RUTHZIL TRATOR COMERCIAL DE PEÇAS LTDA 11 97083-6812 ROLANDO

# PARTS CATALOG

## WHEEL LOADER

## 621E
## TIER 3



BD07G056-01

TABLE OF CONTENTS

General Information
Section 2 – Engine
Section 3 – Fuel System
Section 4 – Electrical System
Section 5 – Tracks / Steering
Section 6 – Power train
Section 7 – Brakes
Section 8 – Hydraulics
Section 9 – Chassis/Attachments
Index

Bur • Issued 01Sept07
Printed in U.S.A. • Book/Form Number 87519729 NA
Copyright © 2007. CNH America, LLC. All Rights Reserved.

CNH America, LLC reserves the right to make improvements in design or changes in specifications at any time without incurring any obligation to install them on units previously sold.

All data given in this publication is subject to production variations. Dimensions and weights are only approximate. Illustrations do not necessarily show products in standard condition. For exact information about any particular product, please consult your Dealer

| This unit first became available 09-2007 | | | |
|---|---|---|---|
| REVISION HISTORY | | | |
| Issue | Issue Date | Applicable Machines | Remarks |
| First Edition | 01Sept07 | 621E Tier 3 Wheel Loader | 87519729 NA |

Any use of editorial or pictorial content is strictly prohibited without express written permission from
CNH America, LLC. Racine, WI 53403 U.S.A..

# TABLE OF CONTENTS


| | |
|---|---|
| 02-01 | MOUNTING, ENGINE |
| 02-02 | RADIATOR - HOSES AND TUBES |
| 02-03 | COOLER, CHARGE AIR |
| 02-04 | COOLER, CHARGE AIR - HOSES AND TUBES |
| 02-05 | FAN DRIVE |
| 02-06 | AIR CLEANER - AIR INTAKE PARTS |
| 02-06A | AIR CLEANER ASSY |
| 02-07 | AIR CLEANER ASSY - PRECLEANER ASSY |
| 02-08 | MUFFLER - EXHAUST SYSTEM |
| 02-09 | OIL FILL, ENGINE |
| 02-10 | OIL PUMP - ENGINE |
| 02-11 | OIL FILTER - ENGINE |
| 02-12 | OIL FILTER AND COOLER |
| 02-13 | OIL PUMP, PAN |
| 02-14 | OIL PUMP, PAN - DRAIN LINE - COVER |
| 02-15 | BREATHER - ENGINE |
| 02-16 | TURBOCHARGER - DRAIN LINE |
| 02-17 | TURBOCHARGER |
| 02-18 | WATER PUMP |
| 02-19 | WATER PUMP - TENSIONER ASSY |
| 02-20 | CYLINDER BLOCK |
| 02-21 | CYLINDER BLOCK - PLUG ASSY |
| 02-22 | CYLINDER BLOCK - NOISE CONTROL |
| 02-23 | CYLINDER HEAD |
| 02-24 | CYLINDER HEAD - ASSEMBLY |
| 02-25 | CYLINDER HEAD - COVERS |
| 02-26 | CRANKSHAFT |
| 02-27 | CRANKSHAFT - PULLEY |
| 02-28 | FLYWHEEL - ENGINE |
| 02-29 | FLYWHEEL HOUSING |
| 02-30 | GEAR COVER - REAR HOUSING |
| 02-31 | GEAR COVER - PLATE |
| 02-32 | FRONT GEAR COVER |
| 02-33 | ROCKER ARMS |
| 02-33A | ROCKER ARMS - ASSEMBLY |
| 02-34 | CAMSHAFT |
| 02-35 | PISTONS |
| 02-36 | CONNECTING ROD |
| 02-37 | INTAKE MANIFOLD |
| 02-38 | EXHAUST MANIFOLD |
| 02-39 | COOLING SYSTEM - ENGINE |
| 02-40 | THERMOSTAT - ENGINE COOLING SYSTEM |
| 02-41 | ENGINE - LIFT HOOKS |
| 02-42 | ENGINE - BLOCK HEATER |
| 03-01 | FUEL LINES - COOLER, FUEL |
| 03-02 | FILTER, FUEL - WATER SEPERATOR |
| 03-03 | FILTER, FUEL |
| 03-04 | FUEL TANK FILLER - SENDER |
| 03-04A | FUEL TANK - BREATHER |
| 03-05 | FUEL INJECTION PUMP |
| 03-06 | FUEL INJECTION SYSTEM |

# TABLE OF CONTENTS


| | |
|---|---|
| 03-07 | FUEL INJECTION SYSTEM - INJECTOR |
| 03-08 | FUEL INJECTION SYSTEM - FUEL, SUPPLY |
| 03-09 | FUEL INJECTION SYSTEM - MODULE, ENGINE CONTROL |
| 03-10 | FUEL INJECTION SYSTEM - HARNESS, ENGINE |
| 03-11 | FUEL INJECTION SYSTEM - DRAIN LINE |
| 04-01 | STARTER |
| 04-02 | ALTERNATOR ASSY |
| 04-02A | ALTERNATOR - MOUNTING WITH AIR CONDITIONING |
| 04-02B | ALTERNATOR - MOUNTING WITHOUT AIR CONDITIONING |
| 04-03 | HARNESS, FRONT - Z-BAR |
| 04-03A | HARNESS, FRONT - XT |
| 04-04 | HARNESS - PANEL, CONTROL |
| 04-05 | HARNESS,  ENGINE |
| 04-06 | HARNESS,  ENGINE - THROTTLE CONTROL |
| 04-07 | HARNESS,  ENGINE -  FUSES AND RELAYS |
| 04-08 | HARNESS - CAB ROOF |
| 04-09 | HARNESS, HOOD - ALARM, BACKUP |
| 04-10 | HARNESS, TRANSMISSION |
| 04-11 | HARNESS - GRID HEATER |
| 04-11A | GRID HEATER |
| 04-12 | HORN, FRONT |
| 04-13 | PANEL, CONTROL  - SWITCHES |
| 04-14 | PANEL, CONTROL - FUSE AND RELAY MOUNTING |
| 04-15 | ELECTRICAL - STEERING COLUMN / INSTRUMENT CLUSTER |
| 04-16 | ELECTRICAL - TRANSMISSION CONTROL |
| 04-17 | ELECTRICAL - STEERING, AUXILIARY |
| 04-18 | MOUNTING - LAMPS, FRONT |
| 04-19 | LAMP ASSY - LAMPS, FRONT |
| 04-20 | MOUNTING - LAMPS, REAR COMBINATION |
| 04-21 | CAB - WORK LAMPS |
| 04-22 | BEACON ASSY, ROTATING - MOUNTING |
| 04-23 | CAB - WIPER, FRONT |
| 04-23A | CAB - WIPER, REAR |
| 04-24 | RADIO - 12 VOLT |
| 04-24A | RADIO - 12 VOLT INSTALLATION |
| 04-25 | BATTERY MOUNTING |
| 04-25A | BATTERY MOUNTING - HEAVY DUTY |
| 04-26 | BATTERY -  CABLES |
| 04-27 | LICENSE PLATE LIGHT |
| 04-28 | WINDSHIELD WASHER MOUNTING |
| 05-01 | STEERING WHEEL |
| 05-02 | STEERING COLUMN |
| 05-02A | STEERING COLUMN - ACCESSORY |
| 05-03 | STEERING COLUMN - TRIM |
| 05-04 | HYDRAULICS - STEERING |
| 05-05 | HYDRAULICS - STEERING - AUXILIARY |
| 05-06 | STEERING CONTROL VALVE |
| 05-07 | STEERING - AUXILIARY - MANIFOLD ASSEMBLY |
| 05-08 | STEERING - AUXILIARY - PUMP |
| 05-09 | STEERING - CYLINDER - HYDRAULICS |
| 05-10 | STEERING - CYLINDER ASSY |

# TABLE OF CONTENTS


| | |
|---|---|
| 06-01 | MOUNTING - TRANSMISSION - TRANSMISSION FILL TUBE |
| 06-02 | HYDRAULICS - TRANSMISSION |
| 06-03 | TRANSMISSION - FILTER, OIL AND FILLER COVER |
| 06-04 | TRANSMISSION - CONVERTER, COVER AND INPUT SHAFT |
| 06-05 | TRANSMISSION - INPUT SHAFT |
| 06-06 | TRANSMISSION ASSY - HOUSING |
| 06-07 | TRANSMISSION ASSY - HOUSING TUBES |
| 06-08 | TRANSMISSION - CLUTCH ASSY, FIRST |
| 06-09 | TRANSMISSION - CLUTCH ASSY, SECOND |
| 06-10 | TRANSMISSION - CLUTCH ASSY, THIRD |
| 06-11 | TRANSMISSION - CLUTCH ASSY, FOURTH |
| 06-12 | TRANSMISSION - CLUTCH ASSY, FORWARD |
| 06-13 | TRANSMISSION - CLUTCH ASSY, REVERSE |
| 06-14 | TRANSMISSION - SHAFT, OUTPUT |
| 06-15 | TRANSMISSION - POWER TAKE OFF |
| 06-16 | TRANSMISSION - VALVE PLATES |
| 06-17 | TRANSMISSION - VALVE, CONTROL |
| 06-18 | TRANSMISSION - VALVE, CONTROL |
| 06-19 | TRANSMISSION - VALVE, REGULATOR AND OIL PUMP |
| 06-20 | TRANSMISSION - SENSOR, SPEED AND PUMP COVER |
| 06-21 | AXLE, REAR - STOP |
| 06-22 | AXLE, FRONT - MOUNTING |
| 06-22A | AXLE, FRONT - HOUSING |
| 06-22B | AXLE, FRONT - DIFFERENTIAL CARRIER |
| 06-22C | AXLE, FRONT - DIFFERENTIAL |
| 06-22D | AXLE, FRONT - BRAKE |
| 06-22E | AXLE, FRONT - HUB, PLANETARY |
| 06-23 | AXLE, REAR - MOUNTING |
| 06-23A | AXLE, REAR - HOUSING |
| 06-23B | AXLE, REAR - DIFFERENTIAL CARRIER |
| 06-23C | AXLE, REAR - DIFFERENTIAL |
| 06-23D | AXLE, REAR - BRAKE |
| 06-23E | AXLE, REAR - HUB, PLANETARY |
| 06-24 | DRIVE SHAFT MOUNTING |
| 06-25 | DRIVE SHAFT, FRONT |
| 06-26 | DRIVE SHAFT, CENTER |
| 06-27 | DRIVE SHAFT, REAR |
| 06-28 | DRIVE SHAFT, ENGINE |
| 06-29 | WHEELS |
| 07-01 | BRAKE, PARKING |
| 07-02 | BRAKE PEDALS |
| 07-03 | HYDRAULICS - BRAKE, MAIN - PUMP |
| 07-03A | HYDRAULICS - BRAKE, MAIN - AXLE |
| 07-03B | HYDRAULICS - BRAKE, MAIN - ACCUMULATOR |
| 07-03C | HYDRAULICS - BRAKE, MAIN - PARKING BRAKE |
| 07-03D | HYDRAULICS - BRAKE, MAIN - RESERVOIR |
| 07-04 | HYDRAULICS - BRAKE - PUMP ASSY |
| 07-05 | VALVE ASSY - BRAKE |
| 08-01 | HYDRAULIC RESERVOIR - ASSEMBLY |
| 08-01A | HYDRAULICS - OIL COOLER MOUNTING |
| 08-02 | HYDRAULIC RESERVOIR - FILTER |

# TABLE OF CONTENTS


| | |
|---|---|
| 08-02A | HYDRAULICS - FILTER, OIL |
| 08-03 | HYDRAULICS - RESERVOIR TO HYDRAULIC PUMP |
| 08-04 | PUMP ASSY |
| 08-05 | HYDRAULICS - LOADER LIFT AND BUCKET (Z BAR, XR LOADER) |
| 08-06 | HYDRAULICS - LOADER LIFT (XT LOADER) |
| 08-07 | HYDRAULICS - LOADER BUCKET (XT LOADER) - RIGHT SIDE |
| 08-07A | HYDRAULICS - LOADER BUCKET (XT LOADER) - LEFT SIDE |
| 08-08 | HYDRAULICS - LOADER AUXILIARY (Z BAR LOADER) |
| 08-09 | HYDRAULICS - LOADER AUXILIARY (XR LOADER) |
| 08-10 | HYDRAULICS - LOADER AUXILIARY (XT LOADER) |
| 08-11 | HYDRAULICS - COUPLER (Z BAR LOADER) |
| 08-12 | HYDRAULICS - COUPLER (XR LOADER) |
| 08-13 | HYDRAULICS - COUPLER (XT LOADER) |
| 08-14 | HYDRAULICS - COUPLER LOCKING |
| 08-15 | CYLINDER ASSY - LOADER LIFT |
| 08-16 | CYLINDER ASSY - LOADER BUCKET (Z BAR LOADER) |
| 08-17 | CYLINDER ASSY - LOADER BUCKET (XR LOADER) |
| 08-18 | CYLINDER ASSY - LOADER BUCKET (XT LOADER) |
| 08-19 | HYDRAULICS - STANDARD BYPASS |
| 08-19A | HYDRAULICS - COOLER WITHOUT BYPASS |
| 08-19B | HYDRAULICS - THERMAL BYPASS |
| 08-20 | HYDRAULICS - RIDE CONTROL |
| 08-20A | VALVE ASSY - RIDE CONTROL DIRECTIONAL (RSM2-16) |
| 08-21 | HYDRAULICS - NON- RIDE CONTROL |
| 08-22 | HYDRAULICS - FAN DRIVE |
| 08-23 | VALVE, FAN RELIEF - MOUNTING |
| 08-23A | VALVE ASSY - FAN RELIEF |
| 08-24 | VALVE, FAN SPEED AND REVERSER - MOUNTING |
| 08-24A | VALVE ASSY - FAN SPEED AND REVERSER |
| 08-25 | HYDRAULICS - LOADER CONTROL, REMOTE |
| 08-26 | VALVE, CONTROL - MOUNTING, TWO SPOOL - (Z-BAR/XR/XT) |
| 08-26A | VALVE, CONTROL - MOUNTING, THREE SPOOL - (Z-BAR/XR/XT) |
| 08-26B | VALVE, CONTROL - MOUNTING, FOUR SPOOL - (Z-BAR/XR/XT) |
| 08-27 | VALVE ASSY - LOADER CONTROL - TWO, THREE, FOUR SPOOL - (Z-BAR/XR) |
| 08-27A | VALVE ASSY - PISTON AXIS - (Z-BAR/XR) |
| 08-27B | VALVE ASSY - LOADER CONTROL -VALVE SECTION - (Z-BAR/XR) |
| 08-28 | VALVE ASSY - LOADER CONTROL - TWO, THREE, FOUR SPOOL - (XT) |
| 08-28A | VALVE ASSY - PISTON AXIS - (XT) |
| 08-28B | VALVE ASSY - LOADER CONTROL - VALVE SECTION - (XT) |
| 08-29 | LOADER CONTROL - JOYSTICK CONTROL MOUNTING |
| 08-29A | VALVE ASSY - JOYSTICK CONTROL |
| 08-29B | VALVE ASSY - JOYSTICK CONTROL |
| 08-30 | LOADER CONTROL - JOYSTICK WITH SINGLE LEVER MOUNTING |
| 08-30A | VALVE ASSY - JOYSTICK WITH SINGLE LEVER |
| 08-31 | LOADER CONTROL - JOYSTICK WITH DUAL LEVER MOUNTING |
| 08-31A | VALVE ASSY - JOYSTICK WITH DUAL LEVER |
| 08-32 | LOADER CONTROL - THREE LEVER MOUNTING |
| 08-32A | VALVE ASSY - 3 LEVER LOADER CONTROL |
| 08-33 | BLOCK MOUNTING - COUPLER, 3 SPOOL HOSES |
| 09-01 | CONTROL - RETURN-TO-DIG (Z-BAR) |
| 09-02 | CONTROL - RETURN-TO-DIG (XR) |

# TABLE OF CONTENTS


| | |
|---|---|
| 09-03 | CONTROL - RETURN-TO-DIG (XT LOADER) |
| 09-04 | CONTROL - BUCKET HEIGHT AND RETURN-TO-TRANSPORT (Z-BAR LOADER) |
| 09-05 | CONTROL - BUCKET HEIGHT AND RETURN-TO-TRANSPORT (XR LOADER) |
| 09-06 | CONTROL - BUCKET HEIGHT AND RETURN-TO-TRANSPORT (XT LOADER) |
| 09-07 | FRAME - LOADER LIFT (Z-BAR) |
| 09-07A | FRAME - LOADER LIFT (XR) |
| 09-07B | FRAME - LOADER LIFT (XT) |
| 09-08 | BUCKETS - ATTACHMENT (Z BAR LOADER) |
| 09-08A | BUCKETS - ATTACHMENT (XT LOADER) |
| 09-09 | COUPLER, HYDRAULIC - Z-BAR - JRB |
| 09-09A | COUPLER, HYDRAULIC - Z-BAR - ACS |
| 09-09B | COUPLER, HYDRAULIC - XT - JRB |
| 09-09C | COUPLER, HYDRAULIC - XT - ACS |
| 09-10 | LOADER BUCKET - WITH BOLT ON TEETH, SEGMENTS AND SKID PADS |
| 09-11 | LOADER BUCKET - WITH BOLT ON EDGE AND SKID PADS |
| 09-12 | FRAME, FRONT (Z-BAR, XR) |
| 09-13 | FRAME, FRONT (XT) |
| 09-14 | FRAME, REAR |
| 09-15 | ARTICULATION JOINT |
| 09-16 | HOOD |
| 09-17 | HOOD - MOUNTING |
| 09-18 | COVERS - BATTERY BOX |
| 09-19 | COVERS - CAB AND CANOPY, LOWER |
| 09-19A | COVERS - FRAME, REAR |
| 09-20 | FENDERS, FRONT |
| 09-20A | FENDERS, FRONT - WIDE |
| 09-21 | FENDERS, REAR - STANDARD |
| 09-22 | FENDERS, REAR - WIDE |
| 09-23 | FENDERS, REAR - GUARD |
| 09-24 | STEPS - LEFT |
| 09-25 | STEPS - RIGHT |
| 09-26 | SOUNDPROOFING - ENGINE |
| 09-27 | PLATE, SKID |
| 09-28 | CAB - MOUNTING |
| 09-29 | CAB - GLASS, FRONT |
| 09-30 | CAB - GLASS, REAR |
| 09-31 | CAB - INTERIOR TRIM |
| 09-31A | CAB - INTERIOR TRIM - COLUMNS |
| 09-31B | CAB - INTERIOR TRIM - ROOF |
| 09-32 | CAB - EXTERIOR TRIM |
| 09-33 | CAB - WINDOW, RIGHT-HAND-UPPER |
| 09-33A | CAB - WINDOW, RIGHT-HAND-UPPER |
| 09-34 | CAB - WINDOW, RIGHT-HAND-LOWER |
| 09-35 | CAB - DOOR MOUNTING |
| 09-35A | CAB - DOOR |
| 09-36 | CAB - MIRRORS |
| 09-37 | CAB - CARPET |
| 09-38 | CAB - SUNVISOR |
| 09-39 | CAB - COMPONENTS |
| 09-40 | CAB - WORK LAMPS |
| 09-41 | CAB - CONVENIENCE PACKAGE |

# TABLE OF CONTENTS


| | |
|---|---|
| 09-42 | SEAT - MOUNTING/SEAT BELTS |
| 09-42A | SEAT ASSY, MECHANICAL SUSPENSION |
| 09-42B | SEAT ASSY, MECHANICAL SUSPENSION |
| 09-42C | SEAT ASSY, AIR SUSPENSION |
| 09-42D | SEAT ASSY, AIR SUSPENSION |
| 09-43 | CAB - HEATER AND AIR CONDITIONING DUCTS |
| 09-43A | CAB - HEATER AND AIR CONDITIONING DUCTS |
| 09-44 | COVERS - DRIVE BELT (WITH AIR CONDITIONING) |
| 09-44A | COVERS - DRIVE BELT (WITHOUT AIR CONDITIONING) |
| 09-44B | COVERS - CAB - WITHOUT AIR CONDITIONING |
| 09-45 | HEATER - MOUNTING |
| 09-45A | HEATER |
| 09-46 | HEATING HOSES |
| 09-47 | AIR CONDITIONING - MOUNTING |
| 09-47A | AIR CONDITIONING |
| 09-48 | AIR CONDITIONING - CONDENSER |
| 09-49 | AIR CONDITIONING HOSES |
| 09-50 | COUNTERWEIGHT |
| 09-50A | COUNTERWEIGHT - HEAVY DUTY |
| 09-51 | FIRE EXTINGUISHER |
| 09-52 | TOOL BOX |
| 09-53 | LICENSE PLATE MOUNTING |
| 09-54 | DECALS - MODEL |
| 09-55 | DECALS - COMMON TO MODEL |
| 09-56 | DECALS - CAB |
| 09-57 | DECALS - ENGLISH |
| 09-58 | DECALS - FRENCH CANADIAN |
| 09-59 | DECALS - LATIN AMERICAN SPANISH |

# GENERAL INFORMATION

## PROPRIETARY NOTICE

The contents of this manual are proprietary data of this company. Reproduction or use of any part for other than the operation and maintenance of our equipment is permissible only if expressly authorized in writing.

Additional copies may be obtained from your dealer. Address requests for copies to your Dealer and refer to the publication part number appearing on the bottom of the rear catalog cover or on the title page.

## COMPANY POLICY

Company policy, which is one of continuous improvement, reserves the right to change prices and to make changes in design and specification at any time without notice and without obligation to modify units previously built.

All data given in this book is subject to production variations. Dimensions and weights are approximate only and the illustrations do not necessarily show machines in standard condition. For exact information about any particular machine please consult your dealer.

## PARTS AND ACCESSORIES

Genuine parts and accessories have been specifically designed for these machines.

We would like to point out that “non-genuine” parts and accessories have NOT been examined and released by the Company. The installation and or use of such products could have negative effects upon the design characteristics of your machine and thereby affect its safety. The company is not liable for any damage caused by the use of “non-genuine” parts and accessories.

## IMPROVEMENTS

We are continually striving to improve our products. We reserve the right to make improvements or changes when it becomes practical and possible to do so, without incurring any obligation to make changes or additions to the equipment sold previously.

## MODEL CODES

The range of machines listed may not be available in all countries or markets therefore, for the latest information consult your local dealer.

## OWNER ASSISTANCE

We want you to be completely satisfied with your investment. Normally any problems with your equipment will be handled by your dealer's Service Department; however, misunderstandings can occur. If your problem has not been handled to your satisfaction, we suggest the following:

1. Contact the owner or General Manager of the dealership, explain the problem, and request assistance. When additional assistance is needed, your dealer has direct access to our office.
2. Provide your dealer with:
   - Your Name, Address, and Telephone number
   - Machine Model and Serial Number
   - Dealership Name and Address
   - Machine purchase date and amount of use
   - Nature of problem

Be aware that your problem will likely be resolved in the dealership using the dealer's facilities, equipment, and personnel. So it is important that your initial contact be with the dealer.

## SPARE PARTS

To maintain operating efficiency, use original spare parts.

When ordering parts, give the following information:

- Machine Model
- Machine and Engine Serial Numbers
- Part Number from the Parts Catalog

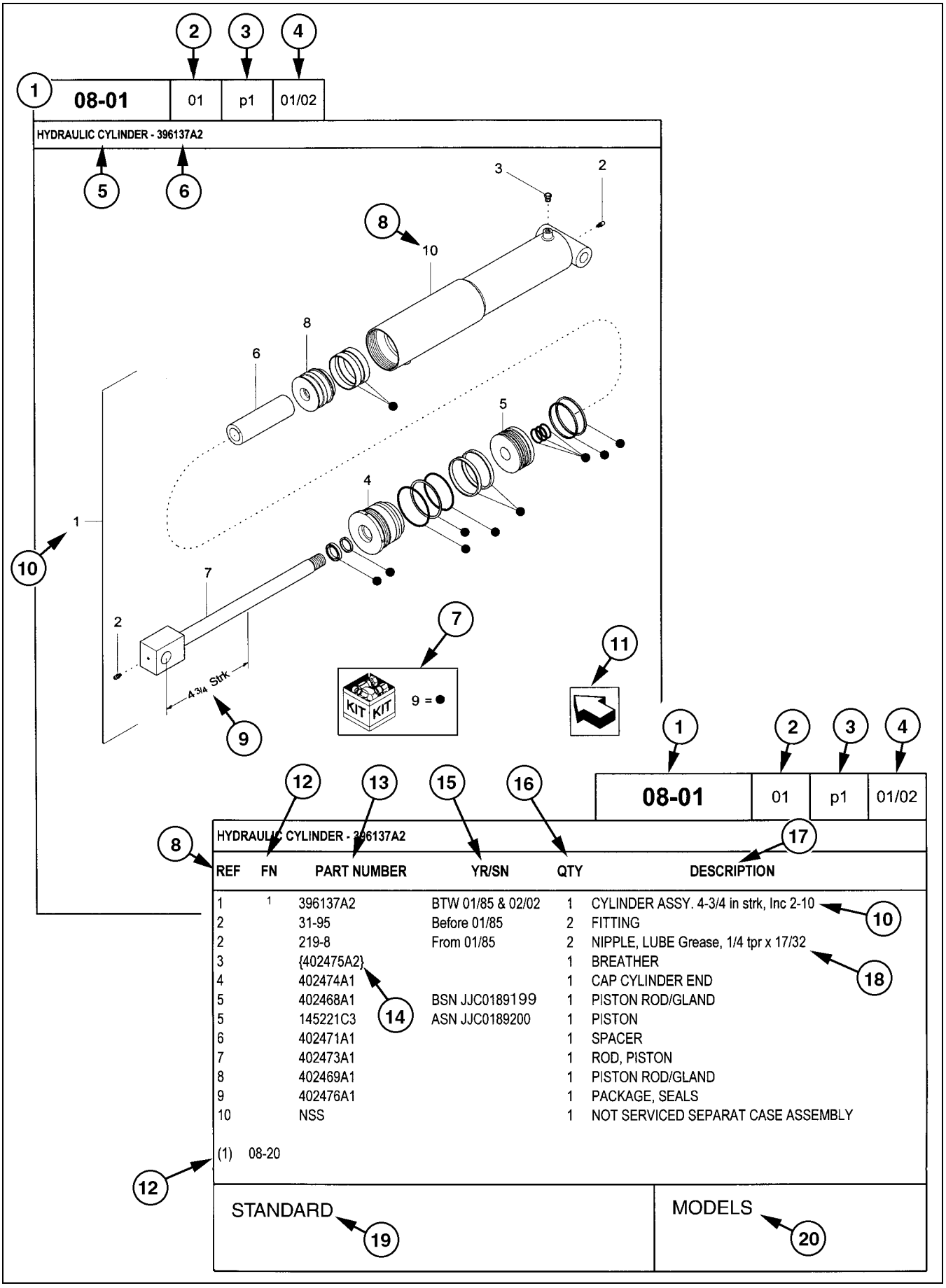


| REF | FN | PART NUMBER | YR/SN | QTY | DESCRIPTION |
|---|---|---|---|---|---|
| 1 | 1 | 396137A2 | BTW 01/85 & 02/02 | 1 | CYLINDER ASSY. 4-3/4 in strk, Inc 2-10 |
| 2 | | 31-95 | Before 01/85 | 2 | FITTING |
| 2 | | 219-8 | From 01/85 | 2 | NIPPLE, LUBE Grease, 1/4 tpr x 17/32 |
| 3 | | {402475A2} | | 1 | BREATHER |
| 4 | | 402474A1 | | 1 | CAP CYLINDER END |
| 5 | | 402468A1 | BSN JJC0189199 | 1 | PISTON ROD/GLAND |
| 5 | | 145221C3 | ASN JJC0189200 | 1 | PISTON |
| 6 | | 402471A1 | | 1 | SPACER |
| 7 | | 402473A1 | | 1 | ROD, PISTON |
| 8 | | 402469A1 | | 1 | PISTON ROD/GLAND |
| 9 | | 402476A1 | | 1 | PACKAGE, SEALS |
| 10 | | NSS | | 1 | NOT SERVICED SEPARAT CASE ASSEMBLY |

(1) 08-20

STANDARD

MODELS

## HOW TO USE YOUR PARTS CATALOG

1. Figure Number
2. Sequence Code within the Figure Number
3. Page Number within the Sequence Code
4. Date of Printing (month / year)
5. Figure Description
6. General information regarding the figure
7. Parts supplied in repair kits per symbol reference
8. Figure call-out of the part number (REF)
9. Technical specifications relating to the part indicated
10. Figure call-out includes bracketed items, the included items may also be listed in the additional description area
11. Orientation - Arrow indicates front of the machine
12. Footnote - Additional information relating to the part number. In this example, 08-20 equals another figure that this part is shown on
13. Part Number
    NSS = Not Serviced Separately (Non-serviced parts)
    Bracketed numbers = not available as service parts in this market
14. Not Available as service part in this market
15. YR/SN
    Year
    Before 01/85 = Part valid for production January 1985 and before
    From 01/85 = Part valid for production from January 1985 and after
    BTW 01/85 & 02/02 = Part valid for machines produced between January 1985 and February 2002.
    Serial Number (P.I.N.)
    BSN JJC0268800 = Part valid for serial number JJC0268800 and below
    ASN JJC0268800 = Part valid for serial number JJC0268800 and above
    BTW JJC0178000 & JJC0179000 = Part valid for serial numbers between JJC0178000 & JJC0179000
16. Total Quantity of the Part referred to in the page. The quantity can be replaced by the following indications:
    AR = As Required
    X = As required
17. Part Description
18. Additional description of the part to help confirm identification
19. Figure Notes
20. Model Number(s)

### RIGHT-HAND AND LEFT-HAND

The reference to right-hand and left-hand in this catalog is identified by the operator standing at the rear of the basic unit (without rear attachment), looking toward the front of the machine (in normal forward travel).

For pages covering any machine attachments, right-hand and left-hand are defined by the operator sitting in the position for proper operation of the attachment.

### DIMENSIONS

Metric and U.S. hardware dimensions do not show the numeric designations of standard coarse threads. A number following a semi colon (;) is the class or grade of hardware. A comma (,) represents the decimal point (.) used in U.S. dimensions.

# EXPLANATION OF ABBREVIATIONS

| | |
|---|---|
| AC | Alternating Current |
| adj | adjustable |
| amp | ampere |
| AR | As required |
| ASN | Serial number and after<br>P.I.N. and after |
| blkhd | bulkhead |
| br | branch |
| BSN | before Serial number<br>before P.I.N. |
| BTW | between |
| cc | cubic centimetre |
| cl | class |
| cmprsn | compression |
| cn pt | cone point |
| cp pt | cup point |
| CRS | Chrome Alloy Steel |
| CST | Carbon Steel |
| cu yd | cubic yard |
| DC | Direct Current |
| deg | degree |
| dg pt | dog point |
| dia | diameter |
| dr type | drive type |
| fc | face |
| fc sl | face seal |
| fem | female |
| fem PT | female pipe thread |
| fl | flare |
| flat pt | flat point |
| ft | feet or foot |
| ga | gauge |
| gal | gallon or gallons |
| gpm | gallons per minute |
| gr | grade |
| hd | head |
| hdg pt | half dog point |
| hp | horsepower |
| ID | inside diameter |
| in | inch or inches |
| Incl. | Includes |
| inv fl | inverted flare |
| K | kilo |
| kg | kilogram |
| km/h | kilometers per hour |
| L | litre |
| lb | pounds |
| lb-ft | pound-foot |
| lg | long |
| LH | left-hand |
| LH thd | left-hand thread |
| M | (prefix) metric thread size |
| m | metre |
| ml | milliliter |
| mm | millimetre |
| NF | National Fine |
| No. | number |
| NPT | National Pipe Thread |
| NS | National Super Fine |
| OD | outside diameter |
| ohm | electrical unit of resistance |
| Or | O-ring |
| ORB | O-ring boss |
| ORFS | O-ring face seal |
| ov cntr | over center |
| ov pt | oval point |
| oz | ounce |
| P | pitch |
| psi | pounds per square inch |
| pt | pint |
| PT | pipe thread |
| rd | round |
| rd holes | round holes |
| RH | right-hand |
| RH thd | right-hand thread |
| rpm | revolutions per minute |
| sl | self-locking |
| sq | square |
| SST | Stainless Steel |
| st | self-tapping |
| strk | stroke |
| sw | swivel |
| T | teeth |
| thk | thick |
| tpr | taper |
| tube OD | tube outside diameter |
| V | volt or volts |
| W | watt or watts |
| X | as required |
| yd | yard |

# SECTION INDEX
## Engine


| | |
|---|---|
| 02-01 | MOUNTING, ENGINE |
| 02-02 | RADIATOR - HOSES AND TUBES |
| 02-03 | COOLER, CHARGE AIR |
| 02-04 | COOLER, CHARGE AIR - HOSES AND TUBES |
| 02-05 | FAN DRIVE |
| 02-06 | AIR CLEANER - AIR INTAKE PARTS |
| 02-06A | AIR CLEANER ASSY |
| 02-07 | AIR CLEANER ASSY - PRECLEANER ASSY |
| 02-08 | MUFFLER - EXHAUST SYSTEM |
| 02-09 | OIL FILL, ENGINE |
| 02-10 | OIL PUMP - ENGINE |
| 02-11 | OIL FILTER - ENGINE |
| 02-12 | OIL FILTER AND COOLER |
| 02-13 | OIL PUMP, PAN |
| 02-14 | OIL PUMP, PAN - DRAIN LINE - COVER |
| 02-15 | BREATHER - ENGINE |
| 02-16 | TURBOCHARGER - DRAIN LINE |
| 02-17 | TURBOCHARGER |
| 02-18 | WATER PUMP |
| 02-19 | WATER PUMP - TENSIONER ASSY |
| 02-20 | CYLINDER BLOCK |
| 02-21 | CYLINDER BLOCK - PLUG ASSY |
| 02-22 | CYLINDER BLOCK - NOISE CONTROL |
| 02-23 | CYLINDER HEAD |
| 02-24 | CYLINDER HEAD - ASSEMBLY |
| 02-25 | CYLINDER HEAD - COVERS |
| 02-26 | CRANKSHAFT |
| 02-27 | CRANKSHAFT - PULLEY |
| 02-28 | FLYWHEEL - ENGINE |
| 02-29 | FLYWHEEL HOUSING |
| 02-30 | GEAR COVER - REAR HOUSING |
| 02-31 | GEAR COVER - PLATE |
| 02-32 | FRONT GEAR COVER |
| 02-33 | ROCKER ARMS |
| 02-33A | ROCKER ARMS - ASSEMBLY |
| 02-34 | CAMSHAFT |
| 02-35 | PISTONS |
| 02-36 | CONNECTING ROD |
| 02-37 | INTAKE MANIFOLD |
| 02-38 | EXHAUST MANIFOLD |
| 02-39 | COOLING SYSTEM - ENGINE |
| 02-40 | THERMOSTAT - ENGINE COOLING SYSTEM |
| 02-41 | ENGINE - LIFT HOOKS |
| 02-42 | ENGINE - BLOCK HEATER |

**MOUNTING, ENGINE**

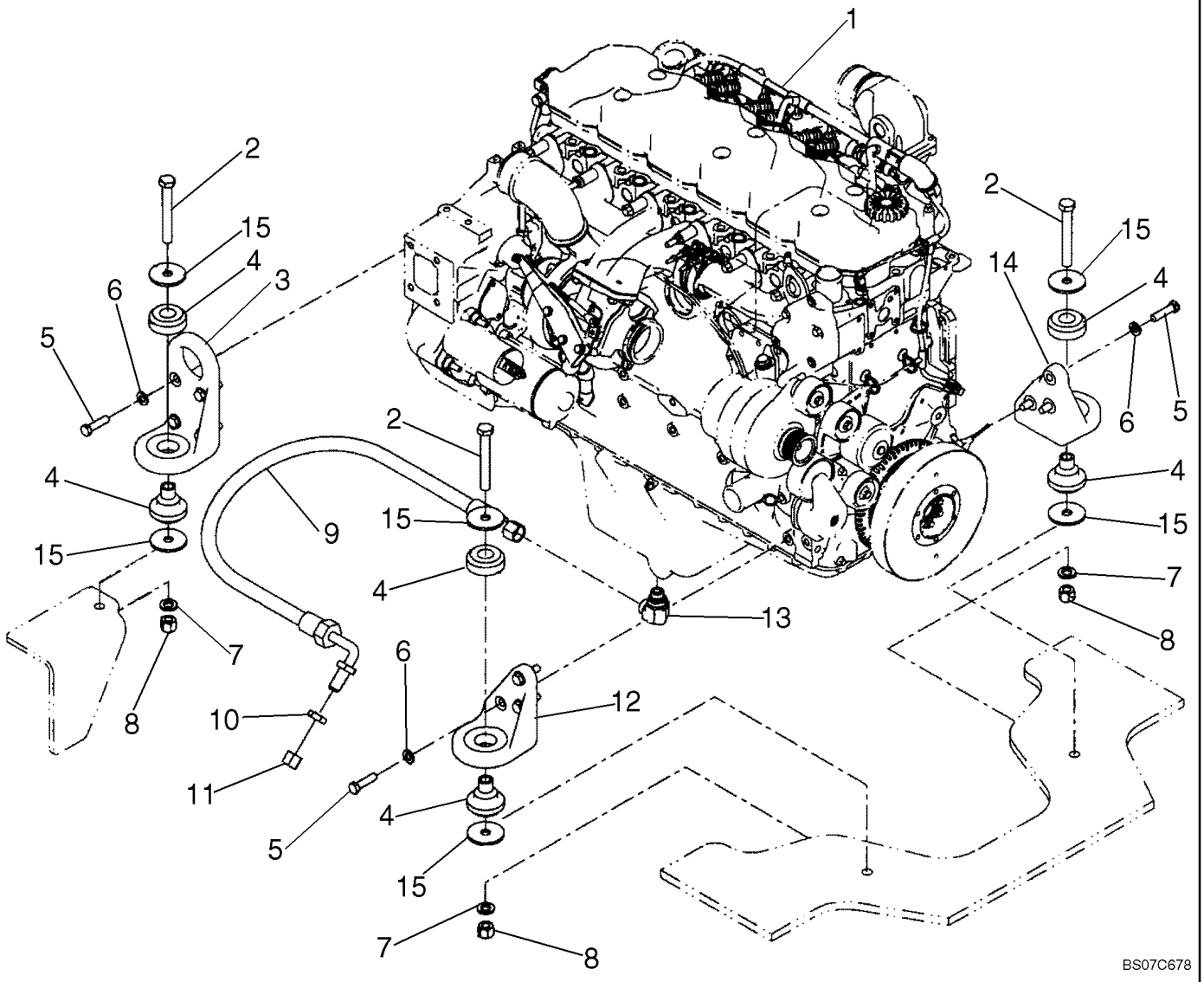

**MOUNTING, ENGINE**

| REF | FN | PART NUMBER | YR/SN | QTY | DESCRIPTION |
|---|---|---|---|---|---|
| 1 | | 87579400 | | 1 | ENGINE, 6 Cylinder 6.7L Turbo, Tier III; See Figures 02-09 - 02-13, 02-15 - 02-41, 03-05 - 03-11 |
| 2 | | 827-16120 | | 4 | BOLT, Hex, M16 x 120, 10.9 |
| 3 | | 8602302 | | 2 | MOUNT, ENGINE, Flywheel Housing |
| 4 | | 361811A1 | | 4 | ISOLATOR |
| 5 | | 627-12045 | | 14 | BOLT, Hex, M12 x 45, 10.9, Full Thd |
| 6 | | 896-11012 | | 14 | WASHER, M13.5 x 24.5 x 3, HT |
| 7 | | 896-11016 | | 4 | WASHER, M17.5 x 30 x 4, HT |
| 8 | | 832-10416 | | 4 | NUT, LOCK, M16 x 2, Cl 8 |
| 9 | | 397437A1 | | 1 | HOSE ASSY. |
| 10 | | 218-1251 | | 1 | NUT, LOCK, Blkhd, 7/8"-14 |
| 11 | | 218-756 | | 1 | CAP, 37º, 7/8"-14 |
| 12 | | 8602304 | | 1 | MOUNT, ENGINE, Rear Left |
| 13 | | 87426452 | | 1 | FITTING |
| 14 | | 8602303 | | 1 | MOUNT, ENGINE, Rear Right |
| 15 | | 496-81025 | | 8 | WASHER, 21/32" x 2 1/2" x .188", HDN |

**RADIATOR - HOSES AND TUBES**

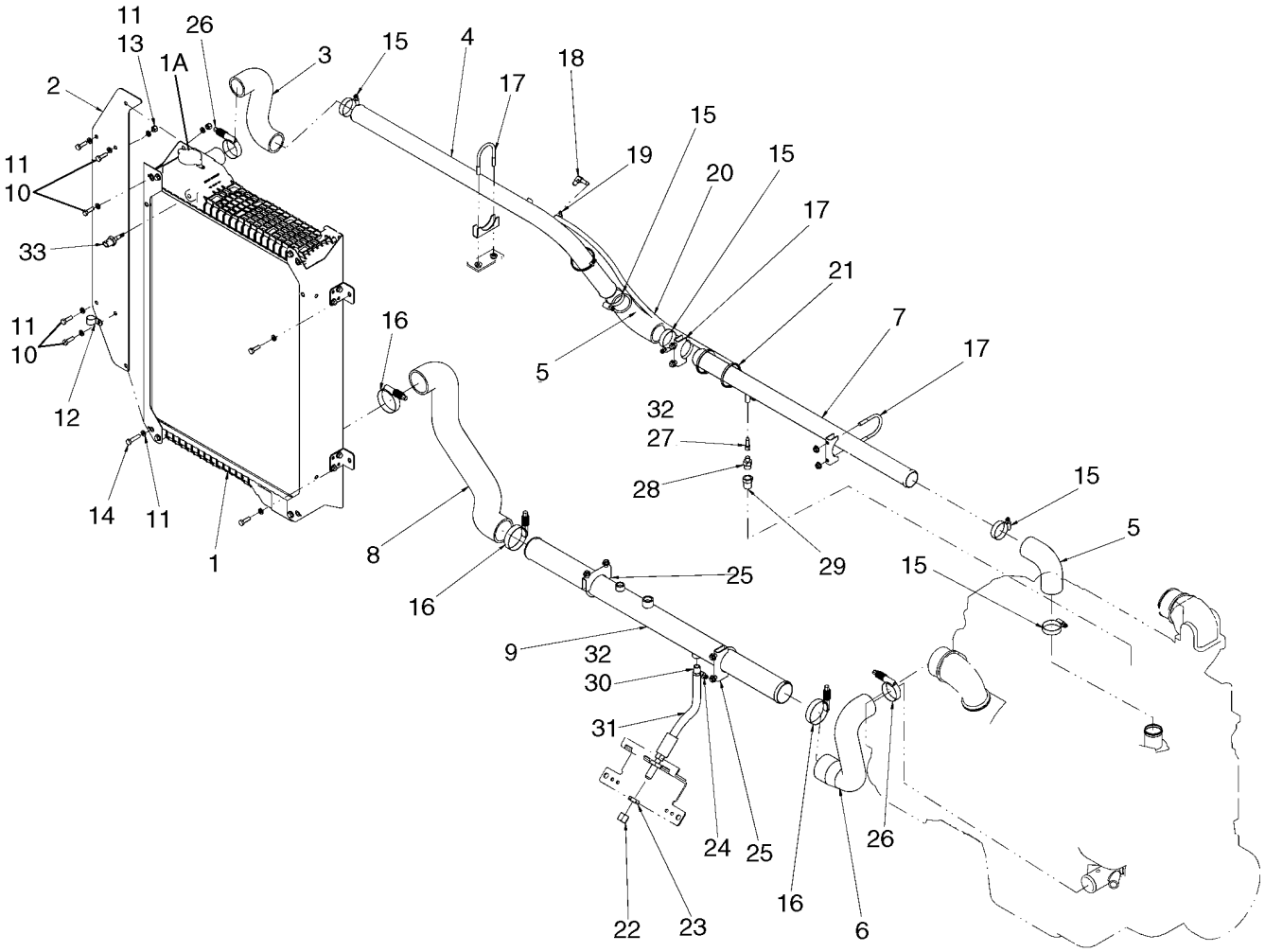

**RADIATOR - HOSES AND TUBES**

| REF | FN | PART NUMBER | YR/SN | QTY | DESCRIPTION |
|---|---|---|---|---|---|
| 1 | | 8602421 | | 1 | RADIATOR, Incl. Ref. 1A |
| 1A | | A170241 | | 1 | CAP, RADIATOR |
| 2 | | 87324042 | | 1 | PLATE, Radiator |
| 3 | | 8500083 | | 1 | HOSE, Radiator Top |
| 4 | | 87552495 | | 1 | TUBE, Top Coolant |
| 5 | | 381232A1 | | 2 | HOSE, Elbow |
| 6 | | 8500084 | | 1 | HOSE, Engine Bottom |
| 7 | | 87446950 | | 1 | TUBE, Top Coolant |
| 8 | | 87552485 | | 1 | HOSE, Radiator Bottom |
| 9 | | 87325208 | | 1 | TUBE, Bottom Coolant |
| 10 | | 627-8025 | | 7 | BOLT, Hex, M8 x 25, 10.9 |
| 11 | | 892-11008 | | 12 | WASHER, LOCK, M8 |
| 12 | | 515-22190 | | 4 | CLAMP, 3/4", Insul, 5/16" Bolt |
| 13 | | 832-10408 | | 4 | NUT, LOCK, M8 x 1.25, Cl 8 |
| 14 | | 627-8035 | | 1 | BOLT, Hex, M8 x 35, 10.9 |
| 15 | | 214-1436 | | 5 | CLAMP, HOSE, #36, 1.81/2.75 Type F Worm |
| 16 | | L115548 | | 3 | CLAMP |
| 17 | | 382189A1 | | 3 | CLAMP |
| 18 | | 217-292 | | 1 | FITTING, 90º, 1/4" Hose x 1/8" NPTF, Barbed |
| 19 | | 214-1704 | | 2 | CLAMP, HOSE, #4, 0.25/0.62 Type M Worm |
| 20 | | 87552499 | | 1 | HOSE, Coolant Breather, 885 mm (33 - 1/2 in) |
| 21 | | L11541 | | 3 | STRAP |
| 22 | | 218-755 | | 1 | CAP, 37º, 3/4"-16 |
| 23 | | 218-1255 | | 1 | NUT, LOCK, Blkhd, 3/4"-16 |
| 24 | | 214-1410 | | 1 | CLAMP, HOSE, #10, 0.56/1.06 Type F Worm |
| 25 | | 393632A1 | | 2 | CLAMP |
| 26 | | 254026A1 | | 2 | CLAMP |
| 27 | | 217-191 | | 1 | FITTING, 1/4" Hose x 1/8" NPTF, Fem, Barbed |
| 28 | | J911901 | | 1 | VALVE, CHECK |
| 29 | | 217-1035 | | 1 | REDUCER, 1/2"-14 Male NPTF x 3/8"-18 Female NPTF |
| 30 | | 217-152 | | 1 | FITTING, 1/2" Hose X 3/8" NPTF Beaded |
| 31 | | 87536091 | | 1 | HOSE ASSY., Remote Coolant Drain, 330 mm (13 in) |
| 32 | | 345-87 | | AR | LOCTITE |

**RADIATOR - HOSES AND TUBES**

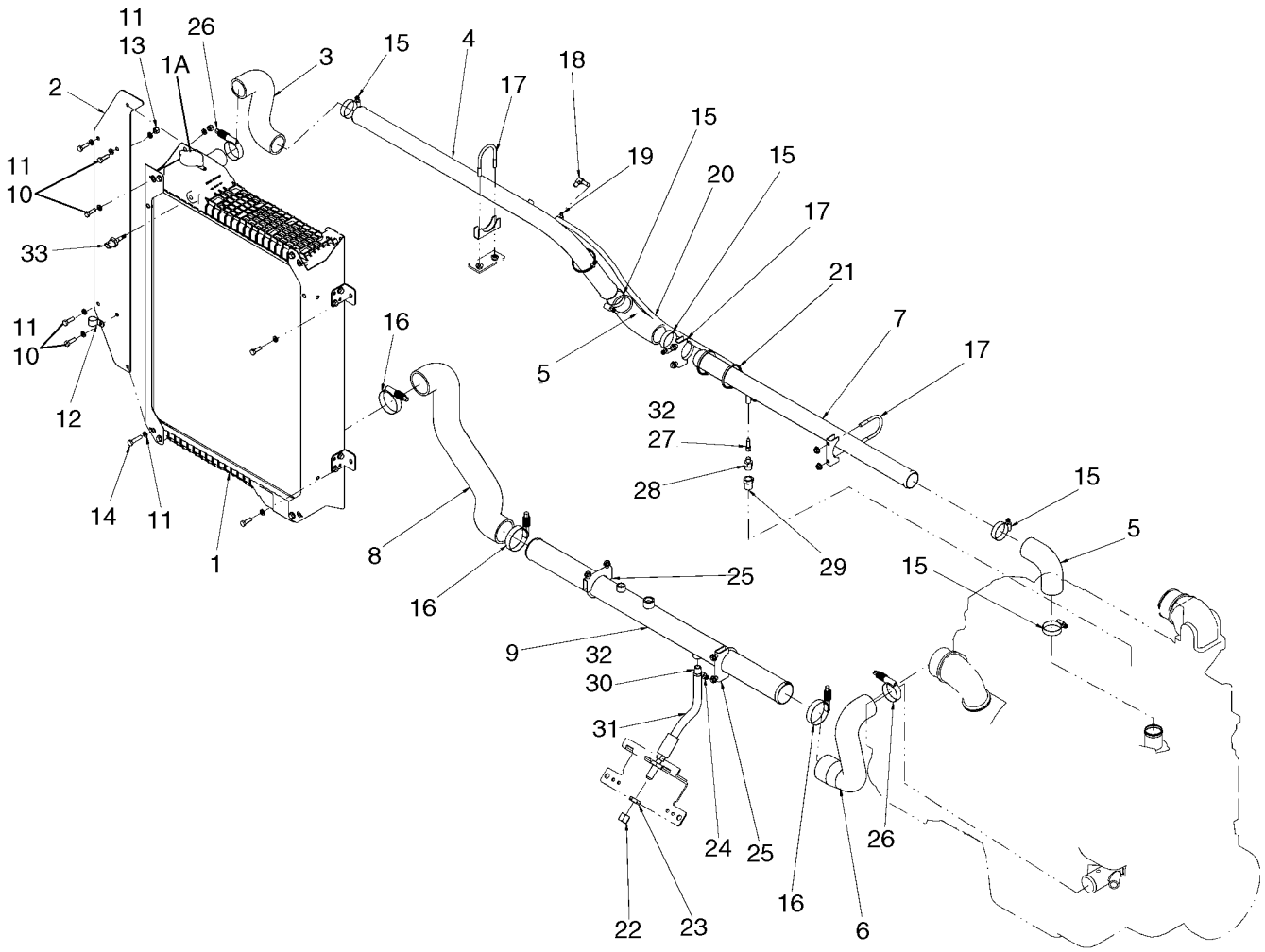

**RADIATOR - HOSES AND TUBES**

| REF | FN | PART NUMBER | YR/SN | QTY | DESCRIPTION |
|---|---|---|---|---|---|
| 33 | | 419792A2 | | 1 | SENSOR, Coolant Level |

| 02-03 | | p1 | 03/07 |
|---|---|---|---|

**COOLER, CHARGE AIR**

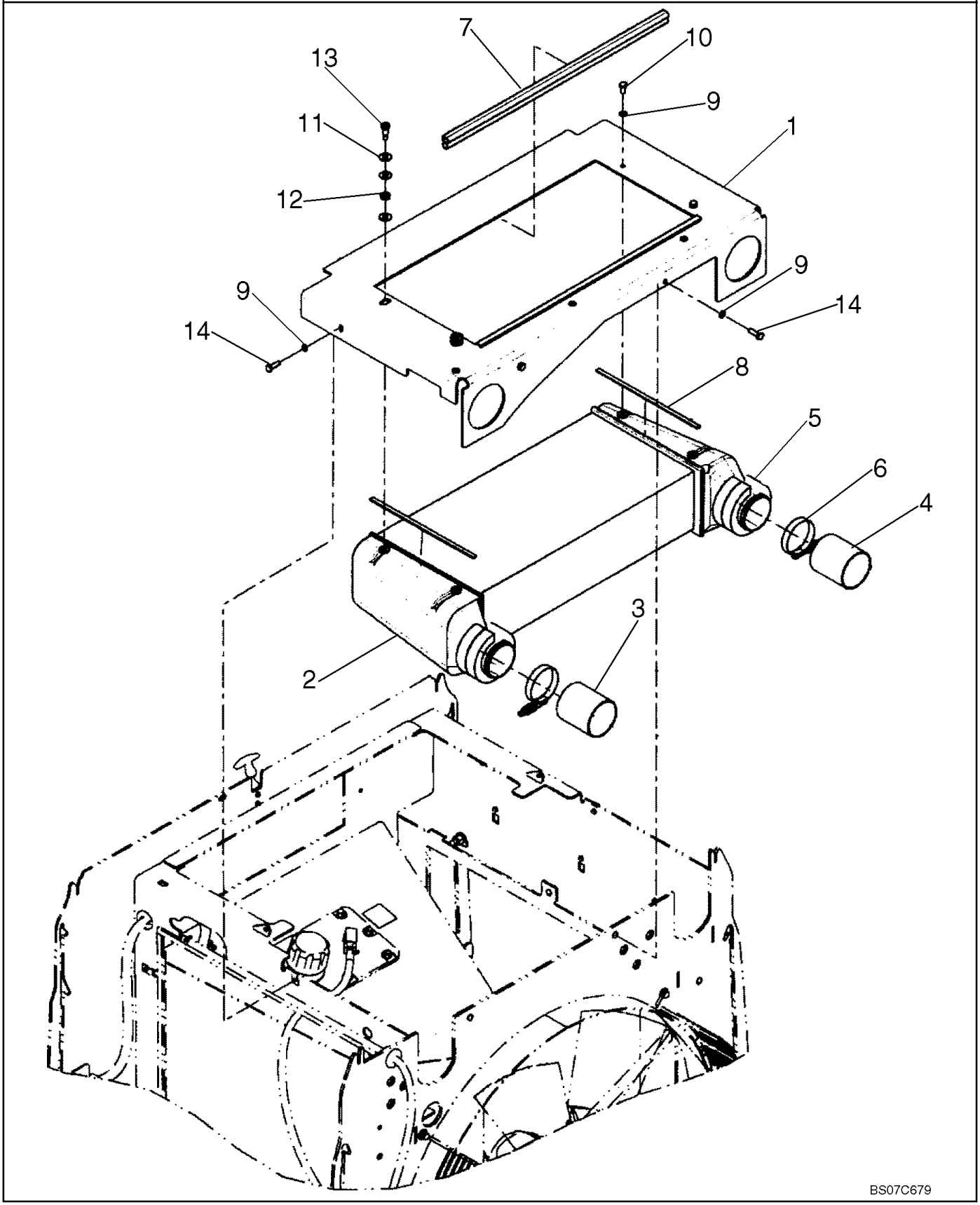

**COOLER, CHARGE AIR**

| REF | FN | PART NUMBER | YR/SN | QTY | DESCRIPTION |
|---|---|---|---|---|---|
| 1 | | 87381953 | | 1 | PLATE ASSY., Charge Air |
| 2 | | 347613A1 | | 1 | COOLER, Charge Air |
| 3 | | {87572375} | | 1 | HOSE, Air Intake |
| 4 | | {87572378} | | 1 | HOSE, Air Intake |
| 5 | | 8500167 | | 2 | SEAL |
| 6 | | L115549 | | 2 | CLAMP |
| 7 | | 8500144 | | 2 | SEAL |
| 8 | | 8500143 | | 2 | SEAL, Foam |
| 9 | | 892-11008 | | 6 | WASHER, LOCK, M8 |
| 10 | | 627-8016 | | 2 | BOLT, Hex, M8 x 16, 10.9 |
| 11 | | 895-15010 | | 6 | WASHER, M11 x 24 x 2 |
| 12 | | 386040R1 | | 2 | SPRING |
| 13 | | 561-703 | | 2 | SCREW, Hex Soc, Shoulder, M8 10 X 16mm, Cl 12.9 |
| 14 | | 627-8025 | | 4 | BOLT, Hex, M8 x 25, 10.9 |

**COOLER, CHARGE AIR - HOSES AND TUBES**

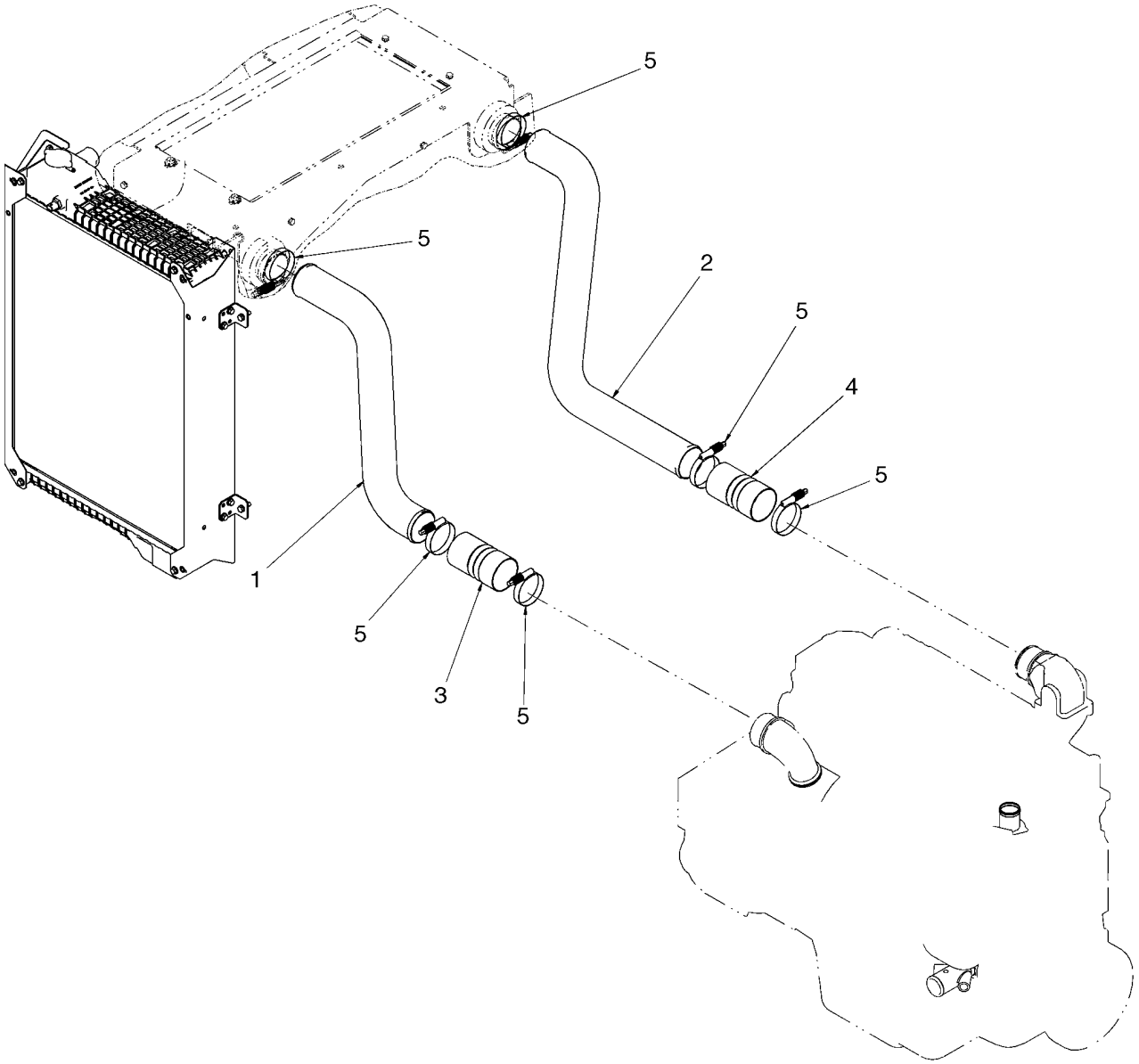

**COOLER, CHARGE AIR - HOSES AND TUBES**

| REF | FN | PART NUMBER | YR/SN | QTY | DESCRIPTION |
|---|---|---|---|---|---|
| 1 | | 87552496 | | 1 | TUBE, Charge Air - Turbo |
| 2 | | 87644742 | | 1 | TUBE, AIR INTAKE, Charge Air - Intake |
| 3 | | 87340284 | | 1 | HOSE, Charge Air, 76X140 mm |
| 4 | | 87340015 | | 1 | HOSE, Air Intake, 76X140 mm |
| 5 | | L115549 | | 6 | CLAMP |

**FAN DRIVE**

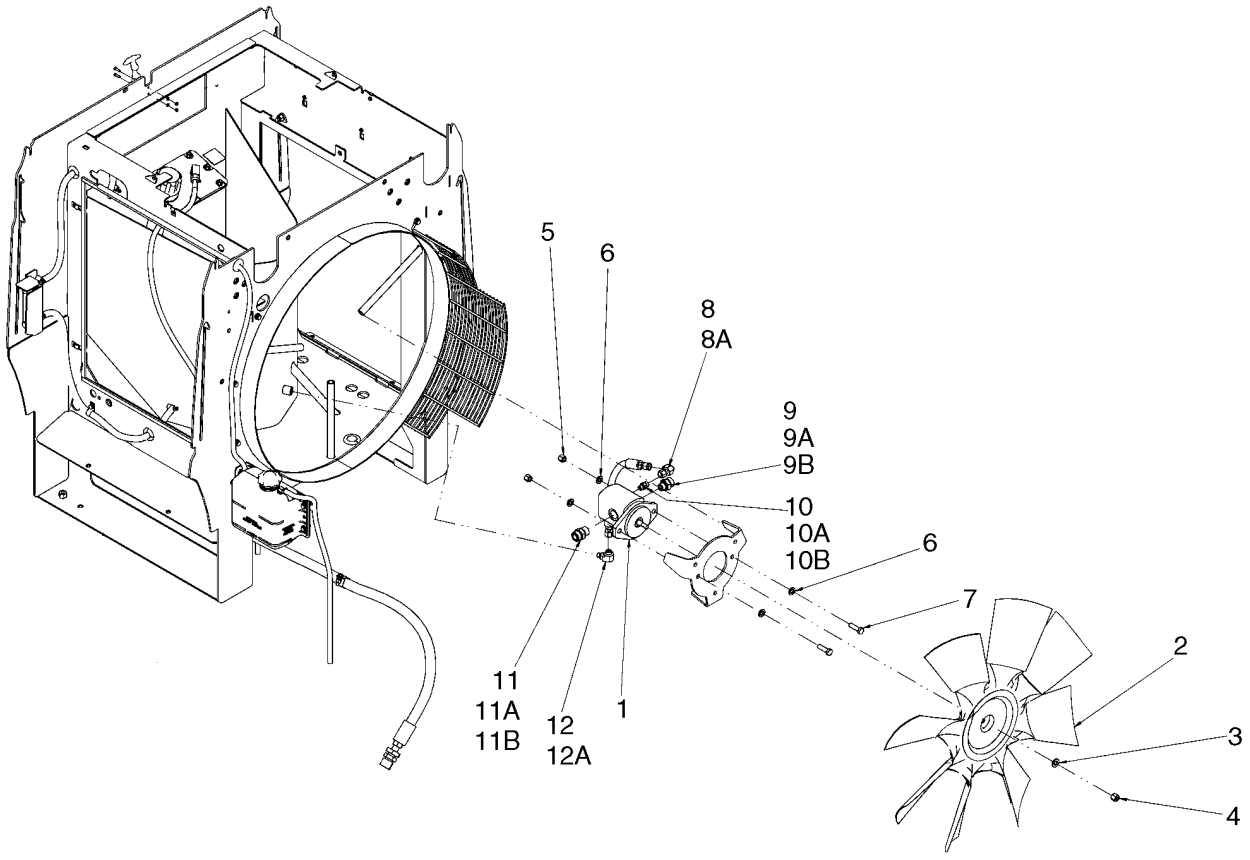

**FAN DRIVE**

| REF | FN | PART NUMBER | YR/SN | QTY | DESCRIPTION |
|---|---|---|---|---|---|
| | | REF | | | INSTRUCTION, FAN DRIVE MOUNTING, FOR HYDRAULICS AND FAN VALVES SEE FIGURES 08-22 - 08-24A |
| 1 | | 8500105 | | 1 | MOTOR, HYDRAULIC, Reversible Fan; Incl. 1A |
| 1A | | 86991683 | | 1 | KIT, Seals, For Fan Drive Motor; Not Illustrated |
| 2 | | 8500471 | | 1 | FAN |
| 3 | | 496-21053 | | 1 | WASHER, 17/32" x 1 1/6" x .134" |
| 4 | | 232-2448 | | 1 | NUT, LOCK, 1/2"-20, GC |
| 5 | | 832-10412 | | 2 | NUT, LOCK, M12 x 1.75, Cl 8 |
| 6 | | 896-11012 | | 4 | WASHER, M13.5 x 24.5 x 3, HT |
| 7 | | 627-12040 | | 2 | BOLT, Hex, M12 x 40, 10.9, Full Thd |
| 8 | | 84989392 | | 1 | ELBOW, 90º, 11/16"-16 ORFS x 11/16"-16 Fem Sw, Incl. Ref. 8A |
| 8A | | 9993141 | | 1 | O-RING, -012, 90 Duro, .364" ID x .070" Thk |
| 9 | | 86579681 | | 1 | CONNECTOR, HYD., 1 3/16"-12 ORFS x M22 x 1.5 ORB, Incl. Refs. 9A, 9B |
| 9A | | 238-6018 | | 1 | O-RING, -018, 90 Duro, .739" ID x .070" Thk, Face Seal |
| 9B | | 637-63193 | | 1 | O-RING, Cl 6, 19.3MM ID x 2.2 Thk, Boss Seal |
| 10 | | 86579671 | | 1 | CONNECTOR, HYD., 11/16"-16 ORFS x M14 x 1.5 ORB |
| 10A | | 238-6012 | | 1 | O-RING, -012, 90 Duro, .364" ID x .070" Thk, Face Seal |
| 10B | | 637-63113 | | 1 | O-RING, Cl 6, 11.3MM ID x 2.2 Thk, Boss Seal |
| 11 | | 86579682 | | 1 | CONNECTOR, HYD., 1 3/16"-12 ORFS x M27 x 2 ORB, Incl. Refs. 11A, 11B |
| 11A | | 238-6018 | | 1 | O-RING, -018, 90 Duro, .739" ID x .070" Thk, Face Seal |
| 11B | | 637-64236 | | 1 | O-RING, Cl 6, 23.6MM ID x 2.9 Thk, Boss Seal |
| 12 | | 86579686 | | 1 | ELBOW, 90º, 11/16"-18 ORFS x M14 x 1.5 ORB, Incl. Ref. 12A |
| 12A | | 238-6012 | | 1 | O-RING, -012, 90 Duro, .364" ID x .070" Thk, Face Seal |

**AIR CLEANER - AIR INTAKE PARTS**

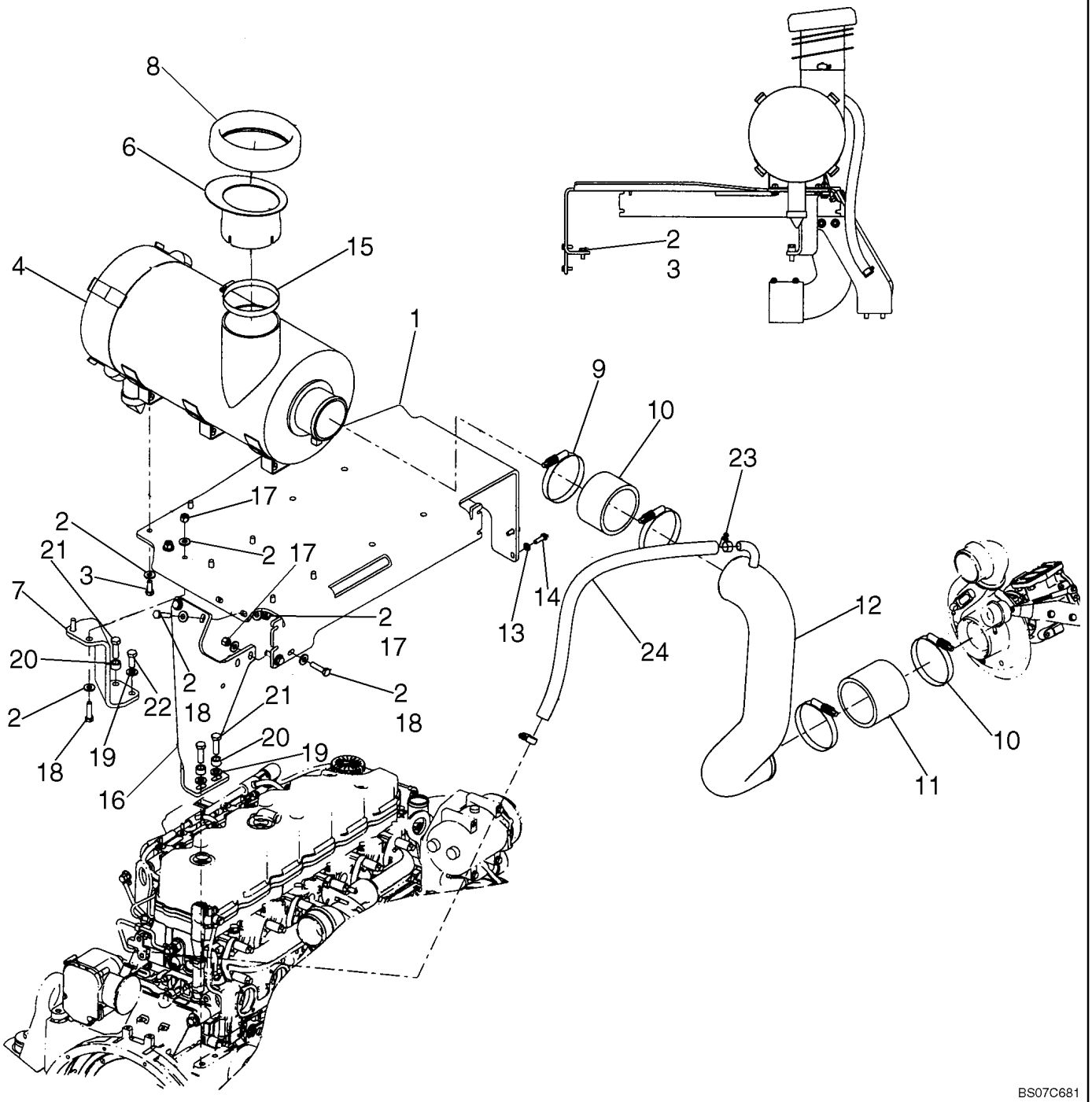

**AIR CLEANER - AIR INTAKE PARTS**

| REF | FN | PART NUMBER | YR/SN | QTY | DESCRIPTION |
|---|---|---|---|---|---|
| 1 | | 87535471 | | 1 | SUPPORT, Air Cleaner |
| 2 | | 896-15010 | | 20 | WASHER, M10 x 24.5 x 3, HT |
| 3 | | 627-10025 | | 8 | BOLT, Hex, M10 x 25, 10.9, Full Thd |
| 4 | | 87590238 | | 1 | AIR CLEANER, See Figure 02-06A |
| 6 | | 87557216 | | 1 | TUBE, Under Hood Intake |
| 7 | | 87535473 | | 1 | SUPPORT, Air Cleaner |
| 8 | | 8500403 | | 1 | SEAL |
| 9 | | 8501205 | | 1 | HOSE, 73 mm ( 2 7/8 in ); Air Cleaner |
| 10 | | L127771 | | 4 | CLAMP |
| 11 | | 8602478 | | 1 | HOSE, 100 mm ( 4 in ); Air Cleaner |
| 12 | | 8602473 | | 1 | TUBE, Air Cleaner Intake |
| 13 | | 896-11008 | | 2 | WASHER, M8 x 17.5 x 2, HT |
| 14 | | 627-8025 | | 2 | BOLT, Hex, M8 x 25, 10.9 |
| 15 | | 214-3188 | | 1 | CLAMP, HOSE, 4.75/6.625 HD Worm |
| 16 | | 87535472 | | 1 | SUPPORT, Left |
| 17 | | 832-10410 | | 6 | NUT, LOCK, M10 x 1.5, Cl 8 |
| 18 | | 627-10040 | | 6 | BOLT, Hex, M10 x 40, 10.9, Full Thd |
| 19 | | 896-11012 | | 3 | WASHER, M13.5 x 24.5 x 3, HT |
| 20 | | D44696 | | 2 | BUSHING, 1/2 Pipe x 1/2 |
| 21 | | 627-12040 | | 3 | BOLT, Hex, M12 x 40, 10.9, Full Thd |
| 22 | | 627-12030 | | 1 | BOLT, Hex, M12 x 30, 10.9 |
| 23 | | 214-1416 | | 2 | CLAMP, HOSE, #16, 0.81/1.50 Type F Worm |
| 24 | | 87342638 | | 1 | HOSE, 800 mm ( 31-1/2in ); Crankcase Ventilation |

**AIR CLEANER ASSY**

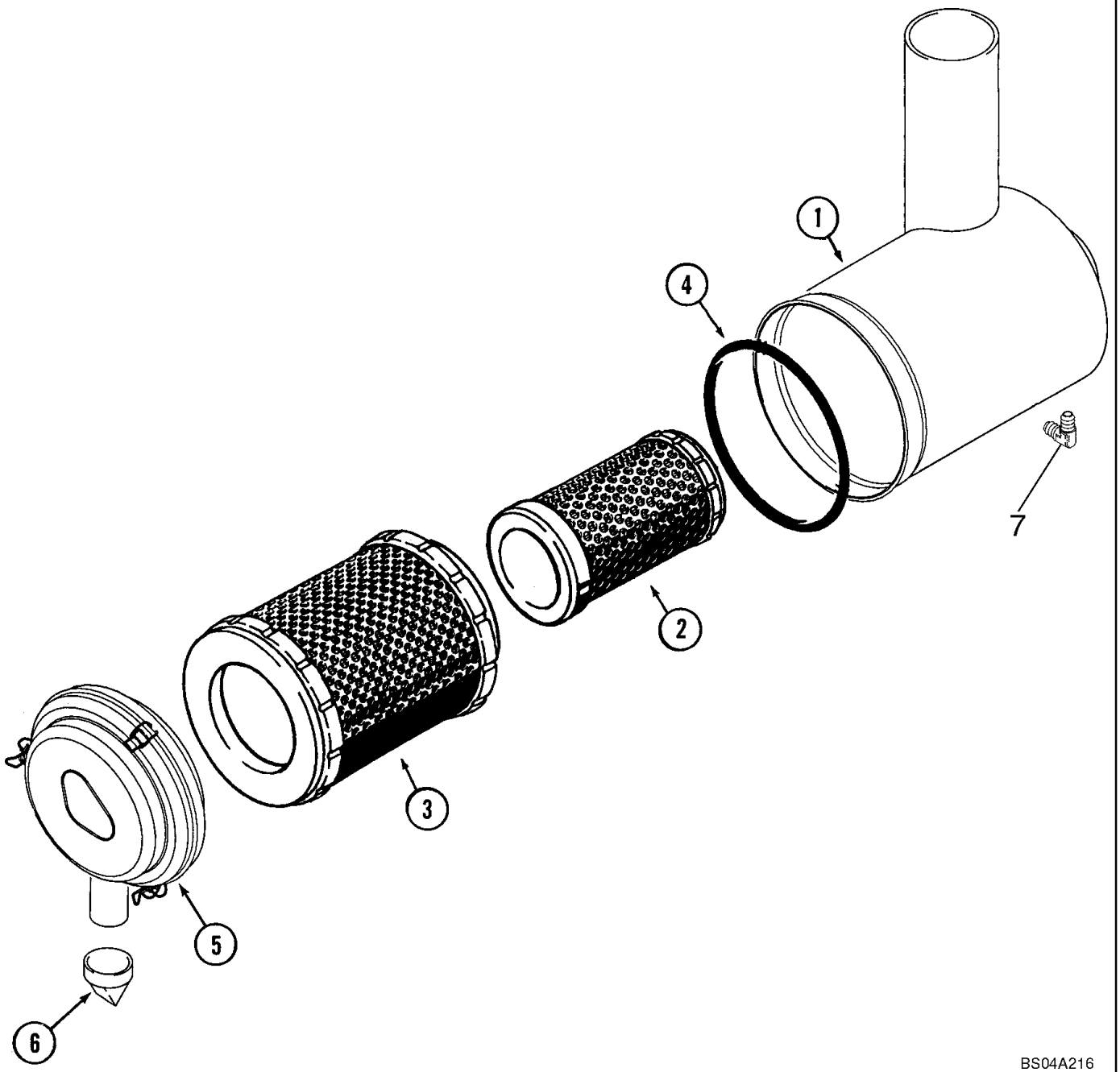

**AIR CLEANER ASSY**

| REF | FN | PART NUMBER | YR/SN | QTY | DESCRIPTION |
|---|---|---|---|---|---|
| | | 87590238 | | 1 | AIR CLEANER, Incl. Refs. 1 - 7 |
| 1 | | NSS | | 1 | NOT SERVICED SEPARATELY, Body |
| 2 | | 8605140 | | 1 | FILTER, AIR, Secondary |
| 3 | | 8605139 | | 1 | FILTER, AIR, Primary |
| 4 | | 8605078 | | 1 | O-RING |
| 5 | | 8605079 | | 1 | COVER |
| 6 | | 8604231 | | 1 | VALVE |
| 7 | | 217-1227 | | 1 | ELBOW, 90°, 1/8"-27 Male |

**AIR CLEANER ASSY - PRECLEANER ASSY**

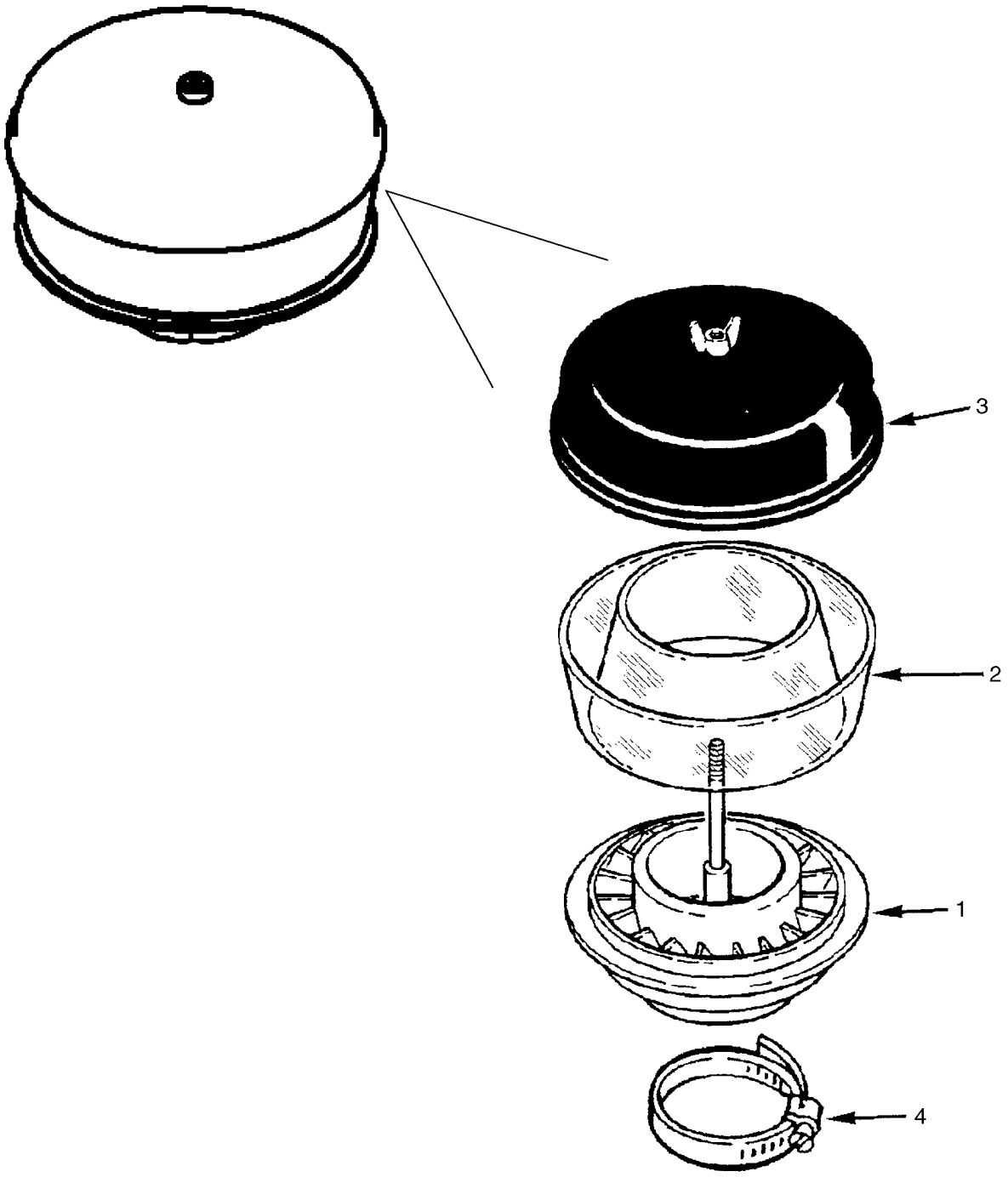

**AIR CLEANER ASSY - PRECLEANER ASSY**

| REF | FN | PART NUMBER | YR/SN | QTY | DESCRIPTION |
|---|---|---|---|---|---|
| | | REF | | | INSTRUCTION, PRECLEANER COMPONENT PARTS |
| | | 258541A1 | | 1 | PRECLEANER, Incl. Refs. 1 - 4 |
| 1 | | NSS | | 1 | NOT SERVICED SEPARATELY, Base |
| 2 | | L30671 | | 1 | HOUSING |
| 3 | | L30669 | | 1 | COVER |
| 4 | | 214-1480 | | 1 | CLAMP, HOSE, #80, 4.62/5.50 Type F Worm |

**MUFFLER - EXHAUST SYSTEM**

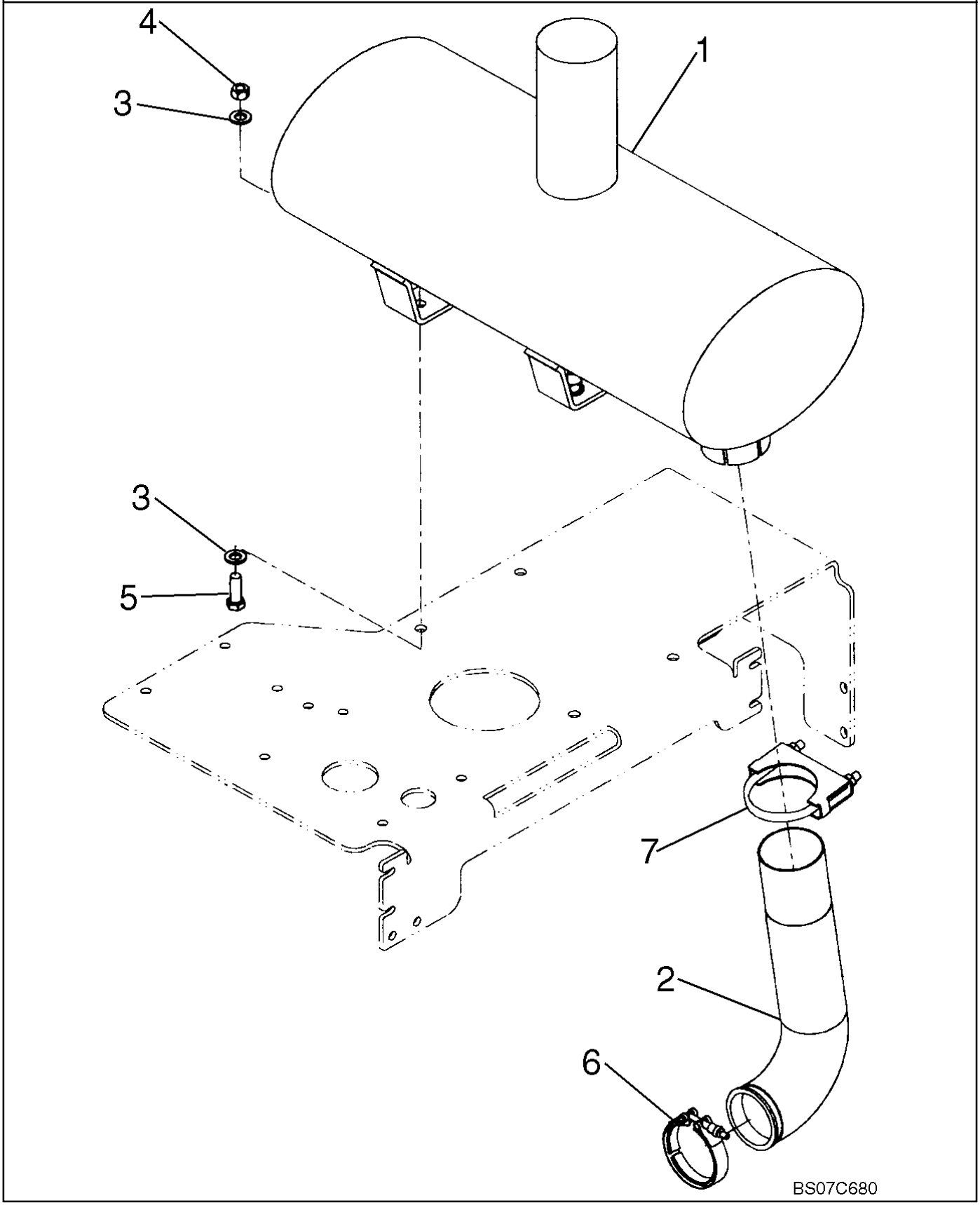

**MUFFLER - EXHAUST SYSTEM**

| REF | FN | PART NUMBER | YR/SN | QTY | DESCRIPTION |
|---|---|---|---|---|---|
| 1 | | 87365731 | | 1 | MUFFLER |
| 2 | | 87365709 | | 1 | TUBE, Exhaust |
| 3 | | 896-11012 | | 8 | WASHER, M13.5 x 24.5 x 3, HT |
| 4 | | 829-1412 | | 4 | NUT, M12, Cl 10 |
| 5 | | 627-12035 | | 4 | BOLT, Hex, M12 x 35, 10.9 |
| 6 | | J903652 | | 1 | CLAMP |
| 7 | | 299456A1 | | 1 | COLLAR CLAMP |

**OIL FILL, ENGINE**

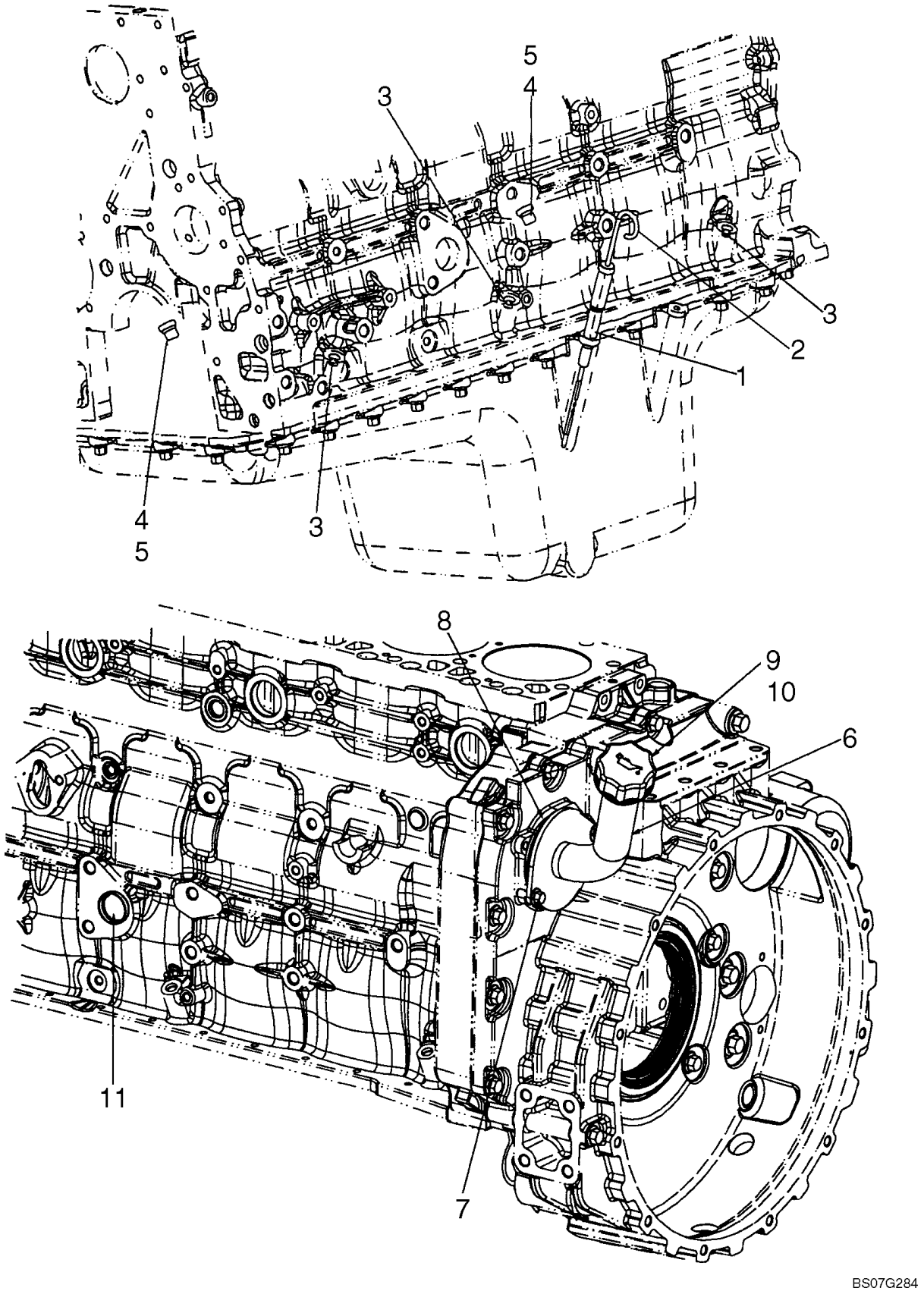

**OIL FILL, ENGINE**

| REF | FN | PART NUMBER | YR/SN | QTY | DESCRIPTION |
|---|---|---|---|---|---|
| | | 87579400 | | 1 | ENGINE, 6 Cylinder 6.7L Turbo, Tier III; Includes Figures 02-09 - 02-13, 02-15 - 02-41, 03-05 - 03-11; Incl. Refs. 1 - 11 |
| | | 2852463 | | 1 | DIPSTICK, ASSY. Incl. Refs. 1, 2 |
| 1 | | 2852122 | | 1 | TUBE, RIGID |
| 2 | | 2852464 | | 1 | DIPSTICK |
| 3 | | 4899036 | | 3 | PLUG, Expansion |
| 4 | | 4897330 | | 4 | PLUG, ASSY. Incl. Ref. 5 |
| 5 | | 4895610 | | 1 | O-RING |
| 6 | | 2856132 | | 1 | NECK FILLER |
| 7 | | 4899020 | | 2 | SCREW |
| 8 | | 2854075 | | 1 | O-RING |
| 9 | | 2853410 | | 1 | CAP, INTRODUCTION, ASSY. Incl. Ref. 10 |
| 10 | | 2853412 | | 1 | O-RING |
| 11 | | 4895037 | | 1 | PLUG |

**OIL PUMP - ENGINE**

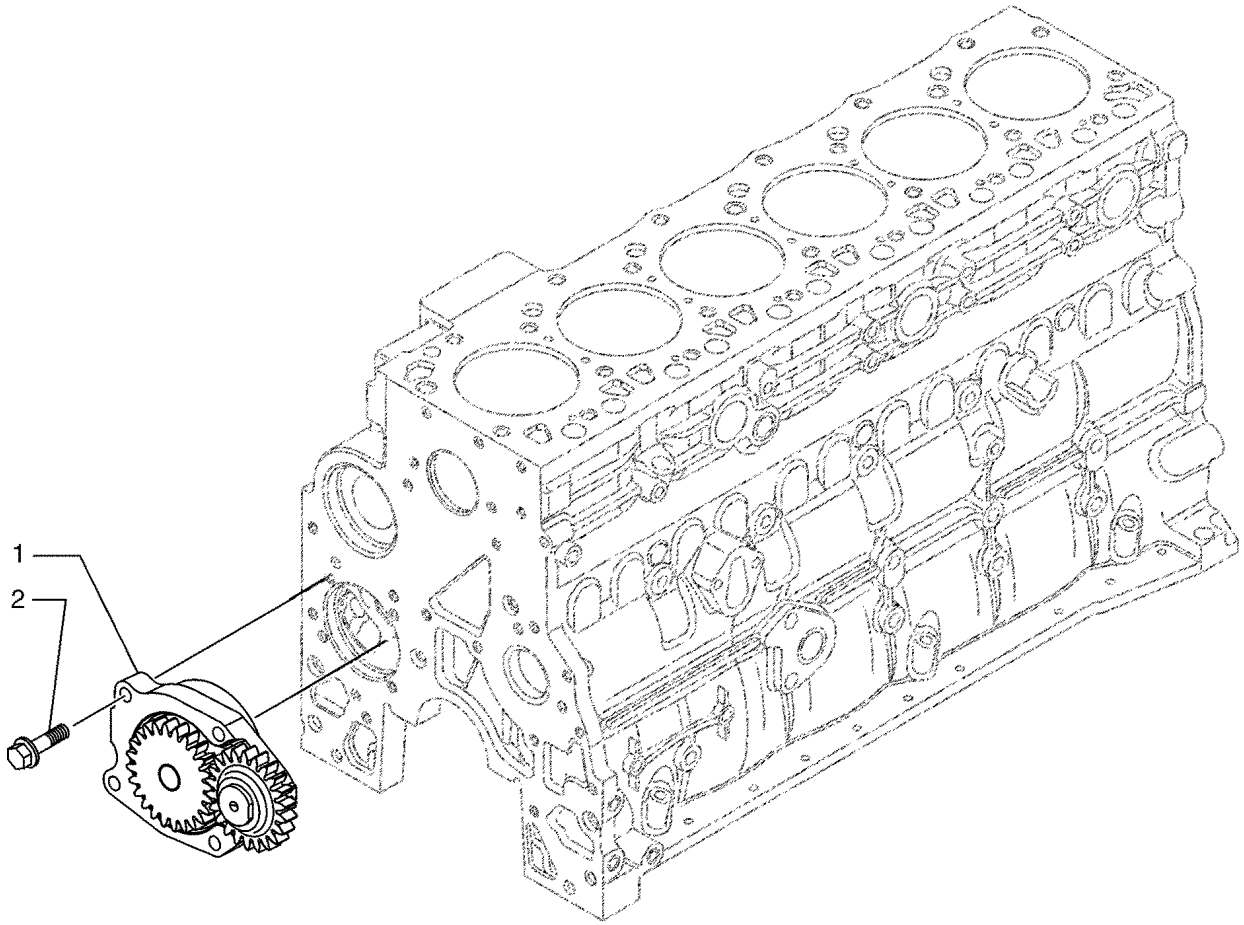


BS03N088

**OIL PUMP - ENGINE**

| REF | FN | PART NUMBER | YR/SN | QTY | DESCRIPTION |
|---|---|---|---|---|---|
| | | 87579400 | | 1 | ENGINE, 6 Cylinder 6.7L Turbo, Tier III; Includes Figures 02-09 - 02-13, 02-15 - 02-41, 03-05 - 03-11; Incl. Refs. 1 - 2 |
| 1 | | 4897481 | | 1 | PUMP, ENGINE OIL |
| 1 | | 2853591 | | 1 | PUMP, ENGINE OIL, In Alternative |
| 2 | | 4899090 | | 4 | SCREW, Hex Flg, M8 x 1.25 x 30 |

**OIL FILTER - ENGINE**

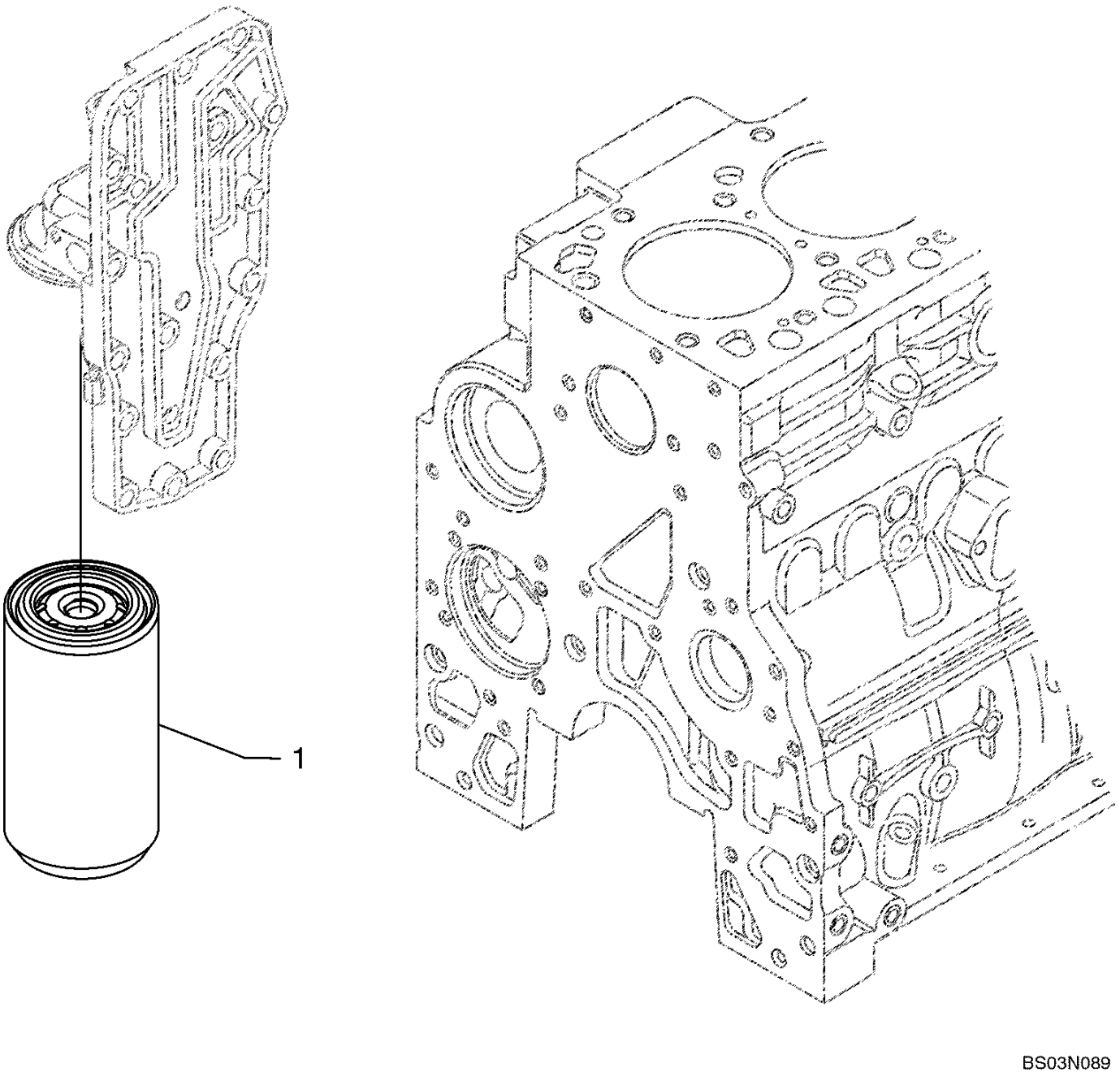

**OIL FILTER - ENGINE**

| REF | FN | PART NUMBER | YR/SN | QTY | DESCRIPTION |
|---|---|---|---|---|---|
| | | 87579400 | | 1 | ENGINE, 6 Cylinder 6.7L Turbo, Tier III; Includes Figures 02-09 - 02-13, 02-15 - 02-41, 03-05 - 03-11; Incl. Ref. 1 |
| 1 | | 87803261 | | 1 | FILTER, ENGINE OIL |

**OIL FILTER AND COOLER**

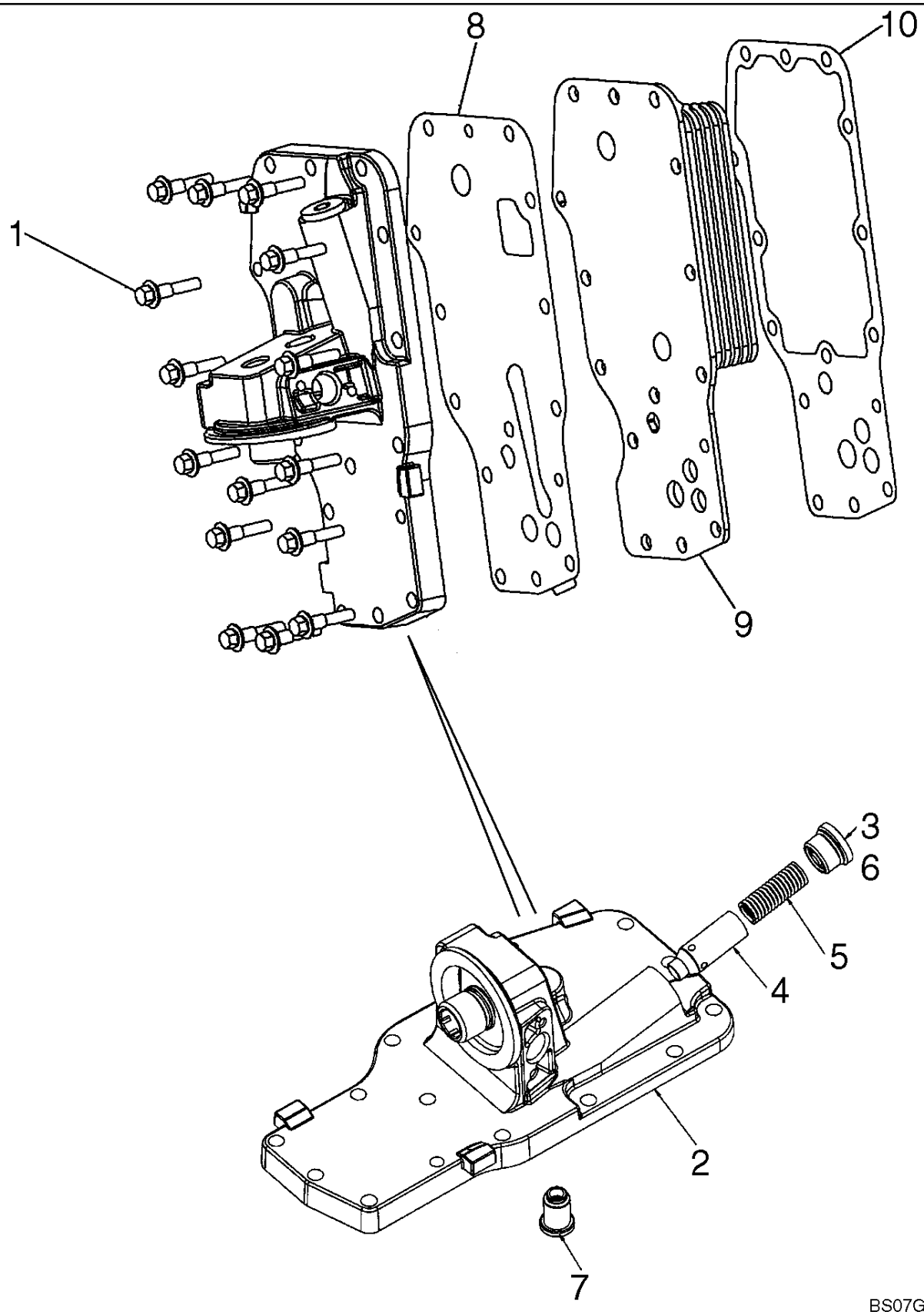

**OIL FILTER AND COOLER**

| REF | FN | PART NUMBER | YR/SN | QTY | DESCRIPTION |
|---|---|---|---|---|---|
| | | 87579400 | | 1 | ENGINE, 6 Cylinder 6.7L Turbo, Tier III; Includes Figures 02-09 - 02-13, 02-15 - 02-41, 03-05 - 03-11; Incl. Refs. 1 - 10 |
| 1 | | 4899019 | | 15 | SCREW, Hex Flg, M8 x 1.25 x 35 |
| | | 2853780 | | 1 | HEAD, FILTER, Housing Assy. Incl. Refs. 2 - 7 |
| 2 | | 4899566 | | 1 | HEAT EXCHANGER, Housing |
| 3 | | 2853781 | | 1 | PLUG, Incl. Ref. 6 |
| 4 | | 4896404 | | 1 | PLUNGER, Pressure Reg. |
| 5 | | 4895045 | | 1 | SPRING |
| 6 | | 4899035 | | 1 | O-RING |
| 7 | | 4896410 | | 1 | VALVE, PRESSURE RELIEF |
| 8 | | 4896409 | | 1 | GASKET |
| 9 | | 4896407 | | 1 | RADIATOR |
| 9 | | 2853604 | | 1 | COOLER, OIL, In Alterative |
| 10 | | 2830559 | | 1 | GASKET |

**OIL PUMP, PAN**

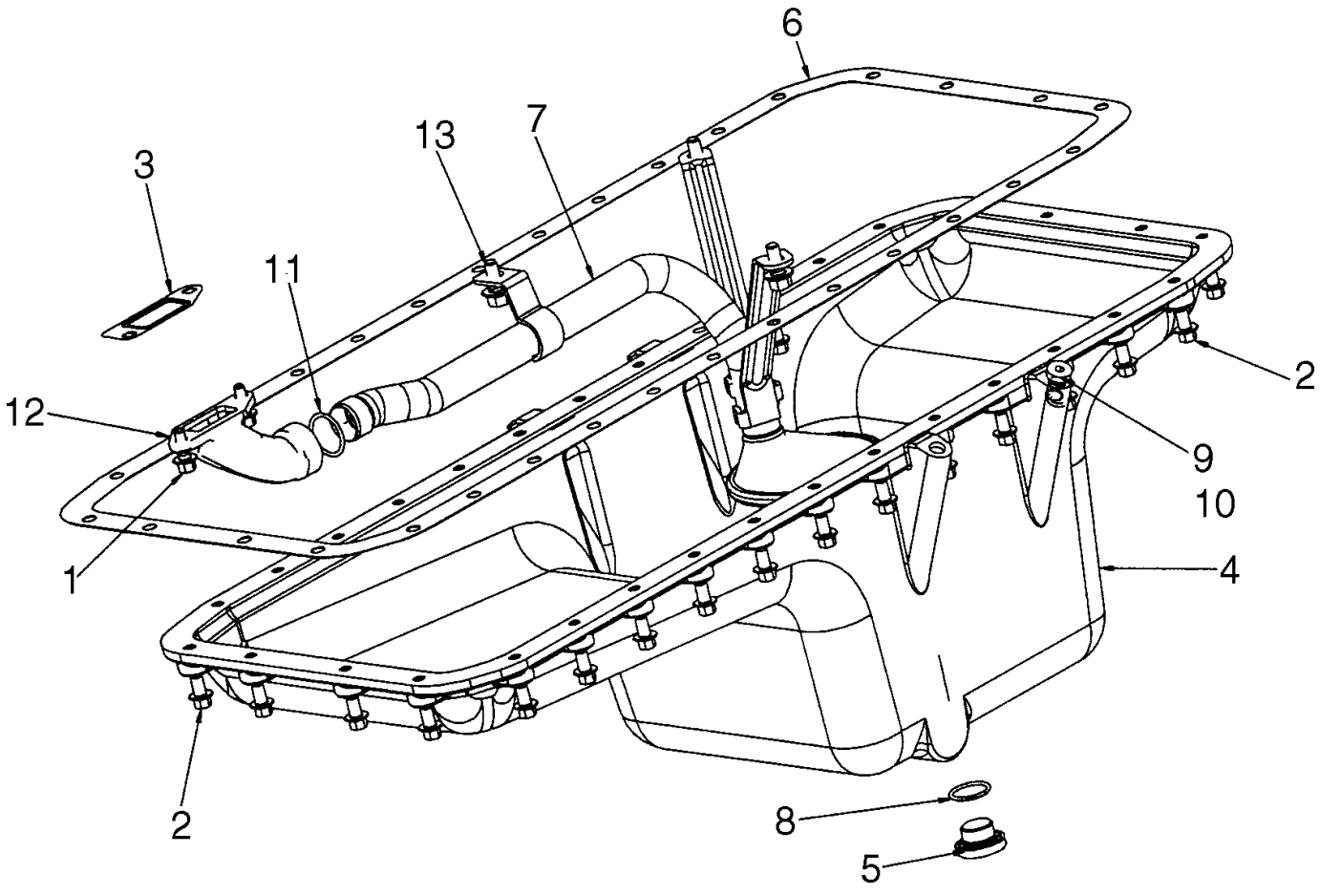

**OIL PUMP, PAN**

| REF | FN | PART NUMBER | YR/SN | QTY | DESCRIPTION |
|---|---|---|---|---|---|
| | | 87579400 | | 1 | ENGINE, 6 Cylinder 6.7L Turbo, Tier III; Includes Figures 02-09 - 02-13, 02-15 - 02-41, 03-05 - 03-11; Incl. Refs. 1 - 13 |
| 1 | | 4899020 | | 2 | SCREW, M8 x 1.25 x 20 |
| 2 | | 4899019 | | 32 | SCREW, Hex Flg, M8 x 1.25 x 35 |
| 3 | | 4898301 | | 1 | GASKET |
| 4 | | 2852419 | | 1 | PAN, ENGINE OIL |
| 5 | | 4894139 | | 1 | PLUG |
| 6 | | 2852420 | | 1 | GASKET |
| 7 | | 2852770 | | 1 | STRAINER, ELEMENT, PIPE, Oil Suction, Incl. Ref. 7A |
| 7A | | 2852217 | | 1 | MESH, ASSY, Gasket And Gauze Oil Strainer, Not Illustrated |
| 8 | | 2853728 | | 1 | O-RING |
| 9 | | 4897330 | | 1 | PLUG |
| 10 | | 4895610 | | 1 | O-RING, 9.3 ID x 2.2 |
| 11 | | 2852237 | | 1 | GASKET, 26.64 ID x 2.62 |
| 12 | | 2852238 | | 1 | TUBE, RIGID |
| 13 | | 4895291 | | 3 | SCREW, Hex Flg, M10 x 1.5 x 20 |

**OIL PUMP, PAN - DRAIN LINE - COVER**

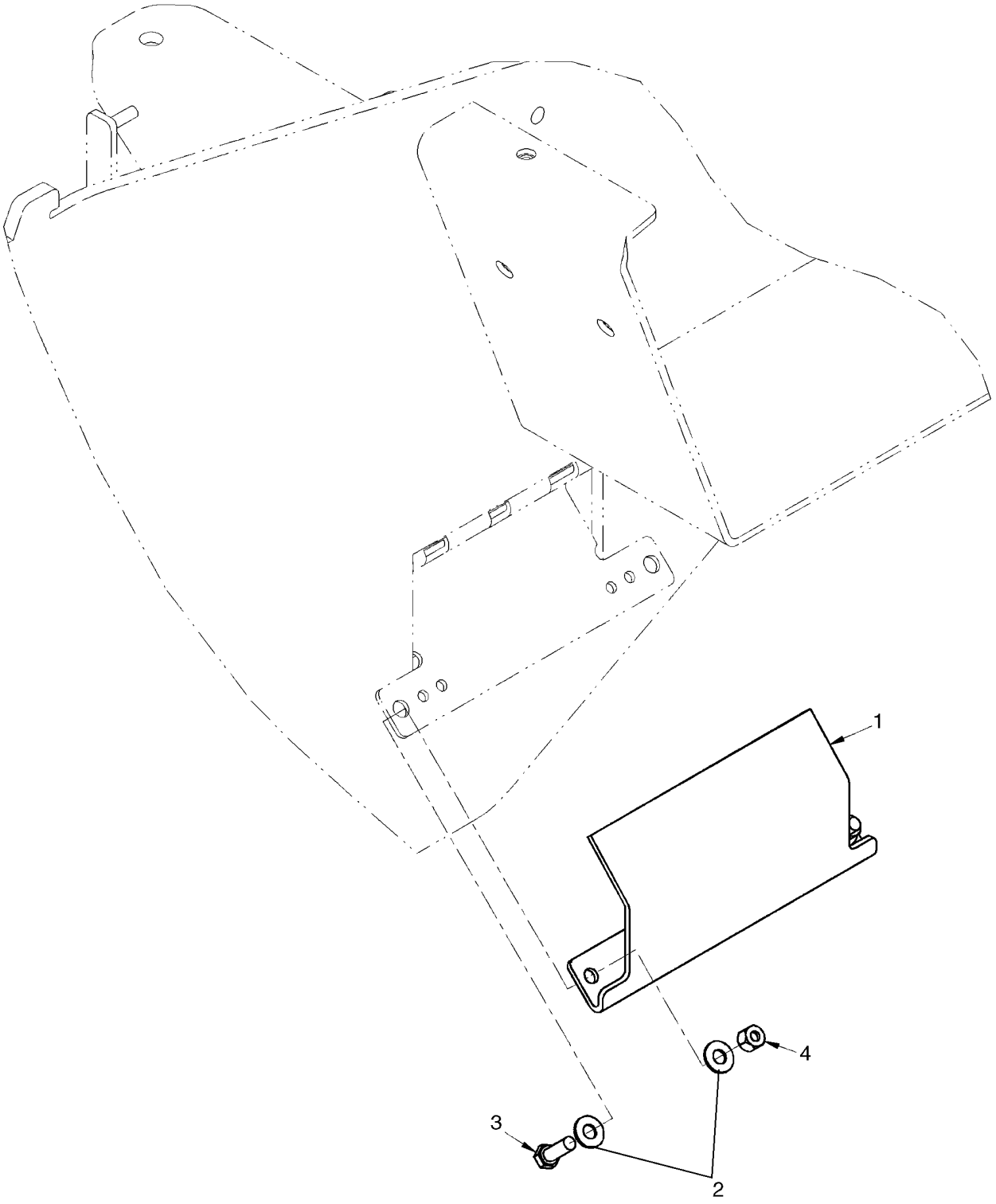

**OIL PUMP, PAN - DRAIN LINE - COVER**

| REF | FN | PART NUMBER | YR/SN | QTY | DESCRIPTION |
|---|---|---|---|---|---|
| 1 | | 407632A1 | | 1 | COVER, Remote Drain |
| 2 | | 895-15010 | | 4 | WASHER, M11 x 24 x 2 |
| 3 | | 627-10030 | | 2 | BOLT, Hex, M10 x 30, 10.9, Full Thd |
| 4 | | 832-10410 | | 2 | NUT, LOCK, M10 x 1.5, Cl 8 |

**BREATHER - ENGINE**

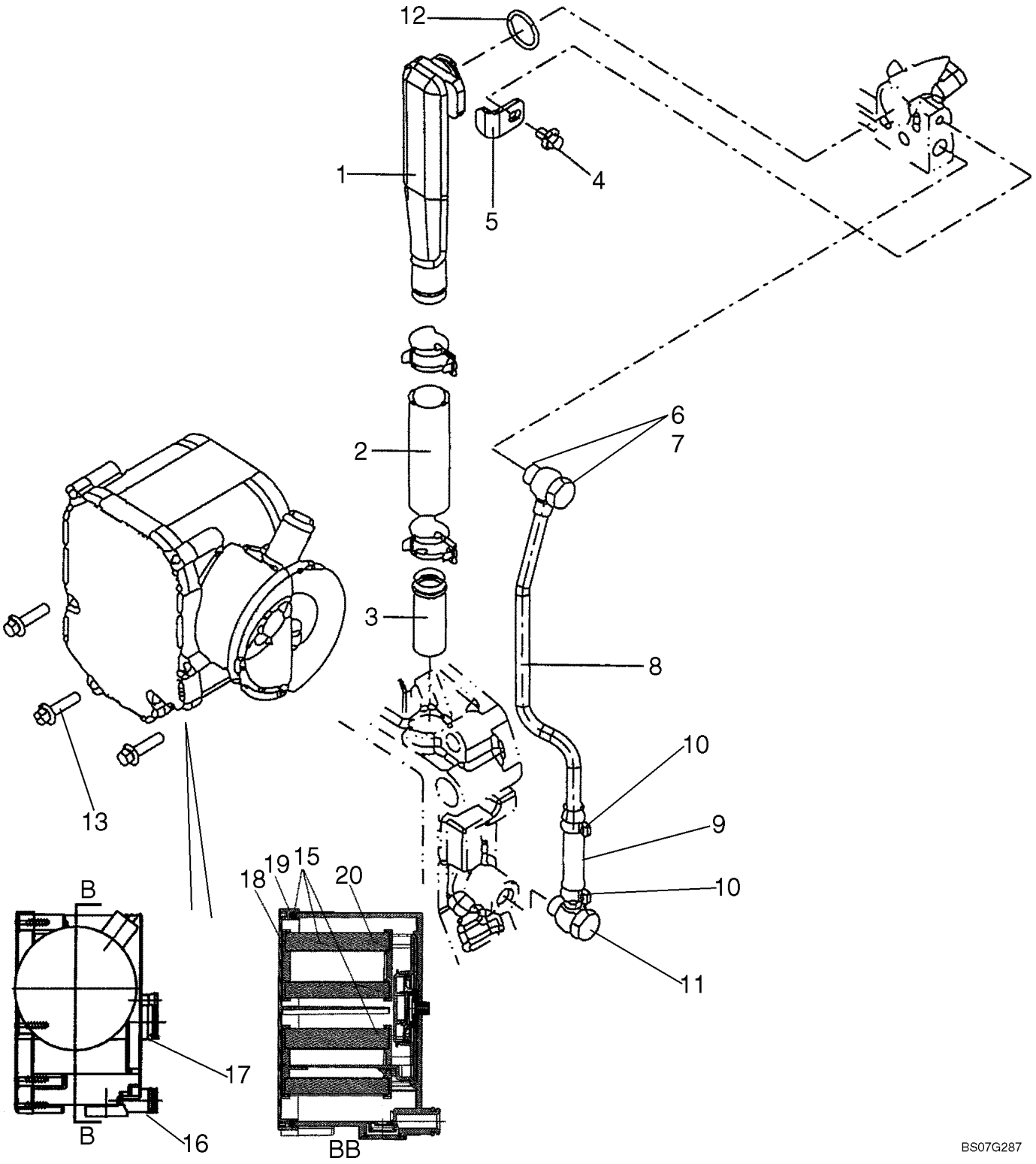

**BREATHER - ENGINE**

| REF | FN | PART NUMBER | YR/SN | QTY | DESCRIPTION |
|---|---|---|---|---|---|
| | | 87579400 | | 1 | ENGINE, 6 Cylinder 6.7L Turbo, Tier III; Includes Figures 02-09 - 02-13, 02-15 - 02-41, 03-05 - 03-11; Incl. Refs. 1 - 21 |
| 1 | | 4897534 | | 1 | TUBE, RIGID, Breather |
| 2 | | 4897546 | | 1 | SLEEVE, Tube |
| 3 | | 4897547 | | 1 | TUBE, RIGID, Connector |
| 4 | | 4897537 | | 1 | SCREW |
| 5 | | 4897536 | | 1 | BRACKET |
| | | 4899219 | | 1 | TUBE, RIGID, Breather Assy. Incl. Refs. 6 - 11 |
| 6 | | 2852772 | | 2 | BOLT, BANJO |
| 7 | | 4899926 | | 4 | O-RING |
| 8 | | NSS | | 1 | NOT SERVICED SEPARATELY, Hose |
| 9 | | 4899240 | | 1 | HOSE, Plain |
| 10 | | 4899242 | | 2 | CLAMP |
| 11 | | 4899243 | | 1 | CONNECTOR, HYD. |
| 12 | | 4898439 | | 1 | O-RING |
| 13 | | 4899092 | | 3 | SCREW, Hex Flg, M6 x 1 x 25 |
| | | 4892871 | | 1 | BREATHER, Assy. Incl. Refs. 14 - 21 |
| 14 | | 2830301 | | 6 | SCREW, Breather Case, Not Illustrated |
| 15 | | 2830307 | | 1 | BREATHER, Crankcase |
| 16 | | 4898372 | | 1 | O-RING |
| 17 | | 2830304 | | 1 | O-RING |
| 18 | | {2820302} | | 1 | COVER, Protective |
| 19 | | 2830303 | | 1 | GASKET, Breather |
| 20 | | 2830592 | | 2 | FILTER, Breather |
| 21 | | 4893234 | | 2 | COLLAR, RETAINER, Not Illustrated |

**TURBOCHARGER - DRAIN LINE**

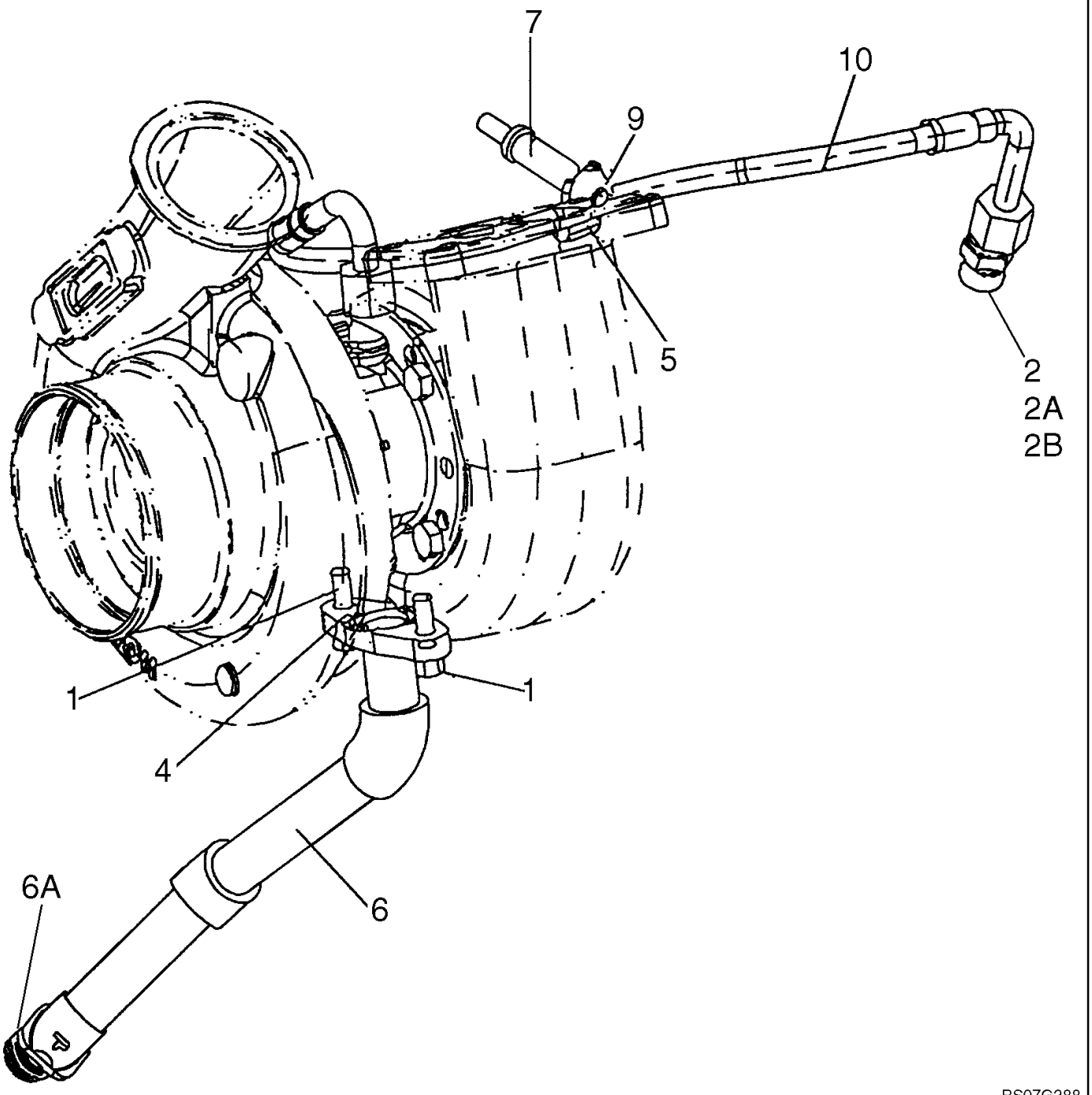

**TURBOCHARGER - DRAIN LINE**

| REF | FN | PART NUMBER | YR/SN | QTY | DESCRIPTION |
|---|---|---|---|---|---|
| | | 87579400 | | 1 | ENGINE, 6 Cylinder 6.7L Turbo, Tier III; Includes Figures 02-09 - 02-13, 02-15 - 02-41, 03-05 - 03-11; Incl. Refs. 1 - 9 |
| 1 | | 4899079 | | 2 | SCREW, Hex Flg, M8 x 1.25 x 25 |
| 2 | | 4895107 | | 1 | CONNECTOR, HYD., Incl. Refs. 2A, 2B |
| 2A | | 4899107 | | 1 | O-RING |
| 2B | | 4899108 | | 1 | O-RING |
| 4 | | 4891288 | | 1 | GASKET |
| 5 | | 4899436 | | 1 | CLAMP |
| 6 | | {2858402} | | 1 | PIPE ASSY. Turbo Oil Drain, Incl. Ref. 6A |
| 6A | | 2852801 | | 1 | O-RING |
| 7 | | 4896991 | | 1 | SCREW |
| 7 | | 2854375 | | 1 | STUD, In Alternative |
| 8 | | 4895089 | | 1 | PLUG, Not Illustrated |
| 9 | | 4899003 | | 1 | NUT, M8X1.25 |
| 10 | | 4899377 | | 1 | HOSE, Flexible |

**TURBOCHARGER**

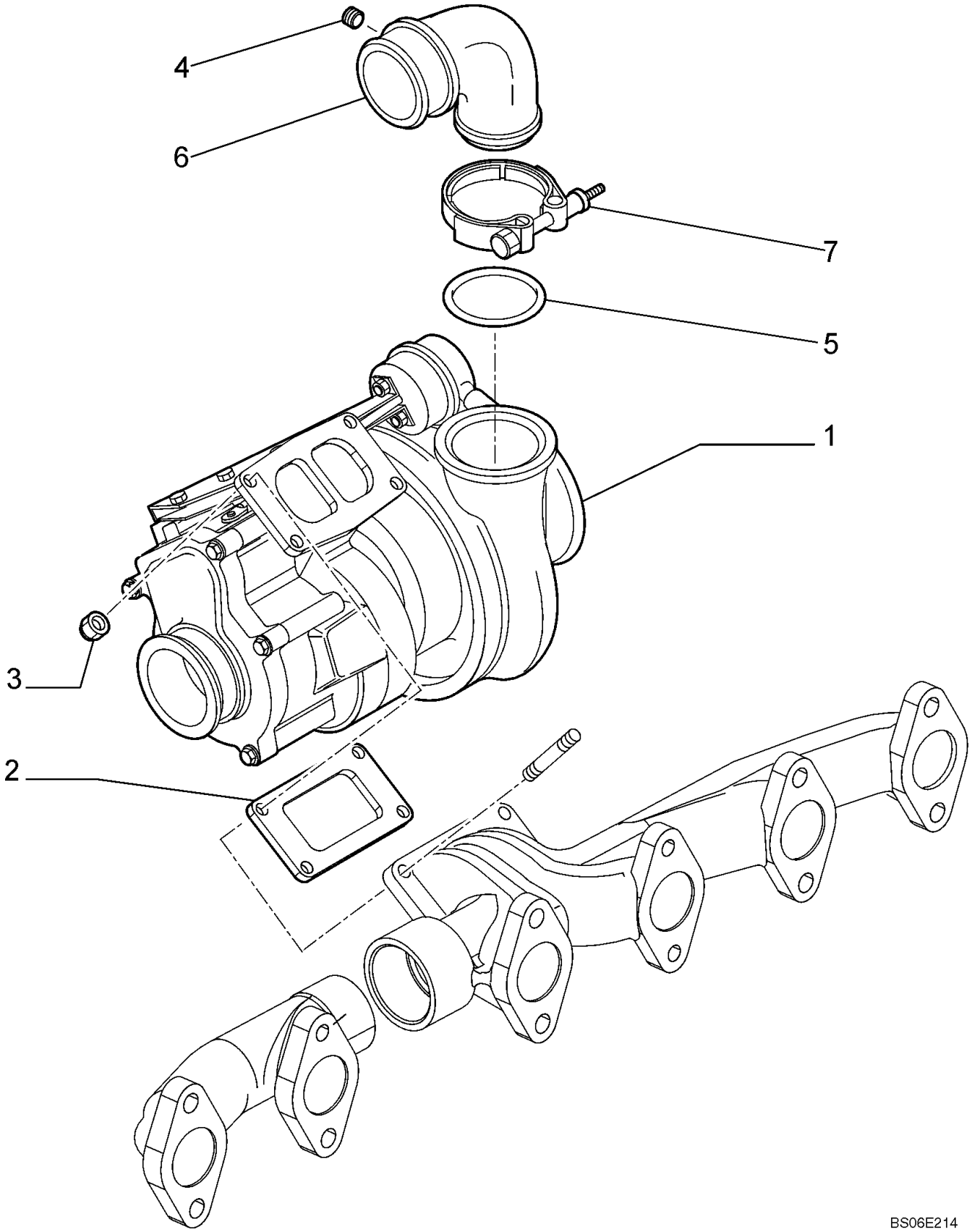

**TURBOCHARGER**

| REF | FN | PART NUMBER | YR/SN | QTY | DESCRIPTION |
|---|---|---|---|---|---|
| | | 87579400 | | 1 | ENGINE, 6 Cylinder 6.7L Turbo, Tier III; Includes Figures 02-09 - 02-13, 02-15 - 02-41, 03-05 - 03-11; Incl. Refs. 1 - 7 |
| 1 | | 2855124 | | 1 | TURBOCHARGER |
| 2 | | 4895132 | | 1 | GASKET |
| 3 | | 4899086 | | 4 | NUT |
| 4 | | 4895098 | | 1 | PLUG |
| 5 | | 4899087 | | 1 | O-RING |
| 6 | | 4895141 | | 1 | ELBOW |
| 7 | | 2852407 | | 1 | COLLAR CLAMP |

**WATER PUMP**

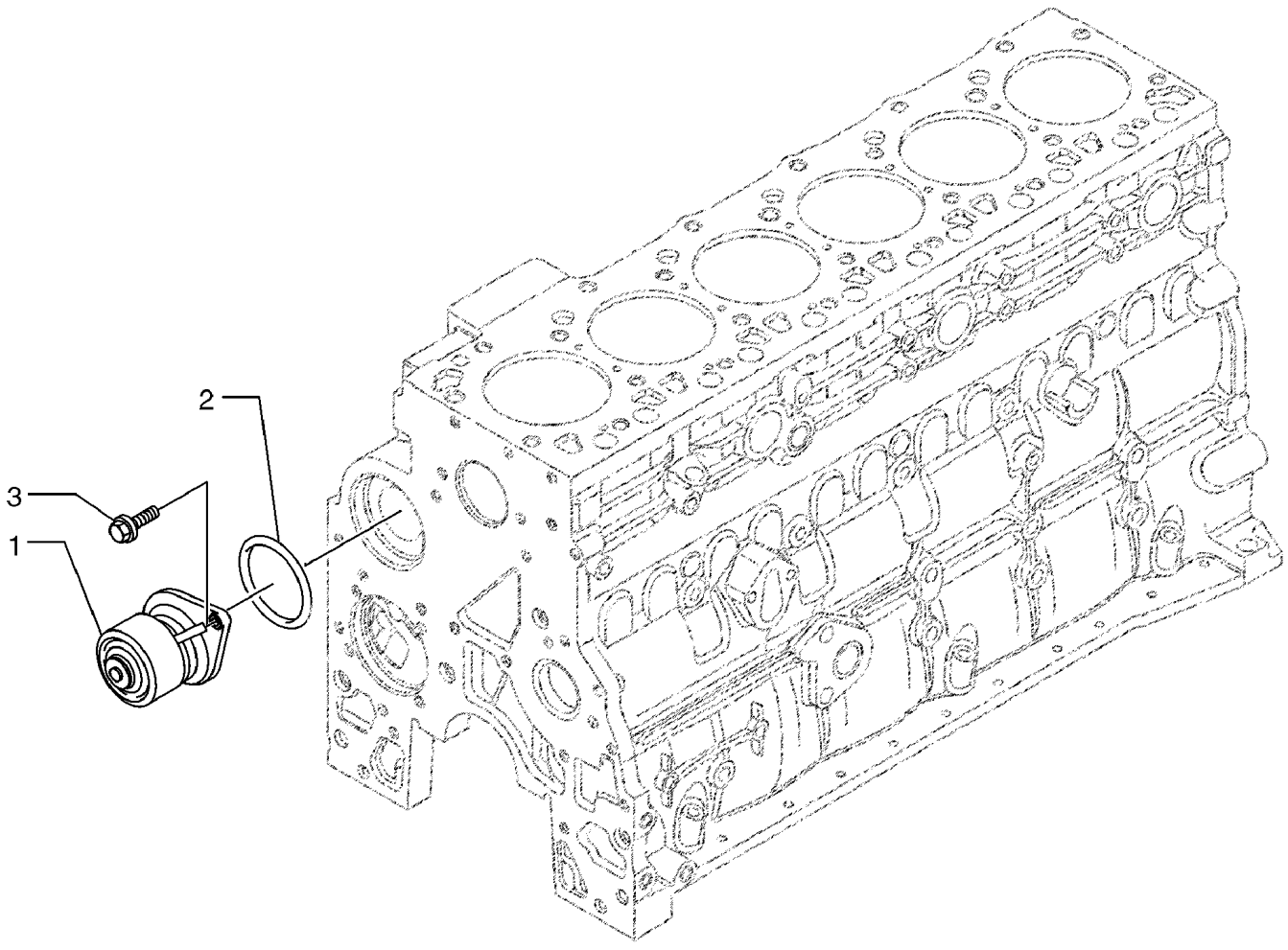


BC03N020

**WATER PUMP**

| REF | FN | PART NUMBER | YR/SN | QTY | DESCRIPTION |
|---|---|---|---|---|---|
| | | 87579400 | | 1 | ENGINE, 6 Cylinder 6.7L Turbo, Tier III; Includes Figures 02-09 - 02-13, 02-15 - 02-41, 03-05 - 03-11; Incl. Refs. 1 - 3 |
| 1 | | 4891252 | | 1 | PUMP, WATER |
| 1 | | 2852114 | | 1 | PUMP, WATER, In Alternative |
| 2 | | 2852047 | | 1 | GASKET |
| 3 | | 4899079 | | 2 | SCREW, Hex Flg, M8 x 1.25 x 25 |

**WATER PUMP - TENSIONER ASSY**

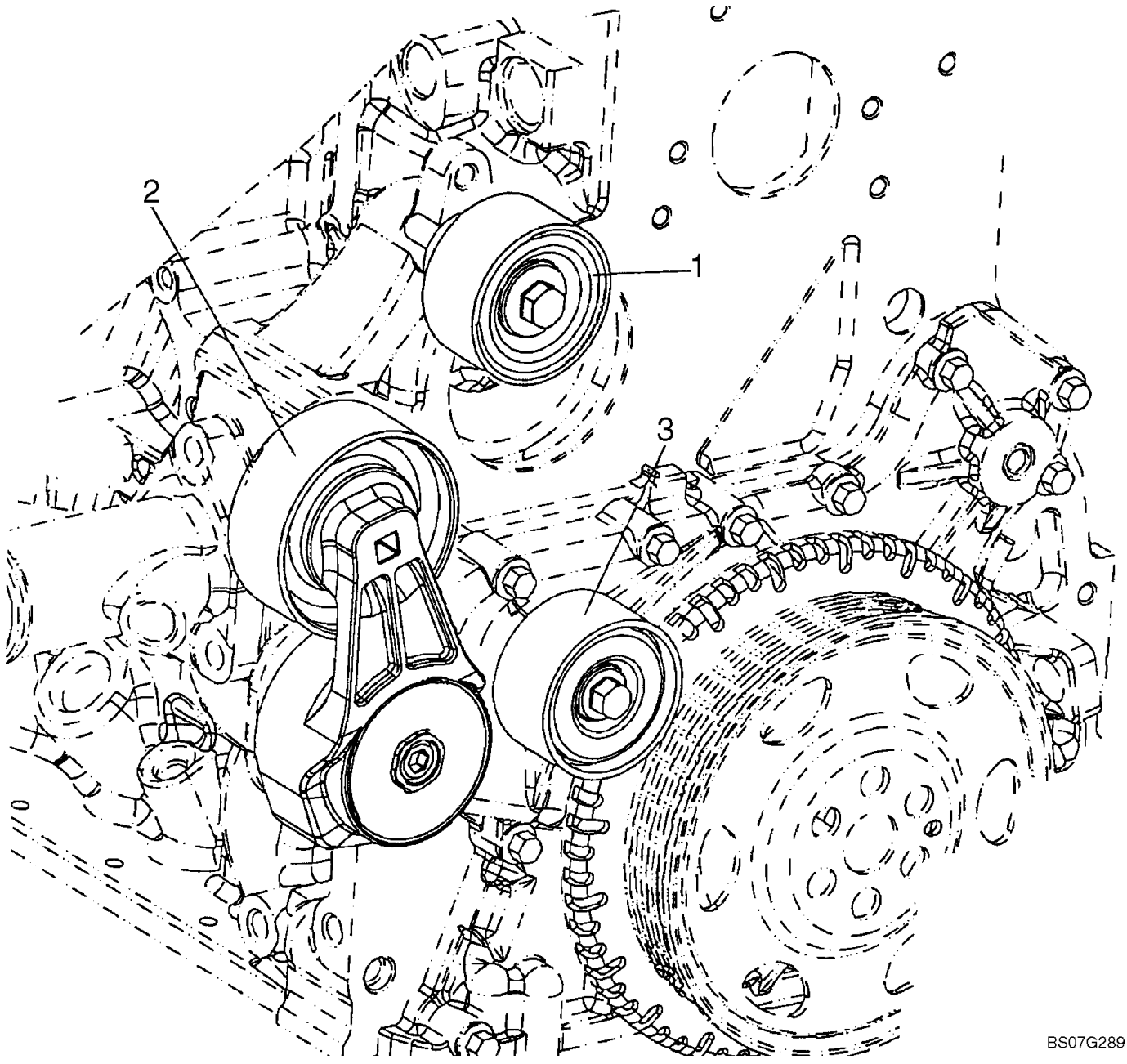

**WATER PUMP - TENSIONER ASSY**

| REF | FN | PART NUMBER | YR/SN | QTY | DESCRIPTION |
|---|---|---|---|---|---|
| | | 87579400 | | 1 | ENGINE, 6 Cylinder 6.7L Turbo, Tier III; Includes Figures 02-09 - 02-13, 02-15 - 02-41, 03-05 - 03-11; Incl. Refs. 1 - 3 |
| 1 | | 2852398 | | 1 | TENSIONER, BELT |
| 2 | | 2852396 | | 1 | TENSIONER, BELT |
| 3 | | 2852397 | | 1 | ROLLER, SHIFTER |

**CYLINDER BLOCK**

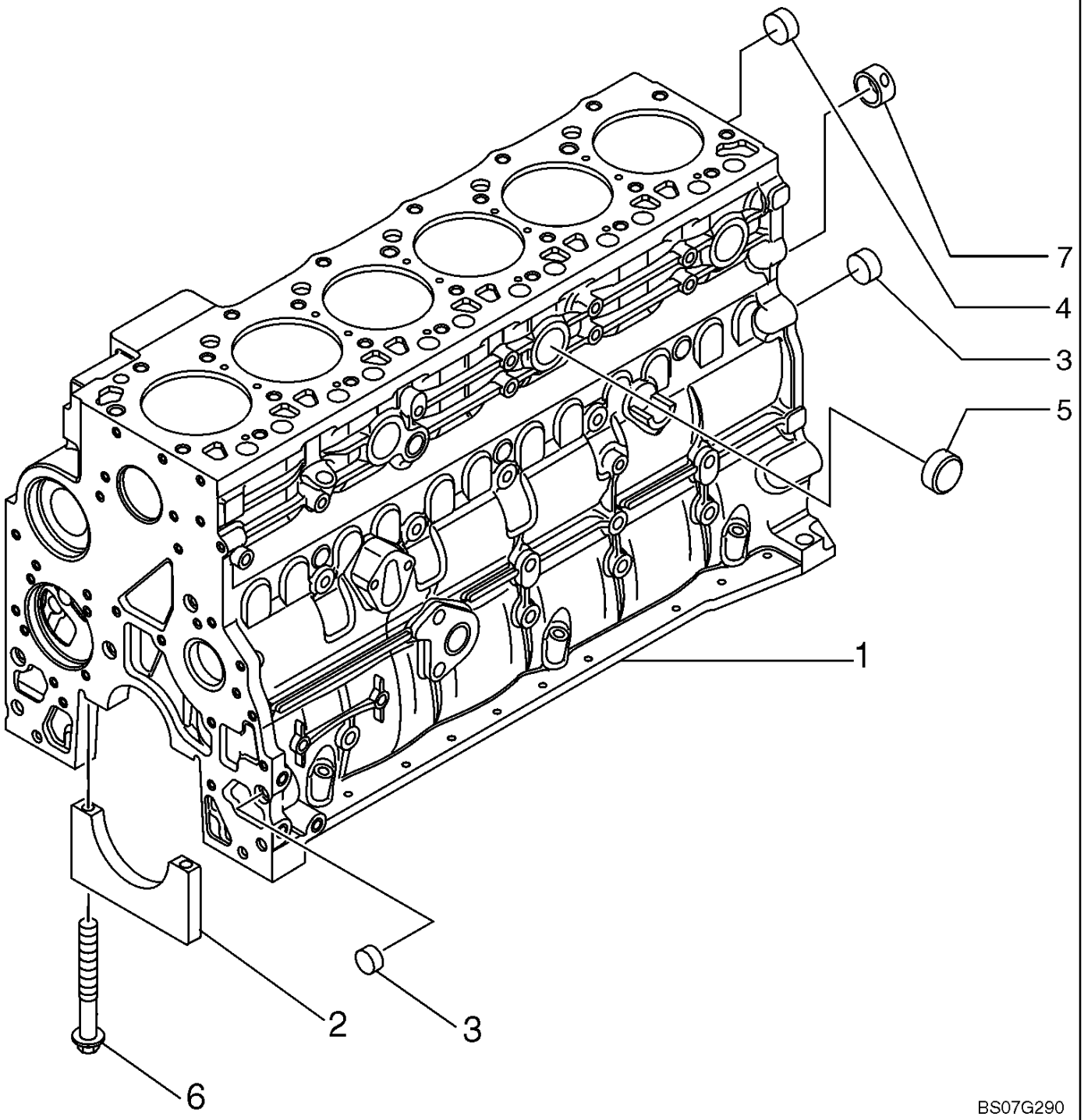

**CYLINDER BLOCK**

| REF | FN | PART NUMBER | YR/SN | QTY | DESCRIPTION |
|---|---|---|---|---|---|
| | | 87579400 | | 1 | ENGINE, 6 Cylinder 6.7L Turbo, Tier III; Includes Figures 02-09 - 02-13, 02-15 - 02-41, 03-05 - 03-11; Incl. Refs. 1 - 8 |
| | | 2830076 | | 1 | CYLINDER BLOCK, ASSY. Incl. Refs. 1 - 8 |
| 1 | | NSS | | 1 | NOT SERVICED SEPARATELY, Cylinder Block |
| 2 | | 4895921 | | 1 | BEARING, CRANKSHAFT |
| 3 | | 4895039 | | 3 | PLUG |
| 4 | | 4895038 | | 6 | PLUG |
| 5 | | 4895228 | | 3 | PLUG |
| 6 | | 4891353 | | 14 | SCREW, Flg Hd, M12 x 1.5 x 120 |
| 7 | | 4895040 | | 1 | BUSHING |
| 8 | | 4895919 | | 6 | BEARING, CRANKSHAFT, Not Illustrated |

**CYLINDER BLOCK - PLUG ASSY**

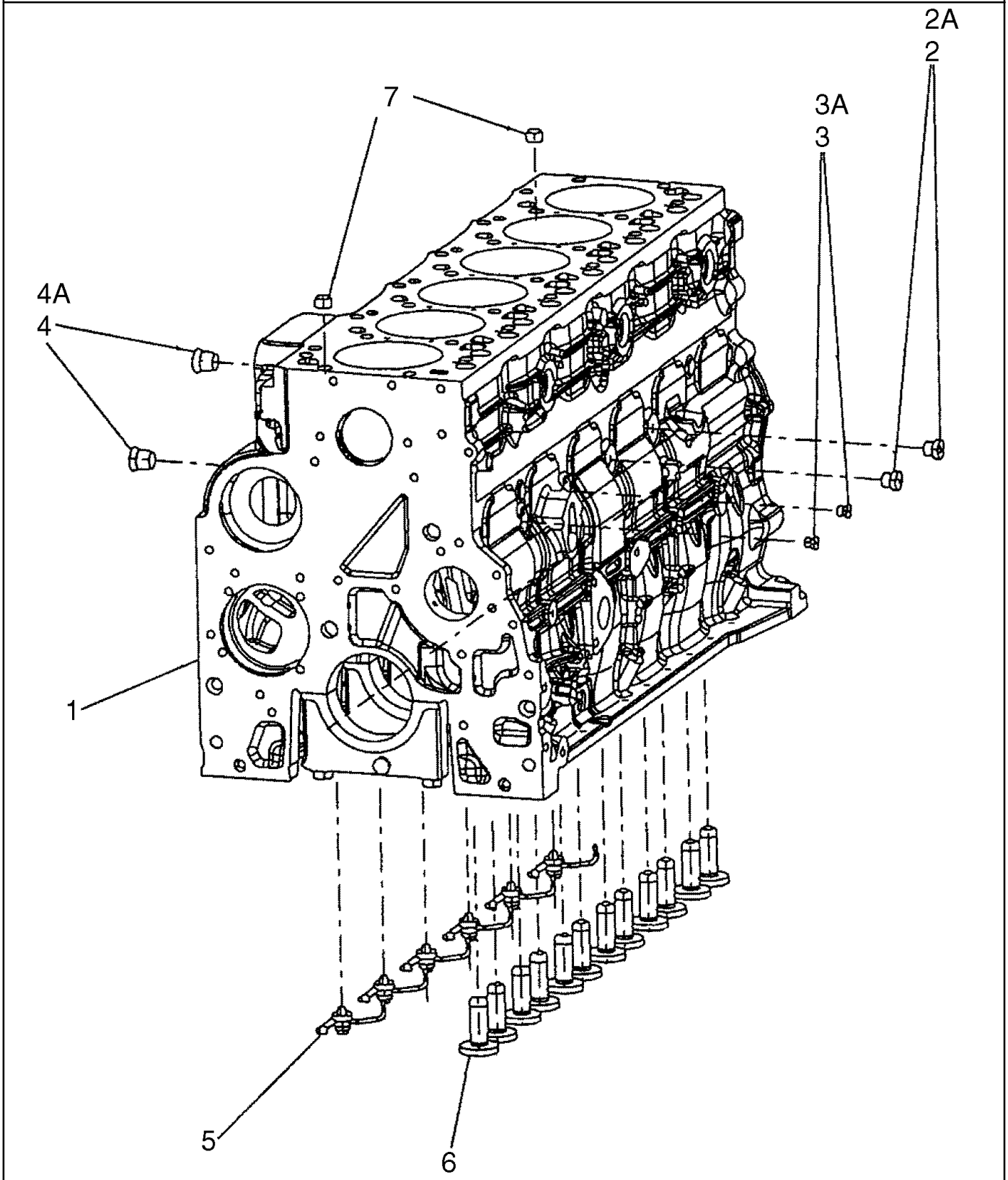

**CYLINDER BLOCK - PLUG ASSY**

| REF | FN | PART NUMBER | YR/SN | QTY | DESCRIPTION |
|---|---|---|---|---|---|
| | | 87579400 | | 1 | ENGINE, 6 Cylinder 6.7L Turbo, Tier III; Includes Figures 02-09 - 02-13, 02-15 - 02-41, 03-05 - 03-11; Incl. Refs. 1 - 7 |
| 1 | | 2830076 | | 1 | CYLINDER BLOCK, ASSY. See Figure 02-20 |
| 2 | | 4895605 | | 2 | PLUG, M14 x 1.5, Incl. Ref. 2A |
| 2A | | 4899115 | | 1 | O-RING |
| 3 | | 4899009 | | 2 | PLUG, M10 x 1.5, Incl. Ref. 3A |
| 3A | | 4899072 | | 1 | O-RING |
| 4 | | 4895392 | | 2 | PLUG, M18 x 1.5, Incl. Ref. 4A |
| 4A | | 4895393 | | 1 | O-RING |
| 5 | | 2852202 | | 6 | NOZZLE, LUB. OIL JET |
| 6 | | 4899803 | | 12 | TAPPET |
| 7 | | 4895049 | | 2 | DOWEL |

**CYLINDER BLOCK - NOISE CONTROL**

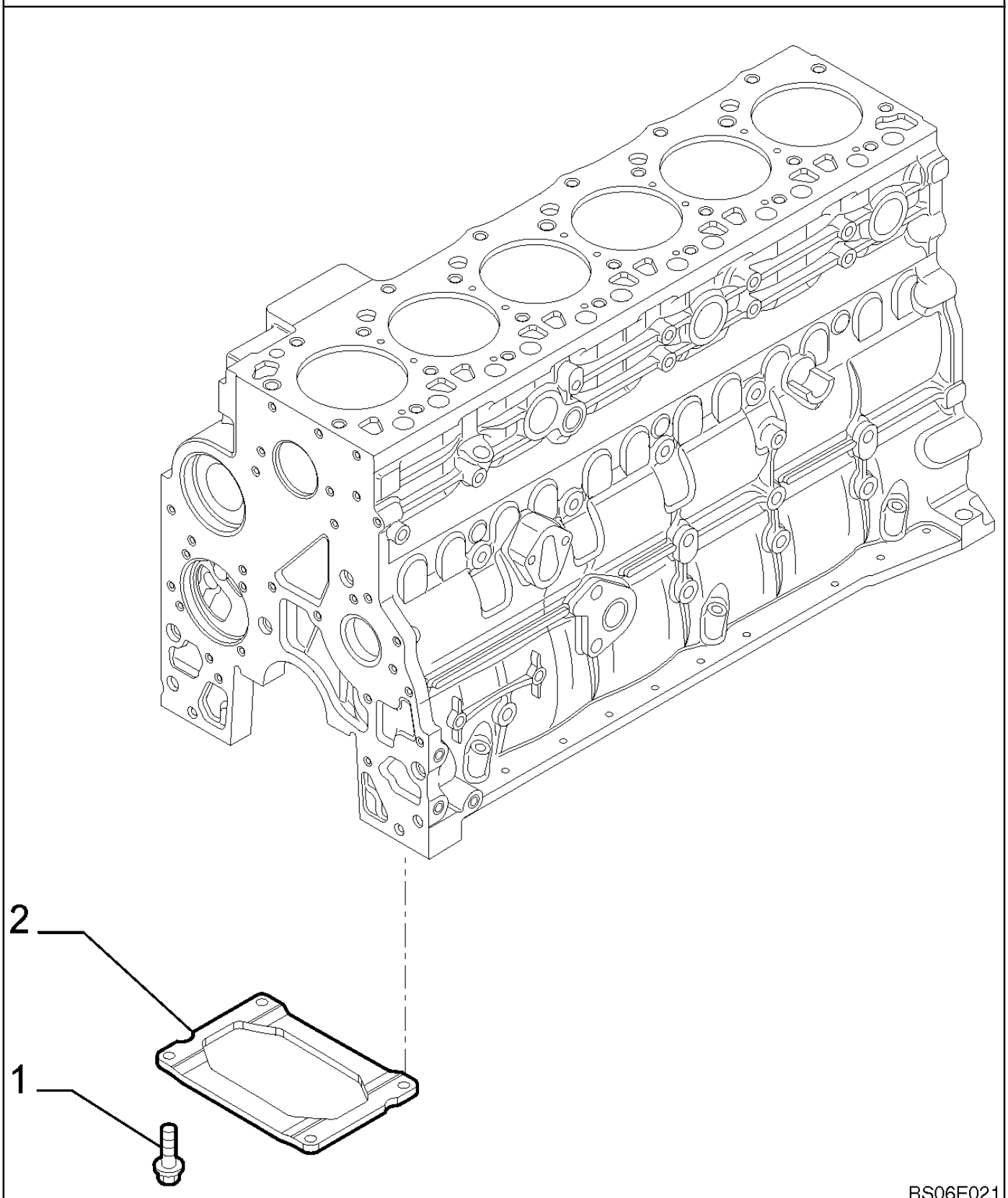

**CYLINDER BLOCK - NOISE CONTROL**

| REF | FN | PART NUMBER | YR/SN | QTY | DESCRIPTION |
|---|---|---|---|---|---|
| | | 87579400 | | 1 | ENGINE, 6 Cylinder 6.7L Turbo, Tier III; Includes Figures 02-09 - 02-13, 02-15 - 02-41, 03-05 - 03-11; Incl. Refs. 1 - 2 |
| 1 | | 4899032 | | 4 | SCREW, Hex Flg, M10 x 1.5 x 25 |
| 2 | | 2852729 | | 1 | STIFFENER |

**CYLINDER HEAD**

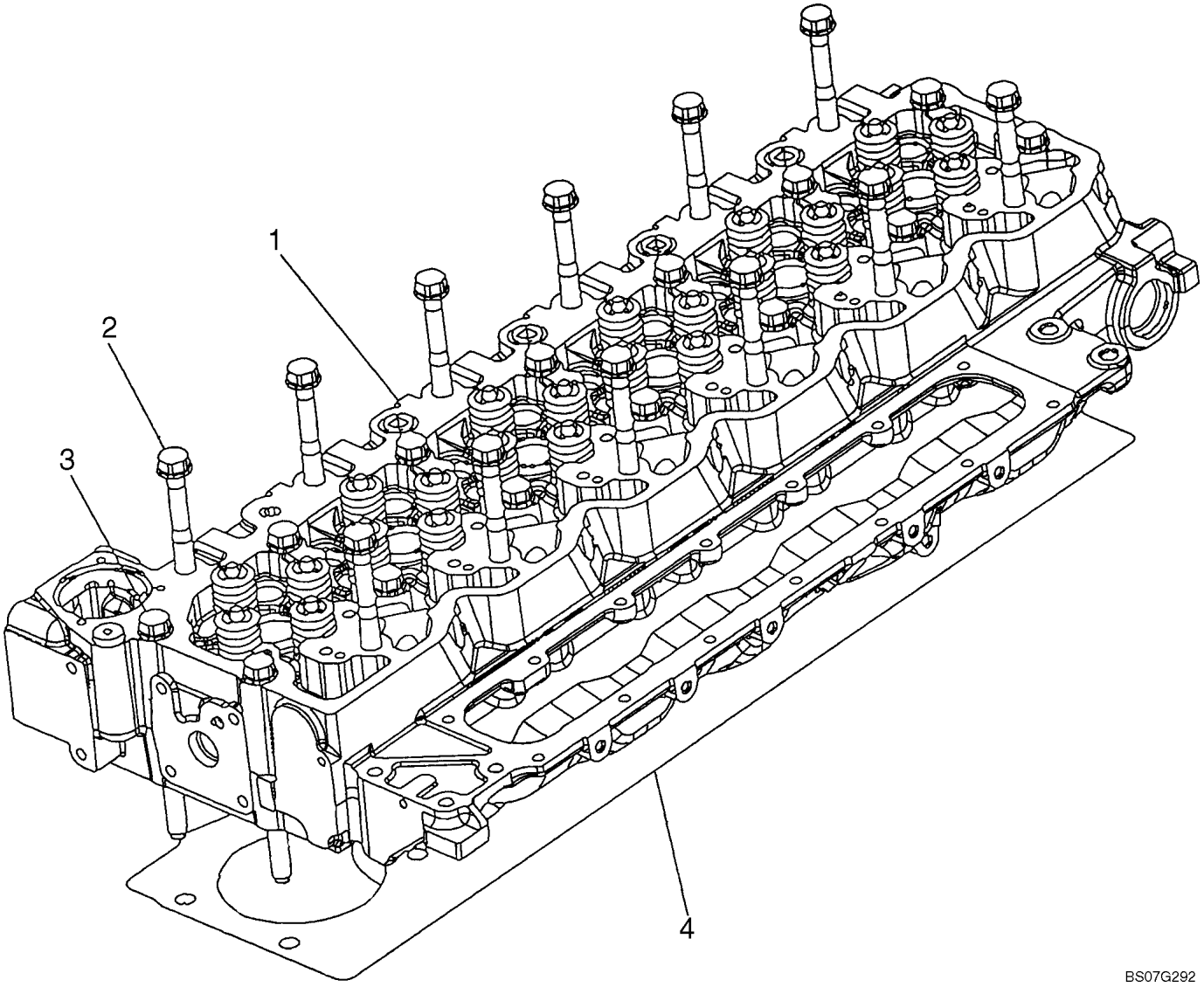

**CYLINDER HEAD**

| REF | FN | PART NUMBER | YR/SN | QTY | DESCRIPTION |
|---|---|---|---|---|---|
| | | 87579400 | | 1 | ENGINE, 6 Cylinder 6.7L Turbo, Tier III; Includes Figures 02-09 - 02-13, 02-15 - 02-41, 03-05 - 03-11; Incl. Refs. 1 - 4 |
| 1 | | 2831274 | | 1 | CYLINDER HEAD, Cylinder Head Assembly, See Figure 02-24 |
| 2 | | 4891024 | | 12 | SCREW, M12 x 130 |
| 3 | | 4891025 | | 14 | SCREW, M12 x 150 |
| 4 | | 2830704 | | 1 | GASKET, CYLINDER HEAD, 1.25 mm, If Used |
| 4 | | 2830705 | | 1 | GASKET, CYLINDER HEAD, 1.15 mm, If Used |

**CYLINDER HEAD - ASSEMBLY**

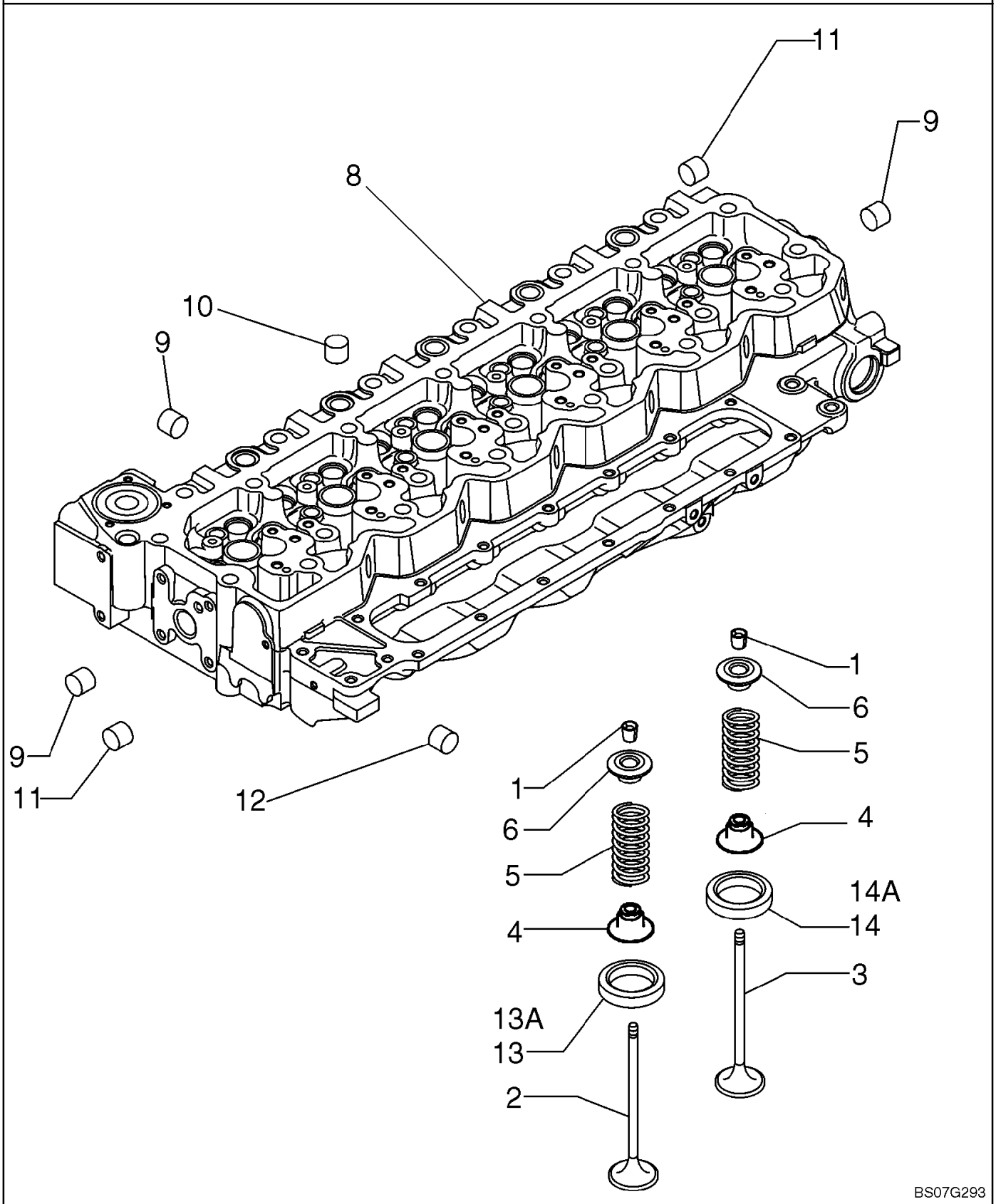

**CYLINDER HEAD - ASSEMBLY**

| REF | FN | PART NUMBER | YR/SN | QTY | DESCRIPTION |
|---|---|---|---|---|---|
| | | 87579400 | | 1 | ENGINE, 6 Cylinder 6.7L Turbo, Tier III; Includes Figures 02-09 - 02-13, 02-15 - 02-41, 03-05 - 03-11; Incl. Refs. 1 - 14A |
| | | 2831274 | | 1 | CYLINDER HEAD, Cylinder Head Assembly; Incl. Refs. 1 - 14 |
| 1 | | 4899081 | | 48 | COTTER, ROCKER ARM |
| 2 | | 4895051 | | 12 | VALVE, ENG EXHAUST, STD |
| 3 | | 4895052 | | 12 | VALVE, ENGINE, INLET, STD, Intake |
| 4 | | 2831287 | | 24 | SEAT, SPRING, Valve Stem Seal |
| 5 | | 4895073 | | 24 | SPRING, VALVE |
| 6 | | 4895074 | | 24 | CUP, Retainer |
| 7 | | 4893036 | | 1 | PLUG, Pipe, 3/4 in - 14 NPTF, Not Illustrated |
| | | 2831278 | | 1 | CYLINDER HEAD, Assy. Incl. Refs. 8 - 12, 13, 14 |
| | | 2831279 | | 1 | CYLINDER HEAD, Assy. Incl. Refs. 8 - 12, 13A, 14A; In Alternative |
| 8 | | NSS | | 1 | NOT SERVICED SEPARATELY, Cylinder Head |
| 9 | | 4895085 | | 13 | PLUG, 25.74mm |
| 9 | | 4895408 | | 2 | PLUG, .511" OD |
| 10 | | 4895089 | | 11 | PLUG, .886" OD |
| 11 | | 4895406 | | 7 | PLUG, 9.8mm OD |
| 12 | | 4895407 | | 2 | PLUG, 38.28mm OD |
| 13 | | 4897106 | | 12 | VALVE SEAT, Used on Cylinder Head Assy. 2831278 |
| 13A | | 4893244 | | 12 | VALVE SEAT, Used on Cylinder Head Assy. 2831279 |
| 14 | | 4897578 | | 12 | VALVE SEAT, Used on Cylinder Head Assy. 2831278 |
| 14A | | 4893244 | | 12 | VALVE SEAT, Used on Cylinder Head Assy. 2831279 |

**CYLINDER HEAD - COVERS**

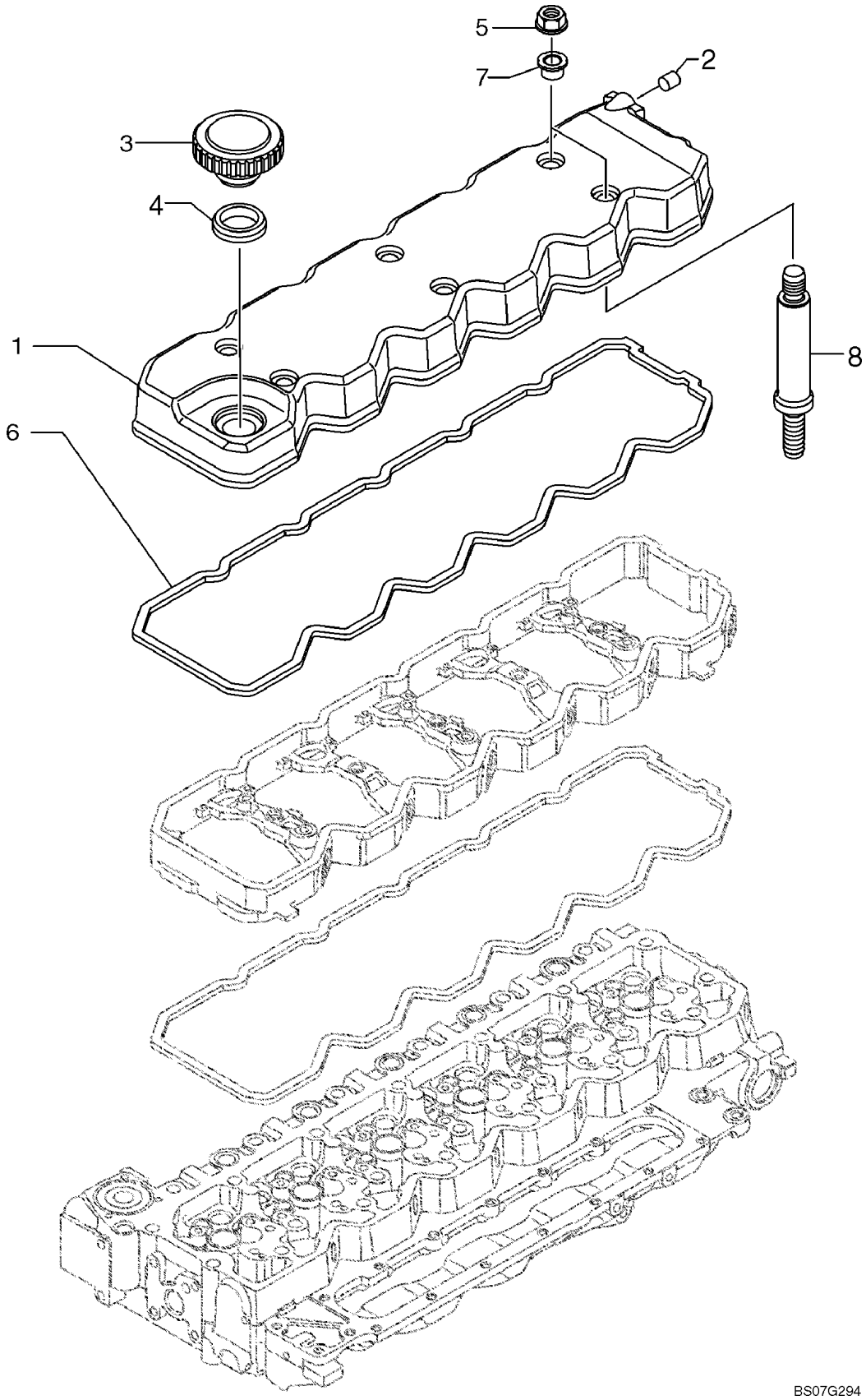

**CYLINDER HEAD - COVERS**

| REF | FN | PART NUMBER | YR/SN | QTY | DESCRIPTION |
|---|---|---|---|---|---|
| | | 87579400 | | 1 | ENGINE, 6 Cylinder 6.7L Turbo, Tier III; Includes Figures 02-09 - 02-13, 02-15 - 02-41, 03-05 - 03-11; Incl. Refs. 1 - 8 |
| 1 | | 4895910 | | 1 | COVER, Valve, Incl. Ref. 2 |
| 2 | | 4898283 | | 1 | PLUG |
| 3 | | 2852773 | | 1 | CAP, INTRODUCTION, Oil Fill Assembly, Incl. Ref. 4 |
| 4 | | 2852774 | | 1 | GASKET, Cap |
| 5 | | 4893936 | | 6 | NUT, M8 x 1.25 |
| 6 | | 2853784 | | 1 | GASKET |
| 7 | | 4899239 | | 6 | GASKET |
| 8 | | 4896991 | | 6 | SCREW |
| 8 | | 2854375 | | 6 | STUD, Used In Alternative |

**CRANKSHAFT**

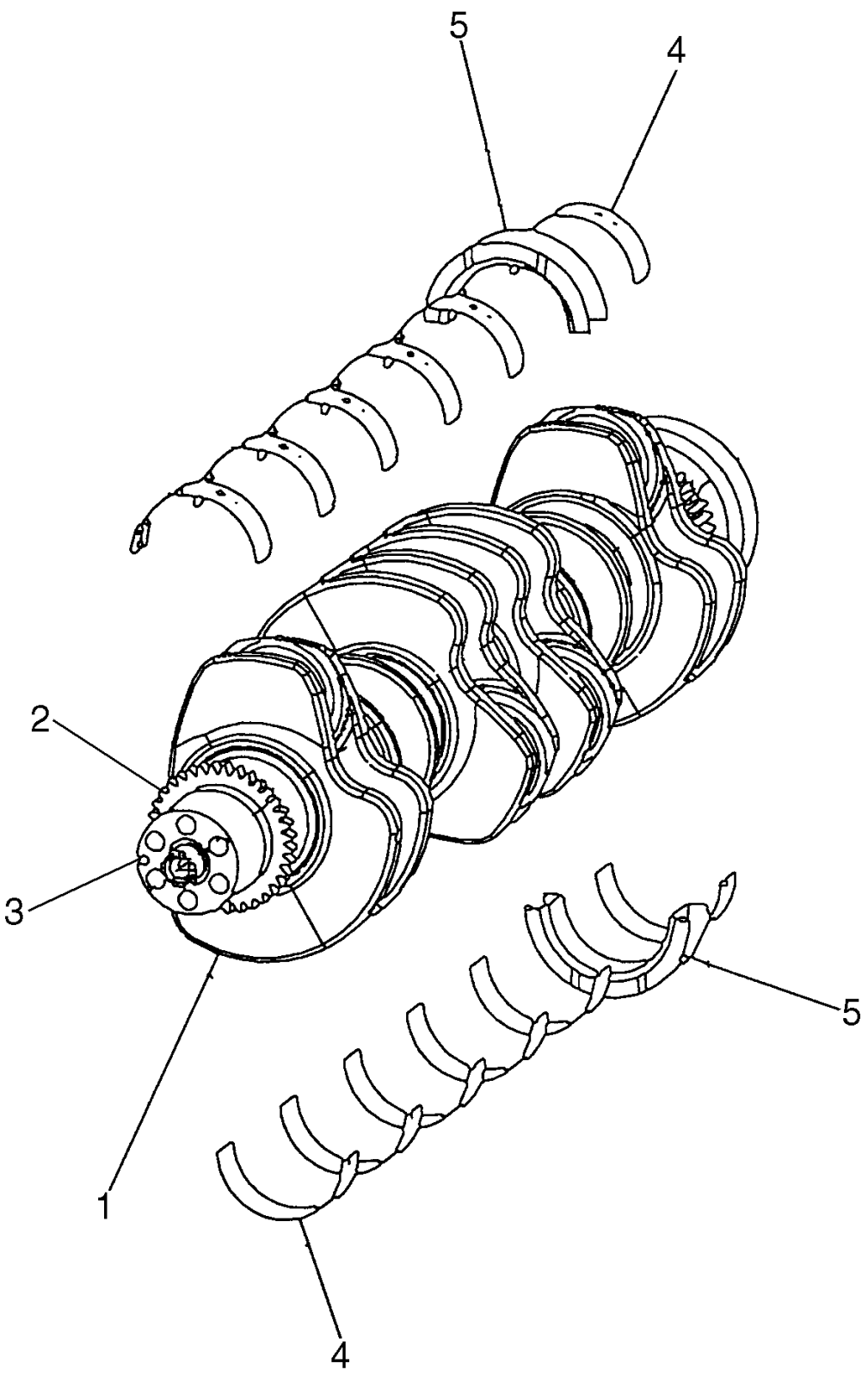


BS07G296

**CRANKSHAFT**

| REF | FN | PART NUMBER | YR/SN | QTY | DESCRIPTION |
|---|---|---|---|---|---|
| | | 87579400 | | 1 | ENGINE, 6 Cylinder 6.7L Turbo, Tier III; Includes Figures 02-09 - 02-13, 02-15 - 02-41, 03-05 - 03-11; Incl. Refs. 1 - 5 |
| 1 | | 2852305 | | 1 | CRANKSHAFT, ASSY. Incl. Refs. 2 - 3 |
| 2 | | 4893386 | | 1 | GEAR |
| 3 | | 4899046 | | 1 | DOWEL |
| 4 | | 4895017 | | 6 | BEARING, CRANKSHAFT, Main, If Used |
| 4 | | {2853815} | | 6 | BEARING, CRANKSHAFT, Main, If Used |
| 5 | | 4895414 | | 1 | BEARING, CRANKSHAFT, Thrust; If Used |
| 5 | | {2853816} | | 1 | BEARING, CRANKSHAFT, Thrust; If Used |

**CRANKSHAFT - PULLEY**

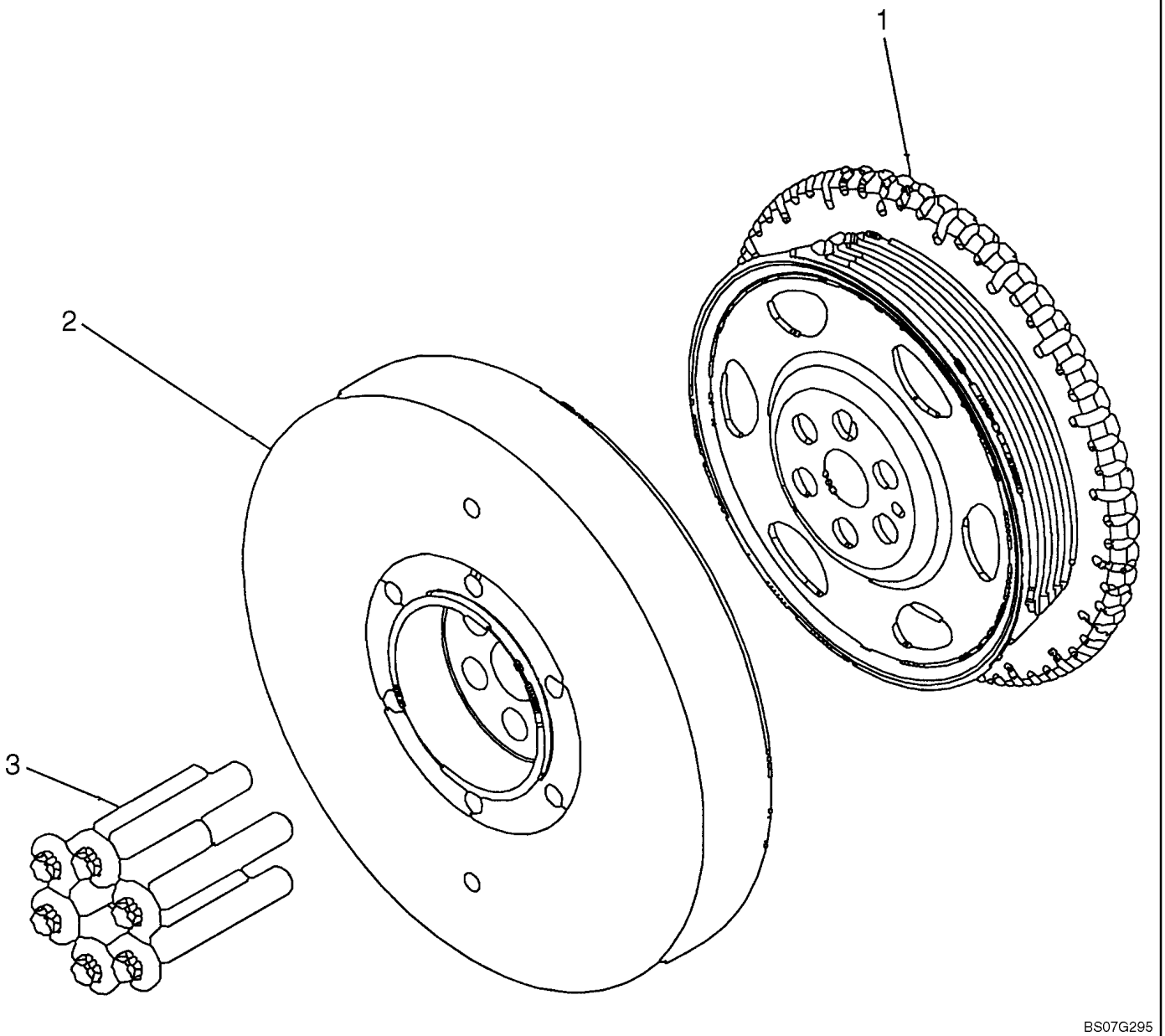

**CRANKSHAFT - PULLEY**

| REF | FN | PART NUMBER | YR/SN | QTY | DESCRIPTION |
|---|---|---|---|---|---|
| | | 87579400 | | 1 | ENGINE, 6 Cylinder 6.7L Turbo, Tier III; Includes Figures 02-09 - 02-13, 02-15 - 02-41, 03-05 - 03-11; Incl. Refs. 1 - 3 |
| 1 | | 4896773 | | 1 | PULLEY, Crankshaft |
| 2 | | 4892893 | | 1 | DAMPER, Vibration |
| 3 | | 4892867 | | 6 | SCREW, Torx Wash Hd, M12 x 1.25 x 78.5 |

**FLYWHEEL - ENGINE**

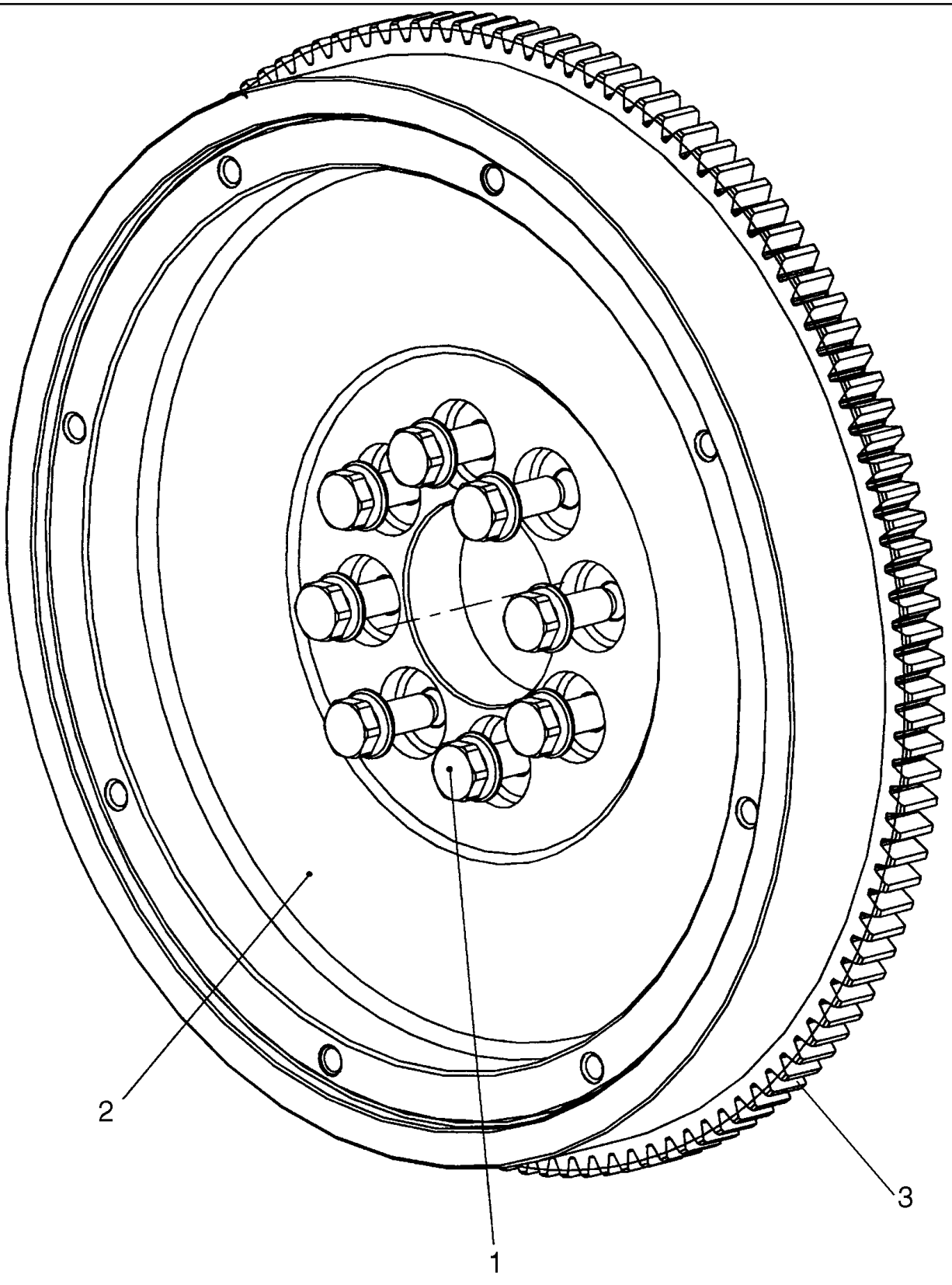

**FLYWHEEL - ENGINE**

| REF | FN | PART NUMBER | YR/SN | QTY | DESCRIPTION |
|---|---|---|---|---|---|
| | | 87579400 | | 1 | ENGINE, 6 Cylinder 6.7L Turbo, Tier III; Includes Figures 02-09 - 02-13, 02-15 - 02-41, 03-05 - 03-11; Incl. Refs. 1 - 3 |
| 1 | | 4894641 | | 8 | SCREW, Wash Hd, M12 x 1.25 x 31 |
| 2 | | 2852219 | | 1 | FLYWHEEL, ENGINE, Assembly, Incl. Ref. 3 |
| 3 | | 2852221 | | 1 | GEAR, RING |

**FLYWHEEL HOUSING**

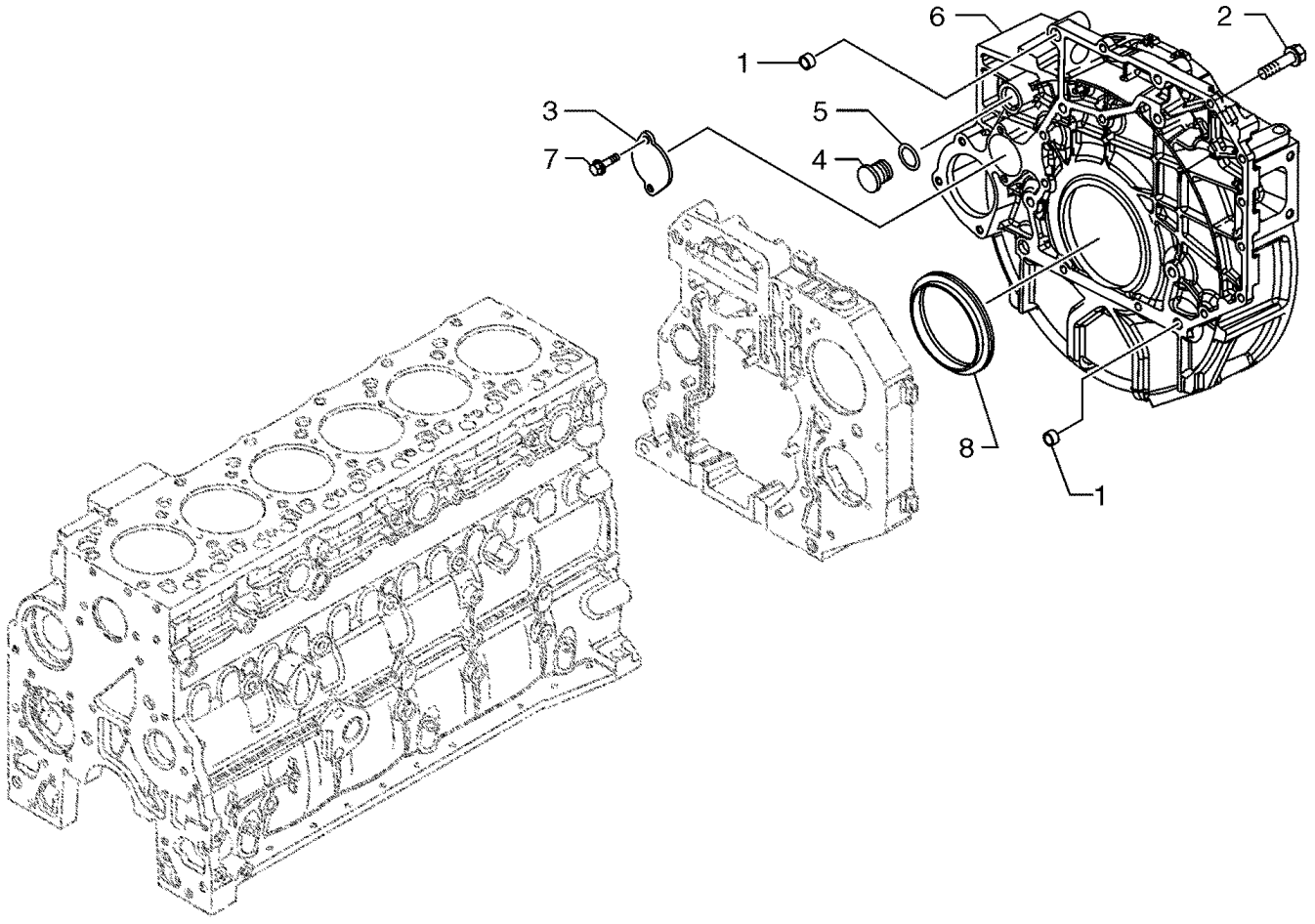


BS03N027

**FLYWHEEL HOUSING**

| REF | FN | PART NUMBER | YR/SN | QTY | DESCRIPTION |
|---|---|---|---|---|---|
| | | 87579400 | | 1 | ENGINE, 6 Cylinder 6.7L Turbo, Tier III; Includes Figures 02-09 - 02-13, 02-15 - 02-41, 03-05 - 03-11; Incl. Refs. 1 - 8 |
| 1 | | 4899026 | | 2 | DOWEL |
| 2 | | 4899109 | | 2 | SCREW, Hex, M10 x 1.5 x 80 |
| 2 | | 4899076 | | 6 | SCREW, Hex Flg, M12 x 1.75 x 80 |
| 2 | | 2852426 | | 2 | SCREW, M12 x 110; If Used |
| 2 | | 4897499 | | 2 | SCREW, M12 x 110; If Used |
| 2 | | 4892915 | | 10 | SCREW, M10 x 40; If Used |
| 3 | | 4895155 | | 1 | COVER |
| 4 | | 4895378 | | 1 | PLUG, D=29 |
| 5 | | 4895379 | | 1 | O-RING |
| 6 | | 2852425 | | 1 | COVER, Flywheel |
| 7 | | 4899068 | | 2 | SCREW, Hex Flg, M8 x 1.25 x 16 |
| 8 | | 4890833 | | 1 | SEAL |

**GEAR COVER - REAR HOUSING**

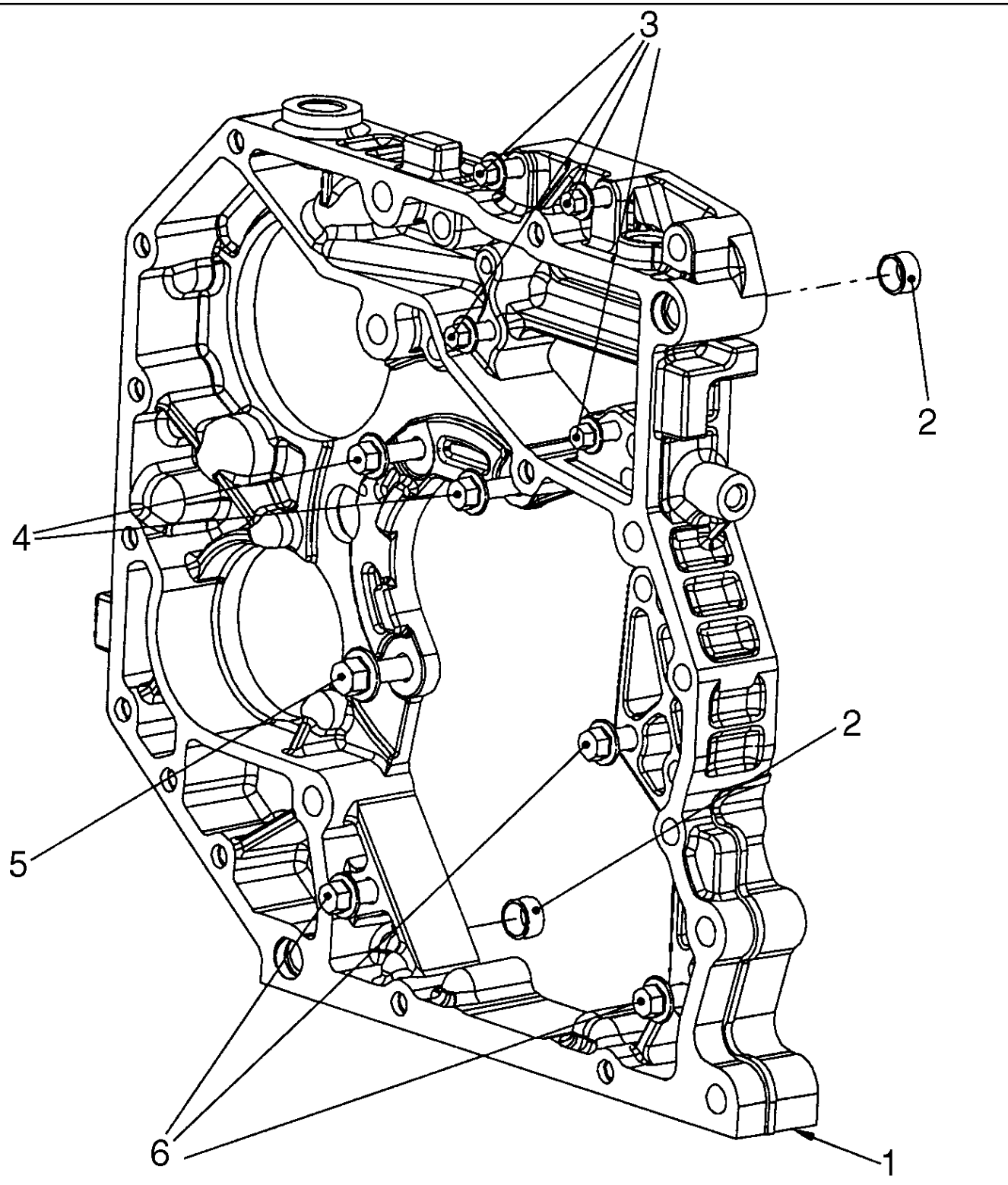

**GEAR COVER - REAR HOUSING**

| REF | FN | PART NUMBER | YR/SN | QTY | DESCRIPTION |
|---|---|---|---|---|---|
| | | 87579400 | | 1 | ENGINE, 6 Cylinder 6.7L Turbo, Tier III; Includes Figures 02-09 - 02-13, 02-15 - 02-41, 03-05 - 03-11; Incl. Refs. 1 - 6 |
| 1 | | 4899679 | | 1 | COVER, Rear Gear Housing |
| 2 | | 4899026 | | 2 | DOWEL, Ring |
| 3 | | 4899078 | | 4 | SCREW, Hex Flg, M8 x 1.25 x 45 |
| 4 | | 4899093 | | 2 | SCREW, Hex Flg, M10 x 1.5 x 30 |
| 5 | | 4899073 | | 1 | SCREW, Hex Flg, M12 x 1.75 x 30 |
| 6 | | 4896939 | | 3 | SCREW, Hex Flg, M10 x 1.5 x 50 |

**GEAR COVER - PLATE**

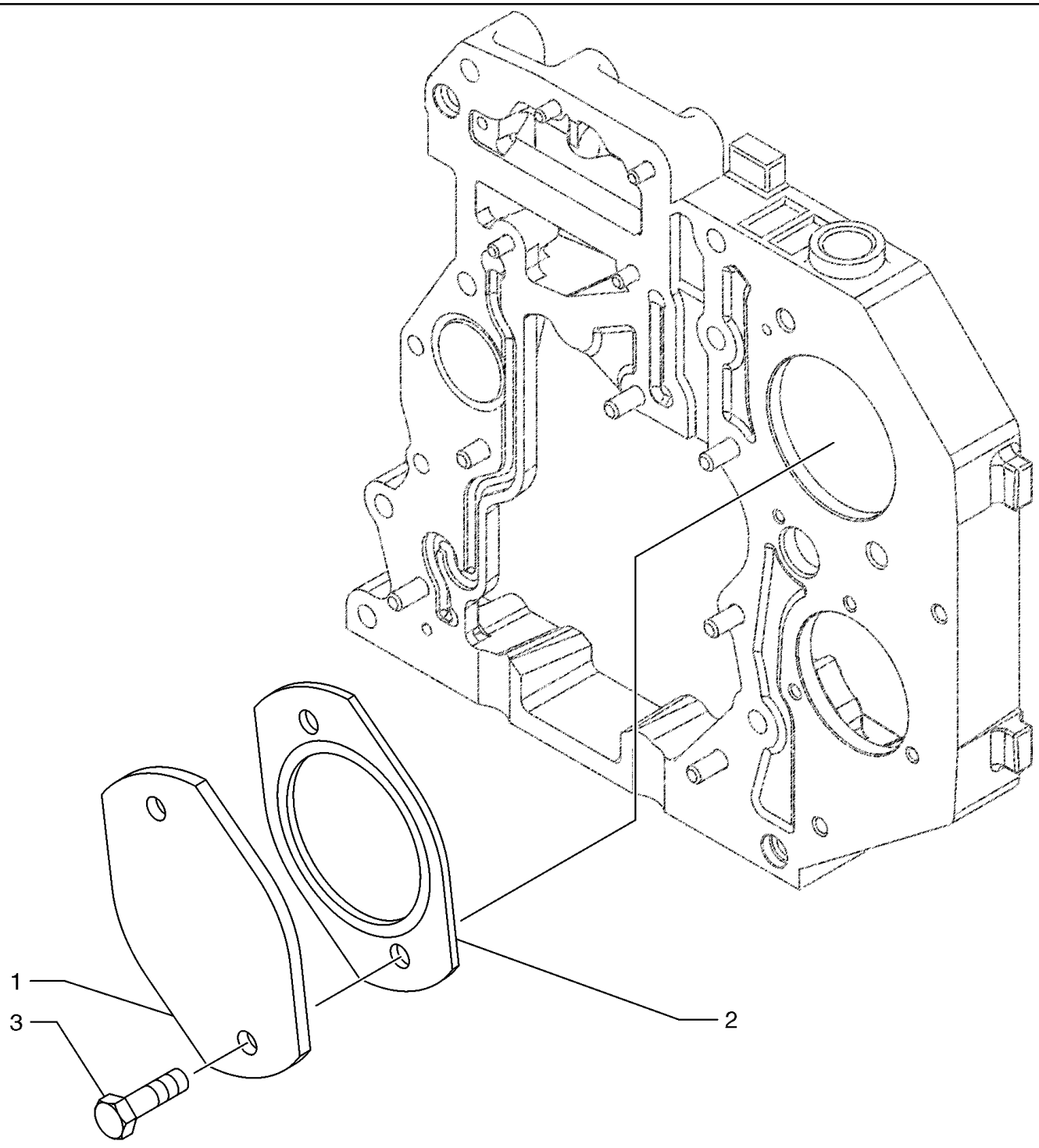


BS04A022

**GEAR COVER - PLATE**

| REF | FN | PART NUMBER | YR/SN | QTY | DESCRIPTION |
|---|---|---|---|---|---|
| | | 87579400 | | 1 | ENGINE, 6 Cylinder 6.7L Turbo, Tier III; Includes Figures 02-09 - 02-13, 02-15 - 02-41, 03-05 - 03-11; Incl. Refs. 1 - 3 |
| 1 | | 2852175 | | 1 | COVER |
| 2 | | 4896897 | | 1 | GASKET |
| 3 | | 4899037 | | 2 | SCREW, Hex Flg, M12 x 1.75 x 25 |

**FRONT GEAR COVER**

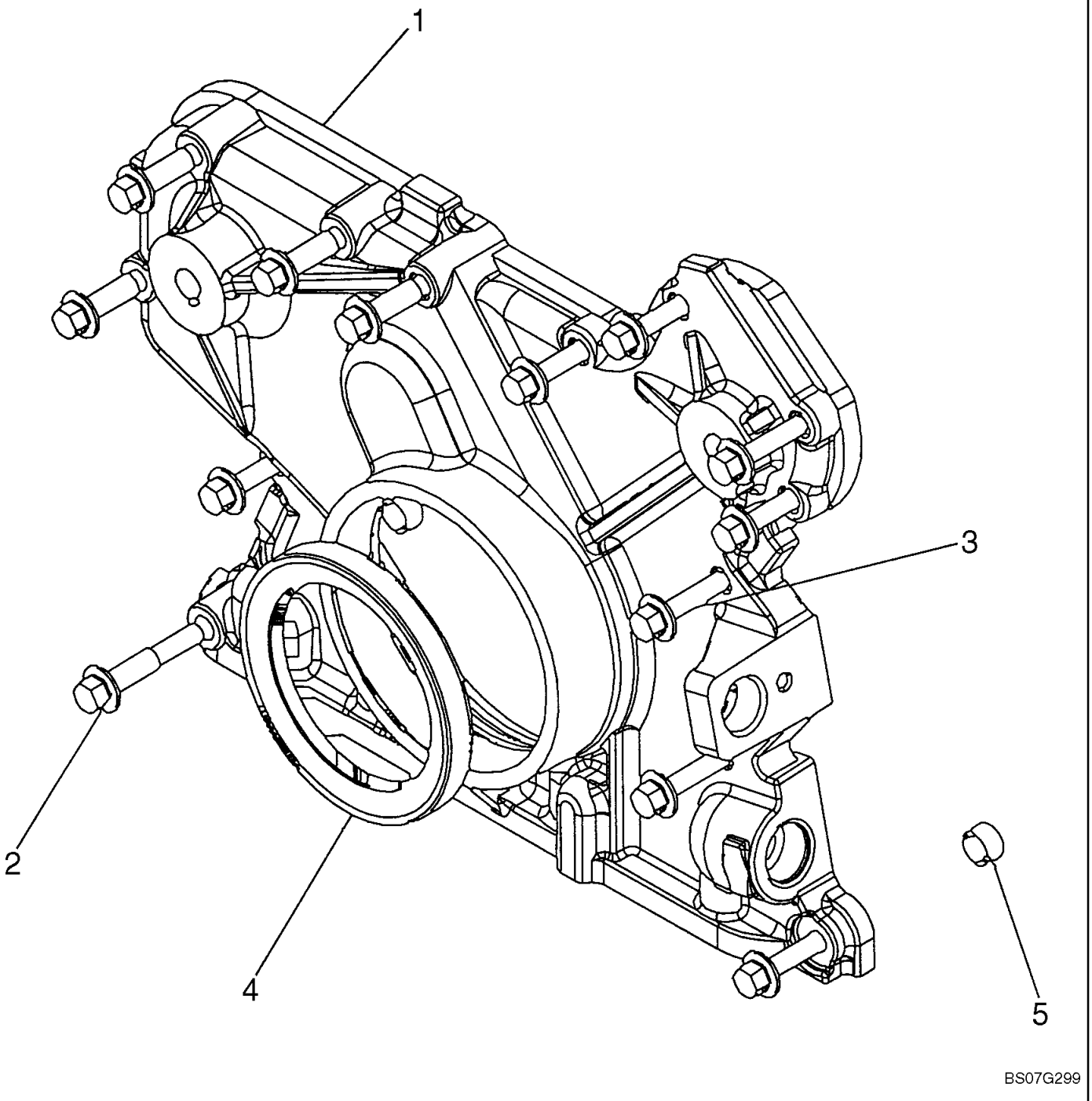

**FRONT GEAR COVER**

| REF | FN | PART NUMBER | YR/SN | QTY | DESCRIPTION |
|---|---|---|---|---|---|
| | | 87579400 | | 1 | ENGINE, 6 Cylinder 6.7L Turbo, Tier III; Includes Figures 02-09 - 02-13, 02-15 - 02-41, 03-05 - 03-11; Incl. Refs. 1 - 5 |
| 1 | | 4897024 | | 1 | COVER |
| 2 | | 4899078 | | 5 | SCREW, Hex Flg, M8 x 1.25 x 45 |
| 3 | | 4899063 | | 8 | SCREW, Hex Flg, M8 x 1.25 x 30 |
| 4 | | 4890832 | | 1 | SEAL |
| 5 | | 4891209 | | 2 | DOWEL |

**ROCKER ARMS**

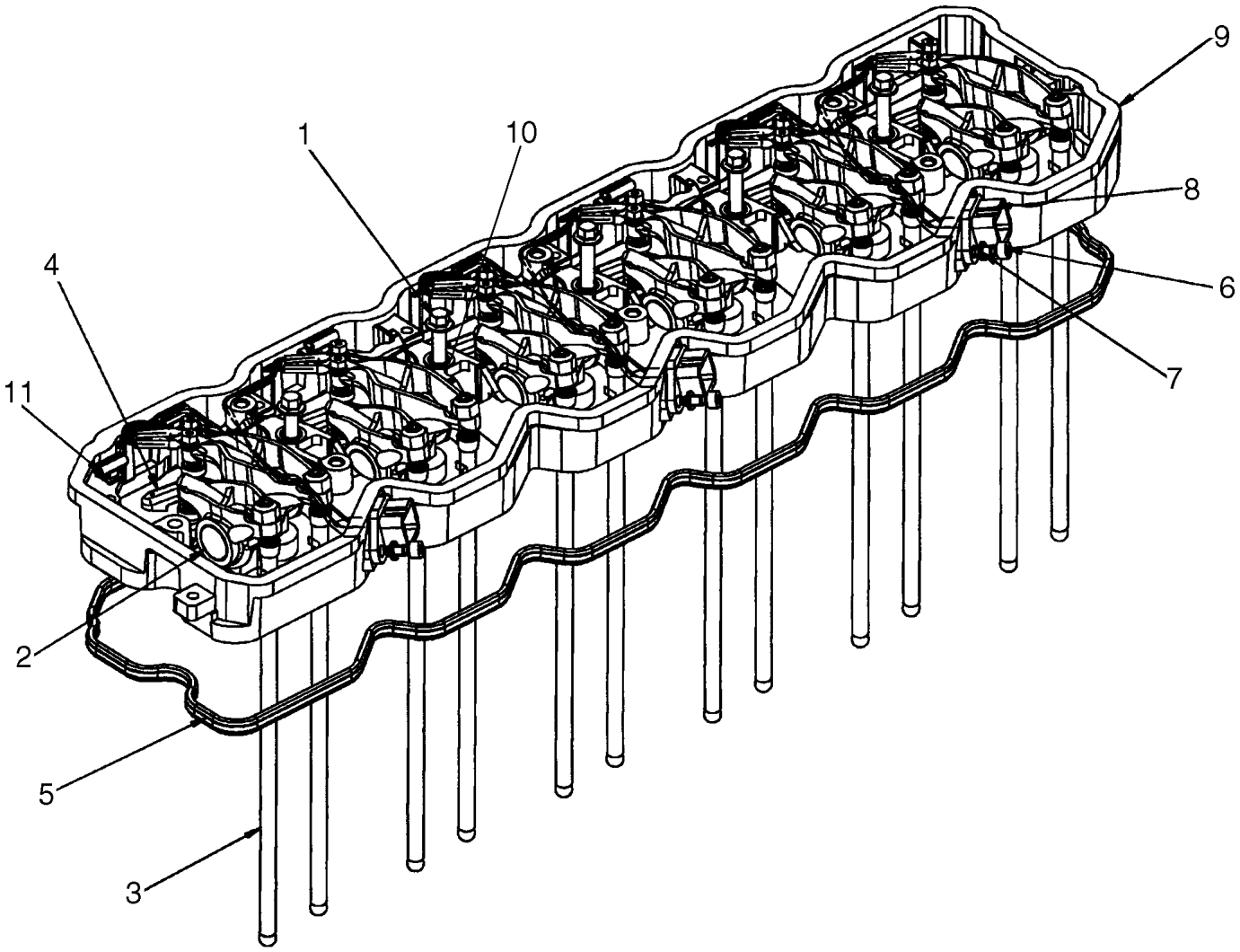

**ROCKER ARMS**

| REF | FN | PART NUMBER | YR/SN | QTY | DESCRIPTION |
|---|---|---|---|---|---|
| | | 87579400 | | 1 | ENGINE, 6 Cylinder 6.7L Turbo, Tier III; Includes Figures 02-09 - 02-13, 02-15 - 02-41, 03-05 - 03-11; Incl. Refs. 1 - 12 |
| 1 | | 4895432 | | 5 | SCREW, M8 x 1.25 x 70 |
| 2 | | {2856458} | | 6 | ROCKER ARM, Assy. See Figure 02-33A |
| 3 | | 4895031 | | 12 | ROD, PUSH |
| 4 | | 2854530 | | 12 | BRIDGE |
| 5 | | 2853788 | | 1 | GASKET, Rocker Lever Housing |
| 6 | | 2852602 | | 3 | SCREW, Socket Head Cap |
| 7 | | 2852776 | | 3 | WASHER, M6 x 11 x 1.6 |
| 8 | | 2852427 | | 3 | CABLE, ELECTRIC, Harness |
| 9 | | 4899257 | | 1 | HOUSING, ASSY. Rocker Lever, Incl. Ref. 10 |
| 10 | | 4899245 | | 5 | DOWEL, Sleeve |
| 11 | | 2852428 | | 6 | CLIP, Wire Retaining |
| 12 | | 4899089 | | 2 | SCREW, Hex Flg, M8 x 1.25 x 50, Not Illustrated |

**ROCKER ARMS - ASSEMBLY**

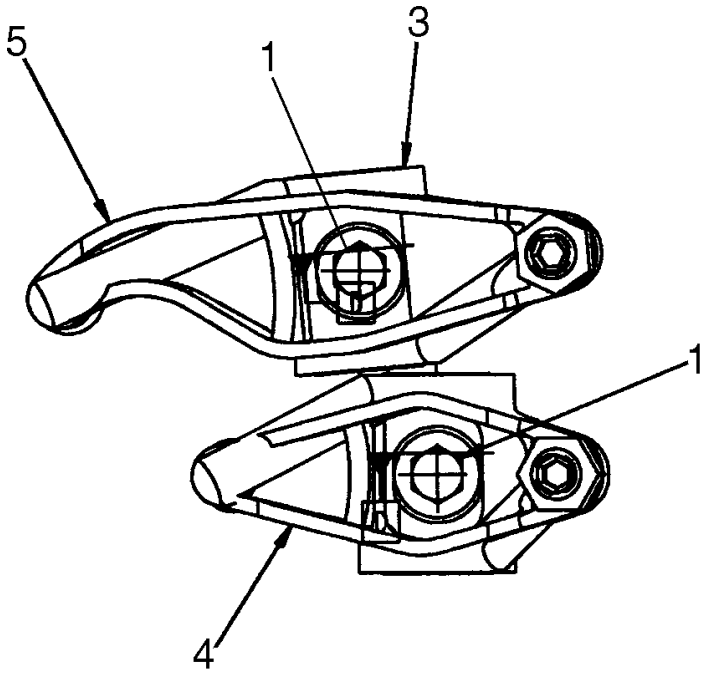


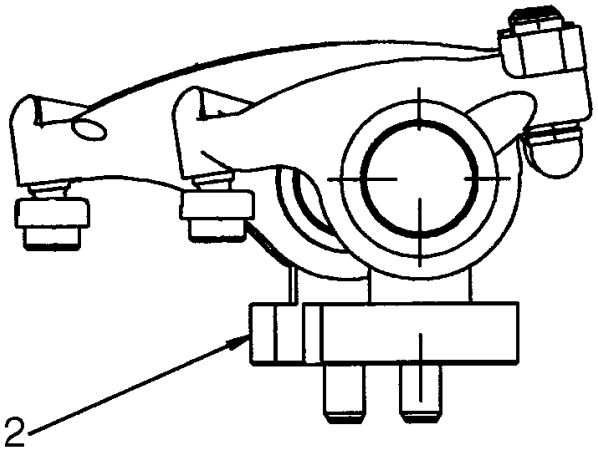


BS07G301

**ROCKER ARMS - ASSEMBLY**

| REF | FN | PART NUMBER | YR/SN | QTY | DESCRIPTION |
|---|---|---|---|---|---|
| | | 87579400 | | 1 | ENGINE, 6 Cylinder 6.7L Turbo, Tier III; Includes Figures 02-09 - 02-13, 02-15 - 02-41, 03-05 - 03-11; Incl. Refs. 1 - 5 |
| | | {2856458} | | 6 | ROCKER ARM, ASSY. Incl. Refs. 1 - 5 |
| 1 | | {2856460} | | 2 | SCREW, Shoulder |
| 2 | | 4893487 | | 1 | SUPPORT, Rocker Lever |
| 3 | | {2856459} | | 2 | SHAFT, Rocker Lever |
| 4 | | NSS | | 1 | NOT SERVICED SEPARATELY, LEVER, ROCKER, Intake |
| 5 | | NSS | | 1 | NOT SERVICED SEPARATELY, LEVER, ROCKER, Exhaust |

**CAMSHAFT**

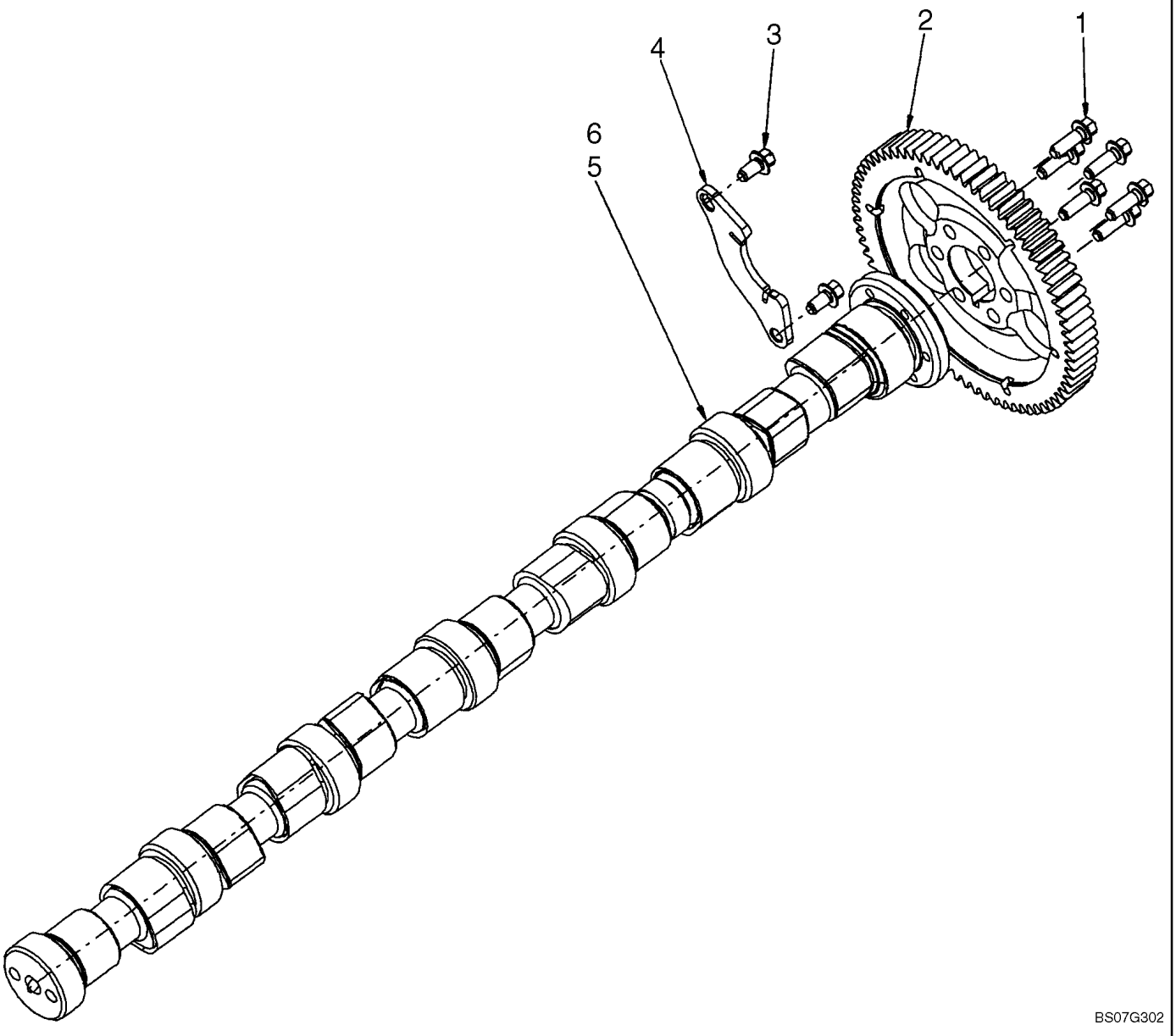

**CAMSHAFT**

| REF | FN | PART NUMBER | YR/SN | QTY | DESCRIPTION |
|---|---|---|---|---|---|
| | | 87579400 | | 1 | ENGINE, 6 Cylinder 6.7L Turbo, Tier III; Includes Figures 02-09 - 02-13, 02-15 - 02-41, 03-05 - 03-11; Incl. Refs. 1 - 6 |
| 1 | | 4899079 | | 6 | SCREW, Hex Flg, M8 x 1.25 x 25 |
| 2 | | 4896380 | | 1 | GEAR, DRIVEN |
| 3 | | 4899068 | | 2 | SCREW, Hex Flg, M8 x 1.25 x 16 |
| 4 | | 4897457 | | 1 | FLANGE |
| 5 | | 2854604 | | 1 | CAMSHAFT, Incl. Ref. 6 |
| 6 | | 4899080 | | 1 | DOWEL, Not Illustrated |

**PISTONS**

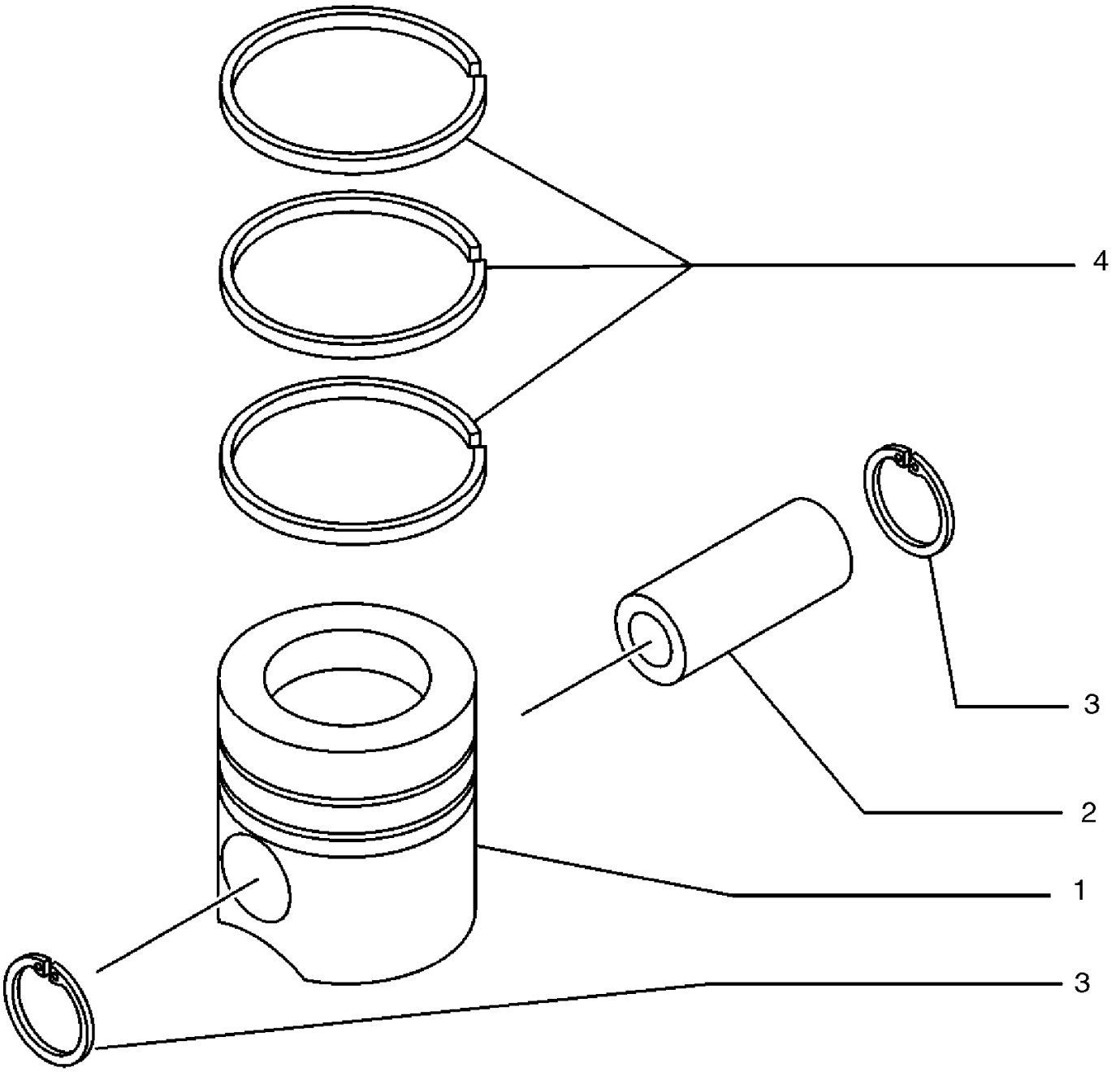

**PISTONS**

| REF | FN | PART NUMBER | YR/SN | QTY | DESCRIPTION |
|---|---|---|---|---|---|
| | | 87579400 | | 1 | ENGINE, 6 Cylinder 6.7L Turbo, Tier III; Includes Figures 02-09 - 02-13, 02-15 - 02-41, 03-05 - 03-11; Incl. Refs. 1 - 4 |
| 1 | | 2855519 | | 6 | KIT, ENGINE OVERHAUL, PISTON |
| 2 | | 4892712 | | 1 | PIN, PISTON |
| 3 | | 2854030 | | 2 | RING, LOCKING |
| 4 | | 2854603 | | 1 | KIT, RING, PISTON SEALING |
| 4 | | 2830158 | | 1 | RING, PISTON |
| 4 | | 2852037 | | 1 | RING, OIL SCRAPER |

## CONNECTING ROD

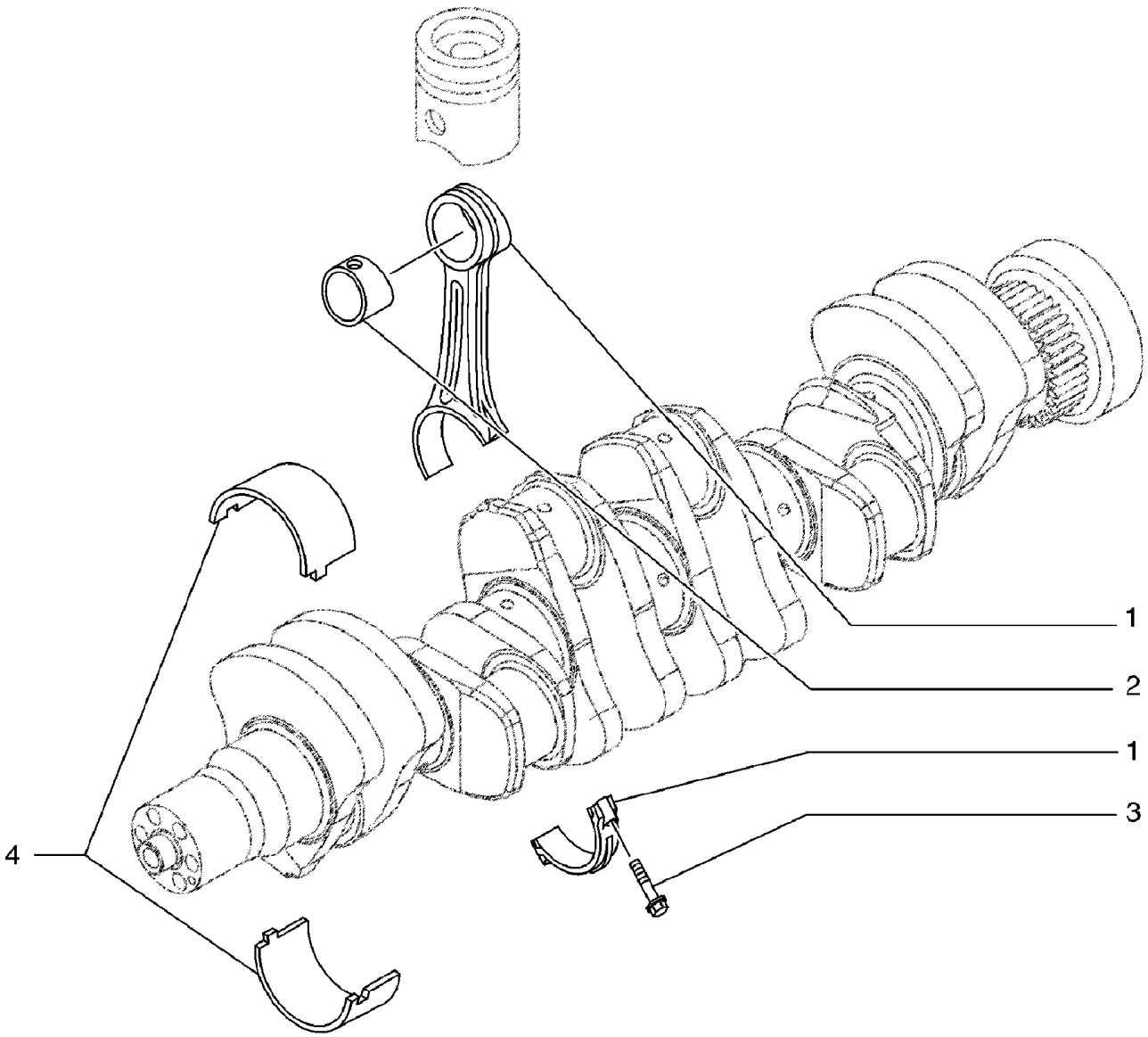

**CONNECTING ROD**

| REF | FN | PART NUMBER | YR/SN | QTY | DESCRIPTION |
|---|---|---|---|---|---|
| | | 87579400 | | 1 | ENGINE, 6 Cylinder 6.7L Turbo, Tier III; Includes Figures 02-09 - 02-13, 02-15 - 02-41, 03-05 - 03-11; Incl. Refs. 1 - 4 |
| | | 2831298 | | 6 | ROD, CONNECTING, ASSY. Incl. Refs. 1 - 3 |
| 1 | | NSS | | 1 | NOT SERVICED SEPARATELY, CONNECTING ROD, Arm |
| 2 | | 4892708 | | 1 | BUSHING |
| 3 | | 2831297 | | 2 | SCREW |
| 4 | | 4892715 | | 6 | BEARING, CRANKSHAFT, If Used |
| 4 | | {2856309} | | 6 | BEARING, CRANKSHAFT, If Used |

**INTAKE MANIFOLD**

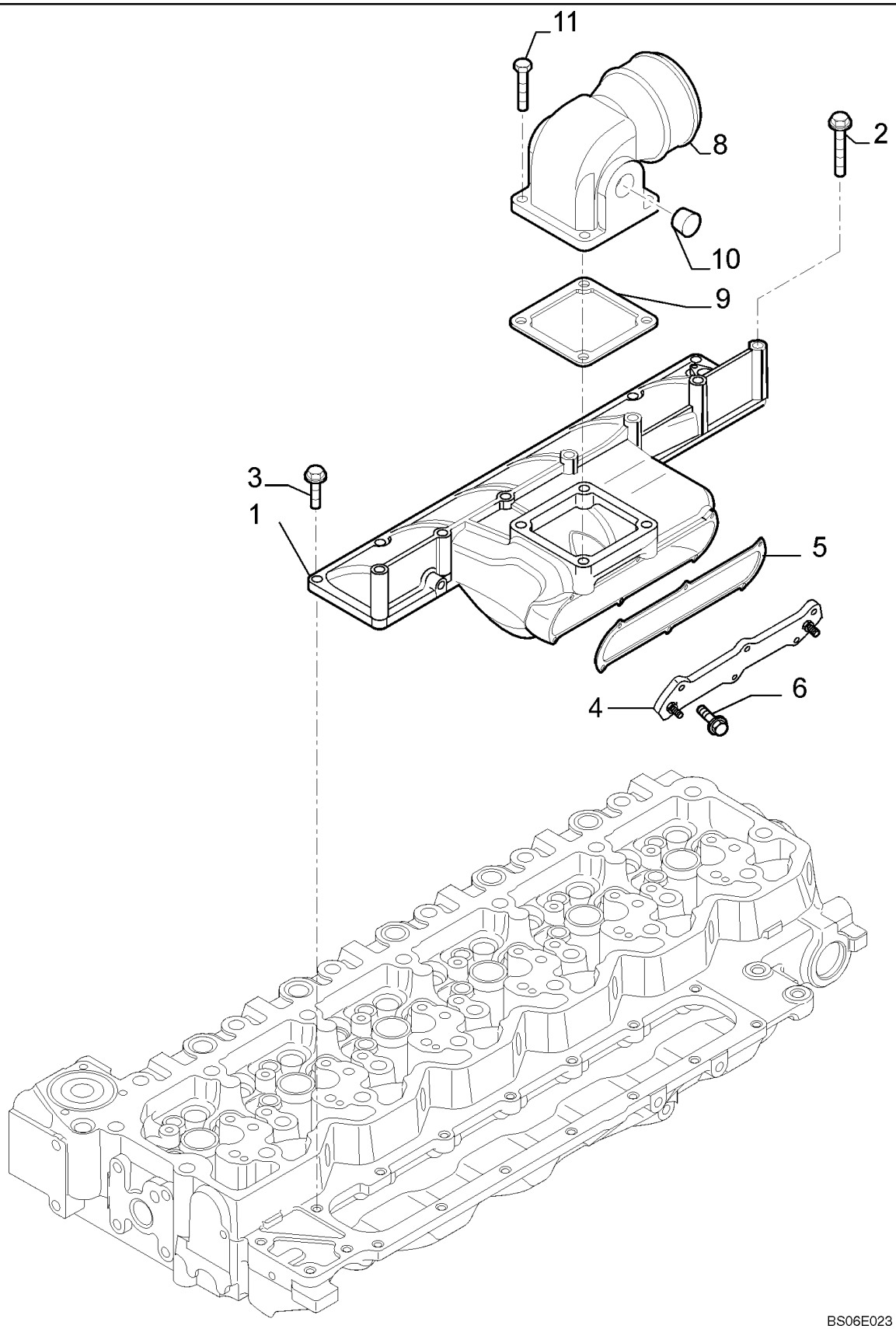

**INTAKE MANIFOLD**

| REF | FN | PART NUMBER | YR/SN | QTY | DESCRIPTION |
|---|---|---|---|---|---|
| | | 87579400 | | 1 | ENGINE, 6 Cylinder 6.7L Turbo, Tier III; Includes Figures 02-09 - 02-13, 02-15 - 02-41, 03-05 - 03-11; Incl. Refs. 1 - 14 |
| 1 | | 2854534 | | 1 | MANIFOLD, INLET |
| 2 | | 4895432 | | 3 | SCREW |
| 3 | | 4899039 | | 7 | SCREW, Hex Flg, M8 x 1.25 x 25 |
| 4 | | 2854700 | | 1 | COVER |
| 5 | | 2854701 | | 1 | GASKET |
| 6 | | 2854702 | | 6 | SCREW |
| 8 | | 4895424 | | 1 | MANIFOLD, INLET |
| 9 | | 4899921 | | 1 | GASKET |
| 10 | | 4893036 | | 2 | PLUG, Alternate Part |
| 10 | | 2854866 | | 2 | PLUG, Alternate Part |
| 11 | | 2852212 | | 4 | SCREW, Alternate Part |
| 11 | | 4895294 | | 4 | SCREW, Alternate Part |
| 12 | | 16745024 | | 1 | STUD, Not Illustrated |
| 13 | | 4897766 | | 1 | CABLE, GROUND, Not Illustrated |
| 14 | | 4896263 | | 1 | BOOT, Not Illustrated |

**EXHAUST MANIFOLD**

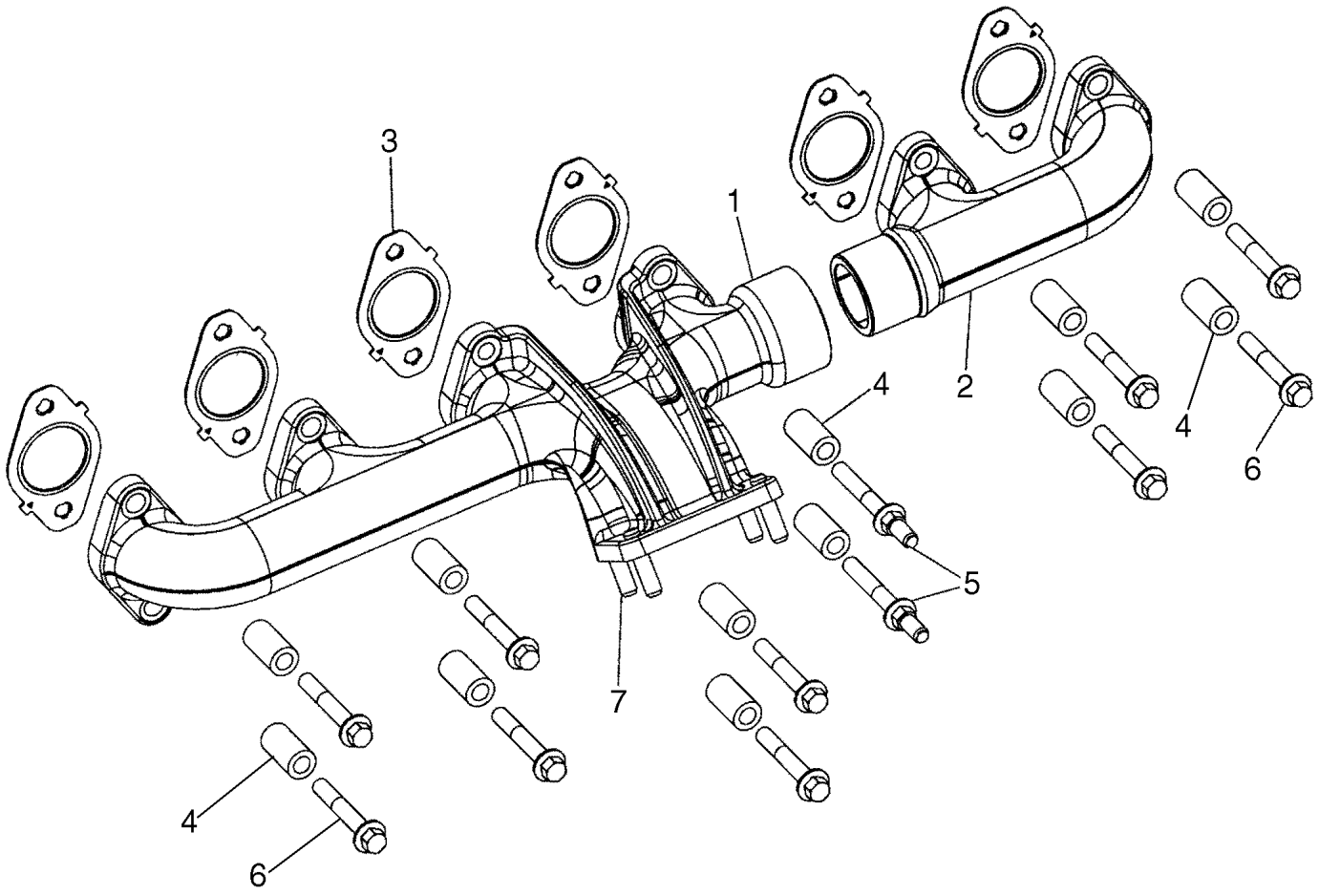


BS07G305

**EXHAUST MANIFOLD**

| REF | FN | PART NUMBER | YR/SN | QTY | DESCRIPTION |
|---|---|---|---|---|---|
| | | 87579400 | | 1 | ENGINE, 6 Cylinder 6.7L Turbo, Tier III; Includes Figures 02-09 - 02-13, 02-15 - 02-41, 03-05 - 03-11; Incl. Refs. 1 - 7 |
| 1 | | 4896651 | | 1 | MANIFOLD, EXHAUST |
| 2 | | 4896650 | | 1 | MANIFOLD, EXHAUST |
| 3 | | 2830444 | | 6 | GASKET |
| 4 | | 4895336 | | 12 | SPACER |
| 5 | | 4895219 | | 2 | STUD |
| 6 | | 2852744 | | 10 | SCREW |
| 7 | | 4899085 | | 4 | STUD |

**COOLING SYSTEM - ENGINE**

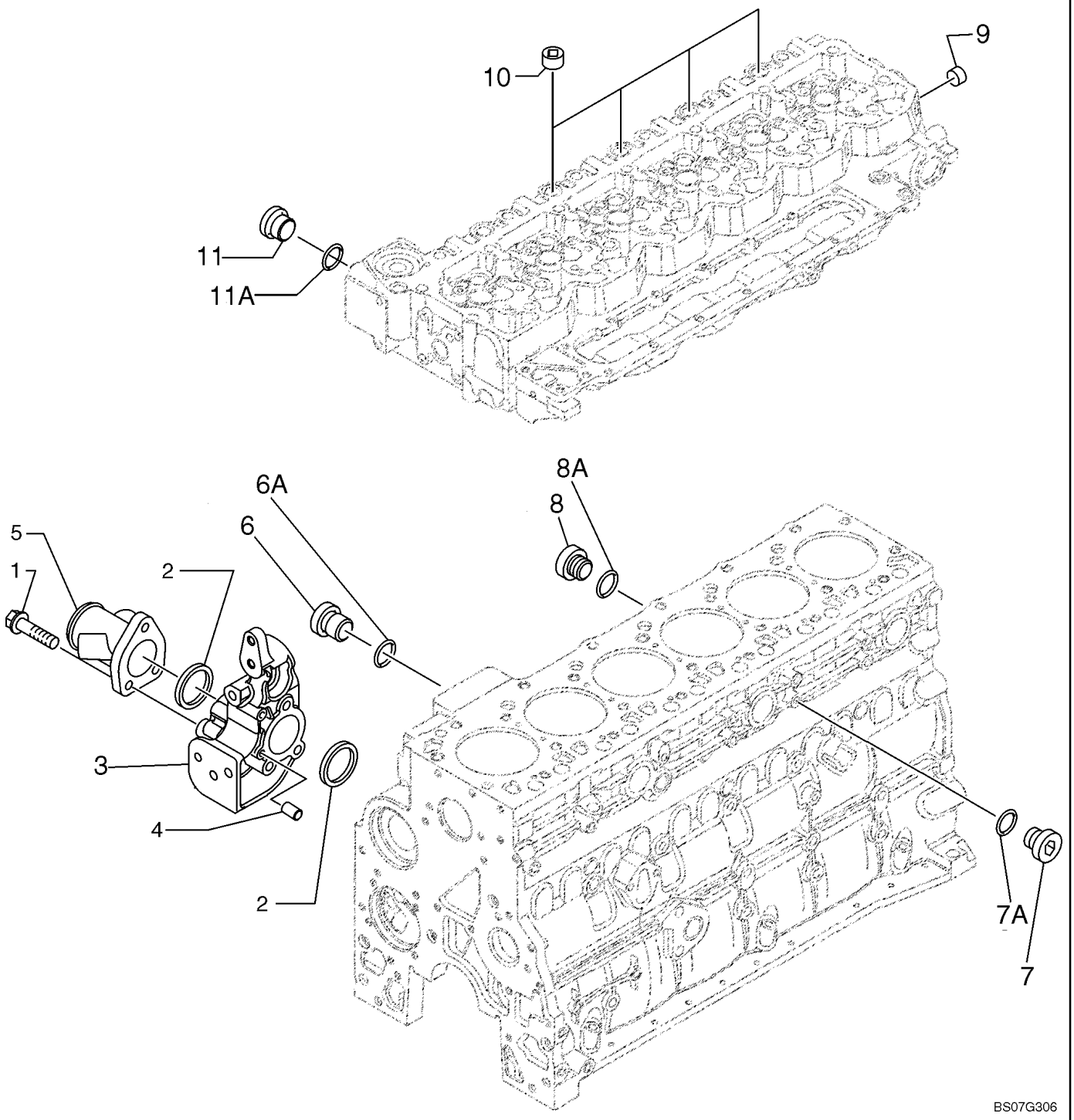

**COOLING SYSTEM - ENGINE**

| REF | FN | PART NUMBER | YR/SN | QTY | DESCRIPTION |
|---|---|---|---|---|---|
| | | 87579400 | | 1 | ENGINE, 6 Cylinder 6.7L Turbo, Tier III; Includes Figures 02-09 - 02-13, 02-15 - 02-41, 03-05 - 03-11; Incl. Refs. 1 - 11A |
| 1 | | 2852325 | | 3 | SCREW, M10 x 80 |
| 2 | | 2854072 | | 2 | O-RING |
| 3 | | 2852392 | | 1 | SUPPORT, Incl. Ref. 4 |
| 4 | | 4895576 | | 2 | DOWEL |
| 5 | | 2852468 | | 1 | TUBE, RIGID |
| 6 | | 2852496 | | 1 | PLUG, Incl. Ref. 6A |
| 6A | | 4895393 | | 1 | O-RING |
| 7 | | 4895623 | | 1 | PLUG, Incl. Ref. 7A |
| 7A | | 4895625 | | 1 | O-RING |
| 8 | | 2852496 | | 2 | PLUG, Incl. Ref. 8A |
| 8A | | 4899824 | | 2 | WASHER, SEALING |
| 9 | | 4895079 | | 2 | PLUG |
| 10 | | 4895078 | | 4 | PLUG |
| 11 | | 4895080 | | 1 | PLUG, Incl. Ref. 11A |
| 11A | | 4895082 | | 1 | O-RING |

**THERMOSTAT - ENGINE COOLING SYSTEM**

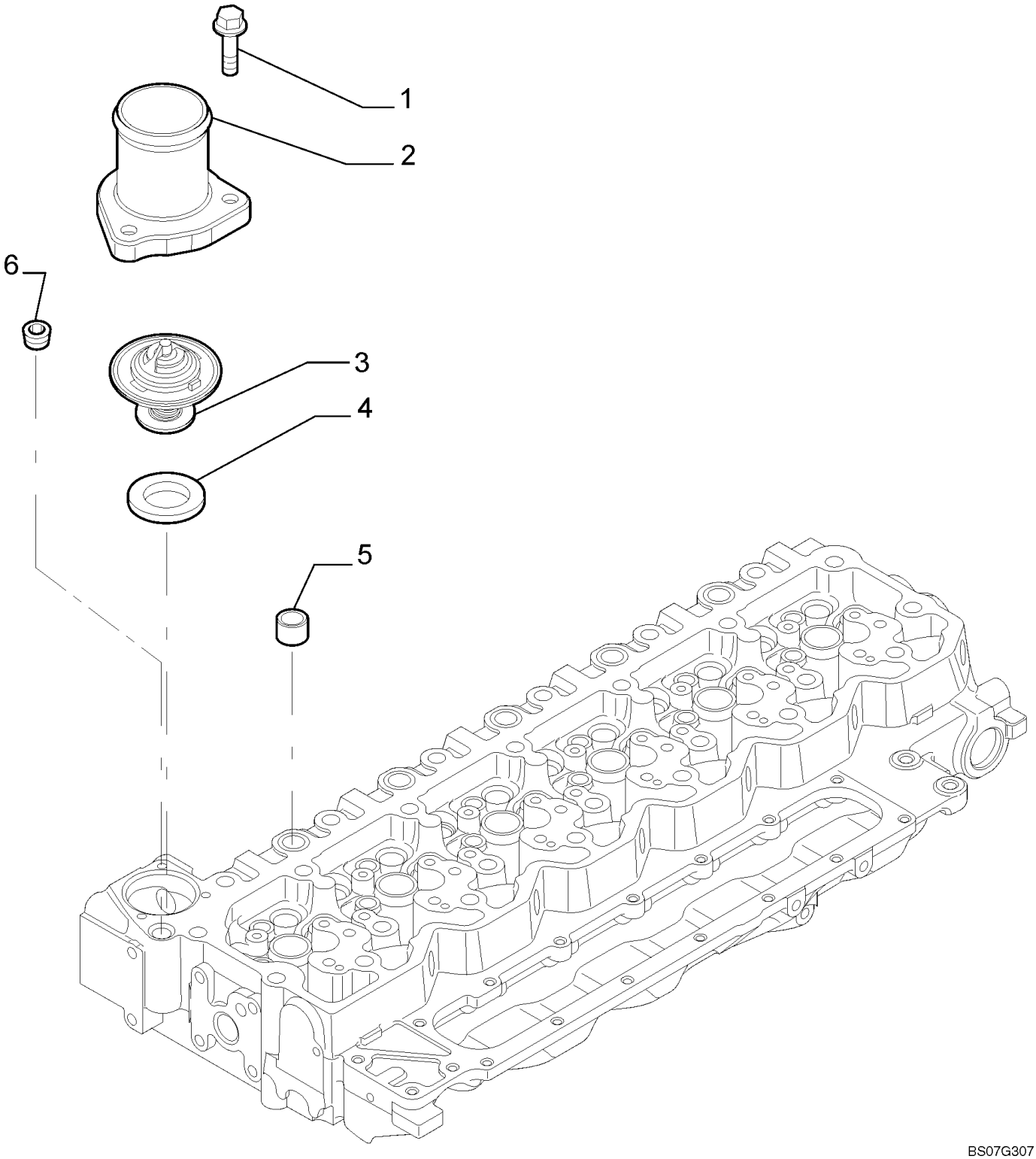

**THERMOSTAT - ENGINE COOLING SYSTEM**

| REF | FN | PART NUMBER | YR/SN | QTY | DESCRIPTION |
|---|---|---|---|---|---|
| | | 87579400 | | 1 | ENGINE, 6 Cylinder 6.7L Turbo, Tier III; Includes Figures 02-09 - 02-13, 02-15 - 02-41, 03-05 - 03-11; Incl. Refs. 1 - 6 |
| 1 | | 4899110 | | 3 | SCREW, Hex Flg, M6 x 1 x 20 |
| 2 | | 4895131 | | 1 | HOUSING |
| 3 | | 2856543 | | 1 | THERMOSTAT, ASSY. Incl. Ref. 4 |
| 4 | | 2852473 | | 1 | GASKET |
| 5 | | 4893036 | | 1 | PLUG, Alternate Part |
| 5 | | 2854866 | | 1 | PLUG, Alternate Part |
| 6 | | 4895078 | | 4 | PLUG |
| 7 | | 2854491 | | 1 | PLUG, Engine Cooland Vent, Not Illustrated |

**ENGINE - LIFT HOOKS**

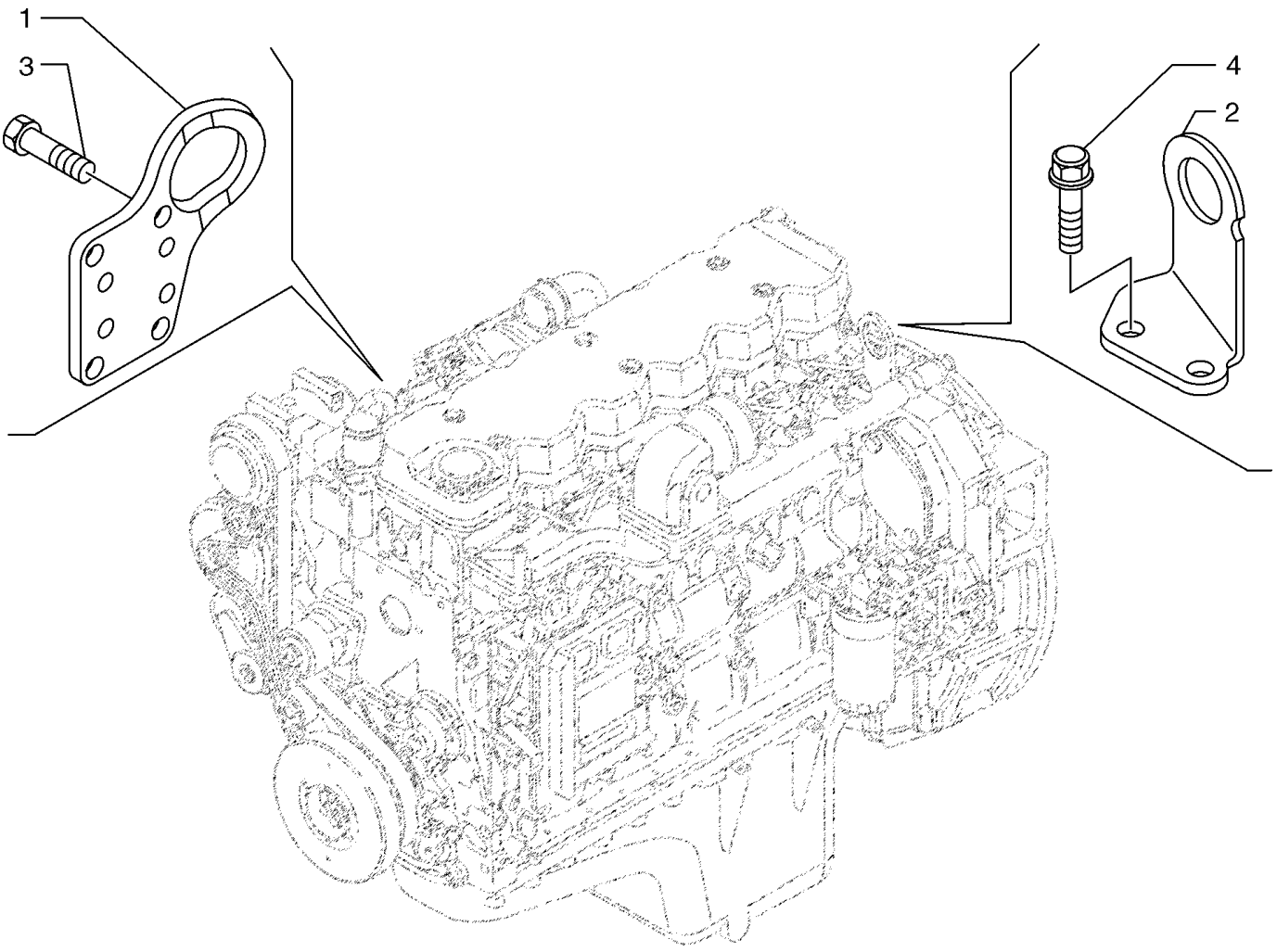

**ENGINE - LIFT HOOKS**

| REF | FN | PART NUMBER | YR/SN | QTY | DESCRIPTION |
|---|---|---|---|---|---|
| | | 87579400 | | 1 | ENGINE, 6 Cylinder 6.7L Turbo, Tier III; Includes Figures 02-09 - 02-13, 02-15 - 02-41, 03-05 - 03-11; Incl. Refs. 1 - 4 |
| 1 | | 4894100 | | 1 | HOOK |
| 2 | | 4894410 | | 1 | HOOK |
| 3 | | 4899037 | | 2 | SCREW, Hex Flg, M12 x 1.75 x 25 |
| 4 | | 4899079 | | 4 | SCREW, Hex Flg, M8 x 1.25 x 25 |

**ENGINE - BLOCK HEATER**

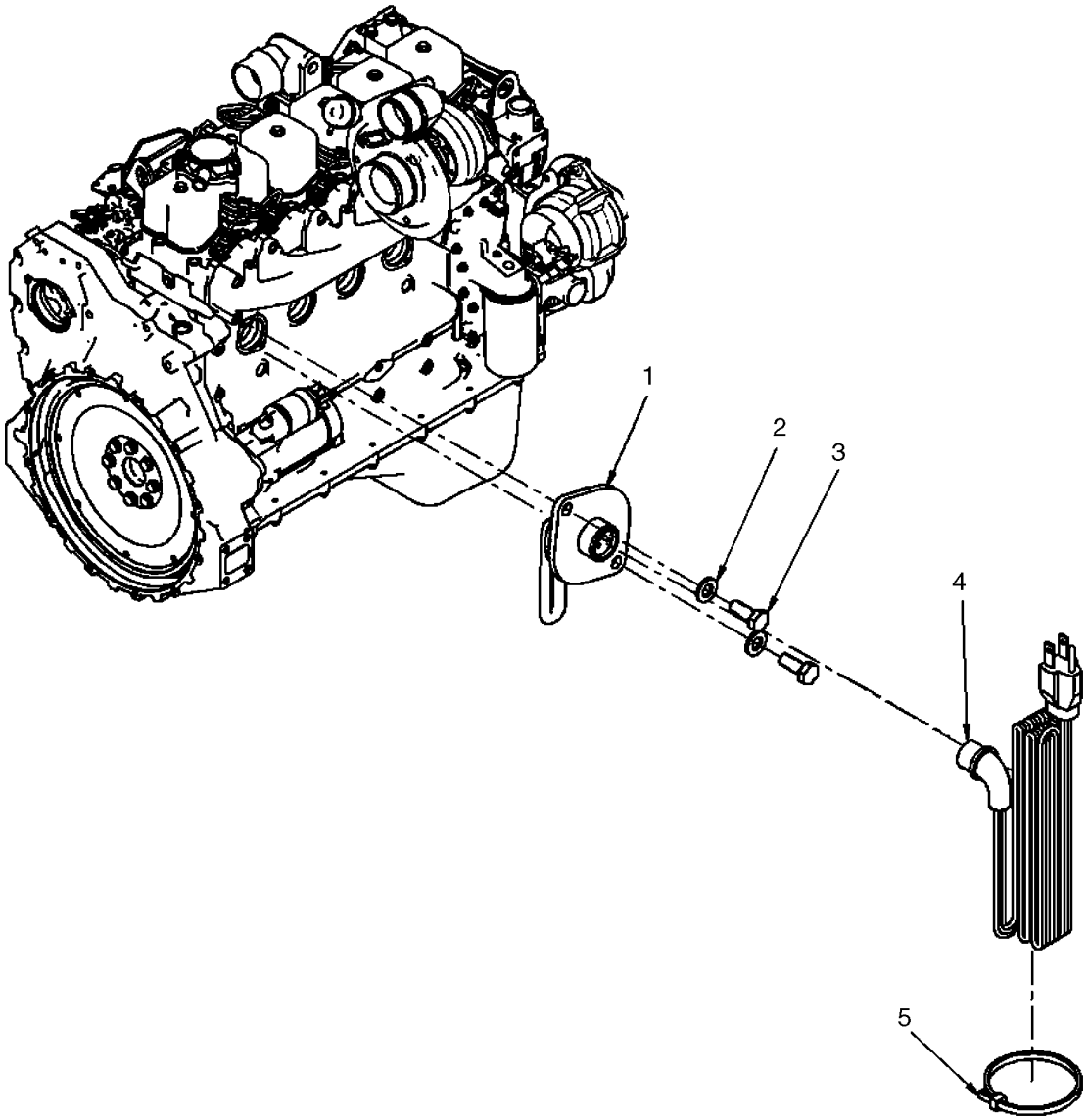


BS07G079

**ENGINE - BLOCK HEATER**

| REF | FN | PART NUMBER | YR/SN | QTY | DESCRIPTION |
|---|---|---|---|---|---|
| 1 | | 8602005 | | 1 | HEATER, 750W, 120V |
| 2 | | 896-11008 | | 2 | WASHER, M8 x 17.5 x 2, HT |
| 3 | | 627-8020 | | 2 | BOLT, Hex, M8 x 20, 10.9 |
| 4 | | 196466A1 | | 1 | CABLE, ELECTRIC, Engine Heater |
| 5 | | L11541 | | 1 | STRAP |

## NOTES

# SECTION INDEX
## Fuel System


| | |
|---|---|
| 03-01 | FUEL LINES - COOLER, FUEL |
| 03-02 | FILTER, FUEL - WATER SEPERATOR |
| 03-03 | FILTER, FUEL |
| 03-04 | FUEL TANK FILLER - SENDER |
| 03-04A | FUEL TANK - BREATHER |
| 03-05 | FUEL INJECTION PUMP |
| 03-06 | FUEL INJECTION SYSTEM |
| 03-07 | FUEL INJECTION SYSTEM - INJECTOR |
| 03-08 | FUEL INJECTION SYSTEM - FUEL, SUPPLY |
| 03-09 | FUEL INJECTION SYSTEM - MODULE, ENGINE CONTROL |
| 03-10 | FUEL INJECTION SYSTEM - HARNESS, ENGINE |
| 03-11 | FUEL INJECTION SYSTEM - DRAIN LINE |

| 03-01 | | p1 | 07/07 |
|---|---|---|---|

**FUEL LINES - COOLER, FUEL**

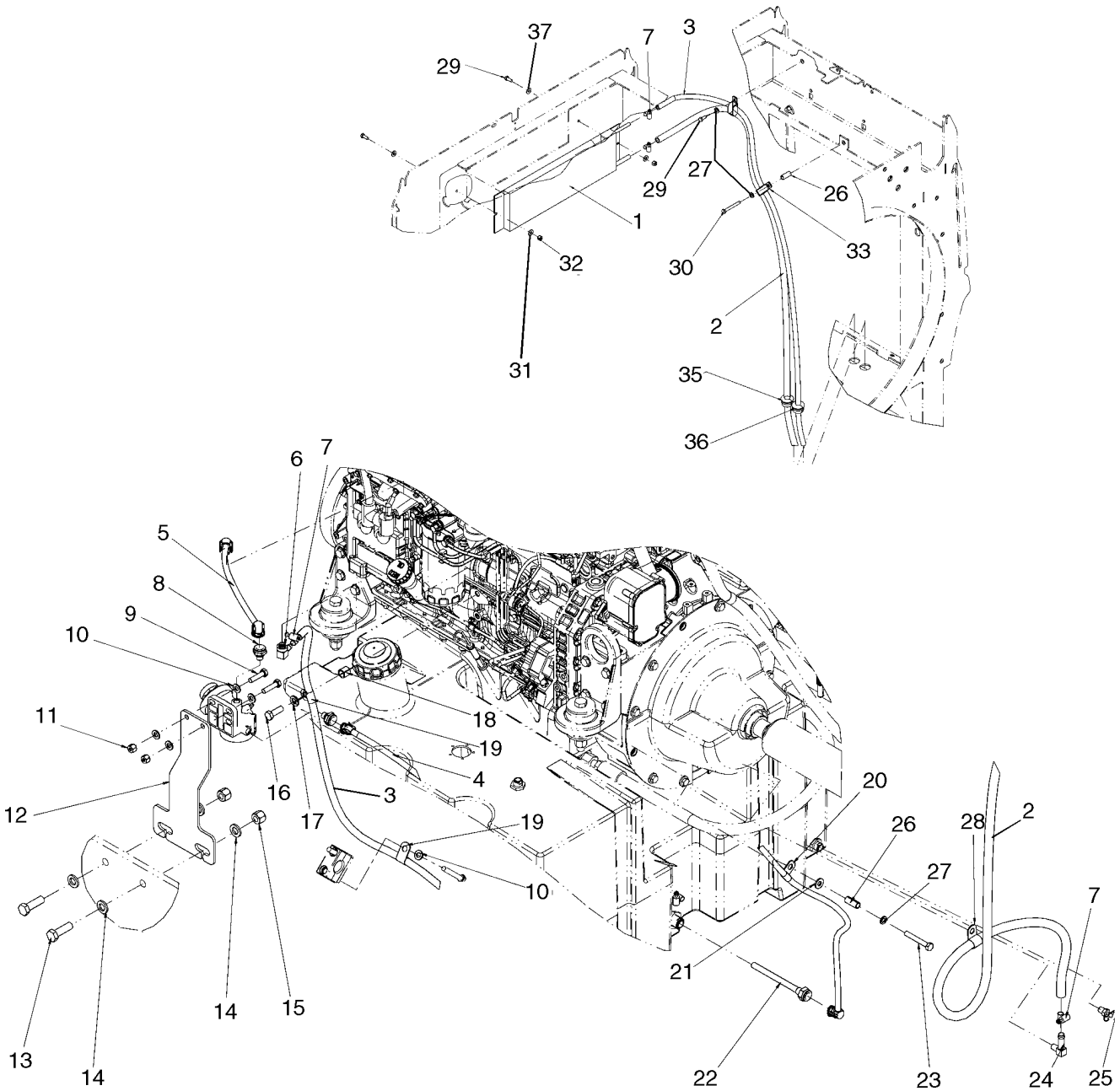

**FUEL LINES - COOLER, FUEL**

| REF | FN | PART NUMBER | YR/SN | QTY | DESCRIPTION |
|---|---|---|---|---|---|
| 1 | | 347615A3 | | 1 | COOLER, Fuel |
| 2 | | 87552502 | | 1 | HOSE, Fuel Cooler to Tank; 2744 mm (108 in) |
| 3 | | 87358043 | | 1 | HOSE (METRES), Engine to Fuel Cooler; 2870 mm (113 in) |
| 4 | | 8602538 | | 1 | TUBE ASSY., Tank to Prefilter |
| 5 | | 87525374 | | 1 | TUBE ASSY., Prefilter to Engine |
| 6 | | 87400460 | | 1 | FITTING, 90 Degree |
| 7 | | 214-1406 | | 6 | CLAMP, HOSE, #06, .44/.78 Type F Worm |
| 8 | | 8602542 | | 2 | ADAPTER |
| 9 | | 827-10040 | | 2 | BOLT, Hex, M10 x 40, 10.9, Full Thd |
| 10 | | 896-11010 | | 5 | WASHER, M10 x 21.5 x 2.5, HT |
| 11 | | 832-10410 | | 2 | NUT, LOCK, M10 x 1.5, Cl 8 |
| 12 | | 87323827 | | 1 | BRACKET, Pre-Filter Mounting |
| 13 | | 627-16050 | | 2 | BOLT, Hex, M16 x 50, 10.9 |
| 14 | | 896-11016 | | 4 | WASHER, M17.5 x 30 x 4, HT |
| 15 | | 832-10416 | | 2 | NUT, LOCK, M16 x 2, Cl 8 |
| 16 | | 627-12035 | | 1 | BOLT, Hex, M12 x 35, 10.9 |
| 17 | | 896-11012 | | 1 | WASHER, M13.5 x 24.5 x 3, HT |
| 18 | | 87307825 | | 1 | SPACER |
| 19 | | 515-25159 | | 2 | CLAMP, 5/8", Insul, 1/2" Bolt |
| 20 | | 515-25127 | | 1 | CLAMP, 1/2", Insul, 1/2" Bolt |
| 21 | | 896-15010 | | 1 | WASHER, M10 x 24.5 x 3, HT |
| 22 | | 8602537 | | 1 | TUBE, Tank Draw |
| 23 | | 827-10070 | | 1 | BOLT, Hex, M10 x 70, 10.9 |
| 24 | | 217-372 | | 1 | FITTING, 90º, 1/2" Hose x 1/4" NPTF Beaded |
| 25 | | 217-92 | | 1 | COCK, DRAIN |
| 26 | | L126936 | | 2 | SPACER |
| 27 | | 892-11010 | | 3 | WASHER, LOCK, M10 |
| 28 | | 515-25190 | | 1 | CLAMP, 3/4", Insul, 1/2" Bolt |
| 29 | | 627-8020 | | 3 | BOLT, Hex, M8 x 20, 10.9 |
| 30 | | 827-8070 | | 1 | BOLT, Hex, M8 x 70, 10.9 |
| 31 | | 627-8025 | | 1 | BOLT, Hex, M8 x 25, 10.9 |
| 32 | | 832-10408 | | 2 | NUT, LOCK, M8 x 1.25, Cl 8 |
| 33 | | L101181 | | 2 | CLAMP |
| 35 | | 198826C1 | | 1 | GROMMET |

**FUEL LINES - COOLER, FUEL**

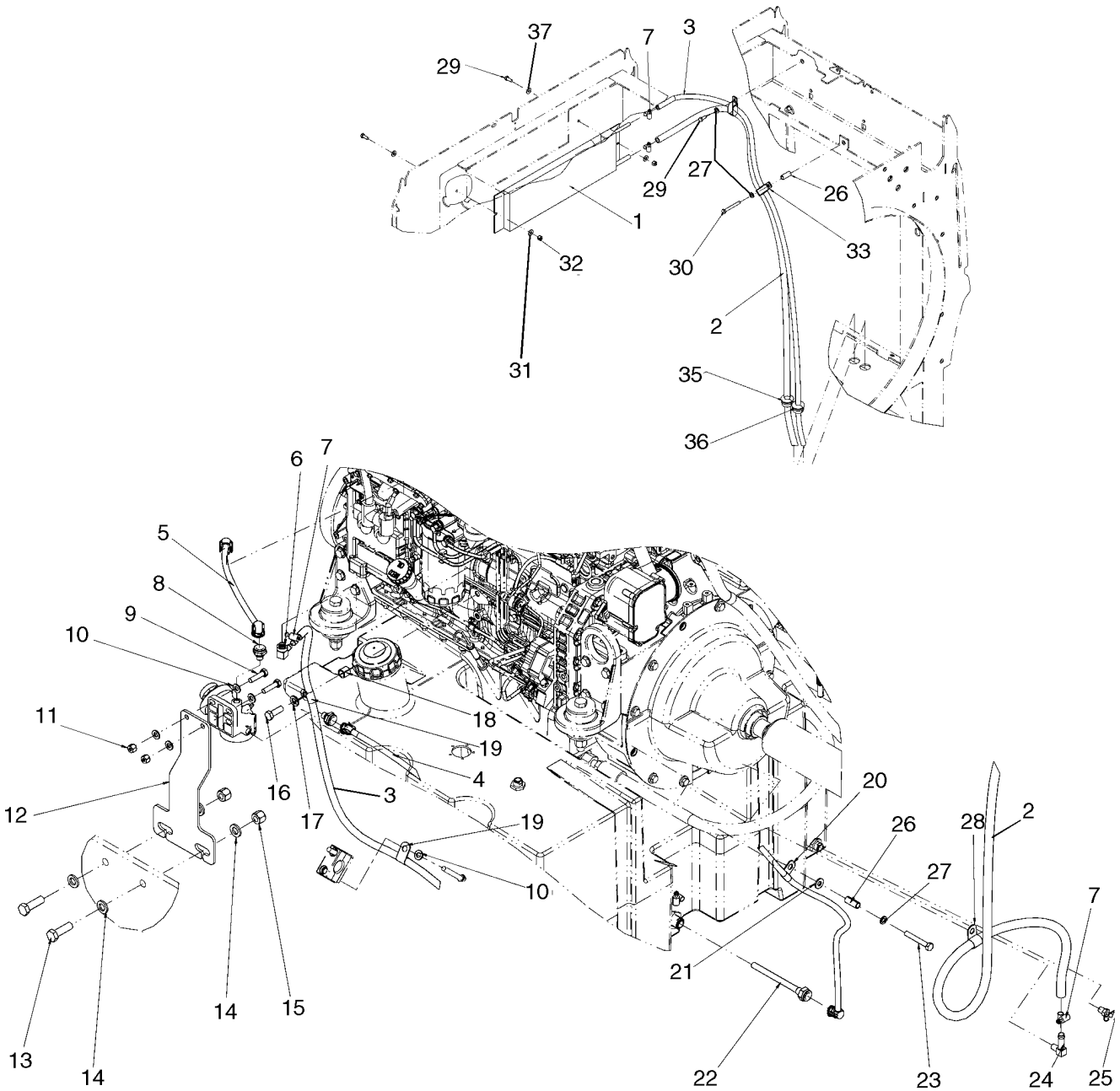


BS07D396

**FUEL LINES - COOLER, FUEL**

| REF | FN | PART NUMBER | YR/SN | QTY | DESCRIPTION |
|---|---|---|---|---|---|
| 36 | | 198825C1 | | 1 | GROMMET |
| 37 | | 895-15008 | | 5 | WASHER, M8 x 20 x 1.6 |

**FILTER, FUEL - WATER SEPERATOR**

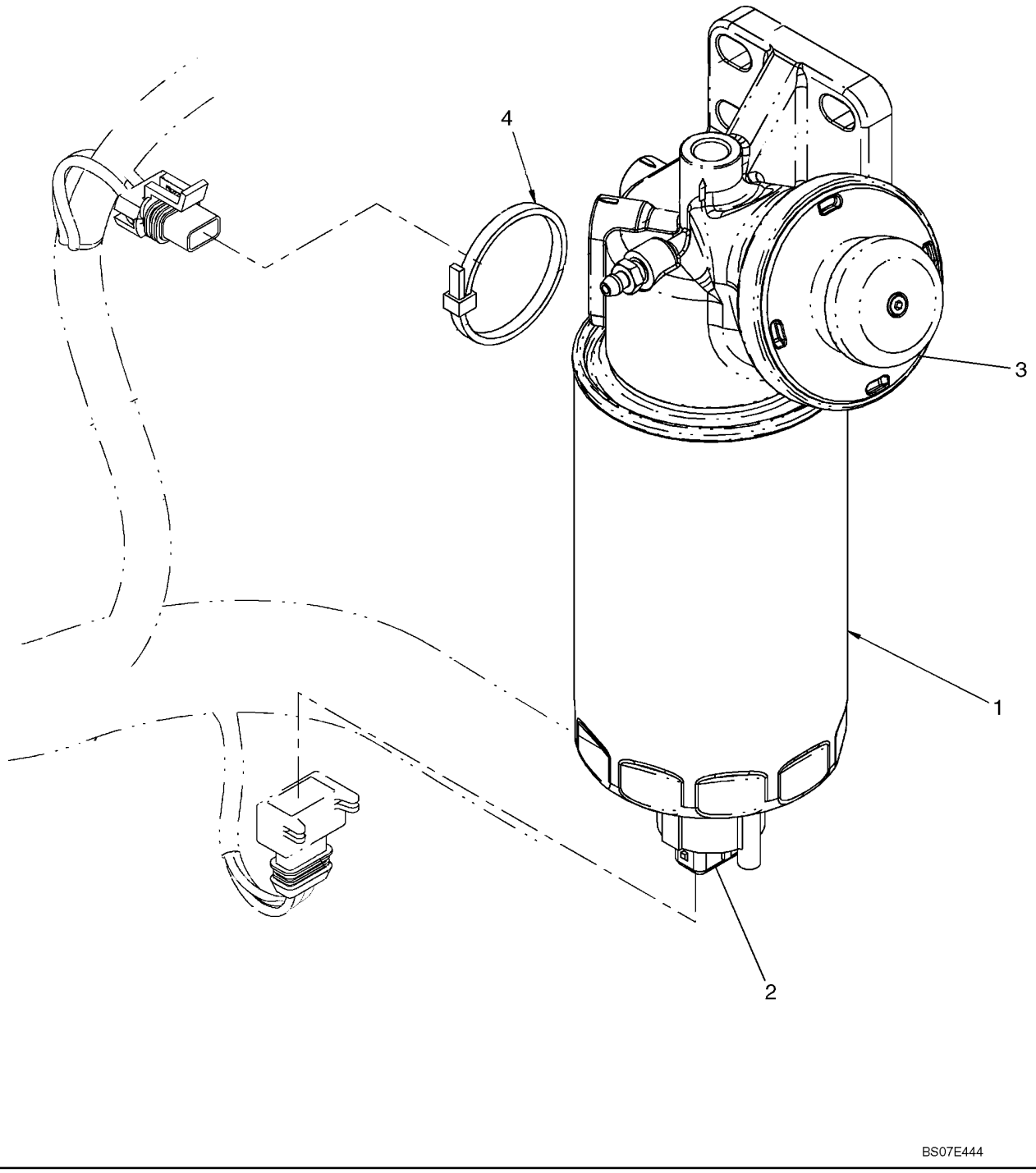

**FILTER, FUEL - WATER SEPERATOR**

| REF | FN | PART NUMBER | YR/SN | QTY | DESCRIPTION |
|---|---|---|---|---|---|
| | | {87519285} | | 1 | FILTER ASSY. Without Heater, Incl. Refs. 1 - 3 |
| | | 87393456 | | 1 | FILTER ASSY., With Heater, Incl. Refs. 1 - 3 |
| 1 | | 87435526 | | 1 | FILTER, FUEL, Cartridge |
| 2 | | 87519307 | | 1 | SENSOR, Water |
| 3 | | NSS | | 1 | NOT SERVICED SEPARATELY, Filter Head |
| 4 | | L11541 | | 1 | STRAP, Wire Tie; If Used |

**FILTER, FUEL**

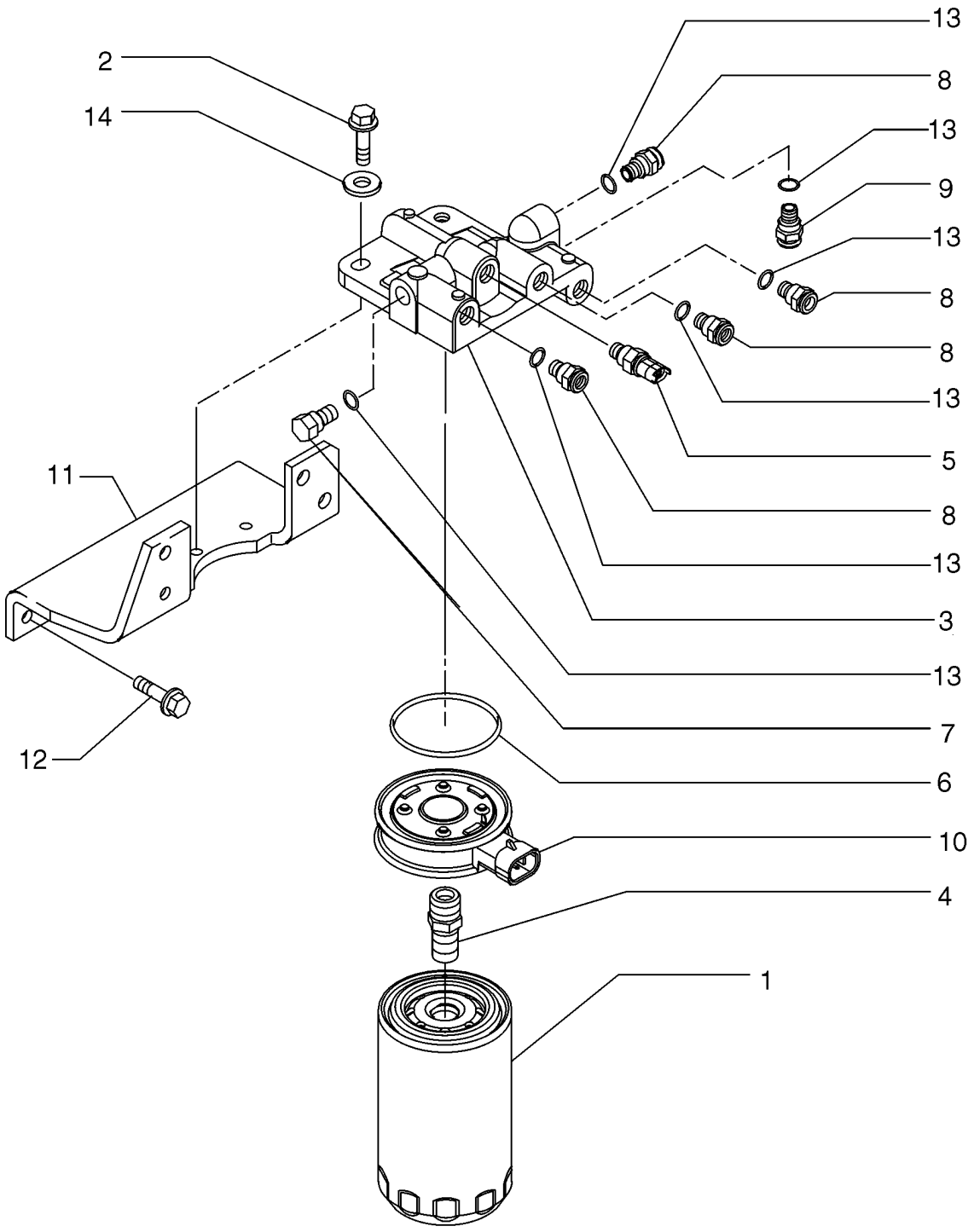

**FILTER, FUEL**

| REF | FN | PART NUMBER | YR/SN | QTY | DESCRIPTION |
|---|---|---|---|---|---|
| | | 87579400 | | 1 | ENGINE, 6 Cylinder 6.7L Turbo, Tier III; Includes Figures 02-09 - 02-13, 02-15 - 02-41, 03-05 - 03-11; Incl. Refs. 1 - 14 |
| 1 | | 87803200 | | 1 | FILTER, FUEL |
| 2 | | 2830733 | | 2 | SCREW, M8 x 25 |
| | | 2852436 | | 1 | HEAD, ASSY. With Heater, Incl. Refs. 3 - 10, 13 |
| 3 | | NSS | | 1 | NOT SERVICED SEPARATELY, Fuel Filter Head |
| 4 | | 4898758 | | 1 | CONNECTOR, HYD. |
| 5 | | 4897224 | | 1 | SENSOR, Temperature |
| 6 | | 4898876 | | 1 | O-RING |
| 7 | | 4893464 | | 1 | PLUG, Threaded |
| 8 | | 4890964 | | 4 | FITTING |
| 9 | | 4896543 | | 1 | FITTING |
| 10 | | 4897838 | | 1 | HEATER |
| 11 | | 2852793 | | 1 | BRACKET, Fuel Filter Head Mounting |
| 12 | | 2852791 | | 4 | SCREW, M8 x 20 |
| 13 | | 4894721 | | 6 | WASHER, SEALING |
| 14 | | 2830711 | | 2 | WASHER |

**FUEL TANK FILLER - SENDER**

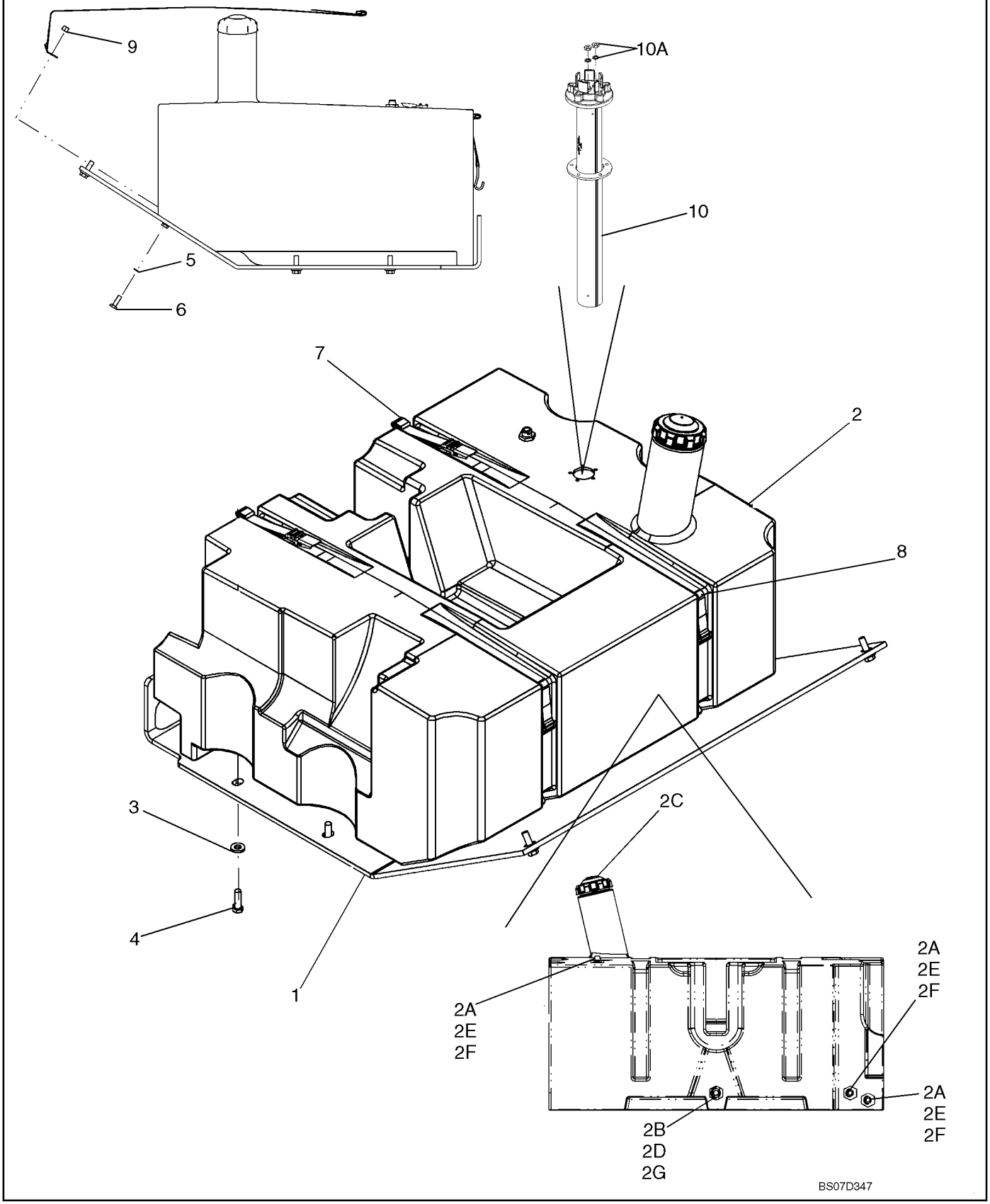

**FUEL TANK FILLER - SENDER**

| REF | FN | PART NUMBER | YR/SN | QTY | DESCRIPTION |
|---|---|---|---|---|---|
| 1 | | 87550115 | | 1 | PLATE, Fuel Tank |
| 2 | | 8500909 | | 1 | FUEL TANK, Incl. Refs. 2A - 2G |
| 2A | | 238-5210 | | 3 | O-RING, -210, 70 Duro, .734" ID x .139" Thk |
| 2B | | 238-5214 | | 1 | O-RING, -214, 70 Duro, .984" ID x .139" Thk |
| 2C | | 8604443 | | 1 | CAP |
| 2D | | 87435224 | | 1 | FITTING |
| 2E | | 87435505 | | 3 | FITTING |
| 2F | | 1251791C1 | | 3 | NUT |
| 2G | | 282709A1 | | 1 | NUT |
| 3 | | 896-15012 | | 6 | WASHER, M12 x 28.5 x 4, HT |
| 4 | | 627-12040 | | 6 | BOLT, Hex, M12 x 40, 10.9, Full Thd |
| 5 | | 627-10030 | | 2 | BOLT, Hex, M10 x 30, 10.9, Full Thd |
| 6 | | 627-10030 | | 2 | BOLT, Hex, M10 x 30, 10.9, Full Thd |
| 7 | | 366905A1 | | 2 | BELT, 476 mm (18 - 3/4in) |
| 8 | | 366904A1 | | 2 | BELT, 1342 mm (52 - 13/16in) |
| 9 | | 832-10410 | | 2 | NUT, LOCK, M10 x 1.5, Cl 8 |
| 10 | | 87542710 | | 1 | SENDER UNIT, Fuel Level |
| 10A | | 87617083 | | 1 | KIT, Nut Pack |

**FUEL TANK - BREATHER**

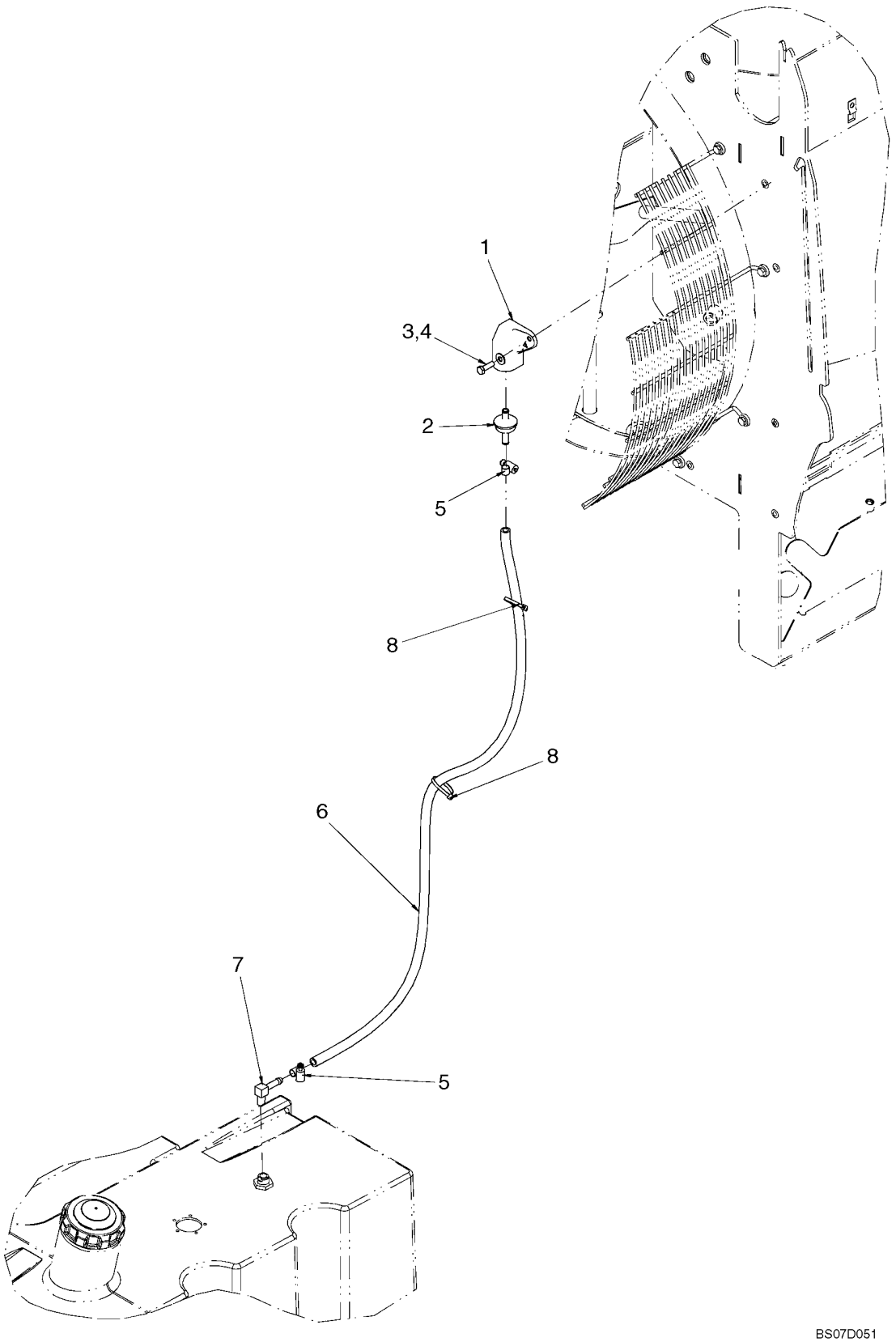

**FUEL TANK - BREATHER**

| REF | FN | PART NUMBER | YR/SN | QTY | DESCRIPTION |
|---|---|---|---|---|---|
| 1 | | 186814A1 | | 1 | CAP, Fuel Tank Vent |
| 2 | | T103750 | | 1 | VALVE, SHUT-OFF |
| 3 | | 895-15008 | | 5 | WASHER, M8 x 20 x 1.6 |
| 4 | | 627-8025 | | 1 | BOLT, Hex, M8 x 25, 10.9 |
| 5 | | 214-1406 | | 6 | CLAMP, HOSE, #06, .44/.78 Type F Worm |
| 6 | | 87549248 | | 1 | HOSE (METRES), Fuel Tank Breather; 1300 mm (51 - 3/8 in) |
| 7 | | 217-132 | | 1 | ELBOW, 90°, 3/8" Hose x 1/4" NPTF Beaded |
| 8 | | L11541 | | 2 | STRAP |

**FUEL INJECTION PUMP**

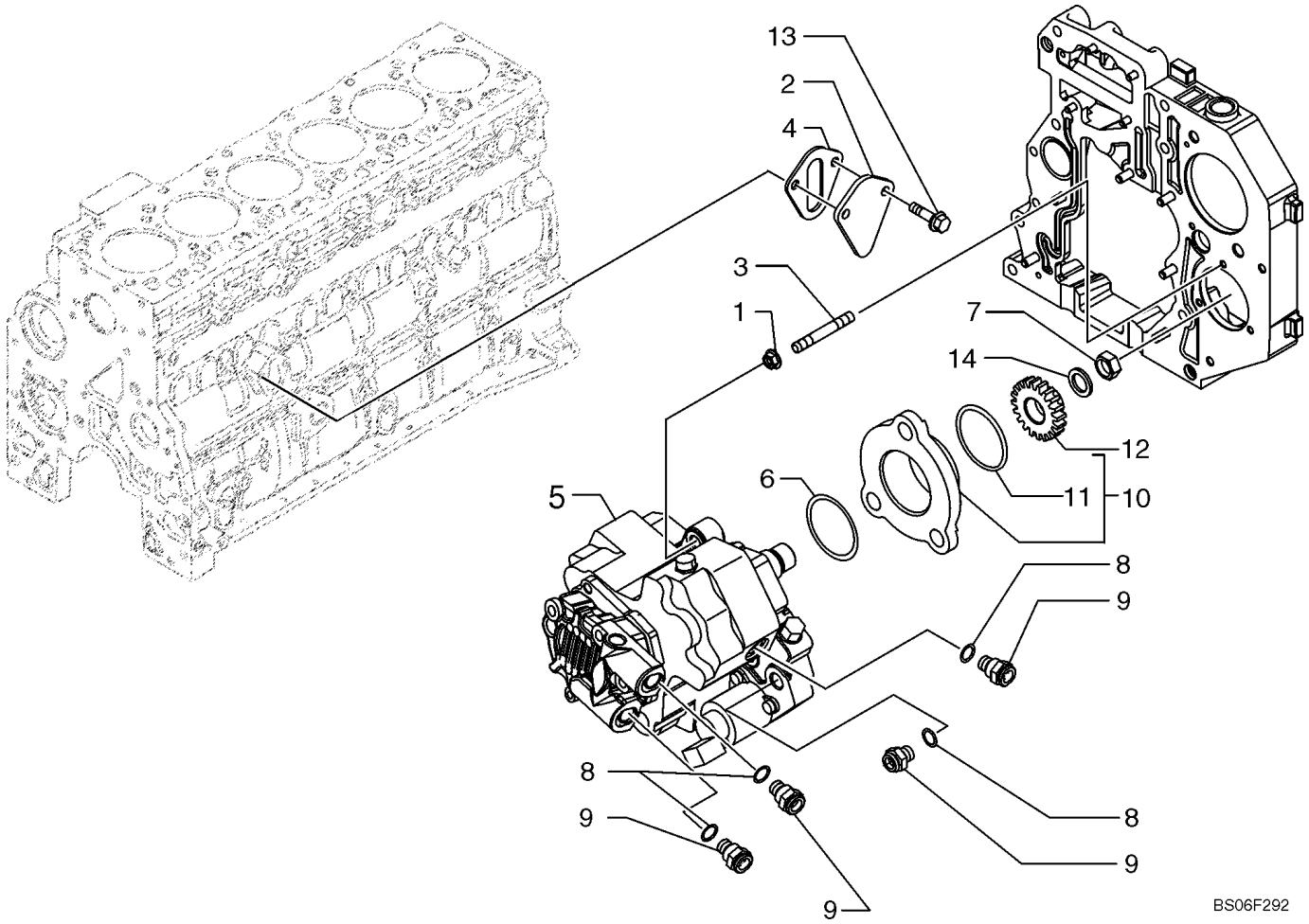

**FUEL INJECTION PUMP**

| REF | FN | PART NUMBER | YR/SN | QTY | DESCRIPTION |
|---|---|---|---|---|---|
| | | 87579400 | | 1 | ENGINE, 6 Cylinder 6.7L Turbo, Tier III; Includes Figures 02-09 - 02-13, 02-15 - 02-41, 03-05 - 03-11; Incl. Refs. 1 - 14 |
| 1 | | 4899003 | | 3 | NUT, M8 |
| 2 | | 4896952 | | 1 | COVER |
| 3 | | 2852488 | | 3 | STUD, M8 x 1.25 x 50 |
| 4 | | 4890700 | | 1 | GASKET |
| | | 4898921 | | 1 | PUMP, FUEL, Incl. Refs. 5 - 9, 14 |
| 5 | | NSS | | 1 | NOT SERVICED SEPARATELY, FUEL PUMP |
| 6 | | 4890088 | | 1 | O-RING |
| 7 | | 4890634 | | 1 | NUT, M18X1.5 |
| 8 | | 4891385 | | 4 | GASKET |
| 9 | | 4893962 | | 4 | COUPLING, QUICK, MALE |
| 10 | | 2852804 | | 1 | HUB, ASSY. Incl. Ref. 11 |
| 11 | | 2852805 | | 1 | O-RING |
| 12 | | 4893389 | | 1 | GEAR, DRIVEN |
| 13 | | 2852234 | | 2 | SCREW, Hex Flg, M8 x 1.25 x 20 |
| 14 | | 4890635 | | 1 | WASHER |

**FUEL INJECTION SYSTEM**

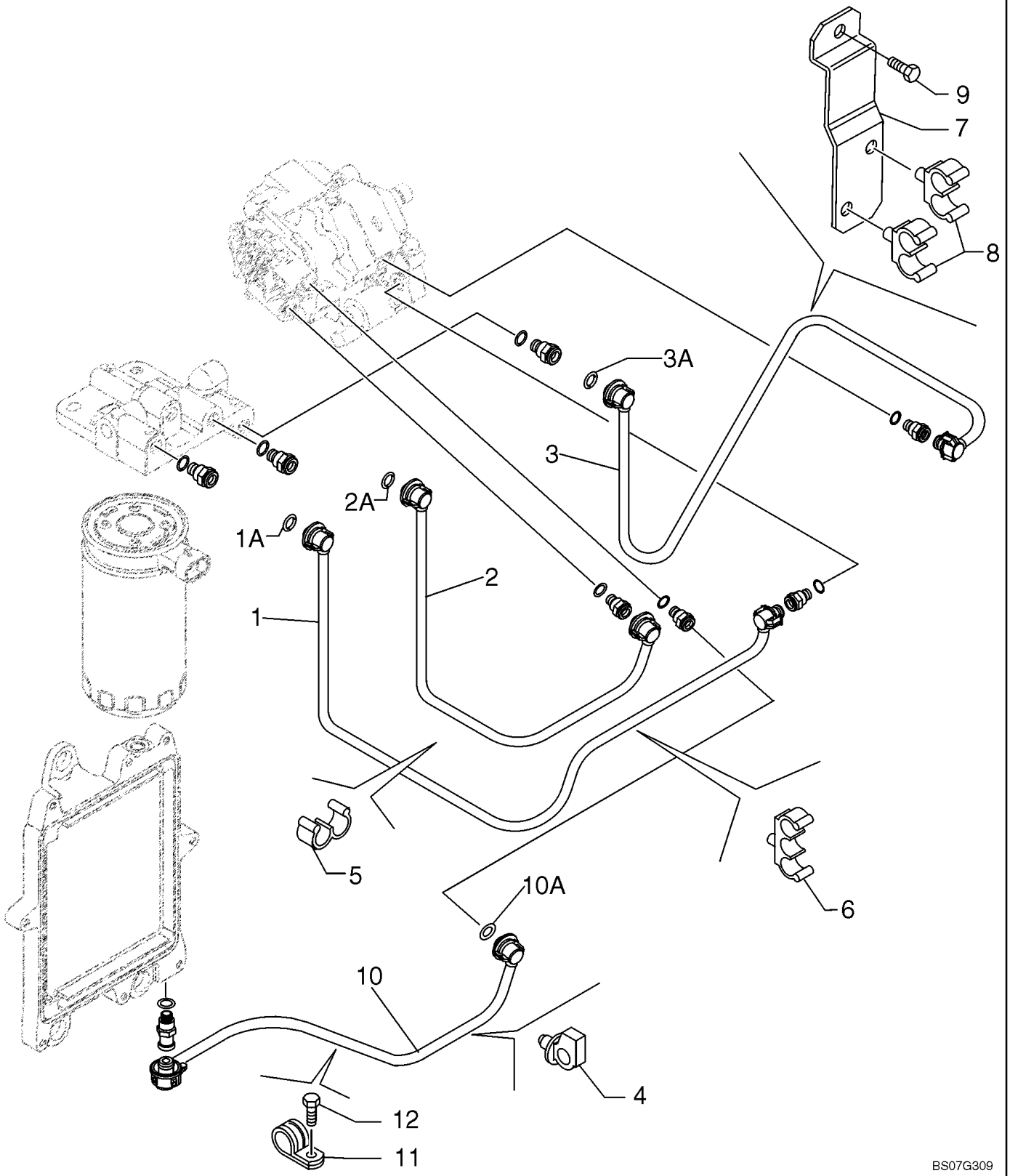

**FUEL INJECTION SYSTEM**

| REF | FN | PART NUMBER | YR/SN | QTY | DESCRIPTION |
|---|---|---|---|---|---|
| | | 87579400 | | 1 | ENGINE, 6 Cylinder 6.7L Turbo, Tier III; Includes Figures 02-09 - 02-13, 02-15 - 02-41, 03-05 - 03-11; Incl. Refs. 1 - 12 |
| 1 | | 2852440 | | 1 | TUBE, RIGID, Fuel Supply, Incl. Ref. 1A |
| 1A | | 4894095 | | 2 | O-RING |
| 2 | | 2852443 | | 1 | TUBE, RIGID, Fuel Supply, Incl. Ref. 2A |
| 2A | | 4894095 | | 2 | O-RING |
| 3 | | 2852446 | | 1 | TUBE, RIGID, Fuel Return, Incl. Ref. 3A |
| 3A | | 4894095 | | 2 | O-RING |
| 4 | | 4896996 | | 1 | CLAMP |
| 5 | | 2852449 | | 2 | CLAMP |
| 6 | | 2852794 | | 1 | CLIP, CABLE |
| 7 | | 2852451 | | 1 | BRACKET, Fuel Plumbing |
| 8 | | 2852452 | | 2 | CLIP, CABLE |
| 9 | | 4897277 | | 1 | SCREW |
| 10 | | 4897817 | | 1 | TUBE, RIGID, Fuel Supply, Incl. Ref. 10A |
| 10A | | 4894095 | | 2 | O-RING |
| 11 | | 4895462 | | 1 | CLAMP |
| 12 | | {76195212} | | 1 | SCREW |

**FUEL INJECTION SYSTEM - INJECTOR**

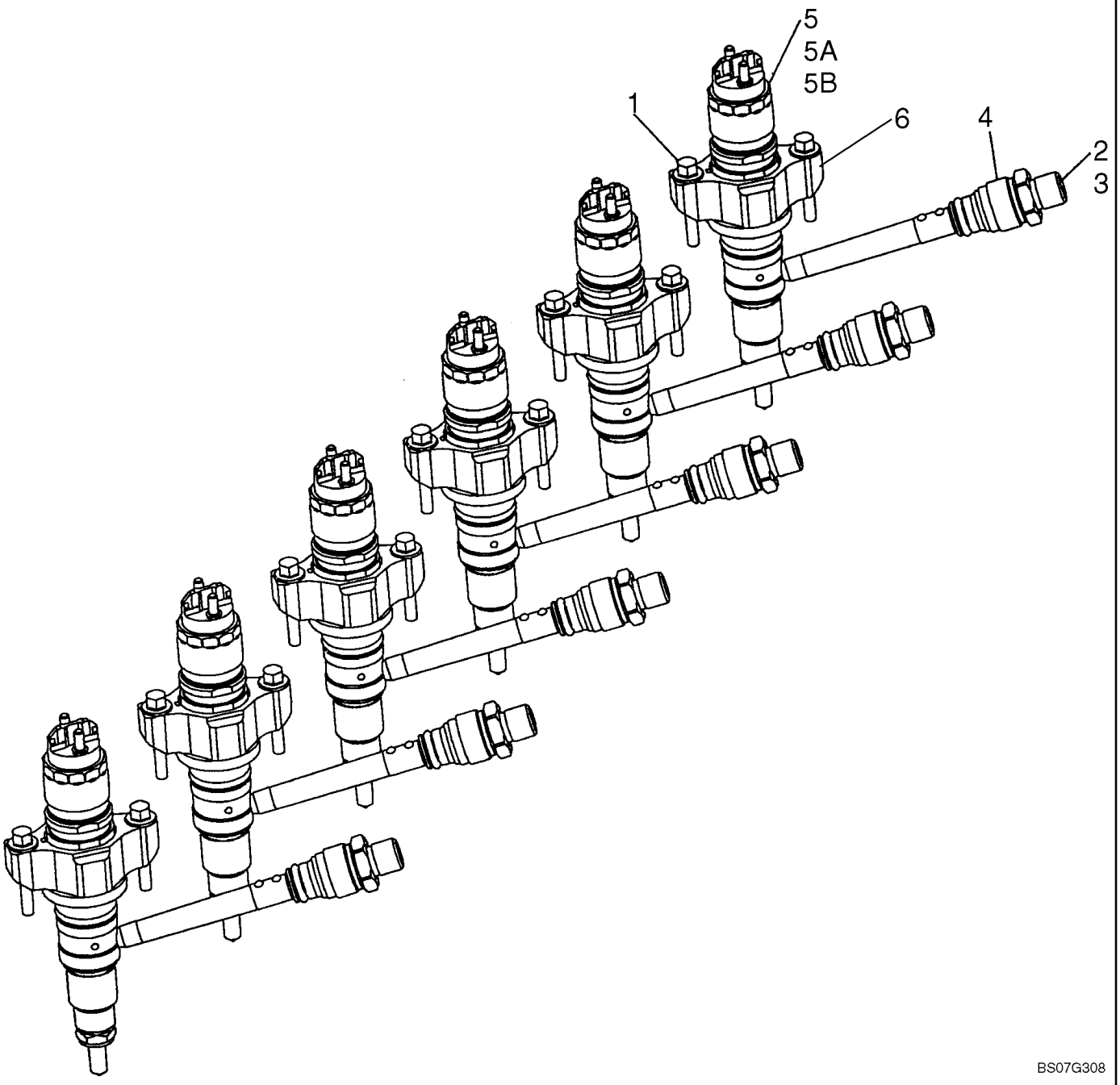

**FUEL INJECTION SYSTEM - INJECTOR**

| REF | FN | PART NUMBER | YR/SN | QTY | DESCRIPTION |
|---|---|---|---|---|---|
| | | 87579400 | | 1 | ENGINE, 6 Cylinder 6.7L Turbo, Tier III; Includes Figures 02-09 - 02-13, 02-15 - 02-41, 03-05 - 03-11; Incl. Refs. 1 - 6 |
| 1 | | 4895483 | | 12 | SCREW, M6 x 35 |
| 2 | | 2854606 | | 6 | FITTING, ASSY. Incl. Ref. 3 |
| 3 | | 4890929 | | 1 | O-RING |
| 4 | | 4893739 | | 6 | NUT, TUBE |
| 5 | | 2854608 | | 6 | INJECTOR, FUEL SYSTEM, Incl. Refs. 5A, 5B |
| 5A | | 4899689 | | 1 | WASHER, SEALING |
| 5B | | 4890926 | | 1 | O-RING, 20.9 ID x 3.0 DIA |
| 6 | | 2854609 | | 6 | BRACKET, Retainer |

**FUEL INJECTION SYSTEM - FUEL, SUPPLY**

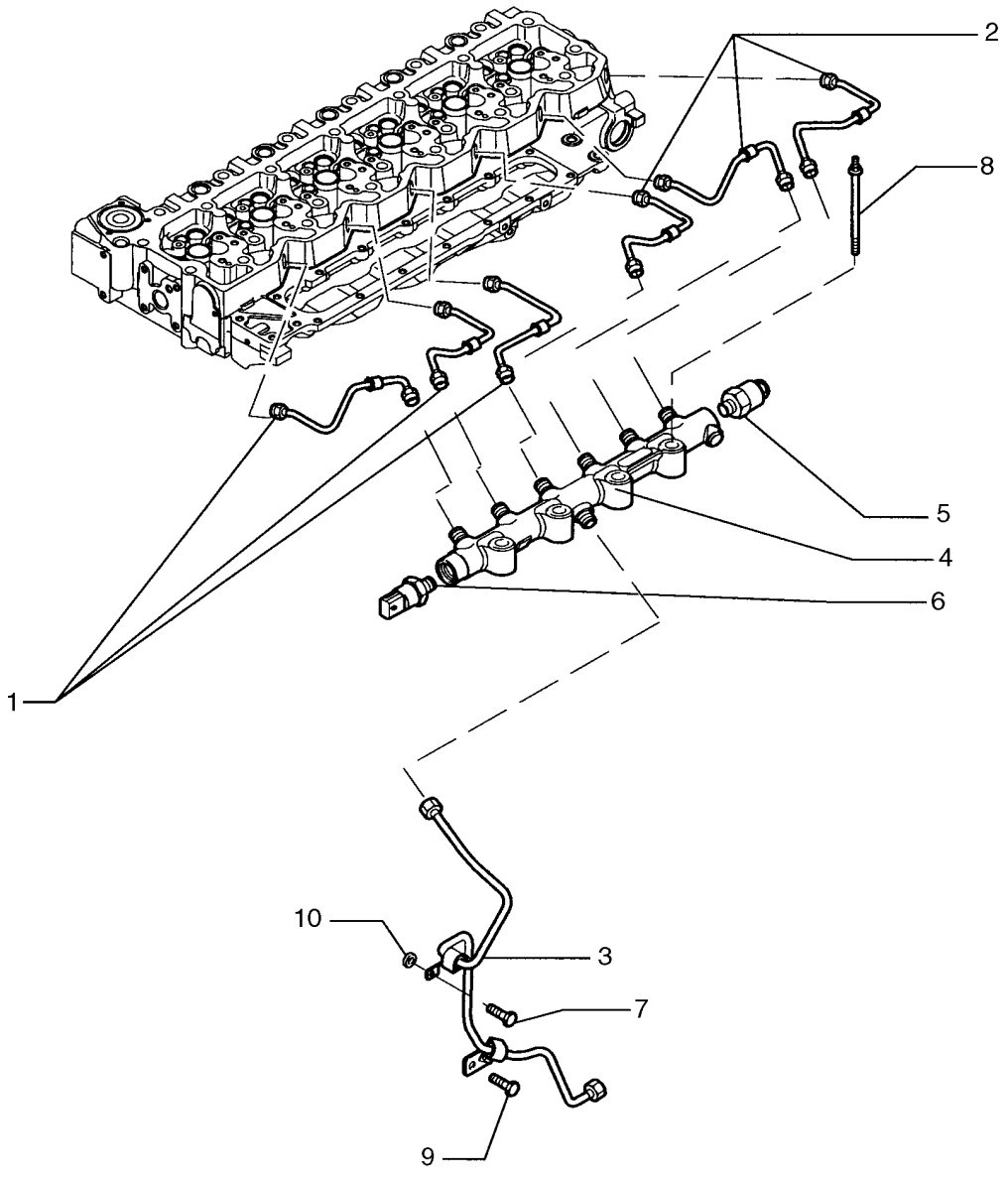


BS07G346

**FUEL INJECTION SYSTEM - FUEL, SUPPLY**

| REF | FN | PART NUMBER | YR/SN | QTY | DESCRIPTION |
|---|---|---|---|---|---|
| | | 87579400 | | 1 | ENGINE, 6 Cylinder 6.7L Turbo, Tier III; Includes Figures 02-09 - 02-13, 02-15 - 02-41, 03-05 - 03-11; Incl. Refs. 1 - 10 |
| 1 | | 2854549 | | 3 | TUBE, RIGID, Fuel Supply |
| 2 | | 2854544 | | 3 | PIPE, Fuel Supply |
| 3 | | 2854552 | | 1 | PIPE, Fuel Supply |
| | | 2854540 | | 1 | MANIFOLD, FUEL ASSY. Incl. Refs. 4 - 6 |
| 4 | | NSS | | 1 | NOT SERVICED SEPARATELY, MANIFOLD, Fuel Rail |
| 5 | | 2854543 | | 1 | VALVE, PRESSURE RELIEF |
| 6 | | 2854542 | | 1 | SENSOR, Fuel Supply Pressure |
| 7 | | 4899020 | | 1 | SCREW, Hex Flg, M8 x 1.25 x 20 |
| 8 | | 2853537 | | 4 | BOLT |
| 9 | | 4896884 | | 1 | SCREW, Hex Flg, M8 x 1.25 x 16 |
| 10 | | 2852434 | | 1 | SPACER |

**FUEL INJECTION SYSTEM - MODULE, ENGINE CONTROL**

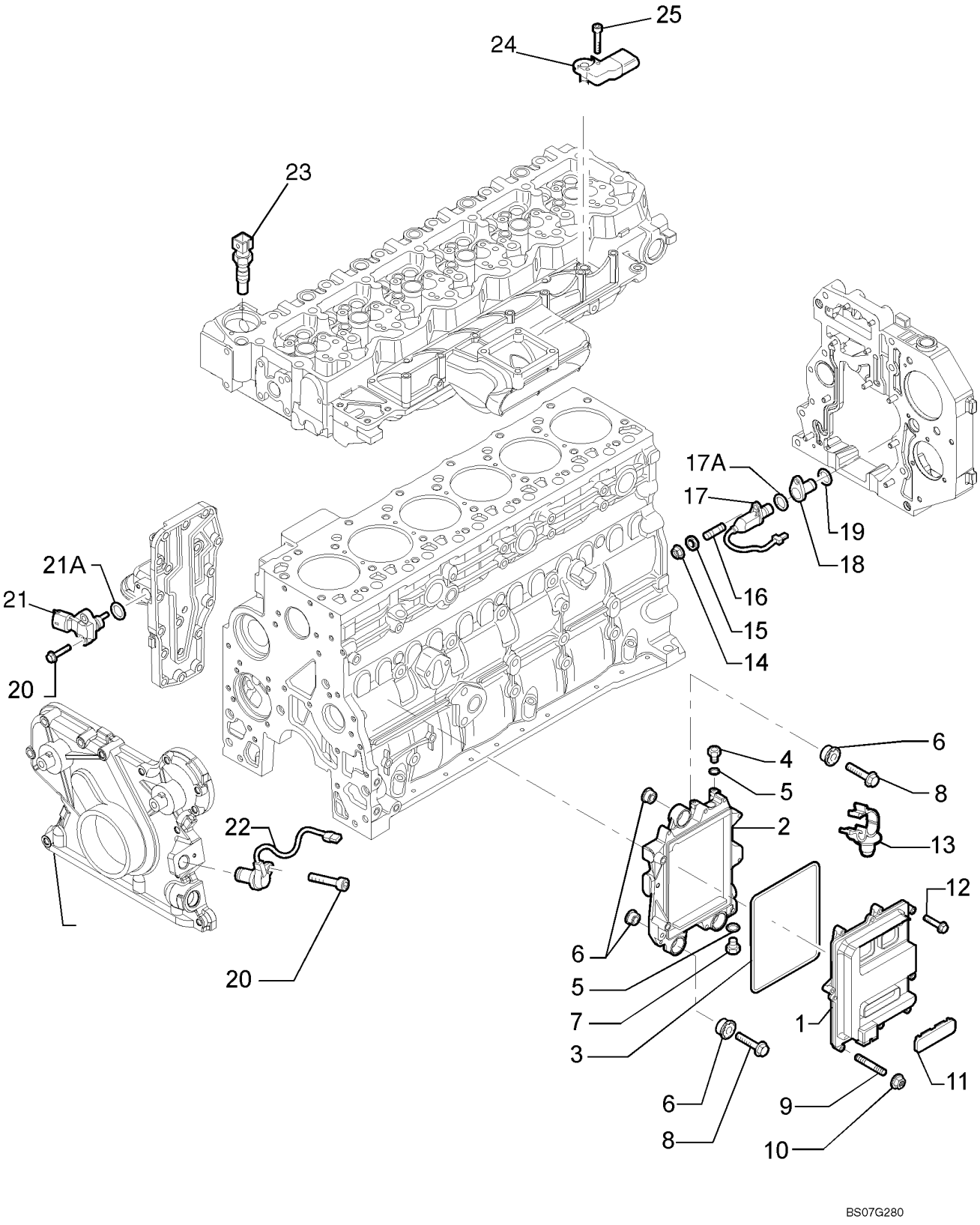

**FUEL INJECTION SYSTEM - MODULE, ENGINE CONTROL**

| REF | FN | PART NUMBER | YR/SN | QTY | DESCRIPTION |
|---|---|---|---|---|---|
| | | 87579400 | | 1 | ENGINE, 6 Cylinder 6.7L Turbo, Tier III; Includes Figures 02-09 - 02-13, 02-15 - 02-41, 03-05 - 03-11; Incl. Refs. 1 - 25 |
| 1 | | 2854594 | | 1 | ELECTRONIC UNIT, CONTROL |
| | | 2854595 | | 1 | BRACKET, ASSY. Incl. Refs. 2 - 7 |
| 2 | | 2854596 | | 1 | BRACKET, Support, Electronic Unit |
| 3 | | 2854079 | | 1 | GASKET |
| 4 | | 4896542 | | 1 | CONNECTOR, HYD., M12X1.5 |
| 5 | | 2854292 | | 2 | GASKET |
| 6 | | 2855150 | | 6 | INSULATOR BLOCK, Stop |
| 7 | | 4890964 | | 1 | FITTING |
| 8 | | 4899078 | | 3 | SCREW, Hex Flg, M8 x 1.25 x 45 |
| 9 | | 2854593 | | 1 | STUD |
| 10 | | 4899057 | | 1 | NUT |
| 11 | | 2852825 | | 1 | PLASTIC PLUG |
| 12 | | 2852818 | | 7 | SCREW, M6X30 |
| 13 | | 2852486 | | 2 | CLIP, CABLE |
| 14 | | 2854282 | | 1 | NUT, M6X1 |
| 15 | | 4899124 | | 1 | WASHER |
| 16 | | 4895157 | | 1 | STUD |
| 17 | | 4890190 | | 1 | SENDER UNIT, Speed, Incl. Ref. 17A |
| 17A | | 2852820 | | 1 | O-RING, 17.17 x 1.78MM |
| 18 | | 4892255 | | 1 | HOUSING, Sender Unit |
| 19 | | 2852817 | | 1 | O-RING, 23.5 x 1.7MM |
| 20 | | 4899110 | | 3 | SCREW, Hex Flg, M6 x 1 x 20 |
| 21 | | 4890193 | | 1 | SENDER UNIT, Temperature, Incl. Ref, 21A |
| 21A | | 4895477 | | 1 | O-RING |
| 22 | | 4890189 | | 1 | SENDER UNIT, Speed |
| 23 | | 4897224 | | 1 | SENSOR, Temperature |
| 24 | | 2852821 | | 1 | SENSOR, ECM |
| 25 | | 4895817 | | 1 | SCREW, Hex Flg, M6 x 1.0 x 20 |

**FUEL INJECTION SYSTEM - HARNESS, ENGINE**

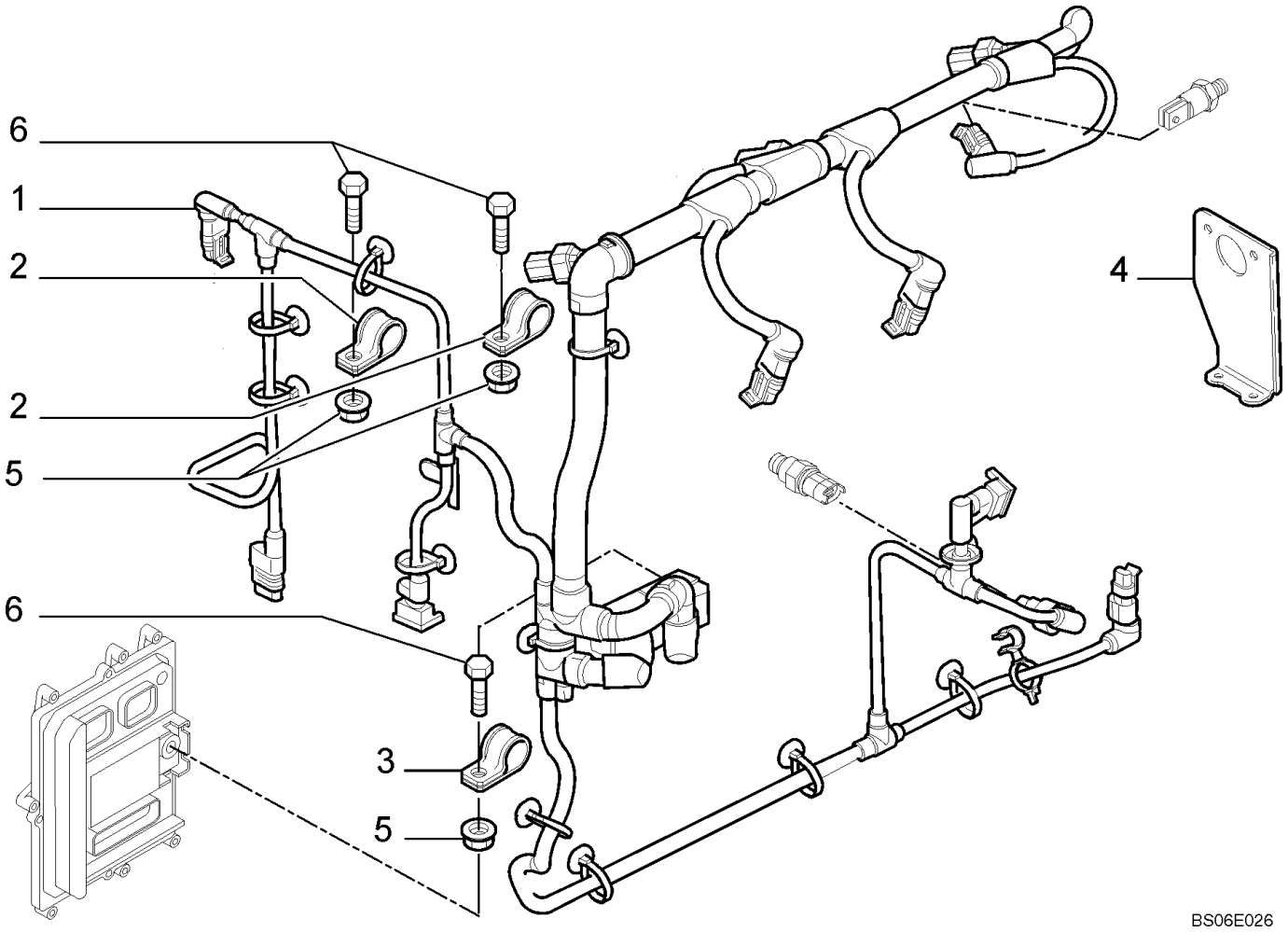

**FUEL INJECTION SYSTEM - HARNESS, ENGINE**

| REF | FN | PART NUMBER | YR/SN | QTY | DESCRIPTION |
|---|---|---|---|---|---|
| | | 87579400 | | 1 | ENGINE, 6 Cylinder 6.7L Turbo, Tier III; Includes Figures 02-09 - 02-13, 02-15 - 02-41, 03-05 - 03-11; Incl. Refs. 1 - 6 |
| 1 | | 2854598 | | 1 | HARNESS, WIRE, Engine Control |
| 2 | | 2852500 | | 2 | COLLAR, RETAINER |
| 3 | | 4899815 | | 1 | COLLAR, RETAINER |
| 4 | | 2854599 | | 1 | BRACKET, Wiring Harness |
| 5 | | 2852484 | | 3 | NUT |
| 6 | | 2854600 | | 3 | SCREW |

**FUEL INJECTION SYSTEM - DRAIN LINE**

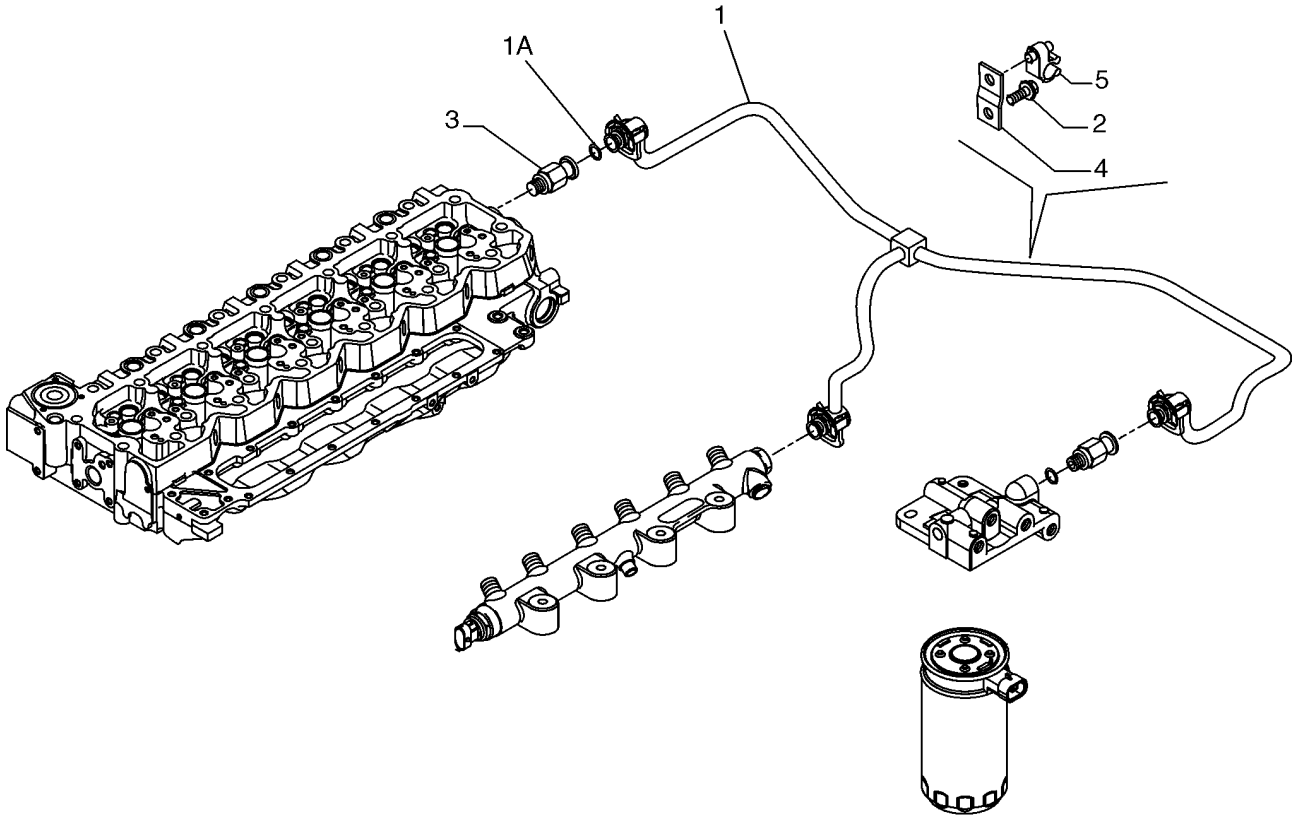


BS07G347

**FUEL INJECTION SYSTEM - DRAIN LINE**

| REF | FN | PART NUMBER | YR/SN | QTY | DESCRIPTION |
|---|---|---|---|---|---|
| | | 87579400 | | 1 | ENGINE, Incl. Refs. 1 - 5, Also Incl. Parts On Figures |
| 1 | | 2855125 | | 1 | PIPE, Fuel Return, Incl. Ref. 1A |
| 1A | | 4894095 | | 3 | O-RING |
| 2 | | 2852100 | | 1 | SCREW, M8 x 16 |
| 3 | | 4896329 | | 1 | VALVE, PRESSURE RELIEF |
| 4 | | 2852457 | | 1 | COLLAR, RETAINER |
| 5 | | 2852458 | | 1 | CLAMP, Cable |

## NOTES

# SECTION INDEX
# Electrical System


| | |
|---|---|
| 04-01 | STARTER |
| 04-02 | ALTERNATOR ASSY |
| 04-02A | ALTERNATOR - MOUNTING WITH AIR CONDITIONING |
| 04-02B | ALTERNATOR - MOUNTING WITHOUT AIR CONDITIONING |
| 04-03 | HARNESS, FRONT - Z-BAR |
| 04-03A | HARNESS, FRONT - XT |
| 04-04 | HARNESS - PANEL, CONTROL |
| 04-05 | HARNESS, ENGINE |
| 04-06 | HARNESS, ENGINE - THROTTLE CONTROL |
| 04-07 | HARNESS, ENGINE - FUSES AND RELAYS |
| 04-08 | HARNESS - CAB ROOF |
| 04-09 | HARNESS, HOOD - ALARM, BACKUP |
| 04-10 | HARNESS, TRANSMISSION |
| 04-11 | HARNESS - GRID HEATER |
| 04-11A | GRID HEATER |
| 04-12 | HORN, FRONT |
| 04-13 | PANEL, CONTROL - SWITCHES |
| 04-14 | PANEL, CONTROL - FUSE AND RELAY MOUNTING |
| 04-15 | ELECTRICAL - STEERING COLUMN / INSTRUMENT CLUSTER |
| 04-16 | ELECTRICAL - TRANSMISSION CONTROL |
| 04-17 | ELECTRICAL - STEERING, AUXILIARY |
| 04-18 | MOUNTING - LAMPS, FRONT |
| 04-19 | LAMP ASSY - LAMPS, FRONT |
| 04-20 | MOUNTING - LAMPS, REAR COMBINATION |
| 04-21 | CAB - WORK LAMPS |
| 04-22 | BEACON ASSY, ROTATING - MOUNTING |
| 04-23 | CAB - WIPER, FRONT |
| 04-23A | CAB - WIPER, REAR |
| 04-24 | RADIO - 12 VOLT |
| 04-24A | RADIO - 12 VOLT INSTALLATION |
| 04-25 | BATTERY MOUNTING |
| 04-25A | BATTERY MOUNTING - HEAVY DUTY |
| 04-26 | BATTERY - CABLES |
| 04-27 | LICENSE PLATE LIGHT |
| 04-28 | WINDSHIELD WASHER MOUNTING |

**STARTER**

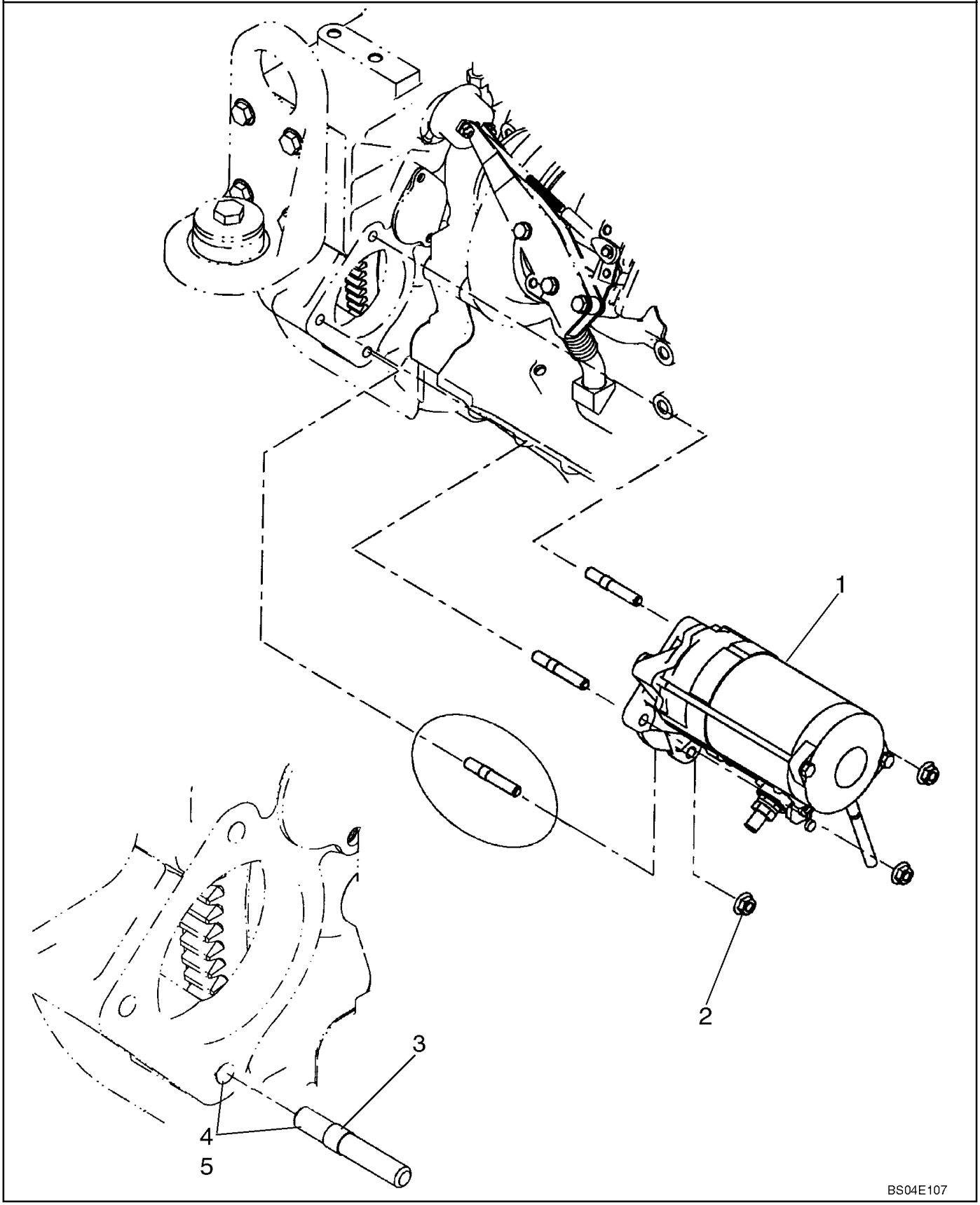

**STARTER**

| REF | FN | PART NUMBER | YR/SN | QTY | DESCRIPTION |
|---|---|---|---|---|---|
| 1 | | 8605784 | | 1 | MOTOR, STARTER, Denso, No Component Parts Available At Time Of Printing |
| 2 | | 829-2310 | | 3 | NUT, M10 x 1.5, Flg, Cl 10, M10 |
| 3 | | 2852476 | | 3 | STUD, Starter; 10mm |
| 4 | | 345-62 | | AR | LOCTITE, 747 |
| 5 | | 345-75 | | AR | LOCTITE, 271 Thread Adhesive |

**ALTERNATOR ASSY**

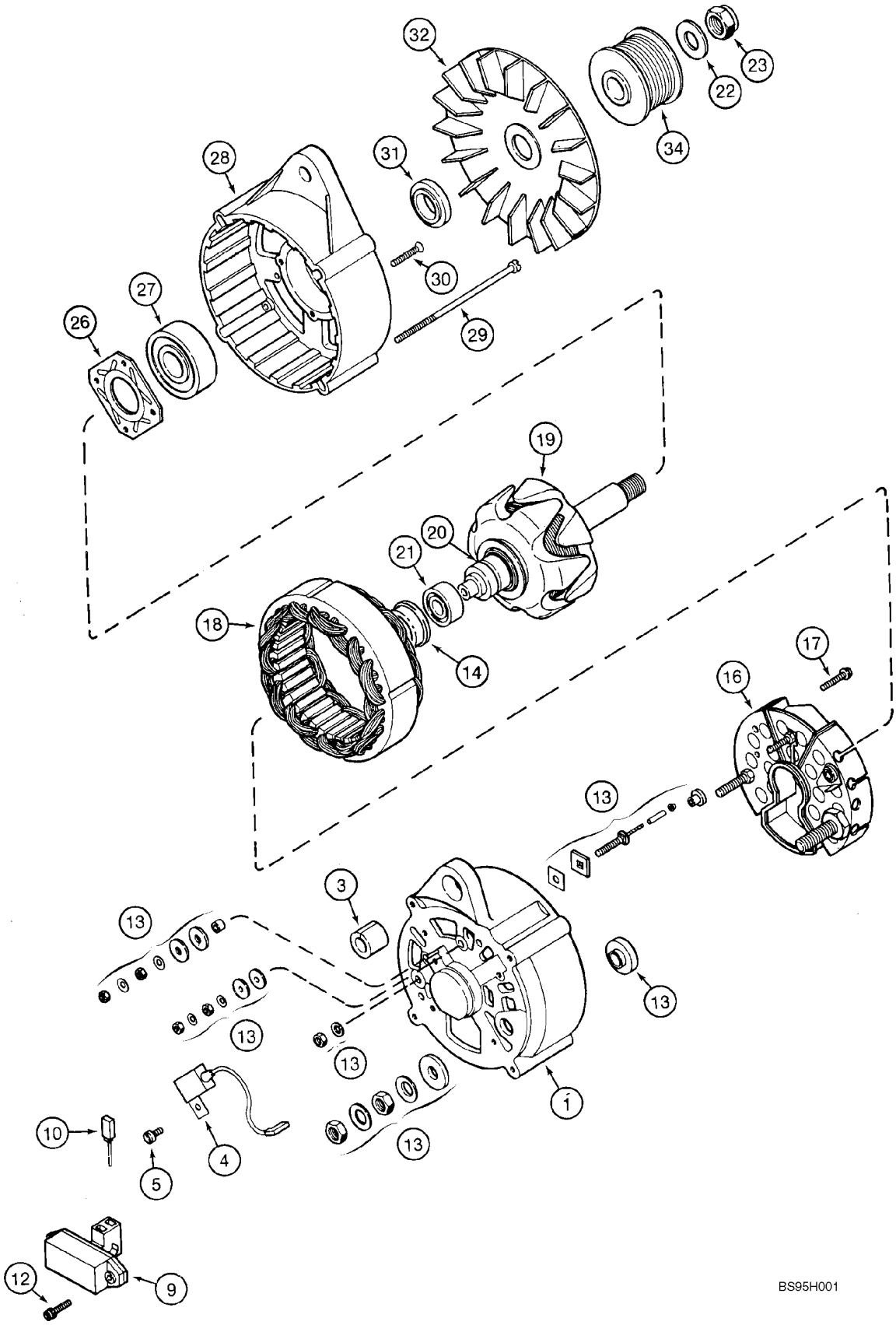

**ALTERNATOR ASSY**

| REF | FN | PART NUMBER | YR/SN | QTY | DESCRIPTION |
|---|---|---|---|---|---|
| | | 1964860C1 | | 1 | ALTERNATOR, 24V, 65 amp; Incl. Refs. 1 - 32 |
| 1 | | 1964731C1 | | 1 | HOUSING |
| 3 | | 1964737C1 | | 1 | BUSHING |
| 4 | | 3079389R1 | | 1 | CAPACITOR |
| 5 | | 1964969C1 | | 1 | BOLT |
| 9 | | 3079392R91 | | 1 | GOVERNOR, Voltage; Incl. 10 |
| 10 | | 1964968C1 | | 1 | BRUSH |
| 12 | | A186194 | | 2 | SCREW, Sltd Truss Hd, M4 x 18, w/LW |
| 13 | | 1964738C1 | | 1 | KIT, REPAIR, Hardware |
| 14 | | 1546477C1 | | 1 | SLEEVE |
| 16 | | 1964965C1 | | 1 | RECTIFIER |
| 17 | | A187504 | | 2 | SCREW |
| 18 | | 1964966C1 | | 1 | STATOR |
| 19 | | 1964964C1 | | 1 | ROTOR |
| 20 | | 3079410R1 | | 1 | RING |
| 21 | | 1964730C1 | | 1 | BEARING, BALL |
| 22 | | 495-21063 | | 1 | WASHER, 9/16" |
| 23 | | 231-46110 | | 1 | NUT, LOCK, 5/8"-18, GB |
| 26 | | 1964727C1 | | 1 | PLATE |
| 27 | | 1964726C1 | | 1 | BEARING, BALL, Drive End |
| 28 | | 1964725C1 | | 1 | HOUSING |
| 29 | | 1964748C1 | | 4 | SCREW, M5 x 132 |
| 30 | | 1964750C1 | | 4 | SCREW, M4 x 30 |
| 31 | | 1964729C1 | | 1 | SPACER |
| 32 | | 1964736C1 | | 1 | FAN |
| 34 | | J918275 | | 1 | PULLEY |

**ALTERNATOR - MOUNTING WITH AIR CONDITIONING**

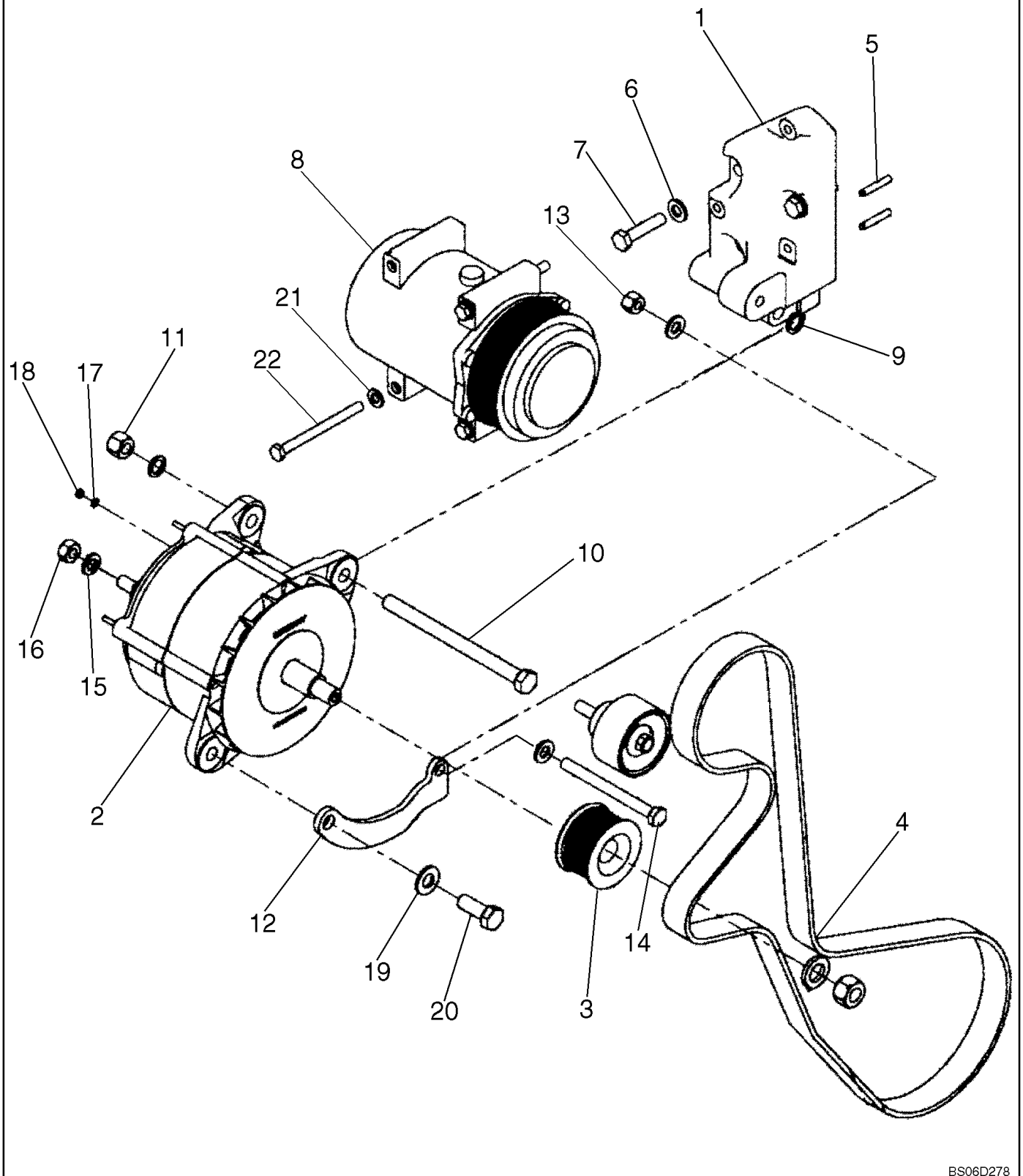

**ALTERNATOR - MOUNTING WITH AIR CONDITIONING**

| REF | FN | PART NUMBER | YR/SN | QTY | DESCRIPTION |
|---|---|---|---|---|---|
| 1 | | 87547181 | | 1 | BRACKET, Alternator |
| 2 | | 1964860C1 | | 1 | ALTERNATOR, 24V, 65 amp; See Figure 04-02 |
| 3 | | A189616 | | 1 | PULLEY, Alternator |
| 4 | | 87397416 | | 1 | BELT, With A/C |
| 5 | | 837-6035 | | 2 | DOWEL, M6 x 35 |
| 6 | | 896-11010 | | 5 | WASHER, M10 x 21.5 x 2.5, HT |
| 7 | | 827-10045 | | 3 | BOLT, Hex, M10 x 45, 10.9 |
| 8 | | 8500795 | | 1 | COMPRESSOR, AIR |
| 9 | | 896-11012 | | 1 | WASHER, M13.5 x 24.5 x 3, HT |
| 10 | | 426-8104 | | 1 | BOLT, Hex, 1/2"-13 x 6 1/2", G8 |
| 11 | | 231-4248 | | 1 | NUT, LOCK, 1/2"-13, GB |
| 12 | | 8501098 | | 1 | BRACE |
| 13 | | 832-10410 | | 1 | NUT, LOCK, M10 x 1.5, Cl 8 |
| 14 | | 827-10110 | | 1 | BOLT, Hex, M10 x 110, 10.9 |
| 15 | | 492-11044 | | 1 | WASHER, LOCK, 7/16" |
| 16 | | 425-107 | | 1 | NUT, 7/16"-14, G5 |
| 17 | | 892-11004 | | 1 | WASHER, LOCK, M4 |
| 18 | | 824-1404 | | 1 | NUT, M4, Cl 5 |
| 19 | | 896-11012 | | 1 | WASHER, M13.5 x 24.5 x 3, HT |
| 20 | | 426-820 | | 1 | BOLT, Hex, 1/2"-13 x 1 1/4", G8, Full Thd |
| 21 | | 896-11008 | | 5 | WASHER, M8 x 17.5 x 2, HT |
| 22 | | 827-8100 | | 3 | BOLT, Hex, M8 x 100, 10.9 |

**ALTERNATOR - MOUNTING WITHOUT AIR CONDITIONING**

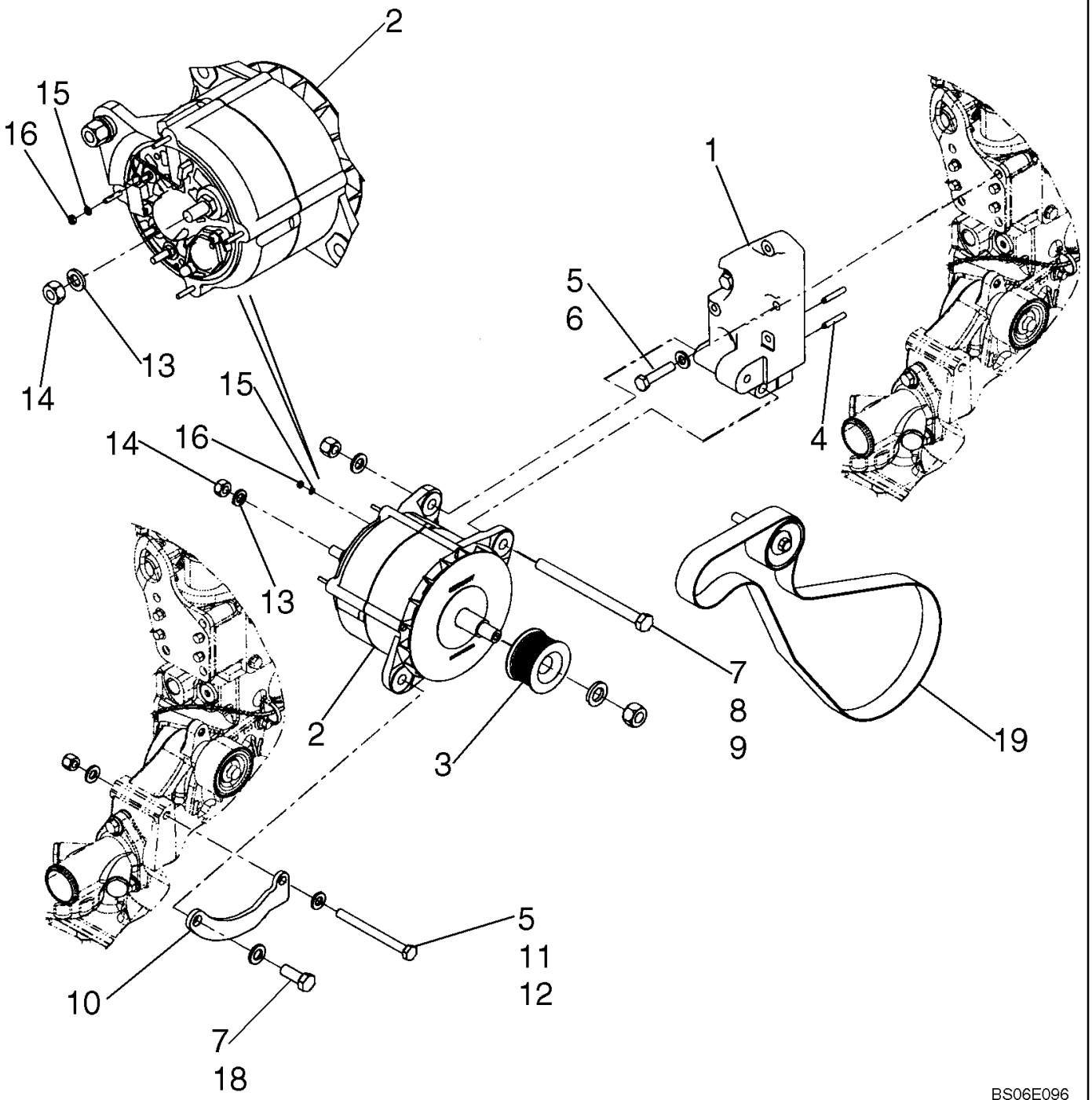

**ALTERNATOR - MOUNTING WITHOUT AIR CONDITIONING**

| REF | FN | PART NUMBER | YR/SN | QTY | DESCRIPTION |
|---|---|---|---|---|---|
| 1 | | 87547181 | | 1 | BRACKET, Alternator |
| 2 | | 1964860C1 | | 1 | ALTERNATOR, 24V, 65 amp; See Figure 04-02 |
| 3 | | A189616 | | 1 | PULLEY, Alternator |
| 4 | | 837-6035 | | 2 | DOWEL, M6 x 35 |
| 5 | | 896-11010 | | 5 | WASHER, M10 x 21.5 x 2.5, HT |
| 6 | | 827-10045 | | 3 | BOLT, Hex, M10 x 45, 10.9 |
| 7 | | 895-11012 | | 2 | WASHER, M12 x 24 x 2.5 |
| 8 | | 426-8104 | | 1 | BOLT, Hex, 1/2"-13 x 6 1/2", G8 |
| 9 | | 231-4248 | | 1 | NUT, LOCK, 1/2"-13, GB |
| 10 | | 8501098 | | 1 | BRACE |
| 11 | | 832-10410 | | 1 | NUT, LOCK, M10 x 1.5, Cl 8 |
| 12 | | 827-10110 | | 1 | BOLT, Hex, M10 x 110, 10.9 |
| 13 | | 492-11044 | | 1 | WASHER, LOCK, 7/16" |
| 14 | | 425-107 | | 1 | NUT, 7/16"-14, G5 |
| 15 | | 892-11004 | | 1 | WASHER, LOCK, M4 |
| 16 | | 824-1404 | | 1 | NUT, M4, Cl 5 |
| 18 | | 426-820 | | 1 | BOLT, Hex, 1/2"-13 x 1 1/4", G8, Full Thd |
| 19 | | 8602680 | | 1 | BELT, Without A/C |

| 04-03 | | p1 | 07/07 |
|---|---|---|---|

**HARNESS, FRONT - Z-BAR**

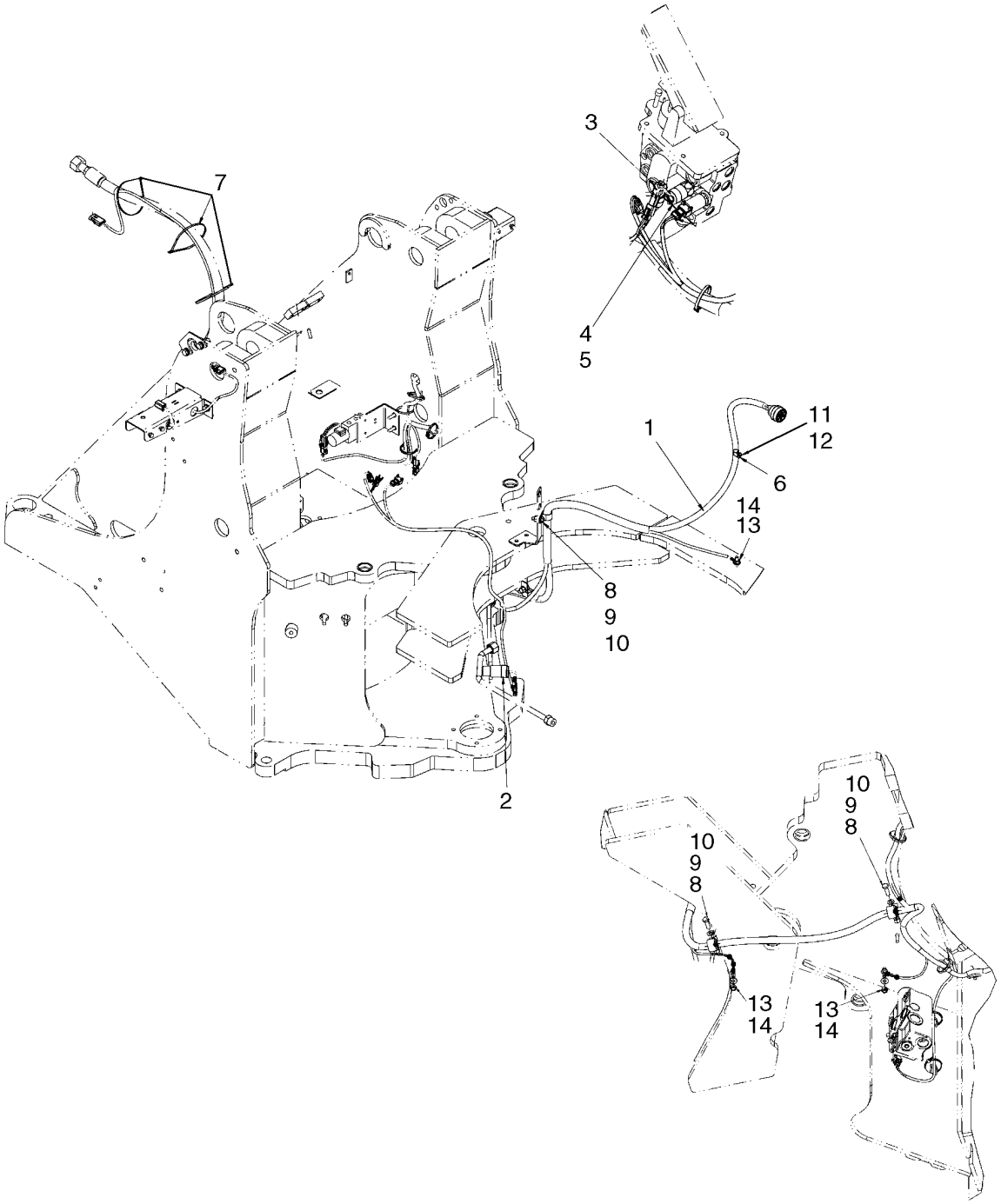


BS07D394

**HARNESS, FRONT - Z-BAR**

| REF | FN | PART NUMBER | YR/SN | QTY | DESCRIPTION |
|---|---|---|---|---|---|
| 1 | | 87655474 | | 1 | HARNESS, Front Chassis, Z-Bar |
| 2 | | 87549589 | | 1 | SWITCH, Brake Declutch |
| 3 | | 87307240 | | 1 | SWITCH, PRESSURE, Brake Light Pressure |
| 4 | | 396471A1 | | 1 | SEAL, 12 mm |
| 5 | | 8605738 | | 1 | SWITCH, PRESSURE, Brake Warning Pressure |
| 6 | | 515-21190 | | 1 | CLAMP, 3/4", Insul, 1/4" Bolt |
| 7 | | 19-135 | | 8 | STRAP |
| 8 | | 895-11010 | | 6 | WASHER, M10 x 20 x 2 |
| 9 | | 627-10030 | | 3 | BOLT, Hex, M10 x 30, 10.9, Full Thd |
| 10 | | 832-10410 | | 3 | NUT, LOCK, M10 x 1.5, Cl 8 |
| 11 | | 895-11006 | | 1 | WASHER, M6 |
| 12 | | 832-10406 | | 1 | NUT, LOCK, M6 x 1, Cl 8 |
| 13 | | L127554 | | 3 | WASHER |
| 14 | | 253347A1 | | 3 | NUT |

| 04-03A | | p1 | 07/07 |
|---|---|---|---|

**HARNESS, FRONT - XT**

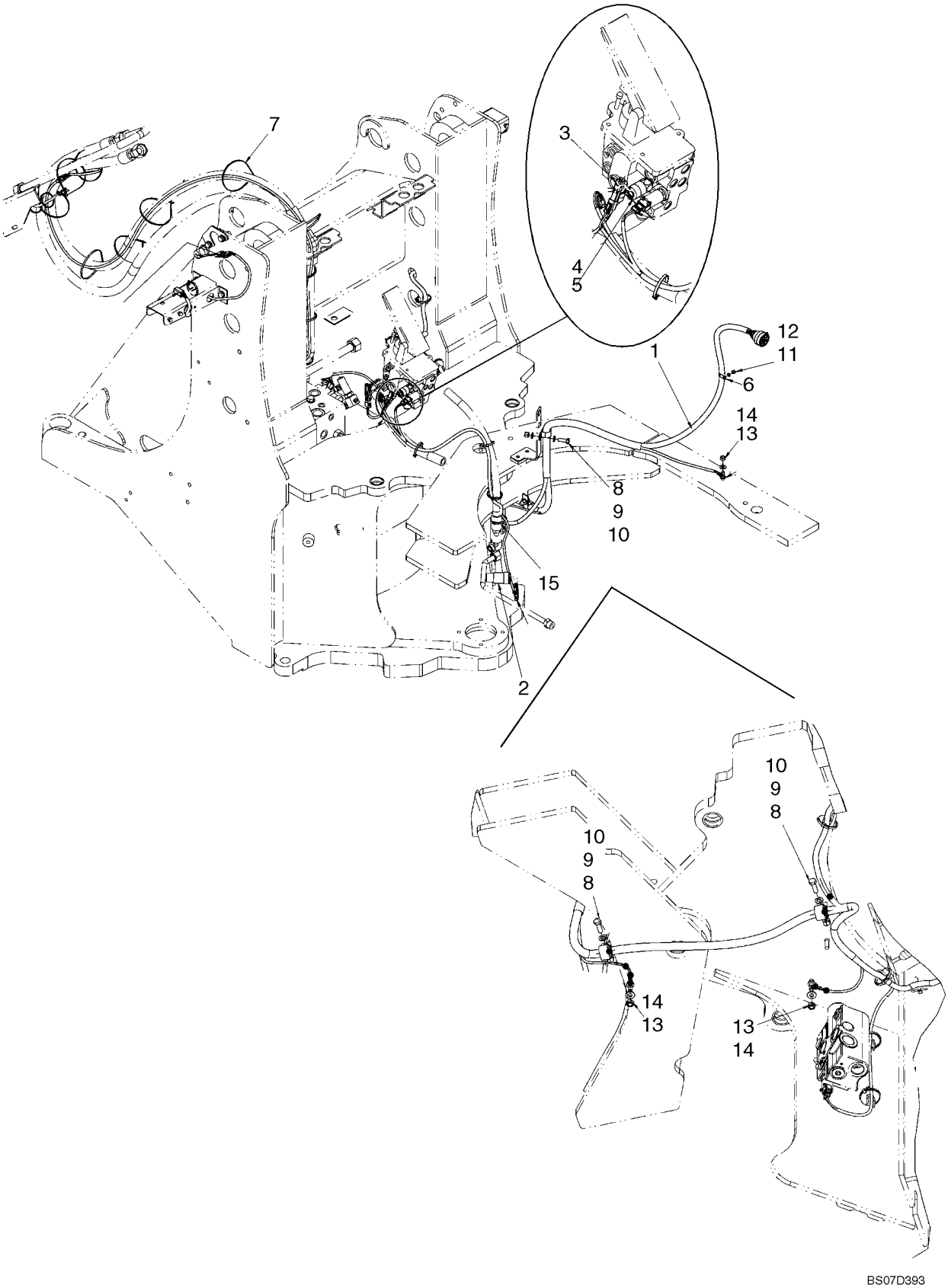

**HARNESS, FRONT - XT**

| REF | FN | PART NUMBER | YR/SN | QTY | DESCRIPTION |
|---|---|---|---|---|---|
| 1 | | 87655474 | | 1 | HARNESS, Front Chassis XT |
| 2 | | 87549589 | | 1 | SWITCH, Brake Declutch |
| 3 | | 87307240 | | 1 | SWITCH, PRESSURE, Brake Light Pressure |
| 4 | | 396471A1 | | 1 | SEAL, 12 mm |
| 5 | | 8605738 | | 1 | SWITCH, PRESSURE, Brake Warning Pressure |
| 6 | | 515-21190 | | 1 | CLAMP, 3/4", Insul, 1/4" Bolt |
| 7 | | 19-135 | | 8 | STRAP |
| 8 | | 895-11010 | | 6 | WASHER, M10 x 20 x 2 |
| 9 | | 627-10030 | | 3 | BOLT, Hex, M10 x 30, 10.9, Full Thd |
| 10 | | 832-10410 | | 3 | NUT, LOCK, M10 x 1.5, Cl 8 |
| 11 | | 895-11006 | | 1 | WASHER, M6 |
| 12 | | 832-10406 | | 1 | NUT, LOCK, M6 x 1, Cl 8 |
| 13 | | L127554 | | 3 | WASHER |
| 14 | | 253347A1 | | 3 | NUT |
| 15 | | L11541 | | 22 | STRAP |

| 04-04 | | p1 | 06/07 |
|---|---|---|---|

**HARNESS - PANEL, CONTROL**

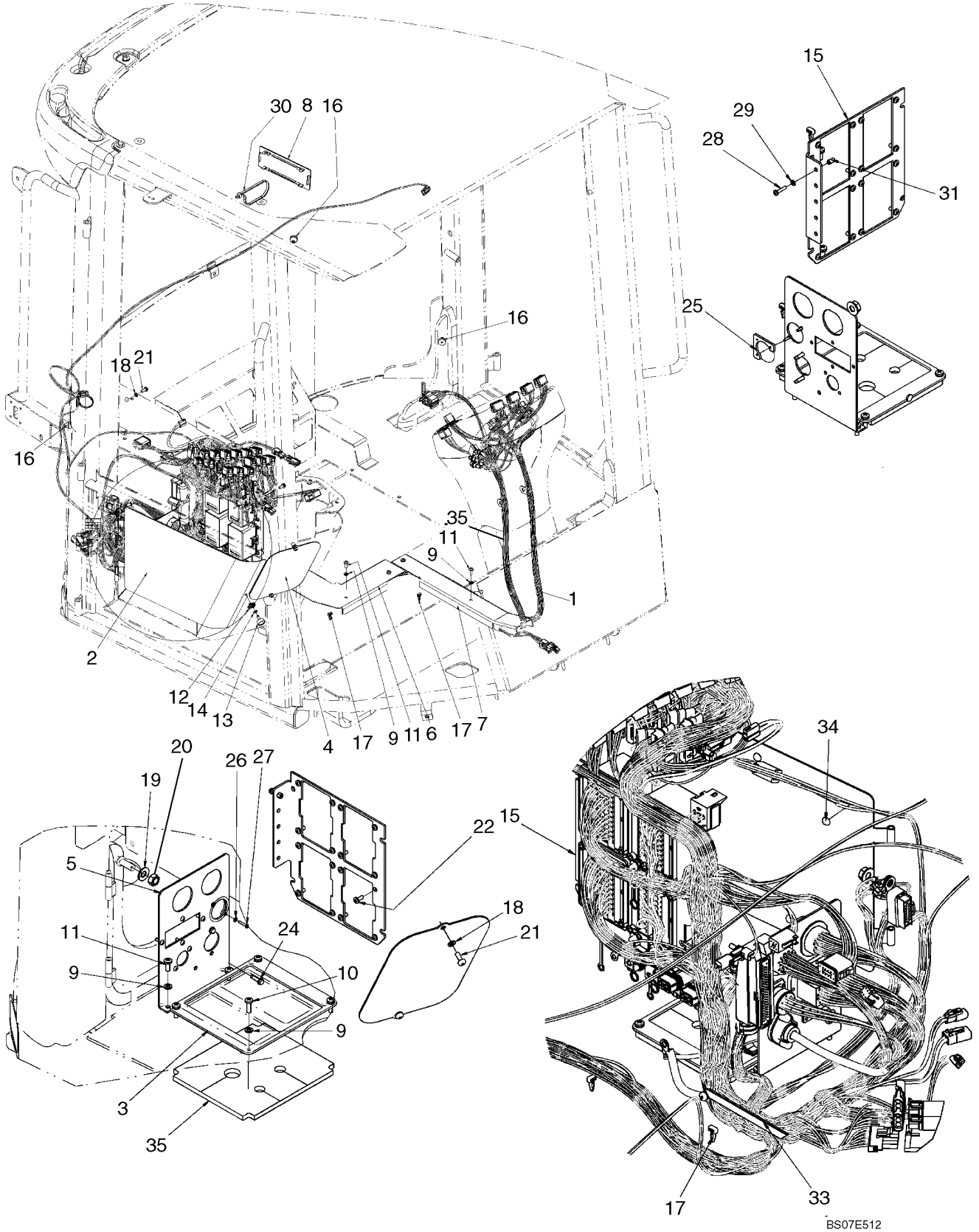

**HARNESS - PANEL, CONTROL**

| REF | FN | PART NUMBER | YR/SN | QTY | DESCRIPTION |
|---|---|---|---|---|---|
| 1 | | 87376662 | | 1 | HARNESS, WIRE, Cab Control Panel |
| 2 | | 76303325 | | 1 | COVER, DOOR, Electrical Access |
| 3 | | 76303258 | | 1 | PLATE |
| 4 | | 76303489 | | 1 | COVER, Console Access |
| 5 | | 87372240 | | 1 | PLATE |
| 6 | | 76303498 | | 1 | BRACKET |
| 7 | | 76303260 | | 1 | COVER, Central Cable |
| 8 | | {76303606} | | 1 | COVER, Radio |
| 9 | | 895-11006 | | 11 | WASHER, M6 |
| 10 | | 840-1620 | | 4 | SCREW, Cross Pan Hd, M6 x 20 |
| 11 | | 840-1616 | | 7 | SCREW, Cross Pan Hd, M6 x 16 |
| 12 | | 76303320 | | 1 | CLIP |
| 13 | | 76303321 | | 1 | PIN |
| 14 | | 76303319 | | 1 | WASHER |
| 15 | | 87341862 | | 1 | PLATE |
| 16 | | 71485202 | | 3 | SHEATH, FLEXIBLE |
| 17 | | 76303347 | | 5 | COLLAR |
| 18 | | 297865A1 | | 8 | WASHER |
| 19 | | L127554 | | 1 | WASHER |
| 20 | | 253347A1 | | 1 | NUT |
| 21 | | 297850A1 | | 8 | SCREW, Cross Pan Hd, M6 x 16 |
| 22 | | 840-1512 | | 16 | SCREW, Cross Pan Hd, M5 x 12 |
| 24 | | {86509545} | | 2 | SCREW |
| 25 | | {76303488} | | 1 | PLATE, Connector |
| 26 | | 895-11003 | | 2 | WASHER, M3 |
| 27 | | 840-1312 | | 2 | SCREW, Cross Pan Hd, M3 x 12 |
| 28 | | 840-1420 | | 1 | SCREW, Cross Pan Hd, M4 x 20 |
| 29 | | 895-11004 | | 1 | WASHER, M4 |
| 30 | | L18331 | | 1 | STRAP, CABLE |
| 31 | | 76043560 | | 1 | INSERT, THREADED |
| 33 | | {87525493} | | 1 | GASKET, Wire Protection |
| 34 | | 322197950 | | 6 | SPACER |
| 35 | | 76303261 | | 1 | SPACER |

**HARNESS, ENGINE**

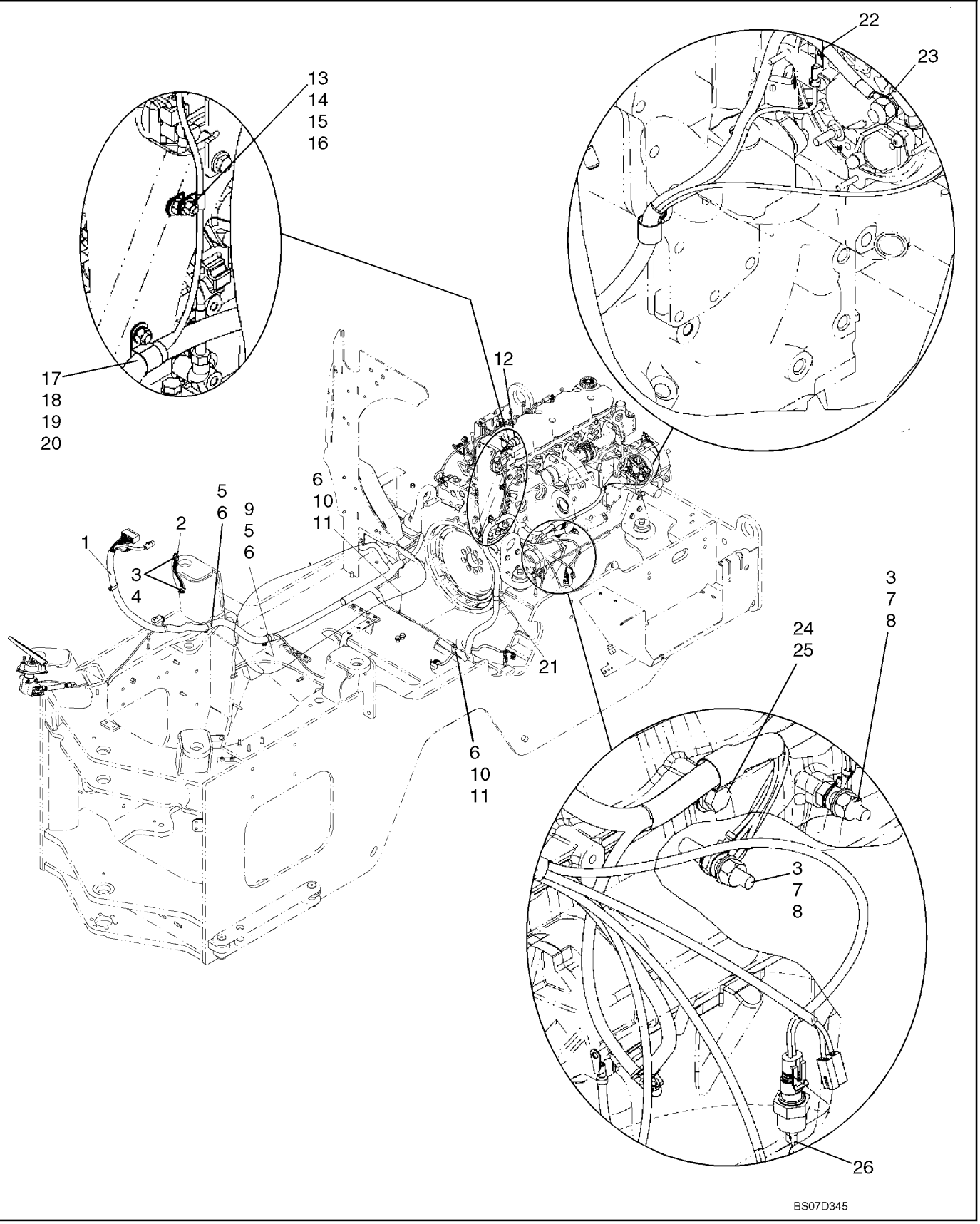

**HARNESS, ENGINE**

| REF | FN | PART NUMBER | YR/SN | QTY | DESCRIPTION |
|---|---|---|---|---|---|
| 1 | | 87351752 | | 1 | HARNESS, WIRE, Engine |
| 2 | | L126051 | | 1 | STRAP, GROUND |
| 3 | | L127554 | | 4 | WASHER, Brass |
| 4 | | 253347A1 | | 2 | NUT |
| 5 | | 895-15010 | | 2 | WASHER, M11 x 24 x 2 |
| 6 | | 832-10410 | | 3 | NUT, LOCK, M10 x 1.5, Cl 8 |
| 7 | | L127553 | | 2 | STUD |
| 8 | | L127555 | | 2 | NUT |
| 9 | | 515-23270 | | 2 | CLAMP, 1 1/16", Insul, 3/8" Bolt |
| 10 | | 895-11010 | | 2 | WASHER, M10 x 20 x 2 |
| 11 | | 515-23222 | | 2 | CLAMP, 7/8", Insul, 3/8" Bolt |
| 12 | | 279492A1 | | 1 | SWITCH, Air Restriction |
| 13 | | 832-10408 | | 1 | NUT, LOCK, M8 x 1.25, Cl 8 |
| 14 | | 895-15008 | | 2 | WASHER, M8 x 20 x 1.6 |
| 15 | | 627-8025 | | 1 | BOLT, Hex, M8 x 25, 10.9 |
| 16 | | 515-2379 | | 1 | CLAMP, 5/16", Insul, 3/8" Bolt |
| 17 | | 829-1410 | | 1 | NUT, M10, Cl 10 |
| 18 | | 895-18010 | | 1 | WASHER, M10 x 18 x 1.6 |
| 19 | | 627-10025 | | 1 | BOLT, Hex, M10 x 25, 10.9, Full Thd |
| 20 | | 515-24238 | | 1 | CLAMP, 15/16", Insul, 7/16" Bolt |
| 21 | | 121411A1 | | 1 | FUSE, 7.5 Amp |
| 22 | | 824-1404 | | 1 | NUT, M4, Cl 5 |
| 23 | | 425-107 | | 1 | NUT, 7/16"-14, G5 |
| 24 | | 896-11012 | | 2 | WASHER, M13.5 x 24.5 x 3, HT |
| 25 | | 627-12025 | | 1 | BOLT, Hex, M12 x 25, 10.9 |
| 26 | | 321446A1 | | 1 | SENDER UNIT, Engine Coolant |

**HARNESS, ENGINE - THROTTLE CONTROL**

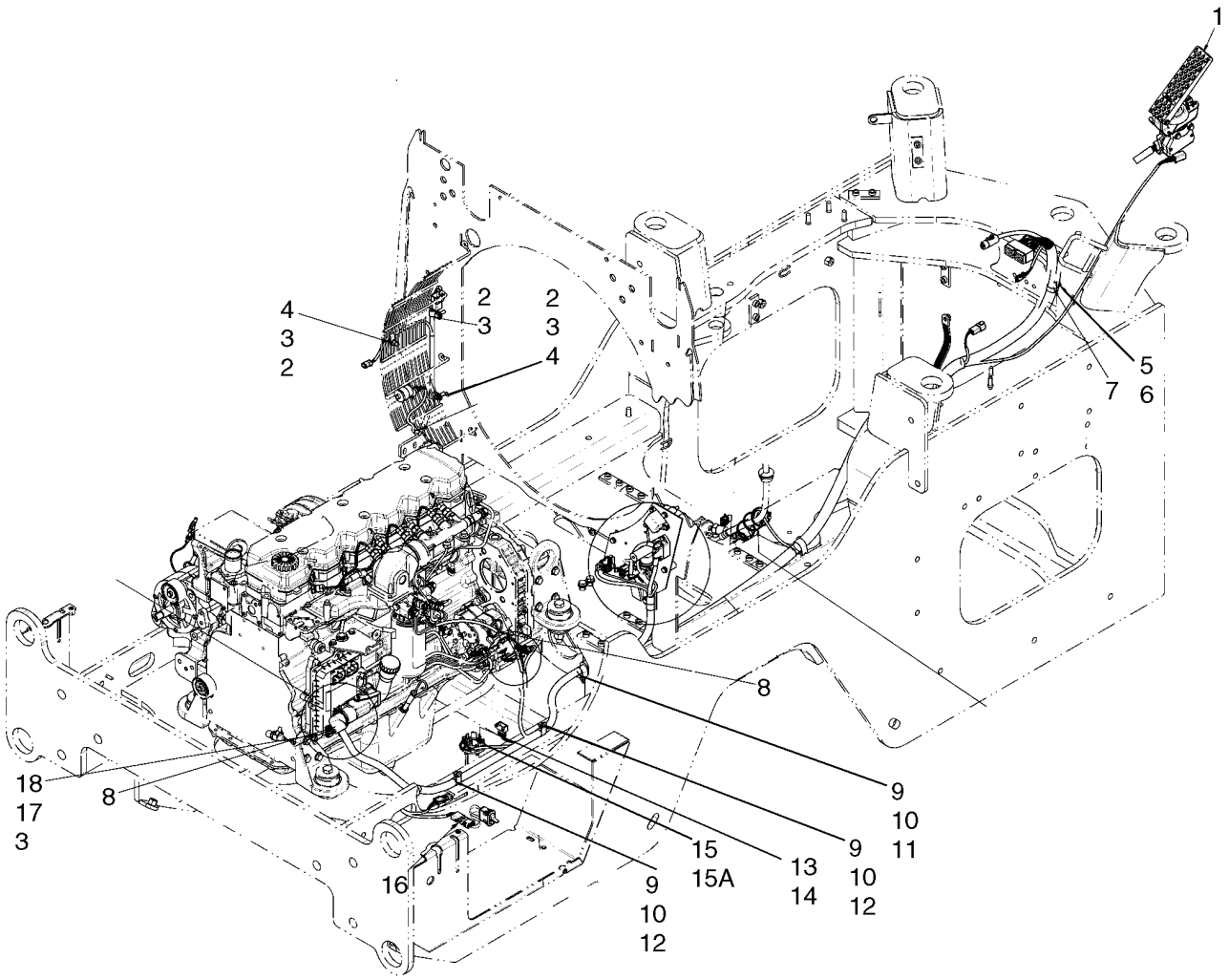

**HARNESS, ENGINE - THROTTLE CONTROL**

| REF | FN | PART NUMBER | YR/SN | QTY | DESCRIPTION |
|---|---|---|---|---|---|
| 1 | | 87360870 | | 1 | THROTTLE, Analog Throttle Control |
| 2 | | 627-8025 | | 3 | BOLT, Hex, M8 x 25, 10.9 |
| 3 | | 895-11008 | | 6 | WASHER, M8 x 16 x 1.6 |
| 4 | | 832-10408 | | 2 | NUT, LOCK, M8 x 1.25, Cl 8 |
| 5 | | 832-10406 | | 1 | NUT, LOCK, M6 x 1, Cl 8 |
| 6 | | 895-11006 | | 1 | WASHER, M6 |
| 7 | | 515-21302 | | 1 | CLAMP, 1 3/16", Insul, 1/4" Bolt |
| 8 | | L11541 | | 5 | STRAP |
| 9 | | 895-15010 | | 3 | WASHER, M11 x 24 x 2 |
| 10 | | 832-10410 | | 3 | NUT, LOCK, M10 x 1.5, Cl 8 |
| 11 | | 515-23270 | | 1 | CLAMP, 1 1/16", Insul, 3/8" Bolt |
| 12 | | 515-23206 | | 2 | CLAMP, 13/16", Insul, 3/8" Bolt |
| 13 | | 814-5030 | | 5 | BOLT, Hex, M5 x 30, 8.8 |
| 14 | | 895-11005 | | 5 | WASHER, M5 x 10 x 1 |
| 15 | | 87542710 | | 1 | SENDER UNIT, Fuel, Incl. Ref. 15A; See Figure 03-04 |
| 15A | | 87617083 | | 1 | KIT, Nut Pack |
| 16 | | 87350087 | | 1 | SWITCH ASSY, Hood Lift |
| 17 | | 627-8016 | | 1 | BOLT, Hex, M8 x 16, 10.9 |
| 18 | | 515-22127 | | 1 | CLAMP, 1/2", Insul, 5/16" Bolt |

**HARNESS, ENGINE - FUSES AND RELAYS**

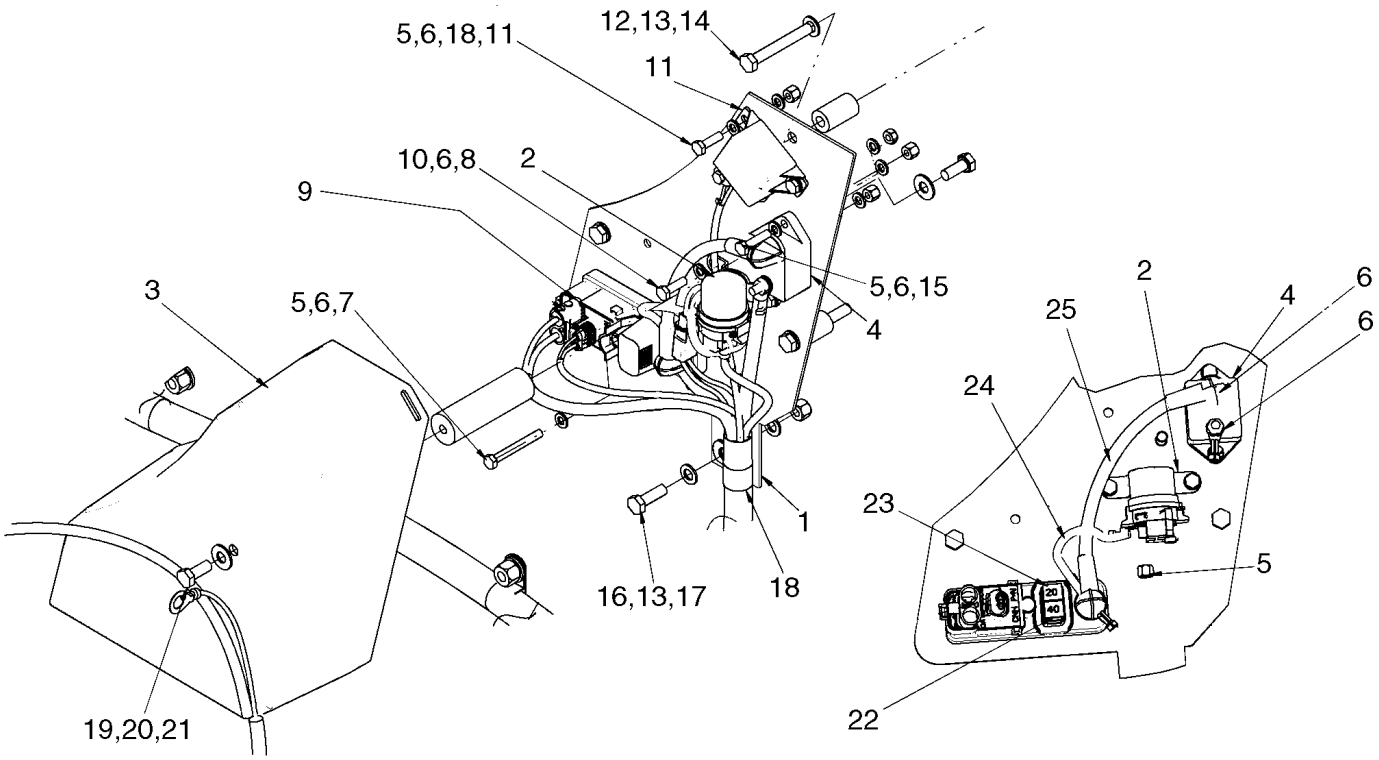


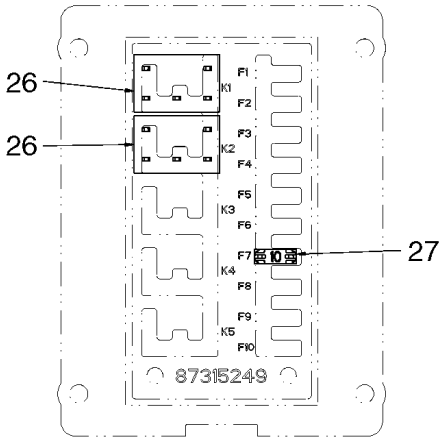


BS07G313

**HARNESS, ENGINE - FUSES AND RELAYS**

| REF | FN | PART NUMBER | YR/SN | QTY | DESCRIPTION |
|---|---|---|---|---|---|
| 1 | | 87348711 | | 1 | PLATE, Electrical Mounting |
| 2 | | 87351908 | | 1 | SOLENOID |
| 3 | | 87353999 | | 1 | COVER, Relay |
| 4 | | 87315269 | | 1 | BREAKER, 105A Auto Reset |
| 5 | | 832-10406 | | 7 | NUT, LOCK, M6 x 1, Cl 8 |
| 6 | | 895-11006 | | 18 | WASHER, M6 |
| 7 | | 827-6050 | | 1 | BOLT, Hex, M6 x 50, 10.9 |
| 8 | | 627-6020 | | 4 | BOLT, Hex, M6 x 20, 10.9 |
| 9 | | 87318627 | | 1 | CONNECTOR, ELEC, Power Relay Module |
| 10 | | 829-1406 | | 2 | NUT, M6, Cl 10 |
| 11 | | 1546485C1 | | 1 | RELAY |
| 12 | | 82024562 | | 3 | SPACER |
| 13 | | 895-11008 | | 3 | WASHER, M8 x 16 x 1.6 |
| 14 | | 827-8060 | | 3 | BOLT, Hex, M8 x 60, 10.9 |
| 15 | | 627-6025 | | 2 | BOLT, Hex, M6 x 25, 10.9 |
| 16 | | 627-8025 | | 1 | BOLT, Hex, M8 x 25, 10.9 |
| 17 | | 832-10408 | | 1 | NUT, LOCK, M8 x 1.25, Cl 8 |
| 18 | | 515-23206 | | 1 | CLAMP, 13/16", Insul, 3/8" Bolt |
| 19 | | 404635A1 | | 1 | SPACER |
| 20 | | 895-15008 | | 2 | WASHER, M8 x 20 x 1.6 |
| 21 | | 627-8020 | | 2 | BOLT, Hex, M8 x 20, 10.9 |
| 22 | | 87327346 | | 1 | FUSE, 32V, 20A |
| 23 | | 87327335 | | 1 | FUSE, 32V, 20A |
| 24 | | 87350066 | | 1 | CABLE, Starter Relay |
| 25 | | 87350064 | | 1 | CABLE, Cab, B+ |
| 26 | | 87312626 | | 2 | RELAY, Micro 5-Pin, 280 Series |
| 27 | | 121412A1 | | 1 | FUSE, 10 Amp |

**HARNESS - CAB ROOF**

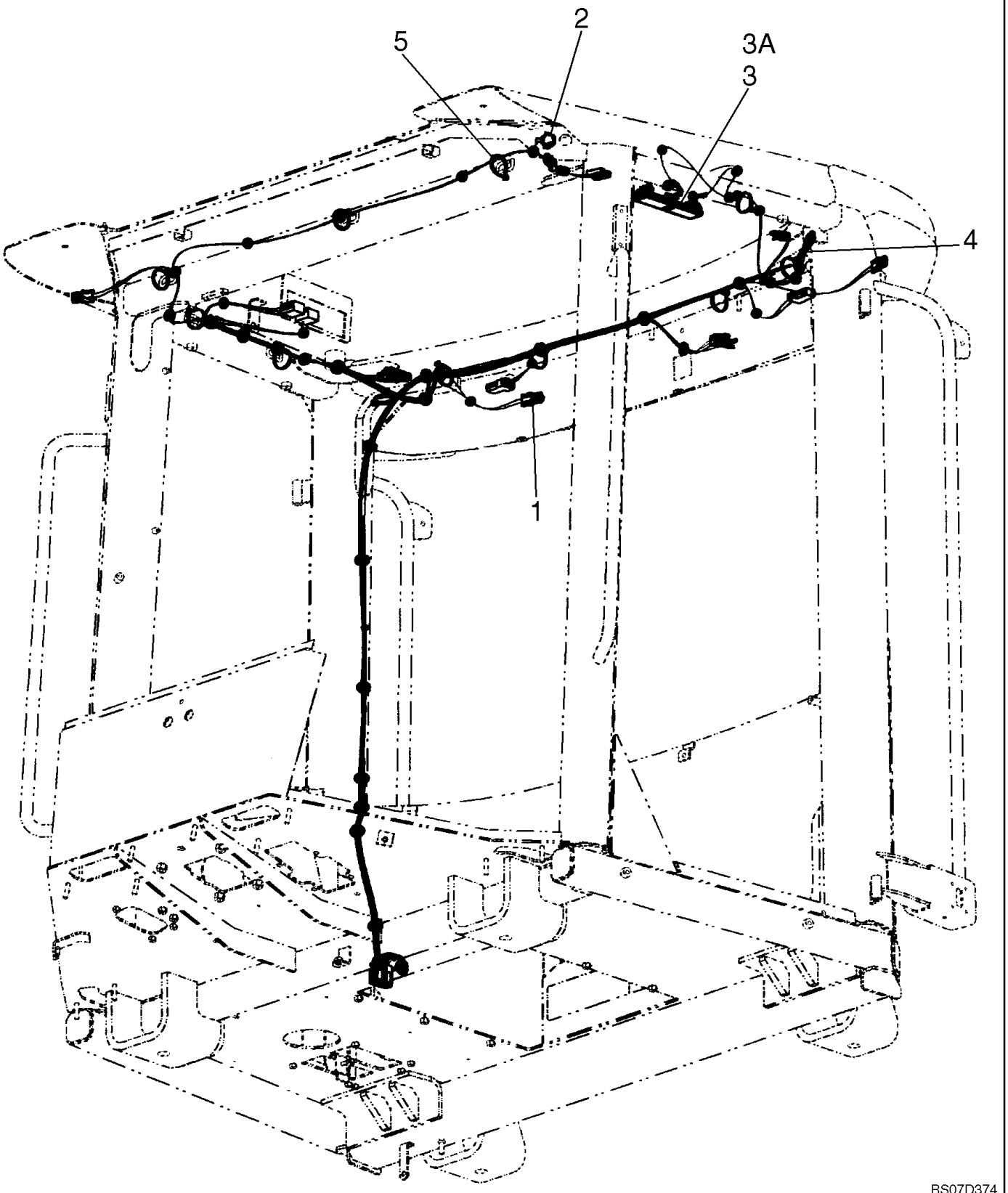

**HARNESS - CAB ROOF**

| REF | FN | PART NUMBER | YR/SN | QTY | DESCRIPTION |
|---|---|---|---|---|---|
| 1 | | 87517052 | | 1 | HARNESS, WIRE, Cab Roof |
| 2 | | 76053295 | | 1 | SOCKET, POWER |
| 3 | | 394799A1 | | 1 | LIGHT ASSY., Incl. Ref. 3A |
| 3A | | 395185A1 | | 1 | BULB, 24V |
| 4 | | 87325760 | | 1 | SWITCH, Door |
| 5 | | L11541 | | 11 | STRAP |

| 04-09 | | p1 | 07/07 |
|---|---|---|---|

**HARNESS, HOOD - ALARM, BACKUP**

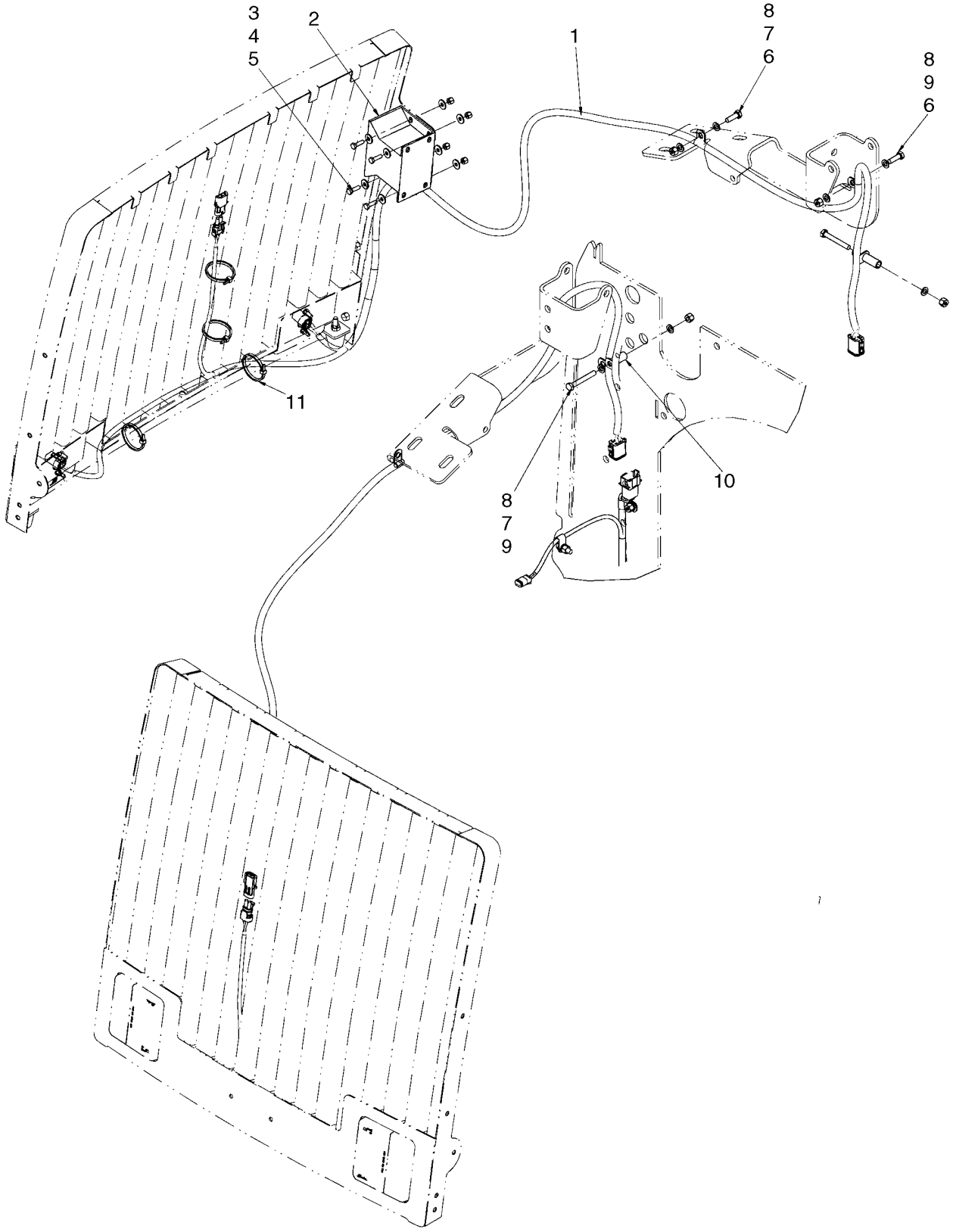

**HARNESS, HOOD - ALARM, BACKUP**

| REF | FN | PART NUMBER | YR/SN | QTY | DESCRIPTION |
|---|---|---|---|---|---|
| 1 | | {87613715} | | 1 | HARNESS, Hood |
| 2 | | D121972 | | 1 | ALARM, Back-Up |
| 3 | | 895-25006 | | 8 | WASHER, M6 x 18 x 1.6 |
| 4 | | 627-6020 | | 4 | BOLT, Hex, M6 x 20, 10.9 |
| 5 | | 832-10406 | | 4 | NUT, LOCK, M6 x 1, Cl 8 |
| 6 | | 627-8025 | | 2 | BOLT, Hex, M8 x 25, 10.9 |
| 7 | | 895-11008 | | 6 | WASHER, M8 x 16 x 1.6 |
| 8 | | 832-10408 | | 3 | NUT, LOCK, M8 x 1.25, Cl 8 |
| 9 | | 827-8060 | | 1 | BOLT, Hex, M8 x 60, 10.9 |
| 10 | | L126936 | | 1 | SPACER |
| 11 | | L11541 | | 3 | STRAP |

**HARNESS, TRANSMISSION**

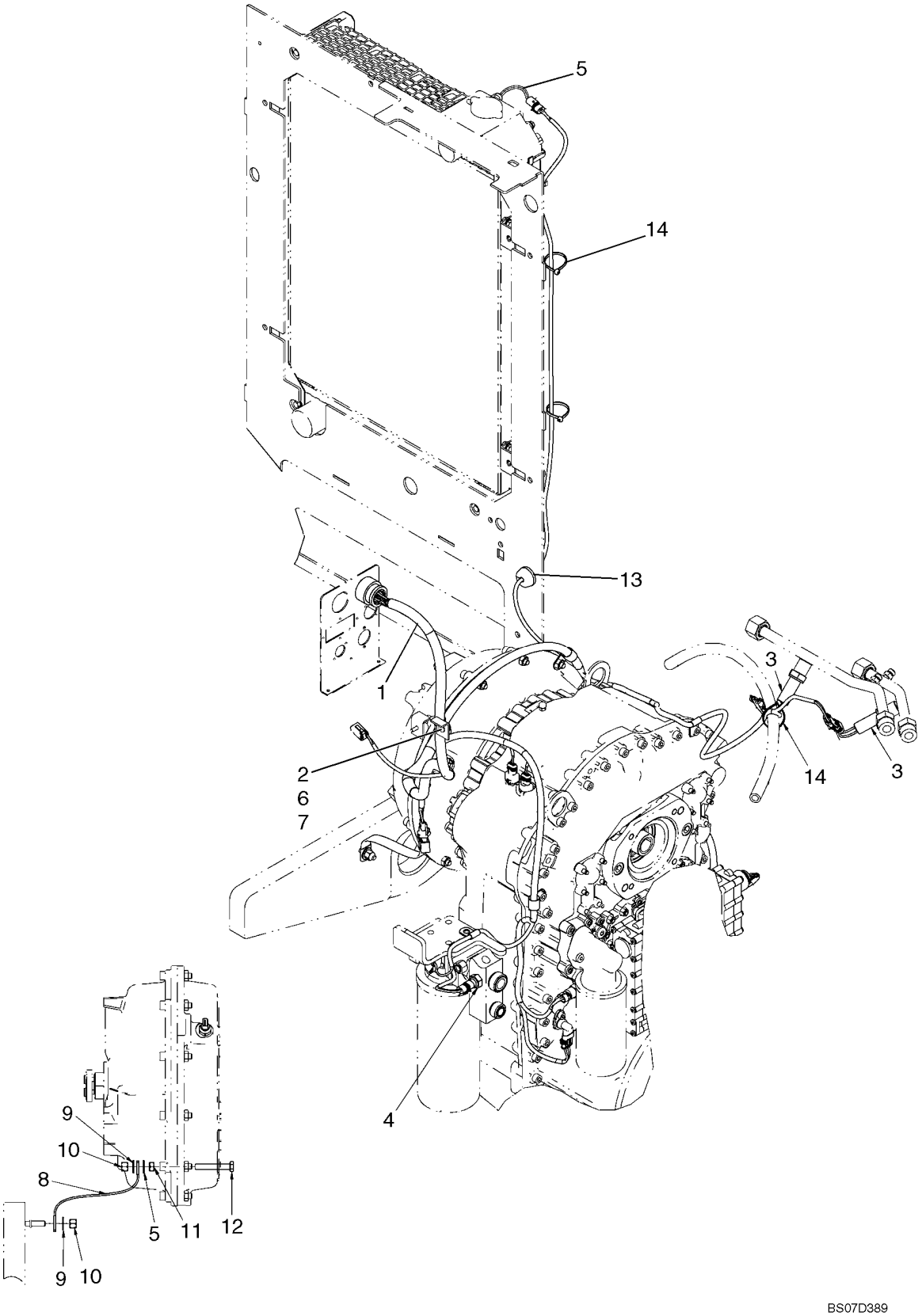

**HARNESS, TRANSMISSION**

| REF | FN | PART NUMBER | YR/SN | QTY | DESCRIPTION |
|---|---|---|---|---|---|
| 1 | | 87592785 | | 1 | HARNESS, Transmission |
| 2 | | 515-21190 | | 1 | CLAMP, 3/4", Insul, 1/4" Bolt |
| 3 | | 377899A1 | | 2 | SWITCH, Redundant Brake |
| 4 | | 321446A1 | | 1 | SENDER UNIT, Engine Coolant |
| 5 | | 445786A1 | | 1 | HARNESS, Sealed Jumper |
| 6 | | 895-11006 | | 1 | WASHER, M6 |
| 7 | | 832-10406 | | 1 | NUT, LOCK, M6 x 1, Cl 8 |
| 8 | | 79028421 | | 1 | CABLE, GROUND |
| 9 | | 895-15010 | | 3 | WASHER, M11 x 24 x 2 |
| 10 | | 832-10410 | | 2 | NUT, LOCK, M10 x 1.5, Cl 8 |
| 11 | | 829-1410 | | 1 | NUT, M10, Cl 10 |
| 12 | | 627-10065 | | 1 | BOLT, Hex, M10 x 65, 10.9, Full Thd |
| 13 | | 198823C1 | | 1 | GROMMET |
| 14 | | L11541 | | 3 | STRAP |

**HARNESS - GRID HEATER**

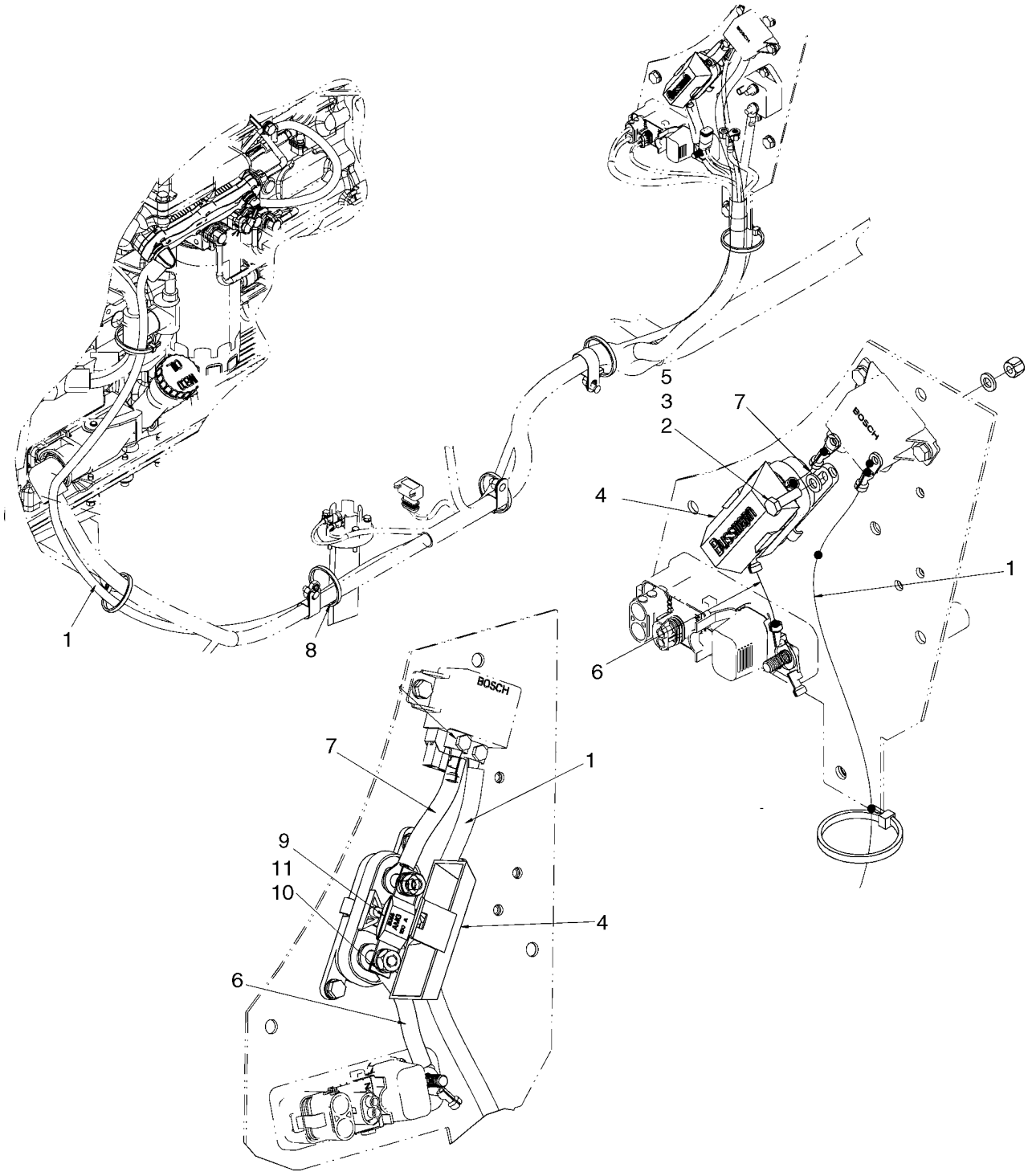

**HARNESS - GRID HEATER**

| REF | FN | PART NUMBER | YR/SN | QTY | DESCRIPTION |
|---|---|---|---|---|---|
| | | REF | | | INSTRUCTION, GRID HEATER CABLES, FUSE BOX |
| 1 | | 87354000 | | 1 | CABLE, Grid Heater; Power |
| 2 | | 895-11006 | | 4 | WASHER, M6 |
| 3 | | 832-10406 | | 2 | NUT, LOCK, M6 x 1, Cl 8 |
| 4 | | 440038A1 | | 1 | JUNCTION, Fuse |
| 5 | | 627-6020 | | 2 | BOLT, Hex, M6 x 20, 10.9 |
| 6 | | 87350062 | | 1 | CABLE, Grid Heater B+ |
| 7 | | 87348713 | | 1 | CABLE, Grid Heater |
| 8 | | L11541 | | 6 | STRAP, Wire Tie |
| 9 | | 8501311 | | 1 | FUSE, 150 Amp |
| 10 | | 892-11008 | | 2 | WASHER, LOCK, M8 |
| 11 | | 829-1408 | | 2 | NUT, M8, Cl 10 |

**GRID HEATER**

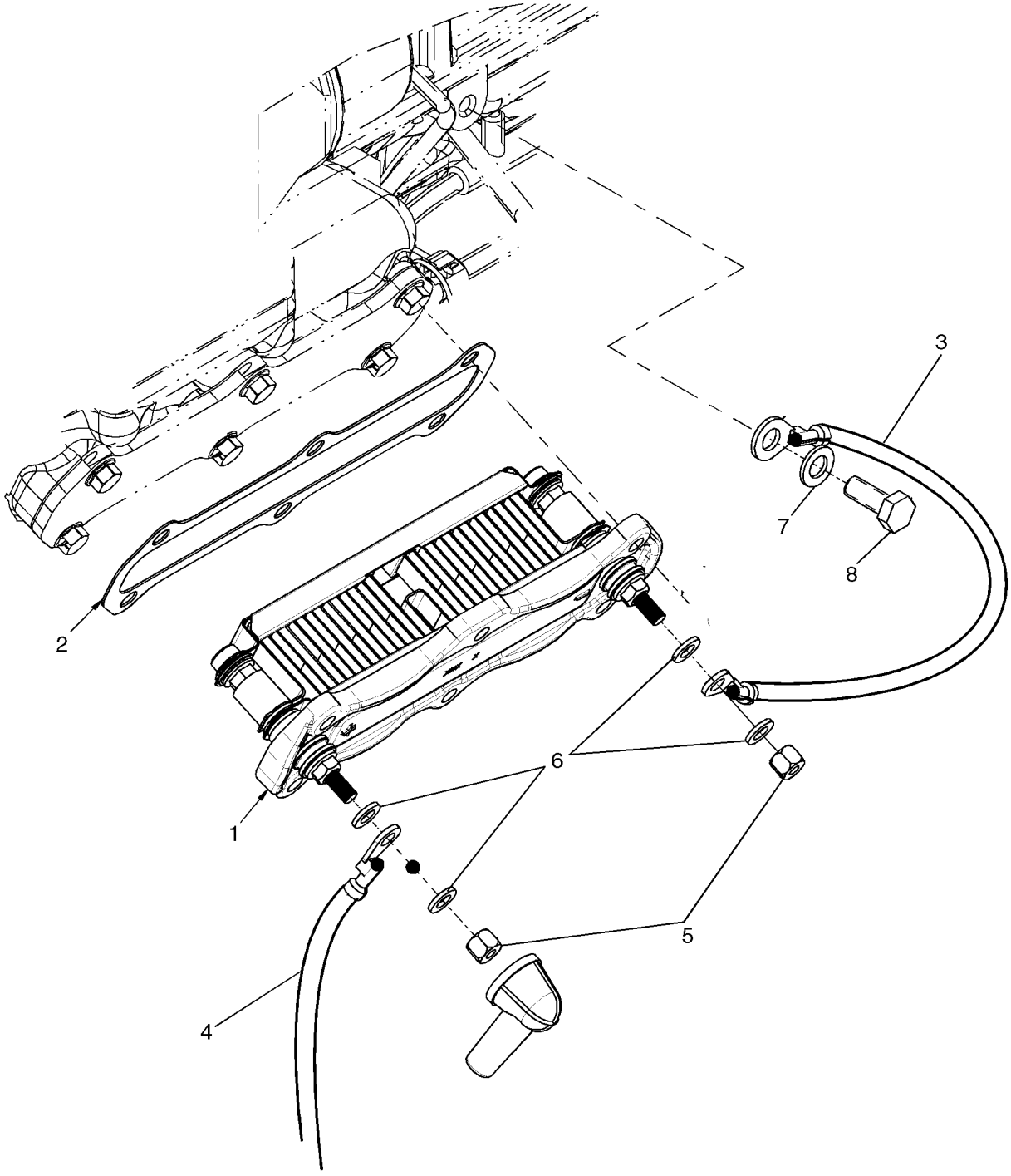

**GRID HEATER**

| REF | FN | PART NUMBER | YR/SN | QTY | DESCRIPTION |
|---|---|---|---|---|---|
| 1 | | 87300128 | | 1 | HEATER, ASSY. Iveco 24V |
| 2 | | 2854701 | | 1 | GASKET |
| 3 | | 87398558 | | 1 | CABLE, Grid Heater Ground |
| 4 | | 87354000 | | 1 | CABLE, Grid Heater Power |
| 5 | | 832-10406 | | 2 | NUT, LOCK, M6 x 1, Cl 8 |
| 6 | | 895-11006 | | 4 | WASHER, M6 |
| 7 | | 895-11008 | | 1 | WASHER, M8 x 16 x 1.6 |
| 8 | | 627-8020 | | 1 | BOLT, Hex, M8 x 20, 10.9 |

## HORN, FRONT

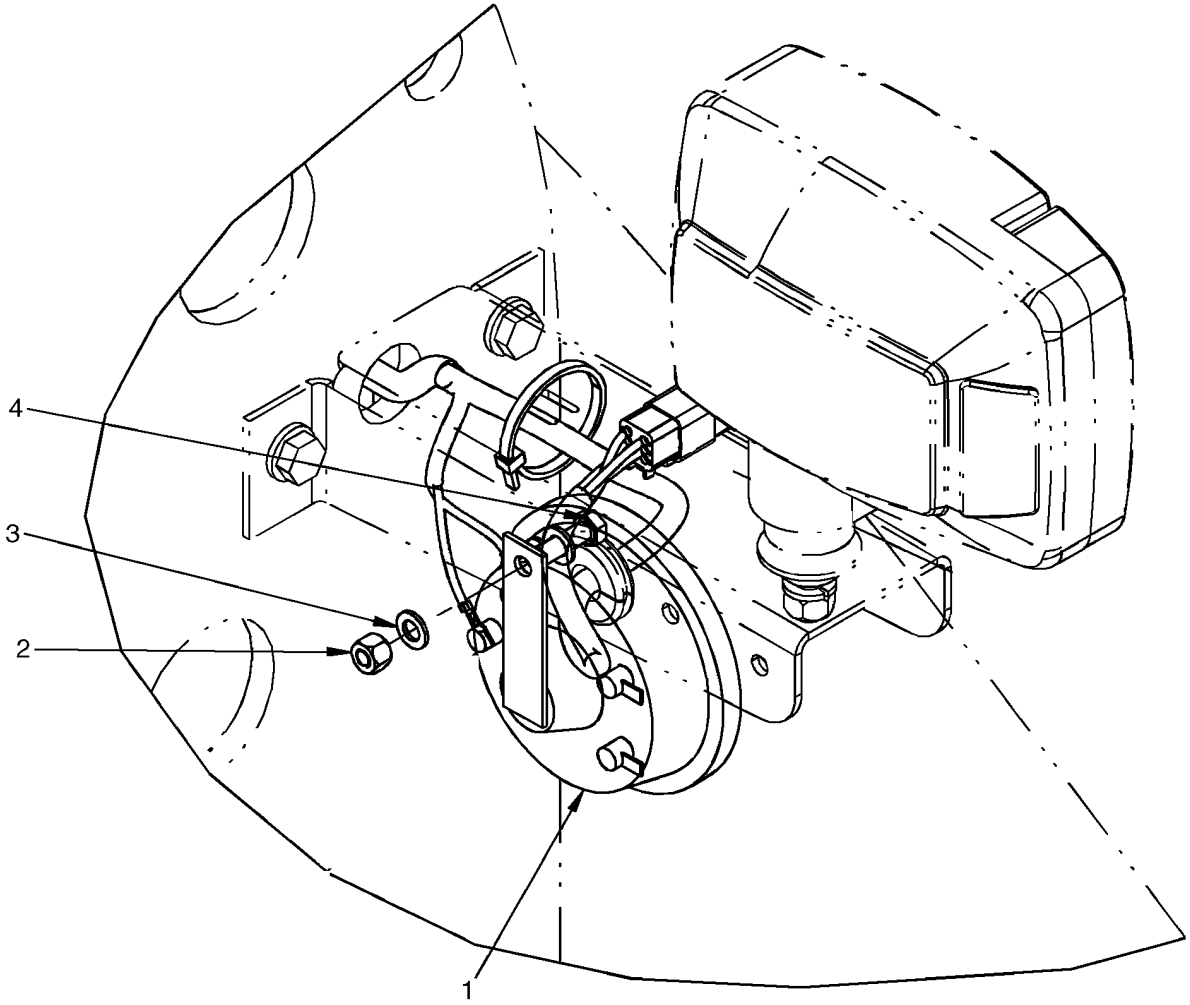

**HORN, FRONT**

| REF | FN | PART NUMBER | YR/SN | QTY | DESCRIPTION |
|---|---|---|---|---|---|
| 1 | | 87382200 | | 1 | HORN, 109 Db |
| 2 | | 832-10408 | | 1 | NUT, LOCK, M8 x 1.25, Cl 8 |
| 3 | | 895-11008 | | 2 | WASHER, M8 x 16 x 1.6 |
| 4 | | 627-8025 | | 1 | BOLT, Hex, M8 x 25, 10.9 |

**PANEL, CONTROL - SWITCHES**

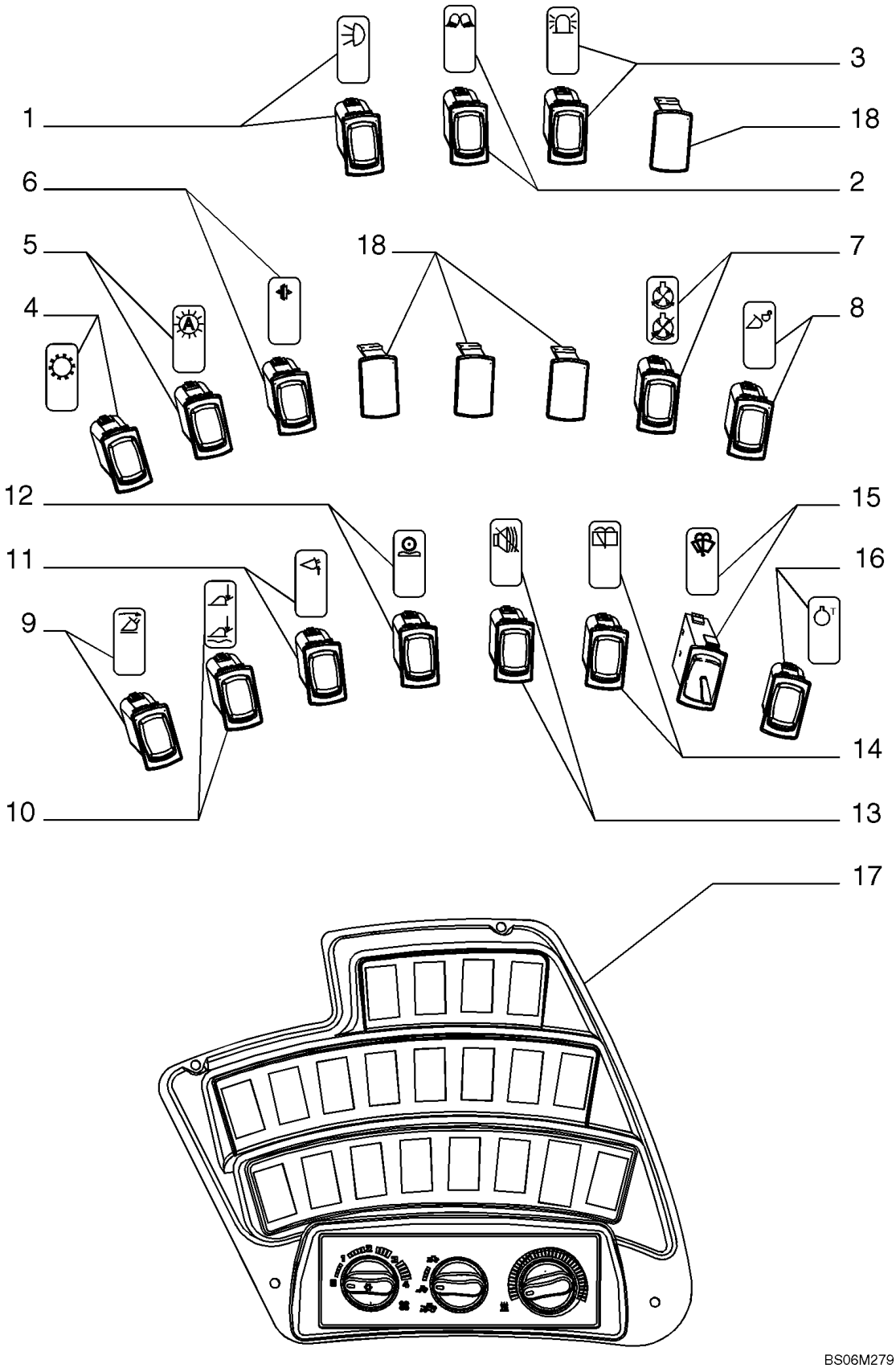

**PANEL, CONTROL - SWITCHES**

| REF | FN | PART NUMBER | YR/SN | QTY | DESCRIPTION |
|---|---|---|---|---|---|
| 1 | | 87350054 | | 1 | SWITCH, Drive Lights |
| 2 | | 87350052 | | 1 | SWITCH, Work Lights |
| 3 | | 374430A2 | | 1 | SWITCH, Rotating Beacon |
| 4 | | 87350044 | | 1 | SWITCH, Transmission Enable |
| 5 | | 374431A2 | | 1 | SWITCH, Transmission Auto |
| 6 | | 374421A4 | | 1 | SWITCH, Declutch |
| 7 | | 87350049 | | 1 | SWITCH, Fan Control |
| 8 | | 364444A2 | | 1 | SWITCH, Pin Engage |
| 9 | | 87350045 | | 1 | SWITCH, Return to Dig |
| 10 | | 87350048 | | 1 | SWITCH, Return to Travel/Float |
| 11 | | 87350047 | | 1 | SWITCH, Height Control, High |
| 12 | | 87350055 | | 1 | SWITCH, TOGGLE, Ride Control |
| 13 | | 374433A3 | | 1 | SWITCH, Back Up Alarm |
| 13 | | {87567880} | | 1 | SWITCH, Back Up Alarm; Used On European Models Only |
| 14 | | 374429A2 | | 1 | SWITCH, Rear Wiper |
| 15 | | 87620692 | | 1 | SWITCH, SWITCH, Front Wiper; Replaces 87350085 |
| 16 | | {87371084} | | 1 | SWITCH, Idle |
| 17 | | 76303030 | | 1 | PANEL, Switch Panel |
| 18 | | 126844A1 | | 4-6 | PLUG |
| 19 | | 87582901 | | 4 | SCREW, Not Illustrated |

| 04-14 | | p1 | 08/07 |
|---|---|---|---|

**PANEL, CONTROL - FUSE AND RELAY MOUNTING**

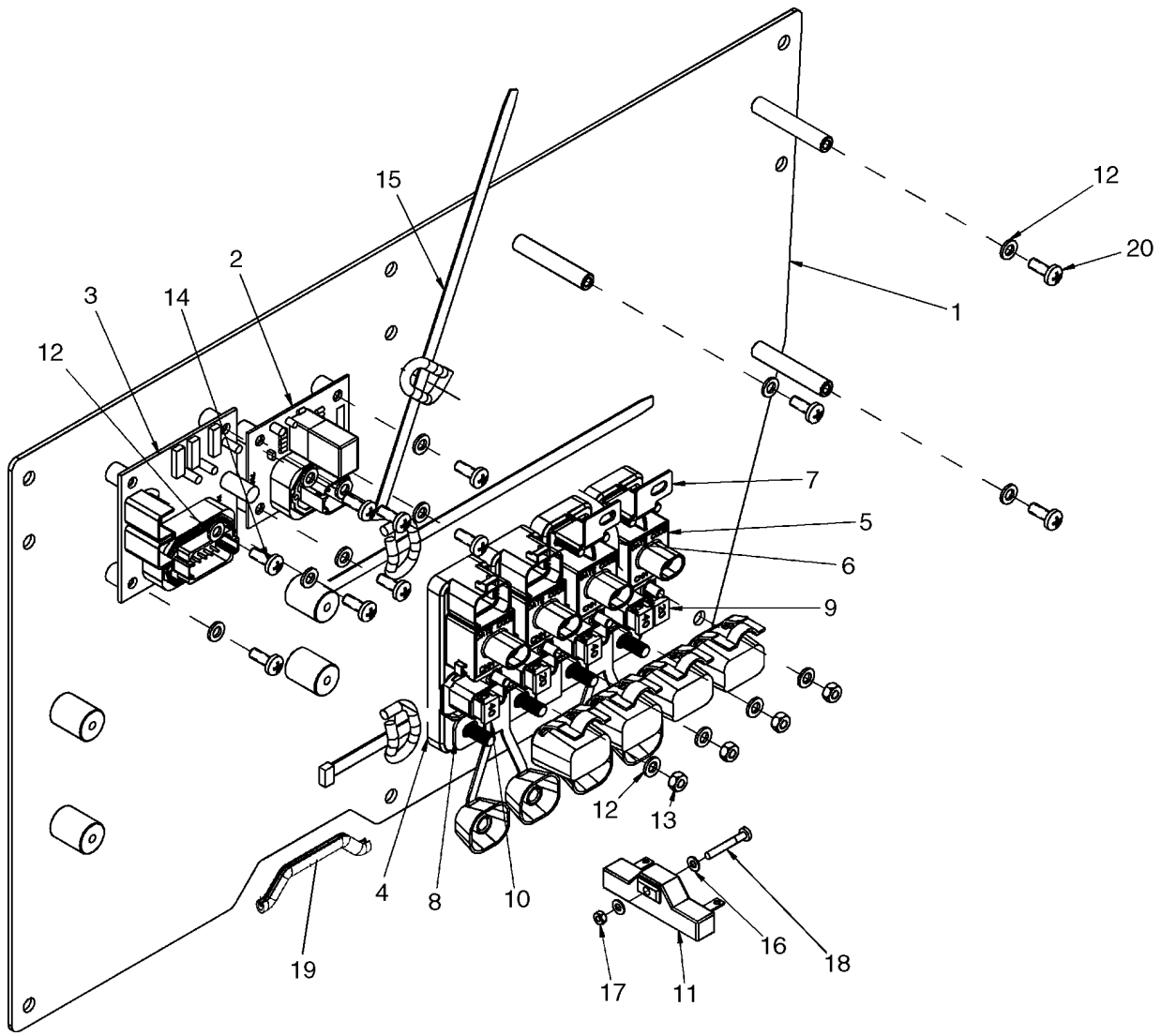

**PANEL, CONTROL - FUSE AND RELAY MOUNTING**

| REF | FN | PART NUMBER | YR/SN | QTY | DESCRIPTION |
|---|---|---|---|---|---|
| 1 | | 87372241 | | 1 | PLATE, Right Console |
| 2 | | 87364605 | | 1 | TIMER |
| 3 | | 232364A1 | | 4 | UNIT, FLASHER |
| 4 | | 87318627 | | 4 | CONNECTOR, ELEC, D.6 |
| 5 | | 87315250 | | 1 | MODULE, Electrical Center |
| 6 | | {87318617} | | 16 | JOINER, PRM |
| 7 | | 87318620 | | 3 | BAR, RTMR to PRM Bus Bar |
| 8 | | 87318612 | | 3 | BAR ASSY., PRM Input Bus Bar |
| 9 | | 87327335 | | 4 | FUSE, 32 Volt, 20 Amp |
| 10 | | 87327346 | | 4 | FUSE, 32 Volt, 40 Amp |
| 11 | | F22316 | | 2 | RESISTOR |
| 12 | | 895-11006 | | 2 | WASHER, M6 |
| 13 | | 829-1406 | | 1 | NUT, M6, Cl 10 |
| 14 | | 840-1612 | | 8 | SCREW, Cross Pan Hd, M6 x 12 |
| 15 | | {885180004} | | 2 | CABLE |
| 16 | | 895-11004 | | 2 | WASHER, M4 |
| 17 | | 825-1404 | | 1 | NUT, M4, Cl 8 |
| 18 | | 86511825 | | 1 | SCREW, Cross Pan Hd, M4 x 30 |
| 19 | | {87661964} | | 1 | GASKET |
| 20 | | 840-1616 | | 3 | SCREW, Cross Pan Hd, M6 x 16 |

**ELECTRICAL - STEERING COLUMN / INSTRUMENT CLUSTER**

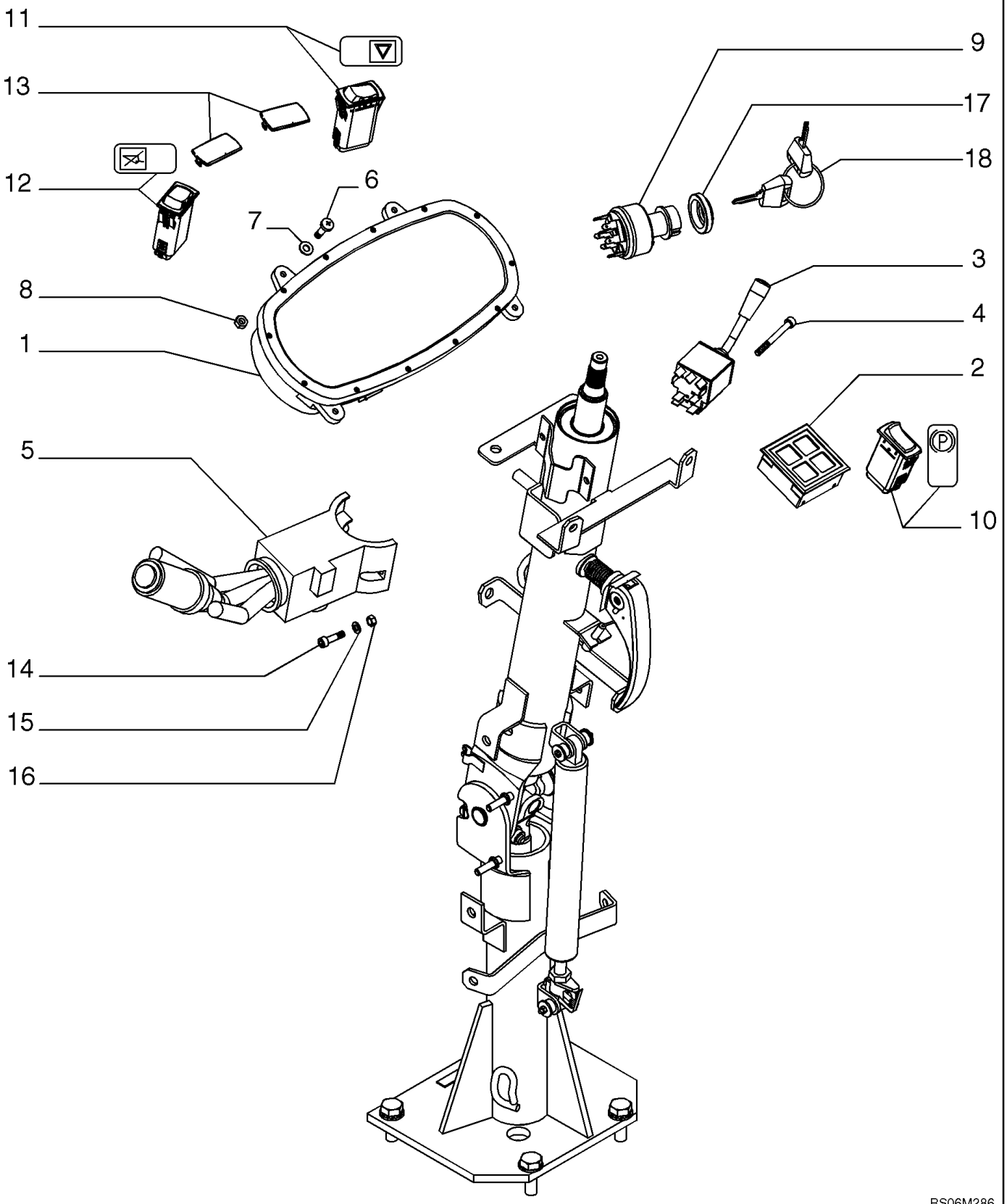

**ELECTRICAL - STEERING COLUMN / INSTRUMENT CLUSTER**

| REF | FN | PART NUMBER | YR/SN | QTY | DESCRIPTION |
|---|---|---|---|---|---|
| 1 | | 87372814 | | 1 | INSTRUMENT CLUSTER, Case |
| 2 | | 87372804 | | 1 | PAD, Key |
| 3 | | 389487A1 | | 1 | SWITCH, LIGHTS |
| 4 | | 14304731 | | 2 | SCREW, Hex Soc Hd, M5 x 50, 10.9 |
| 5 | | 238270A1 | | 1 | CONTROL, Selector |
| 6 | | 13272111 | | 4 | SCREW, Pan Hd, M4 x 14, 5.8 |
| 7 | | 14496201 | | 4 | WASHER, D4 |
| 8 | | 10794011 | | 4 | NUT, M4, Cl 8 |
| 9 | | 282775A1 | | 1 | SWITCH, IGNITION, Incl. Refs. 17, 18 |
| 10 | | 374424A2 | | 1 | SWITCH, Parking Brake |
| 11 | | 374426A2 | | 1 | SWITCH, Hazard |
| 12 | | 374434A2 | | 1 | SWITCH, Pilot Control |
| 13 | | 86000535 | | 2 | PLUG, 1.427" x .62", Plastic |
| 14 | | NSS | | 2 | NOT SERVICED SEPARATELY, SCREW, M5 x 20 |
| 15 | | 14496301 | | 4 | WASHER |
| 16 | | 15896411 | | 4 | NUT, M5, Cl 8 |
| 17 | | NSS | | 1 | NOT SERVICED SEPARATELY, Ignition Switch Cap |
| 18 | | 1964831C2 | | 1 | SET OF 2 KEYS, Padded |

**ELECTRICAL - TRANSMISSION CONTROL**

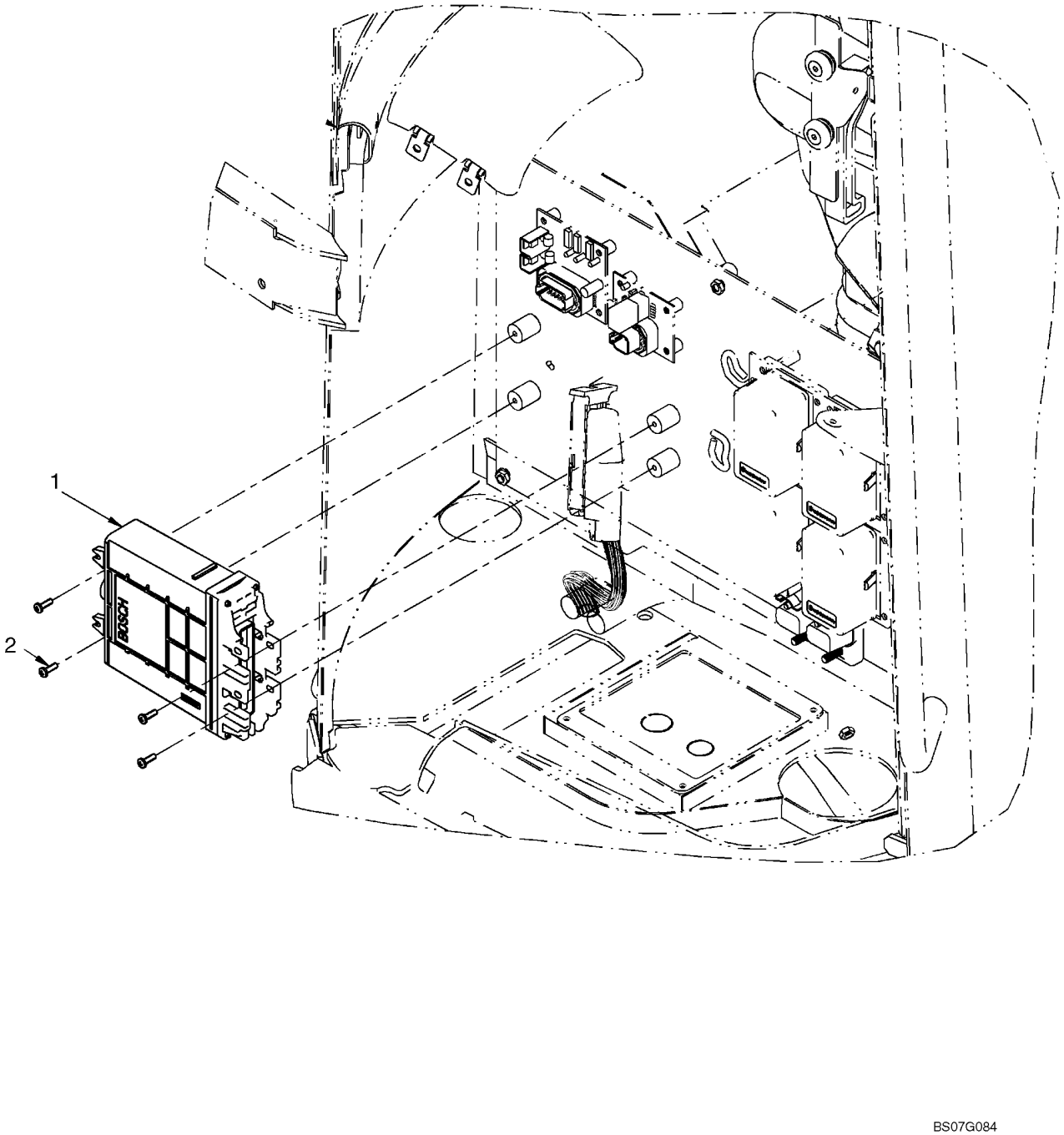

**ELECTRICAL - TRANSMISSION CONTROL**

| REF | FN | PART NUMBER | YR/SN | QTY | DESCRIPTION |
|---|---|---|---|---|---|
| 1 | | 87573767 | | 1 | CONTROL UNIT, Transmission Control |
| 2 | | 840-1516 | | 4 | SCREW, Cross Pan Hd, M5 x 16 |

**ELECTRICAL - STEERING, AUXILIARY**

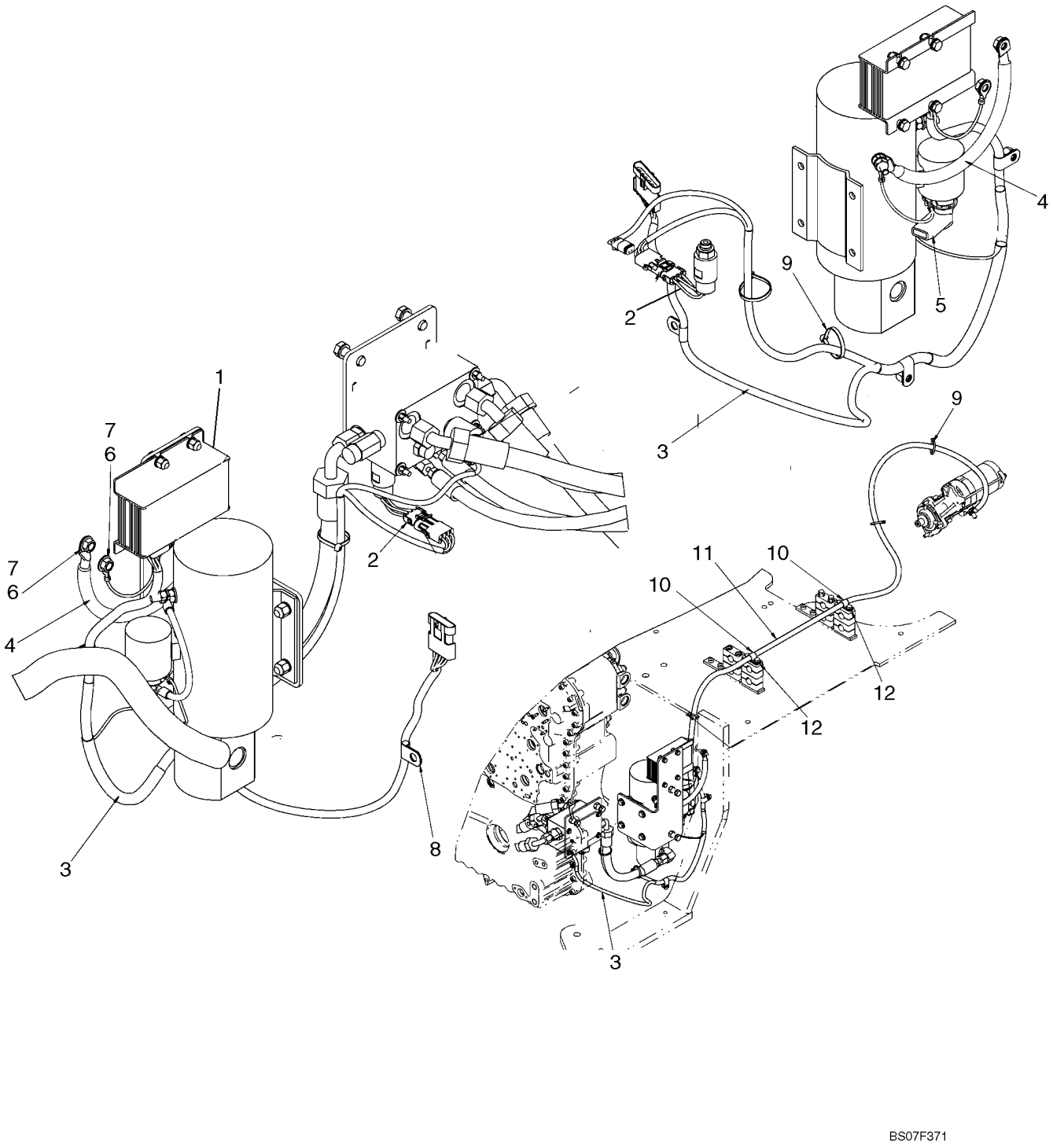

**ELECTRICAL - STEERING, AUXILIARY**

| REF | FN | PART NUMBER | YR/SN | QTY | DESCRIPTION |
|---|---|---|---|---|---|
| 1 | | 8603171 | | 1 | MODULE, Auxiliary Steering |
| 2 | | 398888A1 | | 1 | SWITCH, Auxiliary Steering Pressure Switch |
| 3 | | 87653924 | | 1 | HARNESS, Secondary Steering Module |
| 4 | | L129707 | | 1 | CABLE, Battery, Negative |
| 5 | | L126713 | | 1 | BOOT, Electrical |
| 6 | | L127554 | | 2 | WASHER |
| 7 | | 253347A1 | | 2 | NUT |
| 8 | | 515-2495 | | 1 | CLAMP, 3/8", Insul, 7/16" Bolt |
| 9 | | L11541 | | 6 | STRAP |
| 10 | | 515-24190 | | 2 | CLAMP, 3/4", Insul, 7/16" Bolt |
| 11 | | 87600841 | | 1 | CABLE, Auxiliary Steering |
| 12 | | 895-11010 | | 2 | WASHER, M10 x 20 x 2 |

**MOUNTING - LAMPS, FRONT**

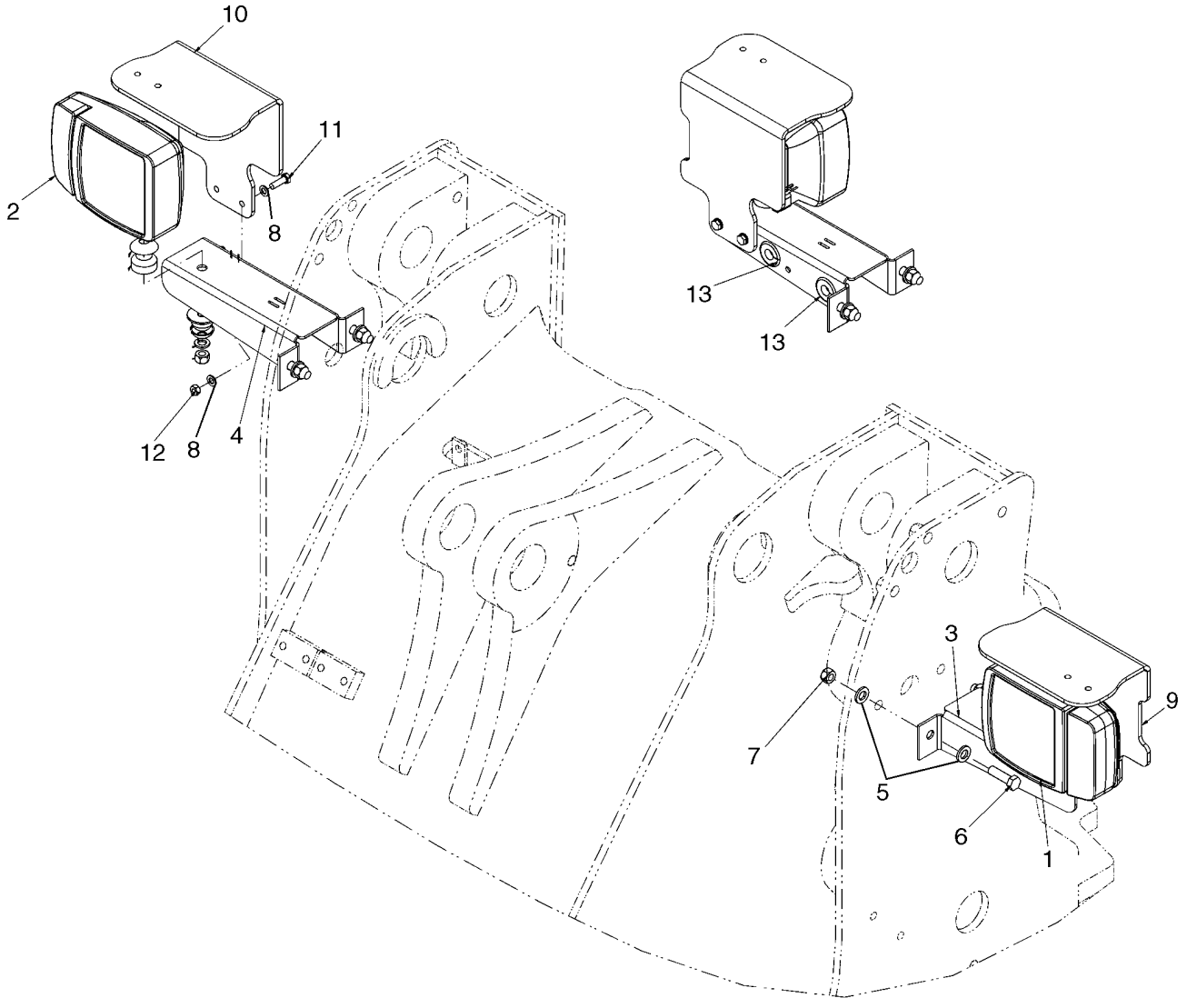

**MOUNTING - LAMPS, FRONT**

| REF | FN | PART NUMBER | YR/SN | QTY | DESCRIPTION |
|---|---|---|---|---|---|
| 1 | | 368056A1 | | 1 | LIGHT, Combination Left; See Figure 04-19 |
| 2 | | 368055A1 | | 1 | LIGHT, Combination Right; See Figure 04-19 |
| 3 | | 87588276 | | 1 | BRACKET, Light Mounting Arm, LH; Light Mounting Bracket |
| 4 | | 87351705 | | 1 | BRACKET, Light Mounting Arm, RH; Light Mounting Bracket |
| 5 | | 896-11012 | | 8 | WASHER, M13.5 x 24.5 x 3, HT |
| 6 | | 614-12040 | | 4 | BOLT, Hex, M12 x 40, 8.8, Full Thd |
| 7 | | 829-1412 | | 4 | NUT, M12, Cl 10 |
| 8 | | 895-11008 | | 8 | WASHER, M8 x 16 x 1.6 |
| 9 | | 87351718 | | 1 | SHIELD, Light |
| 10 | | 87351705 | | 1 | BRACKET, Light Shield |
| 11 | | 614-8025 | | 4 | BOLT, Hex, M8 x 25, 8.8 |
| 12 | | 829-1408 | | 4 | NUT, M8, Cl 10 |
| 13 | | 248-2376 | | 3 | GROMMET, 5/8" ID x 1 1/4" Groove Dia, Str Cut, LH Light Bracket Only |

**LAMP ASSY - LAMPS, FRONT**

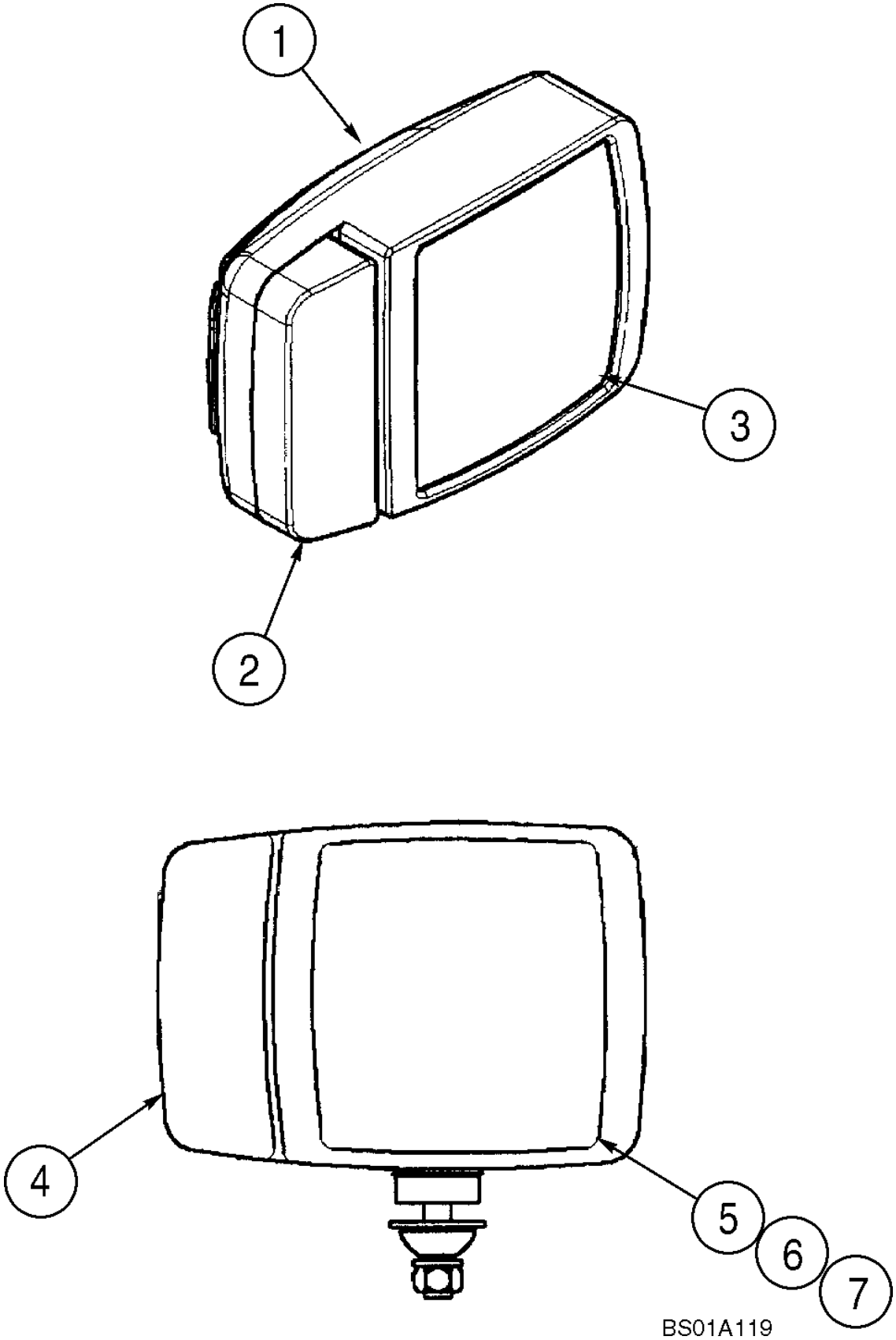

**LAMP ASSY - LAMPS, FRONT**

| REF | FN | PART NUMBER | YR/SN | QTY | DESCRIPTION |
|---|---|---|---|---|---|
| | | 368055A1 | | 1 | LIGHT, Combination; Right Hand; Includes Hardware; Incl. 1 - 7 |
| | | 368056A1 | | 1 | LIGHT, Combination; Left Hand; Includes Hardware; Incl. 1 - 7 |
| 1 | | NSS | | 1 | NOT SERVICED SEPARATELY, Housing |
| 2 | | 408142A1 | | 1 | LENS, Turn Signal and Flasher |
| 3 | | 408143A1 | | 1 | LENS, Head Light |
| 4 | | 410939A1 | | 1 | BULB, 24V; Turn Signal and Flasher |
| 5 | | 410940A1 | | 1 | BULB, 24V; Position |
| 6 | | 410942A1 | | 1 | BULB, 24V; High Beam |
| 7 | | 410941A1 | | 1 | BULB, 24V; Low Beam |

**MOUNTING - LAMPS, REAR COMBINATION**

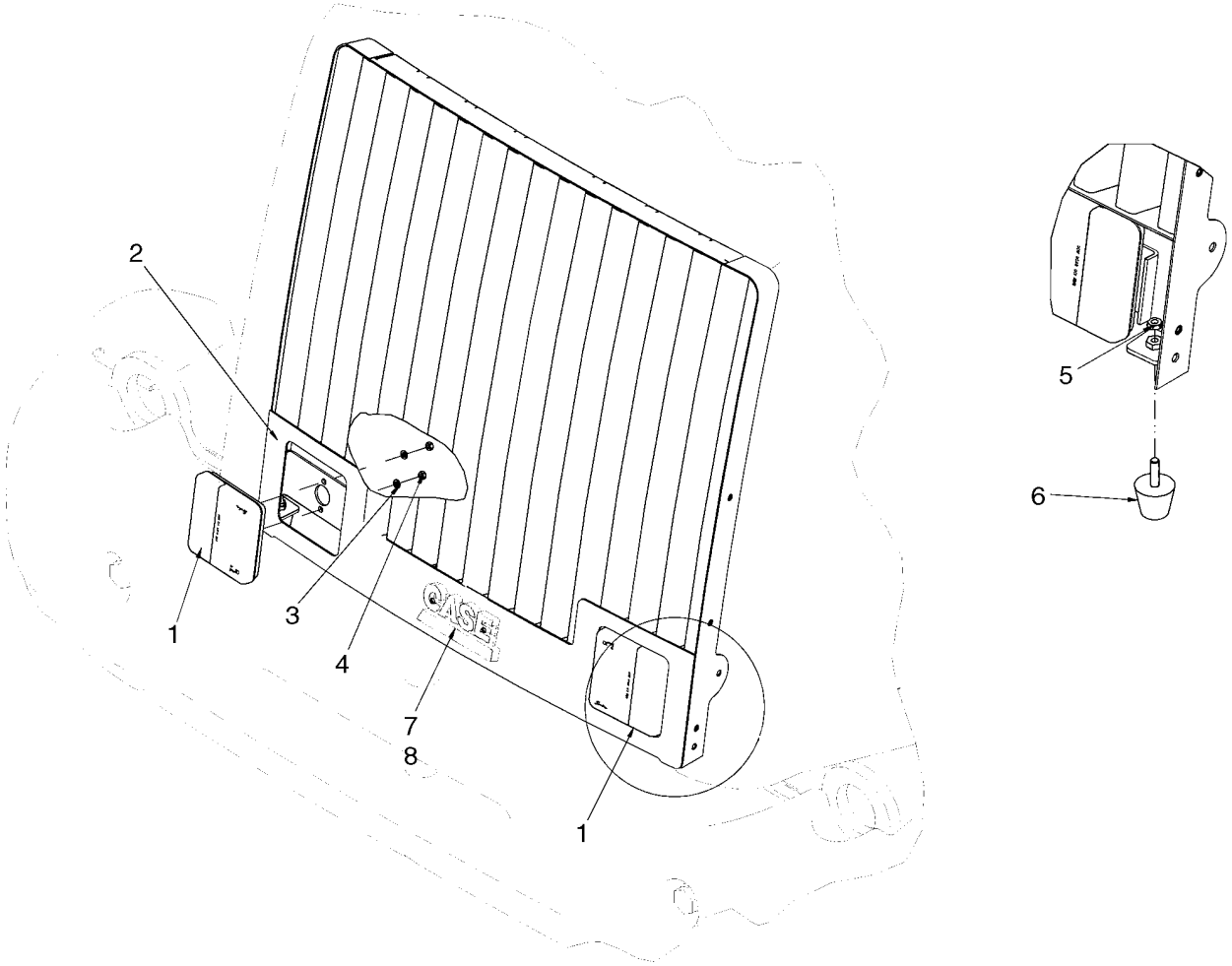


BS07D278

**MOUNTING - LAMPS, REAR COMBINATION**

| REF | FN | PART NUMBER | YR/SN | QTY | DESCRIPTION |
|---|---|---|---|---|---|
| 1 | | 87578654 | | 2 | LAMP, TAIL, Sealed, Rear Combination; Component Parts Not Serviced Separately |
| 2 | | 87591668 | | 1 | GRILLE, Rear, CNH Black |
| 3 | | 892-11006 | | 4 | WASHER, LOCK, M6 |
| 4 | | 825-1406 | | 4 | NUT, M6, Cl 8 |
| 5 | | 425-145 | | 2 | NUT, Jam, 5/16"-18, G5 |
| 6 | | N7673 | | 2 | BUFFER, RUBBER |
| 7 | | 186989A1 | | 1 | PLATE, IDENTITY, Case Logo |
| 8 | | 131-431 | | 2 | NUT, LOCK, Self, Threading, 1/4" |

**CAB - WORK LAMPS**

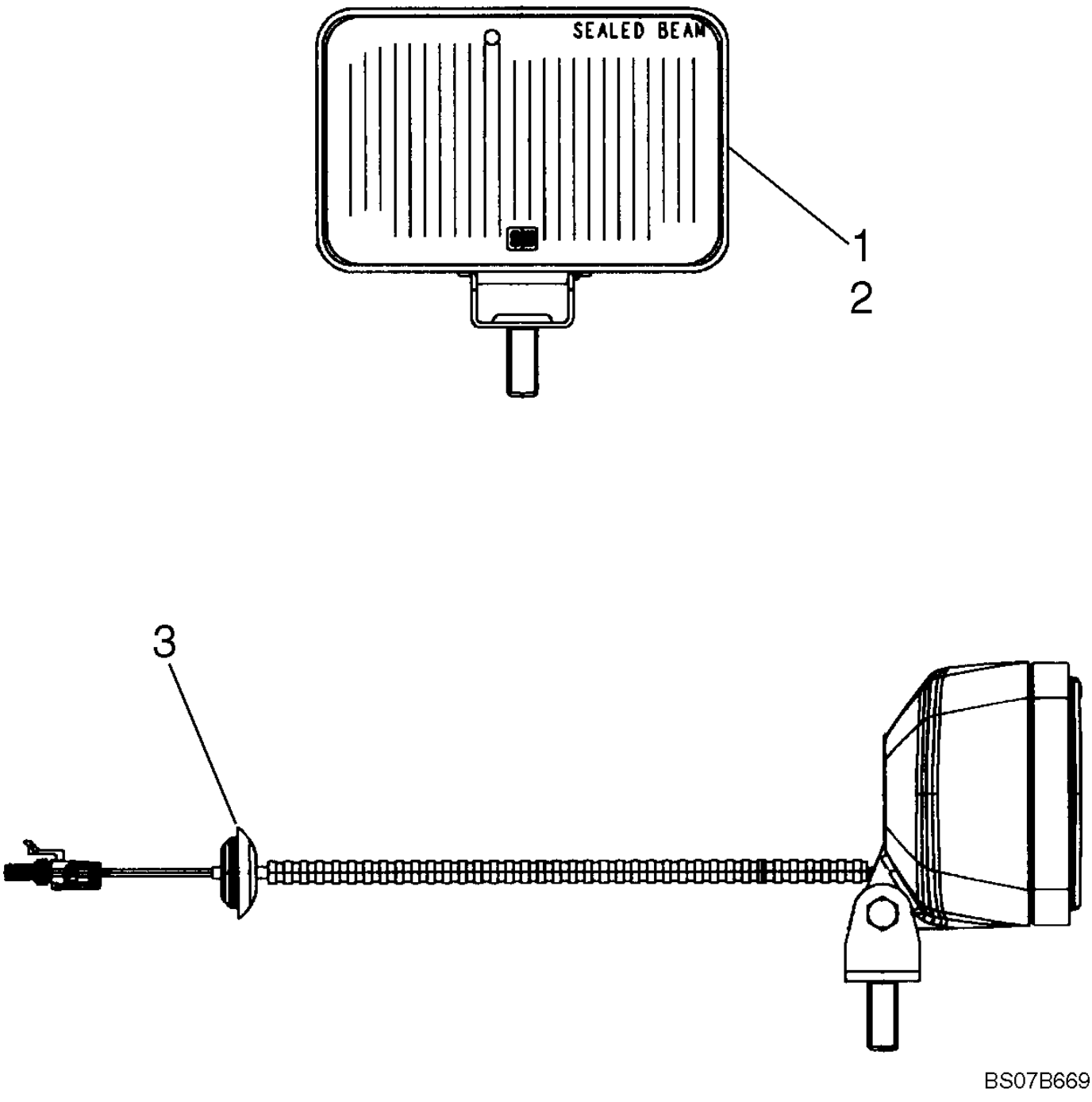

**CAB - WORK LAMPS**

| REF | FN | PART NUMBER | YR/SN | QTY | DESCRIPTION |
|---|---|---|---|---|---|
| | | REF | | | INSTRUCTION, CAB FLOOD LAMPS, SEE FIGURE 09-40 FOR MOUNTING HARDWARE |
| 1 | | 87627057 | | 2 | LAMP, WORK, Front; Incl. Ref. 3 |
| 2 | | 87613498 | | 2 | LAMP, WORK, Rear; Incl. Ref. 3 |
| 3 | | {87613497} | | 1 | GROMMET |

**BEACON ASSY, ROTATING - MOUNTING**

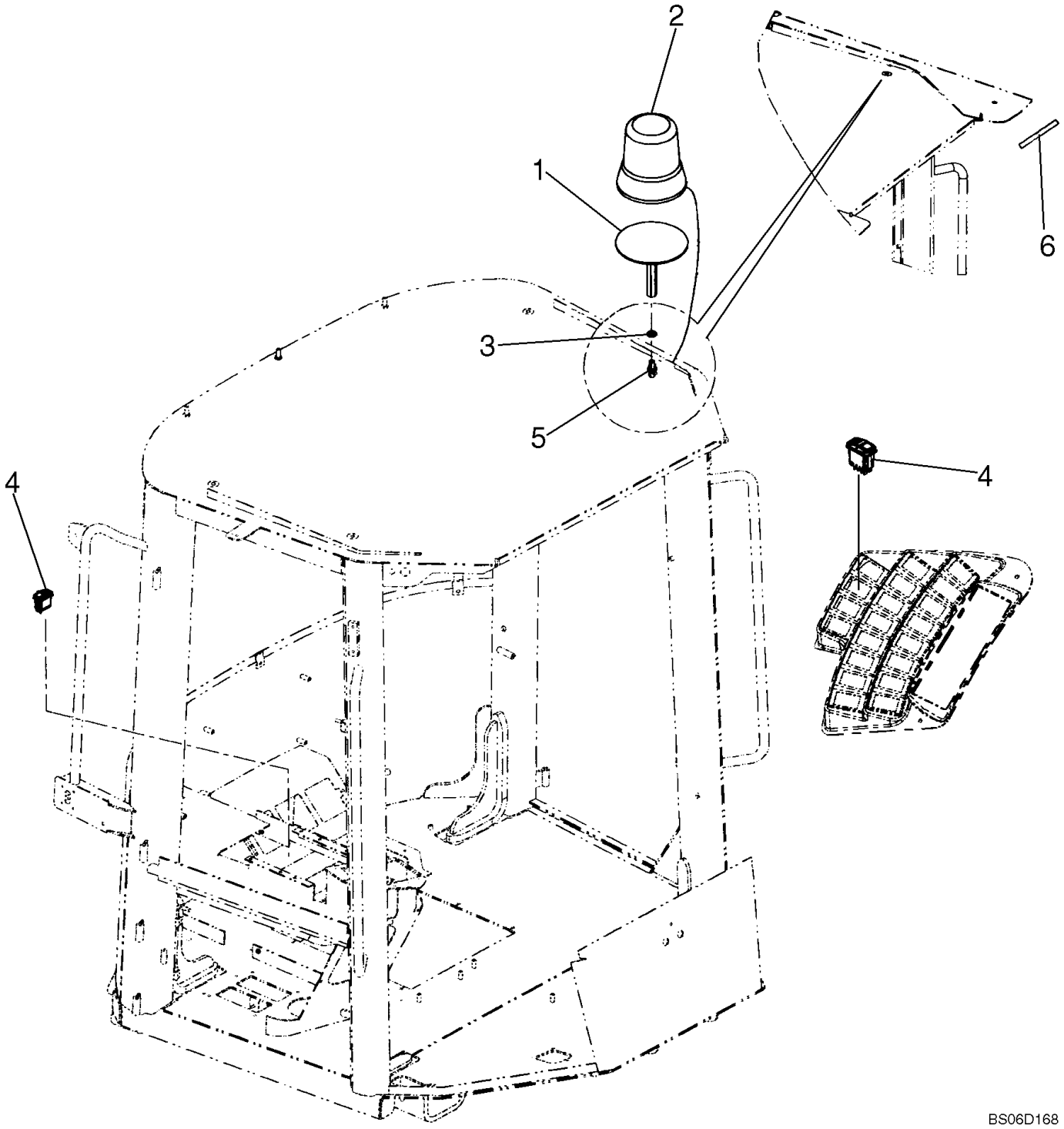

**BEACON ASSY, ROTATING - MOUNTING**

| REF | FN | PART NUMBER | YR/SN | QTY | DESCRIPTION |
|---|---|---|---|---|---|
| 1 | | 87397102 | | 1 | SUPPORT, Rotating Beacon |
| 2 | | 76041998 | | 1 | FLASHER UNIT, Rotating Beacon |
| 3 | | 892-11012 | | 1 | WASHER, LOCK, M12 |
| 4 | | 374430A2 | | 1 | SWITCH, Rotating Beacon |
| 5 | | 87515619 | | 1 | BOLT, Double Sided Thread |
| 6 | | 60-6359T1 | | 1 | GASKET, 7-5/8 inch, Cut to Fit From F64277 47 Foot Bulk Roll |

**CAB - WIPER, FRONT**

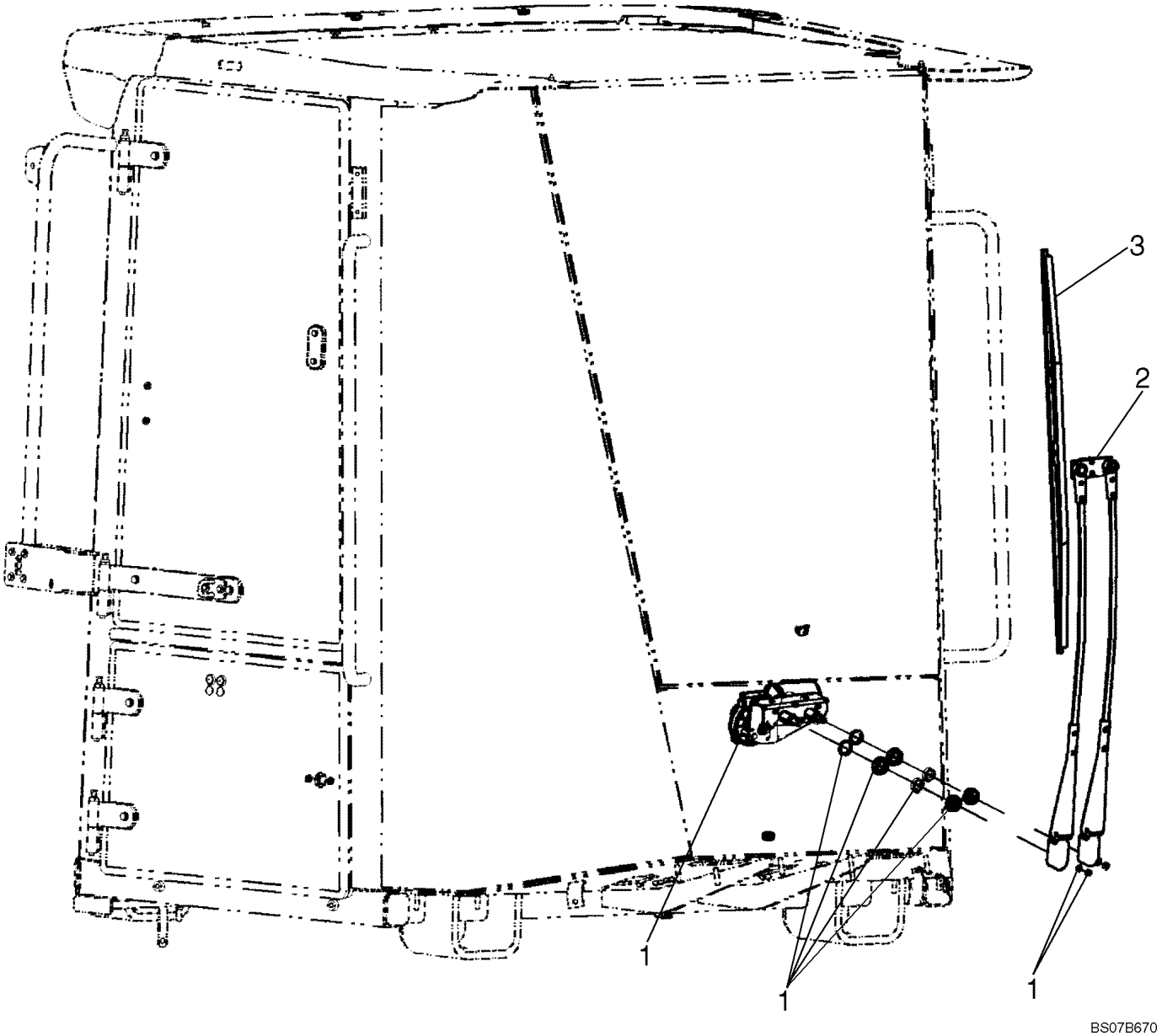

**CAB - WIPER, FRONT**

| REF | FN | PART NUMBER | YR/SN | QTY | DESCRIPTION |
|---|---|---|---|---|---|
| 1 | | 87372246 | | 1 | WIPER MOTOR, Front; Wiper Arm Mounting Hardware Supplied In Motor Assy. |
| 2 | | 76303246 | | 1 | WIPER ARM, Front |
| 3 | | 76043977 | | 1 | BRUSH, 800mm |
| 4 | | 248-1169 | | 1 | GROMMET, 3/8" ID x 5/8" Groove Dia, Not Illustrated |
| 5 | | 31-2369 | | 1 | HOSE, Front Windshield Washer; Not Illustrated |

| 04-23A | | p1 | 07/07 |
|---|---|---|---|

**CAB - WIPER, REAR**

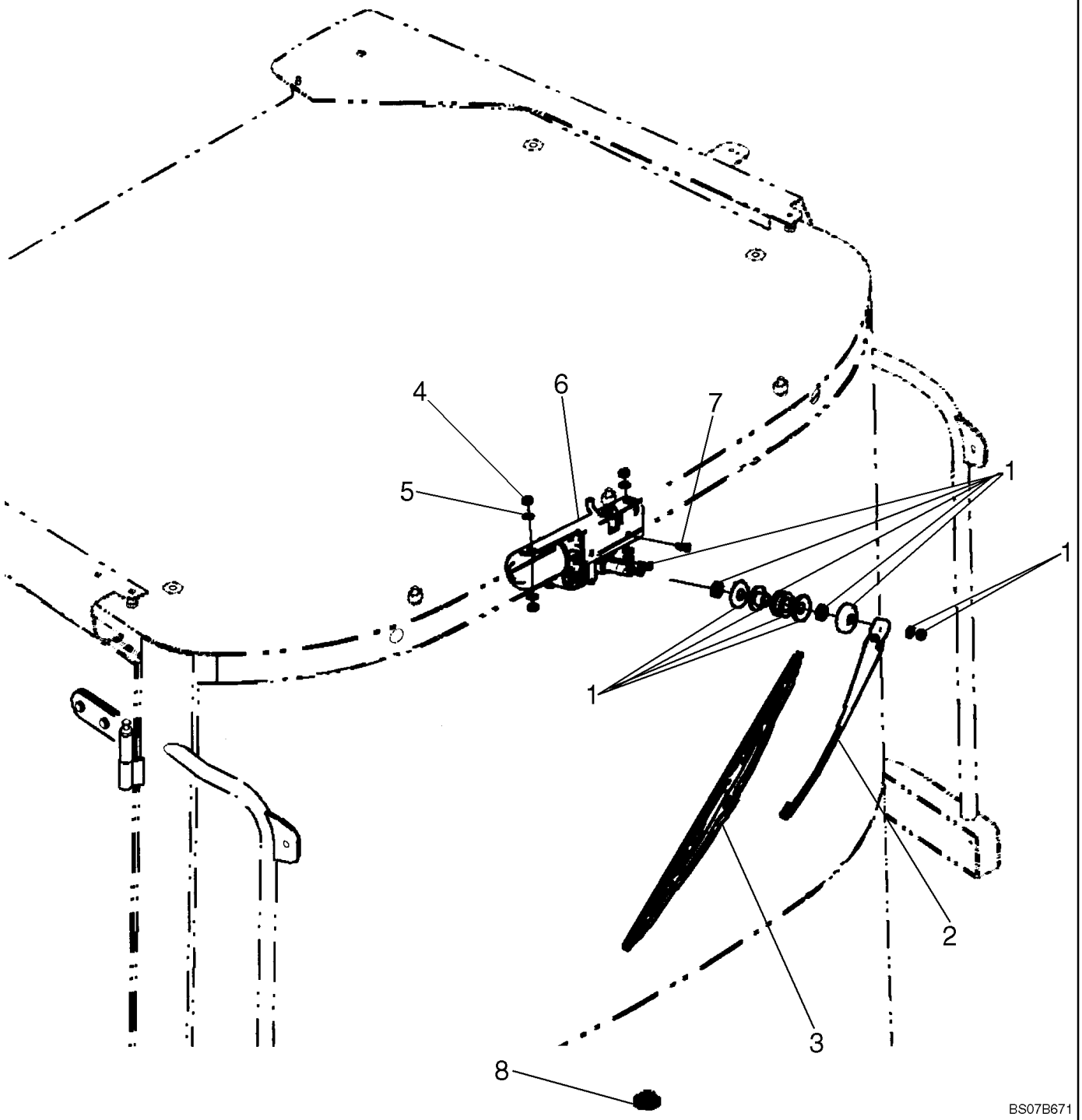

**CAB - WIPER, REAR**

| REF | FN | PART NUMBER | YR/SN | QTY | DESCRIPTION |
|---|---|---|---|---|---|
| 1 | | 87372247 | | 1 | WIPER MOTOR, Rear; Wiper Arm Mounting Hardware Included In Motor Assy. |
| 2 | | 76303244 | | 1 | WIPER ARM, 350 mm |
| 3 | | 82022857 | | 1 | WIPER BLADE, 500 mm |
| 4 | | 825-1408 | | 1 | NUT, M8, Cl 8 |
| 5 | | 895-11008 | | 1 | WASHER, M8 x 16 x 1.6, Wiper Motor |
| 6 | | 76303327 | | 1 | BRACKET |
| 7 | | 543-708 | | 1 | SCREW, Phil Flat Hd, M6 x 20, 4.8 |
| 8 | | 248-1169 | | 1 | GROMMET, 3/8" ID x 5/8" Groove Dia |
| 9 | | 31-2582 | | 1 | HOSE, 3962 mm (156 in) Not Illustrated |

**RADIO - 12 VOLT**

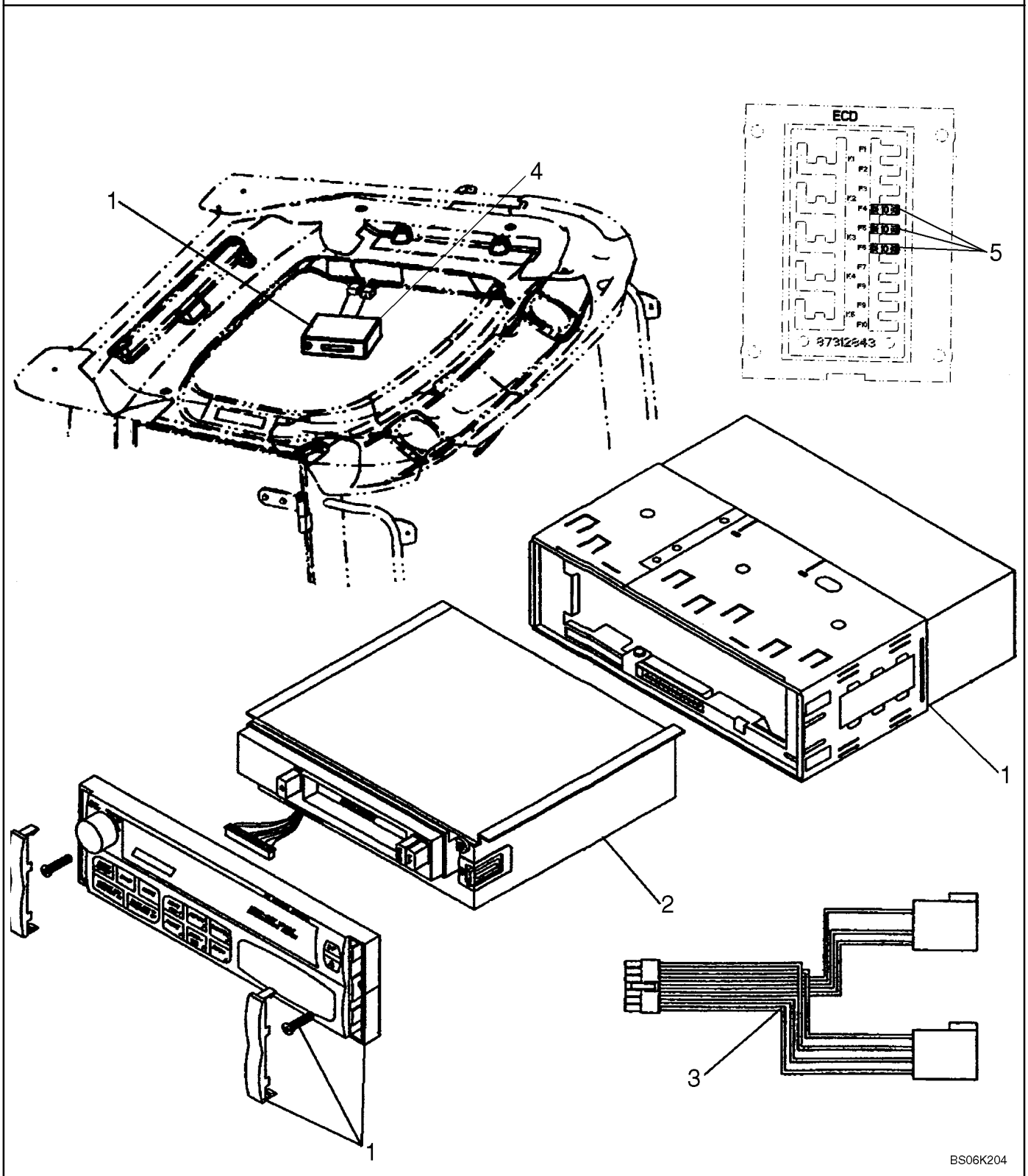

**RADIO - 12 VOLT**

| REF | FN | PART NUMBER | YR/SN | QTY | DESCRIPTION |
|---|---|---|---|---|---|
| | | REF | | | INSTRUCTION, RADIO 12 VOLT |
| 1 | | 87580058 | | 1 | RADIO |
| 2 | | NSS | | 1 | NOT SERVICED SEPARATELY, Cassette |
| 3 | | NSS | | 1 | NOT SERVICED SEPARATELY, Harness |
| 4 | | {87579998} | | 1 | BEZEL |
| 5 | | 121412A1 | | 3 | FUSE, Mini 10 Amp |

**RADIO - 12 VOLT INSTALLATION**

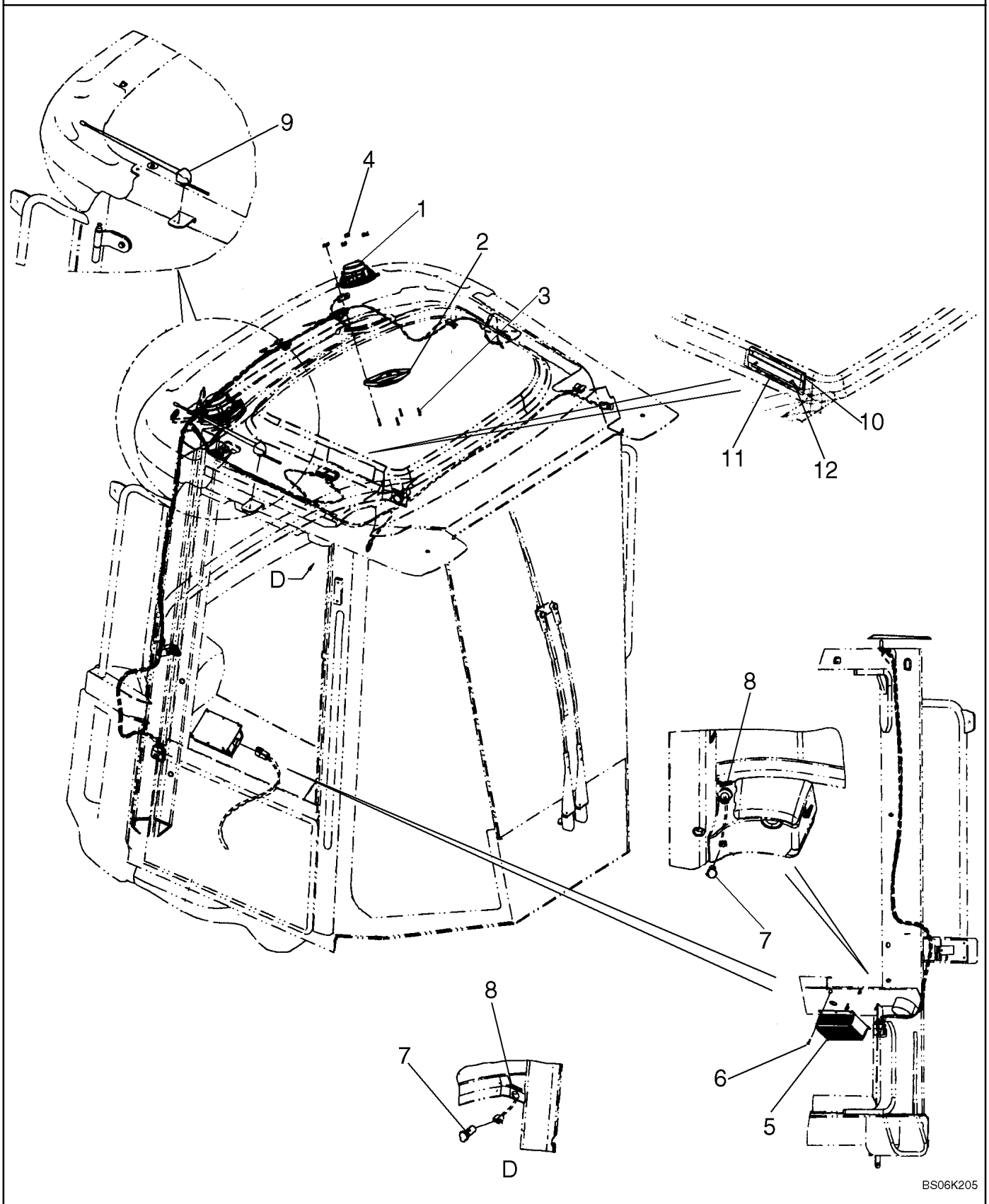

**RADIO - 12 VOLT INSTALLATION**

| REF | FN | PART NUMBER | YR/SN | QTY | DESCRIPTION |
|---|---|---|---|---|---|
| | | REF | | | INSTRUCTION, RADIO 12 VOLT INSTALLATION |
| 1 | | 182721A2 | | 2 | SPEAKER, 4 OHM |
| 2 | | 187281A1 | | 2 | COVER, Grill |
| 3 | | 761-17325 | | 8 | SCREW, SELF TAP, Pan Hd, M4.2 x 25 |
| 4 | | 302862A1 | | 8 | NUT |
| 5 | | 87318825 | | 1 | CONVERTER, 24V/12V |
| 6 | | 760-14113 | | 4 | SCREW, SELF TAP, Pan Hd, M3.5 x 13 |
| 7 | | 388813A1 | | 2 | OUTLET, Power |
| 8 | | 365935A2 | | 2 | DECAL, 12V; 10A |
| 9 | | 71480988 | | 1 | ANTENNA, Kit |
| 10 | | {87579996} | | 1 | COVER, RADIO; If Used: Not Used If Radio Is Installed |
| 11 | | {87579997} | | 1 | BRACKET, RADIO COVER; If Used: Not Used If Radio Is Installed |
| 12 | | 87026656 | | 2 | SCREW, Cross Pan Hd, M5 x 25, If Used: Not Used If Radio Is Installed |

| 04-25 | | p1 | 07/07 |
|---|---|---|---|

**BATTERY MOUNTING**

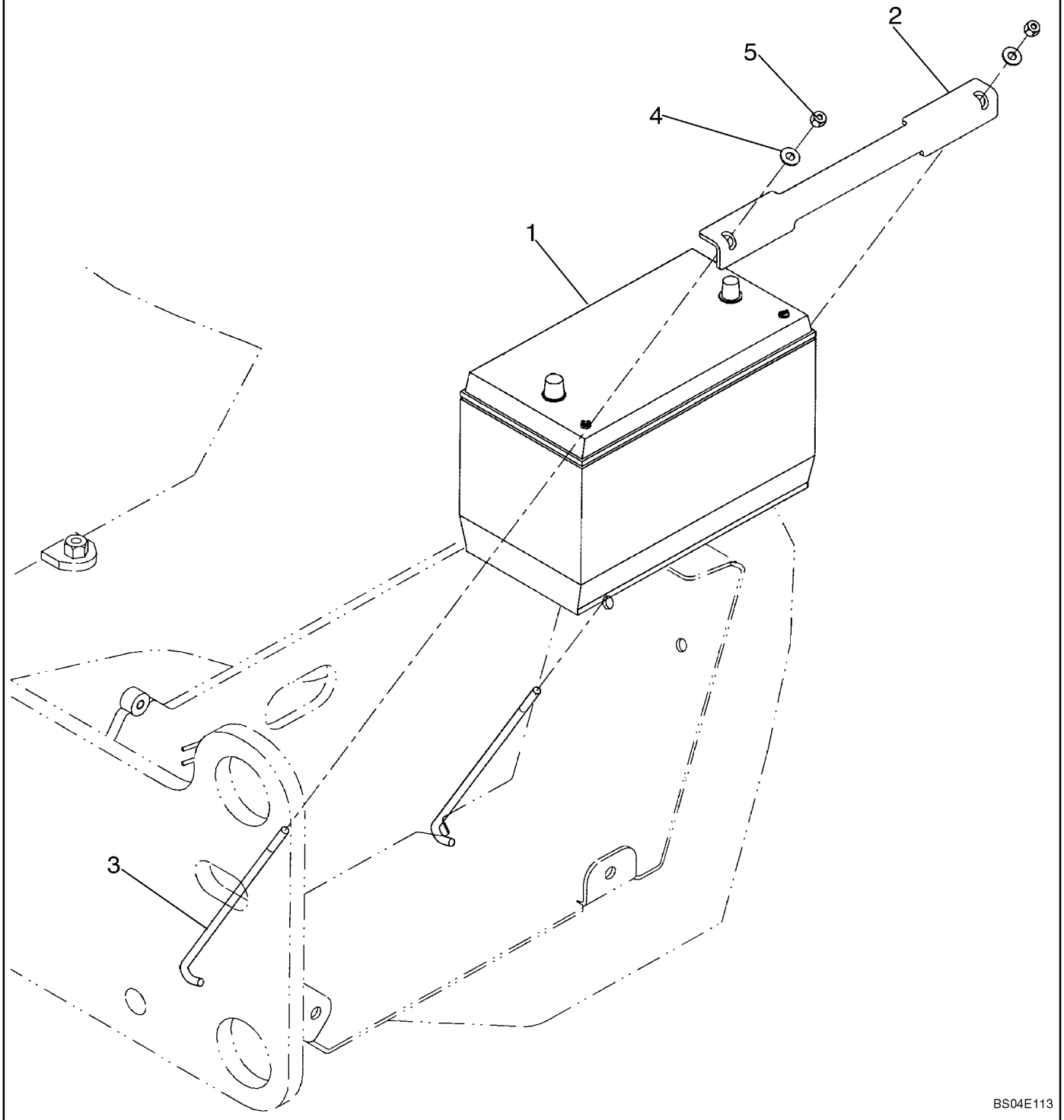

**BATTERY MOUNTING**

| REF | FN | PART NUMBER | YR/SN | QTY | DESCRIPTION |
|---|---|---|---|---|---|
| 1 | | A176482 | | 2 | BATTERY, WET, BMF31E |
| 2 | | 365191A1 | | 2 | STRAP, Battery |
| 3 | | 365357A1 | | 4 | ROD, Hold Down |
| 4 | | 895-15008 | | 4 | WASHER, M8 x 20 x 1.6 |
| 5 | | 832-10408 | | 4 | NUT, LOCK, M8 x 1.25, Cl 8 |

**BATTERY MOUNTING - HEAVY DUTY**

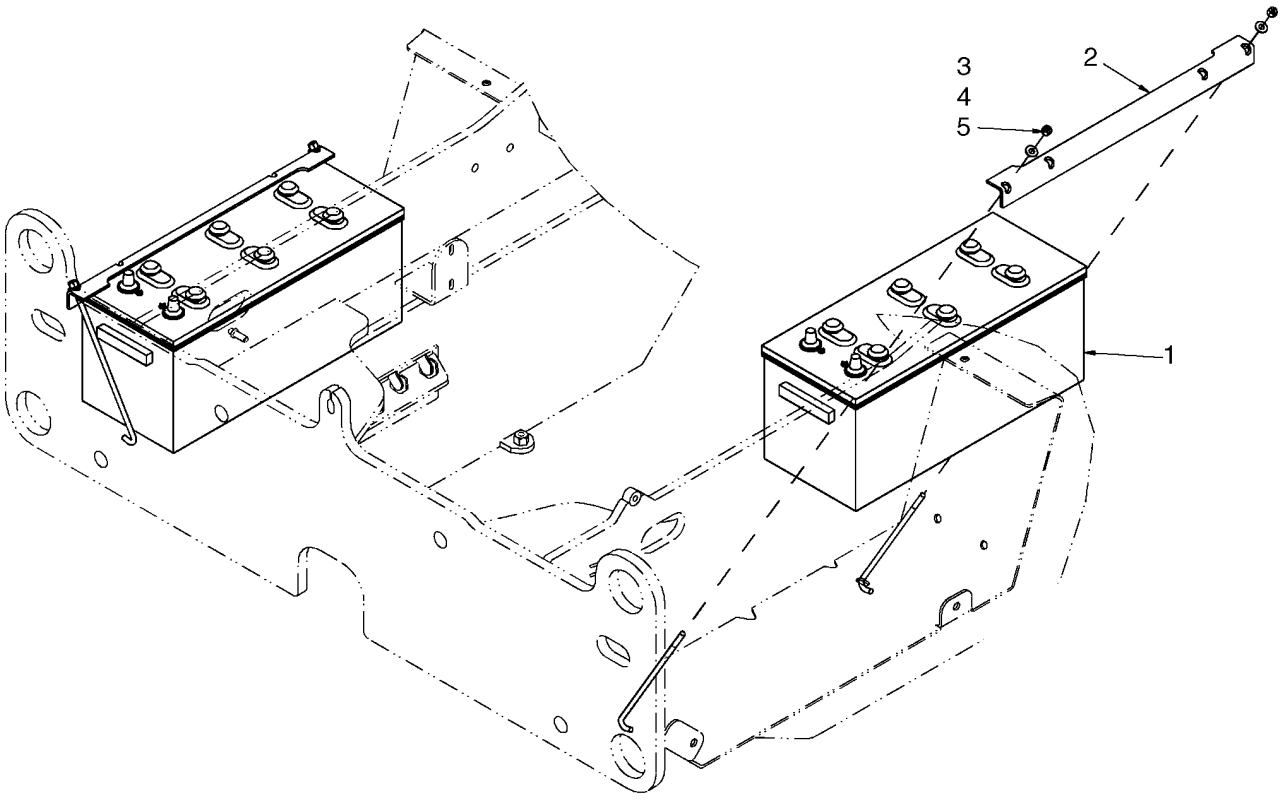


BS07G078

**BATTERY MOUNTING - HEAVY DUTY**

| REF | FN | PART NUMBER | YR/SN | QTY | DESCRIPTION |
|---|---|---|---|---|---|
| 1 | | L51769 | | 2 | BATTERY, WET |
| 2 | | L124221 | | 2 | SUPPORT, Battery Bracket |
| 3 | | 365357A1 | | 4 | ROD, Hold Down |
| 4 | | 895-15008 | | 4 | WASHER, M8 x 20 x 1.6, 9 x 20 x 1.6mm |
| 5 | | 832-10408 | | 4 | NUT, LOCK, M8 x 1.25, Cl 8 |

**BATTERY - CABLES**

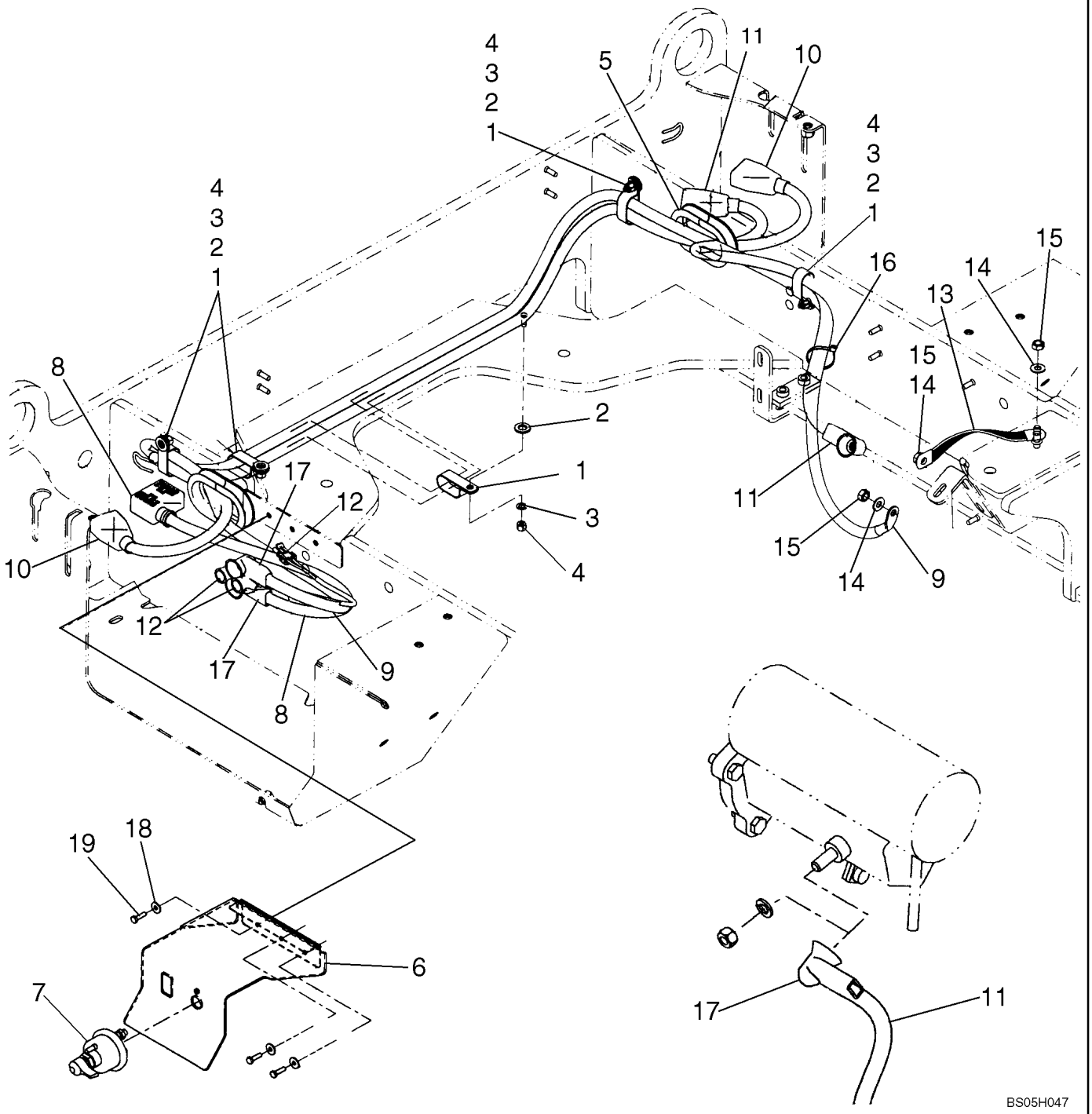

**BATTERY - CABLES**

| REF | FN | PART NUMBER | YR/SN | QTY | DESCRIPTION |
|---|---|---|---|---|---|
| 1 | | R54363 | | 5 | CLAMP, Double |
| 2 | | 896-11012 | | 5 | WASHER, M13.5 x 24.5 x 3, HT |
| 3 | | 895-11008 | | 5 | WASHER, M8 x 16 x 1.6 |
| 4 | | 832-10408 | | 5 | NUT, LOCK, M8 x 1.25, Cl 8 |
| 5 | | 398771A1 | | 2 | CONDUIT, Battery Cable |
| 6 | | 87329253 | | 1 | BRACKET, Hood Switch/ Master Disconnect |
| 7 | | L126256 | | 1 | SWITCH, Master Disconnect |
| 8 | | 87324868 | | 1 | CABLE, BATTERY (NEG), Negative To Disconnect |
| 9 | | 87324875 | | 1 | CABLE, Ground |
| 10 | | 87324722 | | 1 | CABLE, ELECTRIC, Crossover |
| 11 | | 87324979 | | 1 | CABLE, ELECTRIC, Positive To Starter |
| 12 | | L127676 | | 1 | HARNESS, Disconnect |
| 13 | | L126051 | | 1 | STRAP, GROUND, Engine Block |
| 14 | | L127554 | | 3 | WASHER, Brass |
| 15 | | 253347A1 | | 3 | NUT, 3/8; Brass |
| 16 | | L18331 | | 1 | STRAP, CABLE |
| 17 | | L126713 | | 3 | BOOT, Electrical |
| 18 | | 895-25006 | | 3 | WASHER, M6 x 18 x 1.6 |
| 19 | | 627-6020 | | 3 | BOLT, Hex, M6 x 20, 10.9 |
| 20 | | 87591165 | | 1 | SEAL, For Hood Swich/Master Disconnect Bracket, Not Illustrated |

**LICENSE PLATE LIGHT**

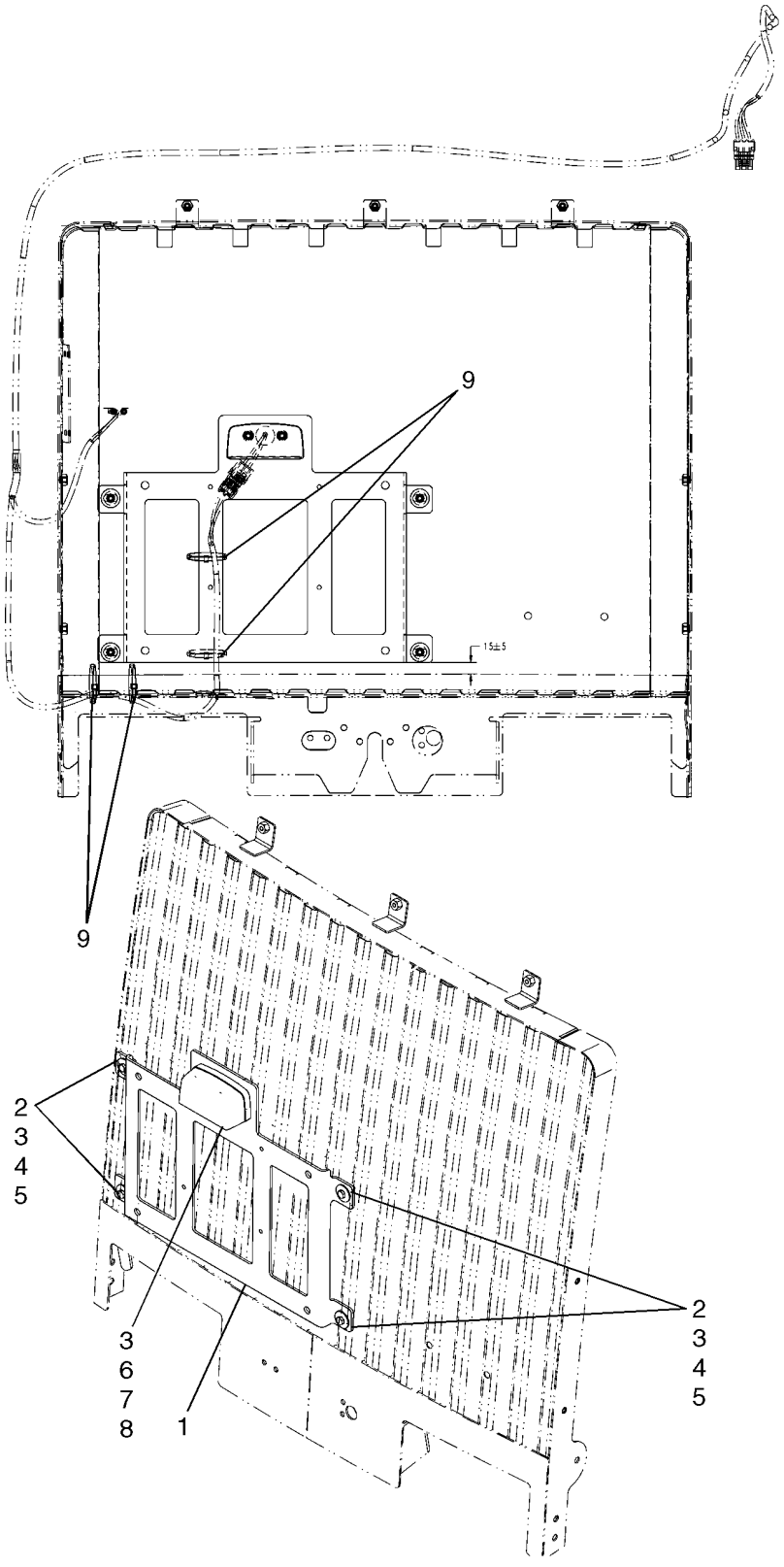


BS07G077

**LICENSE PLATE LIGHT**

| REF | FN | PART NUMBER | YR/SN | QTY | DESCRIPTION |
|---|---|---|---|---|---|
| 1 | | 193446A1 | | 1 | PLATE, License Plate |
| 2 | | 895-15006 | | 4 | WASHER, M6 x 25 x 1.6 |
| 3 | | 614-6020 | | 6 | BOLT, Hex, M6 x 20, 8.8 |
| 4 | | 895-25006 | | 4 | WASHER, M6 x 18 x 1.6 |
| 5 | | 832-10406 | | 4 | NUT, LOCK, M6 x 1, Cl 8 |
| 6 | | 120229A1 | | 1 | LIGHT, License Plate |
| 7 | | 892-11006 | | 2 | WASHER, LOCK, M6 |
| 8 | | 829-1406 | | 2 | NUT, M6, Cl 10 |
| 9 | | L18331 | | 4 | STRAP, CABLE, 15 in |

**WINDSHIELD WASHER MOUNTING**

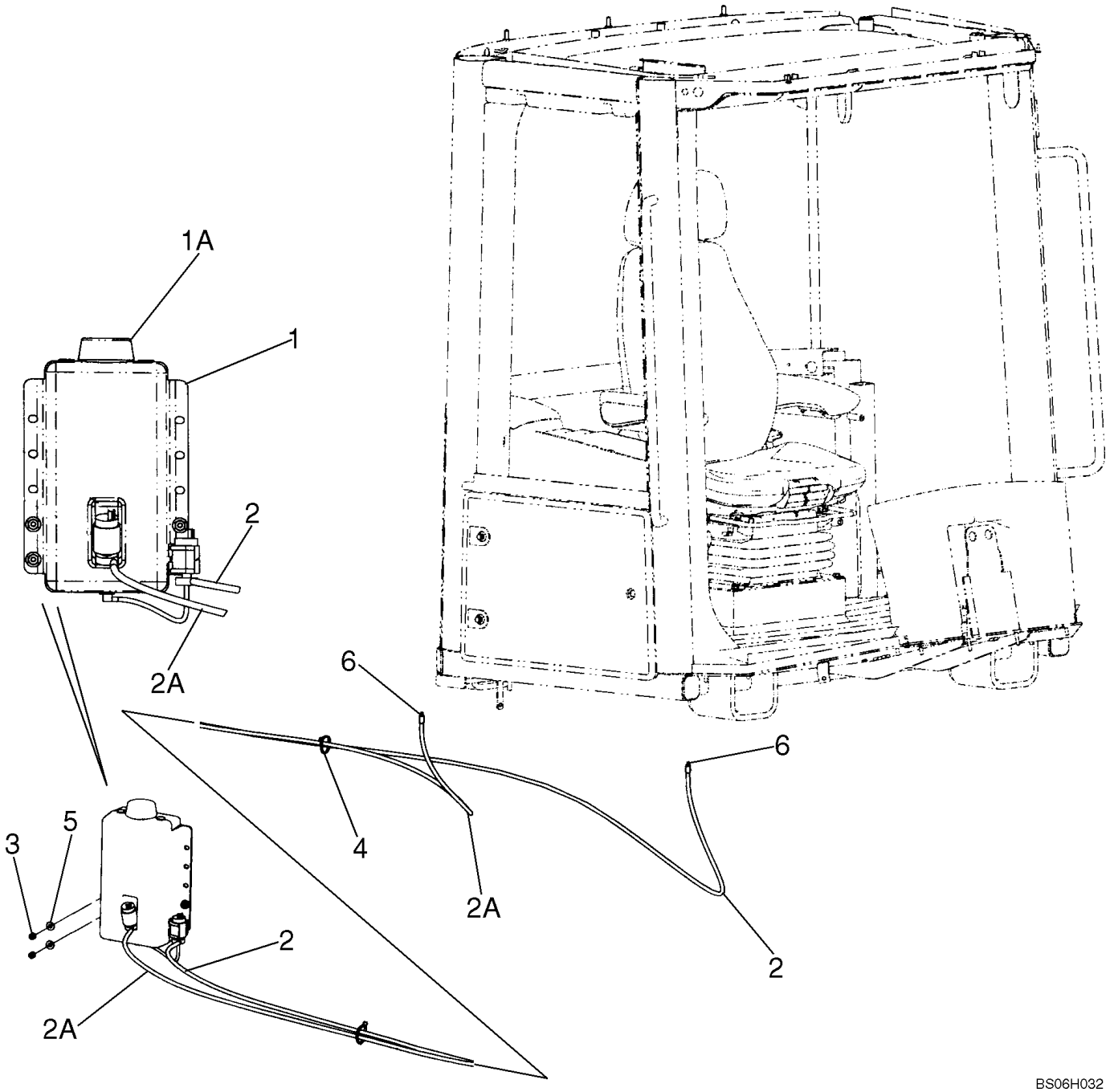

**WINDSHIELD WASHER MOUNTING**

| REF | FN | PART NUMBER | YR/SN | QTY | DESCRIPTION |
|---|---|---|---|---|---|
| 1 | | 371185A1 | | 1 | TANK, Windshield Washer; Front; Incl. Ref. 1A |
| 1A | | 87439461 | | 1 | CAP |
| 2 | | 31-2370 | | 1 | HOSE, Front Windshield, 3302 mm (130 in) |
| 2A | | 384138A1 | | 1 | HOSE ASSY., Rear Windshield, 2591 mm (102 in) |
| 3 | | 832-10408 | | 3 | NUT, LOCK, M8 x 1.25, Cl 8 |
| 4 | | L11541 | | 2 | STRAP, 7-8 Inch. Nylon |
| 5 | | 895-15008 | | 3 | WASHER, M8 x 20 x 1.6 |
| 6 | | 324203A1 | | 2 | VALVE, CHECK, Washer Fluid |

## NOTES

# SECTION INDEX
## Steering


| | |
|---|---|
| 05-01 | STEERING WHEEL |
| 05-02 | STEERING COLUMN |
| 05-02A | STEERING COLUMN - ACCESSORY |
| 05-03 | STEERING COLUMN - TRIM |
| 05-04 | HYDRAULICS - STEERING |
| 05-05 | HYDRAULICS - STEERING - AUXILIARY |
| 05-06 | STEERING CONTROL VALVE |
| 05-07 | STEERING - AUXILIARY - MANIFOLD ASSEMBLY |
| 05-08 | STEERING - AUXILIARY - PUMP |
| 05-09 | STEERING - CYLINDER - HYDRAULICS |
| 05-10 | STEERING - CYLINDER ASSY |

**STEERING WHEEL**

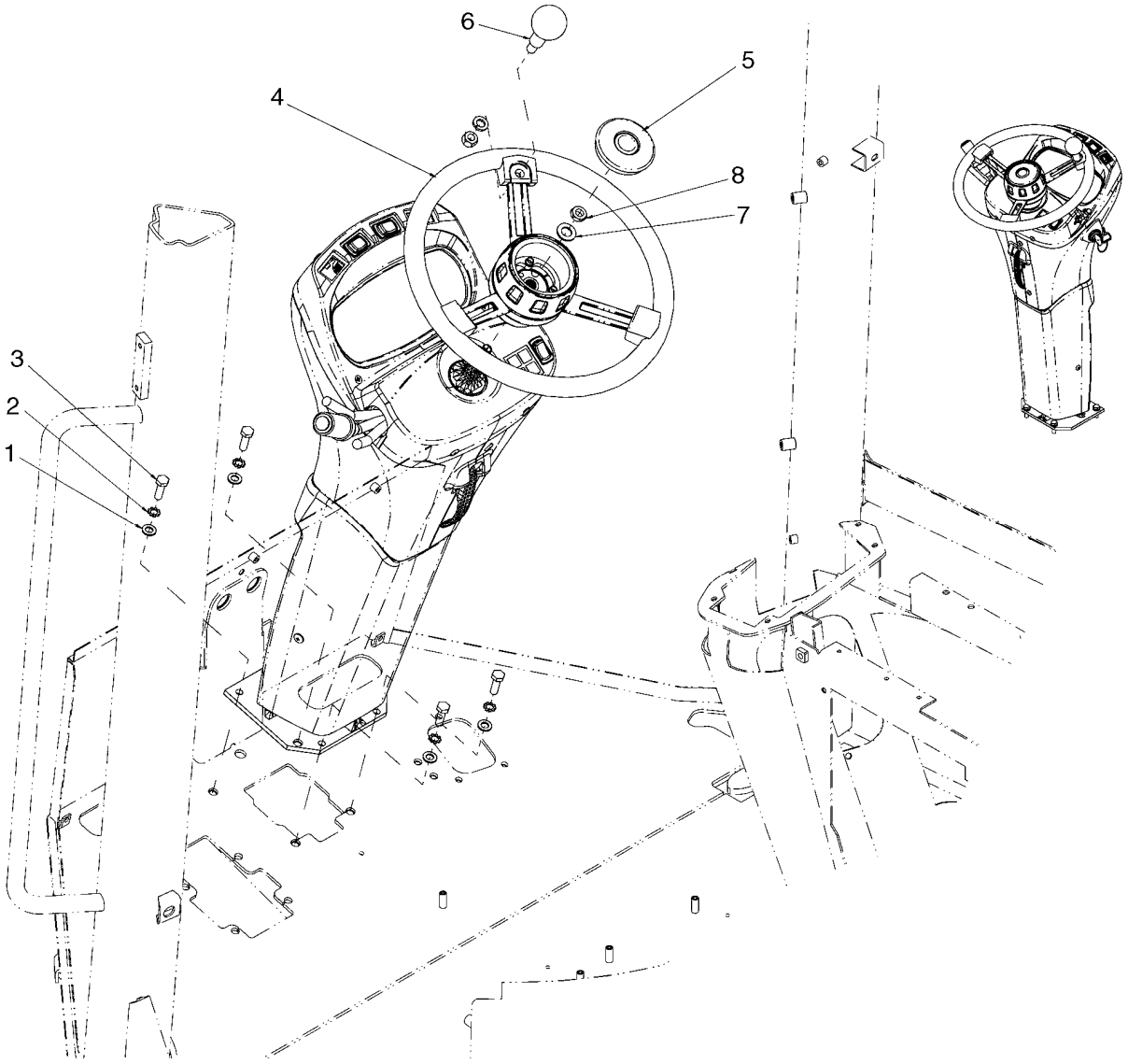

**STEERING WHEEL**

| REF | FN | PART NUMBER | YR/SN | QTY | DESCRIPTION |
|---|---|---|---|---|---|
| 1 | | 895-11010 | | 4 | WASHER, M10 x 20 x 2 |
| 2 | | 893-11010 | | 4 | WASHER, LOCK, Ext Tooth, M10 |
| 3 | | 627-10030 | | 4 | BOLT, Hex, M10 x 30, 10.9, Full Thd |
| 4 | | 283484A1 | | 1 | WHEEL (STEERING) |
| 5 | | 384985A1 | | 1 | CAP, Center |
| 6 | | L127996 | | 1 | KNOB, Steering |
| 7 | | 895-11014 | | 1 | WASHER, M14 x 28 x 2.5 |
| 8 | | 829-23414 | | 1 | NUT, Thin, M14 x 1.5, Cl 05 |

**STEERING COLUMN**

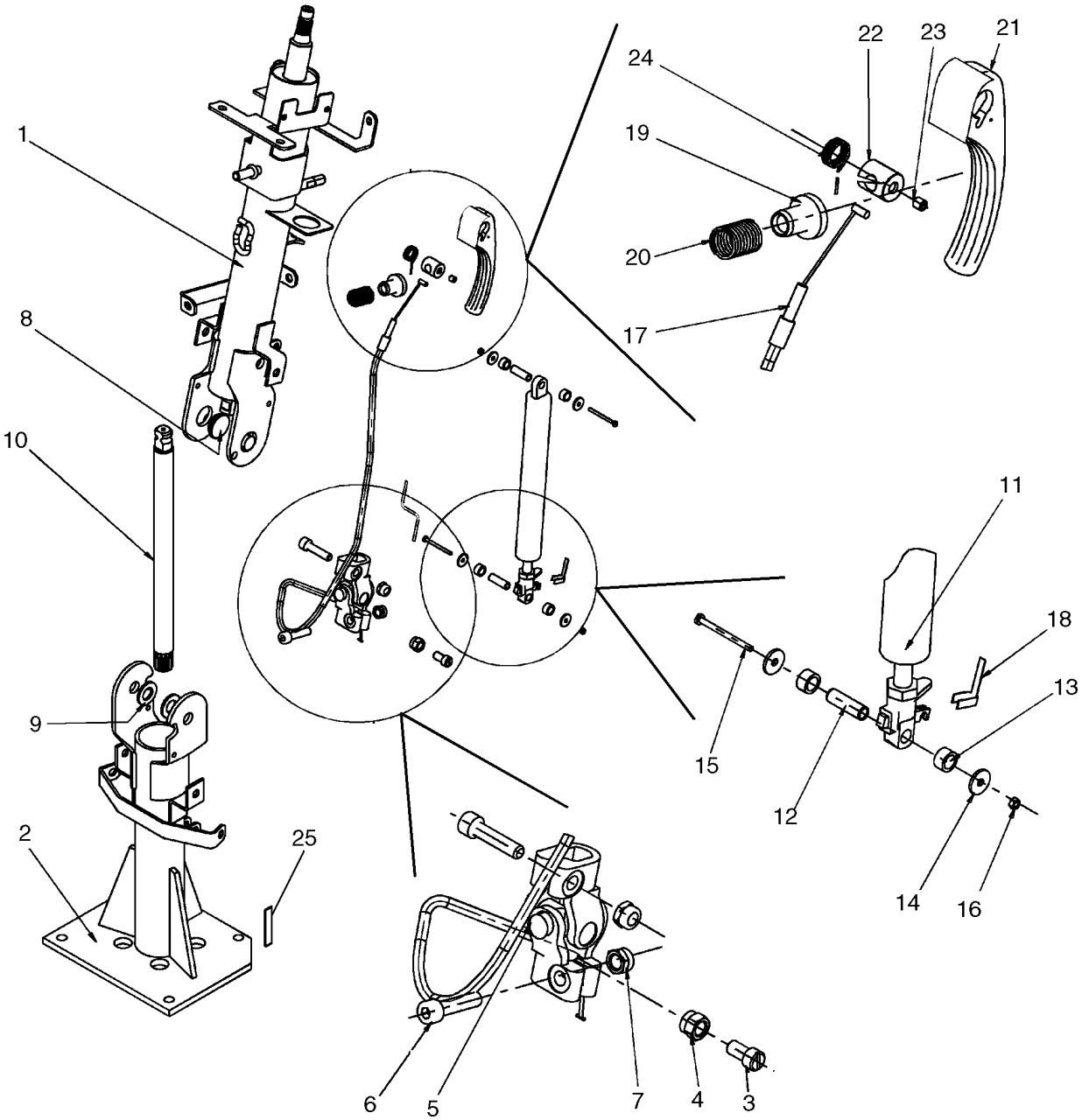

**STEERING COLUMN**

| REF | FN | PART NUMBER | YR/SN | QTY | DESCRIPTION |
|---|---|---|---|---|---|
| 1 | | 76303277 | | 1 | STEERING COLUMN, Upper |
| 2 | | {87525205} | | 1 | STEERING COLUMN, Lower |
| 3 | | {87525216} | | 1 | PIN |
| 4 | | 16104111 | | 1 | NUT, LOCK, M8 x 1.25, Cl 8 |
| 5 | | 4227226 | | 1 | JOINT, UNIVERSAL |
| 6 | | 14306621 | | 2 | SCREW, Hex Soc Hd, M8 x 35, 8.8 |
| 7 | | 16104411 | | 2 | NUT, LOCK, M8 x 1.25, Cl 4 |
| 8 | | 4227225 | | 2 | PIN |
| 9 | | 14496821 | | 2 | WASHER, M14 x 28 x 2.5 |
| 10 | | 76303279 | | 1 | SHAFT |
| 11 | | 76048930 | | 1 | GAS STRUT |
| 12 | | 76048391 | | 2 | PIN, ROLL |
| 13 | | 76048394 | | 4 | SPACER |
| 14 | | {87526283} | | 4 | NUT |
| 15 | | 14496231 | | 2 | WASHER |
| 16 | | 16101721 | | 2 | NUT, M3, Cl 10 |
| 17 | | {75048955} | | 1 | CABLE |
| 18 | | 76300038 | | 1 | PLATE |
| 19 | | {87525218} | | 1 | COMPRESSOR, SPRING |
| 20 | | {87525220} | | 1 | SPRING |
| 21 | | 76048941 | | 1 | HANDLE |
| 22 | | {87525221} | | 1 | PIN, PIVOT |
| 23 | | 13797721 | | 1 | SET SCREW, Hex Soc, M6 x 8, Cone Pt |
| 24 | | 76300020 | | 1 | SPRING |
| 25 | | NSS | | 1 | NOT SERVICED SEPARATELY, Identification Plate |

**STEERING COLUMN - ACCESSORY**

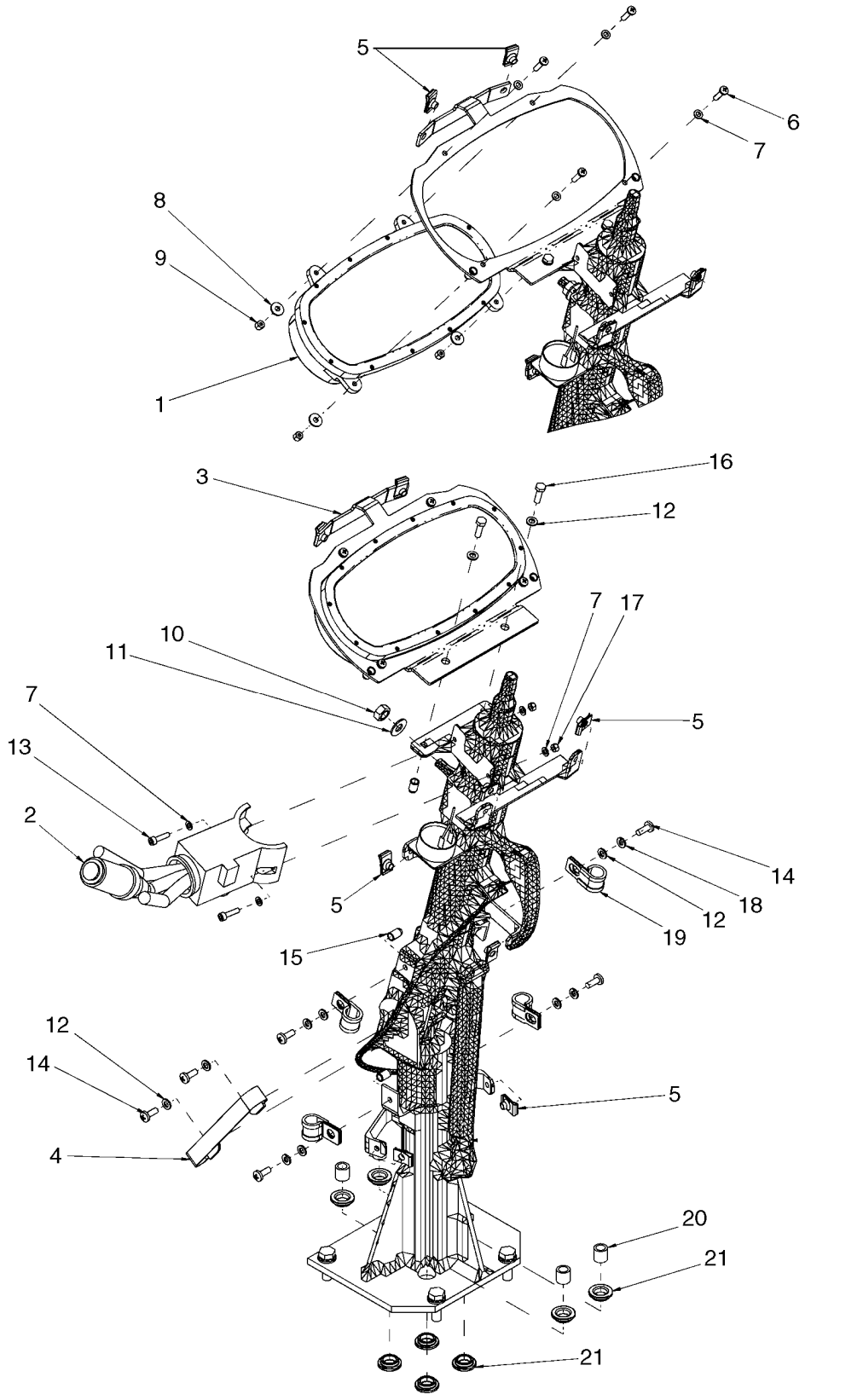

**STEERING COLUMN - ACCESSORY**

| REF | FN | PART NUMBER | YR/SN | QTY | DESCRIPTION |
|---|---|---|---|---|---|
| 1 | | 87372814 | | 1 | INSTRUMENT CLUSTER |
| 2 | | 238270A1 | | 1 | CONTROL |
| 3 | | {76303295} | | 1 | BRACKET |
| 4 | | 349372A1 | | 1 | CABLE, Ground |
| 5 | | 833-40306 | | 11 | NUT, M6, U |
| 6 | | 840-1520 | | 4 | SCREW, Cross Pan Hd, M5 x 20 |
| 7 | | 895-11005 | | 8 | WASHER, M5 x 10 x 1 |
| 8 | | 895-25005 | | 4 | WASHER, M5 x 15 x 1.6 |
| 9 | | 832-10405 | | 4 | NUT, LOCK, M5 x .8, Cl 8 |
| 10 | | 253347A1 | | 1 | NUT |
| 11 | | L127554 | | 1 | WASHER |
| 12 | | 895-11006 | | 10 | WASHER, M6 |
| 13 | | 864-5020 | | 2 | SCREW, Hex Soc Hd, M5 x 20, 8.8 |
| 14 | | 840-1616 | | 6 | SCREW, Cross Pan Hd, M6 x 16 |
| 15 | | 76046110 | | 10 | GROMMET |
| 16 | | 614-6020 | | 2 | BOLT, Hex, M6 x 20, 8.8 |
| 17 | | 824-1405 | | 2 | NUT, M5, Cl 5 |
| 18 | | 892-11006 | | 4 | WASHER, LOCK, M6 |
| 19 | | 71405746 | | 4 | CLIP |
| 20 | | 76081690 | | 4 | SPACER |
| 21 | | 71476260 | | 8 | SPACER |

| 05-03 | | p1 | 07/07 |
|---|---|---|---|

**STEERING COLUMN - TRIM**

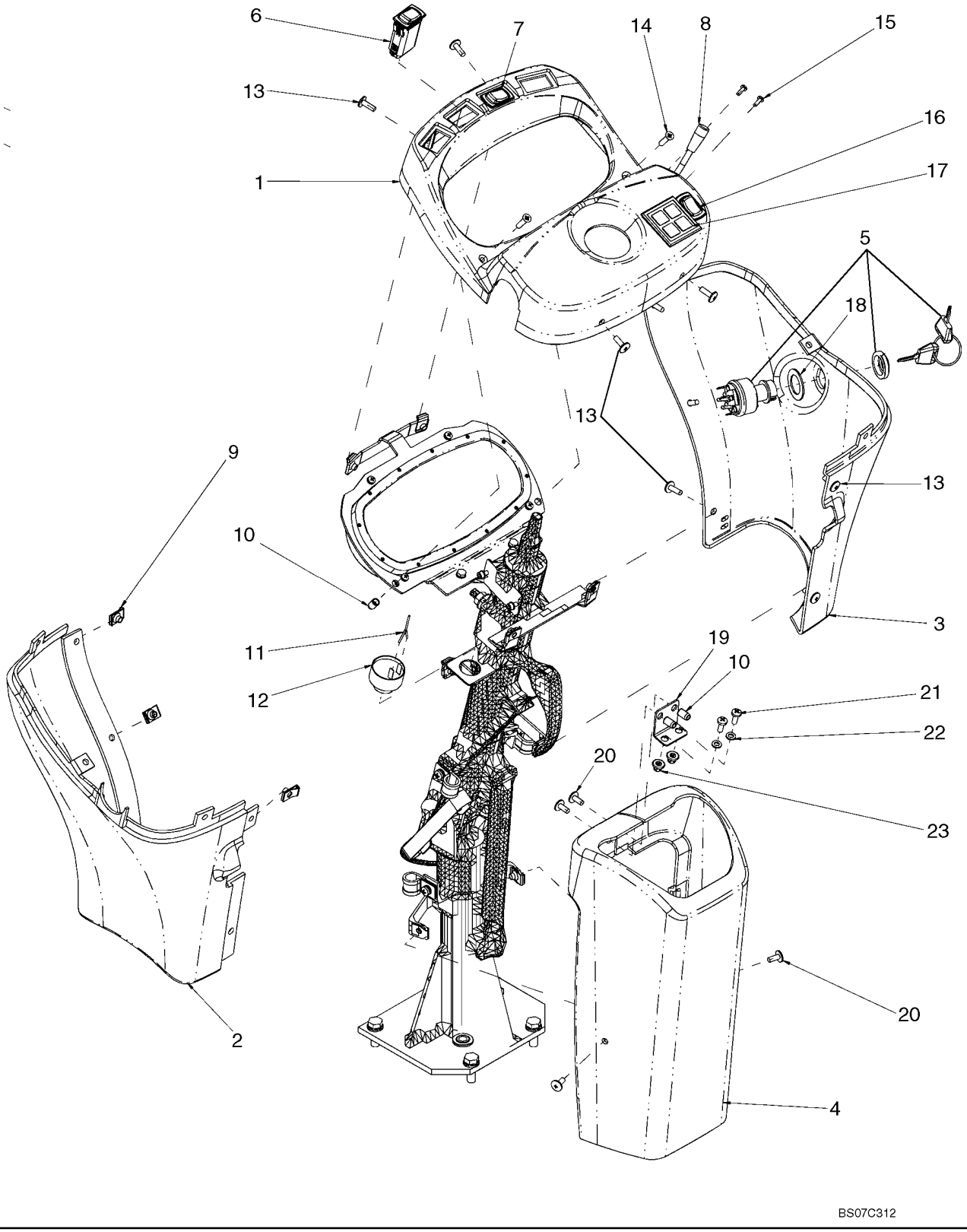

**STEERING COLUMN - TRIM**

| REF | FN | PART NUMBER | YR/SN | QTY | DESCRIPTION |
|---|---|---|---|---|---|
| 1 | | 76303017 | | 1 | COVER, Dashboard Trim |
| 2 | | 76303019 | | 1 | COVER, LH |
| 3 | | 76303020 | | 1 | COVER, RH |
| 4 | | 76303021 | | 1 | COVER, Lower Steering Column |
| 5 | | 282775A1 | | 1 | SWITCH, IGNITION, Includes Padded Keys 1964831C2 |
| 6 | | 374434A2 | | 1 | SWITCH, Pilot Control |
| 7 | | 374426A2 | | 1 | SWITCH, Hazard |
| 8 | | 389487A1 | | 1 | SWITCH, LIGHTS |
| 9 | | 833-40306 | | 3 | NUT, M6, U |
| 10 | | 76046110 | | 4 | GROMMET, M6 |
| 11 | | 76303450 | | 1 | BUZZER, Harness |
| 12 | | {87517128} | | 1 | BUZZER |
| 13 | | 14778411 | | 9 | SCREW, Cheese Hd, M6 x 20 |
| 14 | | 843-2625 | | 2 | SCREW, Phil Flat Hd, M6 x 25, 4.8 |
| 15 | | 840-1412 | | 2 | SCREW, Cross Pan Hd, M4 x 12 |
| 16 | | 374424A2 | | 1 | SWITCH |
| 17 | | 87372804 | | 1 | PAD, Key |
| 18 | | {76303478} | | 1 | WASHER, Nylon |
| 19 | | {76303516} | | 1 | BRACKET |
| 20 | | 14778814 | | 4 | SCREW, Cheese Hd, M6 x 16 |
| 21 | | 840-1616 | | 8 | SCREW, Cross Pan Hd, M6 x 16 |
| 22 | | 895-11006 | | 10 | WASHER, M6 |
| 23 | | 76048924 | | 2 | BUSHING, Threaded |

**HYDRAULICS - STEERING**

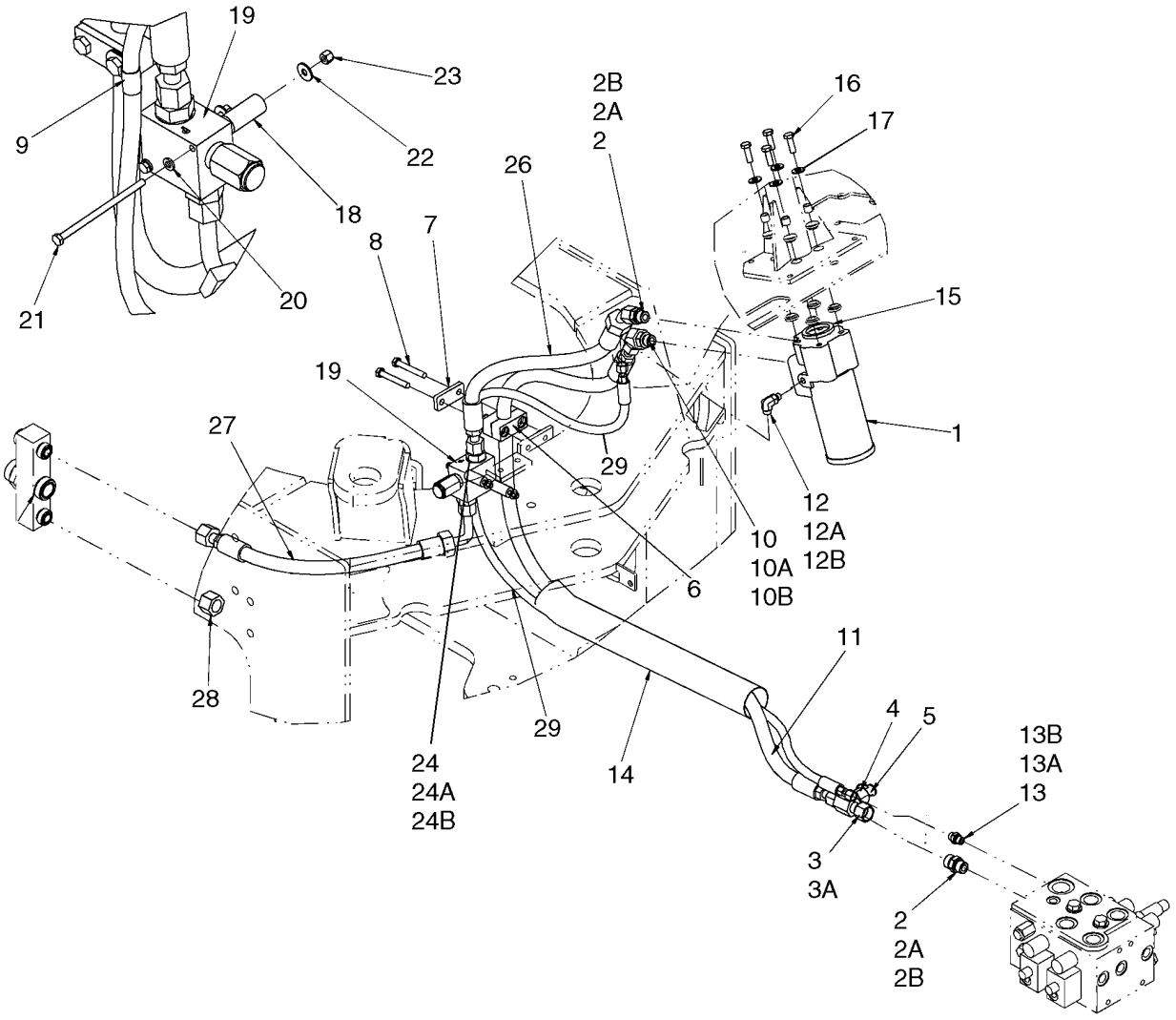


BS07F372

**HYDRAULICS - STEERING**

| REF | FN | PART NUMBER | YR/SN | QTY | DESCRIPTION |
|---|---|---|---|---|---|
| | | REF | | | INSTRUCTION, STANDARD STEERING, STEERING PRESSURE AND RETURN |
| 1 | | 87307060 | | 1 | VALVE, HYDRAULIC, Steering; See Figure 05-06 |
| 2 | | 700-103 | | 2 | CONNECTOR, HYD., 1"-14 ORFS x M22 x 1.5 ORB, Incl. Refs. 2A, 2B |
| 2A | | 637-63193 | | 2 | O-RING, Cl 6, 19.3MM ID x 2.2 Thk, Boss Seal |
| 2B | | 238-6016 | | 2 | O-RING, -016, 90 Duro, .614" ID x .070" Thk, Face Seal |
| 3 | | 701-433 | | 1 | TEE, 1"-14 ORFS x 1"-14 Fem Sw Run, Incl. Ref. 3A |
| 3A | | 238-6016 | | 2 | O-RING, -016, 90 Duro, .614" ID x .070" Thk, Face Seal |
| 4 | | 324201A1 | | 1 | PLUG, Diagnostic |
| 5 | | H434163 | | 1 | CAP |
| 6 | | 367489A1 | | 1 | BLOCK |
| 7 | | 367658A1 | | 1 | PLATE |
| 8 | | 827-10070 | | 2 | BOLT, Hex, M10 x 70, 10.9 |
| 9 | | 515-25159 | | 1 | CLAMP, 5/8", Insul, 1/2" Bolt |
| 10 | | 700-316 | | 2 | ELBOW, 45º, 1"-14 ORFS x M22 x 1.5 ORB, Incl. Refs. 10A, 10B |
| 10A | | 238-6016 | | 1 | O-RING, -016, 90 Duro, .614" ID x .070" Thk, Face Seal |
| 10B | | 637-63193 | | 1 | O-RING, Cl 6, 19.3MM ID x 2.2 Thk, Boss Seal |
| 11 | | 87629993 | | 1 | HOSE, Steering Pressure; 1785 mm (70 - 1/4 in) |
| 12 | | 700-303 | | 1 | ELBOW, 90º, 9/16"-18 ORFS x M12 x 1.5 ORB, Incl. Refs. 12A, 12B |
| 12A | | 637-63093 | | 1 | O-RING, Cl 6, 9.3MM ID x 2.2 Thk, Boss Seal |
| 12B | | 238-6011 | | 1 | O-RING, -011, 90 Duro, .301" ID x .070" Thk, Face Seal |
| 13 | | 700-153 | | 1 | CONNECTOR, HYD., 9/16"-18 ORFS x M14 x 1.5 ORB, Incl. 13A, 13B |
| 13A | | 637-63113 | | 1 | O-RING, Cl 6, 11.3MM ID x 2.2 Thk |
| 13B | | 238-6011 | | 1 | O-RING, -011, 90 Duro, .301" ID x .070" Thk, Face Seal |
| 14 | | 87559559 | | 1 | HOSE, PROTECTION, Hose, 60 x 554 mm |
| 15 | | 76043957 | | 1 | GASKET |

**HYDRAULICS - STEERING**

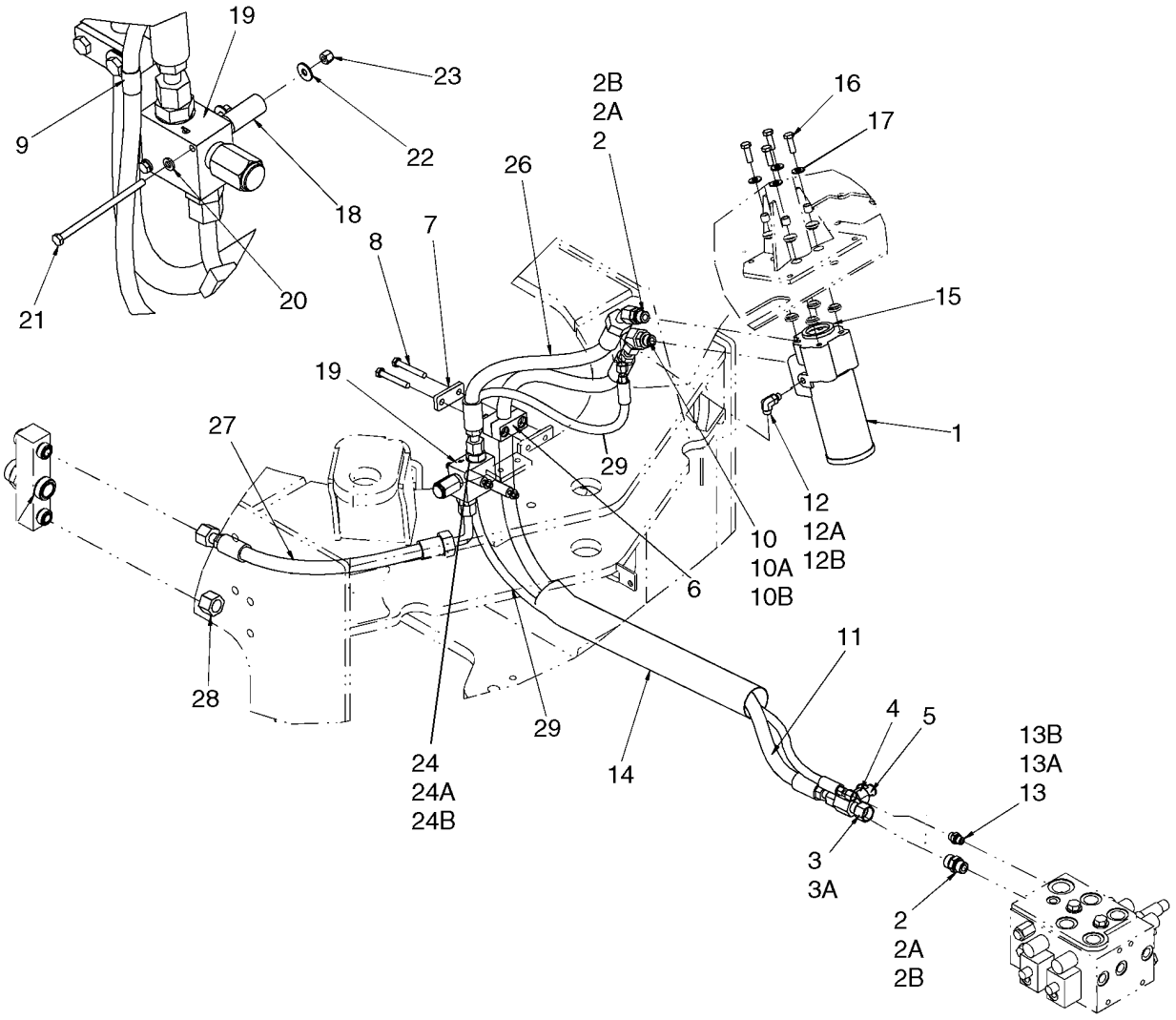


BS07F372

**HYDRAULICS - STEERING**

| REF | FN | PART NUMBER | YR/SN | QTY | DESCRIPTION |
|---|---|---|---|---|---|
| 16 | | 627-10030 | | 4 | BOLT, Hex, M10 x 30, 10.9, Full Thd |
| 17 | | 895-15010 | | 4 | WASHER, M11 x 24 x 2 |
| 18 | | 8500692 | | 2 | SPACER |
| 19 | | 87427823 | | 1 | VALVE, PRESSURE RELIEF |
| 20 | | 896-11006 | | 2 | WASHER, M6 x 13 x 2, HT |
| 21 | | 814-6110 | | 2 | BOLT, Hex, M6 x 110, 8.8 |
| 22 | | 895-25006 | | 2 | WASHER, M6 x 18 x 1.6 |
| 23 | | 832-10406 | | 2 | NUT, LOCK, M6 x 1, Cl 8 |
| 24 | | 86597760 | | 1 | CONNECTOR, HYD., 1"-14 ORFS x M27 x 2 ORB, Inc. Refs. 24A, 24B |
| 24A | | 238-6014 | | 1 | O-RING, -014, 90 Duro, .489" ID x .070" Thk |
| 24B | | 237-6012 | | 1 | O-RING, 12-1, 90 Duro, .924 ID x .118" Thk |
| 26 | | 87519793 | | 1 | HOSE ASSY., Steering Return, Control Valve to Relief Valve; 599 mm (23 - 9/16 in) |
| 27 | | 87653923 | | 1 | HOSE, Steering Return, Relief Valve to Filter; 544 mm (24 - 13/32 in) |
| 28 | | 701-907 | | 1 | CAP, 1 3/16"-12 ORFS |
| 29 | | 87651227 | | 1 | HOSE, Steering Load Sense; 2100 mm (82 - 3/4 in) |

**HYDRAULICS - STEERING - AUXILIARY**

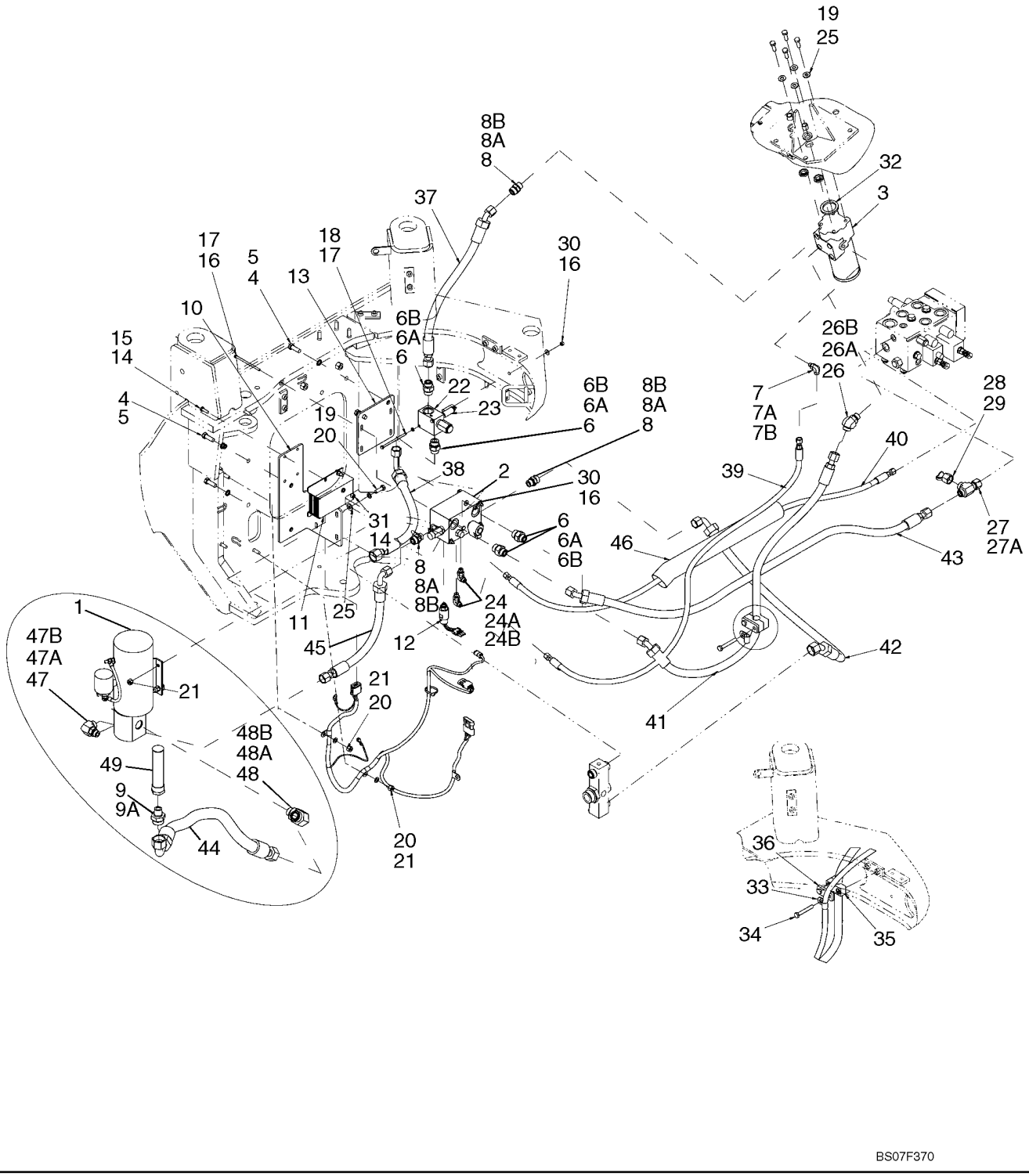

**HYDRAULICS - STEERING - AUXILIARY**

| REF | FN | PART NUMBER | YR/SN | QTY | DESCRIPTION |
|---|---|---|---|---|---|
| | | REF | | | INSTRUCTION, AUXILIARY STEERING HYDRAULICS, FOR ELECTRICAL COMPONENTS, SEE FIGURE 04-17 |
| 1 | | 87581480 | | 1 | PUMP, ELECTRIC, Auxiliary Steering; See Figure 05-08 |
| 2 | | 87609806 | | 1 | MANIFOLD, Auxillary Steering; See Figure 05-07 |
| 3 | | 87307060 | | 1 | VALVE, HYDRAULIC, Steering Control; See Figure 05-06 |
| 4 | | 627-12035 | | 4 | BOLT, Hex, M12 x 35, 10.9 |
| 5 | | 895-18012 | | 4 | WASHER, M12 x 20 x 2 |
| 6 | | 86597760 | | 4 | CONNECTOR, HYD., 1"-14 ORFS x M27 x 2 ORB, Incl. Refs. 6A, 6B |
| 6A | | 238-6016 | | 1 | O-RING, -016, 90 Duro, .614" ID x .070" Thk, Face Seal |
| 6B | | 637-64236 | | 1 | O-RING, Cl 6, 23.6MM ID x 2.9 Thk, Boss Seal |
| 7 | | 700-303 | | 1 | ELBOW, 90º, 9/16"-18 ORFS x M12 x 1.5 ORB, Incl. Refs. 7A, 7B |
| 7A | | 238-6011 | | 1 | O-RING, -011, 90 Duro, .301" ID x .070" Thk, Face Seal |
| 7B | | 637-63093 | | 1 | O-RING, Cl 6, 9.3MM ID x 2.2 Thk, Boss Seal |
| 8 | | 700-103 | | 3 | CONNECTOR, HYD., 1"-14 ORFS x M22 x 1.5 ORB, Incl. Refs. 8A, 8B |
| 8A | | 238-6016 | | 1 | O-RING, -016, 90 Duro, .614" ID x .070" Thk, Face Seal |
| 8B | | 637-63193 | | 1 | O-RING, Cl 6, 19.3MM ID x 2.2 Thk, Boss Seal |
| 9 | | 87433494 | | 1 | CONNECTOR, HYD., Straight Thread ORFS To NPT; Incl. Refs. 9A |
| 9A | | 238-6021 | | 1 | O-RING, -021, 90 Duro, .926" ID x .070" Thk, Face Seal |
| 10 | | 87653912 | | 1 | BRACKET, Aux. Steering Mount |
| 11 | | 8603171 | | 1 | MODULE, Secondary Steering |
| 12 | | 398888A1 | | 1 | SWITCH, Aux. Steering Pressure |
| 13 | | 87653913 | | 1 | BRACKET, Aux. Steering Valve Mount |
| 14 | | 895-11008 | | 8 | WASHER, M8 x 16 x 1.6 |
| 15 | | 627-8025 | | 4 | BOLT, Hex, M8 x 25, 10.9 |

**HYDRAULICS - STEERING - AUXILIARY**

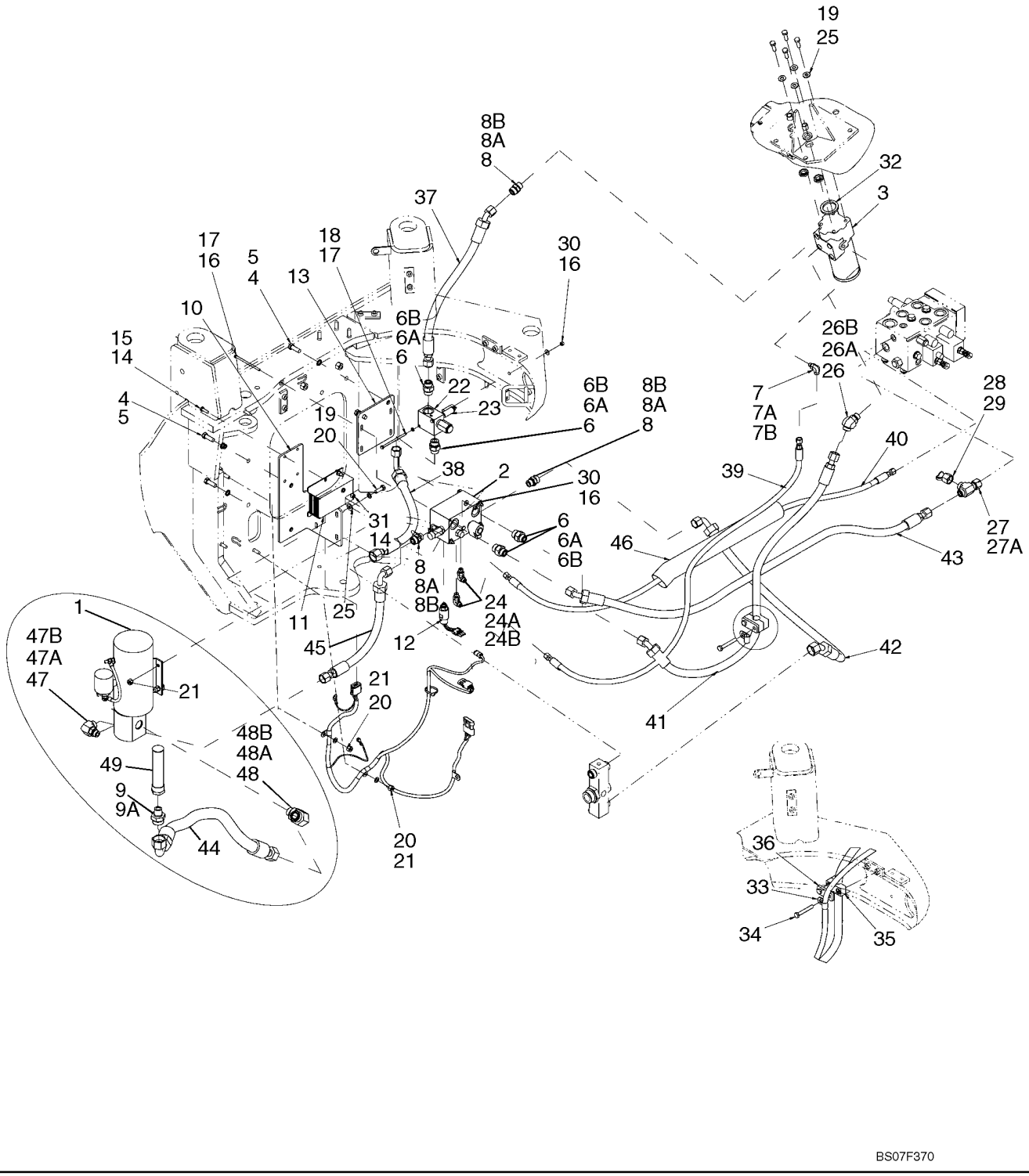

**HYDRAULICS - STEERING - AUXILIARY**

| REF | FN | PART NUMBER | YR/SN | QTY | DESCRIPTION |
|---|---|---|---|---|---|
| 16 | | 895-25006 | | 10 | WASHER, M6 x 18 x 1.6 |
| 17 | | 814-6110 | | 6 | BOLT, Hex, M6 x 110, 8.8 |
| 18 | | 896-11006 | | 2 | WASHER, M6 x 13 x 2, HT |
| 19 | | 627-10030 | | 8 | BOLT, Hex, M10 x 30, 10.9, Full Thd |
| 20 | | 895-18010 | | 6 | WASHER, M10 x 18 x 1.6 |
| 21 | | 832-10410 | | 6 | NUT, LOCK, M10 x 1.5, Cl 8 |
| 22 | | 87427823 | | 1 | VALVE, PRESSURE RELIEF |
| 23 | | 8500692 | | 2 | SPACER |
| 24 | | 700-378 | | 2 | ELBOW, 90º, 9/16"-18 ORFS x M14 x 1.5 ORB, Incl. Refs. 24A, 24B |
| 24A | | 637-63113 | | 1 | O-RING, Cl 6, 11.3MM ID x 2.2 Thk |
| 24B | | 238-6011 | | 1 | O-RING, -011, 90 Duro, .301" ID x .070" Thk, Face Seal |
| 25 | | 895-15010 | | 8 | WASHER, M11 x 24 x 2 |
| 26 | | 700-316 | | 1 | ELBOW, 45º, 1"-14 ORFS x M22 x 1.5 ORB, Incl. Ref. 26A, 26B |
| 26A | | 238-6016 | | 1 | O-RING, -016, 90 Duro, .614" ID x .070" Thk, Face Seal |
| 26B | | 637-63193 | | 1 | O-RING, Cl 6, 19.3MM ID x 2.2 Thk, Boss Seal |
| 27 | | 701-433 | | 1 | TEE, 1"-14 ORFS x 1"-14 Fem Sw Run, Incl. Ref. 27A |
| 27A | | 238-6016 | | 1 | O-RING, -016, 90 Duro, .614" ID x .070" Thk |
| 28 | | 324201A1 | | 1 | PLUG, Diagnostic |
| 29 | | H434163 | | 1 | CAP, Dust |
| 30 | | 832-10406 | | 6 | NUT, LOCK, M6 x 1, Cl 8 |
| 31 | | 832-10408 | | 4 | NUT, LOCK, M8 x 1.25, Cl 8 |
| 32 | | 76043957 | | 1 | GASKET, Steering Control Valve |
| 33 | | 515-25159 | | 1 | CLAMP, 5/8", Insul, 1/2" Bolt |
| 34 | | 827-10070 | | 2 | BOLT, Hex, M10 x 70, 10.9 |
| 35 | | 367489A1 | | 1 | BLOCK |
| 36 | | 367658A1 | | 1 | PLATE |
| 37 | | 87519793 | | 1 | HOSE ASSY., Steering Control Valve to Relief Valve; 599 mm (23 - 19/32 in) |
| 38 | | 87653923 | | 1 | HOSE, Relief Valve to Filter; 544 mm (21 - 13/32 in) |
| 39 | | 87653919 | | 1 | HOSE, Steering Load Sense; 1454 mm (57 - 1/4 in) |
| 40 | | 87653975 | | 1 | HOSE, Steering Load Sense; 1513 mm (59 - 1/2 in) |

**HYDRAULICS - STEERING - AUXILIARY**

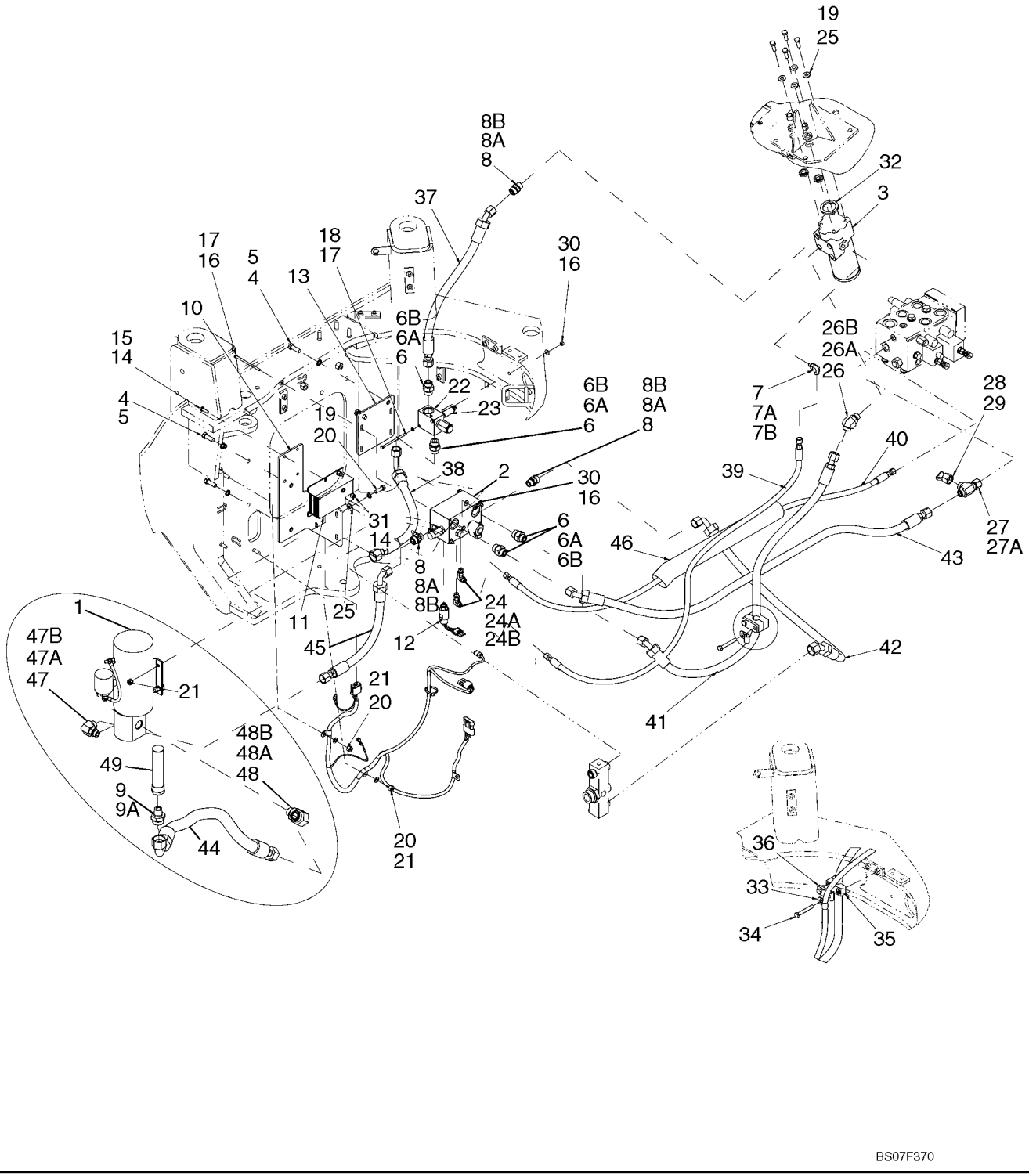

**HYDRAULICS - STEERING - AUXILIARY**

| REF | FN | PART NUMBER | YR/SN | QTY | DESCRIPTION |
|---|---|---|---|---|---|
| 41 | | 87653917 | | 1 | HOSE, Steering Pressure; 1240 mm (48 - 13/16 in) |
| 42 | | 87653921 | | 1 | HOSE, Filter Manifold; 1076 mm (42 - 1/3 in) |
| 43 | | 87653915 | | 1 | HOSE, Steering Relief Valve to Filter; 1423 mm (56 in) |
| 44 | | 87653928 | | 1 | HOSE, Auxiliary Suction; 965 mm (38 in) |
| 45 | | 87653914 | | 1 | HOSE, Auxiliary Pressure; 482 mm (19 in) |
| 46 | | 87559559 | | 1 | HOSE, PROTECTION, 60 x 554 mm (2-1/3 x 21-13/16 in) |
| 47 | | 86579694 | | 1 | ELBOW, 90º, 1"-14 ORFS x M22 x 1.5 ORB, Incl. Refs. 47A, 47B |
| 47A | | 86598102 | | 1 | O-RING, Cl 6, 19.3MM ID x 2.2 Thk |
| 47B | | 9992069 | | 1 | O-RING, -016, 90 Duro, .614" ID x .070" Thk |
| 48 | | 700-313 | | 1 | ELBOW, 90º, 1 7/16"-12 ORFS x M27 x 2 ORB, Incl. Refs. 48A, 48B |
| 48A | | 238-6021 | | 1 | O-RING, -021, 90 Duro, .926" ID x .070" Thk, Face Seal |
| 48B | | 637-64236 | | 1 | O-RING, Cl 6, 23.6MM ID x 2.9 Thk, Boss Seal |
| 49 | | L129303 | | 1 | FILTER, Hydraulic Tank |

**STEERING CONTROL VALVE**

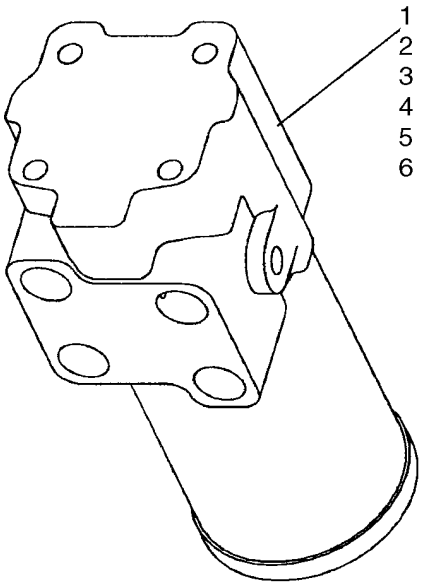


BS07F373

**STEERING CONTROL VALVE**

| REF | FN | PART NUMBER | YR/SN | QTY | DESCRIPTION |
|---|---|---|---|---|---|
| | | 87307060 | | 1 | VALVE, HYDRAULIC, Steering Control; Incl. Refs. 1 - 6 |
| 1 | | 87319529 | | 1 | KIT, Seals |
| 2 | | 8604430 | | 1 | SPRING, Centering |
| 3 | | 298591A1 | | 1 | PIN, Centering |
| 4 | | 8603001 | | 7 | SCREW, Cap |
| 5 | | 8604285 | | 2 | RACE, Bearing |
| 6 | | 8604284 | | 1 | BEARING, NEEDLE |

**STEERING - AUXILIARY - MANIFOLD ASSEMBLY**

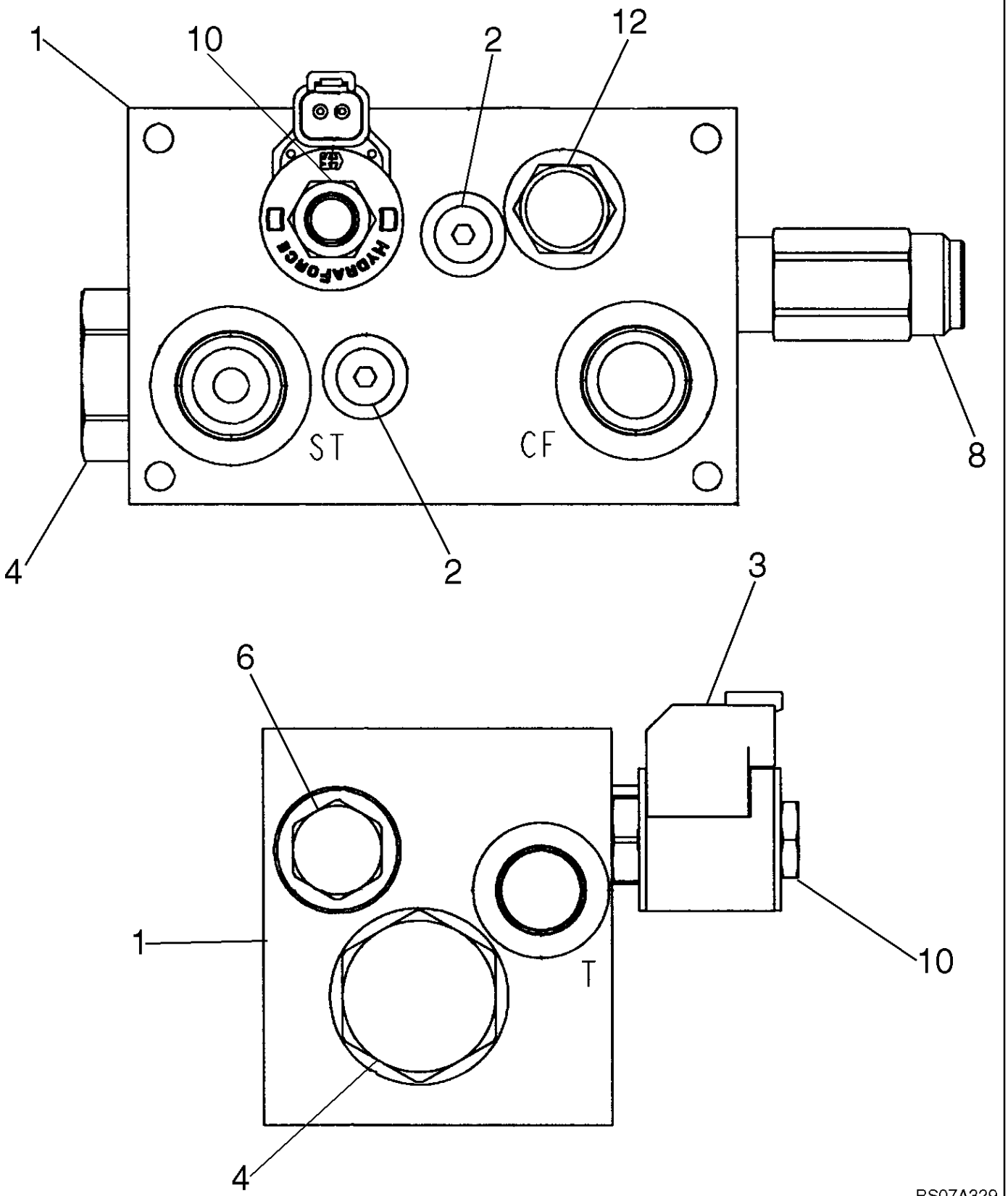

**STEERING - AUXILIARY - MANIFOLD ASSEMBLY**

| REF | FN | PART NUMBER | YR/SN | QTY | DESCRIPTION |
|---|---|---|---|---|---|
| 1 | | 87609806 | | 1 | MANIFOLD, Auxiliary Steering; Incl. Refs. 2 - 13 |
| 2 | | 87365409 | | 1 | PLUG, Orifice |
| 3 | | 87365413 | | 1 | COIL, Solenoid |
| 4 | | 87365418 | | 1 | VALVE, CHECK, Incl. Ref. 5 |
| 5 | | 87365420 | | 1 | KIT, SEALS, Check Valve; Not Illustrated |
| 6 | | 87365422 | | 1 | VALVE, CHECK, Incl. Ref. 7 |
| 7 | | 1542831C1 | | 1 | KIT, SEALS, Not Illustrated |
| 8 | | 87365425 | | 1 | VALVE, PRESSURE RELIEF, Incl. Ref. 9 |
| 9 | | 1542831C1 | | 1 | KIT, SEALS, Not Illustrated |
| 10 | | 87365427 | | 1 | SPOOL, Incl. Ref. 11 |
| 11 | | 87365429 | | 1 | KIT, SEALS, Not Illustrated |
| 12 | | 87365430 | | 1 | ELEMENT, Logic; Incl. Ref. 13 |
| 13 | | 87365429 | | 1 | KIT, SEALS, Not Illustrated |

**STEERING - AUXILIARY - PUMP**

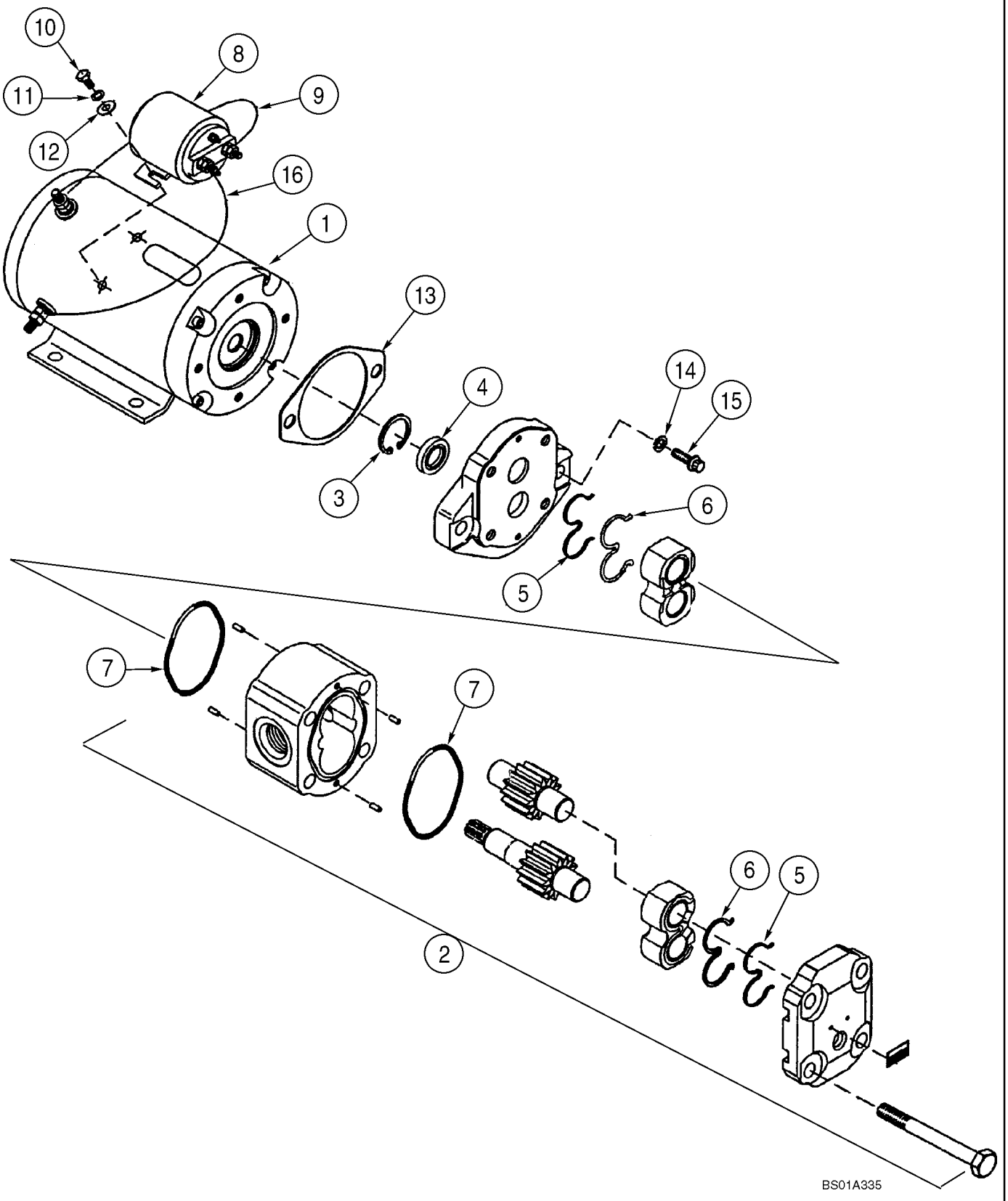

**STEERING - AUXILIARY - PUMP**

| REF | FN | PART NUMBER | YR/SN | QTY | DESCRIPTION |
|---|---|---|---|---|---|
| | | 87581480 | | 1 | PUMP, ELECTRIC, Auxillary Steering; Incl. Refs. 1 - 16 |
| 1 | | 87581481 | | 1 | MOTOR, ELECTRIC |
| 2 | | 8605158 | | 1 | PUMP, HYDRAULIC |
| | | 8605163 | | 1 | KIT, SEALS, Incl. Refs. 3 - 7 |
| 3 | | NSS | | 1 | NOT SERVICED SEPARATELY, Ring, Retaining |
| 4 | | NSS | | 1 | NOT SERVICED SEPARATELY, Seal |
| 5 | | NSS | | 2 | NOT SERVICED SEPARATELY, Ring, Backup |
| 6 | | NSS | | 2 | NOT SERVICED SEPARATELY, Seal |
| 7 | | NSS | | 2 | NOT SERVICED SEPARATELY, O-Ring |
| | | 8605159 | | 1 | KIT, Starting Switch; Incl. Refs. 8 - 12 |
| 8 | | NSS | | 1 | NOT SERVICED SEPARATELY, Switch |
| 9 | | NSS | | 1 | NOT SERVICED SEPARATELY, Cable |
| 10 | | NSS | | 2 | NOT SERVICED SEPARATELY, Screw |
| 11 | | NSS | | 2 | NOT SERVICED SEPARATELY, Washer, Lock |
| 12 | | NSS | | 2 | NOT SERVICED SEPARATELY, Washer |
| | | 8605160 | | 1 | KIT, Mounting; Incl. Refs. 13 - 16 |
| 13 | | NSS | | 1 | NOT SERVICED SEPARATELY, Gasket, Mounting |
| 14 | | NSS | | 2 | NOT SERVICED SEPARATELY, Washer, Lock |
| 15 | | NSS | | 2 | NOT SERVICED SEPARATELY, Screw |
| 16 | | 8605161 | | 1 | WIRE, Primary |

**STEERING - CYLINDER - HYDRAULICS**

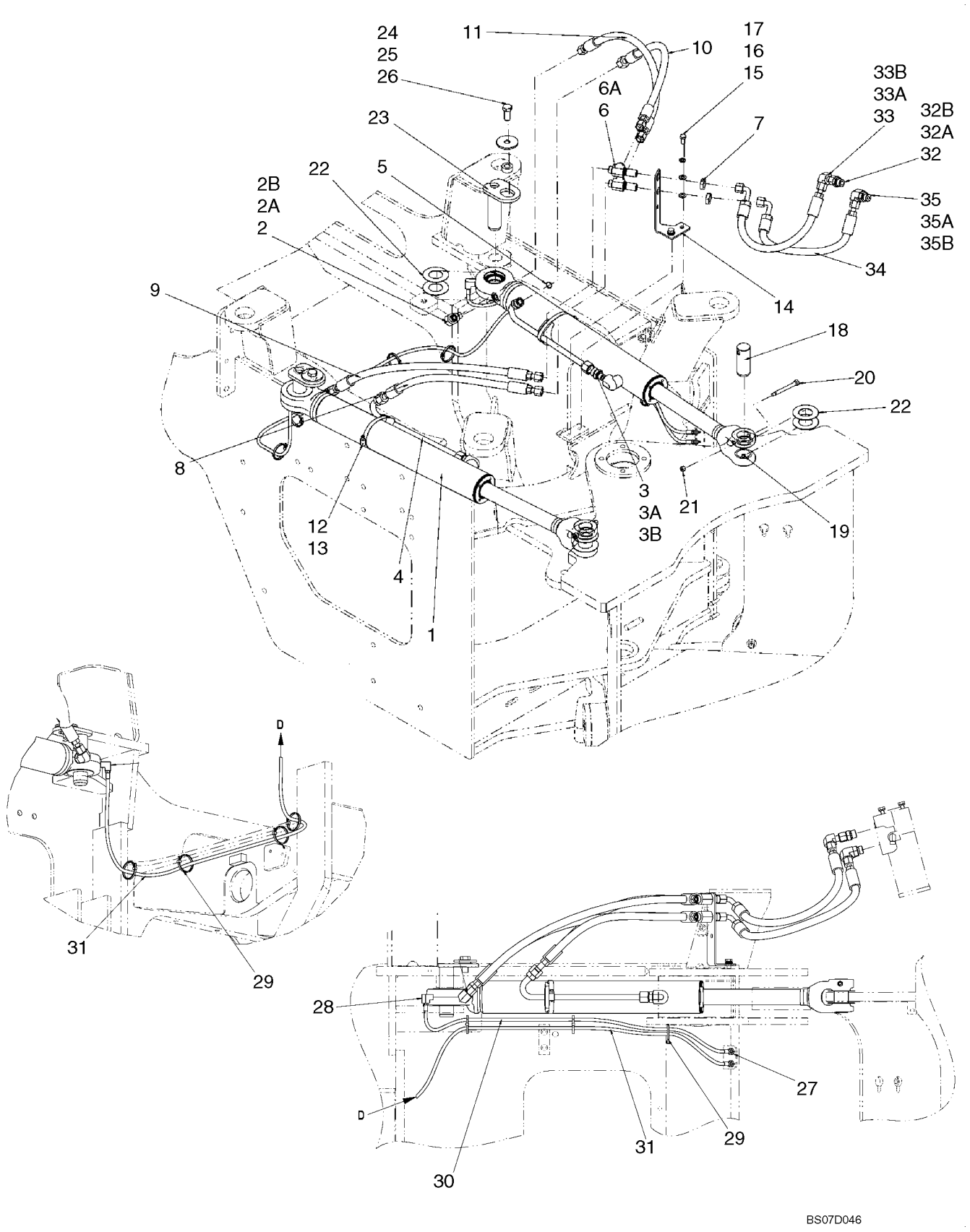

**STEERING - CYLINDER - HYDRAULICS**

| REF | FN | PART NUMBER | YR/SN | QTY | DESCRIPTION |
|---|---|---|---|---|---|
| 1 | | 87452362 | | 2 | CYLINDER STEERING, See Figure 05-10 |
| 2 | | 86579691 | | 2 | ELBOW, 90º, 13/16"-18 ORFS x M18 x 1.5 ORB, Incl. 2A, 2B |
| 2A | | 637-63153 | | 1 | O-RING, Cl 6, 15.3MM ID x 2.2 Thk |
| 2B | | 238-6014 | | 1 | O-RING, -014, 90 Duro, .489" ID x .070" Thk, Face Seal |
| 3 | | 700-115 | | 2 | CONNECTOR, HYD., 1"-14 ORFS x M18 x 1.5 ORB, Ref. 3A, 3B |
| 3A | | 238-6016 | | 1 | O-RING, -016, 90 Duro, .614" ID x .070" Thk, Face Seal |
| 3B | | 637-63153 | | 1 | O-RING, Cl 6, 15.3MM ID x 2.2 Thk, Boss |
| 4 | | 87664495 | | 1 | TUBE, Steering Cylinder RH |
| 5 | | 238-6016 | | 2 | O-RING, -016, 90 Duro, .614" ID x .070" Thk |
| 6 | | 86639080 | | 2 | TEE, 13/16"-16 ORFS, Blkd Run, Incl. Ref. 6A |
| 6A | | 238-6014 | | 3 | O-RING, -014, 90 Duro, .489" ID x .070" Thk |
| 7 | | 86639083 | | 2 | NUT, LOCK, 13/16"-16, ORFS Blkhd, Steering Base LH |
| 8 | | 8602590 | | 1 | HOSE, Right Side Rod; 555 mm (21 - 7/8 in) |
| 9 | | 87519795 | | 1 | HOSE ASSY., Right Side Base; 752 mm (29 - 2/3 in) |
| 10 | | 8602589 | | 1 | HOSE, Left Side Rod; 715 mm (28 - 5/32 in) |
| 11 | | 8500460 | | 1 | HOSE, Left Side Base; 872 mm (34 - 1/3 in) |
| 12 | | 8500483 | | 2 | BLOCK |
| 13 | | 214-1472 | | 2 | CLAMP, HOSE, #72, 4.06/5.00 Type F Worm |
| 14 | | 8602342 | | 1 | BRACKET |
| 15 | | 896-11010 | | 4 | WASHER, M10 x 21.5 x 2.5, HT |
| 16 | | 892-11010 | | 2 | WASHER, LOCK, M10 |
| 17 | | 627-10020 | | 2 | BOLT, Hex, M10 x 20, 10.9, Full Thd |
| 18 | | 87559561 | | 2 | PIN, Steering |
| 19 | | 219-1 | | 2 | NIPPLE, LUBE, 1/8"-27 x .66 lg |
| 20 | | 87308853 | | 2 | SCREW |
| 21 | | 832-10408 | | 2 | NUT, LOCK, M8 x 1.25, Cl 8 |
| 22 | | 8501088 | | 8 | WASHER |
| 23 | | 87351646 | | 2 | PIN |
| 24 | | L125100 | | 2 | SPACER |
| 25 | | 496-81025 | | 2 | WASHER, 21/32" x 2 1/2" x .188", HDN |

| 05-09 | | p2 | 07/07 |
|---|---|---|---|

**STEERING - CYLINDER - HYDRAULICS**

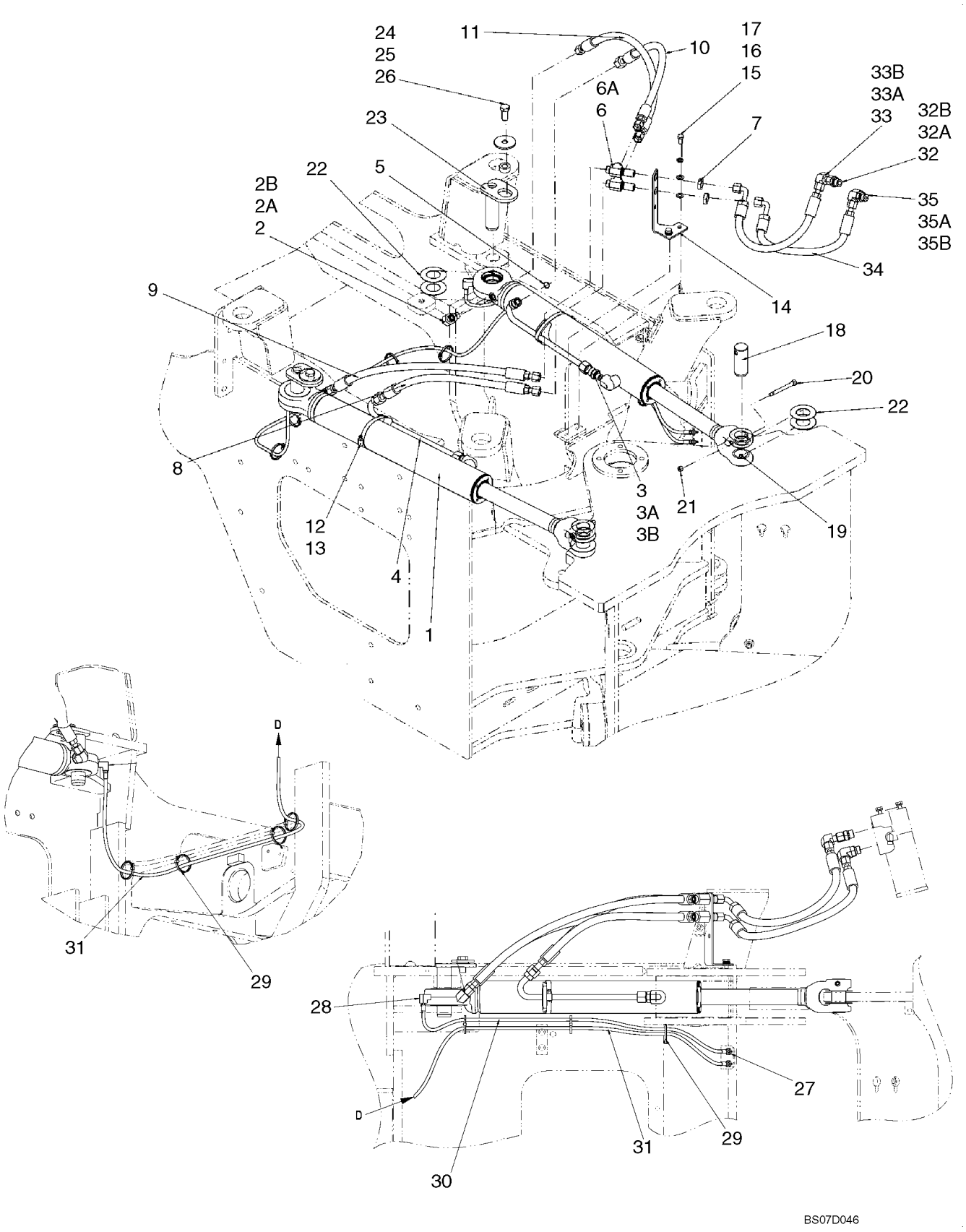

**STEERING - CYLINDER - HYDRAULICS**

| REF | FN | PART NUMBER | YR/SN | QTY | DESCRIPTION |
|---|---|---|---|---|---|
| 26 | | 627-16035 | | 2 | BOLT, Hex, M16 x 35, 10.9 |
| 27 | | F53473 | | 2 | NUT |
| 28 | | 328082A1 | | 2 | ELBOW |
| 29 | | L11541 | | 7 | STRAP |
| 30 | | L54694 | | 1 | HOSE, Grease, Rear Trunnion; 1041 mm (41 in) |
| 31 | | 87559562 | | 1 | HOSE, Rear Steering Grease; 2324 mm (91 - 1/2 in) |
| 32 | | 86579678 | | 1 | CONNECTOR, HYD., 13/16"-16 ORFS x M22 x 1.5 ORB, Incl. Ref. 32A, 32B |
| 32A | | 637-63193 | | 1 | O-RING, Cl 6, 19.3MM ID x 2.2 Thk, Boss |
| 32B | | 238-6014 | | 1 | O-RING, -014, 90 Duro, .489" ID x .070" Thk, Face Seal |
| 33 | | 84989383 | | 1 | ELBOW, 90º, 13/16"-16 ORFS x 13/16"-16 Fem Sw, Incl. Ref. 33A, 33B |
| 33A | | 637-63153 | | 1 | O-RING, Cl 6, 15.3MM ID x 2.2 Thk, Boss |
| 33B | | 238-6014 | | 1 | O-RING, -014, 90 Duro, .489" ID x .070" Thk, Face Seal |
| 34 | | 87385246 | | 2 | HOSE ASSY., Steering Cylinder; 569 mm (22 - 13/32 in) |
| 35 | | 86579692 | | 1 | ELBOW, 90º, 13/16"-18 ORFS x M22 x 1.5 ORB, Incl. Refs. 35A, 35B |
| 35A | | 238-6014 | | 1 | O-RING, -014, 90 Duro, .489" ID x .070" Thk, Face Seal |
| 35B | | 637-63193 | | 1 | O-RING, Cl 6, 19.3MM ID x 2.2 Thk, Boss |
| 36 | | 87664498 | | 1 | TUBE, Steering Cylinder LH |

**STEERING - CYLINDER ASSY**

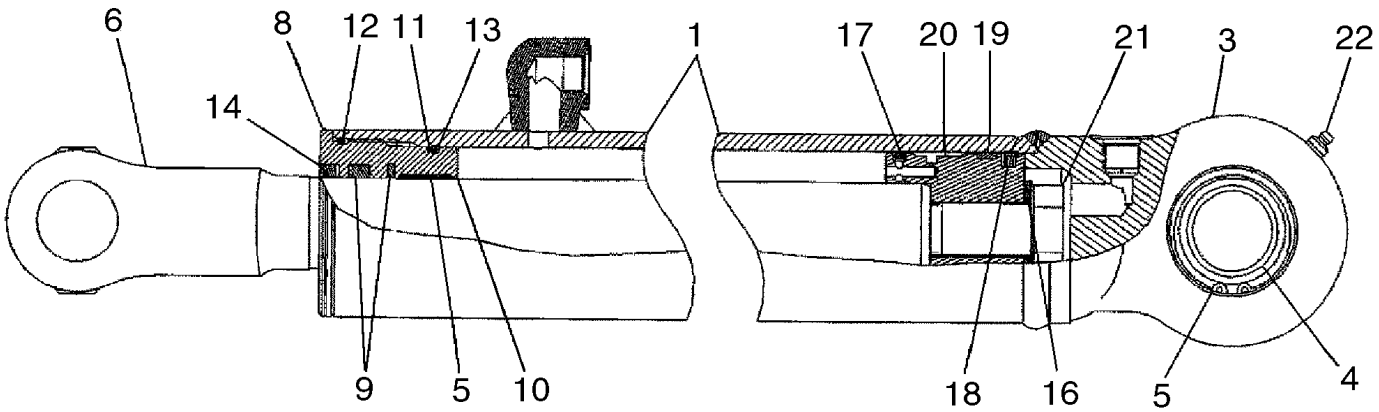


BS04A124

**STEERING - CYLINDER ASSY**

| REF | FN | PART NUMBER | YR/SN | QTY | DESCRIPTION |
|---|---|---|---|---|---|
| | | 87452362 | | 2 | CYLINDER STEERING, 76 ID x 485 strk; Incl. Refs. 1 - 22 And 8605261 Seal Kit |
| 1 | | 442702A1 | | 1 | SLEEVE, HYD CYL, Tube Weldment ; Incl. Refs. 3 - 5 |
| 3 | | NSS | | 1 | NOT SERVICED SEPARATELY, Eye |
| 4 | | 442711A1 | | 1 | BEARING |
| 5 | | 100-21244 | | 2 | RING, SNAP, 2.44", Int, #244 |
| 6 | | 442703A1 | | 1 | ROD, PISTON, Rod Weldment |
| | | 442704A1 | | 1 | GLAND, Assembly; Incl. Refs. 8 - 14 |
| 8 | | 442713A1 | | 1 | GLAND |
| 9 | | 1542875C1 | | 1 | SET OF PARTS, Rod and Buffer Seals |
| 10 | | G102425 | | 1 | BUSHING, LARGE |
| 11 | | G109298 | | 1 | RING |
| 12 | | 238-5233 | | 1 | O-RING, -233, 70 Duro, 2.859" ID x .139" Thk |
| 13 | | 238-5231 | | 1 | O-RING, -231, 70 Duro, 2.609" ID x .139" Thk |
| 14 | | D95143 | | 1 | SEAL |
| | | {87452364} | | 1 | PISTON Assembly; Incl. Refs. 16 - 20 |
| 16 | | 87452365 | | 1 | ROD, PISTON, Flange 7.19mm Thick |
| 17 | | G100444 | | 1 | SEAL |
| 18 | | 364376A1 | | 1 | RING |
| 19 | | G100449 | | 1 | RING, WEAR |
| 20 | | 442717A1 | | 1 | SEAL, Piston |
| 21 | | 86982439 | | 1 | BOLT, SPECIAL, 1 x 4 In; Bolt and Washer Assy |
| 22 | | 219-1 | | 1 | NIPPLE, LUBE, 1/8"-27 x .66 lg |
| | | 8605261 | | 1 | PACKAGE, SEALS, Incl. Refs. 9 - 14, 17 - 19; And G102288 Seal, Not used in this Assembly |

## NOTES

# SECTION INDEX
## Power Train


| | |
|---|---|
| 06-01 | MOUNTING - TRANSMISSION - TRANSMISSION FILL TUBE |
| 06-02 | HYDRAULICS - TRANSMISSION |
| 06-03 | TRANSMISSION - FILTER, OIL AND FILLER COVER |
| 06-04 | TRANSMISSION - CONVERTER, COVER AND INPUT SHAFT |
| 06-05 | TRANSMISSION - INPUT SHAFT |
| 06-06 | TRANSMISSION ASSY - HOUSING |
| 06-07 | TRANSMISSION ASSY - HOUSING TUBES |
| 06-08 | TRANSMISSION - CLUTCH ASSY, FIRST |
| 06-09 | TRANSMISSION - CLUTCH ASSY, SECOND |
| 06-10 | TRANSMISSION - CLUTCH ASSY, THIRD |
| 06-11 | TRANSMISSION - CLUTCH ASSY, FOURTH |
| 06-12 | TRANSMISSION - CLUTCH ASSY, FORWARD |
| 06-13 | TRANSMISSION - CLUTCH ASSY, REVERSE |
| 06-14 | TRANSMISSION - SHAFT, OUTPUT |
| 06-15 | TRANSMISSION - POWER TAKE OFF |
| 06-16 | TRANSMISSION - VALVE PLATES |
| 06-17 | TRANSMISSION - VALVE, CONTROL |
| 06-18 | TRANSMISSION - VALVE, CONTROL |
| 06-19 | TRANSMISSION - VALVE, REGULATOR AND OIL PUMP |
| 06-20 | TRANSMISSION - SENSOR, SPEED AND PUMP COVER |
| 06-21 | AXLE, REAR - STOP |
| 06-22 | AXLE, FRONT - MOUNTING |
| 06-22A | AXLE, FRONT - HOUSING |
| 06-22B | AXLE, FRONT - DIFFERENTIAL CARRIER |
| 06-22C | AXLE, FRONT - DIFFERENTIAL |
| 06-22D | AXLE, FRONT - BRAKE |
| 06-22E | AXLE, FRONT - HUB, PLANETARY |
| 06-23 | AXLE, REAR - MOUNTING |
| 06-23A | AXLE, REAR - HOUSING |
| 06-23B | AXLE, REAR - DIFFERENTIAL CARRIER |
| 06-23C | AXLE, REAR - DIFFERENTIAL |
| 06-23D | AXLE, REAR - BRAKE |
| 06-23E | AXLE, REAR - HUB, PLANETARY |
| 06-24 | DRIVE SHAFT MOUNTING |
| 06-25 | DRIVE SHAFT, FRONT |
| 06-26 | DRIVE SHAFT, CENTER |
| 06-27 | DRIVE SHAFT, REAR |
| 06-28 | DRIVE SHAFT, ENGINE |
| 06-29 | WHEELS |

**MOUNTING - TRANSMISSION - TRANSMISSION FILL TUBE**

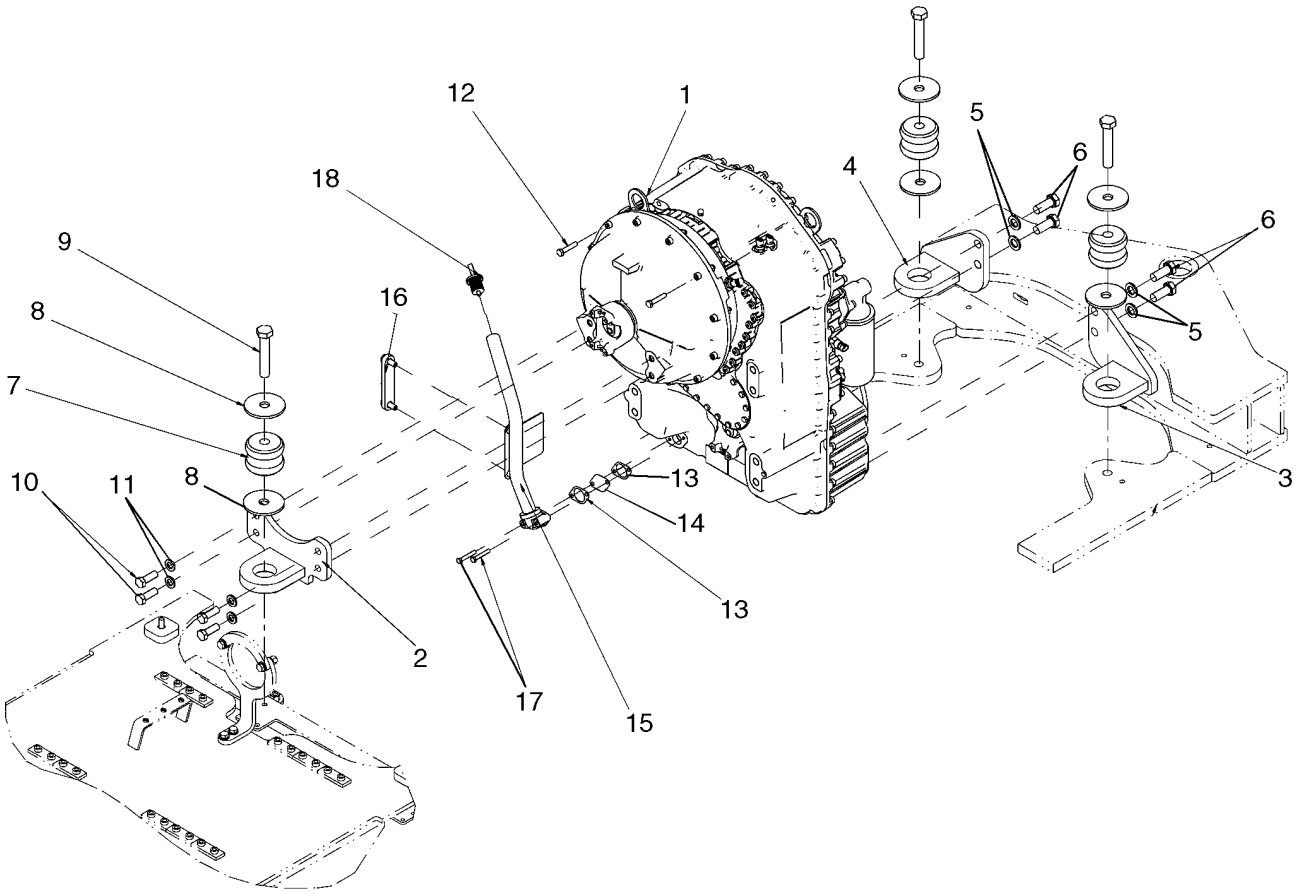


BS07F291

**MOUNTING - TRANSMISSION - TRANSMISSION FILL TUBE**

| REF | FN | PART NUMBER | YR/SN | QTY | DESCRIPTION |
|---|---|---|---|---|---|
| 1 | | 87572394 | | 1 | TRANSMISSION, WG-160 4-Speed Transmission, Includes Parts on Figures 06-03 - 06-20, 07-01 |
| 2 | | 87552960 | | 1 | BRACKET, Top, Transmission Mount |
| 3 | | 87552958 | | 1 | BRACKET, Right, Transmission Mount |
| 4 | | 87552959 | | 1 | BRACKET, Left, Transmission Mount |
| 5 | | 896-11020 | | 4 | WASHER, M20 x 37.5 x 4, HT |
| 6 | | 627-20050 | | 4 | BOLT, Hex, M20 x 50, 10.9 |
| 7 | | 361187A1 | | 3 | ISOLATOR, Transmission Bracket |
| 8 | | 379611A1 | | 6 | WASHER |
| 9 | | 827-22120 | | 3 | BOLT, Hex, M22 x 120, 10.9 |
| 10 | | 627-16045 | | 4 | BOLT, Hex, M16 x 45, 10.9 |
| 11 | | 896-11016 | | 4 | WASHER, M17.5 x 30 x 4, HT |
| 12 | | 827-10050 | | 2 | BOLT, Hex, M10 x 50, 10.9 |
| 13 | | 8603281 | | 2 | GASKET |
| 14 | | E135229 | | 2 | SCREEN, FILTER |
| 15 | | 87653616 | | 1 | TUBE, Transmission Fill |
| 16 | | 86988366 | | 1 | SIGHTGLASS, Oil Level |
| 17 | | 827-8050 | | 2 | BOLT, Hex, M8 x 50, 10.9 |
| 18 | | 443565A1 | | 1 | CAP, Transmission Fill |

**HYDRAULICS - TRANSMISSION**

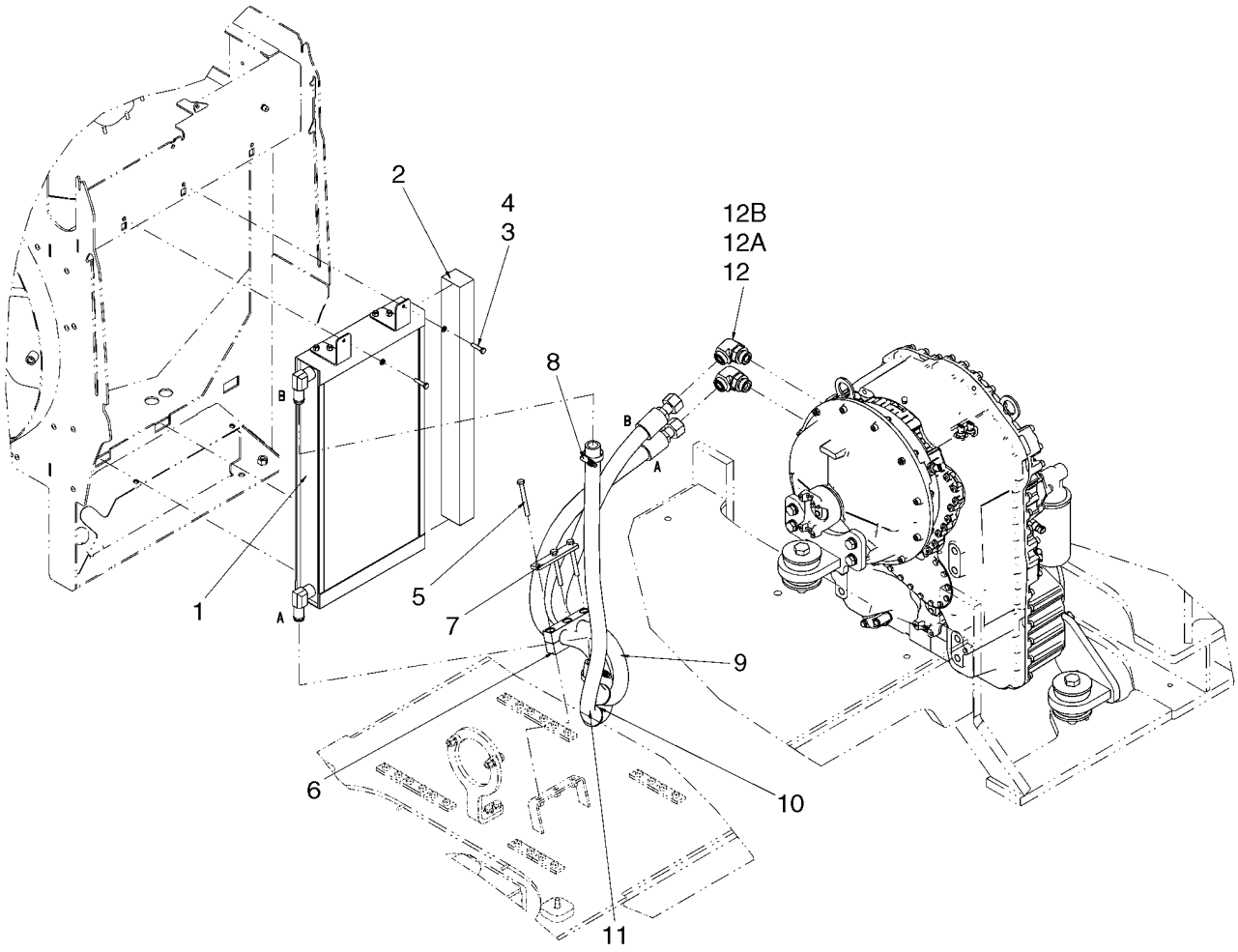


BS07F290

**HYDRAULICS - TRANSMISSION**

| REF | FN | PART NUMBER | YR/SN | QTY | DESCRIPTION |
|---|---|---|---|---|---|
| 1 | | 8501295 | | 1 | COOLER, OIL |
| 2 | | 8500206 | | 1 | SEAL |
| 3 | | 892-11008 | | 2 | WASHER, LOCK, M8 |
| 4 | | 627-8035 | | 2 | BOLT, Hex, M8 x 35, 10.9 |
| 5 | | 827-10090 | | 3 | BOLT, Hex, M10 x 90, 10.9 |
| 6 | | 8500576 | | 1 | CLAMP |
| 7 | | 8500583 | | 1 | PLATE |
| 8 | | 353036A1 | | 2 | CLAMP |
| 9 | | 87578052 | | 1 | HOSE, Cooler to Transmission; 1490 mm (58 - 2/3 in) |
| 10 | | 248-1185 | | 2 | GROMMET, 1 1/2" ID x 1 3/4" Groove Dia |
| 11 | | 87578053 | | 1 | HOSE, Transmission to Cooler; 2260 mm (89 in) |
| 12 | | 201-308 | | 2 | ELBOW, 90°, 1 7/16"-12 x 1 5/8"-12, Adj, ORFS, Incl. Refs. 12A, 12B |
| 12A | | 237-6016 | | 1 | O-RING, 16-1, 90 Duro, 1.171" ID x .118" Thk, Boss Seal |
| 12B | | 238-6021 | | 1 | O-RING, -021, 90 Duro, .926" ID x .070" Thk, Face Seal |

**TRANSMISSION - FILTER, OIL AND FILLER COVER**

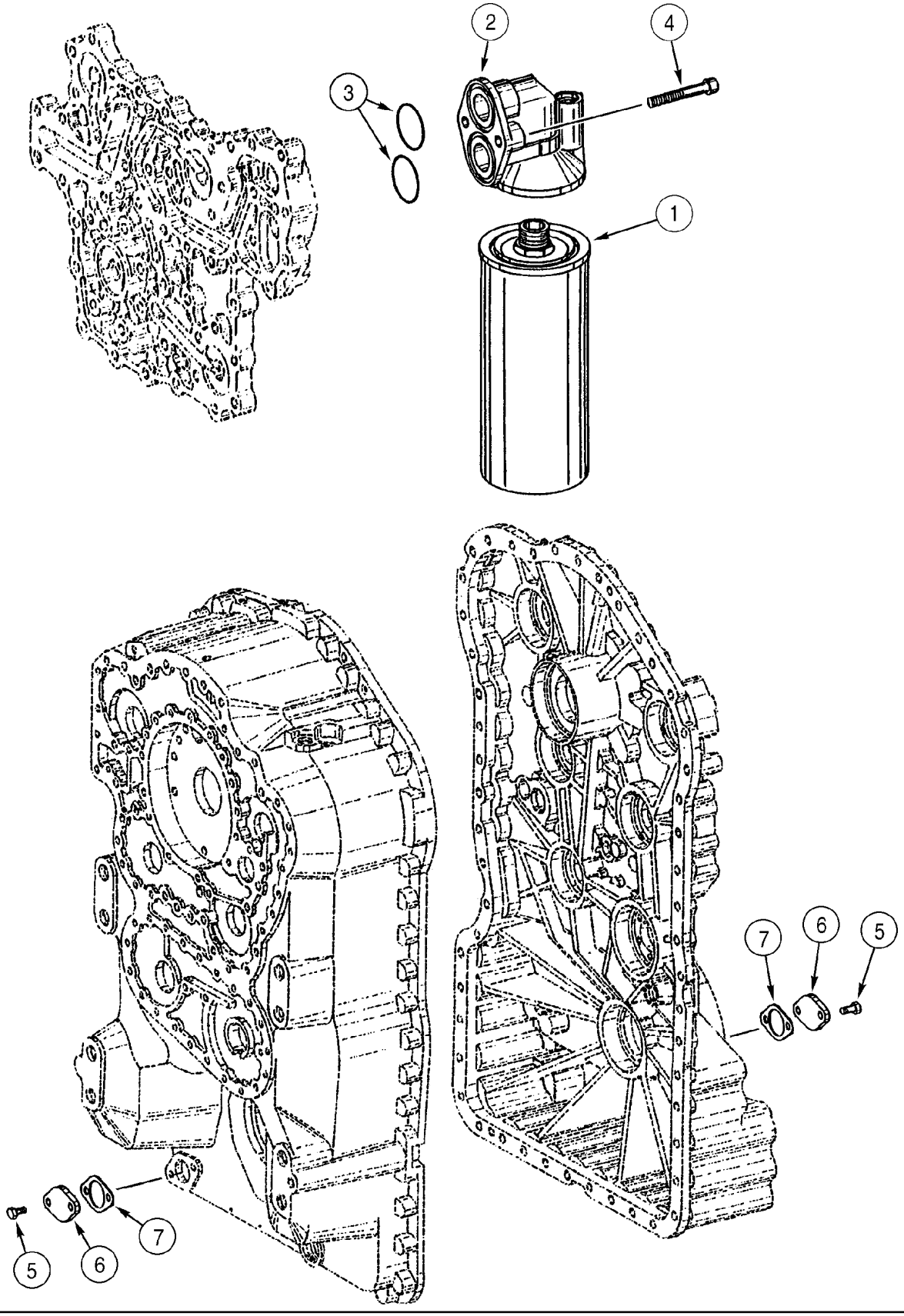

**TRANSMISSION - FILTER, OIL AND FILLER COVER**

| REF | FN | PART NUMBER | YR/SN | QTY | DESCRIPTION |
|---|---|---|---|---|---|
| | | 87572394 | | 1 | TRANSMISSION, See Figure(s) 06-03 - 06-20, 07-01; Incl. Refs. 1 - 7 |
| 1 | | 87519452 | | 1 | FILTER, HYDRAULIC OIL |
| 2 | | 8603403 | | 1 | FILTER ASSY. |
| 3 | | 8603404 | | 2 | O-RING |
| 4 | | 8603311 | | 2 | SCREW |
| 5 | | 8603396 | | 4 | SCREW, M8 x 18 |
| 6 | | 8603217 | | 2 | COVER |
| 7 | | 8603281 | | 2 | GASKET |

**TRANSMISSION - CONVERTER, COVER AND INPUT SHAFT**

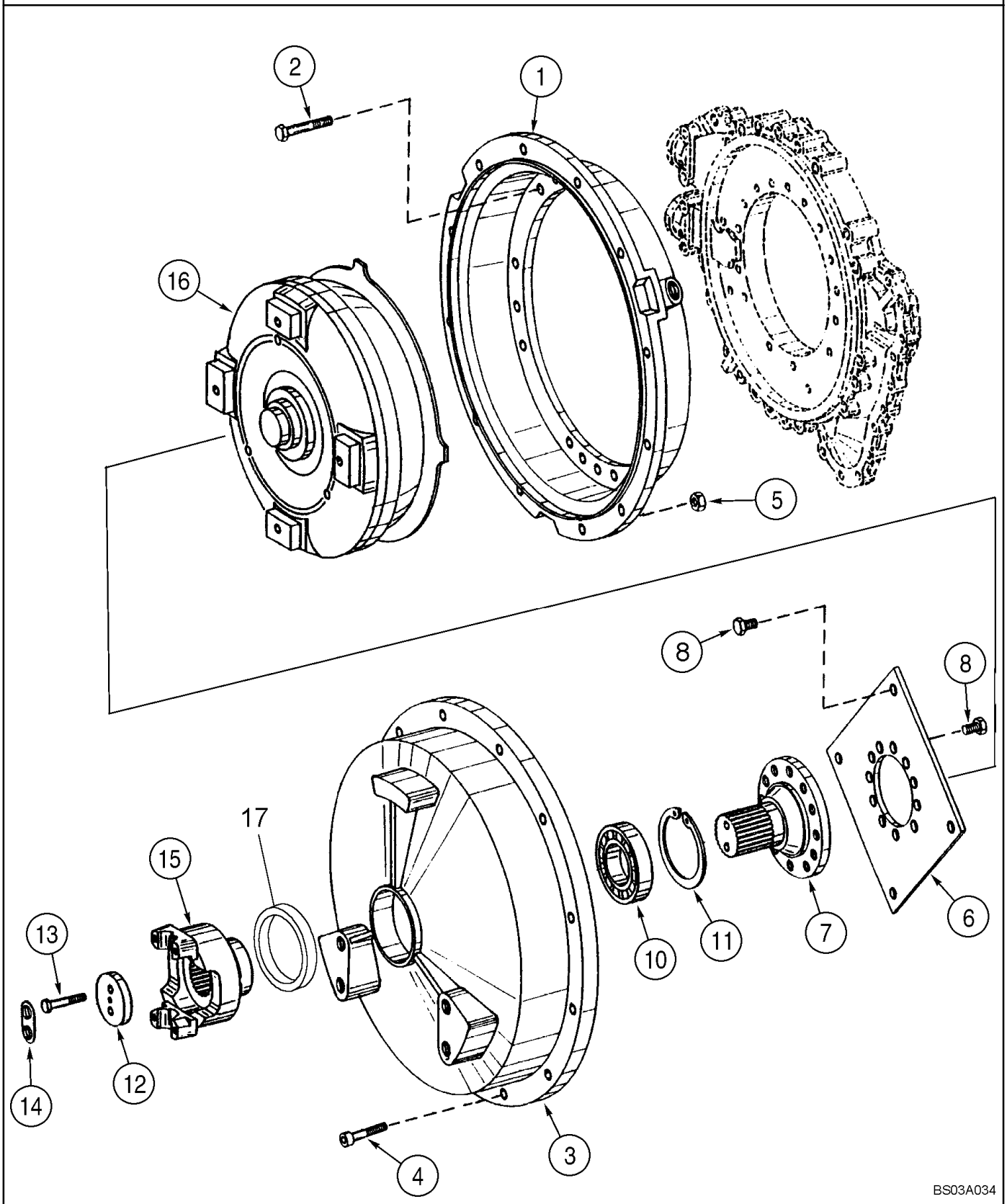

**TRANSMISSION - CONVERTER, COVER AND INPUT SHAFT**

| REF | FN | PART NUMBER | YR/SN | QTY | DESCRIPTION |
|---|---|---|---|---|---|
| | | 87572394 | | 1 | TRANSMISSION, See Figure(s) 06-03 - 06-20, 07-01; Incl. Refs. 1 - 17 |
| 1 | | 8603292 | | 1 | BELL HOUSING |
| 2 | | 8603293 | | 18 | SCREW, M10 x 65 |
| 3 | | 8604676 | | 1 | COVER |
| 4 | | 8603466 | | 12 | SCREW, M10 x 40 |
| 5 | | 829-1510 | | 12 | NUT, M10, Cl 10 |
| 6 | | 8603633 | | 1 | DIAPHRAGM |
| 7 | | 8604677 | | 1 | SHAFT, Input |
| 8 | | 8603294 | | 20 | SCREW, M12 x 18 |
| 10 | | 8604678 | | 1 | BEARING, BALL |
| 11 | | 87410351 | | 1 | RING |
| 12 | | 8603635 | | 1 | WASHER |
| 13 | | 8603405 | | 2 | SCREW, M8 X 50 |
| 14 | | 8603636 | | 1 | WASHER |
| 15 | | 8603637 | | 1 | YOKE |
| 16 | | 8605279 | | 1 | TORQUE CONVERTER, Torque |
| 17 | | 8604229 | | 1 | RING |

**TRANSMISSION - INPUT SHAFT**

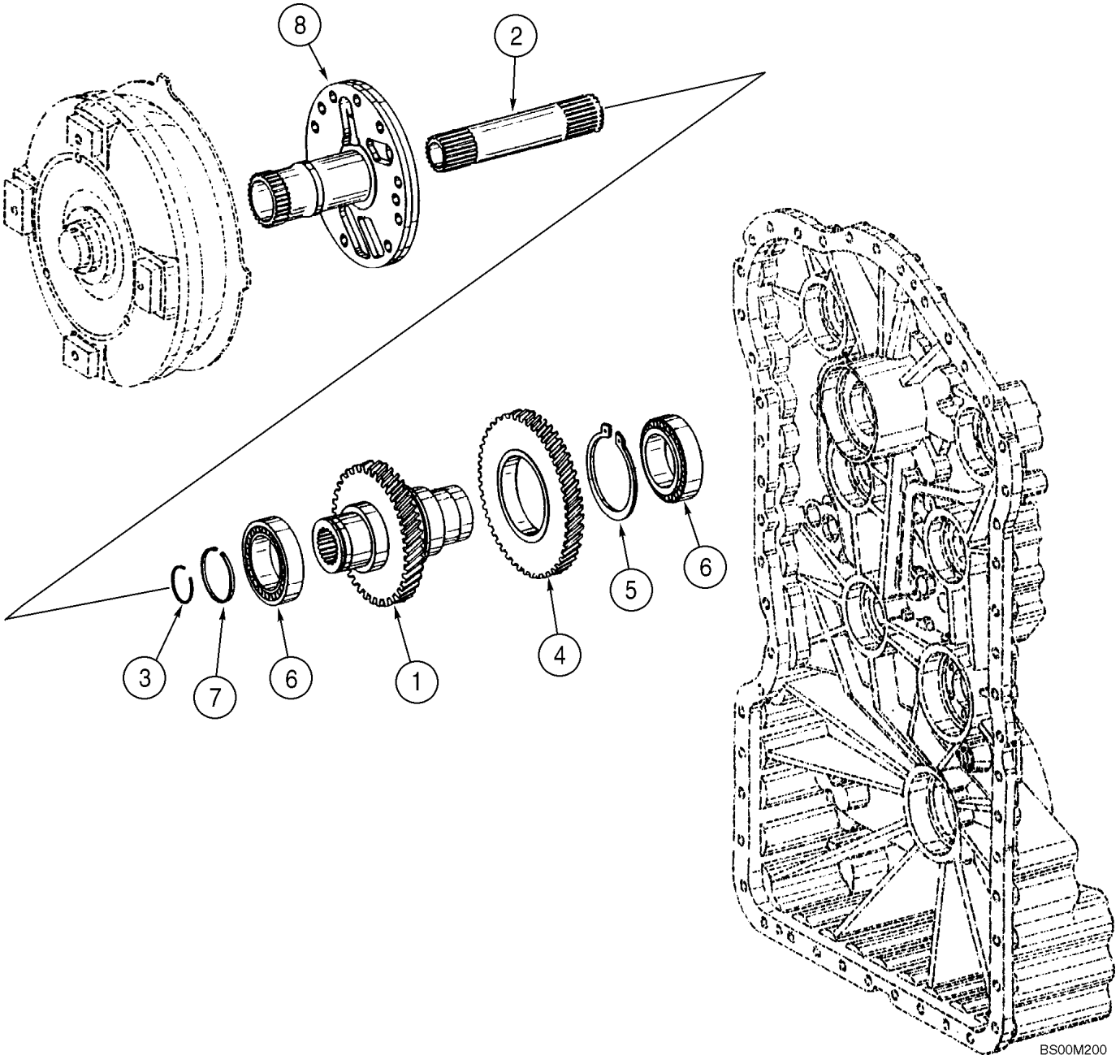

**TRANSMISSION - INPUT SHAFT**

| REF | FN | PART NUMBER | YR/SN | QTY | DESCRIPTION |
|---|---|---|---|---|---|
| | | 87572394 | | 1 | TRANSMISSION, See Figure(s) 06-03 - 06-20, 07-01; Incl. Refs. 1 - 8 |
| 1 | | 8603296 | | 1 | SHAFT, Input |
| 2 | | 8603297 | | 1 | SHAFT, Turbine |
| 3 | | 8603298 | | 1 | RING, SNAP |
| 4 | | 8603299 | | 1 | GEAR, DRIVING, Input |
| 5 | | 8603300 | | 1 | RING |
| 6 | | 8603301 | | 2 | BEARING, ROLLER |
| 7 | | 8603302 | | 1 | RING |
| 8 | | 8603778 | | 1 | SHAFT, Input |

**TRANSMISSION ASSY - HOUSING**

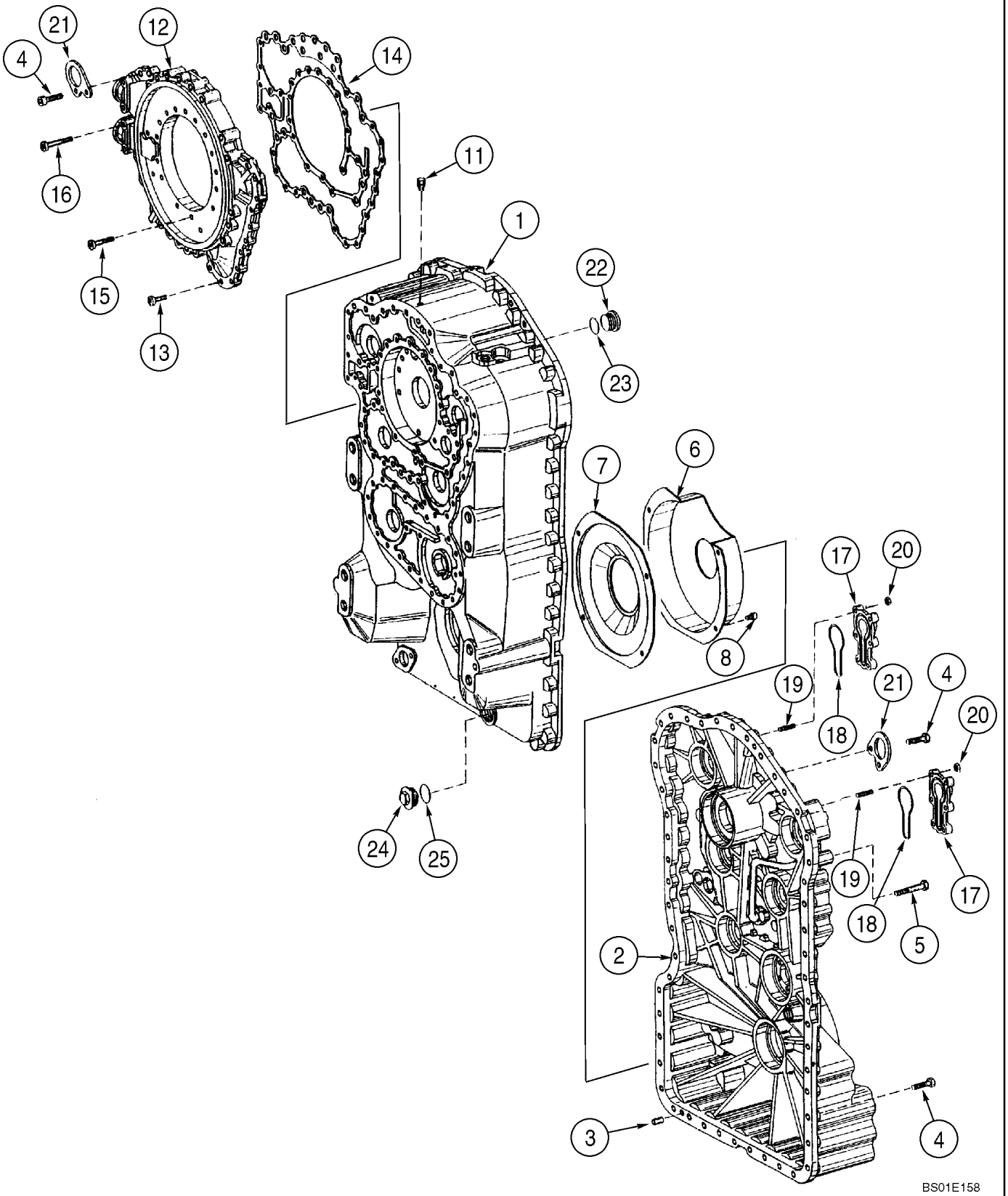

**TRANSMISSION ASSY - HOUSING**

| REF | FN | PART NUMBER | YR/SN | QTY | DESCRIPTION |
|---|---|---|---|---|---|
| | | 87572394 | | 1 | TRANSMISSION, See Figure(s) 06-03 - 06-20, 07-01; Incl. Refs. 1 - 25 |
| 1 | | 8605283 | | 1 | HOUSING, Front |
| 1A | | 8603779 | | 1 | VALVE, PRESSURE RELIEF, Not Illustrated |
| 2 | | 8603187 | | 1 | HOUSING, Rear |
| 3 | | 8603798 | | 2 | PIN |
| 4 | | 8603469 | | 46 | SCREW, M10 x 65 |
| 5 | | 8603640 | | 7 | SCREW, M10 x 65 |
| 6 | | 8603304 | | 1 | FILTER, Gear |
| 7 | | 8603305 | | 1 | FILTER |
| 8 | | 8603306 | | 4 | SCREW |
| 11 | | 8603214 | | 1 | BREATHER |
| 12 | | 8603307 | | 1 | HOUSING |
| 13 | | 8603308 | | 15 | SCREW |
| 14 | | 8603309 | | 1 | GASKET |
| 15 | | 8603310 | | 21 | SCREW |
| 16 | | 8603311 | | 4 | SCREW |
| 17 | | 8603312 | | 2 | COVER |
| 18 | | 8603313 | | 2 | O-RING |
| 19 | | 8604714 | | 12 | STUD, M8 x 25 |
| 20 | | 8603315 | | 12 | NUT, M8 |
| 21 | | 8603316 | | 2 | PLATE, FIXING |
| 22 | | 8603317 | | 1 | PLUG, Incl. 23 |
| 23 | | 8603318 | | 1 | O-RING |
| 24 | | 8603319 | | 1 | PLUG, Incl. 25 |
| 25 | | 8603318 | | 1 | O-RING |

**TRANSMISSION ASSY - HOUSING TUBES**

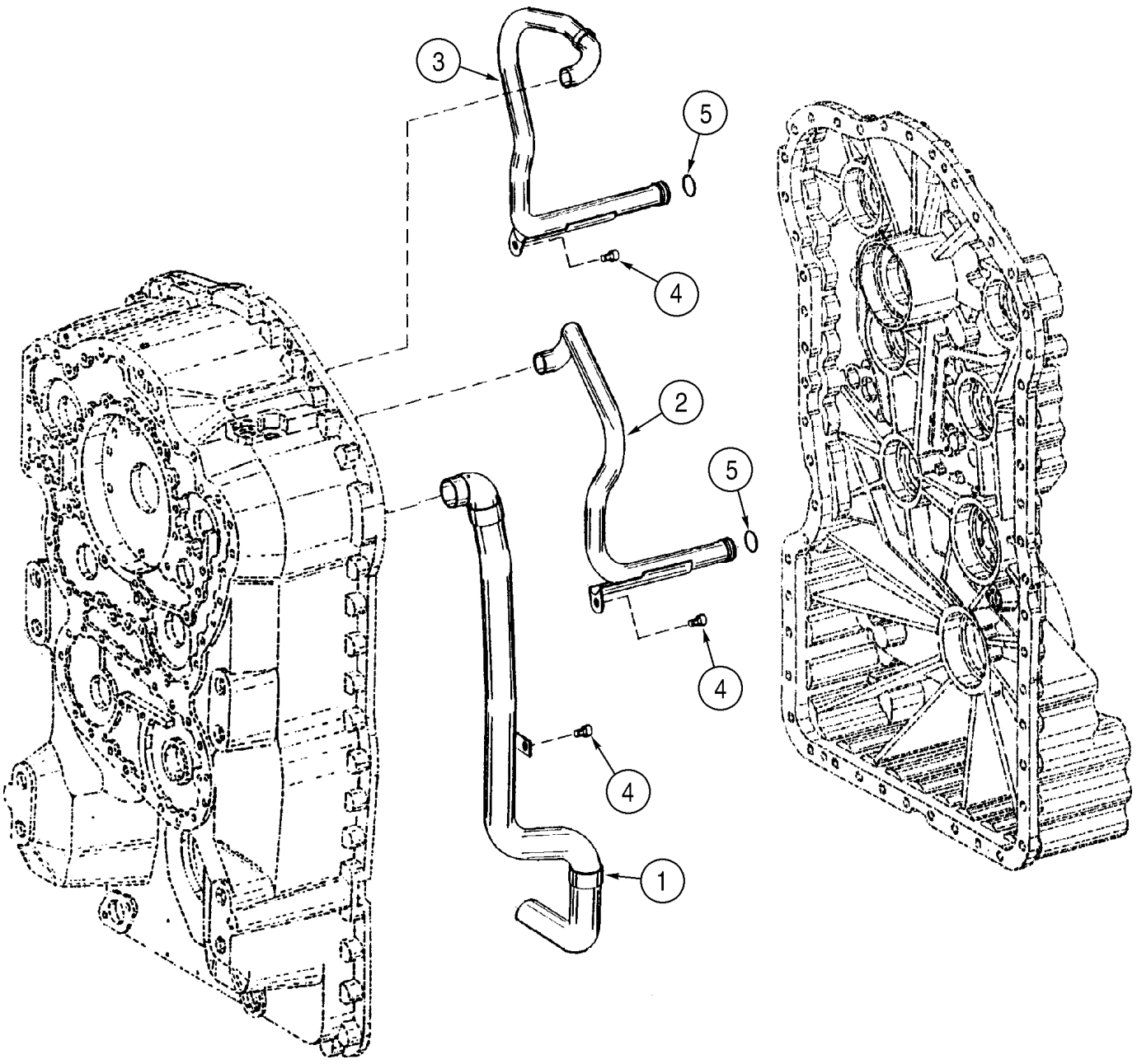

**TRANSMISSION ASSY - HOUSING TUBES**

| REF | FN | PART NUMBER | YR/SN | QTY | DESCRIPTION |
|---|---|---|---|---|---|
| | | 87572394 | | 1 | TRANSMISSION, See Figure(s) 06-03 - 06-20, 07-01; Incl. Refs. 1 - 5 |
| 1 | | 8603320 | | 1 | TUBE, Suction |
| 2 | | 8605280 | | 1 | TUBE |
| 3 | | 8605281 | | 1 | TUBE |
| 4 | | 8603306 | | 3 | SCREW |
| 5 | | 8603323 | | 2 | O-RING |

**TRANSMISSION - CLUTCH ASSY, FIRST**

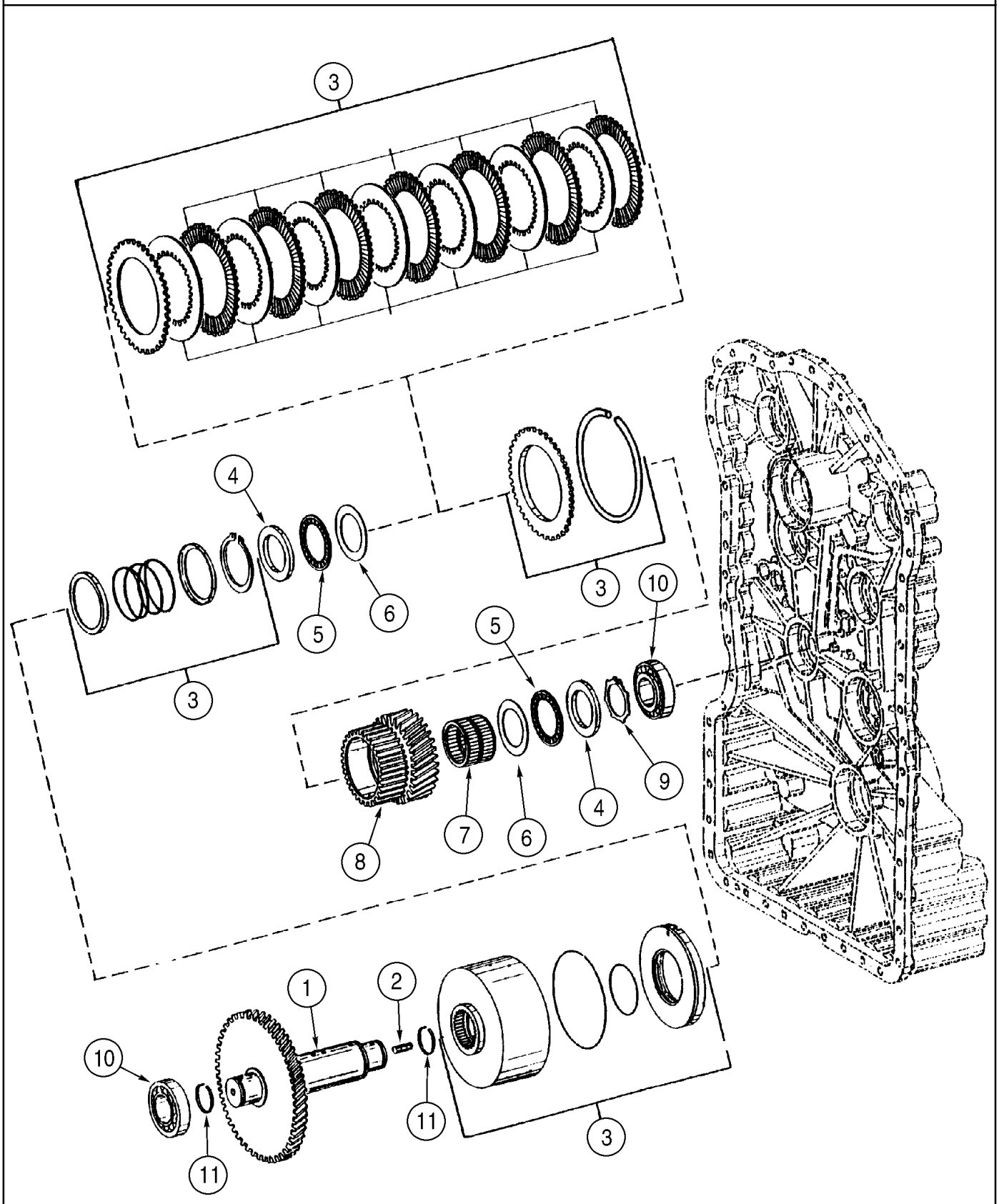

**TRANSMISSION - CLUTCH ASSY, FIRST**

| REF | FN | PART NUMBER | YR/SN | QTY | DESCRIPTION |
|---|---|---|---|---|---|
| | | 87572394 | | 1 | TRANSMISSION, See Figure(s) 06-03 - 06-20, 07-01; Incl. Refs. 1 - 11 |
| 1 | | 8603406 | | 1 | SHAFT |
| 2 | | 8603407 | | 1 | STUD, M10 x 16 |
| 3 | | 8603664 | | 1 | CLUTCH |
| 4 | | 8603430 | | 2 | DISC |
| 5 | | 8603431 | | 2 | BEARING, NEEDLE |
| 6 | | 8603432 | | 2 | WASHER |
| 7 | | 8603643 | | 1 | BEARING, NEEDLE |
| 8 | | 8605282 | | 1 | GEAR |
| 9 | | 8603434 | | 1 | RING, SNAP |
| 10 | | 8603435 | | 2 | BEARING, ROLLER |
| 11 | | 8603436 | | 2 | SEGMENT |

**TRANSMISSION - CLUTCH ASSY, SECOND**

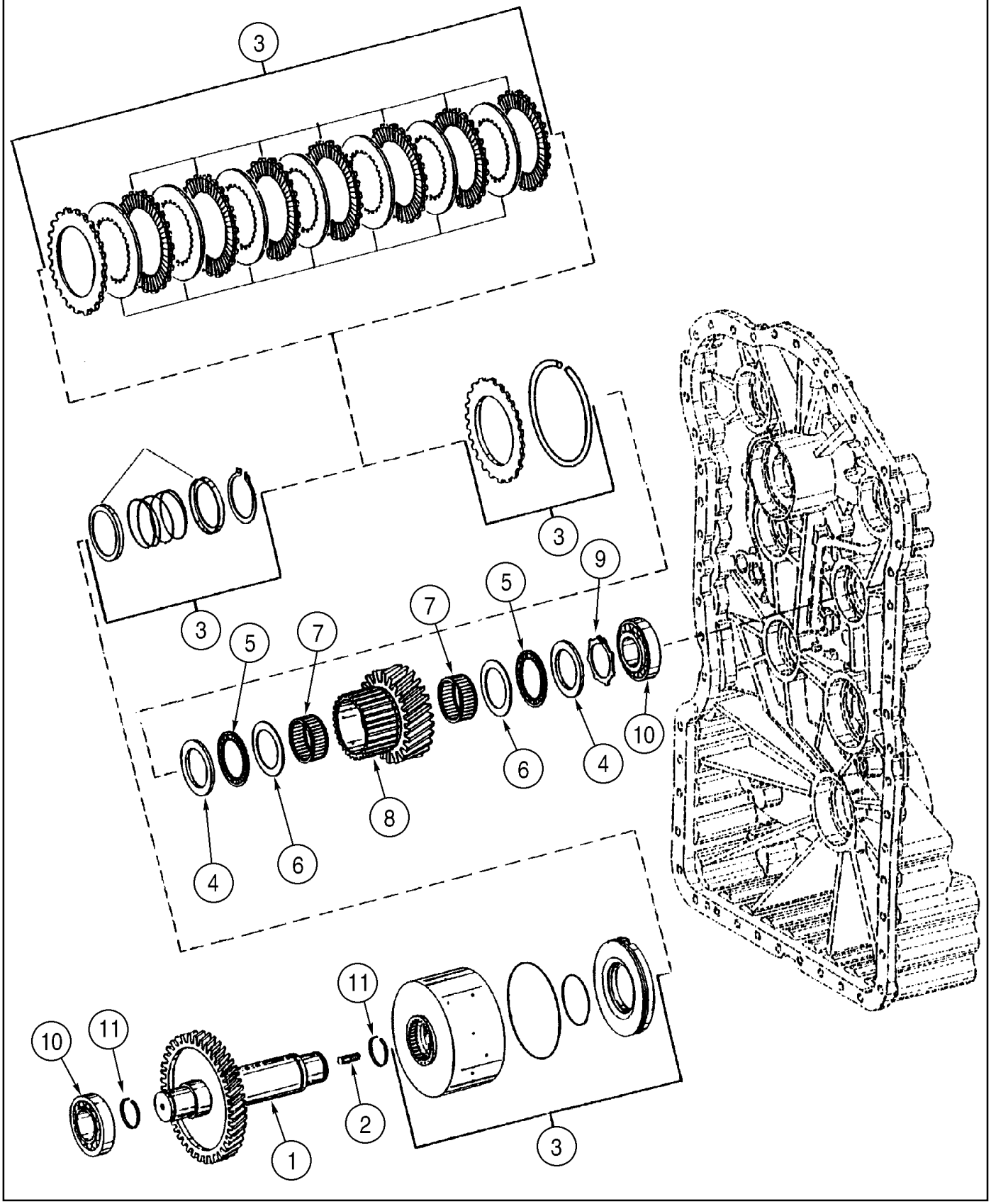

**TRANSMISSION - CLUTCH ASSY, SECOND**

| REF | FN | PART NUMBER | YR/SN | QTY | DESCRIPTION |
|---|---|---|---|---|---|
| | | 87572394 | | 1 | TRANSMISSION, See Figure(s) 06-03 - 06-20, 07-01; Incl. Refs. 1 - 11 |
| 1 | | 8603437 | | 1 | SHAFT |
| 2 | | 8603407 | | 1 | STUD, M10 x 16 |
| 3 | | 8603665 | | 1 | CLUTCH |
| 4 | | 8603438 | | 2 | DISC |
| 5 | | 8603439 | | 2 | BEARING, ROLLER |
| 6 | | 8603440 | | 2 | WASHER |
| 7 | | 8603441 | | 2 | BEARING, ROLLER |
| 8 | | 8603645 | | 1 | GEAR |
| 9 | | 8603442 | | 1 | RETAINER |
| 10 | | 8603435 | | 2 | BEARING, ROLLER |
| 11 | | 8603436 | | 2 | SEGMENT |

**TRANSMISSION - CLUTCH ASSY, THIRD**

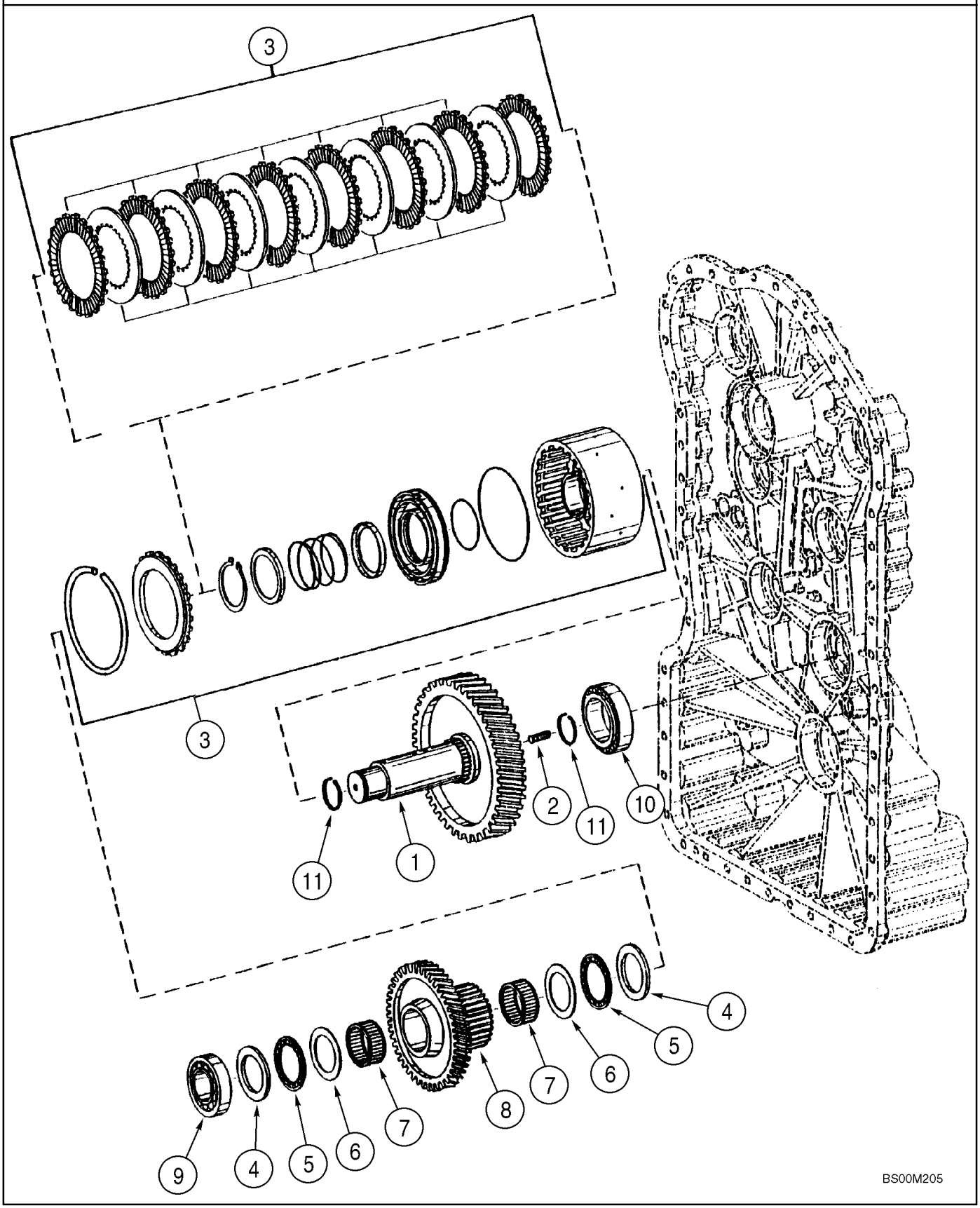

**TRANSMISSION - CLUTCH ASSY, THIRD**

| REF | FN | PART NUMBER | YR/SN | QTY | DESCRIPTION |
|---|---|---|---|---|---|
| | | 87572394 | | 1 | TRANSMISSION, See Figure(s) 06-03 - 06-20, 07-01; Incl. Refs. 1 - 11 |
| 1 | | 8603443 | | 1 | SHAFT |
| 2 | | 8603407 | | 1 | STUD, M10 x 16 |
| 3 | | 8603665 | | 1 | CLUTCH |
| 4 | | 8603438 | | 2 | DISC |
| 5 | | 8603439 | | 2 | BEARING, ROLLER |
| 6 | | 8603440 | | 2 | WASHER |
| 7 | | 8603441 | | 2 | BEARING, ROLLER |
| 8 | | 8603444 | | 1 | GEAR, IDLER |
| 9 | | 8603435 | | 1 | BEARING, ROLLER |
| 10 | | 8603301 | | 1 | BEARING, ROLLER |
| 11 | | 8603436 | | 2 | SEGMENT |

**TRANSMISSION - CLUTCH ASSY, FOURTH**

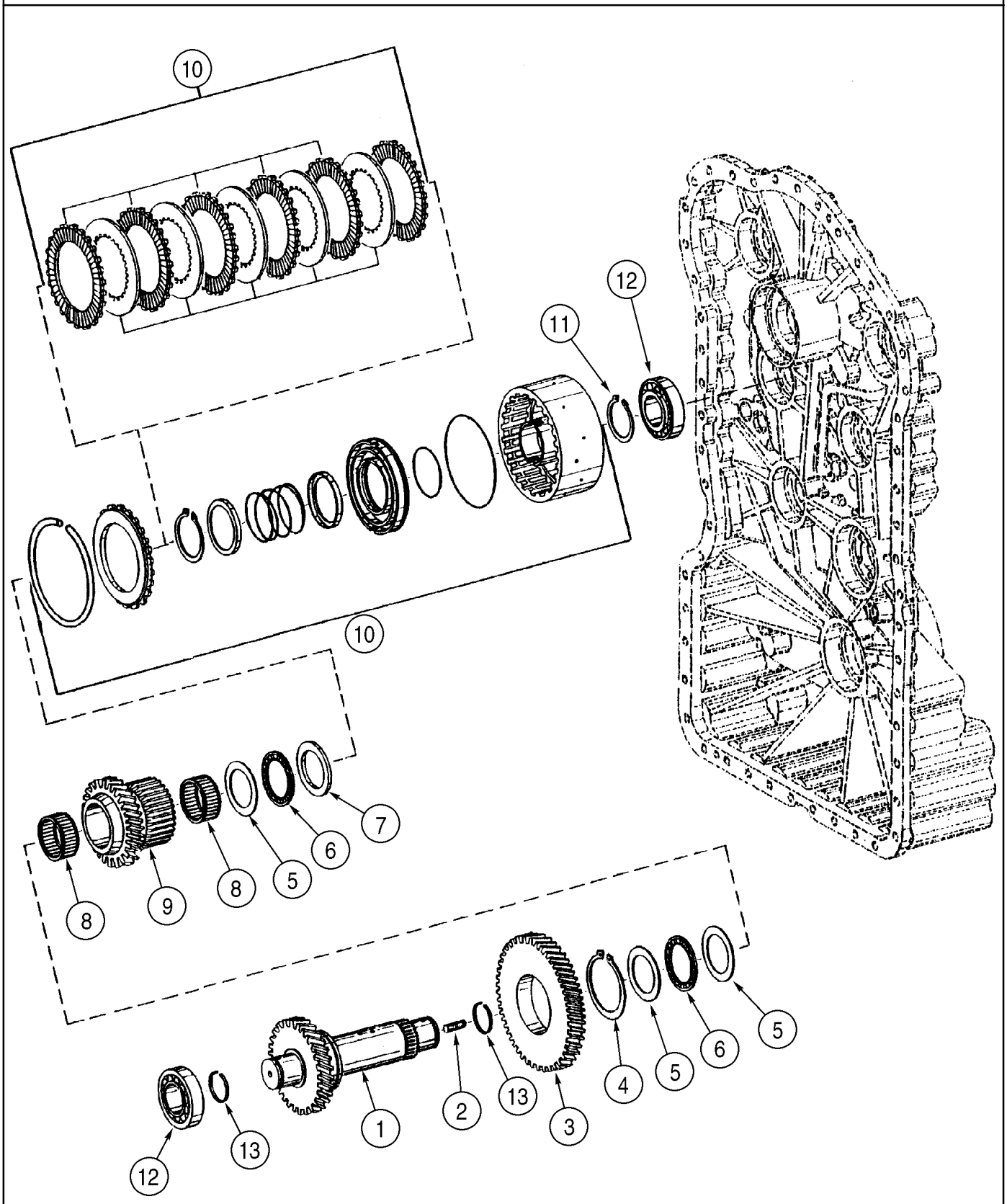

**TRANSMISSION - CLUTCH ASSY, FOURTH**

| REF | FN | PART NUMBER | YR/SN | QTY | DESCRIPTION |
|---|---|---|---|---|---|
| | | 87572394 | | 1 | TRANSMISSION, See Figure(s) 06-03 - 06-20, 07-01; Incl. Refs. 1 - 13 |
| 1 | | 8603445 | | 1 | SHAFT |
| 2 | | 8603407 | | 1 | STUD, M10 x 16 |
| 3 | | 8603446 | | 1 | GEAR |
| 4 | | P0236317R | | 1 | RING, SNAP |
| 5 | | 8603440 | | 3 | WASHER |
| 6 | | 8603439 | | 2 | BEARING, ROLLER |
| 7 | | 8603438 | | 1 | DISC |
| 8 | | 8603441 | | 2 | BEARING, ROLLER |
| 9 | | 8603447 | | 1 | GEAR, IDLER |
| 10 | | 8603646 | | 1 | CLUTCH |
| 11 | | 8603209 | | 1 | RING, SNAP |
| 12 | | 8603435 | | 2 | BEARING, ROLLER |
| 13 | | 8603436 | | 2 | SEGMENT |

**TRANSMISSION - CLUTCH ASSY, FORWARD**

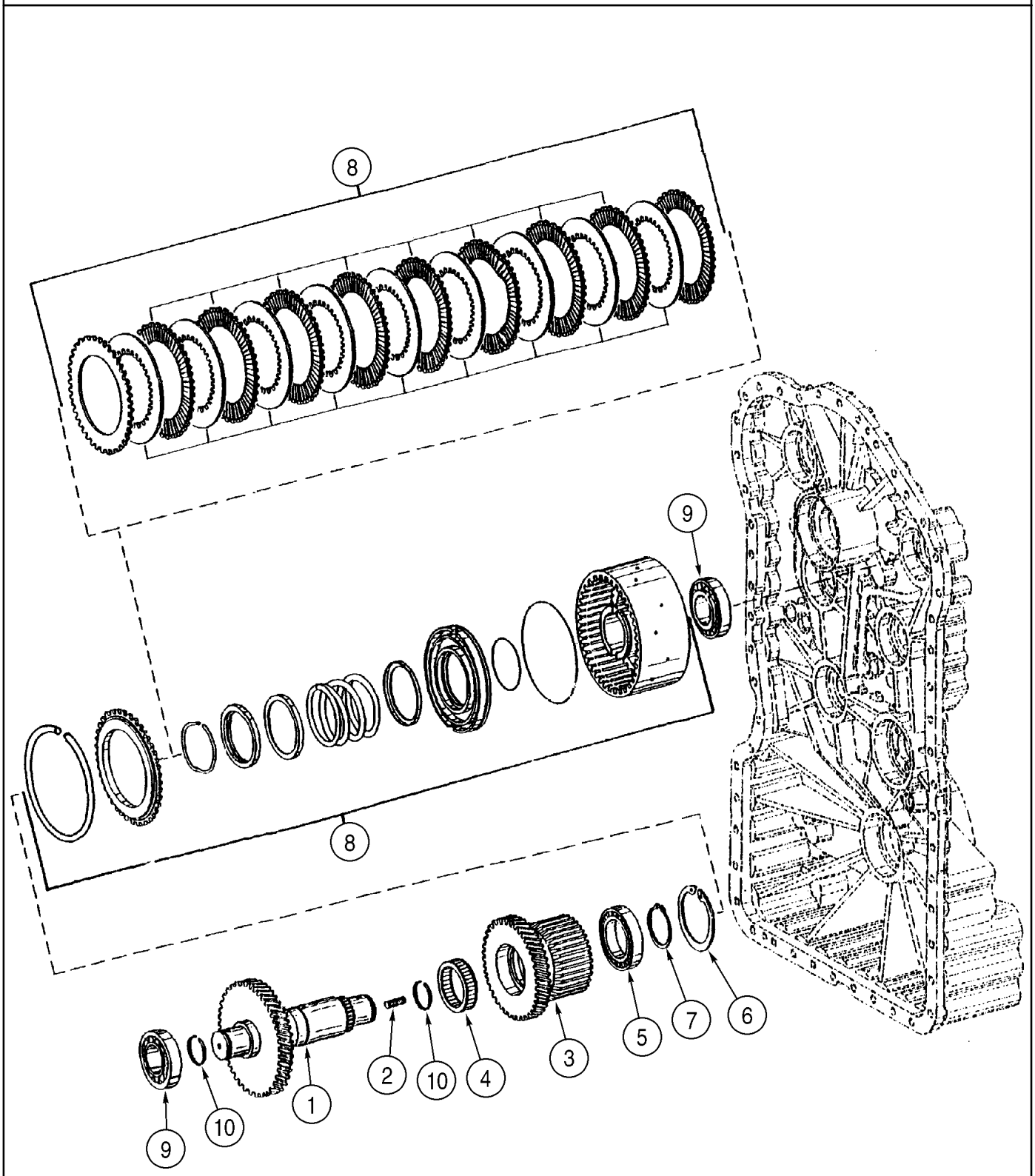

**TRANSMISSION - CLUTCH ASSY, FORWARD**

| REF | FN | PART NUMBER | YR/SN | QTY | DESCRIPTION |
|---|---|---|---|---|---|
| | | 87572394 | | 1 | TRANSMISSION, See Figure(s) 06-03 - 06-20, 07-01; Incl. Refs. 1 - 10 |
| 1 | | 8603448 | | 1 | SHAFT |
| 2 | | 8603407 | | 1 | STUD, M10 x 16 |
| 3 | | 8603449 | | 1 | GEAR, IDLER |
| 4 | | 8603450 | | 1 | BEARING, ROLLER |
| 5 | | 8604716 | | 1 | BEARING, BALL |
| 6 | | 800-2190 | | 1 | RING, SNAP, M90, Int |
| 7 | | 8603452 | | 1 | RETAINER |
| 8 | | 8603666 | | 1 | CLUTCH |
| 9 | | 8603435 | | 2 | BEARING, ROLLER |
| 10 | | 8603436 | | 2 | SEGMENT |

**TRANSMISSION - CLUTCH ASSY, REVERSE**

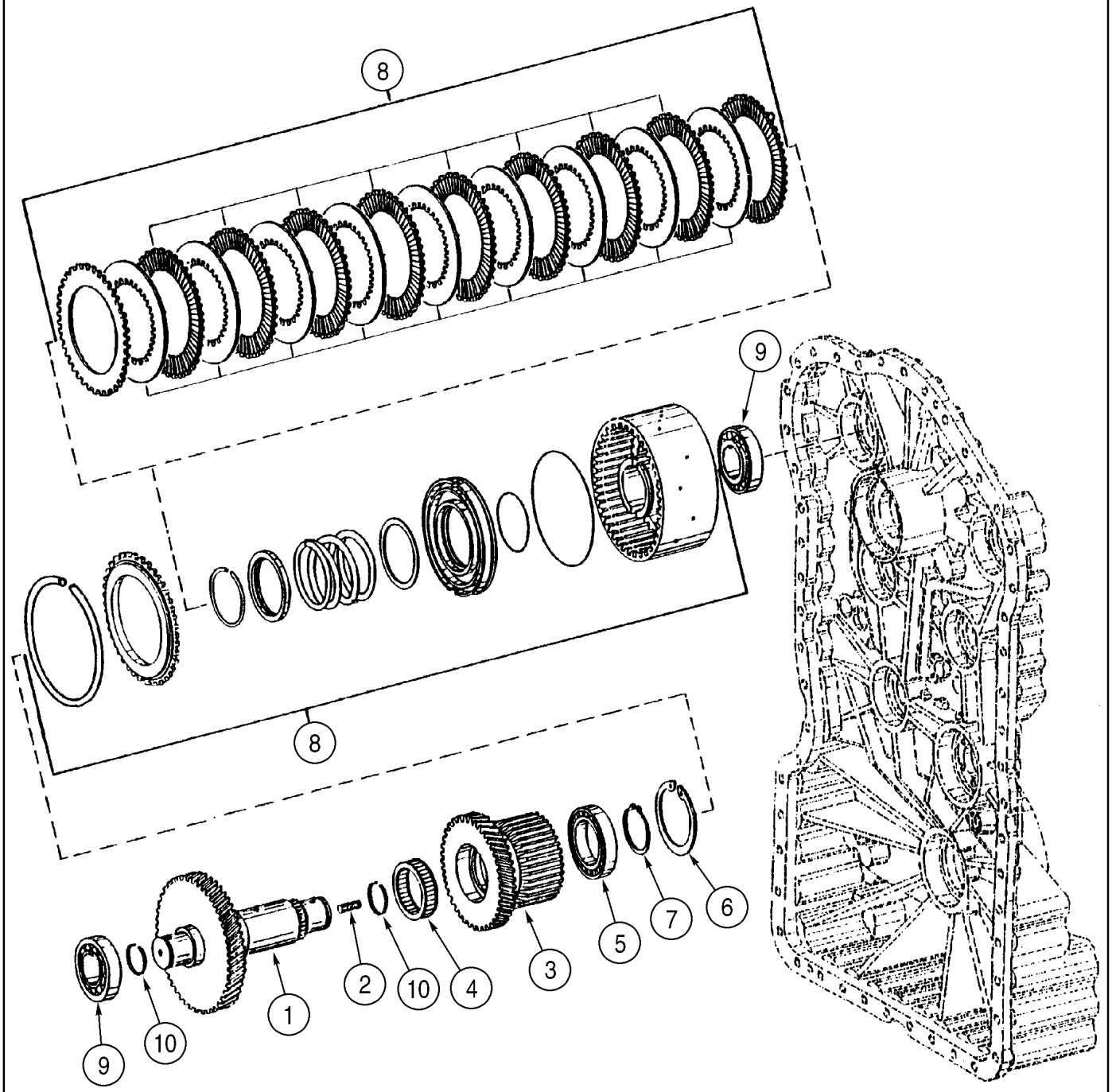

**TRANSMISSION - CLUTCH ASSY, REVERSE**

| REF | FN | PART NUMBER | YR/SN | QTY | DESCRIPTION |
|---|---|---|---|---|---|
| | | 87572394 | | 1 | TRANSMISSION, See Figure(s) 06-03 - 06-20, 07-01; Incl. Refs. 1 - 11 |
| 1 | | 8603457 | | 1 | SHAFT |
| 2 | | 8603407 | | 1 | STUD, M10 x 16 |
| 3 | | 8603449 | | 1 | GEAR, IDLER |
| 4 | | 8603450 | | 1 | BEARING, ROLLER |
| 5 | | 8604716 | | 1 | BEARING, BALL |
| 6 | | 800-2190 | | 1 | RING, SNAP, M90, Int |
| 7 | | 8603452 | | 1 | RETAINER |
| 8 | | 8603666 | | 1 | CLUTCH |
| 9 | | 8603435 | | 2 | BEARING, ROLLER |
| 10 | | 8603436 | | 2 | SEGMENT |
| 11 | | 8603499 | | 1 | RING, SNAP, Not Illustrated |

**TRANSMISSION - SHAFT, OUTPUT**

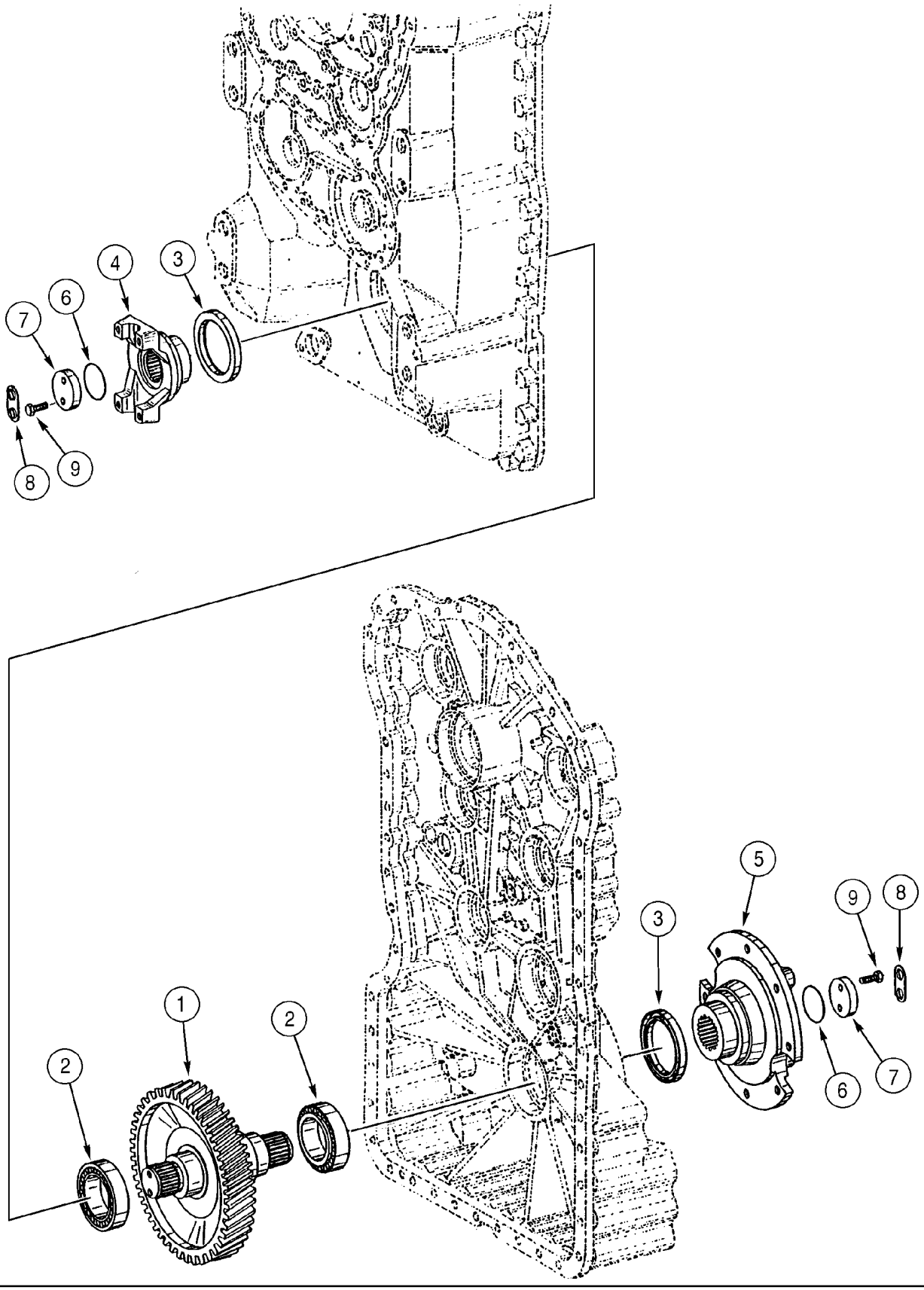

**TRANSMISSION - SHAFT, OUTPUT**

| REF | FN | PART NUMBER | YR/SN | QTY | DESCRIPTION |
|---|---|---|---|---|---|
| | | 87572394 | | 1 | TRANSMISSION, See Figure(s) 06-03 - 06-20, 07-01; Incl. Refs. 1 - 9 |
| 1 | | 8603324 | | 1 | SHAFT |
| 2 | | 8603301 | | 2 | BEARING, ROLLER |
| 3 | | 8603223 | | 2 | SEAL |
| 4 | | 8603326 | | 1 | FLANGE, Output; Rear |
| 5 | | 8603651 | | 1 | YOKE, Output Flange; For Parking Brake Assembly, See Figure 07-01 |
| 6 | | 8603219 | | 2 | O-RING |
| 7 | | 8603220 | | 2 | WASHER |
| 8 | | 8603221 | | 2 | WASHER |
| 9 | | 8603325 | | 4 | SCREW, 8 x 25 |

**TRANSMISSION - POWER TAKE OFF**

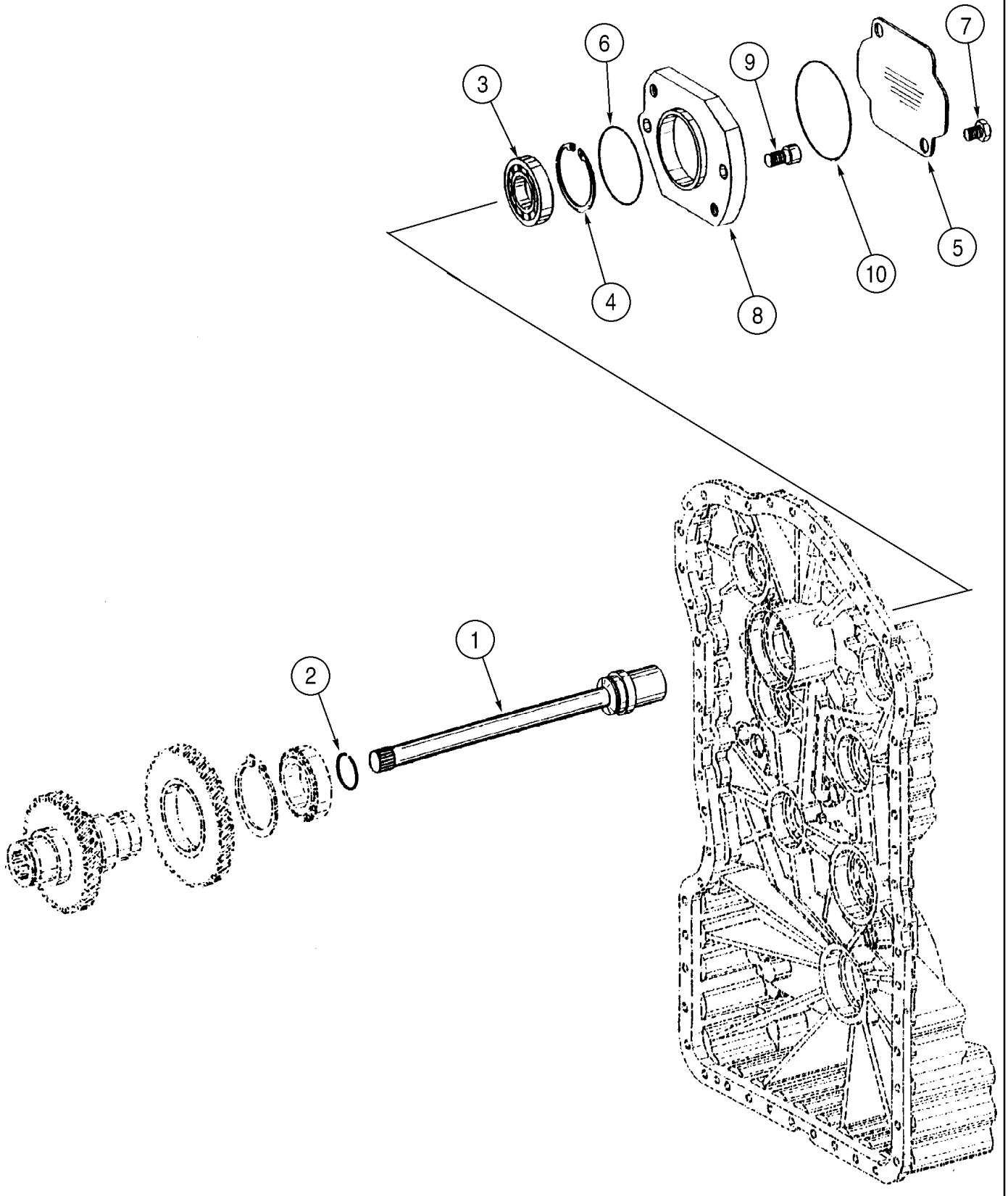

**TRANSMISSION - POWER TAKE OFF**

| REF | FN | PART NUMBER | YR/SN | QTY | DESCRIPTION |
|---|---|---|---|---|---|
| | | 87572394 | | 1 | TRANSMISSION, See Figure(s) 06-03 - 06-20, 07-01; Incl. Refs. 1 - 10 |
| 1 | | 8603655 | | 1 | SHAFT, Pump |
| 2 | | 8603352 | | 1 | RING, SNAP |
| 3 | | 8603353 | | 1 | BEARING, BALL |
| 4 | | 8603354 | | 1 | RING, SNAP |
| 5 | | 8603656 | | 1 | PLATE, COVER |
| 6 | | 8603527 | | 1 | O-RING |
| 7 | | 8603274 | | 2 | SCREW |
| 8 | | 8603657 | | 1 | FLANGE |
| 9 | | 8603658 | | 2 | SCREW, M16 x 30 |
| 10 | | 8603355 | | 1 | O-RING |

**TRANSMISSION - VALVE PLATES**

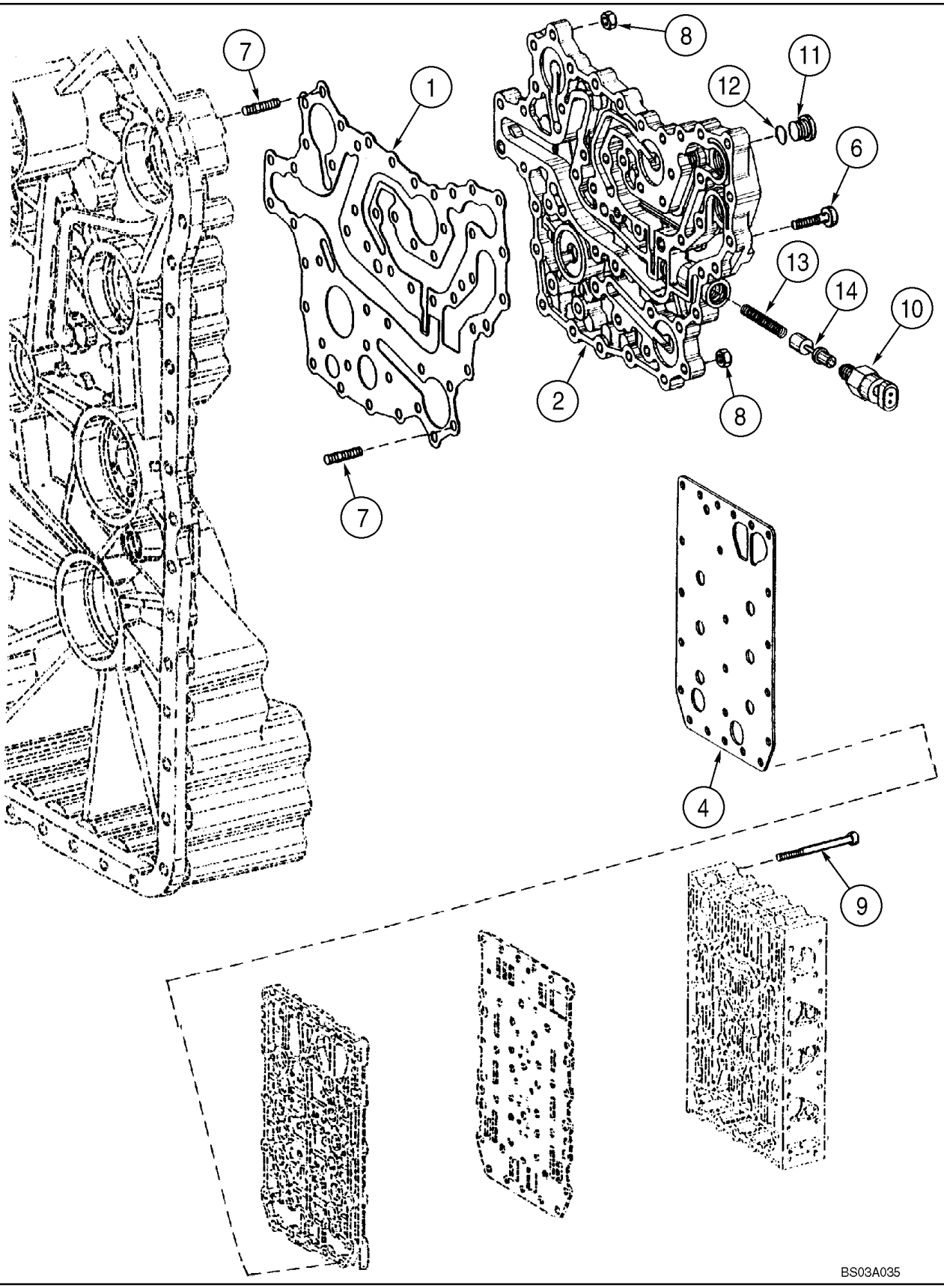

**TRANSMISSION - VALVE PLATES**

| REF | FN | PART NUMBER | YR/SN | QTY | DESCRIPTION |
|---|---|---|---|---|---|
| | | 87572394 | | 1 | TRANSMISSION, See Figure(s) 06-03 - 06-20, 07-01; Incl. Refs. 1 - 14 |
| 1 | | 8603184 | | 1 | SEAL |
| 2 | | 8603185 | | 1 | MANIFOLD |
| 4 | | 8603180 | | 1 | SHEET |
| 6 | | 8603308 | | 37 | SCREW |
| 7 | | 8604714 | | 14 | STUD, M8 x 25 |
| 8 | | 8603315 | | 14 | NUT, M8 |
| 9 | | 8603182 | | 23 | SCREW, M6 x 76 |
| 10 | | 8603537 | | 1 | SWITCH, Filter Maintenance |
| 11 | | 8603357 | | 1 | PLUG, M16 x 1,5; Incl. 12 |
| 12 | | 8603358 | | 1 | O-RING |
| 13 | | 8603534 | | 1 | SPRING, COMPRESSION |
| 14 | | 8603533 | | 1 | PISTON |

**TRANSMISSION - VALVE, CONTROL**

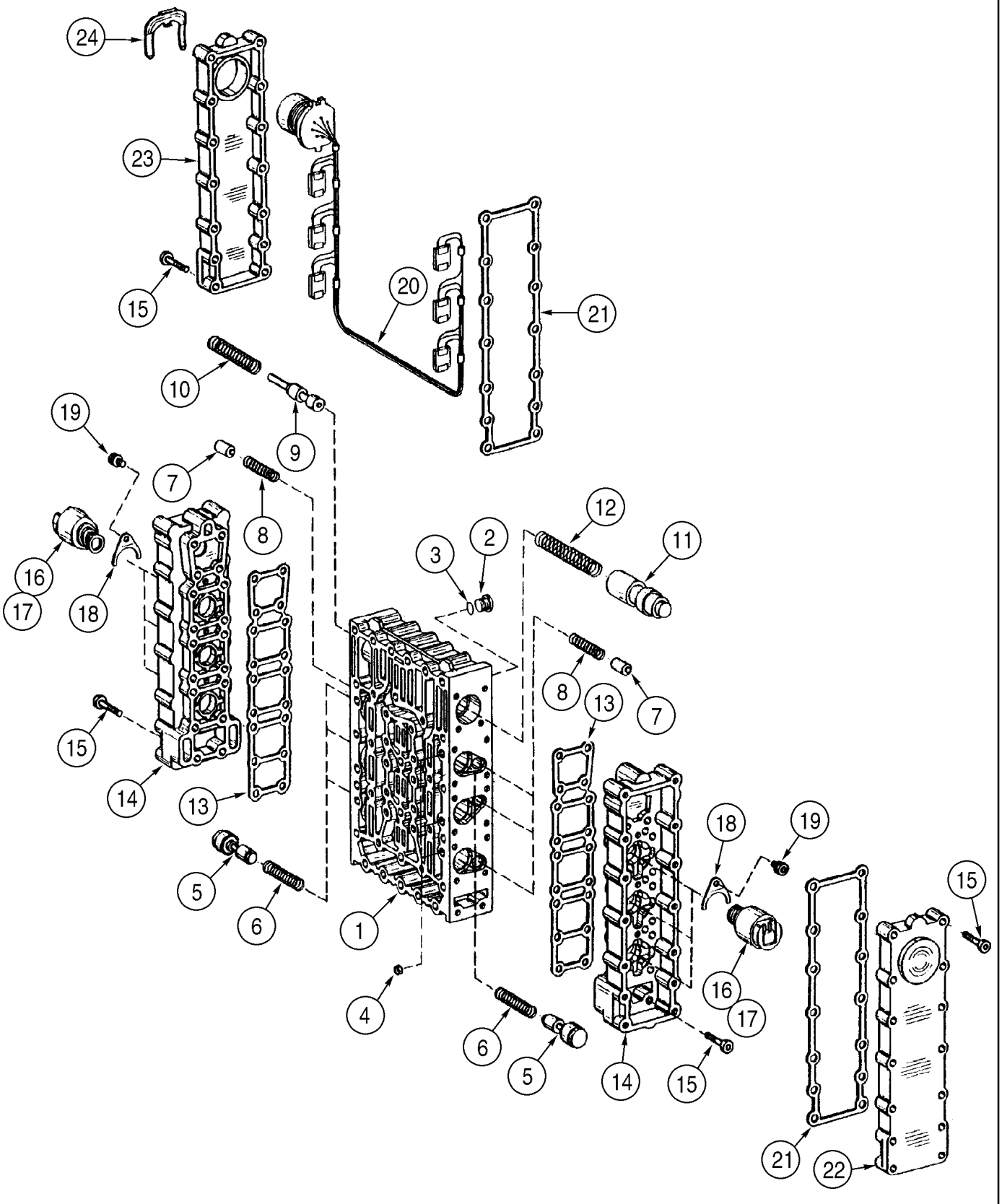

**TRANSMISSION - VALVE, CONTROL**

| REF | FN | PART NUMBER | YR/SN | QTY | DESCRIPTION |
|---|---|---|---|---|---|
| | | 87572394 | | 1 | TRANSMISSION, See Figure(s) 06-03 - 06-20, 07-01; Incl. Refs. 1 - 24 |
| | | 8603179 | | 1 | VALVE, HYDRAULIC, Incl. 1 - 24; Incl. Figure 06-18 |
| 1 | | 8603365 | | 1 | BODY, VALVE |
| 2 | | 8603366 | | 8 | PLUG, M10 x 1; Incl. 3 |
| 3 | | 8603215 | | 1 | O-RING |
| 4 | | 8603367 | | 6 | ORIFICE |
| 5 | | 8603368 | | 6 | PISTON |
| 6 | | 8603369 | | 6 | COMPRESSOR, SPRING |
| 7 | | 8603370 | | 6 | PISTON |
| 8 | | 8603371 | | 6 | COMPRESSOR, SPRING |
| 9 | | 8603372 | | 1 | PISTON |
| 10 | | 8603374 | | 1 | COMPRESSOR, SPRING |
| 11 | | 8603623 | | 1 | PISTON |
| 12 | | 8603375 | | 1 | COMPRESSOR, SPRING |
| 13 | | 8603786 | | 2 | GASKET |
| 14 | | 8603376 | | 2 | HOUSING |
| 15 | | 8603377 | | 64 | SCREW |
| 16 | | 8603624 | | 6 | REGULATING SYSTEM, Pressure; Incl. 17 |
| 17 | | 8603538 | | 1 | O-RING |
| 18 | | 8603218 | | 6 | PLATE, Locating |
| 19 | | 8603359 | | 6 | SCREW |
| 20 | | 8603625 | | 1 | HARNESS |
| 21 | | 8603787 | | 2 | GASKET |
| 22 | | 8603361 | | 1 | COVER, Closed |
| 23 | | 8603360 | | 1 | COVER, Harness Adapter |
| 24 | | 8603362 | | 1 | CLAMP |

**TRANSMISSION - VALVE, CONTROL**

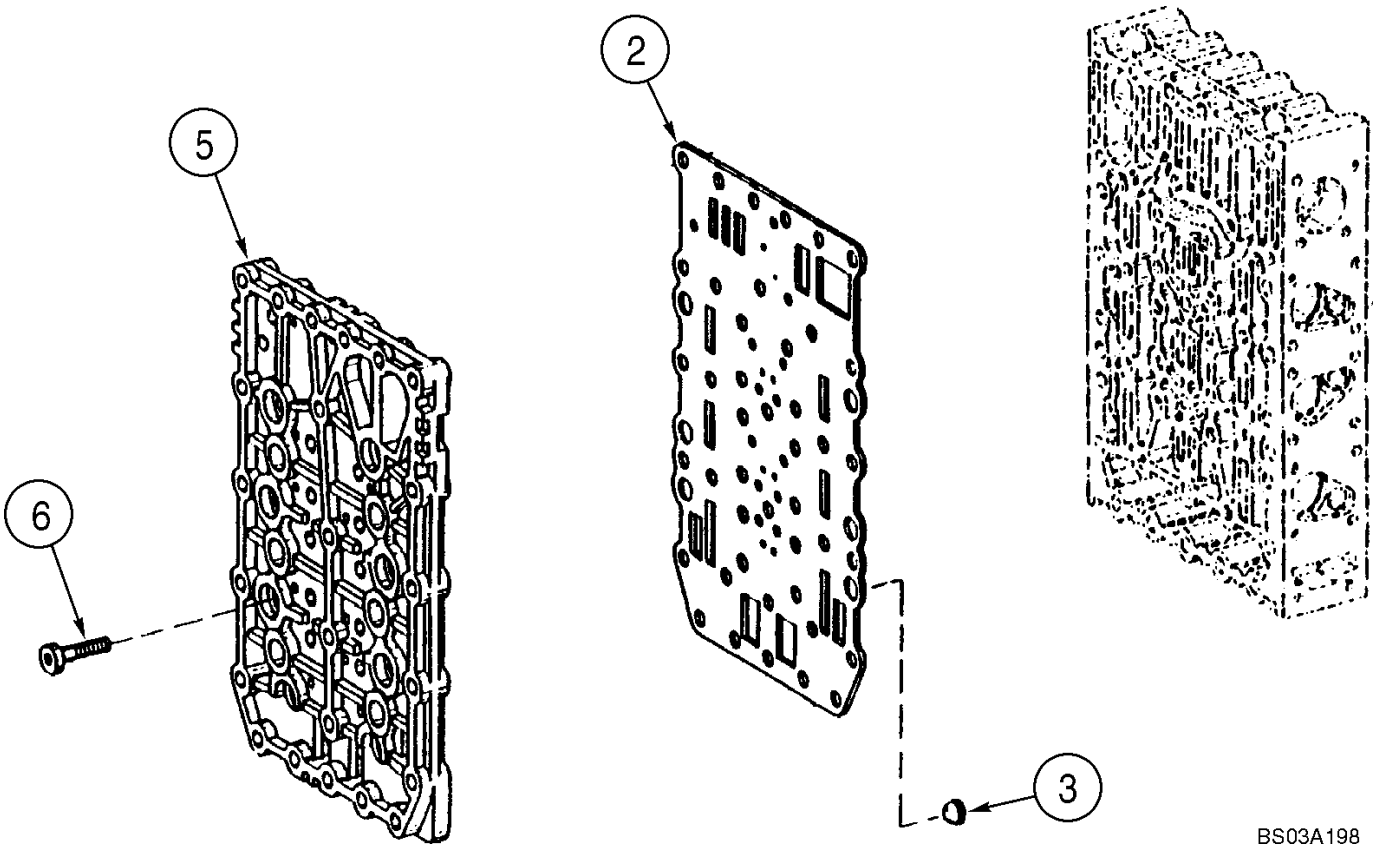

**TRANSMISSION - VALVE, CONTROL**

| REF | FN | PART NUMBER | YR/SN | QTY | DESCRIPTION |
|---|---|---|---|---|---|
| | | 87572394 | | 1 | TRANSMISSION, See Figure(s) 06-03 - 06-20, 07-01; Incl. Refs. 2 - 6 |
| | | 8603179 | | 1 | VALVE, HYDRAULIC, Incl. 2 - 6; Incl. Figure 06-17 |
| 2 | | 8603181 | | 1 | SHEET |
| 3 | | 8603363 | | 6 | SCREEN, Filter |
| 5 | | 8603628 | | 1 | PLATE, Distribution |
| 6 | | 8603183 | | 18 | SCREW, M6 x 23 |

**TRANSMISSION - VALVE, REGULATOR AND OIL PUMP**

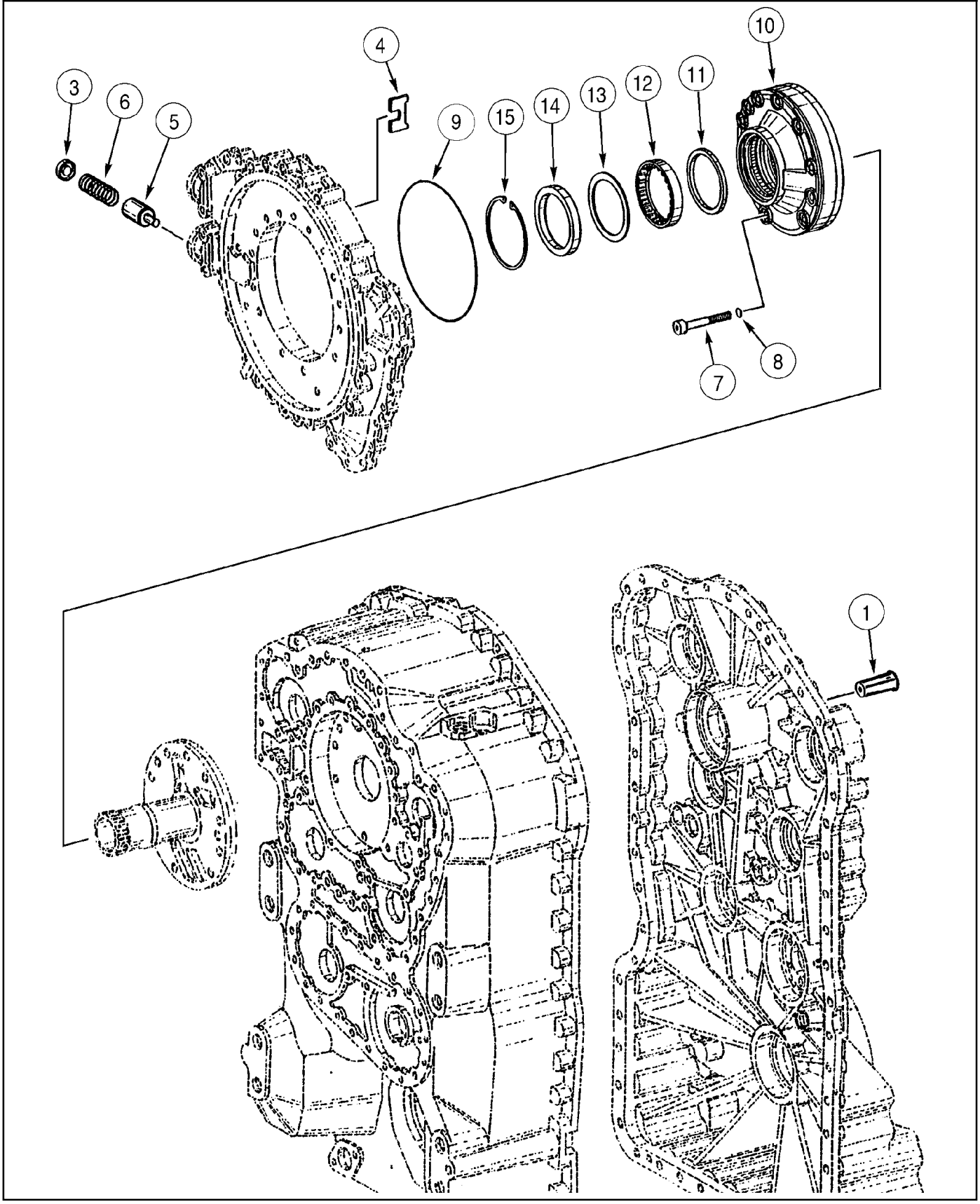

**TRANSMISSION - VALVE, REGULATOR AND OIL PUMP**

| REF | FN | PART NUMBER | YR/SN | QTY | DESCRIPTION |
|---|---|---|---|---|---|
| | | 87572394 | | 1 | TRANSMISSION, See Figure(s) 06-03 - 06-20, 07-01; Incl. Refs. 1 - 15 |
| 1 | | 8603778 | | 1 | SHAFT |
| 3 | | 8603380 | | 1 | PLATE, LOCKING, Pressure |
| 4 | | 8603381 | | 1 | WASHER |
| 5 | | 8603382 | | 1 | PISTON |
| 6 | | 8603383 | | 1 | COMPRESSOR, SPRING |
| 7 | | 8603384 | | 10 | SCREW, Incl. 8 |
| 8 | | 8603385 | | 10 | O-RING |
| 9 | | 8603386 | | 1 | O-RING |
| 10 | | 8603387 | | 1 | PUMP, HYDRAULIC, Oil Pressure |
| 11 | | 8603388 | | 1 | RING |
| 12 | | 8603390 | | 1 | BEARING, NEEDLE |
| 13 | | 8603389 | | 1 | SHIM |
| 14 | | 8603391 | | 1 | GASKET |
| 15 | | 8603392 | | 1 | RING, SNAP |

**TRANSMISSION - SENSOR, SPEED AND PUMP COVER**

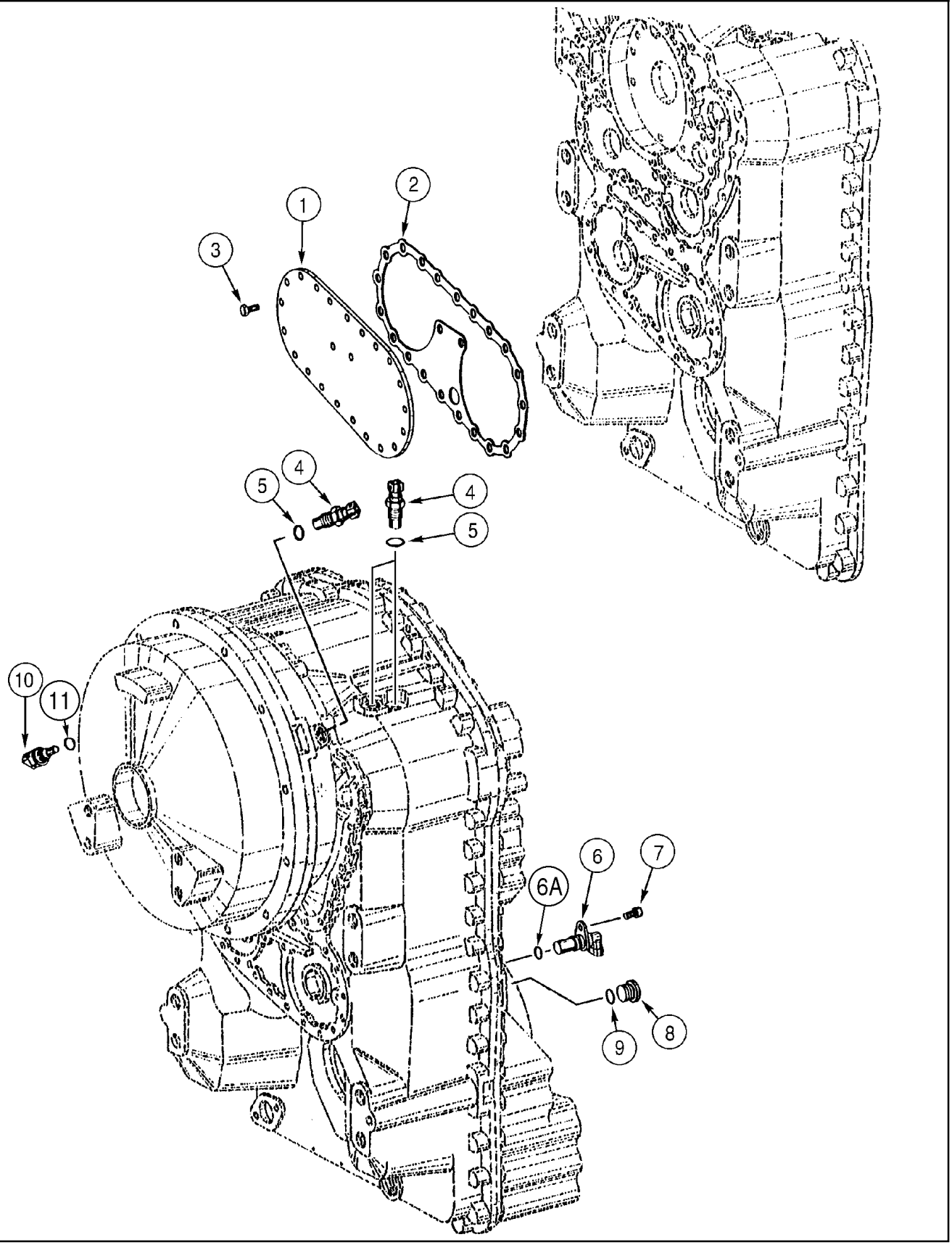

**TRANSMISSION - SENSOR, SPEED AND PUMP COVER**

| REF | FN | PART NUMBER | YR/SN | QTY | DESCRIPTION |
|---|---|---|---|---|---|
| | | 87572394 | | 1 | TRANSMISSION, See Figure(s) 06-03 - 06-20, 07-01; Incl. Refs. 1 - 11 |
| 1 | | 8603393 | | 1 | COVER, Steering Pump |
| 2 | | 8603395 | | 1 | GASKET |
| 3 | | 8603396 | | 23 | SCREW, M8 x 18 |
| 4 | | 8603397 | | 3 | SENSOR, Inductive Coupling |
| 5 | | 8603216 | | 3 | O-RING |
| 6 | | 8603398 | | 1 | SENSOR, Speed; Incl. 6A |
| 6A | | 8603629 | | 1 | O-RING |
| 7 | | 8603399 | | 1 | SCREW |
| 8 | | 8603400 | | 1 | PLUG, Incl. 9 |
| 9 | | 8603401 | | 1 | O-RING |
| 10 | | 8603622 | | 1 | SENSOR, Temperature; Incl. 11 |
| 11 | | 8603402 | | 1 | O-RING |

**AXLE, REAR - STOP**

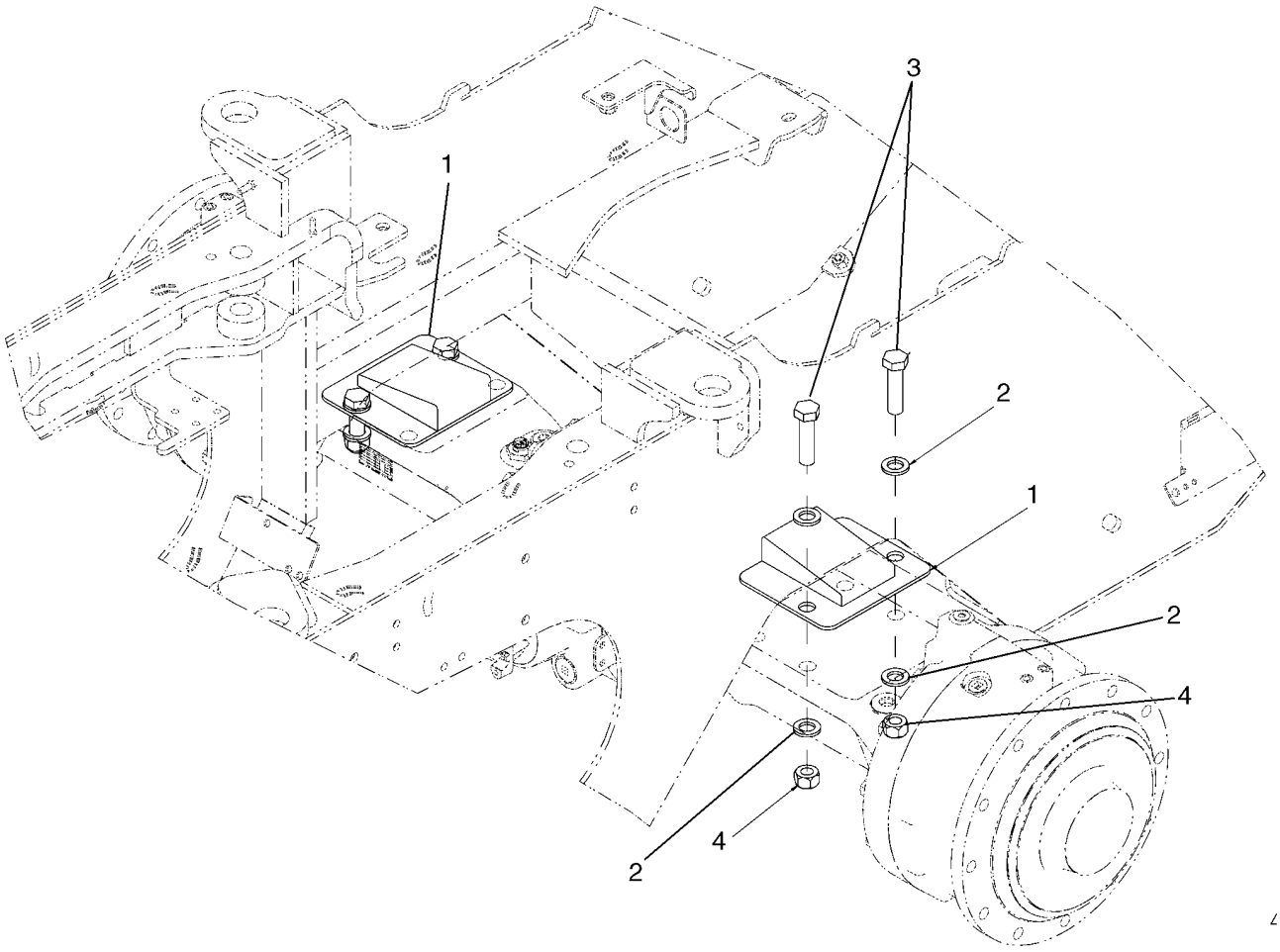


BS07F487

**AXLE, REAR - STOP**

| REF | FN | PART NUMBER | YR/SN | QTY | DESCRIPTION |
|---|---|---|---|---|---|
| 1 | | 87605272 | | 2 | STOP, 8 Degree Axle Stop |
| 2 | | 896-11024 | | 8 | WASHER, M24 x 44.5 x 5, HT |
| 3 | | 827-24090 | | 4 | BOLT, Hex, M24 x 90, 10.9 |
| 4 | | 829-1424 | | 4 | NUT, M24, Cl 10 |

**AXLE, FRONT - MOUNTING**

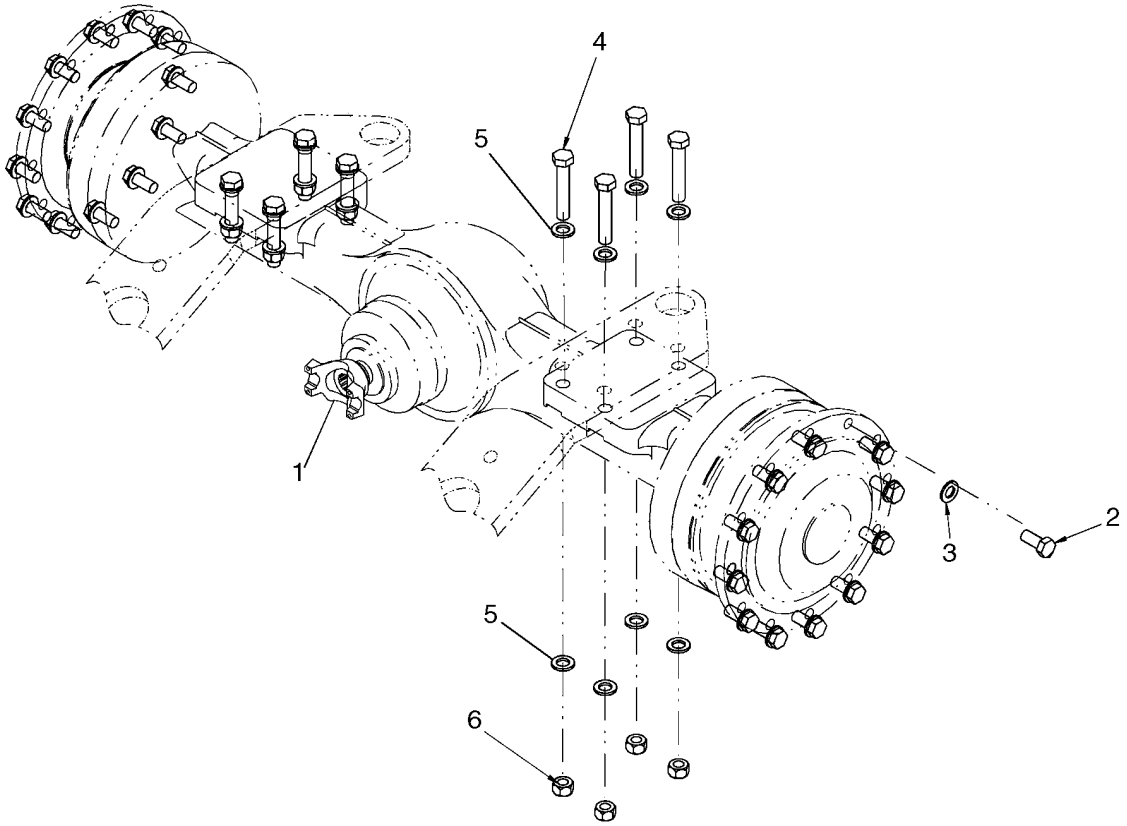


BS07D395

**AXLE, FRONT - MOUNTING**

| REF | FN | PART NUMBER | YR/SN | QTY | DESCRIPTION |
|---|---|---|---|---|---|
| 1 | | 87358580 | | 1 | AXLE, FRONT, See Figures 06-22A - 06-22E |
| 2 | | 514-1315 | | 24 | BOLT, Hex, M22 x 1.5 x 50, 10.9 |
| 3 | | 896-11022 | | 24 | WASHER, M22 x 44 x 4, HT |
| 4 | | 827-24130 | | 8 | BOLT, Hex, M24 x 130, 10.9 |
| 5 | | 896-11024 | | 16 | WASHER, M24 x 44.5 x 5, HT |
| 6 | | 829-1424 | | 8 | NUT, M24, Cl 10 |

| 06-22A | | p1 | 07/07 |
|---|---|---|---|

**AXLE, FRONT - HOUSING**

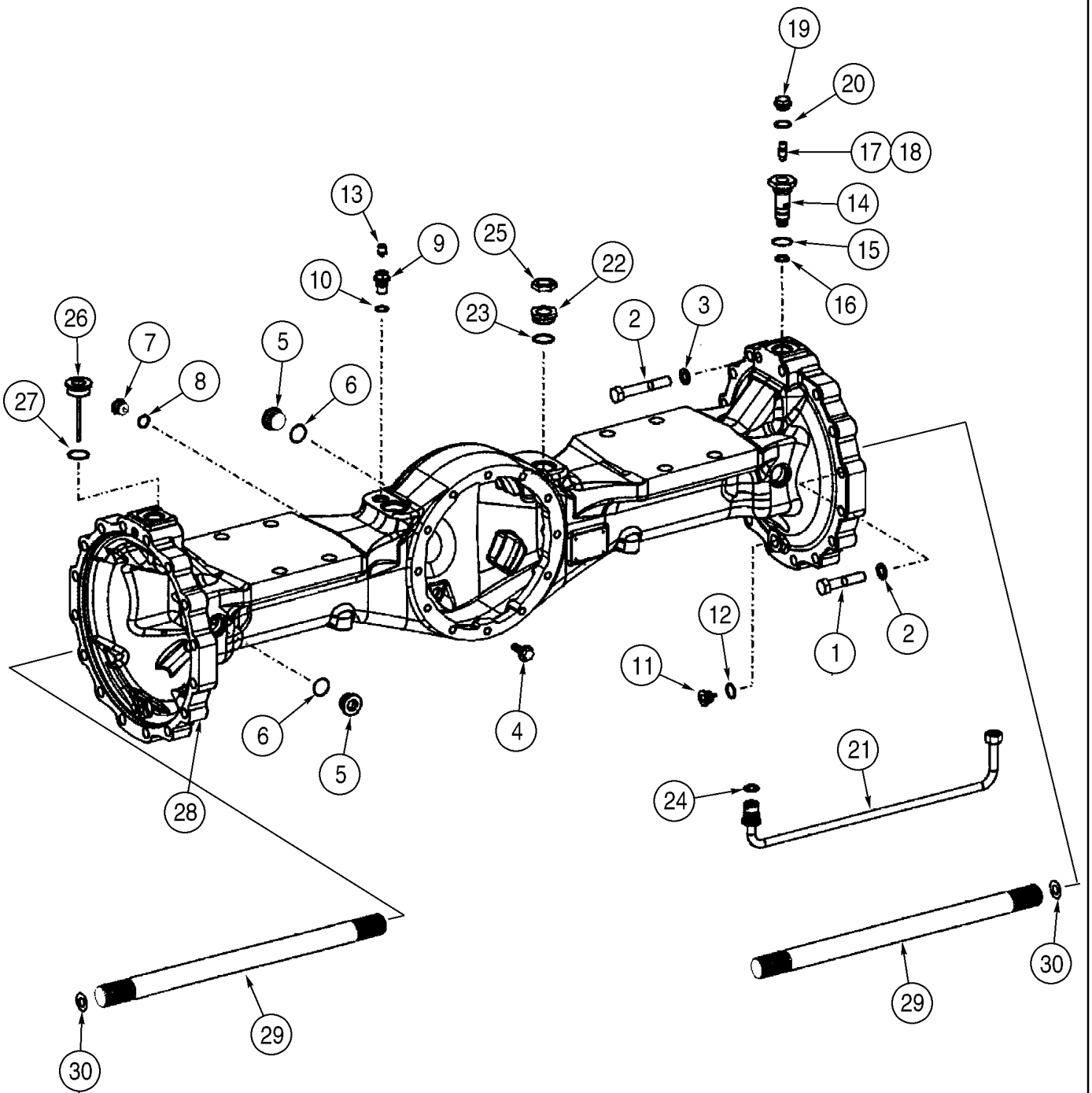

**AXLE, FRONT - HOUSING**

| REF | FN | PART NUMBER | YR/SN | QTY | DESCRIPTION |
|---|---|---|---|---|---|
| | | 87358580 | | 1 | AXLE, FRONT, Limited Slip; Incl. Figures 06-22A - 06-22E; Incl. Refs. 1 - 30 |
| 1 | | 514-1107 | | 28 | BOLT, Hex, M18 x 1.5 x 85, 10.9 |
| 2 | | 8603670 | | 4 | BOLT, M18 x 115 |
| 3 | | 8603202 | | 32 | WASHER |
| 4 | | 8603206 | | 12 | SCREW |
| 5 | | 8603549 | | 2 | PLUG |
| 6 | | 8605636 | | 2 | O-RING, 33 x 2.2; If Used |
| 6 | | 8603727 | | 2 | O-RING, 33 x 2; If Used |
| 7 | | 8603550 | | 1 | PLUG |
| 8 | | 8603208 | | 1 | O-RING |
| 9 | | 8603256 | | 1 | PLUG |
| 10 | | 8603208 | | 1 | O-RING |
| 12 | | 8603200 | | 2 | GASKET |
| 13 | | 8603201 | | 1 | BREATHER |
| 14 | | 8603551 | | 2 | FITTING |
| 15 | | 8605636 | | 2 | O-RING, 33 x 2.2; If Used |
| 15 | | 8603727 | | 2 | O-RING, 33 x 2; If Used |
| 16 | | 8603552 | | 2 | FITTING |
| 17 | | 3222214R1 | | 2 | VALVE, Breather; Incl. 18 |
| 18 | | NSS | | 2 | NOT SERVICED SEPARATELY, Dust Cap |
| 19 | | 8603210 | | 2 | PLUG, M26 - 1,5 |
| 20 | | 8603799 | | 2 | RING, 26 x 31 mm |
| 21 | | 87436733 | | 2 | TUBE, Internal Brake |
| 22 | | 8603696 | | 2 | FITTING, Incl. 23 |
| 23 | | 8603207 | | 2 | O-RING |
| 24 | | 8603725 | | 2 | RING |
| 25 | | 8603619 | | 2 | NUT |
| 26 | | 8603694 | | 1 | DIPSTICK, Oil |
| 27 | | 8603207 | | 1 | O-RING |
| 28 | | 8603668 | | 1 | HOUSING, AXLE |
| 29 | | 8603555 | | 2 | HALF SHAFT |
| 30 | | 8603669 | | AR | SHIM, 0,4 mm |
| 30 | | 8603730 | | AR | SHIM, 0,2 mm |
| 30 | | 8603731 | | AR | SHIM, 1,00 mm |

| 06-22A | | p2 | 07/07 |
|---|---|---|---|

**AXLE, FRONT - HOUSING**

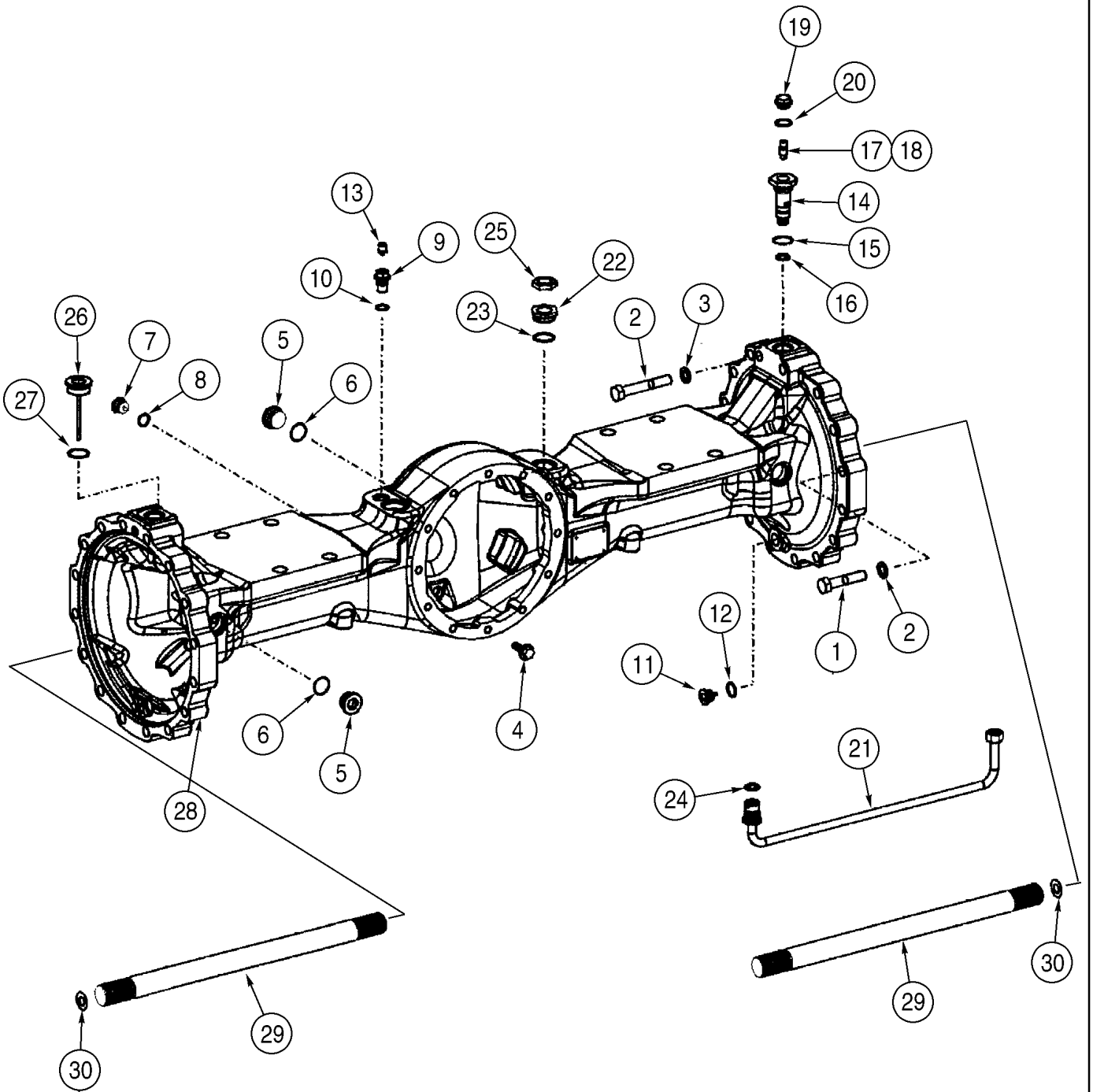

**AXLE, FRONT - HOUSING**

| REF | FN | PART NUMBER | YR/SN | QTY | DESCRIPTION |
|---|---|---|---|---|---|
| 30 | | 8603732 | | AR | SHIM, 1.5 mm; If Used |

**AXLE, FRONT - DIFFERENTIAL CARRIER**

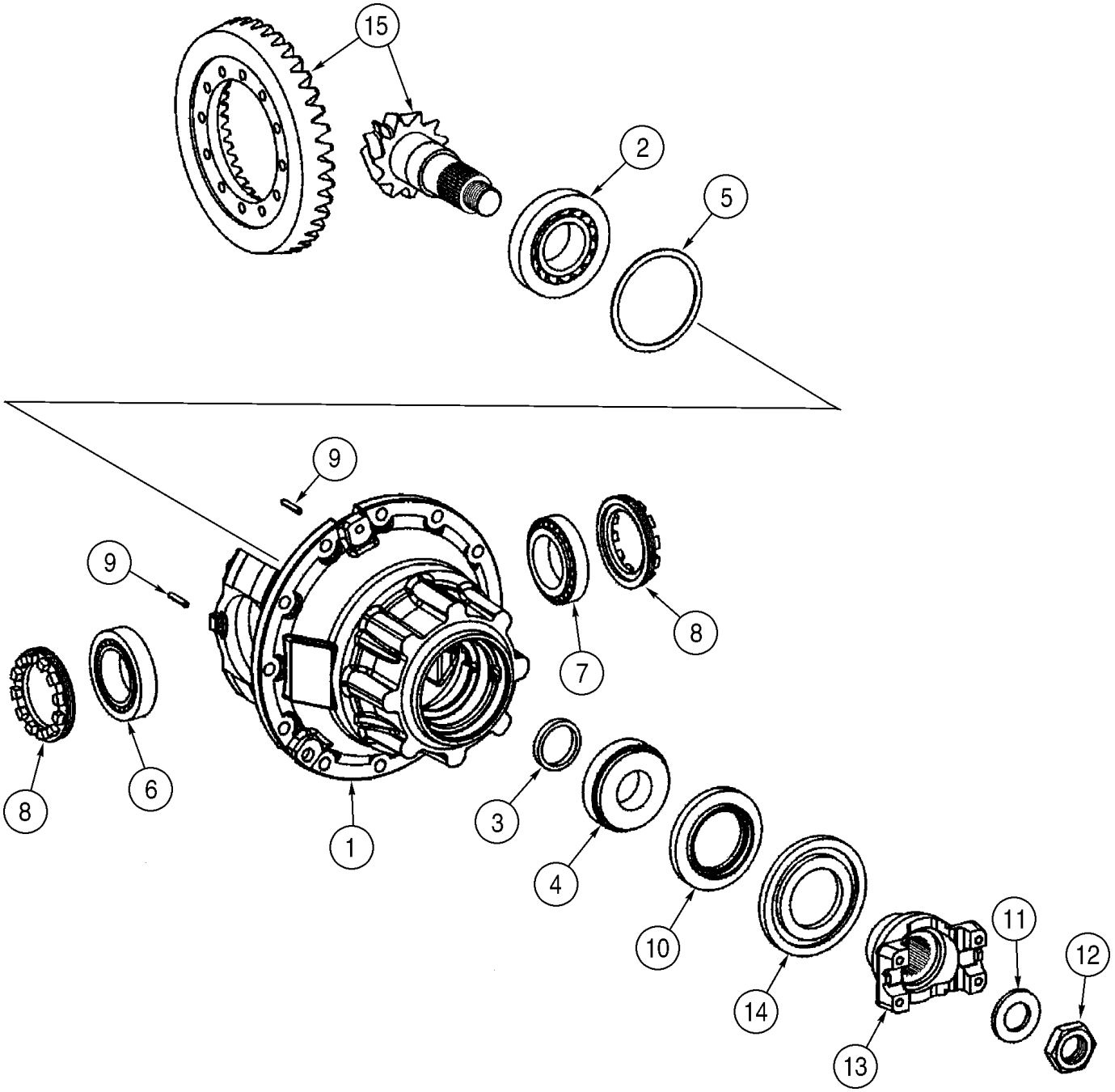

**AXLE, FRONT - DIFFERENTIAL CARRIER**

| REF | FN | PART NUMBER | YR/SN | QTY | DESCRIPTION |
|---|---|---|---|---|---|
| | | 87358580 | | 1 | AXLE, FRONT, Limited Slip; Incl. Figures 06-22A - 06-22E; Incl. Refs. 1 - 15 |
| | | 8605272 | | 1 | CARRIER ASSY., Limited Slip; Incl. Refs. 1 - 15 |
| 1 | | 8603543 | | 1 | HOUSING |
| 2 | | 8603257 | | 1 | BEARING, ROLLER |
| 3 | | 8603239 | | AR | WASHER, 8,8 mm |
| 3 | | 8603789 | | AR | SPACER, 8,7 mm |
| 3 | | 8603794 | | AR | SPACER, 8,6 mm |
| 3 | | 8603793 | | AR | SPACER, 8,5 mm |
| 3 | | 8603792 | | AR | SPACER, 8,4 mm |
| 3 | | 8603791 | | AR | SPACER, 8,3 mm |
| 3 | | 8603240 | | AR | WASHER, 8,9 mm |
| 3 | | 8603241 | | AR | WASHER, 9,1 mm |
| 3 | | 8603242 | | AR | WASHER, 9,2 mm |
| 3 | | 8603243 | | AR | WASHER, 9,3 mm |
| 3 | | 8603244 | | AR | WASHER, 9,4 mm |
| 4 | | 8603258 | | 1 | BEARING, ROLLER |
| 5 | | 8603259 | | AR | SHIM, ,7 mm |
| 5 | | 8603260 | | AR | SHIM, ,8 mm |
| 5 | | 8603261 | | AR | SHIM, ,9 mm |
| 5 | | 8603262 | | AR | SHIM, 1,0 mm |
| 5 | | 8603291 | | AR | SHIM, 1,2 mm |
| 5 | | 8603290 | | AR | SHIM, 1,3 mm |
| 5 | | 8603289 | | AR | SHIM, 1,4 mm |
| 5 | | 8603288 | | AR | SHIM, 1,5 mm |
| 5 | | 8603287 | | AR | SHIM, 1,6 mm |
| 5 | | 8603286 | | AR | SHIM, 1,7 mm |
| 5 | | 8603285 | | AR | SHIM, 1,8 mm |
| 5 | | 8603284 | | AR | SHIM, 1,9 mm |
| 5 | | 8603283 | | AR | SHIM, 2,0 mm |
| 5 | | 8603264 | | AR | SHIM, 1,1 mm |
| 6 | | 8603222 | | 1 | BEARING, ROLLER |
| 7 | | 8603263 | | 1 | BEARING, ROLLER |
| 8 | | 8603265 | | 2 | NUT |
| 9 | | 8603795 | | 2 | PIN, ROLL, 6 x 36 |

**AXLE, FRONT - DIFFERENTIAL CARRIER**

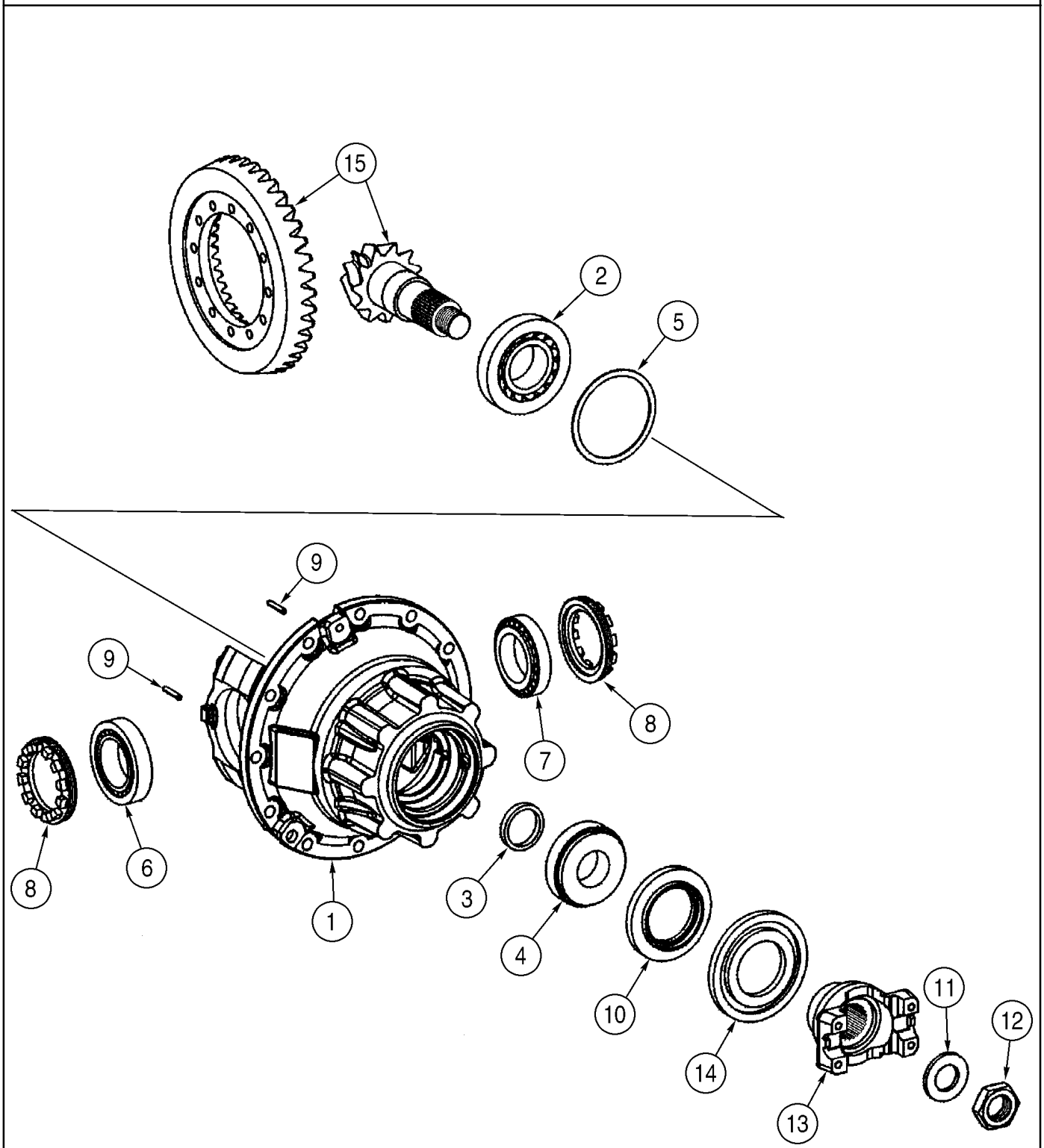

**AXLE, FRONT - DIFFERENTIAL CARRIER**

| REF | FN | PART NUMBER | YR/SN | QTY | DESCRIPTION |
|---|---|---|---|---|---|
| 10 | | 8603247 | | 1 | GASKET |
| 12 | | 8605616 | | 1 | NUT |
| 13 | | 8603266 | | 1 | FLANGE |
| 14 | | 8603594 | | 1 | DISC, CLUTCH |
| 15 | | 8605273 | | 1 | GEAR, BEVEL, Bevel Gear |

**AXLE, FRONT - DIFFERENTIAL**

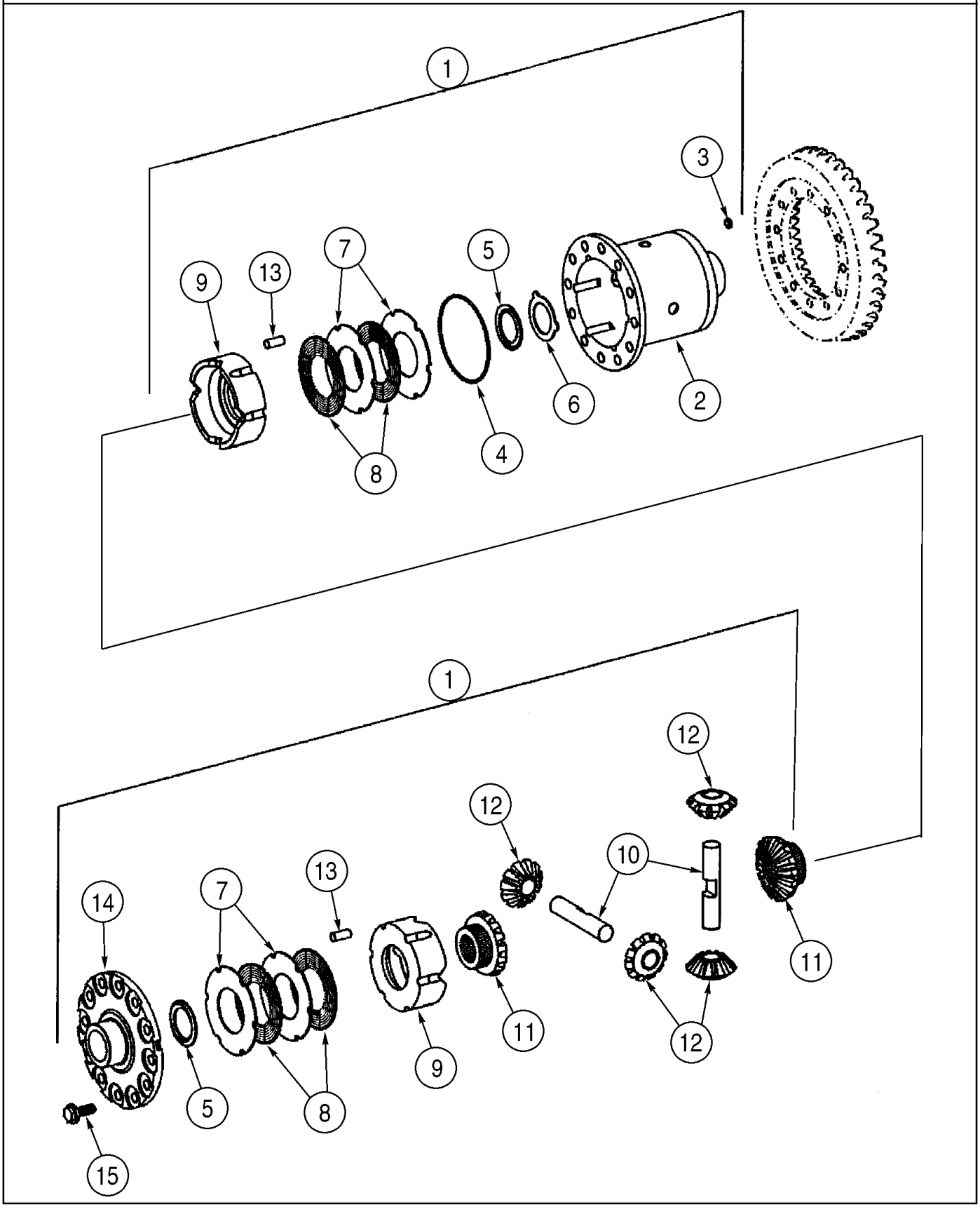

**AXLE, FRONT - DIFFERENTIAL**

| REF | FN | PART NUMBER | YR/SN | QTY | DESCRIPTION |
|---|---|---|---|---|---|
| | | 87358580 | | 1 | AXLE, FRONT, Limited Slip; Incl. Refs. 1 - 15; Incl. Figures 06-22A - 22E |
| | | 8605272 | | 1 | CARRIER ASSY., Limited Slip; Incl. Refs. 2 - 15 |
| 1 | | 8603546 | | 1 | AXLE, DIFF., Incl. Refs. 2 - 15 |
| 2 | | 8603545 | | 1 | HOUSING |
| 3 | | 8603271 | | 6 | GASKET |
| 4 | | 8603250 | | 1 | CIRCLIP |
| 5 | | 8603251 | | 2 | WASHER |
| 6 | | 8603282 | | 1 | WASHER |
| 7 | | 8603277 | | AR | CLUTCH, PLATE, 2,2 mm |
| 7 | | {8603547} | | AR | CLUTCH, PLATE, 2,1 mm; Outer |
| 7 | | 8603278 | | AR | CLUTCH, PLATE, 2,3 mm |
| 7 | | 8603279 | | AR | CLUTCH, PLATE, 2,4 mm |
| 7 | | 8603280 | | AR | CLUTCH, PLATE, 2,5 mm |
| 8 | | 8603272 | | 4 | DISC |
| 9 | | 8603252 | | 2 | RING, SNAP |
| 10 | | 8603253 | | 2 | SHAFT |
| 11 | | 8603267 | | 2 | GEAR, 16T |
| 12 | | 8603254 | | 4 | PINION, 11T |
| 13 | | 8603255 | | 12 | PIN |
| 14 | | 8603548 | | 1 | COVER |
| 15 | | 8603268 | | 12 | SCREW |

**AXLE, FRONT - BRAKE**

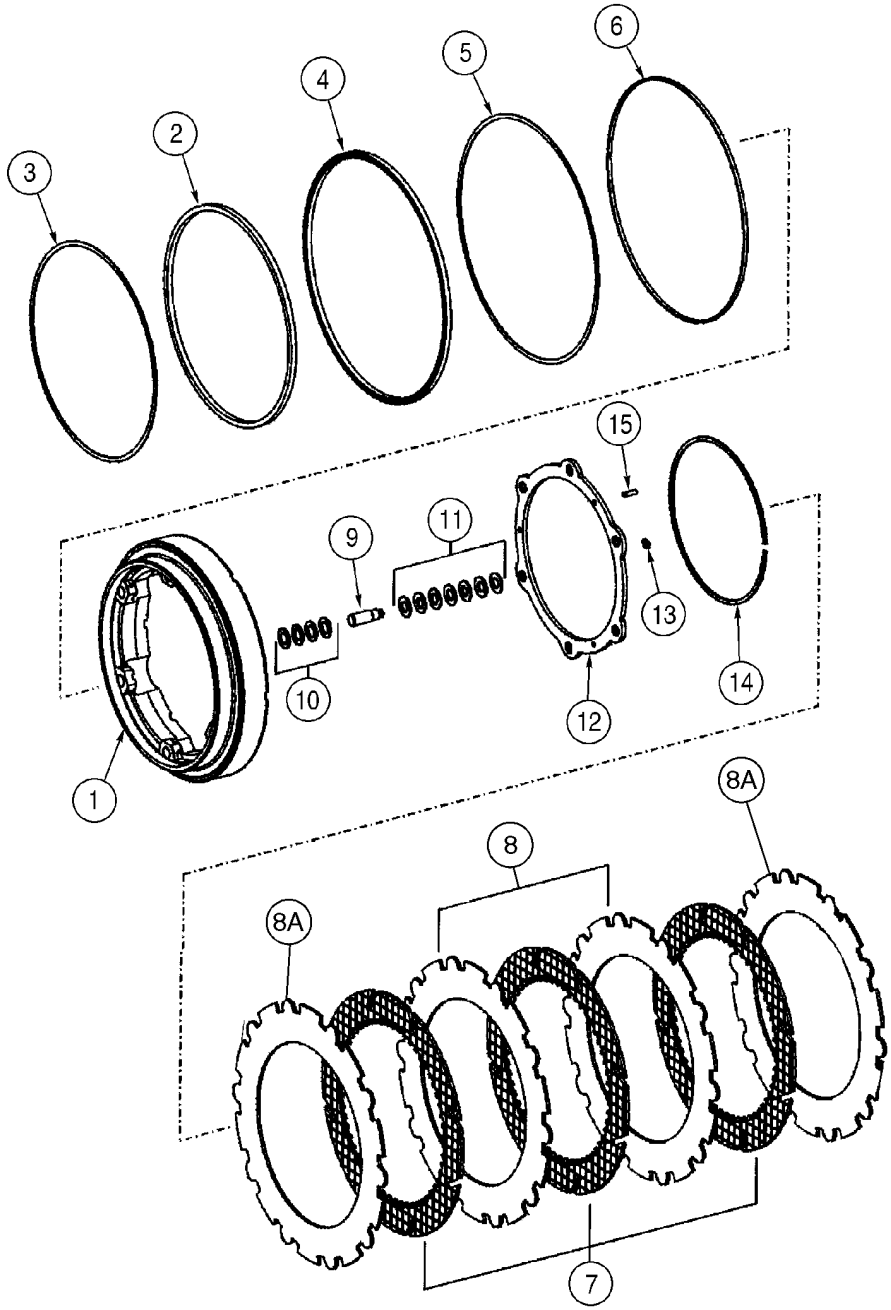


B0000000

**AXLE, FRONT - BRAKE**

| REF | FN | PART NUMBER | YR/SN | QTY | DESCRIPTION |
|---|---|---|---|---|---|
| | | 87358580 | | 1 | AXLE, FRONT, Limited Slip; See Figures 06-22A - 22E; Incl. Refs. 1 - 15 |
| | | 87358680 | | 1 | END ASSY., Incl. Refs. 1 - 15; Incl. Figure 06-22E |
| 1 | | 8603166 | | 1 | PISTON |
| 2 | | 8605314 | | 1 | SEAL |
| 3 | | 8603577 | | 1 | RING, SNAP |
| 4 | | 8605315 | | 1 | SEAL |
| 5 | | 8603579 | | 1 | RING, SNAP |
| 6 | | 8603580 | | 1 | RING, SNAP |
| 7 | | 87341835 | | 4 | BRAKE DISC |
| 8 | | 8603582 | | 2 | PLATE, BRAKE |
| 8A | | 87441328 | | 2 | PLATE, SPACER |
| 9 | | 8603163 | | 6 | PIN |
| 10 | | 8603583 | | 24 | RING, SNAP |
| 11 | | 8603584 | | 42 | WASHER |
| 12 | | 8603162 | | 1 | SHIM |
| 13 | | 8603788 | | 6 | RING, SNAP |
| 14 | | 8603585 | | 1 | RING, SNAP |
| 15 | | 8603796 | | 6 | PIN, ROLL, 6 x 20 mm |

**AXLE, FRONT - HUB, PLANETARY**

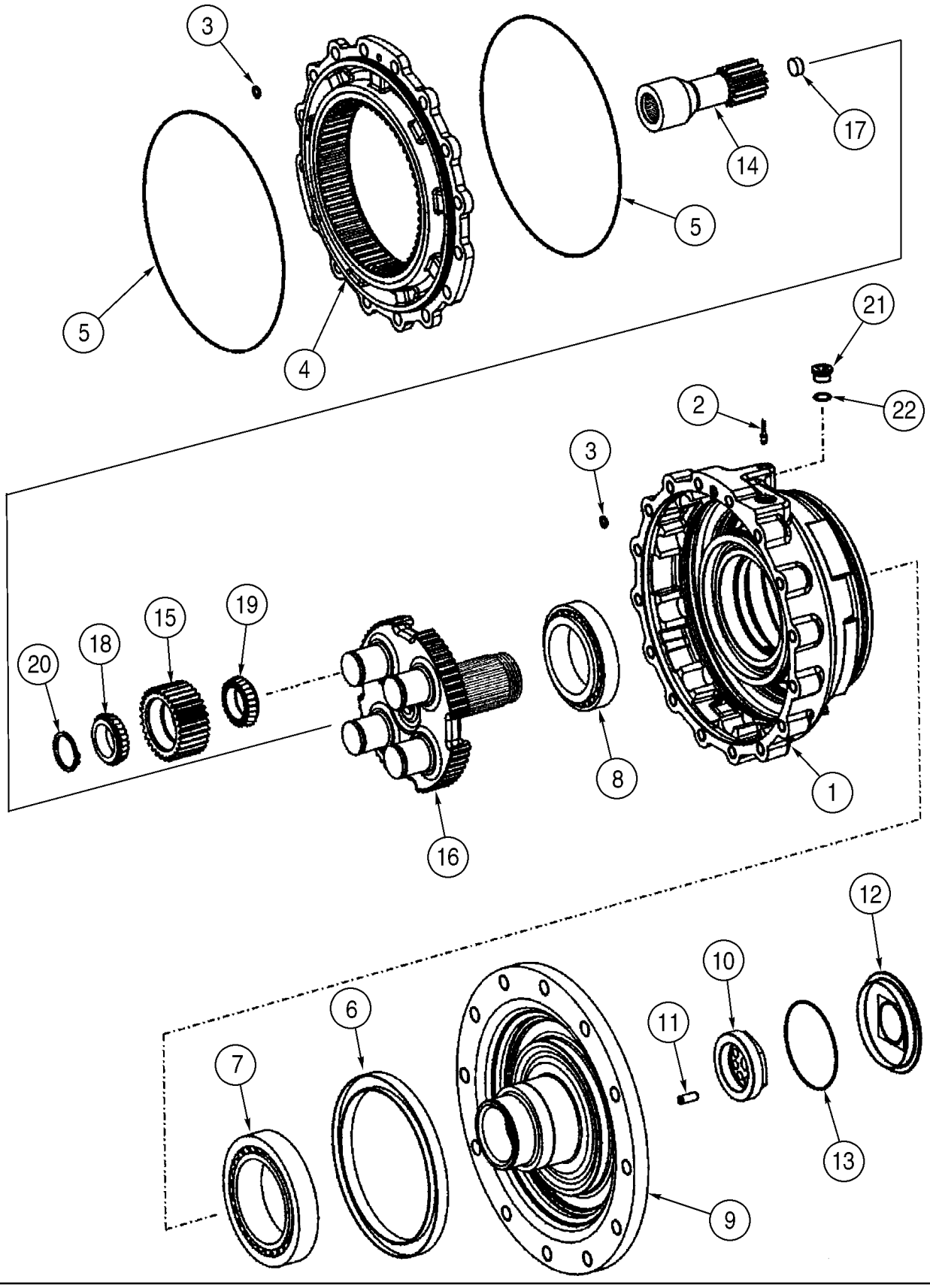

**AXLE, FRONT - HUB, PLANETARY**

| REF | FN | PART NUMBER | YR/SN | QTY | DESCRIPTION |
|---|---|---|---|---|---|
| | | 87358580 | | 1 | AXLE, FRONT, Limited Slip; See Figures 06-22A - 22E; Incl. Refs. 1 - 22 |
| | | 87358680 | | 1 | END ASSY., Incl. Refs. 1 - 22; Incl. Figure 06-22D |
| 1 | | 87437916 | | 1 | HOUSING |
| 2 | | 8603673 | | 1 | PLUG |
| 3 | | 8603559 | | 2 | O-RING |
| 4 | | 8603560 | | 1 | GEAR |
| 5 | | 8603674 | | 2 | O-RING |
| 6 | | 8603562 | | 1 | GASKET |
| 7 | | 8603563 | | 1 | BEARING, ROLLER, Outer |
| 8 | | 8603564 | | 1 | BEARING, ROLLER, Inner |
| 9 | | 8603675 | | 1 | FLANGE, M22 x 1,5; Output |
| 10 | | 8603565 | | 1 | NUT |
| 11 | | 8603566 | | 1 | PIN |
| 12 | | 8603567 | | 1 | COVER |
| 13 | | 8603527 | | 1 | O-RING |
| 14 | | 8603568 | | 1 | GEAR |
| 15 | | 87358699 | | 3 | GEAR |
| 16 | | 87358702 | | 1 | CARRIER |
| 17 | | 8603571 | | 1 | PLUG |
| 18 | | 8603572 | | 4 | BEARING, CONE, Outer |
| 19 | | 87358695 | | 3 | BEARING, CONE |
| 20 | | 87358698 | | 4 | RING, SNAP |
| 21 | | 8603575 | | 1 | PLUG |
| 22 | | 8603208 | | 1 | O-RING |

**AXLE, REAR - MOUNTING**

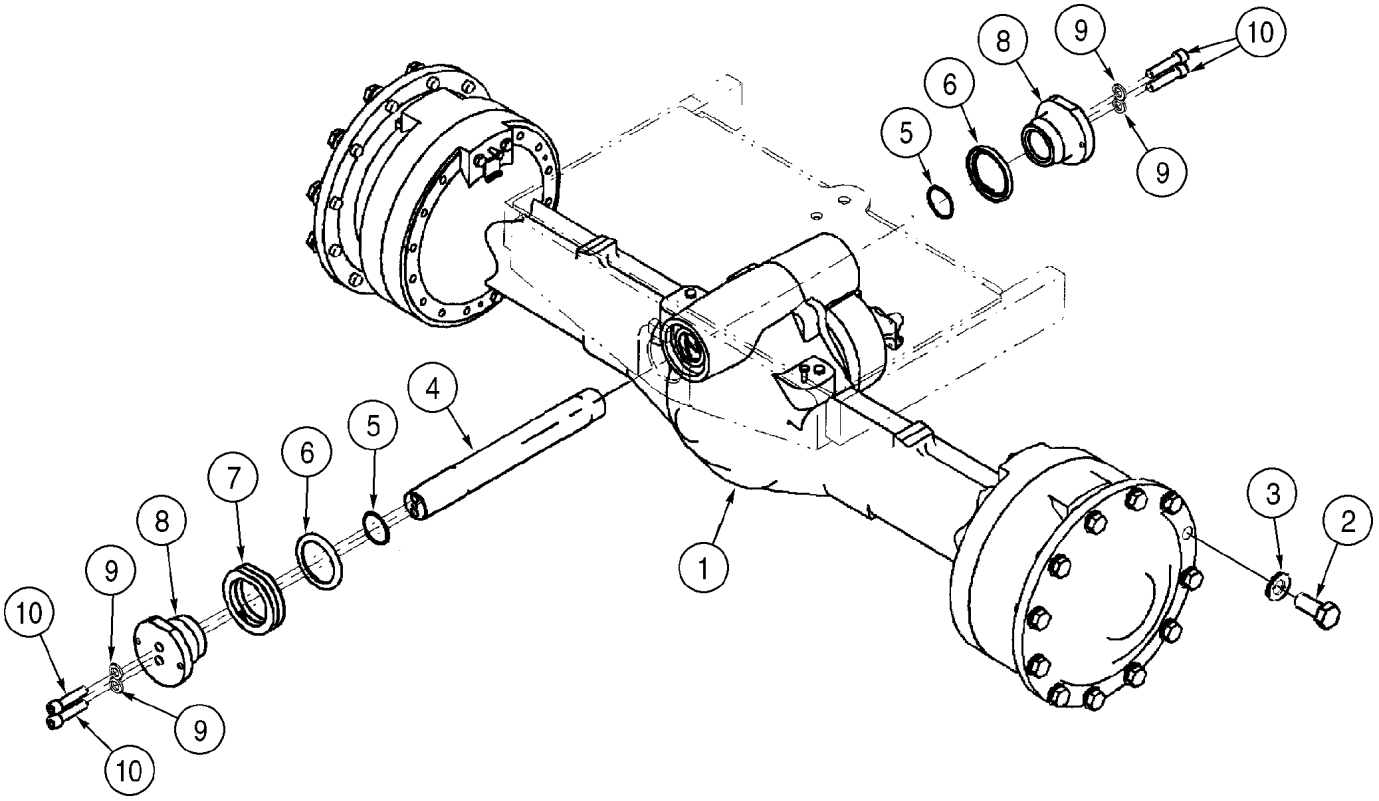

**AXLE, REAR - MOUNTING**

| REF | FN | PART NUMBER | YR/SN | QTY | DESCRIPTION |
|---|---|---|---|---|---|
| 1 | | 87358583 | | 1 | AXLE, REAR, Limited Slip; Incl. Figures 06-23A - 06-23E |
| 2 | | 514-1315 | | 24 | BOLT, Hex, M22 x 1.5 x 50, 10.9 |
| 3 | | 896-11022 | | 24 | WASHER, M22 x 44 x 4, HT |
| 4 | | 87450043 | | 1 | PIN, Pivot |
| 5 | | 238-5228 | | 2 | O-RING, -228, 70 Duro, 2.234" ID x .139" Thk |
| 6 | | A57658 | | 2 | SEAL |
| 7 | | 368140A1 | | AR | SHIM, 0,5 mm |
| 7 | | 368141A1 | | AR | SHIM, 1,0 mm |
| 7 | | 368142A1 | | AR | SHIM, 1,5 mm |
| 8 | | 86991231 | | 2 | CAP |
| 9 | | 896-11016 | | 4 | WASHER, M17.5 x 30 x 4, HT |
| 10 | | 863-16070 | | 4 | SCREW, Hex Soc Hd, M16 x 70, 12.9 |
| 11 | | 8603201 | | 2 | BREATHER, Valve; Not Illustrated |

| 06-23A | | p1 | 08/07 |
|---|---|---|---|

**AXLE, REAR - HOUSING**

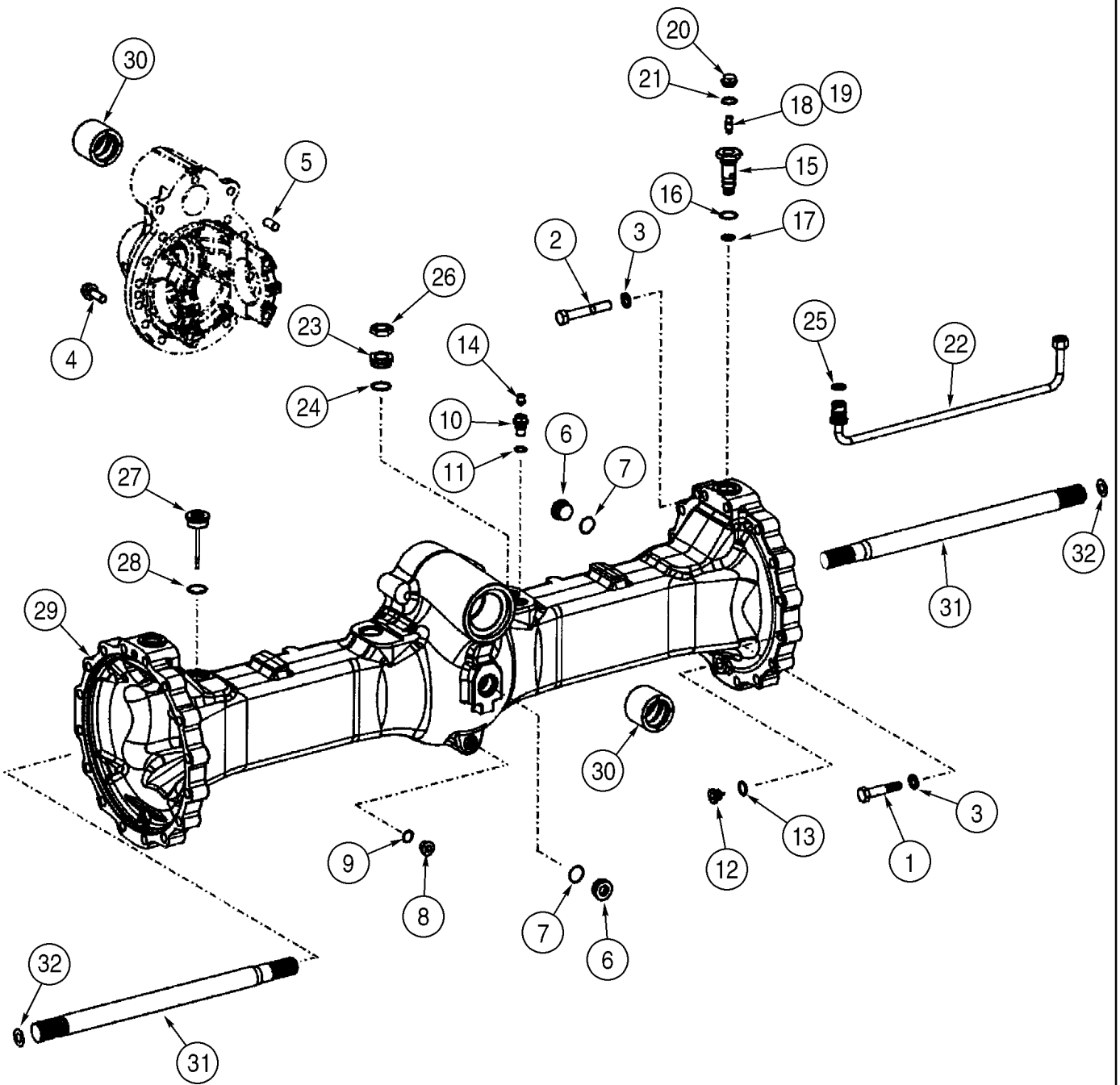

**AXLE, REAR - HOUSING**

| REF | FN | PART NUMBER | YR/SN | QTY | DESCRIPTION |
|---|---|---|---|---|---|
| | | 87358583 | | 1 | AXLE, REAR, Limited Slip; Incl. Refs. 1 - 32; Incl. Figures 06-23A - 06-23E |
| 1 | | 514-1107 | | 28 | BOLT, Hex, M18 x 1.5 x 85, 10.9 |
| 2 | | 8603670 | | 4 | BOLT, M18 x 115 |
| 3 | | 8603202 | | 32 | WASHER |
| 4 | | 8603687 | | 15 | SCREW |
| 5 | | 8603695 | | 3 | DOWEL, M6 x 30 |
| 6 | | 8603549 | | 2 | PLUG |
| 7 | | 8603728 | | 2 | O-RING, 33 x 2,5 |
| 8 | | 8603550 | | 1 | PLUG |
| 9 | | 8603208 | | 1 | O-RING |
| 10 | | 8603256 | | 1 | PLUG |
| 11 | | 8603208 | | 1 | O-RING |
| 13 | | 8603200 | | 2 | GASKET |
| 14 | | 8603201 | | 1 | BREATHER |
| 15 | | 8603551 | | 2 | FITTING |
| 16 | | 8605636 | | 2 | O-RING, M33 x 2,2; If Used |
| 16 | | 8603727 | | 2 | O-RING, M33 x 2: If Used |
| 17 | | 8603552 | | 2 | FITTING |
| 18 | | 3222214R1 | | 2 | VALVE, Bleeder; Incl. 19 |
| 19 | | NSS | | 2 | NOT SERVICED SEPARATELY, Dust Cap |
| 20 | | 8603210 | | 2 | PLUG, M26 - 1,5 |
| 21 | | 8603799 | | 2 | RING, 26 x 31 mm |
| 22 | | 87436733 | | 2 | TUBE, Internal Brake |
| 23 | | 8603696 | | 2 | FITTING, M42 x 1,5; Incl. 24 |
| 24 | | 8603207 | | 2 | O-RING |
| 25 | | 8603725 | | 2 | RING |
| 26 | | 8603619 | | 2 | NUT |
| 27 | | 8603694 | | 1 | DIPSTICK, Oil |
| 28 | | 8603207 | | 1 | O-RING |
| 29 | | 8605639 | | 1 | HOUSING, AXLE |
| 30 | | 8605638 | | 2 | BUSHING |
| 31 | | 8603690 | | 2 | SHAFT |
| 32 | | 8603669 | | AR | SHIM, 0,4 mm |
| 32 | | 8603730 | | AR | SHIM, 0,2 mm |

**AXLE, REAR - HOUSING**

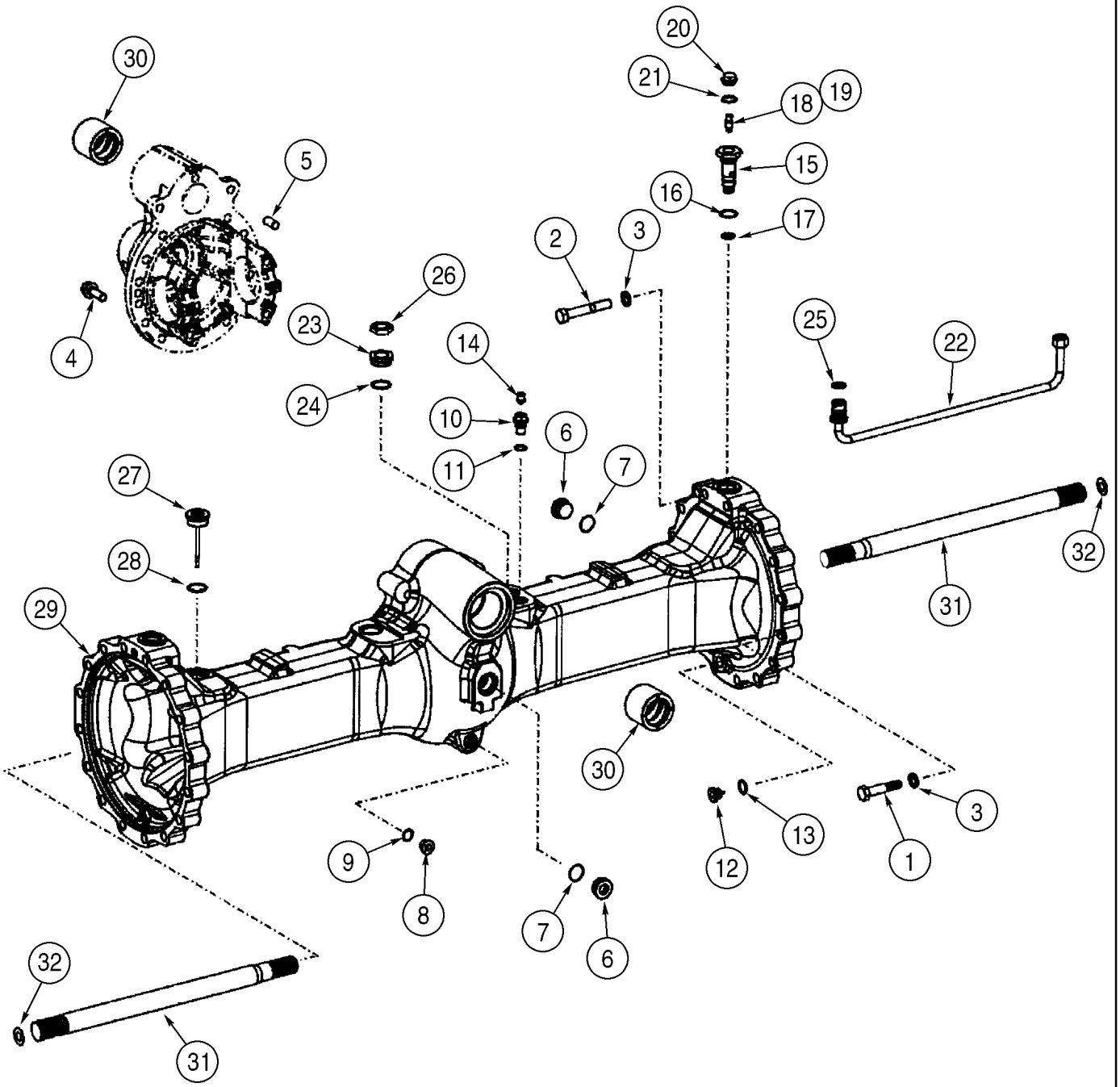

**AXLE, REAR - HOUSING**

| REF | FN | PART NUMBER | YR/SN | QTY | DESCRIPTION |
|---|---|---|---|---|---|
| 32 | | 8603731 | | AR | SHIM, 1,0 mm |
| 32 | | 8603732 | | AR | SHIM, 1,5 mm |

**AXLE, REAR - DIFFERENTIAL CARRIER**

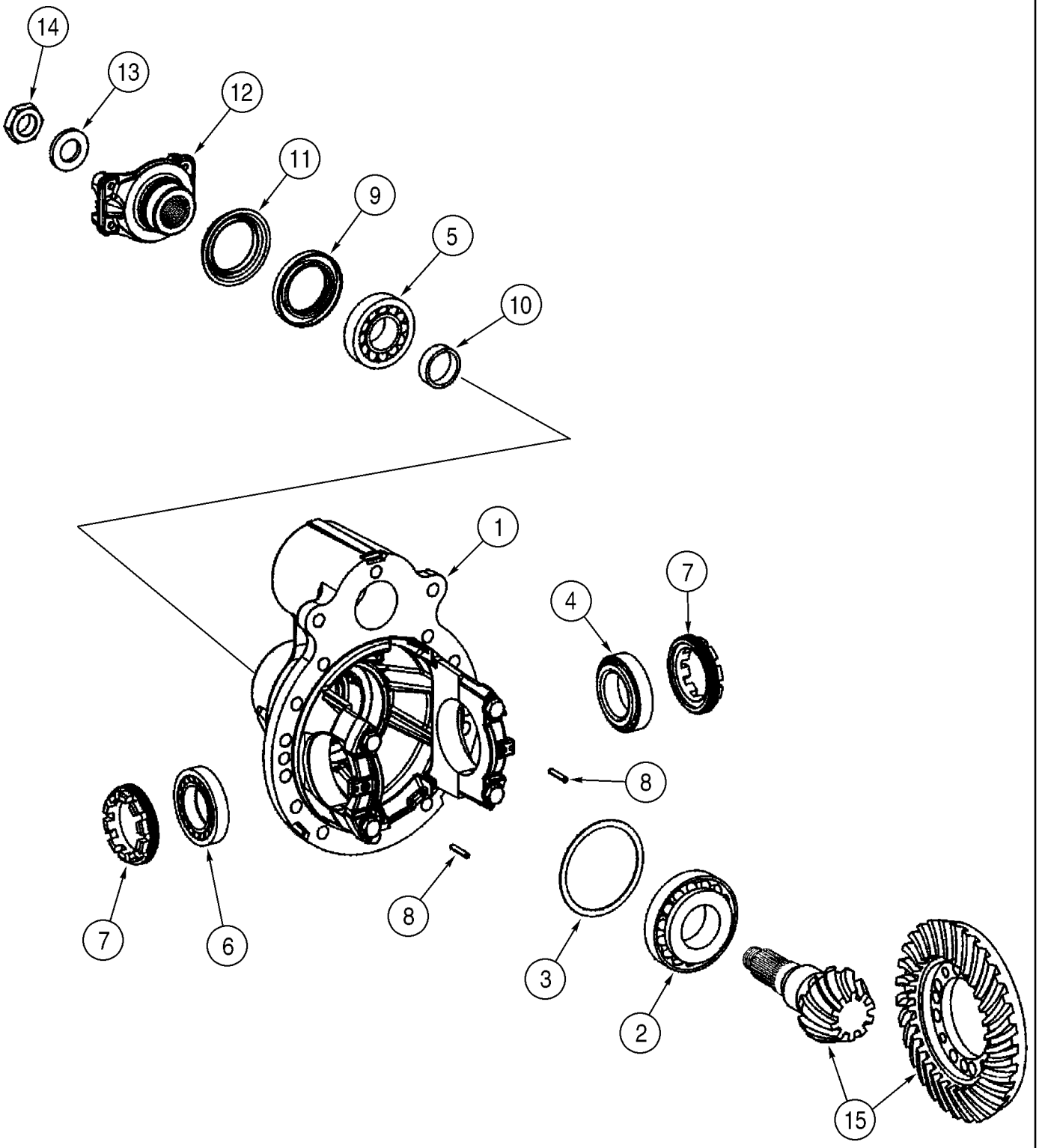

**AXLE, REAR - DIFFERENTIAL CARRIER**

| REF | FN | PART NUMBER | YR/SN | QTY | DESCRIPTION |
|---|---|---|---|---|---|
| | | 87358583 | | 1 | AXLE, REAR, Limited Slip; Incl. Figures 06-23A - 06-23E; Incl. Refs. 1 - 15 |
| | | 8605274 | | 1 | DIFFERENTIAL ASSY, Rear Limited Slip; Incl. Refs. 1 - 15 |
| 1 | | 8605637 | | 1 | HOUSING |
| 1 | | 8603677 | | 1 | CARRIER |
| 2 | | 8603257 | | 1 | BEARING, ROLLER, Inner |
| 3 | | 8603259 | | AR | SHIM, 0,7 mm |
| 3 | | 8603260 | | AR | SHIM, 0,8 mm |
| 3 | | 8603261 | | AR | SHIM, 0,9 mm |
| 3 | | 8603262 | | AR | SHIM, 1,0 mm |
| 3 | | 8603291 | | AR | SHIM, 1,2 mm |
| 3 | | 8603290 | | AR | SHIM, 1,3 mm |
| 3 | | 8603289 | | AR | SHIM, 1,4 mm |
| 3 | | 8603288 | | AR | SHIM, 1,5 mm |
| 3 | | 8603287 | | AR | SHIM, 1,6 mm |
| 3 | | 8603286 | | AR | SHIM, 1,7 mm |
| 3 | | 8603285 | | AR | SHIM, 1,8 mm |
| 3 | | 8603284 | | AR | SHIM, 1,9 mm |
| 3 | | 8603283 | | AR | SHIM, 2,0 mm |
| 3 | | 8603264 | | AR | SHIM, 1,1 mm |
| 4 | | 8603678 | | 1 | BEARING, ROLLER, Right |
| 5 | | 8603679 | | 1 | BEARING, ROLLER, Outer |
| 6 | | 8603680 | | 1 | BEARING, ROLLER, Left |
| 7 | | 8603205 | | 2 | NUT |
| 8 | | 8603795 | | 2 | PIN, ROLL, 6 x 36 |
| 9 | | 8603681 | | 1 | SEAL |
| 10 | | 8603733 | | AR | SHIM, 16,9 mm |
| 10 | | 8603734 | | AR | SHIM, 16.1 mm |
| 10 | | 8603735 | | AR | SHIM, 16,2 mm |
| 10 | | 8603736 | | AR | SHIM, 16,3 mm |
| 10 | | 8603737 | | AR | SHIM, 16,4 mm |
| 10 | | 8603738 | | AR | SHIM, 16,5 mm |
| 10 | | 8603739 | | AR | SHIM, 16,6 mm |
| 10 | | 8603740 | | AR | SHIM, 16,7 mm |

**AXLE, REAR - DIFFERENTIAL CARRIER**

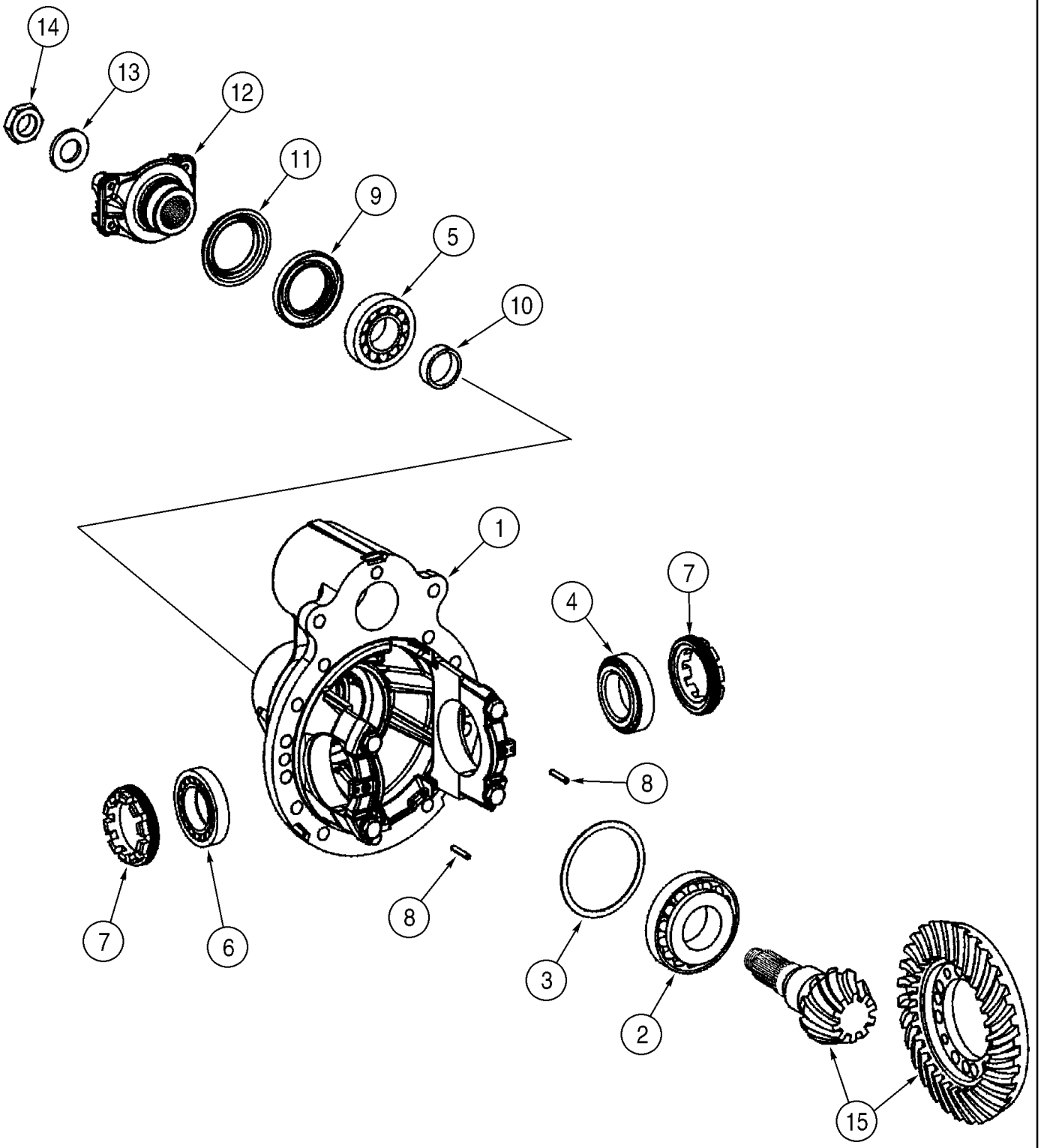

**AXLE, REAR - DIFFERENTIAL CARRIER**

| REF | FN | PART NUMBER | YR/SN | QTY | DESCRIPTION |
|---|---|---|---|---|---|
| 10 | | 8603741 | | AR | SHIM, 16,8 mm |
| 10 | | 8603742 | | AR | SHIM, 16,92 mm |
| 10 | | 8603743 | | AR | SHIM, 17,1 mm |
| 10 | | 8603744 | | AR | SHIM, 17,2 mm |
| 10 | | 8603745 | | AR | SHIM, 17,3 mm |
| 10 | | 8603746 | | AR | SHIM, 17,4 mm |
| 10 | | 8603747 | | AR | SHIM, 16,68 mm |
| 10 | | 8603748 | | AR | SHIM, 16,98 mm |
| 10 | | 8603749 | | AR | SHIM, 17,04 mm |
| 10 | | 8603750 | | AR | SHIM, 16,56 mm |
| 10 | | 8603751 | | AR | SHIM, 16,62 mm |
| 10 | | 8603752 | | AR | SHIM, 16,64 mm |
| 10 | | 8603753 | | AR | SHIM, 16,68 mm |
| 10 | | 8603754 | | AR | SHIM, 16,72 mm |
| 10 | | 8603755 | | AR | SHIM, 16,74 mm |
| 10 | | 8603756 | | AR | SHIM, 16,76 mm |
| 10 | | 8603757 | | AR | SHIM, 16,78 mm |
| 10 | | 8603758 | | AR | SHIM, 16,82 mm |
| 10 | | 8603759 | | AR | SHIM, 16,84 mm |
| 10 | | 8603760 | | AR | SHIM, 16,88 mm |
| 10 | | 8603761 | | AR | SHIM, 16,9 mm |
| 10 | | 8603762 | | AR | SHIM, 16,94 mm |
| 10 | | 8603763 | | AR | SHIM, 16,66 mm |
| 10 | | 8603764 | | AR | SHIM, 16,96 mm |
| 10 | | 8603765 | | AR | SHIM, 17,0 mm |
| 10 | | 8603766 | | AR | SHIM, 17,02 mm |
| 10 | | 8603767 | | AR | SHIM, 17,06 mm |
| 10 | | 8603768 | | AR | SHIM, 17,08 mm |
| 10 | | 8603769 | | AR | SHIM, 17,12 mm |
| 10 | | 8603770 | | AR | SHIM, 17,14 mm |
| 10 | | 8603771 | | AR | SHIM, 17,16 mm |
| 10 | | 8603772 | | AR | SHIM, 17,18 mm |
| 10 | | 8603773 | | AR | SHIM, 17,22 mm |
| 10 | | 8603774 | | AR | SHIM, 17,24 mm |
| 10 | | 8603775 | | AR | SHIM, 17,26 mm |

**AXLE, REAR - DIFFERENTIAL CARRIER**

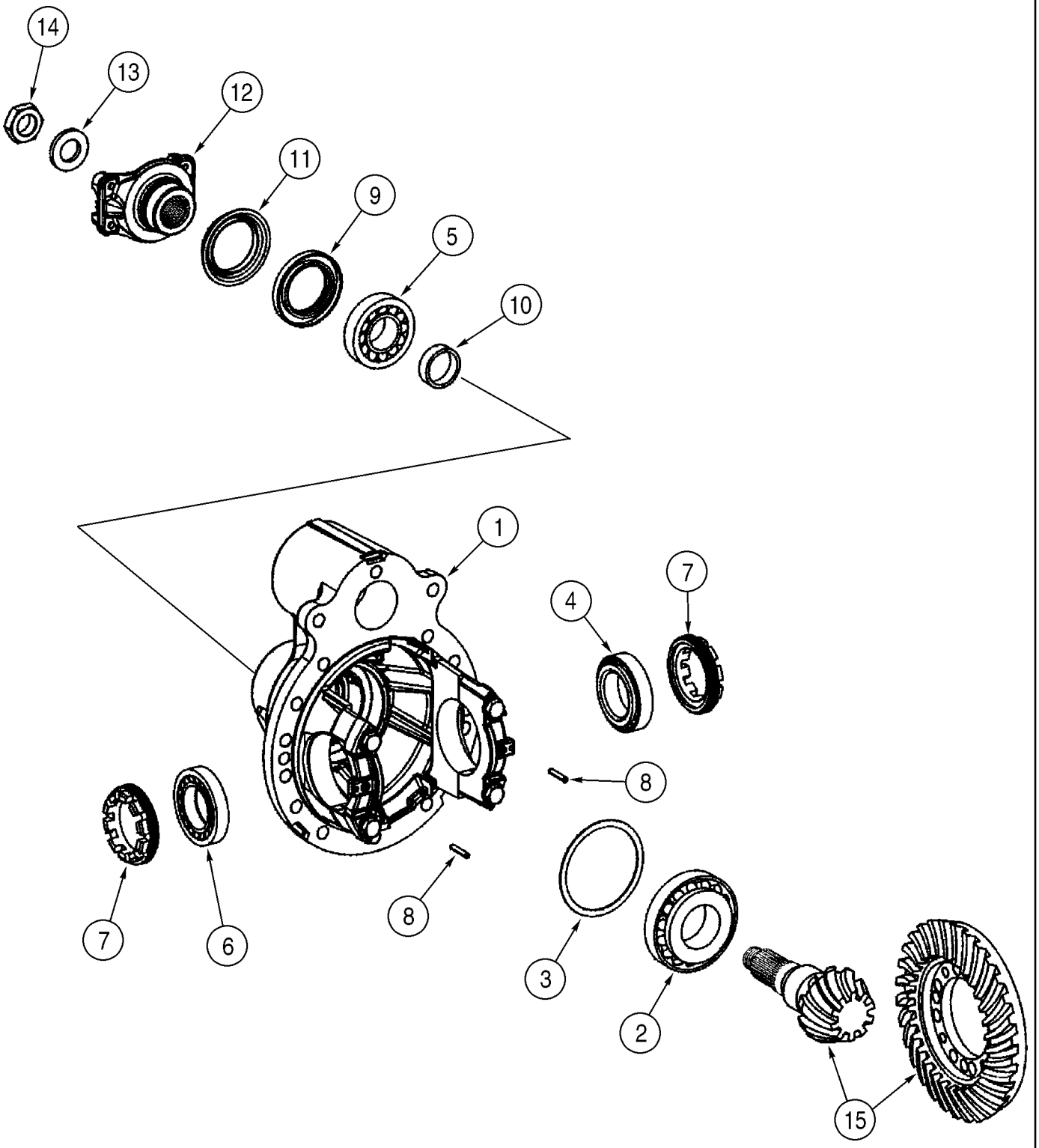

**AXLE, REAR - DIFFERENTIAL CARRIER**

| REF | FN | PART NUMBER | YR/SN | QTY | DESCRIPTION |
|---|---|---|---|---|---|
| 10 | | 8603776 | | AR | SHIM, 17,28 mm |
| 11 | | 8603685 | | 1 | COVER |
| 12 | | 8605635 | | 1 | FLANGE, If Used |
| 12 | | 8603684 | | 1 | YOKE, If Used |
| 13 | | 8603682 | | 1 | WASHER |
| 14 | | 8603683 | | 1 | NUT, M30 x 1,5 |
| 15 | | 8605275 | | 1 | GEAR, BEVEL, Ring and Pinion; Bevel Gear Set |

**AXLE, REAR - DIFFERENTIAL**

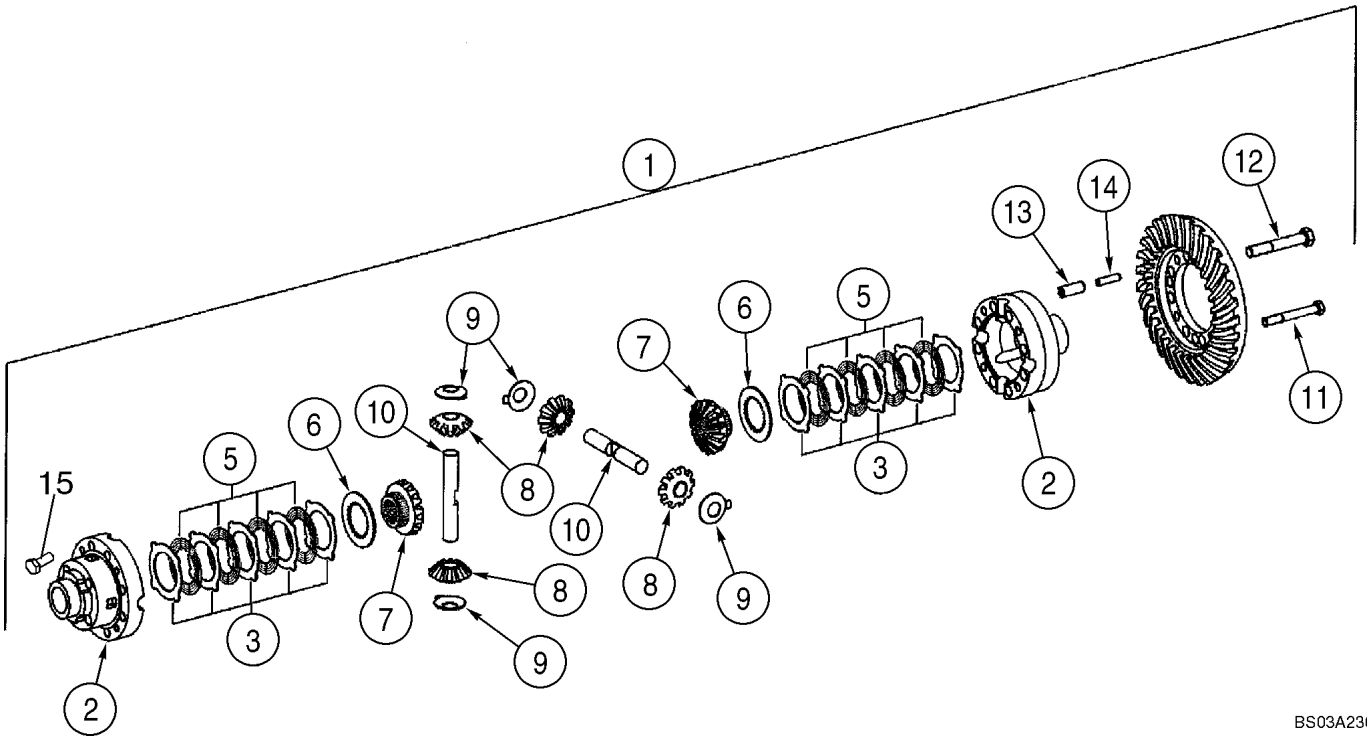

**AXLE, REAR - DIFFERENTIAL**

| REF | FN | PART NUMBER | YR/SN | QTY | DESCRIPTION |
|---|---|---|---|---|---|
| | | 87358583 | | 1 | AXLE, REAR, Limited Slip; Incl. Refs. 1 - 20; Incl. Figure(s) 06-23A - 23E |
| 1 | | 8605274 | | 1 | DIFFERENTIAL ASSY, Incl. Refs. 2 - 20 |
| 2 | | 8605359 | | 1 | HOUSING, If Used |
| 3 | | 8603713 | | 10 | PLATE, 1,4 mm; Separator; If Used |
| 5 | | 8603714 | | 8 | PLATE, Friction |
| 6 | | 8603715 | | 2 | PLATE, 3,0 mm; Pressure |
| 7 | | 8603716 | | 2 | GEAR, 16T |
| 8 | | 8603717 | | 4 | GEAR, 11T |
| 9 | | 8603718 | | 4 | WASHER, THRUST |
| 10 | | 8603719 | | 2 | SHAFT |
| 11 | | 8603720 | | 4 | BOLT, M12 x 1,5 x 95 |
| 12 | | 8603721 | | 8 | SCREW, M16 x 1,5 x 100 |
| 13 | | 8603722 | | 4 | PIN, 16 x 40 |
| 14 | | 8603723 | | 4 | PIN, 10 x 40 |
| 15 | | 8603724 | | 4 | SCREW |
| 16 | | 8603271 | | 1 | GASKET, Front Bevel Gear; Not Illustrated |
| 17 | | 8605631 | | AR | CLUTCH, PLATE, If Used; Not Illustrated |
| 18 | | 8605632 | | AR | CLUTCH, PLATE, If Used; Not Illustrated |
| 19 | | 8605633 | | AR | CLUTCH, PLATE, If Used; Not Illustrated |
| 20 | | 8605634 | | 8 | WASHER, If Used; Not Illustrated |

**AXLE, REAR - BRAKE**

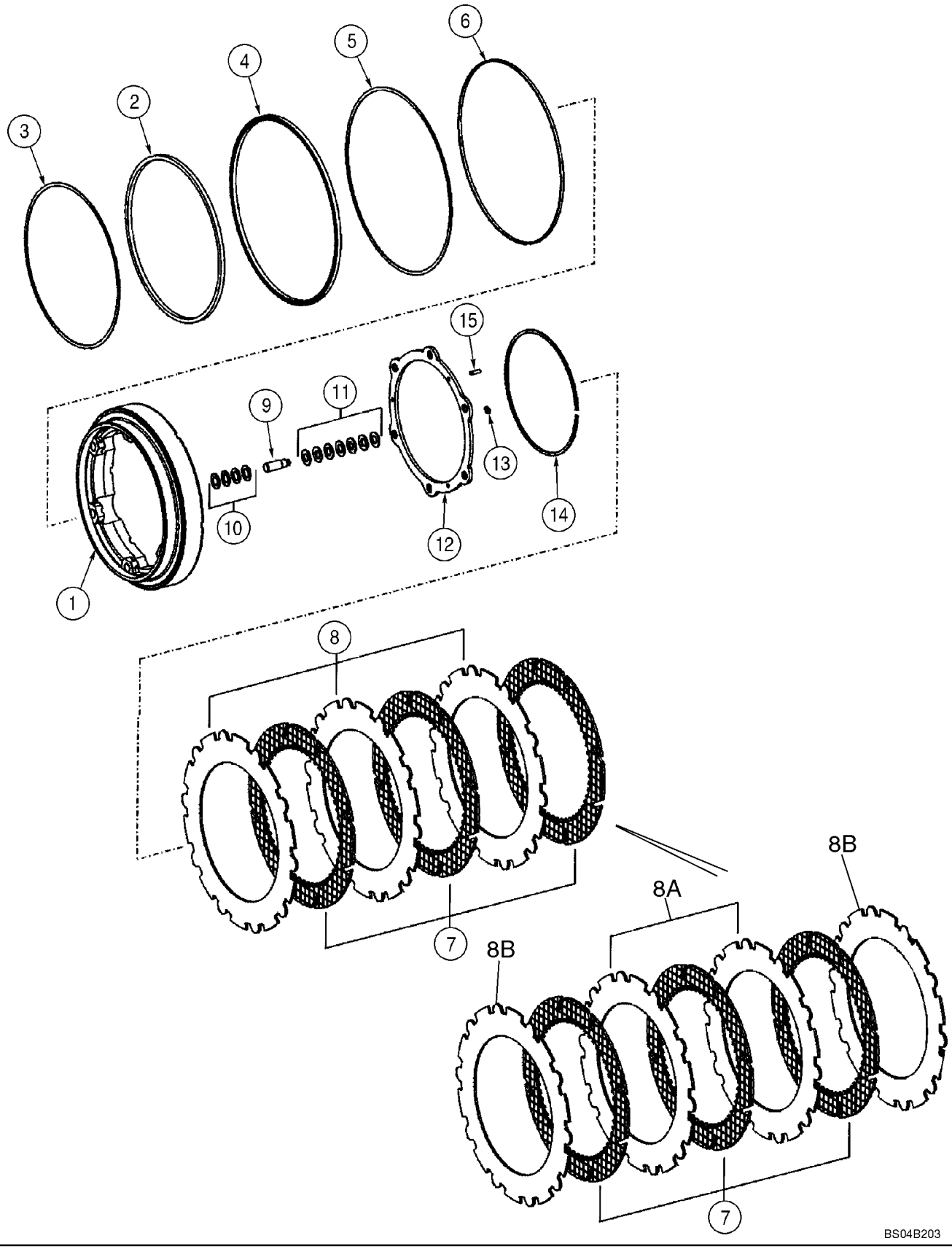

**AXLE, REAR - BRAKE**

| REF | FN | PART NUMBER | YR/SN | QTY | DESCRIPTION |
|---|---|---|---|---|---|
| | | 87358583 | | 1 | AXLE, REAR, Limited Slip; Incl. Figures 06-23A - 06-23E; Incl. Refs. 1 - 15 |
| | | 87358681 | | 1 | END ASSY., Incl. Refs. 1 - 15; Incl. Figure 06-23E |
| 1 | | 8603166 | | 1 | PISTON |
| 2 | | 8605314 | | 1 | SEAL |
| 3 | | 8603577 | | 1 | RING, SNAP |
| 4 | | 8605315 | | 1 | SEAL |
| 5 | | 8603579 | | 1 | RING, SNAP |
| 6 | | 8603580 | | 1 | RING, SNAP |
| 7 | | 87341835 | | 4 | BRAKE DISC |
| 8 | | 8603582 | | 3 | PLATE, BRAKE |
| 8A | | 87441328 | | 2 | PLATE, SPACER |
| 9 | | 8603163 | | 6 | PIN |
| 10 | | 8603583 | | 24 | RING, SNAP |
| 11 | | 8603584 | | 42 | WASHER |
| 12 | | 8603162 | | 1 | SHIM |
| 13 | | 8603788 | | 6 | RING, SNAP |
| 14 | | 8603585 | | 1 | RING, SNAP |
| 15 | | 8603796 | | 6 | PIN, ROLL, 6 x 20 mm |

**AXLE, REAR - HUB, PLANETARY**

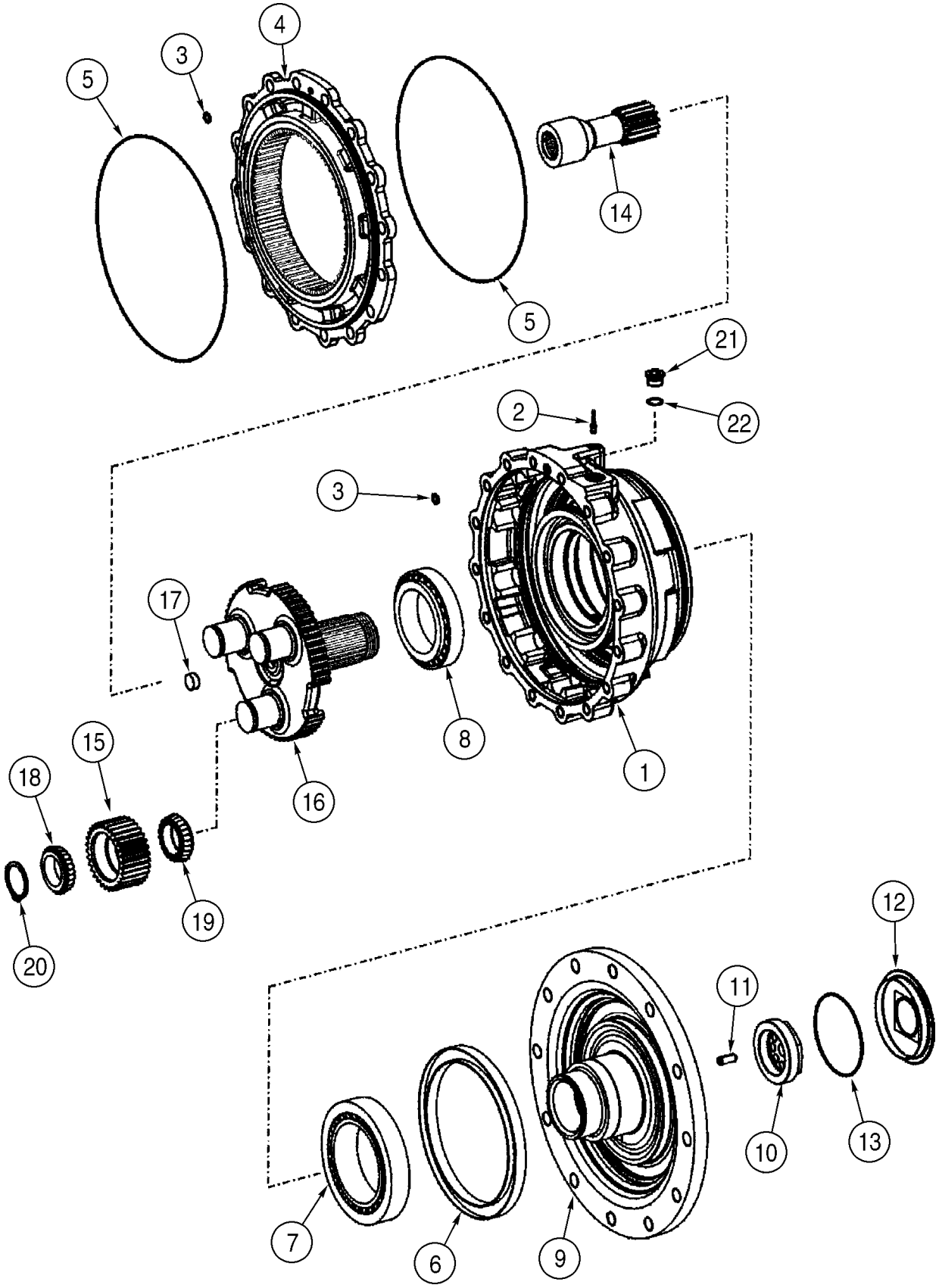

**AXLE, REAR - HUB, PLANETARY**

| REF | FN | PART NUMBER | YR/SN | QTY | DESCRIPTION |
|---|---|---|---|---|---|
| | | 87358583 | | 1 | AXLE, REAR, Limited Slip; Incl. Figures 06-23A - 06-23E; Incl. Refs. 1 - 22 |
| | | 87358681 | | 1 | END ASSY., Incl. Refs. 1 - 22; Incl. Figure 06-23D |
| 1 | | 87437916 | | 1 | HOUSING |
| 2 | | 8603673 | | 1 | PLUG |
| 3 | | 8603559 | | 2 | O-RING |
| 4 | | 8603560 | | 1 | GEAR |
| 5 | | 8603674 | | 2 | O-RING, 360 x 2,5 |
| 6 | | 8603562 | | 1 | GASKET |
| 7 | | 8603691 | | 1 | BEARING, ROLLER, Outer |
| 8 | | 8603692 | | 1 | BEARING, ROLLER, Inner |
| 9 | | 8603675 | | 1 | FLANGE, M22 x 1,5; Output |
| 10 | | 8603565 | | 1 | NUT |
| 11 | | 8603566 | | 1 | PIN |
| 12 | | 8603567 | | 1 | COVER |
| 13 | | 8603527 | | 1 | O-RING |
| 14 | | 8603568 | | 1 | GEAR |
| 15 | | 87358699 | | 3 | GEAR |
| 16 | | {87358700} | | 1 | CARRIER, PANETARY |
| 17 | | 8603571 | | 1 | PLUG |
| 18 | | 8603572 | | 3 | BEARING, CONE, Outer |
| 19 | | 87358695 | | 3 | BEARING, CONE |
| 20 | | 87358698 | | 4 | RING, SNAP |
| 21 | | 8603575 | | 1 | PLUG, Incl. 22 |
| 22 | | 8603208 | | 1 | O-RING |

## DRIVE SHAFT MOUNTING

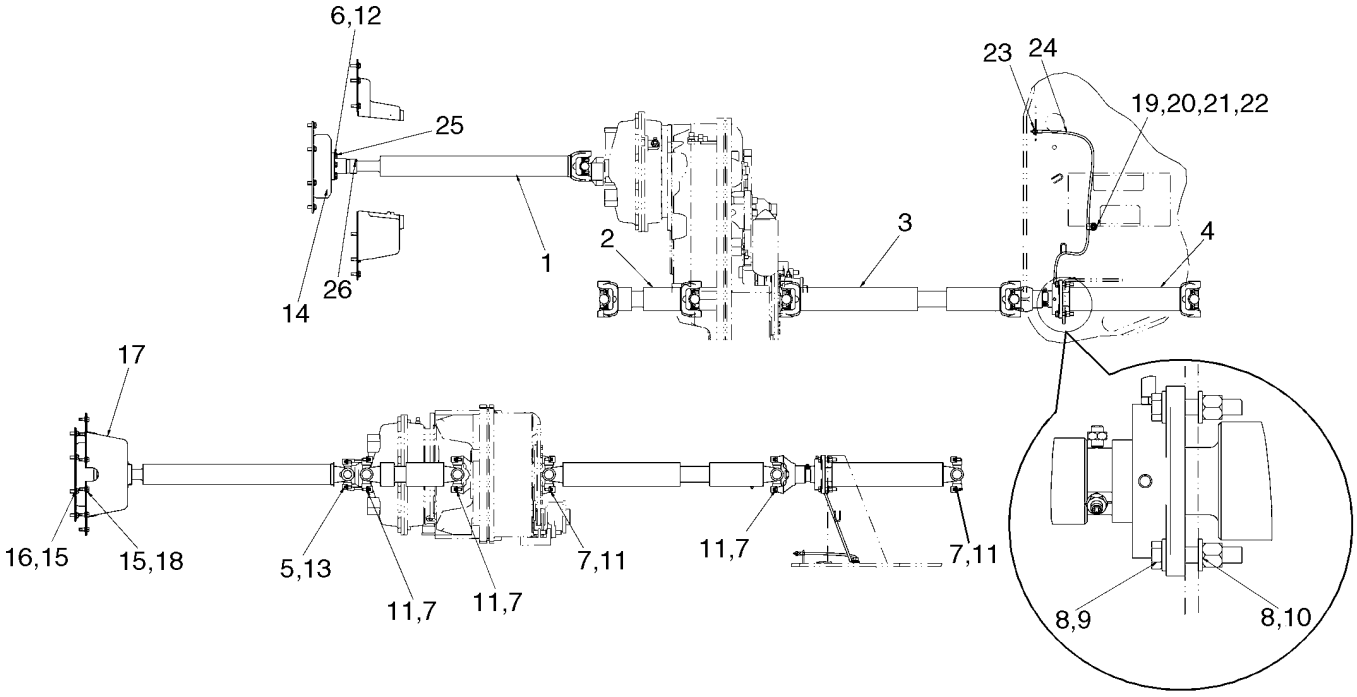


BS07D050

**DRIVE SHAFT MOUNTING**

| REF | FN | PART NUMBER | YR/SN | QTY | DESCRIPTION |
|---|---|---|---|---|---|
| 1 | | 87553862 | | 1 | SHAFT, DRIVE, Engine; See Figure 06-28 |
| 2 | | 86990311 | | 1 | SHAFT, DRIVE, Rear; See Figure 06-27 |
| 3 | | 86990312 | | 1 | SHAFT, DRIVE, Center; See Figure 06-26 |
| 4 | | 87553865 | | 1 | SHAFT, DRIVE, Front; See Figure 06-25 |
| 5 | | D137626 | | 2 | CLAMP |
| 6 | | 896-11010 | | 6 | WASHER, M10 x 21.5 x 2.5, HT |
| 7 | | L116943 | | 10 | CLAMP |
| 8 | | 896-11012 | | 8 | WASHER, M13.5 x 24.5 x 3, HT |
| 9 | | 827-12060 | | 4 | BOLT, Hex, M12 x 60, 10.9 |
| 10 | | 832-10412 | | 4 | NUT, LOCK, M12 x 1.75, Cl 8 |
| 11 | | 19-6247 | | 20 | BOLT |
| 12 | | 627-10035 | | 6 | BOLT, Hex, M10 x 35, 10.9, Full Thd |
| 13 | | D137627 | | 4 | BOLT |
| 14 | | 87553867 | | 1 | COUPLING |
| 15 | | 896-15010 | | 18 | WASHER, M10 x 24.5 x 3, HT |
| 16 | | 627-10025 | | 8 | BOLT, Hex, M10 x 25, 10.9, Full Thd |
| 17 | | 87522101 | | 1 | COVER |
| 18 | | 806-10030 | | 10 | BOLT, Hex, Lock, M10 x 30, Cl 10.9 |
| 19 | | 896-15012 | | 1 | WASHER, M12 x 28.5 x 4, HT |
| 20 | | 515-2495 | | 1 | CLAMP, 3/8", Insul, 7/16" Bolt |
| 21 | | 895-11010 | | 1 | WASHER, M10 x 20 x 2 |
| 22 | | 832-10410 | | 1 | NUT, LOCK, M10 x 1.5, Cl 8 |
| 23 | | F53473 | | 1 | NUT |
| 24 | | L54694 | | 1 | HOSE, Grease; 1041 mm (41 in); Incl. 24A, 24B |
| 24A | | 219-20 | | 1 | NIPPLE, LUBE, 1/4"-28 x .52" lg, Not Illustrated |
| 24B | | 219-8 | | 1 | NIPPLE, LUBE, 1/4"-28 NPT x .54" lg, Not Illustrated |
| 25 | | 345-49 | | AR | LOCTITE, Pilot Line |
| 26 | | 760-14113 | | 2 | SCREW, SELF TAP, Pan Hd, M3.5 x 13 |

**DRIVE SHAFT, FRONT**

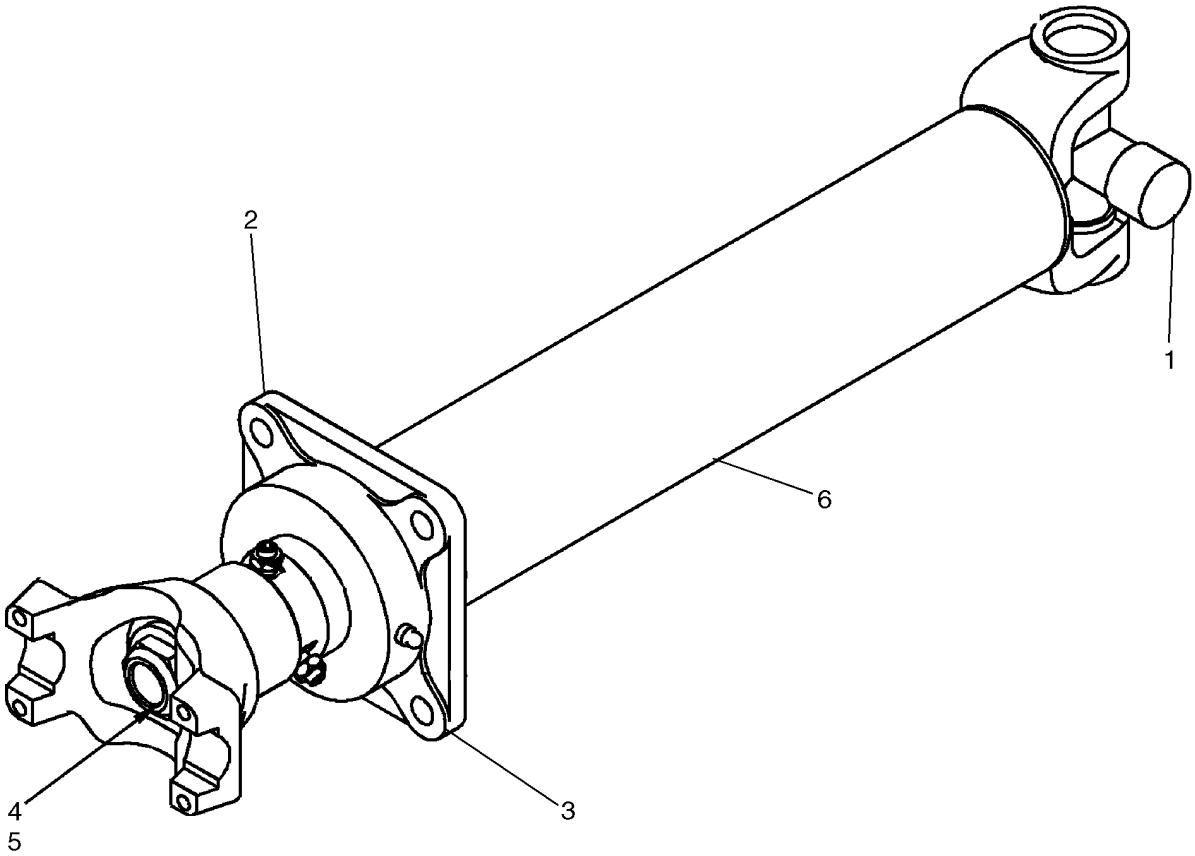


BS07D271

**DRIVE SHAFT, FRONT**

| REF | FN | PART NUMBER | YR/SN | QTY | DESCRIPTION |
|---|---|---|---|---|---|
| | | 87553865 | | 1 | SHAFT, DRIVE, Front; Incl. Refs. 1 - 6 |
| 1 | | 8604675 | | 1 | BEARING, W/ Spider |
| 2 | | 8604674 | | 1 | YOKE |
| 3 | | L106070 | | 1 | BEARING, Carrier |
| 4 | | 8604270 | | 1 | NUT, LOCK |
| 5 | | 86637954 | | 1 | WASHER, 1 1/16" x 2" x .209" |
| 6 | | NSS | | 1 | NOT SERVICED SEPARATELY, TUBE |

**DRIVE SHAFT, CENTER**

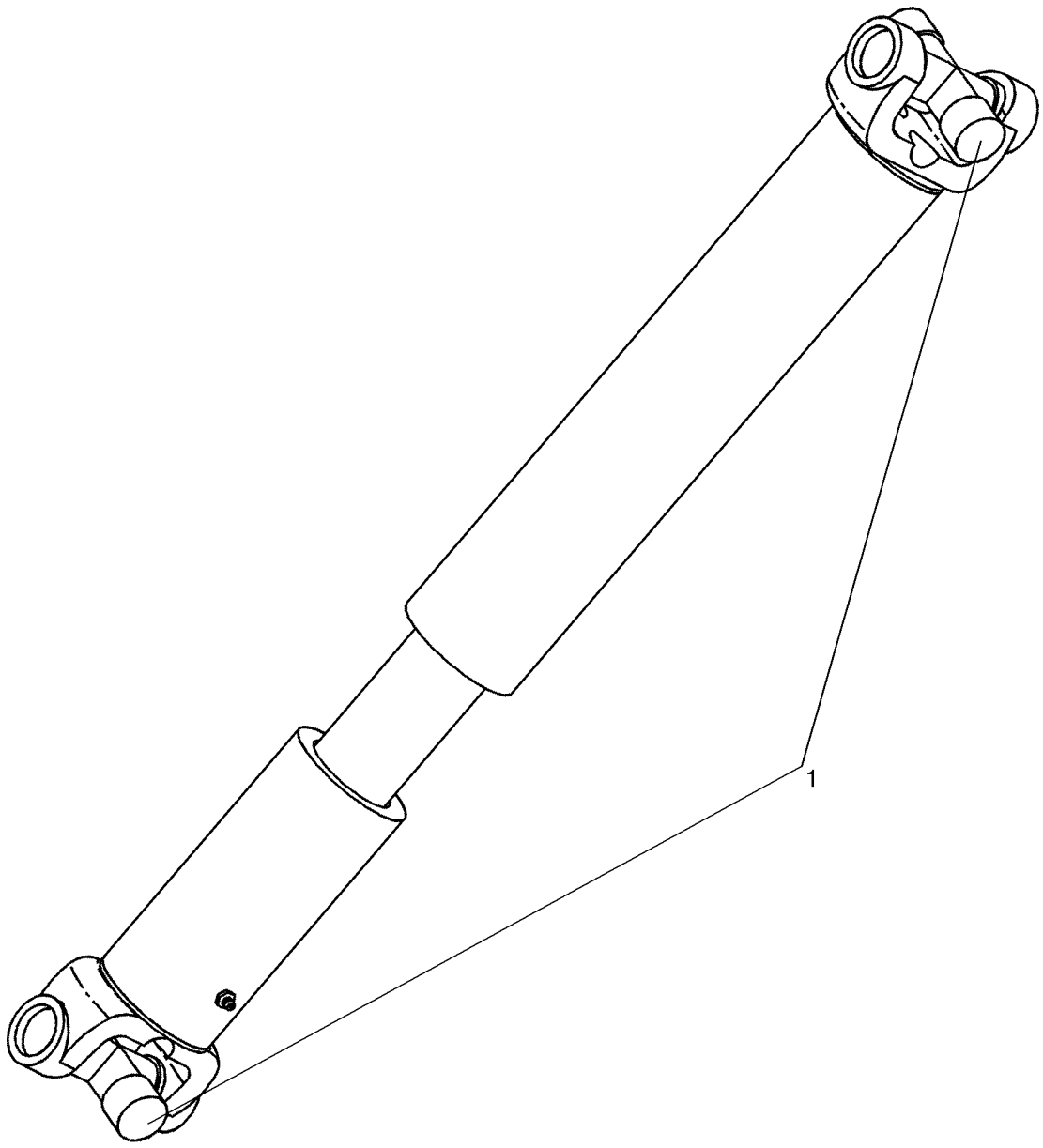

**DRIVE SHAFT, CENTER**

| REF | FN | PART NUMBER | YR/SN | QTY | DESCRIPTION |
|---|---|---|---|---|---|
| | | 86990312 | | 1 | SHAFT, DRIVE, Center; Incl. Ref. 1 |
| 1 | | 8604675 | | 2 | BEARING, W/ Spider |

**DRIVE SHAFT, REAR**

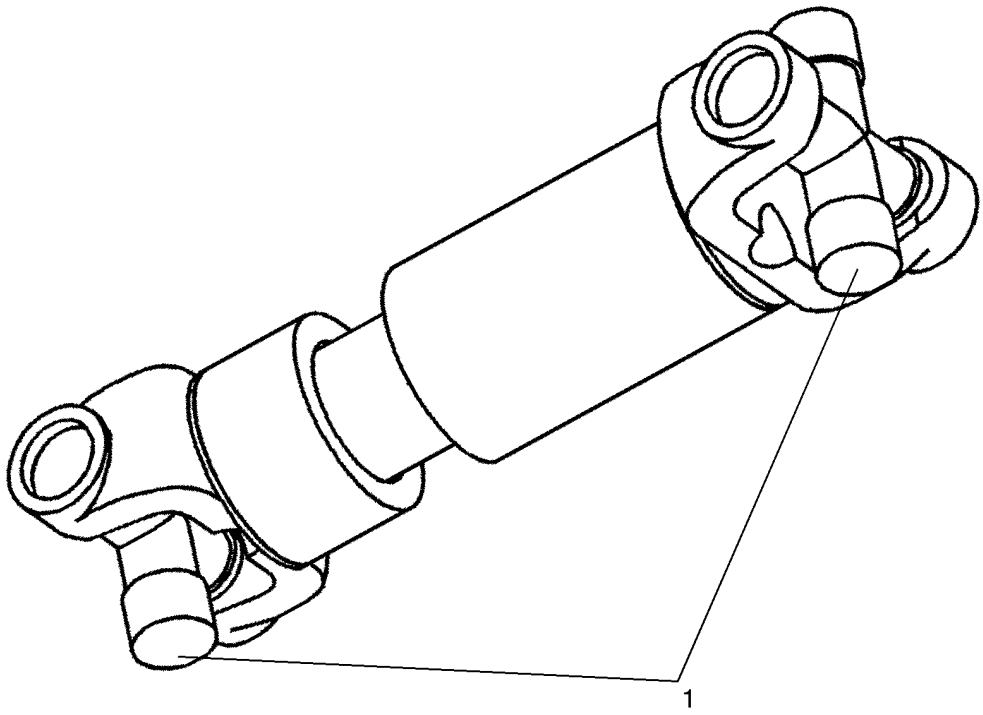


BS07D048

**DRIVE SHAFT, REAR**

| REF | FN | PART NUMBER | YR/SN | QTY | DESCRIPTION |
|---|---|---|---|---|---|
| | | 86990311 | | | SHAFT, DRIVE, Rear; Incl. Ref. 1 |
| 1 | | 8604675 | | 2 | BEARING, W/ Spider |

**DRIVE SHAFT, ENGINE**

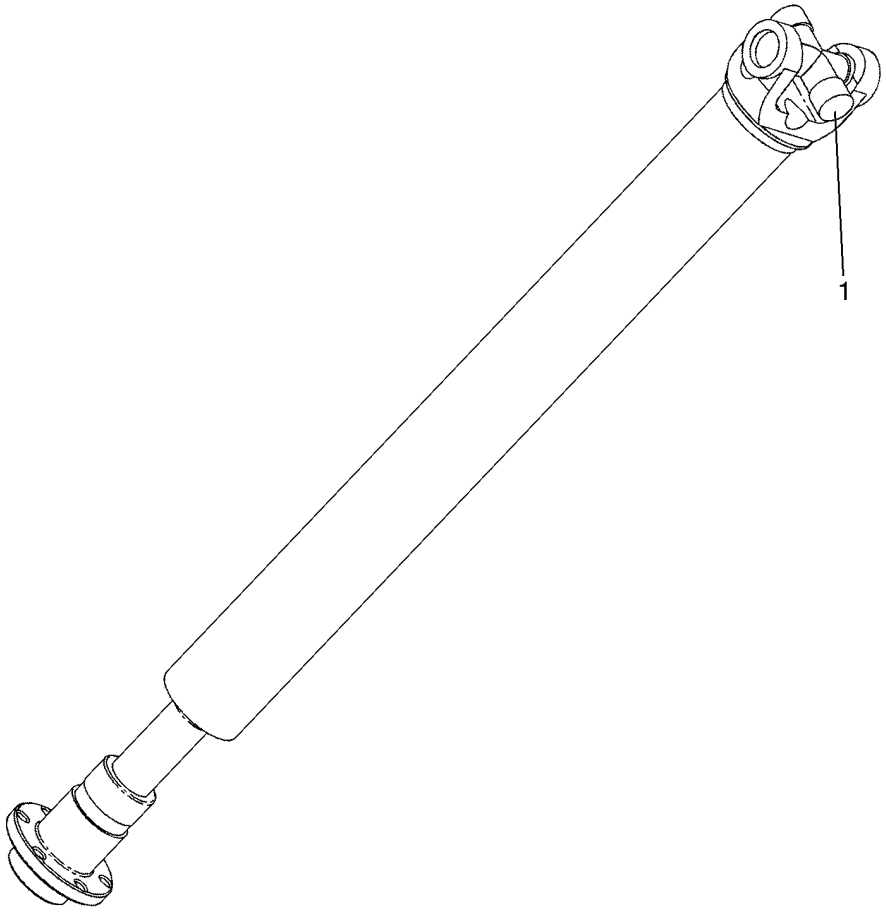


BS07D045

**DRIVE SHAFT, ENGINE**

| REF | FN | PART NUMBER | YR/SN | QTY | DESCRIPTION |
|---|---|---|---|---|---|
| | | 87553862 | | 1 | SHAFT, DRIVE, Engine; Incl. Ref. 1 |
| 1 | | 8604432 | | 1 | BEARING, Spider |

**WHEELS**

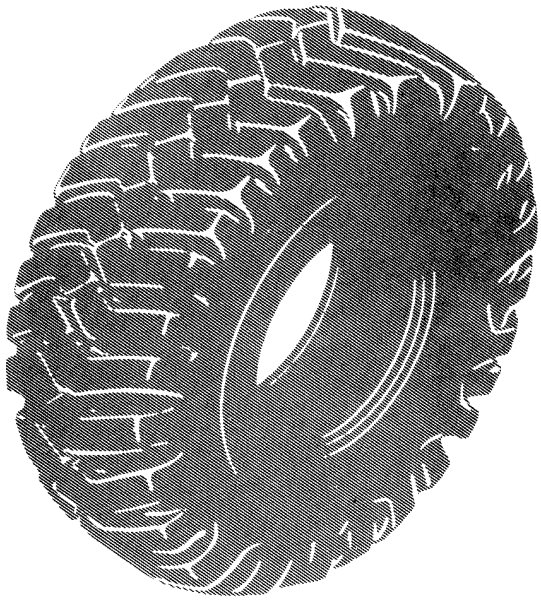

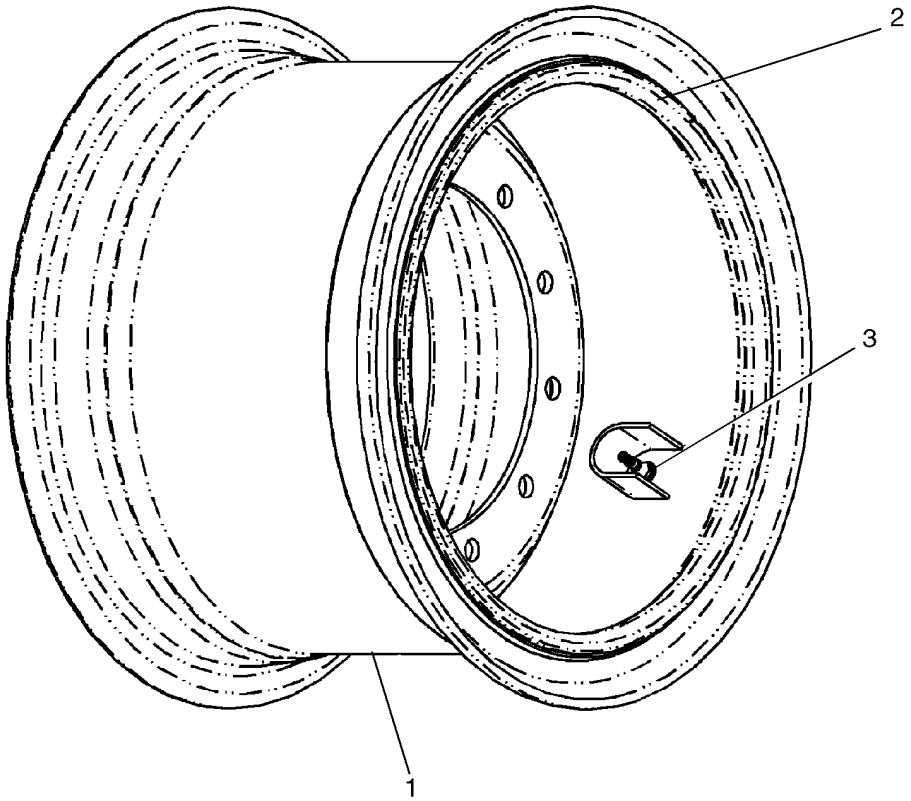


BS07G240

**WHEELS**

| REF | FN | PART NUMBER | YR/SN | QTY | DESCRIPTION |
|---|---|---|---|---|---|
| 1 | | 87557521 | | 4 | WHEEL ASSY, Case Power Tan, 25 x 17 in; Includes Rim, Sidering, and Lockring; Used W/ Axle Assy's 87358580 and 87358583 |
| 2 | | A19101 | | 1 | O-RING, Wheel |
| 3 | | A20058 | | 1 | VALVE STEM |

**Note: Purchase Tires Locally. Nota: Acheter les pneus sur le marché local. Nota: Comprar los neumáticos localmente.**

## NOTES

# SECTION INDEX
## Brakes


| | |
|---|---|
| 07-01 | BRAKE, PARKING |
| 07-02 | BRAKE PEDALS |
| 07-03 | HYDRAULICS - BRAKE, MAIN - PUMP |
| 07-03A | HYDRAULICS - BRAKE, MAIN - AXLE |
| 07-03B | HYDRAULICS - BRAKE, MAIN - ACCUMULATOR |
| 07-03C | HYDRAULICS - BRAKE, MAIN - PARKING BRAKE |
| 07-03D | HYDRAULICS - BRAKE, MAIN - RESERVOIR |
| 07-04 | HYDRAULICS - BRAKE - PUMP ASSY |
| 07-05 | VALVE ASSY - BRAKE |

| 07-01 | | p1 | 07/07 |
|---|---|---|---|

**BRAKE, PARKING**

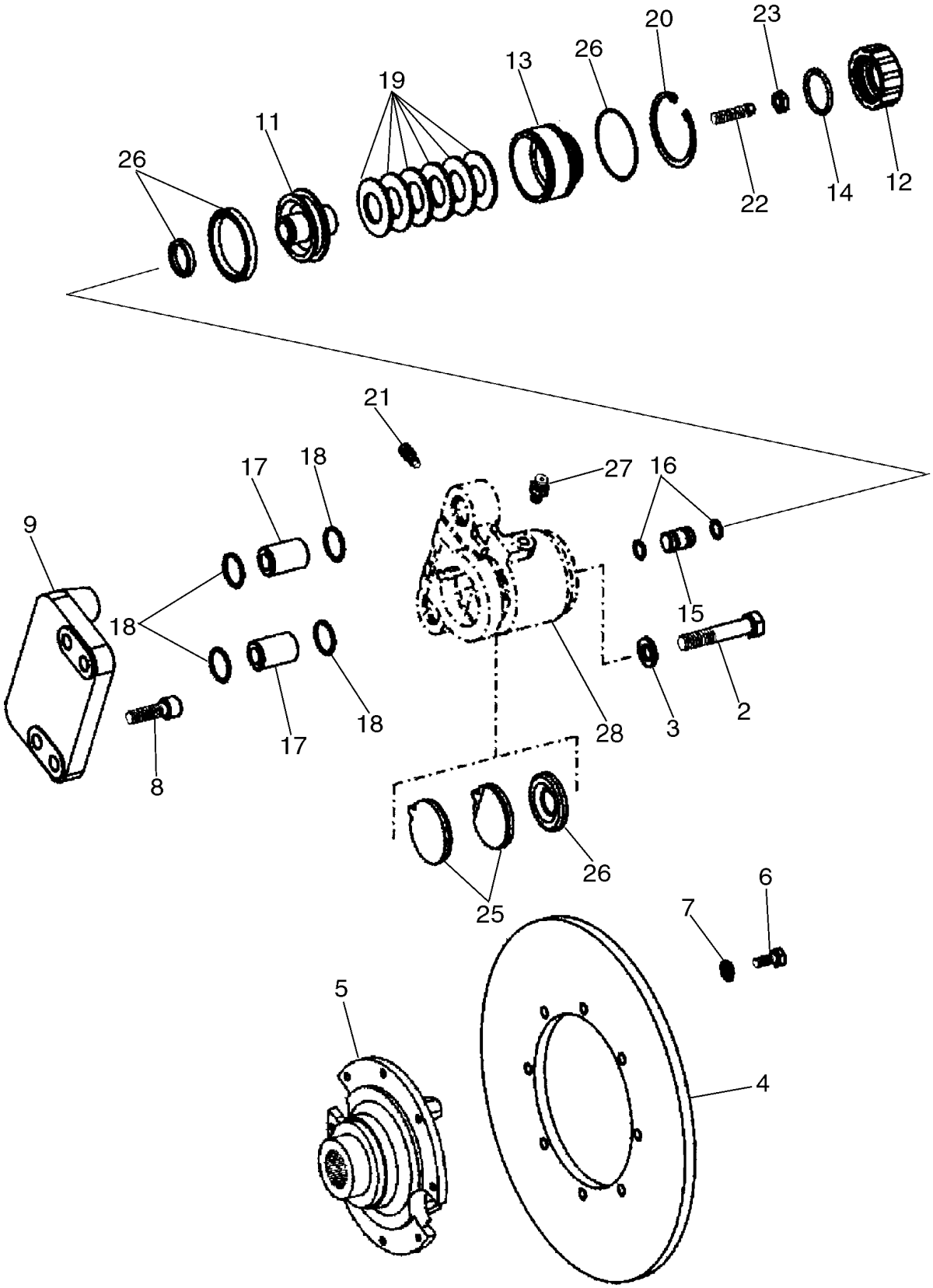

**BRAKE, PARKING**

| REF | FN | PART NUMBER | YR/SN | QTY | DESCRIPTION |
|---|---|---|---|---|---|
| | | 87572394 | | 1 | TRANSMISSION, See Figure(s) 06-03 - 06-20, 07-01; Incl. Refs. 2 - 28 |
| | | 8603630 | | 1 | BRAKE, Incl. 11 - 26, 28; Includes Caliper Which Is Not Serviced Separately |
| 2 | | 8603649 | | 2 | SCREW, M16 x 85 |
| 3 | | 8603650 | | 2 | WASHER |
| 4 | | 8603328 | | 1 | BRAKE DISC |
| 5 | | 8603327 | | 1 | FLANGE, Output |
| 6 | | 626-10025 | | 8 | BOLT, Hex, M10 x 25, 10.9, Full Thd |
| 7 | | 895-11010 | | 8 | WASHER, M10 x 20 x 2 |
| 8 | | 8603652 | | 4 | STUD, M14 x 45 |
| 9 | | 8603653 | | 1 | PLATE |
| 10 | | 8603654 | | 1 | SCREW, Not Illustrated |
| 11 | | 8603699 | | 1 | PISTON |
| 12 | | 8603700 | | 1 | CAP |
| 13 | | 8603701 | | 1 | RING, Pressure |
| 14 | | 8603347 | | 1 | O-RING |
| 15 | | 8603702 | | 1 | PIN, Pressure |
| 16 | | 8603703 | | 2 | O-RING |
| 17 | | 8603704 | | 2 | BUSHING |
| 18 | | 8603705 | | 4 | O-RING |
| 19 | | 8603706 | | 6 | SPRING |
| 20 | | 8603707 | | 1 | RING, Retaining |
| 21 | | 8603348 | | 1 | BREATHER |
| 22 | | 8603708 | | 1 | SCREW, ADJUSTMENT |
| 23 | | 8603709 | | 1 | NUT |
| 24 | | 8603710 | | 1 | PLUG, Not Illustrated |
| 25 | | 8603631 | | 1 | KIT |
| 26 | | 8603711 | | 1 | KIT, SEALS, Park Brake |
| 27 | | 8603542 | | 1 | SLEEVE |
| 28 | | NSS | | 1 | NOT SERVICED SEPARATELY, BRAKE CALIPER |

**BRAKE PEDALS**

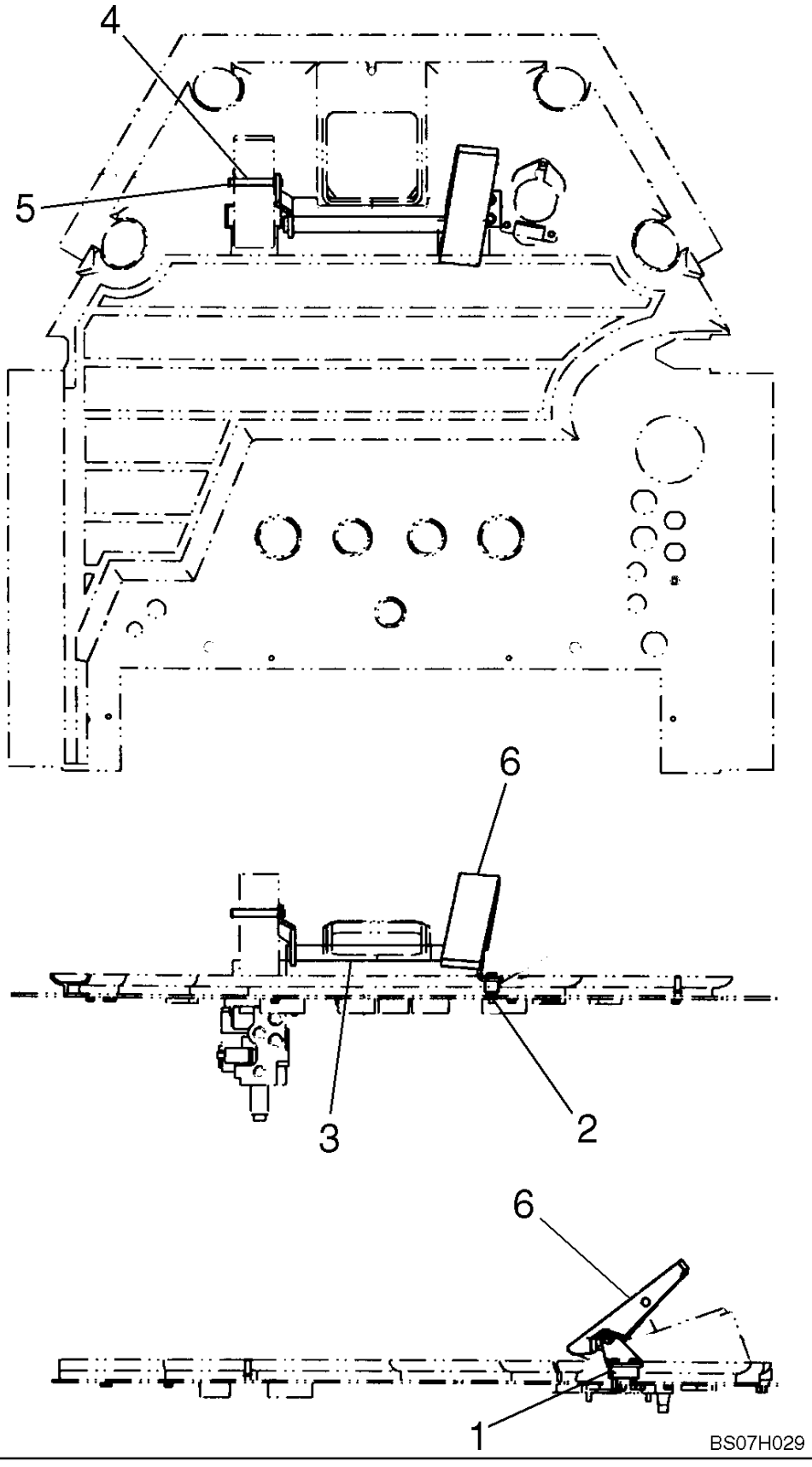

**BRAKE PEDALS**

| REF | FN | PART NUMBER | YR/SN | QTY | DESCRIPTION |
|---|---|---|---|---|---|
| | | REF | | | INSTRUCTION, RIGHT HAND PEDAL |
| 1 | | 87568400 | | 1 | MOUNTING PARTS |
| 2 | | 844-8025 | | 2 | BOLT, Hex Flg, M8 x 25, 8.8 |
| 3 | | 87542219 | | 1 | PEDAL ASSY., Tag-Along Pedal |
| 4 | | 383868A1 | | 1 | PIN |
| 5 | | 800-44012 | | 2 | RING, SNAP, M12, Ext |
| 6 | | 383869A2 | | 1 | PEDAL |

**HYDRAULICS - BRAKE, MAIN - PUMP**

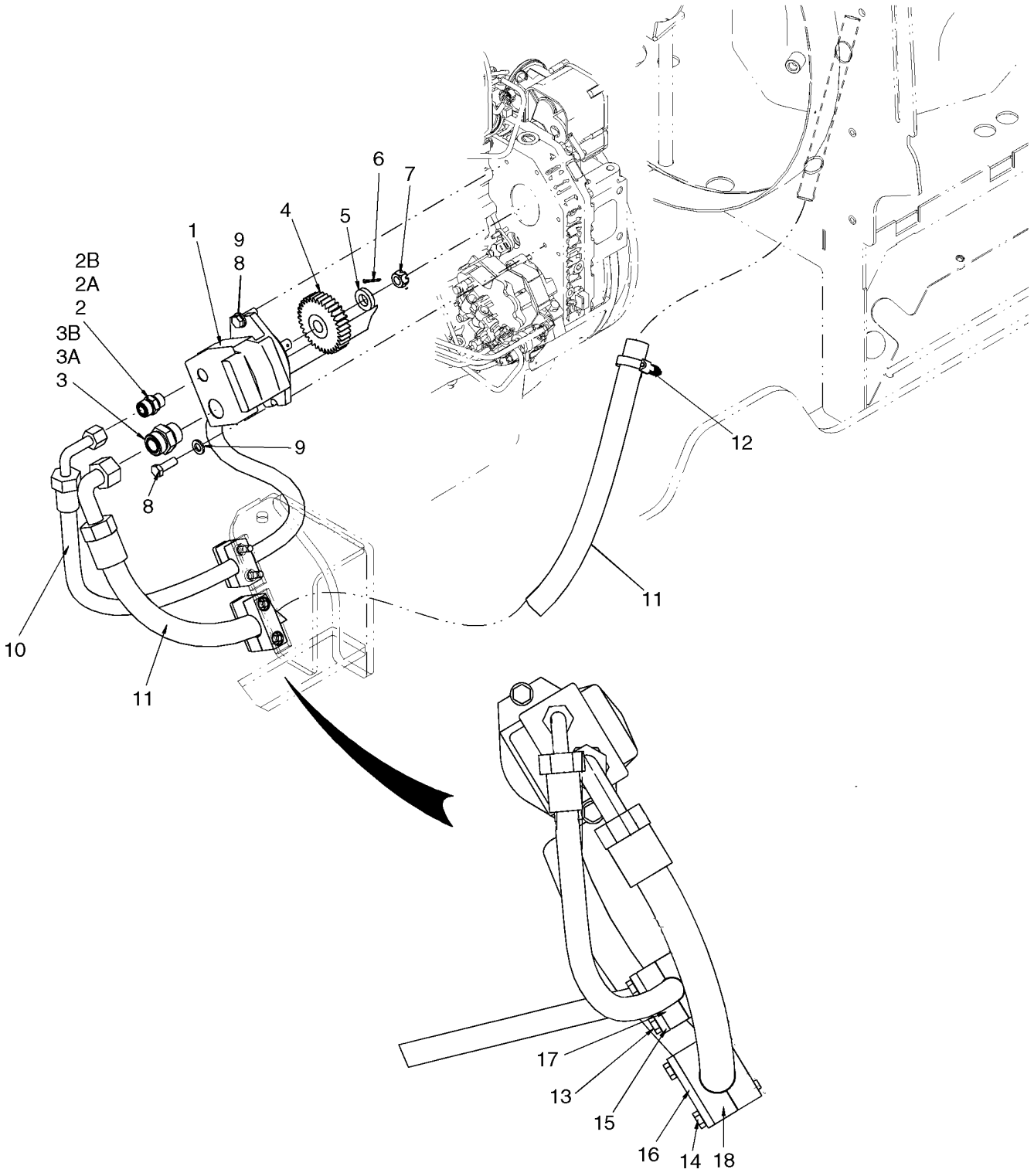

**HYDRAULICS - BRAKE, MAIN - PUMP**

| REF | FN | PART NUMBER | YR/SN | QTY | DESCRIPTION |
|---|---|---|---|---|---|
| 1 | | 87342166 | | 1 | PUMP, HYDRAULIC, Brake; See Figure 07-04 |
| 2 | | 700-103 | | 1 | CONNECTOR, HYD., 1"-14 ORFS x M22 x 1.5 ORB, Incl. 2A, 2B |
| 2A | | 238-6016 | | 1 | O-RING, -016, 90 Duro, .614" ID x .070" Thk, Face Seal |
| 2B | | 637-63193 | | 1 | O-RING, Cl 6, 19.3MM ID x 2.2 Thk, Boss Seal |
| 3 | | 700-105 | | 1 | CONNECTOR, HYD., 1 7/16"-12 ORFS x M22 x 2 ORB, Incl. 3A, 3B |
| 3A | | 238-6021 | | 1 | O-RING, -021, 90 Duro, .926" ID x .070" Thk, Face Seal |
| 3B | | 637-64296 | | 1 | O-RING, Cl 6, 29.6MM ID x 2.9 Thk, Boss Seal |
| 4 | | 87389871 | | 1 | GEAR, Accessory Drive |
| 5 | | 87373112 | | 1 | WASHER, Gear Mounting |
| 6 | | 733-3232 | | 1 | PIN, SPLIT (COTTER), M3.2 x 32 |
| 7 | | 425-1310 | | 1 | NUT, SLOTTED, 5/8"-18, G5 |
| 8 | | 627-12035 | | 2 | BOLT, Hex, M12 x 35, 10.9 |
| 9 | | 896-11012 | | 2 | WASHER, M13.5 x 24.5 x 3, HT |
| 10 | | 87377350 | | 1 | HOSE ASSY., Brake Pump Pressure; 2491 mm (98-1/16 in) |
| 11 | | 87377337 | | 1 | HOSE ASSY., Brake Pump Suction; 1043mm (41 in) |
| 12 | | 353036A1 | | 1 | CLAMP, Constant Torque |
| 13 | | 827-10075 | | 2 | BOLT, Hex, M10 x 75, 10.9 |
| 14 | | 827-10070 | | 2 | BOLT, Hex, M10 x 70, 10.9 |
| 15 | | 367658A1 | | 1 | PLATE, Clamp Cover |
| 16 | | 8500858 | | 1 | PLATE, Clamp Cover |
| 17 | | 8606002 | | 1 | COLLAR, RETAINER, Hose Mounting |
| 18 | | 8500621 | | 1 | BLOCK, Hose Mounting |

**HYDRAULICS - BRAKE, MAIN - AXLE**

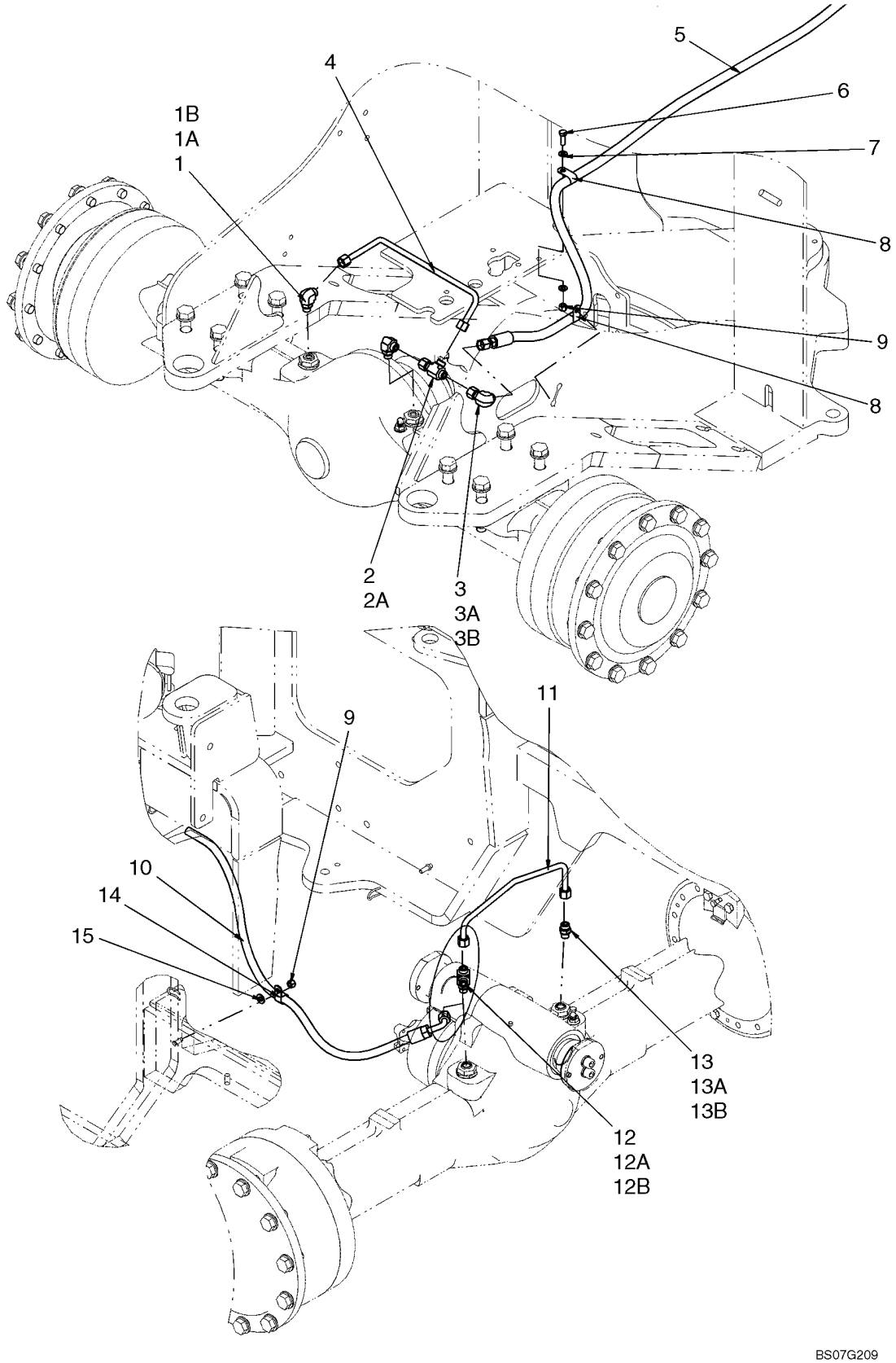

**HYDRAULICS - BRAKE, MAIN - AXLE**

| REF | FN | PART NUMBER | YR/SN | QTY | DESCRIPTION |
|---|---|---|---|---|---|
| | | REF | | | INSTRUCTION, TOP VIEW - FRONT AXLE |
| | | REF | | | INSTRUCTION, BOTTOM VIEW - REAR AXLE |
| 1 | | 700-305 | | 2 | ELBOW, 90º, 13/16"-18 ORFS x M18 x 1.5 ORB, Incl. Refs. 1A, 1B |
| 1A | | 238-6014 | | 1 | O-RING, -014, 90 Duro, .489" ID x .070" Thk, Face Seal |
| 1B | | 637-63153 | | 1 | O-RING, Cl 6, 15.3MM ID x 2.2 Thk |
| 2 | | 701-416 | | 1 | TEE, 13/16"-16 ORFS x 13/16"-16 Fem Sw Run, Incl. Refs. 2A |
| 2A | | 238-6014 | | 2 | O-RING, -014, 90 Duro, .489" ID x .070" Thk, Face Seal |
| 3 | | 701-320 | | 1 | ELBOW, 90º, 13/16"-16 ORFS x 13/16"-16 Fem Sw, Incl. Refs. 3A, 3B |
| 3A | | 238-6014 | | 1 | O-RING, -014, 90 Duro, .489" ID x .070" Thk, Face Seal |
| 3B | | 637-63153 | | 1 | O-RING, Cl 6, 15.3MM ID x 2.2 Thk |
| 4 | | 386735A1 | | 1 | TUBE ASSY., Front Axle Brake |
| 5 | | {87658723} | | 1 | HOSE ASSY. Front Axle Brake; 3168mm ( 124 - 3/4 in ) |
| 6 | | 627-10030 | | 1 | BOLT, Hex, M10 x 30, 10.9, Full Thd |
| 7 | | 895-11010 | | 2 | WASHER, M10 x 20 x 2 |
| 8 | | 515-24222 | | 2 | CLAMP, 7/8", Insul, 7/16" Bolt |
| 9 | | 832-10410 | | 2 | NUT, LOCK, M10 x 1.5, Cl 8 |
| 10 | | 87553873 | | 1 | HOSE, Rear Axle Brake; 1081 mm (42 - 9/16 in) |
| 11 | | 386823A1 | | 1 | TUBE ASSY., Rear Axle Brake |
| 12 | | 700-412 | | 1 | TEE, 13/16"-16 ORFS x M18 x 1.5 ORB Run, Incl. Refs. 12A, 12B |
| 12A | | 238-6014 | | 2 | O-RING, -014, 90 Duro, .489" ID x .070" Thk, Face Seal |
| 12B | | 637-63153 | | 1 | O-RING, Cl 6, 15.3MM ID x 2.2 Thk |
| 13 | | 700-102 | | 1 | CONNECTOR, HYD., 13/16"-16 ORFS x M18 x 1.5 ORB, Incl. Refs. 13A, 13B |
| 13A | | 238-6014 | | 1 | O-RING, -014, 90 Duro, .489" ID x .070" Thk, Face Seal |
| 13B | | 637-63153 | | 1 | O-RING, Cl 6, 15.3MM ID x 2.2 Thk |

**HYDRAULICS - BRAKE, MAIN - AXLE**

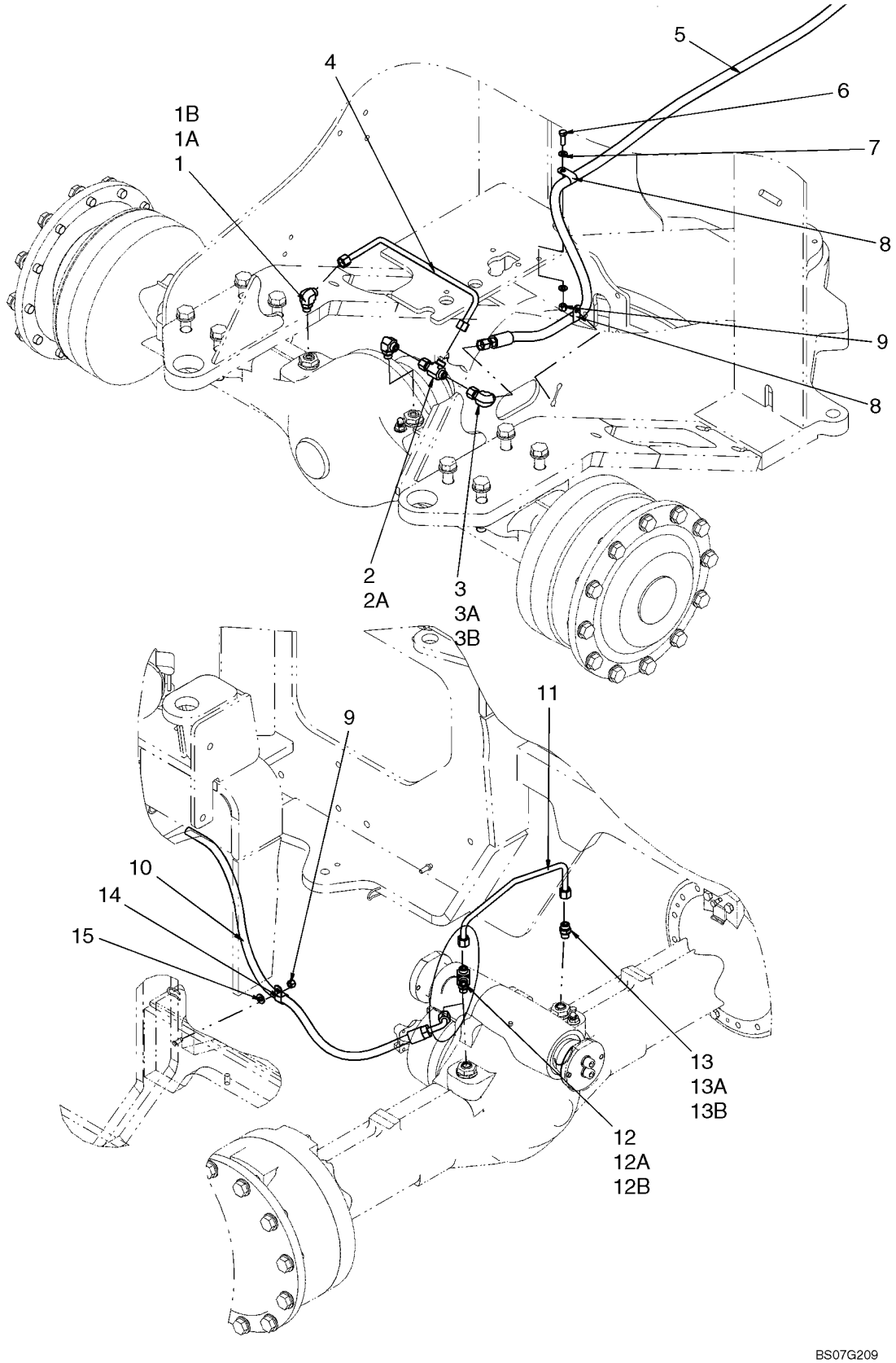

**HYDRAULICS - BRAKE, MAIN - AXLE**

| REF | FN | PART NUMBER | YR/SN | QTY | DESCRIPTION |
|---|---|---|---|---|---|
| 14 | | 515-24238 | | 1 | CLAMP, 15/16", Insul, 7/16" Bolt |
| 15 | | 895-15010 | | 1 | WASHER, M11 x 24 x 2 |

**HYDRAULICS - BRAKE, MAIN - ACCUMULATOR**

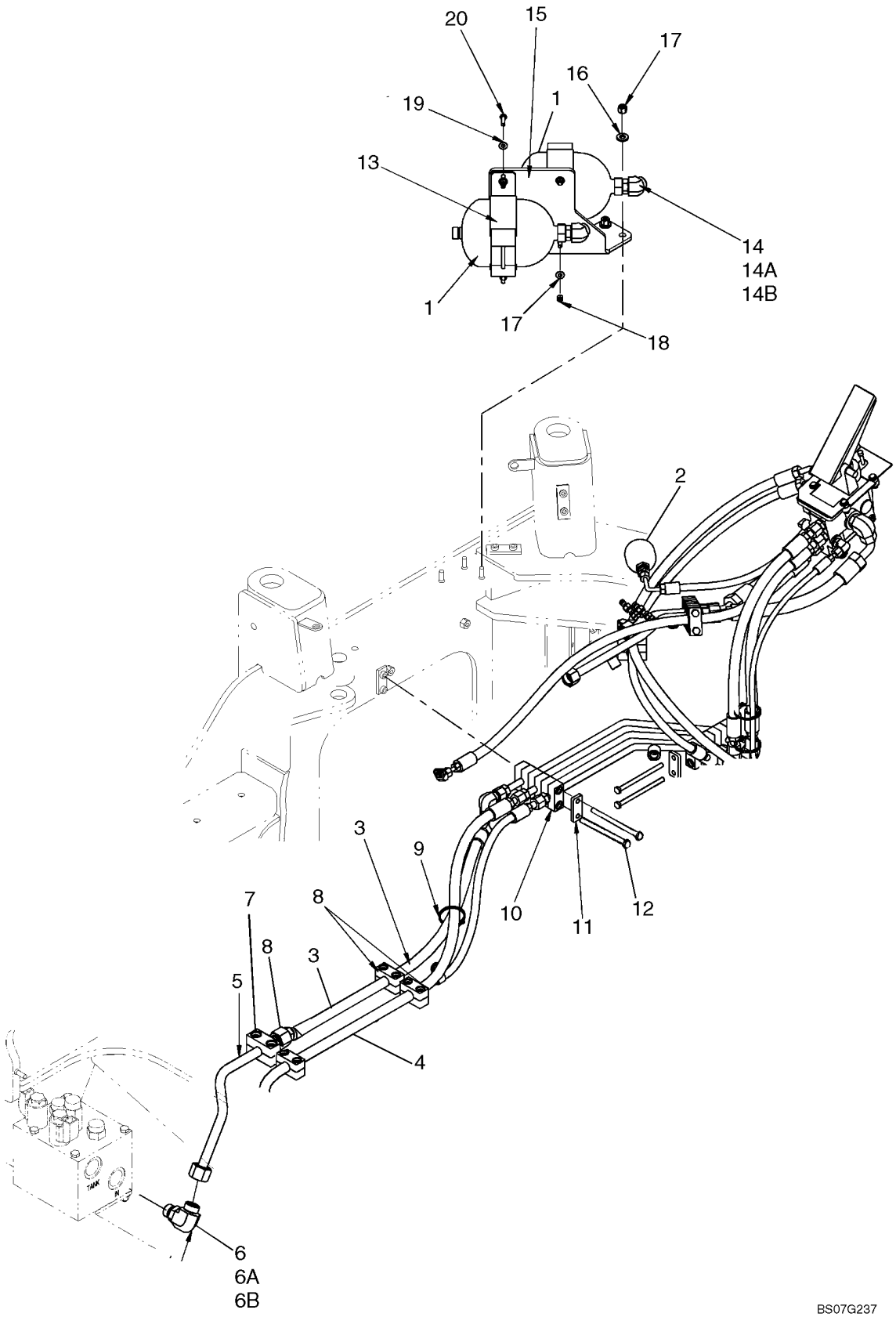

**HYDRAULICS - BRAKE, MAIN - ACCUMULATOR**

| REF | FN | PART NUMBER | YR/SN | QTY | DESCRIPTION |
|---|---|---|---|---|---|
| | | REF | | | INSTRUCTION, SERVICE AND PARKING BRAKE ACCUMULATORS, FAN SUPPLY AND PUMP PRESSURE LINE MOUNTING |
| 1 | | 8603020 | | 2 | ACCUMULATOR, Service Brake |
| 2 | | 8500209 | | 1 | ACCUMULATOR, Parking Brake |
| 3 | | {87658724} | | 1 | HOSE ASSY. Fan Supply; 1049 mm ( 41 - 5/16 in) |
| 4 | | 87377350 | | 1 | HOSE ASSY., Brake Pump Pressure; 2491 mm (98 - 1/16 in) |
| 5 | | {87658725} | | 1 | TUBE ASSY. Fan Supply |
| 6 | | 700-307 | | 2 | ELBOW, 90º, 1 3/16"-12 ORFS x M27 x 2 ORB, Incl. Refs. 6A, 6B |
| 6A | | 238-6018 | | 1 | O-RING, -018, 90 Duro, .739" ID x .070" Thk, Face Seal |
| 6B | | 637-64236 | | 1 | O-RING, Cl 6, 23.6MM ID x 2.9 Thk, Boss Seal |
| 7 | | 379374A1 | | 1 | BLOCK, Hose Mounting |
| 8 | | 367489A1 | | 3 | BLOCK, Hose Mounting |
| 9 | | L11541 | | 1 | STRAP |
| 10 | | 8500210 | | 5 | CLAMP, Tube Mounting |
| 11 | | 367658A1 | | 1 | PLATE, Clamp Cover |
| 12 | | 827-10150 | | 4 | BOLT, Hex, M10 x 150, 10.9 |
| 13 | | 8501315 | | 2 | CLAMP, Accumulator |
| 14 | | 700-387 | | 1 | ELBOW, 45º, 1 3/16"-12 ORFS x M27 x 2 ORB, Incl. Refs. 14A, 14B |
| 14A | | 238-6018 | | 1 | O-RING, -018, 90 Duro, .739" ID x .070" Thk, Face Seal |
| 14B | | 637-64236 | | 1 | O-RING, Cl 6, 23.6MM ID x 2.9 Thk, Boss Seal |
| 15 | | 87326008 | | 1 | BRACKET, Accumulator |
| 16 | | 896-15012 | | 3 | WASHER, M12 x 28.5 x 4, HT |
| 17 | | 832-10412 | | 3 | NUT, LOCK, M12 x 1.75, Cl 8 |
| 18 | | 832-10408 | | 4 | NUT, LOCK, M8 x 1.25, Cl 8 |
| 19 | | 895-15008 | | 8 | WASHER, M8 x 20 x 1.6 |
| 20 | | 627-8030 | | 4 | BOLT, Hex, M8 x 30, 10.9 |

**HYDRAULICS - BRAKE, MAIN - PARKING BRAKE**

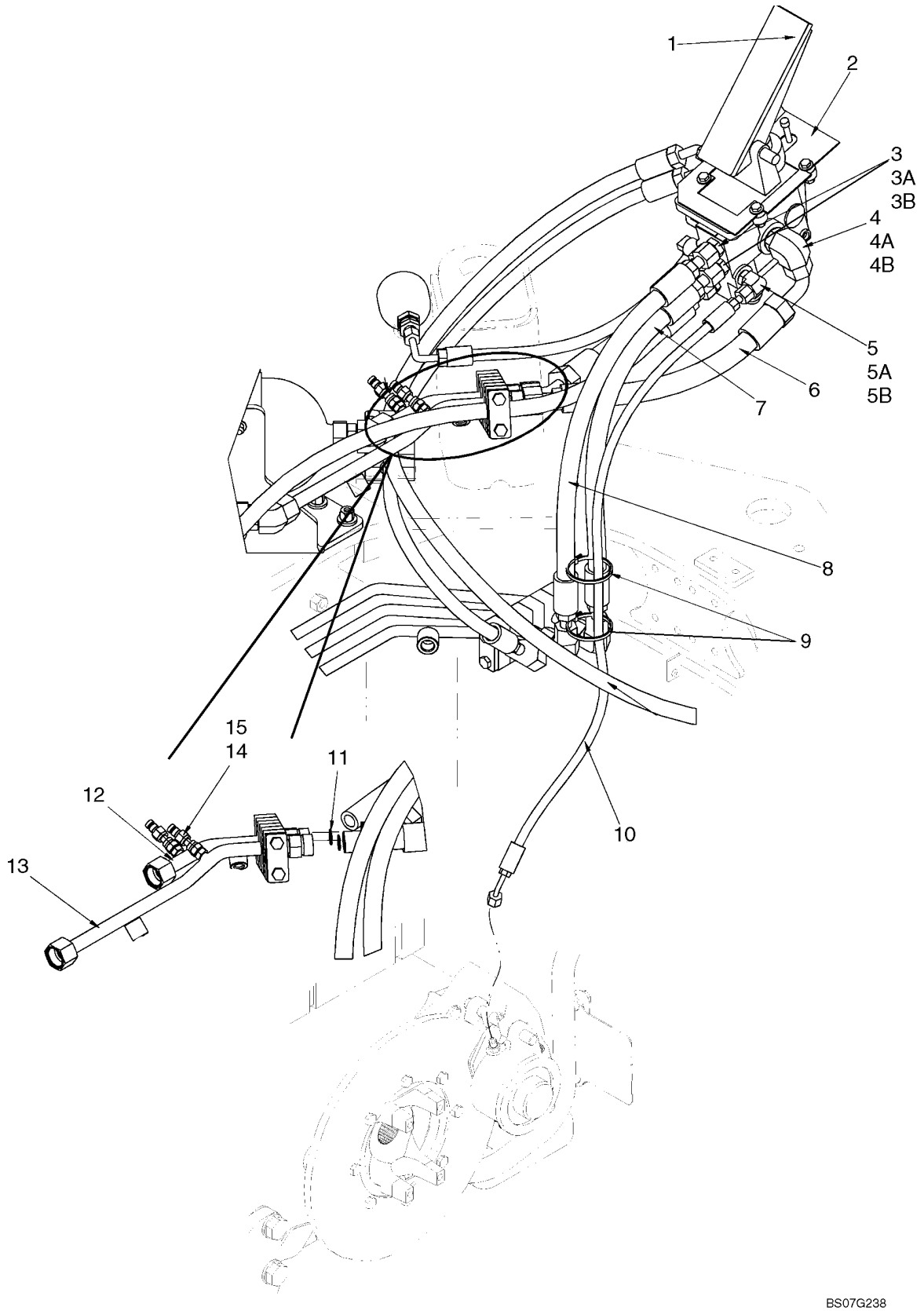

**HYDRAULICS - BRAKE, MAIN - PARKING BRAKE**

| REF | FN | PART NUMBER | YR/SN | QTY | DESCRIPTION |
|---|---|---|---|---|---|
| | | REF | | | INSTRUCTION, BRAKE VALVE TO PARKING BRAKE, BRAKE VALVE AND PUMP DISCHARGE HOSING, REAR ACCUMULATOR HOSING |
| 1 | | 87360067 | | 1 | VALVE, BRAKE, See Figure 07-05 |
| 2 | | 87607227 | | 1 | PLATE, Brake Valve |
| 3 | | 700-115 | | 2 | CONNECTOR, HYD., 1"-14 ORFS x M18 x 1.5 ORB, Incl. 3A, 3B |
| 3A | | 238-6016 | | 1 | O-RING, -016, 90 Duro, .614" ID x .070" Thk, Face Seal |
| 3B | | 637-63153 | | 1 | O-RING, Cl 6, 15.3MM ID x 2.2 Thk |
| 4 | | 700-307 | | 1 | ELBOW, 90º, 1 3/16"-12 ORFS x M27 x 2 ORB, Incl. 4A, 4B |
| 4A | | 238-6018 | | 1 | O-RING, -018, 90 Duro, .739" ID x .070" Thk, Face Seal |
| 4B | | 637-64236 | | 1 | O-RING, Cl 6, 23.6MM ID x 2.9 Thk, Boss Seal |
| 5 | | 700-368 | | 1 | ELBOW, 90º, 11/16"-18 ORFS x M16 x 1.5 ORB, Incl. 5A, 5B |
| 5A | | 238-6012 | | 1 | O-RING, -012, 90 Duro, .364" ID x .070" Thk, Face Seal |
| 5B | | 637-63133 | | 1 | O-RING, Cl 6, 13.3MM ID x 2.2 Thk, Boss Seal |
| 6 | | 87377313 | | 1 | HOSE ASSY., Rear Accumulator; 448mm (17-1/2 in) |
| 7 | | 87354481 | | 1 | HOSE ASSY., Brake Pump Discharge; 618mm (24-1/3 in) |
| 8 | | 87354480 | | 1 | HOSE ASSY., Brake Valve Discharge; 668mm (26-1/4 in) |
| 9 | | L11541 | | 2 | STRAP |
| 10 | | 87325997 | | 1 | HOSE ASSY., Parking Brake; 1070mm (43 in) |
| 11 | | 238-6018 | | 2 | O-RING, -018, 90 Duro, .739" ID x .070" Thk, Face Seal |
| 12 | | 87354290 | | 1 | TUBE ASSY., Front Brake Accumulator |
| 13 | | 87529279 | | 1 | TUBE ASSY., Rear Brake Accumulator |
| 14 | | 190117A1 | | 2 | COUPLING, Diagnostic |
| 15 | | 238-6011 | | 2 | O-RING, -011, 90 Duro, .301" ID x .070" Thk |

**HYDRAULICS - BRAKE, MAIN - RESERVOIR**

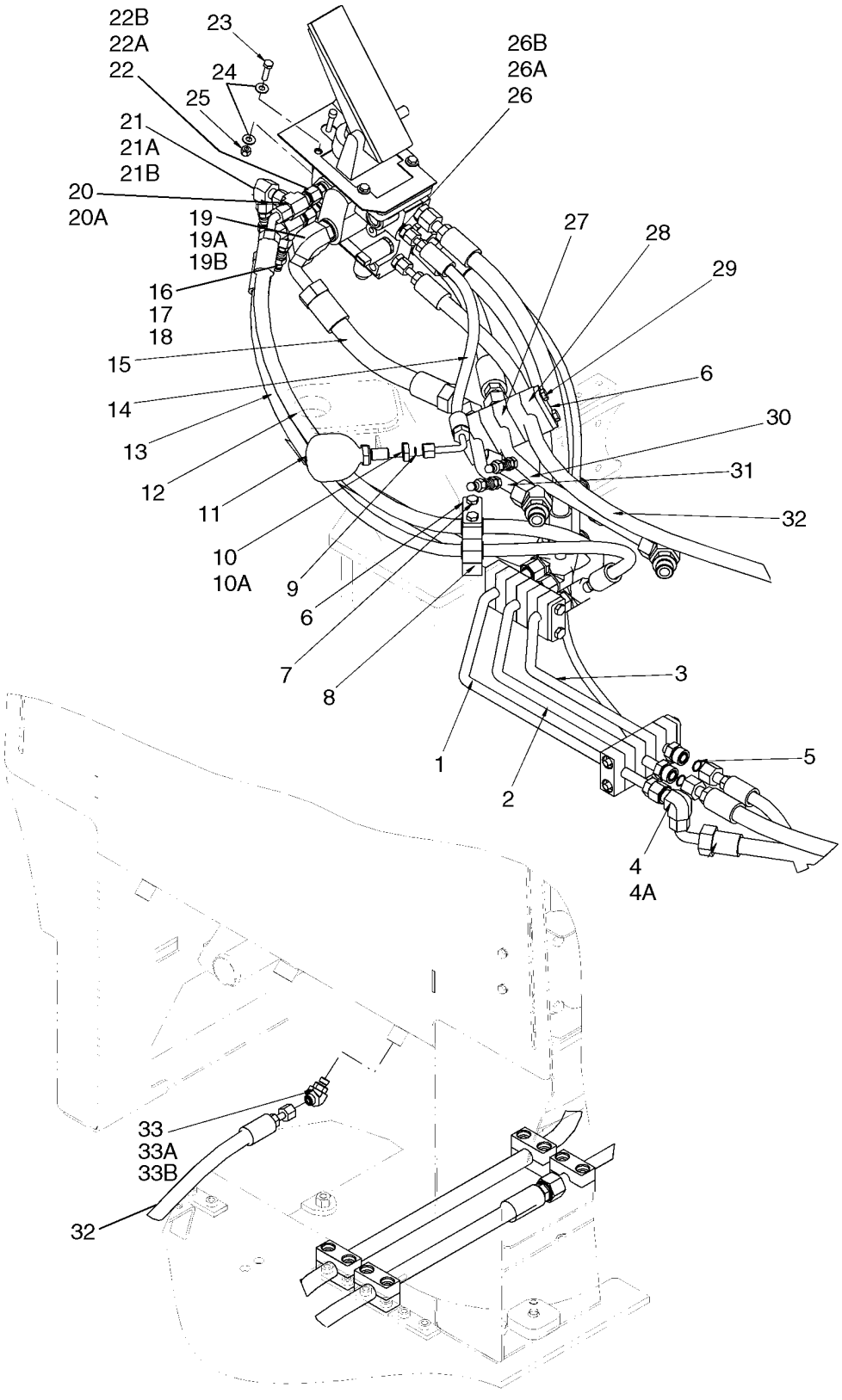

**HYDRAULICS - BRAKE, MAIN - RESERVOIR**

| REF | FN | PART NUMBER | YR/SN | QTY | DESCRIPTION |
|---|---|---|---|---|---|
| 1 | | 87326263 | | 1 | TUBE ASSY., Fan Supply |
| 2 | | 87326262 | | 1 | TUBE ASSY., Brake Supply |
| 3 | | 87326268 | | 1 | TUBE ASSY., Rear Axle Brake |
| 4 | | 701-361 | | 1 | ELBOW, 90º, 1"-14 ORFS x 1"-14 Fem Sw |
| 4A | | 238-6016 | | 1 | O-RING, -016, 90 Duro, .614" ID x .070" Thk, Face Seal |
| 5 | | 238-6016 | | 3 | O-RING, -016, 90 Duro, .614" ID x .070" Thk, Face Seal |
| 6 | | 367658A1 | | 3 | PLATE, Clamp Cover |
| 7 | | 827-10100 | | 2 | BOLT, Hex, M10 x 100, 10.9 |
| 8 | | 367489A1 | | 2 | BLOCK, Tube Mounting |
| 9 | | 238-6012 | | 1 | O-RING, -012, 90 Duro, .364" ID x .070" Thk, Face Seal |
| 10 | | 701-909 | | 1 | NUT, LOCK, 11/16"-16, Blkhd, Incl. Ref. 10A |
| 10A | | 238-6012 | | 1 | O-RING, -012, 90 Duro, .364" ID x .070" Thk, Face Seal |
| 11 | | 8500209 | | 1 | ACCUMULATOR, Parking Brake |
| 12 | | {87658723} | | 1 | HOSE ASSY. Front Axle Brake; 3168 mm ( 124 - 3/4 in ) |
| 13 | | 87325999 | | 1 | HOSE ASSY., Rear Axle Brake; 1206mm ( 47 - 1/2 in ) |
| 14 | | 87325996 | | 1 | HOSE ASSY., 461 mm (18-1/4 in); Parking Brake Accumulator |
| 15 | | 87521823 | | 1 | HOSE ASSY., Front Accumulator; 411mm ( 16-1/4 in ) |
| 16 | | 201-110 | | 2 | REDUCER, 9/16"-18 Male x 13/16"-16 Fem, ORFS |
| 17 | | 703-902 | | 2 | NUT, TUBE, 13/16"-16, ORFS |
| 18 | | 190117A1 | | 2 | COUPLING, Diagnostic |
| 19 | | 700-307 | | 1 | ELBOW, 90º, 1 3/16"-12 ORFS x M27 x 2 ORB, Incl. Refs. 19A, 19B |
| 19A | | 238-6018 | | 1 | O-RING, -018, 90 Duro, .739" ID x .070" Thk, Face Seal |
| 19B | | 637-64236 | | 1 | O-RING, Cl 6, 23.6MM ID x 2.9 Thk, Boss Seal |
| 20 | | 701-416 | | 2 | TEE, 13/16"-16 ORFS x 13/16"-16 Fem Sw Run, Incl. Ref. 20A |

**HYDRAULICS - BRAKE, MAIN - RESERVOIR**

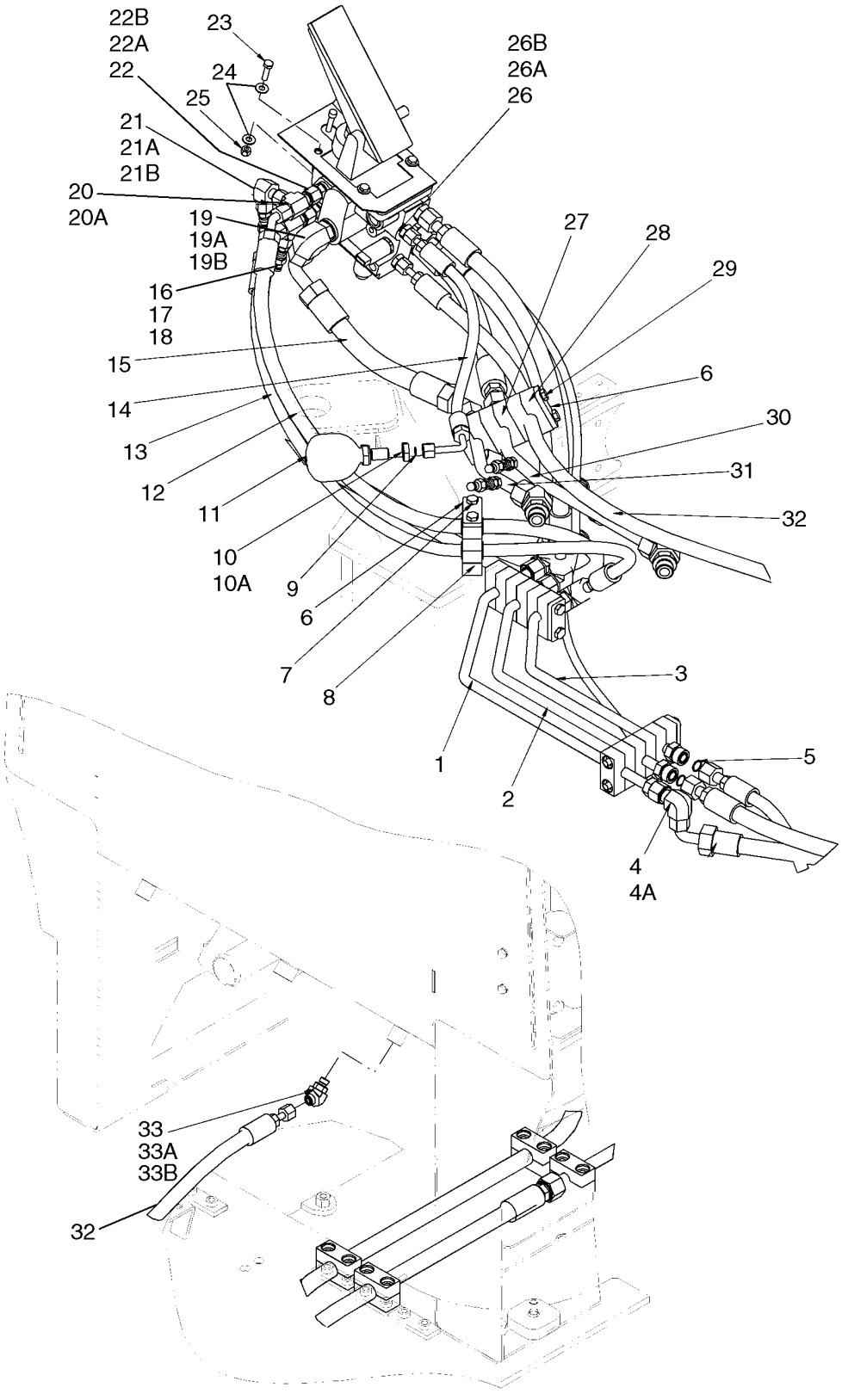

**HYDRAULICS - BRAKE, MAIN - RESERVOIR**

| REF | FN | PART NUMBER | YR/SN | QTY | DESCRIPTION |
|---|---|---|---|---|---|
| 20A | | 238-6014 | | 1 | O-RING, -014, 90 Duro, .489" ID x .070" Thk, Face Seal |
| 21 | | 701-320 | | 1 | ELBOW, 90º, 13/16"-16 ORFS x 13/16"-16 Fem Sw, Incl. Refs. 21A, 21B |
| 21A | | 637-63153 | | 1 | O-RING, Cl 6, 15.3MM ID x 2.2 Thk |
| 21B | | 238-6014 | | 1 | O-RING, -014, 90 Duro, .489" ID x .070" Thk, Face Seal |
| 22 | | 700-169 | | 2 | CONNECTOR, HYD., 13/16"-16 ORFS x M16 x 1.5 ORB, Incl. Refs. 22A, 22B |
| 22A | | 238-6014 | | 1 | O-RING, -014, 90 Duro, .489" ID x .070" Thk, Face Seal |
| 22B | | 637-63133 | | 1 | O-RING, Cl 6, 13.3MM ID x 2.2 Thk, Boss Seal |
| 23 | | 627-8030 | | 4 | BOLT, Hex, M8 x 30, 10.9 |
| 24 | | 895-15008 | | 8 | WASHER, M8 x 20 x 1.6 |
| 25 | | 832-10408 | | 4 | NUT, LOCK, M8 x 1.25, Cl 8 |
| 26 | | 700-157 | | 2 | CONNECTOR, HYD., 11/16"-16 ORFS x M16 x 1.5 ORB, Incl. Refs. 26A, 26B |
| 26A | | 637-63133 | | 1 | O-RING, Cl 6, 13.3MM ID x 2.2 Thk |
| 26B | | 238-6012 | | 1 | O-RING, -012, 90 Duro, .364" ID x .070" Thk |
| 27 | | 379374A1 | | 2 | BLOCK, Tube Mounting |
| 28 | | 8501052 | | 1 | CLAMP, SPECIAL, Tube Mounting |
| 29 | | 827-10150 | | 2 | BOLT, Hex, M10 x 150, 10.9 |
| 30 | | 87529279 | | 1 | TUBE ASSY., Rear Brake Accumulator |
| 31 | | 87354290 | | 1 | TUBE ASSY., Front Brake Accumulator |
| 32 | | 87326000 | | 1 | HOSE ASSY., Tank Reference; 1291mm ( 51 in ) |
| 33 | | 700-315 | | 1 | ELBOW, 45º, 11/16"-18 ORFS x M14 x 1.5 ORB, Incl. Refs. 33A, 33B |
| 33A | | 238-6012 | | 1 | O-RING, -012, 90 Duro, .364" ID x .070" Thk, Face Seal |
| 33B | | 637-63113 | | 1 | O-RING, Cl 6, 11.3MM ID x 2.2 Thk |

**HYDRAULICS - BRAKE - PUMP ASSY**

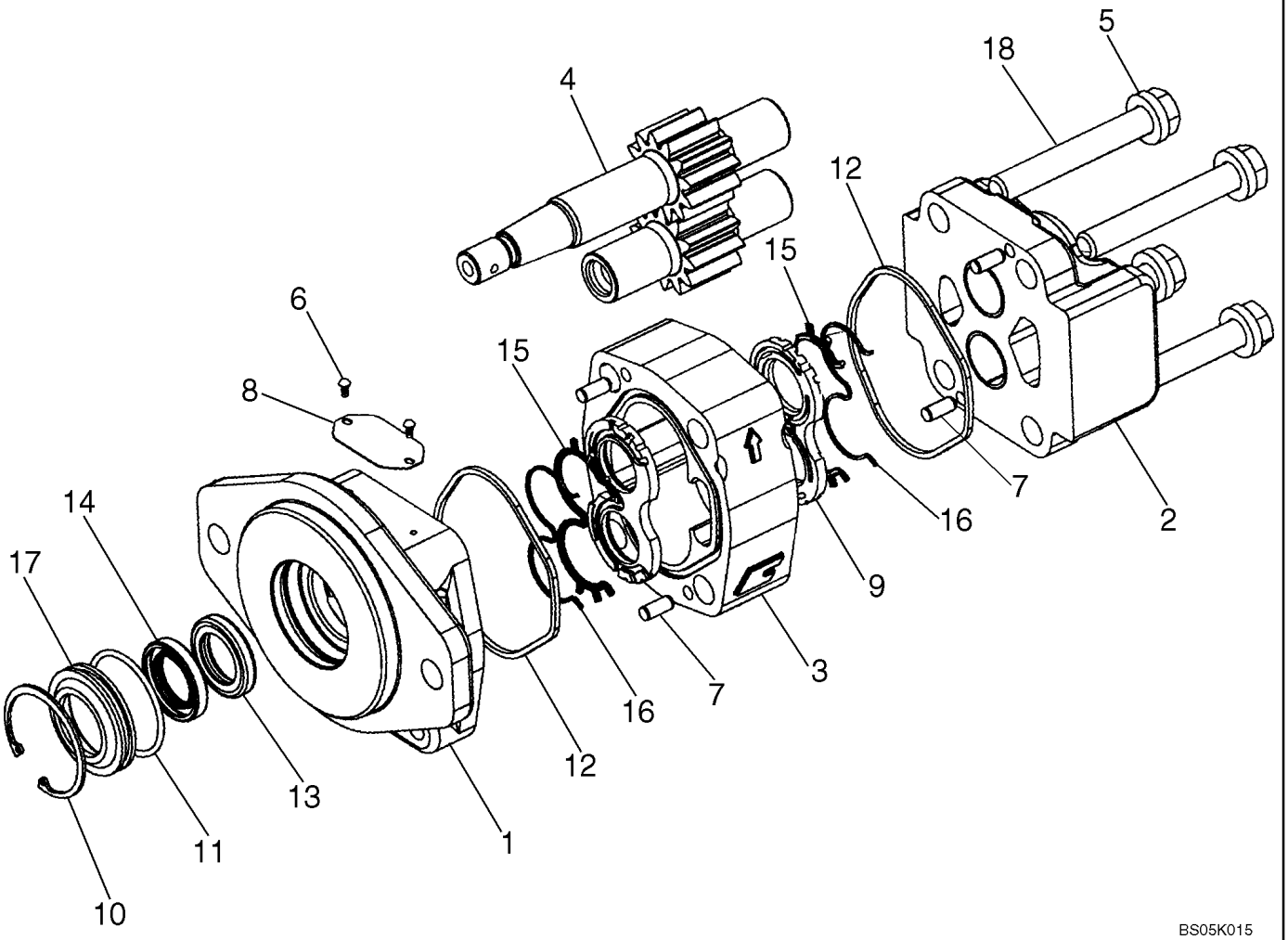

**HYDRAULICS - BRAKE - PUMP ASSY**

| REF | FN | PART NUMBER | YR/SN | QTY | DESCRIPTION |
|---|---|---|---|---|---|
| | | 87342166 | | | PUMP, HYDRAULIC, Brake |
| | | 87364063 | | | KIT, SEALS, Incl. Refs. 9 - 12, 15 - 17 |
| 1 | | NSS | | 1 | NOT SERVICED SEPARATELY, HOUSING |
| 2 | | NSS | | 1 | NOT SERVICED SEPARATELY, HOUSING |
| 3 | | NSS | | 1 | NOT SERVICED SEPARATELY, HOUSING |
| 4 | | NSS | | 1 | NOT SERVICED SEPARATELY, SET GEAR SHAFT |
| 5 | | NSS | | 4 | NOT SERVICED SEPARATELY, CAP SCREW |
| 6 | | NSS | | 2 | NOT SERVICED SEPARATELY, SCREW, DRIVE |
| 7 | | NSS | | 4 | NOT SERVICED SEPARATELY, DOWEL PIN |
| 8 | | NSS | | 1 | NOT SERVICED SEPARATELY, NAME PLATE |
| 9 | | NSS | | 2 | NOT SERVICED SEPARATELY, PLATE, THRUST |
| 10 | | NSS | | 1 | NOT SERVICED SEPARATELY, RING; RETAINER |
| 11 | | NSS | | 1 | NOT SERVICED SEPARATELY, SEAL, O-RING |
| 12 | | NSS | | 2 | NOT SERVICED SEPARATELY, SEAL - SSQUARE |
| 13 | | NSS | | 1 | NOT SERVICED SEPARATELY, SEAL, LIP |
| 14 | | NSS | | 1 | NOT SERVICED SEPARATELY, SEAL, LIP |
| 15 | | NSS | | 2 | NOT SERVICED SEPARATELY, SEAL, CHANNEL |
| 16 | | NSS | | 2 | NOT SERVICED SEPARATELY, SEAL, BACK UP |
| 17 | | NSS | | 1 | NOT SERVICED SEPARATELY, RETAINER SEAL |
| 18 | | NSS | | 4 | NOT SERVICED SEPARATELY, WASHER |

**VALVE ASSY - BRAKE**

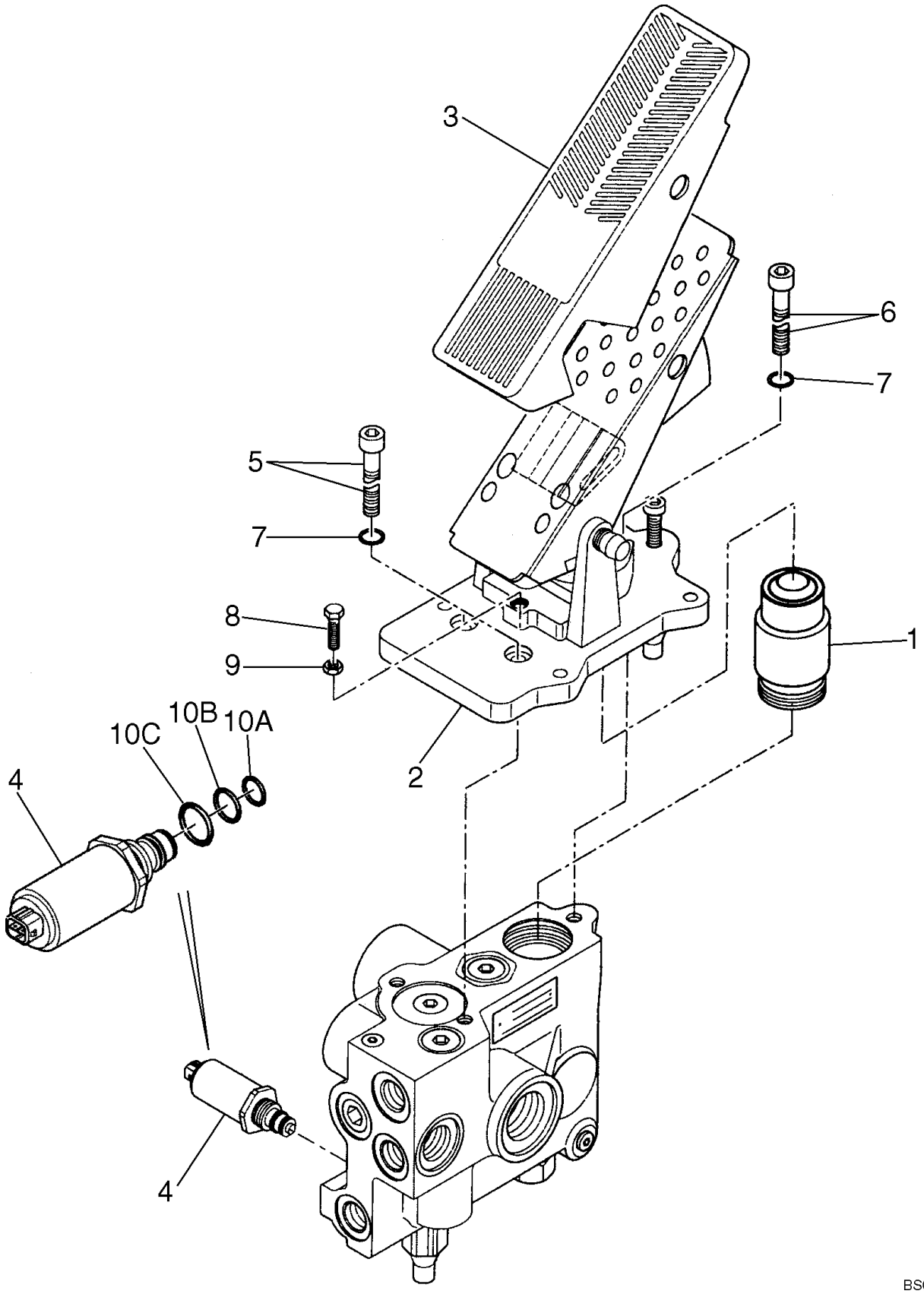

**VALVE ASSY - BRAKE**

| REF | FN | PART NUMBER | YR/SN | QTY | DESCRIPTION |
|---|---|---|---|---|---|
| | | 87360067 | | 1 | VALVE, BRAKE, Incl. Refs. 1 - 10 |
| 1 | | 87398113 | | 1 | ACTUATOR |
| 2 | | 87398114 | | 1 | PEDAL |
| 3 | | 383869A2 | | 1 | PEDAL |
| 4 | | 8604506 | | 1 | CARTRIDGE |
| 5 | | 864-8025 | | 2 | SCREW, Hex Soc Hd, M8 x 25, 8.8 |
| 6 | | 864-8030 | | 1 | SCREW, Hex Soc Hd, M8 x 30, 8.8 |
| 7 | | 892-11008 | | 1 | WASHER, LOCK, M8 |
| 8 | | 827-8060 | | 1 | BOLT, Hex, M8 x 60, 10.9 |
| 9 | | 829-1408 | | 1 | NUT, M8, Cl 10 |
| 10 | | 87398116 | | 1 | KIT, SEALS, Incl. Refs. 10A - 10C |
| 10A | | NSS | | 1 | NOT SERVICED SEPARATELY, O-RING 8.9 x 1.5 |
| 10B | | NSS | | 1 | NOT SERVICED SEPARATELY, O-RING 10.72 x 1.78 |
| 10C | | NSS | | 1 | NOT SERVICED SEPARATELY, O-RING 15 x 2 |

## NOTES

# SECTION INDEX
## Hydraulics


| | |
|---|---|
| 08-01 | HYDRAULIC RESERVOIR - ASSEMBLY |
| 08-01A | HYDRAULICS - OIL COOLER MOUNTING |
| 08-02 | HYDRAULIC RESERVOIR - FILTER |
| 08-02A | HYDRAULICS - FILTER, OIL |
| 08-03 | HYDRAULICS - RESERVOIR TO HYDRAULIC PUMP |
| 08-04 | PUMP ASSY |
| 08-05 | HYDRAULICS - LOADER LIFT AND BUCKET (Z BAR, XR LOADER) |
| 08-06 | HYDRAULICS - LOADER LIFT (XT LOADER) |
| 08-07 | HYDRAULICS - LOADER BUCKET (XT LOADER) - RIGHT SIDE |
| 08-07A | HYDRAULICS - LOADER BUCKET (XT LOADER) - LEFT SIDE |
| 08-08 | HYDRAULICS - LOADER AUXILIARY (Z BAR LOADER) |
| 08-09 | HYDRAULICS - LOADER AUXILIARY (XR LOADER) |
| 08-10 | HYDRAULICS - LOADER AUXILIARY (XT LOADER) |
| 08-11 | HYDRAULICS - COUPLER (Z BAR LOADER) |
| 08-12 | HYDRAULICS - COUPLER (XR LOADER) |
| 08-13 | HYDRAULICS - COUPLER (XT LOADER) |
| 08-14 | HYDRAULICS - COUPLER LOCKING |
| 08-15 | CYLINDER ASSY - LOADER LIFT |
| 08-16 | CYLINDER ASSY - LOADER BUCKET (Z BAR LOADER) |
| 08-17 | CYLINDER ASSY - LOADER BUCKET (XR LOADER) |
| 08-18 | CYLINDER ASSY - LOADER BUCKET (XT LOADER) |
| 08-19 | HYDRAULICS - STANDARD BYPASS |
| 08-19A | HYDRAULICS - COOLER WITHOUT BYPASS |
| 08-19B | HYDRAULICS - THERMAL BYPASS |
| 08-20 | HYDRAULICS - RIDE CONTROL |
| 08-20A | VALVE ASSY - RIDE CONTROL DIRECTIONAL (RSM2-16) |
| 08-21 | HYDRAULICS - NON- RIDE CONTROL |
| 08-22 | HYDRAULICS - FAN DRIVE |
| 08-23 | VALVE, FAN RELIEF - MOUNTING |
| 08-23A | VALVE ASSY - FAN RELIEF |
| 08-24 | VALVE, FAN SPEED AND REVERSER - MOUNTING |
| 08-24A | VALVE ASSY - FAN SPEED AND REVERSER |
| 08-25 | HYDRAULICS - LOADER CONTROL, REMOTE |
| 08-26 | VALVE, CONTROL - MOUNTING, TWO SPOOL - (Z-BAR/XR/XT) |
| 08-26A | VALVE, CONTROL - MOUNTING, THREE SPOOL - (Z-BAR/XR/XT) |
| 08-26B | VALVE, CONTROL - MOUNTING, FOUR SPOOL - (Z-BAR/XR/XT) |
| 08-27 | VALVE ASSY - LOADER CONTROL - TWO, THREE, FOUR SPOOL - (Z-BAR/XR) |
| 08-27A | VALVE ASSY - PISTON AXIS - (Z-BAR/XR) |
| 08-27B | VALVE ASSY - LOADER CONTROL -VALVE SECTION - (Z-BAR/XR) |
| 08-28 | VALVE ASSY - LOADER CONTROL - TWO, THREE, FOUR SPOOL - (XT) |
| 08-28A | VALVE ASSY - PISTON AXIS - (XT) |
| 08-28B | VALVE ASSY - LOADER CONTROL - VALVE SECTION - (XT) |
| 08-29 | LOADER CONTROL - JOYSTICK CONTROL MOUNTING |
| 08-29A | VALVE ASSY - JOYSTICK CONTROL |
| 08-29B | VALVE ASSY - JOYSTICK CONTROL |
| 08-30 | LOADER CONTROL - JOYSTICK WITH SINGLE LEVER MOUNTING |
| 08-30A | VALVE ASSY - JOYSTICK WITH SINGLE LEVER |
| 08-31 | LOADER CONTROL - JOYSTICK WITH DUAL LEVER MOUNTING |
| 08-31A | VALVE ASSY - JOYSTICK WITH DUAL LEVER |
| 08-32 | LOADER CONTROL - THREE LEVER MOUNTING |
| 08-32A | VALVE ASSY - 3 LEVER LOADER CONTROL |

08-33 BLOCK MOUNTING - COUPLER, 3 SPOOL HOSES

## NOTES

**HYDRAULIC RESERVOIR - ASSEMBLY**

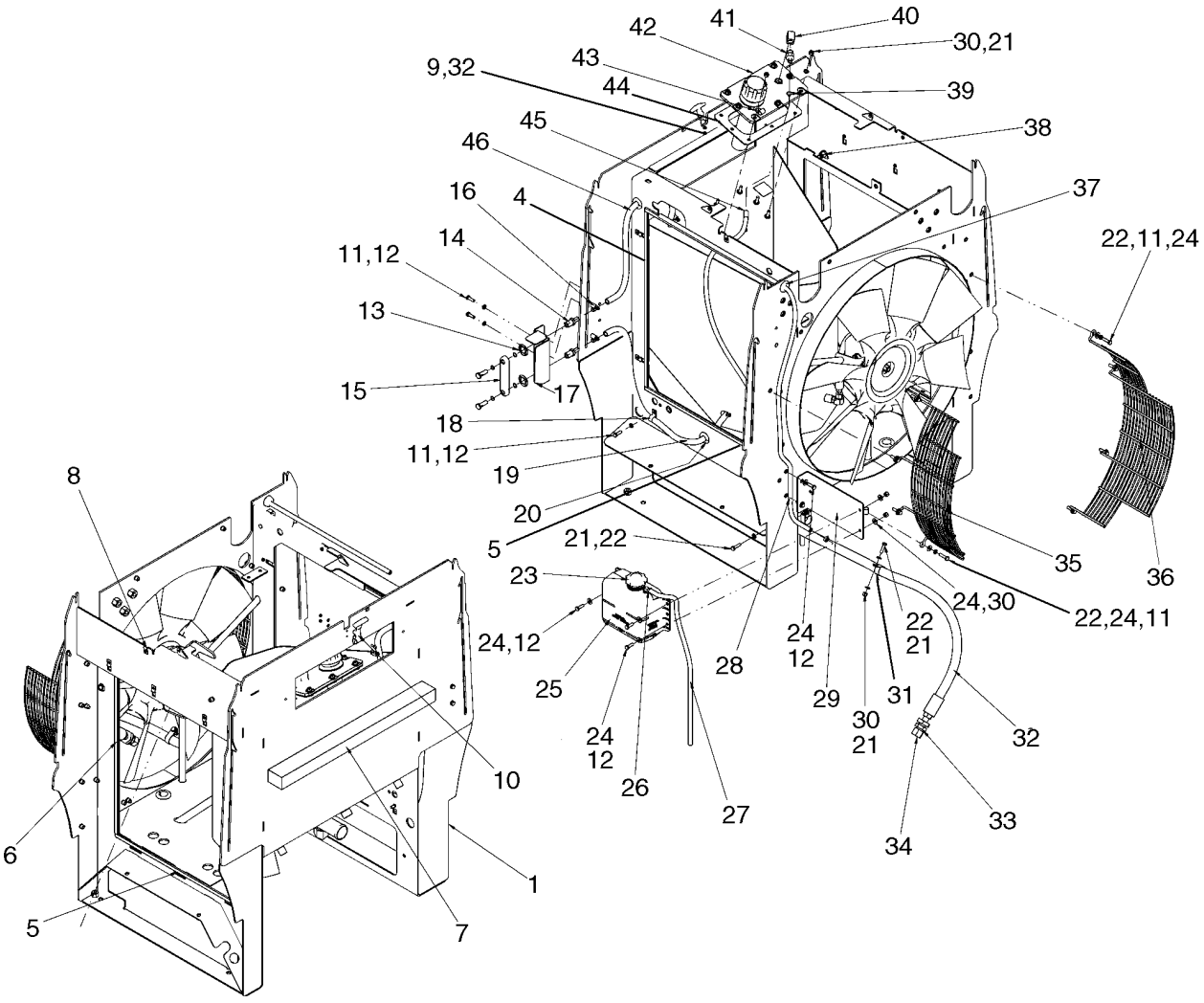

**HYDRAULIC RESERVOIR - ASSEMBLY**

| REF | FN | PART NUMBER | YR/SN | QTY | DESCRIPTION |
|---|---|---|---|---|---|
| 1 | | 87598730 | | 1 | FRAME, Cooling |
| 2 | | 895-11005 | | 2 | WASHER, M5 x 10 x 1 |
| 3 | | 824-1405 | | 2 | NUT, M5, Cl 5 |
| 4 | | 8500136 | | 2 | SEAL, 725 mm (28-9/16 in); Cut From 198573C2 Bulk; Radiator Side |
| 5 | | 87312068 | | 4 | SEAL, 630 mm (24-13/16 in); Cut From 198573C2 Bulk; Oil Cooler Header |
| 6 | | 8500133 | | 2 | SEAL, 698 mm (27-1/2 in); Cut From 198573C2 Bulk; Oil Cooler Side |
| 7 | | 8500206 | | 1 | SEAL, Cooler |
| 8 | | 833-40408 | | 10 | NUT, M8, U |
| 9 | | 864-5016 | | 2 | SCREW, Hex Soc Hd, M5 x 16, 8.8 |
| 10 | | 384774A1 | | 1 | LATCH |
| 11 | | 892-11008 | | 11 | WASHER, LOCK, M8 |
| 12 | | 627-8025 | | 8 | BOLT, Hex, M8 x 25, 10.9 |
| 13 | | 131-141 | | 2 | NUT, .74", Push-on |
| 14 | | L125836 | | 2 | FITTING |
| 15 | | 86988366 | | 1 | SIGHTGLASS, Oil Level |
| 16 | | 214-1406 | | 4 | CLAMP, HOSE, #06, .44/.78 Type F Worm |
| 17 | | 87536075 | | 1 | BRACKET, Sight Gauge |
| 18 | | 515-22190 | | 1 | CLAMP, 3/4", Insul, 5/16" Bolt |
| 19 | | 8500165 | | 1 | HOSE, Sight Gauge; 1800 mm (70-7/8 in) |
| 20 | | 198826C1 | | 2 | GROMMET |
| 21 | | 895-11008 | | 11 | WASHER, M8 x 16 x 1.6 |
| 22 | | 627-8030 | | 10 | BOLT, Hex, M8 x 30, 10.9 |
| 23 | | 1547924C1 | | 1 | CAP, Reservoir |
| 24 | | 895-15008 | | 16 | WASHER, M8 x 20 x 1.6 |
| 25 | | A184395 | | 1 | RESERVOIR, Coolant; Not Serviced With Cap, Order Seperately |
| 26 | | A171099 | | 3 | CLAMP, HOSE |
| 27 | | 87541330 | | 1 | HOSE (METRES), Reservoir Drain; 695mm (27-1/3 in) |
| 28 | | 307149A1 | | 1 | HOSE (METRES), Recovery; 1676 mm (66 in) |
| 29 | | 87585139 | | 1 | PLATE, BASE, Coolant Overflow |
| 30 | | 832-10408 | | 13 | NUT, LOCK, M8 x 1.25, Cl 8 |

**HYDRAULIC RESERVOIR - ASSEMBLY**

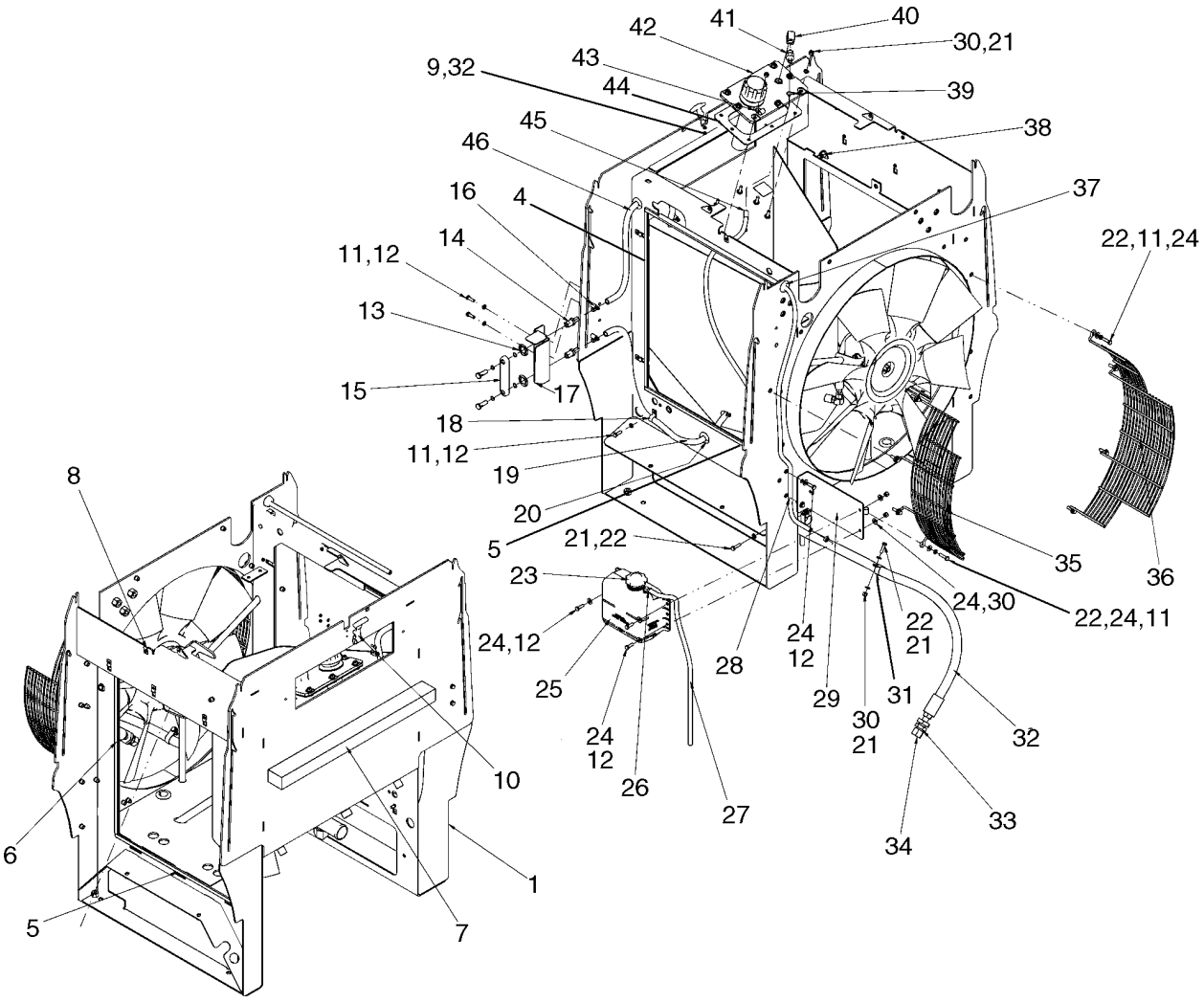

**HYDRAULIC RESERVOIR - ASSEMBLY**

| REF | FN | PART NUMBER | YR/SN | QTY | DESCRIPTION |
|---|---|---|---|---|---|
| 31 | | 515-23317 | | 2 | CLAMP, 1 1/4", Insul, 3/8" Bolt |
| 32 | | 87323556 | | 1 | HOSE ASSY., Hydraulic Drain; 1610 mm (63 - 3/8 in) |
| 33 | | 218-1256 | | 1 | NUT, LOCK, Blkhd, 1 1/16"-12 |
| 34 | | 218-335 | | 1 | CAP, 37º, 1 1/16"-12 |
| 35 | | 87347864 | | 1 | GUARD, Fan |
| 36 | | 87347865 | | 1 | GUARD, Fan |
| 37 | | 198824C1 | | 1 | GROMMET |
| 38 | | 350662A1 | | 1 | STUD |
| 39 | | 214-1704 | | 1 | CLAMP, HOSE, #4, 0.25/0.62 Type M Worm |
| 40 | | 86521965 | | 1 | ELBOW, 90º, 3/8"-18 Female x 3/8"-18 Male |
| 41 | | 8606006 | | 1 | VALVE, CHECK |
| 42 | | 8606005 | | 1 | CAP ASSY. |
| 43 | | 515-23143 | | 2 | CLAMP, 9/16", Insul, 3/8" Bolt |
| 44 | | 379587A2 | | 1 | GASKET |
| 45 | | 31-2940 | | 1 | HOSE, Breather, Hydraulic Tank; 55 mm (2-3/16 in) |
| 46 | | 8500164 | | 1 | HOSE, Sight Guage, Upper; 710 mm (27-15/16 in) |
| 47 | | 8500186 | | 2 | GROMMET |

**HYDRAULICS - OIL COOLER MOUNTING**

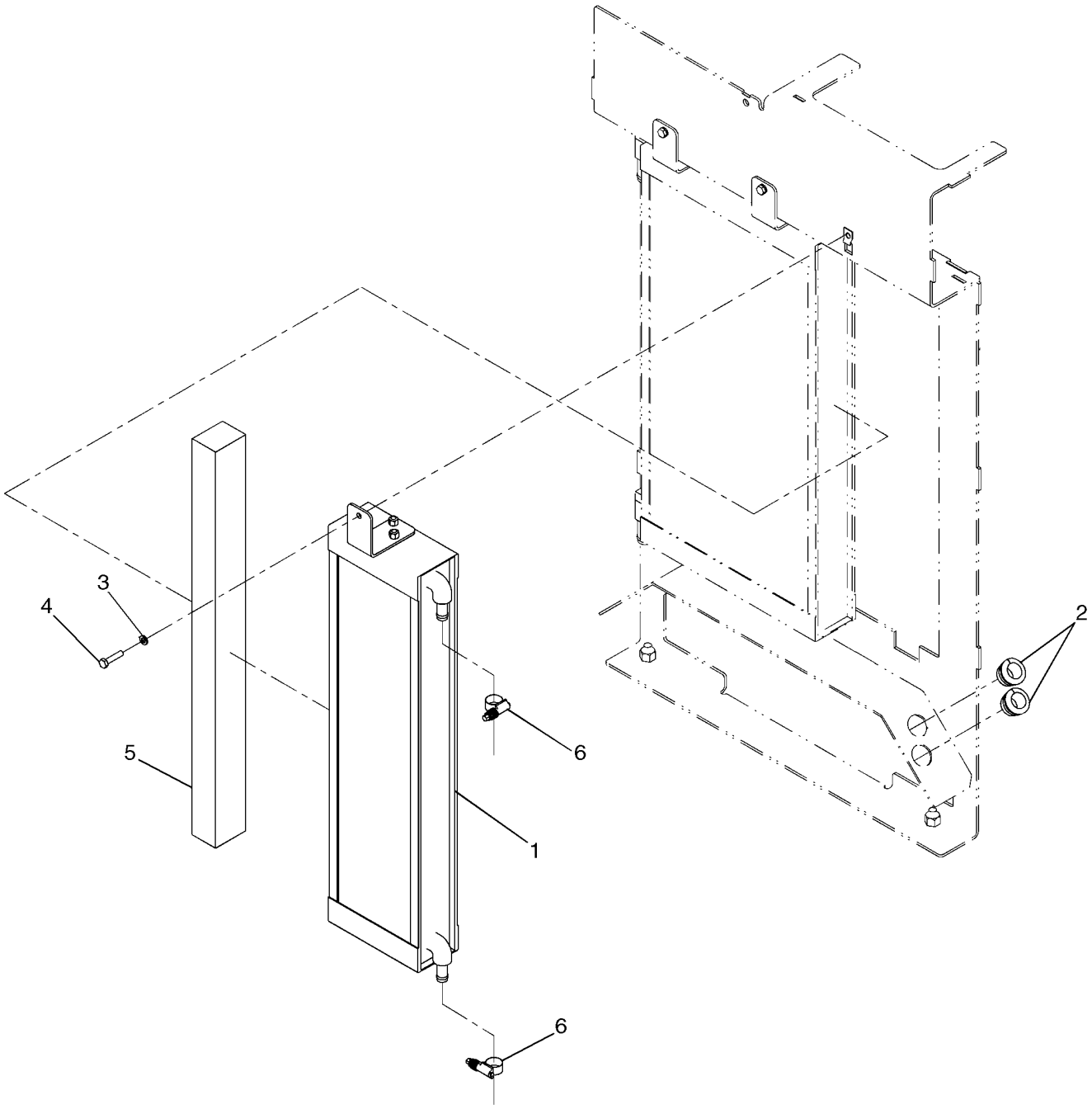

**HYDRAULICS - OIL COOLER MOUNTING**

| REF | FN | PART NUMBER | YR/SN | QTY | DESCRIPTION |
|---|---|---|---|---|---|
| 1 | | 8501296 | | 1 | COOLER, OIL, Hydraulic |
| 2 | | 198828C1 | | 1 | GROMMET |
| 3 | | 892-11008 | | 4 | WASHER, LOCK, M8 |
| 4 | | 627-8035 | | 4 | BOLT, Hex, M8 x 35, 10.9 |
| 5 | | 8500206 | | 1 | SEAL, Oil Cooler |
| 6 | | 328186A1 | | 2 | CLAMP, HOSE |

**HYDRAULIC RESERVOIR - FILTER**

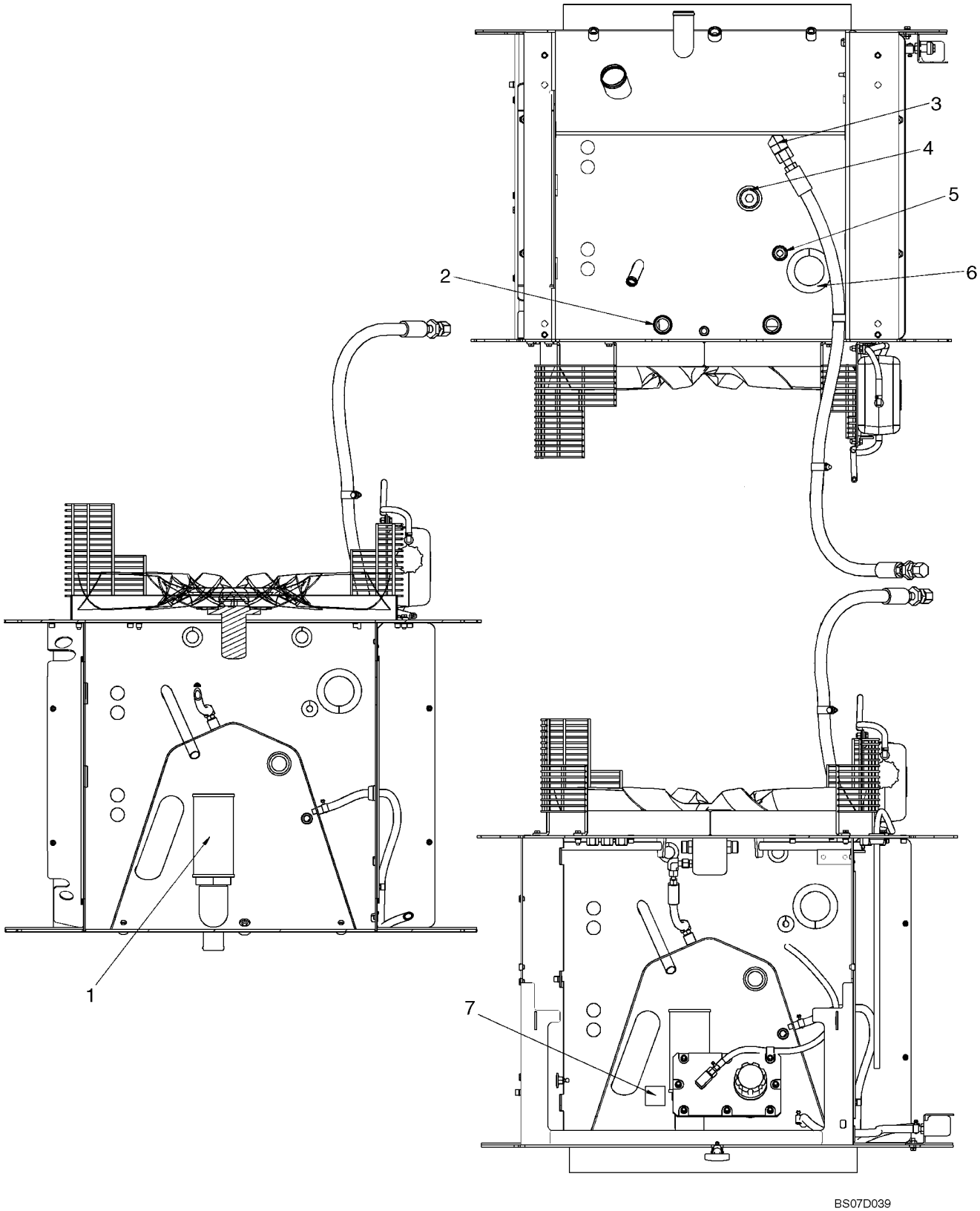

**HYDRAULIC RESERVOIR - FILTER**

| REF | FN | PART NUMBER | YR/SN | QTY | DESCRIPTION |
|---|---|---|---|---|---|
| 1 | | L128515 | | 1 | STRAINER, ELEMENT, Hydraulic Tank |
| 2 | | 8500186 | | 2 | GROMMET |
| 3 | | 86579697 | | 1 | ELBOW, 90º, 1 3/16"-12 ORFS x M27 x 2 ORB, Incl. Refs. 3A, 3B |
| 3A | | 238-6018 | | 1 | O-RING, -018, 90 Duro, .739" ID x .070" Thk, Face Seal, Not Illustrated |
| 3B | | 637-64236 | | 1 | O-RING, Cl 6, 23.6MM ID x 2.9 Thk, Boss Seal, Not Illustrated |
| 4 | | 217-445 | | 1 | PLUG, Hex Soc, 1 1/4"-11 1/2 NPTF |
| 5 | | 198825C1 | | 1 | GROMMET |
| 6 | | 8500167 | | 1 | SEAL |
| 7 | | 395895A1 | | 1 | DECAL, Hydraulic Oil |

**HYDRAULICS - FILTER, OIL**

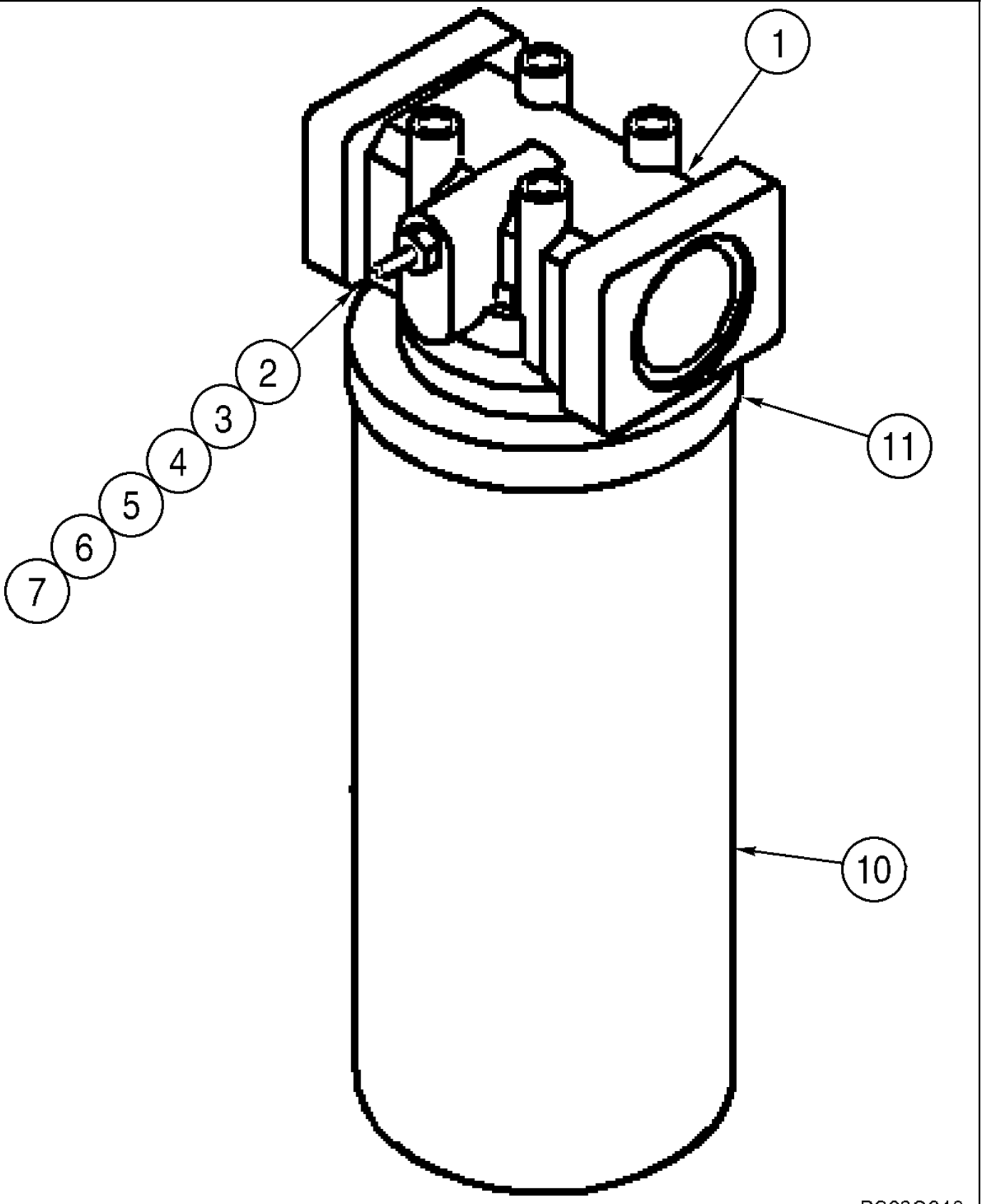

**HYDRAULICS - FILTER, OIL**

| REF | FN | PART NUMBER | YR/SN | QTY | DESCRIPTION |
|---|---|---|---|---|---|
| | | 87308929 | | 1 | FILTER ASSY., With Reverse Flow; Models With Ride Control; Incl. 1 - 11 |
| | | 87308928 | | 1 | FILTER ASSY., Without Reverse Flow: Models Without Ride Control, Incl 1 - 11 |
| 1 | | NSS | | 1 | NOT SERVICED SEPARATELY, Head |
| | | 8604802 | | 1 | SWITCH, PRESSURE, Incl. 2 - 7 |
| 2 | | NSS | | 1 | NOT SERVICED SEPARATELY, Indicator |
| 3 | | NSS | | 1 | NOT SERVICED SEPARATELY, Washer, Special; Red/White |
| 4 | | 129-667 | | 2 | NUT, #10-32, LH |
| 5 | | 493-21020 | | 1 | WASHER, LOCK, Int Tooth, #10, 3/16 |
| 6 | | 237-6006 | | 1 | O-RING, 6-1, 90 Duro, .468" ID x .078" Thk |
| 7 | | 238-5011 | | 1 | O-RING, -011, 70 Duro, .301" ID x .070" Thk |
| 10 | | 87308933 | | 1 | FILTER, HYDRAULIC OIL, For Models With Or Without Ride Control; Incl. 10A |
| 11 | | NSS | | 1 | NOT SERVICED SEPARATELY, O-RING |

**HYDRAULICS - RESERVOIR TO HYDRAULIC PUMP**

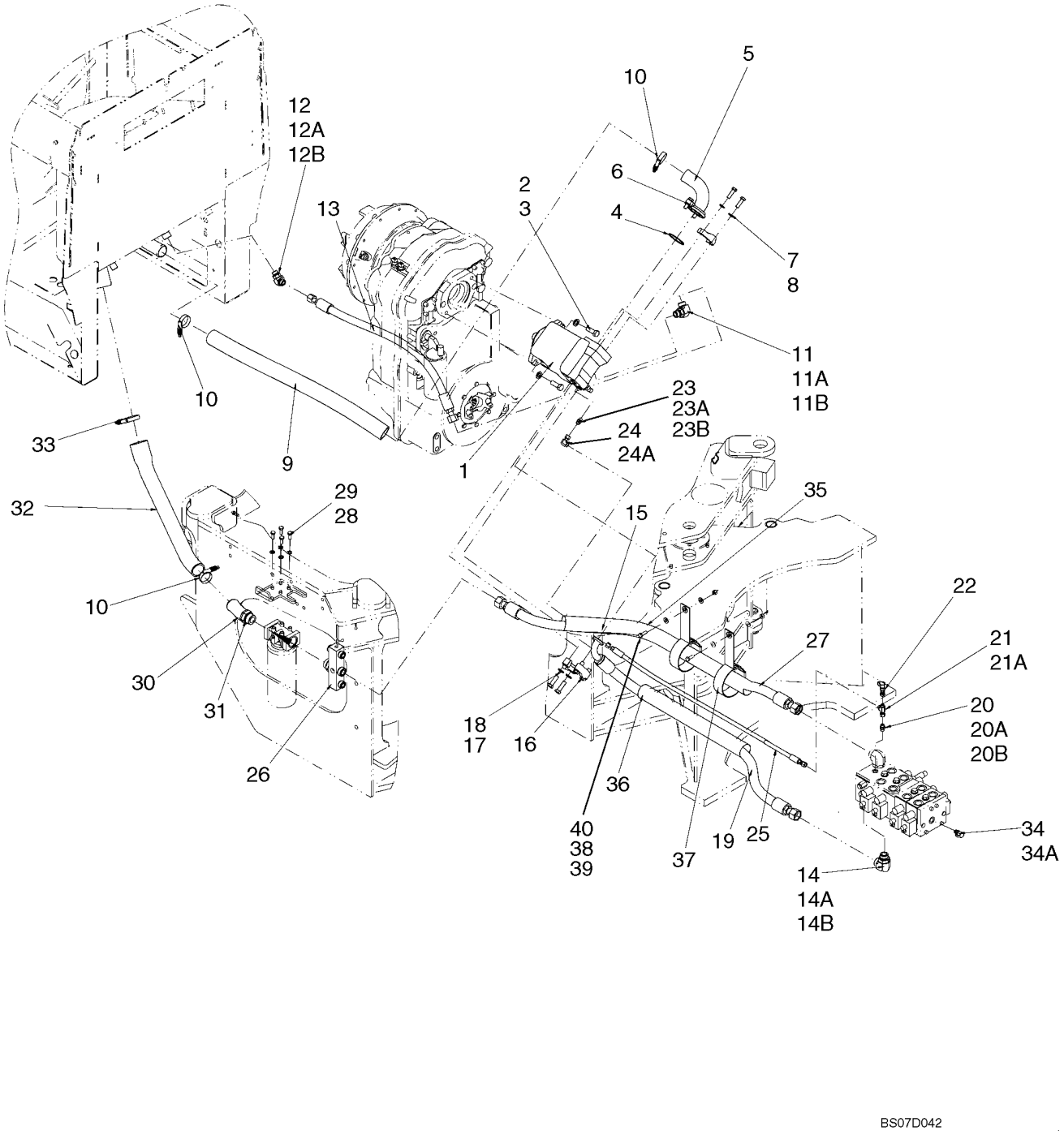

**HYDRAULICS - RESERVOIR TO HYDRAULIC PUMP**

| REF | FN | PART NUMBER | YR/SN | QTY | DESCRIPTION |
|---|---|---|---|---|---|
| | | REF | | | INSTRUCTION, RESERVOIR TO PUMP AND LOADER CONTROL VALVE |
| 1 | | 377608A1 | | 1 | PUMP, See Figure 08-04 |
| 2 | | 896-11016 | | 2 | WASHER, M17.5 x 30 x 4, HT |
| 3 | | 627-16045 | | 2 | BOLT, Hex, M16 x 45, 10.9 |
| 4 | | 238-5232 | | 1 | O-RING, -232, 70 Duro, 2.734" ID x .139" Thk |
| 5 | | 388509A1 | | 1 | TUBE ASSY., Pump Suction |
| 6 | | L14386 | | 2 | CLAMP |
| 7 | | 895-11012 | | 4 | WASHER, M12 x 24 x 2.5 |
| 8 | | 627-12040 | | 4 | BOLT, Hex, M12 x 40, 10.9, Full Thd |
| 9 | | 388556A1 | | 1 | HOSE ASSY., Suction, Reservoir To Pump Inlet; 860 mm (33-7/8 in) |
| 10 | | 254026A1 | | 3 | CLAMP, Constant Torque |
| 11 | | 86579697 | | 1 | ELBOW, 90º, 1 3/16"-12 ORFS x M27 x 2 ORB, Incl. Refs. 11A, 11B |
| 11A | | 637-64236 | | 1 | O-RING, Cl 6, 23.6MM ID x 2.9 Thk, Boss |
| 11B | | 238-6018 | | 1 | O-RING, -018, 90 Duro, .739" ID x .070" Thk, Face Seal |
| 12 | | 86639053 | | 1 | ELBOW, 45º, 1"-14 ORFS x M22 x 1.5 ORB, Incl. Refs. 12A, 12B |
| 12A | | 238-6016 | | 1 | O-RING, -016, 90 Duro, .614" ID x .070" Thk, Face Seal |
| 12B | | 637-63193 | | 1 | O-RING, Cl 6, 19.3MM ID x 2.2 Thk, Boss |
| 13 | | 87629991 | | 1 | HOSE, Case Drain; 838 mm (33 in) |
| 14 | | 86580180 | | 1 | ELBOW, 90º, 1 7/16"-12 ORFS x M33 x 2 ORB, Incl. Refs. 14A, 14B |
| 14A | | 238-6021 | | 1 | O-RING, -021, 90 Duro, .926" ID x .070" Thk, Face Seal |
| 14B | | 637-64296 | | 1 | O-RING, Cl 6, 29.6MM ID x 2.9 Thk, Boss |
| 15 | | 238-6222 | | 1 | O-RING, -222, 90 Duro, 1.484" ID x .139" Thk |
| 16 | | 86985567 | | 2 | FLANGE |
| 17 | | 895-11014 | | 4 | WASHER, M14 x 28 x 2.5 |
| 18 | | 627-14045 | | 4 | BOLT, Hex, M14 x 45, 10.9, Full Thd |
| 19 | | 388555A2 | | 1 | HOSE ASSY., 1337 mm (52-5/8 in); Pressure |

**HYDRAULICS - RESERVOIR TO HYDRAULIC PUMP**

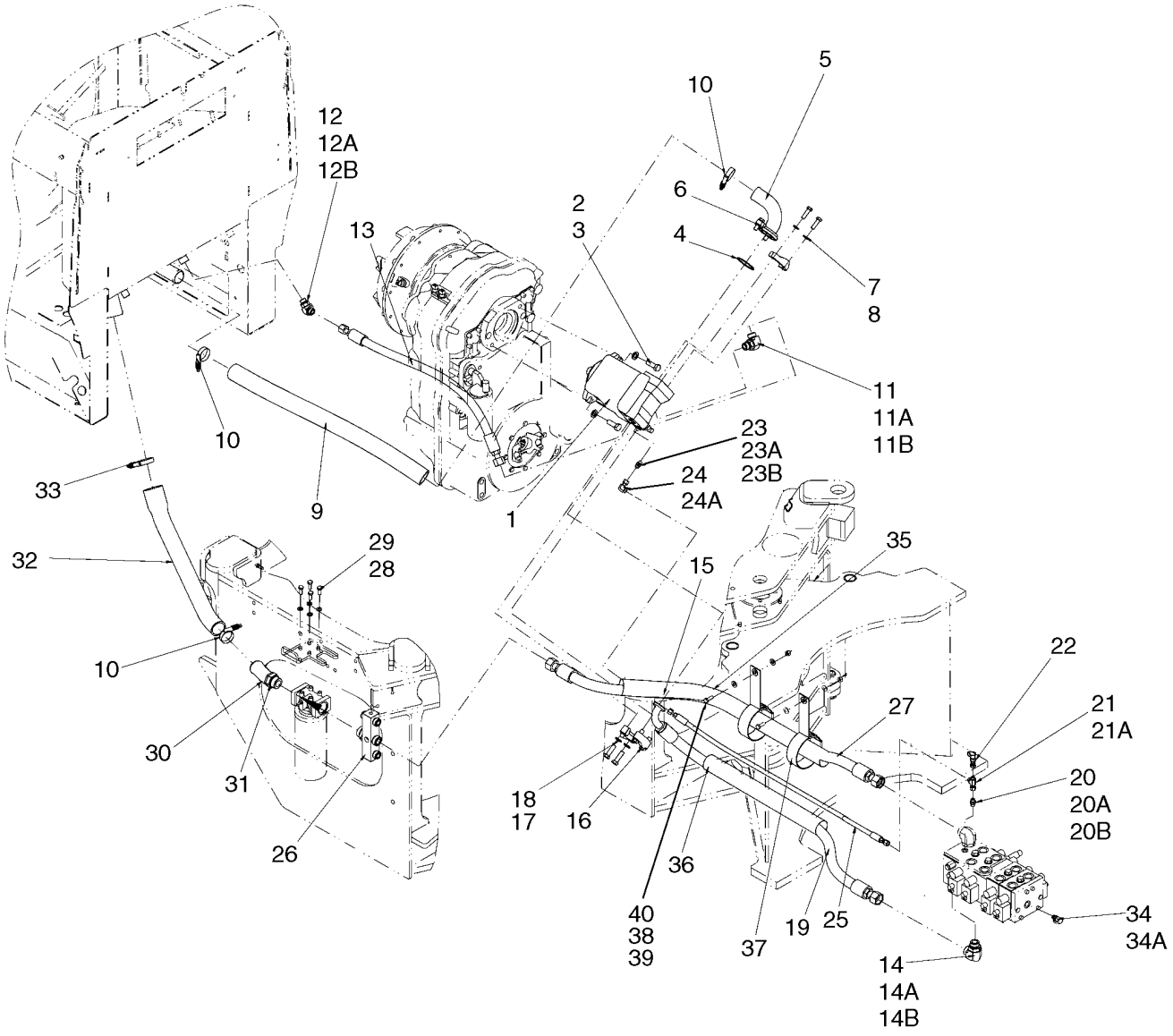


BS07D042

**HYDRAULICS - RESERVOIR TO HYDRAULIC PUMP**

| REF | FN | PART NUMBER | YR/SN | QTY | DESCRIPTION |
|---|---|---|---|---|---|
| 20 | | 700-153 | | 1 | CONNECTOR, HYD., 9/16"-18 ORFS x M14 x 1.5 ORB, Incl. Refs. 20A, 20B |
| 20A | | 238-6011 | | 1 | O-RING, -011, 90 Duro, .301" ID x .070" Thk, Face Seal |
| 20B | | 637-63113 | | 1 | O-RING, Cl 6, 11.3MM ID x 2.2 Thk, Boss |
| 21 | | 701-421 | | 1 | TEE, 9/16"-18 ORFS x 9/16"-18 Fem Sw Run, Incl. Ref. 21A |
| 21A | | 238-6011 | | 2 | O-RING, -011, 90 Duro, .301" ID x .070" Thk, Face Seal |
| 22 | | 190117A1 | | 1 | COUPLING |
| 23 | | 86593173 | | 1 | CONNECTOR, HYD., 9/16"-18 ORFS x M12 x 1.5 ORB, Incl. Refs. 23A, 23B |
| 23A | | 238-6011 | | 1 | O-RING, -011, 90 Duro, .301" ID x .070" Thk, Face Seal |
| 23B | | 637-63093 | | 1 | O-RING, Cl 6, 9.3MM ID x 2.2 Thk, Boss |
| 24 | | 84989411 | | 1 | ELBOW, 90º, 9/16"-18 ORFS x 9/16"-18 Fem Sw, Incl. Refs. 24A |
| 24A | | 238-6011 | | 1 | O-RING, -011, 90 Duro, .301" ID x .070" Thk, Face Seal |
| 25 | | 388558A1 | | 1 | HOSE ASSY., Load Sensing; 1327 mm (52-1/4 in) |
| 26 | | 87577181 | | 1 | MANIFOLD VALVE, Filter |
| 27 | | 365516A2 | | 1 | HOSE ASSY., Valve Return; 1613 mm (63 - 1/2 in) |
| 28 | | 895-11010 | | 4 | WASHER, M10 x 20 x 2 |
| 29 | | 637-63193 | | 4 | O-RING, Cl 6, 19.3MM ID x 2.2 Thk, Boss |
| 30 | | 390208A2 | | 1 | ADAPTER |
| 31 | | 637-64386 | | 1 | O-RING, Cl 6, 38.6MM ID x 2.9 Thk |
| 32 | | 87629990 | | 1 | HOSE, Filter Return; 561mm (22 - 3/32in) |
| 33 | | L115548 | | 1 | CLAMP |
| 34 | | 178889A1 | | 1 | FITTING, Diagnostic; Incl. Ref. 34A |
| 34A | | 637-63113 | | 1 | O-RING, Cl 6, 11.3MM ID x 2.2 Thk |
| 35 | | 401526A1 | | 1 | HOSE, PROTECTION, 60 x 1200 mm |
| 36 | | 401525A1 | | 1 | HOSE, PROTECTION, 60 x 600 mm |
| 37 | | 401527A2 | | 2 | STRAP, Articulation Hoses |
| 38 | | 895-15010 | | 2 | WASHER, M11 x 24 x 2 |
| 39 | | 627-10030 | | 1 | BOLT, Hex, M10 x 30, 10.9, Full Thd |

## HYDRAULICS - RESERVOIR TO HYDRAULIC PUMP

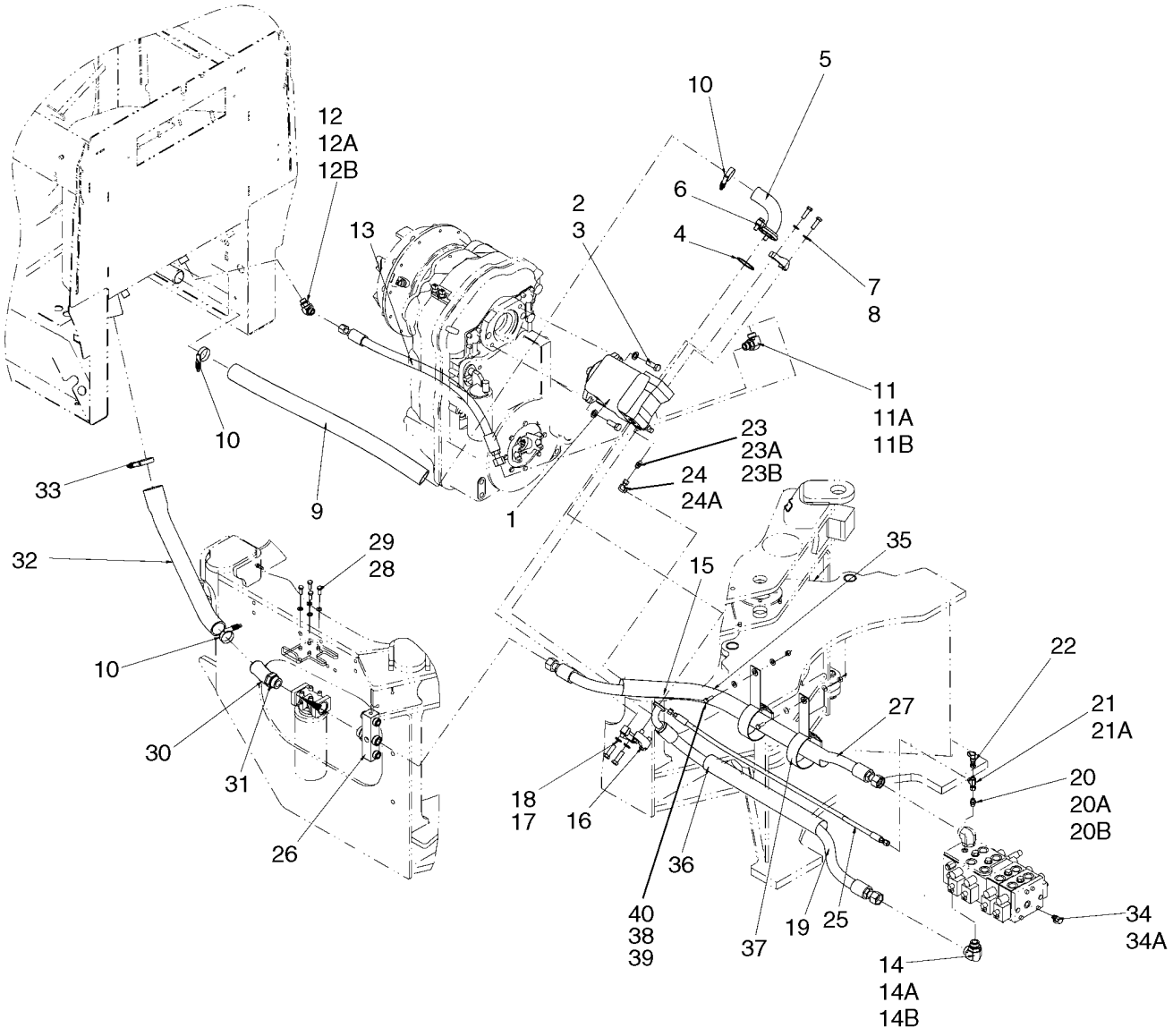

**HYDRAULICS - RESERVOIR TO HYDRAULIC PUMP**

| REF | FN | PART NUMBER | YR/SN | QTY | DESCRIPTION |
|---|---|---|---|---|---|
| 40 | | 832-10410 | | 1 | NUT, LOCK, M10 x 1.5, Cl 8 |

**PUMP ASSY**

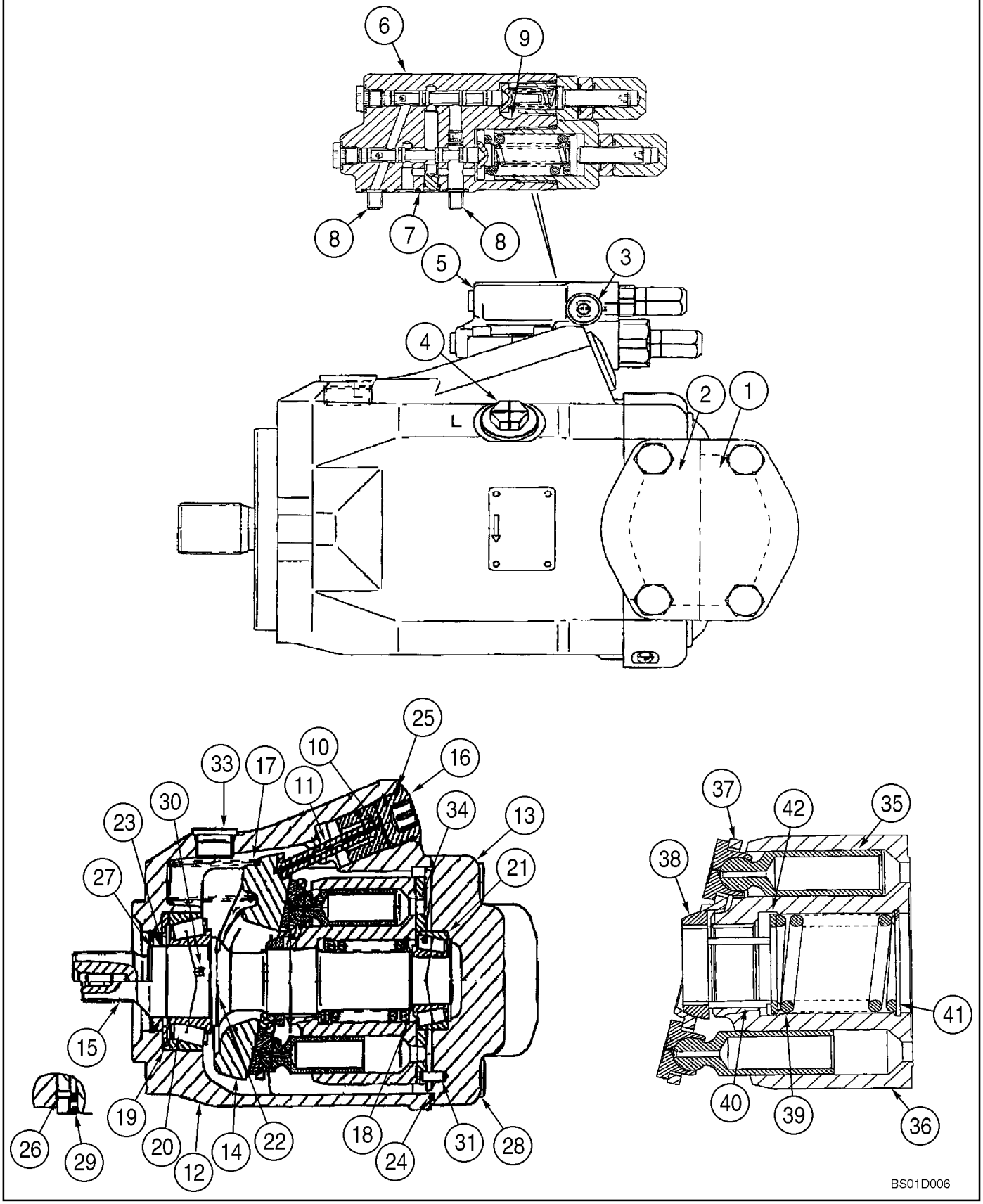
6
9
8
7
8
5
3
4
2
1
25
16
10
33
17
11
30
23
34
13
27
21
15
19
20
12
14
22
18
24
31
28
26
29
37
42
35
38
41
40
39
36
BS01D006

**PUMP ASSY**

| REF | FN | PART NUMBER | YR/SN | QTY | DESCRIPTION |
|---|---|---|---|---|---|
| | | 377608A1 | | 1 | PUMP, Main Hydraulic, Incl. Refs. 1 - 42 |
| 1 | | 8605005 | | 1 | COVER, Flange |
| 2 | | 8605006 | | 1 | COVER, Flange |
| 3 | | 8604962 | | 1 | SCREW |
| 4 | | 8605008 | | 1 | PLUG, Seal |
| 5 | | 8604960 | | 1 | VALVE, HYDRAULIC, Pilot; Incl. 6 - 9 |
| 6 | | 8602844 | | 1 | VALVE, HYDRAULIC, Pilot Body |
| 7 | | 8604965 | | 3 | O-RING, 7,65 x 1,78 |
| 8 | | 8604964 | | 4 | SCREW, M6 x 30; 10,9 |
| 9 | | 8604963 | | 1 | PLUG, M12 x 1,5 |
| 10 | | 8605010 | | 1 | PISTON, Control |
| 11 | | 8605011 | | 1 | ROD, Piston |
| 12 | | NSS | | 1 | NOT SERVICED SEPARATELY, Housing |
| 13 | | 8605012 | | 1 | PLATE, Port |
| 14 | | 8605013 | | 1 | PLATE, Swash |
| 15 | | 8605014 | | 1 | SHAFT, Drive |
| 16 | | 8605015 | | 11 | PLUG, Pump |
| 17 | | 8605016 | | 1 | SPRING, Pump |
| 18 | | 8605017 | | 1 | SHIM |
| 19 | | 8605018 | | 1 | RING, Stop |
| 20 | | 8605019 | | 1 | BEARING, ROLLER |
| 21 | | 8605020 | | 1 | BEARING, ROLLER |
| 22 | | 8605021 | | 2 | SHELL, Cradle |
| 23 | | 8605022 | | 1 | SEAL |
| 24 | | 8605023 | | 1 | O-RING |
| 25 | | 8605024 | | 1 | O-RING |
| 26 | | 8605025 | | 2 | O-RING |
| 27 | | 8605026 | | 1 | RING |
| 28 | | 8605027 | | 4 | PLUG |
| 29 | | 8604958 | | 3 | PLUG, Tear-Off |
| 30 | | 8605029 | | 1 | ORIFICE |
| 31 | | 8605030 | | 1 | PIN, Dowel |
| 32 | | 8605031 | | 1 | PLUG, Not Illustrated |
| 33 | | 8604959 | | 2 | SCREW, Countersink |
| 34 | | 8605033 | | 1 | PLATE |

**PUMP ASSY**

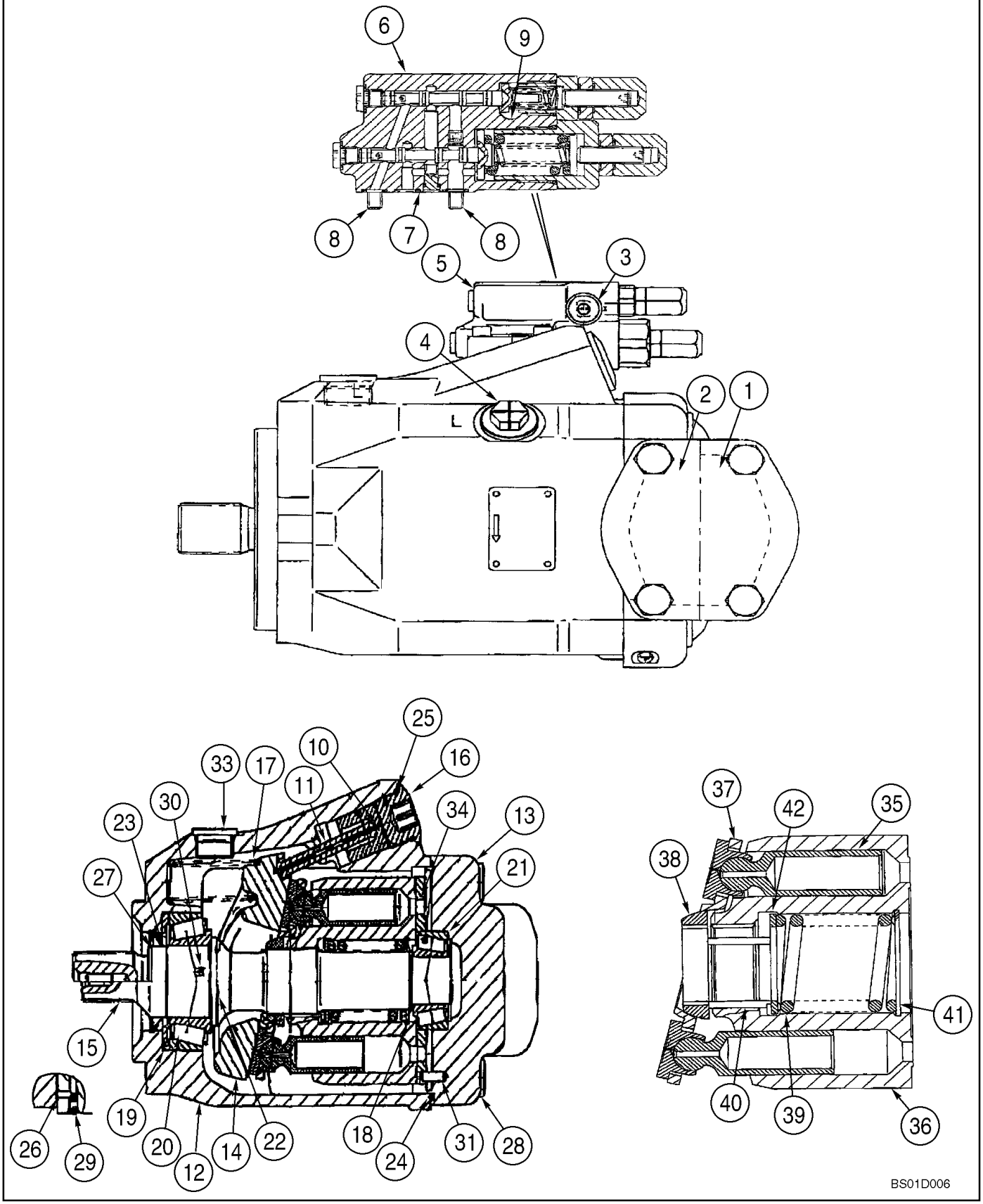
6
9
8
7
8
5
3
4
2
1
25
16
10
33
17
11
30
23
34
13
27
21
15
19
20
12
14
22
18
24
31
28
26
29
37
42
35
38
41
40
39
36
BS01D006

**PUMP ASSY**

| REF | FN | PART NUMBER | YR/SN | QTY | DESCRIPTION |
|---|---|---|---|---|---|
| 35 | | 8605034 | | 9 | PISTON |
| 36 | | 8605218 | | 1 | BARREL |
| 37 | | 8605036 | | 1 | PLATE, Retaining |
| 38 | | 8605037 | | 1 | BALL RACE, Retaining |
| 39 | | 8605038 | | 1 | SPRING |
| 40 | | 8605039 | | 3 | PIN, Press |
| 41 | | 8605040 | | 1 | RING, Seeger |
| 42 | | 8605041 | | 2 | RING, Thrust |

## HYDRAULICS - LOADER LIFT AND BUCKET (Z BAR, XR LOADER)

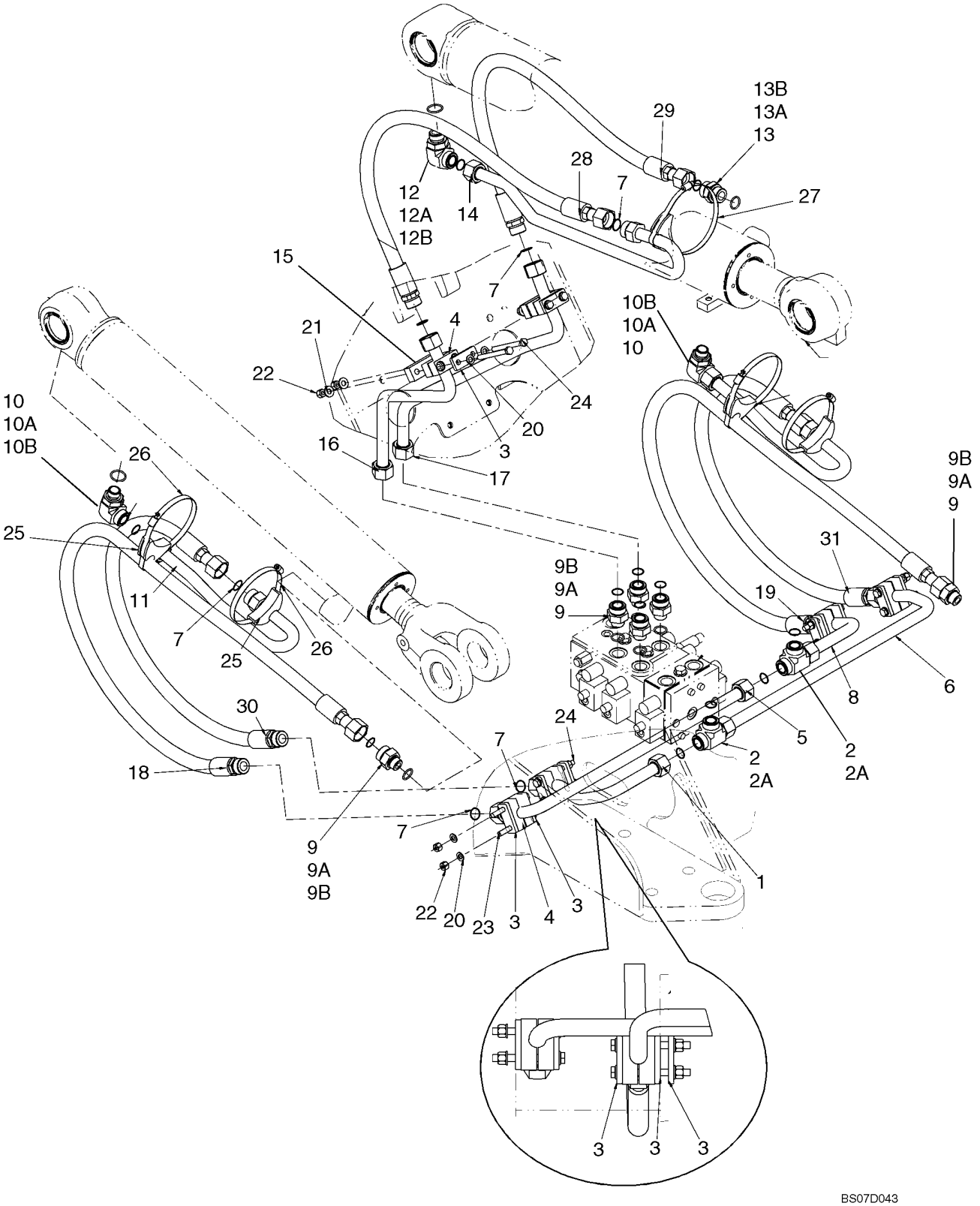

**HYDRAULICS - LOADER LIFT AND BUCKET (Z BAR, XR LOADER)**

| REF | FN | PART NUMBER | YR/SN | QTY | DESCRIPTION |
|---|---|---|---|---|---|
| | | REF | | | INSTRUCTION, Z-BAR LOADER, XR LOADER |
| 1 | | 87389172 | | 1 | TUBE, HYD, Lift Head End, RH |
| 2 | | 87016914 | | 2 | TEE, 1 7/16"-12 ORFS, Incl. Ref. 2A |
| 2A | | 238-6021 | | 3 | O-RING, -021, 90 Duro, .926" ID x .070" Thk, Face Seal |
| 3 | | 367658A1 | | 12 | PLATE, Clamp Cover |
| 4 | | 367489A1 | | 6 | BLOCK, Tube Mounting |
| 5 | | 8606100 | | 1 | TUBE ASSY., Lift Rod End, RH |
| 6 | | 8606092 | | 1 | TUBE ASSY., Lift Head End, LH |
| 7 | | 238-6012 | | 9 | O-RING, -012, 90 Duro, .364" ID x .070" Thk |
| 8 | | 8606098 | | 1 | TUBE ASSY., Lift Rod End, LH |
| 9 | | 86639051 | | 6 | CONNECTOR, HYD., 1 7/16"-12 ORFS x M27 x 1.5 ORB, Incl. Refs 9A, 9B |
| 9A | | 238-6021 | | 1 | O-RING, -021, 90 Duro, .926" ID x .070" Thk, Face Seal |
| 9B | | 637-64236 | | 1 | O-RING, Cl 6, 23.6MM ID x 2.9 Thk, Boss |
| 10 | | 87010650 | | 2 | ELBOW, 90º, 1 7/16"-12 ORFS x M27 x 2 ORB, Incl. Refs. 10A, 10B |
| 10A | | 238-6021 | | 1 | O-RING, -021, 90 Duro, .926" ID x .070" Thk, Face Seal |
| 10B | | 637-64236 | | 1 | O-RING, Cl 6, 23.6MM ID x 2.9 Thk, Boss |
| 11 | | 86983366 | | 2 | TUBE, Lift Cylinder |
| 12 | | 86580180 | | 1 | ELBOW, 90º, 1 7/16"-12 ORFS x M33 x 2 ORB, Incl. Refs. 12A, 12B |
| 12A | | 637-64296 | | 1 | O-RING, Cl 6, 29.6MM ID x 2.9 Thk, Boss |
| 12B | | 238-6021 | | 1 | O-RING, -021, 90 Duro, .926" ID x .070" Thk, Face Seal |
| 13 | | 86580179 | | 1 | CONNECTOR, HYD., 1 7/16"-12 ORFS x M22 x 2 ORB, Incl. Refs. 13A, 13B |
| 13A | | 238-6021 | | 1 | O-RING, -021, 90 Duro, .926" ID x .070" Thk, Face Seal |
| 13B | | 637-64296 | | 1 | O-RING, Cl 6, 29.6MM ID x 2.9 Thk, Boss |
| 14 | | 8605367 | | 1 | TUBE ASSY., Tilt Cylinder |
| 15 | | 87324906 | | 2 | SPACER |
| 16 | | 389049A1 | | 1 | TUBE ASSY., Tilt Head End |

**HYDRAULICS - LOADER LIFT AND BUCKET (Z BAR, XR LOADER)**

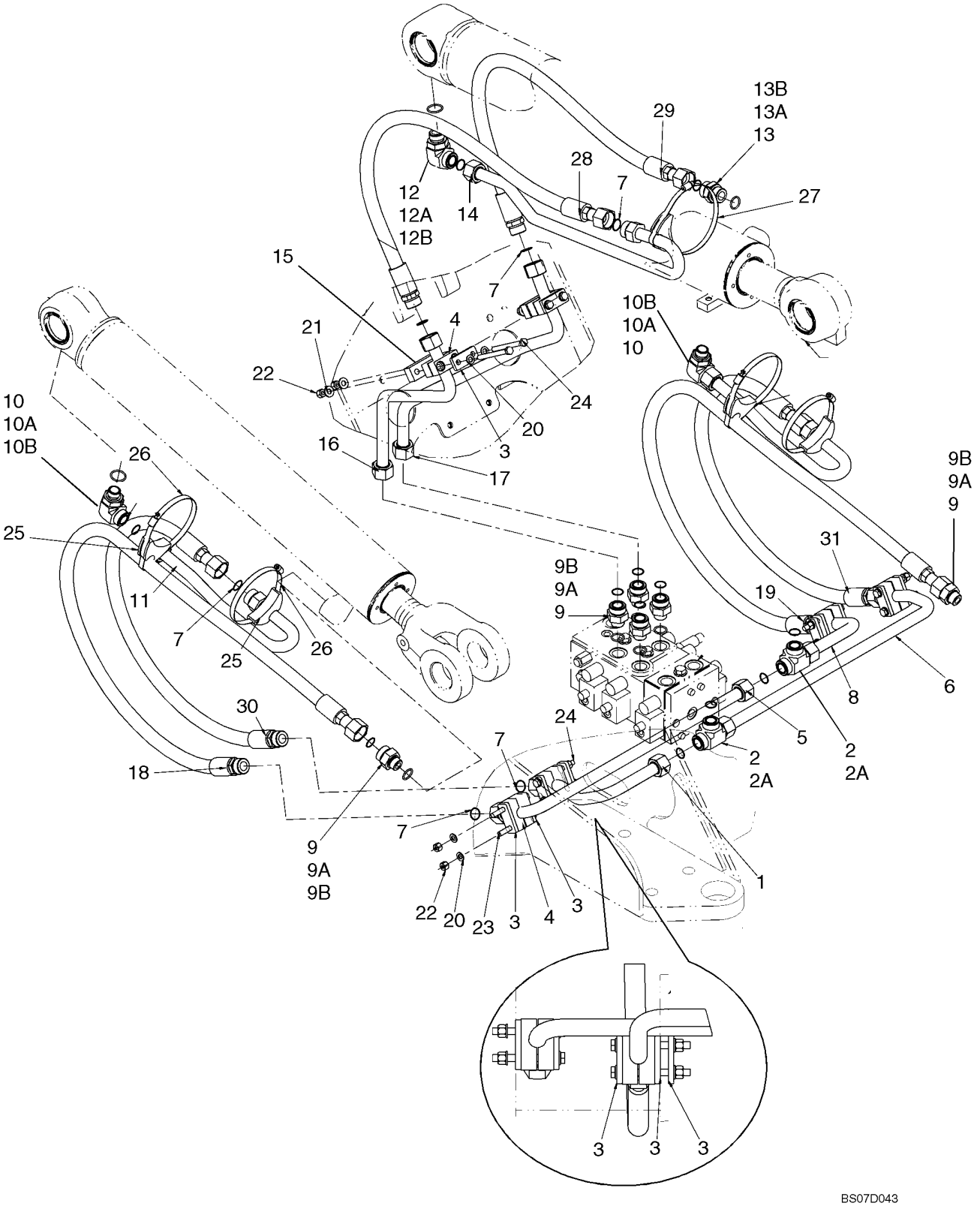


BS07D043

**HYDRAULICS - LOADER LIFT AND BUCKET (Z BAR, XR LOADER)**

| REF | FN | PART NUMBER | YR/SN | QTY | DESCRIPTION |
|---|---|---|---|---|---|
| 17 | | 8605369 | | 1 | TUBE ASSY., Tilt Rod End |
| 18 | | 372359A1 | | 1 | HOSE ASSY., Lift Cylinder; 1760 mm (69 - 5/16 in) |
| 19 | | 372359A1 | | 1 | HOSE ASSY., Lift Cylinder; 1760 mm (69 - 5/16 in) |
| 20 | | 895-11010 | | 20 | WASHER, M10 x 20 x 2 |
| 21 | | 895-15010 | | 4 | WASHER, M11 x 24 x 2 |
| 22 | | 832-10410 | | 12 | NUT, LOCK, M10 x 1.5, Cl 8 |
| 23 | | 827-10100 | | 4 | BOLT, Hex, M10 x 100, 10.9 |
| 24 | | 827-10110 | | 8 | BOLT, Hex, M10 x 110, 10.9 |
| 25 | | 391133A1 | | 5 | CLAMP |
| 26 | | 214-1496 | | 4 | CLAMP, HOSE, #96, 5.56/6.50 Type F Worm, W/liner |
| 27 | | 214-14104 | | 1 | CLAMP, HOSE, #104, 6.12/7.00 Type F Worm |
| 28 | | 389161A1 | | 1 | HOSE ASSY., Tilt Cylinder; 1161 mm (45-11/16 in) |
| 29 | | 389161A1 | | 1 | HOSE ASSY., Tilt Cylinder; 1161 mm (45-11/16 in) |
| 30 | | 86983386 | | 1 | HOSE, FLEXIBLE, Lift Cylinder; 1145 mm (45 - 1/16 in) |
| 31 | | 86983386 | | 1 | HOSE, FLEXIBLE, Lift Cylinder; 1145 mm (45 - 1/16 in) |

**HYDRAULICS - LOADER LIFT (XT LOADER)**

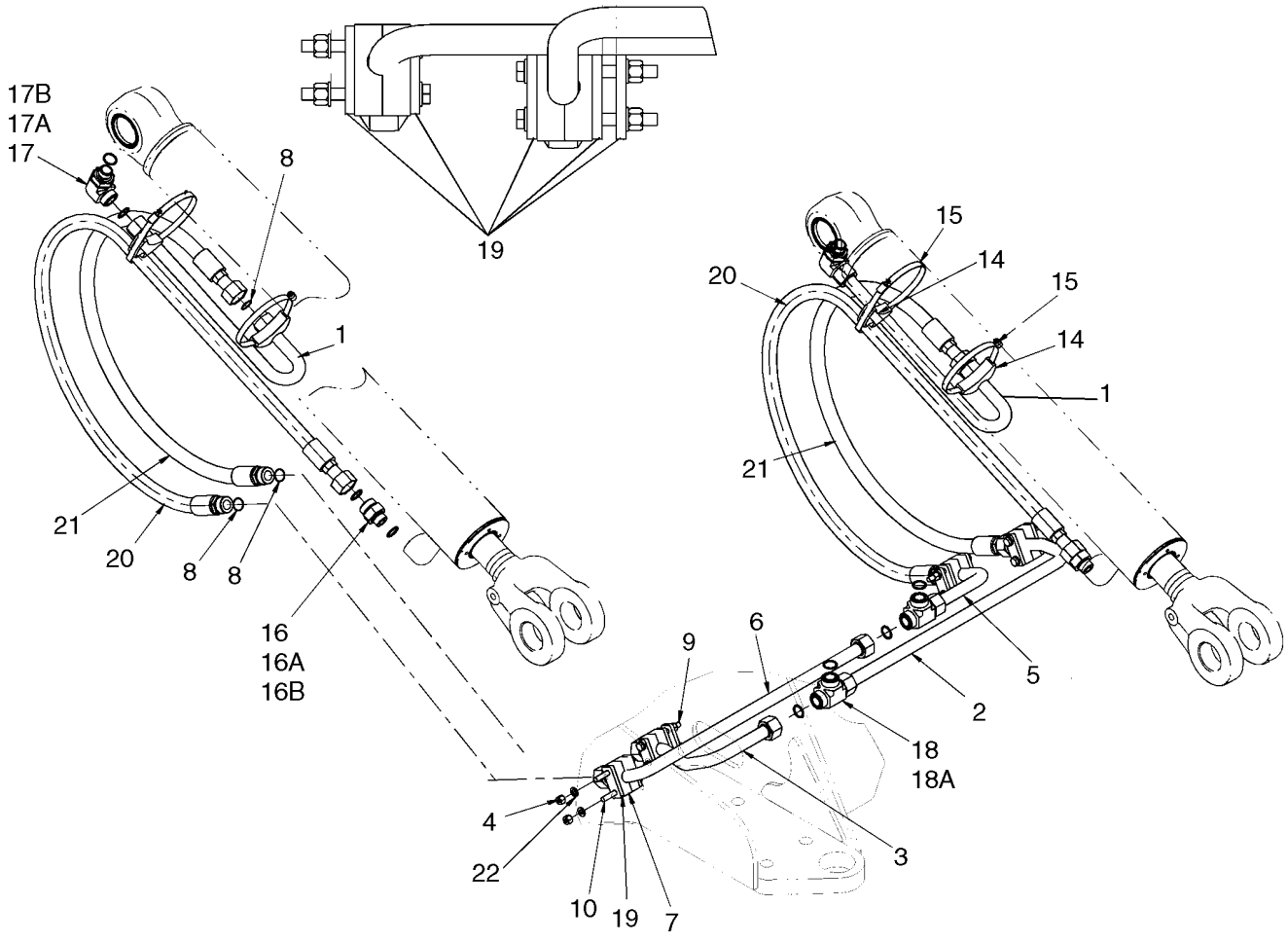

**HYDRAULICS - LOADER LIFT (XT LOADER)**

| REF | FN | PART NUMBER | YR/SN | QTY | DESCRIPTION |
|---|---|---|---|---|---|
| | | REF | | | INSTRUCTION, LOADER LIFT; XT-LOADER |
| 1 | | 87448548 | | 2 | TUBE ASSY., Lift Cylinder |
| 2 | | 8606092 | | 1 | TUBE ASSY., Left Hand; Head End |
| 3 | | 87389172 | | 1 | TUBE, HYD, Right Hand; Head End |
| 4 | | 832-10410 | | 8 | NUT, LOCK, M10 x 1.5, Cl 8 |
| 5 | | 8606098 | | 1 | TUBE ASSY., Rod End; Left Hand |
| 6 | | 8606100 | | 1 | TUBE ASSY., Rod End; Right Hand |
| 7 | | 367489A1 | | 4 | BLOCK, Mounting |
| 8 | | 238-6021 | | 6 | O-RING, -021, 90 Duro, .926" ID x .070" Thk, Face Seal |
| 9 | | 827-10110 | | 4 | BOLT, Hex, M10 x 110, 10.9 |
| 10 | | 827-10100 | | 4 | BOLT, Hex, M10 x 100, 10.9 |
| 14 | | 391133A1 | | 4 | CLAMP |
| 15 | | 214-1488 | | 4 | CLAMP, HOSE, #88, 5.12/6.00 Type F Worm |
| 16 | | 700-166 | | 2 | CONNECTOR, HYD., 1 7/16"-12 ORFS x M27 x 1.5 ORB, Incl. Refs. 16A, 16B |
| 16A | | 238-6021 | | 1 | O-RING, -021, 90 Duro, .926" ID x .070" Thk, Face Seal |
| 16B | | 637-64236 | | 1 | O-RING, Cl 6, 23.6MM ID x 2.9 Thk, Boss Seal |
| 17 | | 700-313 | | 2 | ELBOW, 90º, 1 7/16"-12 ORFS x M27 x 2 ORB, Incl. Refs. 17A, 17B |
| 17A | | 238-6021 | | 1 | O-RING, -021, 90 Duro, .926" ID x .070" Thk, Face Seal |
| 17B | | 637-64236 | | 1 | O-RING, Cl 6, 23.6MM ID x 2.9 Thk, Boss Seal |
| 18 | | 701-410 | | 2 | TEE, 1 7/16"-12 ORFS, Incl. Refs. 18A |
| 18A | | 238-6021 | | 3 | O-RING, -021, 90 Duro, .926" ID x .070" Thk, Face Seal |
| 19 | | 367658A1 | | 10 | PLATE, Clamp Cover |
| 20 | | 87448550 | | 2 | HOSE ASSY., 1802 mm ( 70 7/8 in); Lift Cylinder |
| 21 | | 86983387 | | 2 | HOSE ASSY., 1320 mm ( 52 in ); Lift Cylinder |
| 22 | | 895-11010 | | 16 | WASHER, M10 x 20 x 2 |

**HYDRAULICS - LOADER BUCKET (XT LOADER) - RIGHT SIDE**

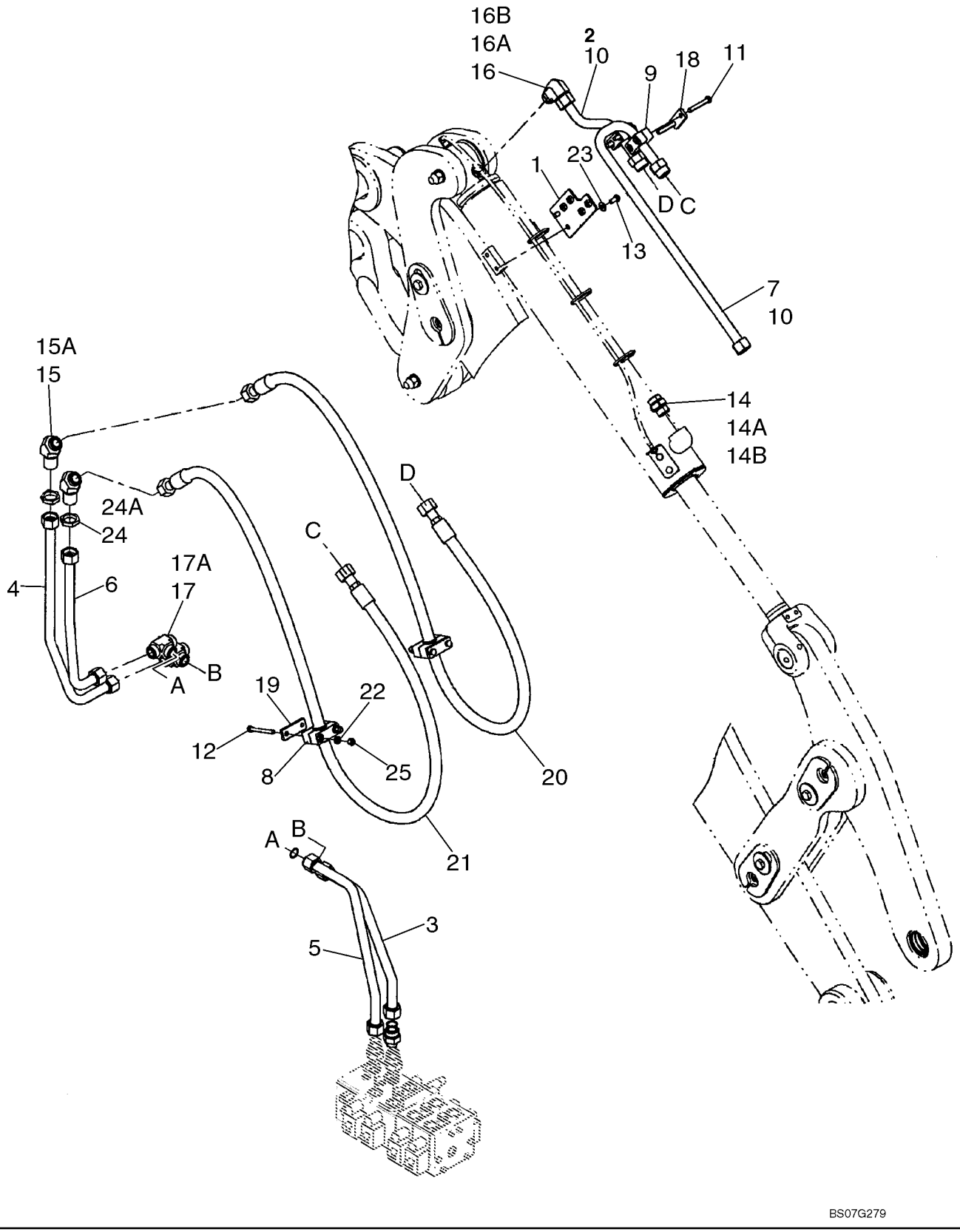

**HYDRAULICS - LOADER BUCKET (XT LOADER) - RIGHT SIDE**

| REF | FN | PART NUMBER | YR/SN | QTY | DESCRIPTION |
|---|---|---|---|---|---|
| | | REF | | | INSTRUCTION, XT LOADER BUCKET |
| 1 | | 87447893 | | 1 | BRACKET, Tilt Tubes Right Side |
| 2 | | 87447895 | | 1 | TUBE ASSY., Tilt Base Right Side |
| 3 | | 389349A1 | | 1 | TUBE ASSY., Tilt Head End Right Side |
| 4 | | 87452603 | | 1 | TUBE ASSY., Tilt Head Right Side |
| 5 | | 389351A1 | | 1 | TUBE ASSY., Tilt Rod End Right Side |
| 6 | | 87445798 | | 1 | TUBE ASSY., Tilt Rod End Right Side |
| 7 | | 87445806 | | 1 | TUBE ASSY., Tilt Rod Right Right Side |
| 8 | | 87452747 | | 2 | BLOCK, Tube Mounting |
| 9 | | 367489A1 | | 2 | BLOCK, Mounting |
| 10 | | 238-6021 | | 2 | O-RING, -021, 90 Duro, .926" ID x .070" Thk, Face Seal |
| 11 | | 827-10070 | | 4 | BOLT, Hex, M10 x 70, 10.9 |
| 12 | | 827-10090 | | 4 | BOLT, Hex, M10 x 90, 10.9 |
| 13 | | 627-10020 | | 2 | BOLT, Hex, M10 x 20, 10.9, Full Thd |
| 14 | | 700-105 | | 1 | CONNECTOR, HYD., 1 7/16"-12 ORFS x M22 x 2 ORB, Incl. Refs. 14A, 14B |
| 14A | | 238-6021 | | 1 | O-RING, -021, 90 Duro, .926" ID x .070" Thk, Face Seal |
| 14B | | 637-64296 | | 1 | O-RING, Cl 6, 29.6MM ID x 2.9 Thk, Boss End |
| 15 | | 701-366 | | 2 | ELBOW, 45º, 1 7/16"-12. ORFS, Blkhd, Incl. Refs. 15A |
| 15A | | 238-6021 | | 2 | O-RING, -021, 90 Duro, .926" ID x .070" Thk, Face Seal |
| 16 | | 700-308 | | 2 | ELBOW, 90º, 1 7/16"-12 ORFS x M33 x 2 ORB, Incl. Refs. 16A, 16B |
| 16A | | 238-6021 | | 1 | O-RING, -021, 90 Duro, .926" ID x .070" Thk, Face Seal |
| 16B | | 637-64296 | | 1 | O-RING, Cl 6, 29.6MM ID x 2.9 Thk, Boss End |
| 17 | | 701-410 | | 2 | TEE, 1 7/16"-12 ORFS, Incl. Ref. 17A |
| 17A | | 238-6021 | | 3 | O-RING, -021, 90 Duro, .926" ID x .070" Thk, Face Seal |
| 18 | | 367658A1 | | 2 | PLATE, Clamp Cover |
| 19 | | 8500858 | | 2 | PLATE, Clamp Cover |
| 20 | | 87304928 | | 1 | HOSE ASSY., Tilt Base; 2273mm ( 89-1/2 in ) |
| 21 | | 87304926 | | 1 | HOSE ASSY., Tilt Rod; 2252mm ( 88-3/4 in ) |

**HYDRAULICS - LOADER BUCKET (XT LOADER) - RIGHT SIDE**

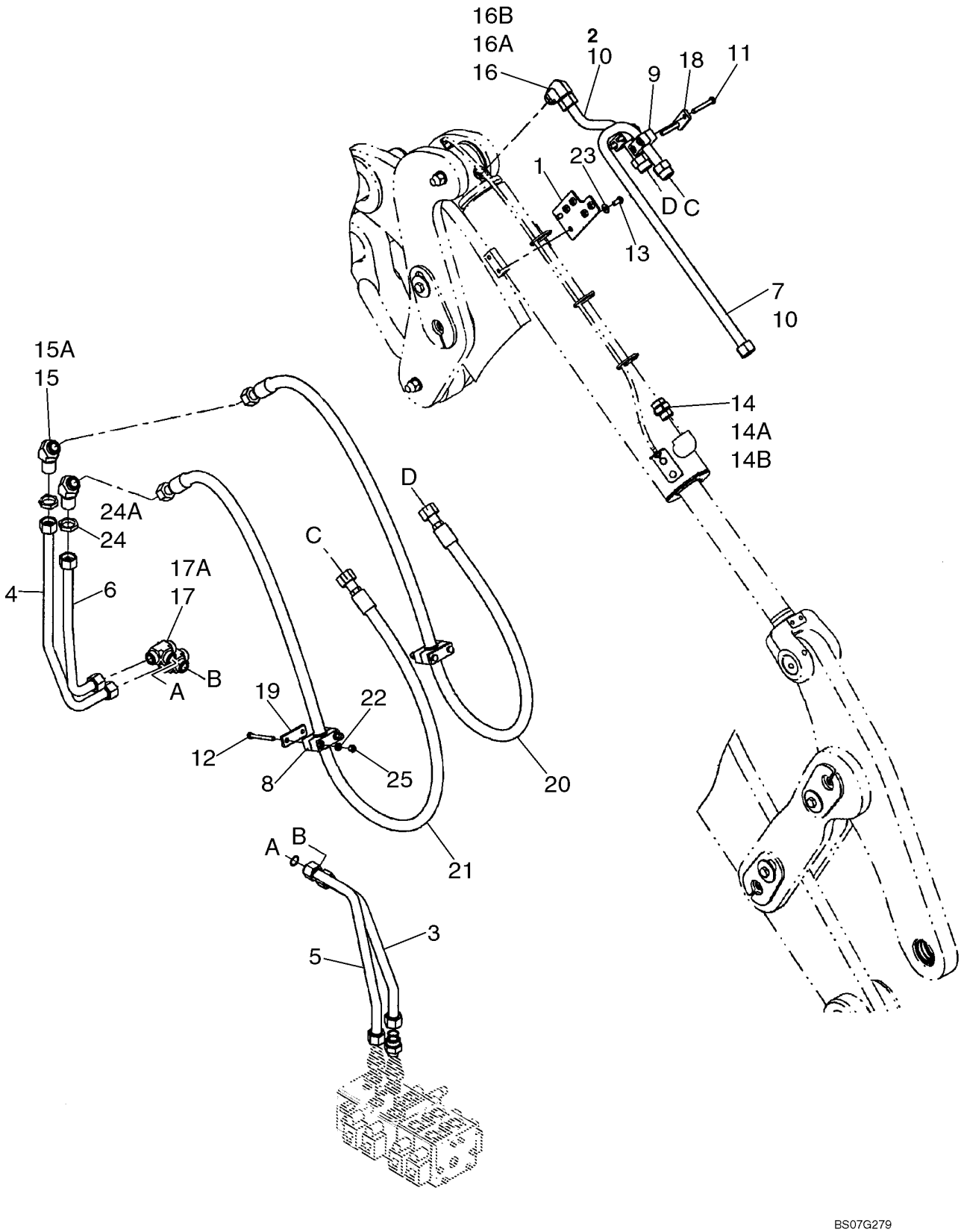

**HYDRAULICS - LOADER BUCKET (XT LOADER) - RIGHT SIDE**

| REF | FN | PART NUMBER | YR/SN | QTY | DESCRIPTION |
|---|---|---|---|---|---|
| 22 | | 895-11010 | | 4 | WASHER, M10 x 20 x 2 |
| 23 | | 895-15010 | | 2 | WASHER, M11 x 24 x 2 |
| 24 | | 701-908 | | 2 | NUT, LOCK, 1 7/16"-12, ORFS Blkhd, Incl. Ref. 24A |
| 24A | | 238-6021 | | 1 | O-RING, -021, 90 Duro, .926" ID x .070" Thk, Face Seal |
| 25 | | 832-10410 | | 4 | NUT, LOCK, M10 x 1.5, Cl 8 |

**HYDRAULICS - LOADER BUCKET (XT LOADER) - LEFT SIDE**

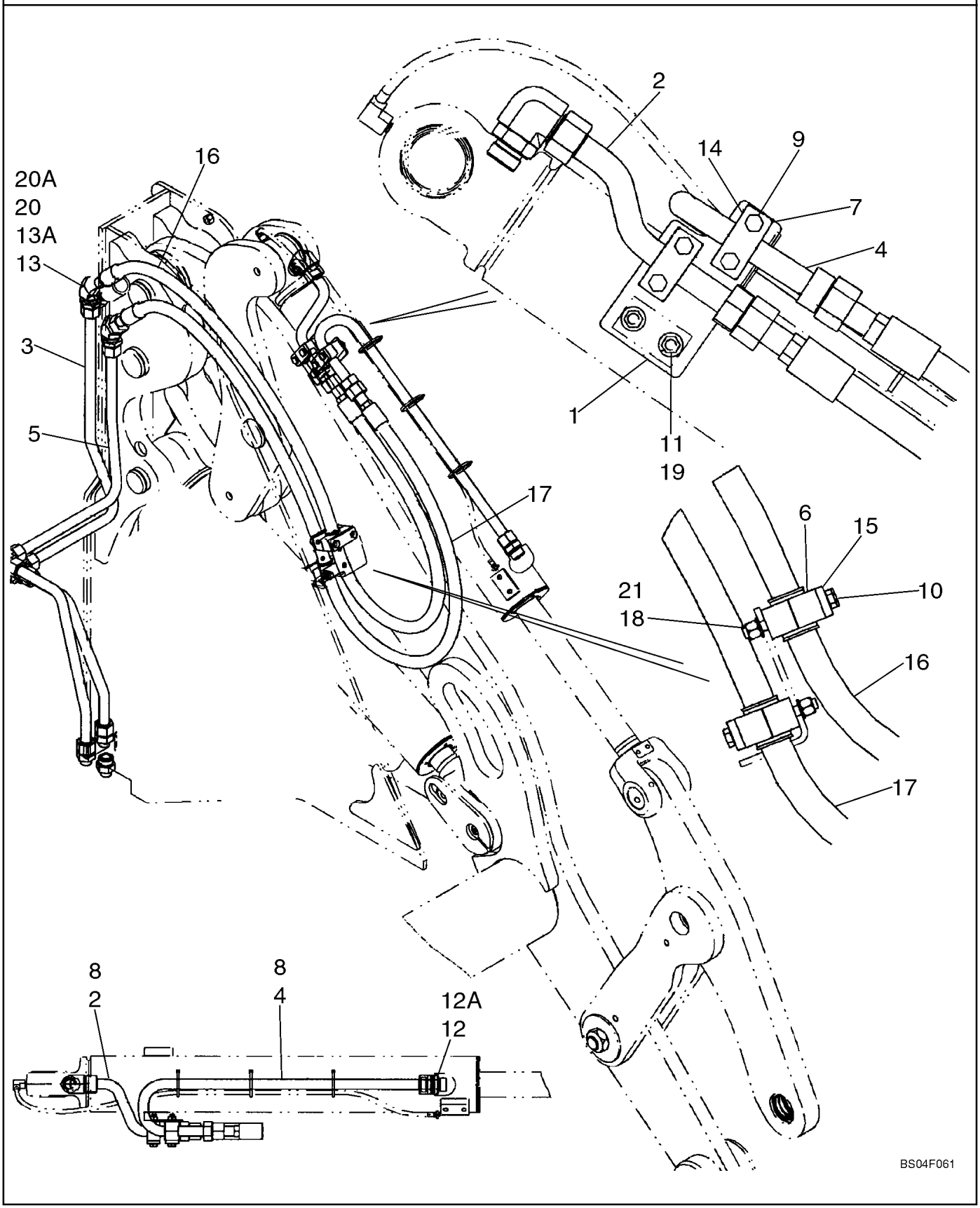

**HYDRAULICS - LOADER BUCKET (XT LOADER) - LEFT SIDE**

| REF | FN | PART NUMBER | YR/SN | QTY | DESCRIPTION |
|---|---|---|---|---|---|
| | | REF | | | INSTRUCTION, XT LOADER BUCKET |
| 1 | | 87447892 | | 1 | BRACKET, Tilt Tubes Left Side |
| 2 | | 87447897 | | 1 | TUBE ASSY., Tilt Base Left Side |
| 3 | | 87452605 | | 1 | TUBE ASSY., Tilt Head Left Side |
| 4 | | 87445800 | | 1 | TUBE ASSY., Tilt Rod End Left Side |
| 5 | | 87445804 | | 1 | TUBE ASSY., Tilt Rod Right Left Side |
| 6 | | 87452747 | | 2 | BLOCK, Tube Mounting |
| 7 | | 367489A1 | | 2 | BLOCK, Mounting |
| 8 | | 238-6021 | | 2 | O-RING, -021, 90 Duro, .926" ID x .070" Thk, Face Seal |
| 9 | | 827-10070 | | 4 | BOLT, Hex, M10 x 70, 10.9 |
| 10 | | 827-10090 | | 4 | BOLT, Hex, M10 x 90, 10.9 |
| 11 | | 627-10020 | | 2 | BOLT, Hex, M10 x 20, 10.9, Full Thd |
| 12 | | 700-105 | | 1 | CONNECTOR, HYD., 1 7/16"-12 ORFS x M22 x 2 ORB, Incl. Ref. 12A |
| 12A | | 238-6021 | | 1 | O-RING, -021, 90 Duro, .926" ID x .070" Thk, Face Seal |
| 13 | | 701-366 | | 2 | ELBOW, 45º, 1 7/16"-12. ORFS, Blkhd, Incl. Ref. 13A |
| 13A | | 238-6021 | | 2 | O-RING, -021, 90 Duro, .926" ID x .070" Thk, Face Seal |
| 14 | | 367658A1 | | 2 | PLATE, Clamp Cover |
| 15 | | 8500858 | | 2 | PLATE, Clamp Cover |
| 16 | | 87304928 | | 1 | HOSE ASSY., Tilt Base; 2273mm ( 89-1/2 in ) |
| 17 | | 87304926 | | 1 | HOSE ASSY., Tilt Rod; 2252mm ( 88-3/4 in ) |
| 18 | | 895-11010 | | 4 | WASHER, M10 x 20 x 2 |
| 19 | | 895-15010 | | 2 | WASHER, M11 x 24 x 2 |
| 20 | | 701-908 | | 2 | NUT, LOCK, 1 7/16"-12, ORFS Blkhd, Incl. Ref. 20A |
| 20A | | 238-6021 | | 1 | O-RING, -021, 90 Duro, .926" ID x .070" Thk, Face Seal |
| 21 | | 832-10410 | | 4 | NUT, LOCK, M10 x 1.5, Cl 8 |

**HYDRAULICS - LOADER AUXILIARY (Z BAR LOADER)**

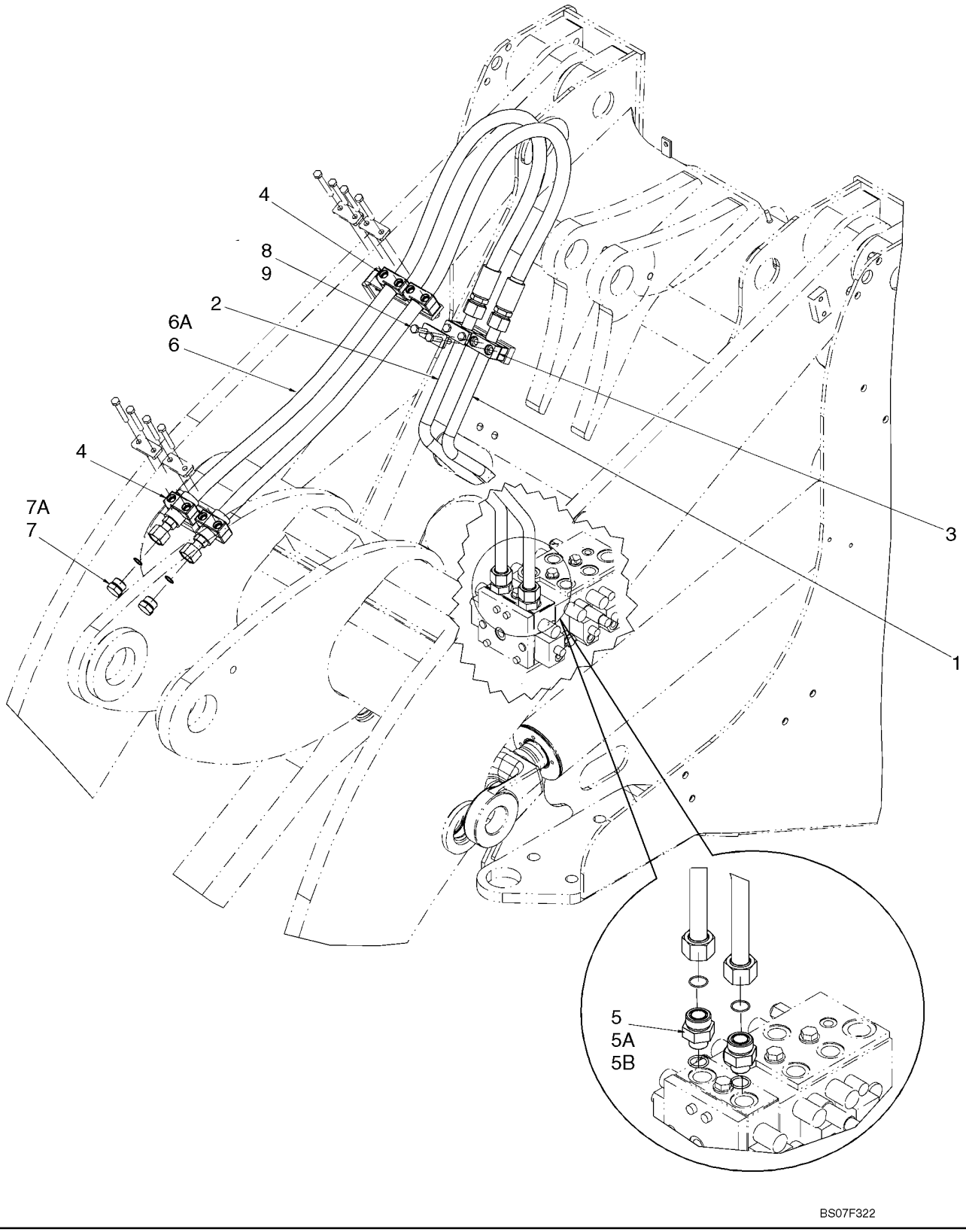

**HYDRAULICS - LOADER AUXILIARY (Z BAR LOADER)**

| REF | FN | PART NUMBER | YR/SN | QTY | DESCRIPTION |
|---|---|---|---|---|---|
| | | REF | | | INSTRUCTION, Z-BAR LOADER, THIRD SPOOL HYDRAULICS |
| 1 | | 86983688 | | 1 | TUBE, Left Hand |
| 2 | | 86983689 | | 1 | TUBE, Right Hand |
| 3 | | 367489A1 | | 2 | BLOCK, Tube Mounting |
| 4 | | 372453A1 | | 2 | BLOCK, Tube Mounting |
| 5 | | 700-166 | | 2 | CONNECTOR, HYD., 1 7/16"-12 ORFS x M27 x 1.5 ORB, Incl. Refs. 5A, 5B |
| 5A | | 637-64236 | | 1 | O-RING, Cl 6, 23.6MM ID x 2.9 Thk, Boss Seal |
| 5B | | 238-6021 | | 1 | O-RING, -021, 90 Duro, .926" ID x .070" Thk, Face Seal |
| 6 | | 372102A3 | | 2 | HOSE ASSY., Incl. Ref. 6A |
| 6A | | 238-6021 | | 1 | O-RING, -021, 90 Duro, .926" ID x .070" Thk, Face Seal |
| 7 | | 701-914 | | 2 | PLUG, 1 3/16"-12 ORFS, Incl. Ref. 7A |
| 7A | | 238-6018 | | 2 | O-RING, -018, 90 Duro, .739" ID x .070" Thk, Face Seal |
| 8 | | 367658A1 | | 2 | PLATE, Clamp Cover |
| 9 | | 827-10070 | | 4 | BOLT, Hex, M10 x 70, 10.9 |

**HYDRAULICS - LOADER AUXILIARY (XR LOADER)**

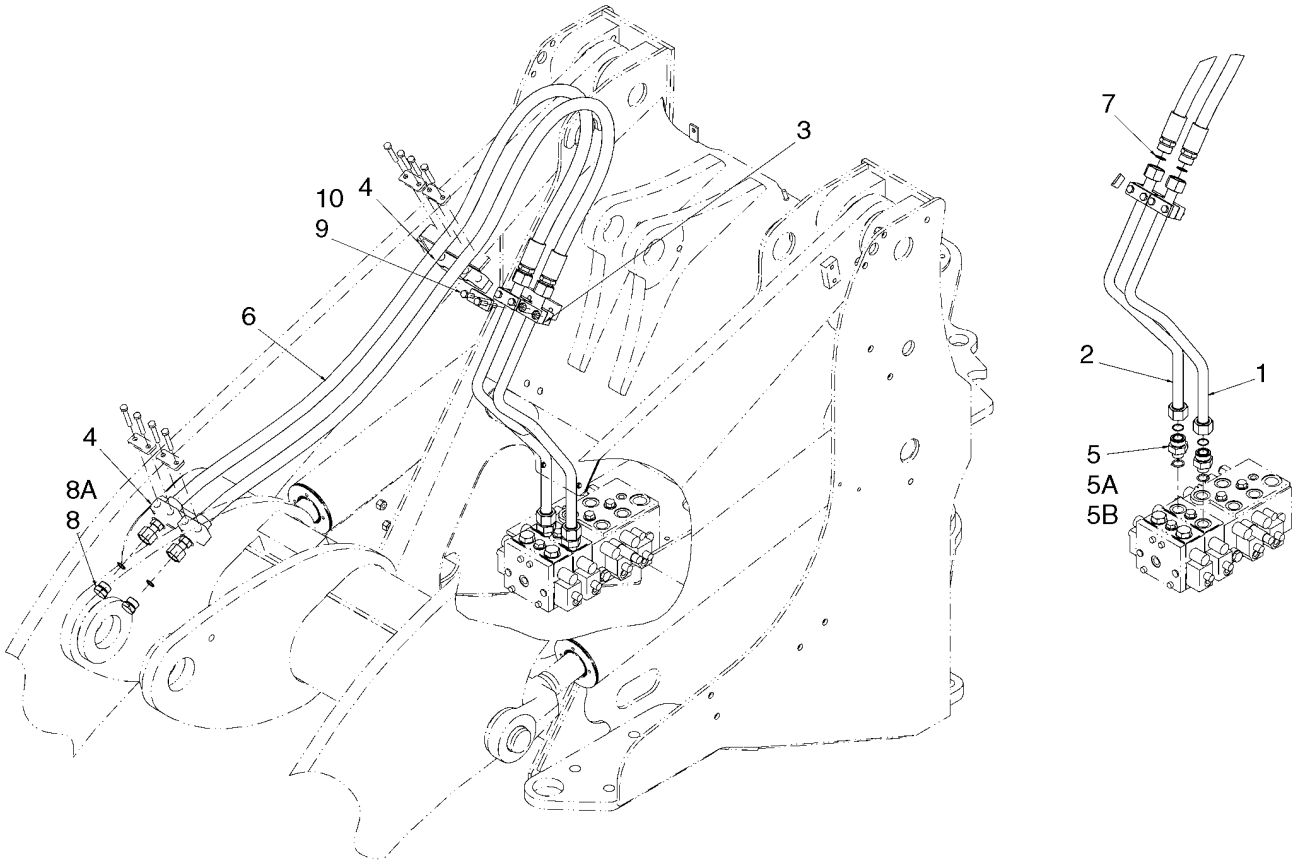

**HYDRAULICS - LOADER AUXILIARY (XR LOADER)**

| REF | FN | PART NUMBER | YR/SN | QTY | DESCRIPTION |
|---|---|---|---|---|---|
| | | REF | | | INSTRUCTION, XR LOADER, THIRD SPOOL HYDRAULICS |
| 1 | | 86983688 | | 1 | TUBE, Left Hand |
| 2 | | 86983689 | | 1 | TUBE, Right Hand |
| 3 | | 367489A1 | | 2 | BLOCK |
| 4 | | 372453A1 | | 4 | BLOCK |
| 5 | | 700-166 | | 2 | CONNECTOR, HYD., 1 7/16"-12 ORFS x M27 x 1.5 ORB, Incl. Refs. 5A, 5B |
| 5A | | 637-64236 | | 1 | O-RING, Cl 6, 23.6MM ID x 2.9 Thk, Boss Seal |
| 5B | | 238-6021 | | 1 | O-RING, -021, 90 Duro, .926" ID x .070" Thk, Face Seal |
| 6 | | 437523A1 | | 2 | HOSE ASSY., Third Spool; 2143 mm (84 - 3/8 in) |
| 7 | | 238-6021 | | 2 | O-RING, -021, 90 Duro, .926" ID x .070" Thk |
| 8 | | 701-914 | | 2 | PLUG, 1 3/16"-12 ORFS, Incl. Ref. 8A |
| 8A | | 238-6018 | | 1 | O-RING, -018, 90 Duro, .739" ID x .070" Thk |
| 9 | | 367658A1 | | 2 | PLATE |
| 10 | | 827-10070 | | 4 | BOLT, Hex, M10 x 70, 10.9 |

**HYDRAULICS - LOADER AUXILIARY (XT LOADER)**

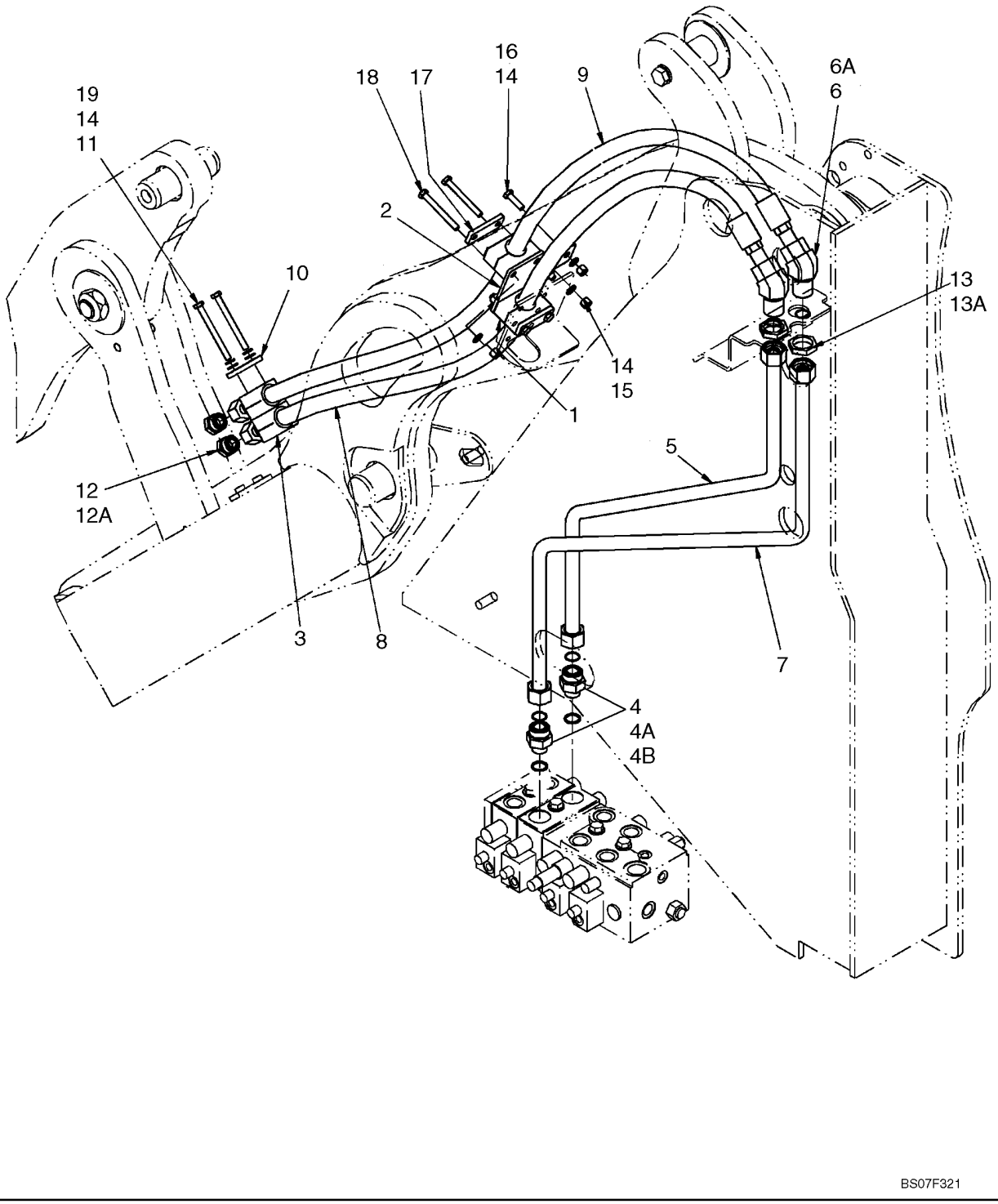

**HYDRAULICS - LOADER AUXILIARY (XT LOADER)**

| REF | FN | PART NUMBER | YR/SN | QTY | DESCRIPTION |
|---|---|---|---|---|---|
| | | REF | | | INSTRUCTION, XT LOADER, THIRD SPOOL HYDRAULICS |
| 1 | | 87452747 | | 2 | BLOCK, Tube Mounting |
| 2 | | 87444440 | | 1 | BRACKET, Accessory Hose Mounting |
| 3 | | 372453A1 | | 2 | BLOCK, Tube Mounting |
| 4 | | 700-166 | | 2 | CONNECTOR, HYD., 1 7/16"-12 ORFS x M27 x 1.5 ORB, Incl. Refs.4A, 4B |
| 4A | | 238-6021 | | 1 | O-RING, -021, 90 Duro, .926" ID x .070" Thk, Face Seal |
| 4B | | 637-64236 | | 1 | O-RING, Cl 6, 23.6MM ID x 2.9 Thk, Boss Seal |
| 5 | | 87445809 | | 1 | TUBE ASSY., Right Hand; Third Spool |
| 6 | | 701-366 | | 2 | ELBOW, 45º, 1 7/16"-12. ORFS, Blkhd, Incl. Refs. 6A |
| 6A | | 238-6021 | | 2 | O-RING, -021, 90 Duro, .926" ID x .070" Thk, Face Seal |
| 7 | | 87452607 | | 1 | TUBE ASSY., Left Hand; Third Spool |
| 8 | | 87304933 | | 1 | HOSE ASSY., XT Accessory, Lower; 2006 mm (78 - 31/32 in) |
| 9 | | 87304930 | | 1 | HOSE ASSY., XT Accessory, Upper; 2145 mm (84 - 7/16 in) |
| 10 | | 367658A1 | | 1 | PLATE, Clamp Cover |
| 11 | | 827-10100 | | 2 | BOLT, Hex, M10 x 100, 10.9 |
| 12 | | 701-914 | | 2 | PLUG, 1 3/16"-12 ORFS, Incl. Ref. 12A |
| 12A | | 238-6018 | | 1 | O-RING, -018, 90 Duro, .739" ID x .070" Thk, Face Seal |
| 13 | | 701-908 | | 2 | NUT, LOCK, 1 7/16"-12, ORFS Blkhd, Incl. Ref. 13A |
| 13A | | 238-6021 | | 1 | O-RING, -021, 90 Duro, .926" ID x .070" Thk, Face Seal |
| 14 | | 895-11010 | | 10 | WASHER, M10 x 20 x 2 |
| 15 | | 832-10410 | | 6 | NUT, LOCK, M10 x 1.5, Cl 8 |
| 16 | | 627-10035 | | 2 | BOLT, Hex, M10 x 35, 10.9, Full Thd |
| 17 | | 8500858 | | 2 | PLATE, Clamp Cover |
| 18 | | 827-10090 | | 4 | BOLT, Hex, M10 x 90, 10.9 |
| 19 | | 892-11010 | | 2 | WASHER, LOCK, M10, M10 |

**HYDRAULICS - COUPLER (Z BAR LOADER)**

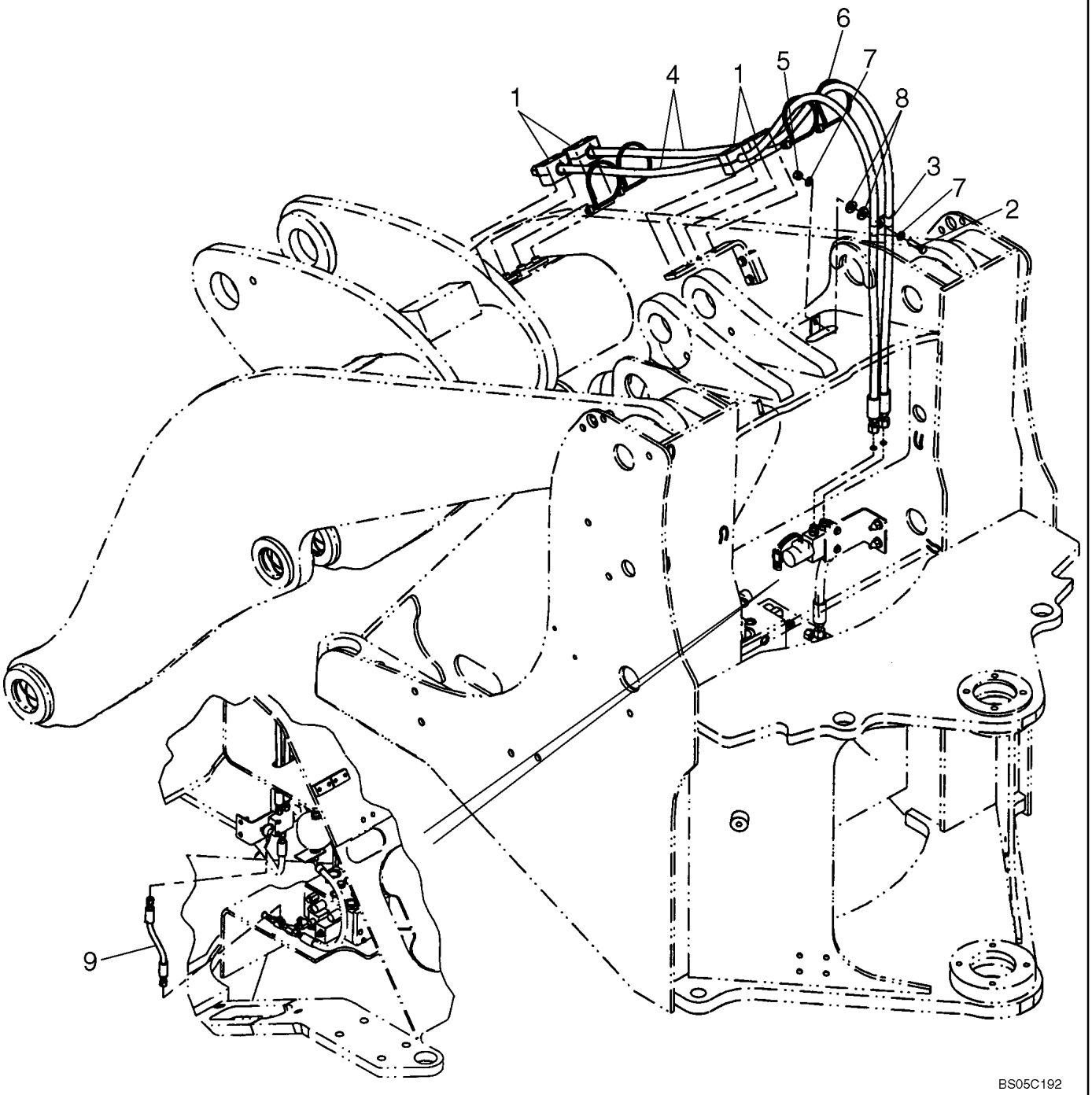

**HYDRAULICS - COUPLER (Z BAR LOADER)**

| REF | FN | PART NUMBER | YR/SN | QTY | DESCRIPTION |
|---|---|---|---|---|---|
| | | REF | | | INSTRUCTION, Z-BAR LOADER |
| 1 | | 379374A1 | | 4 | BLOCK, Mounting |
| 2 | | 827-10040 | | 1 | BOLT, Hex, M10 x 40, 10.9, Full Thd |
| 3 | | 515-25159 | | 2 | CLAMP, 5/8", Insul, 1/2" Bolt |
| 4 | | 87403305 | | 2 | HOSE, Coupler; 2088 mm (82-13/64 in) |
| 5 | | 832-10410 | | 1 | NUT, LOCK, M10 x 1.5, Cl 8 |
| 6 | | L18331 | | 4 | STRAP, CABLE |
| 7 | | 895-11010 | | 2 | WASHER, M10 x 20 x 2 |
| 8 | | 896-15012 | | 2 | WASHER, M12 x 28.5 x 4, HT |
| 9 | | 87403985 | | 1 | HOSE, Coupler Pressure; 308mm (12-1/8 in ) |
| 10 | | 701-911 | | 1 | PLUG, 11/16"-16 ORFS, Incl. Ref. 10A; Not Illustrated |
| 10A | | 238-6012 | | 1 | O-RING, -012, 90 Duro, .364" ID x .070" Thk, Face Seal; Not Illustrated |

**HYDRAULICS - COUPLER (XR LOADER)**

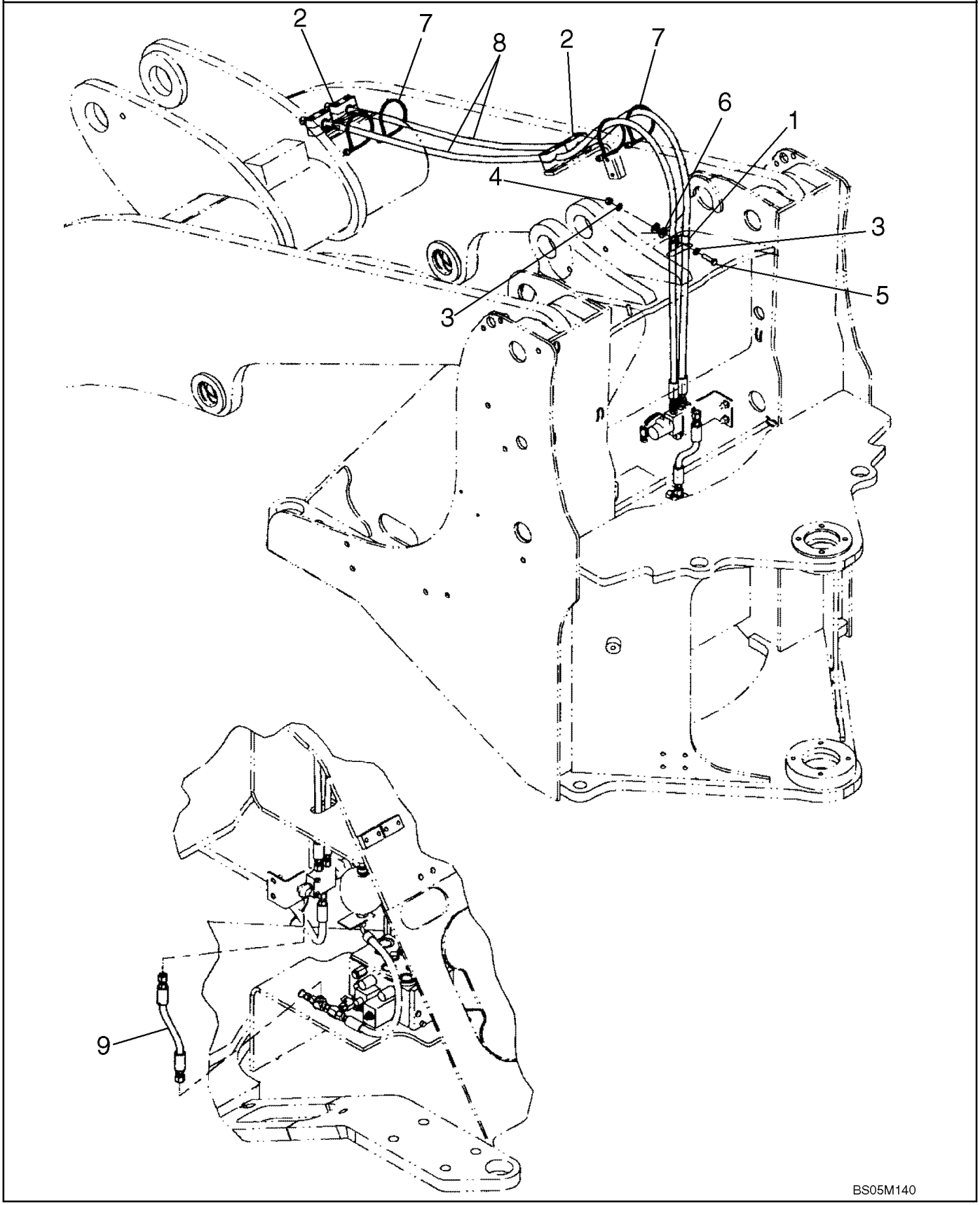

**HYDRAULICS - COUPLER (XR LOADER)**

| REF | FN | PART NUMBER | YR/SN | QTY | DESCRIPTION |
|---|---|---|---|---|---|
| | | REF | | | INSTRUCTION, XR LOADER |
| 1 | | 515-25159 | | 2 | CLAMP, 5/8", Insul, 1/2" Bolt |
| 2 | | 379374A1 | | 4 | BLOCK, Mounting |
| 3 | | 895-11010 | | 2 | WASHER, M10 x 20 x 2 |
| 4 | | 832-10410 | | 1 | NUT, LOCK, M10 x 1.5, Cl 8 |
| 5 | | 827-10040 | | 1 | BOLT, Hex, M10 x 40, 10.9, Full Thd |
| 6 | | 896-15012 | | 2 | WASHER, M12 x 28.5 x 4, HT |
| 7 | | L18331 | | 4 | STRAP, CABLE |
| 8 | | 87405436 | | 2 | HOSE, XR Coupler; 2229 mm ( 87-3/4 in ) |
| 9 | | 87403985 | | 1 | HOSE, Coupler Pressure; 308mm (12-1/8 in ) |
| 10 | | 701-911 | | 1 | PLUG, 11/16"-16 ORFS, Incl. Ref 10A; Not Illustrated |
| 10A | | 238-6012 | | 1 | O-RING, -012, 90 Duro, .364" ID x .070" Thk, Face Seal; Not Illustrated |

**HYDRAULICS - COUPLER (XT LOADER)**

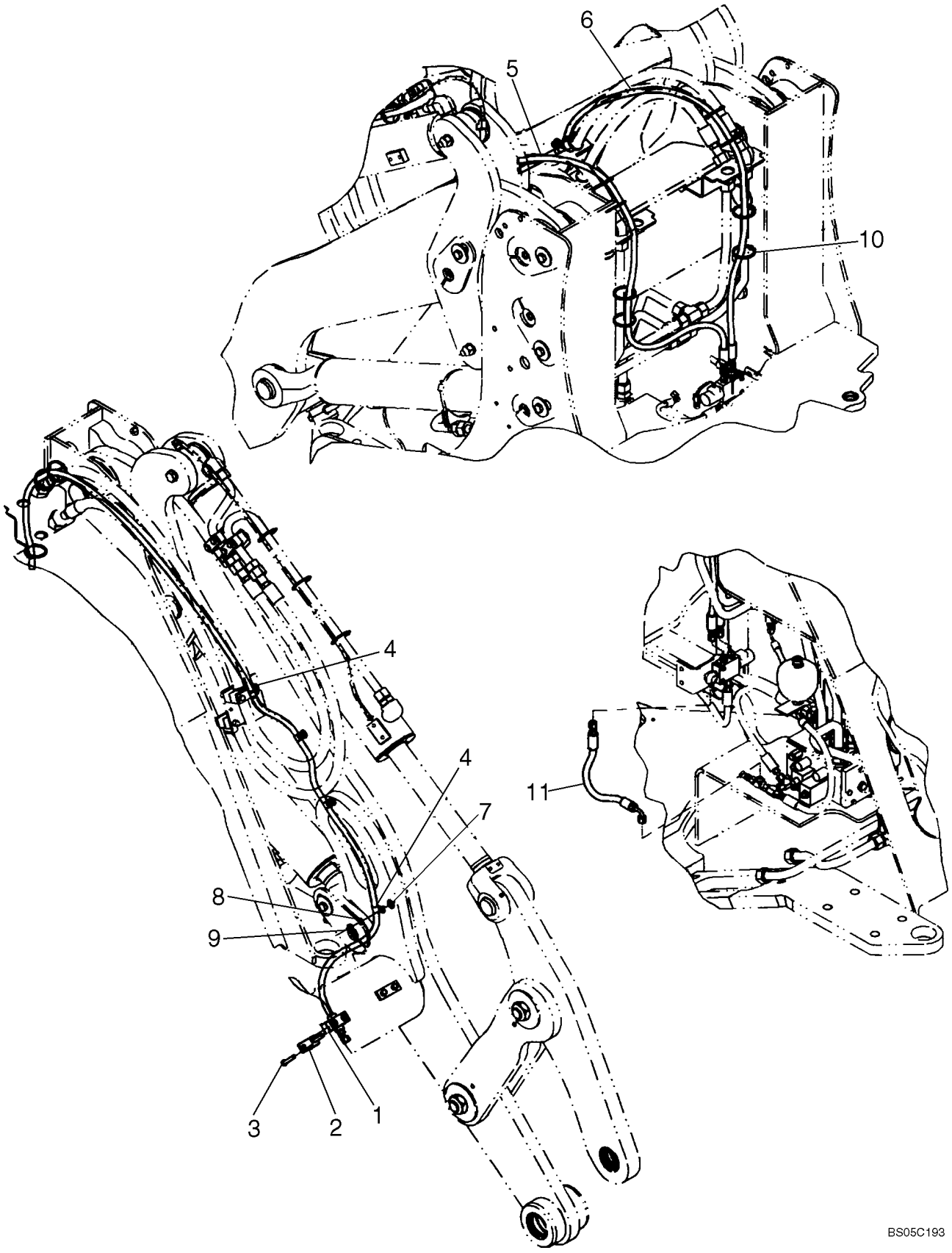

**HYDRAULICS - COUPLER (XT LOADER)**

| REF | FN | PART NUMBER | YR/SN | QTY | DESCRIPTION |
|---|---|---|---|---|---|
| | | REF | | | INSTRUCTION, XT LOADER |
| 1 | | 379374A1 | | 2 | BLOCK, Mounting |
| 2 | | 367658A1 | | 2 | PLATE, Clamp Cover |
| 3 | | 827-10060 | | 4 | BOLT, Hex, M10 x 60, 10.9 |
| 4 | | 515-23159 | | 8 | CLAMP, 5/8", Insul, 3/8" Bolt |
| 5 | | 87448666 | | 1 | HOSE ASSY., XT Coupler; Left; 353mm ( 14 in ) |
| 6 | | 87448665 | | 1 | HOSE ASSY., XT Coupler; Right; 323 (12-3/4 in ) |
| 7 | | 896-15010 | | 6 | WASHER, M10 x 24.5 x 3, HT |
| 8 | | 895-11010 | | 6 | WASHER, M10 x 20 x 2 |
| 9 | | 832-10410 | | 6 | NUT, LOCK, M10 x 1.5, Cl 8 |
| 10 | | L18331 | | 8 | STRAP, CABLE |
| 11 | | 393126A1 | | 1 | HOSE ASSY., Coupler Pressure; 483mm ( 19 in ) |
| 12 | | 701-911 | | 1 | PLUG, 11/16"-16 ORFS, Incl. Ref. 12A; Not Illustrated |
| 12A | | 238-6012 | | 1 | O-RING, -012, 90 Duro, .364" ID x .070" Thk, Face Seal; Not Illustrated |

**HYDRAULICS - COUPLER LOCKING**

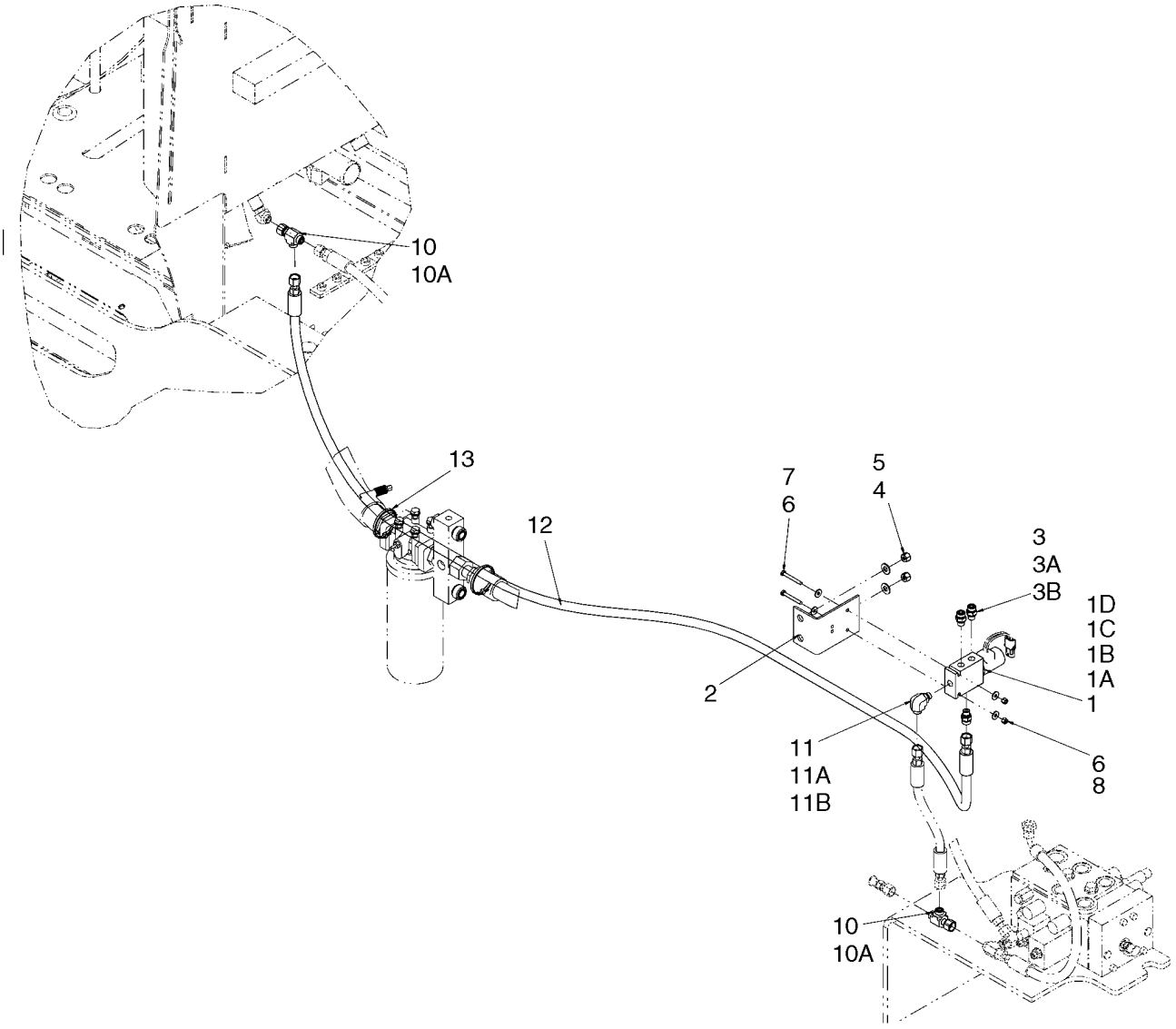

**HYDRAULICS - COUPLER LOCKING**

| REF | FN | PART NUMBER | YR/SN | QTY | DESCRIPTION |
|---|---|---|---|---|---|
| 1 | | 379139A1 | | 1 | VALVE, Coupler Locking; Incl. Refs. 1A - 1C |
| 1A | | NSS | | 1 | NOT SERVICED SEPARATELY, Body |
| 1B | | NSS | | 1 | NOT SERVICED SEPARATELY, Coil |
| 1C | | 8605216 | | 1 | SOLENOID, Valve; Component Parts Not Serviced Separately; Order 8605153 Seal Kit; Incl. 1C |
| 1D | | 124639A1 | | 1 | KIT, GASKET, Seal Kit; Includes (4) O-Rings and (6) Backup Rings, Which Are Not Serviced Separately |
| 2 | | 87404018 | | 1 | BRACKET, Coupler Solenoid |
| 3 | | 700-101 | | 3 | CONNECTOR, HYD., 11/16"-16 ORFS x M14 x 1.5 ORB, Incl. Ref. 3A, 3B |
| 3A | | 637-63113 | | 1 | O-RING, Cl 6, 11.3MM ID x 2.2 Thk |
| 3B | | 238-6012 | | 1 | O-RING, -012, 90 Duro, .364" ID x .070" Thk |
| 4 | | 895-15010 | | 2 | WASHER, M11 x 24 x 2 |
| 5 | | 832-10410 | | 2 | NUT, LOCK, M10 x 1.5, Cl 8 |
| 6 | | 895-25006 | | 4 | WASHER, M6 x 18 x 1.6 |
| 7 | | 827-6050 | | 2 | BOLT, Hex, M6 x 50, 10.9 |
| 8 | | 832-10406 | | 2 | NUT, LOCK, M6 x 1, Cl 8 |
| 10 | | 701-422 | | 2 | TEE, 11/16"-16 ORFS x 11/16"-16 Fem Sw Run, Incl. Ref. 10A |
| 10A | | 238-6012 | | 3 | O-RING, -012, 90 Duro, .364" ID x .070" Thk |
| 11 | | 700-304 | | 1 | ELBOW, 90º, 11/16"-18 ORFS x M14 x 1.5 ORB, Incl. Refs. 11A, 11B |
| 11A | | 637-63113 | | 1 | O-RING, Cl 6, 11.3MM ID x 2.2 Thk |
| 11B | | 238-6012 | | 1 | O-RING, -012, 90 Duro, .364" ID x .070" Thk |
| 12 | | 87581937 | | 1 | HOSE, 2558 mm (100 - 11/16 in); Coupler Tank |
| 13 | | L11541 | | 2 | STRAP, Wire Tie |

**CYLINDER ASSY - LOADER LIFT**

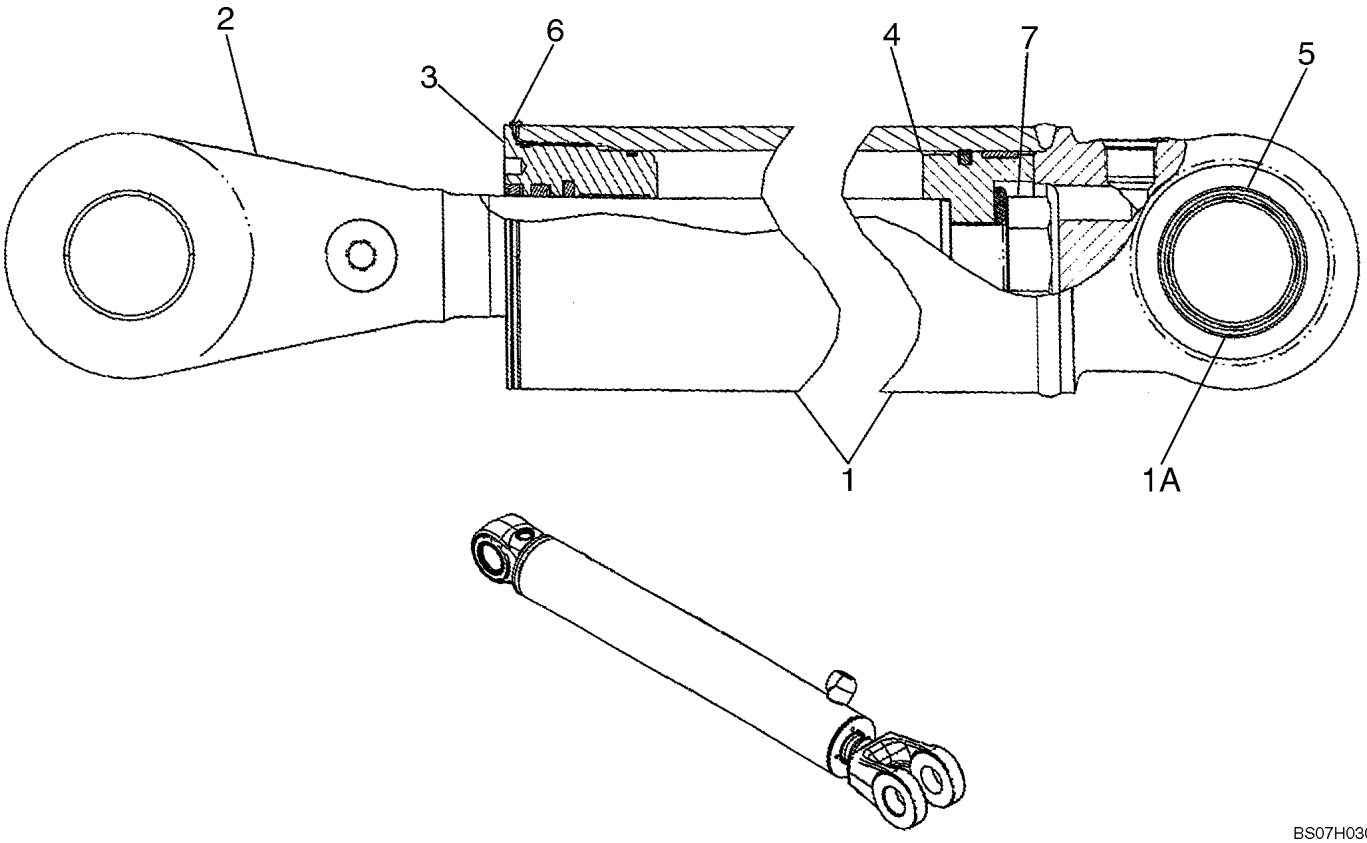


BS07H030

**CYLINDER ASSY - LOADER LIFT**

| REF | FN | PART NUMBER | YR/SN | QTY | DESCRIPTION |
|---|---|---|---|---|---|
| | | REF | | | INSTRUCTION, Z-BAR, XR, XT LOADER LIFT |
| | | 87577649 | | 2 | CYLINDER, LIFT, 120.65 mm ID x 787.6 mm strk; Incl. Refs. 1 - 7 |
| | | {87598751} | | 1 | KIT, SEALS, Cylinder Service; Incl. Refs. 3B - 3G, 4C - 4D |
| 1 | | {87586627} | | 1 | TUBE Incl. 1A |
| 1A | | 87625615 | | 2 | BUSHING |
| 2 | | 87318062 | | 1 | ROD, PISTON, 63.5 Diameter |
| 3 | | {87586629} | | 1 | GLAND ASSY. Cylinder; Incl. Refs. 3A -3G |
| 3A | | {87586628} | | 1 | GLAND, Not Illustrated |
| 3B | | D95146 | | 1 | WIPER, Not Illustrated |
| 3C | | 1542879C1 | | 1 | KIT, SEALS, Seal; Incl. Buffer Seal, Rod Seal, Not Illustrated |
| | | NSS | | 1 | NOT SERVICED SEPARATELY, Seal, Buffer |
| | | NSS | | 1 | NOT SERVICED SEPARATELY, Seal, Rod |
| 3D | | 336041A1 | | 1 | BEARING, Not Illustrated |
| 3E | | 446178A1 | | 1 | SEAL, Not Illustrated |
| 3F | | 238-5245 | | 1 | O-RING, -245, 70 Duro, 4.359" ID x .139" Thk, Not Illustrated |
| 3G | | 238-5246 | | 1 | O-RING, -246, 70 Duro, 4.484" ID x .139" Thk, Not Illustrated |
| 4 | | {87586631} | | 1 | PISTON ASSY. Incl. Refs. 4A-4D |
| 4A | | {87586630} | | 1 | PISTON, 120.7 x 63.5, Not Illustrated |
| 4B | | 87403649 | | 1 | SEAL, Loader; 4.75 Bore, Not Illustrated |
| 4C | | 446481A1 | | 1 | SEAL, Piston, Not Illustrated |
| 4D | | 446195A1 | | 1 | SEAL, Wear Ring, Not Illustrated |
| 5 | | D95146 | | 2 | WIPER |
| 6 | | G109395 | | 1 | SCREW, SELF TAP |
| 7 | | 86982444 | | 1 | BOLT, SPECIAL, Incl. Ref. 7A |
| 7A | | NSS | | 1 | NOT SERVICED SEPARATELY, Washer, Not Illustrated |

**CYLINDER ASSY - LOADER BUCKET (Z BAR LOADER)**

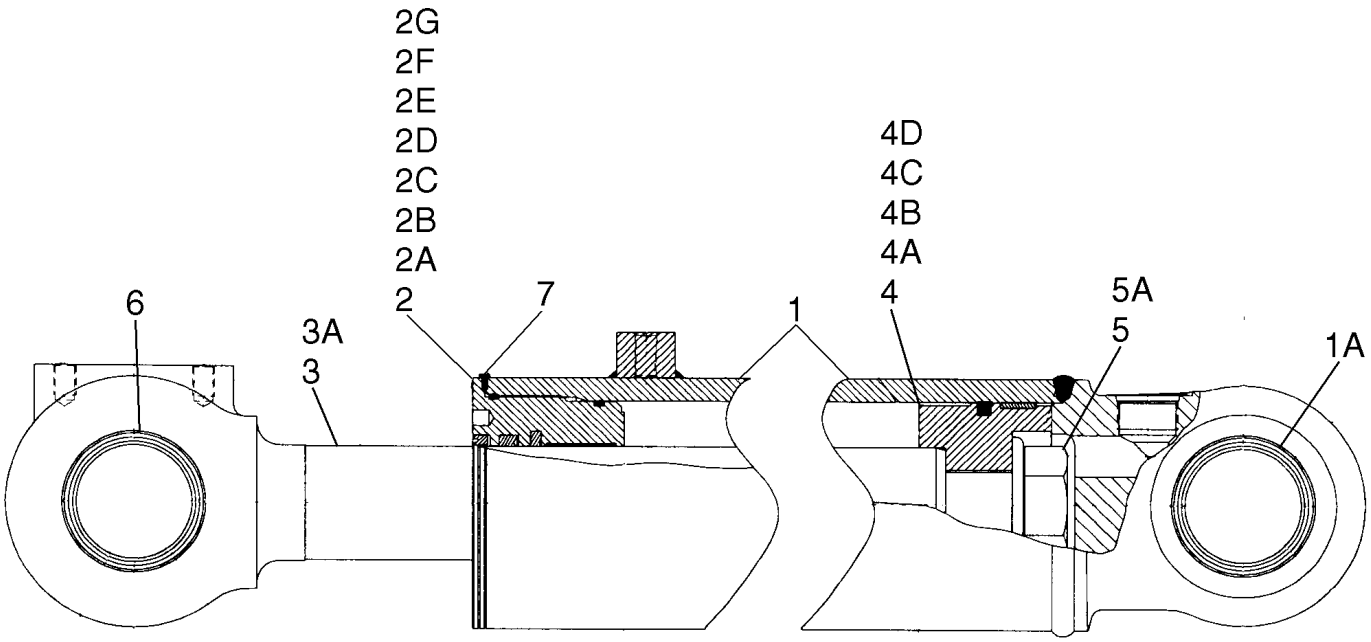


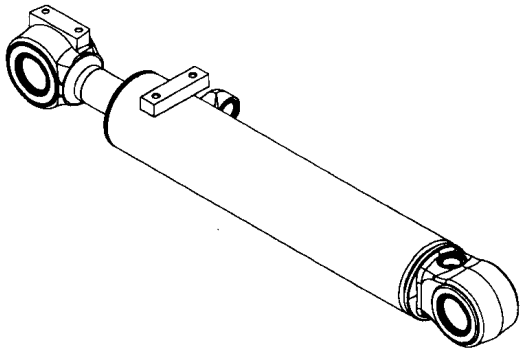

BS05M141

**CYLINDER ASSY - LOADER BUCKET (Z BAR LOADER)**

| REF | FN | PART NUMBER | YR/SN | QTY | DESCRIPTION |
|---|---|---|---|---|---|
| | | REF | | | INSTRUCTION, Z-BAR LOADER |
| | | 87366688 | | 1 | CYLINDER ASSY., 114 ID x 529 mm strk; Bucket; Incl. Refs.1 - 20 |
| | | {87434293} | | 1 | KIT, SEALS; Incl. Refs. 2B-2G, 4B, 4D, And Expandable Seal 1986753C1 |
| 1 | | 339525A1 | | 1 | LINER, ENGINE CYLINDER, Incl. 1A |
| 1A | | 87625613 | | 2 | BUSHING |
| 2 | | 339512A1 | | 1 | GLAND, Assembly; Incl. Refs. 2A - 2G |
| 2A | | 339511A1 | | 1 | GLAND, Packing |
| 2B | | 1542881C1 | | 1 | KIT, GASKET, Incl. Rod And Buffer Seals |
| 2C | | D95148 | | 1 | WIPER |
| 2D | | 336042A1 | | 1 | BUSHING, Bearing; Dia. 76.20 |
| 2E | | G107970 | | 1 | RING, Backup |
| 2F | | 238-5247 | | 1 | O-RING, -247, 70 Duro, 4.609" ID x .139" Thk |
| 2G | | 238-5248 | | 1 | O-RING, -248, 70 Duro, 4.734" ID x .139" Thk |
| 3 | | 339520A1 | | 1 | ROD ASSY., 76.2 Dia; Incl. Ref. 3A |
| 3A | | 339521A1 | | 2 | BUSHING, 69.8 Dia. |
| 4 | | 339510A1 | | 1 | PISTON, Incl. Refs. 4A - 4D |
| 4A | | 339508A1 | | 1 | PISTON, 127.0 Dia Cylinder; 76.2 Dia Rod |
| 4B | | G102092 | | 1 | RING, 127.0 Dia. |
| 4C | | 336030A1 | | 1 | SEAL, 127.0 Dia. |
| 4D | | 336046A1 | | 1 | RING, Wear |
| 5 | | 86982444 | | 1 | BOLT, SPECIAL, Incl. Ref. 5A |
| 5A | | NSS | | 1 | NOT SERVICED SEPARATELY, Washer |
| 6 | | D95147 | | 4 | WIPER |
| 7 | | 86642312 | | 1 | SCREW, SELF TAP, Hex Hd, #8 x 3/8" |
| | | 87442965 | | 1 | KIT, SEALS, Seal; Incl. Refs. 2B - 2G, 4B, 4D |

**CYLINDER ASSY - LOADER BUCKET (XR LOADER)**

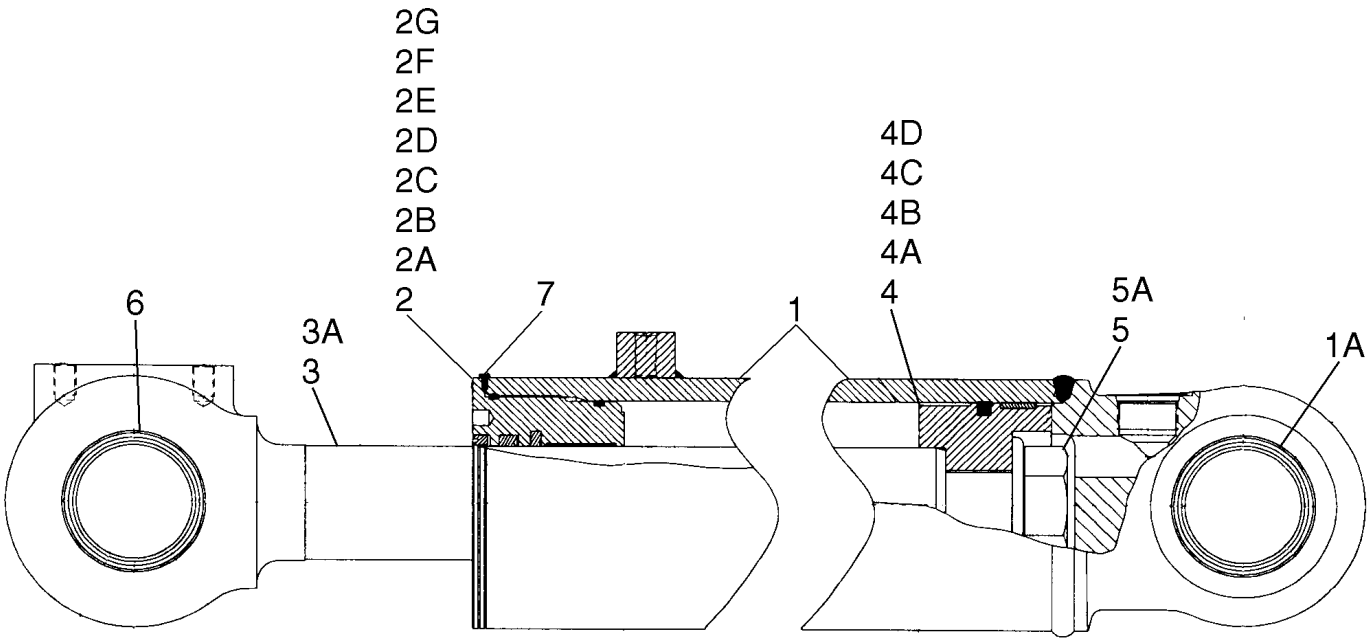


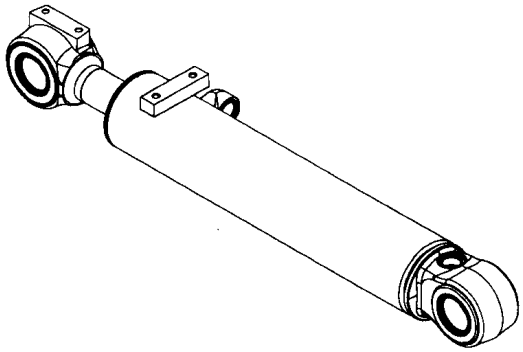

BS05M141

**CYLINDER ASSY - LOADER BUCKET (XR LOADER)**

| REF | FN | PART NUMBER | YR/SN | QTY | DESCRIPTION |
|---|---|---|---|---|---|
| | | REF | | | INSTRUCTION, XR LOADER BUCKET TILT |
| | | 87366695 | | 1 | CYLINDER ASSY., 127 ID x 620 mm strk; Bucket Tilt; Incl. 1 - 20 |
| | | {87434293} | | 1 | KIT, SEALS; Incl. Refs. 3B-3G, 4C, 4D, And Expandable Seal 1986753C1 |
| 1 | | 339525A1 | | 1 | LINER, ENGINE CYLINDER, Incl. 1A |
| 1A | | 87625613 | | 2 | BUSHING |
| 2 | | 339512A1 | | 1 | GLAND, Assembly; Incl. Refs. 2A - 2G |
| 2A | | 339511A1 | | 1 | GLAND, Packing |
| 2B | | 1542881C1 | | 1 | KIT, GASKET, Incl. Rod And Buffer Seals |
| 2C | | D95148 | | 1 | WIPER |
| 2D | | 336042A1 | | 1 | BUSHING, Bearing; Dia. 76.20 |
| 2E | | G107970 | | 1 | RING, Backup |
| 2F | | 238-5247 | | 1 | O-RING, -247, 70 Duro, 4.609" ID x .139" Thk |
| 2G | | 238-5248 | | 1 | O-RING, -248, 70 Duro, 4.734" ID x .139" Thk |
| 3 | | 399350A1 | | 1 | ROD ASSY., 76.2 Dia; Incl. Ref. 3A |
| 3A | | 339521A1 | | 2 | BUSHING, 69.8 Dia. |
| 4 | | 339510A1 | | 1 | PISTON, Incl. Refs. 4A - 4D |
| 4A | | 339508A1 | | 1 | PISTON, 127.0 Dia Cylinder; 76.2 Dia Rod |
| 4B | | G102092 | | 1 | RING, 127.0 Dia. |
| 4C | | 336030A1 | | 1 | SEAL, 127.0 Dia. |
| 4D | | 336046A1 | | 1 | RING, Wear |
| 5 | | 86982444 | | 1 | BOLT, SPECIAL, Incl. Ref. 5A |
| 5A | | NSS | | 1 | NOT SERVICED SEPARATELY, Washer |
| 6 | | D95147 | | 4 | WIPER |
| 7 | | 86642312 | | 1 | SCREW, SELF TAP, Hex Hd, #8 x 3/8" |
| | | 360984A1 | | 1 | KIT, Seal; Incl. Refs. 2B - 2G, 4B, 4D |

**CYLINDER ASSY - LOADER BUCKET (XT LOADER)**

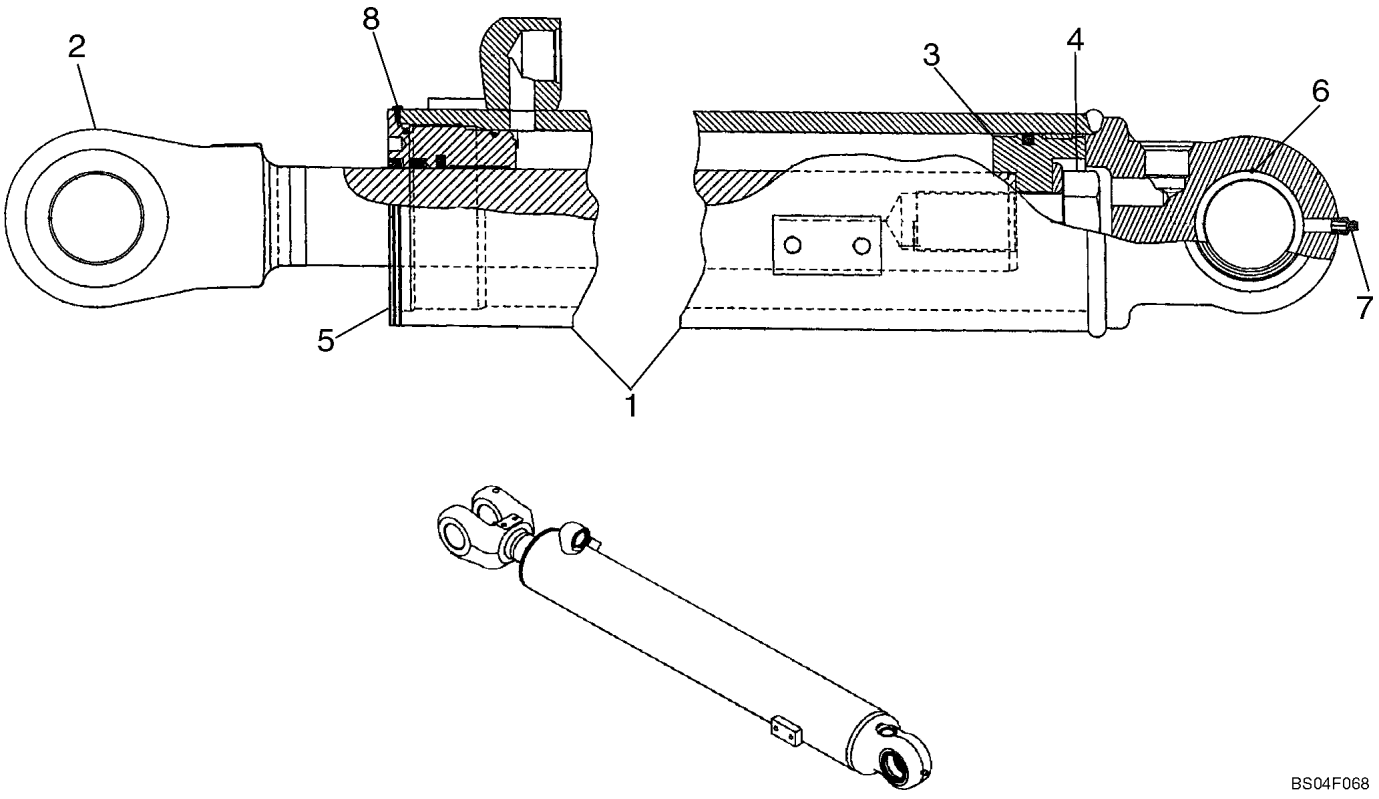


BS04F068

**CYLINDER ASSY - LOADER BUCKET (XT LOADER)**

| REF | FN | PART NUMBER | YR/SN | QTY | DESCRIPTION |
|---|---|---|---|---|---|
| | | REF | | | INSTRUCTION, XT LOADER |
| | | 87442555 | | 2 | CYLINDER, LIFT, 114 ID x 819.9 mm strk; Lift; CNH CE Gray; Incl. 1 - 9 |
| 1 | | 87442557 | | 1 | TUBE ASSY., Incl. Ref. 1A |
| 1A | | 87625614 | | 2 | BUSHING, Not Illustrated |
| 2 | | 87442559 | | 1 | ROD ASSY., 63,5 mm dia |
| 3 | | 341971A1 | | 1 | PISTON, Incl. Refs. 3A-3D |
| 3A | | 341968A1 | | 1 | PISTON, Not Illustrated |
| 3B | | 336029A1 | | 1 | SEAL, Not Illustrated |
| 3C | | G101995 | | 1 | GASKET, Not Illustrated |
| 3D | | 336045A1 | | 1 | RING, Not Illustrated |
| 4 | | 86982444 | | 1 | BOLT, SPECIAL, Incl. Ref. 4A |
| 4A | | NSS | | 1 | NOT SERVICED SEPARATELY, Washer, Not Illustrated |
| 5 | | 336379A1 | | 1 | GLAND, Cylinder; Incl. Refs. 5A -5G |
| 5A | | 336378A1 | | 1 | GLAND, Not Illustrated |
| 5B | | D95146 | | 1 | WIPER, Not Illustrated |
| 5C | | 1542879C1 | | 1 | KIT, SEALS, Incl. Rod Seal, Buffer Seal, Not Illustrated |
| | | NSS | | 1 | NOT SERVICED SEPARATELY, Seal, Rod, Not Illustrated |
| | | NSS | | 1 | NOT SERVICED SEPARATELY, Seal, Buffer, Not Illustrated |
| 5D | | 336041A1 | | 1 | BEARING, Not Illustrated |
| 5E | | G109300 | | 1 | RING, Not Illustrated |
| 5F | | 238-5243 | | 1 | O-RING, -243, 70 Duro, 4.109" ID x .139" Thk, Not Illustrated |
| 5G | | 238-5244 | | 1 | O-RING, -244, 70 Duro, 4.234" ID x .139" Thk, Not Illustrated |
| 6 | | D95145 | | 2 | WIPER |
| 7 | | 219-1 | | 1 | NIPPLE, LUBE, 1/8"-27 x .66 lg |
| 8 | | 86642312 | | 1 | SCREW, SELF TAP, Hex Hd, #8 x 3/8", Self Tapping |
| 9 | | 360982A1 | | 1 | KIT, Seal; Incl. Refs. 3C, 3D, 5B - 5G; Includes 361000A1 Expandable Seal Ring For Service Replacement Of Ref. 3B Piston Seal; Not Illustrated |

**HYDRAULICS - STANDARD BYPASS**

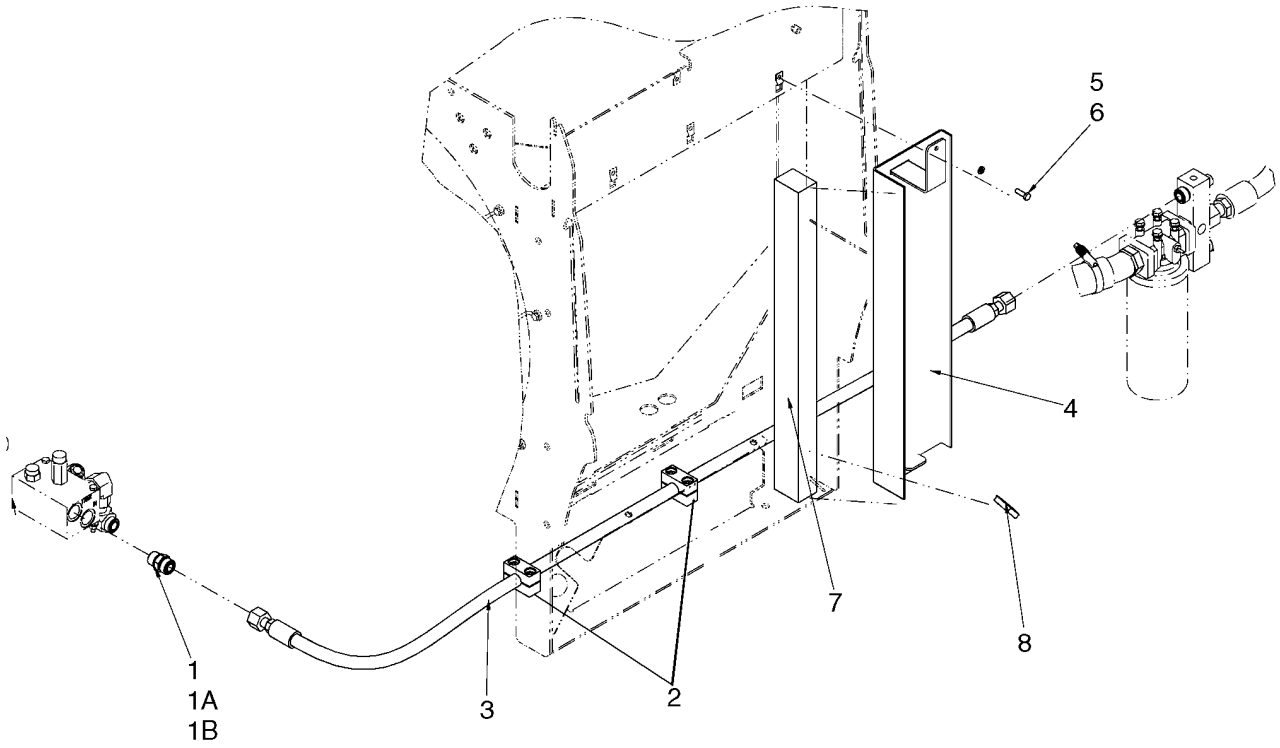

**HYDRAULICS - STANDARD BYPASS**

| REF | FN | PART NUMBER | YR/SN | QTY | DESCRIPTION |
|---|---|---|---|---|---|
| 1 | | 700-104 | | 1 | CONNECTOR, HYD., 1 3/16"-12 ORFS x M27 x 2 ORB, Incl. Refs. 1A, 1B |
| 1A | | 238-6018 | | 1 | O-RING, -018, 90 Duro, .739" ID x .070" Thk, Face Seal |
| 1B | | 637-64236 | | 1 | O-RING, Cl 6, 23.6MM ID x 2.9 Thk, Boss Seal |
| 2 | | 367489A1 | | 2 | BLOCK |
| 3 | | 87559567 | | 1 | HOSE, Cooler Bypass, 1902 mm (74 - 7/8 in) |
| 4 | | 8501329 | | 1 | PLATE, MOUNTING |
| 5 | | 892-11008 | | 1 | WASHER, LOCK, M8 |
| 6 | | 627-8025 | | 1 | BOLT, Hex, M8 x 25, 10.9 |
| 7 | | 8500206 | | 1 | SEAL |
| 8 | | 353-414 | | 2 | PLUG, Dome, 1.375" hole, Nylon |

**HYDRAULICS - COOLER WITHOUT BYPASS**

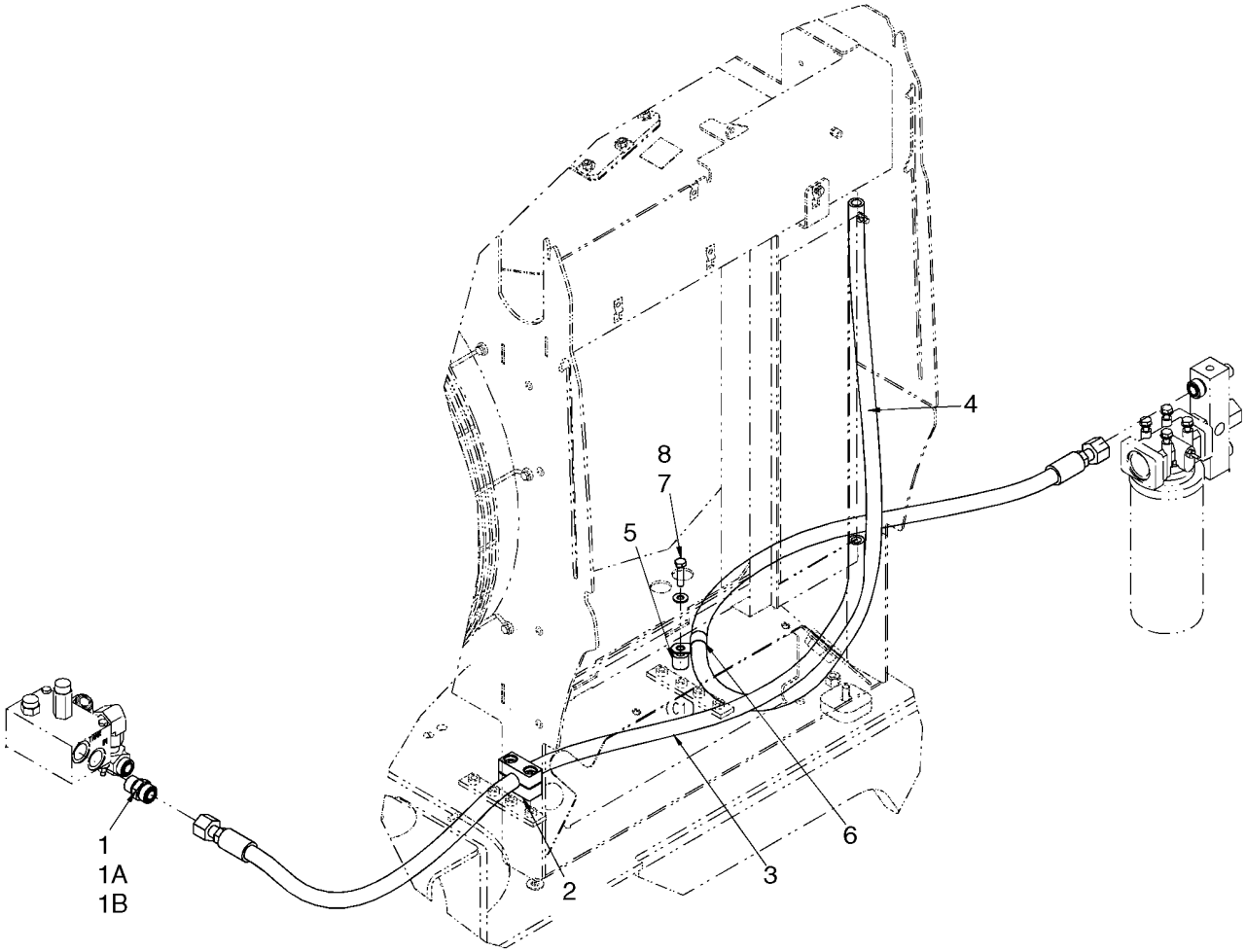

**HYDRAULICS - COOLER WITHOUT BYPASS**

| REF | FN | PART NUMBER | YR/SN | QTY | DESCRIPTION |
|---|---|---|---|---|---|
| | | REF | | | INSTRUCTION, FAN VALVE TO COOLER AND COOLER RETURN HOSES, WITHOUT BYPASS |
| 1 | | 700-104 | | 1 | CONNECTOR, HYD., 1 3/16"-12 ORFS x M27 x 2 ORB, Incl. Refs. 1A, 1B |
| 1A | | 238-6018 | | 1 | O-RING, -018, 90 Duro, .739" ID x .070" Thk, Face Seal |
| 1B | | 637-64236 | | 1 | O-RING, Cl 6, 23.6MM ID x 2.9 Thk, 23,6 ID x 2,9; Boss Seal |
| 2 | | 367489A1 | | 1 | BLOCK |
| 3 | | 87362190 | | 1 | HOSE ASSY., Fan Valve to Cooler; 1530 mm (60 1/4 in) |
| 4 | | 8501321 | | 1 | HOSE, Cooler Return to Filter; 2102 mm (82 - 3/4 in) |
| 5 | | 8500877 | | 1 | SPACER |
| 6 | | 515-25254 | | 1 | CLAMP, 1", Insul, 1/2" Bolt |
| 7 | | 895-15010 | | 1 | WASHER, M11 x 24 x 2 |
| 8 | | 827-10040 | | 1 | BOLT, Hex, M10 x 40, 10.9, Full Thd |

**HYDRAULICS - THERMAL BYPASS**

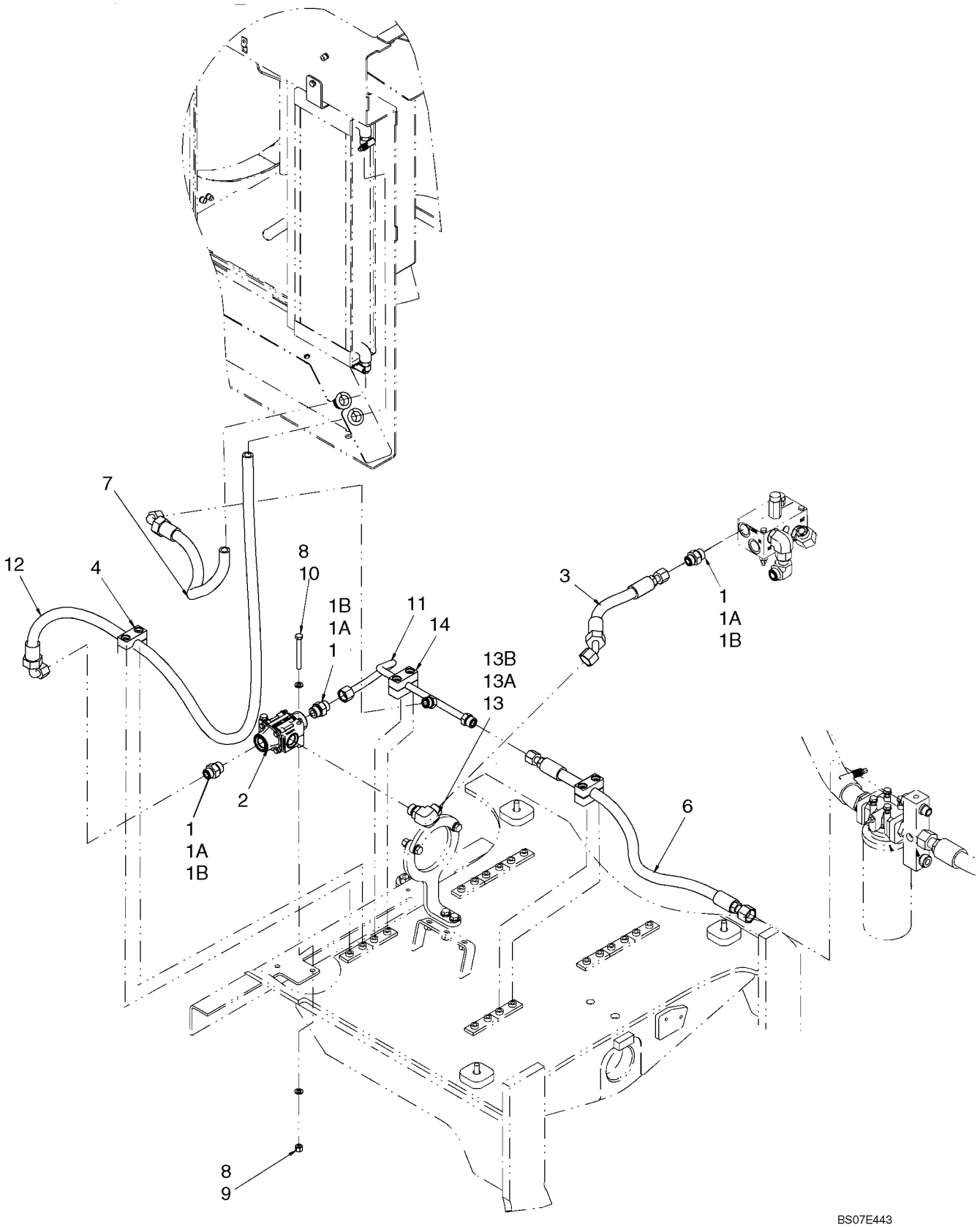

**HYDRAULICS - THERMAL BYPASS**

| REF | FN | PART NUMBER | YR/SN | QTY | DESCRIPTION |
|---|---|---|---|---|---|
| 1 | | 86597760 | | 3 | CONNECTOR, HYD., 1"-14 ORFS x M27 x 2 ORB, Incl. Refs. 1A, 1B |
| 1A | | 637-64236 | | 1 | O-RING, Cl 6, 23.6MM ID x 2.9 Thk |
| 1B | | 238-6016 | | 1 | O-RING, -016, 90 Duro, .614" ID x .070" Thk |
| 2 | | 87326981 | | 1 | VALVE, BY-PASS, Thermal; Incl. Ref. 2A |
| 2A | | 87328377 | | 1 | KIT, REPAIR, For 87326981 Thermal Bypass Valve; Contains: Thermal Element Assy And Seals; Not Illustrated |
| 3 | | {87658721} | | 1 | HOSE ASSY. Fan To Bypass; 387 mm (15 - 1/4 in) |
| 4 | | 367489A1 | | 2 | BLOCK, Mounting |
| 6 | | 87577168 | | 1 | HOSE, Junction to Filter; 1037 mm ( 40 -13/16 in) |
| 7 | | {87658722} | | 1 | HOSE, Cooler to Junction; 700 mm (27 - 9/16 in) |
| 8 | | 895-11010 | | 4 | WASHER, M10 x 20 x 2 |
| 9 | | 832-10410 | | 2 | NUT, LOCK, M10 x 1.5, Cl 8 |
| 10 | | 827-10090 | | 2 | BOLT, Hex, M10 x 90, 10.9 |
| 11 | | {87658720} | | 1 | TUBE ASSY. Thermal Bypass |
| 12 | | 87362185 | | 1 | HOSE ASSY., Bypass to Cooler; 1936 mm (76 - 7/32 in) |
| 13 | | 700-307 | | 1 | ELBOW, 90º, 1 3/16"-12 ORFS x M27 x 2 ORB, Incl. Refs. 13A, 13B |
| 13A | | 238-6016 | | 1 | O-RING, -016, 90 Duro, .614" ID x .070" Thk |
| 13B | | 637-64236 | | 1 | O-RING, Cl 6, 23.6MM ID x 2.9 Thk, Boss Seal |
| 14 | | 8500210 | | 1 | CLAMP, Tube Mounting |

**HYDRAULICS - RIDE CONTROL**

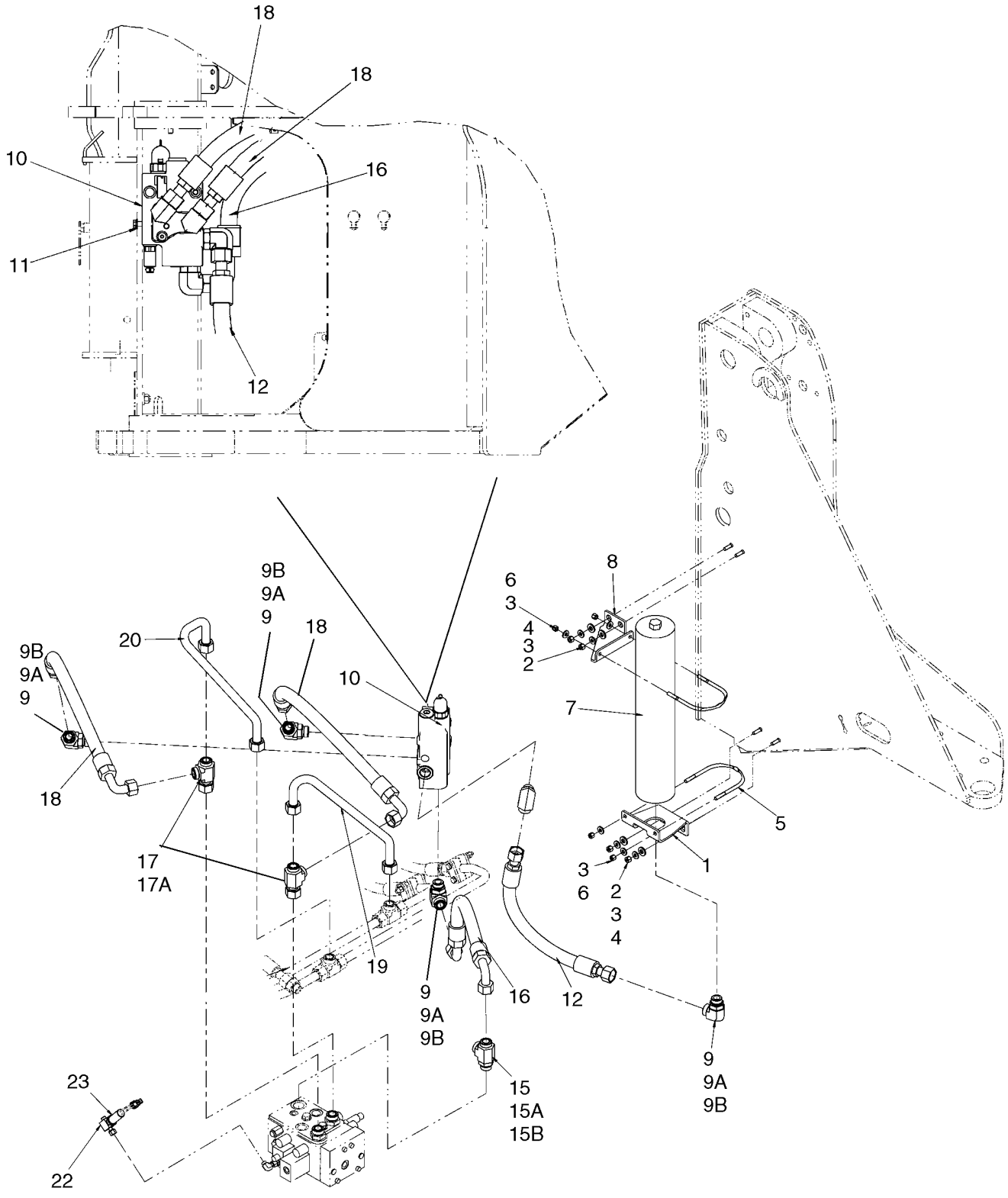

**HYDRAULICS - RIDE CONTROL**

| REF | FN | PART NUMBER | YR/SN | QTY | DESCRIPTION |
|---|---|---|---|---|---|
| 1 | | 87393646 | | 1 | BRACKET, Accumulator |
| 2 | | 896-15012 | | 4 | WASHER, M12 x 28.5 x 4, HT |
| 3 | | 896-15010 | | 8 | WASHER, M10 x 24.5 x 3, HT |
| 4 | | 832-10410 | | 4 | NUT, LOCK, M10 x 1.5, Cl 8 |
| 5 | | L128472 | | 2 | U-BOLT |
| 6 | | 231-1446 | | 4 | NUT, LOCK, 3/8"-16, GB |
| 7 | | 87393434 | | 1 | ACCUMULATOR, Ride Control |
| 8 | | 87403347 | | 1 | BRACKET, Accumulator |
| 9 | | 700-308 | | 5 | ELBOW, 90º, 1 7/16"-12 ORFS x M33 x 2 ORB, Incl. Refs. 9A, 9B |
| 9A | | 637-64296 | | 1 | O-RING, Cl 6, 29.6MM ID x 2.9 Thk |
| 9B | | 238-6021 | | 1 | O-RING, -021, 90 Duro, .926" ID x .070" Thk, Face Seal |
| 10 | | 87393431 | | 1 | VALVE, Ride Control; See Figure 08-20A |
| 11 | | 844-10035 | | 2 | BOLT, Hex Flg, M10 x 35, 8.8 |
| 12 | | 87452278 | | 1 | HOSE ASSY., Ride Control Accumulator; 588 mm (23 - 1/8 in) |
| 15 | | 700-407 | | 1 | TEE, 1 7/16"-12 ORFS x M33 x 2 ORB Run, Incl. Refs. 15A, 15B |
| 15A | | 238-6021 | | 2 | O-RING, -021, 90 Duro, .926" ID x .070" Thk, Face Seal |
| 15B | | 637-64296 | | 1 | O-RING, Cl 6, 29.6MM ID x 2.9 Thk, Boss Seal |
| 16 | | 87452279 | | 1 | HOSE ASSY., Ride Control Tank; 723 mm (28 - 15/32 in) |
| 17 | | 701-418 | | 2 | TEE, 1 7/16"-12 ORFS x 1 7/16"-12 Fem Sw Run, Incl. Ref. 17A |
| 17A | | 238-6021 | | 3 | O-RING, -021, 90 Duro, .926" ID x .070" Thk, Face Seal |
| 18 | | 87452280 | | 2 | HOSE ASSY., Head Or Rod; 873mm ( 34-3/8 in ) |
| 19 | | 87452287 | | 1 | TUBE ASSY. |
| 20 | | 87389423 | | 1 | TUBE, HYD |
| 22 | | 397547A1 | | 1 | FITTING, Pressure Switch |
| 23 | | 446183A1 | | 1 | SWITCH, PRESSURE, Rollback |

**VALVE ASSY - RIDE CONTROL DIRECTIONAL (RSM2-16)**

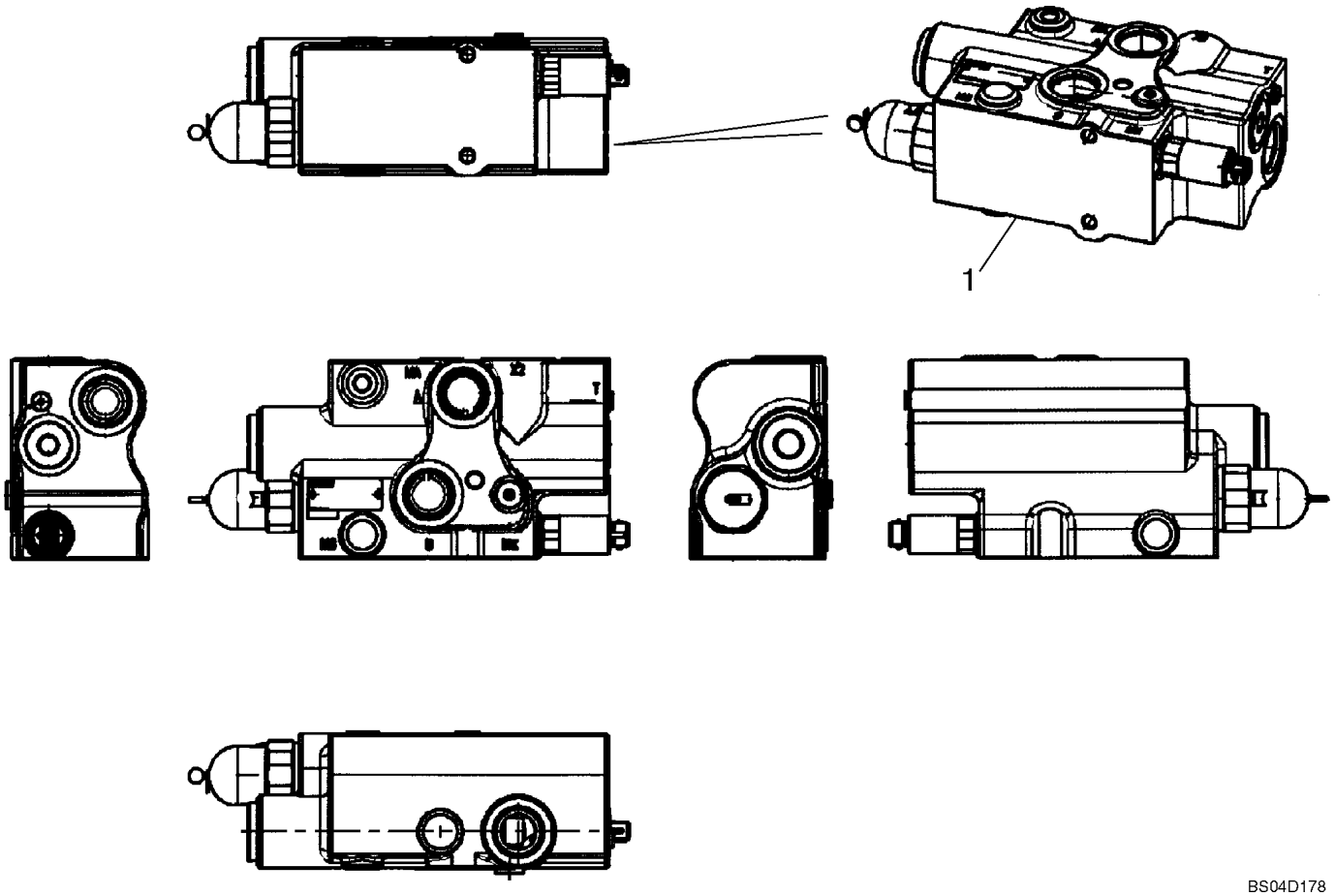

**VALVE ASSY - RIDE CONTROL DIRECTIONAL (RSM2-16)**

| REF | FN | PART NUMBER | YR/SN | QTY | DESCRIPTION |
|---|---|---|---|---|---|
| 1 | | 87393431 | | 1 | VALVE, Ride Control RSM2; Includes The Following Parts, Which Are Not Illustrated |
| 1A | | 87453761 | | 1 | BUSHING |
| 1B | | 87453762 | | 1 | SPRING |
| 1C | | 87453765 | | 1 | SCREW, BLEED |
| 1D | | 87453766 | | 1 | SPRING |
| 1E | | 87453767 | | 1 | SPRING |
| 1F | | 87453768 | | 1 | PLUG, 3/4 in |
| 1G | | 87453769 | | 1 | PLUG, 1 in |
| 1H | | 87453770 | | 1 | PLUG, M14 x 1.5 |
| 1J | | 87453771 | | 1 | SCREW |
| 1K | | 87453772 | | 1 | VALVE, SOLENOID |
| 1L | | 87533290 | | 1 | VALVE, PRESSURE RELIEF |

**HYDRAULICS - NON- RIDE CONTROL**

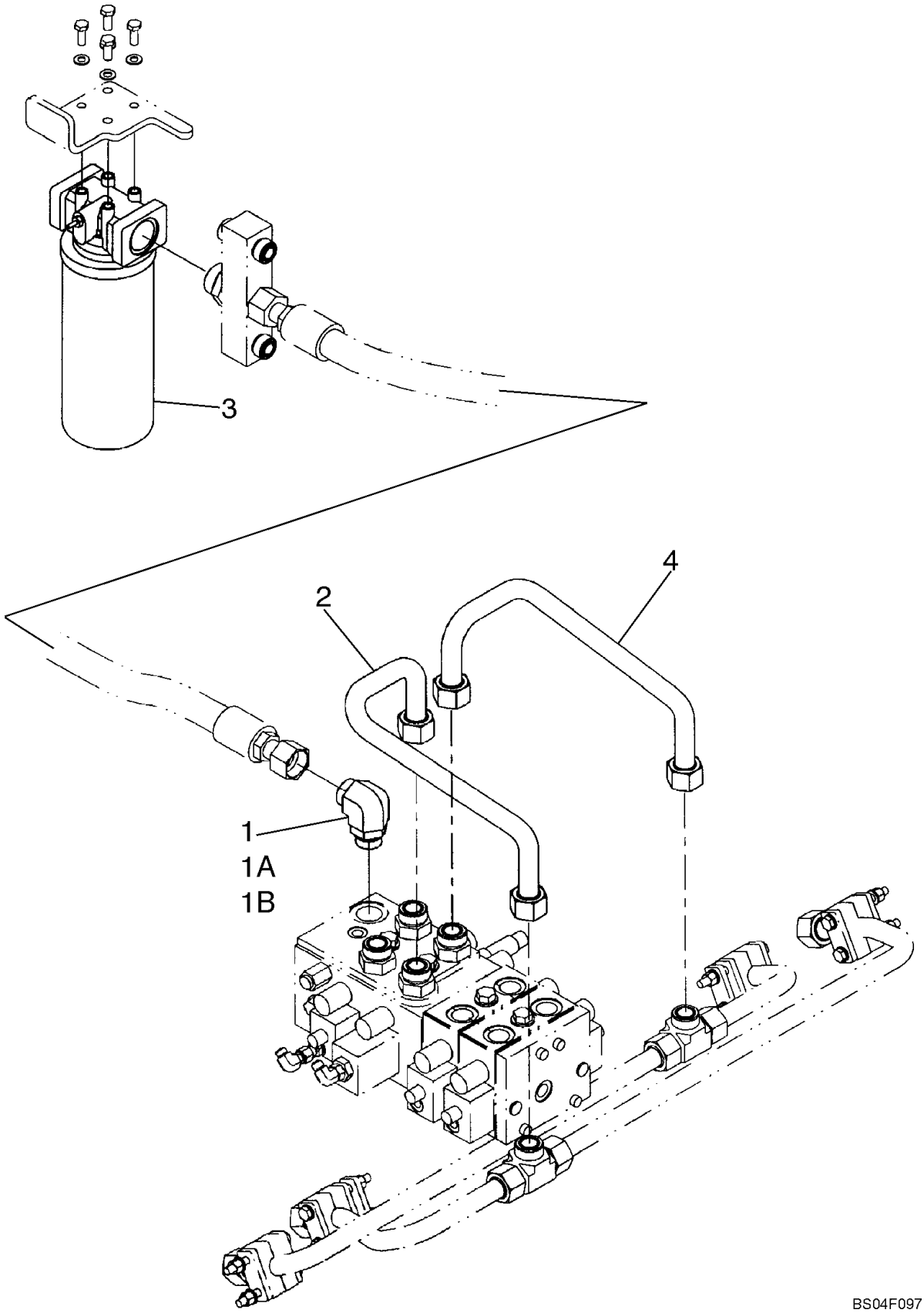

**HYDRAULICS - NON- RIDE CONTROL**

| REF | FN | PART NUMBER | YR/SN | QTY | DESCRIPTION |
|---|---|---|---|---|---|
| | | REF | | | INSTRUCTION, NO RIDE CONTROL - VALVE TO FILTER |
| 1 | | 700-308 | | 1 | ELBOW, 90º, 1 7/16"-12 ORFS x M33 x 2 ORB, Incl. 1A, 1B |
| 1A | | 238-6021 | | 1 | O-RING, -021, 90 Duro, .926" ID x .070" Thk, Face Seal |
| 1B | | 637-64296 | | 1 | O-RING, Cl 6, 29.6MM ID x 2.9 Thk, Boss Seal |
| 2 | | 87389244 | | 1 | TUBE, HYD, Head |
| 3 | | 87308928 | | 1 | FILTER ASSY., Without Reverse Flow; See Figure 08-02A |
| 4 | | 8606096 | | 1 | TUBE ASSY., Rod |

**HYDRAULICS - FAN DRIVE**

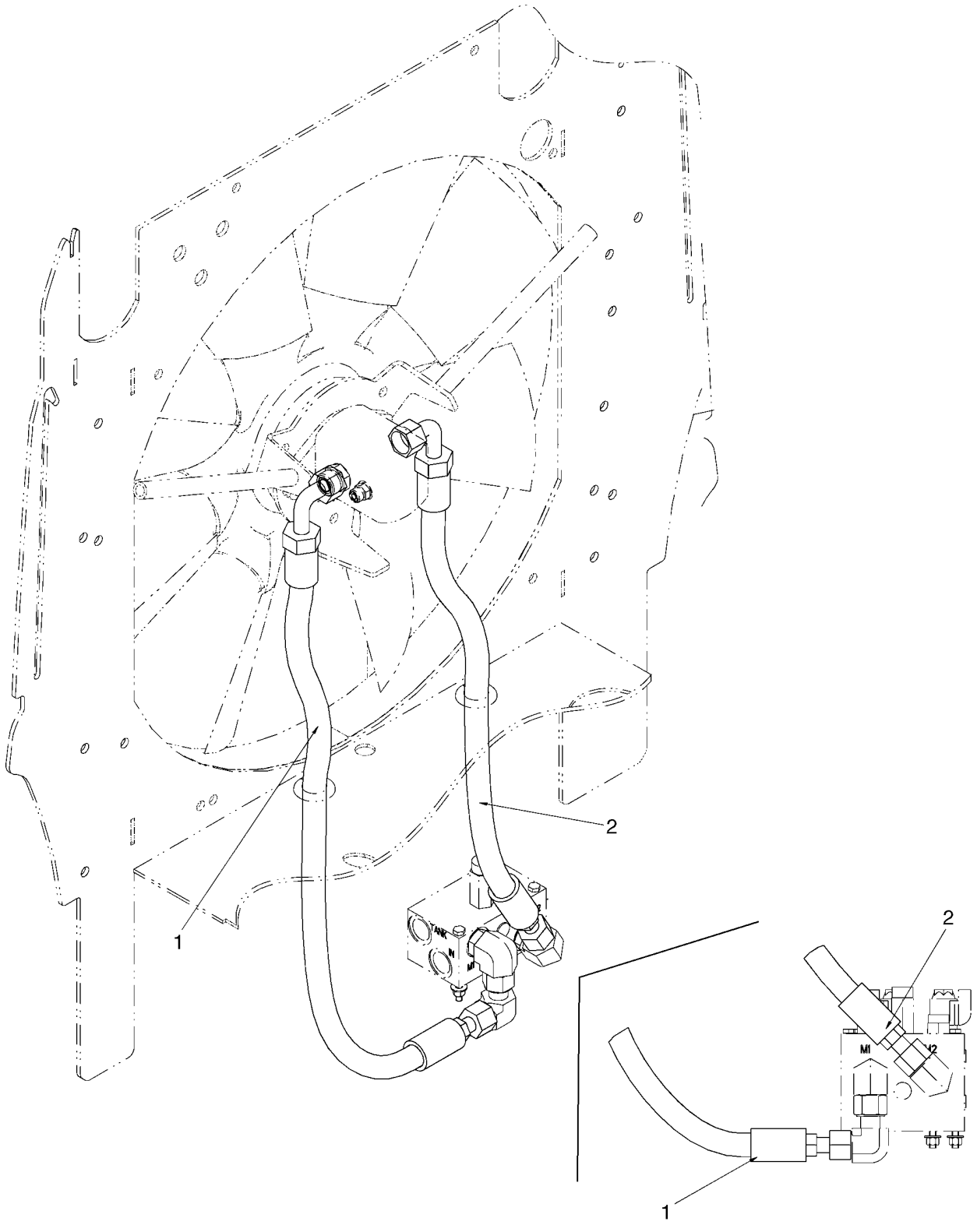

**HYDRAULICS - FAN DRIVE**

| REF | FN | PART NUMBER | YR/SN | QTY | DESCRIPTION |
|---|---|---|---|---|---|
| 1 | | 87559565 | | 1 | HOSE, Fan Reverse |
| 2 | | 87559564 | | 1 | HOSE, Fan Forward |

**VALVE, FAN RELIEF - MOUNTING**

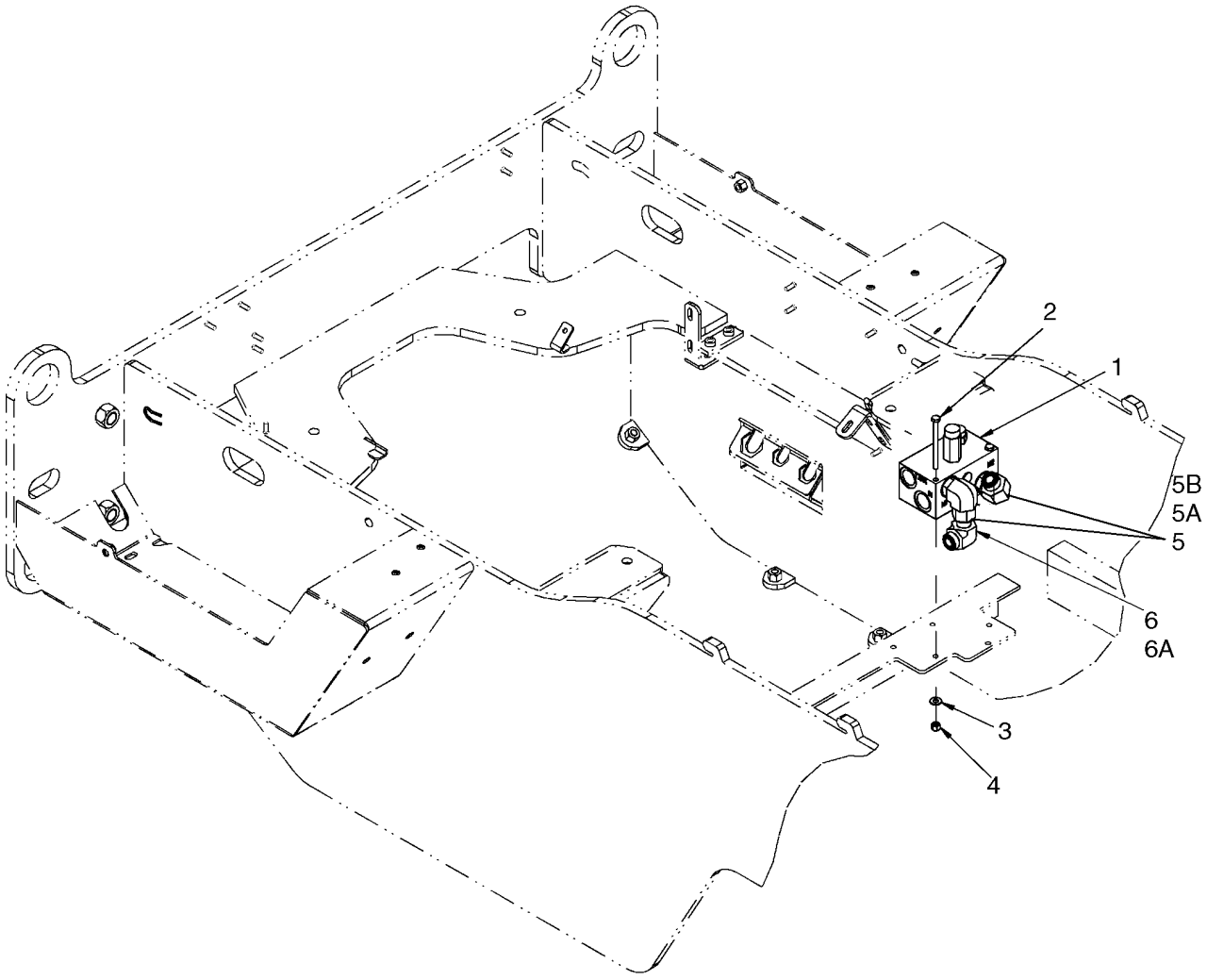

**VALVE, FAN RELIEF - MOUNTING**

| REF | FN | PART NUMBER | YR/SN | QTY | DESCRIPTION |
|---|---|---|---|---|---|
| | | REF | | | INSTRUCTION, FAN RELIEF VALVE MOUNTING |
| 1 | | 8500562 | | 1 | VALVE, HYDRAULIC, Fan Relief; See Figure 08-23A |
| 2 | | 827-8100 | | 2 | BOLT, Hex, M8 x 100, 10.9 |
| 3 | | 895-15008 | | 2 | WASHER, M8 x 20 x 1.6 |
| 4 | | 832-10408 | | 2 | NUT, LOCK, M8 x 1.25, Cl 8 |
| 5 | | 700-307 | | 2 | ELBOW, 90º, 1 3/16"-12 ORFS x M27 x 2 ORB, Incl. Refs. 5A, 5B |
| 5A | | 637-64236 | | 1 | O-RING, Cl 6, 23.6MM ID x 2.9 Thk, Boss |
| 5B | | 238-6018 | | 1 | O-RING, -018, 90 Duro, .739" ID x .070" Thk, Face End |
| 6 | | 701-342 | | 1 | ELBOW, 90º, 1 3/16"-12 ORFS x 1 3/16"-12 Fem Sw, Incl. Refs. 6A |
| 6A | | 238-6018 | | 1 | O-RING, -018, 90 Duro, .739" ID x .070" Thk, Face Seal |

**VALVE ASSY - FAN RELIEF**

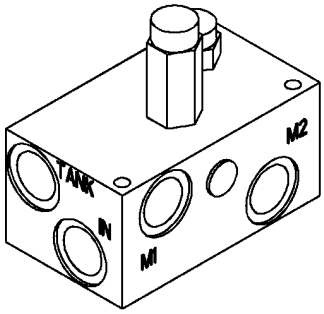


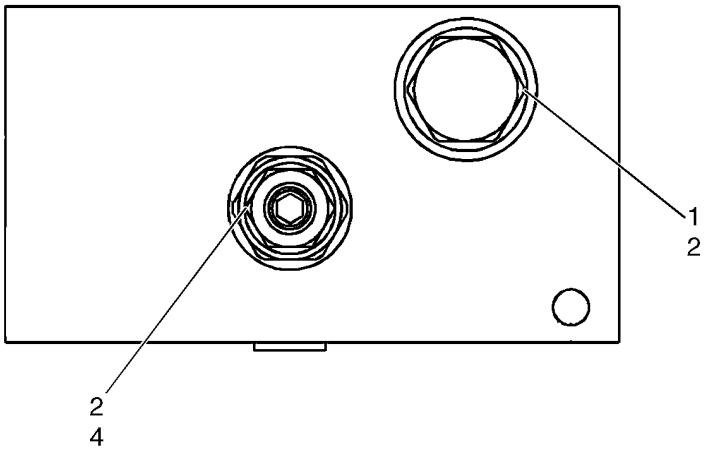


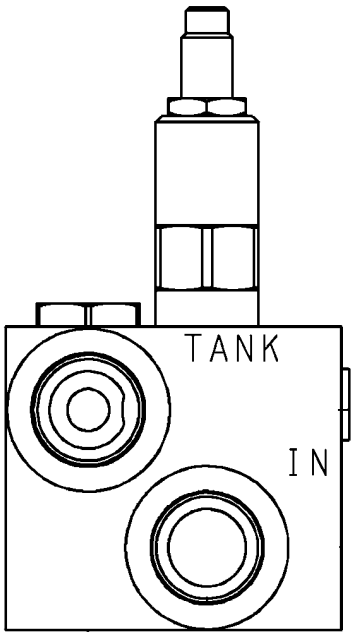


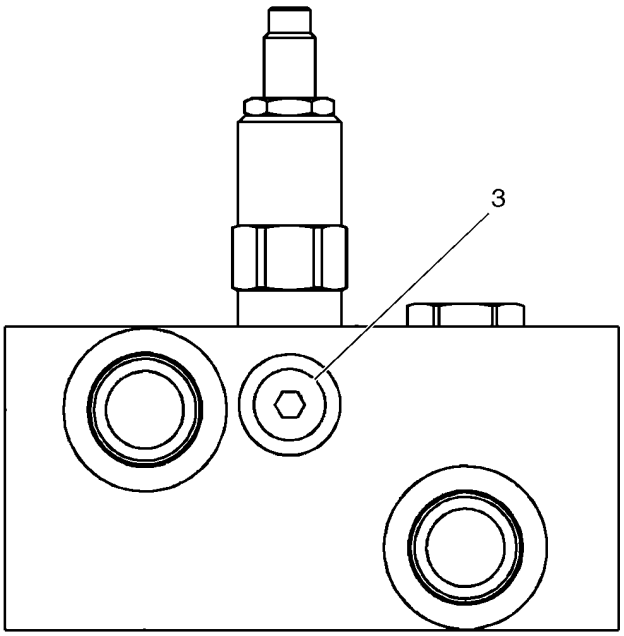


BS06M399

**VALVE ASSY - FAN RELIEF**

| REF | FN | PART NUMBER | YR/SN | QTY | DESCRIPTION |
|---|---|---|---|---|---|
| | | 8500562 | | 1 | VALVE, HYDRAULIC, Fan Relief; Incl. Refs, 1-4, If Used |
| 1 | | 8605073 | | 1 | VALVE, CHECK, Incl. Ref. 2 |
| 2 | | 1542830C2 | | 2 | KIT, GASKET |
| 3 | | 218-5209 | | 1 | PLUG, Hex Soc, 9/16"-18 ORB |
| 4 | | 8605070 | | 1 | VALVE, PRESSURE RELIEF, Pilot Operated; Incl. Ref. 2 |

**VALVE, FAN SPEED AND REVERSER - MOUNTING**

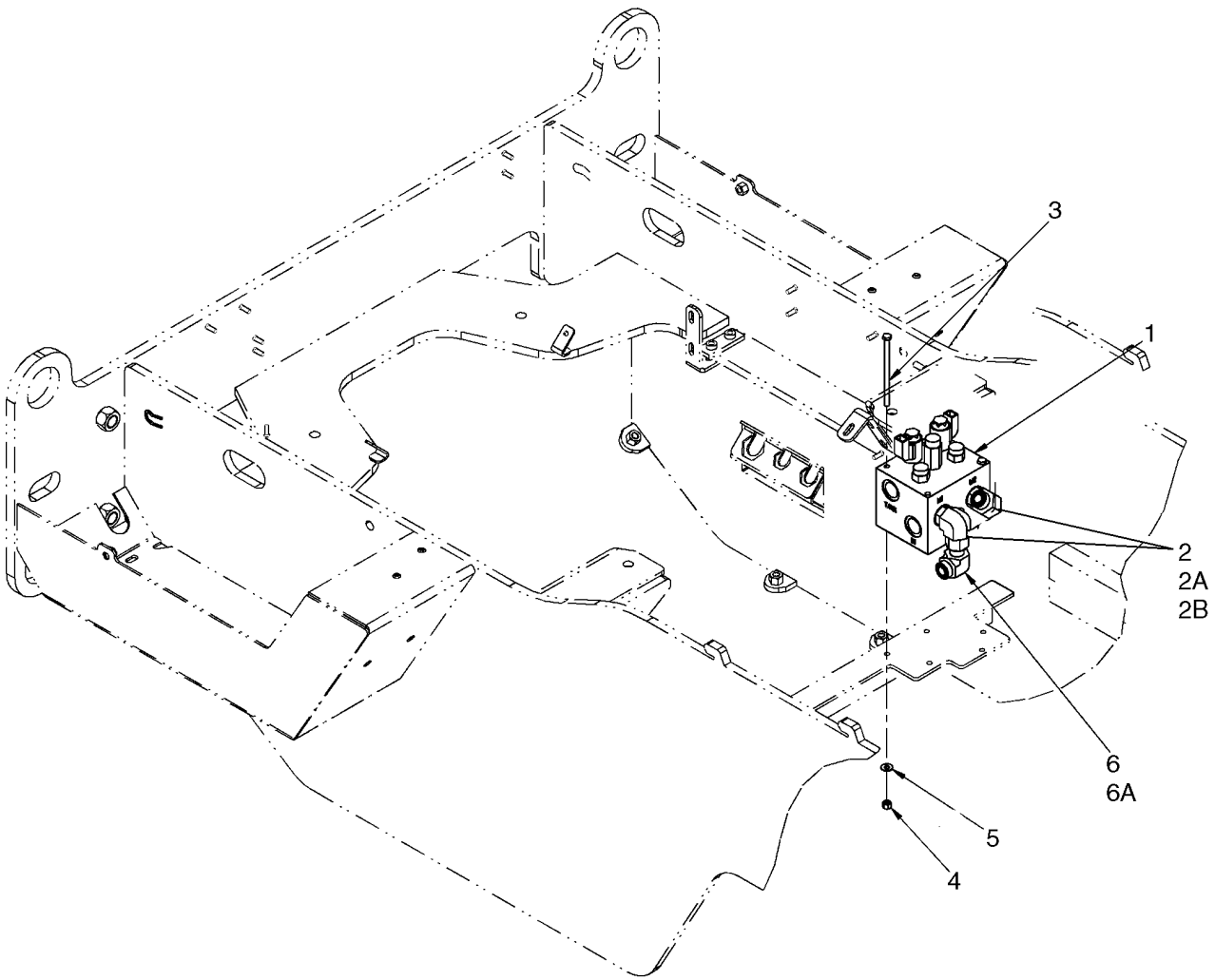

**VALVE, FAN SPEED AND REVERSER - MOUNTING**

| REF | FN | PART NUMBER | YR/SN | QTY | DESCRIPTION |
|---|---|---|---|---|---|
| | | REF | | | INSTRUCTION, FAN SPEED AND REVERSER |
| 1 | | 8500565 | | 1 | VALVE, HYDRAULIC, Fan Speed and Reverser; See Figure 08-24A |
| 2 | | 700-307 | | 2 | ELBOW, 90º, 1 3/16"-12 ORFS x M27 x 2 ORB, Incl. Refs. 2A, 2B |
| 2A | | 637-64236 | | 1 | O-RING, Cl 6, 23.6MM ID x 2.9 Thk, Boss |
| 2B | | 238-6018 | | 1 | O-RING, -018, 90 Duro, .739" ID x .070" Thk, Face Seal |
| 3 | | 814-8140 | | 3 | BOLT, Hex, M8 x 140, 8.8 |
| 4 | | 832-10408 | | 3 | NUT, LOCK, M8 x 1.25, Cl 8 |
| 5 | | 895-15008 | | 3 | WASHER, M8 x 20 x 1.6 |
| 6 | | 701-342 | | 1 | ELBOW, 90º, 1 3/16"-12 ORFS x 1 3/16"-12 Fem Sw, Incl. Ref. 6A |
| 6A | | 238-6018 | | 1 | O-RING, -018, 90 Duro, .739" ID x .070" Thk, Face Seal |

**VALVE ASSY - FAN SPEED AND REVERSER**

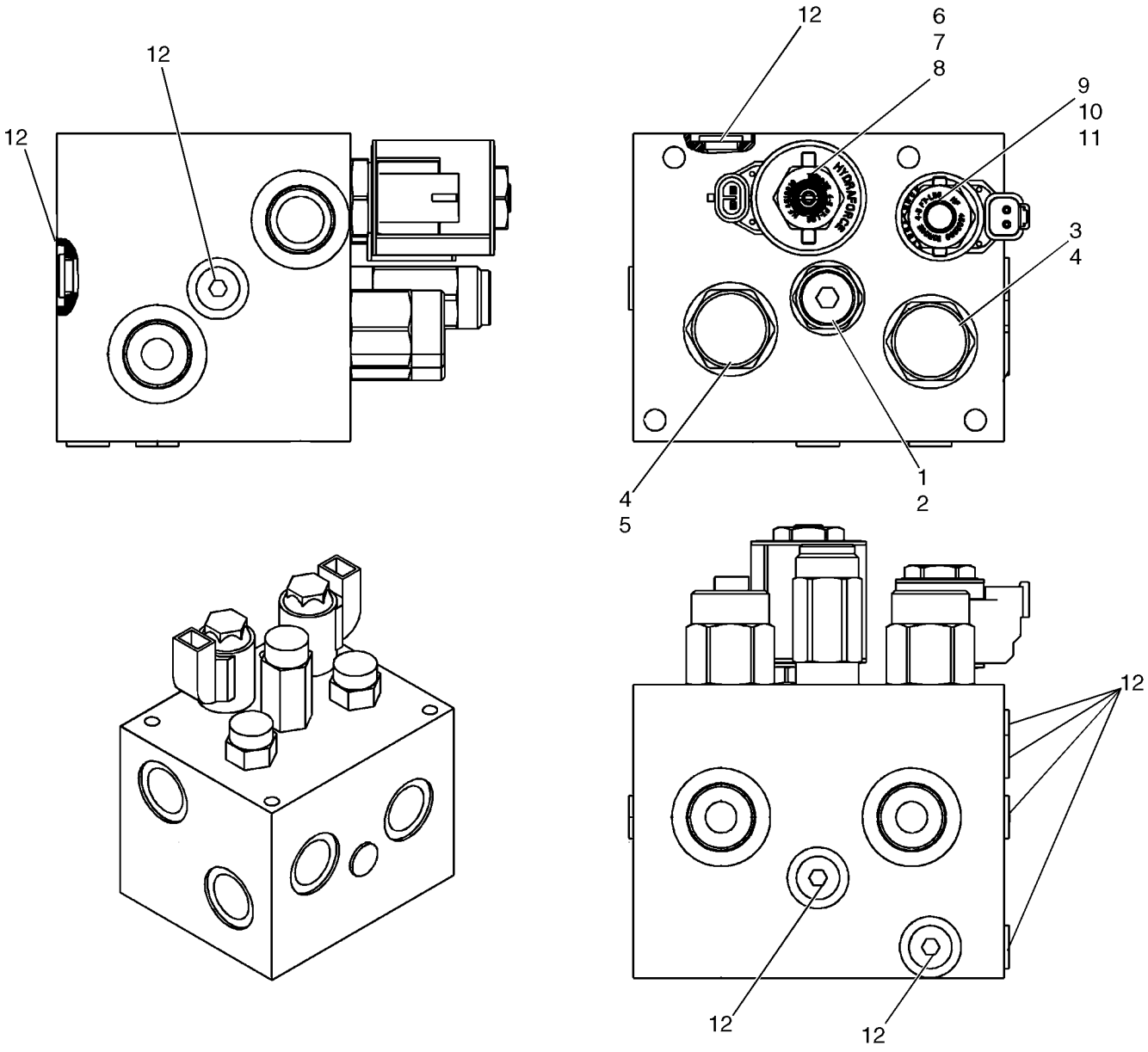


BS06M400

**VALVE ASSY - FAN SPEED AND REVERSER**

| REF | FN | PART NUMBER | YR/SN | QTY | DESCRIPTION |
|---|---|---|---|---|---|
| | | 8500565 | | 1 | VALVE, HYDRAULIC, Fan Speed and Reverser; Incl. Refs. 1-12 |
| 1 | | 8605053 | | 1 | VALVE, PRESSURE RELIEF, Incl. Ref. 2 |
| 2 | | 1542833C1 | | 1 | PACKAGE, SEALS |
| 3 | | 8605056 | | 1 | VALVE, PILOT, Directional; Incl. Ref. 4 |
| 4 | | 388744A1 | | 2 | KIT, Seal; Includes (4) O-Rings and (6) Back-Up Rings |
| 5 | | 8605059 | | 1 | VALVE, PILOT, Directional; Incl. Ref. 4 |
| 6 | | 8605062 | | 1 | VALVE, PRESSURE RELIEF, Pilot Operated Relief; Incl. Ref. 7 |
| 7 | | 1542830C2 | | 1 | KIT, GASKET |
| 8 | | {87617169} | | 1 | COIL, Electronic |
| 9 | | 8605066 | | 1 | VALVE, PRESSURE RELIEF, Solenoid Cartridge; Incl. Ref. 9A |
| 9A | | 329483A1 | | 1 | KIT, GASKET, Not Illustrated |
| 10 | | {87617168} | | 1 | KIT, GASKET, Includes (3) O-Rings and (4) Back-Up Rings |
| 11 | | {87617170} | | 1 | COIL, Electronic |
| 12 | | 218-5209 | | 9 | PLUG, Hex Soc, 9/16"-18 ORB |

| 08-25 | | p1 | 07/07 |
|---|---|---|---|

**HYDRAULICS - LOADER CONTROL, REMOTE**

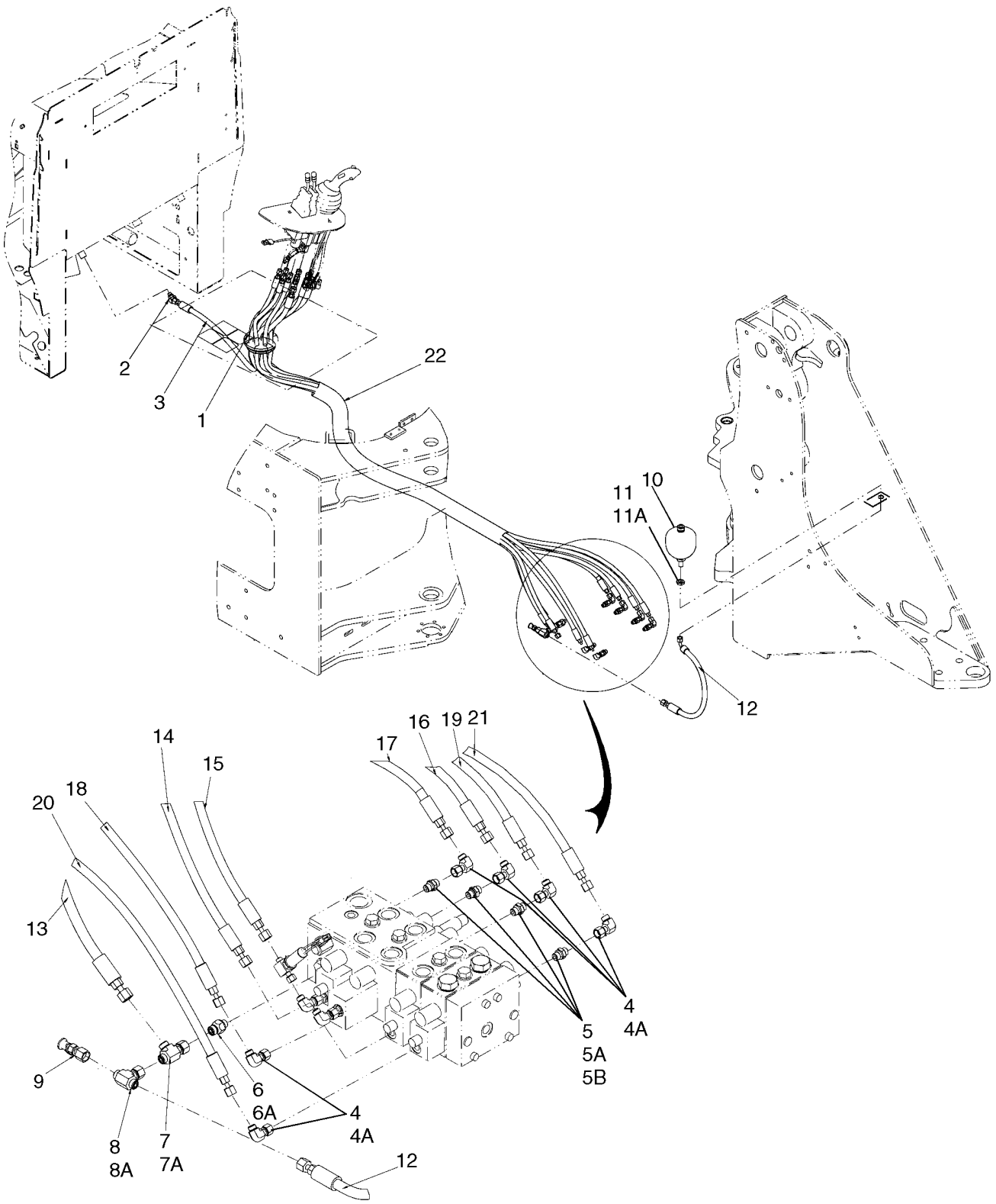

**HYDRAULICS - LOADER CONTROL, REMOTE**

| REF | FN | PART NUMBER | YR/SN | QTY | DESCRIPTION |
|---|---|---|---|---|---|
| | | REF | | | INSTRUCTION, TWO, THREE, AND FOUR SPOOL LOADER CONTROL HYDRAULICS, PILOT SUPPLY ACCUMULATOR |
| 1 | | 380912A1 | | 2 | GROMMET |
| 2 | | 700-315 | | 1 | ELBOW, 45º, 11/16"-18 ORFS x M14 x 1.5 ORB |
| 3 | | 392059A1 | | 1 | HOSE ASSY., Pilot to Tank; 1294 mm (50 - 15/16 in) |
| 4 | | 701-329 | | 2-6 | ELBOW, 90º, 9/16"-18 ORFS x 9/16"-18 Fem Sw, Incl. Ref. 4A |
| 4A | | 238-6011 | | 1 | O-RING, -011, 90 Duro, .301" ID x .070" Thk |
| 5 | | 700-153 | | 2-6 | CONNECTOR, HYD., 9/16"-18 ORFS x M14 x 1.5 ORB, Incl. Refs. 5A, 5B |
| 5A | | 238-6012 | | 1 | O-RING, -012, 90 Duro, .364" ID x .070" Thk, Face Seal |
| 5B | | 637-63113 | | 1 | O-RING, Cl 6, 11.3MM ID x 2.2 Thk |
| 6 | | 391859A1 | | 1 | VALVE, CHECK, Incl. Ref. 6A |
| 6A | | 637-63113 | | 1 | O-RING, Cl 6, 11.3MM ID x 2.2 Thk |
| 7 | | 701-422 | | 1 | TEE, 11/16"-16 ORFS x 11/16"-16 Fem Sw Run, Incl. Ref. 7A |
| 7A | | 238-6012 | | 1 | O-RING, -012, 90 Duro, .364" ID x .070" Thk |
| 8 | | 701-434 | | 1 | TEE, 11/16"-16 ORFS x 11/16"-16 Fem Sw Br, Incl. Ref. 8A |
| 8A | | 238-6012 | | 1 | O-RING, -012, 90 Duro, .364" ID x .070" Thk |
| 9 | | 190119A1 | | 1 | COUPLING, Diagnostic |
| 10 | | 8501047 | | 1 | ACCUMULATOR, Pilot Supply |
| 11 | | 701-909 | | 1 | NUT, LOCK, 11/16"-16, Blkhd, Incl. Ref. 11A |
| 11A | | 238-6012 | | 1 | O-RING, -012, 90 Duro, .364" ID x .070" Thk |
| 12 | | 87308338 | | 1 | HOSE ASSY., Pilot Accumulator; 621 mm (24 - 7/16 in) |
| 13 | | 87651218 | | 1 | HOSE, Pilot Pressure; 2565 mm (101 in) |
| 14 | | 87651219 | | 1 | HOSE, Pilot Lift, Right; Yellow and Black Banding; 2742 mm (107 - 15/16 in) |
| 15 | | 87651220 | | 1 | HOSE, Pilot Tilt, Left; Orange and Black Banding; 2657 mm (104 - 19/32 in) |
| 16 | | 87651221 | | 1 | HOSE, Pilot Lift, Left; Red and Black Banding; 2672 mm (105 - 3/16 in) |

**HYDRAULICS - LOADER CONTROL, REMOTE**

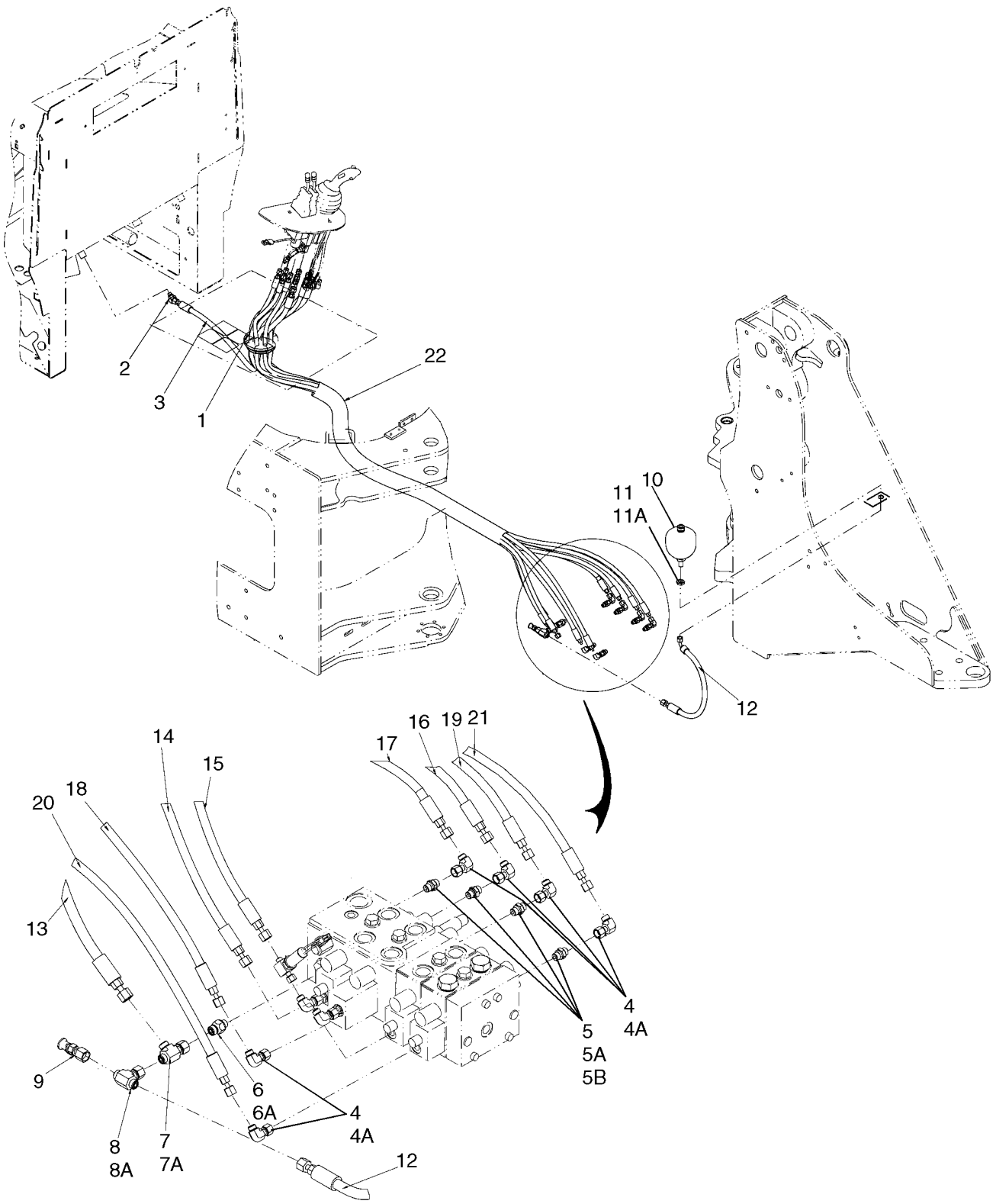

**HYDRAULICS - LOADER CONTROL, REMOTE**

| REF | FN | PART NUMBER | YR/SN | QTY | DESCRIPTION |
|---|---|---|---|---|---|
| 17 | | 87651222 | | 1 | HOSE, Pilot Tilt, Left; Green and Black Banding; 2577 mm (101 - 29/64 in) |
| 18 | | 87651223 | | 1 | HOSE, Pilot 3 Spool, Right; Red and White Banding; 2865 mm (112 - 3/4 in); If Used |
| 19 | | 87651224 | | 1 | HOSE, Pilot 3 Spool, Left; Yellow and White Banding; 2806 mm (110 - 1/2 in); If Used |
| 20 | | 87651225 | | 1 | HOSE, Pilot 4 Spool, Right; Green and White Banding; 2932 mm (115 - 7/16 in); If Used |
| 21 | | 87651226 | | 1 | HOSE, Pilot 4 Spool, Left; Orange and White Banding; 2917 mm (114 - 27/32 in); If Used |
| 22 | | 401526A1 | | 1 | HOSE, PROTECTION, 60 x 1200 mm |

**VALVE, CONTROL - MOUNTING, TWO SPOOL - (Z-BAR/XR/XT)**

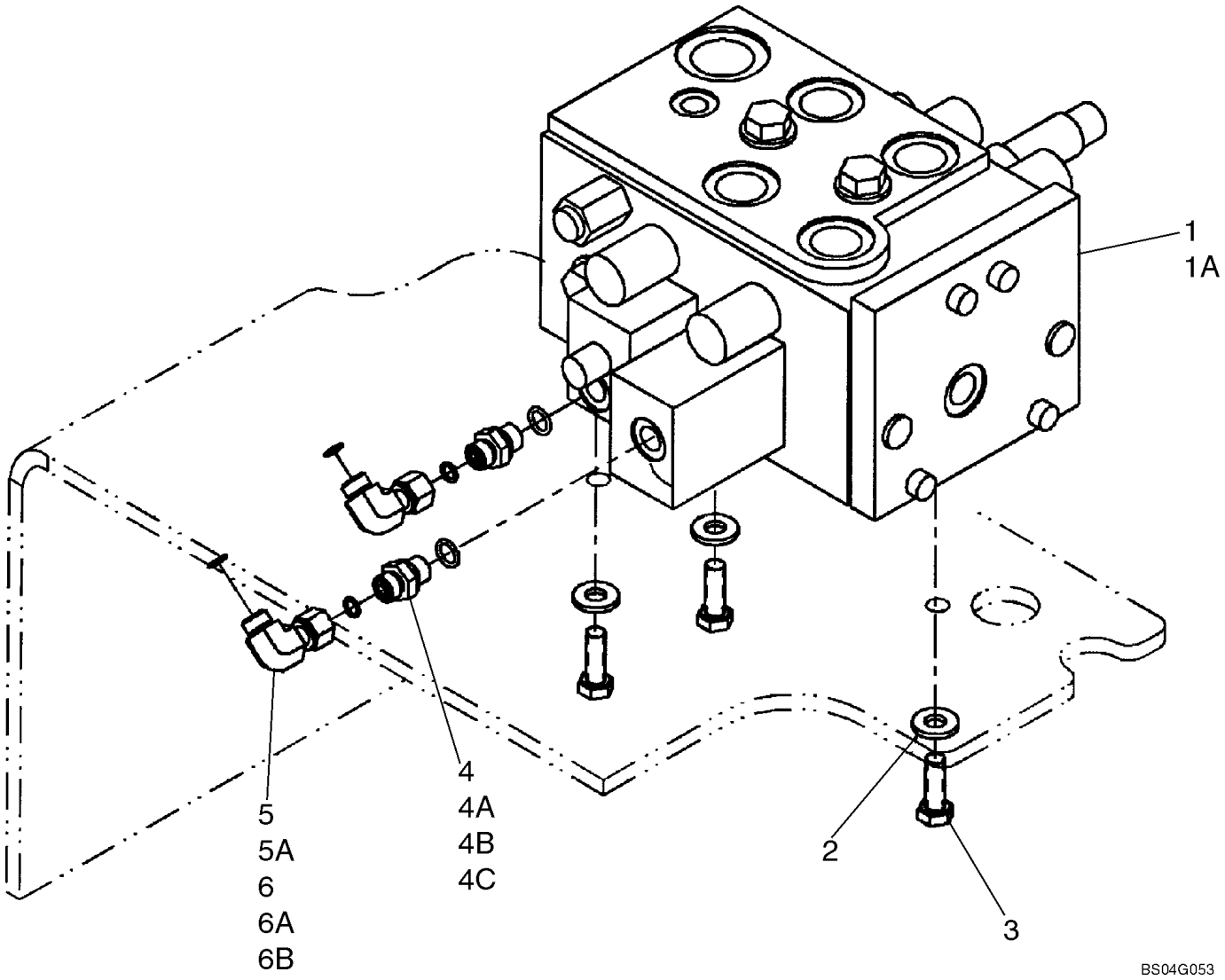

**VALVE, CONTROL - MOUNTING, TWO SPOOL - (Z-BAR/XR/XT)**

| REF | FN | PART NUMBER | YR/SN | QTY | DESCRIPTION |
|---|---|---|---|---|---|
| | | REF | | | INSTRUCTION, TWO SPOOL VALVE MOUNTING |
| 1 | | 87307982 | | 1 | VALVE, HYDRAULIC, Z-Bar/XR Loader, See Fig 08-27 - 08-27B |
| 1A | | 87307986 | | 1 | VALVE, HYDRAULIC, XT Loader, See Fig 08-28 - 08-28B |
| 2 | | 896-15010 | | 3 | WASHER, M10 x 24.5 x 3, HT |
| 3 | | 627-10030 | | 3 | BOLT, Hex, M10 x 30, 10.9, Full Thd |
| 4 | | 700-153 | | 2-1 | CONNECTOR, HYD., 9/16"-18 ORFS x M14 x 1.5 ORB, Incl. 4A, 4B; If Used |
| 4A | | 238-6011 | | 1 | O-RING, -011, 90 Duro, .301" ID x .070" Thk, Face Seal |
| 4B | | 637-63113 | | 1 | O-RING, Cl 6, 11.3MM ID x 2.2 Thk |
| 4C | | REF | | | INSTRUCTION, NOT USED IN THIS APPLICATION FOR XT MODELS |
| 5 | | 701-329 | | 2-1 | ELBOW, 90º, 9/16"-18 ORFS x 9/16"-18 Fem Sw, Incl. Ref. 5A; Used On Z-Bar/XR Loader |
| 5A | | 238-6011 | | 1 | O-RING, -011, 90 Duro, .301" ID x .070" Thk, Face Seal |
| 6 | | 700-378 | | 1 | ELBOW, 90º, 9/16"-18 ORFS x M14 x 1.5 ORB, Incl. Refs. 6A, 6B; Used On XT Loader |
| 6A | | 238-6011 | | 1 | O-RING, -011, 90 Duro, .301" ID x .070" Thk, Face Seal |
| 6B | | 637-63113 | | 1 | O-RING, Cl 6, 11.3MM ID x 2.2 Thk |

**VALVE, CONTROL - MOUNTING, THREE SPOOL - (Z-BAR/XR/XT)**

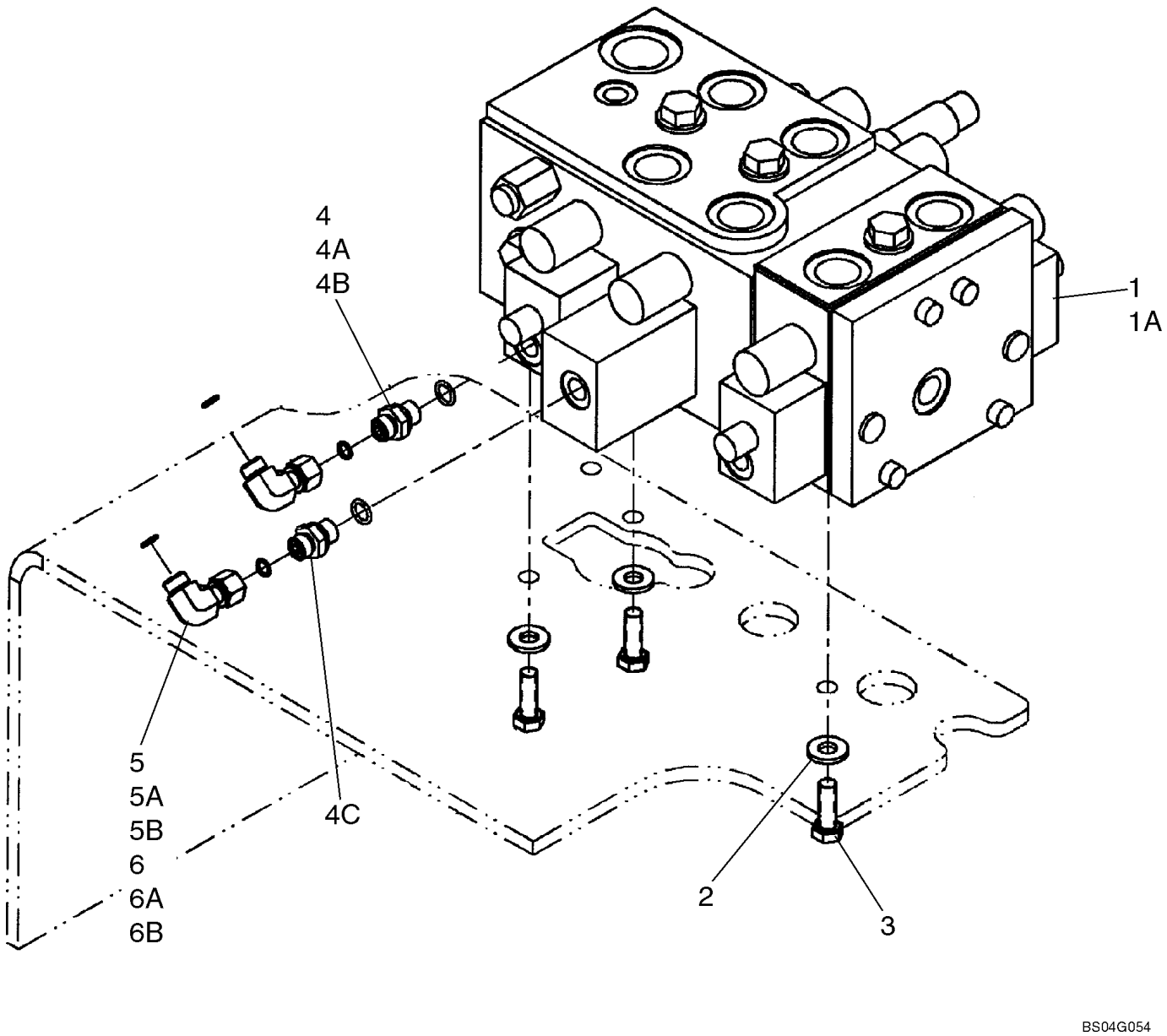

**VALVE, CONTROL - MOUNTING, THREE SPOOL - (Z-BAR/XR/XT)**

| REF | FN | PART NUMBER | YR/SN | QTY | DESCRIPTION |
|---|---|---|---|---|---|
| | | REF | | | INSTRUCTION, THREE SPOOL VALVE MOUNTING |
| 1 | | 87307983 | | 1 | VALVE, HYDRAULIC, Z-Bar/XR Loader, See Fig 08-27 - 08-27B |
| 1A | | 87307988 | | 1 | VALVE, HYDRAULIC, XT Loader, See Fig 08-28 - 08-28B |
| 2 | | 896-15010 | | 3 | WASHER, M10 x 24.5 x 3, HT |
| 3 | | 627-10030 | | 3 | BOLT, Hex, M10 x 30, 10.9, Full Thd |
| 4 | | 700-153 | | 2-1 | CONNECTOR, HYD., 9/16"-18 ORFS x M14 x 1.5 ORB, Incl. 4A, 4B |
| 4A | | 238-6011 | | 1 | O-RING, -011, 90 Duro, .301" ID x .070" Thk, Face Seal |
| 4B | | 637-63113 | | 1 | O-RING, Cl 6, 11.3MM ID x 2.2 Thk |
| 4C | | REF | | | INSTRUCTION, NOT USED IN THIS APPLICATION FOR XT MODELS |
| 5 | | 701-329 | | 2-1 | ELBOW, 90º, 9/16"-18 ORFS x 9/16"-18 Fem Sw, Incl. 5A; Used on Z-Bar Loader |
| 5A | | 238-6011 | | 1 | O-RING, -011, 90 Duro, .301" ID x .070" Thk, Face Seal |
| 6 | | 700-378 | | 1 | ELBOW, 90º, 9/16"-18 ORFS x M14 x 1.5 ORB, Incl. 6A, 6B; Used On XT Loader |
| 6A | | 238-6011 | | 1 | O-RING, -011, 90 Duro, .301" ID x .070" Thk, Face Seal |
| 6B | | 637-63113 | | 1 | O-RING, Cl 6, 11.3MM ID x 2.2 Thk |

**VALVE, CONTROL - MOUNTING, FOUR SPOOL - (Z-BAR/XR/XT)**

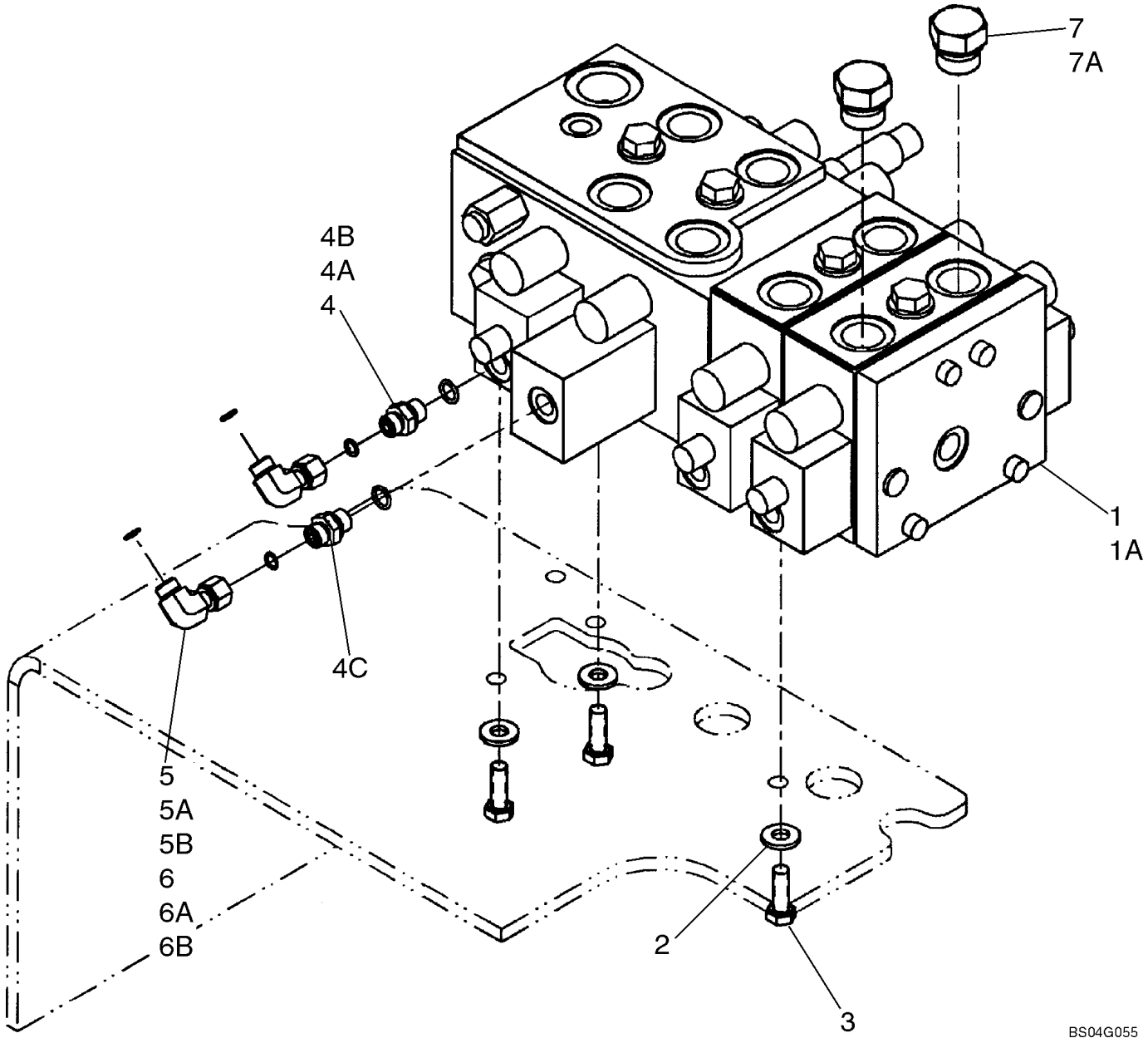

**VALVE, CONTROL - MOUNTING, FOUR SPOOL - (Z-BAR/XR/XT)**

| REF | FN | PART NUMBER | YR/SN | QTY | DESCRIPTION |
|---|---|---|---|---|---|
| | | REF | | | INSTRUCTION, FOUR SPOOL VALVE MOUNTING |
| 1 | | 87307984 | | 1 | VALVE, HYDRAULIC, Z-Bar/XR Loader, See Fig 08-27 - 08-27B |
| 1A | | 87307990 | | 1 | VALVE, HYDRAULIC, XT Loader, See Fig 08-28 - 08-28B |
| 2 | | 896-15010 | | 3 | WASHER, M10 x 24.5 x 3, HT |
| 3 | | 627-10030 | | 3 | BOLT, Hex, M10 x 30, 10.9, Full Thd |
| 4 | | 700-153 | | 2-1 | CONNECTOR, HYD., 9/16"-18 ORFS x M14 x 1.5 ORB, Incl. Refs. 4A, 4B |
| 4A | | 238-6011 | | 1 | O-RING, -011, 90 Duro, .301" ID x .070" Thk, Face Seal |
| 4B | | 637-63113 | | 1 | O-RING, Cl 6, 11.3MM ID x 2.2 Thk |
| 4C | | REF | | | INSTRUCTION, NOT USED IN THIS APPLICATION FOR XT MODELS |
| 5 | | 701-329 | | 2-1 | ELBOW, 90º, 9/16"-18 ORFS x 9/16"-18 Fem Sw, Incl. Refs. 5A |
| 5A | | 238-6011 | | 1 | O-RING, -011, 90 Duro, .301" ID x .070" Thk, Face Seal |
| 6 | | 700-378 | | 1 | ELBOW, 90º, 9/16"-18 ORFS x M14 x 1.5 ORB, Used With XT Loader; Incl. Refs. 6A, 6B |
| 6A | | 238-6011 | | 1 | O-RING, -011, 90 Duro, .301" ID x .070" Thk, Face Seal |
| 6B | | 637-63113 | | 1 | O-RING, Cl 6, 11.3MM ID x 2.2 Thk |
| 7 | | 220068A1 | | 2 | PLUG, M27 x 2, ORB, Used With Z-Bar Loader; Incl. Refs. 7A |
| 7A | | 637-64236 | | 1 | O-RING, Cl 6, 23.6MM ID x 2.9 Thk, Boss Seal |

**VALVE ASSY - LOADER CONTROL - TWO, THREE, FOUR SPOOL - (Z-BAR/XR)**

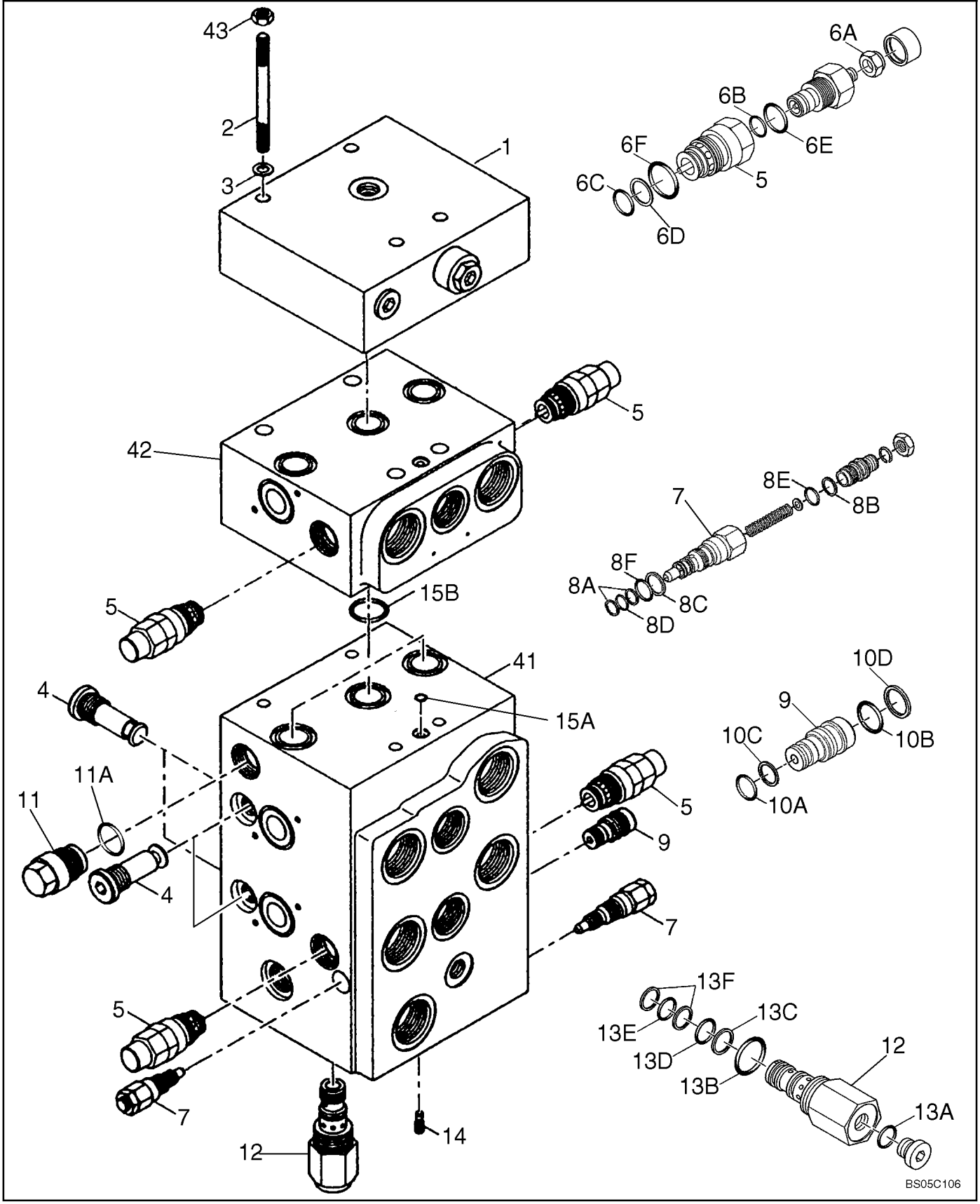

**VALVE ASSY - LOADER CONTROL - TWO, THREE, FOUR SPOOL - (Z-BAR/XR)**

| REF | FN | PART NUMBER | YR/SN | QTY | DESCRIPTION |
|---|---|---|---|---|---|
| | | REF | | | INSTRUCTION, Z-BAR/XR LOADER; IF USED |
| | | 87307982 | | | VALVE, HYDRAULIC, Two Spool; Incl. 1 - 41; Also Includes Figure 08-27A |
| | | 87307983 | | | VALVE, HYDRAULIC, Three Spool; Incl. 1 - 42; Also Includes Figure(s) 08-27A, 27B |
| | | 87307984 | | | VALVE, HYDRAULIC, Four Spool; Incl. 1 - 43; Also Includes Figure(s) 08-27A, 27B |
| 1 | | 87311889 | | 1 | PLATE, Valve |
| 2 | | 87311891 | | 4 | STUD, M8 x 190; 10.9; Four Spool Valve |
| 2 | | {961-8075} | | 4 | M8 x 75; 10.9; Three Spool Valve; Not Illustrated |
| 2 | | {962-8055} | | 4 | M8 x 55; 10.9; Two Spool Valve; Not Illustrated |
| 3 | | 892-11008 | | 4 | WASHER, LOCK, M8 |
| 4 | | 8604567 | | 4 | VALVE, CHECK |
| 5 | | 8604568 | | 2-6 | VALVE, HYDRAULIC, Anticavitation; Includes Spool, (3) O-Rings, Thrust Ring, Spool Seal And Lock-Nut |
| 6 | | 8604588 | | 1 | KIT, Anticavitation; For Ref 5; Incl 6A - 6F |
| 6A | | NSS | | 1 | NOT SERVICED SEPARATELY, Lock Nut; M10 |
| 6B | | NSS | | 1 | NOT SERVICED SEPARATELY, Spool Seal |
| 6C | | NSS | | 1 | NOT SERVICED SEPARATELY, O-Ring; 14 x 0.178 |
| 6D | | NSS | | 1 | NOT SERVICED SEPARATELY, Thrust Ring; 14 x 17 x 1 |
| 6E | | NSS | | 1 | NOT SERVICED SEPARATELY, O-Ring; 15.6 x 1.78 |
| 6F | | NSS | | 1 | NOT SERVICED SEPARATELY, O-Ring; 21.95 x 1.78 |
| 7 | | 8602925 | | 2 | VALVE, PRESSURE RELIEF, Pressure Relief |
| 8 | | 8604590 | | 1 | KIT, Pressure Relief Valve; For Ref 7; Incl 8A - 8F |
| 8A | | NSS | | 2 | NOT SERVICED SEPARATELY, Thrust Ring; 7.3/9.5 x 0.7 |
| 8B | | NSS | | 1 | NOT SERVICED SEPARATELY, Thrust Ring; 9.91 x 1.35 |
| 8C | | NSS | | 1 | NOT SERVICED SEPARATELY, Thrust Ring; 11.56 x 1.35 |
| 8D | | NSS | | 1 | NOT SERVICED SEPARATELY, O-Ring; 8.50 x 1.5 |
| 8E | | NSS | | 1 | NOT SERVICED SEPARATELY, O-Ring;9.25 x 1.78 |
| 8F | | NSS | | 1 | NOT SERVICED SEPARATELY, O-Ring; 10.82 x 1.78 |
| 9 | | 8602915 | | 1 | VALVE, HYDRAULIC, Flow Limiting |

**VALVE ASSY - LOADER CONTROL - TWO, THREE, FOUR SPOOL - (Z-BAR/XR)**

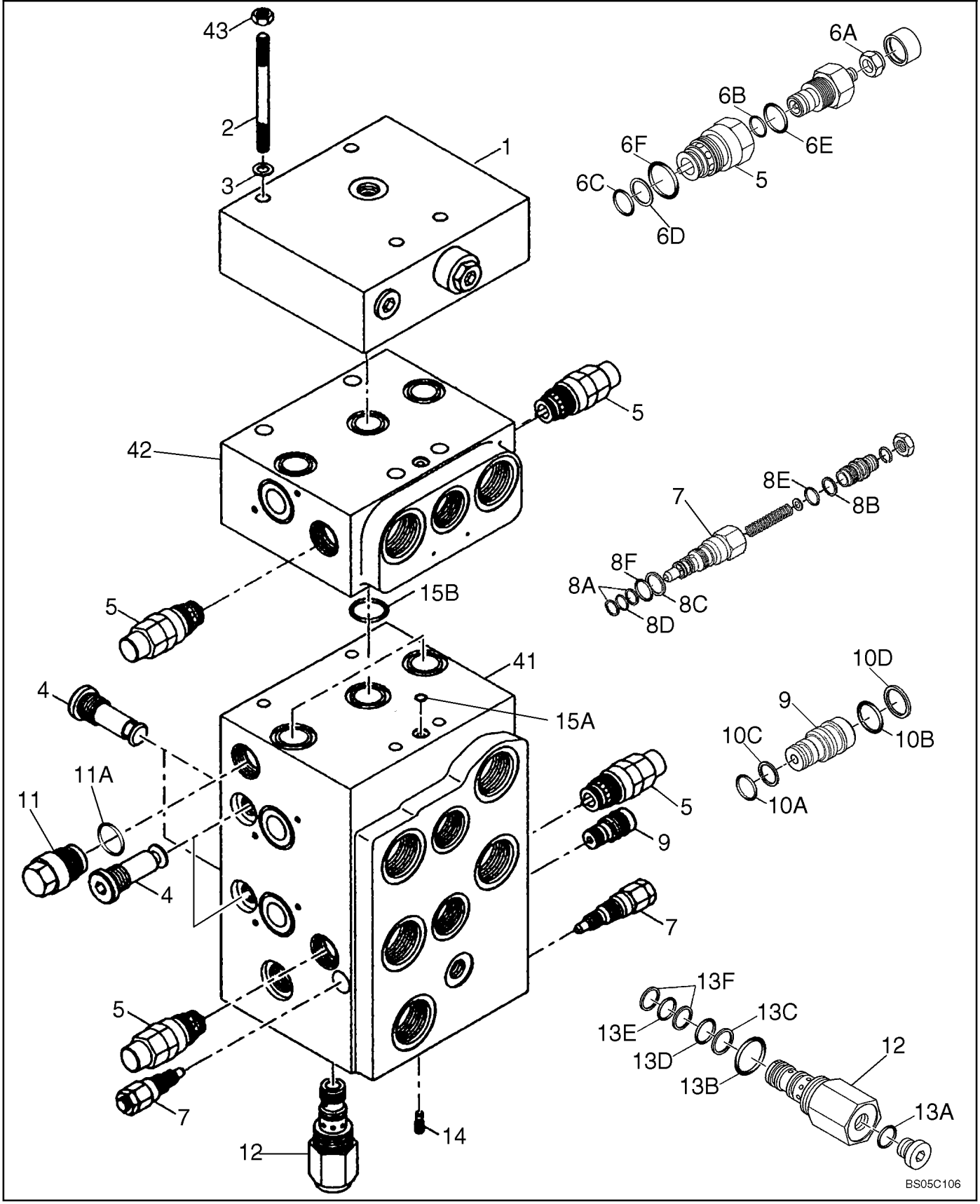

**VALVE ASSY - LOADER CONTROL - TWO, THREE, FOUR SPOOL - (Z-BAR/XR)**

| REF | FN | PART NUMBER | YR/SN | QTY | DESCRIPTION |
|---|---|---|---|---|---|
| 10 | | 8602916 | | 1 | KIT, SEALS, Flow Limiting Valve; For Ref 9; Incl. 10A - 10D |
| 10A | | NSS | | 1 | NOT SERVICED SEPARATELY, O-Ring; 8.5 x 1.5 |
| 10B | | NSS | | 1 | NOT SERVICED SEPARATELY, O-Ring; 10.82 x 1.78 |
| 10C | | NSS | | 2 | NOT SERVICED SEPARATELY, Thrust Ring; 7.3/9.5 x 0.7 |
| 10D | | NSS | | 1 | NOT SERVICED SEPARATELY, Thrust Ring; 11.56 x 1.35 |
| 11 | | 87311965 | | 1 | INSERT, Pilot Pressure Insert; Incl. 11A |
| 11A | | NSS | | 1 | NOT SERVICED SEPARATELY, O-Ring; 23.47 x 2.62 |
| 12 | | 8602913 | | 1 | VALVE, HYDRAULIC, Flow Limiting |
| 13 | | 8604592 | | 1 | KIT, Flow Limiting Valve; For Ref 12; Incl. 13A - 13F |
| 13A | | NSS | | 1 | NOT SERVICED SEPARATELY, Profile Seal; M12 x 1.5 |
| 13B | | NSS | | 1 | NOT SERVICED SEPARATELY, O-Ring; 18.77 x 1.78 |
| 13C | | NSS | | 1 | NOT SERVICED SEPARATELY, Thrust Ring; 11.2/14 x 1 |
| 13D | | NSS | | 1 | NOT SERVICED SEPARATELY, O-Ring; 12.42 x 1.78 |
| 13E | | NSS | | 1 | NOT SERVICED SEPARATELY, O-Ring;10.82 x 1.78 |
| 13F | | NSS | | 2 | NOT SERVICED SEPARATELY, Thrust Ring; 10.2/13 x 1 |
| 14 | | 8604574 | | 1 | BOLT, PLUG |
| 14 | | 87362307 | | 1 | VALVE, CHECK |
| 15 | | 8604575 | | 1 | KIT, For Main Housing Block; Ref 41; Incl 15A, 15B |
| 15A | | NSS | | 1 | NOT SERVICED SEPARATELY, O-Ring; 7.65 x 1.78 |
| 15B | | NSS | | 3 | NOT SERVICED SEPARATELY, O-Ring; 18.64 x 3.53 |
| 41 | | NSS | | 1 | NOT SERVICED SEPARATELY, Main Housing |
| 42 | | NSS | | 1-2 | NOT SERVICED SEPARATELY, Section Housing |
| 43 | | 829-1408 | | 4 | NUT, M8, Cl 10, Four Spool Valve |

**VALVE ASSY - PISTON AXIS - (Z-BAR/XR)**

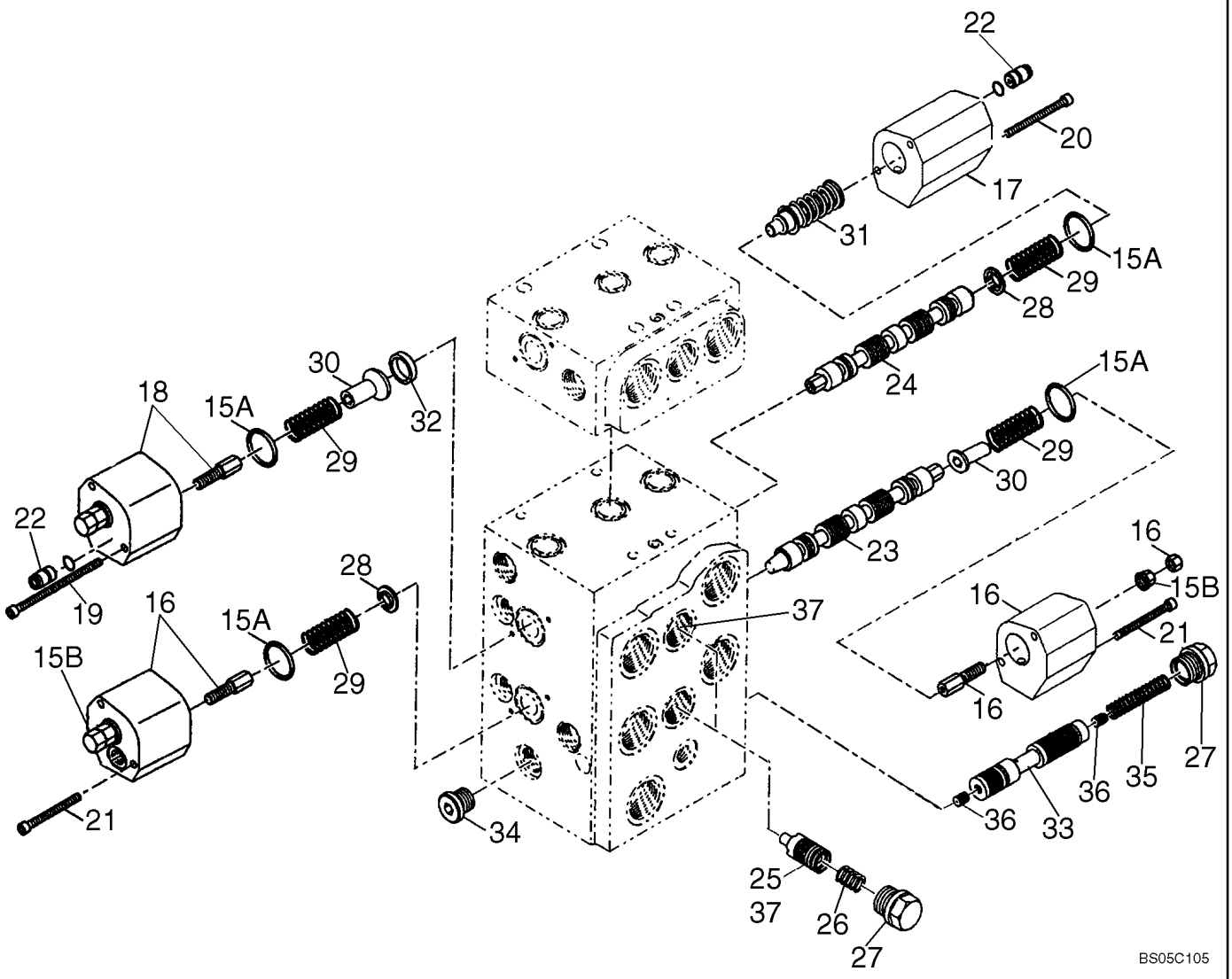

**VALVE ASSY - PISTON AXIS - (Z-BAR/XR)**

| REF | FN | PART NUMBER | YR/SN | QTY | DESCRIPTION |
|---|---|---|---|---|---|
| | | REF | | | INSTRUCTION, TWO, THREE, AND FOUR SPOOL VALVES FOR Z-BAR/XR MODELS |
| 15 | | 8604575 | | 1 | KIT, Incl. 15A, 15B; For REF 16, 17, 18 |
| 15A | | NSS | | 4 | NOT SERVICED SEPARATELY, O-Ring; 25.07 x 2.62 |
| 15B | | NSS | | 2 | NOT SERVICED SEPARATELY, Lock Nut; M8 x 1 |
| 16 | | 8604576 | | 2 | COVER |
| 17 | | 87311972 | | 1 | COVER |
| 18 | | 8605577 | | 1 | COVER |
| 19 | | 864-5060 | | 2 | SCREW, Hex Soc Hd, M5 x 60, 8.8, M5 X 60; 8.8 |
| 20 | | 87311974 | | 2 | SCREW, M5 x 85; 10.9 |
| 21 | | {864-5055} | | 4 | M5 x 55; 8.8 |
| 22 | | 8604578 | | 2 | VALVE, HYDRAULIC, Throttle Check Valve |
| 23 | | 87311975 | | 1 | SPOOL |
| 24 | | 87311976 | | 1 | SPOOL |
| 25 | | 8604579 | | 1 | PISTON |
| 26 | | 8604580 | | 2 | SPRING, Compression |
| 27 | | 8604581 | | 3 | SCREW, Plug; M22 x 1.5 |
| 28 | | 8604582 | | 2 | RETAINER, Spring |
| 29 | | 8604583 | | 4 | SPRING, Compression |
| 30 | | 87311984 | | 2 | SPRING, Retanier |
| 31 | | 87311985 | | 1 | SPRING |
| 32 | | 87311986 | | 1 | RING |
| 33 | | 8604584 | | 1 | PISTON |
| 34 | | 87311988 | | 1 | PLUG |
| 35 | | 8604586 | | 1 | SPRING, Compression |
| 36 | | 87311990 | | 2 | JET |
| 37 | | 87311991 | | 1 | SPOOL |

**VALVE ASSY - LOADER CONTROL -VALVE SECTION - (Z-BAR/XR)**

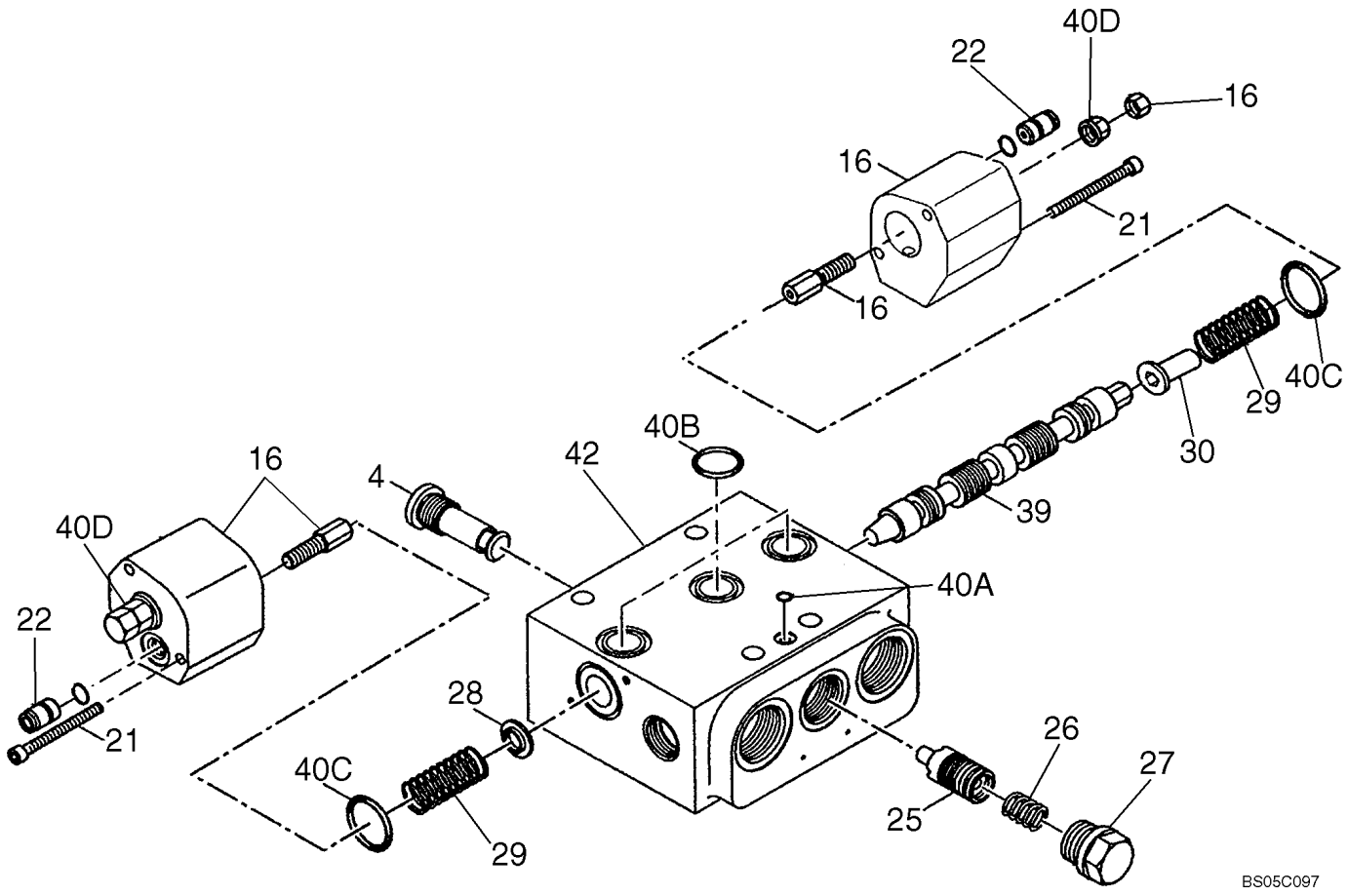

**VALVE ASSY - LOADER CONTROL -VALVE SECTION - (Z-BAR/XR)**

| REF | FN | PART NUMBER | YR/SN | QTY | DESCRIPTION |
|---|---|---|---|---|---|
| | | REF | | | INSTRUCTION, FOR THREE SPOOL AND FOUR SPOOL VALVES; Z-BAR/XR |
| 4 | | 8604567 | | 1 | VALVE, CHECK |
| 16 | | NSS | | 1 | NOT SERVICED SEPARATELY, Housing |
| 21 | | {864-5055} | | 4 | M5 X 55; 8.8 |
| 22 | | 8604758 | | 2 | VALVE, CHECK |
| 25 | | 8604579 | | 1 | PISTON |
| 26 | | 8604580 | | 1 | SPRING, Compression |
| 27 | | 8604781 | | 1 | VALVE, Throttle Check |
| 28 | | 8604582 | | 1 | RETAINER, Spring |
| 29 | | 8604583 | | 2 | SPRING, Compression |
| 30 | | 87311984 | | 1 | SPRING, Retainer |
| 39 | | 87311975 | | 1 | SPOOL |
| 40 | | 8604566 | | 1 | KIT, For Valve Section; Ref 43; Incl. 40A - 40D |
| 40A | | NSS | | 1 | NOT SERVICED SEPARATELY, O-Ring; 7.65 x 1.78 |
| 40B | | NSS | | 3 | NOT SERVICED SEPARATELY, O-Ring; 18.64 x 3.53 |
| 40C | | NSS | | 2 | NOT SERVICED SEPARATELY, O-Ring; 25.07 x 2.62 |
| 40D | | NSS | | 2 | NOT SERVICED SEPARATELY, Lock Nut; M8 x 1 |
| 42 | | NSS | | 1 | NOT SERVICED SEPARATELY, Valve Section |

**VALVE ASSY - LOADER CONTROL - TWO, THREE, FOUR SPOOL - (XT)**

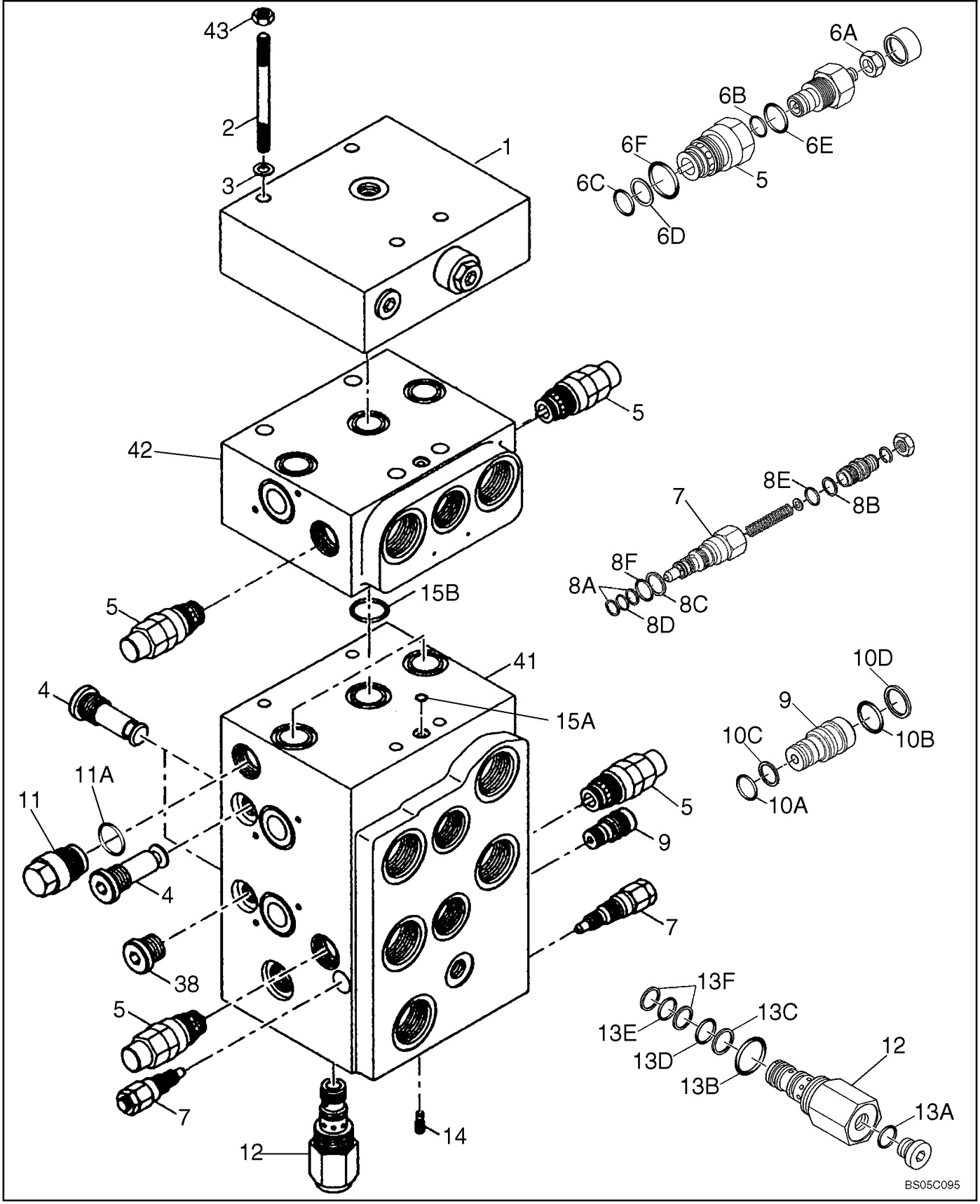

**VALVE ASSY - LOADER CONTROL - TWO, THREE, FOUR SPOOL - (XT)**

| REF | FN | PART NUMBER | YR/SN | QTY | DESCRIPTION |
|---|---|---|---|---|---|
| | | REF | | | INSTRUCTION, XT LOADER |
| | | 87307986 | | | VALVE, HYDRAULIC, Two Spool; Incl. 1 - 41; Also Includes Figure 08-28A |
| | | 87307988 | | | VALVE, HYDRAULIC, Three Spool; Incl. 1 - 42; Also Includes Figure(s) 08-28A, 08-28B |
| | | 87307990 | | | VALVE, HYDRAULIC, Four Spool; Incl. 1 - 43; Also Includes Figure(s) 08-28A, 08-28B |
| 1 | | 87311889 | | 1 | PLATE, Valve |
| 2 | | 87311891 | | 4 | STUD, M8 x 190; 10.9; Four Spool Valve |
| 2 | | {961-8075} | | 4 | M8 x 75; 10.9; Three Spool Valve; Not Illustrated |
| 2 | | {962-8055} | | 4 | M8 x 55; 10.9; Two Spool Valve; Not Illustrated |
| 3 | | 892-11008 | | 4 | WASHER, LOCK, M8 |
| 4 | | 8604567 | | 3 | VALVE, CHECK |
| 5 | | 8604568 | | 2-6 | VALVE, HYDRAULIC, Anticavitation; Includes Spool, (3) O-Rings, Thrust Ring, Spool Seal And Lock-Nut |
| 6 | | 8604588 | | 1 | KIT, Anticavitation; For Ref 5; Incl 6A - 6F |
| 6A | | NSS | | 1 | NOT SERVICED SEPARATELY, Lock Nut; M10 |
| 6B | | NSS | | 1 | NOT SERVICED SEPARATELY, Spool Seal |
| 6C | | NSS | | 1 | NOT SERVICED SEPARATELY, O-Ring; 14 x 0.178 |
| 6D | | NSS | | 1 | NOT SERVICED SEPARATELY, Thrust Ring; 14 x 17 x 1 |
| 6E | | NSS | | 1 | NOT SERVICED SEPARATELY, O-Ring; 15.6 x 1.78 |
| 6F | | NSS | | 1 | NOT SERVICED SEPARATELY, O-Ring; 21.95 x 1.78 |
| 7 | | 8602925 | | 2 | VALVE, PRESSURE RELIEF, Pressure Relief |
| 8 | | 8604590 | | 1 | KIT, Pressure Relief Valve; For Ref 7; Incl 8A - 8f |
| 8A | | NSS | | 2 | NOT SERVICED SEPARATELY, Thrust Ring; 7.3/9.5 x 0.7 |
| 8B | | NSS | | 1 | NOT SERVICED SEPARATELY, Thrust Ring; 9.91 x 1.35 |
| 8C | | NSS | | 1 | NOT SERVICED SEPARATELY, Thrust Ring; 11.56 x 1.35 |
| 8D | | NSS | | 1 | NOT SERVICED SEPARATELY, O-Ring; 8.50 x 1.5 |
| 8E | | NSS | | 1 | NOT SERVICED SEPARATELY, O-Ring;9.25 x 1.78 |
| 8F | | NSS | | 1 | NOT SERVICED SEPARATELY, O-Ring; 10.82 x 1.78 |
| 9 | | 8602915 | | 1 | VALVE, HYDRAULIC, Flow Limiting |

**VALVE ASSY - LOADER CONTROL - TWO, THREE, FOUR SPOOL - (XT)**

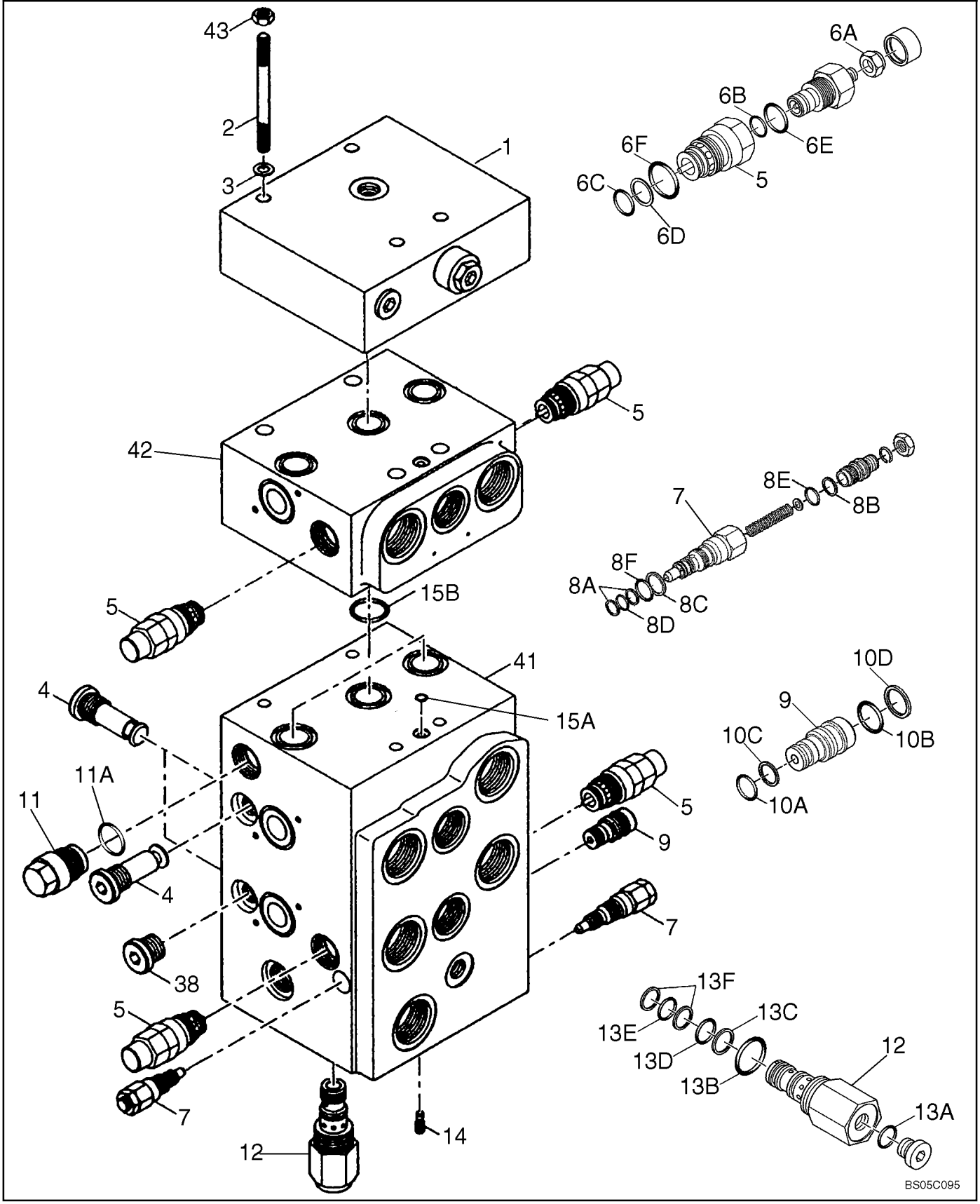

**VALVE ASSY - LOADER CONTROL - TWO, THREE, FOUR SPOOL - (XT)**

| REF | FN | PART NUMBER | YR/SN | QTY | DESCRIPTION |
|---|---|---|---|---|---|
| 10 | | 8602916 | | 1 | KIT, SEALS, Flow Limiting Valve; For Ref 9; Incl. 10A - 10D |
| 10A | | NSS | | 1 | NOT SERVICED SEPARATELY, O-Ring; 8.5 x 1.5 |
| 10B | | NSS | | 1 | NOT SERVICED SEPARATELY, O-Ring; 10.82 x 1.78 |
| 10C | | NSS | | 2 | NOT SERVICED SEPARATELY, Thrust Ring; 7.3/9.5 x 0.7 |
| 10D | | NSS | | 1 | NOT SERVICED SEPARATELY, Thrust Ring; 11.56 x 1.35 |
| 11 | | 87311965 | | 1 | INSERT, Pilot Pressure Insert; Incl. 11A |
| 11A | | NSS | | 1 | NOT SERVICED SEPARATELY, O-Ring; 23.47 x 2.62 |
| 12 | | 8602913 | | 1 | VALVE, HYDRAULIC, Flow Limiting |
| 13 | | 8604592 | | 1 | KIT, Flow Limiting Valve; For Ref 12; Incl. 13A - 13f |
| 13A | | NSS | | 1 | NOT SERVICED SEPARATELY, Profile Seal; M12 x 1.5 |
| 13B | | NSS | | 1 | NOT SERVICED SEPARATELY, O-Ring; 18.77 x 1.78 |
| 13C | | NSS | | 1 | NOT SERVICED SEPARATELY, Thrust Ring; 11.2/14 x 1 |
| 13D | | NSS | | 1 | NOT SERVICED SEPARATELY, O-Ring; 12.42 x 1.78 |
| 13E | | NSS | | 1 | NOT SERVICED SEPARATELY, O-Ring;10.82 x 1.78 |
| 13F | | NSS | | 2 | NOT SERVICED SEPARATELY, Thrust Ring; 10.2/13 x 1 |
| 14 | | 8604574 | | 1 | BOLT |
| 14 | | 87362307 | | 1 | VALVE, CHECK |
| 15 | | 8604575 | | 1 | KIT, For Main Housing Block; Ref 41; Incl 15A, 15B |
| 15A | | NSS | | 1 | NOT SERVICED SEPARATELY, O-Ring; 7.65 x 1.78 |
| 15B | | NSS | | 3 | NOT SERVICED SEPARATELY, O-Ring; 18.64 x 3.53 |
| 41 | | NSS | | 1 | NOT SERVICED SEPARATELY, Main Housing |
| 42 | | NSS | | 1-2 | NOT SERVICED SEPARATELY, Section Housing |
| 43 | | 829-1408 | | 4 | NUT, M8, Cl 10, Four Spool Valve |

**VALVE ASSY - PISTON AXIS - (XT)**

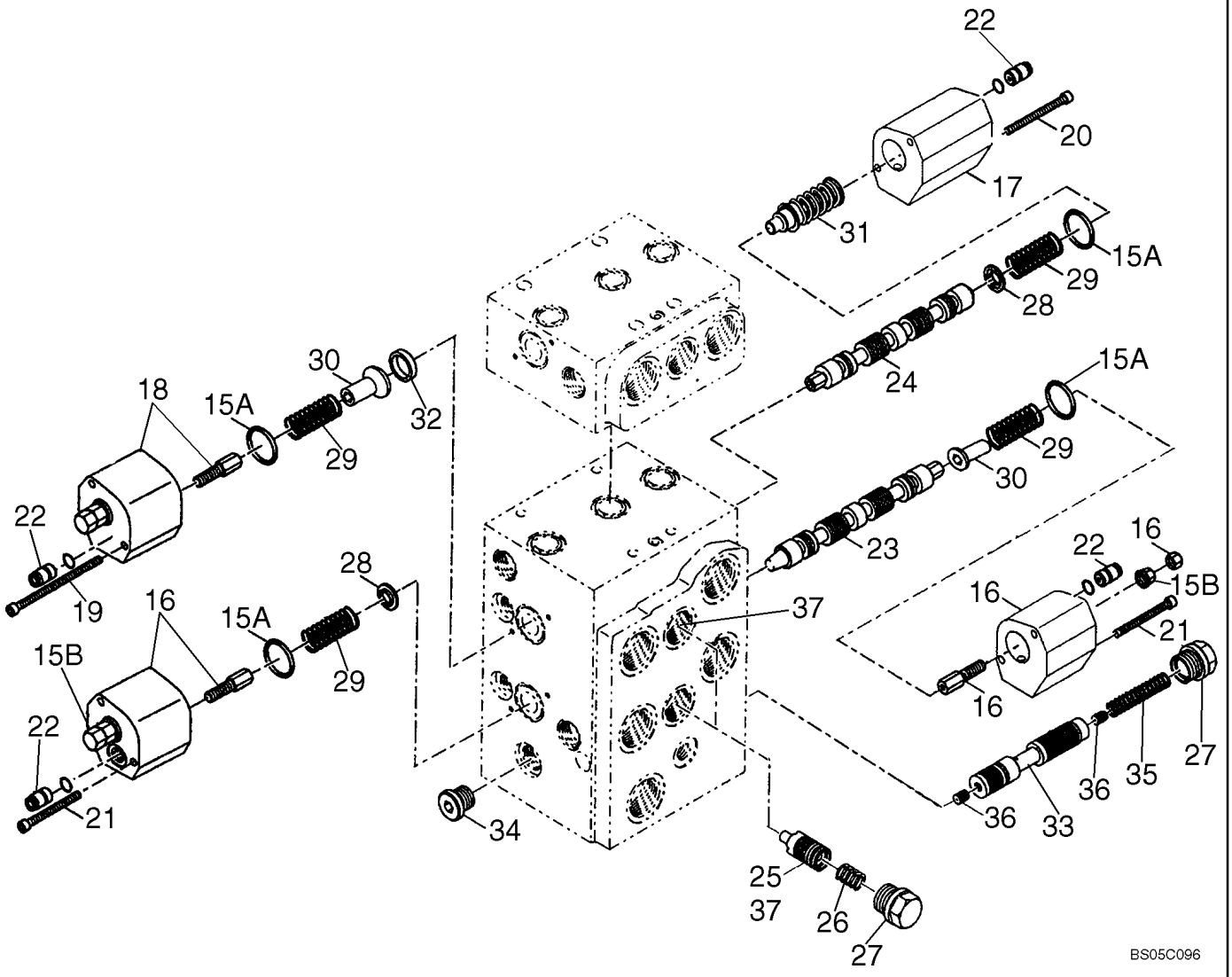

**VALVE ASSY - PISTON AXIS - (XT)**

| REF | FN | PART NUMBER | YR/SN | QTY | DESCRIPTION |
|---|---|---|---|---|---|
| | | REF | | | INSTRUCTION, TWO, THREE, AND FOUR SPOOL VALVES FOR XT MODELS |
| 15 | | 8604575 | | 1 | KIT, Incl. 15A, 15B; For REF 16, 17, 18 |
| 15A | | NSS | | 4 | NOT SERVICED SEPARATELY, O-Ring; 25.07 x 2.62 |
| 15B | | NSS | | 2 | NOT SERVICED SEPARATELY, Lock Nut; M8 x 1 |
| 16 | | 8604576 | | 2 | COVER |
| 17 | | 87311972 | | 1 | COVER |
| 18 | | 8605577 | | 1 | COVER |
| 19 | | 864-5060 | | 2 | SCREW, Hex Soc Hd, M5 x 60, 8.8, M5 X 60; 8.8 |
| 20 | | 87311974 | | 2 | SCREW, M5 x 85; 10.9 |
| 21 | | {864-5055} | | 4 | M5 x 55; 8.8 |
| 22 | | 8604578 | | 2 | VALVE, HYDRAULIC, Throttle Check Valve; 2 Have Been Removed From Ref 16 Covers. |
| 23 | | 87311898 | | 1 | SPOOL |
| 23 | | 87352565 | | 1 | SPOOL |
| 24 | | 87311976 | | 1 | SPOOL |
| 25 | | 8604579 | | 1 | PISTON |
| 26 | | 8604580 | | 2 | SPRING, Compression |
| 27 | | 8604581 | | 3 | SCREW, Plug; M22 x 1.5 |
| 28 | | 8604582 | | 2 | RETAINER, Spring |
| 29 | | 8604583 | | 4 | SPRING, Compression |
| 30 | | 87311984 | | 2 | SPRING, Retanier |
| 31 | | 87311985 | | 1 | SPRING |
| 32 | | 87311986 | | 1 | RING |
| 33 | | 8604584 | | 1 | PISTON |
| 34 | | 87311988 | | 1 | PLUG |
| 35 | | 8604586 | | 1 | SPRING, Compression |
| 36 | | 87311990 | | 2 | JET |
| 37 | | 87311991 | | 1 | SPOOL |

**VALVE ASSY - LOADER CONTROL - VALVE SECTION - (XT)**

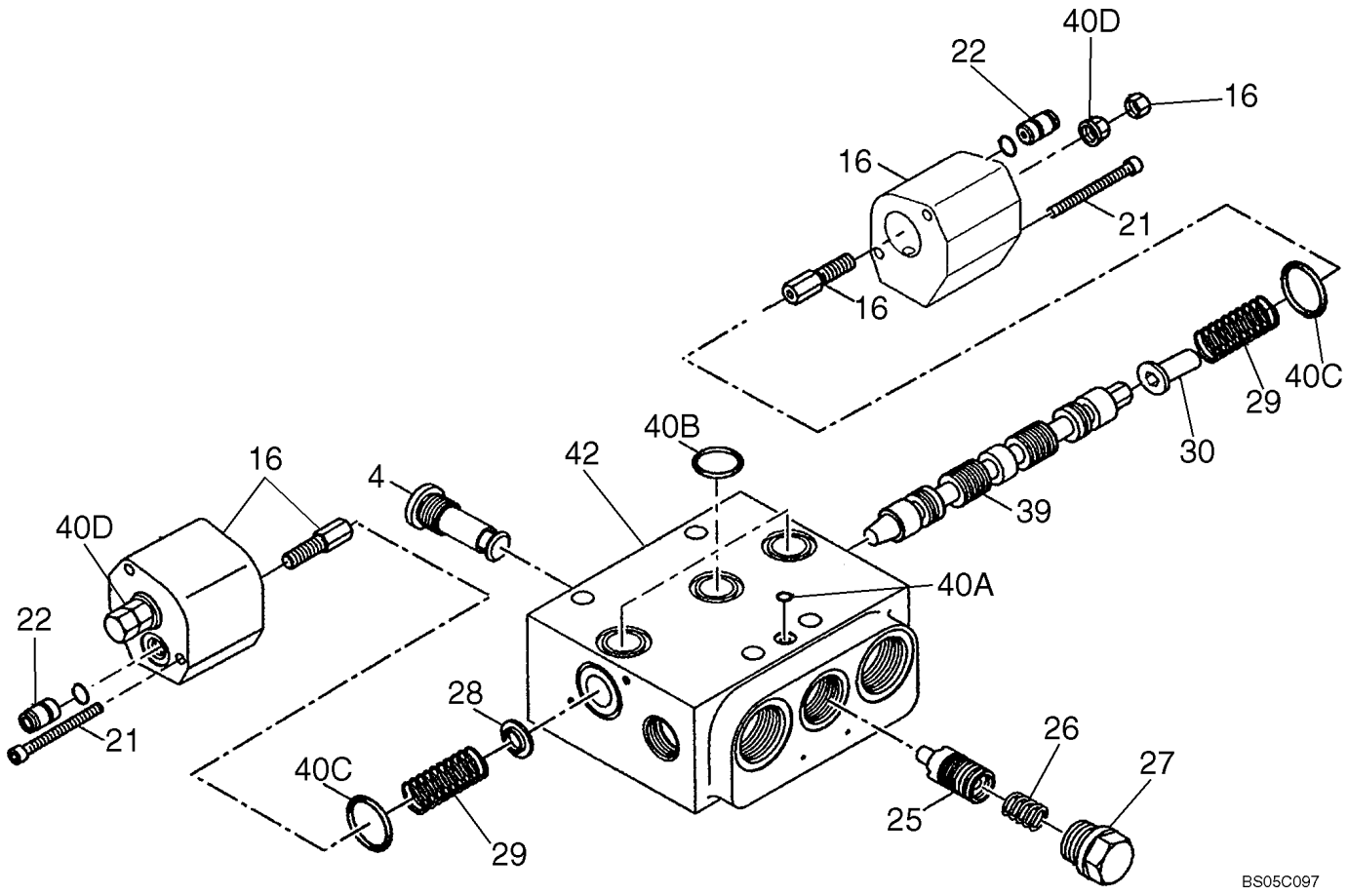

**VALVE ASSY - LOADER CONTROL - VALVE SECTION - (XT)**

| REF | FN | PART NUMBER | YR/SN | QTY | DESCRIPTION |
|---|---|---|---|---|---|
| | | REF | | | INSTRUCTION, FOR THREE SPOOL AND FOUR SPOOL VALVES; XT |
| 4 | | 8604567 | | 1 | VALVE, CHECK |
| 16 | | NSS | | 1 | NOT SERVICED SEPARATELY, Housing |
| 21 | | {864-5055} | | 4 | M5 X 55; 8.8 |
| 22 | | 8604758 | | 2 | VALVE, CHECK |
| 25 | | 8604579 | | 1 | PISTON |
| 26 | | 8604580 | | 1 | SPRING, Compression |
| 27 | | 8604781 | | 1 | VALVE, Throttle Check |
| 28 | | 8604582 | | 1 | RETAINER, Spring |
| 29 | | 8604583 | | 2 | SPRING, Compression |
| 30 | | 87311984 | | 1 | SPRING, Retainer |
| 39 | | 87311975 | | 1 | SPOOL |
| 40 | | 8604566 | | 1 | KIT, For Valve Section; Ref 43; Incl. 40A - 40D |
| 40A | | NSS | | 1 | NOT SERVICED SEPARATELY, O-Ring; 7.65 x 1.78 |
| 40B | | NSS | | 3 | NOT SERVICED SEPARATELY, O-Ring; 18.64 x 3.53 |
| 40C | | NSS | | 2 | NOT SERVICED SEPARATELY, O-Ring; 25.07 x 2.62 |
| 40D | | NSS | | 2 | NOT SERVICED SEPARATELY, Lock Nut; M8 x 1 |
| 42 | | NSS | | 1 | NOT SERVICED SEPARATELY, Valve Section |

## LOADER CONTROL - JOYSTICK CONTROL MOUNTING

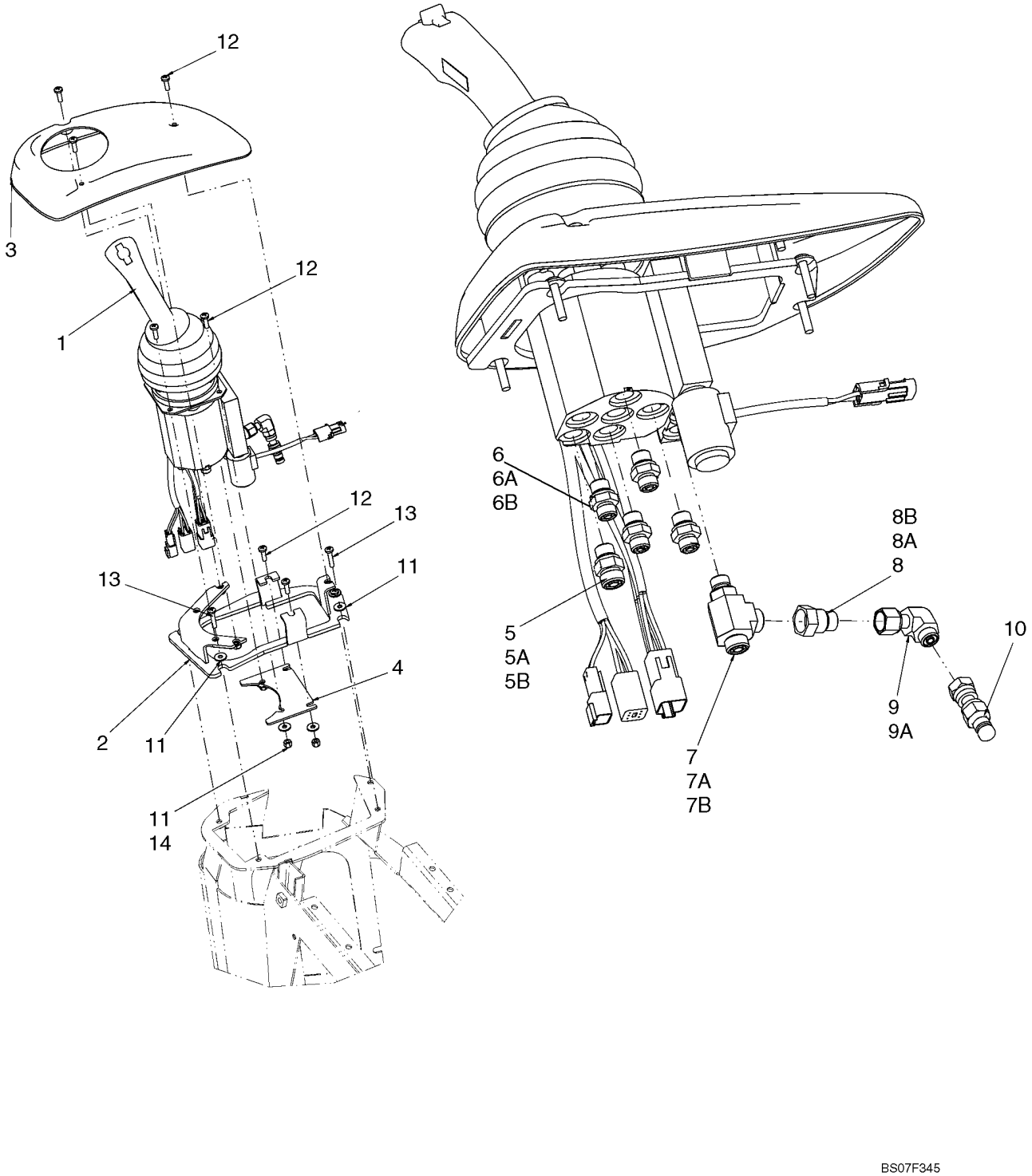

**LOADER CONTROL - JOYSTICK CONTROL MOUNTING**

| REF | FN | PART NUMBER | YR/SN | QTY | DESCRIPTION |
|---|---|---|---|---|---|
| 1 | | 87340016 | | 1 | JOYSTICK, See Figures 08-29A, 08-29B |
| 2 | | 87516506 | | 1 | ADAPTER |
| 3 | | 87638910 | | 1 | BEZEL, BRACKET |
| 4 | | 87349019 | | 1 | ADAPTER |
| 5 | | 700-101 | | 6 | CONNECTOR, HYD., 11/16"-16 ORFS x M14 x 1.5 ORB, Incl. Refs. 5A, 5B |
| 5A | | 238-6012 | | 1 | O-RING, -012, 90 Duro, .364" ID x .070" Thk, Face Seal |
| 5B | | 637-63113 | | 1 | O-RING, Cl 6, 11.3MM ID x 2.2 Thk |
| 6 | | 700-153 | | 4 | CONNECTOR, HYD., 9/16"-18 ORFS x M14 x 1.5 ORB, Incl. Refs. 6A, 6B |
| 6A | | 637-63113 | | 1 | O-RING, Cl 6, 11.3MM ID x 2.2 Thk |
| 6B | | 238-6011 | | 1 | O-RING, -011, 90 Duro, .301" ID x .070" Thk, Face Seal |
| 7 | | 700-406 | | 1 | TEE, 11/16"-16 ORFS x M14 x 1.5 ORB Run, Incl. Refs. 7A, 7B |
| 7A | | 238-6012 | | 2 | O-RING, -012, 90 Duro, .364" ID x .070" Thk, Face Seal |
| 7B | | 637-63113 | | 1 | O-RING, Cl 6, 11.3MM ID x 2.2 Thk |
| 8 | | 201-145 | | 1 | REDUCER, 9/16"-18 Male x 11/16"-16 Fem, ORFS, Incl. Refs. 8A, 8B |
| 8A | | 238-6011 | | 1 | O-RING, -011, 90 Duro, .301" ID x .070" Thk, Face Seal |
| 8B | | 238-6012 | | 1 | O-RING, -012, 90 Duro, .364" ID x .070" Thk, Face Seal |
| 9 | | 701-329 | | 1 | ELBOW, 90º, 9/16"-18 ORFS x 9/16"-18 Fem Sw, Incl. Ref. 9A |
| 9A | | 238-6011 | | 1 | O-RING, -011, 90 Duro, .301" ID x .070" Thk |
| 10 | | 190117A1 | | 1 | COUPLING |
| 11 | | 895-25006 | | 4 | WASHER, M6 x 18 x 1.6 |
| 12 | | 540-719 | | 9 | SCREW, Cross Pan Hd, M6 x 20 |
| 13 | | 840-1630 | | 4 | SCREW, Cross Pan Hd, M6 x 30 |
| 14 | | 832-10406 | | 4 | NUT, LOCK, M6 x 1, Cl 8 |

**VALVE ASSY - JOYSTICK CONTROL**

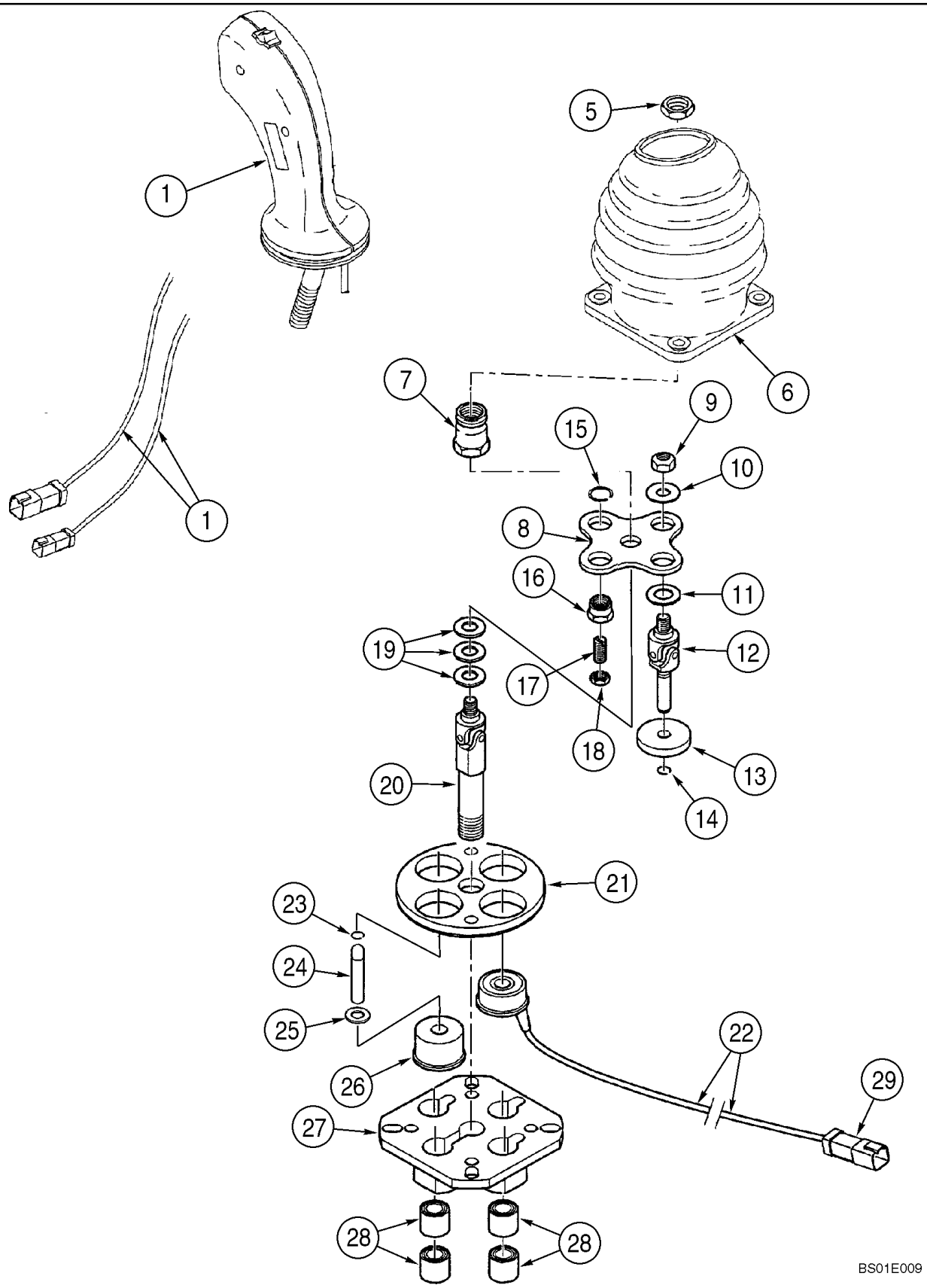

**VALVE ASSY - JOYSTICK CONTROL**

| REF | FN | PART NUMBER | YR/SN | QTY | DESCRIPTION |
|---|---|---|---|---|---|
| | | 87340016 | | 1 | JOYSTICK, Joystick; Incl. 1 - 29; Incl. Figure 08-29B |
| | | 410108A1 | | 1 | KIT, Joystick |
| | | 410566A1 | | 1 | NUT, Locking |
| 1 | | 87372088 | | 1 | HANDLE |
| 5 | | 829-1412 | | 1 | NUT, M12, Cl 10 |
| 6 | | 427501A1 | | 1 | BOOT |
| 7 | | 8604528 | | 1 | NUT, M12 |
| 8 | | 8604529 | | 1 | BRACKET |
| | | 8604530 | | 3 | KIT, Shaft Detent; Incl. Refs. 9 - 14 |
| 9 | | NSS | | 1 | NOT SERVICED SEPARATELY, Nut, Lock |
| 10 | | NSS | | 1 | NOT SERVICED SEPARATELY, Washer |
| 11 | | NSS | | 1 | NOT SERVICED SEPARATELY, Washer |
| 12 | | NSS | | 1 | NOT SERVICED SEPARATELY, Shaft |
| 13 | | NSS | | 1 | NOT SERVICED SEPARATELY, Armature |
| 14 | | NSS | | 1 | NOT SERVICED SEPARATELY, Ring, Snap |
| | | 8604531 | | 1 | KIT, Non-Detent Plunger; Use In Non-Detent Port 2; Incl. Refs. 15 - 18 |
| 15 | | NSS | | 1 | NOT SERVICED SEPARATELY, Ring, Snap |
| 16 | | NSS | | 1 | NOT SERVICED SEPARATELY, M16, Screw |
| 17 | | NSS | | 1 | NOT SERVICED SEPARATELY, M8 x 16, Screw |
| 18 | | NSS | | 1 | NOT SERVICED SEPARATELY, Nut |
| 19 | | 8604532 | | 1 | SHIM, Set Of Three |
| 20 | | 8604533 | | 1 | SHAFT |
| 21 | | 8604534 | | 1 | FLANGE |
| 22 | | 8604535 | | 3 | SOLENOID, 24V; Use In Detent Ports, 1, 3, 4; Component Parts Not Serviced Separately |
| | | 8604536 | | 1 | KIT, REPAIR, Plunger; Incl. Refs. 23 - 25 |
| 23 | | NSS | | 1 | NOT SERVICED SEPARATELY, Ring, Snap |
| 24 | | NSS | | 1 | NOT SERVICED SEPARATELY, Plunger |
| 25 | | NSS | | 1 | NOT SERVICED SEPARATELY, Washer |
| 26 | | 8604537 | | 1 | GUIDE, Plunger |
| 27 | | 8604538 | | 1 | BRACKET |
| 28 | | 8604539 | | 1 | BUSHING, Set Of Four |
| 29 | | 8604527 | | 1 | KIT, 6 Pin Deutsch Connector |

| 08-29B | | p1 | 08/07 |
|---|---|---|---|

**VALVE ASSY - JOYSTICK CONTROL**

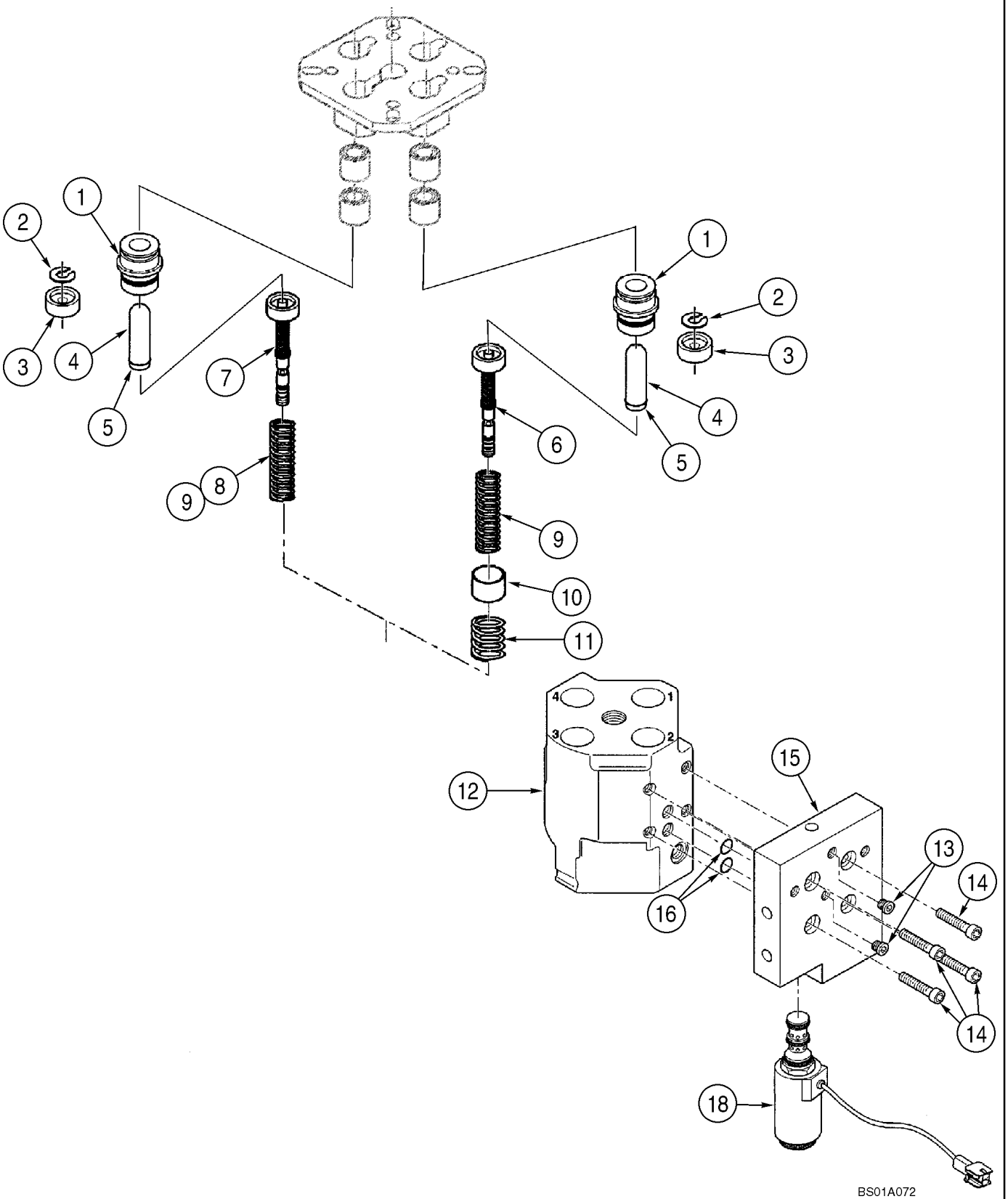

**VALVE ASSY - JOYSTICK CONTROL**

| REF | FN | PART NUMBER | YR/SN | QTY | DESCRIPTION |
|---|---|---|---|---|---|
| | | 87340016 | | 1 | JOYSTICK, Joystick; Incl. 1 - 18; Incl. Figure 08-29A |
| | | 8604521 | | 4 | KIT, Plunger; Used In All Ports; Incl. Refs. 1 - 5 |
| 1 | | NSS | | 2 | NOT SERVICED SEPARATELY, Guide |
| 2 | | NSS | | 2 | NOT SERVICED SEPARATELY, Washer |
| 3 | | NSS | | 2 | NOT SERVICED SEPARATELY, Retainer |
| 4 | | NSS | | 2 | NOT SERVICED SEPARATELY, Plunger |
| 5 | | NSS | | 2 | NOT SERVICED SEPARATELY, Ring, Snap |
| 6 | | 8604522 | | 1 | REGULATOR, Use In Port 1 |
| 7 | | 8604523 | | 3 | REGULATOR, Use In Ports 2, 3, 4 |
| 8 | | 87563048 | | 1 | SPRING, SPRING, Set of Two; Use In Ports 2, 4 |
| 9 | | 8604525 | | 1 | SPRING, Set Of Two; Use In Ports 1, 3 |
| | | 87432563 | | 1 | KIT, SEALS, Springs; Prefeeling; For Ports 1, 3; Use With 8603083 Control Valve; Not Illustrated |
| 10 | | NSS | | 1 | NOT SERVICED SEPARATELY, Socket |
| 11 | | NSS | | 1 | NOT SERVICED SEPARATELY, Spring |
| 12 | | NSS | | 1 | NOT SERVICED SEPARATELY, Housing |
| 13 | | 8604550 | | 1 | KIT, REPAIR, Plug; Set Of Two; If Used |
| | | 8604540 | | 1 | KIT, REPAIR, Flange; Incl. Refs. 14 - 16 |
| 14 | | NSS | | 4 | NOT SERVICED SEPARATELY, M6 x 25, Screw |
| 15 | | NSS | | 1 | NOT SERVICED SEPARATELY, Flange |
| 16 | | NSS | | 2 | NOT SERVICED SEPARATELY, 1,5 x 11, O-Ring |
| 17 | | 8604541 | | 1 | KIT, REPAIR, O-Ring; Set Of Two; Not Illustrated |
| 18 | | 8604542 | | 1 | VALVE, HYDRAULIC, 24V; Solenoid |

## LOADER CONTROL - JOYSTICK WITH SINGLE LEVER MOUNTING

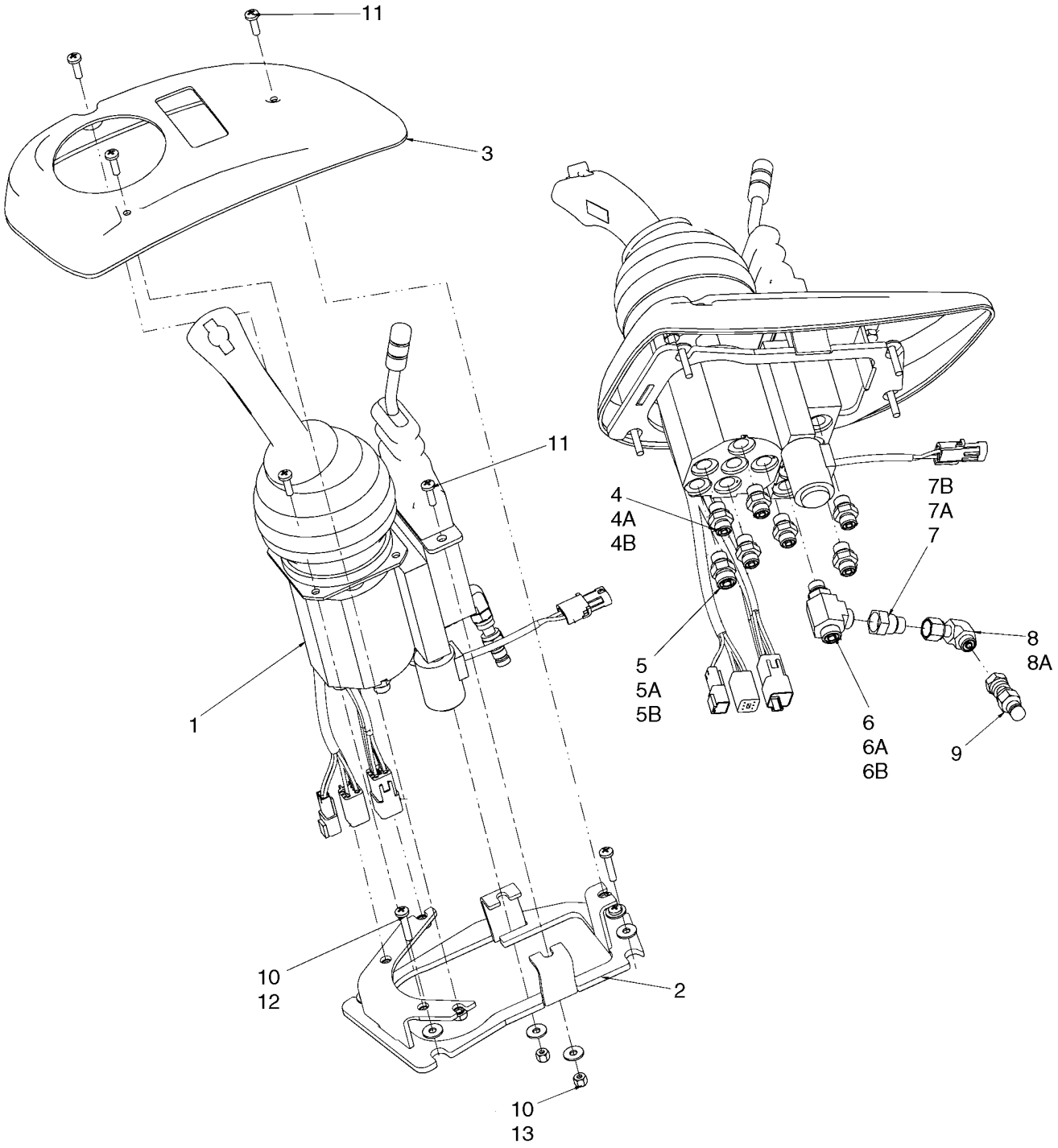

**LOADER CONTROL - JOYSTICK WITH SINGLE LEVER MOUNTING**

| REF | FN | PART NUMBER | YR/SN | QTY | DESCRIPTION |
|---|---|---|---|---|---|
| 1 | | 87340017 | | 1 | JOYSTICK, With One Lever; See Figure 08-30A |
| 2 | | 87516506 | | 1 | ADAPTER, Joystick Controller |
| 3 | | 87638911 | | 1 | BEZEL |
| 4 | | 700-153 | | 6 | CONNECTOR, HYD., 9/16"-18 ORFS x M14 x 1.5 ORB, Incl. Refs. 4A, 4B |
| 4A | | 238-6011 | | 1 | O-RING, -011, 90 Duro, .301" ID x .070" Thk, Face Seal |
| 4B | | 637-63113 | | 1 | O-RING, Cl 6, 11.3MM ID x 2.2 Thk |
| 5 | | 700-101 | | 1 | CONNECTOR, HYD., 11/16"-16 ORFS x M14 x 1.5 ORB, Incl. Refs. 5A, 5B |
| 5A | | 238-6012 | | 1 | O-RING, -012, 90 Duro, .364" ID x .070" Thk, Face Seal |
| 5B | | 637-63113 | | 1 | O-RING, Cl 6, 11.3MM ID x 2.2 Thk |
| 6 | | 700-406 | | 1 | TEE, 11/16"-16 ORFS x M14 x 1.5 ORB Run, Incl. Refs. 6A, 6B |
| 6A | | 238-6012 | | 2 | O-RING, -012, 90 Duro, .364" ID x .070" Thk, Face Seal |
| 6B | | 637-63113 | | 1 | O-RING, Cl 6, 11.3MM ID x 2.2 Thk |
| 7 | | 201-145 | | 1 | REDUCER, 9/16"-18 Male x 11/16"-16 Fem, ORFS, Incl. Refs. 7A, 7B |
| 7A | | 238-6011 | | 1 | O-RING, -011, 90 Duro, .301" ID x .070" Thk, Face Seal |
| 7B | | 238-6012 | | 1 | O-RING, -012, 90 Duro, .364" ID x .070" Thk, Face Seal |
| 8 | | 701-329 | | 1 | ELBOW, 90º, 9/16"-18 ORFS x 9/16"-18 Fem Sw, Incl. Ref. 8A |
| 8A | | 238-6011 | | 1 | O-RING, -011, 90 Duro, .301" ID x .070" Thk, Face Seal |
| 9 | | 190117A1 | | 1 | COUPLING |
| 10 | | 895-25006 | | 6 | WASHER, M6 x 18 x 1.6 |
| 11 | | 540-719 | | 7 | SCREW, Cross Pan Hd, M6 x 20 |
| 12 | | 840-1630 | | 4 | SCREW, Cross Pan Hd, M6 x 30 |
| 13 | | 832-10406 | | 2 | NUT, LOCK, M6 x 1, Cl 8 |

**VALVE ASSY - JOYSTICK WITH SINGLE LEVER**

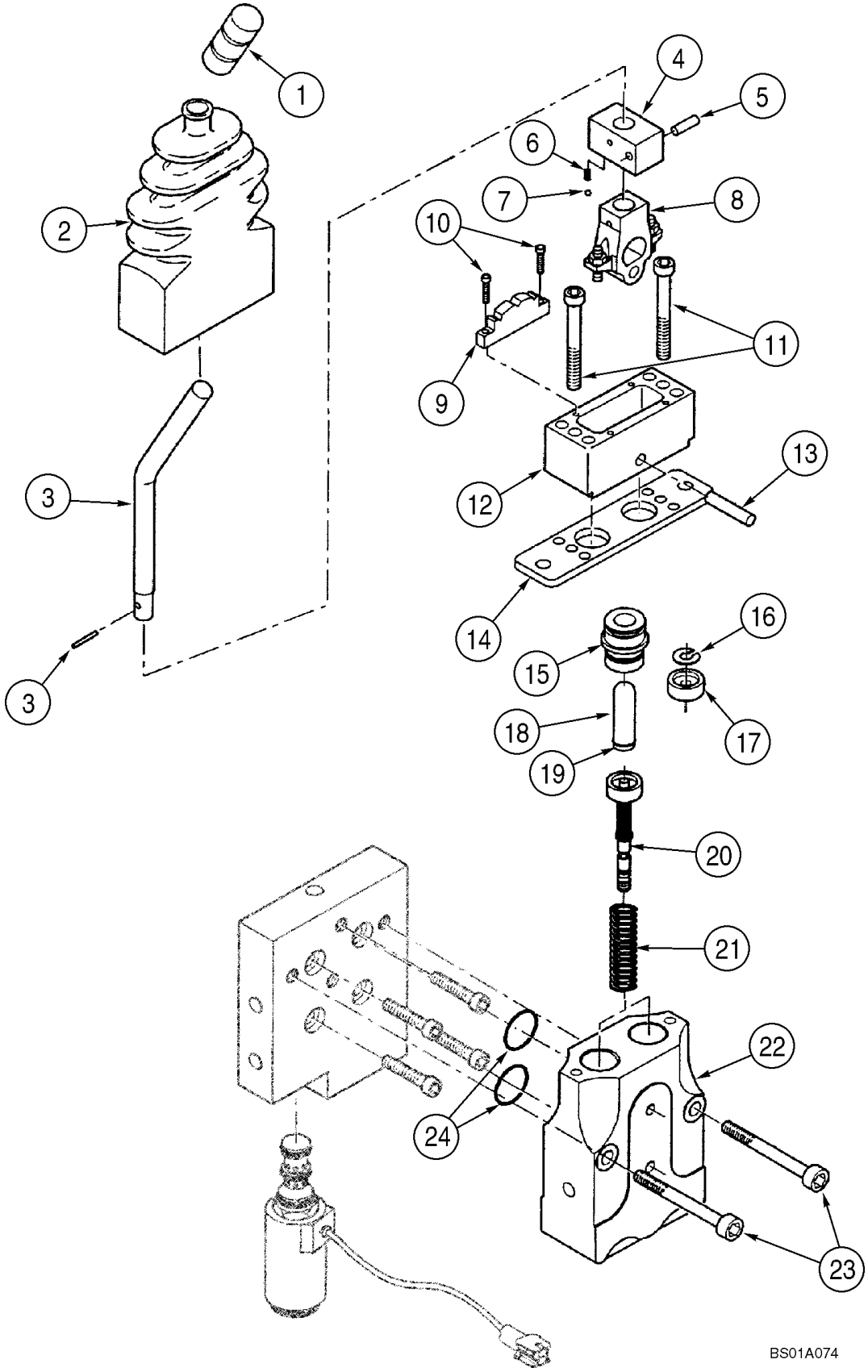

**VALVE ASSY - JOYSTICK WITH SINGLE LEVER**

| REF | FN | PART NUMBER | YR/SN | QTY | DESCRIPTION |
|---|---|---|---|---|---|
| | | 87340017 | | 1 | JOYSTICK, Valve Assembly; With Single Lever; Incl. Refs. 1 - 25 |
| | | 8604593 | | 1 | LEVER, Assembly Valve; Incl. Refs. 1 - 21 |
| 1 | | 8604543 | | 1 | GRIP |
| 2 | | 8604544 | | 1 | BOOT, Rubber |
| | | 8604546 | | 1 | KIT, M Operation; Incl. Refs. 3 - 13 |
| 3 | | NSS | | 1 | NOT SERVICED SEPARATELY, Lever |
| 4 | | NSS | | 1 | NOT SERVICED SEPARATELY, Body |
| 5 | | NSS | | 1 | NOT SERVICED SEPARATELY, Pin, Lock |
| 6 | | NSS | | 1 | NOT SERVICED SEPARATELY, Spring |
| 7 | | NSS | | 1 | NOT SERVICED SEPARATELY, Ball |
| 8 | | NSS | | 1 | NOT SERVICED SEPARATELY, Cam |
| 9 | | NSS | | 1 | NOT SERVICED SEPARATELY, Lock |
| 10 | | NSS | | 2 | NOT SERVICED SEPARATELY, M3 x 12, Screw |
| 11 | | NSS | | 2 | NOT SERVICED SEPARATELY, M6 x 50, Screw |
| 12 | | NSS | | 1 | NOT SERVICED SEPARATELY, Cover |
| 13 | | NSS | | 1 | NOT SERVICED SEPARATELY, Pin |
| 14 | | 8604545 | | 1 | PLATE, Retaining |
| | | 8604255 | | 2 | KIT, REPAIR, Plunger; Incl. Refs. 15 - 19 |
| 15 | | NSS | | 1 | NOT SERVICED SEPARATELY, Guide |
| 16 | | NSS | | 1 | NOT SERVICED SEPARATELY, Washer |
| 17 | | NSS | | 1 | NOT SERVICED SEPARATELY, Retainer |
| 18 | | NSS | | 1 | NOT SERVICED SEPARATELY, Plunger |
| 19 | | NSS | | 1 | NOT SERVICED SEPARATELY, Ring, Snap |
| 20 | | 8604548 | | 2 | REGULATOR, Unit |
| 21 | | 8604549 | | 1 | KIT, Return; Set Of Two |
| 22 | | NSS | | 1 | NOT SERVICED SEPARATELY, Housing |
| 23 | | NSS | | 2 | NOT SERVICED SEPARATELY, M8 x 45 Screw |
| 24 | | NSS | | 2 | NOT SERVICED SEPARATELY, O-Ring; 1,5 x 17,5; Order 8604876, Ref. 25 |
| 25 | | 8604876 | | 1 | KIT, Seal; Not Illustrated |

**LOADER CONTROL - JOYSTICK WITH DUAL LEVER MOUNTING**

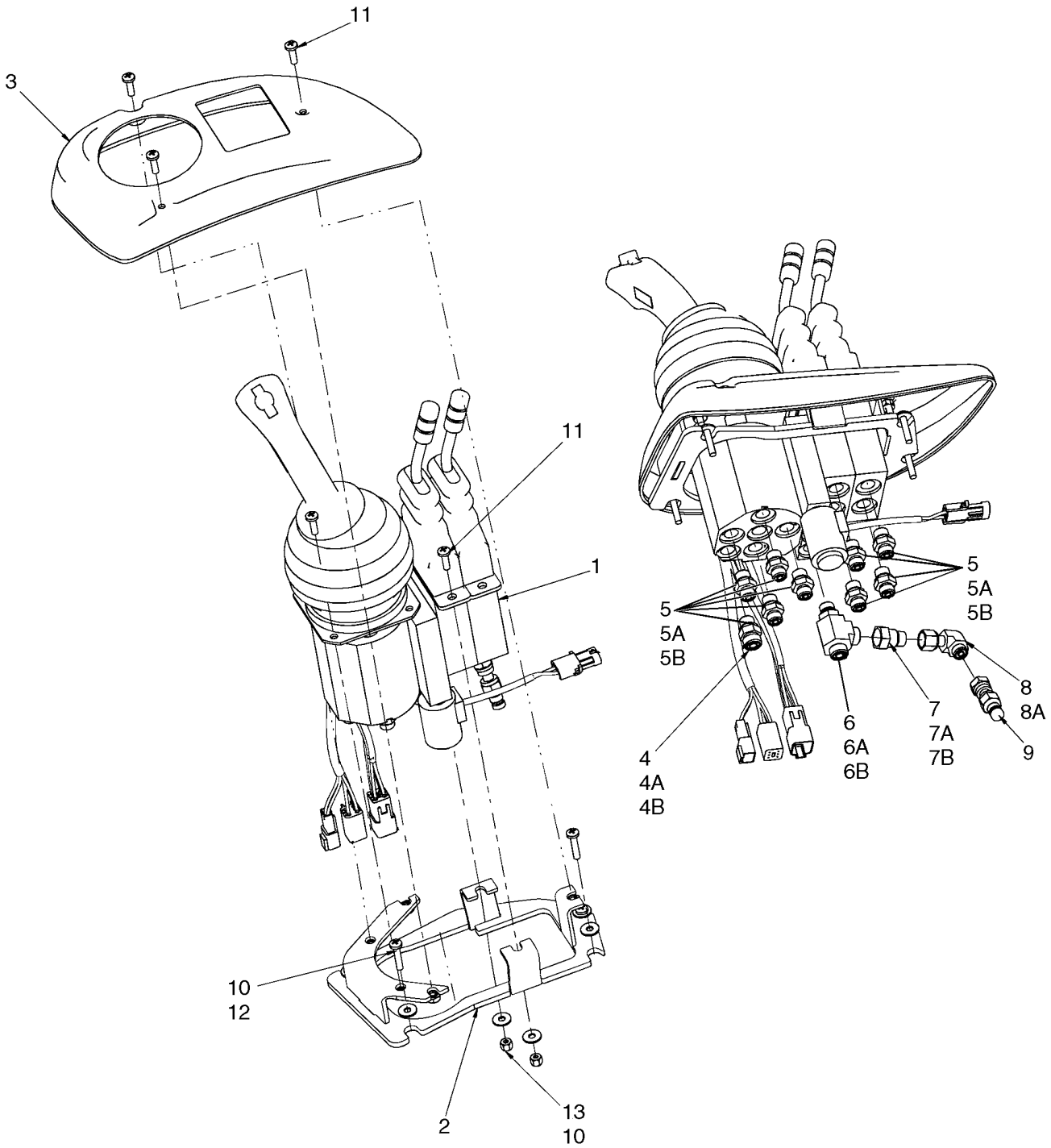

**LOADER CONTROL - JOYSTICK WITH DUAL LEVER MOUNTING**

| REF | FN | PART NUMBER | YR/SN | QTY | DESCRIPTION |
|---|---|---|---|---|---|
| 1 | | 87340019 | | 1 | JOYSTICK, Control With 2 Levers; See Figures 08-31A |
| 2 | | 87516506 | | 1 | ADAPTER |
| 3 | | 87638912 | | 1 | BEZEL |
| 4 | | 700-101 | | 7 | CONNECTOR, HYD., 11/16"-16 ORFS x M14 x 1.5 ORB, Incl. Refs. 4A, 4B |
| 4A | | 238-6012 | | 1 | O-RING, -012, 90 Duro, .364" ID x .070" Thk, Face Seal |
| 4B | | 637-63113 | | 1 | O-RING, Cl 6, 11.3MM ID x 2.2 Thk |
| 5 | | 700-153 | | 8 | CONNECTOR, HYD., 9/16"-18 ORFS x M14 x 1.5 ORB, Incl. Refs. 5A, 5B |
| 5A | | 637-63113 | | 1 | O-RING, Cl 6, 11.3MM ID x 2.2 Thk |
| 5B | | 238-6011 | | 1 | O-RING, -011, 90 Duro, .301" ID x .070" Thk, Face Seal |
| 6 | | 700-406 | | 1 | TEE, 11/16"-16 ORFS x M14 x 1.5 ORB Run, Incl. Refs. 6A, 6B |
| 6A | | 238-6012 | | 2 | O-RING, -012, 90 Duro, .364" ID x .070" Thk, Face Seal |
| 6B | | 637-63113 | | 1 | O-RING, Cl 6, 11.3MM ID x 2.2 Thk |
| 7 | | 201-145 | | 1 | REDUCER, 9/16"-18 Male x 11/16"-16 Fem, ORFS, Incl. Refs. 7A, 7B |
| 7A | | 238-6012 | | 1 | O-RING, -012, 90 Duro, .364" ID x .070" Thk, Face Seal |
| 7B | | 637-63113 | | 1 | O-RING, Cl 6, 11.3MM ID x 2.2 Thk |
| 8 | | 701-329 | | 1 | ELBOW, 90º, 9/16"-18 ORFS x 9/16"-18 Fem Sw, Incl. Ref. 8A |
| 8A | | 238-6011 | | 1 | O-RING, -011, 90 Duro, .301" ID x .070" Thk |
| 9 | | 190117A1 | | 1 | COUPLING, Diagnostic |
| 10 | | 895-25006 | | 2 | WASHER, M6 x 18 x 1.6 |
| 11 | | 540-719 | | 7 | SCREW, Cross Pan Hd, M6 x 20 |
| 12 | | 840-1630 | | 4 | SCREW, Cross Pan Hd, M6 x 30 |
| 13 | | 832-10406 | | 2 | NUT, LOCK, M6 x 1, Cl 8 |

| 08-31A | | p1 | 07/07 |
|---|---|---|---|

**VALVE ASSY - JOYSTICK WITH DUAL LEVER**

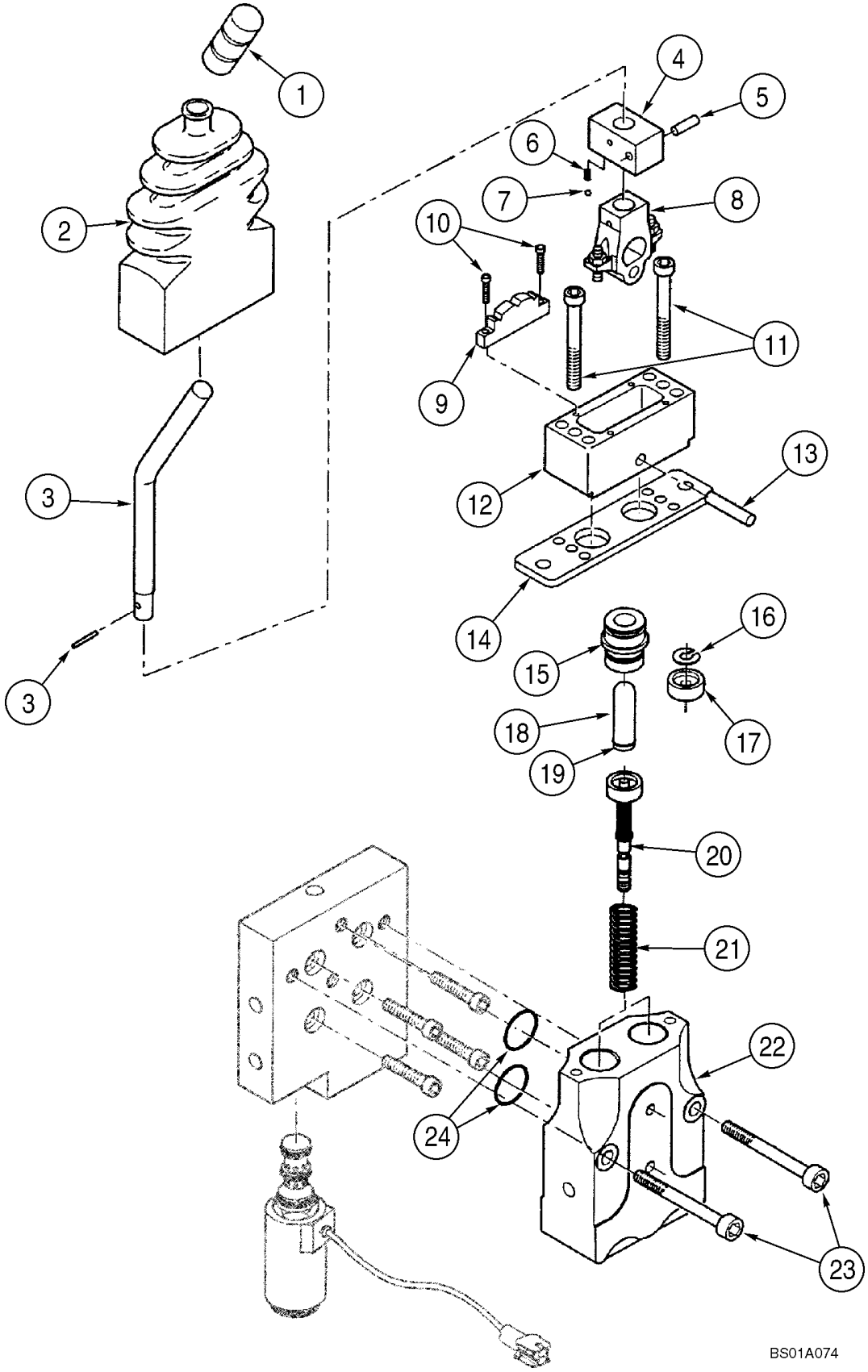

**VALVE ASSY - JOYSTICK WITH DUAL LEVER**

| REF | FN | PART NUMBER | YR/SN | QTY | DESCRIPTION |
|---|---|---|---|---|---|
| | | 87340019 | | 1 | JOYSTICK, Joystick With Dual Lever; Incl. Refs. 1 - 25 |
| | | 8604593 | | 2 | LEVER, Assembly Valve; Incl. Refs. 1 - 21 |
| 1 | | 8604543 | | 1 | GRIP |
| 2 | | 8604544 | | 1 | BOOT, Rubber |
| | | 8604546 | | 1 | KIT, Operation; Incl. Refs. 3 - 13 |
| 3 | | NSS | | 1 | NOT SERVICED SEPARATELY, Lever |
| 4 | | NSS | | 1 | NOT SERVICED SEPARATELY, Body |
| 5 | | NSS | | 1 | NOT SERVICED SEPARATELY, Pin, Lock |
| 6 | | NSS | | 1 | NOT SERVICED SEPARATELY, Spring |
| 7 | | NSS | | 1 | NOT SERVICED SEPARATELY, Ball |
| 8 | | NSS | | 1 | NOT SERVICED SEPARATELY, Cam |
| 9 | | NSS | | 1 | NOT SERVICED SEPARATELY, Lock |
| 10 | | NSS | | 2 | NOT SERVICED SEPARATELY, M3 x 12, Screw |
| 11 | | NSS | | 2 | NOT SERVICED SEPARATELY, M6 x 50, Screw |
| 12 | | NSS | | 1 | NOT SERVICED SEPARATELY, Cover |
| 13 | | NSS | | 1 | NOT SERVICED SEPARATELY, Pin |
| 14 | | 8604545 | | 1 | PLATE |
| | | 8604255 | | 2 | KIT, REPAIR, Plunger; Incl. Refs. 15 - 19 |
| 15 | | NSS | | 1 | NOT SERVICED SEPARATELY, Guide |
| 16 | | NSS | | 1 | NOT SERVICED SEPARATELY, Washer |
| 17 | | NSS | | 1 | NOT SERVICED SEPARATELY, Retainer |
| 18 | | NSS | | 1 | NOT SERVICED SEPARATELY, Plunger |
| 19 | | NSS | | 1 | NOT SERVICED SEPARATELY, Ring, Snap |
| 20 | | 8604548 | | 2 | REGULATOR, Plate; Retaining |
| 21 | | 8604549 | | 1 | KIT, Set Of Two |
| 22 | | NSS | | 1 | NOT SERVICED SEPARATELY, Housing |
| 23 | | NSS | | 2 | NOT SERVICED SEPARATELY, M8 x 80 Screw |
| 24 | | NSS | | 2 | NOT SERVICED SEPARATELY, O-Ring, 1,5 x 17; Order Ref. 25 |
| 25 | | 8604876 | | 1 | KIT, Seal; Not Illustrated |
| 26 | | 864-8080 | | 2 | SCREW, Hex Soc Hd, M8 x 80, 8.8, See Ref 23 |

## LOADER CONTROL - THREE LEVER MOUNTING

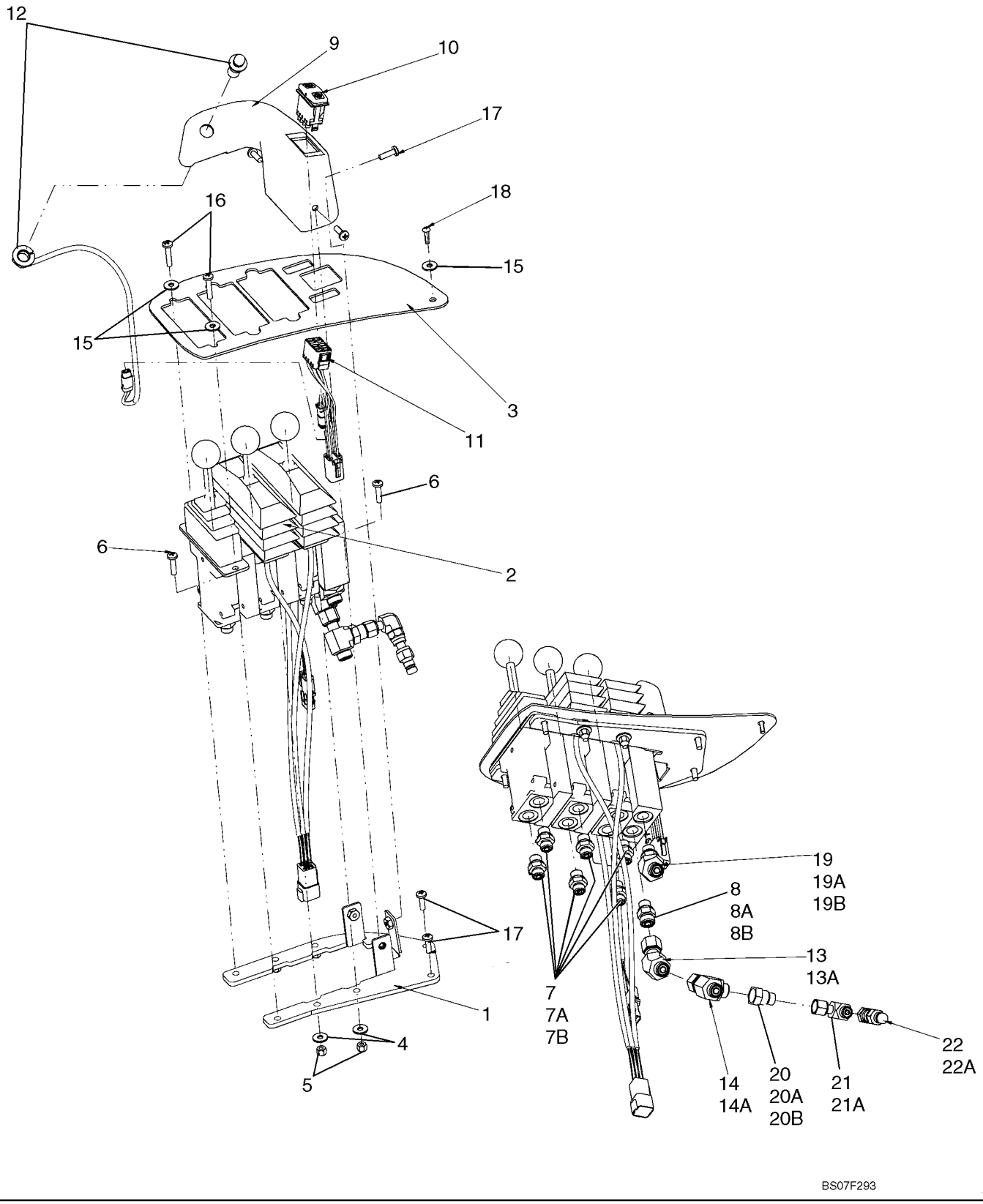

**LOADER CONTROL - THREE LEVER MOUNTING**

| REF | FN | PART NUMBER | YR/SN | QTY | DESCRIPTION |
|---|---|---|---|---|---|
| 1 | | 87534053 | | 1 | BRACKET, Controller |
| 2 | | 407869A2 | | 1 | VALVE, CONTROL, 3 Lever Loader Control; See Figure 08-32A |
| 3 | | 87515559 | | 1 | BRACKET, 3 Lever Loader Control |
| 4 | | 895-25006 | | 4 | WASHER, M6 x 18 x 1.6 |
| 5 | | 832-10406 | | 4 | NUT, LOCK, M6 x 1, Cl 8 |
| 6 | | 840-1625 | | 4 | SCREW, Cross Pan Hd, M6 x 25 |
| 7 | | 700-153 | | 6 | CONNECTOR, HYD., 9/16"-18 ORFS x M14 x 1.5 ORB, Incl. Refs. 7A, 7B |
| 7A | | 238-6011 | | | O-RING, -011, 90 Duro, .301" ID x .070" Thk, Face Seal |
| 7B | | 637-63113 | | 1 | O-RING, Cl 6, 11.3MM ID x 2.2 Thk |
| 8 | | 700-101 | | 1 | CONNECTOR, HYD., 11/16"-16 ORFS x M14 x 1.5 ORB, Incl. Refs. 8A, 8B |
| 8A | | 238-6012 | | 1 | O-RING, -012, 90 Duro, .364" ID x .070" Thk, Face Seal |
| 8B | | 637-63113 | | 1 | O-RING, Cl 6, 11.3MM ID x 2.2 Thk |
| 9 | | 87523729 | | 1 | COVER, Switch |
| 10 | | 400833A2 | | 1 | SWITCH, F-N-R |
| 11 | | 87324389 | | 1 | HARNESS, WIRE, F-N-R Switch |
| 12 | | 402390A1 | | 1 | SWITCH, ASSY. Downshift |
| 13 | | 87354477 | | 1 | ELBOW, 45º, 11/16"-16 x 11/16"-16 Fem Sw, Incl. Refs. 13A |
| 13A | | 238-6012 | | 2 | O-RING, -012, 90 Duro, .364" ID x .070" Thk, Face Seal |
| 14 | | 701-422 | | 1 | TEE, 11/16"-16 ORFS x 11/16"-16 Fem Sw Run, Incl. Refs. 14A |
| 14A | | 238-6012 | | 2 | O-RING, -012, 90 Duro, .364" ID x .070" Thk, Face Seal |
| 15 | | 86639315 | | 3 | WASHER |
| 16 | | 540-711 | | 2 | SCREW, Cross Pan Hd, M6 x 30 |
| 17 | | 540-719 | | 5 | SCREW, Cross Pan Hd, M6 x 20 |
| 18 | | 87582901 | | 1 | SCREW |
| 19 | | 700-315 | | 1 | ELBOW, 45º, 11/16"-18 ORFS x M14 x 1.5 ORB, Incl. Refs. 19A, 19B |

**LOADER CONTROL - THREE LEVER MOUNTING**

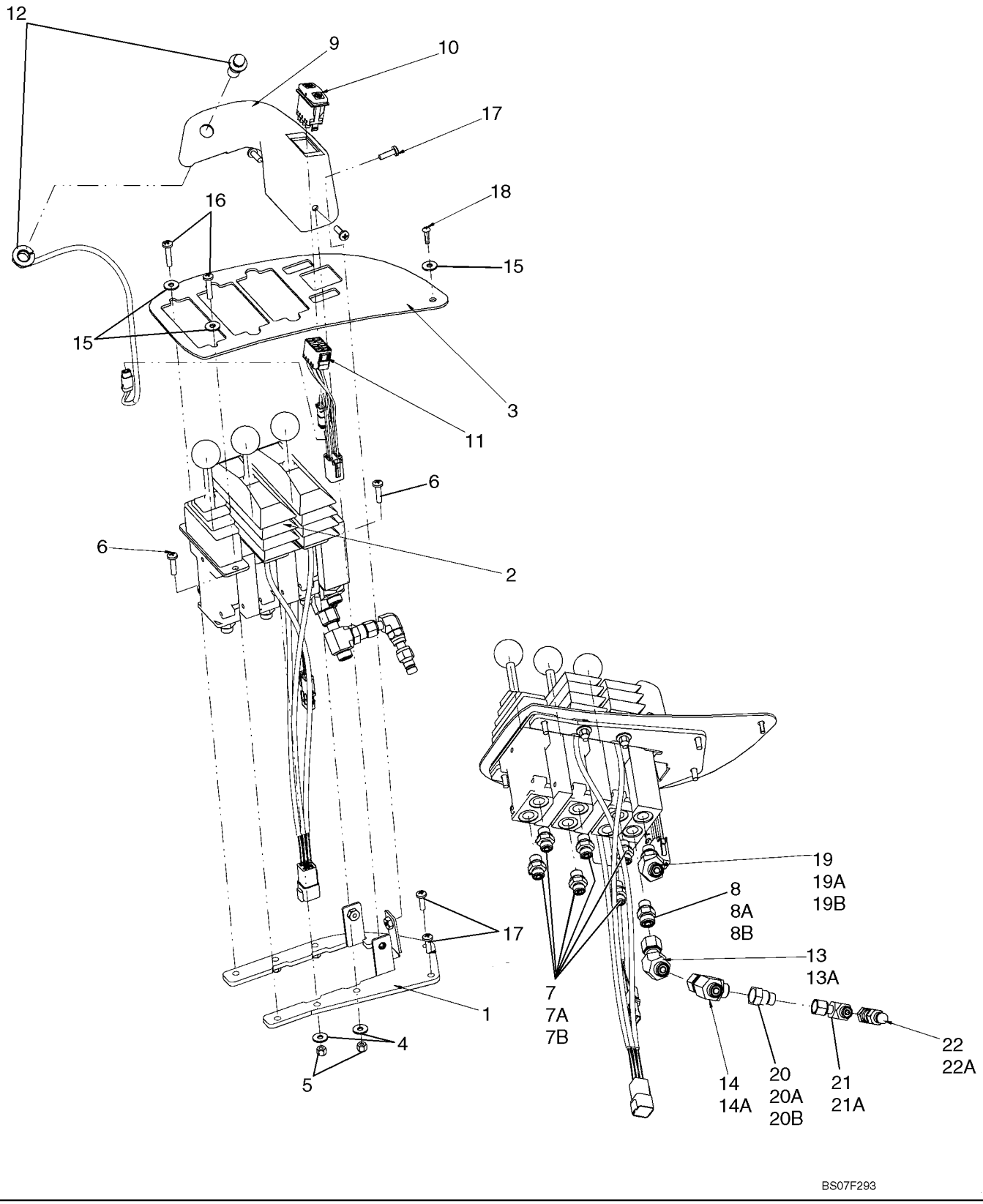

**LOADER CONTROL - THREE LEVER MOUNTING**

| REF | FN | PART NUMBER | YR/SN | QTY | DESCRIPTION |
|---|---|---|---|---|---|
| 19A | | 238-6012 | | 1 | O-RING, -012, 90 Duro, .364" ID x .070" Thk, Face Seal |
| 19B | | 637-63113 | | 1 | O-RING, Cl 6, 11.3MM ID x 2.2 Thk |
| 20 | | 201-145 | | 1 | REDUCER, 9/16"-18 Male x 11/16"-16 Fem, ORFS, Incl. Refs. 20A, 20B |
| 20A | | 238-6012 | | | O-RING, -012, 90 Duro, .364" ID x .070" Thk, Face Seal |
| 20B | | 637-63113 | | | O-RING, Cl 6, 11.3MM ID x 2.2 Thk |
| 21 | | 701-329 | | 1 | ELBOW, 90º, 9/16"-18 ORFS x 9/16"-18 Fem Sw, Incl. Refs. 21A |
| 21A | | 238-6011 | | 1 | O-RING, -011, 90 Duro, .301" ID x .070" Thk, Face Seal |
| 22 | | 190117A1 | | 1 | COUPLING, Incl. Refs. 22A |
| 22A | | 238-6011 | | 1 | O-RING, -011, 90 Duro, .301" ID x .070" Thk |

**VALVE ASSY - 3 LEVER LOADER CONTROL**

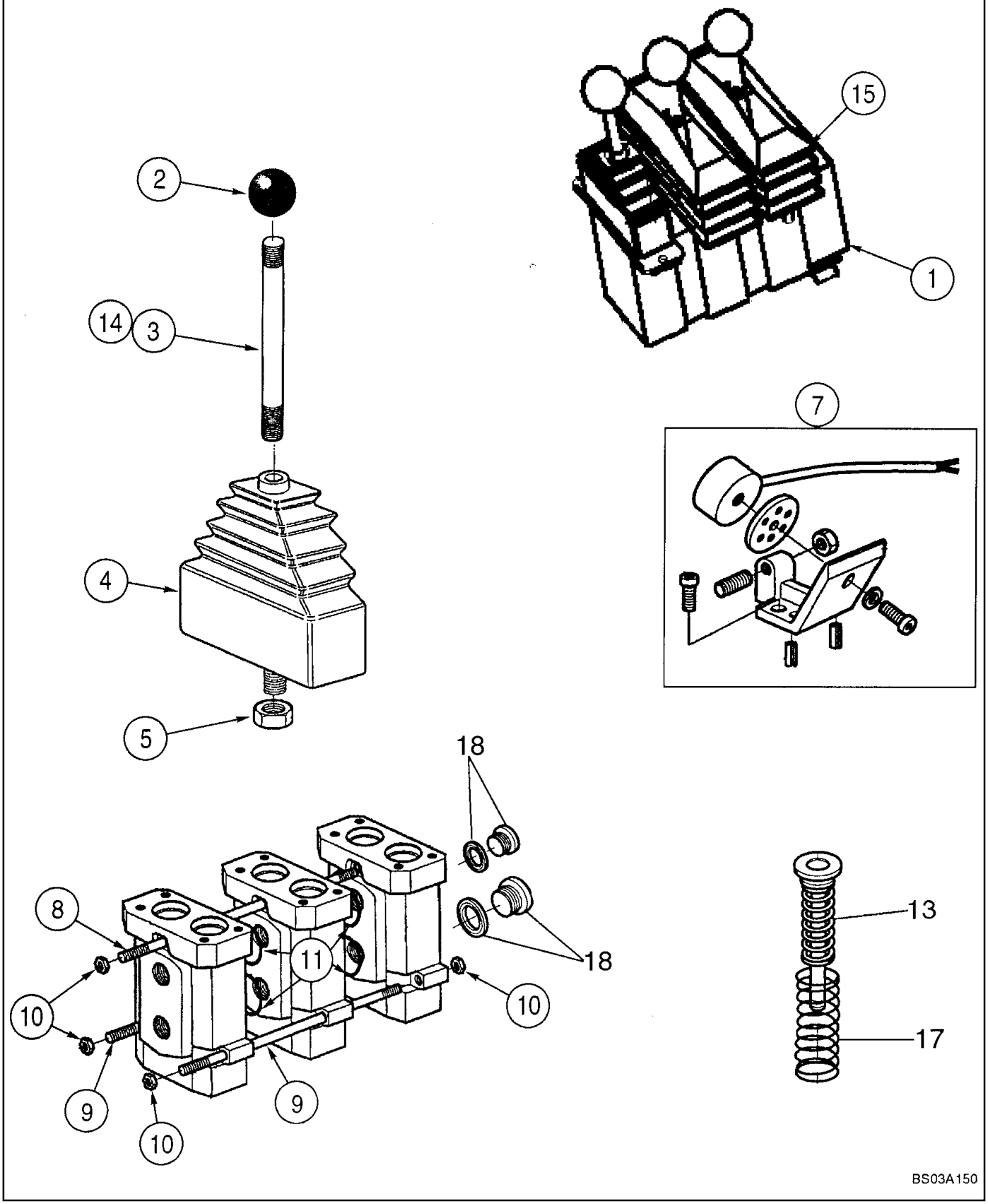

**VALVE ASSY - 3 LEVER LOADER CONTROL**

| REF | FN | PART NUMBER | YR/SN | QTY | DESCRIPTION |
|---|---|---|---|---|---|
| 1 | | 407869A2 | | 1 | VALVE, CONTROL, Three Lever; Three Spool; Incl. Refs. 2 - 19 |
| | | 8604594 | | 1 | KIT, Handle; Incl. Refs. 2 - 5 |
| 2 | | NSS | | 1 | NOT SERVICED SEPARATELY, Knob |
| 3 | | NSS | | 1 | NOT SERVICED SEPARATELY, Handle |
| 4 | | NSS | | 1 | NOT SERVICED SEPARATELY, Boot |
| 5 | | NSS | | 1 | NOT SERVICED SEPARATELY, Nut |
| 6 | | 8604552 | | 2 | SOLENOID, Regulator Unit; Not Illustrated |
| 7 | | 8604553 | | 2 | KIT, REPAIR, Magnet |
| | | 8604554 | | 1 | KIT, Rod; Incl. Refs. 8 - 10 |
| 8 | | NSS | | 1 | NOT SERVICED SEPARATELY, Rod |
| 9 | | NSS | | 2 | NOT SERVICED SEPARATELY, Rod |
| 10 | | NSS | | 6 | NOT SERVICED SEPARATELY, Nut |
| 11 | | 8604557 | | 10 | SEAL, Inter-Section |
| 12 | | 8604555 | | 3 | KIT, Pin; Not Illustrated |
| 13 | | 8604556 | | 3 | SPRING, Pack |
| | | 8604551 | | 2 | KIT, REPAIR, Handle; Incl. Refs. 2, 5, 14, 15 |
| 14 | | NSS | | 1 | NOT SERVICED SEPARATELY, Handle |
| 15 | | NSS | | 1 | NOT SERVICED SEPARATELY, Boot |
| 16 | | 8604598 | | 1 | VALVE, CONTROL, Section; Loader Control; Third; Not Illustrated |
| 17 | | 8604607 | | 1 | SPRING, Pack |
| 18 | | 8604608 | | 3 | PLUG, MAGNETIC, Metric |
| 19 | | 8604599 | | 1 | SPACER, Manifold; Not Illustrated |
| | | REF | | | INSTRUCTION, FOLLOWING COMPONENTS MAY NOT BE ILLUSTRATED |
| | | 449527A1 | | 1 | SPRING, Return; Parker # 91283768 |
| | | 449528A1 | | 1 | LEVER, Bucket; Parker # 9120089536 |
| | | 449529A1 | | 1 | LEVER, Boom; Parker # 9120089656 |
| | | 449530A1 | | 1 | PLATE, Mounting; Parker #9120089308 |
| | | 449533A1 | | 1 | KIT, Seal; Push Pin Set; Parker #9120089332 |
| | | 449555A1 | | 1 | LEVER, Auxillary; Parker #9120089307 |

**BLOCK MOUNTING - COUPLER, 3 SPOOL HOSES**

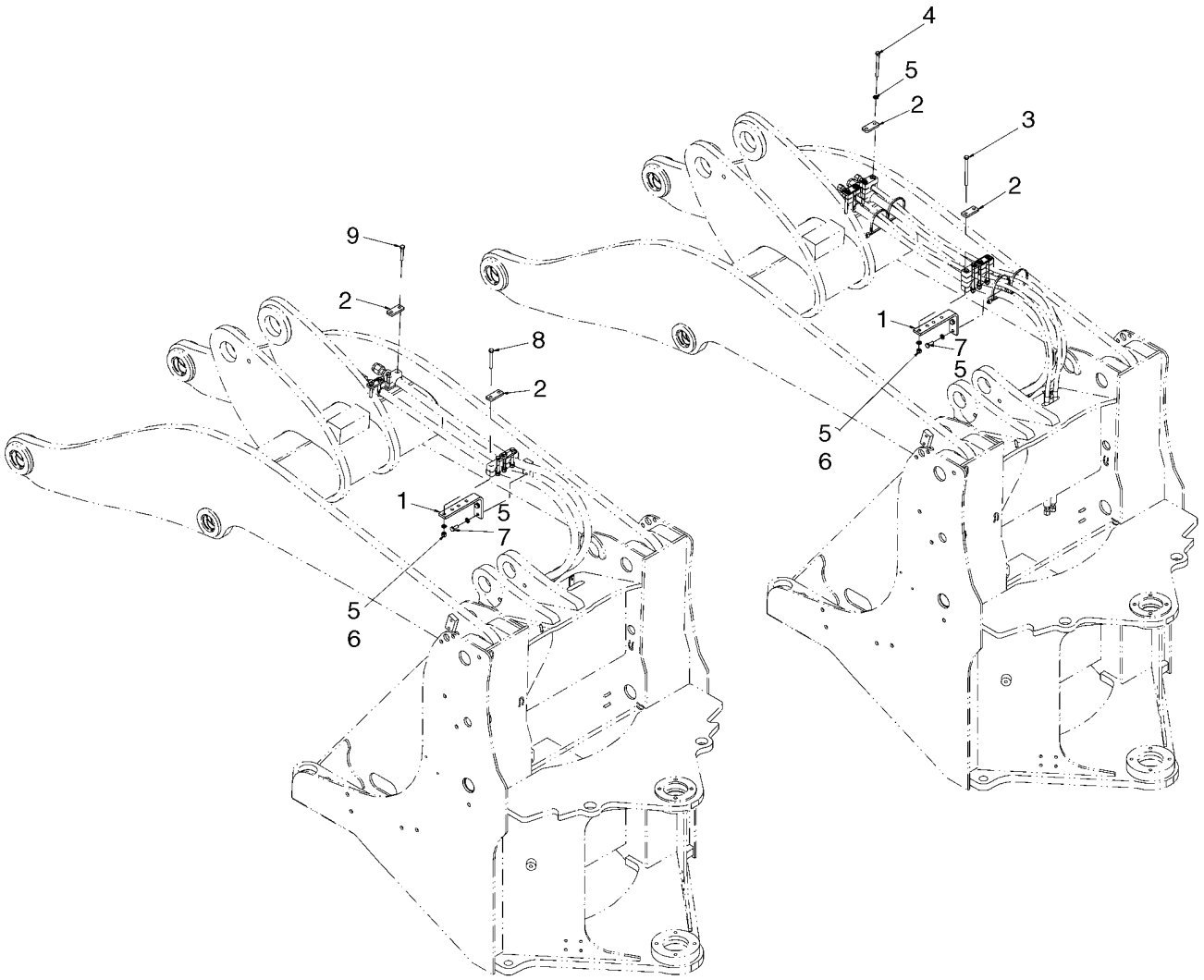


BS07F485

**BLOCK MOUNTING - COUPLER, 3 SPOOL HOSES**

| REF | FN | PART NUMBER | YR/SN | QTY | DESCRIPTION |
|---|---|---|---|---|---|
| | | REF | | | INSTRUCTION, 2 BLOCK INSTALLATION FOR EITHER COUPLER OR 3RD SPOOL HOSES |
| | | REF | | | INSTRUCTION, 3 BLOCK INSTALLATION FOR BOTH COUPLER AND 3RD SPOOL HOSES |
| 1 | | 373040A2 | | 1 | BRACKET, Hose Clamp |
| 2 | | 367658A1 | | 4 | PLATE, Clamp Cover |
| 3 | | 827-10130 | | 4 | BOLT, Hex, M10 x 130, 10.9 |
| 4 | | 827-10110 | | 4 | BOLT, Hex, M10 x 110, 10.9 |
| 5 | | 895-11010 | | 10 | WASHER, M10 x 20 x 2 |
| 6 | | 832-10410 | | 4 | NUT, LOCK, M10 x 1.5, Cl 8 |
| 7 | | 627-10025 | | 2 | BOLT, Hex, M10 x 25, 10.9, Full Thd |
| 8 | | 827-10080 | | 4 | BOLT, Hex, M10 x 80, 10.9 |
| 9 | | 827-10060 | | 4 | BOLT, Hex, M10 x 60, 10.9 |

## NOTES

# SECTION INDEX
## Chassis


| | |
|---|---|
| 09-01 | CONTROL - RETURN-TO-DIG (Z-BAR) |
| 09-02 | CONTROL - RETURN-TO-DIG (XR) |
| 09-03 | CONTROL - RETURN-TO-DIG (XT LOADER) |
| 09-04 | CONTROL - BUCKET HEIGHT AND RETURN-TO-TRANSPORT (Z-BAR LOADER) |
| 09-05 | CONTROL - BUCKET HEIGHT AND RETURN-TO-TRANSPORT (XR LOADER) |
| 09-06 | CONTROL - BUCKET HEIGHT AND RETURN-TO-TRANSPORT (XT LOADER) |
| 09-07 | FRAME - LOADER LIFT (Z-BAR) |
| 09-07A | FRAME - LOADER LIFT (XR) |
| 09-07B | FRAME - LOADER LIFT (XT) |
| 09-08 | BUCKETS - ATTACHMENT (Z BAR LOADER) |
| 09-08A | BUCKETS - ATTACHMENT (XT LOADER) |
| 09-09 | COUPLER, HYDRAULIC - Z-BAR - JRB |
| 09-09A | COUPLER, HYDRAULIC - Z-BAR - ACS |
| 09-09B | COUPLER, HYDRAULIC - XT - JRB |
| 09-09C | COUPLER, HYDRAULIC - XT - ACS |
| 09-10 | LOADER BUCKET - WITH BOLT ON TEETH, SEGMENTS AND SKID PADS |
| 09-11 | LOADER BUCKET - WITH BOLT ON EDGE AND SKID PADS |
| 09-12 | FRAME, FRONT (Z-BAR, XR) |
| 09-13 | FRAME, FRONT (XT) |
| 09-14 | FRAME, REAR |
| 09-15 | ARTICULATION JOINT |
| 09-16 | HOOD |
| 09-17 | HOOD - MOUNTING |
| 09-18 | COVERS - BATTERY BOX |
| 09-19 | COVERS - CAB AND CANOPY, LOWER |
| 09-19A | COVERS - FRAME, REAR |
| 09-20 | FENDERS, FRONT |
| 09-20A | FENDERS, FRONT - WIDE |
| 09-21 | FENDERS, REAR - STANDARD |
| 09-22 | FENDERS, REAR - WIDE |
| 09-23 | FENDERS, REAR - GUARD |
| 09-24 | STEPS - LEFT |
| 09-25 | STEPS - RIGHT |
| 09-26 | SOUNDPROOFING - ENGINE |
| 09-27 | PLATE, SKID |
| 09-28 | CAB - MOUNTING |
| 09-29 | CAB - GLASS, FRONT |
| 09-30 | CAB - GLASS, REAR |
| 09-31 | CAB - INTERIOR TRIM |
| 09-31A | CAB - INTERIOR TRIM - COLUMNS |
| 09-31B | CAB - INTERIOR TRIM - ROOF |
| 09-32 | CAB - EXTERIOR TRIM |
| 09-33 | CAB - WINDOW, RIGHT-HAND-UPPER |
| 09-33A | CAB - WINDOW, RIGHT-HAND-UPPER |
| 09-34 | CAB - WINDOW, RIGHT-HAND-LOWER |
| 09-35 | CAB - DOOR MOUNTING |
| 09-35A | CAB - DOOR |
| 09-36 | CAB - MIRRORS |
| 09-37 | CAB - CARPET |
| 09-38 | CAB - SUNVISOR |
| 09-39 | CAB - COMPONENTS |

# SECTION INDEX
## Chassis


| | |
|---|---|
| 09-40 | CAB - WORK LAMPS |
| 09-41 | CAB - CONVENIENCE PACKAGE |
| 09-42 | SEAT - MOUNTING/SEAT BELTS |
| 09-42A | SEAT ASSY, MECHANICAL SUSPENSION |
| 09-42B | SEAT ASSY, MECHANICAL SUSPENSION |
| 09-42C | SEAT ASSY, AIR SUSPENSION |
| 09-42D | SEAT ASSY, AIR SUSPENSION |
| 09-43 | CAB - HEATER AND AIR CONDITIONING DUCTS |
| 09-43A | CAB - HEATER AND AIR CONDITIONING DUCTS |
| 09-44 | COVERS - DRIVE BELT (WITH AIR CONDITIONING) |
| 09-44A | COVERS - DRIVE BELT (WITHOUT AIR CONDITIONING) |
| 09-44B | COVERS - CAB - WITHOUT AIR CONDITIONING |
| 09-45 | HEATER - MOUNTING |
| 09-45A | HEATER |
| 09-46 | HEATING HOSES |
| 09-47 | AIR CONDITIONING - MOUNTING |
| 09-47A | AIR CONDITIONING |
| 09-48 | AIR CONDITIONING - CONDENSER |
| 09-49 | AIR CONDITIONING HOSES |
| 09-50 | COUNTERWEIGHT |
| 09-50A | COUNTERWEIGHT - HEAVY DUTY |
| 09-51 | FIRE EXTINGUISHER |
| 09-52 | TOOL BOX |
| 09-53 | LICENSE PLATE MOUNTING |
| 09-54 | DECALS - MODEL |
| 09-55 | DECALS - COMMON TO MODEL |
| 09-56 | DECALS - CAB |
| 09-57 | DECALS - ENGLISH |
| 09-58 | DECALS - FRENCH CANADIAN |
| 09-59 | DECALS - LATIN AMERICAN SPANISH |

## NOTES

**CONTROL - RETURN-TO-DIG (Z-BAR)**

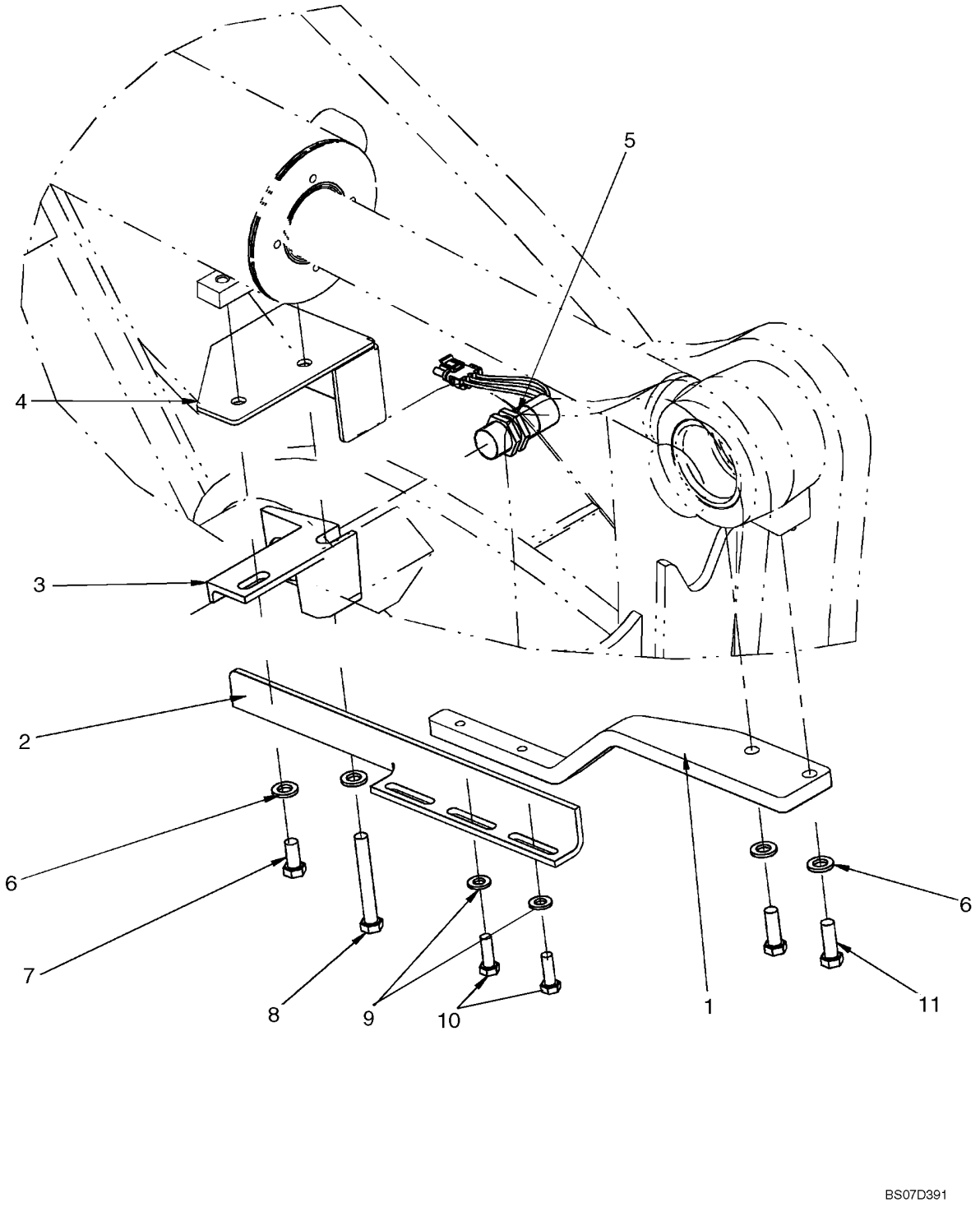

**CONTROL - RETURN-TO-DIG (Z-BAR)**

| REF | FN | PART NUMBER | YR/SN | QTY | DESCRIPTION |
|---|---|---|---|---|---|
| 1 | | 87403964 | | 1 | BRACKET, Return to Dig |
| 2 | | 87403965 | | 1 | BRACKET, Target Return to Dig |
| 3 | | L125983 | | 1 | SUPPORT, Proximity Switch |
| 4 | | 87403966 | | 1 | COVER, Proximity Switch |
| 5 | | 1546497C1 | | 1 | SWITCH, Proximity |
| 6 | | 896-11012 | | 4 | WASHER, M13.5 x 24.5 x 3, HT |
| 7 | | 627-12025 | | 1 | BOLT, Hex, M12 x 25, 10.9 |
| 8 | | 827-12090 | | 1 | BOLT, Hex, M12 x 90, 10.9 |
| 9 | | 896-11010 | | 2 | WASHER, M10 x 21.5 x 2.5, HT |
| 10 | | 627-10030 | | 2 | BOLT, Hex, M10 x 30, 10.9, Full Thd |
| 11 | | 627-12035 | | 2 | BOLT, Hex, M12 x 35, 10.9 |

**CONTROL - RETURN-TO-DIG (XR)**

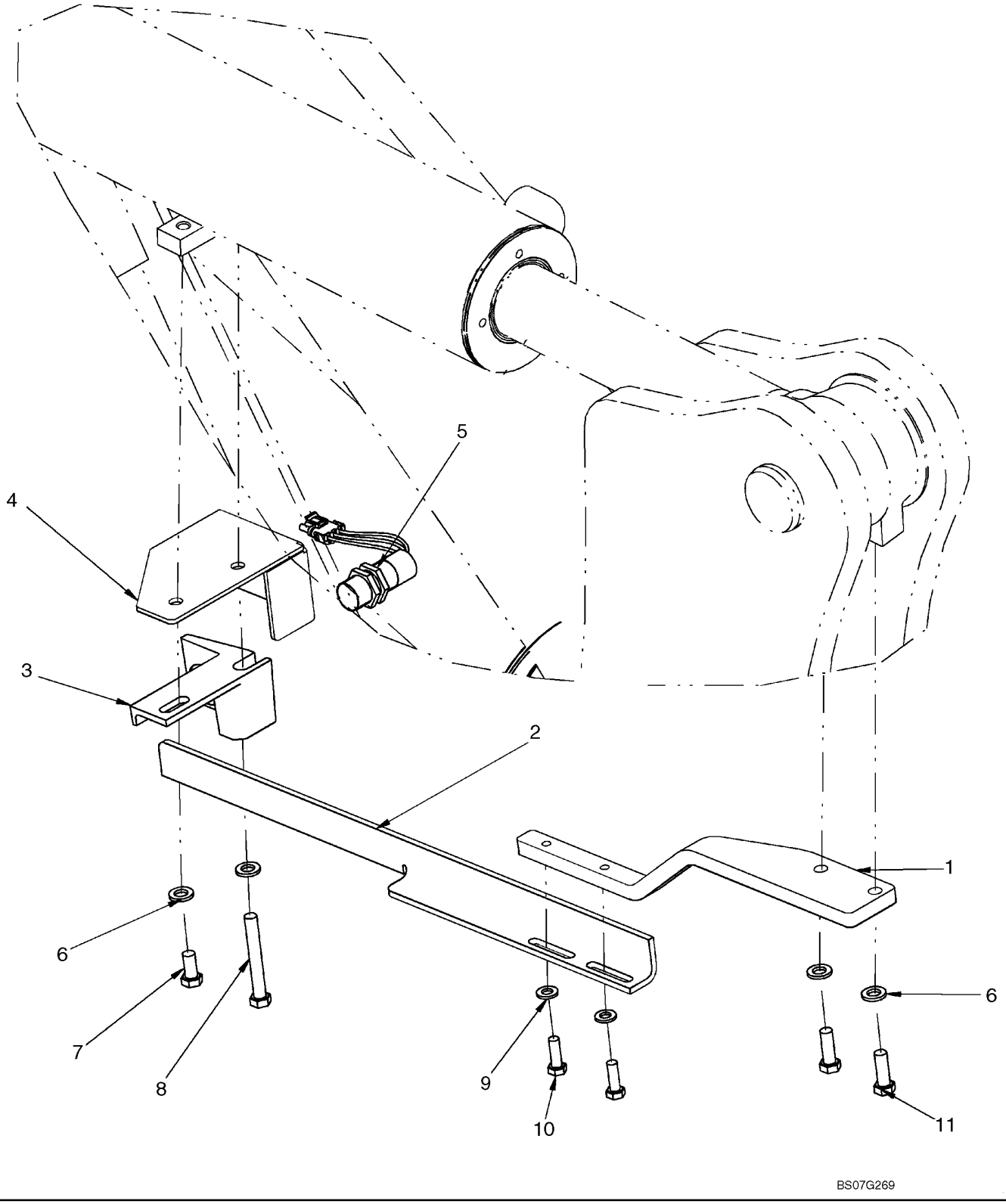

**CONTROL - RETURN-TO-DIG (XR)**

| REF | FN | PART NUMBER | YR/SN | QTY | DESCRIPTION |
|---|---|---|---|---|---|
| 1 | | 87403964 | | 1 | BRACKET, Return to Dig |
| 2 | | 87403968 | | 1 | BRACKET, Target Return to Dig |
| 3 | | L125983 | | 1 | SUPPORT, Proximity Switch |
| 4 | | 87403966 | | 1 | COVER, Proximity Switch |
| 5 | | 1546497C1 | | 1 | SWITCH, Proximity |
| 6 | | 896-11012 | | 4 | WASHER, M13.5 x 24.5 x 3, HT |
| 7 | | 627-12025 | | 1 | BOLT, Hex, M12 x 25, 10.9 |
| 8 | | 827-12090 | | 1 | BOLT, Hex, M12 x 90, 10.9 |
| 9 | | 896-11010 | | 2 | WASHER, M10 x 21.5 x 2.5, HT |
| 10 | | 627-10030 | | 2 | BOLT, Hex, M10 x 30, 10.9, Full Thd |
| 11 | | 627-12035 | | 2 | BOLT, Hex, M12 x 35, 10.9 |

**CONTROL - RETURN-TO-DIG (XT LOADER)**

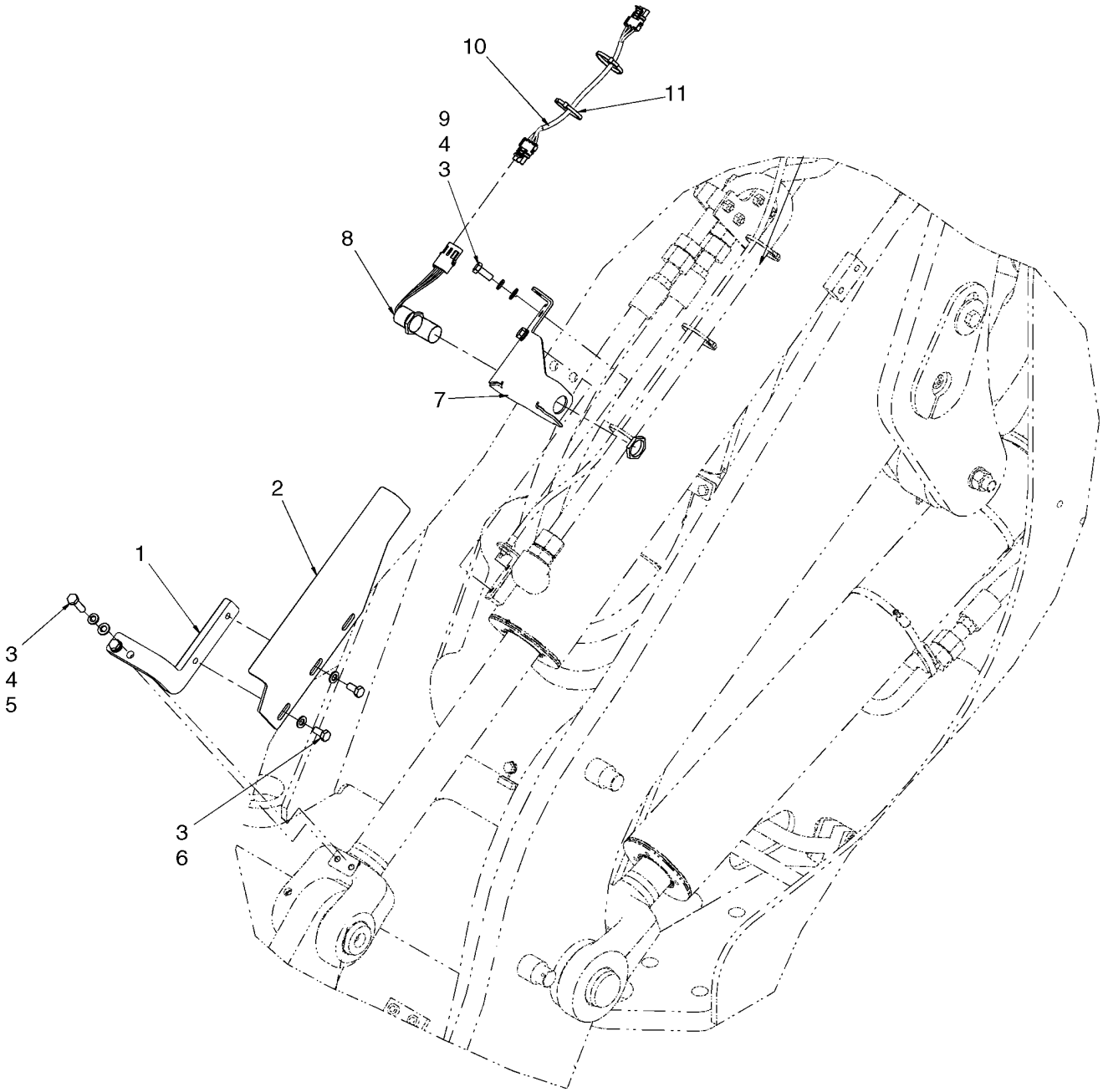

**CONTROL - RETURN-TO-DIG (XT LOADER)**

| REF | FN | PART NUMBER | YR/SN | QTY | DESCRIPTION |
|---|---|---|---|---|---|
| 1 | | 87304560 | | 1 | BRACKET, Return to Dig, Rod End |
| 2 | | 87443659 | | 1 | BRACKET, Return to Dig, Target |
| 3 | | 895-11010 | | 6 | WASHER, M10 x 20 x 2 |
| 4 | | 892-11010 | | 4 | WASHER, LOCK, M10 |
| 5 | | 627-10035 | | 2 | BOLT, Hex, M10 x 35, 10.9, Full Thd |
| 6 | | 627-10020 | | 2 | BOLT, Hex, M10 x 20, 10.9, Full Thd |
| 7 | | 87310689 | | 1 | BRACKET, Switch Guard |
| 8 | | 1546498C1 | | 1 | SWITCH, Proximity |
| 9 | | 627-10025 | | 2 | BOLT, Hex, M10 x 25, 10.9, Full Thd |
| 10 | | 87581938 | | 1 | HARNESS, Return to Dig, XT |
| 11 | | L11541 | | 2 | STRAP |

**CONTROL - BUCKET HEIGHT AND RETURN-TO-TRANSPORT (Z-BAR LOADER)**

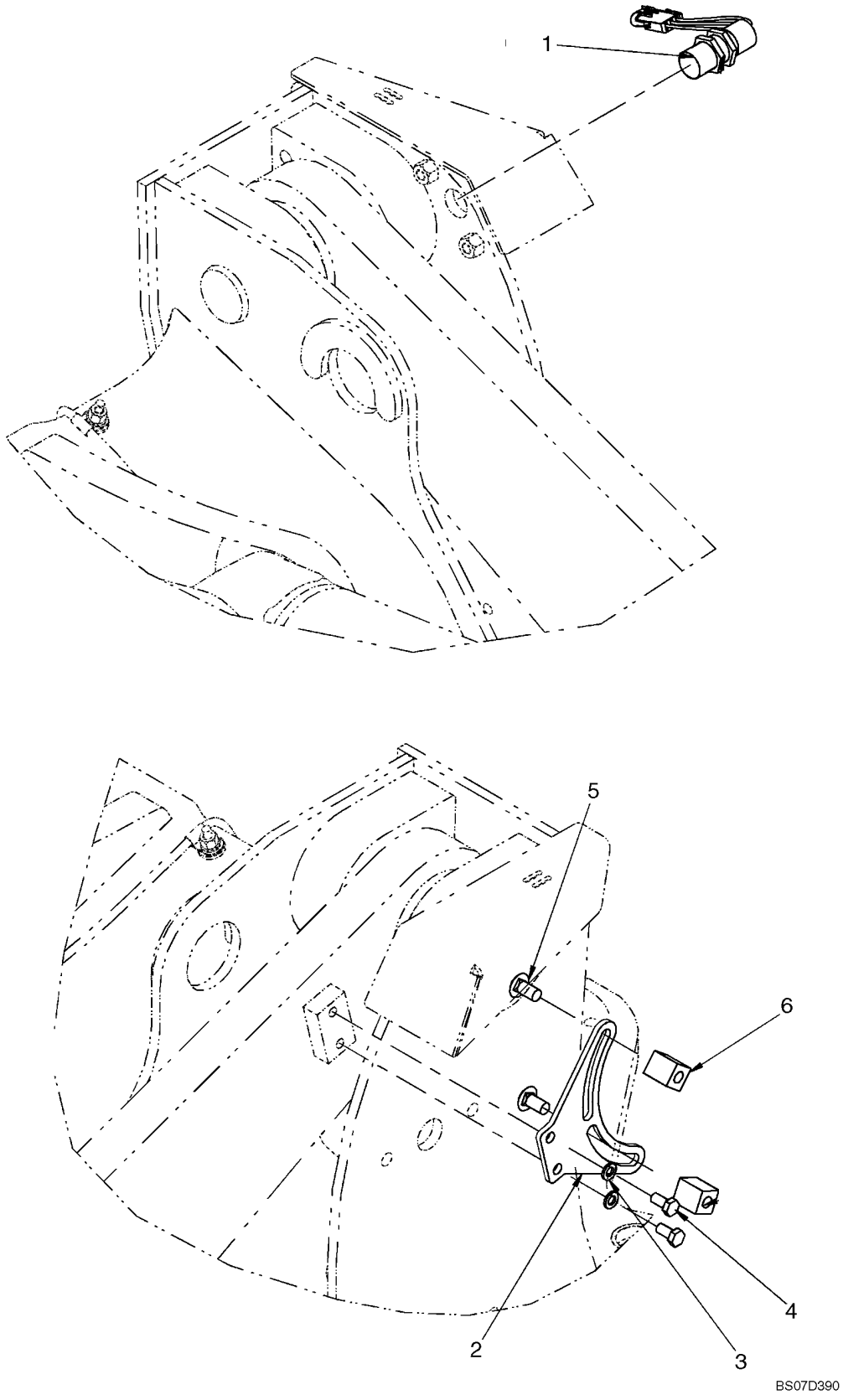

**CONTROL - BUCKET HEIGHT AND RETURN-TO-TRANSPORT (Z-BAR LOADER)**

| REF | FN | PART NUMBER | YR/SN | QTY | DESCRIPTION |
|---|---|---|---|---|---|
| 1 | | 1546498C1 | | 1 | SWITCH, Proximity |
| 2 | | 379149A2 | | 1 | PLATE |
| 3 | | 892-11010 | | 2 | WASHER, LOCK, M10 |
| 4 | | 627-10020 | | 2 | BOLT, Hex, M10 x 20, 10.9, Full Thd |
| 5 | | 811-12025 | | 2 | BOLT, CARRIAGE, Short NK, M12 x 25, Cl8.8, Full Thd |
| 6 | | 87437102 | | 2 | BLOCK |

**CONTROL - BUCKET HEIGHT AND RETURN-TO-TRANSPORT (XR LOADER)**

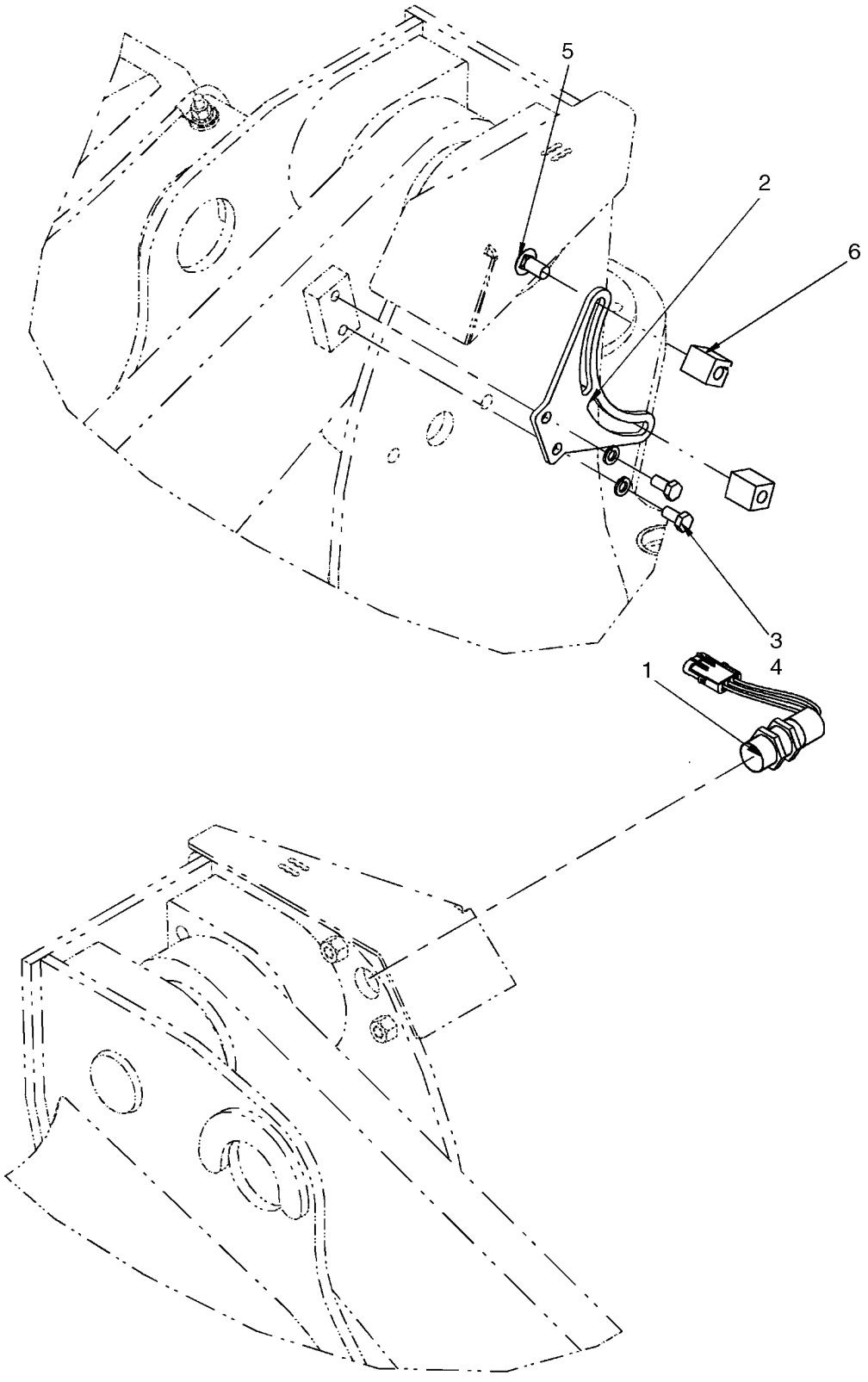

**CONTROL - BUCKET HEIGHT AND RETURN-TO-TRANSPORT (XR LOADER)**

| REF | FN | PART NUMBER | YR/SN | QTY | DESCRIPTION |
|---|---|---|---|---|---|
| 1 | | 1546498C1 | | 1 | SWITCH, Proximity |
| 2 | | 379149A2 | | 1 | PLATE |
| 3 | | 892-11010 | | 2 | WASHER, LOCK, M10 |
| 4 | | 627-10020 | | 2 | BOLT, Hex, M10 x 20, 10.9, Full Thd |
| 5 | | 811-12025 | | 2 | BOLT, CARRIAGE, Short NK, M12 x 25, Cl8.8, Full Thd |
| 6 | | 87437102 | | 2 | BLOCK |

**CONTROL - BUCKET HEIGHT AND RETURN-TO-TRANSPORT (XT LOADER)**

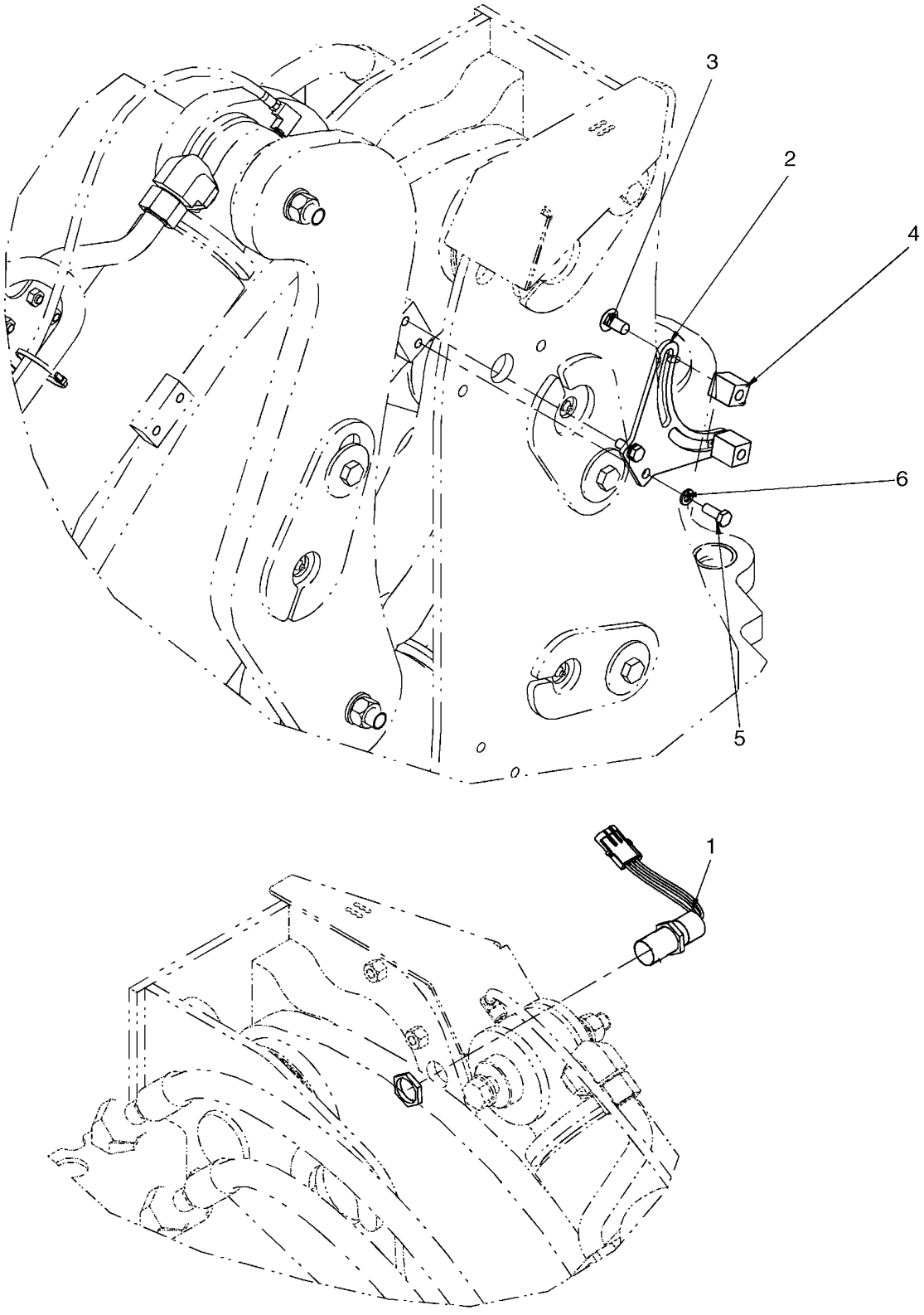


BS07G275

**CONTROL - BUCKET HEIGHT AND RETURN-TO-TRANSPORT (XT LOADER)**

| REF | FN | PART NUMBER | YR/SN | QTY | DESCRIPTION |
|---|---|---|---|---|---|
| 1 | | 1546498C1 | | 1 | SWITCH, Proximity |
| 2 | | 379149A2 | | 1 | PLATE, Target Mounting |
| 3 | | 811-12025 | | 2 | BOLT, CARRIAGE, Short NK, M12 x 25, Cl8.8, Full Thd |
| 4 | | 87437102 | | 2 | BLOCK |
| 5 | | 627-10025 | | 2 | BOLT, Hex, M10 x 25, 10.9, Full Thd |
| 6 | | 892-11010 | | 2 | WASHER, LOCK, M10 |

| 09-07 | | p1 | 08/07 |
|---|---|---|---|

**FRAME - LOADER LIFT (Z-BAR)**

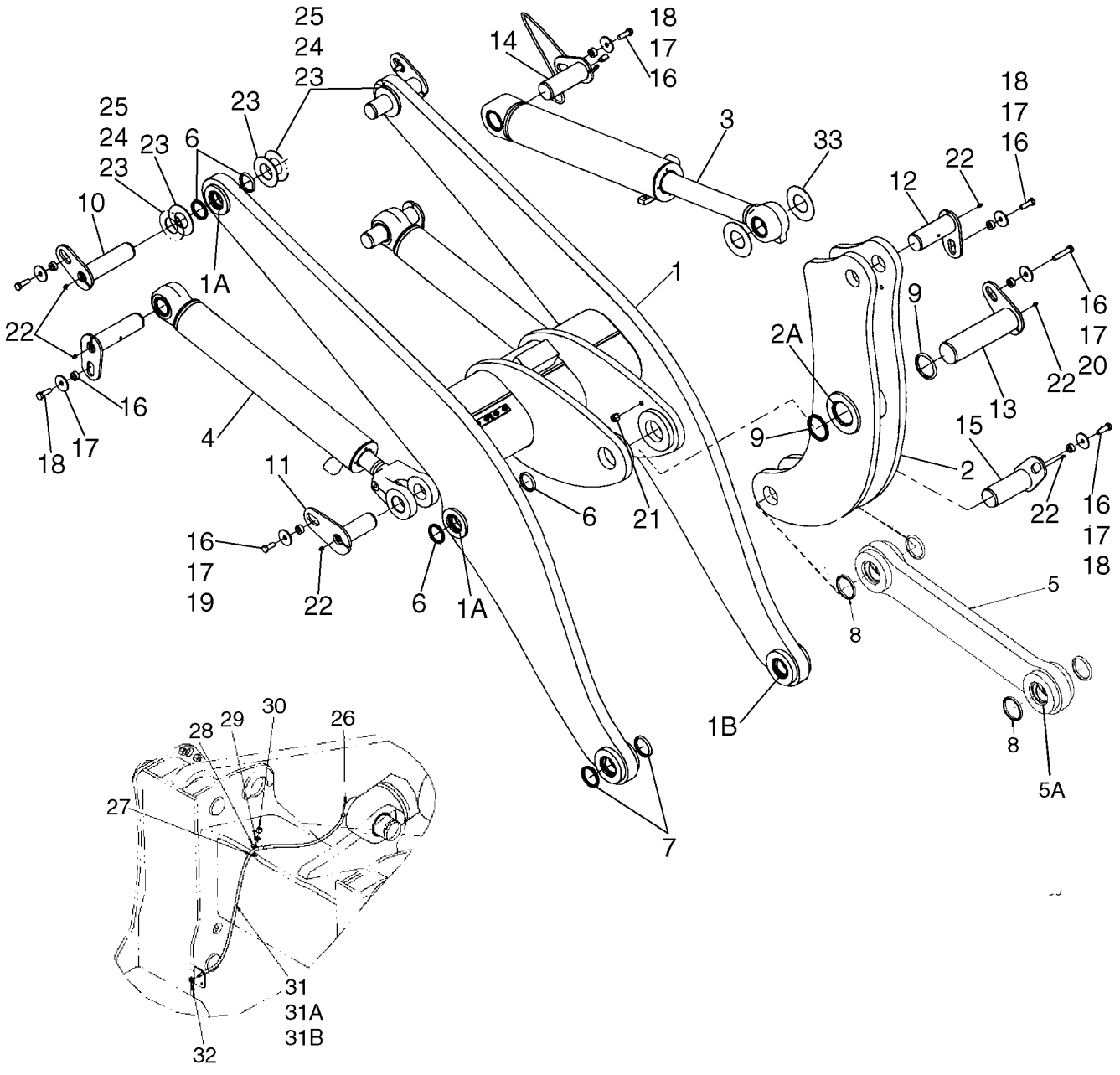

**FRAME - LOADER LIFT (Z-BAR)**

| REF | FN | PART NUMBER | YR/SN | QTY | DESCRIPTION |
|---|---|---|---|---|---|
| | | REF | | | INSTRUCTION, Z-BAR LOADER |
| 1 | | 87343733 | | 1 | ARM, LIFT, Loader Lift; Incl. Refs. 1A - 1B |
| 1A | | 87613439 | | 4 | BUSHING, Lift Arm |
| 1B | | 87613444 | | 2 | BUSHING, Dump Link |
| 2 | | 87330150 | | 1 | BELLCRANK, Incl. Ref. 2A |
| 2A | | 87613429 | | 2 | BUSHING, Bellcrank |
| 3 | | 87366688 | | 1 | CYLINDER ASSY., 127 ID x 620 mm strk; Bucket Tilt; See Figure 08-16 |
| 4 | | 87577649 | | 2 | CYLINDER, LIFT, 114.3 ID x 787.6 mm strk; Lift; See Figure 08-15 |
| 5 | | 87395399 | | 1 | LINK, Dump; Incl. Ref. 5A |
| 5A | | 87613430 | | 2 | BUSHING, Dump Link |
| 6 | | D95146 | | 8 | WIPER, 63.5 ID |
| 7 | | D95147 | | 4 | WIPER, 69.8 ID |
| 8 | | D95148 | | 4 | WIPER, 76.2 ID |
| 9 | | S92653 | | 2 | WIPER, 88.9 ID |
| 10 | | 361128A1 | | 4 | PIN, Lift Arm Pivot Head; Case Power Tan |
| 11 | | 361133A2 | | 2 | PIN ASSY., Lift Arm Pivot Rod; Case Power Tan |
| 12 | | 361139A2 | | 1 | PIN ASSY., Dump Link Pivot; Case Power Tan |
| 13 | | 375328A1 | | 1 | PIN ASSY., Bellcrank Pivot; Case Power Tan |
| 14 | | 375330A1 | | 1 | PIN ASSY., Tilt Cylinder Pivot; Case Power Tan |
| 15 | | 375326A2 | | 1 | PIN ASSY., Dump Link Pivot; Case Power Tan |
| 16 | | L125100 | | 10 | SPACER, Plated |
| 17 | | 496-81025 | | 10 | WASHER, 21/32" x 2 1/2" x .188", HDN |
| 18 | | 627-16050 | | 7 | BOLT, Hex, M16 x 50, 10.9 |
| 19 | | 627-16040 | | 2 | BOLT, Hex, M16 x 40, 10.9 |
| 20 | | 827-16080 | | 1 | BOLT, Hex, M16 x 80, 10.9 |
| 21 | | 832-10416 | | 1 | NUT, LOCK, M16 x 2, Cl 8 |
| 22 | | 219-1 | | 9 | NIPPLE, LUBE, 1/8"-27 x .66 lg |
| 23 | | 365355A1 | | AR | WASHER, 64.9 ID; 3.5 THK; Hardened |
| 24 | | 365353A1 | | AR | WASHER, 64.9 ID; 1.6 THK; Hardened |
| 25 | | 365354A1 | | AR | WASHER, 64.9 ID; 2.5 THK; Hardened |
| 26 | | 328082A1 | | 1 | ELBOW, 1/8 PT |
| 27 | | 896-15012 | | 1 | WASHER, M12 x 28.5 x 4, HT |
| 28 | | 515-2495 | | 1 | CLAMP, 3/8", Insul, 7/16" Bolt |

**FRAME - LOADER LIFT (Z-BAR)**

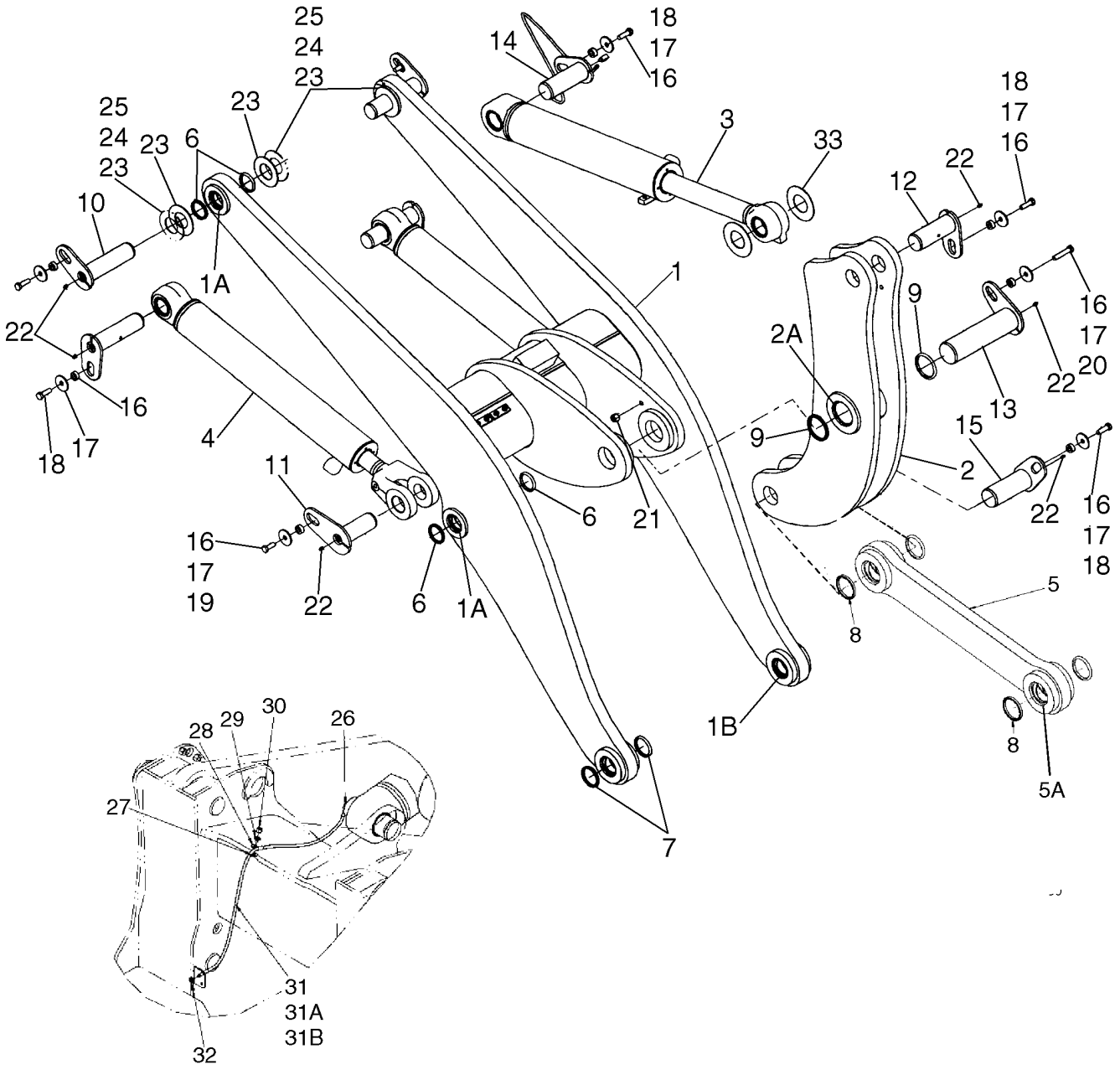

**FRAME - LOADER LIFT (Z-BAR)**

| REF | FN | PART NUMBER | YR/SN | QTY | DESCRIPTION |
|---|---|---|---|---|---|
| 29 | | 895-11010 | | 1 | WASHER, M10 x 20 x 2 |
| 30 | | 832-10410 | | 1 | NUT, LOCK, M10 x 1.5, Cl 8 |
| 31 | | L54694 | | 1 | HOSE, 1041 mm (41 in); Incl. Refs. 31A, 31B |
| 31A | | 86636814 | | 1 | NIPPLE, LUBE, 1/4"-28 x .52" lg |
| 31B | | 219-8 | | 1 | NIPPLE, LUBE, 1/4"-28 NPT x .54" lg |
| 32 | | F53473 | | 1 | NUT, 1/8 PT |
| 33 | | 375517A1 | | 2 | WASHER, 71,3 ID; 2.5 THK |

| 09-07A | | p1 | 08/07 |
|---|---|---|---|

**FRAME - LOADER LIFT (XR)**

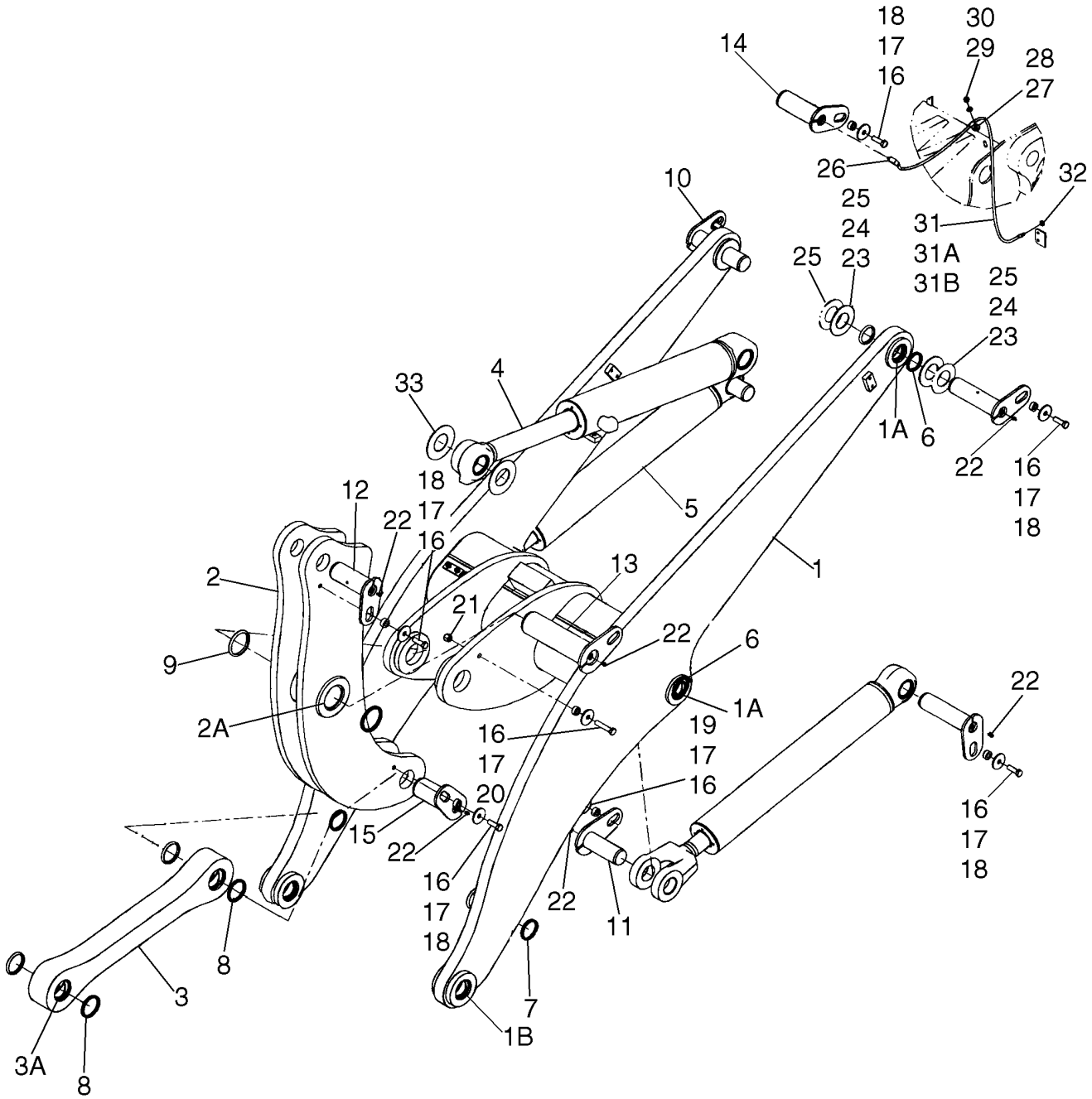


BS07G267

**FRAME - LOADER LIFT (XR)**

| REF | FN | PART NUMBER | YR/SN | QTY | DESCRIPTION |
|---|---|---|---|---|---|
| | | REF | | | INSTRUCTION, XR LOADER |
| 1 | | 87344119 | | 1 | ARM, LIFT, Loader Lift; Incl. Refs. 1A - 1B |
| 1A | | 87613439 | | 4 | BUSHING, Lift Arm |
| 1B | | 87613444 | | 2 | BUSHING, Dump Link |
| 2 | | 87330150 | | 1 | BELLCRANK, Bellcrank; Incl. Ref. 2A |
| 2A | | 371883A1 | | 2 | BUSHING, Bushing |
| 3 | | 87395399 | | 1 | LINK, Dump; Incl. Ref. 3A |
| 3A | | 87613430 | | 2 | BUSHING, Dump Link |
| 4 | | 87366695 | | 1 | CYLINDER ASSY., 127 ID x 620 mm strk; Bucket Tilt; See Figure 08-17 |
| 5 | | 87577649 | | 2 | CYLINDER, LIFT, Lift; 120.65 mm ID x 787.6 mm strk; See Figure 08-15 |
| 6 | | D95146 | | 8 | WIPER, 63.5 ID |
| 7 | | D95147 | | 4 | WIPER, 69.8 ID |
| 8 | | D95148 | | 4 | WIPER, 76.2 ID |
| 9 | | S92653 | | 2 | WIPER, 88.9 ID |
| 10 | | 361128A1 | | 4 | PIN, Lift Arm Pivot; Head End; Case Power Tan |
| 11 | | 361133A2 | | 2 | PIN ASSY., Lift Arm Pivot; Rod End; Case Power Tan |
| 12 | | 361139A2 | | 1 | PIN ASSY., Dump Link Pivot; Case Power Tan |
| 13 | | 375328A1 | | 1 | PIN ASSY., Bellcrank Pivot; Case Power Tan |
| 14 | | 375330A1 | | 1 | PIN ASSY., Tilt Cylinder Pivot; Case Power Tan |
| 15 | | 375326A2 | | 1 | PIN ASSY., Dump Link Pivot; Case Power Tan |
| 16 | | L125100 | | 10 | SPACER, Plated |
| 17 | | 496-81025 | | 10 | WASHER, 21/32" x 2 1/2" x .188", HDN |
| 18 | | 627-16050 | | 7 | BOLT, Hex, M16 x 50, 10.9 |
| 19 | | 627-16040 | | 2 | BOLT, Hex, M16 x 40, 10.9 |
| 20 | | 827-16080 | | 1 | BOLT, Hex, M16 x 80, 10.9 |
| 21 | | 832-10416 | | 1 | NUT, LOCK, M16 x 2, Cl 8 |
| 22 | | 219-1 | | 9 | NIPPLE, LUBE, 1/8"-27 x .66 lg |
| 23 | | 365355A1 | | AR | WASHER, 64.9 ID; 3.5 THK; Hardened |
| 24 | | 365353A1 | | AR | WASHER, 64.9 ID; 1.6 THK; Hardened |
| 25 | | 365354A1 | | AR | WASHER, 64.9 ID; 2.5 THK; Hardened |
| 26 | | 328082A1 | | 1 | ELBOW, 1/8 PT |
| 27 | | 896-15012 | | 1 | WASHER, M12 x 28.5 x 4, HT |
| 28 | | 515-2495 | | 1 | CLAMP, 3/8", Insul, 7/16" Bolt |

**FRAME - LOADER LIFT (XR)**

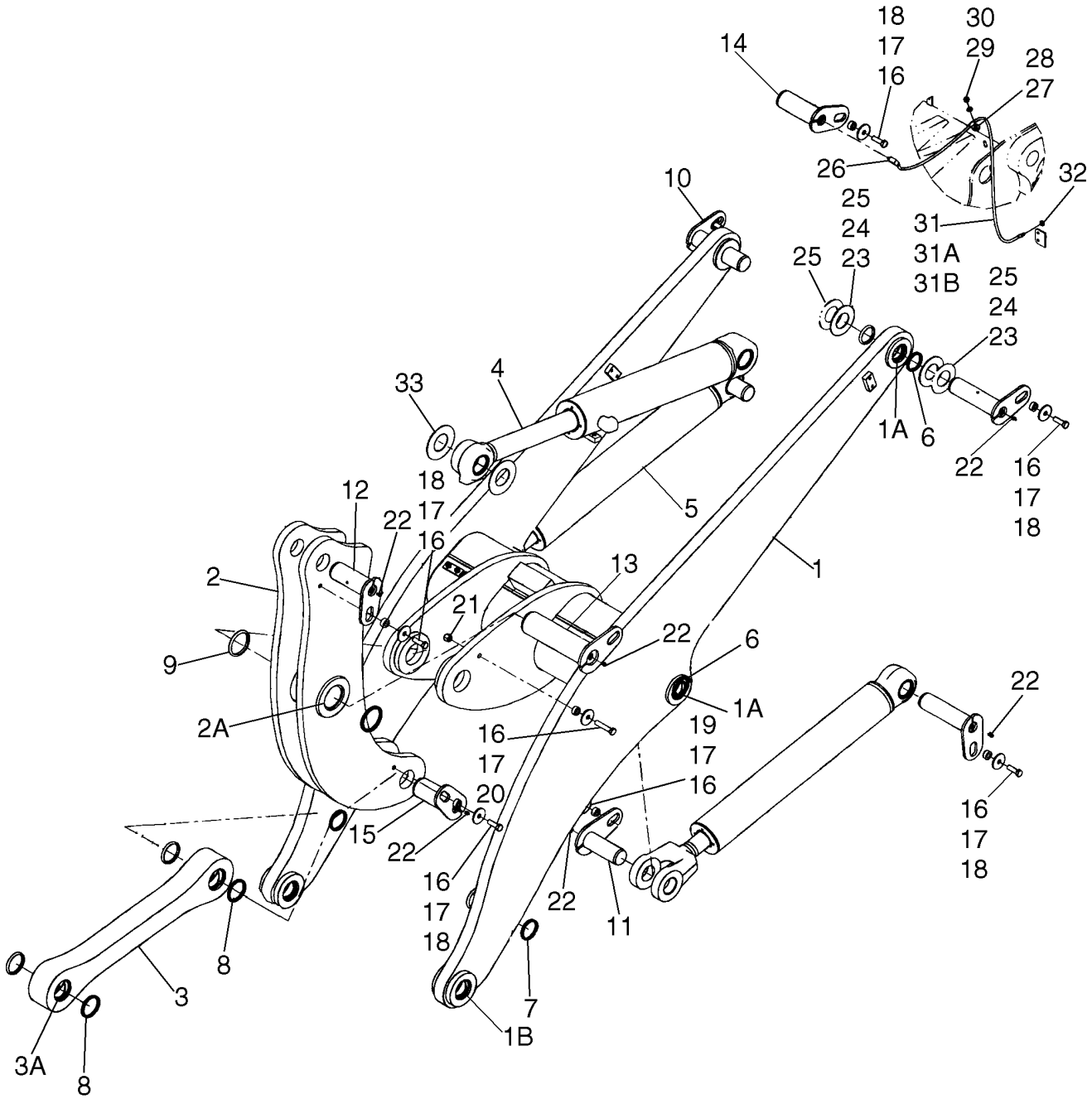

**FRAME - LOADER LIFT (XR)**

| REF | FN | PART NUMBER | YR/SN | QTY | DESCRIPTION |
|---|---|---|---|---|---|
| 29 | | 895-11010 | | 1 | WASHER, M10 x 20 x 2 |
| 30 | | 832-10410 | | 1 | NUT, LOCK, M10 x 1.5, Cl 8 |
| 31 | | L54694 | | 1 | HOSE, 1041 mm (41 in); Incl. Refs. 31A, 31B |
| 31A | | 86636814 | | 1 | NIPPLE, LUBE, 1/4"-28 x .52" lg |
| 31B | | 219-8 | | 1 | NIPPLE, LUBE, 1/4"-28 NPT x .54" lg |
| 32 | | F53473 | | 1 | NUT, 1/8 PT |
| 33 | | 375517A1 | | 2 | WASHER, 71,3 ID; 2.5 THK |

| 09-07B | | p1 | 08/07 |
|---|---|---|---|

**FRAME - LOADER LIFT (XT)**

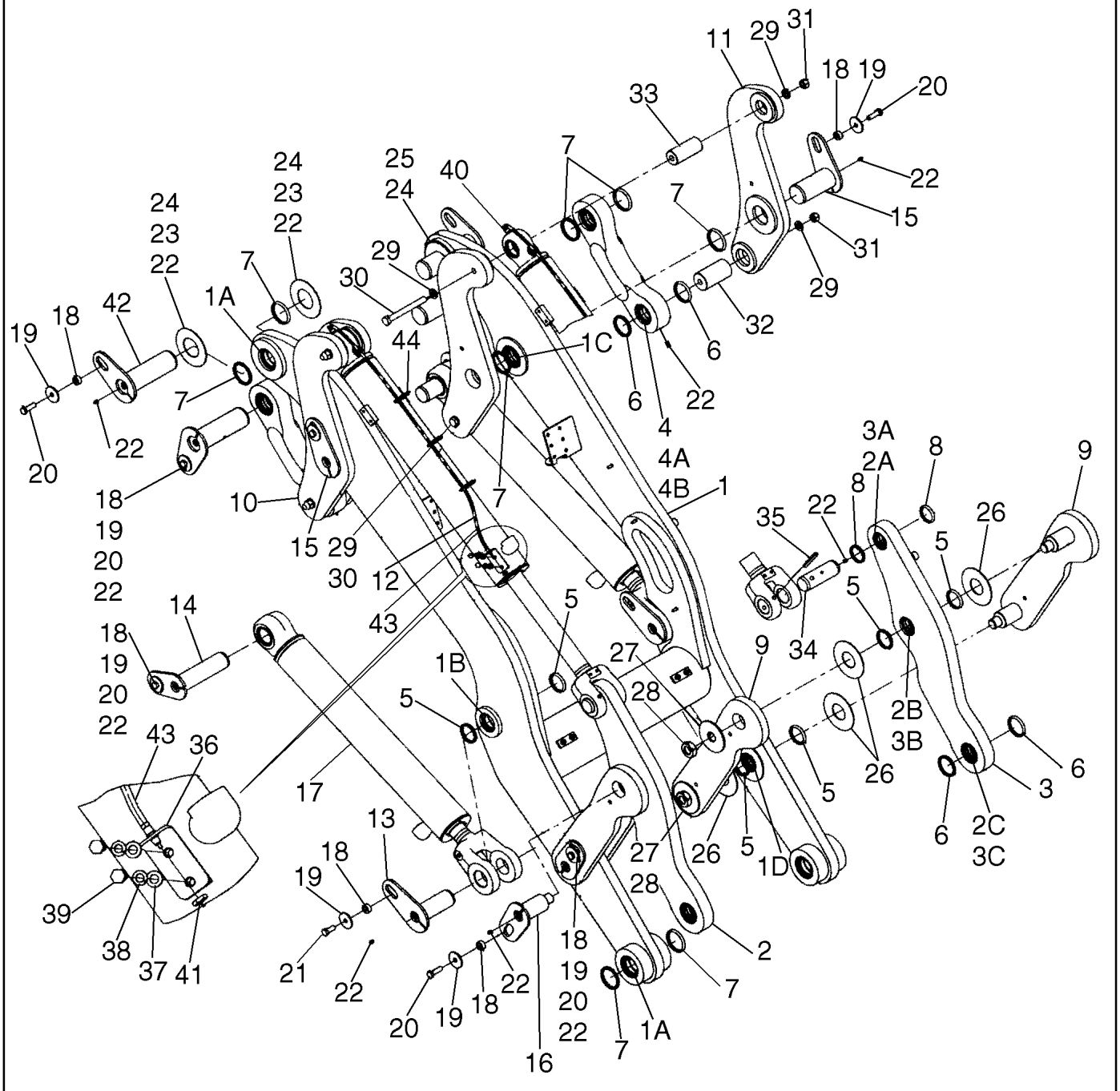

**FRAME - LOADER LIFT (XT)**

| REF | FN | PART NUMBER | YR/SN | QTY | DESCRIPTION |
|---|---|---|---|---|---|
| | | REF | | | INSTRUCTION, XT LOADER |
| 1 | | 87344091 | | 1 | ARM/LIFTING DEVICE, Lift XT; Incl. Refs. 1A -1D |
| 1A | | 87613445 | | 6 | BUSHING, Lift Arm |
| 1B | | 87613439 | | 2 | BUSHING, Lift, Arm Pivot |
| 1C | | 87613442 | | 2 | BUSHING, Lift Arm |
| 1D | | 87613443 | | 2 | BUSHING, Lift Arm |
| 2 | | 87452370 | | 1 | LINKAGE, Dump XT; Incl. Refs. 2A - 2C |
| 2A | | 369432A2 | | 1 | BUSHING, Dump Link |
| 2B | | 379191A2 | | 1 | BUSHING, Lift Arm |
| 2C | | 87441882 | | 1 | BUSHING, Dump Link |
| 3 | | {87310653} | | 1 | LINKAGE, Dump XT; Incl. Refs. 3A - 3C |
| 3A | | 87613427 | | 1 | BUSHING, Dump Link |
| 3B | | 87613432 | | 1 | BUSHING, Lift Arm |
| 3C | | 87617016 | | 1 | BUSHING, Dump Link |
| 4 | | 87445353 | | 2 | LINKAGE, Anchor XT; Incl. Refs. 4A, 4B |
| 4A | | 87613435 | | 1 | BUSHING, Anchor Link |
| 4B | | 87613431 | | 1 | BUSHING, Lift Arm |
| 5 | | D95146 | | 12 | WIPER, Rod; 63.5 |
| 6 | | D95147 | | 8 | WIPER, Rod; 69.8 |
| 7 | | D95148 | | 16 | WIPER, Rod; 76.2 |
| 8 | | D95145 | | 4 | WIPER, Rod; 57.125 |
| 9 | | 87445354 | | 4 | LINKAGE, Guide XT |
| 10 | | 87344111 | | 2 | LINKAGE, Bellcrank; Right Hand |
| 11 | | 87344104 | | 2 | LINKAGE, Bellcrank; Left Hand |
| 12 | | 87442555 | | 2 | CYLINDER, LIFT, 114 ID x 819.9 mm strk; Bucket Tilt; See Figure 08-18 |
| 13 | | 361133A2 | | 2 | PIN ASSY., Lift Arm Pivot; Rod End; Case Power Tan |
| 14 | | 361128A1 | | 2 | PIN, Lift Arm Pivot; Head End; Case Power Tan |
| 15 | | 379070A2 | | 2 | PIN, PIVOT, Bellcrank Pivot; Case Power Tan |
| 16 | | 379197A2 | | 2 | PIN, Guide Link Pivot; CNH CE Gray |
| 17 | | 87577649 | | 2 | CYLINDER, LIFT, 114.3 ID x 787.6 mm strk; Lift; See Figure 08-15 |
| 18 | | L125100 | | 14 | SPACER |
| 19 | | 496-81025 | | 14 | WASHER, 21/32" x 2 1/2" x .188", HDN |
| 20 | | 627-16050 | | 12 | BOLT, Hex, M16 x 50, 10.9 |

| 09-07B | | p2 | 08/07 |
|---|---|---|---|

**FRAME - LOADER LIFT (XT)**

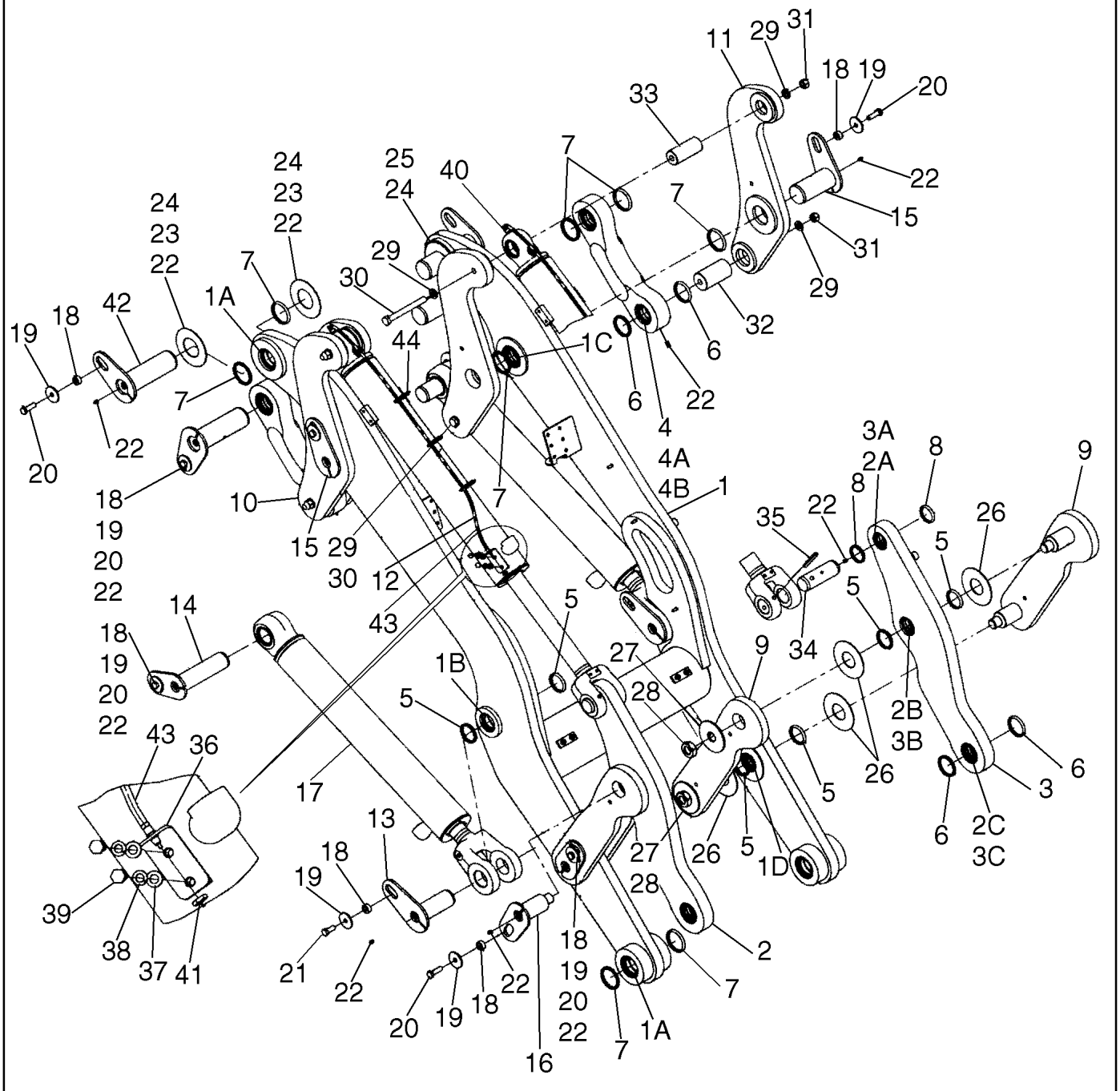

**FRAME - LOADER LIFT (XT)**

| REF | FN | PART NUMBER | YR/SN | QTY | DESCRIPTION |
|---|---|---|---|---|---|
| 21 | | 627-16040 | | 2 | BOLT, Hex, M16 x 40, 10.9 |
| 22 | | 219-1 | | 18 | NIPPLE, LUBE, 1/8"-27 x .66 lg |
| 23 | | 375518A1 | | AR | WASHER, 77.6 ID 3.5thk |
| 24 | | 441822A1 | | AR | WASHER, 77.6 ID 1.6thk |
| 25 | | L127108 | | AR | WASHER, Lift Arm |
| 26 | | 116893A1 | | 8 | WASHER |
| 27 | | 117025A1 | | 4 | WASHER |
| 28 | | 131-53 | | 4 | NUT, LOCK, 1 1/2"-12 |
| 29 | | 896-11020 | | 8 | WASHER, M20 x 37.5 x 4, HT |
| 30 | | 827-20190 | | 4 | BOLT, Hex, M20 x 190, 10.9 |
| 31 | | 829-1420 | | 4 | NUT, M20, Cl 10 |
| 32 | | 8500311 | | 2 | PIN, Bellcrank; Anchor Side |
| 33 | | 368775A1 | | 2 | PIN, Bellcrank; Cylinder Side |
| 34 | | 368836A2 | | 2 | PIN, Tilt Cylinder |
| 35 | | 38-33264 | | 2 | PIN, 1/2" x 4", Coiled |
| 36 | | 87441374 | | 2 | BRACKET, Grease Hose |
| 37 | | 895-11010 | | 4 | WASHER, M10 x 20 x 2 |
| 38 | | 892-11010 | | 4 | WASHER, LOCK, M10 |
| 39 | | 627-10025 | | 4 | BOLT, Hex, M10 x 25, 10.9, Full Thd |
| 40 | | 328082A1 | | 2 | ELBOW, 1/8 PT |
| 41 | | F53473 | | 2 | NUT, 1/8 PT |
| 42 | | 87441342 | | 4 | PIN, HEADED, Lift Arm Pivot; Case Power Tan |
| 43 | | 87444057 | | 2 | HOSE ASSY., Grease |
| 44 | | L11541 | | 6 | STRAP |

**BUCKETS - ATTACHMENT (Z BAR LOADER)**

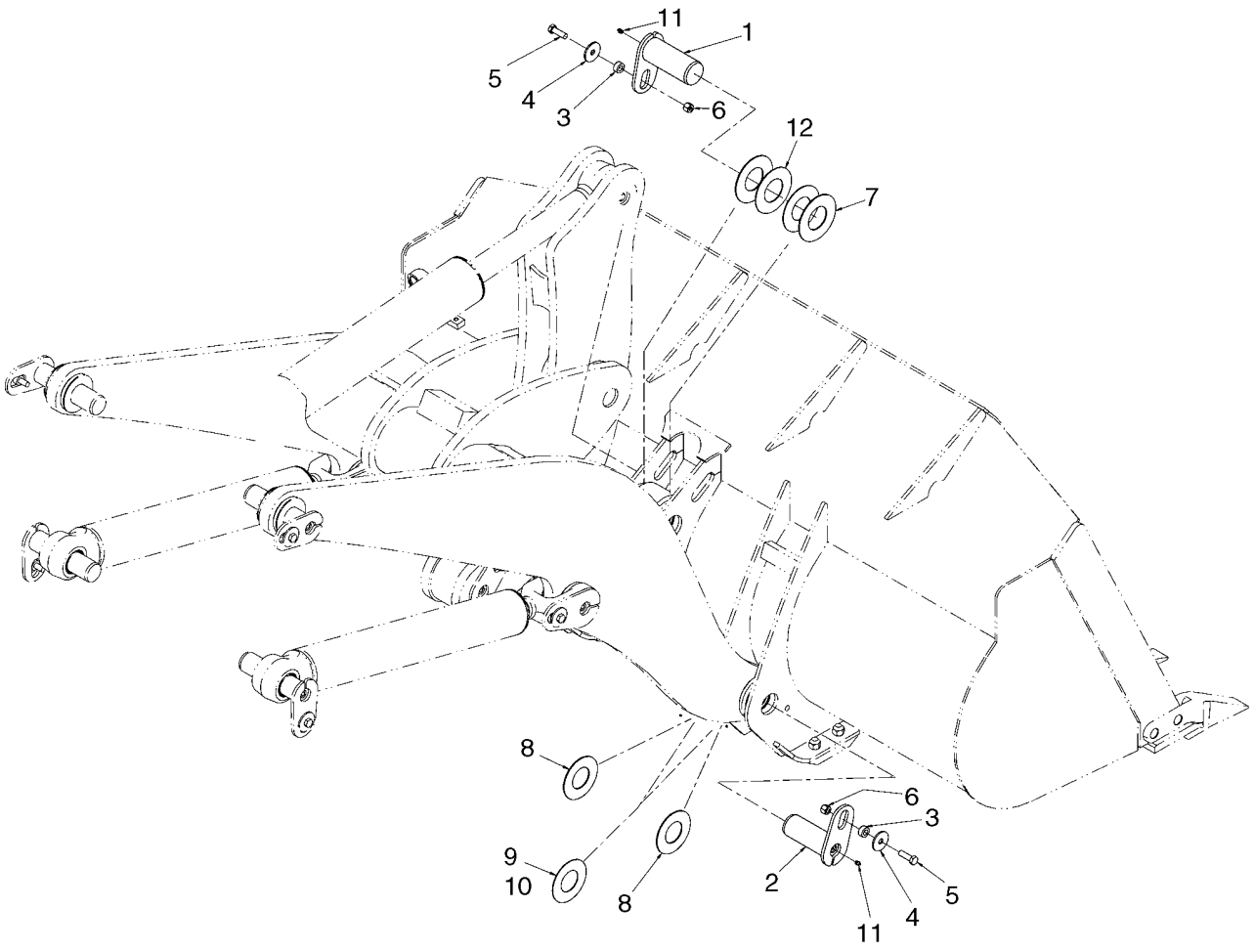


BS07E449

**BUCKETS - ATTACHMENT (Z BAR LOADER)**

| REF | FN | PART NUMBER | YR/SN | QTY | DESCRIPTION |
|---|---|---|---|---|---|
| | | REF | | | INSTRUCTION, Z-BAR LOADER |
| 1 | | 375326A2 | | 1 | PIN ASSY., Dump Link Pivot |
| 2 | | 361139A2 | | 2 | PIN ASSY., Dump Link Pivot |
| 3 | | L125100 | | 3 | SPACER |
| 4 | | 496-81025 | | 3 | WASHER, 21/32" x 2 1/2" x .188", HDN |
| 5 | | 627-16050 | | 3 | BOLT, Hex, M16 x 50, 10.9 |
| 6 | | 832-10416 | | 3 | NUT, LOCK, M16 x 2, Cl 8 |
| 7 | | 375518A1 | | AR | WASHER |
| 8 | | 365356A1 | | AR | WASHER |
| 9 | | 375516A1 | | AR | WASHER |
| 10 | | 375517A1 | | AR | WASHER |
| 11 | | 219-1 | | 3 | NIPPLE, LUBE, 1/8"-27 x .66 lg |
| 12 | | L127108 | | 2 | WASHER, Lift Arm |

| 09-08A | | p1 | 07/07 |
|---|---|---|---|

**BUCKETS - ATTACHMENT (XT LOADER)**

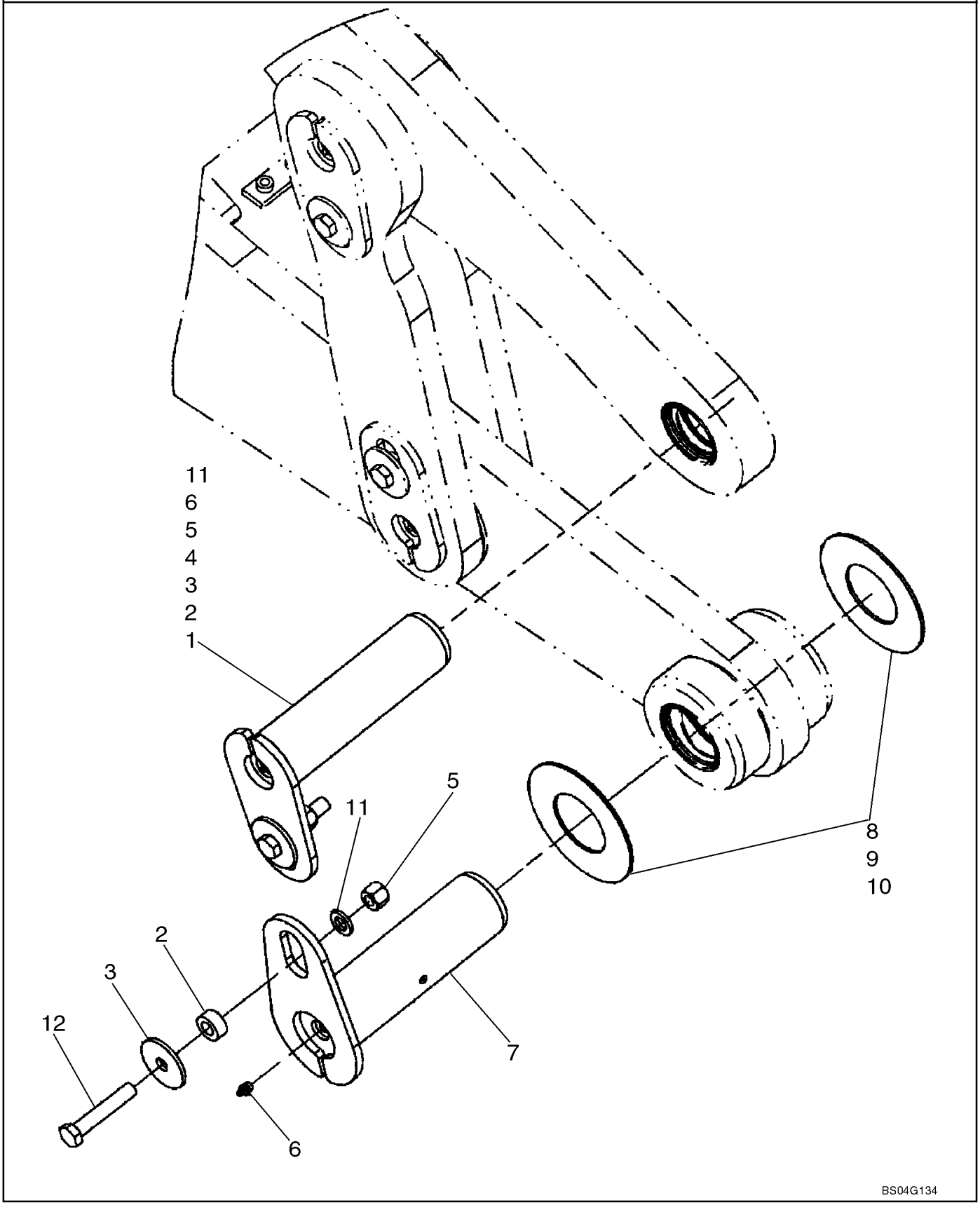

**BUCKETS - ATTACHMENT (XT LOADER)**

| REF | FN | PART NUMBER | YR/SN | QTY | DESCRIPTION |
|---|---|---|---|---|---|
| | | REF | | | INSTRUCTION, XT LOADER |
| 1 | | 379770A2 | | 2 | PIN, Lift Arm |
| 2 | | L125100 | | 4 | SPACER |
| 3 | | 496-81025 | | 4 | WASHER, 21/32" x 2 1/2" x .188", HDN |
| 4 | | 827-16080 | | 2 | BOLT, Hex, M16 x 80, 10.9 |
| 5 | | 832-10416 | | 4 | NUT, LOCK, M16 x 2, Cl 8 |
| 6 | | 219-1 | | 4 | NIPPLE, LUBE, 1/8"-27 x .66 lg |
| 7 | | 87437274 | | 2 | PIN ASSY., Lift Arm |
| 8 | | 375518A1 | | AR | WASHER, 77.6 ID x 3.5mm Thick; If Used |
| 9 | | 441822A1 | | AR | WASHER, 77.6ID x 1.6mm Thick; If Used |
| 10 | | L127108 | | AR | WASHER, Lift Arm; If Used |
| 11 | | 896-11016 | | 4 | WASHER, M17.5 x 30 x 4, HT |
| 12 | | 827-16090 | | 2 | BOLT, Hex, M16 x 90, 10.9 |

**COUPLER, HYDRAULIC - Z-BAR - JRB**

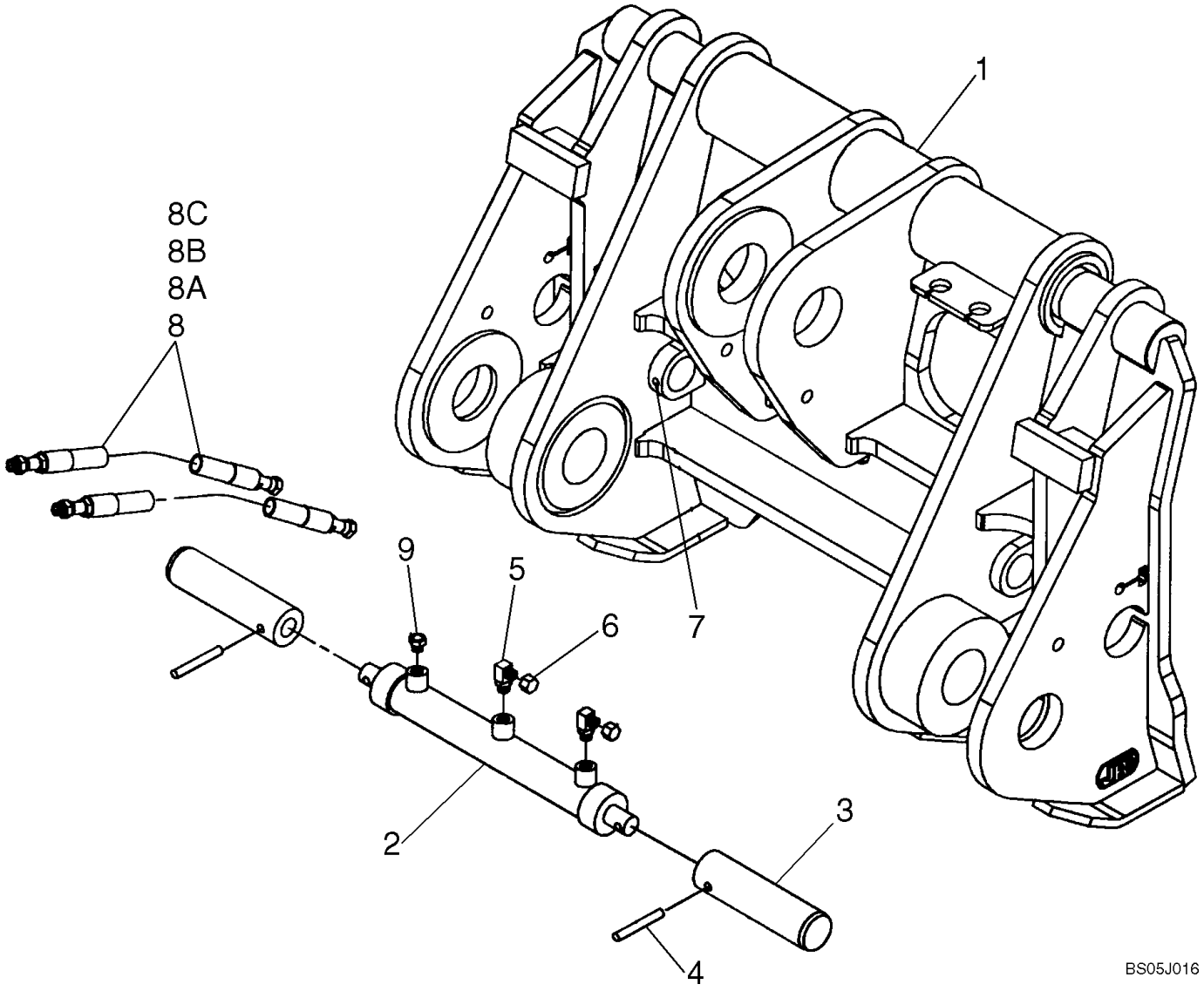

**COUPLER, HYDRAULIC - Z-BAR - JRB**

| REF | FN | PART NUMBER | YR/SN | QTY | DESCRIPTION |
|---|---|---|---|---|---|
| | | {402700A1} | | | COUPLER ASSEMBLY WITH KIT; JRB; Z-BAR; Vendor Part Number; 90A2003 |
| 1 | | REF | | 1 | INSTRUCTION, COUPLER ASSEMBLY; JRB; Z-BAR; Vendor Part Number; D19929 |
| | | REF | | 1 | INSTRUCTION, HYDRAULIC KIT; JRB; Z-BAR; Vendor Part Number; 96A0056 Incl. 2 - 9 |
| 2 | | REF | | 1 | INSTRUCTION, HYDRAULIC CYLINDER; JRB; Z-BAR; Vendor Part Number; B18865 |
| 3 | | REF | | 2 | INSTRUCTION, PLUNGER; JRB; Z-BAR; Vendor Part Number; A23264 |
| 4 | | REF | | 2 | INSTRUCTION, ROLLPIN; 3/8 X 1-3/4; JRB; Z-BAR; Vendor Part Number; 124038000175 |
| 5 | | REF | | 3 | INSTRUCTION, STR THD CONNECTOR 90DEG; JRB; Z-BAR; Vendor Part Number; 46055-02 |
| 6 | | REF | | 3 | INSTRUCTION, FITTING, CAP; JRB; Z-BAR; Vendor Part Number; 46070-02 |
| 7 | | REF | | 2 | INSTRUCTION, GREASE ZERK; JRB; Z-BAR; Vendor Part Number; A31294-1 |
| 8 | | REF | | 2 | INSTRUCTION, HOSE ASSEMBLY; JRB; Z-BAR; Vendor Part Number; 570046-48; Incl. 7A - 7C |
| 8A | | REF | | 1 | INSTRUCTION, FITTING; JRB; Z-BAR; Vendor Part Number; 47036-02 |
| 8B | | REF | | | INSTRUCTION, FITTING; JRB; Z-BAR; Vendor Part Number; 47020-02 |
| 8C | | REF | | | INSTRUCTION, HOSE; JRB; Z-BAR; Vendor Part Number; 56 |
| 9 | | REF | | 1 | INSTRUCTION, HEX PLUG; JRB; Z-BAR; Vendor Part Number; 46154-05 |

**COUPLER, HYDRAULIC - Z-BAR - ACS**

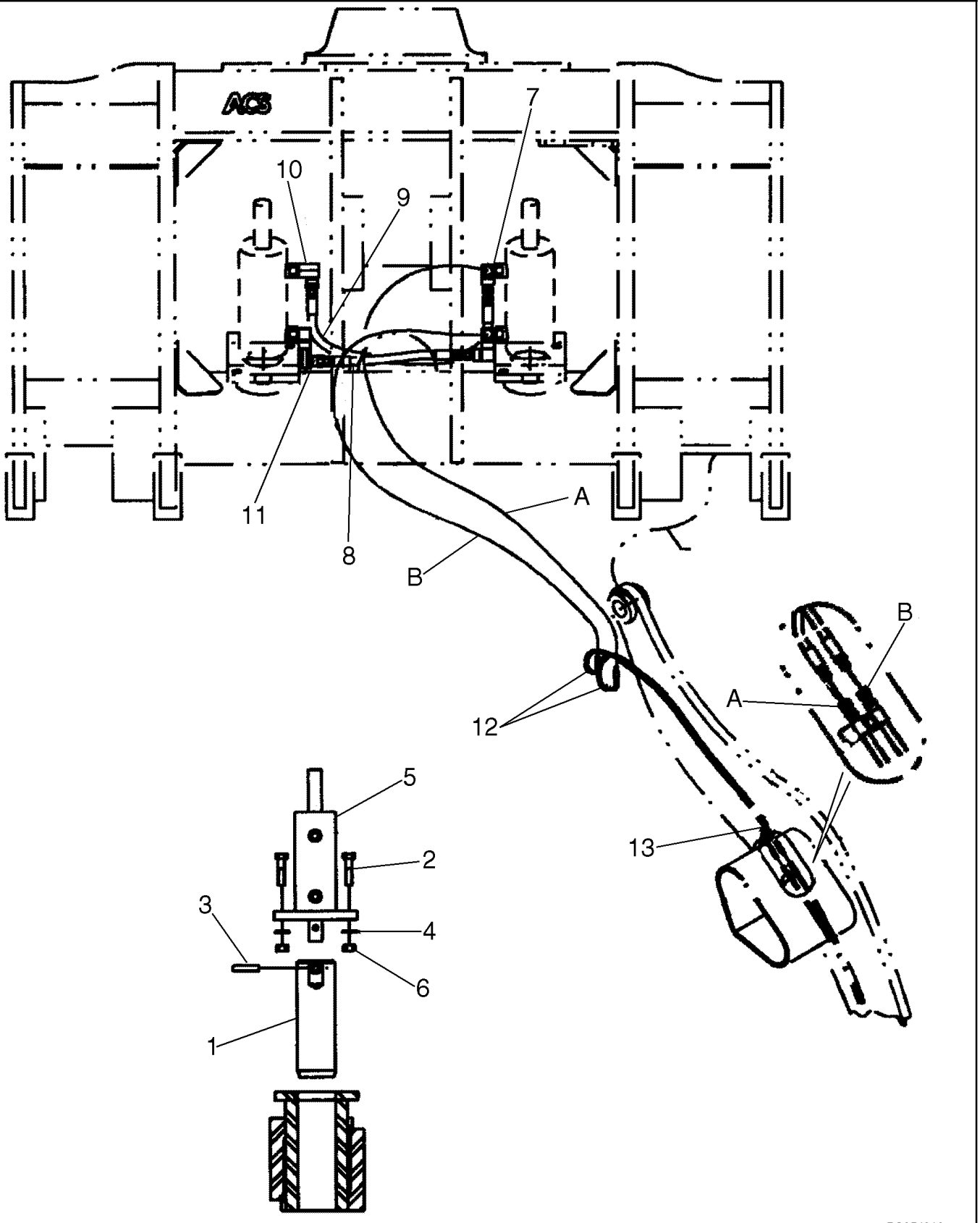

**COUPLER, HYDRAULIC - Z-BAR - ACS**

| REF | FN | PART NUMBER | YR/SN | QTY | DESCRIPTION |
|---|---|---|---|---|---|
| | | {87407966} | | 1 | COUPLER; ACS PRO 2000 Size 30; Z-Bar; Includes Jump Hoses; Not Illustrated |
| | | {388540A1} | | 1 | PACKAGE; Manual; ACS PRO 2000 Size 30; Z-Bar; Not Illustrated |
| | | REF | | 1 | INSTRUCTION, CYLINDER/PIN KIT; ACS; Z-BAR; Vendor Part Number; 65595535; Incl. 1 - 6 |
| 1 | | REF | | 2 | INSTRUCTION, PIN, LOCKING; ACS; Z-BAR; Vendor Part Number; 40600850; 2 x 6-9/16 IN |
| 2 | | REF | | 4 | INSTRUCTION, HEX BOLT; ACS; Z-BAR; Vendor Part Number; 60660520; 1/2-13 X 2 in |
| 3 | | REF | | 2 | INSTRUCTION, PIN,ROLL; ACS; Z-BAR; Vendor Part Number; 40336700; 3/8 X 1-7/8 in |
| 4 | | REF | | 4 | INSTRUCTION, WASHER; ACS; Z-BAR; Vendor Part Number; 60680180; 1/2 Lock |
| 5 | | REF | | 2 | INSTRUCTION, CYLINDER; ACS; Z-BAR; Vendor Part Number; 50600775 |
| 6 | | REF | | 4 | INSTRUCTION, NUT; ACS; Z-BAR; Vendor Part Number; 60481390; 1/2-13 NC |
| 7 | | REF | | 2 | INSTRUCTION, FITTING, TEE; ACS; Z-BAR; Vendor Part Number; 52800539 |
| 8 | | REF | | 1 | INSTRUCTION, HOSE; ACS; Z-BAR; Vendor Part Number; 54001217 |
| 9 | | REF | | 1 | INSTRUCTION, HOSE; ACS; Z-BAR; Vendor Part Number; 54001106 |
| 10 | | REF | | 2 | INSTRUCTION, FITTING, 90DEG; ACS; Z-BAR; Vendor Part Number; 52800553 |
| 11 | | REF | | 2 | INSTRUCTION, FITTING, 90DEG; ACS; Z-BAR; Vendor Part Number; 52800593 |
| 12 | | REF | | 2 | INSTRUCTION, HOSE; ACS; Z-BAR; Vendor Part Number; 54001316 |
| 13 | | REF | | 1 | INSTRUCTION, RETAINER; ACS; Z-BAR; Vendor Part Number; 62640051 |

| 09-09B | | p1 | 06/07 |
|---|---|---|---|

**COUPLER, HYDRAULIC - XT - JRB**

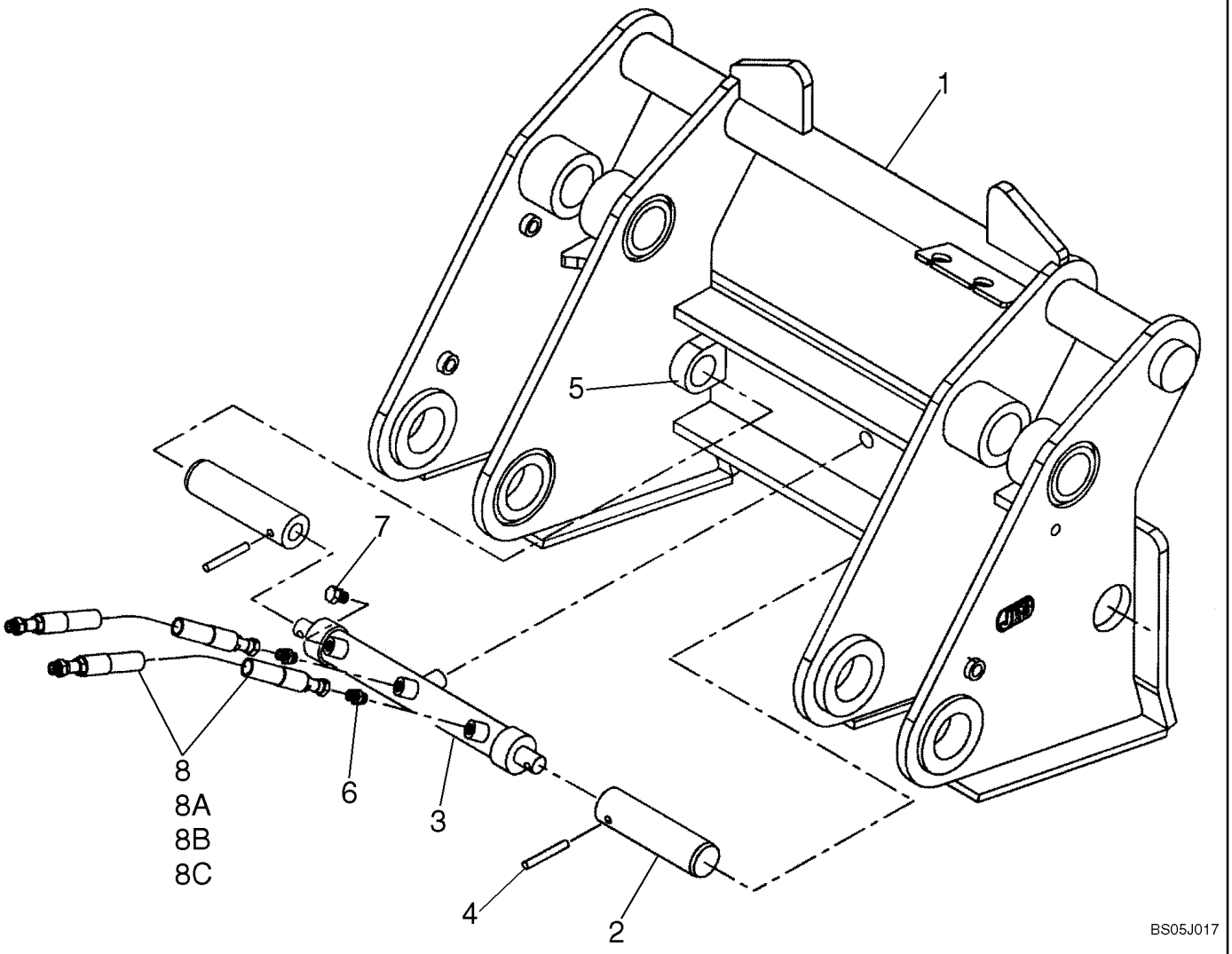

**COUPLER, HYDRAULIC - XT - JRB**

| REF | FN | PART NUMBER | YR/SN | QTY | DESCRIPTION |
|---|---|---|---|---|---|
| | | {87451631} | | | COUPLER ASSEMBLY WITH KIT; JRB; XT; Vendor Part Number; 90A3032 |
| 1 | | REF | | 1 | INSTRUCTION, COUPLER ASSEMBLY; JRB; XT; Vendor Part Number; D22295 |
| | | REF | | 1 | INSTRUCTION, HYDRAULIC KIT; JRB; XT; Vendor Part Number; 96A0116 |
| 2 | | REF | | 2 | INSTRUCTION, PLUNGER; JRB; XT; Vendor Part Number; A23264 |
| 3 | | REF | | 1 | INSTRUCTION, HYDRAULIC CYLINDER; JRB; XT; Vendor Part Number; B18865 |
| 4 | | REF | | 2 | INSTRUCTION, ROLLPIN; 3/8 X 1-3/4; JRB; XT; Vendor Part Number; 124038000175 |
| 5 | | REF | | 2 | INSTRUCTION, GREASE ZERK; JRB; XT; Vendor Part Number; A31294-1 |
| 6 | | REF | | 2 | INSTRUCTION, STR THD CONNECTOR; JRB; XT; Vendor Part Number; 46036-02 |
| 7 | | REF | | 1 | INSTRUCTION, HEX PLUG; JRB; XT; Vendor Part Number; 46154-05 |
| 8 | | REF | | 2 | INSTRUCTION, HOSE ASSEMBLY; JRB; XT; Vendor Part Number; 570046-51; Incl. 8A - 8C |
| 8A | | REF | | 1 | INSTRUCTION, FITTING; JRB; XT; Vendor Part Number; 47036-02 |
| 8B | | REF | | | INSTRUCTION, FITTING; JRB; XT; Vendor Part Number; 47020-02 |
| 8C | | REF | | | INSTRUCTION, HOSE; JRB; XT; Vendor Part Number; 56 |

**COUPLER, HYDRAULIC - XT - ACS**

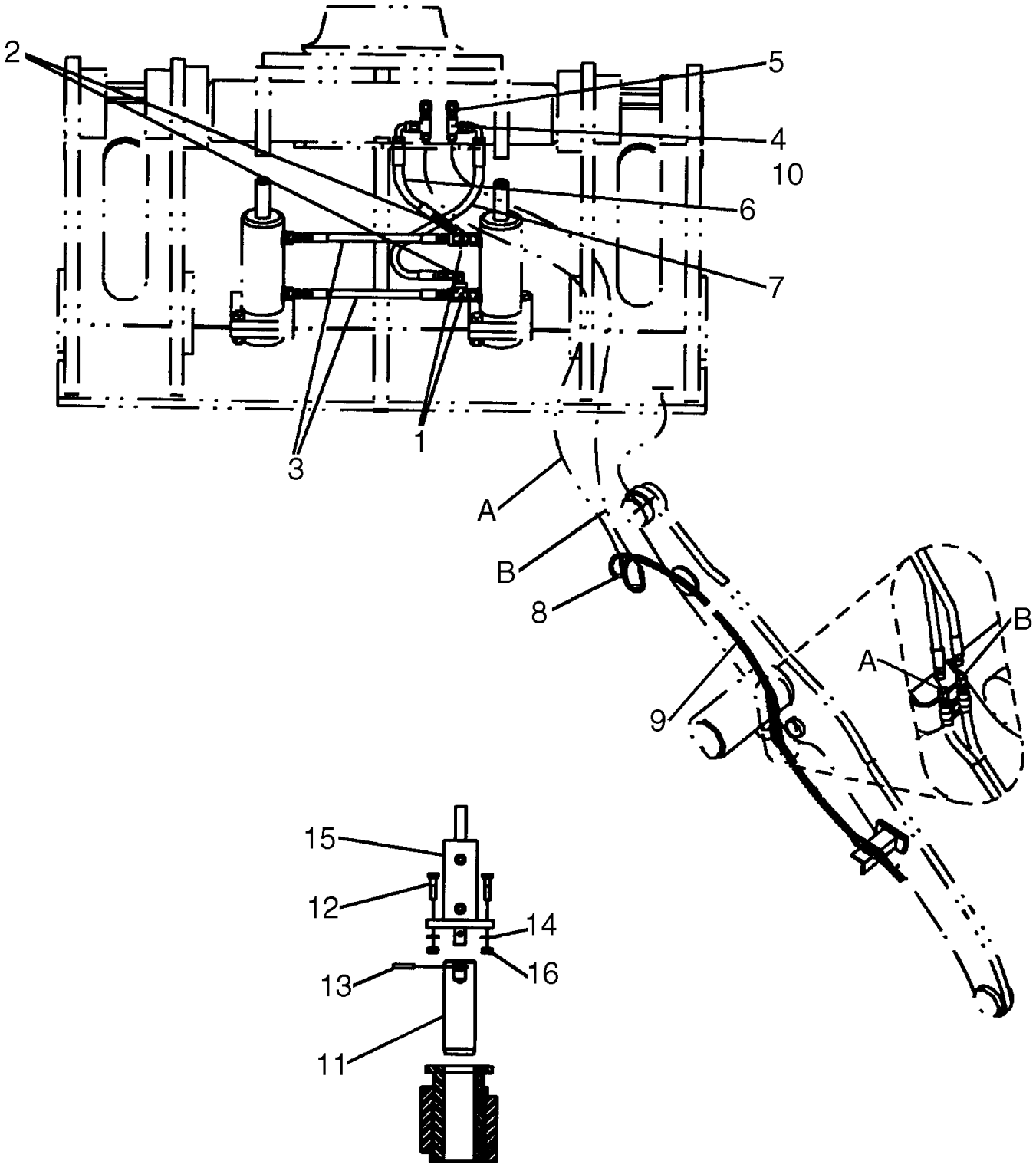

**COUPLER, HYDRAULIC - XT - ACS**

| REF | FN | PART NUMBER | YR/SN | QTY | DESCRIPTION |
|---|---|---|---|---|---|
| | | {87446140} | | 1 | COUPLER; ACS PRO 2000 Size 30; XT; Includes Jump Hoses; Not Illustrated |
| | | {87446143} | | 1 | PACKAGE; Manual; ACS PRO 2000 Size 30; XT; Not Illustrated |
| | | REF | | 1 | INSTRUCTION, CYLINDER/PIN KIT; ACS; XT; Vendor Part Number; 65595535; Incl. 11 - 16 |
| 1 | | REF | | 2 | INSTRUCTION, FITTING, TEE; ACS; XT; Vendor Part Number; 52800540 |
| 2 | | REF | | 2 | INSTRUCTION, FITTING, 90DEG; ACS; XT; Vendor Part Number; 52801119 |
| 3 | | REF | | 2 | INSTRUCTION, HOSE; ACS; XT; Vendor Part Number; 54830114 |
| 4 | | REF | | 2 | INSTRUCTION, FITTING, BULKHEAD TEE; ACS; XT; Vendor Part Number; 52800803 |
| 5 | | REF | | 2 | INSTRUCTION, FITTING, CAP; ACS; XT; Vendor Part Number; 52800727 |
| 6 | | REF | | 1 | INSTRUCTION, HOSE; ACS; XT; Vendor Part Number; 54830358 |
| 7 | | REF | | 1 | INSTRUCTION, HOSE; ACS; XT; Vendor Part Number; 54001576 |
| 8 | | REF | | 2 | INSTRUCTION, HOSE; ACS; XT; Vendor Part Number; 54823250 |
| 9 | | REF | | 4 | INSTRUCTION, RETAINER; ACS; XT; Vendor Part Number; 62640051 |
| 10 | | REF | | 2 | INSTRUCTION, NUT; BULKHEAD; ACS; XT; Vendor Part Number; 52001444 |
| 11 | | REF | | 2 | INSTRUCTION, PIN, LOCKING; ACS; XT; Vendor Part Number; 40600850; 2 x 6-9/16 IN |
| 12 | | REF | | 4 | INSTRUCTION, HEX BOLT; ACS; XT; Vendor Part Number; 60660520; 1/2-13 X 2 in |
| 13 | | REF | | 2 | INSTRUCTION, PIN,ROLL; ACS; XT; Vendor Part Number; 40336700; 3/8 X 1-7/8 in |
| 14 | | REF | | 4 | INSTRUCTION, WASHER; ACS; XT; Vendor Part Number; 60680180; 1/2 Lock |

**COUPLER, HYDRAULIC - XT - ACS**

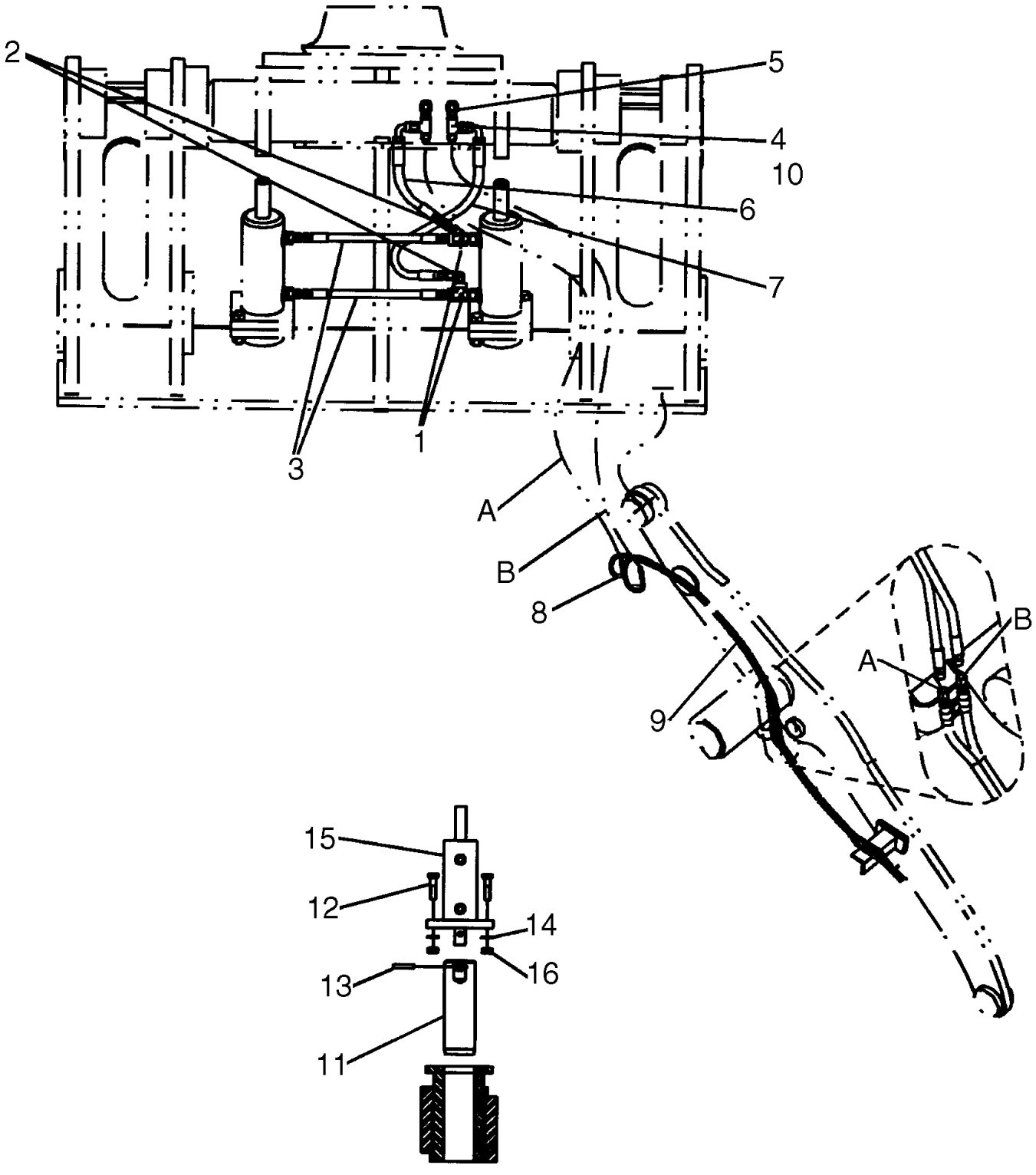

**COUPLER, HYDRAULIC - XT - ACS**

| REF | FN | PART NUMBER | YR/SN | QTY | DESCRIPTION |
|---|---|---|---|---|---|
| 15 | | REF | | 2 | INSTRUCTION, CYLINDER; ACS; XT; Vendor Part Number; 50600775 |
| 16 | | REF | | 4 | INSTRUCTION, NUT; ACS; XT; Vendor Part Number; 60481390; 1/2-13 NC |

**LOADER BUCKET - WITH BOLT ON TEETH, SEGMENTS AND SKID PADS**

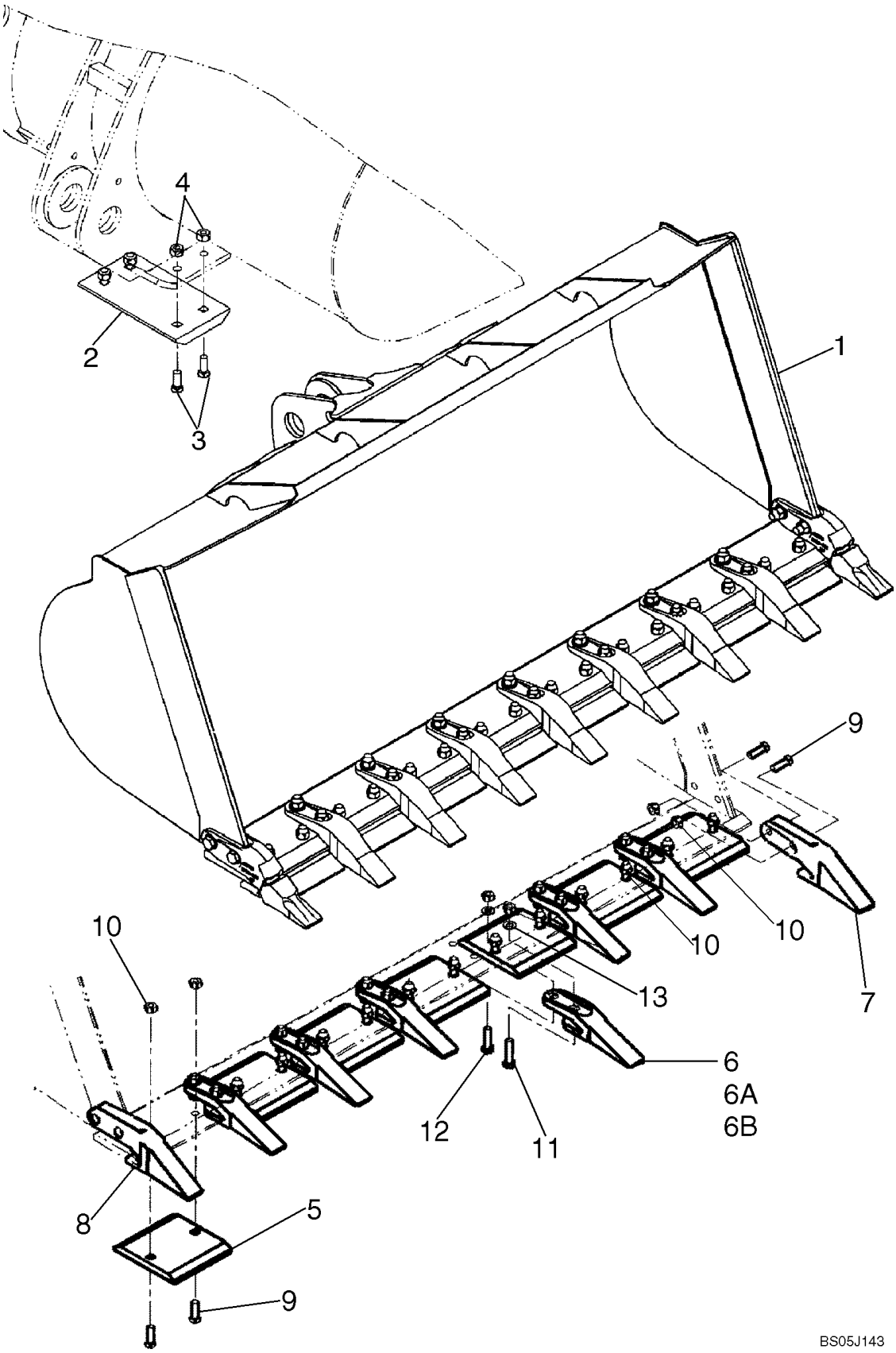

**LOADER BUCKET - WITH BOLT ON TEETH, SEGMENTS AND SKID PADS**

| REF | FN | PART NUMBER | YR/SN | QTY | DESCRIPTION |
|---|---|---|---|---|---|
| | | REF | | | INSTRUCTION, WELDED ON BUCKET COMPONENTS ARE NOT SERVICED SEPARATELY |
| 1 | | {428433A1} | | 1 | BUCKET ASSEMBLY; 1.9 Cubic Meters ( 2.5 Cubic Yards ); Order From Whole Goods; Incl. 2-13 |
| 1 | | {428436A1} | | 1 | BUCKET ASSEMBLY; 2 Cubic Meters ( 2.75 Cubic Yards ); Order From Whole Goods; Incl. 2-13 |
| 1 | | {418471A1} | | 1 | BUCKET ASSEMBLY; 1.9 Cubic Meters ( 2.5 Cubic Yards ); Use With ACS Coupler;Order From Whole Goods; Incl. 2-13 |
| 1 | | {434537A1} | | 1 | BUCKET ASSEMBLY; 1.9 Cubic Meters ( 2.5 Cubic Yards ); Use With JRB Coupler;Order From Whole Goods; Incl. 2-13 |
| | | REF | | | INSTRUCTION, BOLT ON SKID PAD |
| 2 | | 360939A1 | | 2 | PLATE, Bottom; Bolt On |
| 3 | | 420-21236 | | 8 | BOLT, CARRIAGE, 3/4"-10 x 2 1/4", G8 |
| 4 | | 425-1612 | | 8 | NUT, 3/4"-10, G5, Hvy |
| | | REF | | | INSTRUCTION, BUCKET TEETH AND CUTTING EDGE SEGMENTS |
| 5 | | 373354A1 | | 7 | EDGE, CUTTING |
| 6 | | 254825A1 | | 6 | TEETH, Center; Standard Incl. 6A, 6B |
| 6A | | 233792A1 | | 1 | PIN |
| | | NSS | | | NOT SERVICED SEPARATELY, Shank |
| 6B | | 127555A1 | | AR | TOOTH, Standard |
| 6B | | 254822A1 | | AR | TOOTH, Abrasion; Not Illustrated |
| 6B | | 254823A1 | | AR | TOOTH, Penetration; Not Illustrated |
| 7 | | 76082151 | | 1 | TOOTH, Corner; Left |
| 8 | | 368526A1 | | 1 | TOOTH, Corner; Right |
| 9 | | 420-21244 | | 18 | BOLT, PLOW, 3/4"-10 x 2 3/4", G8 |
| 10 | | 425-1612 | | 30 | NUT, 3/4"-10, G5, Hvy |
| 11 | | 426-1252 | | 6 | BOLT, Hex, 3/4"-10 x 3 1/4", G8 |
| 12 | | 426-1244 | | 6 | BOLT, Hex, 3/4"-10 x 2 3/4", G8 |
| 13 | | 496-11081 | | 12 | WASHER, 13/16" x 1 1/2" x .065", HDN |

| 09-11 | | p1 | 05/07 |
|---|---|---|---|

**LOADER BUCKET - WITH BOLT ON EDGE AND SKID PADS**

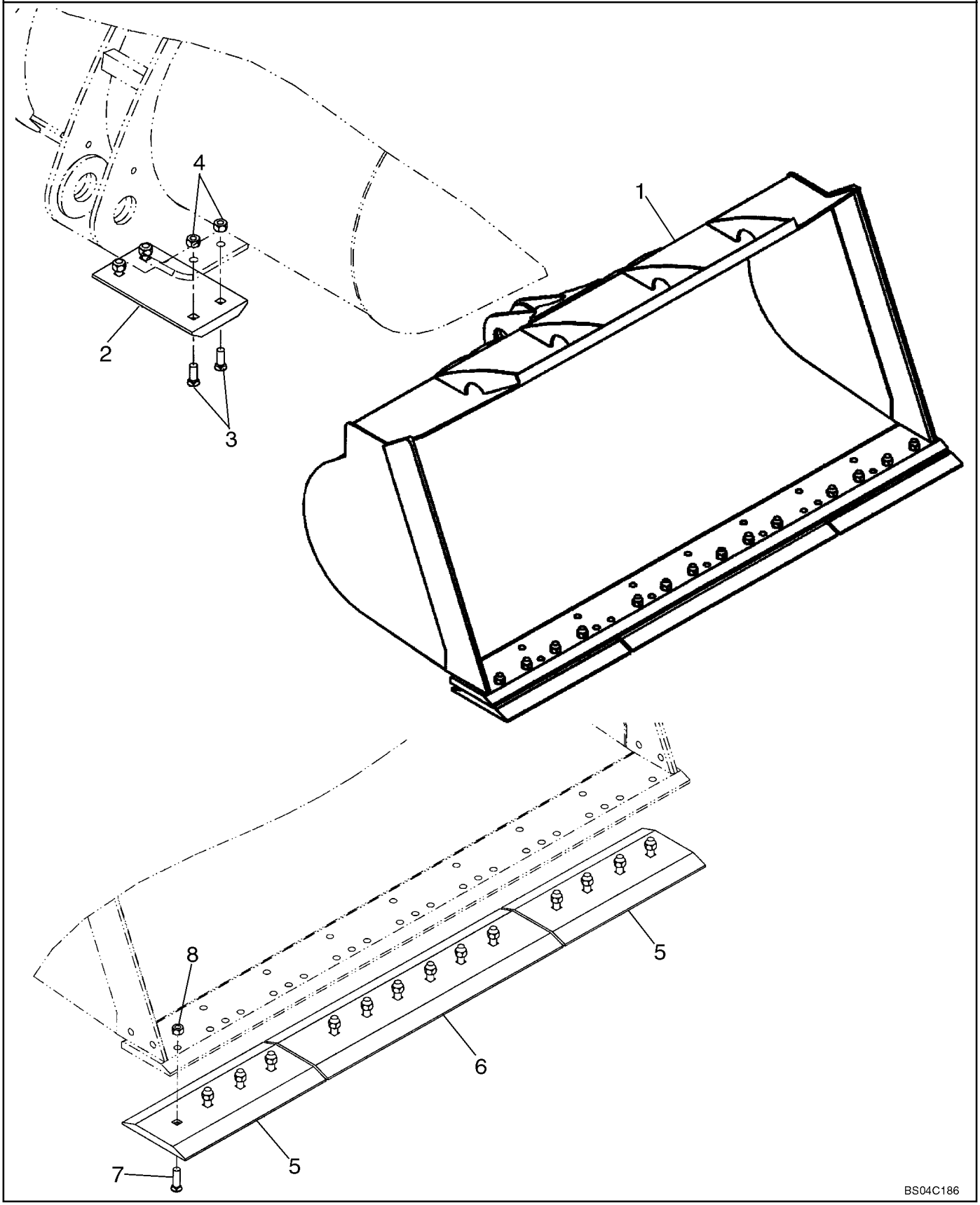

**LOADER BUCKET - WITH BOLT ON EDGE AND SKID PADS**

| REF | FN | PART NUMBER | YR/SN | QTY | DESCRIPTION |
|---|---|---|---|---|---|
| | | REF | | | INSTRUCTION, WELDED ON BUCKET COMPONENTS ARE NOT SERVICED SEPARATELY |
| 1 | | {428434A1} | | 1 | BUCKET/A; 2 Cubic Meter ( 2.75 Cubic Yards ); Order From Whole Goods; Inc. 2 - 8 |
| 1 | | {428437A1} | | 1 | BUCKET/A; 2.25 Cubic Meter ( 3 Cubic Yards ); Order From Whole Goods; Inc. 2 - 8 |
| 1 | | {428432A1} | | 1 | BUCKET/A; 1.9 Cubic Meter ( 2.5 Cubic Yards ); Order From Whole Goods; Inc. 2 - 8 |
| 1 | | {418472A1} | | 1 | BUCKET/A; 2.25 Cubic Meter ( 3 Cubic Yards ); For Use With ASC Pro Series 2000 Size 30 Couplers; Order From Whole Goods; Inc. 2 - 8; |
| 1 | | {418470A1} | | 1 | BUCKET/A; 1.9 Cubic Meter ( 2.5 Cubic Yards ); For Use With ASC Pro Series 2000 Size 30 Couplers; Order From Whole Goods; Inc. 2 - 8 |
| 1 | | {434536A1} | | 1 | BUCKET/A; 1.9 Cubic Meter ( 2.5 Cubic Yards ); For Use With JRB Couplers; Order From Whole Goods; Inc. 2 - 8 |
| | | REF | | | INSTRUCTION, BOLT ON SKID PAD |
| 2 | | 360939A1 | | 2 | PLATE, Bottom; Bolt On |
| 3 | | 420-21236 | | 8 | BOLT, CARRIAGE, 3/4"-10 x 2 1/4", G8, 3/4 x 2-1/4 in |
| 4 | | 425-1612 | | 8 | NUT, 3/4"-10, G5, Hvy, 3/4, Hardened |
| | | REF | | | INSTRUCTION, BOLT ON CUTTING EDGES |
| 5 | | 372082A2 | | 2 | EDGE, CUTTING, Outer; Bolt On |
| 6 | | 372081A1 | | 1 | EDGE, CUTTING, Center; Bolt On |
| 7 | | 420-21244 | | 16 | BOLT, PLOW, 3/4"-10 x 2 3/4", G8, #3; 3/4 x 2-3/4 in |
| 8 | | 425-1612 | | 16 | NUT, 3/4"-10, G5, Hvy, 3/4-10 |

**FRAME, FRONT (Z-BAR, XR)**

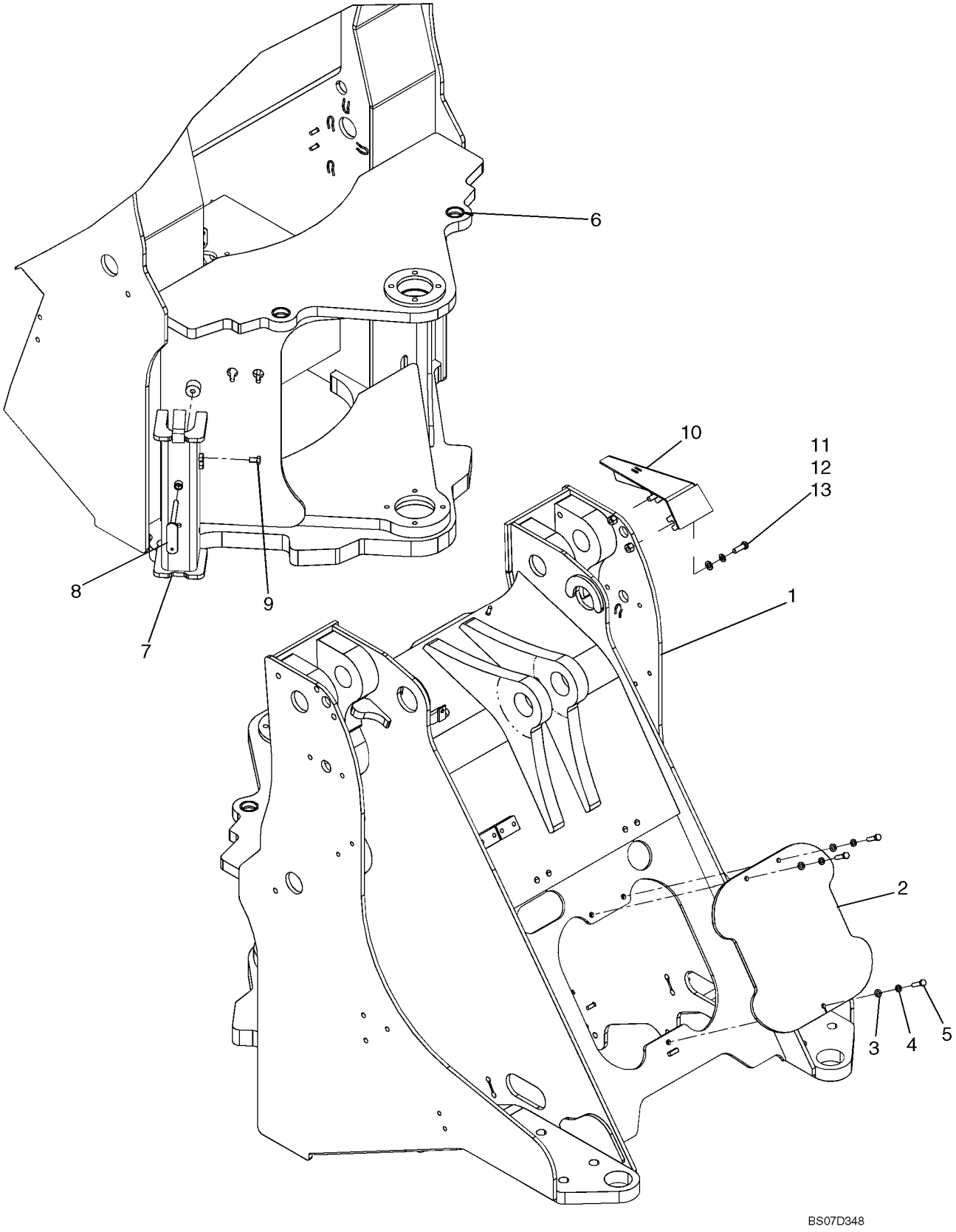

**FRAME, FRONT (Z-BAR, XR)**

| REF | FN | PART NUMBER | YR/SN | QTY | DESCRIPTION |
|---|---|---|---|---|---|
| 1 | | 87547373 | | 1 | FRAMEWORK, Front Chassis; Case Power Tan |
| 2 | | 8605898 | | 1 | COVER, Valve |
| 3 | | 895-11010 | | 3 | WASHER, M10 x 20 x 2 |
| 4 | | 892-11010 | | 3 | WASHER, LOCK, M10 |
| 5 | | 627-10040 | | 3 | BOLT, Hex, M10 x 40, 10.9, Full Thd |
| 6 | | 8500173 | | 2 | BUSHING |
| 7 | | 406347A1 | | 1 | SUPPORT ASSY., Linkage |
| 8 | | 406390A1 | | 1 | HANDLE, Linkage Channel |
| 9 | | 627-12020 | | 1 | BOLT, Hex, M12 x 20, 10.9, Full Thd |
| 10 | | 87430084 | | 1 | COVER, Proximity Switch |
| 11 | | 896-11012 | | 2 | WASHER, M13.5 x 24.5 x 3, HT |
| 12 | | 892-11012 | | 2 | WASHER, LOCK, M12 |
| 13 | | 627-12035 | | 2 | BOLT, Hex, M12 x 35, 10.9 |

| 09-13 | | p1 | 05/07 |
|---|---|---|---|

**FRAME, FRONT (XT)**

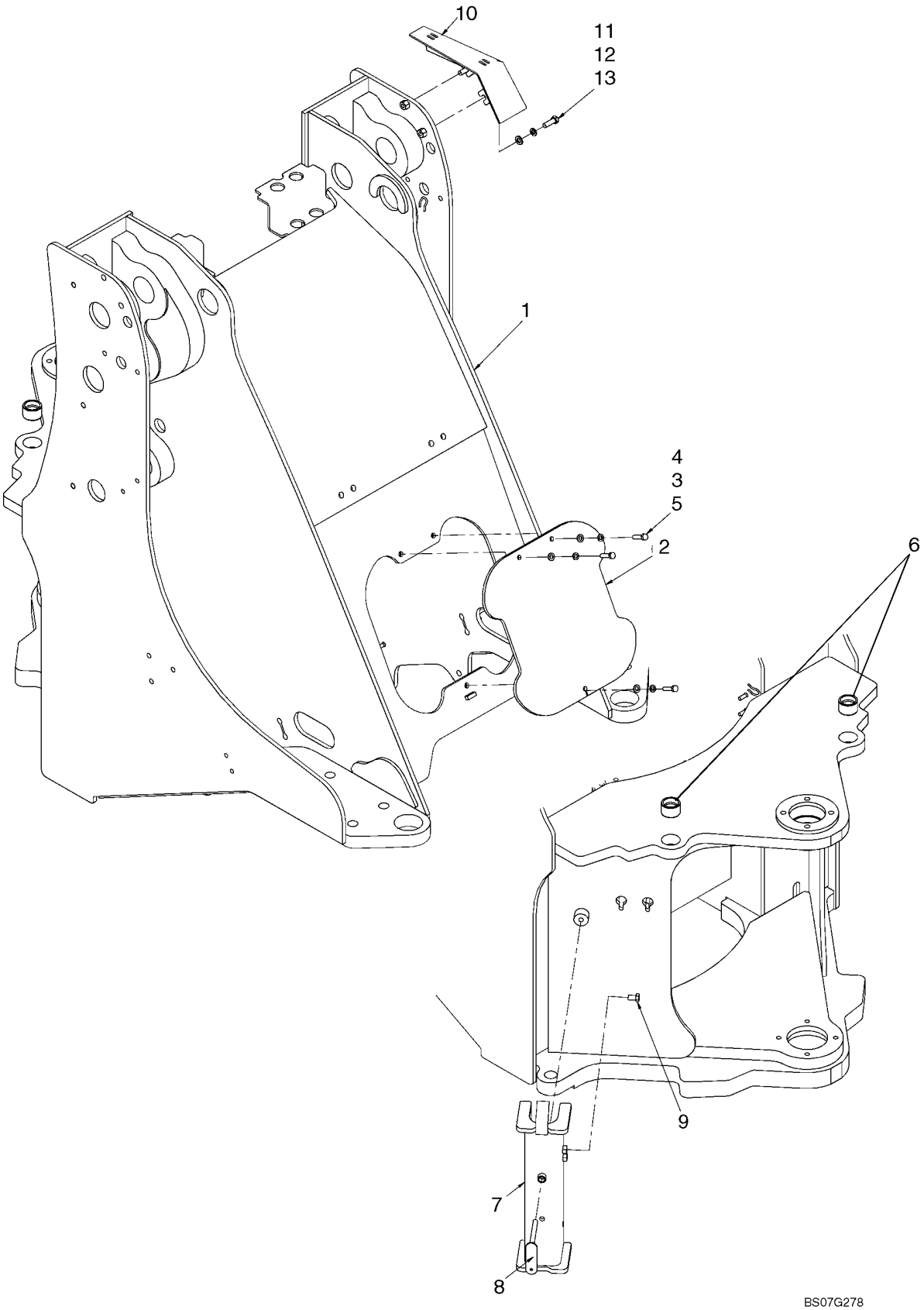

**FRAME, FRONT (XT)**

| REF | FN | PART NUMBER | YR/SN | QTY | DESCRIPTION |
|---|---|---|---|---|---|
| | | REF | | | INSTRUCTION, XT LOADER |
| 1 | | 87547376 | | 1 | FRAMEWORK, Front Chassis |
| 2 | | 8605898 | | 1 | COVER, Valve Case |
| 3 | | 895-11010 | | 3 | WASHER, M10 x 20 x 2 |
| 4 | | 892-11010 | | 3 | WASHER, LOCK, M10 |
| 5 | | 627-10040 | | 3 | BOLT, Hex, M10 x 40, 10.9, Full Thd |
| 6 | | 8500173 | | 2 | BUSHING |
| 7 | | 406347A1 | | 1 | SUPPORT ASSY., Linkage |
| 8 | | 406390A1 | | 1 | HANDLE |
| 9 | | 627-12020 | | 1 | BOLT, Hex, M12 x 20, 10.9, Full Thd |
| 10 | | 87450063 | | 1 | COVER, Proximity Switch |
| 11 | | 896-11012 | | 2 | WASHER, M13.5 x 24.5 x 3, HT |
| 12 | | 892-11012 | | 2 | WASHER, LOCK, M12 |
| 13 | | 627-12035 | | 2 | BOLT, Hex, M12 x 35, 10.9 |

| 09-14 | | p1 | 06/07 |
|---|---|---|---|

**FRAME, REAR**

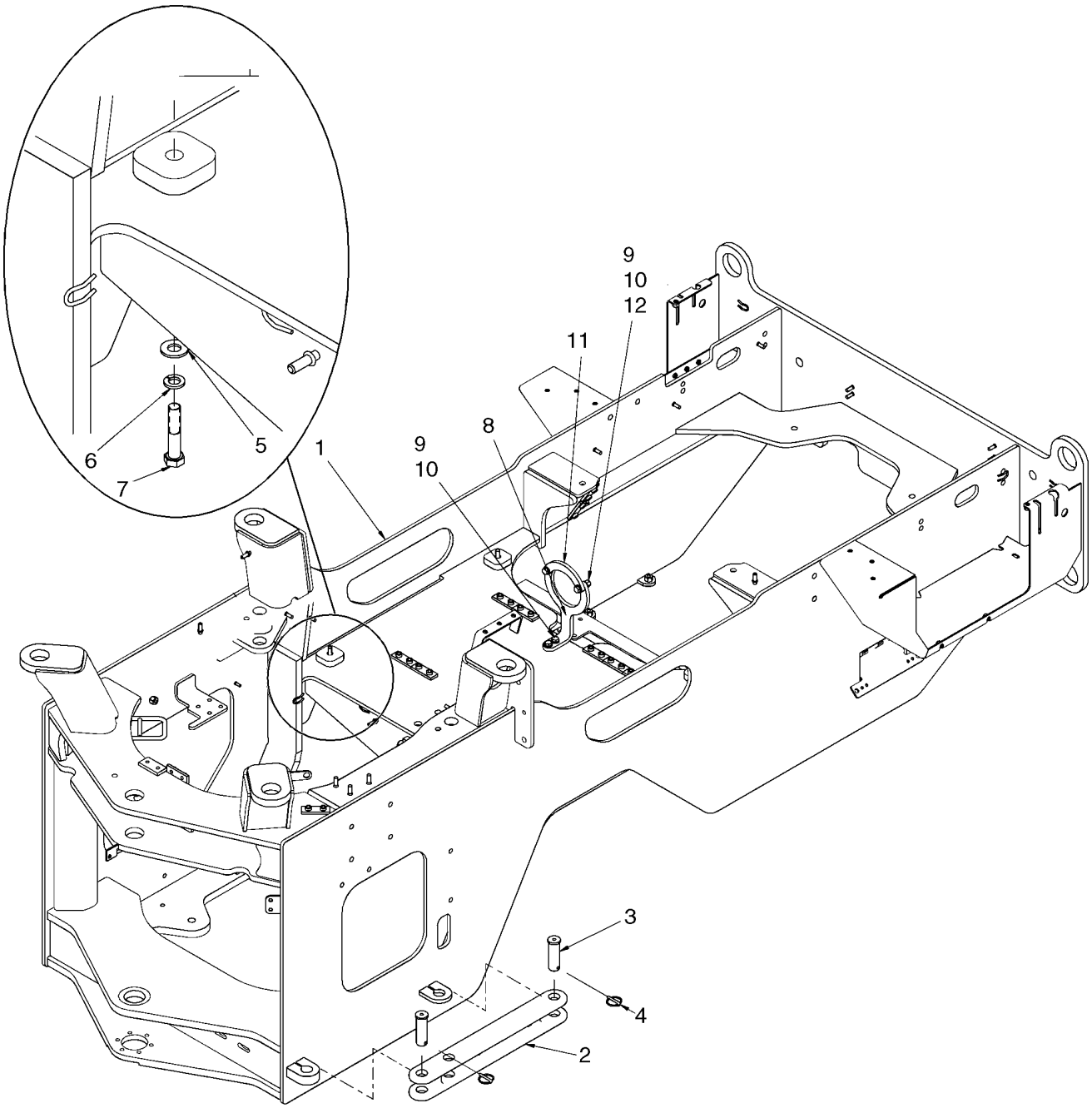

**FRAME, REAR**

| REF | FN | PART NUMBER | YR/SN | QTY | DESCRIPTION |
|---|---|---|---|---|---|
| 1 | | 87653595 | | 1 | FRAME, Rear; Case Power Tan |
| 2 | | 412067A1 | | 1 | BAR, LOCKING |
| 3 | | 126268A1 | | 2 | PIN, LARGE |
| 4 | | A30338 | | 2 | PIN |
| 5 | | 895-15012 | | 4 | WASHER, M12 x 28 x 2.5 |
| 6 | | 892-11012 | | 4 | WASHER, LOCK, M12 |
| 7 | | 827-12060 | | 4 | BOLT, Hex, M12 x 60, 10.9 |
| 8 | | 87559571 | | 1 | GUARD |
| 9 | | 896-11012 | | 6 | WASHER, M13.5 x 24.5 x 3, HT |
| 10 | | 627-12045 | | 4 | BOLT, Hex, M12 x 45, 10.9, Full Thd |
| 11 | | {87333866} | | 1 | GUARD, Drive Shaft |
| 12 | | 832-10412 | | 2 | NUT, LOCK, M12 x 1.75, Cl 8 |

| 09-15 | | p1 | 06/07 |
|---|---|---|---|

**ARTICULATION JOINT**

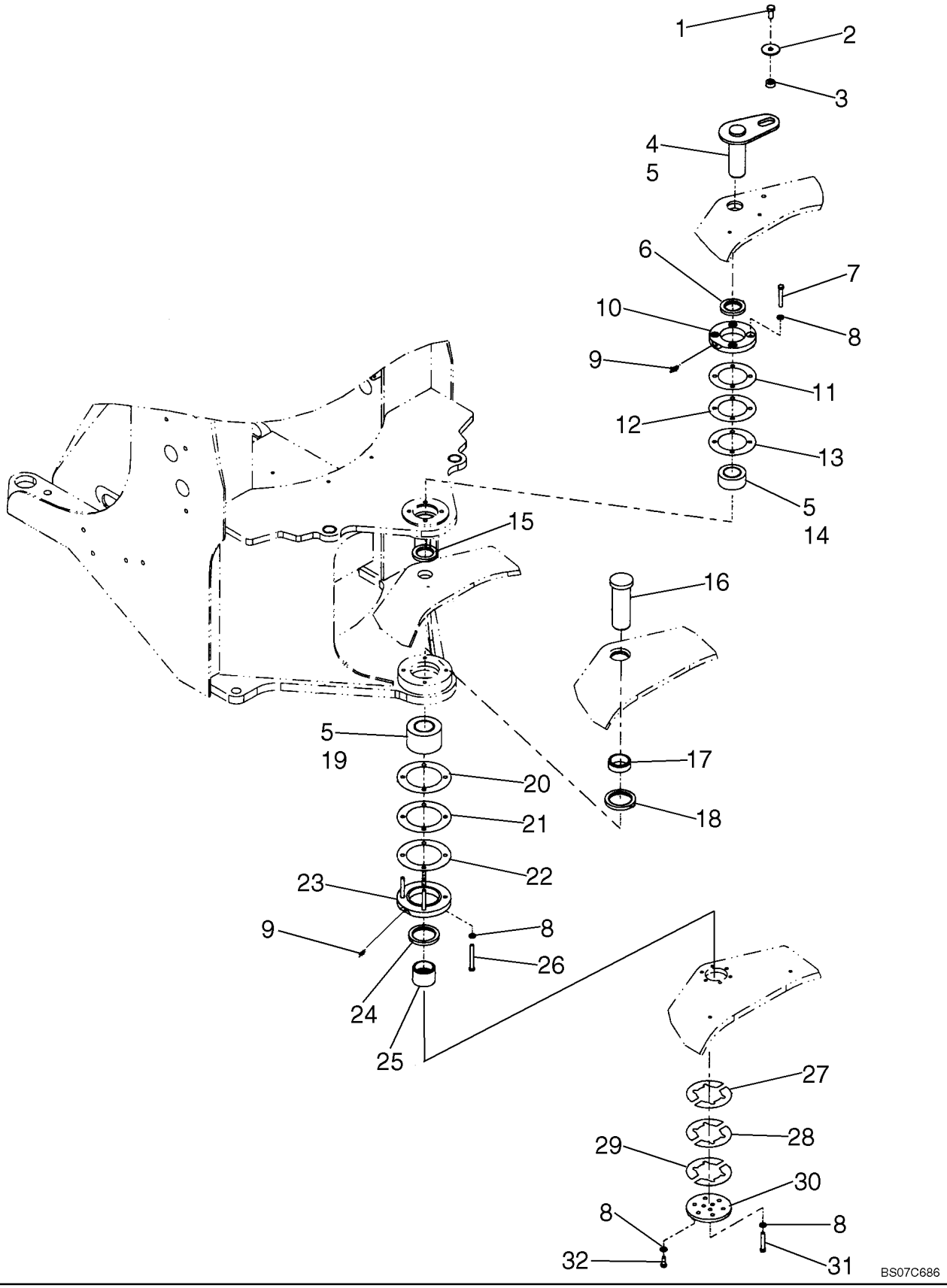

**ARTICULATION JOINT**

| REF | FN | PART NUMBER | YR/SN | QTY | DESCRIPTION |
|---|---|---|---|---|---|
| 1 | | 627-16035 | | 1 | BOLT, Hex, M16 x 35, 10.9 |
| 2 | | 496-81025 | | 1 | WASHER, 21/32" x 2 1/2" x .188", HDN |
| 3 | | L125100 | | 1 | SPACER |
| 4 | | 8606124 | | 1 | PIN |
| 5 | | 331-329 | | AR | GREASE, 1 Ounce Wheel Bearing Grease |
| 6 | | 391281A1 | | 1 | SEAL |
| 7 | | 827-12080 | | 4 | BOLT, Hex, M12 x 80, 10.9 |
| 8 | | 896-11012 | | 17 | WASHER, M13.5 x 24.5 x 3, HT |
| 9 | | 219-1 | | 2 | NIPPLE, LUBE, 1/8"-27 x .66 lg |
| 10 | | 391280A1 | | 1 | RETAINER |
| 11 | | L118987 | | AR | SHIM, .1 mm |
| 12 | | L119202 | | AR | SHIM, .25 mm |
| 13 | | L118986 | | AR | SHIM, .5 mm |
| 14 | | 391276A1 | | 1 | BEARING |
| 15 | | 391278A1 | | 1 | SEAL |
| 16 | | 433264A1 | | 1 | PIN |
| 17 | | 87623437 | | 1 | SPACER, Lower Bearing |
| 18 | | L118978 | | 1 | SEAL |
| 19 | | 432765A1 | | 1 | BEARING ASSY |
| 20 | | L118990 | | AR | SHIM, .1 mm |
| 21 | | L118989 | | AR | SHIM, .5 mm |
| 22 | | L119203 | | AR | SHIM, .25 mm |
| 23 | | 432909A1 | | 1 | RETAINER |
| 24 | | L126168 | | 1 | SEAL |
| 25 | | 87623438 | | 1 | SPACER, Lower Bearing |
| 26 | | 827-12100 | | 4 | BOLT, Hex, M12 x 100, 10.9 |
| 27 | | L118983 | | AR | SHIM, .1 mm |
| 28 | | L118980 | | AR | SHIM, .25 mm |
| 29 | | L118982 | | AR | SHIM, .5 mm |
| 30 | | L128375 | | 1 | PLATE, Lower Pin |
| 31 | | 827-12070 | | 3 | BOLT, Hex, M12 x 70, 10.9 |
| 32 | | 627-12030 | | 6 | BOLT, Hex, M12 x 30, 10.9 |

## HOOD

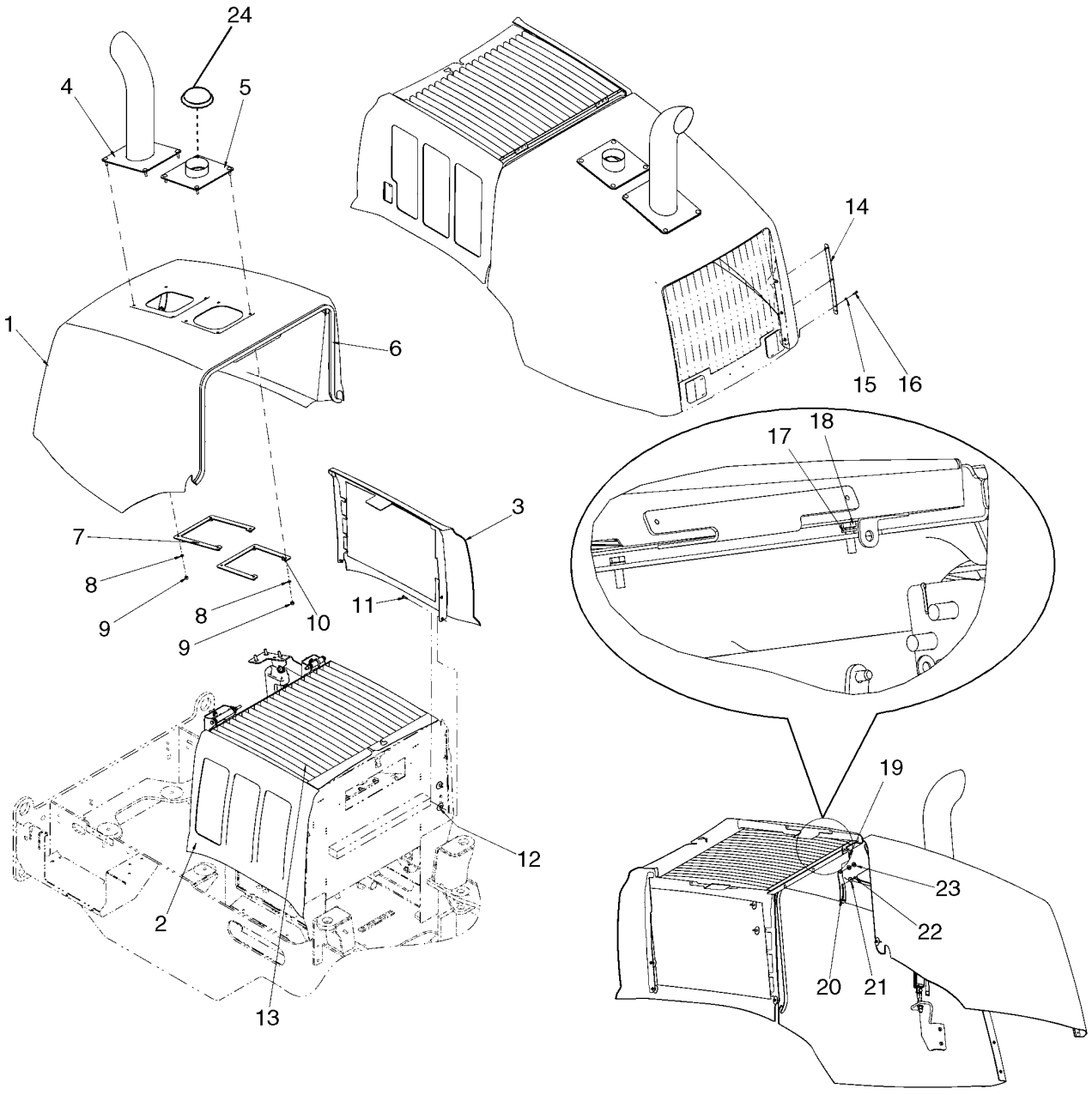

**HOOD**

| REF | FN | PART NUMBER | YR/SN | QTY | DESCRIPTION |
|---|---|---|---|---|---|
| | | REF | | | INSTRUCTION, ENGINE HOOD, FOR GRILLE AND REAR LIGHTS, SEE FIGURE 04-20 |
| 1 | | 87432252 | | 1 | HOOD, Case Power Tan |
| 2 | | 87308682 | | 1 | PANEL, RH Hood; Case Power Tan |
| 3 | | 87308668 | | 1 | PANEL, LH Hood; Case Power Tan |
| 4 | | 8500375 | | 1 | PIPE, EXHAUST SYSTEM |
| 5 | | 8500379 | | 1 | PIPE ASSY., Intake |
| 6 | | 8605846 | | 1 | SEAL, Hood |
| 7 | | 495-81145 | | 1 | WASHER, 13/32" x 1 3/4" x .120" |
| 8 | | 895-18010 | | 8 | WASHER, M10 x 18 x 1.6 |
| 9 | | 832-10410 | | 8 | NUT, LOCK, M10 x 1.5, Cl 8 |
| 10 | | 8500382 | | 1 | PLATE |
| 11 | | {87632741} | | 6 | SCREW |
| 12 | | 495-81144 | | 6 | WASHER, 13/32" x 1 3/4" x .060" |
| 13 | | 87308388 | | 1 | SCREEN, Top |
| 14 | | 444931A1 | | 2 | PLATE |
| 15 | | 892-11006 | | 6 | WASHER, LOCK, M6 |
| 16 | | 627-6025 | | 6 | BOLT, Hex, M6 x 25, 10.9 |
| 17 | | 892-11008 | | 3 | WASHER, LOCK, M8 |
| 18 | | 627-8025 | | 3 | BOLT, Hex, M8 x 25, 10.9 |
| 19 | | 733-3220 | | 3 | PIN, SPLIT (COTTER), M3.2 x 20 |
| 20 | | 8602476 | | 1 | BAR PLATE |
| 21 | | 895-15006 | | 1 | WASHER, M6 x 25 x 1.6 |
| 22 | | 832-10406 | | 1 | NUT, LOCK, M6 x 1, Cl 8 |
| 23 | | 895-15010 | | 2 | WASHER, M11 x 24 x 2 |
| 24 | | 8501036 | | 1 | CAP, Rain |

| 09-17 | | p1 | 07/07 |
|---|---|---|---|

**HOOD - MOUNTING**

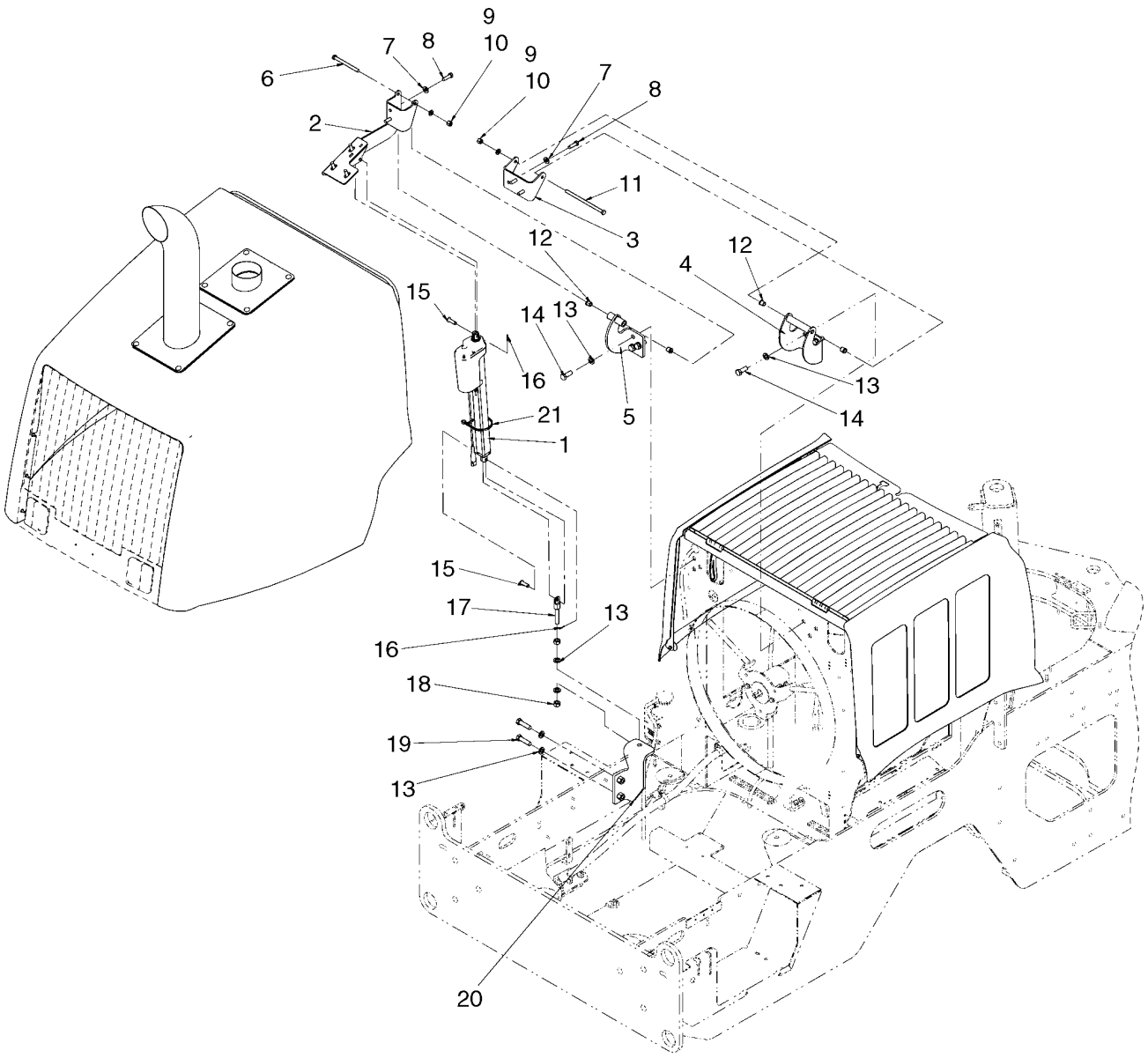

**HOOD - MOUNTING**

| REF | FN | PART NUMBER | YR/SN | QTY | DESCRIPTION |
|---|---|---|---|---|---|
| 1 | | 87398773 | | 1 | ACTUATOR, 400mm Stroke |
| 2 | | 87625616 | | 1 | BRACKET, Hood Left |
| 3 | | 8501151 | | 1 | HINGE, Hood Right |
| 4 | | 8605372 | | 1 | HINGE, Hood Mount Right |
| 5 | | 8605371 | | 1 | HOOK, LATCH |
| 6 | | 827-12140 | | 1 | BOLT, Hex, M12 x 140, 10.9 |
| 7 | | 896-15012 | | 8 | WASHER, M12 x 28.5 x 4, HT |
| 8 | | 627-12040 | | 8 | BOLT, Hex, M12 x 40, 10.9, Full Thd |
| 9 | | 896-11012 | | 2 | WASHER, M13.5 x 24.5 x 3, HT |
| 10 | | 832-10410 | | 2 | NUT, LOCK, M10 x 1.5, Cl 8 |
| 11 | | 827-12220 | | 1 | BOLT, Hex, M12 x 220, 10.9 |
| 12 | | 382495A1 | | 4 | BUSHING |
| 13 | | 896-11016 | | 10 | WASHER, M17.5 x 30 x 4, HT |
| 14 | | 627-16040 | | 6 | BOLT, Hex, M16 x 40, 10.9 |
| 15 | | 728-1240 | | 2 | PIN, CLEVIS, M12 x 40 |
| 16 | | 733-3220 | | 3 | PIN, SPLIT (COTTER), M3.2 x 20 |
| 17 | | 87531205 | | 1 | ROD, Adjuster |
| 18 | | 829-1416 | | 2 | NUT, M16, Cl 10 |
| 19 | | 827-16060 | | 2 | BOLT, Hex, M16 x 60, 10.9 |
| 20 | | 87641237 | | 1 | BRACKET, Jack Base |
| 21 | | L18331 | | 1 | STRAP, CABLE |

**COVERS - BATTERY BOX**

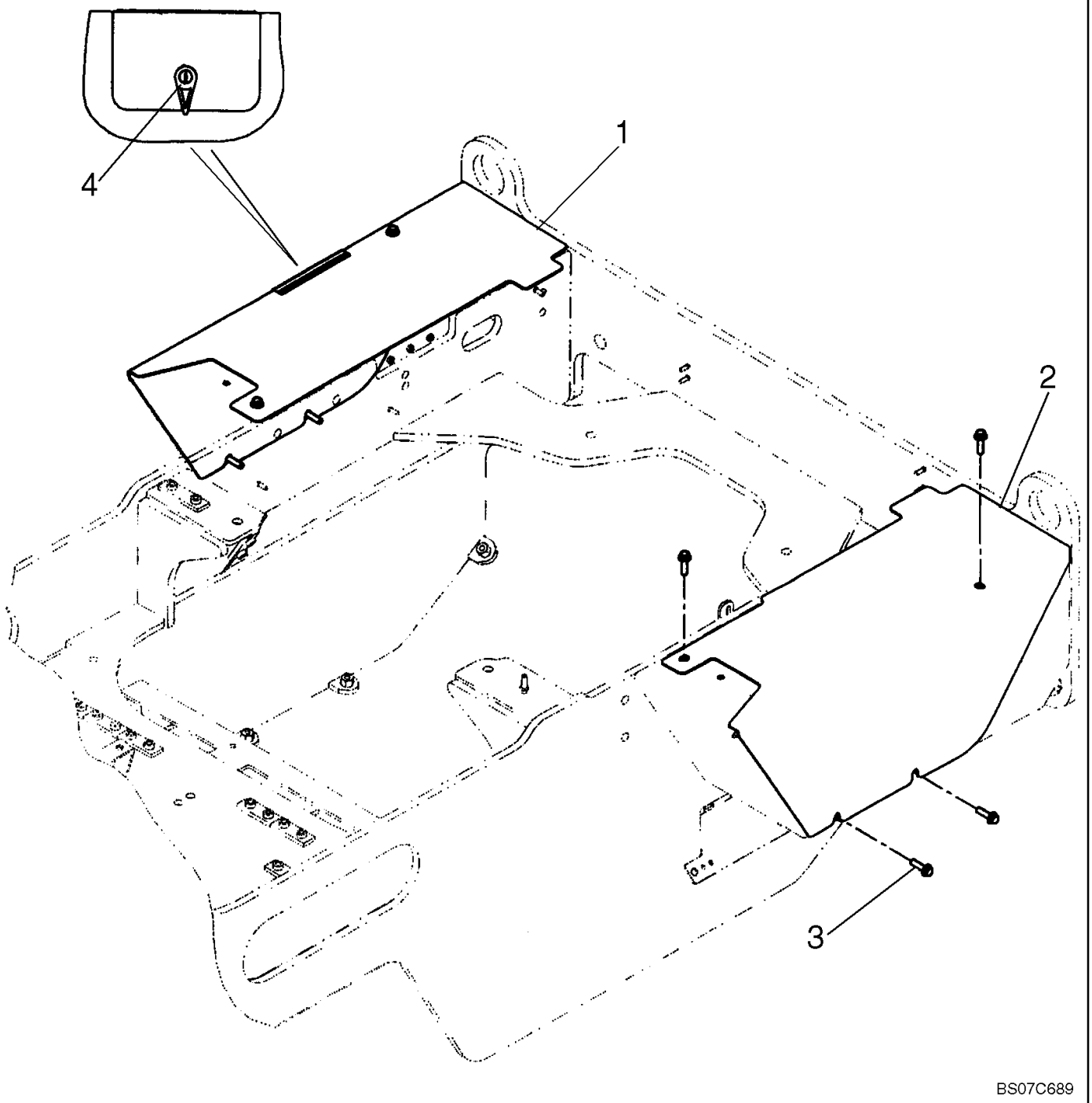

**COVERS - BATTERY BOX**

| REF | FN | PART NUMBER | YR/SN | QTY | DESCRIPTION |
|---|---|---|---|---|---|
| 1 | | 87585843 | | 1 | COVER, Right Battery |
| 2 | | 87585844 | | 1 | COVER, Left Battery |
| 3 | | 844-10035 | | 8 | BOLT, Hex Flg, M10 x 35, 8.8 |
| 4 | | 8602791 | | 1 | LOCK, Battery Box |

| 09-19 | | p1 | 08/07 |
|---|---|---|---|

**COVERS - CAB AND CANOPY, LOWER**

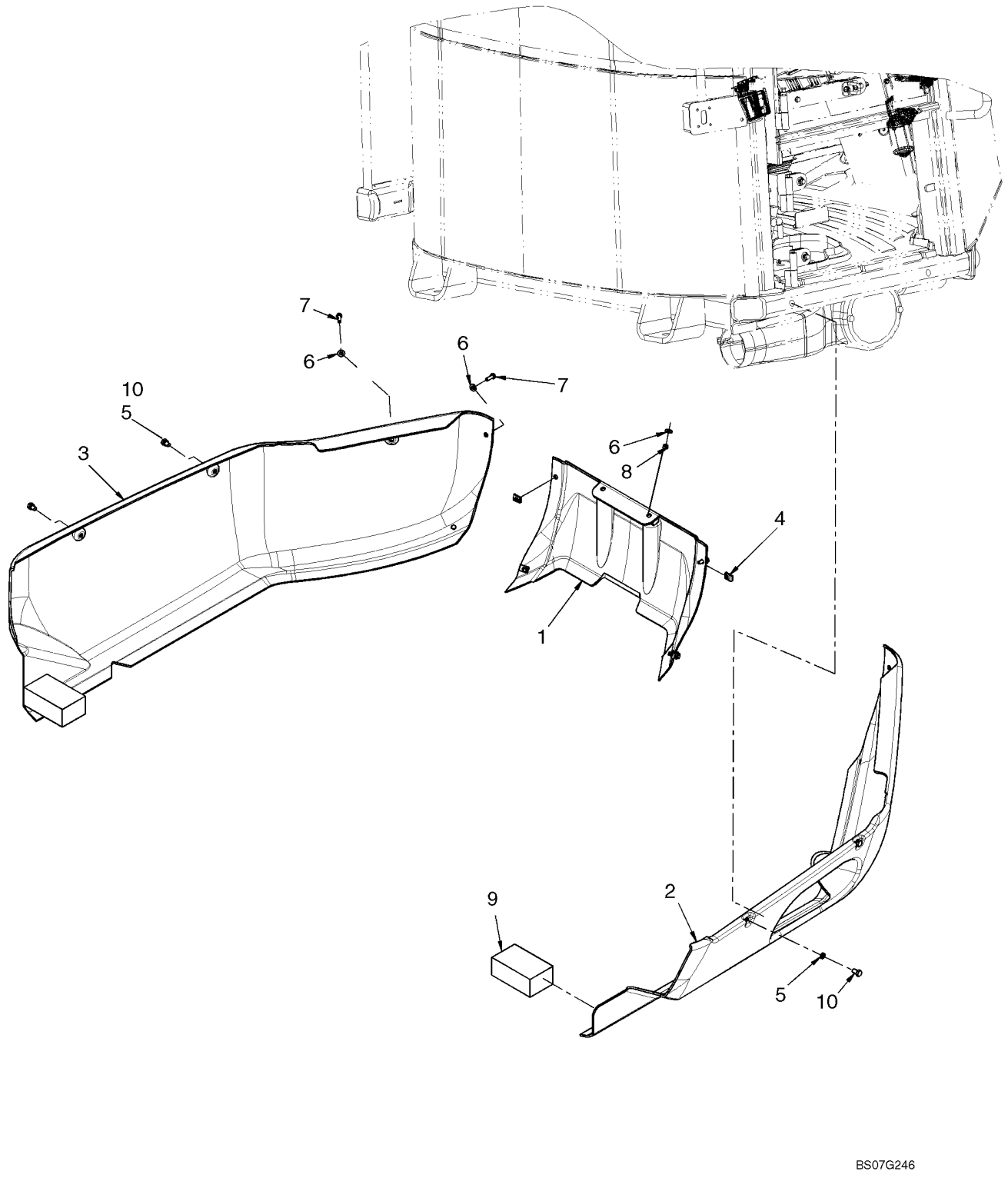

**COVERS - CAB AND CANOPY, LOWER**

| REF | FN | PART NUMBER | YR/SN | QTY | DESCRIPTION |
|---|---|---|---|---|---|
| 1 | | 87389202 | | 1 | PLASTIC, Center; CASE PowerTan |
| 1 | | 87389203 | | 1 | PLASTIC, Center; CNH CE Gray |
| 2 | | 87389199 | | 1 | PLASTIC, Right Hand; CASE PowerTan |
| 2 | | 87389200 | | 1 | PLASTIC, Right Hand; CNH CE Gray |
| 3 | | {87652920} | | 1 | PLASTIC, Left Hand; CASE PowerTan |
| 3 | | {87652921} | | 1 | PLASTIC, Left Hand; CNH CE Gray |
| 4 | | 833-40408 | | 4 | NUT, M8, U |
| 5 | | 432444A1 | | 4 | SPACER |
| 6 | | 895-15008 | | 8 | WASHER, M8 x 20 x 1.6 |
| 7 | | 627-8025 | | 6 | BOLT, Hex, M8 x 25, 10.9 |
| 8 | | 829-1408 | | 2 | NUT, M8, Cl 10 |
| 9 | | 87532611 | | 2 | GASKET, Foam |
| 10 | | {87547661} | | 4 | BOLT, M10x16 |

| 09-19A | | p1 | 08/07 |
|---|---|---|---|

**COVERS - FRAME, REAR**

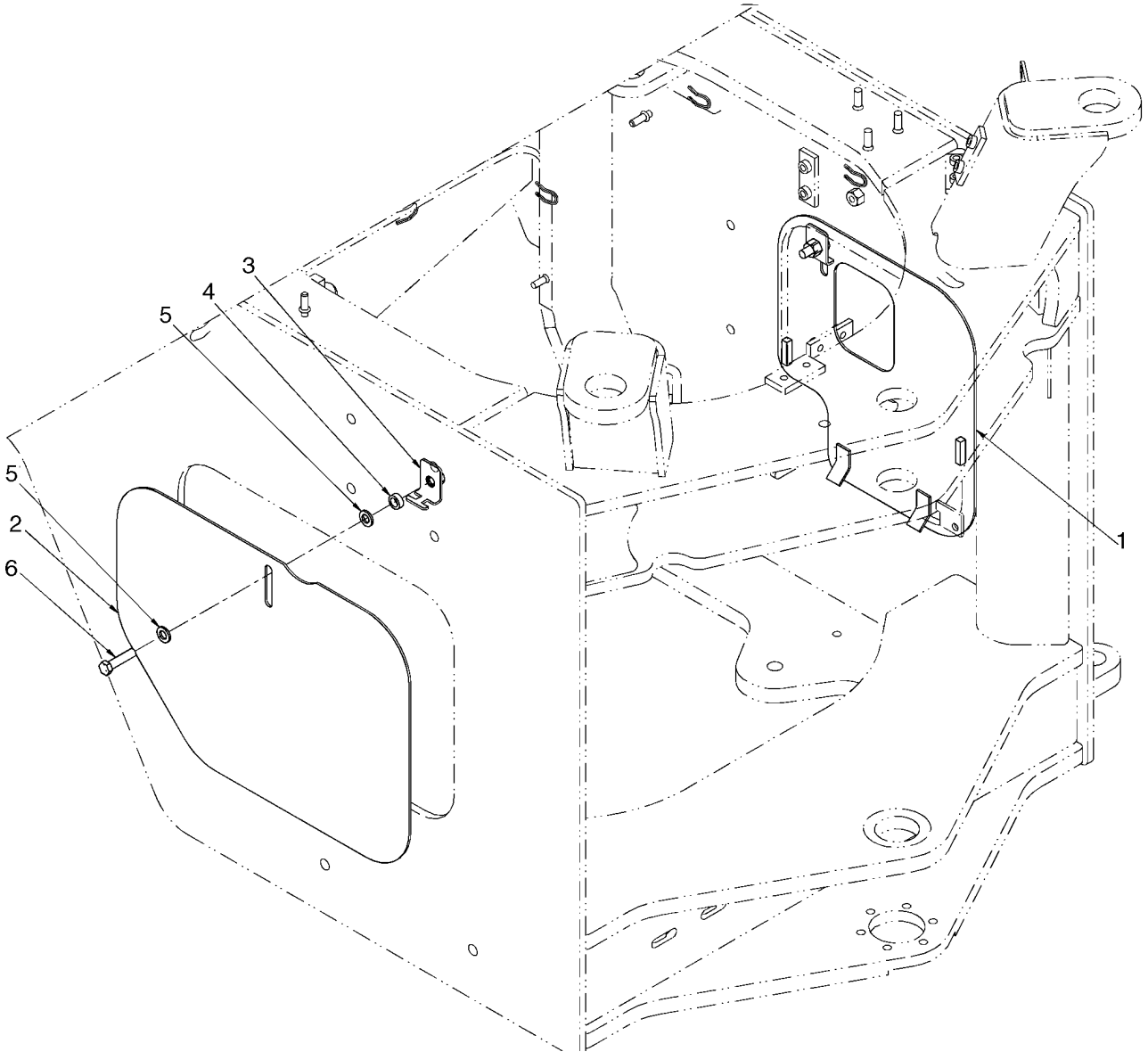

**COVERS - FRAME, REAR**

| REF | FN | PART NUMBER | YR/SN | QTY | DESCRIPTION |
|---|---|---|---|---|---|
| 1 | | 87653634 | | 1 | COVER, Left Side |
| 2 | | 87600838 | | 1 | COVER, Right Side |
| 3 | | 87404138 | | 2 | CLAMP, Side Cover |
| 4 | | D35859 | | 2 | SPACER |
| 5 | | 896-11012 | | 4 | WASHER, M13.5 x 24.5 x 3, HT |
| 6 | | 827-12050 | | 2 | BOLT, Hex, M12 x 50, 10.9 |

**FENDERS, FRONT**

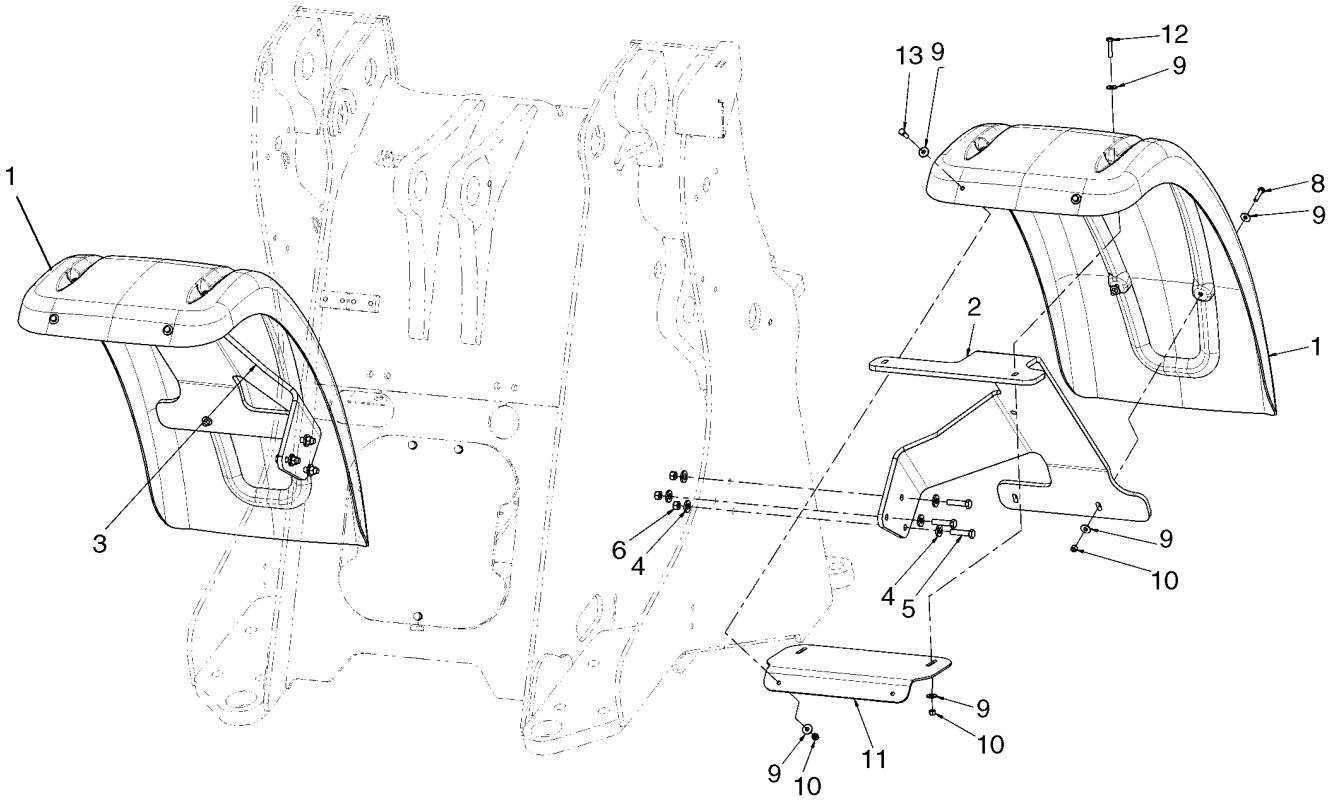


BS07F297

**FENDERS, FRONT**

| REF | FN | PART NUMBER | YR/SN | QTY | DESCRIPTION |
|---|---|---|---|---|---|
| 1 | | 87355957 | | 2 | FENDER, Front |
| 2 | | 87579405 | | 1 | BRACKET, LH Fender |
| 3 | | 87579406 | | 1 | BRACKET, RH Fender |
| 4 | | 896-15012 | | 12 | WASHER, M12 x 28.5 x 4, HT |
| 5 | | 827-12050 | | 6 | BOLT, Hex, M12 x 50, 10.9 |
| 6 | | 829-1412 | | 6 | NUT, M12, Cl 10 |
| 8 | | 627-8035 | | 4 | BOLT, Hex, M8 x 35, 10.9 |
| 9 | | 895-25008 | | 24 | WASHER, M8 x 20 x 1.6 |
| 10 | | 832-10408 | | 12 | NUT, LOCK, M8 x 1.25, Cl 8 |
| 11 | | 87620991 | | 2 | BRACKET, Front Fender |
| 12 | | 827-8040 | | 4 | BOLT, Hex, M8 x 40, 10.9 |
| 13 | | 627-8030 | | 4 | BOLT, Hex, M8 x 30, 10.9 |

**FENDERS, FRONT - WIDE**

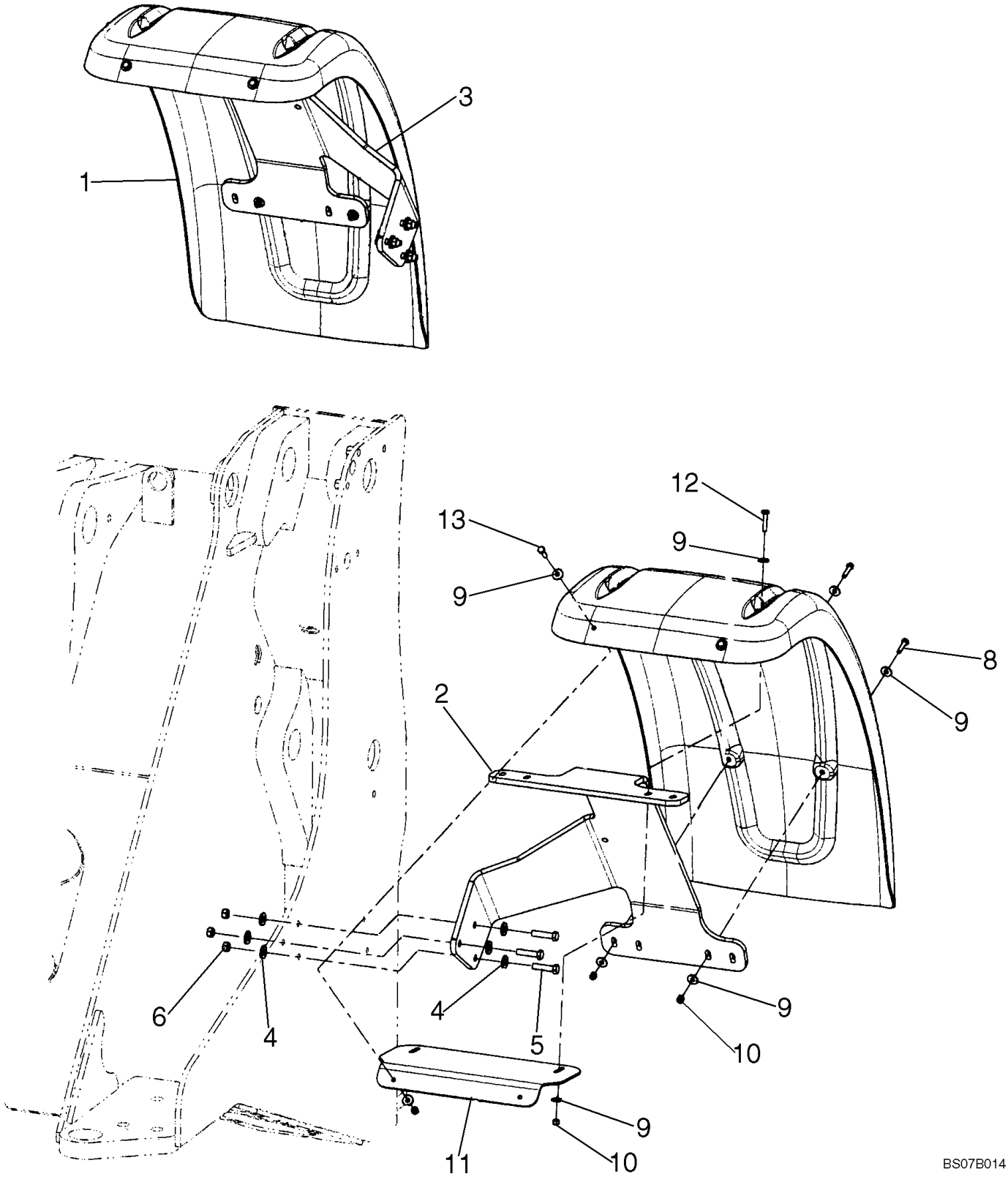

**FENDERS, FRONT - WIDE**

| REF | FN | PART NUMBER | YR/SN | QTY | DESCRIPTION |
|---|---|---|---|---|---|
| 1 | | 87355957 | | 2 | FENDER, Wide; If Used |
| 2 | | 87355960 | | 1 | BRACKET, Fender; LH |
| 3 | | 87355962 | | 1 | BRACKET, Fender; RH |
| 4 | | 896-15012 | | 12 | WASHER, M12 x 28.5 x 4, HT |
| 5 | | 827-12050 | | 6 | BOLT, Hex, M12 x 50, 10.9 |
| 6 | | 829-1412 | | 6 | NUT, M12, Cl 10 |
| 8 | | 627-8035 | | 4 | BOLT, Hex, M8 x 35, 10.9 |
| 9 | | 895-25008 | | 24 | WASHER, M8 x 20 x 1.6 |
| 10 | | 832-10408 | | 12 | NUT, LOCK, M8 x 1.25, Cl 8 |
| 11 | | 87620991 | | 2 | BRACKET, Fender; Wide |
| 12 | | 827-8040 | | 4 | BOLT, Hex, M8 x 40, 10.9 |
| 13 | | 627-8030 | | 4 | BOLT, Hex, M8 x 30, 10.9 |

**FENDERS, REAR - STANDARD**

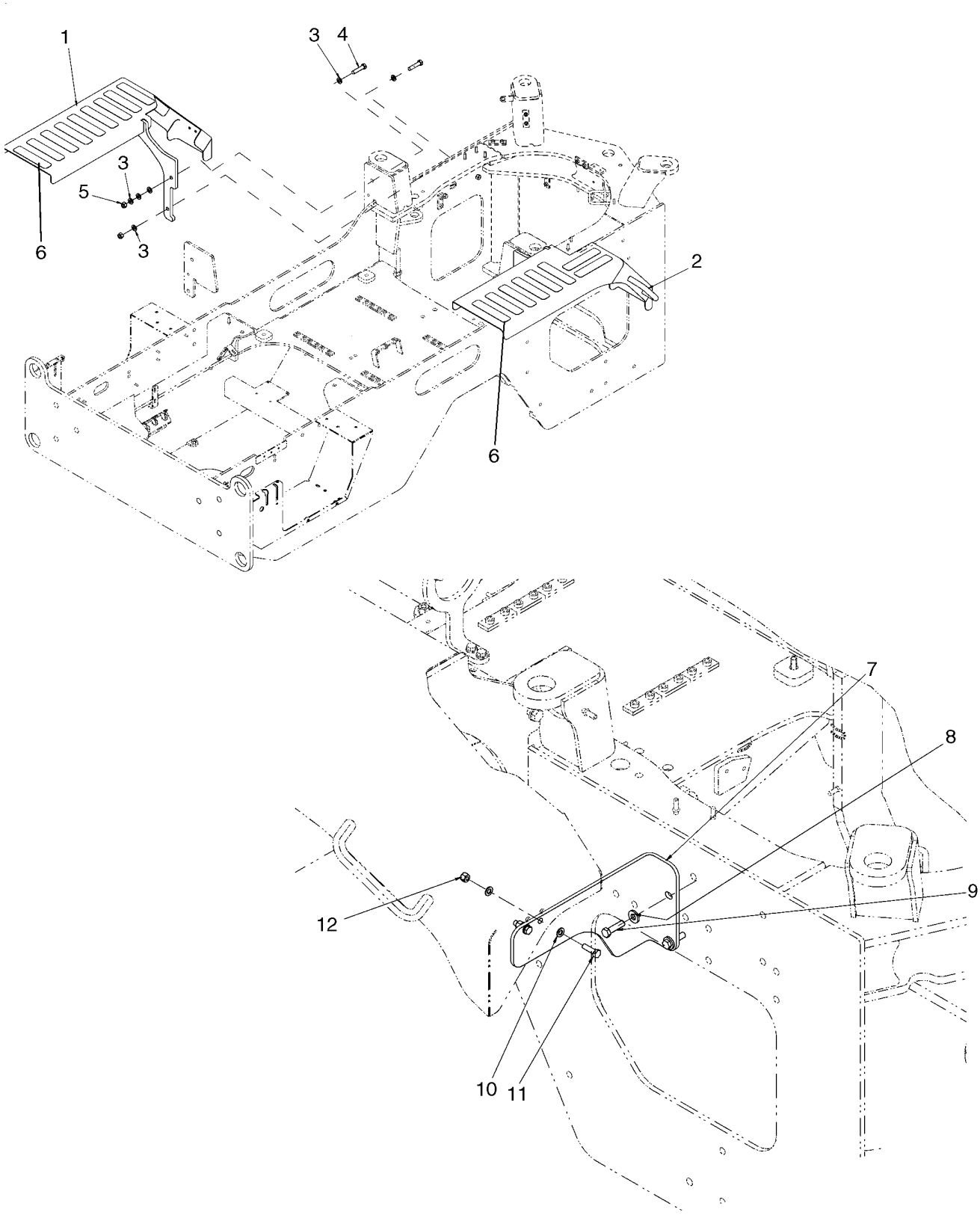

**FENDERS, REAR - STANDARD**

| REF | FN | PART NUMBER | YR/SN | QTY | DESCRIPTION |
|---|---|---|---|---|---|
| 1 | | 87652909 | | 1 | SUPPORT, LH Platform |
| 2 | | 87652910 | | 1 | SUPPORT, RH Platform |
| 3 | | 896-11016 | | 12 | WASHER, M17.5 x 30 x 4, HT |
| 4 | | 827-16070 | | 4 | BOLT, Hex, M16 x 70, 10.9 |
| 5 | | 829-1416 | | 4 | NUT, M16, Cl 10 |
| 6 | | D55216 | | 17 | PAD, Non-Slip |
| 7 | | 87579384 | | 1 | BRACKET, RH Step Support |
| 8 | | 896-15012 | | 2 | WASHER, M12 x 28.5 x 4, HT |
| 9 | | 627-12045 | | 2 | BOLT, Hex, M12 x 45, 10.9, Full Thd |
| 10 | | 895-11010 | | 4 | WASHER, M10 x 20 x 2 |
| 11 | | 627-10035 | | 2 | BOLT, Hex, M10 x 35, 10.9, Full Thd |
| 12 | | 832-10410 | | 2 | NUT, LOCK, M10 x 1.5, Cl 8 |

| 09-22 | | p1 | 06/07 |
|---|---|---|---|

**FENDERS, REAR - WIDE**

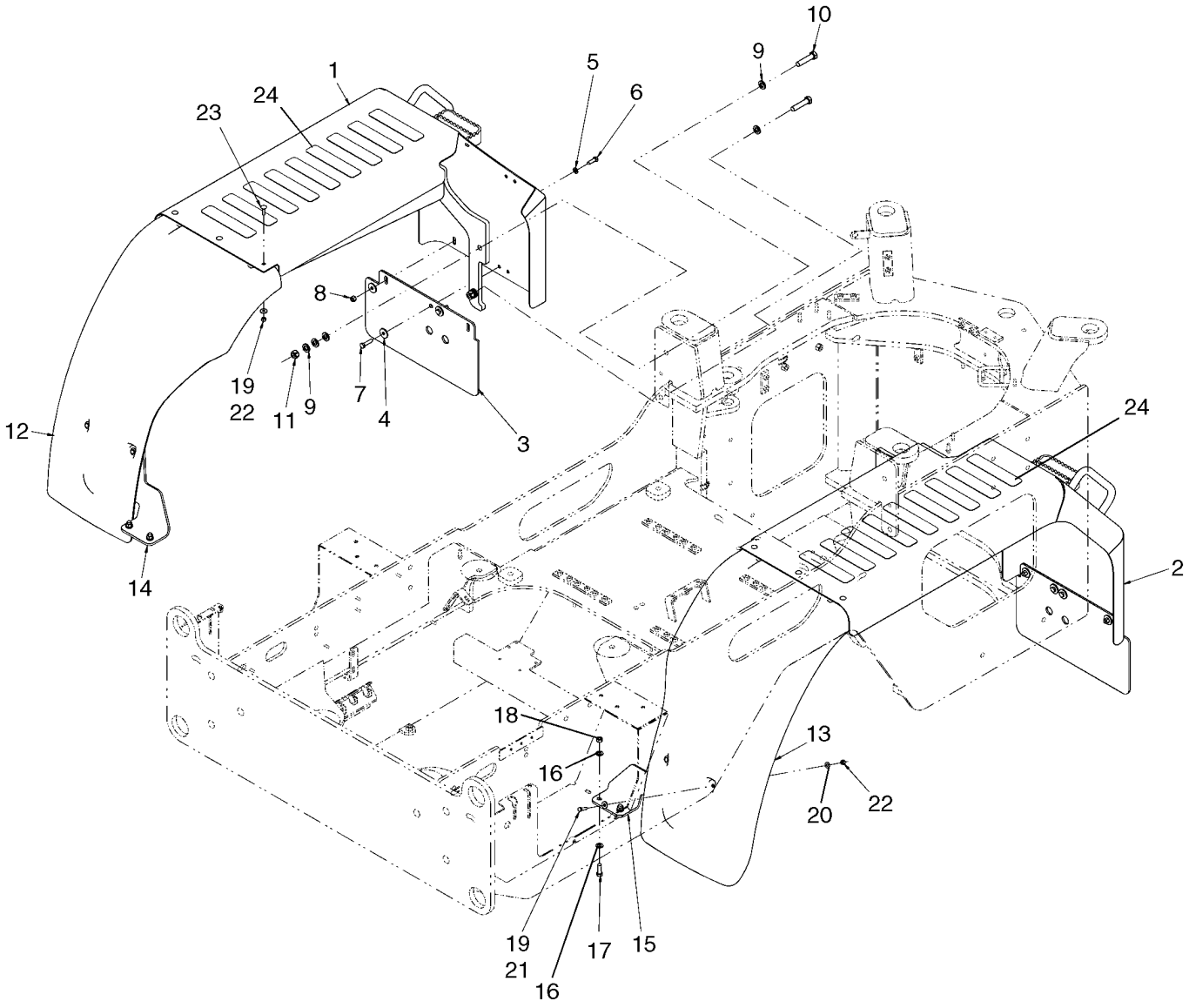

**FENDERS, REAR - WIDE**

| REF | FN | PART NUMBER | YR/SN | QTY | DESCRIPTION |
|---|---|---|---|---|---|
| | | REF | | | INSTRUCTION, REAR FENDERS - WIDE |
| 1 | | 87652903 | | 1 | SUPPORT, Left Hand Platform |
| 2 | | 87652904 | | 1 | SUPPORT, Right Hand Platform |
| 3 | | 87559792 | | 2 | MUDFLAP, Rear |
| 4 | | 39519 | | 8 | WASHER |
| 5 | | 895-11010 | | 4 | WASHER, M10 x 20 x 2 |
| 6 | | 627-10030 | | 4 | BOLT, Hex, M10 x 30, 10.9, Full Thd |
| 7 | | 627-10040 | | 4 | BOLT, Hex, M10 x 40, 10.9, Full Thd |
| 8 | | 832-10410 | | 4 | NUT, LOCK, M10 x 1.5, Cl 8 |
| 9 | | 896-11016 | | 16 | WASHER, M17.5 x 30 x 4, HT |
| 10 | | 827-16070 | | 4 | BOLT, Hex, M16 x 70, 10.9 |
| 11 | | 829-1416 | | 4 | NUT, M16, Cl 10 |
| 12 | | 87559793 | | 1 | FENDER, REAR, Wide Left |
| 13 | | 87559794 | | 1 | FENDER, REAR, Wide Right |
| 14 | | 87559816 | | 1 | BRACKET, Left Hand |
| 15 | | 87559817 | | 1 | BRACKET, Right Hand |
| 16 | | 896-11012 | | 8 | WASHER, M13.5 x 24.5 x 3, HT |
| 17 | | 627-12035 | | 4 | BOLT, Hex, M12 x 35, 10.9 |
| 18 | | 829-1412 | | 4 | NUT, M12, Cl 10 |
| 19 | | 895-25008 | | 10 | WASHER, M8 x 20 x 1.6 |
| 20 | | 895-15008 | | 4 | WASHER, M8 x 20 x 1.6 |
| 21 | | 627-8030 | | 4 | BOLT, Hex, M8 x 30, 10.9 |
| 22 | | 832-10408 | | 10 | NUT, LOCK, M8 x 1.25, Cl 8 |
| 23 | | 612-6 | | 6 | BOLT, CARRIAGE, Short NK, M8 x 30, Cl4.6, Full Thd |
| 24 | | D55216 | | 18 | PAD, Non-Slip |

**FENDERS, REAR - GUARD**

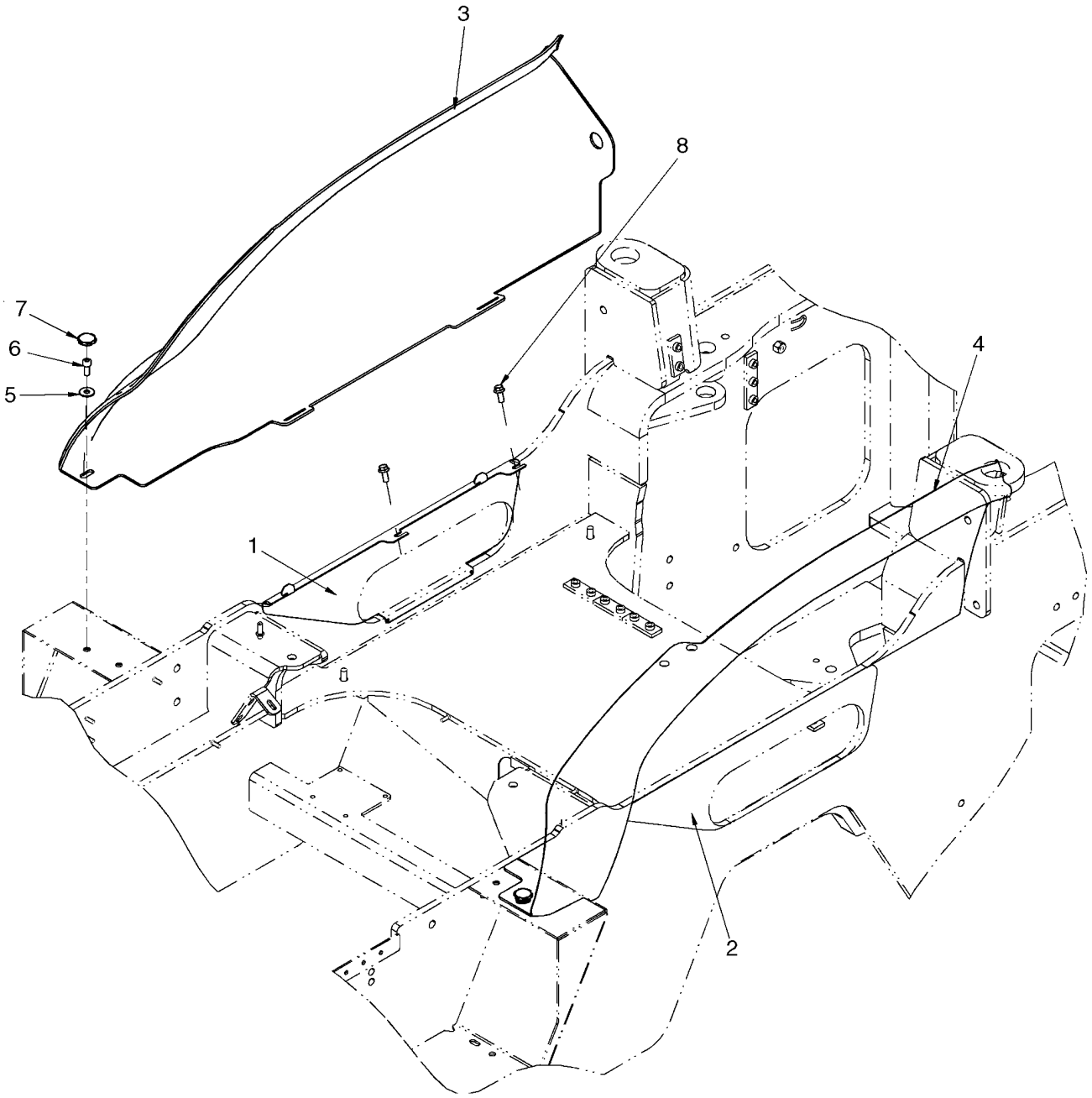

**FENDERS, REAR - GUARD**

| REF | FN | PART NUMBER | YR/SN | QTY | DESCRIPTION |
|---|---|---|---|---|---|
| | | REF | | | INSTRUCTION, WHEEL WELLS |
| 1 | | 87591692 | | 1 | GUARD, Left Side; Case Power Tan |
| 2 | | 87597587 | | 1 | GUARD, Right Side; Case Power Tan |
| 3 | | 87360593 | | 1 | FENDER, Right Side; Case Power Tan; If Used |
| 3 | | 87360602 | | 1 | FENDER, Right Side; CNH CE Gray; If Used |
| 4 | | 87360678 | | 1 | FENDER, Left Side; Case Power Tan; If Used |
| 4 | | 87360690 | | 1 | FENDER, Left Side; CNH CE Gray; If Used |
| 5 | | 895-25010 | | 2 | WASHER, M11 x 30 x 2.5 |
| 6 | | 864-10025 | | 2 | SCREW, Hex Soc Hd, M10 x 25, 8.8 |
| 7 | | 87323866 | | 2 | KNOB, Fluted Black |
| 8 | | 844-10025 | | 4 | BOLT, Hex Flg, M10 x 25, 8.8, Full Thd |

**STEPS - LEFT**

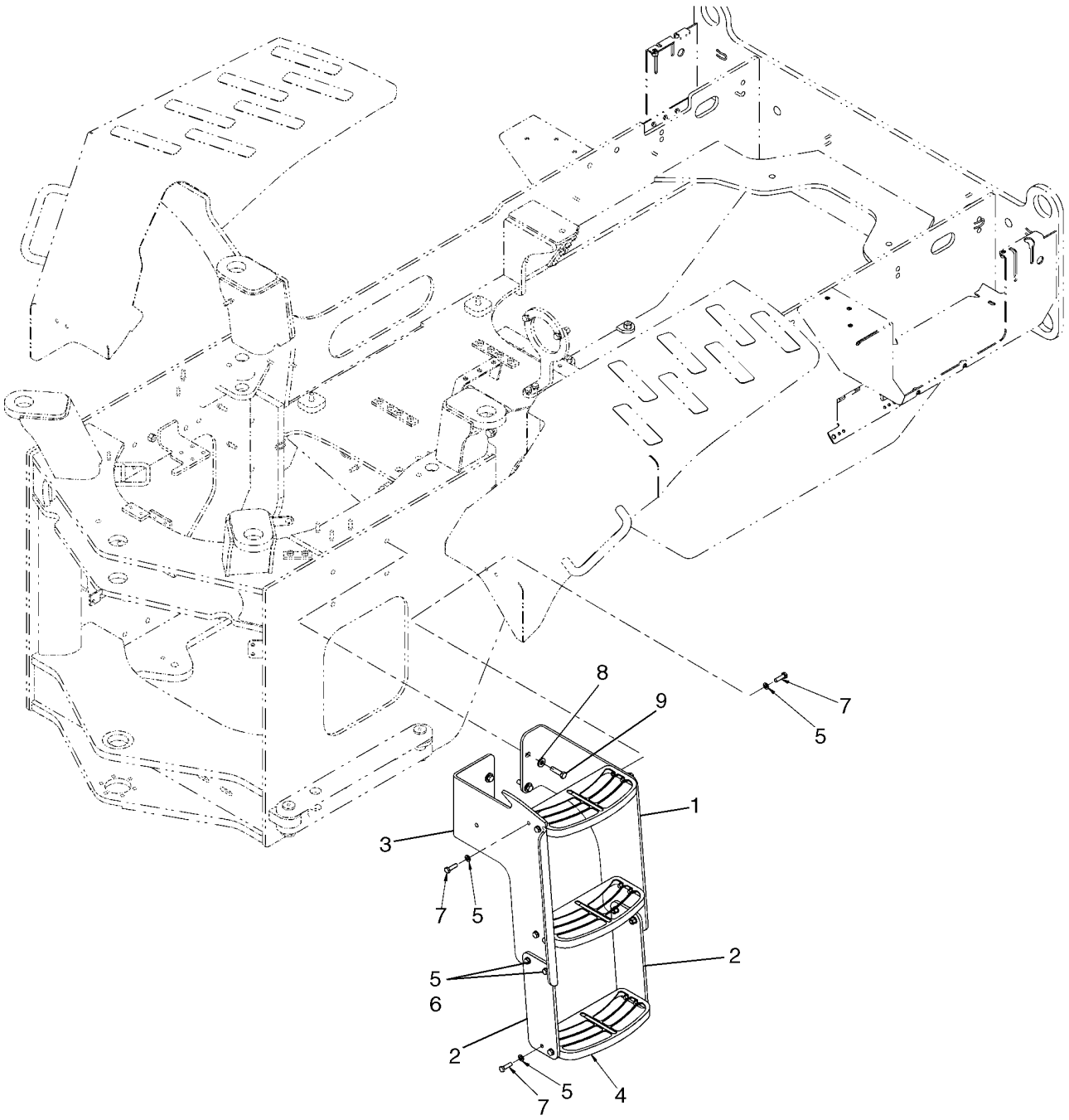

**STEPS - LEFT**

| REF | FN | PART NUMBER | YR/SN | QTY | DESCRIPTION |
|---|---|---|---|---|---|
| 1 | | 87559796 | | 1 | BRACKET, LH Step Support |
| 2 | | 87559798 | | 2 | STRAP |
| 3 | | 87663487 | | 1 | BRACKET, SUPPORTING, LH Step Support |
| 4 | | 87434472 | | 3 | STEP |
| 5 | | 895-11010 | | 32 | WASHER, M10 x 20 x 2 |
| 6 | | 832-10410 | | 16 | NUT, LOCK, M10 x 1.5, Cl 8 |
| 7 | | 627-10035 | | 16 | BOLT, Hex, M10 x 35, 10.9, Full Thd |
| 8 | | 896-15012 | | 4 | WASHER, M12 x 28.5 x 4, HT |
| 9 | | 627-12045 | | 4 | BOLT, Hex, M12 x 45, 10.9, Full Thd |

| 09-25 | | p1 | 08/07 |
|---|---|---|---|

**STEPS - RIGHT**

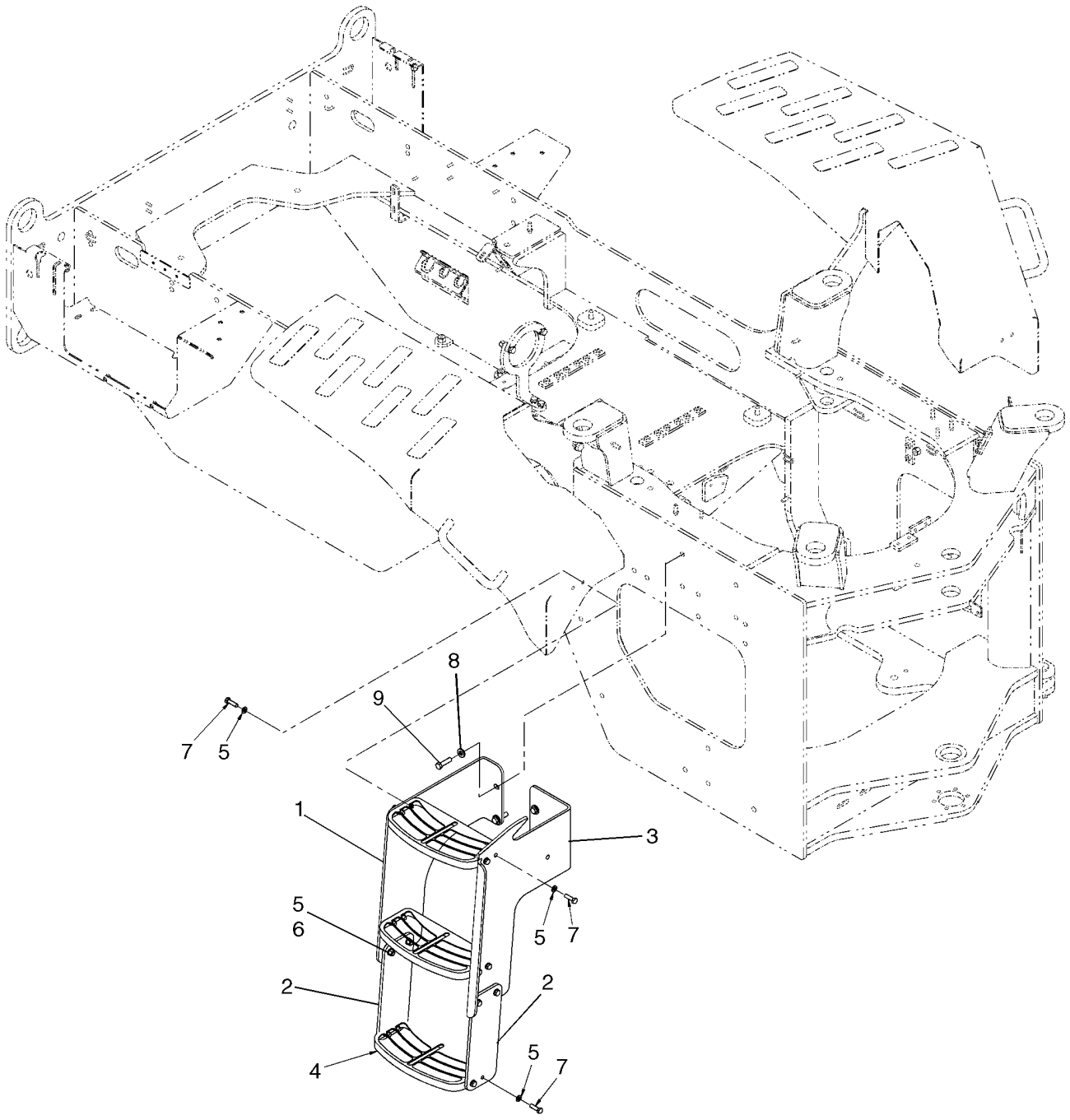


BS07E456

**STEPS - RIGHT**

| REF | FN | PART NUMBER | YR/SN | QTY | DESCRIPTION |
|---|---|---|---|---|---|
| 1 | | 87579386 | | 1 | BRACKET, RH Step Support |
| 2 | | 87559798 | | 2 | STRAP |
| 3 | | 87663490 | | 1 | BRACKET, SUPPORTING, RH Step |
| 4 | | 87434472 | | 3 | STEP |
| 5 | | 895-11010 | | 32 | WASHER, M10 x 20 x 2 |
| 6 | | 832-10410 | | 16 | NUT, LOCK, M10 x 1.5, Cl 8 |
| 7 | | 627-10035 | | 16 | BOLT, Hex, M10 x 35, 10.9, Full Thd |
| 8 | | 896-15012 | | 4 | WASHER, M12 x 28.5 x 4, HT |
| 9 | | 627-12045 | | 4 | BOLT, Hex, M12 x 45, 10.9, Full Thd |

**SOUNDPROOFING - ENGINE**

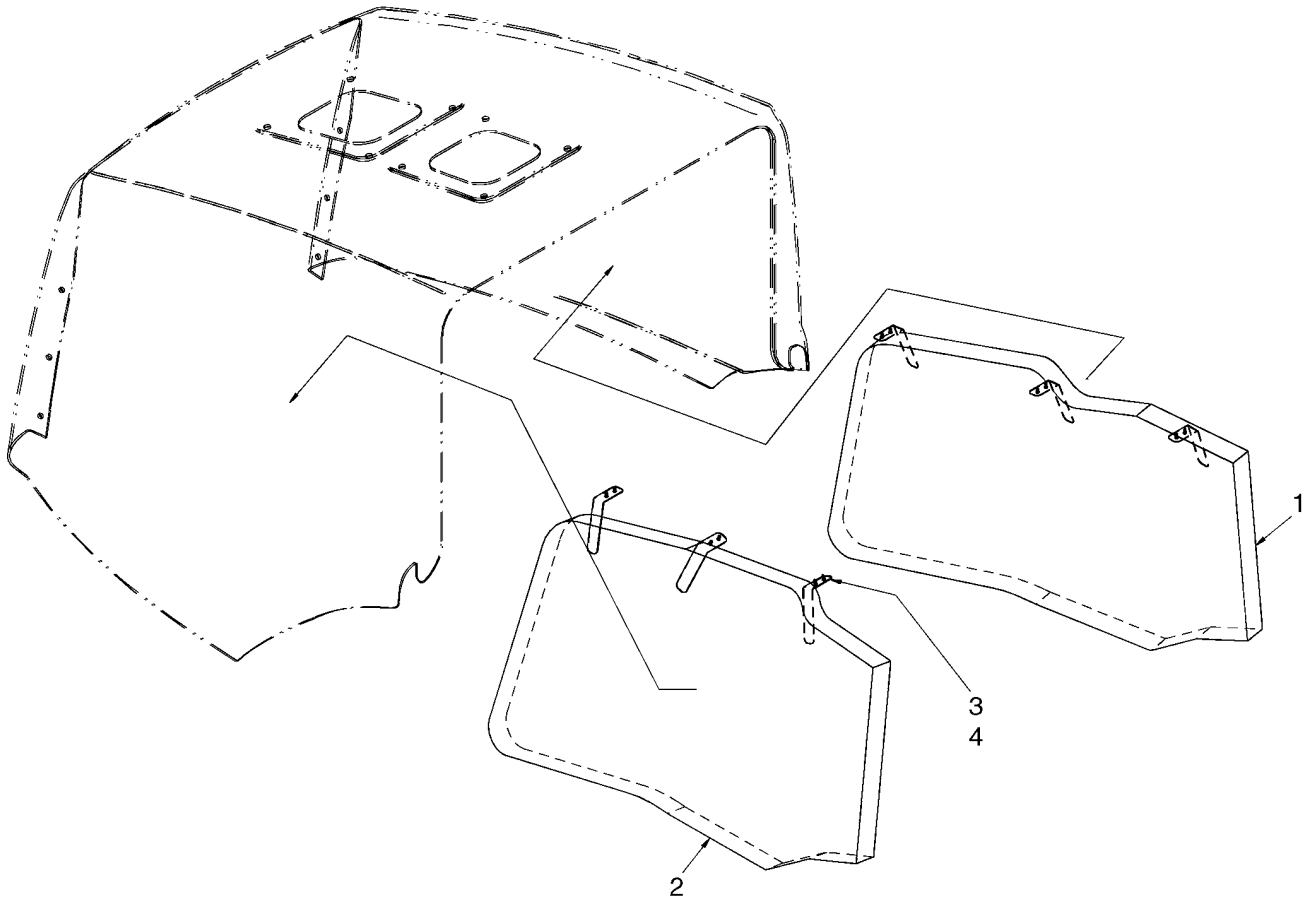


BS07G085

**SOUNDPROOFING - ENGINE**

| REF | FN | PART NUMBER | YR/SN | QTY | DESCRIPTION |
|---|---|---|---|---|---|
| 1 | | 8605485 | | 1 | INSULATION, FOAM, LH |
| 2 | | 8605484 | | 1 | INSULATION, FOAM, RH |
| 3 | | 8604993 | | 6 | BRACKET, Sound Insulation Hanger |
| 4 | | 760-14413 | | 12 | SCREW, SELF TAP, Pan Hd, M4.8 x 13 |

| 09-27 | | p1 | 06/07 |
|---|---|---|---|

**PLATE, SKID**

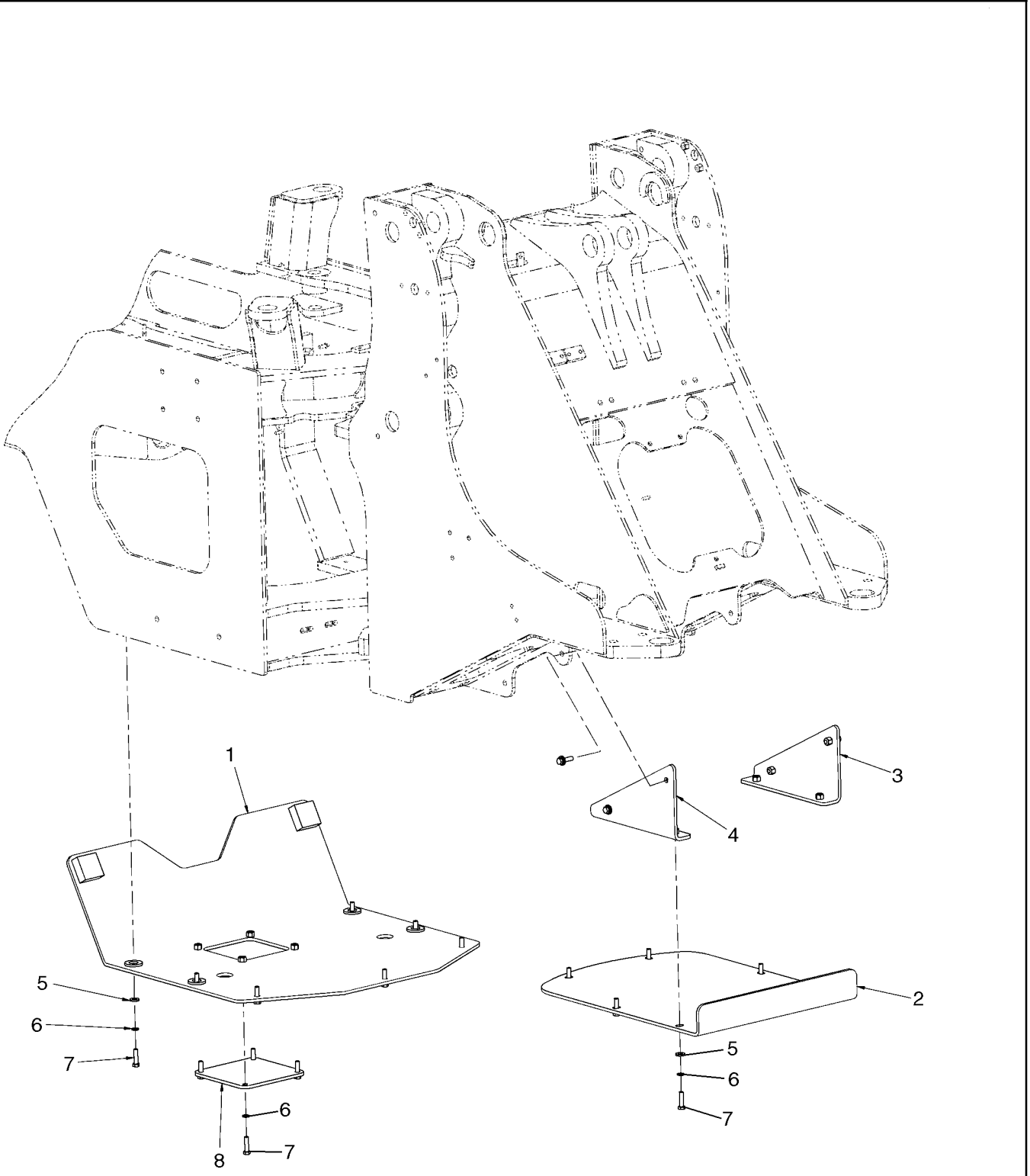

**PLATE, SKID**

| REF | FN | PART NUMBER | YR/SN | QTY | DESCRIPTION |
|---|---|---|---|---|---|
| 1 | | 87598264 | | 1 | PLATE, SKID, Rear |
| 2 | | 87597594 | | 1 | PLATE, SKID, Front |
| 3 | | 87597597 | | 1 | PLATE, SKID, Front Left |
| 4 | | 87597598 | | 1 | PLATE, SKID, Front Right |
| 5 | | 896-15012 | | 17 | WASHER, M12 x 28.5 x 4, HT |
| 6 | | 892-11012 | | 21 | WASHER, LOCK, M12 |
| 7 | | 627-12045 | | 21 | BOLT, Hex, M12 x 45, 10.9, Full Thd |
| 8 | | 87598267 | | 1 | COVER, Transmission Drain |

**CAB - MOUNTING**

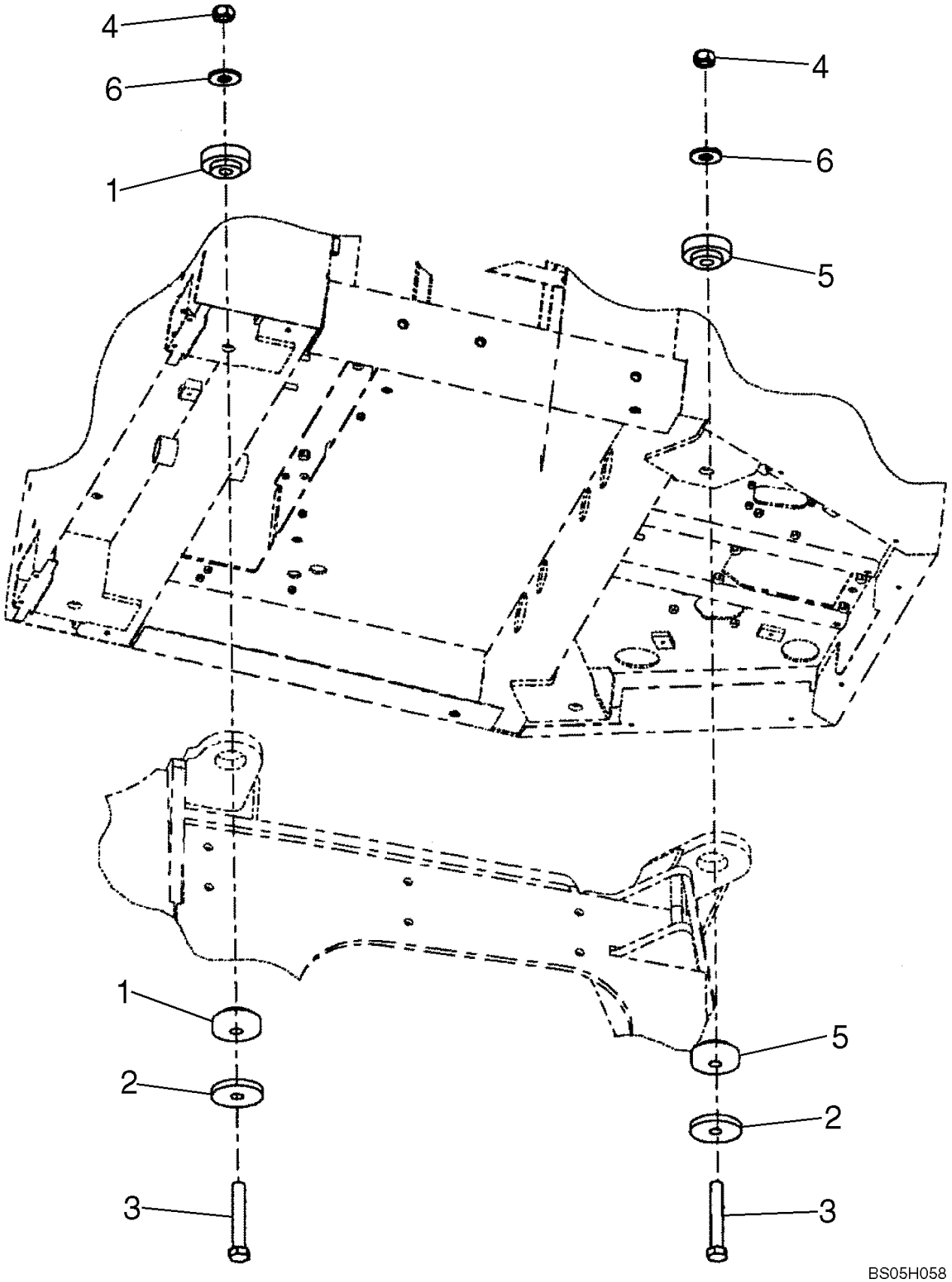

**CAB - MOUNTING**

| REF | FN | PART NUMBER | YR/SN | QTY | DESCRIPTION |
|---|---|---|---|---|---|
| 1 | | 358981A1 | | 4 | MOUNT, RUBBER, Cab/Canopy Support; Rear |
| 2 | | 1332154C1 | | 4 | WASHER, Special |
| 3 | | 326-1488 | | 4 | BOLT, Hex, 7/8"-9 x 5 1/2", G8 |
| 4 | | 329-1014 | | 4 | NUT, 7/8"-9, G8 |
| 5 | | 358982A1 | | 4 | MOUNT, RUBBER, Cab/Canopy Support; Front |
| 6 | | 396-41094 | | 4 | WASHER, 15/16" x 2 1/4" x .219", HDN |

**CAB - GLASS, FRONT**

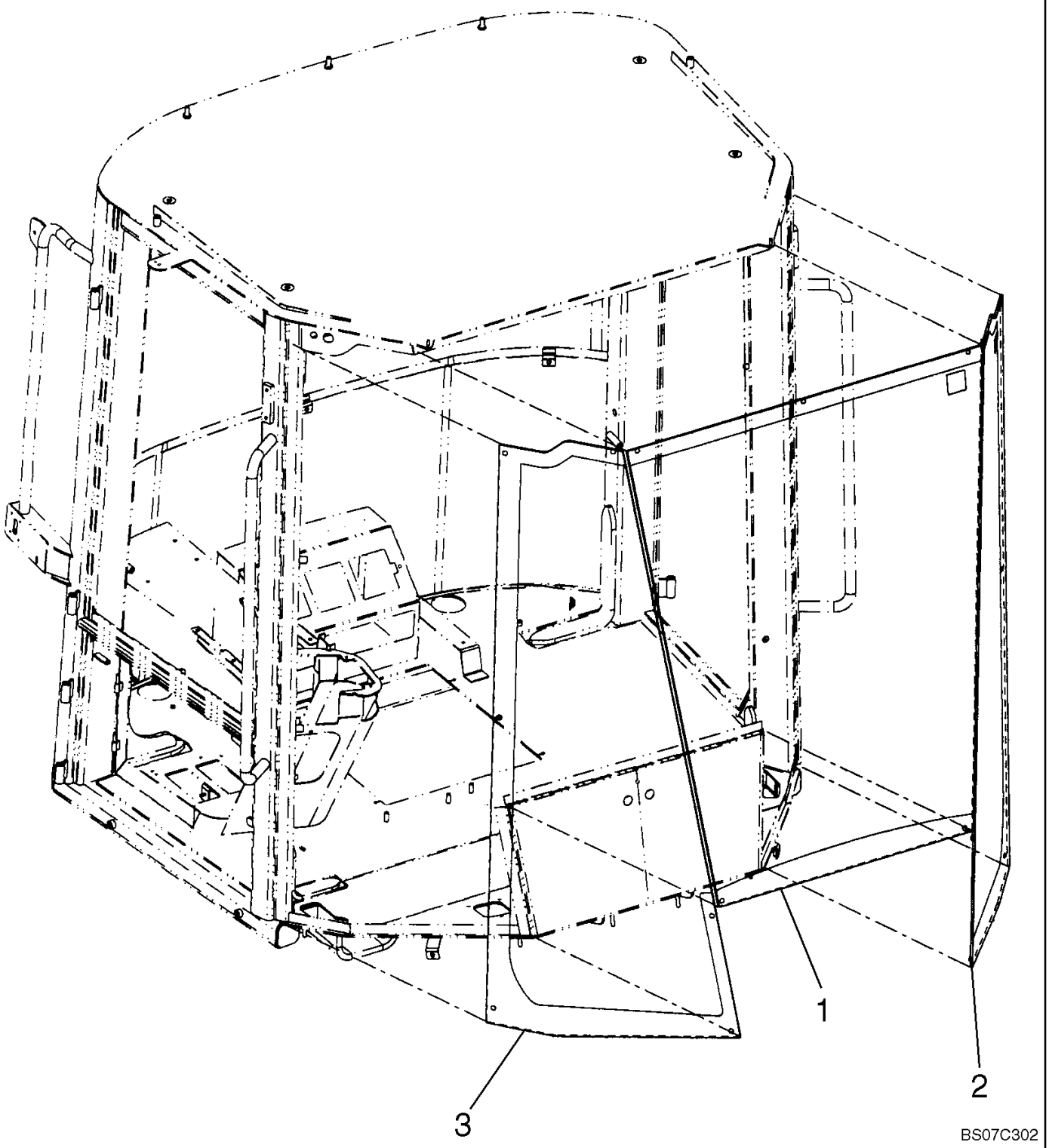

**CAB - GLASS, FRONT**

| REF | FN | PART NUMBER | YR/SN | QTY | DESCRIPTION |
|---|---|---|---|---|---|
| 1 | | 76303237 | | 1 | GLASS, Front Center |
| 2 | | 76303238 | | 1 | GLASS, Front Left |
| 3 | | 76303239 | | 1 | GLASS, Front Right |
| 4 | | 322197950 | | 17 | SPACER, DIA. 11, Not Illustrated |
| 5 | | {345-101-B} | | AR | SEALANT, Dow 732RTV Silicone, Clear, Not Illustrated |
| 6 | | {87337003} | | AR | ADHESIVE, BULK, Not Illustrated |
| 7 | | {87324751} | | AR | ACTIVATOR, Sika UH-2, Not Illustrated |

**CAB - GLASS, REAR**

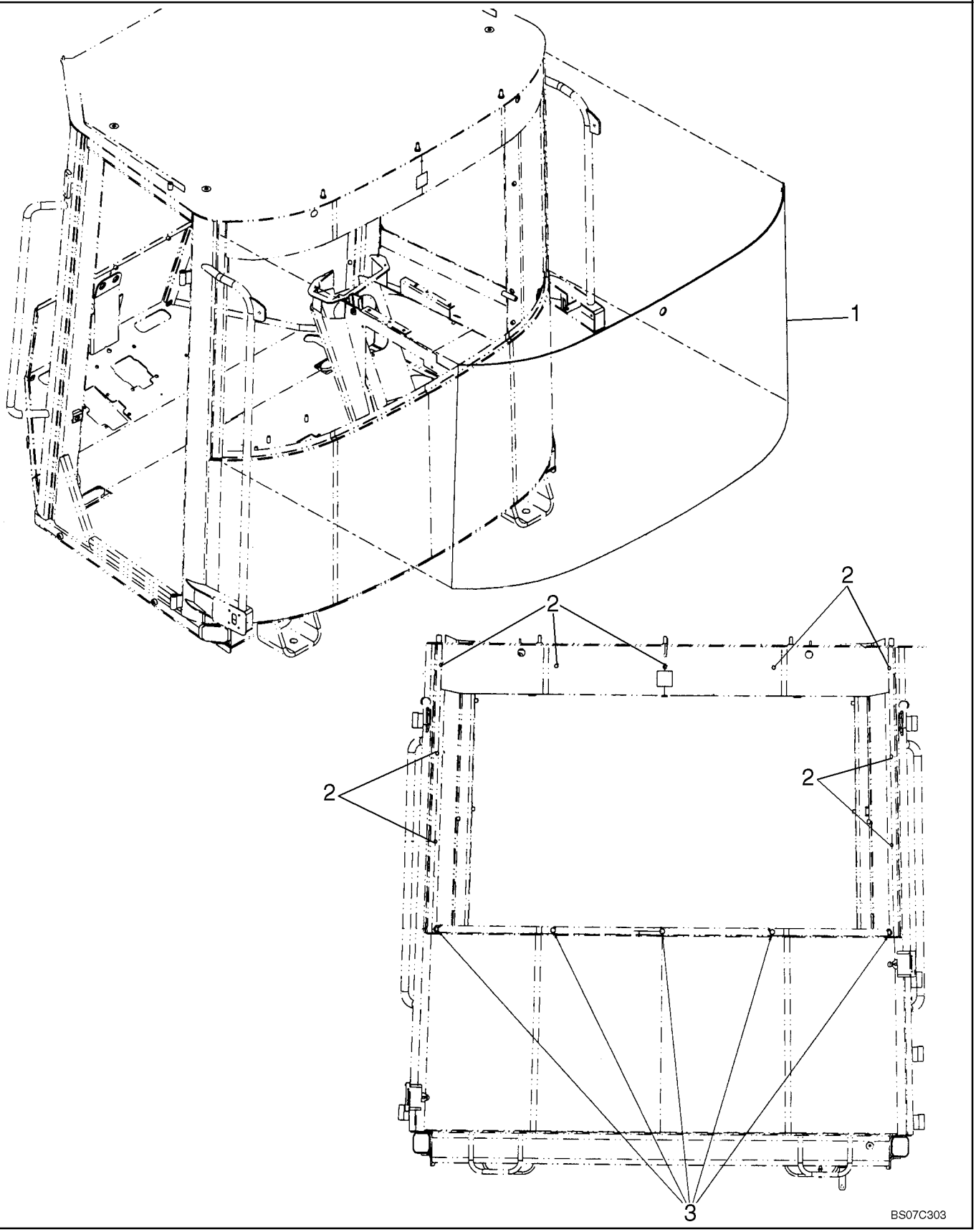

**CAB - GLASS, REAR**

| REF | FN | PART NUMBER | YR/SN | QTY | DESCRIPTION |
|---|---|---|---|---|---|
| 1 | | 76303171 | | 1 | GLASS, Rear |
| 2 | | 322197950 | | 9 | SPACER, DIA. 11 |
| 3 | | 76303582 | | 5 | SPACER, DIA. 16 |
| 4 | | {87337003} | | AR | ADHESIVE, BULK, Sika Tack Ultrafast, Not Illustrated |
| 5 | | {87324751} | | AR | ACTIVATOR, Sika UH-2 LUM, Not Illustrated |

| 09-31 | | p1 | 08/07 |
|---|---|---|---|

**CAB - INTERIOR TRIM**

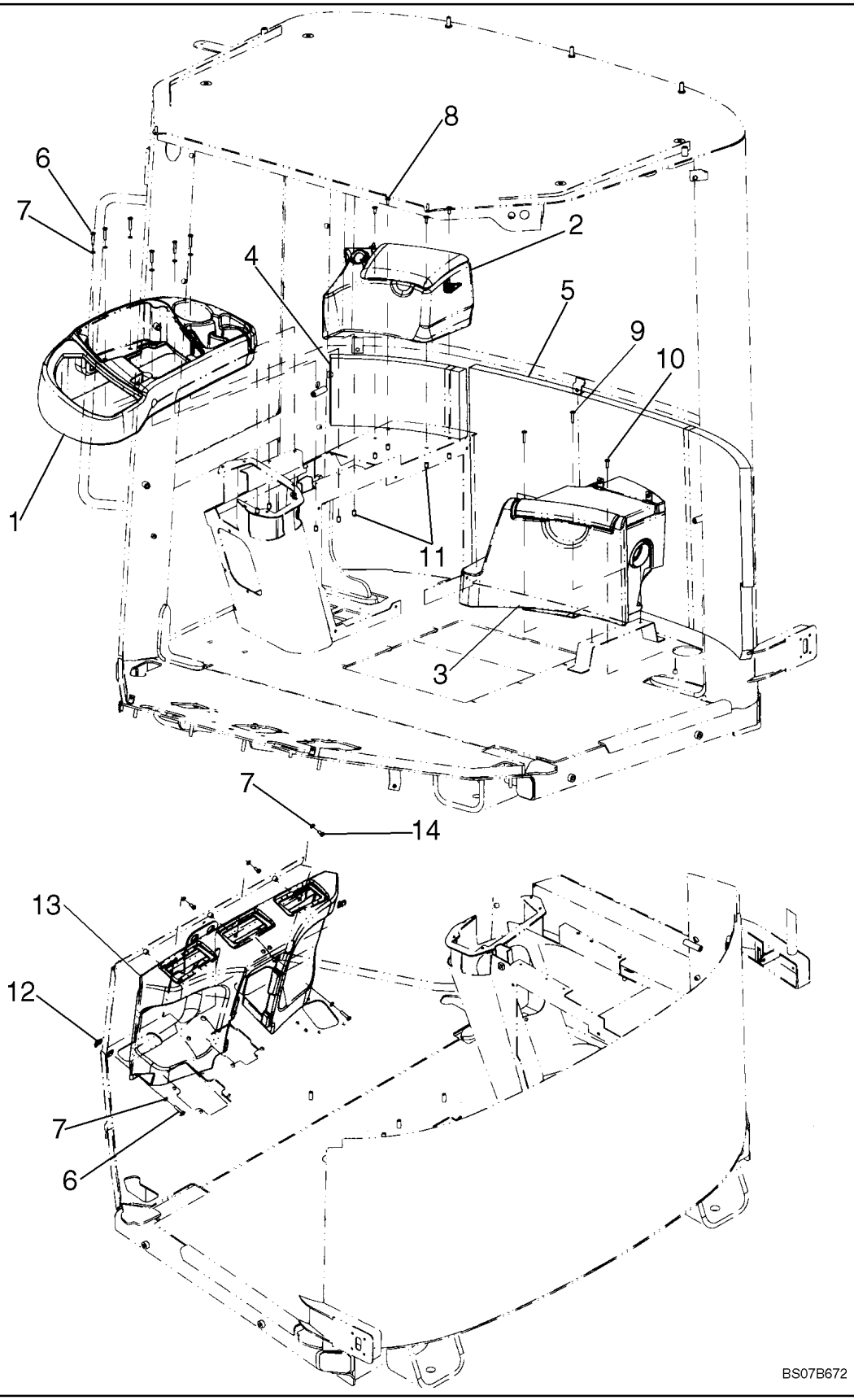

**CAB - INTERIOR TRIM**

| REF | FN | PART NUMBER | YR/SN | QTY | DESCRIPTION |
|---|---|---|---|---|---|
| 1 | | 76303033 | | 1 | CONSOLE, RH |
| 2 | | {76303042} | | 1 | STORAGE BOX |
| 3 | | {76303013} | | 1 | COOL BOX |
| 4 | | {76303425} | | 1 | REAR PANEL |
| 5 | | 76303422 | | 1 | PANEL, Rear |
| 6 | | 840-1630 | | 8 | SCREW, Cross Pan Hd, M6 x 30 |
| 7 | | 895-11006 | | 11 | WASHER, M6 |
| 8 | | 847-3616 | | 4 | SCREW, Sltd Tr Hd, M6 x 16, 10.9, Serr |
| 9 | | 86503049 | | 2 | SCREW, Cross Oval Hd, M6 x 30 |
| 10 | | {14778414} | | 1 | SCREW, M6x20 |
| 11 | | 76046110 | | 10 | GROMMET, M6 |
| 12 | | 833-40306 | | 2 | NUT, M6, U |
| 13 | | 76303040 | | 1 | CONSOLE, Front |
| 14 | | 614-6012 | | 3 | BOLT, Hex, M6 x 12, 8.8 |

**CAB - INTERIOR TRIM - COLUMNS**

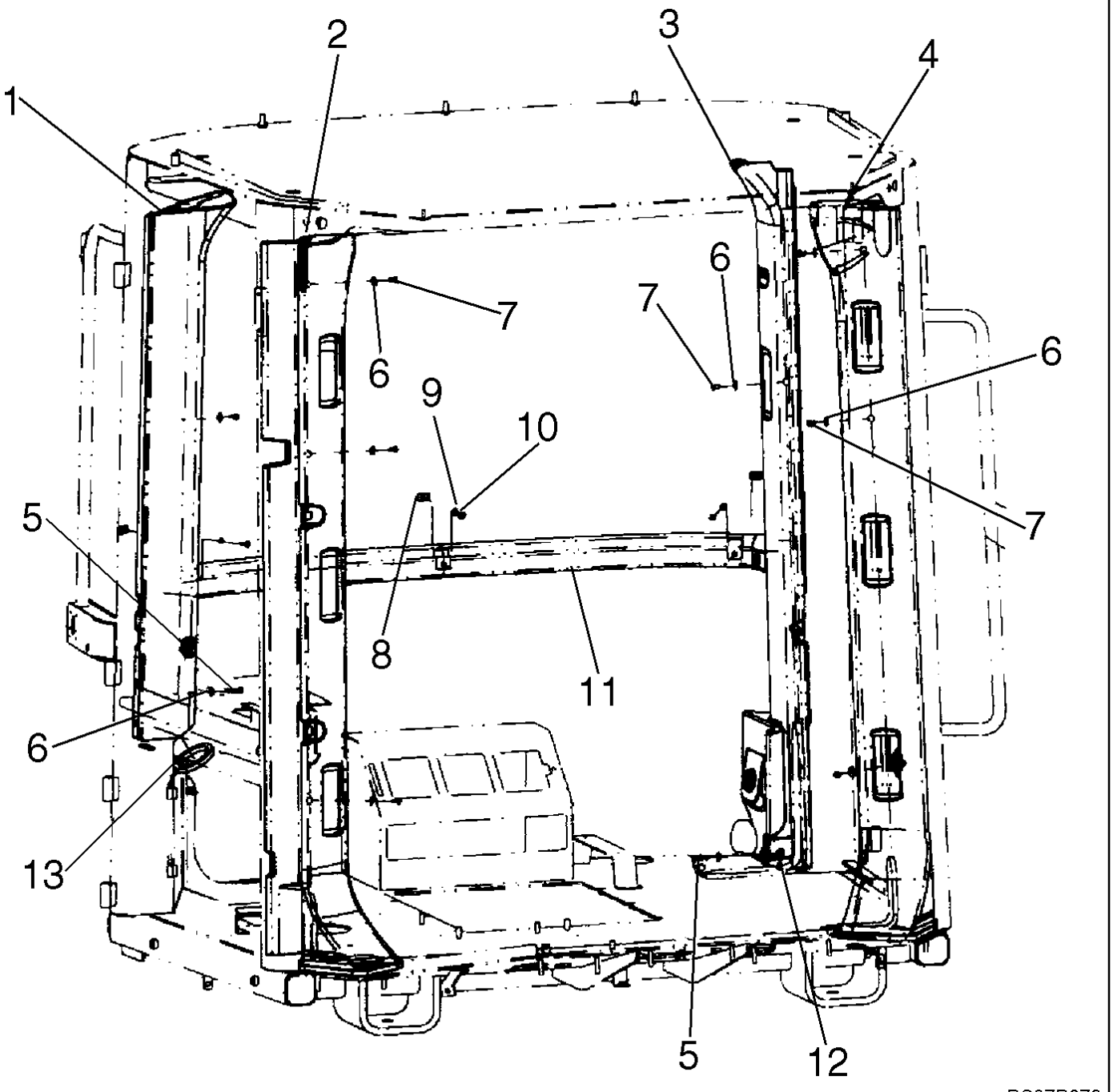

**CAB - INTERIOR TRIM - COLUMNS**

| REF | FN | PART NUMBER | YR/SN | QTY | DESCRIPTION |
|---|---|---|---|---|---|
| 1 | | 76303037 | | 1 | TRIM PANEL, Rear RH |
| 2 | | 76303039 | | 1 | PILLAR, Front RH |
| 3 | | 76303036 | | 1 | TRIM PANEL, Rear LH |
| 4 | | 76303038 | | 1 | TRIM PANEL, Front LH |
| 5 | | 840-1630 | | 2 | SCREW, Cross Pan Hd, M6 x 30 |
| 6 | | 895-25006 | | 10 | WASHER, M6 x 18 x 1.6 |
| 7 | | 840-1612 | | 7 | SCREW, Cross Pan Hd, M6 x 12 |
| 8 | | 833-40306 | | 3 | NUT, M6, U |
| 9 | | 895-11006 | | 3 | WASHER, M6 |
| 10 | | 840-1616 | | 3 | SCREW, Cross Pan Hd, M6 x 16 |
| 11 | | 76303029 | | 1 | COVER, Rear |
| 12 | | 76301020 | | 1 | NUT, Spring M6 |
| 13 | | {76303500} | | 1 | GASKET LH |

**CAB - INTERIOR TRIM - ROOF**

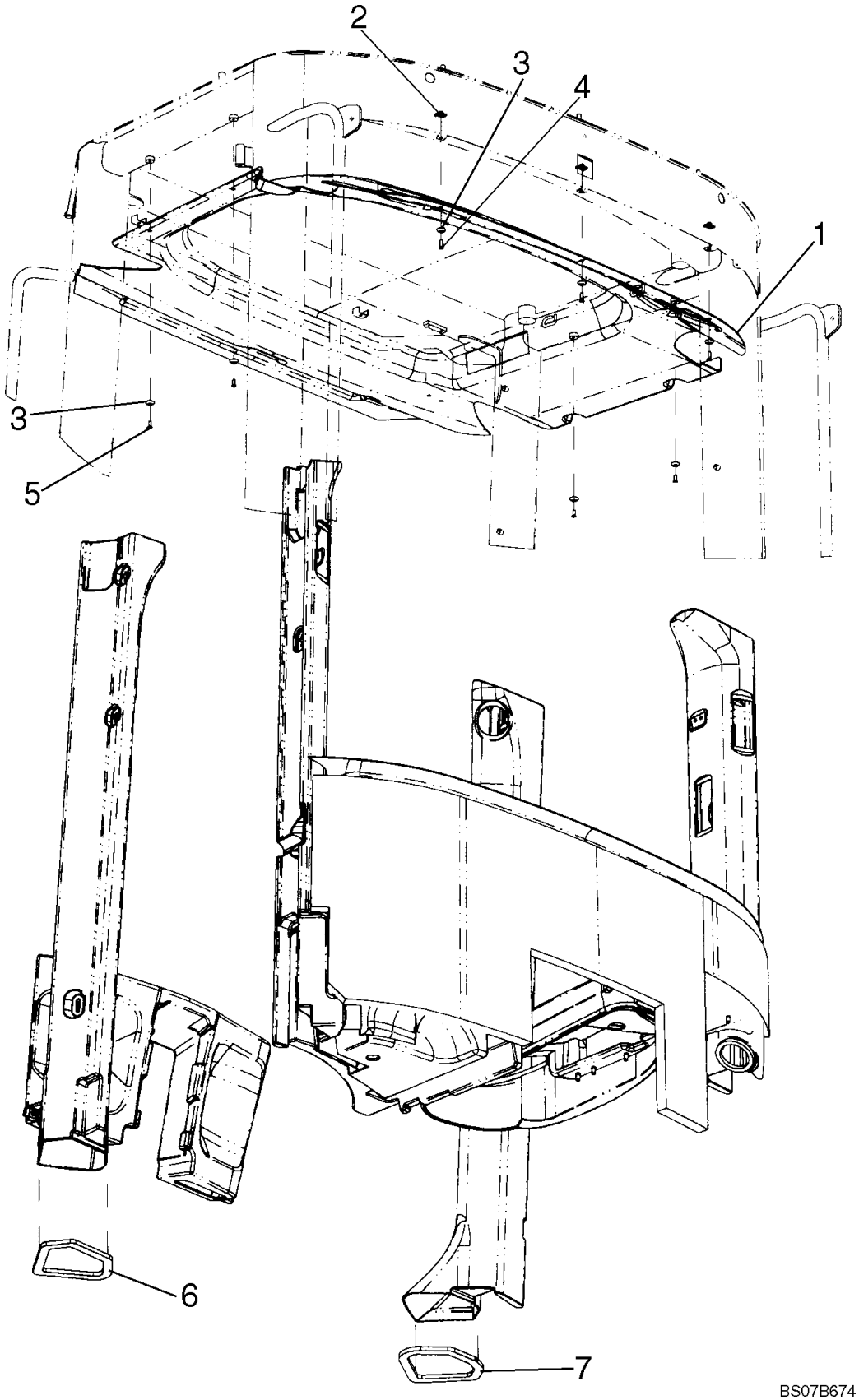

**CAB - INTERIOR TRIM - ROOF**

| REF | FN | PART NUMBER | YR/SN | QTY | DESCRIPTION |
|---|---|---|---|---|---|
| 1 | | 76303481 | | 1 | LINING, ROOF |
| 2 | | 833-40306 | | 3 | NUT, M6, U |
| 3 | | 79076208 | | 7 | WASHER |
| 4 | | 13313017 | | 3 | SCREW, Cross Oval Hd, M6 x 16 |
| 5 | | 13313017 | | 4 | SCREW, Cross Oval Hd, M6 x 16 |
| 6 | | 76303521 | | 1 | GASKET, LH |
| 7 | | 76303522 | | 1 | GASKET, RH |

| 09-32 | | p1 | 07/07 |
|---|---|---|---|

**CAB - EXTERIOR TRIM**

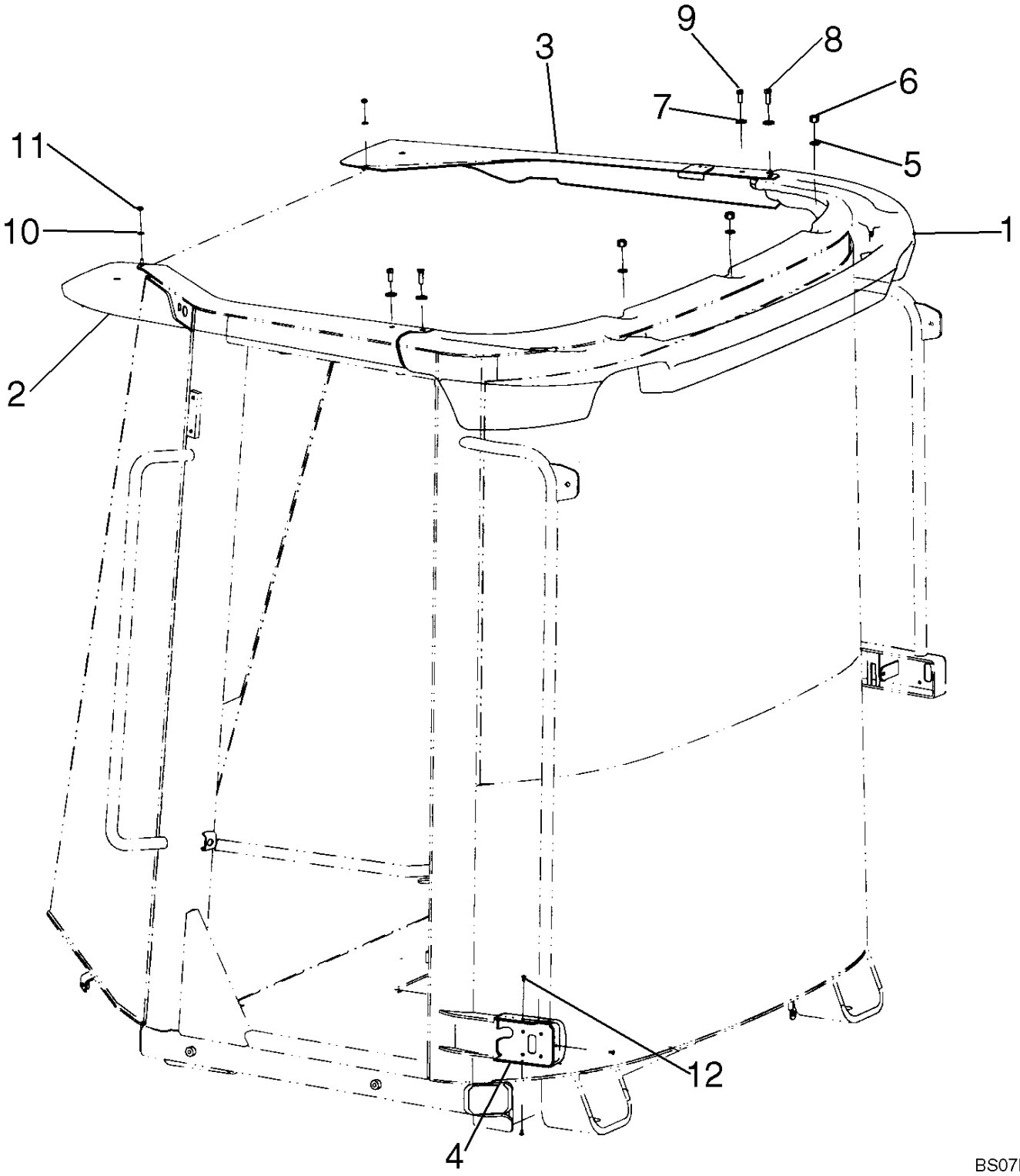

**CAB - EXTERIOR TRIM**

| REF | FN | PART NUMBER | YR/SN | QTY | DESCRIPTION |
|---|---|---|---|---|---|
| 1 | | 76303024 | | 1 | MOULDING, DOOR SILL, Rear |
| 2 | | 76303194 | | 1 | MOULDING, DOOR SILL, Left Front |
| 3 | | 76303195 | | 1 | MOULDING, DOOR SILL, Right Front |
| 4 | | 76303025 | | 1 | BRACKET, Door Latch |
| 5 | | {87664050} | | 3 | WASHER, 11 x 20 x 2 mm |
| 6 | | {87664047} | | 3 | NUT, M10 CL8 |
| 7 | | {87664051} | | 4 | WASHER, 9 x 24 x 2 mm |
| 8 | | 16043624 | | 2 | BOLT, Hex, M8 x 25, 8.8, Full Thd |
| 9 | | 16043424 | | 2 | BOLT, Hex, M8 x 20, 8.8, Full Thd |
| 10 | | {87664048} | | 2 | WASHER, 6.6 x 12 x 1.6 mm |
| 11 | | 15896214 | | 2 | NUT, M6, Cl 8 |
| 12 | | {87664046} | | 3 | SCREW, M4 x 8 |

**CAB - WINDOW, RIGHT-HAND-UPPER**

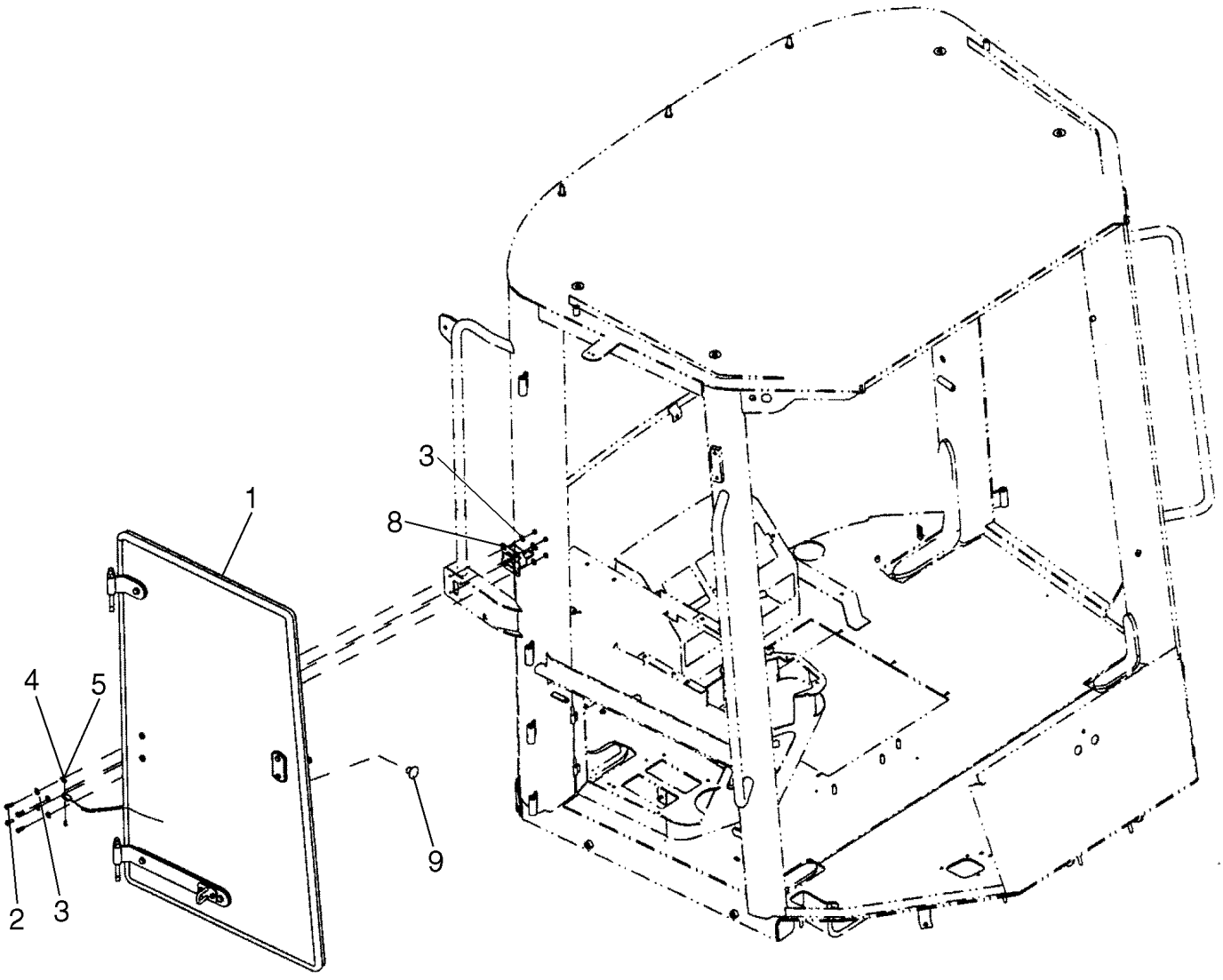

**CAB - WINDOW, RIGHT-HAND-UPPER**

| REF | FN | PART NUMBER | YR/SN | QTY | DESCRIPTION |
|---|---|---|---|---|---|
| 1 | | {87644535} | | 1 | WINDOW ASSY. See Figure 09-33A |
| 2 | | 10902224 | | 4 | BOLT, Hex, M6 x 16, 8.8, Full Thd |
| 3 | | {87664049} | | 8 | WASHER |
| 4 | | 895-11005 | | 1 | WASHER, M5 x 10 x 1 |
| 5 | | 732-1610 | | 1 | PIN, SPLIT (COTTER), M1.6 x 10 |
| 6 | | 71485274 | | 1 | PIN |
| 7 | | 76303590 | | 1 | CABLE, Window Unlock; Not Illustrated |
| 8 | | 4227178 | | 1 | LOCK, Not Illustrated |
| 9 | | 76303157 | | 1 | KNOB |

| 09-33A | | p1 | 07/07 |
|---|---|---|---|

**CAB - WINDOW, RIGHT-HAND-UPPER**

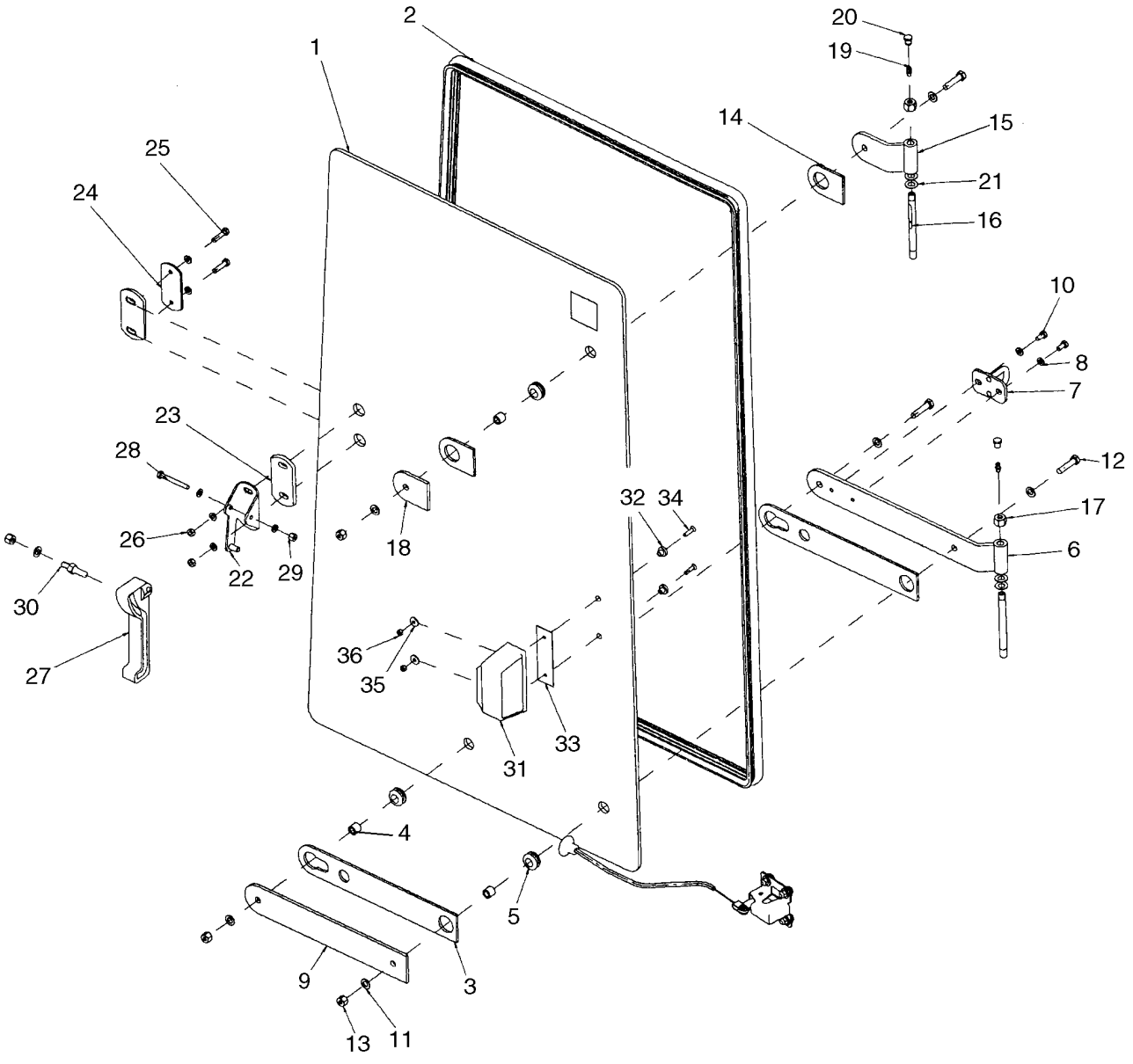

**CAB - WINDOW, RIGHT-HAND-UPPER**

| REF | FN | PART NUMBER | YR/SN | QTY | DESCRIPTION |
|---|---|---|---|---|---|
| | | {87644535} | | 1 | WINDOW ASSY. Incl. Refs. 1 - 15, 18, 22 - 36 |
| 1 | | 76303230 | | 1 | GLASS |
| 2 | | 76303242 | | 1 | SEAL |
| 3 | | 76303159 | | 2 | GASKET |
| 4 | | 816213301 | | 3 | SPACER |
| 5 | | 4227144 | | 3 | RING, RUBBER |
| 6 | | 76303231 | | 1 | HINGE |
| 7 | | 76303154 | | 1 | BRACKET |
| 8 | | {87664048} | | 8 | WASHER, 6.6 x 12 x 1.6 mm |
| 9 | | 76303210 | | 1 | PLATE |
| 10 | | 10902024 | | 2 | BOLT, Hex, M6 x 12, 8.8, Full Thd |
| 11 | | {87664049} | | 7 | WASHER, 9 x 16 x 1.6 mm |
| 12 | | 16044024 | | 3 | BOLT, Hex, M8 x 40, 8.8 |
| 13 | | 832-10408 | | 4 | NUT, LOCK, M8 x 1.25, Cl 8 |
| 14 | | 76303193 | | 2 | GASKET |
| 15 | | 76303248 | | 1 | HINGE |
| 16 | | 3805129 | | 2 | PIN |
| 17 | | 832-10410 | | 2 | NUT, LOCK, M10 x 1.5, Cl 8 |
| 18 | | 76303192 | | 1 | PLATE |
| 19 | | 76043510 | | 2 | CONNECTOR, HYD. |
| 20 | | 1498088 | | 2 | NIPPLE, LUBE, Grease |
| 21 | | F64046 | | 4 | WASHER, Thrust |
| 22 | | 76303250 | | 1 | BRACKET |
| 23 | | 87522593 | | 2 | GASKET |
| 24 | | 76303323 | | 1 | PLATE |
| 25 | | 10902624 | | 2 | BOLT, Hex, M6 x 25, 8.8, Full Thd |
| 26 | | 825-1406 | | 6 | NUT, M6, Cl 8 |
| 27 | | 76043538 | | 1 | HANDLE |
| 28 | | 827-6060 | | 1 | BOLT, Hex, M6 x 60, 10.9 |
| 29 | | 832-10406 | | 1 | NUT, LOCK, M6 x 1, Cl 8 |
| 30 | | 3805251 | | 1 | PIN |
| 31 | | 97399C1 | | 1 | HANDLE |
| 32 | | F64198 | | 2 | BUSHING |
| 33 | | R54047 | | 1 | PAD |
| 34 | | {87629047} | | 2 | SCREW, M5 x 20 |

**CAB - WINDOW, RIGHT-HAND-UPPER**

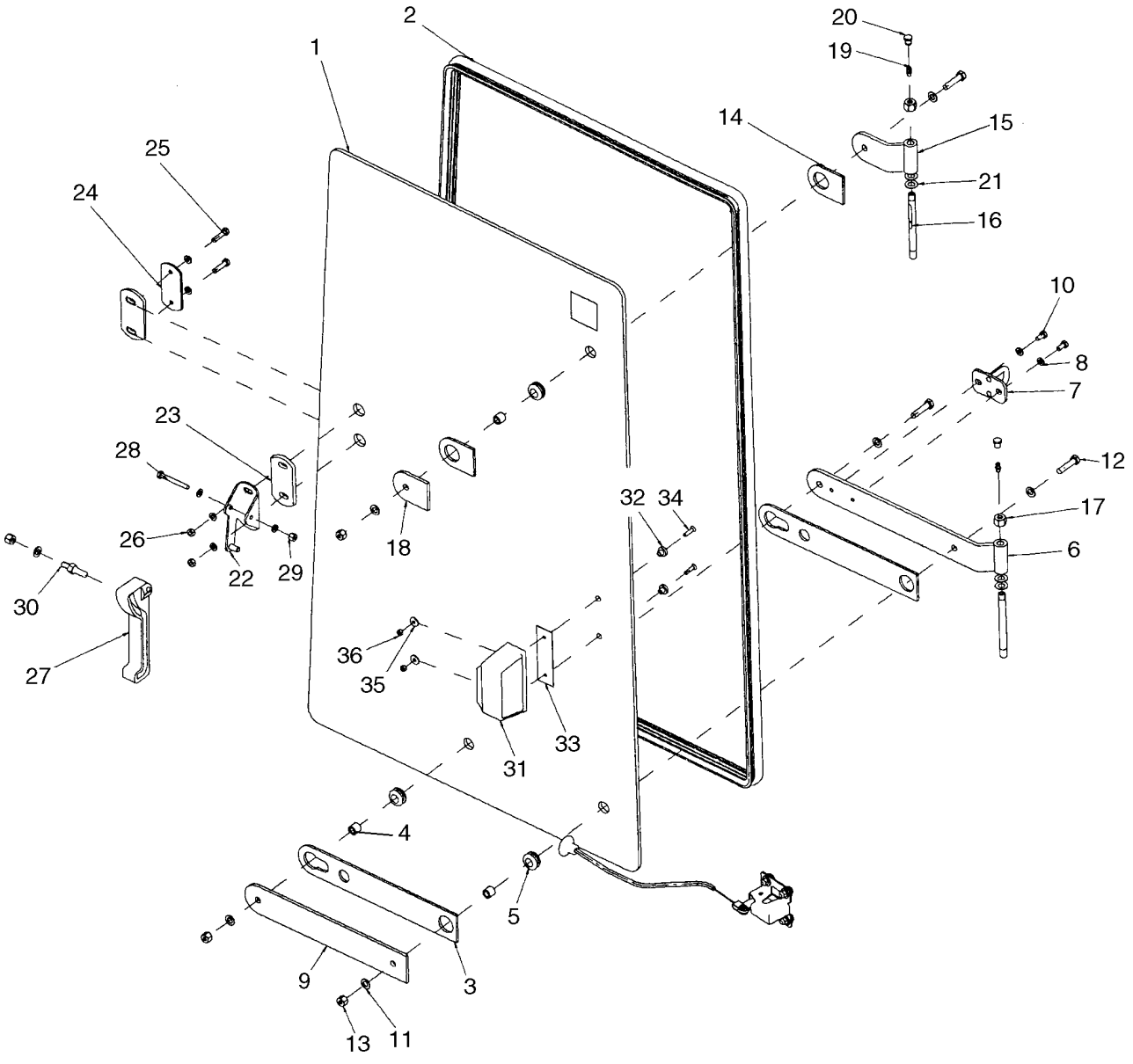

**CAB - WINDOW, RIGHT-HAND-UPPER**

| REF | FN | PART NUMBER | YR/SN | QTY | DESCRIPTION |
|---|---|---|---|---|---|
| 35 | | 895-25005 | | 2 | WASHER, M5 x 15 x 1.6 |
| 36 | | 825-1405 | | 2 | NUT, M5, Cl 8 |

| 09-34 | | p1 | 07/07 |
|---|---|---|---|

**CAB - WINDOW, RIGHT-HAND-LOWER**

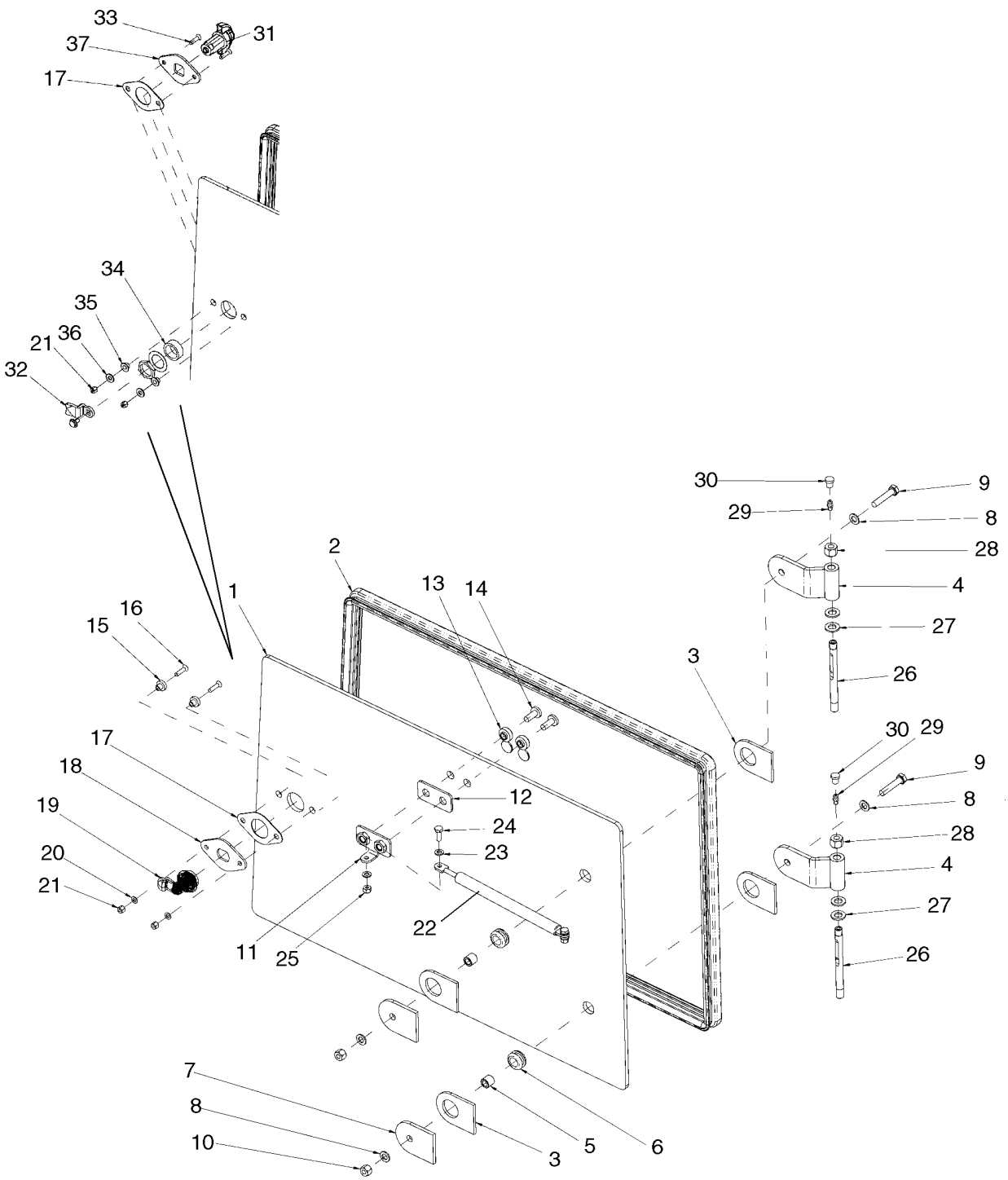

**CAB - WINDOW, RIGHT-HAND-LOWER**

| REF | FN | PART NUMBER | YR/SN | QTY | DESCRIPTION |
|---|---|---|---|---|---|
| 1 | | 76303460 | | 1 | GLASS |
| 2 | | 76303240 | | 1 | SEAL |
| 3 | | 76303193 | | 4 | GASKET |
| 4 | | 76303248 | | 2 | HINGE |
| 5 | | 816213301 | | 2 | SPACER |
| 6 | | 4227144 | | 2 | RING, RUBBER |
| 7 | | 76303192 | | 2 | PLATE |
| 8 | | {87664049} | | 4 | WASHER |
| 9 | | 16044024 | | 2 | BOLT, Hex, M8 x 40, 8.8 |
| 10 | | 832-10408 | | 2 | NUT, LOCK, M8 x 1.25, Cl 8 |
| 11 | | 76303463 | | 1 | BRACKET |
| 12 | | 76303461 | | 1 | GASKET |
| 13 | | 87537993 | | 2 | CAP |
| 14 | | 840-1820 | | 2 | SCREW, Cross Pan Hd, M8 x 20 |
| 15 | | F64198 | | 2 | BUSHING |
| 16 | | 13311217 | | 2 | SCREW, Cross Oval Hd, M5 x 20 |
| 17 | | 76303458 | | 1 | GASKET |
| 18 | | 76303459 | | 1 | PLATE |
| 19 | | {76303249} | | 1 | LOCK, DOOR |
| 20 | | 895-11005 | | 2 | WASHER, M5 x 10 x 1 |
| 21 | | 832-10405 | | 2 | NUT, LOCK, M5 x .8, Cl 8 |
| 22 | | 76303455 | | 1 | GAS STRUT |
| 23 | | 895-11006 | | 4 | WASHER, M6 |
| 24 | | 614-6016 | | 2 | BOLT, Hex, M6 x 16, 8.8 |
| 25 | | 412152 | | 2 | NUT, LOCK, M6 x 1, Cl 8.8 |
| 25 | | 832-10406 | | 2 | NUT, LOCK, M6 x 1, Cl 8, If Used |
| 26 | | 3805129 | | 2 | PIN |
| 27 | | 895-11010 | | 4 | WASHER, M10 x 20 x 2 |
| 27 | | F64046 | | 4 | WASHER, Thrust, If Used |
| 28 | | 832-10410 | | 2 | NUT, LOCK, M10 x 1.5, Cl 8 |
| 29 | | 76043510 | | 2 | CONNECTOR, HYD. |
| 30 | | 1498088 | | 2 | NIPPLE, LUBE |
| 31 | | {87628359} | | 1 | LATCH, DOOR |
| 32 | | {87628360} | | 1 | PAWL, Door Latch |
| 33 | | {87629047} | | 2 | SCREW |

**CAB - WINDOW, RIGHT-HAND-LOWER**

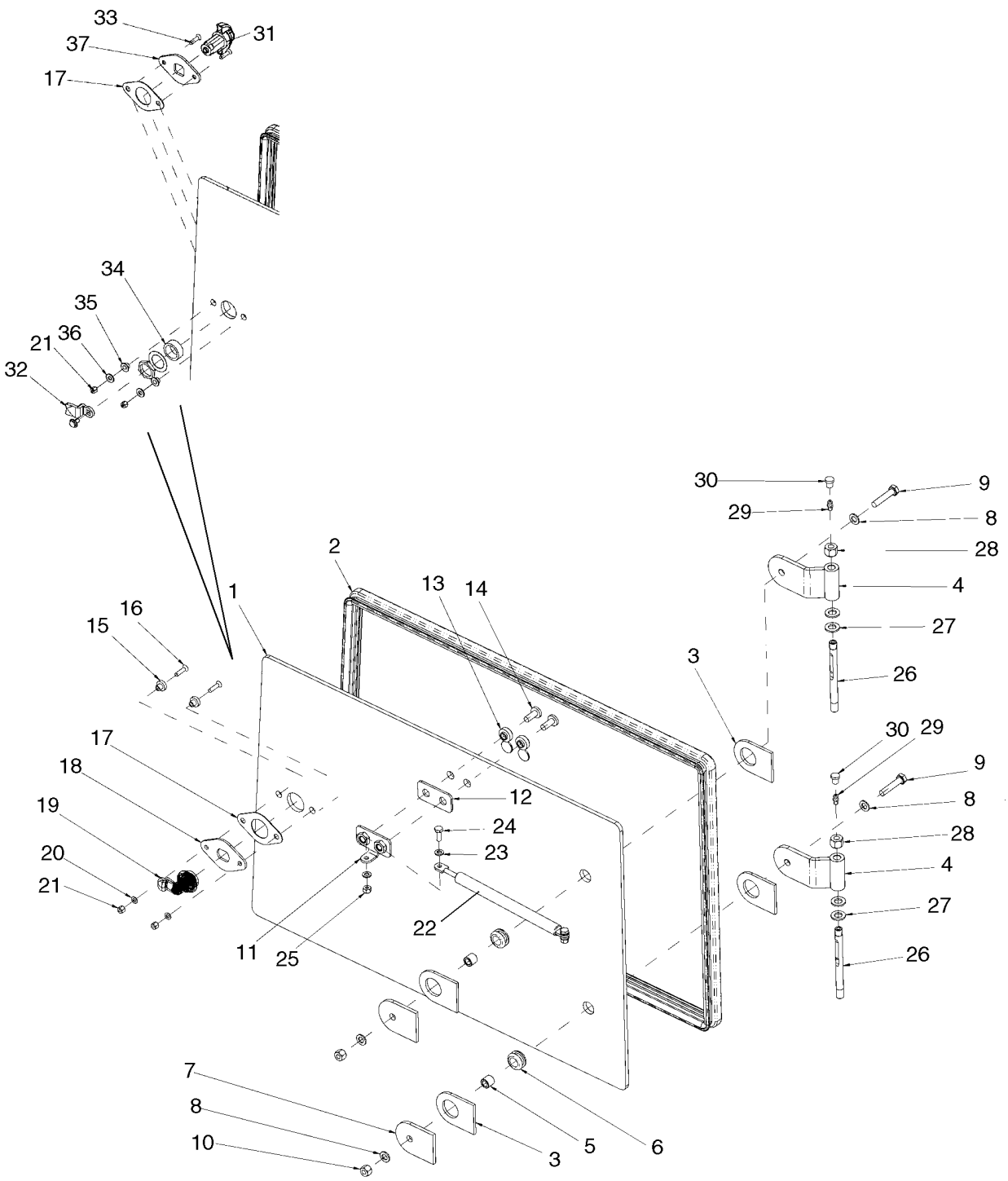

**CAB - WINDOW, RIGHT-HAND-LOWER**

| REF | FN | PART NUMBER | YR/SN | QTY | DESCRIPTION |
|---|---|---|---|---|---|
| 34 | | {87628362} | | 1 | SPACER, Door Latch |
| 35 | | 109171C1 | | 2 | BUSHING |
| 36 | | 195-81023 | | 2 | WASHER, #12 |
| 37 | | {87628364} | | 1 | PLATE, Latch Mounting |

| 09-35 | | p1 | 08/07 |
|---|---|---|---|

**CAB - DOOR MOUNTING**

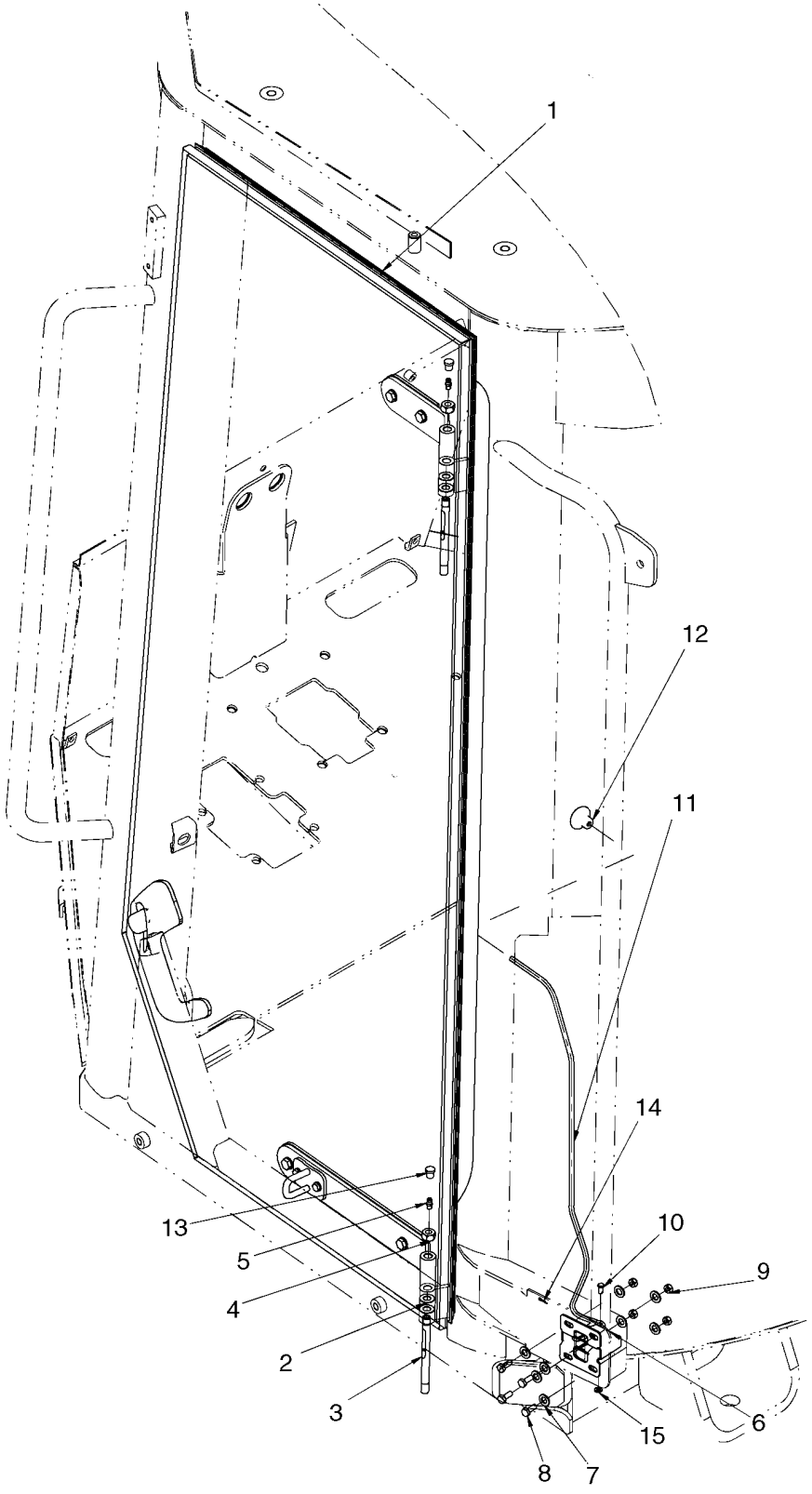

**CAB - DOOR MOUNTING**

| REF | FN | PART NUMBER | YR/SN | QTY | DESCRIPTION |
|---|---|---|---|---|---|
| 1 | | 87627075 | | 1 | DOOR, DOOR ASSY, See Figure 09-35A |
| 2 | | F64046 | | 4 | WASHER, Thrust |
| 3 | | 3805129 | | 2 | PIN |
| 4 | | 832-46410 | | 2 | NUT, LOCK, M10 x 1.5, Cl 8 |
| 5 | | 76043510 | | 2 | CONNECTOR, HYD. |
| 6 | | 4227178 | | 1 | LOCK |
| 7 | | {87664048} | | 8 | WASHER, M6.6 x 12 x 1.6 |
| 8 | | 614-6016 | | 4 | BOLT, Hex, M6 x 16, 8.8 |
| 9 | | 825-1406 | | 4 | NUT, M6, Cl 8 |
| 10 | | 71485274 | | 1 | PIN |
| 11 | | 76303589 | | 1 | CABLE |
| 12 | | 76303157 | | 1 | KNOB |
| 13 | | 1498088 | | 2 | NIPPLE, LUBE |
| 14 | | 732-1610 | | 1 | PIN, SPLIT (COTTER), M1.6 x 10 |
| 15 | | 895-11005 | | 1 | WASHER, M5 x 10 x 1 |

| 09-35A | | p1 | 08/07 |
|---|---|---|---|

**CAB - DOOR**

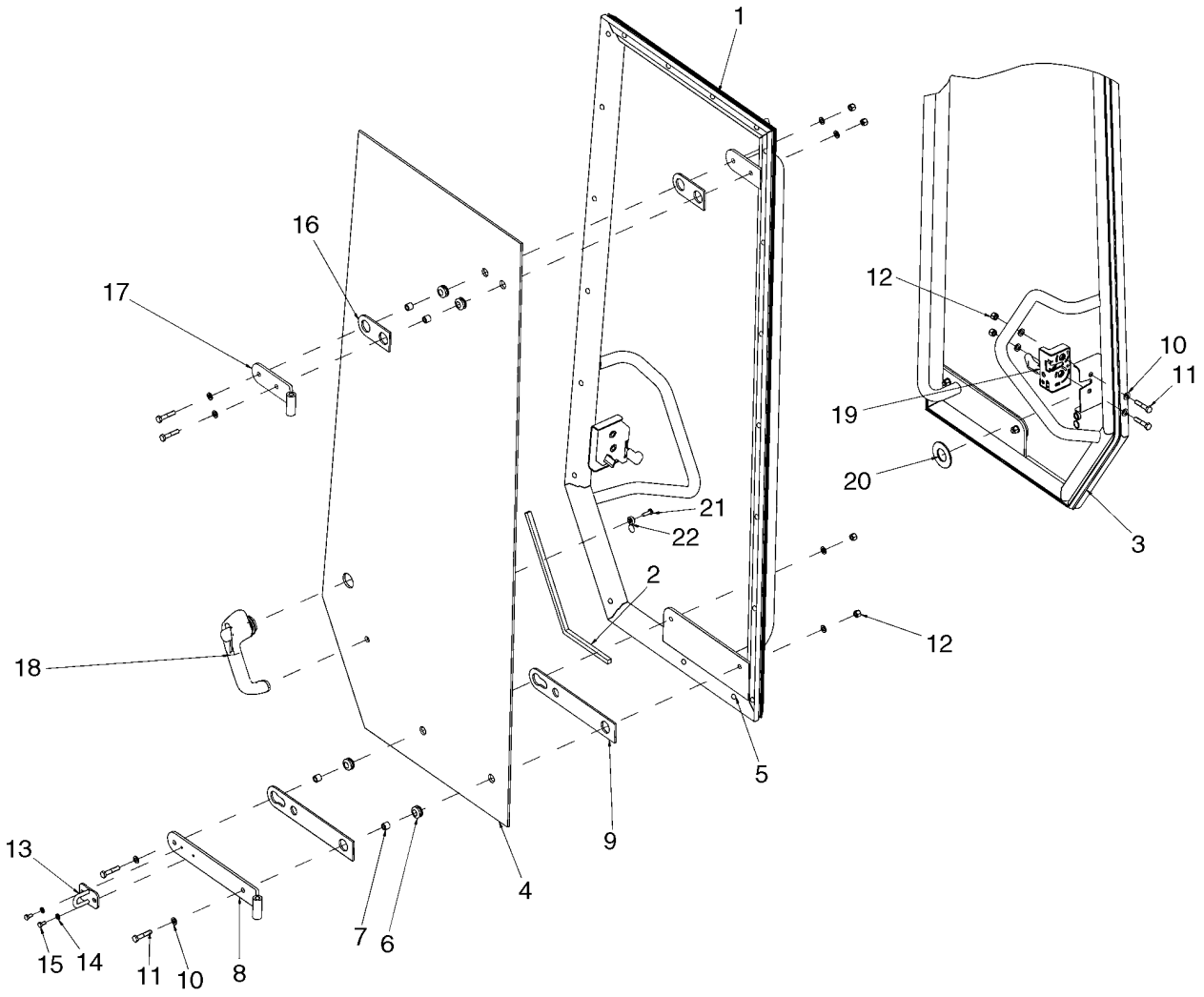


BS07C264

**CAB - DOOR**

| REF | FN | PART NUMBER | YR/SN | QTY | DESCRIPTION |
|---|---|---|---|---|---|
| | | 87627075 | | | DOOR, Left, Incl. Refs. 1 - 24 |
| 1 | | 76303224 | | 1 | FRAME |
| 2 | | 87525153 | | 1 | SEAL, Door |
| 3 | | 76303170 | | 1 | DOOR SEAL |
| 4 | | 76303212 | | 1 | GLASS |
| 5 | | 322197950 | | 20 | SPACER |
| 6 | | 4227144 | | 4 | RING, RUBBER |
| 7 | | 816213301 | | 4 | SPACER |
| 8 | | 76303211 | | 1 | HINGE |
| 9 | | 76303227 | | 2 | SEAL |
| 10 | | {87664049} | | 12 | WASHER, 9 x 16 x 1.6 mm |
| 11 | | 16044024 | | 6 | BOLT, Hex, M8 x 40, 8.8 |
| 12 | | 832-10408 | | 6 | NUT, LOCK, M8 x 1.25, Cl 8 |
| 13 | | 76303154 | | 1 | BRACKET |
| 14 | | {87664048} | | 2 | WASHER, 6.6 x 12 x 1.6 mm |
| 15 | | 10902024 | | 2 | BOLT, Hex, M6 x 12, 8.8, Full Thd |
| 16 | | 76081747 | | 2 | GASKET |
| 17 | | 76303225 | | 1 | HINGE |
| 18 | | 76303253 | | 1 | HANDLE |
| 19 | | 3805086 | | 1 | LOCK ASSY |
| 20 | | 76303605 | | 1 | WASHER, RUBBER |
| 21 | | 86511830 | | 1 | SCREW, Cross Pan Hd, M6 x 20 |
| 22 | | {87528282} | | 1 | COVER |
| 23 | | {87337003} | | AR | ADHESIVE, Sika Tack Ultrafast, Not Illustrated |
| 24 | | {87321451} | | AR | ACTIVATOR, Sika UH-2 LUM, Not Illustrated |

**CAB - MIRRORS**

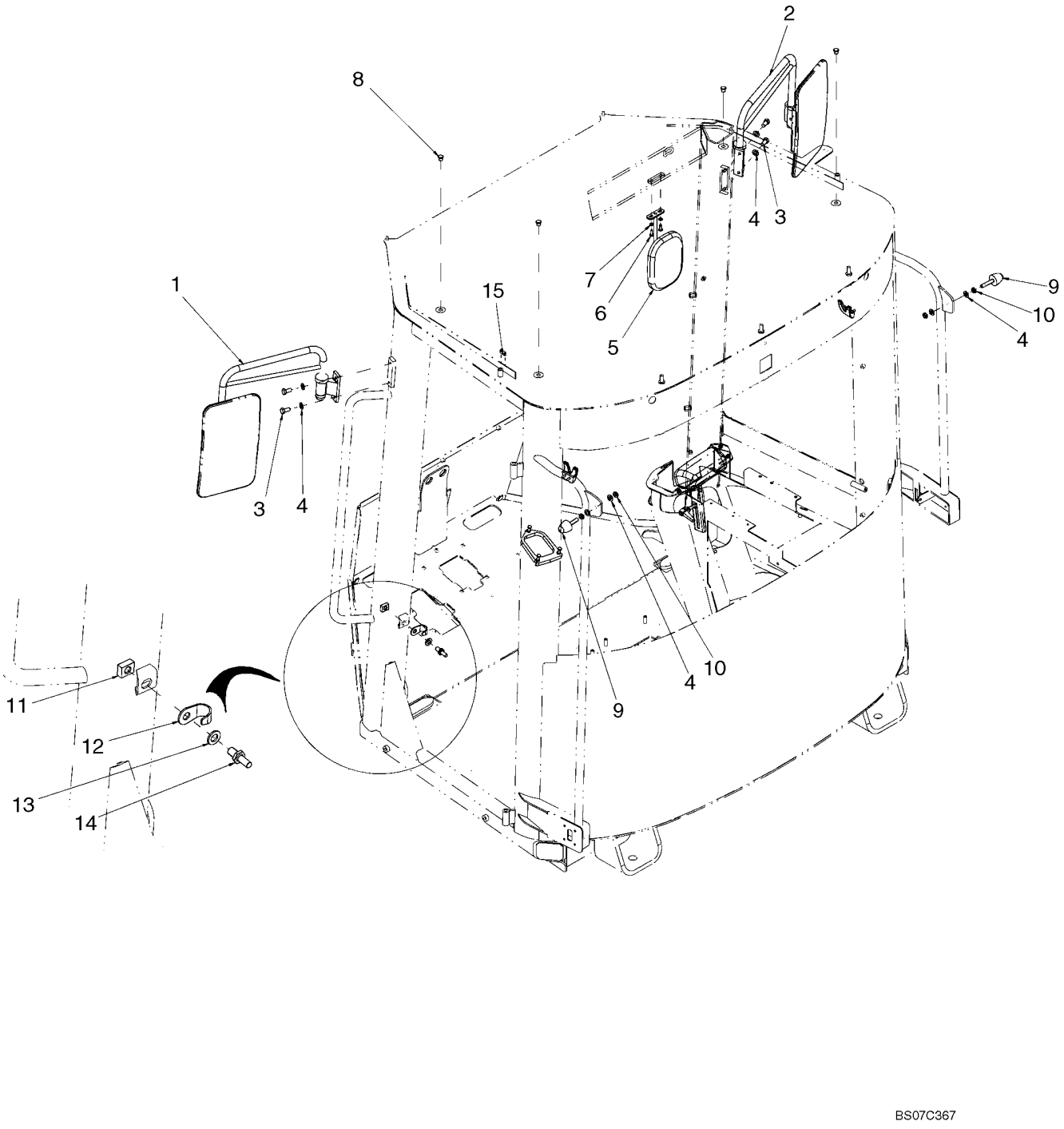

**CAB - MIRRORS**

| REF | FN | PART NUMBER | YR/SN | QTY | DESCRIPTION |
|---|---|---|---|---|---|
| 1 | | 76303266 | | 1 | MIRROR, LH |
| 2 | | 76303267 | | 1 | MIRROR, RH |
| 3 | | 614-10020 | | 4 | BOLT, Hex, M10 x 20, 8.8, Full Thd |
| 4 | | 895-11010 | | 8 | WASHER, M10 x 20 x 2 |
| 5 | | 76048869 | | 1 | MIRROR, REAR-VIEW |
| 6 | | 840-1616 | | 2 | SCREW, Cross Pan Hd, M6 x 16 |
| 7 | | 895-11006 | | 2 | WASHER, M6 |
| 8 | | 72114876 | | 4 | PLUG |
| 9 | | 76303588 | | 2 | INSULATOR BLOCK |
| 10 | | 829-4410 | | 4 | NUT, Thin, M10 x 1.5, Cl 05 |
| 11 | | 76067753 | | 1 | PLATE, COVER |
| 12 | | 76048628 | | 1 | GUARD |
| 13 | | 895-11012 | | 1 | WASHER, M12 x 24 x 2.5 |
| 14 | | 76043511 | | 1 | PIN |
| 15 | | {87525493} | | 1 | SEAL PROFILE |

**CAB - CARPET**

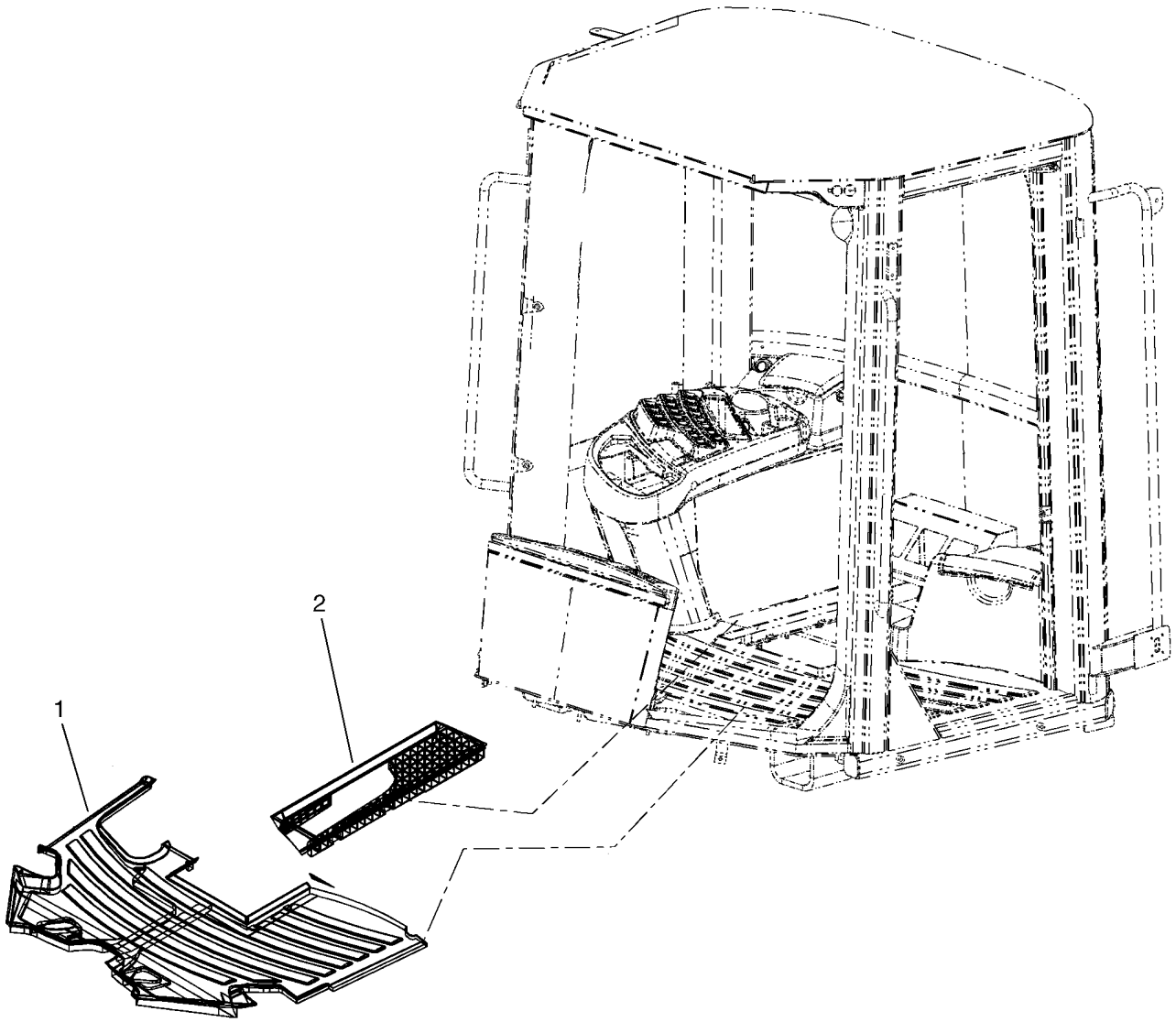


BS06K620

**CAB - CARPET**

| REF | FN | PART NUMBER | YR/SN | QTY | DESCRIPTION |
|---|---|---|---|---|---|
| 1 | | 76303174 | | 1 | CARPET, Front |
| 2 | | 76303317 | | 1 | CARPET, Rear |

**CAB - SUNVISOR**

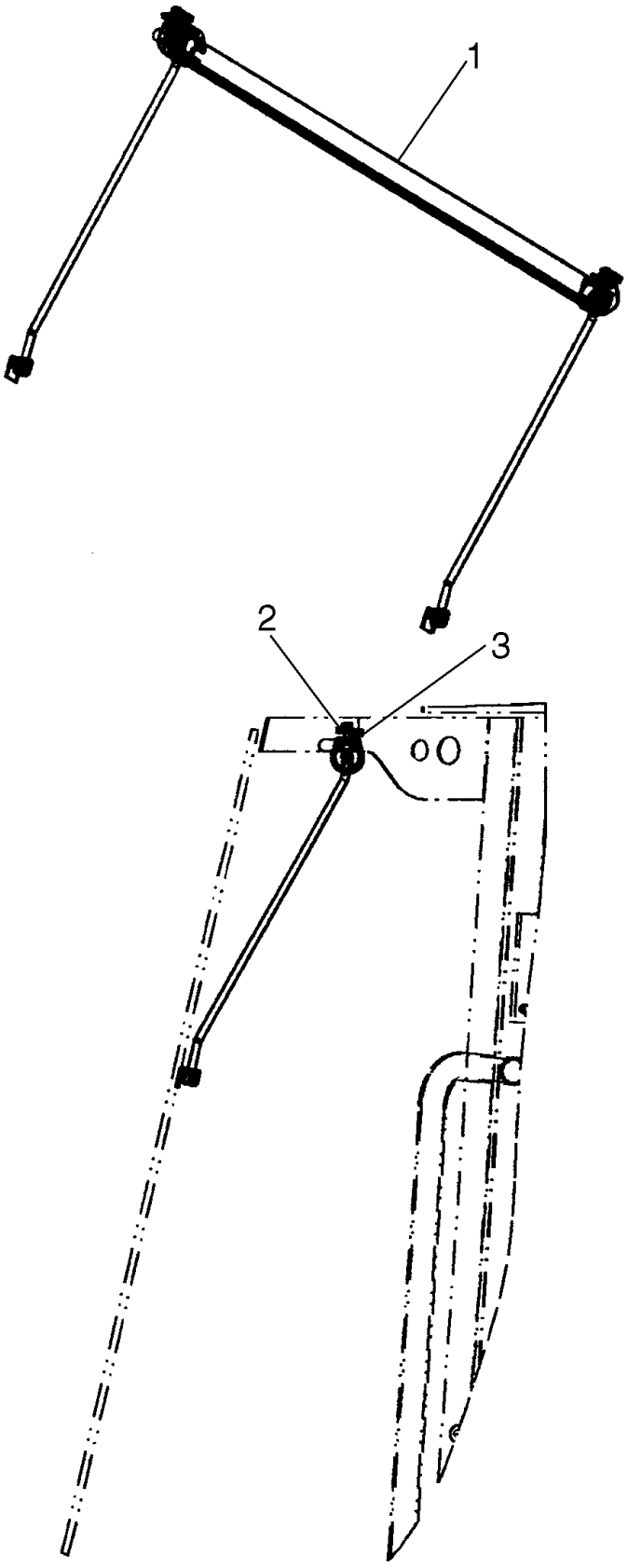

**CAB - SUNVISOR**

| REF | FN | PART NUMBER | YR/SN | QTY | DESCRIPTION |
|---|---|---|---|---|---|
| 1 | | 76303300 | | 1 | SUN VISOR |
| 2 | | 760-17316 | | 2 | SCREW, SELF TAP, Pan Hd, M4.2 x 16 |
| 3 | | 833-40306 | | 2 | NUT, M6, U |

**CAB - COMPONENTS**

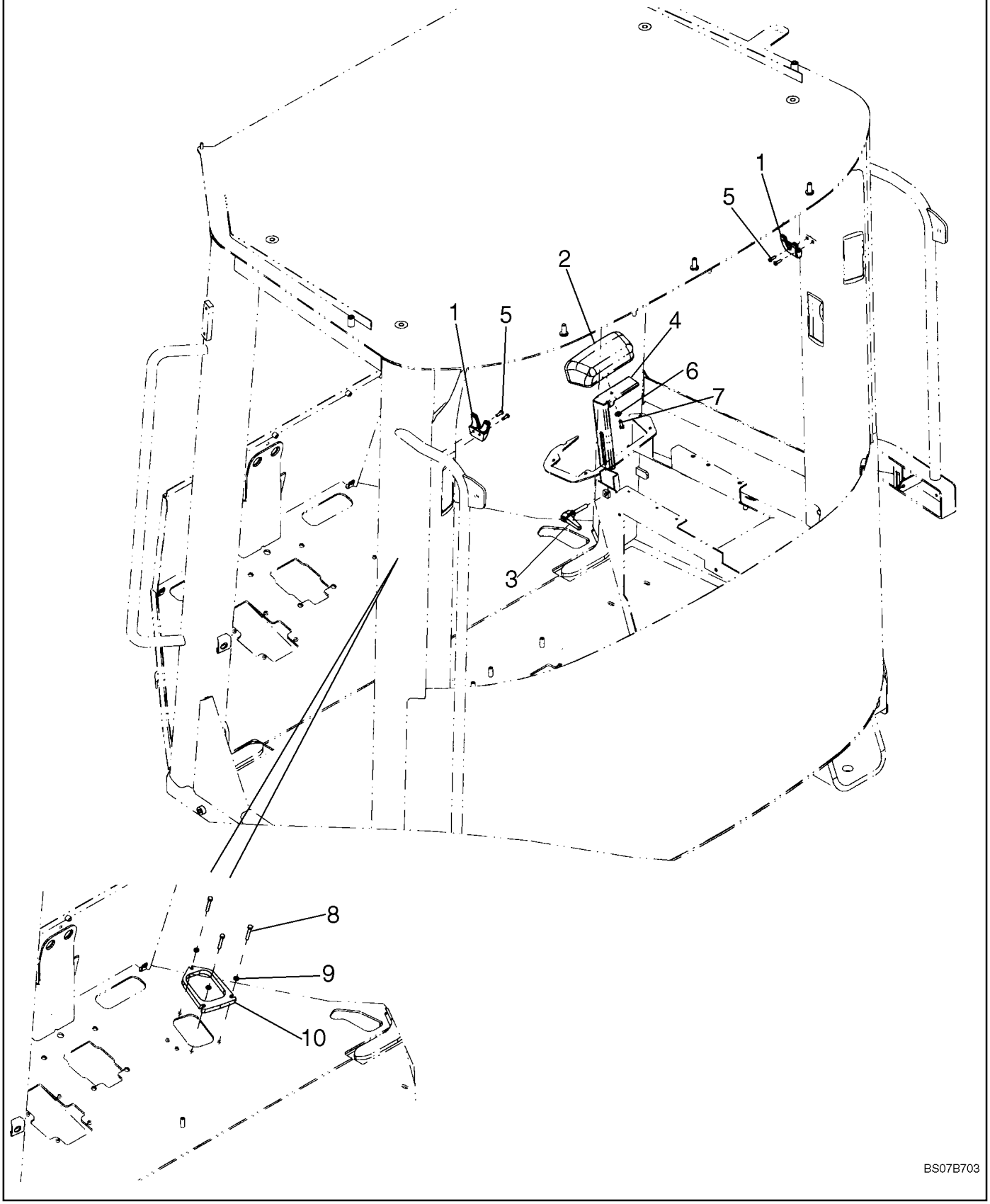

**CAB - COMPONENTS**

| REF | FN | PART NUMBER | YR/SN | QTY | DESCRIPTION |
|---|---|---|---|---|---|
| 1 | | 76067422 | | 2 | HOOK, Coat |
| 2 | | 76303022 | | 1 | ARMREST |
| 3 | | 76303338 | | 1 | HANDLE |
| 4 | | 76303337 | | 1 | SUPPORT |
| 5 | | 840-1516 | | 4 | SCREW, Cross Pan Hd, M5 x 16 |
| 6 | | 896-16006 | | 1 | WASHER, M6 x 14.5 x 2.5, HT |
| 7 | | 614-6016 | | 1 | BOLT, Hex, M6 x 16, 8.8 |
| 8 | | 827-6040 | | 3 | BOLT, Hex, M6 x 40, 10.9 |
| 9 | | 895-11006 | | 3 | WASHER, M6 |
| 10 | | {87516291} | | 1 | PLATE, Throttle Spacer |

**CAB - WORK LAMPS**

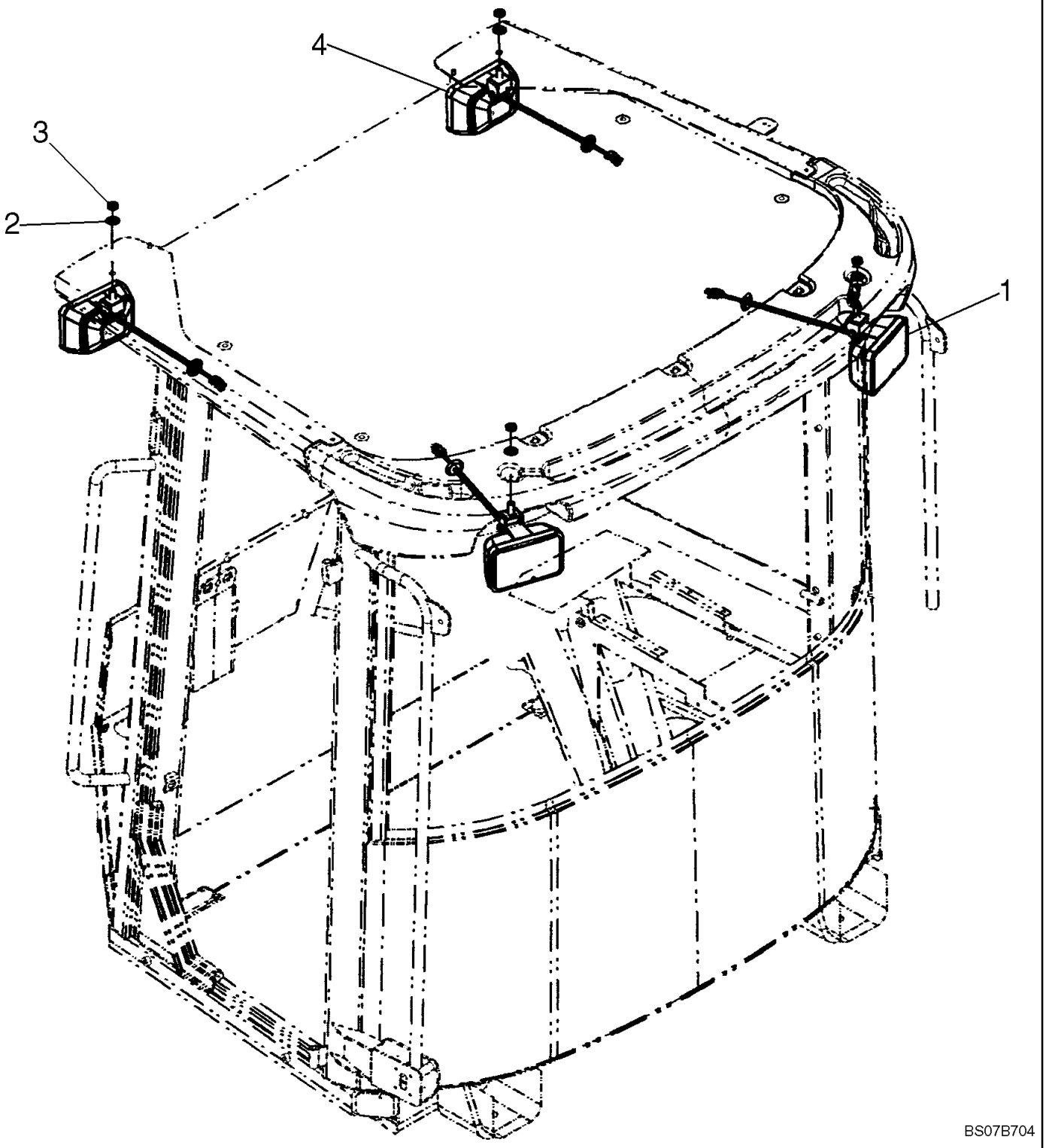

**CAB - WORK LAMPS**

| REF | FN | PART NUMBER | YR/SN | QTY | DESCRIPTION |
|---|---|---|---|---|---|
| 1 | | 87613498 | | 2 | LAMP, WORK, Rear; See Figure 04-21 |
| 2 | | 495-11053 | | 4 | WASHER, 1/2", SAE |
| 3 | | 131-1402 | | 4 | NUT, LOCK, 1/2"-13, GB, Thin |
| 4 | | 87627057 | | 2 | LAMP, WORK, Front; See Figure 04-21 |

**CAB - CONVENIENCE PACKAGE**

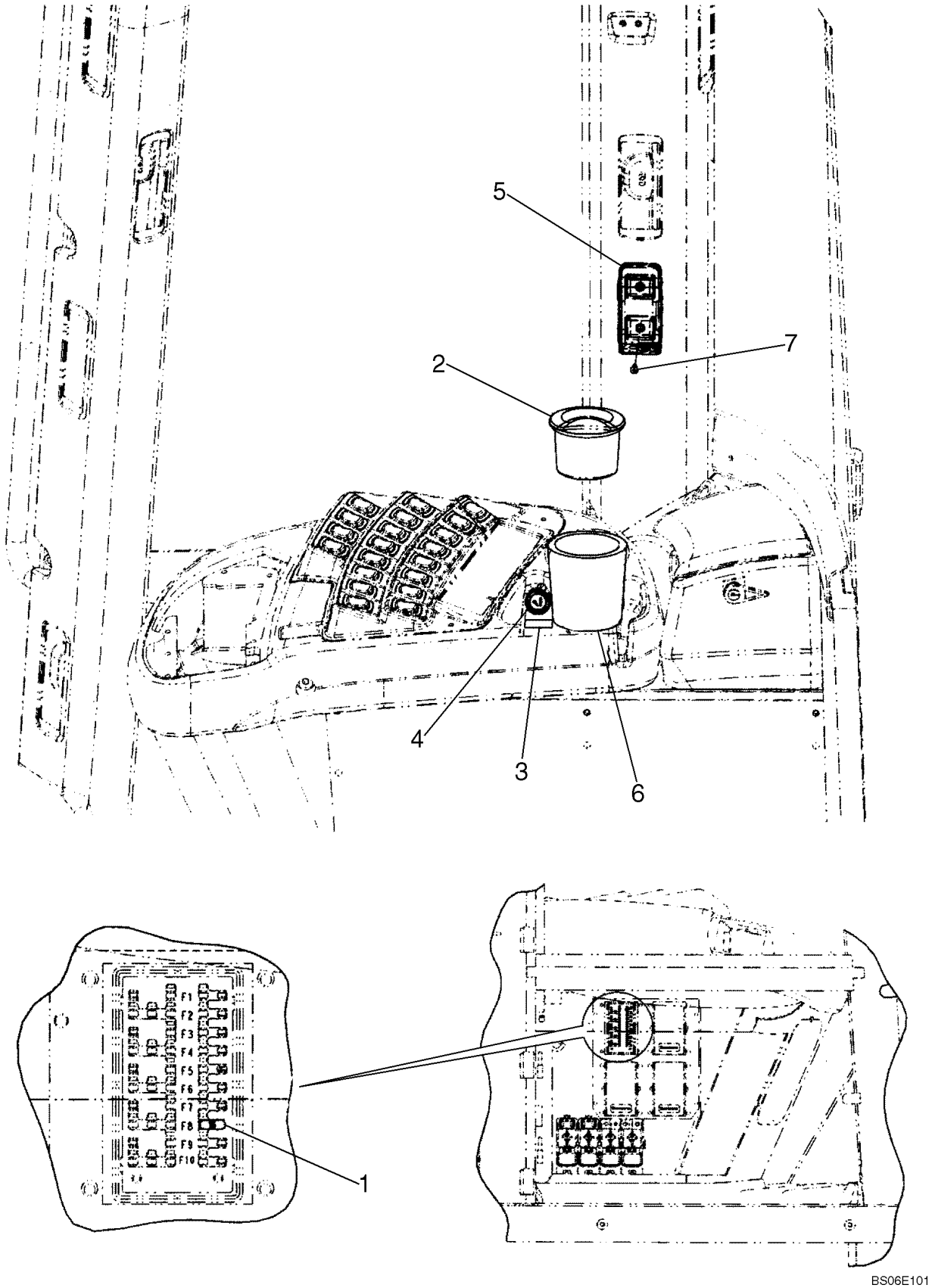

**CAB - CONVENIENCE PACKAGE**

| REF | FN | PART NUMBER | YR/SN | QTY | DESCRIPTION |
|---|---|---|---|---|---|
| 1 | | 121413A1 | | 1 | FUSE, 15A |
| 2 | | 302456A1 | | 1 | ASH TRAY |
| 3 | | 364741A1 | | 1 | DECAL, 24V - 10A |
| 4 | | 87580853 | | 1 | LIGHTER, CIGARETTE, 24V |
| 5 | | 76048849 | | 1 | BOX, Cell Phone |
| 6 | | 87524648 | | 1 | HOLDER, Ashtray |
| 7 | | 265-14512 | | 2 | SCREW, SELF TAP, Cross Oval Hd, #10 x 3/4" |

**SEAT - MOUNTING/SEAT BELTS**

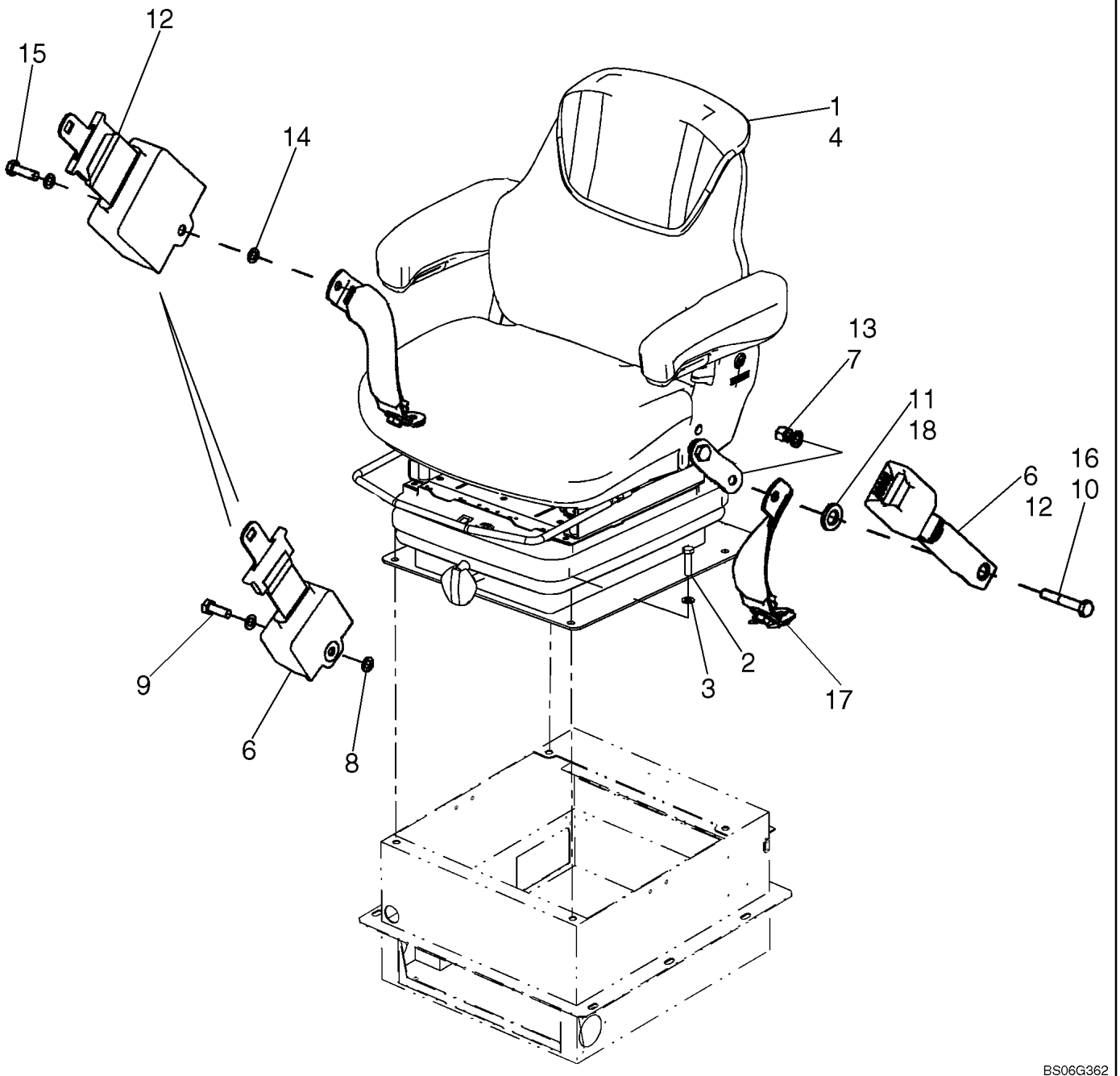

**SEAT - MOUNTING/SEAT BELTS**

| REF | FN | PART NUMBER | YR/SN | QTY | DESCRIPTION |
|---|---|---|---|---|---|
| | | REF | | | INSTRUCTION, MECHANICAL SUSPENSION SEAT |
| 1 | | 87398039 | | 1 | SEAT ASSY., Cloth; Mechanical Suspension; Use Refs. 2, 3 To Mount; See Figures 09-42A, 09-42B |
| 2 | | 627-10040 | | 4 | BOLT, Hex, M10 x 40, 10.9, Full Thd |
| 3 | | 895-11010 | | 4 | WASHER, M10 x 20 x 2 |
| | | REF | | | INSTRUCTION, AIR SUSPENSION SEAT |
| 4 | | 87398040 | | 1 | SEAT ASSY., Cloth; Air Suspension: Use Refs. 2, 3 To Mount; See Figures 09-42C, 09-42D |
| 5 | | 121412A1 | | 1 | FUSE, 10 amp; Air Suspension Seat Only; Not Illustrated |
| | | REF | | | INSTRUCTION, SEAT BELT - 51 mm (2 Inch) WIDE RETRACTABLE SEAT BELT |
| 6 | | 249116A1 | | 1 | SEAT BELT, 51 mm (2 inch) Wide; If Equipped; Uses Refs. 7 - 10 |
| 7 | | 832-10410 | | 2 | NUT, LOCK, M10 x 1.5, Cl 8 |
| 8 | | 895-18010 | | 4 | WASHER, M10 x 18 x 1.6 |
| 9 | | 627-10030 | | 1 | BOLT, Hex, M10 x 30, 10.9, Full Thd |
| 10 | | 827-10060 | | 1 | BOLT, Hex, M10 x 60, 10.9 |
| 11 | | 896-11016 | | 1 | WASHER, M17.5 x 30 x 4, HT |
| | | REF | | | INSTRUCTION, SEAT BELT - 76 mm (3 Inch) WIDE RETRACTABLE SEAT BELT |
| 12 | | 249117A1 | | 1 | BELT, SAFETY, 76 mm (3 inch) Wide; If Equipped; Uses Refs. 12 - 16 |
| 13 | | 832-10410 | | 2 | NUT, LOCK, M10 x 1.5, Cl 8 |
| 14 | | 895-18010 | | 4 | WASHER, M10 x 18 x 1.6 |
| 15 | | 627-10035 | | 1 | BOLT, Hex, M10 x 35, 10.9, Full Thd |
| 16 | | 827-10060 | | 1 | BOLT, Hex, M10 x 60, 10.9 |
| 17 | | 87545658 | | 1 | KIT, Tether Belt; Hardware Included |
| 18 | | 896-11016 | | 1 | WASHER, M17.5 x 30 x 4, HT |

| 09-42A | | p1 | 06/07 |
|---|---|---|---|

**SEAT ASSY, MECHANICAL SUSPENSION**

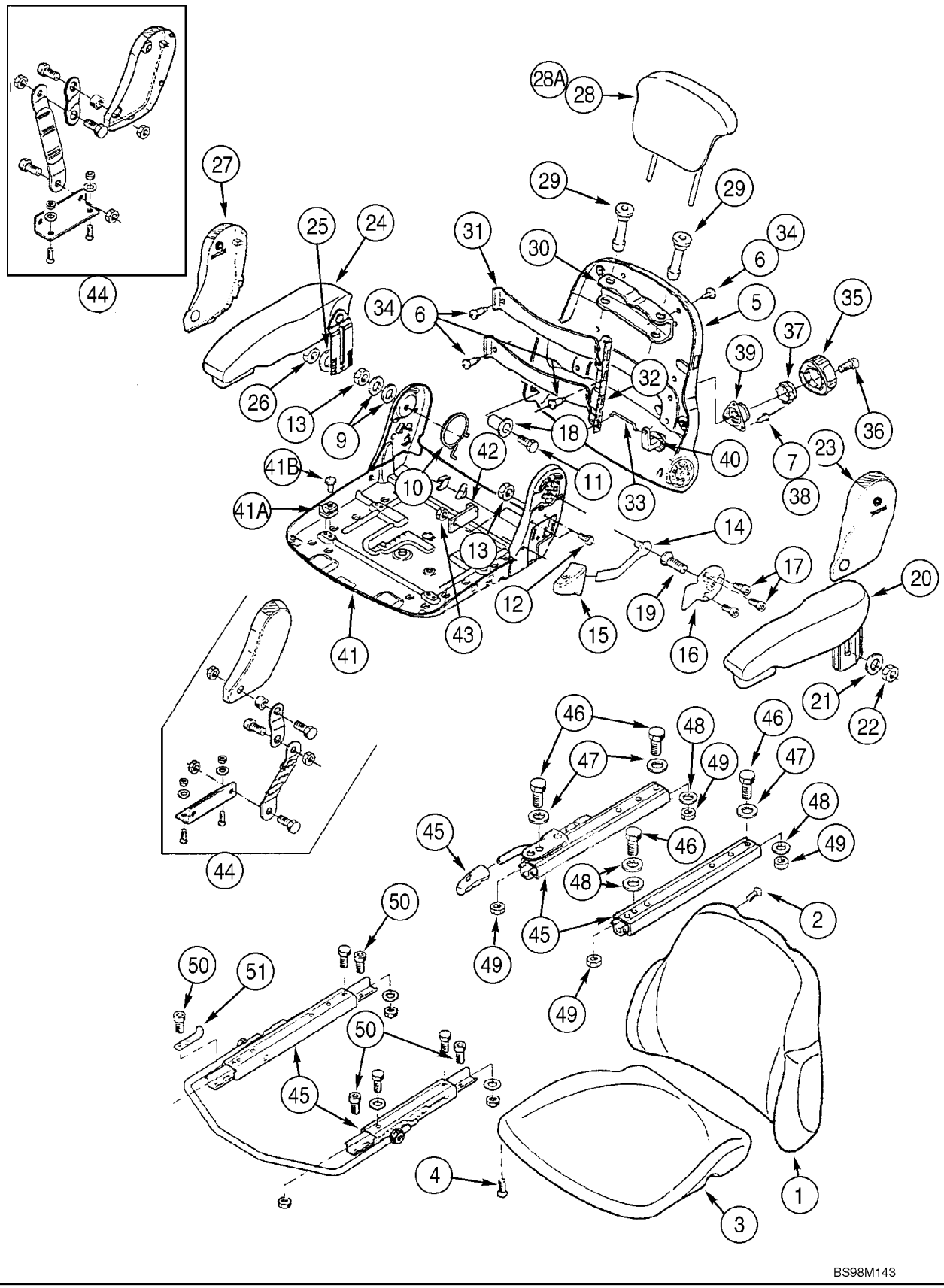

**SEAT ASSY, MECHANICAL SUSPENSION**

| REF | FN | PART NUMBER | YR/SN | QTY | DESCRIPTION |
|---|---|---|---|---|---|
| | | REF | | | INSTRUCTION, UPPER SEAT ASSEMBLY, MECHANICAL |
| | | 87398039 | | 1 | SEAT ASSY., Incl. Refs 1 - 51 , Incl. Parts on Figure 09-42B |
| | | {87583725} | | 1 | SEAT, Cloth; Upper Seat Assembly; Incl. 1 - 51 |
| 1 | | {87583733} | | 1 | CUSHION; Backrest |
| 2 | | 82034997 | | 4 | SCREW |
| 3 | | {87583734} | | 1 | CUSHION; Seat |
| 4 | | 82034997 | | 4 | SCREW |
| | | 71491410 | | 1 | FRAME, Backrest, Incl. 5 - 7 |
| 5 | | NSS | | 1 | NOT SERVICED SEPARATELY, Cover |
| 6 | | 85811351 | | 3 | RIVET |
| 7 | | 47124903 | | 3 | RIVET |
| | | 71491411 | | 1 | KIT, Hardware; Backrest Adjustment; Incl. 9 - 19 |
| 9 | | 82034881 | | 2 | WASHER |
| 10 | | {87567527} | | 1 | SPRING, Leg, RH |
| 11 | | {87583729} | | 1 | BOLT, Hex M8 x 40 |
| 12 | | 82034894 | | 2 | SCREW, M8 x 16 |
| 13 | | {87583748} | | 2 | NUT |
| 14 | | 345749A1 | | 1 | LEVER |
| 15 | | 345752A1 | | 1 | HANDLE |
| 16 | | 345753A1 | | 1 | PLATE, LARGE |
| 17 | | 345754A1 | | 3 | SCREW, M6 x 10 |
| 18 | | 85811352 | | 1 | TUBE, Bushing |
| 19 | | 345776A1 | | 1 | SCREW, M8 x 18 |
| 20 | | {87583757} | | 1 | ARMREST ASSY. Left Hand; Incl. 21, 22 |
| 21 | | 9960692 | | 1 | SPACER |
| 22 | | 85817458 | | 1 | NUT |
| 23 | | {87584704} | | 1 | COVER, Left Hand |
| 24 | | {87583762} | | 1 | ARMREST ASSY. Right Hand; Incl. 25, 26 |
| 25 | | 9960692 | | 1 | SPACER |
| 26 | | 85817458 | | 1 | NUT |
| 27 | | {87583731} | | 1 | COVER, Right Hand |
| 28 | | {87583747} | | 1 | HEADREST |
| 29 | | 85811350 | | 2 | BUSHING |

**SEAT ASSY, MECHANICAL SUSPENSION**

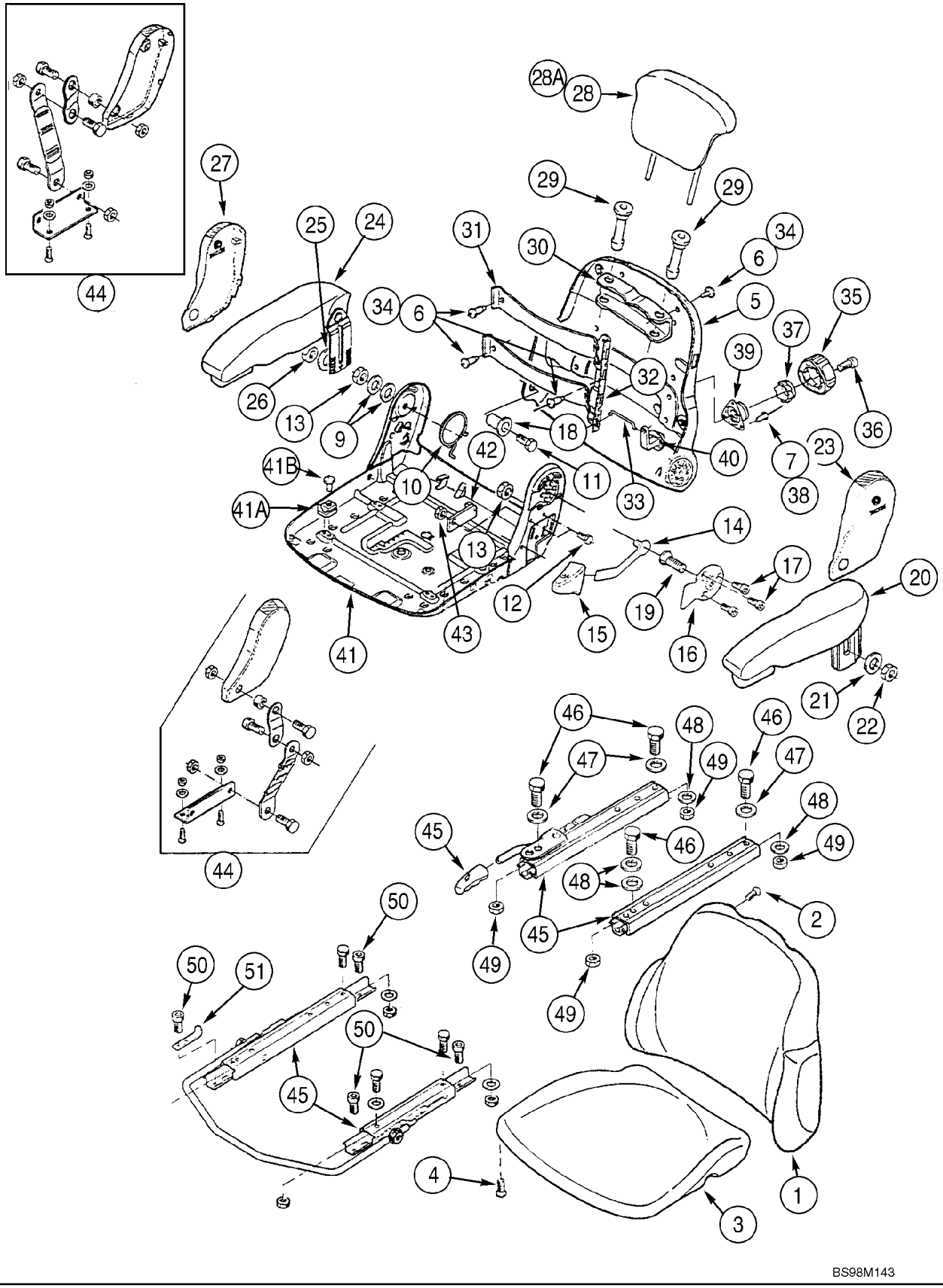

**SEAT ASSY, MECHANICAL SUSPENSION**

| REF | FN | PART NUMBER | YR/SN | QTY | DESCRIPTION |
|---|---|---|---|---|---|
| 30 | | NSS | | 1 | NOT SERVICED SEPARATELY, Retainer |
| | | 82034963 | | 1 | SUPPORT, Lumbar Support; Incl. 31 - 40 |
| 31 | | 82034969 | | 2 | PLATE, Lumbar |
| 32 | | 82034910 | | 1 | PLATE |
| 33 | | 82034909 | | 1 | ROD |
| 34 | | 85811351 | | 3 | RIVET |
| 35 | | 82034964 | | 1 | HANDLE, Incl. 36 |
| 36 | | 82034917 | | 1 | SCREW, M6 x 10 |
| 37 | | 82034916 | | 1 | PAWL |
| 38 | | 47124903 | | 3 | RIVET |
| 39 | | 82034911 | | 1 | BRAKE |
| 40 | | 82034912 | | 1 | CARRIER |
| 41 | | {87583736} | | 1 | PAN, Seat, Incl. 41A, 41B |
| 41A | | NSS | | 4 | NOT SERVICED SEPARATELY, Guide |
| 41B | | NSS | | 4 | NOT SERVICED SEPARATELY, Rivet |
| 42 | | {87583739} | | 1 | STOP |
| 43 | | 85817458 | | 1 | NUT |
| 44 | | NSS | | 1 | NOT SERVICED SEPARATELY, Tether Belt |
| 45 | | 345783A1 | | 1 | RAIL ASSY., Seat Slide Rails; See Figure 09-31 |
| 46 | | 16043231 | | 4 | BOLT, Hex, M8 x 16, 10.9 |
| 47 | | 9960692 | | 3 | SPACER |
| 48 | | 82034881 | | 4 | WASHER |
| 49 | | {87583748} | | 4 | NUT, Hex M8; If Used |
| 49 | | 85817458 | | 4 | NUT, M8, If Used |
| 50 | | 82034894 | | 4 | SCREW, M8 x 16, If Used |
| 50 | | {87583741} | | 4 | SCREW; If Used |
| 51 | | {87583737} | | 1 | STOP, Slide Rail |

| 09-42B | | p1 | 08/07 |
|---|---|---|---|

**SEAT ASSY, MECHANICAL SUSPENSION**

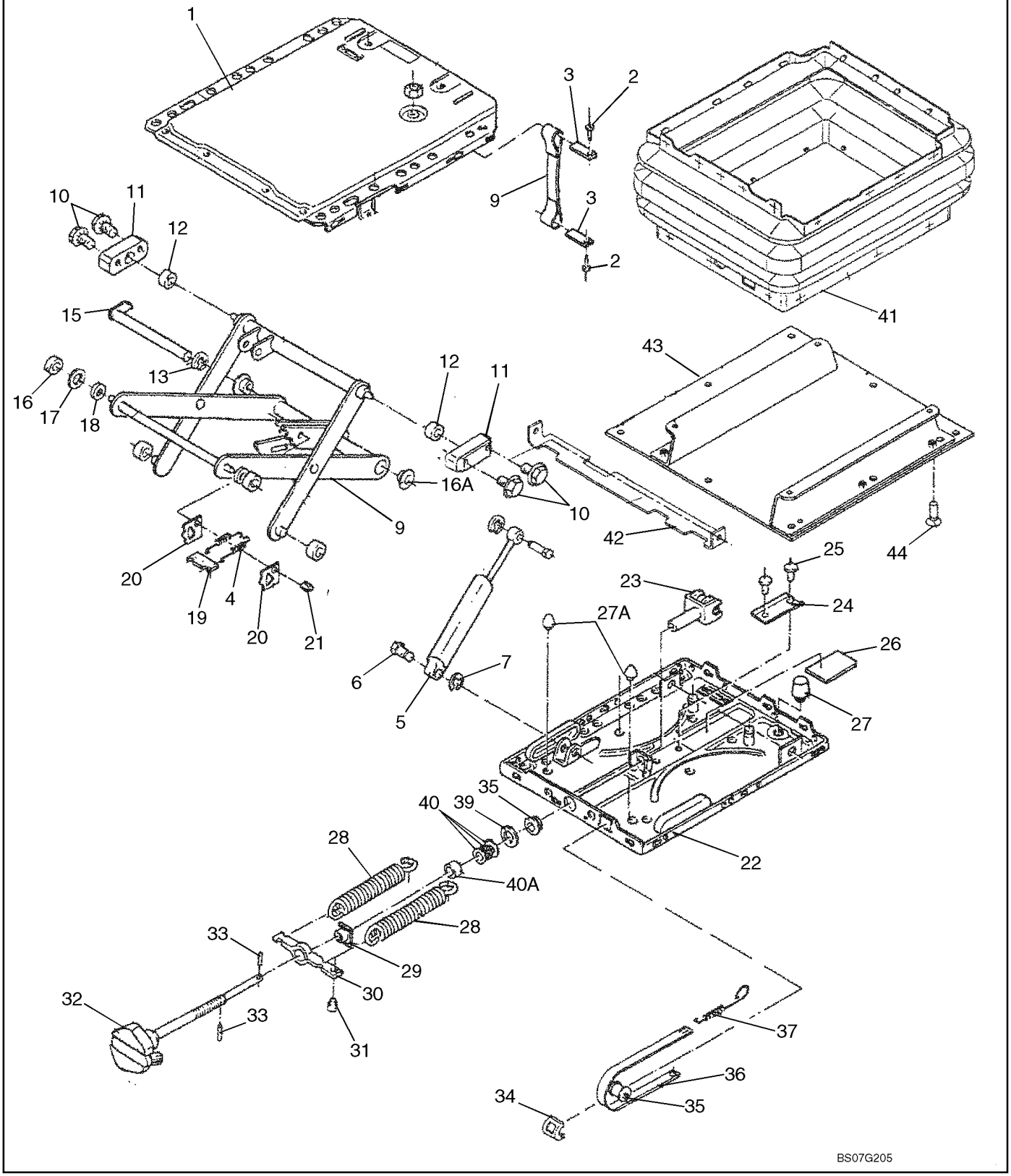

**SEAT ASSY, MECHANICAL SUSPENSION**

| REF | FN | PART NUMBER | YR/SN | QTY | DESCRIPTION |
|---|---|---|---|---|---|
| 1 | | 82035125 | | 1 | SUSPENSION, Plate, Upper |
| | | {87583847} | | 1 | WEBBING, Incl. Refs. 2, 3, 8 |
| 2 | | 85817448 | | 2 | RIVET |
| 3 | | 85817449 | | 2 | PLATE |
| 4 | | 85817430 | | 2 | SPRING |
| | | 9966146 | | 1 | SHOCK ABSORBER, Incl. Refs. 5 - 7 |
| 5 | | NSS | | 1 | NOT SERVICED SEPARATELY, Shock Absorber |
| 6 | | 82035040 | | 1 | BOLT |
| 7 | | 82035128 | | 2 | WASHER |
| 8 | | NSS | | 1 | NOT SERVICED SEPARATELY, BELT |
| | | {87583846} | | 1 | ARM, Swing Assy, Incl. Refs. 9 - 21 |
| 9 | | NSS | | 2 | NOT SERVICED SEPARATELY, ARM |
| 10 | | 85817444 | | 2 | SCREW |
| 11 | | 82035094 | | 2 | BEARING, Roller |
| 12 | | 85817445 | | 2 | BUSHING |
| 13 | | 82035127 | | 1 | WASHER |
| 14 | | NSS | | 2 | NOT SERVICED SEPARATELY, Bushing |
| 15 | | 85817429 | | 1 | BOLT |
| 16 | | 82035031 | | 4 | ROLLER |
| 16A | | 9960755 | | 2 | BUSHING |
| 17 | | {87583854} | | 2 | WASHER |
| 18 | | 85817442 | | 2 | BUSHING |
| 19 | | 82035030 | | 1 | PLATE |
| 20 | | 82035069 | | 2 | PLATE, Release |
| 21 | | 82035036 | | 1 | BOLT |
| | | {87583841} | | 1 | HOUSING, Lower, Incl. Refs 22 - 27 |
| 22 | | NSS | | 1 | NOT SERVICED SEPARATELY, HOUSING |
| 23 | | 82035043 | | 1 | FORK |
| | | 82035054 | | 1 | PROFILE, , Support, Incl. Refs. 24,25 |
| 24 | | NSS | | 1 | NOT SERVICED SEPARATELY, , Plate |
| 25 | | 82035037 | | 2 | RIVET |
| 26 | | 82035032 | | 1 | PLATE |
| 27 | | 85817441 | | 1 | BUMPER, RUBBER |
| 27A | | 85817440 | | 2 | BUMPER, RUBBER |
| 28 | | 85817434 | | 2 | SPRING |

| 09-42B | | p2 | 08/07 |
|---|---|---|---|

**SEAT ASSY, MECHANICAL SUSPENSION**

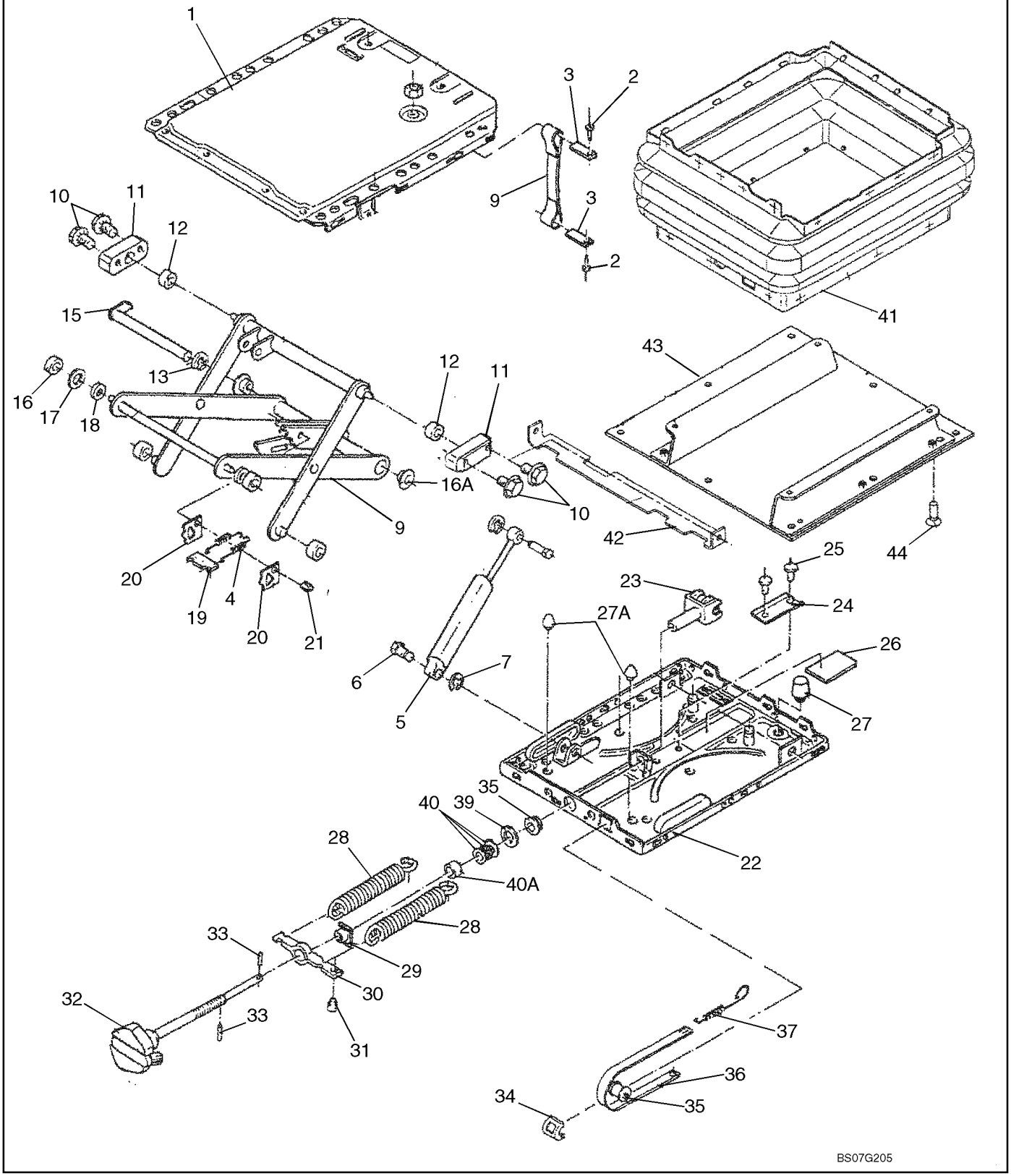

**SEAT ASSY, MECHANICAL SUSPENSION**

| REF | FN | PART NUMBER | YR/SN | QTY | DESCRIPTION |
|---|---|---|---|---|---|
| 29 | | 82035034 | | 1 | NUT |
| 30 | | 82035027 | | 1 | BRACKET |
| 31 | | 82035033 | | 1 | RETAINER, Plug |
| | | 85817451 | | 1 | SCREW, ADJUSTMENT, Kit, Incl. Refs 22, 23 |
| 32 | | NSS | | 1 | NOT SERVICED SEPARATELY, Adjustment Screw Assy |
| 33 | | 85817433 | | 1 | DOWEL, Pin |
| | | 87331925 | | 1 | ADJUSTER, Weight Adjustment Kit, Incl. Refs. 31, 34 - 37 |
| 34 | | 82035025 | | 1 | GUIDE |
| 35 | | 82035029 | | 1 | ROLLER |
| 36 | | NSS | | 1 | NOT SERVICED SEPARATELY, Weight Adjustment |
| 37 | | 82035039 | | 1 | SPRING |
| 38 | | 85817435 | | 1 | BUSHING |
| 39 | | 82035028 | | 1 | WASHER |
| 40 | | 82035035 | | 1 | SET OF WASHERS |
| 40A | | {87583839} | | 1 | SPACER |
| 41 | | 85817428 | | 1 | BELLOWS, Suspension |
| 42 | | {87583849} | | 2 | BRACE |
| 43 | | {87583859} | | 1 | CONSOLE |
| 44 | | {87583860} | | 4 | SCREW |

| 09-42C | | p1 | 06/07 |
|---|---|---|---|

**SEAT ASSY, AIR SUSPENSION**

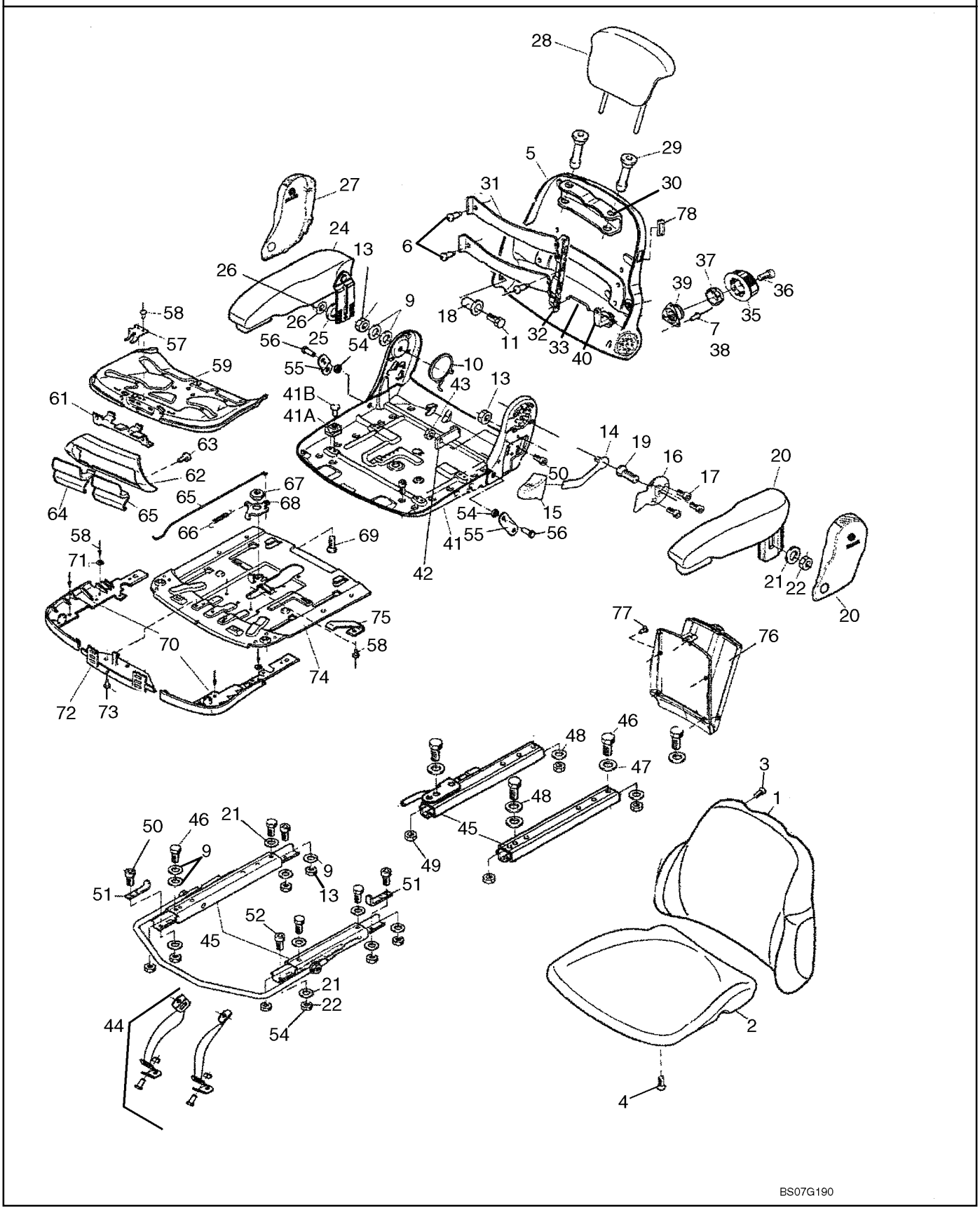

**SEAT ASSY, AIR SUSPENSION**

| REF | FN | PART NUMBER | YR/SN | QTY | DESCRIPTION |
|---|---|---|---|---|---|
| | | REF | | | INSTRUCTION, UPPER SEAT ASSEMBLY, MECHANICAL |
| | | 87398040 | | 1 | SEAT ASSY., Incl. Refs 1 - 78 , Incl. Parts on Figure 09-42D |
| | | {87584101} | | 1 | SEAT, Cloth; Upper Seat Assembly; Incl. 1 - 78 |
| 1 | | {87583733} | | 1 | CUSHION; Backrest; Incl. Ref. 3 |
| 2 | | {87584097} | | 1 | CUSHION; Seat; Incl. Ref. 4 |
| 3 | | 82034997 | | 4 | SCREW |
| 4 | | 82034997 | | 4 | SCREW |
| | | 71491410 | | 1 | FRAME, Backrest, Incl. 5 - 7 |
| 5 | | NSS | | 1 | NOT SERVICED SEPARATELY, Cover |
| 6 | | 85811351 | | 3 | RIVET |
| 7 | | 47124903 | | 3 | RIVET |
| | | 71491411 | | 1 | KIT, Hardware; Backrest Adjustment; Incl. 9 - 19 |
| 9 | | 82034881 | | 2 | WASHER |
| 10 | | {87567527} | | 1 | SPRING, Leg, RH |
| 11 | | {87583729} | | 1 | BOLT, Hex M8 x 40 |
| 12 | | 82034894 | | 2 | SCREW, M8 x 16 |
| 13 | | {87583748} | | 2 | NUT |
| 14 | | 345749A1 | | 1 | LEVER |
| 15 | | 345752A1 | | 1 | HANDLE |
| 16 | | 345753A1 | | 1 | PLATE, LARGE |
| 17 | | 345754A1 | | 3 | SCREW, M6 x 10 |
| 18 | | 85811352 | | 1 | TUBE, Bushing |
| 19 | | 345776A1 | | 1 | SCREW, M8 x 18 |
| 20 | | {87583757} | | 1 | ARMREST ASSY. Left Hand; Incl. 21, 22 |
| 21 | | 9960692 | | 6 | SPACER |
| 22 | | 85817458 | | 6 | NUT |
| 23 | | {87584704} | | 1 | COVER, Left Hand |
| 24 | | {87583762} | | 1 | ARMREST ASSY. Right Hand; Incl. 25, 26 |
| 25 | | 9960692 | | 1 | SPACER |
| 26 | | 85817458 | | 1 | NUT |
| 27 | | {87583731} | | 1 | COVER, Right Hand |
| 28 | | {87583747} | | 1 | HEADREST; Incl. 29 |
| 29 | | 85811350 | | 2 | BUSHING |

| 09-42C | | p2 | 06/07 |
|---|---|---|---|

**SEAT ASSY, AIR SUSPENSION**

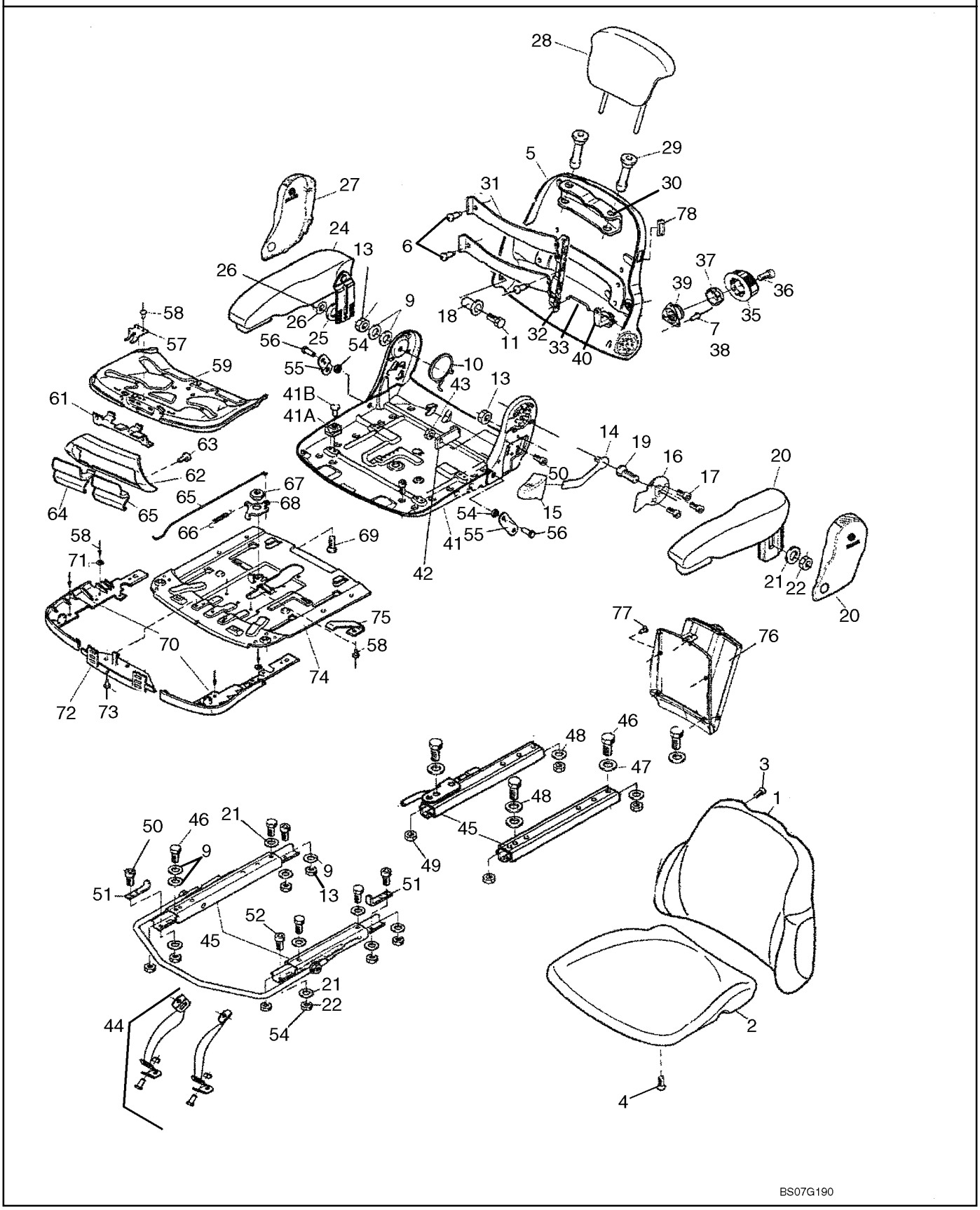

**SEAT ASSY, AIR SUSPENSION**

| REF | FN | PART NUMBER | YR/SN | QTY | DESCRIPTION |
|---|---|---|---|---|---|
| 30 | | NSS | | 1 | NOT SERVICED SEPARATELY, Retainer |
| | | 82034963 | | 1 | SUPPORT, Lumbar Support; Incl. 31 - 40 |
| 31 | | 82034969 | | 2 | PLATE, Lumbar |
| 32 | | 82034910 | | 1 | PLATE |
| 33 | | 82034909 | | 1 | ROD |
| 34 | | 85811351 | | 3 | RIVET |
| 35 | | 82034964 | | 1 | HANDLE, Incl. 36 |
| 36 | | 82034917 | | 1 | SCREW, M6 x 10 |
| 37 | | 82034916 | | 1 | PAWL |
| 38 | | 47124903 | | 3 | RIVET |
| 39 | | 82034911 | | 1 | BRAKE |
| 40 | | 82034912 | | 1 | CARRIER |
| 41 | | {87584099} | | 1 | PAN, Seat, Incl. 41A, 41B |
| 41A | | 82034921 | | 4 | GUIDE, Guide |
| 41B | | 82034923 | | 4 | RIVET, Rivet |
| 42 | | {87583739} | | 1 | STOP |
| 43 | | 85817458 | | 1 | NUT |
| 44 | | 87545658 | | 1 | KIT, Tether Belt |
| 45 | | 345783A1 | | 1 | RAIL ASSY., Seat Slide Rails |
| 46 | | 16043231 | | 4 | BOLT, Hex, M8 x 16, 10.9 |
| 47 | | 9960692 | | 3 | SPACER |
| 48 | | 82034881 | | 4 | WASHER |
| 49 | | {87583748} | | 4 | NUT, Hex M8; If Used |
| 49 | | 85817458 | | 4 | NUT, M8, If Used |
| 50 | | 82034894 | | 4 | SCREW, M8 x 16, If Used |
| 50 | | 82034893 | | 4 | SCREW, If Used |
| 51 | | {87583737} | | 2 | STOP, Slide Rail |
| 52 | | 85817467 | | 3 | SCREW |
| 53 | | {87583752} | | 4 | SCREW, If Used |
| 54 | | 82035064 | | 2 | TUBE |
| 55 | | {87583738} | | 2 | BRACKET |
| 56 | | {87583755} | | 2 | BOLT |
| | | 82034949 | | 1 | CUSHION, SEAT, Incl. 57 - 60 |
| 57 | | 82034947 | | 1 | SHEET, Incl. 58 (1) |
| 58 | | 82034897 | | 7 | RIVET |

**SEAT ASSY, AIR SUSPENSION**

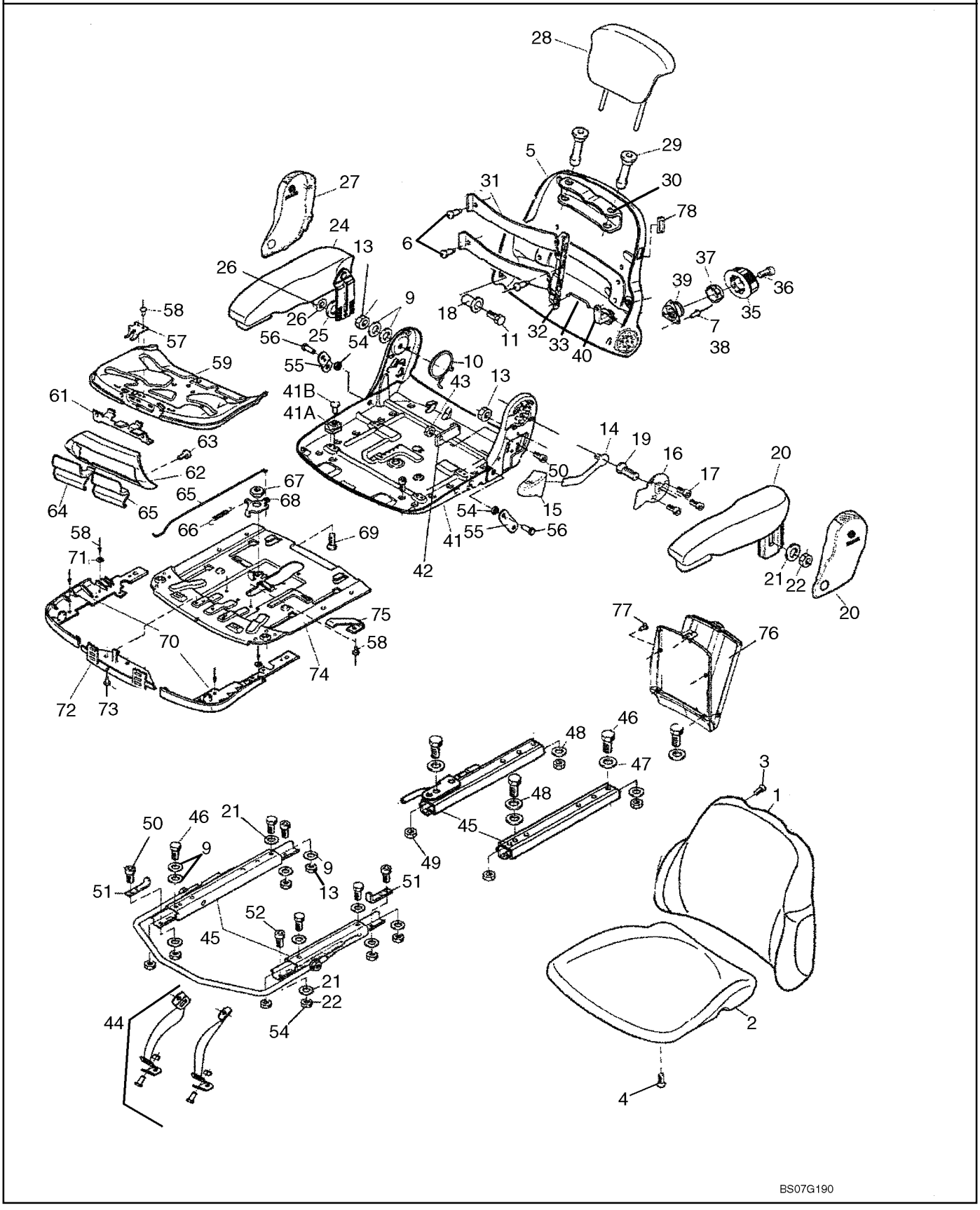

**SEAT ASSY, AIR SUSPENSION**

| REF | FN | PART NUMBER | YR/SN | QTY | DESCRIPTION |
|---|---|---|---|---|---|
| 59 | | NSS | | 1 | NOT SERVICED SEPARATELY, Plate |
| 60 | | 82034997 | | 4 | SCREW, Not Illustrated |
| 61 | | 82034919 | | 1 | LATCH, Seat |
| 62 | | 82034961 | | 1 | COVER, Incl. Ref. 63 |
| 63 | | 85819815 | | 2 | SCREW |
| 64 | | 82034962 | | 1 | HANDLE, Incl. 65 |
| 65 | | 82034912 | | 1 | CARRIER |
| | | 82034944 | | 1 | LEVER, Incl. 66 - 69 |
| 66 | | 82034888 | | 2 | SPRING |
| 67 | | 82034900 | | 1 | BUSHING |
| 68 | | NSS | | 1 | NOT SERVICED SEPARATELY, Plate |
| 69 | | 82034901 | | 1 | SCREW |
| | | 82034952 | | 1 | COVER, Side Cover Kit, Incl. 58 (4), 71 |
| 70 | | NSS | | 1 | NOT SERVICED SEPARATELY, Cover |
| 71 | | 85817489 | | 4 | WASHER |
| | | 82034945 | | 1 | BRACKET, Kit, Incl. 72, 73 |
| 72 | | NSS | | 1 | NOT SERVICED SEPARATELY, Bracket |
| 73 | | 85811353 | | 4 | RIVET |
| | | 82034948 | | | PLATE, Adjustable Seat Kit, Incl. 58 (2), 74, 75; Also Incl. 82034945, Bracket Kit |
| 74 | | NSS | | 1 | NOT SERVICED SEPARATELY |
| 75 | | 82034920 | | 1 | SHEET |
| | | 82034977 | | | CASE, PLASTIC, Kit, Incl. Refs 76, 77 |
| 76 | | NSS | | 1 | NOT SERVICED SEPARATELY, Plastic Case |
| 77 | | {87583748} | | 5 | SCREW, M4 x 8 |
| 78 | | 82034958 | | 1 | COVER, Seat Heat |

| 09-42D | | p1 | 07/07 |
|---|---|---|---|

**SEAT ASSY, AIR SUSPENSION**

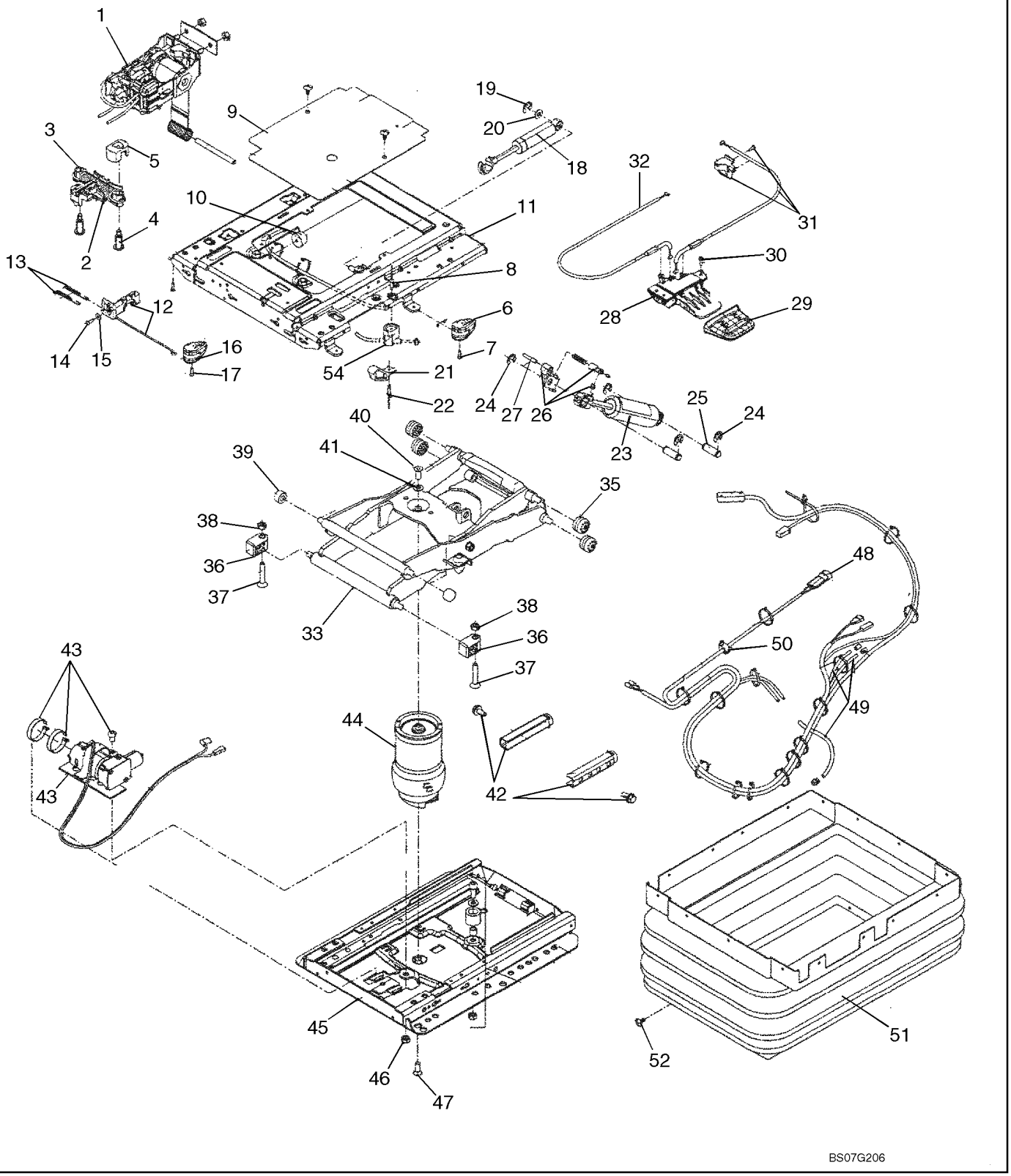

**SEAT ASSY, AIR SUSPENSION**

| REF | FN | PART NUMBER | YR/SN | QTY | DESCRIPTION |
|---|---|---|---|---|---|
| | | 87398040 | | 1 | SEAT ASSY., Incl. Refs. 1 - 54 , Incl. Parts on Figure 09-42C |
| | | {87584095} | | 1 | SEAT, CLoth, Lower Seat Assembly; Incl. Refs. 1 - 54 |
| 1 | | 82035095 | | 1 | CONTROL, Kit, Incl. Control Mechanism, Mounting Parts |
| | | 82035111 | | 1 | ISOLATOR, Kit, Incl. Refs 2 - 5 |
| 2 | | NSS | | 1 | NOT SERVICED SEPARATELY, Isolator |
| 3 | | 82035052 | | 2 | BUSHING |
| 4 | | {87585124} | | 2 | BOLT, Shoulder M8 x 33 |
| 5 | | NSS | | 1 | NOT SERVICED SEPARATELY, Guide |
| | | 82035123 | | 1 | HANDLE, Kit, Incl. Refs. 6 - 8 |
| 6 | | NSS | | 1 | NOT SERVICED SEPARATELY, Handle |
| 7 | | 82035087 | | 2 | SCREW |
| 8 | | 82035065 | | 3 | RIVET, 4 x 16.9 mm |
| 9 | | 85817486 | | 1 | COVER, Kit, Incl. (2) Mounting Screws |
| | | 82035122 | | 1 | SUSPENSION, Kit, Incl. Refs. 10 - 15, Also Incl. (2) Roller Kits, (2) Single Rollers, and (2) 4 x 16.9 Rivets, Which Are Not Illustrated |
| 10 | | 82035081 | | 1 | PLUG |
| 11 | | NSS | | 1 | NOT SERVICED SEPARATELY, Suspension |
| | | 71486982 | | 1 | LEVER & PIN ASSY, Kit, Incl. Refs 12 - 15 |
| 12 | | NSS | | 1 | NOT SERVICED SEPARATELY, Lever and Pin |
| 13 | | {87584172} | | 2 | SPRING, Tension |
| 14 | | NSS | | 1 | NOT SERVICED SEPARATELY, Screw |
| 15 | | NSS | | 1 | NOT SERVICED SEPARATELY, Washer |
| | | 82035073 | | 1 | HANDLE, Kit, Incl. Refs 16, 17 |
| 16 | | NSS | | 1 | NOT SERVICED SEPARATELY, Handle |
| 17 | | 82035087 | | 1 | SCREW |
| | | 82035079 | | 1 | SHOCK ABSORBER, Kit, Incl. Refs. 18 - 20 |
| 18 | | NSS | | 1 | NOT SERVICED SEPARATELY, Shock Absorber |
| 19 | | 85817560 | | 1 | WASHER, E-Clip |
| 20 | | NSS | | 1 | NOT SERVICED SEPARATELY, Washer |
| | | 82035082 | | 2 | STOP, Kit, Incl. Refs. 21, 22 |
| 21 | | NSS | | 1 | NOT SERVICED SEPARATELY, Stop |
| 22 | | 82035065 | | 2 | RIVET |

**SEAT ASSY, AIR SUSPENSION**

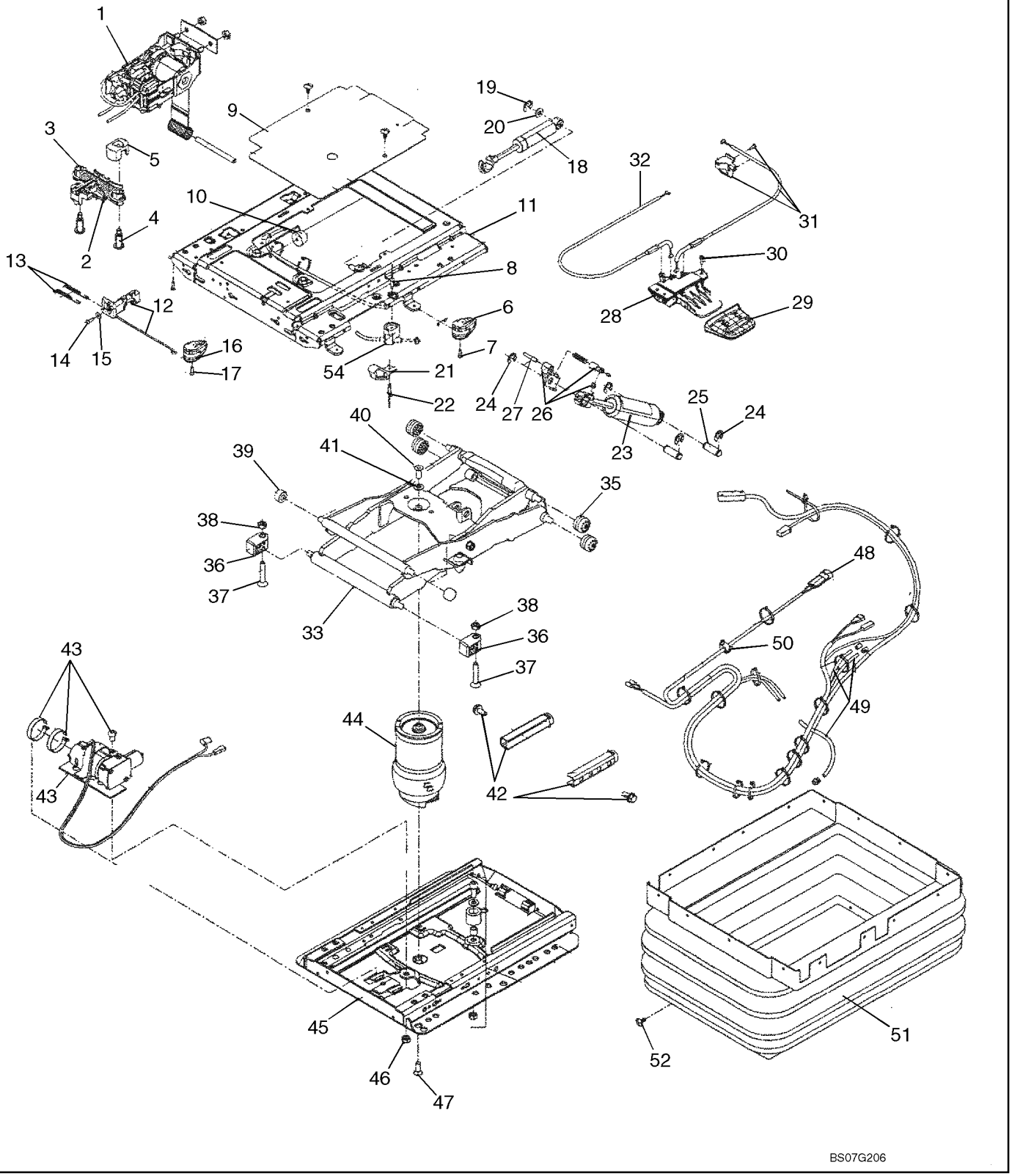

**SEAT ASSY, AIR SUSPENSION**

| REF | FN | PART NUMBER | YR/SN | QTY | DESCRIPTION |
|---|---|---|---|---|---|
| | | {87585037} | | 1 | KIT, SHOCK ABSORBER, Incl. Refs. 23 - 26 |
| 23 | | NSS | | 1 | NOT SERVICED SEPARATELY, Shock Absorber |
| 24 | | 85817496 | | 4 | WASHER, E-Clip, 10mm |
| 25 | | {87567829} | | 2 | PIN, Clevis |
| 26 | | 82035116 | | 1 | BEARING, Kit, Cable Connect |
| 27 | | {87584102} | | 1 | CABLE, Bowden |
| | | 82035086 | | 1 | LEVER, Kit, Incl. Refs. 28 - 30 |
| 28 | | NSS | | 1 | NOT SERVICED SEPARATELY, Lever |
| 29 | | 85817492 | | 1 | HANDLE |
| 30 | | 85819815 | | 3 | SCREW |
| 31 | | 82035106 | | 1 | CABLE, Kit |
| 32 | | 82035075 | | 1 | CABLE, Kit |
| | | 87396449 | | 1 | SUSPENSION, Kit, Incl. Refs. 33 - 41 |
| 33 | | NSS | | 1 | NOT SERVICED SEPARATELY, Suspension |
| 34 | | 82035126 | | 2 | BUMPER |
| 35 | | 82035057 | | 4 | ROLLER |
| 36 | | 87567830 | | 2 | SEAT ACCESSORY, BEARING, Thrust |
| 37 | | NSS | | 2 | NOT SERVICED SEPARATELY, Bolt |
| 38 | | NSS | | 2 | NOT SERVICED SEPARATELY, Nut |
| 39 | | 82035130 | | 2 | ROLLER |
| 40 | | NSS | | 2 | NOT SERVICED SEPARATELY, Screw |
| 41 | | NSS | | 2 | NOT SERVICED SEPARATELY, Washer |
| 42 | | 47335175 | | 1 | STOP, KIT, Stop, Incl. Mounting Hardware |
| 43 | | 345125A1 | | 1 | KIT, Compressor |
| 44 | | 87396450 | | 1 | SPRING, Kit |
| | | 398148A1 | | 1 | BASE, Kit, Incl. Refs. 35, 36, 42, 45 - 47 |
| 45 | | NSS | | 1 | NOT SERVICED SEPARATELY, Lower Suspension |
| 46 | | NSS | | 2 | NOT SERVICED SEPARATELY, Nut |
| 47 | | NSS | | 1 | NOT SERVICED SEPARATELY, Screw |
| 48 | | {87584100} | | 1 | CABLE, Connecting |
| 49 | | 82035077 | | 1 | HOSE KIT |
| 50 | | {87584103} | | 1 | CLAMP, Cable |
| | | 82035078 | | 1 | BELLOWS, Kit, Incl. Refs. 51, 52 |
| 51 | | NSS | | 1 | NOT SERVICED SEPARATELY, Bellows |
| 52 | | NSS | | 22 | NOT SERVICED SEPARATELY, Screw |

**SEAT ASSY, AIR SUSPENSION**

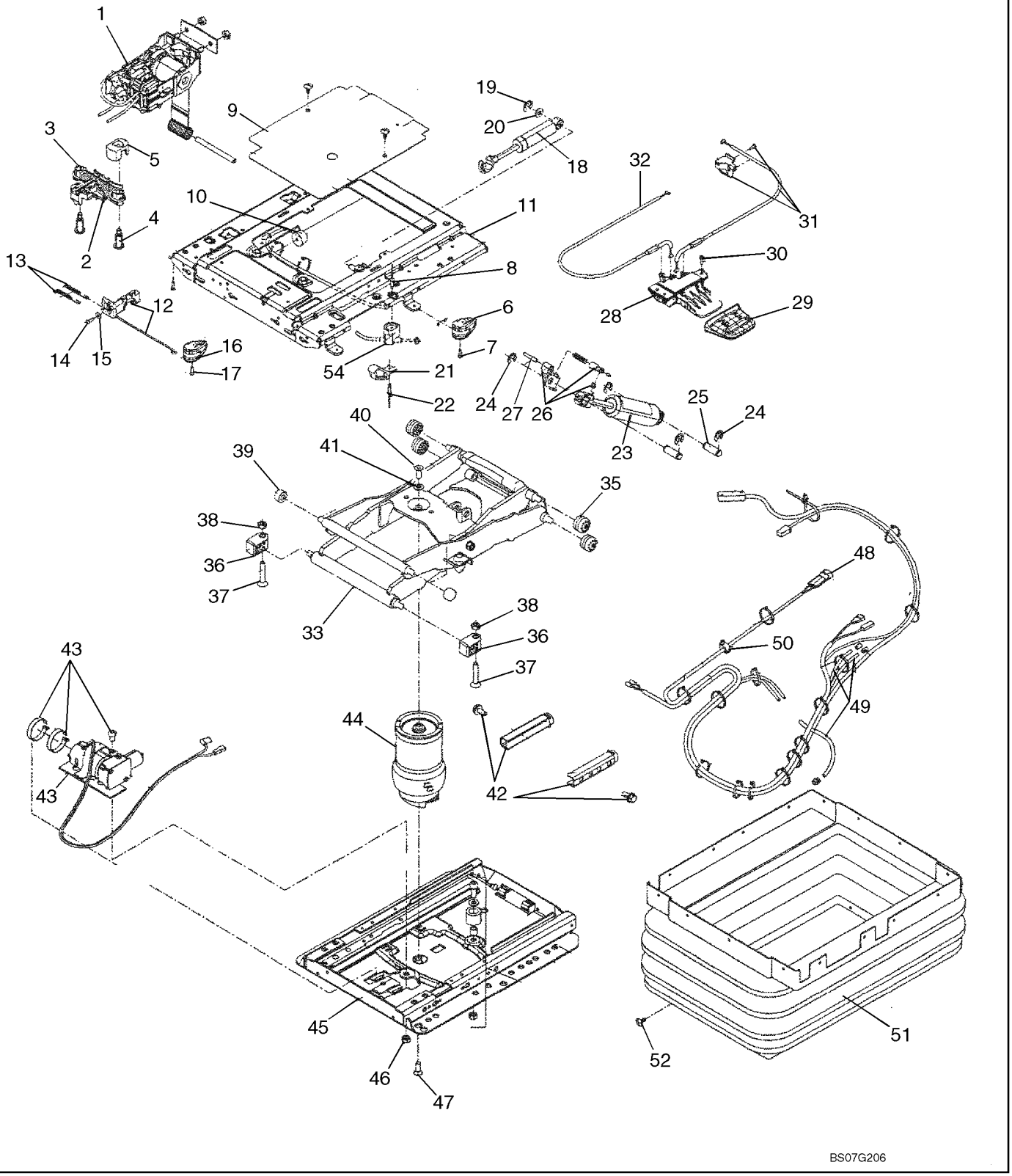

**SEAT ASSY, AIR SUSPENSION**

| REF | FN | PART NUMBER | YR/SN | QTY | DESCRIPTION |
|---|---|---|---|---|---|
| 53 | | {87583859} | | 1 | CONSOLE, Not Illustrated |
| 54 | | 82035071 | | 1 | GUIDE, Cable Holder |
| | | 82848105 | | 1 | KIT, Wear Parts, Incl. Refs. 3, 8, 10, 34, 35, 36, 39, 42, 46, 47, 52 |

| 09-43 | | p1 | 07/07 |
|---|---|---|---|

**CAB - HEATER AND AIR CONDITIONING DUCTS**

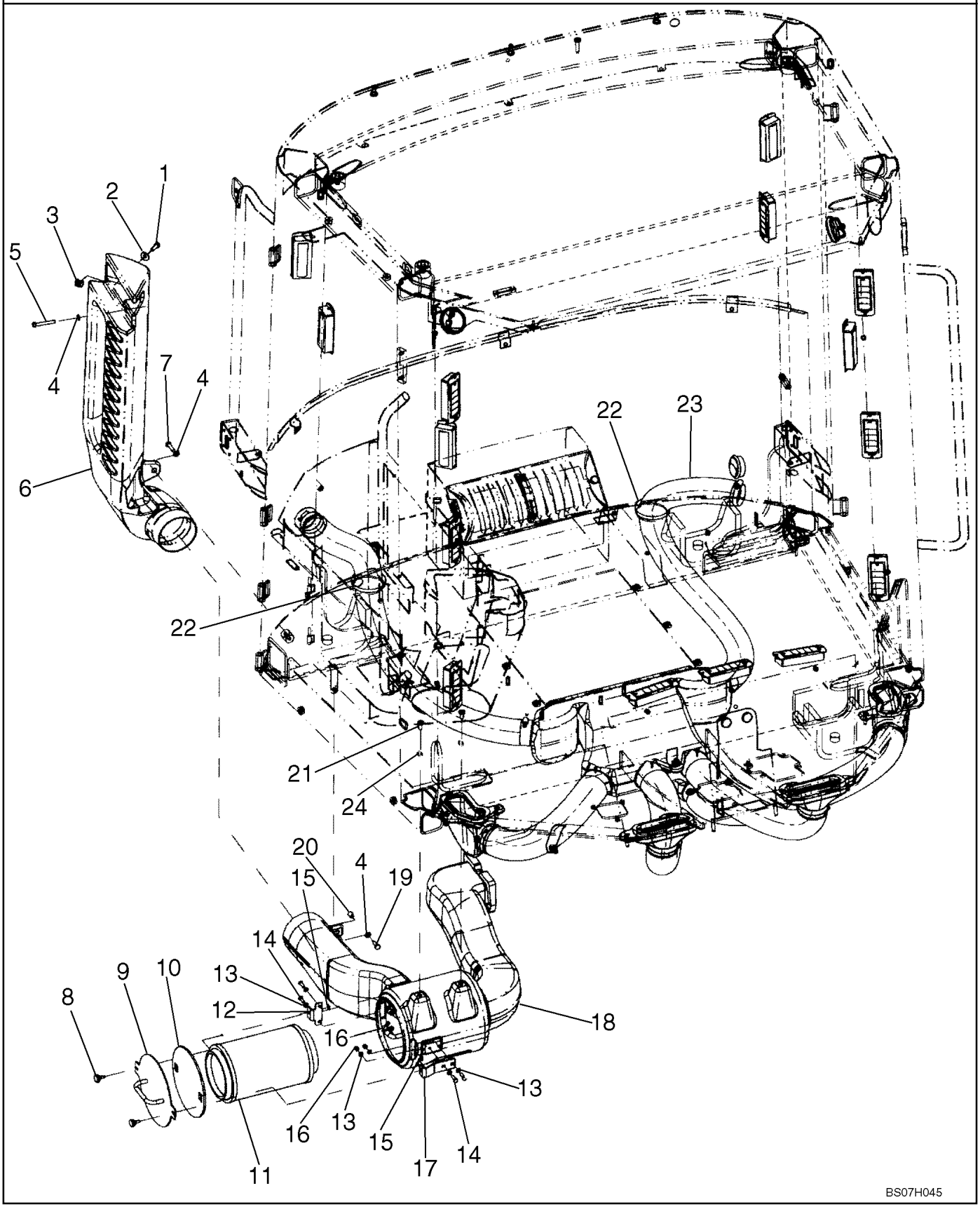

**CAB - HEATER AND AIR CONDITIONING DUCTS**

| REF | FN | PART NUMBER | YR/SN | QTY | DESCRIPTION |
|---|---|---|---|---|---|
| 1 | | 16043624 | | 1 | BOLT, Hex, M8 x 25, 8.8, Full Thd |
| 2 | | {87664051} | | 1 | WASHER, M9 x 24 x 2 |
| 3 | | 76303594 | | 1 | NUT, Square |
| 4 | | 895-11008 | | 3 | WASHER, M8 x 16 x 1.6 |
| 4 | | {87664049} | | 3 | WASHER, M9 x 16 x 1.6 |
| 5 | | 16044324 | | 1 | BOLT, Hex, M8 x 55, 8.8 |
| 6 | | 76303027 | | 1 | FUNNEL |
| 7 | | 16043824 | | 1 | BOLT, Hex, M8 x 30, 8.8, Full Thd |
| 8 | | 422721300 | | 2 | BOLT |
| 9 | | {76303615} | | 1 | COVER |
| 10 | | {76303546} | | 1 | SEAL |
| 11 | | 76303305 | | 1 | FILTER, AIR |
| 12 | | {76303541} | | 1 | BRACKET |
| 13 | | 895-11006 | | 8 | WASHER, M6 |
| 14 | | 614-6020 | | 4 | BOLT, Hex, M6 x 20, 8.8, If Used |
| 15 | | 87610851 | | 2 | NUT, Selflocking |
| 16 | | 832-10406 | | 4 | NUT, LOCK, M6 x 1, Cl 8 |
| 17 | | {76303617} | | 1 | BRACKET |
| 18 | | {76303614} | | 1 | AIR DUCT |
| 19 | | {779-14825} | | 1 | SCREW, ST8 X 25 H/HD C TAP ZND |
| 20 | | {76303609} | | 1 | INSERT, M8; If Used |
| 21 | | 840-1820 | | 2 | SCREW, Cross Pan Hd, M8 x 20, If Used |
| 22 | | {76303500} | | 2 | GASKET |
| 23 | | {76303504} | | 1 | TUBE |
| 24 | | 10519604 | | 2 | WASHER, M8 x 17 x 2, If Used |

**CAB - HEATER AND AIR CONDITIONING DUCTS**

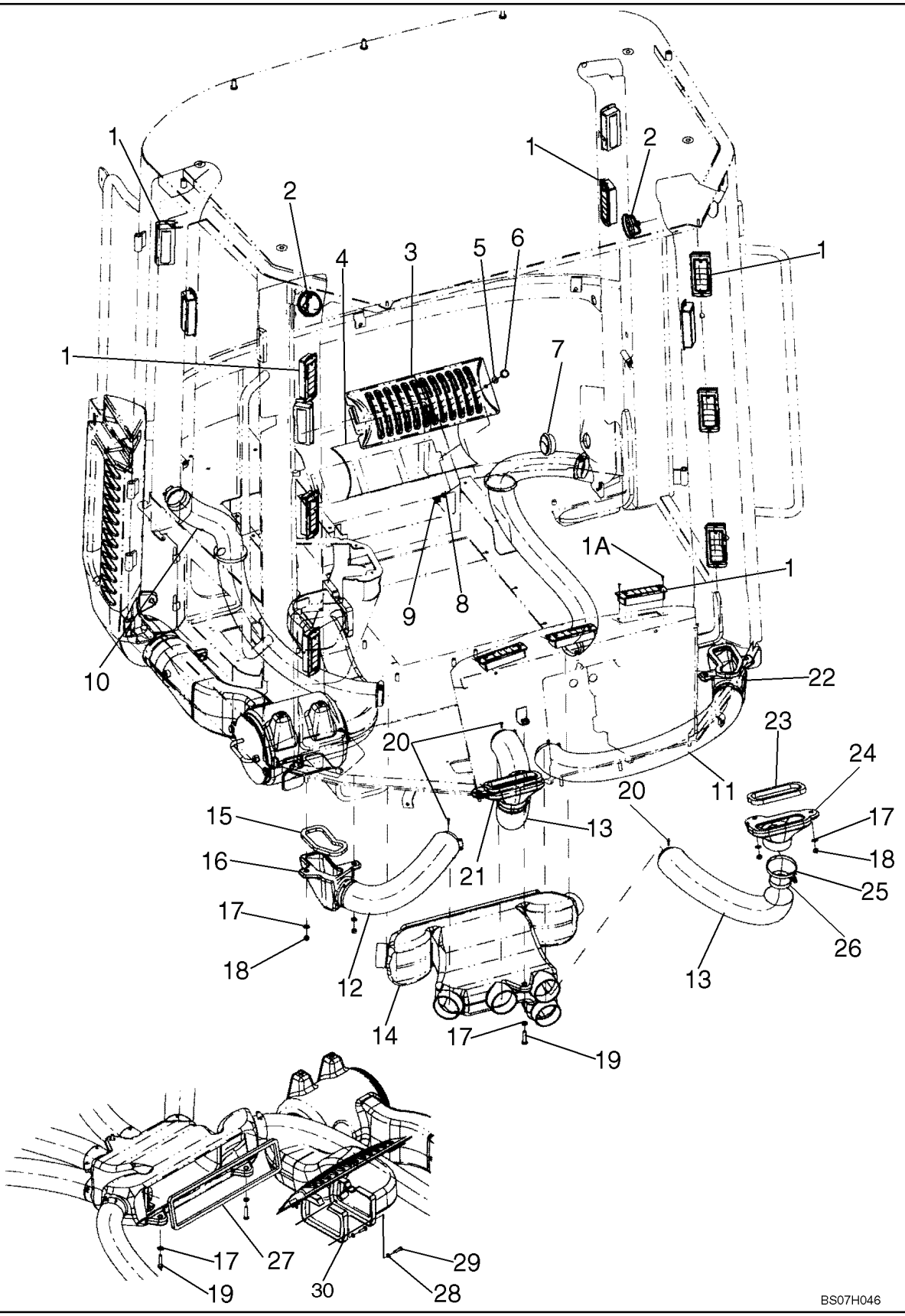

**CAB - HEATER AND AIR CONDITIONING DUCTS**

| REF | FN | PART NUMBER | YR/SN | QTY | DESCRIPTION |
|---|---|---|---|---|---|
| 1 | | 76079036 | | 15 | VENT |
| 1A | | 760-14113 | | 30 | SCREW, SELF TAP, Pan Hd, M3.5 x 13 |
| 2 | | 76048980 | | 2 | SPOUT, DISCHARGE |
| 3 | | 76303331 | | 1 | GRILLE |
| 4 | | 76303499 | | 1 | FILTER |
| 5 | | {87610804} | | 1 | WASHER, RUBBER, D6.4 x 17 |
| 6 | | 76303321 | | 1 | PIN |
| 7 | | 76303265 | | 1 | VENT (AIR) |
| 8 | | 76303319 | | 1 | WASHER |
| 9 | | 76303320 | | 1 | CLIP |
| 10 | | 76303505 | | 1 | HOSE |
| 11 | | 76303501 | | 1 | HOSE |
| 12 | | {76303502} | | 1 | TUBE |
| 13 | | {76303549} | | 2 | TUBE |
| 14 | | 76303023 | | 1 | DUCT |
| 15 | | {76303495} | | 2 | GASKET |
| 16 | | {87619957} | | 1 | DUCT |
| 17 | | 895-11008 | | 14 | WASHER, M8 x 16 x 1.6 |
| 18 | | 825-1408 | | 8 | NUT, M8, Cl 8, If Used |
| 18 | | 832-10408 | | 8 | NUT, LOCK, M8 x 1.25, Cl 8, If Used |
| 19 | | 614-8035 | | 3 | BOLT, Hex, M8 x 35, 8.8 |
| 20 | | 71485317 | | 4 | SCREW |
| 21 | | {87619956} | | 1 | DUCT |
| 22 | | {87619954} | | 1 | DUCT |
| 23 | | {76303494} | | 2 | GASKET |
| 24 | | {87619955} | | 1 | DUCT |
| 25 | | {87610848} | | 4 | GASKET |
| 26 | | 214-1444 | | 12 | CLAMP, HOSE, #44, 2.31/3.25 Type F Worm |
| 27 | | 76303496 | | 1 | GASKET, If Used |
| 28 | | 895-11006 | | 10 | WASHER, M6 |
| 29 | | 614-6020 | | 6 | BOLT, Hex, M6 x 20, 8.8 |
| 30 | | 76303496 | | 1 | GASKET, If Used |

**COVERS - DRIVE BELT (WITH AIR CONDITIONING)**

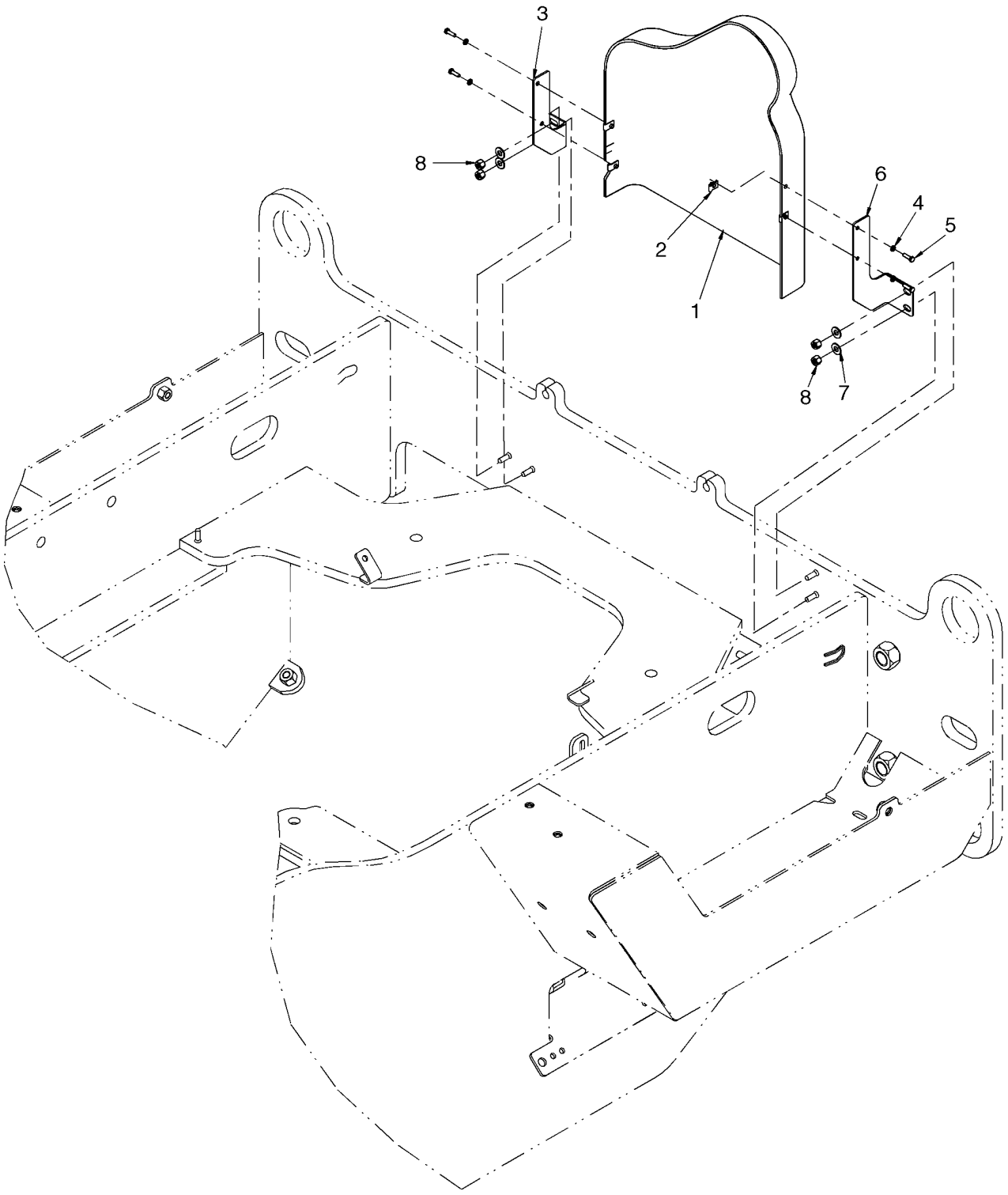

**COVERS - DRIVE BELT (WITH AIR CONDITIONING)**

| REF | FN | PART NUMBER | YR/SN | QTY | DESCRIPTION |
|---|---|---|---|---|---|
| | | REF | | | INSTRUCTION, WITH AIR CONDITIONING |
| 1 | | 8501022 | | 1 | GUARD |
| 2 | | 833-40306 | | 4 | NUT, M6, U |
| 3 | | 87528970 | | 1 | BRACKET, Engine Guard; Right |
| 4 | | 892-11006 | | 4 | WASHER, LOCK, M6 |
| 5 | | 627-6020 | | 4 | BOLT, Hex, M6 x 20, 10.9 |
| 6 | | 87528973 | | 1 | BRACKET, Engine Guard Mount |
| 7 | | 895-15008 | | 4 | WASHER, M8 x 20 x 1.6 |
| 8 | | 832-10410 | | 4 | NUT, LOCK, M10 x 1.5, Cl 8 |

**COVERS - DRIVE BELT (WITHOUT AIR CONDITIONING)**

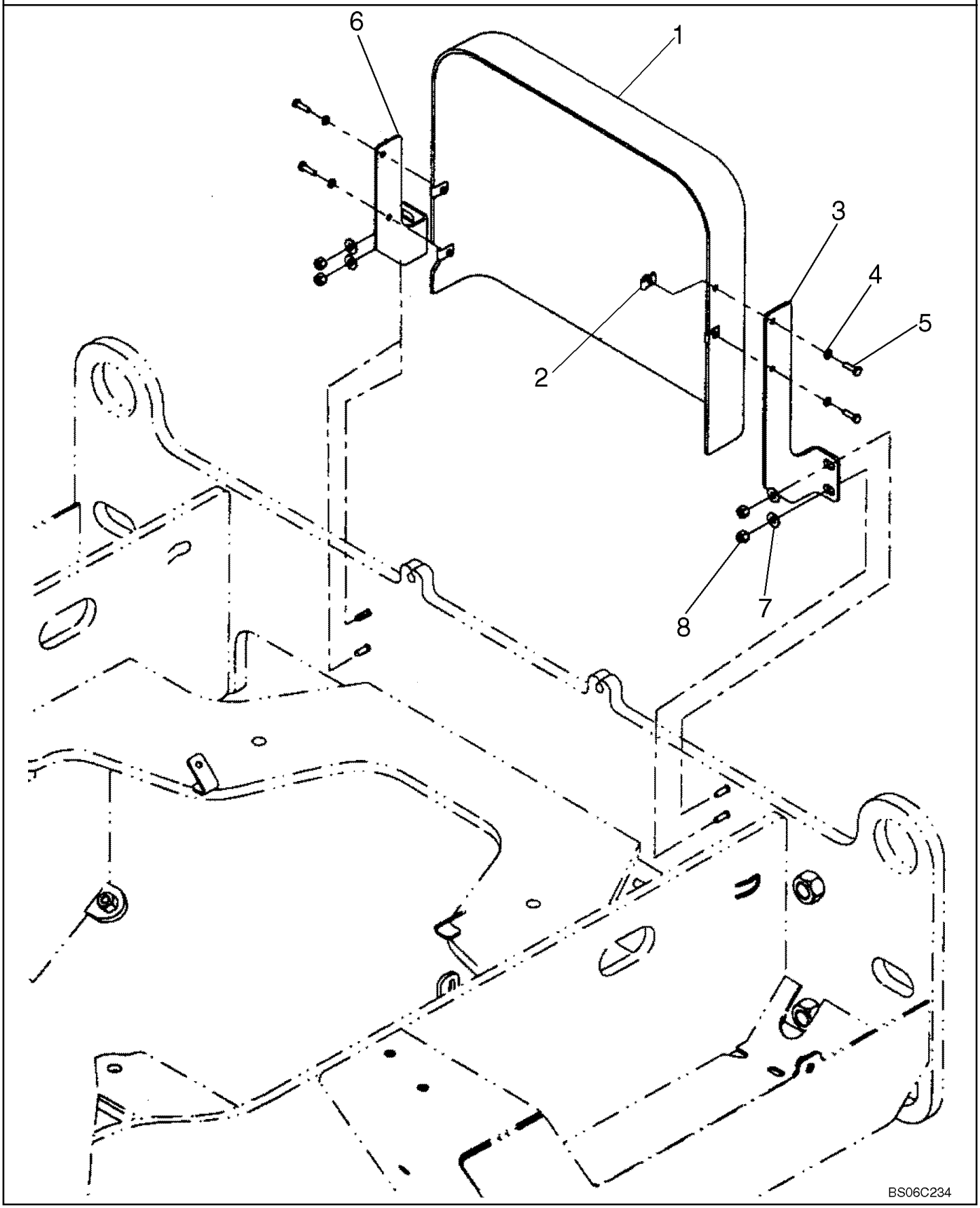

**COVERS - DRIVE BELT (WITHOUT AIR CONDITIONING)**

| REF | FN | PART NUMBER | YR/SN | QTY | DESCRIPTION |
|---|---|---|---|---|---|
| | | REF | | | INSTRUCTION, WITHOUT AIR CONDITIONING |
| 1 | | 8501024 | | 1 | GUARD |
| 2 | | 833-40306 | | 4 | NUT, M6, U |
| 3 | | 87528973 | | 1 | BRACKET, Engine Guard Mounting; Left |
| 4 | | 892-11006 | | 4 | WASHER, LOCK, M6 |
| 5 | | 627-6020 | | 4 | BOLT, Hex, M6 x 20, 10.9 |
| 6 | | 87528970 | | 1 | BRACKET, Engine Guard Mounting; Right |
| 7 | | 895-15008 | | 4 | WASHER, M8 x 20 x 1.6 |
| 8 | | 832-10408 | | 4 | NUT, LOCK, M8 x 1.25, Cl 8 |

| 09-44B | | p1 | 06/07 |
|---|---|---|---|

**COVERS - CAB - WITHOUT AIR CONDITIONING**

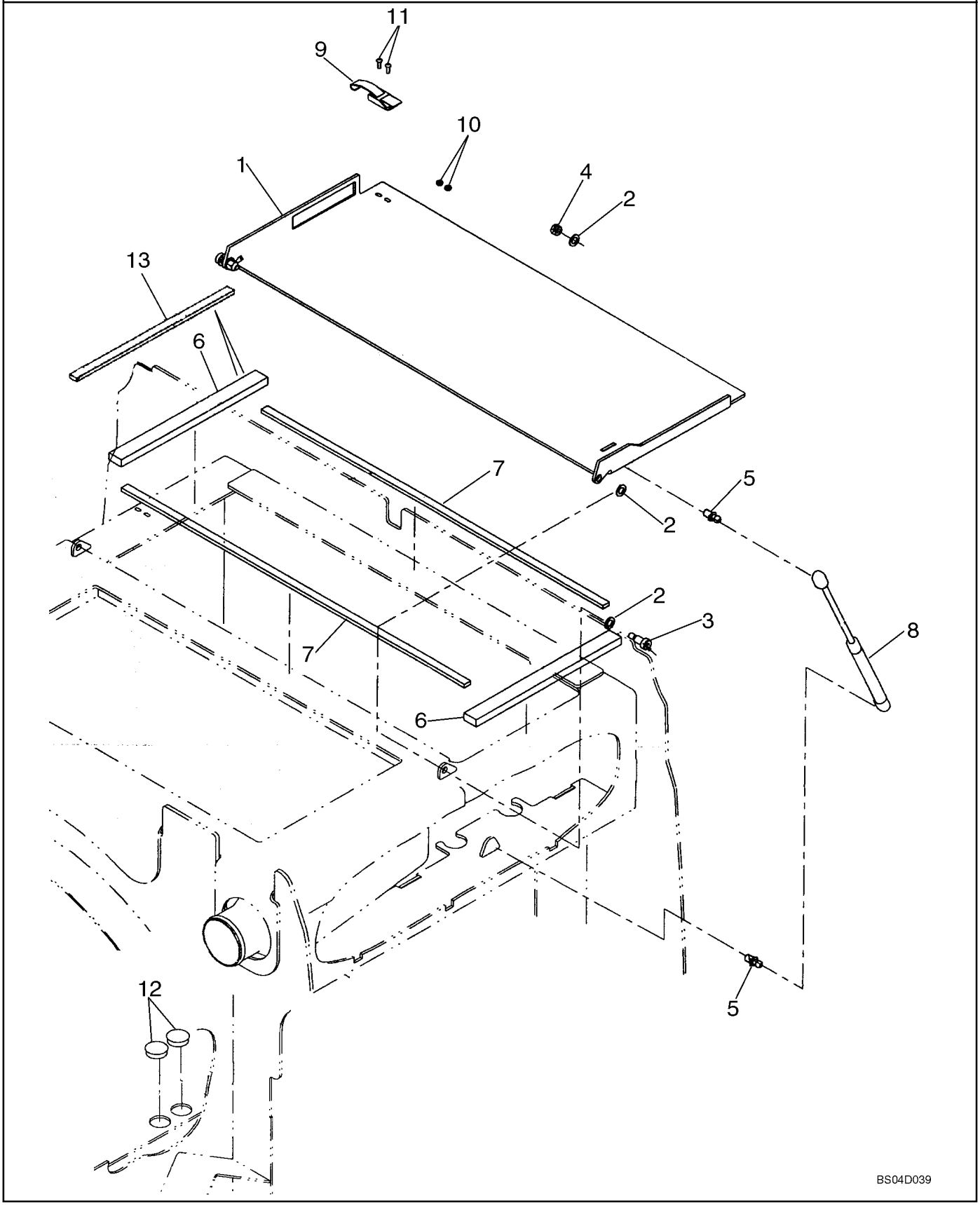

**COVERS - CAB - WITHOUT AIR CONDITIONING**

| REF | FN | PART NUMBER | YR/SN | QTY | DESCRIPTION |
|---|---|---|---|---|---|
| | | REF | | | INSTRUCTION, MODELS WITHOUT AIR CONDITIONING |
| 1 | | 8602727 | | 1 | PLATE ASSY. |
| 2 | | 895-18010 | | 6 | WASHER, M10 x 18 x 1.6 |
| 3 | | 561-703 | | 2 | SCREW, Hex Soc, Shoulder, M8 10 X 16mm, Cl 12.9 |
| 4 | | 832-10408 | | 2 | NUT, LOCK, M8 x 1.25, Cl 8 |
| 5 | | 350662A1 | | 2 | STUD |
| 6 | | 8602498 | | 1 | SEAL |
| 7 | | 8500133 | | 2 | SEAL, Oil Cooler; Side |
| 8 | | 252550A2 | | 1 | GAS STRUT, Cylinder |
| 9 | | 60-4640T1 | | 1 | LATCH |
| 10 | | 225-14108 | | 2 | NUT, #8-32 |
| 11 | | 440-1088 | | 2 | SCREW, Cross Pan Hd, #8-32 x 1/2" |
| 12 | | 353-414 | | 2 | PLUG, Dome, 1.375" hole, Nylon |
| 13 | | 87432328 | | 1 | SEAL |

**HEATER - MOUNTING**

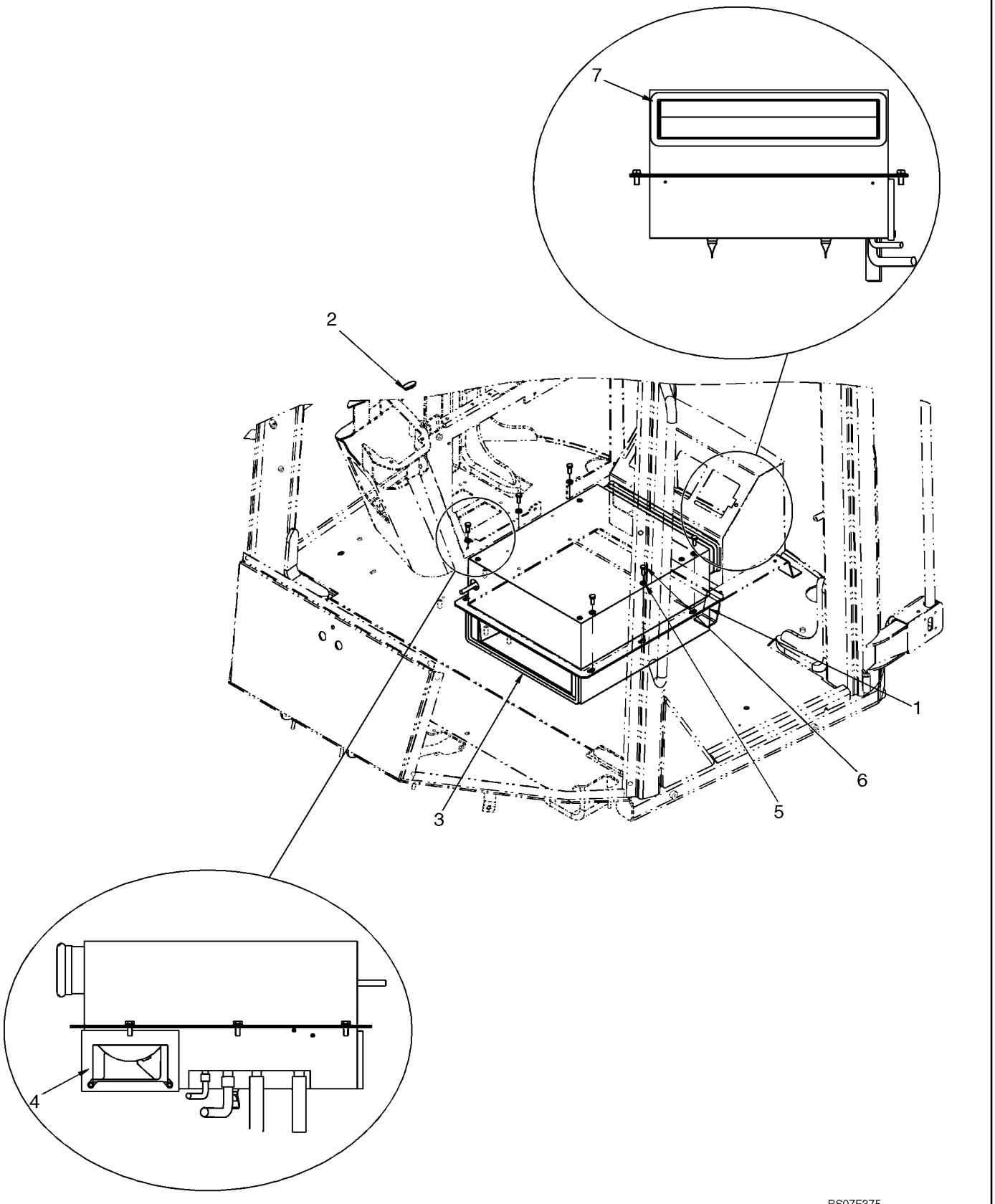

**HEATER - MOUNTING**

| REF | FN | PART NUMBER | YR/SN | QTY | DESCRIPTION |
|---|---|---|---|---|---|
| | | REF | | | INSTRUCTION, UNITS WITH HEATER ONLY |
| 1 | | 76303352 | | 1 | HEATER, HVAC Heater Unit; Production Number Only, Order Component Parts; See Figure 09-45A |
| 2 | | 76047278 | | 1 | PLUG |
| 3 | | 76303496 | | 1 | GASKET |
| 4 | | 76303497 | | 1 | GASKET |
| 5 | | 895-11008 | | 6 | WASHER, M8 x 16 x 1.6 |
| 6 | | 614-8020 | | 6 | BOLT, Hex, M8 x 20, 8.8 |
| 7 | | 87651073 | | 1 | WEATHERSTRIP, SEAL |

| 09-45A | | p1 | 07/07 |
|---|---|---|---|

**HEATER**

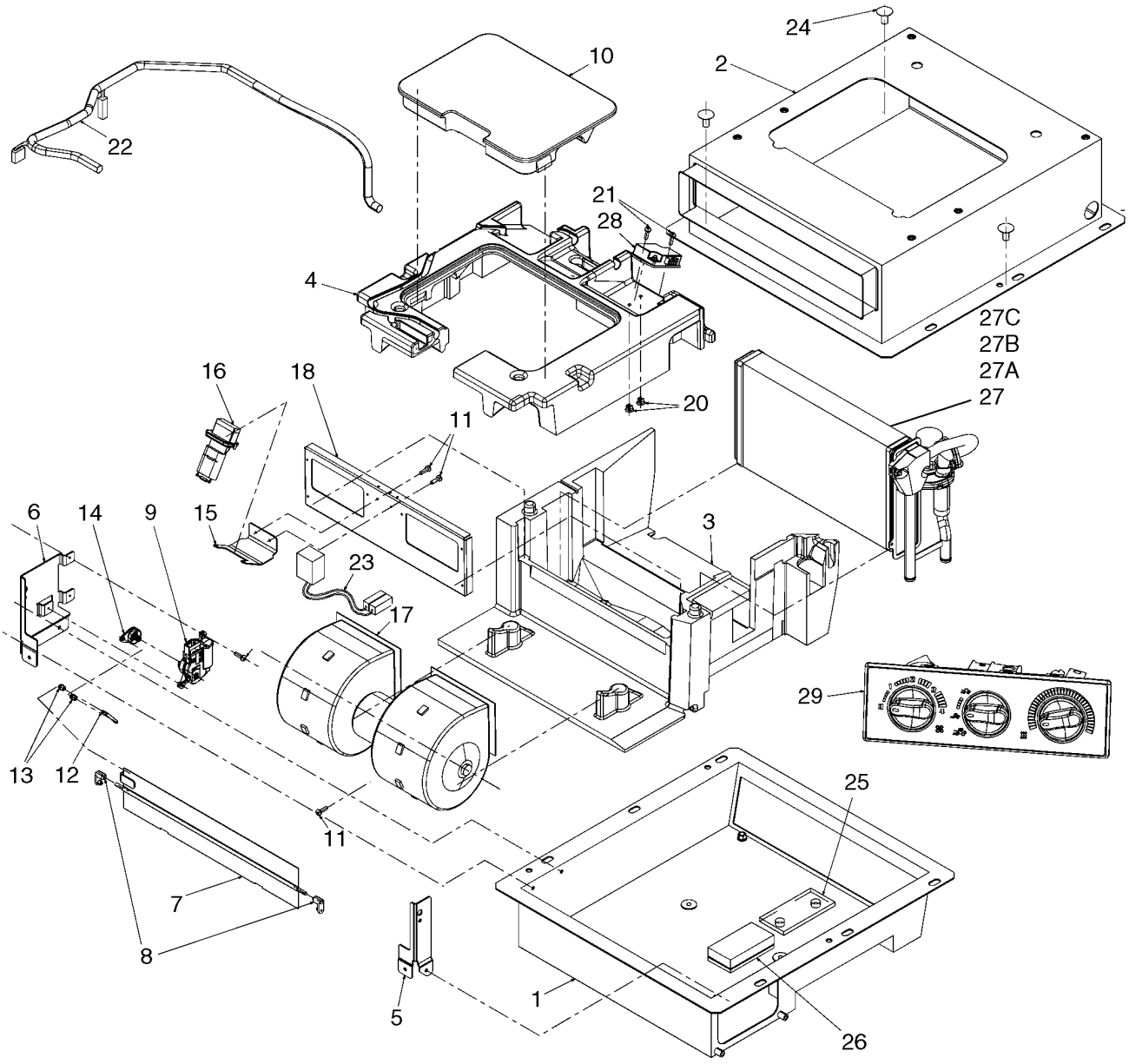

**HEATER**

| REF | FN | PART NUMBER | YR/SN | QTY | DESCRIPTION |
|---|---|---|---|---|---|
| | | REF | | | INSTRUCTION, UNITS WITH HEATER ONLY |
| 1 | | 87529453 | | 1 | BOX, Lower |
| 2 | | 87529457 | | 1 | BOX, Upper |
| 3 | | 87529458 | | 1 | BOX, Lower |
| 4 | | 87529459 | | 1 | BOX, Upper |
| 5 | | NSS | | 1 | NOT SERVICED SEPARATELY, Right Fastening Bracket |
| 6 | | NSS | | 1 | NOT SERVICED SEPARATELY, Left Fastening Bracket |
| 7 | | 87643958 | | 1 | FLAP, Recirculation |
| 8 | | 87643957 | | 2 | BUSHING, For Recirculation Flap |
| 9 | | 87528689 | | 1 | MOTOR, ELECTRIC, SMALL |
| 10 | | 87529462 | | 1 | COVER, Inspection Trapdoor |
| 11 | | NSS | | 13 | NOT SERVICED SEPARATELY, Screw |
| 12 | | 87643954 | | 1 | TIE-ROD |
| 13 | | 87643955 | | 2 | BUSHING |
| 14 | | 87529617 | | 1 | LEVER |
| 15 | | NSS | | 1 | NOT SERVICED SEPARATELY, Pipe Fastening Retainer |
| 16 | | 87528688 | | 1 | RESISTOR |
| 17 | | 87528687 | | 1 | BLOWER ASSY., Electric Fan |
| 18 | | NSS | | 1 | NOT SERVICED SEPARATELY, Bracket |
| 20 | | NSS | | 2 | NOT SERVICED SEPARATELY, Screw |
| 21 | | NSS | | 2 | NOT SERVICED SEPARATELY, Screw |
| 22 | | 87529485 | | 1 | CABLE |
| 23 | | NSS | | 1 | NOT SERVICED SEPARATELY, Fan Cable |
| 24 | | NSS | | 4 | NOT SERVICED SEPARATELY, Plug |
| 25 | | NSS | | 1 | NOT SERVICED SEPARATELY, Seal |
| 26 | | 87577361 | | 1 | FOAM, Seal |
| 27 | | 87529289 | | 1 | HEATER ASSY., Incl. Refs. 27A, 27B |
| 27A | | 87529444 | | 1 | TUBE, HEATER |
| 27B | | 87529447 | | 1 | CORE, Heater |
| 27C | | 87529627 | | 1 | VALVE, Water |
| 28 | | 87529487 | | 1 | SOLENOID |
| 29 | | 87529536 | | 1 | CONTROL, Manual Heater Control |

**HEATING HOSES**

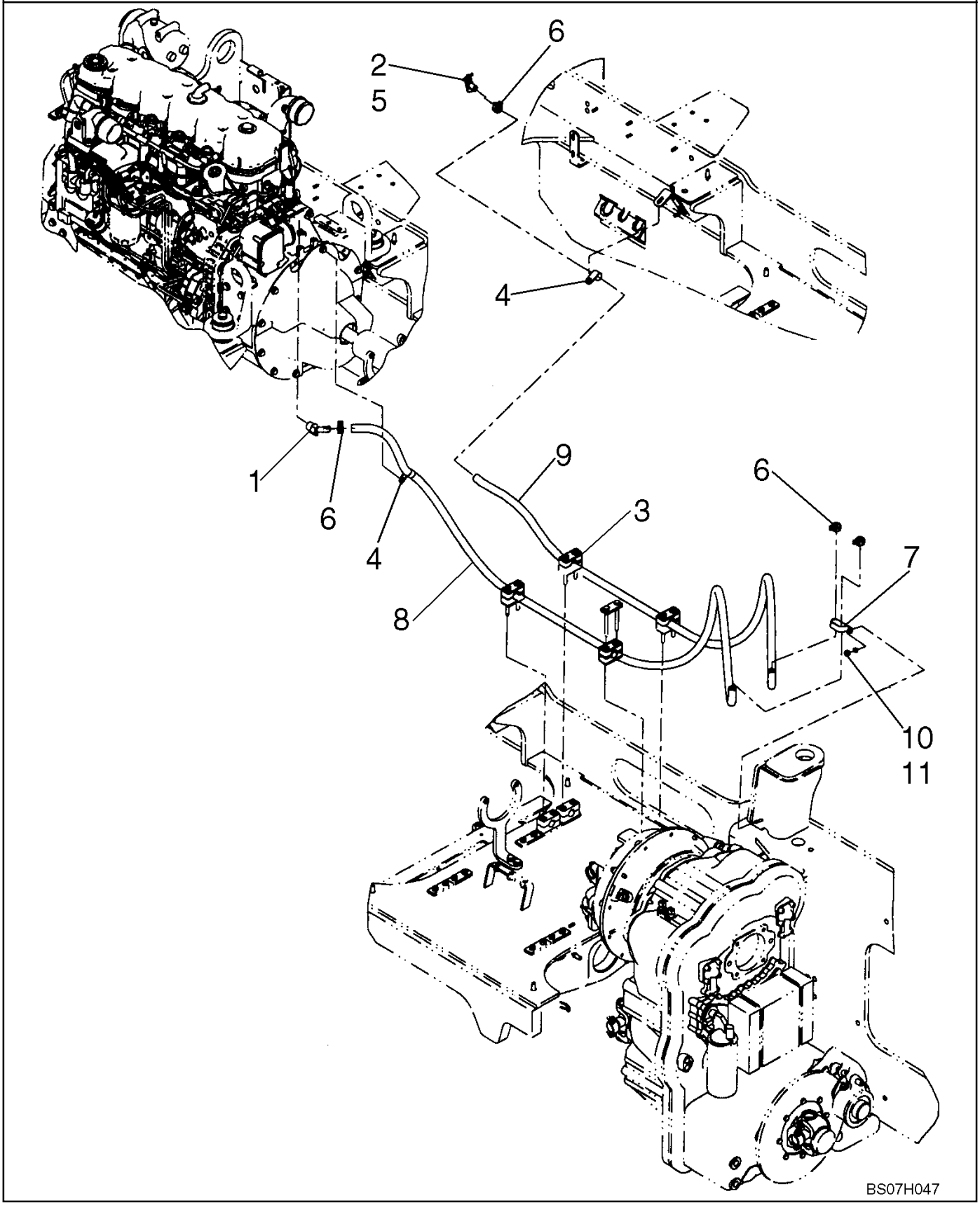

**HEATING HOSES**

| REF | FN | PART NUMBER | YR/SN | QTY | DESCRIPTION |
|---|---|---|---|---|---|
| 1 | | 217-425 | | 1 | FITTING, 45º, 5/8" Hose x 3/4" NPTF Beaded |
| 2 | | 301803R1 | | 1 | VALVE, SHUT-OFF |
| 3 | | 367489A1 | | 4 | BLOCK |
| 4 | | 515-24238 | | 4 | CLAMP, 15/16", Insul, 7/16" Bolt |
| 5 | | 345-87 | | AR | LOCTITE, Loctite 592 |
| 6 | | 1954736C1 | | 2 | CLAMP, HOSE, No. 24 |
| 7 | | 31-1081 | | 2 | CLAMP/Retired |
| 8 | | 1975801C1 | | 1 | HOSE, LARGE, Heater Supply |
| 9 | | R55242 | | 1 | HOSE, LARGE, Heater Return |
| 10 | | 895-11008 | | 1 | WASHER, M8 x 16 x 1.6 |
| 11 | | 829-1410 | | 1 | NUT, M10, Cl 10 |

**AIR CONDITIONING - MOUNTING**

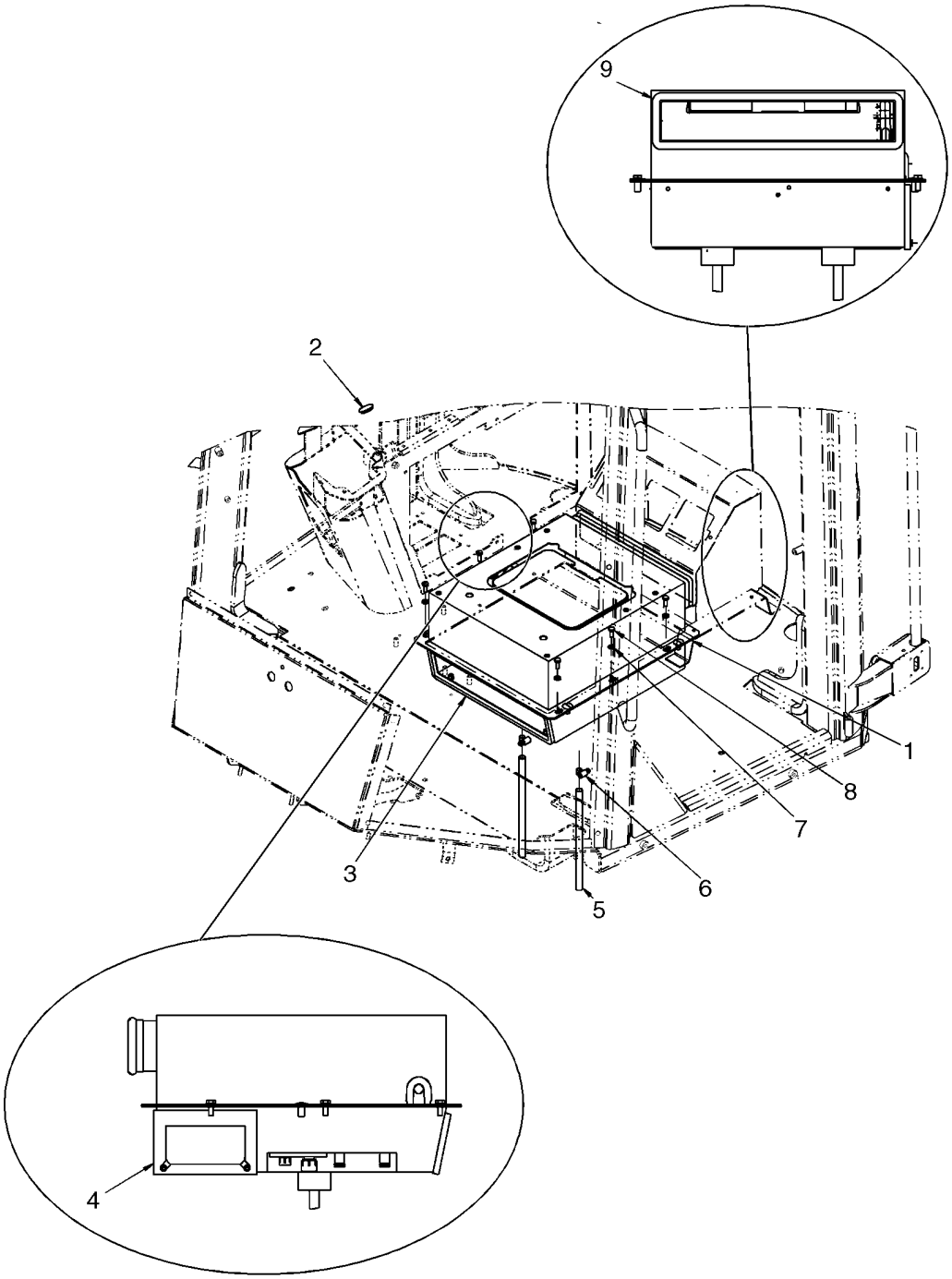


BS07F374

**AIR CONDITIONING - MOUNTING**

| REF | FN | PART NUMBER | YR/SN | QTY | DESCRIPTION |
|---|---|---|---|---|---|
| | | REF | | | INSTRUCTION, UNITS WITH HEATER AND AIR CONDITIONING |
| 1 | | 76303592 | | 1 | AIR CONDITIONER, HVAC A/C And Heater Unit; Production Number Only, Order Component Parts; See Figure 09-47A |
| 2 | | 76047278 | | 1 | PLUG |
| 3 | | 76303496 | | 1 | GASKET |
| 4 | | 76303497 | | 1 | GASKET |
| 5 | | 87587637 | | 2 | TUBE, PLASTIC-RUBBER |
| 6 | | 214-1406 | | 2 | CLAMP, HOSE, #06, .44/.78 Type F Worm |
| 7 | | 895-11008 | | 6 | WASHER, M8 x 16 x 1.6 |
| 8 | | 614-8020 | | 6 | BOLT, Hex, M8 x 20, 8.8 |
| 9 | | {87561073} | | 1 | SEAL |

**AIR CONDITIONING**

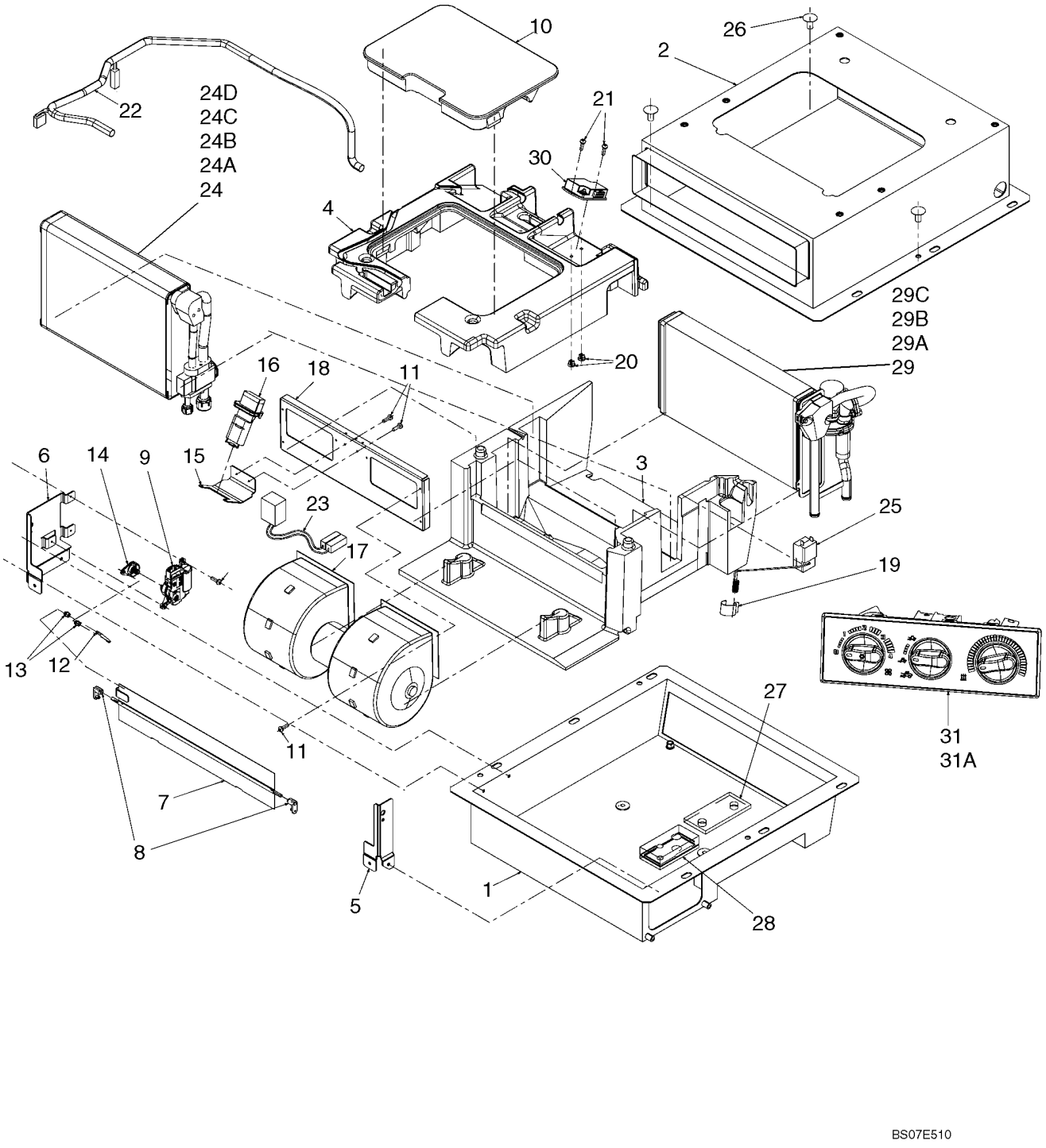

**AIR CONDITIONING**

| REF | FN | PART NUMBER | YR/SN | QTY | DESCRIPTION |
|---|---|---|---|---|---|
| | | REF | | | INSTRUCTION, UNITS WITH HEATER AND AIR CONDITIONING |
| 1 | | 87529453 | | 1 | BOX, Lower |
| 2 | | 87529457 | | 1 | BOX, Upper |
| 3 | | 87529458 | | 1 | BOX, Lower |
| 4 | | 87529459 | | 1 | BOX, Upper |
| 5 | | NSS | | 1 | NOT SERVICED SEPARATELY, Right Fastening Bracket |
| 6 | | NSS | | 1 | NOT SERVICED SEPARATELY, Left Fastening Bracket |
| 7 | | 87643958 | | 1 | FLAP, Recirculation |
| 8 | | 87643957 | | 2 | BUSHING, For Recirculation Flap |
| 9 | | 87528689 | | 1 | MOTOR, ELECTRIC, SMALL |
| 10 | | 87529462 | | 1 | COVER, Inspection Trapdoor |
| 11 | | NSS | | 13 | NOT SERVICED SEPARATELY, Screw |
| 12 | | 87643954 | | 1 | TIE-ROD |
| 13 | | 87643955 | | 2 | BUSHING |
| 14 | | 87529617 | | 1 | LEVER |
| 15 | | NSS | | 1 | NOT SERVICED SEPARATELY, Pipe Fastening Retainer |
| 16 | | 87528688 | | 1 | RESISTOR |
| 17 | | 87528687 | | 1 | BLOWER ASSY., Electric Fan |
| 18 | | NSS | | 1 | NOT SERVICED SEPARATELY, Bracket |
| 19 | | 87577360 | | 1 | CLIP, SPRING |
| 20 | | NSS | | 2 | NOT SERVICED SEPARATELY, Screw |
| 21 | | NSS | | 2 | NOT SERVICED SEPARATELY, Screw |
| 22 | | 87529485 | | 1 | CABLE |
| 23 | | NSS | | 1 | NOT SERVICED SEPARATELY, Fan Cable |
| 24 | | 87529493 | | 1 | EVAPORATOR, Incl. Refs. 24A - 24D |
| 24A | | 87529495 | | 1 | VALVE, Expansion |
| 24B | | 87529498 | | 1 | EVAPORATOR |
| 24C | | 87529505 | | 1 | TUBE, For Evaporator |
| 24D | | 87529508 | | 1 | UNION |
| 25 | | 87529621 | | 1 | THERMOSTAT |
| 26 | | NSS | | 4 | NOT SERVICED SEPARATELY, Plug |

**AIR CONDITIONING**

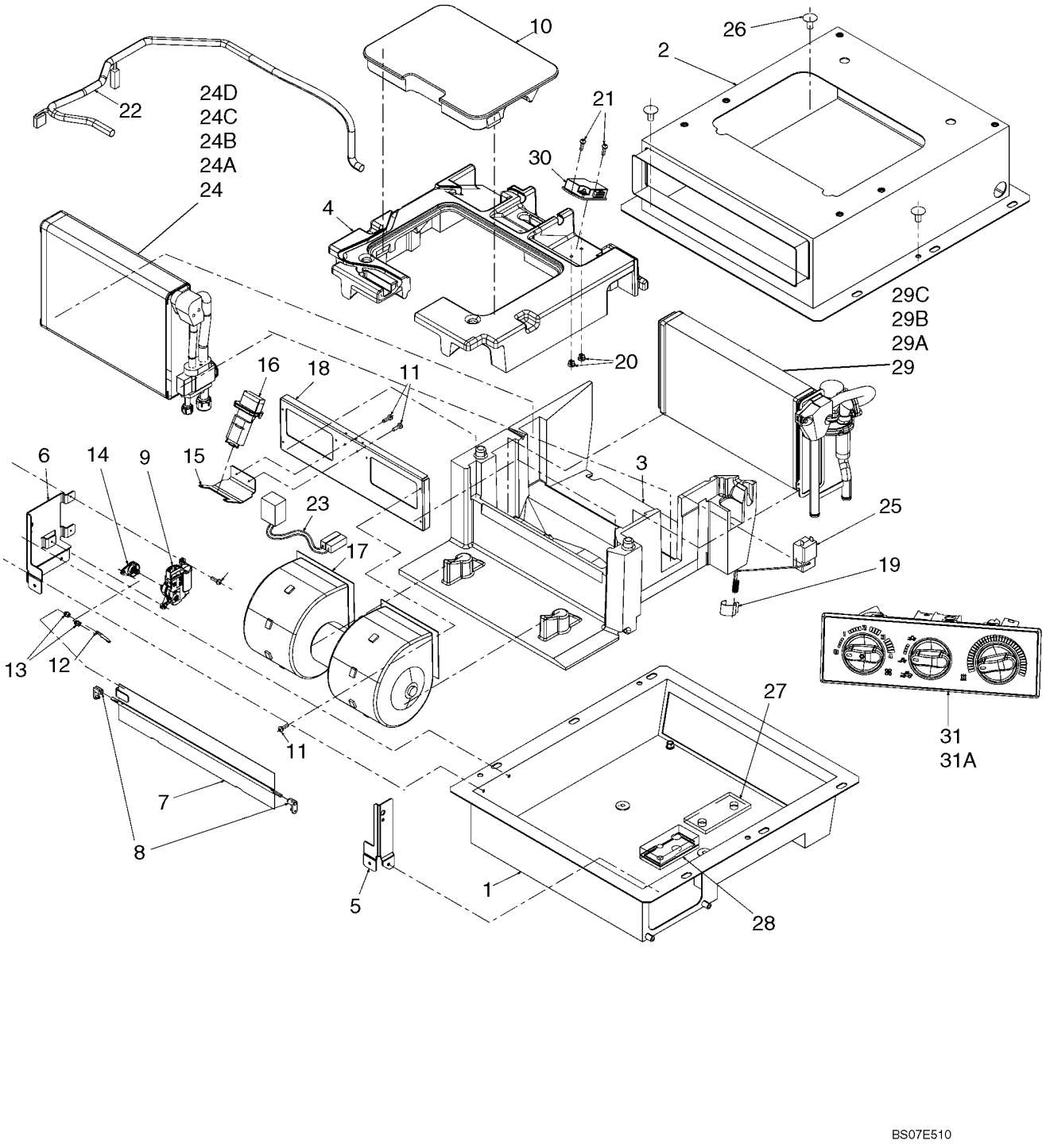

**AIR CONDITIONING**

| REF | FN | PART NUMBER | YR/SN | QTY | DESCRIPTION |
|---|---|---|---|---|---|
| 27 | | NSS | | 1 | NOT SERVICED SEPARATELY, Seal |
| 28 | | 87577361 | | 1 | FOAM, Seal |
| 29 | | 87529289 | | 1 | HEATER ASSY., Incl. Refs. 29A - 29C |
| 29A | | 87529444 | | 1 | TUBE, HEATER |
| 29B | | 87529447 | | 1 | CORE, Heater |
| 29C | | 87529627 | | 1 | VALVE, Water |
| 30 | | 87529487 | | 1 | SOLENOID |
| 31 | | 87529463 | | 1 | CONTROL UNIT, Manual Climate Control, Heater With A/C, Incl. Ref. 31A |
| 31A | | 87529474 | | 1 | CONTROL, Lighting Flange |

**AIR CONDITIONING - CONDENSER**

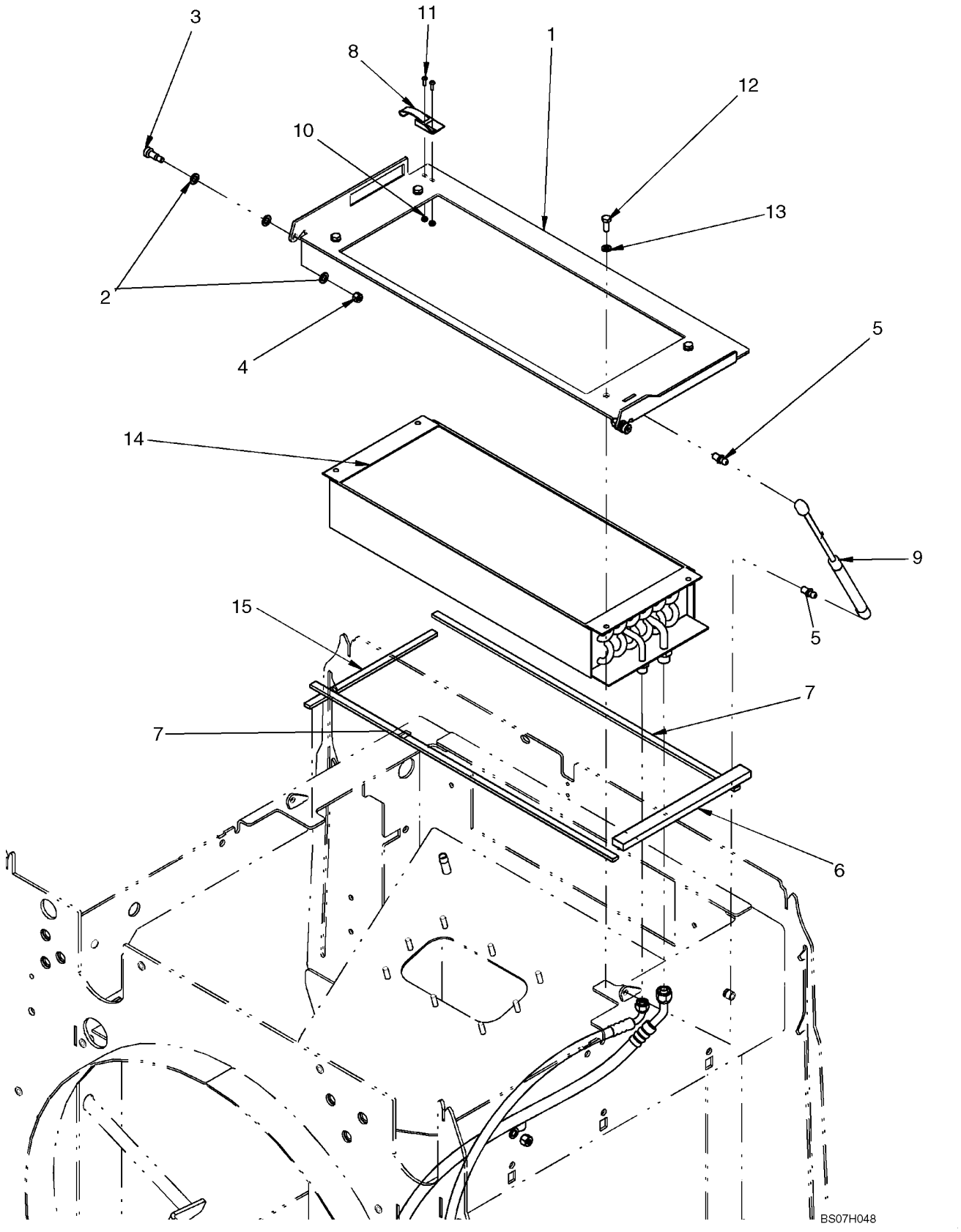

**AIR CONDITIONING - CONDENSER**

| REF | FN | PART NUMBER | YR/SN | QTY | DESCRIPTION |
|---|---|---|---|---|---|
| | | REF | | | INSTRUCTION, AIR CONDITIONING CONDENSER MOUNTING |
| 1 | | 8602725 | | 1 | PLATE ASSY., Condenser |
| 2 | | 895-18010 | | 6 | WASHER, M10 x 18 x 1.6 |
| 3 | | 561-703 | | 2 | SCREW, Hex Soc, Shoulder, M8 10 X 16mm, Cl 12.9 |
| 4 | | 832-10408 | | 2 | NUT, LOCK, M8 x 1.25, Cl 8 |
| 5 | | 350662A1 | | 2 | STUD, Ball |
| 6 | | 8602498 | | 1 | SEAL |
| 7 | | 8500133 | | 2 | SEAL, Oil Cooler; Side |
| 8 | | 60-4640T1 | | 1 | LATCH |
| 9 | | 252550A2 | | 1 | GAS STRUT, Cylinder |
| 10 | | 225-14108 | | 2 | NUT, #8-32 |
| 11 | | 440-1088 | | 2 | SCREW, Cross Pan Hd, #8-32 x 1/2" |
| 12 | | 627-8020 | | 4 | BOLT, Hex, M8 x 20, 10.9 |
| 13 | | 892-11008 | | 4 | WASHER, LOCK, M8 |
| 14 | | 8500878 | | 1 | CONDENSER, Air Conditioning |
| 15 | | 87432328 | | 1 | SEAL, Latch |

**AIR CONDITIONING HOSES**

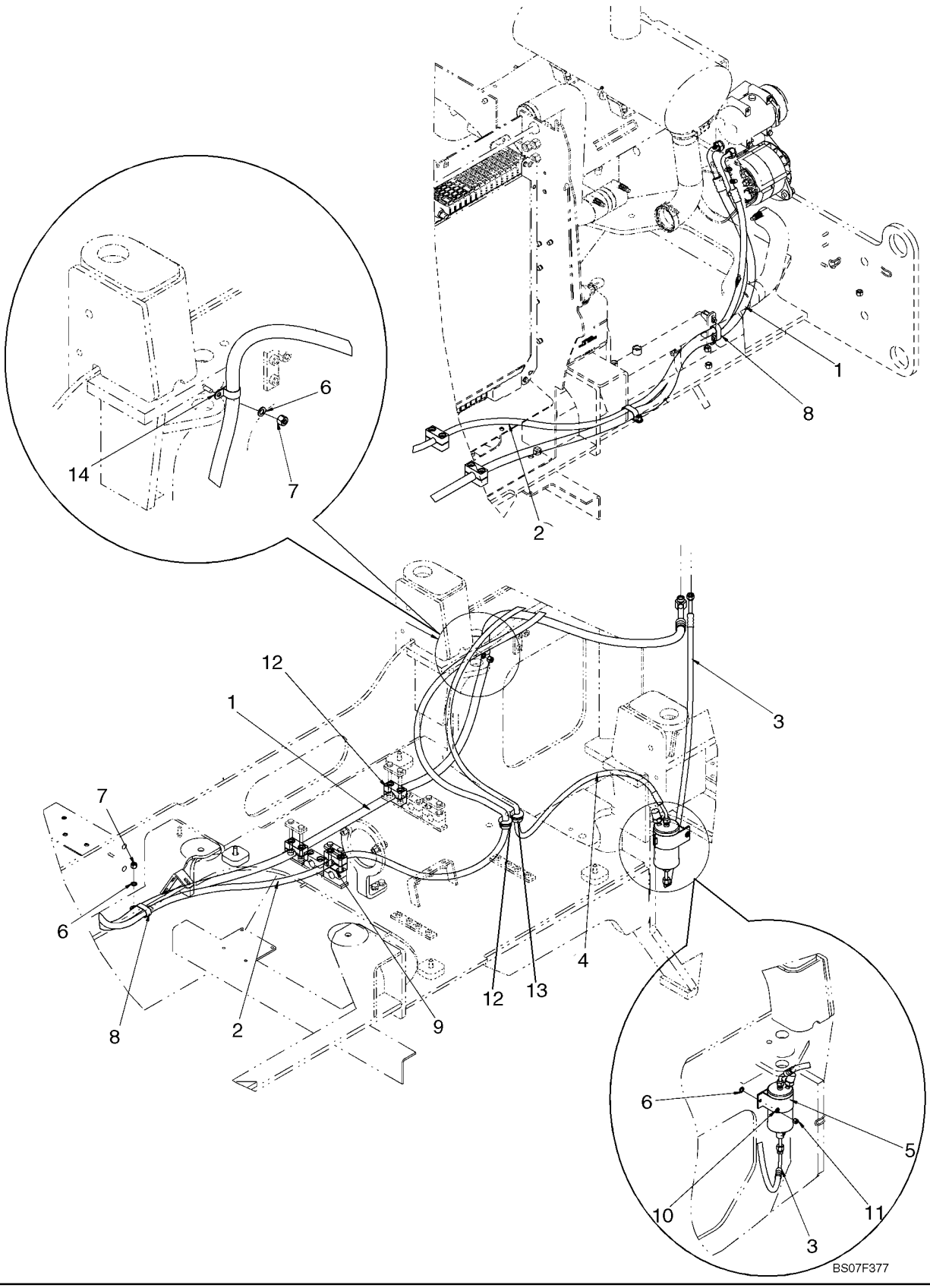

**AIR CONDITIONING HOSES**

| REF | FN | PART NUMBER | YR/SN | QTY | DESCRIPTION |
|---|---|---|---|---|---|
| 1 | | 87440551 | | 1 | HOSE ASSY., Cab to Compressor; 3715 mm (146 in) |
| 2 | | 87629992 | | 1 | HOSE, Compressor to Condensor; 3658 (144 in) |
| 3 | | 87651217 | | 1 | HOSE, Dryer to Cab; 1052 (41 - 13/32 in) |
| 4 | | 8602469 | | 1 | HOSE ASSY., Condensor to Dryer; 2000 mm (79 in) |
| 5 | | 87404588 | | 1 | RECEIVER-DRYER, A/C Dryer Kit |
| 6 | | 895-18010 | | 3 | WASHER, M10 x 18 x 1.6 |
| 7 | | 832-10410 | | 2 | NUT, LOCK, M10 x 1.5, Cl 8 |
| 8 | | 31-1081 | | 2 | CLAMP/Retired |
| 9 | | 379374A1 | | 1 | BLOCK |
| 10 | | 895-11008 | | 1 | WASHER, M8 x 16 x 1.6 |
| 11 | | 832-10408 | | 1 | NUT, LOCK, M8 x 1.25, Cl 8 |
| 12 | | 198826C1 | | 1 | GROMMET |
| 13 | | 198825C1 | | 1 | GROMMET |
| 14 | | 515-22254 | | 1 | CLAMP, 1", Insul, 5/16" Bolt |

**COUNTERWEIGHT**

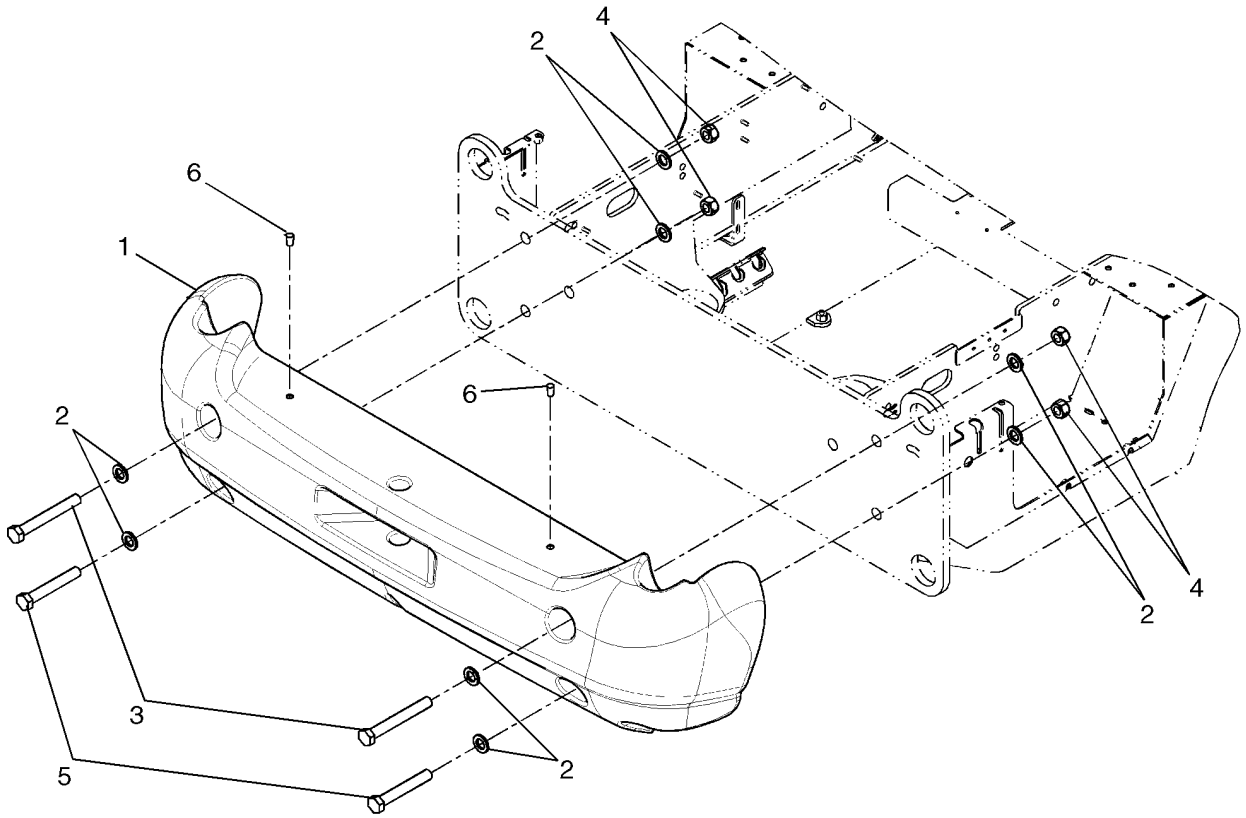


BS07E448

**COUNTERWEIGHT**

| REF | FN | PART NUMBER | YR/SN | QTY | DESCRIPTION |
|---|---|---|---|---|---|
| 1 | | 87577182 | | 1 | WEIGHT, COUNTER, 499 kg (1100 lb) |
| 2 | | 896-11024 | | 8 | WASHER, M24 x 44.5 x 5, HT |
| 3 | | 827-24190 | | 2 | BOLT, Hex, M24 x 190, 10.9 |
| 4 | | 829-1424 | | 4 | NUT, M24, Cl 10 |
| 5 | | 827-24160 | | 2 | BOLT, Hex, M24 x 160, 10.9 |
| 6 | | 87308200 | | 2 | PLASTIC PLUG |

**COUNTERWEIGHT - HEAVY DUTY**

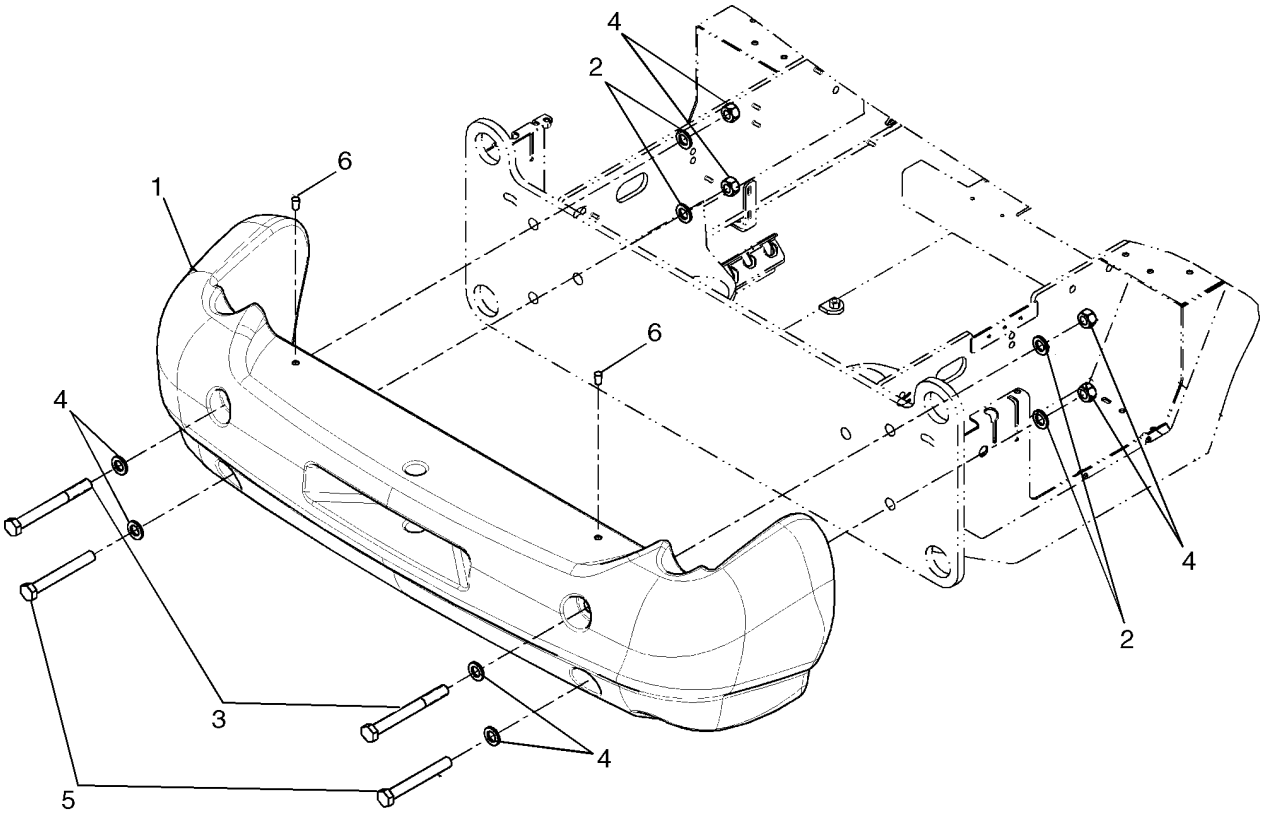


BS07E447

**COUNTERWEIGHT - HEAVY DUTY**

| REF | FN | PART NUMBER | YR/SN | QTY | DESCRIPTION |
|---|---|---|---|---|---|
| | | REF | | | INSTRUCTION, HEAVY DUTY COUNTERWEIGHT |
| 1 | | 87577184 | | 1 | WEIGHT, COUNTER, 885 kg (1950 lb) |
| 2 | | 896-11024 | | 8 | WASHER, M24 x 44.5 x 5, HT |
| 3 | | 827-24230 | | 2 | BOLT |
| 4 | | 829-1424 | | 4 | NUT, M24, Cl 10 |
| 5 | | 827-24190 | | 2 | BOLT, Hex, M24 x 190, 10.9 |
| 6 | | 87308200 | | 2 | PLASTIC PLUG |

This Page Left Intentionally Blank

Page blanche

Esta página se queda en blanco intencionadamente

**FIRE EXTINGUISHER**

| REF | FN | PART NUMBER | YR/SN | QTY | DESCRIPTION |
|---|---|---|---|---|---|
| 1 | | L302850 | | 1 | FIRE EXTINGUISHER, Mount Bracket in Cab |

**TOOL BOX**

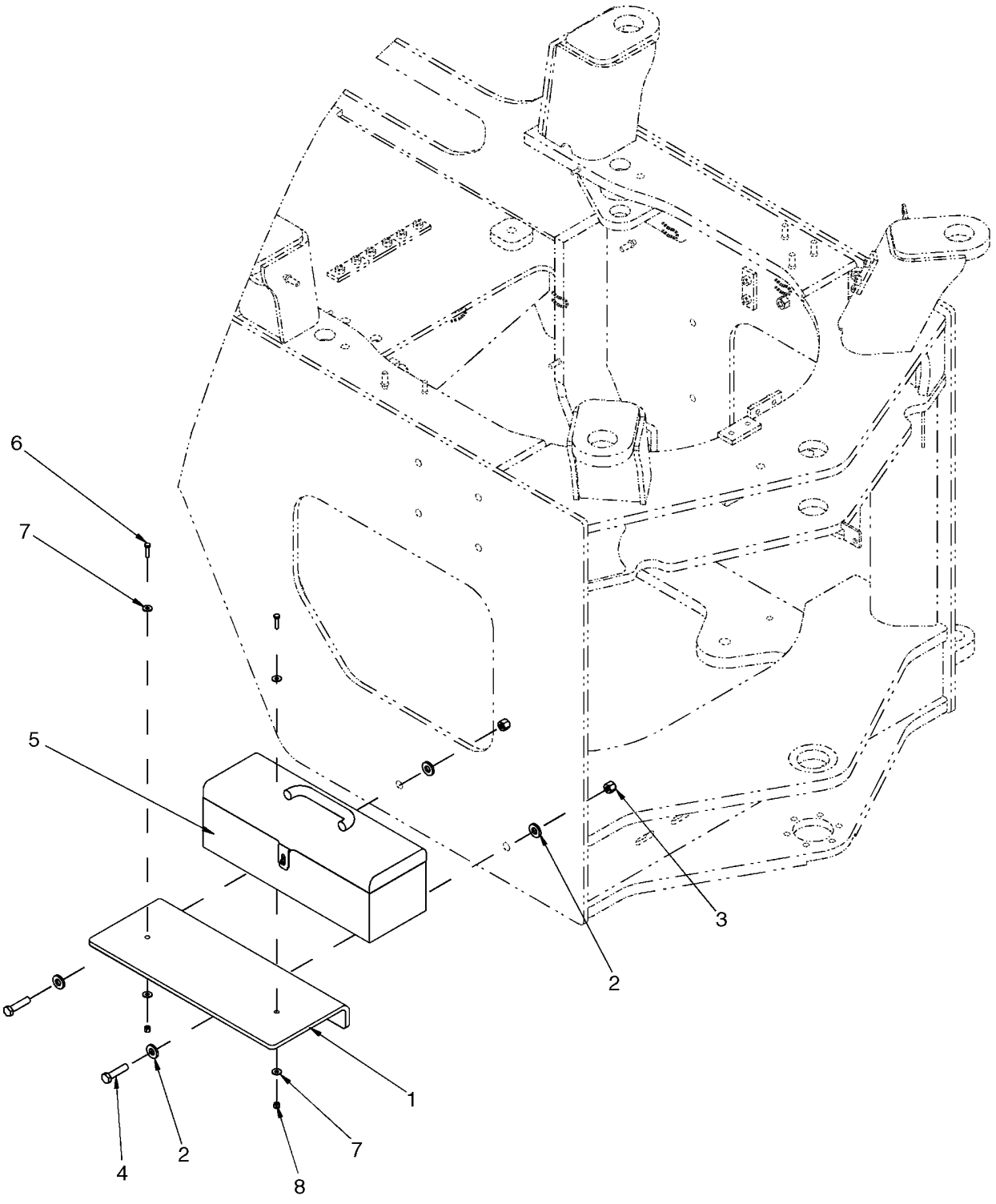

**TOOL BOX**

| REF | FN | PART NUMBER | YR/SN | QTY | DESCRIPTION |
|---|---|---|---|---|---|
| 1 | | {87657832} | | 1 | PLATE, Toolbox Mounting |
| 2 | | 896-15012 | | 4 | WASHER, M12 x 28.5 x 4, HT |
| 3 | | 832-10412 | | 2 | NUT, LOCK, M12 x 1.75, Cl 8 |
| 4 | | 827-12050 | | 2 | BOLT, Hex, M12 x 50, 10.9 |
| 5 | | A181436 | | 1 | BOX, TOOL |
| 6 | | 627-6025 | | 2 | BOLT, Hex, M6 x 25, 10.9 |
| 7 | | 895-25006 | | 4 | WASHER, M6 x 18 x 1.6 |
| 8 | | 832-10406 | | 2 | NUT, LOCK, M6 x 1, Cl 8 |

**LICENSE PLATE MOUNTING**

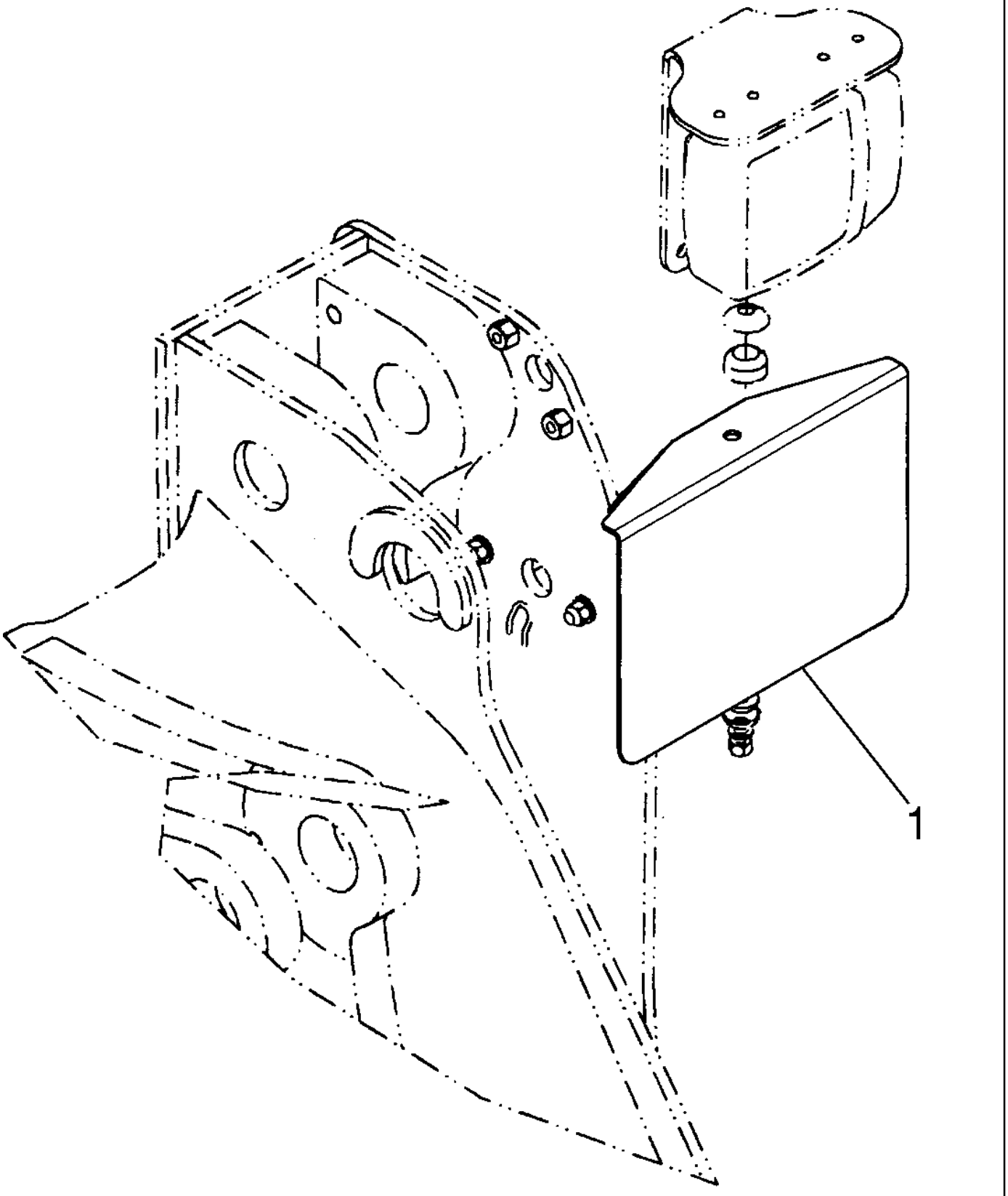

**LICENSE PLATE MOUNTING**

| REF | FN | PART NUMBER | YR/SN | QTY | DESCRIPTION |
|---|---|---|---|---|---|
| | | REF | | | INSTRUCTION, TO MOUNT PLATE USE EXISTING HARDWARE FROM LIGHT |
| 1 | | 87571546 | | 1 | PLATE, License Plate Mounting Plate |

**DECALS - MODEL**




1

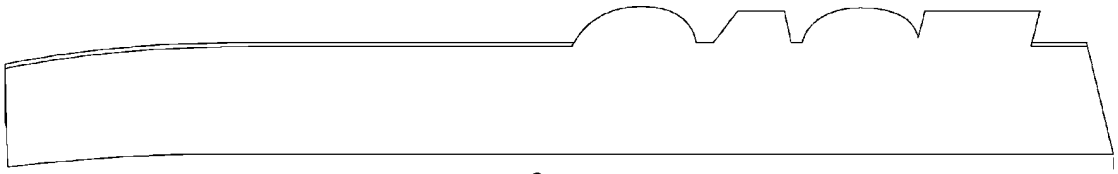

2

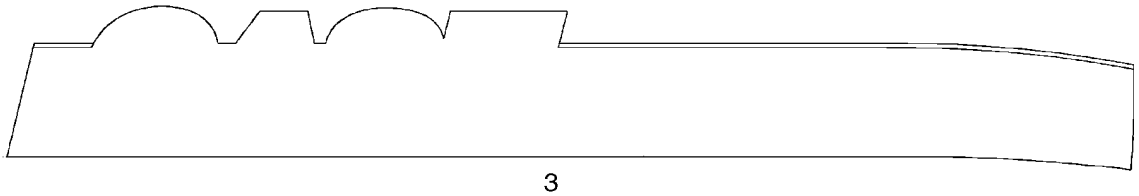

3




4

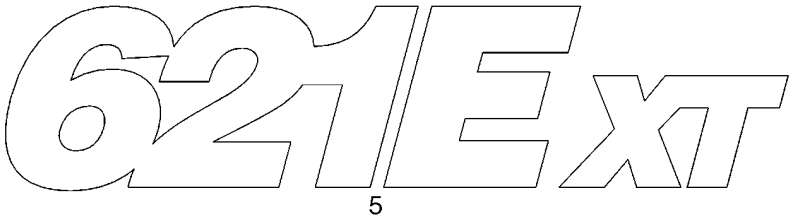


5




6

BS07D273

**DECALS - MODEL**

| REF | FN | PART NUMBER | YR/SN | QTY | DESCRIPTION |
|---|---|---|---|---|---|
| 1 | | 87519006 | | 2 | DECAL, Case Logo |
| 2 | | 87519004 | | 1 | DECAL, LH Hood |
| 3 | | 87519005 | | 1 | DECAL, RH Hood |
| 4 | | 87586610 | | 2 | DECAL, 621E; If Used |
| 5 | | 87586611 | | 2 | DECAL, 621E XT; Case Power Tan; If Used |
| 5 | | 87586612 | | 2 | DECAL, 621E XT; Gray; If Used |
| 6 | | 87597331 | | 2 | DECAL, 621E XR; If Used |

## DECALS - COMMON TO MODEL

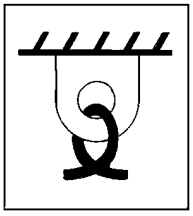

1




2

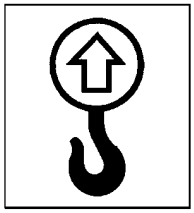

3

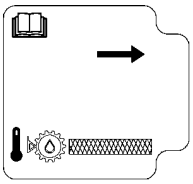

4

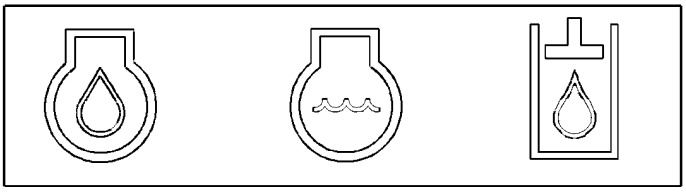

5

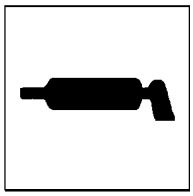

6

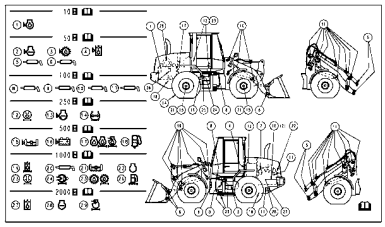

7



8

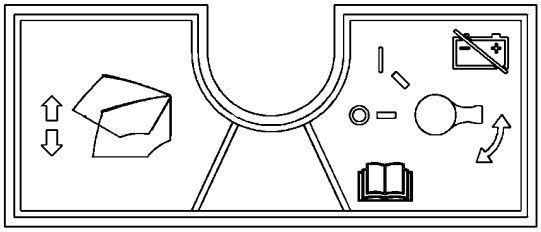

9

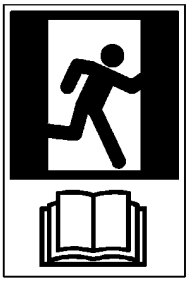

10

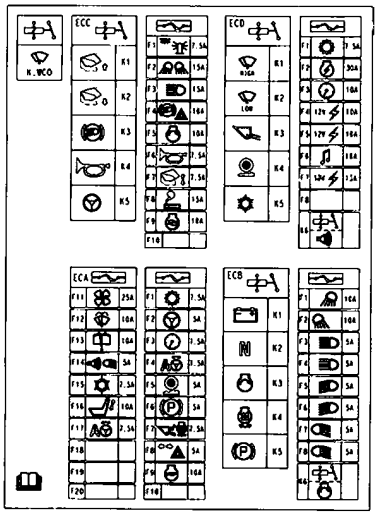


11

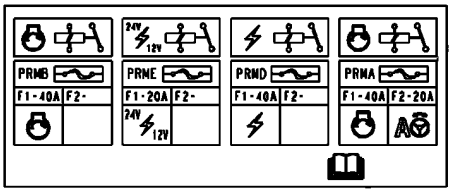


12

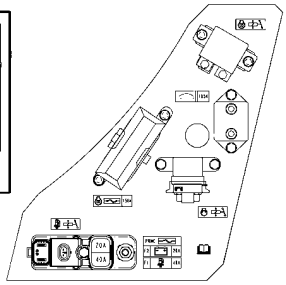

13

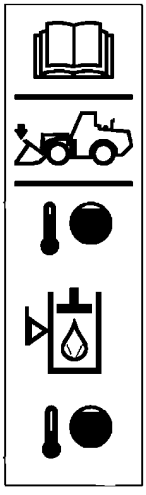

14




15




16

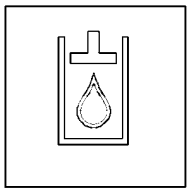

17

BS07D272

**DECALS - COMMON TO MODEL**

| REF | FN | PART NUMBER | YR/SN | QTY | DESCRIPTION |
|---|---|---|---|---|---|
| 1 | | 139728A1 | | 4 | DECAL, Tie Down |
| 2 | | 387147A1 | | 1 | DECAL, Hy-Transmission Ultra |
| 3 | | 139729A1 | | 4 | DECAL, Lift |
| 4 | | 87586616 | | 1 | DECAL, Transmission Oil Level |
| 5 | | 387149A1 | | 1 | DECAL, Fluid Drains |
| 6 | | 187864A1 | | 2 | DECAL, Lube Point |
| 7 | | 87397079 | | 1 | DECAL, Maintenance Chart |
| 8 | | E134402 | | 1 | DECAL, No Step |
| 9 | | 87524649 | | 1 | DECAL, Disconnect Switch |
| 10 | | 329051A1 | | 1 | DECAL, Emergency Exit |
| 11 | | 87647668 | | 1 | DECAL, Fuse |
| 12 | | 87397077 | | 1 | DECAL, Fuse |
| 13 | | 87397078 | | 1 | DECAL, Fuse and Relay |
| 14 | | 386741A2 | | 1 | DECAL, Hydraulic Fluid Temperature |
| 15 | | 87415931 | | 6 | DECAL, Case - Engine |
| 16 | | 87429186 | | 1 | EMBLEM, Engine Medallion |
| 17 | | 395895A1 | | 1 | DECAL, Hydraulic Oil |

**DECALS - CAB**

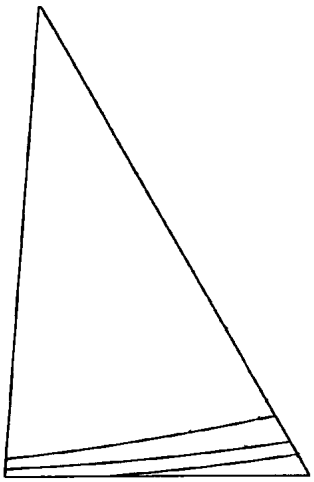

1

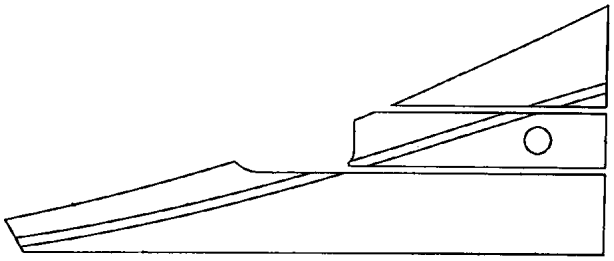

2

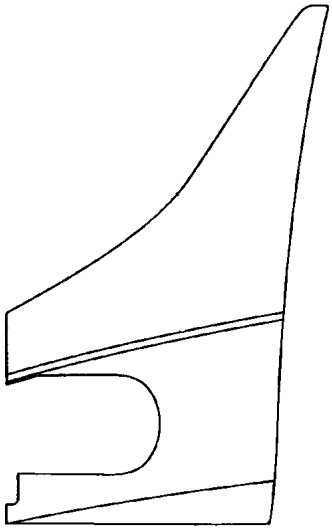

3

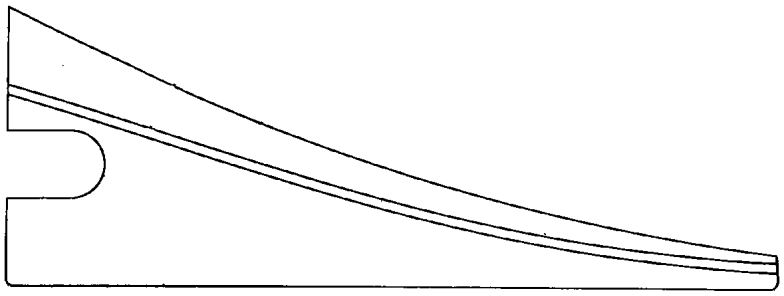

4

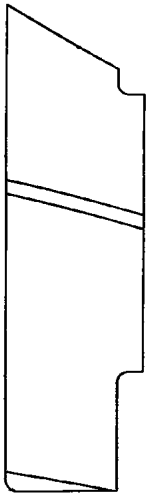

5




6

BS06G020

**DECALS - CAB**

| REF | FN | PART NUMBER | YR/SN | QTY | DESCRIPTION |
|---|---|---|---|---|---|
| 1 | | 87546325 | | 1 | DECAL, Cab, LH Side |
| 2 | | 87546326 | | 1 | DECAL, Cab, LH Door |
| 3 | | 87546327 | | 1 | DECAL, Cab, LH Rear |
| 4 | | 87546328 | | 1 | DECAL, Cab, RH Door |
| 5 | | 87546329 | | 1 | DECAL, Cab, RH Rear |
| 6 | | 87546330 | | 1 | DECAL, Cab, Visor Fritting |

## DECALS - ENGLISH

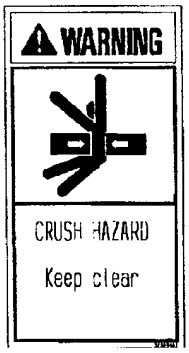

1



2

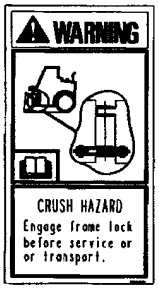

3

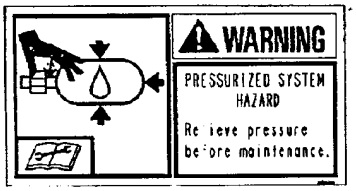

4

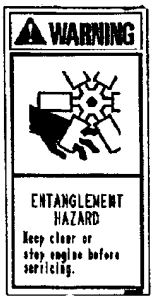

5

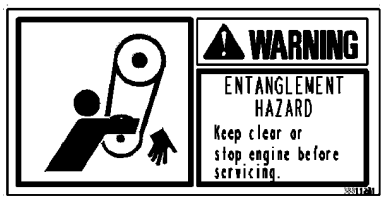

6

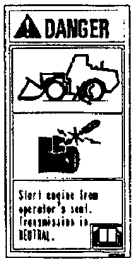

7

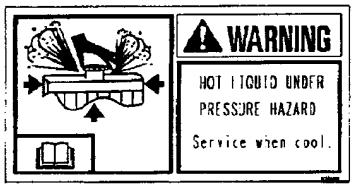

8



9

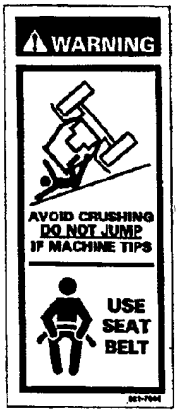

10

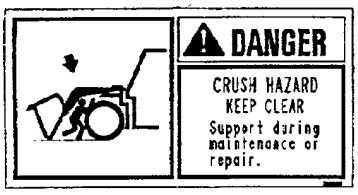

11

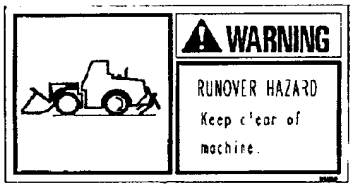

12



13



14

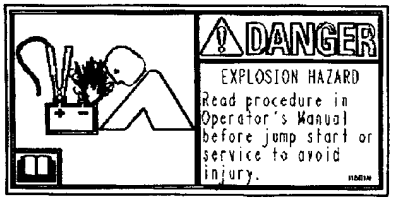

15

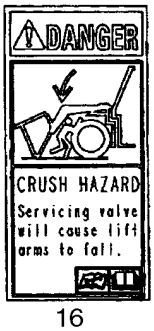

16

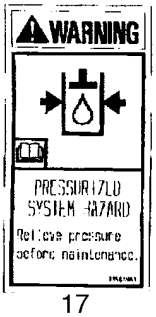

17

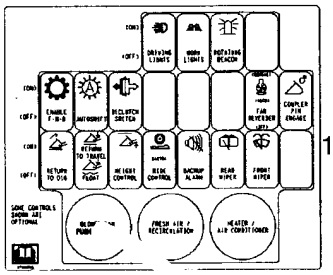
18

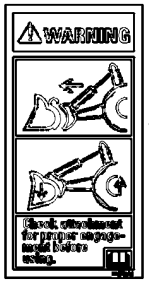

19



20



21

BS07E454

**DECALS - ENGLISH**

| REF | FN | PART NUMBER | YR/SN | QTY | DESCRIPTION |
|---|---|---|---|---|---|
| 1 | | 323694A1 | | 2 | DECAL, Warning; Crush Hazard |
| 2 | | 407737A2 | | 1 | DECAL, Lift Arm Support; If Used |
| 3 | | 329047A1 | | 1 | DECAL, Warning; Crush Hazard |
| 4 | | 328904A1 | | 2 | DECAL, Warning; Pressurized System Hazard |
| 5 | | 332512A1 | | 2 | DECAL, Warning; Fan |
| 6 | | 388112A1 | | 1 | DECAL, Warning; Belt Entanglement |
| 7 | | 334456A1 | | 1 | DECAL, Danger; Starting In Gear |
| 8 | | 329044A1 | | 1 | DECAL, Warning; Hot Liquid Hazard |
| 9 | | 382622A1 | | 1 | DECAL, Warning; Read The Operator's Manual |
| 10 | | 321-7030 | | 1 | DECAL, Warning; Do Not Jump |
| 11 | | 328754A1 | | 1 | DECAL, Danger; Crush Hazard |
| 12 | | 328752A1 | | 1 | DECAL, Warning; Runover Hazard |
| 13 | | 329049A1 | | 1 | DECAL, Caution; Block Wheels |
| 14 | | 304083A1 | | 1 | DECAL, Ride Control |
| 15 | | 412471A1 | | 2 | DECAL, Danger; Battery Explosion Hazard |
| 16 | | 87453132 | | 2 | DECAL, Danger; Crush Hazard |
| 17 | | 335889A1 | | 2 | DECAL, Warning; Pressurized System Hazard |
| 18 | | 87588859 | | 1 | DECAL, Switch |
| 19 | | 364742A1 | | 1 | DECAL, Attachment Test |
| 20 | | 87586617 | | 1 | DECAL, Warning; Pressurized System Hazard |
| 21 | | 8603092 | | 1 | DECAL, Ether Explosion |

## DECALS - FRENCH CANADIAN



1

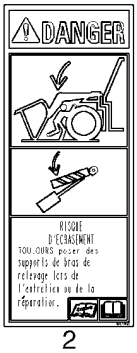

2

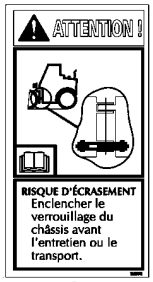

3

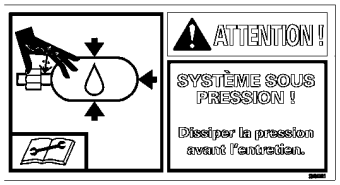

4



5



6



7

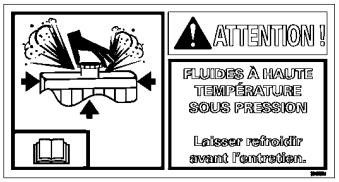

8



9



10

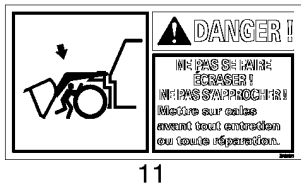

11



12

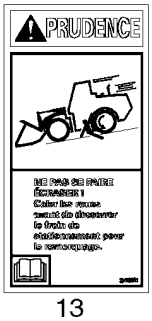

13



14



15



16

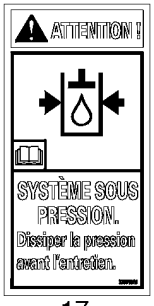

17

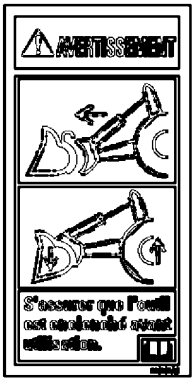

18



19

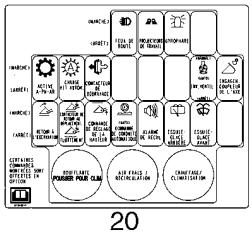
20

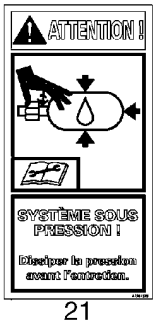

21

BS07E453

**DECALS - FRENCH CANADIAN**

| REF | FN | PART NUMBER | YR/SN | QTY | DESCRIPTION |
|---|---|---|---|---|---|
| 1 | | 334577A1 | | 2 | DECAL, Warning; Crush Hazard |
| 2 | | 407738A2 | | 1 | DECAL, Lift Arm Support; If Used |
| 3 | | 334574A1 | | 1 | DECAL, Warning; Crush Hazard |
| 4 | | 334012A1 | | 2 | DECAL, Warning; Pressurized System Hazard |
| 5 | | 334033A1 | | 2 | DECAL, Warning; Fan |
| 6 | | 388157A1 | | 1 | DECAL, Warning; Belt Entanglement |
| 7 | | 334568A1 | | 1 | DECAL, Danger; Starting In Gear |
| 8 | | 334663A1 | | 1 | DECAL, Warning; Hot Liquid Hazard |
| 9 | | 333999A2 | | 1 | DECAL, Warning; Read The Operator's Manual |
| 10 | | 124269A1 | | 1 | DECAL, Do Not Jump |
| 11 | | 334678A1 | | 1 | DECAL, Danger; Crush Hazard |
| 12 | | 334686A1 | | 1 | DECAL, Warning; Runover Hazard |
| 13 | | 334706A1 | | 1 | DECAL, Caution; Block Wheels |
| 14 | | 304083A1 | | 1 | DECAL, Ride Control |
| 15 | | 412473A1 | | 2 | DECAL, Danger; Battery Explosion Hazard |
| 16 | | 87453133 | | 2 | DECAL, Danger; Crush Hazard |
| 17 | | 336010A1 | | 4 | DECAL, Warning; Pressurized System Hazard |
| 18 | | 364919A1 | | 1 | DECAL, Attachment Test |
| 19 | | 8603093 | | 1 | DECAL, Ether Explosion |
| 20 | | {87599217} | | 1 | DECAL, Rocker Switch |
| 21 | | 87597328 | | 1 | DECAL, Fluid Under Pressure |

## DECALS - LATIN AMERICAN SPANISH



1



2



3

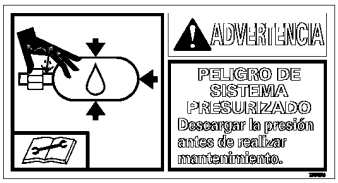

4



5

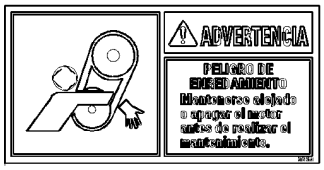

6



7

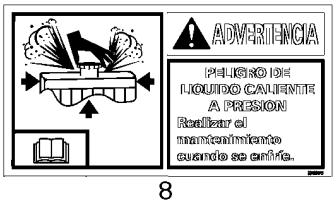

8



9



10



11



12



13



14



15



16



17

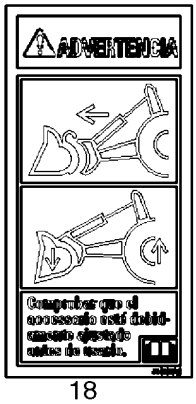

18



19



20

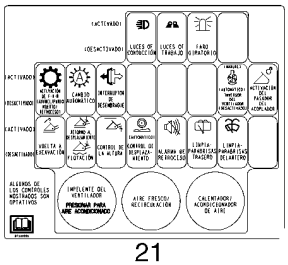
21



22

BS07E452

**DECALS - LATIN AMERICAN SPANISH**

| REF | FN | PART NUMBER | YR/SN | QTY | DESCRIPTION |
|---|---|---|---|---|---|
| 1 | | 334576A1 | | 2 | DECAL, Warning; Crush Hazard |
| 2 | | 407739A2 | | 1 | DECAL, Lift Arm Support |
| 3 | | 334573A1 | | 1 | DECAL, Warning; Crush Hazard |
| 4 | | 334015A1 | | 2 | DECAL, Warning; Pressurized System Hazard |
| 5 | | 334034A1 | | 2 | DECAL, Warning; Fan |
| 6 | | 388158A1 | | 2 | DECAL, Warning; Belt Entanglement |
| 7 | | 334567A1 | | 2 | DECAL, Danger; Starting In Gear |
| 8 | | 334664A1 | | 1 | DECAL, Warning; Hot Liquid Hazard |
| 9 | | 334000A2 | | 1 | DECAL, Warning; Read The Operator's Manual |
| 10 | | 124271A1 | | 1 | DECAL, Warning; Do Not Jump |
| 11 | | 334677A1 | | 1 | DECAL, Danger; Crush Hazard |
| 12 | | 334688A1 | | 1 | DECAL, Warning; Runover Hazard |
| 13 | | 334704A1 | | 1 | DECAL, Caution; Block Wheels |
| 14 | | 304083A1 | | 1 | DECAL, Ride Control |
| 15 | | 412474A1 | | 2 | DECAL, Danger; Battery Explosion Hazard |
| 16 | | 87453134 | | AR | DECAL, Danger; Crush Hazard |
| 17 | | 336011A1 | | 3 | DECAL, Warning; Pressurized System Hazard |
| 18 | | 364918A1 | | 1 | DECAL, Attachment Test |
| 19 | | 87453134 | | 1 | DECAL, Crush Hazard |
| 20 | | 8603094 | | 2 | DECAL, Warning, Ether Explosion |
| 21 | | {87599220} | | 1 | DECAL, Rocker Switch |
| 22 | | 87597329 | | 1 | DECAL, Fluid Under Pressure |

| Number | Figure | Sequence | Ref. |
|---|---|---|---|
| {14778414} | 09-31 | | 10 |
| {2820302} | 02-15 | | 18 |
| {2853815} | 02-26 | | 4 |
| {2853816} | 02-26 | | 5 |
| {2856309} | 02-36 | | 4 |
| {2856458} | 02-33 | | 2 |
| | 02-33A | | |
| {2856459} | 02-33A | | 3 |
| {2856460} | 02-33A | | 1 |
| {2858402} | 02-16 | | 6 |
| {345-101-B} | 09-29 | | 5 |
| {388540A1} | 09-09A | | |
| {402700A1} | 09-09 | | |
| {418470A1} | 09-11 | | 1 |
| {418471A1} | 09-10 | | 1 |
| {418472A1} | 09-11 | | 1 |
| {428432A1} | 09-11 | | 1 |
| {428433A1} | 09-10 | | 1 |
| {428434A1} | 09-11 | | 1 |
| {428436A1} | 09-10 | | 1 |
| {428437A1} | 09-11 | | 1 |
| {434536A1} | 09-11 | | 1 |
| {434537A1} | 09-10 | | 1 |
| {75048955} | 05-02 | | 17 |
| {76195212} | 03-06 | | 12 |
| {76303013} | 09-31 | | 3 |
| {76303042} | 09-31 | | 2 |
| {76303249} | 09-34 | | 19 |
| {76303295} | 05-02A | | 3 |
| {76303425} | 09-31 | | 4 |
| {76303478} | 05-03 | | 18 |
| {76303488} | 04-04 | | 25 |
| {76303494} | 09-43A | | 23 |
| {76303495} | 09-43A | | 15 |
| {76303500} | 09-31A | | 13 |
| | 09-43 | | 22 |
| {76303502} | 09-43A | | 12 |
| {76303504} | 09-43 | | 23 |
| {76303516} | 05-03 | | 19 |
| {76303541} | 09-43 | | 12 |
| {76303546} | 09-43 | | 10 |
| {76303549} | 09-43A | | 13 |
| {76303606} | 04-04 | | 8 |
| {76303609} | 09-43 | | 20 |
| {76303614} | 09-43 | | 18 |
| {76303615} | 09-43 | | 9 |
| {76303617} | 09-43 | | 17 |
| {779-14825} | 09-43 | | 19 |
| {8603547} | 06-22C | | 7 |
| {864-5055} | 08-27A | | 21 |
| | 08-27B | | 21 |
| | 08-28A | | 21 |
| | 08-28B | | 21 |
| {86509545} | 04-04 | | 24 |
| {87310653} | 09-07B | | 3 |
| {87318617} | 04-14 | | 6 |
| {87321451} | 09-35A | | 24 |
| {87324751} | 09-29 | | 7 |
| | 09-30 | | 5 |
| {87333866} | 09-14 | | 11 |
| {87337003} | 09-29 | | 6 |
| | 09-30 | | 4 |
| | 09-35A | | 23 |
| {87358700} | 06-23E | | 16 |
| {87371084} | 04-13 | | 16 |
| {87407966} | 09-09A | | |
| {87434293} | 08-16 | | |
| | 08-17 | | |
| {87446140} | 09-09C | | |
| {87446143} | 09-09C | | |
| {87451631} | 09-09B | | |
| {87452364} | 05-10 | | |
| {87516291} | 09-39 | | 10 |
| {87517128} | 05-03 | | 12 |
| {87519285} | 03-02 | | |
| {87525205} | 05-02 | | 2 |
| {87525216} | 05-02 | | 3 |
| {87525218} | 05-02 | | 19 |
| {87525220} | 05-02 | | 20 |
| {87525221} | 05-02 | | 22 |
| {87525493} | 04-04 | | 33 |
| | 09-36 | | 15 |
| {87526283} | 05-02 | | 14 |
| {87528282} | 09-35A | | 22 |
| {87547661} | 09-19 | | 10 |
| {87561073} | 09-47 | | 9 |
| {87567527} | 09-42A | | 10 |
| | 09-42C | | 10 |
| {87567829} | 09-42D | | 25 |
| {87567880} | 04-13 | | 13 |
| {87572375} | 02-03 | | 3 |
| {87572378} | 02-03 | | 4 |
| {87579996} | 04-24A | | 10 |
| {87579997} | 04-24A | | 11 |
| {87579998} | 04-24 | | 4 |
| {87583725} | 09-42A | | |
| {87583729} | 09-42A | | 11 |
| | 09-42C | | 11 |
| {87583731} | 09-42A | | 27 |
| | 09-42C | | 27 |
| {87583733} | 09-42A | | 1 |
| | 09-42C | | 1 |
| {87583734} | 09-42A | | 3 |
| {87583736} | 09-42A | | 41 |
| {87583737} | 09-42A | | 51 |
| | 09-42C | | 51 |
| {87583738} | 09-42C | | 55 |
| {87583739} | 09-42A | | 42 |
| | 09-42C | | 42 |
| {87583741} | 09-42A | | 50 |
| {87583747} | 09-42A | | 28 |
| | 09-42C | | 28 |
| {87583748} | 09-42A | | 13 |
| | 09-42A | | 49 |
| | 09-42C | | 13 |
| | 09-42C | | 49 |
| | 09-42C | | 77 |
| {87583752} | 09-42C | | 53 |
| {87583755} | 09-42C | | 56 |
| {87583757} | 09-42A | | 20 |
| | 09-42C | | 20 |
| {87583762} | 09-42A | | 24 |
| | 09-42C | | 24 |
| {87583839} | 09-42B | | 40A |
| {87583841} | 09-42B | | |
| {87583846} | 09-42B | | |
| {87583847} | 09-42B | | |
| {87583849} | 09-42B | | 42 |
| {87583854} | 09-42B | | 17 |
| {87583859} | 09-42B | | 43 |
| | 09-42D | | 53 |
| {87583860} | 09-42B | | 44 |
| {87584095} | 09-42D | | |
| {87584097} | 09-42C | | 2 |
| {87584099} | 09-42C | | 41 |
| {87584100} | 09-42D | | 48 |
| {87584101} | 09-42C | | |
| {87584102} | 09-42D | | 27 |
| {87584103} | 09-42D | | 50 |
| {87584172} | 09-42D | | 13 |
| {87584704} | 09-42A | | 23 |
| | 09-42C | | 23 |
| {87585037} | 09-42D | | |
| {87585124} | 09-42D | | 4 |
| {87586627} | 08-15 | | 1 |
| {87586628} | 08-15 | | 3A |
| {87586629} | 08-15 | | 3 |
| {87586630} | 08-15 | | 4A |
| {87586631} | 08-15 | | 4 |
| {87598751} | 08-15 | | |
| {87599217} | 09-58 | | 20 |
| {87599220} | 09-59 | | 21 |
| {87610804} | 09-43A | | 5 |
| {87610848} | 09-43A | | 25 |
| {87613497} | 04-21 | | 3 |
| {87613715} | 04-09 | | 1 |

| Number | Figure | Sequence | Ref. |
|---|---|---|---|
| {87617168} | 08-24A | | 10 |
| {87617169} | 08-24A | | 8 |
| {87617170} | 08-24A | | 11 |
| {87619954} | 09-43A | | 22 |
| {87619955} | 09-43A | | 24 |
| {87619956} | 09-43A | | 21 |
| {87619957} | 09-43A | | 16 |
| {87628359} | 09-34 | | 31 |
| {87628360} | 09-34 | | 32 |
| {87628362} | 09-34 | | 34 |
| {87628364} | 09-34 | | 37 |
| {87629047} | 09-33A | | 34 |
| | 09-34 | | 33 |
| {87632741} | 09-16 | | 11 |
| {87644535} | 09-33 | | 1 |
| | 09-33A | | |
| {87652920} | 09-19 | | 3 |
| {87652921} | 09-19 | | 3 |
| {87657832} | 09-52 | | 1 |
| {87658720} | 08-19B | | 11 |
| {87658721} | 08-19B | | 3 |
| {87658722} | 08-19B | | 7 |
| {87658723} | 07-03A | | 5 |
| | 07-03D | | 12 |
| {87658724} | 07-03B | | 3 |
| {87658725} | 07-03B | | 5 |
| {87661964} | 04-14 | | 19 |
| {87664046} | 09-32 | | 12 |
| {87664047} | 09-32 | | 6 |
| {87664048} | 09-32 | | 10 |
| | 09-33A | | 8 |
| | 09-35 | | 7 |
| | 09-35A | | 14 |
| {87664049} | 09-33 | | 3 |
| | 09-33A | | 11 |
| | 09-34 | | 8 |
| | 09-35A | | 10 |
| | 09-43 | | 4 |
| {87664050} | 09-32 | | 5 |
| {87664051} | 09-32 | | 7 |
| | 09-43 | | 2 |
| {885180004} | 04-14 | | 15 |
| {961-8075} | 08-27 | | 2 |
| | 08-28 | | 2 |
| {962-8055} | 08-27 | | 2 |
| | 08-28 | | 2 |
| 100-21244 | 05-10 | | 5 |
| 10519604 | 09-43 | | 24 |
| 10794011 | 04-15 | | 8 |
| 10902024 | 09-33A | | 10 |
| | 09-35A | | 15 |
| 10902224 | 09-33 | | 2 |
| 10902624 | 09-33A | | 25 |
| 109171C1 | 09-34 | | 35 |
| 116893A1 | 09-07B | | 26 |
| 117025A1 | 09-07B | | 27 |
| 120229A1 | 04-27 | | 6 |
| 121411A1 | 04-05 | | 21 |
| 121412A1 | 04-07 | | 27 |
| | 04-24 | | 5 |
| | 09-42 | | 5 |
| 121413A1 | 09-41 | | 1 |
| 124269A1 | 09-58 | | 10 |
| 124271A1 | 09-59 | | 10 |
| 124639A1 | 08-14 | | 1D |
| 1251791C1 | 03-04 | | 2F |
| 126268A1 | 09-14 | | 3 |
| 126844A1 | 04-13 | | 18 |
| 127555A1 | 09-10 | | 6B |
| 129-667 | 08-02A | | 4 |
| 131-1402 | 09-40 | | 3 |
| 131-141 | 08-01 | | 13 |
| 131-431 | 04-20 | | 8 |
| 131-53 | 09-07B | | 28 |
| 13272111 | 04-15 | | 6 |
| 13311217 | 09-34 | | 16 |
| 13313017 | 09-31B | | 4 |
| | 09-31B | | 5 |
| 1332154C1 | 09-28 | | 2 |
| 13797721 | 05-02 | | 23 |
| 139728A1 | 09-55 | | 1 |
| 139729A1 | 09-55 | | 3 |
| 14304731 | 04-15 | | 4 |
| 14306621 | 05-02 | | 6 |
| 14496201 | 04-15 | | 7 |
| 14496231 | 05-02 | | 15 |
| 14496301 | 04-15 | | 15 |
| 14496821 | 05-02 | | 9 |
| 14778411 | 05-03 | | 13 |
| 14778814 | 05-03 | | 20 |
| 1498088 | 09-33A | | 20 |
| | 09-34 | | 30 |
| | 09-35 | | 13 |
| 1542830C2 | 08-23A | | 2 |
| | 08-24A | | 7 |
| 1542831C1 | 05-07 | | 7 |
| | 05-07 | | 9 |
| 1542833C1 | 08-24A | | 2 |
| 1542875C1 | 05-10 | | 9 |
| 1542879C1 | 08-15 | | 3C |
| | 08-18 | | 5C |
| 1542881C1 | 08-16 | | 2B |
| | 08-17 | | 2B |
| 1546477C1 | 04-02 | | 14 |
| 1546485C1 | 04-07 | | 11 |
| 1546497C1 | 09-01 | | 5 |
| | 09-02 | | 5 |
| 1546498C1 | 09-03 | | 8 |
| | 09-04 | | 1 |
| | 09-05 | | 1 |
| | 09-06 | | 1 |
| 1547924C1 | 08-01 | | 23 |
| 15896214 | 09-32 | | 11 |
| 15896411 | 04-15 | | 16 |
| 16043231 | 09-42A | | 46 |
| | 09-42C | | 46 |
| 16043424 | 09-32 | | 9 |
| 16043624 | 09-32 | | 8 |
| | 09-43 | | 1 |
| 16043824 | 09-43 | | 7 |
| 16044024 | 09-33A | | 12 |
| | 09-34 | | 9 |
| | 09-35A | | 11 |
| 16044324 | 09-43 | | 5 |
| 16101721 | 05-02 | | 16 |
| 16104111 | 05-02 | | 4 |
| 16104411 | 05-02 | | 7 |
| 16745024 | 02-37 | | 12 |
| 178889A1 | 08-03 | | 34 |
| 182721A2 | 04-24A | | 1 |
| 186814A1 | 03-04A | | 1 |
| 186989A1 | 04-20 | | 7 |
| 187281A1 | 04-24A | | 2 |
| 187864A1 | 09-55 | | 6 |
| 19-135 | 04-03 | | 7 |
| | 04-03A | | 7 |
| 19-6247 | 06-24 | | 11 |
| 190117A1 | 07-03C | | 14 |
| | 07-03D | | 18 |
| | 08-03 | | 22 |
| | 08-29 | | 10 |
| | 08-30 | | 9 |
| | 08-31 | | 9 |
| | 08-32 | | 22 |
| 190119A1 | 08-25 | | 9 |
| 193446A1 | 04-27 | | 1 |
| 195-81023 | 09-34 | | 36 |
| 1954736C1 | 09-46 | | 6 |
| 196466A1 | 02-42 | | 4 |
| 1964725C1 | 04-02 | | 28 |
| 1964726C1 | 04-02 | | 27 |
| 1964727C1 | 04-02 | | 26 |
| 1964729C1 | 04-02 | | 31 |
| 1964730C1 | 04-02 | | 21 |
| 1964731C1 | 04-02 | | 1 |
| 1964736C1 | 04-02 | | 32 |

| Number | Figure | Sequence | Ref. |
|---|---|---|---|
| 1964737C1 | 04-02 | | 3 |
| 1964738C1 | 04-02 | | 13 |
| 1964748C1 | 04-02 | | 29 |
| 1964750C1 | 04-02 | | 30 |
| 1964831C2 | 04-15 | | 18 |
| 1964860C1 | 04-02 | | |
| | 04-02A | | 2 |
| | 04-02B | | 2 |
| 1964964C1 | 04-02 | | 19 |
| 1964965C1 | 04-02 | | 16 |
| 1964966C1 | 04-02 | | 18 |
| 1964968C1 | 04-02 | | 10 |
| 1964969C1 | 04-02 | | 5 |
| 1975801C1 | 09-46 | | 8 |
| 198823C1 | 04-10 | | 13 |
| 198824C1 | 08-01 | | 37 |
| 198825C1 | 03-01 | | 36 |
| | 08-02 | | 5 |
| | 09-49 | | 13 |
| 198826C1 | 03-01 | | 35 |
| | 08-01 | | 20 |
| | 09-49 | | 12 |
| 198828C1 | 08-01A | | 2 |
| 201-110 | 07-03D | | 16 |
| 201-145 | 08-29 | | 8 |
| | 08-30 | | 7 |
| | 08-31 | | 7 |
| | 08-32 | | 20 |
| 201-308 | 06-02 | | 12 |
| 214-1406 | 03-01 | | 7 |
| | 03-04A | | 5 |
| | 08-01 | | 16 |
| | 09-47 | | 6 |
| 214-1410 | 02-02 | | 24 |
| 214-14104 | 08-05 | | 27 |
| 214-1416 | 02-06 | | 23 |
| 214-1436 | 02-02 | | 15 |
| 214-1444 | 09-43A | | 26 |
| 214-1472 | 05-09 | | 13 |
| 214-1480 | 02-07 | | 4 |
| 214-1488 | 08-06 | | 15 |
| 214-1496 | 08-05 | | 26 |
| 214-1704 | 02-02 | | 19 |
| | 08-01 | | 39 |
| 214-3188 | 02-06 | | 15 |
| 217-1035 | 02-02 | | 29 |
| 217-1227 | 02-06A | | 7 |
| 217-132 | 03-04A | | 7 |
| 217-152 | 02-02 | | 30 |
| 217-191 | 02-02 | | 27 |
| 217-292 | 02-02 | | 18 |
| 217-372 | 03-01 | | 24 |
| 217-425 | 09-46 | | 1 |
| 217-445 | 08-02 | | 4 |
| 217-92 | 03-01 | | 25 |
| 218-1251 | 02-01 | | 10 |
| 218-1255 | 02-02 | | 23 |
| 218-1256 | 08-01 | | 33 |
| 218-335 | 08-01 | | 34 |
| 218-5209 | 08-23A | | 3 |
| | 08-24A | | 12 |
| 218-755 | 02-02 | | 22 |
| 218-756 | 02-01 | | 11 |
| 219-1 | 05-09 | | 19 |
| | 05-10 | | 22 |
| | 08-18 | | 7 |
| | 09-07 | | 22 |
| | 09-07A | | 22 |
| | 09-07B | | 22 |
| | 09-08 | | 11 |
| | 09-08A | | 6 |
| | 09-15 | | 9 |
| 219-20 | 06-24 | | 24A |
| 219-8 | 06-24 | | 24B |
| | 09-07 | | 31B |
| | 09-07A | | 31B |
| 220068A1 | 08-26B | | 7 |
| 225-14108 | 09-44B | | 10 |
| 225-14108 | 09-48 | | 10 |
| 231-1446 | 08-20 | | 6 |
| 231-4248 | 04-02A | | 11 |
| | 04-02B | | 9 |
| 231-46110 | 04-02 | | 23 |
| 232-2448 | 02-05 | | 4 |
| 232364A1 | 04-14 | | 3 |
| 233792A1 | 09-10 | | 6A |
| 237-6006 | 08-02A | | 6 |
| 237-6012 | 05-04 | | 24B |
| 237-6016 | 06-02 | | 12A |
| 238-5011 | 08-02A | | 7 |
| 238-5210 | 03-04 | | 2A |
| 238-5214 | 03-04 | | 2B |
| 238-5228 | 06-23 | | 5 |
| 238-5231 | 05-10 | | 13 |
| 238-5232 | 08-03 | | 4 |
| 238-5233 | 05-10 | | 12 |
| 238-5243 | 08-18 | | 5F |
| 238-5244 | 08-18 | | 5G |
| 238-5245 | 08-15 | | 3F |
| 238-5246 | 08-15 | | 3G |
| 238-5247 | 08-16 | | 2F |
| | 08-17 | | 2F |
| 238-5248 | 08-16 | | 2G |
| | 08-17 | | 2G |
| 238-6011 | 05-04 | | 12B |
| | 05-04 | | 13B |
| | 05-05 | | 24B |
| | 05-05 | | 7A |
| | 07-03C | | 15 |
| | 08-03 | | 20A |
| | 08-03 | | 21A |
| | 08-03 | | 23A |
| | 08-03 | | 24A |
| | 08-25 | | 4A |
| | 08-26 | | 4A |
| | 08-26 | | 5A |
| | 08-26 | | 6A |
| | 08-26A | | 4A |
| | 08-26A | | 5A |
| | 08-26A | | 6A |
| | 08-26B | | 4A |
| | 08-26B | | 5A |
| | 08-26B | | 6A |
| | 08-29 | | 6B |
| | 08-29 | | 8A |
| | 08-29 | | 9A |
| | 08-30 | | 4A |
| | 08-30 | | 7A |
| | 08-30 | | 8A |
| | 08-31 | | 5B |
| | 08-31 | | 8A |
| | 08-32 | | 21A |
| | 08-32 | | 22A |
| | 08-32 | | 7A |
| 238-6012 | 02-05 | | 10A |
| | 02-05 | | 12A |
| | 07-03C | | 5A |
| | 07-03D | | 10A |
| | 07-03D | | 26B |
| | 07-03D | | 33A |
| | 07-03D | | 9 |
| | 08-05 | | 7 |
| | 08-11 | | 10A |
| | 08-12 | | 10A |
| | 08-13 | | 12A |
| | 08-14 | | 10A |
| | 08-14 | | 11B |
| | 08-14 | | 3B |
| | 08-25 | | 11A |
| | 08-25 | | 5A |
| | 08-25 | | 7A |
| | 08-25 | | 8A |
| | 08-29 | | 5A |
| | 08-29 | | 7A |
| | 08-29 | | 8B |
| | 08-30 | | 5A |

| Number | Figure | Sequence | Ref. |
|---|---|---|---|
| 238-6012 | 08-30 | | 6A |
| | 08-30 | | 7B |
| | 08-31 | | 4A |
| | 08-31 | | 6A |
| | 08-31 | | 7A |
| | 08-32 | | 13A |
| | 08-32 | | 14A |
| | 08-32 | | 19A |
| | 08-32 | | 20A |
| | 08-32 | | 8A |
| 238-6014 | 05-04 | | 24A |
| | 05-09 | | 2B |
| | 05-09 | | 32B |
| | 05-09 | | 33B |
| | 05-09 | | 35A |
| | 05-09 | | 6A |
| | 07-03A | | 12A |
| | 07-03A | | 13A |
| | 07-03A | | 1A |
| | 07-03A | | 2A |
| | 07-03A | | 3A |
| | 07-03D | | 20A |
| | 07-03D | | 21B |
| | 07-03D | | 22A |
| 238-6016 | 05-04 | | 10A |
| | 05-04 | | 2B |
| | 05-04 | | 3A |
| | 05-05 | | 26A |
| | 05-05 | | 27A |
| | 05-05 | | 6A |
| | 05-05 | | 8A |
| | 05-09 | | 3A |
| | 05-09 | | 5 |
| | 07-03 | | 2A |
| | 07-03C | | 3A |
| | 07-03D | | 4A |
| | 07-03D | | 5 |
| | 08-03 | | 12A |
| | 08-19B | | 13A |
| | 08-19B | | 1B |
| 238-6018 | 02-05 | | 11A |
| | 02-05 | | 9A |
| | 07-03B | | 14A |
| | 07-03B | | 6A |
| | 07-03C | | 11 |
| | 07-03C | | 4A |
| | 07-03D | | 19A |
| | 08-02 | | 3A |
| | 08-03 | | 11B |
| | 08-08 | | 7A |
| | 08-09 | | 8A |
| | 08-10 | | 12A |
| | 08-19 | | 1A |
| | 08-19A | | 1A |
| | 08-23 | | 5B |
| | 08-23 | | 6A |
| | 08-24 | | 2B |
| | 08-24 | | 6A |
| 238-6021 | 05-05 | | 48A |
| | 05-05 | | 9A |
| | 06-02 | | 12B |
| | 07-03 | | 3A |
| | 08-03 | | 14A |
| | 08-05 | | 10A |
| | 08-05 | | 12B |
| | 08-05 | | 13A |
| | 08-05 | | 2A |
| | 08-05 | | 9A |
| | 08-06 | | 16A |
| | 08-06 | | 17A |
| | 08-06 | | 18A |
| | 08-06 | | 8 |
| | 08-07 | | 10 |
| | 08-07 | | 14A |
| | 08-07 | | 15A |
| | 08-07 | | 16A |
| | 08-07 | | 17A |
| | 08-07 | | 24A |
| 238-6021 | 08-07A | | 12A |
| | 08-07A | | 13A |
| | 08-07A | | 20A |
| | 08-07A | | 8 |
| | 08-08 | | 5B |
| | 08-08 | | 6A |
| | 08-09 | | 5B |
| | 08-09 | | 7 |
| | 08-10 | | 13A |
| | 08-10 | | 4A |
| | 08-10 | | 6A |
| | 08-20 | | 15A |
| | 08-20 | | 17A |
| | 08-20 | | 9B |
| | 08-21 | | 1A |
| | 08-03 | | 15 |
| 238-6222 | 04-15 | | 5 |
| 238270A1 | 05-02A | | 2 |
| | 04-23 | | 4 |
| 248-1169 | 04-23A | | 8 |
| | 06-02 | | 10 |
| 248-1185 | 04-18 | | 13 |
| 248-2376 | 09-42 | | 6 |
| 249116A1 | 09-42 | | 12 |
| 249117A1 | 09-44B | | 8 |
| 252550A2 | 09-48 | | 9 |
| | 04-03 | | 14 |
| 253347A1 | 04-03A | | 14 |
| | 04-04 | | 20 |
| | 04-05 | | 4 |
| | 04-17 | | 7 |
| | 04-26 | | 15 |
| | 05-02A | | 10 |
| | 02-02 | | 26 |
| 254026A1 | 08-03 | | 10 |
| | 09-10 | | 6B |
| 254822A1 | 09-10 | | 6B |
| 254823A1 | 09-10 | | 6 |
| 254825A1 | 02-07 | | |
| 258541A1 | 09-41 | | 7 |
| 265-14512 | 04-05 | | 12 |
| 279492A1 | 03-04 | | 2G |
| 282709A1 | 04-15 | | 9 |
| 282775A1 | 05-03 | | 5 |
| | 02-20 | | |
| 2830076 | 02-21 | | 1 |
| | 02-35 | | 4 |
| 2830158 | 02-15 | | 14 |
| 2830301 | 02-15 | | 19 |
| 2830303 | 02-15 | | 17 |
| 2830304 | 02-15 | | 15 |
| 2830307 | 02-38 | | 3 |
| 2830444 | 02-12 | | 10 |
| 2830559 | 02-15 | | 20 |
| 2830592 | 02-23 | | 4 |
| 2830704 | 02-23 | | 4 |
| 2830705 | 03-03 | | 14 |
| 2830711 | 03-03 | | 2 |
| 2830733 | 02-23 | | 1 |
| 2831274 | 02-24 | | |
| | 02-24 | | |
| 2831278 | 02-24 | | |
| 2831279 | 02-36 | | 3 |
| 2831287 | 02-36 | | |
| 2831297 | 05-01 | | 4 |
| 2831298 | 02-35 | | 4 |
| 283484A1 | 02-18 | | 2 |
| 2852037 | 03-11 | | 2 |
| 2852047 | 02-18 | | 1 |
| 2852100 | 02-09 | | 1 |
| 2852114 | 02-31 | | 1 |
| 2852122 | 02-21 | | 5 |
| 2852175 | 02-37 | | 11 |
| 2852202 | 02-13 | | 7A |
| 2852212 | 02-28 | | 2 |
| 2852217 | 02-28 | | 3 |
| 2852219 | 03-05 | | 13 |
| 2852221 | | | |
| 2852234 | | | |

| Number | Figure | Sequence | Ref. | Number | Figure | Sequence | Ref. |
|---|---|---|---|---|---|---|---|
| 2852237 | 02-13 | | 11 | 2854543 | 03-08 | | 5 |
| 2852238 | 02-13 | | 12 | 2854544 | 03-08 | | 2 |
| 2852305 | 02-26 | | 1 | 2854549 | 03-08 | | 1 |
| 2852325 | 02-39 | | 1 | 2854552 | 03-08 | | 3 |
| 2852392 | 02-39 | | 3 | 2854593 | 03-09 | | 9 |
| 2852396 | 02-19 | | 2 | 2854594 | 03-09 | | 1 |
| 2852397 | 02-19 | | 3 | 2854595 | 03-09 | | |
| 2852398 | 02-19 | | 1 | 2854596 | 03-09 | | 2 |
| 2852407 | 02-17 | | 7 | 2854598 | 03-10 | | 1 |
| 2852419 | 02-13 | | 4 | 2854599 | 03-10 | | 4 |
| 2852420 | 02-13 | | 6 | 2854600 | 03-10 | | 6 |
| 2852425 | 02-29 | | 6 | 2854603 | 02-35 | | 4 |
| 2852426 | 02-29 | | 2 | 2854604 | 02-34 | | 5 |
| 2852427 | 02-33 | | 8 | 2854606 | 03-07 | | 2 |
| 2852428 | 02-33 | | 11 | 2854608 | 03-07 | | 5 |
| 2852434 | 03-08 | | 10 | 2854609 | 03-07 | | 6 |
| 2852436 | 03-03 | | | 2854700 | 02-37 | | 4 |
| 2852440 | 03-06 | | 1 | 2854701 | 02-37 | | 5 |
| 2852443 | 03-06 | | 2 | | 04-11A | | 2 |
| 2852446 | 03-06 | | 3 | 2854702 | 02-37 | | 6 |
| 2852449 | 03-06 | | 5 | 2854866 | 02-37 | | 10 |
| 2852451 | 03-06 | | 7 | | 02-40 | | 5 |
| 2852452 | 03-06 | | 8 | 2855124 | 02-17 | | 1 |
| 2852457 | 03-11 | | 4 | 2855125 | 03-11 | | 1 |
| 2852458 | 03-11 | | 5 | 2855150 | 03-09 | | 6 |
| 2852463 | 02-09 | | | 2855519 | 02-35 | | 1 |
| 2852464 | 02-09 | | 2 | 2856132 | 02-09 | | 6 |
| 2852468 | 02-39 | | 5 | 2856543 | 02-40 | | 3 |
| 2852473 | 02-40 | | 4 | 297850A1 | 04-04 | | 21 |
| 2852476 | 04-01 | | 3 | 297865A1 | 04-04 | | 18 |
| 2852484 | 03-10 | | 5 | 298591A1 | 05-06 | | 3 |
| 2852486 | 03-09 | | 13 | 299456A1 | 02-08 | | 7 |
| 2852488 | 03-05 | | 3 | 301803R1 | 09-46 | | 2 |
| 2852496 | 02-39 | | 6 | 302456A1 | 09-41 | | 2 |
| | 02-39 | | 8 | 302862A1 | 04-24A | | 4 |
| 2852500 | 03-10 | | 2 | 304083A1 | 09-57 | | 14 |
| 2852602 | 02-33 | | 6 | | 09-58 | | 14 |
| 2852729 | 02-22 | | 2 | | 09-59 | | 14 |
| 2852744 | 02-38 | | 6 | 307149A1 | 08-01 | | 28 |
| 2852770 | 02-13 | | 7 | 3079389R1 | 04-02 | | 4 |
| 2852772 | 02-15 | | 6 | 3079392R91 | 04-02 | | 9 |
| 2852773 | 02-25 | | 3 | 3079410R1 | 04-02 | | 20 |
| 2852774 | 02-25 | | 4 | 31-1081 | 09-46 | | 7 |
| 2852776 | 02-33 | | 7 | | 09-49 | | 8 |
| 2852791 | 03-03 | | 12 | 31-2369 | 04-23 | | 5 |
| 2852793 | 03-03 | | 11 | 31-2370 | 04-28 | | 2 |
| 2852794 | 03-06 | | 6 | 31-2582 | 04-23A | | 9 |
| 2852801 | 02-16 | | 6A | 31-2940 | 08-01 | | 45 |
| 2852804 | 03-05 | | 10 | 321-7030 | 09-57 | | 10 |
| 2852805 | 03-05 | | 11 | 321446A1 | 04-05 | | 26 |
| 2852817 | 03-09 | | 19 | | 04-10 | | 4 |
| 2852818 | 03-09 | | 12 | 322197950 | 04-04 | | 34 |
| 2852820 | 03-09 | | 17A | | 09-29 | | 4 |
| 2852821 | 03-09 | | 24 | | 09-30 | | 2 |
| 2852825 | 03-09 | | 11 | | 09-35A | | 5 |
| 2853410 | 02-09 | | 9 | 3222214R1 | 06-22A | | 17 |
| 2853412 | 02-09 | | 10 | | 06-23A | | 18 |
| 2853537 | 03-08 | | 8 | 323694A1 | 09-57 | | 1 |
| 2853591 | 02-10 | | 1 | 324201A1 | 05-04 | | 4 |
| 2853604 | 02-12 | | 9 | | 05-05 | | 28 |
| 2853728 | 02-13 | | 8 | 324203A1 | 04-28 | | 6 |
| 2853780 | 02-12 | | | 326-1488 | 09-28 | | 3 |
| 2853781 | 02-12 | | 3 | 328082A1 | 05-09 | | 28 |
| 2853784 | 02-25 | | 6 | | 09-07 | | 26 |
| 2853788 | 02-33 | | 5 | | 09-07A | | 26 |
| 2854030 | 02-35 | | 3 | | 09-07B | | 40 |
| 2854072 | 02-39 | | 2 | 328186A1 | 08-01A | | 6 |
| 2854075 | 02-09 | | 8 | 328752A1 | 09-57 | | 12 |
| 2854079 | 03-09 | | 3 | 328754A1 | 09-57 | | 11 |
| 2854282 | 03-09 | | 14 | 328904A1 | 09-57 | | 4 |
| 2854292 | 03-09 | | 5 | 329-1014 | 09-28 | | 4 |
| 2854375 | 02-16 | | 7 | 329044A1 | 09-57 | | 8 |
| | 02-25 | | 8 | 329047A1 | 09-57 | | 3 |
| 2854491 | 02-40 | | 7 | 329049A1 | 09-57 | | 13 |
| 2854530 | 02-33 | | 4 | 329051A1 | 09-55 | | 10 |
| 2854534 | 02-37 | | 1 | 329483A1 | 08-24A | | 9A |
| 2854540 | 03-08 | | | 331-329 | 09-15 | | 5 |
| 2854542 | 03-08 | | 6 | 332512A1 | 09-57 | | 5 |

| Number | Figure | Sequence | Ref. | Number | Figure | Sequence | Ref. |
|---|---|---|---|---|---|---|---|
| 333999A2 | 09-58 | | 9 | 353036A1 | 07-03 | | 12 |
| 334000A2 | 09-59 | | 9 | 358981A1 | 09-28 | | 1 |
| 334012A1 | 09-58 | | 4 | 358982A1 | 09-28 | | 5 |
| 334015A1 | 09-59 | | 4 | 360939A1 | 09-10 | | 2 |
| 334033A1 | 09-58 | | 5 | | 09-11 | | 2 |
| 334034A1 | 09-59 | | 5 | 360982A1 | 08-18 | | 9 |
| 334456A1 | 09-57 | | 7 | 360984A1 | 08-17 | | |
| 334567A1 | 09-59 | | 7 | 361128A1 | 09-07 | | 10 |
| 334568A1 | 09-58 | | 7 | | 09-07A | | 10 |
| 334573A1 | 09-59 | | 3 | | 09-07B | | 14 |
| 334574A1 | 09-58 | | 3 | 361133A2 | 09-07 | | 11 |
| 334576A1 | 09-59 | | 1 | | 09-07A | | 11 |
| 334577A1 | 09-58 | | 1 | | 09-07B | | 13 |
| 334663A1 | 09-58 | | 8 | 361139A2 | 09-07 | | 12 |
| 334664A1 | 09-59 | | 8 | | 09-07A | | 12 |
| 334677A1 | 09-59 | | 11 | | 09-08 | | 2 |
| 334678A1 | 09-58 | | 11 | 361187A1 | 06-01 | | 7 |
| 334686A1 | 09-58 | | 12 | 361811A1 | 02-01 | | 4 |
| 334688A1 | 09-59 | | 12 | 364376A1 | 05-10 | | 18 |
| 334704A1 | 09-59 | | 13 | 364444A2 | 04-13 | | 8 |
| 334706A1 | 09-58 | | 13 | 364741A1 | 09-41 | | 3 |
| 335889A1 | 09-57 | | 17 | 364742A1 | 09-57 | | 19 |
| 336010A1 | 09-58 | | 17 | 364918A1 | 09-59 | | 18 |
| 336011A1 | 09-59 | | 17 | 364919A1 | 09-58 | | 18 |
| 336029A1 | 08-18 | | 3B | 365191A1 | 04-25 | | 2 |
| 336030A1 | 08-16 | | 4C | 365353A1 | 09-07 | | 24 |
| | 08-17 | | 4C | | 09-07A | | 24 |
| 336041A1 | 08-15 | | 3D | 365354A1 | 09-07 | | 25 |
| | 08-18 | | 5D | | 09-07A | | 25 |
| 336042A1 | 08-16 | | 2D | 365355A1 | 09-07 | | 23 |
| | 08-17 | | 2D | | 09-07A | | 23 |
| 336045A1 | 08-18 | | 3D | 365356A1 | 09-08 | | 8 |
| 336046A1 | 08-16 | | 4D | 365357A1 | 04-25 | | 3 |
| | 08-17 | | 4D | | 04-25A | | 3 |
| 336378A1 | 08-18 | | 5A | 365516A2 | 08-03 | | 27 |
| 336379A1 | 08-18 | | 5 | 365935A2 | 04-24A | | 8 |
| 339508A1 | 08-16 | | 4A | 366904A1 | 03-04 | | 8 |
| | 08-17 | | 4A | 366905A1 | 03-04 | | 7 |
| 339510A1 | 08-16 | | 4 | 367489A1 | 05-04 | | 6 |
| | 08-17 | | 4 | | 05-05 | | 35 |
| 339511A1 | 08-16 | | 2A | | 07-03B | | 8 |
| | 08-17 | | 2A | | 07-03D | | 8 |
| 339512A1 | 08-16 | | 2 | | 08-05 | | 4 |
| | 08-17 | | 2 | | 08-06 | | 7 |
| 339520A1 | 08-16 | | 3 | | 08-07 | | 9 |
| 339521A1 | 08-16 | | 3A | | 08-07A | | 7 |
| | 08-17 | | 3A | | 08-08 | | 3 |
| 339525A1 | 08-16 | | 1 | | 08-09 | | 3 |
| | 08-17 | | 1 | | 08-19 | | 2 |
| 341968A1 | 08-18 | | 3A | | 08-19A | | 2 |
| 341971A1 | 08-18 | | 3 | | 08-19B | | 4 |
| 345-49 | 06-24 | | 25 | | 09-46 | | 3 |
| 345-62 | 04-01 | | 4 | 367658A1 | 05-04 | | 7 |
| 345-75 | 04-01 | | 5 | | 05-05 | | 36 |
| 345-87 | 02-02 | | 32 | | 07-03 | | 15 |
| | 09-46 | | 5 | | 07-03B | | 11 |
| 345125A1 | 09-42D | | 43 | | 07-03D | | 6 |
| 345749A1 | 09-42A | | 14 | | 08-05 | | 3 |
| | 09-42C | | 14 | | 08-06 | | 19 |
| 345752A1 | 09-42A | | 15 | | 08-07 | | 18 |
| | 09-42C | | 15 | | 08-07A | | 14 |
| 345753A1 | 09-42A | | 16 | | 08-08 | | 8 |
| | 09-42C | | 16 | | 08-09 | | 9 |
| 345754A1 | 09-42A | | 17 | | 08-10 | | 10 |
| | 09-42C | | 17 | | 08-13 | | 2 |
| 345776A1 | 09-42A | | 19 | | 08-33 | | 2 |
| | 09-42C | | 19 | 368055A1 | 04-18 | | 2 |
| 345783A1 | 09-42A | | 45 | | 04-19 | | |
| | 09-42C | | 45 | 368056A1 | 04-18 | | 1 |
| 347613A1 | 02-03 | | 2 | | 04-19 | | |
| 347615A3 | 03-01 | | 1 | 368140A1 | 06-23 | | 7 |
| 349372A1 | 05-02A | | 4 | 368141A1 | 06-23 | | 7 |
| 350662A1 | 08-01 | | 38 | 368142A1 | 06-23 | | 7 |
| | 09-44B | | 5 | 368526A1 | 09-10 | | 8 |
| | 09-48 | | 5 | 368775A1 | 09-07B | | 33 |
| 353-414 | 08-19 | | 8 | 368836A2 | 09-07B | | 34 |
| | 09-44B | | 12 | 369432A2 | 09-07B | | 2A |
| 353036A1 | 06-02 | | 8 | 371185A1 | 04-28 | | 1 |

| Number | Figure | Sequence | Ref. |
|---|---|---|---|
| 371883A1 | 09-07A | | 2A |
| 372081A1 | 09-11 | | 6 |
| 372082A2 | 09-11 | | 5 |
| 372102A3 | 08-08 | | 6 |
| 372359A1 | 08-05 | | 18 |
| | 08-05 | | 19 |
| 372453A1 | 08-08 | | 4 |
| | 08-09 | | 4 |
| | 08-10 | | 3 |
| 373040A2 | 08-33 | | 1 |
| 373354A1 | 09-10 | | 5 |
| 374421A4 | 04-13 | | 6 |
| 374424A2 | 04-15 | | 10 |
| | 05-03 | | 16 |
| 374426A2 | 04-15 | | 11 |
| | 05-03 | | 7 |
| 374429A2 | 04-13 | | 14 |
| 374430A2 | 04-13 | | 3 |
| | 04-22 | | 4 |
| 374431A2 | 04-13 | | 5 |
| 374433A3 | 04-13 | | 13 |
| 374434A2 | 04-15 | | 12 |
| | 05-03 | | 6 |
| 375326A2 | 09-07 | | 15 |
| | 09-07A | | 15 |
| | 09-08 | | 1 |
| 375328A1 | 09-07 | | 13 |
| | 09-07A | | 13 |
| 375330A1 | 09-07 | | 14 |
| | 09-07A | | 14 |
| 375516A1 | 09-08 | | 9 |
| 375517A1 | 09-07 | | 33 |
| | 09-07A | | 33 |
| | 09-08 | | 10 |
| 375518A1 | 09-07B | | 23 |
| | 09-08 | | 7 |
| | 09-08A | | 8 |
| 377608A1 | 08-03 | | 1 |
| | 08-04 | | |
| 377899A1 | 04-10 | | 3 |
| 379070A2 | 09-07B | | 15 |
| 379139A1 | 08-14 | | 1 |
| 379149A2 | 09-04 | | 2 |
| | 09-05 | | 2 |
| | 09-06 | | 2 |
| 379191A2 | 09-07B | | 2B |
| 379197A2 | 09-07B | | 16 |
| 379374A1 | 07-03B | | 7 |
| | 07-03D | | 27 |
| | 08-11 | | 1 |
| | 08-12 | | 2 |
| | 08-13 | | 1 |
| | 09-49 | | 9 |
| 379587A2 | 08-01 | | 44 |
| 379611A1 | 06-01 | | 8 |
| 379770A2 | 09-08A | | 1 |
| 38-33264 | 09-07B | | 35 |
| 3805086 | 09-35A | | 19 |
| 3805129 | 09-33A | | 16 |
| | 09-34 | | 26 |
| | 09-35 | | 3 |
| 3805251 | 09-33A | | 30 |
| 380912A1 | 08-25 | | 1 |
| 381232A1 | 02-02 | | 5 |
| 382189A1 | 02-02 | | 17 |
| 382495A1 | 09-17 | | 12 |
| 382622A1 | 09-57 | | 9 |
| 383868A1 | 07-02 | | 4 |
| 383869A2 | 07-02 | | 6 |
| | 07-05 | | 3 |
| 384138A1 | 04-28 | | 2A |
| 384774A1 | 08-01 | | 10 |
| 384985A1 | 05-01 | | 5 |
| 386040R1 | 02-03 | | 12 |
| 386735A1 | 07-03A | | 4 |
| 386741A2 | 09-55 | | 14 |
| 386823A1 | 07-03A | | 11 |
| 387147A1 | 09-55 | | 2 |
| 387149A1 | 09-55 | | 5 |
| 388112A1 | 09-57 | | 6 |
| 388157A1 | 09-58 | | 6 |
| 388158A1 | 09-59 | | 6 |
| 388509A1 | 08-03 | | 5 |
| 388555A2 | 08-03 | | 19 |
| 388556A1 | 08-03 | | 9 |
| 388558A1 | 08-03 | | 25 |
| 388744A1 | 08-24A | | 4 |
| 388813A1 | 04-24A | | 7 |
| 389049A1 | 08-05 | | 16 |
| 389161A1 | 08-05 | | 28 |
| | 08-05 | | 29 |
| 389349A1 | 08-07 | | 3 |
| 389351A1 | 08-07 | | 5 |
| 389487A1 | 04-15 | | 3 |
| | 05-03 | | 8 |
| 390208A2 | 08-03 | | 30 |
| 391133A1 | 08-05 | | 25 |
| | 08-06 | | 14 |
| 391276A1 | 09-15 | | 14 |
| 391278A1 | 09-15 | | 15 |
| 391280A1 | 09-15 | | 10 |
| 391281A1 | 09-15 | | 6 |
| 391859A1 | 08-25 | | 6 |
| 392059A1 | 08-25 | | 3 |
| 393126A1 | 08-13 | | 11 |
| 393632A1 | 02-02 | | 25 |
| 394799A1 | 04-08 | | 3 |
| 395185A1 | 04-08 | | 3A |
| 39519 | 09-22 | | 4 |
| 395895A1 | 08-02 | | 7 |
| | 09-55 | | 17 |
| 396-41094 | 09-28 | | 6 |
| 396471A1 | 04-03 | | 4 |
| | 04-03A | | 4 |
| 397437A1 | 02-01 | | 9 |
| 397547A1 | 08-20 | | 22 |
| 398148A1 | 09-42D | | |
| 398771A1 | 04-26 | | 5 |
| 398888A1 | 04-17 | | 2 |
| | 05-05 | | 12 |
| 399350A1 | 08-17 | | 3 |
| 400833A2 | 08-32 | | 10 |
| 401525A1 | 08-03 | | 36 |
| 401526A1 | 08-03 | | 35 |
| | 08-25 | | 22 |
| 401527A2 | 08-03 | | 37 |
| 402390A1 | 08-32 | | 12 |
| 404635A1 | 04-07 | | 19 |
| 406347A1 | 09-12 | | 7 |
| | 09-13 | | 7 |
| 406390A1 | 09-12 | | 8 |
| | 09-13 | | 8 |
| 407632A1 | 02-14 | | 1 |
| 407737A2 | 09-57 | | 2 |
| 407738A2 | 09-58 | | 2 |
| 407739A2 | 09-59 | | 2 |
| 407869A2 | 08-32 | | 2 |
| | 08-32A | | 1 |
| 408142A1 | 04-19 | | 2 |
| 408143A1 | 04-19 | | 3 |
| 410108A1 | 08-29A | | |
| 410566A1 | 08-29A | | |
| 410939A1 | 04-19 | | 4 |
| 410940A1 | 04-19 | | 5 |
| 410941A1 | 04-19 | | 7 |
| 410942A1 | 04-19 | | 6 |
| 412067A1 | 09-14 | | 2 |
| 412152 | 09-34 | | 25 |
| 412471A1 | 09-57 | | 15 |
| 412473A1 | 09-58 | | 15 |
| 412474A1 | 09-59 | | 15 |
| 419792A2 | 02-02 | | 33 |
| 420-21236 | 09-10 | | 3 |
| | 09-11 | | 3 |
| 420-21244 | 09-10 | | 9 |
| | 09-11 | | 7 |

| Number | Figure | Sequence | Ref. |
|---|---|---|---|
| 4227144 | 09-33A | | 5 |
| | 09-34 | | 6 |
| | 09-35A | | 6 |
| 4227178 | 09-33 | | 8 |
| | 09-35 | | 6 |
| 422721300 | 09-43 | | 8 |
| 4227225 | 05-02 | | 8 |
| 4227226 | 05-02 | | 5 |
| 425-107 | 04-02A | | 16 |
| | 04-02B | | 14 |
| | 04-05 | | 23 |
| 425-1310 | 07-03 | | 7 |
| 425-145 | 04-20 | | 5 |
| 425-1612 | 09-10 | | 10 |
| | 09-10 | | 4 |
| | 09-11 | | 4 |
| | 09-11 | | 8 |
| 426-1244 | 09-10 | | 12 |
| 426-1252 | 09-10 | | 11 |
| 426-8104 | 04-02A | | 10 |
| | 04-02B | | 8 |
| 426-820 | 04-02A | | 20 |
| | 04-02B | | 18 |
| 427501A1 | 08-29A | | 6 |
| 432444A1 | 09-19 | | 5 |
| 432765A1 | 09-15 | | 19 |
| 432909A1 | 09-15 | | 23 |
| 433264A1 | 09-15 | | 16 |
| 437523A1 | 08-09 | | 6 |
| 440-1088 | 09-44B | | 11 |
| | 09-48 | | 11 |
| 440038A1 | 04-11 | | 4 |
| 441822A1 | 09-07B | | 24 |
| | 09-08A | | 9 |
| 442702A1 | 05-10 | | 1 |
| 442703A1 | 05-10 | | 6 |
| 442704A1 | 05-10 | | |
| 442711A1 | 05-10 | | 4 |
| 442713A1 | 05-10 | | 8 |
| 442717A1 | 05-10 | | 20 |
| 443565A1 | 06-01 | | 18 |
| 444931A1 | 09-16 | | 14 |
| 445786A1 | 04-10 | | 5 |
| 446178A1 | 08-15 | | 3E |
| 446183A1 | 08-20 | | 23 |
| 446195A1 | 08-15 | | 4D |
| 446481A1 | 08-15 | | 4C |
| 449527A1 | 08-32A | | |
| 449528A1 | 08-32A | | |
| 449529A1 | 08-32A | | |
| 449530A1 | 08-32A | | |
| 449533A1 | 08-32A | | |
| 449555A1 | 08-32A | | |
| 47124903 | 09-42A | | 38 |
| | 09-42A | | 7 |
| | 09-42C | | 38 |
| | 09-42C | | 7 |
| 47335175 | 09-42D | | 42 |
| 4890088 | 03-05 | | 6 |
| 4890189 | 03-09 | | 22 |
| 4890190 | 03-09 | | 17 |
| 4890193 | 03-09 | | 21 |
| 4890634 | 03-05 | | 7 |
| 4890635 | 03-05 | | 14 |
| 4890700 | 03-05 | | 4 |
| 4890832 | 02-32 | | 4 |
| 4890833 | 02-29 | | 8 |
| 4890926 | 03-07 | | 5B |
| 4890929 | 03-07 | | 3 |
| 4890964 | 03-03 | | 8 |
| | 03-09 | | 7 |
| 4891024 | 02-23 | | 2 |
| 4891025 | 02-23 | | 3 |
| 4891209 | 02-32 | | 5 |
| 4891252 | 02-18 | | 1 |
| 4891288 | 02-16 | | 4 |
| 4891353 | 02-20 | | 6 |
| 4891385 | 03-05 | | 8 |
| 4892255 | 03-09 | | 18 |
| 4892708 | 02-36 | | 2 |
| 4892712 | 02-35 | | 2 |
| 4892715 | 02-36 | | 4 |
| 4892867 | 02-27 | | 3 |
| 4892871 | 02-15 | | |
| 4892893 | 02-27 | | 2 |
| 4892915 | 02-29 | | 2 |
| 4893036 | 02-24 | | 7 |
| | 02-37 | | 10 |
| | 02-40 | | 5 |
| 4893234 | 02-15 | | 21 |
| 4893244 | 02-24 | | 13A |
| | 02-24 | | 14A |
| 4893386 | 02-26 | | 2 |
| 4893389 | 03-05 | | 12 |
| 4893464 | 03-03 | | 7 |
| 4893487 | 02-33A | | 2 |
| 4893739 | 03-07 | | 4 |
| 4893936 | 02-25 | | 5 |
| 4893962 | 03-05 | | 9 |
| 4894095 | 03-06 | | 10A |
| | 03-06 | | 1A |
| | 03-06 | | 2A |
| | 03-06 | | 3A |
| | 03-11 | | 1A |
| 4894100 | 02-41 | | 1 |
| 4894139 | 02-13 | | 5 |
| 4894410 | 02-41 | | 2 |
| 4894641 | 02-28 | | 1 |
| 4894721 | 03-03 | | 13 |
| 4895017 | 02-26 | | 4 |
| 4895031 | 02-33 | | 3 |
| 4895037 | 02-09 | | 11 |
| 4895038 | 02-20 | | 4 |
| 4895039 | 02-20 | | 3 |
| 4895040 | 02-20 | | 7 |
| 4895045 | 02-12 | | 5 |
| 4895049 | 02-21 | | 7 |
| 4895051 | 02-24 | | 2 |
| 4895052 | 02-24 | | 3 |
| 4895073 | 02-24 | | 5 |
| 4895074 | 02-24 | | 6 |
| 4895078 | 02-39 | | 10 |
| | 02-40 | | 6 |
| 4895079 | 02-39 | | 9 |
| 4895080 | 02-39 | | 11 |
| 4895082 | 02-39 | | 11A |
| 4895085 | 02-24 | | 9 |
| 4895089 | 02-16 | | 8 |
| | 02-24 | | 10 |
| 4895098 | 02-17 | | 4 |
| 4895107 | 02-16 | | 2 |
| 4895131 | 02-40 | | 2 |
| 4895132 | 02-17 | | 2 |
| 4895141 | 02-17 | | 6 |
| 4895155 | 02-29 | | 3 |
| 4895157 | 03-09 | | 16 |
| 4895219 | 02-38 | | 5 |
| 4895228 | 02-20 | | 5 |
| 4895291 | 02-13 | | 13 |
| 4895294 | 02-37 | | 11 |
| 4895336 | 02-38 | | 4 |
| 4895378 | 02-29 | | 4 |
| 4895379 | 02-29 | | 5 |
| 4895392 | 02-21 | | 4 |
| 4895393 | 02-21 | | 4A |
| | 02-39 | | 6A |
| 4895406 | 02-24 | | 11 |
| 4895407 | 02-24 | | 12 |
| 4895408 | 02-24 | | 9 |
| 4895414 | 02-26 | | 5 |
| 4895424 | 02-37 | | 8 |
| 4895432 | 02-33 | | 1 |
| | 02-37 | | 2 |
| 4895462 | 03-06 | | 11 |
| 4895477 | 03-09 | | 21A |
| 4895483 | 03-07 | | 1 |

| Number | Figure | Sequence | Ref. | Number | Figure | Sequence | Ref. |
|---|---|---|---|---|---|---|---|
| 4895576 | 02-39 | | 4 | 4899076 | 02-29 | | 2 |
| 4895605 | 02-21 | | 2 | 4899078 | 02-30 | | 3 |
| 4895610 | 02-09 | | 5 | | 02-32 | | 2 |
| | 02-13 | | 10 | | 03-09 | | 8 |
| 4895623 | 02-39 | | 7 | 4899079 | 02-16 | | 1 |
| 4895625 | 02-39 | | 7A | | 02-18 | | 3 |
| 4895817 | 03-09 | | 25 | | 02-34 | | 1 |
| 4895910 | 02-25 | | 1 | | 02-41 | | 4 |
| 4895919 | 02-20 | | 8 | 4899080 | 02-34 | | 6 |
| 4895921 | 02-20 | | 2 | 4899081 | 02-24 | | 1 |
| 4896263 | 02-37 | | 14 | 4899085 | 02-38 | | 7 |
| 4896329 | 03-11 | | 3 | 4899086 | 02-17 | | 3 |
| 4896380 | 02-34 | | 2 | 4899087 | 02-17 | | 5 |
| 4896404 | 02-12 | | 4 | 4899089 | 02-33 | | 12 |
| 4896407 | 02-12 | | 9 | 4899090 | 02-10 | | 2 |
| 4896409 | 02-12 | | 8 | 4899092 | 02-15 | | 13 |
| 4896410 | 02-12 | | 7 | 4899093 | 02-30 | | 4 |
| 4896542 | 03-09 | | 4 | 4899107 | 02-16 | | 2A |
| 4896543 | 03-03 | | 9 | 4899108 | 02-16 | | 2B |
| 4896650 | 02-38 | | 2 | 4899109 | 02-29 | | 2 |
| 4896651 | 02-38 | | 1 | 4899110 | 02-40 | | 1 |
| 4896773 | 02-27 | | 1 | | 03-09 | | 20 |
| 4896884 | 03-08 | | 9 | 4899115 | 02-21 | | 2A |
| 4896897 | 02-31 | | 2 | 4899124 | 03-09 | | 15 |
| 4896939 | 02-30 | | 6 | 4899219 | 02-15 | | |
| 4896952 | 03-05 | | 2 | 4899239 | 02-25 | | 7 |
| 4896991 | 02-16 | | 7 | 4899240 | 02-15 | | 9 |
| | 02-25 | | 8 | 4899242 | 02-15 | | 10 |
| 4896996 | 03-06 | | 4 | 4899243 | 02-15 | | 11 |
| 4897024 | 02-32 | | 1 | 4899245 | 02-33 | | 10 |
| 4897106 | 02-24 | | 13 | 4899257 | 02-33 | | 9 |
| 4897224 | 03-03 | | 5 | 4899377 | 02-16 | | 10 |
| | 03-09 | | 23 | 4899436 | 02-16 | | 5 |
| 4897277 | 03-06 | | 9 | 4899566 | 02-12 | | 2 |
| 4897330 | 02-09 | | 4 | 4899679 | 02-30 | | 1 |
| | 02-13 | | 9 | 4899689 | 03-07 | | 5A |
| 4897457 | 02-34 | | 4 | 4899803 | 02-21 | | 6 |
| 4897481 | 02-10 | | 1 | 4899815 | 03-10 | | 3 |
| 4897499 | 02-29 | | 2 | 4899824 | 02-39 | | 8A |
| 4897534 | 02-15 | | 1 | 4899921 | 02-37 | | 9 |
| 4897536 | 02-15 | | 5 | 4899926 | 02-15 | | 7 |
| 4897537 | 02-15 | | 4 | 492-11044 | 04-02A | | 15 |
| 4897546 | 02-15 | | 2 | | 04-02B | | 13 |
| 4897547 | 02-15 | | 3 | 493-21020 | 08-02A | | 5 |
| 4897578 | 02-24 | | 14 | 495-11053 | 09-40 | | 2 |
| 4897766 | 02-37 | | 13 | 495-21063 | 04-02 | | 22 |
| 4897817 | 03-06 | | 10 | 495-81144 | 09-16 | | 12 |
| 4897838 | 03-03 | | 10 | 495-81145 | 09-16 | | 7 |
| 4898283 | 02-25 | | 2 | 496-11081 | 09-10 | | 13 |
| 4898301 | 02-13 | | 3 | 496-21053 | 02-05 | | 3 |
| 4898372 | 02-15 | | 16 | 496-81025 | 02-01 | | 15 |
| 4898439 | 02-15 | | 12 | | 05-09 | | 25 |
| 4898758 | 03-03 | | 4 | | 09-07 | | 17 |
| 4898876 | 03-03 | | 6 | | 09-07A | | 17 |
| 4898921 | 03-05 | | | | 09-07B | | 19 |
| 4899003 | 02-16 | | 9 | | 09-08 | | 4 |
| | 03-05 | | 1 | | 09-08A | | 3 |
| 4899009 | 02-21 | | 3 | | 09-15 | | 2 |
| 4899019 | 02-12 | | 1 | 514-1107 | 06-22A | | 1 |
| | 02-13 | | 2 | | 06-23A | | 1 |
| 4899020 | 02-09 | | 7 | 514-1315 | 06-22 | | 2 |
| | 02-13 | | 1 | | 06-23 | | 2 |
| | 03-08 | | 7 | 515-21190 | 04-03 | | 6 |
| 4899026 | 02-29 | | 1 | | 04-03A | | 6 |
| | 02-30 | | 2 | | 04-10 | | 2 |
| 4899032 | 02-22 | | 1 | 515-21302 | 04-06 | | 7 |
| 4899035 | 02-12 | | 6 | 515-22127 | 04-06 | | 18 |
| 4899036 | 02-09 | | 3 | 515-22190 | 02-02 | | 12 |
| 4899037 | 02-31 | | 3 | | 08-01 | | 18 |
| | 02-41 | | 3 | 515-22254 | 09-49 | | 14 |
| 4899039 | 02-37 | | 3 | 515-23143 | 08-01 | | 43 |
| 4899046 | 02-26 | | 3 | 515-23159 | 08-13 | | 4 |
| 4899057 | 03-09 | | 10 | 515-23206 | 04-06 | | 12 |
| 4899063 | 02-32 | | 3 | | 04-07 | | 18 |
| 4899068 | 02-29 | | 7 | 515-23222 | 04-05 | | 11 |
| | 02-34 | | 3 | 515-23270 | 04-05 | | 9 |
| 4899072 | 02-21 | | 3A | | 04-06 | | 11 |
| 4899073 | 02-30 | | 5 | 515-23317 | 08-01 | | 31 |

| Number | Figure | Sequence | Ref. |
|---|---|---|---|
| 515-2379 | 04-05 | | 16 |
| 515-24190 | 04-17 | | 10 |
| 515-24222 | 07-03A | | 8 |
| 515-24238 | 04-05 | | 20 |
| | 07-03A | | 14 |
| | 09-46 | | 4 |
| 515-2495 | 04-17 | | 8 |
| | 06-24 | | 20 |
| | 09-07 | | 28 |
| | 09-07A | | 28 |
| 515-25127 | 03-01 | | 20 |
| 515-25159 | 03-01 | | 19 |
| | 05-04 | | 9 |
| | 05-05 | | 33 |
| | 08-11 | | 3 |
| | 08-12 | | 1 |
| 515-25190 | 03-01 | | 28 |
| 515-25254 | 08-19A | | 6 |
| 540-711 | 08-32 | | 16 |
| 540-719 | 08-29 | | 12 |
| | 08-30 | | 11 |
| | 08-31 | | 11 |
| | 08-32 | | 17 |
| 543-708 | 04-23A | | 7 |
| 561-703 | 02-03 | | 13 |
| | 09-44B | | 3 |
| | 09-48 | | 3 |
| 60-4640T1 | 09-44B | | 9 |
| | 09-48 | | 8 |
| 60-6359T1 | 04-22 | | 6 |
| 612-6 | 09-22 | | 23 |
| 614-10020 | 09-36 | | 3 |
| 614-12040 | 04-18 | | 6 |
| 614-6012 | 09-31 | | 14 |
| 614-6016 | 09-34 | | 24 |
| | 09-35 | | 8 |
| | 09-39 | | 7 |
| 614-6020 | 04-27 | | 3 |
| | 05-02A | | 16 |
| | 09-43 | | 14 |
| | 09-43A | | 29 |
| 614-8020 | 09-45 | | 6 |
| | 09-47 | | 8 |
| 614-8025 | 04-18 | | 11 |
| 614-8035 | 09-43A | | 19 |
| 626-10025 | 07-01 | | 6 |
| 627-10020 | 05-09 | | 17 |
| | 08-07 | | 13 |
| | 08-07A | | 11 |
| | 09-03 | | 6 |
| | 09-04 | | 4 |
| | 09-05 | | 4 |
| 627-10025 | 02-06 | | 3 |
| | 04-05 | | 19 |
| | 06-24 | | 16 |
| | 08-33 | | 7 |
| | 09-03 | | 9 |
| | 09-06 | | 5 |
| | 09-07B | | 39 |
| 627-10030 | 02-14 | | 3 |
| | 03-04 | | 5 |
| | 03-04 | | 6 |
| | 04-03 | | 9 |
| | 04-03A | | 9 |
| | 05-01 | | 3 |
| | 05-04 | | 16 |
| | 05-05 | | 19 |
| | 07-03A | | 6 |
| | 08-03 | | 39 |
| | 08-26 | | 3 |
| | 08-26A | | 3 |
| | 08-26B | | 3 |
| | 09-01 | | 10 |
| | 09-02 | | 10 |
| | 09-22 | | 6 |
| | 09-42 | | 9 |
| 627-10035 | 06-24 | | 12 |
| | 08-10 | | 16 |
| 627-10035 | 09-03 | | 5 |
| | 09-21 | | 11 |
| | 09-24 | | 7 |
| | 09-25 | | 7 |
| | 09-42 | | 15 |
| 627-10040 | 02-06 | | 18 |
| | 09-12 | | 5 |
| | 09-13 | | 5 |
| | 09-22 | | 7 |
| | 09-42 | | 2 |
| 627-10065 | 04-10 | | 12 |
| 627-12020 | 09-12 | | 9 |
| | 09-13 | | 9 |
| 627-12025 | 04-05 | | 25 |
| | 09-01 | | 7 |
| | 09-02 | | 7 |
| 627-12030 | 02-06 | | 22 |
| | 09-15 | | 32 |
| 627-12035 | 02-08 | | 5 |
| | 03-01 | | 16 |
| | 05-05 | | 4 |
| | 07-03 | | 8 |
| | 09-01 | | 11 |
| | 09-02 | | 11 |
| | 09-12 | | 13 |
| | 09-13 | | 13 |
| | 09-22 | | 17 |
| 627-12040 | 02-05 | | 7 |
| | 02-06 | | 21 |
| | 03-04 | | 4 |
| | 08-03 | | 8 |
| | 09-17 | | 8 |
| 627-12045 | 02-01 | | 5 |
| | 09-14 | | 10 |
| | 09-21 | | 9 |
| | 09-24 | | 9 |
| | 09-25 | | 9 |
| | 09-27 | | 7 |
| 627-14045 | 08-03 | | 18 |
| 627-16035 | 05-09 | | 26 |
| | 09-15 | | 1 |
| 627-16040 | 09-07 | | 19 |
| | 09-07A | | 19 |
| | 09-07B | | 21 |
| | 09-17 | | 14 |
| 627-16045 | 06-01 | | 10 |
| | 08-03 | | 3 |
| 627-16050 | 03-01 | | 13 |
| | 09-07 | | 18 |
| | 09-07A | | 18 |
| | 09-07B | | 20 |
| | 09-08 | | 5 |
| 627-20050 | 06-01 | | 6 |
| 627-6020 | 04-07 | | 8 |
| | 04-09 | | 4 |
| | 04-11 | | 5 |
| | 04-26 | | 19 |
| | 09-44 | | 5 |
| | 09-44A | | 5 |
| 627-6025 | 04-07 | | 15 |
| | 09-16 | | 16 |
| | 09-52 | | 6 |
| 627-8016 | 02-03 | | 10 |
| | 04-06 | | 17 |
| 627-8020 | 02-42 | | 3 |
| | 03-01 | | 29 |
| | 04-07 | | 21 |
| | 04-11A | | 8 |
| | 09-48 | | 12 |
| 627-8025 | 02-02 | | 10 |
| | 02-03 | | 14 |
| | 02-06 | | 14 |
| | 03-01 | | 31 |
| | 03-04A | | 4 |
| | 04-05 | | 15 |
| | 04-06 | | 2 |
| | 04-07 | | 16 |
| | 04-09 | | 6 |

| Number | Figure | Sequence | Ref. | Number | Figure | Sequence | Ref. |
|---|---|---|---|---|---|---|---|
| 627-8025 | 04-12 | | 4 | 637-64236 | 07-03D | | 19B |
| | 05-05 | | 15 | | 08-02 | | 3B |
| | 08-01 | | 12 | | 08-03 | | 11A |
| | 08-19 | | 6 | | 08-05 | | 10B |
| | 09-16 | | 18 | | 08-05 | | 9B |
| | 09-19 | | 7 | | 08-06 | | 16B |
| 627-8030 | 07-03B | | 20 | | 08-06 | | 17B |
| | 07-03D | | 23 | | 08-08 | | 5A |
| | 08-01 | | 22 | | 08-09 | | 5A |
| | 09-20 | | 13 | | 08-10 | | 4B |
| | 09-20A | | 13 | | 08-19 | | 1B |
| | 09-22 | | 21 | | 08-19A | | 1B |
| 627-8035 | 02-02 | | 14 | | 08-19B | | 13B |
| | 06-02 | | 4 | | 08-19B | | 1A |
| | 08-01A | | 4 | | 08-23 | | 5A |
| | 09-20 | | 8 | | 08-24 | | 2A |
| | 09-20A | | 8 | | 08-26B | | 7A |
| 637-63093 | 05-04 | | 12A | 637-64296 | 07-03 | | 3B |
| | 05-05 | | 7B | | 08-03 | | 14B |
| | 08-03 | | 23B | | 08-05 | | 12A |
| 637-63113 | 02-05 | | 10B | | 08-05 | | 13B |
| | 05-04 | | 13A | | 08-07 | | 14B |
| | 05-05 | | 24A | | 08-07 | | 16B |
| | 07-03D | | 33B | | 08-20 | | 15B |
| | 08-03 | | 20B | | 08-20 | | 9A |
| | 08-03 | | 34A | | 08-21 | | 1B |
| | 08-14 | | 11A | 637-64386 | 08-03 | | 31 |
| | 08-14 | | 3A | 700-101 | 08-14 | | 3 |
| | 08-25 | | 5B | | 08-29 | | 5 |
| | 08-25 | | 6A | | 08-30 | | 5 |
| | 08-26 | | 4B | | 08-31 | | 4 |
| | 08-26 | | 6B | | 08-32 | | 8 |
| | 08-26A | | 4B | 700-102 | 07-03A | | 13 |
| | 08-26A | | 6B | 700-103 | 05-04 | | 2 |
| | 08-26B | | 4B | | 05-05 | | 8 |
| | 08-26B | | 6B | | 07-03 | | 2 |
| | 08-29 | | 5B | 700-104 | 08-19 | | 1 |
| | 08-29 | | 6A | | 08-19A | | 1 |
| | 08-29 | | 7B | 700-105 | 07-03 | | 3 |
| | 08-30 | | 4B | | 08-07 | | 14 |
| | 08-30 | | 5B | | 08-07A | | 12 |
| | 08-30 | | 6B | 700-115 | 05-09 | | 3 |
| | 08-31 | | 4B | | 07-03C | | 3 |
| | 08-31 | | 5A | 700-153 | 05-04 | | 13 |
| | 08-31 | | 6B | | 08-03 | | 20 |
| | 08-31 | | 7B | | 08-25 | | 5 |
| | 08-32 | | 19B | | 08-26 | | 4 |
| | 08-32 | | 20B | | 08-26A | | 4 |
| | 08-32 | | 7B | | 08-26B | | 4 |
| | 08-32 | | 8B | | 08-29 | | 6 |
| 637-63133 | 07-03C | | 5B | | 08-30 | | 4 |
| | 07-03D | | 22B | | 08-31 | | 5 |
| | 07-03D | | 26A | | 08-32 | | 7 |
| 637-63153 | 05-09 | | 2A | 700-157 | 07-03D | | 26 |
| | 05-09 | | 33A | 700-166 | 08-06 | | 16 |
| | 05-09 | | 3B | | 08-08 | | 5 |
| | 07-03A | | 12B | | 08-09 | | 5 |
| | 07-03A | | 13B | | 08-10 | | 4 |
| | 07-03A | | 1B | 700-169 | 07-03D | | 22 |
| | 07-03A | | 3B | 700-303 | 05-04 | | 12 |
| | 07-03C | | 3B | | 05-05 | | 7 |
| | 07-03D | | 21A | 700-304 | 08-14 | | 11 |
| 637-63193 | 02-05 | | 9B | 700-305 | 07-03A | | 1 |
| | 05-04 | | 10B | 700-307 | 07-03B | | 6 |
| | 05-04 | | 2A | | 07-03C | | 4 |
| | 05-05 | | 26B | | 07-03D | | 19 |
| | 05-05 | | 8B | | 08-19B | | 13 |
| | 05-09 | | 32A | | 08-23 | | 5 |
| | 05-09 | | 35B | | 08-24 | | 2 |
| | 07-03 | | 2B | 700-308 | 08-07 | | 16 |
| | 08-03 | | 12B | | 08-20 | | 9 |
| | 08-03 | | 29 | | 08-21 | | 1 |
| 637-64236 | 02-05 | | 11B | 700-313 | 05-05 | | 48 |
| | 05-05 | | 48B | | 08-06 | | 17 |
| | 05-05 | | 6B | 700-315 | 07-03D | | 33 |
| | 07-03B | | 14B | | 08-25 | | 2 |
| | 07-03B | | 6B | | 08-32 | | 19 |
| | 07-03C | | 4B | 700-316 | 05-04 | | 10 |

| Number | Figure | Sequence | Ref. |
|---|---|---|---|
| 700-316 | 05-05 | | 26 |
| 700-368 | 07-03C | | 5 |
| 700-378 | 05-05 | | 24 |
| | 08-26 | | 6 |
| | 08-26A | | 6 |
| | 08-26B | | 6 |
| 700-387 | 07-03B | | 14 |
| 700-406 | 08-29 | | 7 |
| | 08-30 | | 6 |
| | 08-31 | | 6 |
| 700-407 | 08-20 | | 15 |
| 700-412 | 07-03A | | 12 |
| 701-320 | 07-03A | | 3 |
| | 07-03D | | 21 |
| 701-329 | 08-25 | | 4 |
| | 08-26 | | 5 |
| | 08-26A | | 5 |
| | 08-26B | | 5 |
| | 08-29 | | 9 |
| | 08-30 | | 8 |
| | 08-31 | | 8 |
| | 08-32 | | 21 |
| 701-342 | 08-23 | | 6 |
| | 08-24 | | 6 |
| 701-361 | 07-03D | | 4 |
| 701-366 | 08-07 | | 15 |
| | 08-07A | | 13 |
| | 08-10 | | 6 |
| 701-410 | 08-06 | | 18 |
| | 08-07 | | 17 |
| 701-416 | 07-03A | | 2 |
| | 07-03D | | 20 |
| 701-418 | 08-20 | | 17 |
| 701-421 | 08-03 | | 21 |
| 701-422 | 08-14 | | 10 |
| | 08-25 | | 7 |
| | 08-32 | | 14 |
| 701-433 | 05-04 | | 3 |
| | 05-05 | | 27 |
| 701-434 | 08-25 | | 8 |
| 701-907 | 05-04 | | 28 |
| 701-908 | 08-07 | | 24 |
| | 08-07A | | 20 |
| | 08-10 | | 13 |
| 701-909 | 07-03D | | 10 |
| | 08-25 | | 11 |
| 701-911 | 08-11 | | 10 |
| | 08-12 | | 10 |
| | 08-13 | | 12 |
| 701-914 | 08-08 | | 7 |
| | 08-09 | | 8 |
| | 08-10 | | 12 |
| 703-902 | 07-03D | | 17 |
| 71405746 | 05-02A | | 19 |
| 71476260 | 05-02A | | 21 |
| 71480988 | 04-24A | | 9 |
| 71485202 | 04-04 | | 16 |
| 71485274 | 09-33 | | 6 |
| | 09-35 | | 10 |
| 71485317 | 09-43A | | 20 |
| 71486982 | 09-42D | | |
| 71491410 | 09-42A | | |
| | 09-42C | | |
| 71491411 | 09-42A | | |
| | 09-42C | | |
| 72114876 | 09-36 | | 8 |
| 728-1240 | 09-17 | | 15 |
| 732-1610 | 09-33 | | 5 |
| | 09-35 | | 14 |
| 733-3220 | 09-16 | | 19 |
| | 09-17 | | 16 |
| 733-3232 | 07-03 | | 6 |
| 760-14113 | 04-24A | | 6 |
| | 06-24 | | 26 |
| | 09-43A | | 1A |
| 760-14413 | 09-26 | | 4 |
| 760-17316 | 09-38 | | 2 |
| 76041998 | 04-22 | | 2 |
| 76043510 | 09-33A | | 19 |
| | 09-34 | | 29 |
| | 09-35 | | 5 |
| 76043511 | 09-36 | | 14 |
| 76043538 | 09-33A | | 27 |
| 76043560 | 04-04 | | 31 |
| 76043957 | 05-04 | | 15 |
| | 05-05 | | 32 |
| 76043977 | 04-23 | | 3 |
| 76046110 | 05-02A | | 15 |
| | 05-03 | | 10 |
| | 09-31 | | 11 |
| 76047278 | 09-45 | | 2 |
| | 09-47 | | 2 |
| 76048391 | 05-02 | | 12 |
| 76048394 | 05-02 | | 13 |
| 76048628 | 09-36 | | 12 |
| 76048849 | 09-41 | | 5 |
| 76048869 | 09-36 | | 5 |
| 76048924 | 05-03 | | 23 |
| 76048930 | 05-02 | | 11 |
| 76048941 | 05-02 | | 21 |
| 76048980 | 09-43A | | 2 |
| 76053295 | 04-08 | | 2 |
| 76067422 | 09-39 | | 1 |
| 76067753 | 09-36 | | 11 |
| 76079036 | 09-43A | | 1 |
| 76081690 | 05-02A | | 20 |
| 76081747 | 09-35A | | 16 |
| 76082151 | 09-10 | | 7 |
| 761-17325 | 04-24A | | 3 |
| 76300020 | 05-02 | | 24 |
| 76300038 | 05-02 | | 18 |
| 76301020 | 09-31A | | 12 |
| 76303017 | 05-03 | | 1 |
| 76303019 | 05-03 | | 2 |
| 76303020 | 05-03 | | 3 |
| 76303021 | 05-03 | | 4 |
| 76303022 | 09-39 | | 2 |
| 76303023 | 09-43A | | 14 |
| 76303024 | 09-32 | | 1 |
| 76303025 | 09-32 | | 4 |
| 76303027 | 09-43 | | 6 |
| 76303029 | 09-31A | | 11 |
| 76303030 | 04-13 | | 17 |
| 76303033 | 09-31 | | 1 |
| 76303036 | 09-31A | | 3 |
| 76303037 | 09-31A | | 1 |
| 76303038 | 09-31A | | 4 |
| 76303039 | 09-31A | | 2 |
| 76303040 | 09-31 | | 13 |
| 76303154 | 09-33A | | 7 |
| | 09-35A | | 13 |
| 76303157 | 09-33 | | 9 |
| | 09-35 | | 12 |
| 76303159 | 09-33A | | 3 |
| 76303170 | 09-35A | | 3 |
| 76303171 | 09-30 | | 1 |
| 76303174 | 09-37 | | 1 |
| 76303192 | 09-33A | | 18 |
| | 09-34 | | 7 |
| 76303193 | 09-33A | | 14 |
| | 09-34 | | 3 |
| 76303194 | 09-32 | | 2 |
| 76303195 | 09-32 | | 3 |
| 76303210 | 09-33A | | 9 |
| 76303211 | 09-35A | | 8 |
| 76303212 | 09-35A | | 4 |
| 76303224 | 09-35A | | 1 |
| 76303225 | 09-35A | | 17 |
| 76303227 | 09-35A | | 9 |
| 76303230 | 09-33A | | 1 |
| 76303231 | 09-33A | | 6 |
| 76303237 | 09-29 | | 1 |
| 76303238 | 09-29 | | 2 |
| 76303239 | 09-29 | | 3 |
| 76303240 | 09-34 | | 2 |
| 76303242 | 09-33A | | 2 |

| Number | Figure | Sequence | Ref. | Number | Figure | Sequence | Ref. |
|---|---|---|---|---|---|---|---|
| 76303244 | 04-23A | | 2 | 82034881 | 09-42A | | 48 |
| 76303246 | 04-23 | | 2 | | 09-42A | | 9 |
| 76303248 | 09-33A | | 15 | | 09-42C | | 48 |
| | 09-34 | | 4 | | 09-42C | | 9 |
| 76303250 | 09-33A | | 22 | 82034888 | 09-42C | | 66 |
| 76303253 | 09-35A | | 18 | 82034893 | 09-42C | | 50 |
| 76303258 | 04-04 | | 3 | 82034894 | 09-42A | | 12 |
| 76303260 | 04-04 | | 7 | | 09-42A | | 50 |
| 76303261 | 04-04 | | 35 | | 09-42C | | 12 |
| 76303265 | 09-43A | | 7 | | 09-42C | | 50 |
| 76303266 | 09-36 | | 1 | 82034897 | 09-42C | | 58 |
| 76303267 | 09-36 | | 2 | 82034900 | 09-42C | | 67 |
| 76303277 | 05-02 | | 1 | 82034901 | 09-42C | | 69 |
| 76303279 | 05-02 | | 10 | 82034909 | 09-42A | | 33 |
| 76303300 | 09-38 | | 1 | | 09-42C | | 33 |
| 76303305 | 09-43 | | 11 | 82034910 | 09-42A | | 32 |
| 76303317 | 09-37 | | 2 | | 09-42C | | 32 |
| 76303319 | 04-04 | | 14 | 82034911 | 09-42A | | 39 |
| | 09-43A | | 8 | | 09-42C | | 39 |
| 76303320 | 04-04 | | 12 | 82034912 | 09-42A | | 40 |
| | 09-43A | | 9 | | 09-42C | | 40 |
| 76303321 | 04-04 | | 13 | | 09-42C | | 65 |
| | 09-43A | | 6 | 82034916 | 09-42A | | 37 |
| 76303323 | 09-33A | | 24 | | 09-42C | | 37 |
| 76303325 | 04-04 | | 2 | 82034917 | 09-42A | | 36 |
| 76303327 | 04-23A | | 6 | | 09-42C | | 36 |
| 76303331 | 09-43A | | 3 | 82034919 | 09-42C | | 61 |
| 76303337 | 09-39 | | 4 | 82034920 | 09-42C | | 75 |
| 76303338 | 09-39 | | 3 | 82034921 | 09-42C | | 41A |
| 76303347 | 04-04 | | 17 | 82034923 | 09-42C | | 41B |
| 76303352 | 09-45 | | 1 | 82034944 | 09-42C | | |
| 76303422 | 09-31 | | 5 | 82034945 | 09-42C | | |
| 76303450 | 05-03 | | 11 | 82034947 | 09-42C | | 57 |
| 76303455 | 09-34 | | 22 | 82034948 | 09-42C | | |
| 76303458 | 09-34 | | 17 | 82034949 | 09-42C | | |
| 76303459 | 09-34 | | 18 | 82034952 | 09-42C | | |
| 76303460 | 09-34 | | 1 | 82034958 | 09-42C | | 78 |
| 76303461 | 09-34 | | 12 | 82034961 | 09-42C | | 62 |
| 76303463 | 09-34 | | 11 | 82034962 | 09-42C | | 64 |
| 76303481 | 09-31B | | 1 | 82034963 | 09-42A | | |
| 76303489 | 04-04 | | 4 | | 09-42C | | |
| 76303496 | 09-43A | | 27 | 82034964 | 09-42A | | 35 |
| | 09-43A | | 30 | | 09-42C | | 35 |
| | 09-45 | | 3 | 82034969 | 09-42A | | 31 |
| | 09-47 | | 3 | | 09-42C | | 31 |
| 76303497 | 09-45 | | 4 | 82034977 | 09-42C | | |
| | 09-47 | | 4 | 82034997 | 09-42A | | 2 |
| 76303498 | 04-04 | | 6 | | 09-42A | | 4 |
| 76303499 | 09-43A | | 4 | | 09-42C | | 3 |
| 76303501 | 09-43A | | 11 | | 09-42C | | 4 |
| 76303505 | 09-43A | | 10 | | 09-42C | | 60 |
| 76303521 | 09-31B | | 6 | 82035025 | 09-42B | | 34 |
| 76303522 | 09-31B | | 7 | 82035027 | 09-42B | | 30 |
| 76303582 | 09-30 | | 3 | 82035028 | 09-42B | | 39 |
| 76303588 | 09-36 | | 9 | 82035029 | 09-42B | | 35 |
| 76303589 | 09-35 | | 11 | 82035030 | 09-42B | | 19 |
| 76303590 | 09-33 | | 7 | 82035031 | 09-42B | | 16 |
| 76303592 | 09-47 | | 1 | 82035032 | 09-42B | | 26 |
| 76303594 | 09-43 | | 3 | 82035033 | 09-42B | | 31 |
| 76303605 | 09-35A | | 20 | 82035034 | 09-42B | | 29 |
| 79028421 | 04-10 | | 8 | 82035035 | 09-42B | | 40 |
| 79076208 | 09-31B | | 3 | 82035036 | 09-42B | | 21 |
| 800-2190 | 06-12 | | 6 | 82035037 | 09-42B | | 25 |
| | 06-13 | | 6 | 82035039 | 09-42B | | 37 |
| 800-44012 | 07-02 | | 5 | 82035040 | 09-42B | | 6 |
| 806-10030 | 06-24 | | 18 | 82035043 | 09-42B | | 23 |
| 811-12025 | 09-04 | | 5 | 82035052 | 09-42D | | 3 |
| | 09-05 | | 5 | 82035054 | 09-42B | | |
| | 09-06 | | 3 | 82035057 | 09-42D | | 35 |
| 814-5030 | 04-06 | | 13 | 82035064 | 09-42C | | 54 |
| 814-6110 | 05-04 | | 21 | 82035065 | 09-42D | | 22 |
| | 05-05 | | 17 | | 09-42D | | 8 |
| 814-8140 | 08-24 | | 3 | 82035069 | 09-42B | | 20 |
| 816213301 | 09-33A | | 4 | 82035071 | 09-42D | | 54 |
| | 09-34 | | 5 | 82035073 | 09-42D | | |
| | 09-35A | | 7 | 82035075 | 09-42D | | 32 |
| 82022857 | 04-23A | | 3 | 82035077 | 09-42D | | 49 |
| 82024562 | 04-07 | | 12 | 82035078 | 09-42D | | |

| Number | Figure | Sequence | Ref. |
|---|---|---|---|
| 82035079 | 09-42D | | |
| 82035081 | 09-42D | | 10 |
| 82035082 | 09-42D | | |
| 82035086 | 09-42D | | |
| 82035087 | 09-42D | | 17 |
| | 09-42D | | 7 |
| 82035094 | 09-42B | | 11 |
| 82035095 | 09-42D | | 1 |
| 82035106 | 09-42D | | 31 |
| 82035111 | 09-42D | | |
| 82035116 | 09-42D | | 26 |
| 82035122 | 09-42D | | |
| 82035123 | 09-42D | | |
| 82035125 | 09-42B | | 1 |
| 82035126 | 09-42D | | 34 |
| 82035127 | 09-42B | | 13 |
| 82035128 | 09-42B | | 7 |
| 82035130 | 09-42D | | 39 |
| 824-1404 | 04-02A | | 18 |
| | 04-02B | | 16 |
| | 04-05 | | 22 |
| 824-1405 | 05-02A | | 17 |
| | 08-01 | | 3 |
| 825-1404 | 04-14 | | 17 |
| 825-1405 | 09-33A | | 36 |
| 825-1406 | 04-20 | | 4 |
| | 09-33A | | 26 |
| | 09-35 | | 9 |
| 825-1408 | 04-23A | | 4 |
| | 09-43A | | 18 |
| 827-10040 | 03-01 | | 9 |
| | 08-11 | | 2 |
| | 08-12 | | 5 |
| | 08-19A | | 8 |
| 827-10045 | 04-02A | | 7 |
| | 04-02B | | 6 |
| 827-10050 | 06-01 | | 12 |
| 827-10060 | 08-13 | | 3 |
| | 08-33 | | 9 |
| | 09-42 | | 10 |
| | 09-42 | | 16 |
| 827-10070 | 03-01 | | 23 |
| | 05-04 | | 8 |
| | 05-05 | | 34 |
| | 07-03 | | 14 |
| | 08-07 | | 11 |
| | 08-07A | | 9 |
| | 08-08 | | 9 |
| | 08-09 | | 10 |
| 827-10075 | 07-03 | | 13 |
| 827-10080 | 08-33 | | 8 |
| 827-10090 | 06-02 | | 5 |
| | 08-07 | | 12 |
| | 08-07A | | 10 |
| | 08-10 | | 18 |
| | 08-19B | | 10 |
| 827-10100 | 07-03D | | 7 |
| | 08-05 | | 23 |
| | 08-06 | | 10 |
| | 08-10 | | 11 |
| 827-10110 | 04-02A | | 14 |
| | 04-02B | | 12 |
| | 08-05 | | 24 |
| | 08-06 | | 9 |
| | 08-33 | | 4 |
| 827-10130 | 08-33 | | 3 |
| 827-10150 | 07-03B | | 12 |
| | 07-03D | | 29 |
| 827-12050 | 09-19A | | 6 |
| | 09-20 | | 5 |
| | 09-20A | | 5 |
| | 09-52 | | 4 |
| 827-12060 | 06-24 | | 9 |
| | 09-14 | | 7 |
| 827-12070 | 09-15 | | 31 |
| 827-12080 | 09-15 | | 7 |
| 827-12090 | 09-01 | | 8 |
| | 09-02 | | 8 |
| 827-12100 | 09-15 | | 26 |
| 827-12140 | 09-17 | | 6 |
| 827-12220 | 09-17 | | 11 |
| 827-16060 | 09-17 | | 19 |
| 827-16070 | 09-21 | | 4 |
| | 09-22 | | 10 |
| 827-16080 | 09-07 | | 20 |
| | 09-07A | | 20 |
| | 09-08A | | 4 |
| 827-16090 | 09-08A | | 12 |
| 827-16120 | 02-01 | | 2 |
| 827-20190 | 09-07B | | 30 |
| 827-22120 | 06-01 | | 9 |
| 827-24090 | 06-21 | | 3 |
| 827-24130 | 06-22 | | 4 |
| 827-24160 | 09-50 | | 5 |
| 827-24190 | 09-50 | | 3 |
| | 09-50A | | 5 |
| 827-24230 | 09-50A | | 3 |
| 827-6040 | 09-39 | | 8 |
| 827-6050 | 04-07 | | 7 |
| | 08-14 | | 7 |
| 827-6060 | 09-33A | | 28 |
| 827-8040 | 09-20 | | 12 |
| | 09-20A | | 12 |
| 827-8050 | 06-01 | | 17 |
| 827-8060 | 04-07 | | 14 |
| | 04-09 | | 9 |
| | 07-05 | | 8 |
| 827-8070 | 03-01 | | 30 |
| 827-8100 | 04-02A | | 22 |
| | 08-23 | | 2 |
| 82848105 | 09-42D | | |
| 829-1406 | 04-07 | | 10 |
| | 04-14 | | 13 |
| | 04-27 | | 8 |
| 829-1408 | 04-11 | | 11 |
| | 04-18 | | 12 |
| | 07-05 | | 9 |
| | 08-27 | | 43 |
| | 08-28 | | 43 |
| | 09-19 | | 8 |
| 829-1410 | 04-05 | | 17 |
| | 04-10 | | 11 |
| | 09-46 | | 11 |
| 829-1412 | 02-08 | | 4 |
| | 04-18 | | 7 |
| | 08-29A | | 5 |
| | 09-20 | | 6 |
| | 09-20A | | 6 |
| | 09-22 | | 18 |
| 829-1416 | 09-17 | | 18 |
| | 09-21 | | 5 |
| | 09-22 | | 11 |
| 829-1420 | 09-07B | | 31 |
| 829-1424 | 06-21 | | 4 |
| | 06-22 | | 6 |
| | 09-50 | | 4 |
| | 09-50A | | 4 |
| 829-1510 | 06-04 | | 5 |
| 829-2310 | 04-01 | | 2 |
| 829-23414 | 05-01 | | 8 |
| 829-4410 | 09-36 | | 10 |
| 832-10405 | 05-02A | | 9 |
| | 09-34 | | 21 |
| 832-10406 | 04-03 | | 12 |
| | 04-03A | | 12 |
| | 04-06 | | 5 |
| | 04-07 | | 5 |
| | 04-09 | | 5 |
| | 04-10 | | 7 |
| | 04-11 | | 3 |
| | 04-11A | | 5 |
| | 04-27 | | 5 |
| | 05-04 | | 23 |
| | 05-05 | | 30 |
| | 08-14 | | 8 |
| | 08-29 | | 14 |

| Number | Figure | Sequence | Ref. |
|---|---|---|---|
| 832-10406 | 08-30 | | 13 |
| | 08-31 | | 13 |
| | 08-32 | | 5 |
| | 09-16 | | 22 |
| | 09-33A | | 29 |
| | 09-34 | | 25 |
| | 09-43 | | 16 |
| | 09-52 | | 8 |
| 832-10408 | 02-02 | | 13 |
| | 03-01 | | 32 |
| | 04-05 | | 13 |
| | 04-06 | | 4 |
| | 04-07 | | 17 |
| | 04-09 | | 8 |
| | 04-12 | | 2 |
| | 04-25 | | 5 |
| | 04-25A | | 5 |
| | 04-26 | | 4 |
| | 04-28 | | 3 |
| | 05-05 | | 31 |
| | 05-09 | | 21 |
| | 07-03B | | 18 |
| | 07-03D | | 25 |
| | 08-01 | | 30 |
| | 08-23 | | 4 |
| | 08-24 | | 4 |
| | 09-20 | | 10 |
| | 09-20A | | 10 |
| | 09-22 | | 22 |
| | 09-33A | | 13 |
| | 09-34 | | 10 |
| | 09-35A | | 12 |
| | 09-43A | | 18 |
| | 09-44A | | 8 |
| | 09-44B | | 4 |
| | 09-48 | | 4 |
| | 09-49 | | 11 |
| 832-10410 | 02-06 | | 17 |
| | 02-14 | | 4 |
| | 03-01 | | 11 |
| | 03-04 | | 9 |
| | 04-02A | | 13 |
| | 04-02B | | 11 |
| | 04-03 | | 10 |
| | 04-03A | | 10 |
| | 04-05 | | 6 |
| | 04-06 | | 10 |
| | 04-10 | | 10 |
| | 05-05 | | 21 |
| | 06-24 | | 22 |
| | 07-03A | | 9 |
| | 08-03 | | 40 |
| | 08-05 | | 22 |
| | 08-06 | | 4 |
| | 08-07 | | 25 |
| | 08-07A | | 21 |
| | 08-10 | | 15 |
| | 08-11 | | 5 |
| | 08-12 | | 4 |
| | 08-13 | | 9 |
| | 08-14 | | 5 |
| | 08-19B | | 9 |
| | 08-20 | | 4 |
| | 08-33 | | 6 |
| | 09-07 | | 30 |
| | 09-07A | | 30 |
| | 09-16 | | 9 |
| | 09-17 | | 10 |
| | 09-21 | | 12 |
| | 09-22 | | 8 |
| | 09-24 | | 6 |
| | 09-25 | | 6 |
| | 09-33A | | 17 |
| | 09-34 | | 28 |
| | 09-42 | | 13 |
| | 09-42 | | 7 |
| | 09-44 | | 8 |
| | 09-49 | | 7 |
| 832-10412 | 02-05 | | 5 |
| | 06-24 | | 10 |
| | 07-03B | | 17 |
| | 09-14 | | 12 |
| | 09-52 | | 3 |
| 832-10416 | 02-01 | | 8 |
| | 03-01 | | 15 |
| | 09-07 | | 21 |
| | 09-07A | | 21 |
| | 09-08 | | 6 |
| | 09-08A | | 5 |
| | 09-35 | | 4 |
| | 05-02A | | 5 |
| | 05-03 | | 9 |
| | 09-31 | | 12 |
| | 09-31A | | 8 |
| | 09-31B | | 2 |
| | 09-38 | | 3 |
| | 09-44 | | 2 |
| | 09-44A | | 2 |
| 833-40408 | 08-01 | | 8 |
| | 09-19 | | 4 |
| 837-6035 | 04-02A | | 5 |
| | 04-02B | | 4 |
| 840-1312 | 04-04 | | 27 |
| 840-1412 | 05-03 | | 15 |
| 840-1420 | 04-04 | | 28 |
| 840-1512 | 04-04 | | 22 |
| 840-1516 | 04-16 | | 2 |
| | 09-39 | | 5 |
| 840-1520 | 05-02A | | 6 |
| 840-1612 | 04-14 | | 14 |
| | 09-31A | | 7 |
| 840-1616 | 04-04 | | 11 |
| | 04-14 | | 20 |
| | 05-02A | | 14 |
| | 05-03 | | 21 |
| | 09-31A | | 10 |
| | 09-36 | | 6 |
| 840-1620 | 04-04 | | 10 |
| 840-1625 | 08-32 | | 6 |
| 840-1630 | 08-29 | | 13 |
| | 08-30 | | 12 |
| | 08-31 | | 12 |
| | 09-31 | | 6 |
| | 09-31A | | 5 |
| 840-1820 | 09-34 | | 14 |
| | 09-43 | | 21 |
| 843-2625 | 05-03 | | 14 |
| 844-10025 | 09-23 | | 8 |
| 844-10035 | 08-20 | | 11 |
| | 09-18 | | 3 |
| 844-8025 | 07-02 | | 2 |
| 847-3616 | 09-31 | | 8 |
| 84989383 | 05-09 | | 33 |
| 84989392 | 02-05 | | 8 |
| 84989411 | 08-03 | | 24 |
| 8500083 | 02-02 | | 3 |
| 8500084 | 02-02 | | 6 |
| 8500105 | 02-05 | | 1 |
| 8500133 | 08-01 | | 6 |
| | 09-44B | | 7 |
| | 09-48 | | 7 |
| 8500136 | 08-01 | | 4 |
| 8500143 | 02-03 | | 8 |
| 8500144 | 02-03 | | 7 |
| 8500164 | 08-01 | | 46 |
| 8500165 | 08-01 | | 19 |
| 8500167 | 02-03 | | 5 |
| | 08-02 | | 6 |
| 8500173 | 09-12 | | 6 |
| | 09-13 | | 6 |
| 8500186 | 08-01 | | 47 |
| | 08-02 | | 2 |
| 8500206 | 06-02 | | 2 |
| | 08-01 | | 7 |
| | 08-01A | | 5 |
| | 08-19 | | 7 |

| Number | Figure | Sequence | Ref. |
|---|---|---|---|
| 8500209 | 07-03B | | 2 |
| | 07-03D | | 11 |
| 8500210 | 07-03B | | 10 |
| | 08-19B | | 14 |
| 8500311 | 09-07B | | 32 |
| 8500375 | 09-16 | | 4 |
| 8500379 | 09-16 | | 5 |
| 8500382 | 09-16 | | 10 |
| 8500403 | 02-06 | | 8 |
| 8500460 | 05-09 | | 11 |
| 8500471 | 02-05 | | 2 |
| 8500483 | 05-09 | | 12 |
| 8500562 | 08-23 | | 1 |
| | 08-23A | | |
| 8500565 | 08-24 | | 1 |
| | 08-24A | | |
| 8500576 | 06-02 | | 6 |
| 8500583 | 06-02 | | 7 |
| 8500621 | 07-03 | | 18 |
| 8500692 | 05-04 | | 18 |
| | 05-05 | | 23 |
| 8500795 | 04-02A | | 8 |
| 8500858 | 07-03 | | 16 |
| | 08-07 | | 19 |
| | 08-07A | | 15 |
| | 08-10 | | 17 |
| 8500877 | 08-19A | | 5 |
| 8500878 | 09-48 | | 14 |
| 8500909 | 03-04 | | 2 |
| 8501022 | 09-44 | | 1 |
| 8501024 | 09-44A | | 1 |
| 8501036 | 09-16 | | 24 |
| 8501047 | 08-25 | | 10 |
| 8501052 | 07-03D | | 28 |
| 8501088 | 05-09 | | 22 |
| 8501098 | 04-02A | | 12 |
| | 04-02B | | 10 |
| 8501151 | 09-17 | | 3 |
| 8501205 | 02-06 | | 9 |
| 8501295 | 06-02 | | 1 |
| 8501296 | 08-01A | | 1 |
| 8501311 | 04-11 | | 9 |
| 8501315 | 07-03B | | 13 |
| 8501321 | 08-19A | | 4 |
| 8501329 | 08-19 | | 4 |
| 85811350 | 09-42A | | 29 |
| | 09-42C | | 29 |
| 85811351 | 09-42A | | 34 |
| | 09-42A | | 6 |
| | 09-42C | | 34 |
| | 09-42C | | 6 |
| 85811352 | 09-42A | | 18 |
| | 09-42C | | 18 |
| 85811353 | 09-42C | | 73 |
| 85817428 | 09-42B | | 41 |
| 85817429 | 09-42B | | 15 |
| 85817430 | 09-42B | | 4 |
| 85817433 | 09-42B | | 33 |
| 85817434 | 09-42B | | 28 |
| 85817435 | 09-42B | | 38 |
| 85817440 | 09-42B | | 27A |
| 85817441 | 09-42B | | 27 |
| 85817442 | 09-42B | | 18 |
| 85817444 | 09-42B | | 10 |
| 85817445 | 09-42B | | 12 |
| 85817448 | 09-42B | | 2 |
| 85817449 | 09-42B | | 3 |
| 85817451 | 09-42B | | |
| 85817458 | 09-42A | | 22 |
| | 09-42A | | 26 |
| | 09-42A | | 43 |
| | 09-42A | | 49 |
| | 09-42C | | 22 |
| | 09-42C | | 26 |
| | 09-42C | | 43 |
| | 09-42C | | 49 |
| 85817467 | 09-42C | | 52 |
| 85817486 | 09-42D | | 9 |
| 85817489 | 09-42C | | 71 |
| 85817492 | 09-42D | | 29 |
| 85817496 | 09-42D | | 24 |
| 85817560 | 09-42D | | 19 |
| 85819815 | 09-42C | | 63 |
| | 09-42D | | 30 |
| 86000535 | 04-15 | | 13 |
| 8602005 | 02-42 | | 1 |
| 8602302 | 02-01 | | 3 |
| 8602303 | 02-01 | | 14 |
| 8602304 | 02-01 | | 12 |
| 8602342 | 05-09 | | 14 |
| 8602421 | 02-02 | | 1 |
| 8602469 | 09-49 | | 4 |
| 8602473 | 02-06 | | 12 |
| 8602476 | 09-16 | | 20 |
| 8602478 | 02-06 | | 11 |
| 8602498 | 09-44B | | 6 |
| | 09-48 | | 6 |
| 8602537 | 03-01 | | 22 |
| 8602538 | 03-01 | | 4 |
| 8602542 | 03-01 | | 8 |
| 8602589 | 05-09 | | 10 |
| 8602590 | 05-09 | | 8 |
| 8602680 | 04-02B | | 19 |
| 8602725 | 09-48 | | 1 |
| 8602727 | 09-44B | | 1 |
| 8602791 | 09-18 | | 4 |
| 8602844 | 08-04 | | 6 |
| 8602913 | 08-27 | | 12 |
| | 08-28 | | 12 |
| 8602915 | 08-27 | | 9 |
| | 08-28 | | 9 |
| 8602916 | 08-27 | | 10 |
| | 08-28 | | 10 |
| 8602925 | 08-27 | | 7 |
| | 08-28 | | 7 |
| 8603001 | 05-06 | | 4 |
| 8603020 | 07-03B | | 1 |
| 8603092 | 09-57 | | 21 |
| 8603093 | 09-58 | | 19 |
| 8603094 | 09-59 | | 20 |
| 8603162 | 06-22D | | 12 |
| | 06-23D | | 12 |
| 8603163 | 06-22D | | 9 |
| | 06-23D | | 9 |
| 8603166 | 06-22D | | 1 |
| | 06-23D | | 1 |
| 8603171 | 04-17 | | 1 |
| | 05-05 | | 11 |
| 8603179 | 06-17 | | |
| | 06-18 | | |
| 8603180 | 06-16 | | 4 |
| 8603181 | 06-18 | | 2 |
| 8603182 | 06-16 | | 9 |
| 8603183 | 06-18 | | 6 |
| 8603184 | 06-16 | | 1 |
| 8603185 | 06-16 | | 2 |
| 8603187 | 06-06 | | 2 |
| 8603200 | 06-22A | | 12 |
| | 06-23A | | 13 |
| 8603201 | 06-22A | | 13 |
| | 06-23 | | 11 |
| | 06-23A | | 14 |
| 8603202 | 06-22A | | 3 |
| | 06-23A | | 3 |
| 8603205 | 06-23B | | 7 |
| 8603206 | 06-22A | | 4 |
| 8603207 | 06-22A | | 23 |
| | 06-22A | | 27 |
| | 06-23A | | 24 |
| | 06-23A | | 28 |
| 8603208 | 06-22A | | 10 |
| | 06-22A | | 8 |
| | 06-22E | | 22 |
| | 06-23A | | 11 |
| | 06-23A | | 9 |
| | 06-23E | | 22 |

| Number | Figure | Sequence | Ref. | Number | Figure | Sequence | Ref. |
|---|---|---|---|---|---|---|---|
| 8603209 | 06-11 | | 11 | 8603296 | 06-05 | | 1 |
| 8603210 | 06-22A | | 19 | 8603297 | 06-05 | | 2 |
| | 06-23A | | 20 | 8603298 | 06-05 | | 3 |
| 8603214 | 06-06 | | 11 | 8603299 | 06-05 | | 4 |
| 8603215 | 06-17 | | 3 | 8603300 | 06-05 | | 5 |
| 8603216 | 06-20 | | 5 | 8603301 | 06-05 | | 6 |
| 8603217 | 06-03 | | 6 | | 06-10 | | 10 |
| 8603218 | 06-17 | | 18 | | 06-14 | | 2 |
| 8603219 | 06-14 | | 6 | 8603302 | 06-05 | | 7 |
| 8603220 | 06-14 | | 7 | 8603304 | 06-06 | | 6 |
| 8603221 | 06-14 | | 8 | 8603305 | 06-06 | | 7 |
| 8603222 | 06-22B | | 6 | 8603306 | 06-06 | | 8 |
| 8603223 | 06-14 | | 3 | | 06-07 | | 4 |
| 8603239 | 06-22B | | 3 | 8603307 | 06-06 | | 12 |
| 8603240 | 06-22B | | 3 | 8603308 | 06-06 | | 13 |
| 8603241 | 06-22B | | 3 | | 06-16 | | 6 |
| 8603242 | 06-22B | | 3 | 8603309 | 06-06 | | 14 |
| 8603243 | 06-22B | | 3 | 8603310 | 06-06 | | 15 |
| 8603244 | 06-22B | | 3 | 8603311 | 06-03 | | 4 |
| 8603247 | 06-22B | | 10 | | 06-06 | | 16 |
| 8603250 | 06-22C | | 4 | 8603312 | 06-06 | | 17 |
| 8603251 | 06-22C | | 5 | 8603313 | 06-06 | | 18 |
| 8603252 | 06-22C | | 9 | 8603315 | 06-06 | | 20 |
| 8603253 | 06-22C | | 10 | | 06-16 | | 8 |
| 8603254 | 06-22C | | 12 | 8603316 | 06-06 | | 21 |
| 8603255 | 06-22C | | 13 | 8603317 | 06-06 | | 22 |
| 8603256 | 06-22A | | 9 | 8603318 | 06-06 | | 23 |
| | 06-23A | | 10 | | 06-06 | | 25 |
| 8603257 | 06-22B | | 2 | 8603319 | 06-06 | | 24 |
| | 06-23B | | 2 | 8603320 | 06-07 | | 1 |
| 8603258 | 06-22B | | 4 | 8603323 | 06-07 | | 5 |
| 8603259 | 06-22B | | 5 | 8603324 | 06-14 | | 1 |
| | 06-23B | | 3 | 8603325 | 06-14 | | 9 |
| 8603260 | 06-22B | | 5 | 8603326 | 06-14 | | 4 |
| | 06-23B | | 3 | 8603327 | 07-01 | | 5 |
| 8603261 | 06-22B | | 5 | 8603328 | 07-01 | | 4 |
| | 06-23B | | 3 | 8603347 | 07-01 | | 14 |
| 8603262 | 06-22B | | 5 | 8603348 | 07-01 | | 21 |
| | 06-23B | | 3 | 8603352 | 06-15 | | 2 |
| 8603263 | 06-22B | | 7 | 8603353 | 06-15 | | 3 |
| 8603264 | 06-22B | | 5 | 8603354 | 06-15 | | 4 |
| | 06-23B | | 3 | 8603355 | 06-15 | | 10 |
| 8603265 | 06-22B | | 8 | 8603357 | 06-16 | | 11 |
| 8603266 | 06-22B | | 13 | 8603358 | 06-16 | | 12 |
| 8603267 | 06-22C | | 11 | 8603359 | 06-17 | | 19 |
| 8603268 | 06-22C | | 15 | 8603360 | 06-17 | | 23 |
| 8603271 | 06-22C | | 3 | 8603361 | 06-17 | | 22 |
| | 06-23C | | 16 | 8603362 | 06-17 | | 24 |
| 8603272 | 06-22C | | 8 | 8603363 | 06-18 | | 3 |
| 8603274 | 06-15 | | 7 | 8603365 | 06-17 | | 1 |
| 8603277 | 06-22C | | 7 | 8603366 | 06-17 | | 2 |
| 8603278 | 06-22C | | 7 | 8603367 | 06-17 | | 4 |
| 8603279 | 06-22C | | 7 | 8603368 | 06-17 | | 5 |
| 8603280 | 06-22C | | 7 | 8603369 | 06-17 | | 6 |
| 8603281 | 06-01 | | 13 | 8603370 | 06-17 | | 7 |
| | 06-03 | | 7 | 8603371 | 06-17 | | 8 |
| 8603282 | 06-22C | | 6 | 8603372 | 06-17 | | 9 |
| 8603283 | 06-22B | | 5 | 8603374 | 06-17 | | 10 |
| | 06-23B | | 3 | 8603375 | 06-17 | | 12 |
| 8603284 | 06-22B | | 5 | 8603376 | 06-17 | | 14 |
| | 06-23B | | 3 | 8603377 | 06-17 | | 15 |
| 8603285 | 06-22B | | 5 | 8603380 | 06-19 | | 3 |
| | 06-23B | | 3 | 8603381 | 06-19 | | 4 |
| 8603286 | 06-22B | | 5 | 8603382 | 06-19 | | 5 |
| | 06-23B | | 3 | 8603383 | 06-19 | | 6 |
| 8603287 | 06-22B | | 5 | 8603384 | 06-19 | | 7 |
| | 06-23B | | 3 | 8603385 | 06-19 | | 8 |
| 8603288 | 06-22B | | 5 | 8603386 | 06-19 | | 9 |
| | 06-23B | | 3 | 8603387 | 06-19 | | 10 |
| 8603289 | 06-22B | | 5 | 8603388 | 06-19 | | 11 |
| | 06-23B | | 3 | 8603389 | 06-19 | | 13 |
| 8603290 | 06-22B | | 5 | 8603390 | 06-19 | | 12 |
| | 06-23B | | 3 | 8603391 | 06-19 | | 14 |
| 8603291 | 06-22B | | 5 | 8603392 | 06-19 | | 15 |
| | 06-23B | | 3 | 8603393 | 06-20 | | 1 |
| 8603292 | 06-04 | | 1 | 8603395 | 06-20 | | 2 |
| 8603293 | 06-04 | | 2 | 8603396 | 06-03 | | 5 |
| 8603294 | 06-04 | | 8 | | 06-20 | | 3 |

| Number | Figure | Sequence | Ref. | Number | Figure | Sequence | Ref. |
|---|---|---|---|---|---|---|---|
| 8603397 | 06-20 | | 4 | 8603551 | 06-22A | | 14 |
| 8603398 | 06-20 | | 6 | | 06-23A | | 15 |
| 8603399 | 06-20 | | 7 | 8603552 | 06-22A | | 16 |
| 8603400 | 06-20 | | 8 | | 06-23A | | 17 |
| 8603401 | 06-20 | | 9 | 8603555 | 06-22A | | 29 |
| 8603402 | 06-20 | | 11 | 8603559 | 06-22E | | 3 |
| 8603403 | 06-03 | | 2 | | 06-23E | | 3 |
| 8603404 | 06-03 | | 3 | 8603560 | 06-22E | | 4 |
| 8603405 | 06-04 | | 13 | | 06-23E | | 4 |
| 8603406 | 06-08 | | 1 | 8603562 | 06-22E | | 6 |
| 8603407 | 06-08 | | 2 | | 06-23E | | 6 |
| | 06-09 | | 2 | 8603563 | 06-22E | | 7 |
| | 06-10 | | 2 | 8603564 | 06-22E | | 8 |
| | 06-11 | | 2 | 8603565 | 06-22E | | 10 |
| | 06-12 | | 2 | | 06-23E | | 10 |
| | 06-13 | | 2 | 8603566 | 06-22E | | 11 |
| 8603430 | 06-08 | | 4 | | 06-23E | | 11 |
| 8603431 | 06-08 | | 5 | 8603567 | 06-22E | | 12 |
| 8603432 | 06-08 | | 6 | | 06-23E | | 12 |
| 8603434 | 06-08 | | 9 | 8603568 | 06-22E | | 14 |
| 8603435 | 06-08 | | 10 | | 06-23E | | 14 |
| | 06-09 | | 10 | 8603571 | 06-22E | | 17 |
| | 06-10 | | 9 | | 06-23E | | 17 |
| | 06-11 | | 12 | 8603572 | 06-22E | | 18 |
| | 06-12 | | 9 | | 06-23E | | 18 |
| | 06-13 | | 9 | 8603575 | 06-22E | | 21 |
| 8603436 | 06-08 | | 11 | | 06-23E | | 21 |
| | 06-09 | | 11 | 8603577 | 06-22D | | 3 |
| | 06-10 | | 11 | | 06-23D | | 3 |
| | 06-11 | | 13 | 8603579 | 06-22D | | 5 |
| | 06-12 | | 10 | | 06-23D | | 5 |
| | 06-13 | | 10 | 8603580 | 06-22D | | 6 |
| 8603437 | 06-09 | | 1 | | 06-23D | | 6 |
| 8603438 | 06-09 | | 4 | 8603582 | 06-22D | | 8 |
| | 06-10 | | 4 | | 06-23D | | 8 |
| | 06-11 | | 7 | 8603583 | 06-22D | | 10 |
| 8603439 | 06-09 | | 5 | | 06-23D | | 10 |
| | 06-10 | | 5 | 8603584 | 06-22D | | 11 |
| | 06-11 | | 6 | | 06-23D | | 11 |
| 8603440 | 06-09 | | 6 | 8603585 | 06-22D | | 14 |
| | 06-10 | | 6 | | 06-23D | | 14 |
| | 06-11 | | 5 | 8603594 | 06-22B | | 14 |
| 8603441 | 06-09 | | 7 | 8603619 | 06-22A | | 25 |
| | 06-10 | | 7 | | 06-23A | | 26 |
| | 06-11 | | 8 | 8603622 | 06-20 | | 10 |
| 8603442 | 06-09 | | 9 | 8603623 | 06-17 | | 11 |
| 8603443 | 06-10 | | 1 | 8603624 | 06-17 | | 16 |
| 8603444 | 06-10 | | 8 | 8603625 | 06-17 | | 20 |
| 8603445 | 06-11 | | 1 | 8603628 | 06-18 | | 5 |
| 8603446 | 06-11 | | 3 | 8603629 | 06-20 | | 6A |
| 8603447 | 06-11 | | 9 | 8603630 | 07-01 | | |
| 8603448 | 06-12 | | 1 | 8603631 | 07-01 | | 25 |
| 8603449 | 06-12 | | 3 | 8603633 | 06-04 | | 6 |
| | 06-13 | | 3 | 8603635 | 06-04 | | 12 |
| 8603450 | 06-12 | | 4 | 8603636 | 06-04 | | 14 |
| | 06-13 | | 4 | 8603637 | 06-04 | | 15 |
| 8603452 | 06-12 | | 7 | 8603640 | 06-06 | | 5 |
| | 06-13 | | 7 | 8603643 | 06-08 | | 7 |
| 8603457 | 06-13 | | 1 | 8603645 | 06-09 | | 8 |
| 8603466 | 06-04 | | 4 | 8603646 | 06-11 | | 10 |
| 8603469 | 06-06 | | 4 | 8603649 | 07-01 | | 2 |
| 8603499 | 06-13 | | 11 | 8603650 | 07-01 | | 3 |
| 8603527 | 06-15 | | 6 | 8603651 | 06-14 | | 5 |
| | 06-22E | | 13 | 8603652 | 07-01 | | 8 |
| | 06-23E | | 13 | 8603653 | 07-01 | | 9 |
| 8603533 | 06-16 | | 14 | 8603654 | 07-01 | | 10 |
| 8603534 | 06-16 | | 13 | 8603655 | 06-15 | | 1 |
| 8603537 | 06-16 | | 10 | 8603656 | 06-15 | | 5 |
| 8603538 | 06-17 | | 17 | 8603657 | 06-15 | | 8 |
| 8603542 | 07-01 | | 27 | 8603658 | 06-15 | | 9 |
| 8603543 | 06-22B | | 1 | 8603664 | 06-08 | | 3 |
| 8603545 | 06-22C | | 2 | 8603665 | 06-09 | | 3 |
| 8603546 | 06-22C | | 1 | | 06-10 | | 3 |
| 8603548 | 06-22C | | 14 | 8603666 | 06-12 | | 8 |
| 8603549 | 06-22A | | 5 | | 06-13 | | 8 |
| | 06-23A | | 6 | 8603668 | 06-22A | | 28 |
| 8603550 | 06-22A | | 7 | 8603669 | 06-22A | | 30 |
| | 06-23A | | 8 | | 06-23A | | 32 |

| Number | Figure | Sequence | Ref. | Number | Figure | Sequence | Ref. |
|---|---|---|---|---|---|---|---|
| 8603670 | 06-22A | | 2 | 8603748 | 06-23B | | 10 |
| | 06-23A | | 2 | 8603749 | 06-23B | | 10 |
| 8603673 | 06-22E | | 2 | 8603750 | 06-23B | | 10 |
| | 06-23E | | 2 | 8603751 | 06-23B | | 10 |
| 8603674 | 06-22E | | 5 | 8603752 | 06-23B | | 10 |
| | 06-23E | | 5 | 8603753 | 06-23B | | 10 |
| 8603675 | 06-22E | | 9 | 8603754 | 06-23B | | 10 |
| | 06-23E | | 9 | 8603755 | 06-23B | | 10 |
| 8603677 | 06-23B | | 1 | 8603756 | 06-23B | | 10 |
| 8603678 | 06-23B | | 4 | 8603757 | 06-23B | | 10 |
| 8603679 | 06-23B | | 5 | 8603758 | 06-23B | | 10 |
| 8603680 | 06-23B | | 6 | 8603759 | 06-23B | | 10 |
| 8603681 | 06-23B | | 9 | 8603760 | 06-23B | | 10 |
| 8603682 | 06-23B | | 13 | 8603761 | 06-23B | | 10 |
| 8603683 | 06-23B | | 14 | 8603762 | 06-23B | | 10 |
| 8603684 | 06-23B | | 12 | 8603763 | 06-23B | | 10 |
| 8603685 | 06-23B | | 11 | 8603764 | 06-23B | | 10 |
| 8603687 | 06-23A | | 4 | 8603765 | 06-23B | | 10 |
| 8603690 | 06-23A | | 31 | 8603766 | 06-23B | | 10 |
| 8603691 | 06-23E | | 7 | 8603767 | 06-23B | | 10 |
| 8603692 | 06-23E | | 8 | 8603768 | 06-23B | | 10 |
| 8603694 | 06-22A | | 26 | 8603769 | 06-23B | | 10 |
| | 06-23A | | 27 | 8603770 | 06-23B | | 10 |
| 8603695 | 06-23A | | 5 | 8603771 | 06-23B | | 10 |
| 8603696 | 06-22A | | 22 | 8603772 | 06-23B | | 10 |
| | 06-23A | | 23 | 8603773 | 06-23B | | 10 |
| 8603699 | 07-01 | | 11 | 8603774 | 06-23B | | 10 |
| 8603700 | 07-01 | | 12 | 8603775 | 06-23B | | 10 |
| 8603701 | 07-01 | | 13 | 8603776 | 06-23B | | 10 |
| 8603702 | 07-01 | | 15 | 8603778 | 06-05 | | 8 |
| 8603703 | 07-01 | | 16 | | 06-19 | | 1 |
| 8603704 | 07-01 | | 17 | 8603779 | 06-06 | | 1A |
| 8603705 | 07-01 | | 18 | 8603786 | 06-17 | | 13 |
| 8603706 | 07-01 | | 19 | 8603787 | 06-17 | | 21 |
| 8603707 | 07-01 | | 20 | 8603788 | 06-22D | | 13 |
| 8603708 | 07-01 | | 22 | | 06-23D | | 13 |
| 8603709 | 07-01 | | 23 | 8603789 | 06-22B | | 3 |
| 8603710 | 07-01 | | 24 | 8603791 | 06-22B | | 3 |
| 8603711 | 07-01 | | 26 | 8603792 | 06-22B | | 3 |
| 8603713 | 06-23C | | 3 | 8603793 | 06-22B | | 3 |
| 8603714 | 06-23C | | 5 | 8603794 | 06-22B | | 3 |
| 8603715 | 06-23C | | 6 | 8603795 | 06-22B | | 9 |
| 8603716 | 06-23C | | 7 | | 06-23B | | 8 |
| 8603717 | 06-23C | | 8 | 8603796 | 06-22D | | 15 |
| 8603718 | 06-23C | | 9 | | 06-23D | | 15 |
| 8603719 | 06-23C | | 10 | 8603798 | 06-06 | | 3 |
| 8603720 | 06-23C | | 11 | 8603799 | 06-22A | | 20 |
| 8603721 | 06-23C | | 12 | | 06-23A | | 21 |
| 8603722 | 06-23C | | 13 | 8604229 | 06-04 | | 17 |
| 8603723 | 06-23C | | 14 | 8604231 | 02-06A | | 6 |
| 8603724 | 06-23C | | 15 | 8604255 | 08-30A | | |
| 8603725 | 06-22A | | 24 | | 08-31A | | |
| | 06-23A | | 25 | 8604270 | 06-25 | | 4 |
| 8603727 | 06-22A | | 15 | 8604284 | 05-06 | | 6 |
| | 06-22A | | 6 | 8604285 | 05-06 | | 5 |
| | 06-23A | | 16 | 8604430 | 05-06 | | 2 |
| 8603728 | 06-23A | | 7 | 8604432 | 06-28 | | 1 |
| 8603730 | 06-22A | | 30 | 8604443 | 03-04 | | 2C |
| | 06-23A | | 32 | 8604506 | 07-05 | | 4 |
| 8603731 | 06-22A | | 30 | 8604521 | 08-29B | | |
| | 06-23A | | 32 | 8604522 | 08-29B | | 6 |
| 8603732 | 06-22A | | 30 | 8604523 | 08-29B | | 7 |
| | 06-23A | | 32 | 8604525 | 08-29B | | 9 |
| 8603733 | 06-23B | | 10 | 8604527 | 08-29A | | 29 |
| 8603734 | 06-23B | | 10 | 8604528 | 08-29A | | 7 |
| 8603735 | 06-23B | | 10 | 8604529 | 08-29A | | 8 |
| 8603736 | 06-23B | | 10 | 8604530 | 08-29A | | |
| 8603737 | 06-23B | | 10 | 8604531 | 08-29A | | |
| 8603738 | 06-23B | | 10 | 8604532 | 08-29A | | 19 |
| 8603739 | 06-23B | | 10 | 8604533 | 08-29A | | 20 |
| 8603740 | 06-23B | | 10 | 8604534 | 08-29A | | 21 |
| 8603741 | 06-23B | | 10 | 8604535 | 08-29A | | 22 |
| 8603742 | 06-23B | | 10 | 8604536 | 08-29A | | |
| 8603743 | 06-23B | | 10 | 8604537 | 08-29A | | 26 |
| 8603744 | 06-23B | | 10 | 8604538 | 08-29A | | 27 |
| 8603745 | 06-23B | | 10 | 8604539 | 08-29A | | 28 |
| 8603746 | 06-23B | | 10 | 8604540 | 08-29B | | |
| 8603747 | 06-23B | | 10 | 8604541 | 08-29B | | 17 |

| Number | Figure | Sequence | Ref. |
|---|---|---|---|
| 8604542 | 08-29B | | 18 |
| 8604543 | 08-30A | | 1 |
| | 08-31A | | 1 |
| 8604544 | 08-30A | | 2 |
| | 08-31A | | 2 |
| 8604545 | 08-30A | | 14 |
| | 08-31A | | 14 |
| 8604546 | 08-30A | | |
| | 08-31A | | |
| 8604548 | 08-30A | | 20 |
| | 08-31A | | 20 |
| 8604549 | 08-30A | | 21 |
| | 08-31A | | 21 |
| 8604550 | 08-29B | | 13 |
| 8604551 | 08-32A | | |
| 8604552 | 08-32A | | 6 |
| 8604553 | 08-32A | | 7 |
| 8604554 | 08-32A | | |
| 8604555 | 08-32A | | 12 |
| 8604556 | 08-32A | | 13 |
| 8604557 | 08-32A | | 11 |
| 8604566 | 08-27B | | 40 |
| | 08-28B | | 40 |
| 8604567 | 08-27 | | 4 |
| | 08-27B | | 4 |
| | 08-28 | | 4 |
| | 08-28B | | 4 |
| 8604568 | 08-27 | | 5 |
| | 08-28 | | 5 |
| 8604574 | 08-27 | | 14 |
| | 08-28 | | 14 |
| 8604575 | 08-27 | | 15 |
| | 08-27A | | 15 |
| | 08-28 | | 15 |
| | 08-28A | | 15 |
| 8604576 | 08-27A | | 16 |
| | 08-28A | | 16 |
| 8604578 | 08-27A | | 22 |
| | 08-28A | | 22 |
| 8604579 | 08-27A | | 25 |
| | 08-27B | | 25 |
| | 08-28A | | 25 |
| | 08-28B | | 25 |
| 8604580 | 08-27A | | 26 |
| | 08-27B | | 26 |
| | 08-28A | | 26 |
| | 08-28B | | 26 |
| 8604581 | 08-27A | | 27 |
| | 08-28A | | 27 |
| 8604582 | 08-27A | | 28 |
| | 08-27B | | 28 |
| | 08-28A | | 28 |
| | 08-28B | | 28 |
| 8604583 | 08-27A | | 29 |
| | 08-27B | | 29 |
| | 08-28A | | 29 |
| | 08-28B | | 29 |
| 8604584 | 08-27A | | 33 |
| | 08-28A | | 33 |
| 8604586 | 08-27A | | 35 |
| | 08-28A | | 35 |
| 8604588 | 08-27 | | 6 |
| | 08-28 | | 6 |
| 8604590 | 08-27 | | 8 |
| | 08-28 | | 8 |
| 8604592 | 08-27 | | 13 |
| | 08-28 | | 13 |
| 8604593 | 08-30A | | |
| | 08-31A | | |
| 8604594 | 08-32A | | |
| 8604598 | 08-32A | | 16 |
| 8604599 | 08-32A | | 19 |
| 8604607 | 08-32A | | 17 |
| 8604608 | 08-32A | | 18 |
| 8604674 | 06-25 | | 2 |
| 8604675 | 06-25 | | 1 |
| | 06-26 | | 1 |
| | 06-27 | | 1 |
| 8604676 | 06-04 | | 3 |
| 8604677 | 06-04 | | 7 |
| 8604678 | 06-04 | | 10 |
| 8604714 | 06-06 | | 19 |
| | 06-16 | | 7 |
| 8604716 | 06-12 | | 5 |
| | 06-13 | | 5 |
| 8604758 | 08-27B | | 22 |
| | 08-28B | | 22 |
| 8604781 | 08-27B | | 27 |
| | 08-28B | | 27 |
| 8604802 | 08-02A | | |
| 8604876 | 08-30A | | 25 |
| | 08-31A | | 25 |
| 8604958 | 08-04 | | 29 |
| 8604959 | 08-04 | | 33 |
| 8604960 | 08-04 | | 5 |
| 8604962 | 08-04 | | 3 |
| 8604963 | 08-04 | | 9 |
| 8604964 | 08-04 | | 8 |
| 8604965 | 08-04 | | 7 |
| 8604993 | 09-26 | | 3 |
| 8605005 | 08-04 | | 1 |
| 8605006 | 08-04 | | 2 |
| 8605008 | 08-04 | | 4 |
| 8605010 | 08-04 | | 10 |
| 8605011 | 08-04 | | 11 |
| 8605012 | 08-04 | | 13 |
| 8605013 | 08-04 | | 14 |
| 8605014 | 08-04 | | 15 |
| 8605015 | 08-04 | | 16 |
| 8605016 | 08-04 | | 17 |
| 8605017 | 08-04 | | 18 |
| 8605018 | 08-04 | | 19 |
| 8605019 | 08-04 | | 20 |
| 8605020 | 08-04 | | 21 |
| 8605021 | 08-04 | | 22 |
| 8605022 | 08-04 | | 23 |
| 8605023 | 08-04 | | 24 |
| 8605024 | 08-04 | | 25 |
| 8605025 | 08-04 | | 26 |
| 8605026 | 08-04 | | 27 |
| 8605027 | 08-04 | | 28 |
| 8605029 | 08-04 | | 30 |
| 8605030 | 08-04 | | 31 |
| 8605031 | 08-04 | | 32 |
| 8605033 | 08-04 | | 34 |
| 8605034 | 08-04 | | 35 |
| 8605036 | 08-04 | | 37 |
| 8605037 | 08-04 | | 38 |
| 8605038 | 08-04 | | 39 |
| 8605039 | 08-04 | | 40 |
| 8605040 | 08-04 | | 41 |
| 8605041 | 08-04 | | 42 |
| 8605053 | 08-24A | | 1 |
| 8605056 | 08-24A | | 3 |
| 8605059 | 08-24A | | 5 |
| 8605062 | 08-24A | | 6 |
| 8605066 | 08-24A | | 9 |
| 8605070 | 08-23A | | 4 |
| 8605073 | 08-23A | | 1 |
| 8605078 | 02-06A | | 4 |
| 8605079 | 02-06A | | 5 |
| 8605139 | 02-06A | | 3 |
| 8605140 | 02-06A | | 2 |
| 8605158 | 05-08 | | 2 |
| 8605159 | 05-08 | | |
| 8605160 | 05-08 | | |
| 8605161 | 05-08 | | 16 |
| 8605163 | 05-08 | | |
| 8605216 | 08-14 | | 1C |
| 8605218 | 08-04 | | 36 |
| 8605261 | 05-10 | | |
| 8605272 | 06-22B | | |
| | 06-22C | | |
| 8605273 | 06-22B | | 15 |
| 8605274 | 06-23B | | |
| | 06-23C | | 1 |

| Number | Figure | Sequence | Ref. |
|---|---|---|---|
| 8605275 | 06-23B | | 15 |
| 8605279 | 06-04 | | 16 |
| 8605280 | 06-07 | | 2 |
| 8605281 | 06-07 | | 3 |
| 8605282 | 06-08 | | 8 |
| 8605283 | 06-06 | | 1 |
| 8605314 | 06-22D | | 2 |
| | 06-23D | | 2 |
| 8605315 | 06-22D | | 4 |
| | 06-23D | | 4 |
| 8605359 | 06-23C | | 2 |
| 8605367 | 08-05 | | 14 |
| 8605369 | 08-05 | | 17 |
| 8605371 | 09-17 | | 5 |
| 8605372 | 09-17 | | 4 |
| 8605484 | 09-26 | | 2 |
| 8605485 | 09-26 | | 1 |
| 8605577 | 08-27A | | 18 |
| | 08-28A | | 18 |
| 8605616 | 06-22B | | 12 |
| 8605631 | 06-23C | | 17 |
| 8605632 | 06-23C | | 18 |
| 8605633 | 06-23C | | 19 |
| 8605634 | 06-23C | | 20 |
| 8605635 | 06-23B | | 12 |
| 8605636 | 06-22A | | 15 |
| | 06-22A | | 6 |
| | 06-23A | | 16 |
| 8605637 | 06-23B | | 1 |
| 8605638 | 06-23A | | 30 |
| 8605639 | 06-23A | | 29 |
| 8605738 | 04-03 | | 5 |
| | 04-03A | | 5 |
| 8605784 | 04-01 | | 1 |
| 8605846 | 09-16 | | 6 |
| 8605898 | 09-12 | | 2 |
| | 09-13 | | 2 |
| 8606002 | 07-03 | | 17 |
| 8606005 | 08-01 | | 42 |
| 8606006 | 08-01 | | 41 |
| 8606092 | 08-05 | | 6 |
| | 08-06 | | 2 |
| 8606096 | 08-21 | | 4 |
| 8606098 | 08-05 | | 8 |
| | 08-06 | | 5 |
| 8606100 | 08-05 | | 5 |
| | 08-06 | | 6 |
| 8606124 | 09-15 | | 4 |
| 863-16070 | 06-23 | | 10 |
| 864-10025 | 09-23 | | 6 |
| 864-5016 | 08-01 | | 9 |
| 864-5020 | 05-02A | | 13 |
| 864-5060 | 08-27A | | 19 |
| | 08-28A | | 19 |
| 864-8025 | 07-05 | | 5 |
| 864-8030 | 07-05 | | 6 |
| 864-8080 | 08-31A | | 26 |
| 86503049 | 09-31 | | 9 |
| 86511825 | 04-14 | | 18 |
| 86511830 | 09-35A | | 21 |
| 86521965 | 08-01 | | 40 |
| 86579671 | 02-05 | | 10 |
| 86579678 | 05-09 | | 32 |
| 86579681 | 02-05 | | 9 |
| 86579682 | 02-05 | | 11 |
| 86579686 | 02-05 | | 12 |
| 86579691 | 05-09 | | 2 |
| 86579692 | 05-09 | | 35 |
| 86579694 | 05-05 | | 47 |
| 86579697 | 08-02 | | 3 |
| | 08-03 | | 11 |
| 86580179 | 08-05 | | 13 |
| 86580180 | 08-03 | | 14 |
| | 08-05 | | 12 |
| 86593173 | 08-03 | | 23 |
| 86597760 | 05-04 | | 24 |
| | 05-05 | | 6 |
| | 08-19B | | 1 |
| 86598102 | 05-05 | | 47A |
| 86636814 | 09-07 | | 31A |
| | 09-07A | | 31A |
| 86637954 | 06-25 | | 5 |
| 86639051 | 08-05 | | 9 |
| 86639053 | 08-03 | | 12 |
| 86639080 | 05-09 | | 6 |
| 86639083 | 05-09 | | 7 |
| 86639315 | 08-32 | | 15 |
| 86642312 | 08-16 | | 7 |
| | 08-17 | | 7 |
| | 08-18 | | 8 |
| 86982439 | 05-10 | | 21 |
| 86982444 | 08-15 | | 7 |
| | 08-16 | | 5 |
| | 08-17 | | 5 |
| | 08-18 | | 4 |
| 86983366 | 08-05 | | 11 |
| 86983386 | 08-05 | | 30 |
| | 08-05 | | 31 |
| 86983387 | 08-06 | | 21 |
| 86983688 | 08-08 | | 1 |
| | 08-09 | | 1 |
| 86983689 | 08-08 | | 2 |
| | 08-09 | | 2 |
| 86985567 | 08-03 | | 16 |
| 86988366 | 06-01 | | 16 |
| | 08-01 | | 15 |
| 86990311 | 06-24 | | 2 |
| | 06-27 | | |
| 86990312 | 06-24 | | 3 |
| | 06-26 | | |
| 86991231 | 06-23 | | 8 |
| 86991683 | 02-05 | | 1A |
| 87010650 | 08-05 | | 10 |
| 87016914 | 08-05 | | 2 |
| 87026656 | 04-24A | | 12 |
| 87300128 | 04-11A | | 1 |
| 87304560 | 09-03 | | 1 |
| 87304926 | 08-07 | | 21 |
| | 08-07A | | 17 |
| 87304928 | 08-07 | | 20 |
| | 08-07A | | 16 |
| 87304930 | 08-10 | | 9 |
| 87304933 | 08-10 | | 8 |
| 87307060 | 05-04 | | 1 |
| | 05-05 | | 3 |
| | 05-06 | | |
| 87307240 | 04-03 | | 3 |
| | 04-03A | | 3 |
| 87307825 | 03-01 | | 18 |
| 87307982 | 08-26 | | 1 |
| | 08-27 | | |
| 87307983 | 08-26A | | 1 |
| | 08-27 | | |
| 87307984 | 08-26B | | 1 |
| | 08-27 | | |
| 87307986 | 08-26 | | 1A |
| | 08-28 | | |
| 87307988 | 08-26A | | 1A |
| | 08-28 | | |
| 87307990 | 08-26B | | 1A |
| | 08-28 | | |
| 87308200 | 09-50 | | 6 |
| | 09-50A | | 6 |
| 87308338 | 08-25 | | 12 |
| 87308388 | 09-16 | | 13 |
| 87308668 | 09-16 | | 3 |
| 87308682 | 09-16 | | 2 |
| 87308853 | 05-09 | | 20 |
| 87308928 | 08-02A | | |
| | 08-21 | | 3 |
| 87308929 | 08-02A | | |
| 87308933 | 08-02A | | 10 |
| 87310689 | 09-03 | | 7 |
| 87311889 | 08-27 | | 1 |
| | 08-28 | | 1 |
| 87311891 | 08-27 | | 2 |

| Number | Figure | Sequence | Ref. | Number | Figure | Sequence | Ref. |
|---|---|---|---|---|---|---|---|
| 87311891 | 08-28 | | 2 | 87341835 | 06-23D | | 7 |
| 87311898 | 08-28A | | 23 | 87341862 | 04-04 | | 15 |
| 87311965 | 08-27 | | 11 | 87342166 | 07-03 | | 1 |
| | 08-28 | | 11 | | 07-04 | | |
| 87311972 | 08-27A | | 17 | 87342638 | 02-06 | | 24 |
| | 08-28A | | 17 | 87343733 | 09-07 | | 1 |
| 87311974 | 08-27A | | 20 | 87344091 | 09-07B | | 1 |
| | 08-28A | | 20 | 87344104 | 09-07B | | 11 |
| 87311975 | 08-27A | | 23 | 87344111 | 09-07B | | 10 |
| | 08-27B | | 39 | 87344119 | 09-07A | | 1 |
| | 08-28B | | 39 | 87347864 | 08-01 | | 35 |
| 87311976 | 08-27A | | 24 | 87347865 | 08-01 | | 36 |
| | 08-28A | | 24 | 87348711 | 04-07 | | 1 |
| 87311984 | 08-27A | | 30 | 87348713 | 04-11 | | 7 |
| | 08-27B | | 30 | 87349019 | 08-29 | | 4 |
| | 08-28A | | 30 | 87350044 | 04-13 | | 4 |
| | 08-28B | | 30 | 87350045 | 04-13 | | 9 |
| 87311985 | 08-27A | | 31 | 87350047 | 04-13 | | 11 |
| | 08-28A | | 31 | 87350048 | 04-13 | | 10 |
| 87311986 | 08-27A | | 32 | 87350049 | 04-13 | | 7 |
| | 08-28A | | 32 | 87350052 | 04-13 | | 2 |
| 87311988 | 08-27A | | 34 | 87350054 | 04-13 | | 1 |
| | 08-28A | | 34 | 87350055 | 04-13 | | 12 |
| 87311990 | 08-27A | | 36 | 87350062 | 04-11 | | 6 |
| | 08-28A | | 36 | 87350064 | 04-07 | | 25 |
| 87311991 | 08-27A | | 37 | 87350066 | 04-07 | | 24 |
| | 08-28A | | 37 | 87350087 | 04-06 | | 16 |
| 87312068 | 08-01 | | 5 | 87351646 | 05-09 | | 23 |
| 87312626 | 04-07 | | 26 | 87351705 | 04-18 | | 10 |
| 87315250 | 04-14 | | 5 | | 04-18 | | 4 |
| 87315269 | 04-07 | | 4 | 87351718 | 04-18 | | 9 |
| 87318062 | 08-15 | | 2 | 87351752 | 04-05 | | 1 |
| 87318612 | 04-14 | | 8 | 87351908 | 04-07 | | 2 |
| 87318620 | 04-14 | | 7 | 87352565 | 08-28A | | 23 |
| 87318627 | 04-07 | | 9 | 87353999 | 04-07 | | 3 |
| | 04-14 | | 4 | 87354000 | 04-11 | | 1 |
| 87318825 | 04-24A | | 5 | | 04-11A | | 4 |
| 87319529 | 05-06 | | 1 | 87354290 | 07-03C | | 12 |
| 87323556 | 08-01 | | 32 | | 07-03D | | 31 |
| 87323827 | 03-01 | | 12 | 87354477 | 08-32 | | 13 |
| 87323866 | 09-23 | | 7 | 87354480 | 07-03C | | 8 |
| 87324042 | 02-02 | | 2 | 87354481 | 07-03C | | 7 |
| 87324389 | 08-32 | | 11 | 87355957 | 09-20 | | 1 |
| 87324722 | 04-26 | | 10 | | 09-20A | | 1 |
| 87324868 | 04-26 | | 8 | 87355960 | 09-20A | | 2 |
| 87324875 | 04-26 | | 9 | 87355962 | 09-20A | | 3 |
| 87324906 | 08-05 | | 15 | 87358043 | 03-01 | | 3 |
| 87324979 | 04-26 | | 11 | 87358580 | 06-22 | | 1 |
| 87325208 | 02-02 | | 9 | | 06-22A | | |
| 87325760 | 04-08 | | 4 | | 06-22B | | |
| 87325996 | 07-03D | | 14 | | 06-22C | | |
| 87325997 | 07-03C | | 10 | | 06-22D | | |
| 87325999 | 07-03D | | 13 | | 06-22E | | |
| 87326000 | 07-03D | | 32 | 87358583 | 06-23 | | 1 |
| 87326008 | 07-03B | | 15 | | 06-23A | | |
| 87326262 | 07-03D | | 2 | | 06-23B | | |
| 87326263 | 07-03D | | 1 | | 06-23C | | |
| 87326268 | 07-03D | | 3 | | 06-23D | | |
| 87326981 | 08-19B | | 2 | | 06-23E | | |
| 87327335 | 04-07 | | 23 | 87358680 | 06-22D | | |
| | 04-14 | | 9 | | 06-22E | | |
| 87327346 | 04-07 | | 22 | 87358681 | 06-23D | | |
| | 04-14 | | 10 | | 06-23E | | |
| 87328377 | 08-19B | | 2A | 87358695 | 06-22E | | 19 |
| 87329253 | 04-26 | | 6 | | 06-23E | | 19 |
| 87330150 | 09-07 | | 2 | 87358698 | 06-22E | | 20 |
| | 09-07A | | 2 | | 06-23E | | 20 |
| 87331925 | 09-42B | | | 87358699 | 06-22E | | 15 |
| 87340015 | 02-04 | | 4 | | 06-23E | | 15 |
| 87340016 | 08-29 | | 1 | 87358702 | 06-22E | | 16 |
| | 08-29A | | | 87360067 | 07-03C | | 1 |
| | 08-29B | | | | 07-05 | | |
| 87340017 | 08-30 | | 1 | 87360593 | 09-23 | | 3 |
| | 08-30A | | | 87360602 | 09-23 | | 3 |
| 87340019 | 08-31 | | 1 | 87360678 | 09-23 | | 4 |
| | 08-31A | | | 87360690 | 09-23 | | 4 |
| 87340284 | 02-04 | | 3 | 87360870 | 04-06 | | 1 |
| 87341835 | 06-22D | | 7 | 87362185 | 08-19B | | 12 |

| Number | Figure | Sequence | Ref. |
|---|---|---|---|
| 87362190 | 08-19A | | 3 |
| 87362307 | 08-27 | | 14 |
| | 08-28 | | 14 |
| 87364063 | 07-04 | | |
| 87364605 | 04-14 | | 2 |
| 87365409 | 05-07 | | 2 |
| 87365413 | 05-07 | | 3 |
| 87365418 | 05-07 | | 4 |
| 87365420 | 05-07 | | 5 |
| 87365422 | 05-07 | | 6 |
| 87365425 | 05-07 | | 8 |
| 87365427 | 05-07 | | 10 |
| 87365429 | 05-07 | | 11 |
| | 05-07 | | 13 |
| 87365430 | 05-07 | | 12 |
| 87365709 | 02-08 | | 2 |
| 87365731 | 02-08 | | 1 |
| 87366688 | 08-16 | | |
| | 09-07 | | 3 |
| 87366695 | 08-17 | | |
| | 09-07A | | 4 |
| 87372088 | 08-29A | | 1 |
| 87372240 | 04-04 | | 5 |
| 87372241 | 04-14 | | 1 |
| 87372246 | 04-23 | | 1 |
| 87372247 | 04-23A | | 1 |
| 87372804 | 04-15 | | 2 |
| | 05-03 | | 17 |
| 87372814 | 04-15 | | 1 |
| | 05-02A | | 1 |
| 87373112 | 07-03 | | 5 |
| 87376662 | 04-04 | | 1 |
| 87377313 | 07-03C | | 6 |
| 87377337 | 07-03 | | 11 |
| 87377350 | 07-03 | | 10 |
| | 07-03B | | 4 |
| 87381953 | 02-03 | | 1 |
| 87382200 | 04-12 | | 1 |
| 87385246 | 05-09 | | 34 |
| 87389172 | 08-05 | | 1 |
| | 08-06 | | 3 |
| 87389199 | 09-19 | | 2 |
| 87389200 | 09-19 | | 2 |
| 87389202 | 09-19 | | 1 |
| 87389203 | 09-19 | | 1 |
| 87389244 | 08-21 | | 2 |
| 87389423 | 08-20 | | 20 |
| 87389871 | 07-03 | | 4 |
| 87393431 | 08-20 | | 10 |
| | 08-20A | | 1 |
| 87393434 | 08-20 | | 7 |
| 87393456 | 03-02 | | |
| 87393646 | 08-20 | | 1 |
| 87395399 | 09-07 | | 5 |
| | 09-07A | | 3 |
| 87396449 | 09-42D | | |
| 87396450 | 09-42D | | 44 |
| 87397077 | 09-55 | | 12 |
| 87397078 | 09-55 | | 13 |
| 87397079 | 09-55 | | 7 |
| 87397102 | 04-22 | | 1 |
| 87397416 | 04-02A | | 4 |
| 87398039 | 09-42 | | 1 |
| | 09-42A | | |
| 87398040 | 09-42 | | 4 |
| | 09-42C | | |
| | 09-42D | | |
| 87398113 | 07-05 | | 1 |
| 87398114 | 07-05 | | 2 |
| 87398116 | 07-05 | | 10 |
| 87398558 | 04-11A | | 3 |
| 87398773 | 09-17 | | 1 |
| 87400460 | 03-01 | | 6 |
| 87403305 | 08-11 | | 4 |
| 87403347 | 08-20 | | 8 |
| 87403649 | 08-15 | | 4B |
| 87403964 | 09-01 | | 1 |
| | 09-02 | | 1 |
| 87403965 | 09-01 | | 2 |
| 87403966 | 09-01 | | 4 |
| | 09-02 | | 4 |
| 87403968 | 09-02 | | 2 |
| 87403985 | 08-11 | | 9 |
| | 08-12 | | 9 |
| 87404018 | 08-14 | | 2 |
| 87404138 | 09-19A | | 3 |
| 87404588 | 09-49 | | 5 |
| 87405436 | 08-12 | | 8 |
| 87410351 | 06-04 | | 11 |
| 87415931 | 09-55 | | 15 |
| 87426452 | 02-01 | | 13 |
| 87427823 | 05-04 | | 19 |
| | 05-05 | | 22 |
| 87429186 | 09-55 | | 16 |
| 87430084 | 09-12 | | 10 |
| 87432252 | 09-16 | | 1 |
| 87432328 | 09-44B | | 13 |
| | 09-48 | | 15 |
| 87432563 | 08-29B | | |
| 87433494 | 05-05 | | 9 |
| 87434472 | 09-24 | | 4 |
| | 09-25 | | 4 |
| 87435224 | 03-04 | | 2D |
| 87435505 | 03-04 | | 2E |
| 87435526 | 03-02 | | 1 |
| 87436733 | 06-22A | | 21 |
| | 06-23A | | 22 |
| 87437102 | 09-04 | | 6 |
| | 09-05 | | 6 |
| | 09-06 | | 4 |
| 87437274 | 09-08A | | 7 |
| 87437916 | 06-22E | | 1 |
| | 06-23E | | 1 |
| 87439461 | 04-28 | | 1A |
| 87440551 | 09-49 | | 1 |
| 87441328 | 06-22D | | 8A |
| | 06-23D | | 8A |
| 87441342 | 09-07B | | 42 |
| 87441374 | 09-07B | | 36 |
| 87441882 | 09-07B | | 2C |
| 87442555 | 08-18 | | |
| | 09-07B | | 12 |
| 87442557 | 08-18 | | 1 |
| 87442559 | 08-18 | | 2 |
| 87442965 | 08-16 | | |
| 87443659 | 09-03 | | 2 |
| 87444057 | 09-07B | | 43 |
| 87444440 | 08-10 | | 2 |
| 87445353 | 09-07B | | 4 |
| 87445354 | 09-07B | | 9 |
| 87445798 | 08-07 | | 6 |
| 87445800 | 08-07A | | 4 |
| 87445804 | 08-07A | | 5 |
| 87445806 | 08-07 | | 7 |
| 87445809 | 08-10 | | 5 |
| 87446950 | 02-02 | | 7 |
| 87447892 | 08-07A | | 1 |
| 87447893 | 08-07 | | 1 |
| 87447895 | 08-07 | | 2 |
| 87447897 | 08-07A | | 2 |
| 87448548 | 08-06 | | 1 |
| 87448550 | 08-06 | | 20 |
| 87448665 | 08-13 | | 6 |
| 87448666 | 08-13 | | 5 |
| 87450043 | 06-23 | | 4 |
| 87450063 | 09-13 | | 10 |
| 87452278 | 08-20 | | 12 |
| 87452279 | 08-20 | | 16 |
| 87452280 | 08-20 | | 18 |
| 87452287 | 08-20 | | 19 |
| 87452362 | 05-09 | | 1 |
| | 05-10 | | |
| 87452365 | 05-10 | | 16 |
| 87452370 | 09-07B | | 2 |
| 87452603 | 08-07 | | 4 |
| 87452605 | 08-07A | | 3 |

| Number | Figure | Sequence | Ref. |
|---|---|---|---|
| 87452607 | 08-10 | | 7 |
| 87452747 | 08-07 | | 8 |
| | 08-07A | | 6 |
| | 08-10 | | 1 |
| 87453132 | 09-57 | | 16 |
| 87453133 | 09-58 | | 16 |
| 87453134 | 09-59 | | 16 |
| | 09-59 | | 19 |
| 87453761 | 08-20A | | 1A |
| 87453762 | 08-20A | | 1B |
| 87453765 | 08-20A | | 1C |
| 87453766 | 08-20A | | 1D |
| 87453767 | 08-20A | | 1E |
| 87453768 | 08-20A | | 1F |
| 87453769 | 08-20A | | 1G |
| 87453770 | 08-20A | | 1H |
| 87453771 | 08-20A | | 1J |
| 87453772 | 08-20A | | 1K |
| 87515559 | 08-32 | | 3 |
| 87515619 | 04-22 | | 5 |
| 87516506 | 08-29 | | 2 |
| | 08-30 | | 2 |
| | 08-31 | | 2 |
| 87517052 | 04-08 | | 1 |
| 87519004 | 09-54 | | 2 |
| 87519005 | 09-54 | | 3 |
| 87519006 | 09-54 | | 1 |
| 87519307 | 03-02 | | 2 |
| 87519452 | 06-03 | | 1 |
| 87519793 | 05-04 | | 26 |
| | 05-05 | | 37 |
| 87519795 | 05-09 | | 9 |
| 87521823 | 07-03D | | 15 |
| 87522101 | 06-24 | | 17 |
| 87522593 | 09-33A | | 23 |
| 87523729 | 08-32 | | 9 |
| 87524648 | 09-41 | | 6 |
| 87524649 | 09-55 | | 9 |
| 87525153 | 09-35A | | 2 |
| 87525374 | 03-01 | | 5 |
| 87528687 | 09-45A | | 17 |
| | 09-47A | | 17 |
| 87528688 | 09-45A | | 16 |
| | 09-47A | | 16 |
| 87528689 | 09-45A | | 9 |
| | 09-47A | | 9 |
| 87528970 | 09-44 | | 3 |
| | 09-44A | | 6 |
| 87528973 | 09-44 | | 6 |
| | 09-44A | | 3 |
| 87529279 | 07-03C | | 13 |
| | 07-03D | | 30 |
| 87529289 | 09-45A | | 27 |
| | 09-47A | | 29 |
| 87529444 | 09-45A | | 27A |
| | 09-47A | | 29A |
| 87529447 | 09-45A | | 27B |
| | 09-47A | | 29B |
| 87529453 | 09-45A | | 1 |
| | 09-47A | | 1 |
| 87529457 | 09-45A | | 2 |
| | 09-47A | | 2 |
| 87529458 | 09-45A | | 3 |
| | 09-47A | | 3 |
| 87529459 | 09-45A | | 4 |
| | 09-47A | | 4 |
| 87529462 | 09-45A | | 10 |
| | 09-47A | | 10 |
| 87529463 | 09-47A | | 31 |
| 87529474 | 09-47A | | 31A |
| 87529485 | 09-45A | | 22 |
| | 09-47A | | 22 |
| 87529487 | 09-45A | | 28 |
| | 09-47A | | 30 |
| 87529493 | 09-47A | | 24 |
| 87529495 | 09-47A | | 24A |
| 87529498 | 09-47A | | 24B |
| 87529505 | 09-47A | | 24C |
| 87529508 | 09-47A | | 24D |
| 87529536 | 09-45A | | 29 |
| 87529617 | 09-45A | | 14 |
| | 09-47A | | 14 |
| 87529621 | 09-47A | | 25 |
| 87529627 | 09-45A | | 27C |
| | 09-47A | | 29C |
| 87531205 | 09-17 | | 17 |
| 87532611 | 09-19 | | 9 |
| 87533290 | 08-20A | | 1L |
| 87534053 | 08-32 | | 1 |
| 87535471 | 02-06 | | 1 |
| 87535472 | 02-06 | | 16 |
| 87535473 | 02-06 | | 7 |
| 87536075 | 08-01 | | 17 |
| 87536091 | 02-02 | | 31 |
| 87537993 | 09-34 | | 13 |
| 87541330 | 08-01 | | 27 |
| 87542219 | 07-02 | | 3 |
| 87542710 | 03-04 | | 10 |
| | 04-06 | | 15 |
| 87545658 | 09-42 | | 17 |
| | 09-42C | | 44 |
| 87546325 | 09-56 | | 1 |
| 87546326 | 09-56 | | 2 |
| 87546327 | 09-56 | | 3 |
| 87546328 | 09-56 | | 4 |
| 87546329 | 09-56 | | 5 |
| 87546330 | 09-56 | | 6 |
| 87547181 | 04-02A | | 1 |
| | 04-02B | | 1 |
| 87547373 | 09-12 | | 1 |
| 87547376 | 09-13 | | 1 |
| 87549248 | 03-04A | | 6 |
| 87549589 | 04-03 | | 2 |
| | 04-03A | | 2 |
| 87550115 | 03-04 | | 1 |
| 87552485 | 02-02 | | 8 |
| 87552495 | 02-02 | | 4 |
| 87552496 | 02-04 | | 1 |
| 87552499 | 02-02 | | 20 |
| 87552502 | 03-01 | | 2 |
| 87552958 | 06-01 | | 3 |
| 87552959 | 06-01 | | 4 |
| 87552960 | 06-01 | | 2 |
| 87553862 | 06-24 | | 1 |
| | 06-28 | | |
| 87553865 | 06-24 | | 4 |
| | 06-25 | | |
| 87553867 | 06-24 | | 14 |
| 87553873 | 07-03A | | 10 |
| 87557216 | 02-06 | | 6 |
| 87557521 | 06-29 | | 1 |
| 87559559 | 05-04 | | 14 |
| | 05-05 | | 46 |
| 87559561 | 05-09 | | 18 |
| 87559562 | 05-09 | | 31 |
| 87559564 | 08-22 | | 2 |
| 87559565 | 08-22 | | 1 |
| 87559567 | 08-19 | | 3 |
| 87559571 | 09-14 | | 8 |
| 87559792 | 09-22 | | 3 |
| 87559793 | 09-22 | | 12 |
| 87559794 | 09-22 | | 13 |
| 87559796 | 09-24 | | 1 |
| 87559798 | 09-24 | | 2 |
| | 09-25 | | 2 |
| 87559816 | 09-22 | | 14 |
| 87559817 | 09-22 | | 15 |
| 87563048 | 08-29B | | 8 |
| 87567830 | 09-42D | | 36 |
| 87568400 | 07-02 | | 1 |
| 87571546 | 09-53 | | 1 |
| 87572394 | 06-01 | | 1 |
| | 06-03 | | |
| | 06-04 | | |
| | 06-05 | | |
| | 06-06 | | |

| Number | Figure | Sequence | Ref. |
|---|---|---|---|
| 87572394 | 06-07 | | |
| | 06-08 | | |
| | 06-09 | | |
| | 06-10 | | |
| | 06-11 | | |
| | 06-12 | | |
| | 06-13 | | |
| | 06-14 | | |
| | 06-15 | | |
| | 06-16 | | |
| | 06-17 | | |
| | 06-18 | | |
| | 06-19 | | |
| | 06-20 | | |
| | 07-01 | | |
| 87573767 | 04-16 | | 1 |
| 87577168 | 08-19B | | 6 |
| 87577181 | 08-03 | | 26 |
| 87577182 | 09-50 | | 1 |
| 87577184 | 09-50A | | 1 |
| 87577360 | 09-47A | | 19 |
| 87577361 | 09-45A | | 26 |
| | 09-47A | | 28 |
| 87577649 | 08-15 | | |
| | 09-07 | | 4 |
| | 09-07A | | 5 |
| | 09-07B | | 17 |
| 87578052 | 06-02 | | 9 |
| 87578053 | 06-02 | | 11 |
| 87578654 | 04-20 | | 1 |
| 87579384 | 09-21 | | 7 |
| 87579386 | 09-25 | | 1 |
| 87579400 | 02-01 | | 1 |
| | 02-09 | | |
| | 02-10 | | |
| | 02-11 | | |
| | 02-12 | | |
| | 02-13 | | |
| | 02-15 | | |
| | 02-16 | | |
| | 02-17 | | |
| | 02-18 | | |
| | 02-19 | | |
| | 02-20 | | |
| | 02-21 | | |
| | 02-22 | | |
| | 02-23 | | |
| | 02-24 | | |
| | 02-25 | | |
| | 02-26 | | |
| | 02-27 | | |
| | 02-28 | | |
| | 02-29 | | |
| | 02-30 | | |
| | 02-31 | | |
| | 02-32 | | |
| | 02-33 | | |
| | 02-33A | | |
| | 02-34 | | |
| | 02-35 | | |
| | 02-36 | | |
| | 02-37 | | |
| | 02-38 | | |
| | 02-39 | | |
| | 02-40 | | |
| | 02-41 | | |
| | 03-03 | | |
| | 03-05 | | |
| | 03-06 | | |
| | 03-07 | | |
| | 03-08 | | |
| | 03-09 | | |
| | 03-10 | | |
| | 03-11 | | |
| 87579405 | 09-20 | | 2 |
| 87579406 | 09-20 | | 3 |
| 87580058 | 04-24 | | 1 |
| 87580853 | 09-41 | | 4 |
| 87581480 | 05-05 | | 1 |
| | 05-08 | | |
| 87581481 | 05-08 | | 1 |
| 87581937 | 08-14 | | 12 |
| 87581938 | 09-03 | | 10 |
| 87582901 | 04-13 | | 19 |
| | 08-32 | | 18 |
| 87585139 | 08-01 | | 29 |
| 87585843 | 09-18 | | 1 |
| 87585844 | 09-18 | | 2 |
| 87586610 | 09-54 | | 4 |
| 87586611 | 09-54 | | 5 |
| 87586612 | 09-54 | | 5 |
| 87586616 | 09-55 | | 4 |
| 87586617 | 09-57 | | 20 |
| 87587637 | 09-47 | | 5 |
| 87588276 | 04-18 | | 3 |
| 87588859 | 09-57 | | 18 |
| 87590238 | 02-06 | | 4 |
| | 02-06A | | |
| 87591165 | 04-26 | | 20 |
| 87591668 | 04-20 | | 2 |
| 87591692 | 09-23 | | 1 |
| 87592785 | 04-10 | | 1 |
| 87597328 | 09-58 | | 21 |
| 87597329 | 09-59 | | 22 |
| 87597331 | 09-54 | | 6 |
| 87597587 | 09-23 | | 2 |
| 87597594 | 09-27 | | 2 |
| 87597597 | 09-27 | | 3 |
| 87597598 | 09-27 | | 4 |
| 87598264 | 09-27 | | 1 |
| 87598267 | 09-27 | | 8 |
| 87598730 | 08-01 | | 1 |
| 87600838 | 09-19A | | 2 |
| 87600841 | 04-17 | | 11 |
| 87605272 | 06-21 | | 1 |
| 87607227 | 07-03C | | 2 |
| 87609806 | 05-05 | | 2 |
| | 05-07 | | 1 |
| 87610851 | 09-43 | | 15 |
| 87613427 | 09-07B | | 3A |
| 87613429 | 09-07 | | 2A |
| 87613430 | 09-07 | | 5A |
| | 09-07A | | 3A |
| 87613431 | 09-07B | | 4B |
| 87613432 | 09-07B | | 3B |
| 87613435 | 09-07B | | 4A |
| 87613439 | 09-07 | | 1A |
| | 09-07A | | 1A |
| | 09-07B | | 1B |
| 87613442 | 09-07B | | 1C |
| 87613443 | 09-07B | | 1D |
| 87613444 | 09-07 | | 1B |
| | 09-07A | | 1B |
| 87613445 | 09-07B | | 1A |
| 87613498 | 04-21 | | 2 |
| | 09-40 | | 1 |
| 87617016 | 09-07B | | 3C |
| 87617083 | 03-04 | | 10A |
| | 04-06 | | 15A |
| 87620692 | 04-13 | | 15 |
| 87620991 | 09-20 | | 11 |
| | 09-20A | | 11 |
| 87623437 | 09-15 | | 17 |
| 87623438 | 09-15 | | 25 |
| 87625613 | 08-16 | | 1A |
| | 08-17 | | 1A |
| 87625614 | 08-18 | | 1A |
| 87625615 | 08-15 | | 1A |
| 87625616 | 09-17 | | 2 |
| 87627057 | 04-21 | | 1 |
| | 09-40 | | 4 |
| 87627075 | 09-35 | | 1 |
| | 09-35A | | |
| 87629990 | 08-03 | | 32 |
| 87629991 | 08-03 | | 13 |
| 87629992 | 09-49 | | 2 |

| Number | Figure | Sequence | Ref. |
|---|---|---|---|
| 87629993 | 05-04 | | 11 |
| 87638910 | 08-29 | | 3 |
| 87638911 | 08-30 | | 3 |
| 87638912 | 08-31 | | 3 |
| 87641237 | 09-17 | | 20 |
| 87643954 | 09-45A | | 12 |
| | 09-47A | | 12 |
| 87643955 | 09-45A | | 13 |
| | 09-47A | | 13 |
| 87643957 | 09-45A | | 8 |
| | 09-47A | | 8 |
| 87643958 | 09-45A | | 7 |
| | 09-47A | | 7 |
| 87644742 | 02-04 | | 2 |
| 87647668 | 09-55 | | 11 |
| 87651073 | 09-45 | | 7 |
| 87651217 | 09-49 | | 3 |
| 87651218 | 08-25 | | 13 |
| 87651219 | 08-25 | | 14 |
| 87651220 | 08-25 | | 15 |
| 87651221 | 08-25 | | 16 |
| 87651222 | 08-25 | | 17 |
| 87651223 | 08-25 | | 18 |
| 87651224 | 08-25 | | 19 |
| 87651225 | 08-25 | | 20 |
| 87651226 | 08-25 | | 21 |
| 87651227 | 05-04 | | 29 |
| 87652903 | 09-22 | | 1 |
| 87652904 | 09-22 | | 2 |
| 87652909 | 09-21 | | 1 |
| 87652910 | 09-21 | | 2 |
| 87653595 | 09-14 | | 1 |
| 87653616 | 06-01 | | 15 |
| 87653634 | 09-19A | | 1 |
| 87653912 | 05-05 | | 10 |
| 87653913 | 05-05 | | 13 |
| 87653914 | 05-05 | | 45 |
| 87653915 | 05-05 | | 43 |
| 87653917 | 05-05 | | 41 |
| 87653919 | 05-05 | | 39 |
| 87653921 | 05-05 | | 42 |
| 87653923 | 05-04 | | 27 |
| | 05-05 | | 38 |
| 87653924 | 04-17 | | 3 |
| 87653928 | 05-05 | | 44 |
| 87653975 | 05-05 | | 40 |
| 87655474 | 04-03 | | 1 |
| | 04-03A | | 1 |
| 87663487 | 09-24 | | 3 |
| 87663490 | 09-25 | | 3 |
| 87664495 | 05-09 | | 4 |
| 87664498 | 05-09 | | 36 |
| 87803200 | 03-03 | | 1 |
| 87803261 | 02-11 | | 1 |
| 892-11004 | 04-02A | | 17 |
| | 04-02B | | 15 |
| 892-11006 | 04-20 | | 3 |
| | 04-27 | | 7 |
| | 05-02A | | 18 |
| | 09-16 | | 15 |
| | 09-44 | | 4 |
| | 09-44A | | 4 |
| 892-11008 | 02-02 | | 11 |
| | 02-03 | | 9 |
| | 04-11 | | 10 |
| | 06-02 | | 3 |
| | 07-05 | | 7 |
| | 08-01 | | 11 |
| | 08-01A | | 3 |
| | 08-19 | | 5 |
| | 08-27 | | 3 |
| | 08-28 | | 3 |
| | 09-16 | | 17 |
| | 09-48 | | 13 |
| 892-11010 | 03-01 | | 27 |
| | 05-09 | | 16 |
| | 08-10 | | 19 |
| | 09-03 | | 4 |
| 892-11010 | 09-04 | | 3 |
| | 09-05 | | 3 |
| | 09-06 | | 6 |
| | 09-07B | | 38 |
| | 09-12 | | 4 |
| | 09-13 | | 4 |
| 892-11012 | 04-22 | | 3 |
| | 09-12 | | 12 |
| | 09-13 | | 12 |
| | 09-14 | | 6 |
| | 09-27 | | 6 |
| 893-11010 | 05-01 | | 2 |
| 895-11003 | 04-04 | | 26 |
| 895-11004 | 04-04 | | 29 |
| | 04-14 | | 16 |
| 895-11005 | 04-06 | | 14 |
| | 05-02A | | 7 |
| | 08-01 | | 2 |
| | 09-33 | | 4 |
| | 09-34 | | 20 |
| | 09-35 | | 15 |
| 895-11006 | 04-03 | | 11 |
| | 04-03A | | 11 |
| | 04-04 | | 9 |
| | 04-06 | | 6 |
| | 04-07 | | 6 |
| | 04-10 | | 6 |
| | 04-11 | | 2 |
| | 04-11A | | 6 |
| | 04-14 | | 12 |
| | 05-02A | | 12 |
| | 05-03 | | 22 |
| | 09-31 | | 7 |
| | 09-31A | | 9 |
| | 09-34 | | 23 |
| | 09-36 | | 7 |
| | 09-39 | | 9 |
| | 09-43 | | 13 |
| | 09-43A | | 28 |
| 895-11008 | 04-06 | | 3 |
| | 04-07 | | 13 |
| | 04-09 | | 7 |
| | 04-11A | | 7 |
| | 04-12 | | 3 |
| | 04-18 | | 8 |
| | 04-23A | | 5 |
| | 04-26 | | 3 |
| | 05-05 | | 14 |
| | 08-01 | | 21 |
| | 09-43 | | 4 |
| | 09-43A | | 17 |
| | 09-45 | | 5 |
| | 09-46 | | 10 |
| | 09-47 | | 7 |
| | 09-49 | | 10 |
| 895-11010 | 04-03 | | 8 |
| | 04-03A | | 8 |
| | 04-05 | | 10 |
| | 04-17 | | 12 |
| | 05-01 | | 1 |
| | 06-24 | | 21 |
| | 07-01 | | 7 |
| | 07-03A | | 7 |
| | 08-03 | | 28 |
| | 08-05 | | 20 |
| | 08-06 | | 22 |
| | 08-07 | | 22 |
| | 08-07A | | 18 |
| | 08-10 | | 14 |
| | 08-11 | | 7 |
| | 08-12 | | 3 |
| | 08-13 | | 8 |
| | 08-19B | | 8 |
| | 08-33 | | 5 |
| | 09-03 | | 3 |
| | 09-07 | | 29 |
| | 09-07A | | 29 |
| | 09-07B | | 37 |

| Number | Figure | Sequence | Ref. |
|---|---|---|---|
| 895-11010 | 09-12 | | 3 |
| | 09-13 | | 3 |
| | 09-21 | | 10 |
| | 09-22 | | 5 |
| | 09-24 | | 5 |
| | 09-25 | | 5 |
| | 09-34 | | 27 |
| | 09-36 | | 4 |
| | 09-42 | | 3 |
| 895-11012 | 04-02B | | 7 |
| | 08-03 | | 7 |
| | 09-36 | | 13 |
| 895-11014 | 05-01 | | 7 |
| | 08-03 | | 17 |
| 895-15006 | 04-27 | | 2 |
| | 09-16 | | 21 |
| 895-15008 | 03-01 | | 37 |
| | 03-04A | | 3 |
| | 04-05 | | 14 |
| | 04-07 | | 20 |
| | 04-25 | | 4 |
| | 04-25A | | 4 |
| | 04-28 | | 5 |
| | 07-03B | | 19 |
| | 07-03D | | 24 |
| | 08-01 | | 24 |
| | 08-23 | | 3 |
| | 08-24 | | 5 |
| | 09-19 | | 6 |
| | 09-22 | | 20 |
| | 09-44 | | 7 |
| | 09-44A | | 7 |
| 895-15010 | 02-03 | | 11 |
| | 02-14 | | 2 |
| | 04-05 | | 5 |
| | 04-06 | | 9 |
| | 04-10 | | 9 |
| | 05-04 | | 17 |
| | 05-05 | | 25 |
| | 07-03A | | 15 |
| | 08-03 | | 38 |
| | 08-05 | | 21 |
| | 08-07 | | 23 |
| | 08-07A | | 19 |
| | 08-14 | | 4 |
| | 08-19A | | 7 |
| | 09-16 | | 23 |
| 895-15012 | 09-14 | | 5 |
| 895-18010 | 04-05 | | 18 |
| | 05-05 | | 20 |
| | 09-16 | | 8 |
| | 09-42 | | 14 |
| | 09-42 | | 8 |
| | 09-44B | | 2 |
| | 09-48 | | 2 |
| | 09-49 | | 6 |
| 895-18012 | 05-05 | | 5 |
| 895-25005 | 05-02A | | 8 |
| | 09-33A | | 35 |
| 895-25006 | 04-09 | | 3 |
| | 04-26 | | 18 |
| | 04-27 | | 4 |
| | 05-04 | | 22 |
| | 05-05 | | 16 |
| | 08-14 | | 6 |
| | 08-29 | | 11 |
| | 08-30 | | 10 |
| | 08-31 | | 10 |
| | 08-32 | | 4 |
| | 09-31A | | 6 |
| | 09-52 | | 7 |
| 895-25008 | 09-20 | | 9 |
| | 09-20A | | 9 |
| | 09-22 | | 19 |
| 895-25010 | 09-23 | | 5 |
| 896-11006 | 05-04 | | 20 |
| | 05-05 | | 18 |
| 896-11008 | 02-06 | | 13 |
| 896-11008 | 02-42 | | 2 |
| | 04-02A | | 21 |
| 896-11010 | 03-01 | | 10 |
| | 04-02A | | 6 |
| | 04-02B | | 5 |
| | 05-09 | | 15 |
| | 06-24 | | 6 |
| | 09-01 | | 9 |
| | 09-02 | | 9 |
| 896-11012 | 02-01 | | 6 |
| | 02-05 | | 6 |
| | 02-06 | | 19 |
| | 02-08 | | 3 |
| | 03-01 | | 17 |
| | 04-02A | | 19 |
| | 04-02A | | 9 |
| | 04-05 | | 24 |
| | 04-18 | | 5 |
| | 04-26 | | 2 |
| | 06-24 | | 8 |
| | 07-03 | | 9 |
| | 09-01 | | 6 |
| | 09-02 | | 6 |
| | 09-12 | | 11 |
| | 09-13 | | 11 |
| | 09-14 | | 9 |
| | 09-15 | | 8 |
| | 09-17 | | 9 |
| | 09-19A | | 5 |
| | 09-22 | | 16 |
| 896-11016 | 02-01 | | 7 |
| | 03-01 | | 14 |
| | 06-01 | | 11 |
| | 06-23 | | 9 |
| | 08-03 | | 2 |
| | 09-08A | | 11 |
| | 09-17 | | 13 |
| | 09-21 | | 3 |
| | 09-22 | | 9 |
| | 09-42 | | 11 |
| | 09-42 | | 18 |
| 896-11020 | 06-01 | | 5 |
| | 09-07B | | 29 |
| 896-11022 | 06-22 | | 3 |
| | 06-23 | | 3 |
| 896-11024 | 06-21 | | 2 |
| | 06-22 | | 5 |
| | 09-50 | | 2 |
| | 09-50A | | 2 |
| 896-15010 | 02-06 | | 2 |
| | 03-01 | | 21 |
| | 06-24 | | 15 |
| | 08-13 | | 7 |
| | 08-20 | | 3 |
| | 08-26 | | 2 |
| | 08-26A | | 2 |
| | 08-26B | | 2 |
| 896-15012 | 03-04 | | 3 |
| | 06-24 | | 19 |
| | 07-03B | | 16 |
| | 08-11 | | 8 |
| | 08-12 | | 6 |
| | 08-20 | | 2 |
| | 09-07 | | 27 |
| | 09-07A | | 27 |
| | 09-17 | | 7 |
| | 09-20 | | 4 |
| | 09-20A | | 4 |
| | 09-21 | | 8 |
| | 09-24 | | 8 |
| | 09-25 | | 8 |
| | 09-27 | | 5 |
| | 09-52 | | 2 |
| 896-16006 | 09-39 | | 6 |
| 97399C1 | 09-33A | | 31 |
| 9960692 | 09-42A | | 21 |
| | 09-42A | | 25 |
| | 09-42A | | 47 |

| Number | Figure | Sequence | Ref. |
|---|---|---|---|
| 9960692 | 09-42C | | 21 |
| | 09-42C | | 25 |
| | 09-42C | | 47 |
| 9960755 | 09-42B | | 16A |
| 9966146 | 09-42B | | |
| 9992069 | 05-05 | | 47B |
| 9993141 | 02-05 | | 8A |
| A170241 | 02-02 | | 1A |
| A171099 | 08-01 | | 26 |
| A176482 | 04-25 | | 1 |
| A181436 | 09-52 | | 5 |
| A184395 | 08-01 | | 25 |
| A186194 | 04-02 | | 12 |
| A187504 | 04-02 | | 17 |
| A189616 | 04-02A | | 3 |
| | 04-02B | | 3 |
| A19101 | 06-29 | | 2 |
| A20058 | 06-29 | | 3 |
| A30338 | 09-14 | | 4 |
| A57658 | 06-23 | | 6 |
| D121972 | 04-09 | | 2 |
| D137626 | 06-24 | | 5 |
| D137627 | 06-24 | | 13 |
| D35859 | 09-19A | | 4 |
| D44696 | 02-06 | | 20 |
| D55216 | 09-21 | | 6 |
| | 09-22 | | 24 |
| D95143 | 05-10 | | 14 |
| D95145 | 08-18 | | 6 |
| | 09-07B | | 8 |
| D95146 | 08-15 | | 3B |
| | 08-15 | | 5 |
| | 08-18 | | 5B |
| | 09-07 | | 6 |
| | 09-07A | | 6 |
| | 09-07B | | 5 |
| D95147 | 08-16 | | 6 |
| | 08-17 | | 6 |
| | 09-07 | | 7 |
| | 09-07A | | 7 |
| | 09-07B | | 6 |
| D95148 | 08-16 | | 2C |
| | 08-17 | | 2C |
| | 09-07 | | 8 |
| | 09-07A | | 8 |
| | 09-07B | | 7 |
| E134402 | 09-55 | | 8 |
| E135229 | 06-01 | | 14 |
| F22316 | 04-14 | | 11 |
| F53473 | 05-09 | | 27 |
| | 06-24 | | 23 |
| | 09-07 | | 32 |
| | 09-07A | | 32 |
| | 09-07B | | 41 |
| F64046 | 09-33A | | 21 |
| | 09-34 | | 27 |
| | 09-35 | | 2 |
| F64198 | 09-33A | | 32 |
| | 09-34 | | 15 |
| G100444 | 05-10 | | 17 |
| G100449 | 05-10 | | 19 |
| G101995 | 08-18 | | 3C |
| G102092 | 08-16 | | 4B |
| | 08-17 | | 4B |
| G102425 | 05-10 | | 10 |
| G107970 | 08-16 | | 2E |
| | 08-17 | | 2E |
| G109298 | 05-10 | | 11 |
| G109300 | 08-18 | | 5E |
| G109395 | 08-15 | | 6 |
| H434163 | 05-04 | | 5 |
| | 05-05 | | 29 |
| J903652 | 02-08 | | 6 |
| J911901 | 02-02 | | 28 |
| J918275 | 04-02 | | 34 |
| L101181 | 03-01 | | 33 |
| L106070 | 06-25 | | 3 |
| L11541 | 02-02 | | 21 |
| L11541 | 02-42 | | 5 |
| | 03-02 | | 4 |
| | 03-04A | | 8 |
| | 04-03A | | 15 |
| | 04-06 | | 8 |
| | 04-08 | | 5 |
| | 04-09 | | 11 |
| | 04-10 | | 14 |
| | 04-11 | | 8 |
| | 04-17 | | 9 |
| | 04-28 | | 4 |
| | 05-09 | | 29 |
| | 07-03B | | 9 |
| | 07-03C | | 9 |
| | 08-14 | | 13 |
| | 09-03 | | 11 |
| | 09-07B | | 44 |
| L115548 | 02-02 | | 16 |
| | 08-03 | | 33 |
| L115549 | 02-03 | | 6 |
| | 02-04 | | 5 |
| L116943 | 06-24 | | 7 |
| L118978 | 09-15 | | 18 |
| L118980 | 09-15 | | 28 |
| L118982 | 09-15 | | 29 |
| L118983 | 09-15 | | 27 |
| L118986 | 09-15 | | 13 |
| L118987 | 09-15 | | 11 |
| L118989 | 09-15 | | 21 |
| L118990 | 09-15 | | 20 |
| L119202 | 09-15 | | 12 |
| L119203 | 09-15 | | 22 |
| L124221 | 04-25A | | 2 |
| L125100 | 05-09 | | 24 |
| | 09-07 | | 16 |
| | 09-07A | | 16 |
| | 09-07B | | 18 |
| | 09-08 | | 3 |
| | 09-08A | | 2 |
| | 09-15 | | 3 |
| L125836 | 08-01 | | 14 |
| L125983 | 09-01 | | 3 |
| | 09-02 | | 3 |
| L126051 | 04-05 | | 2 |
| | 04-26 | | 13 |
| L126168 | 09-15 | | 24 |
| L126256 | 04-26 | | 7 |
| L126713 | 04-17 | | 5 |
| | 04-26 | | 17 |
| L126936 | 03-01 | | 26 |
| | 04-09 | | 10 |
| L127108 | 09-07B | | 25 |
| | 09-08 | | 12 |
| | 09-08A | | 10 |
| L127553 | 04-05 | | 7 |
| L127554 | 04-03 | | 13 |
| | 04-03A | | 13 |
| | 04-04 | | 19 |
| | 04-05 | | 3 |
| | 04-17 | | 6 |
| | 04-26 | | 14 |
| | 05-02A | | 11 |
| L127555 | 04-05 | | 8 |
| L127676 | 04-26 | | 12 |
| L127771 | 02-06 | | 10 |
| L127996 | 05-01 | | 6 |
| L128375 | 09-15 | | 30 |
| L128472 | 08-20 | | 5 |
| L128515 | 08-02 | | 1 |
| L129303 | 05-05 | | 49 |
| L129707 | 04-17 | | 4 |
| L14386 | 08-03 | | 6 |
| L18331 | 04-04 | | 30 |
| | 04-26 | | 16 |
| | 04-27 | | 9 |
| | 08-11 | | 6 |
| | 08-12 | | 7 |
| | 08-13 | | 10 |

| Number | Figure | Sequence | Ref. |
|---|---|---|---|
| L18331 | 09-17 | | 21 |
| L302850 | 09-51 | | 1 |
| L30669 | 02-07 | | 3 |
| L30671 | 02-07 | | 2 |
| L51769 | 04-25A | | 1 |
| L54694 | 05-09 | | 30 |
| | 06-24 | | 24 |
| | 09-07 | | 31 |
| | 09-07A | | 31 |
| N7673 | 04-20 | | 6 |
| NSS | 02-06A | | 1 |
| | 02-07 | | 1 |
| | 02-15 | | 8 |
| | 02-20 | | 1 |
| | 02-24 | | 8 |
| | 02-33A | | 4 |
| | 02-33A | | 5 |
| | 02-36 | | 1 |
| | 03-02 | | 3 |
| | 03-03 | | 3 |
| | 03-05 | | 5 |
| | 03-08 | | 4 |
| | 04-15 | | 14 |
| | 04-15 | | 17 |
| | 04-19 | | 1 |
| | 04-24 | | 2 |
| | 04-24 | | 3 |
| | 05-02 | | 25 |
| | 05-08 | | 10 |
| | 05-08 | | 11 |
| | 05-08 | | 12 |
| | 05-08 | | 13 |
| | 05-08 | | 14 |
| | 05-08 | | 15 |
| | 05-08 | | 3 |
| | 05-08 | | 4 |
| | 05-08 | | 5 |
| | 05-08 | | 6 |
| | 05-08 | | 7 |
| | 05-08 | | 8 |
| | 05-08 | | 9 |
| | 05-10 | | 3 |
| | 06-22A | | 18 |
| | 06-23A | | 19 |
| | 06-25 | | 6 |
| | 07-01 | | 28 |
| | 07-04 | | 1 |
| | 07-04 | | 10 |
| | 07-04 | | 11 |
| | 07-04 | | 12 |
| | 07-04 | | 13 |
| | 07-04 | | 14 |
| | 07-04 | | 15 |
| | 07-04 | | 16 |
| | 07-04 | | 17 |
| | 07-04 | | 18 |
| | 07-04 | | 2 |
| | 07-04 | | 3 |
| | 07-04 | | 4 |
| | 07-04 | | 5 |
| | 07-04 | | 6 |
| | 07-04 | | 7 |
| | 07-04 | | 8 |
| | 07-04 | | 9 |
| | 07-05 | | 10A |
| | 07-05 | | 10B |
| | 07-05 | | 10C |
| | 08-02A | | 1 |
| | 08-02A | | 11 |
| | 08-02A | | 2 |
| | 08-02A | | 3 |
| | 08-04 | | 12 |
| | 08-14 | | 1A |
| | 08-14 | | 1B |
| | 08-15 | | |
| | 08-15 | | |
| | 08-15 | | 7A |
| | 08-16 | | 5A |
| NSS | 08-17 | | 5A |
| | 08-18 | | |
| | 08-18 | | |
| | 08-18 | | 4A |
| | 08-27 | | 10A |
| | 08-27 | | 10B |
| | 08-27 | | 10C |
| | 08-27 | | 10D |
| | 08-27 | | 11A |
| | 08-27 | | 13A |
| | 08-27 | | 13B |
| | 08-27 | | 13C |
| | 08-27 | | 13D |
| | 08-27 | | 13E |
| | 08-27 | | 13F |
| | 08-27 | | 15A |
| | 08-27 | | 15B |
| | 08-27 | | 41 |
| | 08-27 | | 42 |
| | 08-27 | | 6A |
| | 08-27 | | 6B |
| | 08-27 | | 6C |
| | 08-27 | | 6D |
| | 08-27 | | 6E |
| | 08-27 | | 6F |
| | 08-27 | | 8A |
| | 08-27 | | 8B |
| | 08-27 | | 8C |
| | 08-27 | | 8D |
| | 08-27 | | 8E |
| | 08-27 | | 8F |
| | 08-27A | | 15A |
| | 08-27A | | 15B |
| | 08-27B | | 16 |
| | 08-27B | | 40A |
| | 08-27B | | 40B |
| | 08-27B | | 40C |
| | 08-27B | | 40D |
| | 08-27B | | 42 |
| | 08-28 | | 10A |
| | 08-28 | | 10B |
| | 08-28 | | 10C |
| | 08-28 | | 10D |
| | 08-28 | | 11A |
| | 08-28 | | 13A |
| | 08-28 | | 13B |
| | 08-28 | | 13C |
| | 08-28 | | 13D |
| | 08-28 | | 13E |
| | 08-28 | | 13F |
| | 08-28 | | 15A |
| | 08-28 | | 15B |
| | 08-28 | | 41 |
| | 08-28 | | 42 |
| | 08-28 | | 6A |
| | 08-28 | | 6B |
| | 08-28 | | 6C |
| | 08-28 | | 6D |
| | 08-28 | | 6E |
| | 08-28 | | 6F |
| | 08-28 | | 8A |
| | 08-28 | | 8B |
| | 08-28 | | 8C |
| | 08-28 | | 8D |
| | 08-28 | | 8E |
| | 08-28 | | 8F |
| | 08-28A | | 15A |
| | 08-28A | | 15B |
| | 08-28B | | 16 |
| | 08-28B | | 40A |
| | 08-28B | | 40B |
| | 08-28B | | 40C |
| | 08-28B | | 40D |
| | 08-28B | | 42 |
| | 08-29A | | 10 |
| | 08-29A | | 11 |
| | 08-29A | | 12 |
| | 08-29A | | 13 |

| Number | Figure | Sequence | Ref. | Number | Figure | Sequence | Ref. |
|---|---|---|---|---|---|---|---|
| NSS | 08-29A | | 14 | NSS | 09-42B | | 5 |
| | 08-29A | | 15 | | 09-42B | | 8 |
| | 08-29A | | 16 | | 09-42B | | 9 |
| | 08-29A | | 17 | | 09-42C | | 30 |
| | 08-29A | | 18 | | 09-42C | | 5 |
| | 08-29A | | 23 | | 09-42C | | 59 |
| | 08-29A | | 24 | | 09-42C | | 68 |
| | 08-29A | | 25 | | 09-42C | | 70 |
| | 08-29A | | 9 | | 09-42C | | 72 |
| | 08-29B | | 1 | | 09-42C | | 74 |
| | 08-29B | | 10 | | 09-42C | | 76 |
| | 08-29B | | 11 | | 09-42D | | 11 |
| | 08-29B | | 12 | | 09-42D | | 12 |
| | 08-29B | | 14 | | 09-42D | | 14 |
| | 08-29B | | 15 | | 09-42D | | 15 |
| | 08-29B | | 16 | | 09-42D | | 16 |
| | 08-29B | | 2 | | 09-42D | | 18 |
| | 08-29B | | 3 | | 09-42D | | 2 |
| | 08-29B | | 4 | | 09-42D | | 20 |
| | 08-29B | | 5 | | 09-42D | | 21 |
| | 08-30A | | 10 | | 09-42D | | 23 |
| | 08-30A | | 11 | | 09-42D | | 28 |
| | 08-30A | | 12 | | 09-42D | | 33 |
| | 08-30A | | 13 | | 09-42D | | 37 |
| | 08-30A | | 15 | | 09-42D | | 38 |
| | 08-30A | | 16 | | 09-42D | | 40 |
| | 08-30A | | 17 | | 09-42D | | 41 |
| | 08-30A | | 18 | | 09-42D | | 45 |
| | 08-30A | | 19 | | 09-42D | | 46 |
| | 08-30A | | 22 | | 09-42D | | 47 |
| | 08-30A | | 23 | | 09-42D | | 5 |
| | 08-30A | | 24 | | 09-42D | | 51 |
| | 08-30A | | 3 | | 09-42D | | 52 |
| | 08-30A | | 4 | | 09-42D | | 6 |
| | 08-30A | | 5 | | 09-45A | | 11 |
| | 08-30A | | 6 | | 09-45A | | 15 |
| | 08-30A | | 7 | | 09-45A | | 18 |
| | 08-30A | | 8 | | 09-45A | | 20 |
| | 08-30A | | 9 | | 09-45A | | 21 |
| | 08-31A | | 10 | | 09-45A | | 23 |
| | 08-31A | | 11 | | 09-45A | | 24 |
| | 08-31A | | 12 | | 09-45A | | 25 |
| | 08-31A | | 13 | | 09-45A | | 5 |
| | 08-31A | | 15 | | 09-45A | | 6 |
| | 08-31A | | 16 | | 09-47A | | 11 |
| | 08-31A | | 17 | | 09-47A | | 15 |
| | 08-31A | | 18 | | 09-47A | | 18 |
| | 08-31A | | 19 | | 09-47A | | 20 |
| | 08-31A | | 22 | | 09-47A | | 21 |
| | 08-31A | | 23 | | 09-47A | | 23 |
| | 08-31A | | 24 | | 09-47A | | 26 |
| | 08-31A | | 3 | | 09-47A | | 27 |
| | 08-31A | | 4 | | 09-47A | | 5 |
| | 08-31A | | 5 | | 09-47A | | 6 |
| | 08-31A | | 6 | P0236317R | 06-11 | | 4 |
| | 08-31A | | 7 | R54047 | 09-33A | | 33 |
| | 08-31A | | 8 | R54363 | 04-26 | | 1 |
| | 08-31A | | 9 | R55242 | 09-46 | | 9 |
| | 08-32A | | 10 | REF | 02-05 | | |
| | 08-32A | | 14 | | 02-07 | | |
| | 08-32A | | 15 | | 04-11 | | |
| | 08-32A | | 2 | | 04-21 | | |
| | 08-32A | | 3 | | 04-24 | | |
| | 08-32A | | 4 | | 04-24A | | |
| | 08-32A | | 5 | | 05-04 | | |
| | 08-32A | | 8 | | 05-05 | | |
| | 08-32A | | 9 | | 07-02 | | |
| | 09-10 | | | | 07-03A | | |
| | 09-42A | | 30 | | 07-03A | | |
| | 09-42A | | 41A | | 07-03B | | |
| | 09-42A | | 41B | | 07-03C | | |
| | 09-42A | | 44 | | 08-03 | | |
| | 09-42A | | 5 | | 08-05 | | |
| | 09-42B | | 14 | | 08-06 | | |
| | 09-42B | | 22 | | 08-07 | | |
| | 09-42B | | 24 | | 08-07A | | |
| | 09-42B | | 32 | | 08-08 | | |
| | 09-42B | | 36 | | 08-09 | | |

| Number | Figure | Sequence | Ref. |
|---|---|---|---|
| REF | 08-10 | | |
| | 08-11 | | |
| | 08-12 | | |
| | 08-13 | | |
| | 08-15 | | |
| | 08-16 | | |
| | 08-17 | | |
| | 08-18 | | |
| | 08-19A | | |
| | 08-21 | | |
| | 08-23 | | |
| | 08-24 | | |
| | 08-25 | | |
| | 08-26 | | |
| | 08-26 | | 4C |
| | 08-26A | | |
| | 08-26A | | 4C |
| | 08-26B | | |
| | 08-26B | | 4C |
| | 08-27 | | |
| | 08-27A | | |
| | 08-27B | | |
| | 08-28 | | |
| | 08-28A | | |
| | 08-28B | | |
| | 08-32A | | |
| | 08-33 | | |
| | 08-33 | | |
| | 09-07 | | |
| | 09-07A | | |
| | 09-07B | | |
| | 09-08 | | |
| | 09-08A | | |
| | 09-09 | | |
| | 09-09 | | 1 |
| | 09-09 | | 2 |
| | 09-09 | | 3 |
| | 09-09 | | 4 |
| | 09-09 | | 5 |
| | 09-09 | | 6 |
| | 09-09 | | 7 |
| | 09-09 | | 8 |
| | 09-09 | | 8A |
| | 09-09 | | 8B |
| | 09-09 | | 8C |
| | 09-09 | | 9 |
| | 09-09A | | |
| | 09-09A | | 1 |
| | 09-09A | | 10 |
| | 09-09A | | 11 |
| | 09-09A | | 12 |
| | 09-09A | | 13 |
| | 09-09A | | 2 |
| | 09-09A | | 3 |
| | 09-09A | | 4 |
| | 09-09A | | 5 |
| | 09-09A | | 6 |
| | 09-09A | | 7 |
| | 09-09A | | 8 |
| | 09-09A | | 9 |
| | 09-09B | | |
| | 09-09B | | 1 |
| | 09-09B | | 2 |
| | 09-09B | | 3 |
| | 09-09B | | 4 |
| | 09-09B | | 5 |
| | 09-09B | | 6 |
| | 09-09B | | 7 |
| | 09-09B | | 8 |
| | 09-09B | | 8A |
| | 09-09B | | 8B |
| | 09-09B | | 8C |
| | 09-09C | | |
| | 09-09C | | 1 |
| | 09-09C | | 10 |
| | 09-09C | | 11 |
| | 09-09C | | 12 |
| | 09-09C | | 13 |
| REF | 09-09C | | 14 |
| | 09-09C | | 15 |
| | 09-09C | | 16 |
| | 09-09C | | 2 |
| | 09-09C | | 3 |
| | 09-09C | | 4 |
| | 09-09C | | 5 |
| | 09-09C | | 6 |
| | 09-09C | | 7 |
| | 09-09C | | 8 |
| | 09-09C | | 9 |
| | 09-10 | | |
| | 09-10 | | |
| | 09-10 | | |
| | 09-11 | | |
| | 09-11 | | |
| | 09-11 | | |
| | 09-13 | | |
| | 09-16 | | |
| | 09-22 | | |
| | 09-23 | | |
| | 09-42 | | |
| | 09-42 | | |
| | 09-42 | | |
| | 09-42 | | |
| | 09-42A | | |
| | 09-42C | | |
| | 09-44 | | |
| | 09-44A | | |
| | 09-44B | | |
| | 09-45 | | |
| | 09-45A | | |
| | 09-47 | | |
| | 09-47A | | |
| | 09-48 | | |
| | 09-50A | | |
| | 09-53 | | |
| S92653 | 09-07 | | 9 |
| | 09-07A | | 9 |
| T103750 | 03-04A | | 2 |

# CATALOGUE DES PIÉCES

## CHARGEUSE SUR ROUES

## 621E
## TIER 3



BD07G056-01

Bur • Publication 01Sept07
Imprimé aux États-Unis • Réf. Catalogue/formulaire 87519729 FC
Copyright © 2007. CNH America, LLC. Tous droits réservés.

La société CNH America LLC se réserve le droit de modifier sans préavis la conception ou les caractéristiques de ses machines, et ce sans encourir d'obligation quelconque de mettre en place les nouvelles caractéristiques sur des machines déjà en service.

Toutes les informations fournies dans ce manuel sont susceptibles de varier selon les besoins de la production. Les dimensions et les masses indiquées sont approximatives. Les illustrations ne montrent pas nécessairement les produits en état standard. Pour obtenir des données précises au sujet d'un modèle de machine particulier, consulter un concessionnaire.

| LISTE DE RÉVISIONS | | | |
|---|---|---|---|
| Publication | Date de publication | Machines concernées | Remarques |
| Première édition | 01Sept07 | 621E Tier 3 Chargeuse sur Roues | 87519729 FC |

L'utilisation du texte ou des images de ce manuel est strictement interdite sans l'autorisation écrite de
CNH America LLC. Carol Stream, IL 60188 États-Unis

# TABLE OF CONTENTS


| | |
|---|---|
| 02-01 | MONTAGE, MOTEUR |
| 02-02 | RADIATEUR - CONDUITES ET TUYAUX |
| 02-03 | REFROIDISSEUR, AIR DE SURALIMENTATION |
| 02-04 | REFROIDISSEUR, AIR DE SURALIMENTATION - CONDUITES ET TUYAUX |
| 02-05 | ENTRAÎNEMENT DU VENTILATEUR |
| 02-06 | FILTRE A AIR - PIÈCES DE LA PRISE D'AIR |
| 02-06A | FILTRE À AIR |
| 02-07 | FILTRE À AIR - PRÉ-FILTRE |
| 02-08 | SILENCIEUX - ÉCHAPPEMENT |
| 02-09 | REMPLISSAGE D'HUILE, MOTEUR |
| 02-10 | POMPE A HUILE - MOTEUR |
| 02-11 | FILTRE A HUILE - MOTEUR |
| 02-12 | FILTRE ET REFROIDISSEUR D'HUILE |
| 02-13 | POMPE À HUILE, CARTER |
| 02-14 | POMPE À HUILE, CARTER - CONDUITE DE VIDANGE - COUVERCLE |
| 02-15 | RENIFLARD - MOTEUR |
| 02-16 | TURBO COMPRESSEUR - CONDUITE DE VIDANGE |
| 02-17 | TURBOCOMPRESSEUR |
| 02-18 | POMPE A EAU |
| 02-19 | POMPE A EAU - TENDEUR |
| 02-20 | BLOC CYLINDRES |
| 02-21 | BLOC CYLINDRES - BOUCHON |
| 02-22 | BLOC CYLINDRES - RÉDUCTION DU BRUIT |
| 02-23 | CULASSE DE CYLINDRE |
| 02-24 | CULASSE DE CYLINDRE - MONTAGE |
| 02-25 | COUVERCLES CULASSE |
| 02-26 | VILEBREQUIN |
| 02-27 | VILEBREQUIN - POULIE |
| 02-28 | VOLANT - MOTEUR |
| 02-29 | CARTER DE VOLANT |
| 02-30 | COUVERCLE DE PIGNONS - CARTER ARRIÈRE |
| 02-31 | COUVERCLE DE PIGNONS- PLAQUE |
| 02-32 | CARTER AVANT |
| 02-33 | CULBUTEURS |
| 02-33A | CULBUTEURS - MONTAGE |
| 02-34 | ARBRE À CAMES |
| 02-35 | PISTONS |
| 02-36 | BIELLES |
| 02-37 | CONDUIT D'ADMISSION |
| 02-38 | CONDUIT D'ÉCHAPPEMENT |
| 02-39 | CIRCUIT DE REFROIDISSEMENT - MOTEUR |
| 02-40 | THERMOSTAT - REFROIDISSEMENT MOTEUR |
| 02-41 | CROCHETS DE MANOEUVRE - MOTEUR |
| 02-42 | MOTEUR - CHAUFFE-BLOC |
| 03-01 | CONDUITES D'ESSENCE - REFROIDISSEUR, CARBURANT |
| 03-02 | FILTRE, CARBURANT - L'EAU SEPERATOR |
| 03-03 | FILTRE, CARBURANT |
| 03-04 | GOULOT DU RÉSERVOIR DE CARBURANT - ÉMETTEUR |
| 03-04A | RÉSERVOIR DE CARBURANT - RENIFLARD |
| 03-05 | POMPE DINJECTION |
| 03-06 | SYSTÈME D'INJECTION |

# TABLE OF CONTENTS


| | |
|---|---|
| 03-07 | SYSTÈME D'INJECTION - INJECTEUR |
| 03-08 | SYSTÈME D'INJECTION - ALIMENTATION EN CARBURANT |
| 03-09 | SYSTÈME D'INJECTION - MODULE DE COMMANDE DU MOTEUR |
| 03-10 | SYSTÈME D'INJECTION - FAISCEAU, MOTEUR |
| 03-11 | SYSTÈME D'INJECTION - CONDUITE DE VIDANGE |
| 04-01 | DEMARREUR |
| 04-02 | ALTERNATEUR |
| 04-02A | ALTERNATEUR - SUPPORT AVEC AIR CONDITIONNE |
| 04-02B | ALTERNATEUR - SUPPORT SANS AIR CONDITIONNE |
| 04-03 | FAISCEAU, AVANT - Z-BAR |
| 04-03A | FAISCEAU, AVANT - XT |
| 04-04 | FAISCEAU - PANNEAU DE COMMANDES |
| 04-05 | FAISCEAU, MOTEUR |
| 04-06 | FAISCEAU, MOTEUR - COMMANDE DES GAZ |
| 04-07 | FAISCEAU, MOTEUR - FUSIBLES ET RELAIS |
| 04-08 | FAISCEAU - TOIT DE LA CABINE |
| 04-09 | FAISCEAU, CAPOT - ALARME DE RECUL |
| 04-10 | FAISCEAU, TRANSMISSION |
| 04-11 | FAISCEAU - APPAREIL DE CHAUFFAGE DE GRILLE |
| 04-11A | APPAREIL DE CHAUFFAGE DE GRILLE |
| 04-12 | AVERTISSEUR SONORE AVANT |
| 04-13 | PANNEAU DE COMMANDES - CONTACTEURS |
| 04-14 | PANNEAU DE COMMANDES - FUSIBLE ET RELAIS SUPPORT |
| 04-15 | SYSTÈME ÉLECTRIQUE - COLONNE DE DIRECTION / TABLEAU DE BORD |
| 04-16 | SYSTÈME ÉLECTRIQUE - COMMANDE DE LA TRANSMISSION |
| 04-17 | SYSTÈME ÉLECTRIQUE - DIRECTION, AUXILIAIRE |
| 04-18 | SUPPORT - PHARES, AVANT |
| 04-19 | ÉCLAIRAGE - PHARE, AVANT |
| 04-20 | SUPPORT- FEUX, COMBINAISON ARRIÈRE |
| 04-21 | CABINE - FEUX |
| 04-22 | GYROPHARE - SUPPORT |
| 04-23 | CABINE - ESSUIE-GLACE, AVANT |
| 04-23A | CABINE - ESSUIE-GLACE ARRIÈRE |
| 04-24 | RADIO- 12 VOLT |
| 04-24A | RADIO- 12 VOLT POSE |
| 04-25 | FIXATION DES BATTERIES |
| 04-25A | FIXATION DES BATTERIES - SERVICE SEVERE |
| 04-26 | BATTERIE - CABLES |
| 04-27 | FEUX DECLAIRAGE DE PLAQUE DIMMATRICULATION |
| 04-28 | LAVE-GLACE MONTAGE |
| 05-01 | VOLANT - COLONNE |
| 05-02 | COLONNE DE DIRECTION |
| 05-02A | COLONNE DE DIRECTION - ACCESSOIRES |
| 05-03 | COLONNE DE DIRECTION - ÉQUILIBRAGE |
| 05-04 | SYSTEME HYDRAULIQUE - DIRECTION |
| 05-05 | DIRECTION - AUXILIAIRE - SYSTEME HYDRAULIQUE |
| 05-06 | DISTRIBUTEUR DE LA COMMANDE DE DIRECTION |
| 05-07 | DIRECTION - AUXILIAIRE - BLOC FORE |
| 05-08 | DIRECTION - AUXILIAIRE - POMPE |
| 05-09 | DIRECTION - VERIN - SYSTEME HYDRAULIQUE |
| 05-10 | IRECTION - VERIN |

# TABLE OF CONTENTS


| | |
|---|---|
| 06-01 | SUPPORT - TRANSMISSION - GOULOT DE REMPLISSAGE DE LA TRANSMISSION |
| 06-02 | SYSTEME HYDRAULIQUE - TRANSMISSION |
| 06-03 | TRANSMISSION - FILTRE À HUILE ET COUVERCLE |
| 06-04 | TRANSMISSION - CONVERTISSEUR, COUVERCLE ET ARBRE D'ENTRÉE |
| 06-05 | TRANSMISSION - ARBRE D'ENTRÉE |
| 06-06 | TRANSMISSION - BOÎTIER |
| 06-07 | TRANSMISSION - GAINES |
| 06-08 | TRANSMISSION - EMBRAYAGE PREMIÈRE |
| 06-09 | TRANSMISSION - EMBRAYAGE, SECONDE |
| 06-10 | TRANSMISSION - EMBRAYAGE TROISIÈME |
| 06-11 | TRANSMISSION - EMBRAYAGE, QUATRIÈME |
| 06-12 | TRANSMISSION - EMBRAYAGE, MARCHE AVANT |
| 06-13 | TRANSMISSION - EMBRAYAGE, MARCHE ARRIÈRE |
| 06-14 | TRANSMISSION - ARBRE DE SORTIE |
| 06-15 | TRANSMISSION - PRISE DE FORCE |
| 06-16 | TRANSMISSION - PLAQUES DES DISTRIBUTEURS |
| 06-17 | TRANSMISSION - DISTRIBUTEUR |
| 06-18 | TRANSMISSION - DISTRIBUTEUR |
| 06-19 | TRANSMISSION - VALVE, RÉGULATEUR ET POMPE À HUILE |
| 06-20 | TRANSMISSION - CAPTEUR, VITESSE ET COUVERCLE DE LA POMPE |
| 06-21 | ESSIEU ARRIÈRE - ARRÊT |
| 06-22 | ESSIEU, AVANT - SUPPORT |
| 06-22A | ESSIEU, AVANT - BOÎTIER |
| 06-22B | ESSIEU, AVANT - COQUILLE DU DIFFÉRENTIEL |
| 06-22C | ESSIEU, AVANT - DIFFERENTIEL |
| 06-22D | ESSIEU, AVANT - FREIN |
| 06-22E | ESSIEU, AVANT - MOYEU, SATELLITE |
| 06-23 | ESSIEU ARRIÈRE - SUPPORT |
| 06-23A | ESSIEU ARRIÈRE - BOÎTIER |
| 06-23B | ESSIEU ARRIÈRE - COQUILLE DU DIFFÉRENTIEL |
| 06-23C | ESSIEU ARRIÈRE - DIFFERENTIEL |
| 06-23D | ESSIEU ARRIÈRE - FREIN |
| 06-23E | ESSIEU ARRIÈRE - MOYEU, SATELLITE |
| 06-24 | ARBRE D'ENTRAÎNEMENT MONTAGE |
| 06-25 | ARBRE DE TRANSMISSION, AVANT |
| 06-26 | ARBRE D'ENTRAÎNEMENT, CENTRE |
| 06-27 | ARBRE D'ENTRAÎNEMENT, ARRIÈRE |
| 06-28 | ARBRE DE TRANSMISSION, MOTEUR |
| 06-29 | ROUES |
| 07-01 | FREIN DE STATIONNEMENT |
| 07-02 | FREINS PÉDALES |
| 07-03 | SYSTEME HYDRAULIQUE - RÉSERVOIR - POMPE |
| 07-03A | SYSTEME HYDRAULIQUE - FREIN, PRINCIPAL - ESSIEU |
| 07-03B | SYSTEME HYDRAULIQUE - FREIN, PRINCIPAL - ACCUMULATEUR |
| 07-03C | SYSTEME HYDRAULIQUE - FREIN, PRINCIPAL - FREIN DE PARC |
| 07-03D | SYSTEME HYDRAULIQUE - FREIN, PRINCIPAL - RÉSERVOIR |
| 07-04 | SYSTEME HYDRAULIQUE - FREIN - POMPE |
| 07-05 | DISTRIBUTEUR - FREIN |
| 08-01 | RESERVOIR HYDRAULIQUE- MONTAGE |
| 08-01A | SYSTEME HYDRAULIQUE - REFROIDISSEUR D'HUILE SUPPORT |
| 08-02 | RESERVOIR HYDRAULIQUE - FILTRE |

# TABLE OF CONTENTS


| | |
|---|---|
| 08-02A | SYSTEME HYDRAULIQUE - FILTRE À HUILE |
| 08-03 | SYSTEME HYDRAULIQUE - DU RÉSERVOIR À LA POMPE HYDRAULIQUE |
| 08-04 | POMPE |
| 08-05 | SYSTEME HYDRAULIQUE - RELEVAGE ET GODET DES BRAS DE RELEVAGE (Z-BAR, XR CHARGEUSE) |
| 08-06 | SYSTEME HYDRAULIQUE - RELEVAGE DE LA CHARGEUSE (XT CHARGEUSE) |
| 08-07 | SYSTEME HYDRAULIQUE - GODET DE LA CHARGEUSE (XT CHARGEUSE) |
| 08-07A | SYSTEME HYDRAULIQUE - GODET DE LA CHARGEUSE (XT CHARGEUSE) |
| 08-08 | SYSTEME HYDRAULIQUE - CHARGEUR AUXILIAIRE (Z CHARGEUSE) |
| 08-09 | SYSTEME HYDRAULIQUE - CHARGEUR AUXILIAIREN (XR) |
| 08-10 | SYSTEME HYDRAULIQUE - CHARGEUR AUXILIAIRE (XT CHARGEUSE) - SI UTILISÉ |
| 08-11 | SYSTEME HYDRAULIQUE - COUPLEUR (Z CHARGEUSE) |
| 08-12 | SYSTEME HYDRAULIQUE - COUPLEUR (XRCHARGEUSE) |
| 08-13 | SYSTEME HYDRAULIQUE - COUPLEUR (XT CHARGEUSE) |
| 08-14 | CIRCUITS HYDRAULIQUES - VERROUILLAGE DU COUPLEUR |
| 08-15 | VERIN - GODET DE LA CHARGEUSE |
| 08-16 | VERIN - GODET DE LA CHARGEUSE (Z CHARGEUSE) |
| 08-17 | VERIN - GODET DE LA CHARGEUSE (XR CHARGEUSE) |
| 08-18 | VERIN - RELEVAGE DE LA CHARGEUSE (XT CHARGEUSE) |
| 08-19 | CIRCUIT HYDRAULIQUE - DÉRIVATION STANDARD |
| 08-19A | CIRCUIT HYDRAULIQUE - SANS DÉRIVATION |
| 08-19B | CIRCUIT HYDRAULIQUE -DÉRIVATION THERMIQUE |
| 08-20 | SYSTEME HYDRAULIQUE - SYSTEME ANTI-TANGAGE |
| 08-20A | DISTRIBUTEUR - DISTRIBUTEUR DE CONTRÔLE E LA CONDUITE (RSM2-16) |
| 08-21 | SYSTEME HYDRAULIQUE - NON-SYSTEME ANTI-TANGAGE |
| 08-22 | SYSTEME HYDRAULIQUE - ENTRAÎNEMENT DU VENTILATEUR |
| 08-23 | DISTRIBUTEUR, VENTILATEUR SOUPAPE DE SÉCURITÉ - MONTAGE |
| 08-23A | DISTRIBUTEUR, VENTILATEUR SOUPAPE DE SÉCURITÉ |
| 08-24 | DISTRIBUTEUR, VENTILATEUR - VITESSE VARIABLE ET MARCHE ARRIÈRE - MONTAGE |
| 08-24A | DISTRIBUTEUR, VENTILATEUR - VITESSE VARIABLE ET MARCHE ARRIÈRE |
| 08-25 | SYSTEME HYDRAULIQUE - COMMANDE À DISTANCE DU CHARGEUR |
| 08-26 | COMMANDE DU DISTRIBUTEUR - SUPPORT, DEUX TIROIRS - (Z-BAR/XR/XT) |
| 08-26A | COMMANDE DU DISTRIBUTEUR - SUPPORT, TROIS TIROIRS -(Z-BAR/XR/XT) |
| 08-26B | COMMANDE DU DISTRIBUTEUR - SUPPORT, QUATRE TIROIRS - (Z-BAR/XR/XT) |
| 08-27 | DISTRIBUTEUR - COMMANDE DU CHARGEUR - DEUX, TROIS, QUATRE TIROIRS - (Z-BAR/XR) |
| 08-27A | DISTRIBUTEUR - AXE DU PISTON - (Z-BAR/XR) |
| 08-27B | DISTRIBUTEUR - COMMANDE DU CHARGEUR - CIRCUIT - (Z-BAR/XR) |
| 08-28 | DISTRIBUTEUR - COMMANDE DU CHARGEUR - DEUX, TROIS, QUATRE TIROIRS - (XT) |
| 08-28A | DISTRIBUTEUR - AXE DU PISTON - (XT) |
| 08-28B | DISTRIBUTEUR - COMMANDE DU CHARGEUR - CIRCUIT - (XT) |
| 08-29 | SYSTEME HYDRAULIQUE - LEVIER DE COMMANDE SUPPORT |
| 08-29A | DISTRIBUTEUR - LEVIER DE COMMANDE |
| 08-29B | DISTRIBUTEUR - LEVIER DE COMMANDE |
| 08-30 | COMMANDE DU CHARGEUR - MANETTE AVEC LEVIER UNIQUE - MONTAGE |
| 08-30A | COMMANDE DU CHARGEUR - MANETTE AVEC LEVIER UNIQUE |
| 08-31 | COMMANDE À DISTANCE DU CHARGEUR - MANETTE AVEC LEVIER DOUBLE SUPPORT |
| 08-31A | DISTRIBUTEUR - MANETTE AVEC LEVIER DOUBLE |

# TABLE OF CONTENTS


| | |
|---|---|
| 08-32 | COMMANDE DU CHARGEUR - TROIS LEVIERS SUPPORT |
| 08-32A | DISTRIBUTEUR - COMMANDE DE CHARGEUSE À 3 LEVIERS |
| 08-33 | MONTAGE DE BLOC - COUPLEUR, CONDUITES À TROIS TIROIRS |
| 09-01 | COMMANDE - RETOUR À EXCAVATION (Z-BAR) |
| 09-02 | COMMANDE - RETOUR À EXCAVATION (XR) |
| 09-03 | COMMANDE - RETOUR À EXCAVATION - XT |
| 09-04 | COMMANDES - HAUTEUR DU GODET ET RETOUR À TRANSPORT - Z-BAR |
| 09-05 | COMMANDES - HAUTEUR DU GODET ET RETOUR À TRANSPORT (XR) |
| 09-06 | COMMANDES - HAUTEUR DU GODET ET RETOUR À TRANSPORT - XT |
| 09-07 | CADRE - RELEVAGE DE LA CHARGEUSE (Z CHARGEUSE) |
| 09-07A | CADRE - RELEVAGE DE LA CHARGEUSE (XR) |
| 09-07B | CADRE - RELEVAGE DE LA CHARGEUSE (XT) |
| 09-08 | GODETS - EQUIPEMENT (Z CHARGEUSE) |
| 09-08A | GODETS - EQUIPEMENT (XT CHARGEUSE) |
| 09-09 | COUPLEUR HYDRAULIQUE - Z-BAR - JRB |
| 09-09A | COUPLEUR HYDRAULIQUE - Z-BAR - ACS |
| 09-09B | COUPLEUR HYDRAULIQUE - XT - JRB |
| 09-09C | COUPLEUR HYDRAULIQUE - XT - ACS |
| 09-10 | GODET DE LA CHARGEUSE - AVEC DENTS, SEGMENTS ET PATINS ANTI-DÉRAPAGE |
| 09-11 | GODET DE LA CHARGEUSE - AVEC BORD VISSABLE ET PATINS ANTI-DÉRAPAGE |
| 09-12 | CHÂSSIS AVANT (Z-BAR, XR) |
| 09-13 | CHÂSSIS AVANT (XT) |
| 09-14 | CHÂSSIS ARRIÈRE |
| 09-15 | JOINT D'ARTICULATION |
| 09-16 | CAPOT |
| 09-17 | CAPOT MOTEUR - MONTAGE |
| 09-18 | COUVERCLES - COMPARTIMENT BATTERIE |
| 09-19 | COUVERCLES - CABINE ET TOIT, BAS |
| 09-19A | COUVERCLES - CHÂSSIS ARRIÈRE |
| 09-20 | GARDE-BOUE AVANT |
| 09-20A | GARDE-BOUE AVANT - LARGE |
| 09-21 | GARDE-BOUE ARRIÈRE - STANDARD |
| 09-22 | GARDE-BOUE ARRIÈRE - LARGE |
| 09-23 | GARDE-BOUE ARRIÈRE -GARANT |
| 09-24 | MARCHES - A GAUCHE |
| 09-25 | MARCHES - DROIT |
| 09-26 | INSONORISATION - MOTEUR |
| 09-27 | PLAQUE DE PROTECTION |
| 09-28 | CABINE - MONTAGE |
| 09-29 | CABINE - VITRE, AVANT |
| 09-30 | CABINE - VITRE, ARRIERE |
| 09-31 | CABINE - BORD INTÉRIEUR |
| 09-31A | CABINE - BORD INTÉRIEUR - COLONNE |
| 09-31B | CABINE - BORD INTÉRIEUR - TOIT |
| 09-32 | CABINE - AJUSTAGE EXTÉRIEUR |
| 09-33 | CABINE - FENÊTRE DROITE |
| 09-33A | CABINE - FENÊTRE DROITE |
| 09-34 | CABINE - FENÊTRE DROITE |
| 09-35 | CABINE - MONTAGE DE PORTIÈRE |
| 09-35A | CABINE - PORTE |

# TABLE OF CONTENTS


| | |
|---|---|
| 09-36 | CABINE - RETROVISSEUR |
| 09-37 | CABINE - CARPETTE |
| 09-38 | CABINE- PARE-SOLEIL |
| 09-39 | CABINE - COMPOSANTS |
| 09-40 | CABINE - FEUX |
| 09-41 | CABINE - CONVENANCE COLIS |
| 09-42 | SIEGE - SUPPORT/CEINTURES DE SÉCURITÉ |
| 09-42A | SIÈGE, SUSPENSION MÉCANIQUE |
| 09-42B | SIÈGE, SUSPENSION MÉCANIQUE |
| 09-42C | SIÈGE, SUSPENSION PNEUMATIQUE |
| 09-42D | SIÈGE, SUSPENSION PNEUMATIQUE |
| 09-43 | CABINE - CONDUITES DU CHAUFFAGE ET DE LA CLIMATISATION |
| 09-43A | CABINE - CONDUITES DU CHAUFFAGE ET DE LA CLIMATISATION |
| 09-44 | COUVERCLES - COURROIE D'ENTRAÎNEMENT (MODÈLES ÉQUIPÉS DE LA CLIMATISATION) |
| 09-44A | COUVERCLES - COURROIE D'ENTRAÎNEMENT (MODÈLES NON ÉQUIPÉS DE LA CLIMATISATION) |
| 09-44B | COUVERCLES - CABINE - SANS AIR CONDITIONNE |
| 09-45 | CHAUFFAGE - MONTAGE |
| 09-45A | CHAUFFAGE |
| 09-46 | CHAUFFAGE |
| 09-47 | CLIMATISATION - MONTAGE |
| 09-47A | CLIMATISATION |
| 09-48 | CLIMATISATION - CONDENSEUR |
| 09-49 | CLIMATISATION |
| 09-50 | CONTREPOIDS |
| 09-50A | CONTREPOIDS - SERVICE SEVERE |
| 09-51 | EXTINCTEUR |
| 09-52 | BOITE A OUTILS |
| 09-53 | PLAQUE DE POLICE SUPPORT |
| 09-54 | AUTOCOLLANTS - MODÈLE |
| 09-55 | AUTOCOLLANTS - COMMUN VERS MODÈLE |
| 09-56 | AUTOCOLLANTS - CABINE |
| 09-57 | AUTOCOLLANTS - ANGLAIS |
| 09-58 | AUTOCOLLANTS - FRANÇAIS CANADIEN |
| 09-59 | AUTOCOLLANTS - ESPAGNOL D'AMÉRIQUE LATINE |

# GÉNÉRALITÉS

## AVIS DE PROPRIÉTÉ

Les données contenues dans ce manuel constituent la propriété de cette société. Toute reproduction ou utilisation de toute partie de ce manuel à d'autres fins que l'utilisation et l'entretien de notre matériel ne sont permises que si elles sont expressément autorisées par écrit.

Des copies supplémentaires peuvent être obtenues auprès du concessionnaire. Pour obtenir des exemplaires supplémentaires, s'adresser au concessionnaire et donner en référence le numéro de publication imprimé au bas de la couverture arrière de ce manuel ou sur la page de titre.

## POLITIQUE DE LA SOCIÉTÉ

L'entreprise, dont la politique est fondée sur le progrès constant, se réserve le droit de changer ses prix et d'apporter des modifications à la conception et aux caractéristiques du matériel à tout moment, sans préavis et sans obligation de modifier les machines précédemment fabriquées.

Toutes les données qui apparaissent dans le présent manuel peuvent faire l'objet de variations dues aux contraintes de production. Les dimensions et les mesures de poids ne sont qu'approximatives et les machines illustrées ne sont pas nécessairement en état standard. Pour des données précises au sujet d'un modèle de machine en particulier, consulter un concessionnaire agréé.

## PIÈCES ET ACCESSOIRES

Des pièces et des accessoires d'origine ont été conçus spécifiquement pour ces machines.

New Holland souhaite préciser que les pièces et accessoires « non originaux » n'ont PAS été examinés et mis en vente par la société. La pose et l'utilisation de ces produits pourraient s'avérer néfaste pour la conception de la machine et donc altérer ses caractéristiques de sécurité. La compagnie ne peut être tenue responsable des dégâts résultant de l'utilisation de pièces et d'accessoires « non originaux ».

## AMÉLIORATIONS

Nous nous efforçons de sans cesse continuer à améliorer nos produits. Nous nous réservons le droit d'apporter des améliorations ou modifications dès qu'elles s'avèrent pratiques et possibles, sans engagement ni obligation d'apporter des modifications ou des ajouts sur les équipements vendus auparavant.

## CODES DE MODÈLES

Les machines énumérées ne sont peut-être pas toutes disponibles dans tous les pays ou sur tous les marchés ; en conséquence, pour obtenir les informations les plus récentes, consulter le concessionnaire.

## ASSISTANCE AU PROPRIÉTAIRE

Nous souhaitons que vous soyez entièrement satisfait de votre investissement. Tous les problèmes rencontrés lors de l'utilisation de l'équipement sont normalement gérés par le service Entretien des concessionnaires, mais il est possible que des malentendus aient lieu. Si le problème n'a pas été géré de façon satisfaisante, procéder comme suit.

1. Contacter le propriétaire ou le directeur de la concession, expliquer le problème et demander de l'aide. En cas de besoin d'assistance supplémentaire, le concessionnaire peut contacter directement nos bureaux.
2. Fournir au concessionnaire les renseignements suivants :
   - Nom, adresse et numéro de téléphone
   - Modèle de la machine et numéro de série
   - Nom et adresse du concessionnaire
   - Date d'achat et nombre d'heures d'utilisation
   - Nature du problème

Garder à l'esprit le fait que le problème sera très certainement réglé au sein de la concession, à l'aide des infrastructures, des équipements et du personnel du concessionnaire. C'est pourquoi il est important que le premier contact se situe au niveau du concessionnaire.

## PIÈCES DÉTACHÉES

Pour maintenir un fonctionnement efficace, utiliser des pièces détachées d'origine.

Lors de la commande de pièces, fournir les informations suivantes.

- Modèle de la machine
- Numéros de série de la machine et du moteur
- Référence de la pièce du catalogue de pièces détachées

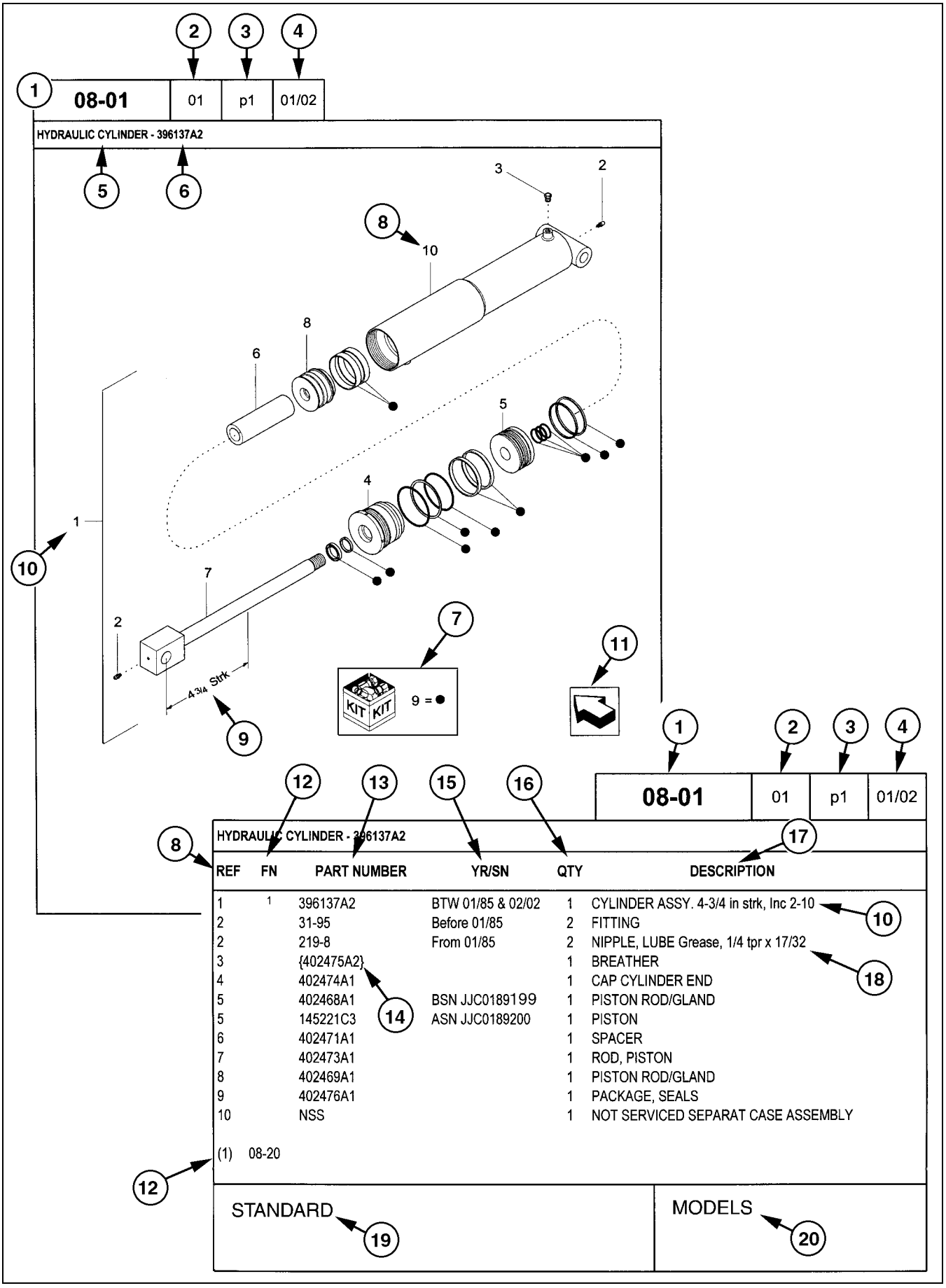


| REF | FN | PART NUMBER | YR/SN | QTY | DESCRIPTION |
|---|---|---|---|---|---|
| 1 | 1 | 396137A2 | BTW 01/85 & 02/02 | 1 | CYLINDER ASSY. 4-3/4 in strk, Inc 2-10 |
| 2 | | 31-95 | Before 01/85 | 2 | FITTING |
| 2 | | 219-8 | From 01/85 | 2 | NIPPLE, LUBE Grease, 1/4 tpr x 17/32 |
| 3 | | {402475A2} | | 1 | BREATHER |
| 4 | | 402474A1 | | 1 | CAP CYLINDER END |
| 5 | | 402468A1 | BSN JJC0189199 | 1 | PISTON ROD/GLAND |
| 5 | | 145221C3 | ASN JJC0189200 | 1 | PISTON |
| 6 | | 402471A1 | | 1 | SPACER |
| 7 | | 402473A1 | | 1 | ROD, PISTON |
| 8 | | 402469A1 | | 1 | PISTON ROD/GLAND |
| 9 | | 402476A1 | | 1 | PACKAGE, SEALS |
| 10 | | NSS | | 1 | NOT SERVICED SEPARAT CASE ASSEMBLY |

(1) 08-20

STANDARD

MODELS

# UTILISATION DU CATALOGUE DE PIÈCES

1. Numéro de la figure
2. Code de séquence dans le numéro de la figure
3. Numéro de la page dans le code de séquence
4. Date d'impression (mois/année)
5. Description de la figure
6. Informations générales relatives à la figure
7. Pièces fournies dans les kits de réparation selon référence de symbole
8. Chiffre-référence de la référence
9. Caractéristiques techniques relatives à la pièce indiquée
10. Le chiffre-référence de la figure inclut des articles entre crochets, les articles inclus peuvent aussi être énumérés dans la zone de description additionnelle
11. Orientation – La flèche indique l'avant de la machine
12. Note de pied de page – Informations supplémentaires relatives à la référence. Dans cet exemple, 08-20 correspond à une autre figure où cette pièce est illustrée
13. Référence
    NSS = pièces sans entretien
    Numéros entre parenthèses = localement non disponibles comme pièces détachées
14. Localement non disponible comme pièce détachée
15. Année/N° de série

    Année
    Avant 01/85 = pièce valable pour la production de janvier 1985 et antérieure
    À partir de 01/85 = pièce valable pour la production de janvier 1985 et postérieure
    Entre 01/85 et 02/02 = pièce valable pour les machines produites entre janvier 1985 et février 2002

    Numéro de série (P.I.N.)
    BSN JJC0268800 = pièce valable pour les numéros de série JJC0268800 et inférieurs
    ASN JJC0268800 = pièce valable pour les numéros de série JJC0268800 et supérieurs
    Entre JJC0178000 et JJC0179000 = pièce valable pour les numéros de série compris entre JJC0178000 et JJC0179000
16. La quantité totale de pièces auxquelles il est fait référence dans cette page. La quantité peut être remplacée par les indications suivantes :
    AR = Selon besoin
    X = Selon le besoin
17. Description
18. Description complémentaire de la pièce pour faciliter la confirmation de l'identification
19. Notes de la figure
20. Numéro(s) de modèle

## GAUCHE ET DROIT

La référence aux côtés gauche et droit dans ce catalogue est identifiée par l'opérateur debout à l'arrière de l'unité de base (sans outil arrière), regardant vers l'avant de la machine (en marche avant normale).

Pour les pages concernant les outils de la machine, les côtés droit et gauche sont définis par l'opérateur assis en position correcte de commande de l'outil.

## DIMENSIONS

Les dimensions impériales et métriques ne montrent pas les désignations numériques du filetage standard. Un chiffre suivant un point virgule (;) est la classe ou le grade de la visserie. Une virgule (,) représente le point séparateur décimal (.) du système impérial.

# SIGNIFICATION DES ABRÉVIATIONS

| | |
|---|---|
| AC | courant alternatif |
| adj | réglable |
| amp | ampère |
| AR | selon le besoin |
| ASN | numéro de série et supérieur<br>P.I.N. et supérieur |

| | |
|---|---|
| blkhd | cloison |
| br | branche |
| BSN | avant numéro de série<br>avant P.I.N. |
| BTW | entre |

| | |
|---|---|
| cc | centimètre cube |
| cl | classe |
| cmprsn | compression |
| cn pt | bout pointu |
| cp pt | bout cuvette |
| CRS | acier en alliage de chrome |
| CST | acier au carbone |
| cu yd | verge cube |

| | |
|---|---|
| DC | courant continu |
| deg | degré |
| dg pt | bout cylindrique long |
| dia | diamètre |
| dr type | type de transmission |

| | |
|---|---|
| fc | face |
| fc sl | joint à face |
| fem | femelle |
| fem PT | filetage de tube femelle |
| fl | évasement |
| flat pt | bout plat |
| ft | pied(s) |

| | |
|---|---|
| ga | jauge |
| gal | gallon(s) |
| gpm | gallons par minute |
| gr | grade |

| | |
|---|---|
| hd | tête |
| hdg pt | bout cylindrique court |
| hp | chevaux |
| ID | diamètre intérieur |
| in | pouce(s) |
| Incl. | comprend |
| inv fl | évasement inversé |

| | |
|---|---|
| K | kilo |
| kg | kilogramme |
| km/h | kilomètres/heure |

| | |
|---|---|
| L | litre |
| lb | livre |
| lb-ft | livre/pied |
| lg | long |
| LH | côté gauche |
| LH thd | filetage à gauche |

| | |
|---|---|
| M | (préfixe) taille métrique du filetage |
| m | mètre |
| ml | millilitre |
| mm | millimètre |

| | |
|---|---|
| NF | National Fine |
| No. | n° |
| NPT | pas de tuyauterie |
| NS | National Super Fine |

| | |
|---|---|
| OD | diamètre extérieur |
| ohm | ohm |
| Or | joint torique |
| ORB | bossage de joint torique |
| ORFS | joint torique à face |
| ov cntr | hypercentrique |
| ov pt | bout ovale |
| oz | once |

| | |
|---|---|
| P | pas |
| psi | livre par pouce carré |
| pt | pinte |
| PT | filetage de tuyau |

| | |
|---|---|
| rd | rond |
| rd holes | trous ronds |
| RH | droit |
| RH thd | filetage à droite |
| rpm | tr/mn |

| | |
|---|---|
| sl | autobloquant |
| sq | carré |
| SST | acier inoxydable |
| st | à auto-taraudage |
| strk | course |
| sw | pivot |

| | |
|---|---|
| T | dent |
| thk | épais |
| tpr | conique |
| tube OD | diamètre extérieur de tube |

| | |
|---|---|
| V | volt(s) |
| W | watt(s) |
| X | selon le besoin |
| yd | yard |

# SECTION INDEX
## Moteur


| | |
|---|---|
| 02-01 | MONTAGE, MOTEUR |
| 02-02 | RADIATEUR - CONDUITES ET TUYAUX |
| 02-03 | REFROIDISSEUR, AIR DE SURALIMENTATION |
| 02-04 | REFROIDISSEUR, AIR DE SURALIMENTATION - CONDUITES ET TUYAUX |
| 02-05 | ENTRAÎNEMENT DU VENTILATEUR |
| 02-06 | FILTRE A AIR - PIÈCES DE LA PRISE D'AIR |
| 02-06A | FILTRE À AIR |
| 02-07 | FILTRE À AIR - PRÉ-FILTRE |
| 02-08 | SILENCIEUX - ÉCHAPPEMENT |
| 02-09 | REMPLISSAGE D'HUILE, MOTEUR |
| 02-10 | POMPE A HUILE - MOTEUR |
| 02-11 | FILTRE A HUILE - MOTEUR |
| 02-12 | FILTRE ET REFROIDISSEUR D'HUILE |
| 02-13 | POMPE À HUILE, CARTER |
| 02-14 | POMPE À HUILE, CARTER - CONDUITE DE VIDANGE - COUVERCLE |
| 02-15 | RENIFLARD - MOTEUR |
| 02-16 | TURBO COMPRESSEUR - CONDUITE DE VIDANGE |
| 02-17 | TURBOCOMPRESSEUR |
| 02-18 | POMPE A EAU |
| 02-19 | POMPE A EAU - TENDEUR |
| 02-20 | BLOC CYLINDRES |
| 02-21 | BLOC CYLINDRES - BOUCHON |
| 02-22 | BLOC CYLINDRES - RÉDUCTION DU BRUIT |
| 02-23 | CULASSE DE CYLINDRE |
| 02-24 | CULASSE DE CYLINDRE - MONTAGE |
| 02-25 | COUVERCLES CULASSE |
| 02-26 | VILEBREQUIN |
| 02-27 | VILEBREQUIN - POULIE |
| 02-28 | VOLANT - MOTEUR |
| 02-29 | CARTER DE VOLANT |
| 02-30 | COUVERCLE DE PIGNONS - CARTER ARRIÈRE |
| 02-31 | COUVERCLE DE PIGNONS- PLAQUE |
| 02-32 | CARTER AVANT |
| 02-33 | CULBUTEURS |
| 02-33A | CULBUTEURS - MONTAGE |
| 02-34 | ARBRE À CAMES |
| 02-35 | PISTONS |
| 02-36 | BIELLES |
| 02-37 | CONDUIT D'ADMISSION |
| 02-38 | CONDUIT D'ÉCHAPPEMENT |
| 02-39 | CIRCUIT DE REFROIDISSEMENT - MOTEUR |
| 02-40 | THERMOSTAT - REFROIDISSEMENT MOTEUR |
| 02-41 | CROCHETS DE MANOEUVRE - MOTEUR |
| 02-42 | MOTEUR - CHAUFFE-BLOC |

**MONTAGE, MOTEUR**

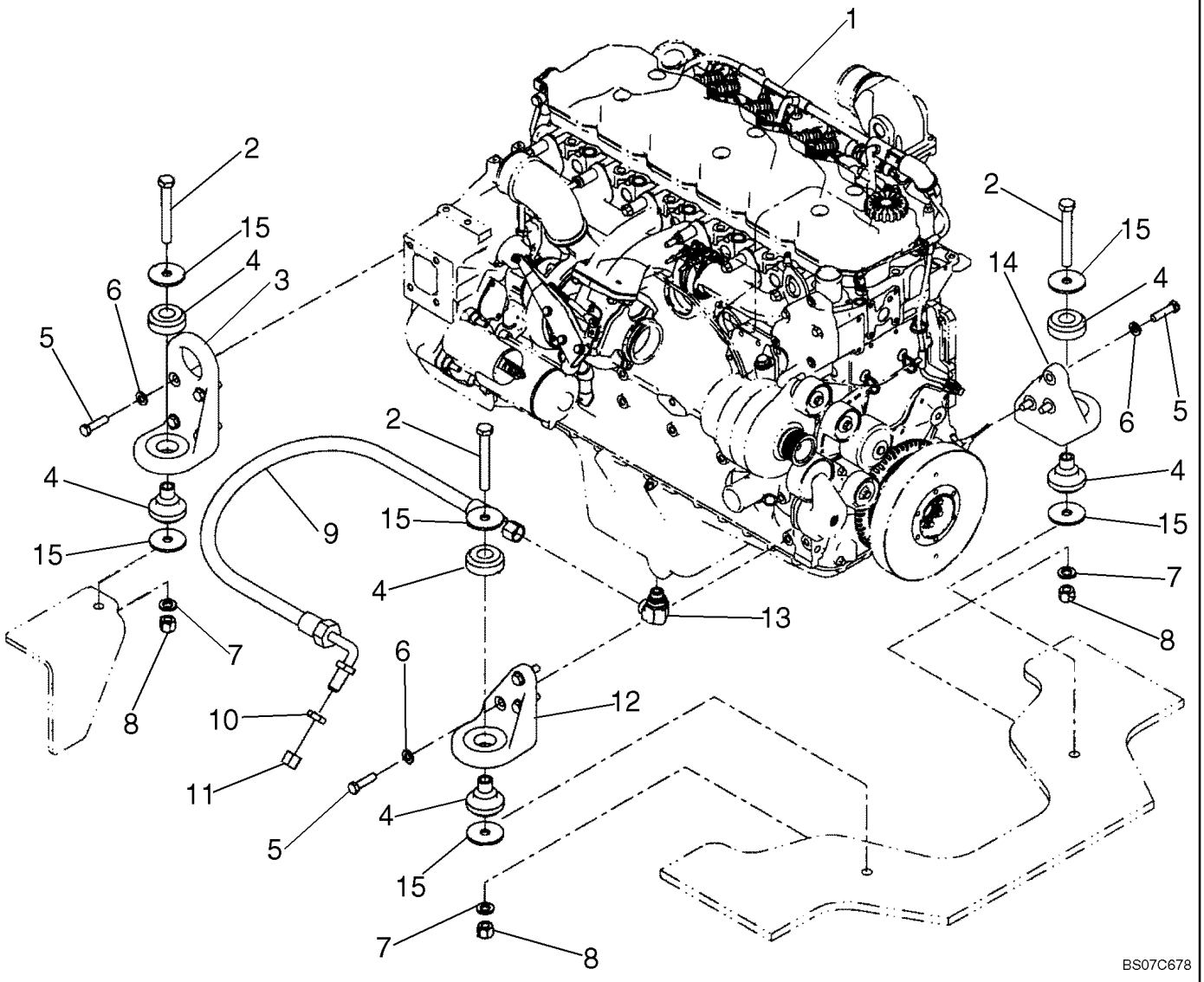

**MONTAGE, MOTEUR**

| REF | FN | PART NUMBER | YR/SN | QTY | DESCRIPTION |
|---|---|---|---|---|---|
| 1 | | 87579400 | | 1 | MOTEUR, 6 Cylinder 6.7L Turbo, Tier III; See Figures 02-09 - 02-13, 02-15 - 02-41, 03-05 - 03-11 |
| 2 | | 827-16120 | | 4 | BOULON, Hex, M16 x 120, 10.9 |
| 3 | | 8602302 | | 2 | SUPPORT MOTEUR, Flywheel Housing |
| 4 | | 361811A1 | | 4 | ISOLATEUR |
| 5 | | 627-12045 | | 14 | BOULON, Hex, M12 x 45, 10.9, Full Thd |
| 6 | | 896-11012 | | 14 | RONDELLE, M13.5 x 24.5 x 3, HT |
| 7 | | 896-11016 | | 4 | RONDELLE, M17.5 x 30 x 4, HT |
| 8 | | 832-10416 | | 4 | CONTRE-ECROU, M16 x 2, Cl 8 |
| 9 | | 397437A1 | | 1 | FLEXIBLE (ASSEMBLE) |
| 10 | | 218-1251 | | 1 | CONTRE-ECROU, Blkhd, 7/8"-14 |
| 11 | | 218-756 | | 1 | CHAPEAU, 37º, 7/8"-14 |
| 12 | | 8602304 | | 1 | SUPPORT MOTEUR, Rear Left |
| 13 | | 87426452 | | 1 | RACCORD |
| 14 | | 8602303 | | 1 | SUPPORT MOTEUR, Rear Right |
| 15 | | 496-81025 | | 8 | RONDELLE, 21/32" x 2 1/2" x .188", HDN |

**RADIATEUR - CONDUITES ET TUYAUX**

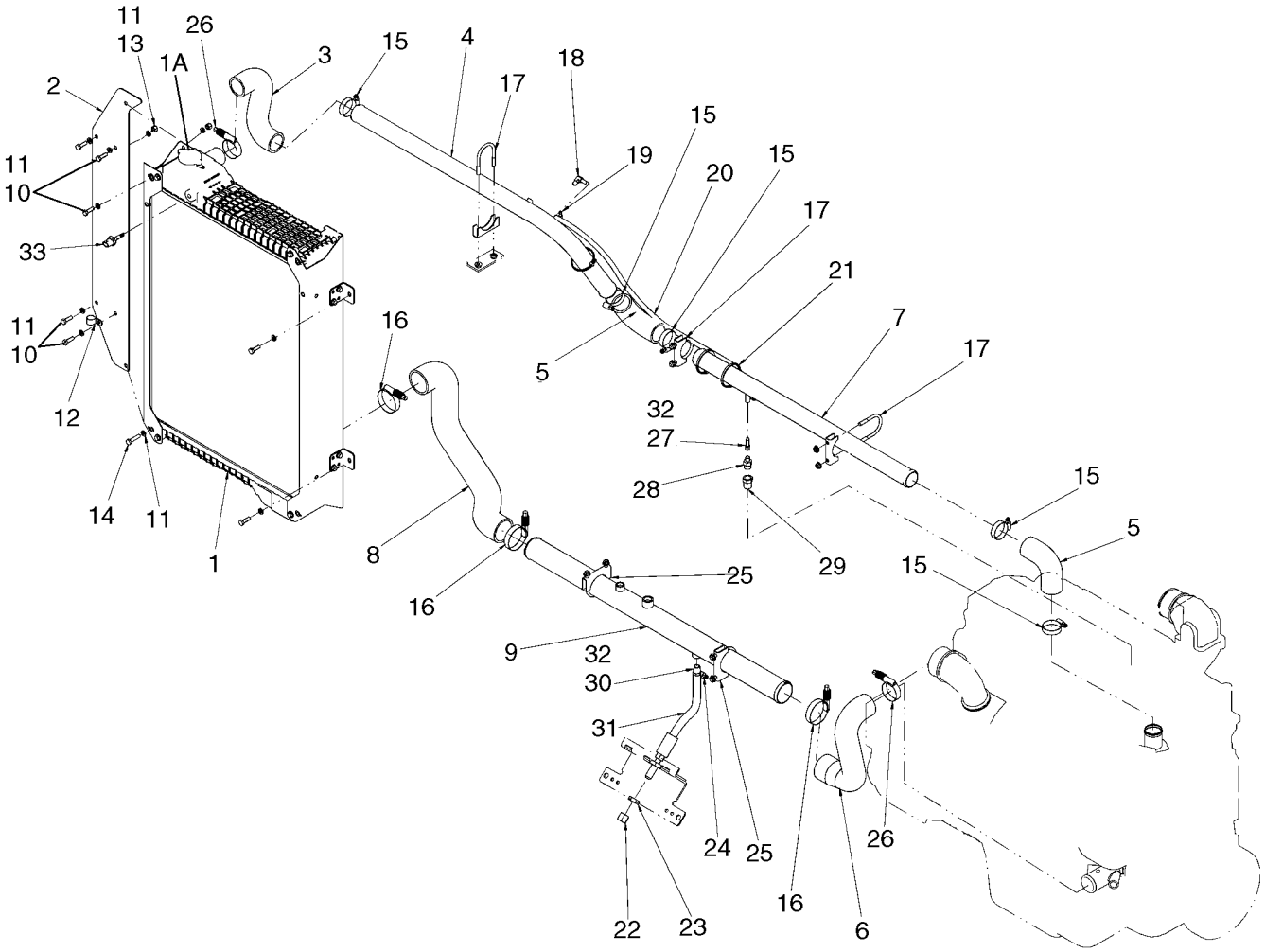

**RADIATEUR - CONDUITES ET TUYAUX**

| REF | FN | PART NUMBER | YR/SN | QTY | DESCRIPTION |
|---|---|---|---|---|---|
| 1 | | 8602421 | | 1 | RADIATEUR, Incl. Ref. 1A |
| 1A | | A170241 | | 1 | BOUCHON RADIATEUR |
| 2 | | 87324042 | | 1 | PLAQUE, Radiator |
| 3 | | 8500083 | | 1 | FLEXIBLE, Radiator Top |
| 4 | | 87552495 | | 1 | TUBE, Top Coolant |
| 5 | | 381232A1 | | 2 | FLEXIBLE, Elbow |
| 6 | | 8500084 | | 1 | FLEXIBLE, Engine Bottom |
| 7 | | 87446950 | | 1 | TUBE, Top Coolant |
| 8 | | 87552485 | | 1 | FLEXIBLE, Radiator Bottom |
| 9 | | 87325208 | | 1 | TUBE, Bottom Coolant |
| 10 | | 627-8025 | | 7 | BOULON, Hex, M8 x 25, 10.9 |
| 11 | | 892-11008 | | 12 | RONDELLE FREIN, M8 |
| 12 | | 515-22190 | | 4 | BRIDE, 3/4", Insul, 5/16" Bolt |
| 13 | | 832-10408 | | 4 | CONTRE-ECROU, M8 x 1.25, Cl 8 |
| 14 | | 627-8035 | | 1 | BOULON, Hex, M8 x 35, 10.9 |
| 15 | | 214-1436 | | 5 | BRIDE, FLEXIBLE, #36, 1.81/2.75 Type F Worm |
| 16 | | L115548 | | 3 | COLLIER |
| 17 | | 382189A1 | | 3 | BRIDE |
| 18 | | 217-292 | | 1 | RACCORD, 90º, 1/4" Hose x 1/8" NPTF, Barbed |
| 19 | | 214-1704 | | 2 | BRIDE, FLEXIBLE, #4, 0.25/0.62 Type M Worm |
| 20 | | 87552499 | | 1 | FLEXIBLE, Coolant Breather, 885 mm (33 - 1/2 in) |
| 21 | | L11541 | | 3 | SANGLE |
| 22 | | 218-755 | | 1 | CHAPEAU, 37º, 3/4"-16 |
| 23 | | 218-1255 | | 1 | CONTRE-ECROU, Blkhd, 3/4"-16 |
| 24 | | 214-1410 | | 1 | BRIDE, FLEXIBLE, #10, 0.56/1.06 Type F Worm |
| 25 | | 393632A1 | | 2 | ATTACHE ASSEMBLEE |
| 26 | | 254026A1 | | 2 | COLLIER |
| 27 | | 217-191 | | 1 | RACCORD, 1/4" Hose x 1/8" NPTF, Fem, Barbed |
| 28 | | J911901 | | 1 | SOUPAPE ANTI RETOUR |
| 29 | | 217-1035 | | 1 | REDUCTEUR, 1/2"-14 Male NPTF x 3/8"-18 Female NPTF |
| 30 | | 217-152 | | 1 | RACCORD, 1/2" Hose X 3/8" NPTF Beaded |
| 31 | | 87536091 | | 1 | FLEXIBLE (ASSEMBLE), Remote Coolant Drain, 330 mm (13 in) |
| 32 | | 345-87 | | AR | LOCTITE |

**RADIATEUR - CONDUITES ET TUYAUX**

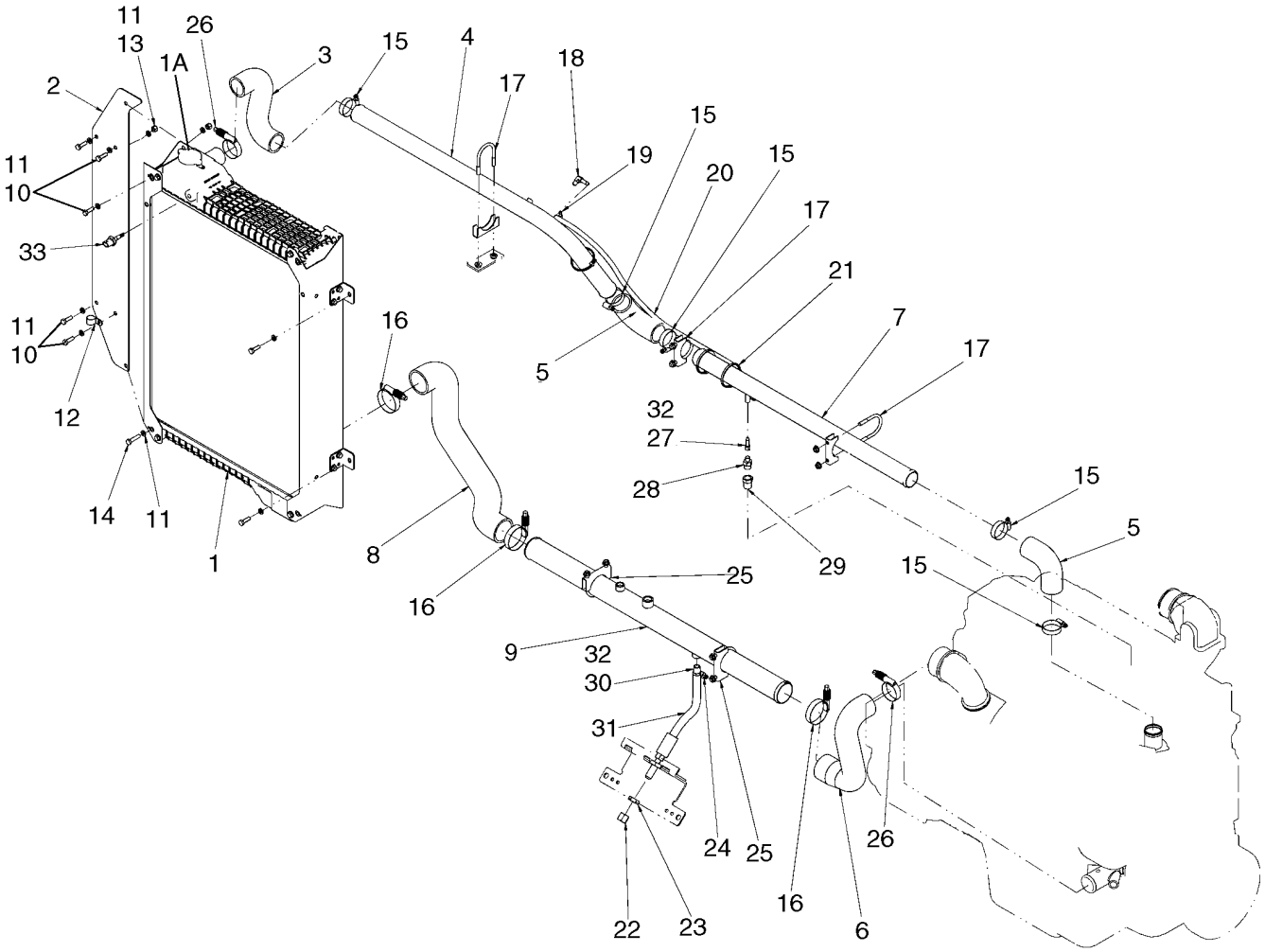


BS07D397

**RADIATEUR - CONDUITES ET TUYAUX**

| REF | FN | PART NUMBER | YR/SN | QTY | DESCRIPTION |
|---|---|---|---|---|---|
| 33 | | 419792A2 | | 1 | CAPTEUR, Coolant Level |

| 02-03 | | p1 | 03/07 |
|---|---|---|---|

**REFROIDISSEUR, AIR DE SURALIMENTATION**

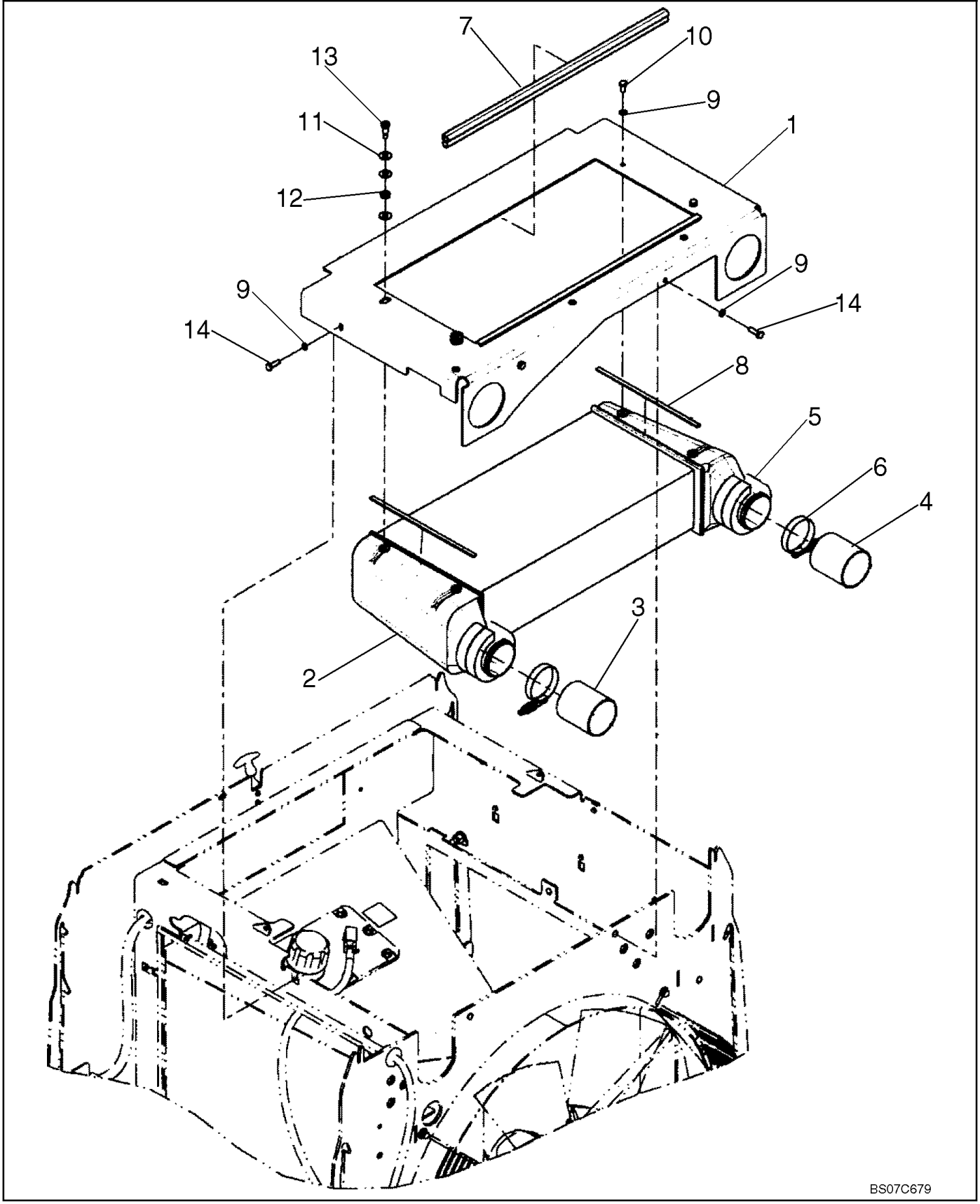

**REFROIDISSEUR, AIR DE SURALIMENTATION**

| REF | FN | PART NUMBER | YR/SN | QTY | DESCRIPTION |
|---|---|---|---|---|---|
| 1 | | 87381953 | | 1 | PLAQUE (ASSEMBLEE), Charge Air |
| 2 | | 347613A1 | | 1 | REFROIDISSEUR, Charge Air |
| 3 | | {87572375} | | 1 | HOSE, Air Intake |
| 4 | | {87572378} | | 1 | HOSE, Air Intake |
| 5 | | 8500167 | | 2 | JOINT |
| 6 | | L115549 | | 2 | BRIDE |
| 7 | | 8500144 | | 2 | JOINT |
| 8 | | 8500143 | | 2 | JOINT, Foam |
| 9 | | 892-11008 | | 6 | RONDELLE FREIN, M8 |
| 10 | | 627-8016 | | 2 | BOULON, Hex, M8 x 16, 10.9 |
| 11 | | 895-15010 | | 6 | RONDELLE, M11 x 24 x 2 |
| 12 | | 386040R1 | | 2 | RESSORT |
| 13 | | 561-703 | | 2 | VIS, Hex Soc, Shoulder, M8 10 X 16mm, Cl 12.9 |
| 14 | | 627-8025 | | 4 | BOULON, Hex, M8 x 25, 10.9 |

**REFROIDISSEUR, AIR DE SURALIMENTATION - CONDUITES ET TUYAUX**

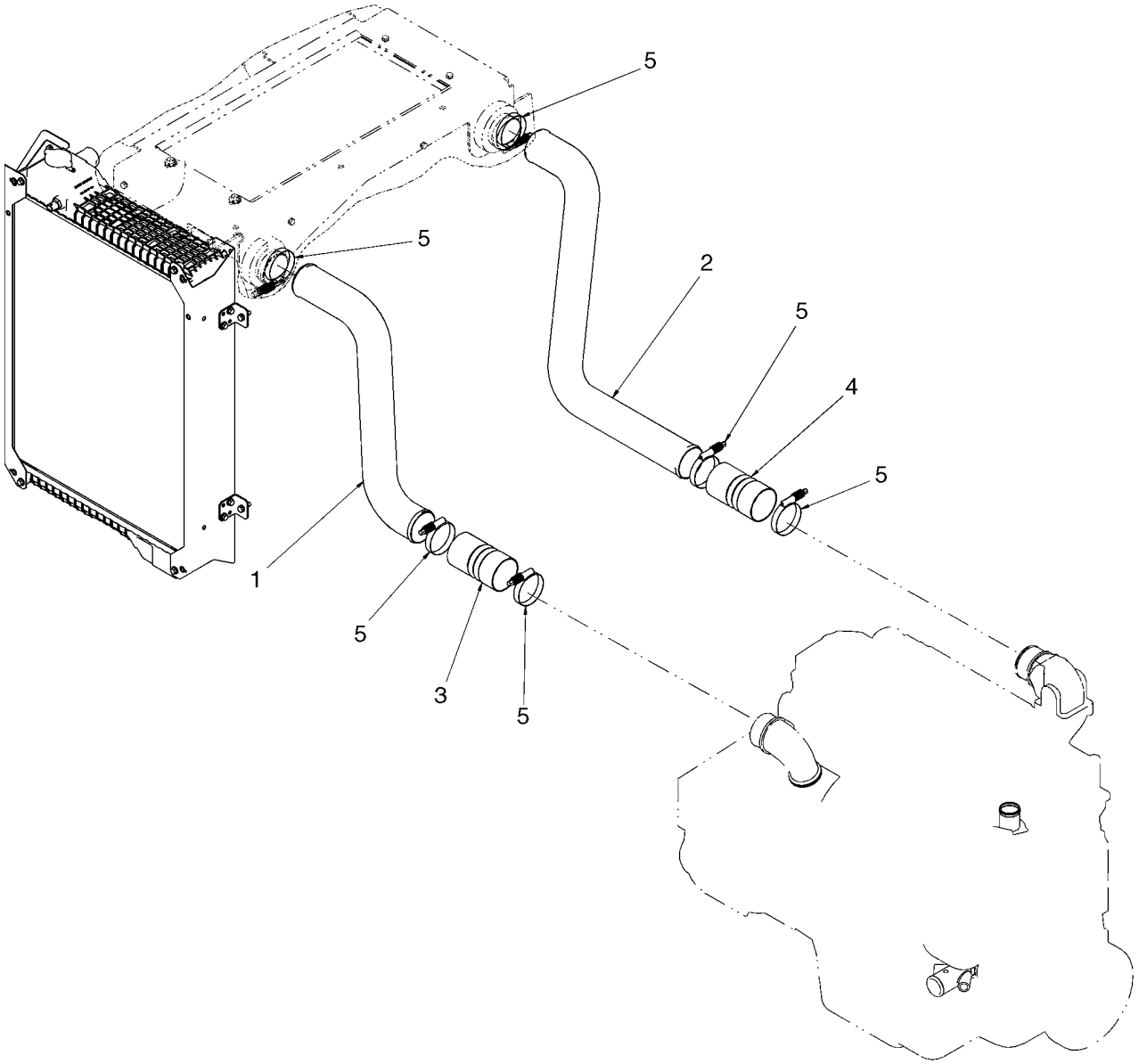

**REFROIDISSEUR, AIR DE SURALIMENTATION - CONDUITES ET TUYAUX**

| REF | FN | PART NUMBER | YR/SN | QTY | DESCRIPTION |
|---|---|---|---|---|---|
| 1 | | 87552496 | | 1 | TUBE, Charge Air - Turbo |
| 2 | | 87644742 | | 1 | TUBE ADMISSION D'AIR, Charge Air - Intake |
| 3 | | 87340284 | | 1 | FLEXIBLE, Charge Air, 76X140 mm |
| 4 | | 87340015 | | 1 | FLEXIBLE, Air Intake, 76X140 mm |
| 5 | | L115549 | | 6 | BRIDE |

**ENTRAÎNEMENT DU VENTILATEUR**

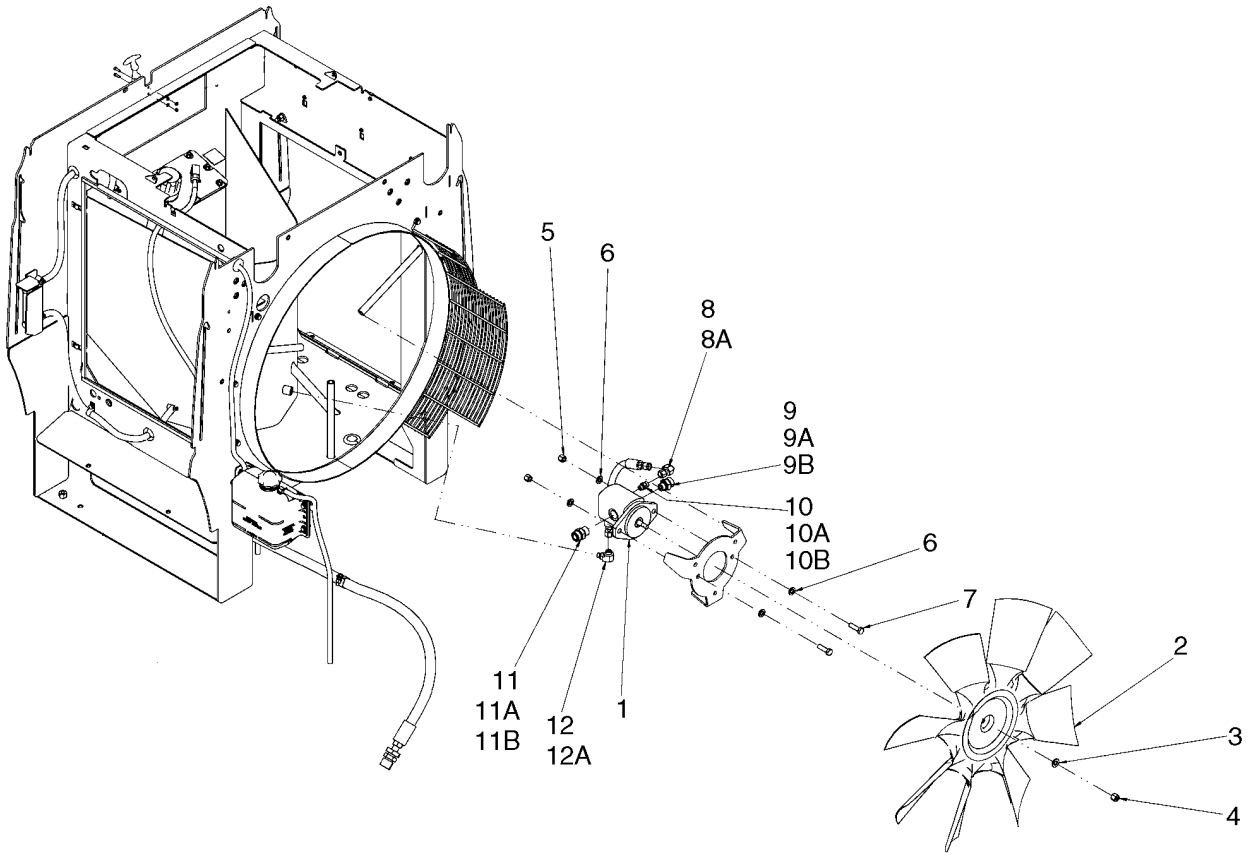


BS07D041

**ENTRAÎNEMENT DU VENTILATEUR**

| REF | FN | PART NUMBER | YR/SN | QTY | DESCRIPTION |
|---|---|---|---|---|---|
| | | REF | | | NOTICE, FAN DRIVE MOUNTING, FOR HYDRAULICS AND FAN VALVES SEE FIGURES 08-22 - 08-24A |
| 1 | | 8500105 | | 1 | MOTEUR HYDRAULIQUE, Reversible Fan; Incl. 1A |
| 1A | | 86991683 | | 1 | POCHETTE, Seals, For Fan Drive Motor; Not Illustrated |
| 2 | | 8500471 | | 1 | VENTILATEUR |
| 3 | | 496-21053 | | 1 | RONDELLE, 17/32" x 1 1/6" x .134" |
| 4 | | 232-2448 | | 1 | CONTRE-ECROU, 1/2"-20, GC |
| 5 | | 832-10412 | | 2 | CONTRE-ECROU, M12 x 1.75, Cl 8 |
| 6 | | 896-11012 | | 4 | RONDELLE, M13.5 x 24.5 x 3, HT |
| 7 | | 627-12040 | | 2 | BOULON, Hex, M12 x 40, 10.9, Full Thd |
| 8 | | 84989392 | | 1 | COUDE, 90º, 11/16"-16 ORFS x 11/16"-16 Fem Sw, Incl. Ref. 8A |
| 8A | | 9993141 | | 1 | JOINT THORIQUE, -012, 90 Duro, .364" ID x .070" Thk |
| 9 | | 86579681 | | 1 | RACCORD, 1 3/16"-12 ORFS x M22 x 1.5 ORB, Incl. Refs. 9A, 9B |
| 9A | | 238-6018 | | 1 | JOINT THORIQUE, -018, 90 Duro, .739" ID x .070" Thk, Face Seal |
| 9B | | 637-63193 | | 1 | JOINT THORIQUE, Cl 6, 19.3MM ID x 2.2 Thk, Boss Seal |
| 10 | | 86579671 | | 1 | RACCORD, 11/16"-16 ORFS x M14 x 1.5 ORB |
| 10A | | 238-6012 | | 1 | JOINT THORIQUE, -012, 90 Duro, .364" ID x .070" Thk, Face Seal |
| 10B | | 637-63113 | | 1 | JOINT THORIQUE, Cl 6, 11.3MM ID x 2.2 Thk, Boss Seal |
| 11 | | 86579682 | | 1 | RACCORD, 1 3/16"-12 ORFS x M27 x 2 ORB, Incl. Refs. 11A, 11B |
| 11A | | 238-6018 | | 1 | JOINT THORIQUE, -018, 90 Duro, .739" ID x .070" Thk, Face Seal |
| 11B | | 637-64236 | | 1 | JOINT THORIQUE, Cl 6, 23.6MM ID x 2.9 Thk, Boss Seal |
| 12 | | 86579686 | | 1 | COUDE, 90º, 11/16"-18 ORFS x M14 x 1.5 ORB, Incl. Ref. 12A |

**ENTRAÎNEMENT DU VENTILATEUR**

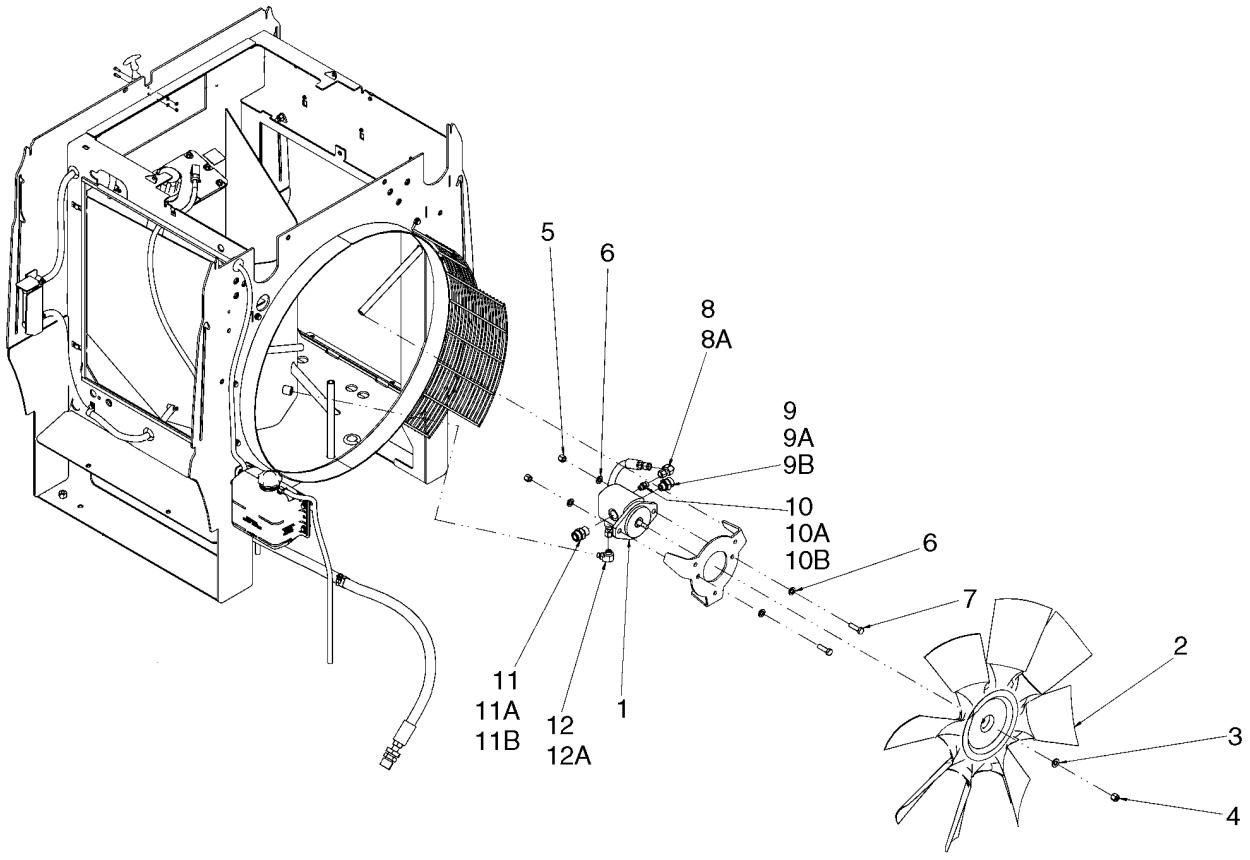


BS07D041

**ENTRAÎNEMENT DU VENTILATEUR**

| REF | FN | PART NUMBER | YR/SN | QTY | DESCRIPTION |
|---|---|---|---|---|---|
| 12A | | 238-6012 | | 1 | JOINT THORIQUE, -012, 90 Duro, .364" ID x .070" Thk, Face Seal |

**FILTRE A AIR - PIÈCES DE LA PRISE D'AIR**

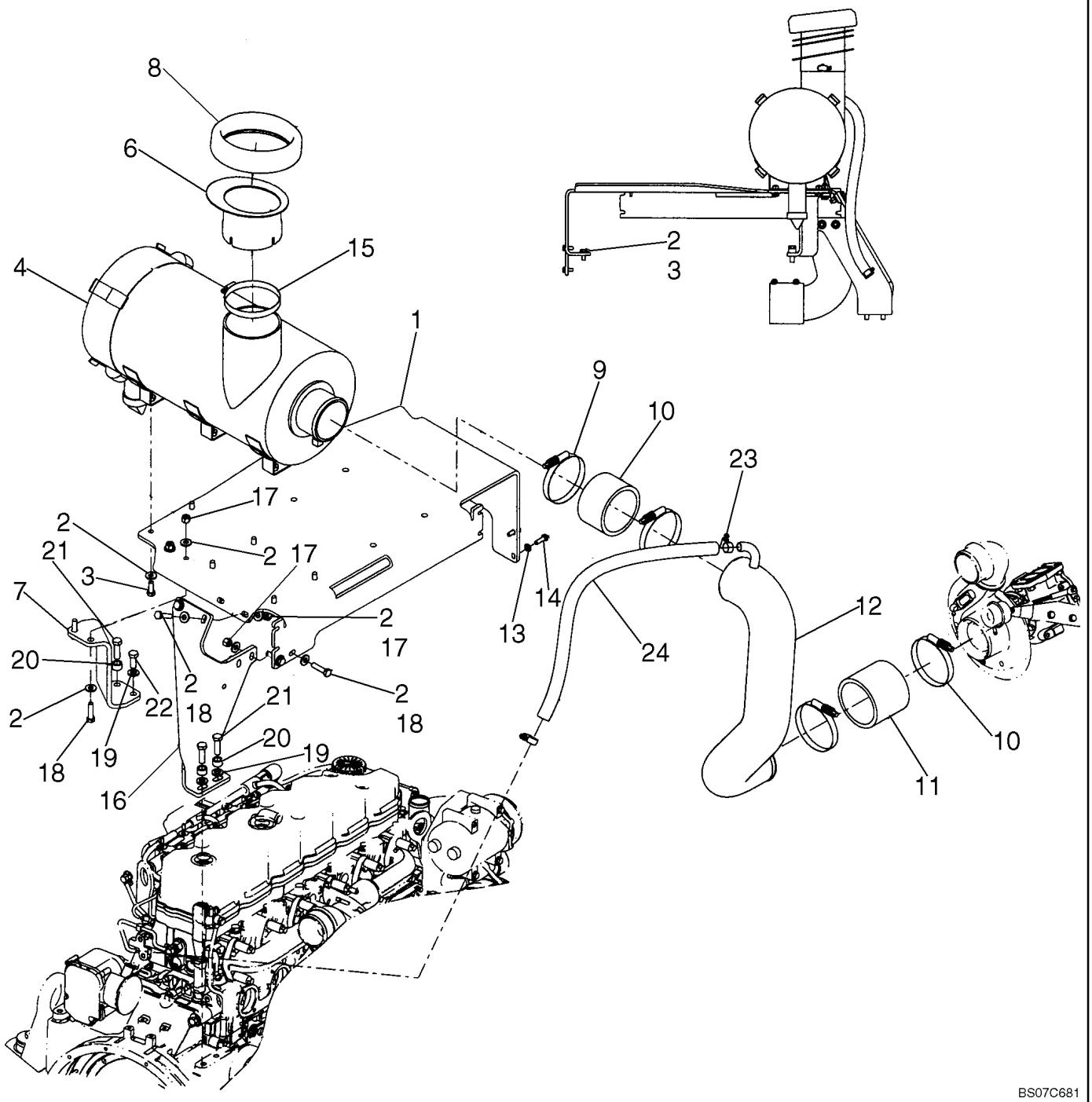

**FILTRE A AIR - PIÈCES DE LA PRISE D'AIR**

| REF | FN | PART NUMBER | YR/SN | QTY | DESCRIPTION |
|---|---|---|---|---|---|
| 1 | | 87535471 | | 1 | SUPPORT, Air Cleaner |
| 2 | | 896-15010 | | 20 | RONDELLE, M10 x 24.5 x 3, HT |
| 3 | | 627-10025 | | 8 | BOULON, Hex, M10 x 25, 10.9, Full Thd |
| 4 | | 87590238 | | 1 | FILTER A AIR, See Figure 02-06A |
| 6 | | 87557216 | | 1 | TUBE, Under Hood Intake |
| 7 | | 87535473 | | 1 | SUPPORT, Air Cleaner |
| 8 | | 8500403 | | 1 | JOINT |
| 9 | | 8501205 | | 1 | FLEXIBLE, 73 mm ( 2 7/8 in ); Air Cleaner |
| 10 | | L127771 | | 4 | COLLIER |
| 11 | | 8602478 | | 1 | FLEXIBLE, 100 mm ( 4 in ); Air Cleaner |
| 12 | | 8602473 | | 1 | TUBE, Air Cleaner Intake |
| 13 | | 896-11008 | | 2 | RONDELLE, M8 x 17.5 x 2, HT |
| 14 | | 627-8025 | | 2 | BOULON, Hex, M8 x 25, 10.9 |
| 15 | | 214-3188 | | 1 | BRIDE, FLEXIBLE, 4.75/6.625 HD Worm |
| 16 | | 87535472 | | 1 | SUPPORT, Left |
| 17 | | 832-10410 | | 6 | CONTRE-ECROU, M10 x 1.5, Cl 8 |
| 18 | | 627-10040 | | 6 | BOULON, Hex, M10 x 40, 10.9, Full Thd |
| 19 | | 896-11012 | | 3 | RONDELLE, M13.5 x 24.5 x 3, HT |
| 20 | | D44696 | | 2 | BAGUE, 1/2 Pipe x 1/2 |
| 21 | | 627-12040 | | 3 | BOULON, Hex, M12 x 40, 10.9, Full Thd |
| 22 | | 627-12030 | | 1 | BOULON, Hex, M12 x 30, 10.9 |
| 23 | | 214-1416 | | 2 | BRIDE, FLEXIBLE, #16, 0.81/1.50 Type F Worm |
| 24 | | 87342638 | | 1 | FLEXIBLE, 800 mm ( 31-1/2in ); Crankcase Ventilation |

**FILTRE À AIR**

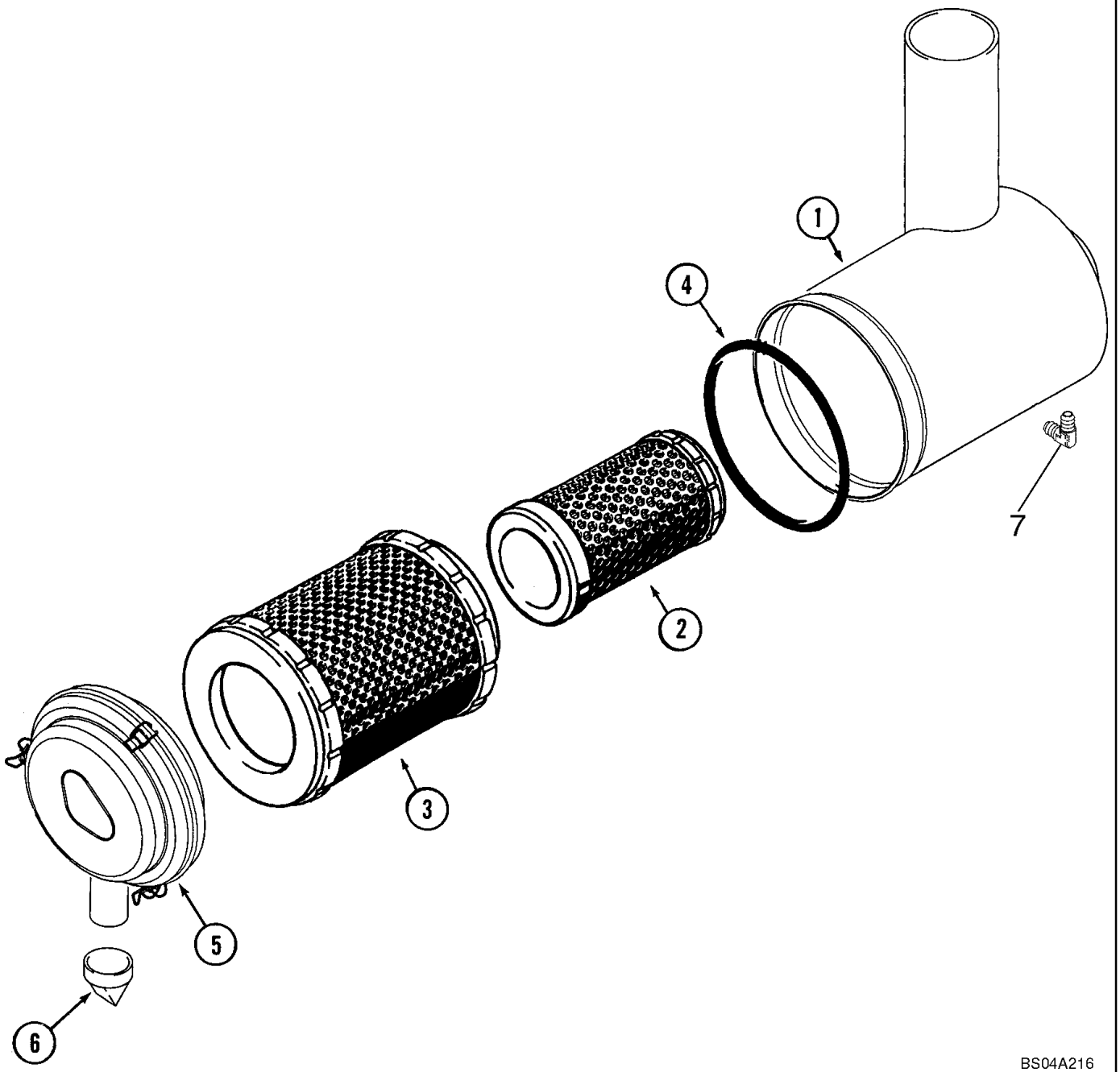

**FILTRE À AIR**

| REF | FN | PART NUMBER | YR/SN | QTY | DESCRIPTION |
|---|---|---|---|---|---|
| | | 87590238 | | 1 | FILTER A AIR, Incl. Refs. 1 - 7 |
| 1 | | NSS | | 1 | NON FOURNI SEPAREMENT, Body |
| 2 | | 8605140 | | 1 | FILTRE A AIR, Secondary |
| 3 | | 8605139 | | 1 | FILTRE A AIR, Primary |
| 4 | | 8605078 | | 1 | JOINT THORIQUE |
| 5 | | 8605079 | | 1 | COUVERCLE |
| 6 | | 8604231 | | 1 | SOUPAPE |
| 7 | | 217-1227 | | 1 | COUDE, 90º, 1/8"-27 Male |

**FILTRE À AIR - PRÉ-FILTRE**

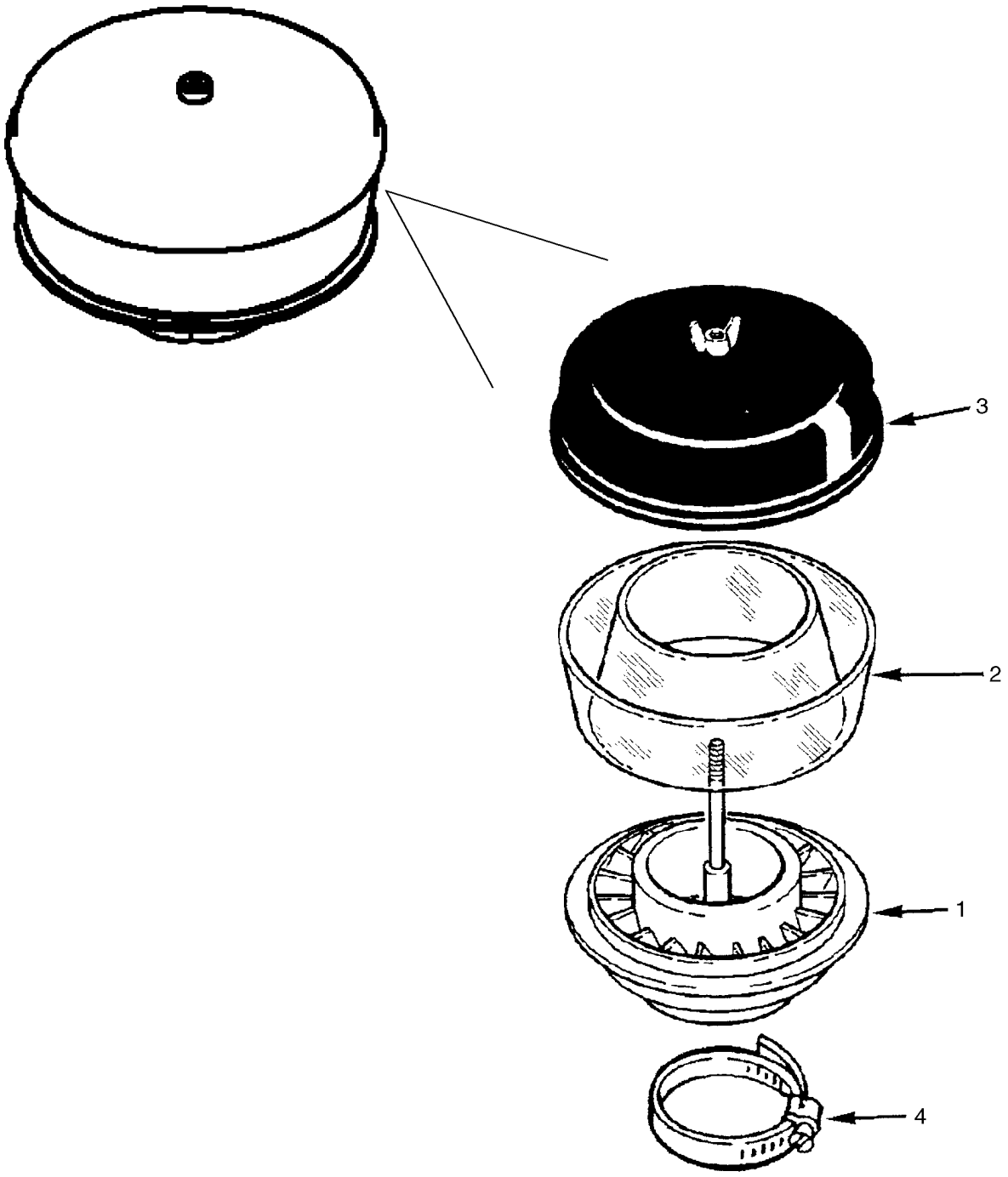

**FILTRE À AIR - PRÉ-FILTRE**

| REF | FN | PART NUMBER | YR/SN | QTY | DESCRIPTION |
|---|---|---|---|---|---|
| | | REF | | | NOTICE, PRECLEANER COMPONENT PARTS |
| | | 258541A1 | | 1 | PRÉFILTRE, Incl. Refs. 1 - 4 |
| 1 | | NSS | | 1 | NON FOURNI SEPAREMENT, Base |
| 2 | | L30671 | | 1 | CARTER |
| 3 | | L30669 | | 1 | COUVERCLE |
| 4 | | 214-1480 | | 1 | BRIDE, FLEXIBLE, #80, 4.62/5.50 Type F Worm |

| 02-08 | | p1 | 06/07 |
|---|---|---|---|

**SILENCIEUX - ÉCHAPPEMENT**

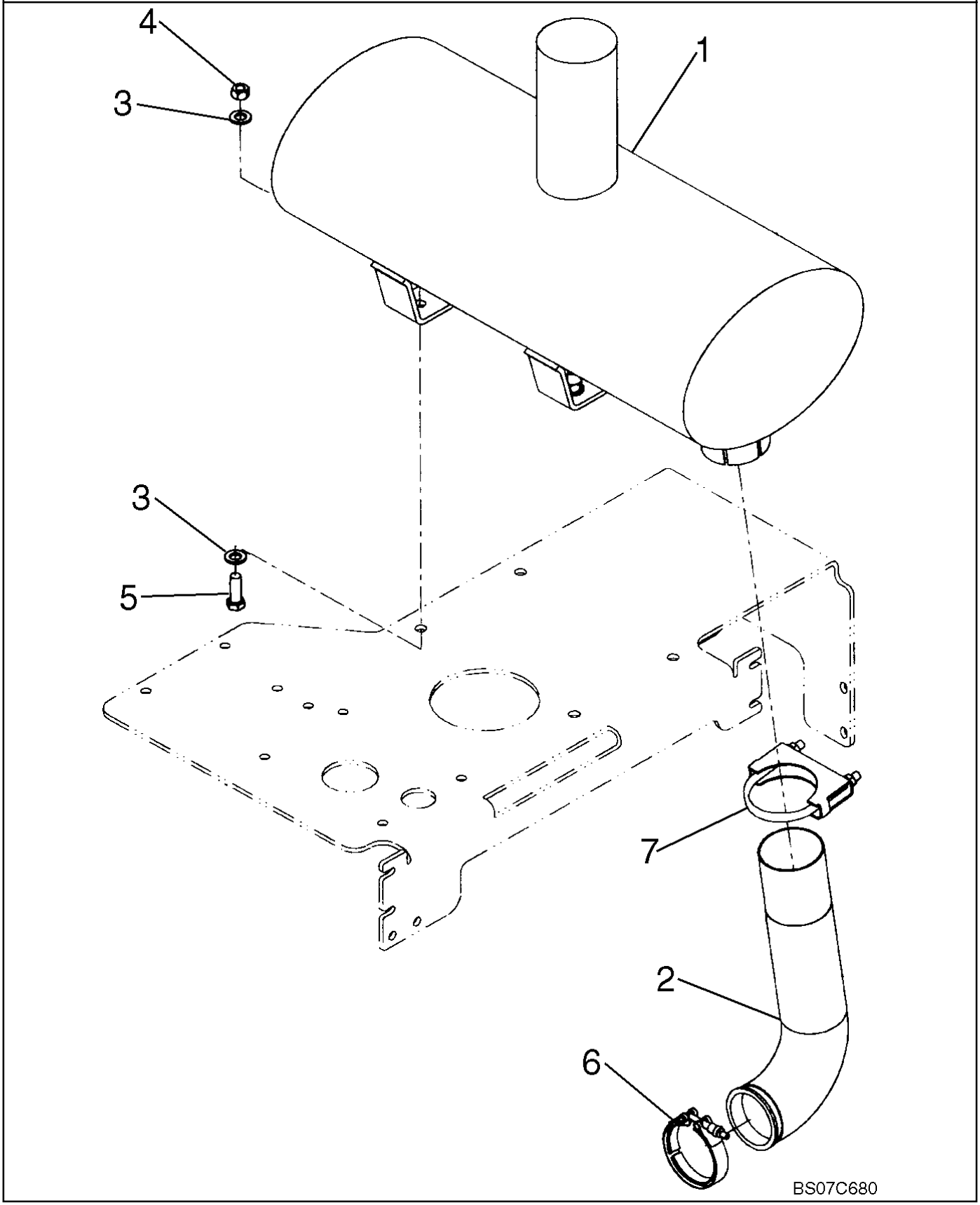

**SILENCIEUX - ÉCHAPPEMENT**

| REF | FN | PART NUMBER | YR/SN | QTY | DESCRIPTION |
|---|---|---|---|---|---|
| 1 | | 87365731 | | 1 | SILENCIEUX |
| 2 | | 87365709 | | 1 | TUBE, Exhaust |
| 3 | | 896-11012 | | 8 | RONDELLE, M13.5 x 24.5 x 3, HT |
| 4 | | 829-1412 | | 4 | ECROU, M12, Cl 10 |
| 5 | | 627-12035 | | 4 | BOULON, Hex, M12 x 35, 10.9 |
| 6 | | J903652 | | 1 | COLLIER |
| 7 | | 299456A1 | | 1 | COLLIER-DE-SERRAGE |

**REMPLISSAGE D'HUILE, MOTEUR**

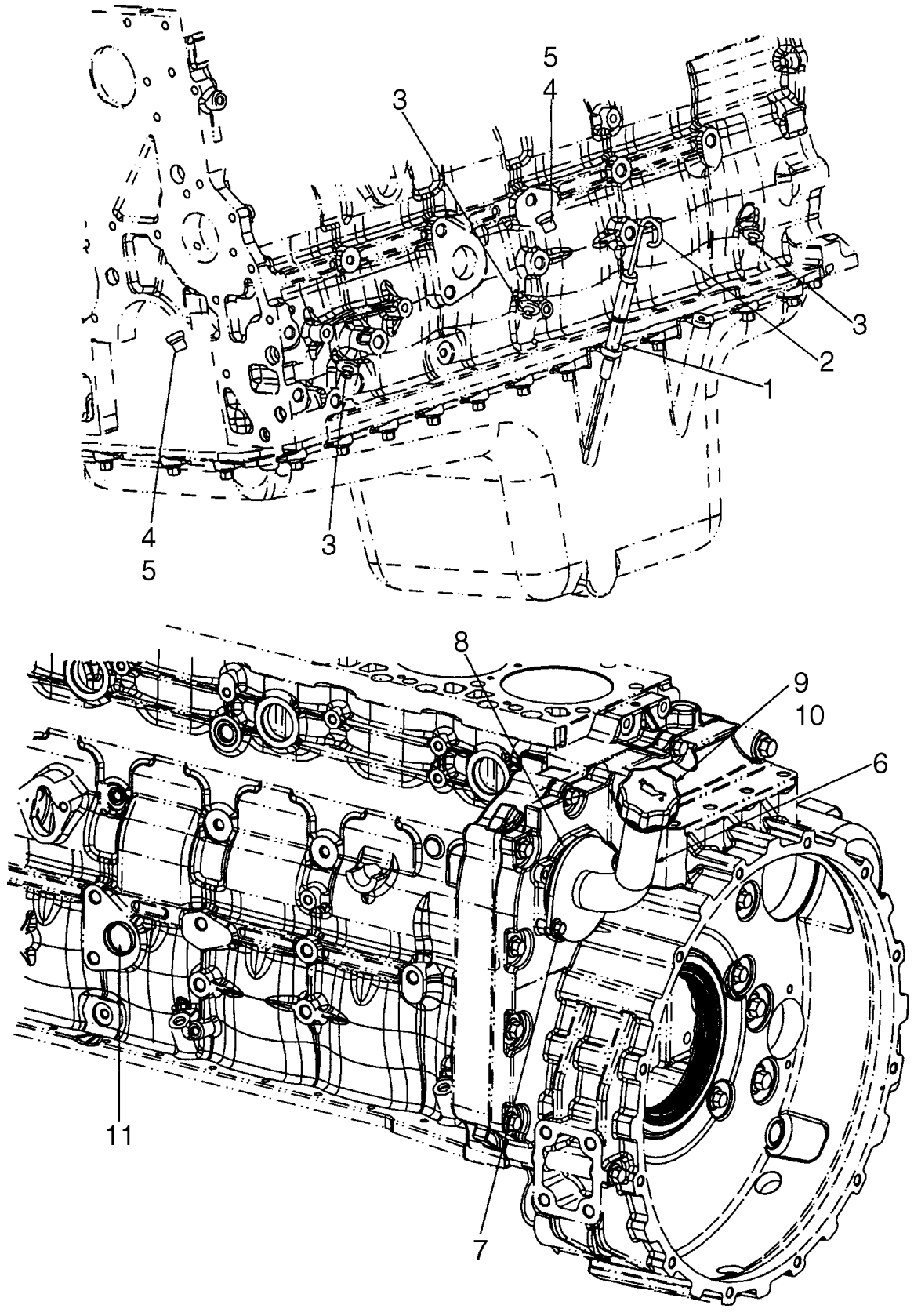

**REMPLISSAGE D'HUILE, MOTEUR**

| REF | FN | PART NUMBER | YR/SN | QTY | DESCRIPTION |
|---|---|---|---|---|---|
| | | 87579400 | | 1 | MOTEUR, 6 Cylinder 6.7L Turbo, Tier III; Includes Figures 02-09 - 02-13, 02-15 - 02-41, 03-05 - 03-11; Incl. Refs. 1 - 11 |
| | | 2852463 | | 1 | JAUGE DE NIVEAU, ASSY. Incl. Refs. 1, 2 |
| 1 | | 2852122 | | 1 | TUYAU RIGIDE |
| 2 | | 2852464 | | 1 | JAUGE DE NIVEAU |
| 3 | | 4899036 | | 3 | BOUCHON, Expansion |
| 4 | | 4897330 | | 4 | BOUCHON, ASSY. Incl. Ref. 5 |
| 5 | | 4895610 | | 1 | JOINT THORIQUE |
| 6 | | 2856132 | | 1 | GOULOT REMPLISSAGE |
| 7 | | 4899020 | | 2 | VIS |
| 8 | | 2854075 | | 1 | JOINT THORIQUE |
| 9 | | 2853410 | | 1 | BOUCHON DE REMPLISSAGE, ASSY. Incl. Ref. 10 |
| 10 | | 2853412 | | 1 | JOINT THORIQUE |
| 11 | | 4895037 | | 1 | BOUCHON |

**POMPE A HUILE - MOTEUR**

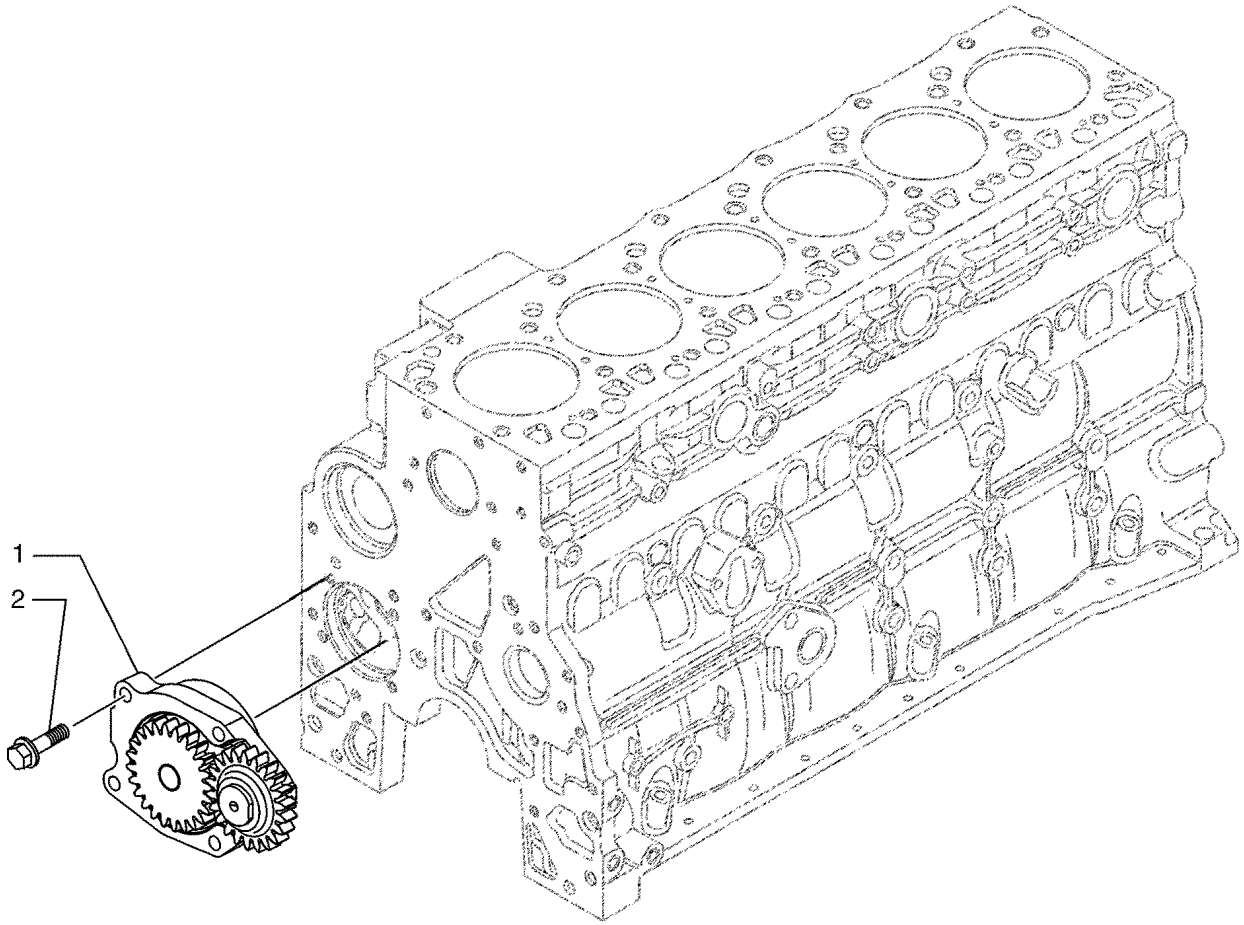


BS03N088

**POMPE A HUILE - MOTEUR**

| REF | FN | PART NUMBER | YR/SN | QTY | DESCRIPTION |
|---|---|---|---|---|---|
| | | 87579400 | | 1 | MOTEUR, 6 Cylinder 6.7L Turbo, Tier III; Includes Figures 02-09 - 02-13, 02-15 - 02-41, 03-05 - 03-11; Incl. Refs. 1 - 2 |
| 1 | | 4897481 | | 1 | POMPE A HUILE |
| 1 | | 2853591 | | 1 | POMPE A HUILE, In Alternative |
| 2 | | 4899090 | | 4 | VIS, Hex Flg, M8 x 1.25 x 30 |

**FILTRE A HUILE - MOTEUR**

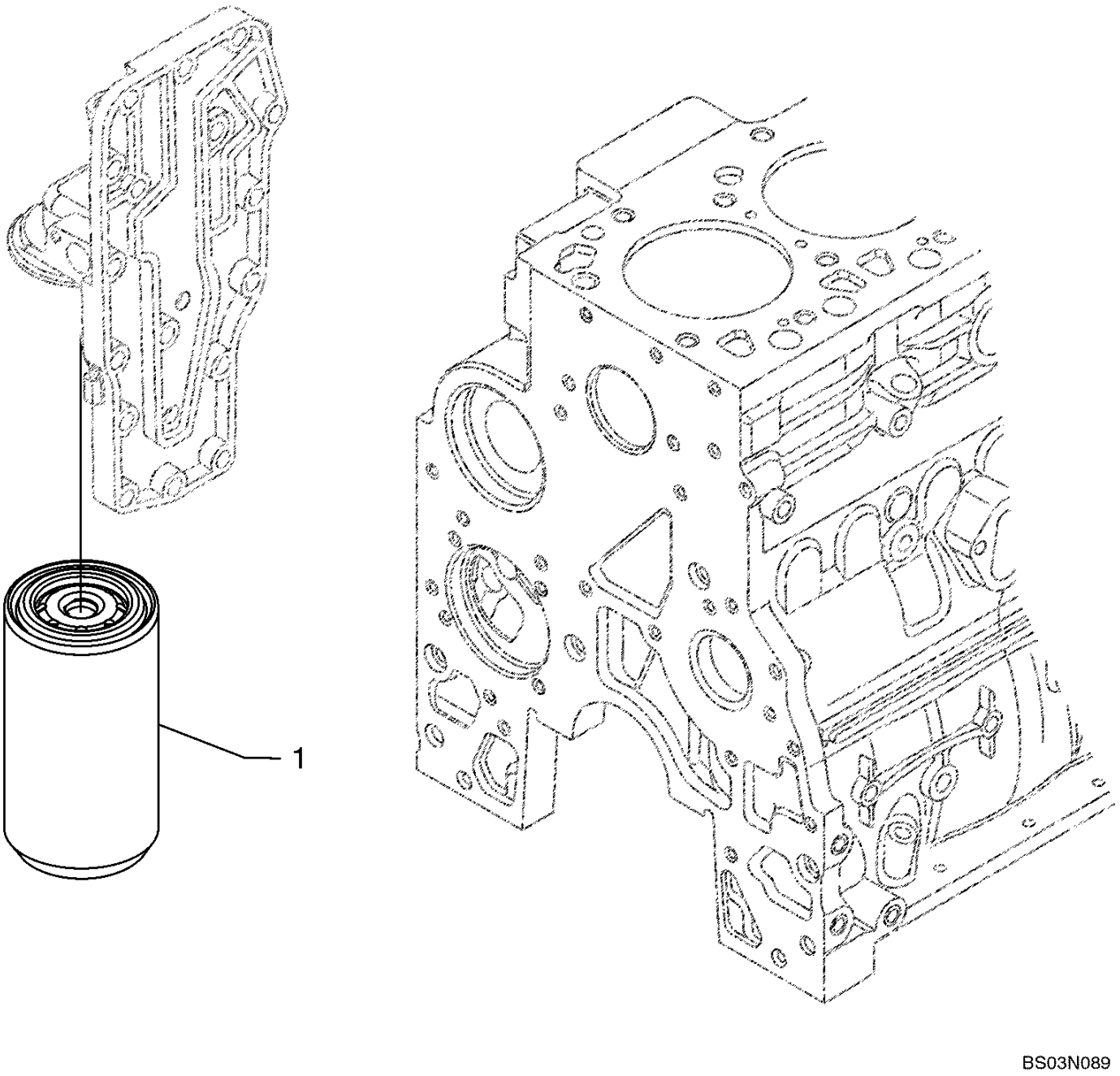

**FILTRE A HUILE - MOTEUR**

| REF | FN | PART NUMBER | YR/SN | QTY | DESCRIPTION |
|---|---|---|---|---|---|
| | | 87579400 | | 1 | MOTEUR, 6 Cylinder 6.7L Turbo, Tier III; Includes Figures 02-09 - 02-13, 02-15 - 02-41, 03-05 - 03-11; Incl. Ref. 1 |
| 1 | | 87803261 | | 1 | FILTRE A HUILE MOTEUR |

**FILTRE ET REFROIDISSEUR D'HUILE**

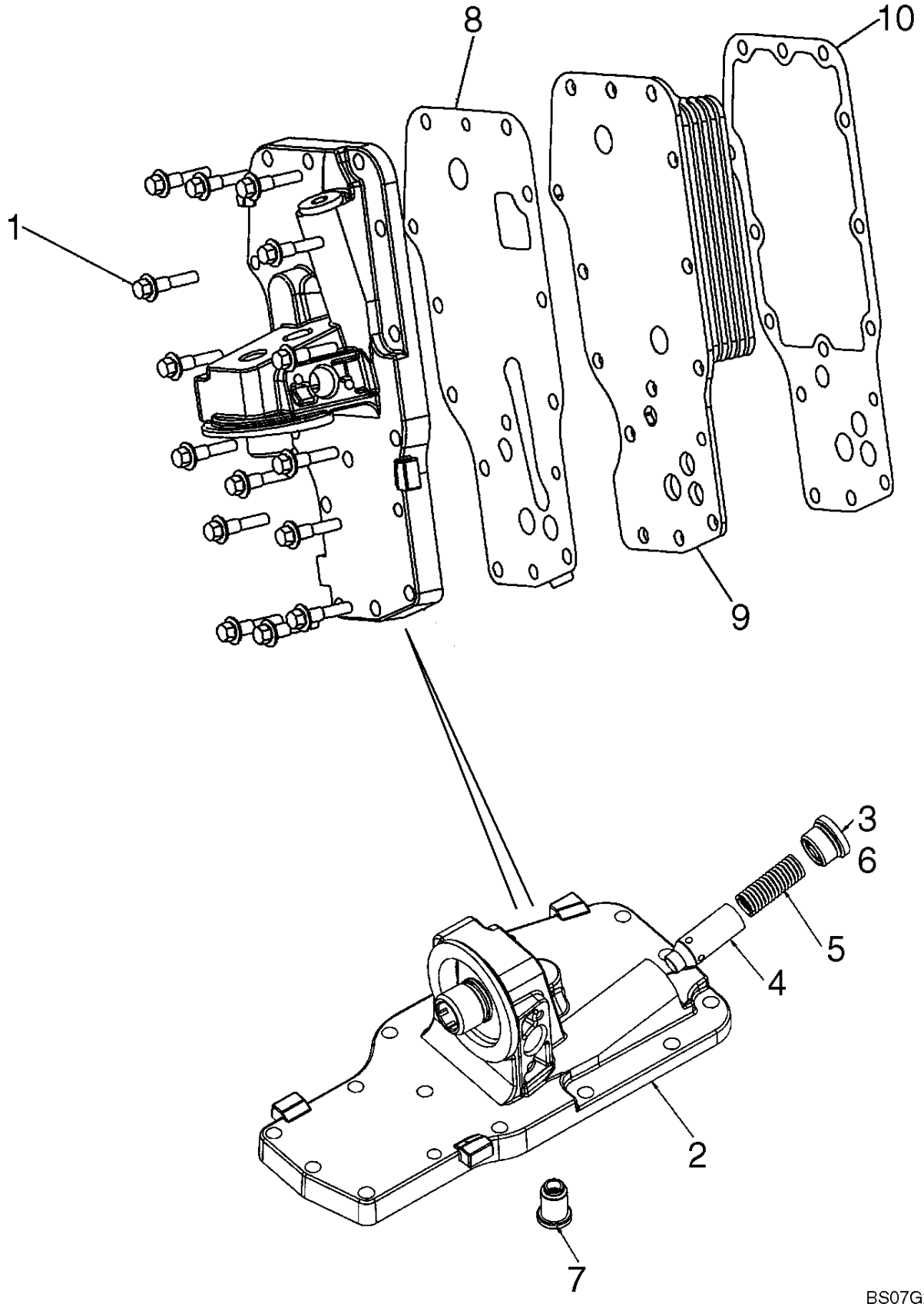

**FILTRE ET REFROIDISSEUR D'HUILE**

| REF | FN | PART NUMBER | YR/SN | QTY | DESCRIPTION |
|---|---|---|---|---|---|
| | | 87579400 | | 1 | MOTEUR, 6 Cylinder 6.7L Turbo, Tier III; Includes Figures 02-09 - 02-13, 02-15 - 02-41, 03-05 - 03-11; Incl. Refs. 1 - 10 |
| 1 | | 4899019 | | 15 | VIS, Hex Flg, M8 x 1.25 x 35 |
| | | 2853780 | | 1 | TETE DE FILTRE, Housing Assy. Incl. Refs. 2 - 7 |
| 2 | | 4899566 | | 1 | ECHANGEUR DE CHALEUR, Housing |
| 3 | | 2853781 | | 1 | BOUCHON, Incl. Ref. 6 |
| 4 | | 4896404 | | 1 | PLONGEUR, Pressure Reg. |
| 5 | | 4895045 | | 1 | RESSORT |
| 6 | | 4899035 | | 1 | JOINT THORIQUE |
| 7 | | 4896410 | | 1 | SOUPAPE, DÉCHARGE |
| 8 | | 4896409 | | 1 | JOINT |
| 9 | | 4896407 | | 1 | RADIATEUR |
| 9 | | 2853604 | | 1 | REFROIDISSEUR D'HUILE, In Alterative |
| 10 | | 2830559 | | 1 | JOINT |

**POMPE À HUILE, CARTER**

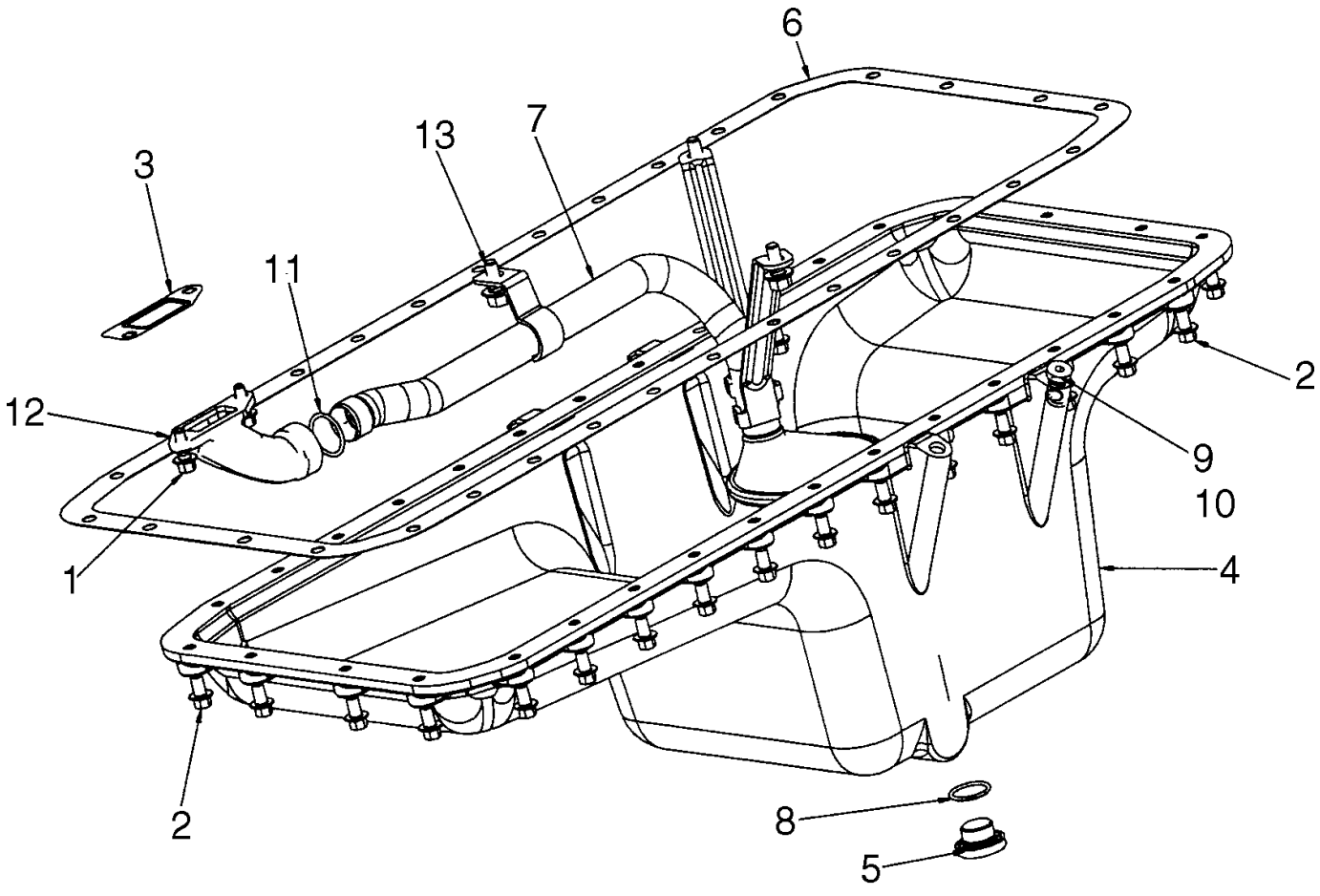

**POMPE À HUILE, CARTER**

| REF | FN | PART NUMBER | YR/SN | QTY | DESCRIPTION |
|---|---|---|---|---|---|
| | | 87579400 | | 1 | MOTEUR, 6 Cylinder 6.7L Turbo, Tier III; Includes Figures 02-09 - 02-13, 02-15 - 02-41, 03-05 - 03-11; Incl. Refs. 1 - 13 |
| 1 | | 4899020 | | 2 | VIS, M8 x 1.25 x 20 |
| 2 | | 4899019 | | 32 | VIS, Hex Flg, M8 x 1.25 x 35 |
| 3 | | 4898301 | | 1 | JOINT |
| 4 | | 2852419 | | 1 | CARTER D'HUILE |
| 5 | | 4894139 | | 1 | BOUCHON |
| 6 | | 2852420 | | 1 | JOINT |
| 7 | | 2852770 | | 1 | TAMIS DE CRÉPINE, PIPE, Oil Suction, Incl. Ref. 7A |
| 7A | | 2852217 | | 1 | FILET, ASSY, Gasket And Gauze Oil Strainer, Not Illustrated |
| 8 | | 2853728 | | 1 | JOINT THORIQUE |
| 9 | | 4897330 | | 1 | BOUCHON |
| 10 | | 4895610 | | 1 | JOINT THORIQUE, 9.3 ID x 2.2 |
| 11 | | 2852237 | | 1 | JOINT, 26.64 ID x 2.62 |
| 12 | | 2852238 | | 1 | TUYAU RIGIDE |
| 13 | | 4895291 | | 3 | VIS, Hex Flg, M10 x 1.5 x 20 |

| 02-14 | | p1 | 07/07 |
|---|---|---|---|

**POMPE À HUILE, CARTER - CONDUITE DE VIDANGE - COUVERCLE**

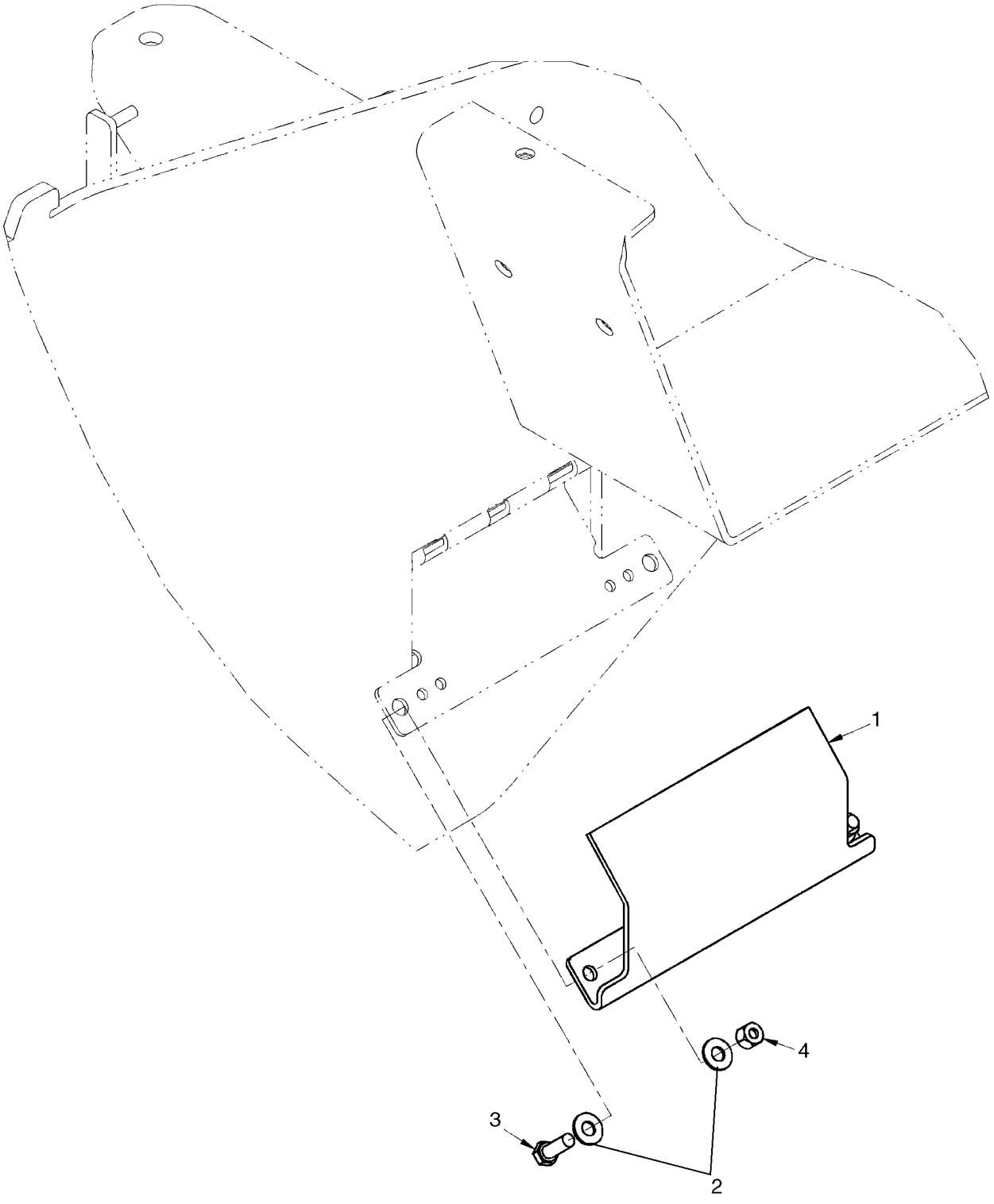

**POMPE À HUILE, CARTER - CONDUITE DE VIDANGE - COUVERCLE**

| REF | FN | PART NUMBER | YR/SN | QTY | DESCRIPTION |
|---|---|---|---|---|---|
| 1 | | 407632A1 | | 1 | COUVERCLE, Remote Drain |
| 2 | | 895-15010 | | 4 | RONDELLE, M11 x 24 x 2 |
| 3 | | 627-10030 | | 2 | BOULON, Hex, M10 x 30, 10.9, Full Thd |
| 4 | | 832-10410 | | 2 | CONTRE-ECROU, M10 x 1.5, Cl 8 |

| 02-15 | | p1 | 07/07 |
|---|---|---|---|

**RENIFLARD - MOTEUR**

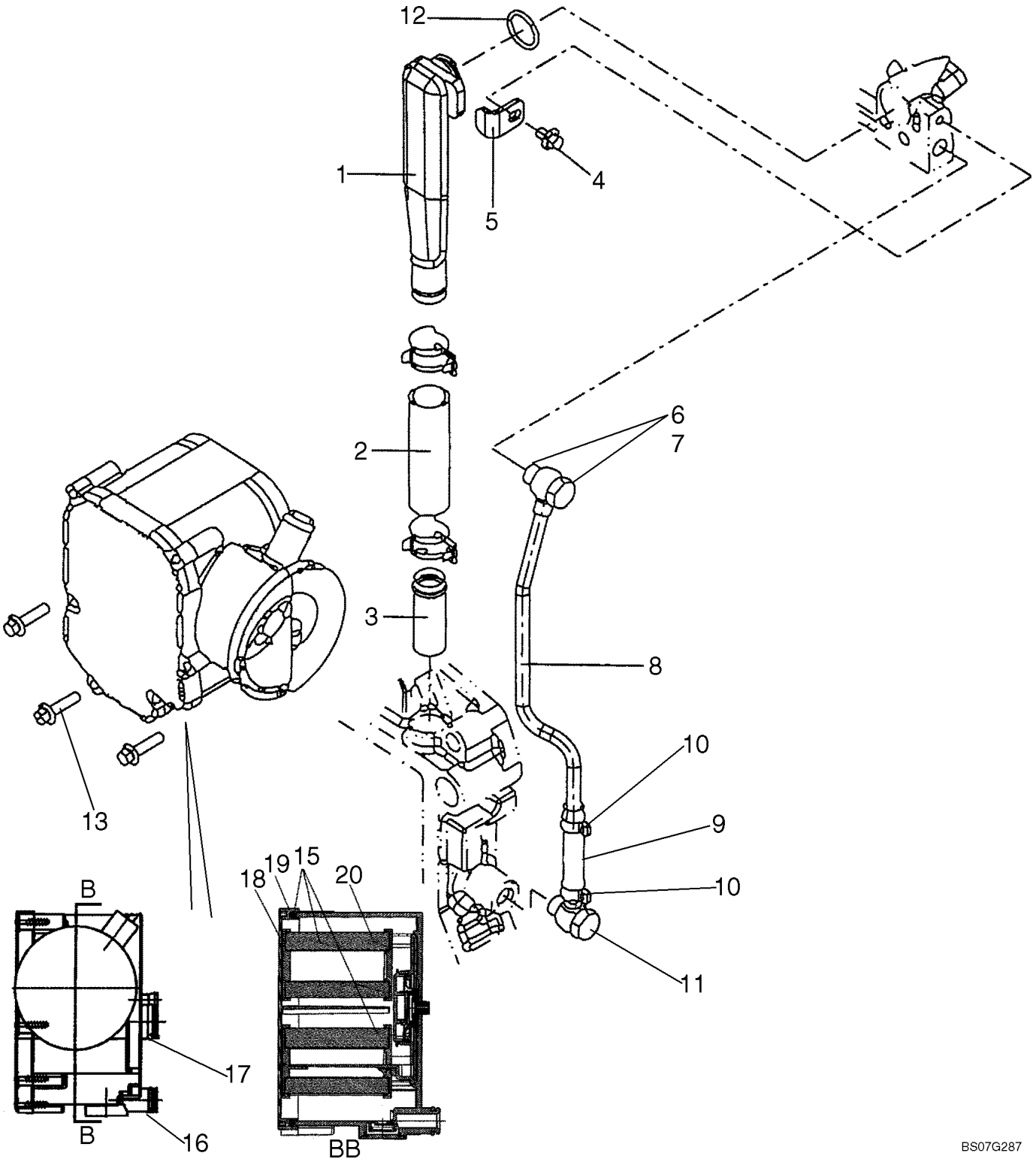

**RENIFLARD - MOTEUR**

| REF | FN | PART NUMBER | YR/SN | QTY | DESCRIPTION |
|---|---|---|---|---|---|
| | | 87579400 | | 1 | MOTEUR, 6 Cylinder 6.7L Turbo, Tier III; Includes Figures 02-09 - 02-13, 02-15 - 02-41, 03-05 - 03-11; Incl. Refs. 1 - 21 |
| 1 | | 4897534 | | 1 | TUYAU RIGIDE, Breather |
| 2 | | 4897546 | | 1 | MANCHON, Tube |
| 3 | | 4897547 | | 1 | TUYAU RIGIDE, Connector |
| 4 | | 4897537 | | 1 | VIS |
| 5 | | 4897536 | | 1 | PATTE FIXATION |
| | | 4899219 | | 1 | TUYAU RIGIDE, Breather Assy. Incl. Refs. 6 - 11 |
| 6 | | 2852772 | | 2 | VIS-RACCORD |
| 7 | | 4899926 | | 4 | JOINT THORIQUE |
| 8 | | NSS | | 1 | NON FOURNI SEPAREMENT, Hose |
| 9 | | 4899240 | | 1 | FLEXIBLE, Plain |
| 10 | | 4899242 | | 2 | BRIDE |
| 11 | | 4899243 | | 1 | RACCORD |
| 12 | | 4898439 | | 1 | JOINT THORIQUE |
| 13 | | 4899092 | | 3 | VIS, Hex Flg, M6 x 1 x 25 |
| | | 4892871 | | 1 | RENIFLARD, Assy. Incl. Refs. 14 - 21 |
| 14 | | 2830301 | | 6 | VIS, Breather Case, Not Illustrated |
| 15 | | 2830307 | | 1 | RENIFLARD, Crankcase |
| 16 | | 4898372 | | 1 | JOINT THORIQUE |
| 17 | | 2830304 | | 1 | JOINT THORIQUE |
| 18 | | {2820302} | | 1 | COVER, Protective |
| 19 | | 2830303 | | 1 | JOINT, Breather |
| 20 | | 2830592 | | 2 | FILTRE, Breather |
| 21 | | 4893234 | | 2 | BRIDE-FIXATION/ COLLIER, Not Illustrated |

**TURBO COMPRESSEUR - CONDUITE DE VIDANGE**

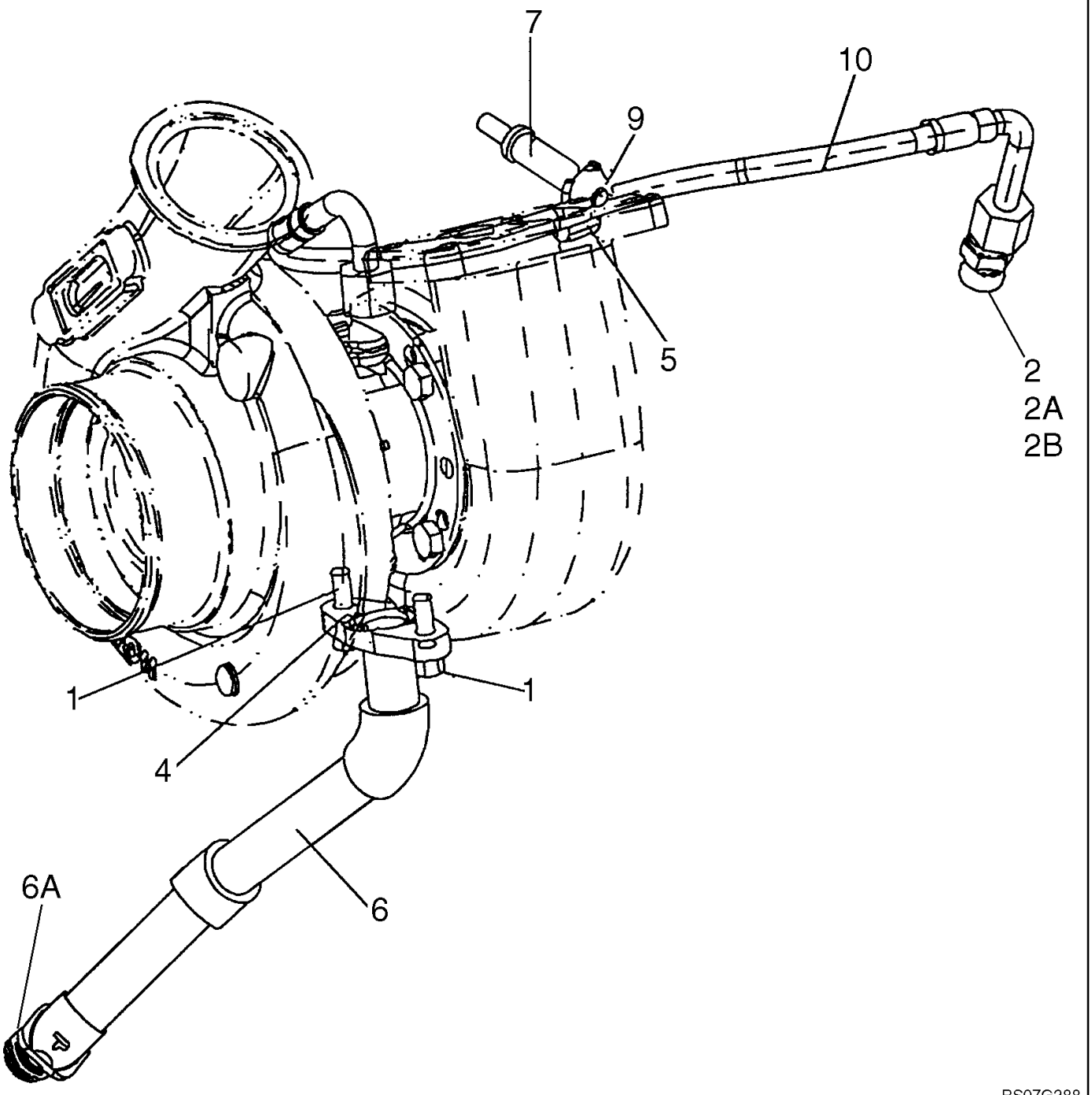

**TURBO COMPRESSEUR - CONDUITE DE VIDANGE**

| REF | FN | PART NUMBER | YR/SN | QTY | DESCRIPTION |
|---|---|---|---|---|---|
| | | 87579400 | | 1 | MOTEUR, 6 Cylinder 6.7L Turbo, Tier III; Includes Figures 02-09 - 02-13, 02-15 - 02-41, 03-05 - 03-11; Incl. Refs. 1 - 9 |
| 1 | | 4899079 | | 2 | VIS, Hex Flg, M8 x 1.25 x 25 |
| 2 | | 4895107 | | 1 | RACCORD, Incl. Refs. 2A, 2B |
| 2A | | 4899107 | | 1 | JOINT THORIQUE |
| 2B | | 4899108 | | 1 | JOINT THORIQUE |
| 4 | | 4891288 | | 1 | JOINT |
| 5 | | 4899436 | | 1 | BRIDE |
| 6 | | {2858402} | | 1 | PIPE ASSY. Turbo Oil Drain, Incl. Ref. 6A |
| 6A | | 2852801 | | 1 | JOINT THORIQUE |
| 7 | | 4896991 | | 1 | VIS |
| 7 | | 2854375 | | 1 | GOUJON, In Alternative |
| 8 | | 4895089 | | 1 | BOUCHON, Not Illustrated |
| 9 | | 4899003 | | 1 | ECROU, M8X1.25 |
| 10 | | 4899377 | | 1 | FLEXIBLE, Flexible |

**TURBOCOMPRESSEUR**

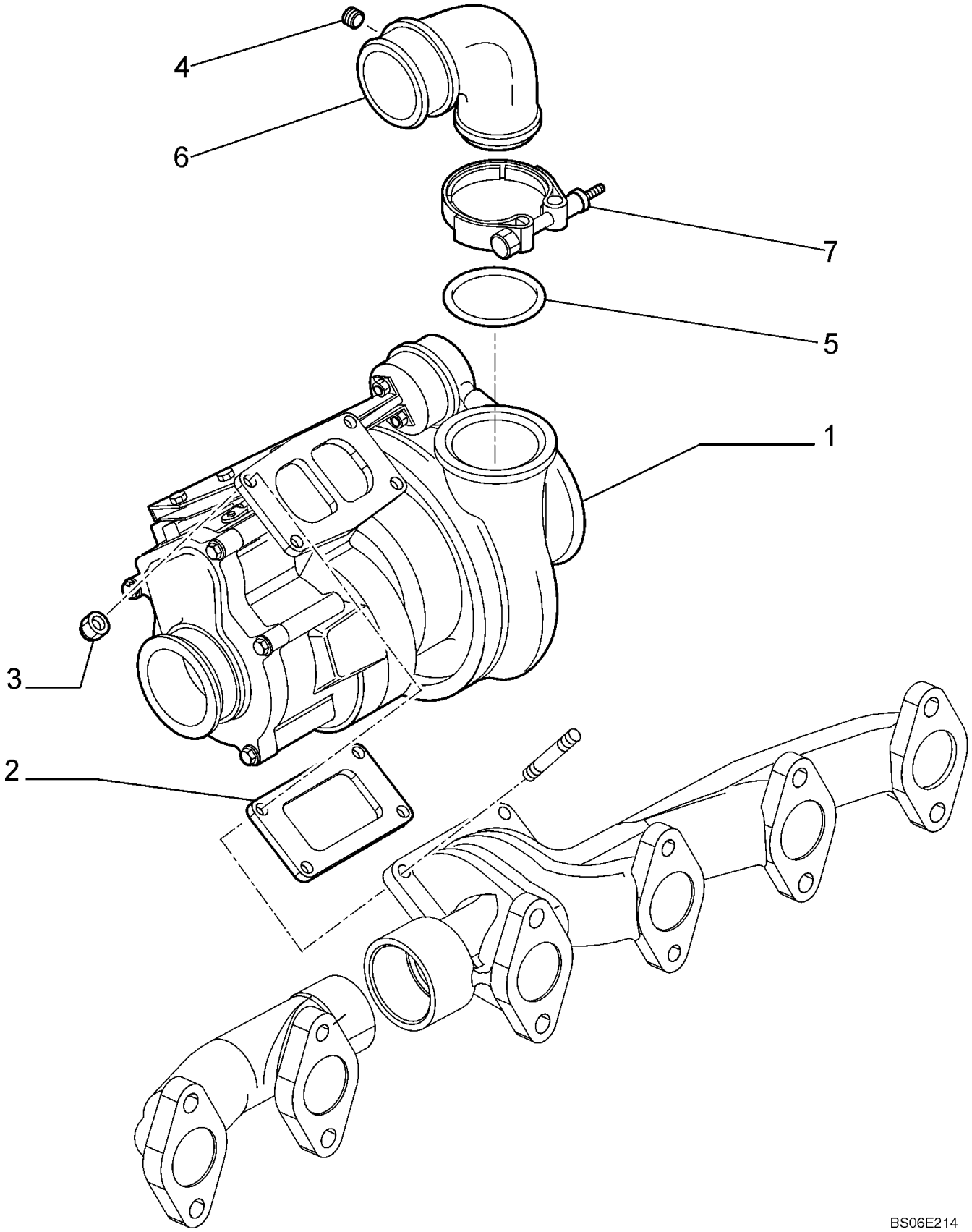

**TURBOCOMPRESSEUR**

| REF | FN | PART NUMBER | YR/SN | QTY | DESCRIPTION |
|---|---|---|---|---|---|
| | | 87579400 | | 1 | MOTEUR, 6 Cylinder 6.7L Turbo, Tier III; Includes Figures 02-09 - 02-13, 02-15 - 02-41, 03-05 - 03-11; Incl. Refs. 1 - 7 |
| 1 | | 2855124 | | 1 | TURBOCOMPRESSEUR |
| 2 | | 4895132 | | 1 | JOINT |
| 3 | | 4899086 | | 4 | ECROU |
| 4 | | 4895098 | | 1 | BOUCHON |
| 5 | | 4899087 | | 1 | JOINT THORIQUE |
| 6 | | 4895141 | | 1 | COUDE |
| 7 | | 2852407 | | 1 | COLLIER-DE-SERRAGE |

**POMPE A EAU**

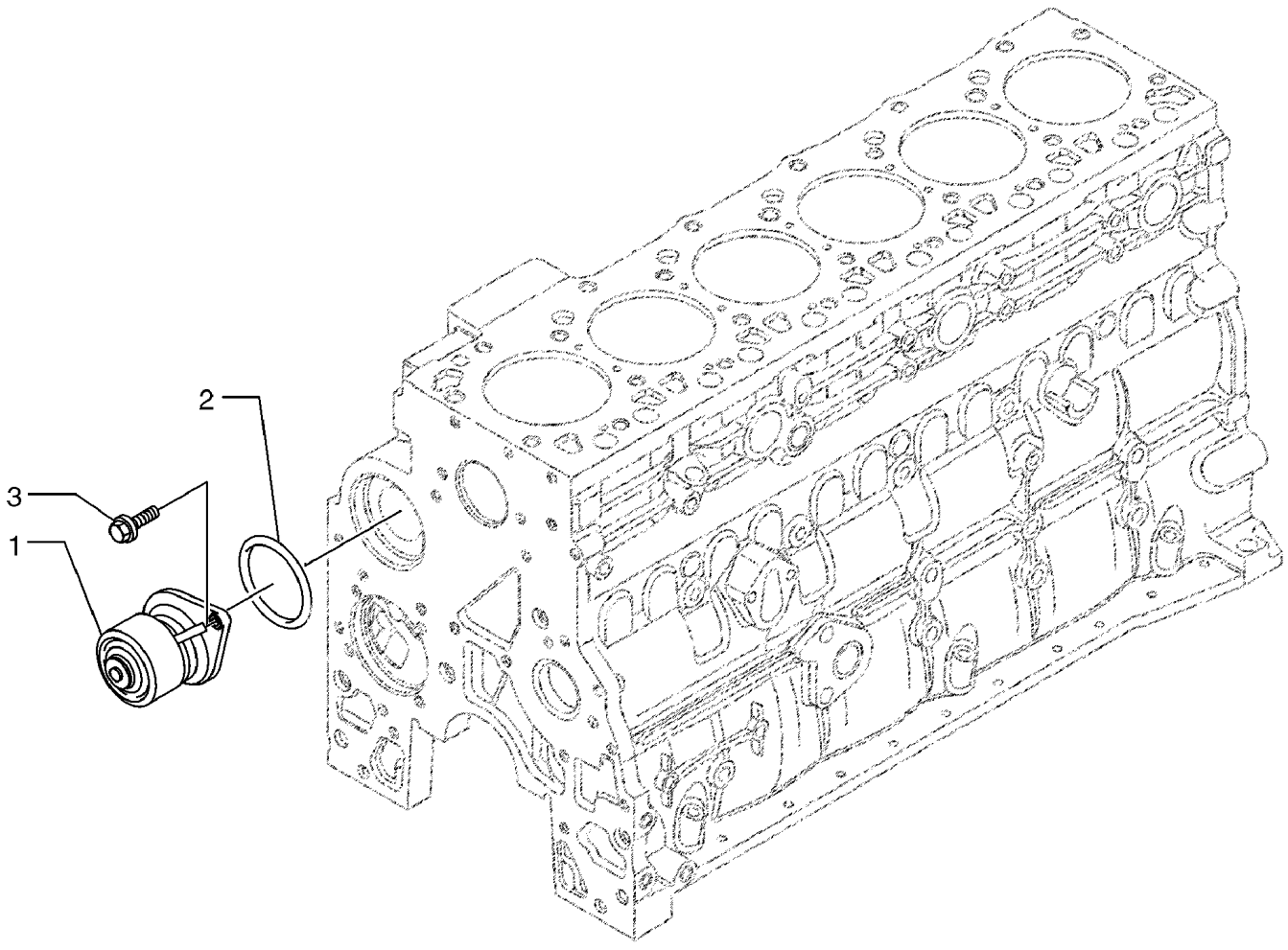


BC03N020

**POMPE A EAU**

| REF | FN | PART NUMBER | YR/SN | QTY | DESCRIPTION |
|---|---|---|---|---|---|
| | | 87579400 | | 1 | MOTEUR, 6 Cylinder 6.7L Turbo, Tier III; Includes Figures 02-09 - 02-13, 02-15 - 02-41, 03-05 - 03-11; Incl. Refs. 1 - 3 |
| 1 | | 4891252 | | 1 | POMPE A EAU |
| 1 | | 2852114 | | 1 | POMPE A EAU, In Alternative |
| 2 | | 2852047 | | 1 | JOINT |
| 3 | | 4899079 | | 2 | VIS, Hex Flg, M8 x 1.25 x 25 |

**POMPE A EAU - TENDEUR**

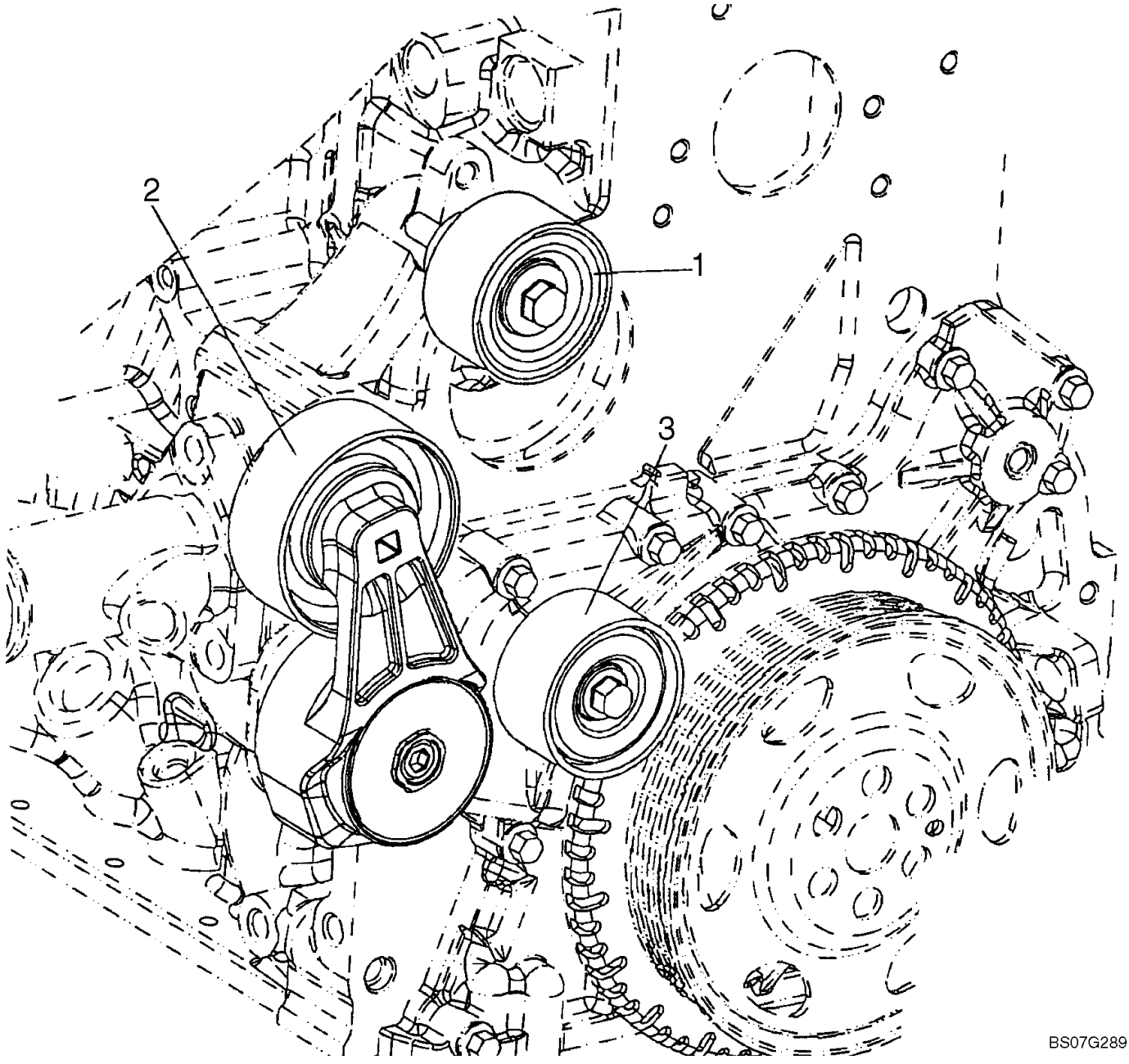

**POMPE A EAU - TENDEUR**

| REF | FN | PART NUMBER | YR/SN | QTY | DESCRIPTION |
|---|---|---|---|---|---|
| | | 87579400 | | 1 | MOTEUR, 6 Cylinder 6.7L Turbo, Tier III; Includes Figures 02-09 - 02-13, 02-15 - 02-41, 03-05 - 03-11; Incl. Refs. 1 - 3 |
| 1 | | 2852398 | | 1 | TENDEUR DE COURROIE |
| 2 | | 2852396 | | 1 | TENDEUR DE COURROIE |
| 3 | | 2852397 | | 1 | GALET |

**BLOC CYLINDRES**

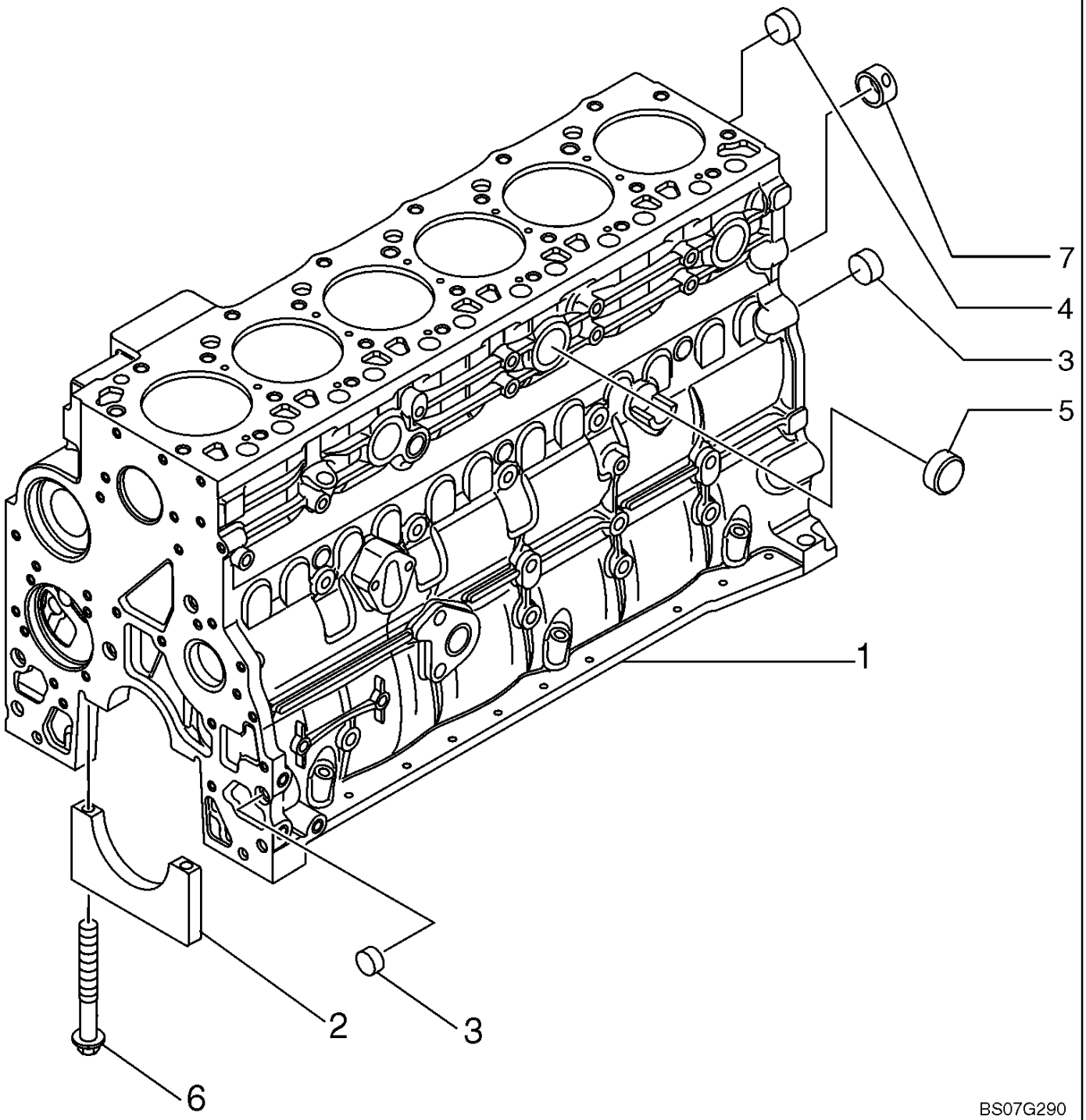

**BLOC CYLINDRES**

| REF | FN | PART NUMBER | YR/SN | QTY | DESCRIPTION |
|---|---|---|---|---|---|
| | | 87579400 | | 1 | MOTEUR, 6 Cylinder 6.7L Turbo, Tier III; Includes Figures 02-09 - 02-13, 02-15 - 02-41, 03-05 - 03-11; Incl. Refs. 1 - 8 |
| | | 2830076 | | 1 | BLOC MOTEUR, ASSY. Incl. Refs. 1 - 8 |
| 1 | | NSS | | 1 | NON FOURNI SEPAREMENT, Cylinder Block |
| 2 | | 4895921 | | 1 | COUSSINET VILEBREQUI |
| 3 | | 4895039 | | 3 | BOUCHON |
| 4 | | 4895038 | | 6 | BOUCHON |
| 5 | | 4895228 | | 3 | BOUCHON |
| 6 | | 4891353 | | 14 | VIS, Flg Hd, M12 x 1.5 x 120 |
| 7 | | 4895040 | | 1 | BAGUE |
| 8 | | 4895919 | | 6 | COUSSINET VILEBREQUI, Not Illustrated |

**BLOC CYLINDRES - BOUCHON**

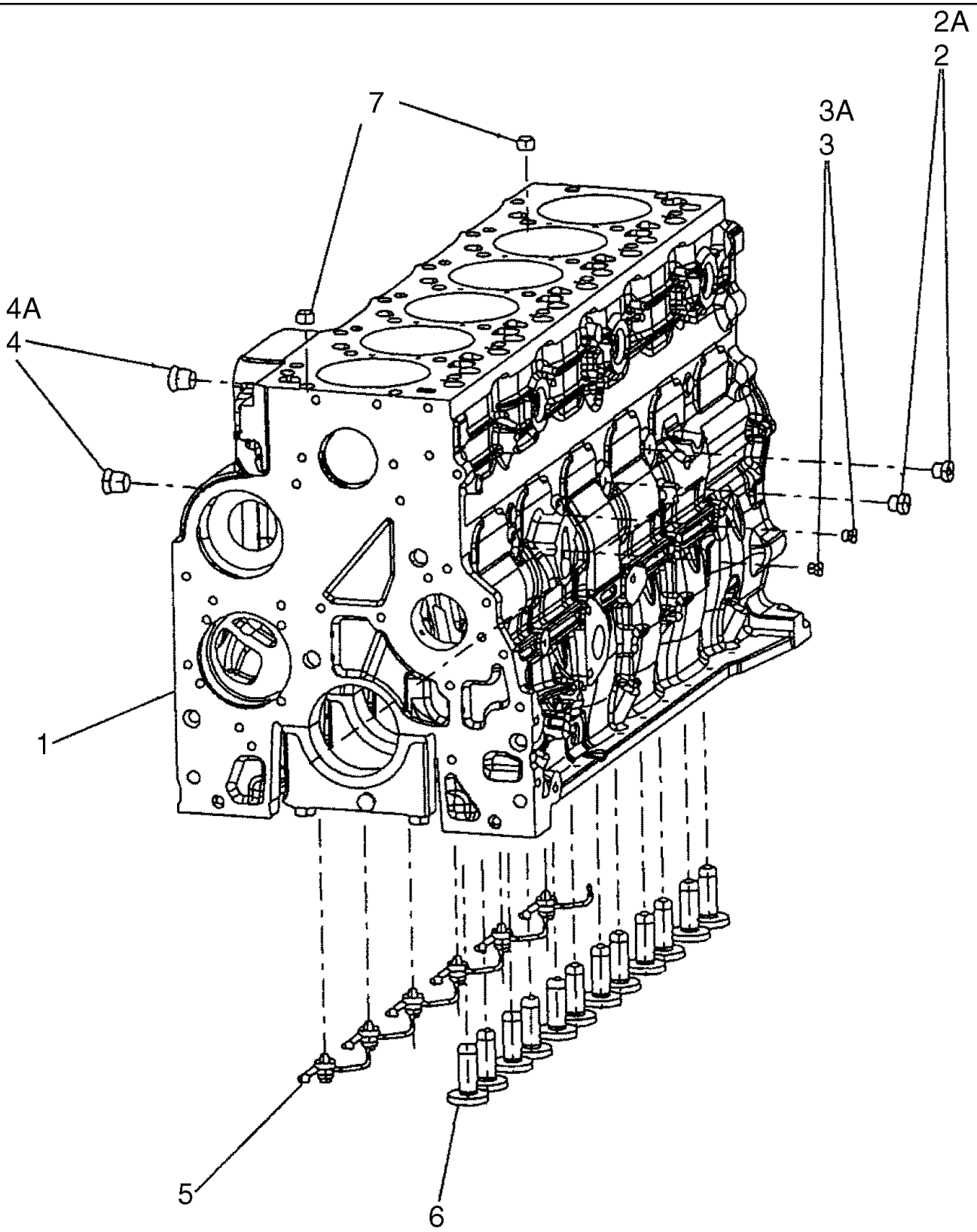

**BLOC CYLINDRES - BOUCHON**

| REF | FN | PART NUMBER | YR/SN | QTY | DESCRIPTION |
|---|---|---|---|---|---|
| | | 87579400 | | 1 | MOTEUR, 6 Cylinder 6.7L Turbo, Tier III; Includes Figures 02-09 - 02-13, 02-15 - 02-41, 03-05 - 03-11; Incl. Refs. 1 - 7 |
| 1 | | 2830076 | | 1 | BLOC MOTEUR, ASSY. See Figure 02-20 |
| 2 | | 4895605 | | 2 | BOUCHON, M14 x 1.5, Incl. Ref. 2A |
| 2A | | 4899115 | | 1 | JOINT THORIQUE |
| 3 | | 4899009 | | 2 | BOUCHON, M10 x 1.5, Incl. Ref. 3A |
| 3A | | 4899072 | | 1 | JOINT THORIQUE |
| 4 | | 4895392 | | 2 | BOUCHON, M18 x 1.5, Incl. Ref. 4A |
| 4A | | 4895393 | | 1 | JOINT THORIQUE |
| 5 | | 2852202 | | 6 | GICLEUR |
| 6 | | 4899803 | | 12 | POUSSOIR |
| 7 | | 4895049 | | 2 | PION |

**BLOC CYLINDRES - RÉDUCTION DU BRUIT**

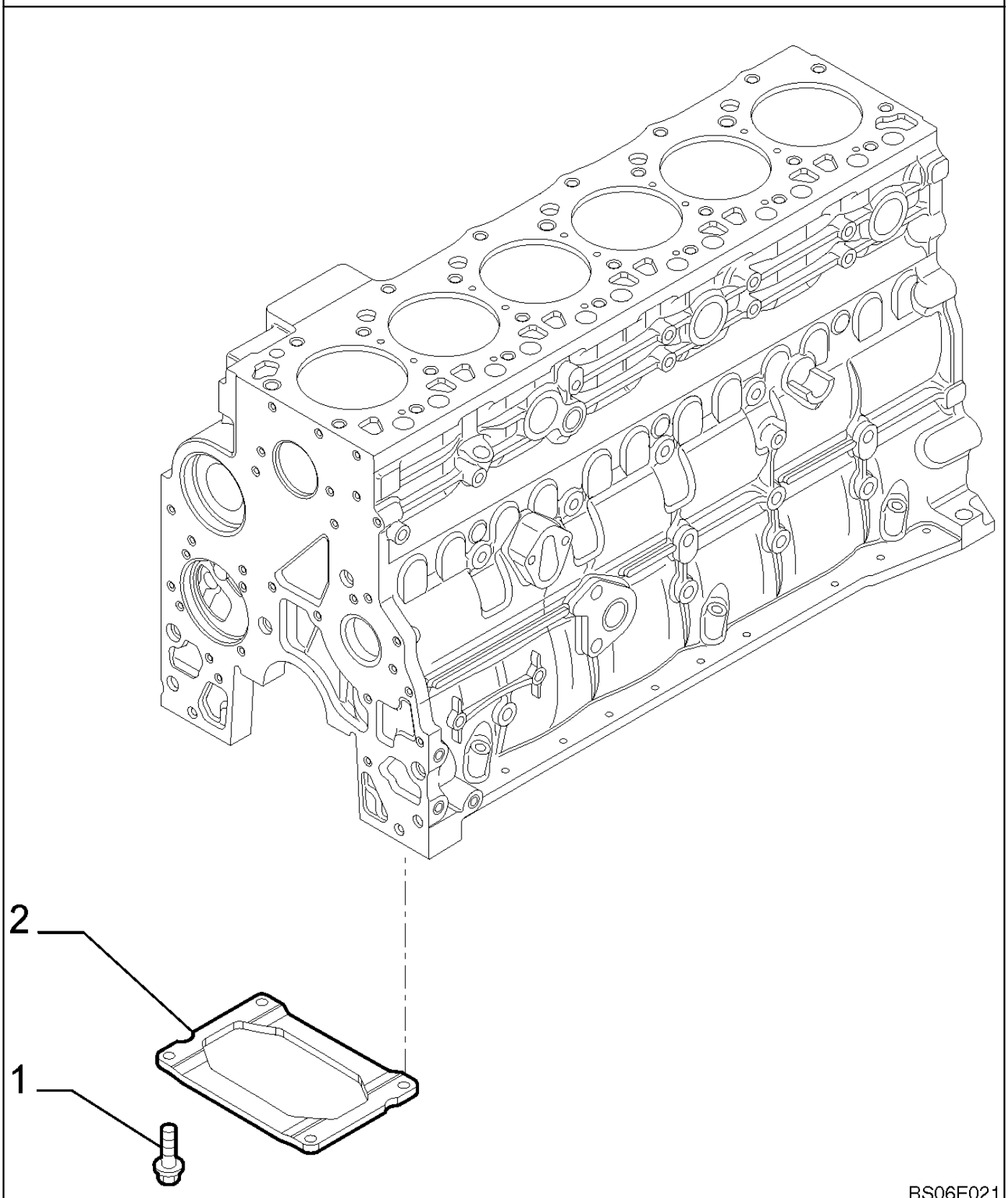

**BLOC CYLINDRES - RÉDUCTION DU BRUIT**

| REF | FN | PART NUMBER | YR/SN | QTY | DESCRIPTION |
|---|---|---|---|---|---|
| | | 87579400 | | 1 | MOTEUR, 6 Cylinder 6.7L Turbo, Tier III; Includes Figures 02-09 - 02-13, 02-15 - 02-41, 03-05 - 03-11; Incl. Refs. 1 - 2 |
| 1 | | 4899032 | | 4 | VIS, Hex Flg, M10 x 1.5 x 25 |
| 2 | | 2852729 | | 1 | RENFORT |

**CULASSE DE CYLINDRE**

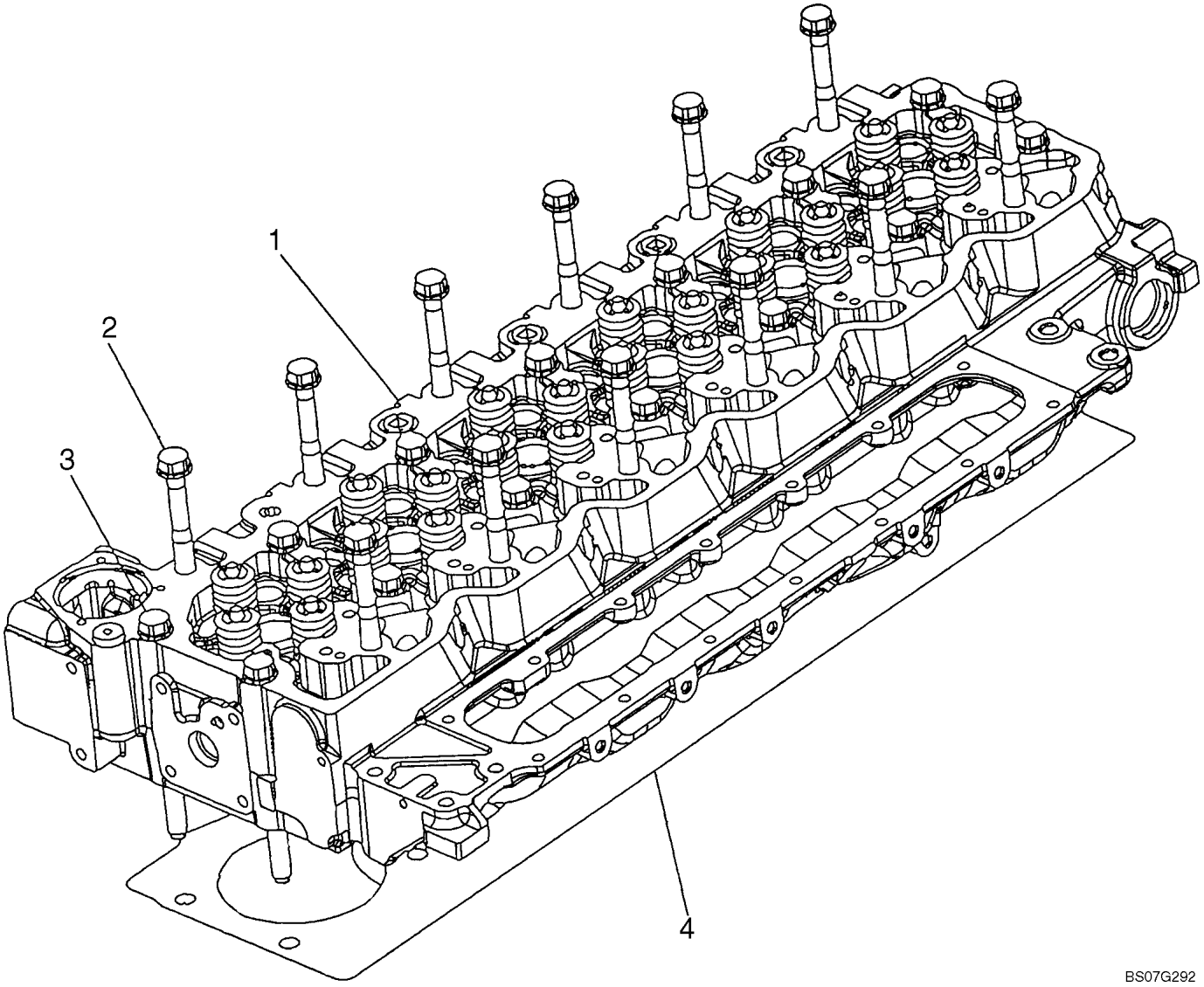

**CULASSE DE CYLINDRE**

| REF | FN | PART NUMBER | YR/SN | QTY | DESCRIPTION |
|---|---|---|---|---|---|
| | | 87579400 | | 1 | MOTEUR, 6 Cylinder 6.7L Turbo, Tier III; Includes Figures 02-09 - 02-13, 02-15 - 02-41, 03-05 - 03-11; Incl. Refs. 1 - 4 |
| 1 | | 2831274 | | 1 | CULASSE, Cylinder Head Assembly, See Figure 02-24 |
| 2 | | 4891024 | | 12 | VIS, M12 x 130 |
| 3 | | 4891025 | | 14 | VIS, M12 x 150 |
| 4 | | 2830704 | | 1 | JOINT DE CULASSE, 1.25 mm, If Used |
| 4 | | 2830705 | | 1 | JOINT DE CULASSE, 1.15 mm, If Used |

**CULASSE DE CYLINDRE - MONTAGE**

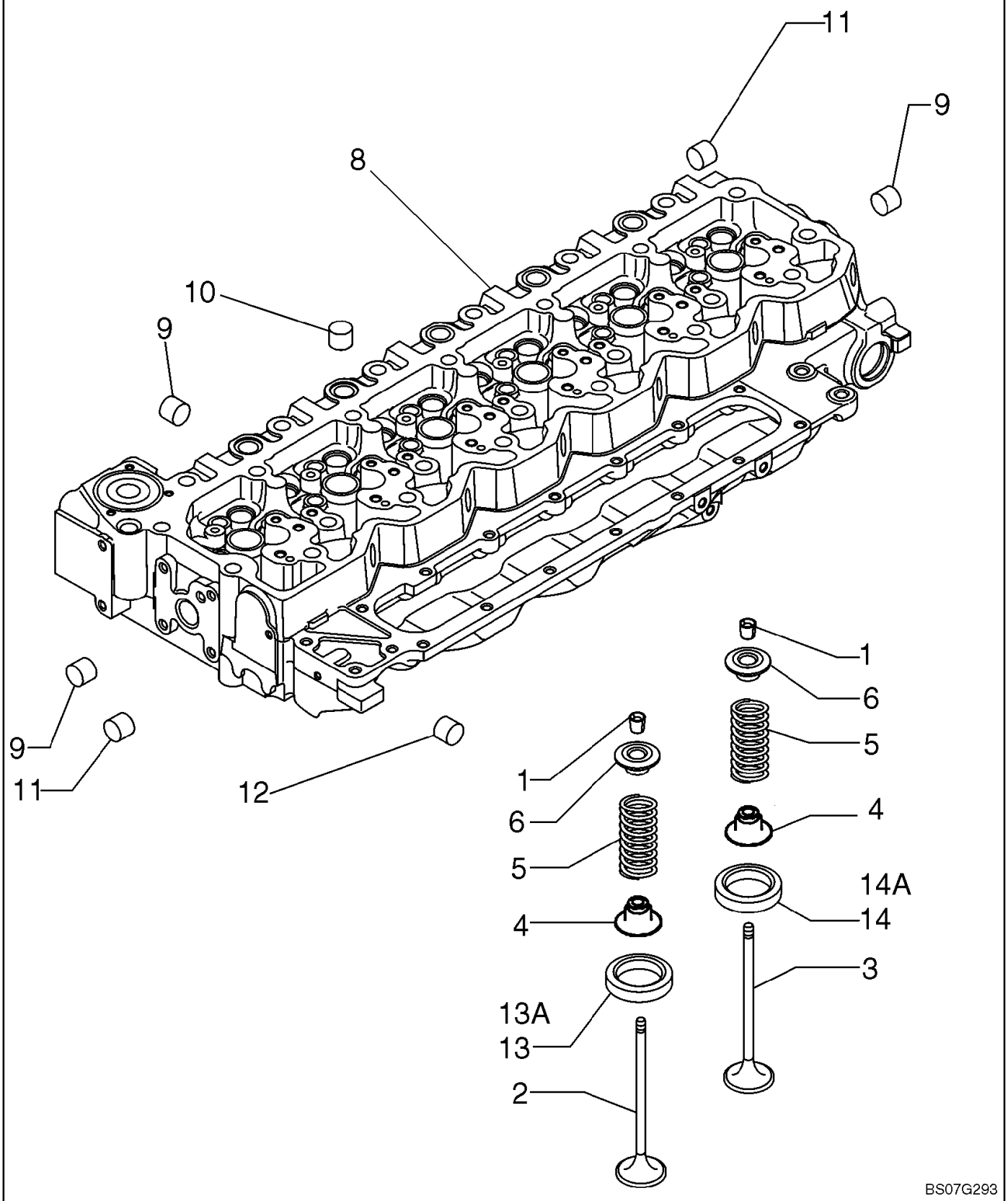

**CULASSE DE CYLINDRE - MONTAGE**

| REF | FN | PART NUMBER | YR/SN | QTY | DESCRIPTION |
|---|---|---|---|---|---|
| | | 87579400 | | 1 | MOTEUR, 6 Cylinder 6.7L Turbo, Tier III; Includes Figures 02-09 - 02-13, 02-15 - 02-41, 03-05 - 03-11; Incl. Refs. 1 - 14A |
| | | 2831274 | | 1 | CULASSE, Cylinder Head Assembly; Incl. Refs. 1 - 14 |
| 1 | | 4899081 | | 48 | DEMI-CONE DE POUSSOIR |
| 2 | | 4895051 | | 12 | SOUPAPE D'ECHAPPEMENT |
| 3 | | 4895052 | | 12 | SOUPAPE D'ADMISSION, Intake |
| 4 | | 2831287 | | 24 | SIEGE DE RESSORT, Valve Stem Seal |
| 5 | | 4895073 | | 24 | RESSORT, SOUPAPE |
| 6 | | 4895074 | | 24 | CUVE, Retainer |
| 7 | | 4893036 | | 1 | BOUCHON, Pipe, 3/4 in - 14 NPTF, Not Illustrated |
| | | 2831278 | | 1 | CULASSE, Assy. Incl. Refs. 8 - 12, 13, 14 |
| | | 2831279 | | 1 | CULASSE, Assy. Incl. Refs. 8 - 12, 13A, 14A; In Alternative |
| 8 | | NSS | | 1 | NON FOURNI SEPAREMENT, Cylinder Head |
| 9 | | 4895085 | | 13 | BOUCHON, 25.74mm |
| 9 | | 4895408 | | 2 | BOUCHON, .511" OD |
| 10 | | 4895089 | | 11 | BOUCHON, .886" OD |
| 11 | | 4895406 | | 7 | BOUCHON, 9.8mm OD |
| 12 | | 4895407 | | 2 | BOUCHON, 38.28mm OD |
| 13 | | 4897106 | | 12 | SIEGE DE SOUPAPE, Used on Cylinder Head Assy. 2831278 |
| 13A | | 4893244 | | 12 | SIEGE DE SOUPAPE, Used on Cylinder Head Assy. 2831279 |
| 14 | | 4897578 | | 12 | SIEGE DE SOUPAPE, Used on Cylinder Head Assy. 2831278 |
| 14A | | 4893244 | | 12 | SIEGE DE SOUPAPE, Used on Cylinder Head Assy. 2831279 |

**COUVERCLES CULASSE**

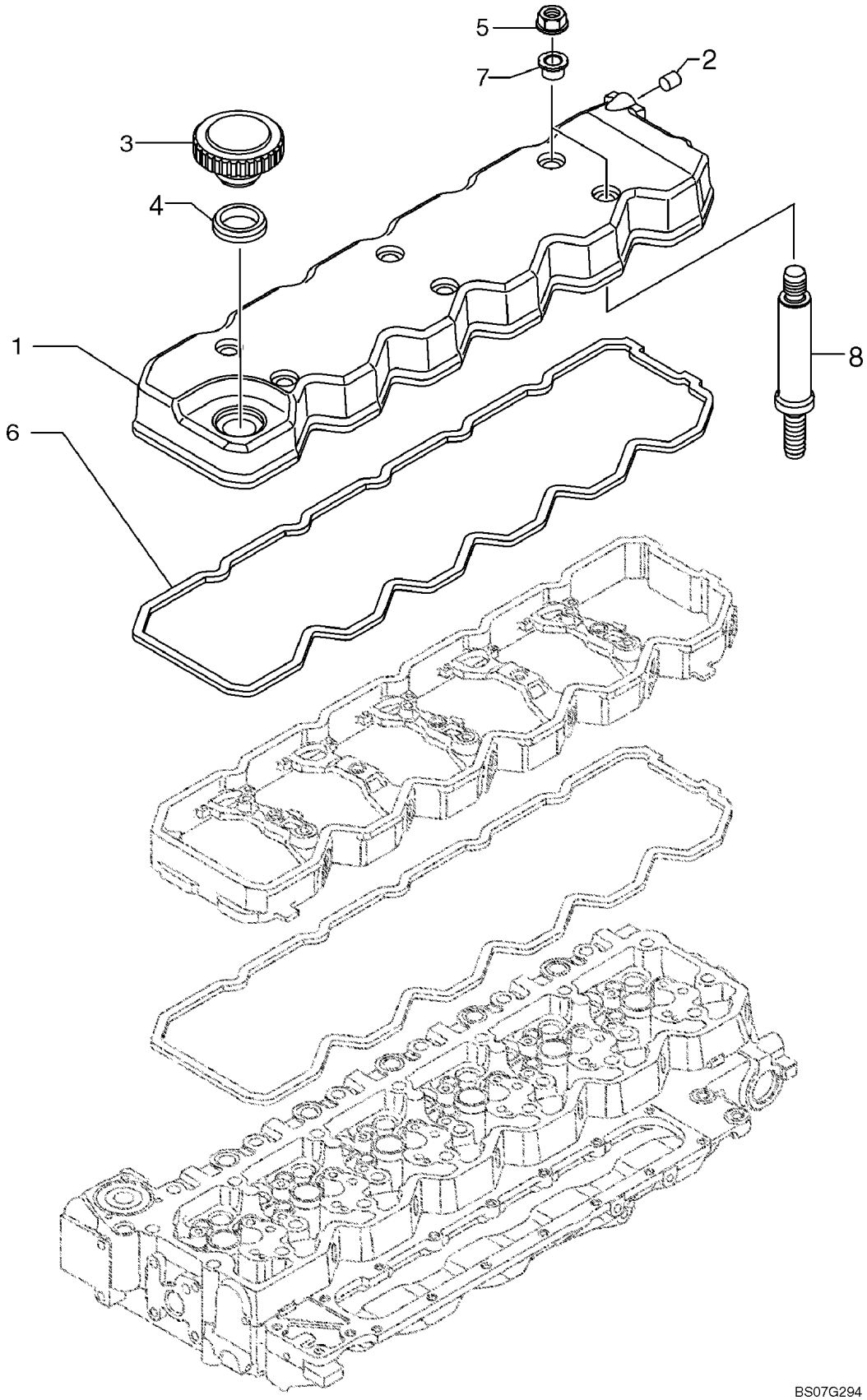

**COUVERCLES CULASSE**

| REF | FN | PART NUMBER | YR/SN | QTY | DESCRIPTION |
|---|---|---|---|---|---|
| | | 87579400 | | 1 | MOTEUR, 6 Cylinder 6.7L Turbo, Tier III; Includes Figures 02-09 - 02-13, 02-15 - 02-41, 03-05 - 03-11; Incl. Refs. 1 - 8 |
| 1 | | 4895910 | | 1 | COUVERCLE, Valve, Incl. Ref. 2 |
| 2 | | 4898283 | | 1 | BOUCHON |
| 3 | | 2852773 | | 1 | BOUCHON DE REMPLISSAGE, Oil Fill Assembly, Incl. Ref. 4 |
| 4 | | 2852774 | | 1 | JOINT, Cap |
| 5 | | 4893936 | | 6 | ECROU, M8 x 1.25 |
| 6 | | 2853784 | | 1 | JOINT |
| 7 | | 4899239 | | 6 | JOINT |
| 8 | | 4896991 | | 6 | VIS |
| 8 | | 2854375 | | 6 | GOUJON, Used In Alternative |

**VILEBREQUIN**

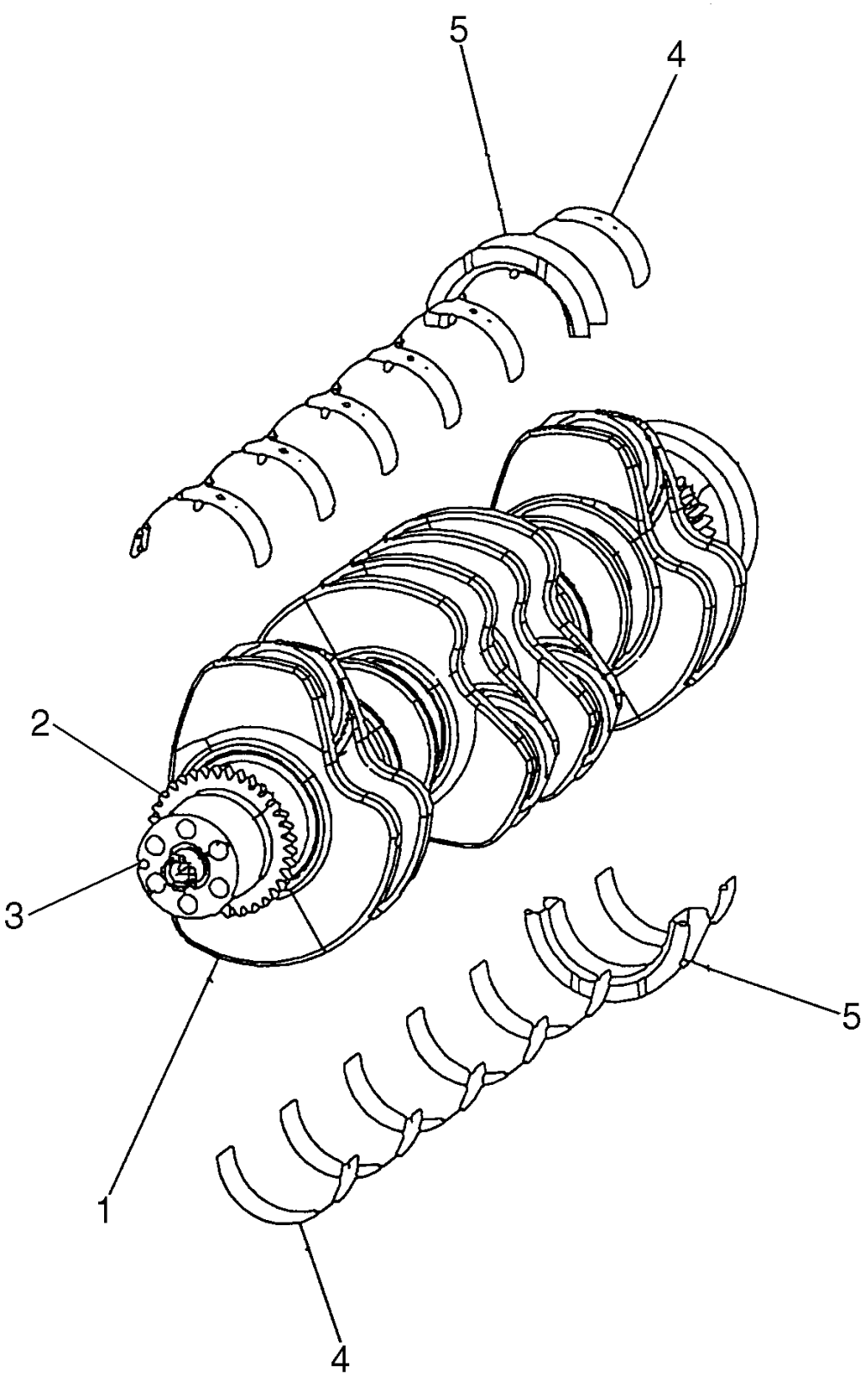


BS07G296

**VILEBREQUIN**

| REF | FN | PART NUMBER | YR/SN | QTY | DESCRIPTION |
|---|---|---|---|---|---|
| | | 87579400 | | 1 | MOTEUR, 6 Cylinder 6.7L Turbo, Tier III; Includes Figures 02-09 - 02-13, 02-15 - 02-41, 03-05 - 03-11; Incl. Refs. 1 - 5 |
| 1 | | 2852305 | | 1 | VILEBREQUIN, ASSY. Incl. Refs. 2 - 3 |
| 2 | | 4893386 | | 1 | PIGNON |
| 3 | | 4899046 | | 1 | PION |
| 4 | | 4895017 | | 6 | COUSSINET VILEBREQUI, Main, If Used |
| 4 | | {2853815} | | 6 | BEARING, CRANKSHAFT, Main, If Used |
| 5 | | 4895414 | | 1 | COUSSINET VILEBREQUI, Thrust; If Used |
| 5 | | {2853816} | | 1 | BEARING, CRANKSHAFT, Thrust; If Used |

**VILEBREQUIN - POULIE**

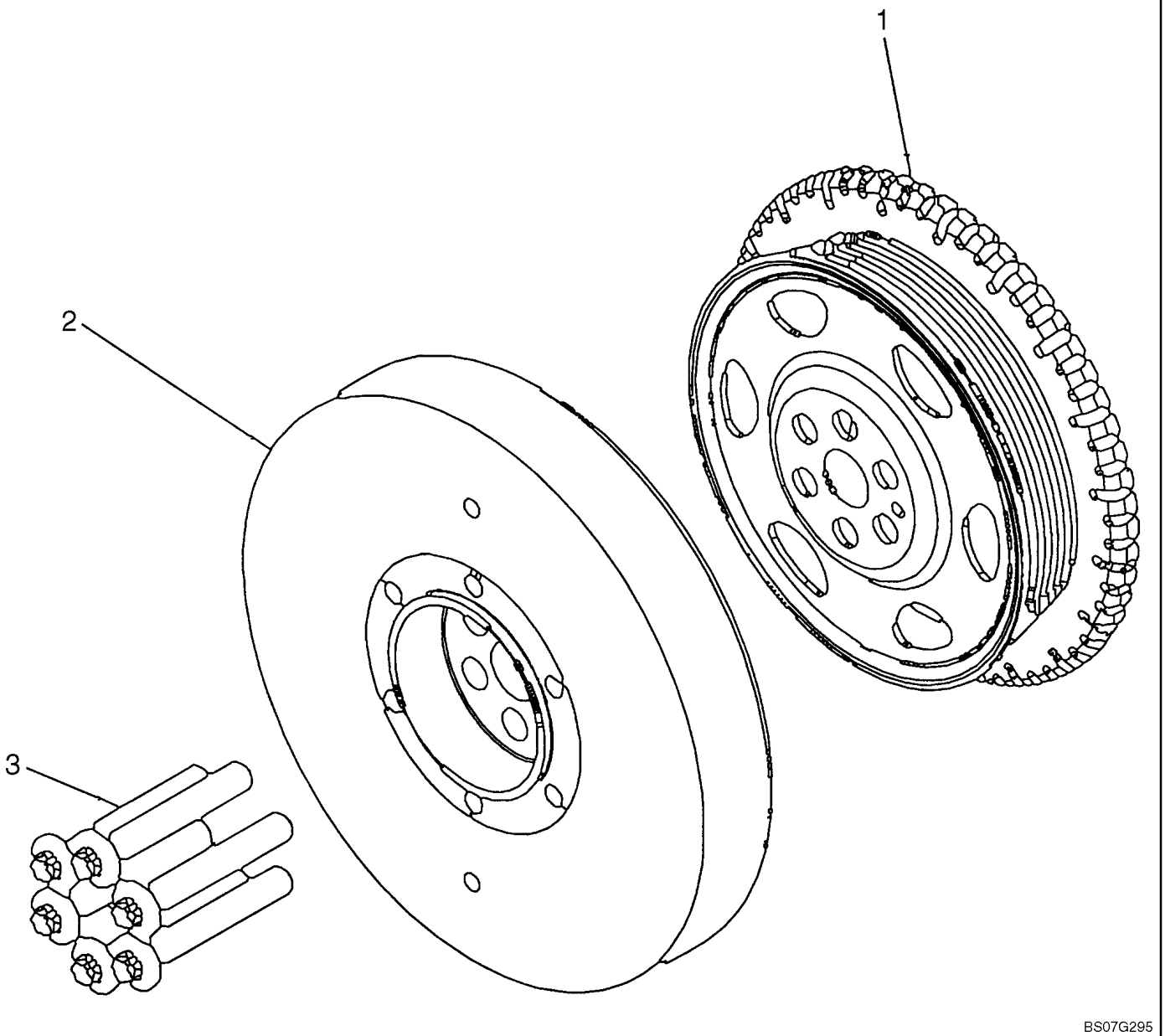

**VILEBREQUIN - POULIE**

| REF | FN | PART NUMBER | YR/SN | QTY | DESCRIPTION |
|---|---|---|---|---|---|
| | | 87579400 | | 1 | MOTEUR, 6 Cylinder 6.7L Turbo, Tier III; Includes Figures 02-09 - 02-13, 02-15 - 02-41, 03-05 - 03-11; Incl. Refs. 1 - 3 |
| 1 | | 4896773 | | 1 | POULIE, Crankshaft |
| 2 | | 4892893 | | 1 | AMORTISSEUR VIBRATION, Vibration |
| 3 | | 4892867 | | 6 | VIS, Torx Wash Hd, M12 x 1.25 x 78.5 |

**VOLANT - MOTEUR**

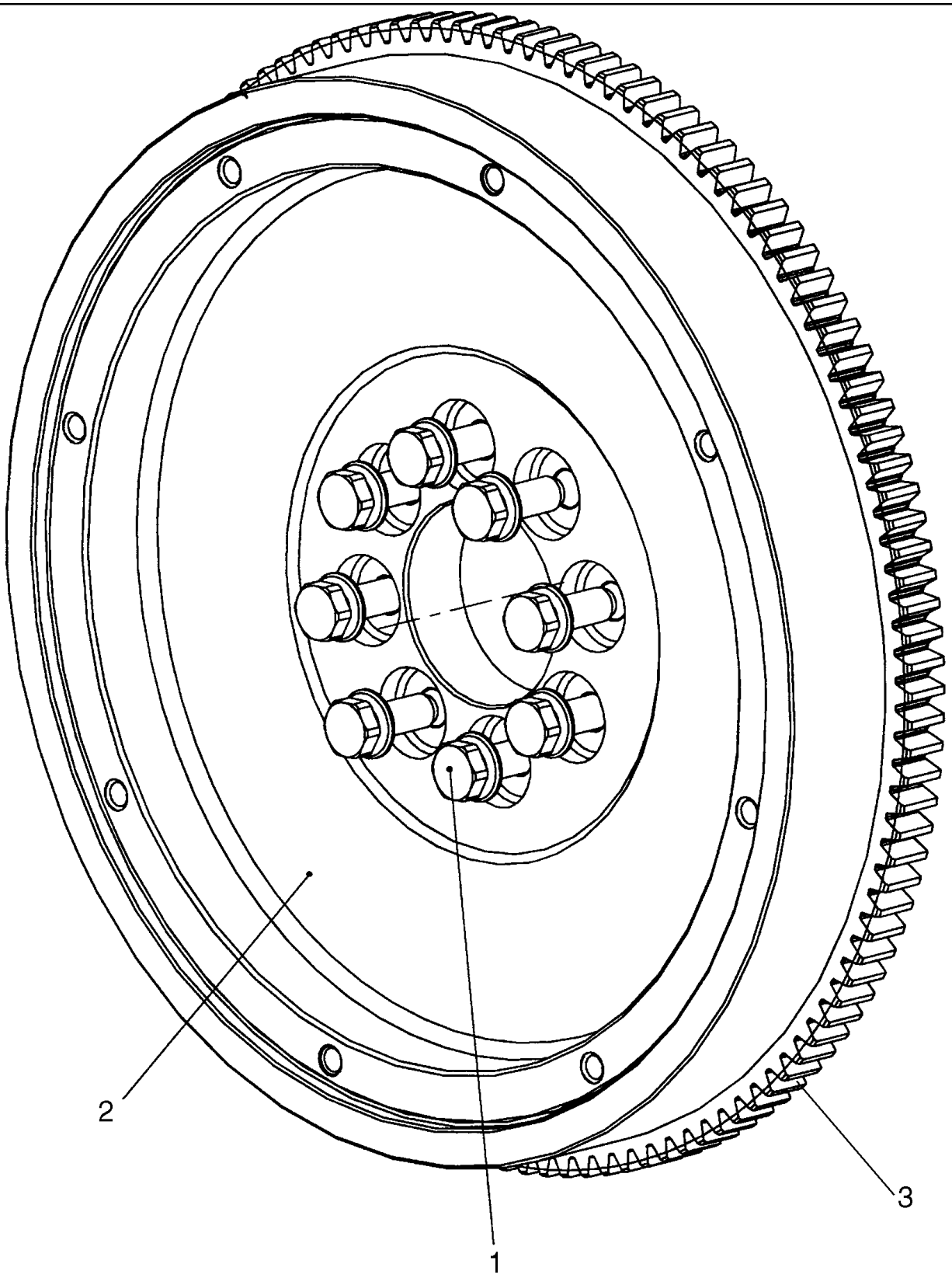

**VOLANT - MOTEUR**

| REF | FN | PART NUMBER | YR/SN | QTY | DESCRIPTION |
|---|---|---|---|---|---|
| | | 87579400 | | 1 | MOTEUR, 6 Cylinder 6.7L Turbo, Tier III; Includes Figures 02-09 - 02-13, 02-15 - 02-41, 03-05 - 03-11; Incl. Refs. 1 - 3 |
| 1 | | 4894641 | | 8 | VIS, Wash Hd, M12 x 1.25 x 31 |
| 2 | | 2852219 | | 1 | VOLANT DU MOTEUR, Assembly, Incl. Ref. 3 |
| 3 | | 2852221 | | 1 | COURONNE DENTÉE |

**CARTER DE VOLANT**

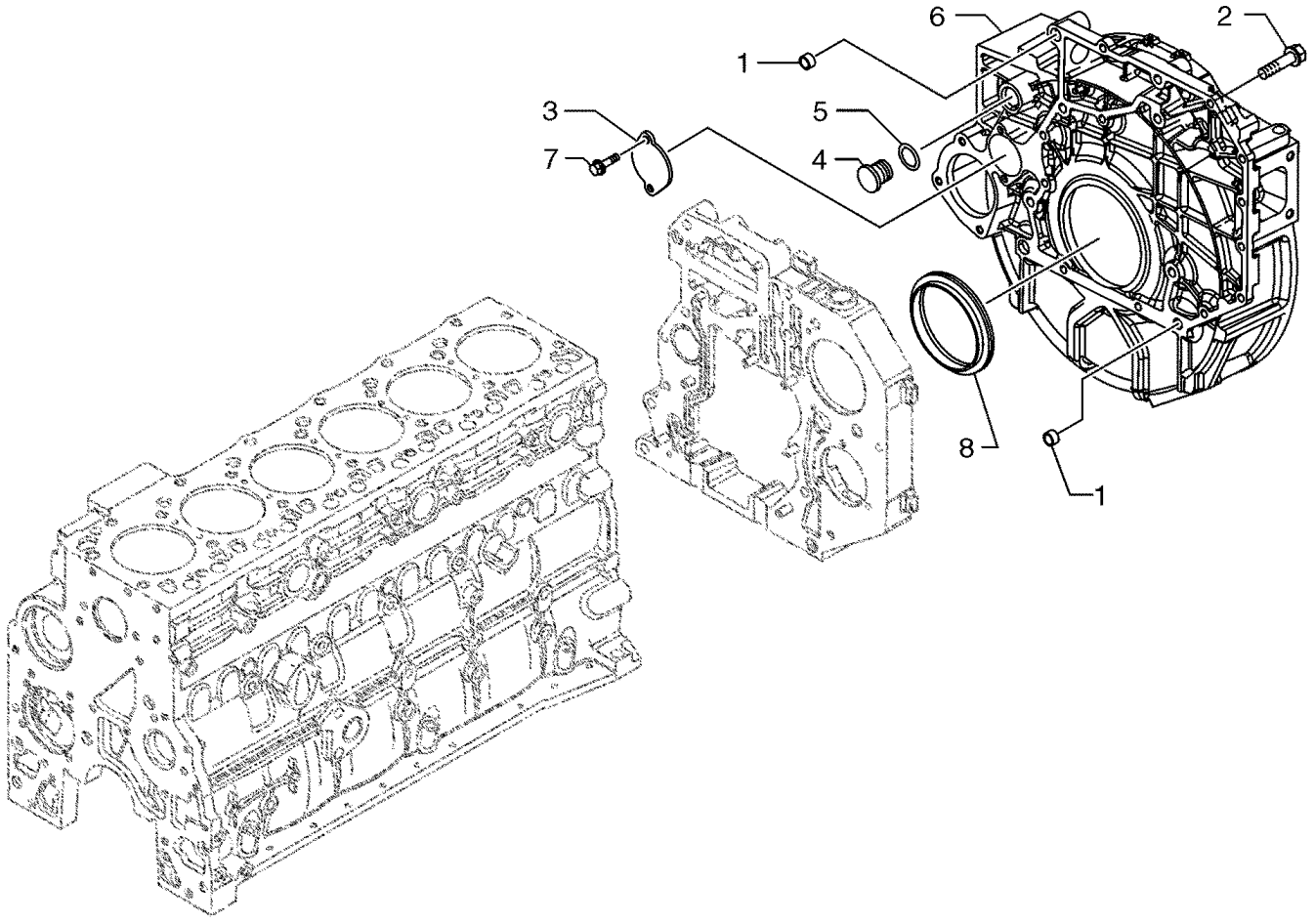


BS03N027

**CARTER DE VOLANT**

| REF | FN | PART NUMBER | YR/SN | QTY | DESCRIPTION |
|---|---|---|---|---|---|
| | | 87579400 | | 1 | MOTEUR, 6 Cylinder 6.7L Turbo, Tier III; Includes Figures 02-09 - 02-13, 02-15 - 02-41, 03-05 - 03-11; Incl. Refs. 1 - 8 |
| 1 | | 4899026 | | 2 | PION |
| 2 | | 4899109 | | 2 | VIS, Hex, M10 x 1.5 x 80 |
| 2 | | 4899076 | | 6 | VIS, Hex Flg, M12 x 1.75 x 80 |
| 2 | | 2852426 | | 2 | VIS, M12 x 110; If Used |
| 2 | | 4897499 | | 2 | VIS, M12 x 110; If Used |
| 2 | | 4892915 | | 10 | VIS, M10 x 40; If Used |
| 3 | | 4895155 | | 1 | COUVERCLE |
| 4 | | 4895378 | | 1 | BOUCHON, D=29 |
| 5 | | 4895379 | | 1 | JOINT THORIQUE |
| 6 | | 2852425 | | 1 | COUVERCLE, Flywheel |
| 7 | | 4899068 | | 2 | VIS, Hex Flg, M8 x 1.25 x 16 |
| 8 | | 4890833 | | 1 | JOINT |

**COUVERCLE DE PIGNONS - CARTER ARRIÈRE**

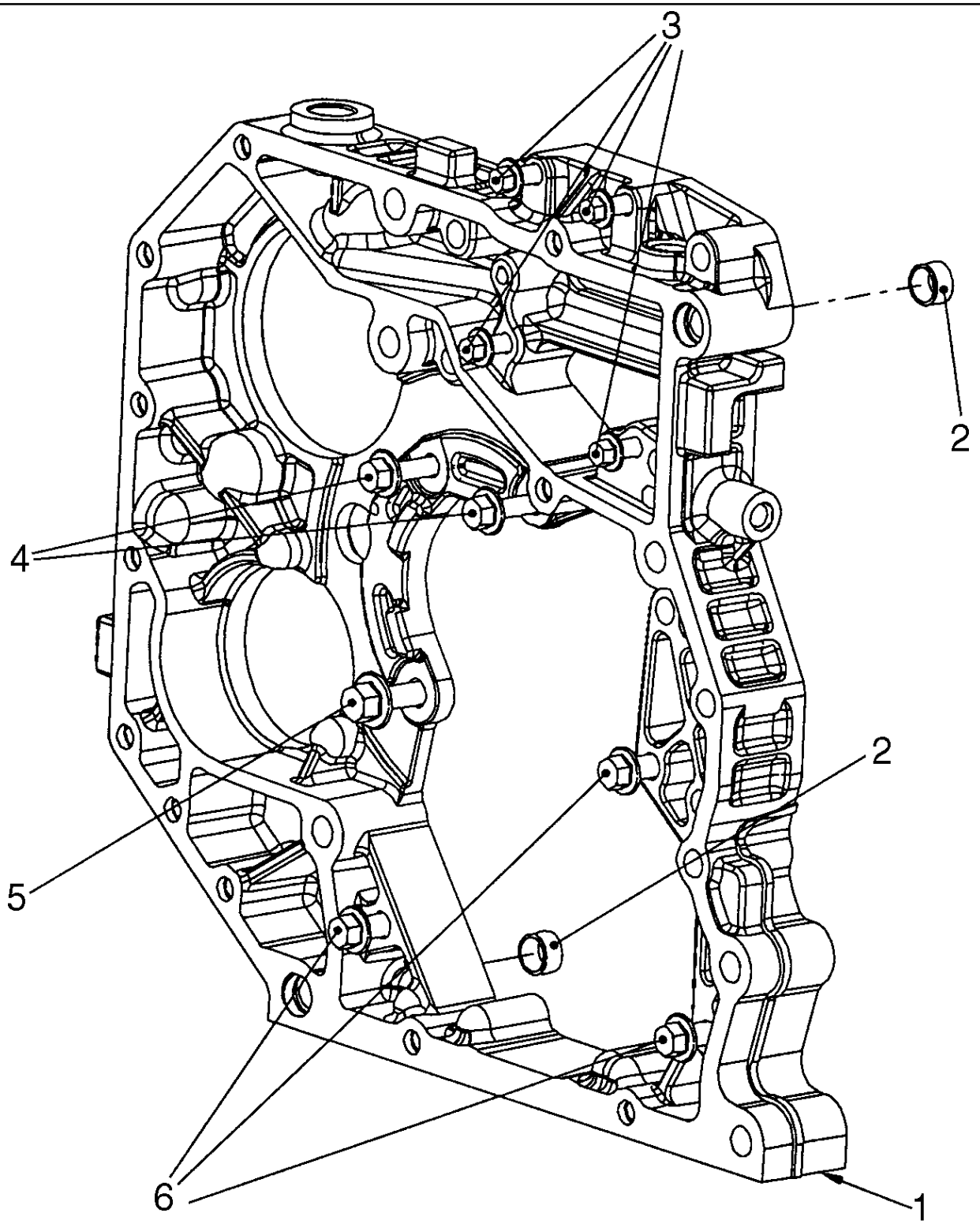


BS07G298

**COUVERCLE DE PIGNONS - CARTER ARRIÈRE**

| REF | FN | PART NUMBER | YR/SN | QTY | DESCRIPTION |
|---|---|---|---|---|---|
| | | 87579400 | | 1 | MOTEUR, 6 Cylinder 6.7L Turbo, Tier III; Includes Figures 02-09 - 02-13, 02-15 - 02-41, 03-05 - 03-11; Incl. Refs. 1 - 6 |
| 1 | | 4899679 | | 1 | COUVERCLE, Rear Gear Housing |
| 2 | | 4899026 | | 2 | PION, Ring |
| 3 | | 4899078 | | 4 | VIS, Hex Flg, M8 x 1.25 x 45 |
| 4 | | 4899093 | | 2 | VIS, Hex Flg, M10 x 1.5 x 30 |
| 5 | | 4899073 | | 1 | VIS, Hex Flg, M12 x 1.75 x 30 |
| 6 | | 4896939 | | 3 | VIS, Hex Flg, M10 x 1.5 x 50 |

**COUVERCLE DE PIGNONS- PLAQUE**

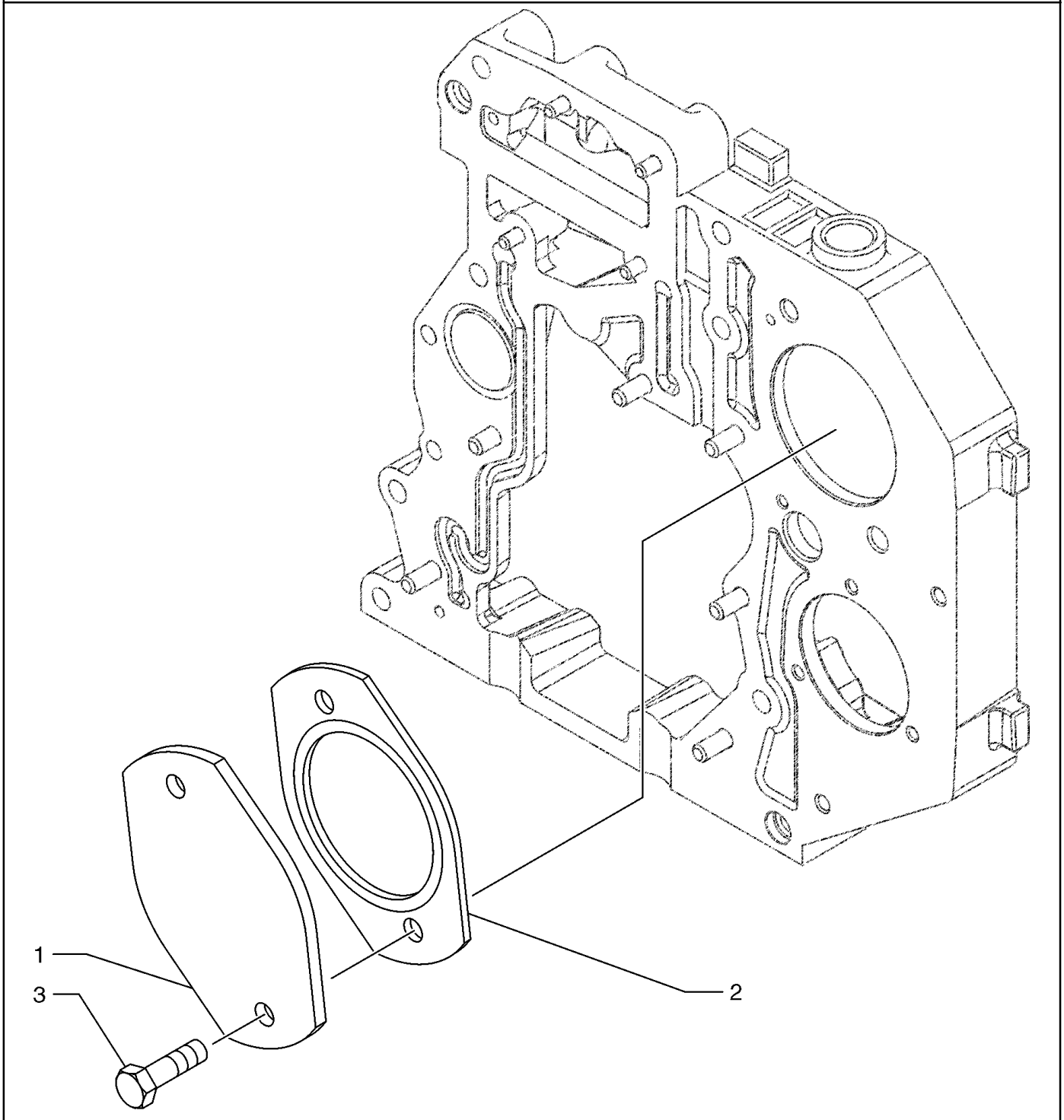

**COUVERCLE DE PIGNONS- PLAQUE**

| REF | FN | PART NUMBER | YR/SN | QTY | DESCRIPTION |
|---|---|---|---|---|---|
| | | 87579400 | | 1 | MOTEUR, 6 Cylinder 6.7L Turbo, Tier III; Includes Figures 02-09 - 02-13, 02-15 - 02-41, 03-05 - 03-11; Incl. Refs. 1 - 3 |
| 1 | | 2852175 | | 1 | COUVERCLE |
| 2 | | 4896897 | | 1 | JOINT |
| 3 | | 4899037 | | 2 | VIS, Hex Flg, M12 x 1.75 x 25 |

**CARTER AVANT**

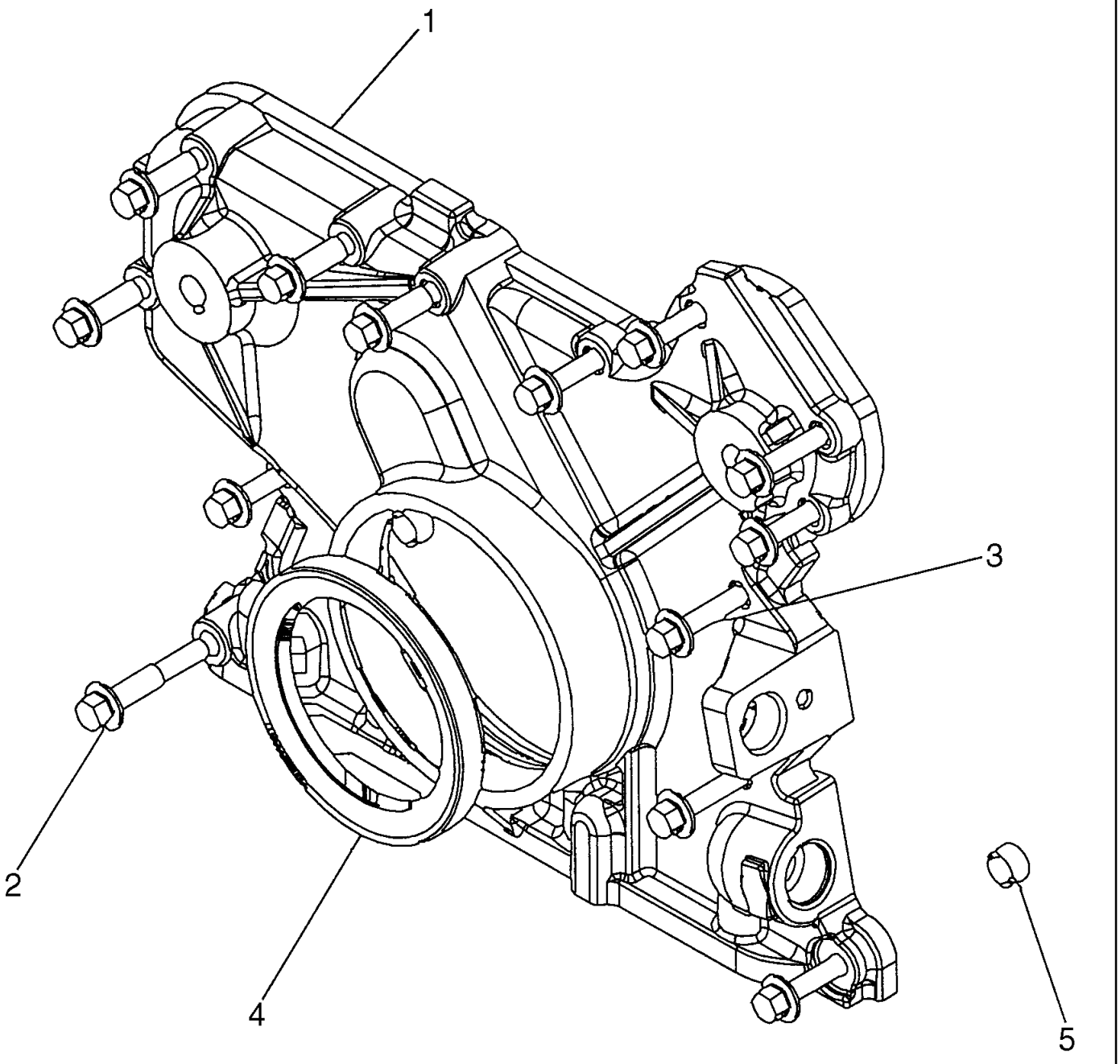

**CARTER AVANT**

| REF | FN | PART NUMBER | YR/SN | QTY | DESCRIPTION |
|---|---|---|---|---|---|
| | | 87579400 | | 1 | MOTEUR, 6 Cylinder 6.7L Turbo, Tier III; Includes Figures 02-09 - 02-13, 02-15 - 02-41, 03-05 - 03-11; Incl. Refs. 1 - 5 |
| 1 | | 4897024 | | 1 | COUVERCLE |
| 2 | | 4899078 | | 5 | VIS, Hex Flg, M8 x 1.25 x 45 |
| 3 | | 4899063 | | 8 | VIS, Hex Flg, M8 x 1.25 x 30 |
| 4 | | 4890832 | | 1 | JOINT |
| 5 | | 4891209 | | 2 | PION |

**CULBUTEURS**

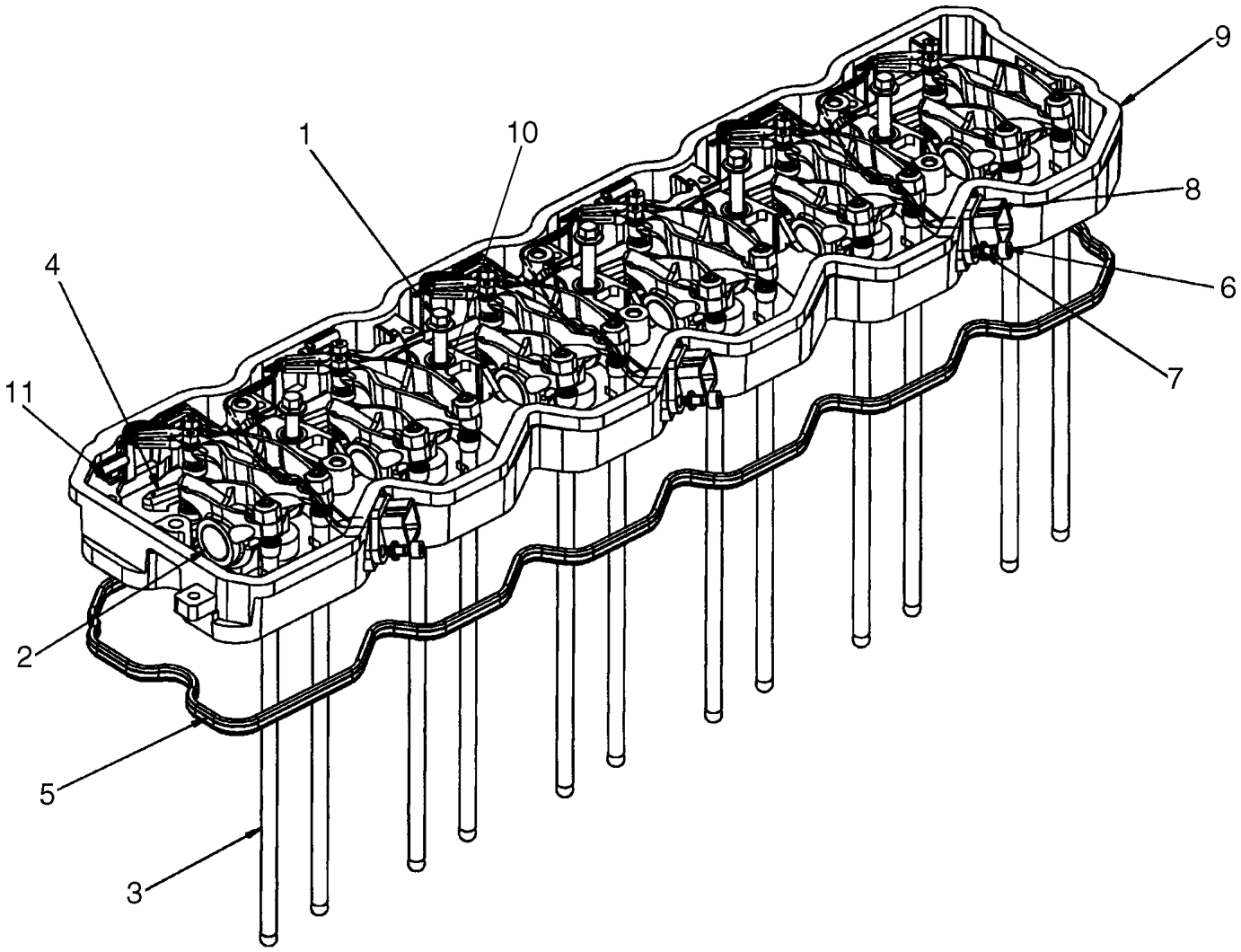

**CULBUTEURS**

| REF | FN | PART NUMBER | YR/SN | QTY | DESCRIPTION |
|---|---|---|---|---|---|
| | | 87579400 | | 1 | MOTEUR, 6 Cylinder 6.7L Turbo, Tier III; Includes Figures 02-09 - 02-13, 02-15 - 02-41, 03-05 - 03-11; Incl. Refs. 1 - 12 |
| 1 | | 4895432 | | 5 | VIS, M8 x 1.25 x 70 |
| 2 | | {2856458} | | 6 | ROCKER ARM, Assy. See Figure 02-33A |
| 3 | | 4895031 | | 12 | TIGE DE CULBUTEUR |
| 4 | | 2854530 | | 12 | PONTET |
| 5 | | 2853788 | | 1 | JOINT, Rocker Lever Housing |
| 6 | | 2852602 | | 3 | VIS, Socket Head Cap |
| 7 | | 2852776 | | 3 | RONDELLE, M6 x 11 x 1.6 |
| 8 | | 2852427 | | 3 | CABLE ELECTRIQUE, Harness |
| 9 | | 4899257 | | 1 | CARTER, ASSY. Rocker Lever, Incl. Ref. 10 |
| 10 | | 4899245 | | 5 | PION, Sleeve |
| 11 | | 2852428 | | 6 | CLIP, Wire Retaining |
| 12 | | 4899089 | | 2 | VIS, Hex Flg, M8 x 1.25 x 50, Not Illustrated |

**CULBUTEURS - MONTAGE**

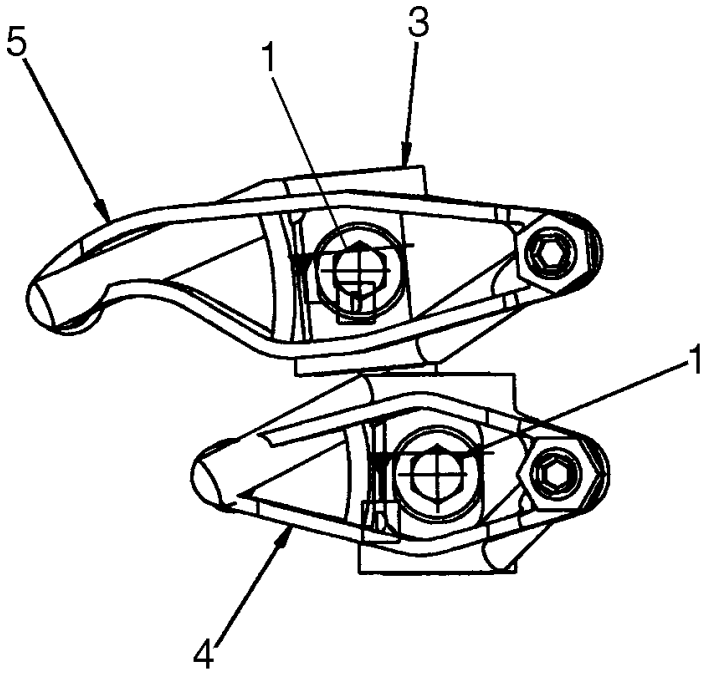


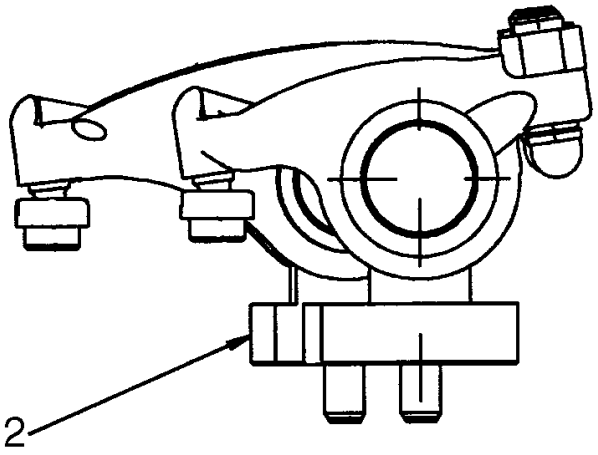


BS07G301

**CULBUTEURS - MONTAGE**

| REF | FN | PART NUMBER | YR/SN | QTY | DESCRIPTION |
|---|---|---|---|---|---|
| | | 87579400 | | 1 | MOTEUR, 6 Cylinder 6.7L Turbo, Tier III; Includes Figures 02-09 - 02-13, 02-15 - 02-41, 03-05 - 03-11; Incl. Refs. 1 - 5 |
| | | {2856458} | | 6 | ROCKER ARM, ASSY. Incl. Refs. 1 - 5 |
| 1 | | {2856460} | | 2 | SCREW, Shoulder |
| 2 | | 4893487 | | 1 | SUPPORT, Rocker Lever |
| 3 | | {2856459} | | 2 | SHAFT, Rocker Lever |
| 4 | | NSS | | 1 | NON FOURNI SEPAREMENT, LEVER, ROCKER, Intake |
| 5 | | NSS | | 1 | NON FOURNI SEPAREMENT, LEVER, ROCKER, Exhaust |

**ARBRE À CAMES**

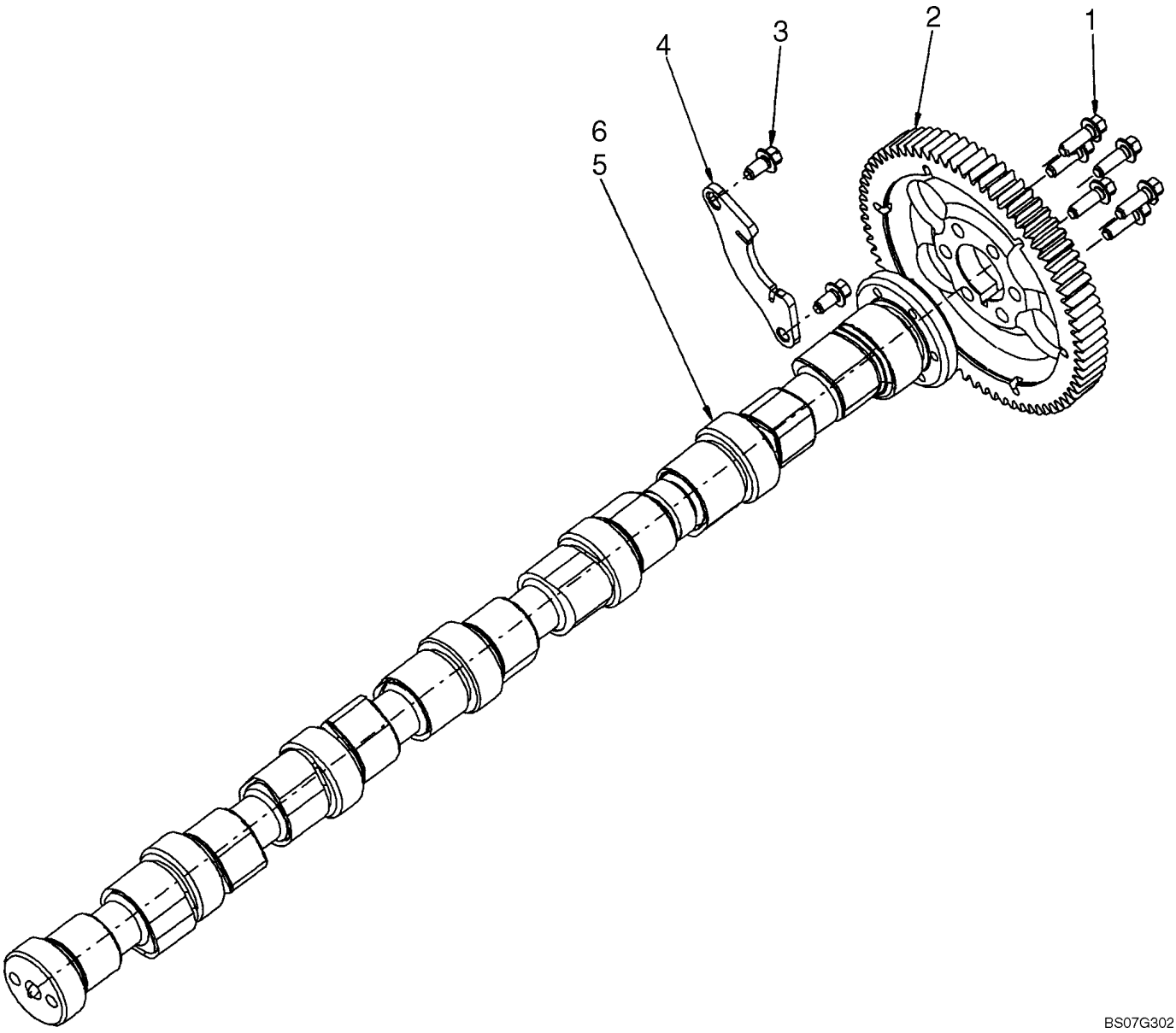

**ARBRE À CAMES**

| REF | FN | PART NUMBER | YR/SN | QTY | DESCRIPTION |
|---|---|---|---|---|---|
| | | 87579400 | | 1 | MOTEUR, 6 Cylinder 6.7L Turbo, Tier III; Includes Figures 02-09 - 02-13, 02-15 - 02-41, 03-05 - 03-11; Incl. Refs. 1 - 6 |
| 1 | | 4899079 | | 6 | VIS, Hex Flg, M8 x 1.25 x 25 |
| 2 | | 4896380 | | 1 | PIGNON CONDUIT |
| 3 | | 4899068 | | 2 | VIS, Hex Flg, M8 x 1.25 x 16 |
| 4 | | 4897457 | | 1 | FLASQUE |
| 5 | | 2854604 | | 1 | ARBRE A CAMES, Incl. Ref. 6 |
| 6 | | 4899080 | | 1 | PION, Not Illustrated |

**PISTONS**

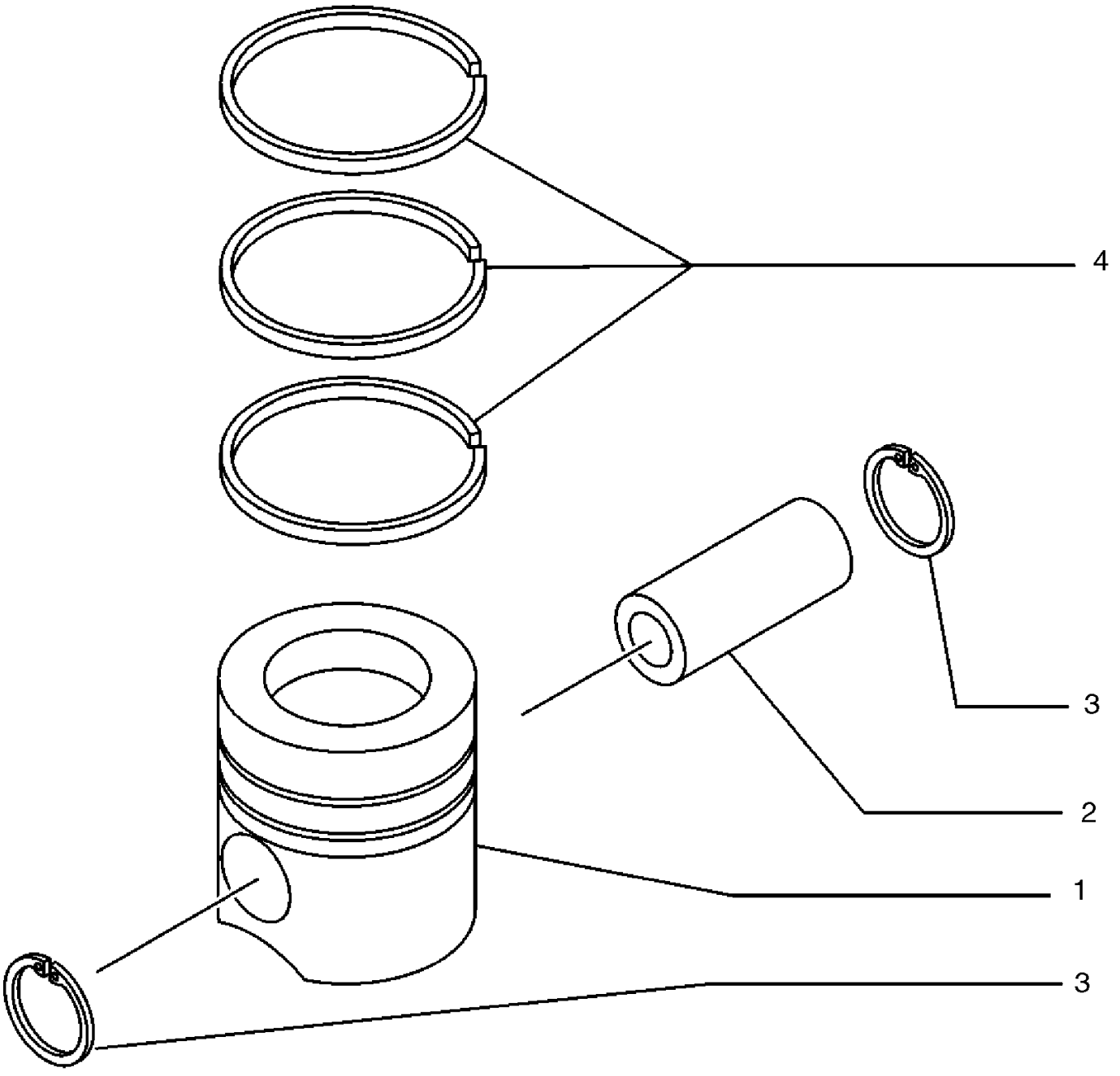

**PISTONS**

| REF | FN | PART NUMBER | YR/SN | QTY | DESCRIPTION |
|---|---|---|---|---|---|
| | | 87579400 | | 1 | MOTEUR, 6 Cylinder 6.7L Turbo, Tier III; Includes Figures 02-09 - 02-13, 02-15 - 02-41, 03-05 - 03-11; Incl. Refs. 1 - 4 |
| 1 | | 2855519 | | 6 | KIT REVISION MOTEUR, PISTON |
| 2 | | 4892712 | | 1 | AXE DE PISTON |
| 3 | | 2854030 | | 2 | JONC D'ARRET |
| 4 | | 2854603 | | 1 | KIT, RING, PISTON SEALING |
| 4 | | 2830158 | | 1 | SEGMENT DE PISTON |
| 4 | | 2852037 | | 1 | SEGMENT RACLEUR |

**BIELLES**

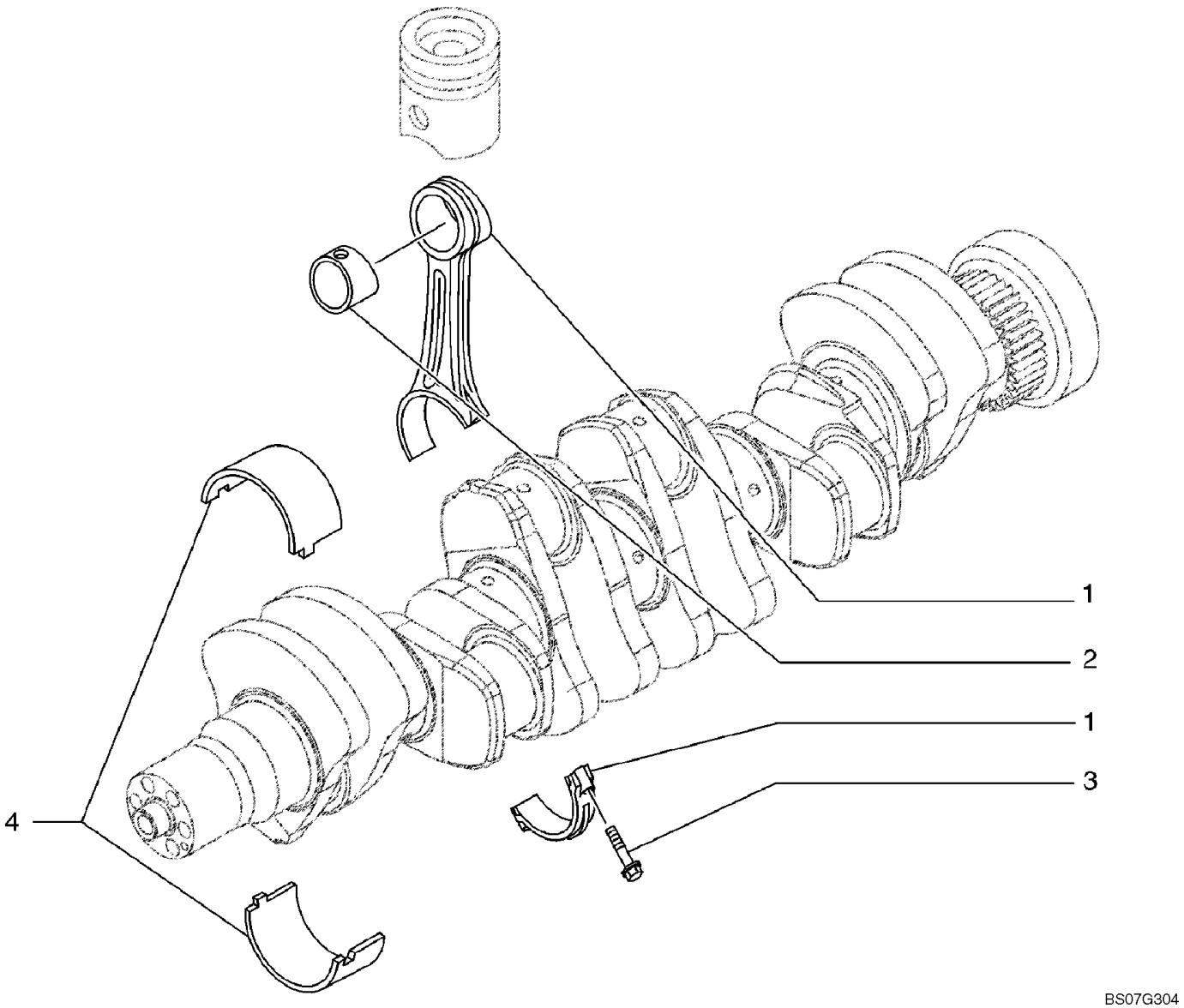

**BIELLES**

| REF | FN | PART NUMBER | YR/SN | QTY | DESCRIPTION |
|---|---|---|---|---|---|
| | | 87579400 | | 1 | MOTEUR, 6 Cylinder 6.7L Turbo, Tier III; Includes Figures 02-09 - 02-13, 02-15 - 02-41, 03-05 - 03-11; Incl. Refs. 1 - 4 |
| | | 2831298 | | 6 | BIELLE, ASSY. Incl. Refs. 1 - 3 |
| 1 | | NSS | | 1 | NON FOURNI SEPAREMENT, CONNECTING ROD, Arm |
| 2 | | 4892708 | | 1 | BAGUE |
| 3 | | 2831297 | | 2 | VIS |
| 4 | | 4892715 | | 6 | COUSSINET VILEBREQUI, If Used |
| 4 | | {2856309} | | 6 | BEARING, CRANKSHAFT, If Used |

**CONDUIT D'ADMISSION**

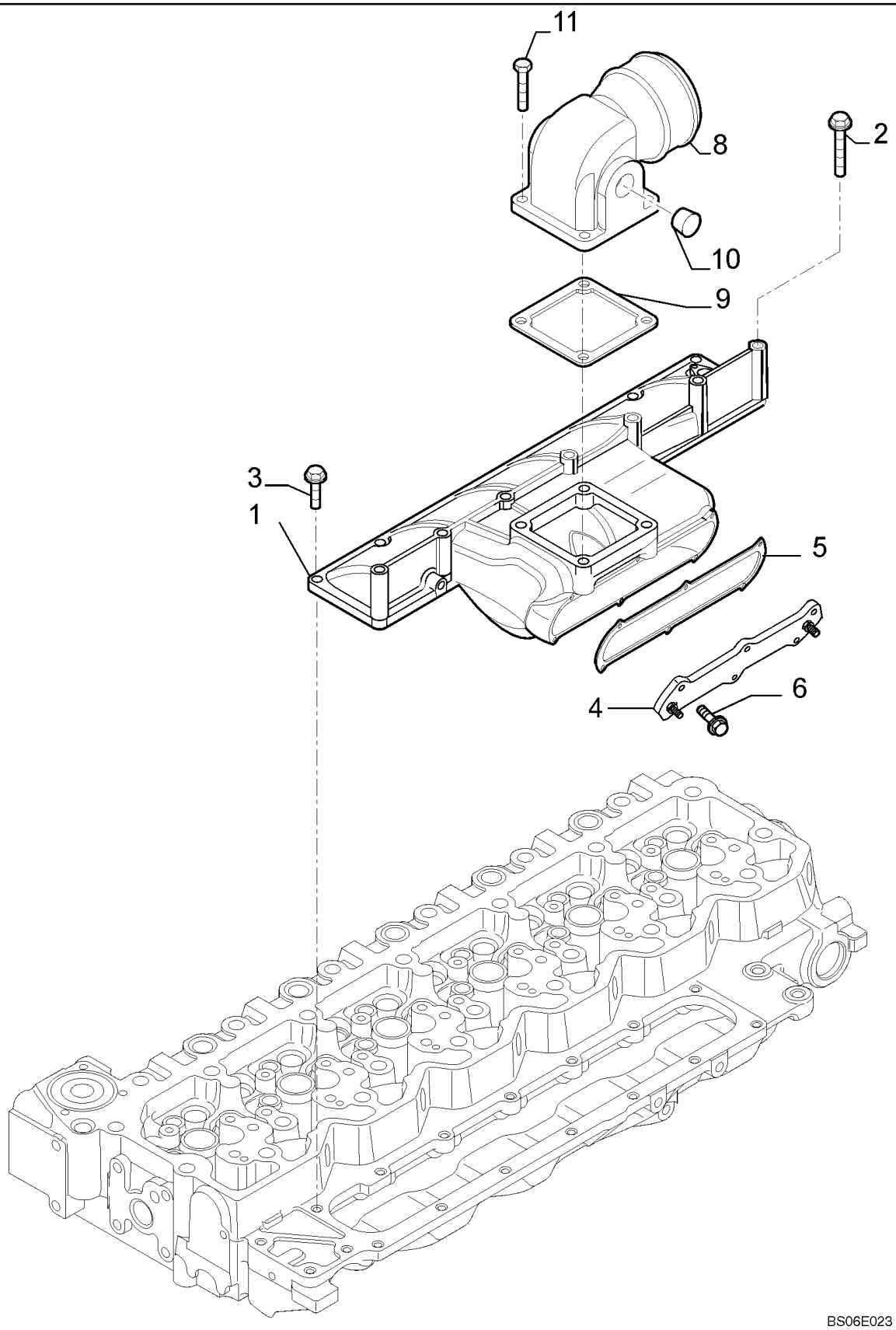

**CONDUIT D'ADMISSION**

| REF | FN | PART NUMBER | YR/SN | QTY | DESCRIPTION |
|---|---|---|---|---|---|
| | | 87579400 | | 1 | MOTEUR, 6 Cylinder 6.7L Turbo, Tier III; Includes Figures 02-09 - 02-13, 02-15 - 02-41, 03-05 - 03-11; Incl. Refs. 1 - 14 |
| 1 | | 2854534 | | 1 | CONDUIT D'ADMISSION |
| 2 | | 4895432 | | 3 | VIS |
| 3 | | 4899039 | | 7 | VIS, Hex Flg, M8 x 1.25 x 25 |
| 4 | | 2854700 | | 1 | COUVERCLE |
| 5 | | 2854701 | | 1 | JOINT |
| 6 | | 2854702 | | 6 | VIS |
| 8 | | 4895424 | | 1 | CONDUIT D'ADMISSION |
| 9 | | 4899921 | | 1 | JOINT |
| 10 | | 4893036 | | 2 | BOUCHON, Alternate Part |
| 10 | | 2854866 | | 2 | BOUCHON, Alternate Part |
| 11 | | 2852212 | | 4 | VIS, Alternate Part |
| 11 | | 4895294 | | 4 | VIS, Alternate Part |
| 12 | | 16745024 | | 1 | GOUJON, Not Illustrated |
| 13 | | 4897766 | | 1 | CABLE, MASSE, Not Illustrated |
| 14 | | 4896263 | | 1 | COIFFE, Not Illustrated |

**CONDUIT D'ÉCHAPPEMENT**

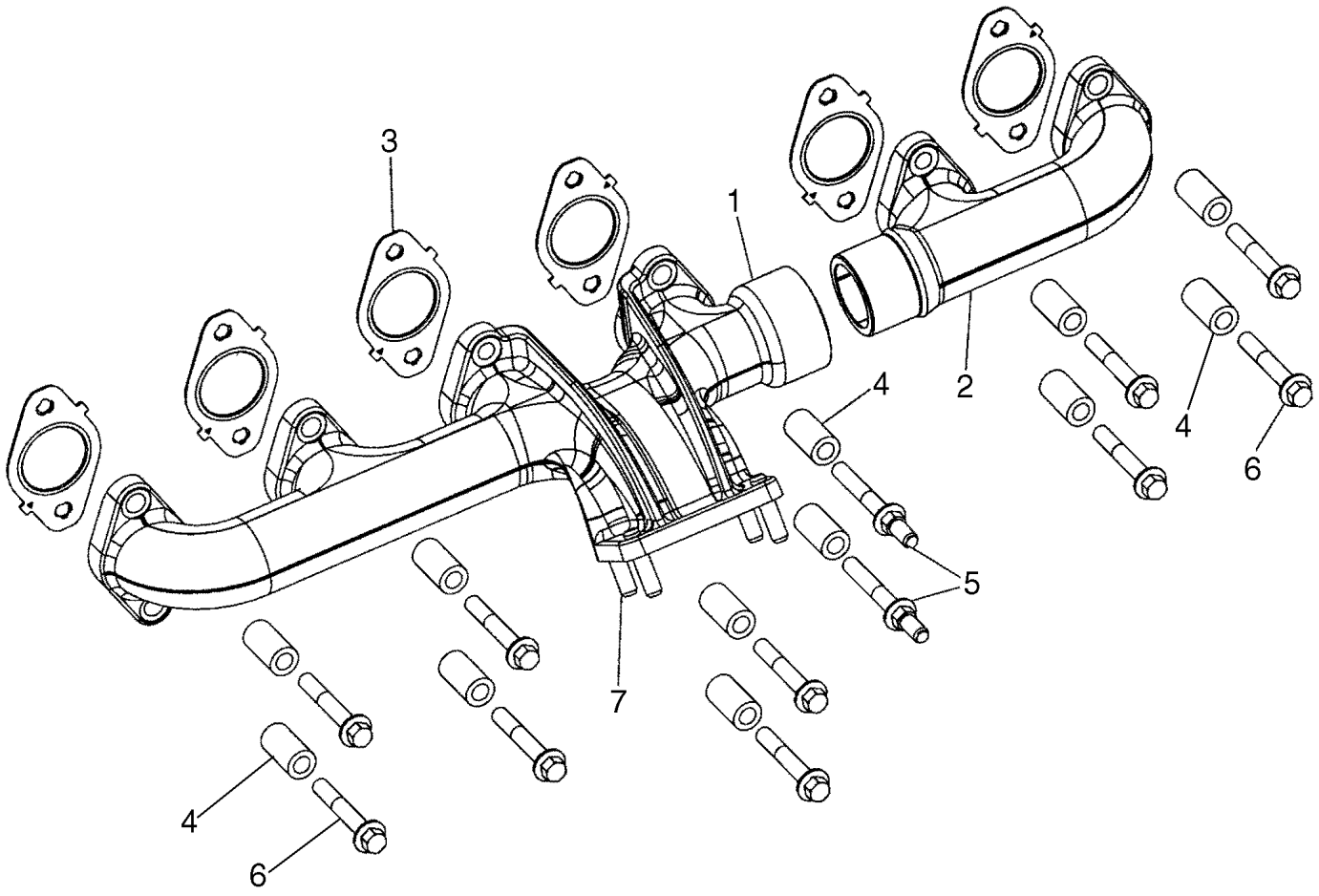

**CONDUIT D'ÉCHAPPEMENT**

| REF | FN | PART NUMBER | YR/SN | QTY | DESCRIPTION |
|---|---|---|---|---|---|
| | | 87579400 | | 1 | MOTEUR, 6 Cylinder 6.7L Turbo, Tier III; Includes Figures 02-09 - 02-13, 02-15 - 02-41, 03-05 - 03-11; Incl. Refs. 1 - 7 |
| 1 | | 4896651 | | 1 | CONDUIT D'ECHAPPEMENT |
| 2 | | 4896650 | | 1 | CONDUIT D'ECHAPPEMENT |
| 3 | | 2830444 | | 6 | JOINT |
| 4 | | 4895336 | | 12 | ENTRETOISE |
| 5 | | 4895219 | | 2 | GOUJON |
| 6 | | 2852744 | | 10 | VIS |
| 7 | | 4899085 | | 4 | GOUJON |

**CIRCUIT DE REFROIDISSEMENT - MOTEUR**

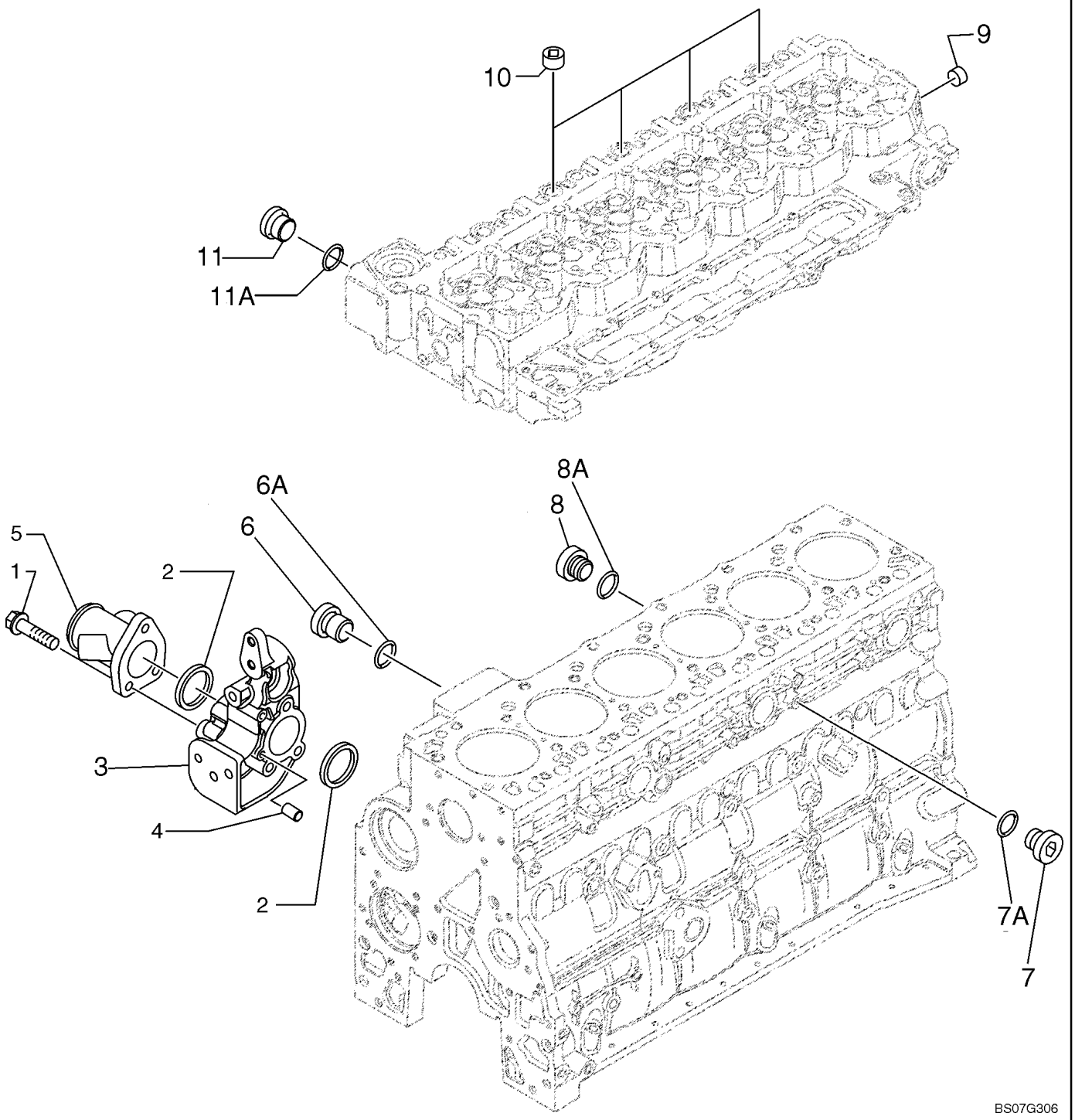

**CIRCUIT DE REFROIDISSEMENT - MOTEUR**

| REF | FN | PART NUMBER | YR/SN | QTY | DESCRIPTION |
|---|---|---|---|---|---|
| | | 87579400 | | 1 | MOTEUR, 6 Cylinder 6.7L Turbo, Tier III; Includes Figures 02-09 - 02-13, 02-15 - 02-41, 03-05 - 03-11; Incl. Refs. 1 - 11A |
| 1 | | 2852325 | | 3 | VIS, M10 x 80 |
| 2 | | 2854072 | | 2 | JOINT THORIQUE |
| 3 | | 2852392 | | 1 | SUPPORT, Incl. Ref. 4 |
| 4 | | 4895576 | | 2 | PION |
| 5 | | 2852468 | | 1 | TUYAU RIGIDE |
| 6 | | 2852496 | | 1 | BOUCHON, Incl. Ref. 6A |
| 6A | | 4895393 | | 1 | JOINT THORIQUE |
| 7 | | 4895623 | | 1 | BOUCHON, Incl. Ref. 7A |
| 7A | | 4895625 | | 1 | JOINT THORIQUE |
| 8 | | 2852496 | | 2 | BOUCHON, Incl. Ref. 8A |
| 8A | | 4899824 | | 2 | RONDELLE D'ETANCHEITE |
| 9 | | 4895079 | | 2 | BOUCHON |
| 10 | | 4895078 | | 4 | BOUCHON |
| 11 | | 4895080 | | 1 | BOUCHON, Incl. Ref. 11A |
| 11A | | 4895082 | | 1 | JOINT THORIQUE |

**THERMOSTAT - REFROIDISSEMENT MOTEUR**

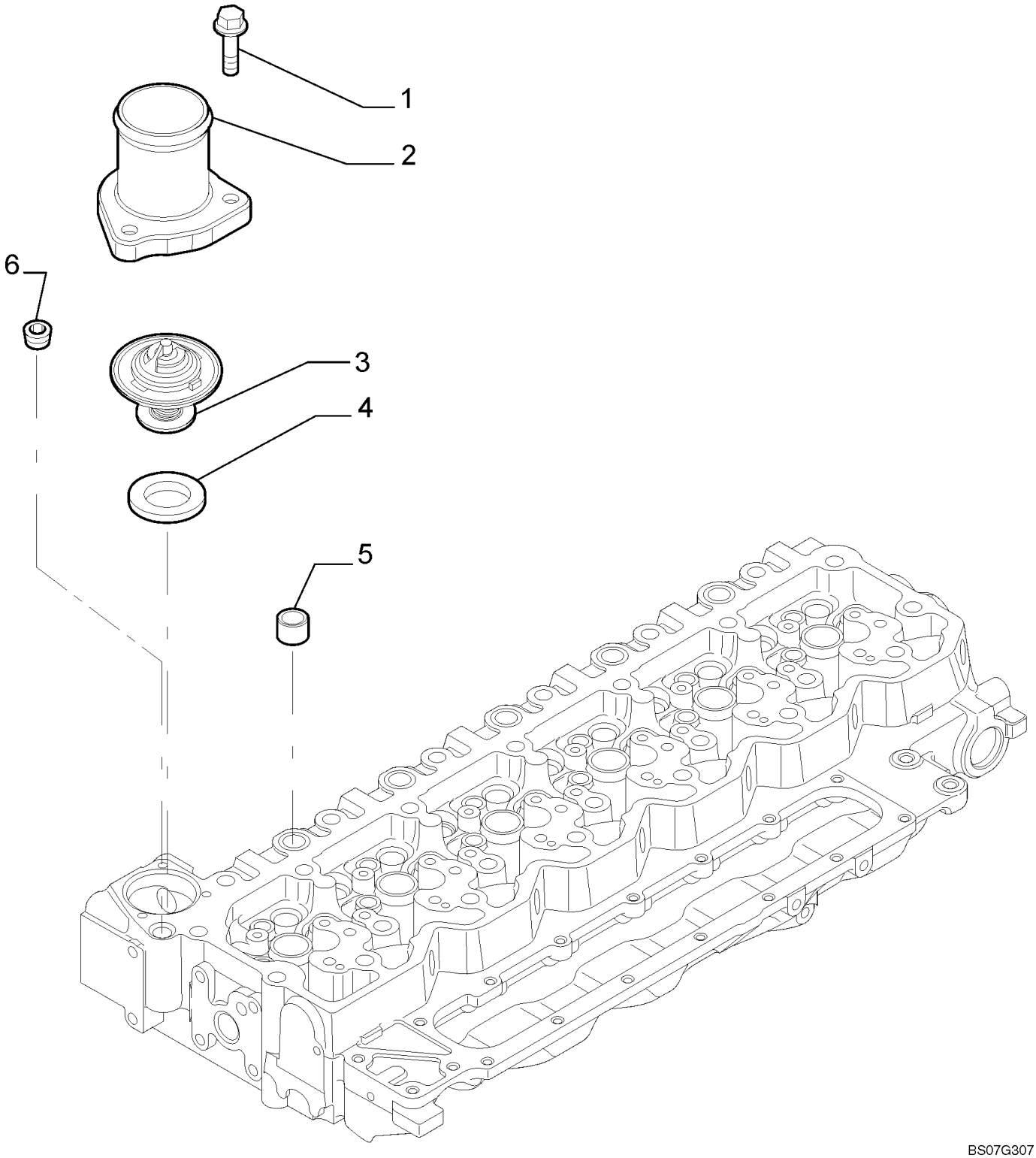

**THERMOSTAT - REFROIDISSEMENT MOTEUR**

| REF | FN | PART NUMBER | YR/SN | QTY | DESCRIPTION |
|---|---|---|---|---|---|
| | | 87579400 | | 1 | MOTEUR, 6 Cylinder 6.7L Turbo, Tier III; Includes Figures 02-09 - 02-13, 02-15 - 02-41, 03-05 - 03-11; Incl. Refs. 1 - 6 |
| 1 | | 4899110 | | 3 | VIS, Hex Flg, M6 x 1 x 20 |
| 2 | | 4895131 | | 1 | CARTER |
| 3 | | 2856543 | | 1 | THERMOSTAT, ASSY. Incl. Ref. 4 |
| 4 | | 2852473 | | 1 | JOINT |
| 5 | | 4893036 | | 1 | BOUCHON, Alternate Part |
| 5 | | 2854866 | | 1 | BOUCHON, Alternate Part |
| 6 | | 4895078 | | 4 | BOUCHON |
| 7 | | 2854491 | | 1 | BOUCHON, Engine Cooland Vent, Not Illustrated |

**CROCHETS DE MANOEUVRE - MOTEUR**

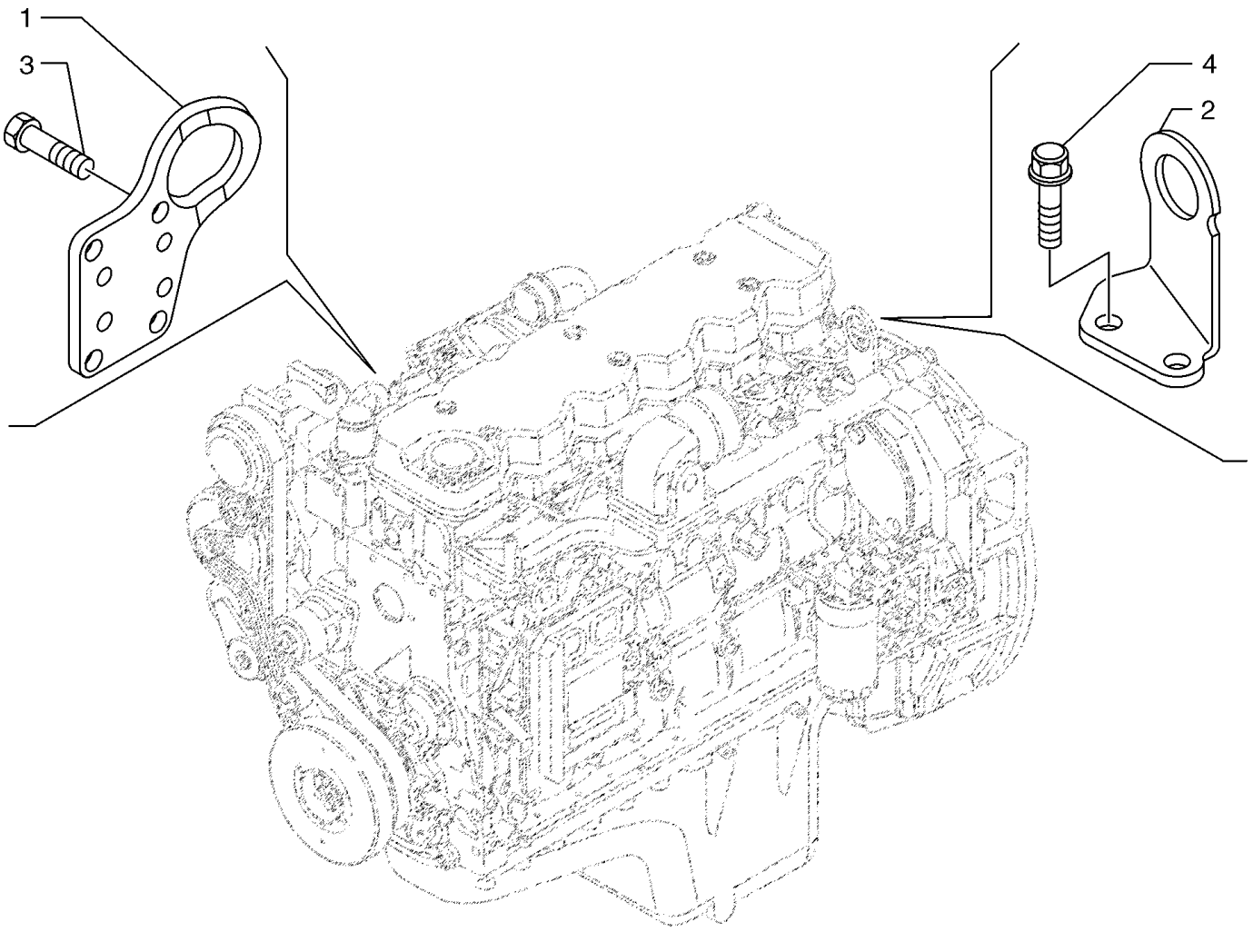

**CROCHETS DE MANOEUVRE - MOTEUR**

| REF | FN | PART NUMBER | YR/SN | QTY | DESCRIPTION |
|---|---|---|---|---|---|
| | | 87579400 | | 1 | MOTEUR, 6 Cylinder 6.7L Turbo, Tier III; Includes Figures 02-09 - 02-13, 02-15 - 02-41, 03-05 - 03-11; Incl. Refs. 1 - 4 |
| 1 | | 4894100 | | 1 | CROCHET |
| 2 | | 4894410 | | 1 | CROCHET |
| 3 | | 4899037 | | 2 | VIS, Hex Flg, M12 x 1.75 x 25 |
| 4 | | 4899079 | | 4 | VIS, Hex Flg, M8 x 1.25 x 25 |

**MOTEUR - CHAUFFE-BLOC**

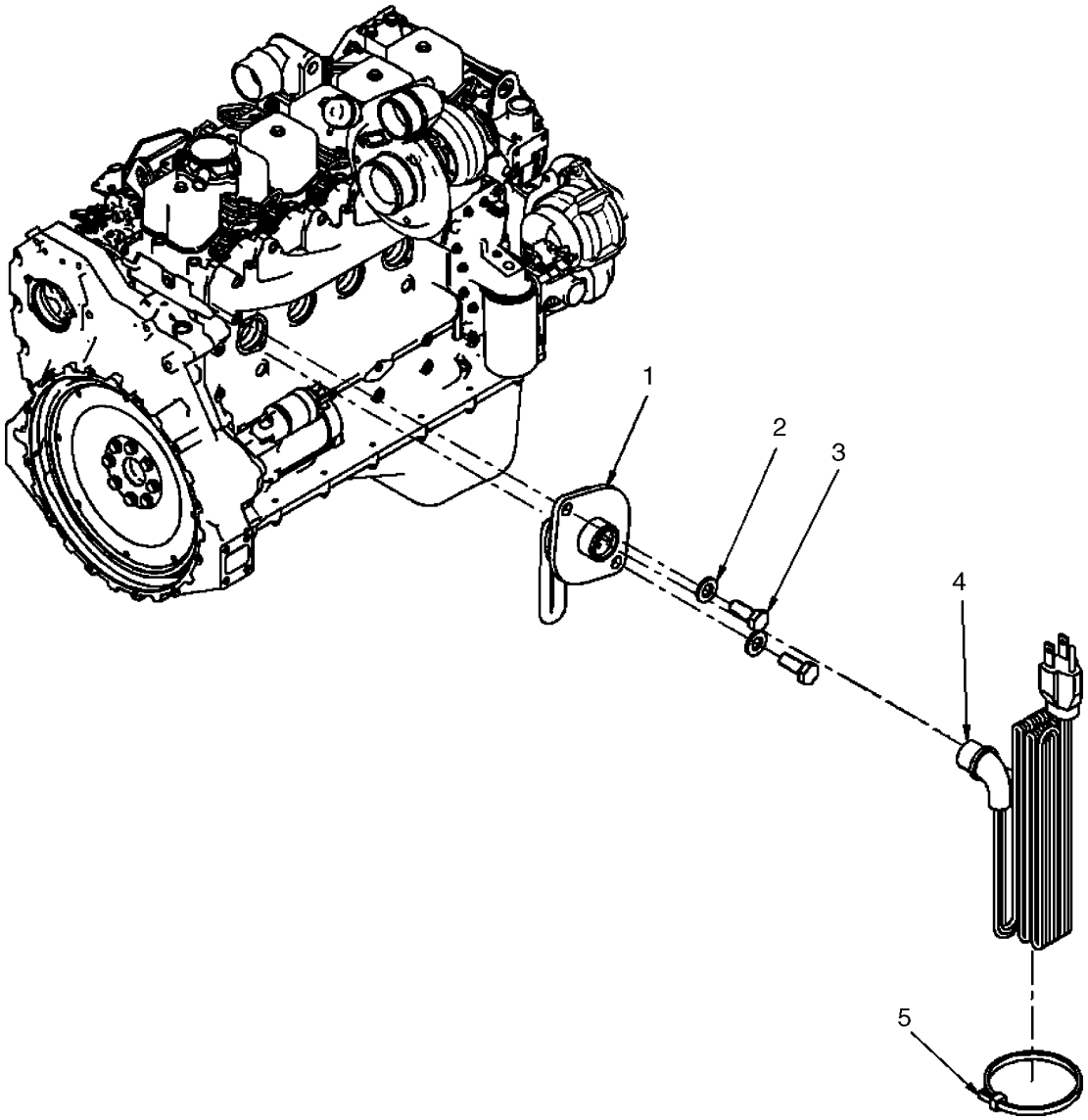


BS07G079

**MOTEUR - CHAUFFE-BLOC**

| REF | FN | PART NUMBER | YR/SN | QTY | DESCRIPTION |
|---|---|---|---|---|---|
| 1 | | 8602005 | | 1 | RECHAUFFEUR, 750W, 120V |
| 2 | | 896-11008 | | 2 | RONDELLE, M8 x 17.5 x 2, HT |
| 3 | | 627-8020 | | 2 | BOULON, Hex, M8 x 20, 10.9 |
| 4 | | 196466A1 | | 1 | CABLE ELECTRIQUE, Engine Heater |
| 5 | | L11541 | | 1 | SANGLE |

## NOTES

# SECTION INDEX
## Circuit de Carburant


| | |
|---|---|
| 03-01 | CONDUITES D'ESSENCE - REFROIDISSEUR, CARBURANT |
| 03-02 | FILTRE, CARBURANT - L'EAU SEPERATOR |
| 03-03 | FILTRE, CARBURANT |
| 03-04 | GOULOT DU RÉSERVOIR DE CARBURANT - ÉMETTEUR |
| 03-04A | RÉSERVOIR DE CARBURANT - RENIFLARD |
| 03-05 | POMPE DINJECTION |
| 03-06 | SYSTÈME D'INJECTION |
| 03-07 | SYSTÈME D'INJECTION - INJECTEUR |
| 03-08 | SYSTÈME D'INJECTION - ALIMENTATION EN CARBURANT |
| 03-09 | SYSTÈME D'INJECTION - MODULE DE COMMANDE DU MOTEUR |
| 03-10 | SYSTÈME D'INJECTION - FAISCEAU, MOTEUR |
| 03-11 | SYSTÈME D'INJECTION - CONDUITE DE VIDANGE |

| 03-01 | | p1 | 07/07 |
|---|---|---|---|

**CONDUITES D'ESSENCE - REFROIDISSEUR, CARBURANT**

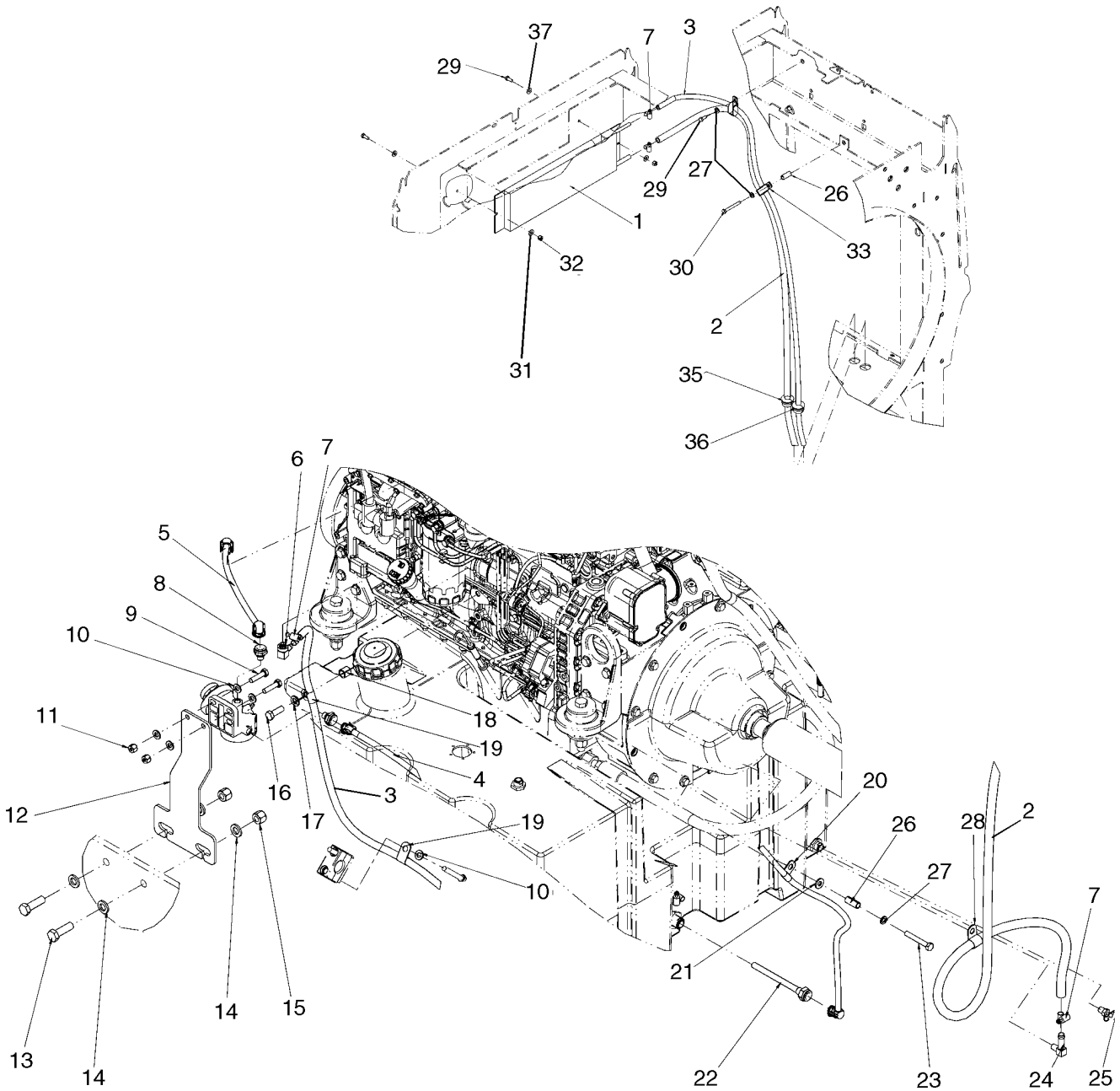


BS07D396

**CONDUITES D'ESSENCE - REFROIDISSEUR, CARBURANT**

| REF | FN | PART NUMBER | YR/SN | QTY | DESCRIPTION |
|---|---|---|---|---|---|
| 1 | | 347615A3 | | 1 | REFROIDISSEUR, Fuel |
| 2 | | 87552502 | | 1 | FLEXIBLE, Fuel Cooler to Tank; 2744 mm (108 in) |
| 3 | | 87358043 | | 1 | FLEXIBLE AU METRE, Engine to Fuel Cooler; 2870 mm (113 in) |
| 4 | | 8602538 | | 1 | TUYAUTERIE, Tank to Prefilter |
| 5 | | 87525374 | | 1 | TUYAUTERIE, Prefilter to Engine |
| 6 | | 87400460 | | 1 | RACCORD, 90 Degree |
| 7 | | 214-1406 | | 6 | BRIDE, FLEXIBLE, #06, .44/.78 Type F Worm |
| 8 | | 8602542 | | 2 | ADAPTEUR |
| 9 | | 827-10040 | | 2 | BOULON, Hex, M10 x 40, 10.9, Full Thd |
| 10 | | 896-11010 | | 5 | RONDELLE, M10 x 21.5 x 2.5, HT |
| 11 | | 832-10410 | | 2 | CONTRE-ECROU, M10 x 1.5, Cl 8 |
| 12 | | 87323827 | | 1 | PATTE FIXATION, Pre-Filter Mounting |
| 13 | | 627-16050 | | 2 | BOULON, Hex, M16 x 50, 10.9 |
| 14 | | 896-11016 | | 4 | RONDELLE, M17.5 x 30 x 4, HT |
| 15 | | 832-10416 | | 2 | CONTRE-ECROU, M16 x 2, Cl 8 |
| 16 | | 627-12035 | | 1 | BOULON, Hex, M12 x 35, 10.9 |
| 17 | | 896-11012 | | 1 | RONDELLE, M13.5 x 24.5 x 3, HT |
| 18 | | 87307825 | | 1 | ENTRETOISE |
| 19 | | 515-25159 | | 2 | BRIDE, 5/8", Insul, 1/2" Bolt |
| 20 | | 515-25127 | | 1 | BRIDE, 1/2", Insul, 1/2" Bolt |
| 21 | | 896-15010 | | 1 | RONDELLE, M10 x 24.5 x 3, HT |
| 22 | | 8602537 | | 1 | TUBE, Tank Draw |
| 23 | | 827-10070 | | 1 | BOULON, Hex, M10 x 70, 10.9 |
| 24 | | 217-372 | | 1 | RACCORD, 90º, 1/2" Hose x 1/4" NPTF Beaded |
| 25 | | 217-92 | | 1 | ROBINET DE VIDANGE |
| 26 | | L126936 | | 2 | ENTRETOISE |
| 27 | | 892-11010 | | 3 | RONDELLE FREIN, M10 |
| 28 | | 515-25190 | | 1 | BRIDE, 3/4", Insul, 1/2" Bolt |
| 29 | | 627-8020 | | 3 | BOULON, Hex, M8 x 20, 10.9 |
| 30 | | 827-8070 | | 1 | BOULON, Hex, M8 x 70, 10.9 |
| 31 | | 627-8025 | | 1 | BOULON, Hex, M8 x 25, 10.9 |
| 32 | | 832-10408 | | 2 | CONTRE-ECROU, M8 x 1.25, Cl 8 |
| 33 | | L101181 | | 2 | BRIDE |
| 35 | | 198826C1 | | 1 | PASSE-FIL |

| 03-01 | | p2 | 07/07 |
|---|---|---|---|

**CONDUITES D'ESSENCE - REFROIDISSEUR, CARBURANT**

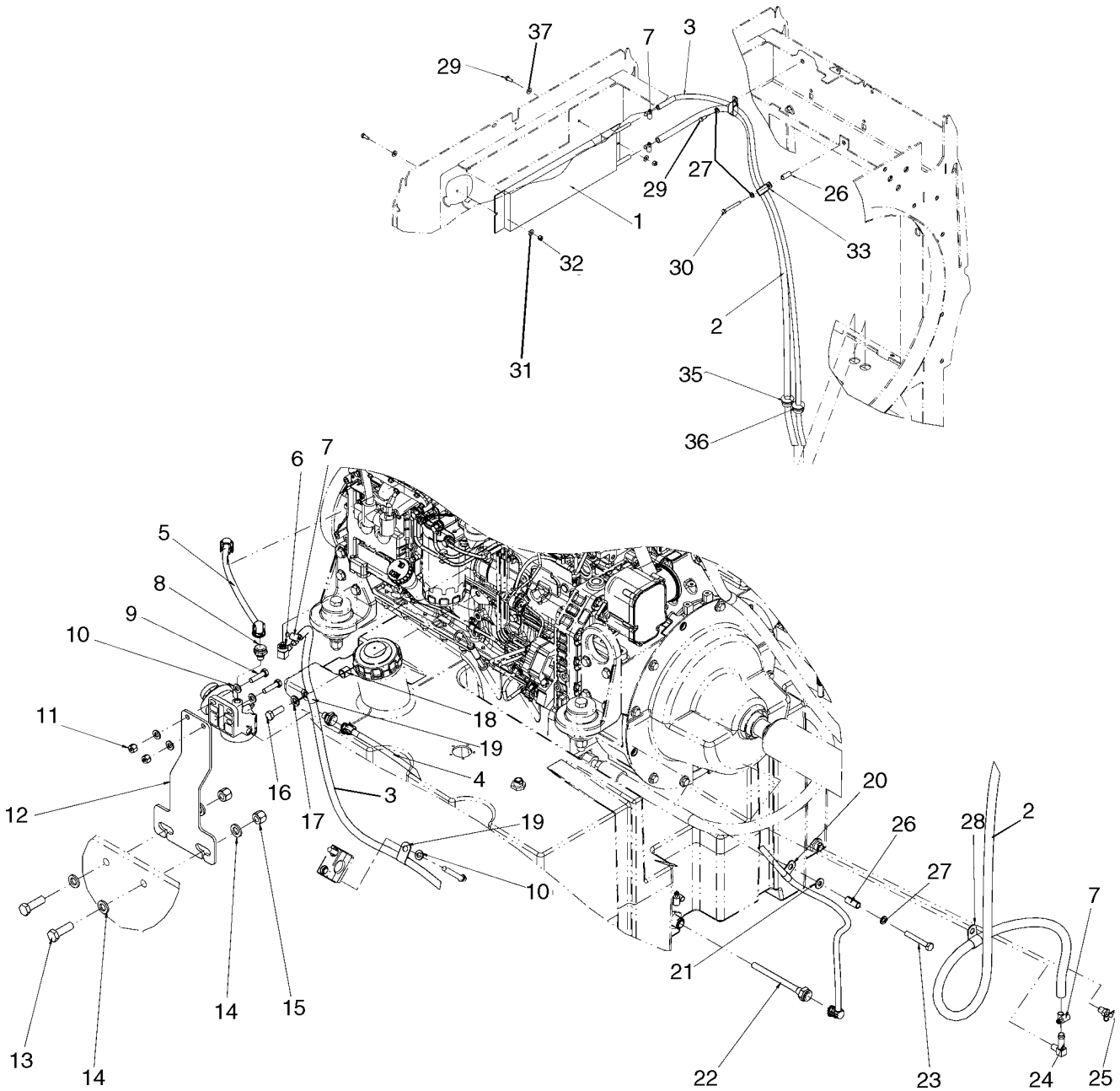


BS07D396

**CONDUITES D'ESSENCE - REFROIDISSEUR, CARBURANT**

| REF | FN | PART NUMBER | YR/SN | QTY | DESCRIPTION |
|---|---|---|---|---|---|
| 36 | | 198825C1 | | 1 | PASSE-FIL |
| 37 | | 895-15008 | | 5 | RONDELLE, M8 x 20 x 1.6 |

**FILTRE, CARBURANT - L'EAU SEPERATOR**

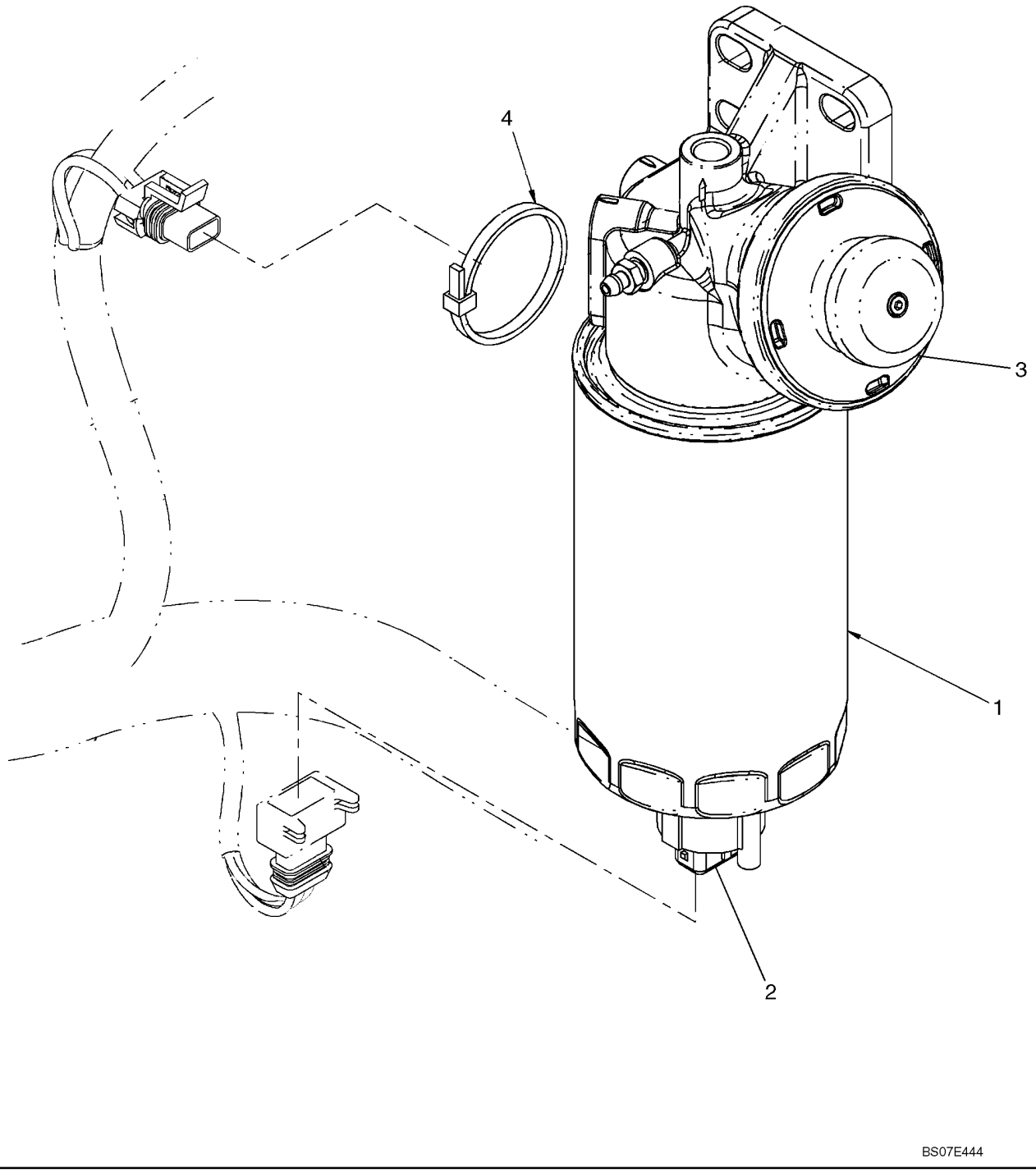

**FILTRE, CARBURANT - L'EAU SEPERATOR**

| REF | FN | PART NUMBER | YR/SN | QTY | DESCRIPTION |
|---|---|---|---|---|---|
| | | {87519285} | | 1 | FILTER ASSY. Without Heater, Incl. Refs. 1 - 3 |
| | | 87393456 | | 1 | FILTRE ASSY, With Heater, Incl. Refs. 1 - 3 |
| 1 | | 87435526 | | 1 | FILTRE A COMBUSTIBLE, Cartridge |
| 2 | | 87519307 | | 1 | CAPTEUR, Water |
| 3 | | NSS | | 1 | NON FOURNI SEPAREMENT, Filter Head |
| 4 | | L11541 | | 1 | SANGLE, Wire Tie; If Used |

**FILTRE, CARBURANT**

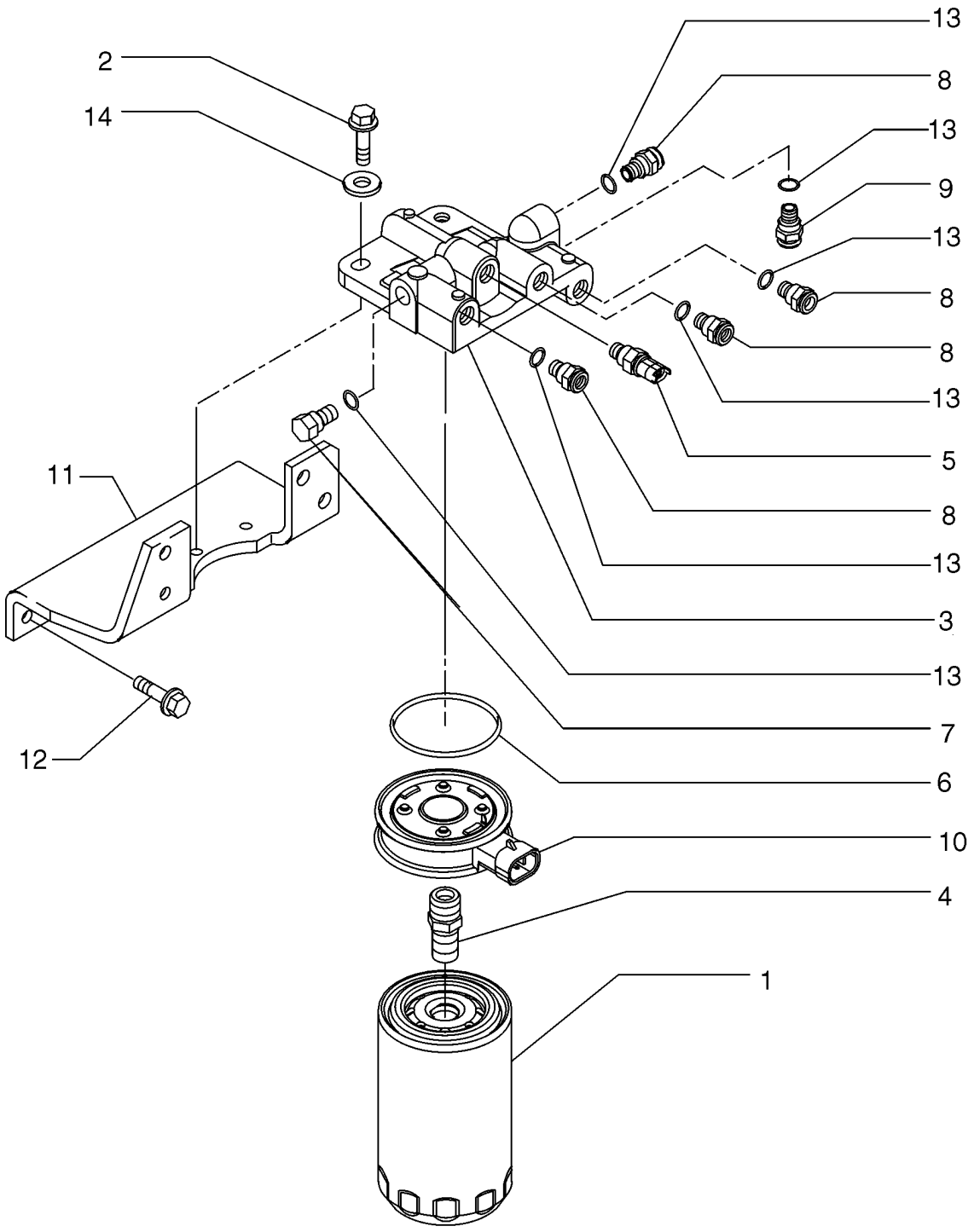

**FILTRE, CARBURANT**

| REF | FN | PART NUMBER | YR/SN | QTY | DESCRIPTION |
|---|---|---|---|---|---|
| | | 87579400 | | 1 | MOTEUR, 6 Cylinder 6.7L Turbo, Tier III; Includes Figures 02-09 - 02-13, 02-15 - 02-41, 03-05 - 03-11; Incl. Refs. 1 - 14 |
| 1 | | 87803200 | | 1 | FILTRE A COMBUSTIBLE |
| 2 | | 2830733 | | 2 | VIS, M8 x 25 |
| | | 2852436 | | 1 | TÊTE, ASSY. With Heater, Incl. Refs. 3 - 10, 13 |
| 3 | | NSS | | 1 | NON FOURNI SEPAREMENT, Fuel Filter Head |
| 4 | | 4898758 | | 1 | RACCORD |
| 5 | | 4897224 | | 1 | CAPTEUR, Temperature |
| 6 | | 4898876 | | 1 | JOINT THORIQUE |
| 7 | | 4893464 | | 1 | BOUCHON, Threaded |
| 8 | | 4890964 | | 4 | RACCORD |
| 9 | | 4896543 | | 1 | RACCORD |
| 10 | | 4897838 | | 1 | RECHAUFFEUR |
| 11 | | 2852793 | | 1 | PATTE FIXATION, Fuel Filter Head Mounting |
| 12 | | 2852791 | | 4 | VIS, M8 x 20 |
| 13 | | 4894721 | | 6 | RONDELLE D'ETANCHEITE |
| 14 | | 2830711 | | 2 | RONDELLE |

| 03-04 | | p1 | 07/07 |
|---|---|---|---|

**GOULOT DU RÉSERVOIR DE CARBURANT - ÉMETTEUR**

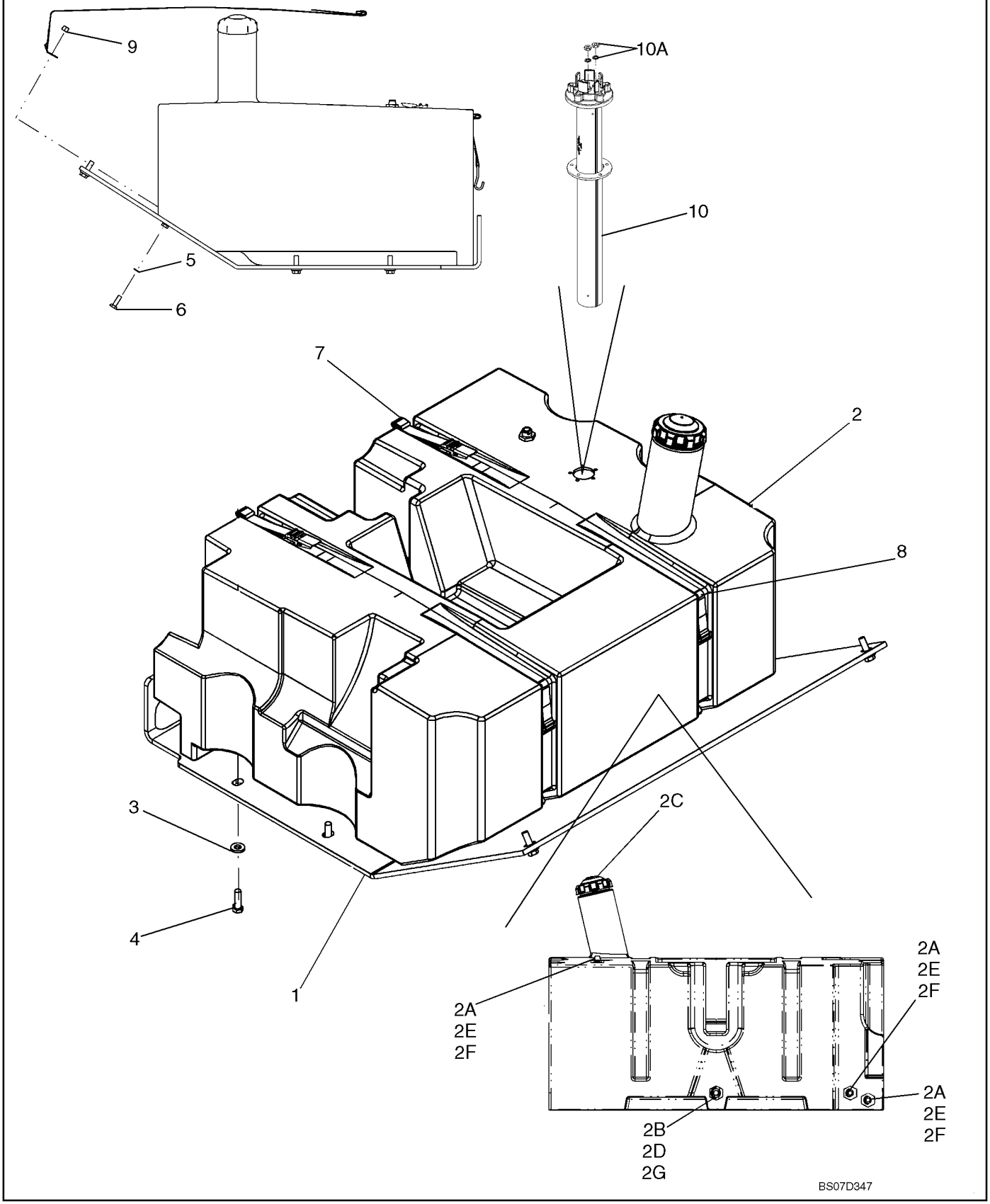

**GOULOT DU RÉSERVOIR DE CARBURANT - ÉMETTEUR**

| REF | FN | PART NUMBER | YR/SN | QTY | DESCRIPTION |
|---|---|---|---|---|---|
| 1 | | 87550115 | | 1 | PLAQUE, Fuel Tank |
| 2 | | 8500909 | | 1 | RESERVOIR DE COMBUSTIBLE, Incl. Refs. 2A - 2G |
| 2A | | 238-5210 | | 3 | JOINT THORIQUE, -210, 70 Duro, .734" ID x .139" Thk |
| 2B | | 238-5214 | | 1 | JOINT THORIQUE, -214, 70 Duro, .984" ID x .139" Thk |
| 2C | | 8604443 | | 1 | CHAPEAU |
| 2D | | 87435224 | | 1 | RACCORD |
| 2E | | 87435505 | | 3 | RACCORD |
| 2F | | 1251791C1 | | 3 | ECROU |
| 2G | | 282709A1 | | 1 | ECROU |
| 3 | | 896-15012 | | 6 | RONDELLE, M12 x 28.5 x 4, HT |
| 4 | | 627-12040 | | 6 | BOULON, Hex, M12 x 40, 10.9, Full Thd |
| 5 | | 627-10030 | | 2 | BOULON, Hex, M10 x 30, 10.9, Full Thd |
| 6 | | 627-10030 | | 2 | BOULON, Hex, M10 x 30, 10.9, Full Thd |
| 7 | | 366905A1 | | 2 | COURROIE, 476 mm (18 - 3/4in) |
| 8 | | 366904A1 | | 2 | COURROIE, 1342 mm (52 - 13/16in) |
| 9 | | 832-10410 | | 2 | CONTRE-ECROU, M10 x 1.5, Cl 8 |
| 10 | | 87542710 | | 1 | TRANSMETTEUR ASSY, Fuel Level |
| 10A | | 87617083 | | 1 | KIT, Nut Pack |

**RÉSERVOIR DE CARBURANT - RENIFLARD**

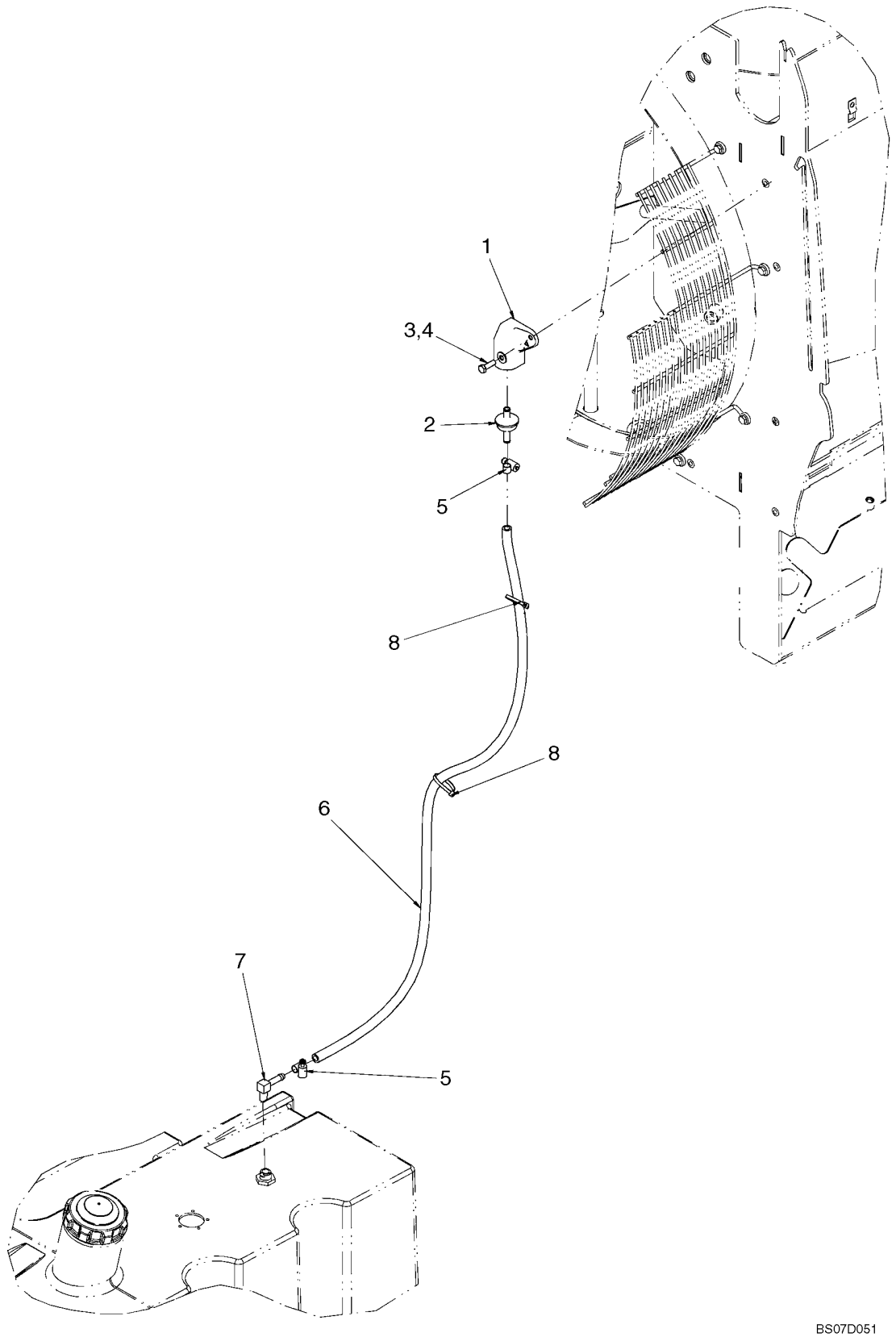

**RÉSERVOIR DE CARBURANT - RENIFLARD**

| REF | FN | PART NUMBER | YR/SN | QTY | DESCRIPTION |
|---|---|---|---|---|---|
| 1 | | 186814A1 | | 1 | CHAPEAU, Fuel Tank Vent |
| 2 | | T103750 | | 1 | VALVE D'ARRET |
| 3 | | 895-15008 | | 5 | RONDELLE, M8 x 20 x 1.6 |
| 4 | | 627-8025 | | 1 | BOULON, Hex, M8 x 25, 10.9 |
| 5 | | 214-1406 | | 6 | BRIDE, FLEXIBLE, #06, .44/.78 Type F Worm |
| 6 | | 87549248 | | 1 | FLEXIBLE AU METRE, Fuel Tank Breather; 1300 mm (51 - 3/8 in) |
| 7 | | 217-132 | | 1 | COUDE, 90°, 3/8" Hose x 1/4" NPTF Beaded |
| 8 | | L11541 | | 2 | SANGLE |

**POMPE DINJECTION**

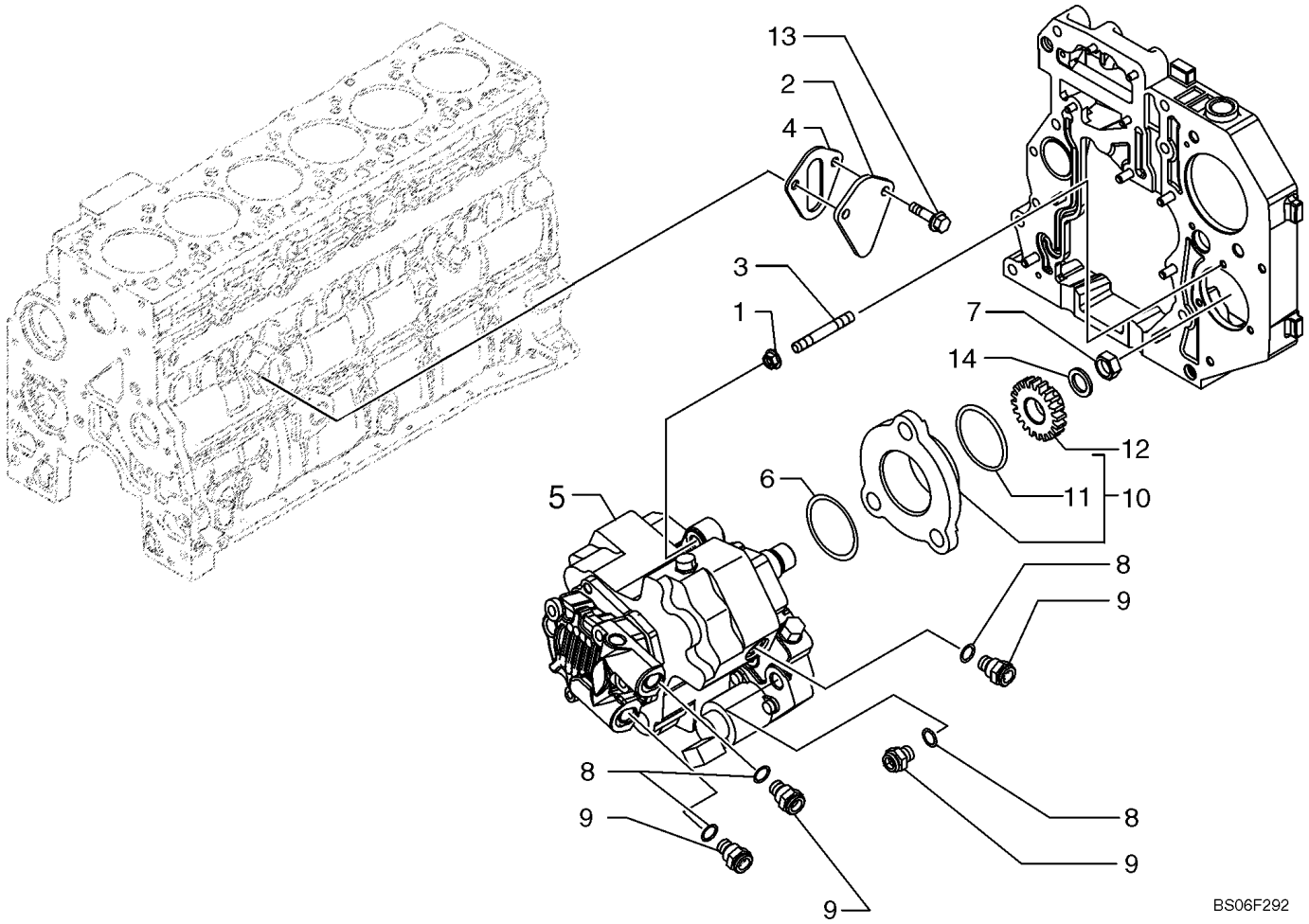

**POMPE DINJECTION**

| REF | FN | PART NUMBER | YR/SN | QTY | DESCRIPTION |
|---|---|---|---|---|---|
| | | 87579400 | | 1 | MOTEUR, 6 Cylinder 6.7L Turbo, Tier III; Includes Figures 02-09 - 02-13, 02-15 - 02-41, 03-05 - 03-11; Incl. Refs. 1 - 14 |
| 1 | | 4899003 | | 3 | ECROU, M8 |
| 2 | | 4896952 | | 1 | COUVERCLE |
| 3 | | 2852488 | | 3 | GOUJON, M8 x 1.25 x 50 |
| 4 | | 4890700 | | 1 | JOINT |
| | | 4898921 | | 1 | POMPE D'ALIMENTATION, Incl. Refs. 5 - 9, 14 |
| 5 | | NSS | | 1 | NON FOURNI SEPAREMENT, FUEL PUMP |
| 6 | | 4890088 | | 1 | JOINT THORIQUE |
| 7 | | 4890634 | | 1 | ECROU, M18X1.5 |
| 8 | | 4891385 | | 4 | JOINT |
| 9 | | 4893962 | | 4 | ACCOUPLEMANT RAP MALE |
| 10 | | 2852804 | | 1 | MOYEU, ASSY. Incl. Ref. 11 |
| 11 | | 2852805 | | 1 | JOINT THORIQUE |
| 12 | | 4893389 | | 1 | PIGNON CONDUIT |
| 13 | | 2852234 | | 2 | VIS, Hex Flg, M8 x 1.25 x 20 |
| 14 | | 4890635 | | 1 | RONDELLE |

**SYSTÈME D'INJECTION**

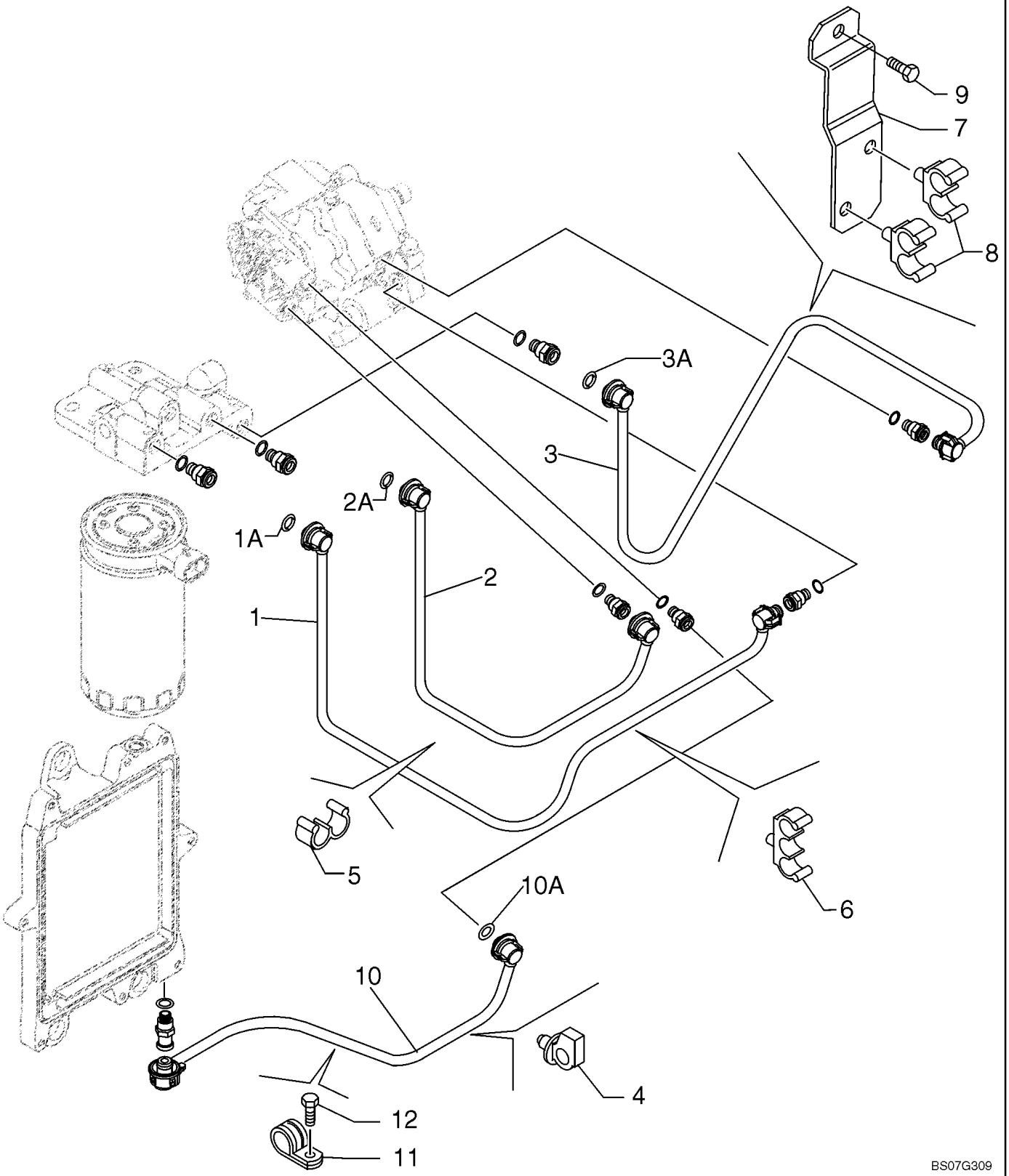

**SYSTÈME D'INJECTION**

| REF | FN | PART NUMBER | YR/SN | QTY | DESCRIPTION |
|---|---|---|---|---|---|
| | | 87579400 | | 1 | MOTEUR, 6 Cylinder 6.7L Turbo, Tier III; Includes Figures 02-09 - 02-13, 02-15 - 02-41, 03-05 - 03-11; Incl. Refs. 1 - 12 |
| 1 | | 2852440 | | 1 | TUYAU RIGIDE, Fuel Supply, Incl. Ref. 1A |
| 1A | | 4894095 | | 2 | JOINT THORIQUE |
| 2 | | 2852443 | | 1 | TUYAU RIGIDE, Fuel Supply, Incl. Ref. 2A |
| 2A | | 4894095 | | 2 | JOINT THORIQUE |
| 3 | | 2852446 | | 1 | TUYAU RIGIDE, Fuel Return, Incl. Ref. 3A |
| 3A | | 4894095 | | 2 | JOINT THORIQUE |
| 4 | | 4896996 | | 1 | BRIDE |
| 5 | | 2852449 | | 2 | BRIDE |
| 6 | | 2852794 | | 1 | ATTACHE-CABLE |
| 7 | | 2852451 | | 1 | PATTE FIXATION, Fuel Plumbing |
| 8 | | 2852452 | | 2 | ATTACHE-CABLE |
| 9 | | 4897277 | | 1 | VIS |
| 10 | | 4897817 | | 1 | TUYAU RIGIDE, Fuel Supply, Incl. Ref. 10A |
| 10A | | 4894095 | | 2 | JOINT THORIQUE |
| 11 | | 4895462 | | 1 | BRIDE |
| 12 | | {76195212} | | 1 | SCREW |

**SYSTÈME D'INJECTION - INJECTEUR**

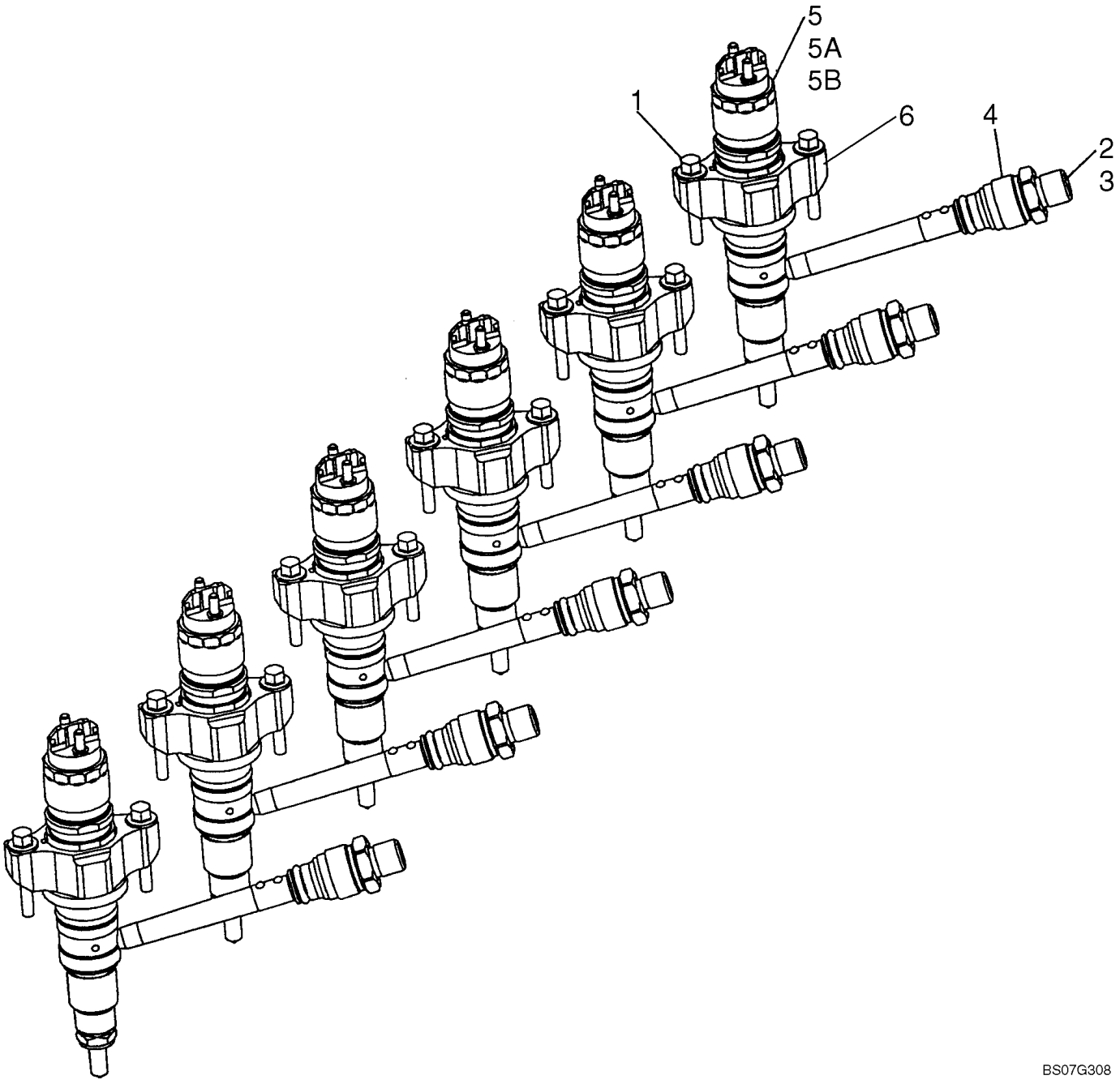

**SYSTÈME D'INJECTION - INJECTEUR**

| REF | FN | PART NUMBER | YR/SN | QTY | DESCRIPTION |
|---|---|---|---|---|---|
| | | 87579400 | | 1 | MOTEUR, 6 Cylinder 6.7L Turbo, Tier III; Includes Figures 02-09 - 02-13, 02-15 - 02-41, 03-05 - 03-11; Incl. Refs. 1 - 6 |
| 1 | | 4895483 | | 12 | VIS, M6 x 35 |
| 2 | | 2854606 | | 6 | RACCORD, ASSY. Incl. Ref. 3 |
| 3 | | 4890929 | | 1 | JOINT THORIQUE |
| 4 | | 4893739 | | 6 | ECROU DE TUYAUTERIE |
| 5 | | 2854608 | | 6 | INJECTEUR, Incl. Refs. 5A, 5B |
| 5A | | 4899689 | | 1 | RONDELLE D'ETANCHEITE |
| 5B | | 4890926 | | 1 | JOINT THORIQUE, 20.9 ID x 3.0 DIA |
| 6 | | 2854609 | | 6 | PATTE FIXATION, Retainer |

**SYSTÈME D'INJECTION - ALIMENTATION EN CARBURANT**

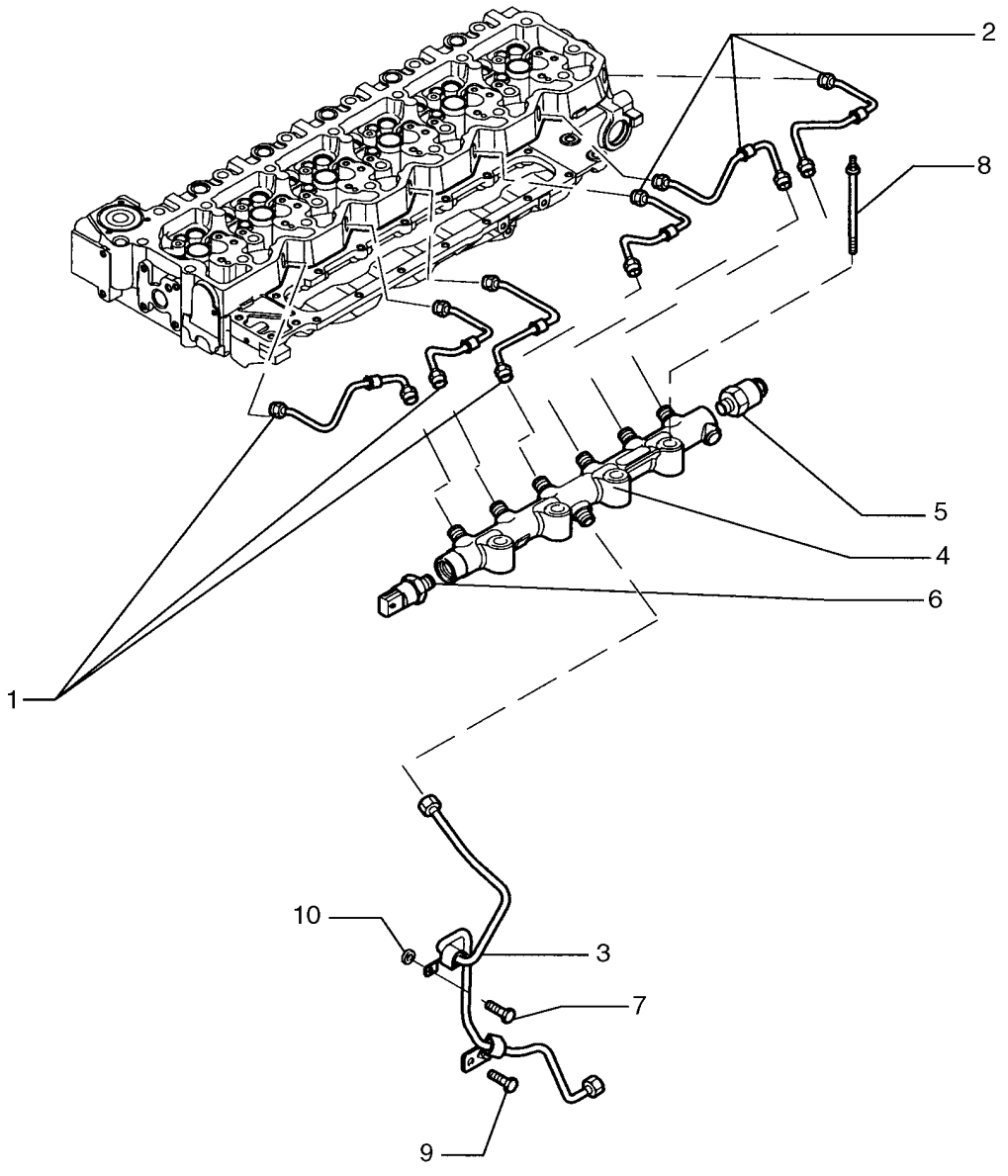


BS07G346

**SYSTÈME D'INJECTION - ALIMENTATION EN CARBURANT**

| REF | FN | PART NUMBER | YR/SN | QTY | DESCRIPTION |
|---|---|---|---|---|---|
| | | 87579400 | | 1 | MOTEUR, 6 Cylinder 6.7L Turbo, Tier III; Includes Figures 02-09 - 02-13, 02-15 - 02-41, 03-05 - 03-11; Incl. Refs. 1 - 10 |
| 1 | | 2854549 | | 3 | TUYAU RIGIDE, Fuel Supply |
| 2 | | 2854544 | | 3 | TUYAU, Fuel Supply |
| 3 | | 2854552 | | 1 | TUYAU, Fuel Supply |
| | | 2854540 | | 1 | COLLECTEUR, FUEL ASSY. Incl. Refs. 4 - 6 |
| 4 | | NSS | | 1 | NON FOURNI SEPAREMENT, MANIFOLD, Fuel Rail |
| 5 | | 2854543 | | 1 | SOUPAPE, DÉCHARGE |
| 6 | | 2854542 | | 1 | CAPTEUR, Fuel Supply Pressure |
| 7 | | 4899020 | | 1 | VIS, Hex Flg, M8 x 1.25 x 20 |
| 8 | | 2853537 | | 4 | BOULON |
| 9 | | 4896884 | | 1 | VIS, Hex Flg, M8 x 1.25 x 16 |
| 10 | | 2852434 | | 1 | ENTRETOISE |

**SYSTÈME D'INJECTION - MODULE DE COMMANDE DU MOTEUR**

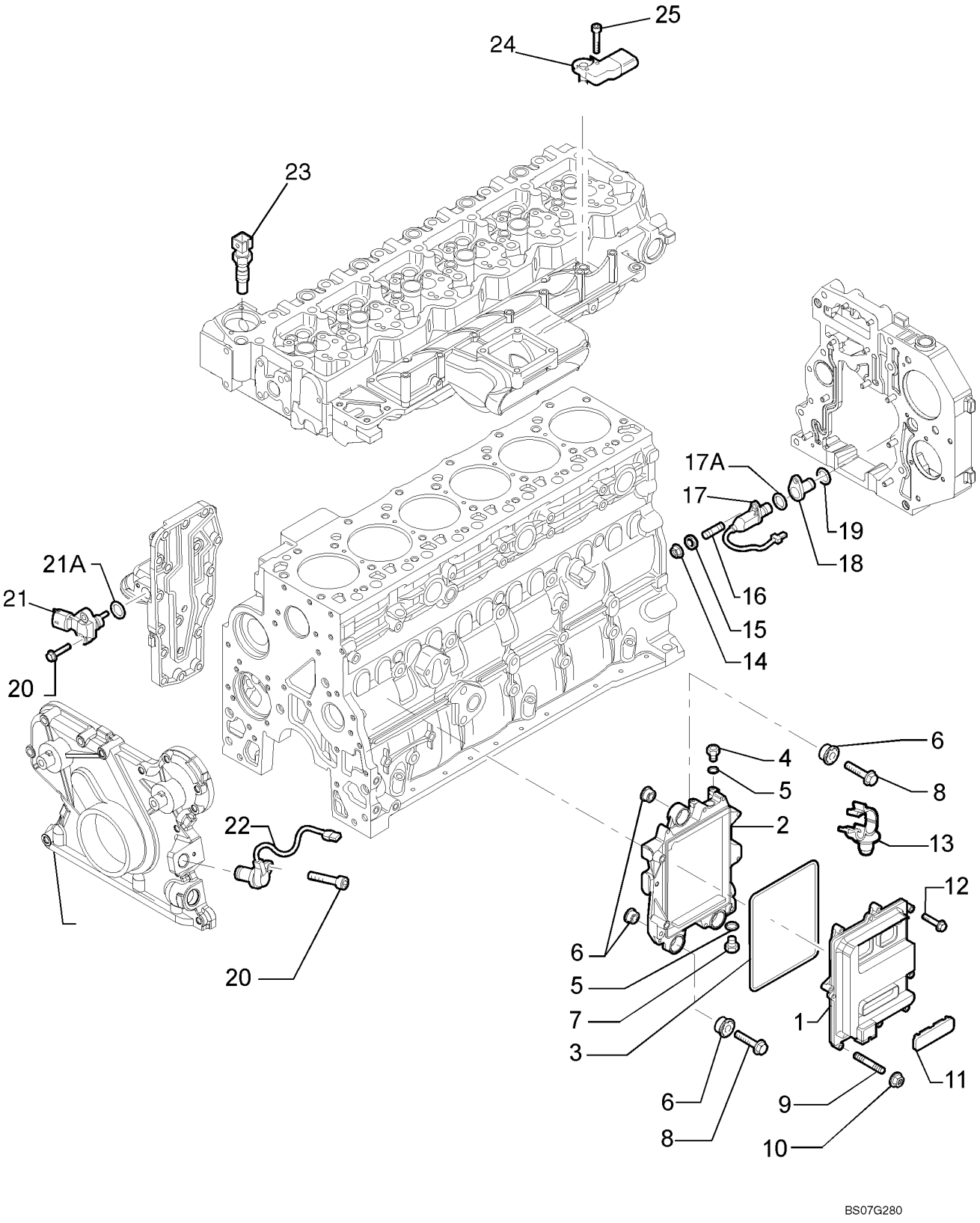

**SYSTÈME D'INJECTION - MODULE DE COMMANDE DU MOTEUR**

| REF | FN | PART NUMBER | YR/SN | QTY | DESCRIPTION |
|---|---|---|---|---|---|
| | | 87579400 | | 1 | MOTEUR, 6 Cylinder 6.7L Turbo, Tier III; Includes Figures 02-09 - 02-13, 02-15 - 02-41, 03-05 - 03-11; Incl. Refs. 1 - 25 |
| 1 | | 2854594 | | 1 | BOITIER ELECTRONIQUE |
| | | 2854595 | | 1 | PATTE FIXATION, ASSY. Incl. Refs. 2 - 7 |
| 2 | | 2854596 | | 1 | PATTE FIXATION, Support, Electronic Unit |
| 3 | | 2854079 | | 1 | JOINT |
| 4 | | 4896542 | | 1 | RACCORD, M12X1.5 |
| 5 | | 2854292 | | 2 | JOINT |
| 6 | | 2855150 | | 6 | PLOT SUSPENSION, Stop |
| 7 | | 4890964 | | 1 | RACCORD |
| 8 | | 4899078 | | 3 | VIS, Hex Flg, M8 x 1.25 x 45 |
| 9 | | 2854593 | | 1 | GOUJON |
| 10 | | 4899057 | | 1 | ECROU |
| 11 | | 2852825 | | 1 | BOUCHON PLASTIQUE |
| 12 | | 2852818 | | 7 | VIS, M6X30 |
| 13 | | 2852486 | | 2 | ATTACHE-CABLE |
| 14 | | 2854282 | | 1 | ECROU, M6X1 |
| 15 | | 4899124 | | 1 | RONDELLE |
| 16 | | 4895157 | | 1 | GOUJON |
| 17 | | 4890190 | | 1 | TRANSMETTEUR ASSY, Speed, Incl. Ref. 17A |
| 17A | | 2852820 | | 1 | JOINT THORIQUE, 17.17 x 1.78MM |
| 18 | | 4892255 | | 1 | CARTER, Sender Unit |
| 19 | | 2852817 | | 1 | JOINT THORIQUE, 23.5 x 1.7MM |
| 20 | | 4899110 | | 3 | VIS, Hex Flg, M6 x 1 x 20 |
| 21 | | 4890193 | | 1 | TRANSMETTEUR ASSY, Temperature, Incl. Ref, 21A |
| 21A | | 4895477 | | 1 | JOINT THORIQUE |
| 22 | | 4890189 | | 1 | TRANSMETTEUR ASSY, Speed |
| 23 | | 4897224 | | 1 | CAPTEUR, Temperature |
| 24 | | 2852821 | | 1 | CAPTEUR, ECM |
| 25 | | 4895817 | | 1 | VIS, Hex Flg, M6 x 1.0 x 20 |

**SYSTÈME D'INJECTION - FAISCEAU, MOTEUR**

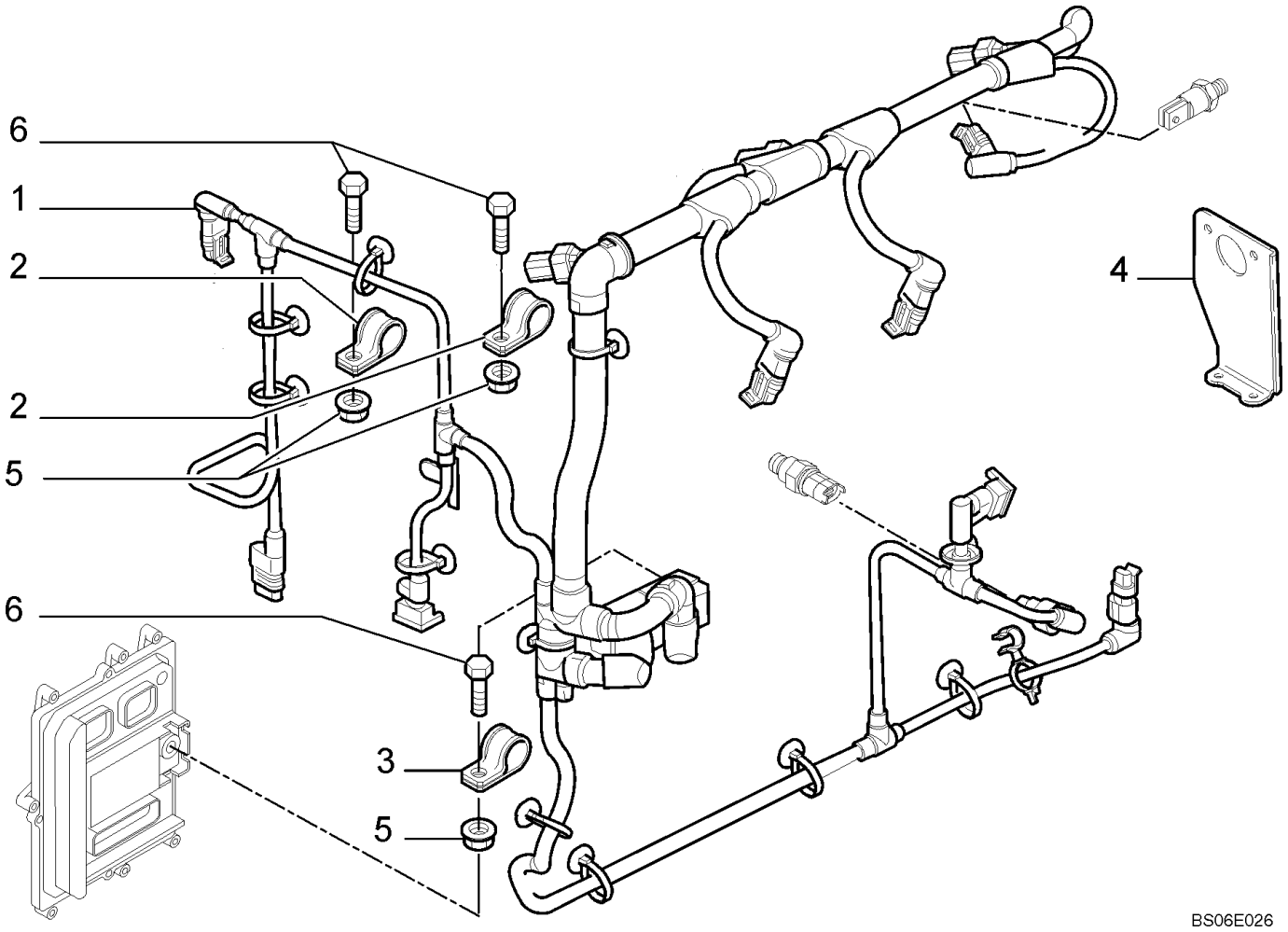

**SYSTÈME D'INJECTION - FAISCEAU, MOTEUR**

| REF | FN | PART NUMBER | YR/SN | QTY | DESCRIPTION |
|---|---|---|---|---|---|
| | | 87579400 | | 1 | MOTEUR, 6 Cylinder 6.7L Turbo, Tier III; Includes Figures 02-09 - 02-13, 02-15 - 02-41, 03-05 - 03-11; Incl. Refs. 1 - 6 |
| 1 | | 2854598 | | 1 | FAISCEAU COMPLET, Engine Control |
| 2 | | 2852500 | | 2 | BRIDE-FIXATION/ COLLIER |
| 3 | | 4899815 | | 1 | BRIDE-FIXATION/ COLLIER |
| 4 | | 2854599 | | 1 | PATTE FIXATION, Wiring Harness |
| 5 | | 2852484 | | 3 | ECROU |
| 6 | | 2854600 | | 3 | VIS |

**SYSTÈME D'INJECTION - CONDUITE DE VIDANGE**

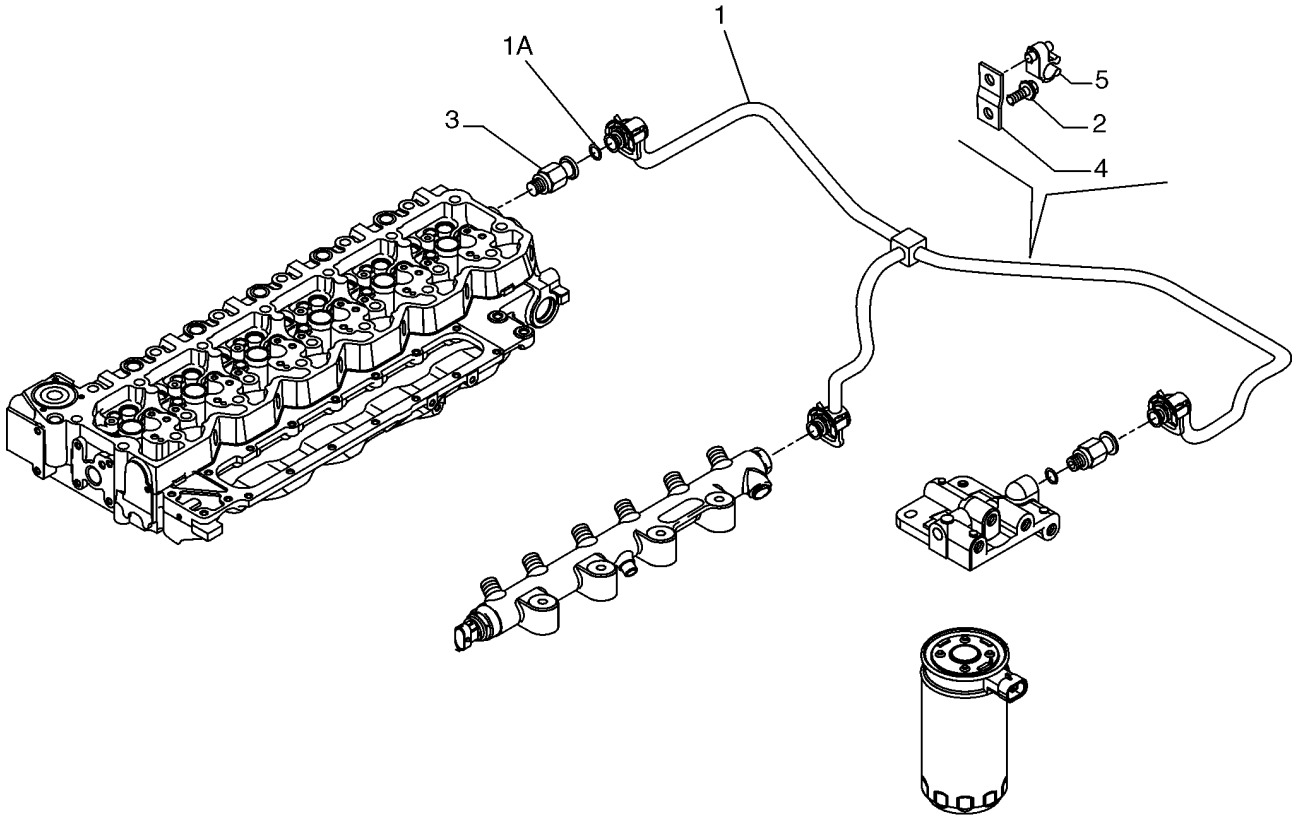


BS07G347

**SYSTÈME D'INJECTION - CONDUITE DE VIDANGE**

| REF | FN | PART NUMBER | YR/SN | QTY | DESCRIPTION |
|---|---|---|---|---|---|
| | | 87579400 | | 1 | MOTEUR, Incl. Refs. 1 - 5, Also Incl. Parts On Figures |
| 1 | | 2855125 | | 1 | TUYAU, Fuel Return, Incl. Ref. 1A |
| 1A | | 4894095 | | 3 | JOINT THORIQUE |
| 2 | | 2852100 | | 1 | VIS, M8 x 16 |
| 3 | | 4896329 | | 1 | SOUPAPE, DÉCHARGE |
| 4 | | 2852457 | | 1 | BRIDE-FIXATION/ COLLIER |
| 5 | | 2852458 | | 1 | BRIDE, Cable |

## NOTES

# SECTION INDEX
## Circuit électrique


| | |
|---|---|
| 04-01 | DEMARREUR |
| 04-02 | ALTERNATEUR |
| 04-02A | ALTERNATEUR - SUPPORT AVEC AIR CONDITIONNE |
| 04-02B | ALTERNATEUR - SUPPORT SANS AIR CONDITIONNE |
| 04-03 | FAISCEAU, AVANT - Z-BAR |
| 04-03A | FAISCEAU, AVANT - XT |
| 04-04 | FAISCEAU - PANNEAU DE COMMANDES |
| 04-05 | FAISCEAU, MOTEUR |
| 04-06 | FAISCEAU, MOTEUR - COMMANDE DES GAZ |
| 04-07 | FAISCEAU, MOTEUR - FUSIBLES ET RELAIS |
| 04-08 | FAISCEAU - TOIT DE LA CABINE |
| 04-09 | FAISCEAU, CAPOT - ALARME DE RECUL |
| 04-10 | FAISCEAU, TRANSMISSION |
| 04-11 | FAISCEAU - APPAREIL DE CHAUFFAGE DE GRILLE |
| 04-11A | APPAREIL DE CHAUFFAGE DE GRILLE |
| 04-12 | AVERTISSEUR SONORE AVANT |
| 04-13 | PANNEAU DE COMMANDES - CONTACTEURS |
| 04-14 | PANNEAU DE COMMANDES - FUSIBLE ET RELAIS SUPPORT |
| 04-15 | SYSTÈME ÉLECTRIQUE - COLONNE DE DIRECTION / TABLEAU DE BORD |
| 04-16 | SYSTÈME ÉLECTRIQUE - COMMANDE DE LA TRANSMISSION |
| 04-17 | SYSTÈME ÉLECTRIQUE - DIRECTION, AUXILIAIRE |
| 04-18 | SUPPORT - PHARES, AVANT |
| 04-19 | ÉCLAIRAGE - PHARE, AVANT |
| 04-20 | SUPPORT- FEUX, COMBINAISON ARRIÈRE |
| 04-21 | CABINE - FEUX |
| 04-22 | GYROPHARE - SUPPORT |
| 04-23 | CABINE - ESSUIE-GLACE, AVANT |
| 04-23A | CABINE - ESSUIE-GLACE ARRIÈRE |
| 04-24 | RADIO- 12 VOLT |
| 04-24A | RADIO- 12 VOLT POSE |
| 04-25 | FIXATION DES BATTERIES |
| 04-25A | FIXATION DES BATTERIES - SERVICE SEVERE |
| 04-26 | BATTERIE - CABLES |
| 04-27 | FEUX DECLAIRAGE DE PLAQUE DIMMATRICULATION |
| 04-28 | LAVE-GLACE MONTAGE |

**DEMARREUR**

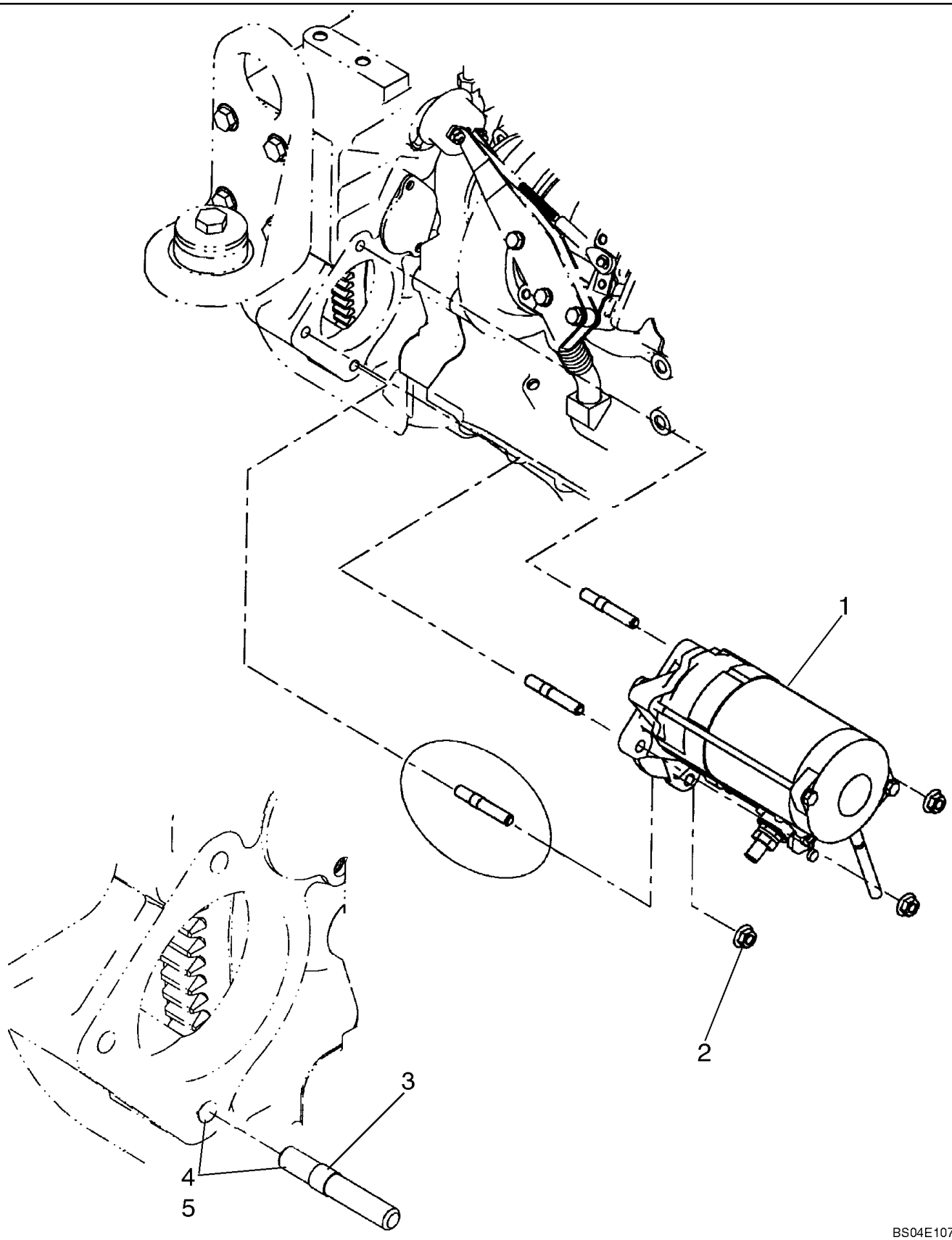

**DEMARREUR**

| REF | FN | PART NUMBER | YR/SN | QTY | DESCRIPTION |
|---|---|---|---|---|---|
| 1 | | 8605784 | | 1 | DEMARREUR, Denso, No Component Parts Available At Time Of Printing |
| 2 | | 829-2310 | | 3 | ECROU, M10 x 1.5, Flg, Cl 10, M10 |
| 3 | | 2852476 | | 3 | GOUJON, Starter; 10mm |
| 4 | | 345-62 | | AR | LOCTITE, 747 |
| 5 | | 345-75 | | AR | LOCTITE, 271 Thread Adhesive |

**ALTERNATEUR**

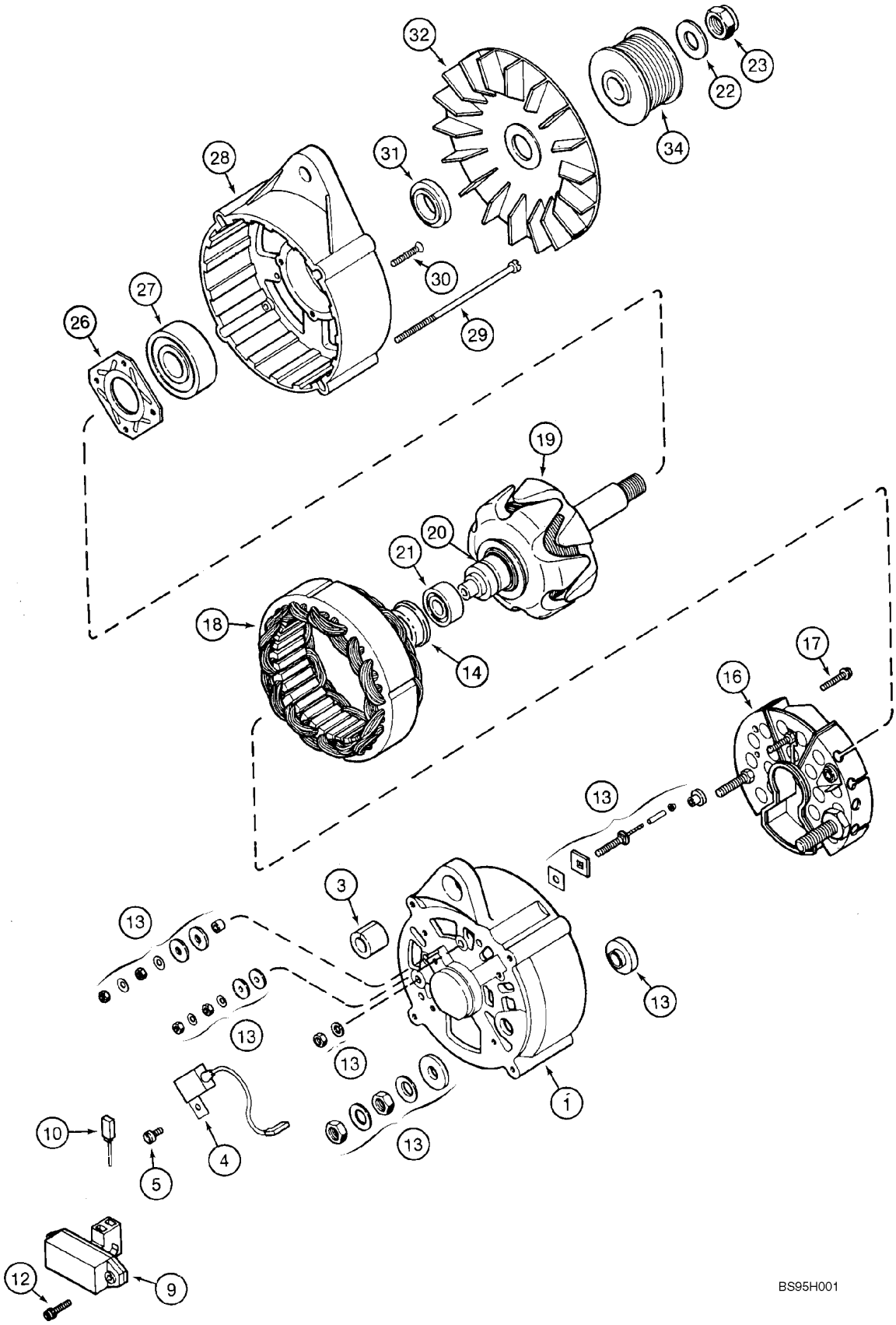

**ALTERNATEUR**

| REF | FN | PART NUMBER | YR/SN | QTY | DESCRIPTION |
|---|---|---|---|---|---|
| | | 1964860C1 | | 1 | ALTERNATEUR, 24V, 65 amp; Incl. Refs. 1 - 32 |
| 1 | | 1964731C1 | | 1 | CARTER |
| 3 | | 1964737C1 | | 1 | BAGUE |
| 4 | | 3079389R1 | | 1 | CONDENSATEUR |
| 5 | | 1964969C1 | | 1 | BOULON |
| 9 | | 3079392R91 | | 1 | REGULATEUR, Voltage; Incl. 10 |
| 10 | | 1964968C1 | | 1 | BALAI |
| 12 | | A186194 | | 2 | VIS, Sltd Truss Hd, M4 x 18, w/LW |
| 13 | | 1964738C1 | | 1 | COLIS DE RÉPARATION, Hardware |
| 14 | | 1546477C1 | | 1 | DOUILLE |
| 16 | | 1964965C1 | | 1 | REDRESSEUR |
| 17 | | A187504 | | 2 | VIS |
| 18 | | 1964966C1 | | 1 | STATOR |
| 19 | | 1964964C1 | | 1 | ROTOR |
| 20 | | 3079410R1 | | 1 | ANNEAU |
| 21 | | 1964730C1 | | 1 | ROULEMENT A BILLES |
| 22 | | 495-21063 | | 1 | RONDELLE, 9/16" |
| 23 | | 231-46110 | | 1 | CONTRE-ECROU, 5/8"-18, GB |
| 26 | | 1964727C1 | | 1 | PLAQUE |
| 27 | | 1964726C1 | | 1 | ROULEMENT A BILLES, Drive End |
| 28 | | 1964725C1 | | 1 | CARTER |
| 29 | | 1964748C1 | | 4 | VIS, M5 x 132 |
| 30 | | 1964750C1 | | 4 | VIS, M4 x 30 |
| 31 | | 1964729C1 | | 1 | ENTRETOISE |
| 32 | | 1964736C1 | | 1 | VENTILATEUR |
| 34 | | J918275 | | 1 | POULIE |

| 04-02A | | p1 | 06/07 |
|---|---|---|---|

**ALTERNATEUR - SUPPORT AVEC AIR CONDITIONNE**

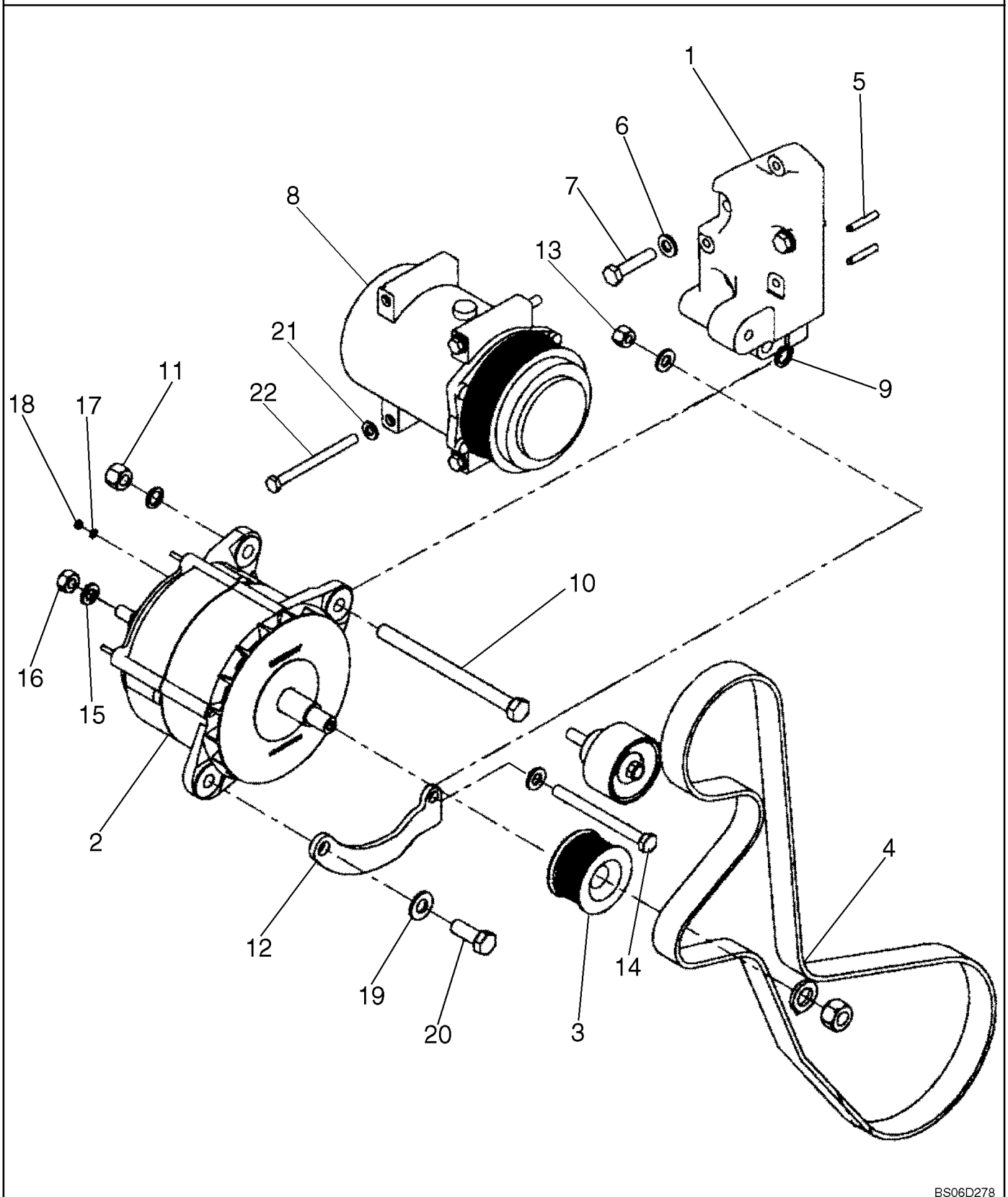

**ALTERNATEUR - SUPPORT AVEC AIR CONDITIONNE**

| REF | FN | PART NUMBER | YR/SN | QTY | DESCRIPTION |
|---|---|---|---|---|---|
| 1 | | 87547181 | | 1 | PATTE FIXATION, Alternator |
| 2 | | 1964860C1 | | 1 | ALTERNATEUR, 24V, 65 amp; See Figure 04-02 |
| 3 | | A189616 | | 1 | POULIE, Alternator |
| 4 | | 87397416 | | 1 | COURROIE, With A/C |
| 5 | | 837-6035 | | 2 | PION, M6 x 35 |
| 6 | | 896-11010 | | 5 | RONDELLE, M10 x 21.5 x 2.5, HT |
| 7 | | 827-10045 | | 3 | BOULON, Hex, M10 x 45, 10.9 |
| 8 | | 8500795 | | 1 | COMPRESSEUR D'AIR |
| 9 | | 896-11012 | | 1 | RONDELLE, M13.5 x 24.5 x 3, HT |
| 10 | | 426-8104 | | 1 | BOULON, Hex, 1/2"-13 x 6 1/2", G8 |
| 11 | | 231-4248 | | 1 | CONTRE-ECROU, 1/2"-13, GB |
| 12 | | 8501098 | | 1 | JAMBE-DE-FORCE |
| 13 | | 832-10410 | | 1 | CONTRE-ECROU, M10 x 1.5, Cl 8 |
| 14 | | 827-10110 | | 1 | BOULON, Hex, M10 x 110, 10.9 |
| 15 | | 492-11044 | | 1 | RONDELLE FREIN, 7/16" |
| 16 | | 425-107 | | 1 | ECROU, 7/16"-14, G5 |
| 17 | | 892-11004 | | 1 | RONDELLE FREIN, M4 |
| 18 | | 824-1404 | | 1 | ECROU, M4, Cl 5 |
| 19 | | 896-11012 | | 1 | RONDELLE, M13.5 x 24.5 x 3, HT |
| 20 | | 426-820 | | 1 | BOULON, Hex, 1/2"-13 x 1 1/4", G8, Full Thd |
| 21 | | 896-11008 | | 5 | RONDELLE, M8 x 17.5 x 2, HT |
| 22 | | 827-8100 | | 3 | BOULON, Hex, M8 x 100, 10.9 |

**ALTERNATEUR - SUPPORT SANS AIR CONDITIONNE**

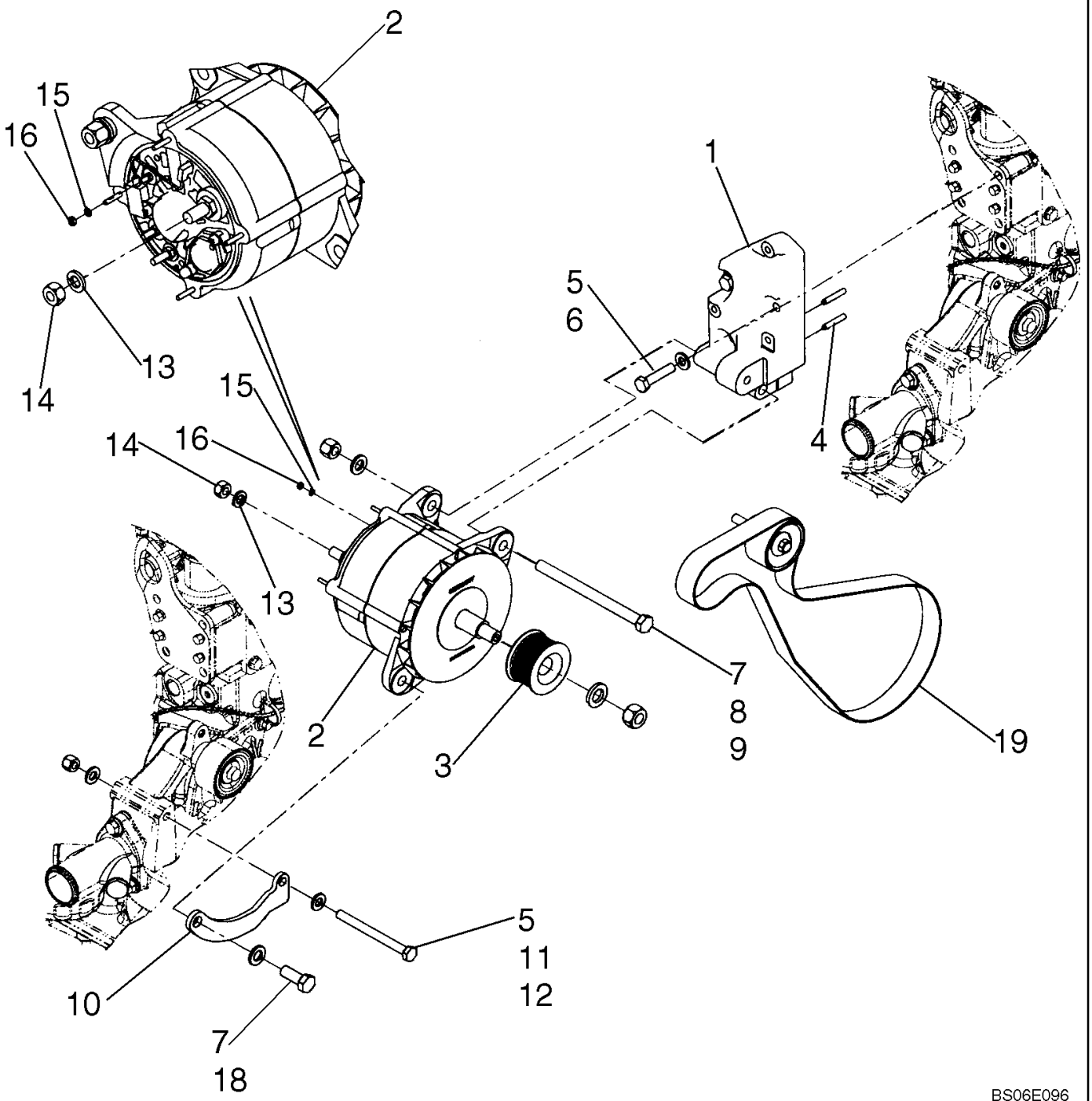

**ALTERNATEUR - SUPPORT SANS AIR CONDITIONNE**

| REF | FN | PART NUMBER | YR/SN | QTY | DESCRIPTION |
|---|---|---|---|---|---|
| 1 | | 87547181 | | 1 | PATTE FIXATION, Alternator |
| 2 | | 1964860C1 | | 1 | ALTERNATEUR, 24V, 65 amp; See Figure 04-02 |
| 3 | | A189616 | | 1 | POULIE, Alternator |
| 4 | | 837-6035 | | 2 | PION, M6 x 35 |
| 5 | | 896-11010 | | 5 | RONDELLE, M10 x 21.5 x 2.5, HT |
| 6 | | 827-10045 | | 3 | BOULON, Hex, M10 x 45, 10.9 |
| 7 | | 895-11012 | | 2 | RONDELLE, M12 x 24 x 2.5 |
| 8 | | 426-8104 | | 1 | BOULON, Hex, 1/2"-13 x 6 1/2", G8 |
| 9 | | 231-4248 | | 1 | CONTRE-ECROU, 1/2"-13, GB |
| 10 | | 8501098 | | 1 | JAMBE-DE-FORCE |
| 11 | | 832-10410 | | 1 | CONTRE-ECROU, M10 x 1.5, Cl 8 |
| 12 | | 827-10110 | | 1 | BOULON, Hex, M10 x 110, 10.9 |
| 13 | | 492-11044 | | 1 | RONDELLE FREIN, 7/16" |
| 14 | | 425-107 | | 1 | ECROU, 7/16"-14, G5 |
| 15 | | 892-11004 | | 1 | RONDELLE FREIN, M4 |
| 16 | | 824-1404 | | 1 | ECROU, M4, Cl 5 |
| 18 | | 426-820 | | 1 | BOULON, Hex, 1/2"-13 x 1 1/4", G8, Full Thd |
| 19 | | 8602680 | | 1 | COURROIE, Without A/C |

**FAISCEAU, AVANT - Z-BAR**

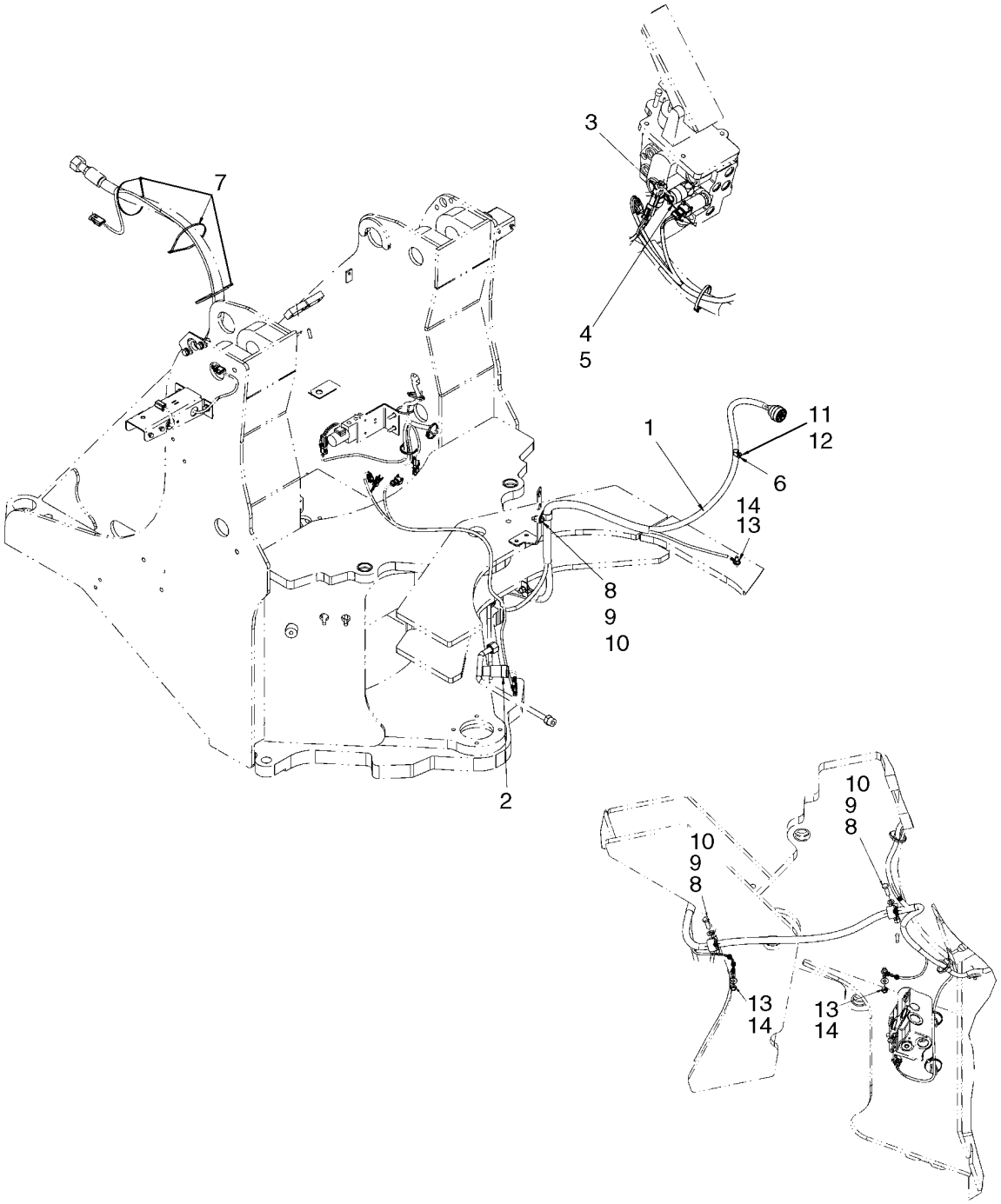

**FAISCEAU, AVANT - Z-BAR**

| REF | FN | PART NUMBER | YR/SN | QTY | DESCRIPTION |
|---|---|---|---|---|---|
| 1 | | 87655474 | | 1 | FAISCEAU, Front Chassis, Z-Bar |
| 2 | | 87549589 | | 1 | CONTACTEUR, Brake Declutch |
| 3 | | 87307240 | | 1 | PRESSOSTAT, Brake Light Pressure |
| 4 | | 396471A1 | | 1 | JOINT, 12 mm |
| 5 | | 8605738 | | 1 | PRESSOSTAT, Brake Warning Pressure |
| 6 | | 515-21190 | | 1 | BRIDE, 3/4", Insul, 1/4" Bolt |
| 7 | | 19-135 | | 8 | SANGLE |
| 8 | | 895-11010 | | 6 | RONDELLE, M10 x 20 x 2 |
| 9 | | 627-10030 | | 3 | BOULON, Hex, M10 x 30, 10.9, Full Thd |
| 10 | | 832-10410 | | 3 | CONTRE-ECROU, M10 x 1.5, Cl 8 |
| 11 | | 895-11006 | | 1 | RONDELLE, M6 |
| 12 | | 832-10406 | | 1 | CONTRE-ECROU, M6 x 1, Cl 8 |
| 13 | | L127554 | | 3 | RONDELLE |
| 14 | | 253347A1 | | 3 | ECROU |

| 04-03A | | p1 | 07/07 |
|---|---|---|---|

**FAISCEAU, AVANT - XT**

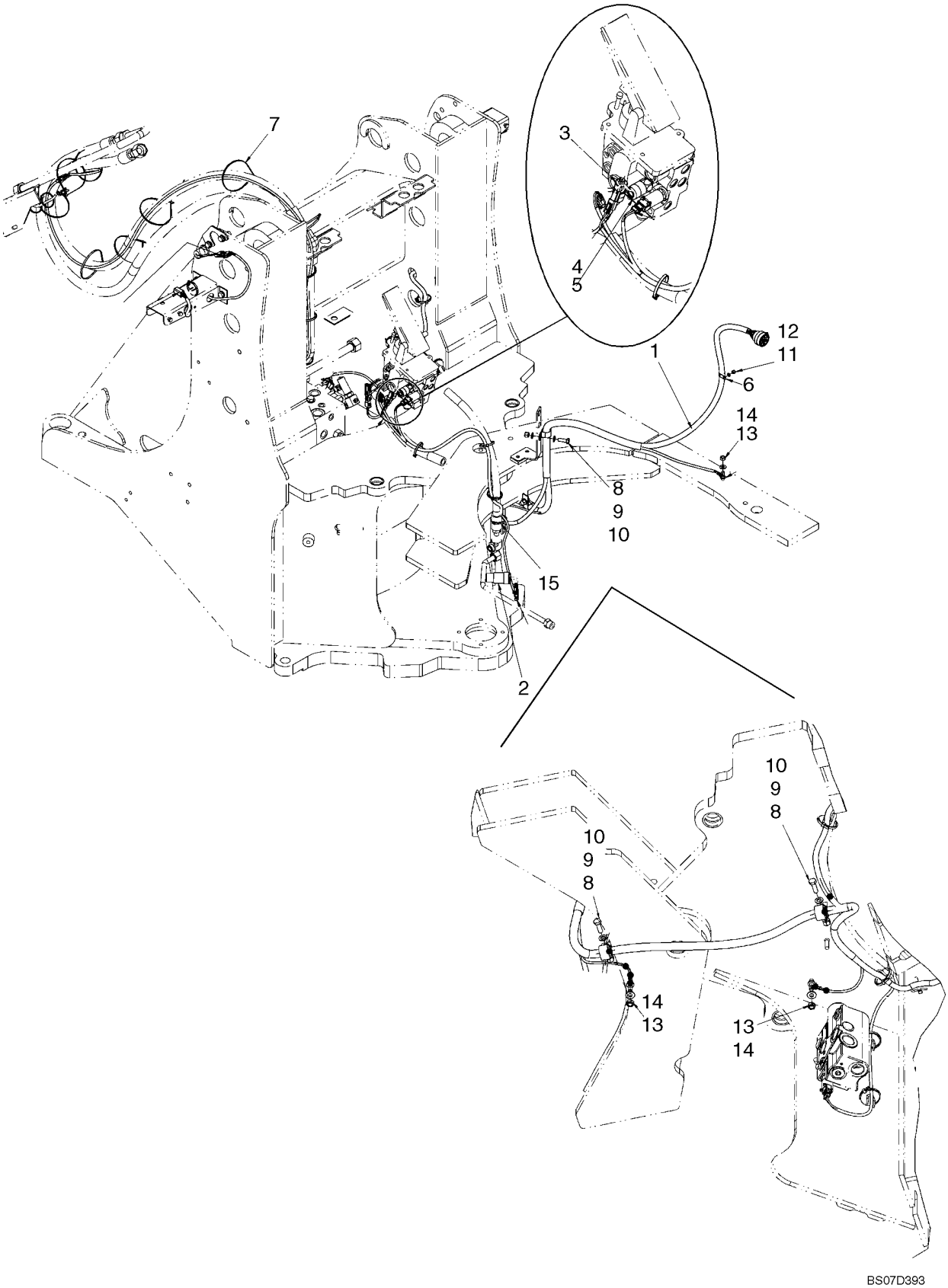

**FAISCEAU, AVANT - XT**

| REF | FN | PART NUMBER | YR/SN | QTY | DESCRIPTION |
|---|---|---|---|---|---|
| 1 | | 87655474 | | 1 | FAISCEAU, Front Chassis XT |
| 2 | | 87549589 | | 1 | CONTACTEUR, Brake Declutch |
| 3 | | 87307240 | | 1 | PRESSOSTAT, Brake Light Pressure |
| 4 | | 396471A1 | | 1 | JOINT, 12 mm |
| 5 | | 8605738 | | 1 | PRESSOSTAT, Brake Warning Pressure |
| 6 | | 515-21190 | | 1 | BRIDE, 3/4", Insul, 1/4" Bolt |
| 7 | | 19-135 | | 8 | SANGLE |
| 8 | | 895-11010 | | 6 | RONDELLE, M10 x 20 x 2 |
| 9 | | 627-10030 | | 3 | BOULON, Hex, M10 x 30, 10.9, Full Thd |
| 10 | | 832-10410 | | 3 | CONTRE-ECROU, M10 x 1.5, Cl 8 |
| 11 | | 895-11006 | | 1 | RONDELLE, M6 |
| 12 | | 832-10406 | | 1 | CONTRE-ECROU, M6 x 1, Cl 8 |
| 13 | | L127554 | | 3 | RONDELLE |
| 14 | | 253347A1 | | 3 | ECROU |
| 15 | | L11541 | | 22 | SANGLE |

| 04-04 | | p1 | 06/07 |
|---|---|---|---|

**FAISCEAU - PANNEAU DE COMMANDES**

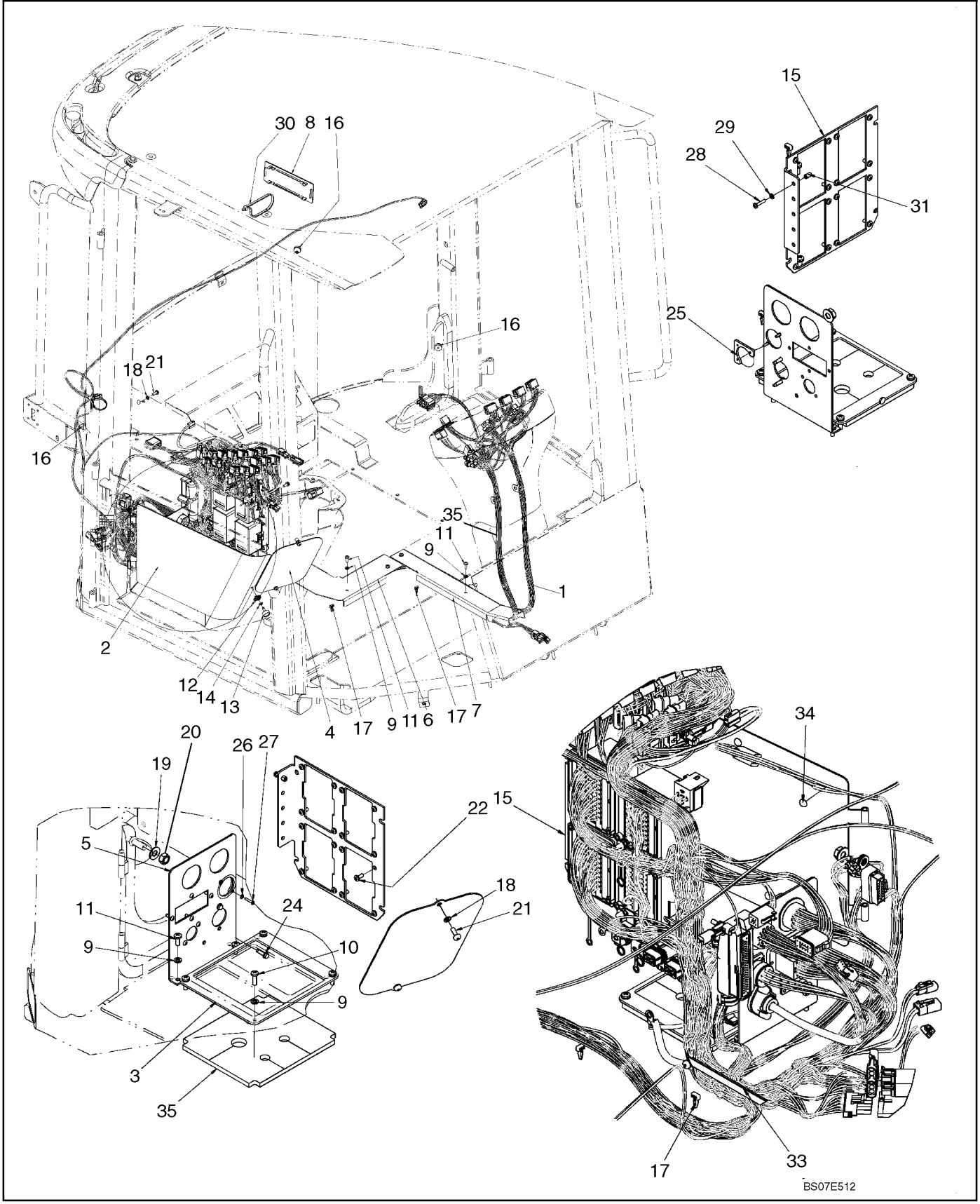

**FAISCEAU - PANNEAU DE COMMANDES**

| REF | FN | PART NUMBER | YR/SN | QTY | DESCRIPTION |
|---|---|---|---|---|---|
| 1 | | 87376662 | | 1 | FAISCEAU COMPLET, Cab Control Panel |
| 2 | | 76303325 | | 1 | GARNITURE DE PORTE, Electrical Access |
| 3 | | 76303258 | | 1 | PLAQUE |
| 4 | | 76303489 | | 1 | COUVERCLE, Console Access |
| 5 | | 87372240 | | 1 | PLAQUE |
| 6 | | 76303498 | | 1 | PATTE FIXATION |
| 7 | | 76303260 | | 1 | COUVERCLE, Central Cable |
| 8 | | {76303606} | | 1 | COVER, Radio |
| 9 | | 895-11006 | | 11 | RONDELLE, M6 |
| 10 | | 840-1620 | | 4 | VIS, Cross Pan Hd, M6 x 20 |
| 11 | | 840-1616 | | 7 | VIS, Cross Pan Hd, M6 x 16 |
| 12 | | 76303320 | | 1 | CLIP |
| 13 | | 76303321 | | 1 | AXE |
| 14 | | 76303319 | | 1 | RONDELLE |
| 15 | | 87341862 | | 1 | PLAQUE |
| 16 | | 71485202 | | 3 | GAINE SOUPLE |
| 17 | | 76303347 | | 5 | COLLIER |
| 18 | | 297865A1 | | 8 | RONDELLE |
| 19 | | L127554 | | 1 | RONDELLE |
| 20 | | 253347A1 | | 1 | ECROU |
| 21 | | 297850A1 | | 8 | VIS, Cross Pan Hd, M6 x 16 |
| 22 | | 840-1512 | | 16 | VIS, Cross Pan Hd, M5 x 12 |
| 24 | | {86509545} | | 2 | SCREW |
| 25 | | {76303488} | | 1 | PLATE, Connector |
| 26 | | 895-11003 | | 2 | RONDELLE, M3 |
| 27 | | 840-1312 | | 2 | VIS, Cross Pan Hd, M3 x 12 |
| 28 | | 840-1420 | | 1 | VIS, Cross Pan Hd, M4 x 20 |
| 29 | | 895-11004 | | 1 | RONDELLE, M4 |
| 30 | | L18331 | | 1 | SERRE-CABLE |
| 31 | | 76043560 | | 1 | INSERT FILETE |
| 33 | | {87525493} | | 1 | GASKET, Wire Protection |
| 34 | | 322197950 | | 6 | ENTRETOISE |
| 35 | | 76303261 | | 1 | ENTRETOISE |

**FAISCEAU, MOTEUR**

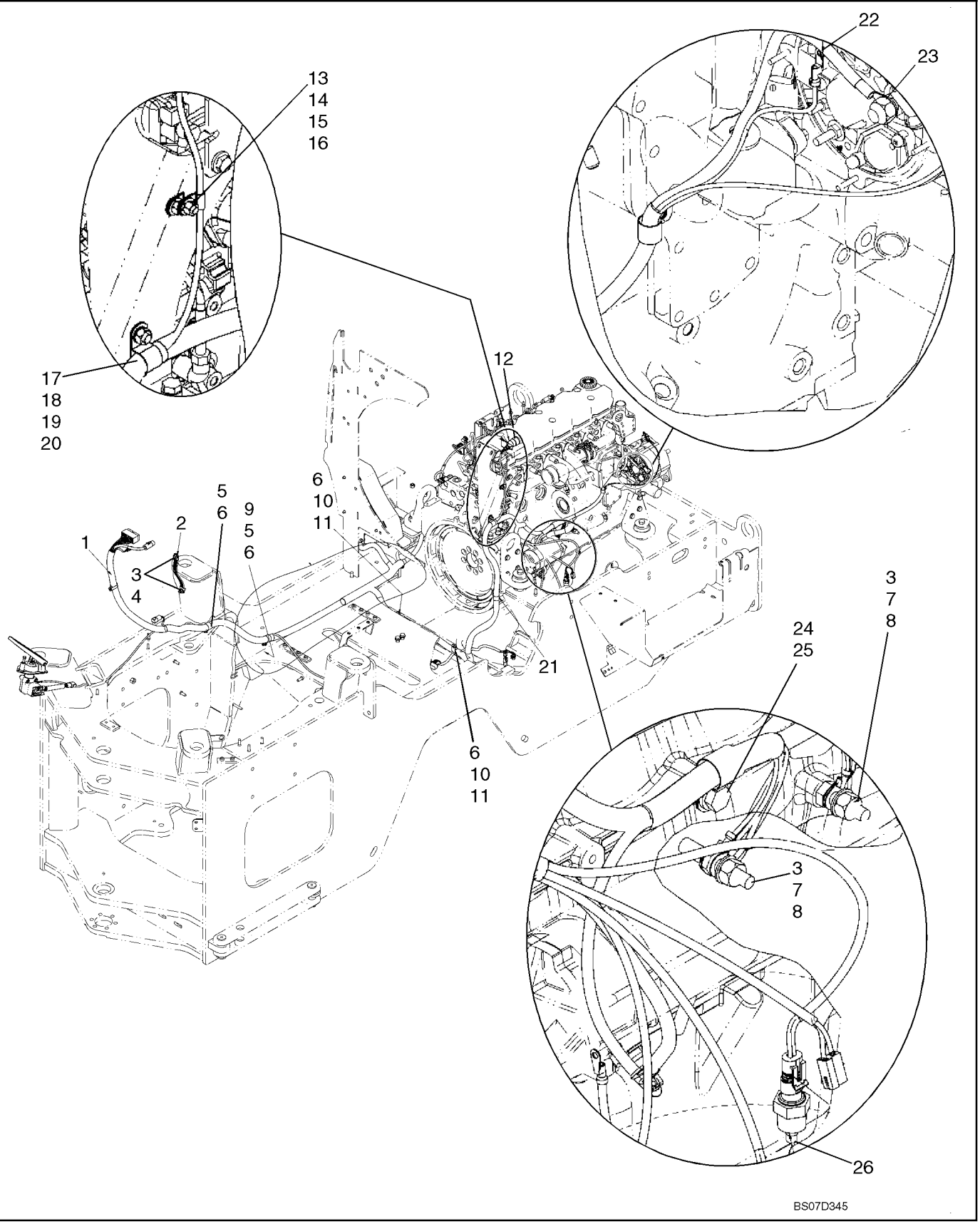

**FAISCEAU, MOTEUR**

| REF | FN | PART NUMBER | YR/SN | QTY | DESCRIPTION |
|---|---|---|---|---|---|
| 1 | | 87351752 | | 1 | FAISCEAU COMPLET, Engine |
| 2 | | L126051 | | 1 | TRESSE DE MASSE |
| 3 | | L127554 | | 4 | RONDELLE, Brass |
| 4 | | 253347A1 | | 2 | ECROU |
| 5 | | 895-15010 | | 2 | RONDELLE, M11 x 24 x 2 |
| 6 | | 832-10410 | | 3 | CONTRE-ECROU, M10 x 1.5, Cl 8 |
| 7 | | L127553 | | 2 | GOUJON |
| 8 | | L127555 | | 2 | ECROU |
| 9 | | 515-23270 | | 2 | BRIDE, 1 1/16", Insul, 3/8" Bolt |
| 10 | | 895-11010 | | 2 | RONDELLE, M10 x 20 x 2 |
| 11 | | 515-23222 | | 2 | BRIDE, 7/8", Insul, 3/8" Bolt |
| 12 | | 279492A1 | | 1 | CONTACTEUR, Air Restriction |
| 13 | | 832-10408 | | 1 | CONTRE-ECROU, M8 x 1.25, Cl 8 |
| 14 | | 895-15008 | | 2 | RONDELLE, M8 x 20 x 1.6 |
| 15 | | 627-8025 | | 1 | BOULON, Hex, M8 x 25, 10.9 |
| 16 | | 515-2379 | | 1 | BRIDE, 5/16", Insul, 3/8" Bolt |
| 17 | | 829-1410 | | 1 | ECROU, M10, Cl 10 |
| 18 | | 895-18010 | | 1 | RONDELLE, M10 x 18 x 1.6 |
| 19 | | 627-10025 | | 1 | BOULON, Hex, M10 x 25, 10.9, Full Thd |
| 20 | | 515-24238 | | 1 | BRIDE, 15/16", Insul, 7/16" Bolt |
| 21 | | 121411A1 | | 1 | FUSIBLE, 7.5 Amp |
| 22 | | 824-1404 | | 1 | ECROU, M4, Cl 5 |
| 23 | | 425-107 | | 1 | ECROU, 7/16"-14, G5 |
| 24 | | 896-11012 | | 2 | RONDELLE, M13.5 x 24.5 x 3, HT |
| 25 | | 627-12025 | | 1 | BOULON, Hex, M12 x 25, 10.9 |
| 26 | | 321446A1 | | 1 | TRANSMETTEUR ASSY, Engine Coolant |

**FAISCEAU, MOTEUR - COMMANDE DES GAZ**

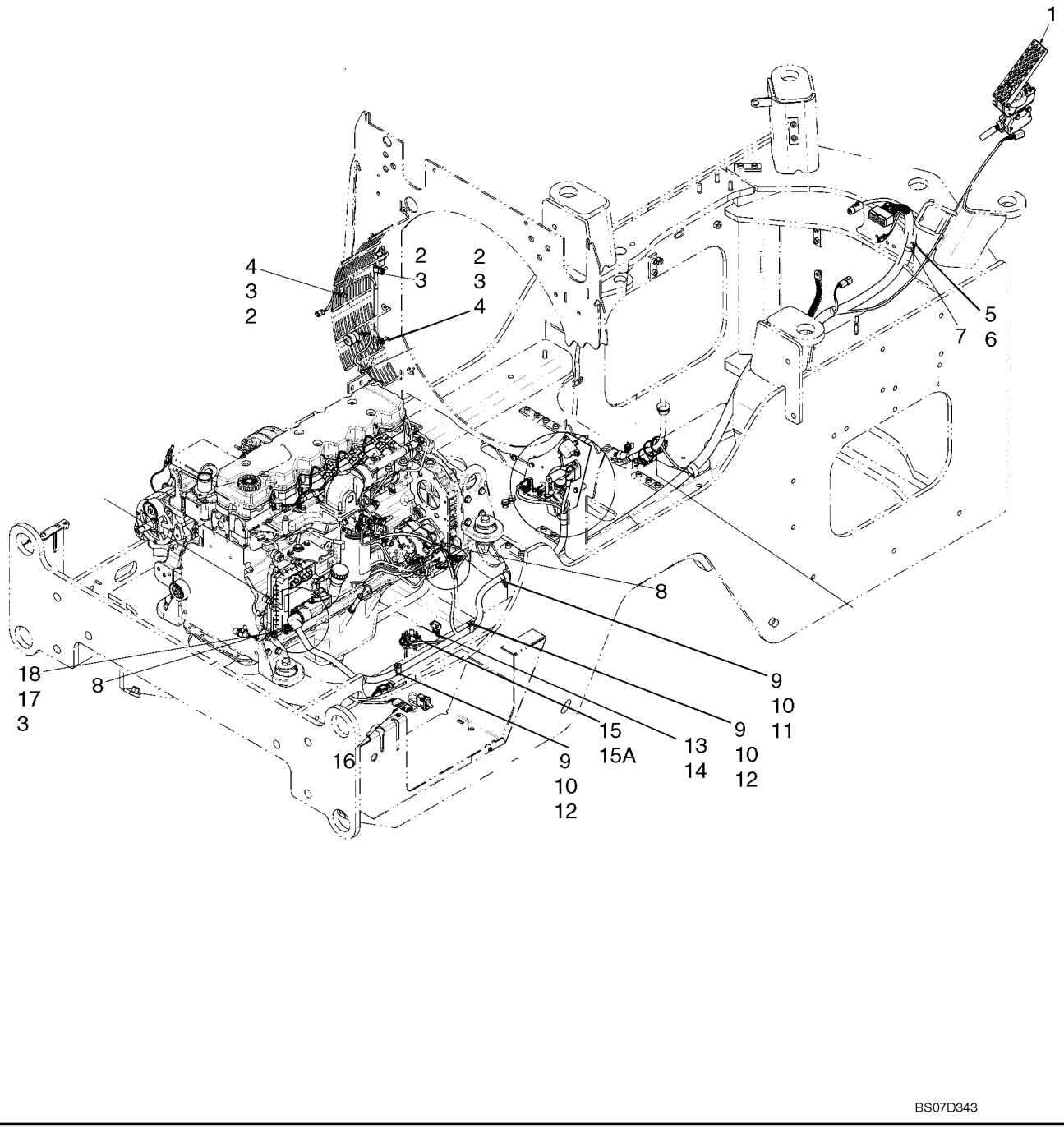

**FAISCEAU, MOTEUR - COMMANDE DES GAZ**

| REF | FN | PART NUMBER | YR/SN | QTY | DESCRIPTION |
|---|---|---|---|---|---|
| 1 | | 87360870 | | 1 | PAPILLON DES GAZ, Analog Throttle Control |
| 2 | | 627-8025 | | 3 | BOULON, Hex, M8 x 25, 10.9 |
| 3 | | 895-11008 | | 6 | RONDELLE, M8 x 16 x 1.6 |
| 4 | | 832-10408 | | 2 | CONTRE-ECROU, M8 x 1.25, Cl 8 |
| 5 | | 832-10406 | | 1 | CONTRE-ECROU, M6 x 1, Cl 8 |
| 6 | | 895-11006 | | 1 | RONDELLE, M6 |
| 7 | | 515-21302 | | 1 | BRIDE, 1 3/16", Insul, 1/4" Bolt |
| 8 | | L11541 | | 5 | SANGLE |
| 9 | | 895-15010 | | 3 | RONDELLE, M11 x 24 x 2 |
| 10 | | 832-10410 | | 3 | CONTRE-ECROU, M10 x 1.5, Cl 8 |
| 11 | | 515-23270 | | 1 | BRIDE, 1 1/16", Insul, 3/8" Bolt |
| 12 | | 515-23206 | | 2 | BRIDE, 13/16", Insul, 3/8" Bolt |
| 13 | | 814-5030 | | 5 | BOULON, Hex, M5 x 30, 8.8 |
| 14 | | 895-11005 | | 5 | RONDELLE, M5 x 10 x 1 |
| 15 | | 87542710 | | 1 | TRANSMETTEUR ASSY, Fuel, Incl. Ref. 15A; See Figure 03-04 |
| 15A | | 87617083 | | 1 | KIT, Nut Pack |
| 16 | | 87350087 | | 1 | INTERRUPTEUR COMPLET, Hood Lift |
| 17 | | 627-8016 | | 1 | BOULON, Hex, M8 x 16, 10.9 |
| 18 | | 515-22127 | | 1 | BRIDE, 1/2", Insul, 5/16" Bolt |

**FAISCEAU, MOTEUR - FUSIBLES ET RELAIS**

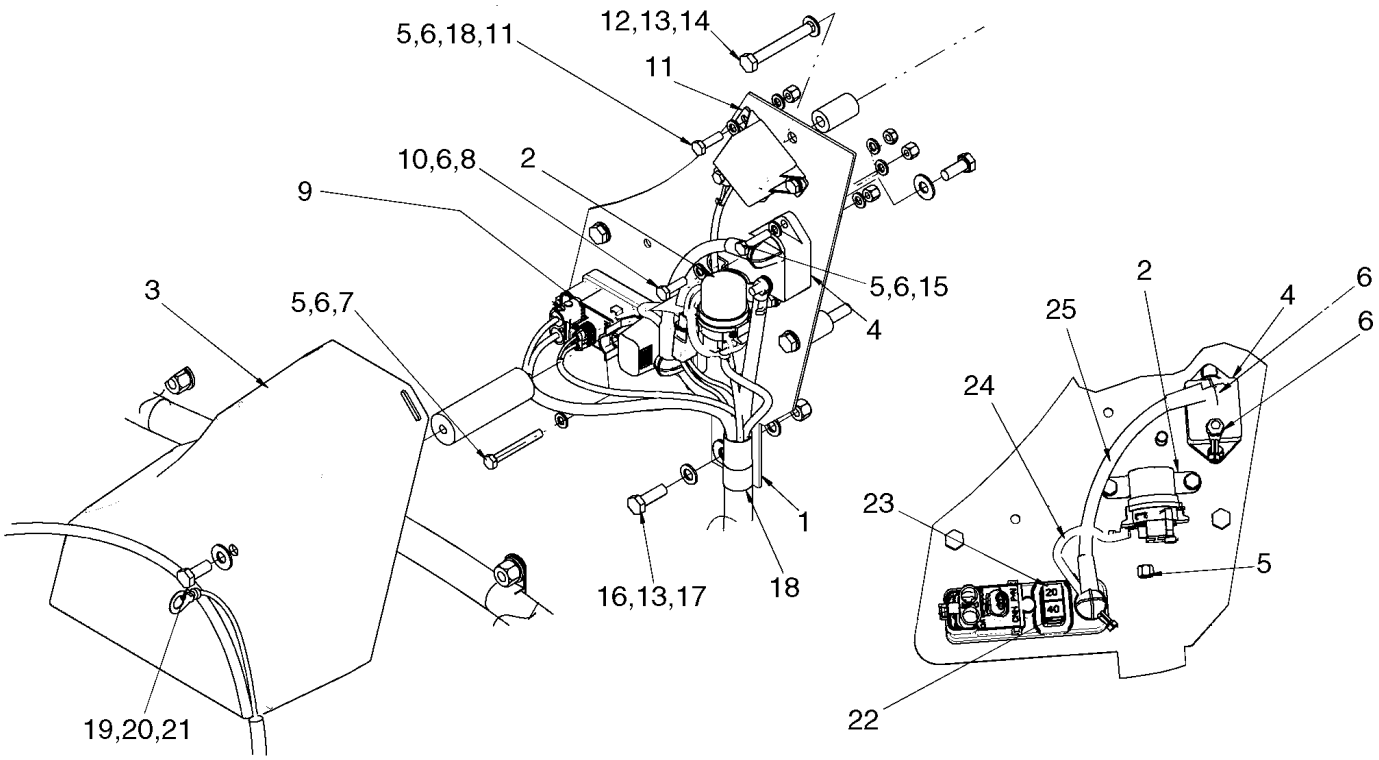


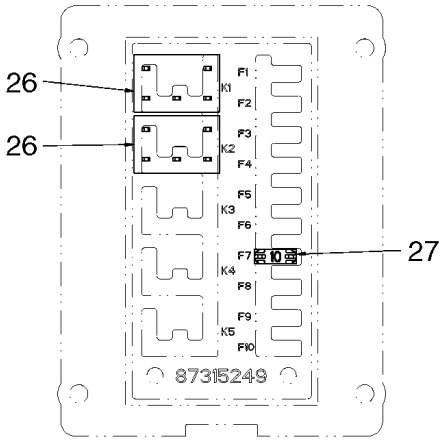


BS07G313

**FAISCEAU, MOTEUR - FUSIBLES ET RELAIS**

| REF | FN | PART NUMBER | YR/SN | QTY | DESCRIPTION |
|---|---|---|---|---|---|
| 1 | | 87348711 | | 1 | PLAQUE, Electrical Mounting |
| 2 | | 87351908 | | 1 | SOLENOIDE |
| 3 | | 87353999 | | 1 | COUVERCLE, Relay |
| 4 | | 87315269 | | 1 | RUPTEUR, 105A Auto Reset |
| 5 | | 832-10406 | | 7 | CONTRE-ECROU, M6 x 1, Cl 8 |
| 6 | | 895-11006 | | 18 | RONDELLE, M6 |
| 7 | | 827-6050 | | 1 | BOULON, Hex, M6 x 50, 10.9 |
| 8 | | 627-6020 | | 4 | BOULON, Hex, M6 x 20, 10.9 |
| 9 | | 87318627 | | 1 | CONNECTEUR, Power Relay Module |
| 10 | | 829-1406 | | 2 | ECROU, M6, Cl 10 |
| 11 | | 1546485C1 | | 1 | RELAIS |
| 12 | | 82024562 | | 3 | ENTRETOISE |
| 13 | | 895-11008 | | 3 | RONDELLE, M8 x 16 x 1.6 |
| 14 | | 827-8060 | | 3 | BOULON, Hex, M8 x 60, 10.9 |
| 15 | | 627-6025 | | 2 | BOULON, Hex, M6 x 25, 10.9 |
| 16 | | 627-8025 | | 1 | BOULON, Hex, M8 x 25, 10.9 |
| 17 | | 832-10408 | | 1 | CONTRE-ECROU, M8 x 1.25, Cl 8 |
| 18 | | 515-23206 | | 1 | BRIDE, 13/16", Insul, 3/8" Bolt |
| 19 | | 404635A1 | | 1 | ENTRETOISE |
| 20 | | 895-15008 | | 2 | RONDELLE, M8 x 20 x 1.6 |
| 21 | | 627-8020 | | 2 | BOULON, Hex, M8 x 20, 10.9 |
| 22 | | 87327346 | | 1 | FUSIBLE, 32V, 20A |
| 23 | | 87327335 | | 1 | FUSIBLE, 32V, 20A |
| 24 | | 87350066 | | 1 | CABLE, Starter Relay |
| 25 | | 87350064 | | 1 | CABLE, Cab, B+ |
| 26 | | 87312626 | | 2 | RELAIS, Micro 5-Pin, 280 Series |
| 27 | | 121412A1 | | 1 | FUSIBLE, 10 Amp |

**FAISCEAU - TOIT DE LA CABINE**

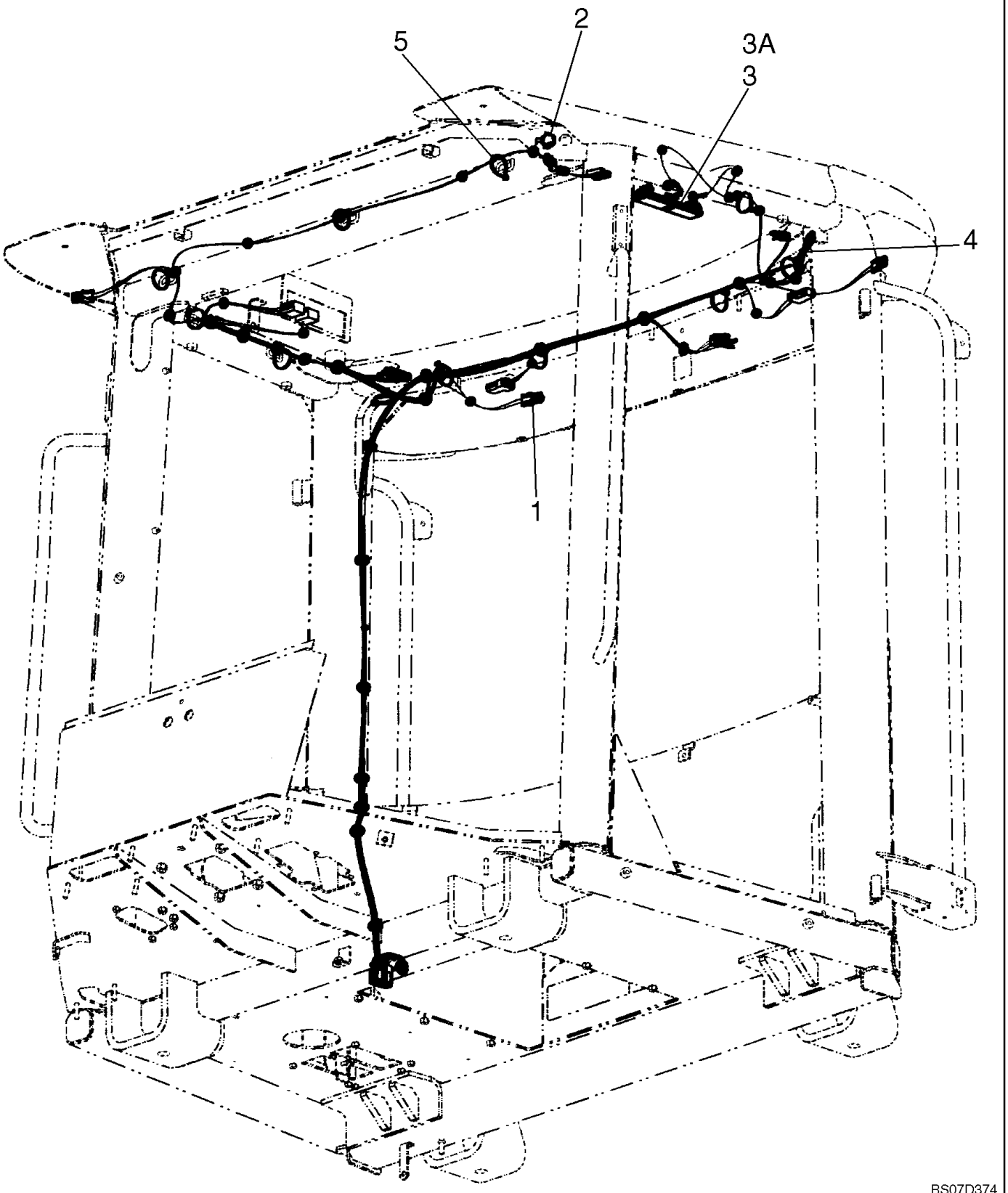

**FAISCEAU - TOIT DE LA CABINE**

| REF | FN | PART NUMBER | YR/SN | QTY | DESCRIPTION |
|---|---|---|---|---|---|
| 1 | | 87517052 | | 1 | FAISCEAU COMPLET, Cab Roof |
| 2 | | 76053295 | | 1 | PRISE DE COURANT |
| 3 | | 394799A1 | | 1 | FEU (ASSEMBLE), Incl. Ref. 3A |
| 3A | | 395185A1 | | 1 | AMPOULE, 24V |
| 4 | | 87325760 | | 1 | CONTACTEUR, Door |
| 5 | | L11541 | | 11 | SANGLE |

| 04-09 | | p1 | 07/07 |
|---|---|---|---|

**FAISCEAU, CAPOT - ALARME DE RECUL**

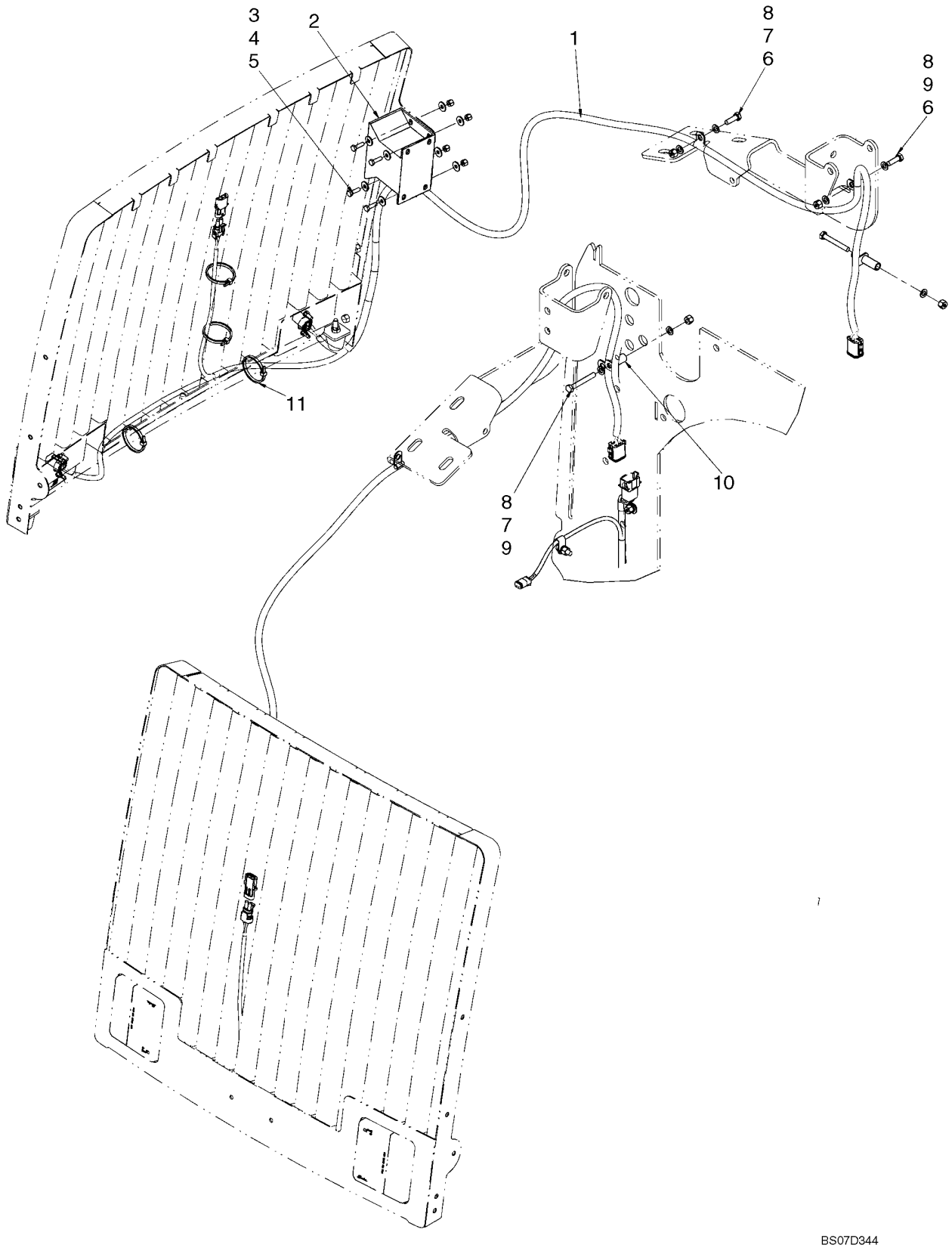

**FAISCEAU, CAPOT - ALARME DE RECUL**

| REF | FN | PART NUMBER | YR/SN | QTY | DESCRIPTION |
|---|---|---|---|---|---|
| 1 | | {87613715} | | 1 | HARNESS, Hood |
| 2 | | D121972 | | 1 | ALARME, Back-Up |
| 3 | | 895-25006 | | 8 | RONDELLE, M6 x 18 x 1.6 |
| 4 | | 627-6020 | | 4 | BOULON, Hex, M6 x 20, 10.9 |
| 5 | | 832-10406 | | 4 | CONTRE-ECROU, M6 x 1, Cl 8 |
| 6 | | 627-8025 | | 2 | BOULON, Hex, M8 x 25, 10.9 |
| 7 | | 895-11008 | | 6 | RONDELLE, M8 x 16 x 1.6 |
| 8 | | 832-10408 | | 3 | CONTRE-ECROU, M8 x 1.25, Cl 8 |
| 9 | | 827-8060 | | 1 | BOULON, Hex, M8 x 60, 10.9 |
| 10 | | L126936 | | 1 | ENTRETOISE |
| 11 | | L11541 | | 3 | SANGLE |

**FAISCEAU, TRANSMISSION**

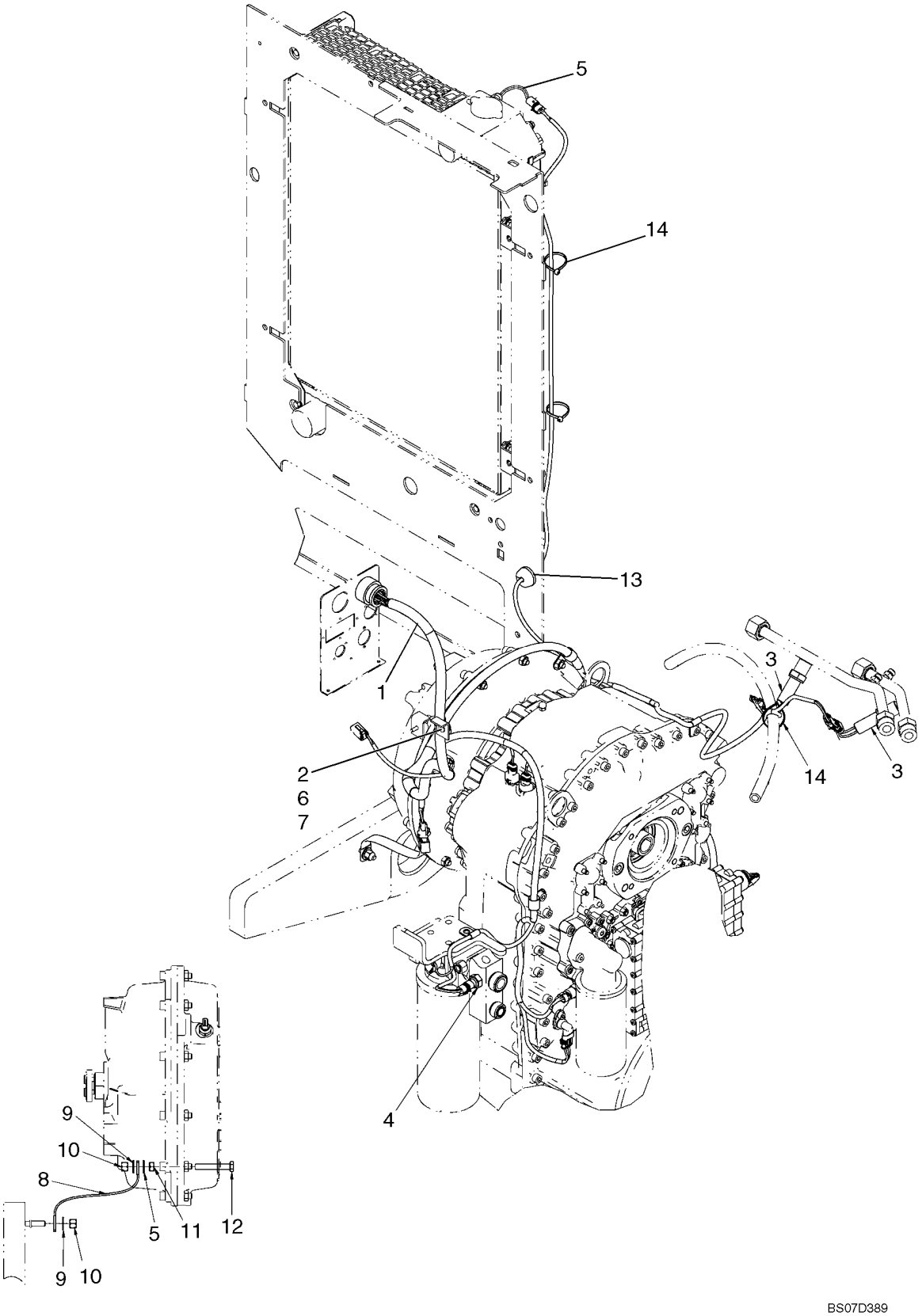

**FAISCEAU, TRANSMISSION**

| REF | FN | PART NUMBER | YR/SN | QTY | DESCRIPTION |
|---|---|---|---|---|---|
| 1 | | 87592785 | | 1 | FAISCEAU, Transmission |
| 2 | | 515-21190 | | 1 | BRIDE, 3/4", Insul, 1/4" Bolt |
| 3 | | 377899A1 | | 2 | CONTACTEUR, Redundant Brake |
| 4 | | 321446A1 | | 1 | TRANSMETTEUR ASSY, Engine Coolant |
| 5 | | 445786A1 | | 1 | FAISCEAU, Sealed Jumper |
| 6 | | 895-11006 | | 1 | RONDELLE, M6 |
| 7 | | 832-10406 | | 1 | CONTRE-ECROU, M6 x 1, Cl 8 |
| 8 | | 79028421 | | 1 | CABLE, MASSE |
| 9 | | 895-15010 | | 3 | RONDELLE, M11 x 24 x 2 |
| 10 | | 832-10410 | | 2 | CONTRE-ECROU, M10 x 1.5, Cl 8 |
| 11 | | 829-1410 | | 1 | ECROU, M10, Cl 10 |
| 12 | | 627-10065 | | 1 | BOULON, Hex, M10 x 65, 10.9, Full Thd |
| 13 | | 198823C1 | | 1 | PASSE-FIL |
| 14 | | L11541 | | 3 | SANGLE |

**FAISCEAU - APPAREIL DE CHAUFFAGE DE GRILLE**

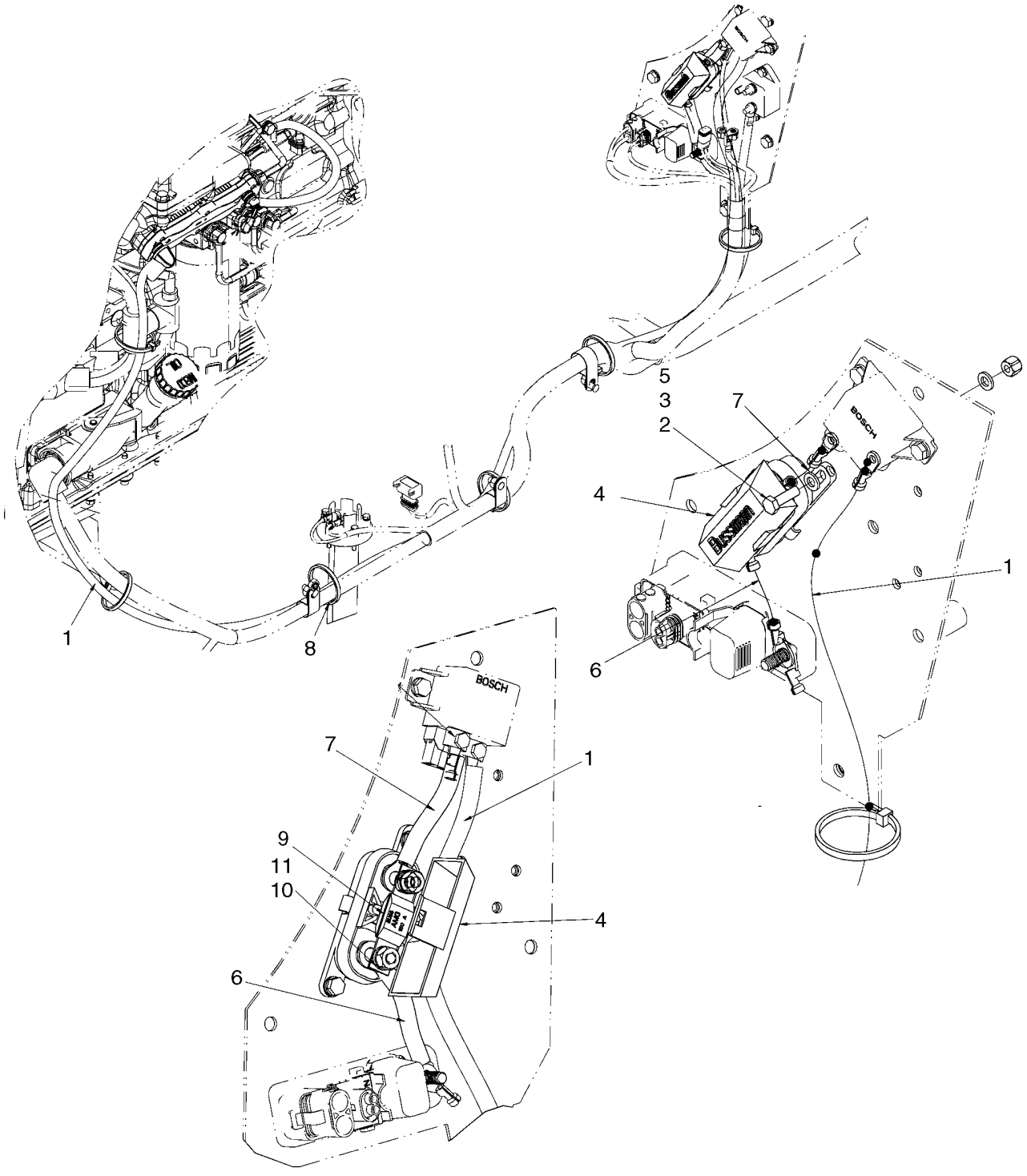

**FAISCEAU - APPAREIL DE CHAUFFAGE DE GRILLE**

| REF | FN | PART NUMBER | YR/SN | QTY | DESCRIPTION |
|---|---|---|---|---|---|
| | | REF | | | NOTICE, GRID HEATER CABLES, FUSE BOX |
| 1 | | 87354000 | | 1 | CABLE, Grid Heater; Power |
| 2 | | 895-11006 | | 4 | RONDELLE, M6 |
| 3 | | 832-10406 | | 2 | CONTRE-ECROU, M6 x 1, Cl 8 |
| 4 | | 440038A1 | | 1 | JONCTION, Fuse |
| 5 | | 627-6020 | | 2 | BOULON, Hex, M6 x 20, 10.9 |
| 6 | | 87350062 | | 1 | CABLE, Grid Heater B+ |
| 7 | | 87348713 | | 1 | CABLE, Grid Heater |
| 8 | | L11541 | | 6 | SANGLE, Wire Tie |
| 9 | | 8501311 | | 1 | FUSIBLE, 150 Amp |
| 10 | | 892-11008 | | 2 | RONDELLE FREIN, M8 |
| 11 | | 829-1408 | | 2 | ECROU, M8, Cl 10 |

**APPAREIL DE CHAUFFAGE DE GRILLE**

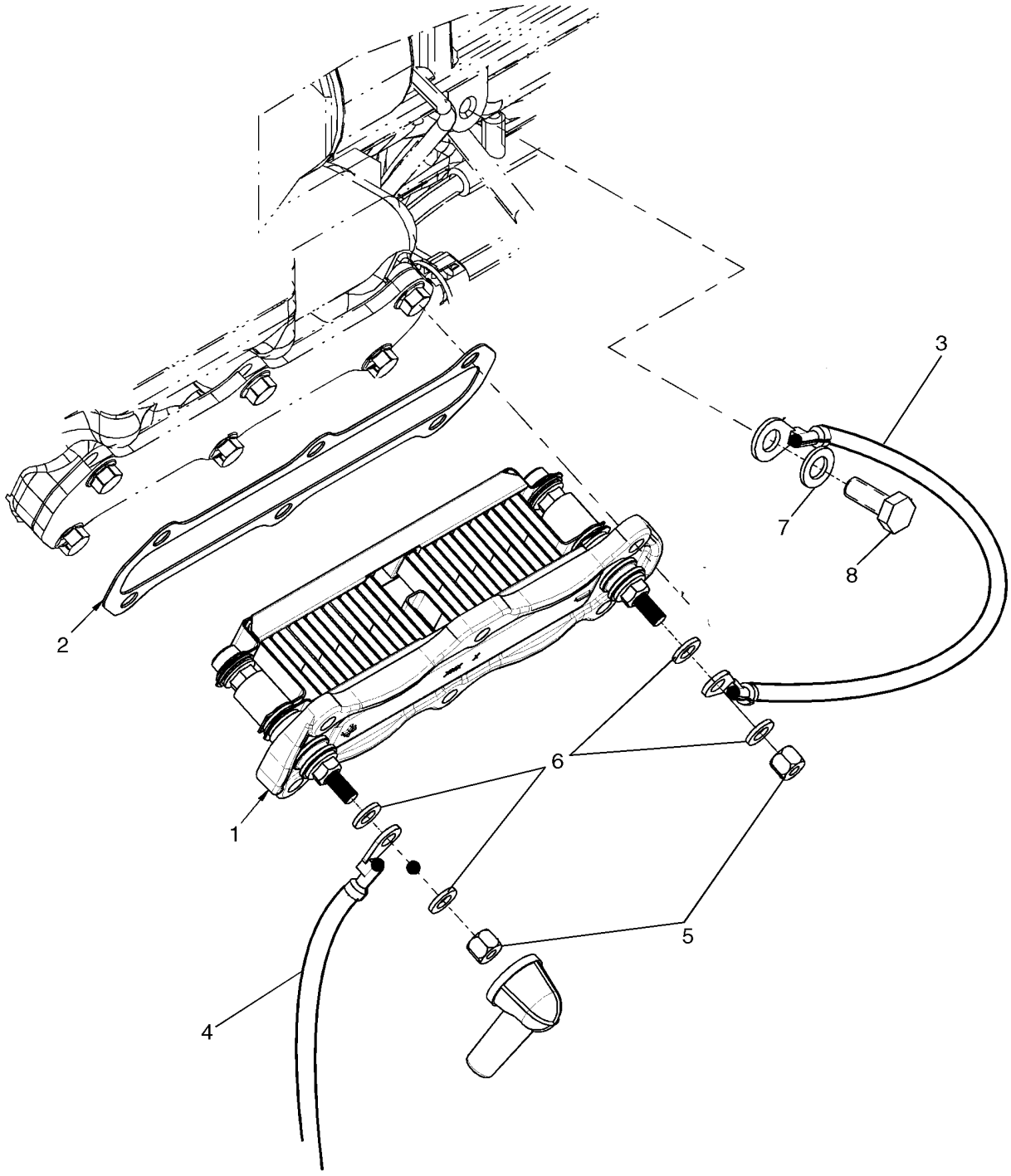

**APPAREIL DE CHAUFFAGE DE GRILLE**

| REF | FN | PART NUMBER | YR/SN | QTY | DESCRIPTION |
|---|---|---|---|---|---|
| 1 | | 87300128 | | 1 | RECHAUFFEUR, ASSY. Iveco 24V |
| 2 | | 2854701 | | 1 | JOINT |
| 3 | | 87398558 | | 1 | CABLE, Grid Heater Ground |
| 4 | | 87354000 | | 1 | CABLE, Grid Heater Power |
| 5 | | 832-10406 | | 2 | CONTRE-ECROU, M6 x 1, Cl 8 |
| 6 | | 895-11006 | | 4 | RONDELLE, M6 |
| 7 | | 895-11008 | | 1 | RONDELLE, M8 x 16 x 1.6 |
| 8 | | 627-8020 | | 1 | BOULON, Hex, M8 x 20, 10.9 |

**AVERTISSEUR SONORE AVANT**

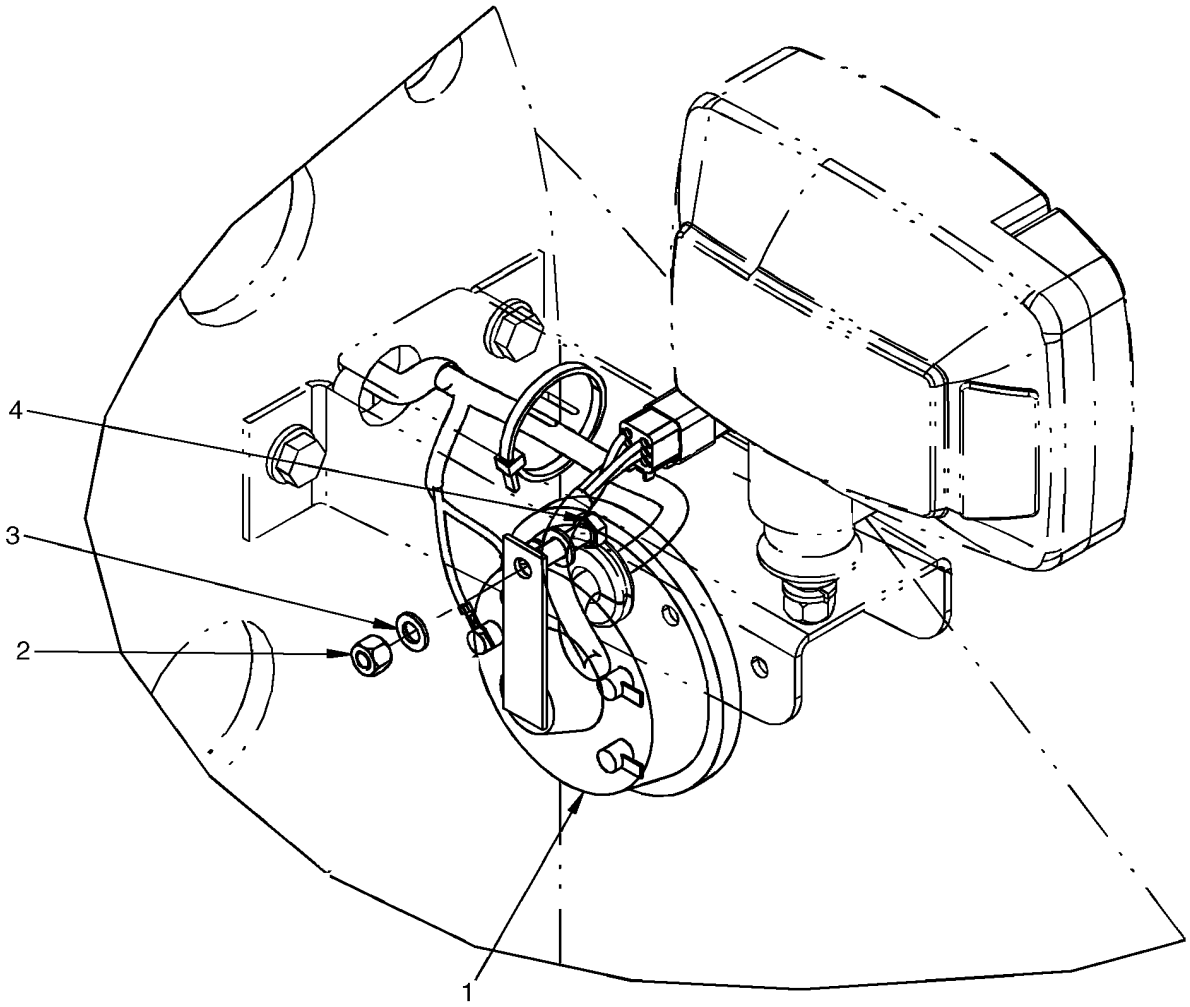


BS07D392

**AVERTISSEUR SONORE AVANT**

| REF | FN | PART NUMBER | YR/SN | QTY | DESCRIPTION |
|---|---|---|---|---|---|
| 1 | | 87382200 | | 1 | AVERTISSEUR, 109 Db |
| 2 | | 832-10408 | | 1 | CONTRE-ECROU, M8 x 1.25, Cl 8 |
| 3 | | 895-11008 | | 2 | RONDELLE, M8 x 16 x 1.6 |
| 4 | | 627-8025 | | 1 | BOULON, Hex, M8 x 25, 10.9 |

**PANNEAU DE COMMANDES - CONTACTEURS**

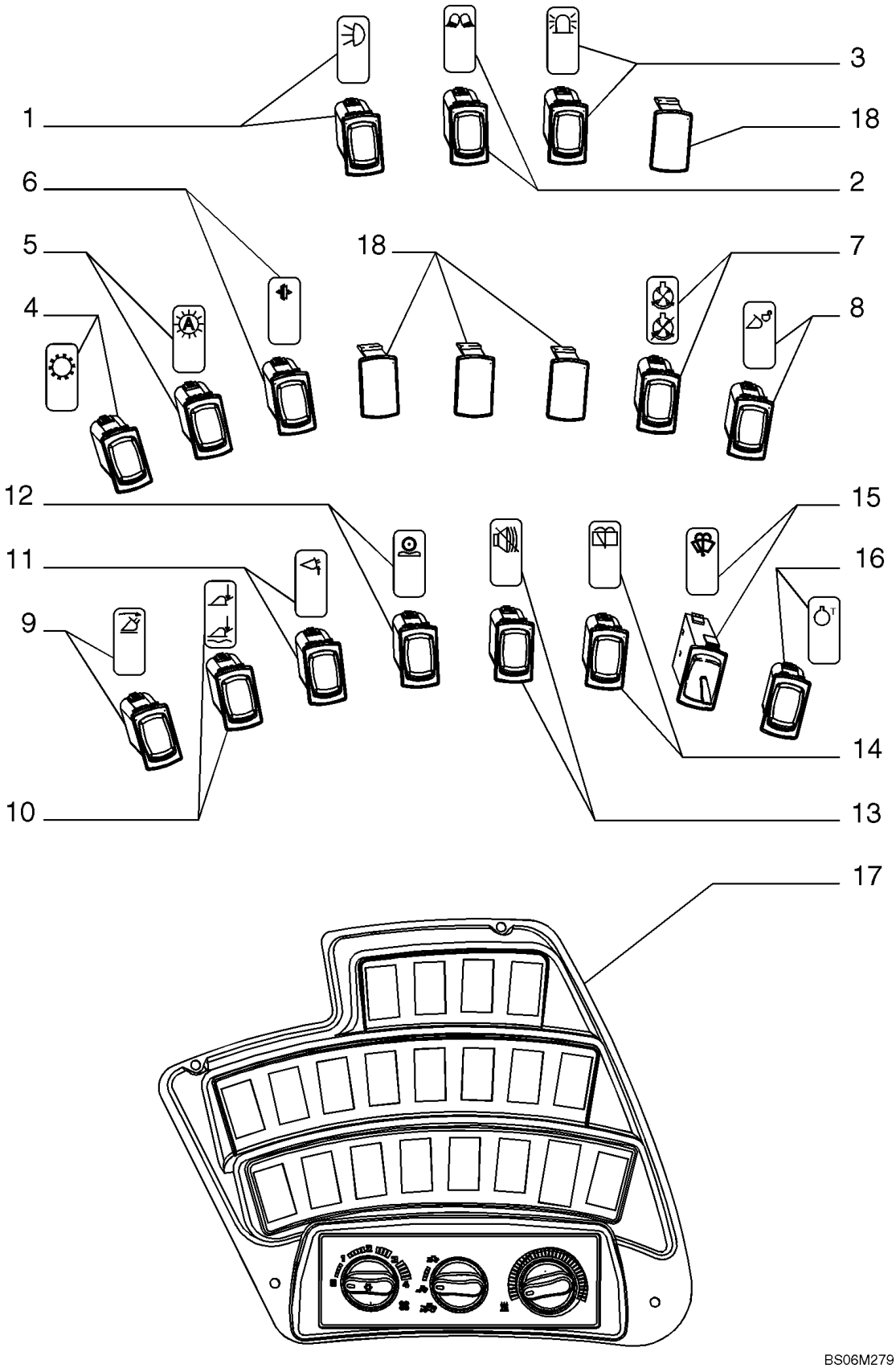

**PANNEAU DE COMMANDES - CONTACTEURS**

| REF | FN | PART NUMBER | YR/SN | QTY | DESCRIPTION |
|---|---|---|---|---|---|
| 1 | | 87350054 | | 1 | CONTACTEUR, Drive Lights |
| 2 | | 87350052 | | 1 | CONTACTEUR, Work Lights |
| 3 | | 374430A2 | | 1 | CONTACTEUR, Rotating Beacon |
| 4 | | 87350044 | | 1 | CONTACTEUR, Transmission Enable |
| 5 | | 374431A2 | | 1 | CONTACTEUR, Transmission Auto |
| 6 | | 374421A4 | | 1 | CONTACTEUR, Declutch |
| 7 | | 87350049 | | 1 | CONTACTEUR, Fan Control |
| 8 | | 364444A2 | | 1 | CONTACTEUR, Pin Engage |
| 9 | | 87350045 | | 1 | CONTACTEUR, Return to Dig |
| 10 | | 87350048 | | 1 | CONTACTEUR, Return to Travel/Float |
| 11 | | 87350047 | | 1 | CONTACTEUR, Height Control, High |
| 12 | | 87350055 | | 1 | COMMUTATER A LEVIER, Ride Control |
| 13 | | 374433A3 | | 1 | CONTACTEUR, Back Up Alarm |
| 13 | | {87567880} | | 1 | SWITCH, Back Up Alarm; Used On European Models Only |
| 14 | | 374429A2 | | 1 | CONTACTEUR, Rear Wiper |
| 15 | | 87620692 | | 1 | CONTACTEUR, SWITCH, Front Wiper; Replaces 87350085 |
| 16 | | {87371084} | | 1 | SWITCH, Idle |
| 17 | | 76303030 | | 1 | PANNEAU, Switch Panel |
| 18 | | 126844A1 | | 4-6 | BOUCHON |
| 19 | | 87582901 | | 4 | VIS, Not Illustrated |

| 04-14 | | p1 | 08/07 |
|---|---|---|---|

**PANNEAU DE COMMANDES - FUSIBLE ET RELAIS SUPPORT**

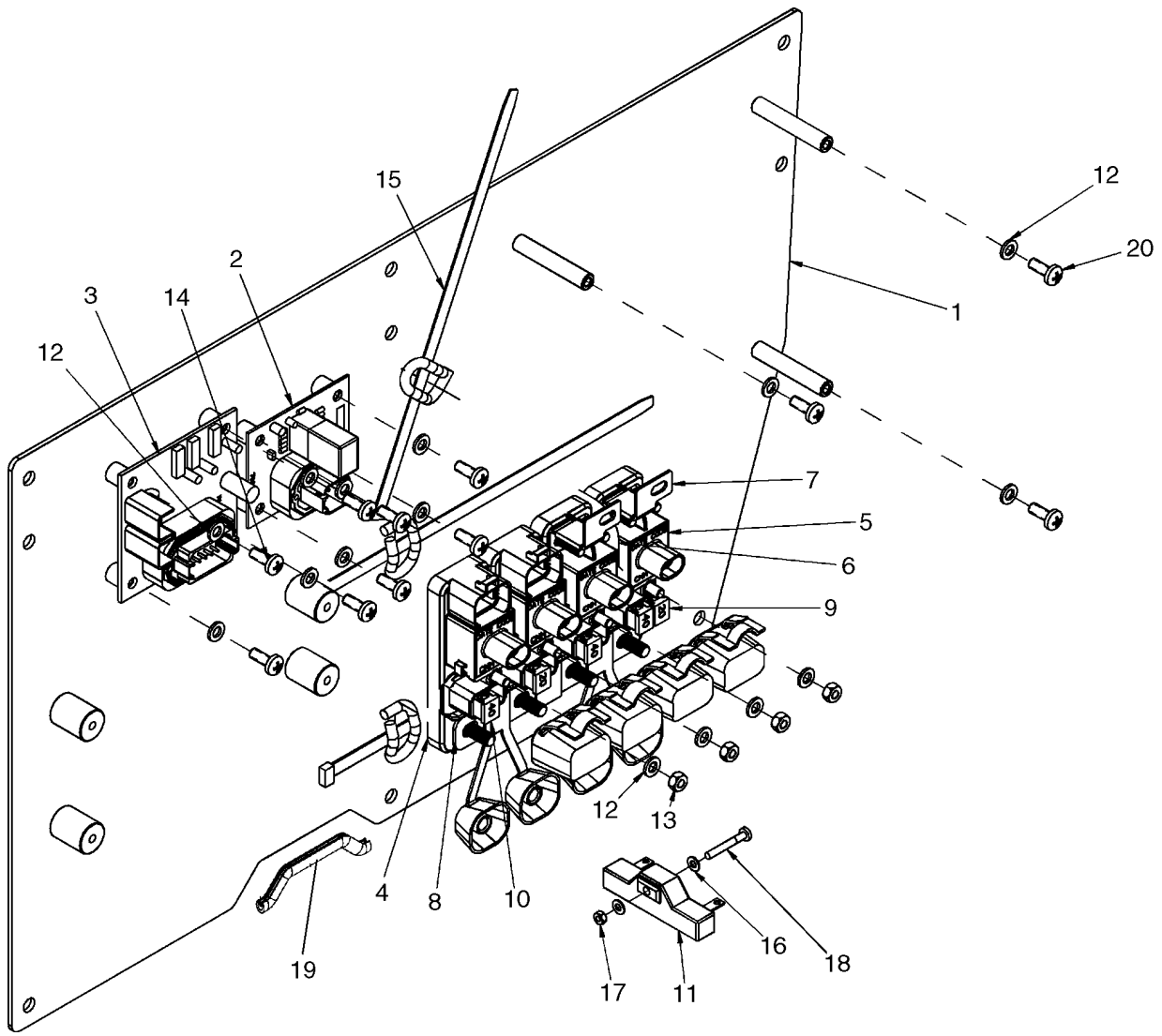

**PANNEAU DE COMMANDES - FUSIBLE ET RELAIS SUPPORT**

| REF | FN | PART NUMBER | YR/SN | QTY | DESCRIPTION |
|---|---|---|---|---|---|
| 1 | | 87372241 | | 1 | PLAQUE, Right Console |
| 2 | | 87364605 | | 1 | TIMON |
| 3 | | 232364A1 | | 4 | CENTRALE CLIGNOTANTE |
| 4 | | 87318627 | | 4 | CONNECTEUR, D.6 |
| 5 | | 87315250 | | 1 | MODULE, Electrical Center |
| 6 | | {87318617} | | 16 | JOINER, PRM |
| 7 | | 87318620 | | 3 | BARRE, RTMR to PRM Bus Bar |
| 8 | | 87318612 | | 3 | BARRE (ASSEMBLEE), PRM Input Bus Bar |
| 9 | | 87327335 | | 4 | FUSIBLE, 32 Volt, 20 Amp |
| 10 | | 87327346 | | 4 | FUSIBLE, 32 Volt, 40 Amp |
| 11 | | F22316 | | 2 | RESISTANCE |
| 12 | | 895-11006 | | 2 | RONDELLE, M6 |
| 13 | | 829-1406 | | 1 | ECROU, M6, Cl 10 |
| 14 | | 840-1612 | | 8 | VIS, Cross Pan Hd, M6 x 12 |
| 15 | | {885180004} | | 2 | CABLE |
| 16 | | 895-11004 | | 2 | RONDELLE, M4 |
| 17 | | 825-1404 | | 1 | ECROU, M4, Cl 8 |
| 18 | | 86511825 | | 1 | VIS, Cross Pan Hd, M4 x 30 |
| 19 | | {87661964} | | 1 | GASKET |
| 20 | | 840-1616 | | 3 | VIS, Cross Pan Hd, M6 x 16 |

**SYSTÈME ÉLECTRIQUE - COLONNE DE DIRECTION / TABLEAU DE BORD**

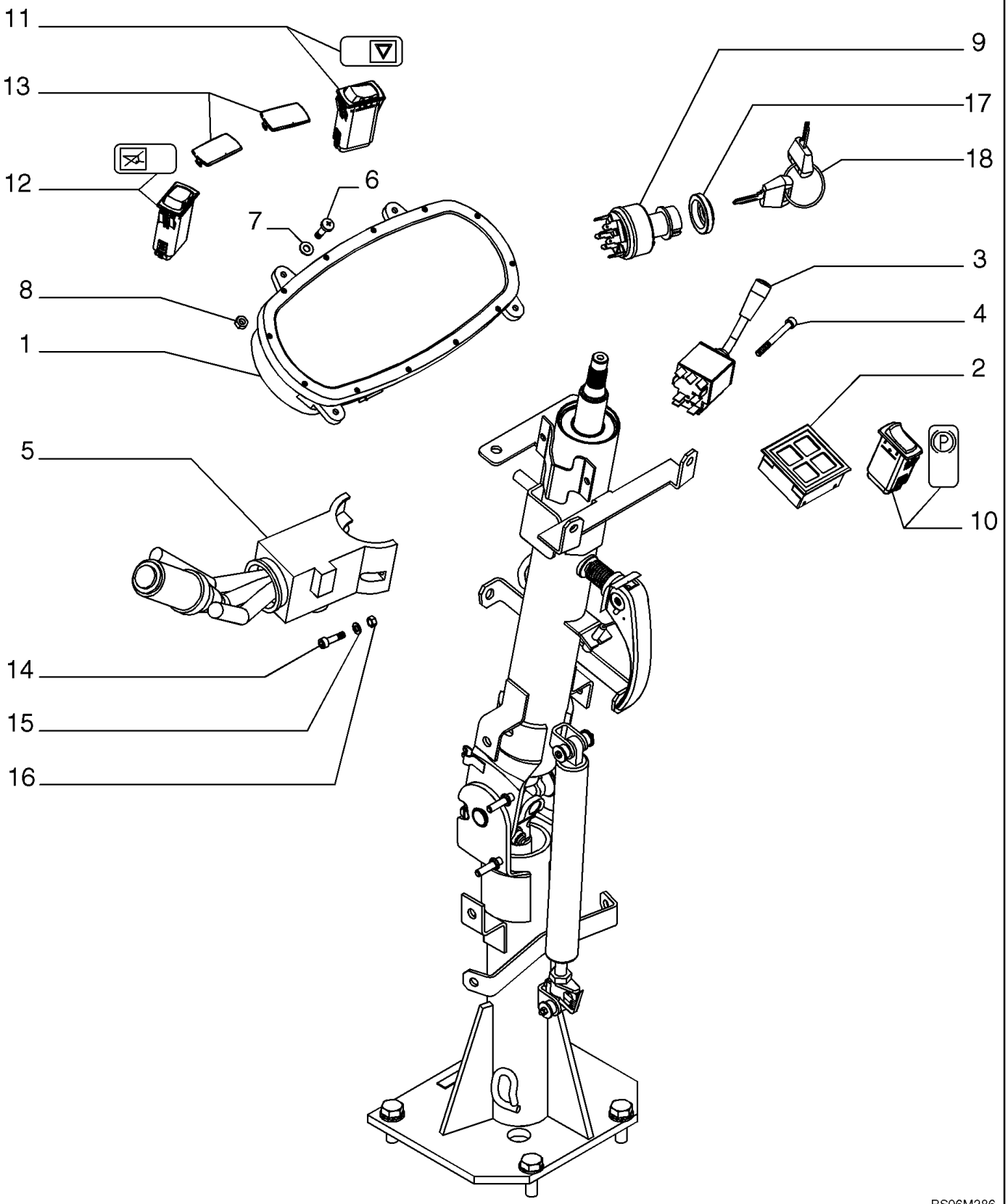

**SYSTÈME ÉLECTRIQUE - COLONNE DE DIRECTION / TABLEAU DE BORD**

| REF | FN | PART NUMBER | YR/SN | QTY | DESCRIPTION |
|---|---|---|---|---|---|
| 1 | | 87372814 | | 1 | TABLEAU DES INSTRUMENTS, Case |
| 2 | | 87372804 | | 1 | TAMPON, Key |
| 3 | | 389487A1 | | 1 | COMM. LUMIERES |
| 4 | | 14304731 | | 2 | VIS, Hex Soc Hd, M5 x 50, 10.9 |
| 5 | | 238270A1 | | 1 | COMMANDE, Selector |
| 6 | | 13272111 | | 4 | VIS, Pan Hd, M4 x 14, 5.8 |
| 7 | | 14496201 | | 4 | RONDELLE, D4 |
| 8 | | 10794011 | | 4 | ECROU, M4, Cl 8 |
| 9 | | 282775A1 | | 1 | COMMUTATEUR, DEM., Incl. Refs. 17, 18 |
| 10 | | 374424A2 | | 1 | CONTACTEUR, Parking Brake |
| 11 | | 374426A2 | | 1 | CONTACTEUR, Hazard |
| 12 | | 374434A2 | | 1 | CONTACTEUR, Pilot Control |
| 13 | | 86000535 | | 2 | BOUCHON, 1.427" x .62", Plastic |
| 14 | | NSS | | 2 | NON FOURNI SEPAREMENT, SCREW, M5 x 20 |
| 15 | | 14496301 | | 4 | RONDELLE |
| 16 | | 15896411 | | 4 | ECROU, M5, Cl 8 |
| 17 | | NSS | | 1 | NON FOURNI SEPAREMENT, Ignition Switch Cap |
| 18 | | 1964831C2 | | 1 | JEU DE 2 CLES, Padded |

**SYSTÈME ÉLECTRIQUE - COMMANDE DE LA TRANSMISSION**

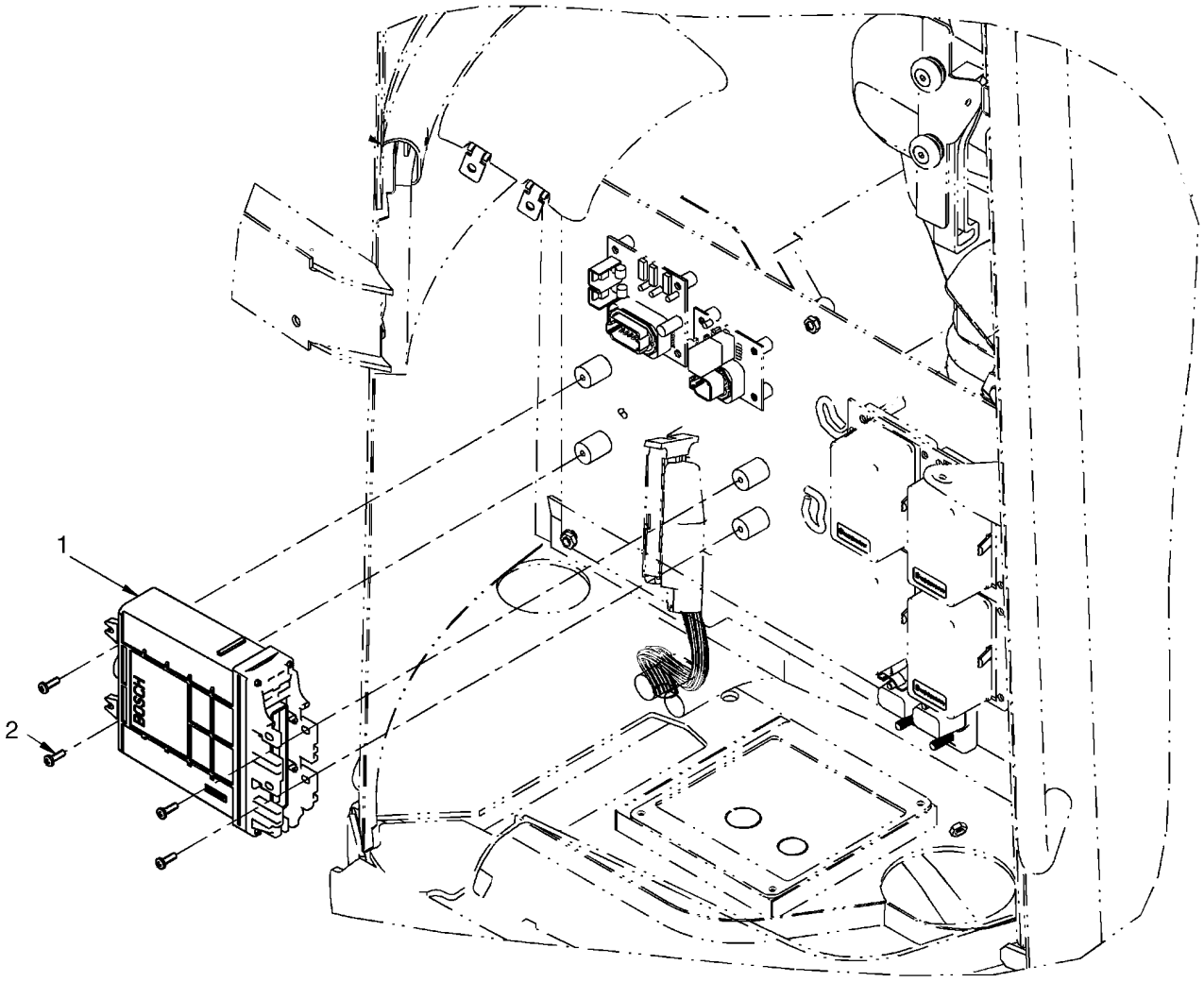


BS07G084

**SYSTÈME ÉLECTRIQUE - COMMANDE DE LA TRANSMISSION**

| REF | FN | PART NUMBER | YR/SN | QTY | DESCRIPTION |
|---|---|---|---|---|---|
| 1 | | 87573767 | | 1 | GROUPE REGULATEUR, Transmission Control |
| 2 | | 840-1516 | | 4 | VIS, Cross Pan Hd, M5 x 16 |

**SYSTÈME ÉLECTRIQUE - DIRECTION, AUXILIAIRE**

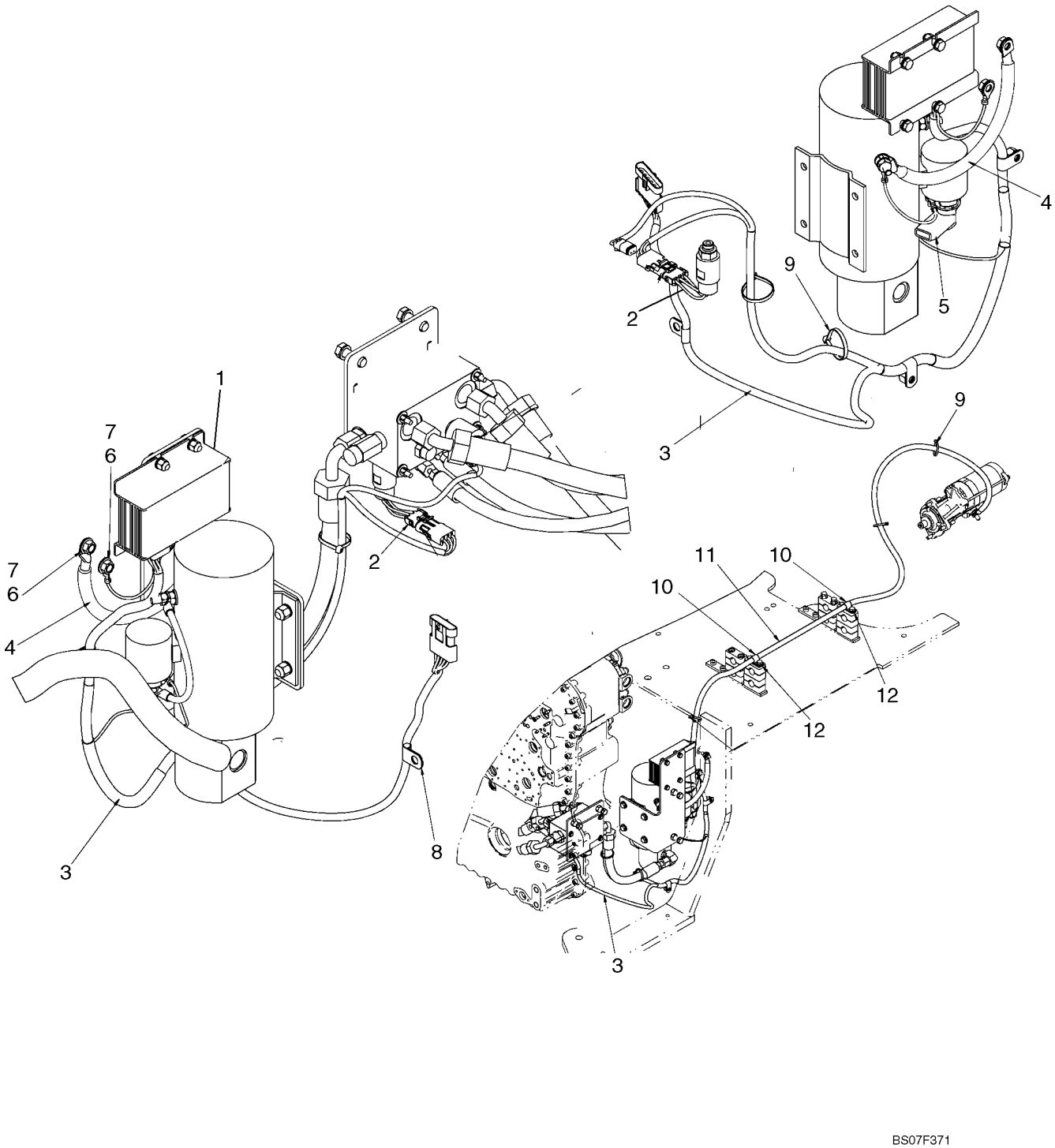

**SYSTÈME ÉLECTRIQUE - DIRECTION, AUXILIAIRE**

| REF | FN | PART NUMBER | YR/SN | QTY | DESCRIPTION |
|---|---|---|---|---|---|
| 1 | | 8603171 | | 1 | MODULE, Auxiliary Steering |
| 2 | | 398888A1 | | 1 | CONTACTEUR, Auxiliary Steering Pressure Switch |
| 3 | | 87653924 | | 1 | FAISCEAU, Secondary Steering Module |
| 4 | | L129707 | | 1 | CABLE, Battery, Negative |
| 5 | | L126713 | | 1 | COIFFE, Electrical |
| 6 | | L127554 | | 2 | RONDELLE |
| 7 | | 253347A1 | | 2 | ECROU |
| 8 | | 515-2495 | | 1 | BRIDE, 3/8", Insul, 7/16" Bolt |
| 9 | | L11541 | | 6 | SANGLE |
| 10 | | 515-24190 | | 2 | BRIDE, 3/4", Insul, 7/16" Bolt |
| 11 | | 87600841 | | 1 | CABLE, Auxiliary Steering |
| 12 | | 895-11010 | | 2 | RONDELLE, M10 x 20 x 2 |

| 04-18 | | p1 | 06/07 |
|---|---|---|---|

**SUPPORT - PHARES, AVANT**

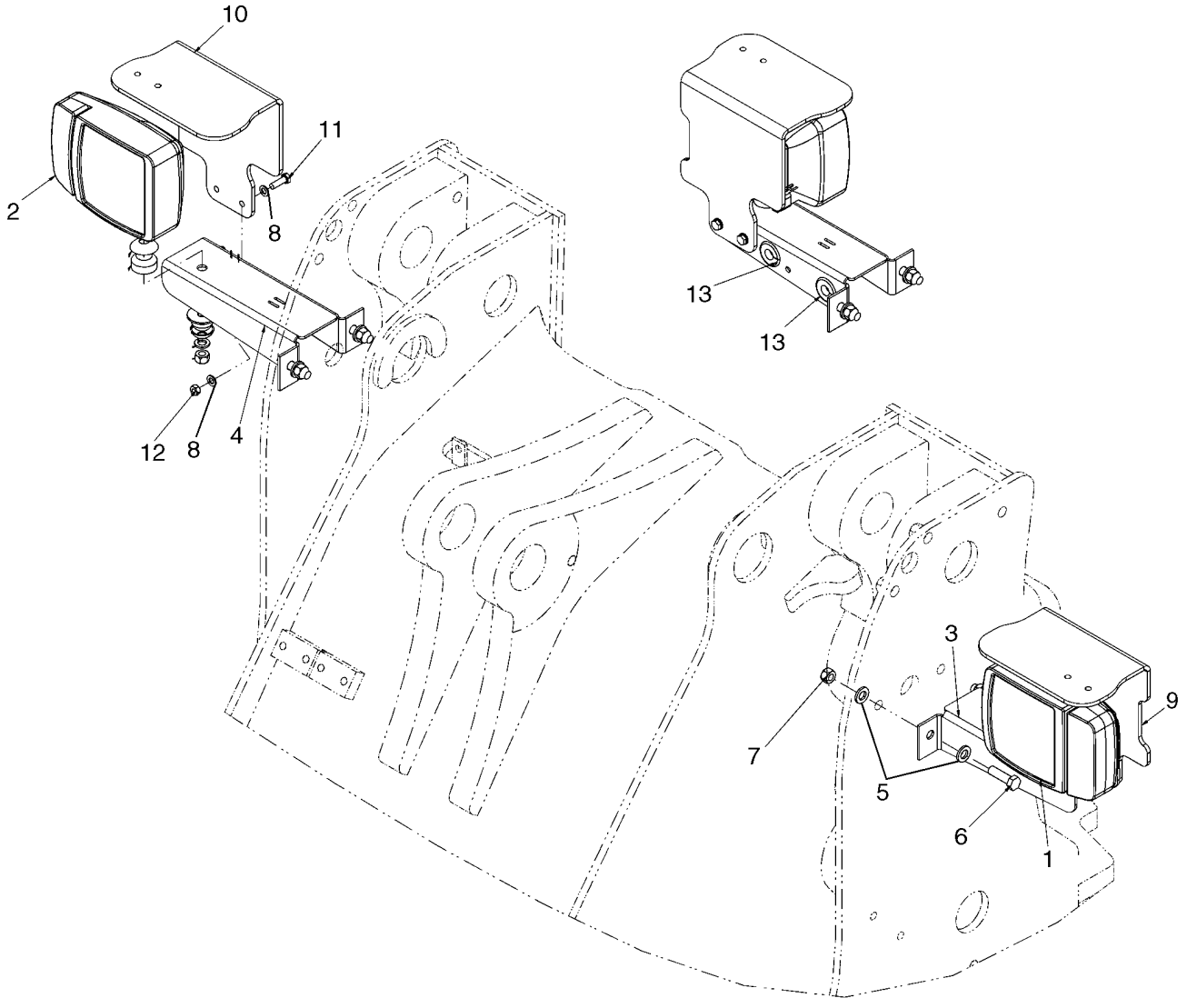

**SUPPORT - PHARES, AVANT**

| REF | FN | PART NUMBER | YR/SN | QTY | DESCRIPTION |
|---|---|---|---|---|---|
| 1 | | 368056A1 | | 1 | FEU, Combination Left; See Figure 04-19 |
| 2 | | 368055A1 | | 1 | FEU, Combination Right; See Figure 04-19 |
| 3 | | 87588276 | | 1 | PATTE FIXATION, Light Mounting Arm, LH; Light Mounting Bracket |
| 4 | | 87351705 | | 1 | PATTE FIXATION, Light Mounting Arm, RH; Light Mounting Bracket |
| 5 | | 896-11012 | | 8 | RONDELLE, M13.5 x 24.5 x 3, HT |
| 6 | | 614-12040 | | 4 | BOULON, Hex, M12 x 40, 8.8, Full Thd |
| 7 | | 829-1412 | | 4 | ECROU, M12, Cl 10 |
| 8 | | 895-11008 | | 8 | RONDELLE, M8 x 16 x 1.6 |
| 9 | | 87351718 | | 1 | PROTECTION, Light |
| 10 | | 87351705 | | 1 | PATTE FIXATION, Light Shield |
| 11 | | 614-8025 | | 4 | BOULON, Hex, M8 x 25, 8.8 |
| 12 | | 829-1408 | | 4 | ECROU, M8, Cl 10 |
| 13 | | 248-2376 | | 3 | PASSE-FIL, 5/8" ID x 1 1/4" Groove Dia, Str Cut, LH Light Bracket Only |

**ÉCLAIRAGE - PHARE, AVANT**

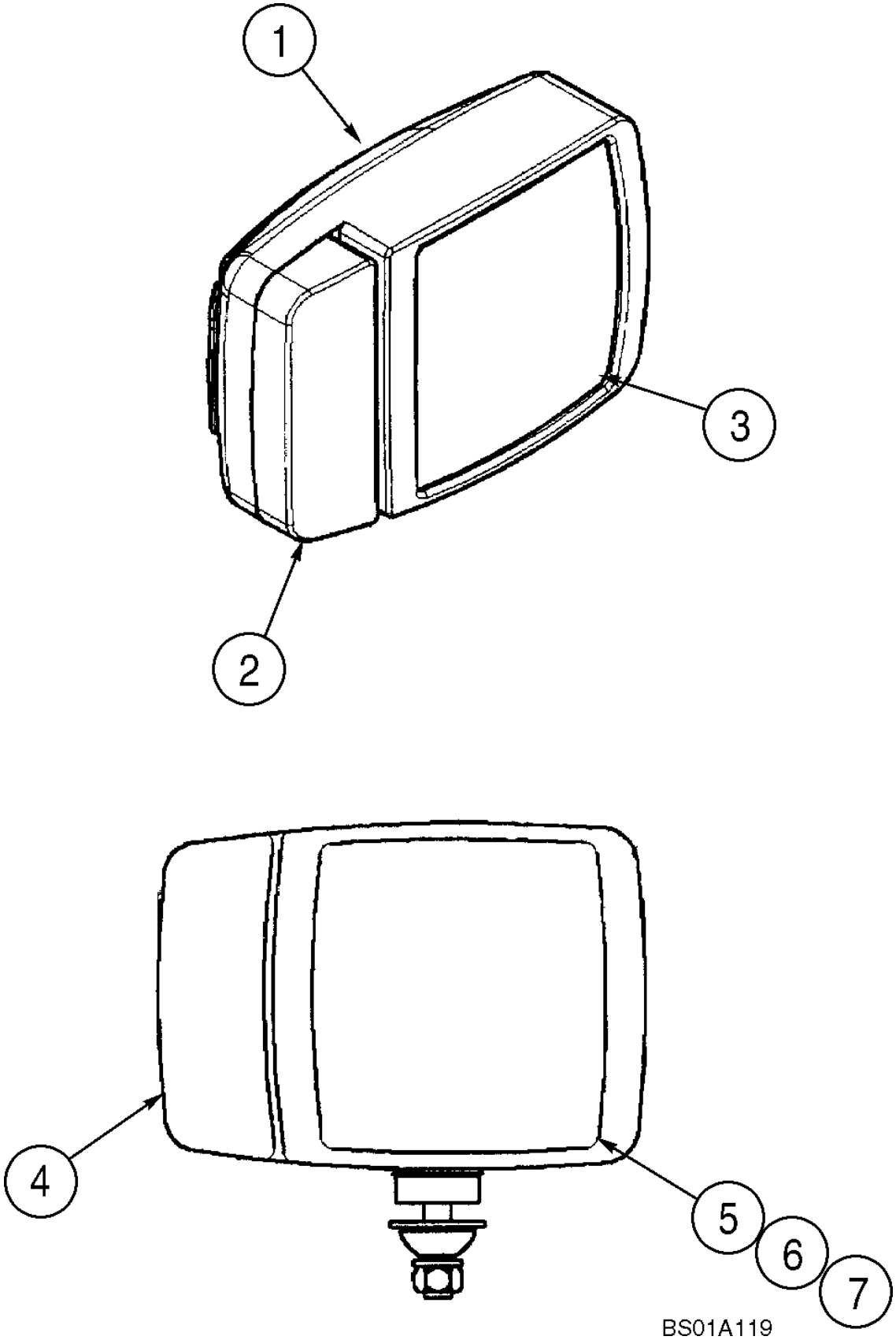

**ÉCLAIRAGE - PHARE, AVANT**

| REF | FN | PART NUMBER | YR/SN | QTY | DESCRIPTION |
|---|---|---|---|---|---|
| | | 368055A1 | | 1 | FEU, Combination; Right Hand; Includes Hardware; Incl. 1 - 7 |
| | | 368056A1 | | 1 | FEU, Combination; Left Hand; Includes Hardware; Incl. 1 - 7 |
| 1 | | NSS | | 1 | NON FOURNI SEPAREMENT, Housing |
| 2 | | 408142A1 | | 1 | CABOCHON, Turn Signal and Flasher |
| 3 | | 408143A1 | | 1 | CABOCHON, Head Light |
| 4 | | 410939A1 | | 1 | AMPOULE, 24V; Turn Signal and Flasher |
| 5 | | 410940A1 | | 1 | AMPOULE, 24V; Position |
| 6 | | 410942A1 | | 1 | AMPOULE, 24V; High Beam |
| 7 | | 410941A1 | | 1 | AMPOULE, 24V; Low Beam |

**SUPPORT- FEUX, COMBINAISON ARRIÈRE**

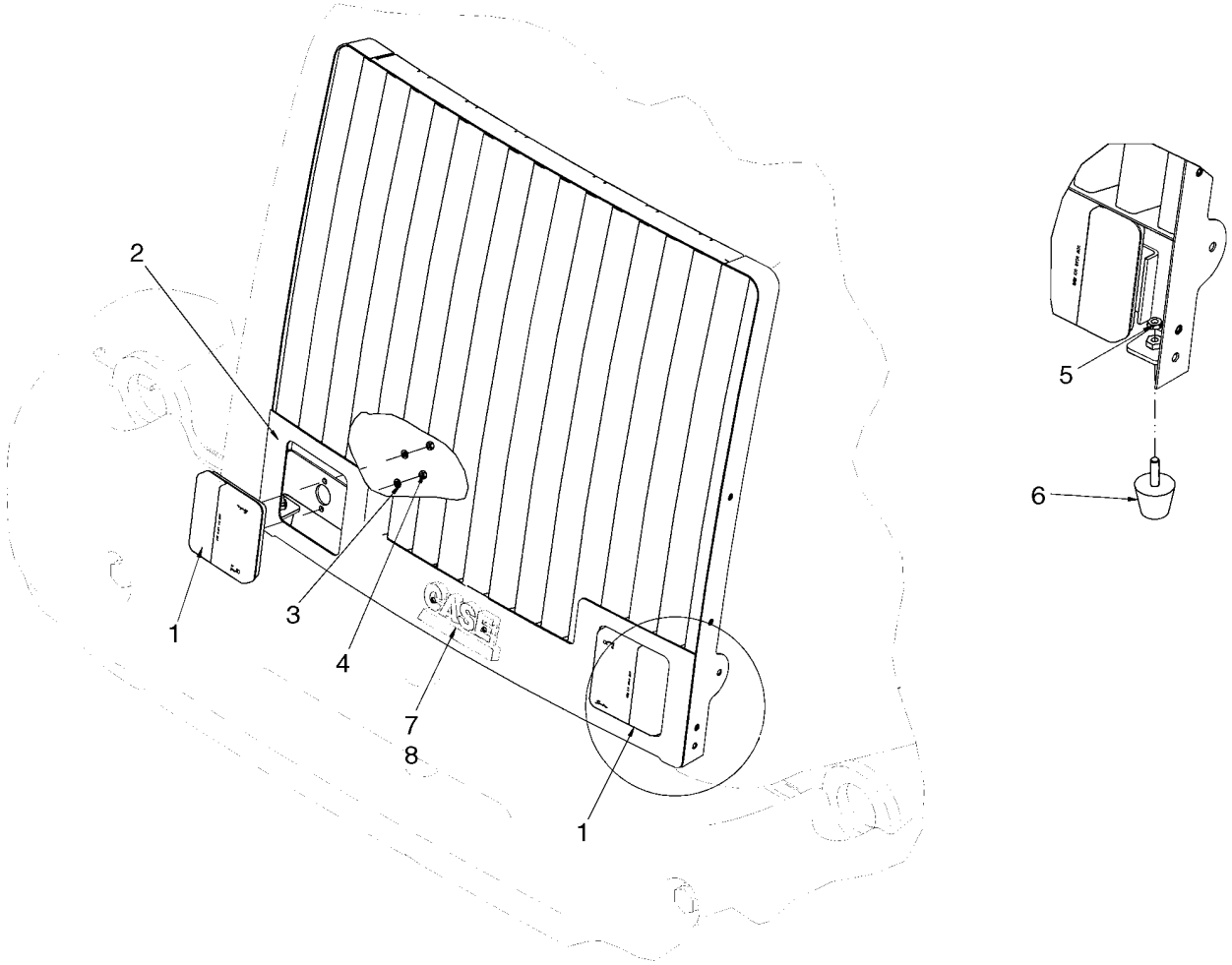


BS07D278

**SUPPORT- FEUX, COMBINAISON ARRIÈRE**

| REF | FN | PART NUMBER | YR/SN | QTY | DESCRIPTION |
|---|---|---|---|---|---|
| 1 | | 87578654 | | 2 | FEU ARRIERE, Sealed, Rear Combination; Component Parts Not Serviced Separately |
| 2 | | 87591668 | | 1 | CALANDRE, Rear, CNH Black |
| 3 | | 892-11006 | | 4 | RONDELLE FREIN, M6 |
| 4 | | 825-1406 | | 4 | ECROU, M6, Cl 8 |
| 5 | | 425-145 | | 2 | ECROU, Jam, 5/16"-18, G5 |
| 6 | | N7673 | | 2 | BUTOIR EN CAOUTCHOUC |
| 7 | | 186989A1 | | 1 | PLAQUE IDENTIFICATION, Case Logo |
| 8 | | 131-431 | | 2 | CONTRE-ECROU, Self, Threading, 1/4" |

**CABINE - FEUX**

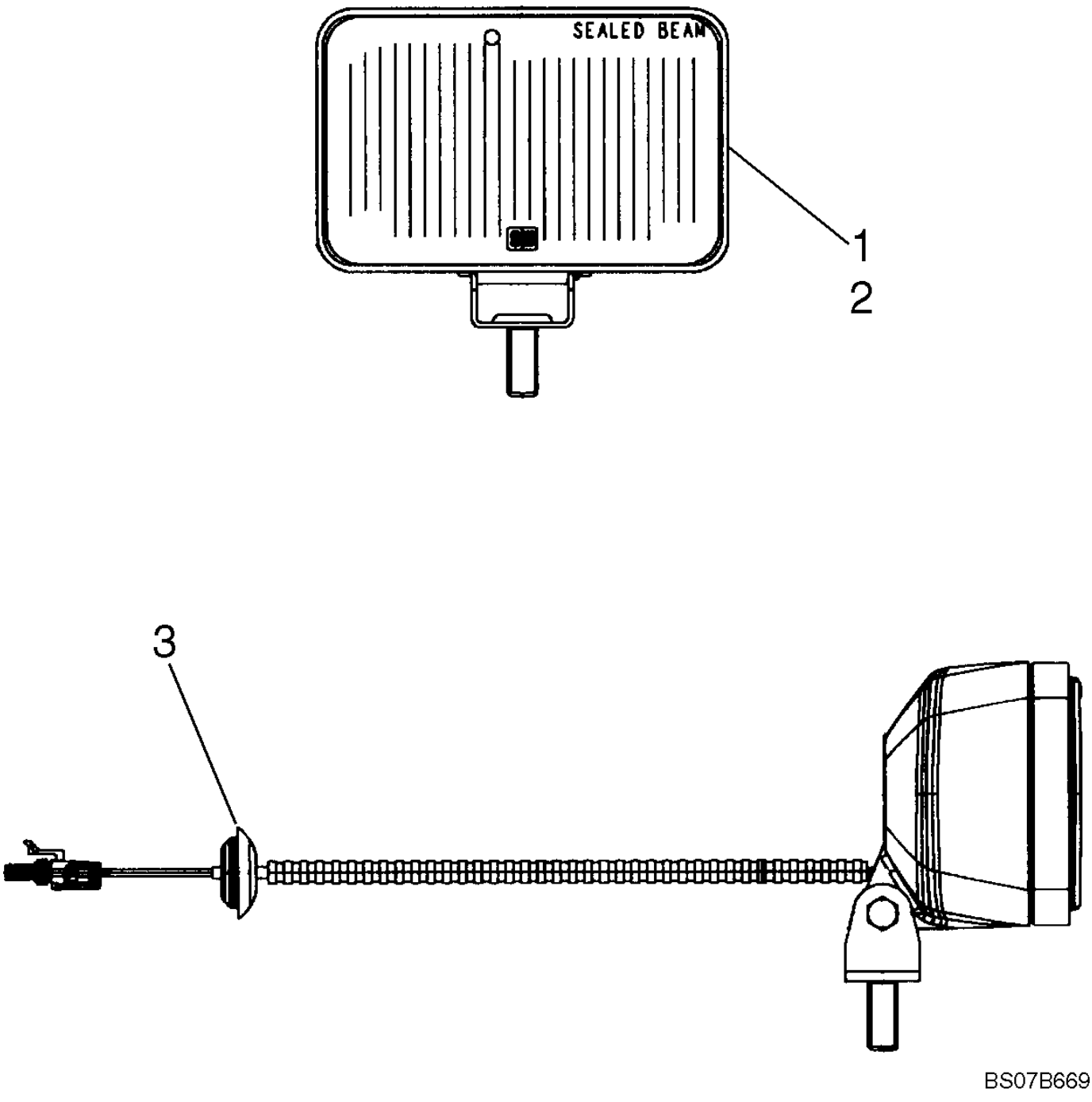

**CABINE - FEUX**

| REF | FN | PART NUMBER | YR/SN | QTY | DESCRIPTION |
|---|---|---|---|---|---|
| | | REF | | | NOTICE, CAB FLOOD LAMPS, SEE FIGURE 09-40 FOR MOUNTING HARDWARE |
| 1 | | 87627057 | | 2 | PHARE DE TRAVAIL, Front; Incl. Ref. 3 |
| 2 | | 87613498 | | 2 | PHARE DE TRAVAIL, Rear; Incl. Ref. 3 |
| 3 | | {87613497} | | 1 | GROMMET |

| 04-22 | | p1 | 07/07 |
|---|---|---|---|

**GYROPHARE - SUPPORT**

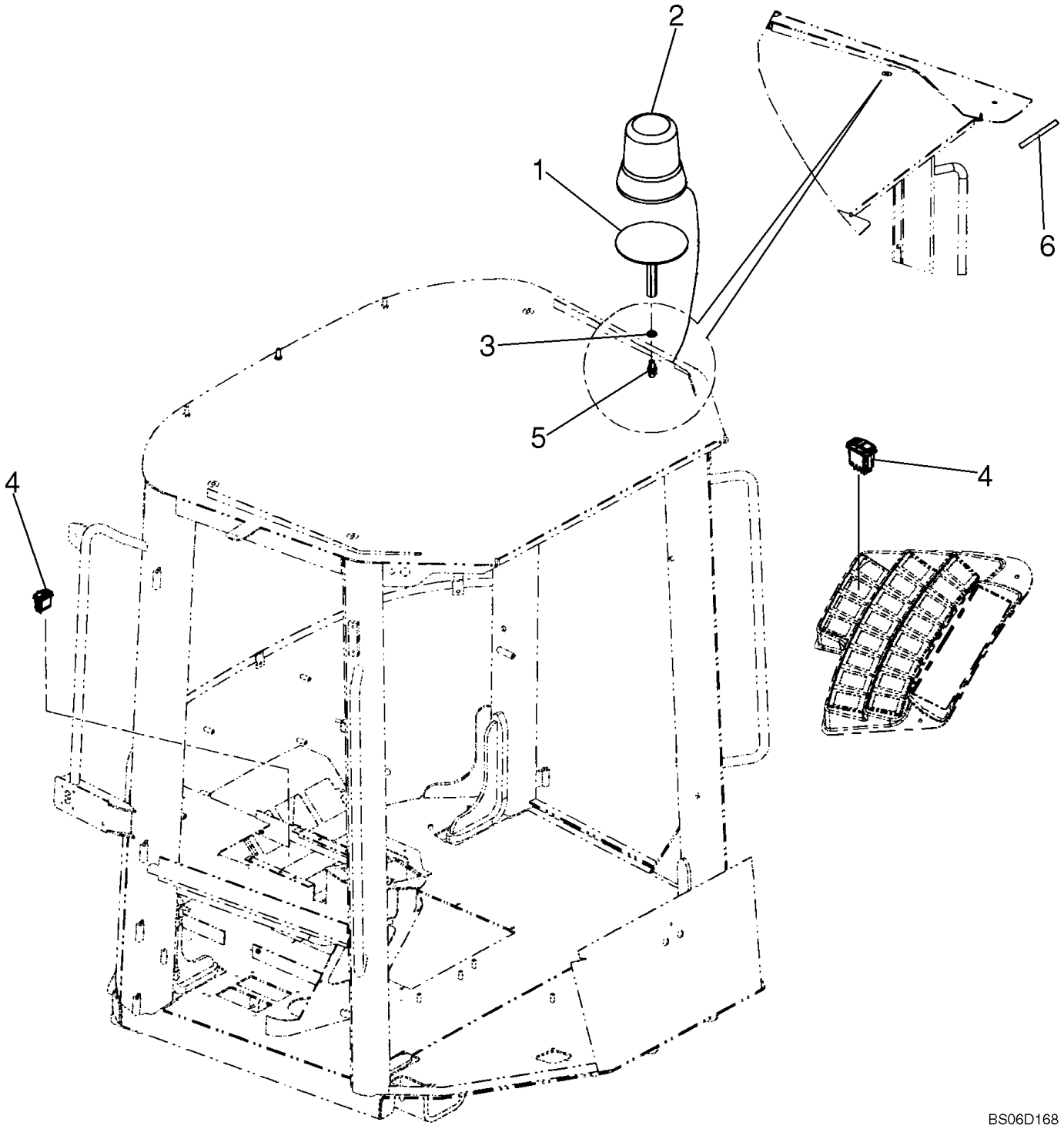

**GYROPHARE - SUPPORT**

| REF | FN | PART NUMBER | YR/SN | QTY | DESCRIPTION |
|---|---|---|---|---|---|
| 1 | | 87397102 | | 1 | SUPPORT, Rotating Beacon |
| 2 | | 76041998 | | 1 | CLIGNOTANT, Rotating Beacon |
| 3 | | 892-11012 | | 1 | RONDELLE FREIN, M12 |
| 4 | | 374430A2 | | 1 | CONTACTEUR, Rotating Beacon |
| 5 | | 87515619 | | 1 | BOULON, Double Sided Thread |
| 6 | | 60-6359T1 | | 1 | JOINT, 7-5/8 inch, Cut to Fit From F64277 47 Foot Bulk Roll |

**CABINE - ESSUIE-GLACE, AVANT**

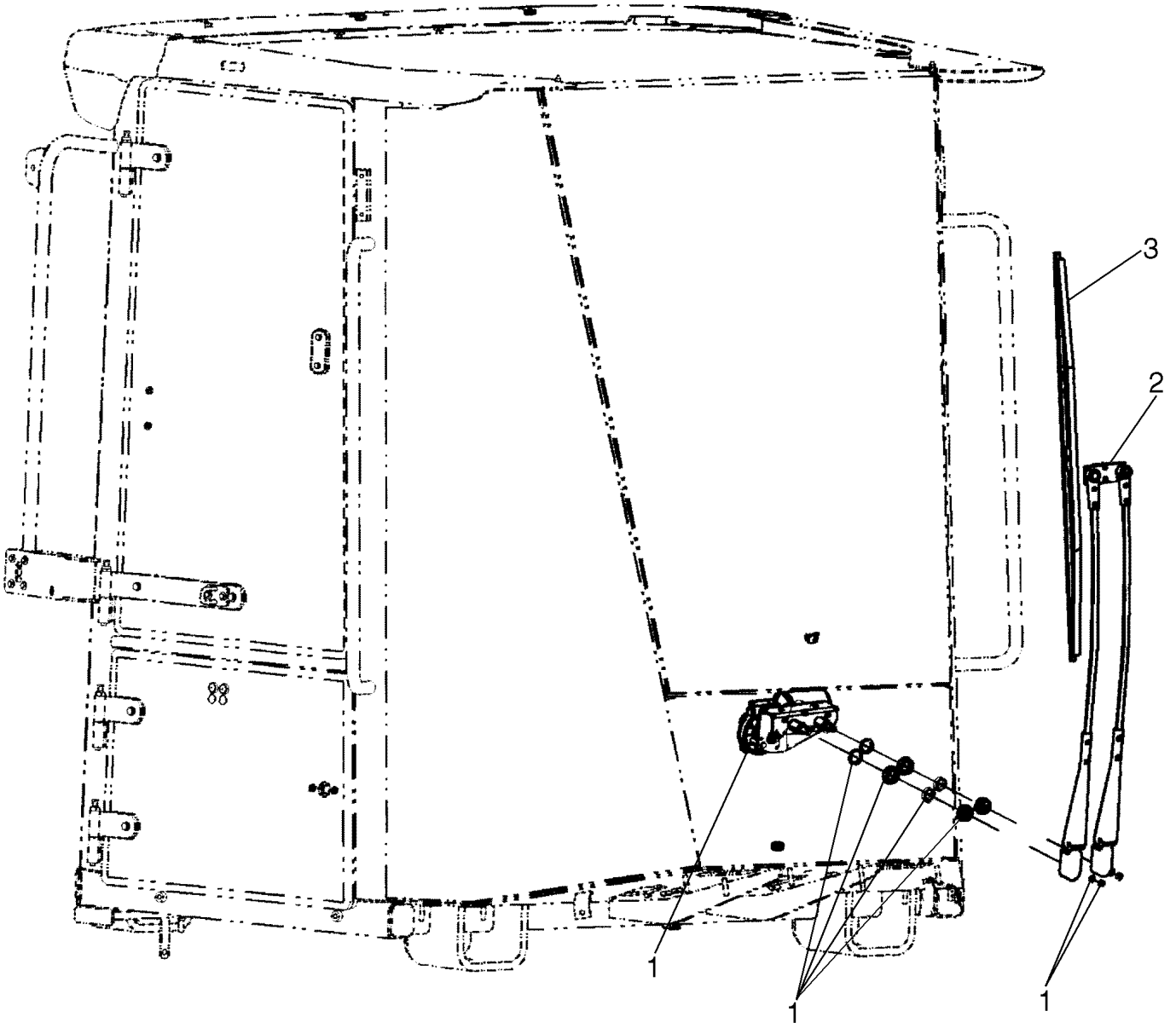

**CABINE - ESSUIE-GLACE, AVANT**

| REF | FN | PART NUMBER | YR/SN | QTY | DESCRIPTION |
|---|---|---|---|---|---|
| 1 | | 87372246 | | 1 | MOTEUR ESSUIE-GLACE, Front; Wiper Arm Mounting Hardware Supplied In Motor Assy. |
| 2 | | 76303246 | | 1 | BRAS D'ESSUIE-GLACE, Front |
| 3 | | 76043977 | | 1 | BALAI, 800mm |
| 4 | | 248-1169 | | 1 | PASSE-FIL, 3/8" ID x 5/8" Groove Dia, Not Illustrated |
| 5 | | 31-2369 | | 1 | FLEXIBLE, Front Windshield Washer; Not Illustrated |

**CABINE - ESSUIE-GLACE ARRIÈRE**

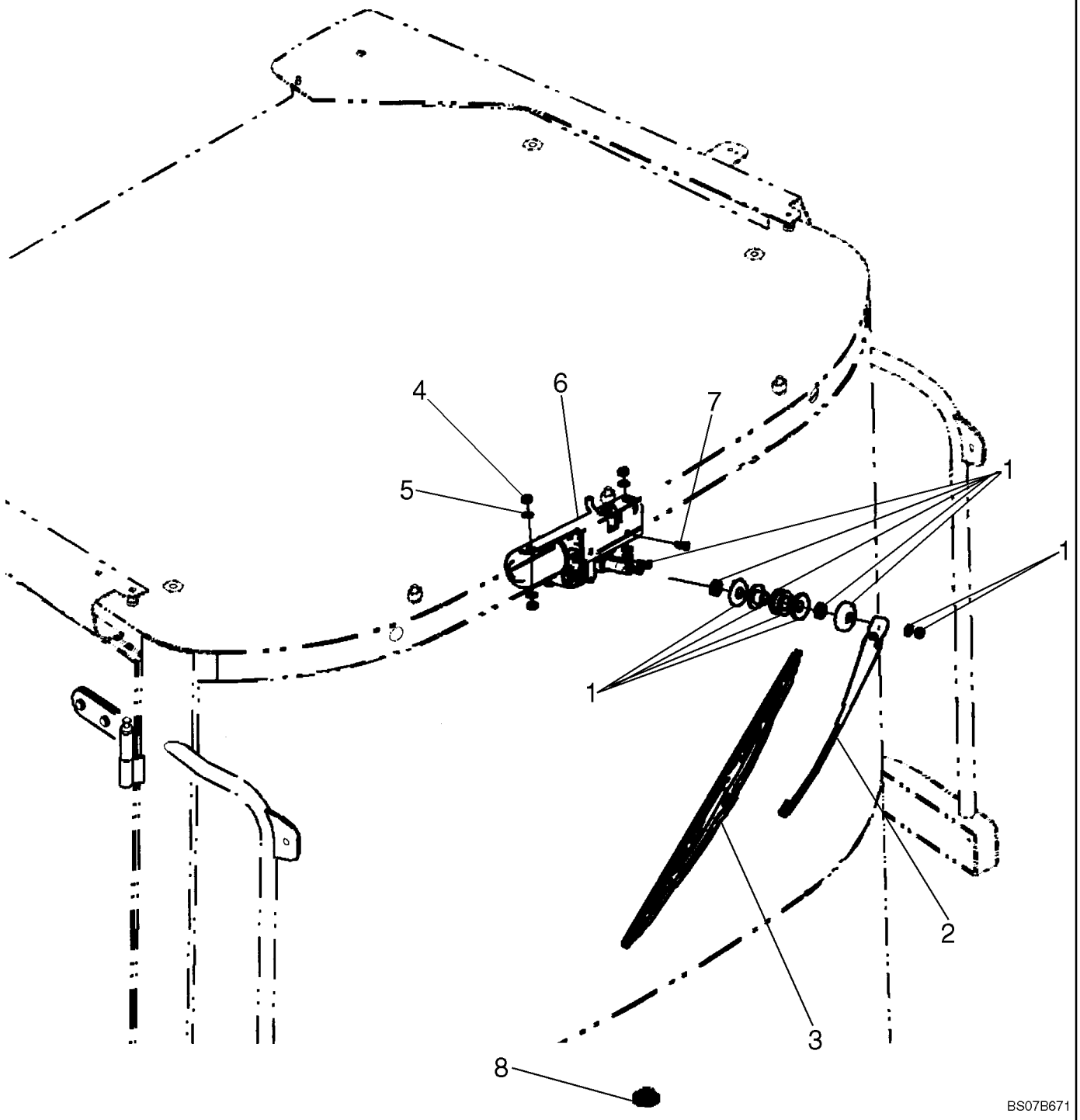

**CABINE - ESSUIE-GLACE ARRIÈRE**

| REF | FN | PART NUMBER | YR/SN | QTY | DESCRIPTION |
|---|---|---|---|---|---|
| 1 | | 87372247 | | 1 | MOTEUR ESSUIE-GLACE, Rear; Wiper Arm Mounting Hardware Included In Motor Assy. |
| 2 | | 76303244 | | 1 | BRAS D'ESSUIE-GLACE, 350 mm |
| 3 | | 82022857 | | 1 | BALAI D'ESSUIE-GLACE, 500 mm |
| 4 | | 825-1408 | | 1 | ECROU, M8, Cl 8 |
| 5 | | 895-11008 | | 1 | RONDELLE, M8 x 16 x 1.6, Wiper Motor |
| 6 | | 76303327 | | 1 | PATTE FIXATION |
| 7 | | 543-708 | | 1 | VIS, Phil Flat Hd, M6 x 20, 4.8 |
| 8 | | 248-1169 | | 1 | PASSE-FIL, 3/8" ID x 5/8" Groove Dia |
| 9 | | 31-2582 | | 1 | FLEXIBLE, 3962 mm (156 in) Not Illustrated |

**RADIO- 12 VOLT**

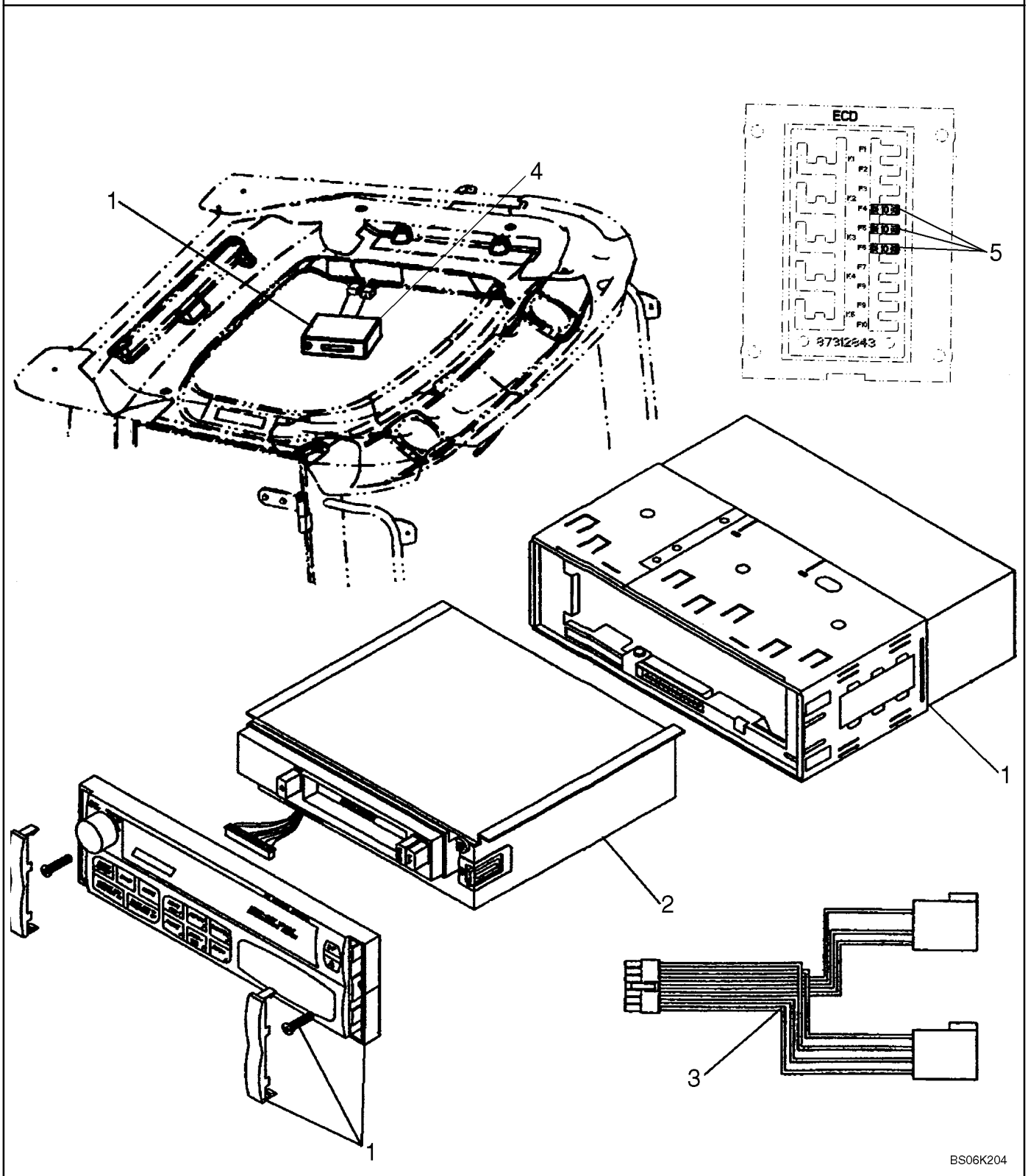

**RADIO- 12 VOLT**

| REF | FN | PART NUMBER | YR/SN | QTY | DESCRIPTION |
|---|---|---|---|---|---|
| | | REF | | | NOTICE, RADIO 12 VOLT |
| 1 | | 87580058 | | 1 | RADIO |
| 2 | | NSS | | 1 | NON FOURNI SEPAREMENT, Cassette |
| 3 | | NSS | | 1 | NON FOURNI SEPAREMENT, Harness |
| 4 | | {87579998} | | 1 | BEZEL |
| 5 | | 121412A1 | | 3 | FUSIBLE, Mini 10 Amp |

**RADIO- 12 VOLT POSE**

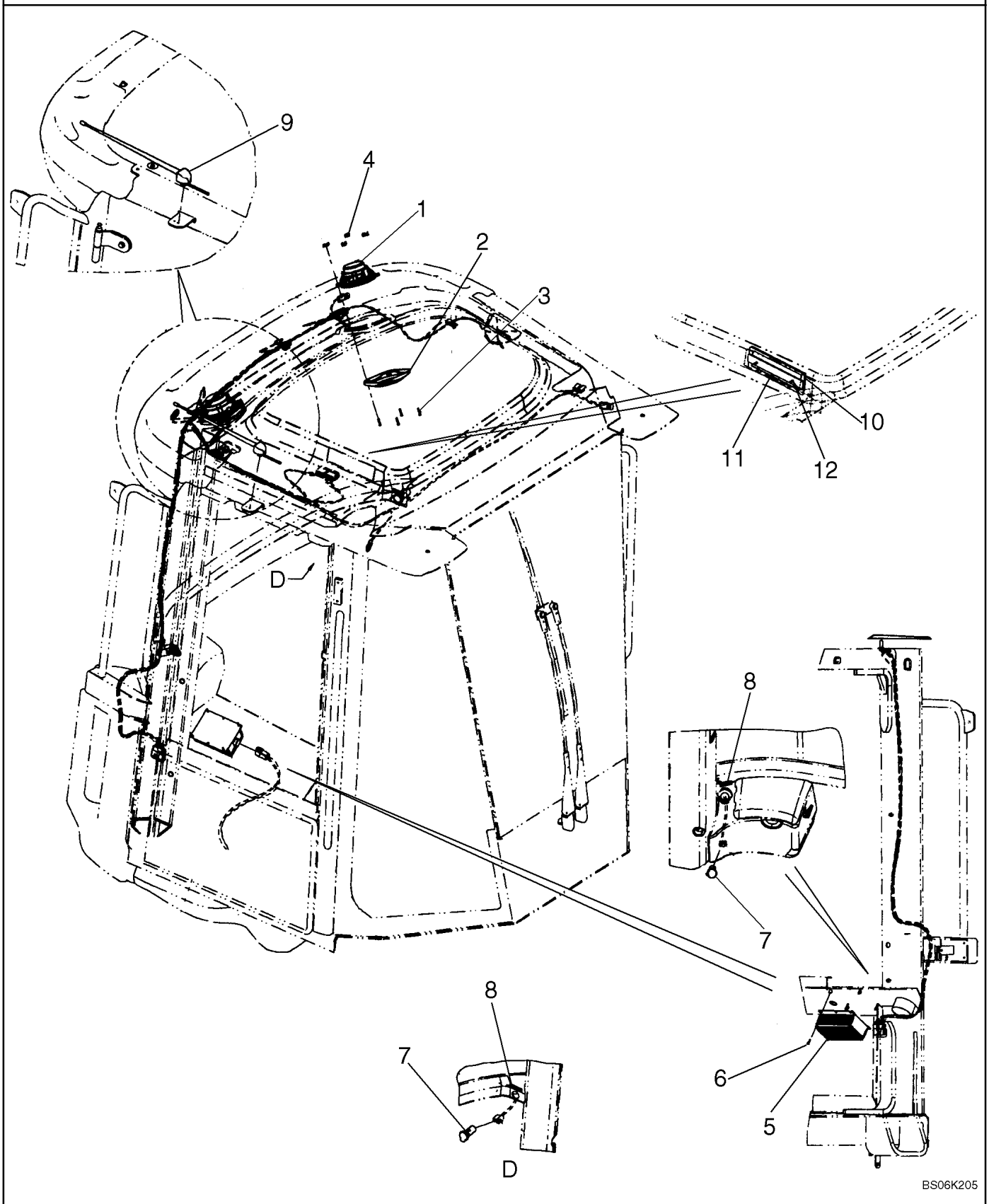

**RADIO- 12 VOLT POSE**

| REF | FN | PART NUMBER | YR/SN | QTY | DESCRIPTION |
|---|---|---|---|---|---|
| | | REF | | | NOTICE, RADIO 12 VOLT INSTALLATION |
| 1 | | 182721A2 | | 2 | HAUT-PARLEUR, 4 OHM |
| 2 | | 187281A1 | | 2 | COUVERCLE, Grill |
| 3 | | 761-17325 | | 8 | VIS AUTO-TARAUDEUSE, Pan Hd, M4.2 x 25 |
| 4 | | 302862A1 | | 8 | ECROU |
| 5 | | 87318825 | | 1 | CONVERTISSEUR, 24V/12V |
| 6 | | 760-14113 | | 4 | VIS AUTO-TARAUDEUSE, Pan Hd, M3.5 x 13 |
| 7 | | 388813A1 | | 2 | SORTIE, Power |
| 8 | | 365935A2 | | 2 | DECALCOMANIE, 12V; 10A |
| 9 | | 71480988 | | 1 | ANTENNE, Kit |
| 10 | | {87579996} | | 1 | COVER, RADIO; If Used: Not Used If Radio Is Installed |
| 11 | | {87579997} | | 1 | BRACKET, RADIO COVER; If Used: Not Used If Radio Is Installed |
| 12 | | 87026656 | | 2 | VIS, Cross Pan Hd, M5 x 25, If Used: Not Used If Radio Is Installed |

| 04-25 | | p1 | 07/07 |
|---|---|---|---|

**FIXATION DES BATTERIES**

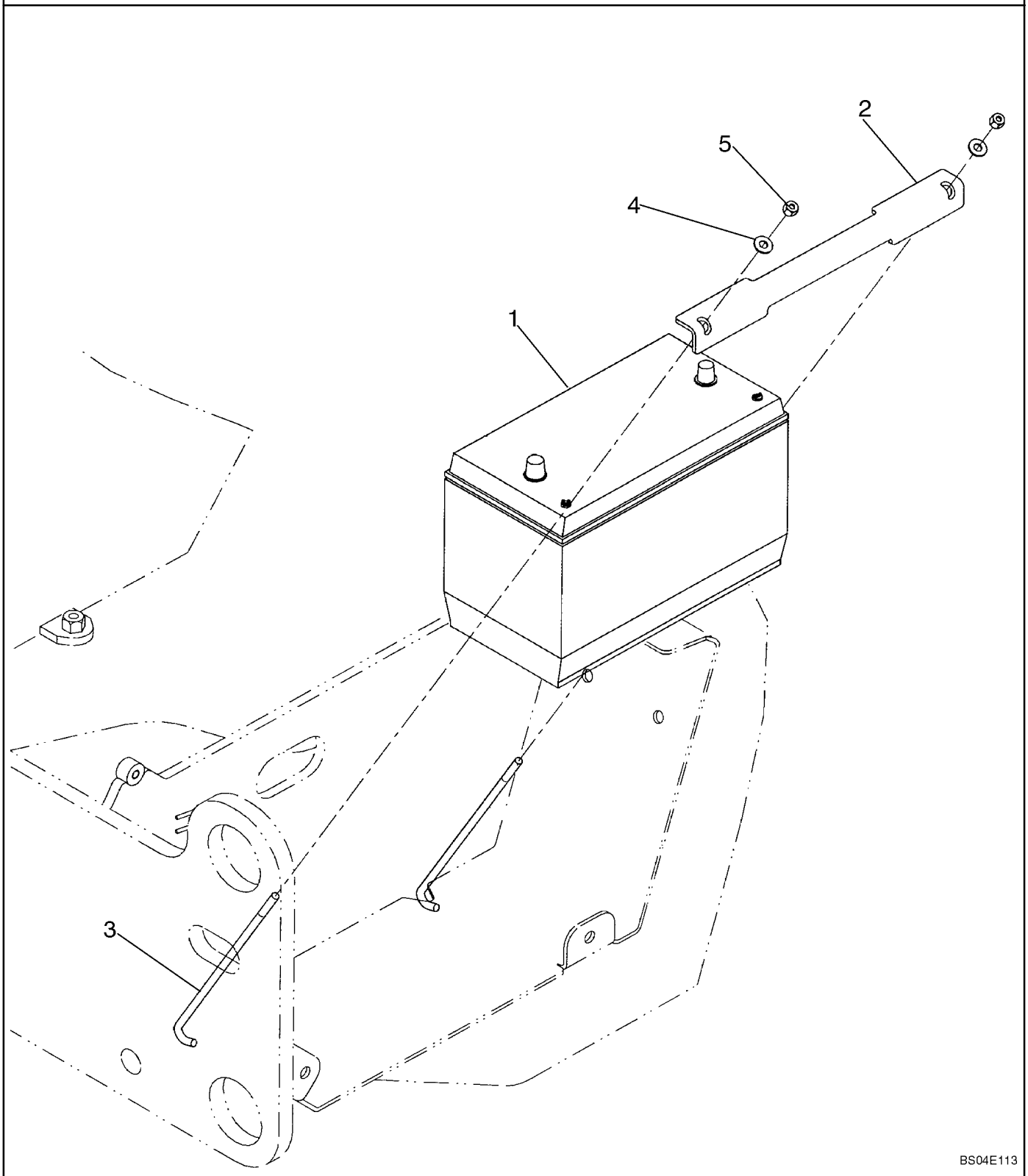

**FIXATION DES BATTERIES**

| REF | FN | PART NUMBER | YR/SN | QTY | DESCRIPTION |
|---|---|---|---|---|---|
| 1 | | A176482 | | 2 | BATTERIE HUMIDE, BMF31E |
| 2 | | 365191A1 | | 2 | SANGLE, Battery |
| 3 | | 365357A1 | | 4 | TRINGLE, Hold Down |
| 4 | | 895-15008 | | 4 | RONDELLE, M8 x 20 x 1.6 |
| 5 | | 832-10408 | | 4 | CONTRE-ECROU, M8 x 1.25, Cl 8 |

**FIXATION DES BATTERIES - SERVICE SEVERE**

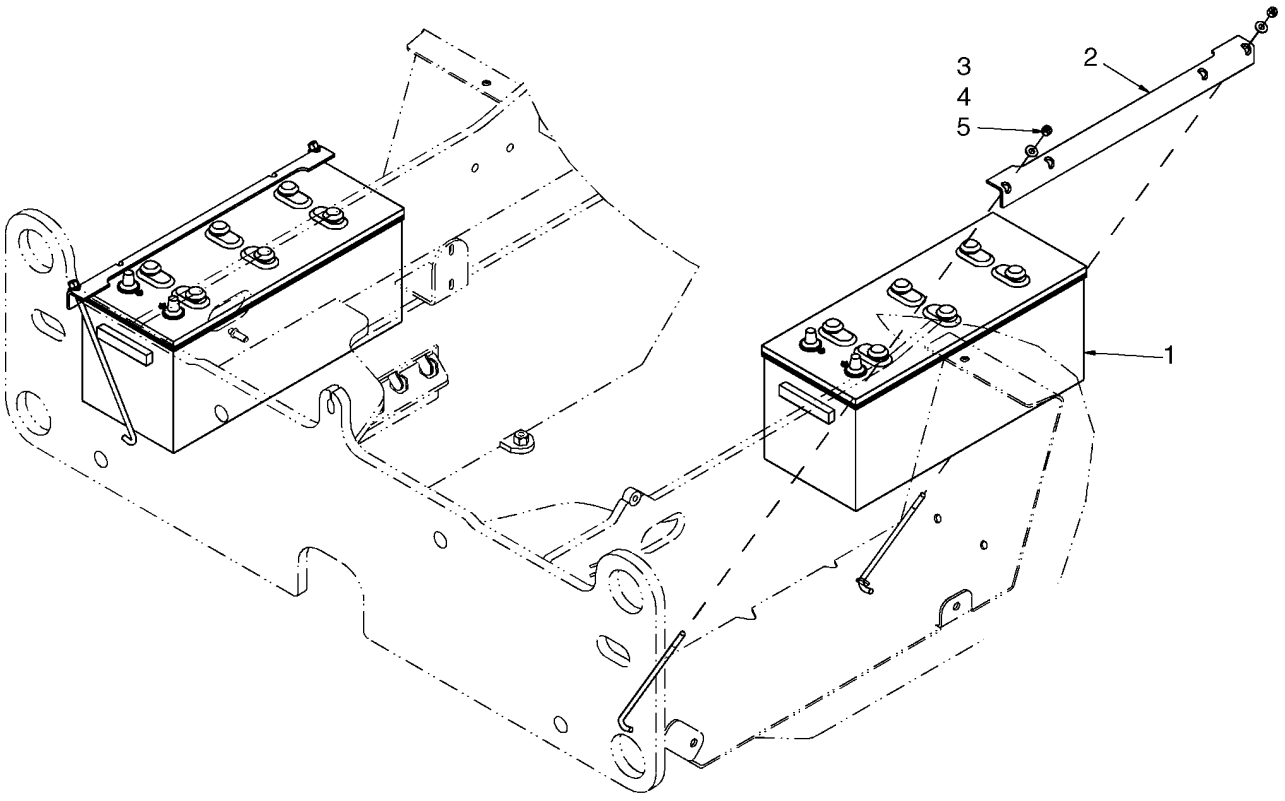

**FIXATION DES BATTERIES - SERVICE SEVERE**

| REF | FN | PART NUMBER | YR/SN | QTY | DESCRIPTION |
|---|---|---|---|---|---|
| 1 | | L51769 | | 2 | BATTERIE HUMIDE |
| 2 | | L124221 | | 2 | SUPPORT, Battery Bracket |
| 3 | | 365357A1 | | 4 | TRINGLE, Hold Down |
| 4 | | 895-15008 | | 4 | RONDELLE, M8 x 20 x 1.6, 9 x 20 x 1.6mm |
| 5 | | 832-10408 | | 4 | CONTRE-ECROU, M8 x 1.25, Cl 8 |

| 04-26 | | p1 | 07/07 |
|---|---|---|---|

**BATTERIE - CABLES**

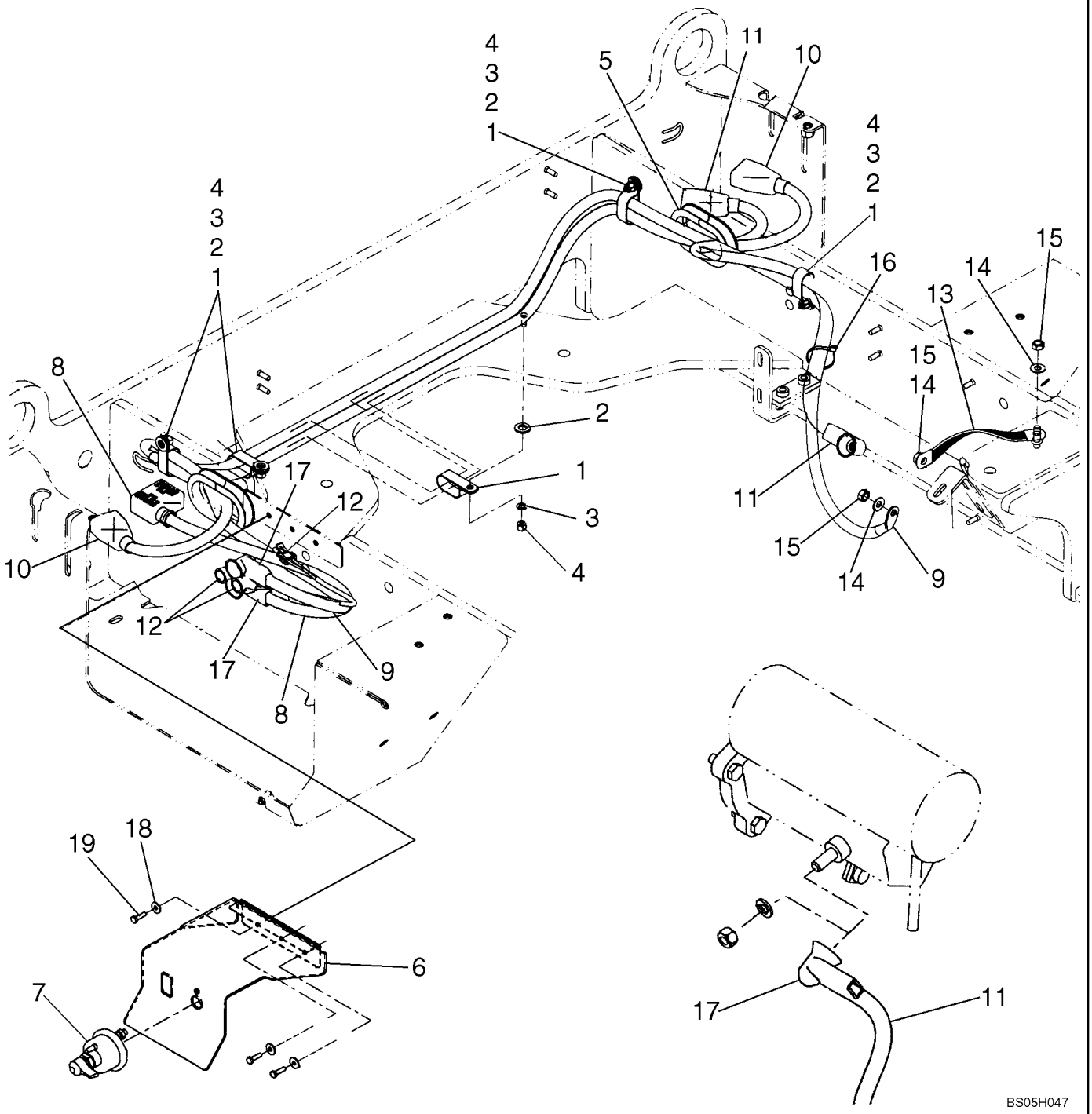

**BATTERIE - CABLES**

| REF | FN | PART NUMBER | YR/SN | QTY | DESCRIPTION |
|---|---|---|---|---|---|
| 1 | | R54363 | | 5 | COLLIER, Double |
| 2 | | 896-11012 | | 5 | RONDELLE, M13.5 x 24.5 x 3, HT |
| 3 | | 895-11008 | | 5 | RONDELLE, M8 x 16 x 1.6 |
| 4 | | 832-10408 | | 5 | CONTRE-ECROU, M8 x 1.25, Cl 8 |
| 5 | | 398771A1 | | 2 | CONDUIT, Battery Cable |
| 6 | | 87329253 | | 1 | PATTE FIXATION, Hood Switch/ Master Disconnect |
| 7 | | L126256 | | 1 | CONTACTEUR, Master Disconnect |
| 8 | | 87324868 | | 1 | JARRETIERE, Negative To Disconnect |
| 9 | | 87324875 | | 1 | CABLE, Ground |
| 10 | | 87324722 | | 1 | CABLE ELECTRIQUE, Crossover |
| 11 | | 87324979 | | 1 | CABLE ELECTRIQUE, Positive To Starter |
| 12 | | L127676 | | 1 | FAISCEAU, Disconnect |
| 13 | | L126051 | | 1 | TRESSE DE MASSE, Engine Block |
| 14 | | L127554 | | 3 | RONDELLE, Brass |
| 15 | | 253347A1 | | 3 | ECROU, 3/8; Brass |
| 16 | | L18331 | | 1 | SERRE-CABLE |
| 17 | | L126713 | | 3 | COIFFE, Electrical |
| 18 | | 895-25006 | | 3 | RONDELLE, M6 x 18 x 1.6 |
| 19 | | 627-6020 | | 3 | BOULON, Hex, M6 x 20, 10.9 |
| 20 | | 87591165 | | 1 | JOINT, For Hood Swich/Master Disconnect Bracket, Not Illustrated |

**FEUX DECLAIRAGE DE PLAQUE DIMMATRICULATION**

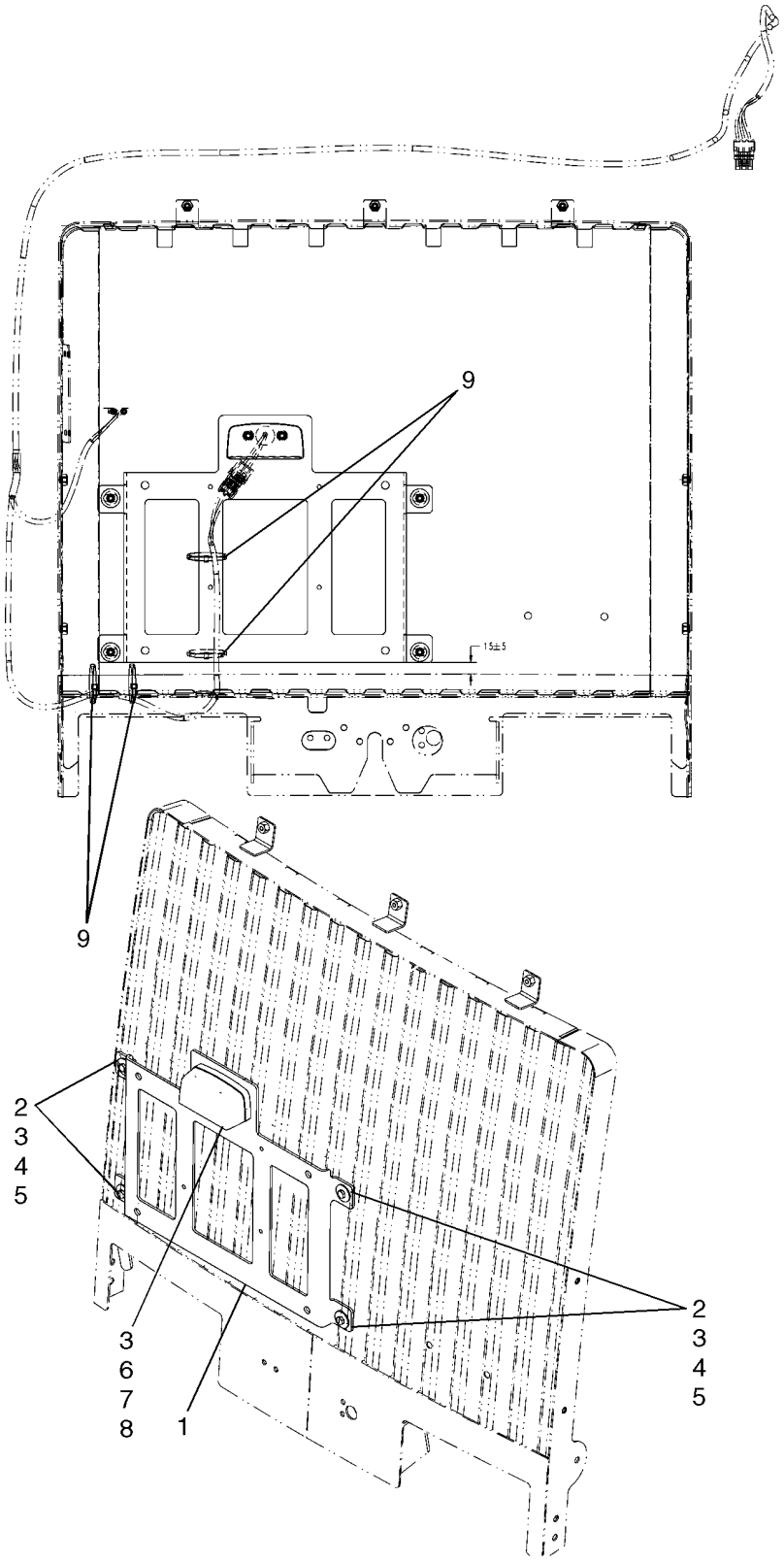


BS07G077

**FEUX DECLAIRAGE DE PLAQUE DIMMATRICULATION**

| REF | FN | PART NUMBER | YR/SN | QTY | DESCRIPTION |
|---|---|---|---|---|---|
| 1 | | 193446A1 | | 1 | PLAQUE, License Plate |
| 2 | | 895-15006 | | 4 | RONDELLE, M6 x 25 x 1.6 |
| 3 | | 614-6020 | | 6 | BOULON, Hex, M6 x 20, 8.8 |
| 4 | | 895-25006 | | 4 | RONDELLE, M6 x 18 x 1.6 |
| 5 | | 832-10406 | | 4 | CONTRE-ECROU, M6 x 1, Cl 8 |
| 6 | | 120229A1 | | 1 | FEU, License Plate |
| 7 | | 892-11006 | | 2 | RONDELLE FREIN, M6 |
| 8 | | 829-1406 | | 2 | ECROU, M6, Cl 10 |
| 9 | | L18331 | | 4 | SERRE-CABLE, 15 in |

**LAVE-GLACE MONTAGE**

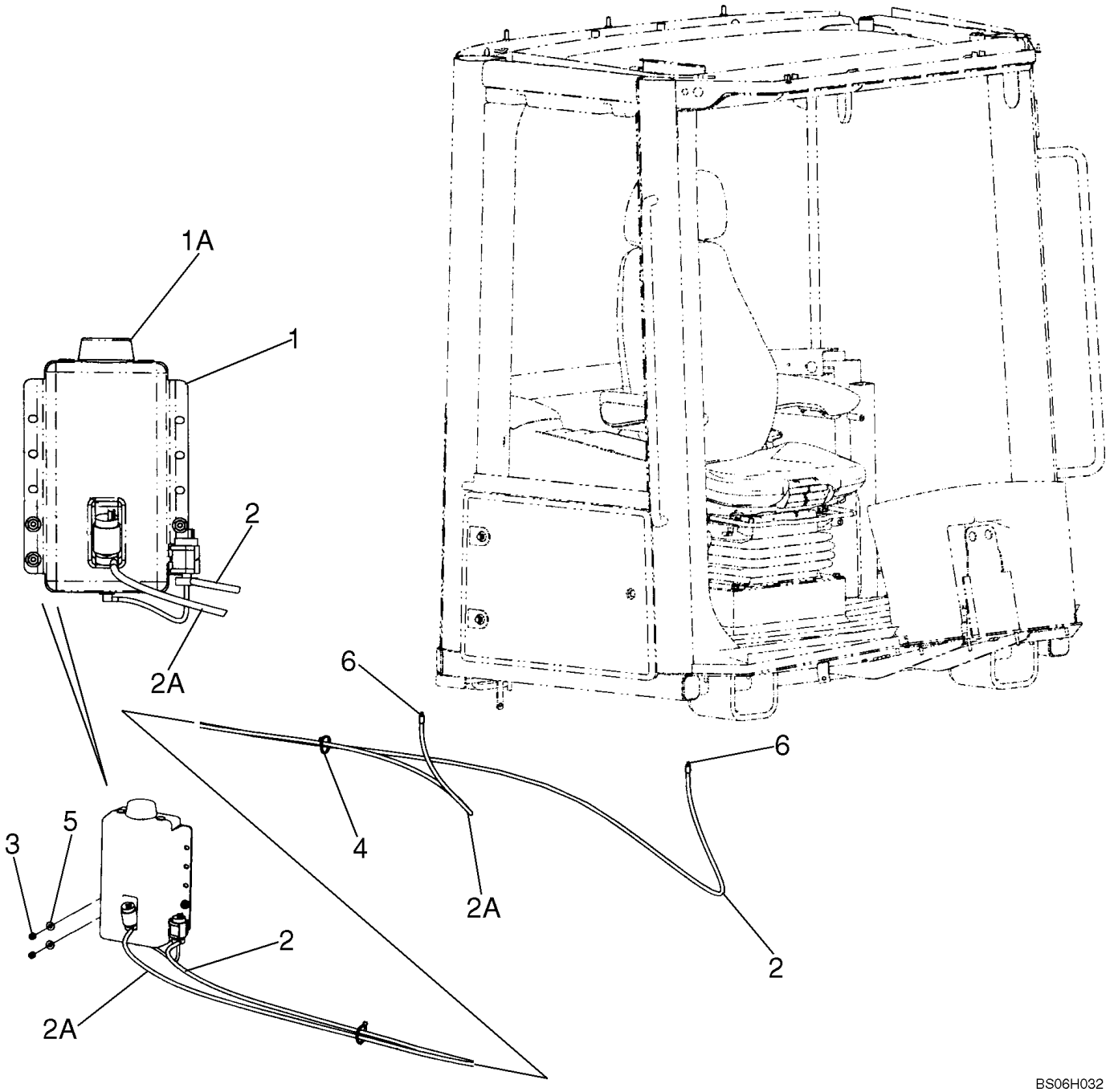

**LAVE-GLACE MONTAGE**

| REF | FN | PART NUMBER | YR/SN | QTY | DESCRIPTION |
|---|---|---|---|---|---|
| 1 | | 371185A1 | | 1 | RESERVOIR, Windshield Washer; Front; Incl. Ref. 1A |
| 1A | | 87439461 | | 1 | CHAPEAU |
| 2 | | 31-2370 | | 1 | FLEXIBLE, Front Windshield, 3302 mm (130 in) |
| 2A | | 384138A1 | | 1 | FLEXIBLE (ASSEMBLE), Rear Windshield, 2591 mm (102 in) |
| 3 | | 832-10408 | | 3 | CONTRE-ECROU, M8 x 1.25, Cl 8 |
| 4 | | L11541 | | 2 | SANGLE, 7-8 Inch. Nylon |
| 5 | | 895-15008 | | 3 | RONDELLE, M8 x 20 x 1.6 |
| 6 | | 324203A1 | | 2 | CLAPET ANTI-RETOUR, Washer Fluid |

## NOTES

# SECTION INDEX
## Direction


| | |
|---|---|
| 05-01 | VOLANT - COLONNE |
| 05-02 | COLONNE DE DIRECTION |
| 05-02A | COLONNE DE DIRECTION - ACCESSOIRES |
| 05-03 | COLONNE DE DIRECTION - ÉQUILIBRAGE |
| 05-04 | SYSTEME HYDRAULIQUE - DIRECTION |
| 05-05 | DIRECTION - AUXILIAIRE - SYSTEME HYDRAULIQUE |
| 05-06 | DISTRIBUTEUR DE LA COMMANDE DE DIRECTION |
| 05-07 | DIRECTION - AUXILIAIRE - BLOC FORE |
| 05-08 | DIRECTION - AUXILIAIRE - POMPE |
| 05-09 | DIRECTION - VERIN - SYSTEME HYDRAULIQUE |
| 05-10 | IRECTION - VERIN |

**VOLANT - COLONNE**

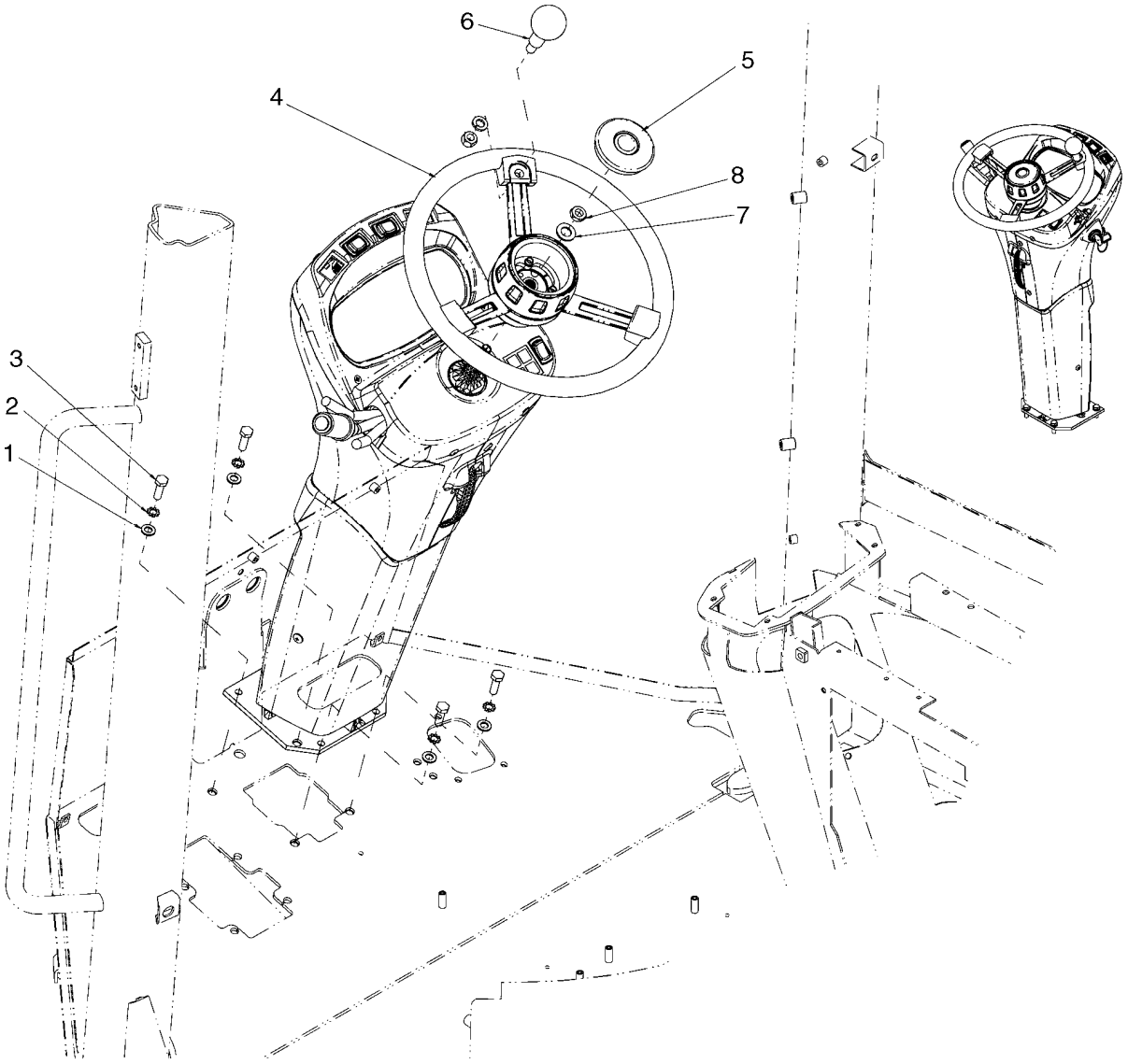

**VOLANT - COLONNE**

| REF | FN | PART NUMBER | YR/SN | QTY | DESCRIPTION |
|---|---|---|---|---|---|
| 1 | | 895-11010 | | 4 | RONDELLE, M10 x 20 x 2 |
| 2 | | 893-11010 | | 4 | RONDELLE FREIN, Ext Tooth, M10 |
| 3 | | 627-10030 | | 4 | BOULON, Hex, M10 x 30, 10.9, Full Thd |
| 4 | | 283484A1 | | 1 | VOLANT-DE-DIRECTION |
| 5 | | 384985A1 | | 1 | CHAPEAU, Center |
| 6 | | L127996 | | 1 | POMMEAU, Steering |
| 7 | | 895-11014 | | 1 | RONDELLE, M14 x 28 x 2.5 |
| 8 | | 829-23414 | | 1 | ECROU, Thin, M14 x 1.5, Cl 05 |

**COLONNE DE DIRECTION**

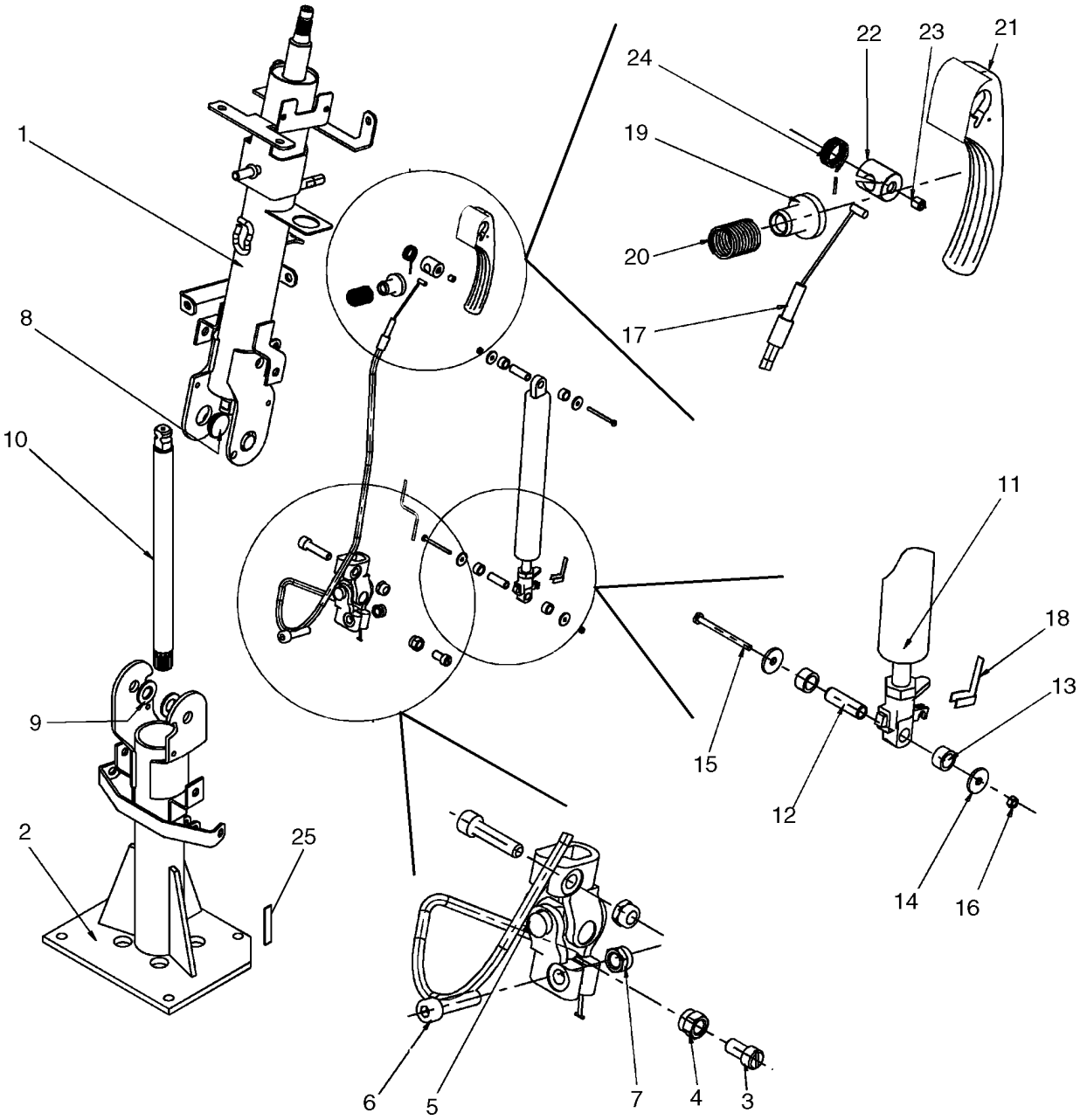

**COLONNE DE DIRECTION**

| REF | FN | PART NUMBER | YR/SN | QTY | DESCRIPTION |
|---|---|---|---|---|---|
| 1 | | 76303277 | | 1 | COLONNE DE DIRECTION, Upper |
| 2 | | {87525205} | | 1 | STEERING COLUMN, Lower |
| 3 | | {87525216} | | 1 | PIN |
| 4 | | 16104111 | | 1 | CONTRE-ECROU, M8 x 1.25, Cl 8 |
| 5 | | 4227226 | | 1 | JOINT DE CARDAN |
| 6 | | 14306621 | | 2 | VIS, Hex Soc Hd, M8 x 35, 8.8 |
| 7 | | 16104411 | | 2 | CONTRE-ECROU, M8 x 1.25, Cl 4 |
| 8 | | 4227225 | | 2 | AXE |
| 9 | | 14496821 | | 2 | RONDELLE, M14 x 28 x 2.5 |
| 10 | | 76303279 | | 1 | ARBRE |
| 11 | | 76048930 | | 1 | COMPAS |
| 12 | | 76048391 | | 2 | GOUPILLE ELASTIQUE |
| 13 | | 76048394 | | 4 | ENTRETOISE |
| 14 | | {87526283} | | 4 | NUT |
| 15 | | 14496231 | | 2 | RONDELLE |
| 16 | | 16101721 | | 2 | ECROU, M3, Cl 10 |
| 17 | | {75048955} | | 1 | CABLE |
| 18 | | 76300038 | | 1 | PLAQUE |
| 19 | | {87525218} | | 1 | COMPRESSOR, SPRING |
| 20 | | {87525220} | | 1 | SPRING |
| 21 | | 76048941 | | 1 | POIGNÉE |
| 22 | | {87525221} | | 1 | PIN, PIVOT |
| 23 | | 13797721 | | 1 | VIS DE RÉGLAGE, Hex Soc, M6 x 8, Cone Pt |
| 24 | | 76300020 | | 1 | RESSORT |
| 25 | | NSS | | 1 | NON FOURNI SEPAREMENT, Identification Plate |

| 05-02A | | p1 | 05/07 |
|---|---|---|---|

**COLONNE DE DIRECTION - ACCESSOIRES**

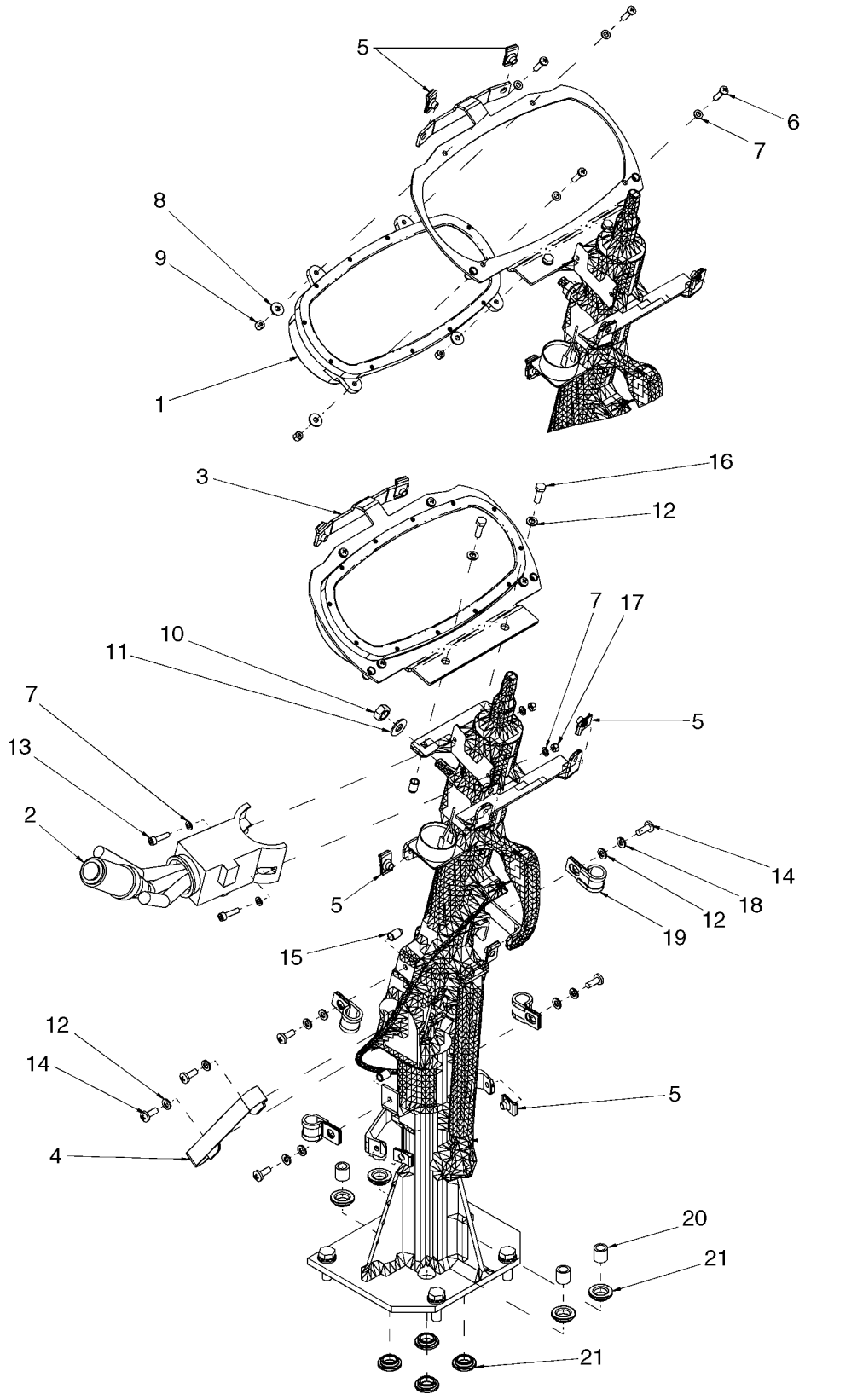

**COLONNE DE DIRECTION - ACCESSOIRES**

| REF | FN | PART NUMBER | YR/SN | QTY | DESCRIPTION |
|---|---|---|---|---|---|
| 1 | | 87372814 | | 1 | TABLEAU DES INSTRUMENTS |
| 2 | | 238270A1 | | 1 | COMMANDE |
| 3 | | {76303295} | | 1 | BRACKET |
| 4 | | 349372A1 | | 1 | CABLE, Ground |
| 5 | | 833-40306 | | 11 | ECROU, M6, U |
| 6 | | 840-1520 | | 4 | VIS, Cross Pan Hd, M5 x 20 |
| 7 | | 895-11005 | | 8 | RONDELLE, M5 x 10 x 1 |
| 8 | | 895-25005 | | 4 | RONDELLE, M5 x 15 x 1.6 |
| 9 | | 832-10405 | | 4 | CONTRE-ECROU, M5 x .8, Cl 8 |
| 10 | | 253347A1 | | 1 | ECROU |
| 11 | | L127554 | | 1 | RONDELLE |
| 12 | | 895-11006 | | 10 | RONDELLE, M6 |
| 13 | | 864-5020 | | 2 | VIS, Hex Soc Hd, M5 x 20, 8.8 |
| 14 | | 840-1616 | | 6 | VIS, Cross Pan Hd, M6 x 16 |
| 15 | | 76046110 | | 10 | PASSE-FIL |
| 16 | | 614-6020 | | 2 | BOULON, Hex, M6 x 20, 8.8 |
| 17 | | 824-1405 | | 2 | ECROU, M5, Cl 5 |
| 18 | | 892-11006 | | 4 | RONDELLE FREIN, M6 |
| 19 | | 71405746 | | 4 | CLIP |
| 20 | | 76081690 | | 4 | ENTRETOISE |
| 21 | | 71476260 | | 8 | ENTRETOISE |

| 05-03 | | p1 | 07/07 |
|---|---|---|---|

**COLONNE DE DIRECTION - ÉQUILIBRAGE**

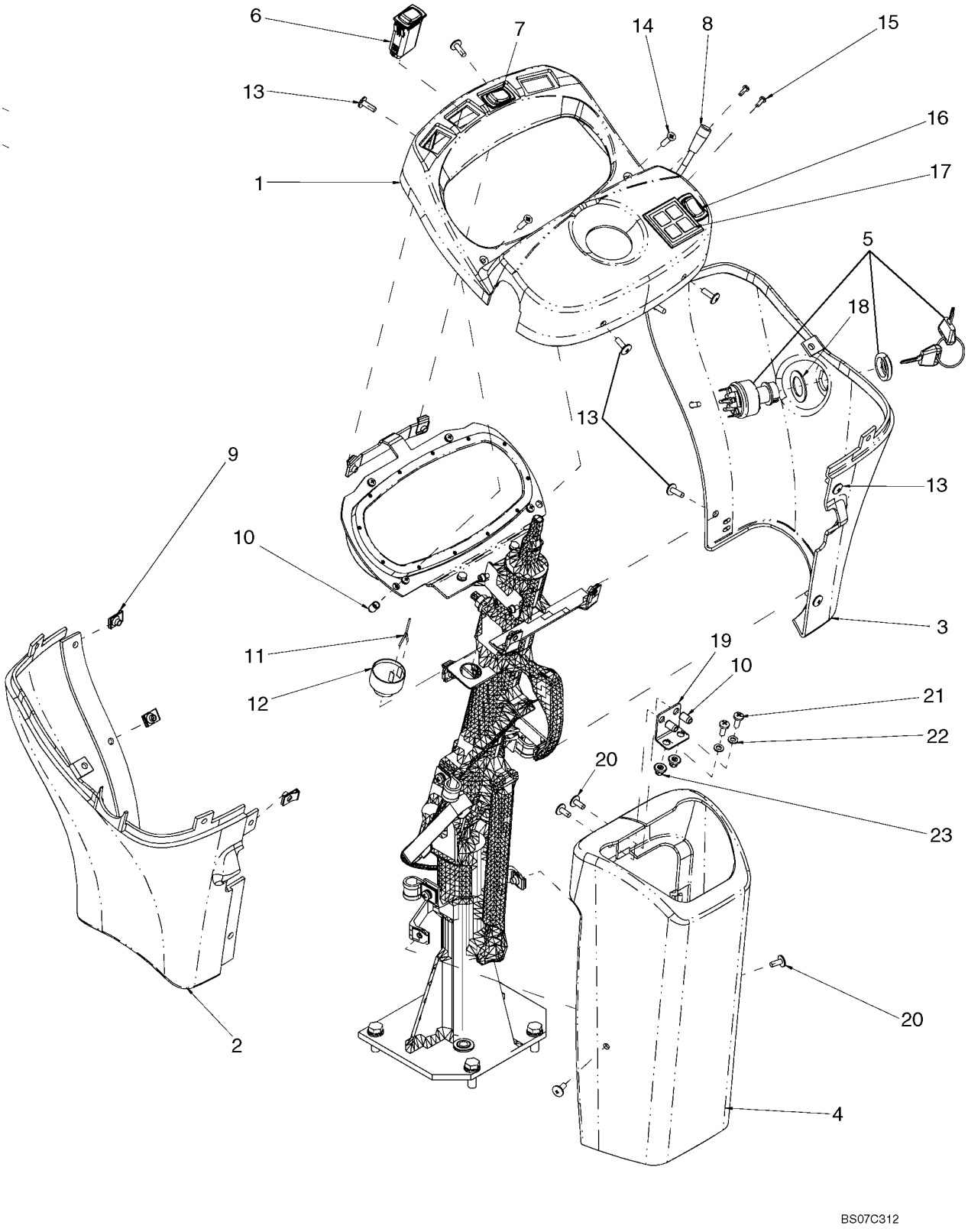

**COLONNE DE DIRECTION - ÉQUILIBRAGE**

| REF | FN | PART NUMBER | YR/SN | QTY | DESCRIPTION |
|---|---|---|---|---|---|
| 1 | | 76303017 | | 1 | COUVERCLE, Dashboard Trim |
| 2 | | 76303019 | | 1 | COUVERCLE, LH |
| 3 | | 76303020 | | 1 | COUVERCLE, RH |
| 4 | | 76303021 | | 1 | COUVERCLE, Lower Steering Column |
| 5 | | 282775A1 | | 1 | COMMUTATEUR, DEM., Includes Padded Keys 1964831C2 |
| 6 | | 374434A2 | | 1 | CONTACTEUR, Pilot Control |
| 7 | | 374426A2 | | 1 | CONTACTEUR, Hazard |
| 8 | | 389487A1 | | 1 | COMM. LUMIERES |
| 9 | | 833-40306 | | 3 | ECROU, M6, U |
| 10 | | 76046110 | | 4 | PASSE-FIL, M6 |
| 11 | | 76303450 | | 1 | AVERTISSEUR, Harness |
| 12 | | {87517128} | | 1 | BUZZER |
| 13 | | 14778411 | | 9 | VIS, Cheese Hd, M6 x 20 |
| 14 | | 843-2625 | | 2 | VIS, Phil Flat Hd, M6 x 25, 4.8 |
| 15 | | 840-1412 | | 2 | VIS, Cross Pan Hd, M4 x 12 |
| 16 | | 374424A2 | | 1 | CONTACTEUR |
| 17 | | 87372804 | | 1 | TAMPON, Key |
| 18 | | {76303478} | | 1 | WASHER, Nylon |
| 19 | | {76303516} | | 1 | BRACKET |
| 20 | | 14778814 | | 4 | VIS, Cheese Hd, M6 x 16 |
| 21 | | 840-1616 | | 8 | VIS, Cross Pan Hd, M6 x 16 |
| 22 | | 895-11006 | | 10 | RONDELLE, M6 |
| 23 | | 76048924 | | 2 | BAGUE, Threaded |

**SYSTEME HYDRAULIQUE - DIRECTION**

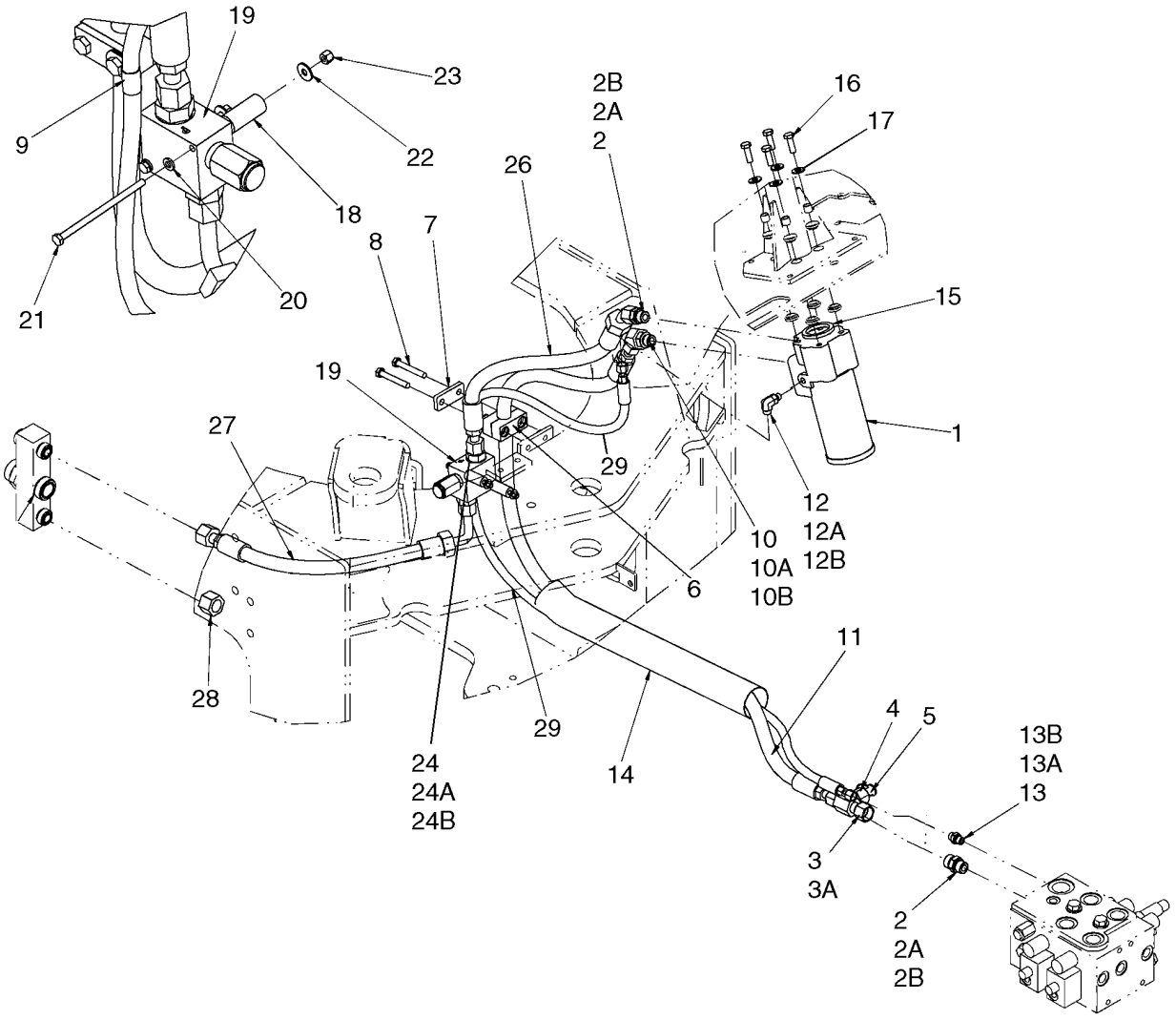


BS07F372

**SYSTEME HYDRAULIQUE - DIRECTION**

| REF | FN | PART NUMBER | YR/SN | QTY | DESCRIPTION |
|---|---|---|---|---|---|
| | | REF | | | NOTICE, STANDARD STEERING, STEERING PRESSURE AND RETURN |
| 1 | | 87307060 | | 1 | SOUPAPE HYDRAULIQUE, Steering; See Figure 05-06 |
| 2 | | 700-103 | | 2 | RACCORD, 1"-14 ORFS x M22 x 1.5 ORB, Incl. Refs. 2A, 2B |
| 2A | | 637-63193 | | 2 | JOINT THORIQUE, CI 6, 19.3MM ID x 2.2 Thk, Boss Seal |
| 2B | | 238-6016 | | 2 | JOINT THORIQUE, -016, 90 Duro, .614" ID x .070" Thk, Face Seal |
| 3 | | 701-433 | | 1 | TE, 1"-14 ORFS x 1"-14 Fem Sw Run, Incl. Ref. 3A |
| 3A | | 238-6016 | | 2 | JOINT THORIQUE, -016, 90 Duro, .614" ID x .070" Thk, Face Seal |
| 4 | | 324201A1 | | 1 | BOUCHON, Diagnostic |
| 5 | | H434163 | | 1 | CHAPEAU |
| 6 | | 367489A1 | | 1 | BLOC |
| 7 | | 367658A1 | | 1 | PLAQUE |
| 8 | | 827-10070 | | 2 | BOULON, Hex, M10 x 70, 10.9 |
| 9 | | 515-25159 | | 1 | BRIDE, 5/8", Insul, 1/2" Bolt |
| 10 | | 700-316 | | 2 | COUDE, 45º, 1"-14 ORFS x M22 x 1.5 ORB, Incl. Refs. 10A, 10B |
| 10A | | 238-6016 | | 1 | JOINT THORIQUE, -016, 90 Duro, .614" ID x .070" Thk, Face Seal |
| 10B | | 637-63193 | | 1 | JOINT THORIQUE, CI 6, 19.3MM ID x 2.2 Thk, Boss Seal |
| 11 | | 87629993 | | 1 | FLEXIBLE, Steering Pressure; 1785 mm (70 - 1/4 in) |
| 12 | | 700-303 | | 1 | COUDE, 90º, 9/16"-18 ORFS x M12 x 1.5 ORB, Incl. Refs. 12A, 12B |
| 12A | | 637-63093 | | 1 | JOINT THORIQUE, CI 6, 9.3MM ID x 2.2 Thk, Boss Seal |
| 12B | | 238-6011 | | 1 | JOINT THORIQUE, -011, 90 Duro, .301" ID x .070" Thk, Face Seal |
| 13 | | 700-153 | | 1 | RACCORD, 9/16"-18 ORFS x M14 x 1.5 ORB, Incl. 13A, 13B |
| 13A | | 637-63113 | | 1 | JOINT THORIQUE, CI 6, 11.3MM ID x 2.2 Thk |

**SYSTEME HYDRAULIQUE - DIRECTION**

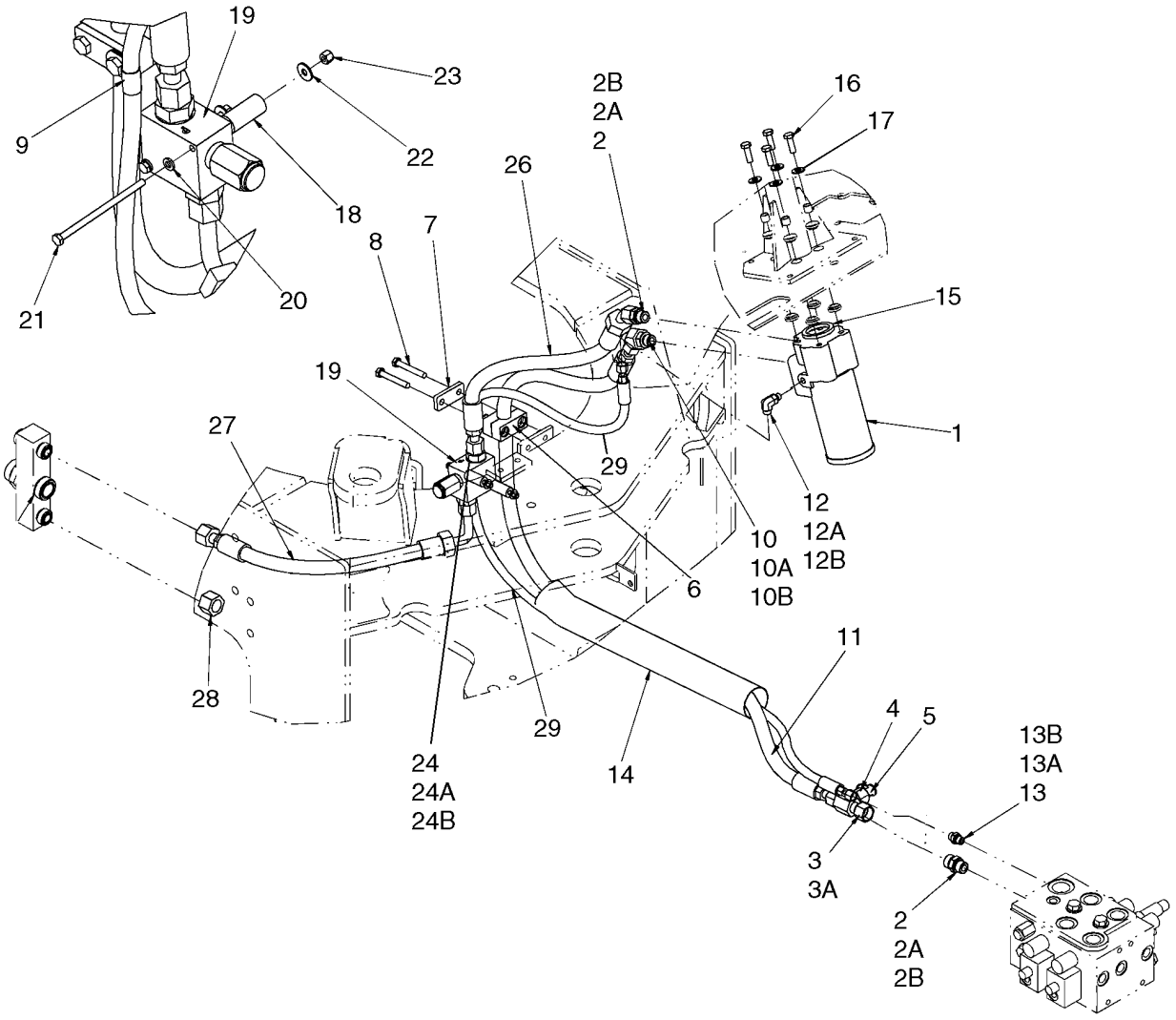


BS07F372

**SYSTEME HYDRAULIQUE - DIRECTION**

| REF | FN | PART NUMBER | YR/SN | QTY | DESCRIPTION |
|---|---|---|---|---|---|
| 13B | | 238-6011 | | 1 | JOINT THORIQUE, -011, 90 Duro, .301" ID x .070" Thk, Face Seal |
| 14 | | 87559559 | | 1 | PROTECTEUR DE TUYAU, Hose, 60 x 554 mm |
| 15 | | 76043957 | | 1 | JOINT |
| 16 | | 627-10030 | | 4 | BOULON, Hex, M10 x 30, 10.9, Full Thd |
| 17 | | 895-15010 | | 4 | RONDELLE, M11 x 24 x 2 |
| 18 | | 8500692 | | 2 | ENTRETOISE |
| 19 | | 87427823 | | 1 | SOUPAPE, DÉCHARGE |
| 20 | | 896-11006 | | 2 | RONDELLE, M6 x 13 x 2, HT |
| 21 | | 814-6110 | | 2 | BOULON, Hex, M6 x 110, 8.8 |
| 22 | | 895-25006 | | 2 | RONDELLE, M6 x 18 x 1.6 |
| 23 | | 832-10406 | | 2 | CONTRE-ECROU, M6 x 1, Cl 8 |
| 24 | | 86597760 | | 1 | RACCORD, 1"-14 ORFS x M27 x 2 ORB, Inc. Refs. 24A, 24B |
| 24A | | 238-6014 | | 1 | JOINT THORIQUE, -014, 90 Duro, .489" ID x .070" Thk |
| 24B | | 237-6012 | | 1 | JOINT THORIQUE, 12-1, 90 Duro, .924 ID x .118" Thk |
| 26 | | 87519793 | | 1 | FLEXIBLE (ASSEMBLE), Steering Return, Control Valve to Relief Valve; 599 mm (23 - 9/16 in) |
| 27 | | 87653923 | | 1 | FLEXIBLE, Steering Return, Relief Valve to Filter; 544 mm (24 - 13/32 in) |
| 28 | | 701-907 | | 1 | CHAPEAU, 1 3/16"-12 ORFS |
| 29 | | 87651227 | | 1 | FLEXIBLE, Steering Load Sense; 2100 mm (82 - 3/4 in) |

**DIRECTION - AUXILIAIRE - SYSTEME HYDRAULIQUE**

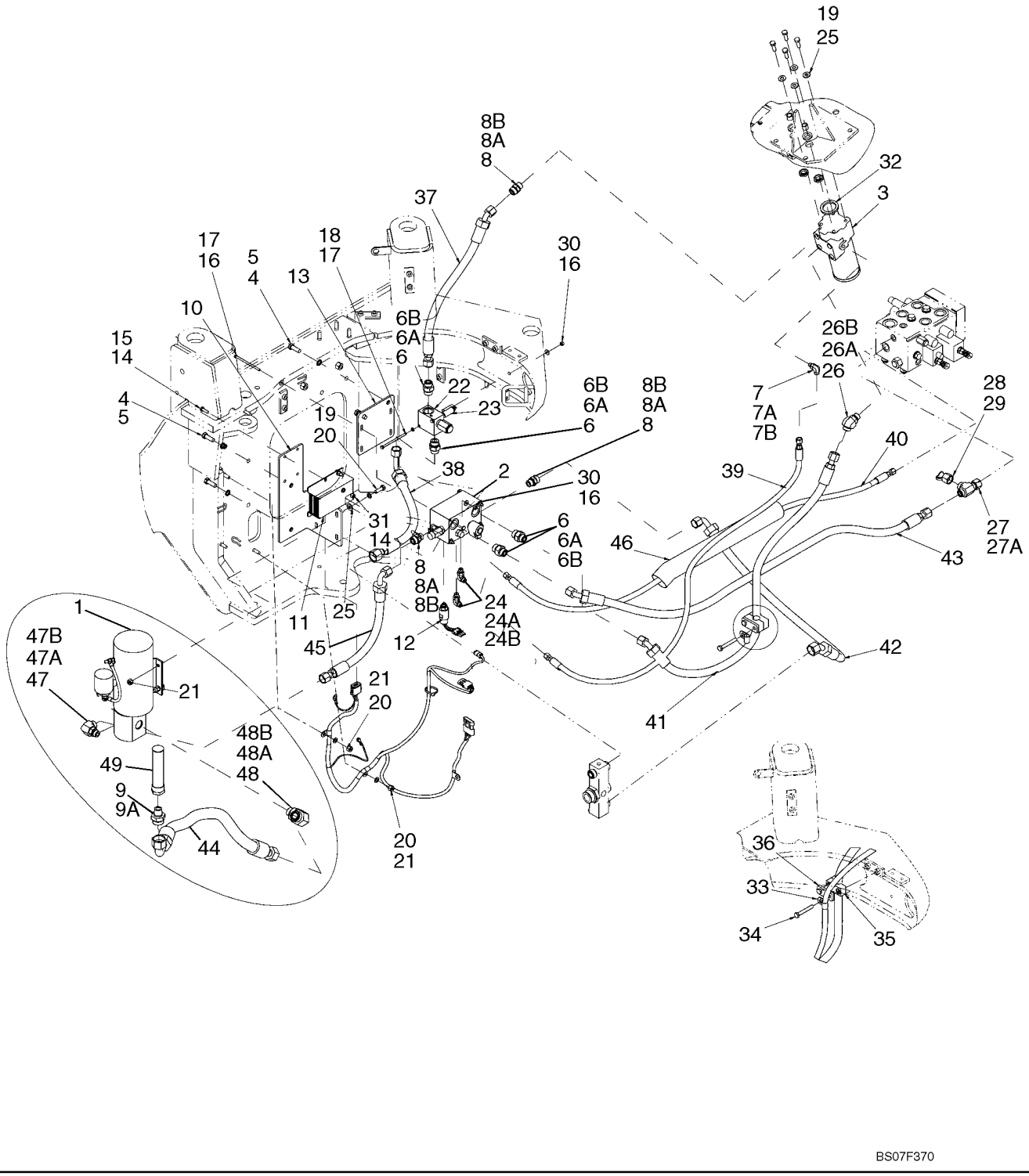

**DIRECTION - AUXILIAIRE - SYSTEME HYDRAULIQUE**

| REF | FN | PART NUMBER | YR/SN | QTY | DESCRIPTION |
|---|---|---|---|---|---|
| | | REF | | | NOTICE, AUXILIARY STEERING HYDRAULICS, FOR ELECTRICAL COMPONENTS, SEE FIGURE 04-17 |
| 1 | | 87581480 | | 1 | POMPE ELECTRIQUE, Auxiliary Steering; See Figure 05-08 |
| 2 | | 87609806 | | 1 | COLLECTEUR, Auxillary Steering; See Figure 05-07 |
| 3 | | 87307060 | | 1 | SOUPAPE HYDRAULIQUE, Steering Control; See Figure 05-06 |
| 4 | | 627-12035 | | 4 | BOULON, Hex, M12 x 35, 10.9 |
| 5 | | 895-18012 | | 4 | RONDELLE, M12 x 20 x 2 |
| 6 | | 86597760 | | 4 | RACCORD, 1"-14 ORFS x M27 x 2 ORB, Incl. Refs. 6A, 6B |
| 6A | | 238-6016 | | 1 | JOINT THORIQUE, -016, 90 Duro, .614" ID x .070" Thk, Face Seal |
| 6B | | 637-64236 | | 1 | JOINT THORIQUE, CI 6, 23.6MM ID x 2.9 Thk, Boss Seal |
| 7 | | 700-303 | | 1 | COUDE, 90º, 9/16"-18 ORFS x M12 x 1.5 ORB, Incl. Refs. 7A, 7B |
| 7A | | 238-6011 | | 1 | JOINT THORIQUE, -011, 90 Duro, .301" ID x .070" Thk, Face Seal |
| 7B | | 637-63093 | | 1 | JOINT THORIQUE, CI 6, 9.3MM ID x 2.2 Thk, Boss Seal |
| 8 | | 700-103 | | 3 | RACCORD, 1"-14 ORFS x M22 x 1.5 ORB, Incl. Refs. 8A, 8B |
| 8A | | 238-6016 | | 1 | JOINT THORIQUE, -016, 90 Duro, .614" ID x .070" Thk, Face Seal |
| 8B | | 637-63193 | | 1 | JOINT THORIQUE, CI 6, 19.3MM ID x 2.2 Thk, Boss Seal |
| 9 | | 87433494 | | 1 | RACCORD, Straight Thread ORFS To NPT; Incl. Refs. 9A |
| 9A | | 238-6021 | | 1 | JOINT THORIQUE, -021, 90 Duro, .926" ID x .070" Thk, Face Seal |
| 10 | | 87653912 | | 1 | PATTE FIXATION, Aux. Steering Mount |
| 11 | | 8603171 | | 1 | MODULE, Secondary Steering |
| 12 | | 398888A1 | | 1 | CONTACTEUR, Aux. Steering Pressure |

**DIRECTION - AUXILIAIRE - SYSTEME HYDRAULIQUE**

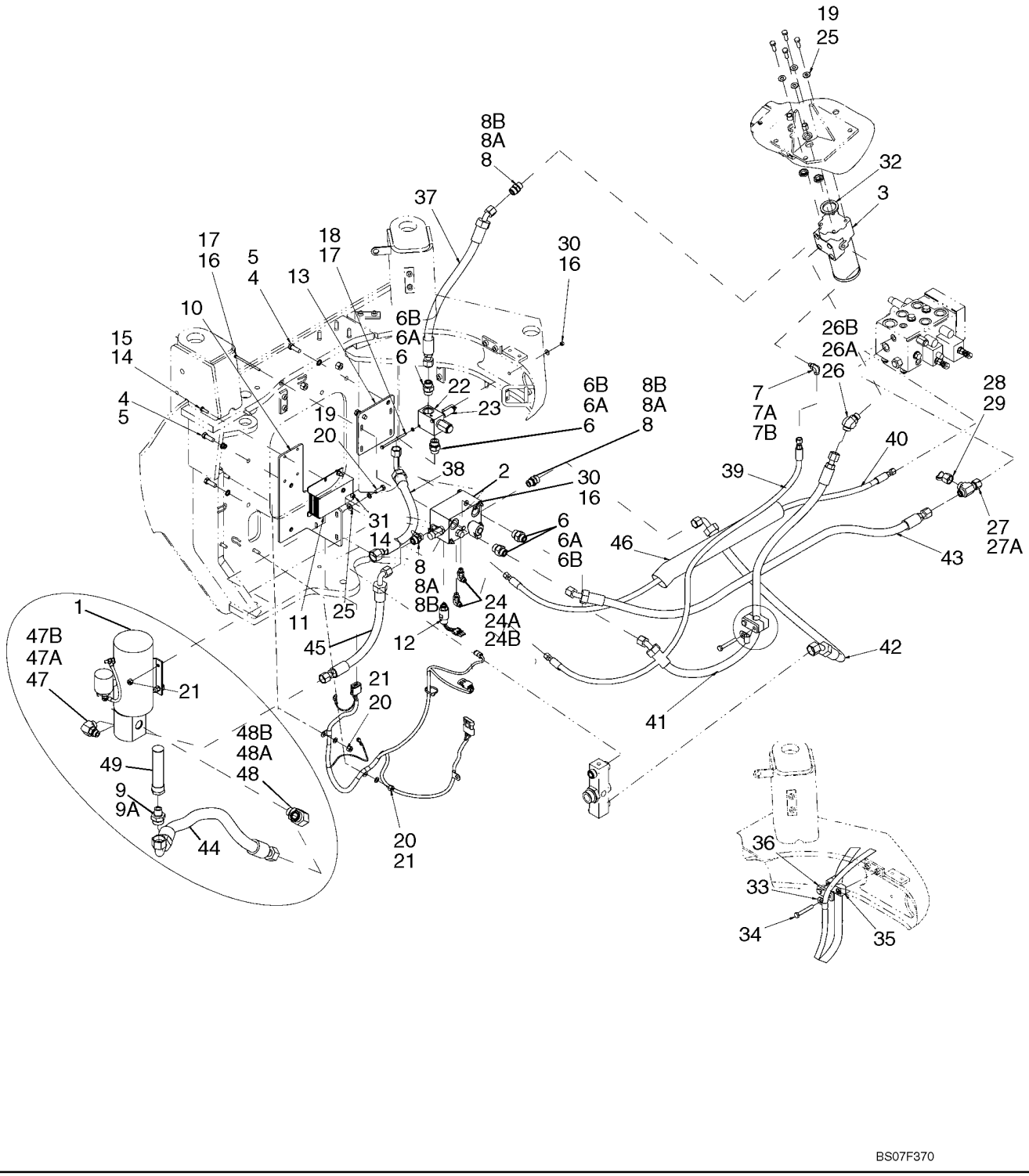

**DIRECTION - AUXILIAIRE - SYSTEME HYDRAULIQUE**

| REF | FN | PART NUMBER | YR/SN | QTY | DESCRIPTION |
|---|---|---|---|---|---|
| 13 | | 87653913 | | 1 | PATTE FIXATION, Aux. Steering Valve Mount |
| 14 | | 895-11008 | | 8 | RONDELLE, M8 x 16 x 1.6 |
| 15 | | 627-8025 | | 4 | BOULON, Hex, M8 x 25, 10.9 |
| 16 | | 895-25006 | | 10 | RONDELLE, M6 x 18 x 1.6 |
| 17 | | 814-6110 | | 6 | BOULON, Hex, M6 x 110, 8.8 |
| 18 | | 896-11006 | | 2 | RONDELLE, M6 x 13 x 2, HT |
| 19 | | 627-10030 | | 8 | BOULON, Hex, M10 x 30, 10.9, Full Thd |
| 20 | | 895-18010 | | 6 | RONDELLE, M10 x 18 x 1.6 |
| 21 | | 832-10410 | | 6 | CONTRE-ECROU, M10 x 1.5, Cl 8 |
| 22 | | 87427823 | | 1 | SOUPAPE, DÉCHARGE |
| 23 | | 8500692 | | 2 | ENTRETOISE |
| 24 | | 700-378 | | 2 | COUDE, 90º, 9/16"-18 ORFS x M14 x 1.5 ORB, Incl. Refs. 24A, 24B |
| 24A | | 637-63113 | | 1 | JOINT THORIQUE, Cl 6, 11.3MM ID x 2.2 Thk |
| 24B | | 238-6011 | | 1 | JOINT THORIQUE, -011, 90 Duro, .301" ID x .070" Thk, Face Seal |
| 25 | | 895-15010 | | 8 | RONDELLE, M11 x 24 x 2 |
| 26 | | 700-316 | | 1 | COUDE, 45º, 1"-14 ORFS x M22 x 1.5 ORB, Incl. Ref. 26A, 26B |
| 26A | | 238-6016 | | 1 | JOINT THORIQUE, -016, 90 Duro, .614" ID x .070" Thk, Face Seal |
| 26B | | 637-63193 | | 1 | JOINT THORIQUE, Cl 6, 19.3MM ID x 2.2 Thk, Boss Seal |
| 27 | | 701-433 | | 1 | TE, 1"-14 ORFS x 1"-14 Fem Sw Run, Incl. Ref. 27A |
| 27A | | 238-6016 | | 1 | JOINT THORIQUE, -016, 90 Duro, .614" ID x .070" Thk |
| 28 | | 324201A1 | | 1 | BOUCHON, Diagnostic |
| 29 | | H434163 | | 1 | CHAPEAU, Dust |
| 30 | | 832-10406 | | 6 | CONTRE-ECROU, M6 x 1, Cl 8 |
| 31 | | 832-10408 | | 4 | CONTRE-ECROU, M8 x 1.25, Cl 8 |
| 32 | | 76043957 | | 1 | JOINT, Steering Control Valve |
| 33 | | 515-25159 | | 1 | BRIDE, 5/8", Insul, 1/2" Bolt |
| 34 | | 827-10070 | | 2 | BOULON, Hex, M10 x 70, 10.9 |
| 35 | | 367489A1 | | 1 | BLOC |
| 36 | | 367658A1 | | 1 | PLAQUE |

**DIRECTION - AUXILIAIRE - SYSTEME HYDRAULIQUE**

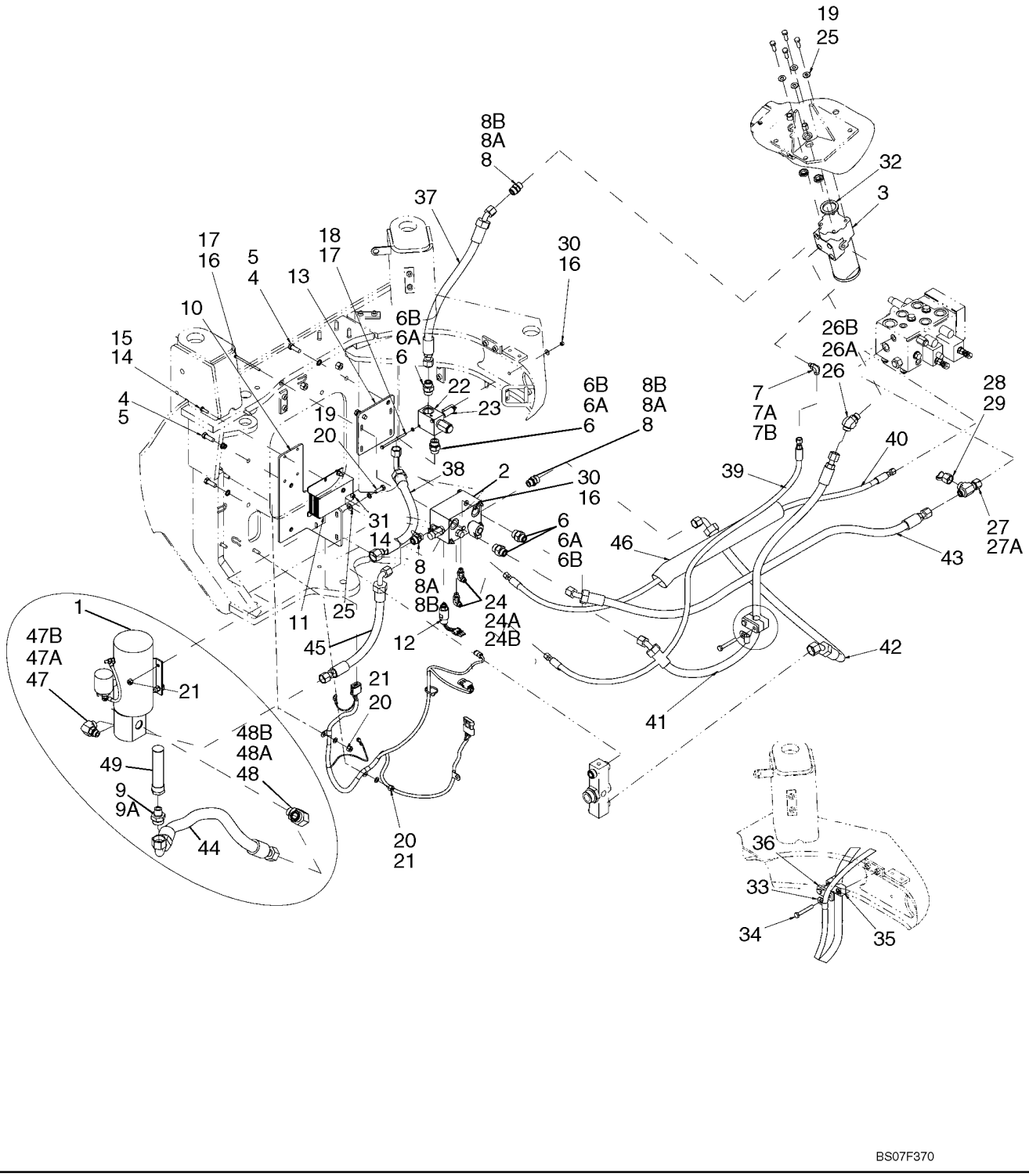

**DIRECTION - AUXILIAIRE - SYSTEME HYDRAULIQUE**

| REF | FN | PART NUMBER | YR/SN | QTY | DESCRIPTION |
|---|---|---|---|---|---|
| 37 | | 87519793 | | 1 | FLEXIBLE (ASSEMBLE), Steering Control Valve to Relief Valve; 599 mm (23 - 19/32 in) |
| 38 | | 87653923 | | 1 | FLEXIBLE, Relief Valve to Filter; 544 mm (21 - 13/32 in) |
| 39 | | 87653919 | | 1 | FLEXIBLE, Steering Load Sense; 1454 mm (57 - 1/4 in) |
| 40 | | 87653975 | | 1 | FLEXIBLE, Steering Load Sense; 1513 mm (59 - 1/2 in) |
| 41 | | 87653917 | | 1 | FLEXIBLE, Steering Pressure; 1240 mm (48 - 13/16 in) |
| 42 | | 87653921 | | 1 | FLEXIBLE, Filter Manifold; 1076 mm (42 - 1/3 in) |
| 43 | | 87653915 | | 1 | FLEXIBLE, Steering Relief Valve to Filter; 1423 mm (56 in) |
| 44 | | 87653928 | | 1 | FLEXIBLE, Auxiliary Suction; 965 mm (38 in) |
| 45 | | 87653914 | | 1 | FLEXIBLE, Auxiliary Pressure; 482 mm (19 in) |
| 46 | | 87559559 | | 1 | PROTECTEUR DE TUYAU, 60 x 554 mm (2-1/3 x 21-13/16 in) |
| 47 | | 86579694 | | 1 | COUDE, 90º, 1"-14 ORFS x M22 x 1.5 ORB, Incl. Refs. 47A, 47B |
| 47A | | 86598102 | | 1 | JOINT THORIQUE, CI 6, 19.3MM ID x 2.2 Thk |
| 47B | | 9992069 | | 1 | JOINT THORIQUE, -016, 90 Duro, .614" ID x .070" Thk |
| 48 | | 700-313 | | 1 | COUDE, 90º, 1 7/16"-12 ORFS x M27 x 2 ORB, Incl. Refs. 48A, 48B |
| 48A | | 238-6021 | | 1 | JOINT THORIQUE, -021, 90 Duro, .926" ID x .070" Thk, Face Seal |
| 48B | | 637-64236 | | 1 | JOINT THORIQUE, CI 6, 23.6MM ID x 2.9 Thk, Boss Seal |
| 49 | | L129303 | | 1 | FILTRE, Hydraulic Tank |

**DISTRIBUTEUR DE LA COMMANDE DE DIRECTION**

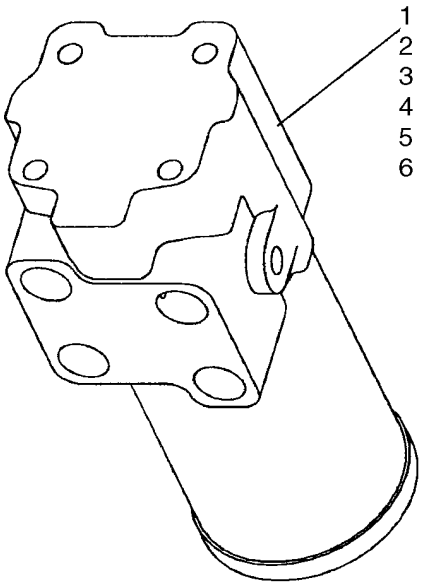


BS07F373

**DISTRIBUTEUR DE LA COMMANDE DE DIRECTION**

| REF | FN | PART NUMBER | YR/SN | QTY | DESCRIPTION |
|---|---|---|---|---|---|
| | | 87307060 | | 1 | SOUPAPE HYDRAULIQUE, Steering Control; Incl. Refs. 1 - 6 |
| 1 | | 87319529 | | 1 | POCHETTE, Seals |
| 2 | | 8604430 | | 1 | RESSORT, Centering |
| 3 | | 298591A1 | | 1 | AXE, Centering |
| 4 | | 8603001 | | 7 | VIS, Cap |
| 5 | | 8604285 | | 2 | CHEMIN DE ROULEMENT, Bearing |
| 6 | | 8604284 | | 1 | ROULEMENT A AIGUILLES |

**DIRECTION - AUXILIAIRE - BLOC FORE**

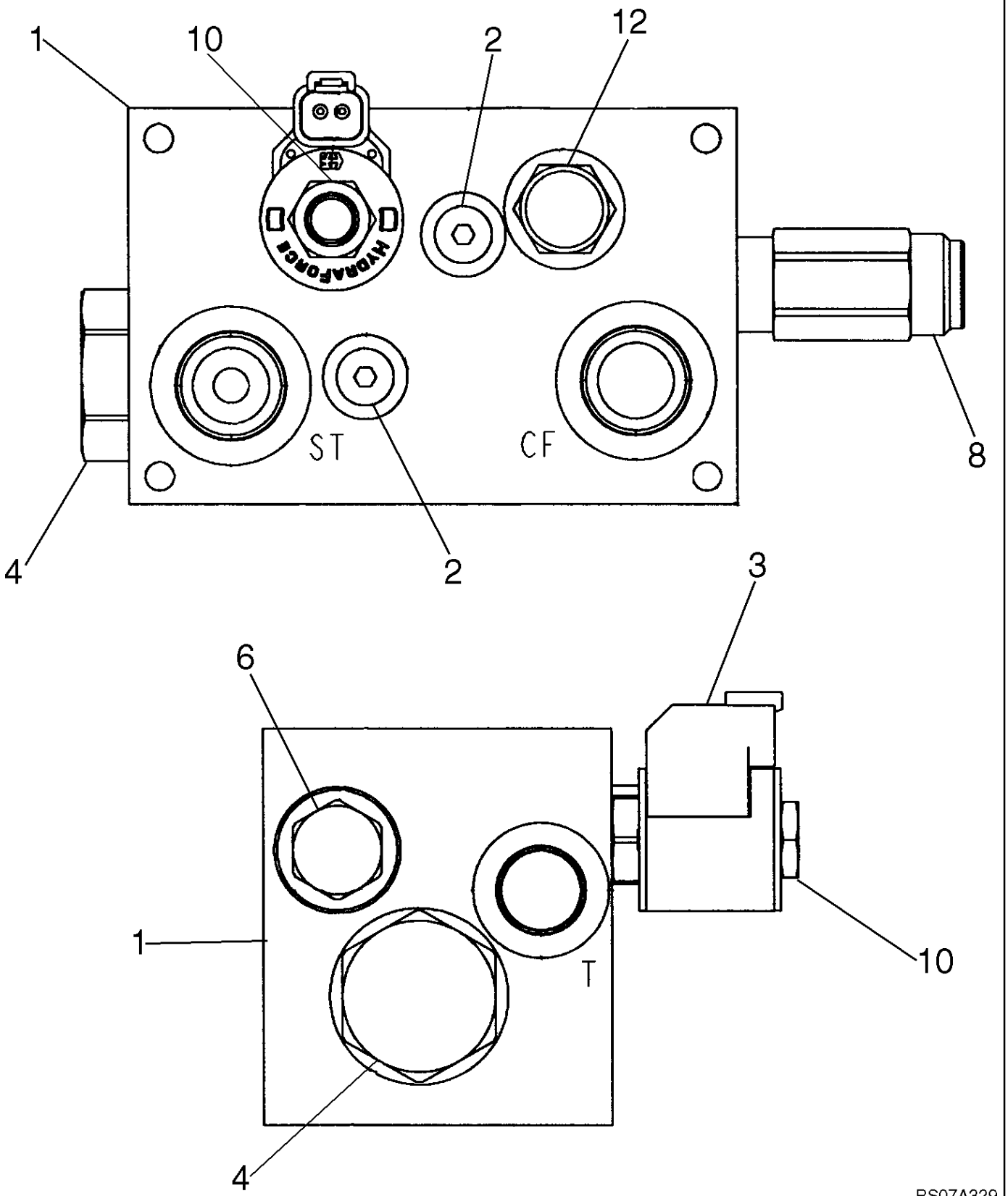

**DIRECTION - AUXILIAIRE - BLOC FORE**

| REF | FN | PART NUMBER | YR/SN | QTY | DESCRIPTION |
|---|---|---|---|---|---|
| 1 | | 87609806 | | 1 | COLLECTEUR, Auxiliary Steering; Incl. Refs. 2 - 13 |
| 2 | | 87365409 | | 1 | BOUCHON, Orifice |
| 3 | | 87365413 | | 1 | BOBINE, Solenoid |
| 4 | | 87365418 | | 1 | CLAPET ANTI-RETOUR, Incl. Ref. 5 |
| 5 | | 87365420 | | 1 | POCHETTE DE JOINTS, Check Valve; Not Illustrated |
| 6 | | 87365422 | | 1 | CLAPET ANTI-RETOUR, Incl. Ref. 7 |
| 7 | | 1542831C1 | | 1 | POCHETTE DE JOINTS, Not Illustrated |
| 8 | | 87365425 | | 1 | SOUPAPE, DÉCHARGE, Incl. Ref. 9 |
| 9 | | 1542831C1 | | 1 | POCHETTE DE JOINTS, Not Illustrated |
| 10 | | 87365427 | | 1 | TIROIR, Incl. Ref. 11 |
| 11 | | 87365429 | | 1 | POCHETTE DE JOINTS, Not Illustrated |
| 12 | | 87365430 | | 1 | ELÉMENT, Logic; Incl. Ref. 13 |
| 13 | | 87365429 | | 1 | POCHETTE DE JOINTS, Not Illustrated |

**DIRECTION - AUXILIAIRE - POMPE**

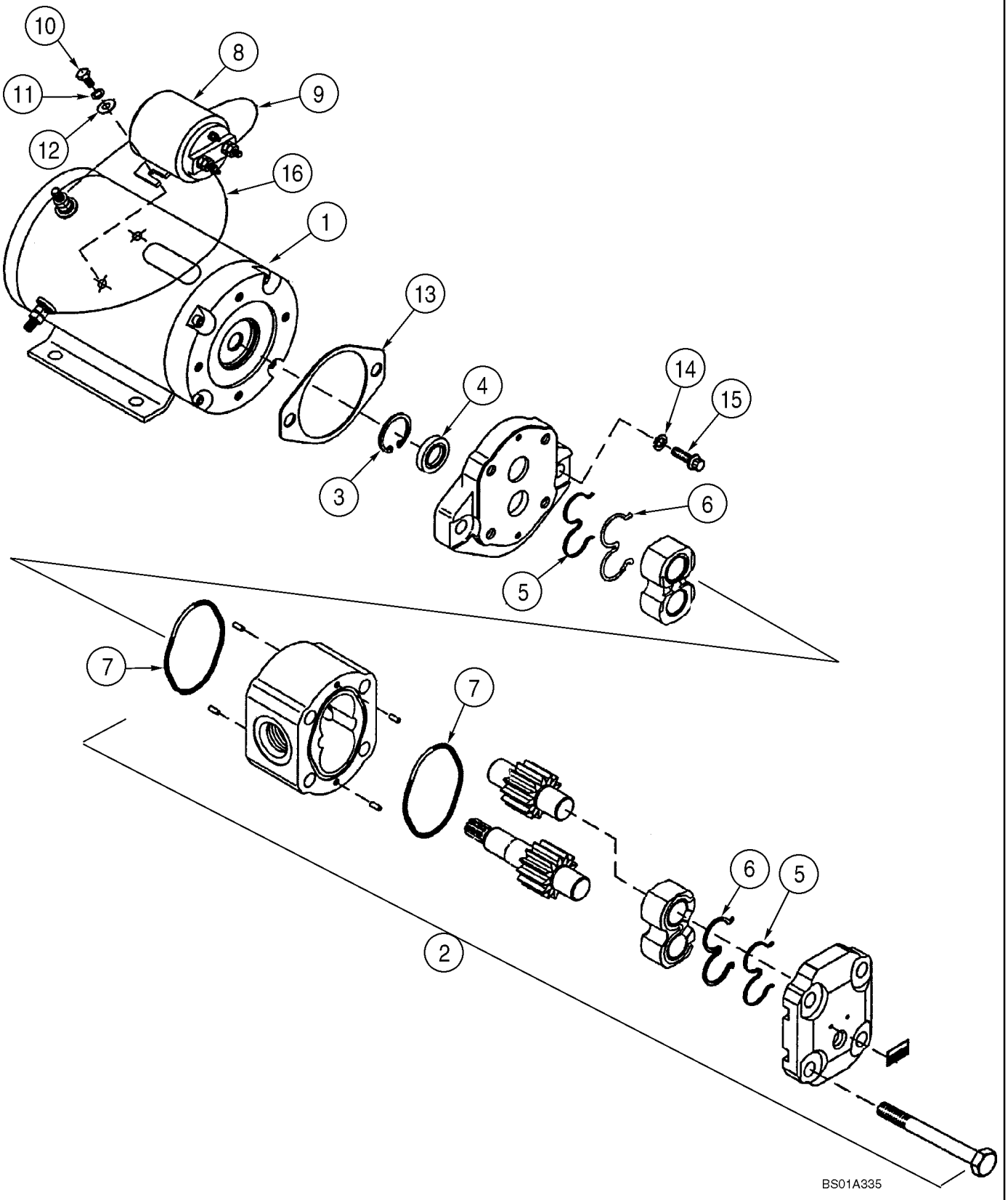

**DIRECTION - AUXILIAIRE - POMPE**

| REF | FN | PART NUMBER | YR/SN | QTY | DESCRIPTION |
|---|---|---|---|---|---|
| | | 87581480 | | 1 | POMPE ELECTRIQUE, Auxillary Steering; Incl. Refs. 1 - 16 |
| 1 | | 87581481 | | 1 | MOTEUR ELECTRIQUE |
| 2 | | 8605158 | | 1 | POMPE HYDRAULIQUE |
| | | 8605163 | | 1 | POCHETTE DE JOINTS, Incl. Refs. 3 - 7 |
| 3 | | NSS | | 1 | NON FOURNI SEPAREMENT, Ring, Retaining |
| 4 | | NSS | | 1 | NON FOURNI SEPAREMENT, Seal |
| 5 | | NSS | | 2 | NON FOURNI SEPAREMENT, Ring, Backup |
| 6 | | NSS | | 2 | NON FOURNI SEPAREMENT, Seal |
| 7 | | NSS | | 2 | NON FOURNI SEPAREMENT, O-Ring |
| | | 8605159 | | 1 | KIT, Starting Switch; Incl. Refs. 8 - 12 |
| 8 | | NSS | | 1 | NON FOURNI SEPAREMENT, Switch |
| 9 | | NSS | | 1 | NON FOURNI SEPAREMENT, Cable |
| 10 | | NSS | | 2 | NON FOURNI SEPAREMENT, Screw |
| 11 | | NSS | | 2 | NON FOURNI SEPAREMENT, Washer, Lock |
| 12 | | NSS | | 2 | NON FOURNI SEPAREMENT, Washer |
| | | 8605160 | | 1 | KIT, Mounting; Incl. Refs. 13 - 16 |
| 13 | | NSS | | 1 | NON FOURNI SEPAREMENT, Gasket, Mounting |
| 14 | | NSS | | 2 | NON FOURNI SEPAREMENT, Washer, Lock |
| 15 | | NSS | | 2 | NON FOURNI SEPAREMENT, Screw |
| 16 | | 8605161 | | 1 | FIL D'ACIER, Primary |

**DIRECTION - VERIN - SYSTEME HYDRAULIQUE**

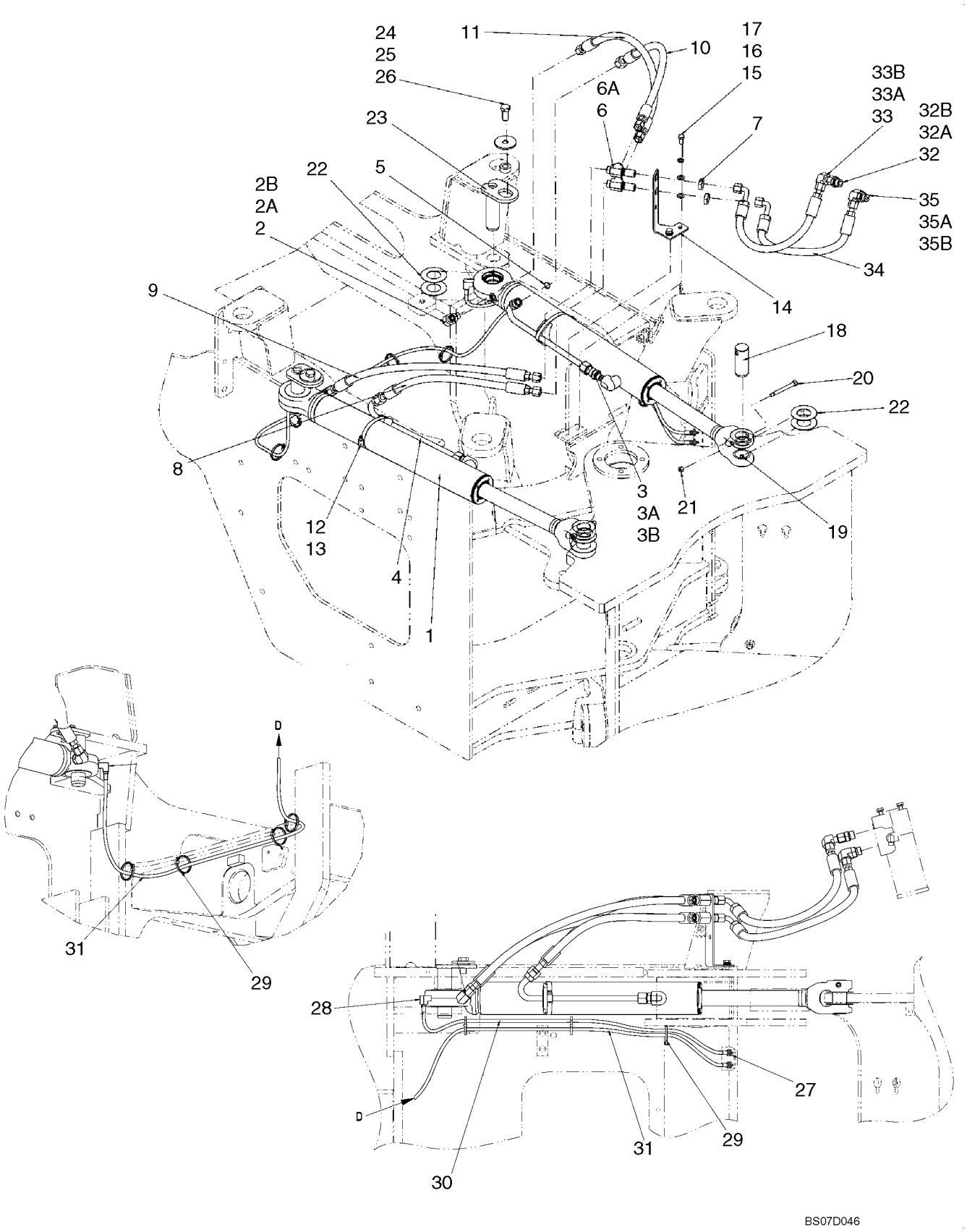

**DIRECTION - VERIN - SYSTEME HYDRAULIQUE**

| REF | FN | PART NUMBER | YR/SN | QTY | DESCRIPTION |
|---|---|---|---|---|---|
| 1 | | 87452362 | | 2 | VÉRIN DE DIRECTION, See Figure 05-10 |
| 2 | | 86579691 | | 2 | COUDE, 90º, 13/16"-18 ORFS x M18 x 1.5 ORB, Incl. 2A, 2B |
| 2A | | 637-63153 | | 1 | JOINT THORIQUE, Cl 6, 15.3MM ID x 2.2 Thk |
| 2B | | 238-6014 | | 1 | JOINT THORIQUE, -014, 90 Duro, .489" ID x .070" Thk, Face Seal |
| 3 | | 700-115 | | 2 | RACCORD, 1"-14 ORFS x M18 x 1.5 ORB, Ref. 3A, 3B |
| 3A | | 238-6016 | | 1 | JOINT THORIQUE, -016, 90 Duro, .614" ID x .070" Thk, Face Seal |
| 3B | | 637-63153 | | 1 | JOINT THORIQUE, Cl 6, 15.3MM ID x 2.2 Thk, Boss |
| 4 | | 87664495 | | 1 | TUBE, Steering Cylinder RH |
| 5 | | 238-6016 | | 2 | JOINT THORIQUE, -016, 90 Duro, .614" ID x .070" Thk |
| 6 | | 86639080 | | 2 | TE, 13/16"-16 ORFS, Blkd Run, Incl. Ref. 6A |
| 6A | | 238-6014 | | 3 | JOINT THORIQUE, -014, 90 Duro, .489" ID x .070" Thk |
| 7 | | 86639083 | | 2 | CONTRE-ECROU, 13/16"-16, ORFS Blkhd, Steering Base LH |
| 8 | | 8602590 | | 1 | FLEXIBLE, Right Side Rod; 555 mm (21 - 7/8 in) |
| 9 | | 87519795 | | 1 | FLEXIBLE (ASSEMBLE), Right Side Base; 752 mm (29 - 2/3 in) |
| 10 | | 8602589 | | 1 | FLEXIBLE, Left Side Rod; 715 mm (28 - 5/32 in) |
| 11 | | 8500460 | | 1 | FLEXIBLE, Left Side Base; 872 mm (34 - 1/3 in) |
| 12 | | 8500483 | | 2 | BLOC |
| 13 | | 214-1472 | | 2 | BRIDE, FLEXIBLE, #72, 4.06/5.00 Type F Worm |
| 14 | | 8602342 | | 1 | PATTE FIXATION |
| 15 | | 896-11010 | | 4 | RONDELLE, M10 x 21.5 x 2.5, HT |
| 16 | | 892-11010 | | 2 | RONDELLE FREIN, M10 |
| 17 | | 627-10020 | | 2 | BOULON, Hex, M10 x 20, 10.9, Full Thd |
| 18 | | 87559561 | | 2 | AXE, Steering |
| 19 | | 219-1 | | 2 | GRAISSEUR, 1/8"-27 x .66 lg |
| 20 | | 87308853 | | 2 | VIS |
| 21 | | 832-10408 | | 2 | CONTRE-ECROU, M8 x 1.25, Cl 8 |
| 22 | | 8501088 | | 8 | RONDELLE |

**DIRECTION - VERIN - SYSTEME HYDRAULIQUE**

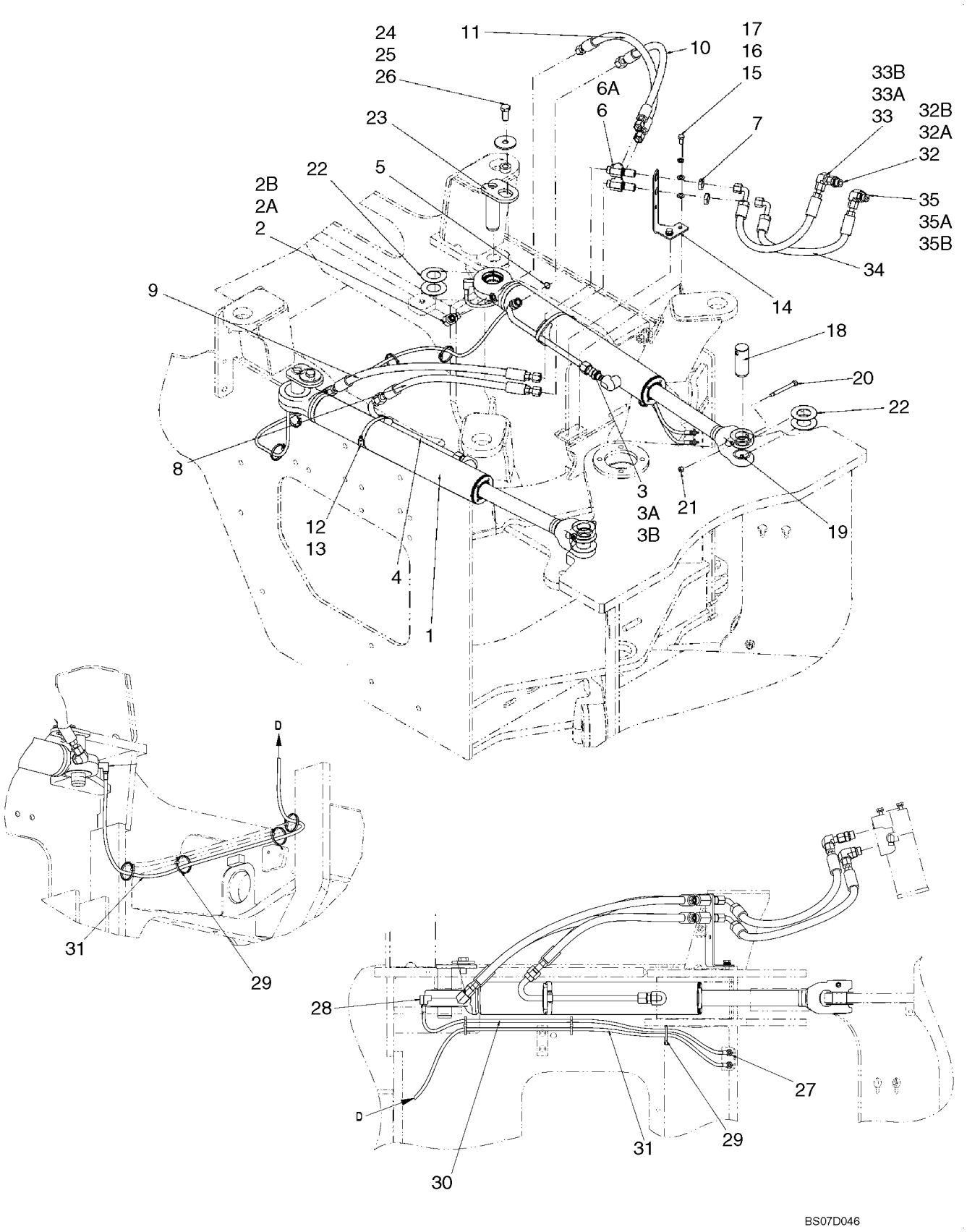

**DIRECTION - VERIN - SYSTEME HYDRAULIQUE**

| REF | FN | PART NUMBER | YR/SN | QTY | DESCRIPTION |
|---|---|---|---|---|---|
| 23 | | 87351646 | | 2 | AXE |
| 24 | | L125100 | | 2 | ENTRETOISE |
| 25 | | 496-81025 | | 2 | RONDELLE, 21/32" x 2 1/2" x .188", HDN |
| 26 | | 627-16035 | | 2 | BOULON, Hex, M16 x 35, 10.9 |
| 27 | | F53473 | | 2 | ECROU |
| 28 | | 328082A1 | | 2 | COUDE |
| 29 | | L11541 | | 7 | SANGLE |
| 30 | | L54694 | | 1 | FLEXIBLE, Grease, Rear Trunnion; 1041 mm (41 in) |
| 31 | | 87559562 | | 1 | FLEXIBLE, Rear Steering Grease; 2324 mm (91 - 1/2 in) |
| 32 | | 86579678 | | 1 | RACCORD, 13/16"-16 ORFS x M22 x 1.5 ORB, Incl. Ref. 32A, 32B |
| 32A | | 637-63193 | | 1 | JOINT THORIQUE, CI 6, 19.3MM ID x 2.2 Thk, Boss |
| 32B | | 238-6014 | | 1 | JOINT THORIQUE, -014, 90 Duro, .489" ID x .070" Thk, Face Seal |
| 33 | | 84989383 | | 1 | COUDE, 90º, 13/16"-16 ORFS x 13/16"-16 Fem Sw, Incl. Ref. 33A, 33B |
| 33A | | 637-63153 | | 1 | JOINT THORIQUE, CI 6, 15.3MM ID x 2.2 Thk, Boss |
| 33B | | 238-6014 | | 1 | JOINT THORIQUE, -014, 90 Duro, .489" ID x .070" Thk, Face Seal |
| 34 | | 87385246 | | 2 | FLEXIBLE (ASSEMBLE), Steering Cylinder; 569 mm (22 - 13/32 in) |
| 35 | | 86579692 | | 1 | COUDE, 90º, 13/16"-18 ORFS x M22 x 1.5 ORB, Incl. Refs. 35A, 35B |
| 35A | | 238-6014 | | 1 | JOINT THORIQUE, -014, 90 Duro, .489" ID x .070" Thk, Face Seal |
| 35B | | 637-63193 | | 1 | JOINT THORIQUE, CI 6, 19.3MM ID x 2.2 Thk, Boss |
| 36 | | 87664498 | | 1 | TUBE, Steering Cylinder LH |

**IRECTION - VERIN**

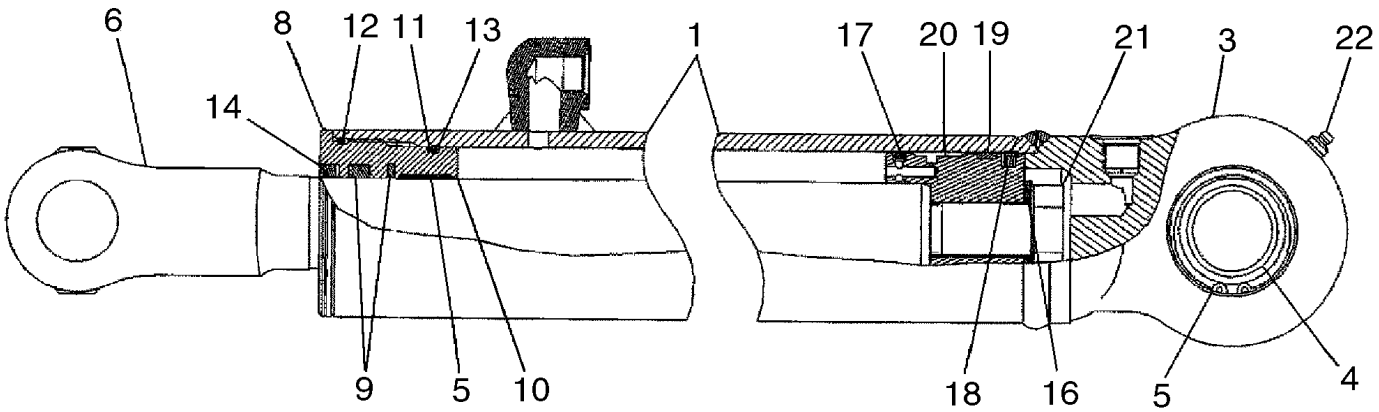


BS04A124

**IRECTION - VERIN**

| REF | FN | PART NUMBER | YR/SN | QTY | DESCRIPTION |
|---|---|---|---|---|---|
| | | 87452362 | | 2 | VÉRIN DE DIRECTION, 76 ID x 485 strk; Incl. Refs. 1 - 22 And 8605261 Seal Kit |
| 1 | | 442702A1 | | 1 | TUBE DE VERIN, Tube Weldment ; Incl. Refs. 3 - 5 |
| 3 | | NSS | | 1 | NON FOURNI SEPAREMENT, Eye |
| 4 | | 442711A1 | | 1 | ROULEMENT |
| 5 | | 100-21244 | | 2 | ANNEAU D'ARRÊT, 2.44", Int, #244 |
| 6 | | 442703A1 | | 1 | TIGE DE VERIN, Rod Weldment |
| | | 442704A1 | | 1 | PRESSE-ETOUPE, Assembly; Incl. Refs. 8 - 14 |
| 8 | | 442713A1 | | 1 | PRESSE-ETOUPE |
| 9 | | 1542875C1 | | 1 | LOT DE PIECES, Rod and Buffer Seals |
| 10 | | G102425 | | 1 | BAGUE |
| 11 | | G109298 | | 1 | ANNEAU |
| 12 | | 238-5233 | | 1 | JOINT THORIQUE, -233, 70 Duro, 2.859" ID x .139" Thk |
| 13 | | 238-5231 | | 1 | JOINT THORIQUE, -231, 70 Duro, 2.609" ID x .139" Thk |
| 14 | | D95143 | | 1 | JOINT |
| | | {87452364} | | 1 | PISTON Assembly; Incl. Refs. 16 - 20 |
| 16 | | 87452365 | | 1 | TIGE DE VERIN, Flange 7.19mm Thick |
| 17 | | G100444 | | 1 | JOINT |
| 18 | | 364376A1 | | 1 | ANNEAU |
| 19 | | G100449 | | 1 | BAGUE D"USURE |
| 20 | | 442717A1 | | 1 | JOINT, Piston |
| 21 | | 86982439 | | 1 | BOULON SPECIAL, 1 x 4 In; Bolt and Washer Assy |
| 22 | | 219-1 | | 1 | GRAISSEUR, 1/8"-27 x .66 lg |
| | | 8605261 | | 1 | POCHETTE-JOINTS, Incl. Refs. 9 - 14, 17 - 19; And G102288 Seal, Not used in this Assembly |

## NOTES

# SECTION INDEX
## Chaîne cinématique


| | |
|---|---|
| 06-01 | SUPPORT - TRANSMISSION - GOULOT DE REMPLISSAGE DE LA TRANSMISSION |
| 06-02 | SYSTEME HYDRAULIQUE - TRANSMISSION |
| 06-03 | TRANSMISSION - FILTRE À HUILE ET COUVERCLE |
| 06-04 | TRANSMISSION - CONVERTISSEUR, COUVERCLE ET ARBRE D'ENTRÉE |
| 06-05 | TRANSMISSION - ARBRE D'ENTRÉE |
| 06-06 | TRANSMISSION - BOÎTIER |
| 06-07 | TRANSMISSION - GAINES |
| 06-08 | TRANSMISSION - EMBRAYAGE PREMIÈRE |
| 06-09 | TRANSMISSION - EMBRAYAGE, SECONDE |
| 06-10 | TRANSMISSION - EMBRAYAGE TROISIÈME |
| 06-11 | TRANSMISSION - EMBRAYAGE, QUATRIÈME |
| 06-12 | TRANSMISSION - EMBRAYAGE, MARCHE AVANT |
| 06-13 | TRANSMISSION - EMBRAYAGE, MARCHE ARRIÈRE |
| 06-14 | TRANSMISSION - ARBRE DE SORTIE |
| 06-15 | TRANSMISSION - PRISE DE FORCE |
| 06-16 | TRANSMISSION - PLAQUES DES DISTRIBUTEURS |
| 06-17 | TRANSMISSION - DISTRIBUTEUR |
| 06-18 | TRANSMISSION - DISTRIBUTEUR |
| 06-19 | TRANSMISSION - VALVE, RÉGULATEUR ET POMPE À HUILE |
| 06-20 | TRANSMISSION - CAPTEUR, VITESSE ET COUVERCLE DE LA POMPE |
| 06-21 | ESSIEU ARRIÈRE - ARRÊT |
| 06-22 | ESSIEU, AVANT - SUPPORT |
| 06-22A | ESSIEU, AVANT - BOÎTIER |
| 06-22B | ESSIEU, AVANT - COQUILLE DU DIFFÉRENTIEL |
| 06-22C | ESSIEU, AVANT - DIFFERENTIEL |
| 06-22D | ESSIEU, AVANT - FREIN |
| 06-22E | ESSIEU, AVANT - MOYEU, SATELLITE |
| 06-23 | ESSIEU ARRIÈRE - SUPPORT |
| 06-23A | ESSIEU ARRIÈRE - BOÎTIER |
| 06-23B | ESSIEU ARRIÈRE - COQUILLE DU DIFFÉRENTIEL |
| 06-23C | ESSIEU ARRIÈRE - DIFFERENTIEL |
| 06-23D | ESSIEU ARRIÈRE - FREIN |
| 06-23E | ESSIEU ARRIÈRE - MOYEU, SATELLITE |
| 06-24 | ARBRE D'ENTRAÎNEMENT MONTAGE |
| 06-25 | ARBRE DE TRANSMISSION, AVANT |
| 06-26 | ARBRE D'ENTRAÎNEMENT, CENTRE |
| 06-27 | ARBRE D'ENTRAÎNEMENT, ARRIÈRE |
| 06-28 | ARBRE DE TRANSMISSION, MOTEUR |
| 06-29 | ROUES |

**SUPPORT - TRANSMISSION - GOULOT DE REMPLISSAGE DE LA TRANSMISSION**

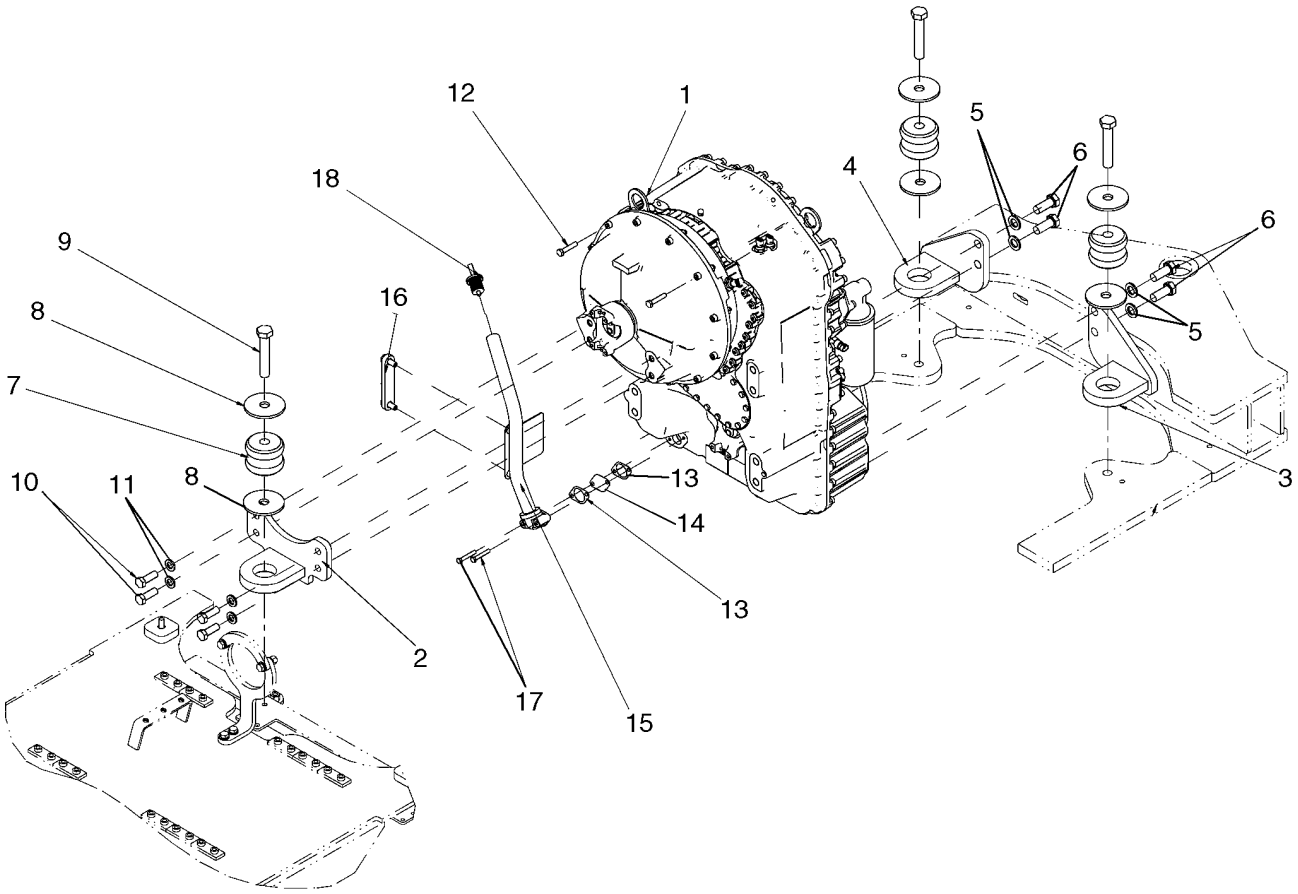


BS07F291

**SUPPORT - TRANSMISSION - GOULOT DE REMPLISSAGE DE LA TRANSMISSION**

| REF | FN | PART NUMBER | YR/SN | QTY | DESCRIPTION |
|---|---|---|---|---|---|
| 1 | | 87572394 | | 1 | TRANSMISSION, WG-160 4-Speed Transmission, Includes Parts on Figures 06-03 - 06-20, 07-01 |
| 2 | | 87552960 | | 1 | PATTE FIXATION, Top, Transmission Mount |
| 3 | | 87552958 | | 1 | PATTE FIXATION, Right, Transmission Mount |
| 4 | | 87552959 | | 1 | PATTE FIXATION, Left, Transmission Mount |
| 5 | | 896-11020 | | 4 | RONDELLE, M20 x 37.5 x 4, HT |
| 6 | | 627-20050 | | 4 | BOULON, Hex, M20 x 50, 10.9 |
| 7 | | 361187A1 | | 3 | ISOLATEUR, Transmission Bracket |
| 8 | | 379611A1 | | 6 | RONDELLE |
| 9 | | 827-22120 | | 3 | BOULON, Hex, M22 x 120, 10.9 |
| 10 | | 627-16045 | | 4 | BOULON, Hex, M16 x 45, 10.9 |
| 11 | | 896-11016 | | 4 | RONDELLE, M17.5 x 30 x 4, HT |
| 12 | | 827-10050 | | 2 | BOULON, Hex, M10 x 50, 10.9 |
| 13 | | 8603281 | | 2 | JOINT |
| 14 | | E135229 | | 2 | TAMIS-FILTRE |
| 15 | | 87653616 | | 1 | TUBE, Transmission Fill |
| 16 | | 86988366 | | 1 | VOYANT, Oil Level |
| 17 | | 827-8050 | | 2 | BOULON, Hex, M8 x 50, 10.9 |
| 18 | | 443565A1 | | 1 | CHAPEAU, Transmission Fill |

**SYSTEME HYDRAULIQUE - TRANSMISSION**

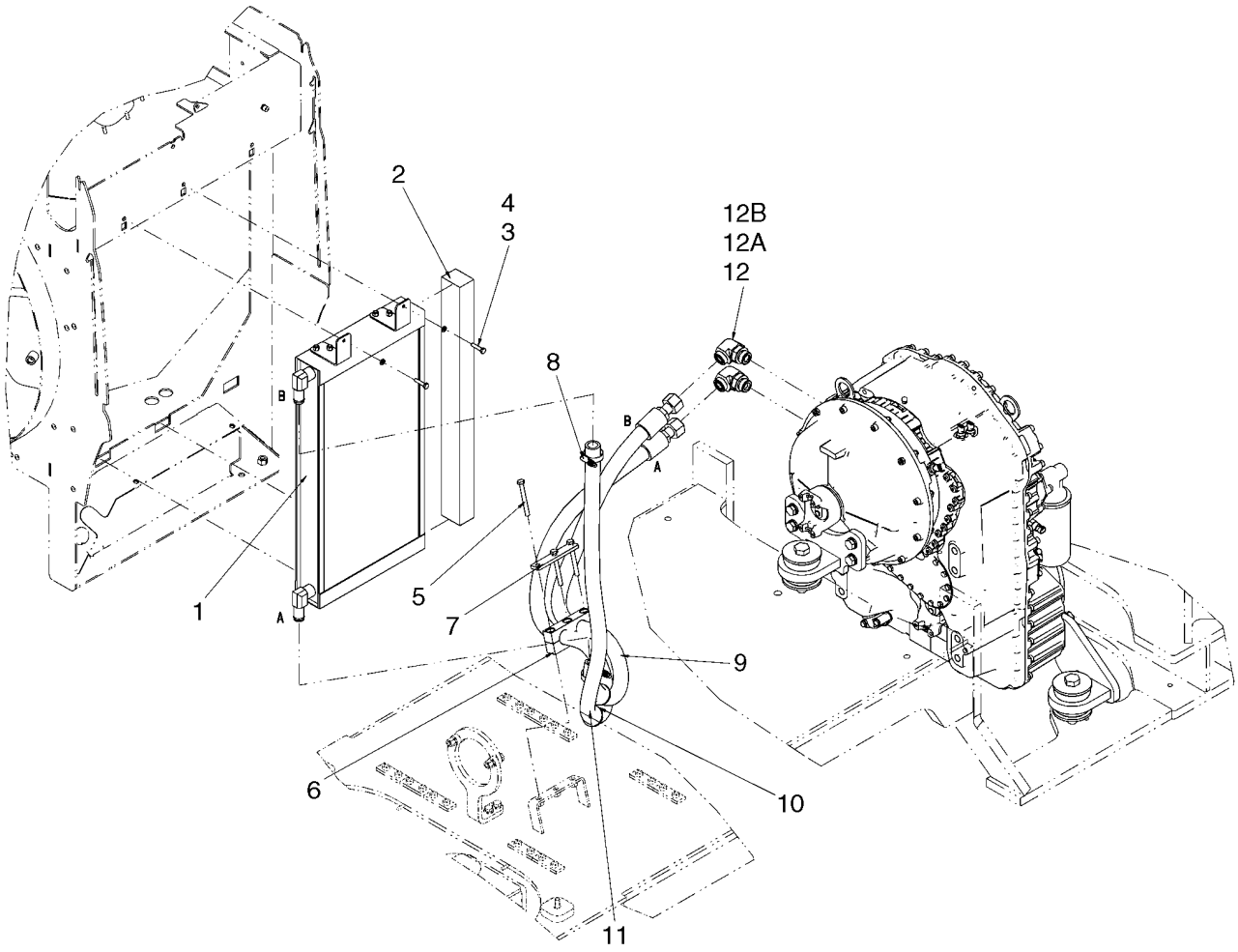


BS07F290

**SYSTEME HYDRAULIQUE - TRANSMISSION**

| REF | FN | PART NUMBER | YR/SN | QTY | DESCRIPTION |
|---|---|---|---|---|---|
| 1 | | 8501295 | | 1 | REFROIDISSEUR D'HUILE |
| 2 | | 8500206 | | 1 | JOINT |
| 3 | | 892-11008 | | 2 | RONDELLE FREIN, M8 |
| 4 | | 627-8035 | | 2 | BOULON, Hex, M8 x 35, 10.9 |
| 5 | | 827-10090 | | 3 | BOULON, Hex, M10 x 90, 10.9 |
| 6 | | 8500576 | | 1 | BRIDE |
| 7 | | 8500583 | | 1 | PLAQUE |
| 8 | | 353036A1 | | 2 | COLLIER |
| 9 | | 87578052 | | 1 | FLEXIBLE, Cooler to Transmission; 1490 mm (58 - 2/3 in) |
| 10 | | 248-1185 | | 2 | PASSE-FIL, 1 1/2" ID x 1 3/4" Groove Dia |
| 11 | | 87578053 | | 1 | FLEXIBLE, Transmission to Cooler; 2260 mm (89 in) |
| 12 | | 201-308 | | 2 | COUDE, 90º, 1 7/16"-12 x 1 5/8"-12, Adj, ORFS, Incl. Refs. 12A, 12B |
| 12A | | 237-6016 | | 1 | JOINT THORIQUE, 16-1, 90 Duro, 1.171" ID x .118" Thk, Boss Seal |
| 12B | | 238-6021 | | 1 | JOINT THORIQUE, -021, 90 Duro, .926" ID x .070" Thk, Face Seal |

**TRANSMISSION - FILTRE À HUILE ET COUVERCLE**

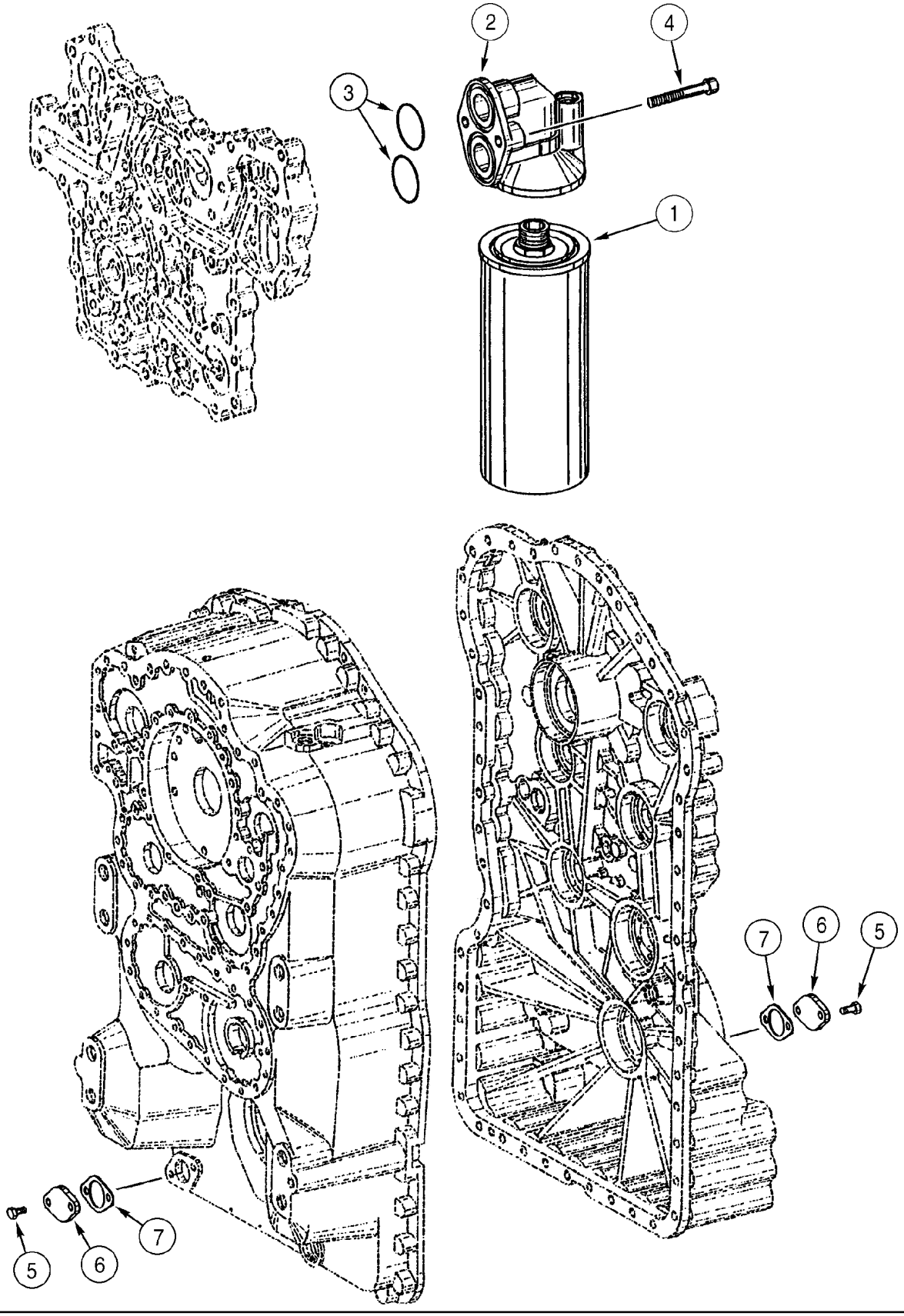

**TRANSMISSION - FILTRE À HUILE ET COUVERCLE**

| REF | FN | PART NUMBER | YR/SN | QTY | DESCRIPTION |
|---|---|---|---|---|---|
| | | 87572394 | | 1 | TRANSMISSION, See Figure(s) 06-03 - 06-20, 07-01; Incl. Refs. 1 - 7 |
| 1 | | 87519452 | | 1 | FILTRE, HUILE HYDRAULIQUE |
| 2 | | 8603403 | | 1 | FILTRE ASSY |
| 3 | | 8603404 | | 2 | JOINT THORIQUE |
| 4 | | 8603311 | | 2 | VIS |
| 5 | | 8603396 | | 4 | VIS, M8 x 18 |
| 6 | | 8603217 | | 2 | COUVERCLE |
| 7 | | 8603281 | | 2 | JOINT |

**TRANSMISSION - CONVERTISSEUR, COUVERCLE ET ARBRE D'ENTRÉE**

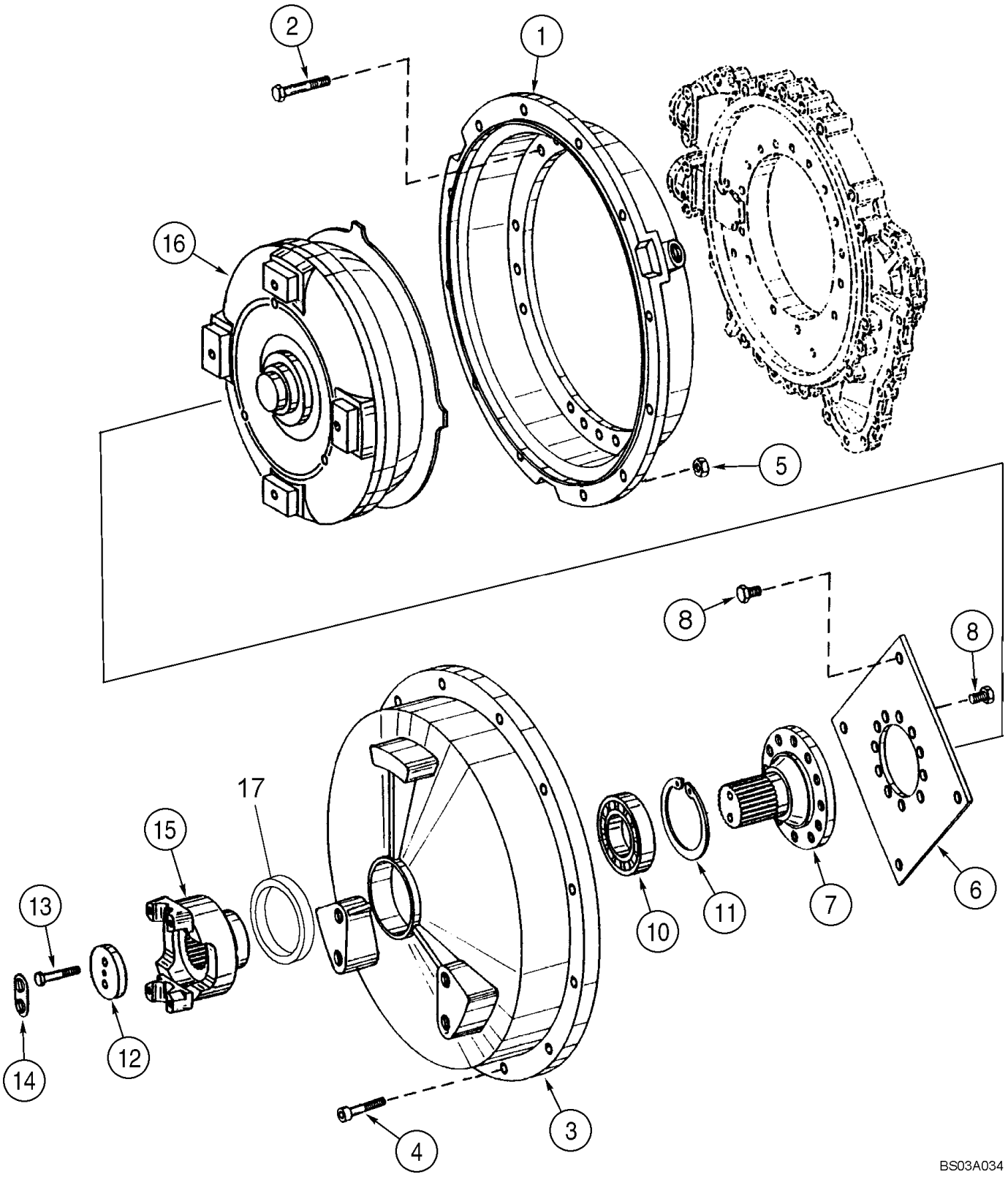

**TRANSMISSION - CONVERTISSEUR, COUVERCLE ET ARBRE D'ENTRÉE**

| REF | FN | PART NUMBER | YR/SN | QTY | DESCRIPTION |
|---|---|---|---|---|---|
| | | 87572394 | | 1 | TRANSMISSION, See Figure(s) 06-03 - 06-20, 07-01; Incl. Refs. 1 - 17 |
| 1 | | 8603292 | | 1 | CLOCHE |
| 2 | | 8603293 | | 18 | VIS, M10 x 65 |
| 3 | | 8604676 | | 1 | COUVERCLE |
| 4 | | 8603466 | | 12 | VIS, M10 x 40 |
| 5 | | 829-1510 | | 12 | ECROU, M10, Cl 10 |
| 6 | | 8603633 | | 1 | DIAPHRAGME |
| 7 | | 8604677 | | 1 | ARBRE, Input |
| 8 | | 8603294 | | 20 | VIS, M12 x 18 |
| 10 | | 8604678 | | 1 | ROULEMENT A BILLES |
| 11 | | 87410351 | | 1 | ANNEAU |
| 12 | | 8603635 | | 1 | RONDELLE |
| 13 | | 8603405 | | 2 | VIS, M8 X 50 |
| 14 | | 8603636 | | 1 | RONDELLE |
| 15 | | 8603637 | | 1 | MACHOIRE |
| 16 | | 8605279 | | 1 | CONVERTISSEUR DE COUPLE, Torque |
| 17 | | 8604229 | | 1 | ANNEAU |

**TRANSMISSION - ARBRE D'ENTRÉE**

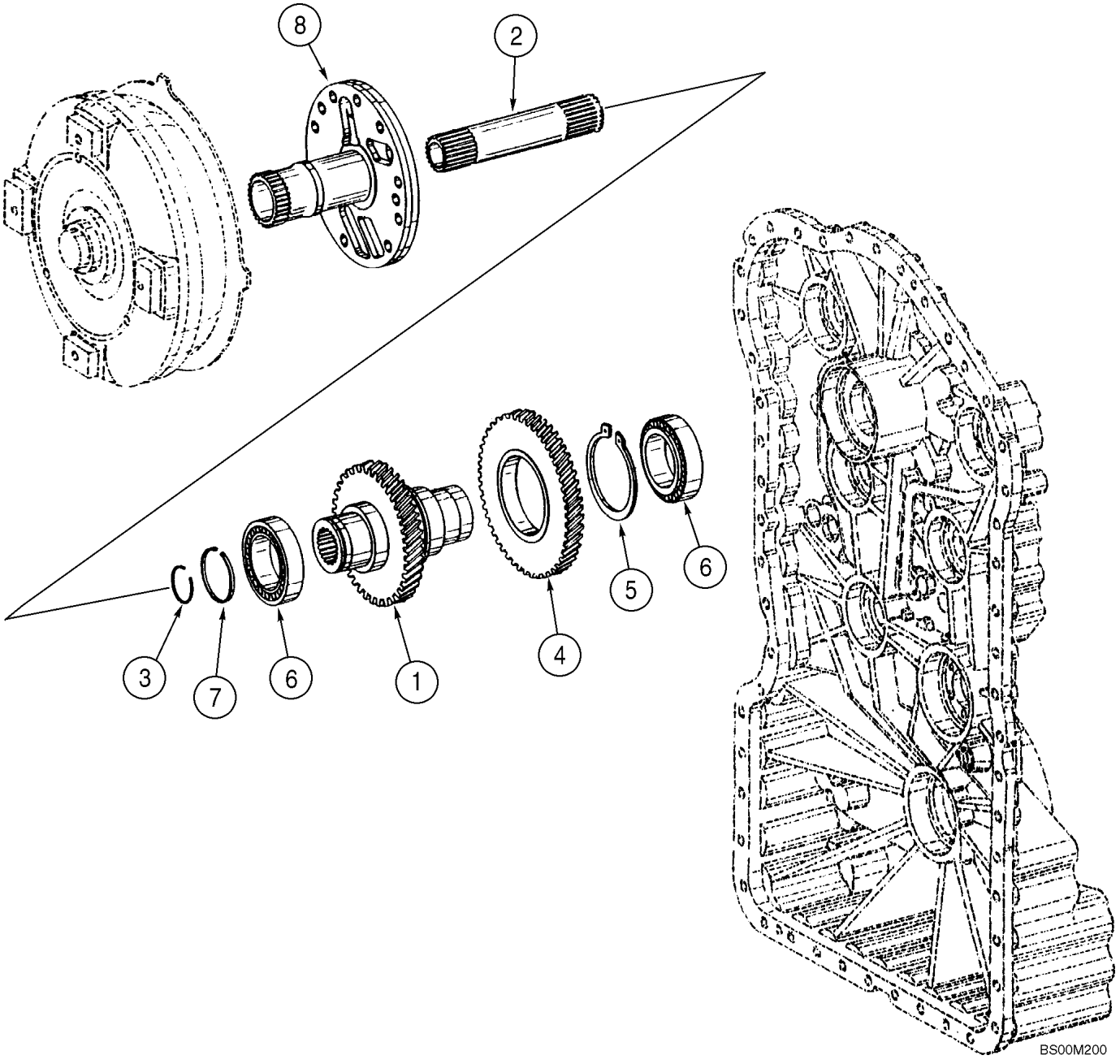

**TRANSMISSION - ARBRE D'ENTRÉE**

| REF | FN | PART NUMBER | YR/SN | QTY | DESCRIPTION |
|---|---|---|---|---|---|
| | | 87572394 | | 1 | TRANSMISSION, See Figure(s) 06-03 - 06-20, 07-01; Incl. Refs. 1 - 8 |
| 1 | | 8603296 | | 1 | ARBRE, Input |
| 2 | | 8603297 | | 1 | ARBRE, Turbine |
| 3 | | 8603298 | | 1 | ANNEAU D'ARRÊT |
| 4 | | 8603299 | | 1 | PIGNON CONDUCTEUR, Input |
| 5 | | 8603300 | | 1 | ANNEAU |
| 6 | | 8603301 | | 2 | ROULEMENT A ROULEAU |
| 7 | | 8603302 | | 1 | ANNEAU |
| 8 | | 8603778 | | 1 | ARBRE, Input |

**TRANSMISSION - BOÎTIER**

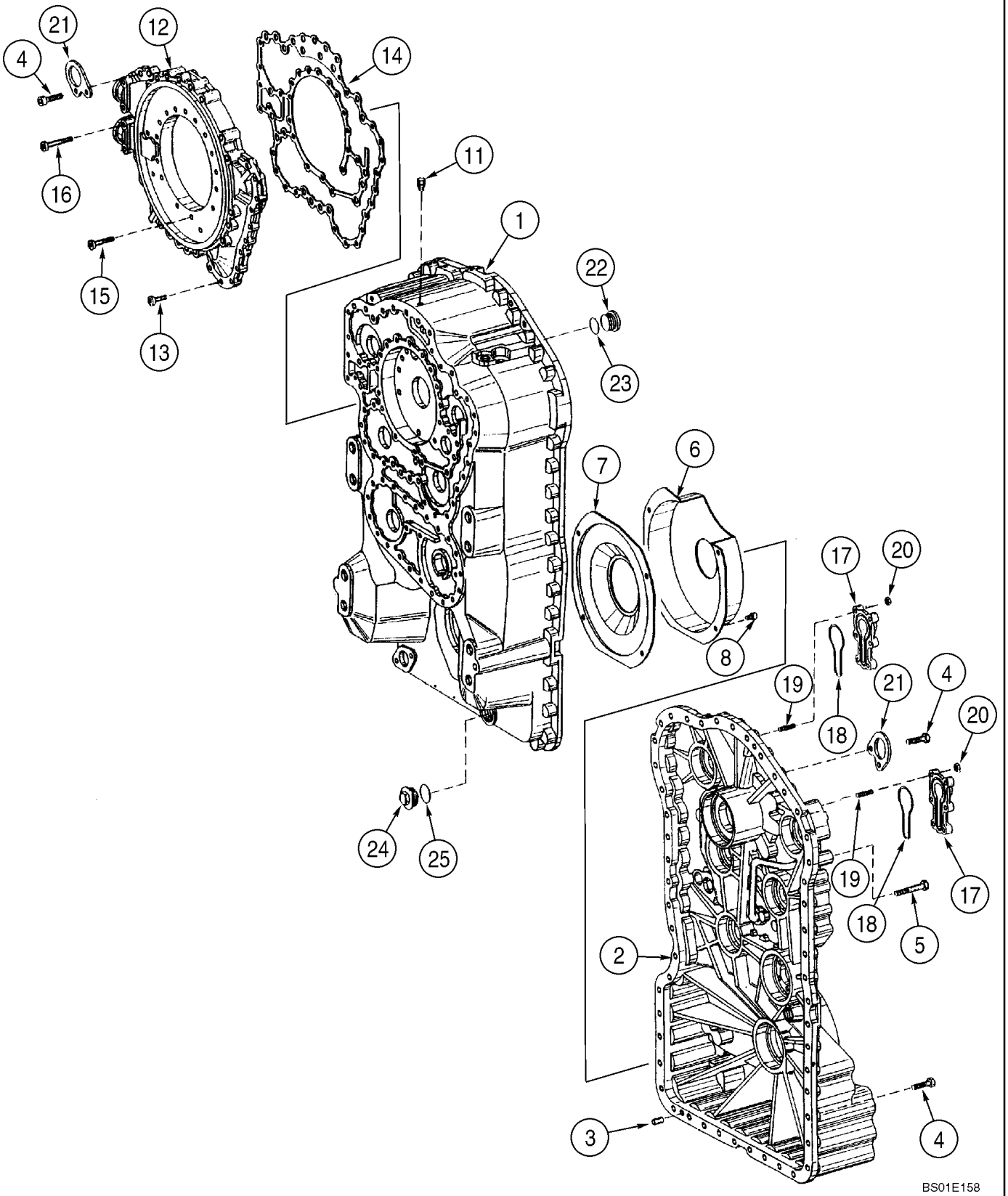

**TRANSMISSION - BOÎTIER**

| REF | FN | PART NUMBER | YR/SN | QTY | DESCRIPTION |
|---|---|---|---|---|---|
| | | 87572394 | | 1 | TRANSMISSION, See Figure(s) 06-03 - 06-20, 07-01; Incl. Refs. 1 - 25 |
| 1 | | 8605283 | | 1 | CARTER, Front |
| 1A | | 8603779 | | 1 | SOUPAPE, DÉCHARGE, Not Illustrated |
| 2 | | 8603187 | | 1 | CARTER, Rear |
| 3 | | 8603798 | | 2 | AXE |
| 4 | | 8603469 | | 46 | VIS, M10 x 65 |
| 5 | | 8603640 | | 7 | VIS, M10 x 65 |
| 6 | | 8603304 | | 1 | FILTRE, Gear |
| 7 | | 8603305 | | 1 | FILTRE |
| 8 | | 8603306 | | 4 | VIS |
| 11 | | 8603214 | | 1 | RENIFLARD |
| 12 | | 8603307 | | 1 | CARTER |
| 13 | | 8603308 | | 15 | VIS |
| 14 | | 8603309 | | 1 | JOINT |
| 15 | | 8603310 | | 21 | VIS |
| 16 | | 8603311 | | 4 | VIS |
| 17 | | 8603312 | | 2 | COUVERCLE |
| 18 | | 8603313 | | 2 | JOINT THORIQUE |
| 19 | | 8604714 | | 12 | GOUJON, M8 x 25 |
| 20 | | 8603315 | | 12 | ECROU, M8 |
| 21 | | 8603316 | | 2 | TAQUET DE FIXATION |
| 22 | | 8603317 | | 1 | BOUCHON, Incl. 23 |
| 23 | | 8603318 | | 1 | JOINT THORIQUE |
| 24 | | 8603319 | | 1 | BOUCHON, Incl. 25 |
| 25 | | 8603318 | | 1 | JOINT THORIQUE |

**TRANSMISSION - GAINES**

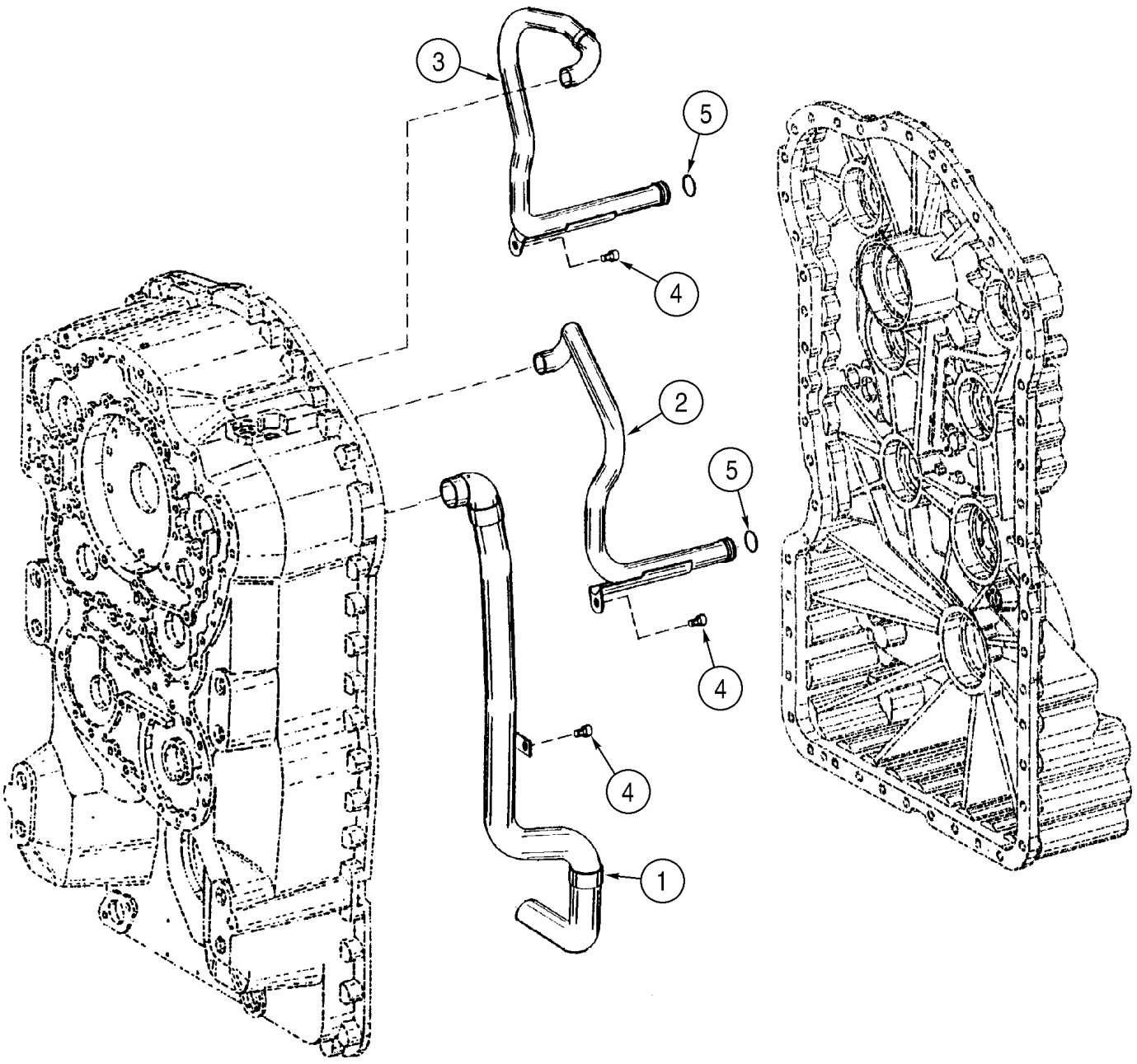

**TRANSMISSION - GAINES**

| REF | FN | PART NUMBER | YR/SN | QTY | DESCRIPTION |
|---|---|---|---|---|---|
| | | 87572394 | | 1 | TRANSMISSION, See Figure(s) 06-03 - 06-20, 07-01; Incl. Refs. 1 - 5 |
| 1 | | 8603320 | | 1 | TUBE, Suction |
| 2 | | 8605280 | | 1 | TUBE |
| 3 | | 8605281 | | 1 | TUBE |
| 4 | | 8603306 | | 3 | VIS |
| 5 | | 8603323 | | 2 | JOINT THORIQUE |

**TRANSMISSION - EMBRAYAGE PREMIÈRE**

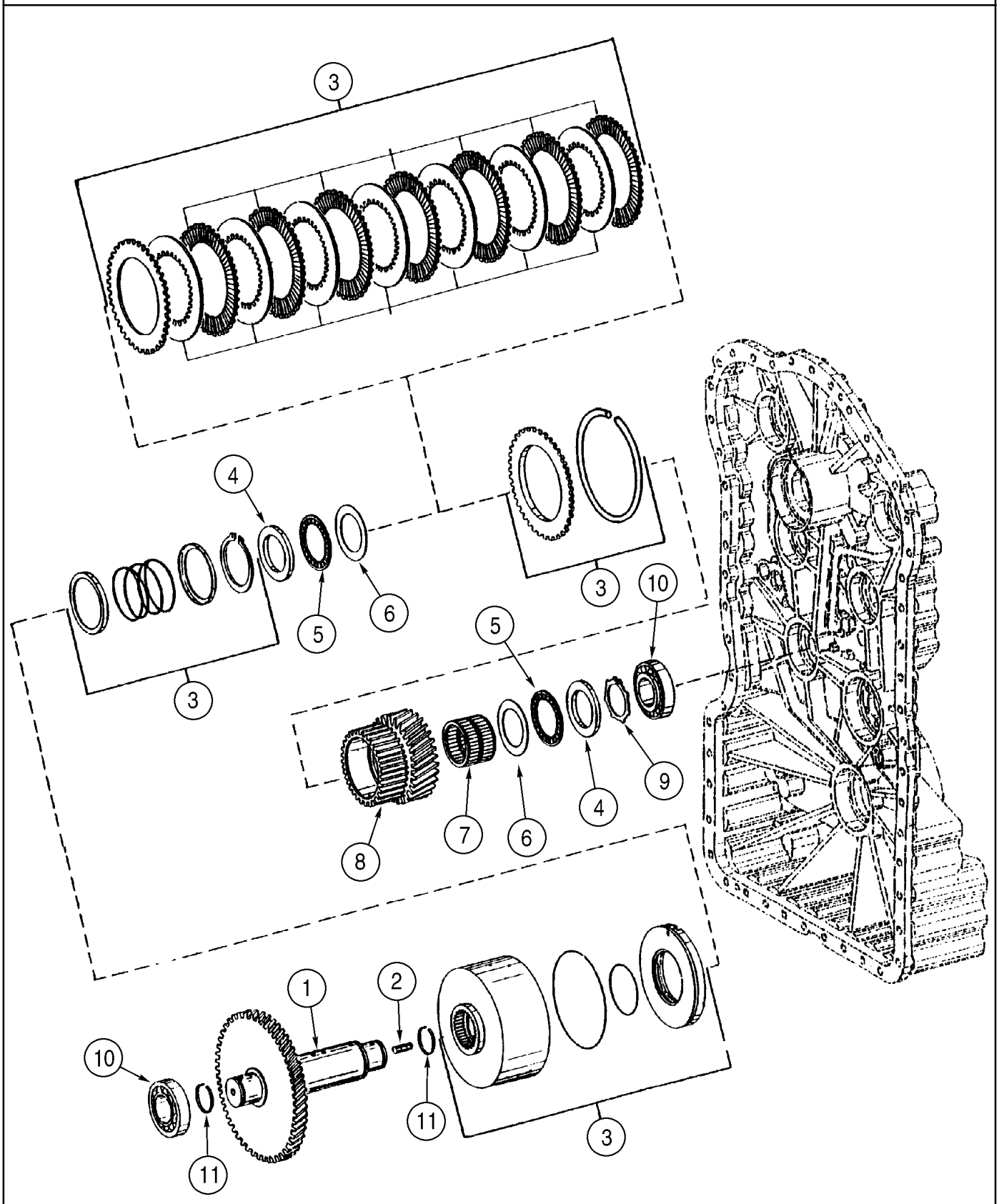

**TRANSMISSION - EMBRAYAGE PREMIÈRE**

| REF | FN | PART NUMBER | YR/SN | QTY | DESCRIPTION |
|---|---|---|---|---|---|
| | | 87572394 | | 1 | TRANSMISSION, See Figure(s) 06-03 - 06-20, 07-01; Incl. Refs. 1 - 11 |
| 1 | | 8603406 | | 1 | ARBRE |
| 2 | | 8603407 | | 1 | GOUJON, M10 x 16 |
| 3 | | 8603664 | | 1 | EMBRAYAGE |
| 4 | | 8603430 | | 2 | DISQUE |
| 5 | | 8603431 | | 2 | ROULEMENT A AIGUILLES |
| 6 | | 8603432 | | 2 | RONDELLE |
| 7 | | 8603643 | | 1 | ROULEMENT A AIGUILLES |
| 8 | | 8605282 | | 1 | PIGNON |
| 9 | | 8603434 | | 1 | ANNEAU D'ARRÊT |
| 10 | | 8603435 | | 2 | ROULEMENT A ROULEAU |
| 11 | | 8603436 | | 2 | SEGMENT |

**TRANSMISSION - EMBRAYAGE, SECONDE**

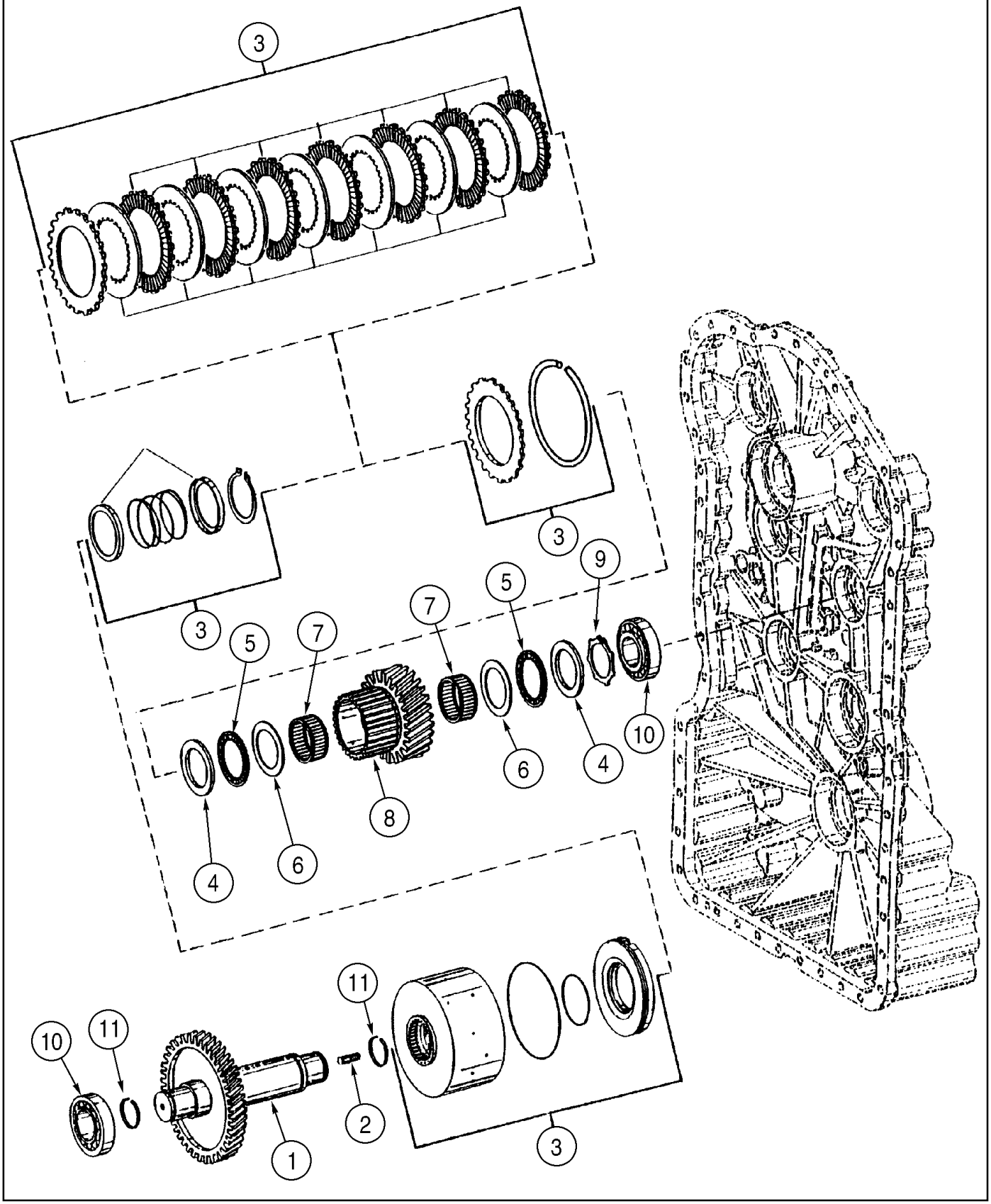

**TRANSMISSION - EMBRAYAGE, SECONDE**

| REF | FN | PART NUMBER | YR/SN | QTY | DESCRIPTION |
|---|---|---|---|---|---|
| | | 87572394 | | 1 | TRANSMISSION, See Figure(s) 06-03 - 06-20, 07-01; Incl. Refs. 1 - 11 |
| 1 | | 8603437 | | 1 | ARBRE |
| 2 | | 8603407 | | 1 | GOUJON, M10 x 16 |
| 3 | | 8603665 | | 1 | EMBRAYAGE |
| 4 | | 8603438 | | 2 | DISQUE |
| 5 | | 8603439 | | 2 | ROULEMENT A ROULEAU |
| 6 | | 8603440 | | 2 | RONDELLE |
| 7 | | 8603441 | | 2 | ROULEMENT A ROULEAU |
| 8 | | 8603645 | | 1 | PIGNON |
| 9 | | 8603442 | | 1 | RETENEUR |
| 10 | | 8603435 | | 2 | ROULEMENT A ROULEAU |
| 11 | | 8603436 | | 2 | SEGMENT |

**TRANSMISSION - EMBRAYAGE TROISIÈME**

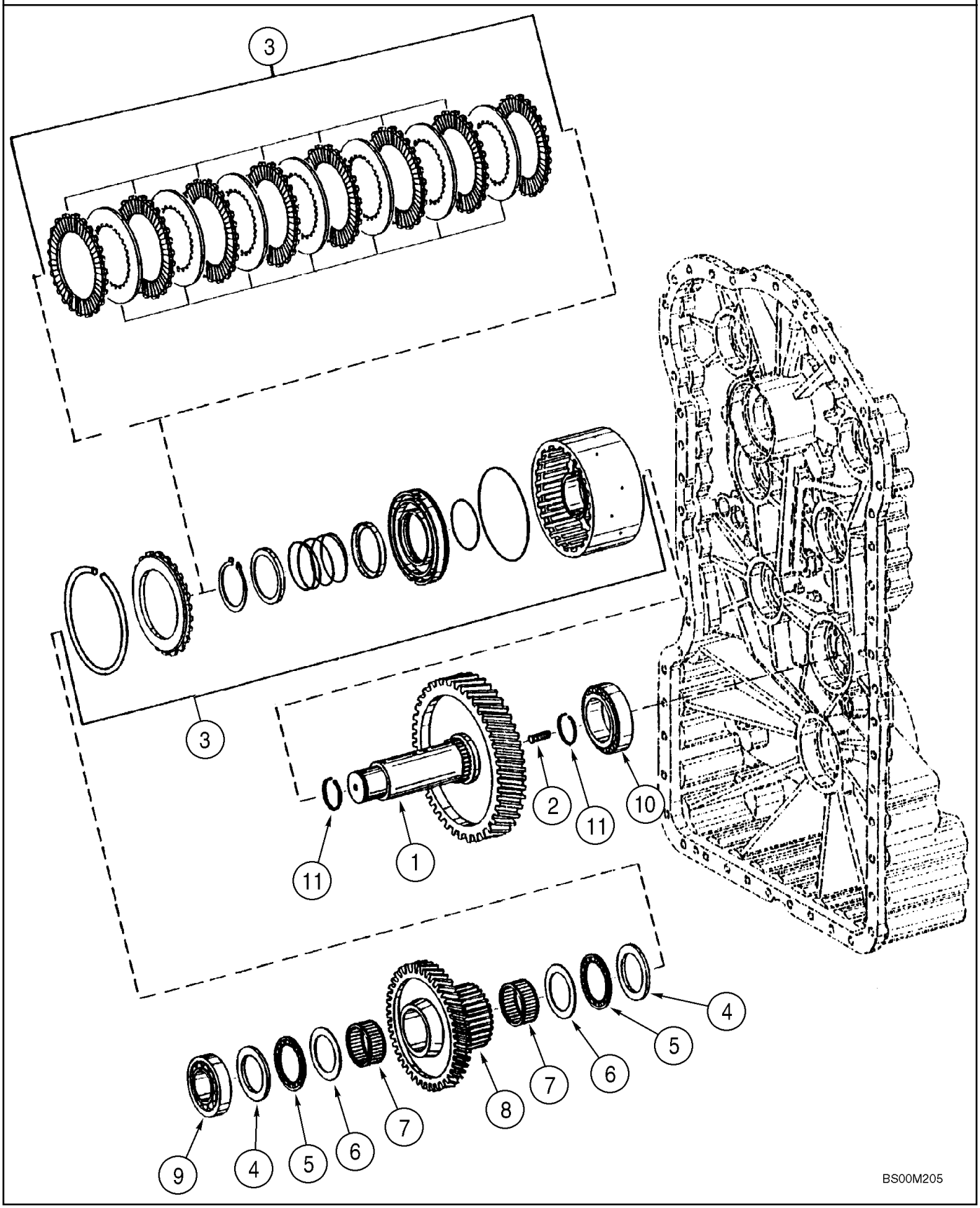

**TRANSMISSION - EMBRAYAGE TROISIÈME**

| REF | FN | PART NUMBER | YR/SN | QTY | DESCRIPTION |
|---|---|---|---|---|---|
| | | 87572394 | | 1 | TRANSMISSION, See Figure(s) 06-03 - 06-20, 07-01; Incl. Refs. 1 - 11 |
| 1 | | 8603443 | | 1 | ARBRE |
| 2 | | 8603407 | | 1 | GOUJON, M10 x 16 |
| 3 | | 8603665 | | 1 | EMBRAYAGE |
| 4 | | 8603438 | | 2 | DISQUE |
| 5 | | 8603439 | | 2 | ROULEMENT A ROULEAU |
| 6 | | 8603440 | | 2 | RONDELLE |
| 7 | | 8603441 | | 2 | ROULEMENT A ROULEAU |
| 8 | | 8603444 | | 1 | PIGNON FOU |
| 9 | | 8603435 | | 1 | ROULEMENT A ROULEAU |
| 10 | | 8603301 | | 1 | ROULEMENT A ROULEAU |
| 11 | | 8603436 | | 2 | SEGMENT |

**TRANSMISSION - EMBRAYAGE, QUATRIÈME**

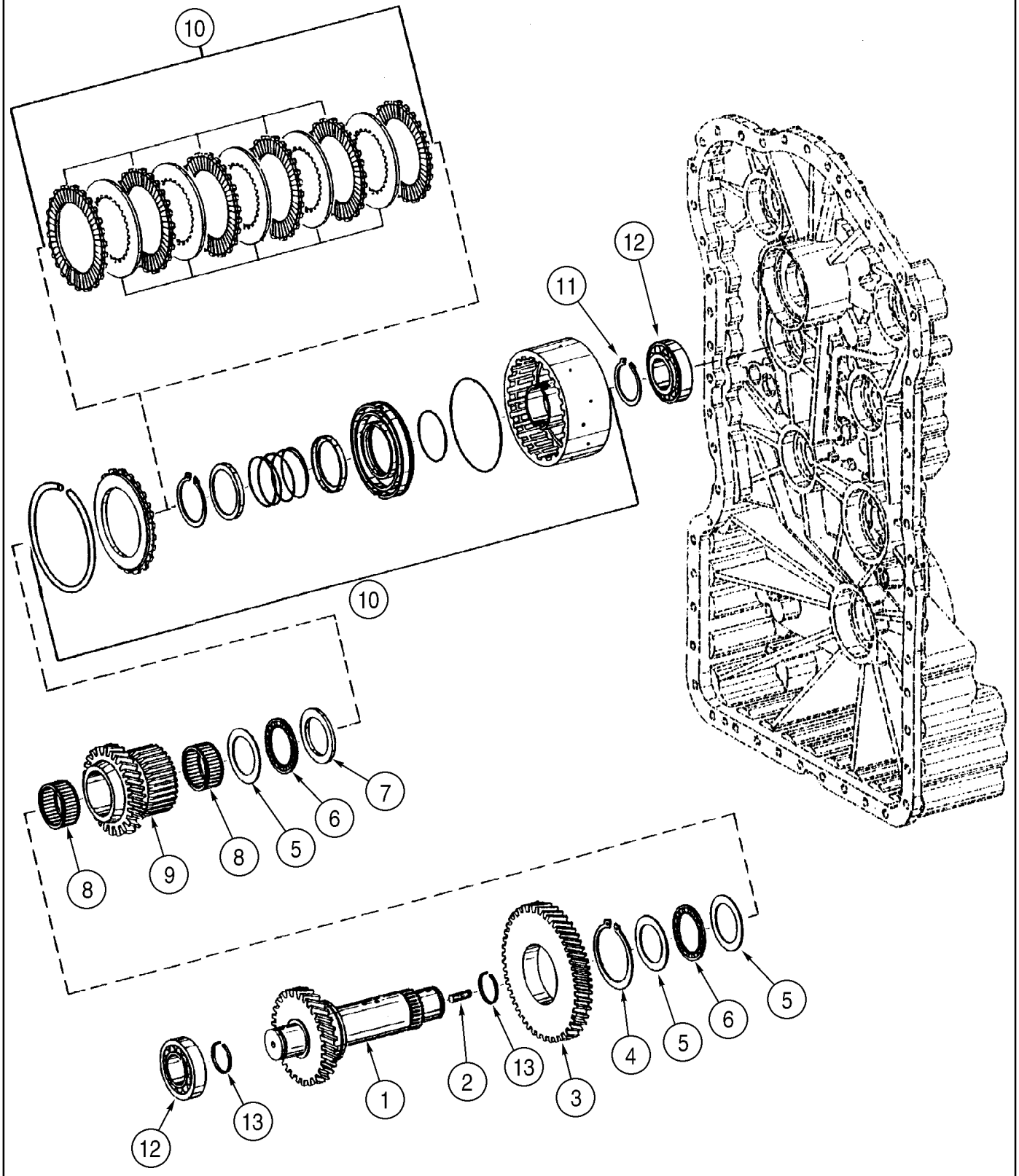

**TRANSMISSION - EMBRAYAGE, QUATRIÈME**

| REF | FN | PART NUMBER | YR/SN | QTY | DESCRIPTION |
|---|---|---|---|---|---|
| | | 87572394 | | 1 | TRANSMISSION, See Figure(s) 06-03 - 06-20, 07-01; Incl. Refs. 1 - 13 |
| 1 | | 8603445 | | 1 | ARBRE |
| 2 | | 8603407 | | 1 | GOUJON, M10 x 16 |
| 3 | | 8603446 | | 1 | PIGNON |
| 4 | | P0236317R | | 1 | ANNEAU D'ARRÊT |
| 5 | | 8603440 | | 3 | RONDELLE |
| 6 | | 8603439 | | 2 | ROULEMENT A ROULEAU |
| 7 | | 8603438 | | 1 | DISQUE |
| 8 | | 8603441 | | 2 | ROULEMENT A ROULEAU |
| 9 | | 8603447 | | 1 | PIGNON FOU |
| 10 | | 8603646 | | 1 | EMBRAYAGE |
| 11 | | 8603209 | | 1 | ANNEAU D'ARRÊT |
| 12 | | 8603435 | | 2 | ROULEMENT A ROULEAU |
| 13 | | 8603436 | | 2 | SEGMENT |

**TRANSMISSION - EMBRAYAGE, MARCHE AVANT**

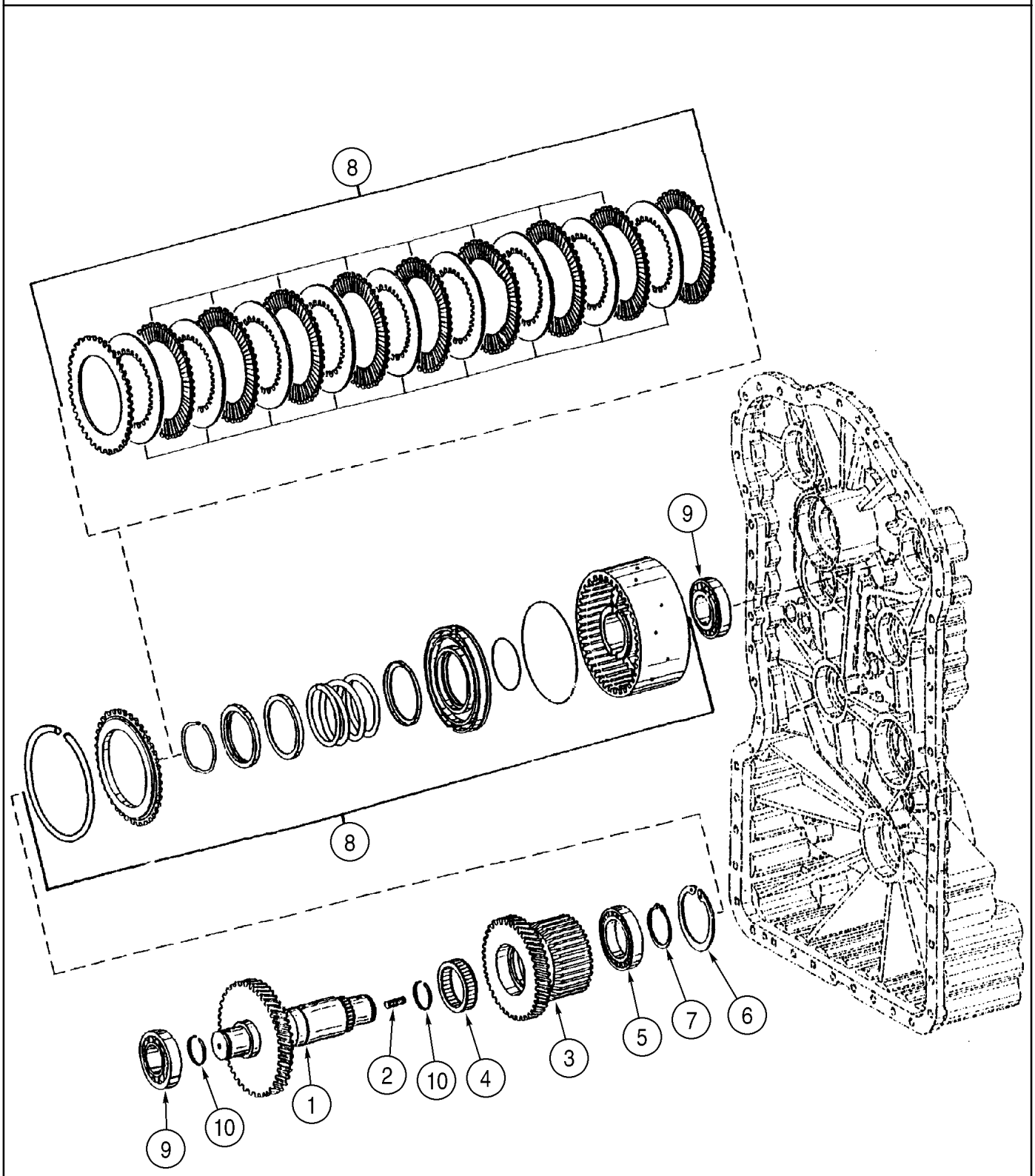

**TRANSMISSION - EMBRAYAGE, MARCHE AVANT**

| REF | FN | PART NUMBER | YR/SN | QTY | DESCRIPTION |
|---|---|---|---|---|---|
| | | 87572394 | | 1 | TRANSMISSION, See Figure(s) 06-03 - 06-20, 07-01; Incl. Refs. 1 - 10 |
| 1 | | 8603448 | | 1 | ARBRE |
| 2 | | 8603407 | | 1 | GOUJON, M10 x 16 |
| 3 | | 8603449 | | 1 | PIGNON FOU |
| 4 | | 8603450 | | 1 | ROULEMENT A ROULEAU |
| 5 | | 8604716 | | 1 | ROULEMENT A BILLES |
| 6 | | 800-2190 | | 1 | ANNEAU D'ARRÊT, M90, Int |
| 7 | | 8603452 | | 1 | RETENEUR |
| 8 | | 8603666 | | 1 | EMBRAYAGE |
| 9 | | 8603435 | | 2 | ROULEMENT A ROULEAU |
| 10 | | 8603436 | | 2 | SEGMENT |

**TRANSMISSION - EMBRAYAGE, MARCHE ARRIÈRE**

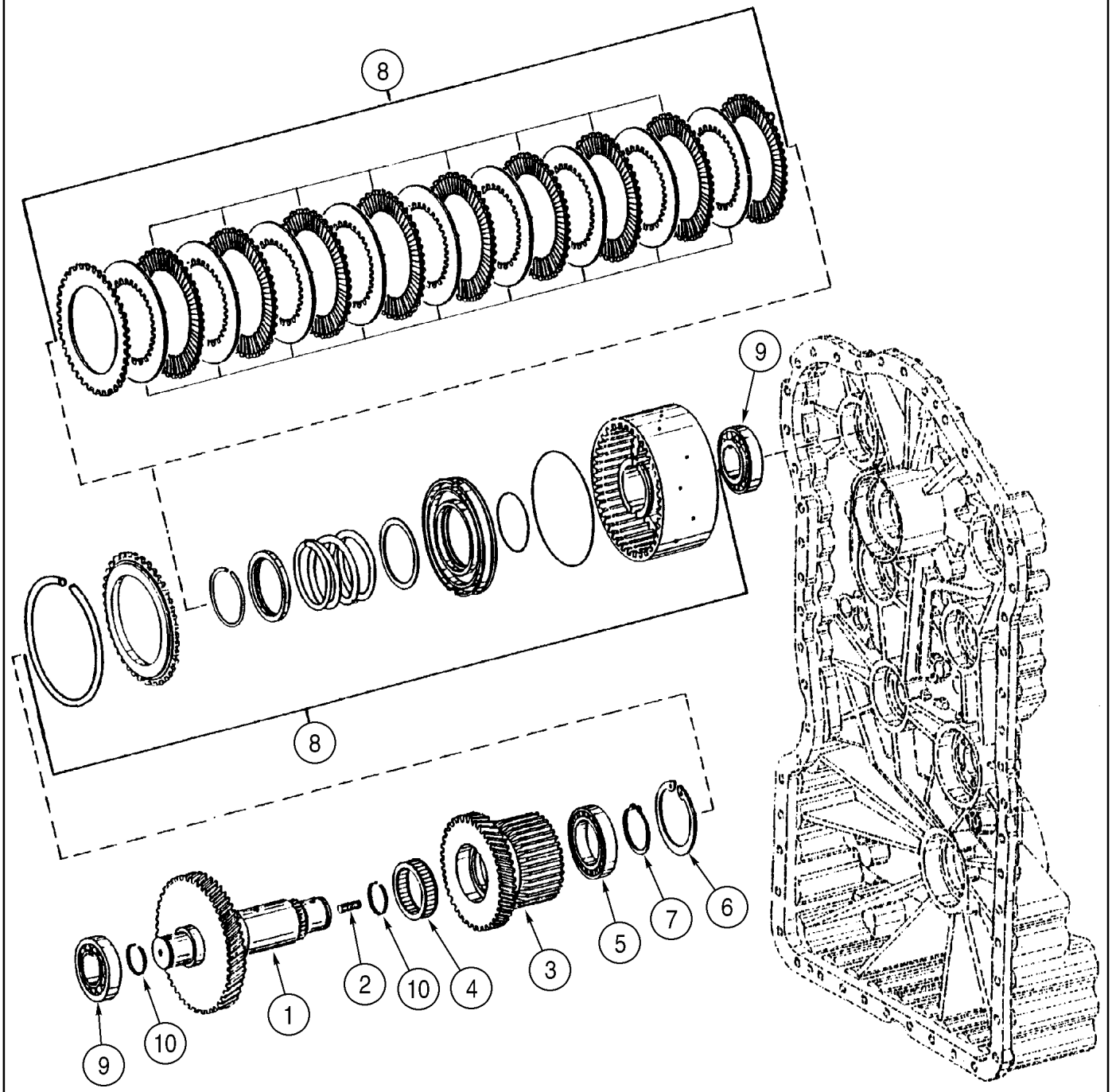

**TRANSMISSION - EMBRAYAGE, MARCHE ARRIÈRE**

| REF | FN | PART NUMBER | YR/SN | QTY | DESCRIPTION |
|---|---|---|---|---|---|
| | | 87572394 | | 1 | TRANSMISSION, See Figure(s) 06-03 - 06-20, 07-01; Incl. Refs. 1 - 11 |
| 1 | | 8603457 | | 1 | ARBRE |
| 2 | | 8603407 | | 1 | GOUJON, M10 x 16 |
| 3 | | 8603449 | | 1 | PIGNON FOU |
| 4 | | 8603450 | | 1 | ROULEMENT A ROULEAU |
| 5 | | 8604716 | | 1 | ROULEMENT A BILLES |
| 6 | | 800-2190 | | 1 | ANNEAU D'ARRÊT, M90, Int |
| 7 | | 8603452 | | 1 | RETENEUR |
| 8 | | 8603666 | | 1 | EMBRAYAGE |
| 9 | | 8603435 | | 2 | ROULEMENT A ROULEAU |
| 10 | | 8603436 | | 2 | SEGMENT |
| 11 | | 8603499 | | 1 | ANNEAU D'ARRÊT, Not Illustrated |

**TRANSMISSION - ARBRE DE SORTIE**

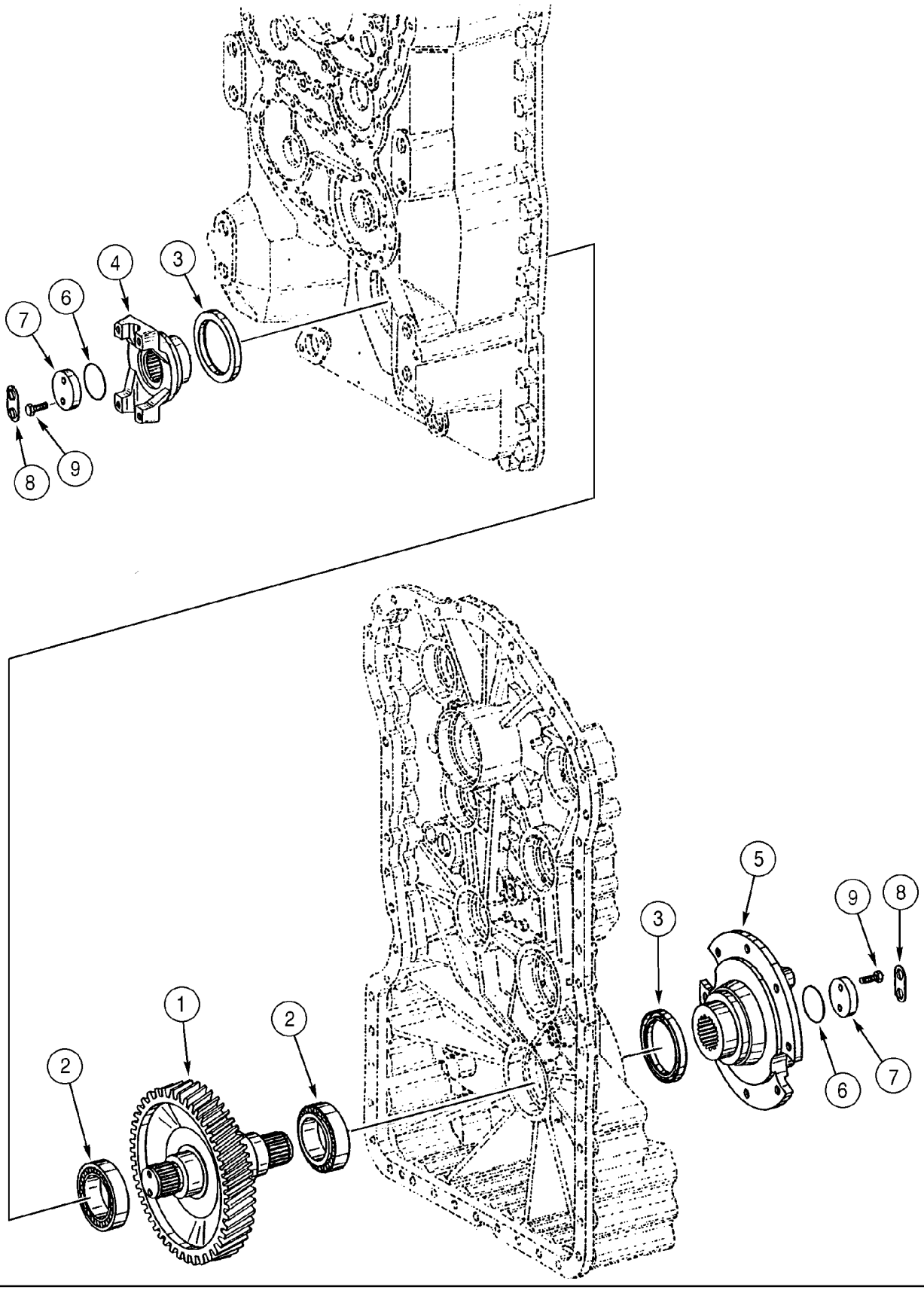

**TRANSMISSION - ARBRE DE SORTIE**

| REF | FN | PART NUMBER | YR/SN | QTY | DESCRIPTION |
|---|---|---|---|---|---|
| | | 87572394 | | 1 | TRANSMISSION, See Figure(s) 06-03 - 06-20, 07-01; Incl. Refs. 1 - 9 |
| 1 | | 8603324 | | 1 | ARBRE |
| 2 | | 8603301 | | 2 | ROULEMENT A ROULEAU |
| 3 | | 8603223 | | 2 | JOINT |
| 4 | | 8603326 | | 1 | FLASQUE, Output; Rear |
| 5 | | 8603651 | | 1 | MACHOIRE, Output Flange; For Parking Brake Assembly, See Figure 07-01 |
| 6 | | 8603219 | | 2 | JOINT THORIQUE |
| 7 | | 8603220 | | 2 | RONDELLE |
| 8 | | 8603221 | | 2 | RONDELLE |
| 9 | | 8603325 | | 4 | VIS, 8 x 25 |

**TRANSMISSION - PRISE DE FORCE**

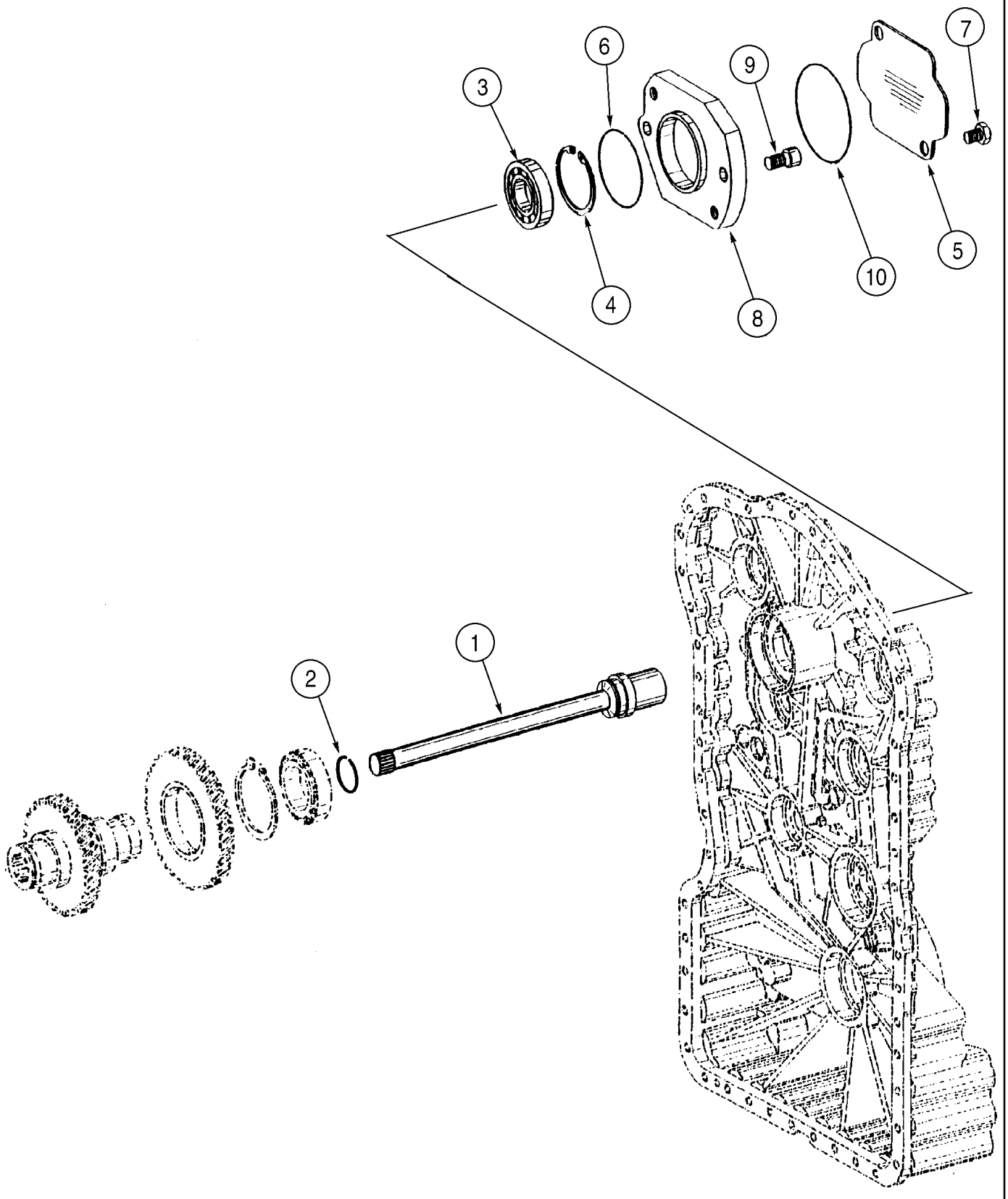

**TRANSMISSION - PRISE DE FORCE**

| REF | FN | PART NUMBER | YR/SN | QTY | DESCRIPTION |
|---|---|---|---|---|---|
| | | 87572394 | | 1 | TRANSMISSION, See Figure(s) 06-03 - 06-20, 07-01; Incl. Refs. 1 - 10 |
| 1 | | 8603655 | | 1 | ARBRE, Pump |
| 2 | | 8603352 | | 1 | ANNEAU D'ARRÊT |
| 3 | | 8603353 | | 1 | ROULEMENT A BILLES |
| 4 | | 8603354 | | 1 | ANNEAU D'ARRÊT |
| 5 | | 8603656 | | 1 | PLAQUETTE |
| 6 | | 8603527 | | 1 | JOINT THORIQUE |
| 7 | | 8603274 | | 2 | VIS |
| 8 | | 8603657 | | 1 | FLASQUE |
| 9 | | 8603658 | | 2 | VIS, M16 x 30 |
| 10 | | 8603355 | | 1 | JOINT THORIQUE |

**TRANSMISSION - PLAQUES DES DISTRIBUTEURS**

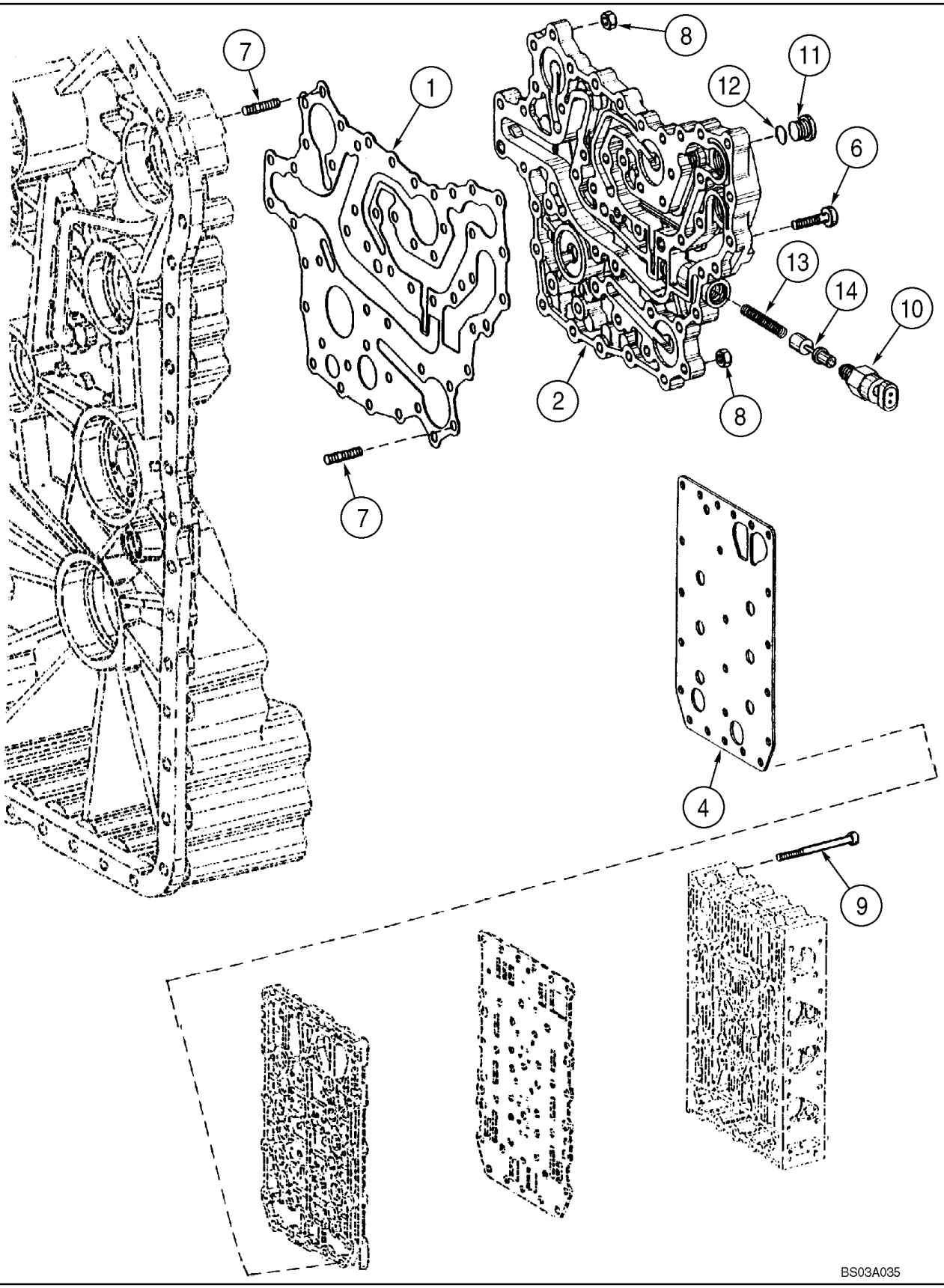

**TRANSMISSION - PLAQUES DES DISTRIBUTEURS**

| REF | FN | PART NUMBER | YR/SN | QTY | DESCRIPTION |
|---|---|---|---|---|---|
| | | 87572394 | | 1 | TRANSMISSION, See Figure(s) 06-03 - 06-20, 07-01; Incl. Refs. 1 - 14 |
| 1 | | 8603184 | | 1 | JOINT |
| 2 | | 8603185 | | 1 | COLLECTEUR |
| 4 | | 8603180 | | 1 | TÔLE |
| 6 | | 8603308 | | 37 | VIS |
| 7 | | 8604714 | | 14 | GOUJON, M8 x 25 |
| 8 | | 8603315 | | 14 | ECROU, M8 |
| 9 | | 8603182 | | 23 | VIS, M6 x 76 |
| 10 | | 8603537 | | 1 | CONTACTEUR, Filter Maintenance |
| 11 | | 8603357 | | 1 | BOUCHON, M16 x 1,5; Incl. 12 |
| 12 | | 8603358 | | 1 | JOINT THORIQUE |
| 13 | | 8603534 | | 1 | RESSORT DE COMPRESS. |
| 14 | | 8603533 | | 1 | PISTON |

**TRANSMISSION - DISTRIBUTEUR**

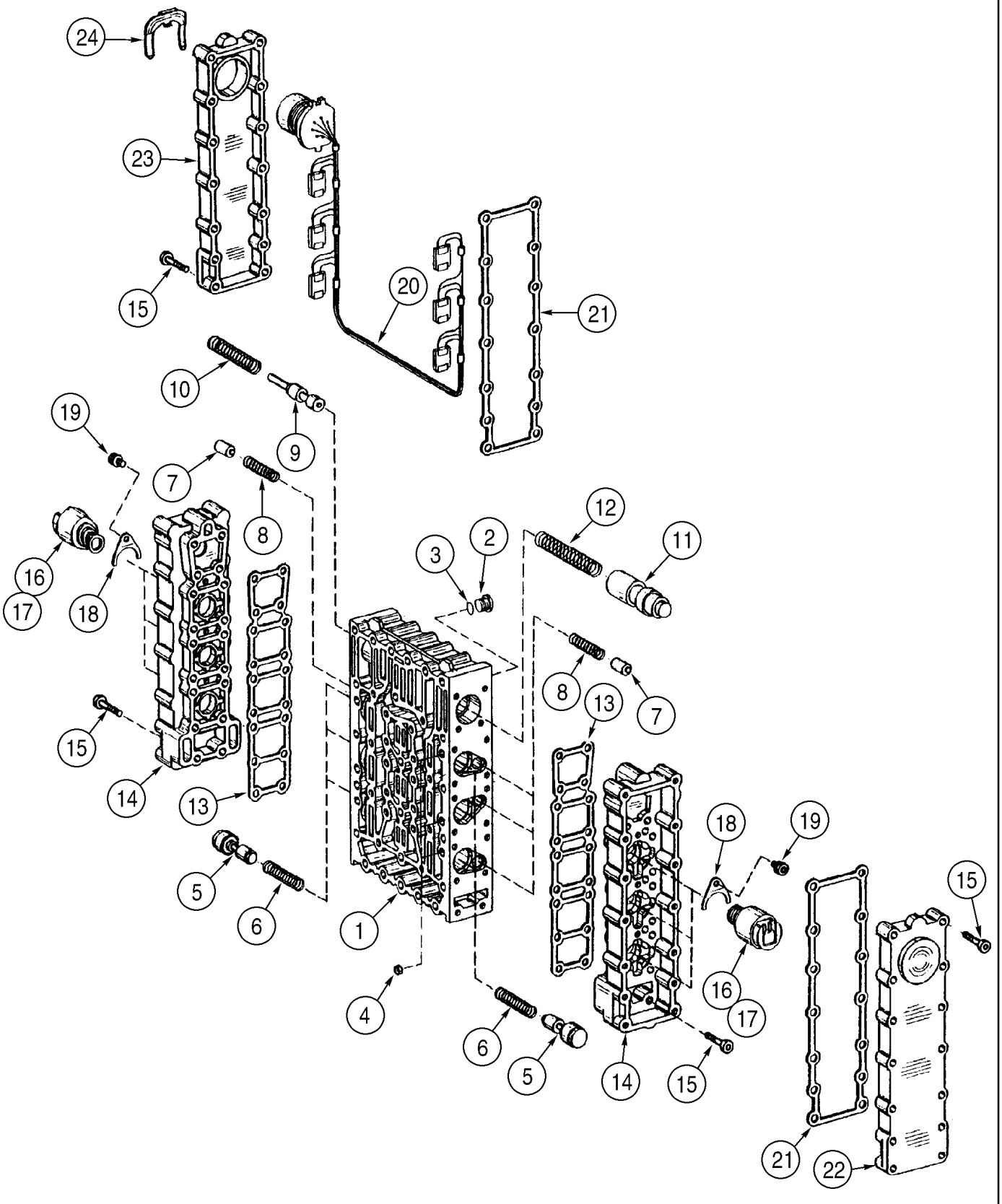

**TRANSMISSION - DISTRIBUTEUR**

| REF | FN | PART NUMBER | YR/SN | QTY | DESCRIPTION |
|---|---|---|---|---|---|
| | | 87572394 | | 1 | TRANSMISSION, See Figure(s) 06-03 - 06-20, 07-01; Incl. Refs. 1 - 24 |
| | | 8603179 | | 1 | SOUPAPE HYDRAULIQUE, Incl. 1 - 24; Incl. Figure 06-18 |
| 1 | | 8603365 | | 1 | CORPS VALVE |
| 2 | | 8603366 | | 8 | BOUCHON, M10 x 1; Incl. 3 |
| 3 | | 8603215 | | 1 | JOINT THORIQUE |
| 4 | | 8603367 | | 6 | ORIFICE |
| 5 | | 8603368 | | 6 | PISTON |
| 6 | | 8603369 | | 6 | SERRE-RESSORT |
| 7 | | 8603370 | | 6 | PISTON |
| 8 | | 8603371 | | 6 | SERRE-RESSORT |
| 9 | | 8603372 | | 1 | PISTON |
| 10 | | 8603374 | | 1 | SERRE-RESSORT |
| 11 | | 8603623 | | 1 | PISTON |
| 12 | | 8603375 | | 1 | SERRE-RESSORT |
| 13 | | 8603786 | | 2 | JOINT |
| 14 | | 8603376 | | 2 | CARTER |
| 15 | | 8603377 | | 64 | VIS |
| 16 | | 8603624 | | 6 | DISPOSITIF DE REGLAGE, Pressure; Incl. 17 |
| 17 | | 8603538 | | 1 | JOINT THORIQUE |
| 18 | | 8603218 | | 6 | PLAQUE, Locating |
| 19 | | 8603359 | | 6 | VIS |
| 20 | | 8603625 | | 1 | FAISCEAU |
| 21 | | 8603787 | | 2 | JOINT |
| 22 | | 8603361 | | 1 | COUVERCLE, Closed |
| 23 | | 8603360 | | 1 | COUVERCLE, Harness Adapter |
| 24 | | 8603362 | | 1 | BRIDE |

**TRANSMISSION - DISTRIBUTEUR**

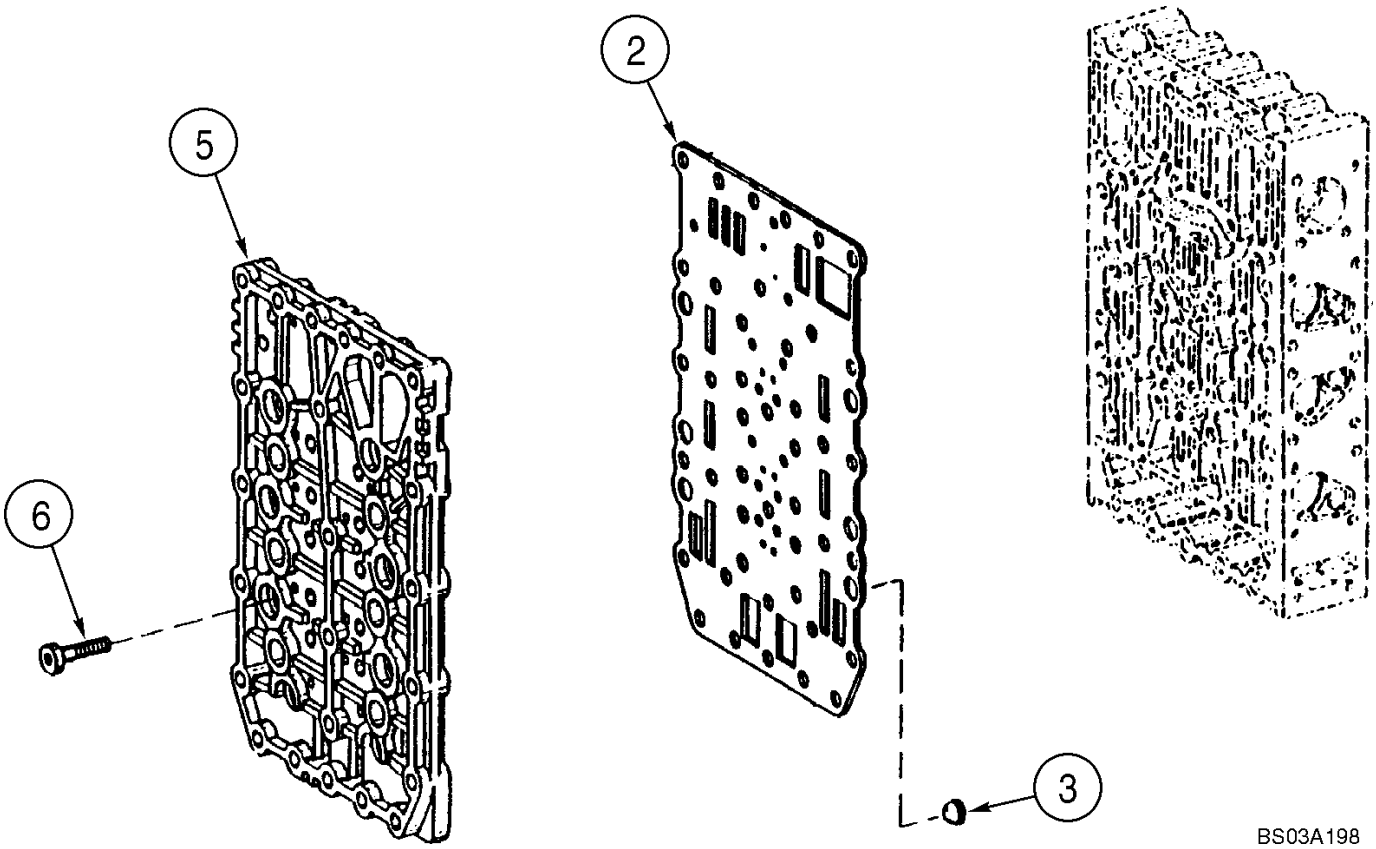

**TRANSMISSION - DISTRIBUTEUR**

| REF | FN | PART NUMBER | YR/SN | QTY | DESCRIPTION |
|---|---|---|---|---|---|
| | | 87572394 | | 1 | TRANSMISSION, See Figure(s) 06-03 - 06-20, 07-01; Incl. Refs. 2 - 6 |
| | | 8603179 | | 1 | SOUPAPE HYDRAULIQUE, Incl. 2 - 6; Incl. Figure 06-17 |
| 2 | | 8603181 | | 1 | TÔLE |
| 3 | | 8603363 | | 6 | ECRAN, Filter |
| 5 | | 8603628 | | 1 | PLAQUE, Distribution |
| 6 | | 8603183 | | 18 | VIS, M6 x 23 |

**TRANSMISSION - VALVE, RÉGULATEUR ET POMPE À HUILE**

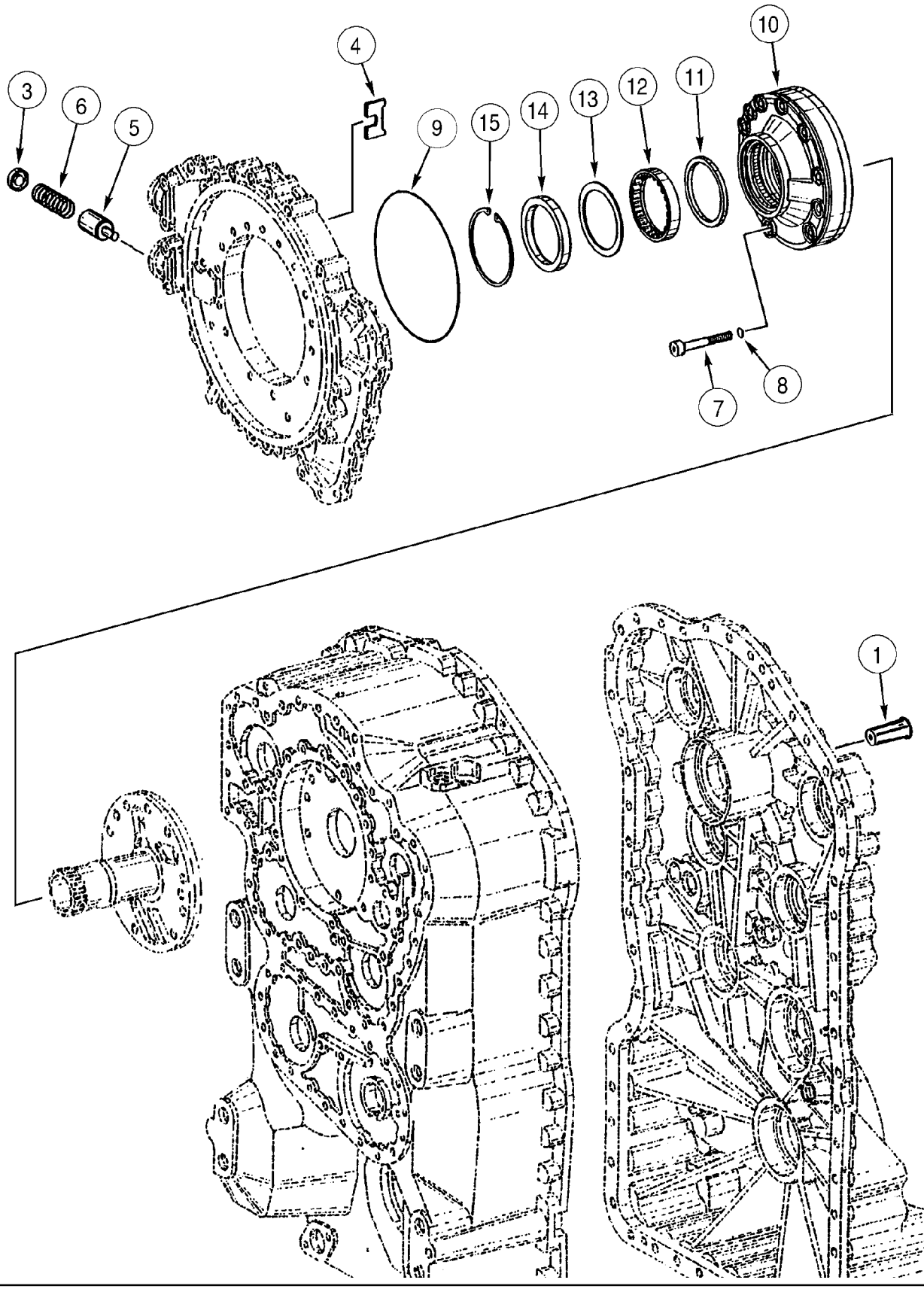

**TRANSMISSION - VALVE, RÉGULATEUR ET POMPE À HUILE**

| REF | FN | PART NUMBER | YR/SN | QTY | DESCRIPTION |
|---|---|---|---|---|---|
| | | 87572394 | | 1 | TRANSMISSION, See Figure(s) 06-03 - 06-20, 07-01; Incl. Refs. 1 - 15 |
| 1 | | 8603778 | | 1 | ARBRE |
| 3 | | 8603380 | | 1 | PLAQUE D'ARRÊT, Pressure |
| 4 | | 8603381 | | 1 | RONDELLE |
| 5 | | 8603382 | | 1 | PISTON |
| 6 | | 8603383 | | 1 | SERRE-RESSORT |
| 7 | | 8603384 | | 10 | VIS, Incl. 8 |
| 8 | | 8603385 | | 10 | JOINT THORIQUE |
| 9 | | 8603386 | | 1 | JOINT THORIQUE |
| 10 | | 8603387 | | 1 | POMPE HYDRAULIQUE, Oil Pressure |
| 11 | | 8603388 | | 1 | ANNEAU |
| 12 | | 8603390 | | 1 | ROULEMENT A AIGUILLES |
| 13 | | 8603389 | | 1 | CALE D'EPAISSEUR |
| 14 | | 8603391 | | 1 | JOINT |
| 15 | | 8603392 | | 1 | ANNEAU D'ARRÊT |

**TRANSMISSION - CAPTEUR, VITESSE ET COUVERCLE DE LA POMPE**

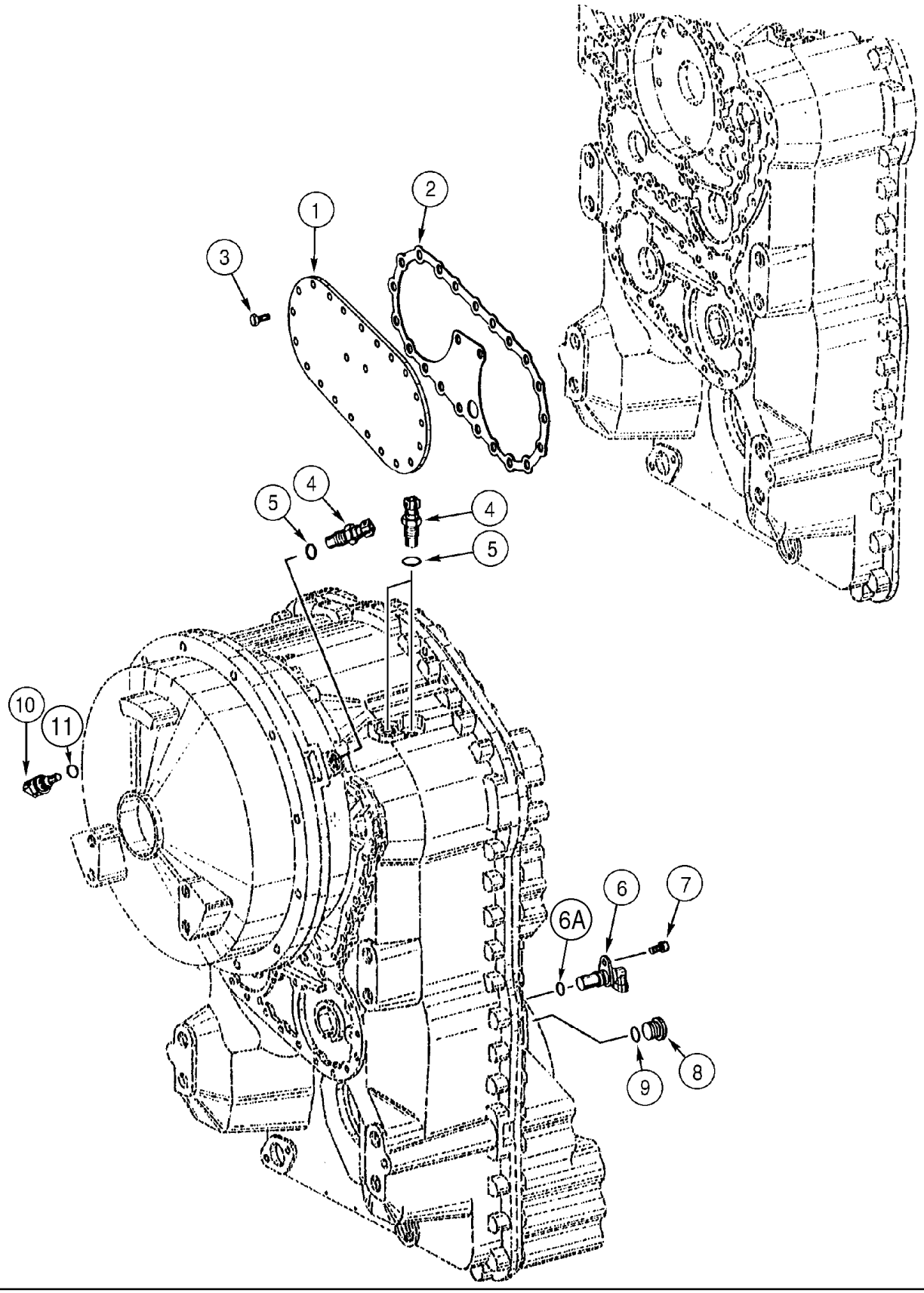

**TRANSMISSION - CAPTEUR, VITESSE ET COUVERCLE DE LA POMPE**

| REF | FN | PART NUMBER | YR/SN | QTY | DESCRIPTION |
|---|---|---|---|---|---|
| | | 87572394 | | 1 | TRANSMISSION, See Figure(s) 06-03 - 06-20, 07-01; Incl. Refs. 1 - 11 |
| 1 | | 8603393 | | 1 | COUVERCLE, Steering Pump |
| 2 | | 8603395 | | 1 | JOINT |
| 3 | | 8603396 | | 23 | VIS, M8 x 18 |
| 4 | | 8603397 | | 3 | CAPTEUR, Inductive Coupling |
| 5 | | 8603216 | | 3 | JOINT THORIQUE |
| 6 | | 8603398 | | 1 | CAPTEUR, Speed; Incl. 6A |
| 6A | | 8603629 | | 1 | JOINT THORIQUE |
| 7 | | 8603399 | | 1 | VIS |
| 8 | | 8603400 | | 1 | BOUCHON, Incl. 9 |
| 9 | | 8603401 | | 1 | JOINT THORIQUE |
| 10 | | 8603622 | | 1 | CAPTEUR, Temperature; Incl. 11 |
| 11 | | 8603402 | | 1 | JOINT THORIQUE |

**ESSIEU ARRIÈRE - ARRÊT**

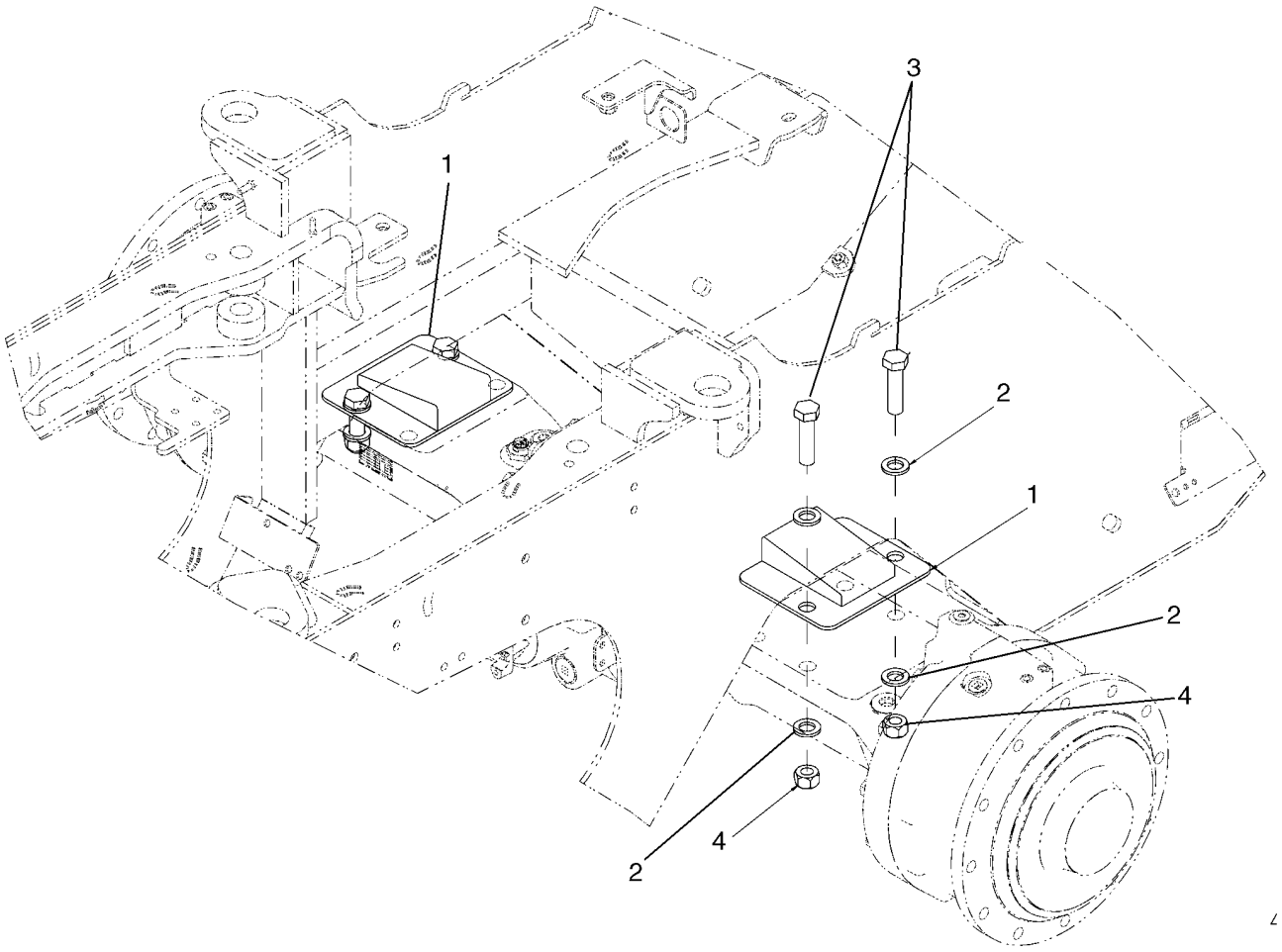


BS07F487

**ESSIEU ARRIÈRE - ARRÊT**

| REF | FN | PART NUMBER | YR/SN | QTY | DESCRIPTION |
|---|---|---|---|---|---|
| 1 | | 87605272 | | 2 | BUTÉE, 8 Degree Axle Stop |
| 2 | | 896-11024 | | 8 | RONDELLE, M24 x 44.5 x 5, HT |
| 3 | | 827-24090 | | 4 | BOULON, Hex, M24 x 90, 10.9 |
| 4 | | 829-1424 | | 4 | ECROU, M24, Cl 10 |

**ESSIEU, AVANT - SUPPORT**

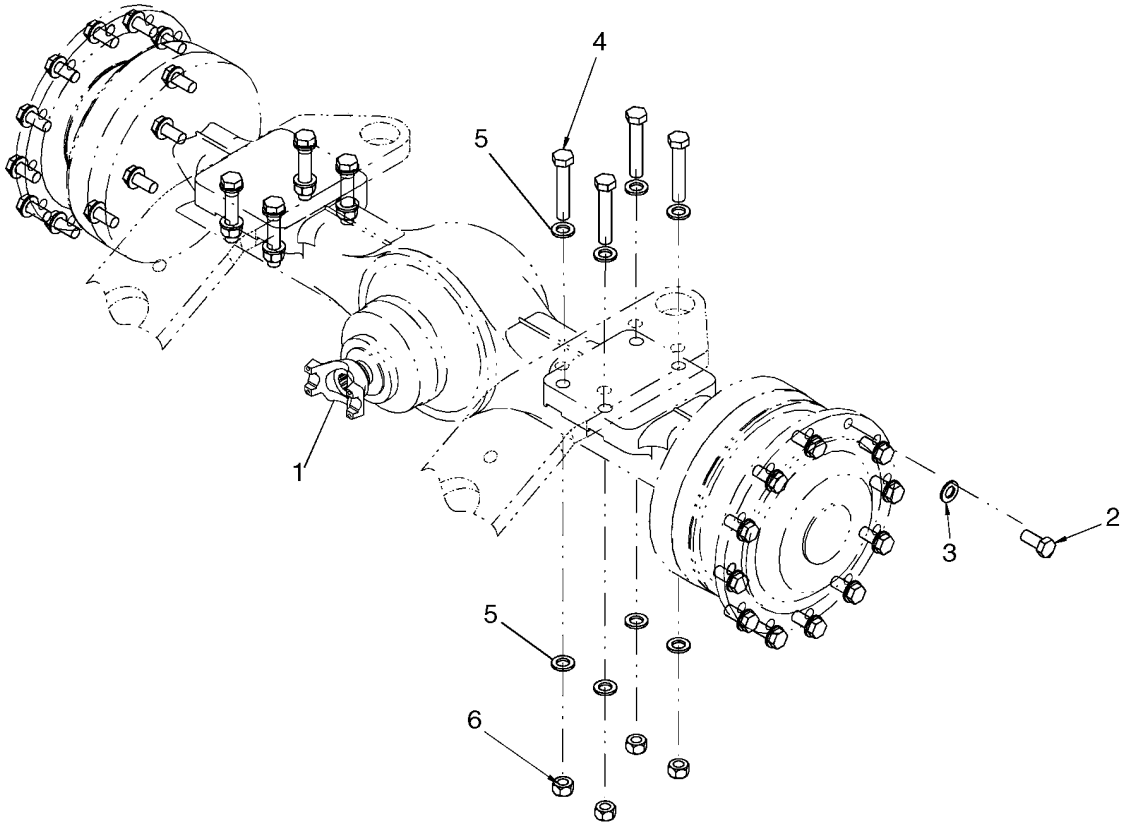


BS07D395

**ESSIEU, AVANT - SUPPORT**

| REF | FN | PART NUMBER | YR/SN | QTY | DESCRIPTION |
|---|---|---|---|---|---|
| 1 | | 87358580 | | 1 | ESSIEU AVANT, See Figures 06-22A - 06-22E |
| 2 | | 514-1315 | | 24 | BOULON, Hex, M22 x 1.5 x 50, 10.9 |
| 3 | | 896-11022 | | 24 | RONDELLE, M22 x 44 x 4, HT |
| 4 | | 827-24130 | | 8 | BOULON, Hex, M24 x 130, 10.9 |
| 5 | | 896-11024 | | 16 | RONDELLE, M24 x 44.5 x 5, HT |
| 6 | | 829-1424 | | 8 | ECROU, M24, Cl 10 |

| 06-22A | | p1 | 07/07 |
|---|---|---|---|

**ESSIEU, AVANT - BOÎTIER**

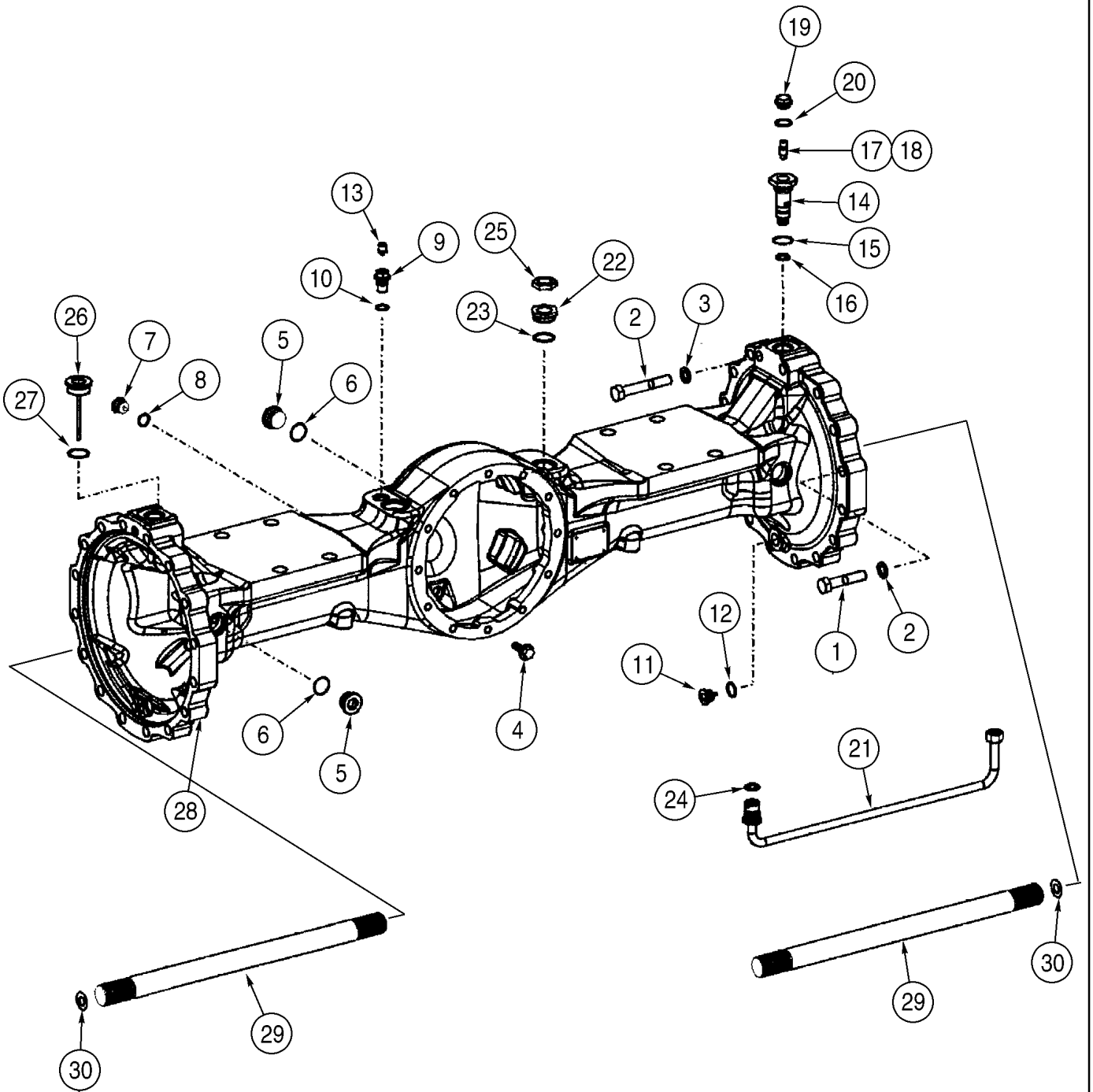

**ESSIEU, AVANT - BOÎTIER**

| REF | FN | PART NUMBER | YR/SN | QTY | DESCRIPTION |
|---|---|---|---|---|---|
| | | 87358580 | | 1 | ESSIEU AVANT, Limited Slip; Incl. Figures 06-22A - 06-22E; Incl. Refs. 1 - 30 |
| 1 | | 514-1107 | | 28 | BOULON, Hex, M18 x 1.5 x 85, 10.9 |
| 2 | | 8603670 | | 4 | BOULON, M18 x 115 |
| 3 | | 8603202 | | 32 | RONDELLE |
| 4 | | 8603206 | | 12 | VIS |
| 5 | | 8603549 | | 2 | BOUCHON |
| 6 | | 8605636 | | 2 | JOINT THORIQUE, 33 x 2.2; If Used |
| 6 | | 8603727 | | 2 | JOINT THORIQUE, 33 x 2; If Used |
| 7 | | 8603550 | | 1 | BOUCHON |
| 8 | | 8603208 | | 1 | JOINT THORIQUE |
| 9 | | 8603256 | | 1 | BOUCHON |
| 10 | | 8603208 | | 1 | JOINT THORIQUE |
| 12 | | 8603200 | | 2 | JOINT |
| 13 | | 8603201 | | 1 | RENIFLARD |
| 14 | | 8603551 | | 2 | RACCORD |
| 15 | | 8605636 | | 2 | JOINT THORIQUE, 33 x 2.2; If Used |
| 15 | | 8603727 | | 2 | JOINT THORIQUE, 33 x 2; If Used |
| 16 | | 8603552 | | 2 | RACCORD |
| 17 | | 3222214R1 | | 2 | SOUPAPE, Breather; Incl. 18 |
| 18 | | NSS | | 2 | NON FOURNI SEPAREMENT, Dust Cap |
| 19 | | 8603210 | | 2 | BOUCHON, M26 - 1,5 |
| 20 | | 8603799 | | 2 | ANNEAU, 26 x 31 mm |
| 21 | | 87436733 | | 2 | TUBE, Internal Brake |
| 22 | | 8603696 | | 2 | RACCORD, Incl. 23 |
| 23 | | 8603207 | | 2 | JOINT THORIQUE |
| 24 | | 8603725 | | 2 | ANNEAU |
| 25 | | 8603619 | | 2 | ECROU |
| 26 | | 8603694 | | 1 | JAUGE DE NIVEAU, Oil |
| 27 | | 8603207 | | 1 | JOINT THORIQUE |
| 28 | | 8603668 | | 1 | CARTER DE PONT |
| 29 | | 8603555 | | 2 | DEMI-ARBRE |
| 30 | | 8603669 | | AR | CALE D'EPAISSEUR, 0,4 mm |
| 30 | | 8603730 | | AR | CALE D'EPAISSEUR, 0,2 mm |
| 30 | | 8603731 | | AR | CALE D'EPAISSEUR, 1,00 mm |

**ESSIEU, AVANT - BOÎTIER**

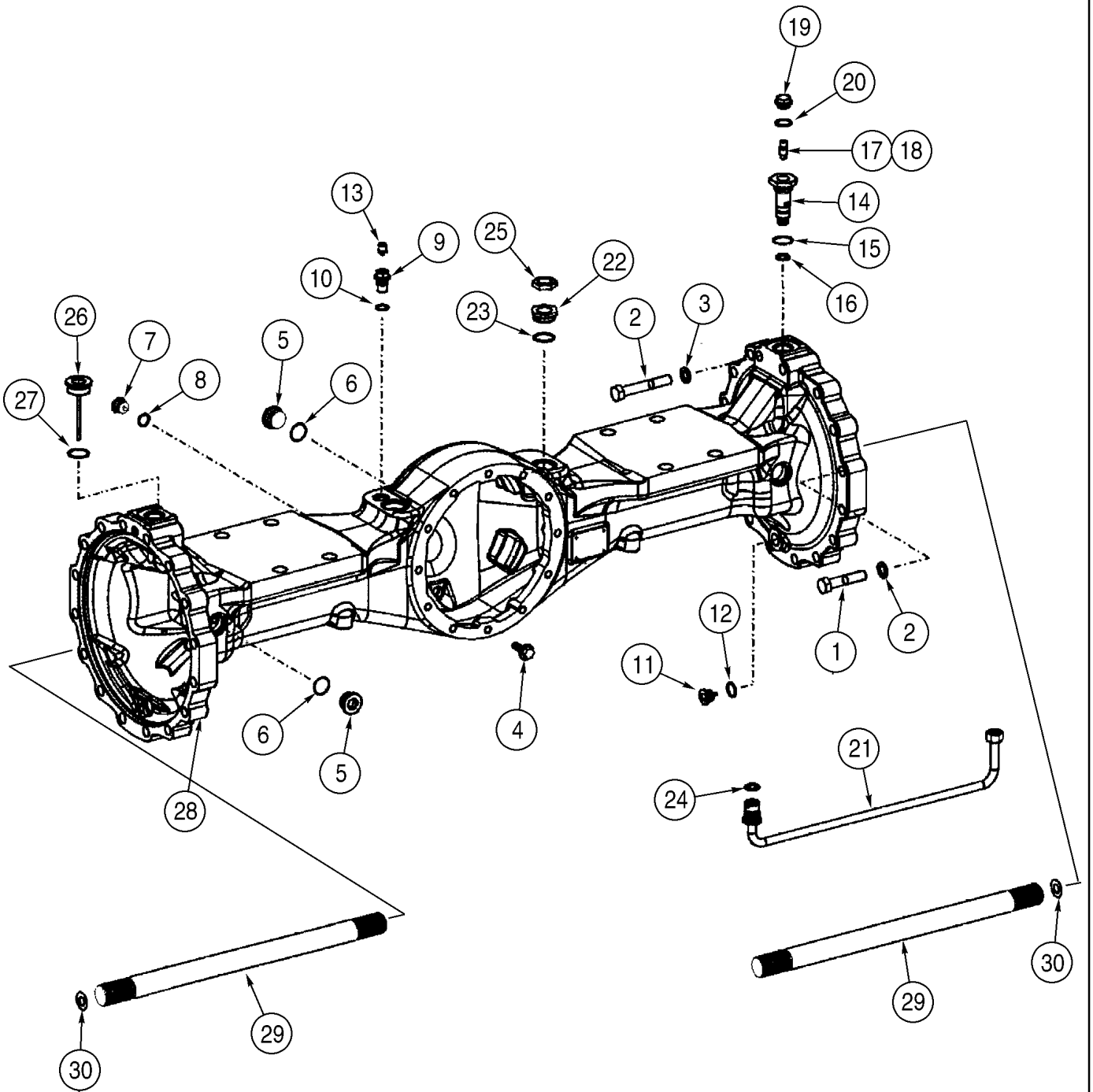

**ESSIEU, AVANT - BOÎTIER**

| REF | FN | PART NUMBER | YR/SN | QTY | DESCRIPTION |
|---|---|---|---|---|---|
| 30 | | 8603732 | | AR | CALE D'EPAISSEUR, 1.5 mm; If Used |

**ESSIEU, AVANT - COQUILLE DU DIFFÉRENTIEL**

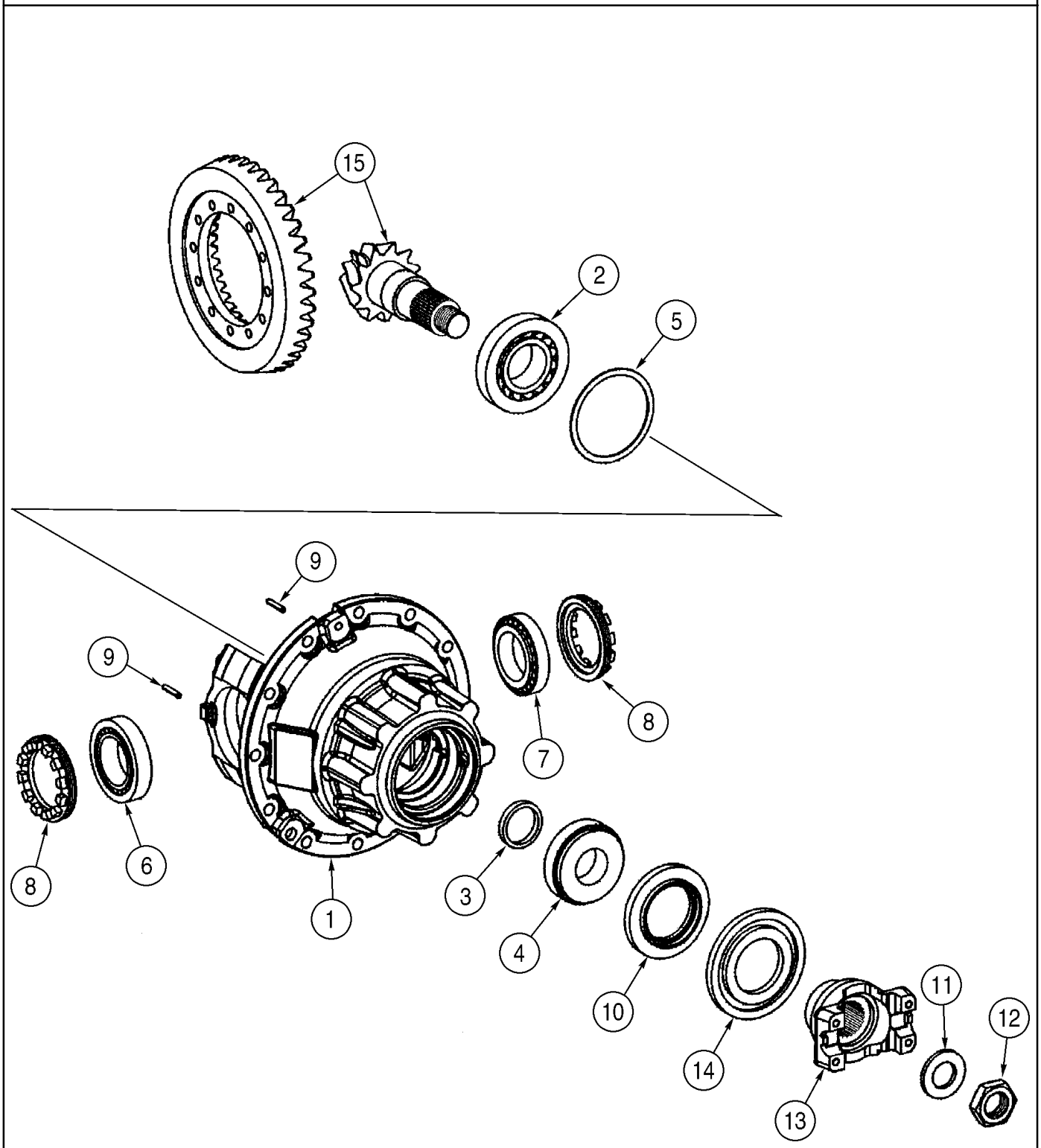

**ESSIEU, AVANT - COQUILLE DU DIFFÉRENTIEL**

| REF | FN | PART NUMBER | YR/SN | QTY | DESCRIPTION |
|---|---|---|---|---|---|
| | | 87358580 | | 1 | ESSIEU AVANT, Limited Slip; Incl. Figures 06-22A - 06-22E; Incl. Refs. 1 - 15 |
| | | 8605272 | | 1 | PILIER-SOUTIEN ASS., Limited Slip; Incl. Refs. 1 - 15 |
| 1 | | 8603543 | | 1 | CARTER |
| 2 | | 8603257 | | 1 | ROULEMENT A ROULEAU |
| 3 | | 8603239 | | AR | RONDELLE, 8,8 mm |
| 3 | | 8603789 | | AR | ENTRETOISE, 8,7 mm |
| 3 | | 8603794 | | AR | ENTRETOISE, 8,6 mm |
| 3 | | 8603793 | | AR | ENTRETOISE, 8,5 mm |
| 3 | | 8603792 | | AR | ENTRETOISE, 8,4 mm |
| 3 | | 8603791 | | AR | ENTRETOISE, 8,3 mm |
| 3 | | 8603240 | | AR | RONDELLE, 8,9 mm |
| 3 | | 8603241 | | AR | RONDELLE, 9,1 mm |
| 3 | | 8603242 | | AR | RONDELLE, 9,2 mm |
| 3 | | 8603243 | | AR | RONDELLE, 9,3 mm |
| 3 | | 8603244 | | AR | RONDELLE, 9,4 mm |
| 4 | | 8603258 | | 1 | ROULEMENT A ROULEAU |
| 5 | | 8603259 | | AR | CALE D'EPAISSEUR, ,7 mm |
| 5 | | 8603260 | | AR | CALE D'EPAISSEUR, ,8 mm |
| 5 | | 8603261 | | AR | CALE D'EPAISSEUR, ,9 mm |
| 5 | | 8603262 | | AR | CALE D'EPAISSEUR, 1,0 mm |
| 5 | | 8603291 | | AR | CALE D'EPAISSEUR, 1,2 mm |
| 5 | | 8603290 | | AR | CALE D'EPAISSEUR, 1,3 mm |
| 5 | | 8603289 | | AR | CALE D'EPAISSEUR, 1,4 mm |
| 5 | | 8603288 | | AR | CALE D'EPAISSEUR, 1,5 mm |
| 5 | | 8603287 | | AR | CALE D'EPAISSEUR, 1,6 mm |
| 5 | | 8603286 | | AR | CALE D'EPAISSEUR, 1,7 mm |
| 5 | | 8603285 | | AR | CALE D'EPAISSEUR, 1,8 mm |
| 5 | | 8603284 | | AR | CALE D'EPAISSEUR, 1,9 mm |
| 5 | | 8603283 | | AR | CALE D'EPAISSEUR, 2,0 mm |
| 5 | | 8603264 | | AR | CALE D'EPAISSEUR, 1,1 mm |
| 6 | | 8603222 | | 1 | ROULEMENT A ROULEAU |
| 7 | | 8603263 | | 1 | ROULEMENT A ROULEAU |
| 8 | | 8603265 | | 2 | ECROU |
| 9 | | 8603795 | | 2 | GOUPILLE ELASTIQUE, 6 x 36 |

**ESSIEU, AVANT - COQUILLE DU DIFFÉRENTIEL**

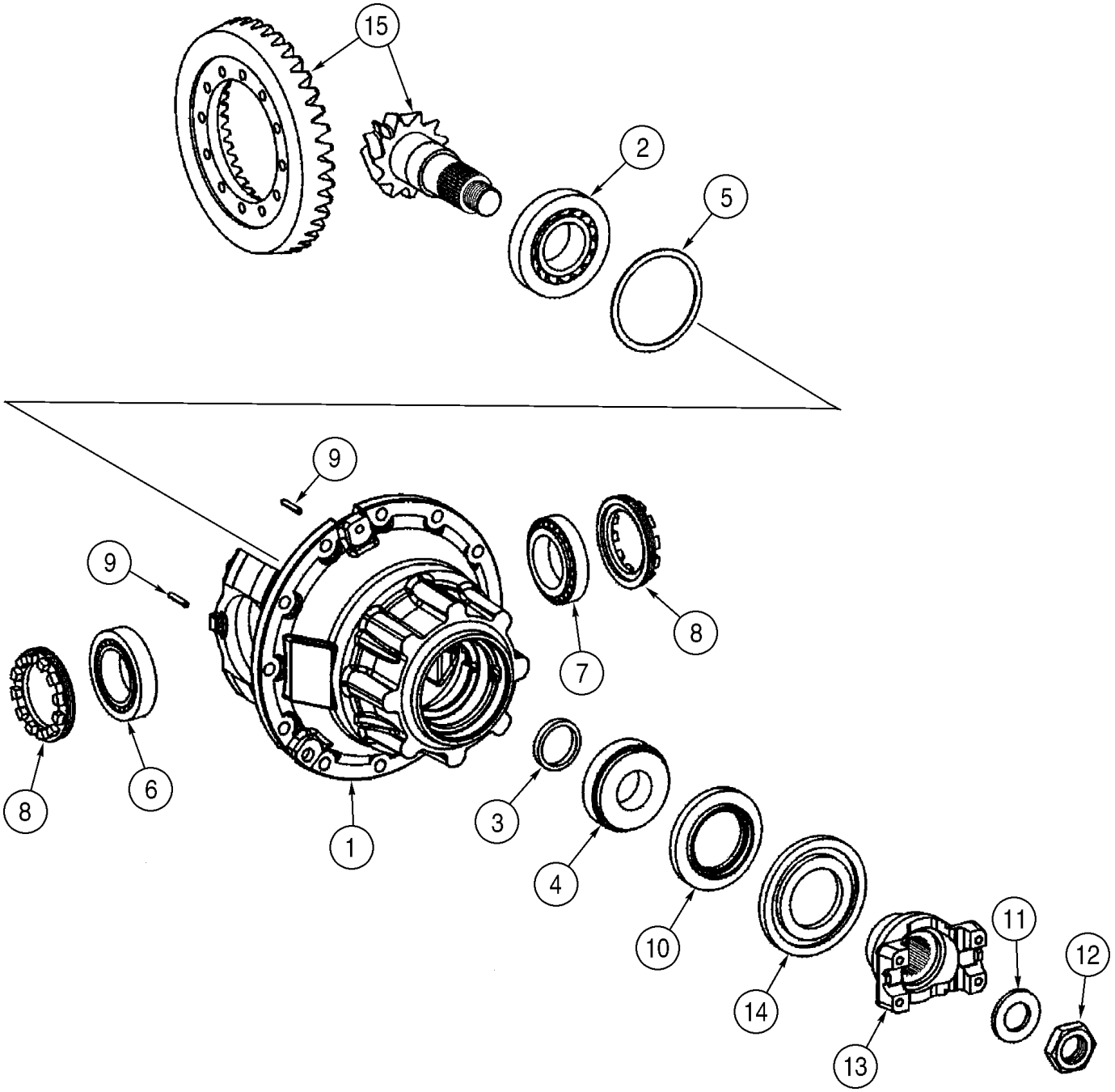

**ESSIEU, AVANT - COQUILLE DU DIFFÉRENTIEL**

| REF | FN | PART NUMBER | YR/SN | QTY | DESCRIPTION |
|---|---|---|---|---|---|
| 10 | | 8603247 | | 1 | JOINT |
| 12 | | 8605616 | | 1 | ECROU |
| 13 | | 8603266 | | 1 | FLASQUE |
| 14 | | 8603594 | | 1 | DISQUE-D'EMBRAYAGE |
| 15 | | 8605273 | | 1 | COUPLE CONIQUE, Bevel Gear |

**ESSIEU, AVANT - DIFFERENTIEL**

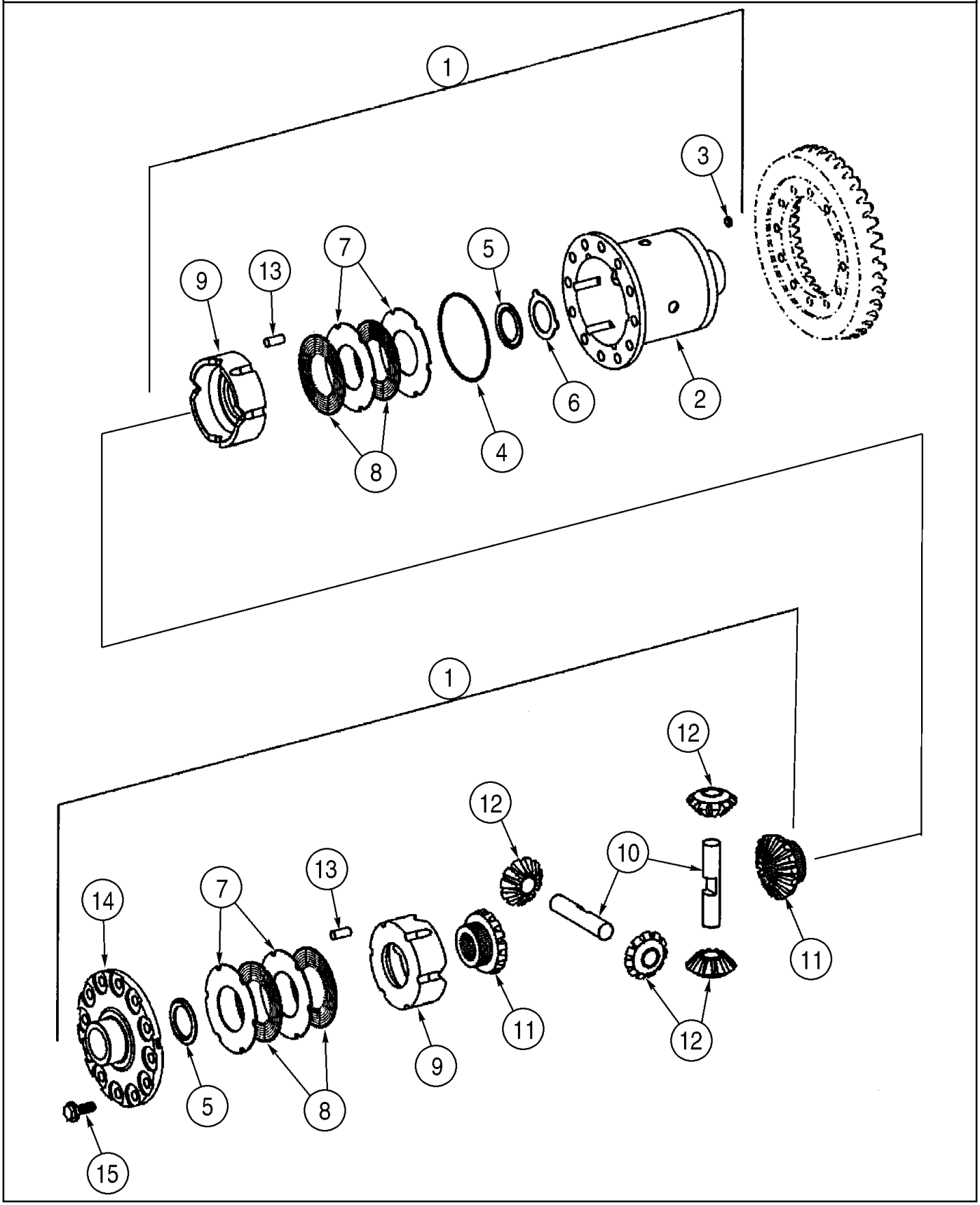

**ESSIEU, AVANT - DIFFERENTIEL**

| REF | FN | PART NUMBER | YR/SN | QTY | DESCRIPTION |
|---|---|---|---|---|---|
| | | 87358580 | | 1 | ESSIEU AVANT, Limited Slip; Incl. Refs. 1 - 15; Incl. Figures 06-22A - 22E |
| | | 8605272 | | 1 | PILIER-SOUTIEN ASS., Limited Slip; Incl. Refs. 2 - 15 |
| 1 | | 8603546 | | 1 | AXE DE PIGNON DIFF., Incl. Refs. 2 - 15 |
| 2 | | 8603545 | | 1 | CARTER |
| 3 | | 8603271 | | 6 | JOINT |
| 4 | | 8603250 | | 1 | CIRCLIP |
| 5 | | 8603251 | | 2 | RONDELLE |
| 6 | | 8603282 | | 1 | RONDELLE |
| 7 | | 8603277 | | AR | DISQUE EMBRAYAGE, 2,2 mm |
| 7 | | {8603547} | | AR | CLUTCH, PLATE, 2,1 mm; Outer |
| 7 | | 8603278 | | AR | DISQUE EMBRAYAGE, 2,3 mm |
| 7 | | 8603279 | | AR | DISQUE EMBRAYAGE, 2,4 mm |
| 7 | | 8603280 | | AR | DISQUE EMBRAYAGE, 2,5 mm |
| 8 | | 8603272 | | 4 | DISQUE |
| 9 | | 8603252 | | 2 | ANNEAU D'ARRÊT |
| 10 | | 8603253 | | 2 | ARBRE |
| 11 | | 8603267 | | 2 | PIGNON, 16T |
| 12 | | 8603254 | | 4 | PIGNON, 11T |
| 13 | | 8603255 | | 12 | AXE |
| 14 | | 8603548 | | 1 | COUVERCLE |
| 15 | | 8603268 | | 12 | VIS |

**ESSIEU, AVANT - FREIN**

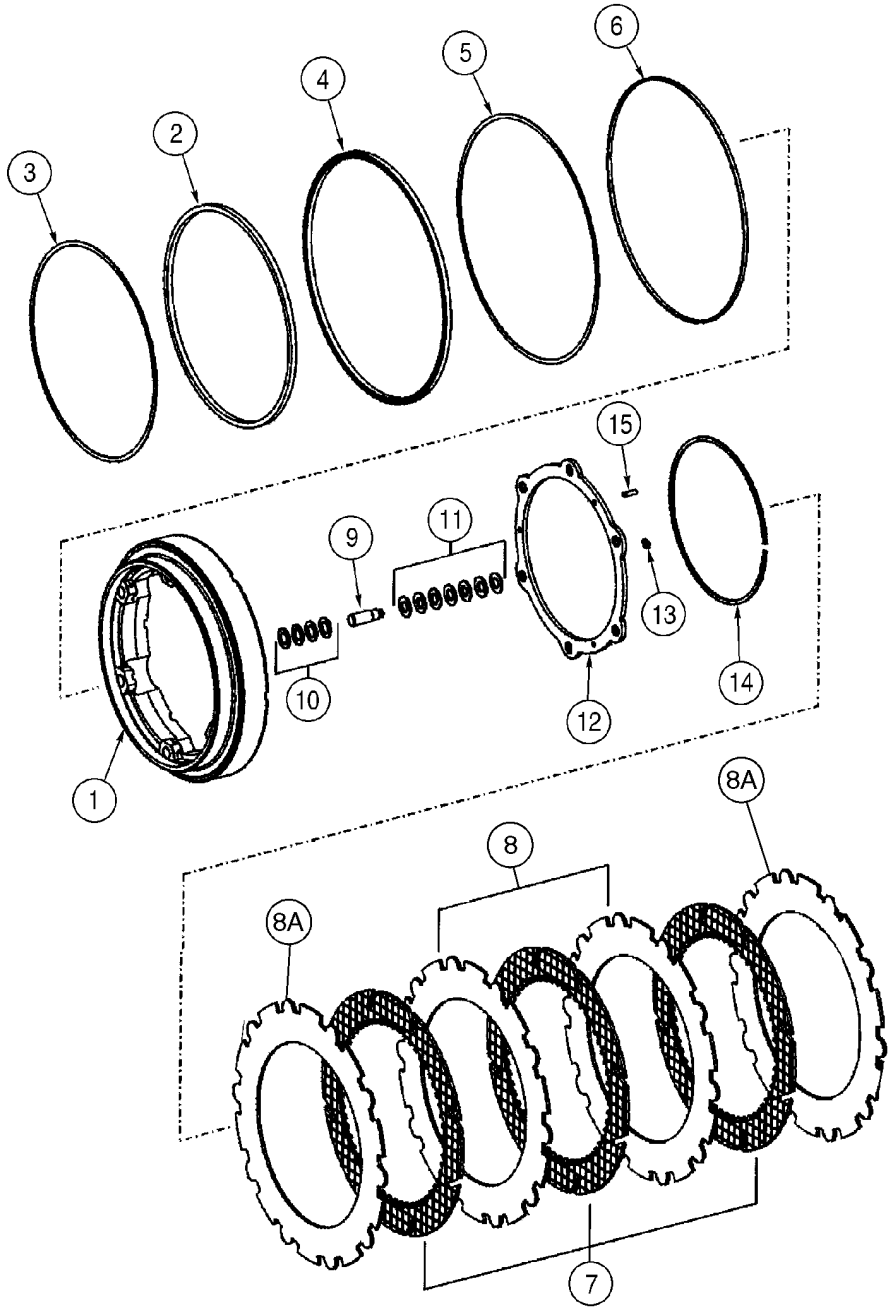


B0000000

**ESSIEU, AVANT - FREIN**

| REF | FN | PART NUMBER | YR/SN | QTY | DESCRIPTION |
|---|---|---|---|---|---|
| | | 87358580 | | 1 | ESSIEU AVANT, Limited Slip; See Figures 06-22A - 22E; Incl. Refs. 1 - 15 |
| | | 87358680 | | 1 | EXTREMITE ASSEMBLEE, Incl. Refs. 1 - 15; Incl. Figure 06-22E |
| 1 | | 8603166 | | 1 | PISTON |
| 2 | | 8605314 | | 1 | JOINT |
| 3 | | 8603577 | | 1 | ANNEAU D'ARRÊT |
| 4 | | 8605315 | | 1 | JOINT |
| 5 | | 8603579 | | 1 | ANNEAU D'ARRÊT |
| 6 | | 8603580 | | 1 | ANNEAU D'ARRÊT |
| 7 | | 87341835 | | 4 | DISQUE DE FREIN |
| 8 | | 8603582 | | 2 | COUPELLE DE FREIN |
| 8A | | 87441328 | | 2 | PLAQUETTE |
| 9 | | 8603163 | | 6 | AXE |
| 10 | | 8603583 | | 24 | ANNEAU D'ARRÊT |
| 11 | | 8603584 | | 42 | RONDELLE |
| 12 | | 8603162 | | 1 | CALE D'EPAISSEUR |
| 13 | | 8603788 | | 6 | ANNEAU D'ARRÊT |
| 14 | | 8603585 | | 1 | ANNEAU D'ARRÊT |
| 15 | | 8603796 | | 6 | GOUPILLE ELASTIQUE, 6 x 20 mm |

**ESSIEU, AVANT - MOYEU, SATELLITE**

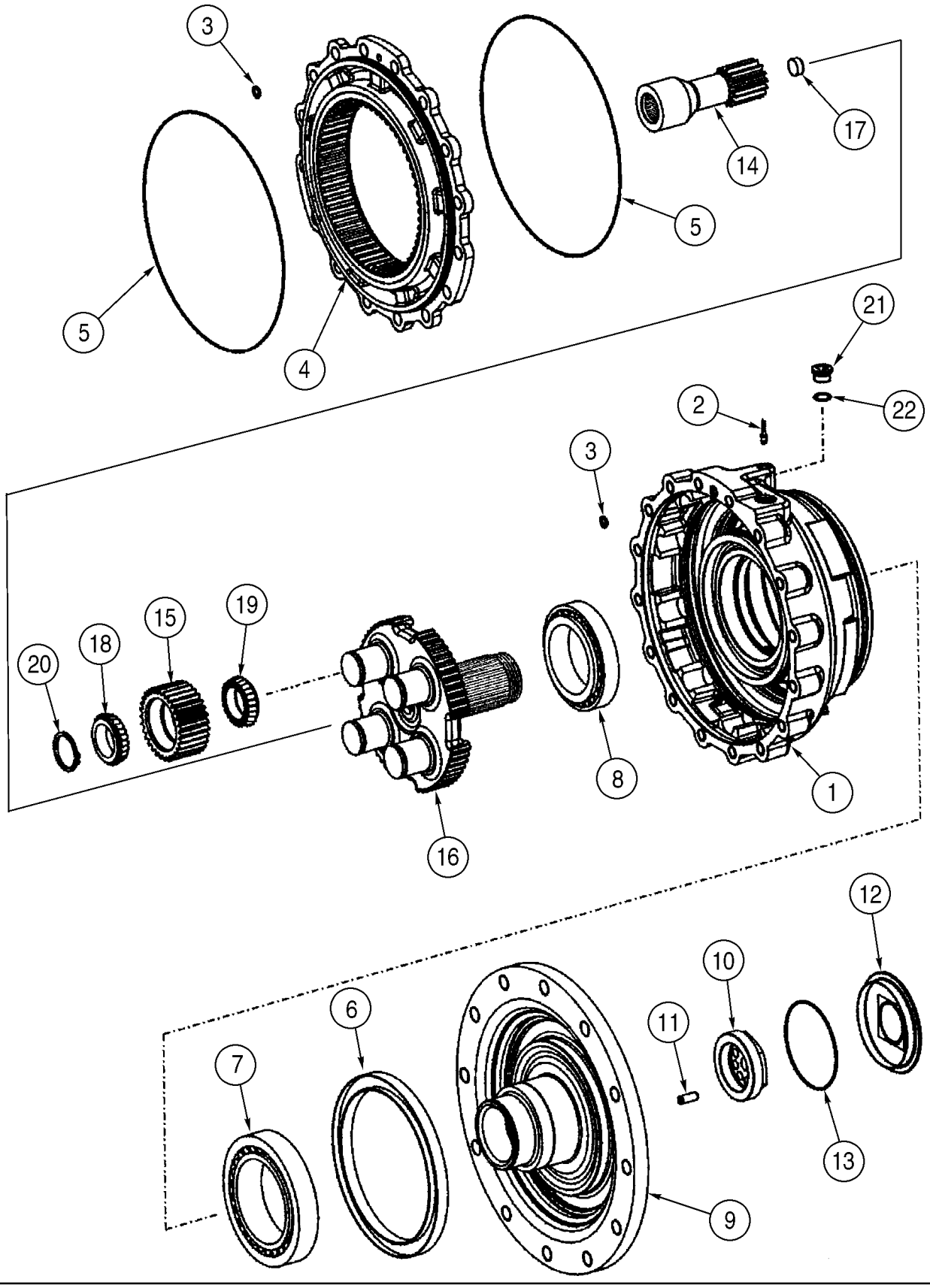

**ESSIEU, AVANT - MOYEU, SATELLITE**

| REF | FN | PART NUMBER | YR/SN | QTY | DESCRIPTION |
|---|---|---|---|---|---|
| | | 87358580 | | 1 | ESSIEU AVANT, Limited Slip; See Figures 06-22A - 22E; Incl. Refs. 1 - 22 |
| | | 87358680 | | 1 | EXTREMITE ASSEMBLEE, Incl. Refs. 1 - 22; Incl. Figure 06-22D |
| 1 | | 87437916 | | 1 | CARTER |
| 2 | | 8603673 | | 1 | BOUCHON |
| 3 | | 8603559 | | 2 | JOINT THORIQUE |
| 4 | | 8603560 | | 1 | PIGNON |
| 5 | | 8603674 | | 2 | JOINT THORIQUE |
| 6 | | 8603562 | | 1 | JOINT |
| 7 | | 8603563 | | 1 | ROULEMENT A ROULEAU, Outer |
| 8 | | 8603564 | | 1 | ROULEMENT A ROULEAU, Inner |
| 9 | | 8603675 | | 1 | FLASQUE, M22 x 1,5; Output |
| 10 | | 8603565 | | 1 | ECROU |
| 11 | | 8603566 | | 1 | AXE |
| 12 | | 8603567 | | 1 | COUVERCLE |
| 13 | | 8603527 | | 1 | JOINT THORIQUE |
| 14 | | 8603568 | | 1 | PIGNON |
| 15 | | 87358699 | | 3 | PIGNON |
| 16 | | 87358702 | | 1 | PILIER, SOUTIEN |
| 17 | | 8603571 | | 1 | BOUCHON |
| 18 | | 8603572 | | 4 | CONE DE ROULEMENT, Outer |
| 19 | | 87358695 | | 3 | CONE DE ROULEMENT |
| 20 | | 87358698 | | 4 | ANNEAU D'ARRÊT |
| 21 | | 8603575 | | 1 | BOUCHON |
| 22 | | 8603208 | | 1 | JOINT THORIQUE |

**ESSIEU ARRIÈRE - SUPPORT**

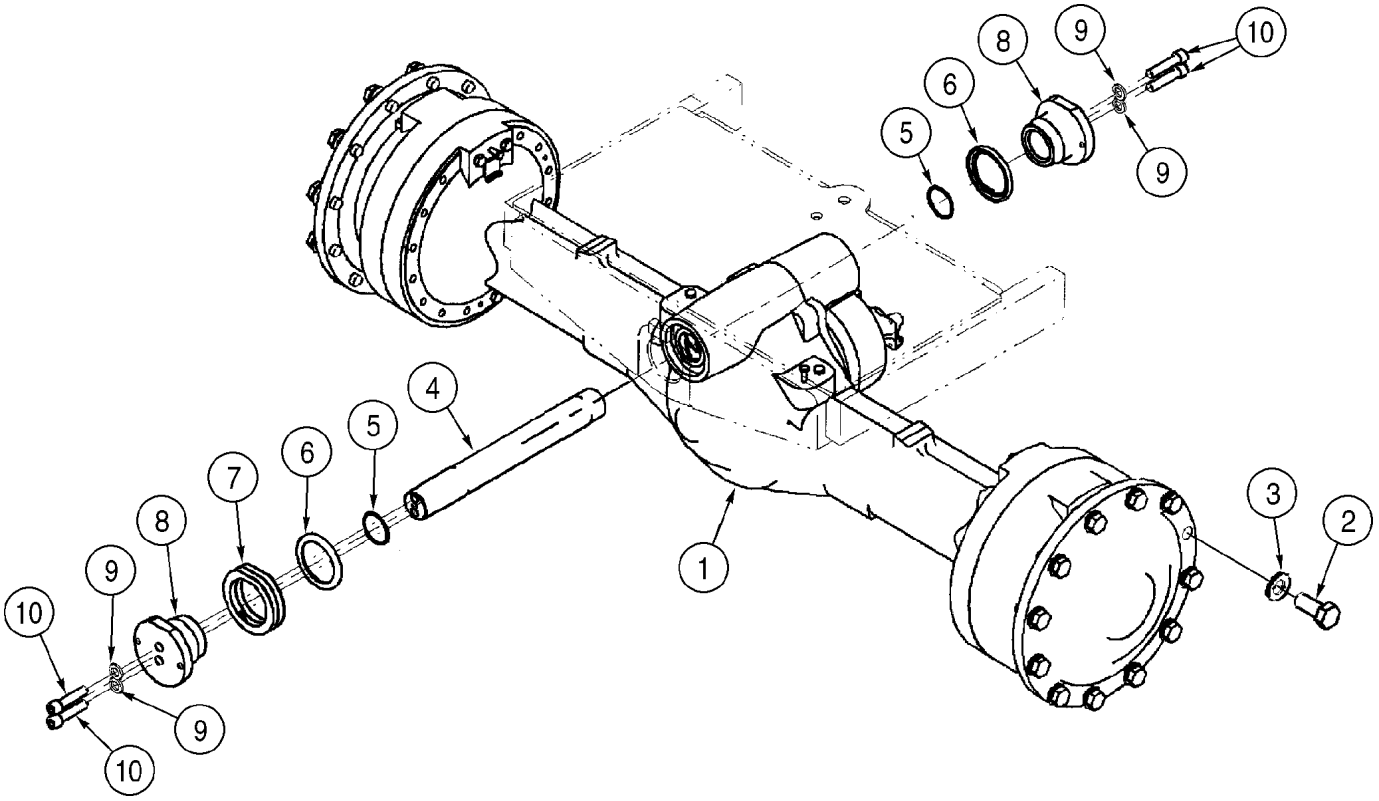

**ESSIEU ARRIÈRE - SUPPORT**

| REF | FN | PART NUMBER | YR/SN | QTY | DESCRIPTION |
|---|---|---|---|---|---|
| 1 | | 87358583 | | 1 | PONT ARRIERE, Limited Slip; Incl. Figures 06-23A - 06-23E |
| 2 | | 514-1315 | | 24 | BOULON, Hex, M22 x 1.5 x 50, 10.9 |
| 3 | | 896-11022 | | 24 | RONDELLE, M22 x 44 x 4, HT |
| 4 | | 87450043 | | 1 | AXE, Pivot |
| 5 | | 238-5228 | | 2 | JOINT THORIQUE, -228, 70 Duro, 2.234" ID x .139" Thk |
| 6 | | A57658 | | 2 | JOINT |
| 7 | | 368140A1 | | AR | CALE D'EPAISSEUR, 0,5 mm |
| 7 | | 368141A1 | | AR | CALE D'EPAISSEUR, 1,0 mm |
| 7 | | 368142A1 | | AR | CALE D'EPAISSEUR, 1,5 mm |
| 8 | | 86991231 | | 2 | CHAPEAU |
| 9 | | 896-11016 | | 4 | RONDELLE, M17.5 x 30 x 4, HT |
| 10 | | 863-16070 | | 4 | VIS, Hex Soc Hd, M16 x 70, 12.9 |
| 11 | | 8603201 | | 2 | RENIFLARD, Valve; Not Illustrated |

| 06-23A | | p1 | 08/07 |
|---|---|---|---|

**ESSIEU ARRIÈRE - BOÎTIER**

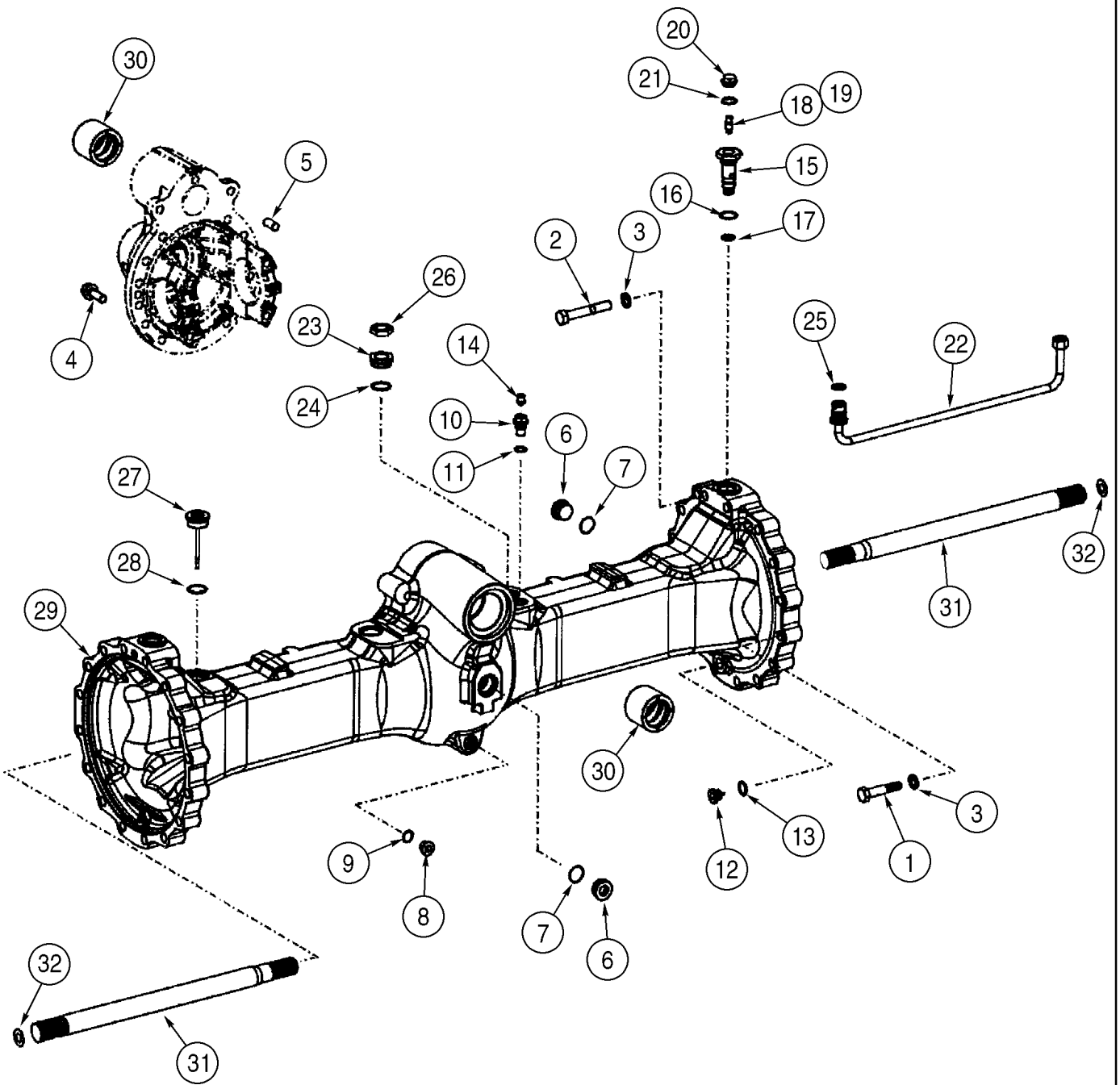

**ESSIEU ARRIÈRE - BOÎTIER**

| REF | FN | PART NUMBER | YR/SN | QTY | DESCRIPTION |
|---|---|---|---|---|---|
| | | 87358583 | | 1 | PONT ARRIERE, Limited Slip; Incl. Refs. 1 - 32; Incl. Figures 06-23A - 06-23E |
| 1 | | 514-1107 | | 28 | BOULON, Hex, M18 x 1.5 x 85, 10.9 |
| 2 | | 8603670 | | 4 | BOULON, M18 x 115 |
| 3 | | 8603202 | | 32 | RONDELLE |
| 4 | | 8603687 | | 15 | VIS |
| 5 | | 8603695 | | 3 | PION, M6 x 30 |
| 6 | | 8603549 | | 2 | BOUCHON |
| 7 | | 8603728 | | 2 | JOINT THORIQUE, 33 x 2,5 |
| 8 | | 8603550 | | 1 | BOUCHON |
| 9 | | 8603208 | | 1 | JOINT THORIQUE |
| 10 | | 8603256 | | 1 | BOUCHON |
| 11 | | 8603208 | | 1 | JOINT THORIQUE |
| 13 | | 8603200 | | 2 | JOINT |
| 14 | | 8603201 | | 1 | RENIFLARD |
| 15 | | 8603551 | | 2 | RACCORD |
| 16 | | 8605636 | | 2 | JOINT THORIQUE, M33 x 2,2; If Used |
| 16 | | 8603727 | | 2 | JOINT THORIQUE, M33 x 2: If Used |
| 17 | | 8603552 | | 2 | RACCORD |
| 18 | | 3222214R1 | | 2 | SOUPAPE, Bleeder; Incl. 19 |
| 19 | | NSS | | 2 | NON FOURNI SEPAREMENT, Dust Cap |
| 20 | | 8603210 | | 2 | BOUCHON, M26 - 1,5 |
| 21 | | 8603799 | | 2 | ANNEAU, 26 x 31 mm |
| 22 | | 87436733 | | 2 | TUBE, Internal Brake |
| 23 | | 8603696 | | 2 | RACCORD, M42 x 1,5; Incl. 24 |
| 24 | | 8603207 | | 2 | JOINT THORIQUE |
| 25 | | 8603725 | | 2 | ANNEAU |
| 26 | | 8603619 | | 2 | ECROU |
| 27 | | 8603694 | | 1 | JAUGE DE NIVEAU, Oil |
| 28 | | 8603207 | | 1 | JOINT THORIQUE |
| 29 | | 8605639 | | 1 | CARTER DE PONT |
| 30 | | 8605638 | | 2 | BAGUE |
| 31 | | 8603690 | | 2 | ARBRE |
| 32 | | 8603669 | | AR | CALE D'EPAISSEUR, 0,4 mm |
| 32 | | 8603730 | | AR | CALE D'EPAISSEUR, 0,2 mm |

**ESSIEU ARRIÈRE - BOÎTIER**

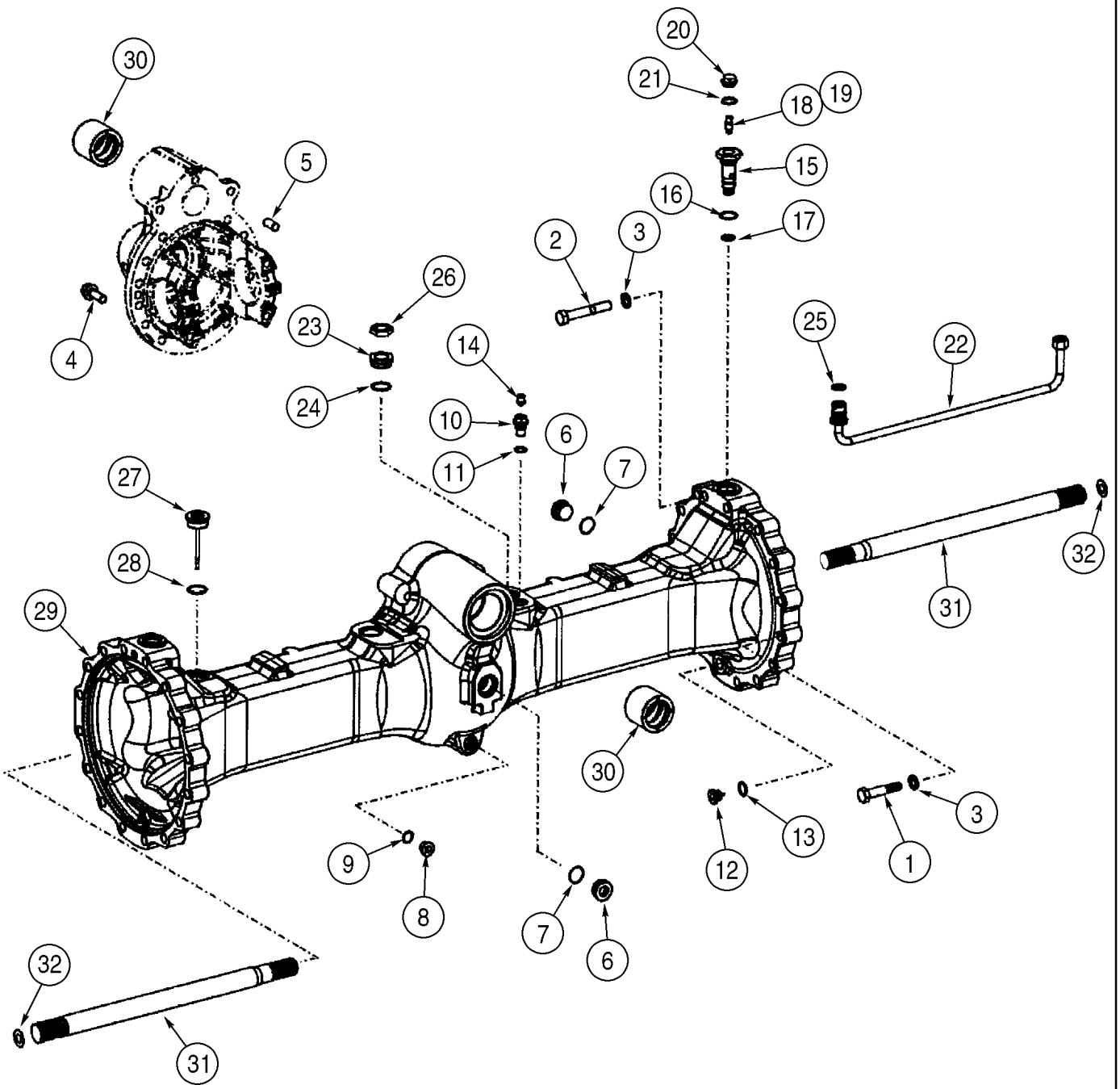

**ESSIEU ARRIÈRE - BOÎTIER**

| REF | FN | PART NUMBER | YR/SN | QTY | DESCRIPTION |
|---|---|---|---|---|---|
| 32 | | 8603731 | | AR | CALE D'EPAISSEUR, 1,0 mm |
| 32 | | 8603732 | | AR | CALE D'EPAISSEUR, 1,5 mm |

**ESSIEU ARRIÈRE - COQUILLE DU DIFFÉRENTIEL**

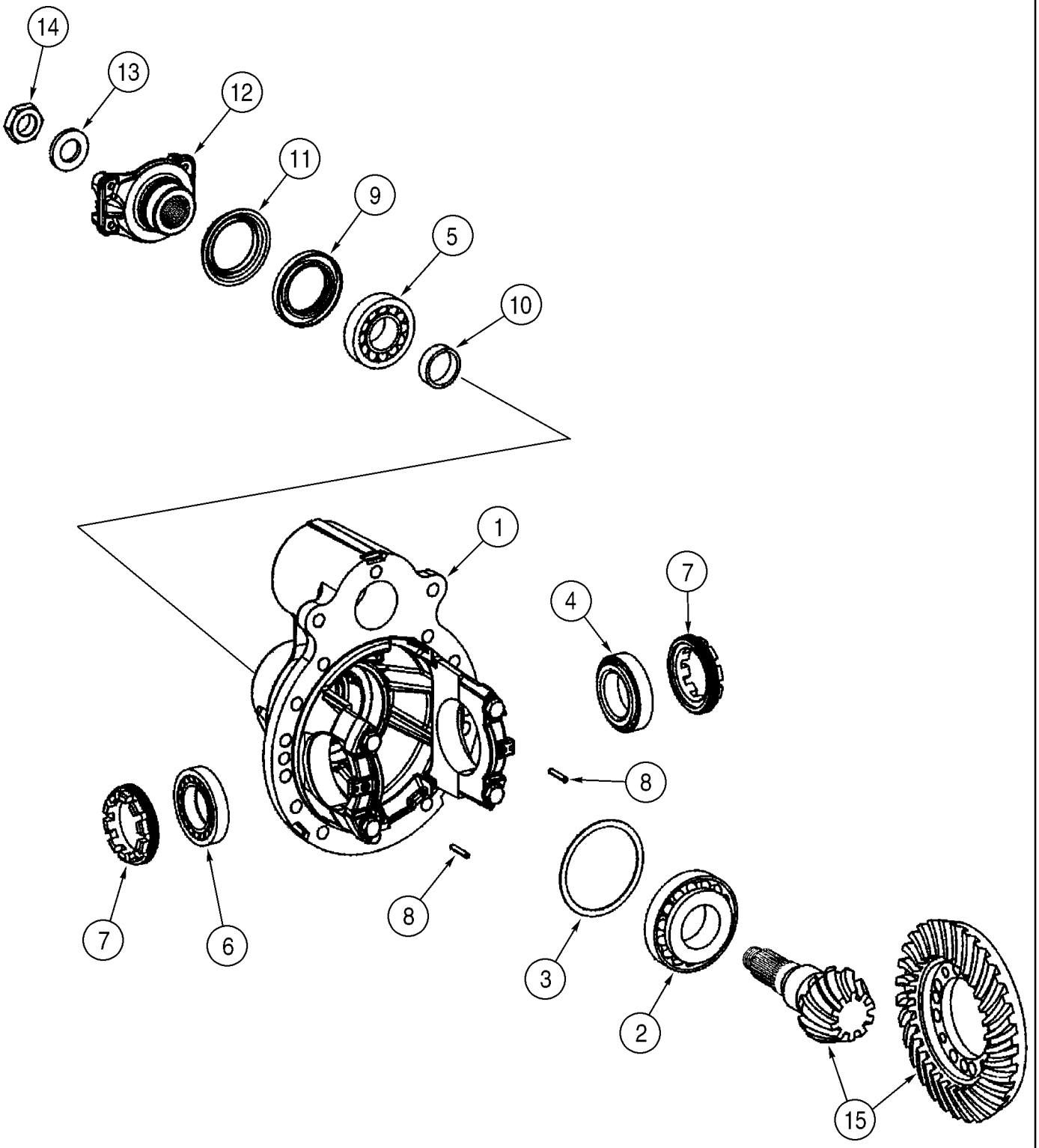

**ESSIEU ARRIÈRE - COQUILLE DU DIFFÉRENTIEL**

| REF | FN | PART NUMBER | YR/SN | QTY | DESCRIPTION |
|---|---|---|---|---|---|
| | | 87358583 | | 1 | PONT ARRIERE, Limited Slip; Incl. Figures 06-23A - 06-23E; Incl. Refs. 1 - 15 |
| | | 8605274 | | 1 | NEZ-DE-PONT, Rear Limited Slip; Incl. Refs. 1 - 15 |
| 1 | | 8605637 | | 1 | CARTER |
| 1 | | 8603677 | | 1 | PILIER, SOUTIEN |
| 2 | | 8603257 | | 1 | ROULEMENT A ROULEAU, Inner |
| 3 | | 8603259 | | AR | CALE D'EPAISSEUR, 0,7 mm |
| 3 | | 8603260 | | AR | CALE D'EPAISSEUR, 0,8 mm |
| 3 | | 8603261 | | AR | CALE D'EPAISSEUR, 0,9 mm |
| 3 | | 8603262 | | AR | CALE D'EPAISSEUR, 1,0 mm |
| 3 | | 8603291 | | AR | CALE D'EPAISSEUR, 1,2 mm |
| 3 | | 8603290 | | AR | CALE D'EPAISSEUR, 1,3 mm |
| 3 | | 8603289 | | AR | CALE D'EPAISSEUR, 1,4 mm |
| 3 | | 8603288 | | AR | CALE D'EPAISSEUR, 1,5 mm |
| 3 | | 8603287 | | AR | CALE D'EPAISSEUR, 1,6 mm |
| 3 | | 8603286 | | AR | CALE D'EPAISSEUR, 1,7 mm |
| 3 | | 8603285 | | AR | CALE D'EPAISSEUR, 1,8 mm |
| 3 | | 8603284 | | AR | CALE D'EPAISSEUR, 1,9 mm |
| 3 | | 8603283 | | AR | CALE D'EPAISSEUR, 2,0 mm |
| 3 | | 8603264 | | AR | CALE D'EPAISSEUR, 1,1 mm |
| 4 | | 8603678 | | 1 | ROULEMENT A ROULEAU, Right |
| 5 | | 8603679 | | 1 | ROULEMENT A ROULEAU, Outer |
| 6 | | 8603680 | | 1 | ROULEMENT A ROULEAU, Left |
| 7 | | 8603205 | | 2 | ECROU |
| 8 | | 8603795 | | 2 | GOUPILLE ELASTIQUE, 6 x 36 |
| 9 | | 8603681 | | 1 | JOINT |
| 10 | | 8603733 | | AR | CALE D'EPAISSEUR, 16,9 mm |
| 10 | | 8603734 | | AR | CALE D'EPAISSEUR, 16.1 mm |
| 10 | | 8603735 | | AR | CALE D'EPAISSEUR, 16,2 mm |
| 10 | | 8603736 | | AR | CALE D'EPAISSEUR, 16,3 mm |
| 10 | | 8603737 | | AR | CALE D'EPAISSEUR, 16,4 mm |
| 10 | | 8603738 | | AR | CALE D'EPAISSEUR, 16,5 mm |
| 10 | | 8603739 | | AR | CALE D'EPAISSEUR, 16,6 mm |
| 10 | | 8603740 | | AR | CALE D'EPAISSEUR, 16,7 mm |
| 10 | | 8603741 | | AR | CALE D'EPAISSEUR, 16,8 mm |

**ESSIEU ARRIÈRE - COQUILLE DU DIFFÉRENTIEL**

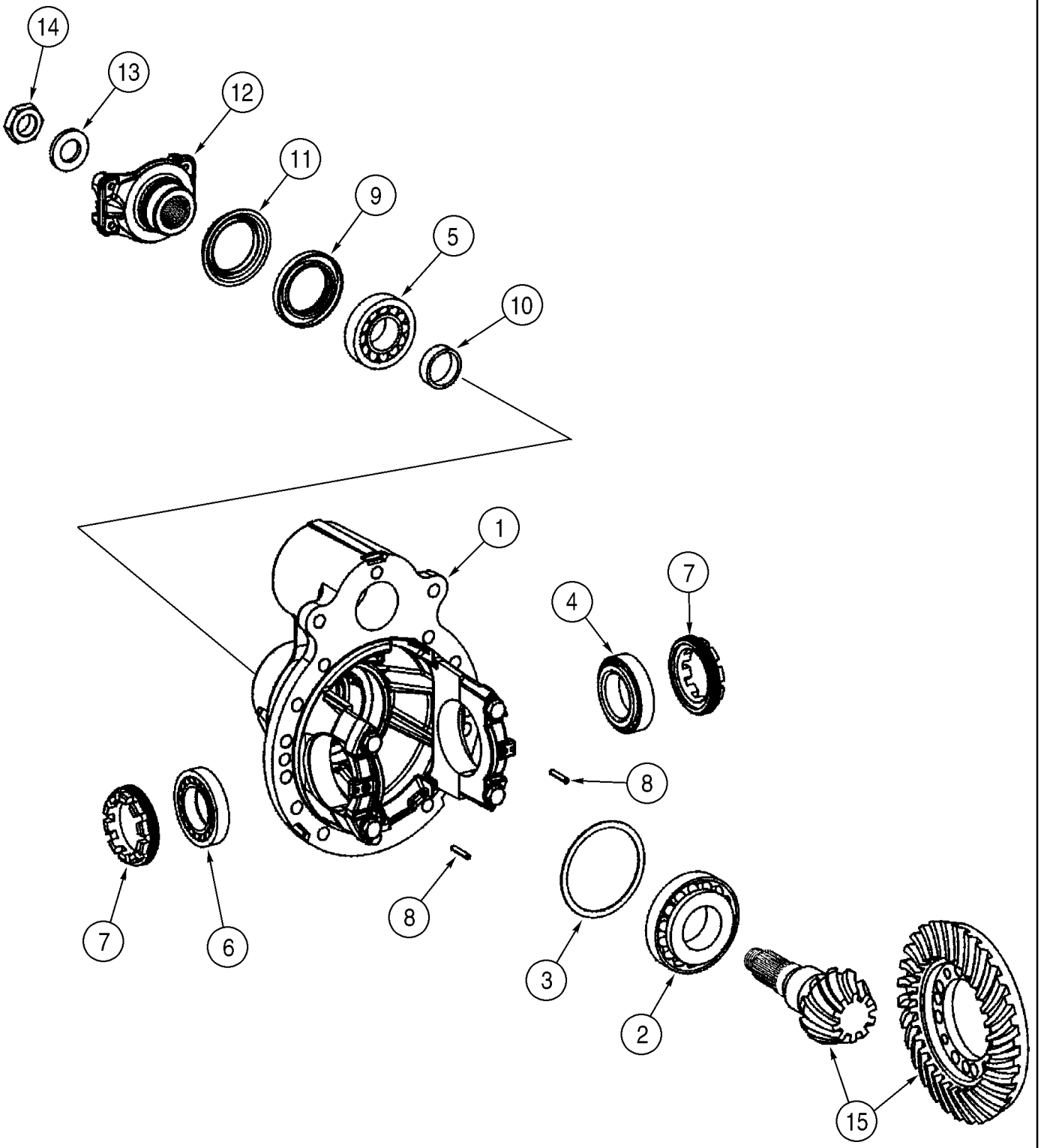

**ESSIEU ARRIÈRE - COQUILLE DU DIFFÉRENTIEL**

| REF | FN | PART NUMBER | YR/SN | QTY | DESCRIPTION |
|---|---|---|---|---|---|
| 10 | | 8603742 | | AR | CALE D'EPAISSEUR, 16,92 mm |
| 10 | | 8603743 | | AR | CALE D'EPAISSEUR, 17,1 mm |
| 10 | | 8603744 | | AR | CALE D'EPAISSEUR, 17,2 mm |
| 10 | | 8603745 | | AR | CALE D'EPAISSEUR, 17,3 mm |
| 10 | | 8603746 | | AR | CALE D'EPAISSEUR, 17,4 mm |
| 10 | | 8603747 | | AR | CALE D'EPAISSEUR, 16,68 mm |
| 10 | | 8603748 | | AR | CALE D'EPAISSEUR, 16,98 mm |
| 10 | | 8603749 | | AR | CALE D'EPAISSEUR, 17,04 mm |
| 10 | | 8603750 | | AR | CALE D'EPAISSEUR, 16,56 mm |
| 10 | | 8603751 | | AR | CALE D'EPAISSEUR, 16,62 mm |
| 10 | | 8603752 | | AR | CALE D'EPAISSEUR, 16,64 mm |
| 10 | | 8603753 | | AR | CALE D'EPAISSEUR, 16,68 mm |
| 10 | | 8603754 | | AR | CALE D'EPAISSEUR, 16,72 mm |
| 10 | | 8603755 | | AR | CALE D'EPAISSEUR, 16,74 mm |
| 10 | | 8603756 | | AR | CALE D'EPAISSEUR, 16,76 mm |
| 10 | | 8603757 | | AR | CALE D'EPAISSEUR, 16,78 mm |
| 10 | | 8603758 | | AR | CALE D'EPAISSEUR, 16,82 mm |
| 10 | | 8603759 | | AR | CALE D'EPAISSEUR, 16,84 mm |
| 10 | | 8603760 | | AR | CALE D'EPAISSEUR, 16,88 mm |
| 10 | | 8603761 | | AR | CALE D'EPAISSEUR, 16,9 mm |
| 10 | | 8603762 | | AR | CALE D'EPAISSEUR, 16,94 mm |
| 10 | | 8603763 | | AR | CALE D'EPAISSEUR, 16,66 mm |
| 10 | | 8603764 | | AR | CALE D'EPAISSEUR, 16,96 mm |
| 10 | | 8603765 | | AR | CALE D'EPAISSEUR, 17,0 mm |
| 10 | | 8603766 | | AR | CALE D'EPAISSEUR, 17,02 mm |
| 10 | | 8603767 | | AR | CALE D'EPAISSEUR, 17,06 mm |
| 10 | | 8603768 | | AR | CALE D'EPAISSEUR, 17,08 mm |
| 10 | | 8603769 | | AR | CALE D'EPAISSEUR, 17,12 mm |
| 10 | | 8603770 | | AR | CALE D'EPAISSEUR, 17,14 mm |
| 10 | | 8603771 | | AR | CALE D'EPAISSEUR, 17,16 mm |
| 10 | | 8603772 | | AR | CALE D'EPAISSEUR, 17,18 mm |
| 10 | | 8603773 | | AR | CALE D'EPAISSEUR, 17,22 mm |
| 10 | | 8603774 | | AR | CALE D'EPAISSEUR, 17,24 mm |
| 10 | | 8603775 | | AR | CALE D'EPAISSEUR, 17,26 mm |
| 10 | | 8603776 | | AR | CALE D'EPAISSEUR, 17,28 mm |

**ESSIEU ARRIÈRE - COQUILLE DU DIFFÉRENTIEL**

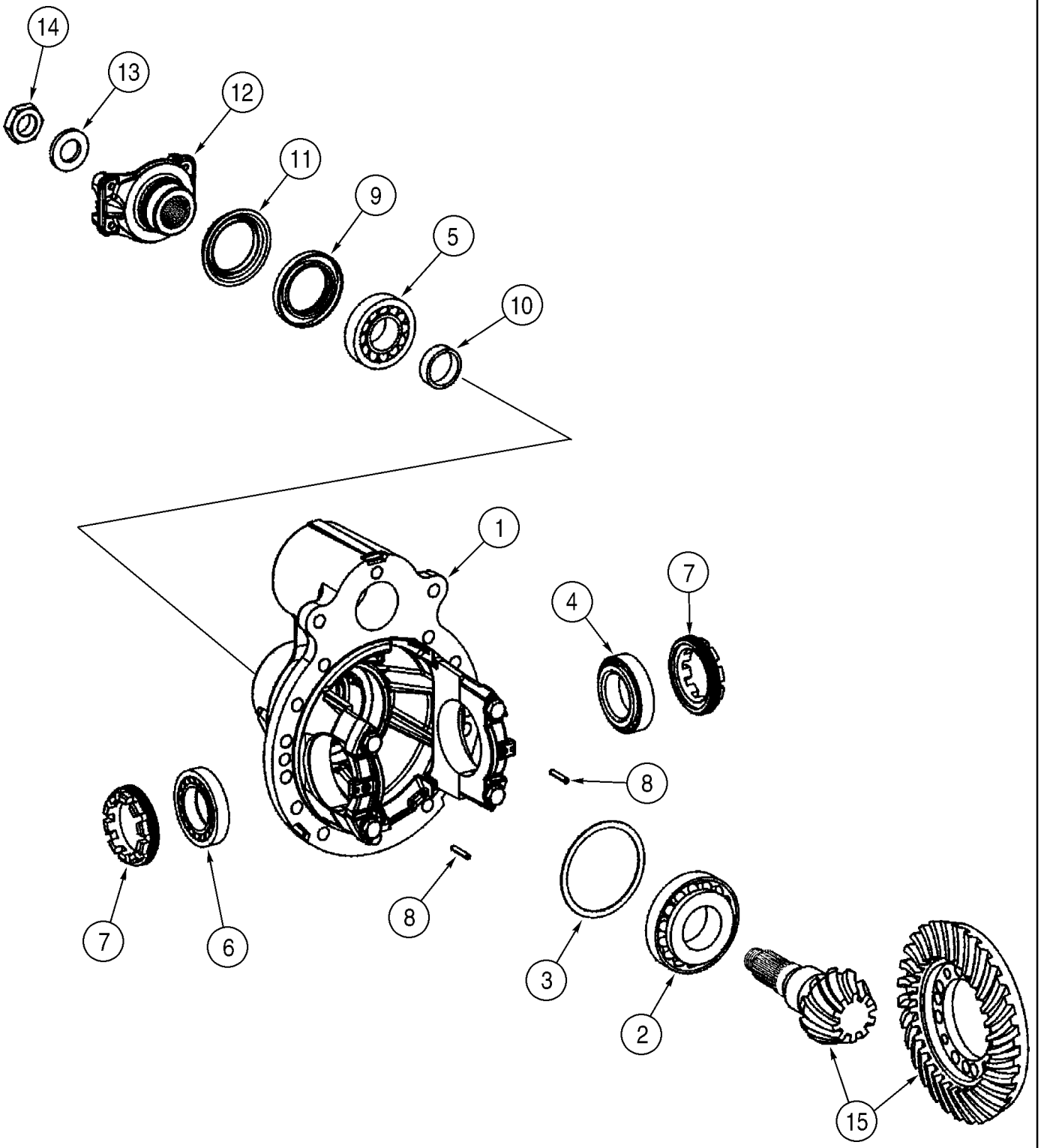

**ESSIEU ARRIÈRE - COQUILLE DU DIFFÉRENTIEL**

| REF | FN | PART NUMBER | YR/SN | QTY | DESCRIPTION |
|---|---|---|---|---|---|
| 11 | | 8603685 | | 1 | COUVERTURE |
| 12 | | 8605635 | | 1 | FLASQUE, If Used |
| 12 | | 8603684 | | 1 | MACHOIRE, If Used |
| 13 | | 8603682 | | 1 | RONDELLE |
| 14 | | 8603683 | | 1 | ECROU, M30 x 1,5 |
| 15 | | 8605275 | | 1 | COUPLE CONIQUE, Ring and Pinion; Bevel Gear Set |

**ESSIEU ARRIÈRE - DIFFERENTIEL**

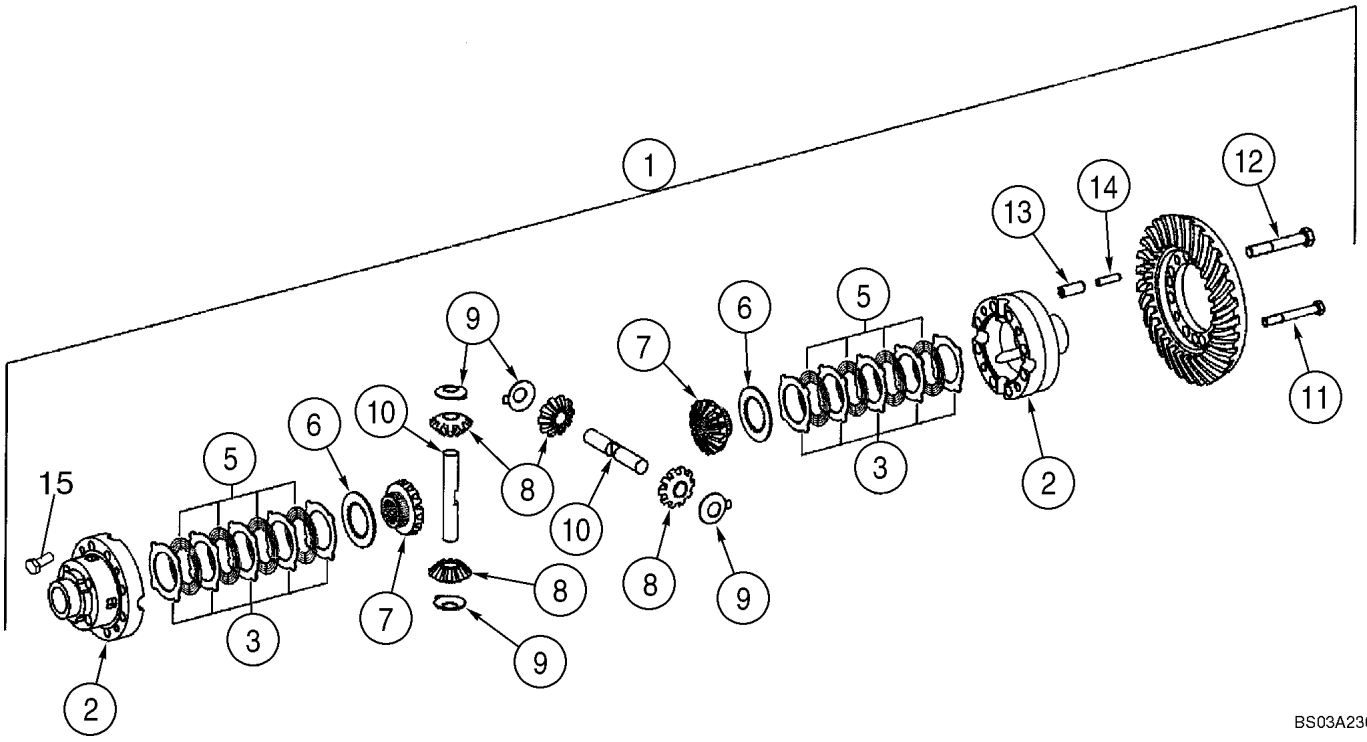

**ESSIEU ARRIÈRE - DIFFERENTIEL**

| REF | FN | PART NUMBER | YR/SN | QTY | DESCRIPTION |
|---|---|---|---|---|---|
| | | 87358583 | | 1 | PONT ARRIERE, Limited Slip; Incl. Refs. 1 - 20; Incl. Figure(s) 06-23A - 23E |
| 1 | | 8605274 | | 1 | NEZ-DE-PONT, Incl. Refs. 2 - 20 |
| 2 | | 8605359 | | 1 | CARTER, If Used |
| 3 | | 8603713 | | 10 | PLAQUE, 1,4 mm; Separator; If Used |
| 5 | | 8603714 | | 8 | PLAQUE, Friction |
| 6 | | 8603715 | | 2 | PLAQUE, 3,0 mm; Pressure |
| 7 | | 8603716 | | 2 | PIGNON, 16T |
| 8 | | 8603717 | | 4 | PIGNON, 11T |
| 9 | | 8603718 | | 4 | RONDELLE DE BUTEE |
| 10 | | 8603719 | | 2 | ARBRE |
| 11 | | 8603720 | | 4 | BOULON, M12 x 1,5 x 95 |
| 12 | | 8603721 | | 8 | VIS, M16 x 1,5 x 100 |
| 13 | | 8603722 | | 4 | AXE, 16 x 40 |
| 14 | | 8603723 | | 4 | AXE, 10 x 40 |
| 15 | | 8603724 | | 4 | VIS |
| 16 | | 8603271 | | 1 | JOINT, Front Bevel Gear; Not Illustrated |
| 17 | | 8605631 | | AR | DISQUE EMBRAYAGE, If Used; Not Illustrated |
| 18 | | 8605632 | | AR | DISQUE EMBRAYAGE, If Used; Not Illustrated |
| 19 | | 8605633 | | AR | DISQUE EMBRAYAGE, If Used; Not Illustrated |
| 20 | | 8605634 | | 8 | RONDELLE, If Used; Not Illustrated |

**ESSIEU ARRIÈRE - FREIN**

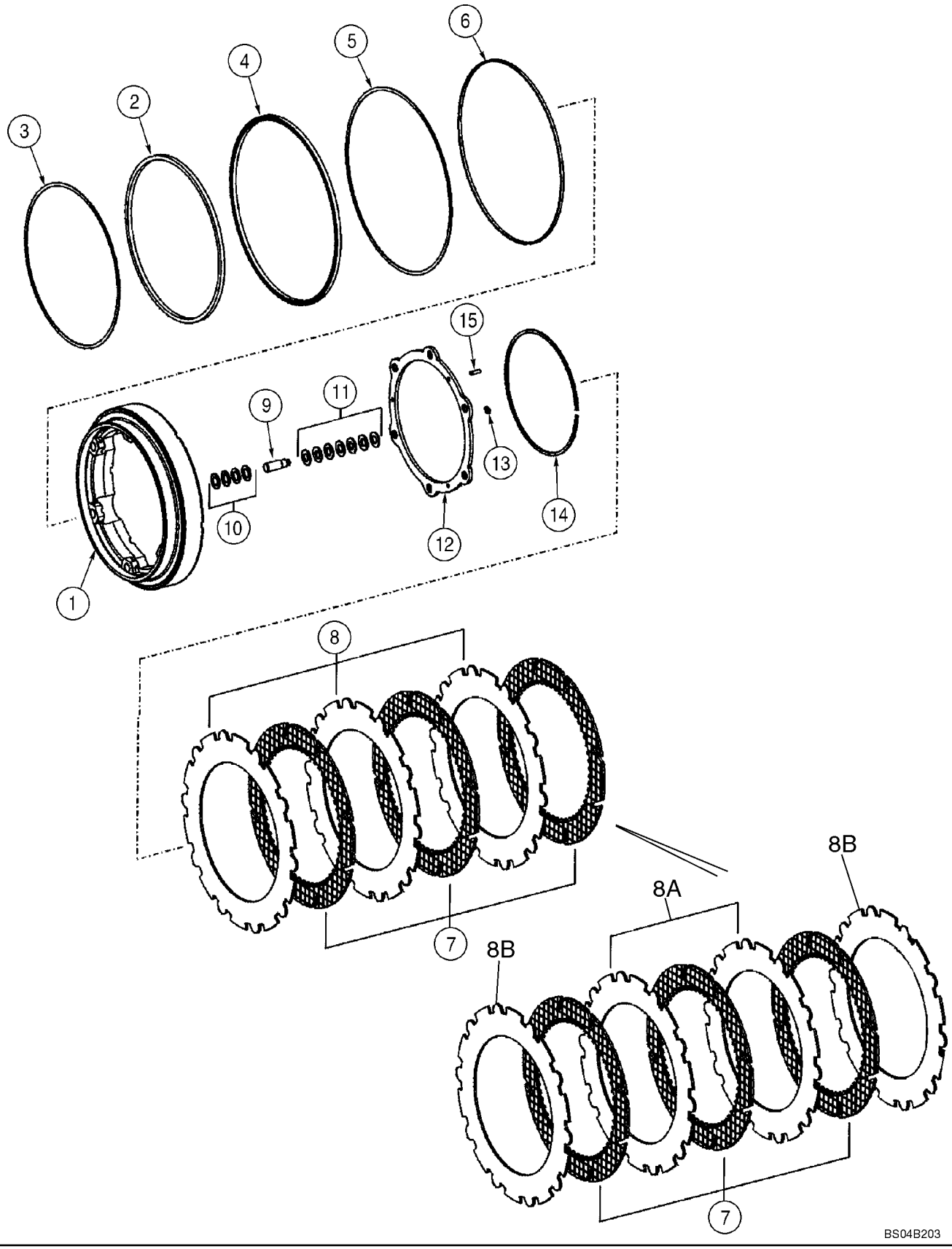

**ESSIEU ARRIÈRE - FREIN**

| REF | FN | PART NUMBER | YR/SN | QTY | DESCRIPTION |
|---|---|---|---|---|---|
| | | 87358583 | | 1 | PONT ARRIERE, Limited Slip; Incl. Figures 06-23A - 06-23E; Incl. Refs. 1 - 15 |
| | | 87358681 | | 1 | EXTREMITE ASSEMBLEE, Incl. Refs. 1 - 15; Incl. Figure 06-23E |
| 1 | | 8603166 | | 1 | PISTON |
| 2 | | 8605314 | | 1 | JOINT |
| 3 | | 8603577 | | 1 | ANNEAU D'ARRÊT |
| 4 | | 8605315 | | 1 | JOINT |
| 5 | | 8603579 | | 1 | ANNEAU D'ARRÊT |
| 6 | | 8603580 | | 1 | ANNEAU D'ARRÊT |
| 7 | | 87341835 | | 4 | DISQUE DE FREIN |
| 8 | | 8603582 | | 3 | COUPELLE DE FREIN |
| 8A | | 87441328 | | 2 | PLAQUETTE |
| 9 | | 8603163 | | 6 | AXE |
| 10 | | 8603583 | | 24 | ANNEAU D'ARRÊT |
| 11 | | 8603584 | | 42 | RONDELLE |
| 12 | | 8603162 | | 1 | CALE D'EPAISSEUR |
| 13 | | 8603788 | | 6 | ANNEAU D'ARRÊT |
| 14 | | 8603585 | | 1 | ANNEAU D'ARRÊT |
| 15 | | 8603796 | | 6 | GOUPILLE ELASTIQUE, 6 x 20 mm |

**ESSIEU ARRIÈRE - MOYEU, SATELLITE**

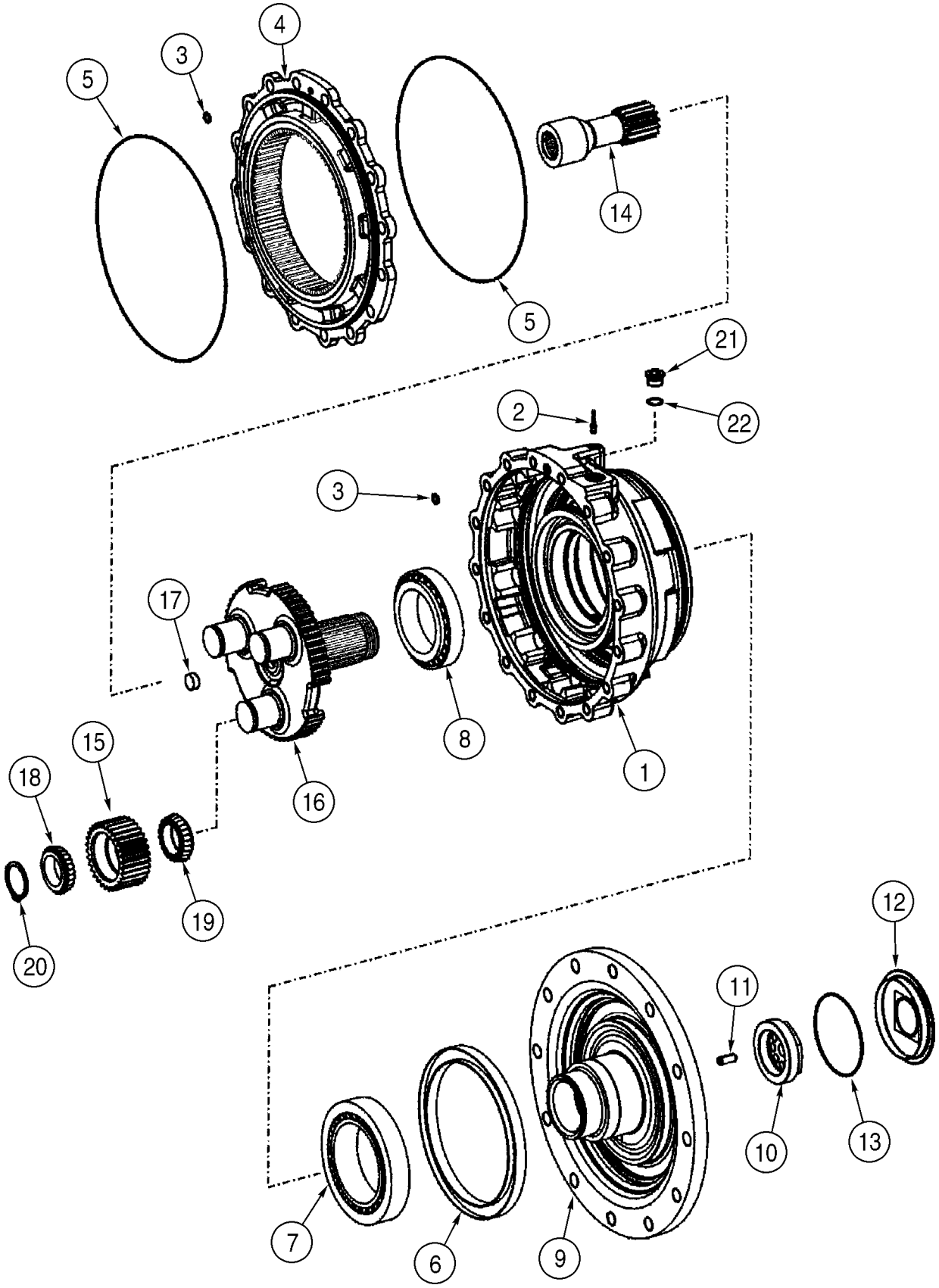

**ESSIEU ARRIÈRE - MOYEU, SATELLITE**

| REF | FN | PART NUMBER | YR/SN | QTY | DESCRIPTION |
|---|---|---|---|---|---|
| | | 87358583 | | 1 | PONT ARRIERE, Limited Slip; Incl. Figures 06-23A - 06-23E; Incl. Refs. 1 - 22 |
| | | 87358681 | | 1 | EXTREMITE ASSEMBLEE, Incl. Refs. 1 - 22; Incl. Figure 06-23D |
| 1 | | 87437916 | | 1 | CARTER |
| 2 | | 8603673 | | 1 | BOUCHON |
| 3 | | 8603559 | | 2 | JOINT THORIQUE |
| 4 | | 8603560 | | 1 | PIGNON |
| 5 | | 8603674 | | 2 | JOINT THORIQUE, 360 x 2,5 |
| 6 | | 8603562 | | 1 | JOINT |
| 7 | | 8603691 | | 1 | ROULEMENT A ROULEAU, Outer |
| 8 | | 8603692 | | 1 | ROULEMENT A ROULEAU, Inner |
| 9 | | 8603675 | | 1 | FLASQUE, M22 x 1,5; Output |
| 10 | | 8603565 | | 1 | ECROU |
| 11 | | 8603566 | | 1 | AXE |
| 12 | | 8603567 | | 1 | COUVERCLE |
| 13 | | 8603527 | | 1 | JOINT THORIQUE |
| 14 | | 8603568 | | 1 | PIGNON |
| 15 | | 87358699 | | 3 | PIGNON |
| 16 | | {87358700} | | 1 | CARRIER, PANETARY |
| 17 | | 8603571 | | 1 | BOUCHON |
| 18 | | 8603572 | | 3 | CONE DE ROULEMENT, Outer |
| 19 | | 87358695 | | 3 | CONE DE ROULEMENT |
| 20 | | 87358698 | | 4 | ANNEAU D'ARRÊT |
| 21 | | 8603575 | | 1 | BOUCHON, Incl. 22 |
| 22 | | 8603208 | | 1 | JOINT THORIQUE |

**ARBRE D'ENTRAÎNEMENT MONTAGE**

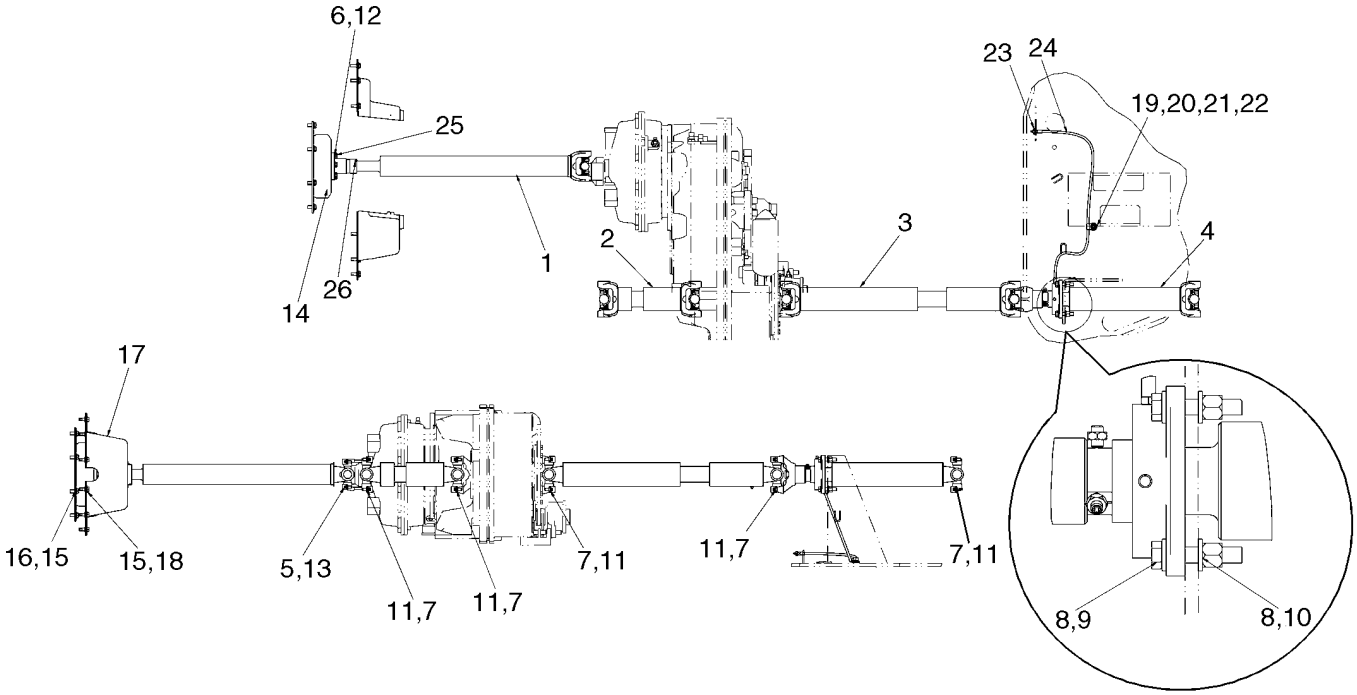


BS07D050

**ARBRE D'ENTRAÎNEMENT MONTAGE**

| REF | FN | PART NUMBER | YR/SN | QTY | DESCRIPTION |
|---|---|---|---|---|---|
| 1 | | 87553862 | | 1 | ARBRE D'ENTRAINEMENT, Engine; See Figure 06-28 |
| 2 | | 86990311 | | 1 | ARBRE D'ENTRAINEMENT, Rear; See Figure 06-27 |
| 3 | | 86990312 | | 1 | ARBRE D'ENTRAINEMENT, Center; See Figure 06-26 |
| 4 | | 87553865 | | 1 | ARBRE D'ENTRAINEMENT, Front; See Figure 06-25 |
| 5 | | D137626 | | 2 | COLLIER |
| 6 | | 896-11010 | | 6 | RONDELLE, M10 x 21.5 x 2.5, HT |
| 7 | | L116943 | | 10 | COLLIER |
| 8 | | 896-11012 | | 8 | RONDELLE, M13.5 x 24.5 x 3, HT |
| 9 | | 827-12060 | | 4 | BOULON, Hex, M12 x 60, 10.9 |
| 10 | | 832-10412 | | 4 | CONTRE-ECROU, M12 x 1.75, Cl 8 |
| 11 | | 19-6247 | | 20 | BOULON |
| 12 | | 627-10035 | | 6 | BOULON, Hex, M10 x 35, 10.9, Full Thd |
| 13 | | D137627 | | 4 | BOULON |
| 14 | | 87553867 | | 1 | CHAPE |
| 15 | | 896-15010 | | 18 | RONDELLE, M10 x 24.5 x 3, HT |
| 16 | | 627-10025 | | 8 | BOULON, Hex, M10 x 25, 10.9, Full Thd |
| 17 | | 87522101 | | 1 | COUVERTURE |
| 18 | | 806-10030 | | 10 | BOULON, Hex, Lock, M10 x 30, Cl 10.9 |
| 19 | | 896-15012 | | 1 | RONDELLE, M12 x 28.5 x 4, HT |
| 20 | | 515-2495 | | 1 | BRIDE, 3/8", Insul, 7/16" Bolt |
| 21 | | 895-11010 | | 1 | RONDELLE, M10 x 20 x 2 |
| 22 | | 832-10410 | | 1 | CONTRE-ECROU, M10 x 1.5, Cl 8 |
| 23 | | F53473 | | 1 | ECROU |
| 24 | | L54694 | | 1 | FLEXIBLE, Grease; 1041 mm (41 in); Incl. 24A, 24B |
| 24A | | 219-20 | | 1 | GRAISSEUR, 1/4"-28 x .52" lg, Not Illustrated |
| 24B | | 219-8 | | 1 | GRAISSEUR, 1/4"-28 NPT x .54" lg, Not Illustrated |
| 25 | | 345-49 | | AR | LOCTITE, Pilot Line |
| 26 | | 760-14113 | | 2 | VIS AUTO-TARAUDEUSE, Pan Hd, M3.5 x 13 |

**ARBRE DE TRANSMISSION, AVANT**

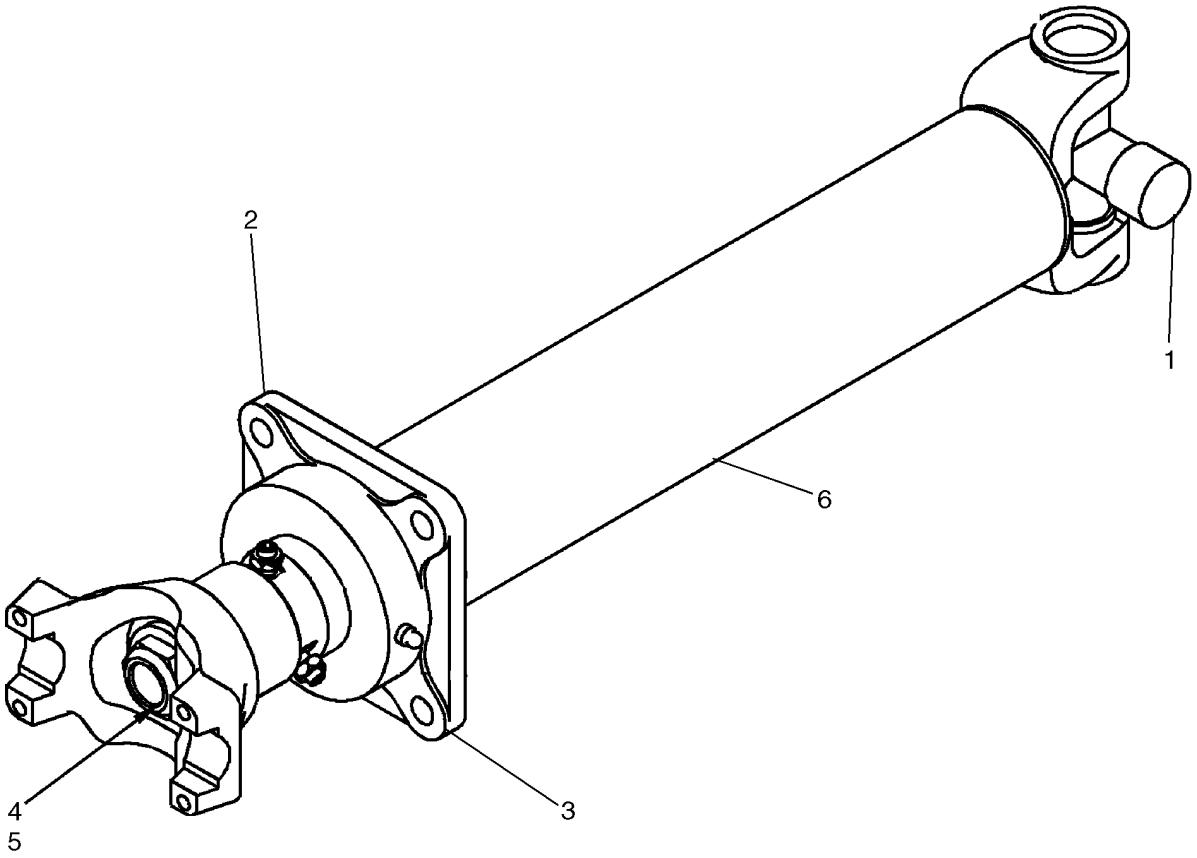


BS07D271

**ARBRE DE TRANSMISSION, AVANT**

| REF | FN | PART NUMBER | YR/SN | QTY | DESCRIPTION |
|---|---|---|---|---|---|
| | | 87553865 | | 1 | ARBRE D'ENTRAINEMENT, Front; Incl. Refs. 1 - 6 |
| 1 | | 8604675 | | 1 | ROULEMENT, W/ Spider |
| 2 | | 8604674 | | 1 | MACHOIRE |
| 3 | | L106070 | | 1 | ROULEMENT, Carrier |
| 4 | | 8604270 | | 1 | CONTRE-ECROU |
| 5 | | 86637954 | | 1 | RONDELLE, 1 1/16" x 2" x .209" |
| 6 | | NSS | | 1 | NON FOURNI SEPAREMENT, TUBE |

**ARBRE D'ENTRAÎNEMENT, CENTRE**

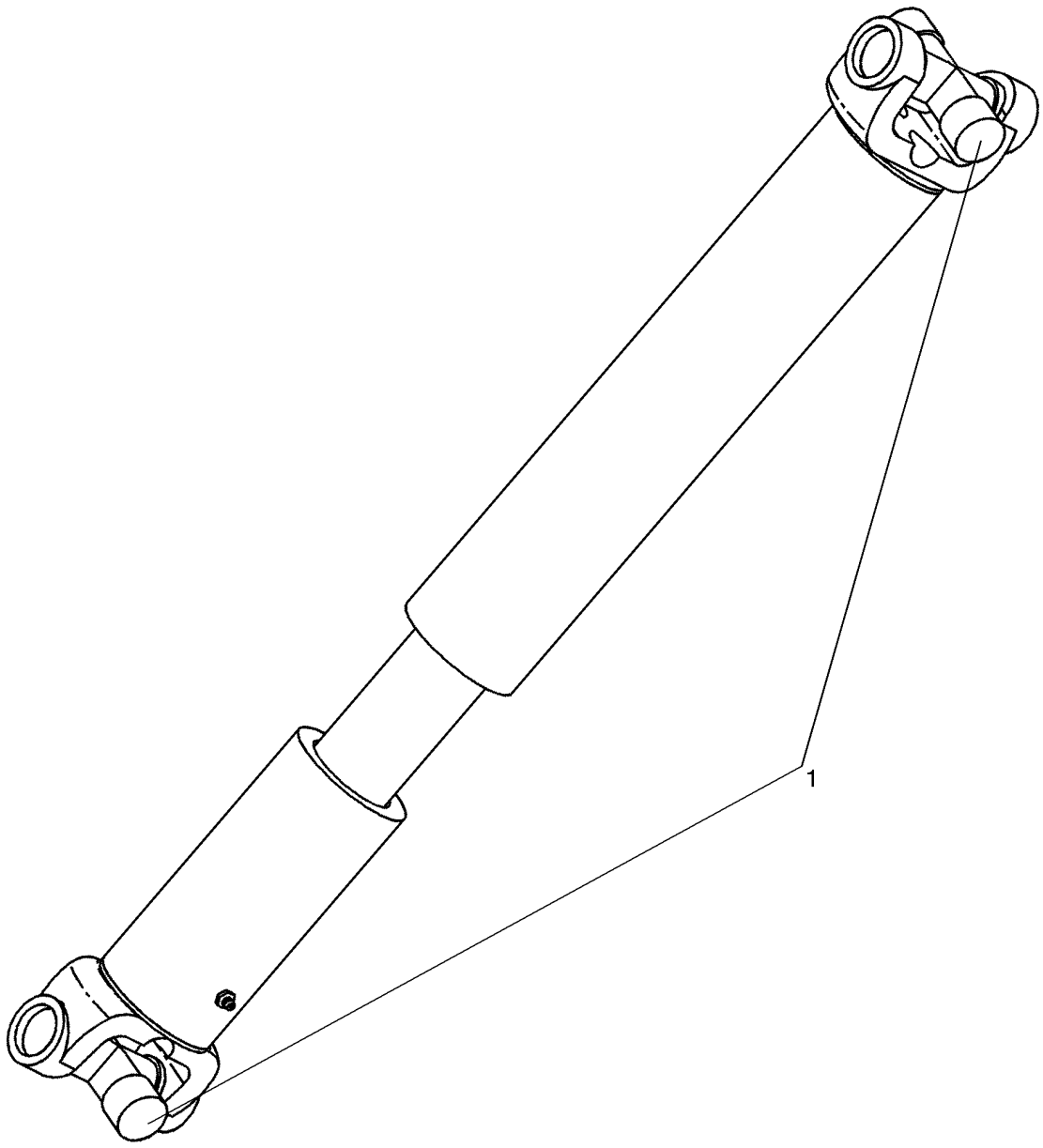


BS07D047

**ARBRE D'ENTRAÎNEMENT, CENTRE**

| REF | FN | PART NUMBER | YR/SN | QTY | DESCRIPTION |
|---|---|---|---|---|---|
| | | 86990312 | | 1 | ARBRE D'ENTRAINEMENT, Center; Incl. Ref. 1 |
| 1 | | 8604675 | | 2 | ROULEMENT, W/ Spider |

**ARBRE D'ENTRAÎNEMENT, ARRIÈRE**

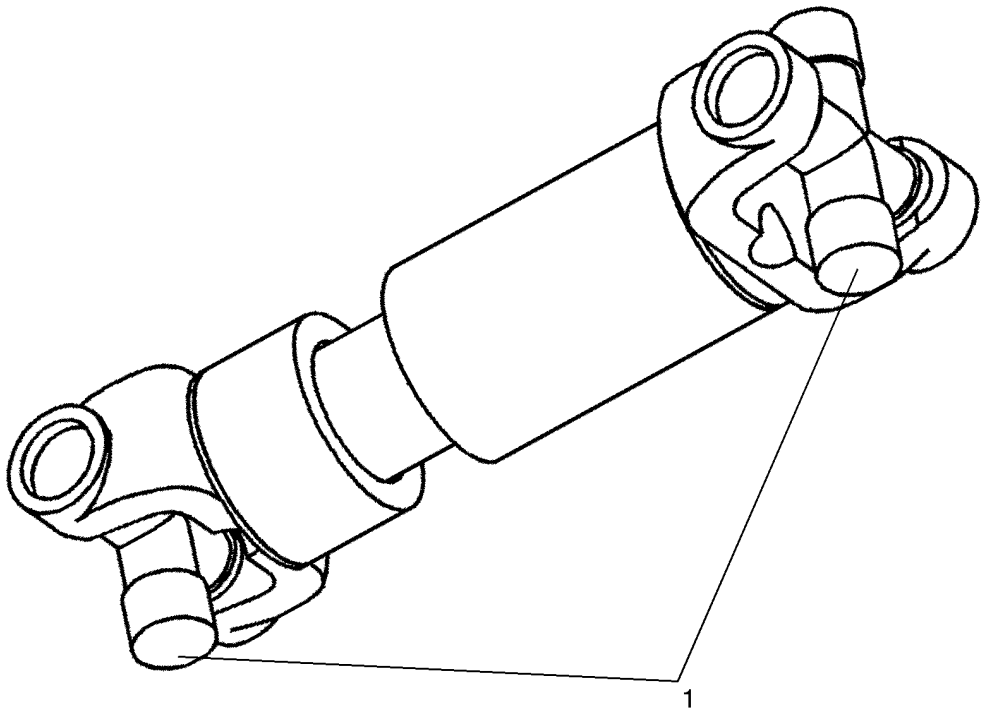


BS07D048

**ARBRE D'ENTRAÎNEMENT, ARRIÈRE**

| REF | FN | PART NUMBER | YR/SN | QTY | DESCRIPTION |
|---|---|---|---|---|---|
| | | 86990311 | | | ARBRE D'ENTRAINEMENT, Rear; Incl. Ref. 1 |
| 1 | | 8604675 | | 2 | ROULEMENT, W/ Spider |

**ARBRE DE TRANSMISSION, MOTEUR**

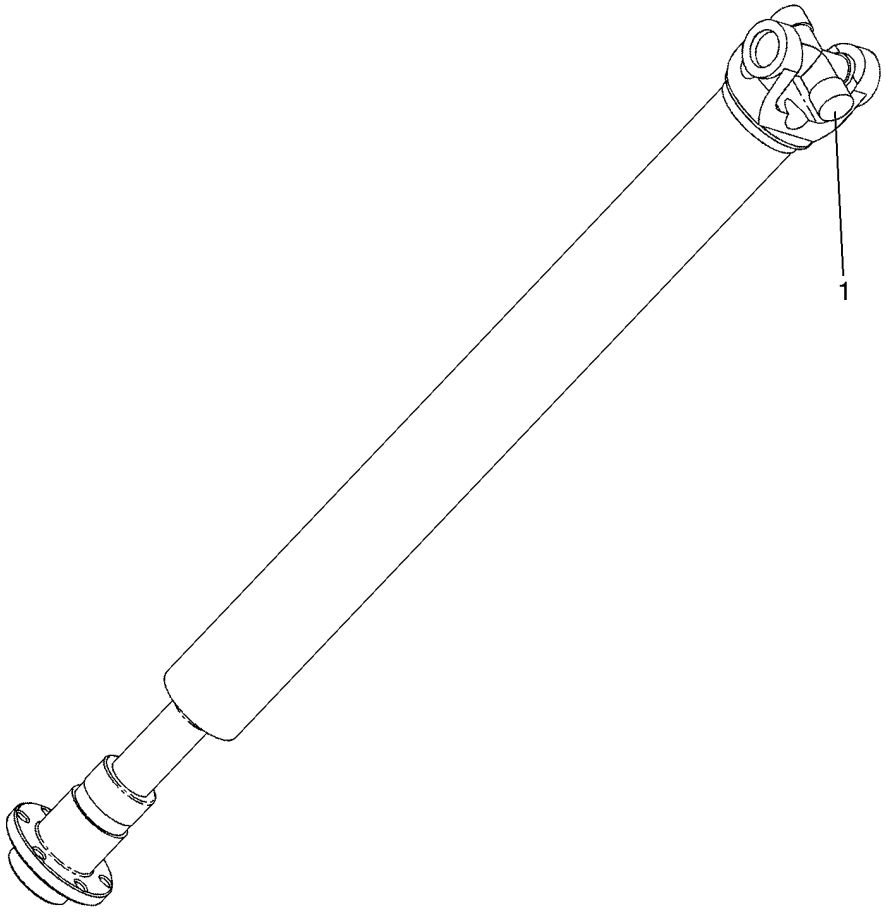


BS07D045

**ARBRE DE TRANSMISSION, MOTEUR**

| REF | FN | PART NUMBER | YR/SN | QTY | DESCRIPTION |
|---|---|---|---|---|---|
| | | 87553862 | | 1 | ARBRE D'ENTRAINEMENT, Engine; Incl. Ref. 1 |
| 1 | | 8604432 | | 1 | ROULEMENT, Spider |

**ROUES**

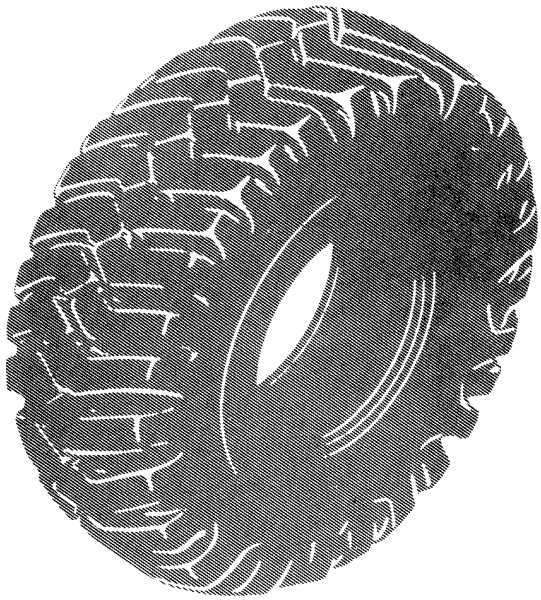

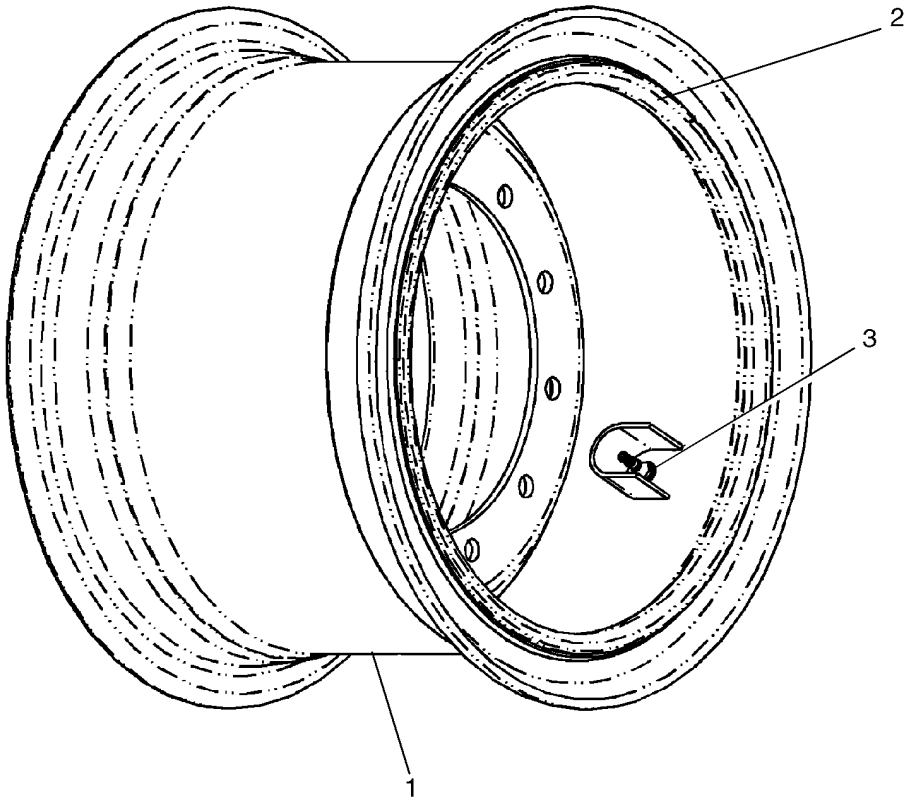


BS07G240

**ROUES**

| REF | FN | PART NUMBER | YR/SN | QTY | DESCRIPTION |
|---|---|---|---|---|---|
| 1 | | 87557521 | | 4 | ROUE COMPLETE, Case Power Tan, 25 x 17 in; Includes Rim, Sidering, and Lockring; Used W/ Axle Assy's 87358580 and 87358583 |
| 2 | | A19101 | | 1 | JOINT TORIQUE, Wheel |
| 3 | | A20058 | | 1 | TIGE DE SOUPAPE |

**Note: Purchase Tires Locally. Nota: Acheter les pneus sur le marché local. Nota: Comprar los neumáticos localmente.**

## NOTES

# SECTION INDEX
## Freins


| | |
|---|---|
| 07-01 | FREIN DE STATIONNEMENT |
| 07-02 | FREINS PÉDALES |
| 07-03 | SYSTEME HYDRAULIQUE - RÉSERVOIR - POMPE |
| 07-03A | SYSTEME HYDRAULIQUE - FREIN, PRINCIPAL - ESSIEU |
| 07-03B | SYSTEME HYDRAULIQUE - FREIN, PRINCIPAL - ACCUMULATEUR |
| 07-03C | SYSTEME HYDRAULIQUE - FREIN, PRINCIPAL - FREIN DE PARC |
| 07-03D | SYSTEME HYDRAULIQUE - FREIN, PRINCIPAL - RÉSERVOIR |
| 07-04 | SYSTEME HYDRAULIQUE - FREIN - POMPE |
| 07-05 | DISTRIBUTEUR - FREIN |

**FREIN DE STATIONNEMENT**

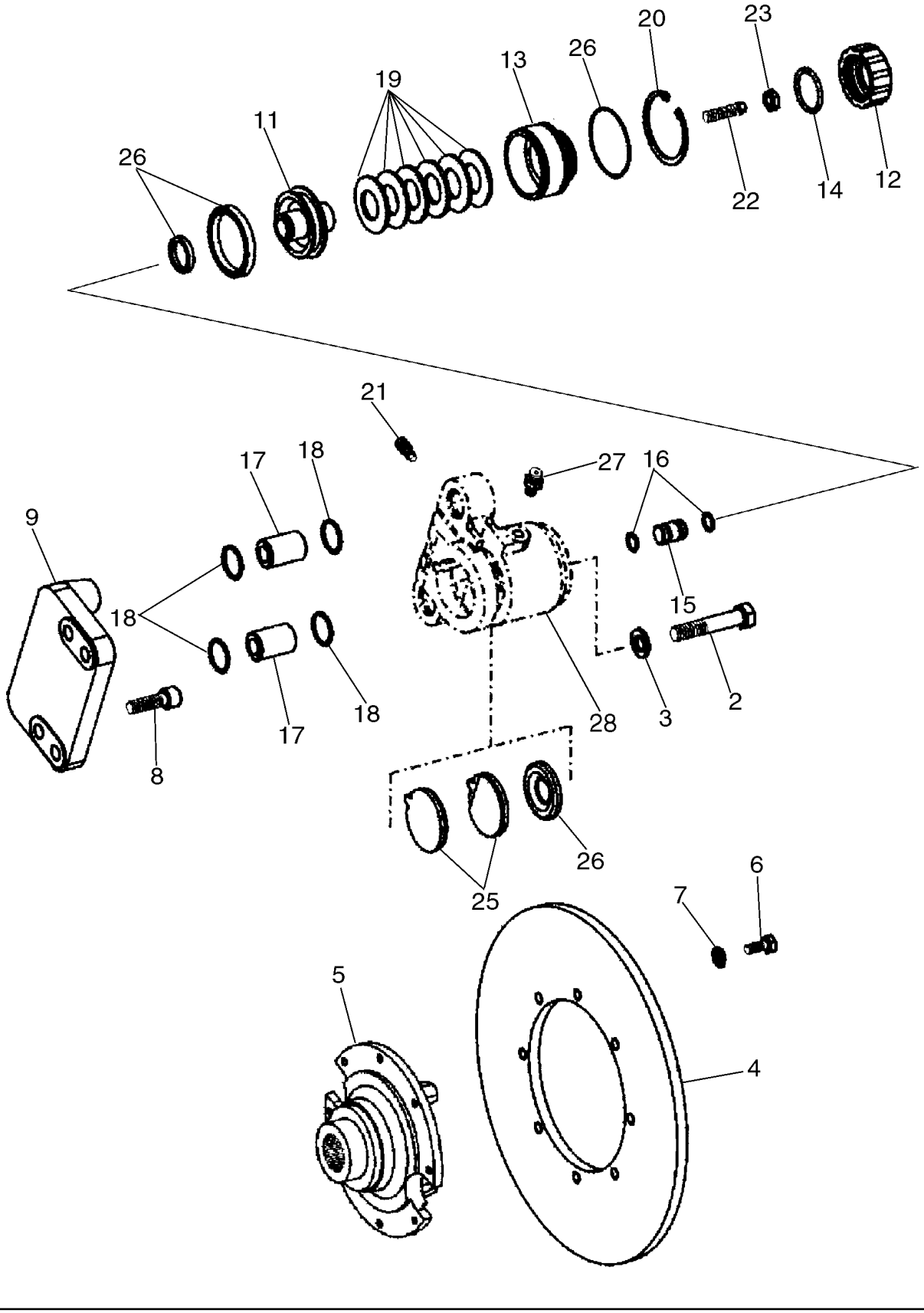

**FREIN DE STATIONNEMENT**

| REF | FN | PART NUMBER | YR/SN | QTY | DESCRIPTION |
|---|---|---|---|---|---|
| | | 87572394 | | 1 | TRANSMISSION, See Figure(s) 06-03 - 06-20, 07-01; Incl. Refs. 2 - 28 |
| | | 8603630 | | 1 | FREIN, Incl. 11 - 26, 28; Includes Caliper Which Is Not Serviced Separately |
| 2 | | 8603649 | | 2 | VIS, M16 x 85 |
| 3 | | 8603650 | | 2 | RONDELLE |
| 4 | | 8603328 | | 1 | DISQUE DE FREIN |
| 5 | | 8603327 | | 1 | FLASQUE, Output |
| 6 | | 626-10025 | | 8 | BOULON, Hex, M10 x 25, 10.9, Full Thd |
| 7 | | 895-11010 | | 8 | RONDELLE, M10 x 20 x 2 |
| 8 | | 8603652 | | 4 | GOUJON, M14 x 45 |
| 9 | | 8603653 | | 1 | PLAQUE |
| 10 | | 8603654 | | 1 | VIS, Not Illustrated |
| 11 | | 8603699 | | 1 | PISTON |
| 12 | | 8603700 | | 1 | CHAPEAU |
| 13 | | 8603701 | | 1 | ANNEAU, Pressure |
| 14 | | 8603347 | | 1 | JOINT THORIQUE |
| 15 | | 8603702 | | 1 | AXE, Pressure |
| 16 | | 8603703 | | 2 | JOINT THORIQUE |
| 17 | | 8603704 | | 2 | BAGUE |
| 18 | | 8603705 | | 4 | JOINT THORIQUE |
| 19 | | 8603706 | | 6 | RESSORT |
| 20 | | 8603707 | | 1 | ANNEAU, Retaining |
| 21 | | 8603348 | | 1 | RENIFLARD |
| 22 | | 8603708 | | 1 | VIS DE REGLAGE |
| 23 | | 8603709 | | 1 | ECROU |
| 24 | | 8603710 | | 1 | BOUCHON, Not Illustrated |
| 25 | | 8603631 | | 1 | KIT |
| 26 | | 8603711 | | 1 | POCHETTE DE JOINTS, Park Brake |
| 27 | | 8603542 | | 1 | MANCHON |
| 28 | | NSS | | 1 | NON FOURNI SEPAREMENT, BRAKE CALIPER |

**FREINS PÉDALES**

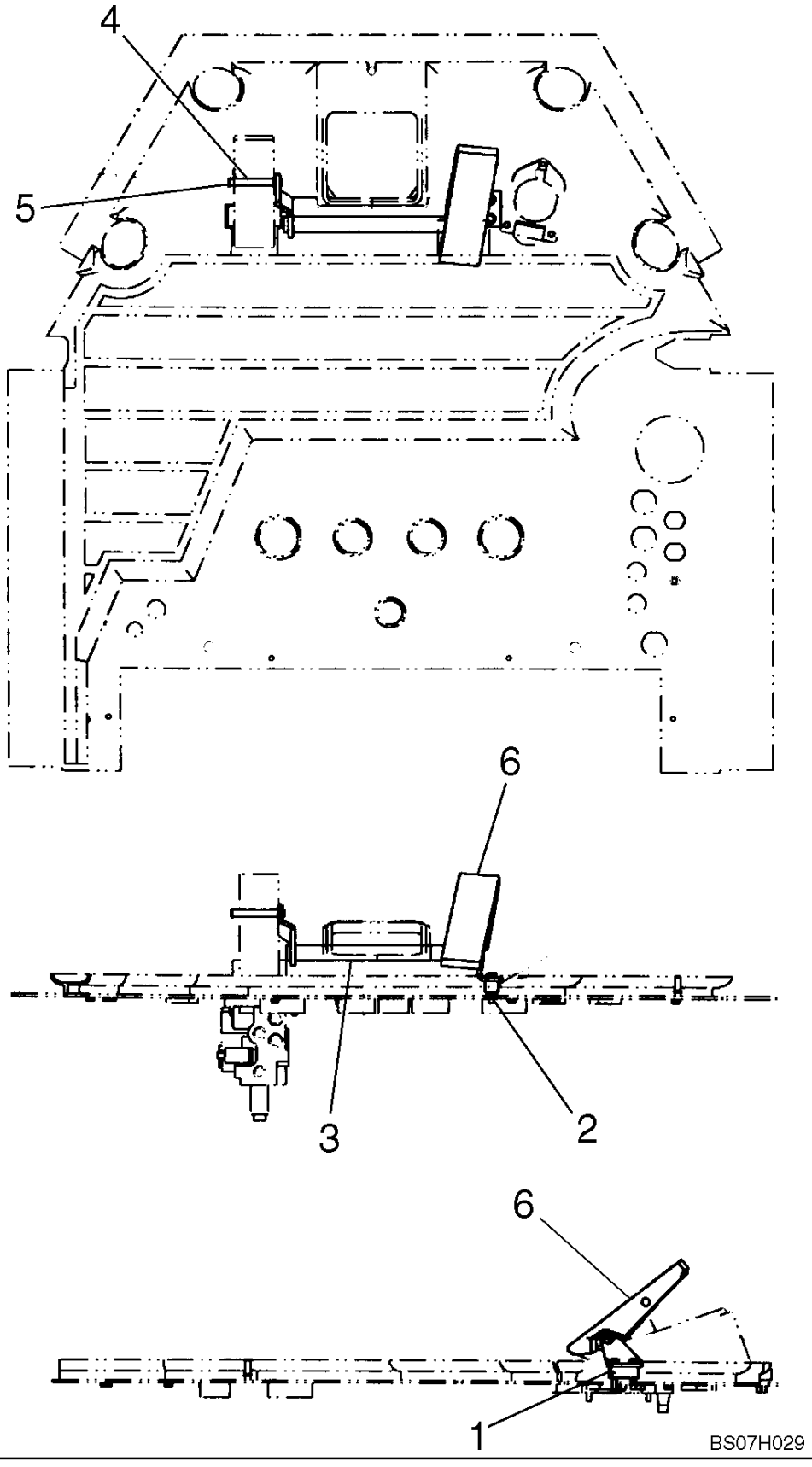

**FREINS PÉDALES**

| REF | FN | PART NUMBER | YR/SN | QTY | DESCRIPTION |
|---|---|---|---|---|---|
| | | REF | | | NOTICE, RIGHT HAND PEDAL |
| 1 | | 87568400 | | 1 | PIÈCES DE FIXATION |
| 2 | | 844-8025 | | 2 | BOULON, Hex Flg, M8 x 25, 8.8 |
| 3 | | 87542219 | | 1 | PEDALE (ASSEMBLEE), Tag-Along Pedal |
| 4 | | 383868A1 | | 1 | AXE |
| 5 | | 800-44012 | | 2 | ANNEAU D'ARRÊT, M12, Ext |
| 6 | | 383869A2 | | 1 | PEDALE |

**SYSTEME HYDRAULIQUE - RÉSERVOIR - POMPE**

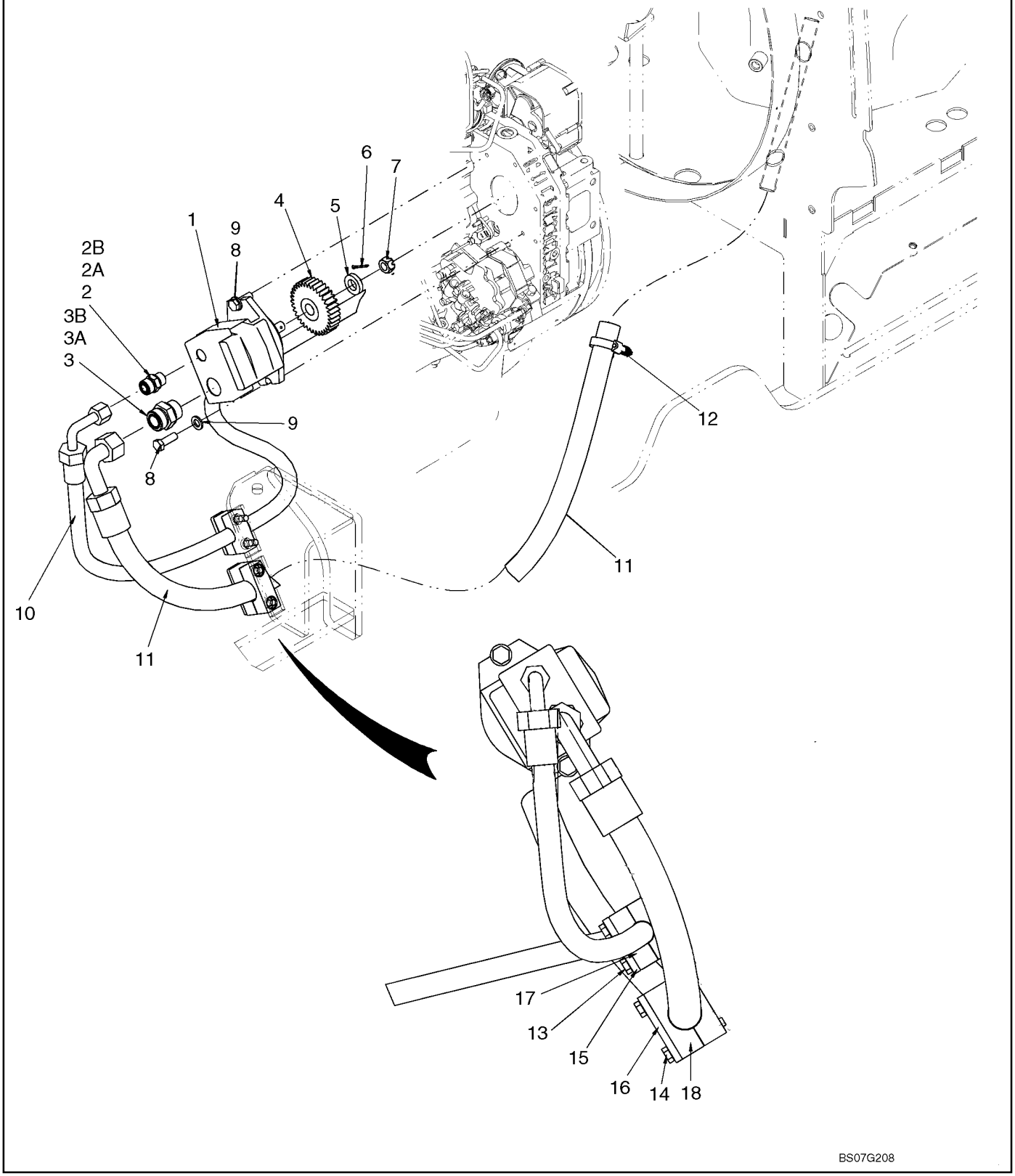

**SYSTEME HYDRAULIQUE - RÉSERVOIR - POMPE**

| REF | FN | PART NUMBER | YR/SN | QTY | DESCRIPTION |
|---|---|---|---|---|---|
| 1 | | 87342166 | | 1 | POMPE HYDRAULIQUE, Brake; See Figure 07-04 |
| 2 | | 700-103 | | 1 | RACCORD, 1"-14 ORFS x M22 x 1.5 ORB, Incl. 2A, 2B |
| 2A | | 238-6016 | | 1 | JOINT THORIQUE, -016, 90 Duro, .614" ID x .070" Thk, Face Seal |
| 2B | | 637-63193 | | 1 | JOINT THORIQUE, CI 6, 19.3MM ID x 2.2 Thk, Boss Seal |
| 3 | | 700-105 | | 1 | RACCORD, 1 7/16"-12 ORFS x M22 x 2 ORB, Incl. 3A, 3B |
| 3A | | 238-6021 | | 1 | JOINT THORIQUE, -021, 90 Duro, .926" ID x .070" Thk, Face Seal |
| 3B | | 637-64296 | | 1 | JOINT THORIQUE, CI 6, 29.6MM ID x 2.9 Thk, Boss Seal |
| 4 | | 87389871 | | 1 | PIGNON, Accessory Drive |
| 5 | | 87373112 | | 1 | RONDELLE, Gear Mounting |
| 6 | | 733-3232 | | 1 | GOUPILLE, M3.2 x 32 |
| 7 | | 425-1310 | | 1 | ECROU A ENCOCHES, 5/8"-18, G5 |
| 8 | | 627-12035 | | 2 | BOULON, Hex, M12 x 35, 10.9 |
| 9 | | 896-11012 | | 2 | RONDELLE, M13.5 x 24.5 x 3, HT |
| 10 | | 87377350 | | 1 | FLEXIBLE (ASSEMBLE), Brake Pump Pressure; 2491 mm (98-1/16 in) |
| 11 | | 87377337 | | 1 | FLEXIBLE (ASSEMBLE), Brake Pump Suction; 1043mm (41 in) |
| 12 | | 353036A1 | | 1 | COLLIER, Constant Torque |
| 13 | | 827-10075 | | 2 | BOULON, Hex, M10 x 75, 10.9 |
| 14 | | 827-10070 | | 2 | BOULON, Hex, M10 x 70, 10.9 |
| 15 | | 367658A1 | | 1 | PLAQUE, Clamp Cover |
| 16 | | 8500858 | | 1 | PLAQUE, Clamp Cover |
| 17 | | 8606002 | | 1 | BRIDE-FIXATION/ COLLIER, Hose Mounting |
| 18 | | 8500621 | | 1 | BLOC, Hose Mounting |

**SYSTEME HYDRAULIQUE - FREIN, PRINCIPAL - ESSIEU**

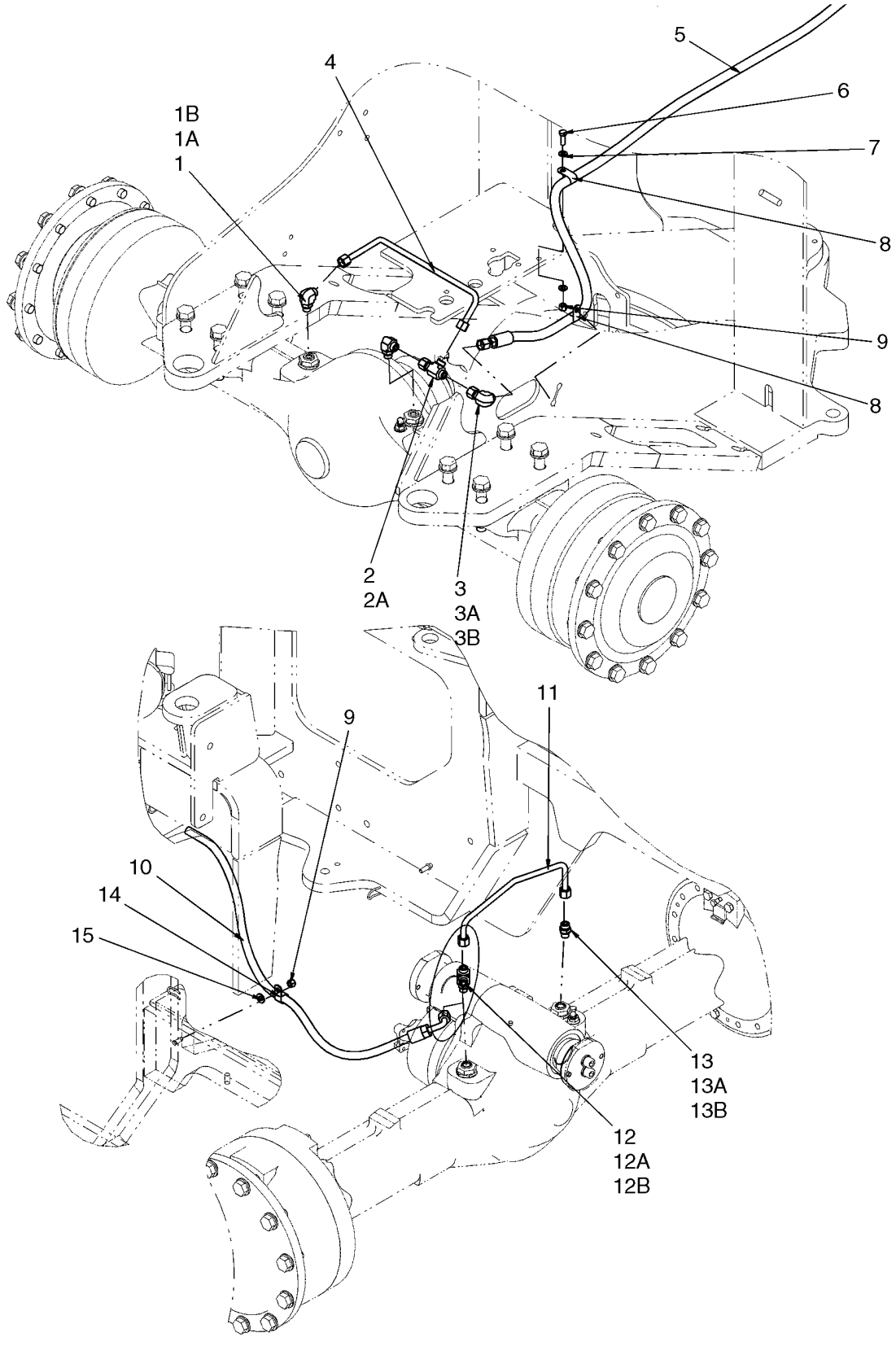

**SYSTEME HYDRAULIQUE - FREIN, PRINCIPAL - ESSIEU**

| REF | FN | PART NUMBER | YR/SN | QTY | DESCRIPTION |
|---|---|---|---|---|---|
| | | REF | | | NOTICE, TOP VIEW - FRONT AXLE |
| | | REF | | | NOTICE, BOTTOM VIEW - REAR AXLE |
| 1 | | 700-305 | | 2 | COUDE, 90º, 13/16"-18 ORFS x M18 x 1.5 ORB, Incl. Refs. 1A, 1B |
| 1A | | 238-6014 | | 1 | JOINT THORIQUE, -014, 90 Duro, .489" ID x .070" Thk, Face Seal |
| 1B | | 637-63153 | | 1 | JOINT THORIQUE, Cl 6, 15.3MM ID x 2.2 Thk |
| 2 | | 701-416 | | 1 | TE, 13/16"-16 ORFS x 13/16"-16 Fem Sw Run, Incl. Refs. 2A |
| 2A | | 238-6014 | | 2 | JOINT THORIQUE, -014, 90 Duro, .489" ID x .070" Thk, Face Seal |
| 3 | | 701-320 | | 1 | COUDE, 90º, 13/16"-16 ORFS x 13/16"-16 Fem Sw, Incl. Refs. 3A, 3B |
| 3A | | 238-6014 | | 1 | JOINT THORIQUE, -014, 90 Duro, .489" ID x .070" Thk, Face Seal |
| 3B | | 637-63153 | | 1 | JOINT THORIQUE, Cl 6, 15.3MM ID x 2.2 Thk |
| 4 | | 386735A1 | | 1 | TUYAUTERIE, Front Axle Brake |
| 5 | | {87658723} | | 1 | HOSE ASSY. Front Axle Brake; 3168mm ( 124 - 3/4 in ) |
| 6 | | 627-10030 | | 1 | BOULON, Hex, M10 x 30, 10.9, Full Thd |
| 7 | | 895-11010 | | 2 | RONDELLE, M10 x 20 x 2 |
| 8 | | 515-24222 | | 2 | BRIDE, 7/8", Insul, 7/16" Bolt |
| 9 | | 832-10410 | | 2 | CONTRE-ECROU, M10 x 1.5, Cl 8 |
| 10 | | 87553873 | | 1 | FLEXIBLE, Rear Axle Brake; 1081 mm (42 - 9/16 in) |
| 11 | | 386823A1 | | 1 | TUYAUTERIE, Rear Axle Brake |
| 12 | | 700-412 | | 1 | TE, 13/16"-16 ORFS x M18 x 1.5 ORB Run, Incl. Refs. 12A, 12B |
| 12A | | 238-6014 | | 2 | JOINT THORIQUE, -014, 90 Duro, .489" ID x .070" Thk, Face Seal |
| 12B | | 637-63153 | | 1 | JOINT THORIQUE, Cl 6, 15.3MM ID x 2.2 Thk |
| 13 | | 700-102 | | 1 | RACCORD, 13/16"-16 ORFS x M18 x 1.5 ORB, Incl. Refs. 13A, 13B |
| 13A | | 238-6014 | | 1 | JOINT THORIQUE, -014, 90 Duro, .489" ID x .070" Thk, Face Seal |
| 13B | | 637-63153 | | 1 | JOINT THORIQUE, Cl 6, 15.3MM ID x 2.2 Thk |

**SYSTEME HYDRAULIQUE - FREIN, PRINCIPAL - ESSIEU**

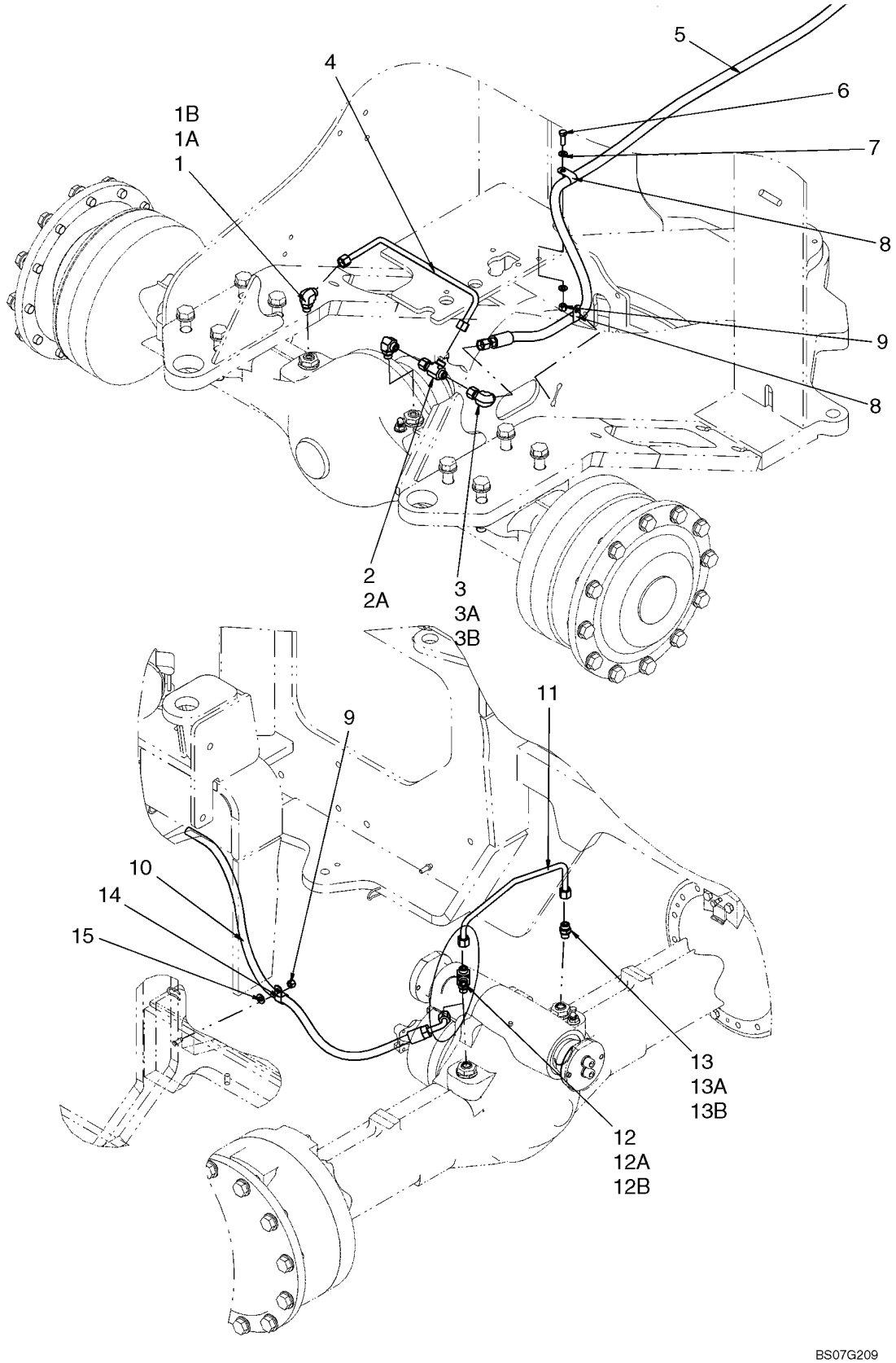

**SYSTEME HYDRAULIQUE - FREIN, PRINCIPAL - ESSIEU**

| REF | FN | PART NUMBER | YR/SN | QTY | DESCRIPTION |
|---|---|---|---|---|---|
| 14 | | 515-24238 | | 1 | BRIDE, 15/16", Insul, 7/16" Bolt |
| 15 | | 895-15010 | | 1 | RONDELLE, M11 x 24 x 2 |

**SYSTEME HYDRAULIQUE - FREIN, PRINCIPAL - ACCUMULATEUR**

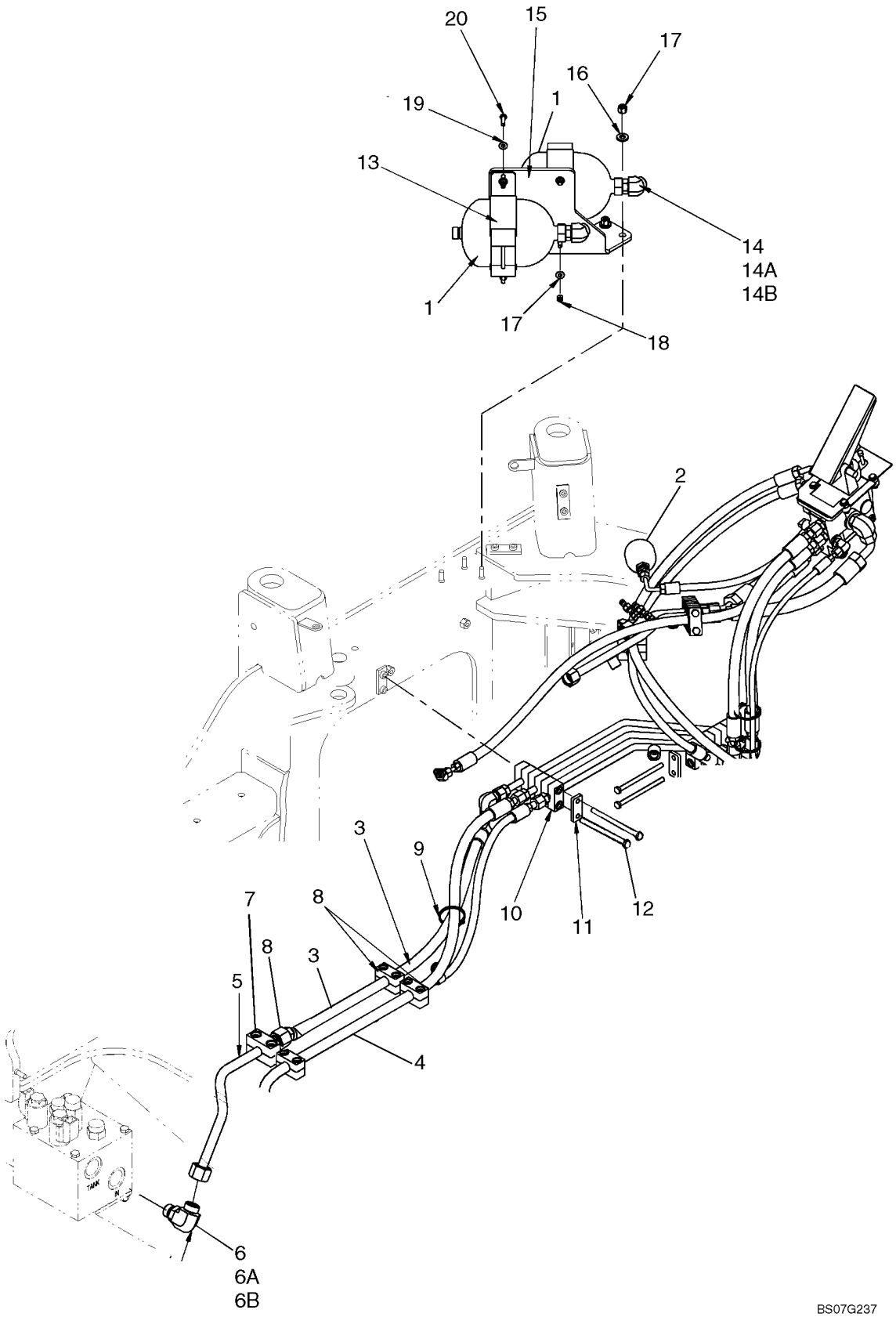

**SYSTEME HYDRAULIQUE - FREIN, PRINCIPAL - ACCUMULATEUR**

| REF | FN | PART NUMBER | YR/SN | QTY | DESCRIPTION |
|---|---|---|---|---|---|
| | | REF | | | NOTICE, SERVICE AND PARKING BRAKE ACCUMULATORS, FAN SUPPLY AND PUMP PRESSURE LINE MOUNTING |
| 1 | | 8603020 | | 2 | ACCUMULATEUR, Service Brake |
| 2 | | 8500209 | | 1 | ACCUMULATEUR, Parking Brake |
| 3 | | {87658724} | | 1 | HOSE ASSY. Fan Supply; 1049 mm ( 41 - 5/16 in) |
| 4 | | 87377350 | | 1 | FLEXIBLE (ASSEMBLE), Brake Pump Pressure; 2491 mm (98 - 1/16 in) |
| 5 | | {87658725} | | 1 | TUBE ASSY. Fan Supply |
| 6 | | 700-307 | | 2 | COUDE, 90º, 1 3/16"-12 ORFS x M27 x 2 ORB, Incl. Refs. 6A, 6B |
| 6A | | 238-6018 | | 1 | JOINT THORIQUE, -018, 90 Duro, .739" ID x .070" Thk, Face Seal |
| 6B | | 637-64236 | | 1 | JOINT THORIQUE, CI 6, 23.6MM ID x 2.9 Thk, Boss Seal |
| 7 | | 379374A1 | | 1 | BLOC, Hose Mounting |
| 8 | | 367489A1 | | 3 | BLOC, Hose Mounting |
| 9 | | L11541 | | 1 | SANGLE |
| 10 | | 8500210 | | 5 | BRIDE, Tube Mounting |
| 11 | | 367658A1 | | 1 | PLAQUE, Clamp Cover |
| 12 | | 827-10150 | | 4 | BOULON, Hex, M10 x 150, 10.9 |
| 13 | | 8501315 | | 2 | COLLIER, Accumulator |
| 14 | | 700-387 | | 1 | COUDE, 45º, 1 3/16"-12 ORFS x M27 x 2 ORB, Incl. Refs. 14A, 14B |
| 14A | | 238-6018 | | 1 | JOINT THORIQUE, -018, 90 Duro, .739" ID x .070" Thk, Face Seal |
| 14B | | 637-64236 | | 1 | JOINT THORIQUE, CI 6, 23.6MM ID x 2.9 Thk, Boss Seal |
| 15 | | 87326008 | | 1 | PATTE FIXATION, Accumulator |
| 16 | | 896-15012 | | 3 | RONDELLE, M12 x 28.5 x 4, HT |
| 17 | | 832-10412 | | 3 | CONTRE-ECROU, M12 x 1.75, CI 8 |
| 18 | | 832-10408 | | 4 | CONTRE-ECROU, M8 x 1.25, CI 8 |
| 19 | | 895-15008 | | 8 | RONDELLE, M8 x 20 x 1.6 |
| 20 | | 627-8030 | | 4 | BOULON, Hex, M8 x 30, 10.9 |

**SYSTEME HYDRAULIQUE - FREIN, PRINCIPAL - FREIN DE PARC**

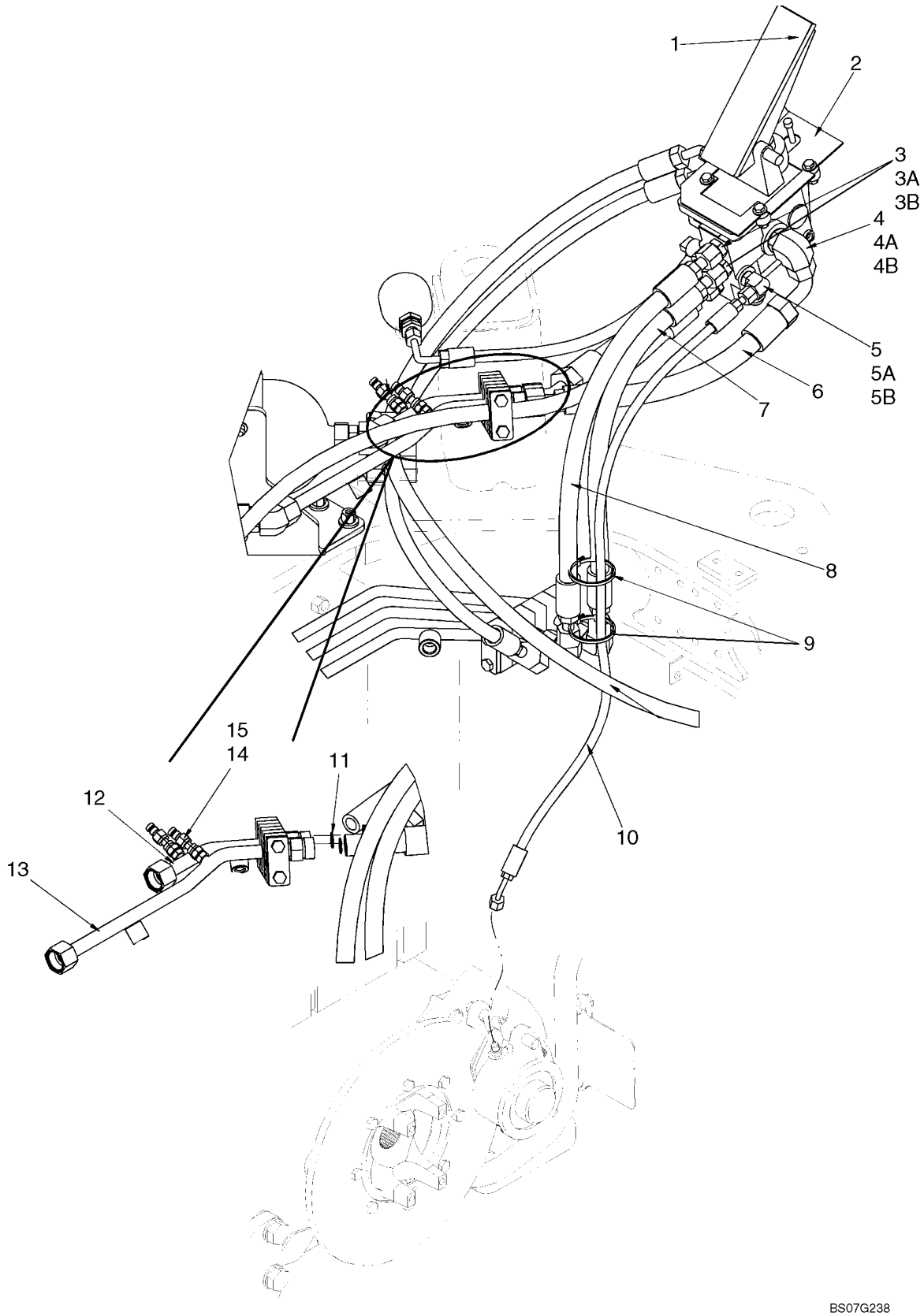

**SYSTEME HYDRAULIQUE - FREIN, PRINCIPAL - FREIN DE PARC**

| REF | FN | PART NUMBER | YR/SN | QTY | DESCRIPTION |
|---|---|---|---|---|---|
| | | REF | | | NOTICE, BRAKE VALVE TO PARKING BRAKE, BRAKE VALVE AND PUMP DISCHARGE HOSING, REAR ACCUMULATOR HOSING |
| 1 | | 87360067 | | 1 | SOUPAPE, FREIN, See Figure 07-05 |
| 2 | | 87607227 | | 1 | PLAQUE, Brake Valve |
| 3 | | 700-115 | | 2 | RACCORD, 1"-14 ORFS x M18 x 1.5 ORB, Incl. 3A, 3B |
| 3A | | 238-6016 | | 1 | JOINT THORIQUE, -016, 90 Duro, .614" ID x .070" Thk, Face Seal |
| 3B | | 637-63153 | | 1 | JOINT THORIQUE, CI 6, 15.3MM ID x 2.2 Thk |
| 4 | | 700-307 | | 1 | COUDE, 90º, 1 3/16"-12 ORFS x M27 x 2 ORB, Incl. 4A, 4B |
| 4A | | 238-6018 | | 1 | JOINT THORIQUE, -018, 90 Duro, .739" ID x .070" Thk, Face Seal |
| 4B | | 637-64236 | | 1 | JOINT THORIQUE, CI 6, 23.6MM ID x 2.9 Thk, Boss Seal |
| 5 | | 700-368 | | 1 | COUDE, 90º, 11/16"-18 ORFS x M16 x 1.5 ORB, Incl. 5A, 5B |
| 5A | | 238-6012 | | 1 | JOINT THORIQUE, -012, 90 Duro, .364" ID x .070" Thk, Face Seal |
| 5B | | 637-63133 | | 1 | JOINT THORIQUE, CI 6, 13.3MM ID x 2.2 Thk, Boss Seal |
| 6 | | 87377313 | | 1 | FLEXIBLE (ASSEMBLE), Rear Accumulator; 448mm (17-1/2 in) |
| 7 | | 87354481 | | 1 | FLEXIBLE (ASSEMBLE), Brake Pump Discharge; 618mm (24-1/3 in) |
| 8 | | 87354480 | | 1 | FLEXIBLE (ASSEMBLE), Brake Valve Discharge; 668mm (26-1/4 in) |
| 9 | | L11541 | | 2 | SANGLE |
| 10 | | 87325997 | | 1 | FLEXIBLE (ASSEMBLE), Parking Brake; 1070mm (43 in) |
| 11 | | 238-6018 | | 2 | JOINT THORIQUE, -018, 90 Duro, .739" ID x .070" Thk, Face Seal |
| 12 | | 87354290 | | 1 | TUYAUTERIE, Front Brake Accumulator |
| 13 | | 87529279 | | 1 | TUYAUTERIE, Rear Brake Accumulator |

**SYSTEME HYDRAULIQUE - FREIN, PRINCIPAL - FREIN DE PARC**

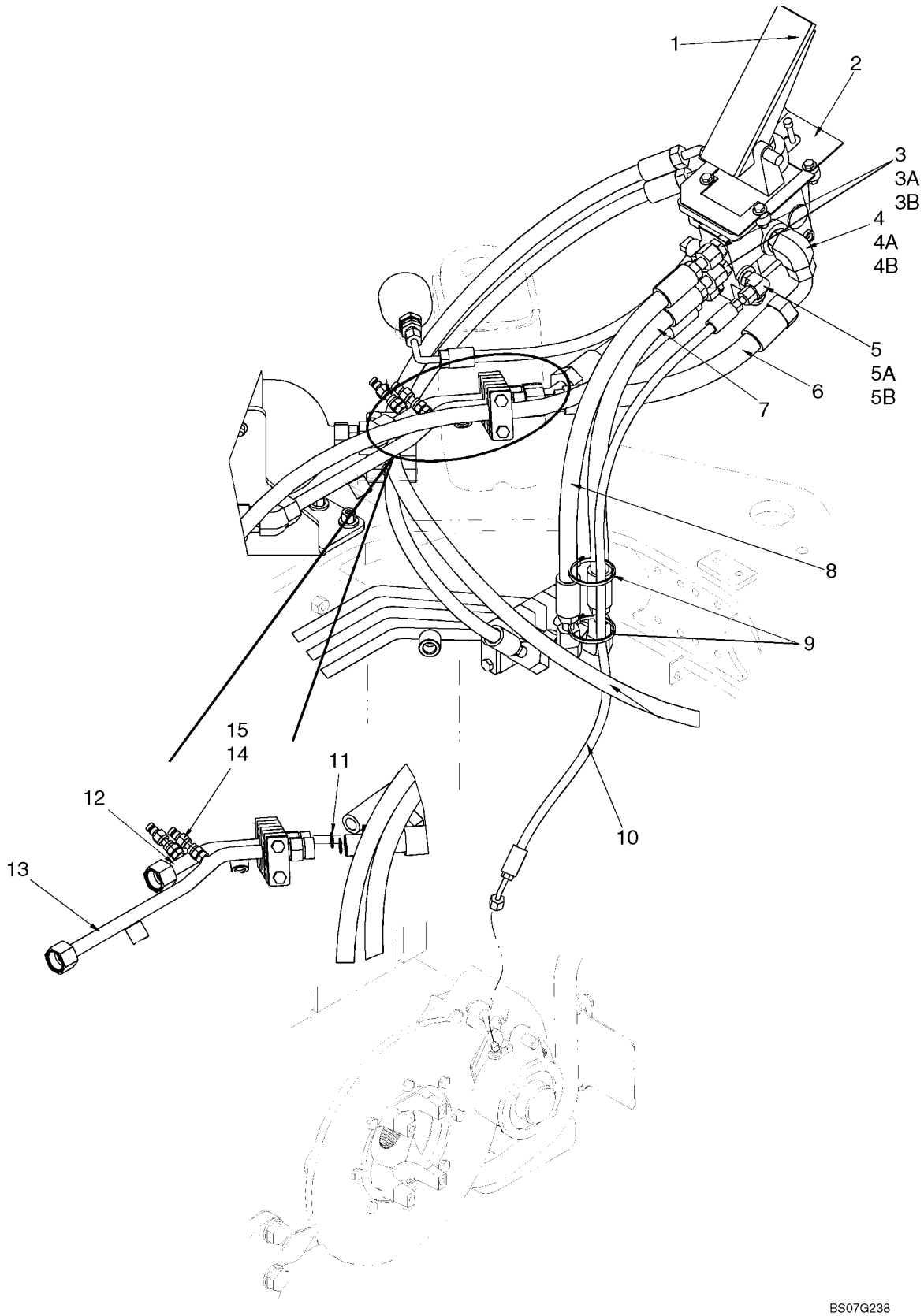

**SYSTEME HYDRAULIQUE - FREIN, PRINCIPAL - FREIN DE PARC**

| REF | FN | PART NUMBER | YR/SN | QTY | DESCRIPTION |
|---|---|---|---|---|---|
| 14 | | 190117A1 | | 2 | CARDAN, Diagnostic |
| 15 | | 238-6011 | | 2 | JOINT THORIQUE, -011, 90 Duro, .301" ID x .070" Thk |

**SYSTEME HYDRAULIQUE - FREIN, PRINCIPAL - RÉSERVOIR**

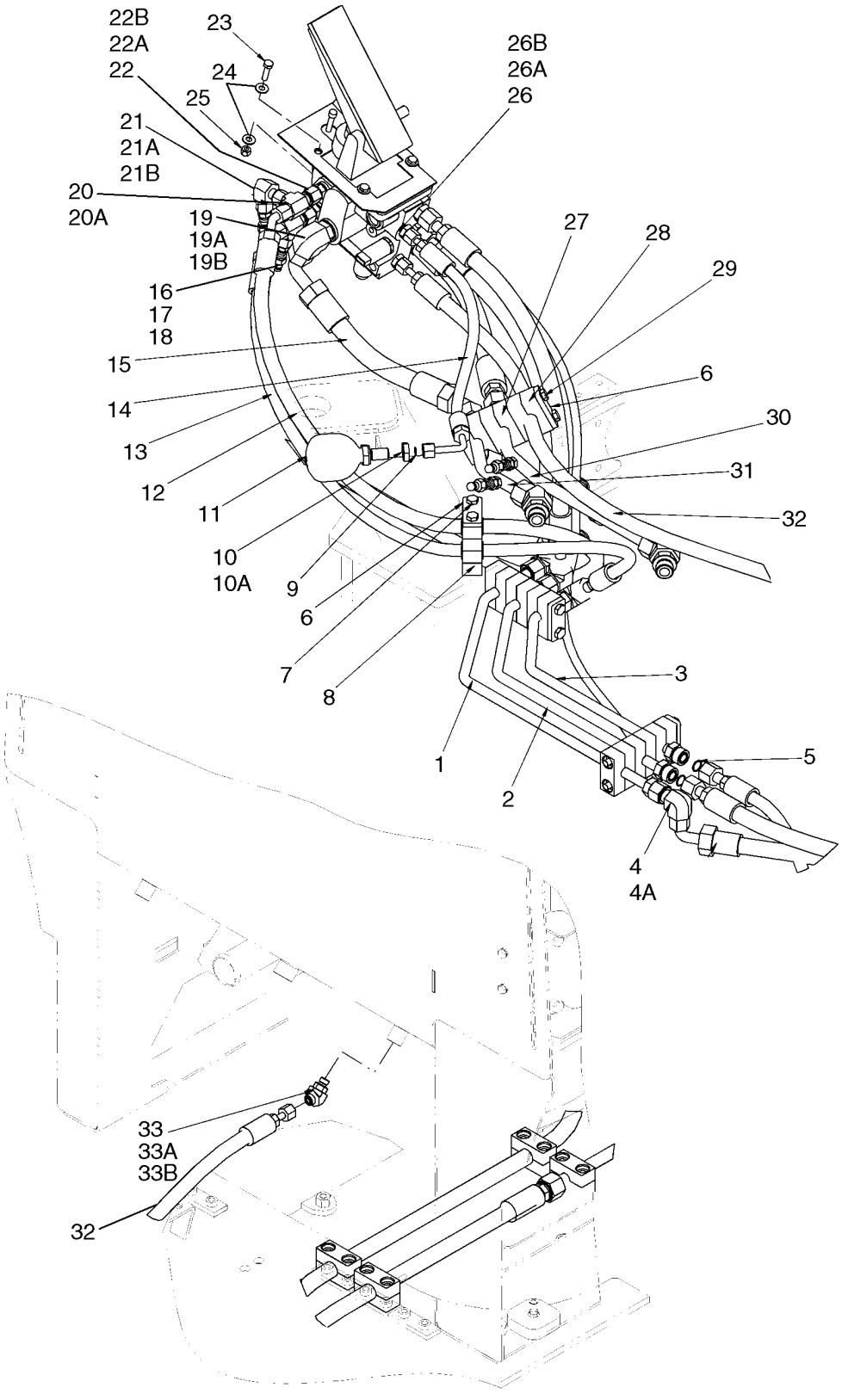

**SYSTEME HYDRAULIQUE - FREIN, PRINCIPAL - RÉSERVOIR**

| REF | FN | PART NUMBER | YR/SN | QTY | DESCRIPTION |
|---|---|---|---|---|---|
| 1 | | 87326263 | | 1 | TUYAUTERIE, Fan Supply |
| 2 | | 87326262 | | 1 | TUYAUTERIE, Brake Supply |
| 3 | | 87326268 | | 1 | TUYAUTERIE, Rear Axle Brake |
| 4 | | 701-361 | | 1 | COUDE, 90º, 1"-14 ORFS x 1"-14 Fem Sw |
| 4A | | 238-6016 | | 1 | JOINT THORIQUE, -016, 90 Duro, .614" ID x .070" Thk, Face Seal |
| 5 | | 238-6016 | | 3 | JOINT THORIQUE, -016, 90 Duro, .614" ID x .070" Thk, Face Seal |
| 6 | | 367658A1 | | 3 | PLAQUE, Clamp Cover |
| 7 | | 827-10100 | | 2 | BOULON, Hex, M10 x 100, 10.9 |
| 8 | | 367489A1 | | 2 | BLOC, Tube Mounting |
| 9 | | 238-6012 | | 1 | JOINT THORIQUE, -012, 90 Duro, .364" ID x .070" Thk, Face Seal |
| 10 | | 701-909 | | 1 | CONTRE-ECROU, 11/16"-16, Blkhd, Incl. Ref. 10A |
| 10A | | 238-6012 | | 1 | JOINT THORIQUE, -012, 90 Duro, .364" ID x .070" Thk, Face Seal |
| 11 | | 8500209 | | 1 | ACCUMULATEUR, Parking Brake |
| 12 | | {87658723} | | 1 | HOSE ASSY. Front Axle Brake; 3168 mm ( 124 - 3/4 in ) |
| 13 | | 87325999 | | 1 | FLEXIBLE (ASSEMBLE), Rear Axle Brake; 1206mm ( 47 - 1/2 in ) |
| 14 | | 87325996 | | 1 | FLEXIBLE (ASSEMBLE), 461 mm (18-1/4 in); Parking Brake Accumulator |
| 15 | | 87521823 | | 1 | FLEXIBLE (ASSEMBLE), Front Accumulator; 411mm ( 16-1/4 in ) |
| 16 | | 201-110 | | 2 | REDUCTEUR, 9/16"-18 Male x 13/16"-16 Fem, ORFS |
| 17 | | 703-902 | | 2 | ECROU DE TUYAUTERIE, 13/16"-16, ORFS |
| 18 | | 190117A1 | | 2 | CARDAN, Diagnostic |
| 19 | | 700-307 | | 1 | COUDE, 90º, 1 3/16"-12 ORFS x M27 x 2 ORB, Incl. Refs. 19A, 19B |
| 19A | | 238-6018 | | 1 | JOINT THORIQUE, -018, 90 Duro, .739" ID x .070" Thk, Face Seal |
| 19B | | 637-64236 | | 1 | JOINT THORIQUE, Cl 6, 23.6MM ID x 2.9 Thk, Boss Seal |

**SYSTEME HYDRAULIQUE - FREIN, PRINCIPAL - RÉSERVOIR**

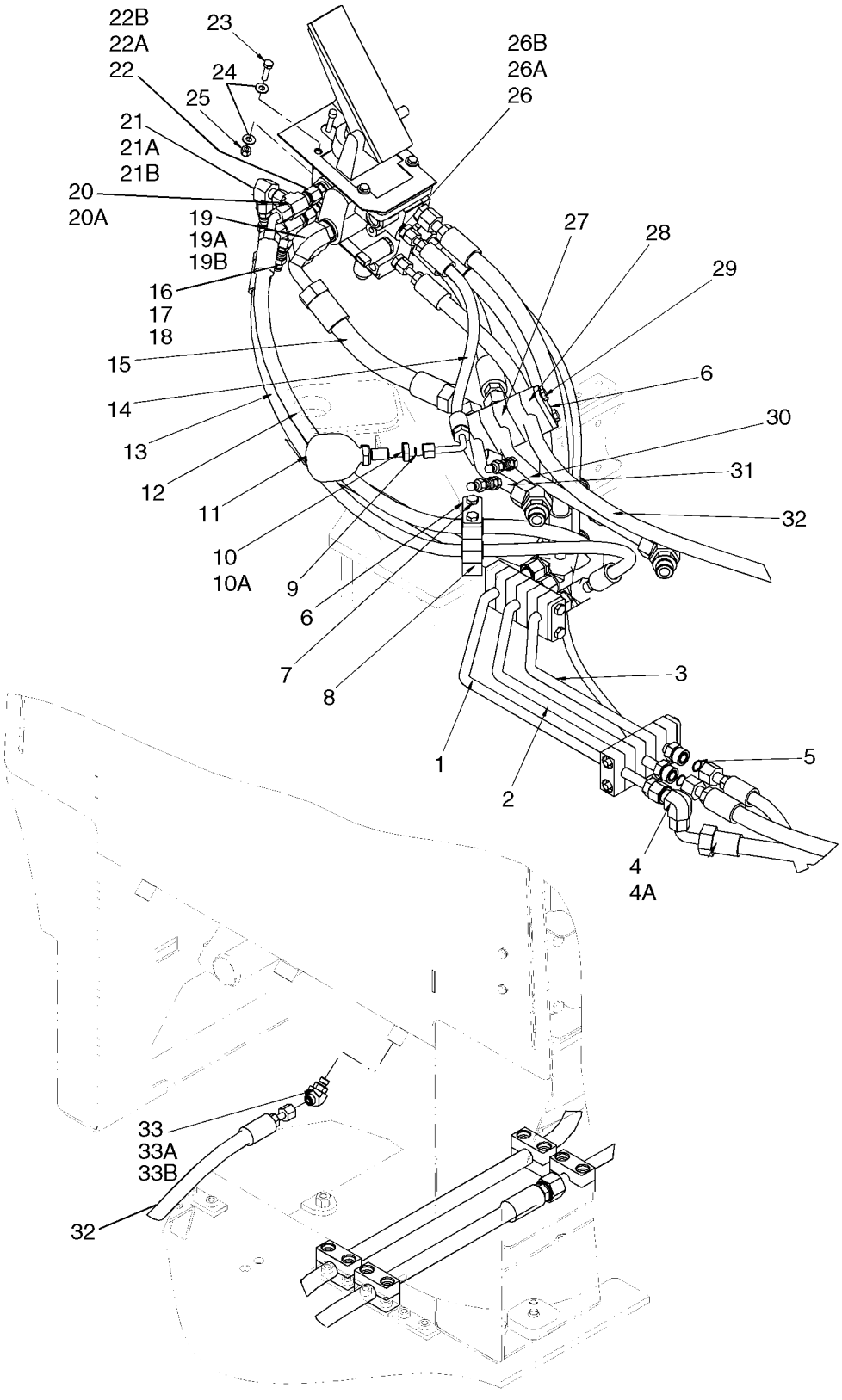

**SYSTEME HYDRAULIQUE - FREIN, PRINCIPAL - RÉSERVOIR**

| REF | FN | PART NUMBER | YR/SN | QTY | DESCRIPTION |
|---|---|---|---|---|---|
| 20 | | 701-416 | | 2 | TE, 13/16"-16 ORFS x 13/16"-16 Fem Sw Run, Incl. Ref. 20A |
| 20A | | 238-6014 | | 1 | JOINT THORIQUE, -014, 90 Duro, .489" ID x .070" Thk, Face Seal |
| 21 | | 701-320 | | 1 | COUDE, 90º, 13/16"-16 ORFS x 13/16"-16 Fem Sw, Incl. Refs. 21A, 21B |
| 21A | | 637-63153 | | 1 | JOINT THORIQUE, CI 6, 15.3MM ID x 2.2 Thk |
| 21B | | 238-6014 | | 1 | JOINT THORIQUE, -014, 90 Duro, .489" ID x .070" Thk, Face Seal |
| 22 | | 700-169 | | 2 | RACCORD, 13/16"-16 ORFS x M16 x 1.5 ORB, Incl. Refs. 22A, 22B |
| 22A | | 238-6014 | | 1 | JOINT THORIQUE, -014, 90 Duro, .489" ID x .070" Thk, Face Seal |
| 22B | | 637-63133 | | 1 | JOINT THORIQUE, CI 6, 13.3MM ID x 2.2 Thk, Boss Seal |
| 23 | | 627-8030 | | 4 | BOULON, Hex, M8 x 30, 10.9 |
| 24 | | 895-15008 | | 8 | RONDELLE, M8 x 20 x 1.6 |
| 25 | | 832-10408 | | 4 | CONTRE-ECROU, M8 x 1.25, CI 8 |
| 26 | | 700-157 | | 2 | RACCORD, 11/16"-16 ORFS x M16 x 1.5 ORB, Incl. Refs. 26A, 26B |
| 26A | | 637-63133 | | 1 | JOINT THORIQUE, CI 6, 13.3MM ID x 2.2 Thk |
| 26B | | 238-6012 | | 1 | JOINT THORIQUE, -012, 90 Duro, .364" ID x .070" Thk |
| 27 | | 379374A1 | | 2 | BLOC, Tube Mounting |
| 28 | | 8501052 | | 1 | PONTET, Tube Mounting |
| 29 | | 827-10150 | | 2 | BOULON, Hex, M10 x 150, 10.9 |
| 30 | | 87529279 | | 1 | TUYAUTERIE, Rear Brake Accumulator |
| 31 | | 87354290 | | 1 | TUYAUTERIE, Front Brake Accumulator |
| 32 | | 87326000 | | 1 | FLEXIBLE (ASSEMBLE), Tank Reference; 1291mm ( 51 in ) |
| 33 | | 700-315 | | 1 | COUDE, 45º, 11/16"-18 ORFS x M14 x 1.5 ORB, Incl. Refs. 33A, 33B |
| 33A | | 238-6012 | | 1 | JOINT THORIQUE, -012, 90 Duro, .364" ID x .070" Thk, Face Seal |
| 33B | | 637-63113 | | 1 | JOINT THORIQUE, CI 6, 11.3MM ID x 2.2 Thk |

**SYSTEME HYDRAULIQUE - FREIN - POMPE**

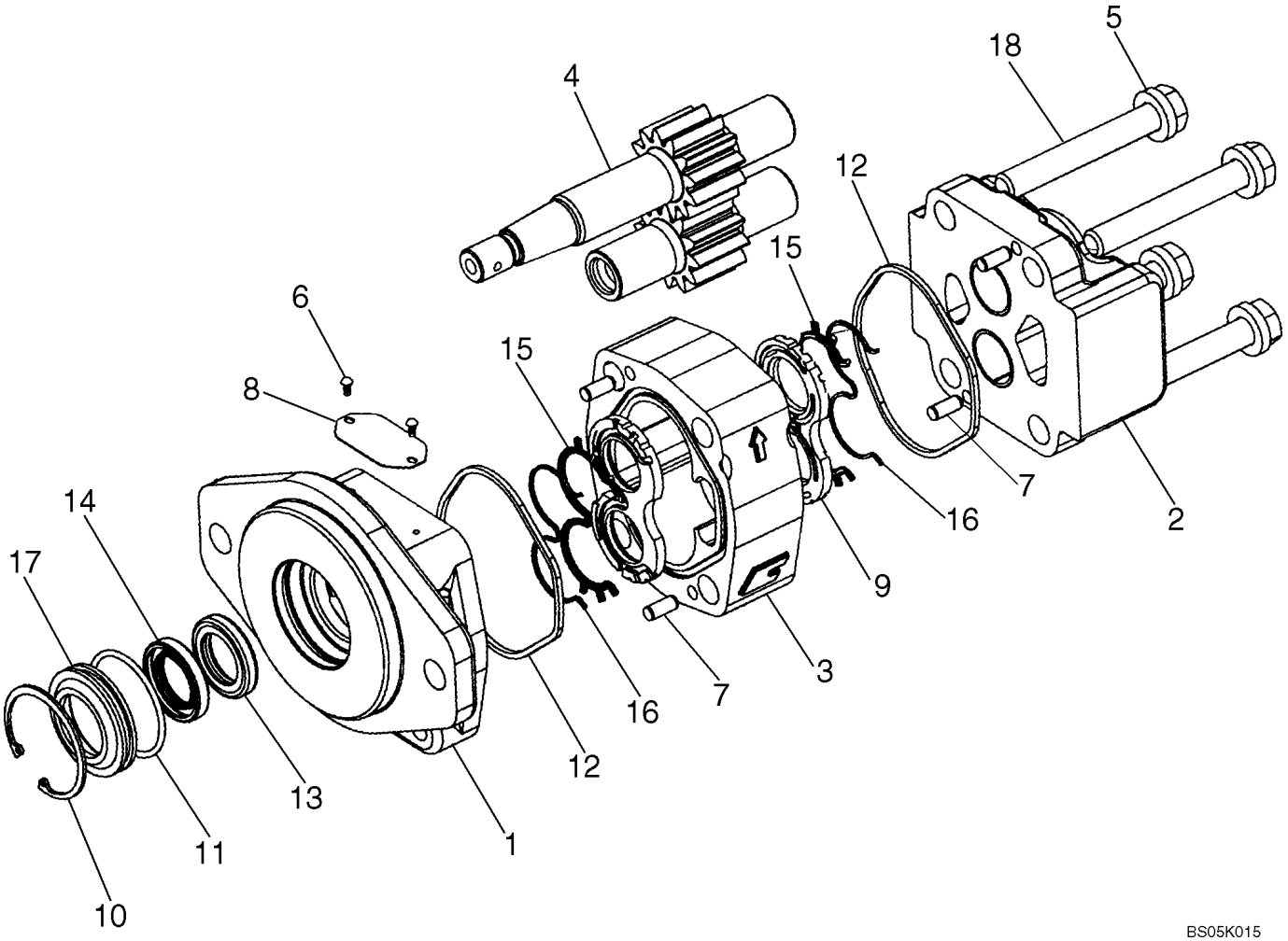

**SYSTEME HYDRAULIQUE - FREIN - POMPE**

| REF | FN | PART NUMBER | YR/SN | QTY | DESCRIPTION |
|---|---|---|---|---|---|
| | | 87342166 | | | POMPE HYDRAULIQUE, Brake |
| | | 87364063 | | | POCHETTE DE JOINTS, Incl. Refs. 9 - 12, 15 - 17 |
| 1 | | NSS | | 1 | NON FOURNI SEPAREMENT, HOUSING |
| 2 | | NSS | | 1 | NON FOURNI SEPAREMENT, HOUSING |
| 3 | | NSS | | 1 | NON FOURNI SEPAREMENT, HOUSING |
| 4 | | NSS | | 1 | NON FOURNI SEPAREMENT, SET GEAR SHAFT |
| 5 | | NSS | | 4 | NON FOURNI SEPAREMENT, CAP SCREW |
| 6 | | NSS | | 2 | NON FOURNI SEPAREMENT, SCREW, DRIVE |
| 7 | | NSS | | 4 | NON FOURNI SEPAREMENT, DOWEL PIN |
| 8 | | NSS | | 1 | NON FOURNI SEPAREMENT, NAME PLATE |
| 9 | | NSS | | 2 | NON FOURNI SEPAREMENT, PLATE, THRUST |
| 10 | | NSS | | 1 | NON FOURNI SEPAREMENT, RING; RETAINER |
| 11 | | NSS | | 1 | NON FOURNI SEPAREMENT, SEAL, O-RING |
| 12 | | NSS | | 2 | NON FOURNI SEPAREMENT, SEAL - SSQUARE |
| 13 | | NSS | | 1 | NON FOURNI SEPAREMENT, SEAL, LIP |
| 14 | | NSS | | 1 | NON FOURNI SEPAREMENT, SEAL, LIP |
| 15 | | NSS | | 2 | NON FOURNI SEPAREMENT, SEAL, CHANNEL |
| 16 | | NSS | | 2 | NON FOURNI SEPAREMENT, SEAL, BACK UP |
| 17 | | NSS | | 1 | NON FOURNI SEPAREMENT, RETAINER SEAL |
| 18 | | NSS | | 4 | NON FOURNI SEPAREMENT, WASHER |

**DISTRIBUTEUR - FREIN**

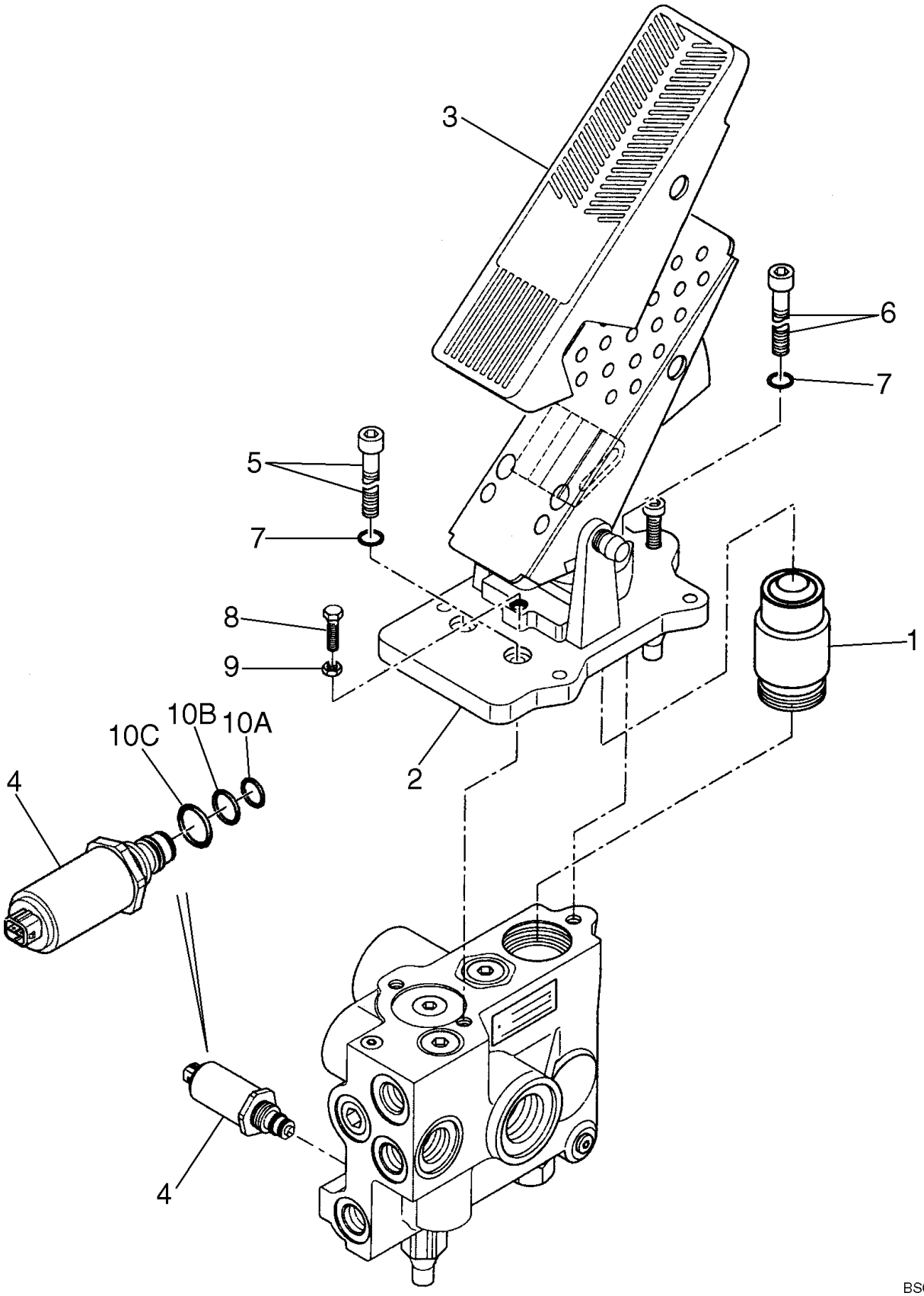

**DISTRIBUTEUR - FREIN**

| REF | FN | PART NUMBER | YR/SN | QTY | DESCRIPTION |
|---|---|---|---|---|---|
| | | 87360067 | | 1 | SOUPAPE, FREIN, Incl. Refs. 1 - 10 |
| 1 | | 87398113 | | 1 | MECANISME DE CDE |
| 2 | | 87398114 | | 1 | PEDALE |
| 3 | | 383869A2 | | 1 | PEDALE |
| 4 | | 8604506 | | 1 | CARTOUCHE |
| 5 | | 864-8025 | | 2 | VIS, Hex Soc Hd, M8 x 25, 8.8 |
| 6 | | 864-8030 | | 1 | VIS, Hex Soc Hd, M8 x 30, 8.8 |
| 7 | | 892-11008 | | 1 | RONDELLE FREIN, M8 |
| 8 | | 827-8060 | | 1 | BOULON, Hex, M8 x 60, 10.9 |
| 9 | | 829-1408 | | 1 | ECROU, M8, Cl 10 |
| 10 | | 87398116 | | 1 | POCHETTE DE JOINTS, Incl. Refs. 10A - 10C |
| 10A | | NSS | | 1 | NON FOURNI SEPAREMENT, O-RING 8.9 x 1.5 |
| 10B | | NSS | | 1 | NON FOURNI SEPAREMENT, O-RING 10.72 x 1.78 |
| 10C | | NSS | | 1 | NON FOURNI SEPAREMENT, O-RING 15 x 2 |

## NOTES

# SECTION INDEX
## Installation hydraulique


| | |
|---|---|
| 08-01 | RESERVOIR HYDRAULIQUE- MONTAGE |
| 08-01A | SYSTEME HYDRAULIQUE - REFROIDISSEUR D'HUILE SUPPORT |
| 08-02 | RESERVOIR HYDRAULIQUE - FILTRE |
| 08-02A | SYSTEME HYDRAULIQUE - FILTRE À HUILE |
| 08-03 | SYSTEME HYDRAULIQUE - DU RÉSERVOIR À LA POMPE HYDRAULIQUE |
| 08-04 | POMPE |
| 08-05 | SYSTEME HYDRAULIQUE - RELEVAGE ET GODET DES BRAS DE RELEVAGE (Z-BAR, XR CHARGEUSE) |
| 08-06 | SYSTEME HYDRAULIQUE - RELEVAGE DE LA CHARGEUSE (XT CHARGEUSE) |
| 08-07 | SYSTEME HYDRAULIQUE - GODET DE LA CHARGEUSE (XT CHARGEUSE) |
| 08-07A | SYSTEME HYDRAULIQUE - GODET DE LA CHARGEUSE (XT CHARGEUSE) |
| 08-08 | SYSTEME HYDRAULIQUE - CHARGEUR AUXILIAIRE (Z CHARGEUSE) |
| 08-09 | SYSTEME HYDRAULIQUE - CHARGEUR AUXILIAIREN (XR) |
| 08-10 | SYSTEME HYDRAULIQUE - CHARGEUR AUXILIAIRE (XT CHARGEUSE) - SI UTILISÉ |
| 08-11 | SYSTEME HYDRAULIQUE - COUPLEUR (Z CHARGEUSE) |
| 08-12 | SYSTEME HYDRAULIQUE - COUPLEUR (XRCHARGEUSE) |
| 08-13 | SYSTEME HYDRAULIQUE - COUPLEUR (XT CHARGEUSE) |
| 08-14 | CIRCUITS HYDRAULIQUES - VERROUILLAGE DU COUPLEUR |
| 08-15 | VERIN - GODET DE LA CHARGEUSE |
| 08-16 | VERIN - GODET DE LA CHARGEUSE (Z CHARGEUSE) |
| 08-17 | VERIN - GODET DE LA CHARGEUSE (XR CHARGEUSE) |
| 08-18 | VERIN - RELEVAGE DE LA CHARGEUSE (XT CHARGEUSE) |
| 08-19 | CIRCUIT HYDRAULIQUE - DÉRIVATION STANDARD |
| 08-19A | CIRCUIT HYDRAULIQUE - SANS DÉRIVATION |
| 08-19B | CIRCUIT HYDRAULIQUE -DÉRIVATION THERMIQUE |
| 08-20 | SYSTEME HYDRAULIQUE - SYSTEME ANTI-TANGAGE |
| 08-20A | DISTRIBUTEUR - DISTRIBUTEUR DE CONTRÔLE E LA CONDUITE (RSM2-16) |
| 08-21 | SYSTEME HYDRAULIQUE - NON-SYSTEME ANTI-TANGAGE |
| 08-22 | SYSTEME HYDRAULIQUE - ENTRAÎNEMENT DU VENTILATEUR |
| 08-23 | DISTRIBUTEUR, VENTILATEUR SOUPAPE DE SÉCURITÉ - MONTAGE |
| 08-23A | DISTRIBUTEUR, VENTILATEUR SOUPAPE DE SÉCURITÉ |
| 08-24 | DISTRIBUTEUR, VENTILATEUR - VITESSE VARIABLE ET MARCHE ARRIÈRE - MONTAGE |
| 08-24A | DISTRIBUTEUR, VENTILATEUR - VITESSE VARIABLE ET MARCHE ARRIÈRE |
| 08-25 | SYSTEME HYDRAULIQUE - COMMANDE À DISTANCE DU CHARGEUR |
| 08-26 | COMMANDE DU DISTRIBUTEUR - SUPPORT, DEUX TIROIRS - (Z-BAR/XR/XT) |
| 08-26A | COMMANDE DU DISTRIBUTEUR - SUPPORT, TROIS TIROIRS -(Z-BAR/XR/XT) |
| 08-26B | COMMANDE DU DISTRIBUTEUR - SUPPORT, QUATRE TIROIRS - (Z-BAR/XR/XT) |
| 08-27 | DISTRIBUTEUR - COMMANDE DU CHARGEUR - DEUX, TROIS, QUATRE TIROIRS - (Z-BAR/XR) |
| 08-27A | DISTRIBUTEUR - AXE DU PISTON - (Z-BAR/XR) |
| 08-27B | DISTRIBUTEUR - COMMANDE DU CHARGEUR - CIRCUIT - (Z-BAR/XR) |
| 08-28 | DISTRIBUTEUR - COMMANDE DU CHARGEUR - DEUX, TROIS, QUATRE TIROIRS - (XT) |
| 08-28A | DISTRIBUTEUR - AXE DU PISTON - (XT) |
| 08-28B | DISTRIBUTEUR - COMMANDE DU CHARGEUR - CIRCUIT - (XT) |
| 08-29 | SYSTEME HYDRAULIQUE - LEVIER DE COMMANDE SUPPORT |
| 08-29A | DISTRIBUTEUR - LEVIER DE COMMANDE |
| 08-29B | DISTRIBUTEUR - LEVIER DE COMMANDE |
| 08-30 | COMMANDE DU CHARGEUR - MANETTE AVEC LEVIER UNIQUE - MONTAGE |
| 08-30A | COMMANDE DU CHARGEUR - MANETTE AVEC LEVIER UNIQUE |

# SECTION INDEX
## Installation hydraulique


| | |
|---|---|
| 08-31 | COMMANDE À DISTANCE DU CHARGEUR - MANETTE AVEC LEVIER DOUBLE SUPPORT |
| 08-31A | DISTRIBUTEUR - MANETTE AVEC LEVIER DOUBLE |
| 08-32 | COMMANDE DU CHARGEUR - TROIS LEVIERS SUPPORT |
| 08-32A | DISTRIBUTEUR - COMMANDE DE CHARGEUSE À 3 LEVIERS |
| 08-33 | MONTAGE DE BLOC - COUPLEUR, CONDUITES À TROIS TIROIRS |

## NOTES

| 08-01 | | p1 | 08/07 |
|---|---|---|---|

**RESERVOIR HYDRAULIQUE- MONTAGE**

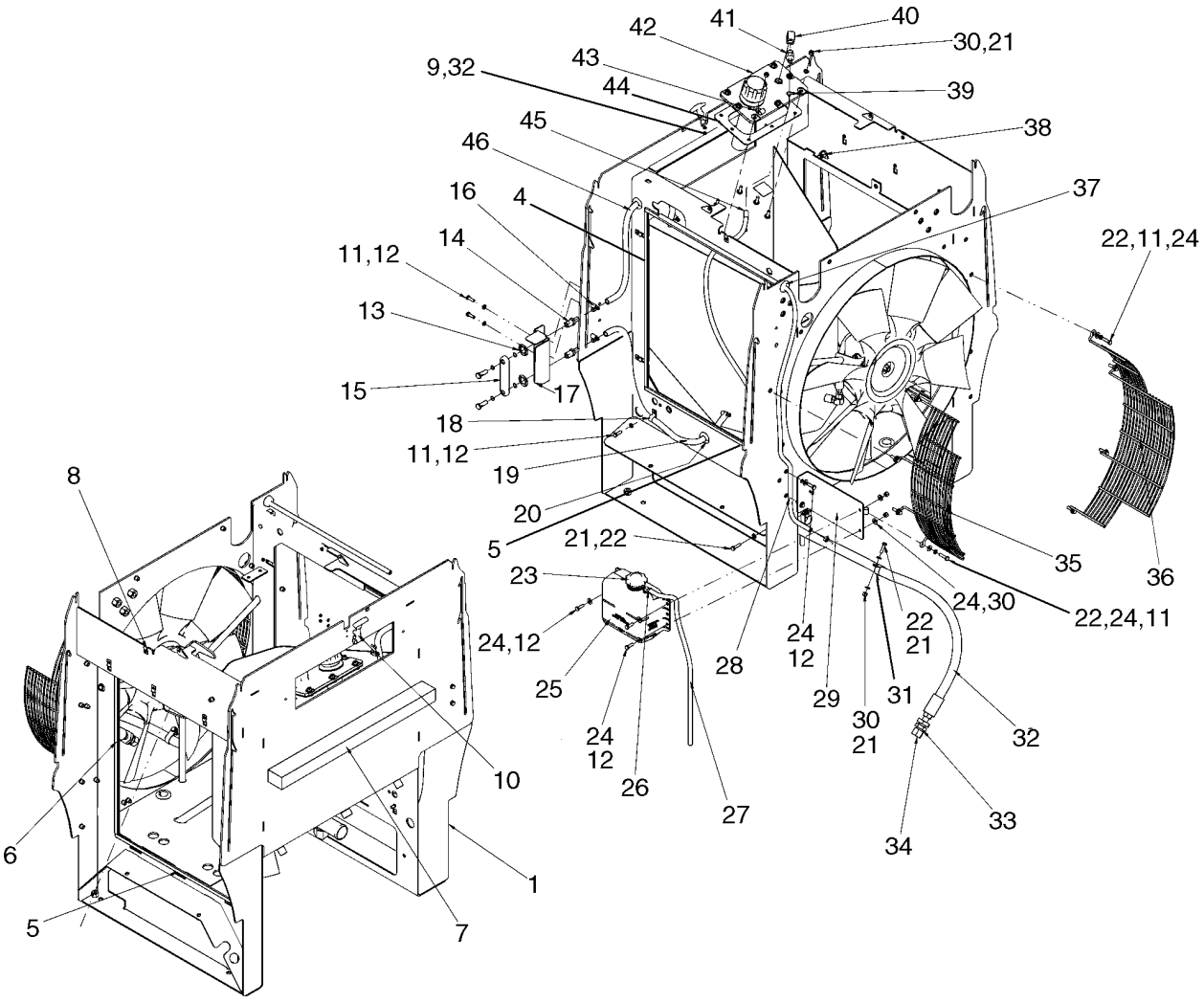

**RESERVOIR HYDRAULIQUE- MONTAGE**

| REF | FN | PART NUMBER | YR/SN | QTY | DESCRIPTION |
|---|---|---|---|---|---|
| 1 | | 87598730 | | 1 | CHASSIS, Cooling |
| 2 | | 895-11005 | | 2 | RONDELLE, M5 x 10 x 1 |
| 3 | | 824-1405 | | 2 | ECROU, M5, Cl 5 |
| 4 | | 8500136 | | 2 | JOINT, 725 mm (28-9/16 in); Cut From 198573C2 Bulk; Radiator Side |
| 5 | | 87312068 | | 4 | JOINT, 630 mm (24-13/16 in); Cut From 198573C2 Bulk; Oil Cooler Header |
| 6 | | 8500133 | | 2 | JOINT, 698 mm (27-1/2 in); Cut From 198573C2 Bulk; Oil Cooler Side |
| 7 | | 8500206 | | 1 | JOINT, Cooler |
| 8 | | 833-40408 | | 10 | ECROU, M8, U |
| 9 | | 864-5016 | | 2 | VIS, Hex Soc Hd, M5 x 16, 8.8 |
| 10 | | 384774A1 | | 1 | LOQUET |
| 11 | | 892-11008 | | 11 | RONDELLE FREIN, M8 |
| 12 | | 627-8025 | | 8 | BOULON, Hex, M8 x 25, 10.9 |
| 13 | | 131-141 | | 2 | ECROU, .74", Push-on |
| 14 | | L125836 | | 2 | RACCORD |
| 15 | | 86988366 | | 1 | VOYANT, Oil Level |
| 16 | | 214-1406 | | 4 | BRIDE, FLEXIBLE, #06, .44/.78 Type F Worm |
| 17 | | 87536075 | | 1 | PATTE FIXATION, Sight Gauge |
| 18 | | 515-22190 | | 1 | BRIDE, 3/4", Insul, 5/16" Bolt |
| 19 | | 8500165 | | 1 | FLEXIBLE, Sight Gauge; 1800 mm (70-7/8 in) |
| 20 | | 198826C1 | | 2 | PASSE-FIL |
| 21 | | 895-11008 | | 11 | RONDELLE, M8 x 16 x 1.6 |
| 22 | | 627-8030 | | 10 | BOULON, Hex, M8 x 30, 10.9 |
| 23 | | 1547924C1 | | 1 | CHAPEAU, Reservoir |
| 24 | | 895-15008 | | 16 | RONDELLE, M8 x 20 x 1.6 |
| 25 | | A184395 | | 1 | RÉSERVOIR, Coolant; Not Serviced With Cap, Order Seperately |
| 26 | | A171099 | | 3 | BRIDE, FLEXIBLE |
| 27 | | 87541330 | | 1 | FLEXIBLE AU METRE, Reservoir Drain; 695mm (27-1/3 in) |
| 28 | | 307149A1 | | 1 | FLEXIBLE AU METRE, Recovery; 1676 mm (66 in) |
| 29 | | 87585139 | | 1 | PLAQUE DE BASE, Coolant Overflow |
| 30 | | 832-10408 | | 13 | CONTRE-ECROU, M8 x 1.25, Cl 8 |

**RESERVOIR HYDRAULIQUE- MONTAGE**

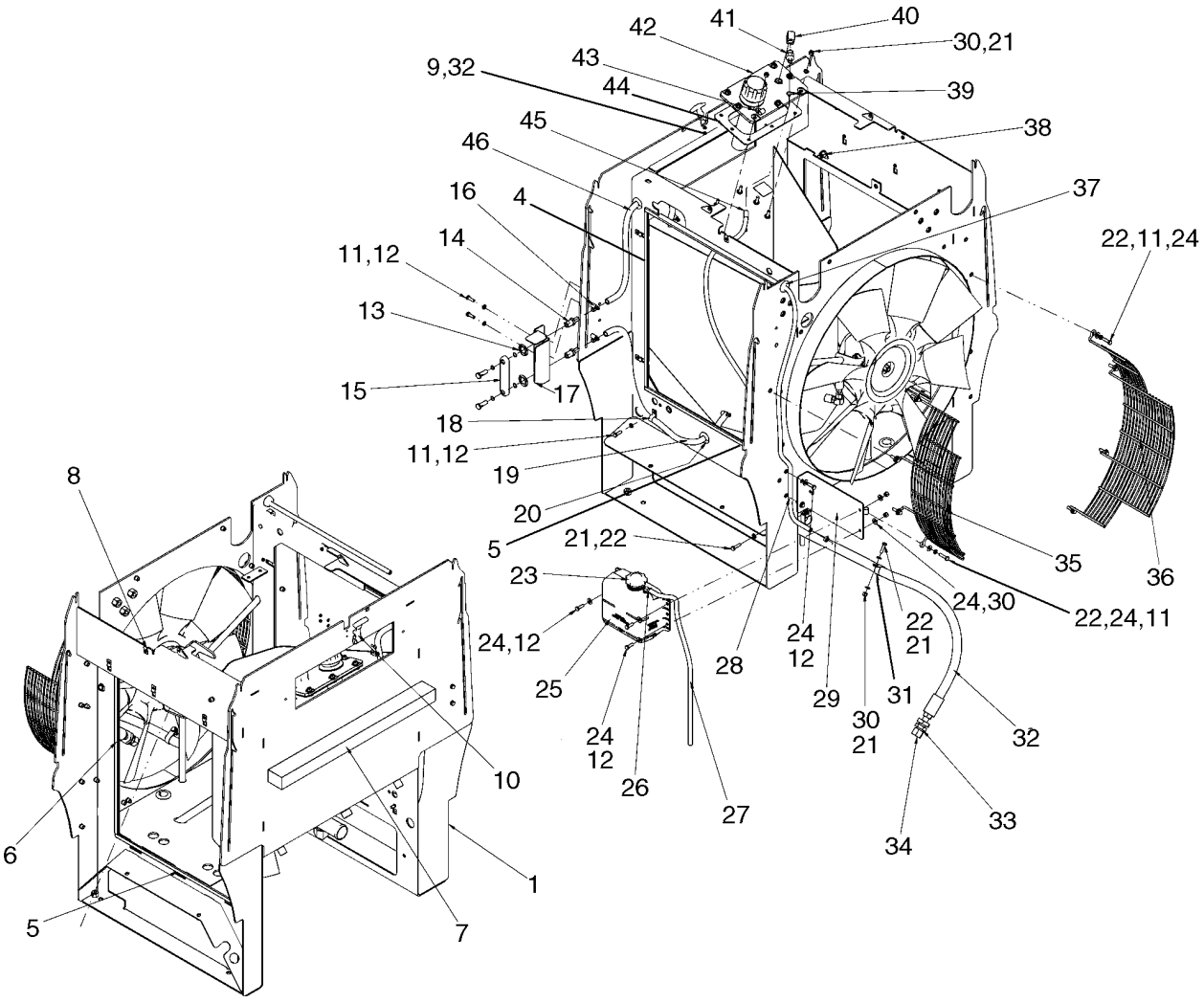

**RESERVOIR HYDRAULIQUE- MONTAGE**

| REF | FN | PART NUMBER | YR/SN | QTY | DESCRIPTION |
|---|---|---|---|---|---|
| 31 | | 515-23317 | | 2 | BRIDE, 1 1/4", Insul, 3/8" Bolt |
| 32 | | 87323556 | | 1 | FLEXIBLE (ASSEMBLE), Hydraulic Drain; 1610 mm (63 - 3/8 in) |
| 33 | | 218-1256 | | 1 | CONTRE-ECROU, Blkhd, 1 1/16"-12 |
| 34 | | 218-335 | | 1 | CHAPEAU, 37º, 1 1/16"-12 |
| 35 | | 87347864 | | 1 | GARANT, Fan |
| 36 | | 87347865 | | 1 | GARANT, Fan |
| 37 | | 198824C1 | | 1 | PASSE-FIL |
| 38 | | 350662A1 | | 1 | GOUJON |
| 39 | | 214-1704 | | 1 | BRIDE, FLEXIBLE, #4, 0.25/0.62 Type M Worm |
| 40 | | 86521965 | | 1 | COUDE, 90º, 3/8"-18 Female x 3/8"-18 Male |
| 41 | | 8606006 | | 1 | SOUPAPE ANTI RETOUR |
| 42 | | 8606005 | | 1 | CACHE ASSEMBLE |
| 43 | | 515-23143 | | 2 | BRIDE, 9/16", Insul, 3/8" Bolt |
| 44 | | 379587A2 | | 1 | JOINT |
| 45 | | 31-2940 | | 1 | FLEXIBLE, Breather, Hydraulic Tank; 55 mm (2-3/16 in) |
| 46 | | 8500164 | | 1 | FLEXIBLE, Sight Guage, Upper; 710 mm (27-15/16 in) |
| 47 | | 8500186 | | 2 | PASSE-FIL |

| 08-01A | | p1 | 07/07 |
|---|---|---|---|

**SYSTEME HYDRAULIQUE - REFROIDISSEUR D'HUILE SUPPORT**

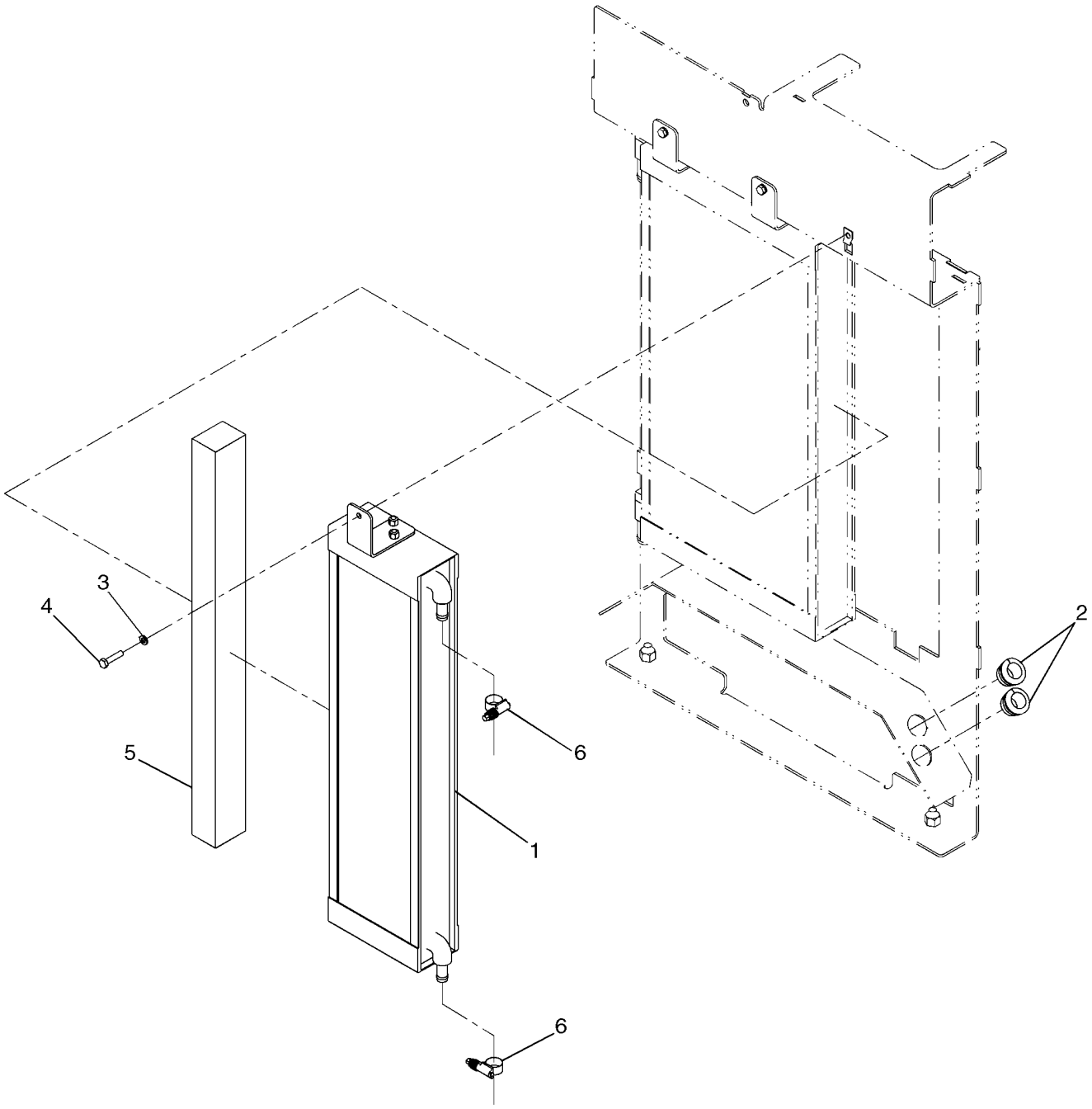

**SYSTEME HYDRAULIQUE - REFROIDISSEUR D'HUILE SUPPORT**

| REF | FN | PART NUMBER | YR/SN | QTY | DESCRIPTION |
|---|---|---|---|---|---|
| 1 | | 8501296 | | 1 | REFROIDISSEUR D'HUILE, Hydraulic |
| 2 | | 198828C1 | | 1 | PASSE-FIL |
| 3 | | 892-11008 | | 4 | RONDELLE FREIN, M8 |
| 4 | | 627-8035 | | 4 | BOULON, Hex, M8 x 35, 10.9 |
| 5 | | 8500206 | | 1 | JOINT, Oil Cooler |
| 6 | | 328186A1 | | 2 | BRIDE, FLEXIBLE |

**RESERVOIR HYDRAULIQUE - FILTRE**

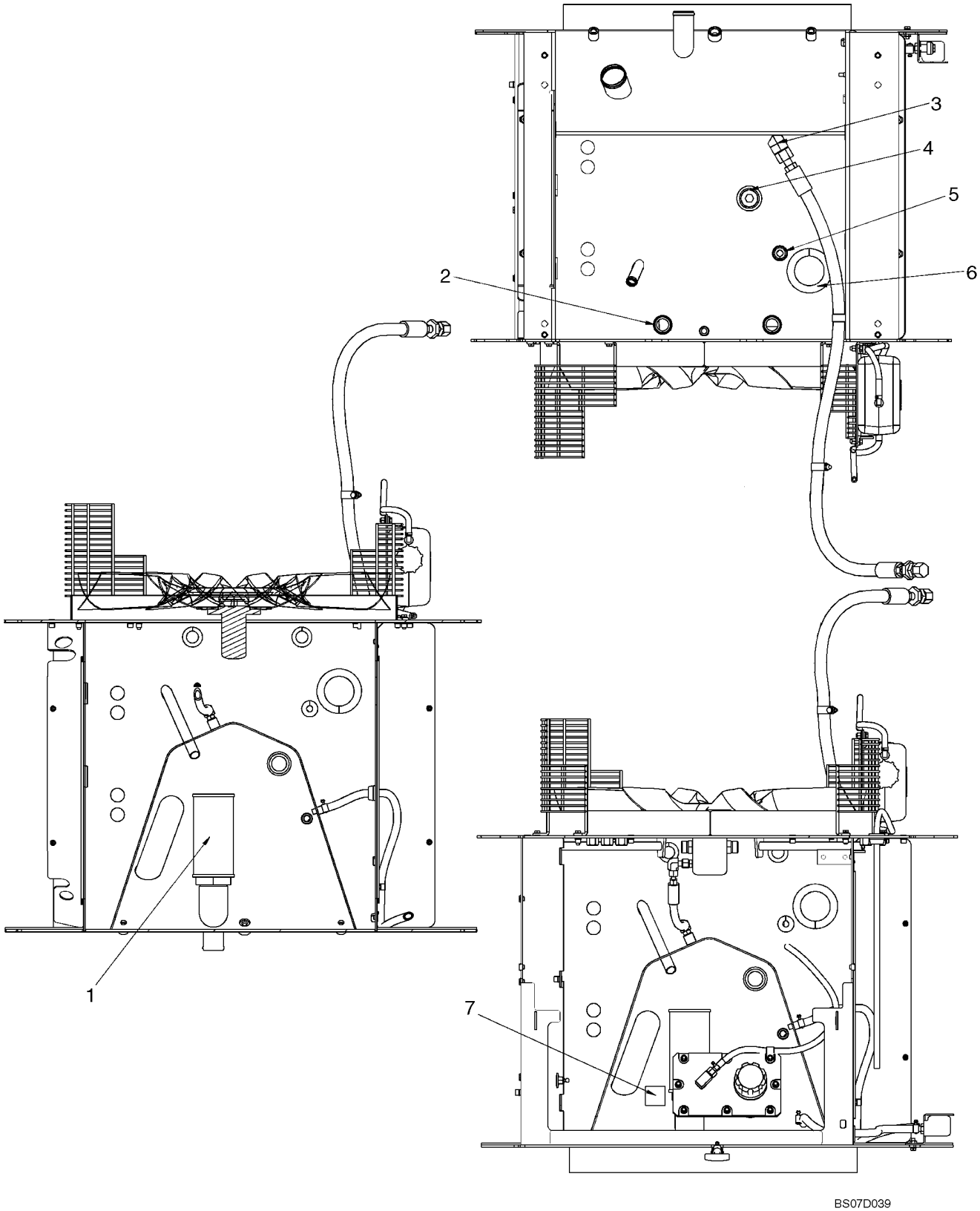

**RESERVOIR HYDRAULIQUE - FILTRE**

| REF | FN | PART NUMBER | YR/SN | QTY | DESCRIPTION |
|---|---|---|---|---|---|
| 1 | | L128515 | | 1 | TAMIS DE CRÉPINE, Hydraulic Tank |
| 2 | | 8500186 | | 2 | PASSE-FIL |
| 3 | | 86579697 | | 1 | COUDE, 90º, 1 3/16"-12 ORFS x M27 x 2 ORB, Incl. Refs. 3A, 3B |
| 3A | | 238-6018 | | 1 | JOINT THORIQUE, -018, 90 Duro, .739" ID x .070" Thk, Face Seal, Not Illustrated |
| 3B | | 637-64236 | | 1 | JOINT THORIQUE, CI 6, 23.6MM ID x 2.9 Thk, Boss Seal, Not Illustrated |
| 4 | | 217-445 | | 1 | BOUCHON, Hex Soc, 1 1/4"-11 1/2 NPTF |
| 5 | | 198825C1 | | 1 | PASSE-FIL |
| 6 | | 8500167 | | 1 | JOINT |
| 7 | | 395895A1 | | 1 | DECALCOMANIE, Hydraulic Oil |

**SYSTEME HYDRAULIQUE - FILTRE À HUILE**

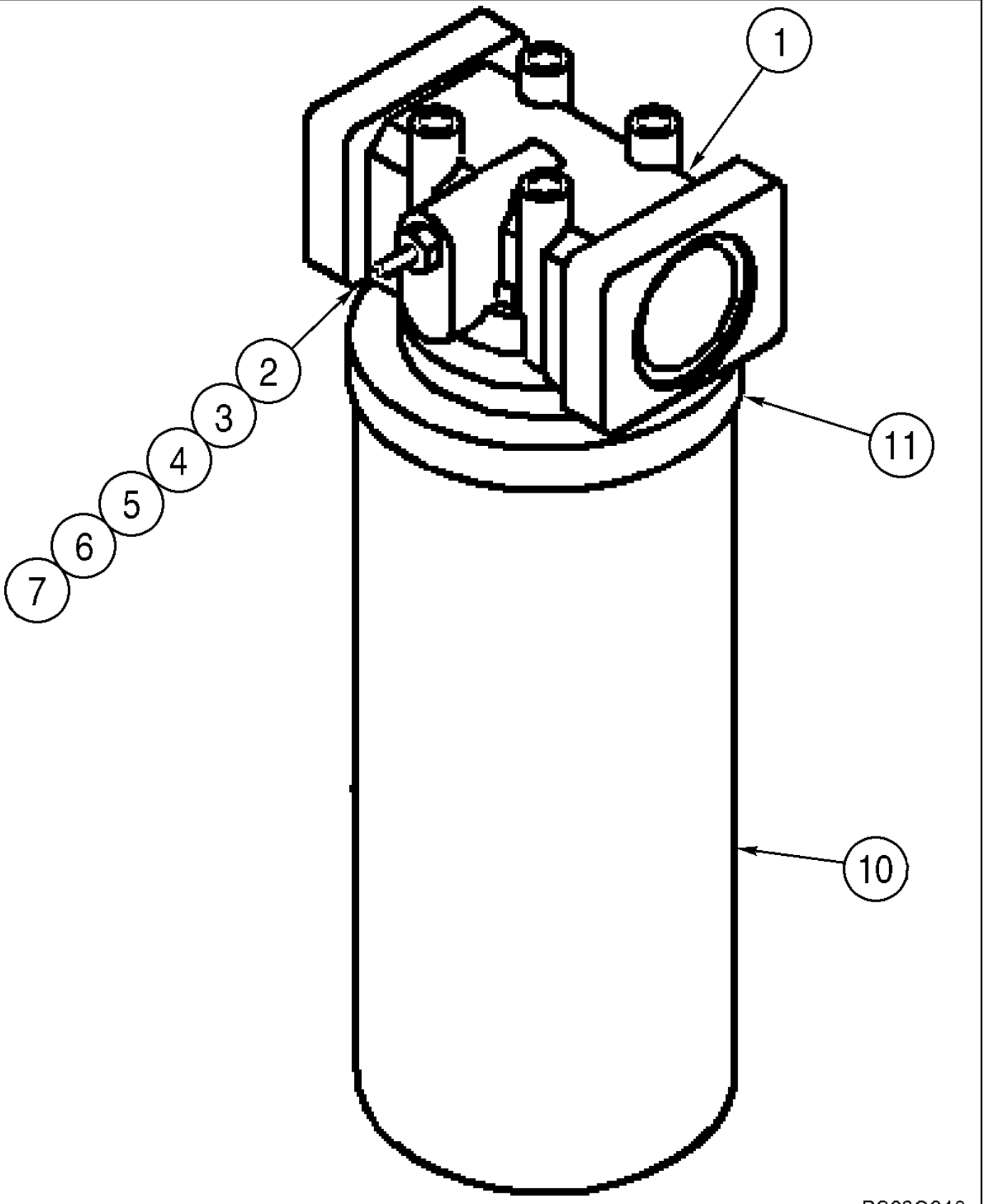

**SYSTEME HYDRAULIQUE - FILTRE À HUILE**

| REF | FN | PART NUMBER | YR/SN | QTY | DESCRIPTION |
|---|---|---|---|---|---|
| | | 87308929 | | 1 | FILTRE ASSY, With Reverse Flow; Models With Ride Control; Incl. 1 - 11 |
| | | 87308928 | | 1 | FILTRE ASSY, Without Reverse Flow: Models Without Ride Control, Incl 1 - 11 |
| 1 | | NSS | | 1 | NON FOURNI SEPAREMENT, Head |
| | | 8604802 | | 1 | PRESSOSTAT, Incl. 2 - 7 |
| 2 | | NSS | | 1 | NON FOURNI SEPAREMENT, Indicator |
| 3 | | NSS | | 1 | NON FOURNI SEPAREMENT, Washer, Special; Red/White |
| 4 | | 129-667 | | 2 | ECROU, #10-32, LH |
| 5 | | 493-21020 | | 1 | RONDELLE FREIN, Int Tooth, #10, 3/16 |
| 6 | | 237-6006 | | 1 | JOINT THORIQUE, 6-1, 90 Duro, .468" ID x .078" Thk |
| 7 | | 238-5011 | | 1 | JOINT THORIQUE, -011, 70 Duro, .301" ID x .070" Thk |
| 10 | | 87308933 | | 1 | FILTRE, HUILE HYDRAULIQUE, For Models With Or Without Ride Control; Incl. 10A |
| 11 | | NSS | | 1 | NON FOURNI SEPAREMENT, O-RING |

| 08-03 | | p1 | 07/07 |
|---|---|---|---|

**SYSTEME HYDRAULIQUE - DU RÉSERVOIR À LA POMPE HYDRAULIQUE**

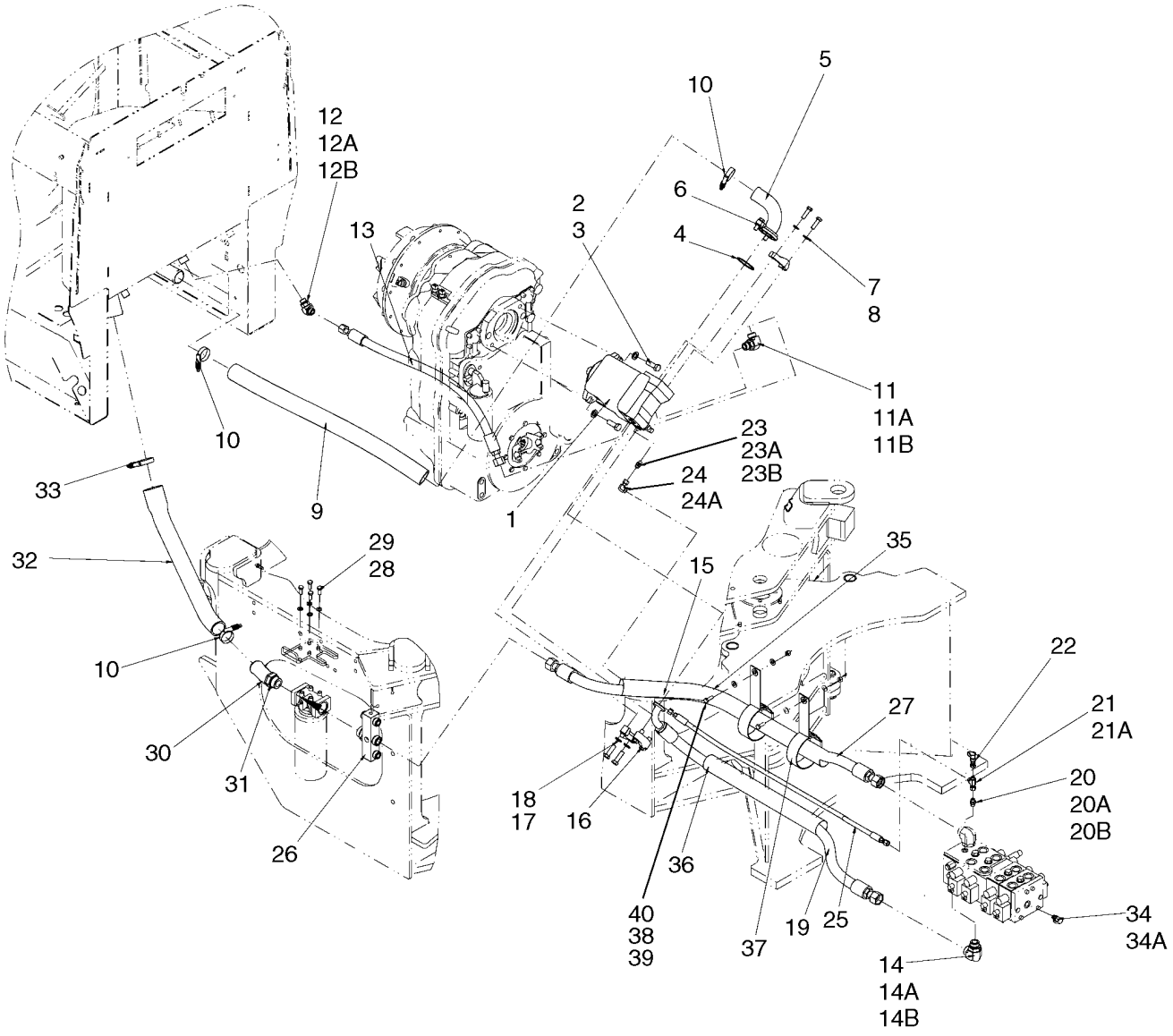


BS07D042

**SYSTEME HYDRAULIQUE - DU RÉSERVOIR À LA POMPE HYDRAULIQUE**

| REF | FN | PART NUMBER | YR/SN | QTY | DESCRIPTION |
|---|---|---|---|---|---|
| | | REF | | | NOTICE, RESERVOIR TO PUMP AND LOADER CONTROL VALVE |
| 1 | | 377608A1 | | 1 | POMPE, See Figure 08-04 |
| 2 | | 896-11016 | | 2 | RONDELLE, M17.5 x 30 x 4, HT |
| 3 | | 627-16045 | | 2 | BOULON, Hex, M16 x 45, 10.9 |
| 4 | | 238-5232 | | 1 | JOINT THORIQUE, -232, 70 Duro, 2.734" ID x .139" Thk |
| 5 | | 388509A1 | | 1 | TUYAUTERIE, Pump Suction |
| 6 | | L14386 | | 2 | BRIDE |
| 7 | | 895-11012 | | 4 | RONDELLE, M12 x 24 x 2.5 |
| 8 | | 627-12040 | | 4 | BOULON, Hex, M12 x 40, 10.9, Full Thd |
| 9 | | 388556A1 | | 1 | FLEXIBLE (ASSEMBLE), Suction, Reservoir To Pump Inlet; 860 mm (33-7/8 in) |
| 10 | | 254026A1 | | 3 | COLLIER, Constant Torque |
| 11 | | 86579697 | | 1 | COUDE, 90º, 1 3/16"-12 ORFS x M27 x 2 ORB, Incl. Refs. 11A, 11B |
| 11A | | 637-64236 | | 1 | JOINT THORIQUE, CI 6, 23.6MM ID x 2.9 Thk, Boss |
| 11B | | 238-6018 | | 1 | JOINT THORIQUE, -018, 90 Duro, .739" ID x .070" Thk, Face Seal |
| 12 | | 86639053 | | 1 | COUDE, 45º, 1"-14 ORFS x M22 x 1.5 ORB, Incl. Refs. 12A, 12B |
| 12A | | 238-6016 | | 1 | JOINT THORIQUE, -016, 90 Duro, .614" ID x .070" Thk, Face Seal |
| 12B | | 637-63193 | | 1 | JOINT THORIQUE, CI 6, 19.3MM ID x 2.2 Thk, Boss |
| 13 | | 87629991 | | 1 | FLEXIBLE, Case Drain; 838 mm (33 in) |
| 14 | | 86580180 | | 1 | COUDE, 90º, 1 7/16"-12 ORFS x M33 x 2 ORB, Incl. Refs. 14A, 14B |
| 14A | | 238-6021 | | 1 | JOINT THORIQUE, -021, 90 Duro, .926" ID x .070" Thk, Face Seal |
| 14B | | 637-64296 | | 1 | JOINT THORIQUE, CI 6, 29.6MM ID x 2.9 Thk, Boss |
| 15 | | 238-6222 | | 1 | JOINT THORIQUE, -222, 90 Duro, 1.484" ID x .139" Thk |
| 16 | | 86985567 | | 2 | FLASQUE |
| 17 | | 895-11014 | | 4 | RONDELLE, M14 x 28 x 2.5 |
| 18 | | 627-14045 | | 4 | BOULON, Hex, M14 x 45, 10.9, Full Thd |

**SYSTEME HYDRAULIQUE - DU RÉSERVOIR À LA POMPE HYDRAULIQUE**

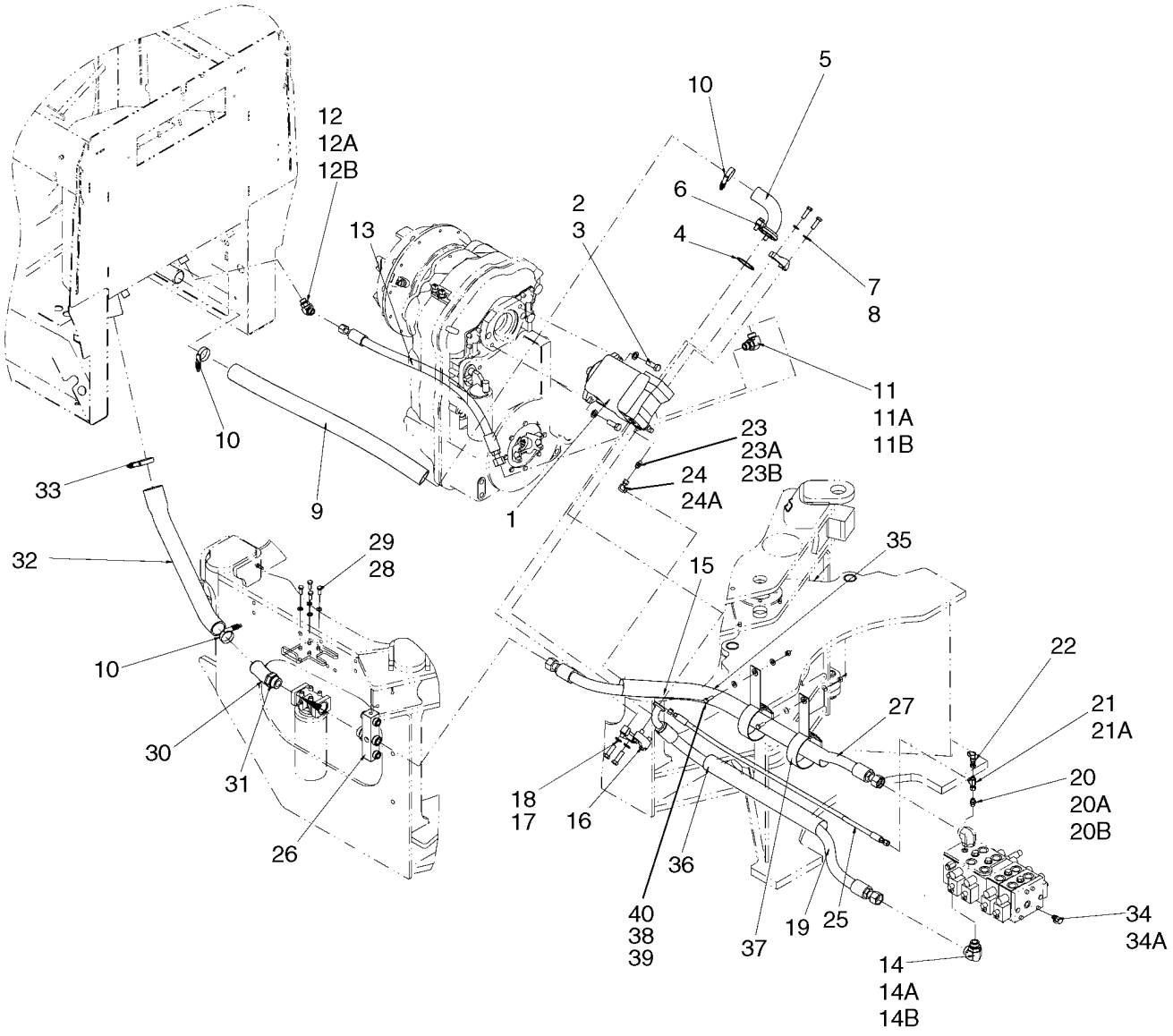

**SYSTEME HYDRAULIQUE - DU RÉSERVOIR À LA POMPE HYDRAULIQUE**

| REF | FN | PART NUMBER | YR/SN | QTY | DESCRIPTION |
|---|---|---|---|---|---|
| 19 | | 388555A2 | | 1 | FLEXIBLE (ASSEMBLE), 1337 mm (52-5/8 in); Pressure |
| 20 | | 700-153 | | 1 | RACCORD, 9/16"-18 ORFS x M14 x 1.5 ORB, Incl. Refs. 20A, 20B |
| 20A | | 238-6011 | | 1 | JOINT THORIQUE, -011, 90 Duro, .301" ID x .070" Thk, Face Seal |
| 20B | | 637-63113 | | 1 | JOINT THORIQUE, CI 6, 11.3MM ID x 2.2 Thk, Boss |
| 21 | | 701-421 | | 1 | TE, 9/16"-18 ORFS x 9/16"-18 Fem Sw Run, Incl. Ref. 21A |
| 21A | | 238-6011 | | 2 | JOINT THORIQUE, -011, 90 Duro, .301" ID x .070" Thk, Face Seal |
| 22 | | 190117A1 | | 1 | CARDAN |
| 23 | | 86593173 | | 1 | RACCORD, 9/16"-18 ORFS x M12 x 1.5 ORB, Incl. Refs. 23A, 23B |
| 23A | | 238-6011 | | 1 | JOINT THORIQUE, -011, 90 Duro, .301" ID x .070" Thk, Face Seal |
| 23B | | 637-63093 | | 1 | JOINT THORIQUE, CI 6, 9.3MM ID x 2.2 Thk, Boss |
| 24 | | 84989411 | | 1 | COUDE, 90º, 9/16"-18 ORFS x 9/16"-18 Fem Sw, Incl. Refs. 24A |
| 24A | | 238-6011 | | 1 | JOINT THORIQUE, -011, 90 Duro, .301" ID x .070" Thk, Face Seal |
| 25 | | 388558A1 | | 1 | FLEXIBLE (ASSEMBLE), Load Sensing; 1327 mm (52-1/4 in) |
| 26 | | 87577181 | | 1 | BLOC COLLECTEUR, Filter |
| 27 | | 365516A2 | | 1 | FLEXIBLE (ASSEMBLE), Valve Return; 1613 mm (63 - 1/2 in) |
| 28 | | 895-11010 | | 4 | RONDELLE, M10 x 20 x 2 |
| 29 | | 637-63193 | | 4 | JOINT THORIQUE, CI 6, 19.3MM ID x 2.2 Thk, Boss |
| 30 | | 390208A2 | | 1 | ADAPTEUR |
| 31 | | 637-64386 | | 1 | JOINT THORIQUE, CI 6, 38.6MM ID x 2.9 Thk |
| 32 | | 87629990 | | 1 | FLEXIBLE, Filter Return; 561mm (22 - 3/32in) |
| 33 | | L115548 | | 1 | COLLIER |
| 34 | | 178889A1 | | 1 | RACCORD, Diagnostic; Incl. Ref. 34A |
| 34A | | 637-63113 | | 1 | JOINT THORIQUE, CI 6, 11.3MM ID x 2.2 Thk |
| 35 | | 401526A1 | | 1 | PROTECTEUR DE TUYAU, 60 x 1200 mm |

**SYSTEME HYDRAULIQUE - DU RÉSERVOIR À LA POMPE HYDRAULIQUE**

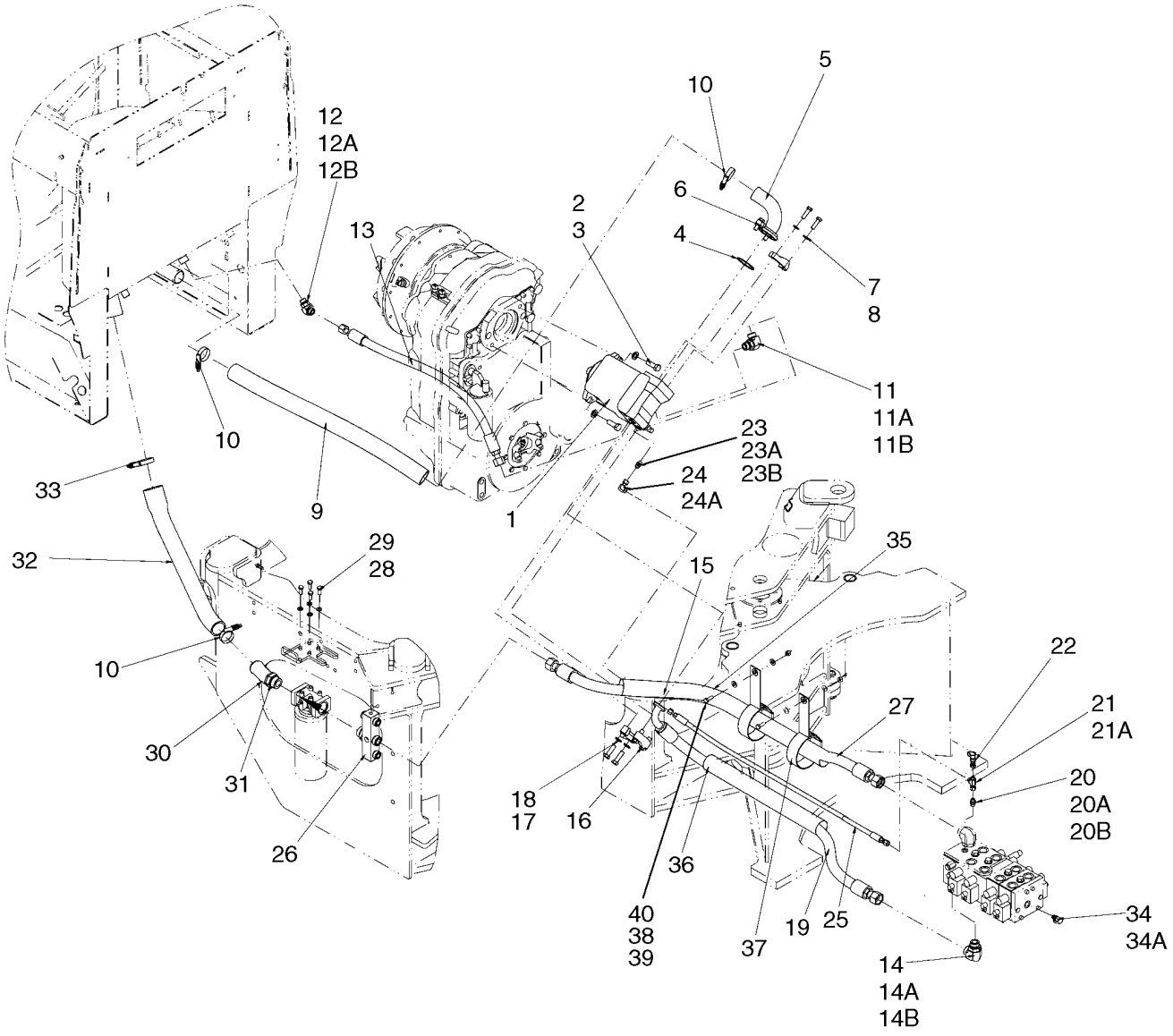

**SYSTEME HYDRAULIQUE - DU RÉSERVOIR À LA POMPE HYDRAULIQUE**

| REF | FN | PART NUMBER | YR/SN | QTY | DESCRIPTION |
|---|---|---|---|---|---|
| 36 | | 401525A1 | | 1 | PROTECTEUR DE TUYAU, 60 x 600 mm |
| 37 | | 401527A2 | | 2 | SANGLE, Articulation Hoses |
| 38 | | 895-15010 | | 2 | RONDELLE, M11 x 24 x 2 |
| 39 | | 627-10030 | | 1 | BOULON, Hex, M10 x 30, 10.9, Full Thd |
| 40 | | 832-10410 | | 1 | CONTRE-ECROU, M10 x 1.5, Cl 8 |

**POMPE**

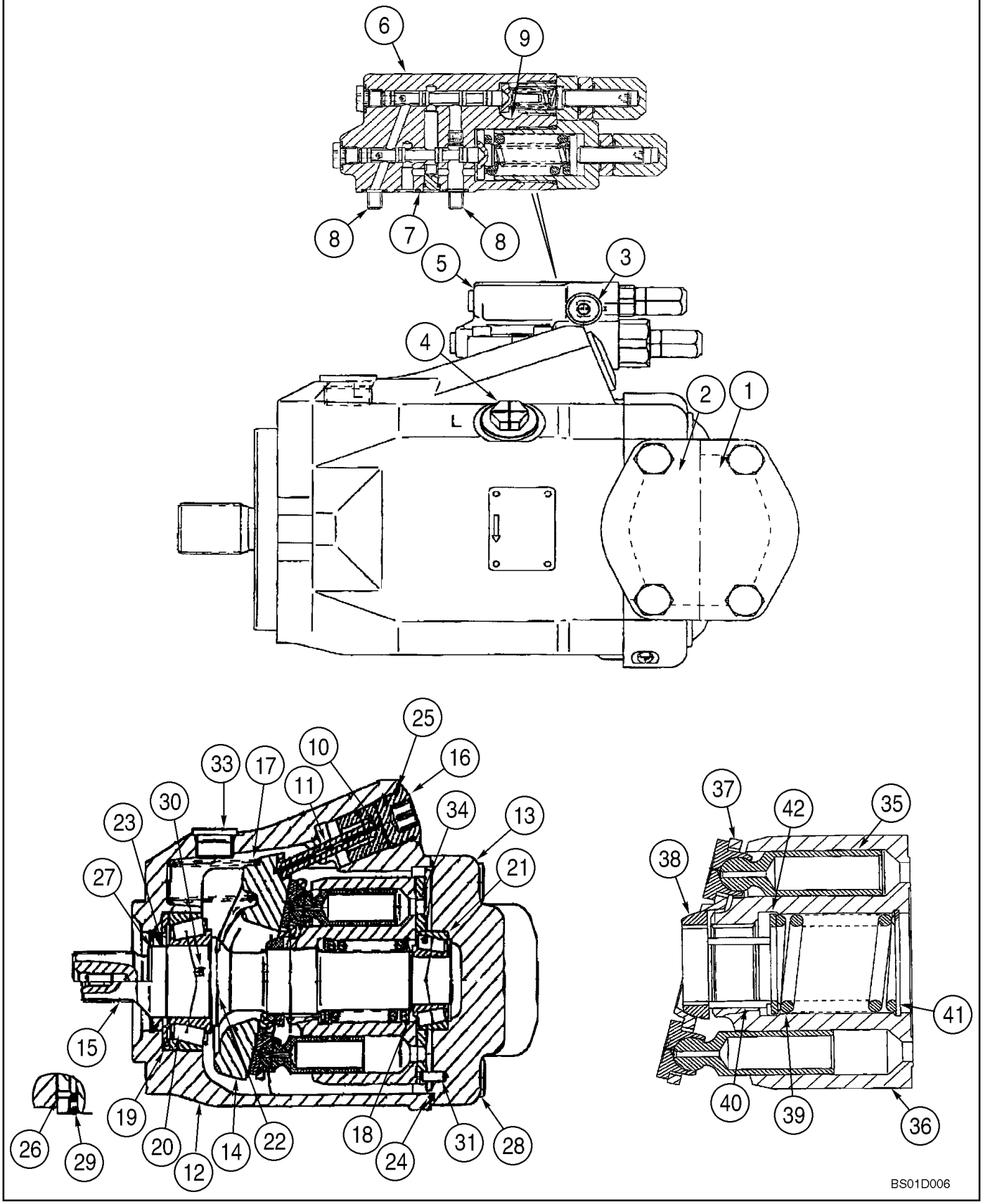
6
9
8
7
8
5
3
4
2
1
25
16
10
33
17
11
30
23
34
13
27
21
15
19
20
12
14
22
18
24
31
28
26
29
37
42
35
38
41
40
39
36
BS01D006

**POMPE**

| REF | FN | PART NUMBER | YR/SN | QTY | DESCRIPTION |
|---|---|---|---|---|---|
| | | 377608A1 | | 1 | POMPE, Main Hydraulic, Incl. Refs. 1 - 42 |
| 1 | | 8605005 | | 1 | COUVERCLE, Flange |
| 2 | | 8605006 | | 1 | COUVERCLE, Flange |
| 3 | | 8604962 | | 1 | VIS |
| 4 | | 8605008 | | 1 | BOUCHON, Seal |
| 5 | | 8604960 | | 1 | SOUPAPE HYDRAULIQUE, Pilot; Incl. 6 - 9 |
| 6 | | 8602844 | | 1 | SOUPAPE HYDRAULIQUE, Pilot Body |
| 7 | | 8604965 | | 3 | JOINT THORIQUE, 7,65 x 1,78 |
| 8 | | 8604964 | | 4 | VIS, M6 x 30; 10,9 |
| 9 | | 8604963 | | 1 | BOUCHON, M12 x 1,5 |
| 10 | | 8605010 | | 1 | PISTON, Control |
| 11 | | 8605011 | | 1 | TRINGLE, Piston |
| 12 | | NSS | | 1 | NON FOURNI SEPAREMENT, Housing |
| 13 | | 8605012 | | 1 | PLAQUE, Port |
| 14 | | 8605013 | | 1 | PLAQUE, Swash |
| 15 | | 8605014 | | 1 | ARBRE, Drive |
| 16 | | 8605015 | | 11 | BOUCHON, Pump |
| 17 | | 8605016 | | 1 | RESSORT, Pump |
| 18 | | 8605017 | | 1 | CALE D'EPAISSEUR |
| 19 | | 8605018 | | 1 | ANNEAU, Stop |
| 20 | | 8605019 | | 1 | ROULEMENT A ROULEAU |
| 21 | | 8605020 | | 1 | ROULEMENT A ROULEAU |
| 22 | | 8605021 | | 2 | COQUILLE, Cradle |
| 23 | | 8605022 | | 1 | JOINT |
| 24 | | 8605023 | | 1 | JOINT THORIQUE |
| 25 | | 8605024 | | 1 | JOINT THORIQUE |
| 26 | | 8605025 | | 2 | JOINT THORIQUE |
| 27 | | 8605026 | | 1 | ANNEAU |
| 28 | | 8605027 | | 4 | BOUCHON |
| 29 | | 8604958 | | 3 | BOUCHON, Tear-Off |
| 30 | | 8605029 | | 1 | ORIFICE |
| 31 | | 8605030 | | 1 | AXE, Dowel |
| 32 | | 8605031 | | 1 | BOUCHON, Not Illustrated |
| 33 | | 8604959 | | 2 | VIS, Countersink |
| 34 | | 8605033 | | 1 | PLAQUE |

**POMPE**

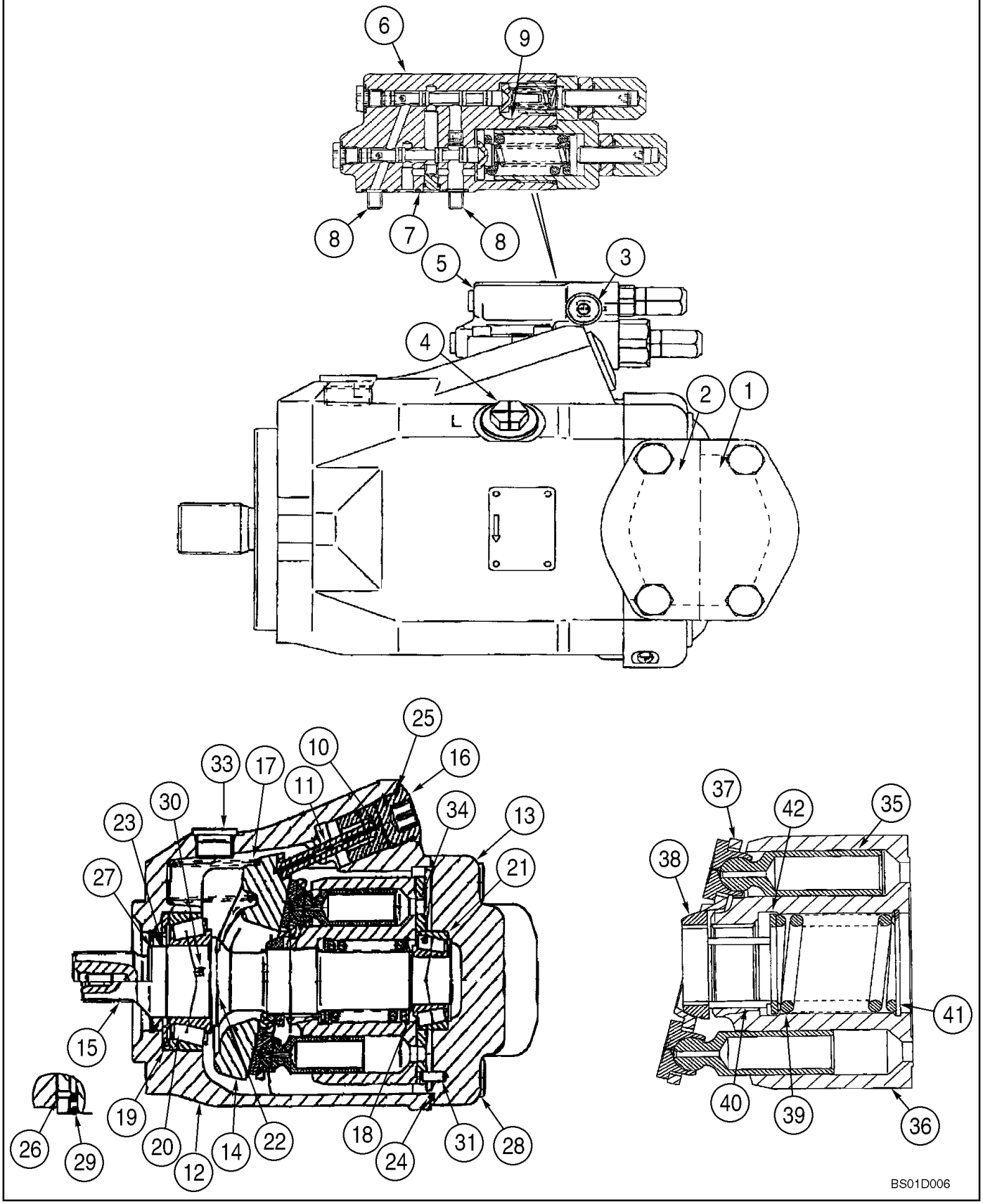
6
9
8
7
8
5
3
4
2
1
25
16
10
33
17
11
30
34
13
23
21
27
15
19
20
12
14
22
18
24
31
28
26
29
37
42
35
38
41
40
39
36
BS01D006

**POMPE**

| REF | FN | PART NUMBER | YR/SN | QTY | DESCRIPTION |
|---|---|---|---|---|---|
| 35 | | 8605034 | | 9 | PISTON |
| 36 | | 8605218 | | 1 | CYLINDRE |
| 37 | | 8605036 | | 1 | PLAQUE, Retaining |
| 38 | | 8605037 | | 1 | CAGE A ROULEMENT, Retaining |
| 39 | | 8605038 | | 1 | RESSORT |
| 40 | | 8605039 | | 3 | AXE, Press |
| 41 | | 8605040 | | 1 | ANNEAU, Seeger |
| 42 | | 8605041 | | 2 | ANNEAU, Thrust |

**SYSTEME HYDRAULIQUE - RELEVAGE ET GODET DES BRAS DE RELEVAGE (Z-BAR, XR CHARGEUSE)**

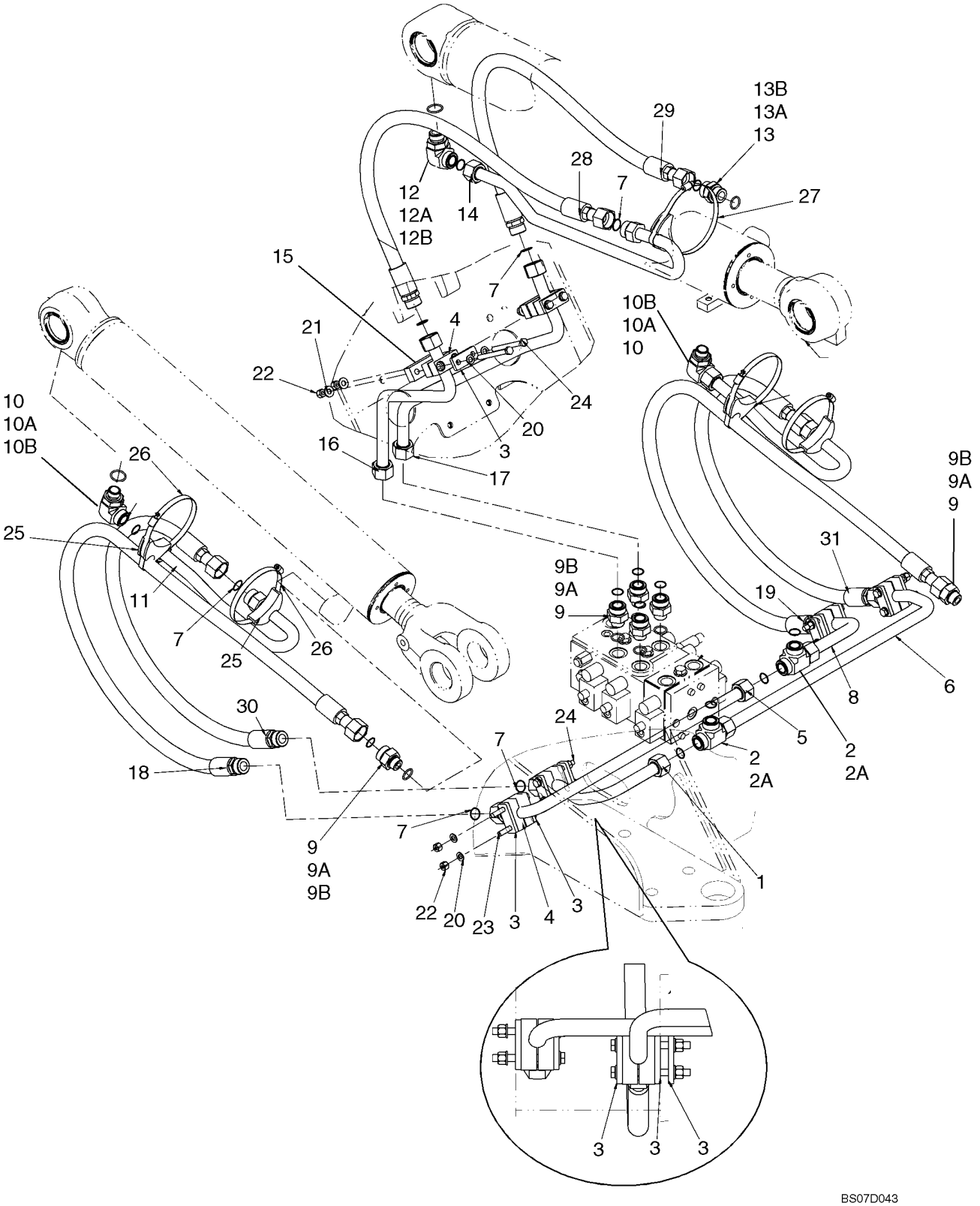


BS07D043

**SYSTEME HYDRAULIQUE - RELEVAGE ET GODET DES BRAS DE RELEVAGE (Z-BAR, XR CHARGEUSE)**

| REF | FN | PART NUMBER | YR/SN | QTY | DESCRIPTION |
|---|---|---|---|---|---|
| | | REF | | | NOTICE, Z-BAR LOADER, XR LOADER |
| 1 | | 87389172 | | 1 | TUYAU HYDRAULIQUE, Lift Head End, RH |
| 2 | | 87016914 | | 2 | TE, 1 7/16"-12 ORFS, Incl. Ref. 2A |
| 2A | | 238-6021 | | 3 | JOINT THORIQUE, -021, 90 Duro, .926" ID x .070" Thk, Face Seal |
| 3 | | 367658A1 | | 12 | PLAQUE, Clamp Cover |
| 4 | | 367489A1 | | 6 | BLOC, Tube Mounting |
| 5 | | 8606100 | | 1 | TUYAUTERIE, Lift Rod End, RH |
| 6 | | 8606092 | | 1 | TUYAUTERIE, Lift Head End, LH |
| 7 | | 238-6012 | | 9 | JOINT THORIQUE, -012, 90 Duro, .364" ID x .070" Thk |
| 8 | | 8606098 | | 1 | TUYAUTERIE, Lift Rod End, LH |
| 9 | | 86639051 | | 6 | RACCORD, 1 7/16"-12 ORFS x M27 x 1.5 ORB, Incl. Refs 9A, 9B |
| 9A | | 238-6021 | | 1 | JOINT THORIQUE, -021, 90 Duro, .926" ID x .070" Thk, Face Seal |
| 9B | | 637-64236 | | 1 | JOINT THORIQUE, CI 6, 23.6MM ID x 2.9 Thk, Boss |
| 10 | | 87010650 | | 2 | COUDE, 90º, 1 7/16"-12 ORFS x M27 x 2 ORB, Incl. Refs. 10A, 10B |
| 10A | | 238-6021 | | 1 | JOINT THORIQUE, -021, 90 Duro, .926" ID x .070" Thk, Face Seal |
| 10B | | 637-64236 | | 1 | JOINT THORIQUE, CI 6, 23.6MM ID x 2.9 Thk, Boss |
| 11 | | 86983366 | | 2 | TUBE, Lift Cylinder |
| 12 | | 86580180 | | 1 | COUDE, 90º, 1 7/16"-12 ORFS x M33 x 2 ORB, Incl. Refs. 12A, 12B |
| 12A | | 637-64296 | | 1 | JOINT THORIQUE, CI 6, 29.6MM ID x 2.9 Thk, Boss |
| 12B | | 238-6021 | | 1 | JOINT THORIQUE, -021, 90 Duro, .926" ID x .070" Thk, Face Seal |
| 13 | | 86580179 | | 1 | RACCORD, 1 7/16"-12 ORFS x M22 x 2 ORB, Incl. Refs. 13A, 13B |
| 13A | | 238-6021 | | 1 | JOINT THORIQUE, -021, 90 Duro, .926" ID x .070" Thk, Face Seal |
| 13B | | 637-64296 | | 1 | JOINT THORIQUE, CI 6, 29.6MM ID x 2.9 Thk, Boss |
| 14 | | 8605367 | | 1 | TUYAUTERIE, Tilt Cylinder |
| 15 | | 87324906 | | 2 | ENTRETOISE |

**SYSTEME HYDRAULIQUE - RELEVAGE ET GODET DES BRAS DE RELEVAGE (Z-BAR, XR CHARGEUSE)**

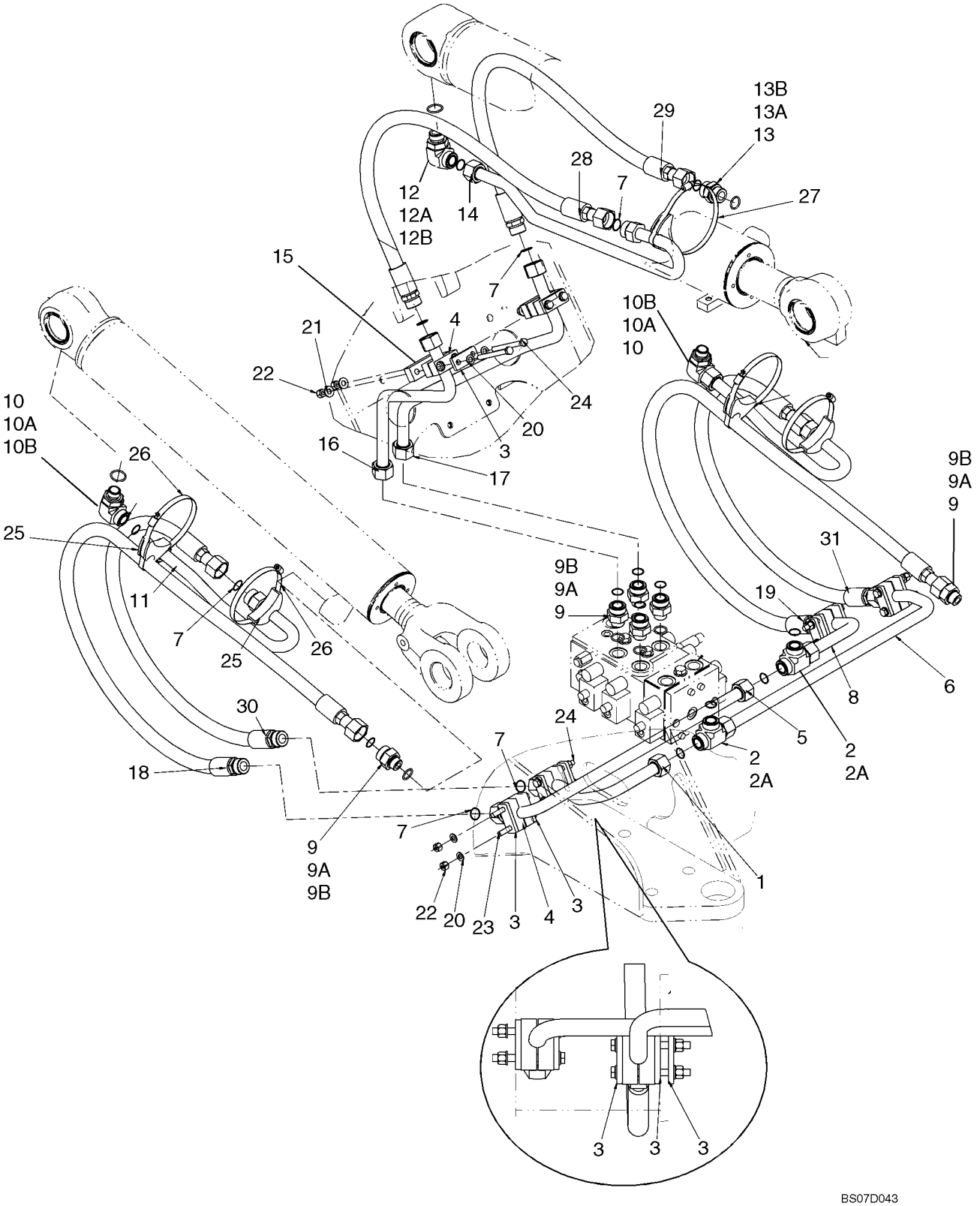


BS07D043

**SYSTEME HYDRAULIQUE - RELEVAGE ET GODET DES BRAS DE RELEVAGE (Z-BAR, XR CHARGEUSE)**

| REF | FN | PART NUMBER | YR/SN | QTY | DESCRIPTION |
|---|---|---|---|---|---|
| 16 | | 389049A1 | | 1 | TUYAUTERIE, Tilt Head End |
| 17 | | 8605369 | | 1 | TUYAUTERIE, Tilt Rod End |
| 18 | | 372359A1 | | 1 | FLEXIBLE (ASSEMBLE), Lift Cylinder; 1760 mm (69 - 5/16 in) |
| 19 | | 372359A1 | | 1 | FLEXIBLE (ASSEMBLE), Lift Cylinder; 1760 mm (69 - 5/16 in) |
| 20 | | 895-11010 | | 20 | RONDELLE, M10 x 20 x 2 |
| 21 | | 895-15010 | | 4 | RONDELLE, M11 x 24 x 2 |
| 22 | | 832-10410 | | 12 | CONTRE-ECROU, M10 x 1.5, Cl 8 |
| 23 | | 827-10100 | | 4 | BOULON, Hex, M10 x 100, 10.9 |
| 24 | | 827-10110 | | 8 | BOULON, Hex, M10 x 110, 10.9 |
| 25 | | 391133A1 | | 5 | COLLIER |
| 26 | | 214-1496 | | 4 | BRIDE, FLEXIBLE, #96, 5.56/6.50 Type F Worm, W/liner |
| 27 | | 214-14104 | | 1 | BRIDE, FLEXIBLE, #104, 6.12/7.00 Type F Worm |
| 28 | | 389161A1 | | 1 | FLEXIBLE (ASSEMBLE), Tilt Cylinder; 1161 mm (45-11/16 in) |
| 29 | | 389161A1 | | 1 | FLEXIBLE (ASSEMBLE), Tilt Cylinder; 1161 mm (45-11/16 in) |
| 30 | | 86983386 | | 1 | TUYAU FLEXIBLE, Lift Cylinder; 1145 mm (45 - 1/16 in) |
| 31 | | 86983386 | | 1 | TUYAU FLEXIBLE, Lift Cylinder; 1145 mm (45 - 1/16 in) |

**SYSTEME HYDRAULIQUE - RELEVAGE DE LA CHARGEUSE (XT CHARGEUSE)**

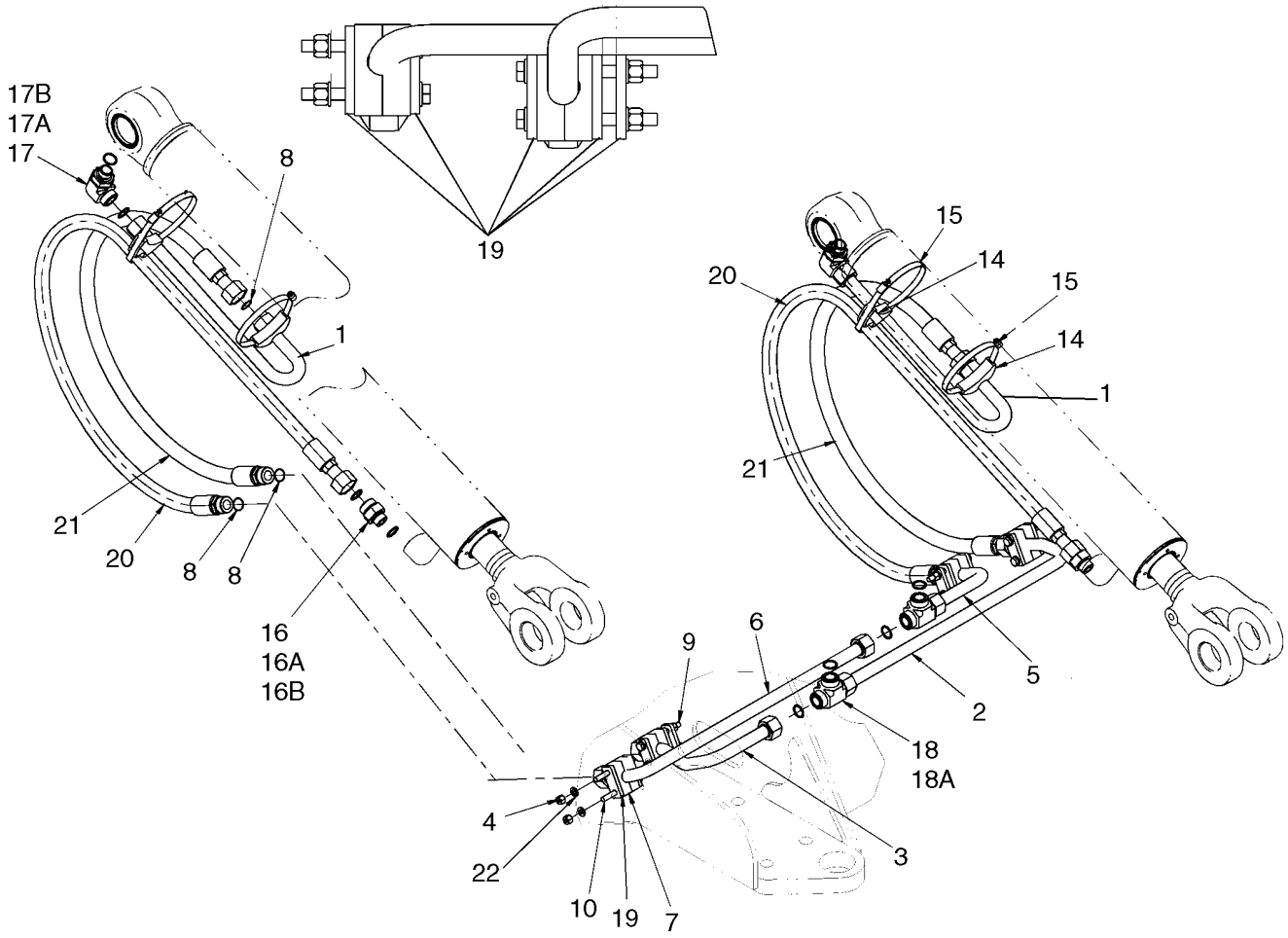

**SYSTEME HYDRAULIQUE - RELEVAGE DE LA CHARGEUSE (XT CHARGEUSE)**

| REF | FN | PART NUMBER | YR/SN | QTY | DESCRIPTION |
|---|---|---|---|---|---|
| | | REF | | | NOTICE, LOADER LIFT; XT-LOADER |
| 1 | | 87448548 | | 2 | TUYAUTERIE, Lift Cylinder |
| 2 | | 8606092 | | 1 | TUYAUTERIE, Left Hand; Head End |
| 3 | | 87389172 | | 1 | TUYAU HYDRAULIQUE, Right Hand; Head End |
| 4 | | 832-10410 | | 8 | CONTRE-ECROU, M10 x 1.5, Cl 8 |
| 5 | | 8606098 | | 1 | TUYAUTERIE, Rod End; Left Hand |
| 6 | | 8606100 | | 1 | TUYAUTERIE, Rod End; Right Hand |
| 7 | | 367489A1 | | 4 | BLOC, Mounting |
| 8 | | 238-6021 | | 6 | JOINT THORIQUE, -021, 90 Duro, .926" ID x .070" Thk, Face Seal |
| 9 | | 827-10110 | | 4 | BOULON, Hex, M10 x 110, 10.9 |
| 10 | | 827-10100 | | 4 | BOULON, Hex, M10 x 100, 10.9 |
| 14 | | 391133A1 | | 4 | COLLIER |
| 15 | | 214-1488 | | 4 | BRIDE, FLEXIBLE, #88, 5.12/6.00 Type F Worm |
| 16 | | 700-166 | | 2 | RACCORD, 1 7/16"-12 ORFS x M27 x 1.5 ORB, Incl. Refs. 16A, 16B |
| 16A | | 238-6021 | | 1 | JOINT THORIQUE, -021, 90 Duro, .926" ID x .070" Thk, Face Seal |
| 16B | | 637-64236 | | 1 | JOINT THORIQUE, Cl 6, 23.6MM ID x 2.9 Thk, Boss Seal |
| 17 | | 700-313 | | 2 | COUDE, 90º, 1 7/16"-12 ORFS x M27 x 2 ORB, Incl. Refs. 17A, 17B |
| 17A | | 238-6021 | | 1 | JOINT THORIQUE, -021, 90 Duro, .926" ID x .070" Thk, Face Seal |
| 17B | | 637-64236 | | 1 | JOINT THORIQUE, Cl 6, 23.6MM ID x 2.9 Thk, Boss Seal |
| 18 | | 701-410 | | 2 | TE, 1 7/16"-12 ORFS, Incl. Refs. 18A |
| 18A | | 238-6021 | | 3 | JOINT THORIQUE, -021, 90 Duro, .926" ID x .070" Thk, Face Seal |
| 19 | | 367658A1 | | 10 | PLAQUE, Clamp Cover |
| 20 | | 87448550 | | 2 | FLEXIBLE (ASSEMBLE), 1802 mm ( 70 7/8 in); Lift Cylinder |
| 21 | | 86983387 | | 2 | FLEXIBLE (ASSEMBLE), 1320 mm ( 52 in ); Lift Cylinder |
| 22 | | 895-11010 | | 16 | RONDELLE, M10 x 20 x 2 |

**SYSTEME HYDRAULIQUE - GODET DE LA CHARGEUSE (XT CHARGEUSE)**

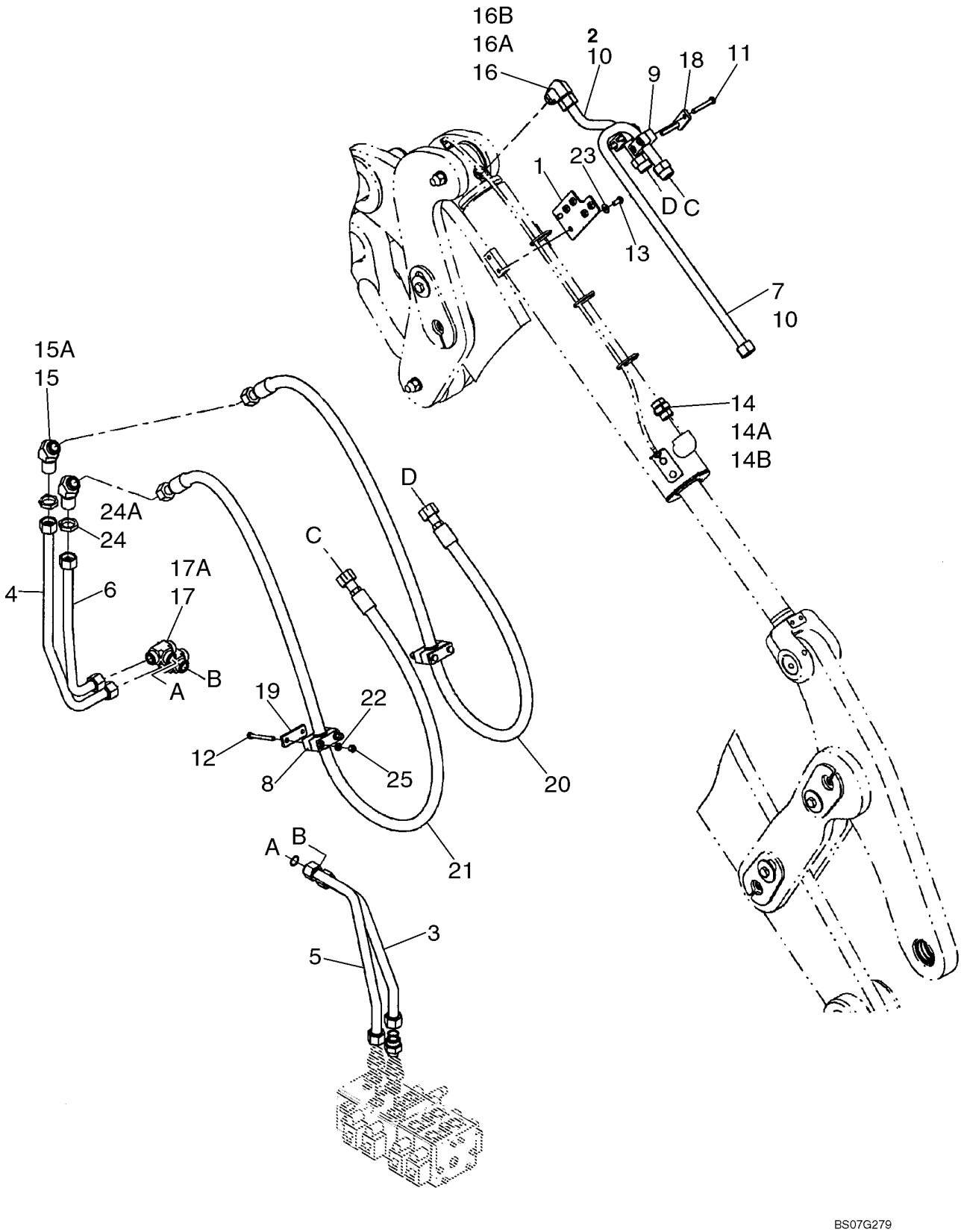

**SYSTEME HYDRAULIQUE - GODET DE LA CHARGEUSE (XT CHARGEUSE)**

| REF | FN | PART NUMBER | YR/SN | QTY | DESCRIPTION |
|---|---|---|---|---|---|
| | | REF | | | NOTICE, XT LOADER BUCKET |
| 1 | | 87447893 | | 1 | PATTE FIXATION, Tilt Tubes Right Side |
| 2 | | 87447895 | | 1 | TUYAUTERIE, Tilt Base Right Side |
| 3 | | 389349A1 | | 1 | TUYAUTERIE, Tilt Head End Right Side |
| 4 | | 87452603 | | 1 | TUYAUTERIE, Tilt Head Right Side |
| 5 | | 389351A1 | | 1 | TUYAUTERIE, Tilt Rod End Right Side |
| 6 | | 87445798 | | 1 | TUYAUTERIE, Tilt Rod End Right Side |
| 7 | | 87445806 | | 1 | TUYAUTERIE, Tilt Rod Right Right Side |
| 8 | | 87452747 | | 2 | BLOC, Tube Mounting |
| 9 | | 367489A1 | | 2 | BLOC, Mounting |
| 10 | | 238-6021 | | 2 | JOINT THORIQUE, -021, 90 Duro, .926" ID x .070" Thk, Face Seal |
| 11 | | 827-10070 | | 4 | BOULON, Hex, M10 x 70, 10.9 |
| 12 | | 827-10090 | | 4 | BOULON, Hex, M10 x 90, 10.9 |
| 13 | | 627-10020 | | 2 | BOULON, Hex, M10 x 20, 10.9, Full Thd |
| 14 | | 700-105 | | 1 | RACCORD, 1 7/16"-12 ORFS x M22 x 2 ORB, Incl. Refs. 14A, 14B |
| 14A | | 238-6021 | | 1 | JOINT THORIQUE, -021, 90 Duro, .926" ID x .070" Thk, Face Seal |
| 14B | | 637-64296 | | 1 | JOINT THORIQUE, CI 6, 29.6MM ID x 2.9 Thk, Boss End |
| 15 | | 701-366 | | 2 | COUDE, 45º, 1 7/16"-12. ORFS, Blkhd, Incl. Refs. 15A |
| 15A | | 238-6021 | | 2 | JOINT THORIQUE, -021, 90 Duro, .926" ID x .070" Thk, Face Seal |
| 16 | | 700-308 | | 2 | COUDE, 90º, 1 7/16"-12 ORFS x M33 x 2 ORB, Incl. Refs. 16A, 16B |
| 16A | | 238-6021 | | 1 | JOINT THORIQUE, -021, 90 Duro, .926" ID x .070" Thk, Face Seal |
| 16B | | 637-64296 | | 1 | JOINT THORIQUE, CI 6, 29.6MM ID x 2.9 Thk, Boss End |
| 17 | | 701-410 | | 2 | TE, 1 7/16"-12 ORFS, Incl. Ref. 17A |
| 17A | | 238-6021 | | 3 | JOINT THORIQUE, -021, 90 Duro, .926" ID x .070" Thk, Face Seal |
| 18 | | 367658A1 | | 2 | PLAQUE, Clamp Cover |
| 19 | | 8500858 | | 2 | PLAQUE, Clamp Cover |

**SYSTEME HYDRAULIQUE - GODET DE LA CHARGEUSE (XT CHARGEUSE)**

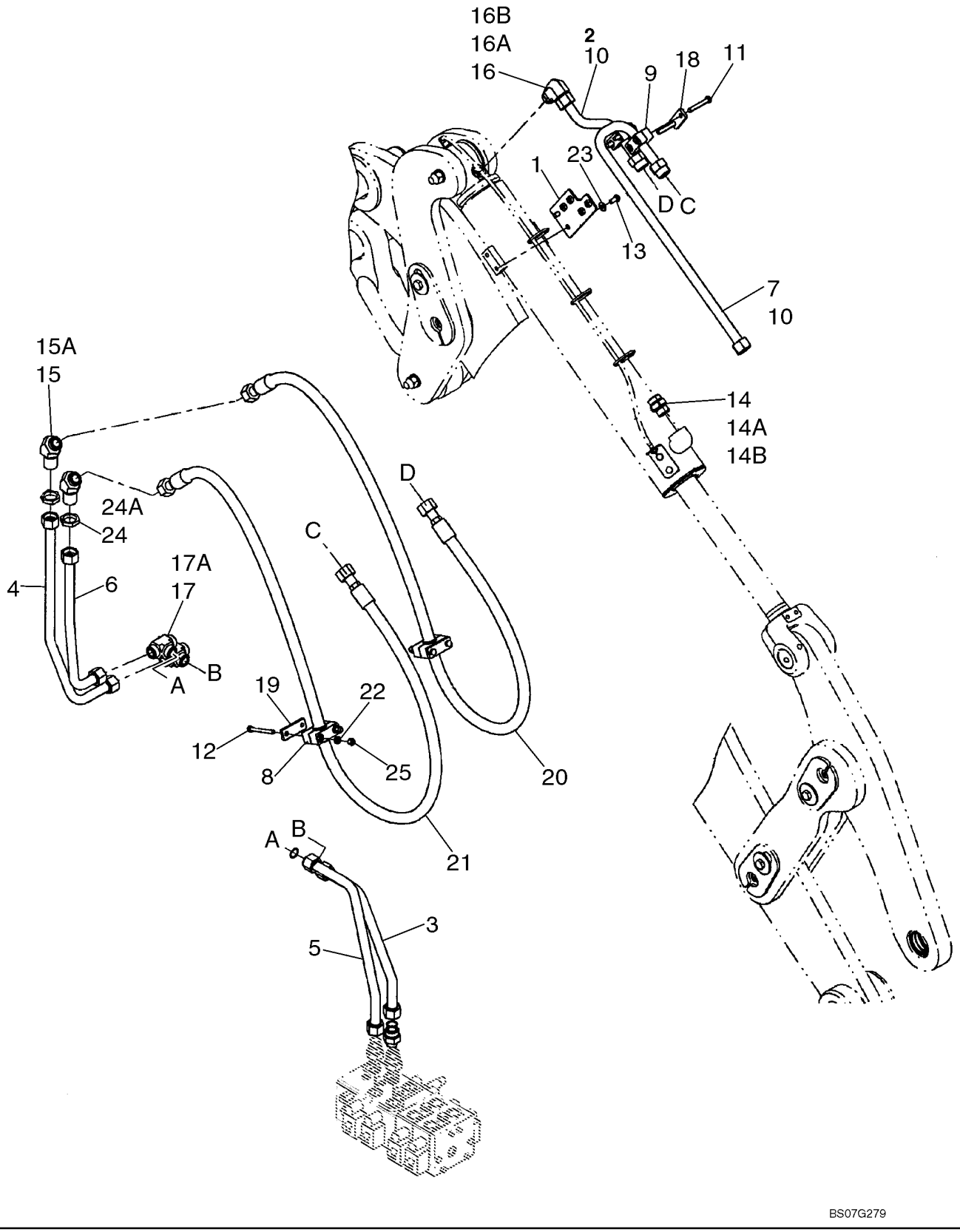

**SYSTEME HYDRAULIQUE - GODET DE LA CHARGEUSE (XT CHARGEUSE)**

| REF | FN | PART NUMBER | YR/SN | QTY | DESCRIPTION |
|---|---|---|---|---|---|
| 20 | | 87304928 | | 1 | FLEXIBLE (ASSEMBLE), Tilt Base; 2273mm ( 89-1/2 in ) |
| 21 | | 87304926 | | 1 | FLEXIBLE (ASSEMBLE), Tilt Rod; 2252mm ( 88-3/4 in ) |
| 22 | | 895-11010 | | 4 | RONDELLE, M10 x 20 x 2 |
| 23 | | 895-15010 | | 2 | RONDELLE, M11 x 24 x 2 |
| 24 | | 701-908 | | 2 | CONTRE-ECROU, 1 7/16"-12, ORFS Blkhd, Incl. Ref. 24A |
| 24A | | 238-6021 | | 1 | JOINT THORIQUE, -021, 90 Duro, .926" ID x .070" Thk, Face Seal |
| 25 | | 832-10410 | | 4 | CONTRE-ECROU, M10 x 1.5, Cl 8 |

**SYSTEME HYDRAULIQUE - GODET DE LA CHARGEUSE (XT CHARGEUSE)**

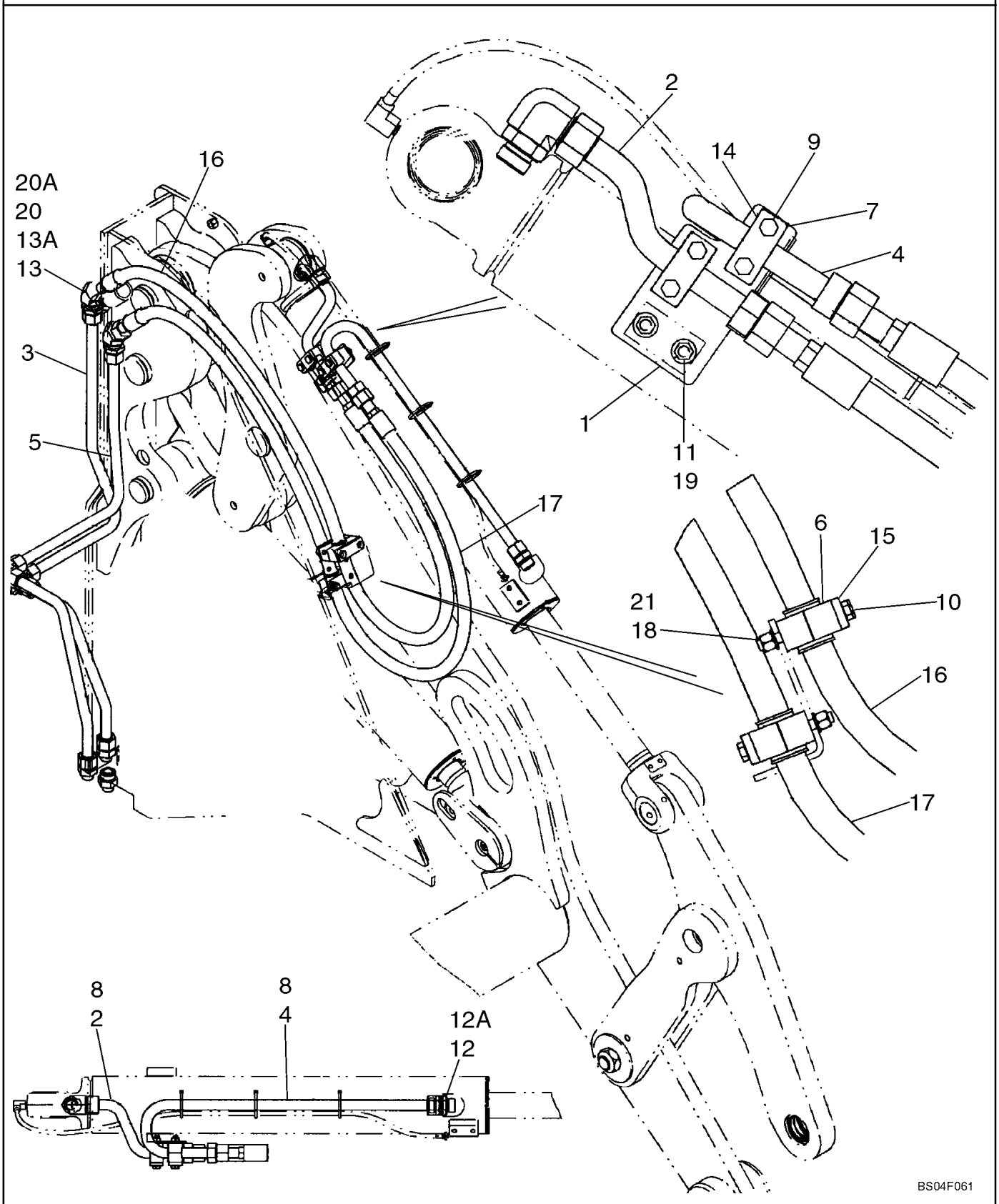

**SYSTEME HYDRAULIQUE - GODET DE LA CHARGEUSE (XT CHARGEUSE)**

| REF | FN | PART NUMBER | YR/SN | QTY | DESCRIPTION |
|---|---|---|---|---|---|
| | | REF | | | NOTICE, XT LOADER BUCKET |
| 1 | | 87447892 | | 1 | PATTE FIXATION, Tilt Tubes Left Side |
| 2 | | 87447897 | | 1 | TUYAUTERIE, Tilt Base Left Side |
| 3 | | 87452605 | | 1 | TUYAUTERIE, Tilt Head Left Side |
| 4 | | 87445800 | | 1 | TUYAUTERIE, Tilt Rod End Left Side |
| 5 | | 87445804 | | 1 | TUYAUTERIE, Tilt Rod Right Left Side |
| 6 | | 87452747 | | 2 | BLOC, Tube Mounting |
| 7 | | 367489A1 | | 2 | BLOC, Mounting |
| 8 | | 238-6021 | | 2 | JOINT THORIQUE, -021, 90 Duro, .926" ID x .070" Thk, Face Seal |
| 9 | | 827-10070 | | 4 | BOULON, Hex, M10 x 70, 10.9 |
| 10 | | 827-10090 | | 4 | BOULON, Hex, M10 x 90, 10.9 |
| 11 | | 627-10020 | | 2 | BOULON, Hex, M10 x 20, 10.9, Full Thd |
| 12 | | 700-105 | | 1 | RACCORD, 1 7/16"-12 ORFS x M22 x 2 ORB, Incl. Ref. 12A |
| 12A | | 238-6021 | | 1 | JOINT THORIQUE, -021, 90 Duro, .926" ID x .070" Thk, Face Seal |
| 13 | | 701-366 | | 2 | COUDE, 45º, 1 7/16"-12. ORFS, Blkhd, Incl. Ref. 13A |
| 13A | | 238-6021 | | 2 | JOINT THORIQUE, -021, 90 Duro, .926" ID x .070" Thk, Face Seal |
| 14 | | 367658A1 | | 2 | PLAQUE, Clamp Cover |
| 15 | | 8500858 | | 2 | PLAQUE, Clamp Cover |
| 16 | | 87304928 | | 1 | FLEXIBLE (ASSEMBLE), Tilt Base; 2273mm ( 89-1/2 in ) |
| 17 | | 87304926 | | 1 | FLEXIBLE (ASSEMBLE), Tilt Rod; 2252mm ( 88-3/4 in ) |
| 18 | | 895-11010 | | 4 | RONDELLE, M10 x 20 x 2 |
| 19 | | 895-15010 | | 2 | RONDELLE, M11 x 24 x 2 |
| 20 | | 701-908 | | 2 | CONTRE-ECROU, 1 7/16"-12, ORFS Blkhd, Incl. Ref. 20A |
| 20A | | 238-6021 | | 1 | JOINT THORIQUE, -021, 90 Duro, .926" ID x .070" Thk, Face Seal |
| 21 | | 832-10410 | | 4 | CONTRE-ECROU, M10 x 1.5, Cl 8 |

**SYSTEME HYDRAULIQUE - CHARGEUR AUXILIAIRE (Z CHARGEUSE)**

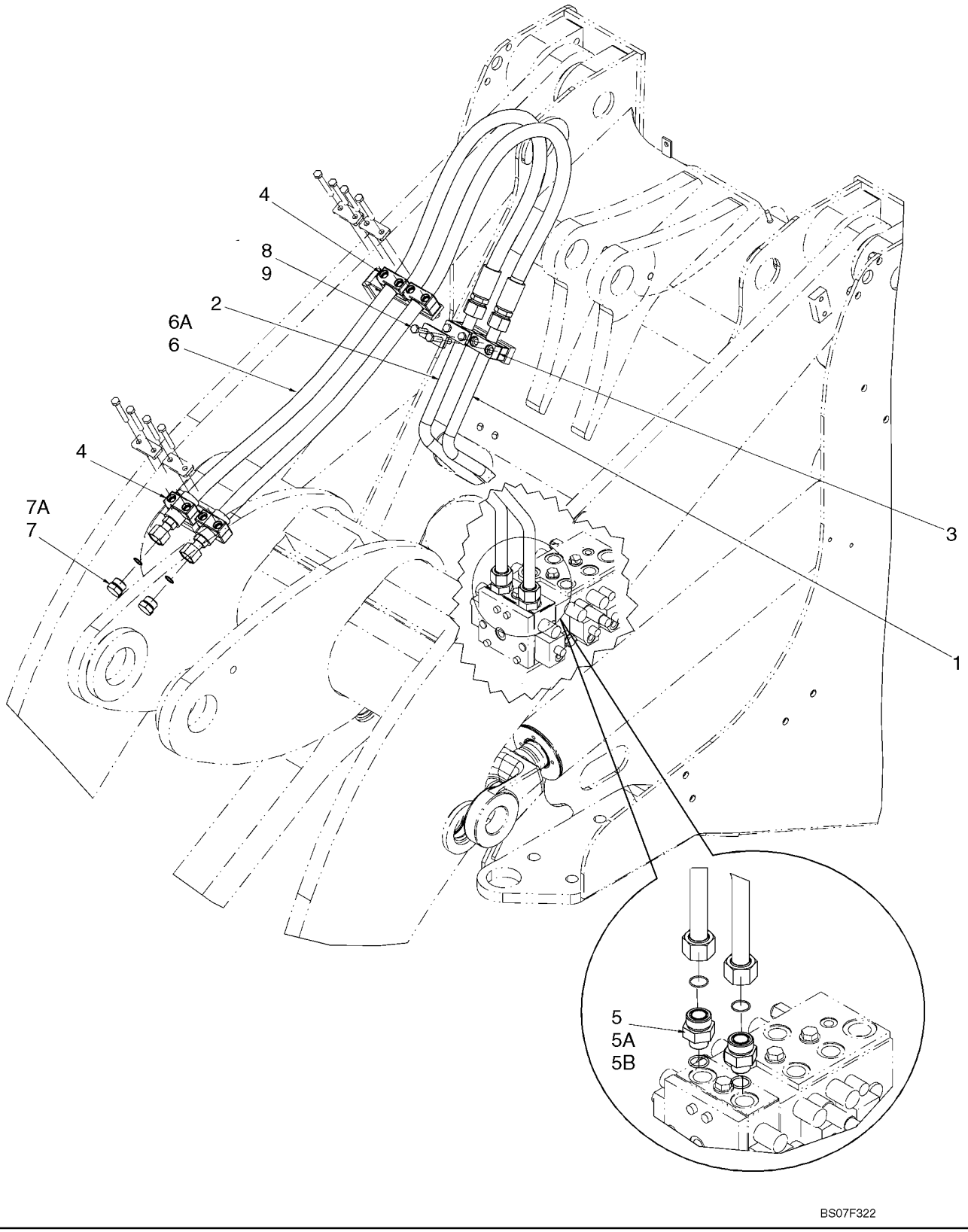

**SYSTEME HYDRAULIQUE - CHARGEUR AUXILIAIRE (Z CHARGEUSE)**

| REF | FN | PART NUMBER | YR/SN | QTY | DESCRIPTION |
|---|---|---|---|---|---|
| | | REF | | | NOTICE, Z-BAR LOADER, THIRD SPOOL HYDRAULICS |
| 1 | | 86983688 | | 1 | TUBE, Left Hand |
| 2 | | 86983689 | | 1 | TUBE, Right Hand |
| 3 | | 367489A1 | | 2 | BLOC, Tube Mounting |
| 4 | | 372453A1 | | 2 | BLOC, Tube Mounting |
| 5 | | 700-166 | | 2 | RACCORD, 1 7/16"-12 ORFS x M27 x 1.5 ORB, Incl. Refs. 5A, 5B |
| 5A | | 637-64236 | | 1 | JOINT THORIQUE, CI 6, 23.6MM ID x 2.9 Thk, Boss Seal |
| 5B | | 238-6021 | | 1 | JOINT THORIQUE, -021, 90 Duro, .926" ID x .070" Thk, Face Seal |
| 6 | | 372102A3 | | 2 | FLEXIBLE (ASSEMBLE), Incl. Ref. 6A |
| 6A | | 238-6021 | | 1 | JOINT THORIQUE, -021, 90 Duro, .926" ID x .070" Thk, Face Seal |
| 7 | | 701-914 | | 2 | BOUCHON, 1 3/16"-12 ORFS, Incl. Ref. 7A |
| 7A | | 238-6018 | | 2 | JOINT THORIQUE, -018, 90 Duro, .739" ID x .070" Thk, Face Seal |
| 8 | | 367658A1 | | 2 | PLAQUE, Clamp Cover |
| 9 | | 827-10070 | | 4 | BOULON, Hex, M10 x 70, 10.9 |

**SYSTEME HYDRAULIQUE - CHARGEUR AUXILIAIREN (XR)**

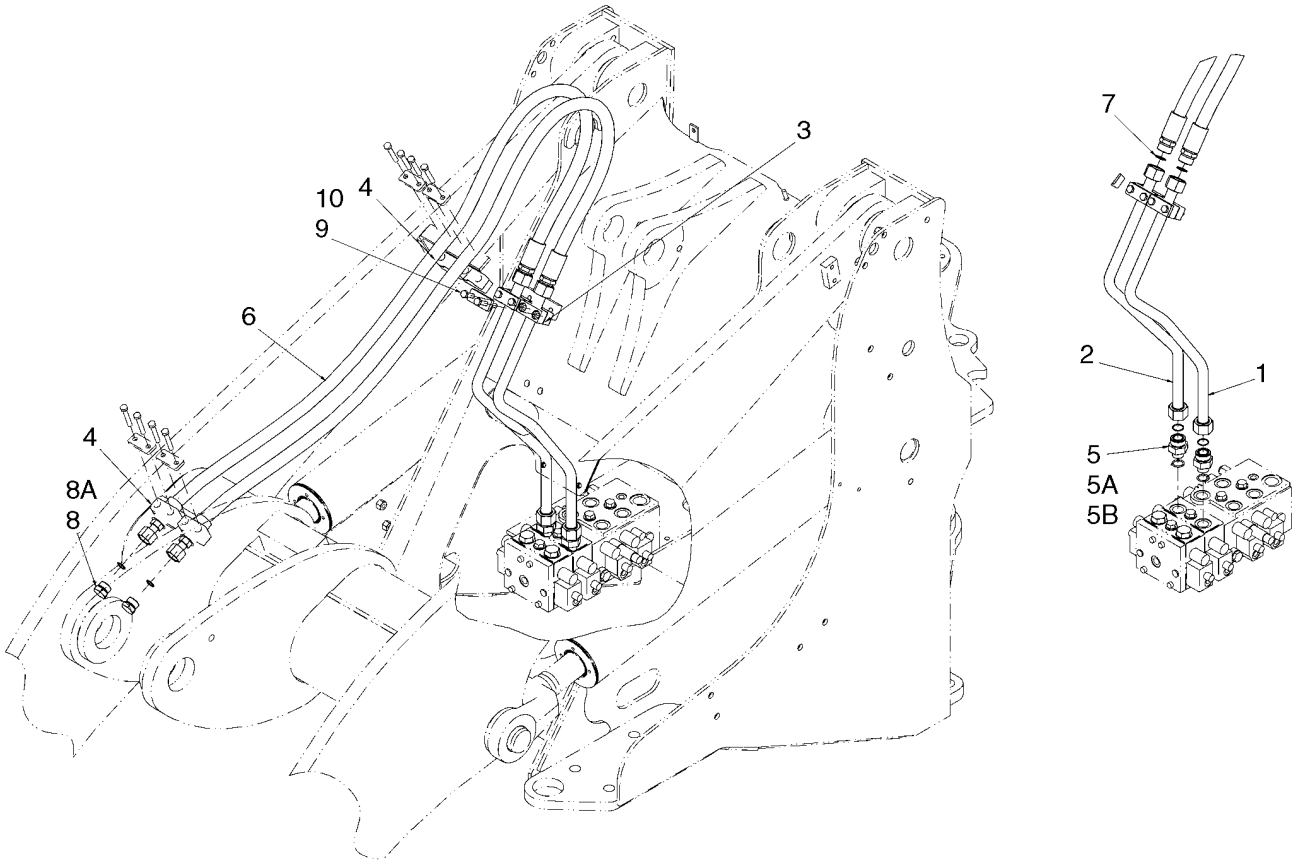

**SYSTEME HYDRAULIQUE - CHARGEUR AUXILIAIREN (XR)**

| REF | FN | PART NUMBER | YR/SN | QTY | DESCRIPTION |
|---|---|---|---|---|---|
| | | REF | | | NOTICE, XR LOADER, THIRD SPOOL HYDRAULICS |
| 1 | | 86983688 | | 1 | TUBE, Left Hand |
| 2 | | 86983689 | | 1 | TUBE, Right Hand |
| 3 | | 367489A1 | | 2 | BLOC |
| 4 | | 372453A1 | | 4 | BLOC |
| 5 | | 700-166 | | 2 | RACCORD, 1 7/16"-12 ORFS x M27 x 1.5 ORB, Incl. Refs. 5A, 5B |
| 5A | | 637-64236 | | 1 | JOINT THORIQUE, CI 6, 23.6MM ID x 2.9 Thk, Boss Seal |
| 5B | | 238-6021 | | 1 | JOINT THORIQUE, -021, 90 Duro, .926" ID x .070" Thk, Face Seal |
| 6 | | 437523A1 | | 2 | FLEXIBLE (ASSEMBLE), Third Spool; 2143 mm (84 - 3/8 in) |
| 7 | | 238-6021 | | 2 | JOINT THORIQUE, -021, 90 Duro, .926" ID x .070" Thk |
| 8 | | 701-914 | | 2 | BOUCHON, 1 3/16"-12 ORFS, Incl. Ref. 8A |
| 8A | | 238-6018 | | 1 | JOINT THORIQUE, -018, 90 Duro, .739" ID x .070" Thk |
| 9 | | 367658A1 | | 2 | PLAQUE |
| 10 | | 827-10070 | | 4 | BOULON, Hex, M10 x 70, 10.9 |

**SYSTEME HYDRAULIQUE - CHARGEUR AUXILIAIRE (XT CHARGEUSE) - SI UTILISÉ**

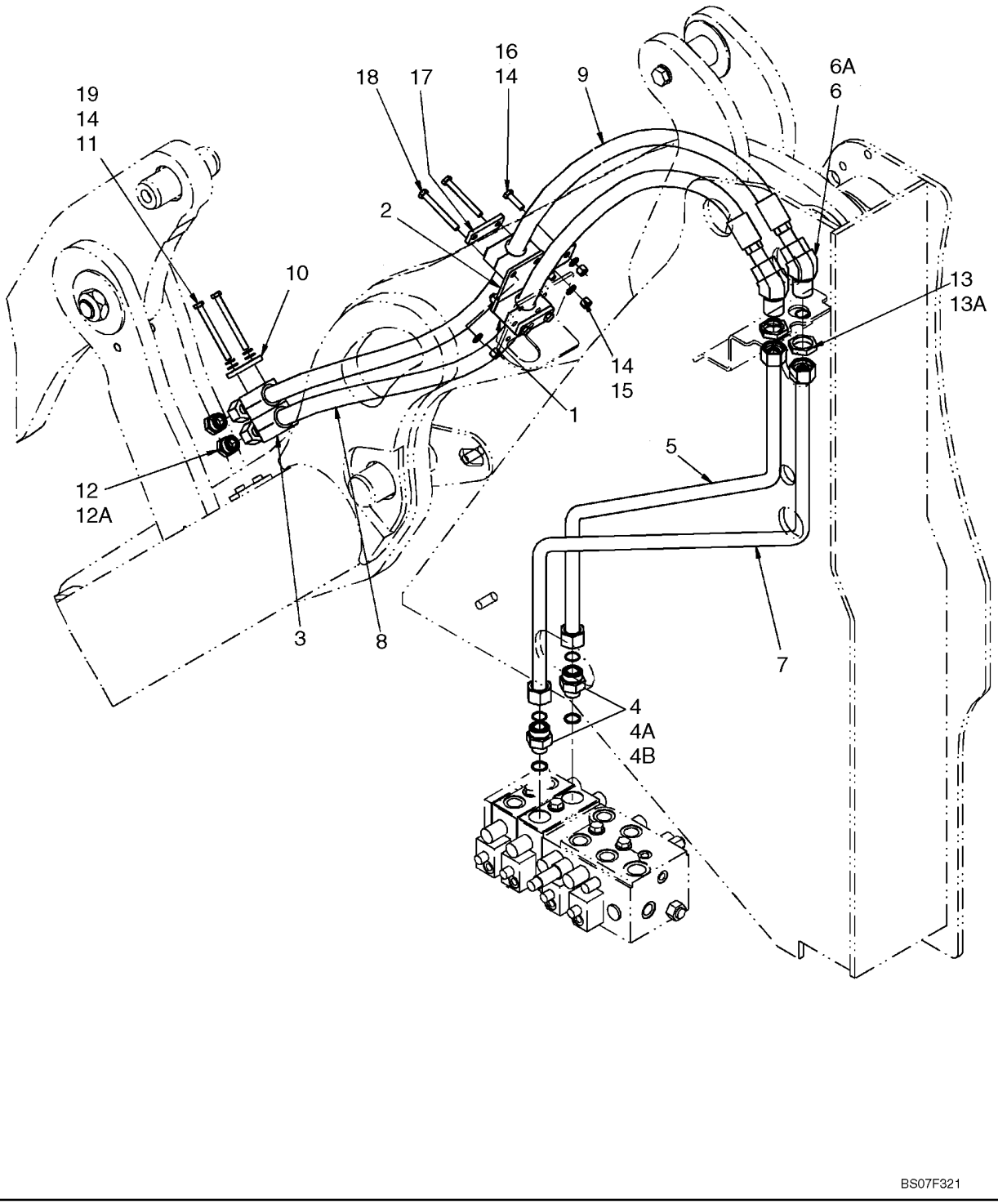

**SYSTEME HYDRAULIQUE - CHARGEUR AUXILIAIRE (XT CHARGEUSE) - SI UTILISÉ**

| REF | FN | PART NUMBER | YR/SN | QTY | DESCRIPTION |
|---|---|---|---|---|---|
| | | REF | | | NOTICE, XT LOADER, THIRD SPOOL HYDRAULICS |
| 1 | | 87452747 | | 2 | BLOC, Tube Mounting |
| 2 | | 87444440 | | 1 | PATTE FIXATION, Accessory Hose Mounting |
| 3 | | 372453A1 | | 2 | BLOC, Tube Mounting |
| 4 | | 700-166 | | 2 | RACCORD, 1 7/16"-12 ORFS x M27 x 1.5 ORB, Incl. Refs.4A, 4B |
| 4A | | 238-6021 | | 1 | JOINT THORIQUE, -021, 90 Duro, .926" ID x .070" Thk, Face Seal |
| 4B | | 637-64236 | | 1 | JOINT THORIQUE, CI 6, 23.6MM ID x 2.9 Thk, Boss Seal |
| 5 | | 87445809 | | 1 | TUYAUTERIE, Right Hand; Third Spool |
| 6 | | 701-366 | | 2 | COUDE, 45º, 1 7/16"-12. ORFS, Blkhd, Incl. Refs. 6A |
| 6A | | 238-6021 | | 2 | JOINT THORIQUE, -021, 90 Duro, .926" ID x .070" Thk, Face Seal |
| 7 | | 87452607 | | 1 | TUYAUTERIE, Left Hand; Third Spool |
| 8 | | 87304933 | | 1 | FLEXIBLE (ASSEMBLE), XT Accessory, Lower; 2006 mm (78 - 31/32 in) |
| 9 | | 87304930 | | 1 | FLEXIBLE (ASSEMBLE), XT Accessory, Upper; 2145 mm (84 - 7/16 in) |
| 10 | | 367658A1 | | 1 | PLAQUE, Clamp Cover |
| 11 | | 827-10100 | | 2 | BOULON, Hex, M10 x 100, 10.9 |
| 12 | | 701-914 | | 2 | BOUCHON, 1 3/16"-12 ORFS, Incl. Ref. 12A |
| 12A | | 238-6018 | | 1 | JOINT THORIQUE, -018, 90 Duro, .739" ID x .070" Thk, Face Seal |
| 13 | | 701-908 | | 2 | CONTRE-ECROU, 1 7/16"-12, ORFS Blkhd, Incl. Ref. 13A |
| 13A | | 238-6021 | | 1 | JOINT THORIQUE, -021, 90 Duro, .926" ID x .070" Thk, Face Seal |
| 14 | | 895-11010 | | 10 | RONDELLE, M10 x 20 x 2 |
| 15 | | 832-10410 | | 6 | CONTRE-ECROU, M10 x 1.5, CI 8 |
| 16 | | 627-10035 | | 2 | BOULON, Hex, M10 x 35, 10.9, Full Thd |
| 17 | | 8500858 | | 2 | PLAQUE, Clamp Cover |
| 18 | | 827-10090 | | 4 | BOULON, Hex, M10 x 90, 10.9 |
| 19 | | 892-11010 | | 2 | RONDELLE FREIN, M10, M10 |

**SYSTEME HYDRAULIQUE - COUPLEUR (Z CHARGEUSE)**

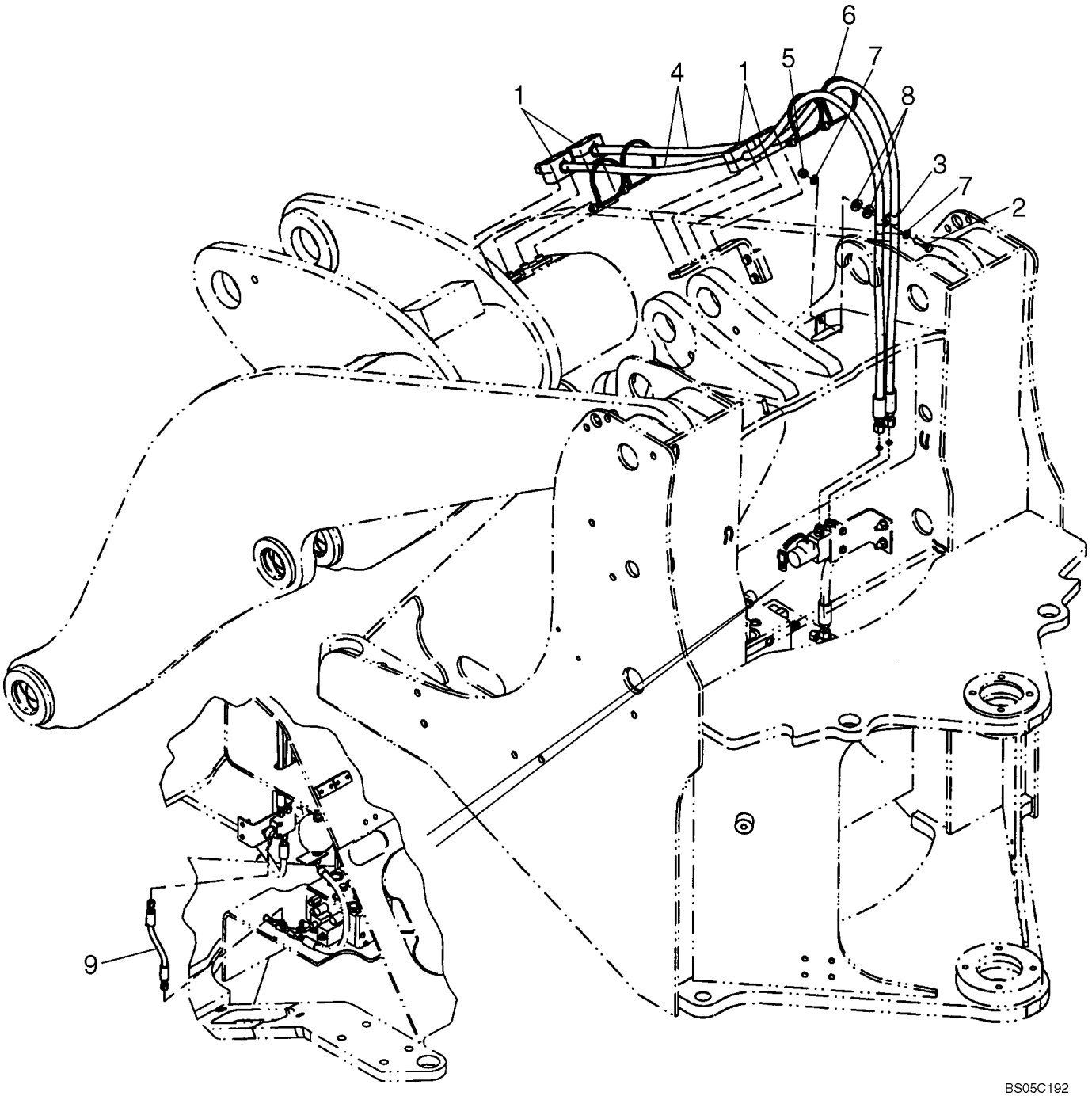

**SYSTEME HYDRAULIQUE - COUPLEUR (Z CHARGEUSE)**

| REF | FN | PART NUMBER | YR/SN | QTY | DESCRIPTION |
|---|---|---|---|---|---|
| | | REF | | | NOTICE, Z-BAR LOADER |
| 1 | | 379374A1 | | 4 | BLOC, Mounting |
| 2 | | 827-10040 | | 1 | BOULON, Hex, M10 x 40, 10.9, Full Thd |
| 3 | | 515-25159 | | 2 | BRIDE, 5/8", Insul, 1/2" Bolt |
| 4 | | 87403305 | | 2 | FLEXIBLE, Coupler; 2088 mm (82-13/64 in) |
| 5 | | 832-10410 | | 1 | CONTRE-ECROU, M10 x 1.5, Cl 8 |
| 6 | | L18331 | | 4 | SERRE-CABLE |
| 7 | | 895-11010 | | 2 | RONDELLE, M10 x 20 x 2 |
| 8 | | 896-15012 | | 2 | RONDELLE, M12 x 28.5 x 4, HT |
| 9 | | 87403985 | | 1 | FLEXIBLE, Coupler Pressure; 308mm (12-1/8 in ) |
| 10 | | 701-911 | | 1 | BOUCHON, 11/16"-16 ORFS, Incl. Ref. 10A; Not Illustrated |
| 10A | | 238-6012 | | 1 | JOINT THORIQUE, -012, 90 Duro, .364" ID x .070" Thk, Face Seal; Not Illustrated |

**SYSTEME HYDRAULIQUE - COUPLEUR (XRCHARGEUSE)**

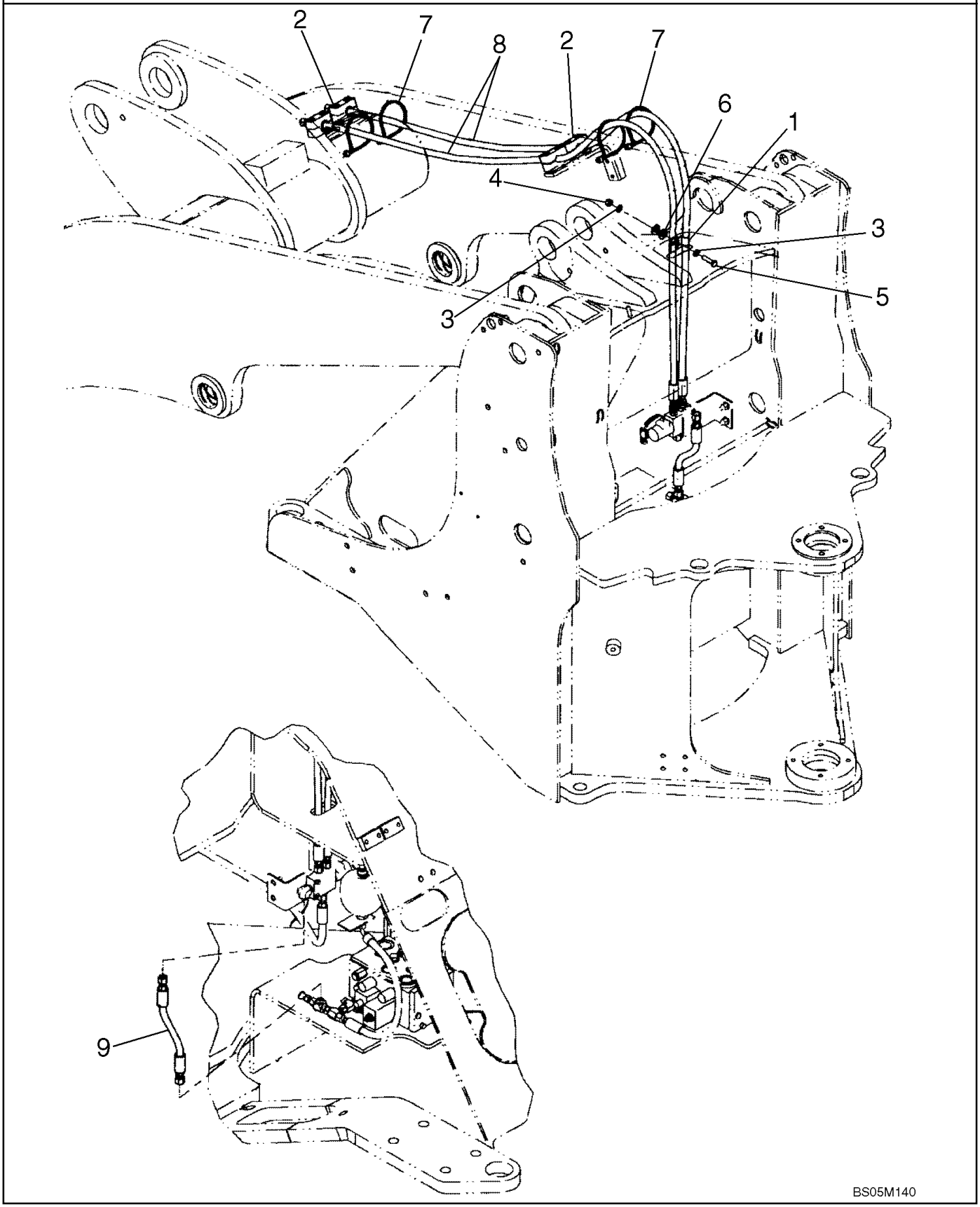

**SYSTEME HYDRAULIQUE - COUPLEUR (XRCHARGEUSE)**

| REF | FN | PART NUMBER | YR/SN | QTY | DESCRIPTION |
|---|---|---|---|---|---|
| | | REF | | | NOTICE, XR LOADER |
| 1 | | 515-25159 | | 2 | BRIDE, 5/8", Insul, 1/2" Bolt |
| 2 | | 379374A1 | | 4 | BLOC, Mounting |
| 3 | | 895-11010 | | 2 | RONDELLE, M10 x 20 x 2 |
| 4 | | 832-10410 | | 1 | CONTRE-ECROU, M10 x 1.5, Cl 8 |
| 5 | | 827-10040 | | 1 | BOULON, Hex, M10 x 40, 10.9, Full Thd |
| 6 | | 896-15012 | | 2 | RONDELLE, M12 x 28.5 x 4, HT |
| 7 | | L18331 | | 4 | SERRE-CABLE |
| 8 | | 87405436 | | 2 | FLEXIBLE, XR Coupler; 2229 mm ( 87-3/4 in ) |
| 9 | | 87403985 | | 1 | FLEXIBLE, Coupler Pressure; 308mm (12-1/8 in ) |
| 10 | | 701-911 | | 1 | BOUCHON, 11/16"-16 ORFS, Incl. Ref 10A; Not Illustrated |
| 10A | | 238-6012 | | 1 | JOINT THORIQUE, -012, 90 Duro, .364" ID x .070" Thk, Face Seal; Not Illustrated |

**SYSTEME HYDRAULIQUE - COUPLEUR (XT CHARGEUSE)**

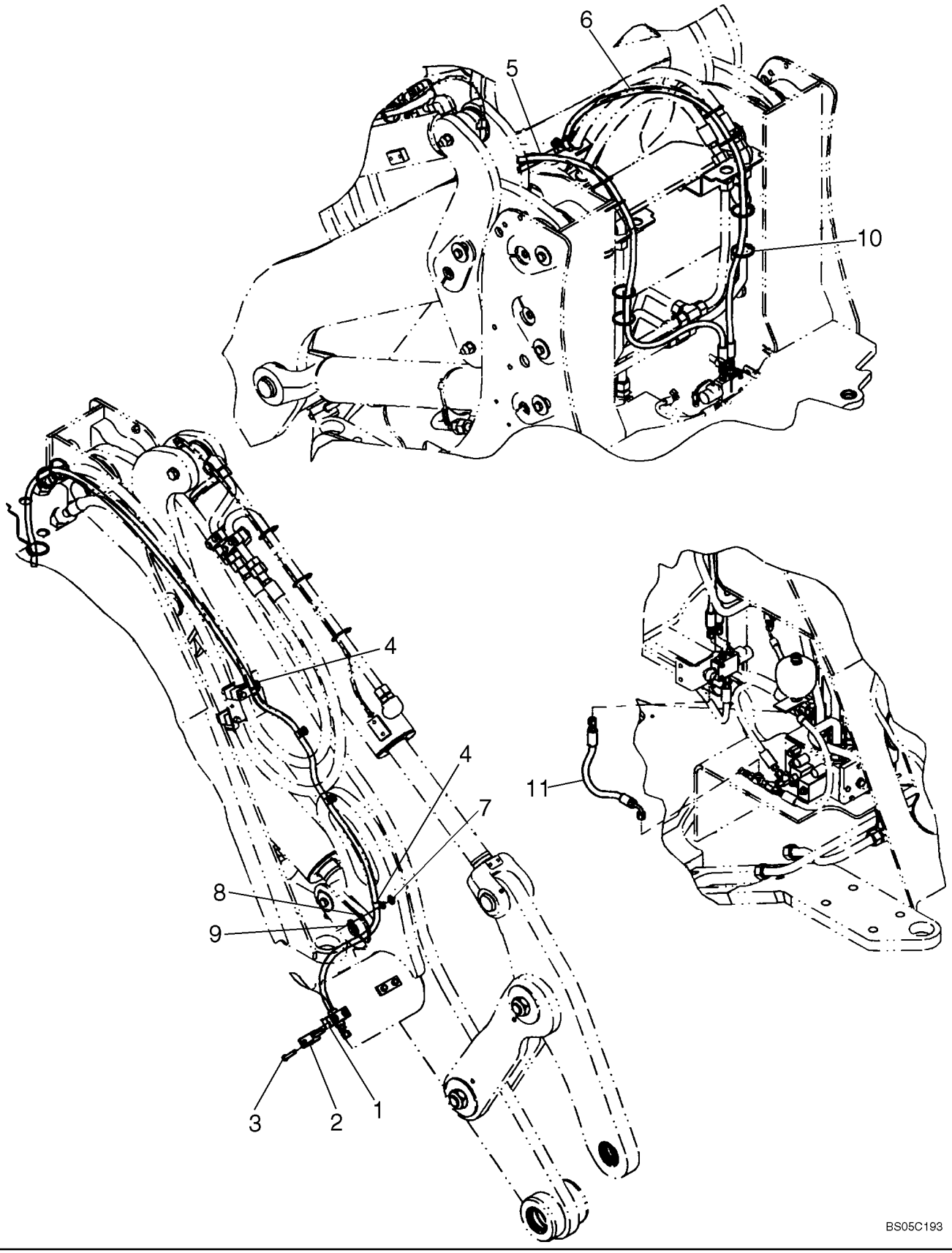

**SYSTEME HYDRAULIQUE - COUPLEUR (XT CHARGEUSE)**

| REF | FN | PART NUMBER | YR/SN | QTY | DESCRIPTION |
|---|---|---|---|---|---|
| | | REF | | | NOTICE, XT LOADER |
| 1 | | 379374A1 | | 2 | BLOC, Mounting |
| 2 | | 367658A1 | | 2 | PLAQUE, Clamp Cover |
| 3 | | 827-10060 | | 4 | BOULON, Hex, M10 x 60, 10.9 |
| 4 | | 515-23159 | | 8 | BRIDE, 5/8", Insul, 3/8" Bolt |
| 5 | | 87448666 | | 1 | FLEXIBLE (ASSEMBLE), XT Coupler; Left; 353mm ( 14 in ) |
| 6 | | 87448665 | | 1 | FLEXIBLE (ASSEMBLE), XT Coupler; Right; 323 (12-3/4 in ) |
| 7 | | 896-15010 | | 6 | RONDELLE, M10 x 24.5 x 3, HT |
| 8 | | 895-11010 | | 6 | RONDELLE, M10 x 20 x 2 |
| 9 | | 832-10410 | | 6 | CONTRE-ECROU, M10 x 1.5, Cl 8 |
| 10 | | L18331 | | 8 | SERRE-CABLE |
| 11 | | 393126A1 | | 1 | FLEXIBLE (ASSEMBLE), Coupler Pressure; 483mm ( 19 in ) |
| 12 | | 701-911 | | 1 | BOUCHON, 11/16"-16 ORFS, Incl. Ref. 12A; Not Illustrated |
| 12A | | 238-6012 | | 1 | JOINT THORIQUE, -012, 90 Duro, .364" ID x .070" Thk, Face Seal; Not Illustrated |

## CIRCUITS HYDRAULIQUES - VERROUILLAGE DU COUPLEUR

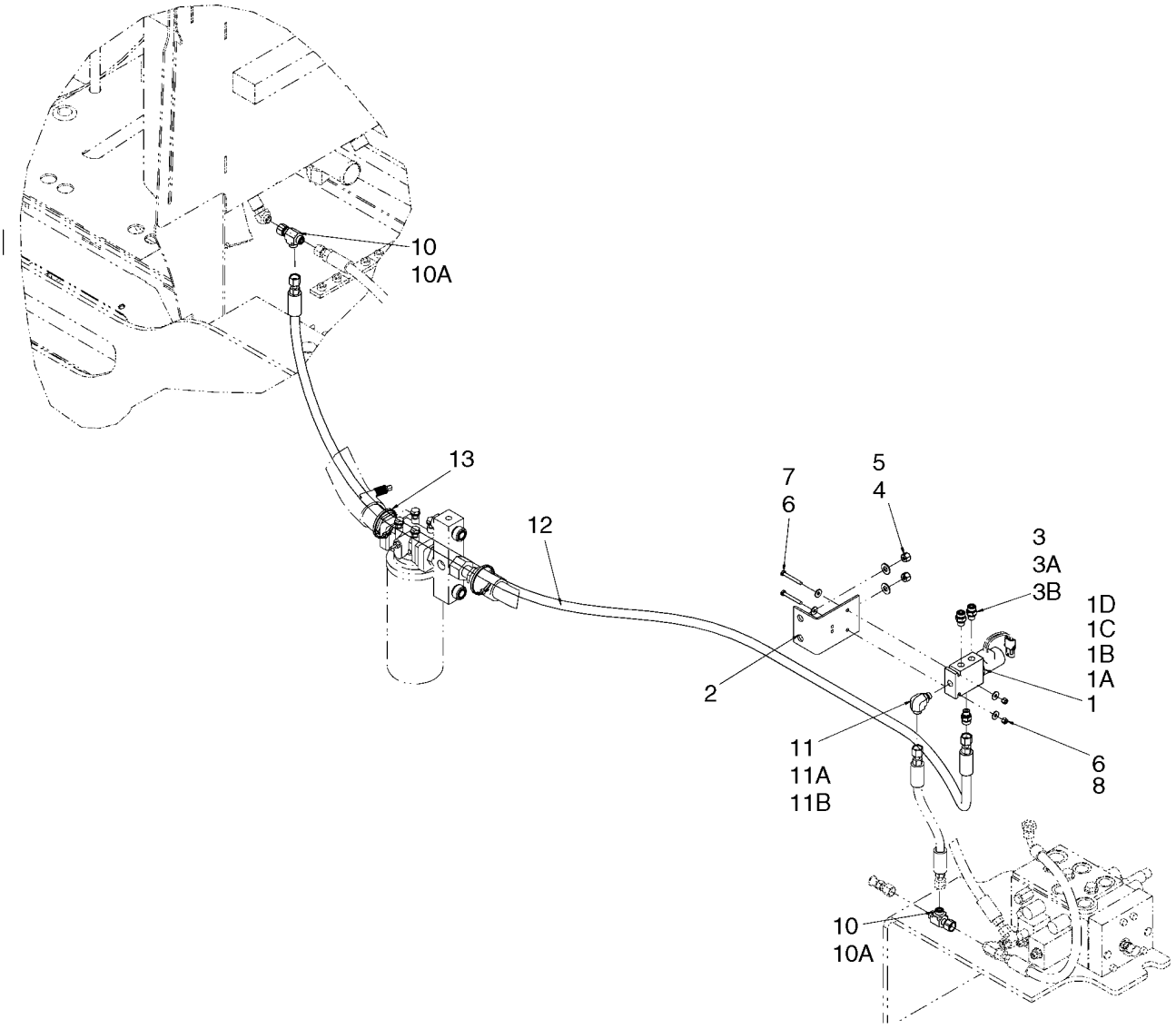

**CIRCUITS HYDRAULIQUES - VERROUILLAGE DU COUPLEUR**

| REF | FN | PART NUMBER | YR/SN | QTY | DESCRIPTION |
|---|---|---|---|---|---|
| 1 | | 379139A1 | | 1 | VALVE, Coupler Locking; Incl. Refs. 1A - 1C |
| 1A | | NSS | | 1 | NON FOURNI SEPAREMENT, Body |
| 1B | | NSS | | 1 | NON FOURNI SEPAREMENT, Coil |
| 1C | | 8605216 | | 1 | SOLENOIDE, Valve; Component Parts Not Serviced Separately; Order 8605153 Seal Kit; Incl. 1C |
| 1D | | 124639A1 | | 1 | JEU JOINTS ETANCHEITE, Seal Kit; Includes (4) O-Rings and (6) Backup Rings, Which Are Not Serviced Separately |
| 2 | | 87404018 | | 1 | PATTE FIXATION, Coupler Solenoid |
| 3 | | 700-101 | | 3 | RACCORD, 11/16"-16 ORFS x M14 x 1.5 ORB, Incl. Ref. 3A, 3B |
| 3A | | 637-63113 | | 1 | JOINT THORIQUE, Cl 6, 11.3MM ID x 2.2 Thk |
| 3B | | 238-6012 | | 1 | JOINT THORIQUE, -012, 90 Duro, .364" ID x .070" Thk |
| 4 | | 895-15010 | | 2 | RONDELLE, M11 x 24 x 2 |
| 5 | | 832-10410 | | 2 | CONTRE-ECROU, M10 x 1.5, Cl 8 |
| 6 | | 895-25006 | | 4 | RONDELLE, M6 x 18 x 1.6 |
| 7 | | 827-6050 | | 2 | BOULON, Hex, M6 x 50, 10.9 |
| 8 | | 832-10406 | | 2 | CONTRE-ECROU, M6 x 1, Cl 8 |
| 10 | | 701-422 | | 2 | TE, 11/16"-16 ORFS x 11/16"-16 Fem Sw Run, Incl. Ref. 10A |
| 10A | | 238-6012 | | 3 | JOINT THORIQUE, -012, 90 Duro, .364" ID x .070" Thk |
| 11 | | 700-304 | | 1 | COUDE, 90º, 11/16"-18 ORFS x M14 x 1.5 ORB, Incl. Refs. 11A, 11B |
| 11A | | 637-63113 | | 1 | JOINT THORIQUE, Cl 6, 11.3MM ID x 2.2 Thk |
| 11B | | 238-6012 | | 1 | JOINT THORIQUE, -012, 90 Duro, .364" ID x .070" Thk |
| 12 | | 87581937 | | 1 | FLEXIBLE, 2558 mm (100 - 11/16 in); Coupler Tank |
| 13 | | L11541 | | 2 | SANGLE, Wire Tie |

**VERIN - GODET DE LA CHARGEUSE**

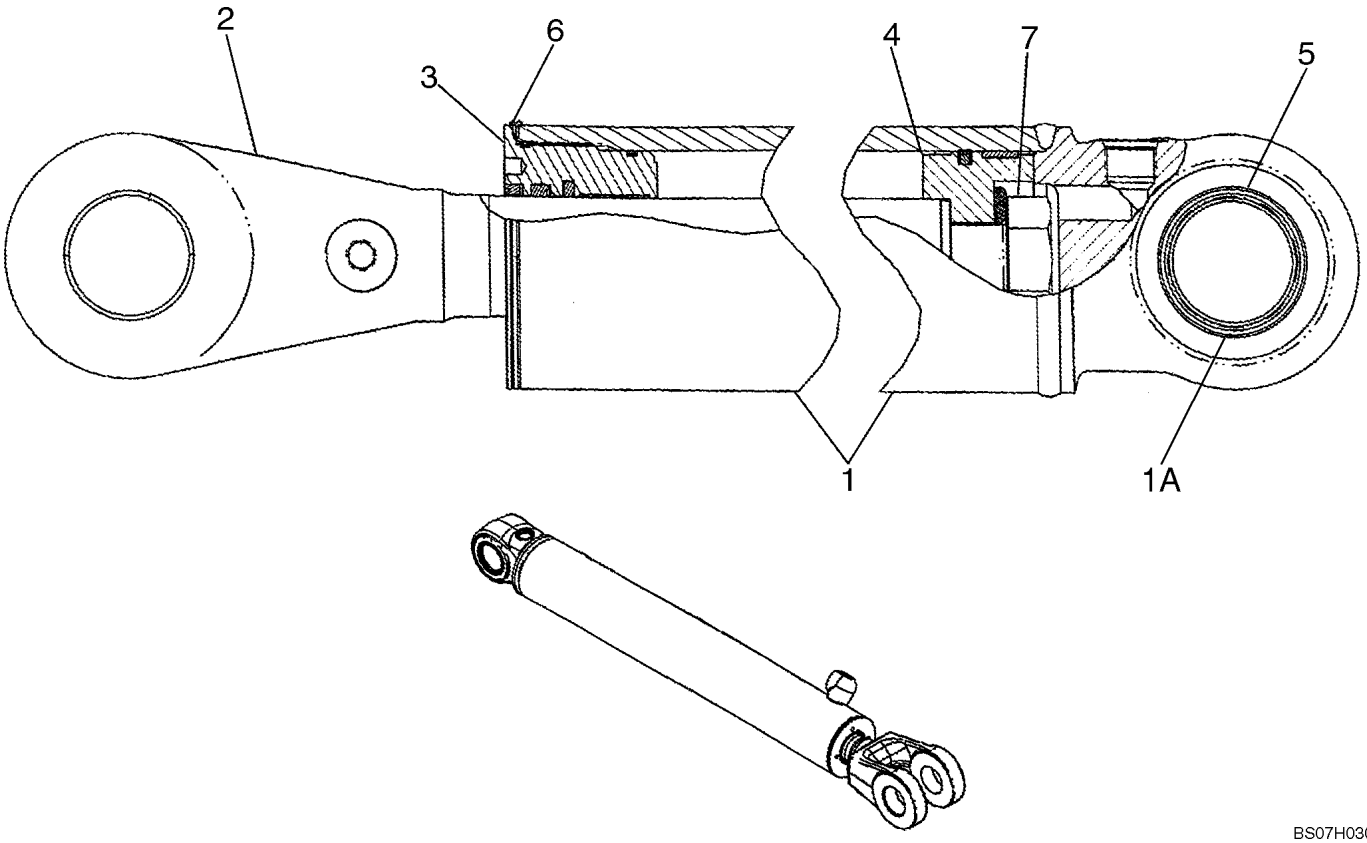


BS07H030

**VERIN - GODET DE LA CHARGEUSE**

| REF | FN | PART NUMBER | YR/SN | QTY | DESCRIPTION |
|---|---|---|---|---|---|
| | | REF | | | NOTICE, Z-BAR, XR, XT LOADER LIFT |
| | | 87577649 | | 2 | VERIN DE LEVAGE, 120.65 mm ID x 787.6 mm strk; Incl. Refs. 1 - 7 |
| | | {87598751} | | 1 | KIT, SEALS, Cylinder Service; Incl. Refs. 3B - 3G, 4C - 4D |
| 1 | | {87586627} | | 1 | TUBE Incl. 1A |
| 1A | | 87625615 | | 2 | BAGUE |
| 2 | | 87318062 | | 1 | TIGE DE VERIN, 63.5 Diameter |
| 3 | | {87586629} | | 1 | GLAND ASSY. Cylinder; Incl. Refs. 3A -3G |
| 3A | | {87586628} | | 1 | GLAND, Not Illustrated |
| 3B | | D95146 | | 1 | RACLEUR BALAIS, Not Illustrated |
| 3C | | 1542879C1 | | 1 | POCHETTE DE JOINTS, Seal; Incl. Buffer Seal, Rod Seal, Not Illustrated |
| | | NSS | | 1 | NON FOURNI SEPAREMENT, Seal, Buffer |
| | | NSS | | 1 | NON FOURNI SEPAREMENT, Seal, Rod |
| 3D | | 336041A1 | | 1 | ROULEMENT, Not Illustrated |
| 3E | | 446178A1 | | 1 | JOINT, Not Illustrated |
| 3F | | 238-5245 | | 1 | JOINT THORIQUE, -245, 70 Duro, 4.359" ID x .139" Thk, Not Illustrated |
| 3G | | 238-5246 | | 1 | JOINT THORIQUE, -246, 70 Duro, 4.484" ID x .139" Thk, Not Illustrated |
| 4 | | {87586631} | | 1 | PISTON ASSY. Incl. Refs. 4A-4D |
| 4A | | {87586630} | | 1 | PISTON, 120.7 x 63.5, Not Illustrated |
| 4B | | 87403649 | | 1 | JOINT, Loader; 4.75 Bore, Not Illustrated |
| 4C | | 446481A1 | | 1 | JOINT, Piston, Not Illustrated |
| 4D | | 446195A1 | | 1 | JOINT, Wear Ring, Not Illustrated |
| 5 | | D95146 | | 2 | RACLEUR BALAIS |
| 6 | | G109395 | | 1 | VIS AUTO-TARAUDEUSE |
| 7 | | 86982444 | | 1 | BOULON SPECIAL, Incl. Ref. 7A |
| 7A | | NSS | | 1 | NON FOURNI SEPAREMENT, Washer, Not Illustrated |

**VERIN - GODET DE LA CHARGEUSE (Z CHARGEUSE)**

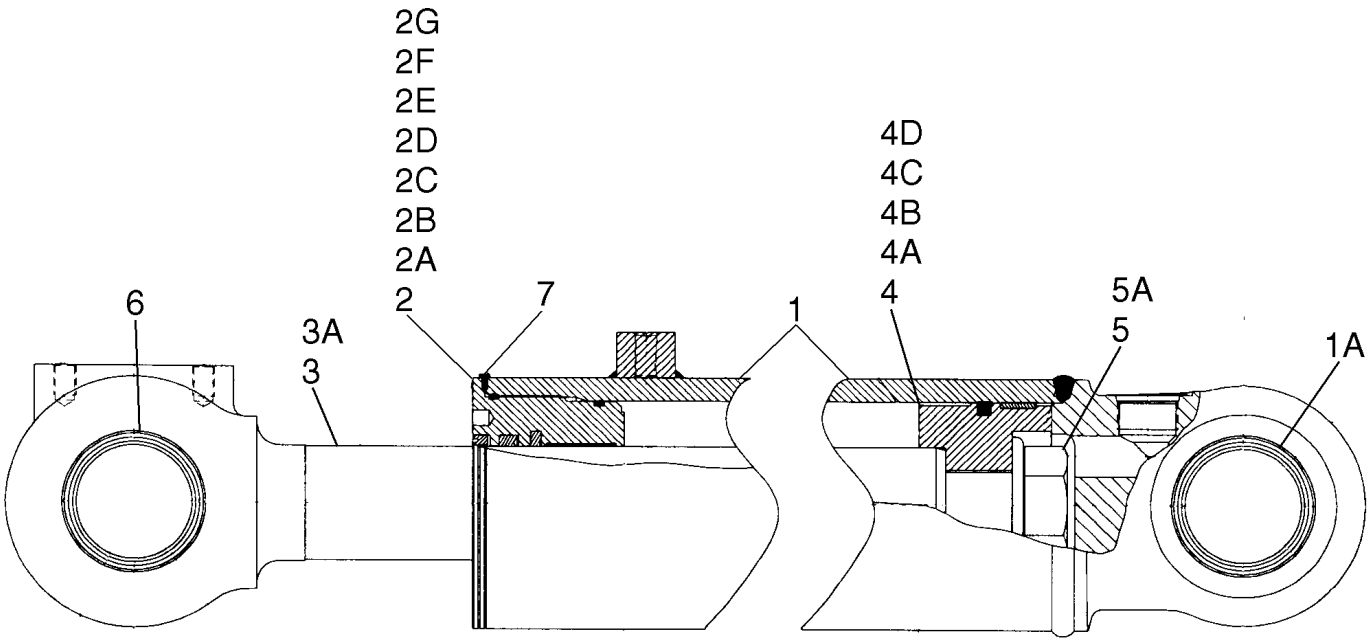


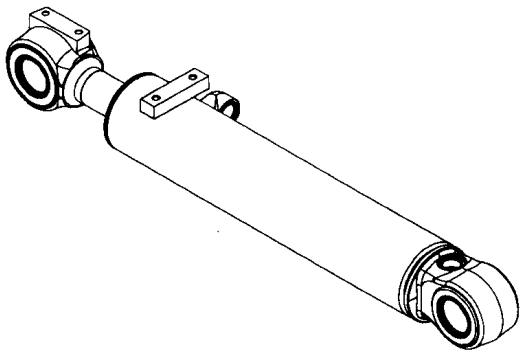

BS05M141

**VERIN - GODET DE LA CHARGEUSE (Z CHARGEUSE)**

| REF | FN | PART NUMBER | YR/SN | QTY | DESCRIPTION |
|---|---|---|---|---|---|
| | | REF | | | NOTICE, Z-BAR LOADER |
| | | 87366688 | | 1 | VERIN, 114 ID x 529 mm strk; Bucket; Incl. Refs.1 - 20 |
| | | {87434293} | | 1 | KIT, SEALS; Incl. Refs. 2B-2G, 4B, 4D, And Expandable Seal 1986753C1 |
| 1 | | 339525A1 | | 1 | CHEMISE DE CYLINDRE, Incl. 1A |
| 1A | | 87625613 | | 2 | BAGUE |
| 2 | | 339512A1 | | 1 | PRESSE-ETOUPE, Assembly; Incl. Refs. 2A - 2G |
| 2A | | 339511A1 | | 1 | PRESSE-ETOUPE, Packing |
| 2B | | 1542881C1 | | 1 | JEU JOINTS ETANCHEITE, Incl. Rod And Buffer Seals |
| 2C | | D95148 | | 1 | RACLEUR BALAIS |
| 2D | | 336042A1 | | 1 | BAGUE, Bearing; Dia. 76.20 |
| 2E | | G107970 | | 1 | ANNEAU, Backup |
| 2F | | 238-5247 | | 1 | JOINT THORIQUE, -247, 70 Duro, 4.609" ID x .139" Thk |
| 2G | | 238-5248 | | 1 | JOINT THORIQUE, -248, 70 Duro, 4.734" ID x .139" Thk |
| 3 | | 339520A1 | | 1 | TRINGLE (ASSEMBLEE), 76.2 Dia; Incl. Ref. 3A |
| 3A | | 339521A1 | | 2 | BAGUE, 69.8 Dia. |
| 4 | | 339510A1 | | 1 | PISTON, Incl. Refs. 4A - 4D |
| 4A | | 339508A1 | | 1 | PISTON, 127.0 Dia Cylinder; 76.2 Dia Rod |
| 4B | | G102092 | | 1 | ANNEAU, 127.0 Dia. |
| 4C | | 336030A1 | | 1 | JOINT, 127.0 Dia. |
| 4D | | 336046A1 | | 1 | ANNEAU, Wear |
| 5 | | 86982444 | | 1 | BOULON SPECIAL, Incl. Ref. 5A |
| 5A | | NSS | | 1 | NON FOURNI SEPAREMENT, Washer |
| 6 | | D95147 | | 4 | RACLEUR BALAIS |
| 7 | | 86642312 | | 1 | VIS AUTO-TARAUDEUSE, Hex Hd, #8 x 3/8" |
| | | 87442965 | | 1 | POCHETTE DE JOINTS, Seal; Incl. Refs. 2B - 2G, 4B, 4D |

**VERIN - GODET DE LA CHARGEUSE (XR CHARGEUSE)**

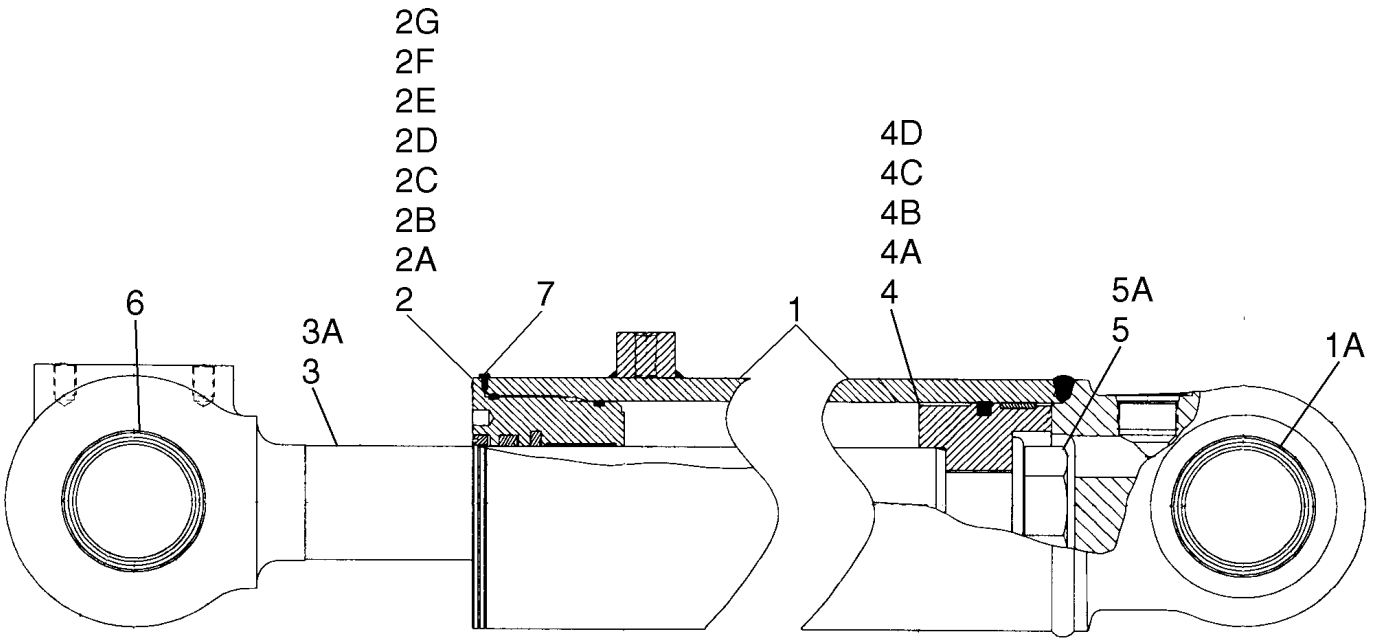


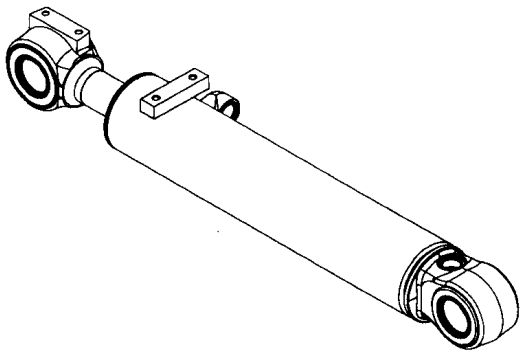

BS05M141

**VERIN - GODET DE LA CHARGEUSE (XR CHARGEUSE)**

| REF | FN | PART NUMBER | YR/SN | QTY | DESCRIPTION |
|---|---|---|---|---|---|
| | | REF | | | NOTICE, XR LOADER BUCKET TILT |
| | | 87366695 | | 1 | VERIN, 127 ID x 620 mm strk; Bucket Tilt; Incl. 1 - 20 |
| | | {87434293} | | 1 | KIT, SEALS; Incl. Refs. 3B-3G, 4C, 4D, And Expandable Seal 1986753C1 |
| 1 | | 339525A1 | | 1 | CHEMISE DE CYLINDRE, Incl. 1A |
| 1A | | 87625613 | | 2 | BAGUE |
| 2 | | 339512A1 | | 1 | PRESSE-ETOUPE, Assembly; Incl. Refs. 2A - 2G |
| 2A | | 339511A1 | | 1 | PRESSE-ETOUPE, Packing |
| 2B | | 1542881C1 | | 1 | JEU JOINTS ETANCHEITE, Incl. Rod And Buffer Seals |
| 2C | | D95148 | | 1 | RACLEUR BALAIS |
| 2D | | 336042A1 | | 1 | BAGUE, Bearing; Dia. 76.20 |
| 2E | | G107970 | | 1 | ANNEAU, Backup |
| 2F | | 238-5247 | | 1 | JOINT THORIQUE, -247, 70 Duro, 4.609" ID x .139" Thk |
| 2G | | 238-5248 | | 1 | JOINT THORIQUE, -248, 70 Duro, 4.734" ID x .139" Thk |
| 3 | | 399350A1 | | 1 | TRINGLE (ASSEMBLEE), 76.2 Dia; Incl. Ref. 3A |
| 3A | | 339521A1 | | 2 | BAGUE, 69.8 Dia. |
| 4 | | 339510A1 | | 1 | PISTON, Incl. Refs. 4A - 4D |
| 4A | | 339508A1 | | 1 | PISTON, 127.0 Dia Cylinder; 76.2 Dia Rod |
| 4B | | G102092 | | 1 | ANNEAU, 127.0 Dia. |
| 4C | | 336030A1 | | 1 | JOINT, 127.0 Dia. |
| 4D | | 336046A1 | | 1 | ANNEAU, Wear |
| 5 | | 86982444 | | 1 | BOULON SPECIAL, Incl. Ref. 5A |
| 5A | | NSS | | 1 | NON FOURNI SEPAREMENT, Washer |
| 6 | | D95147 | | 4 | RACLEUR BALAIS |
| 7 | | 86642312 | | 1 | VIS AUTO-TARAUDEUSE, Hex Hd, #8 x 3/8" |
| | | 360984A1 | | 1 | POCHETTE, Seal; Incl. Refs. 2B - 2G, 4B, 4D |

**VERIN - RELEVAGE DE LA CHARGEUSE (XT CHARGEUSE)**

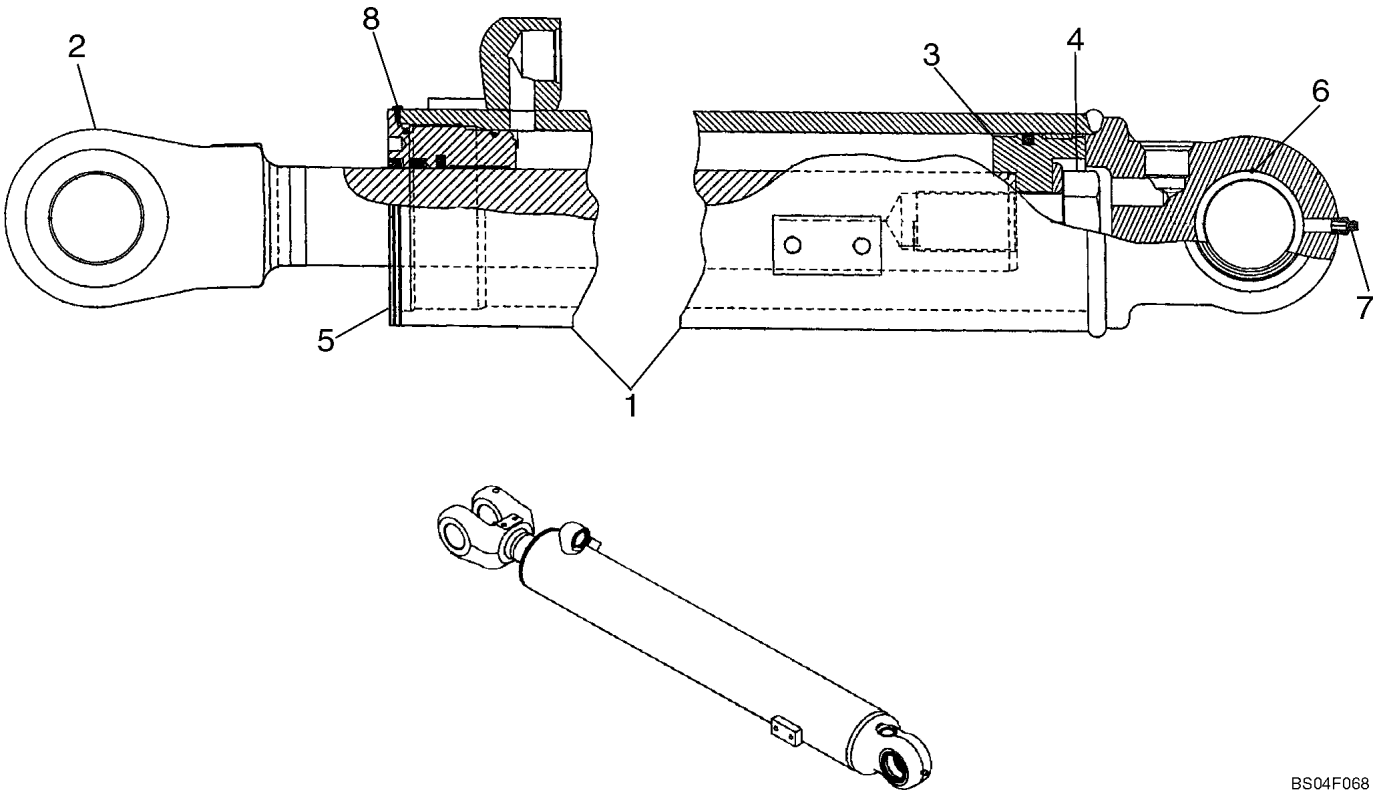


BS04F068

**VERIN - RELEVAGE DE LA CHARGEUSE (XT CHARGEUSE)**

| REF | FN | PART NUMBER | YR/SN | QTY | DESCRIPTION |
|---|---|---|---|---|---|
| | | REF | | | NOTICE, XT LOADER |
| | | 87442555 | | 2 | VERIN DE LEVAGE, 114 ID x 819.9 mm strk; Lift; CNH CE Gray; Incl. 1 - 9 |
| 1 | | 87442557 | | 1 | TUYAUTERIE, Incl. Ref. 1A |
| 1A | | 87625614 | | 2 | BAGUE, Not Illustrated |
| 2 | | 87442559 | | 1 | TRINGLE (ASSEMBLEE), 63,5 mm dia |
| 3 | | 341971A1 | | 1 | PISTON, Incl. Refs. 3A-3D |
| 3A | | 341968A1 | | 1 | PISTON, Not Illustrated |
| 3B | | 336029A1 | | 1 | JOINT, Not Illustrated |
| 3C | | G101995 | | 1 | JOINT, Not Illustrated |
| 3D | | 336045A1 | | 1 | ANNEAU, Not Illustrated |
| 4 | | 86982444 | | 1 | BOULON SPECIAL, Incl. Ref. 4A |
| 4A | | NSS | | 1 | NON FOURNI SEPAREMENT, Washer, Not Illustrated |
| 5 | | 336379A1 | | 1 | PRESSE-ETOUPE, Cylinder; Incl. Refs. 5A -5G |
| 5A | | 336378A1 | | 1 | PRESSE-ETOUPE, Not Illustrated |
| 5B | | D95146 | | 1 | RACLEUR BALAIS, Not Illustrated |
| 5C | | 1542879C1 | | 1 | POCHETTE DE JOINTS, Incl. Rod Seal, Buffer Seal, Not Illustrated |
| | | NSS | | 1 | NON FOURNI SEPAREMENT, Seal, Rod, Not Illustrated |
| | | NSS | | 1 | NON FOURNI SEPAREMENT, Seal, Buffer, Not Illustrated |
| 5D | | 336041A1 | | 1 | ROULEMENT, Not Illustrated |
| 5E | | G109300 | | 1 | ANNEAU, Not Illustrated |
| 5F | | 238-5243 | | 1 | JOINT THORIQUE, -243, 70 Duro, 4.109" ID x .139" Thk, Not Illustrated |
| 5G | | 238-5244 | | 1 | JOINT THORIQUE, -244, 70 Duro, 4.234" ID x .139" Thk, Not Illustrated |
| 6 | | D95145 | | 2 | RACLEUR BALAIS |
| 7 | | 219-1 | | 1 | GRAISSEUR, 1/8"-27 x .66 lg |
| 8 | | 86642312 | | 1 | VIS AUTO-TARAUDEUSE, Hex Hd, #8 x 3/8", Self Tapping |

**VERIN - RELEVAGE DE LA CHARGEUSE (XT CHARGEUSE)**

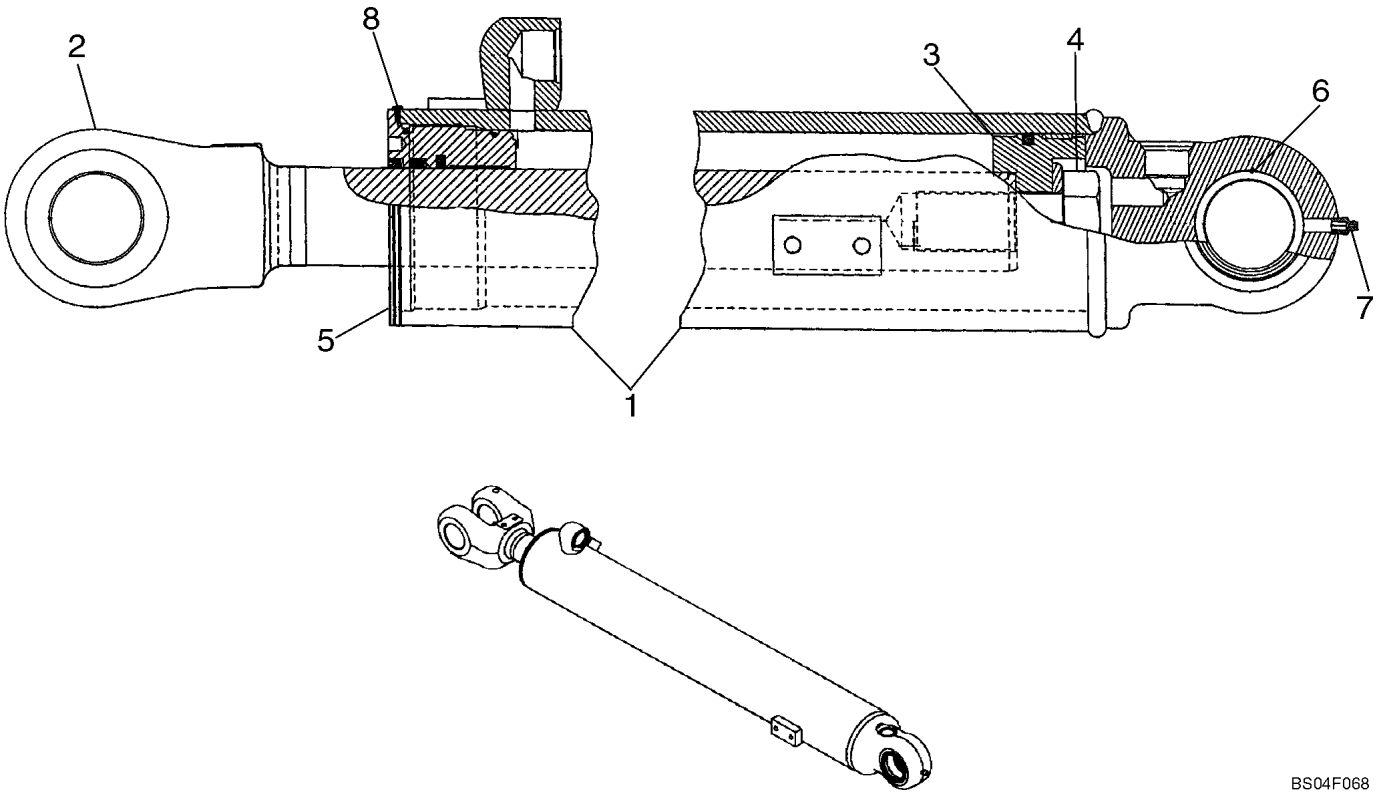


BS04F068

**VERIN - RELEVAGE DE LA CHARGEUSE (XT CHARGEUSE)**

| REF | FN | PART NUMBER | YR/SN | QTY | DESCRIPTION |
|---|---|---|---|---|---|
| 9 | | 360982A1 | | 1 | POCHETTE, Seal; Incl. Refs. 3C, 3D, 5B - 5G; Includes 361000A1 Expandable Seal Ring For Service Replacement Of Ref. 3B Piston Seal; Not Illustrated |

**CIRCUIT HYDRAULIQUE - DÉRIVATION STANDARD**

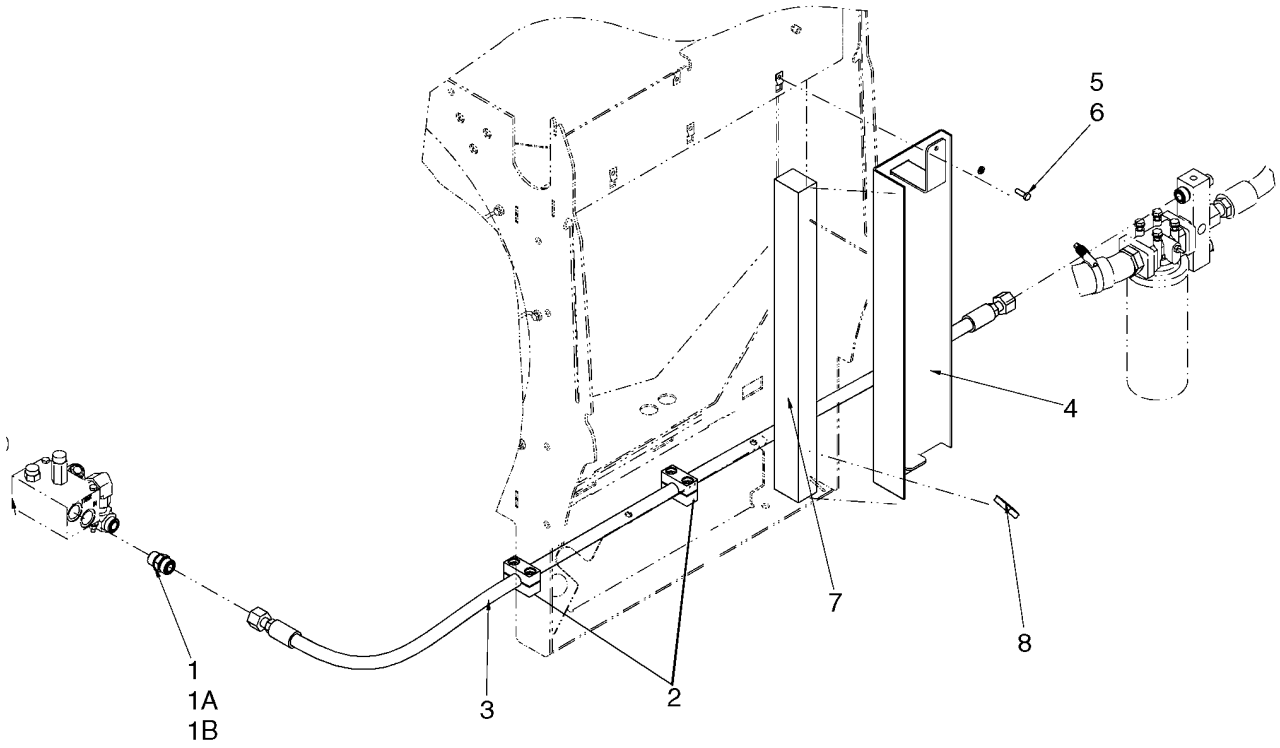

**CIRCUIT HYDRAULIQUE - DÉRIVATION STANDARD**

| REF | FN | PART NUMBER | YR/SN | QTY | DESCRIPTION |
|---|---|---|---|---|---|
| 1 | | 700-104 | | 1 | RACCORD, 1 3/16"-12 ORFS x M27 x 2 ORB, Incl. Refs. 1A, 1B |
| 1A | | 238-6018 | | 1 | JOINT THORIQUE, -018, 90 Duro, .739" ID x .070" Thk, Face Seal |
| 1B | | 637-64236 | | 1 | JOINT THORIQUE, CI 6, 23.6MM ID x 2.9 Thk, Boss Seal |
| 2 | | 367489A1 | | 2 | BLOC |
| 3 | | 87559567 | | 1 | FLEXIBLE, Cooler Bypass, 1902 mm (74 - 7/8 in) |
| 4 | | 8501329 | | 1 | PANOPLIE |
| 5 | | 892-11008 | | 1 | RONDELLE FREIN, M8 |
| 6 | | 627-8025 | | 1 | BOULON, Hex, M8 x 25, 10.9 |
| 7 | | 8500206 | | 1 | JOINT |
| 8 | | 353-414 | | 2 | BOUCHON, Dome, 1.375" hole, Nylon |

**CIRCUIT HYDRAULIQUE - SANS DÉRIVATION**

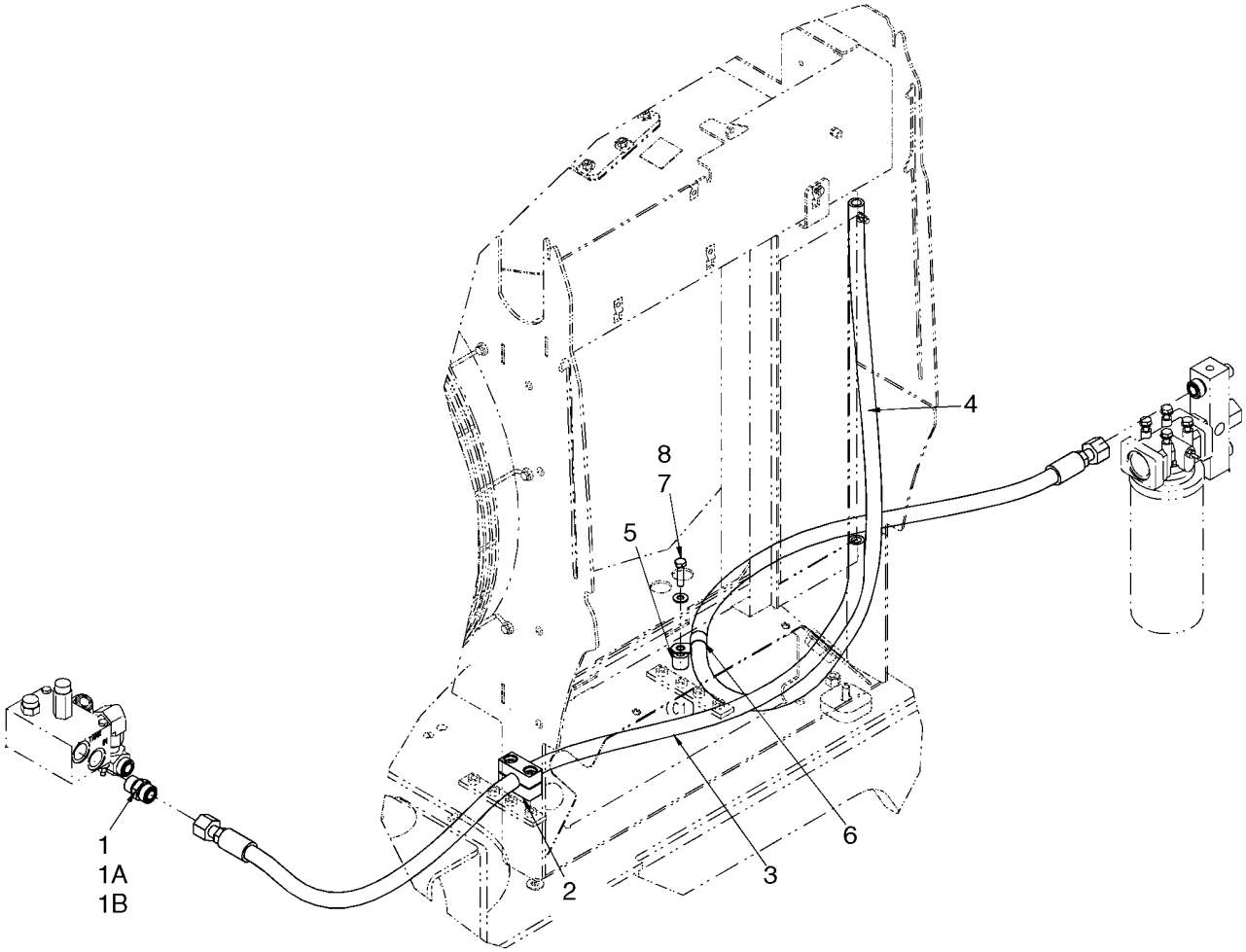

**CIRCUIT HYDRAULIQUE - SANS DÉRIVATION**

| REF | FN | PART NUMBER | YR/SN | QTY | DESCRIPTION |
|---|---|---|---|---|---|
| | | REF | | | NOTICE, FAN VALVE TO COOLER AND COOLER RETURN HOSES, WITHOUT BYPASS |
| 1 | | 700-104 | | 1 | RACCORD, 1 3/16"-12 ORFS x M27 x 2 ORB, Incl. Refs. 1A, 1B |
| 1A | | 238-6018 | | 1 | JOINT THORIQUE, -018, 90 Duro, .739" ID x .070" Thk, Face Seal |
| 1B | | 637-64236 | | 1 | JOINT THORIQUE, CI 6, 23.6MM ID x 2.9 Thk, 23,6 ID x 2,9; Boss Seal |
| 2 | | 367489A1 | | 1 | BLOC |
| 3 | | 87362190 | | 1 | FLEXIBLE (ASSEMBLE), Fan Valve to Cooler; 1530 mm (60 1/4 in) |
| 4 | | 8501321 | | 1 | FLEXIBLE, Cooler Return to Filter; 2102 mm (82 - 3/4 in) |
| 5 | | 8500877 | | 1 | ENTRETOISE |
| 6 | | 515-25254 | | 1 | BRIDE, 1", Insul, 1/2" Bolt |
| 7 | | 895-15010 | | 1 | RONDELLE, M11 x 24 x 2 |
| 8 | | 827-10040 | | 1 | BOULON, Hex, M10 x 40, 10.9, Full Thd |

| 08-19B | | p1 | 07/07 |
|---|---|---|---|

**CIRCUIT HYDRAULIQUE -DÉRIVATION THERMIQUE**

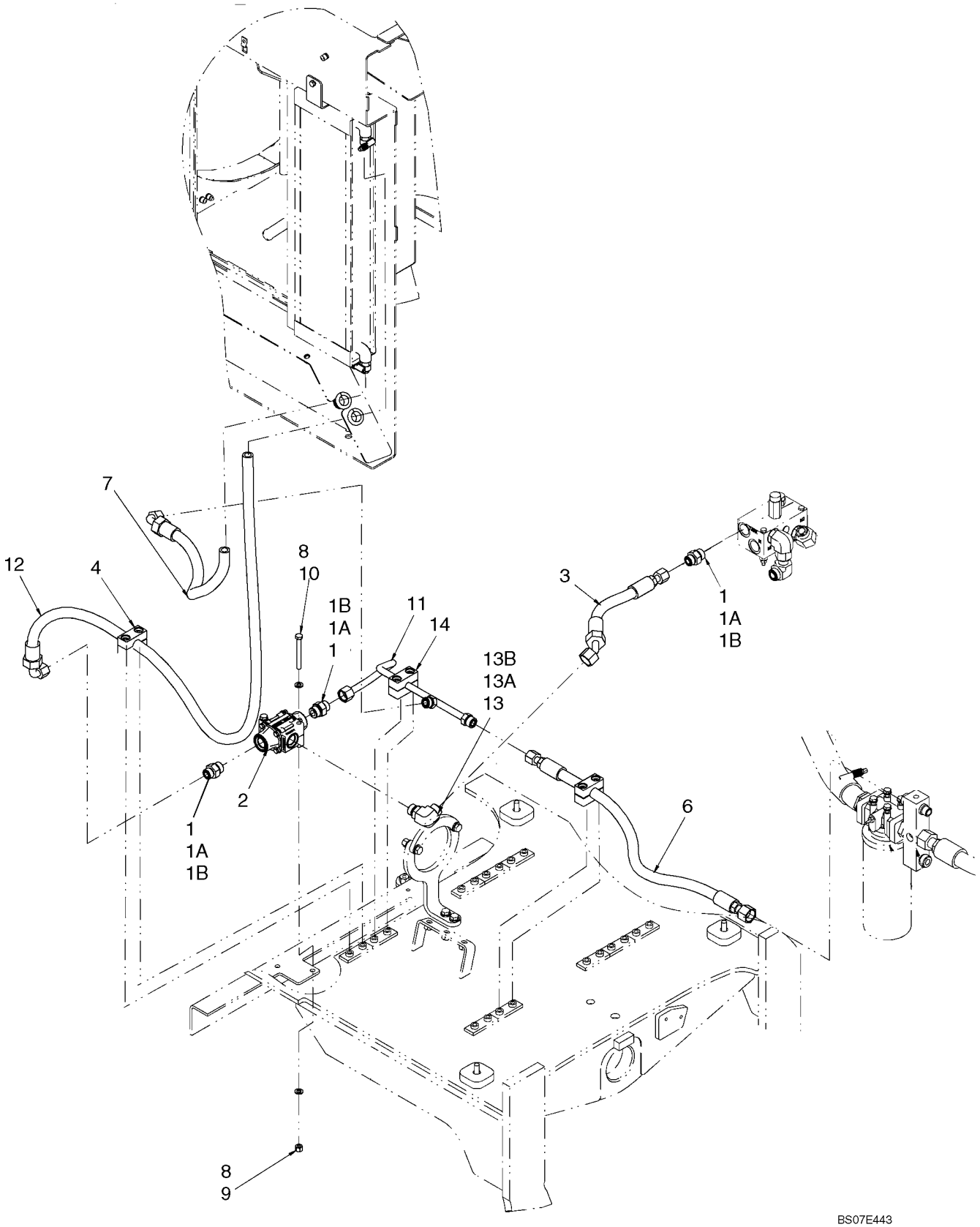

**CIRCUIT HYDRAULIQUE -DÉRIVATION THERMIQUE**

| REF | FN | PART NUMBER | YR/SN | QTY | DESCRIPTION |
|---|---|---|---|---|---|
| 1 | | 86597760 | | 3 | RACCORD, 1"-14 ORFS x M27 x 2 ORB, Incl. Refs. 1A, 1B |
| 1A | | 637-64236 | | 1 | JOINT THORIQUE, Cl 6, 23.6MM ID x 2.9 Thk |
| 1B | | 238-6016 | | 1 | JOINT THORIQUE, -016, 90 Duro, .614" ID x .070" Thk |
| 2 | | 87326981 | | 1 | VALVE BY-PASS, Thermal; Incl. Ref. 2A |
| 2A | | 87328377 | | 1 | COLIS DE RÉPARATION, For 87326981 Thermal Bypass Valve; Contains: Thermal Element Assy And Seals; Not Illustrated |
| 3 | | {87658721} | | 1 | HOSE ASSY. Fan To Bypass; 387 mm (15 - 1/4 in) |
| 4 | | 367489A1 | | 2 | BLOC, Mounting |
| 6 | | 87577168 | | 1 | FLEXIBLE, Junction to Filter; 1037 mm ( 40 -13/16 in) |
| 7 | | {87658722} | | 1 | HOSE, Cooler to Junction; 700 mm (27 - 9/16 in) |
| 8 | | 895-11010 | | 4 | RONDELLE, M10 x 20 x 2 |
| 9 | | 832-10410 | | 2 | CONTRE-ECROU, M10 x 1.5, Cl 8 |
| 10 | | 827-10090 | | 2 | BOULON, Hex, M10 x 90, 10.9 |
| 11 | | {87658720} | | 1 | TUBE ASSY. Thermal Bypass |
| 12 | | 87362185 | | 1 | FLEXIBLE (ASSEMBLE), Bypass to Cooler; 1936 mm (76 - 7/32 in) |
| 13 | | 700-307 | | 1 | COUDE, 90º, 1 3/16"-12 ORFS x M27 x 2 ORB, Incl. Refs. 13A, 13B |
| 13A | | 238-6016 | | 1 | JOINT THORIQUE, -016, 90 Duro, .614" ID x .070" Thk |
| 13B | | 637-64236 | | 1 | JOINT THORIQUE, Cl 6, 23.6MM ID x 2.9 Thk, Boss Seal |
| 14 | | 8500210 | | 1 | BRIDE, Tube Mounting |

**SYSTEME HYDRAULIQUE - SYSTEME ANTI-TANGAGE**

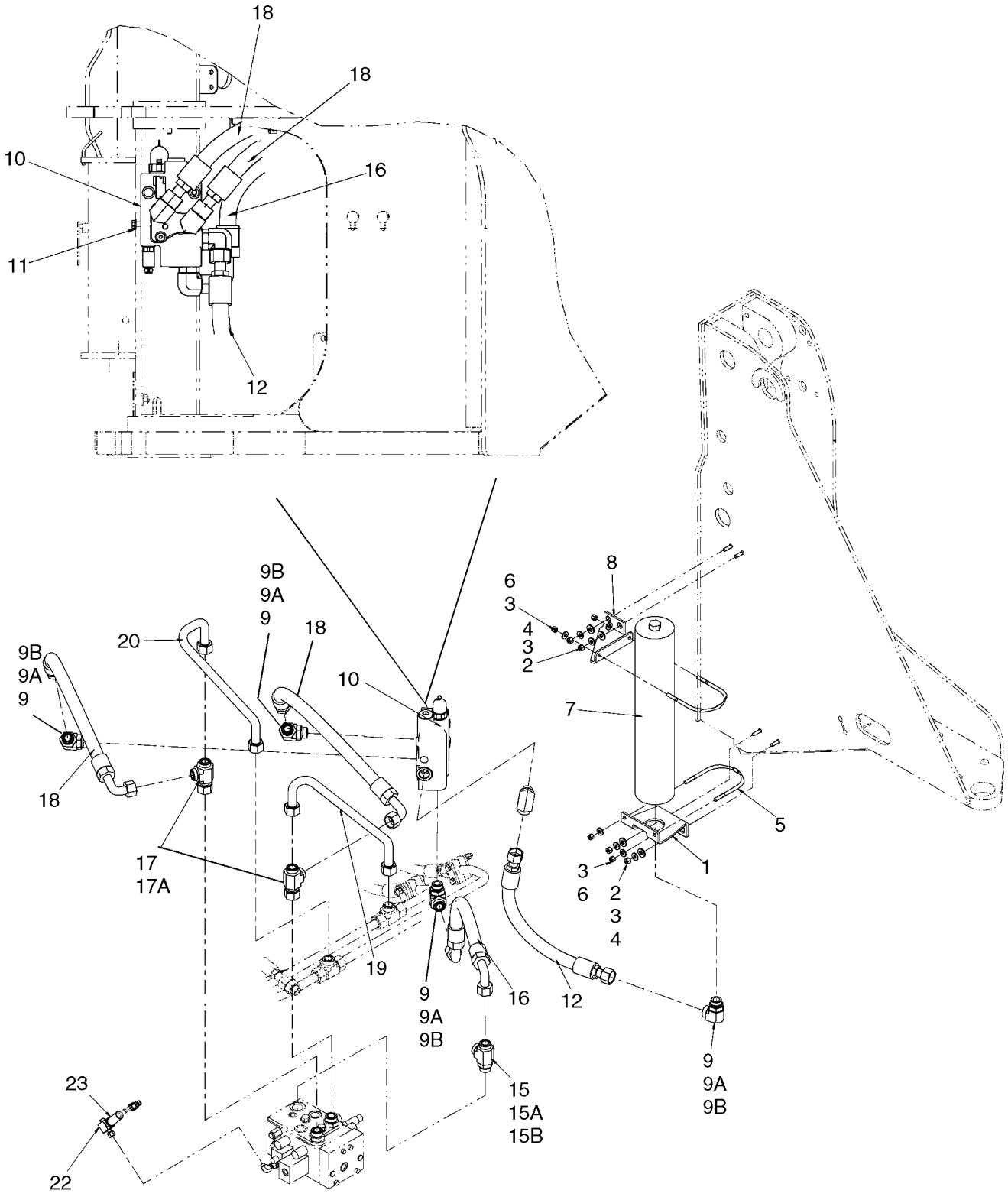

**SYSTEME HYDRAULIQUE - SYSTEME ANTI-TANGAGE**

| REF | FN | PART NUMBER | YR/SN | QTY | DESCRIPTION |
|---|---|---|---|---|---|
| 1 | | 87393646 | | 1 | PATTE FIXATION, Accumulator |
| 2 | | 896-15012 | | 4 | RONDELLE, M12 x 28.5 x 4, HT |
| 3 | | 896-15010 | | 8 | RONDELLE, M10 x 24.5 x 3, HT |
| 4 | | 832-10410 | | 4 | CONTRE-ECROU, M10 x 1.5, Cl 8 |
| 5 | | L128472 | | 2 | CAVALIER |
| 6 | | 231-1446 | | 4 | CONTRE-ECROU, 3/8"-16, GB |
| 7 | | 87393434 | | 1 | ACCUMULATEUR, Ride Control |
| 8 | | 87403347 | | 1 | PATTE FIXATION, Accumulator |
| 9 | | 700-308 | | 5 | COUDE, 90º, 1 7/16"-12 ORFS x M33 x 2 ORB, Incl. Refs. 9A, 9B |
| 9A | | 637-64296 | | 1 | JOINT THORIQUE, Cl 6, 29.6MM ID x 2.9 Thk |
| 9B | | 238-6021 | | 1 | JOINT THORIQUE, -021, 90 Duro, .926" ID x .070" Thk, Face Seal |
| 10 | | 87393431 | | 1 | VALVE, Ride Control; See Figure 08-20A |
| 11 | | 844-10035 | | 2 | BOULON, Hex Flg, M10 x 35, 8.8 |
| 12 | | 87452278 | | 1 | FLEXIBLE (ASSEMBLE), Ride Control Accumulator; 588 mm (23 - 1/8 in) |
| 15 | | 700-407 | | 1 | TE, 1 7/16"-12 ORFS x M33 x 2 ORB Run, Incl. Refs. 15A, 15B |
| 15A | | 238-6021 | | 2 | JOINT THORIQUE, -021, 90 Duro, .926" ID x .070" Thk, Face Seal |
| 15B | | 637-64296 | | 1 | JOINT THORIQUE, Cl 6, 29.6MM ID x 2.9 Thk, Boss Seal |
| 16 | | 87452279 | | 1 | FLEXIBLE (ASSEMBLE), Ride Control Tank; 723 mm (28 - 15/32 in) |
| 17 | | 701-418 | | 2 | TE, 1 7/16"-12 ORFS x 1 7/16"-12 Fem Sw Run, Incl. Ref. 17A |
| 17A | | 238-6021 | | 3 | JOINT THORIQUE, -021, 90 Duro, .926" ID x .070" Thk, Face Seal |
| 18 | | 87452280 | | 2 | FLEXIBLE (ASSEMBLE), Head Or Rod; 873mm ( 34-3/8 in ) |
| 19 | | 87452287 | | 1 | TUYAUTERIE |
| 20 | | 87389423 | | 1 | TUYAU HYDRAULIQUE |
| 22 | | 397547A1 | | 1 | RACCORD, Pressure Switch |
| 23 | | 446183A1 | | 1 | PRESSOSTAT, Rollback |

**DISTRIBUTEUR - DISTRIBUTEUR DE CONTRÔLE E LA CONDUITE (RSM2-16)**

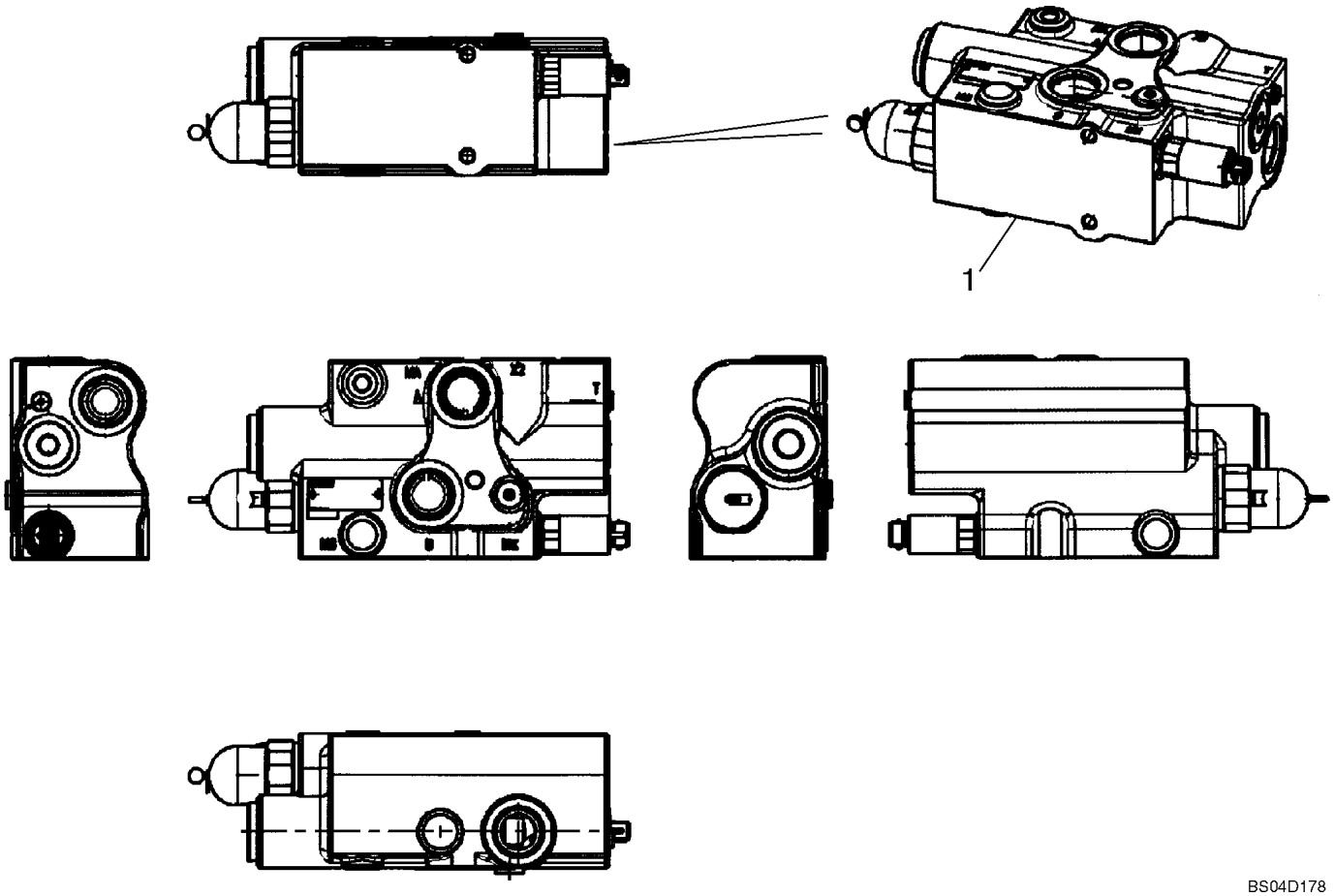

**DISTRIBUTEUR - DISTRIBUTEUR DE CONTRÔLE E LA CONDUITE (RSM2-16)**

| REF | FN | PART NUMBER | YR/SN | QTY | DESCRIPTION |
|---|---|---|---|---|---|
| 1 | | 87393431 | | 1 | VALVE, Ride Control RSM2; Includes The Following Parts, Which Are Not Illustrated |
| 1A | | 87453761 | | 1 | BAGUE |
| 1B | | 87453762 | | 1 | RESSORT |
| 1C | | 87453765 | | 1 | VIS DE PURGE |
| 1D | | 87453766 | | 1 | RESSORT |
| 1E | | 87453767 | | 1 | RESSORT |
| 1F | | 87453768 | | 1 | BOUCHON, 3/4 in |
| 1G | | 87453769 | | 1 | BOUCHON, 1 in |
| 1H | | 87453770 | | 1 | BOUCHON, M14 x 1.5 |
| 1J | | 87453771 | | 1 | VIS |
| 1K | | 87453772 | | 1 | ELECTRO-VALVE |
| 1L | | 87533290 | | 1 | SOUPAPE, DÉCHARGE |

**SYSTEME HYDRAULIQUE - NON-SYSTEME ANTI-TANGAGE**

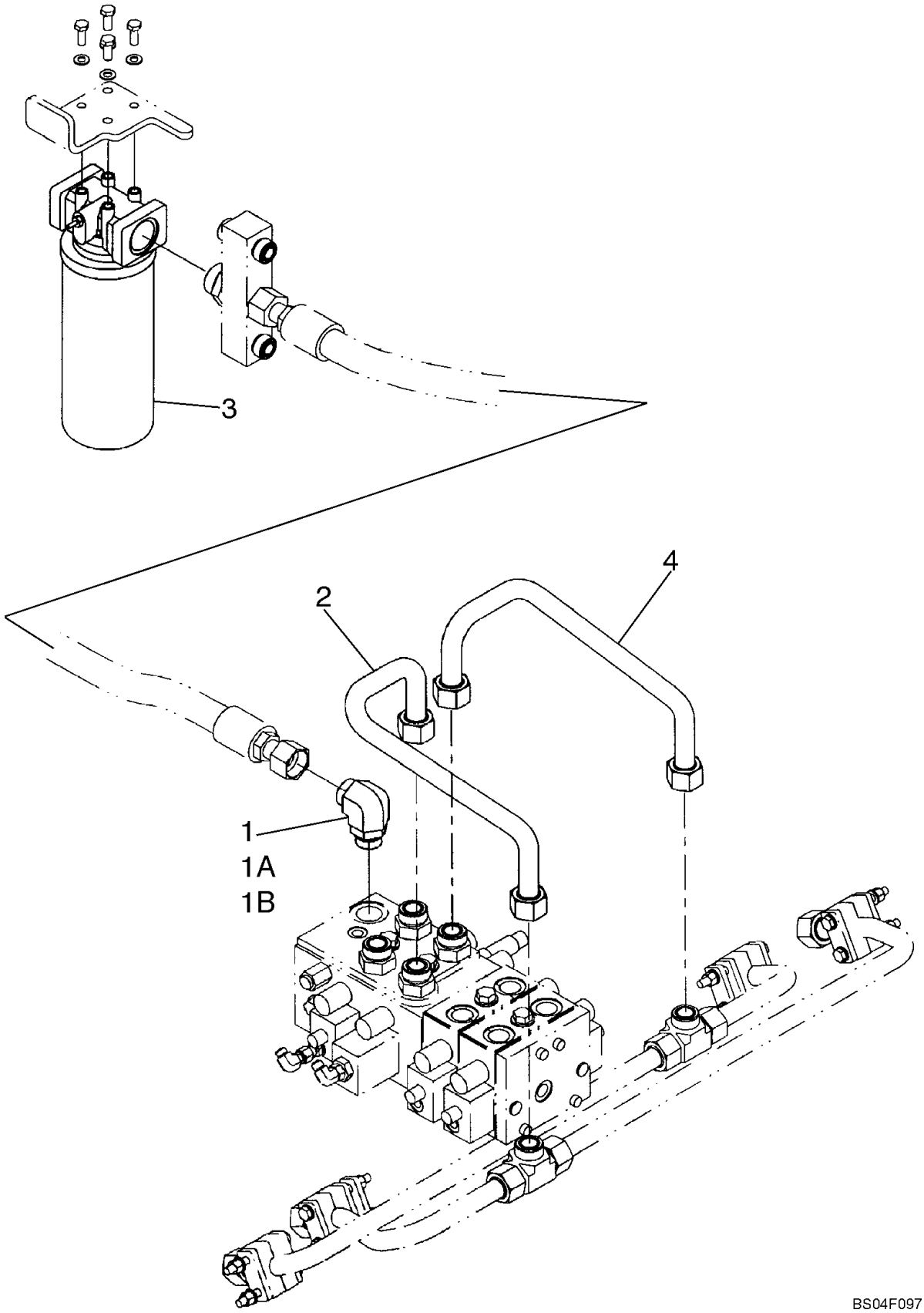

**SYSTEME HYDRAULIQUE - NON-SYSTEME ANTI-TANGAGE**

| REF | FN | PART NUMBER | YR/SN | QTY | DESCRIPTION |
|---|---|---|---|---|---|
| | | REF | | | NOTICE, NO RIDE CONTROL - VALVE TO FILTER |
| 1 | | 700-308 | | 1 | COUDE, 90º, 1 7/16"-12 ORFS x M33 x 2 ORB, Incl. 1A, 1B |
| 1A | | 238-6021 | | 1 | JOINT THORIQUE, -021, 90 Duro, .926" ID x .070" Thk, Face Seal |
| 1B | | 637-64296 | | 1 | JOINT THORIQUE, CI 6, 29.6MM ID x 2.9 Thk, Boss Seal |
| 2 | | 87389244 | | 1 | TUYAU HYDRAULIQUE, Head |
| 3 | | 87308928 | | 1 | FILTRE ASSY, Without Reverse Flow; See Figure 08-02A |
| 4 | | 8606096 | | 1 | TUYAUTERIE, Rod |

**SYSTEME HYDRAULIQUE - ENTRAÎNEMENT DU VENTILATEUR**

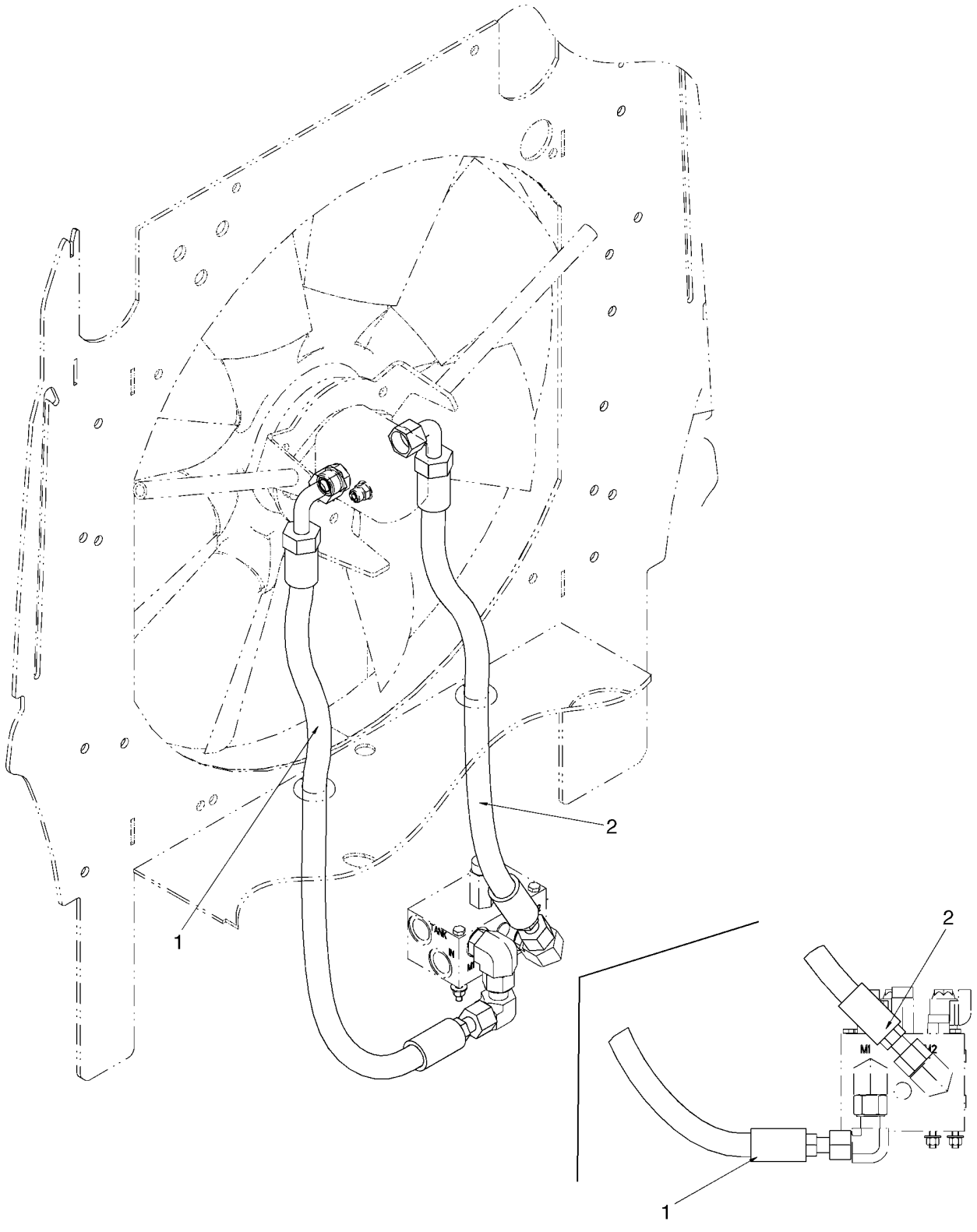

**SYSTEME HYDRAULIQUE - ENTRAÎNEMENT DU VENTILATEUR**

| REF | FN | PART NUMBER | YR/SN | QTY | DESCRIPTION |
|---|---|---|---|---|---|
| 1 | | 87559565 | | 1 | FLEXIBLE, Fan Reverse |
| 2 | | 87559564 | | 1 | FLEXIBLE, Fan Forward |

**DISTRIBUTEUR, VENTILATEUR SOUPAPE DE SÉCURITÉ - MONTAGE**

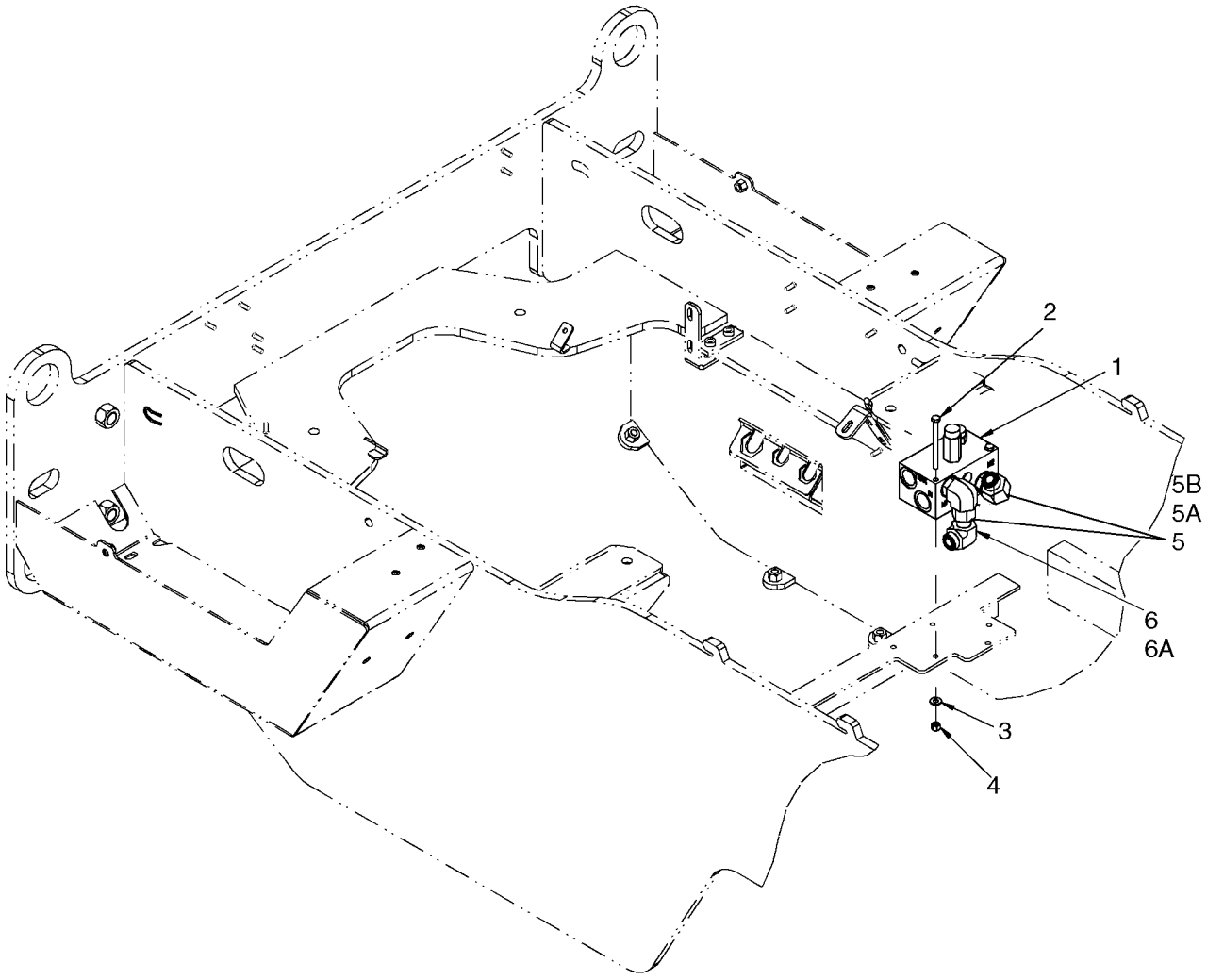

**DISTRIBUTEUR, VENTILATEUR SOUPAPE DE SÉCURITÉ - MONTAGE**

| REF | FN | PART NUMBER | YR/SN | QTY | DESCRIPTION |
|---|---|---|---|---|---|
| | | REF | | | NOTICE, FAN RELIEF VALVE MOUNTING |
| 1 | | 8500562 | | 1 | SOUPAPE HYDRAULIQUE, Fan Relief; See Figure 08-23A |
| 2 | | 827-8100 | | 2 | BOULON, Hex, M8 x 100, 10.9 |
| 3 | | 895-15008 | | 2 | RONDELLE, M8 x 20 x 1.6 |
| 4 | | 832-10408 | | 2 | CONTRE-ECROU, M8 x 1.25, Cl 8 |
| 5 | | 700-307 | | 2 | COUDE, 90º, 1 3/16"-12 ORFS x M27 x 2 ORB, Incl. Refs. 5A, 5B |
| 5A | | 637-64236 | | 1 | JOINT THORIQUE, Cl 6, 23.6MM ID x 2.9 Thk, Boss |
| 5B | | 238-6018 | | 1 | JOINT THORIQUE, -018, 90 Duro, .739" ID x .070" Thk, Face End |
| 6 | | 701-342 | | 1 | COUDE, 90º, 1 3/16"-12 ORFS x 1 3/16"-12 Fem Sw, Incl. Refs. 6A |
| 6A | | 238-6018 | | 1 | JOINT THORIQUE, -018, 90 Duro, .739" ID x .070" Thk, Face Seal |

**DISTRIBUTEUR, VENTILATEUR SOUPAPE DE SÉCURITÉ**

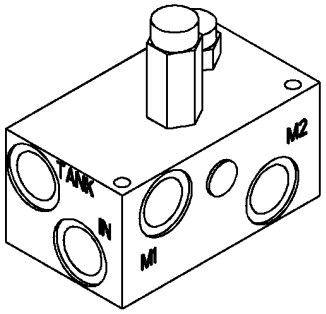


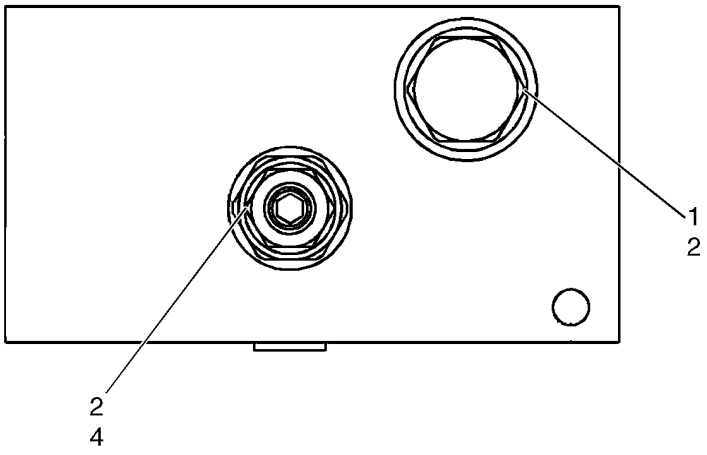


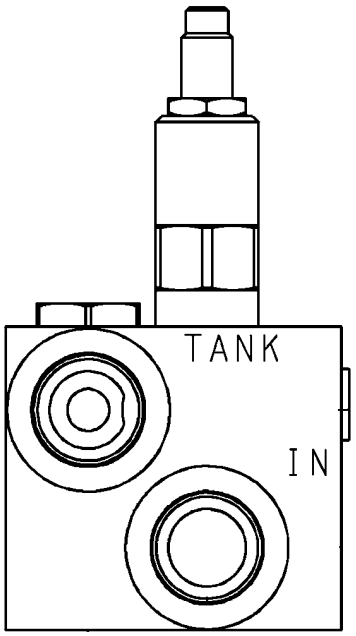


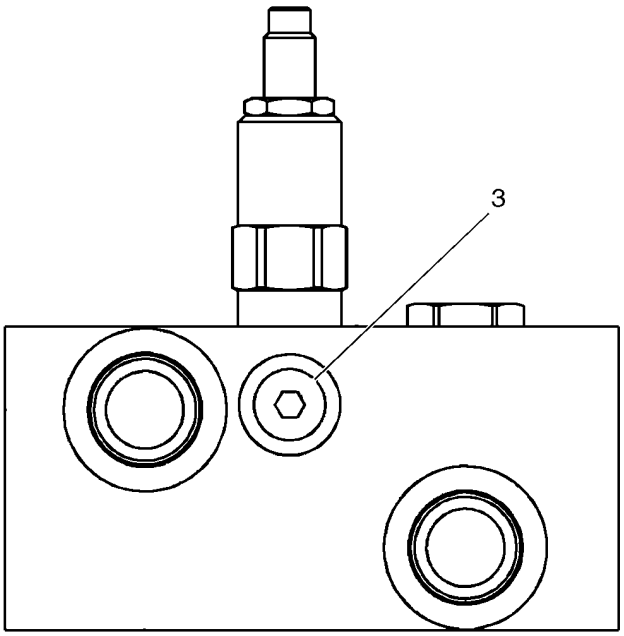


BS06M399

**DISTRIBUTEUR, VENTILATEUR SOUPAPE DE SÉCURITÉ**

| REF | FN | PART NUMBER | YR/SN | QTY | DESCRIPTION |
|---|---|---|---|---|---|
| | | 8500562 | | 1 | SOUPAPE HYDRAULIQUE, Fan Relief; Incl. Refs, 1-4, If Used |
| 1 | | 8605073 | | 1 | SOUPAPE ANTI RETOUR, Incl. Ref. 2 |
| 2 | | 1542830C2 | | 2 | JEU JOINTS ETANCHEITE |
| 3 | | 218-5209 | | 1 | BOUCHON, Hex Soc, 9/16"-18 ORB |
| 4 | | 8605070 | | 1 | SOUPAPE, DÉCHARGE, Pilot Operated; Incl. Ref. 2 |

**DISTRIBUTEUR, VENTILATEUR - VITESSE VARIABLE ET MARCHE ARRIÈRE - MONTAGE**

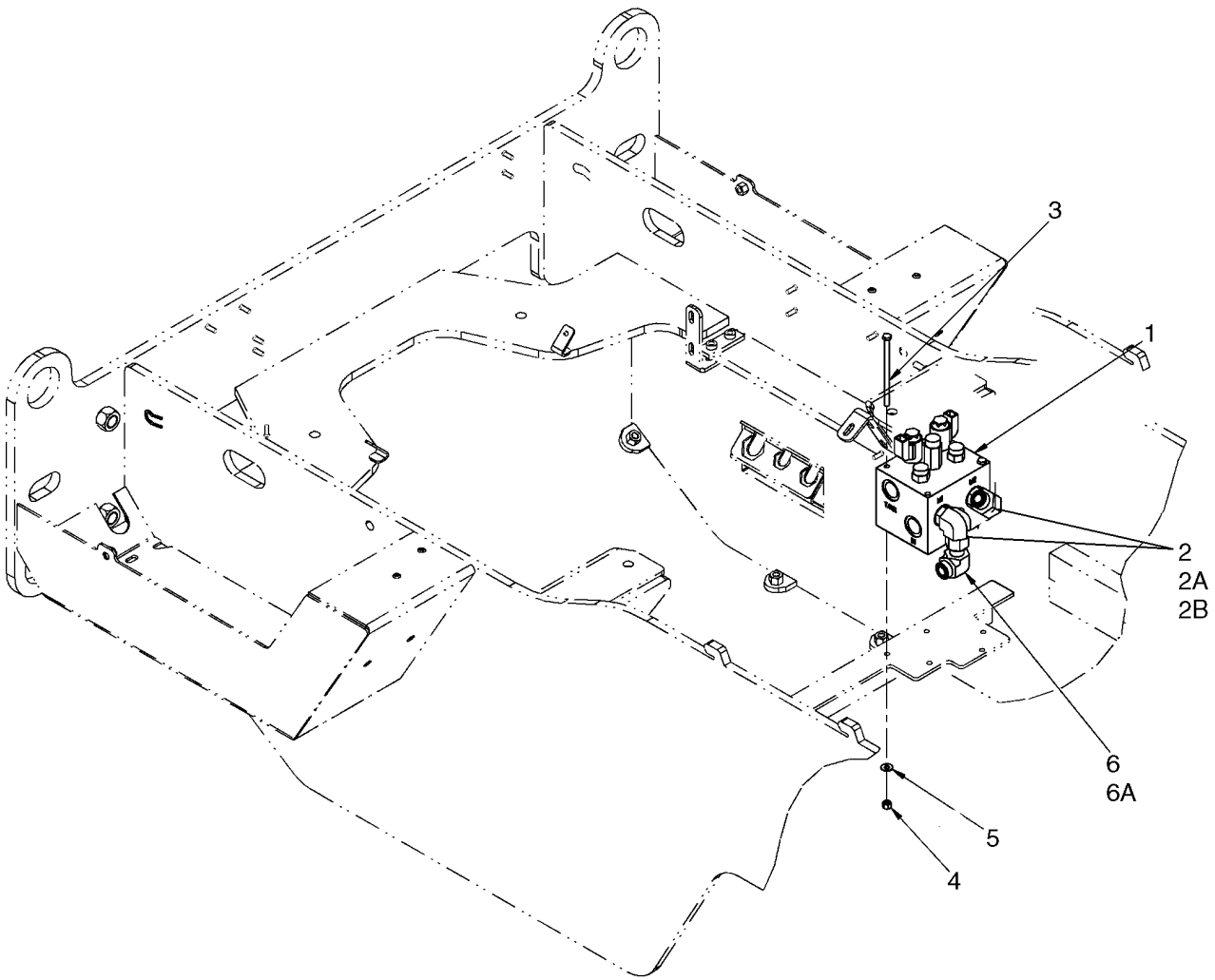

**DISTRIBUTEUR, VENTILATEUR - VITESSE VARIABLE ET MARCHE ARRIÈRE - MONTAGE**

| REF | FN | PART NUMBER | YR/SN | QTY | DESCRIPTION |
|---|---|---|---|---|---|
| | | REF | | | NOTICE, FAN SPEED AND REVERSER |
| 1 | | 8500565 | | 1 | SOUPAPE HYDRAULIQUE, Fan Speed and Reverser; See Figure 08-24A |
| 2 | | 700-307 | | 2 | COUDE, 90º, 1 3/16"-12 ORFS x M27 x 2 ORB, Incl. Refs. 2A, 2B |
| 2A | | 637-64236 | | 1 | JOINT THORIQUE, Cl 6, 23.6MM ID x 2.9 Thk, Boss |
| 2B | | 238-6018 | | 1 | JOINT THORIQUE, -018, 90 Duro, .739" ID x .070" Thk, Face Seal |
| 3 | | 814-8140 | | 3 | BOULON, Hex, M8 x 140, 8.8 |
| 4 | | 832-10408 | | 3 | CONTRE-ECROU, M8 x 1.25, Cl 8 |
| 5 | | 895-15008 | | 3 | RONDELLE, M8 x 20 x 1.6 |
| 6 | | 701-342 | | 1 | COUDE, 90º, 1 3/16"-12 ORFS x 1 3/16"-12 Fem Sw, Incl. Ref. 6A |
| 6A | | 238-6018 | | 1 | JOINT THORIQUE, -018, 90 Duro, .739" ID x .070" Thk, Face Seal |

**DISTRIBUTEUR, VENTILATEUR - VITESSE VARIABLE ET MARCHE ARRIÈRE**

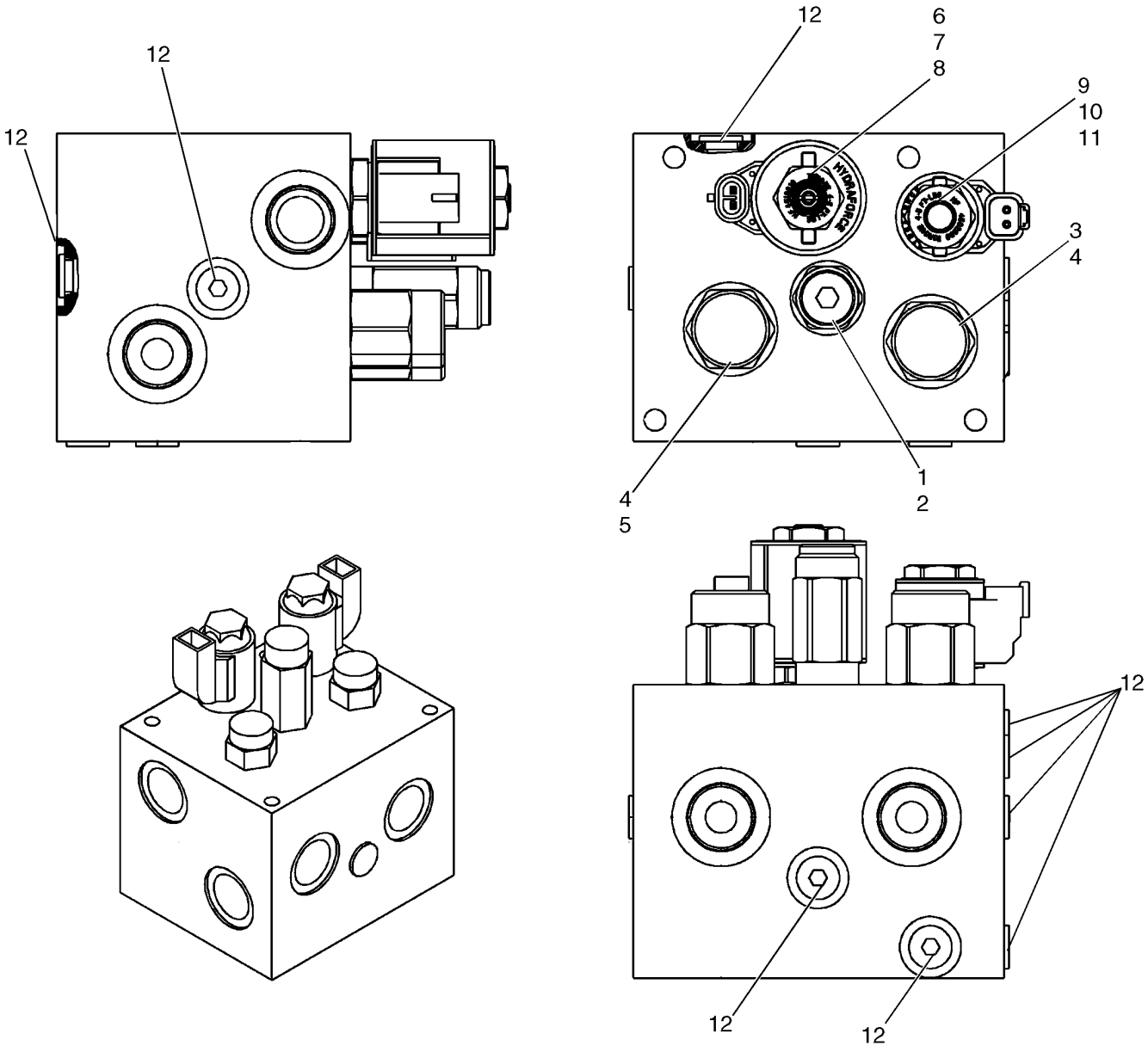


BS06M400

**DISTRIBUTEUR, VENTILATEUR - VITESSE VARIABLE ET MARCHE ARRIÈRE**

| REF | FN | PART NUMBER | YR/SN | QTY | DESCRIPTION |
|---|---|---|---|---|---|
| | | 8500565 | | 1 | SOUPAPE HYDRAULIQUE, Fan Speed and Reverser; Incl. Refs. 1-12 |
| 1 | | 8605053 | | 1 | SOUPAPE, DÉCHARGE, Incl. Ref. 2 |
| 2 | | 1542833C1 | | 1 | POCHETTE-JOINTS |
| 3 | | 8605056 | | 1 | VALVE DE PILOTAGE, Directional; Incl. Ref. 4 |
| 4 | | 388744A1 | | 2 | POCHETTE, Seal; Includes (4) O-Rings and (6) Back-Up Rings |
| 5 | | 8605059 | | 1 | VALVE DE PILOTAGE, Directional; Incl. Ref. 4 |
| 6 | | 8605062 | | 1 | SOUPAPE, DÉCHARGE, Pilot Operated Relief; Incl. Ref. 7 |
| 7 | | 1542830C2 | | 1 | JEU JOINTS ETANCHEITE |
| 8 | | {87617169} | | 1 | COIL, Electronic |
| 9 | | 8605066 | | 1 | SOUPAPE, DÉCHARGE, Solenoid Cartridge; Incl. Ref. 9A |
| 9A | | 329483A1 | | 1 | JEU JOINTS ETANCHEITE, Not Illustrated |
| 10 | | {87617168} | | 1 | KIT, GASKET, Includes (3) O-Rings and (4) Back-Up Rings |
| 11 | | {87617170} | | 1 | COIL, Electronic |
| 12 | | 218-5209 | | 9 | BOUCHON, Hex Soc, 9/16"-18 ORB |

**SYSTEME HYDRAULIQUE - COMMANDE À DISTANCE DU CHARGEUR**

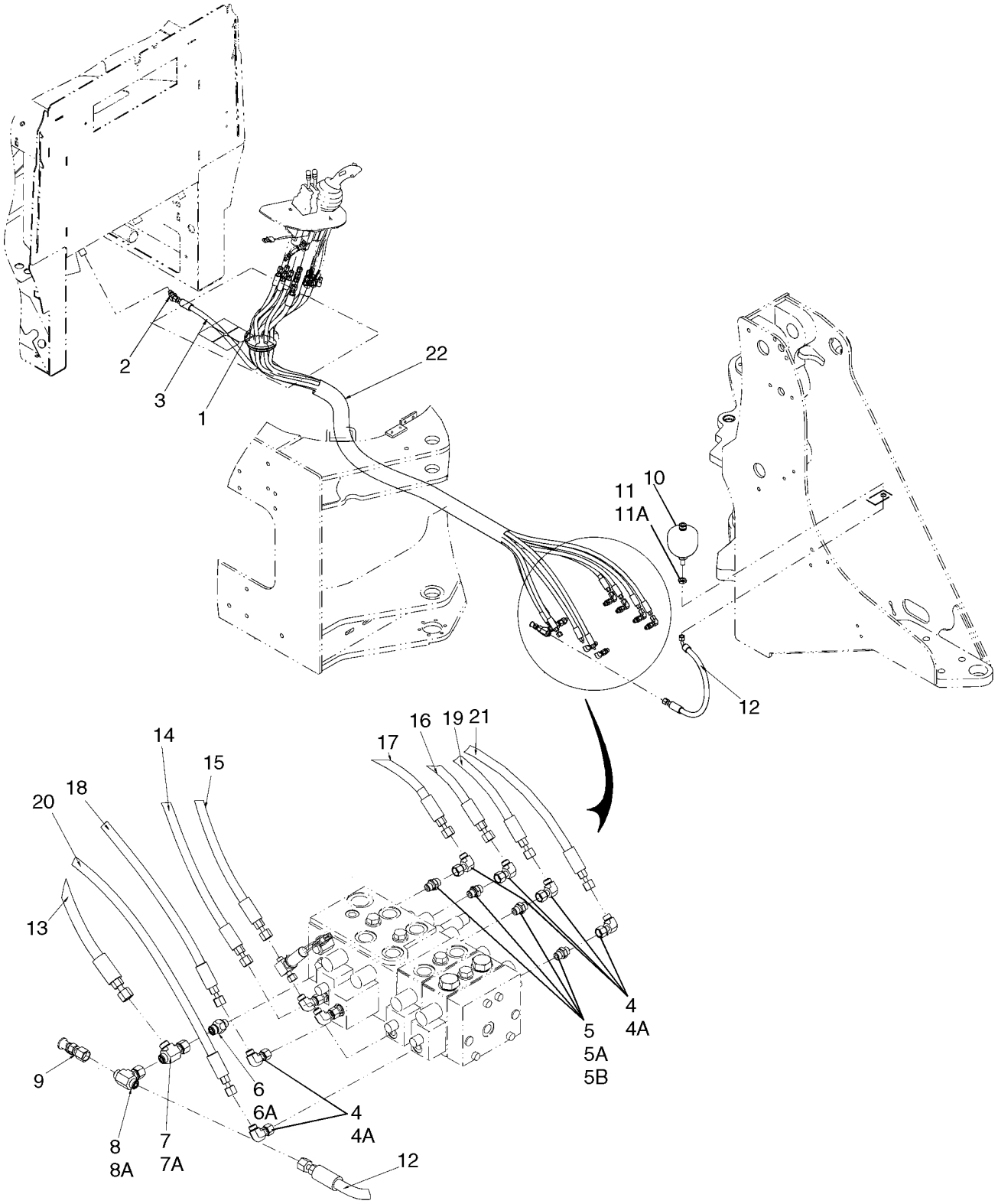

**SYSTEME HYDRAULIQUE - COMMANDE À DISTANCE DU CHARGEUR**

| REF | FN | PART NUMBER | YR/SN | QTY | DESCRIPTION |
|---|---|---|---|---|---|
| | | REF | | | NOTICE, TWO, THREE, AND FOUR SPOOL LOADER CONTROL HYDRAULICS, PILOT SUPPLY ACCUMULATOR |
| 1 | | 380912A1 | | 2 | PASSE-FIL |
| 2 | | 700-315 | | 1 | COUDE, 45º, 11/16"-18 ORFS x M14 x 1.5 ORB |
| 3 | | 392059A1 | | 1 | FLEXIBLE (ASSEMBLE), Pilot to Tank; 1294 mm (50 - 15/16 in) |
| 4 | | 701-329 | | 2-6 | COUDE, 90º, 9/16"-18 ORFS x 9/16"-18 Fem Sw, Incl. Ref. 4A |
| 4A | | 238-6011 | | 1 | JOINT THORIQUE, -011, 90 Duro, .301" ID x .070" Thk |
| 5 | | 700-153 | | 2-6 | RACCORD, 9/16"-18 ORFS x M14 x 1.5 ORB, Incl. Refs. 5A, 5B |
| 5A | | 238-6012 | | 1 | JOINT THORIQUE, -012, 90 Duro, .364" ID x .070" Thk, Face Seal |
| 5B | | 637-63113 | | 1 | JOINT THORIQUE, CI 6, 11.3MM ID x 2.2 Thk |
| 6 | | 391859A1 | | 1 | SOUPAPE ANTI RETOUR, Incl. Ref. 6A |
| 6A | | 637-63113 | | 1 | JOINT THORIQUE, CI 6, 11.3MM ID x 2.2 Thk |
| 7 | | 701-422 | | 1 | TE, 11/16"-16 ORFS x 11/16"-16 Fem Sw Run, Incl. Ref. 7A |
| 7A | | 238-6012 | | 1 | JOINT THORIQUE, -012, 90 Duro, .364" ID x .070" Thk |
| 8 | | 701-434 | | 1 | TE, 11/16"-16 ORFS x 11/16"-16 Fem Sw Br, Incl. Ref. 8A |
| 8A | | 238-6012 | | 1 | JOINT THORIQUE, -012, 90 Duro, .364" ID x .070" Thk |
| 9 | | 190119A1 | | 1 | CARDAN, Diagnostic |
| 10 | | 8501047 | | 1 | ACCUMULATEUR, Pilot Supply |
| 11 | | 701-909 | | 1 | CONTRE-ECROU, 11/16"-16, Blkhd, Incl. Ref. 11A |
| 11A | | 238-6012 | | 1 | JOINT THORIQUE, -012, 90 Duro, .364" ID x .070" Thk |
| 12 | | 87308338 | | 1 | FLEXIBLE (ASSEMBLE), Pilot Accumulator; 621 mm (24 - 7/16 in) |
| 13 | | 87651218 | | 1 | FLEXIBLE, Pilot Pressure; 2565 mm (101 in) |

**SYSTEME HYDRAULIQUE - COMMANDE À DISTANCE DU CHARGEUR**

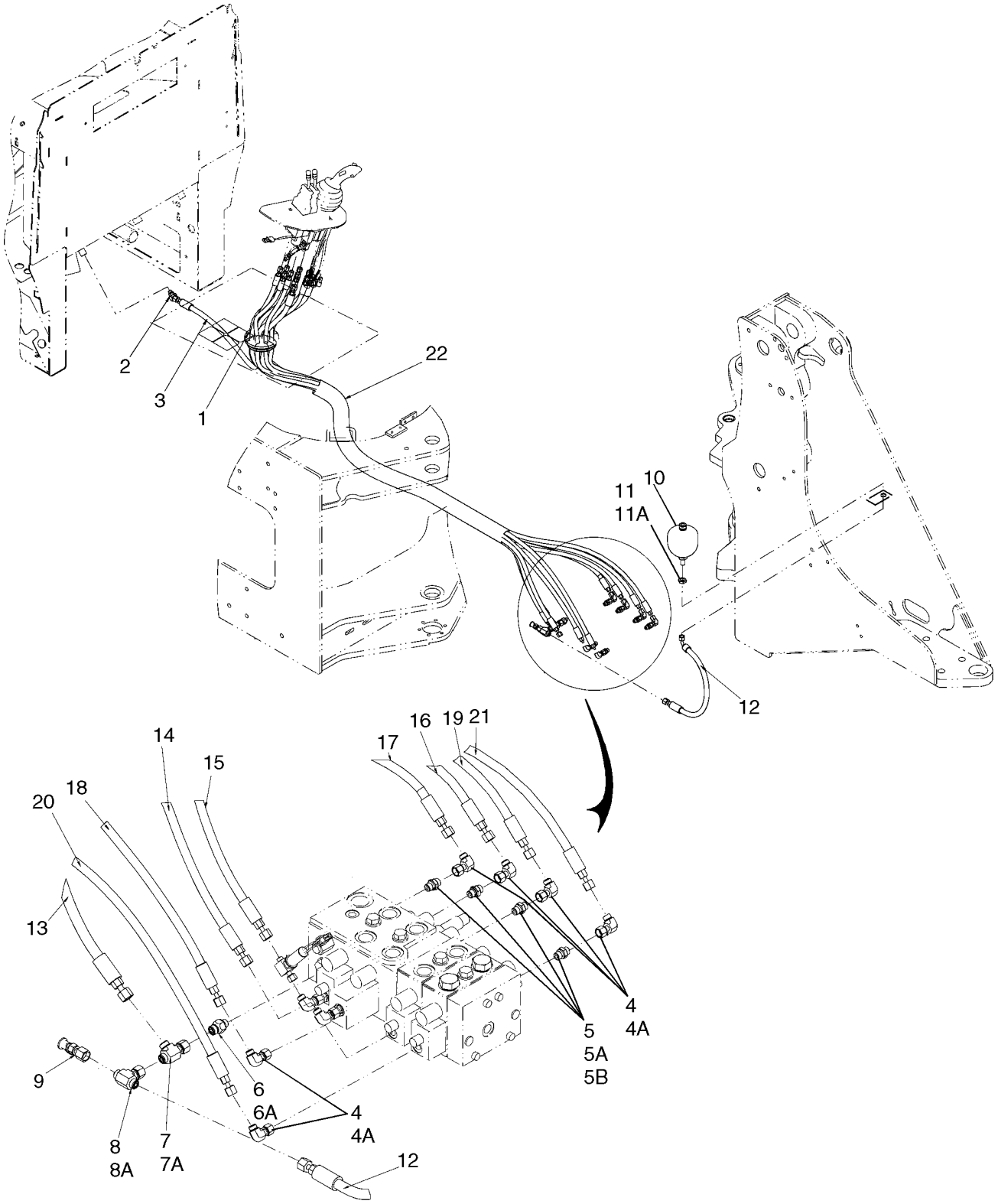

**SYSTEME HYDRAULIQUE - COMMANDE À DISTANCE DU CHARGEUR**

| REF | FN | PART NUMBER | YR/SN | QTY | DESCRIPTION |
|---|---|---|---|---|---|
| 14 | | 87651219 | | 1 | FLEXIBLE, Pilot Lift, Right; Yellow and Black Banding; 2742 mm (107 - 15/16 in) |
| 15 | | 87651220 | | 1 | FLEXIBLE, Pilot Tilt, Left; Orange and Black Banding; 2657 mm (104 - 19/32 in) |
| 16 | | 87651221 | | 1 | FLEXIBLE, Pilot Lift, Left; Red and Black Banding; 2672 mm (105 - 3/16 in) |
| 17 | | 87651222 | | 1 | FLEXIBLE, Pilot Tilt, Left; Green and Black Banding; 2577 mm (101 - 29/64 in) |
| 18 | | 87651223 | | 1 | FLEXIBLE, Pilot 3 Spool, Right; Red and White Banding; 2865 mm (112 - 3/4 in); If Used |
| 19 | | 87651224 | | 1 | FLEXIBLE, Pilot 3 Spool, Left; Yellow and White Banding; 2806 mm (110 - 1/2 in); If Used |
| 20 | | 87651225 | | 1 | FLEXIBLE, Pilot 4 Spool, Right; Green and White Banding; 2932 mm (115 - 7/16 in); If Used |
| 21 | | 87651226 | | 1 | FLEXIBLE, Pilot 4 Spool, Left; Orange and White Banding; 2917 mm (114 - 27/32 in); If Used |
| 22 | | 401526A1 | | 1 | PROTECTEUR DE TUYAU, 60 x 1200 mm |

**COMMANDE DU DISTRIBUTEUR - SUPPORT, DEUX TIROIRS - (Z-BAR/XR/XT)**

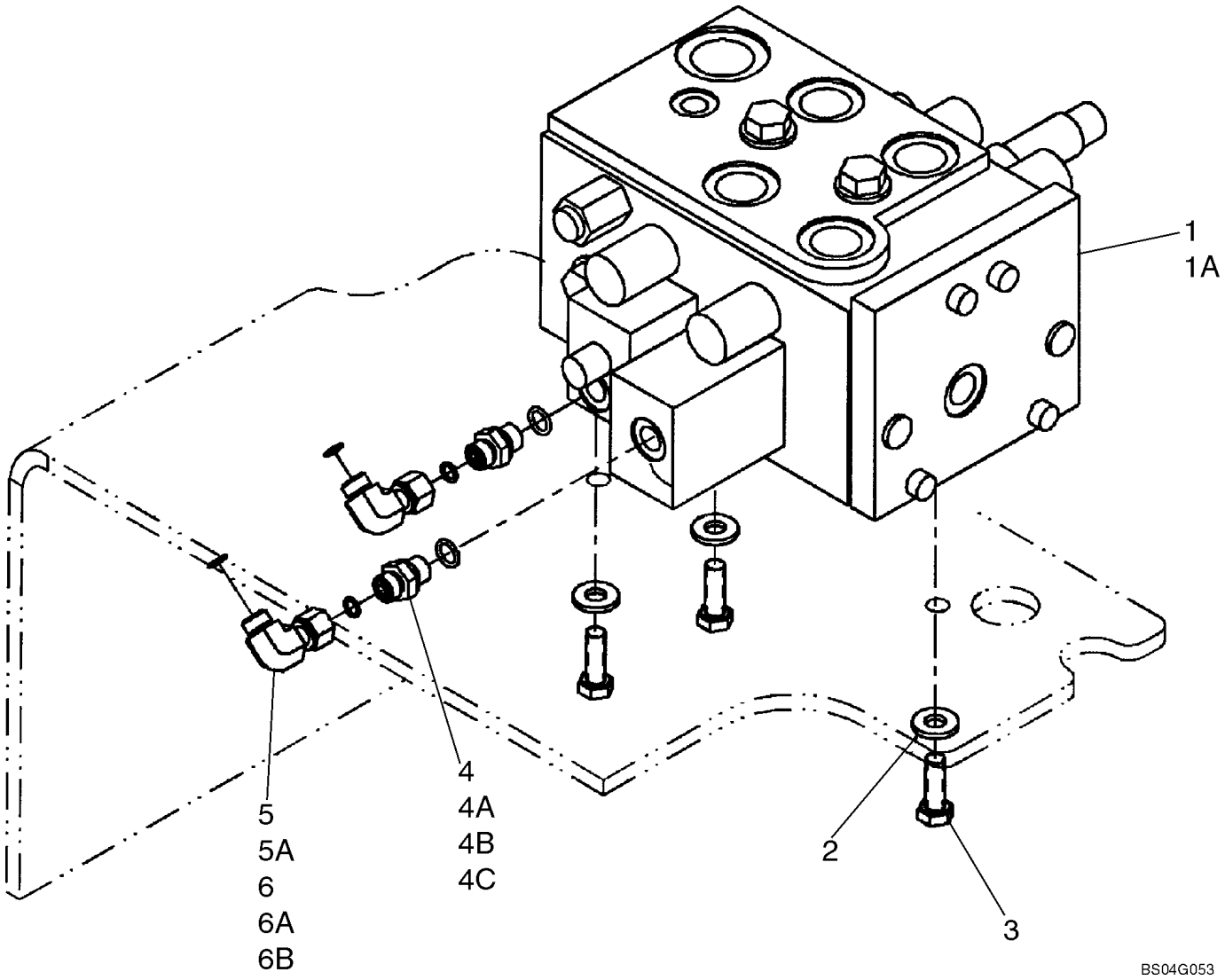

**COMMANDE DU DISTRIBUTEUR - SUPPORT, DEUX TIROIRS - (Z-BAR/XR/XT)**

| REF | FN | PART NUMBER | YR/SN | QTY | DESCRIPTION |
|---|---|---|---|---|---|
| | | REF | | | NOTICE, TWO SPOOL VALVE MOUNTING |
| 1 | | 87307982 | | 1 | SOUPAPE HYDRAULIQUE, Z-Bar/XR Loader, See Fig 08-27 - 08-27B |
| 1A | | 87307986 | | 1 | SOUPAPE HYDRAULIQUE, XT Loader, See Fig 08-28 - 08-28B |
| 2 | | 896-15010 | | 3 | RONDELLE, M10 x 24.5 x 3, HT |
| 3 | | 627-10030 | | 3 | BOULON, Hex, M10 x 30, 10.9, Full Thd |
| 4 | | 700-153 | | 2-1 | RACCORD, 9/16"-18 ORFS x M14 x 1.5 ORB, Incl. 4A, 4B; If Used |
| 4A | | 238-6011 | | 1 | JOINT THORIQUE, -011, 90 Duro, .301" ID x .070" Thk, Face Seal |
| 4B | | 637-63113 | | 1 | JOINT THORIQUE, CI 6, 11.3MM ID x 2.2 Thk |
| 4C | | REF | | | NOTICE, NOT USED IN THIS APPLICATION FOR XT MODELS |
| 5 | | 701-329 | | 2-1 | COUDE, 90º, 9/16"-18 ORFS x 9/16"-18 Fem Sw, Incl. Ref. 5A; Used On Z-Bar/XR Loader |
| 5A | | 238-6011 | | 1 | JOINT THORIQUE, -011, 90 Duro, .301" ID x .070" Thk, Face Seal |
| 6 | | 700-378 | | 1 | COUDE, 90º, 9/16"-18 ORFS x M14 x 1.5 ORB, Incl. Refs. 6A, 6B; Used On XT Loader |
| 6A | | 238-6011 | | 1 | JOINT THORIQUE, -011, 90 Duro, .301" ID x .070" Thk, Face Seal |
| 6B | | 637-63113 | | 1 | JOINT THORIQUE, CI 6, 11.3MM ID x 2.2 Thk |

**COMMANDE DU DISTRIBUTEUR - SUPPORT, TROIS TIROIRS -(Z-BAR/XR/XT)**

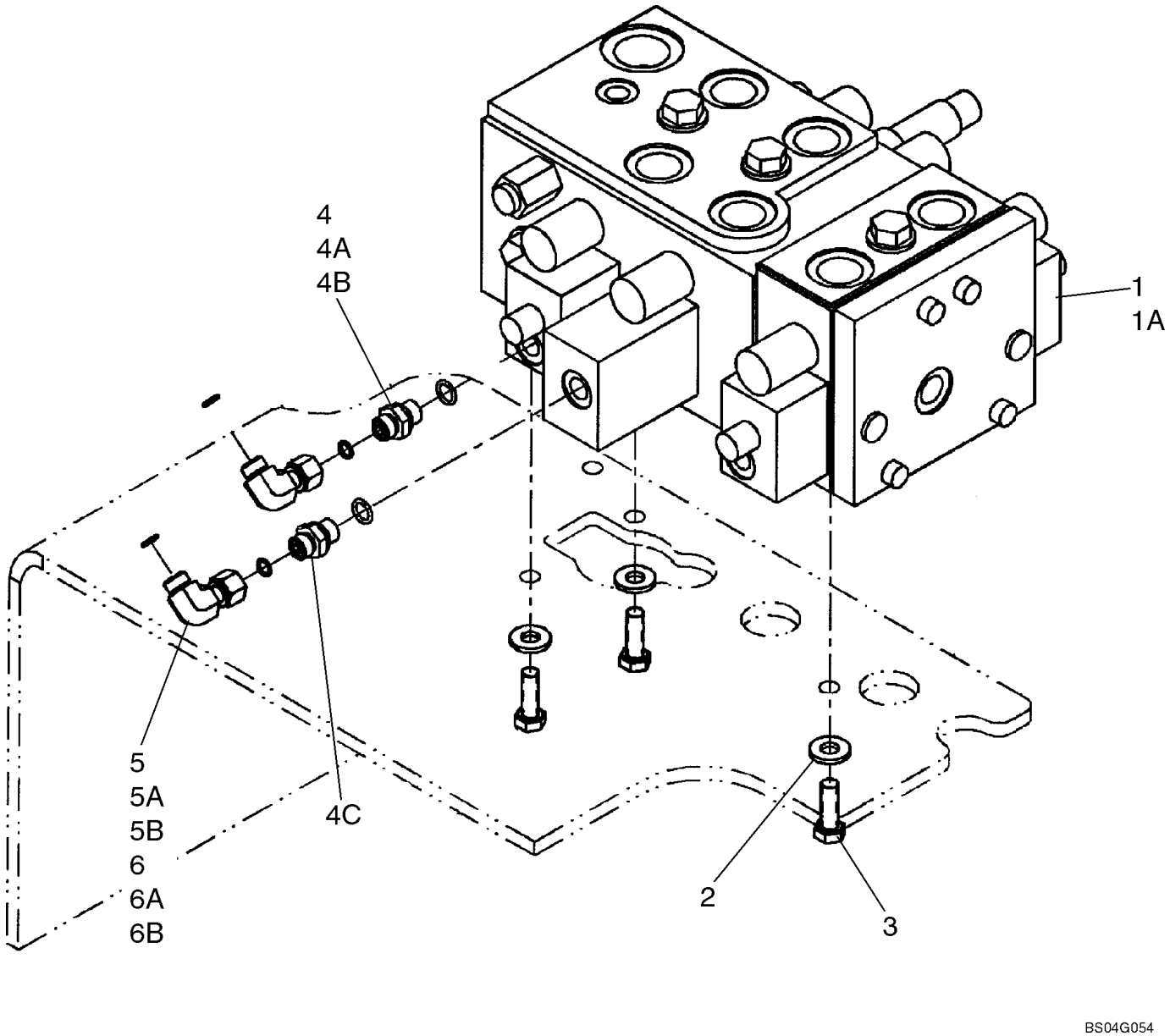

**COMMANDE DU DISTRIBUTEUR - SUPPORT, TROIS TIROIRS -(Z-BAR/XR/XT)**

| REF | FN | PART NUMBER | YR/SN | QTY | DESCRIPTION |
|---|---|---|---|---|---|
| | | REF | | | NOTICE, THREE SPOOL VALVE MOUNTING |
| 1 | | 87307983 | | 1 | SOUPAPE HYDRAULIQUE, Z-Bar/XR Loader, See Fig 08-27 - 08-27B |
| 1A | | 87307988 | | 1 | SOUPAPE HYDRAULIQUE, XT Loader, See Fig 08-28 - 08-28B |
| 2 | | 896-15010 | | 3 | RONDELLE, M10 x 24.5 x 3, HT |
| 3 | | 627-10030 | | 3 | BOULON, Hex, M10 x 30, 10.9, Full Thd |
| 4 | | 700-153 | | 2-1 | RACCORD, 9/16"-18 ORFS x M14 x 1.5 ORB, Incl. 4A, 4B |
| 4A | | 238-6011 | | 1 | JOINT THORIQUE, -011, 90 Duro, .301" ID x .070" Thk, Face Seal |
| 4B | | 637-63113 | | 1 | JOINT THORIQUE, CI 6, 11.3MM ID x 2.2 Thk |
| 4C | | REF | | | NOTICE, NOT USED IN THIS APPLICATION FOR XT MODELS |
| 5 | | 701-329 | | 2-1 | COUDE, 90º, 9/16"-18 ORFS x 9/16"-18 Fem Sw, Incl. 5A; Used on Z-Bar Loader |
| 5A | | 238-6011 | | 1 | JOINT THORIQUE, -011, 90 Duro, .301" ID x .070" Thk, Face Seal |
| 6 | | 700-378 | | 1 | COUDE, 90º, 9/16"-18 ORFS x M14 x 1.5 ORB, Incl. 6A, 6B; Used On XT Loader |
| 6A | | 238-6011 | | 1 | JOINT THORIQUE, -011, 90 Duro, .301" ID x .070" Thk, Face Seal |
| 6B | | 637-63113 | | 1 | JOINT THORIQUE, CI 6, 11.3MM ID x 2.2 Thk |

**COMMANDE DU DISTRIBUTEUR - SUPPORT, QUATRE TIROIRS - (Z-BAR/XR/XT)**

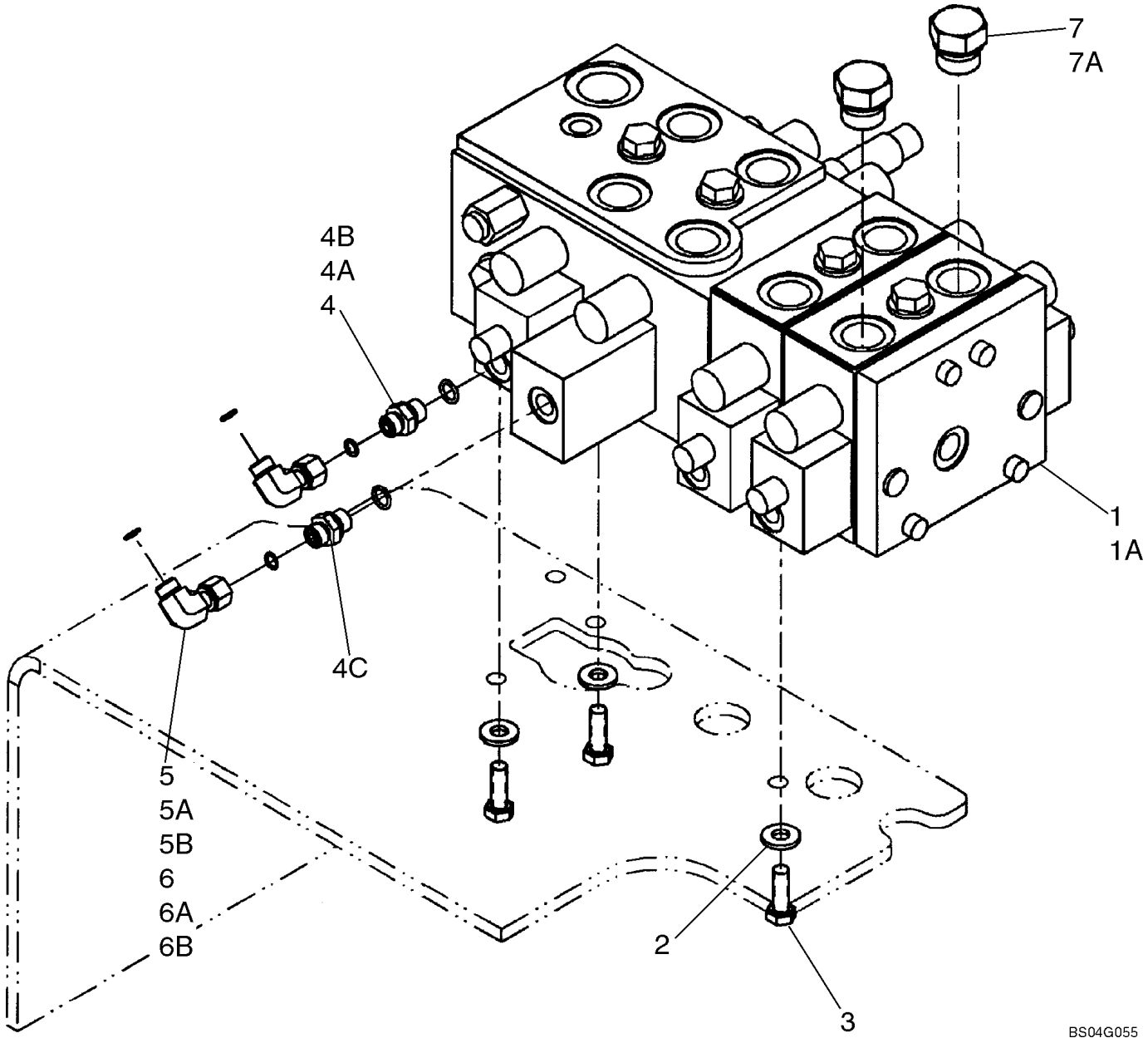

**COMMANDE DU DISTRIBUTEUR - SUPPORT, QUATRE TIROIRS - (Z-BAR/XR/XT)**

| REF | FN | PART NUMBER | YR/SN | QTY | DESCRIPTION |
|---|---|---|---|---|---|
| | | REF | | | NOTICE, FOUR SPOOL VALVE MOUNTING |
| 1 | | 87307984 | | 1 | SOUPAPE HYDRAULIQUE, Z-Bar/XR Loader, See Fig 08-27 - 08-27B |
| 1A | | 87307990 | | 1 | SOUPAPE HYDRAULIQUE, XT Loader, See Fig 08-28 - 08-28B |
| 2 | | 896-15010 | | 3 | RONDELLE, M10 x 24.5 x 3, HT |
| 3 | | 627-10030 | | 3 | BOULON, Hex, M10 x 30, 10.9, Full Thd |
| 4 | | 700-153 | | 2-1 | RACCORD, 9/16"-18 ORFS x M14 x 1.5 ORB, Incl. Refs. 4A, 4B |
| 4A | | 238-6011 | | 1 | JOINT THORIQUE, -011, 90 Duro, .301" ID x .070" Thk, Face Seal |
| 4B | | 637-63113 | | 1 | JOINT THORIQUE, CI 6, 11.3MM ID x 2.2 Thk |
| 4C | | REF | | | NOTICE, NOT USED IN THIS APPLICATION FOR XT MODELS |
| 5 | | 701-329 | | 2-1 | COUDE, 90º, 9/16"-18 ORFS x 9/16"-18 Fem Sw, Incl. Refs. 5A |
| 5A | | 238-6011 | | 1 | JOINT THORIQUE, -011, 90 Duro, .301" ID x .070" Thk, Face Seal |
| 6 | | 700-378 | | 1 | COUDE, 90º, 9/16"-18 ORFS x M14 x 1.5 ORB, Used With XT Loader; Incl. Refs. 6A, 6B |
| 6A | | 238-6011 | | 1 | JOINT THORIQUE, -011, 90 Duro, .301" ID x .070" Thk, Face Seal |
| 6B | | 637-63113 | | 1 | JOINT THORIQUE, CI 6, 11.3MM ID x 2.2 Thk |
| 7 | | 220068A1 | | 2 | BOUCHON, M27 x 2, ORB, Used With Z-Bar Loader; Incl. Refs. 7A |
| 7A | | 637-64236 | | 1 | JOINT THORIQUE, CI 6, 23.6MM ID x 2.9 Thk, Boss Seal |

**DISTRIBUTEUR - COMMANDE DU CHARGEUR - DEUX, TROIS, QUATRE TIROIRS - (Z-BAR/XR)**

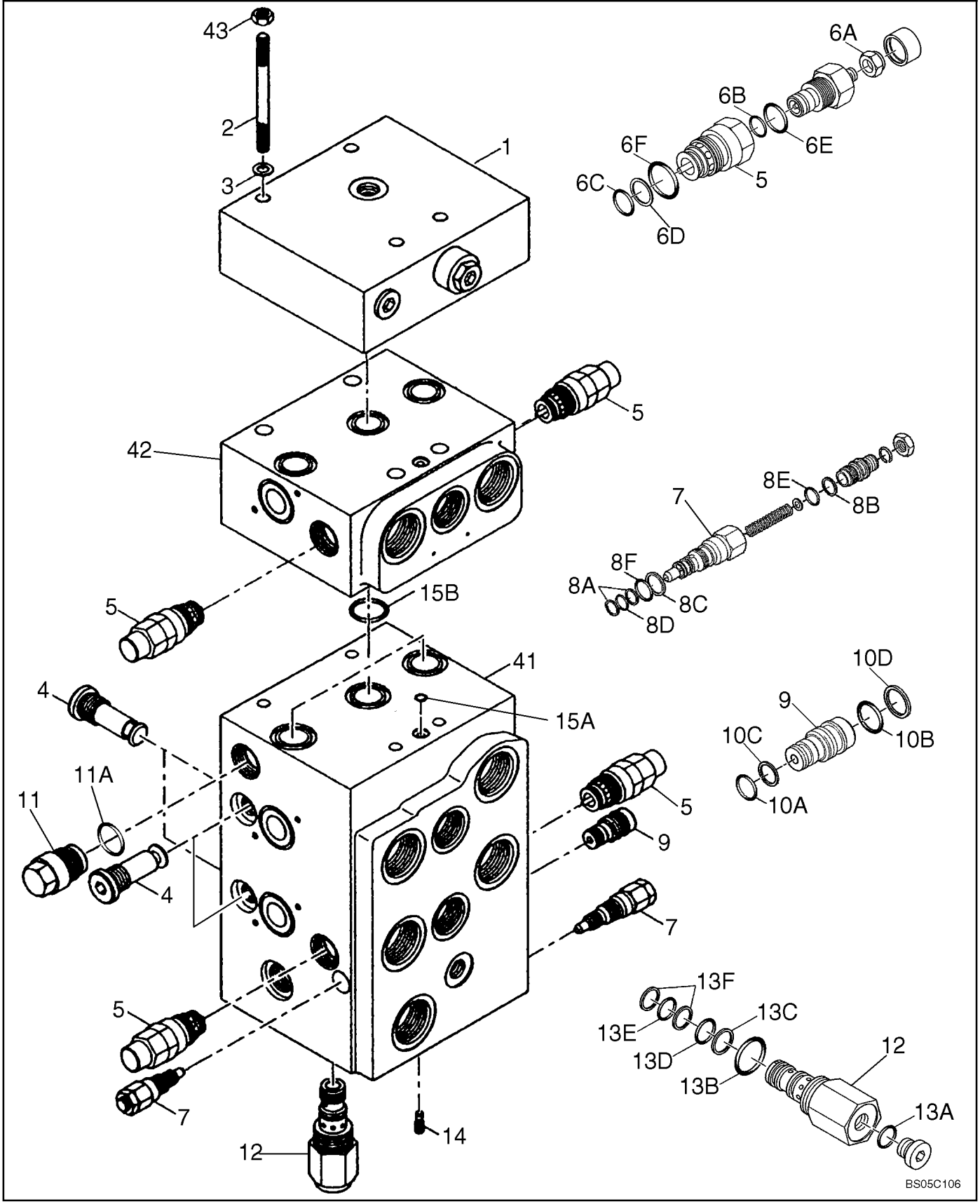

**DISTRIBUTEUR - COMMANDE DU CHARGEUR - DEUX, TROIS, QUATRE TIROIRS - (Z-BAR/XR)**

| REF | FN | PART NUMBER | YR/SN | QTY | DESCRIPTION |
|---|---|---|---|---|---|
| | | REF | | | NOTICE, Z-BAR/XR LOADER; IF USED |
| | | 87307982 | | | SOUPAPE HYDRAULIQUE, Two Spool; Incl. 1 - 41; Also Includes Figure 08-27A |
| | | 87307983 | | | SOUPAPE HYDRAULIQUE, Three Spool; Incl. 1 - 42; Also Includes Figure(s) 08-27A, 27B |
| | | 87307984 | | | SOUPAPE HYDRAULIQUE, Four Spool; Incl. 1 - 43; Also Includes Figure(s) 08-27A, 27B |
| 1 | | 87311889 | | 1 | PLAQUE, Valve |
| 2 | | 87311891 | | 4 | GOUJON, M8 x 190; 10.9; Four Spool Valve |
| 2 | | {961-8075} | | 4 | M8 x 75; 10.9; Three Spool Valve; Not Illustrated |
| 2 | | {962-8055} | | 4 | M8 x 55; 10.9; Two Spool Valve; Not Illustrated |
| 3 | | 892-11008 | | 4 | RONDELLE FREIN, M8 |
| 4 | | 8604567 | | 4 | SOUPAPE ANTI RETOUR |
| 5 | | 8604568 | | 2-6 | SOUPAPE HYDRAULIQUE, Anticavitation; Includes Spool, (3) O-Rings, Thrust Ring, Spool Seal And Lock-Nut |
| 6 | | 8604588 | | 1 | POCHETTE, Anticavitation; For Ref 5; Incl 6A - 6F |
| 6A | | NSS | | 1 | NON FOURNI SEPAREMENT, Lock Nut; M10 |
| 6B | | NSS | | 1 | NON FOURNI SEPAREMENT, Spool Seal |
| 6C | | NSS | | 1 | NON FOURNI SEPAREMENT, O-Ring; 14 x 0.178 |
| 6D | | NSS | | 1 | NON FOURNI SEPAREMENT, Thrust Ring; 14 x 17 x 1 |
| 6E | | NSS | | 1 | NON FOURNI SEPAREMENT, O-Ring; 15.6 x 1.78 |
| 6F | | NSS | | 1 | NON FOURNI SEPAREMENT, O-Ring; 21.95 x 1.78 |
| 7 | | 8602925 | | 2 | SOUPAPE, DÉCHARGE, Pressure Relief |
| 8 | | 8604590 | | 1 | POCHETTE, Pressure Relief Valve; For Ref 7; Incl 8A - 8F |
| 8A | | NSS | | 2 | NON FOURNI SEPAREMENT, Thrust Ring; 7.3/9.5 x 0.7 |
| 8B | | NSS | | 1 | NON FOURNI SEPAREMENT, Thrust Ring; 9.91 x 1.35 |
| 8C | | NSS | | 1 | NON FOURNI SEPAREMENT, Thrust Ring; 11.56 x 1.35 |
| 8D | | NSS | | 1 | NON FOURNI SEPAREMENT, O-Ring; 8.50 x 1.5 |
| 8E | | NSS | | 1 | NON FOURNI SEPAREMENT, O-Ring;9.25 x 1.78 |

**DISTRIBUTEUR - COMMANDE DU CHARGEUR - DEUX, TROIS, QUATRE TIROIRS - (Z-BAR/XR)**

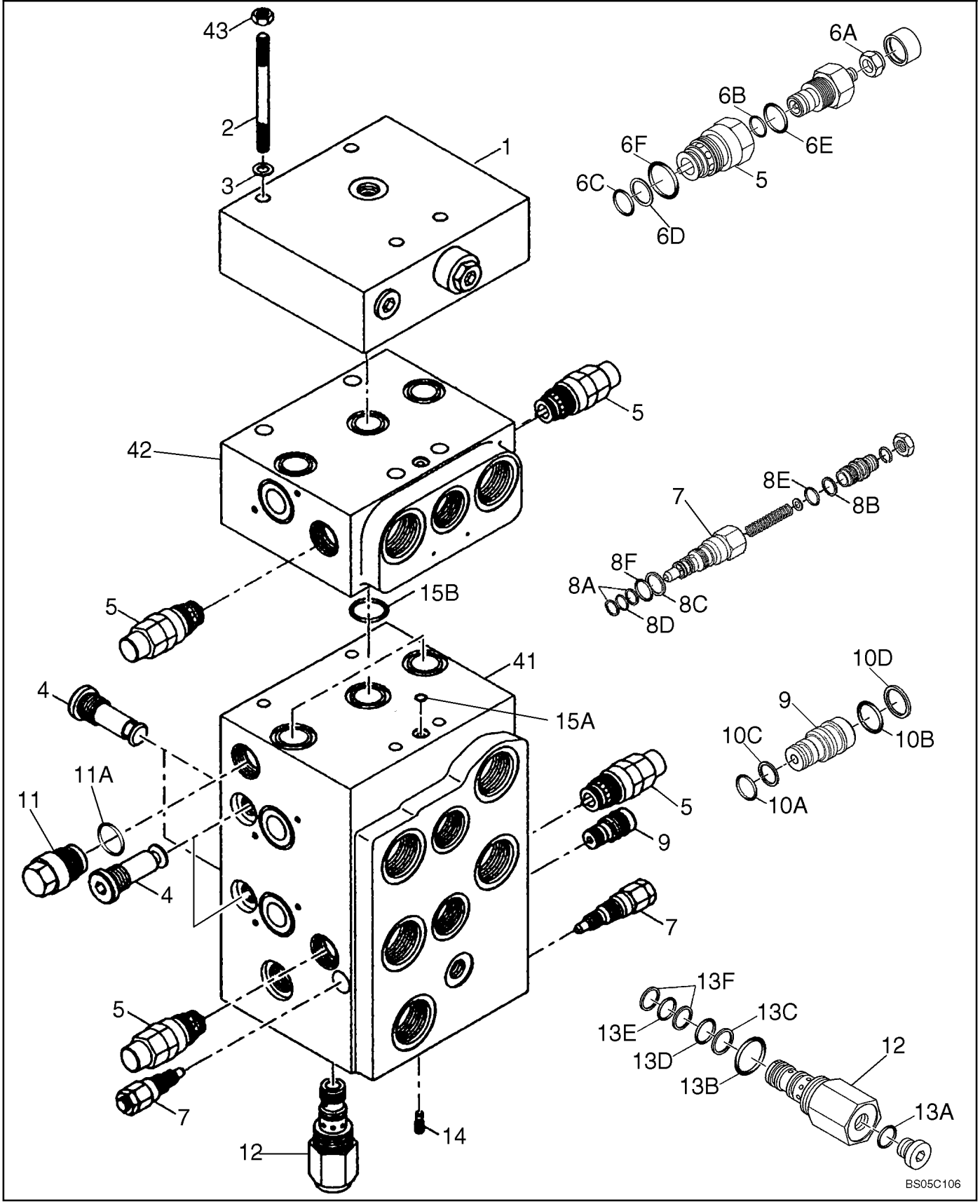

**DISTRIBUTEUR - COMMANDE DU CHARGEUR - DEUX, TROIS, QUATRE TIROIRS - (Z-BAR/XR)**

| REF | FN | PART NUMBER | YR/SN | QTY | DESCRIPTION |
|---|---|---|---|---|---|
| 8F | | NSS | | 1 | NON FOURNI SEPAREMENT, O-Ring; 10.82 x 1.78 |
| 9 | | 8602915 | | 1 | SOUPAPE HYDRAULIQUE, Flow Limiting |
| 10 | | 8602916 | | 1 | POCHETTE DE JOINTS, Flow Limiting Valve; For Ref 9; Incl. 10A - 10D |
| 10A | | NSS | | 1 | NON FOURNI SEPAREMENT, O-Ring; 8.5 x 1.5 |
| 10B | | NSS | | 1 | NON FOURNI SEPAREMENT, O-Ring; 10.82 x 1.78 |
| 10C | | NSS | | 2 | NON FOURNI SEPAREMENT, Thrust Ring; 7.3/9.5 x 0.7 |
| 10D | | NSS | | 1 | NON FOURNI SEPAREMENT, Thrust Ring; 11.56 x 1.35 |
| 11 | | 87311965 | | 1 | INSERT, Pilot Pressure Insert; Incl. 11A |
| 11A | | NSS | | 1 | NON FOURNI SEPAREMENT, O-Ring; 23.47 x 2.62 |
| 12 | | 8602913 | | 1 | SOUPAPE HYDRAULIQUE, Flow Limiting |
| 13 | | 8604592 | | 1 | POCHETTE, Flow Limiting Valve; For Ref 12; Incl. 13A - 13F |
| 13A | | NSS | | 1 | NON FOURNI SEPAREMENT, Profile Seal; M12 x 1.5 |
| 13B | | NSS | | 1 | NON FOURNI SEPAREMENT, O-Ring; 18.77 x 1.78 |
| 13C | | NSS | | 1 | NON FOURNI SEPAREMENT, Thrust Ring; 11.2/14 x 1 |
| 13D | | NSS | | 1 | NON FOURNI SEPAREMENT, O-Ring; 12.42 x 1.78 |
| 13E | | NSS | | 1 | NON FOURNI SEPAREMENT, O-Ring;10.82 x 1.78 |
| 13F | | NSS | | 2 | NON FOURNI SEPAREMENT, Thrust Ring; 10.2/13 x 1 |
| 14 | | 8604574 | | 1 | BOULON, PLUG |
| 14 | | 87362307 | | 1 | CLAPET ANTI-RETOUR |
| 15 | | 8604575 | | 1 | KIT, For Main Housing Block; Ref 41; Incl 15A, 15B |
| 15A | | NSS | | 1 | NON FOURNI SEPAREMENT, O-Ring; 7.65 x 1.78 |
| 15B | | NSS | | 3 | NON FOURNI SEPAREMENT, O-Ring; 18.64 x 3.53 |
| 41 | | NSS | | 1 | NON FOURNI SEPAREMENT, Main Housing |
| 42 | | NSS | | 1-2 | NON FOURNI SEPAREMENT, Section Housing |
| 43 | | 829-1408 | | 4 | ECROU, M8, Cl 10, Four Spool Valve |

| 08-27A | | p1 | 08/07 |
|---|---|---|---|

**DISTRIBUTEUR - AXE DU PISTON - (Z-BAR/XR)**

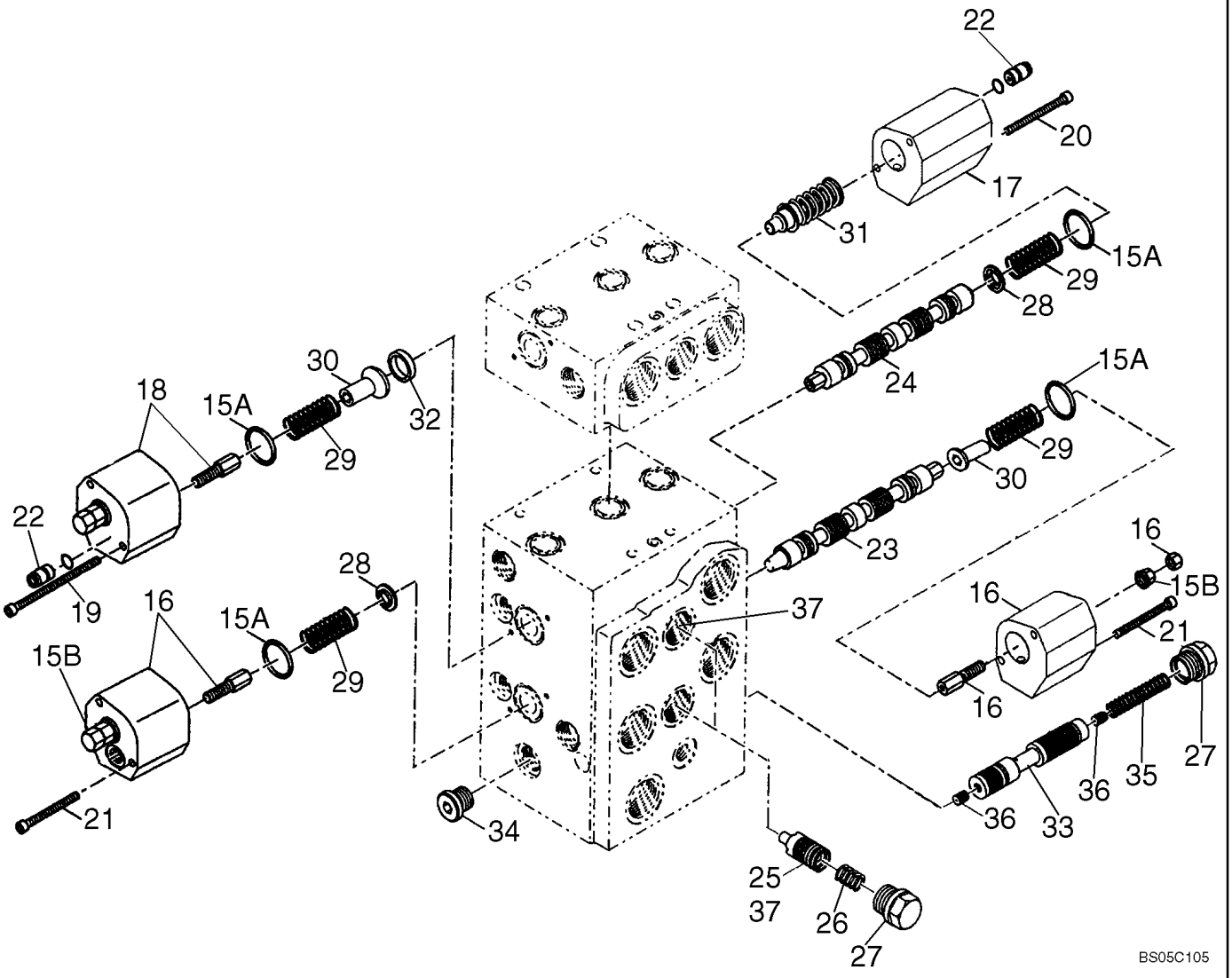

**DISTRIBUTEUR - AXE DU PISTON - (Z-BAR/XR)**

| REF | FN | PART NUMBER | YR/SN | QTY | DESCRIPTION |
|---|---|---|---|---|---|
| | | REF | | | NOTICE, TWO, THREE, AND FOUR SPOOL VALVES FOR Z-BAR/XR MODELS |
| 15 | | 8604575 | | 1 | KIT, Incl. 15A, 15B; For REF 16, 17, 18 |
| 15A | | NSS | | 4 | NON FOURNI SEPAREMENT, O-Ring; 25.07 x 2.62 |
| 15B | | NSS | | 2 | NON FOURNI SEPAREMENT, Lock Nut; M8 x 1 |
| 16 | | 8604576 | | 2 | COUVERCLE |
| 17 | | 87311972 | | 1 | COUVERCLE |
| 18 | | 8605577 | | 1 | COUVERCLE |
| 19 | | 864-5060 | | 2 | VIS, Hex Soc Hd, M5 x 60, 8.8, M5 X 60; 8.8 |
| 20 | | 87311974 | | 2 | VIS, M5 x 85; 10.9 |
| 21 | | {864-5055} | | 4 | M5 x 55; 8.8 |
| 22 | | 8604578 | | 2 | SOUPAPE HYDRAULIQUE, Throttle Check Valve |
| 23 | | 87311975 | | 1 | TIROIR |
| 24 | | 87311976 | | 1 | TIROIR |
| 25 | | 8604579 | | 1 | PISTON |
| 26 | | 8604580 | | 2 | RESSORT, Compression |
| 27 | | 8604581 | | 3 | VIS, Plug; M22 x 1.5 |
| 28 | | 8604582 | | 2 | RETENEUR, Spring |
| 29 | | 8604583 | | 4 | RESSORT, Compression |
| 30 | | 87311984 | | 2 | RESSORT, Retanier |
| 31 | | 87311985 | | 1 | RESSORT |
| 32 | | 87311986 | | 1 | ANNEAU |
| 33 | | 8604584 | | 1 | PISTON |
| 34 | | 87311988 | | 1 | BOUCHON |
| 35 | | 8604586 | | 1 | RESSORT, Compression |
| 36 | | 87311990 | | 2 | GICLEUR |
| 37 | | 87311991 | | 1 | TIROIR |

**DISTRIBUTEUR - COMMANDE DU CHARGEUR - CIRCUIT - (Z-BAR/XR)**

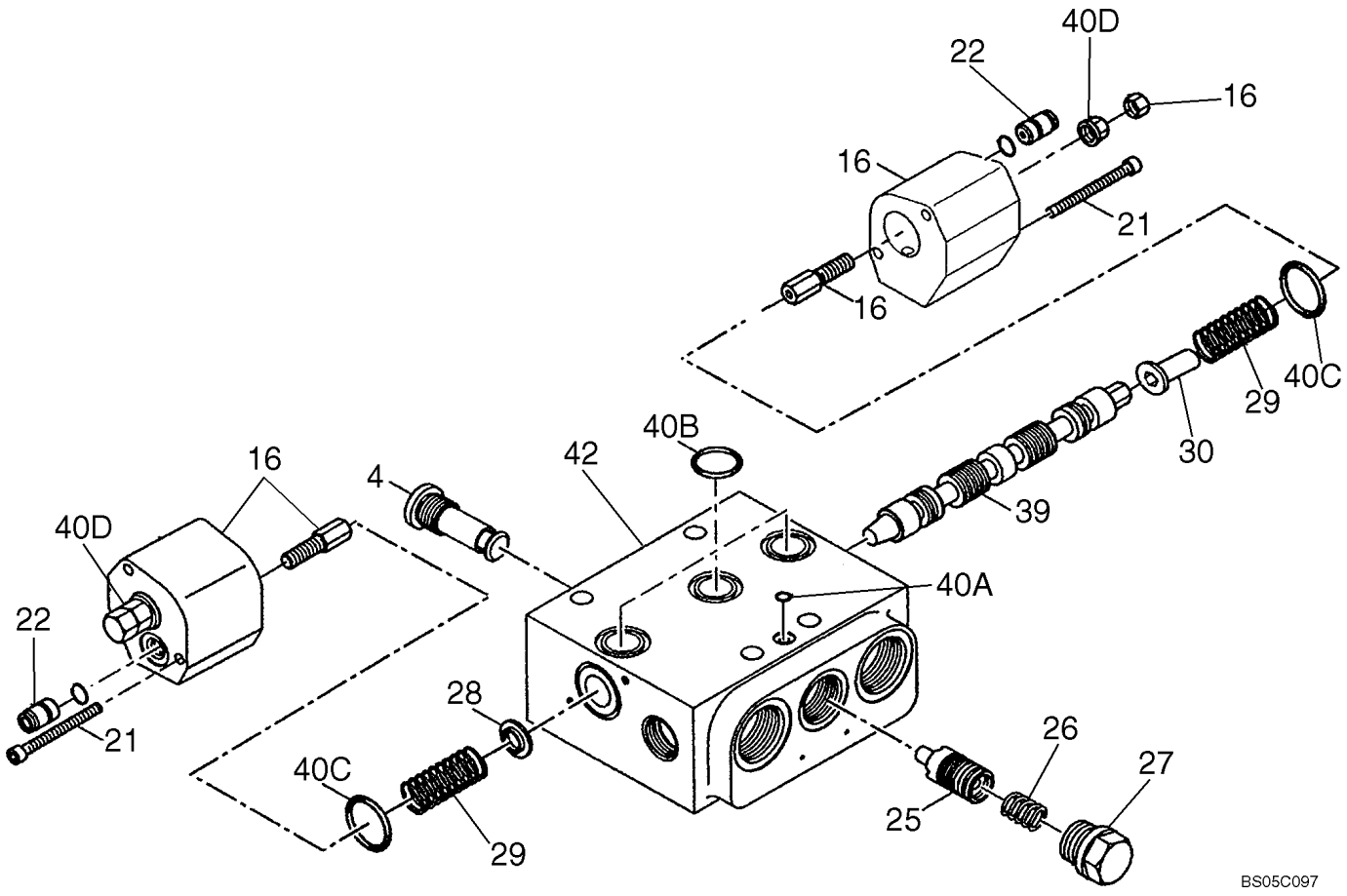

**DISTRIBUTEUR - COMMANDE DU CHARGEUR - CIRCUIT - (Z-BAR/XR)**

| REF | FN | PART NUMBER | YR/SN | QTY | DESCRIPTION |
|---|---|---|---|---|---|
| | | REF | | | NOTICE, FOR THREE SPOOL AND FOUR SPOOL VALVES; Z-BAR/XR |
| 4 | | 8604567 | | 1 | SOUPAPE ANTI RETOUR |
| 16 | | NSS | | 1 | NON FOURNI SEPAREMENT, Housing |
| 21 | | {864-5055} | | 4 | M5 X 55; 8.8 |
| 22 | | 8604758 | | 2 | SOUPAPE ANTI RETOUR |
| 25 | | 8604579 | | 1 | PISTON |
| 26 | | 8604580 | | 1 | RESSORT, Compression |
| 27 | | 8604781 | | 1 | VALVE, Throttle Check |
| 28 | | 8604582 | | 1 | RETENEUR, Spring |
| 29 | | 8604583 | | 2 | RESSORT, Compression |
| 30 | | 87311984 | | 1 | RESSORT, Retainer |
| 39 | | 87311975 | | 1 | TIROIR |
| 40 | | 8604566 | | 1 | POCHETTE, For Valve Section; Ref 43; Incl. 40A - 40D |
| 40A | | NSS | | 1 | NON FOURNI SEPAREMENT, O-Ring; 7.65 x 1.78 |
| 40B | | NSS | | 3 | NON FOURNI SEPAREMENT, O-Ring; 18.64 x 3.53 |
| 40C | | NSS | | 2 | NON FOURNI SEPAREMENT, O-Ring; 25.07 x 2.62 |
| 40D | | NSS | | 2 | NON FOURNI SEPAREMENT, Lock Nut; M8 x 1 |
| 42 | | NSS | | 1 | NON FOURNI SEPAREMENT, Valve Section |

**DISTRIBUTEUR - COMMANDE DU CHARGEUR - DEUX, TROIS, QUATRE TIROIRS - (XT)**

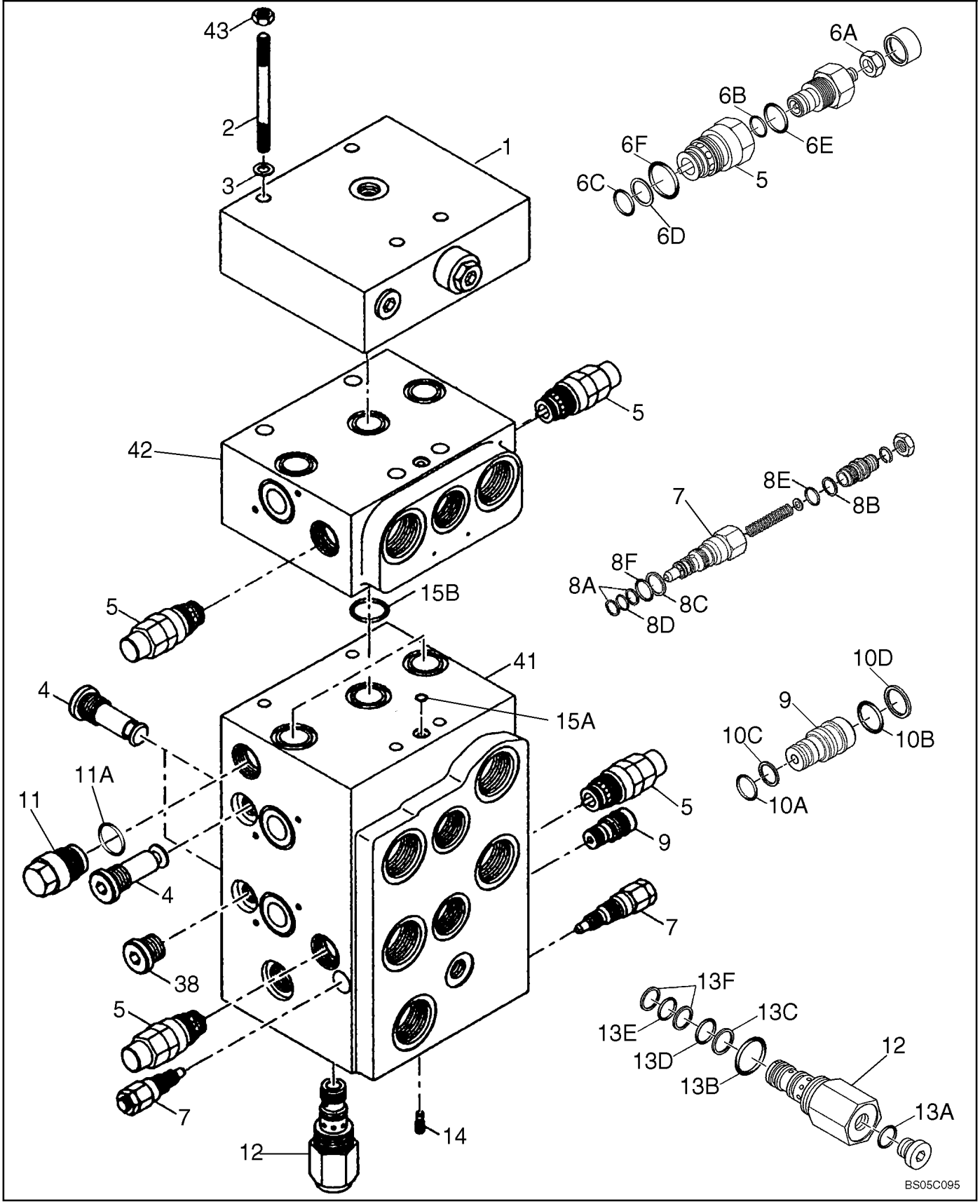

**DISTRIBUTEUR - COMMANDE DU CHARGEUR - DEUX, TROIS, QUATRE TIROIRS - (XT)**

| REF | FN | PART NUMBER | YR/SN | QTY | DESCRIPTION |
|---|---|---|---|---|---|
| | | REF | | | NOTICE, XT LOADER |
| | | 87307986 | | | SOUPAPE HYDRAULIQUE, Two Spool; Incl. 1 - 41; Also Includes Figure 08-28A |
| | | 87307988 | | | SOUPAPE HYDRAULIQUE, Three Spool; Incl. 1 - 42; Also Includes Figure(s) 08-28A, 08-28B |
| | | 87307990 | | | SOUPAPE HYDRAULIQUE, Four Spool; Incl. 1 - 43; Also Includes Figure(s) 08-28A, 08-28B |
| 1 | | 87311889 | | 1 | PLAQUE, Valve |
| 2 | | 87311891 | | 4 | GOUJON, M8 x 190; 10.9; Four Spool Valve |
| 2 | | {961-8075} | | 4 | M8 x 75; 10.9; Three Spool Valve; Not Illustrated |
| 2 | | {962-8055} | | 4 | M8 x 55; 10.9; Two Spool Valve; Not Illustrated |
| 3 | | 892-11008 | | 4 | RONDELLE FREIN, M8 |
| 4 | | 8604567 | | 3 | SOUPAPE ANTI RETOUR |
| 5 | | 8604568 | | 2-6 | SOUPAPE HYDRAULIQUE, Anticavitation; Includes Spool, (3) O-Rings, Thrust Ring, Spool Seal And Lock-Nut |
| 6 | | 8604588 | | 1 | POCHETTE, Anticavitation; For Ref 5; Incl 6A - 6F |
| 6A | | NSS | | 1 | NON FOURNI SEPAREMENT, Lock Nut; M10 |
| 6B | | NSS | | 1 | NON FOURNI SEPAREMENT, Spool Seal |
| 6C | | NSS | | 1 | NON FOURNI SEPAREMENT, O-Ring; 14 x 0.178 |
| 6D | | NSS | | 1 | NON FOURNI SEPAREMENT, Thrust Ring; 14 x 17 x 1 |
| 6E | | NSS | | 1 | NON FOURNI SEPAREMENT, O-Ring; 15.6 x 1.78 |
| 6F | | NSS | | 1 | NON FOURNI SEPAREMENT, O-Ring; 21.95 x 1.78 |
| 7 | | 8602925 | | 2 | SOUPAPE, DÉCHARGE, Pressure Relief |
| 8 | | 8604590 | | 1 | POCHETTE, Pressure Relief Valve; For Ref 7; Incl 8A - 8f |
| 8A | | NSS | | 2 | NON FOURNI SEPAREMENT, Thrust Ring; 7.3/9.5 x 0.7 |
| 8B | | NSS | | 1 | NON FOURNI SEPAREMENT, Thrust Ring; 9.91 x 1.35 |
| 8C | | NSS | | 1 | NON FOURNI SEPAREMENT, Thrust Ring; 11.56 x 1.35 |
| 8D | | NSS | | 1 | NON FOURNI SEPAREMENT, O-Ring; 8.50 x 1.5 |
| 8E | | NSS | | 1 | NON FOURNI SEPAREMENT, O-Ring;9.25 x 1.78 |

**DISTRIBUTEUR - COMMANDE DU CHARGEUR - DEUX, TROIS, QUATRE TIROIRS - (XT)**

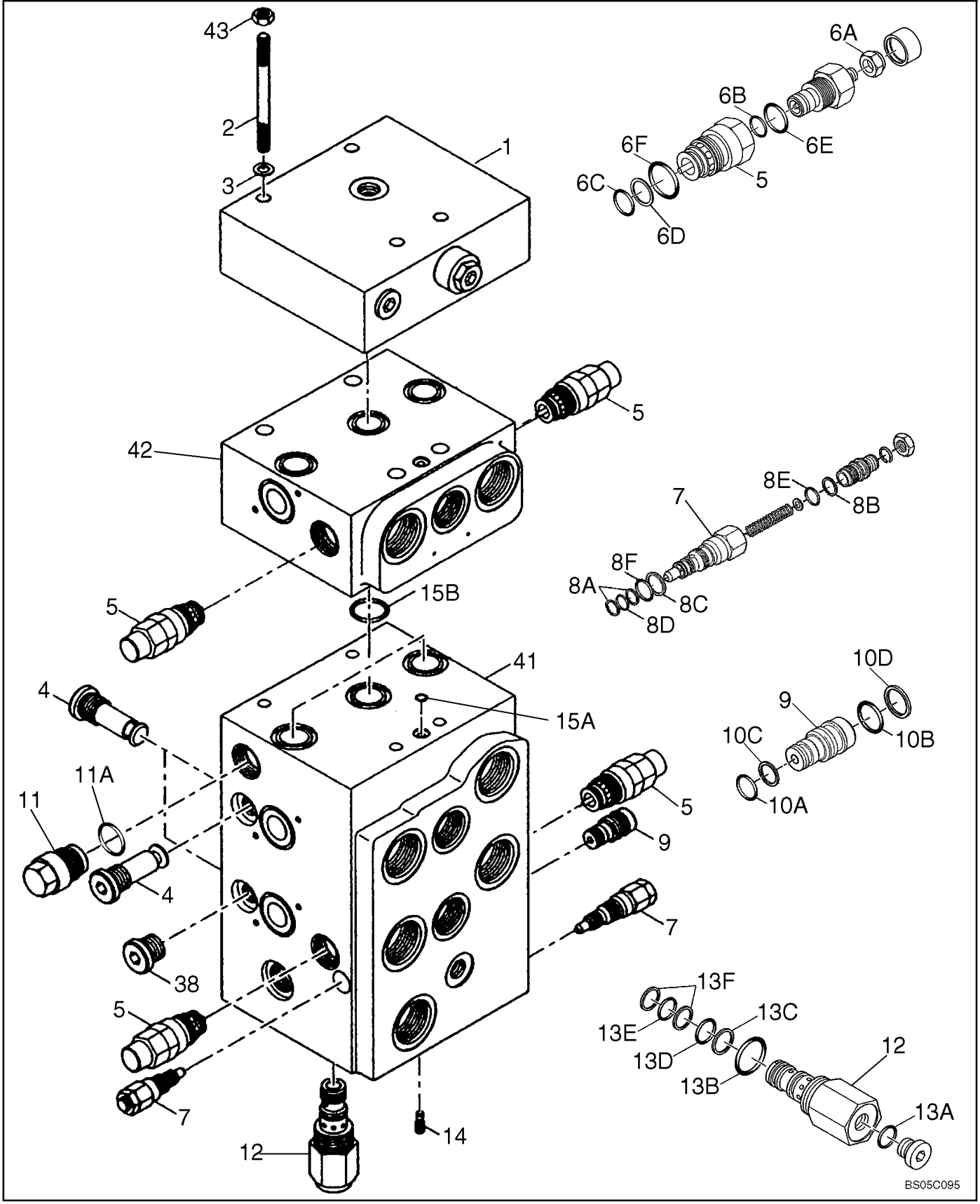

**DISTRIBUTEUR - COMMANDE DU CHARGEUR - DEUX, TROIS, QUATRE TIROIRS - (XT)**

| REF | FN | PART NUMBER | YR/SN | QTY | DESCRIPTION |
|---|---|---|---|---|---|
| 8F | | NSS | | 1 | NON FOURNI SEPAREMENT, O-Ring; 10.82 x 1.78 |
| 9 | | 8602915 | | 1 | SOUPAPE HYDRAULIQUE, Flow Limiting |
| 10 | | 8602916 | | 1 | POCHETTE DE JOINTS, Flow Limiting Valve; For Ref 9; Incl. 10A - 10D |
| 10A | | NSS | | 1 | NON FOURNI SEPAREMENT, O-Ring; 8.5 x 1.5 |
| 10B | | NSS | | 1 | NON FOURNI SEPAREMENT, O-Ring; 10.82 x 1.78 |
| 10C | | NSS | | 2 | NON FOURNI SEPAREMENT, Thrust Ring; 7.3/9.5 x 0.7 |
| 10D | | NSS | | 1 | NON FOURNI SEPAREMENT, Thrust Ring; 11.56 x 1.35 |
| 11 | | 87311965 | | 1 | INSERT, Pilot Pressure Insert; Incl. 11A |
| 11A | | NSS | | 1 | NON FOURNI SEPAREMENT, O-Ring; 23.47 x 2.62 |
| 12 | | 8602913 | | 1 | SOUPAPE HYDRAULIQUE, Flow Limiting |
| 13 | | 8604592 | | 1 | POCHETTE, Flow Limiting Valve; For Ref 12; Incl. 13A - 13f |
| 13A | | NSS | | 1 | NON FOURNI SEPAREMENT, Profile Seal; M12 x 1.5 |
| 13B | | NSS | | 1 | NON FOURNI SEPAREMENT, O-Ring; 18.77 x 1.78 |
| 13C | | NSS | | 1 | NON FOURNI SEPAREMENT, Thrust Ring; 11.2/14 x 1 |
| 13D | | NSS | | 1 | NON FOURNI SEPAREMENT, O-Ring; 12.42 x 1.78 |
| 13E | | NSS | | 1 | NON FOURNI SEPAREMENT, O-Ring;10.82 x 1.78 |
| 13F | | NSS | | 2 | NON FOURNI SEPAREMENT, Thrust Ring; 10.2/13 x 1 |
| 14 | | 8604574 | | 1 | BOULON |
| 14 | | 87362307 | | 1 | CLAPET ANTI-RETOUR |
| 15 | | 8604575 | | 1 | KIT, For Main Housing Block; Ref 41; Incl 15A, 15B |
| 15A | | NSS | | 1 | NON FOURNI SEPAREMENT, O-Ring; 7.65 x 1.78 |
| 15B | | NSS | | 3 | NON FOURNI SEPAREMENT, O-Ring; 18.64 x 3.53 |
| 41 | | NSS | | 1 | NON FOURNI SEPAREMENT, Main Housing |
| 42 | | NSS | | 1-2 | NON FOURNI SEPAREMENT, Section Housing |
| 43 | | 829-1408 | | 4 | ECROU, M8, Cl 10, Four Spool Valve |

**DISTRIBUTEUR - AXE DU PISTON - (XT)**

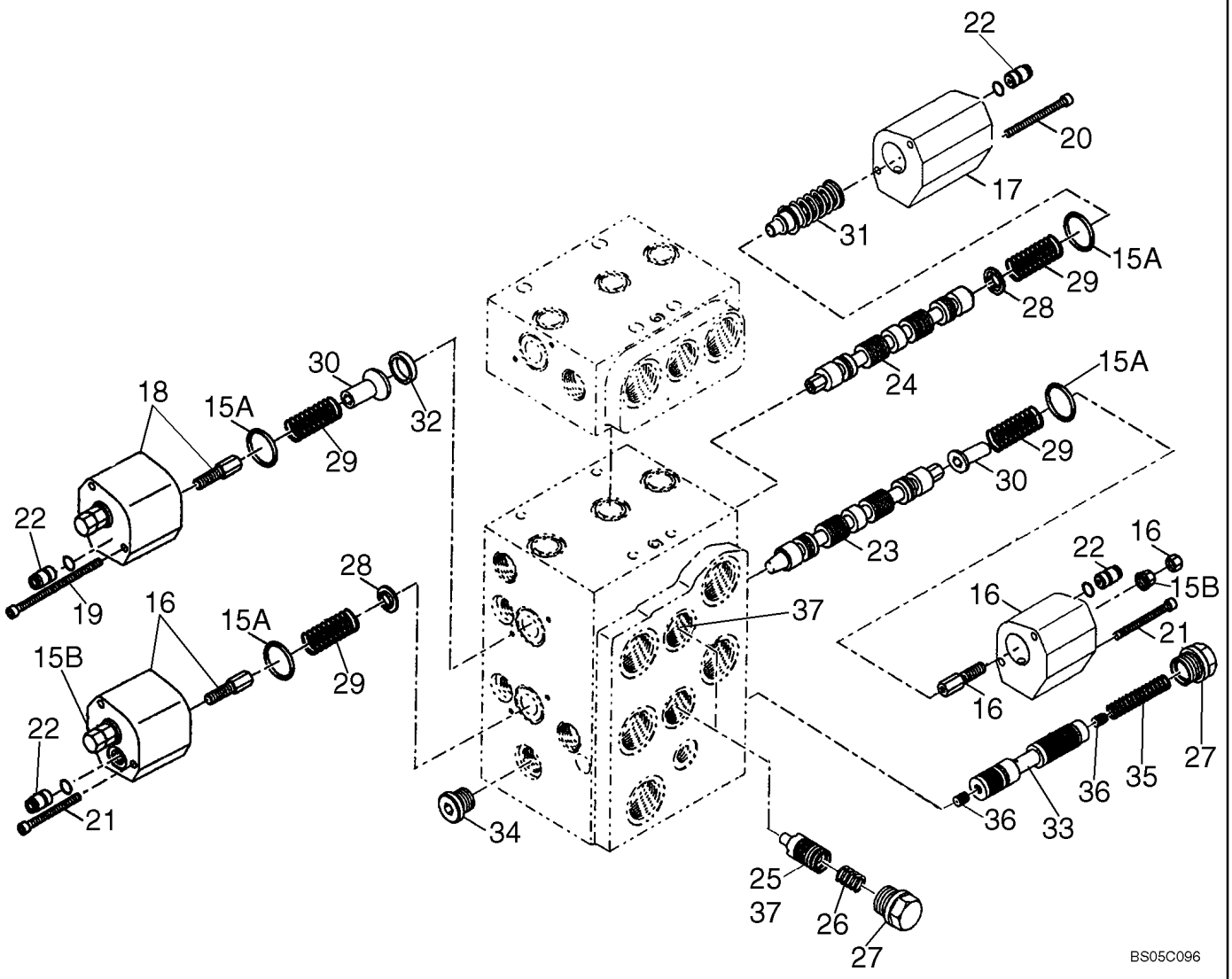

**DISTRIBUTEUR - AXE DU PISTON - (XT)**

| REF | FN | PART NUMBER | YR/SN | QTY | DESCRIPTION |
|---|---|---|---|---|---|
| | | REF | | | NOTICE, TWO, THREE, AND FOUR SPOOL VALVES FOR XT MODELS |
| 15 | | 8604575 | | 1 | KIT, Incl. 15A, 15B; For REF 16, 17, 18 |
| 15A | | NSS | | 4 | NON FOURNI SEPAREMENT, O-Ring; 25.07 x 2.62 |
| 15B | | NSS | | 2 | NON FOURNI SEPAREMENT, Lock Nut; M8 x 1 |
| 16 | | 8604576 | | 2 | COUVERCLE |
| 17 | | 87311972 | | 1 | COUVERCLE |
| 18 | | 8605577 | | 1 | COUVERCLE |
| 19 | | 864-5060 | | 2 | VIS, Hex Soc Hd, M5 x 60, 8.8, M5 X 60; 8.8 |
| 20 | | 87311974 | | 2 | VIS, M5 x 85; 10.9 |
| 21 | | {864-5055} | | 4 | M5 x 55; 8.8 |
| 22 | | 8604578 | | 2 | SOUPAPE HYDRAULIQUE, Throttle Check Valve; 2 Have Been Removed From Ref 16 Covers. |
| 23 | | 87311898 | | 1 | TIROIR |
| 23 | | 87352565 | | 1 | TIROIR |
| 24 | | 87311976 | | 1 | TIROIR |
| 25 | | 8604579 | | 1 | PISTON |
| 26 | | 8604580 | | 2 | RESSORT, Compression |
| 27 | | 8604581 | | 3 | VIS, Plug; M22 x 1.5 |
| 28 | | 8604582 | | 2 | RETENEUR, Spring |
| 29 | | 8604583 | | 4 | RESSORT, Compression |
| 30 | | 87311984 | | 2 | RESSORT, Retanier |
| 31 | | 87311985 | | 1 | RESSORT |
| 32 | | 87311986 | | 1 | ANNEAU |
| 33 | | 8604584 | | 1 | PISTON |
| 34 | | 87311988 | | 1 | BOUCHON |
| 35 | | 8604586 | | 1 | RESSORT, Compression |
| 36 | | 87311990 | | 2 | GICLEUR |
| 37 | | 87311991 | | 1 | TIROIR |

**DISTRIBUTEUR - COMMANDE DU CHARGEUR - CIRCUIT - (XT)**

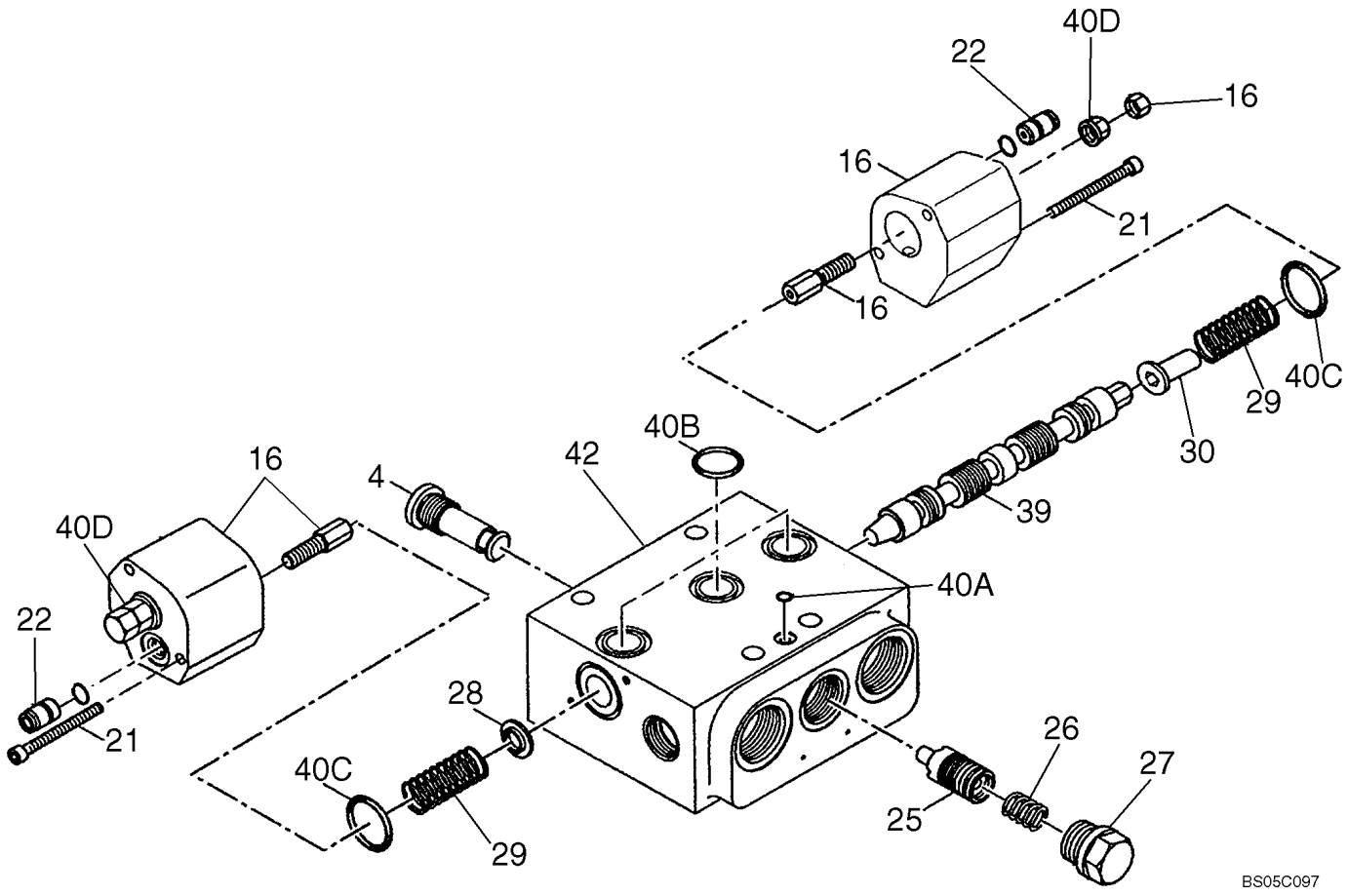

**DISTRIBUTEUR - COMMANDE DU CHARGEUR - CIRCUIT - (XT)**

| REF | FN | PART NUMBER | YR/SN | QTY | DESCRIPTION |
|---|---|---|---|---|---|
| | | REF | | | NOTICE, FOR THREE SPOOL AND FOUR SPOOL VALVES; XT |
| 4 | | 8604567 | | 1 | SOUPAPE ANTI RETOUR |
| 16 | | NSS | | 1 | NON FOURNI SEPAREMENT, Housing |
| 21 | | {864-5055} | | 4 | M5 X 55; 8.8 |
| 22 | | 8604758 | | 2 | SOUPAPE ANTI RETOUR |
| 25 | | 8604579 | | 1 | PISTON |
| 26 | | 8604580 | | 1 | RESSORT, Compression |
| 27 | | 8604781 | | 1 | VALVE, Throttle Check |
| 28 | | 8604582 | | 1 | RETENEUR, Spring |
| 29 | | 8604583 | | 2 | RESSORT, Compression |
| 30 | | 87311984 | | 1 | RESSORT, Retainer |
| 39 | | 87311975 | | 1 | TIROIR |
| 40 | | 8604566 | | 1 | POCHETTE, For Valve Section; Ref 43; Incl. 40A - 40D |
| 40A | | NSS | | 1 | NON FOURNI SEPAREMENT, O-Ring; 7.65 x 1.78 |
| 40B | | NSS | | 3 | NON FOURNI SEPAREMENT, O-Ring; 18.64 x 3.53 |
| 40C | | NSS | | 2 | NON FOURNI SEPAREMENT, O-Ring; 25.07 x 2.62 |
| 40D | | NSS | | 2 | NON FOURNI SEPAREMENT, Lock Nut; M8 x 1 |
| 42 | | NSS | | 1 | NON FOURNI SEPAREMENT, Valve Section |

**SYSTEME HYDRAULIQUE - LEVIER DE COMMANDE SUPPORT**

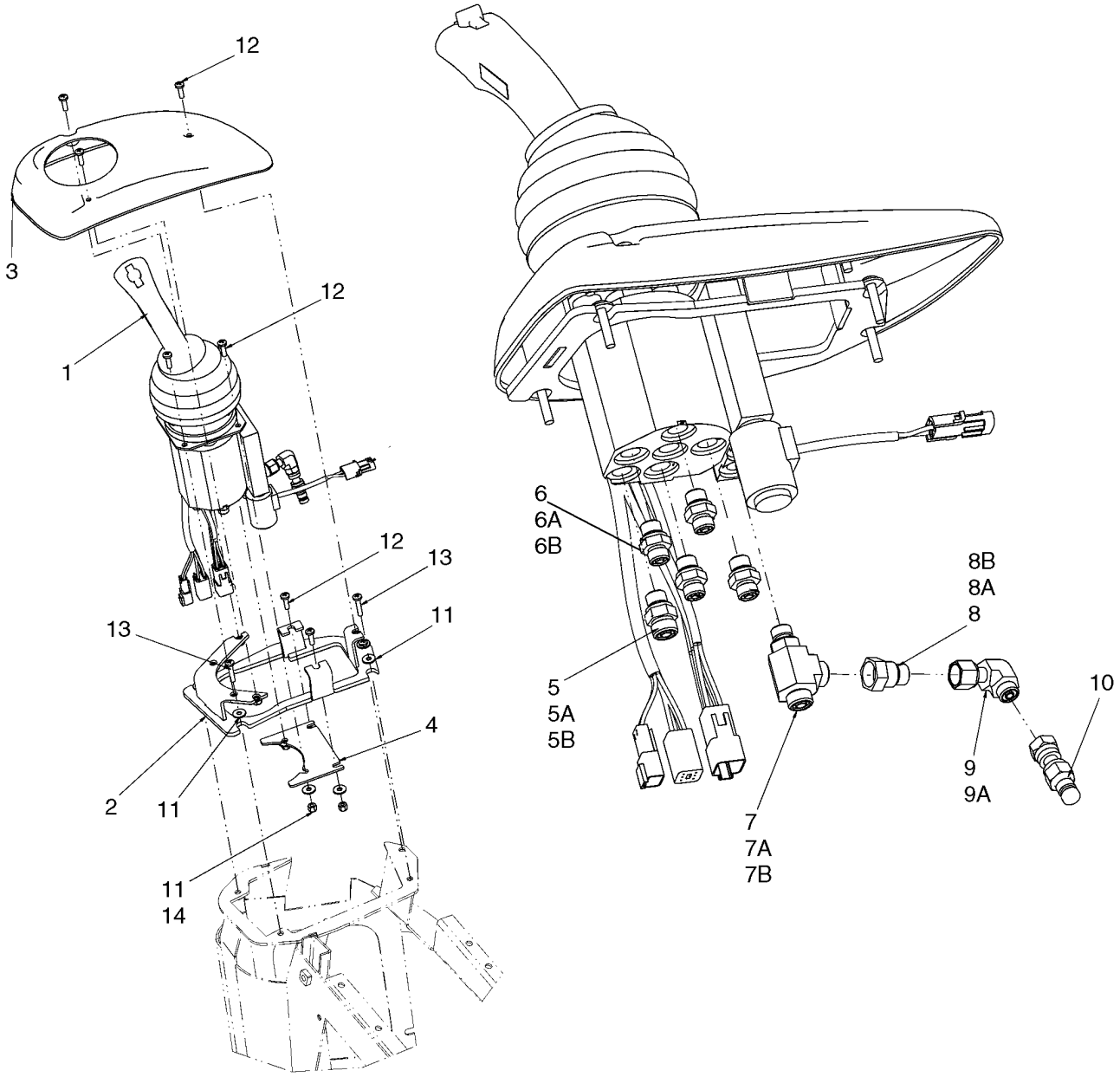

**SYSTEME HYDRAULIQUE - LEVIER DE COMMANDE SUPPORT**

| REF | FN | PART NUMBER | YR/SN | QTY | DESCRIPTION |
|---|---|---|---|---|---|
| 1 | | 87340016 | | 1 | JOYSTICK, See Figures 08-29A, 08-29B |
| 2 | | 87516506 | | 1 | ADAPTEUR |
| 3 | | 87638910 | | 1 | ENCADREMENT, BRACKET |
| 4 | | 87349019 | | 1 | ADAPTEUR |
| 5 | | 700-101 | | 6 | RACCORD, 11/16"-16 ORFS x M14 x 1.5 ORB, Incl. Refs. 5A, 5B |
| 5A | | 238-6012 | | 1 | JOINT THORIQUE, -012, 90 Duro, .364" ID x .070" Thk, Face Seal |
| 5B | | 637-63113 | | 1 | JOINT THORIQUE, CI 6, 11.3MM ID x 2.2 Thk |
| 6 | | 700-153 | | 4 | RACCORD, 9/16"-18 ORFS x M14 x 1.5 ORB, Incl. Refs. 6A, 6B |
| 6A | | 637-63113 | | 1 | JOINT THORIQUE, CI 6, 11.3MM ID x 2.2 Thk |
| 6B | | 238-6011 | | 1 | JOINT THORIQUE, -011, 90 Duro, .301" ID x .070" Thk, Face Seal |
| 7 | | 700-406 | | 1 | TE, 11/16"-16 ORFS x M14 x 1.5 ORB Run, Incl. Refs. 7A, 7B |
| 7A | | 238-6012 | | 2 | JOINT THORIQUE, -012, 90 Duro, .364" ID x .070" Thk, Face Seal |
| 7B | | 637-63113 | | 1 | JOINT THORIQUE, CI 6, 11.3MM ID x 2.2 Thk |
| 8 | | 201-145 | | 1 | REDUCTEUR, 9/16"-18 Male x 11/16"-16 Fem, ORFS, Incl. Refs. 8A, 8B |
| 8A | | 238-6011 | | 1 | JOINT THORIQUE, -011, 90 Duro, .301" ID x .070" Thk, Face Seal |
| 8B | | 238-6012 | | 1 | JOINT THORIQUE, -012, 90 Duro, .364" ID x .070" Thk, Face Seal |
| 9 | | 701-329 | | 1 | COUDE, 90º, 9/16"-18 ORFS x 9/16"-18 Fem Sw, Incl. Ref. 9A |
| 9A | | 238-6011 | | 1 | JOINT THORIQUE, -011, 90 Duro, .301" ID x .070" Thk |
| 10 | | 190117A1 | | 1 | CARDAN |
| 11 | | 895-25006 | | 4 | RONDELLE, M6 x 18 x 1.6 |
| 12 | | 540-719 | | 9 | VIS, Cross Pan Hd, M6 x 20 |
| 13 | | 840-1630 | | 4 | VIS, Cross Pan Hd, M6 x 30 |
| 14 | | 832-10406 | | 4 | CONTRE-ECROU, M6 x 1, Cl 8 |

| 08-29A | | p1 | 08/07 |
|---|---|---|---|

**DISTRIBUTEUR - LEVIER DE COMMANDE**

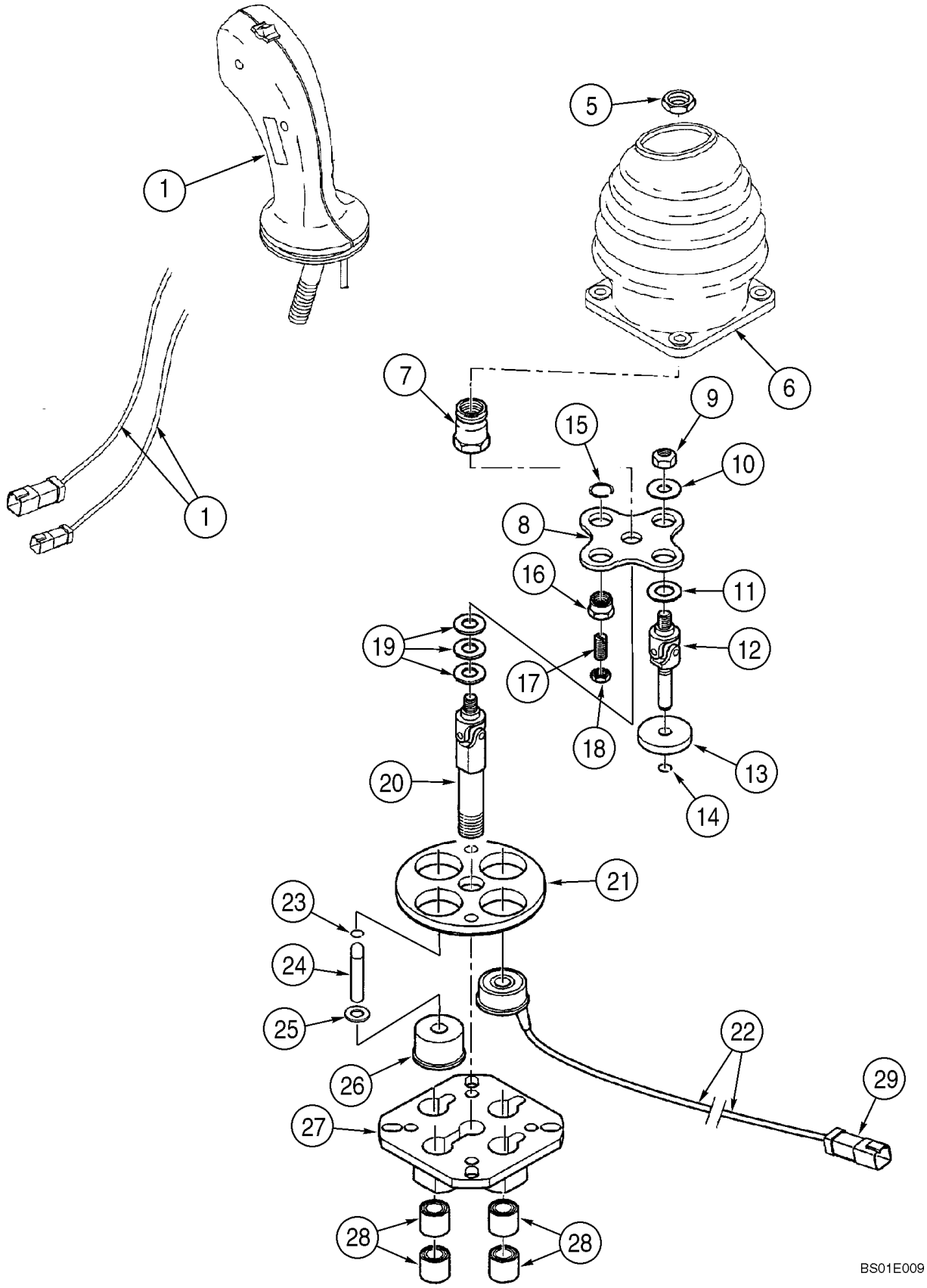

**DISTRIBUTEUR - LEVIER DE COMMANDE**

| REF | FN | PART NUMBER | YR/SN | QTY | DESCRIPTION |
|---|---|---|---|---|---|
| | | 87340016 | | 1 | JOYSTICK, Joystick; Incl. 1 - 29; Incl. Figure 08-29B |
| | | 410108A1 | | 1 | POCHETTE, Joystick |
| | | 410566A1 | | 1 | ECROU, Locking |
| 1 | | 87372088 | | 1 | POIGNÉE |
| 5 | | 829-1412 | | 1 | ECROU, M12, Cl 10 |
| 6 | | 427501A1 | | 1 | MANCHETTE |
| 7 | | 8604528 | | 1 | ECROU, M12 |
| 8 | | 8604529 | | 1 | PATTE FIXATION |
| | | 8604530 | | 3 | KIT, Shaft Detent; Incl. Refs. 9 - 14 |
| 9 | | NSS | | 1 | NON FOURNI SEPAREMENT, Nut, Lock |
| 10 | | NSS | | 1 | NON FOURNI SEPAREMENT, Washer |
| 11 | | NSS | | 1 | NON FOURNI SEPAREMENT, Washer |
| 12 | | NSS | | 1 | NON FOURNI SEPAREMENT, Shaft |
| 13 | | NSS | | 1 | NON FOURNI SEPAREMENT, Armature |
| 14 | | NSS | | 1 | NON FOURNI SEPAREMENT, Ring, Snap |
| | | 8604531 | | 1 | KIT, Non-Detent Plunger; Use In Non-Detent Port 2; Incl. Refs. 15 - 18 |
| 15 | | NSS | | 1 | NON FOURNI SEPAREMENT, Ring, Snap |
| 16 | | NSS | | 1 | NON FOURNI SEPAREMENT, M16, Screw |
| 17 | | NSS | | 1 | NON FOURNI SEPAREMENT, M8 x 16, Screw |
| 18 | | NSS | | 1 | NON FOURNI SEPAREMENT, Nut |
| 19 | | 8604532 | | 1 | CALE D'EPAISSEUR, Set Of Three |
| 20 | | 8604533 | | 1 | ARBRE |
| 21 | | 8604534 | | 1 | FLASQUE |
| 22 | | 8604535 | | 3 | SOLENOIDE, 24V; Use In Detent Ports, 1, 3, 4; Component Parts Not Serviced Separately |
| | | 8604536 | | 1 | COLIS DE RÉPARATION, Plunger; Incl. Refs. 23 - 25 |
| 23 | | NSS | | 1 | NON FOURNI SEPAREMENT, Ring, Snap |
| 24 | | NSS | | 1 | NON FOURNI SEPAREMENT, Plunger |
| 25 | | NSS | | 1 | NON FOURNI SEPAREMENT, Washer |
| 26 | | 8604537 | | 1 | GUIDE, Plunger |
| 27 | | 8604538 | | 1 | PATTE FIXATION |
| 28 | | 8604539 | | 1 | BAGUE, Set Of Four |
| 29 | | 8604527 | | 1 | KIT, 6 Pin Deutsch Connector |

**DISTRIBUTEUR - LEVIER DE COMMANDE**

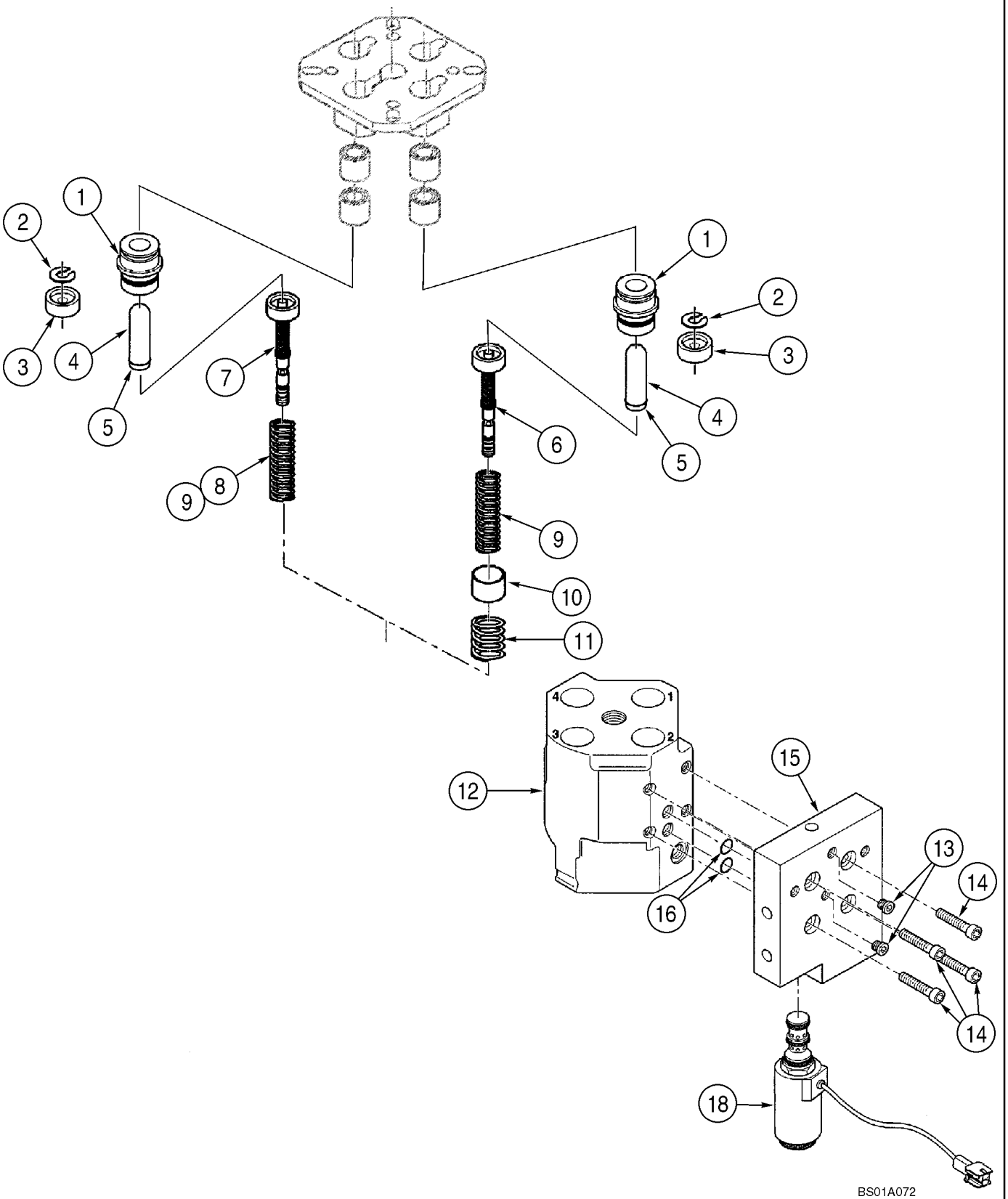

**DISTRIBUTEUR - LEVIER DE COMMANDE**

| REF | FN | PART NUMBER | YR/SN | QTY | DESCRIPTION |
|---|---|---|---|---|---|
| | | 87340016 | | 1 | JOYSTICK, Joystick; Incl. 1 - 18; Incl. Figure 08-29A |
| | | 8604521 | | 4 | POCHETTE, Plunger; Used In All Ports; Incl. Refs. 1 - 5 |
| 1 | | NSS | | 2 | NON FOURNI SEPAREMENT, Guide |
| 2 | | NSS | | 2 | NON FOURNI SEPAREMENT, Washer |
| 3 | | NSS | | 2 | NON FOURNI SEPAREMENT, Retainer |
| 4 | | NSS | | 2 | NON FOURNI SEPAREMENT, Plunger |
| 5 | | NSS | | 2 | NON FOURNI SEPAREMENT, Ring, Snap |
| 6 | | 8604522 | | 1 | REGULATEUR-TENSION, Use In Port 1 |
| 7 | | 8604523 | | 3 | REGULATEUR-TENSION, Use In Ports 2, 3, 4 |
| 8 | | 87563048 | | 1 | RESSORT, SPRING, Set of Two; Use In Ports 2, 4 |
| 9 | | 8604525 | | 1 | RESSORT, Set Of Two; Use In Ports 1, 3 |
| | | 87432563 | | 1 | POCHETTE DE JOINTS, Springs; Prefeeling; For Ports 1, 3; Use With 8603083 Control Valve; Not Illustrated |
| 10 | | NSS | | 1 | NON FOURNI SEPAREMENT, Socket |
| 11 | | NSS | | 1 | NON FOURNI SEPAREMENT, Spring |
| 12 | | NSS | | 1 | NON FOURNI SEPAREMENT, Housing |
| 13 | | 8604550 | | 1 | COLIS DE RÉPARATION, Plug; Set Of Two; If Used |
| | | 8604540 | | 1 | COLIS DE RÉPARATION, Flange; Incl. Refs. 14 - 16 |
| 14 | | NSS | | 4 | NON FOURNI SEPAREMENT, M6 x 25, Screw |
| 15 | | NSS | | 1 | NON FOURNI SEPAREMENT, Flange |
| 16 | | NSS | | 2 | NON FOURNI SEPAREMENT, 1,5 x 11, O-Ring |
| 17 | | 8604541 | | 1 | COLIS DE RÉPARATION, O-Ring; Set Of Two; Not Illustrated |
| 18 | | 8604542 | | 1 | SOUPAPE HYDRAULIQUE, 24V; Solenoid |

**COMMANDE DU CHARGEUR - MANETTE AVEC LEVIER UNIQUE - MONTAGE**

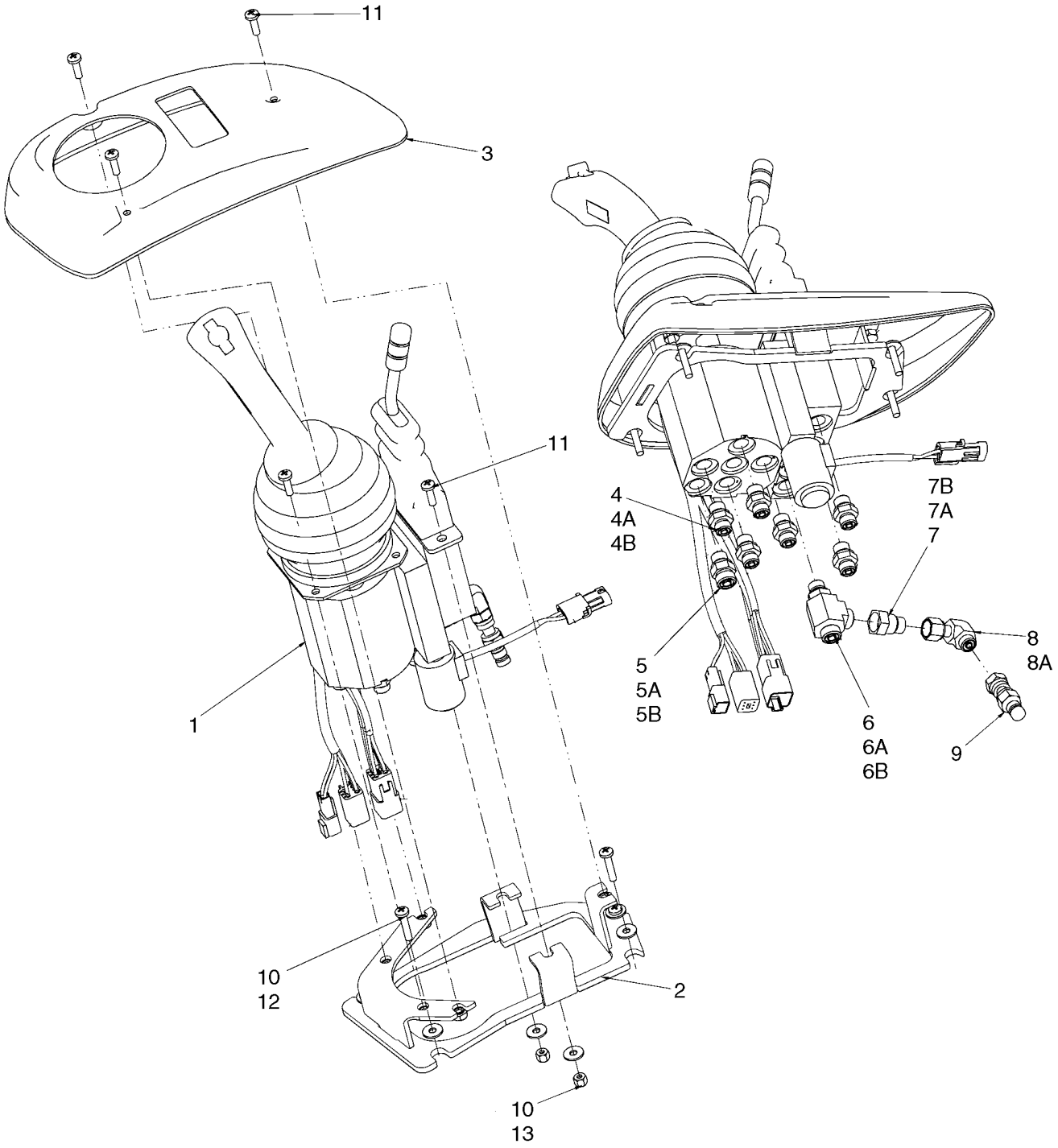

**COMMANDE DU CHARGEUR - MANETTE AVEC LEVIER UNIQUE - MONTAGE**

| REF | FN | PART NUMBER | YR/SN | QTY | DESCRIPTION |
|---|---|---|---|---|---|
| 1 | | 87340017 | | 1 | JOYSTICK, With One Lever; See Figure 08-30A |
| 2 | | 87516506 | | 1 | ADAPTEUR, Joystick Controller |
| 3 | | 87638911 | | 1 | ENCADREMENT |
| 4 | | 700-153 | | 6 | RACCORD, 9/16"-18 ORFS x M14 x 1.5 ORB, Incl. Refs. 4A, 4B |
| 4A | | 238-6011 | | 1 | JOINT THORIQUE, -011, 90 Duro, .301" ID x .070" Thk, Face Seal |
| 4B | | 637-63113 | | 1 | JOINT THORIQUE, CI 6, 11.3MM ID x 2.2 Thk |
| 5 | | 700-101 | | 1 | RACCORD, 11/16"-16 ORFS x M14 x 1.5 ORB, Incl. Refs. 5A, 5B |
| 5A | | 238-6012 | | 1 | JOINT THORIQUE, -012, 90 Duro, .364" ID x .070" Thk, Face Seal |
| 5B | | 637-63113 | | 1 | JOINT THORIQUE, CI 6, 11.3MM ID x 2.2 Thk |
| 6 | | 700-406 | | 1 | TE, 11/16"-16 ORFS x M14 x 1.5 ORB Run, Incl. Refs. 6A, 6B |
| 6A | | 238-6012 | | 2 | JOINT THORIQUE, -012, 90 Duro, .364" ID x .070" Thk, Face Seal |
| 6B | | 637-63113 | | 1 | JOINT THORIQUE, CI 6, 11.3MM ID x 2.2 Thk |
| 7 | | 201-145 | | 1 | REDUCTEUR, 9/16"-18 Male x 11/16"-16 Fem, ORFS, Incl. Refs. 7A, 7B |
| 7A | | 238-6011 | | 1 | JOINT THORIQUE, -011, 90 Duro, .301" ID x .070" Thk, Face Seal |
| 7B | | 238-6012 | | 1 | JOINT THORIQUE, -012, 90 Duro, .364" ID x .070" Thk, Face Seal |
| 8 | | 701-329 | | 1 | COUDE, 90º, 9/16"-18 ORFS x 9/16"-18 Fem Sw, Incl. Ref. 8A |
| 8A | | 238-6011 | | 1 | JOINT THORIQUE, -011, 90 Duro, .301" ID x .070" Thk, Face Seal |
| 9 | | 190117A1 | | 1 | CARDAN |
| 10 | | 895-25006 | | 6 | RONDELLE, M6 x 18 x 1.6 |
| 11 | | 540-719 | | 7 | VIS, Cross Pan Hd, M6 x 20 |
| 12 | | 840-1630 | | 4 | VIS, Cross Pan Hd, M6 x 30 |
| 13 | | 832-10406 | | 2 | CONTRE-ECROU, M6 x 1, CI 8 |

**COMMANDE DU CHARGEUR - MANETTE AVEC LEVIER UNIQUE**

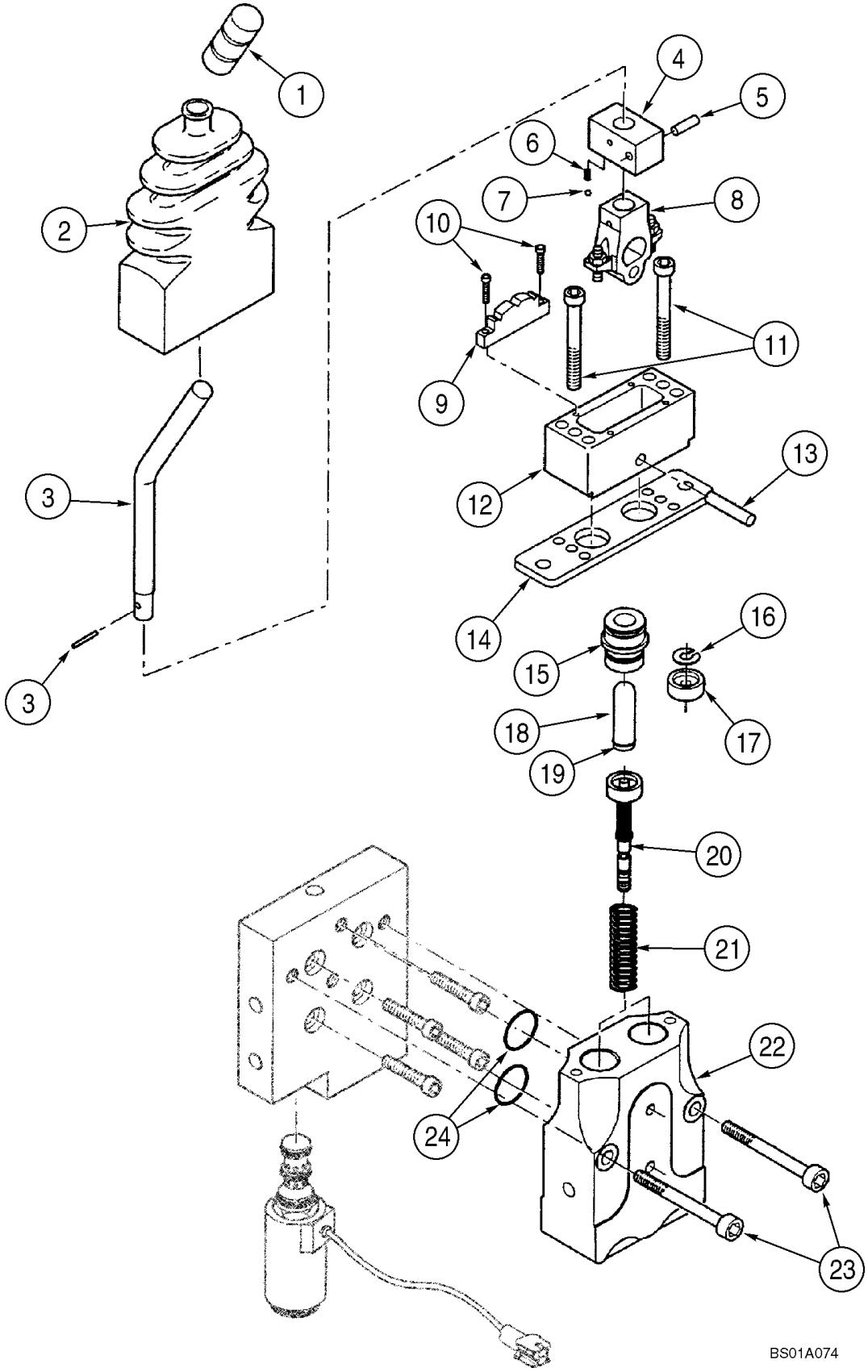

**COMMANDE DU CHARGEUR - MANETTE AVEC LEVIER UNIQUE**

| REF | FN | PART NUMBER | YR/SN | QTY | DESCRIPTION |
|---|---|---|---|---|---|
| | | 87340017 | | 1 | JOYSTICK, Valve Assembly; With Single Lever; Incl. Refs. 1 - 25 |
| | | 8604593 | | 1 | LEVIER, Assembly Valve; Incl. Refs. 1 - 21 |
| 1 | | 8604543 | | 1 | POIGNEE DE MANETTE |
| 2 | | 8604544 | | 1 | COIFFE, Rubber |
| | | 8604546 | | 1 | KIT, M Operation; Incl. Refs. 3 - 13 |
| 3 | | NSS | | 1 | NON FOURNI SEPAREMENT, Lever |
| 4 | | NSS | | 1 | NON FOURNI SEPAREMENT, Body |
| 5 | | NSS | | 1 | NON FOURNI SEPAREMENT, Pin, Lock |
| 6 | | NSS | | 1 | NON FOURNI SEPAREMENT, Spring |
| 7 | | NSS | | 1 | NON FOURNI SEPAREMENT, Ball |
| 8 | | NSS | | 1 | NON FOURNI SEPAREMENT, Cam |
| 9 | | NSS | | 1 | NON FOURNI SEPAREMENT, Lock |
| 10 | | NSS | | 2 | NON FOURNI SEPAREMENT, M3 x 12, Screw |
| 11 | | NSS | | 2 | NON FOURNI SEPAREMENT, M6 x 50, Screw |
| 12 | | NSS | | 1 | NON FOURNI SEPAREMENT, Cover |
| 13 | | NSS | | 1 | NON FOURNI SEPAREMENT, Pin |
| 14 | | 8604545 | | 1 | PLAQUE, Retaining |
| | | 8604255 | | 2 | COLIS DE RÉPARATION, Plunger; Incl. Refs. 15 - 19 |
| 15 | | NSS | | 1 | NON FOURNI SEPAREMENT, Guide |
| 16 | | NSS | | 1 | NON FOURNI SEPAREMENT, Washer |
| 17 | | NSS | | 1 | NON FOURNI SEPAREMENT, Retainer |
| 18 | | NSS | | 1 | NON FOURNI SEPAREMENT, Plunger |
| 19 | | NSS | | 1 | NON FOURNI SEPAREMENT, Ring, Snap |
| 20 | | 8604548 | | 2 | REGULATEUR-TENSION, Unit |
| 21 | | 8604549 | | 1 | KIT, Return; Set Of Two |
| 22 | | NSS | | 1 | NON FOURNI SEPAREMENT, Housing |
| 23 | | NSS | | 2 | NON FOURNI SEPAREMENT, M8 x 45 Screw |
| 24 | | NSS | | 2 | NON FOURNI SEPAREMENT, O-Ring; 1,5 x 17,5; Order 8604876, Ref. 25 |
| 25 | | 8604876 | | 1 | POCHETTE, Seal; Not Illustrated |

**COMMANDE À DISTANCE DU CHARGEUR - MANETTE AVEC LEVIER DOUBLE SUPPORT**

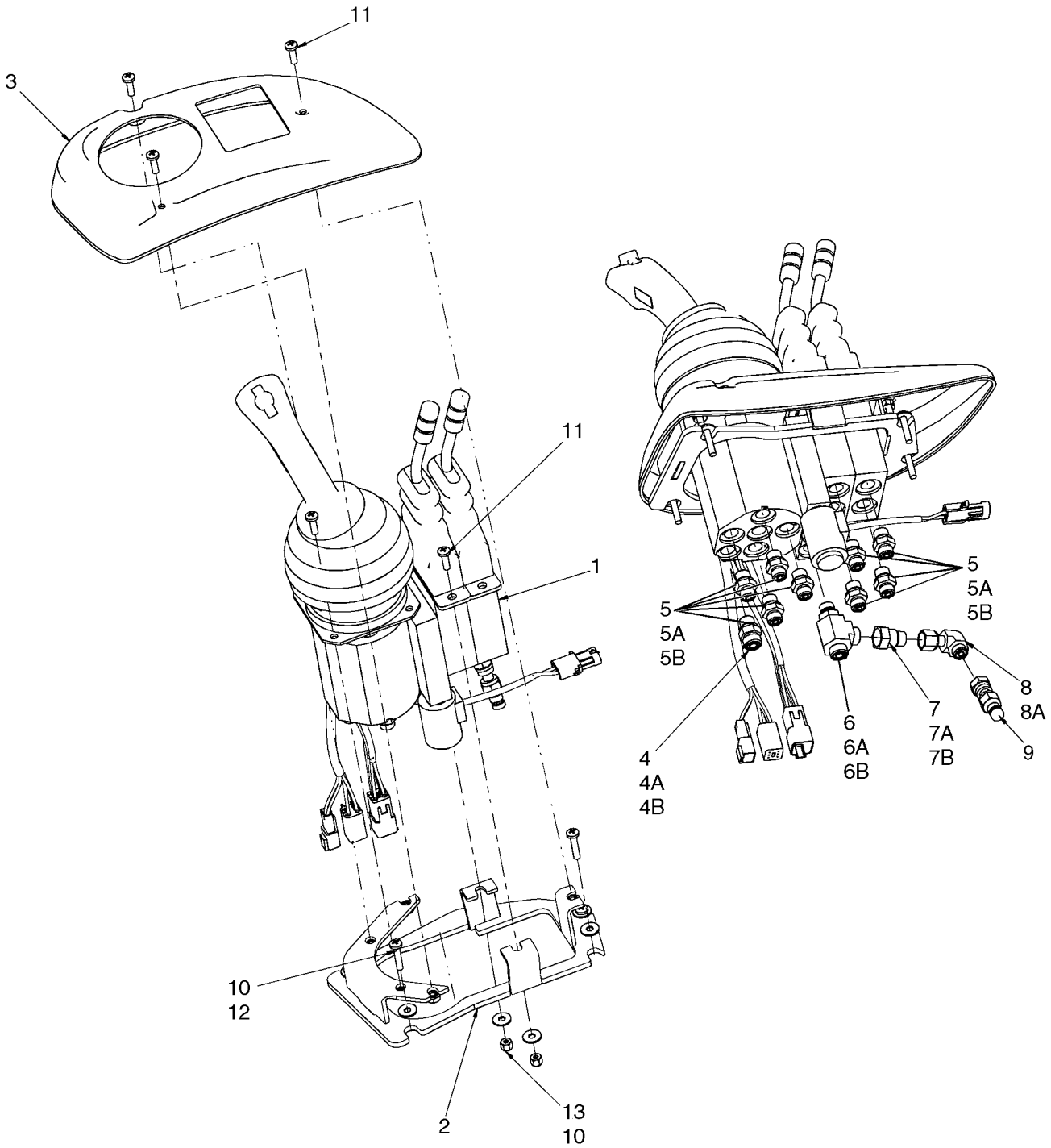

**COMMANDE À DISTANCE DU CHARGEUR - MANETTE AVEC LEVIER DOUBLE SUPPORT**

| REF | FN | PART NUMBER | YR/SN | QTY | DESCRIPTION |
|---|---|---|---|---|---|
| 1 | | 87340019 | | 1 | JOYSTICK, Control With 2 Levers; See Figures 08-31A |
| 2 | | 87516506 | | 1 | ADAPTEUR |
| 3 | | 87638912 | | 1 | ENCADREMENT |
| 4 | | 700-101 | | 7 | RACCORD, 11/16"-16 ORFS x M14 x 1.5 ORB, Incl. Refs. 4A, 4B |
| 4A | | 238-6012 | | 1 | JOINT THORIQUE, -012, 90 Duro, .364" ID x .070" Thk, Face Seal |
| 4B | | 637-63113 | | 1 | JOINT THORIQUE, CI 6, 11.3MM ID x 2.2 Thk |
| 5 | | 700-153 | | 8 | RACCORD, 9/16"-18 ORFS x M14 x 1.5 ORB, Incl. Refs. 5A, 5B |
| 5A | | 637-63113 | | 1 | JOINT THORIQUE, CI 6, 11.3MM ID x 2.2 Thk |
| 5B | | 238-6011 | | 1 | JOINT THORIQUE, -011, 90 Duro, .301" ID x .070" Thk, Face Seal |
| 6 | | 700-406 | | 1 | TE, 11/16"-16 ORFS x M14 x 1.5 ORB Run, Incl. Refs. 6A, 6B |
| 6A | | 238-6012 | | 2 | JOINT THORIQUE, -012, 90 Duro, .364" ID x .070" Thk, Face Seal |
| 6B | | 637-63113 | | 1 | JOINT THORIQUE, CI 6, 11.3MM ID x 2.2 Thk |
| 7 | | 201-145 | | 1 | REDUCTEUR, 9/16"-18 Male x 11/16"-16 Fem, ORFS, Incl. Refs. 7A, 7B |
| 7A | | 238-6012 | | 1 | JOINT THORIQUE, -012, 90 Duro, .364" ID x .070" Thk, Face Seal |
| 7B | | 637-63113 | | 1 | JOINT THORIQUE, CI 6, 11.3MM ID x 2.2 Thk |
| 8 | | 701-329 | | 1 | COUDE, 90º, 9/16"-18 ORFS x 9/16"-18 Fem Sw, Incl. Ref. 8A |
| 8A | | 238-6011 | | 1 | JOINT THORIQUE, -011, 90 Duro, .301" ID x .070" Thk |
| 9 | | 190117A1 | | 1 | CARDAN, Diagnostic |
| 10 | | 895-25006 | | 2 | RONDELLE, M6 x 18 x 1.6 |
| 11 | | 540-719 | | 7 | VIS, Cross Pan Hd, M6 x 20 |
| 12 | | 840-1630 | | 4 | VIS, Cross Pan Hd, M6 x 30 |
| 13 | | 832-10406 | | 2 | CONTRE-ECROU, M6 x 1, CI 8 |

**DISTRIBUTEUR - MANETTE AVEC LEVIER DOUBLE**

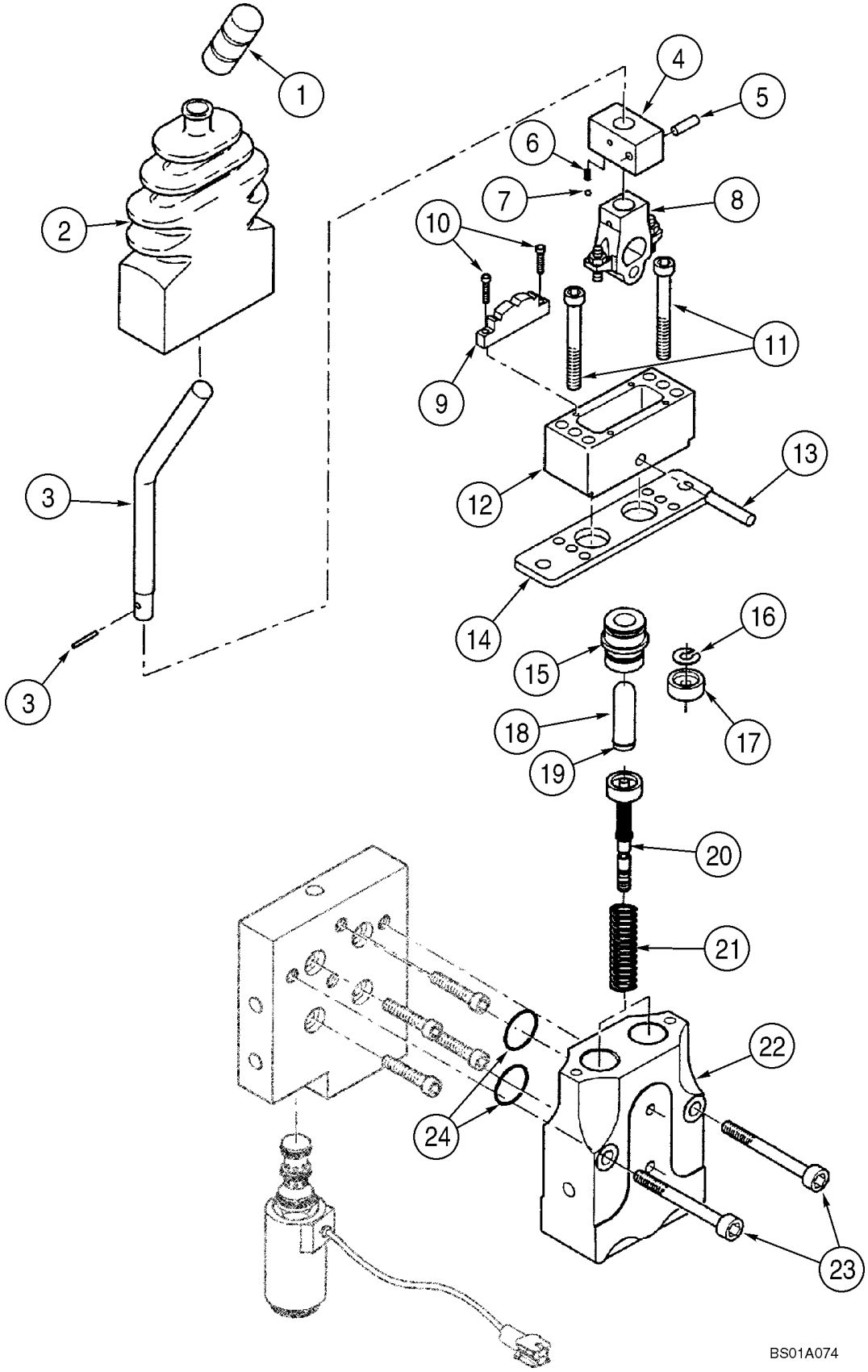

**DISTRIBUTEUR - MANETTE AVEC LEVIER DOUBLE**

| REF | FN | PART NUMBER | YR/SN | QTY | DESCRIPTION |
|---|---|---|---|---|---|
| | | 87340019 | | 1 | JOYSTICK, Joystick With Dual Lever; Incl. Refs. 1 - 25 |
| | | 8604593 | | 2 | LEVIER, Assembly Valve; Incl. Refs. 1 - 21 |
| 1 | | 8604543 | | 1 | POIGNEE DE MANETTE |
| 2 | | 8604544 | | 1 | COIFFE, Rubber |
| | | 8604546 | | 1 | KIT, Operation; Incl. Refs. 3 - 13 |
| 3 | | NSS | | 1 | NON FOURNI SEPAREMENT, Lever |
| 4 | | NSS | | 1 | NON FOURNI SEPAREMENT, Body |
| 5 | | NSS | | 1 | NON FOURNI SEPAREMENT, Pin, Lock |
| 6 | | NSS | | 1 | NON FOURNI SEPAREMENT, Spring |
| 7 | | NSS | | 1 | NON FOURNI SEPAREMENT, Ball |
| 8 | | NSS | | 1 | NON FOURNI SEPAREMENT, Cam |
| 9 | | NSS | | 1 | NON FOURNI SEPAREMENT, Lock |
| 10 | | NSS | | 2 | NON FOURNI SEPAREMENT, M3 x 12, Screw |
| 11 | | NSS | | 2 | NON FOURNI SEPAREMENT, M6 x 50, Screw |
| 12 | | NSS | | 1 | NON FOURNI SEPAREMENT, Cover |
| 13 | | NSS | | 1 | NON FOURNI SEPAREMENT, Pin |
| 14 | | 8604545 | | 1 | PLAQUE |
| | | 8604255 | | 2 | COLIS DE RÉPARATION, Plunger; Incl. Refs. 15 - 19 |
| 15 | | NSS | | 1 | NON FOURNI SEPAREMENT, Guide |
| 16 | | NSS | | 1 | NON FOURNI SEPAREMENT, Washer |
| 17 | | NSS | | 1 | NON FOURNI SEPAREMENT, Retainer |
| 18 | | NSS | | 1 | NON FOURNI SEPAREMENT, Plunger |
| 19 | | NSS | | 1 | NON FOURNI SEPAREMENT, Ring, Snap |
| 20 | | 8604548 | | 2 | REGULATEUR-TENSION, Plate; Retaining |
| 21 | | 8604549 | | 1 | KIT, Set Of Two |
| 22 | | NSS | | 1 | NON FOURNI SEPAREMENT, Housing |
| 23 | | NSS | | 2 | NON FOURNI SEPAREMENT, M8 x 80 Screw |
| 24 | | NSS | | 2 | NON FOURNI SEPAREMENT, O-Ring, 1,5 x 17; Order Ref. 25 |
| 25 | | 8604876 | | 1 | POCHETTE, Seal; Not Illustrated |
| 26 | | 864-8080 | | 2 | VIS, Hex Soc Hd, M8 x 80, 8.8, See Ref 23 |

**COMMANDE DU CHARGEUR - TROIS LEVIERS SUPPORT**

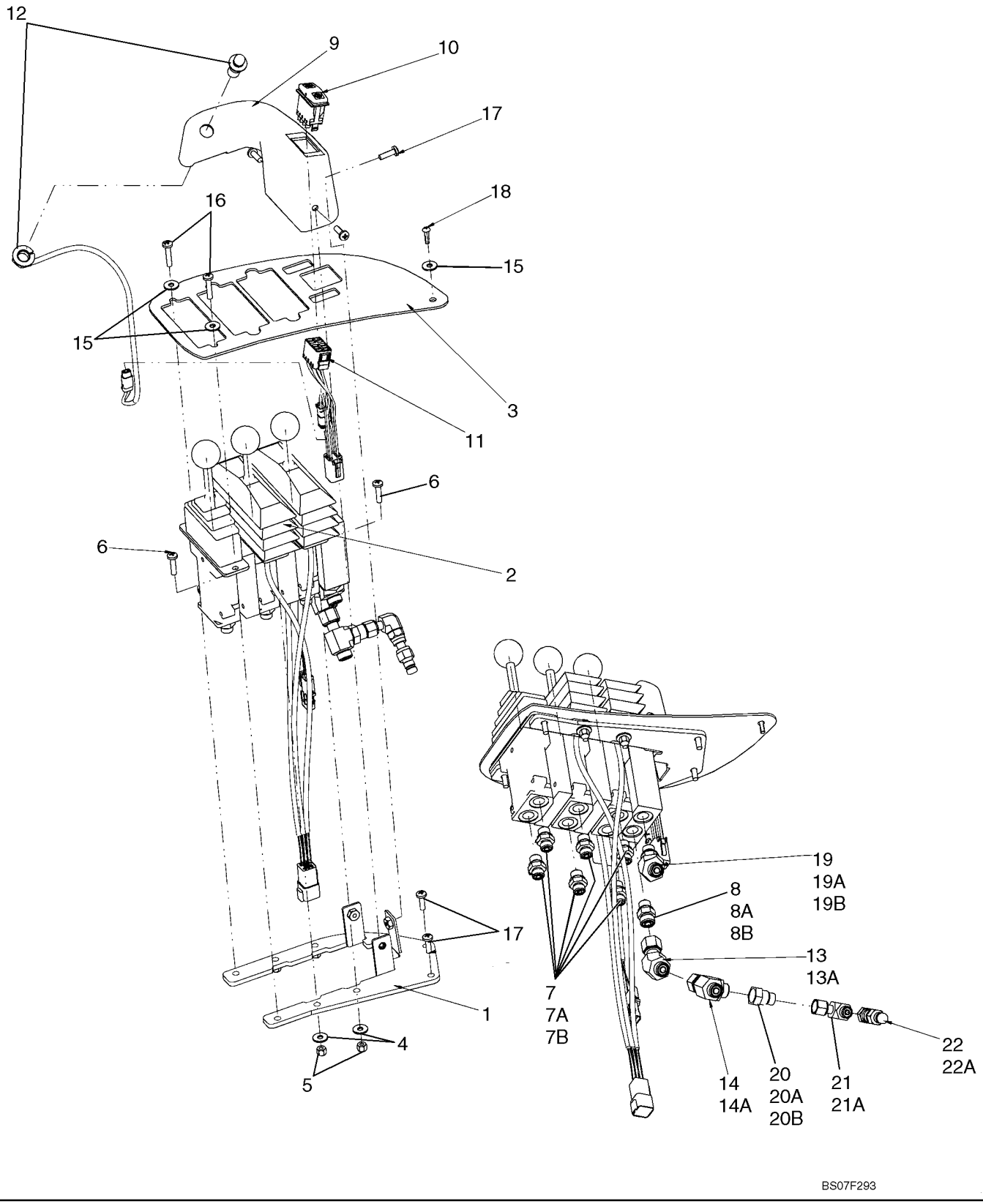

**COMMANDE DU CHARGEUR - TROIS LEVIERS SUPPORT**

| REF | FN | PART NUMBER | YR/SN | QTY | DESCRIPTION |
|---|---|---|---|---|---|
| 1 | | 87534053 | | 1 | PATTE FIXATION, Controller |
| 2 | | 407869A2 | | 1 | DISTRIBUTEUR HYDRAUL, 3 Lever Loader Control; See Figure 08-32A |
| 3 | | 87515559 | | 1 | PATTE FIXATION, 3 Lever Loader Control |
| 4 | | 895-25006 | | 4 | RONDELLE, M6 x 18 x 1.6 |
| 5 | | 832-10406 | | 4 | CONTRE-ECROU, M6 x 1, Cl 8 |
| 6 | | 840-1625 | | 4 | VIS, Cross Pan Hd, M6 x 25 |
| 7 | | 700-153 | | 6 | RACCORD, 9/16"-18 ORFS x M14 x 1.5 ORB, Incl. Refs. 7A, 7B |
| 7A | | 238-6011 | | | JOINT THORIQUE, -011, 90 Duro, .301" ID x .070" Thk, Face Seal |
| 7B | | 637-63113 | | 1 | JOINT THORIQUE, Cl 6, 11.3MM ID x 2.2 Thk |
| 8 | | 700-101 | | 1 | RACCORD, 11/16"-16 ORFS x M14 x 1.5 ORB, Incl. Refs. 8A, 8B |
| 8A | | 238-6012 | | 1 | JOINT THORIQUE, -012, 90 Duro, .364" ID x .070" Thk, Face Seal |
| 8B | | 637-63113 | | 1 | JOINT THORIQUE, Cl 6, 11.3MM ID x 2.2 Thk |
| 9 | | 87523729 | | 1 | COUVERCLE, Switch |
| 10 | | 400833A2 | | 1 | CONTACTEUR, F-N-R |
| 11 | | 87324389 | | 1 | FAISCEAU COMPLET, F-N-R Switch |
| 12 | | 402390A1 | | 1 | CONTACTEUR, ASSY. Downshift |
| 13 | | 87354477 | | 1 | COUDE, 45º, 11/16"-16 x 11/16"-16 Fem Sw, Incl. Refs. 13A |
| 13A | | 238-6012 | | 2 | JOINT THORIQUE, -012, 90 Duro, .364" ID x .070" Thk, Face Seal |
| 14 | | 701-422 | | 1 | TE, 11/16"-16 ORFS x 11/16"-16 Fem Sw Run, Incl. Refs. 14A |
| 14A | | 238-6012 | | 2 | JOINT THORIQUE, -012, 90 Duro, .364" ID x .070" Thk, Face Seal |
| 15 | | 86639315 | | 3 | RONDELLE |
| 16 | | 540-711 | | 2 | VIS, Cross Pan Hd, M6 x 30 |
| 17 | | 540-719 | | 5 | VIS, Cross Pan Hd, M6 x 20 |
| 18 | | 87582901 | | 1 | VIS |
| 19 | | 700-315 | | 1 | COUDE, 45º, 11/16"-18 ORFS x M14 x 1.5 ORB, Incl. Refs. 19A, 19B |

**COMMANDE DU CHARGEUR - TROIS LEVIERS SUPPORT**

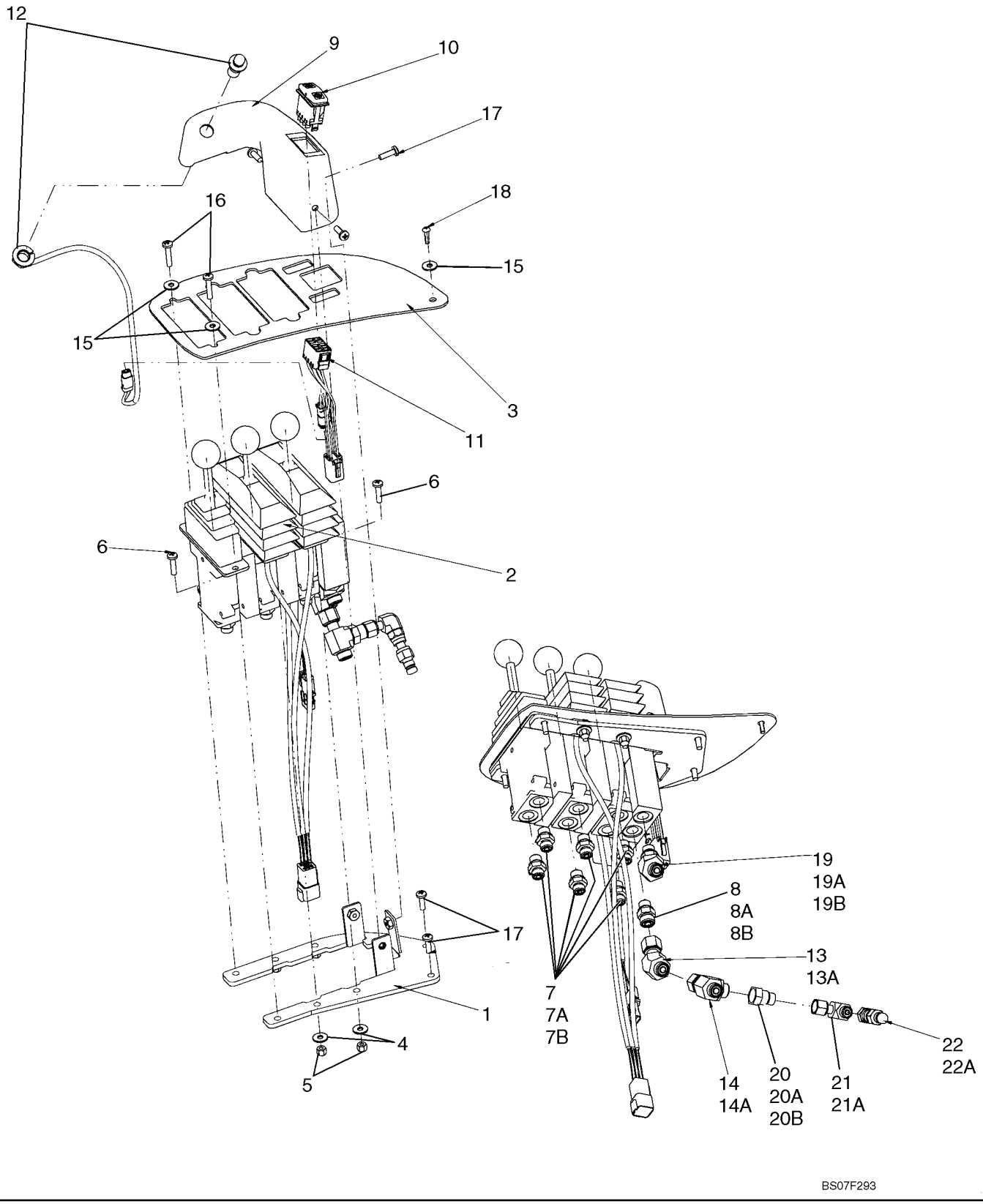

**COMMANDE DU CHARGEUR - TROIS LEVIERS SUPPORT**

| REF | FN | PART NUMBER | YR/SN | QTY | DESCRIPTION |
|---|---|---|---|---|---|
| 19A | | 238-6012 | | 1 | JOINT THORIQUE, -012, 90 Duro, .364" ID x .070" Thk, Face Seal |
| 19B | | 637-63113 | | 1 | JOINT THORIQUE, CI 6, 11.3MM ID x 2.2 Thk |
| 20 | | 201-145 | | 1 | REDUCTEUR, 9/16"-18 Male x 11/16"-16 Fem, ORFS, Incl. Refs. 20A, 20B |
| 20A | | 238-6012 | | | JOINT THORIQUE, -012, 90 Duro, .364" ID x .070" Thk, Face Seal |
| 20B | | 637-63113 | | | JOINT THORIQUE, CI 6, 11.3MM ID x 2.2 Thk |
| 21 | | 701-329 | | 1 | COUDE, 90º, 9/16"-18 ORFS x 9/16"-18 Fem Sw, Incl. Refs. 21A |
| 21A | | 238-6011 | | 1 | JOINT THORIQUE, -011, 90 Duro, .301" ID x .070" Thk, Face Seal |
| 22 | | 190117A1 | | 1 | CARDAN, Incl. Refs. 22A |
| 22A | | 238-6011 | | 1 | JOINT THORIQUE, -011, 90 Duro, .301" ID x .070" Thk |

**DISTRIBUTEUR - COMMANDE DE CHARGEUSE À 3 LEVIERS**

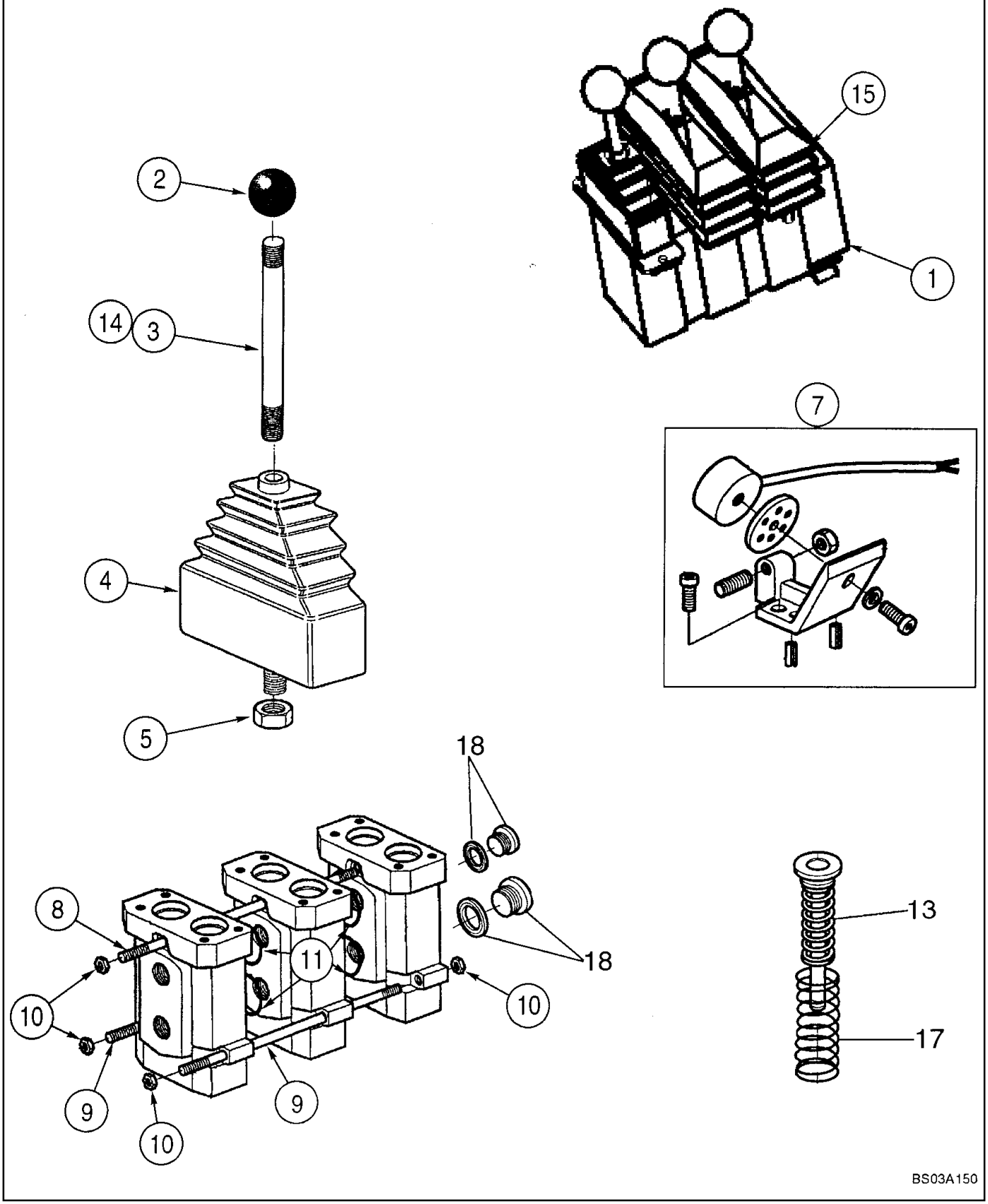

**DISTRIBUTEUR - COMMANDE DE CHARGEUSE À 3 LEVIERS**

| REF | FN | PART NUMBER | YR/SN | QTY | DESCRIPTION |
|---|---|---|---|---|---|
| 1 | | 407869A2 | | 1 | DISTRIBUTEUR HYDRAUL, Three Lever; Three Spool; Incl. Refs. 2 - 19 |
| | | 8604594 | | 1 | KIT, Handle; Incl. Refs. 2 - 5 |
| 2 | | NSS | | 1 | NON FOURNI SEPAREMENT, Knob |
| 3 | | NSS | | 1 | NON FOURNI SEPAREMENT, Handle |
| 4 | | NSS | | 1 | NON FOURNI SEPAREMENT, Boot |
| 5 | | NSS | | 1 | NON FOURNI SEPAREMENT, Nut |
| 6 | | 8604552 | | 2 | SOLENOIDE, Regulator Unit; Not Illustrated |
| 7 | | 8604553 | | 2 | COLIS DE RÉPARATION, Magnet |
| | | 8604554 | | 1 | POCHETTE, Rod; Incl. Refs. 8 - 10 |
| 8 | | NSS | | 1 | NON FOURNI SEPAREMENT, Rod |
| 9 | | NSS | | 2 | NON FOURNI SEPAREMENT, Rod |
| 10 | | NSS | | 6 | NON FOURNI SEPAREMENT, Nut |
| 11 | | 8604557 | | 10 | JOINT, Inter-Section |
| 12 | | 8604555 | | 3 | KIT, Pin; Not Illustrated |
| 13 | | 8604556 | | 3 | RESSORT, Pack |
| | | 8604551 | | 2 | COLIS DE RÉPARATION, Handle; Incl. Refs. 2, 5, 14, 15 |
| 14 | | NSS | | 1 | NON FOURNI SEPAREMENT, Handle |
| 15 | | NSS | | 1 | NON FOURNI SEPAREMENT, Boot |
| 16 | | 8604598 | | 1 | DISTRIBUTEUR, Section; Loader Control; Third; Not Illustrated |
| 17 | | 8604607 | | 1 | RESSORT, Pack |
| 18 | | 8604608 | | 3 | BOUCHON FILTRANT MAGNETI, Metric |
| 19 | | 8604599 | | 1 | ENTRETOISE, Manifold; Not Illustrated |
| | | REF | | | NOTICE, FOLLOWING COMPONENTS MAY NOT BE ILLUSTRATED |
| | | 449527A1 | | 1 | RESSORT, Return; Parker # 91283768 |
| | | 449528A1 | | 1 | LEVIER, Bucket; Parker # 9120089536 |
| | | 449529A1 | | 1 | LEVIER, Boom; Parker # 9120089656 |
| | | 449530A1 | | 1 | PLAQUE, Mounting; Parker #9120089308 |
| | | 449533A1 | | 1 | POCHETTE, Seal; Push Pin Set; Parker #9120089332 |
| | | 449555A1 | | 1 | LEVIER, Auxillary; Parker #9120089307 |

**MONTAGE DE BLOC - COUPLEUR, CONDUITES À TROIS TIROIRS**

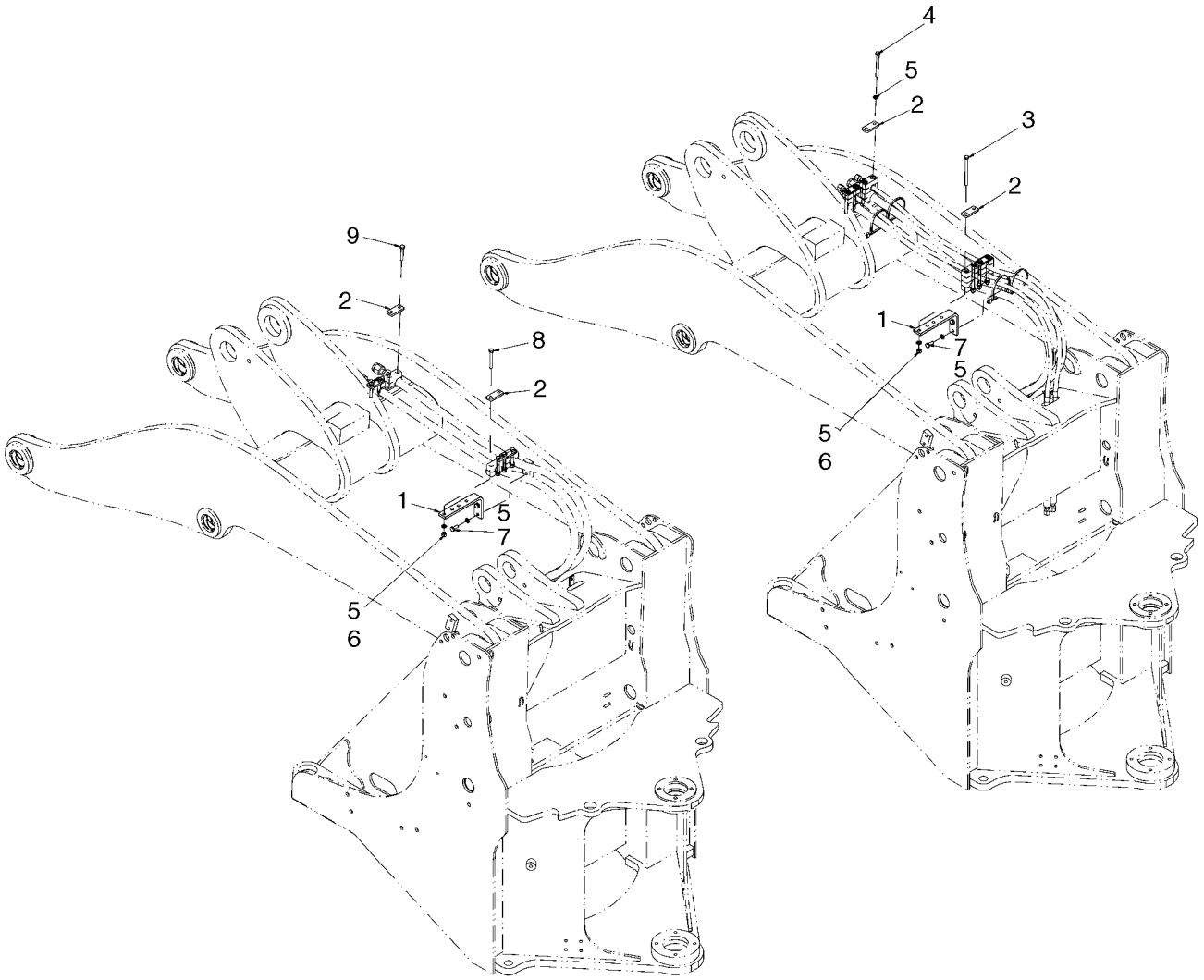

**MONTAGE DE BLOC - COUPLEUR, CONDUITES À TROIS TIROIRS**

| REF | FN | PART NUMBER | YR/SN | QTY | DESCRIPTION |
|---|---|---|---|---|---|
| | | REF | | | NOTICE, 2 BLOCK INSTALLATION FOR EITHER COUPLER OR 3RD SPOOL HOSES |
| | | REF | | | NOTICE, 3 BLOCK INSTALLATION FOR BOTH COUPLER AND 3RD SPOOL HOSES |
| 1 | | 373040A2 | | 1 | PATTE FIXATION, Hose Clamp |
| 2 | | 367658A1 | | 4 | PLAQUE, Clamp Cover |
| 3 | | 827-10130 | | 4 | BOULON, Hex, M10 x 130, 10.9 |
| 4 | | 827-10110 | | 4 | BOULON, Hex, M10 x 110, 10.9 |
| 5 | | 895-11010 | | 10 | RONDELLE, M10 x 20 x 2 |
| 6 | | 832-10410 | | 4 | CONTRE-ECROU, M10 x 1.5, Cl 8 |
| 7 | | 627-10025 | | 2 | BOULON, Hex, M10 x 25, 10.9, Full Thd |
| 8 | | 827-10080 | | 4 | BOULON, Hex, M10 x 80, 10.9 |
| 9 | | 827-10060 | | 4 | BOULON, Hex, M10 x 60, 10.9 |

## NOTES

# SECTION INDEX
## Châssis


| | |
|---|---|
| 09-01 | COMMANDE - RETOUR À EXCAVATION (Z-BAR) |
| 09-02 | COMMANDE - RETOUR À EXCAVATION (XR) |
| 09-03 | COMMANDE - RETOUR À EXCAVATION - XT |
| 09-04 | COMMANDES - HAUTEUR DU GODET ET RETOUR À TRANSPORT - Z-BAR |
| 09-05 | COMMANDES - HAUTEUR DU GODET ET RETOUR À TRANSPORT (XR) |
| 09-06 | COMMANDES - HAUTEUR DU GODET ET RETOUR À TRANSPORT - XT |
| 09-07 | CADRE - RELEVAGE DE LA CHARGEUSE (Z CHARGEUSE) |
| 09-07A | CADRE - RELEVAGE DE LA CHARGEUSE (XR) |
| 09-07B | CADRE - RELEVAGE DE LA CHARGEUSE (XT) |
| 09-08 | GODETS - EQUIPEMENT (Z CHARGEUSE) |
| 09-08A | GODETS - EQUIPEMENT (XT CHARGEUSE) |
| 09-09 | COUPLEUR HYDRAULIQUE - Z-BAR - JRB |
| 09-09A | COUPLEUR HYDRAULIQUE - Z-BAR - ACS |
| 09-09B | COUPLEUR HYDRAULIQUE - XT - JRB |
| 09-09C | COUPLEUR HYDRAULIQUE - XT - ACS |
| 09-10 | GODET DE LA CHARGEUSE - AVEC DENTS, SEGMENTS ET PATINS ANTI-DÉRAPAGE |
| 09-11 | GODET DE LA CHARGEUSE - AVEC BORD VISSABLE ET PATINS ANTI-DÉRAPAGE |
| 09-12 | CHÂSSIS AVANT (Z-BAR, XR) |
| 09-13 | CHÂSSIS AVANT (XT) |
| 09-14 | CHÂSSIS ARRIÈRE |
| 09-15 | JOINT D'ARTICULATION |
| 09-16 | CAPOT |
| 09-17 | CAPOT MOTEUR - MONTAGE |
| 09-18 | COUVERCLES - COMPARTIMENT BATTERIE |
| 09-19 | COUVERCLES - CABINE ET TOIT, BAS |
| 09-19A | COUVERCLES - CHÂSSIS ARRIÈRE |
| 09-20 | GARDE-BOUE AVANT |
| 09-20A | GARDE-BOUE AVANT - LARGE |
| 09-21 | GARDE-BOUE ARRIÈRE - STANDARD |
| 09-22 | GARDE-BOUE ARRIÈRE - LARGE |
| 09-23 | GARDE-BOUE ARRIÈRE -GARANT |
| 09-24 | MARCHES - A GAUCHE |
| 09-25 | MARCHES - DROIT |
| 09-26 | INSONORISATION - MOTEUR |
| 09-27 | PLAQUE DE PROTECTION |
| 09-28 | CABINE - MONTAGE |
| 09-29 | CABINE - VITRE, AVANT |
| 09-30 | CABINE - VITRE, ARRIERE |
| 09-31 | CABINE - BORD INTÉRIEUR |
| 09-31A | CABINE - BORD INTÉRIEUR - COLONNE |
| 09-31B | CABINE - BORD INTÉRIEUR - TOIT |
| 09-32 | CABINE - AJUSTAGE EXTÉRIEUR |
| 09-33 | CABINE - FENÊTRE DROITE |
| 09-33A | CABINE - FENÊTRE DROITE |
| 09-34 | CABINE - FENÊTRE DROITE |
| 09-35 | CABINE - MONTAGE DE PORTIÈRE |
| 09-35A | CABINE - PORTE |
| 09-36 | CABINE - RETROVISSEUR |
| 09-37 | CABINE - CARPETTE |
| 09-38 | CABINE- PARE-SOLEIL |

# SECTION INDEX
## Châssis


| | |
|---|---|
| 09-39 | CABINE - COMPOSANTS |
| 09-40 | CABINE - FEUX |
| 09-41 | CABINE - CONVENANCE COLIS |
| 09-42 | SIEGE - SUPPORT/CEINTURES DE SÉCURITÉ |
| 09-42A | SIÈGE, SUSPENSION MÉCANIQUE |
| 09-42B | SIÈGE, SUSPENSION MÉCANIQUE |
| 09-42C | SIÈGE, SUSPENSION PNEUMATIQUE |
| 09-42D | SIÈGE, SUSPENSION PNEUMATIQUE |
| 09-43 | CABINE - CONDUITES DU CHAUFFAGE ET DE LA CLIMATISATION |
| 09-43A | CABINE - CONDUITES DU CHAUFFAGE ET DE LA CLIMATISATION |
| 09-44 | COUVERCLES - COURROIE D'ENTRAÎNEMENT (MODÈLES ÉQUIPÉS DE LA CLIMATISATION) |
| 09-44A | COUVERCLES - COURROIE D'ENTRAÎNEMENT (MODÈLES NON ÉQUIPÉS DE LA CLIMATISATION) |
| 09-44B | COUVERCLES - CABINE - SANS AIR CONDITIONNE |
| 09-45 | CHAUFFAGE - MONTAGE |
| 09-45A | CHAUFFAGE |
| 09-46 | CHAUFFAGE |
| 09-47 | CLIMATISATION - MONTAGE |
| 09-47A | CLIMATISATION |
| 09-48 | CLIMATISATION - CONDENSEUR |
| 09-49 | CLIMATISATION |
| 09-50 | CONTREPOIDS |
| 09-50A | CONTREPOIDS - SERVICE SEVERE |
| 09-51 | EXTINCTEUR |
| 09-52 | BOITE A OUTILS |
| 09-53 | PLAQUE DE POLICE SUPPORT |
| 09-54 | AUTOCOLLANTS - MODÈLE |
| 09-55 | AUTOCOLLANTS - COMMUN VERS MODÈLE |
| 09-56 | AUTOCOLLANTS - CABINE |
| 09-57 | AUTOCOLLANTS - ANGLAIS |
| 09-58 | AUTOCOLLANTS - FRANÇAIS CANADIEN |
| 09-59 | AUTOCOLLANTS - ESPAGNOL D'AMÉRIQUE LATINE |

## NOTES

**COMMANDE - RETOUR À EXCAVATION (Z-BAR)**

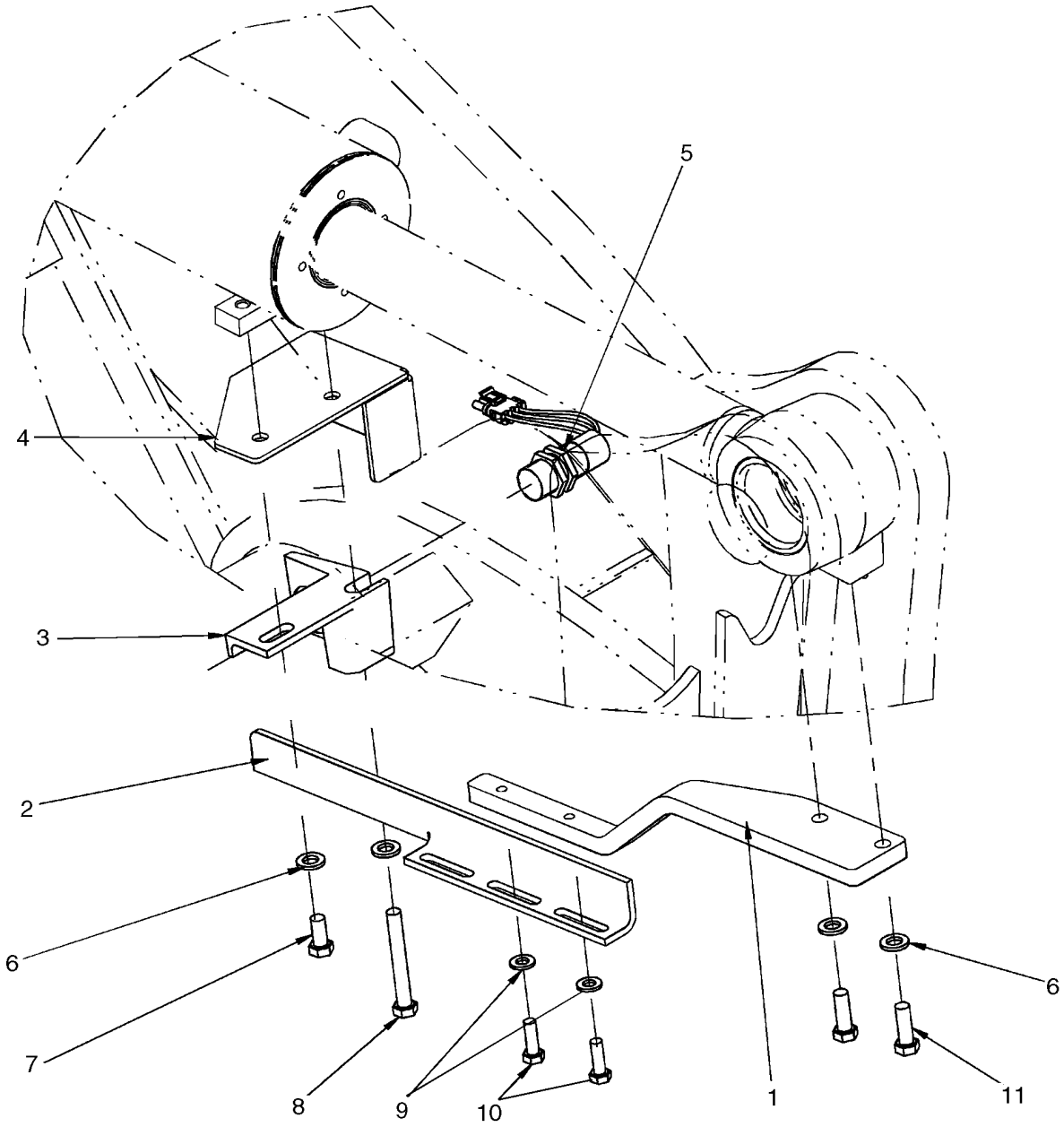

**COMMANDE - RETOUR À EXCAVATION (Z-BAR)**

| REF | FN | PART NUMBER | YR/SN | QTY | DESCRIPTION |
|---|---|---|---|---|---|
| 1 | | 87403964 | | 1 | PATTE FIXATION, Return to Dig |
| 2 | | 87403965 | | 1 | PATTE FIXATION, Target Return to Dig |
| 3 | | L125983 | | 1 | SUPPORT, Proximity Switch |
| 4 | | 87403966 | | 1 | COUVERCLE, Proximity Switch |
| 5 | | 1546497C1 | | 1 | CONTACTEUR, Proximity |
| 6 | | 896-11012 | | 4 | RONDELLE, M13.5 x 24.5 x 3, HT |
| 7 | | 627-12025 | | 1 | BOULON, Hex, M12 x 25, 10.9 |
| 8 | | 827-12090 | | 1 | BOULON, Hex, M12 x 90, 10.9 |
| 9 | | 896-11010 | | 2 | RONDELLE, M10 x 21.5 x 2.5, HT |
| 10 | | 627-10030 | | 2 | BOULON, Hex, M10 x 30, 10.9, Full Thd |
| 11 | | 627-12035 | | 2 | BOULON, Hex, M12 x 35, 10.9 |

**COMMANDE - RETOUR À EXCAVATION (XR)**

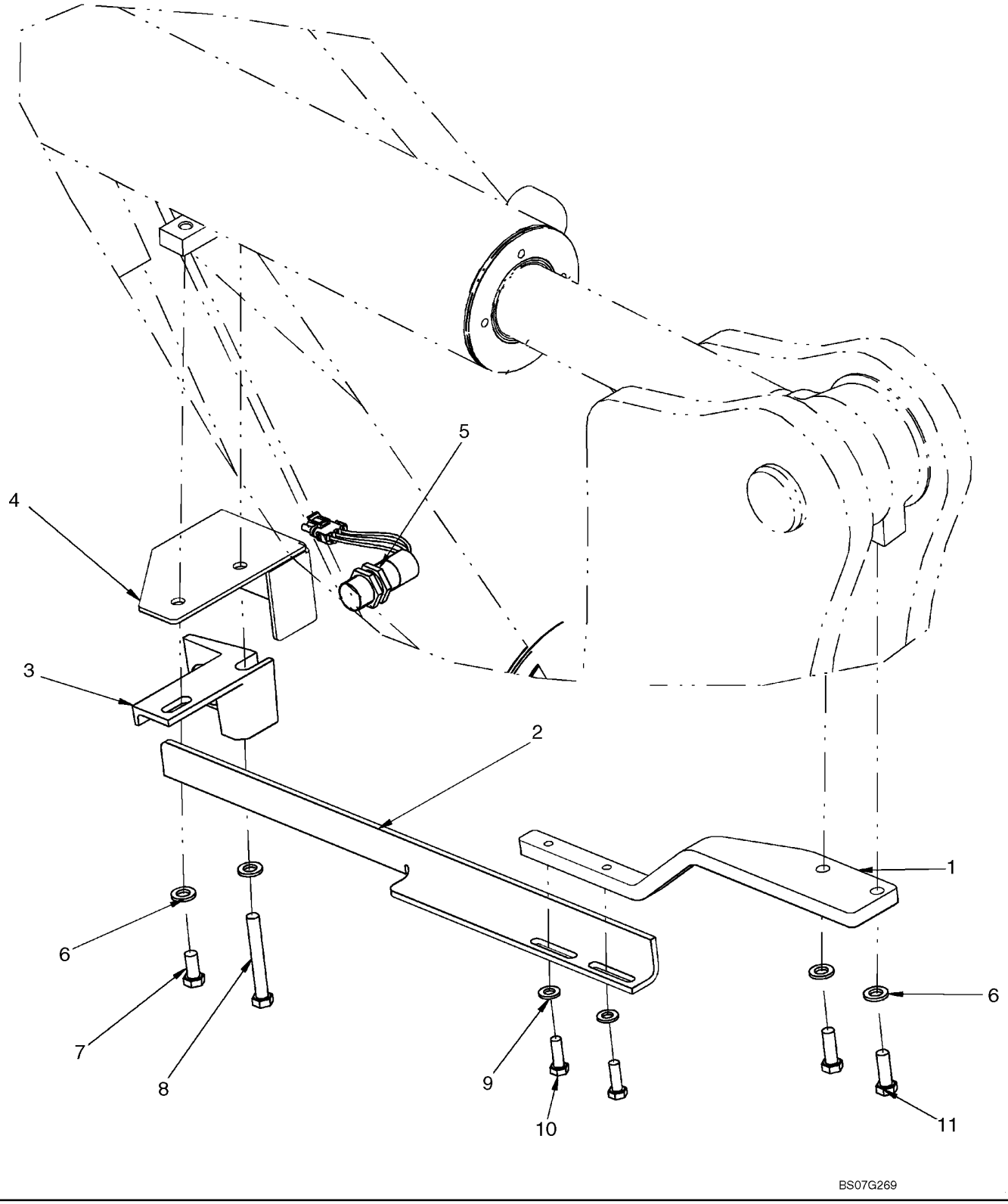

**COMMANDE - RETOUR À EXCAVATION (XR)**

| REF | FN | PART NUMBER | YR/SN | QTY | DESCRIPTION |
|---|---|---|---|---|---|
| 1 | | 87403964 | | 1 | PATTE FIXATION, Return to Dig |
| 2 | | 87403968 | | 1 | PATTE FIXATION, Target Return to Dig |
| 3 | | L125983 | | 1 | SUPPORT, Proximity Switch |
| 4 | | 87403966 | | 1 | COUVERCLE, Proximity Switch |
| 5 | | 1546497C1 | | 1 | CONTACTEUR, Proximity |
| 6 | | 896-11012 | | 4 | RONDELLE, M13.5 x 24.5 x 3, HT |
| 7 | | 627-12025 | | 1 | BOULON, Hex, M12 x 25, 10.9 |
| 8 | | 827-12090 | | 1 | BOULON, Hex, M12 x 90, 10.9 |
| 9 | | 896-11010 | | 2 | RONDELLE, M10 x 21.5 x 2.5, HT |
| 10 | | 627-10030 | | 2 | BOULON, Hex, M10 x 30, 10.9, Full Thd |
| 11 | | 627-12035 | | 2 | BOULON, Hex, M12 x 35, 10.9 |

**COMMANDE - RETOUR À EXCAVATION - XT**

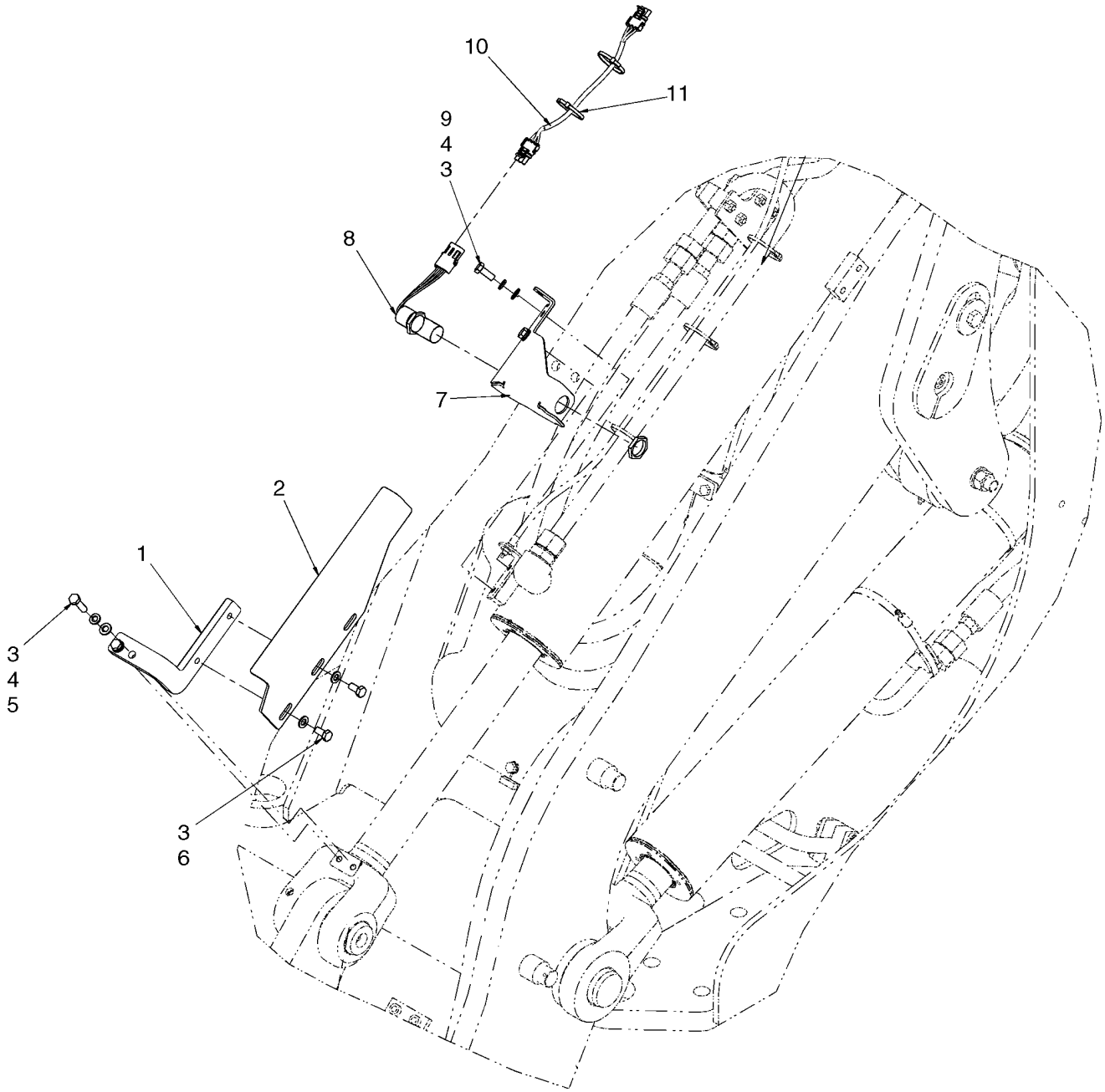

**COMMANDE - RETOUR À EXCAVATION - XT**

| REF | FN | PART NUMBER | YR/SN | QTY | DESCRIPTION |
|---|---|---|---|---|---|
| 1 | | 87304560 | | 1 | PATTE FIXATION, Return to Dig, Rod End |
| 2 | | 87443659 | | 1 | PATTE FIXATION, Return to Dig, Target |
| 3 | | 895-11010 | | 6 | RONDELLE, M10 x 20 x 2 |
| 4 | | 892-11010 | | 4 | RONDELLE FREIN, M10 |
| 5 | | 627-10035 | | 2 | BOULON, Hex, M10 x 35, 10.9, Full Thd |
| 6 | | 627-10020 | | 2 | BOULON, Hex, M10 x 20, 10.9, Full Thd |
| 7 | | 87310689 | | 1 | PATTE FIXATION, Switch Guard |
| 8 | | 1546498C1 | | 1 | CONTACTEUR, Proximity |
| 9 | | 627-10025 | | 2 | BOULON, Hex, M10 x 25, 10.9, Full Thd |
| 10 | | 87581938 | | 1 | FAISCEAU, Return to Dig, XT |
| 11 | | L11541 | | 2 | SANGLE |

**COMMANDES - HAUTEUR DU GODET ET RETOUR À TRANSPORT - Z-BAR**

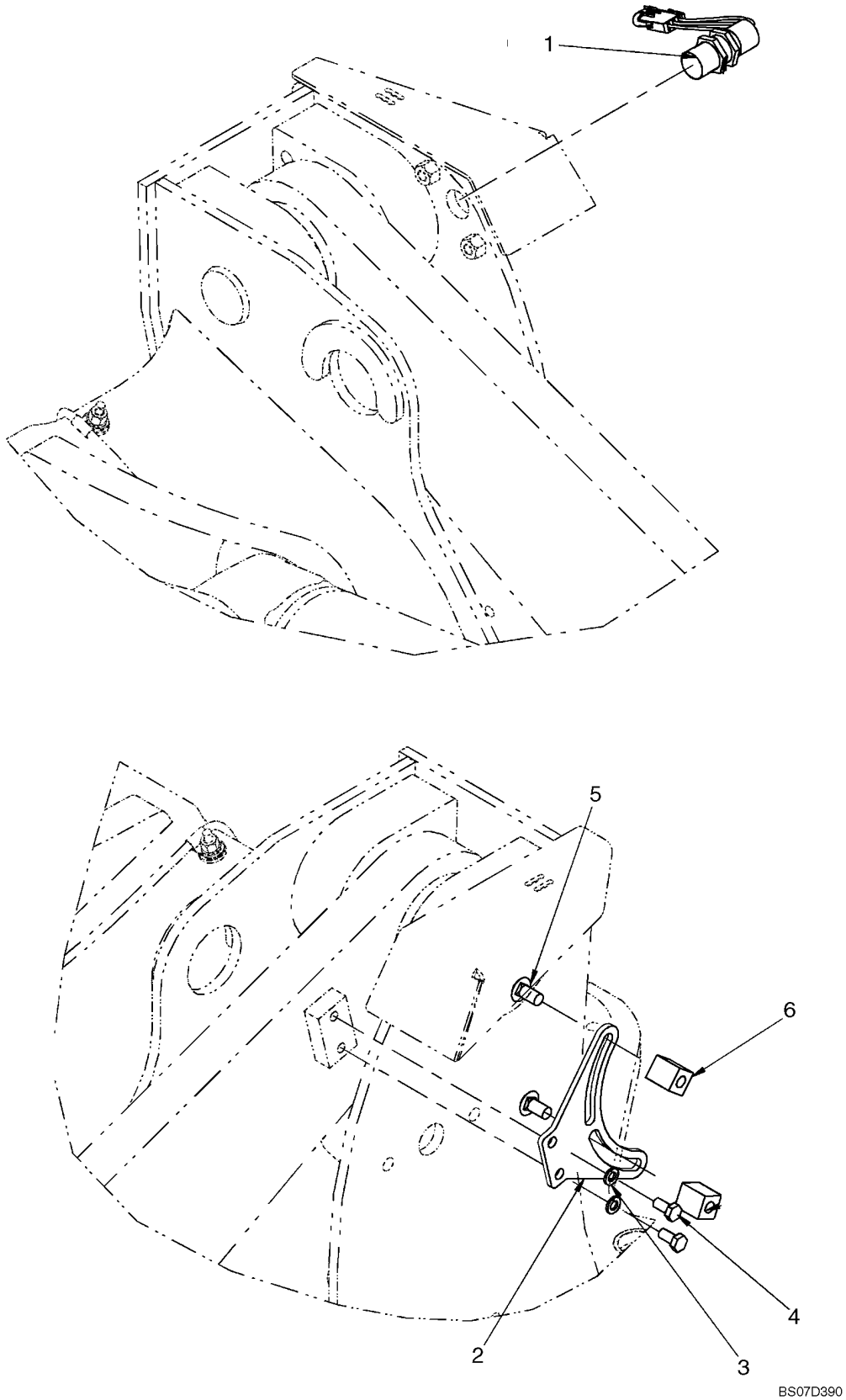

**COMMANDES - HAUTEUR DU GODET ET RETOUR À TRANSPORT - Z-BAR**

| REF | FN | PART NUMBER | YR/SN | QTY | DESCRIPTION |
|---|---|---|---|---|---|
| 1 | | 1546498C1 | | 1 | CONTACTEUR, Proximity |
| 2 | | 379149A2 | | 1 | PLAQUE |
| 3 | | 892-11010 | | 2 | RONDELLE FREIN, M10 |
| 4 | | 627-10020 | | 2 | BOULON, Hex, M10 x 20, 10.9, Full Thd |
| 5 | | 811-12025 | | 2 | BOULON TETE BOMBEE, Short NK, M12 x 25, Cl8.8, Full Thd |
| 6 | | 87437102 | | 2 | BLOC |

**COMMANDES - HAUTEUR DU GODET ET RETOUR À TRANSPORT (XR)**

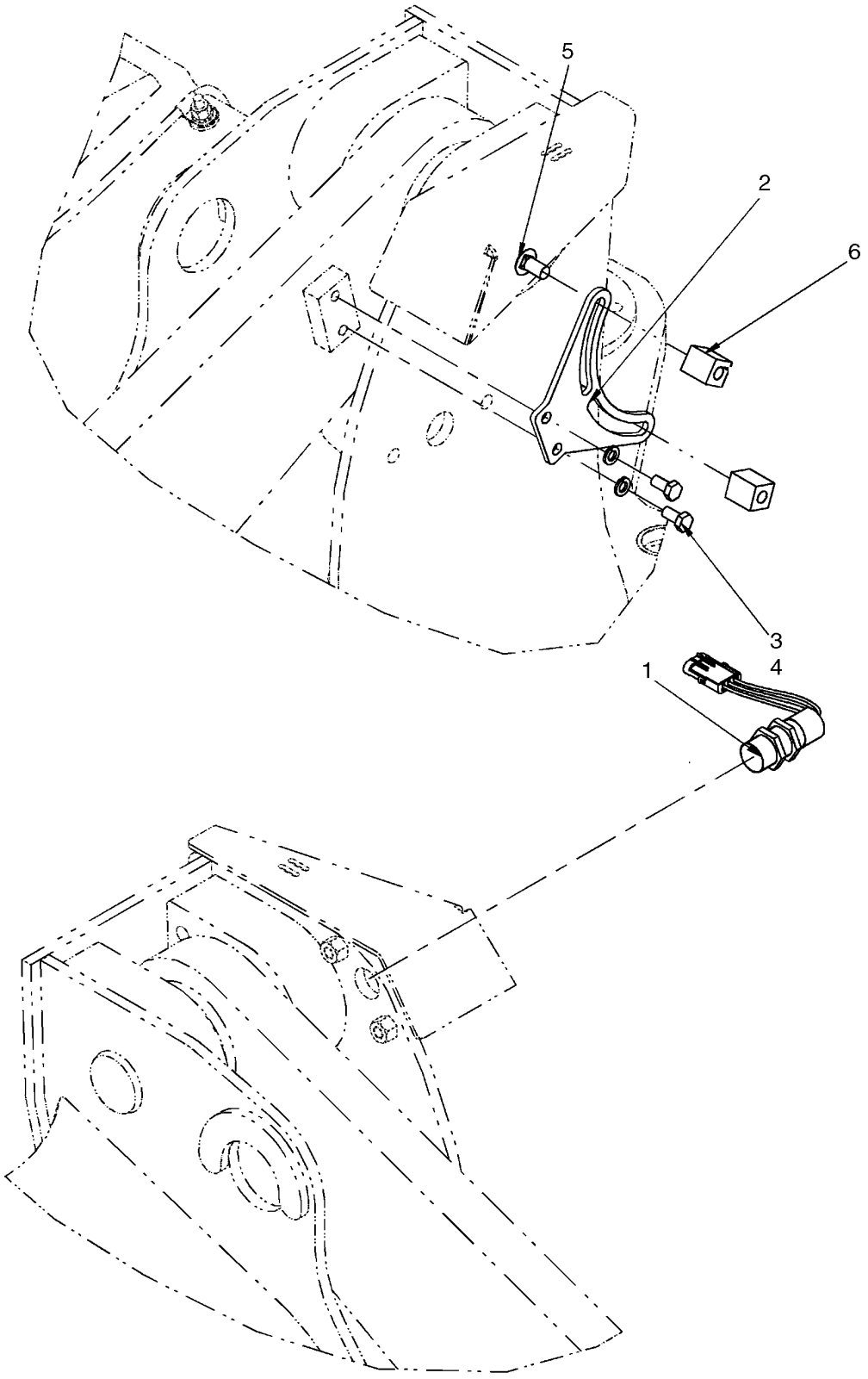

**COMMANDES - HAUTEUR DU GODET ET RETOUR À TRANSPORT (XR)**

| REF | FN | PART NUMBER | YR/SN | QTY | DESCRIPTION |
|---|---|---|---|---|---|
| 1 | | 1546498C1 | | 1 | CONTACTEUR, Proximity |
| 2 | | 379149A2 | | 1 | PLAQUE |
| 3 | | 892-11010 | | 2 | RONDELLE FREIN, M10 |
| 4 | | 627-10020 | | 2 | BOULON, Hex, M10 x 20, 10.9, Full Thd |
| 5 | | 811-12025 | | 2 | BOULON TETE BOMBEE, Short NK, M12 x 25, Cl8.8, Full Thd |
| 6 | | 87437102 | | 2 | BLOC |

**COMMANDES - HAUTEUR DU GODET ET RETOUR À TRANSPORT - XT**

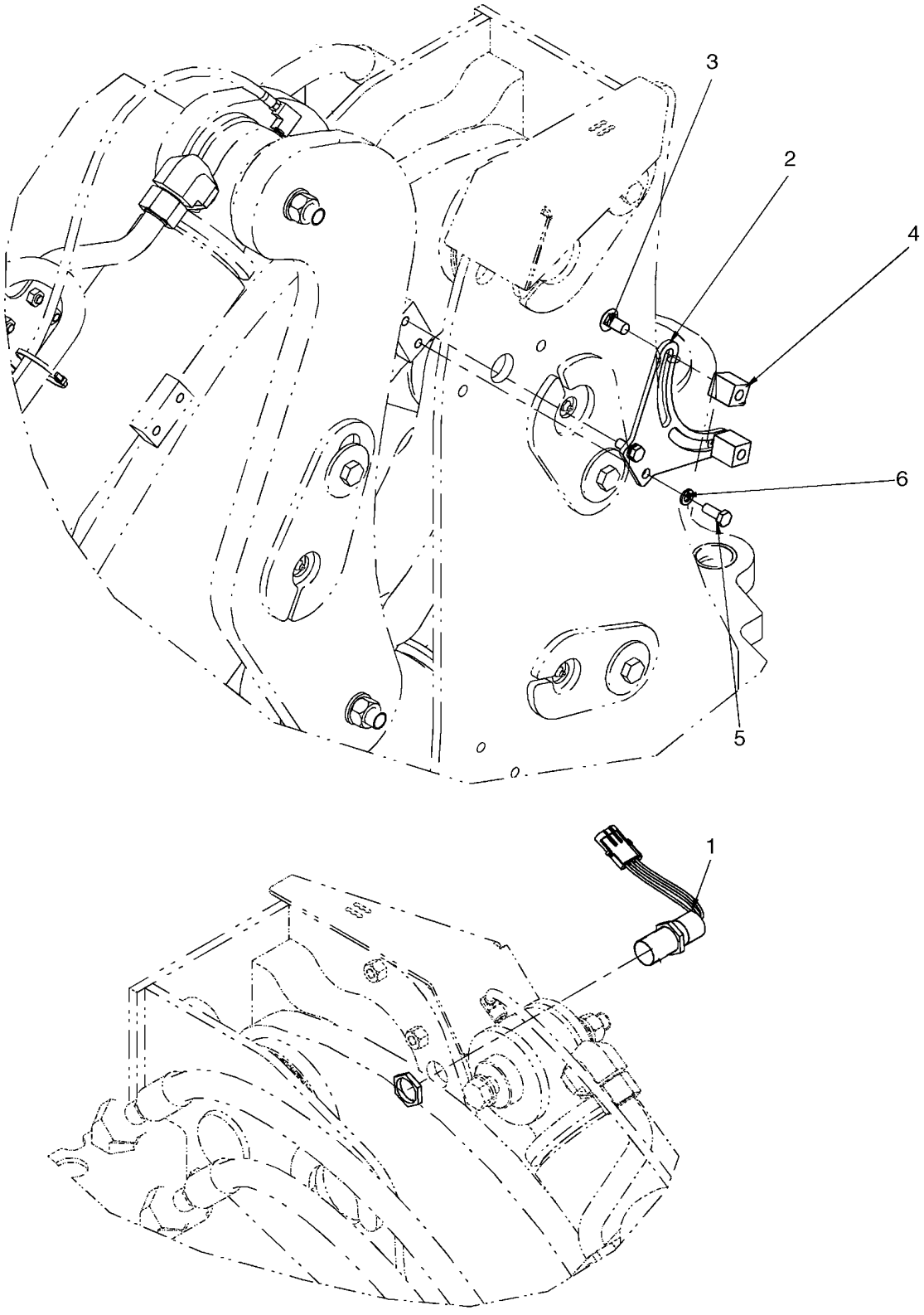


BS07G275

**COMMANDES - HAUTEUR DU GODET ET RETOUR À TRANSPORT - XT**

| REF | FN | PART NUMBER | YR/SN | QTY | DESCRIPTION |
|---|---|---|---|---|---|
| 1 | | 1546498C1 | | 1 | CONTACTEUR, Proximity |
| 2 | | 379149A2 | | 1 | PLAQUE, Target Mounting |
| 3 | | 811-12025 | | 2 | BOULON TETE BOMBEE, Short NK, M12 x 25, Cl8.8, Full Thd |
| 4 | | 87437102 | | 2 | BLOC |
| 5 | | 627-10025 | | 2 | BOULON, Hex, M10 x 25, 10.9, Full Thd |
| 6 | | 892-11010 | | 2 | RONDELLE FREIN, M10 |

| 09-07 | | p1 | 08/07 |
|---|---|---|---|

**CADRE - RELEVAGE DE LA CHARGEUSE (Z CHARGEUSE)**

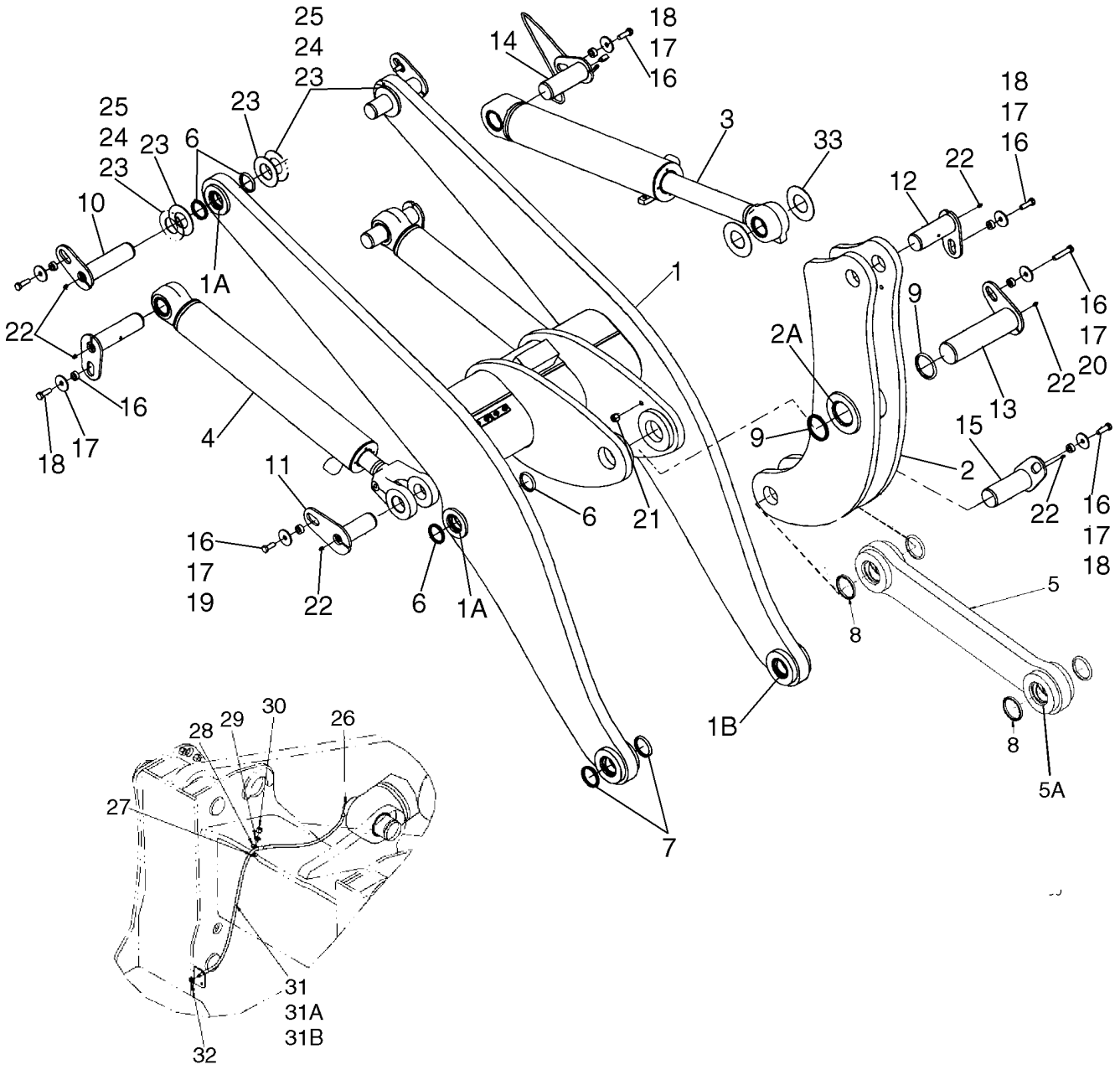

**CADRE - RELEVAGE DE LA CHARGEUSE (Z CHARGEUSE)**

| REF | FN | PART NUMBER | YR/SN | QTY | DESCRIPTION |
|---|---|---|---|---|---|
| | | REF | | | NOTICE, Z-BAR LOADER |
| 1 | | 87343733 | | 1 | BRAS DE LEVAGE, Loader Lift; Incl. Refs. 1A - 1B |
| 1A | | 87613439 | | 4 | BAGUE, Lift Arm |
| 1B | | 87613444 | | 2 | BAGUE, Dump Link |
| 2 | | 87330150 | | 1 | LEVIER DE RENVOI, Incl. Ref. 2A |
| 2A | | 87613429 | | 2 | BAGUE, Bellcrank |
| 3 | | 87366688 | | 1 | VERIN, 127 ID x 620 mm strk; Bucket Tilt; See Figure 08-16 |
| 4 | | 87577649 | | 2 | VERIN DE LEVAGE, 114.3 ID x 787.6 mm strk; Lift; See Figure 08-15 |
| 5 | | 87395399 | | 1 | MAILLON, Dump; Incl. Ref. 5A |
| 5A | | 87613430 | | 2 | BAGUE, Dump Link |
| 6 | | D95146 | | 8 | RACLEUR BALAIS, 63.5 ID |
| 7 | | D95147 | | 4 | RACLEUR BALAIS, 69.8 ID |
| 8 | | D95148 | | 4 | RACLEUR BALAIS, 76.2 ID |
| 9 | | S92653 | | 2 | RACLEUR BALAIS, 88.9 ID |
| 10 | | 361128A1 | | 4 | AXE, Lift Arm Pivot Head; Case Power Tan |
| 11 | | 361133A2 | | 2 | CHEVILLE (ASSEMBLEE), Lift Arm Pivot Rod; Case Power Tan |
| 12 | | 361139A2 | | 1 | CHEVILLE (ASSEMBLEE), Dump Link Pivot; Case Power Tan |
| 13 | | 375328A1 | | 1 | CHEVILLE (ASSEMBLEE), Bellcrank Pivot; Case Power Tan |
| 14 | | 375330A1 | | 1 | CHEVILLE (ASSEMBLEE), Tilt Cylinder Pivot; Case Power Tan |
| 15 | | 375326A2 | | 1 | CHEVILLE (ASSEMBLEE), Dump Link Pivot; Case Power Tan |
| 16 | | L125100 | | 10 | ENTRETOISE, Plated |
| 17 | | 496-81025 | | 10 | RONDELLE, 21/32" x 2 1/2" x .188", HDN |
| 18 | | 627-16050 | | 7 | BOULON, Hex, M16 x 50, 10.9 |
| 19 | | 627-16040 | | 2 | BOULON, Hex, M16 x 40, 10.9 |
| 20 | | 827-16080 | | 1 | BOULON, Hex, M16 x 80, 10.9 |
| 21 | | 832-10416 | | 1 | CONTRE-ECROU, M16 x 2, Cl 8 |
| 22 | | 219-1 | | 9 | GRAISSEUR, 1/8"-27 x .66 lg |
| 23 | | 365355A1 | | AR | RONDELLE, 64.9 ID; 3.5 THK; Hardened |

**CADRE - RELEVAGE DE LA CHARGEUSE (Z CHARGEUSE)**

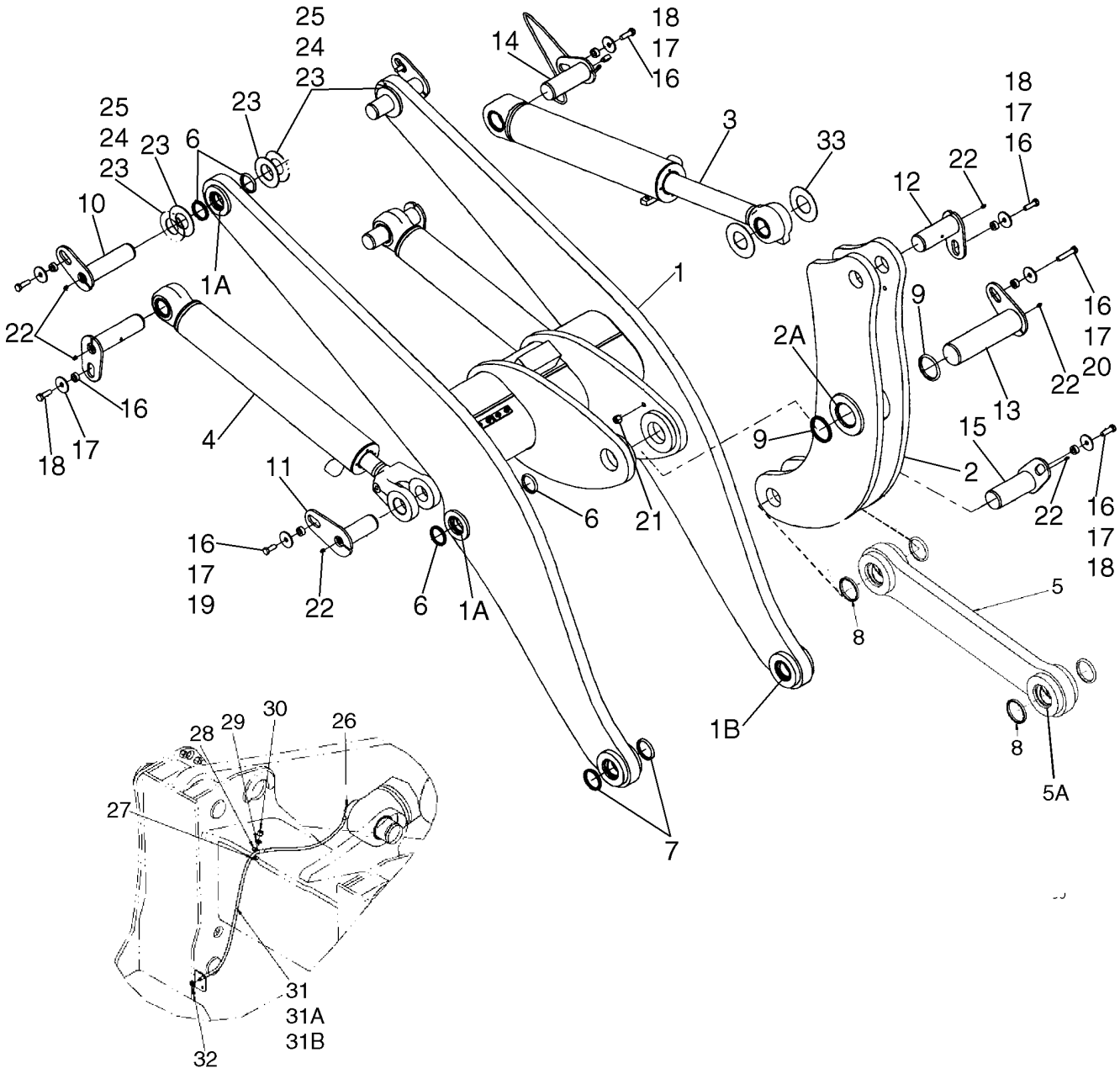

**CADRE - RELEVAGE DE LA CHARGEUSE (Z CHARGEUSE)**

| REF | FN | PART NUMBER | YR/SN | QTY | DESCRIPTION |
|---|---|---|---|---|---|
| 24 | | 365353A1 | | AR | RONDELLE, 64.9 ID; 1.6 THK; Hardened |
| 25 | | 365354A1 | | AR | RONDELLE, 64.9 ID; 2.5 THK; Hardened |
| 26 | | 328082A1 | | 1 | COUDE, 1/8 PT |
| 27 | | 896-15012 | | 1 | RONDELLE, M12 x 28.5 x 4, HT |
| 28 | | 515-2495 | | 1 | BRIDE, 3/8", Insul, 7/16" Bolt |
| 29 | | 895-11010 | | 1 | RONDELLE, M10 x 20 x 2 |
| 30 | | 832-10410 | | 1 | CONTRE-ECROU, M10 x 1.5, Cl 8 |
| 31 | | L54694 | | 1 | FLEXIBLE, 1041 mm (41 in); Incl. Refs. 31A, 31B |
| 31A | | 86636814 | | 1 | GRAISSEUR, 1/4"-28 x .52" lg |
| 31B | | 219-8 | | 1 | GRAISSEUR, 1/4"-28 NPT x .54" lg |
| 32 | | F53473 | | 1 | ECROU, 1/8 PT |
| 33 | | 375517A1 | | 2 | RONDELLE, 71,3 ID; 2.5 THK |

| 09-07A | | p1 | 08/07 |
|---|---|---|---|

**CADRE - RELEVAGE DE LA CHARGEUSE (XR)**

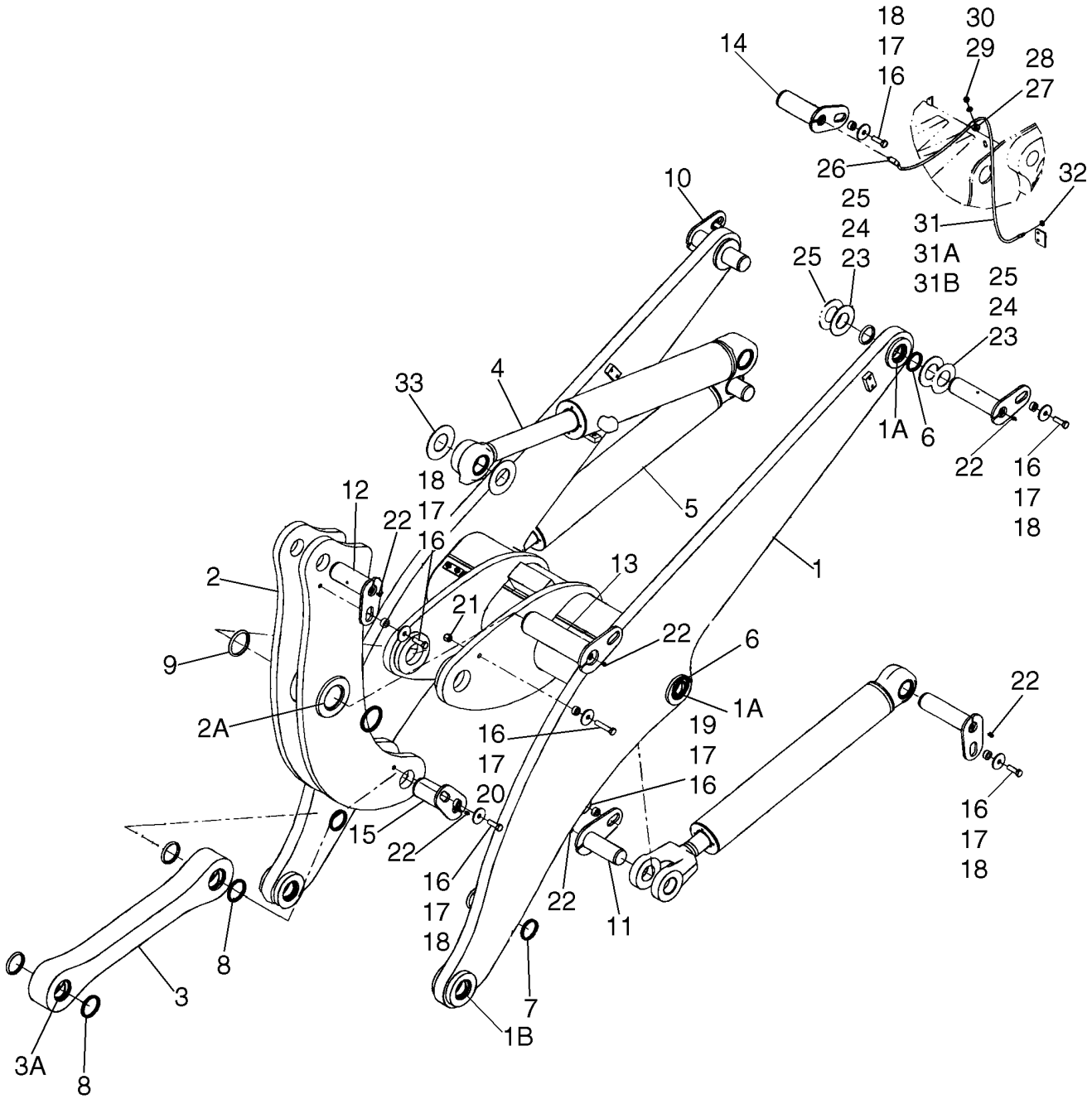


BS07G267

**CADRE - RELEVAGE DE LA CHARGEUSE (XR)**

| REF | FN | PART NUMBER | YR/SN | QTY | DESCRIPTION |
|---|---|---|---|---|---|
| | | REF | | | NOTICE, XR LOADER |
| 1 | | 87344119 | | 1 | BRAS DE LEVAGE, Loader Lift; Incl. Refs. 1A - 1B |
| 1A | | 87613439 | | 4 | BAGUE, Lift Arm |
| 1B | | 87613444 | | 2 | BAGUE, Dump Link |
| 2 | | 87330150 | | 1 | LEVIER DE RENVOI, Bellcrank; Incl. Ref. 2A |
| 2A | | 371883A1 | | 2 | BAGUE, Bushing |
| 3 | | 87395399 | | 1 | MAILLON, Dump; Incl. Ref. 3A |
| 3A | | 87613430 | | 2 | BAGUE, Dump Link |
| 4 | | 87366695 | | 1 | VERIN, 127 ID x 620 mm strk; Bucket Tilt; See Figure 08-17 |
| 5 | | 87577649 | | 2 | VERIN DE LEVAGE, Lift; 120.65 mm ID x 787.6 mm strk; See Figure 08-15 |
| 6 | | D95146 | | 8 | RACLEUR BALAIS, 63.5 ID |
| 7 | | D95147 | | 4 | RACLEUR BALAIS, 69.8 ID |
| 8 | | D95148 | | 4 | RACLEUR BALAIS, 76.2 ID |
| 9 | | S92653 | | 2 | RACLEUR BALAIS, 88.9 ID |
| 10 | | 361128A1 | | 4 | AXE, Lift Arm Pivot; Head End; Case Power Tan |
| 11 | | 361133A2 | | 2 | CHEVILLE (ASSEMBLEE), Lift Arm Pivot; Rod End; Case Power Tan |
| 12 | | 361139A2 | | 1 | CHEVILLE (ASSEMBLEE), Dump Link Pivot; Case Power Tan |
| 13 | | 375328A1 | | 1 | CHEVILLE (ASSEMBLEE), Bellcrank Pivot; Case Power Tan |
| 14 | | 375330A1 | | 1 | CHEVILLE (ASSEMBLEE), Tilt Cylinder Pivot; Case Power Tan |
| 15 | | 375326A2 | | 1 | CHEVILLE (ASSEMBLEE), Dump Link Pivot; Case Power Tan |
| 16 | | L125100 | | 10 | ENTRETOISE, Plated |
| 17 | | 496-81025 | | 10 | RONDELLE, 21/32" x 2 1/2" x .188", HDN |
| 18 | | 627-16050 | | 7 | BOULON, Hex, M16 x 50, 10.9 |
| 19 | | 627-16040 | | 2 | BOULON, Hex, M16 x 40, 10.9 |
| 20 | | 827-16080 | | 1 | BOULON, Hex, M16 x 80, 10.9 |
| 21 | | 832-10416 | | 1 | CONTRE-ECROU, M16 x 2, Cl 8 |
| 22 | | 219-1 | | 9 | GRAISSEUR, 1/8"-27 x .66 lg |
| 23 | | 365355A1 | | AR | RONDELLE, 64.9 ID; 3.5 THK; Hardened |

**CADRE - RELEVAGE DE LA CHARGEUSE (XR)**

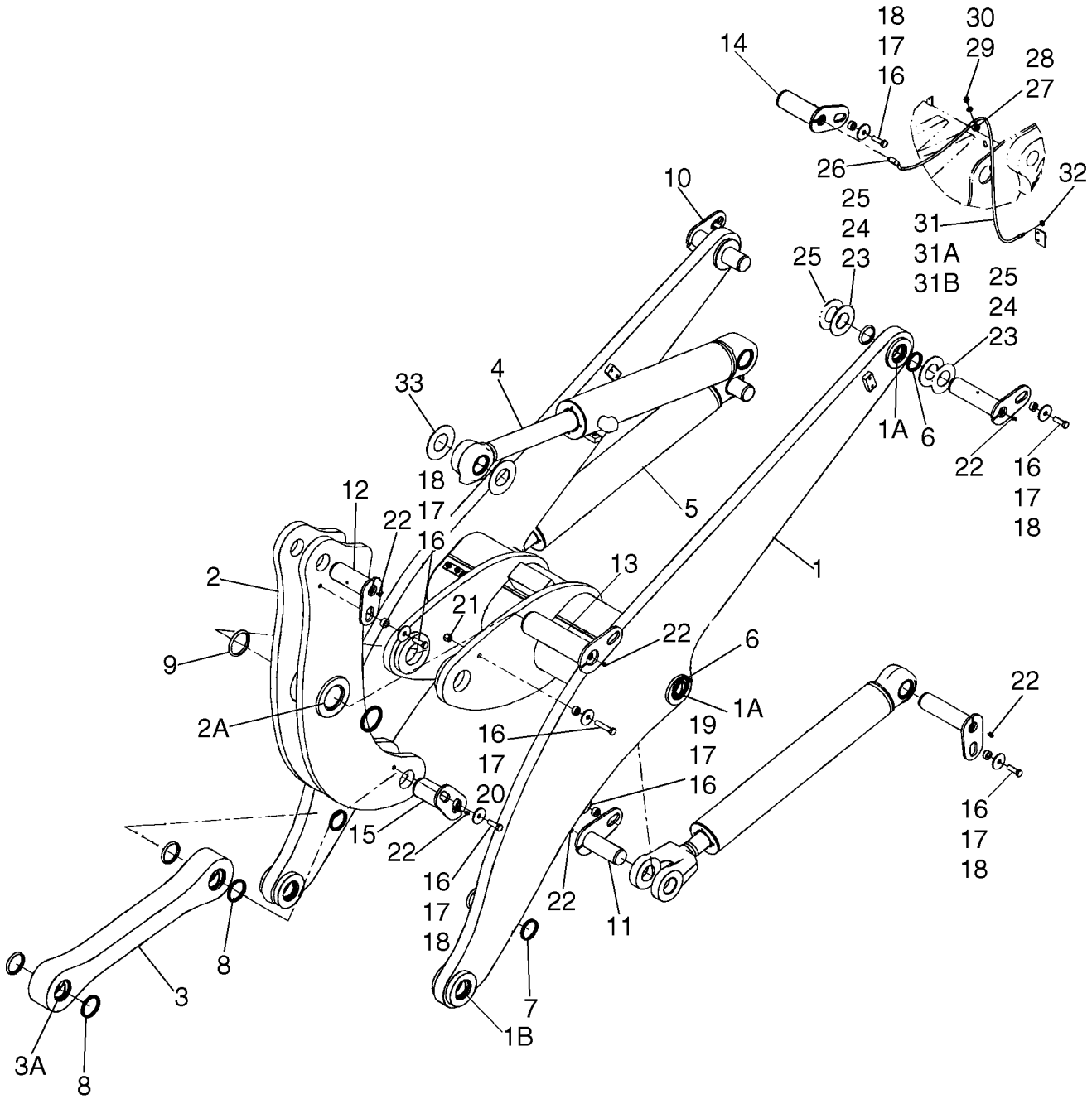

**CADRE - RELEVAGE DE LA CHARGEUSE (XR)**

| REF | FN | PART NUMBER | YR/SN | QTY | DESCRIPTION |
|---|---|---|---|---|---|
| 24 | | 365353A1 | | AR | RONDELLE, 64.9 ID; 1.6 THK; Hardened |
| 25 | | 365354A1 | | AR | RONDELLE, 64.9 ID; 2.5 THK; Hardened |
| 26 | | 328082A1 | | 1 | COUDE, 1/8 PT |
| 27 | | 896-15012 | | 1 | RONDELLE, M12 x 28.5 x 4, HT |
| 28 | | 515-2495 | | 1 | BRIDE, 3/8", Insul, 7/16" Bolt |
| 29 | | 895-11010 | | 1 | RONDELLE, M10 x 20 x 2 |
| 30 | | 832-10410 | | 1 | CONTRE-ECROU, M10 x 1.5, Cl 8 |
| 31 | | L54694 | | 1 | FLEXIBLE, 1041 mm (41 in); Incl. Refs. 31A, 31B |
| 31A | | 86636814 | | 1 | GRAISSEUR, 1/4"-28 x .52" lg |
| 31B | | 219-8 | | 1 | GRAISSEUR, 1/4"-28 NPT x .54" lg |
| 32 | | F53473 | | 1 | ECROU, 1/8 PT |
| 33 | | 375517A1 | | 2 | RONDELLE, 71,3 ID; 2.5 THK |

| 09-07B | | p1 | 08/07 |
|---|---|---|---|

**CADRE - RELEVAGE DE LA CHARGEUSE (XT)**

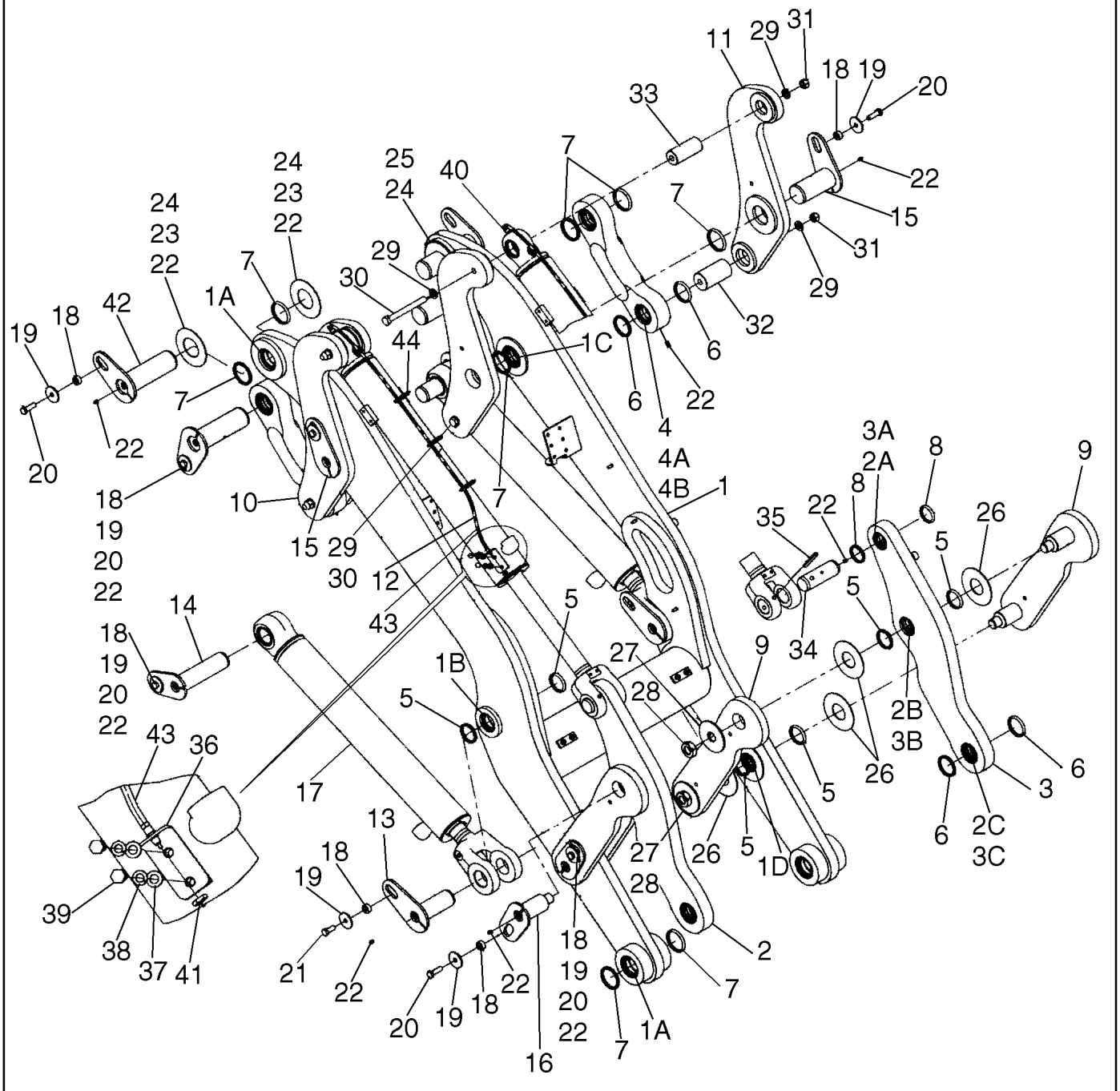

**CADRE - RELEVAGE DE LA CHARGEUSE (XT)**

| REF | FN | PART NUMBER | YR/SN | QTY | DESCRIPTION |
|---|---|---|---|---|---|
| | | REF | | | NOTICE, XT LOADER |
| 1 | | 87344091 | | 1 | POTENCE, Lift XT; Incl. Refs. 1A -1D |
| 1A | | 87613445 | | 6 | BAGUE, Lift Arm |
| 1B | | 87613439 | | 2 | BAGUE, Lift, Arm Pivot |
| 1C | | 87613442 | | 2 | BAGUE, Lift Arm |
| 1D | | 87613443 | | 2 | BAGUE, Lift Arm |
| 2 | | 87452370 | | 1 | BARRE DE LIAISON, Dump XT; Incl. Refs. 2A - 2C |
| 2A | | 369432A2 | | 1 | BAGUE, Dump Link |
| 2B | | 379191A2 | | 1 | BAGUE, Lift Arm |
| 2C | | 87441882 | | 1 | BAGUE, Dump Link |
| 3 | | {87310653} | | 1 | LINKAGE, Dump XT; Incl. Refs. 3A - 3C |
| 3A | | 87613427 | | 1 | BAGUE, Dump Link |
| 3B | | 87613432 | | 1 | BAGUE, Lift Arm |
| 3C | | 87617016 | | 1 | BAGUE, Dump Link |
| 4 | | 87445353 | | 2 | BARRE DE LIAISON, Anchor XT; Incl. Refs. 4A, 4B |
| 4A | | 87613435 | | 1 | BAGUE, Anchor Link |
| 4B | | 87613431 | | 1 | BAGUE, Lift Arm |
| 5 | | D95146 | | 12 | RACLEUR BALAIS, Rod; 63.5 |
| 6 | | D95147 | | 8 | RACLEUR BALAIS, Rod; 69.8 |
| 7 | | D95148 | | 16 | RACLEUR BALAIS, Rod; 76.2 |
| 8 | | D95145 | | 4 | RACLEUR BALAIS, Rod; 57.125 |
| 9 | | 87445354 | | 4 | BARRE DE LIAISON, Guide XT |
| 10 | | 87344111 | | 2 | BARRE DE LIAISON, Bellcrank; Right Hand |
| 11 | | 87344104 | | 2 | BARRE DE LIAISON, Bellcrank; Left Hand |
| 12 | | 87442555 | | 2 | VERIN DE LEVAGE, 114 ID x 819.9 mm strk; Bucket Tilt; See Figure 08-18 |
| 13 | | 361133A2 | | 2 | CHEVILLE (ASSEMBLEE), Lift Arm Pivot; Rod End; Case Power Tan |
| 14 | | 361128A1 | | 2 | AXE, Lift Arm Pivot; Head End; Case Power Tan |
| 15 | | 379070A2 | | 2 | CHEVILLE PIVOT, Bellcrank Pivot; Case Power Tan |
| 16 | | 379197A2 | | 2 | AXE, Guide Link Pivot; CNH CE Gray |
| 17 | | 87577649 | | 2 | VERIN DE LEVAGE, 114.3 ID x 787.6 mm strk; Lift; See Figure 08-15 |
| 18 | | L125100 | | 14 | ENTRETOISE |
| 19 | | 496-81025 | | 14 | RONDELLE, 21/32" x 2 1/2" x .188", HDN |

| 09-07B | | p2 | 08/07 |
|---|---|---|---|

**CADRE - RELEVAGE DE LA CHARGEUSE (XT)**

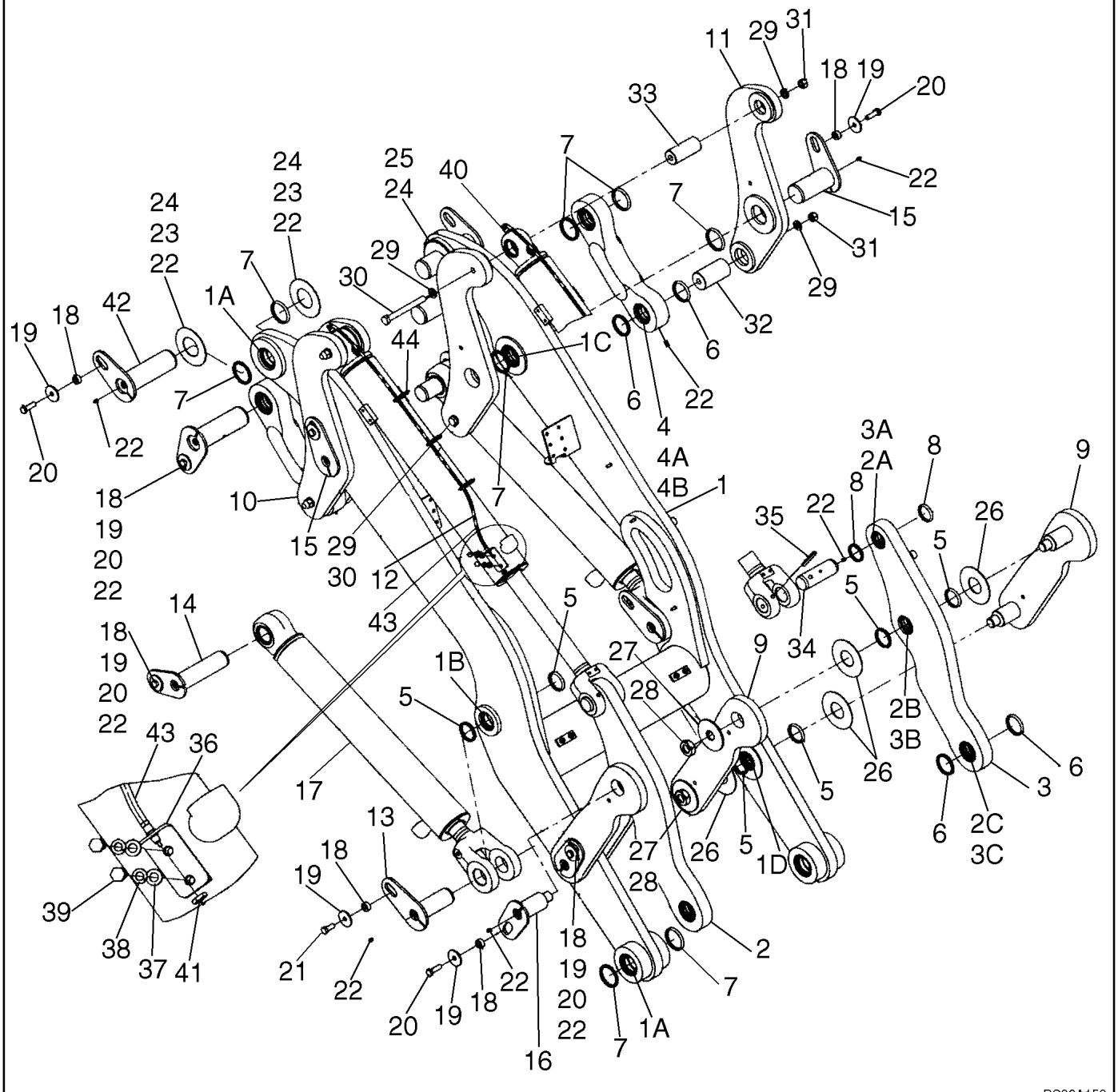

**CADRE - RELEVAGE DE LA CHARGEUSE (XT)**

| REF | FN | PART NUMBER | YR/SN | QTY | DESCRIPTION |
|---|---|---|---|---|---|
| 20 | | 627-16050 | | 12 | BOULON, Hex, M16 x 50, 10.9 |
| 21 | | 627-16040 | | 2 | BOULON, Hex, M16 x 40, 10.9 |
| 22 | | 219-1 | | 18 | GRAISSEUR, 1/8"-27 x .66 lg |
| 23 | | 375518A1 | | AR | RONDELLE, 77.6 ID 3.5thk |
| 24 | | 441822A1 | | AR | RONDELLE, 77.6 ID 1.6thk |
| 25 | | L127108 | | AR | RONDELLE, Lift Arm |
| 26 | | 116893A1 | | 8 | RONDELLE |
| 27 | | 117025A1 | | 4 | RONDELLE |
| 28 | | 131-53 | | 4 | CONTRE-ECROU, 1 1/2"-12 |
| 29 | | 896-11020 | | 8 | RONDELLE, M20 x 37.5 x 4, HT |
| 30 | | 827-20190 | | 4 | BOULON, Hex, M20 x 190, 10.9 |
| 31 | | 829-1420 | | 4 | ECROU, M20, Cl 10 |
| 32 | | 8500311 | | 2 | AXE, Bellcrank; Anchor Side |
| 33 | | 368775A1 | | 2 | AXE, Bellcrank; Cylinder Side |
| 34 | | 368836A2 | | 2 | AXE, Tilt Cylinder |
| 35 | | 38-33264 | | 2 | AXE, 1/2" x 4", Coiled |
| 36 | | 87441374 | | 2 | PATTE FIXATION, Grease Hose |
| 37 | | 895-11010 | | 4 | RONDELLE, M10 x 20 x 2 |
| 38 | | 892-11010 | | 4 | RONDELLE FREIN, M10 |
| 39 | | 627-10025 | | 4 | BOULON, Hex, M10 x 25, 10.9, Full Thd |
| 40 | | 328082A1 | | 2 | COUDE, 1/8 PT |
| 41 | | F53473 | | 2 | ECROU, 1/8 PT |
| 42 | | 87441342 | | 4 | AXE A TÊTE, Lift Arm Pivot; Case Power Tan |
| 43 | | 87444057 | | 2 | FLEXIBLE (ASSEMBLE), Grease |
| 44 | | L11541 | | 6 | SANGLE |

| 09-08 | | p1 | 06/07 |
|---|---|---|---|

**GODETS - EQUIPEMENT (Z CHARGEUSE)**

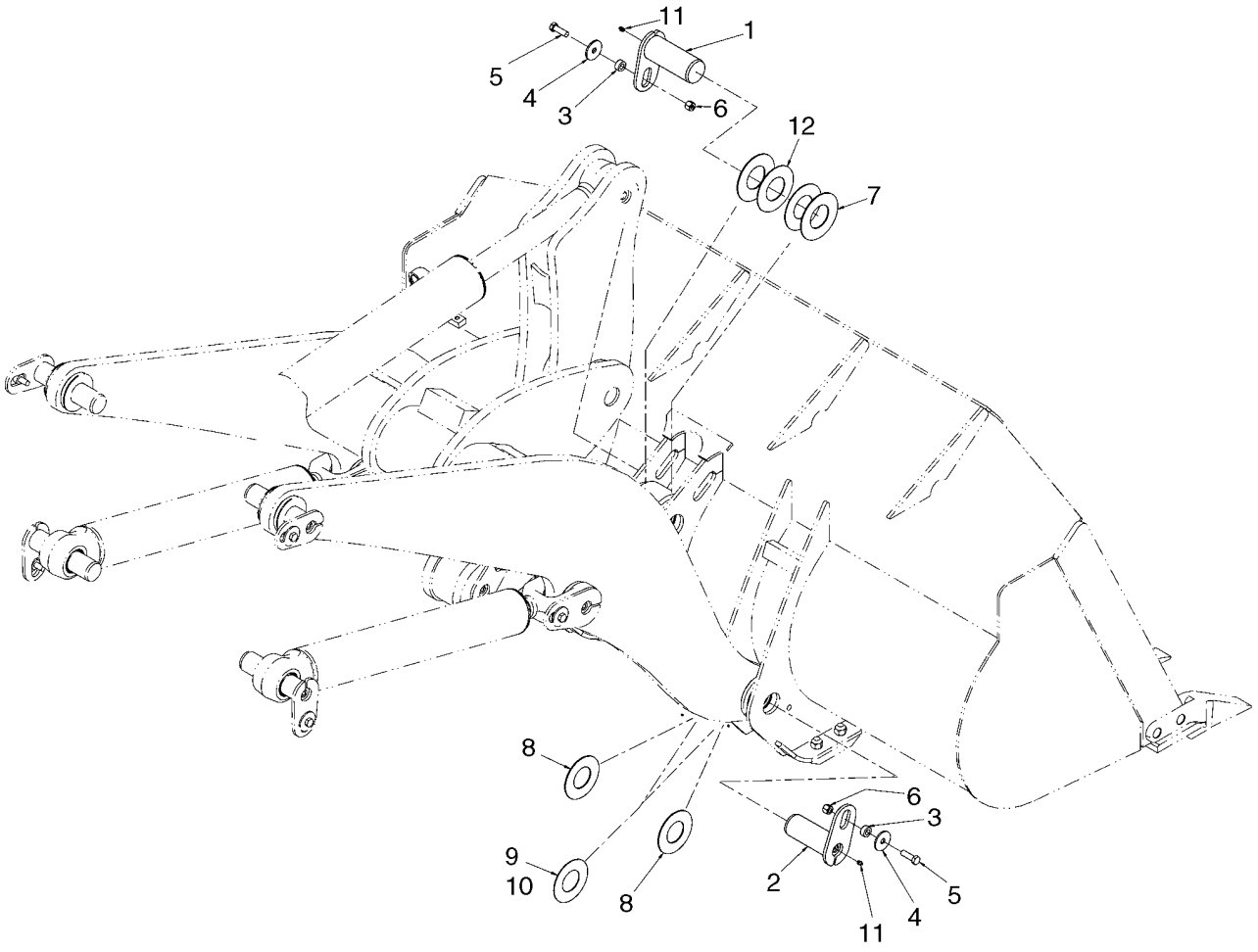


BS07E449

**GODETS - EQUIPEMENT (Z CHARGEUSE)**

| REF | FN | PART NUMBER | YR/SN | QTY | DESCRIPTION |
|---|---|---|---|---|---|
| | | REF | | | NOTICE, Z-BAR LOADER |
| 1 | | 375326A2 | | 1 | CHEVILLE (ASSEMBLEE), Dump Link Pivot |
| 2 | | 361139A2 | | 2 | CHEVILLE (ASSEMBLEE), Dump Link Pivot |
| 3 | | L125100 | | 3 | ENTRETOISE |
| 4 | | 496-81025 | | 3 | RONDELLE, 21/32" x 2 1/2" x .188", HDN |
| 5 | | 627-16050 | | 3 | BOULON, Hex, M16 x 50, 10.9 |
| 6 | | 832-10416 | | 3 | CONTRE-ECROU, M16 x 2, Cl 8 |
| 7 | | 375518A1 | | AR | RONDELLE |
| 8 | | 365356A1 | | AR | RONDELLE |
| 9 | | 375516A1 | | AR | RONDELLE |
| 10 | | 375517A1 | | AR | RONDELLE |
| 11 | | 219-1 | | 3 | GRAISSEUR, 1/8"-27 x .66 lg |
| 12 | | L127108 | | 2 | RONDELLE, Lift Arm |

| 09-08A | | p1 | 07/07 |
|---|---|---|---|

**GODETS - EQUIPEMENT (XT CHARGEUSE)**

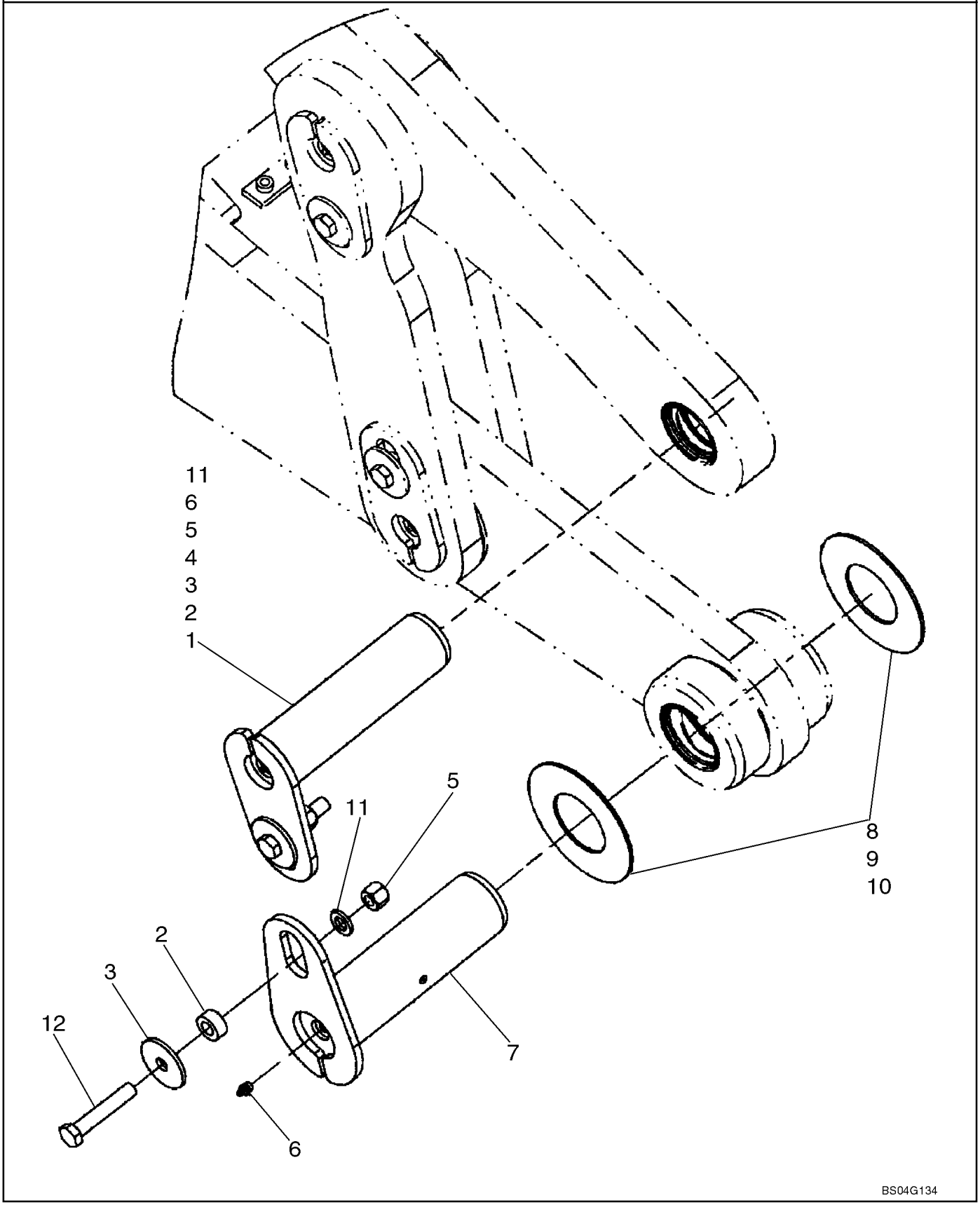

**GODETS - EQUIPEMENT (XT CHARGEUSE)**

| REF | FN | PART NUMBER | YR/SN | QTY | DESCRIPTION |
|---|---|---|---|---|---|
| | | REF | | | NOTICE, XT LOADER |
| 1 | | 379770A2 | | 2 | AXE, Lift Arm |
| 2 | | L125100 | | 4 | ENTRETOISE |
| 3 | | 496-81025 | | 4 | RONDELLE, 21/32" x 2 1/2" x .188", HDN |
| 4 | | 827-16080 | | 2 | BOULON, Hex, M16 x 80, 10.9 |
| 5 | | 832-10416 | | 4 | CONTRE-ECROU, M16 x 2, Cl 8 |
| 6 | | 219-1 | | 4 | GRAISSEUR, 1/8"-27 x .66 lg |
| 7 | | 87437274 | | 2 | CHEVILLE (ASSEMBLEE), Lift Arm |
| 8 | | 375518A1 | | AR | RONDELLE, 77.6 ID x 3.5mm Thick; If Used |
| 9 | | 441822A1 | | AR | RONDELLE, 77.6ID x 1.6mm Thick; If Used |
| 10 | | L127108 | | AR | RONDELLE, Lift Arm; If Used |
| 11 | | 896-11016 | | 4 | RONDELLE, M17.5 x 30 x 4, HT |
| 12 | | 827-16090 | | 2 | BOULON, Hex, M16 x 90, 10.9 |

**COUPLEUR HYDRAULIQUE - Z-BAR - JRB**

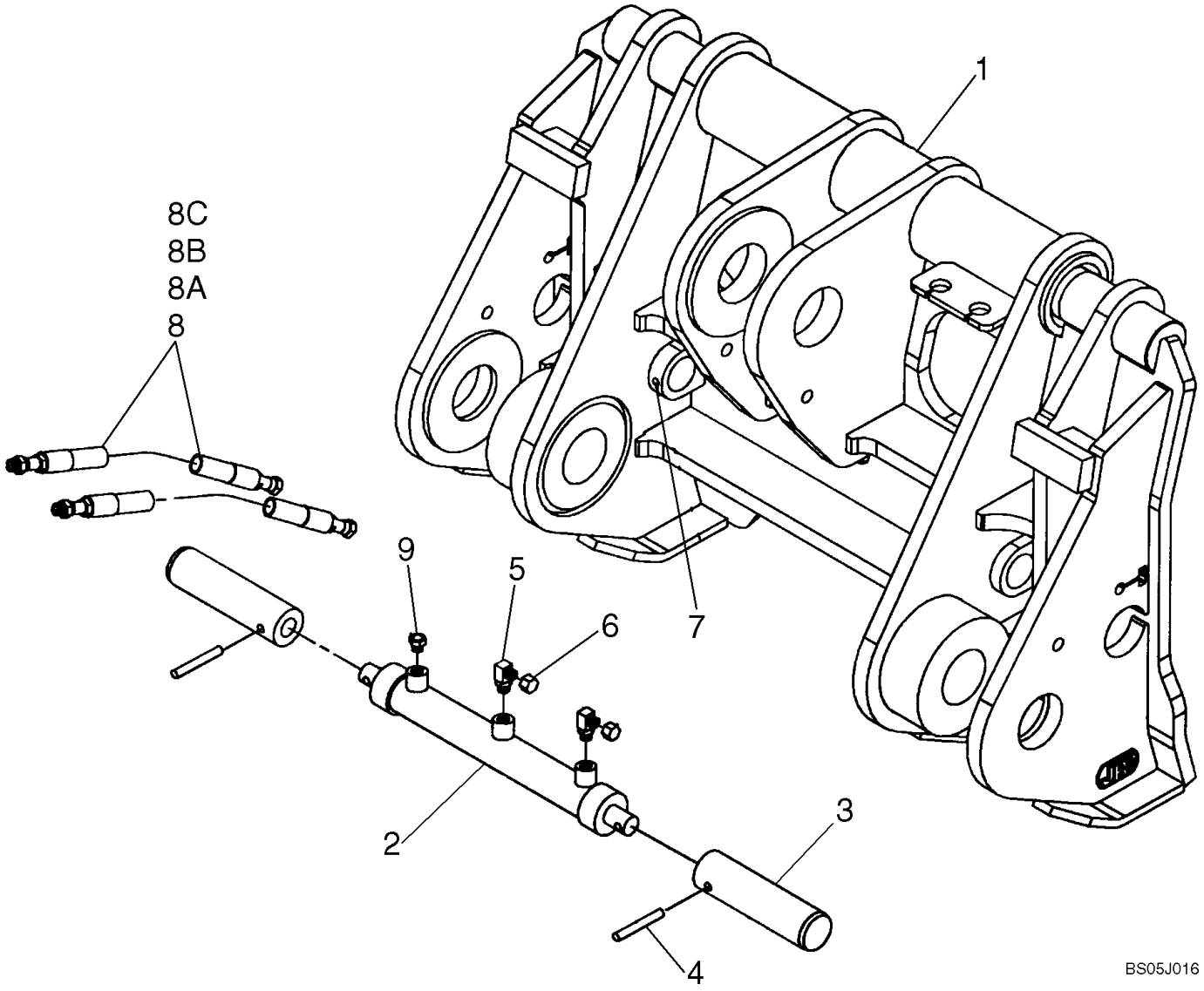

**COUPLEUR HYDRAULIQUE - Z-BAR - JRB**

| REF | FN | PART NUMBER | YR/SN | QTY | DESCRIPTION |
|---|---|---|---|---|---|
| | | {402700A1} | | | COUPLER ASSEMBLY WITH KIT; JRB; Z-BAR; Vendor Part Number; 90A2003 |
| 1 | | REF | | 1 | NOTICE, COUPLER ASSEMBLY; JRB; Z-BAR; Vendor Part Number; D19929 |
| | | REF | | 1 | NOTICE, HYDRAULIC KIT; JRB; Z-BAR; Vendor Part Number; 96A0056 Incl. 2 - 9 |
| 2 | | REF | | 1 | NOTICE, HYDRAULIC CYLINDER; JRB; Z-BAR; Vendor Part Number; B18865 |
| 3 | | REF | | 2 | NOTICE, PLUNGER; JRB; Z-BAR; Vendor Part Number; A23264 |
| 4 | | REF | | 2 | NOTICE, ROLLPIN; 3/8 X 1-3/4; JRB; Z-BAR; Vendor Part Number; 124038000175 |
| 5 | | REF | | 3 | NOTICE, STR THD CONNECTOR 90DEG; JRB; Z-BAR; Vendor Part Number; 46055-02 |
| 6 | | REF | | 3 | NOTICE, FITTING, CAP; JRB; Z-BAR; Vendor Part Number; 46070-02 |
| 7 | | REF | | 2 | NOTICE, GREASE ZERK; JRB; Z-BAR; Vendor Part Number; A31294-1 |
| 8 | | REF | | 2 | NOTICE, HOSE ASSEMBLY; JRB; Z-BAR; Vendor Part Number; 570046-48; Incl. 7A - 7C |
| 8A | | REF | | 1 | NOTICE, FITTING; JRB; Z-BAR; Vendor Part Number; 47036-02 |
| 8B | | REF | | | NOTICE, FITTING; JRB; Z-BAR; Vendor Part Number; 47020-02 |
| 8C | | REF | | | NOTICE, HOSE; JRB; Z-BAR; Vendor Part Number; 56 |
| 9 | | REF | | 1 | NOTICE, HEX PLUG; JRB; Z-BAR; Vendor Part Number; 46154-05 |

**COUPLEUR HYDRAULIQUE - Z-BAR - ACS**

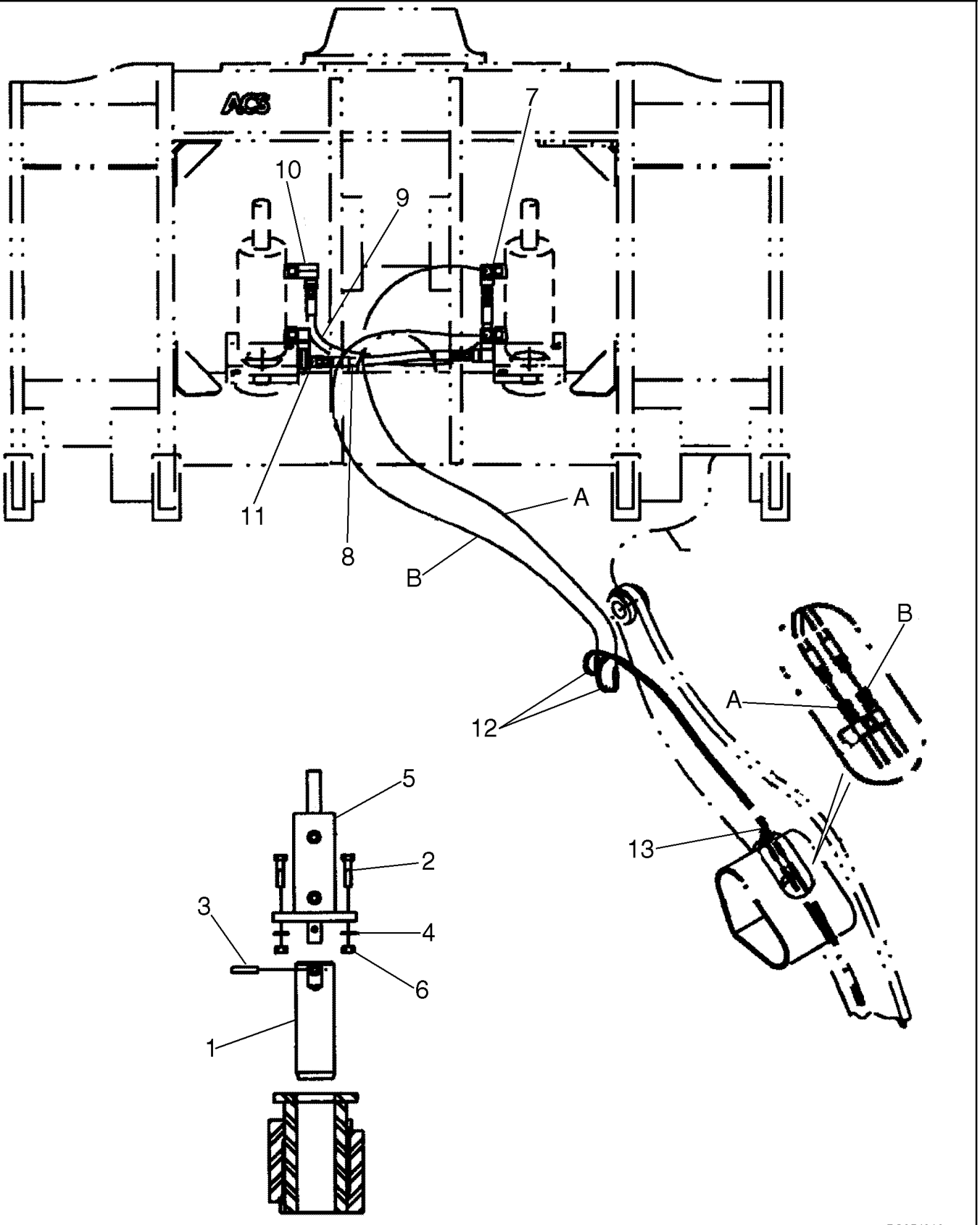

**COUPLEUR HYDRAULIQUE - Z-BAR - ACS**

| REF | FN | PART NUMBER | YR/SN | QTY | DESCRIPTION |
|---|---|---|---|---|---|
| | | {87407966} | | 1 | COUPLER; ACS PRO 2000 Size 30; Z-Bar; Includes Jump Hoses; Not Illustrated |
| | | {388540A1} | | 1 | PACKAGE; Manual; ACS PRO 2000 Size 30; Z-Bar; Not Illustrated |
| | | REF | | 1 | NOTICE, CYLINDER/PIN KIT; ACS; Z-BAR; Vendor Part Number; 65595535; Incl. 1 - 6 |
| 1 | | REF | | 2 | NOTICE, PIN, LOCKING; ACS; Z-BAR; Vendor Part Number; 40600850; 2 x 6-9/16 IN |
| 2 | | REF | | 4 | NOTICE, HEX BOLT; ACS; Z-BAR; Vendor Part Number; 60660520; 1/2-13 X 2 in |
| 3 | | REF | | 2 | NOTICE, PIN,ROLL; ACS; Z-BAR; Vendor Part Number; 40336700; 3/8 X 1-7/8 in |
| 4 | | REF | | 4 | NOTICE, WASHER; ACS; Z-BAR; Vendor Part Number; 60680180; 1/2 Lock |
| 5 | | REF | | 2 | NOTICE, CYLINDER; ACS; Z-BAR; Vendor Part Number; 50600775 |
| 6 | | REF | | 4 | NOTICE, NUT; ACS; Z-BAR; Vendor Part Number; 60481390; 1/2-13 NC |
| 7 | | REF | | 2 | NOTICE, FITTING, TEE; ACS; Z-BAR; Vendor Part Number; 52800539 |
| 8 | | REF | | 1 | NOTICE, HOSE; ACS; Z-BAR; Vendor Part Number; 54001217 |
| 9 | | REF | | 1 | NOTICE, HOSE; ACS; Z-BAR; Vendor Part Number; 54001106 |
| 10 | | REF | | 2 | NOTICE, FITTING, 90DEG; ACS; Z-BAR; Vendor Part Number; 52800553 |
| 11 | | REF | | 2 | NOTICE, FITTING, 90DEG; ACS; Z-BAR; Vendor Part Number; 52800593 |
| 12 | | REF | | 2 | NOTICE, HOSE; ACS; Z-BAR; Vendor Part Number; 54001316 |
| 13 | | REF | | 1 | NOTICE, RETAINER; ACS; Z-BAR; Vendor Part Number; 62640051 |

| 09-09B | | p1 | 06/07 |
|---|---|---|---|

**COUPLEUR HYDRAULIQUE - XT - JRB**

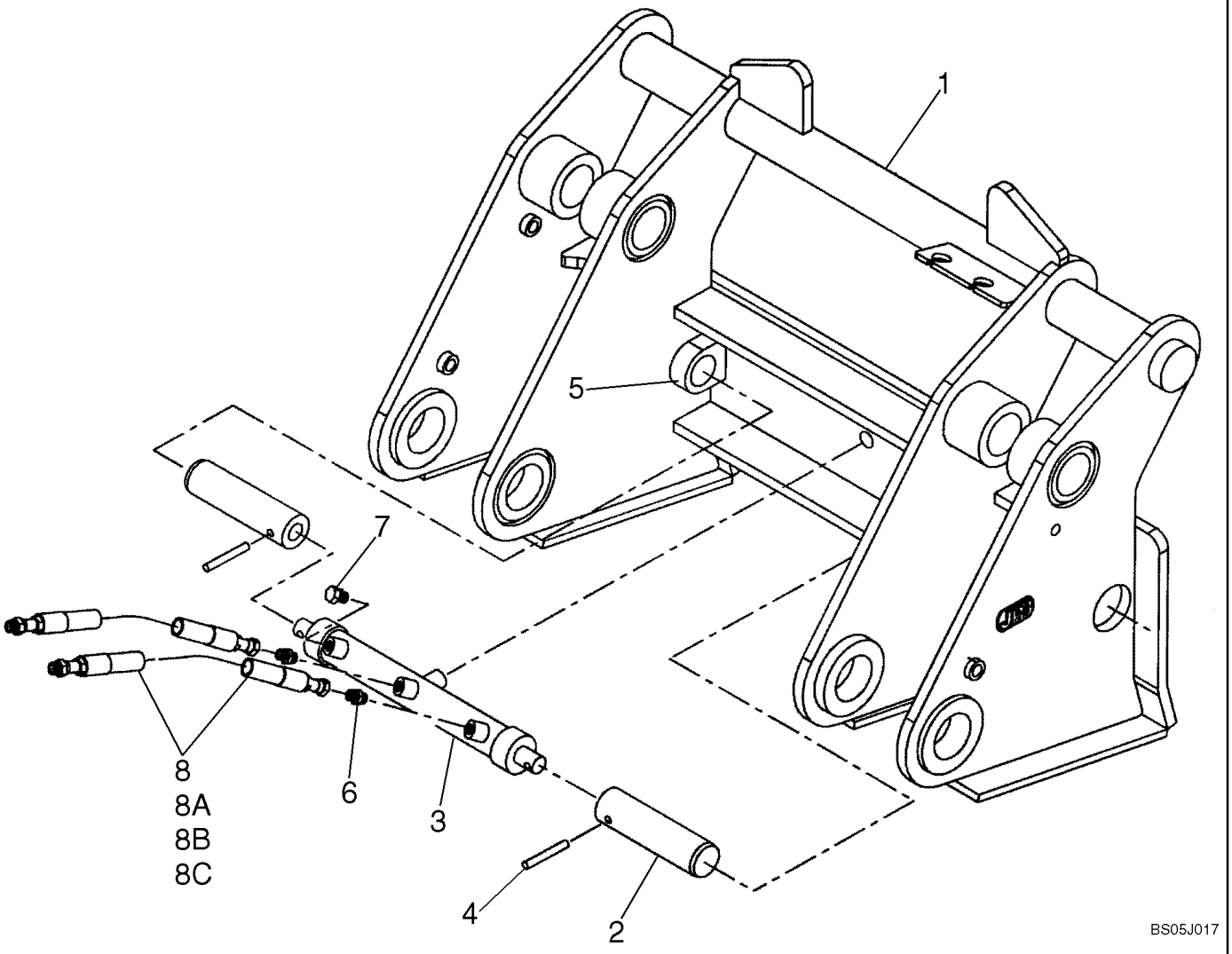

**COUPLEUR HYDRAULIQUE - XT - JRB**

| REF | FN | PART NUMBER | YR/SN | QTY | DESCRIPTION |
|---|---|---|---|---|---|
| | | {87451631} | | | COUPLER ASSEMBLY WITH KIT; JRB; XT; Vendor Part Number; 90A3032 |
| 1 | | REF | | 1 | NOTICE, COUPLER ASSEMBLY; JRB; XT; Vendor Part Number; D22295 |
| | | REF | | 1 | NOTICE, HYDRAULIC KIT; JRB; XT; Vendor Part Number; 96A0116 |
| 2 | | REF | | 2 | NOTICE, PLUNGER; JRB; XT; Vendor Part Number; A23264 |
| 3 | | REF | | 1 | NOTICE, HYDRAULIC CYLINDER; JRB; XT; Vendor Part Number; B18865 |
| 4 | | REF | | 2 | NOTICE, ROLLPIN; 3/8 X 1-3/4; JRB; XT; Vendor Part Number; 124038000175 |
| 5 | | REF | | 2 | NOTICE, GREASE ZERK; JRB; XT; Vendor Part Number; A31294-1 |
| 6 | | REF | | 2 | NOTICE, STR THD CONNECTOR; JRB; XT; Vendor Part Number; 46036-02 |
| 7 | | REF | | 1 | NOTICE, HEX PLUG; JRB; XT; Vendor Part Number; 46154-05 |
| 8 | | REF | | 2 | NOTICE, HOSE ASSEMBLY; JRB; XT; Vendor Part Number; 570046-51; Incl. 8A - 8C |
| 8A | | REF | | 1 | NOTICE, FITTING; JRB; XT; Vendor Part Number; 47036-02 |
| 8B | | REF | | | NOTICE, FITTING; JRB; XT; Vendor Part Number; 47020-02 |
| 8C | | REF | | | NOTICE, HOSE; JRB; XT; Vendor Part Number; 56 |

**COUPLEUR HYDRAULIQUE - XT - ACS**

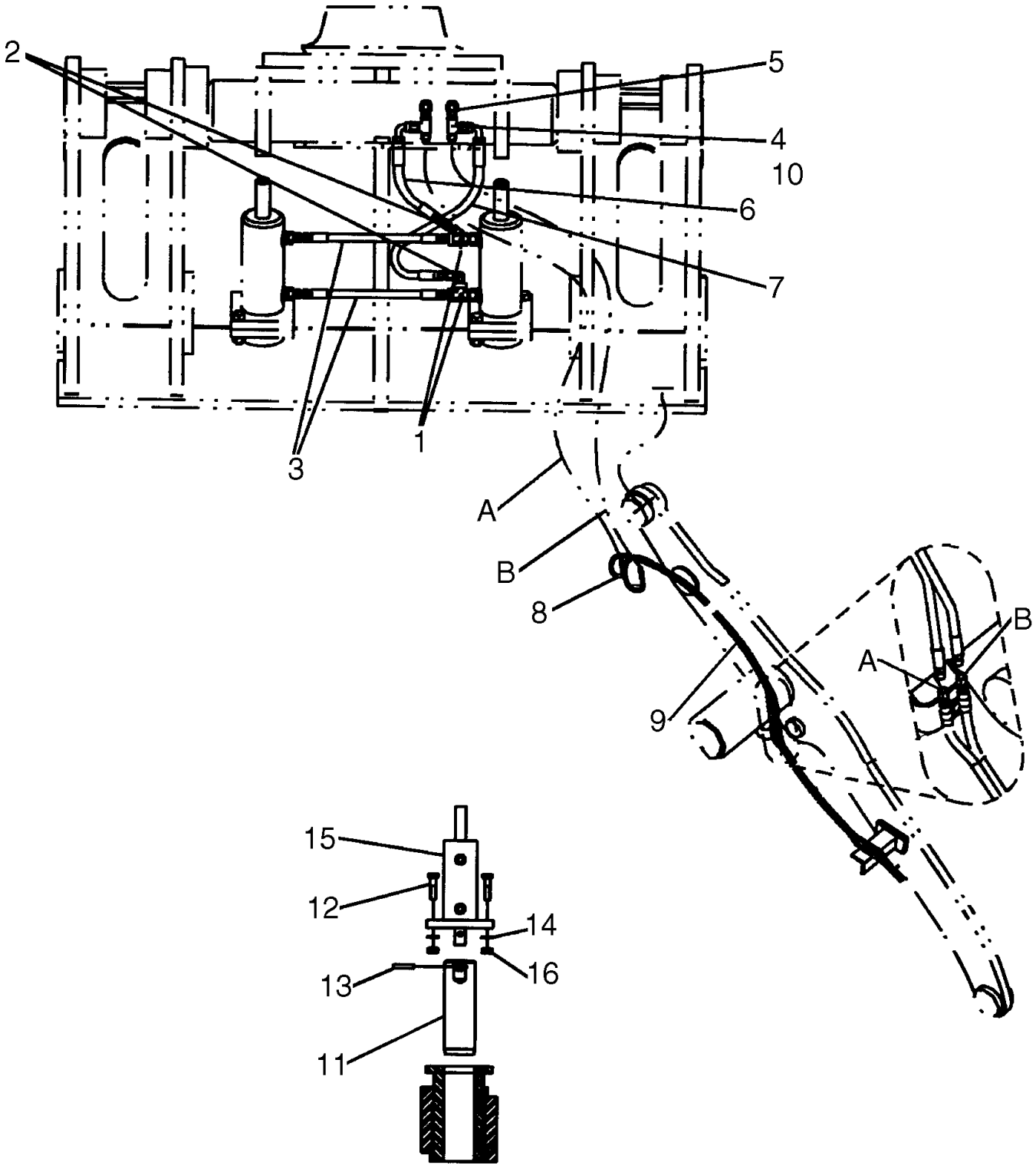

**COUPLEUR HYDRAULIQUE - XT - ACS**

| REF | FN | PART NUMBER | YR/SN | QTY | DESCRIPTION |
|---|---|---|---|---|---|
| | | {87446140} | | 1 | COUPLER; ACS PRO 2000 Size 30; XT; Includes Jump Hoses; Not Illustrated |
| | | {87446143} | | 1 | PACKAGE; Manual; ACS PRO 2000 Size 30; XT; Not Illustrated |
| | | REF | | 1 | NOTICE, CYLINDER/PIN KIT; ACS; XT; Vendor Part Number; 65595535; Incl. 11 - 16 |
| 1 | | REF | | 2 | NOTICE, FITTING, TEE; ACS; XT; Vendor Part Number; 52800540 |
| 2 | | REF | | 2 | NOTICE, FITTING, 90DEG; ACS; XT; Vendor Part Number; 52801119 |
| 3 | | REF | | 2 | NOTICE, HOSE; ACS; XT; Vendor Part Number; 54830114 |
| 4 | | REF | | 2 | NOTICE, FITTING, BULKHEAD TEE; ACS; XT; Vendor Part Number; 52800803 |
| 5 | | REF | | 2 | NOTICE, FITTING, CAP; ACS; XT; Vendor Part Number; 52800727 |
| 6 | | REF | | 1 | NOTICE, HOSE; ACS; XT; Vendor Part Number; 54830358 |
| 7 | | REF | | 1 | NOTICE, HOSE; ACS; XT; Vendor Part Number; 54001576 |
| 8 | | REF | | 2 | NOTICE, HOSE; ACS; XT; Vendor Part Number; 54823250 |
| 9 | | REF | | 4 | NOTICE, RETAINER; ACS; XT; Vendor Part Number; 62640051 |
| 10 | | REF | | 2 | NOTICE, NUT; BULKHEAD; ACS; XT; Vendor Part Number; 52001444 |
| 11 | | REF | | 2 | NOTICE, PIN, LOCKING; ACS; XT; Vendor Part Number; 40600850; 2 x 6-9/16 IN |
| 12 | | REF | | 4 | NOTICE, HEX BOLT; ACS; XT; Vendor Part Number; 60660520; 1/2-13 X 2 in |
| 13 | | REF | | 2 | NOTICE, PIN,ROLL; ACS; XT; Vendor Part Number; 40336700; 3/8 X 1-7/8 in |
| 14 | | REF | | 4 | NOTICE, WASHER; ACS; XT; Vendor Part Number; 60680180; 1/2 Lock |

**COUPLEUR HYDRAULIQUE - XT - ACS**

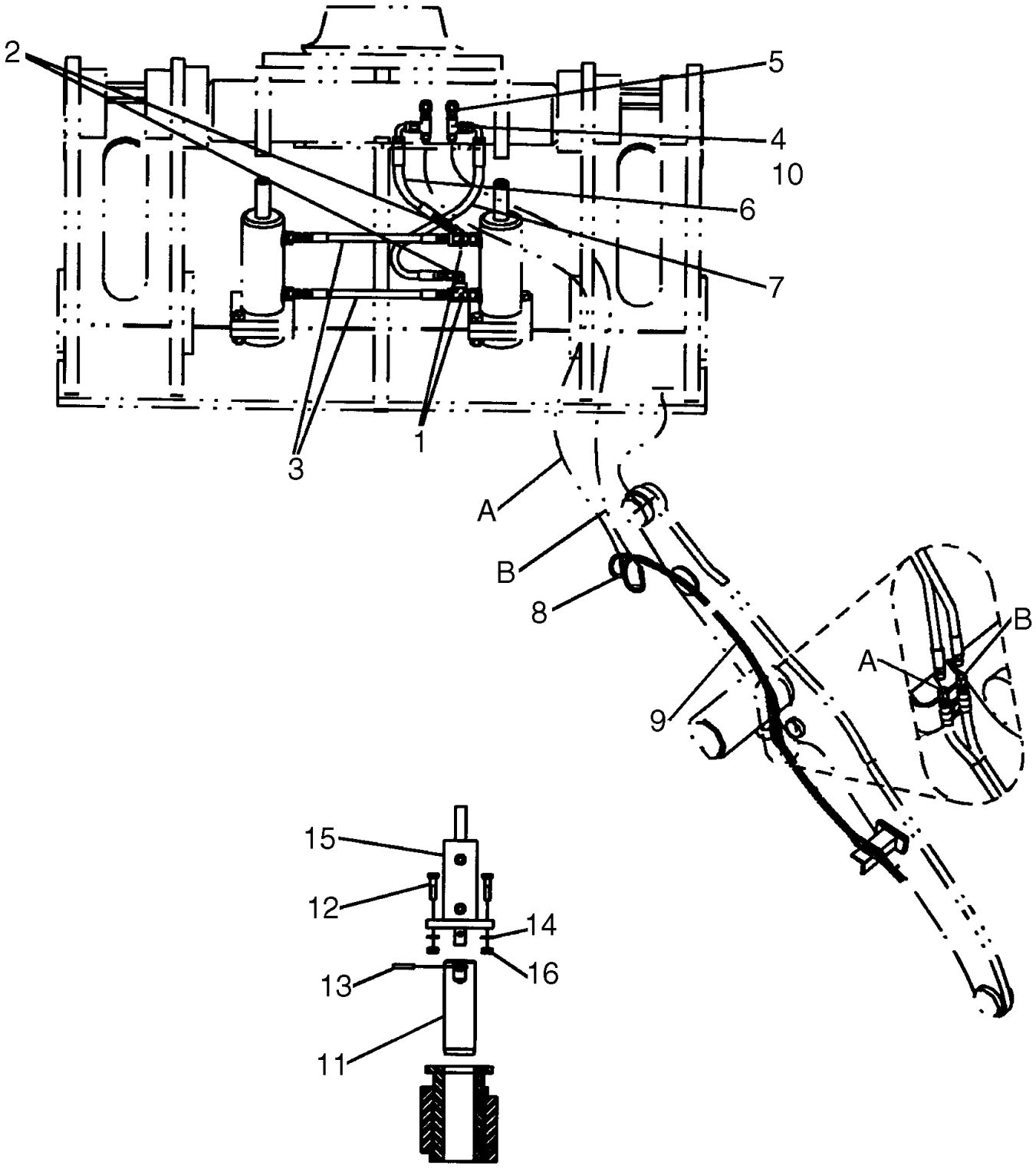


BS05J014

**COUPLEUR HYDRAULIQUE - XT - ACS**

| REF | FN | PART NUMBER | YR/SN | QTY | DESCRIPTION |
|---|---|---|---|---|---|
| 15 | | REF | | 2 | NOTICE, CYLINDER; ACS; XT; Vendor Part Number; 50600775 |
| 16 | | REF | | 4 | NOTICE, NUT; ACS; XT; Vendor Part Number; 60481390; 1/2-13 NC |

**GODET DE LA CHARGEUSE - AVEC DENTS, SEGMENTS ET PATINS ANTI-DÉRAPAGE**

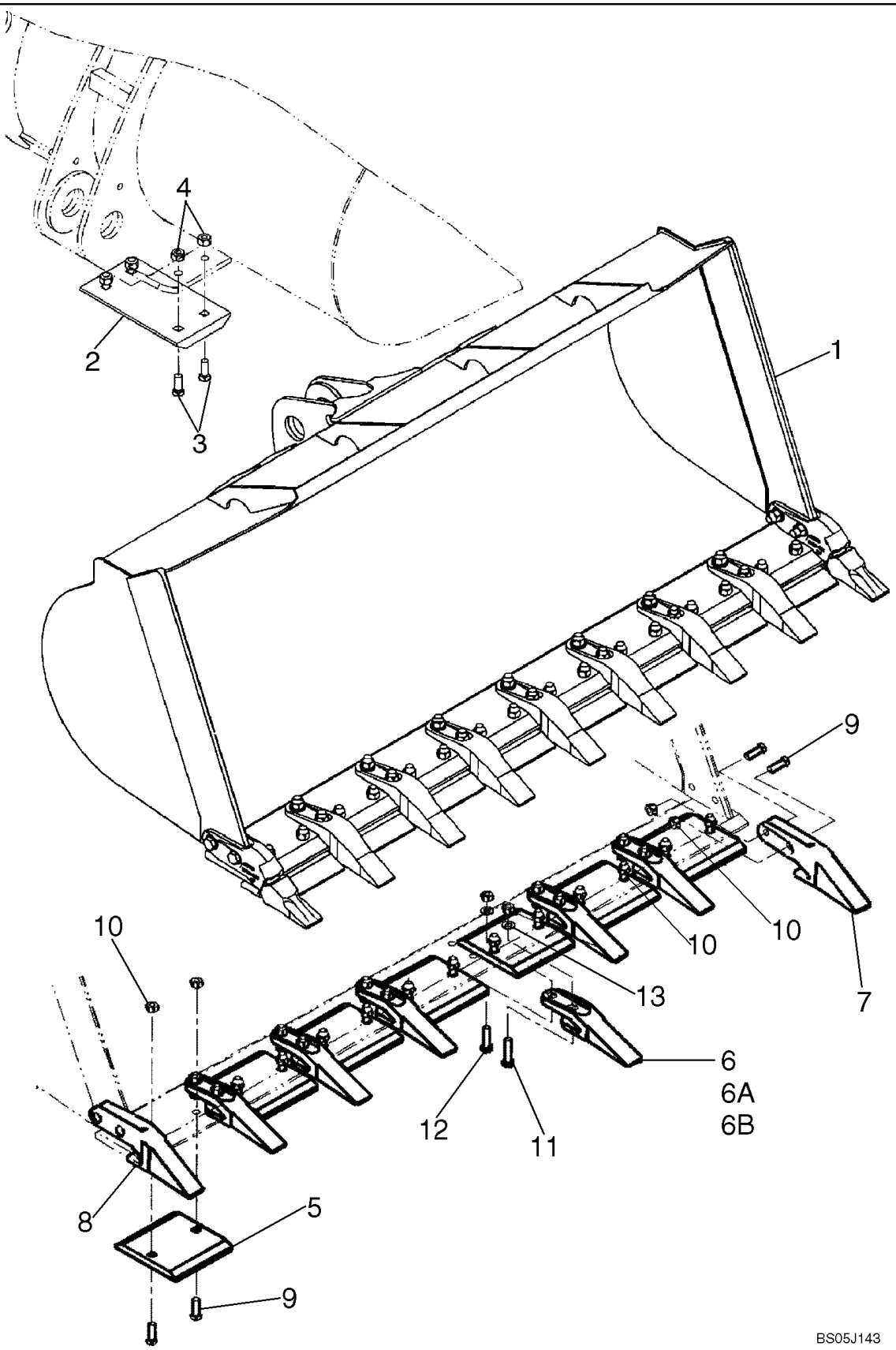

**GODET DE LA CHARGEUSE - AVEC DENTS, SEGMENTS ET PATINS ANTI-DÉRAPAGE**

| REF | FN | PART NUMBER | YR/SN | QTY | DESCRIPTION |
|---|---|---|---|---|---|
| | | REF | | | NOTICE, WELDED ON BUCKET COMPONENTS ARE NOT SERVICED SEPARATELY |
| 1 | | {428433A1} | | 1 | BUCKET ASSEMBLY; 1.9 Cubic Meters ( 2.5 Cubic Yards ); Order From Whole Goods; Incl. 2-13 |
| 1 | | {428436A1} | | 1 | BUCKET ASSEMBLY; 2 Cubic Meters ( 2.75 Cubic Yards ); Order From Whole Goods; Incl. 2-13 |
| 1 | | {418471A1} | | 1 | BUCKET ASSEMBLY; 1.9 Cubic Meters ( 2.5 Cubic Yards ); Use With ACS Coupler;Order From Whole Goods; Incl. 2-13 |
| 1 | | {434537A1} | | 1 | BUCKET ASSEMBLY; 1.9 Cubic Meters ( 2.5 Cubic Yards ); Use With JRB Coupler;Order From Whole Goods; Incl. 2-13 |
| | | REF | | | NOTICE, BOLT ON SKID PAD |
| 2 | | 360939A1 | | 2 | PLAQUE, Bottom; Bolt On |
| 3 | | 420-21236 | | 8 | BOULON TETE BOMBEE, 3/4"-10 x 2 1/4", G8 |
| 4 | | 425-1612 | | 8 | ECROU, 3/4"-10, G5, Hvy |
| | | REF | | | NOTICE, BUCKET TEETH AND CUTTING EDGE SEGMENTS |
| 5 | | 373354A1 | | 7 | LAME D'ATTAQUE |
| 6 | | 254825A1 | | 6 | DENTS, Center; Standard Incl. 6A, 6B |
| 6A | | 233792A1 | | 1 | AXE |
| | | NSS | | | NON FOURNI SEPAREMENT, Shank |
| 6B | | 127555A1 | | AR | DENT, Standard |
| 6B | | 254822A1 | | AR | DENT, Abrasion; Not Illustrated |
| 6B | | 254823A1 | | AR | DENT, Penetration; Not Illustrated |
| 7 | | 76082151 | | 1 | DENT, Corner; Left |
| 8 | | 368526A1 | | 1 | DENT, Corner; Right |
| 9 | | 420-21244 | | 18 | BOULON CHARRUE, 3/4"-10 x 2 3/4", G8 |
| 10 | | 425-1612 | | 30 | ECROU, 3/4"-10, G5, Hvy |
| 11 | | 426-1252 | | 6 | BOULON, Hex, 3/4"-10 x 3 1/4", G8 |
| 12 | | 426-1244 | | 6 | BOULON, Hex, 3/4"-10 x 2 3/4", G8 |
| 13 | | 496-11081 | | 12 | RONDELLE, 13/16" x 1 1/2" x .065", HDN |

| 09-11 | | p1 | 05/07 |
|---|---|---|---|

**GODET DE LA CHARGEUSE - AVEC BORD VISSABLE ET PATINS ANTI-DÉRAPAGE**

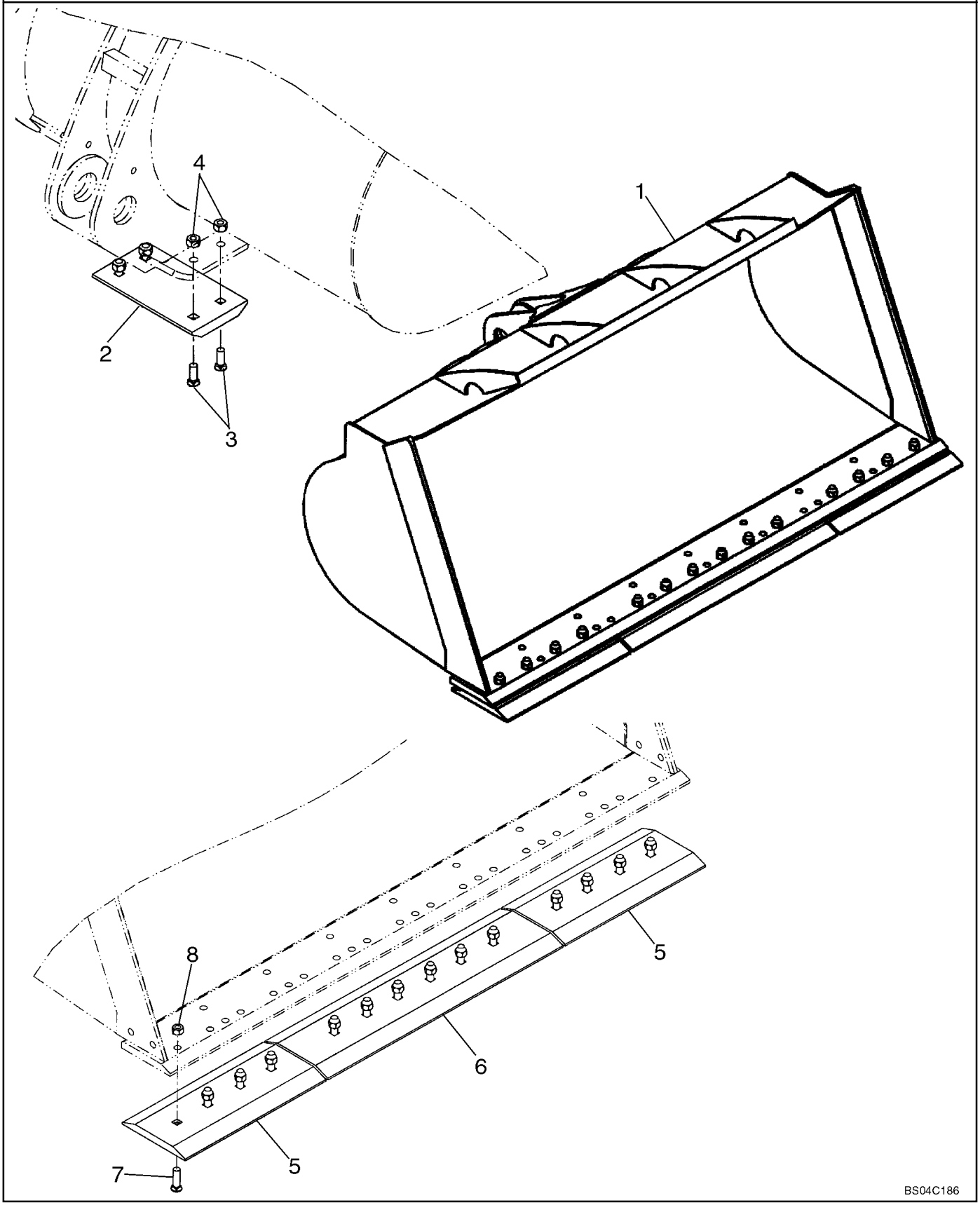

**GODET DE LA CHARGEUSE - AVEC BORD VISSABLE ET PATINS ANTI-DÉRAPAGE**

| REF | FN | PART NUMBER | YR/SN | QTY | DESCRIPTION |
|---|---|---|---|---|---|
| | | REF | | | NOTICE, WELDED ON BUCKET COMPONENTS ARE NOT SERVICED SEPARATELY |
| 1 | | {428434A1} | | 1 | BUCKET/A; 2 Cubic Meter ( 2.75 Cubic Yards ); Order From Whole Goods; Inc. 2 - 8 |
| 1 | | {428437A1} | | 1 | BUCKET/A; 2.25 Cubic Meter ( 3 Cubic Yards ); Order From Whole Goods; Inc. 2 - 8 |
| 1 | | {428432A1} | | 1 | BUCKET/A; 1.9 Cubic Meter ( 2.5 Cubic Yards ); Order From Whole Goods; Inc. 2 - 8 |
| 1 | | {418472A1} | | 1 | BUCKET/A; 2.25 Cubic Meter ( 3 Cubic Yards ); For Use With ASC Pro Series 2000 Size 30 Couplers; Order From Whole Goods; Inc. 2 - 8; |
| 1 | | {418470A1} | | 1 | BUCKET/A; 1.9 Cubic Meter ( 2.5 Cubic Yards ); For Use With ASC Pro Series 2000 Size 30 Couplers; Order From Whole Goods; Inc. 2 - 8 |
| 1 | | {434536A1} | | 1 | BUCKET/A; 1.9 Cubic Meter ( 2.5 Cubic Yards ); For Use With JRB Couplers; Order From Whole Goods; Inc. 2 - 8 |
| | | REF | | | NOTICE, BOLT ON SKID PAD |
| 2 | | 360939A1 | | 2 | PLAQUE, Bottom; Bolt On |
| 3 | | 420-21236 | | 8 | BOULON TETE BOMBEE, 3/4"-10 x 2 1/4", G8, 3/4 x 2-1/4 in |
| 4 | | 425-1612 | | 8 | ECROU, 3/4"-10, G5, Hvy, 3/4, Hardened |
| | | REF | | | NOTICE, BOLT ON CUTTING EDGES |
| 5 | | 372082A2 | | 2 | LAME D'ATTAQUE, Outer; Bolt On |
| 6 | | 372081A1 | | 1 | LAME D'ATTAQUE, Center; Bolt On |
| 7 | | 420-21244 | | 16 | BOULON CHARRUE, 3/4"-10 x 2 3/4", G8, #3; 3/4 x 2-3/4 in |
| 8 | | 425-1612 | | 16 | ECROU, 3/4"-10, G5, Hvy, 3/4-10 |

| 09-12 | | p1 | 05/07 |
|---|---|---|---|

**CHÂSSIS AVANT (Z-BAR, XR)**

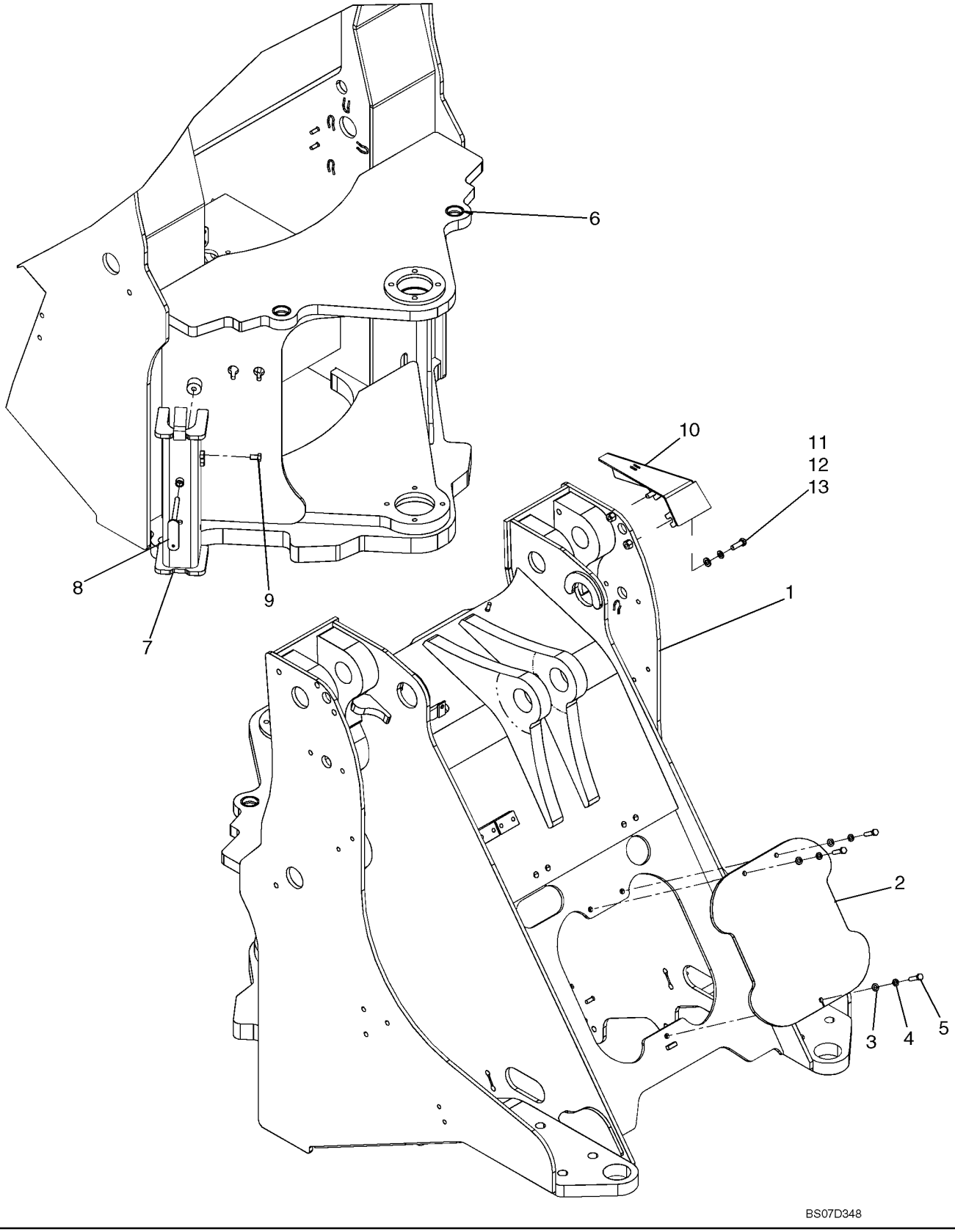

**CHÂSSIS AVANT (Z-BAR, XR)**

| REF | FN | PART NUMBER | YR/SN | QTY | DESCRIPTION |
|---|---|---|---|---|---|
| 1 | | 87547373 | | 1 | CARCASSE, Front Chassis; Case Power Tan |
| 2 | | 8605898 | | 1 | COUVERCLE, Valve |
| 3 | | 895-11010 | | 3 | RONDELLE, M10 x 20 x 2 |
| 4 | | 892-11010 | | 3 | RONDELLE FREIN, M10 |
| 5 | | 627-10040 | | 3 | BOULON, Hex, M10 x 40, 10.9, Full Thd |
| 6 | | 8500173 | | 2 | BAGUE |
| 7 | | 406347A1 | | 1 | SUPPORT (ASSEMBLE), Linkage |
| 8 | | 406390A1 | | 1 | POIGNÉE, Linkage Channel |
| 9 | | 627-12020 | | 1 | BOULON, Hex, M12 x 20, 10.9, Full Thd |
| 10 | | 87430084 | | 1 | COUVERCLE, Proximity Switch |
| 11 | | 896-11012 | | 2 | RONDELLE, M13.5 x 24.5 x 3, HT |
| 12 | | 892-11012 | | 2 | RONDELLE FREIN, M12 |
| 13 | | 627-12035 | | 2 | BOULON, Hex, M12 x 35, 10.9 |

| 09-13 | | p1 | 05/07 |
|---|---|---|---|

**CHÂSSIS AVANT (XT)**

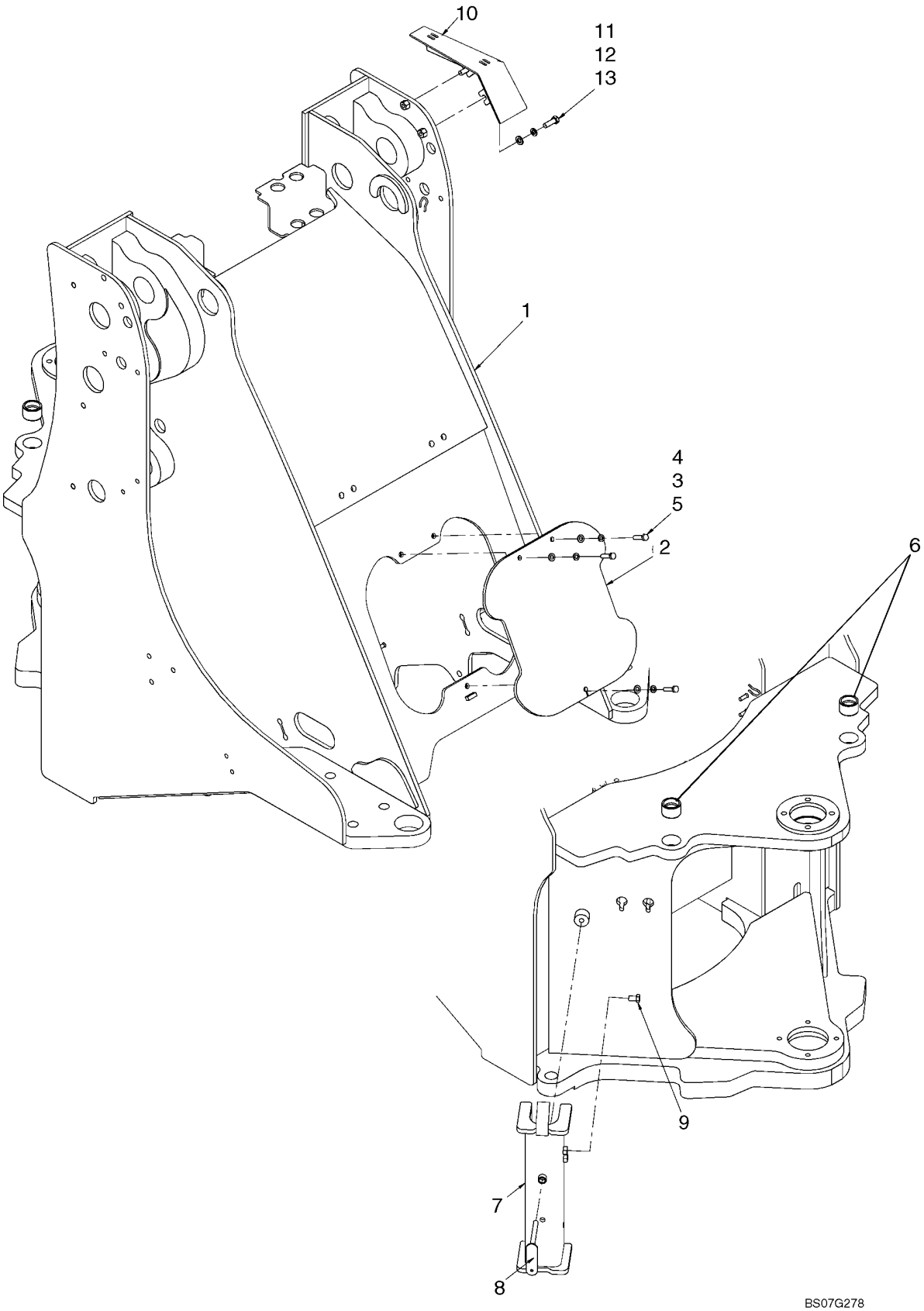

**CHÂSSIS AVANT (XT)**

| REF | FN | PART NUMBER | YR/SN | QTY | DESCRIPTION |
|---|---|---|---|---|---|
| | | REF | | | NOTICE, XT LOADER |
| 1 | | 87547376 | | 1 | CARCASSE, Front Chassis |
| 2 | | 8605898 | | 1 | COUVERCLE, Valve Case |
| 3 | | 895-11010 | | 3 | RONDELLE, M10 x 20 x 2 |
| 4 | | 892-11010 | | 3 | RONDELLE FREIN, M10 |
| 5 | | 627-10040 | | 3 | BOULON, Hex, M10 x 40, 10.9, Full Thd |
| 6 | | 8500173 | | 2 | BAGUE |
| 7 | | 406347A1 | | 1 | SUPPORT (ASSEMBLE), Linkage |
| 8 | | 406390A1 | | 1 | POIGNÉE |
| 9 | | 627-12020 | | 1 | BOULON, Hex, M12 x 20, 10.9, Full Thd |
| 10 | | 87450063 | | 1 | COUVERCLE, Proximity Switch |
| 11 | | 896-11012 | | 2 | RONDELLE, M13.5 x 24.5 x 3, HT |
| 12 | | 892-11012 | | 2 | RONDELLE FREIN, M12 |
| 13 | | 627-12035 | | 2 | BOULON, Hex, M12 x 35, 10.9 |

**CHÂSSIS ARRIÈRE**

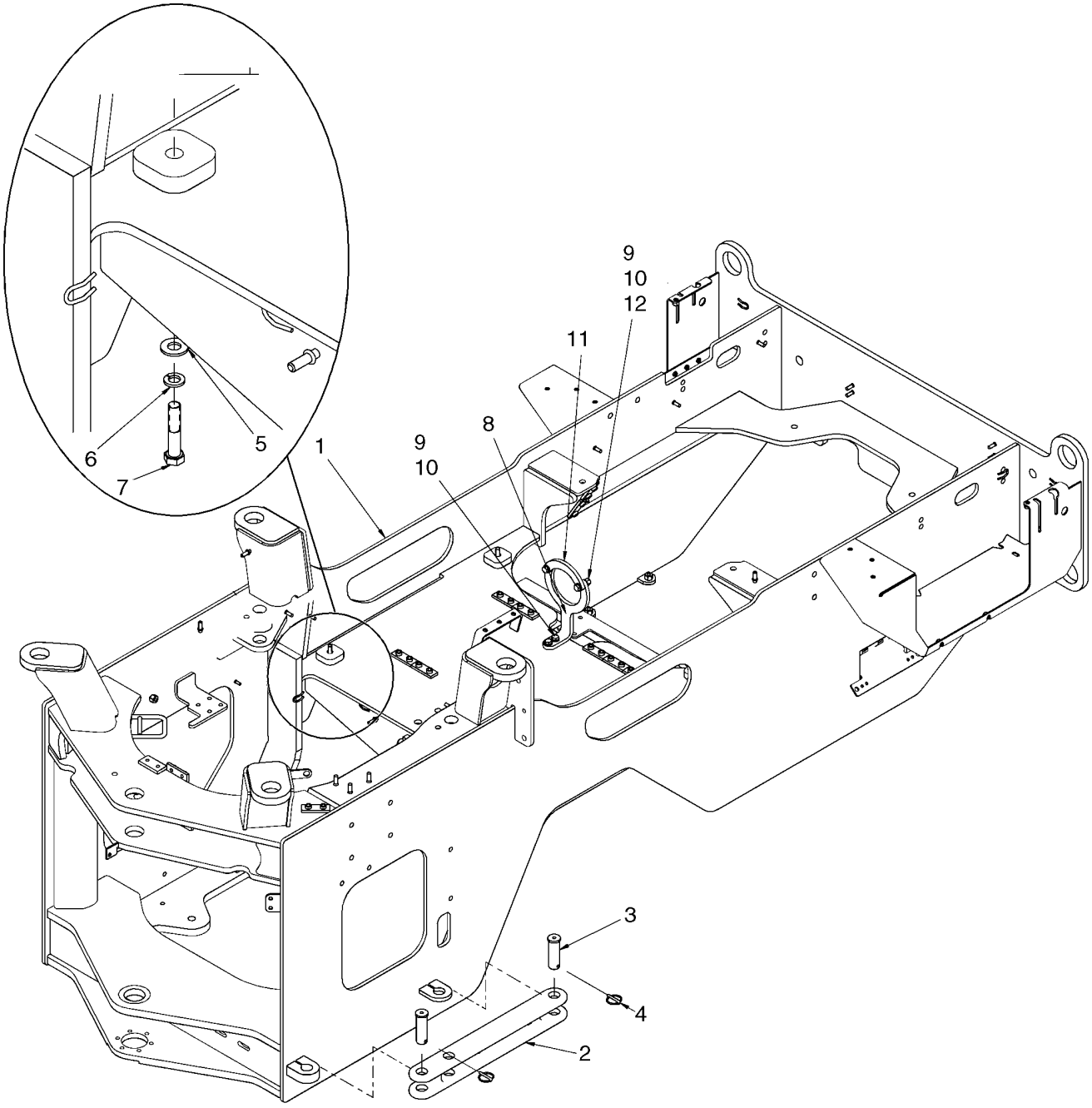

**CHÂSSIS ARRIÈRE**

| REF | FN | PART NUMBER | YR/SN | QTY | DESCRIPTION |
|---|---|---|---|---|---|
| 1 | | 87653595 | | 1 | CHASSIS, Rear; Case Power Tan |
| 2 | | 412067A1 | | 1 | VERROU |
| 3 | | 126268A1 | | 2 | AXE, GROS |
| 4 | | A30338 | | 2 | AXE |
| 5 | | 895-15012 | | 4 | RONDELLE, M12 x 28 x 2.5 |
| 6 | | 892-11012 | | 4 | RONDELLE FREIN, M12 |
| 7 | | 827-12060 | | 4 | BOULON, Hex, M12 x 60, 10.9 |
| 8 | | 87559571 | | 1 | GARANT |
| 9 | | 896-11012 | | 6 | RONDELLE, M13.5 x 24.5 x 3, HT |
| 10 | | 627-12045 | | 4 | BOULON, Hex, M12 x 45, 10.9, Full Thd |
| 11 | | {87333866} | | 1 | GUARD, Drive Shaft |
| 12 | | 832-10412 | | 2 | CONTRE-ECROU, M12 x 1.75, Cl 8 |

| 09-15 | | p1 | 06/07 |
|---|---|---|---|

**JOINT D'ARTICULATION**

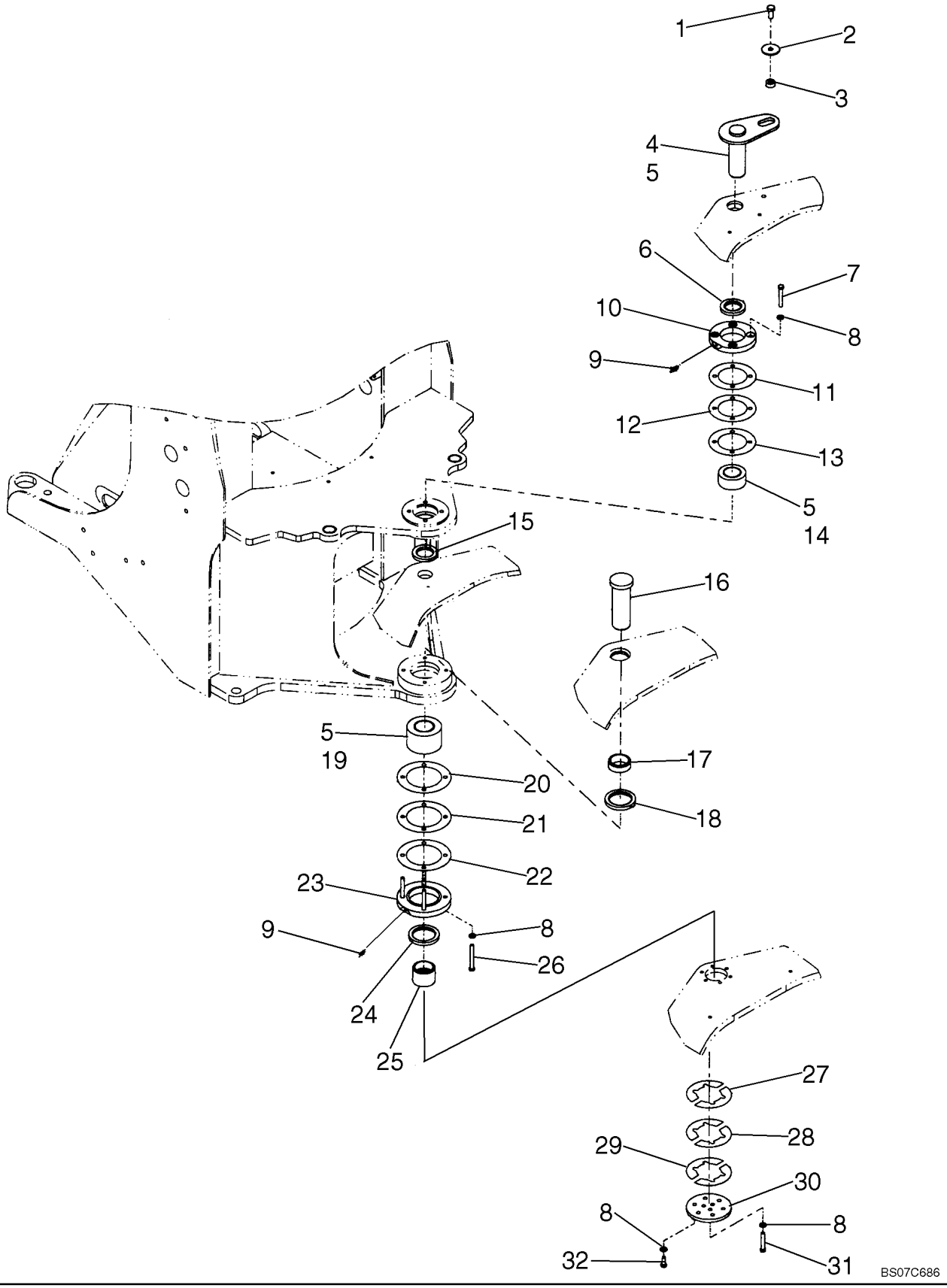

**JOINT D'ARTICULATION**

| REF | FN | PART NUMBER | YR/SN | QTY | DESCRIPTION |
|---|---|---|---|---|---|
| 1 | | 627-16035 | | 1 | BOULON, Hex, M16 x 35, 10.9 |
| 2 | | 496-81025 | | 1 | RONDELLE, 21/32" x 2 1/2" x .188", HDN |
| 3 | | L125100 | | 1 | ENTRETOISE |
| 4 | | 8606124 | | 1 | AXE |
| 5 | | 331-329 | | AR | GRAISSE, 1 Ounce Wheel Bearing Grease |
| 6 | | 391281A1 | | 1 | JOINT |
| 7 | | 827-12080 | | 4 | BOULON, Hex, M12 x 80, 10.9 |
| 8 | | 896-11012 | | 17 | RONDELLE, M13.5 x 24.5 x 3, HT |
| 9 | | 219-1 | | 2 | GRAISSEUR, 1/8"-27 x .66 lg |
| 10 | | 391280A1 | | 1 | RETENEUR |
| 11 | | L118987 | | AR | CALE D'EPAISSEUR, .1 mm |
| 12 | | L119202 | | AR | CALE D'EPAISSEUR, .25 mm |
| 13 | | L118986 | | AR | CALE D'EPAISSEUR, .5 mm |
| 14 | | 391276A1 | | 1 | ROULEMENT |
| 15 | | 391278A1 | | 1 | JOINT |
| 16 | | 433264A1 | | 1 | AXE |
| 17 | | 87623437 | | 1 | ENTRETOISE, Lower Bearing |
| 18 | | L118978 | | 1 | JOINT |
| 19 | | 432765A1 | | 1 | ROULEMENT |
| 20 | | L118990 | | AR | CALE D'EPAISSEUR, .1 mm |
| 21 | | L118989 | | AR | CALE D'EPAISSEUR, .5 mm |
| 22 | | L119203 | | AR | CALE D'EPAISSEUR, .25 mm |
| 23 | | 432909A1 | | 1 | RETENEUR |
| 24 | | L126168 | | 1 | JOINT |
| 25 | | 87623438 | | 1 | ENTRETOISE, Lower Bearing |
| 26 | | 827-12100 | | 4 | BOULON, Hex, M12 x 100, 10.9 |
| 27 | | L118983 | | AR | CALE D'EPAISSEUR, .1 mm |
| 28 | | L118980 | | AR | CALE D'EPAISSEUR, .25 mm |
| 29 | | L118982 | | AR | CALE D'EPAISSEUR, .5 mm |
| 30 | | L128375 | | 1 | PLAQUE, Lower Pin |
| 31 | | 827-12070 | | 3 | BOULON, Hex, M12 x 70, 10.9 |
| 32 | | 627-12030 | | 6 | BOULON, Hex, M12 x 30, 10.9 |

| 09-16 | | p1 | 07/07 |
|---|---|---|---|

**CAPOT**

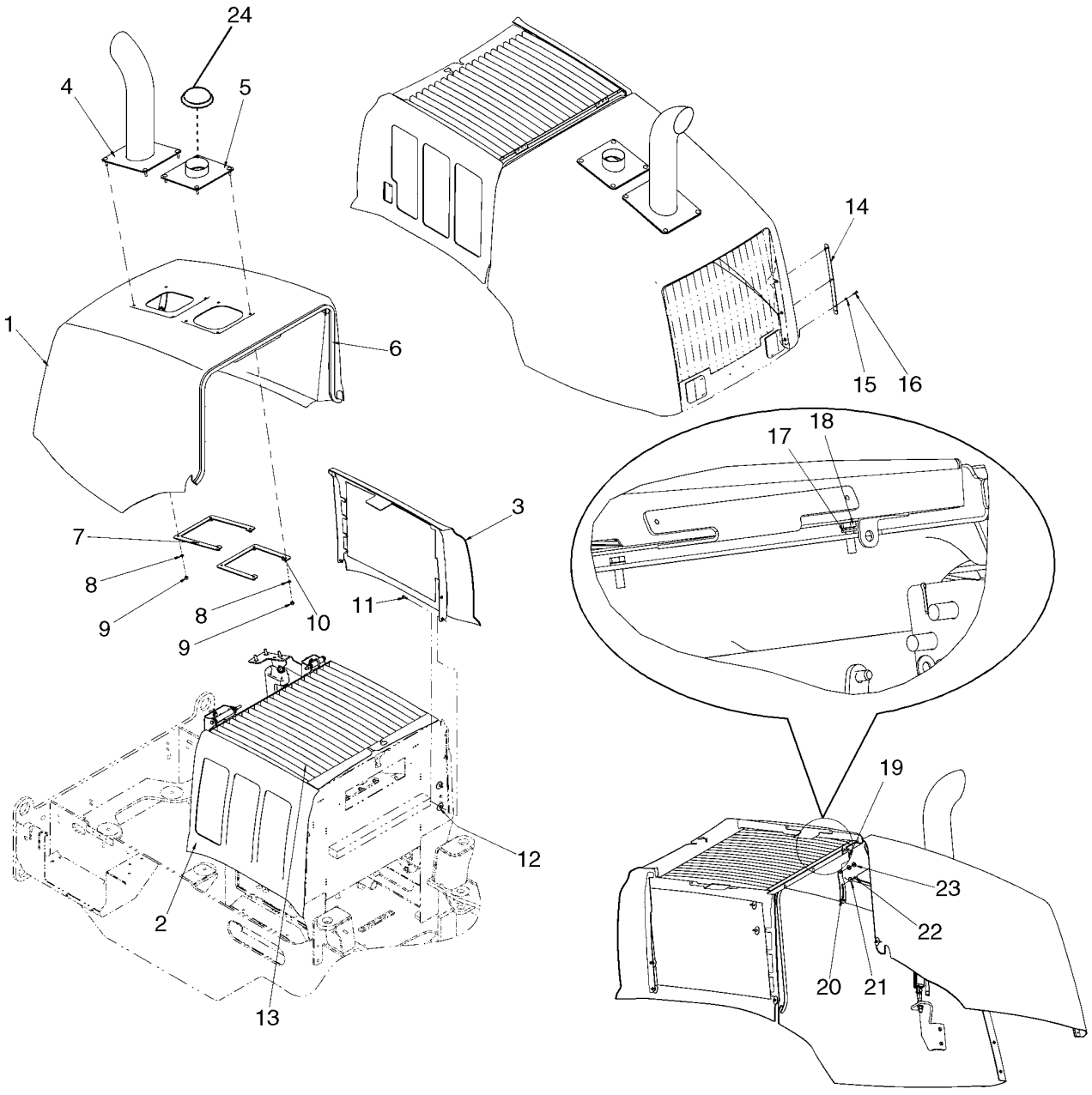

**CAPOT**

| REF | FN | PART NUMBER | YR/SN | QTY | DESCRIPTION |
|---|---|---|---|---|---|
| | | REF | | | NOTICE, ENGINE HOOD, FOR GRILLE AND REAR LIGHTS, SEE FIGURE 04-20 |
| 1 | | 87432252 | | 1 | TÔLE DE FERMETURE, Case Power Tan |
| 2 | | 87308682 | | 1 | PANNEAU, RH Hood; Case Power Tan |
| 3 | | 87308668 | | 1 | PANNEAU, LH Hood; Case Power Tan |
| 4 | | 8500375 | | 1 | TUBE ECHAPPEMENT |
| 5 | | 8500379 | | 1 | TUBE (ASSEMBLE), Intake |
| 6 | | 8605846 | | 1 | JOINT, Hood |
| 7 | | 495-81145 | | 1 | RONDELLE, 13/32" x 1 3/4" x .120" |
| 8 | | 895-18010 | | 8 | RONDELLE, M10 x 18 x 1.6 |
| 9 | | 832-10410 | | 8 | CONTRE-ECROU, M10 x 1.5, Cl 8 |
| 10 | | 8500382 | | 1 | PLAQUE |
| 11 | | {87632741} | | 6 | SCREW |
| 12 | | 495-81144 | | 6 | RONDELLE, 13/32" x 1 3/4" x .060" |
| 13 | | 87308388 | | 1 | ECRAN, Top |
| 14 | | 444931A1 | | 2 | PLAQUE |
| 15 | | 892-11006 | | 6 | RONDELLE FREIN, M6 |
| 16 | | 627-6025 | | 6 | BOULON, Hex, M6 x 25, 10.9 |
| 17 | | 892-11008 | | 3 | RONDELLE FREIN, M8 |
| 18 | | 627-8025 | | 3 | BOULON, Hex, M8 x 25, 10.9 |
| 19 | | 733-3220 | | 3 | GOUPILLE, M3.2 x 20 |
| 20 | | 8602476 | | 1 | BATTE |
| 21 | | 895-15006 | | 1 | RONDELLE, M6 x 25 x 1.6 |
| 22 | | 832-10406 | | 1 | CONTRE-ECROU, M6 x 1, Cl 8 |
| 23 | | 895-15010 | | 2 | RONDELLE, M11 x 24 x 2 |
| 24 | | 8501036 | | 1 | CHAPEAU, Rain |

| 09-17 | | p1 | 07/07 |
|---|---|---|---|

**CAPOT MOTEUR - MONTAGE**

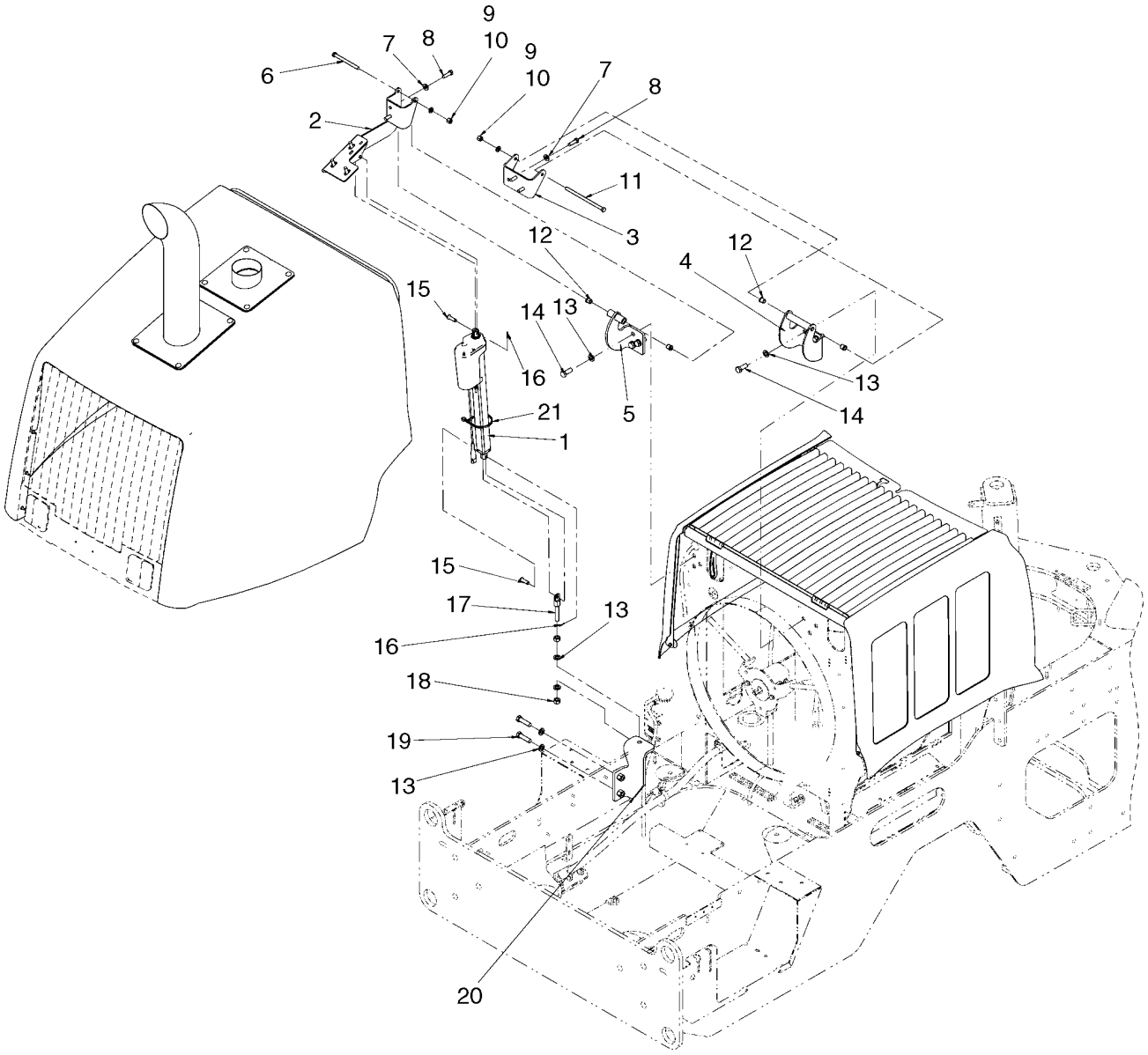


BS07D276

**CAPOT MOTEUR - MONTAGE**

| REF | FN | PART NUMBER | YR/SN | QTY | DESCRIPTION |
|---|---|---|---|---|---|
| 1 | | 87398773 | | 1 | MECANISME DE CDE, 400mm Stroke |
| 2 | | 87625616 | | 1 | PATTE FIXATION, Hood Left |
| 3 | | 8501151 | | 1 | CHARNIERE, Hood Right |
| 4 | | 8605372 | | 1 | CHARNIERE, Hood Mount Right |
| 5 | | 8605371 | | 1 | CROCHET D'ARRET |
| 6 | | 827-12140 | | 1 | BOULON, Hex, M12 x 140, 10.9 |
| 7 | | 896-15012 | | 8 | RONDELLE, M12 x 28.5 x 4, HT |
| 8 | | 627-12040 | | 8 | BOULON, Hex, M12 x 40, 10.9, Full Thd |
| 9 | | 896-11012 | | 2 | RONDELLE, M13.5 x 24.5 x 3, HT |
| 10 | | 832-10410 | | 2 | CONTRE-ECROU, M10 x 1.5, Cl 8 |
| 11 | | 827-12220 | | 1 | BOULON, Hex, M12 x 220, 10.9 |
| 12 | | 382495A1 | | 4 | BAGUE |
| 13 | | 896-11016 | | 10 | RONDELLE, M17.5 x 30 x 4, HT |
| 14 | | 627-16040 | | 6 | BOULON, Hex, M16 x 40, 10.9 |
| 15 | | 728-1240 | | 2 | AXE DE CHAPE, M12 x 40 |
| 16 | | 733-3220 | | 3 | GOUPILLE, M3.2 x 20 |
| 17 | | 87531205 | | 1 | TRINGLE, Adjuster |
| 18 | | 829-1416 | | 2 | ECROU, M16, Cl 10 |
| 19 | | 827-16060 | | 2 | BOULON, Hex, M16 x 60, 10.9 |
| 20 | | 87641237 | | 1 | PATTE FIXATION, Jack Base |
| 21 | | L18331 | | 1 | SERRE-CABLE |

**COUVERCLES - COMPARTIMENT BATTERIE**

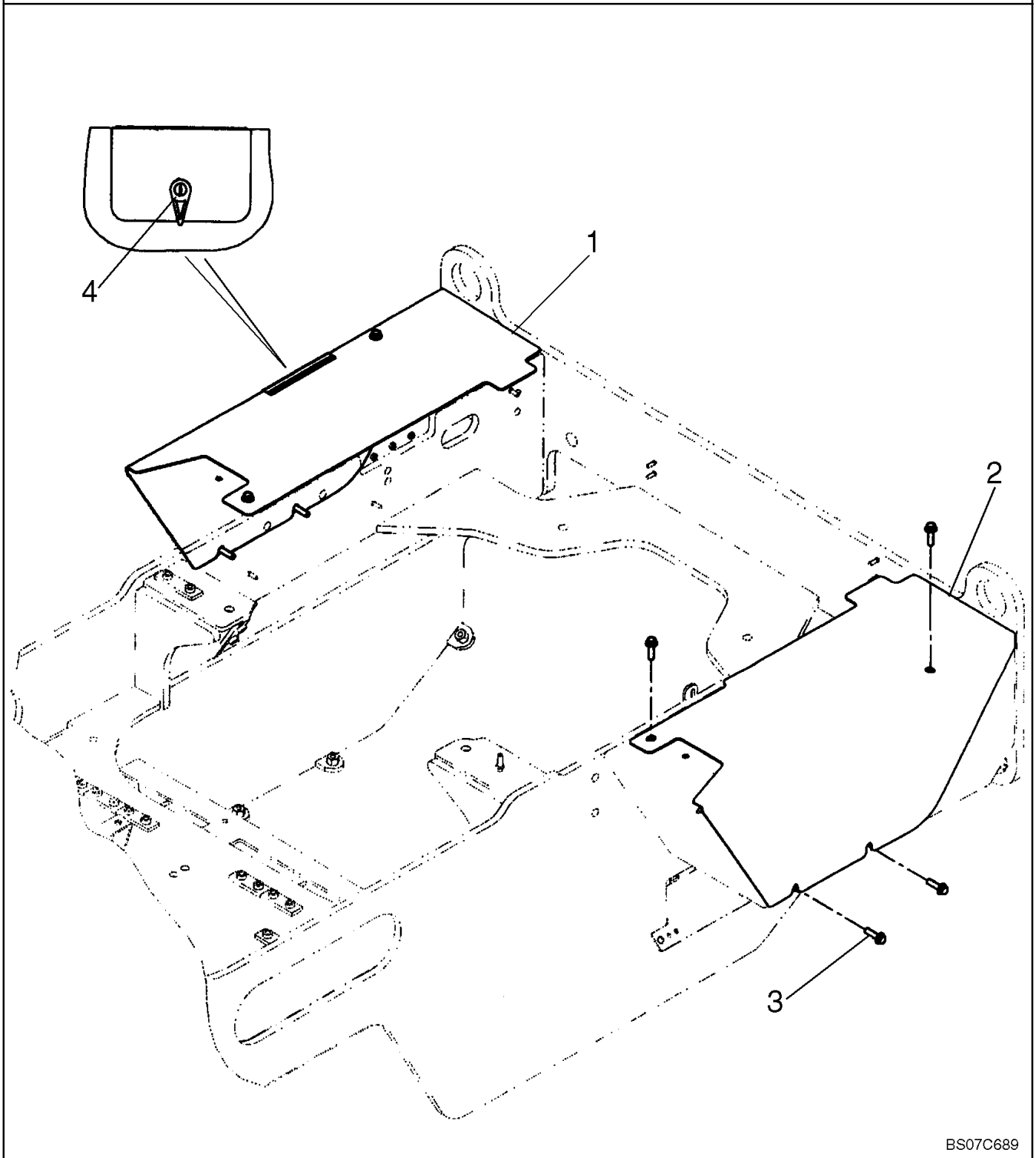

**COUVERCLES - COMPARTIMENT BATTERIE**

| REF | FN | PART NUMBER | YR/SN | QTY | DESCRIPTION |
|---|---|---|---|---|---|
| 1 | | 87585843 | | 1 | COUVERCLE, Right Battery |
| 2 | | 87585844 | | 1 | COUVERCLE, Left Battery |
| 3 | | 844-10035 | | 8 | BOULON, Hex Flg, M10 x 35, 8.8 |
| 4 | | 8602791 | | 1 | SERRURE, Battery Box |

**COUVERCLES - CABINE ET TOIT, BAS**

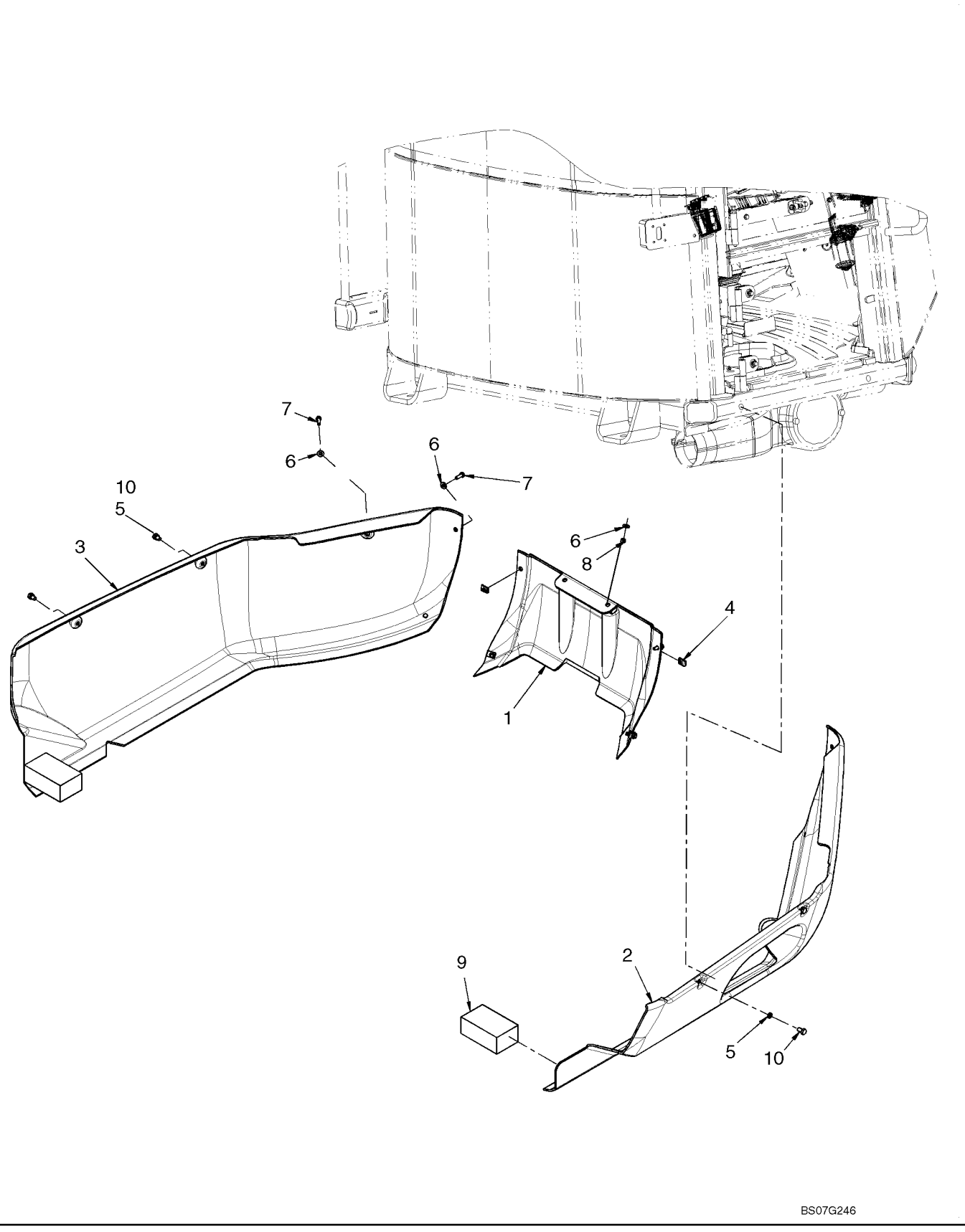

**COUVERCLES - CABINE ET TOIT, BAS**

| REF | FN | PART NUMBER | YR/SN | QTY | DESCRIPTION |
|---|---|---|---|---|---|
| 1 | | 87389202 | | 1 | FEUILLE, Center; CASE PowerTan |
| 1 | | 87389203 | | 1 | FEUILLE, Center; CNH CE Gray |
| 2 | | 87389199 | | 1 | FEUILLE, Right Hand; CASE PowerTan |
| 2 | | 87389200 | | 1 | FEUILLE, Right Hand; CNH CE Gray |
| 3 | | {87652920} | | 1 | PLASTIC, Left Hand; CASE PowerTan |
| 3 | | {87652921} | | 1 | PLASTIC, Left Hand; CNH CE Gray |
| 4 | | 833-40408 | | 4 | ECROU, M8, U |
| 5 | | 432444A1 | | 4 | ENTRETOISE |
| 6 | | 895-15008 | | 8 | RONDELLE, M8 x 20 x 1.6 |
| 7 | | 627-8025 | | 6 | BOULON, Hex, M8 x 25, 10.9 |
| 8 | | 829-1408 | | 2 | ECROU, M8, Cl 10 |
| 9 | | 87532611 | | 2 | JOINT, Foam |
| 10 | | {87547661} | | 4 | BOLT, M10x16 |

| 09-19A | | p1 | 08/07 |
|---|---|---|---|

**COUVERCLES - CHÂSSIS ARRIÈRE**

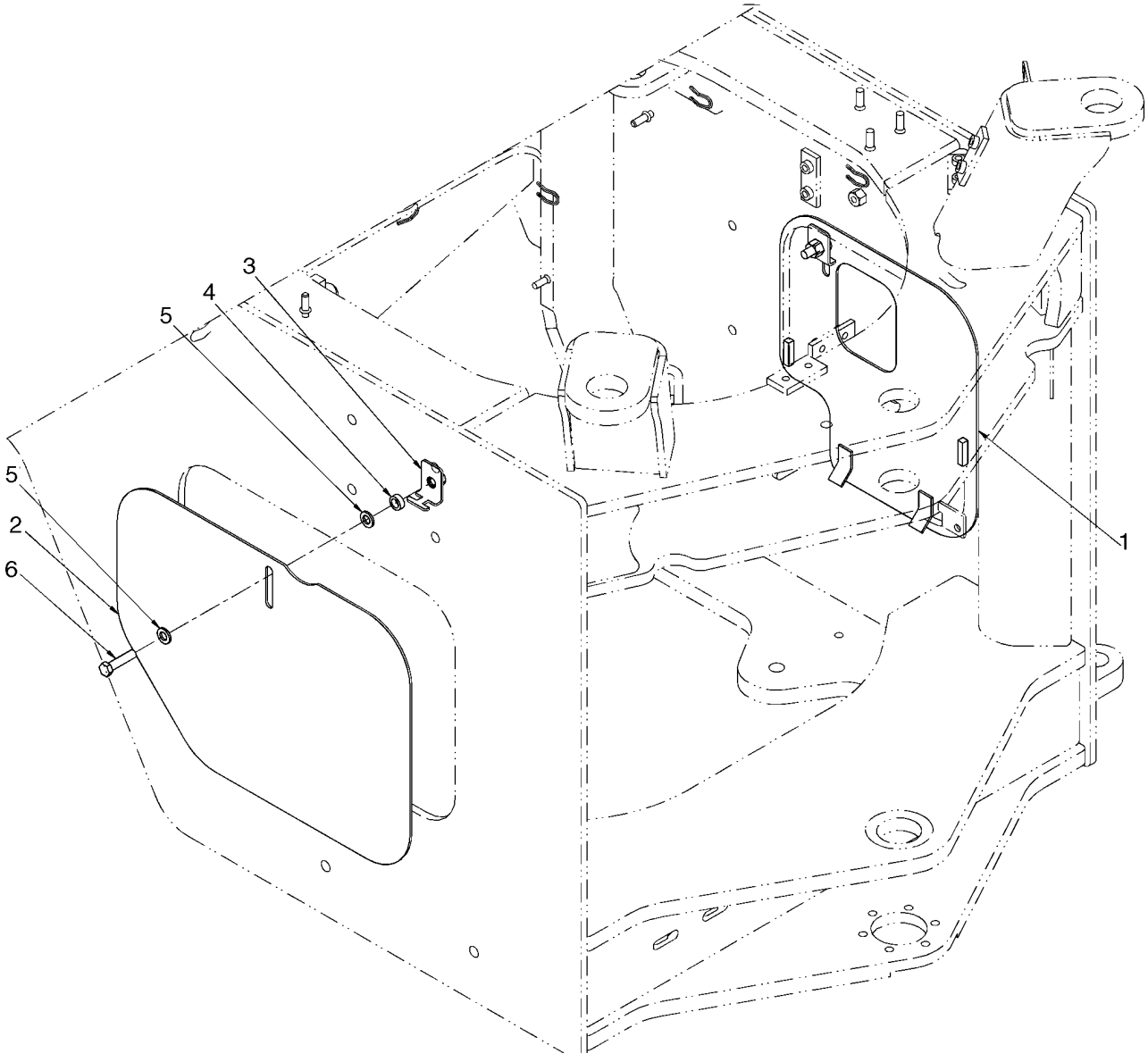

**COUVERCLES - CHÂSSIS ARRIÈRE**

| REF | FN | PART NUMBER | YR/SN | QTY | DESCRIPTION |
|---|---|---|---|---|---|
| 1 | | 87653634 | | 1 | COUVERCLE, Left Side |
| 2 | | 87600838 | | 1 | COUVERCLE, Right Side |
| 3 | | 87404138 | | 2 | CRAMPON, Side Cover |
| 4 | | D35859 | | 2 | ENTRETOISE |
| 5 | | 896-11012 | | 4 | RONDELLE, M13.5 x 24.5 x 3, HT |
| 6 | | 827-12050 | | 2 | BOULON, Hex, M12 x 50, 10.9 |

| 09-20 | | p1 | 08/07 |
|---|---|---|---|

**GARDE-BOUE AVANT**

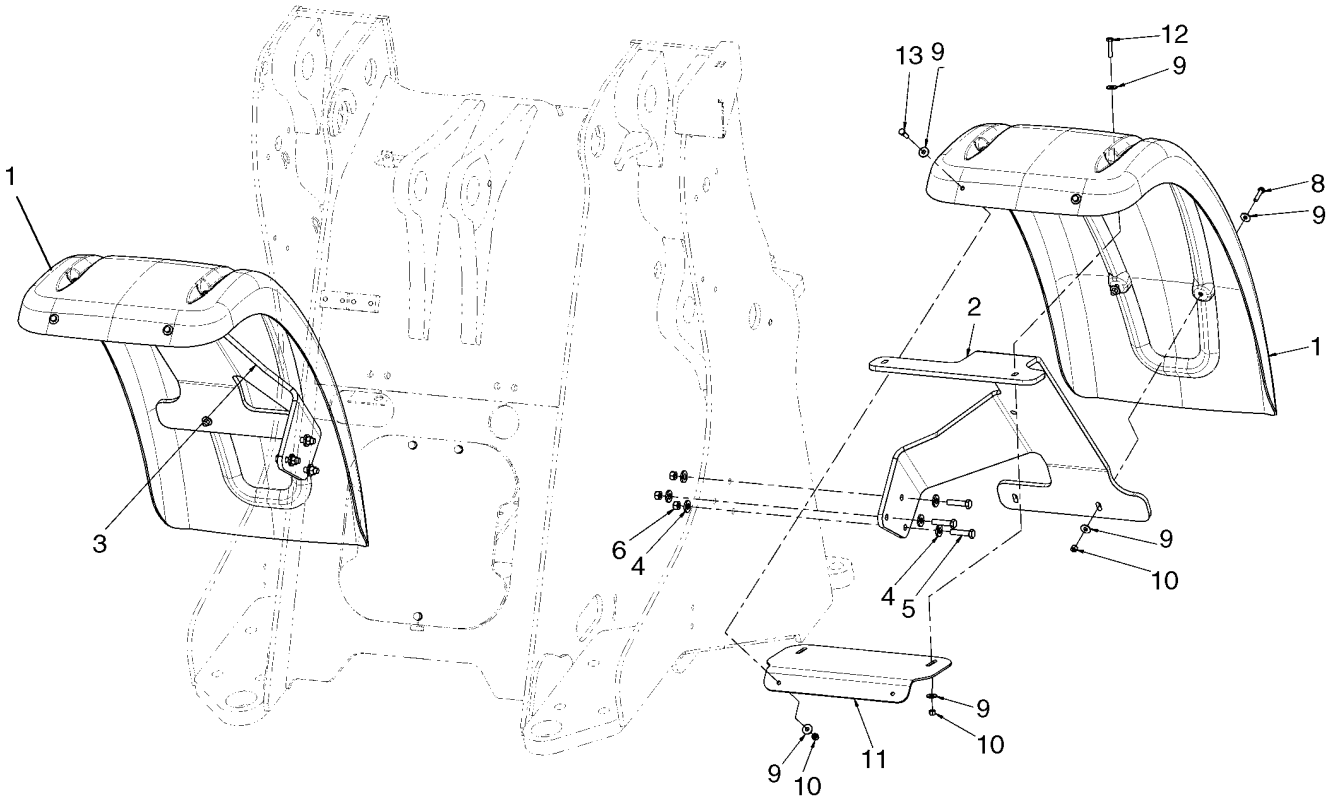


BS07F297

**GARDE-BOUE AVANT**

| REF | FN | PART NUMBER | YR/SN | QTY | DESCRIPTION |
|---|---|---|---|---|---|
| 1 | | 87355957 | | 2 | GARDE-BOUE, Front |
| 2 | | 87579405 | | 1 | PATTE FIXATION, LH Fender |
| 3 | | 87579406 | | 1 | PATTE FIXATION, RH Fender |
| 4 | | 896-15012 | | 12 | RONDELLE, M12 x 28.5 x 4, HT |
| 5 | | 827-12050 | | 6 | BOULON, Hex, M12 x 50, 10.9 |
| 6 | | 829-1412 | | 6 | ECROU, M12, Cl 10 |
| 8 | | 627-8035 | | 4 | BOULON, Hex, M8 x 35, 10.9 |
| 9 | | 895-25008 | | 24 | RONDELLE, M8 x 20 x 1.6 |
| 10 | | 832-10408 | | 12 | CONTRE-ECROU, M8 x 1.25, Cl 8 |
| 11 | | 87620991 | | 2 | PATTE FIXATION, Front Fender |
| 12 | | 827-8040 | | 4 | BOULON, Hex, M8 x 40, 10.9 |
| 13 | | 627-8030 | | 4 | BOULON, Hex, M8 x 30, 10.9 |

| 09-20A | | p1 | 05/07 |
|---|---|---|---|

**GARDE-BOUE AVANT - LARGE**

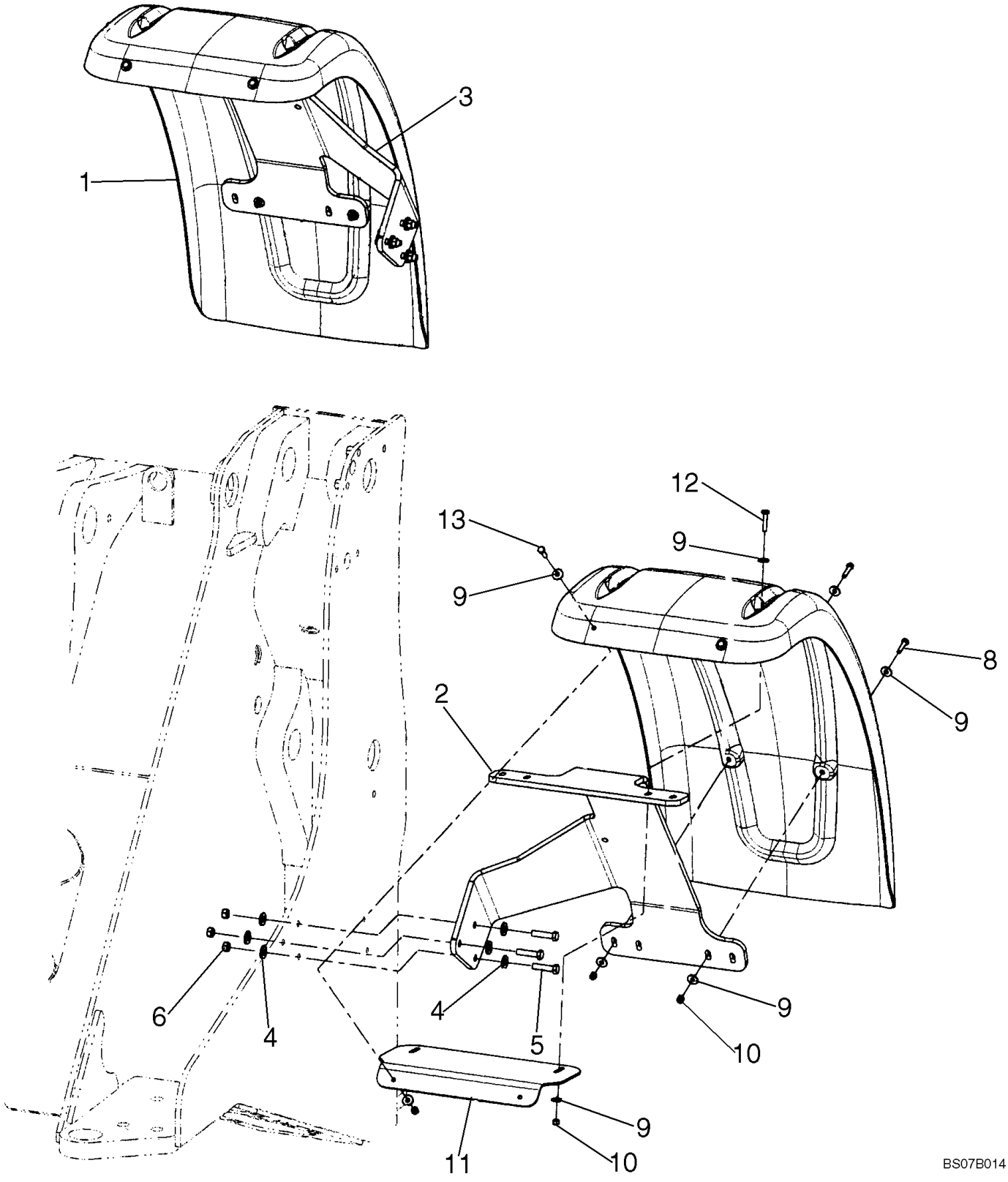

**GARDE-BOUE AVANT - LARGE**

| REF | FN | PART NUMBER | YR/SN | QTY | DESCRIPTION |
|---|---|---|---|---|---|
| 1 | | 87355957 | | 2 | GARDE-BOUE, Wide; If Used |
| 2 | | 87355960 | | 1 | PATTE FIXATION, Fender; LH |
| 3 | | 87355962 | | 1 | PATTE FIXATION, Fender; RH |
| 4 | | 896-15012 | | 12 | RONDELLE, M12 x 28.5 x 4, HT |
| 5 | | 827-12050 | | 6 | BOULON, Hex, M12 x 50, 10.9 |
| 6 | | 829-1412 | | 6 | ECROU, M12, Cl 10 |
| 8 | | 627-8035 | | 4 | BOULON, Hex, M8 x 35, 10.9 |
| 9 | | 895-25008 | | 24 | RONDELLE, M8 x 20 x 1.6 |
| 10 | | 832-10408 | | 12 | CONTRE-ECROU, M8 x 1.25, Cl 8 |
| 11 | | 87620991 | | 2 | PATTE FIXATION, Fender; Wide |
| 12 | | 827-8040 | | 4 | BOULON, Hex, M8 x 40, 10.9 |
| 13 | | 627-8030 | | 4 | BOULON, Hex, M8 x 30, 10.9 |

| 09-21 | | p1 | 06/07 |
|---|---|---|---|

**GARDE-BOUE ARRIÈRE - STANDARD**

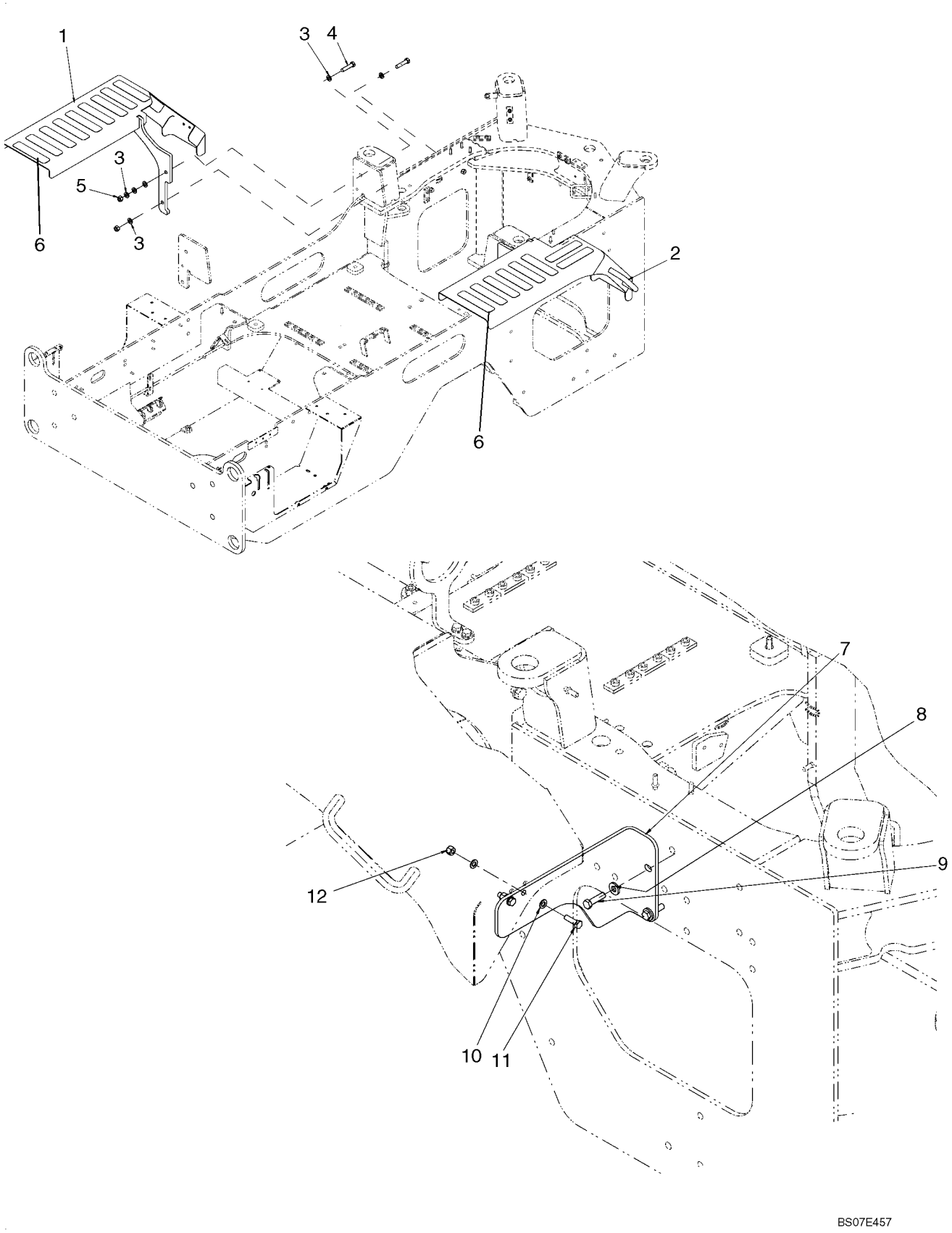

**GARDE-BOUE ARRIÈRE - STANDARD**

| REF | FN | PART NUMBER | YR/SN | QTY | DESCRIPTION |
|---|---|---|---|---|---|
| 1 | | 87652909 | | 1 | SUPPORT, LH Platform |
| 2 | | 87652910 | | 1 | SUPPORT, RH Platform |
| 3 | | 896-11016 | | 12 | RONDELLE, M17.5 x 30 x 4, HT |
| 4 | | 827-16070 | | 4 | BOULON, Hex, M16 x 70, 10.9 |
| 5 | | 829-1416 | | 4 | ECROU, M16, Cl 10 |
| 6 | | D55216 | | 17 | TAMPON, Non-Slip |
| 7 | | 87579384 | | 1 | PATTE FIXATION, RH Step Support |
| 8 | | 896-15012 | | 2 | RONDELLE, M12 x 28.5 x 4, HT |
| 9 | | 627-12045 | | 2 | BOULON, Hex, M12 x 45, 10.9, Full Thd |
| 10 | | 895-11010 | | 4 | RONDELLE, M10 x 20 x 2 |
| 11 | | 627-10035 | | 2 | BOULON, Hex, M10 x 35, 10.9, Full Thd |
| 12 | | 832-10410 | | 2 | CONTRE-ECROU, M10 x 1.5, Cl 8 |

| 09-22 | | p1 | 06/07 |
|---|---|---|---|

**GARDE-BOUE ARRIÈRE - LARGE**

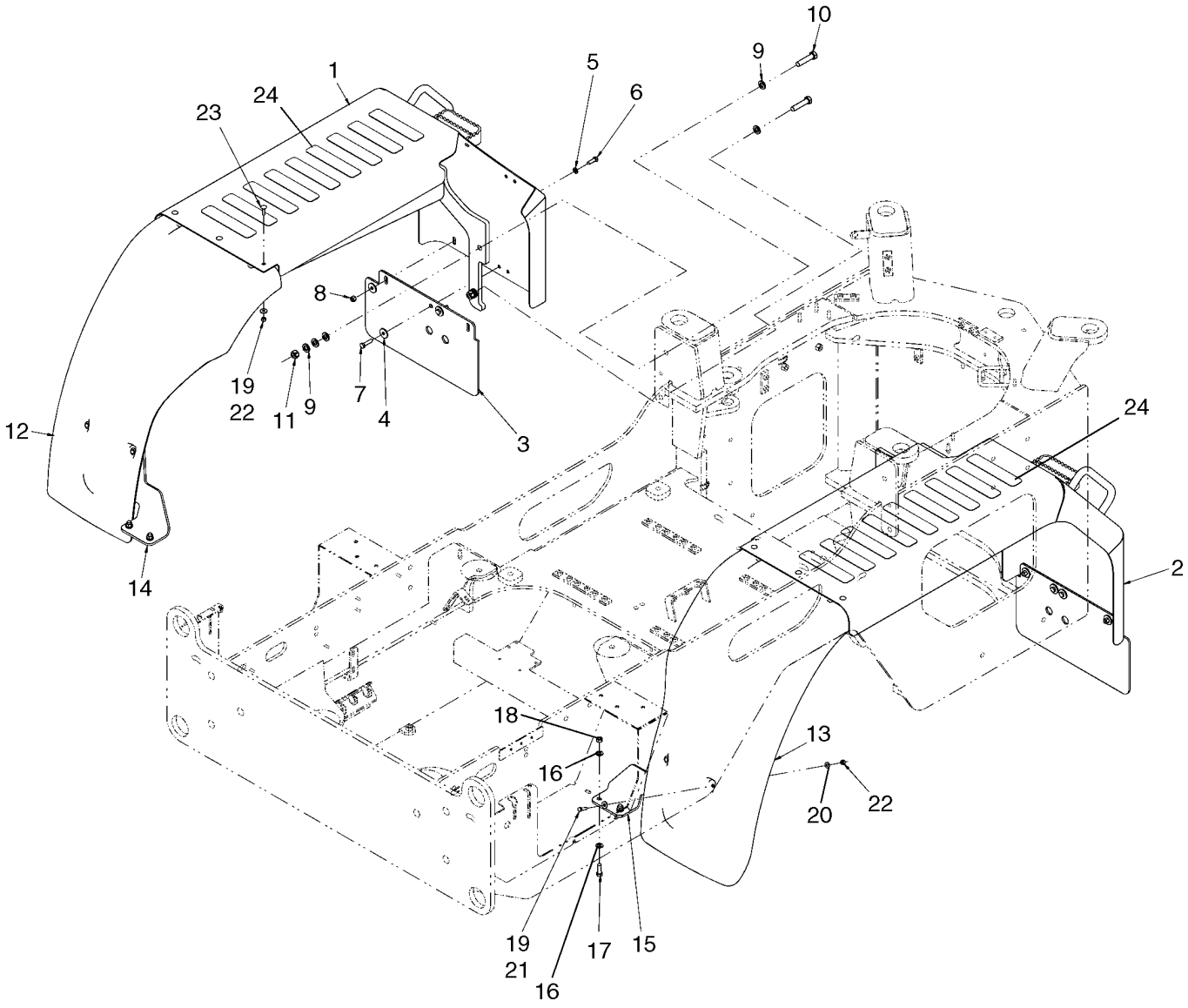

**GARDE-BOUE ARRIÈRE - LARGE**

| REF | FN | PART NUMBER | YR/SN | QTY | DESCRIPTION |
|---|---|---|---|---|---|
| | | REF | | | NOTICE, REAR FENDERS - WIDE |
| 1 | | 87652903 | | 1 | SUPPORT, Left Hand Platform |
| 2 | | 87652904 | | 1 | SUPPORT, Right Hand Platform |
| 3 | | 87559792 | | 2 | BAVETTE CAOUTCHOUC, Rear |
| 4 | | 39519 | | 8 | RONDELLE |
| 5 | | 895-11010 | | 4 | RONDELLE, M10 x 20 x 2 |
| 6 | | 627-10030 | | 4 | BOULON, Hex, M10 x 30, 10.9, Full Thd |
| 7 | | 627-10040 | | 4 | BOULON, Hex, M10 x 40, 10.9, Full Thd |
| 8 | | 832-10410 | | 4 | CONTRE-ECROU, M10 x 1.5, Cl 8 |
| 9 | | 896-11016 | | 16 | RONDELLE, M17.5 x 30 x 4, HT |
| 10 | | 827-16070 | | 4 | BOULON, Hex, M16 x 70, 10.9 |
| 11 | | 829-1416 | | 4 | ECROU, M16, Cl 10 |
| 12 | | 87559793 | | 1 | GARDE BOUE ARRIERE, Wide Left |
| 13 | | 87559794 | | 1 | GARDE BOUE ARRIERE, Wide Right |
| 14 | | 87559816 | | 1 | PATTE FIXATION, Left Hand |
| 15 | | 87559817 | | 1 | PATTE FIXATION, Right Hand |
| 16 | | 896-11012 | | 8 | RONDELLE, M13.5 x 24.5 x 3, HT |
| 17 | | 627-12035 | | 4 | BOULON, Hex, M12 x 35, 10.9 |
| 18 | | 829-1412 | | 4 | ECROU, M12, Cl 10 |
| 19 | | 895-25008 | | 10 | RONDELLE, M8 x 20 x 1.6 |
| 20 | | 895-15008 | | 4 | RONDELLE, M8 x 20 x 1.6 |
| 21 | | 627-8030 | | 4 | BOULON, Hex, M8 x 30, 10.9 |
| 22 | | 832-10408 | | 10 | CONTRE-ECROU, M8 x 1.25, Cl 8 |
| 23 | | 612-6 | | 6 | BOULON TETE BOMBEE, Short NK, M8 x 30, Cl4.6, Full Thd |
| 24 | | D55216 | | 18 | TAMPON, Non-Slip |

| 09-23 | | p1 | 06/07 |
|---|---|---|---|

**GARDE-BOUE ARRIÈRE -GARANT**

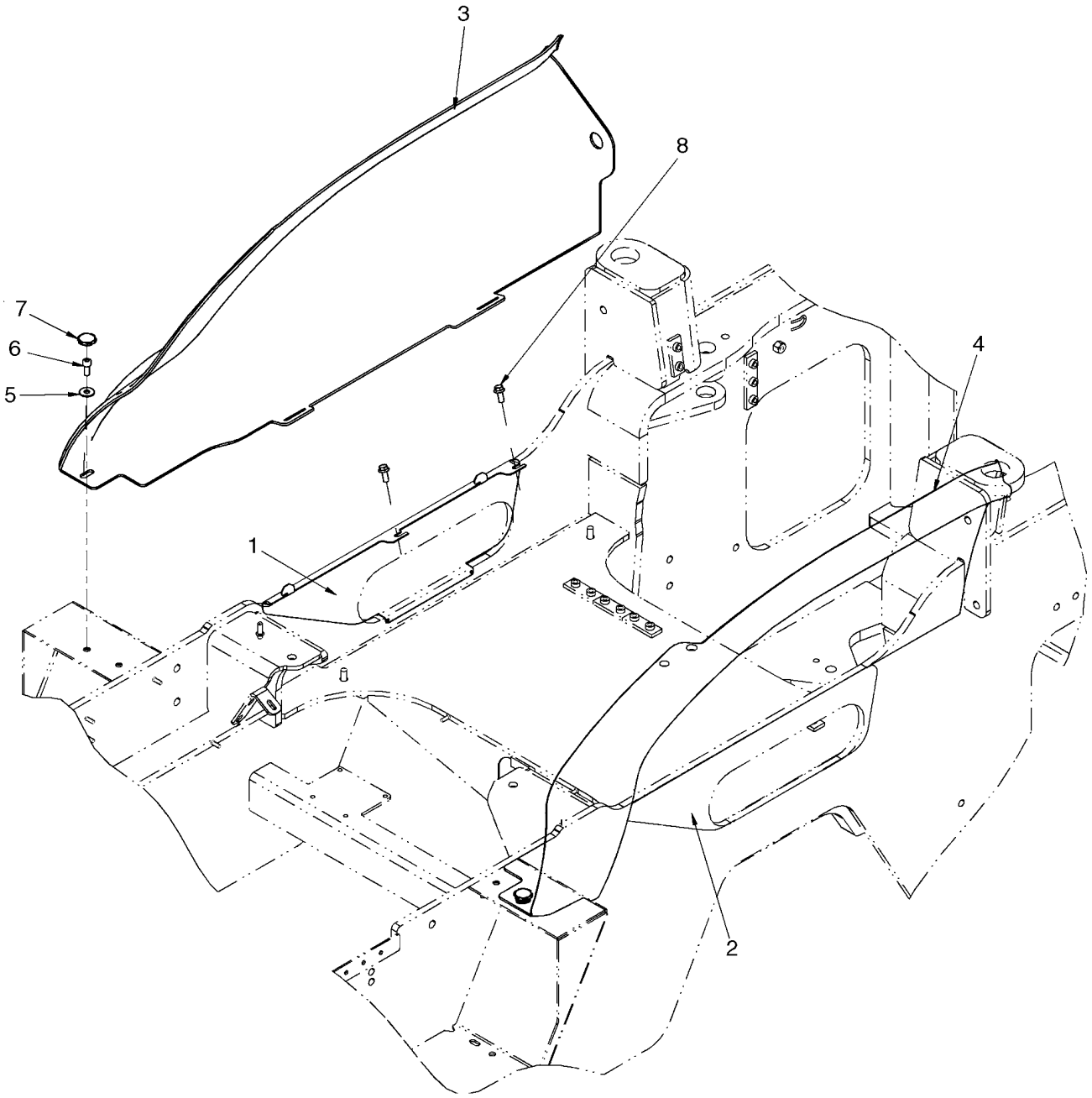

**GARDE-BOUE ARRIÈRE -GARANT**

| REF | FN | PART NUMBER | YR/SN | QTY | DESCRIPTION |
|---|---|---|---|---|---|
| | | REF | | | NOTICE, WHEEL WELLS |
| 1 | | 87591692 | | 1 | GARANT, Left Side; Case Power Tan |
| 2 | | 87597587 | | 1 | GARANT, Right Side; Case Power Tan |
| 3 | | 87360593 | | 1 | GARDE-BOUE, Right Side; Case Power Tan; If Used |
| 3 | | 87360602 | | 1 | GARDE-BOUE, Right Side; CNH CE Gray; If Used |
| 4 | | 87360678 | | 1 | GARDE-BOUE, Left Side; Case Power Tan; If Used |
| 4 | | 87360690 | | 1 | GARDE-BOUE, Left Side;  CNH CE Gray; If Used |
| 5 | | 895-25010 | | 2 | RONDELLE, M11 x 30 x 2.5 |
| 6 | | 864-10025 | | 2 | VIS, Hex Soc Hd, M10 x 25, 8.8 |
| 7 | | 87323866 | | 2 | POMMEAU, Fluted Black |
| 8 | | 844-10025 | | 4 | BOULON, Hex Flg, M10 x 25, 8.8, Full Thd |

**MARCHES - A GAUCHE**

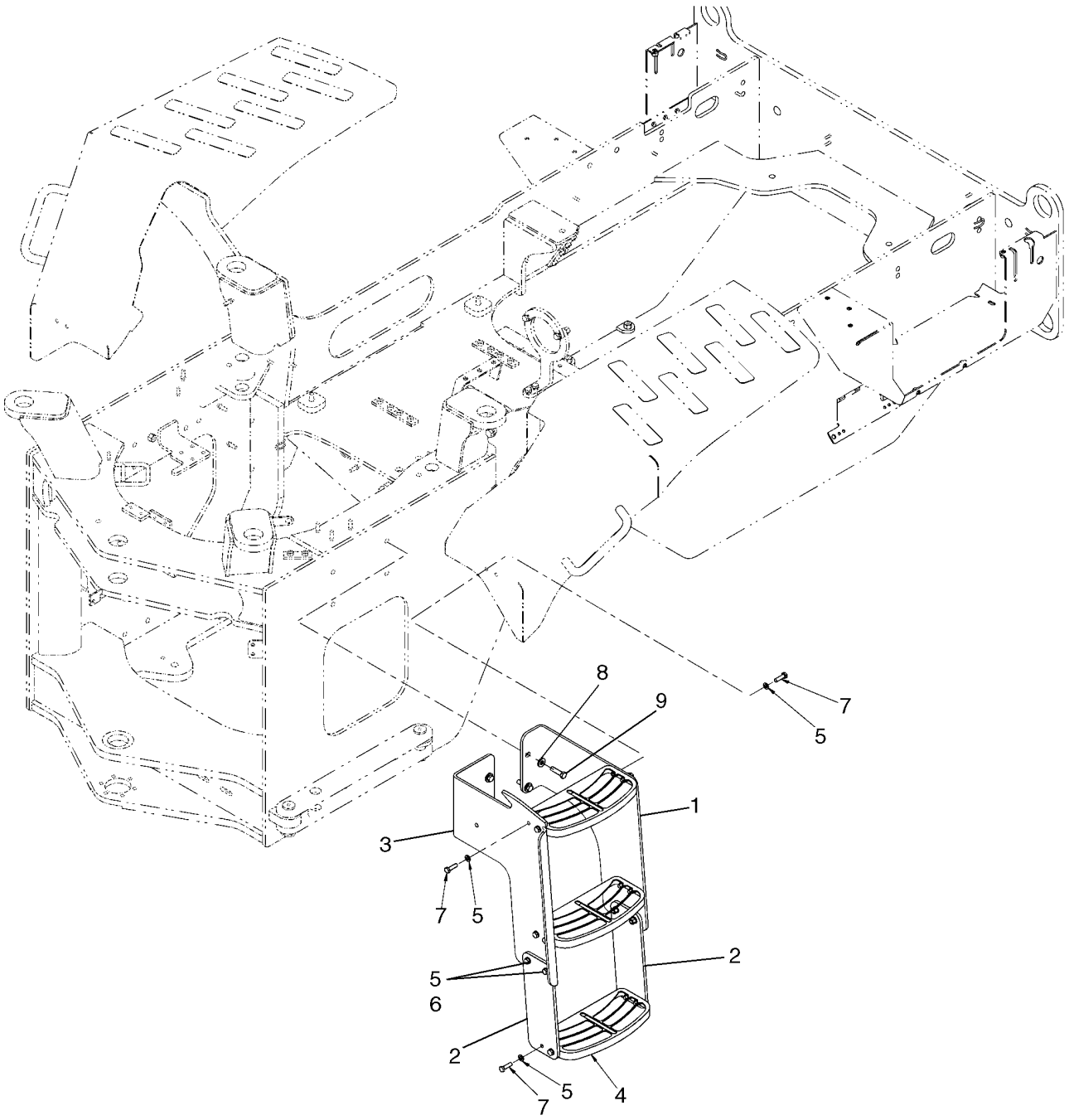

**MARCHES - A GAUCHE**

| REF | FN | PART NUMBER | YR/SN | QTY | DESCRIPTION |
|---|---|---|---|---|---|
| 1 | | 87559796 | | 1 | PATTE FIXATION, LH Step Support |
| 2 | | 87559798 | | 2 | SANGLE |
| 3 | | 87663487 | | 1 | EQUERRE, LH Step Support |
| 4 | | 87434472 | | 3 | MARCHE |
| 5 | | 895-11010 | | 32 | RONDELLE, M10 x 20 x 2 |
| 6 | | 832-10410 | | 16 | CONTRE-ECROU, M10 x 1.5, Cl 8 |
| 7 | | 627-10035 | | 16 | BOULON, Hex, M10 x 35, 10.9, Full Thd |
| 8 | | 896-15012 | | 4 | RONDELLE, M12 x 28.5 x 4, HT |
| 9 | | 627-12045 | | 4 | BOULON, Hex, M12 x 45, 10.9, Full Thd |

| 09-25 | | p1 | 08/07 |
|---|---|---|---|

**MARCHES - DROIT**

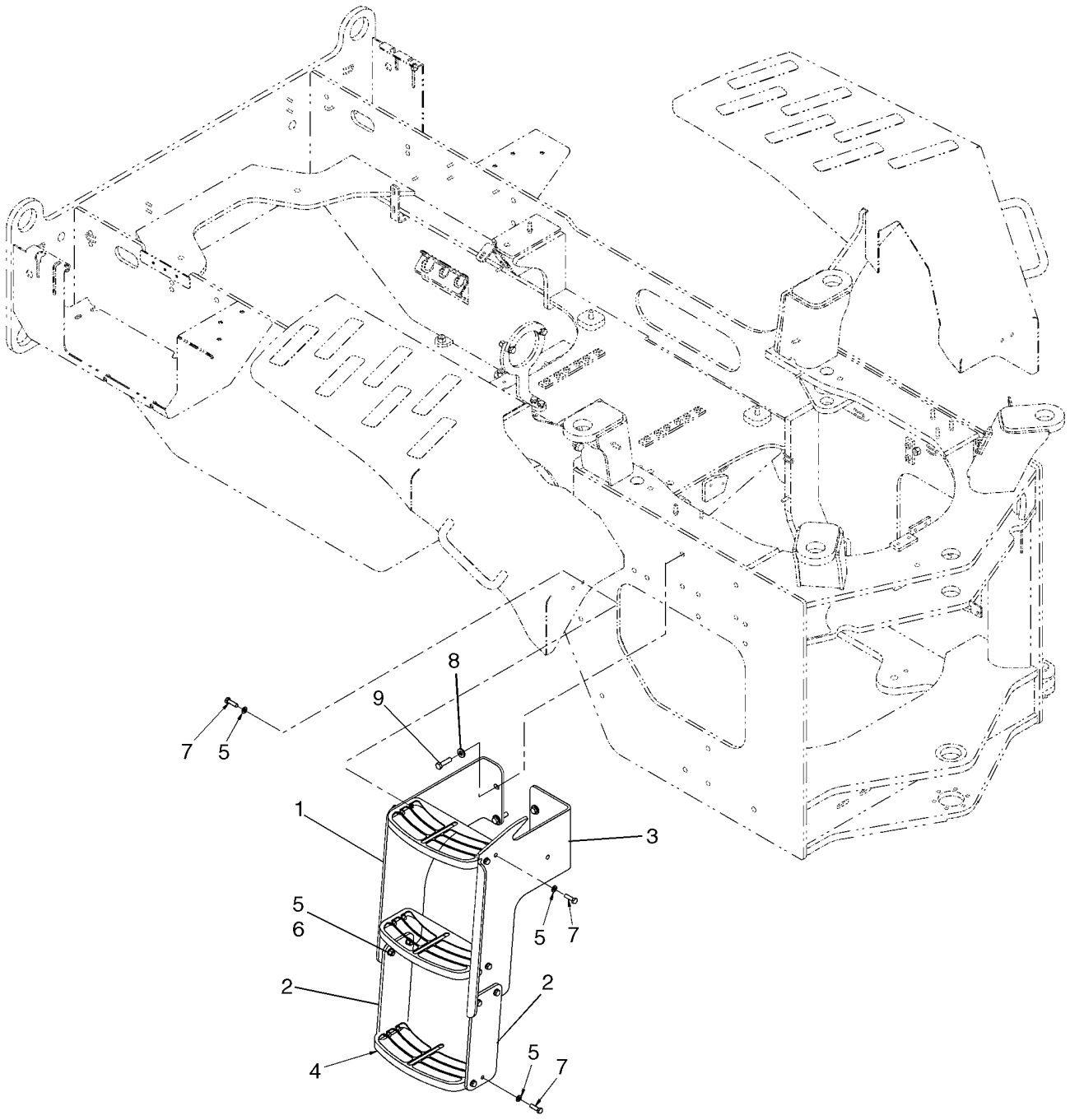


BS07E456

**MARCHES - DROIT**

| REF | FN | PART NUMBER | YR/SN | QTY | DESCRIPTION |
|---|---|---|---|---|---|
| 1 | | 87579386 | | 1 | PATTE FIXATION, RH Step Support |
| 2 | | 87559798 | | 2 | SANGLE |
| 3 | | 87663490 | | 1 | EQUERRE, RH Step |
| 4 | | 87434472 | | 3 | MARCHE |
| 5 | | 895-11010 | | 32 | RONDELLE, M10 x 20 x 2 |
| 6 | | 832-10410 | | 16 | CONTRE-ECROU, M10 x 1.5, Cl 8 |
| 7 | | 627-10035 | | 16 | BOULON, Hex, M10 x 35, 10.9, Full Thd |
| 8 | | 896-15012 | | 4 | RONDELLE, M12 x 28.5 x 4, HT |
| 9 | | 627-12045 | | 4 | BOULON, Hex, M12 x 45, 10.9, Full Thd |

**INSONORISATION - MOTEUR**

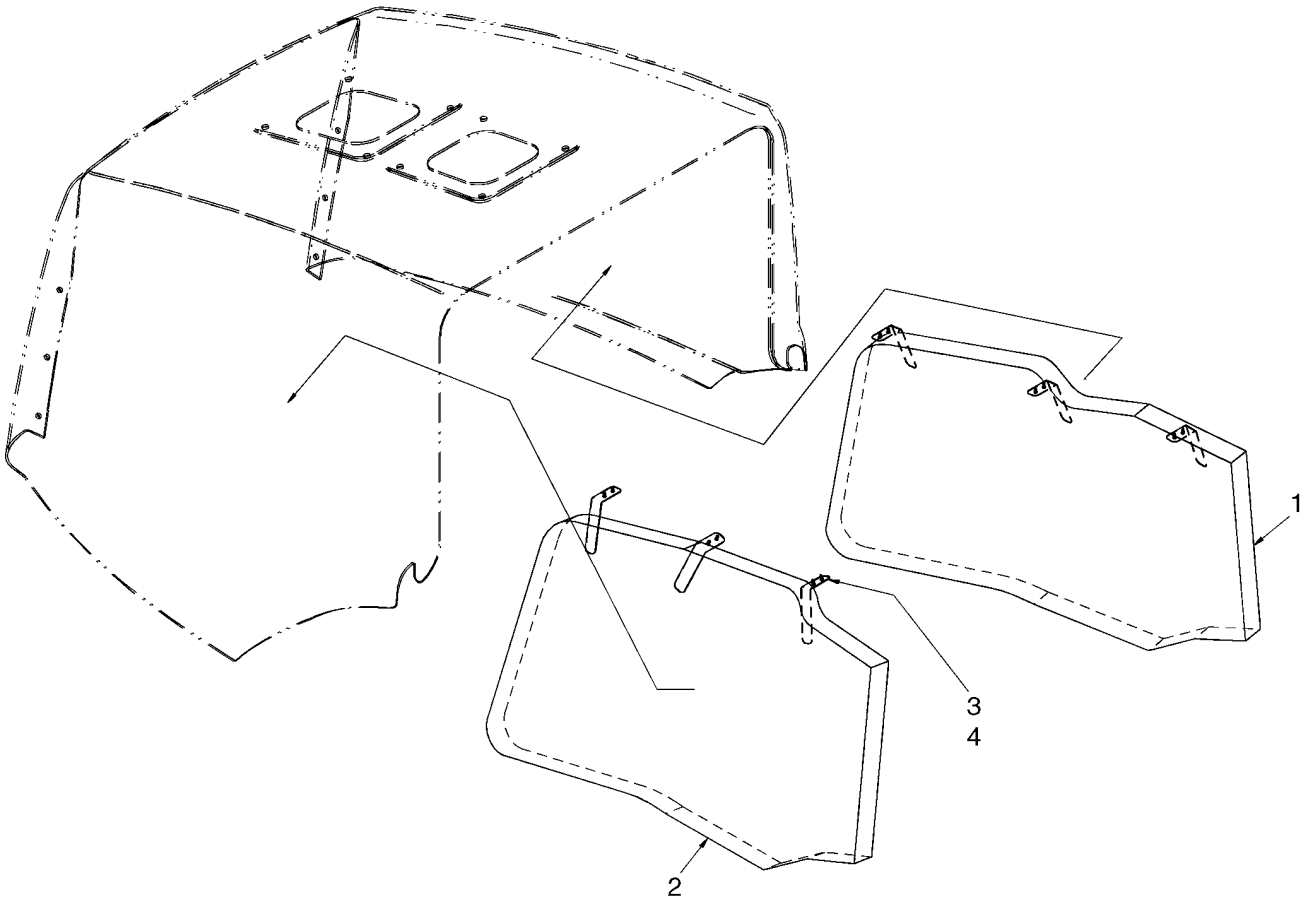


BS07G085

**INSONORISATION - MOTEUR**

| REF | FN | PART NUMBER | YR/SN | QTY | DESCRIPTION |
|---|---|---|---|---|---|
| 1 | | 8605485 | | 1 | MOUSSE ISOLANTE, LH |
| 2 | | 8605484 | | 1 | MOUSSE ISOLANTE, RH |
| 3 | | 8604993 | | 6 | PATTE FIXATION, Sound Insulation Hanger |
| 4 | | 760-14413 | | 12 | VIS AUTO-TARAUDEUSE, Pan Hd, M4.8 x 13 |

**PLAQUE DE PROTECTION**

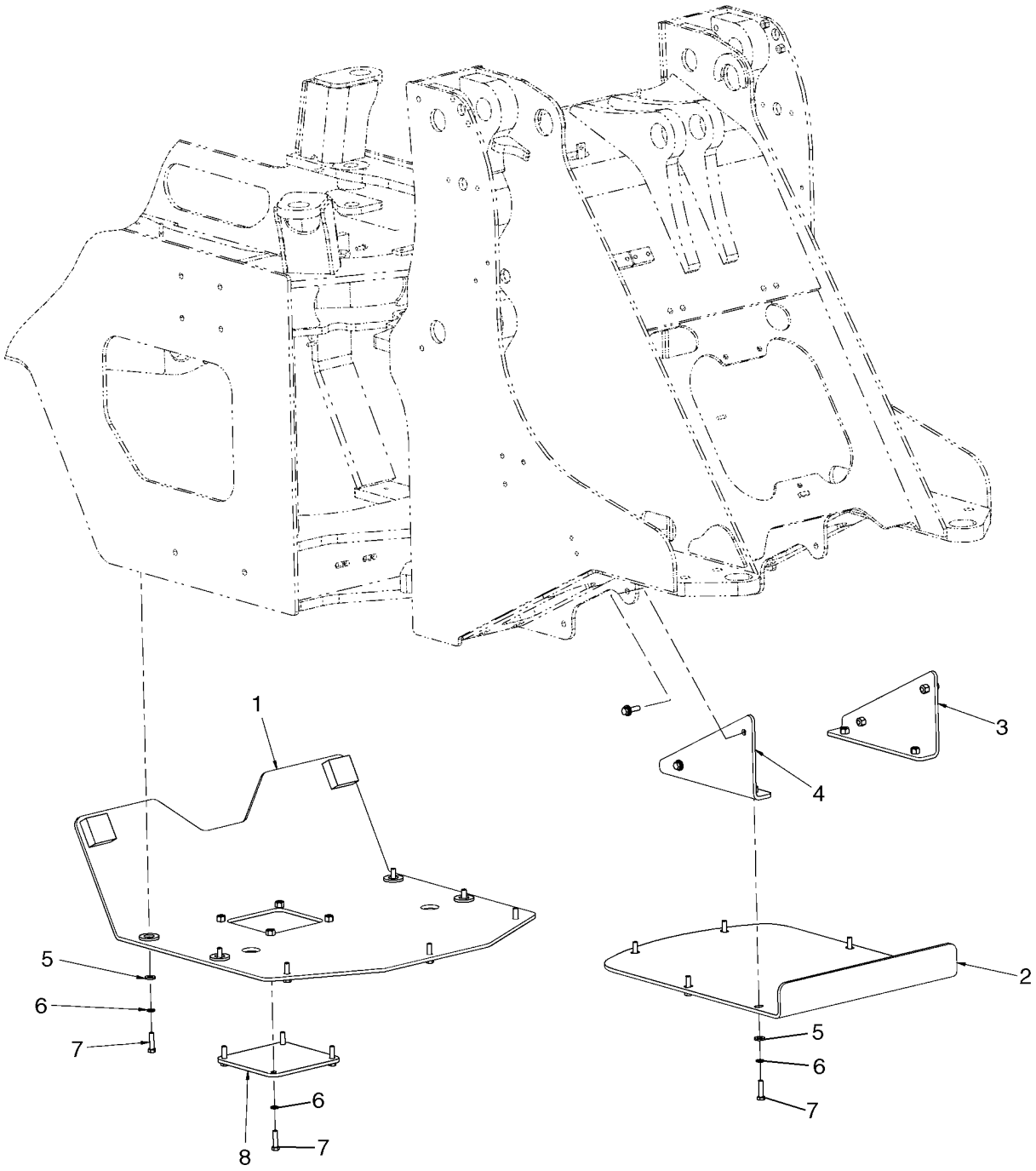

**PLAQUE DE PROTECTION**

| REF | FN | PART NUMBER | YR/SN | QTY | DESCRIPTION |
|---|---|---|---|---|---|
| 1 | | 87598264 | | 1 | COULISSEAU, Rear |
| 2 | | 87597594 | | 1 | COULISSEAU, Front |
| 3 | | 87597597 | | 1 | COULISSEAU, Front Left |
| 4 | | 87597598 | | 1 | COULISSEAU, Front Right |
| 5 | | 896-15012 | | 17 | RONDELLE, M12 x 28.5 x 4, HT |
| 6 | | 892-11012 | | 21 | RONDELLE FREIN, M12 |
| 7 | | 627-12045 | | 21 | BOULON, Hex, M12 x 45, 10.9, Full Thd |
| 8 | | 87598267 | | 1 | COUVERCLE, Transmission Drain |

**CABINE - MONTAGE**

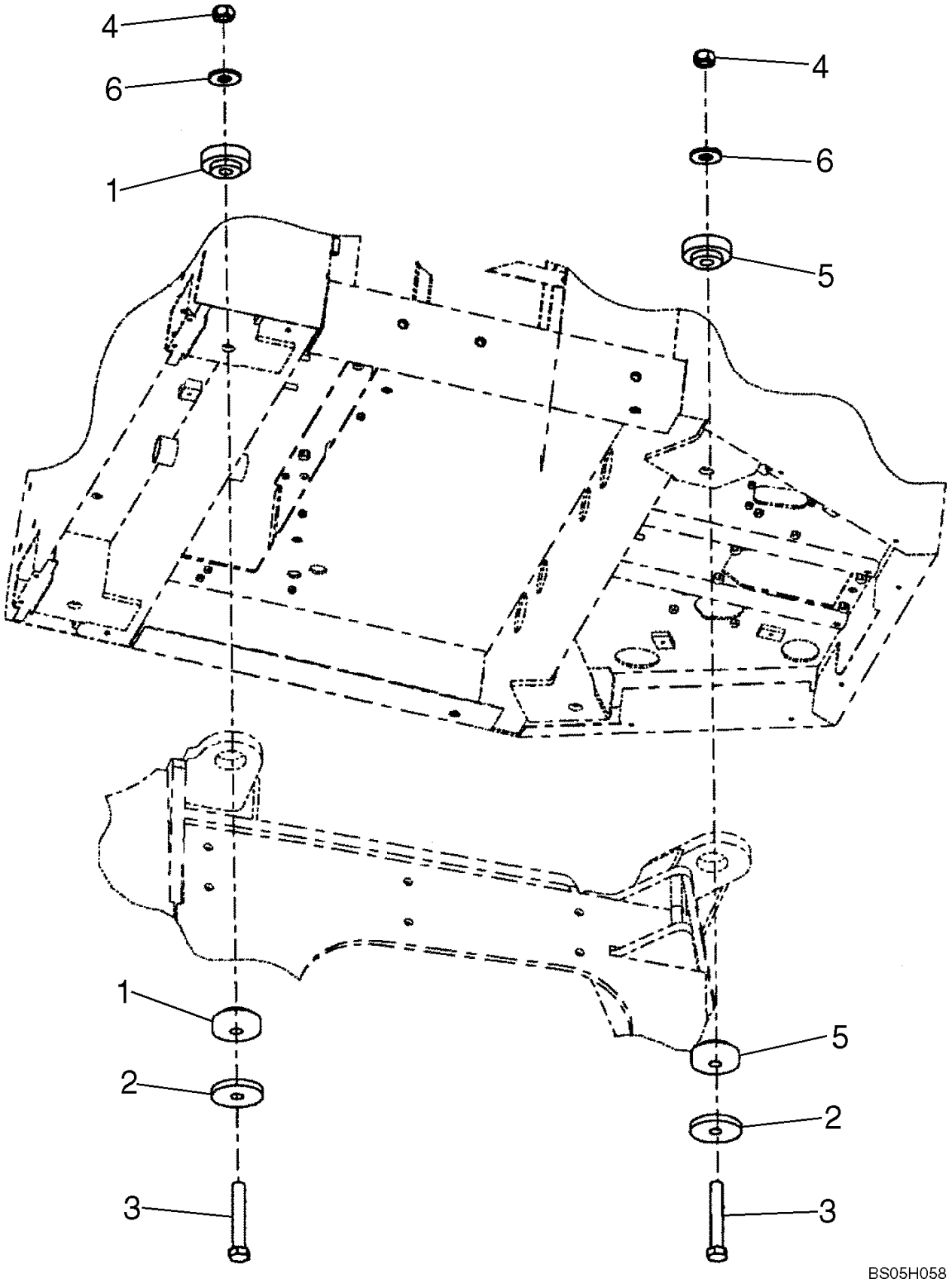

**CABINE - MONTAGE**

| REF | FN | PART NUMBER | YR/SN | QTY | DESCRIPTION |
|---|---|---|---|---|---|
| 1 | | 358981A1 | | 4 | PALIER CAOUTCHOUC, Cab/Canopy Support; Rear |
| 2 | | 1332154C1 | | 4 | RONDELLE, Special |
| 3 | | 326-1488 | | 4 | BOULON, Hex, 7/8"-9 x 5 1/2", G8 |
| 4 | | 329-1014 | | 4 | ECROU, 7/8"-9, G8 |
| 5 | | 358982A1 | | 4 | PALIER CAOUTCHOUC, Cab/Canopy Support; Front |
| 6 | | 396-41094 | | 4 | RONDELLE, 15/16" x 2 1/4" x .219", HDN |

**CABINE - VITRE, AVANT**

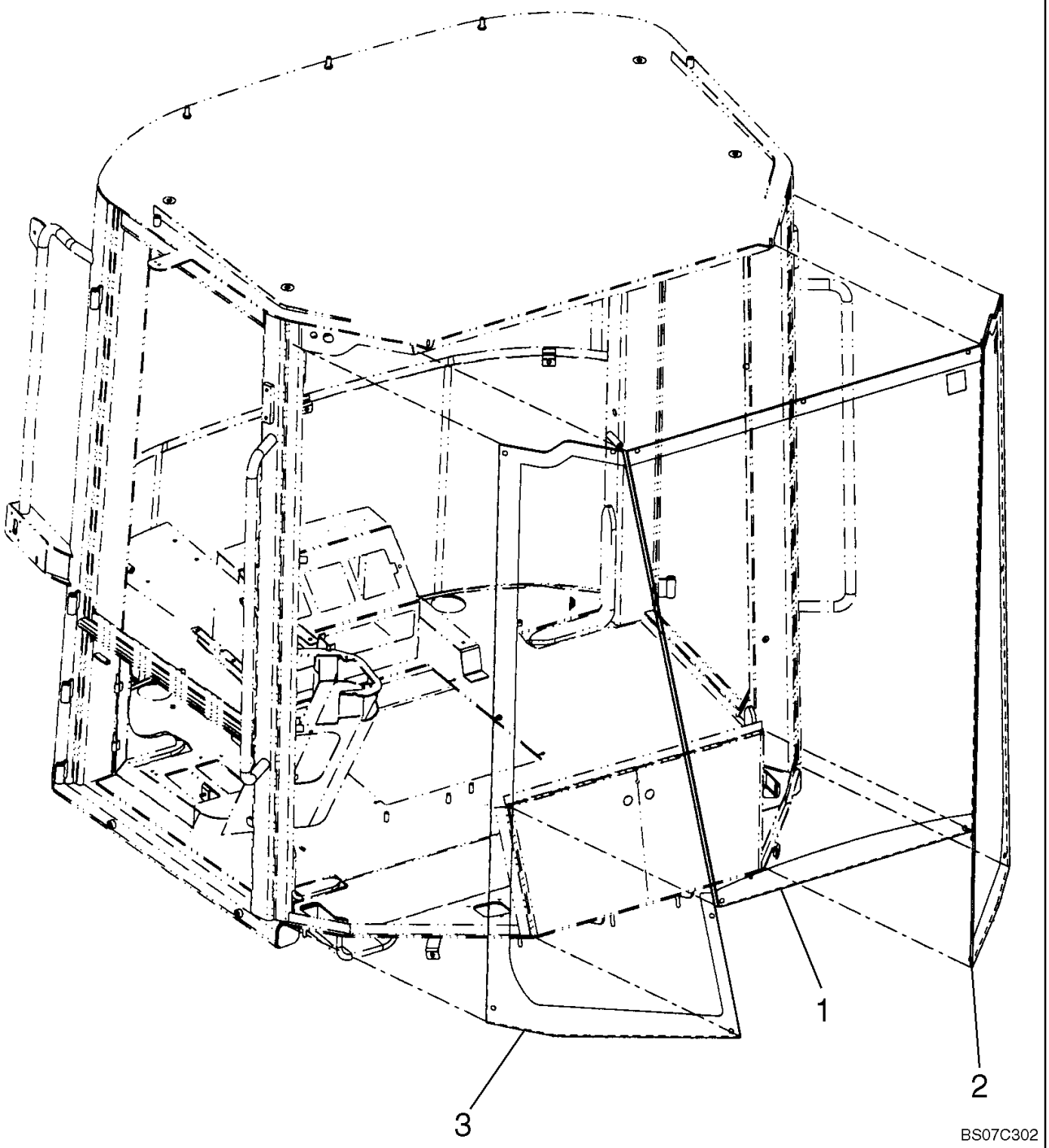

**CABINE - VITRE, AVANT**

| REF | FN | PART NUMBER | YR/SN | QTY | DESCRIPTION |
|---|---|---|---|---|---|
| 1 | | 76303237 | | 1 | VITRE, Front Center |
| 2 | | 76303238 | | 1 | VITRE, Front Left |
| 3 | | 76303239 | | 1 | VITRE, Front Right |
| 4 | | 322197950 | | 17 | ENTRETOISE, DIA. 11, Not Illustrated |
| 5 | | {345-101-B} | | AR | SEALANT, Dow 732RTV Silicone, Clear, Not Illustrated |
| 6 | | {87337003} | | AR | ADHESIVE, BULK, Not Illustrated |
| 7 | | {87324751} | | AR | ACTIVATOR, Sika UH-2, Not Illustrated |

**CABINE - VITRE, ARRIERE**

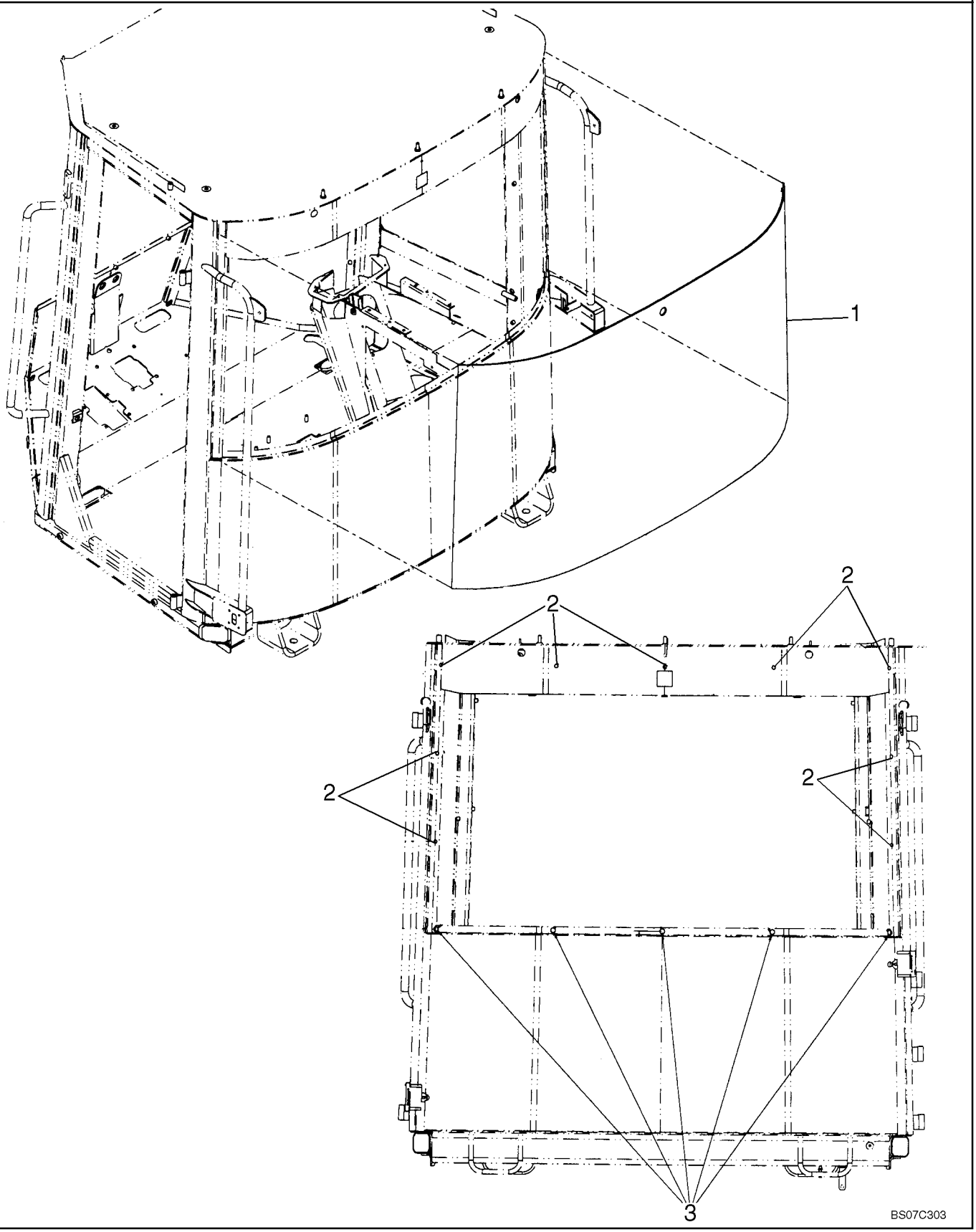

**CABINE - VITRE, ARRIERE**

| REF | FN | PART NUMBER | YR/SN | QTY | DESCRIPTION |
|---|---|---|---|---|---|
| 1 | | 76303171 | | 1 | VITRE, Rear |
| 2 | | 322197950 | | 9 | ENTRETOISE, DIA. 11 |
| 3 | | 76303582 | | 5 | ENTRETOISE, DIA. 16 |
| 4 | | {87337003} | | AR | ADHESIVE, BULK, Sika Tack Ultrafast, Not Illustrated |
| 5 | | {87324751} | | AR | ACTIVATOR, Sika UH-2 LUM, Not Illustrated |

| 09-31 | | p1 | 08/07 |
|---|---|---|---|

**CABINE - BORD INTÉRIEUR**

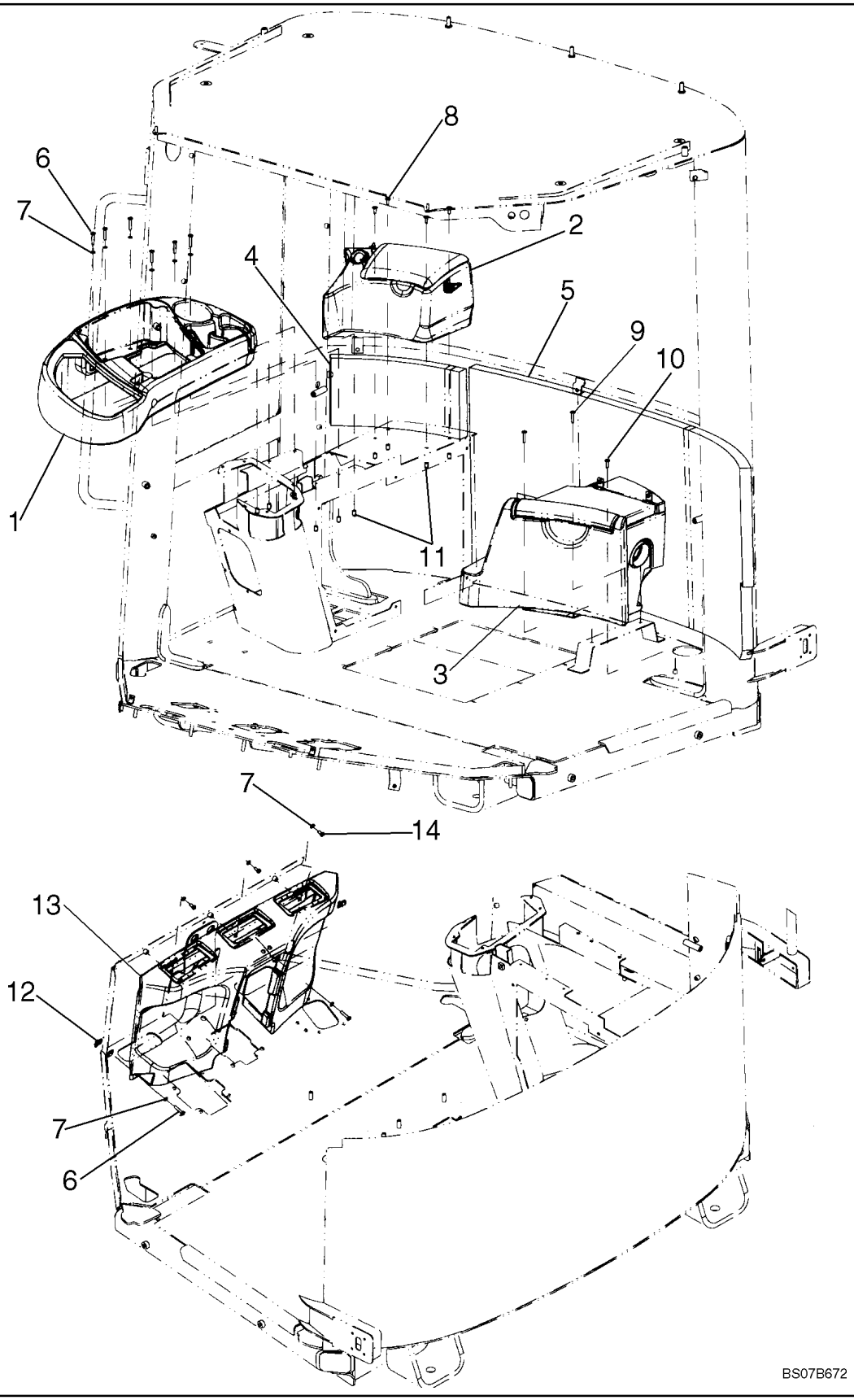

**CABINE - BORD INTÉRIEUR**

| REF | FN | PART NUMBER | YR/SN | QTY | DESCRIPTION |
|---|---|---|---|---|---|
| 1 | | 76303033 | | 1 | CONSOLE, RH |
| 2 | | {76303042} | | 1 | STORAGE BOX |
| 3 | | {76303013} | | 1 | COOL BOX |
| 4 | | {76303425} | | 1 | REAR PANEL |
| 5 | | 76303422 | | 1 | PANNEAU, Rear |
| 6 | | 840-1630 | | 8 | VIS, Cross Pan Hd, M6 x 30 |
| 7 | | 895-11006 | | 11 | RONDELLE, M6 |
| 8 | | 847-3616 | | 4 | VIS, Sltd Tr Hd, M6 x 16, 10.9, Serr |
| 9 | | 86503049 | | 2 | VIS, Cross Oval Hd, M6 x 30 |
| 10 | | {14778414} | | 1 | SCREW, M6x20 |
| 11 | | 76046110 | | 10 | PASSE-FIL, M6 |
| 12 | | 833-40306 | | 2 | ECROU, M6, U |
| 13 | | 76303040 | | 1 | CONSOLE, Front |
| 14 | | 614-6012 | | 3 | BOULON, Hex, M6 x 12, 8.8 |

**CABINE - BORD INTÉRIEUR - COLONNE**

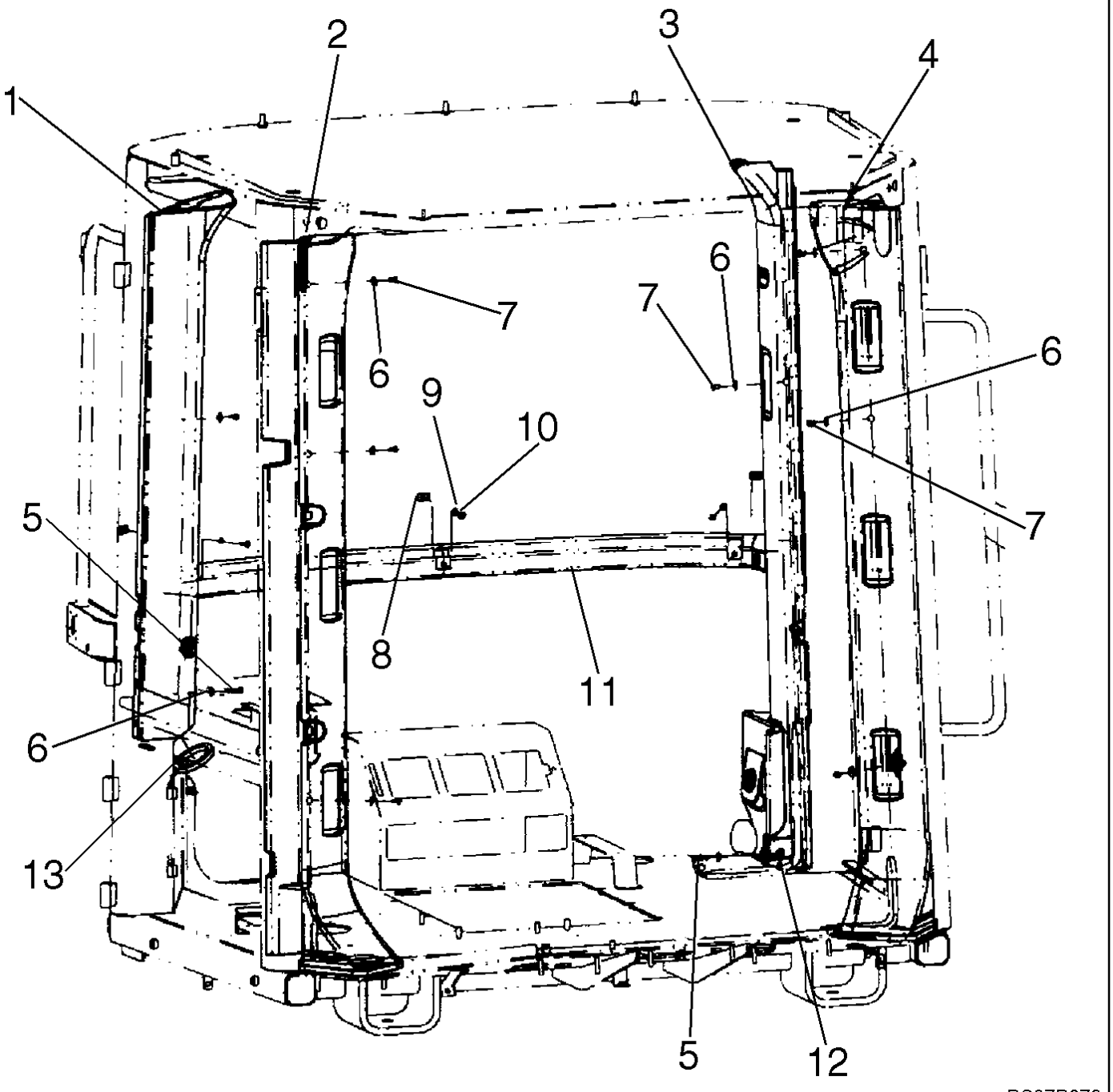

**CABINE - BORD INTÉRIEUR - COLONNE**

| REF | FN | PART NUMBER | YR/SN | QTY | DESCRIPTION |
|---|---|---|---|---|---|
| 1 | | 76303037 | | 1 | PANNEAU-TAPISSERIE, Rear RH |
| 2 | | 76303039 | | 1 | PILIER, Front RH |
| 3 | | 76303036 | | 1 | PANNEAU-TAPISSERIE, Rear LH |
| 4 | | 76303038 | | 1 | PANNEAU-TAPISSERIE, Front LH |
| 5 | | 840-1630 | | 2 | VIS, Cross Pan Hd, M6 x 30 |
| 6 | | 895-25006 | | 10 | RONDELLE, M6 x 18 x 1.6 |
| 7 | | 840-1612 | | 7 | VIS, Cross Pan Hd, M6 x 12 |
| 8 | | 833-40306 | | 3 | ECROU, M6, U |
| 9 | | 895-11006 | | 3 | RONDELLE, M6 |
| 10 | | 840-1616 | | 3 | VIS, Cross Pan Hd, M6 x 16 |
| 11 | | 76303029 | | 1 | COUVERCLE, Rear |
| 12 | | 76301020 | | 1 | ECROU, Spring M6 |
| 13 | | {76303500} | | 1 | GASKET LH |

| 09-31B | | p1 | 07/07 |
|---|---|---|---|

**CABINE - BORD INTÉRIEUR - TOIT**

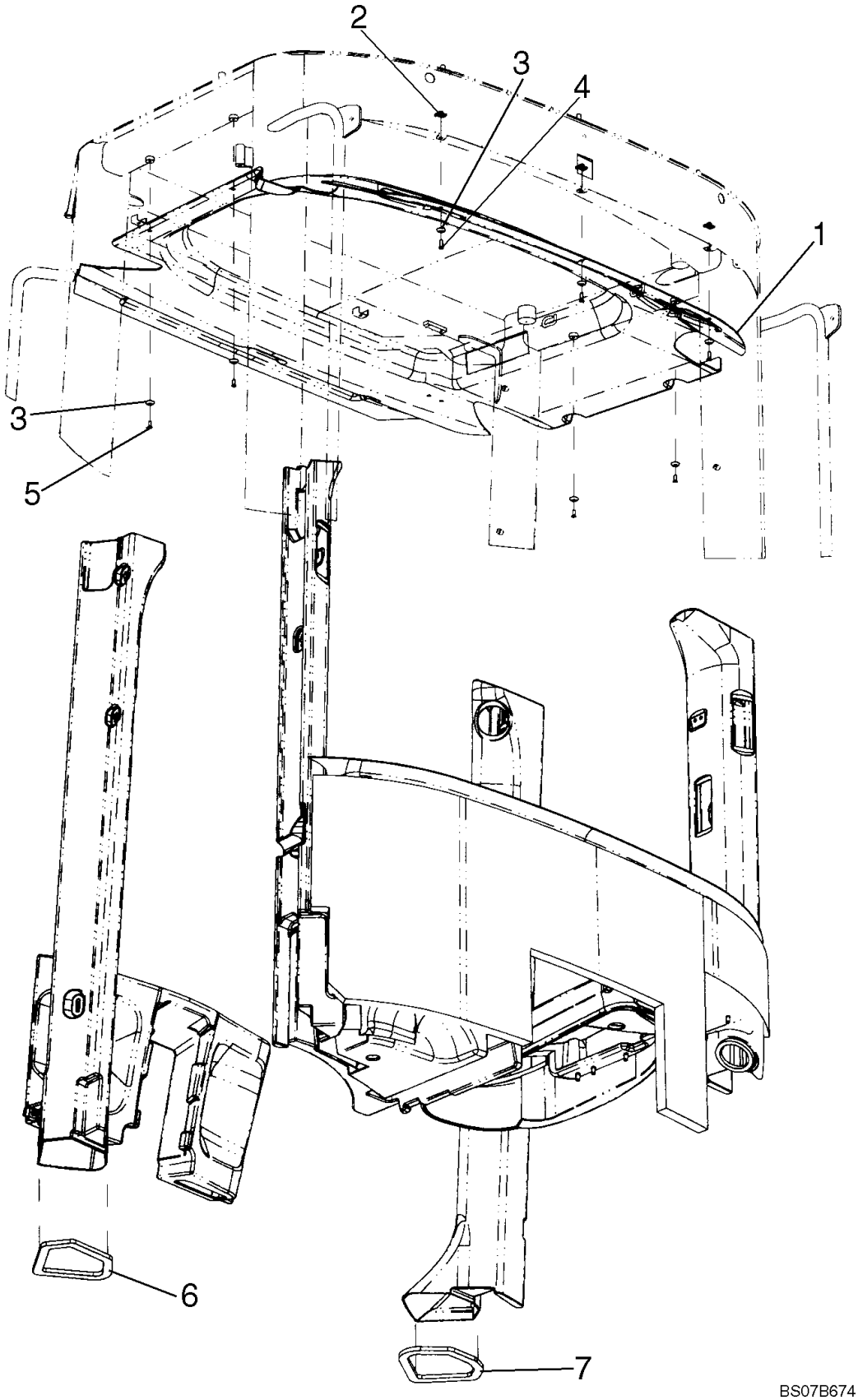

**CABINE - BORD INTÉRIEUR - TOIT**

| REF | FN | PART NUMBER | YR/SN | QTY | DESCRIPTION |
|---|---|---|---|---|---|
| 1 | | 76303481 | | 1 | HABILLEMENT DE TOIT |
| 2 | | 833-40306 | | 3 | ECROU, M6, U |
| 3 | | 79076208 | | 7 | RONDELLE |
| 4 | | 13313017 | | 3 | VIS, Cross Oval Hd, M6 x 16 |
| 5 | | 13313017 | | 4 | VIS, Cross Oval Hd, M6 x 16 |
| 6 | | 76303521 | | 1 | JOINT, LH |
| 7 | | 76303522 | | 1 | JOINT, RH |

| 09-32 | | p1 | 07/07 |
|---|---|---|---|

**CABINE - AJUSTAGE EXTÉRIEUR**

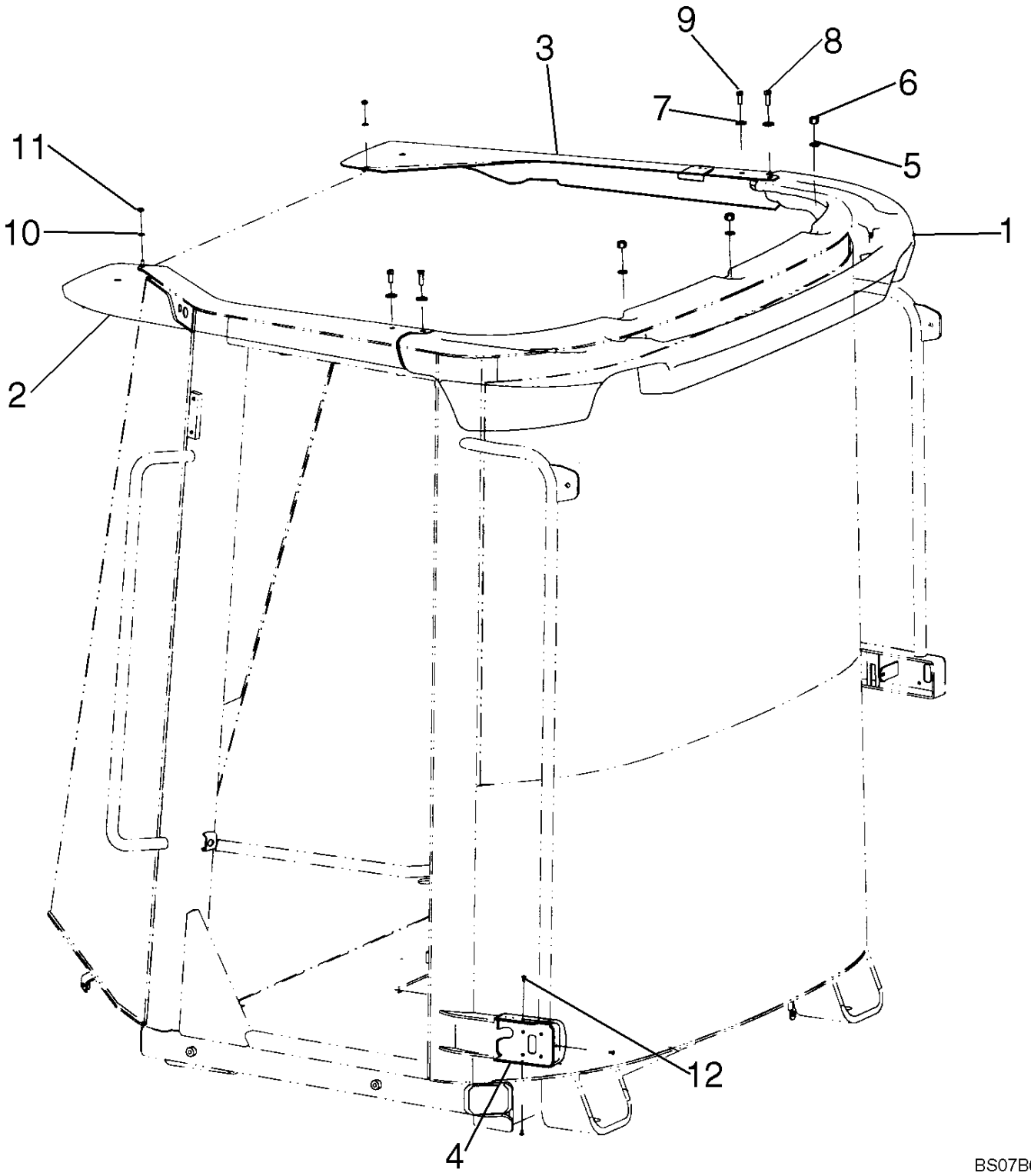

**CABINE - AJUSTAGE EXTÉRIEUR**

| REF | FN | PART NUMBER | YR/SN | QTY | DESCRIPTION |
|---|---|---|---|---|---|
| 1 | | 76303024 | | 1 | BAVOLET DE PORTE, Rear |
| 2 | | 76303194 | | 1 | BAVOLET DE PORTE, Left Front |
| 3 | | 76303195 | | 1 | BAVOLET DE PORTE, Right Front |
| 4 | | 76303025 | | 1 | PATTE FIXATION, Door Latch |
| 5 | | {87664050} | | 3 | WASHER, 11 x 20 x 2 mm |
| 6 | | {87664047} | | 3 | NUT, M10 CL8 |
| 7 | | {87664051} | | 4 | WASHER, 9 x 24 x 2 mm |
| 8 | | 16043624 | | 2 | BOULON, Hex, M8 x 25, 8.8, Full Thd |
| 9 | | 16043424 | | 2 | BOULON, Hex, M8 x 20, 8.8, Full Thd |
| 10 | | {87664048} | | 2 | WASHER, 6.6 x 12 x 1.6 mm |
| 11 | | 15896214 | | 2 | ECROU, M6, Cl 8 |
| 12 | | {87664046} | | 3 | SCREW, M4 x 8 |

| 09-33 | | p1 | 08/07 |
|---|---|---|---|

**CABINE - FENÊTRE DROITE**

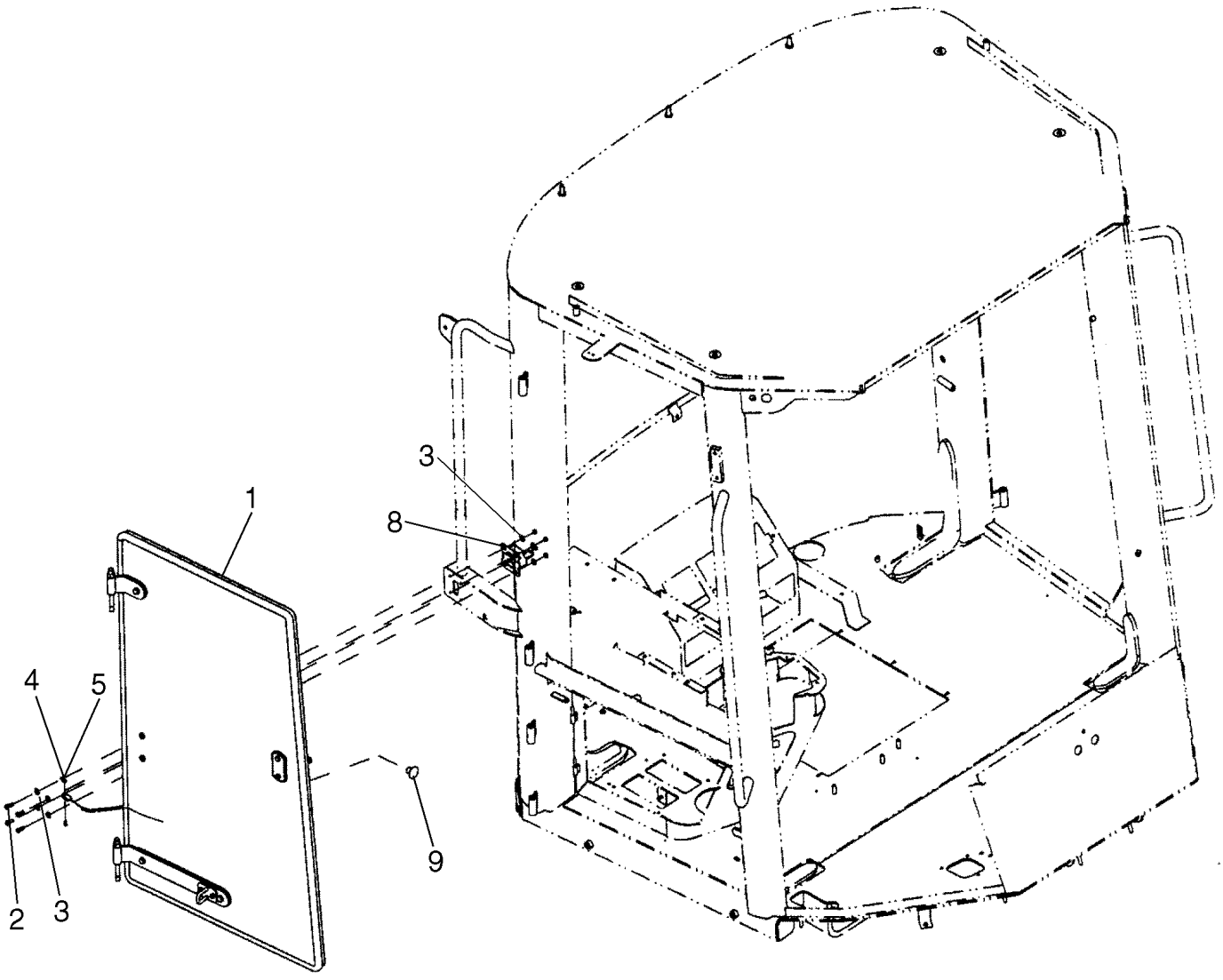

**CABINE - FENÊTRE DROITE**

| REF | FN | PART NUMBER | YR/SN | QTY | DESCRIPTION |
|---|---|---|---|---|---|
| 1 | | {87644535} | | 1 | WINDOW ASSY. See Figure 09-33A |
| 2 | | 10902224 | | 4 | BOULON, Hex, M6 x 16, 8.8, Full Thd |
| 3 | | {87664049} | | 8 | WASHER |
| 4 | | 895-11005 | | 1 | RONDELLE, M5 x 10 x 1 |
| 5 | | 732-1610 | | 1 | GOUPILLE, M1.6 x 10 |
| 6 | | 71485274 | | 1 | AXE |
| 7 | | 76303590 | | 1 | CABLE, Window Unlock; Not Illustrated |
| 8 | | 4227178 | | 1 | SERRURE, Not Illustrated |
| 9 | | 76303157 | | 1 | POMMEAU |

| 09-33A | | p1 | 07/07 |
|---|---|---|---|

**CABINE - FENÊTRE DROITE**

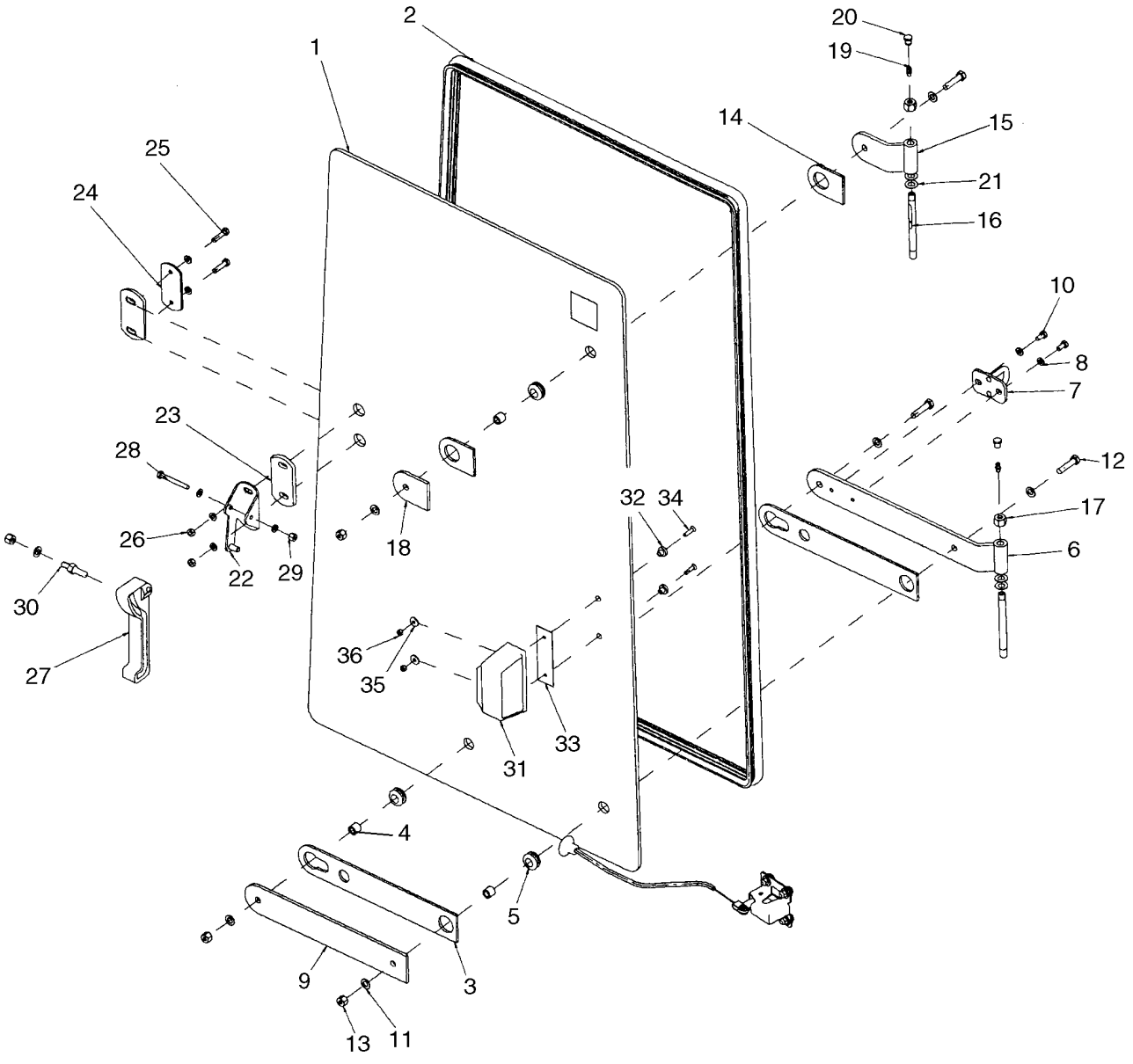

**CABINE - FENÊTRE DROITE**

| REF | FN | PART NUMBER | YR/SN | QTY | DESCRIPTION |
|---|---|---|---|---|---|
| | | {87644535} | | 1 | WINDOW ASSY. Incl. Refs. 1 - 15, 18, 22 - 36 |
| 1 | | 76303230 | | 1 | VITRE |
| 2 | | 76303242 | | 1 | JOINT |
| 3 | | 76303159 | | 2 | JOINT |
| 4 | | 816213301 | | 3 | ENTRETOISE |
| 5 | | 4227144 | | 3 | ANNEAU CAOUTCHOUC |
| 6 | | 76303231 | | 1 | CHARNIERE |
| 7 | | 76303154 | | 1 | PATTE FIXATION |
| 8 | | {87664048} | | 8 | WASHER, 6.6 x 12 x 1.6 mm |
| 9 | | 76303210 | | 1 | PLAQUE |
| 10 | | 10902024 | | 2 | BOULON, Hex, M6 x 12, 8.8, Full Thd |
| 11 | | {87664049} | | 7 | WASHER, 9 x 16 x 1.6 mm |
| 12 | | 16044024 | | 3 | BOULON, Hex, M8 x 40, 8.8 |
| 13 | | 832-10408 | | 4 | CONTRE-ECROU, M8 x 1.25, Cl 8 |
| 14 | | 76303193 | | 2 | JOINT |
| 15 | | 76303248 | | 1 | CHARNIERE |
| 16 | | 3805129 | | 2 | AXE |
| 17 | | 832-10410 | | 2 | CONTRE-ECROU, M10 x 1.5, Cl 8 |
| 18 | | 76303192 | | 1 | PLAQUE |
| 19 | | 76043510 | | 2 | RACCORD |
| 20 | | 1498088 | | 2 | BAGUE RACCORD, Grease |
| 21 | | F64046 | | 4 | RONDELLE, Thrust |
| 22 | | 76303250 | | 1 | PATTE FIXATION |
| 23 | | 87522593 | | 2 | JOINT |
| 24 | | 76303323 | | 1 | PLAQUE |
| 25 | | 10902624 | | 2 | BOULON, Hex, M6 x 25, 8.8, Full Thd |
| 26 | | 825-1406 | | 6 | ECROU, M6, Cl 8 |
| 27 | | 76043538 | | 1 | POIGNÉE |
| 28 | | 827-6060 | | 1 | BOULON, Hex, M6 x 60, 10.9 |
| 29 | | 832-10406 | | 1 | CONTRE-ECROU, M6 x 1, Cl 8 |
| 30 | | 3805251 | | 1 | AXE |
| 31 | | 97399C1 | | 1 | POIGNÉE |
| 32 | | F64198 | | 2 | BAGUE |
| 33 | | R54047 | | 1 | TAMPON |
| 34 | | {87629047} | | 2 | SCREW, M5 x 20 |

| 09-33A | | p2 | 07/07 |
|---|---|---|---|

**CABINE - FENÊTRE DROITE**

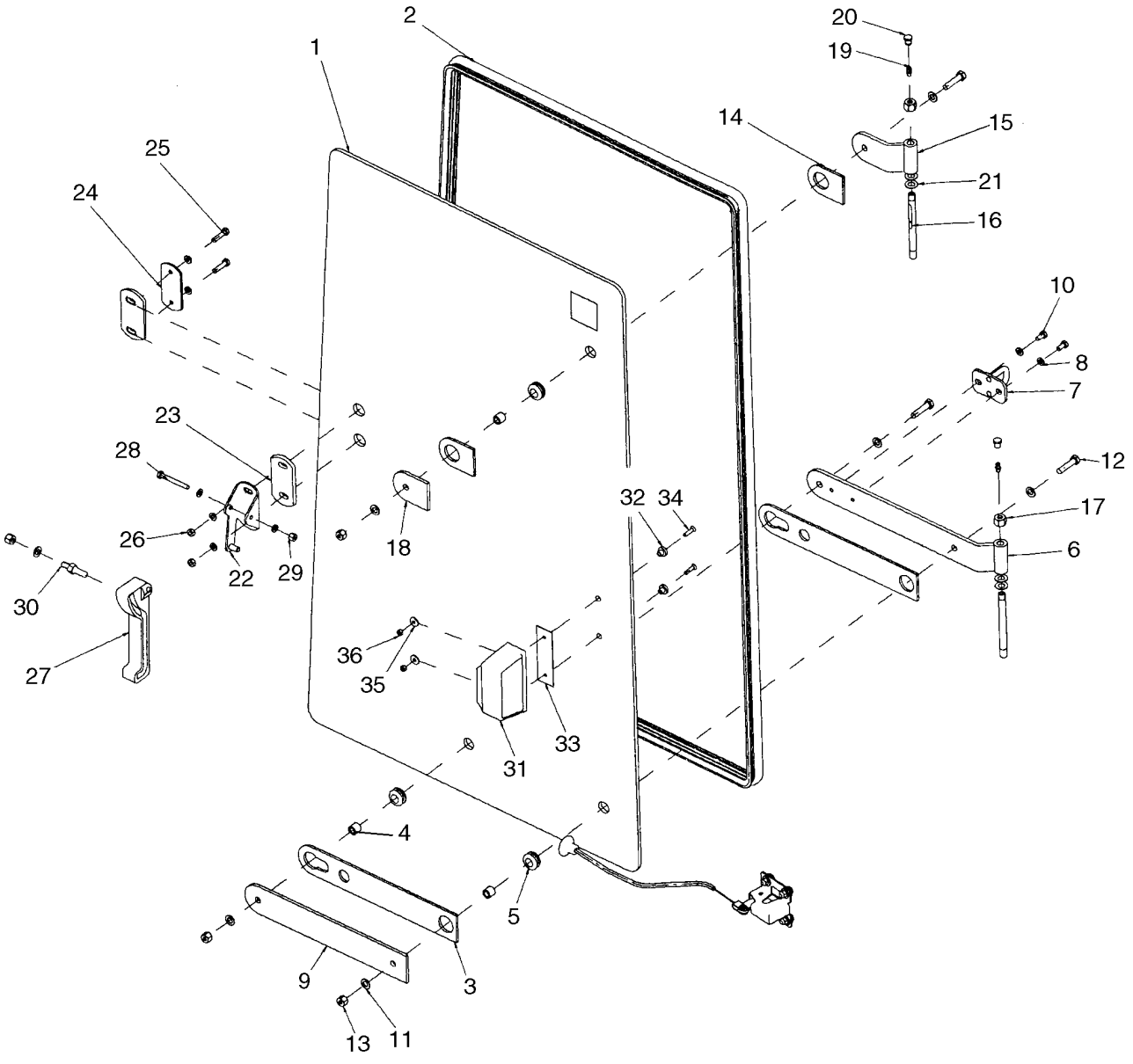

**CABINE - FENÊTRE DROITE**

| REF | FN | PART NUMBER | YR/SN | QTY | DESCRIPTION |
|---|---|---|---|---|---|
| 35 | | 895-25005 | | 2 | RONDELLE, M5 x 15 x 1.6 |
| 36 | | 825-1405 | | 2 | ECROU, M5, Cl 8 |

| 09-34 | | p1 | 07/07 |
|---|---|---|---|

**CABINE - FENÊTRE DROITE**

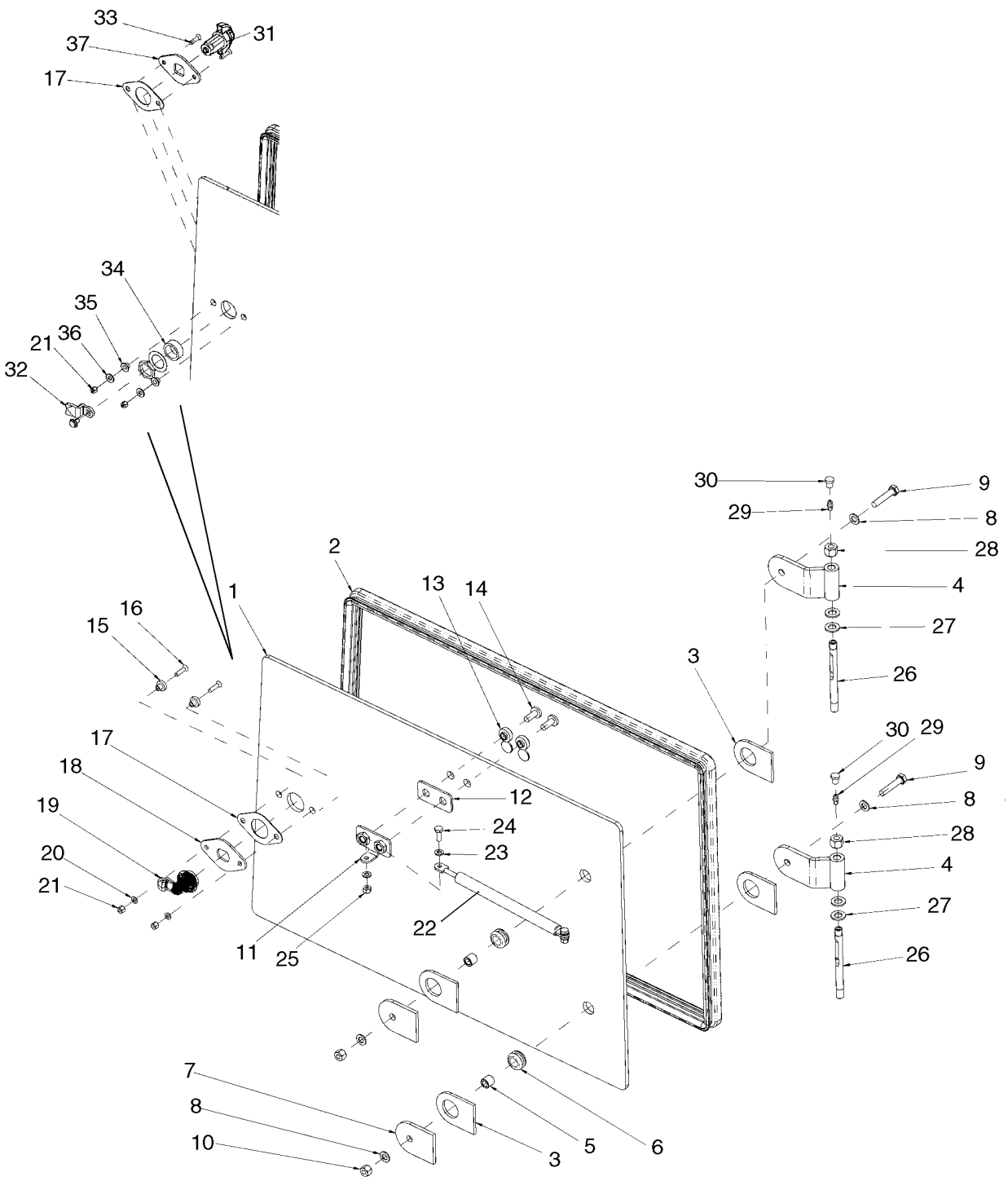

**CABINE - FENÊTRE DROITE**

| REF | FN | PART NUMBER | YR/SN | QTY | DESCRIPTION |
|---|---|---|---|---|---|
| 1 | | 76303460 | | 1 | VITRE |
| 2 | | 76303240 | | 1 | JOINT |
| 3 | | 76303193 | | 4 | JOINT |
| 4 | | 76303248 | | 2 | CHARNIERE |
| 5 | | 816213301 | | 2 | ENTRETOISE |
| 6 | | 4227144 | | 2 | ANNEAU CAOUTCHOUC |
| 7 | | 76303192 | | 2 | PLAQUE |
| 8 | | {87664049} | | 4 | WASHER |
| 9 | | 16044024 | | 2 | BOULON, Hex, M8 x 40, 8.8 |
| 10 | | 832-10408 | | 2 | CONTRE-ECROU, M8 x 1.25, Cl 8 |
| 11 | | 76303463 | | 1 | PATTE FIXATION |
| 12 | | 76303461 | | 1 | JOINT |
| 13 | | 87537993 | | 2 | CHAPEAU |
| 14 | | 840-1820 | | 2 | VIS, Cross Pan Hd, M8 x 20 |
| 15 | | F64198 | | 2 | BAGUE |
| 16 | | 13311217 | | 2 | VIS, Cross Oval Hd, M5 x 20 |
| 17 | | 76303458 | | 1 | JOINT |
| 18 | | 76303459 | | 1 | PLAQUE |
| 19 | | {76303249} | | 1 | LOCK, DOOR |
| 20 | | 895-11005 | | 2 | RONDELLE, M5 x 10 x 1 |
| 21 | | 832-10405 | | 2 | CONTRE-ECROU, M5 x .8, Cl 8 |
| 22 | | 76303455 | | 1 | COMPAS |
| 23 | | 895-11006 | | 4 | RONDELLE, M6 |
| 24 | | 614-6016 | | 2 | BOULON, Hex, M6 x 16, 8.8 |
| 25 | | 412152 | | 2 | CONTRE-ECROU, M6 x 1, Cl 8.8 |
| 25 | | 832-10406 | | 2 | CONTRE-ECROU, M6 x 1, Cl 8, If Used |
| 26 | | 3805129 | | 2 | AXE |
| 27 | | 895-11010 | | 4 | RONDELLE, M10 x 20 x 2 |
| 27 | | F64046 | | 4 | RONDELLE, Thrust, If Used |
| 28 | | 832-10410 | | 2 | CONTRE-ECROU, M10 x 1.5, Cl 8 |
| 29 | | 76043510 | | 2 | RACCORD |
| 30 | | 1498088 | | 2 | BAGUE RACCORD |
| 31 | | {87628359} | | 1 | LATCH, DOOR |
| 32 | | {87628360} | | 1 | PAWL, Door Latch |
| 33 | | {87629047} | | 2 | SCREW |

**CABINE - FENÊTRE DROITE**

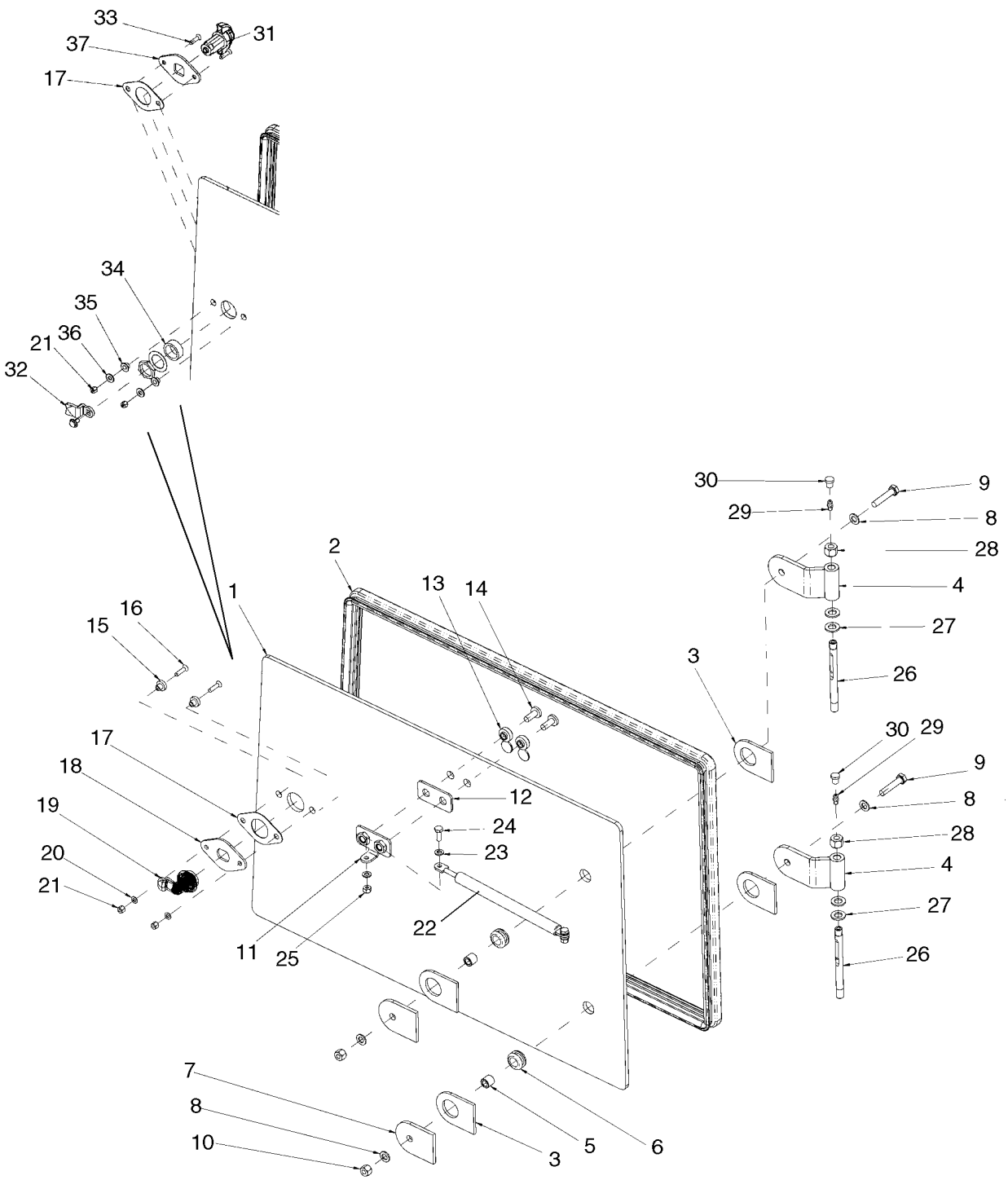


BS07F018

**CABINE - FENÊTRE DROITE**

| REF | FN | PART NUMBER | YR/SN | QTY | DESCRIPTION |
|---|---|---|---|---|---|
| 34 | | {87628362} | | 1 | SPACER, Door Latch |
| 35 | | 109171C1 | | 2 | BAGUE |
| 36 | | 195-81023 | | 2 | RONDELLE, #12 |
| 37 | | {87628364} | | 1 | PLATE, Latch Mounting |

| 09-35 | | p1 | 08/07 |
|---|---|---|---|

**CABINE - MONTAGE DE PORTIÈRE**

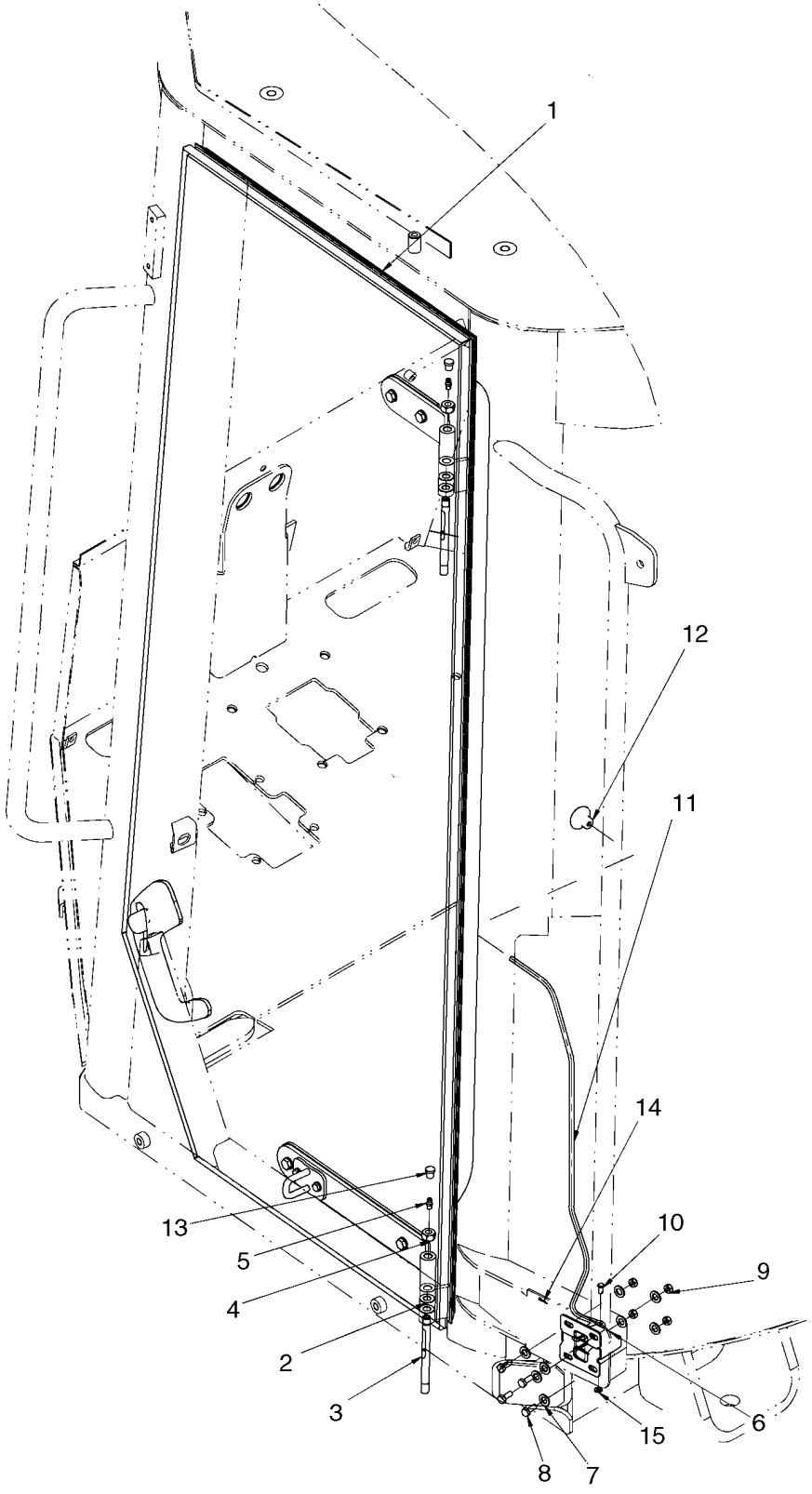

**CABINE - MONTAGE DE PORTIÈRE**

| REF | FN | PART NUMBER | YR/SN | QTY | DESCRIPTION |
|---|---|---|---|---|---|
| 1 | | 87627075 | | 1 | PORTE, DOOR ASSY, See Figure 09-35A |
| 2 | | F64046 | | 4 | RONDELLE, Thrust |
| 3 | | 3805129 | | 2 | AXE |
| 4 | | 832-46410 | | 2 | CONTRE-ECROU, M10 x 1.5, Cl 8 |
| 5 | | 76043510 | | 2 | RACCORD |
| 6 | | 4227178 | | 1 | SERRURE |
| 7 | | {87664048} | | 8 | WASHER, M6.6 x 12 x 1.6 |
| 8 | | 614-6016 | | 4 | BOULON, Hex, M6 x 16, 8.8 |
| 9 | | 825-1406 | | 4 | ECROU, M6, Cl 8 |
| 10 | | 71485274 | | 1 | AXE |
| 11 | | 76303589 | | 1 | CABLE |
| 12 | | 76303157 | | 1 | POMMEAU |
| 13 | | 1498088 | | 2 | BAGUE RACCORD |
| 14 | | 732-1610 | | 1 | GOUPILLE, M1.6 x 10 |
| 15 | | 895-11005 | | 1 | RONDELLE, M5 x 10 x 1 |

**CABINE - PORTE**

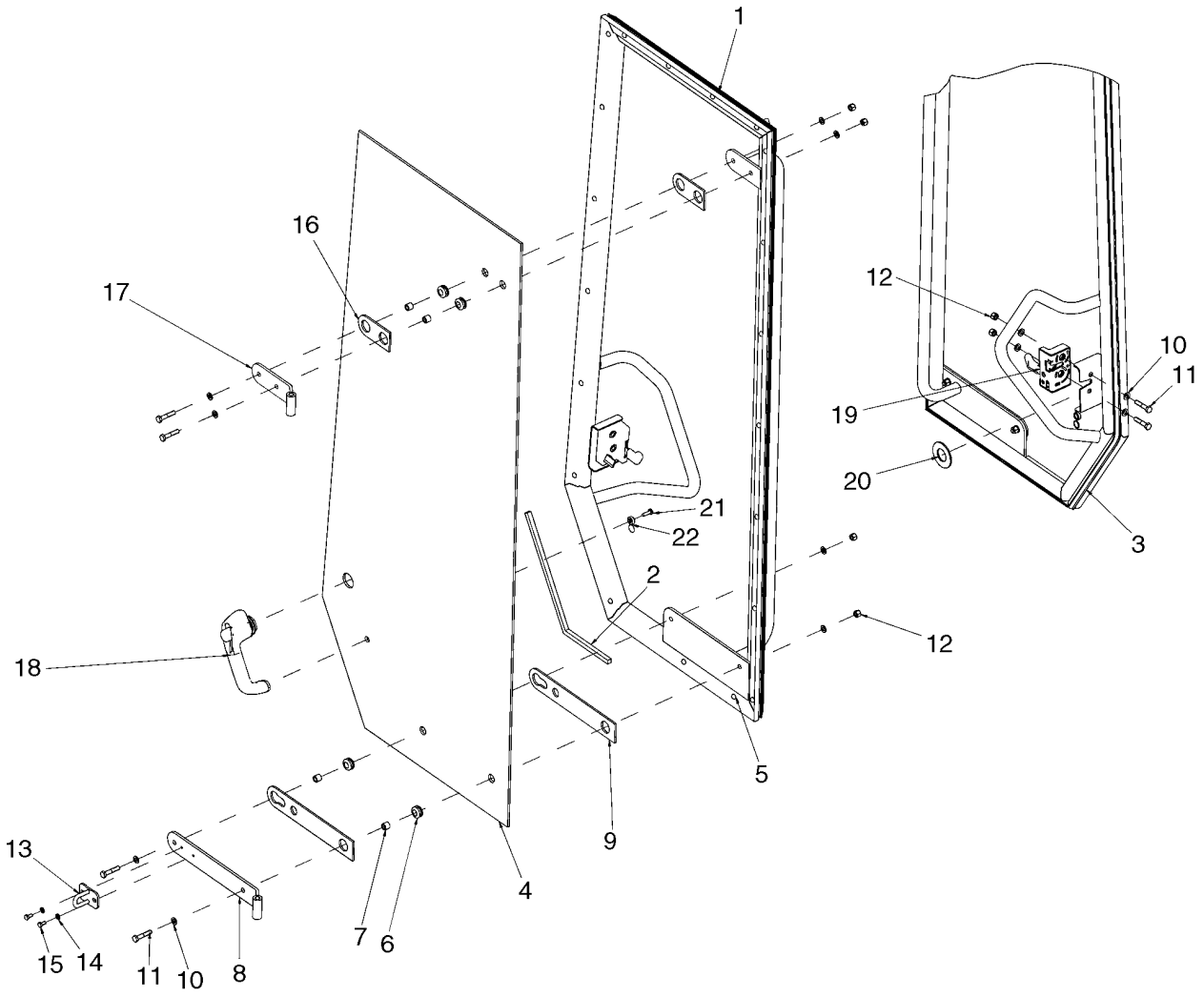


BS07C264

**CABINE - PORTE**

| REF | FN | PART NUMBER | YR/SN | QTY | DESCRIPTION |
|---|---|---|---|---|---|
| | | 87627075 | | | PORTE, Left, Incl. Refs. 1 - 24 |
| 1 | | 76303224 | | 1 | CHASSIS |
| 2 | | 87525153 | | 1 | JOINT, Door |
| 3 | | 76303170 | | 1 | JOINT DE PORTE |
| 4 | | 76303212 | | 1 | VITRE |
| 5 | | 322197950 | | 20 | ENTRETOISE |
| 6 | | 4227144 | | 4 | ANNEAU CAOUTCHOUC |
| 7 | | 816213301 | | 4 | ENTRETOISE |
| 8 | | 76303211 | | 1 | CHARNIERE |
| 9 | | 76303227 | | 2 | JOINT |
| 10 | | {87664049} | | 12 | WASHER, 9 x 16 x 1.6 mm |
| 11 | | 16044024 | | 6 | BOULON, Hex, M8 x 40, 8.8 |
| 12 | | 832-10408 | | 6 | CONTRE-ECROU, M8 x 1.25, Cl 8 |
| 13 | | 76303154 | | 1 | PATTE FIXATION |
| 14 | | {87664048} | | 2 | WASHER, 6.6 x 12 x 1.6 mm |
| 15 | | 10902024 | | 2 | BOULON, Hex, M6 x 12, 8.8, Full Thd |
| 16 | | 76081747 | | 2 | JOINT |
| 17 | | 76303225 | | 1 | CHARNIERE |
| 18 | | 76303253 | | 1 | POIGNÉE |
| 19 | | 3805086 | | 1 | SERRURE |
| 20 | | 76303605 | | 1 | RONDELLE ELASTIQUE |
| 21 | | 86511830 | | 1 | VIS, Cross Pan Hd, M6 x 20 |
| 22 | | {87528282} | | 1 | COVER |
| 23 | | {87337003} | | AR | ADHESIVE, Sika Tack Ultrafast, Not Illustrated |
| 24 | | {87321451} | | AR | ACTIVATOR, Sika UH-2 LUM, Not Illustrated |

| 09-36 | | p1 | 05/07 |
|---|---|---|---|

**CABINE - RETROVISSEUR**

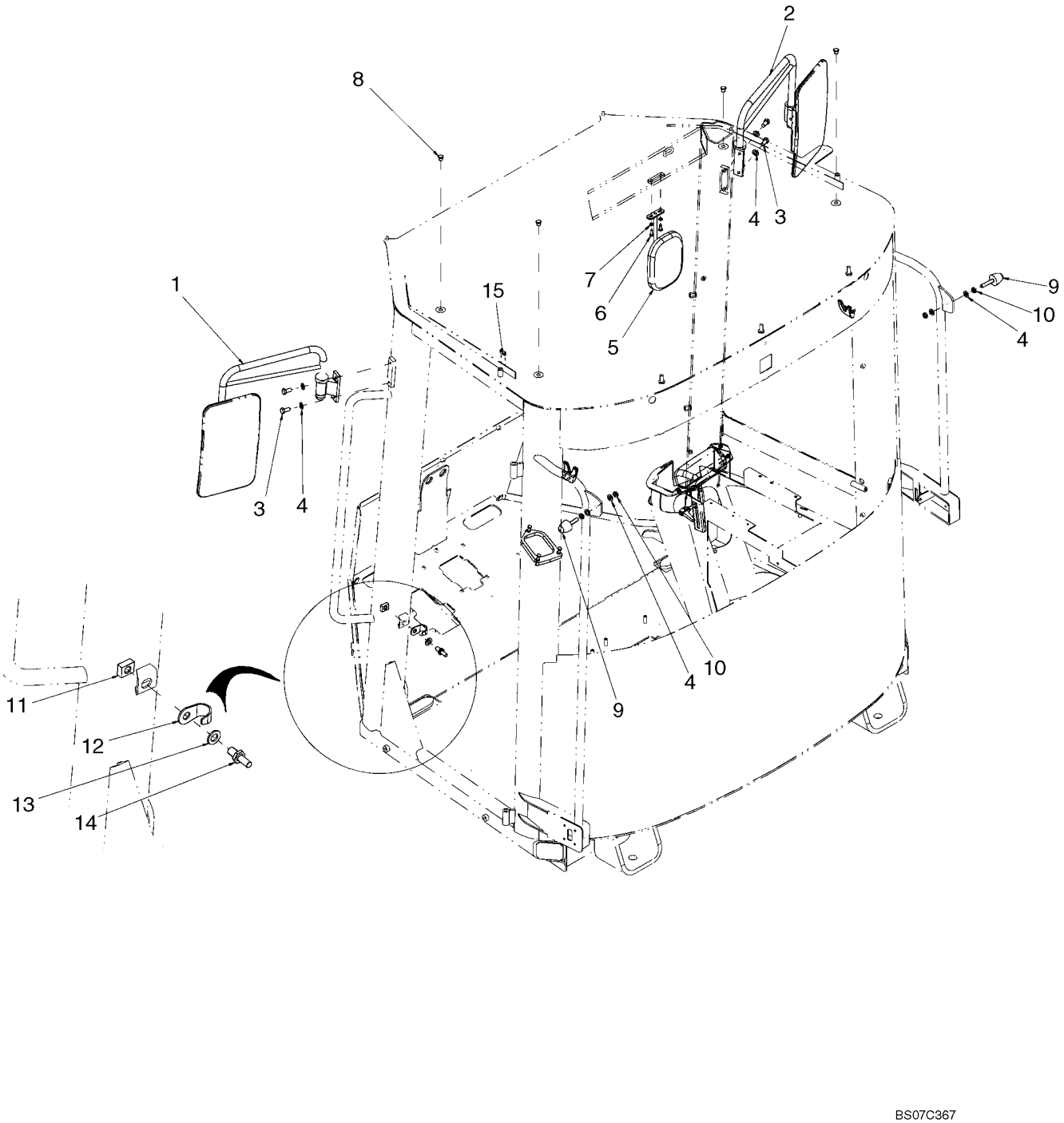

**CABINE - RETROVISSEUR**

| REF | FN | PART NUMBER | YR/SN | QTY | DESCRIPTION |
|---|---|---|---|---|---|
| 1 | | 76303266 | | 1 | RETROVISEUR, GCH |
| 2 | | 76303267 | | 1 | RETROVISEUR, DRT |
| 3 | | 614-10020 | | 4 | BOULON, Hex, M10 x 20, 8.8, Full Thd |
| 4 | | 895-11010 | | 8 | RONDELLE, M10 x 20 x 2 |
| 5 | | 76048869 | | 1 | RÉTROVISEUR |
| 6 | | 840-1616 | | 2 | VIS, Cross Pan Hd, M6 x 16 |
| 7 | | 895-11006 | | 2 | RONDELLE, M6 |
| 8 | | 72114876 | | 4 | BOUCHON |
| 9 | | 76303588 | | 2 | PLOT SUSPENSION |
| 10 | | 829-4410 | | 4 | ECROU, Thin, M10 x 1.5, Cl 05 |
| 11 | | 76067753 | | 1 | PLAQUETTE |
| 12 | | 76048628 | | 1 | GARANT |
| 13 | | 895-11012 | | 1 | RONDELLE, M12 x 24 x 2.5 |
| 14 | | 76043511 | | 1 | AXE |
| 15 | | {87525493} | | 1 | SEAL PROFILE |

**CABINE - CARPETTE**

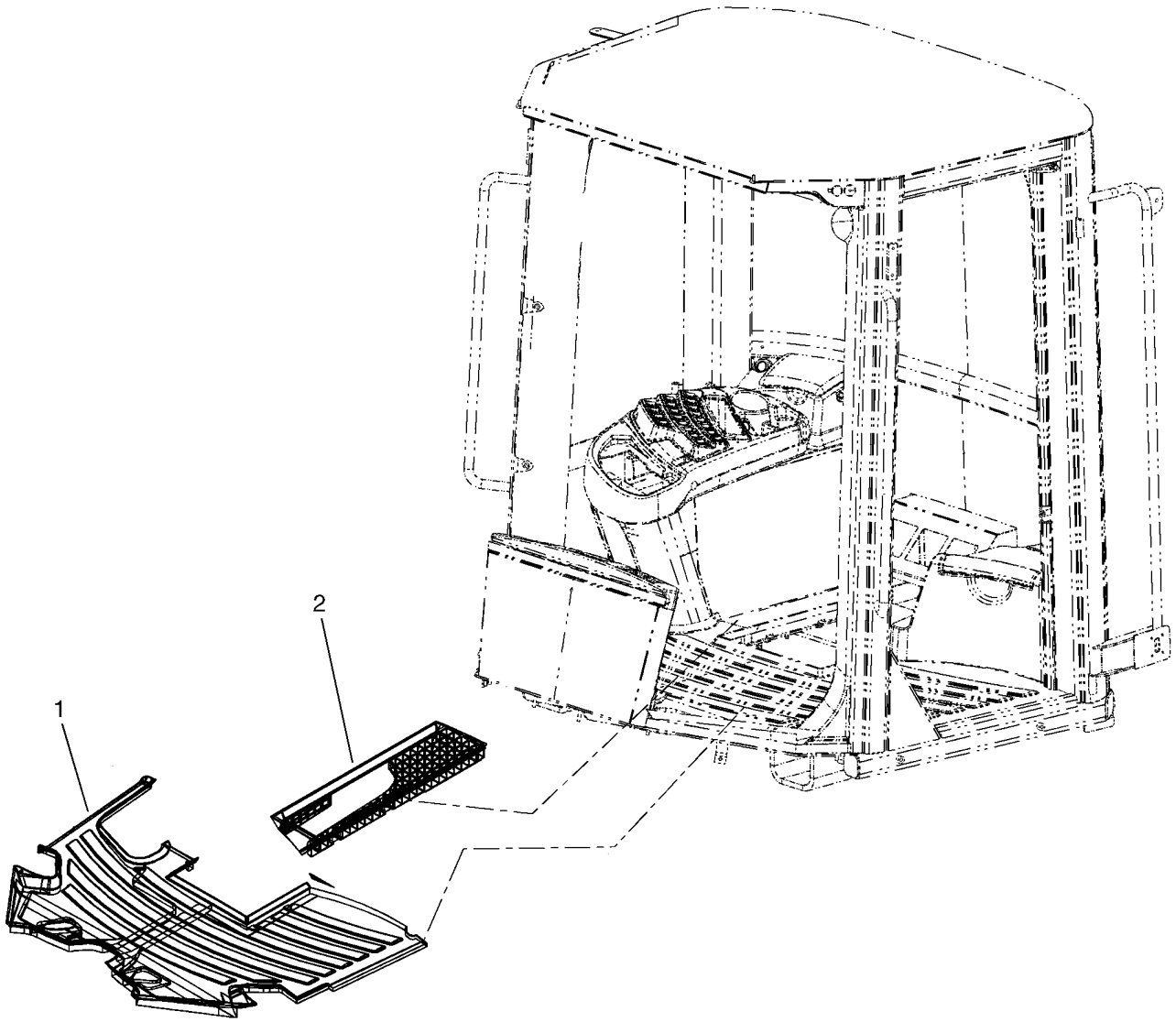


BS06K620

**CABINE - CARPETTE**

| REF | FN | PART NUMBER | YR/SN | QTY | DESCRIPTION |
|---|---|---|---|---|---|
| 1 | | 76303174 | | 1 | CARPETTE, Front |
| 2 | | 76303317 | | 1 | CARPETTE, Rear |

**CABINE- PARE-SOLEIL**

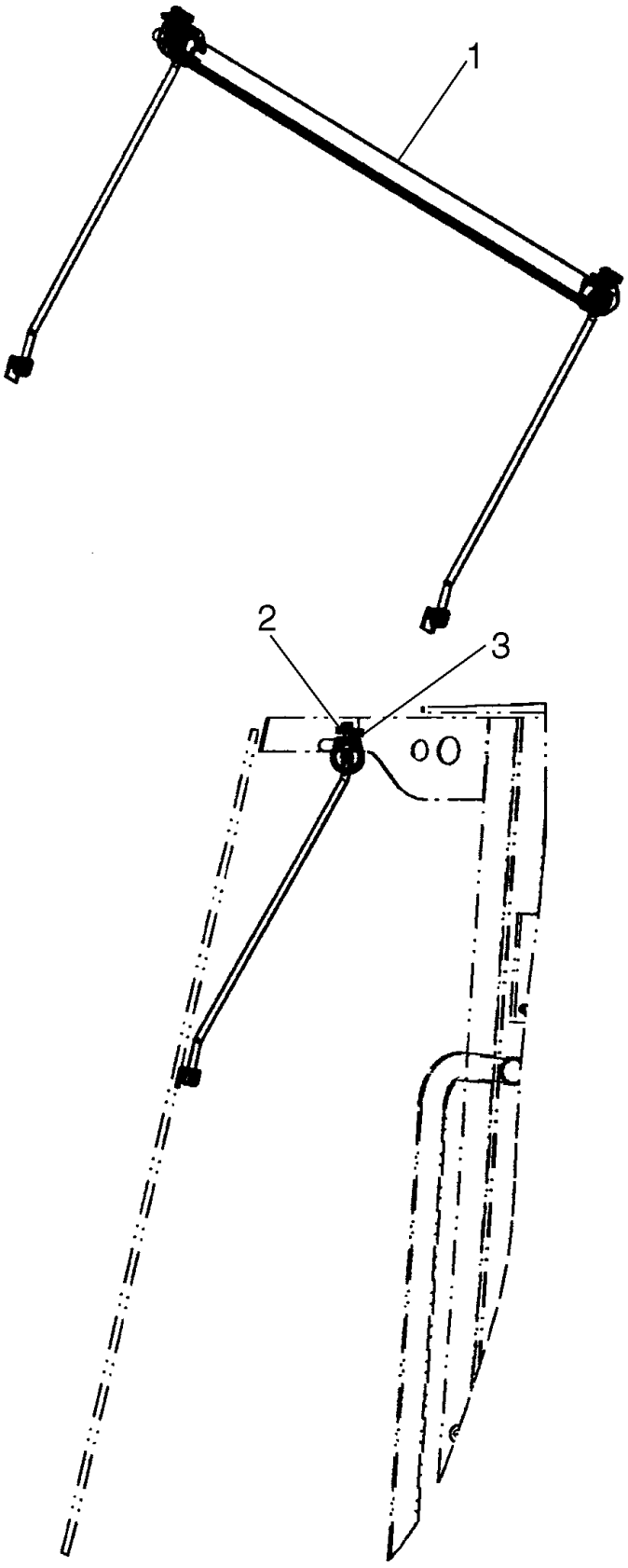

**CABINE- PARE-SOLEIL**

| REF | FN | PART NUMBER | YR/SN | QTY | DESCRIPTION |
|---|---|---|---|---|---|
| 1 | | 76303300 | | 1 | VISIÈRE |
| 2 | | 760-17316 | | 2 | VIS AUTO-TARAUDEUSE, Pan Hd, M4.2 x 16 |
| 3 | | 833-40306 | | 2 | ECROU, M6, U |

**CABINE - COMPOSANTS**

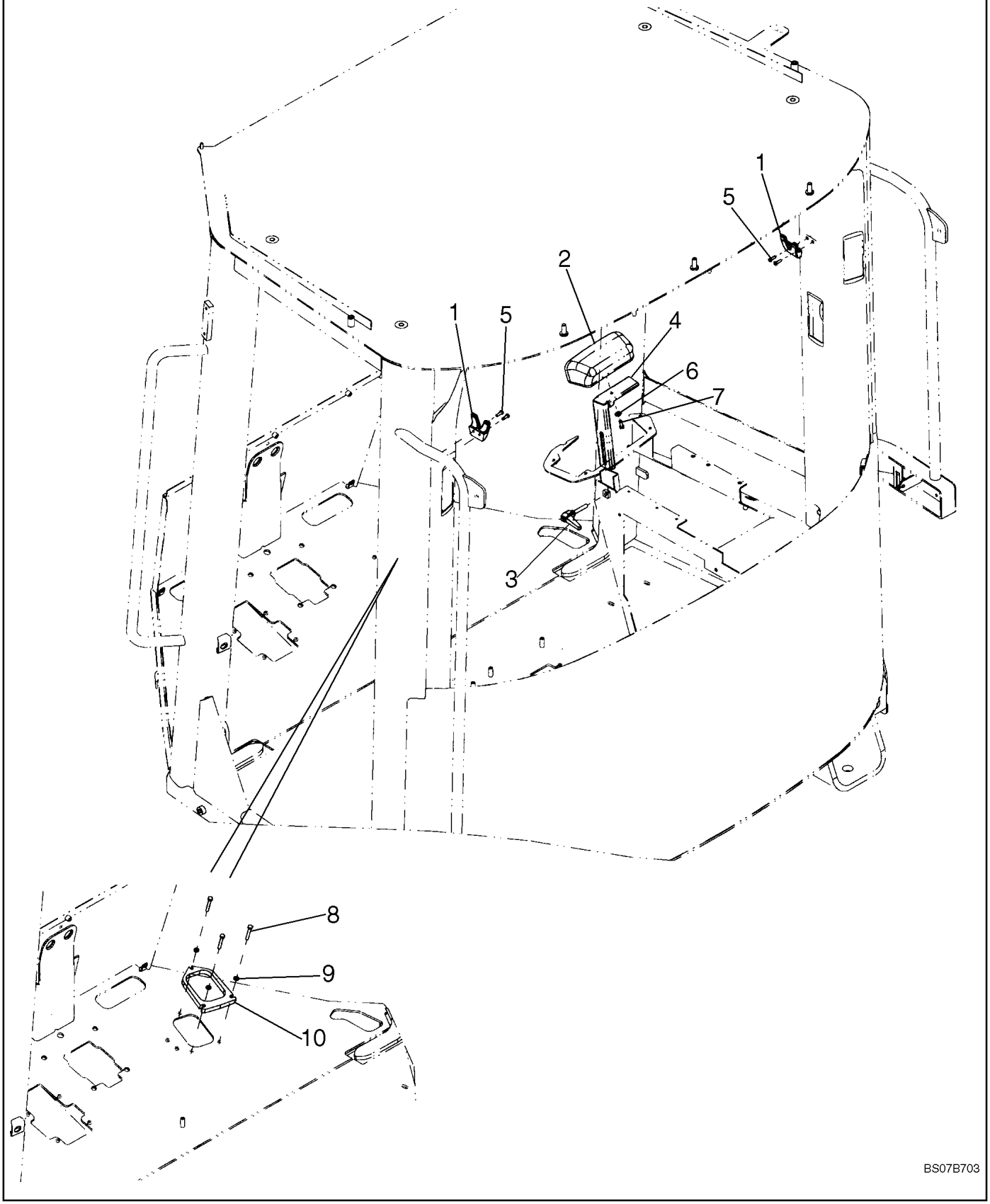

**CABINE - COMPOSANTS**

| REF | FN | PART NUMBER | YR/SN | QTY | DESCRIPTION |
|---|---|---|---|---|---|
| 1 | | 76067422 | | 2 | CROCHET, Coat |
| 2 | | 76303022 | | 1 | ACCOUDOIR |
| 3 | | 76303338 | | 1 | POIGNÉE |
| 4 | | 76303337 | | 1 | SUPPORT |
| 5 | | 840-1516 | | 4 | VIS, Cross Pan Hd, M5 x 16 |
| 6 | | 896-16006 | | 1 | RONDELLE, M6 x 14.5 x 2.5, HT |
| 7 | | 614-6016 | | 1 | BOULON, Hex, M6 x 16, 8.8 |
| 8 | | 827-6040 | | 3 | BOULON, Hex, M6 x 40, 10.9 |
| 9 | | 895-11006 | | 3 | RONDELLE, M6 |
| 10 | | {87516291} | | 1 | PLATE, Throttle Spacer |

**CABINE - FEUX**

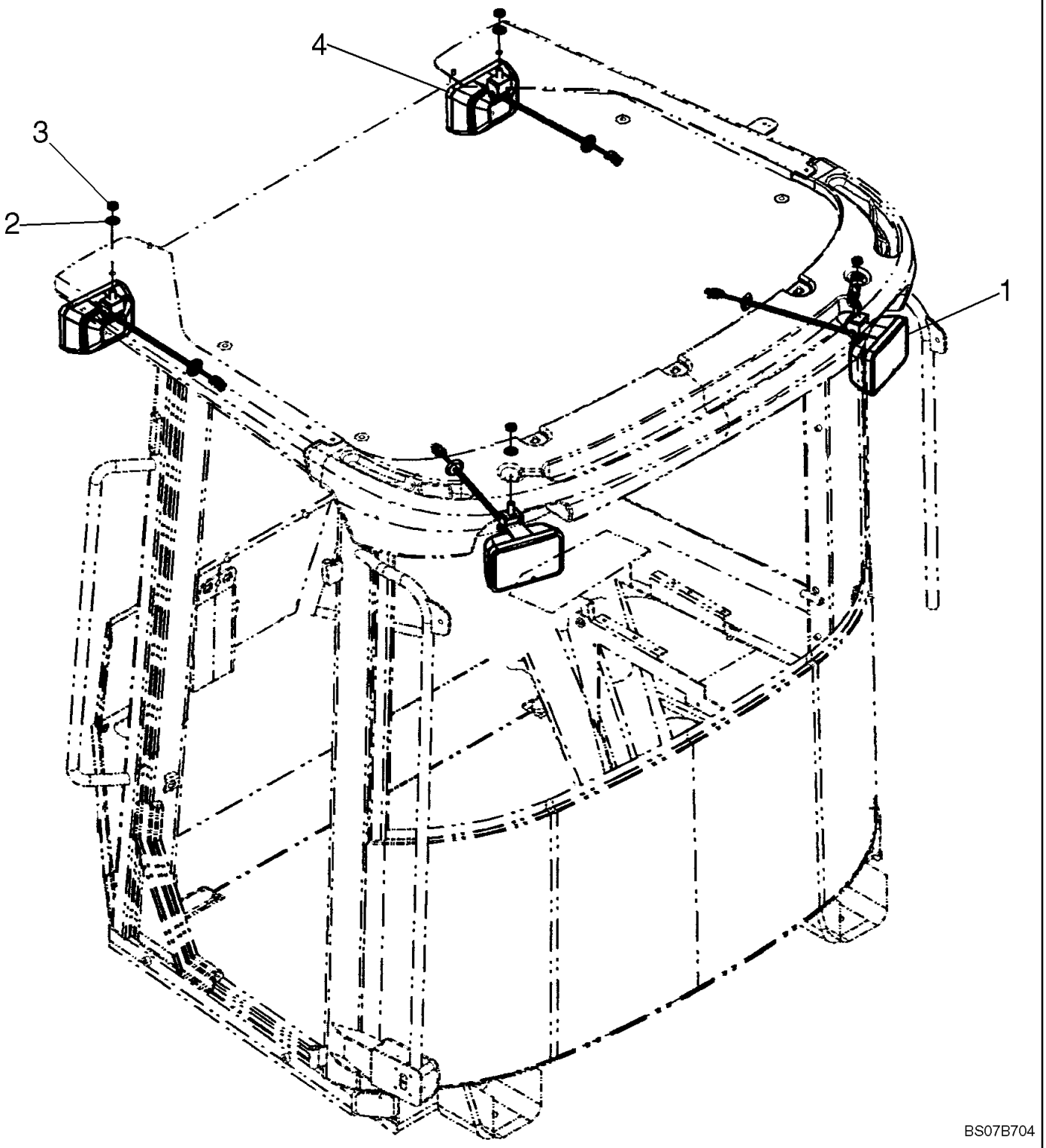

**CABINE - FEUX**

| REF | FN | PART NUMBER | YR/SN | QTY | DESCRIPTION |
|---|---|---|---|---|---|
| 1 | | 87613498 | | 2 | PHARE DE TRAVAIL, Rear; See Figure 04-21 |
| 2 | | 495-11053 | | 4 | RONDELLE, 1/2", SAE |
| 3 | | 131-1402 | | 4 | CONTRE-ECROU, 1/2"-13, GB, Thin |
| 4 | | 87627057 | | 2 | PHARE DE TRAVAIL, Front; See Figure 04-21 |

**CABINE - CONVENANCE COLIS**

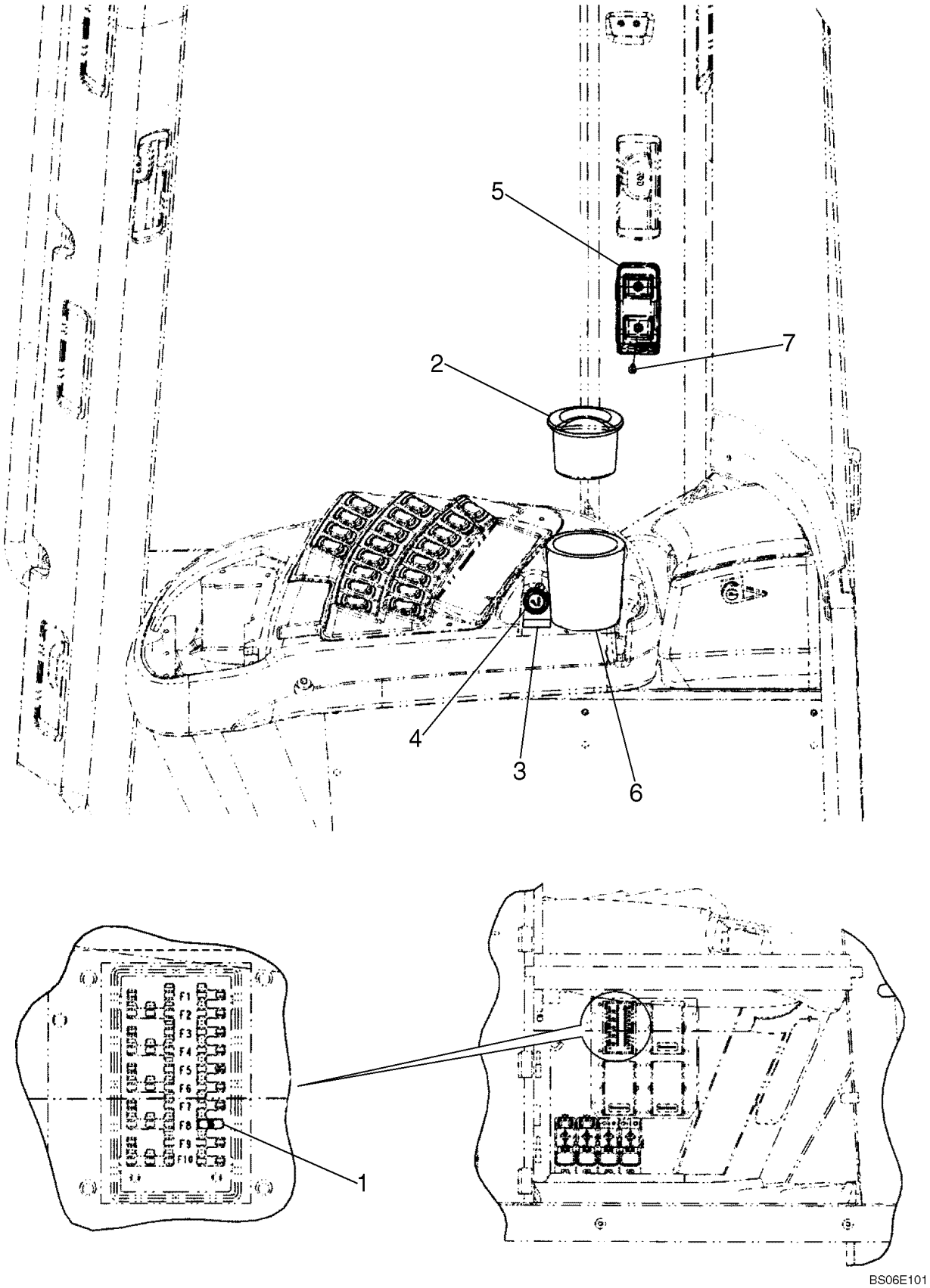

**CABINE - CONVENANCE COLIS**

| REF | FN | PART NUMBER | YR/SN | QTY | DESCRIPTION |
|---|---|---|---|---|---|
| 1 | | 121413A1 | | 1 | FUSIBLE, 15A |
| 2 | | 302456A1 | | 1 | CENDRIER |
| 3 | | 364741A1 | | 1 | DECALCOMANIE, 24V - 10A |
| 4 | | 87580853 | | 1 | ALLUME-CIGARE, 24V |
| 5 | | 76048849 | | 1 | BOÎTIER, Cell Phone |
| 6 | | 87524648 | | 1 | SUPPORT, Ashtray |
| 7 | | 265-14512 | | 2 | VIS AUTO-TARAUDEUSE, Cross Oval Hd, #10 x 3/4" |

**SIEGE - SUPPORT/CEINTURES DE SÉCURITÉ**

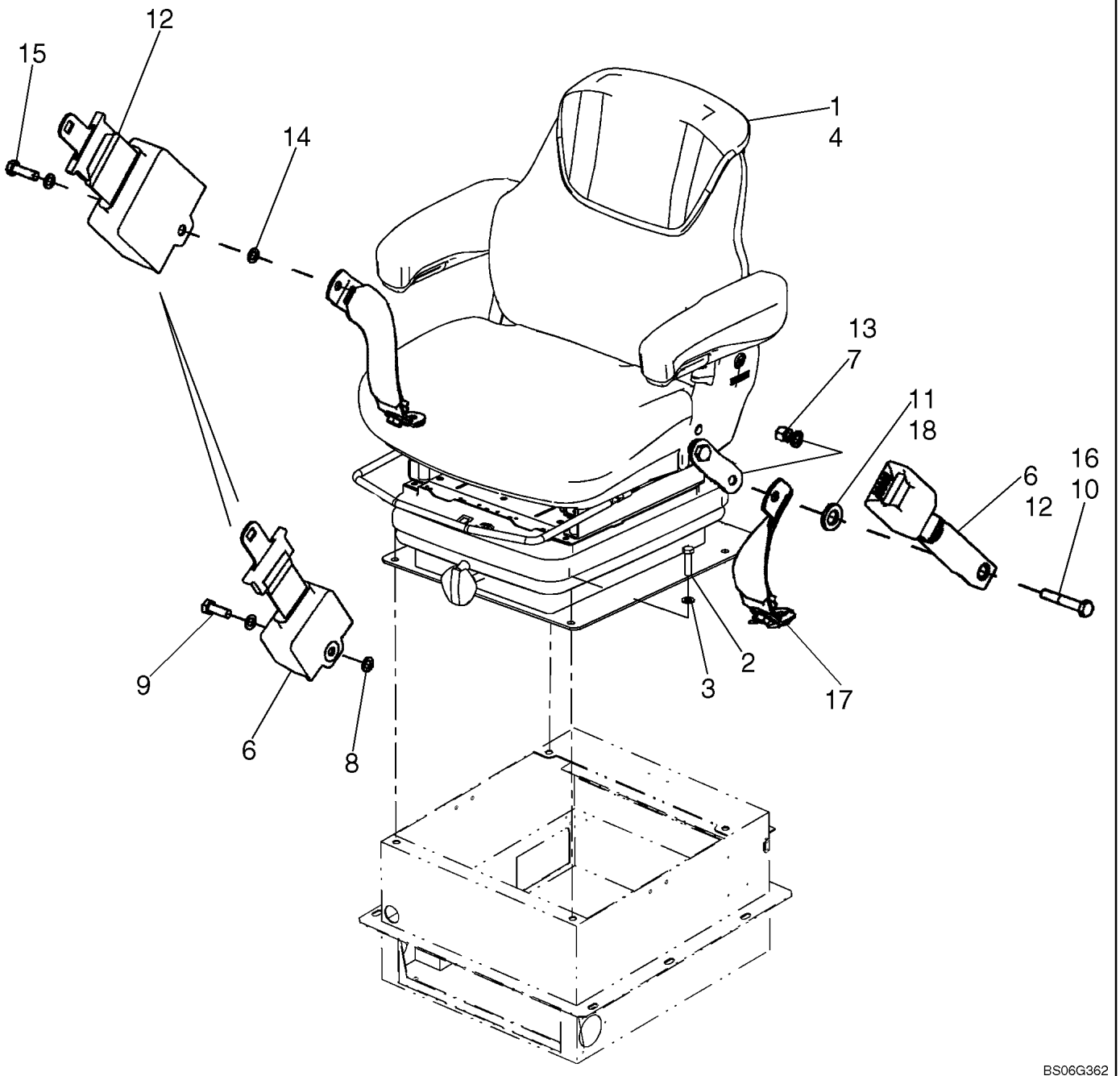

**SIEGE - SUPPORT/CEINTURES DE SÉCURITÉ**

| REF | FN | PART NUMBER | YR/SN | QTY | DESCRIPTION |
|---|---|---|---|---|---|
| | | REF | | | NOTICE, MECHANICAL SUSPENSION SEAT |
| 1 | | 87398039 | | 1 | SIEGE (ASSEMBLE), Cloth; Mechanical Suspension; Use Refs. 2, 3 To Mount; See Figures 09-42A, 09-42B |
| 2 | | 627-10040 | | 4 | BOULON, Hex, M10 x 40, 10.9, Full Thd |
| 3 | | 895-11010 | | 4 | RONDELLE, M10 x 20 x 2 |
| | | REF | | | NOTICE, AIR SUSPENSION SEAT |
| 4 | | 87398040 | | 1 | SIEGE (ASSEMBLE), Cloth; Air Suspension: Use Refs. 2, 3 To Mount; See Figures 09-42C, 09-42D |
| 5 | | 121412A1 | | 1 | FUSIBLE, 10 amp; Air Suspension Seat Only; Not Illustrated |
| | | REF | | | NOTICE, SEAT BELT - 51 mm (2 Inch) WIDE RETRACTABLE SEAT BELT |
| 6 | | 249116A1 | | 1 | CEINTURE DE SÉCURITÉ, 51 mm (2 inch) Wide; If Equipped; Uses Refs. 7 - 10 |
| 7 | | 832-10410 | | 2 | CONTRE-ECROU, M10 x 1.5, Cl 8 |
| 8 | | 895-18010 | | 4 | RONDELLE, M10 x 18 x 1.6 |
| 9 | | 627-10030 | | 1 | BOULON, Hex, M10 x 30, 10.9, Full Thd |
| 10 | | 827-10060 | | 1 | BOULON, Hex, M10 x 60, 10.9 |
| 11 | | 896-11016 | | 1 | RONDELLE, M17.5 x 30 x 4, HT |
| | | REF | | | NOTICE, SEAT BELT - 76 mm (3 Inch) WIDE RETRACTABLE SEAT BELT |
| 12 | | 249117A1 | | 1 | CEINTURE DE SECURITE, 76 mm (3 inch) Wide; If Equipped; Uses Refs. 12 - 16 |
| 13 | | 832-10410 | | 2 | CONTRE-ECROU, M10 x 1.5, Cl 8 |
| 14 | | 895-18010 | | 4 | RONDELLE, M10 x 18 x 1.6 |
| 15 | | 627-10035 | | 1 | BOULON, Hex, M10 x 35, 10.9, Full Thd |
| 16 | | 827-10060 | | 1 | BOULON, Hex, M10 x 60, 10.9 |
| 17 | | 87545658 | | 1 | KIT, Tether Belt; Hardware Included |
| 18 | | 896-11016 | | 1 | RONDELLE, M17.5 x 30 x 4, HT |

| 09-42A | | p1 | 06/07 |
|---|---|---|---|

**SIÈGE, SUSPENSION MÉCANIQUE**

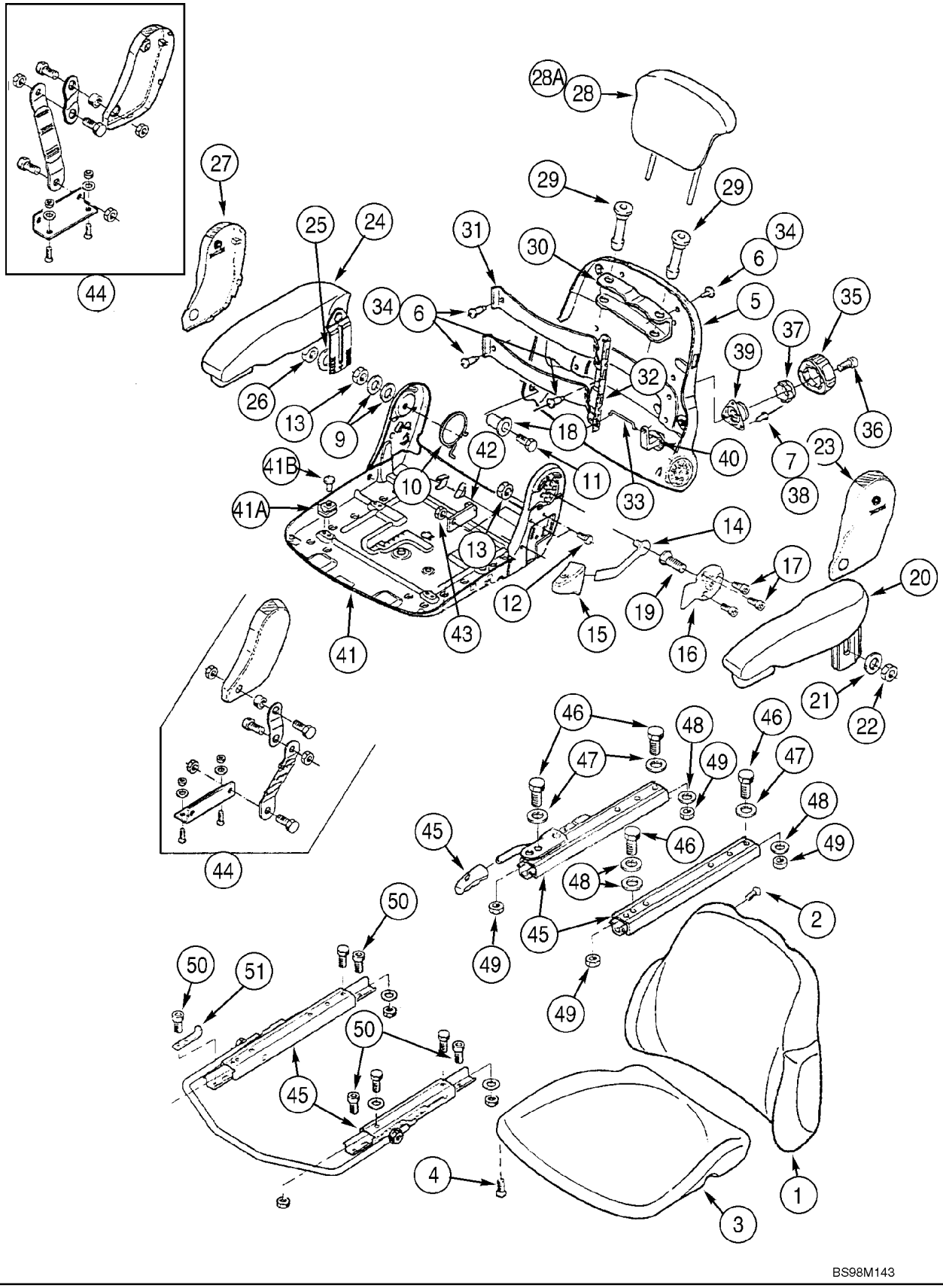

**SIÈGE, SUSPENSION MÉCANIQUE**

| REF | FN | PART NUMBER | YR/SN | QTY | DESCRIPTION |
|---|---|---|---|---|---|
| | | REF | | | NOTICE, UPPER SEAT ASSEMBLY, MECHANICAL |
| | | 87398039 | | 1 | SIEGE (ASSEMBLE), Incl. Refs 1 - 51 , Incl. Parts on Figure 09-42B |
| | | {87583725} | | 1 | SEAT, Cloth; Upper Seat Assembly; Incl. 1 - 51 |
| 1 | | {87583733} | | 1 | CUSHION; Backrest |
| 2 | | 82034997 | | 4 | VIS |
| 3 | | {87583734} | | 1 | CUSHION; Seat |
| 4 | | 82034997 | | 4 | VIS |
| | | 71491410 | | 1 | CHASSIS, Backrest, Incl. 5 - 7 |
| 5 | | NSS | | 1 | NON FOURNI SEPAREMENT, Cover |
| 6 | | 85811351 | | 3 | RIVET |
| 7 | | 47124903 | | 3 | RIVET |
| | | 71491411 | | 1 | KIT, Hardware; Backrest Adjustment; Incl. 9 - 19 |
| 9 | | 82034881 | | 2 | RONDELLE |
| 10 | | {87567527} | | 1 | SPRING, Leg, RH |
| 11 | | {87583729} | | 1 | BOLT, Hex M8 x 40 |
| 12 | | 82034894 | | 2 | VIS, M8 x 16 |
| 13 | | {87583748} | | 2 | NUT |
| 14 | | 345749A1 | | 1 | LEVIER |
| 15 | | 345752A1 | | 1 | POIGNÉE |
| 16 | | 345753A1 | | 1 | PLAQUE, GRANDE |
| 17 | | 345754A1 | | 3 | VIS, M6 x 10 |
| 18 | | 85811352 | | 1 | TUBE, Bushing |
| 19 | | 345776A1 | | 1 | VIS, M8 x 18 |
| 20 | | {87583757} | | 1 | ARMREST ASSY. Left Hand; Incl. 21, 22 |
| 21 | | 9960692 | | 1 | ENTRETOISE |
| 22 | | 85817458 | | 1 | ECROU |
| 23 | | {87584704} | | 1 | COVER, Left Hand |
| 24 | | {87583762} | | 1 | ARMREST ASSY. Right Hand; Incl. 25, 26 |
| 25 | | 9960692 | | 1 | ENTRETOISE |
| 26 | | 85817458 | | 1 | ECROU |
| 27 | | {87583731} | | 1 | COVER, Right Hand |
| 28 | | {87583747} | | 1 | HEADREST |
| 29 | | 85811350 | | 2 | BAGUE |
| 30 | | NSS | | 1 | NON FOURNI SEPAREMENT, Retainer |

**SIÈGE, SUSPENSION MÉCANIQUE**

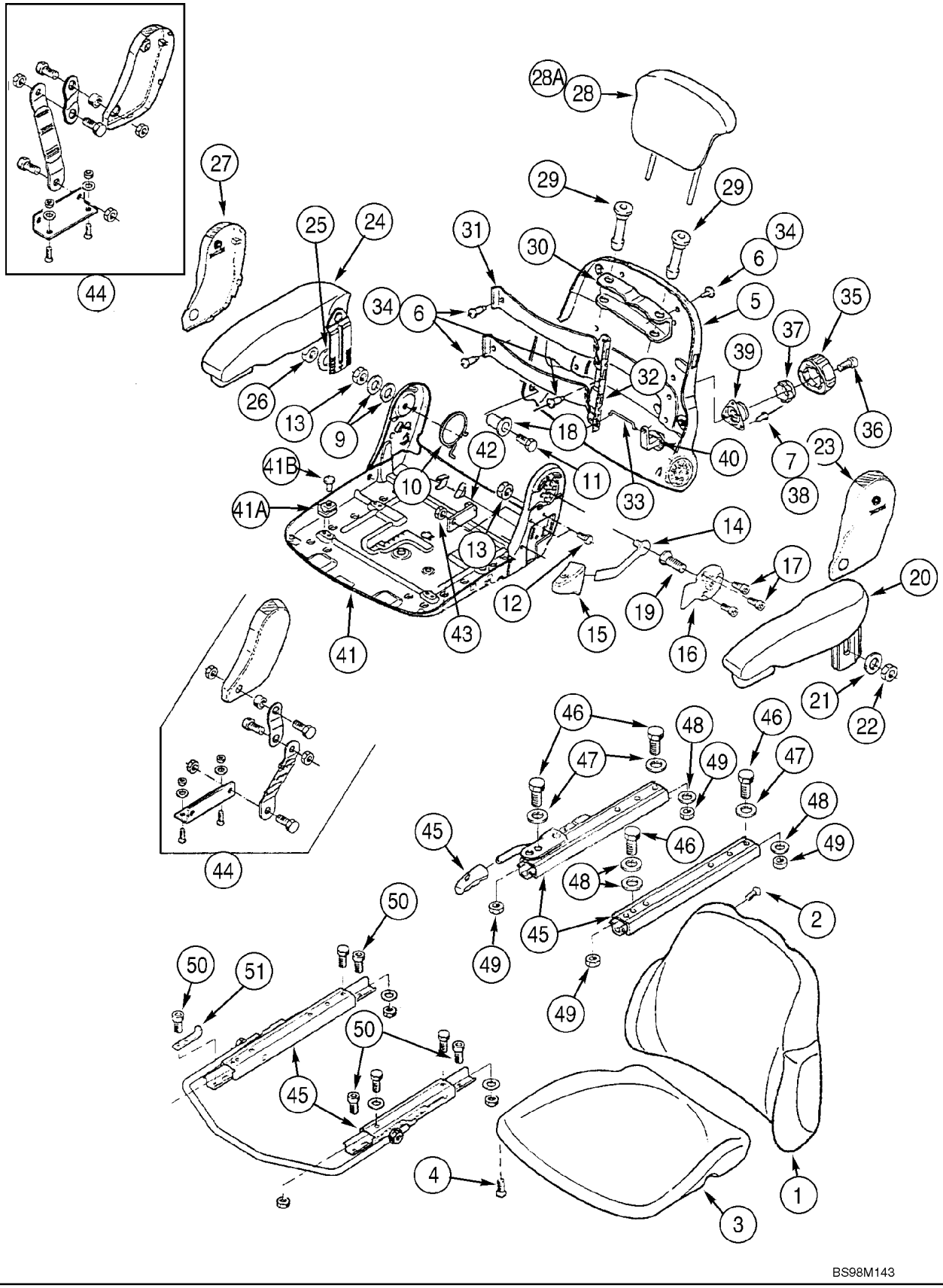

**SIÈGE, SUSPENSION MÉCANIQUE**

| REF | FN | PART NUMBER | YR/SN | QTY | DESCRIPTION |
|---|---|---|---|---|---|
| | | 82034963 | | 1 | SUPPORT, Lumbar Support; Incl. 31 - 40 |
| 31 | | 82034969 | | 2 | PLAQUE, Lumbar |
| 32 | | 82034910 | | 1 | PLAQUE |
| 33 | | 82034909 | | 1 | TRINGLE |
| 34 | | 85811351 | | 3 | RIVET |
| 35 | | 82034964 | | 1 | POIGNÉE, Incl. 36 |
| 36 | | 82034917 | | 1 | VIS, M6 x 10 |
| 37 | | 82034916 | | 1 | CLIQUET |
| 38 | | 47124903 | | 3 | RIVET |
| 39 | | 82034911 | | 1 | FREIN |
| 40 | | 82034912 | | 1 | PILIER, SOUTIEN |
| 41 | | {87583736} | | 1 | PAN, Seat, Incl. 41A, 41B |
| 41A | | NSS | | 4 | NON FOURNI SEPAREMENT, Guide |
| 41B | | NSS | | 4 | NON FOURNI SEPAREMENT, Rivet |
| 42 | | {87583739} | | 1 | STOP |
| 43 | | 85817458 | | 1 | ECROU |
| 44 | | NSS | | 1 | NON FOURNI SEPAREMENT, Tether Belt |
| 45 | | 345783A1 | | 1 | RAIL (ASSEMBLE), Seat Slide Rails; See Figure 09-31 |
| 46 | | 16043231 | | 4 | BOULON, Hex, M8 x 16, 10.9 |
| 47 | | 9960692 | | 3 | ENTRETOISE |
| 48 | | 82034881 | | 4 | RONDELLE |
| 49 | | {87583748} | | 4 | NUT, Hex M8; If Used |
| 49 | | 85817458 | | 4 | ECROU, M8, If Used |
| 50 | | 82034894 | | 4 | VIS, M8 x 16, If Used |
| 50 | | {87583741} | | 4 | SCREW; If Used |
| 51 | | {87583737} | | 1 | STOP, Slide Rail |

| 09-42B | | p1 | 08/07 |
|---|---|---|---|

**SIÈGE, SUSPENSION MÉCANIQUE**

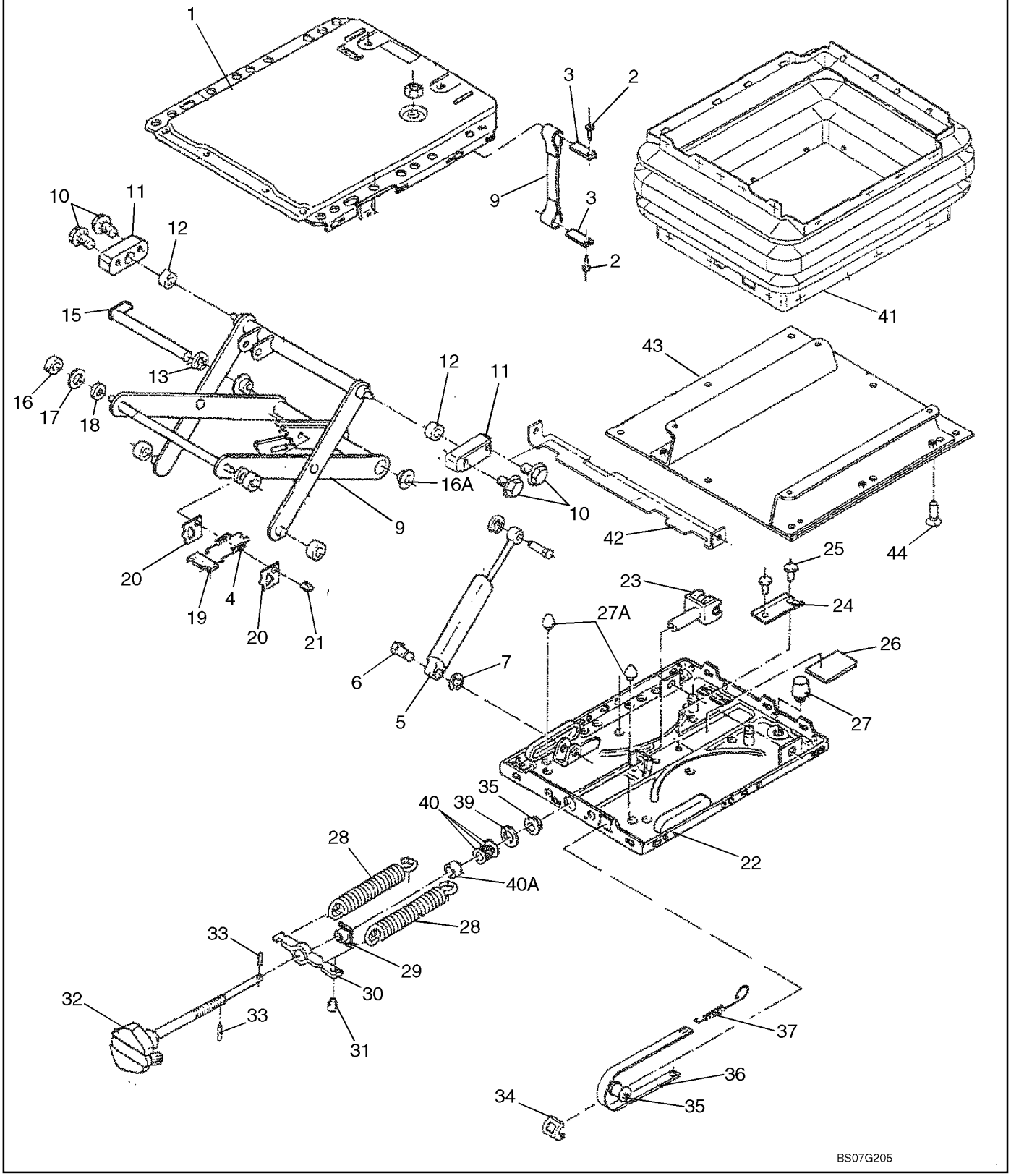

**SIÈGE, SUSPENSION MÉCANIQUE**

| REF | FN | PART NUMBER | YR/SN | QTY | DESCRIPTION |
|---|---|---|---|---|---|
| 1 | | 82035125 | | 1 | SUSPENSION, Plate, Upper |
| | | {87583847} | | 1 | WEBBING, Incl. Refs. 2, 3, 8 |
| 2 | | 85817448 | | 2 | RIVET |
| 3 | | 85817449 | | 2 | PLAQUE |
| 4 | | 85817430 | | 2 | RESSORT |
| | | 9966146 | | 1 | AMORTISSEUR, Incl. Refs. 5 - 7 |
| 5 | | NSS | | 1 | NON FOURNI SEPAREMENT, Shock Absorber |
| 6 | | 82035040 | | 1 | BOULON |
| 7 | | 82035128 | | 2 | RONDELLE |
| 8 | | NSS | | 1 | NON FOURNI SEPAREMENT, BELT |
| | | {87583846} | | 1 | ARM, Swing Assy, Incl. Refs. 9 - 21 |
| 9 | | NSS | | 2 | NON FOURNI SEPAREMENT, ARM |
| 10 | | 85817444 | | 2 | VIS |
| 11 | | 82035094 | | 2 | PALIER, Roller |
| 12 | | 85817445 | | 2 | BAGUE |
| 13 | | 82035127 | | 1 | RONDELLE |
| 14 | | NSS | | 2 | NON FOURNI SEPAREMENT, Bushing |
| 15 | | 85817429 | | 1 | BOULON |
| 16 | | 82035031 | | 4 | ROULEAU |
| 16A | | 9960755 | | 2 | BAGUE |
| 17 | | {87583854} | | 2 | WASHER |
| 18 | | 85817442 | | 2 | BAGUE |
| 19 | | 82035030 | | 1 | PLAQUE |
| 20 | | 82035069 | | 2 | PLAQUE, Release |
| 21 | | 82035036 | | 1 | BOULON |
| | | {87583841} | | 1 | HOUSING, Lower, Incl. Refs 22 - 27 |
| 22 | | NSS | | 1 | NON FOURNI SEPAREMENT, HOUSING |
| 23 | | 82035043 | | 1 | FOURCHE |
| | | 82035054 | | 1 | PROFILE, BOURRELET, , Support, Incl. Refs. 24,25 |
| 24 | | NSS | | 1 | NON FOURNI SEPAREMENT, , Plate |
| 25 | | 82035037 | | 2 | RIVET |
| 26 | | 82035032 | | 1 | PLAQUE |
| 27 | | 85817441 | | 1 | PARE-CHOCS CAOUTCHOUC |
| 27A | | 85817440 | | 2 | PARE-CHOCS CAOUTCHOUC |
| 28 | | 85817434 | | 2 | RESSORT |

| 09-42B | | p2 | 08/07 |
|---|---|---|---|

**SIÈGE, SUSPENSION MÉCANIQUE**

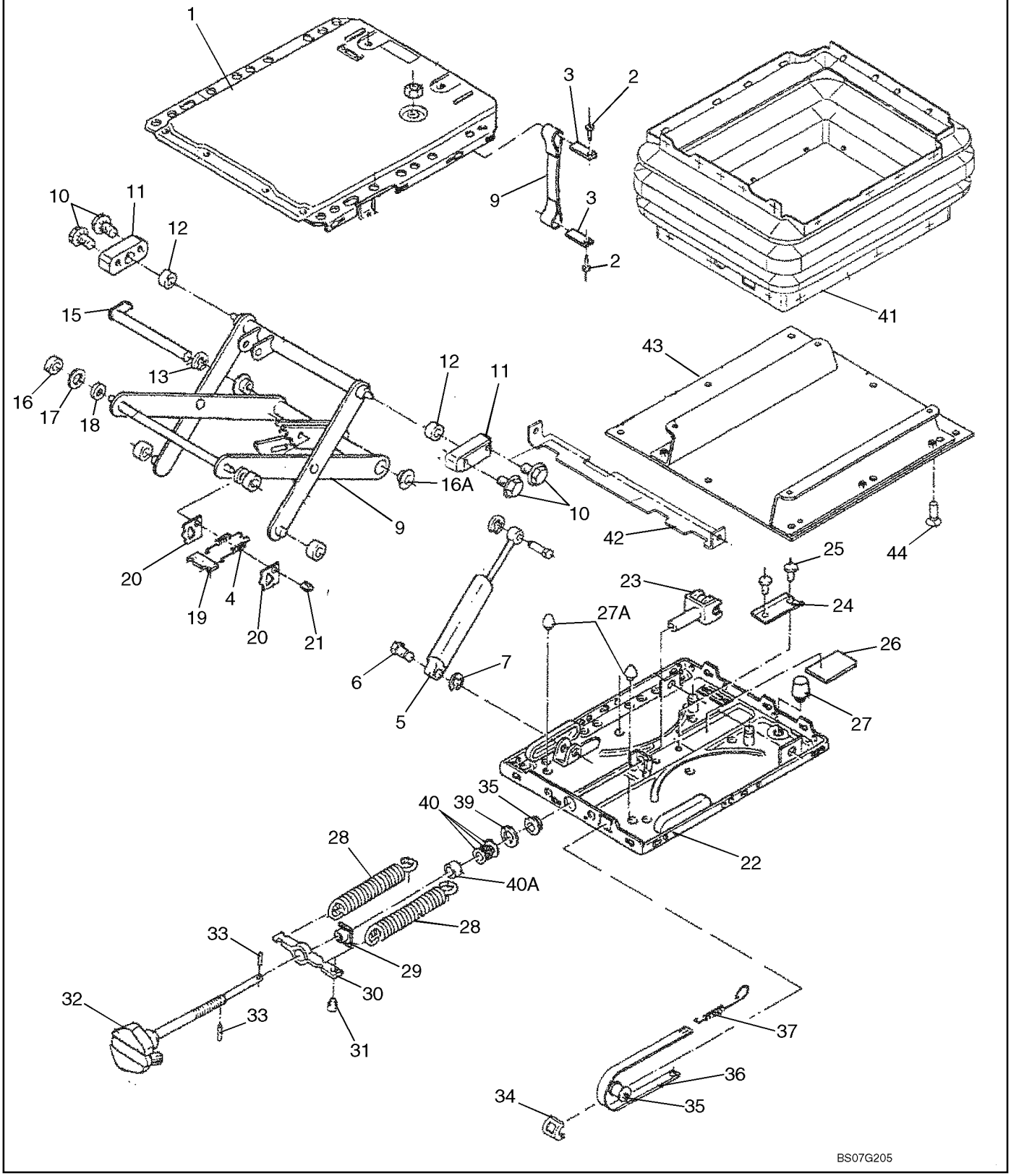

**SIÈGE, SUSPENSION MÉCANIQUE**

| REF | FN | PART NUMBER | YR/SN | QTY | DESCRIPTION |
|---|---|---|---|---|---|
| 29 | | 82035034 | | 1 | ECROU |
| 30 | | 82035027 | | 1 | PATTE FIXATION |
| 31 | | 82035033 | | 1 | RETENEUR, Plug |
| | | 85817451 | | 1 | VIS DE REGLAGE, Kit, Incl. Refs 22, 23 |
| 32 | | NSS | | 1 | NON FOURNI SEPAREMENT, Adjustment Screw Assy |
| 33 | | 85817433 | | 1 | PION, Pin |
| | | 87331925 | | 1 | REGLEUR, Weight Adjustment Kit, Incl. Refs. 31, 34 - 37 |
| 34 | | 82035025 | | 1 | GUIDE |
| 35 | | 82035029 | | 1 | ROULEAU |
| 36 | | NSS | | 1 | NON FOURNI SEPAREMENT, Weight Adjustment |
| 37 | | 82035039 | | 1 | RESSORT |
| 38 | | 85817435 | | 1 | BAGUE |
| 39 | | 82035028 | | 1 | RONDELLE |
| 40 | | 82035035 | | 1 | JEU-DE-RONDELLES |
| 40A | | {87583839} | | 1 | SPACER |
| 41 | | 85817428 | | 1 | SOUFFLET, Suspension |
| 42 | | {87583849} | | 2 | BRACE |
| 43 | | {87583859} | | 1 | CONSOLE |
| 44 | | {87583860} | | 4 | SCREW |

| 09-42C | | p1 | 06/07 |
|---|---|---|---|

**SIÈGE, SUSPENSION PNEUMATIQUE**

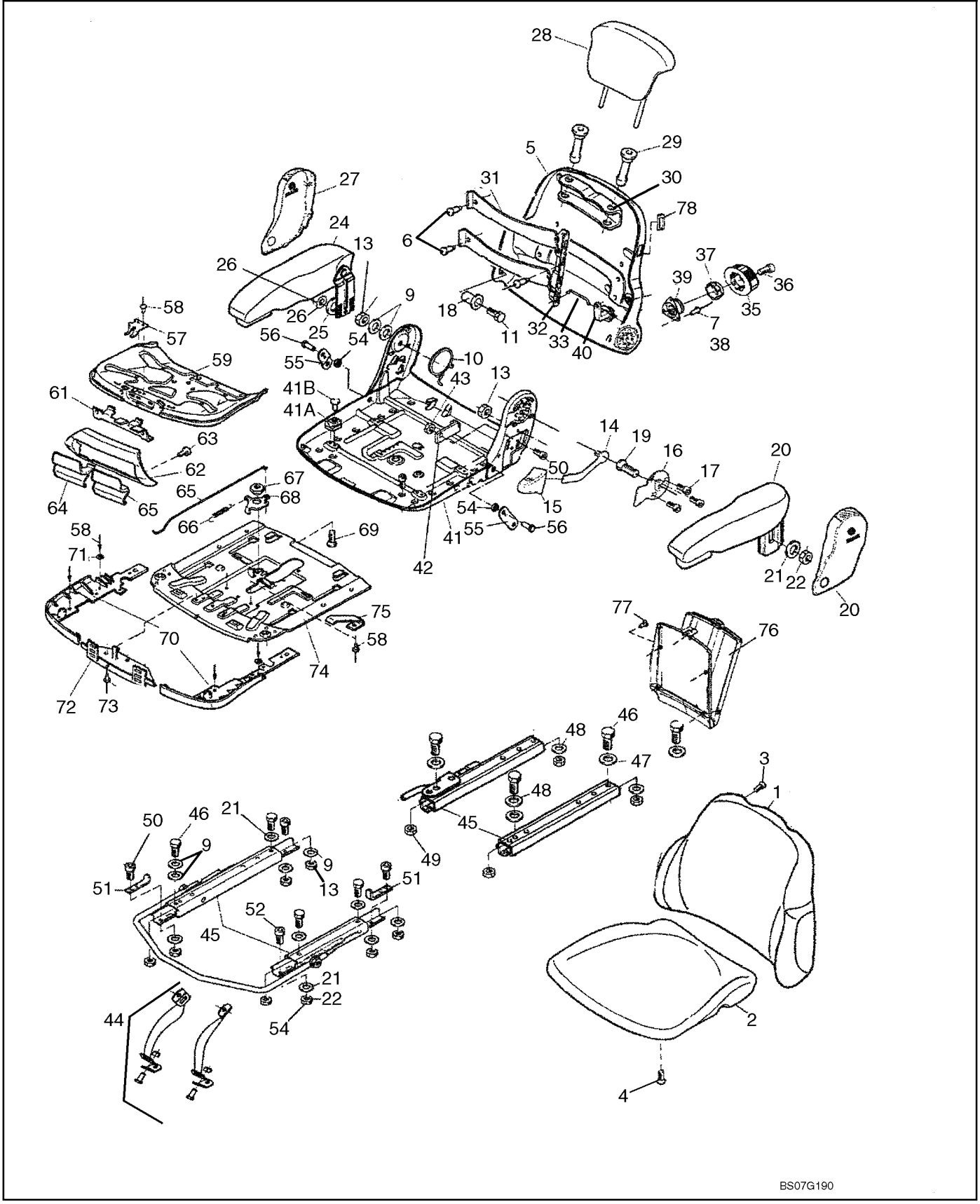

**SIÈGE, SUSPENSION PNEUMATIQUE**

| REF | FN | PART NUMBER | YR/SN | QTY | DESCRIPTION |
|---|---|---|---|---|---|
| | | REF | | | NOTICE, UPPER SEAT ASSEMBLY, MECHANICAL |
| | | 87398040 | | 1 | SIEGE (ASSEMBLE), Incl. Refs 1 - 78 , Incl. Parts on Figure 09-42D |
| | | {87584101} | | 1 | SEAT, Cloth; Upper Seat Assembly; Incl. 1 - 78 |
| 1 | | {87583733} | | 1 | CUSHION; Backrest; Incl. Ref. 3 |
| 2 | | {87584097} | | 1 | CUSHION; Seat; Incl. Ref. 4 |
| 3 | | 82034997 | | 4 | VIS |
| 4 | | 82034997 | | 4 | VIS |
| | | 71491410 | | 1 | CHASSIS, Backrest, Incl. 5 - 7 |
| 5 | | NSS | | 1 | NON FOURNI SEPAREMENT, Cover |
| 6 | | 85811351 | | 3 | RIVET |
| 7 | | 47124903 | | 3 | RIVET |
| | | 71491411 | | 1 | KIT, Hardware; Backrest Adjustment; Incl. 9 - 19 |
| 9 | | 82034881 | | 2 | RONDELLE |
| 10 | | {87567527} | | 1 | SPRING, Leg, RH |
| 11 | | {87583729} | | 1 | BOLT, Hex M8 x 40 |
| 12 | | 82034894 | | 2 | VIS, M8 x 16 |
| 13 | | {87583748} | | 2 | NUT |
| 14 | | 345749A1 | | 1 | LEVIER |
| 15 | | 345752A1 | | 1 | POIGNÉE |
| 16 | | 345753A1 | | 1 | PLAQUE, GRANDE |
| 17 | | 345754A1 | | 3 | VIS, M6 x 10 |
| 18 | | 85811352 | | 1 | TUBE, Bushing |
| 19 | | 345776A1 | | 1 | VIS, M8 x 18 |
| 20 | | {87583757} | | 1 | ARMREST ASSY. Left Hand; Incl. 21, 22 |
| 21 | | 9960692 | | 6 | ENTRETOISE |
| 22 | | 85817458 | | 6 | ECROU |
| 23 | | {87584704} | | 1 | COVER, Left Hand |
| 24 | | {87583762} | | 1 | ARMREST ASSY. Right Hand; Incl. 25, 26 |
| 25 | | 9960692 | | 1 | ENTRETOISE |
| 26 | | 85817458 | | 1 | ECROU |
| 27 | | {87583731} | | 1 | COVER, Right Hand |
| 28 | | {87583747} | | 1 | HEADREST; Incl. 29 |
| 29 | | 85811350 | | 2 | BAGUE |
| 30 | | NSS | | 1 | NON FOURNI SEPAREMENT, Retainer |

**SIÈGE, SUSPENSION PNEUMATIQUE**

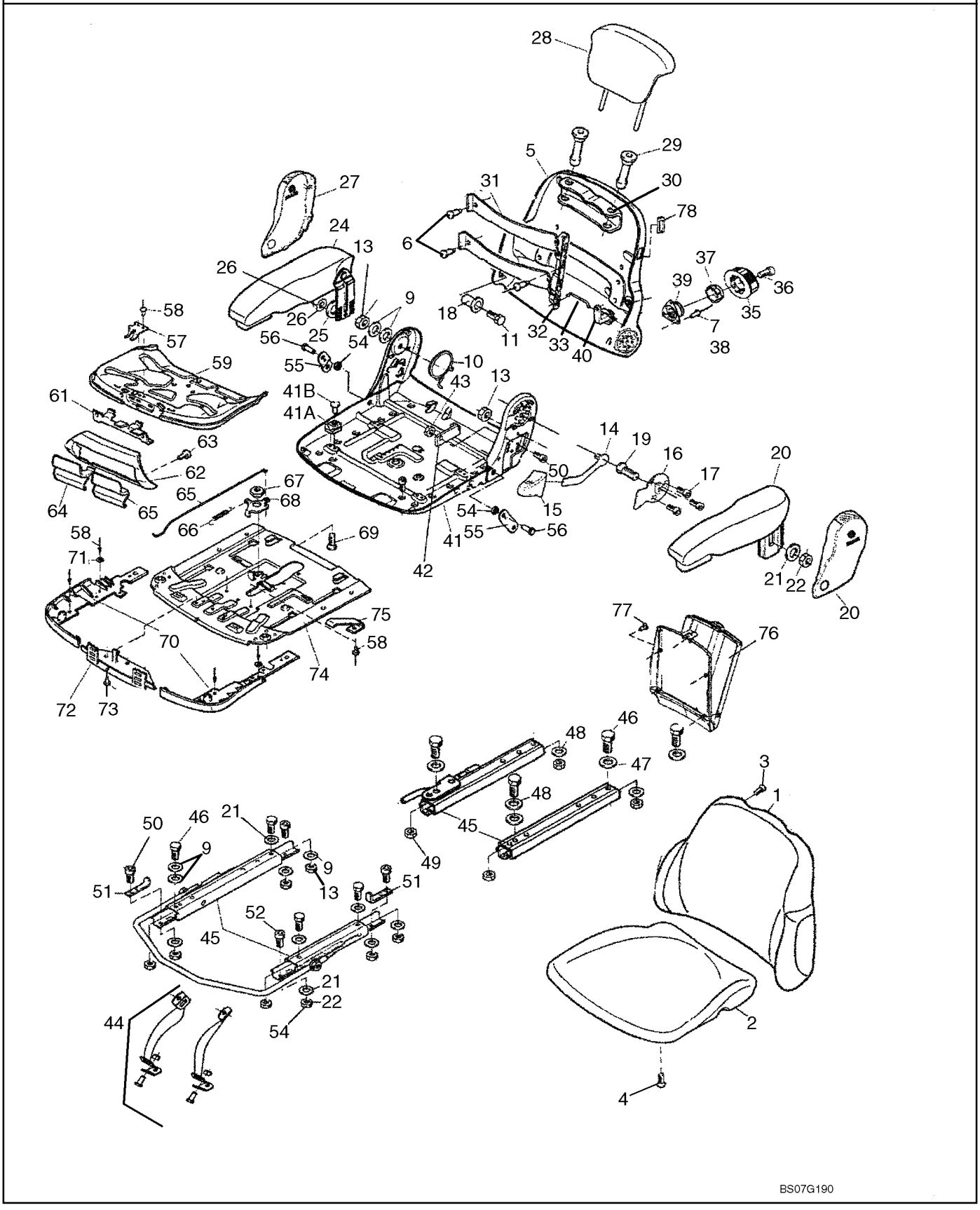

**SIÈGE, SUSPENSION PNEUMATIQUE**

| REF | FN | PART NUMBER | YR/SN | QTY | DESCRIPTION |
|---|---|---|---|---|---|
| | | 82034963 | | 1 | SUPPORT, Lumbar Support; Incl. 31 - 40 |
| 31 | | 82034969 | | 2 | PLAQUE, Lumbar |
| 32 | | 82034910 | | 1 | PLAQUE |
| 33 | | 82034909 | | 1 | TRINGLE |
| 34 | | 85811351 | | 3 | RIVET |
| 35 | | 82034964 | | 1 | POIGNÉE, Incl. 36 |
| 36 | | 82034917 | | 1 | VIS, M6 x 10 |
| 37 | | 82034916 | | 1 | CLIQUET |
| 38 | | 47124903 | | 3 | RIVET |
| 39 | | 82034911 | | 1 | FREIN |
| 40 | | 82034912 | | 1 | PILIER, SOUTIEN |
| 41 | | {87584099} | | 1 | PAN, Seat, Incl. 41A, 41B |
| 41A | | 82034921 | | 4 | GUIDE, Guide |
| 41B | | 82034923 | | 4 | RIVET, Rivet |
| 42 | | {87583739} | | 1 | STOP |
| 43 | | 85817458 | | 1 | ECROU |
| 44 | | 87545658 | | 1 | KIT, Tether Belt |
| 45 | | 345783A1 | | 1 | RAIL (ASSEMBLE), Seat Slide Rails |
| 46 | | 16043231 | | 4 | BOULON, Hex, M8 x 16, 10.9 |
| 47 | | 9960692 | | 3 | ENTRETOISE |
| 48 | | 82034881 | | 4 | RONDELLE |
| 49 | | {87583748} | | 4 | NUT, Hex M8; If Used |
| 49 | | 85817458 | | 4 | ECROU, M8, If Used |
| 50 | | 82034894 | | 4 | VIS, M8 x 16, If Used |
| 50 | | 82034893 | | 4 | VIS, If Used |
| 51 | | {87583737} | | 2 | STOP, Slide Rail |
| 52 | | 85817467 | | 3 | VIS |
| 53 | | {87583752} | | 4 | SCREW, If Used |
| 54 | | 82035064 | | 2 | TUBE |
| 55 | | {87583738} | | 2 | BRACKET |
| 56 | | {87583755} | | 2 | BOLT |
| | | 82034949 | | 1 | COUSSIN DE SIEGE, Incl. 57 - 60 |
| 57 | | 82034947 | | 1 | TÔLE, Incl. 58 (1) |
| 58 | | 82034897 | | 7 | RIVET |
| 59 | | NSS | | 1 | NON FOURNI SEPAREMENT, Plate |

**SIÈGE, SUSPENSION PNEUMATIQUE**

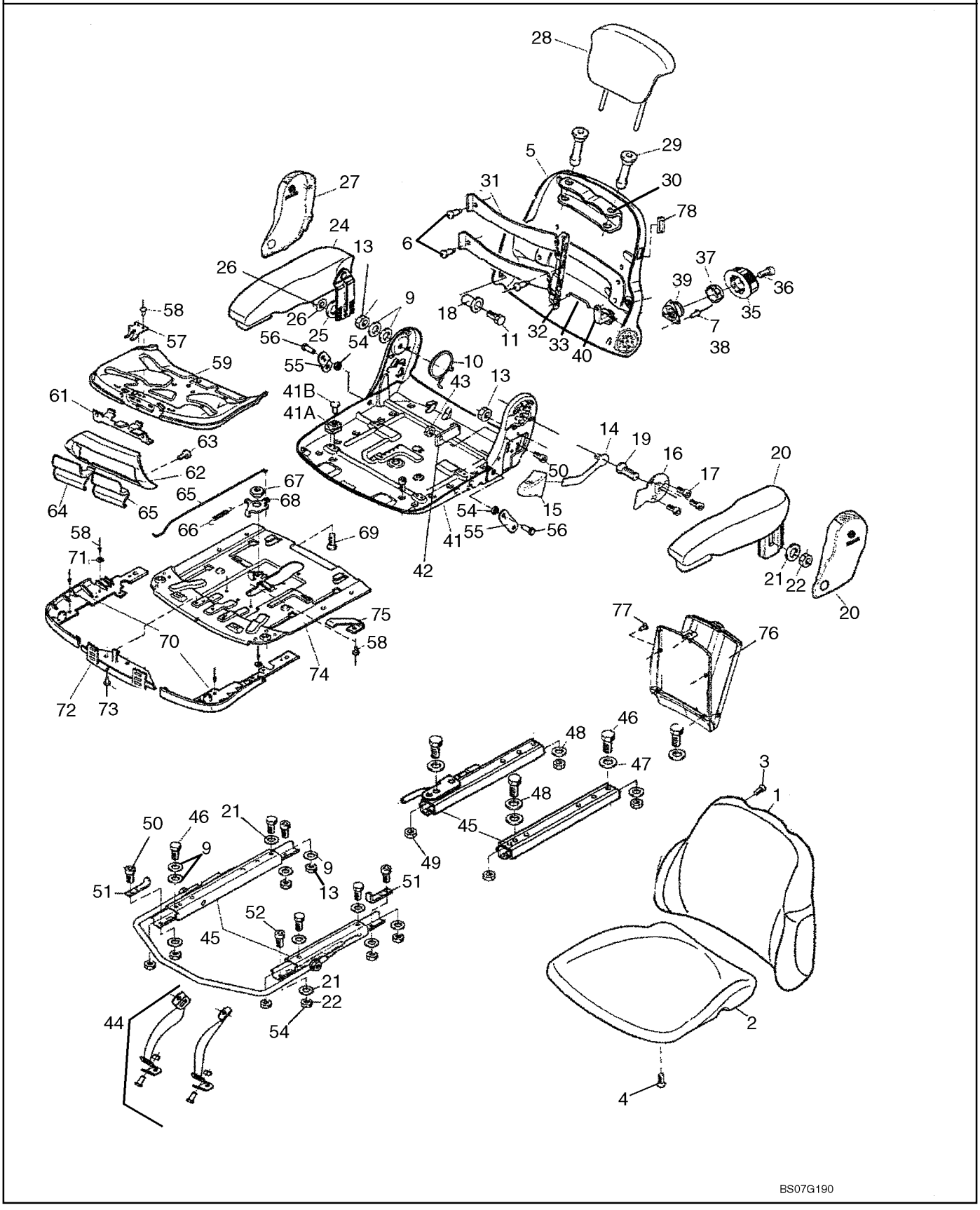

**SIÈGE, SUSPENSION PNEUMATIQUE**

| REF | FN | PART NUMBER | YR/SN | QTY | DESCRIPTION |
|---|---|---|---|---|---|
| 60 | | 82034997 | | 4 | VIS, Not Illustrated |
| 61 | | 82034919 | | 1 | LOQUET, Seat |
| 62 | | 82034961 | | 1 | COUVERCLE, Incl. Ref. 63 |
| 63 | | 85819815 | | 2 | VIS |
| 64 | | 82034962 | | 1 | POIGNÉE, Incl. 65 |
| 65 | | 82034912 | | 1 | PILIER, SOUTIEN |
| | | 82034944 | | 1 | LEVIER, Incl. 66 - 69 |
| 66 | | 82034888 | | 2 | RESSORT |
| 67 | | 82034900 | | 1 | BAGUE |
| 68 | | NSS | | 1 | NON FOURNI SEPAREMENT, Plate |
| 69 | | 82034901 | | 1 | VIS |
| | | 82034952 | | 1 | COUVERCLE, Side Cover Kit, Incl. 58 (4), 71 |
| 70 | | NSS | | 1 | NON FOURNI SEPAREMENT, Cover |
| 71 | | 85817489 | | 4 | RONDELLE |
| | | 82034945 | | 1 | PATTE FIXATION, Kit, Incl. 72, 73 |
| 72 | | NSS | | 1 | NON FOURNI SEPAREMENT, Bracket |
| 73 | | 85811353 | | 4 | RIVET |
| | | 82034948 | | | PLAQUE, Adjustable Seat Kit, Incl. 58 (2), 74, 75; Also Incl. 82034945, Bracket Kit |
| 74 | | NSS | | 1 | NON FOURNI SEPAREMENT |
| 75 | | 82034920 | | 1 | TÔLE |
| | | 82034977 | | | COFFRE PLASTIQUE, Kit, Incl. Refs 76, 77 |
| 76 | | NSS | | 1 | NON FOURNI SEPAREMENT, Plastic Case |
| 77 | | {87583748} | | 5 | SCREW, M4 x 8 |
| 78 | | 82034958 | | 1 | COUVERCLE, Seat Heat |

| 09-42D | | p1 | 07/07 |
|---|---|---|---|

**SIÈGE, SUSPENSION PNEUMATIQUE**

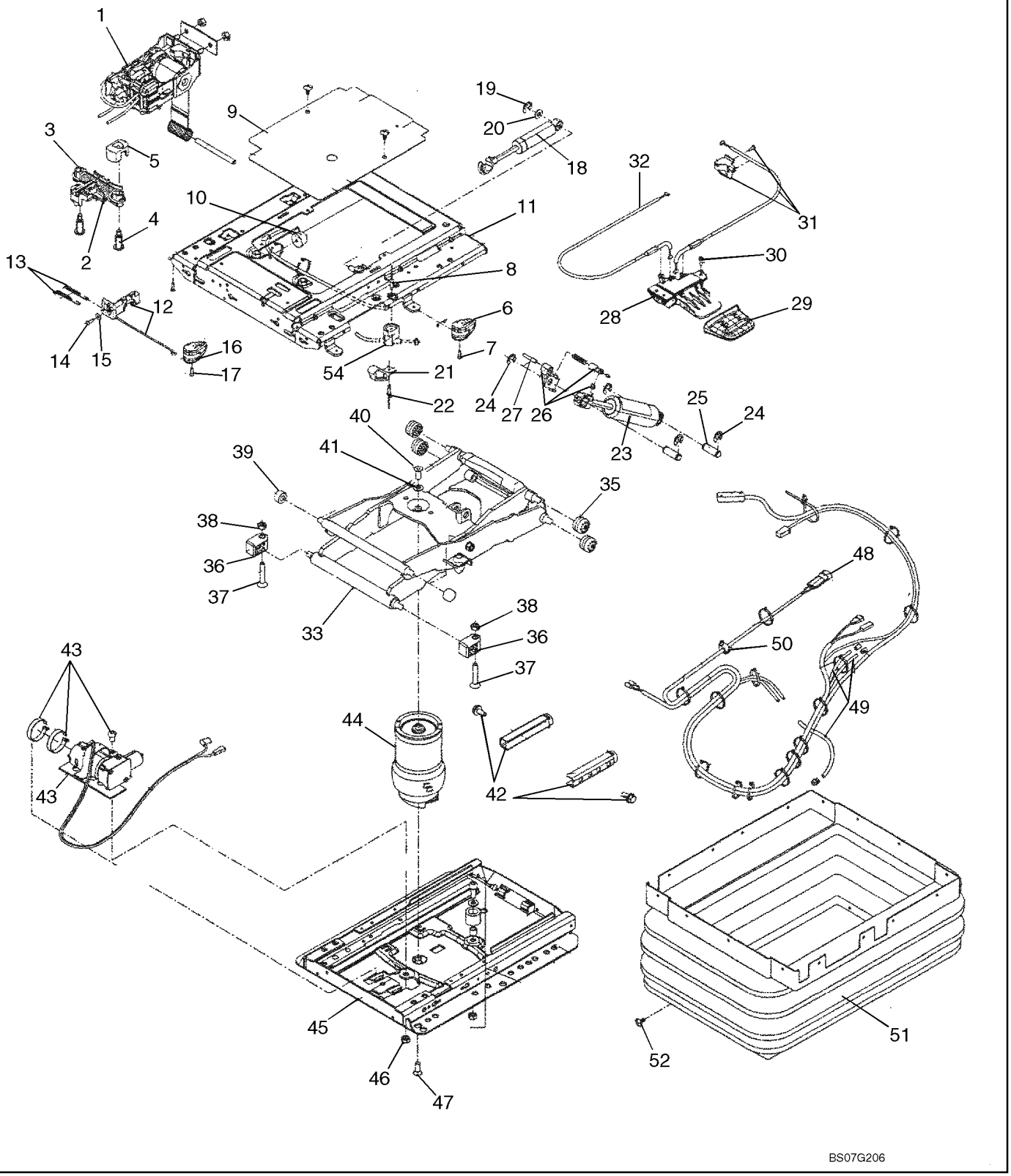

**SIÈGE, SUSPENSION PNEUMATIQUE**

| REF | FN | PART NUMBER | YR/SN | QTY | DESCRIPTION |
|---|---|---|---|---|---|
| | | 87398040 | | 1 | SIEGE (ASSEMBLE), Incl. Refs. 1 - 54 , Incl. Parts on Figure 09-42C |
| | | {87584095} | | 1 | SEAT, CLoth, Lower Seat Assembly; Incl. Refs. 1 - 54 |
| 1 | | 82035095 | | 1 | COMMANDE, Kit, Incl. Control Mechanism, Mounting Parts |
| | | 82035111 | | 1 | ISOLATEUR, Kit, Incl. Refs 2 - 5 |
| 2 | | NSS | | 1 | NON FOURNI SEPAREMENT, Isolator |
| 3 | | 82035052 | | 2 | BAGUE |
| 4 | | {87585124} | | 2 | BOLT, Shoulder M8 x 33 |
| 5 | | NSS | | 1 | NON FOURNI SEPAREMENT, Guide |
| | | 82035123 | | 1 | POIGNÉE, Kit, Incl. Refs. 6 - 8 |
| 6 | | NSS | | 1 | NON FOURNI SEPAREMENT, Handle |
| 7 | | 82035087 | | 2 | VIS |
| 8 | | 82035065 | | 3 | RIVET, 4 x 16.9 mm |
| 9 | | 85817486 | | 1 | COUVERCLE, Kit, Incl. (2) Mounting Screws |
| | | 82035122 | | 1 | SUSPENSION, Kit, Incl. Refs. 10 - 15, Also Incl. (2) Roller Kits, (2) Single Rollers, and (2) 4 x 16.9 Rivets, Which Are Not Illustrated |
| 10 | | 82035081 | | 1 | BOUCHON |
| 11 | | NSS | | 1 | NON FOURNI SEPAREMENT, Suspension |
| | | 71486982 | | 1 | AXE ET LEVIER, Kit, Incl. Refs 12 - 15 |
| 12 | | NSS | | 1 | NON FOURNI SEPAREMENT, Lever and Pin |
| 13 | | {87584172} | | 2 | SPRING, Tension |
| 14 | | NSS | | 1 | NON FOURNI SEPAREMENT, Screw |
| 15 | | NSS | | 1 | NON FOURNI SEPAREMENT, Washer |
| | | 82035073 | | 1 | POIGNÉE, Kit, Incl. Refs 16, 17 |
| 16 | | NSS | | 1 | NON FOURNI SEPAREMENT, Handle |
| 17 | | 82035087 | | 1 | VIS |
| | | 82035079 | | 1 | AMORTISSEUR, Kit, Incl. Refs. 18 - 20 |
| 18 | | NSS | | 1 | NON FOURNI SEPAREMENT, Shock Absorber |
| 19 | | 85817560 | | 1 | RONDELLE, E-Clip |
| 20 | | NSS | | 1 | NON FOURNI SEPAREMENT, Washer |
| | | 82035082 | | 2 | BUTÉE, Kit, Incl. Refs. 21, 22 |
| 21 | | NSS | | 1 | NON FOURNI SEPAREMENT, Stop |
| 22 | | 82035065 | | 2 | RIVET |

| 09-42D | | p2 | 07/07 |
|---|---|---|---|

**SIÈGE, SUSPENSION PNEUMATIQUE**

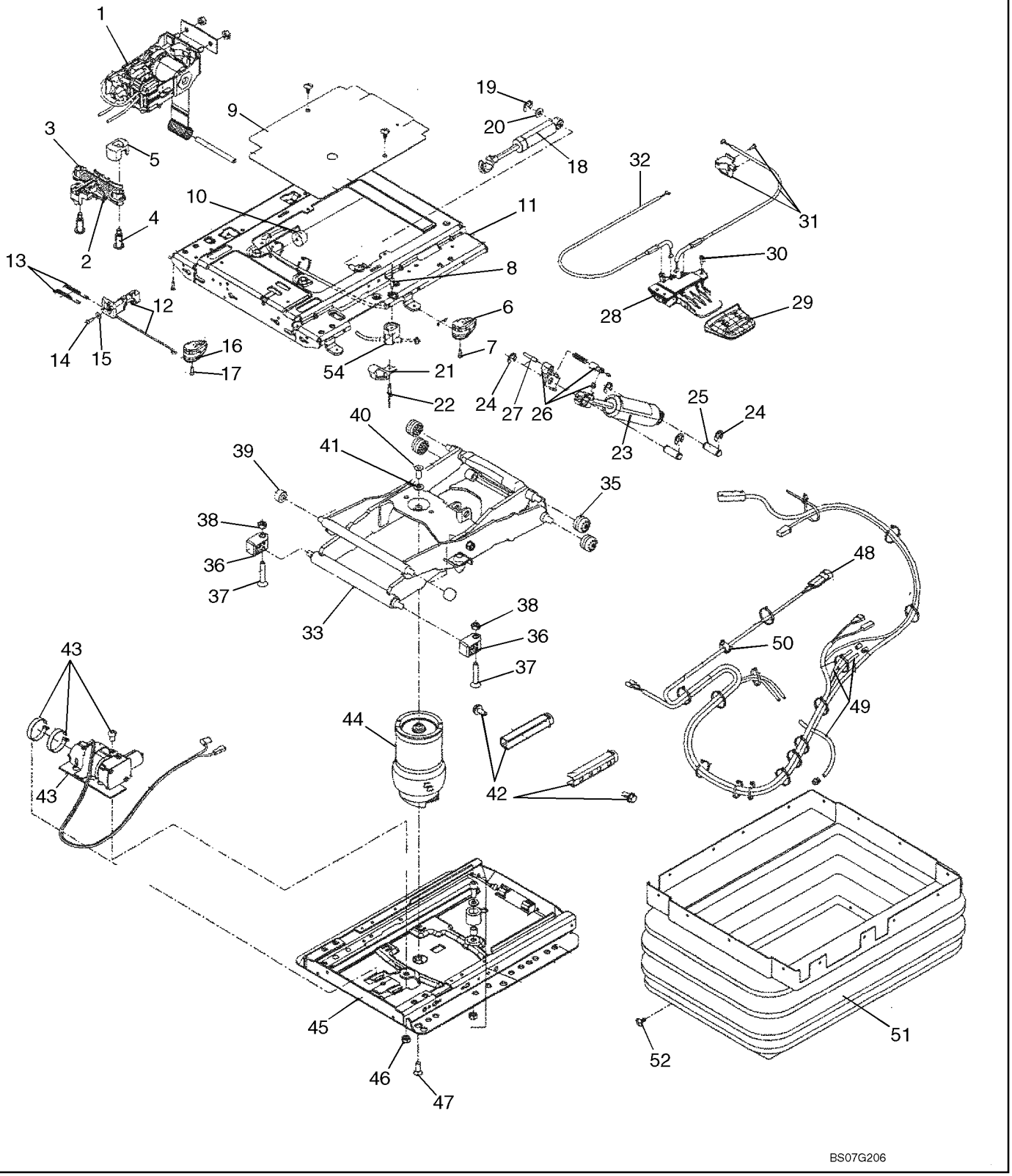

**SIÈGE, SUSPENSION PNEUMATIQUE**

| REF | FN | PART NUMBER | YR/SN | QTY | DESCRIPTION |
|---|---|---|---|---|---|
| | | {87585037} | | 1 | KIT, SHOCK ABSORBER, Incl. Refs. 23 - 26 |
| 23 | | NSS | | 1 | NON FOURNI SEPAREMENT, Shock Absorber |
| 24 | | 85817496 | | 4 | RONDELLE, E-Clip, 10mm |
| 25 | | {87567829} | | 2 | PIN, Clevis |
| 26 | | 82035116 | | 1 | PALIER, Kit, Cable Connect |
| 27 | | {87584102} | | 1 | CABLE, Bowden |
| | | 82035086 | | 1 | LEVIER, Kit, Incl. Refs. 28 - 30 |
| 28 | | NSS | | 1 | NON FOURNI SEPAREMENT, Lever |
| 29 | | 85817492 | | 1 | POIGNÉE |
| 30 | | 85819815 | | 3 | VIS |
| 31 | | 82035106 | | 1 | CABLE, Kit |
| 32 | | 82035075 | | 1 | CABLE, Kit |
| | | 87396449 | | 1 | SUSPENSION, Kit, Incl. Refs. 33 - 41 |
| 33 | | NSS | | 1 | NON FOURNI SEPAREMENT, Suspension |
| 34 | | 82035126 | | 2 | PARE-CHOCS |
| 35 | | 82035057 | | 4 | ROULEAU |
| 36 | | 87567830 | | 2 | SIEGE, ACCESSOIRES, BEARING, Thrust |
| 37 | | NSS | | 2 | NON FOURNI SEPAREMENT, Bolt |
| 38 | | NSS | | 2 | NON FOURNI SEPAREMENT, Nut |
| 39 | | 82035130 | | 2 | ROULEAU |
| 40 | | NSS | | 2 | NON FOURNI SEPAREMENT, Screw |
| 41 | | NSS | | 2 | NON FOURNI SEPAREMENT, Washer |
| 42 | | 47335175 | | 1 | BUTÉE, KIT, Stop, Incl. Mounting Hardware |
| 43 | | 345125A1 | | 1 | POCHETTE, Compressor |
| 44 | | 87396450 | | 1 | RESSORT, Kit |
| | | 398148A1 | | 1 | SOCLE, Kit, Incl. Refs. 35, 36, 42, 45 - 47 |
| 45 | | NSS | | 1 | NON FOURNI SEPAREMENT, Lower Suspension |
| 46 | | NSS | | 2 | NON FOURNI SEPAREMENT, Nut |
| 47 | | NSS | | 1 | NON FOURNI SEPAREMENT, Screw |
| 48 | | {87584100} | | 1 | CABLE, Connecting |
| 49 | | 82035077 | | 1 | KIT FLEXIBLES |
| 50 | | {87584103} | | 1 | CLAMP, Cable |
| | | 82035078 | | 1 | SOUFFLET, Kit, Incl. Refs. 51, 52 |
| 51 | | NSS | | 1 | NON FOURNI SEPAREMENT, Bellows |
| 52 | | NSS | | 22 | NON FOURNI SEPAREMENT, Screw |

**SIÈGE, SUSPENSION PNEUMATIQUE**

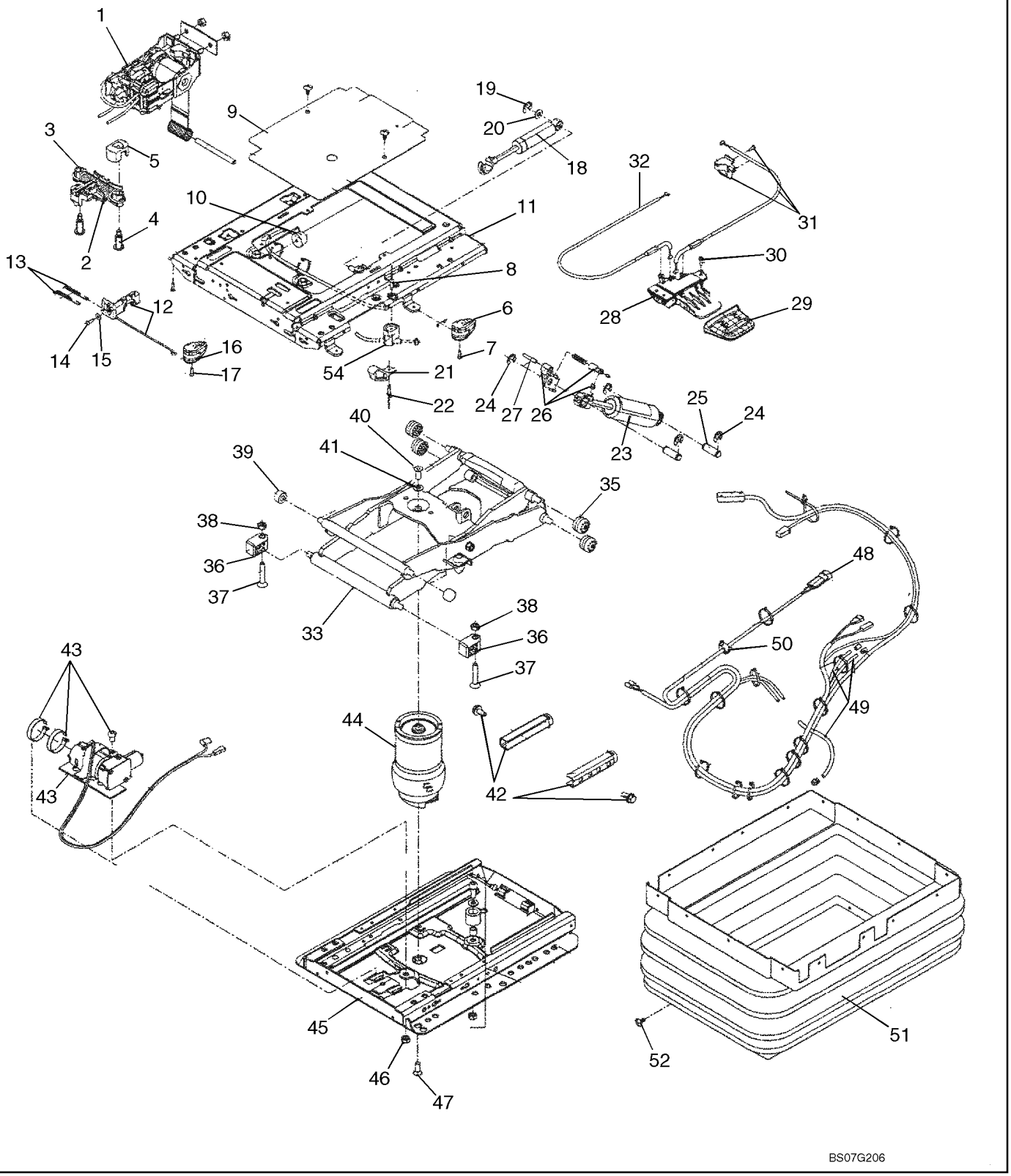

**SIÈGE, SUSPENSION PNEUMATIQUE**

| REF | FN | PART NUMBER | YR/SN | QTY | DESCRIPTION |
|---|---|---|---|---|---|
| 53 | | {87583859} | | 1 | CONSOLE, Not Illustrated |
| 54 | | 82035071 | | 1 | GUIDE, Cable Holder |
| | | 82848105 | | 1 | KIT, Wear Parts, Incl. Refs. 3, 8, 10, 34, 35, 36, 39, 42, 46, 47, 52 |

| 09-43 | | p1 | 07/07 |
|---|---|---|---|

**CABINE - CONDUITES DU CHAUFFAGE ET DE LA CLIMATISATION**

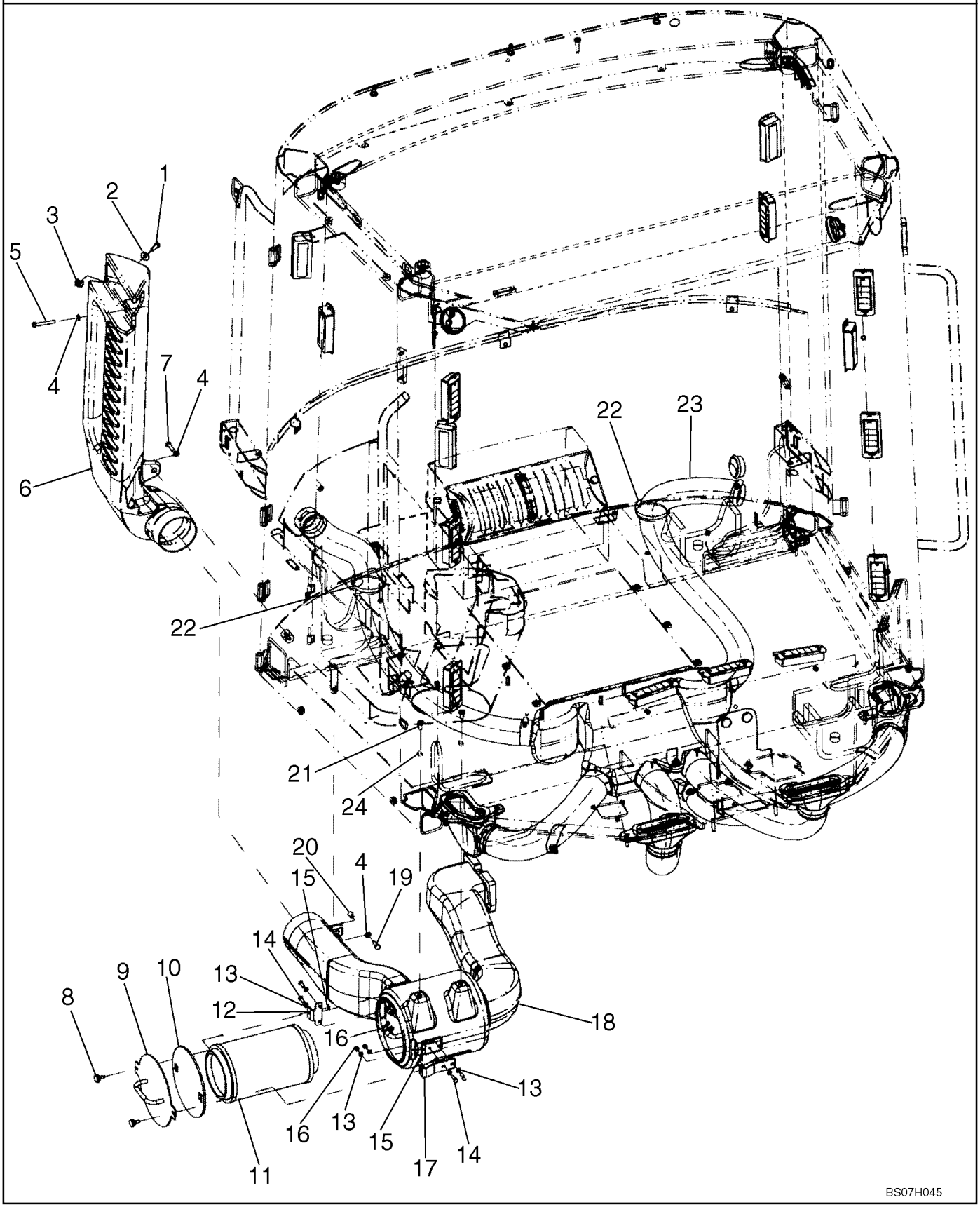

**CABINE - CONDUITES DU CHAUFFAGE ET DE LA CLIMATISATION**

| REF | FN | PART NUMBER | YR/SN | QTY | DESCRIPTION |
|---|---|---|---|---|---|
| 1 | | 16043624 | | 1 | BOULON, Hex, M8 x 25, 8.8, Full Thd |
| 2 | | {87664051} | | 1 | WASHER, M9 x 24 x 2 |
| 3 | | 76303594 | | 1 | ECROU, Square |
| 4 | | 895-11008 | | 3 | RONDELLE, M8 x 16 x 1.6 |
| 4 | | {87664049} | | 3 | WASHER, M9 x 16 x 1.6 |
| 5 | | 16044324 | | 1 | BOULON, Hex, M8 x 55, 8.8 |
| 6 | | 76303027 | | 1 | ENTONNOIR |
| 7 | | 16043824 | | 1 | BOULON, Hex, M8 x 30, 8.8, Full Thd |
| 8 | | 422721300 | | 2 | BOULON |
| 9 | | {76303615} | | 1 | COVER |
| 10 | | {76303546} | | 1 | SEAL |
| 11 | | 76303305 | | 1 | FILTRE A AIR |
| 12 | | {76303541} | | 1 | BRACKET |
| 13 | | 895-11006 | | 8 | RONDELLE, M6 |
| 14 | | 614-6020 | | 4 | BOULON, Hex, M6 x 20, 8.8, If Used |
| 15 | | 87610851 | | 2 | ECROU, Selflocking |
| 16 | | 832-10406 | | 4 | CONTRE-ECROU, M6 x 1, Cl 8 |
| 17 | | {76303617} | | 1 | BRACKET |
| 18 | | {76303614} | | 1 | AIR DUCT |
| 19 | | {779-14825} | | 1 | SCREW, ST8 X 25 H/HD C TAP ZND |
| 20 | | {76303609} | | 1 | INSERT, M8; If Used |
| 21 | | 840-1820 | | 2 | VIS, Cross Pan Hd, M8 x 20, If Used |
| 22 | | {76303500} | | 2 | GASKET |
| 23 | | {76303504} | | 1 | TUBE |
| 24 | | 10519604 | | 2 | RONDELLE, M8 x 17 x 2, If Used |

**CABINE - CONDUITES DU CHAUFFAGE ET DE LA CLIMATISATION**

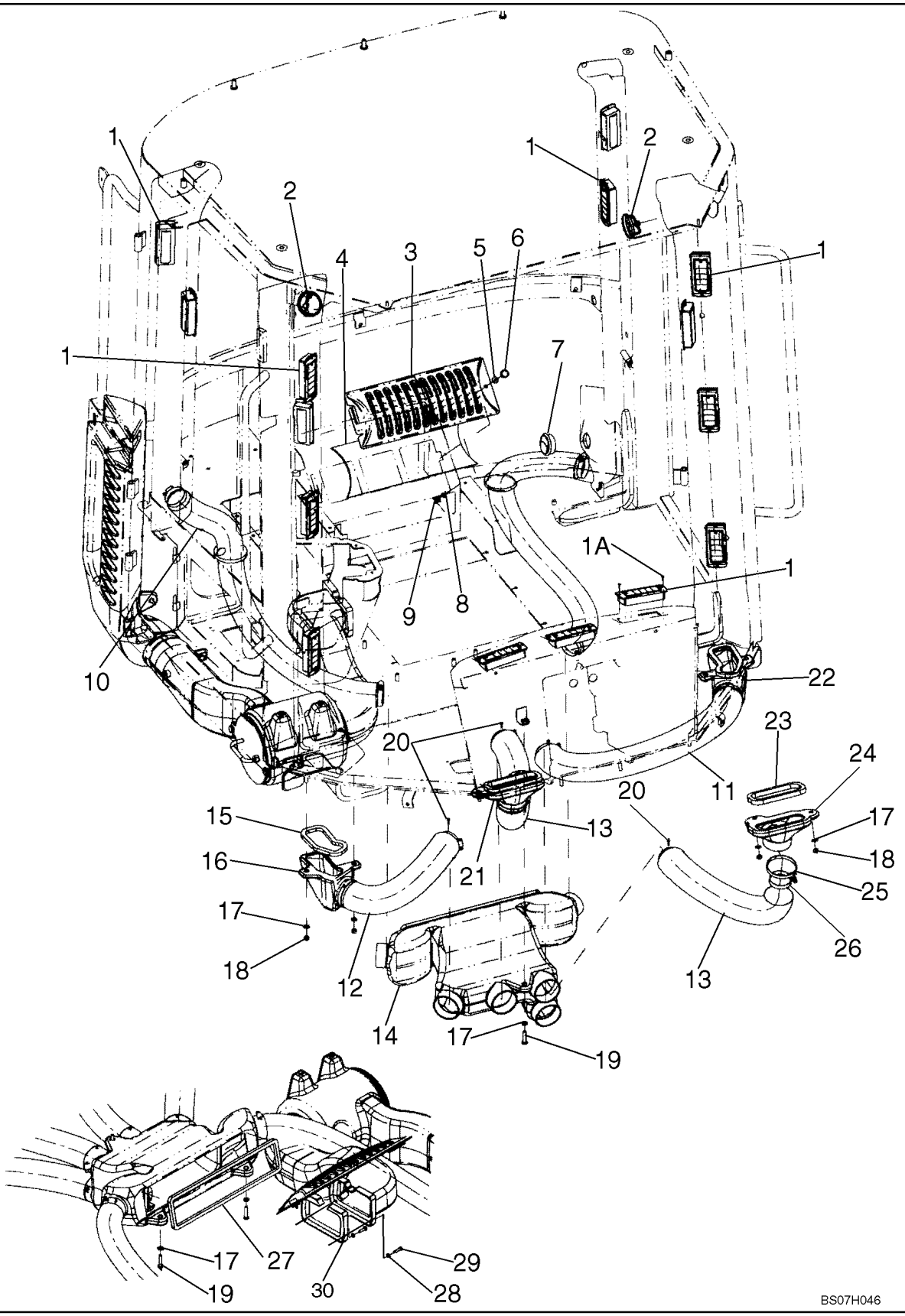

**CABINE - CONDUITES DU CHAUFFAGE ET DE LA CLIMATISATION**

| REF | FN | PART NUMBER | YR/SN | QTY | DESCRIPTION |
|---|---|---|---|---|---|
| 1 | | 76079036 | | 15 | BUSE D'AÉRATION |
| 1A | | 760-14113 | | 30 | VIS AUTO-TARAUDEUSE, Pan Hd, M3.5 x 13 |
| 2 | | 76048980 | | 2 | GOULOTTE |
| 3 | | 76303331 | | 1 | CALANDRE |
| 4 | | 76303499 | | 1 | FILTRE |
| 5 | | {87610804} | | 1 | WASHER, RUBBER, D6.4 x 17 |
| 6 | | 76303321 | | 1 | AXE |
| 7 | | 76303265 | | 1 | VALVE D'AERATION |
| 8 | | 76303319 | | 1 | RONDELLE |
| 9 | | 76303320 | | 1 | CLIP |
| 10 | | 76303505 | | 1 | FLEXIBLE |
| 11 | | 76303501 | | 1 | FLEXIBLE |
| 12 | | {76303502} | | 1 | TUBE |
| 13 | | {76303549} | | 2 | TUBE |
| 14 | | 76303023 | | 1 | CONDUIT |
| 15 | | {76303495} | | 2 | GASKET |
| 16 | | {87619957} | | 1 | DUCT |
| 17 | | 895-11008 | | 14 | RONDELLE, M8 x 16 x 1.6 |
| 18 | | 825-1408 | | 8 | ECROU, M8, Cl 8, If Used |
| 18 | | 832-10408 | | 8 | CONTRE-ECROU, M8 x 1.25, Cl 8, If Used |
| 19 | | 614-8035 | | 3 | BOULON, Hex, M8 x 35, 8.8 |
| 20 | | 71485317 | | 4 | VIS |
| 21 | | {87619956} | | 1 | DUCT |
| 22 | | {87619954} | | 1 | DUCT |
| 23 | | {76303494} | | 2 | GASKET |
| 24 | | {87619955} | | 1 | DUCT |
| 25 | | {87610848} | | 4 | GASKET |
| 26 | | 214-1444 | | 12 | BRIDE, FLEXIBLE, #44, 2.31/3.25 Type F Worm |
| 27 | | 76303496 | | 1 | JOINT, If Used |
| 28 | | 895-11006 | | 10 | RONDELLE, M6 |
| 29 | | 614-6020 | | 6 | BOULON, Hex, M6 x 20, 8.8 |
| 30 | | 76303496 | | 1 | JOINT, If Used |

**COUVERCLES - COURROIE D'ENTRAÎNEMENT (MODÈLES ÉQUIPÉS DE LA CLIMATISATION)**

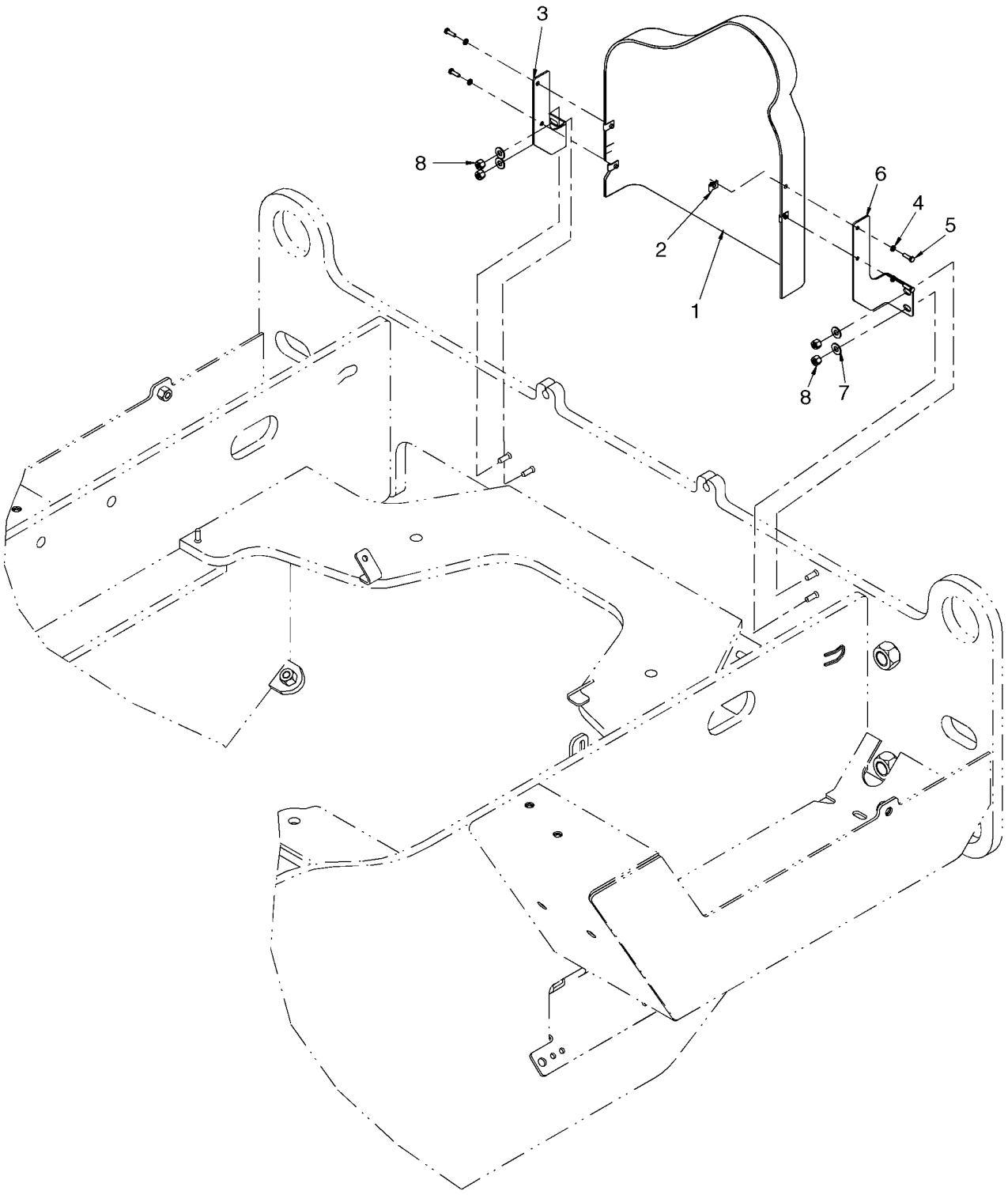

**COUVERCLES - COURROIE D'ENTRAÎNEMENT (MODÈLES ÉQUIPÉS DE LA CLIMATISATION)**

| REF | FN | PART NUMBER | YR/SN | QTY | DESCRIPTION |
|---|---|---|---|---|---|
| | | REF | | | NOTICE, WITH AIR CONDITIONING |
| 1 | | 8501022 | | 1 | GARANT |
| 2 | | 833-40306 | | 4 | ECROU, M6, U |
| 3 | | 87528970 | | 1 | PATTE FIXATION, Engine Guard; Right |
| 4 | | 892-11006 | | 4 | RONDELLE FREIN, M6 |
| 5 | | 627-6020 | | 4 | BOULON, Hex, M6 x 20, 10.9 |
| 6 | | 87528973 | | 1 | PATTE FIXATION, Engine Guard Mount |
| 7 | | 895-15008 | | 4 | RONDELLE, M8 x 20 x 1.6 |
| 8 | | 832-10410 | | 4 | CONTRE-ECROU, M10 x 1.5, Cl 8 |

| 09-44A | | p1 | 06/07 |
|---|---|---|---|

**COUVERCLES - COURROIE D'ENTRAÎNEMENT (MODÈLES NON ÉQUIPÉS DE LA CLIMATISATION)**

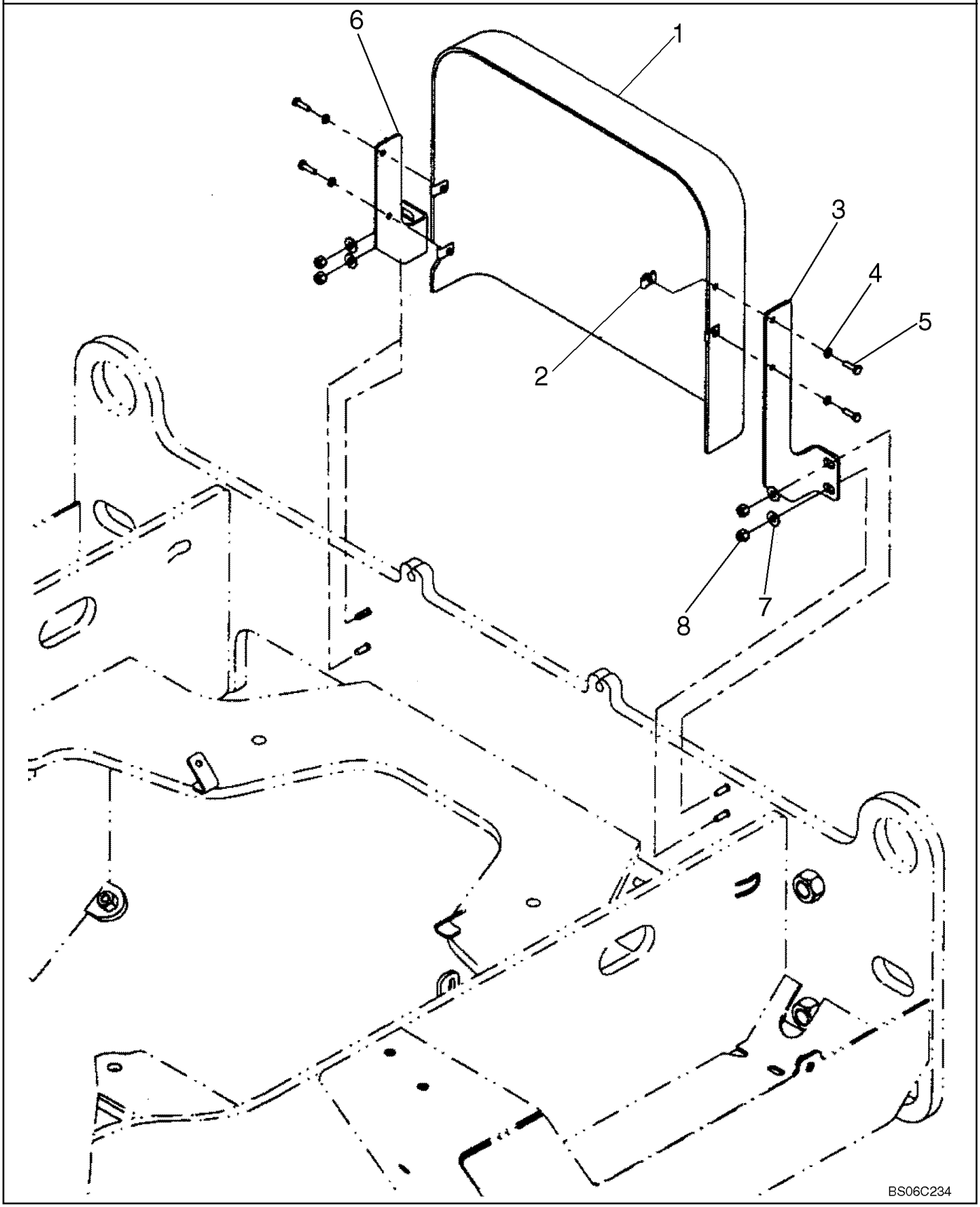

**COUVERCLES - COURROIE D'ENTRAÎNEMENT (MODÈLES NON ÉQUIPÉS DE LA CLIMATISATION)**

| REF | FN | PART NUMBER | YR/SN | QTY | DESCRIPTION |
|---|---|---|---|---|---|
| | | REF | | | NOTICE, WITHOUT AIR CONDITIONING |
| 1 | | 8501024 | | 1 | GARANT |
| 2 | | 833-40306 | | 4 | ECROU, M6, U |
| 3 | | 87528973 | | 1 | PATTE FIXATION, Engine Guard Mounting; Left |
| 4 | | 892-11006 | | 4 | RONDELLE FREIN, M6 |
| 5 | | 627-6020 | | 4 | BOULON, Hex, M6 x 20, 10.9 |
| 6 | | 87528970 | | 1 | PATTE FIXATION, Engine Guard Mounting; Right |
| 7 | | 895-15008 | | 4 | RONDELLE, M8 x 20 x 1.6 |
| 8 | | 832-10408 | | 4 | CONTRE-ECROU, M8 x 1.25, Cl 8 |

| 09-44B | | p1 | 06/07 |
|---|---|---|---|

**COUVERCLES - CABINE - SANS AIR CONDITIONNE**

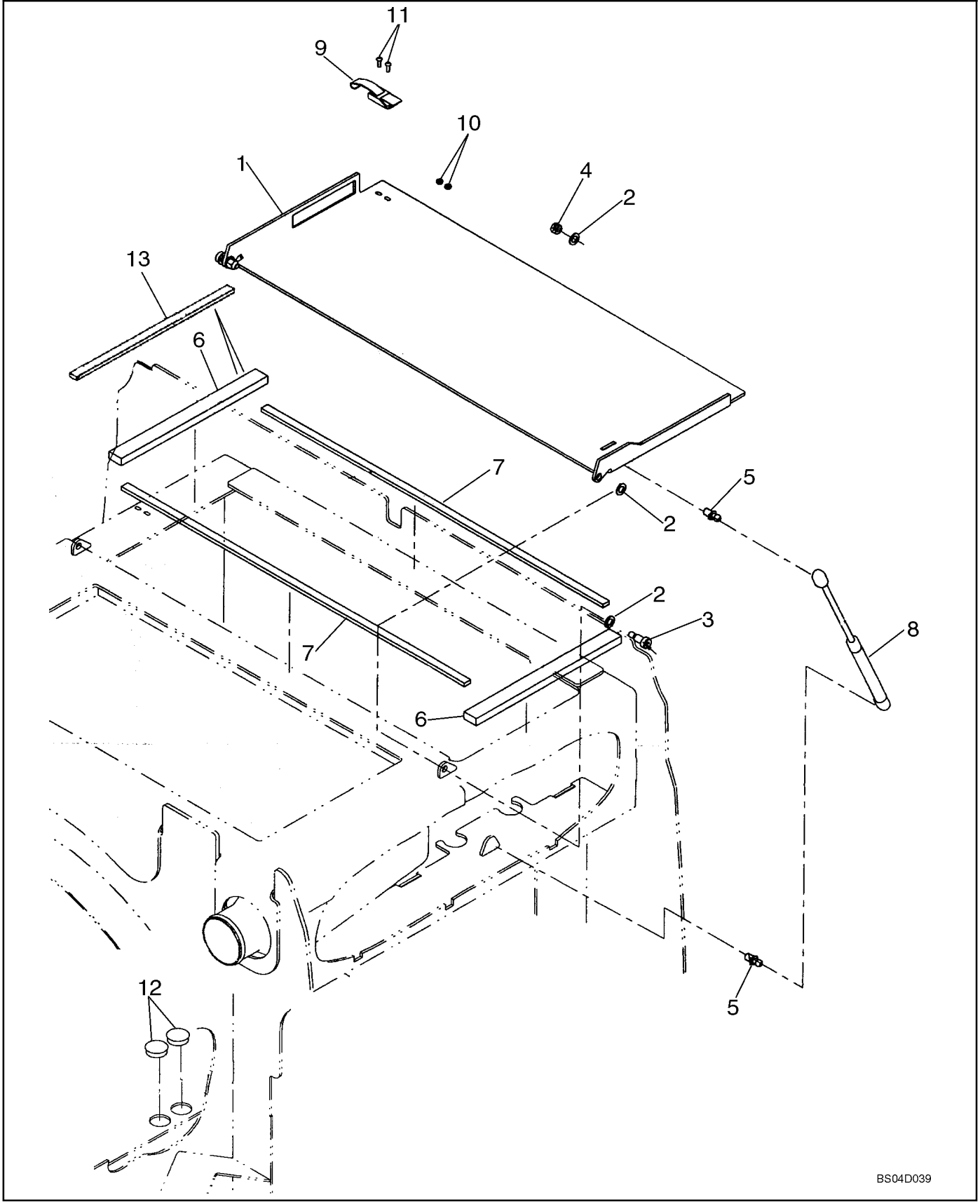

**COUVERCLES - CABINE - SANS AIR CONDITIONNE**

| REF | FN | PART NUMBER | YR/SN | QTY | DESCRIPTION |
|---|---|---|---|---|---|
| | | REF | | | NOTICE, MODELS WITHOUT AIR CONDITIONING |
| 1 | | 8602727 | | 1 | PLAQUE (ASSEMBLEE) |
| 2 | | 895-18010 | | 6 | RONDELLE, M10 x 18 x 1.6 |
| 3 | | 561-703 | | 2 | VIS, Hex Soc, Shoulder, M8 10 X 16mm, Cl 12.9 |
| 4 | | 832-10408 | | 2 | CONTRE-ECROU, M8 x 1.25, Cl 8 |
| 5 | | 350662A1 | | 2 | GOUJON |
| 6 | | 8602498 | | 1 | JOINT |
| 7 | | 8500133 | | 2 | JOINT, Oil Cooler; Side |
| 8 | | 252550A2 | | 1 | COMPAS, Cylinder |
| 9 | | 60-4640T1 | | 1 | LOQUET |
| 10 | | 225-14108 | | 2 | ECROU, #8-32 |
| 11 | | 440-1088 | | 2 | VIS, Cross Pan Hd, #8-32 x 1/2" |
| 12 | | 353-414 | | 2 | BOUCHON, Dome, 1.375" hole, Nylon |
| 13 | | 87432328 | | 1 | JOINT |

**CHAUFFAGE - MONTAGE**

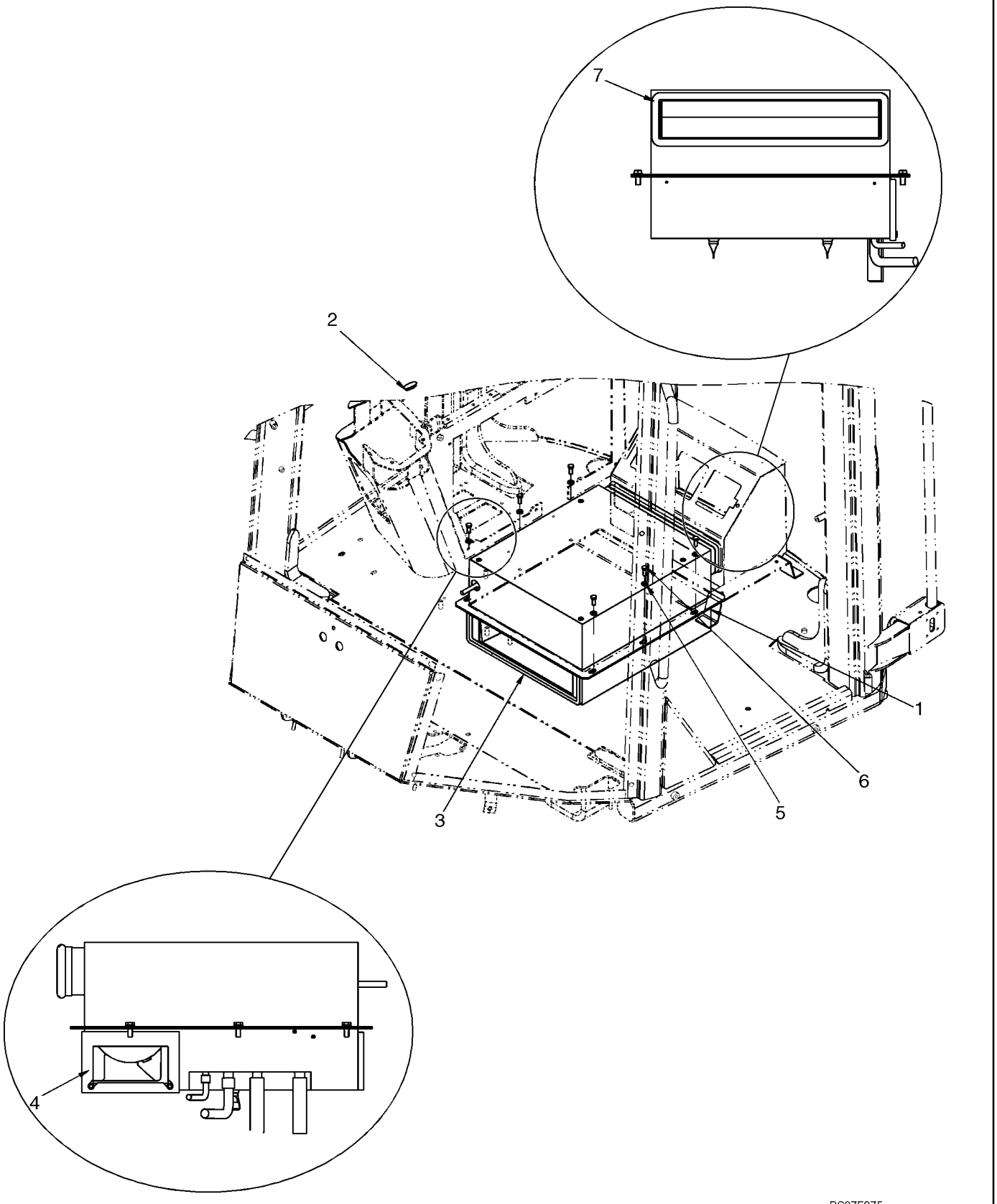

**CHAUFFAGE - MONTAGE**

| REF | FN | PART NUMBER | YR/SN | QTY | DESCRIPTION |
|---|---|---|---|---|---|
| | | REF | | | NOTICE, UNITS WITH HEATER ONLY |
| 1 | | 76303352 | | 1 | RECHAUFFEUR, HVAC Heater Unit; Production Number Only, Order Component Parts; See Figure 09-45A |
| 2 | | 76047278 | | 1 | BOUCHON |
| 3 | | 76303496 | | 1 | JOINT |
| 4 | | 76303497 | | 1 | JOINT |
| 5 | | 895-11008 | | 6 | RONDELLE, M8 x 16 x 1.6 |
| 6 | | 614-8020 | | 6 | BOULON, Hex, M8 x 20, 8.8 |
| 7 | | 87651073 | | 1 | JOINT PAREBRISE, SEAL |

| 09-45A | | p1 | 07/07 |
|---|---|---|---|

**CHAUFFAGE**

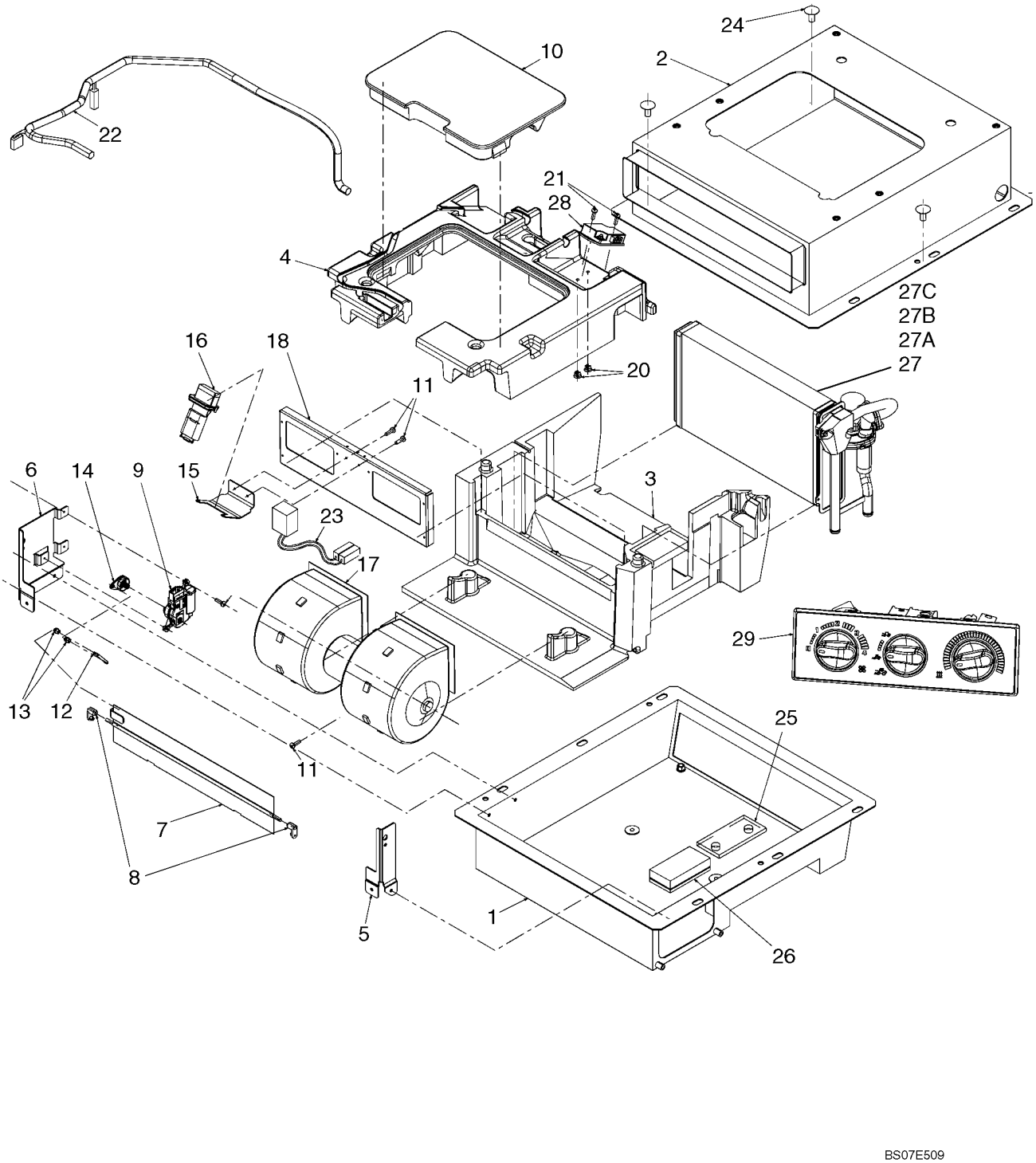

**CHAUFFAGE**

| REF | FN | PART NUMBER | YR/SN | QTY | DESCRIPTION |
|---|---|---|---|---|---|
| | | REF | | | NOTICE, UNITS WITH HEATER ONLY |
| 1 | | 87529453 | | 1 | BOÎTIER, Lower |
| 2 | | 87529457 | | 1 | BOÎTIER, Upper |
| 3 | | 87529458 | | 1 | BOÎTIER, Lower |
| 4 | | 87529459 | | 1 | BOÎTIER, Upper |
| 5 | | NSS | | 1 | NON FOURNI SEPAREMENT, Right Fastening Bracket |
| 6 | | NSS | | 1 | NON FOURNI SEPAREMENT, Left Fastening Bracket |
| 7 | | 87643958 | | 1 | TRAPPE, Recirculation |
| 8 | | 87643957 | | 2 | BAGUE, For Recirculation Flap |
| 9 | | 87528689 | | 1 | MOTEUR ELECTRIQUE(PETIT) |
| 10 | | 87529462 | | 1 | COUVERCLE, Inspection Trapdoor |
| 11 | | NSS | | 13 | NON FOURNI SEPAREMENT, Screw |
| 12 | | 87643954 | | 1 | TIRANT |
| 13 | | 87643955 | | 2 | BAGUE |
| 14 | | 87529617 | | 1 | LEVIER |
| 15 | | NSS | | 1 | NON FOURNI SEPAREMENT, Pipe Fastening Retainer |
| 16 | | 87528688 | | 1 | RESISTANCE |
| 17 | | 87528687 | | 1 | SOUFFLERIE ASSEMBLEE, Electric Fan |
| 18 | | NSS | | 1 | NON FOURNI SEPAREMENT, Bracket |
| 20 | | NSS | | 2 | NON FOURNI SEPAREMENT, Screw |
| 21 | | NSS | | 2 | NON FOURNI SEPAREMENT, Screw |
| 22 | | 87529485 | | 1 | CABLE |
| 23 | | NSS | | 1 | NON FOURNI SEPAREMENT, Fan Cable |
| 24 | | NSS | | 4 | NON FOURNI SEPAREMENT, Plug |
| 25 | | NSS | | 1 | NON FOURNI SEPAREMENT, Seal |
| 26 | | 87577361 | | 1 | MOUSSE, Seal |
| 27 | | 87529289 | | 1 | CHAUFFAGE (ASSEMBLE), Incl. Refs. 27A, 27B |
| 27A | | 87529444 | | 1 | TUBE DE CHAUFFAGE |
| 27B | | 87529447 | | 1 | NOYAU, Heater |
| 27C | | 87529627 | | 1 | SOUPAPE, Water |
| 28 | | 87529487 | | 1 | SOLENOIDE |
| 29 | | 87529536 | | 1 | COMMANDE, Manual Heater Control |

**CHAUFFAGE**

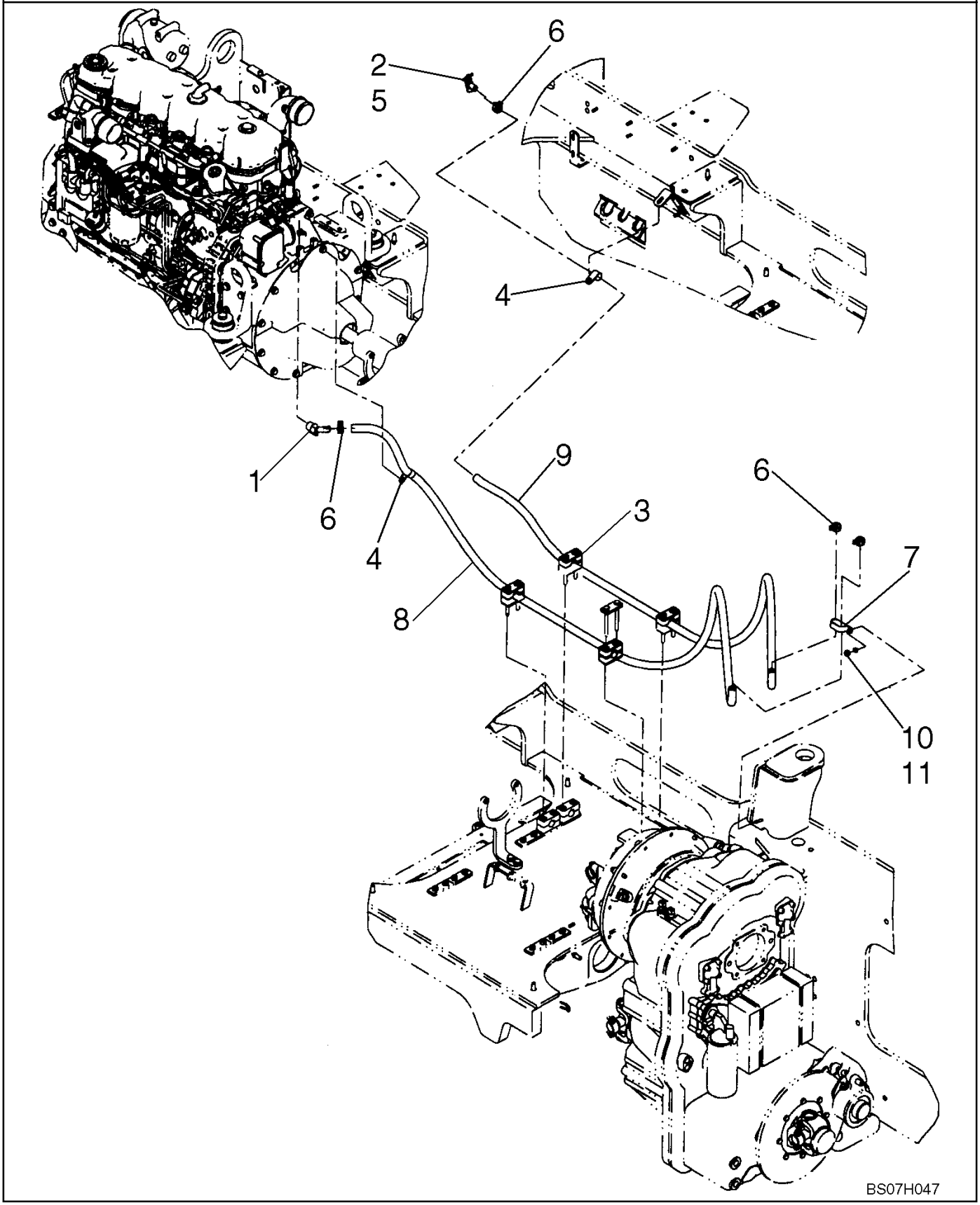

**CHAUFFAGE**

| REF | FN | PART NUMBER | YR/SN | QTY | DESCRIPTION |
|---|---|---|---|---|---|
| 1 | | 217-425 | | 1 | RACCORD, 45º, 5/8" Hose x 3/4" NPTF Beaded |
| 2 | | 301803R1 | | 1 | VALVE D'ARRET |
| 3 | | 367489A1 | | 4 | BLOC |
| 4 | | 515-24238 | | 4 | BRIDE, 15/16", Insul, 7/16" Bolt |
| 5 | | 345-87 | | AR | LOCTITE, Loctite 592 |
| 6 | | 1954736C1 | | 2 | BRIDE, FLEXIBLE, No. 24 |
| 7 | | 31-1081 | | 2 | CLAMP/Retired |
| 8 | | 1975801C1 | | 1 | DURITE, Heater Supply |
| 9 | | R55242 | | 1 | DURITE, Heater Return |
| 10 | | 895-11008 | | 1 | RONDELLE, M8 x 16 x 1.6 |
| 11 | | 829-1410 | | 1 | ECROU, M10, Cl 10 |

**CLIMATISATION - MONTAGE**

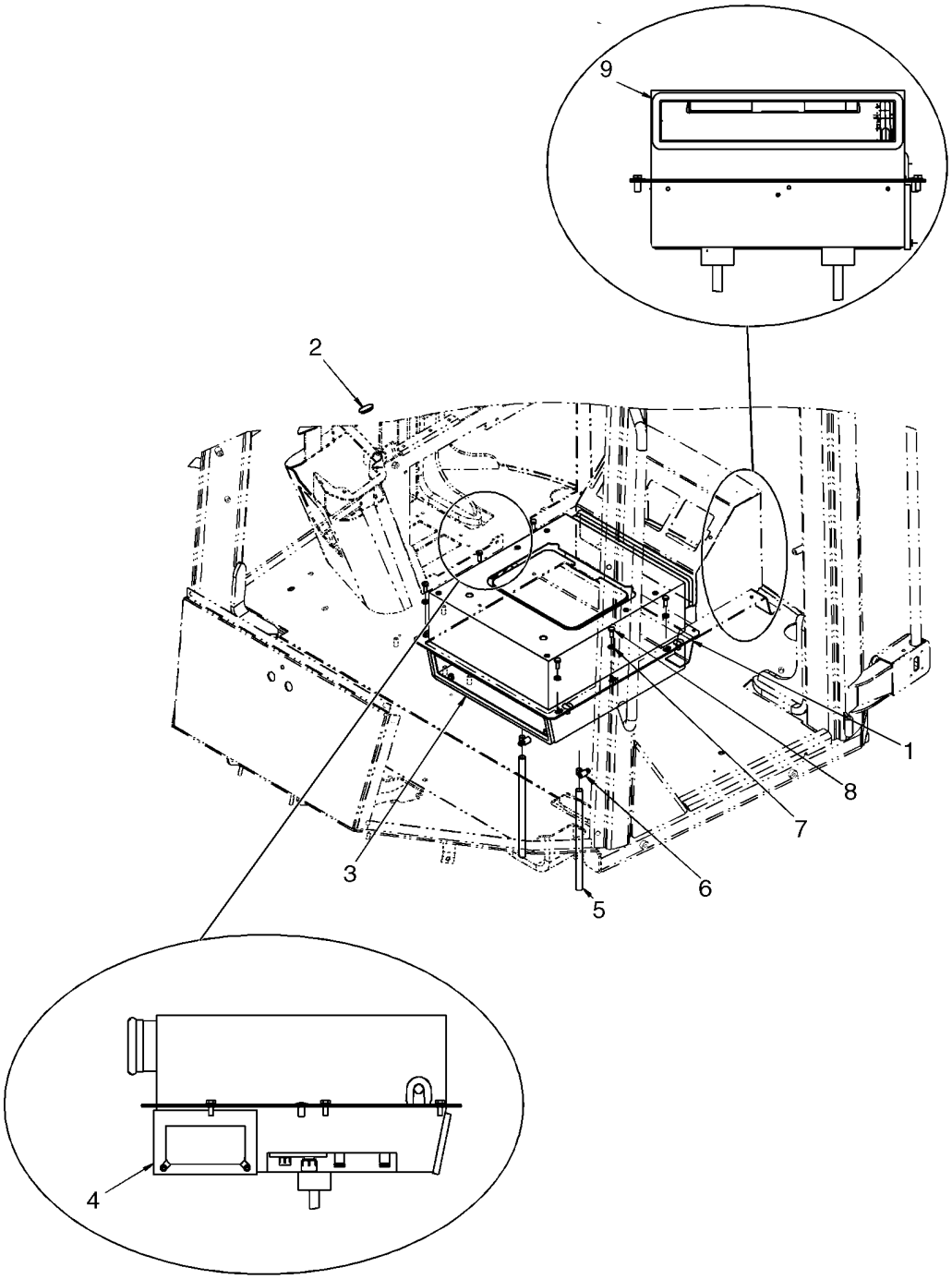


BS07F374

**CLIMATISATION - MONTAGE**

| REF | FN | PART NUMBER | YR/SN | QTY | DESCRIPTION |
|---|---|---|---|---|---|
| | | REF | | | NOTICE, UNITS WITH HEATER AND AIR CONDITIONING |
| 1 | | 76303592 | | 1 | CLIMATISEUR, HVAC A/C And Heater Unit; Production Number Only, Order Component Parts; See Figure 09-47A |
| 2 | | 76047278 | | 1 | BOUCHON |
| 3 | | 76303496 | | 1 | JOINT |
| 4 | | 76303497 | | 1 | JOINT |
| 5 | | 87587637 | | 2 | GAINE PLASTIQUE |
| 6 | | 214-1406 | | 2 | BRIDE, FLEXIBLE, #06, .44/.78 Type F Worm |
| 7 | | 895-11008 | | 6 | RONDELLE, M8 x 16 x 1.6 |
| 8 | | 614-8020 | | 6 | BOULON, Hex, M8 x 20, 8.8 |
| 9 | | {87561073} | | 1 | SEAL |

| 09-47A | | p1 | 06/07 |
|---|---|---|---|

**CLIMATISATION**

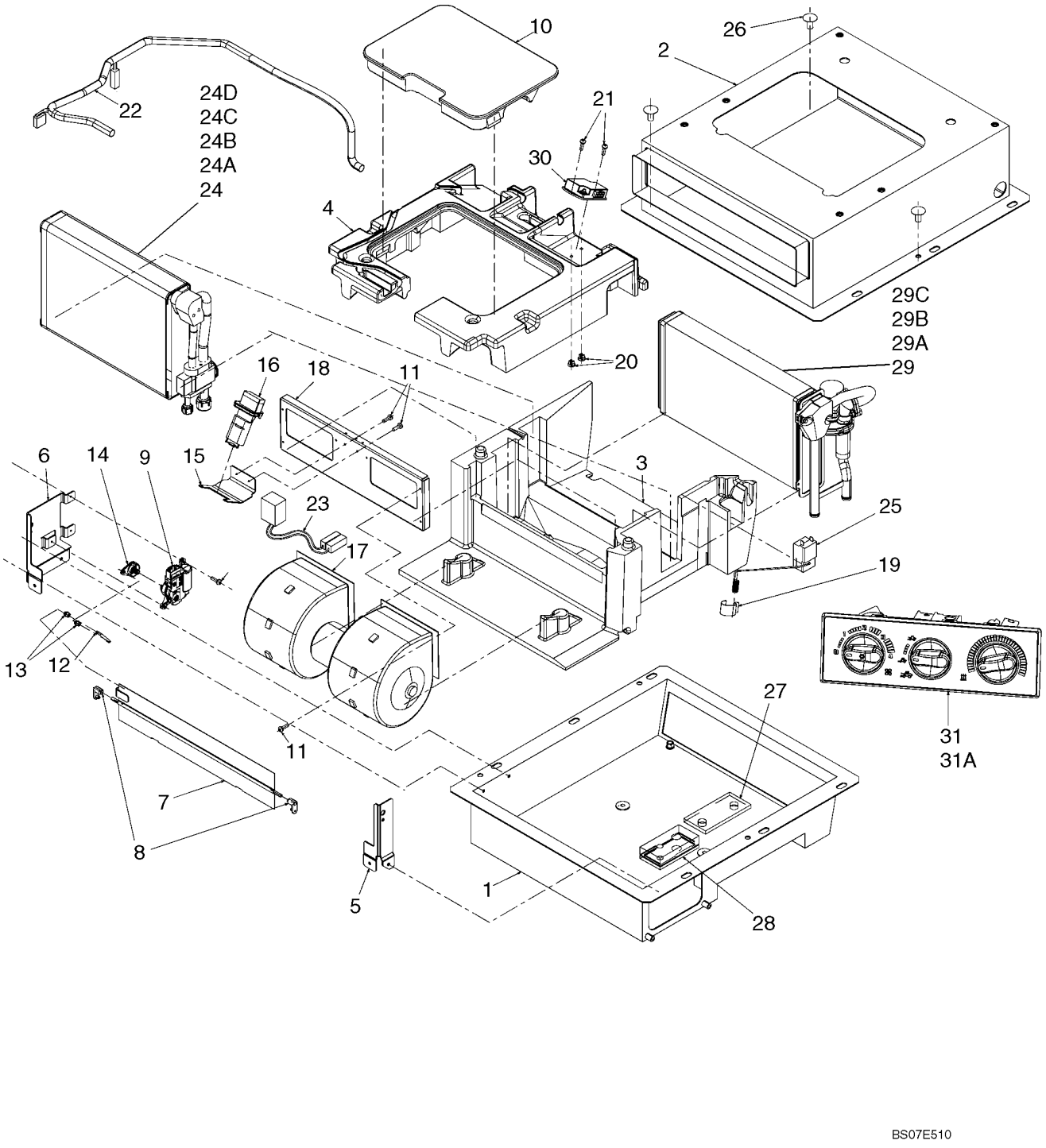

**CLIMATISATION**

| REF | FN | PART NUMBER | YR/SN | QTY | DESCRIPTION |
|---|---|---|---|---|---|
| | | REF | | | NOTICE, UNITS WITH HEATER AND AIR CONDITIONING |
| 1 | | 87529453 | | 1 | BOÎTIER, Lower |
| 2 | | 87529457 | | 1 | BOÎTIER, Upper |
| 3 | | 87529458 | | 1 | BOÎTIER, Lower |
| 4 | | 87529459 | | 1 | BOÎTIER, Upper |
| 5 | | NSS | | 1 | NON FOURNI SEPAREMENT, Right Fastening Bracket |
| 6 | | NSS | | 1 | NON FOURNI SEPAREMENT, Left Fastening Bracket |
| 7 | | 87643958 | | 1 | TRAPPE, Recirculation |
| 8 | | 87643957 | | 2 | BAGUE, For Recirculation Flap |
| 9 | | 87528689 | | 1 | MOTEUR ELECTRIQUE(PETIT) |
| 10 | | 87529462 | | 1 | COUVERCLE, Inspection Trapdoor |
| 11 | | NSS | | 13 | NON FOURNI SEPAREMENT, Screw |
| 12 | | 87643954 | | 1 | TIRANT |
| 13 | | 87643955 | | 2 | BAGUE |
| 14 | | 87529617 | | 1 | LEVIER |
| 15 | | NSS | | 1 | NON FOURNI SEPAREMENT, Pipe Fastening Retainer |
| 16 | | 87528688 | | 1 | RESISTANCE |
| 17 | | 87528687 | | 1 | SOUFFLERIE ASSEMBLEE, Electric Fan |
| 18 | | NSS | | 1 | NON FOURNI SEPAREMENT, Bracket |
| 19 | | 87577360 | | 1 | ATTACHE A RESSORT |
| 20 | | NSS | | 2 | NON FOURNI SEPAREMENT, Screw |
| 21 | | NSS | | 2 | NON FOURNI SEPAREMENT, Screw |
| 22 | | 87529485 | | 1 | CABLE |
| 23 | | NSS | | 1 | NON FOURNI SEPAREMENT, Fan Cable |
| 24 | | 87529493 | | 1 | EVAPORATEUR, Incl. Refs. 24A - 24D |
| 24A | | 87529495 | | 1 | SOUPAPE, Expansion |
| 24B | | 87529498 | | 1 | EVAPORATEUR |
| 24C | | 87529505 | | 1 | TUBE, For Evaporator |
| 24D | | 87529508 | | 1 | UNION |
| 25 | | 87529621 | | 1 | THERMOSTAT |
| 26 | | NSS | | 4 | NON FOURNI SEPAREMENT, Plug |

**CLIMATISATION**

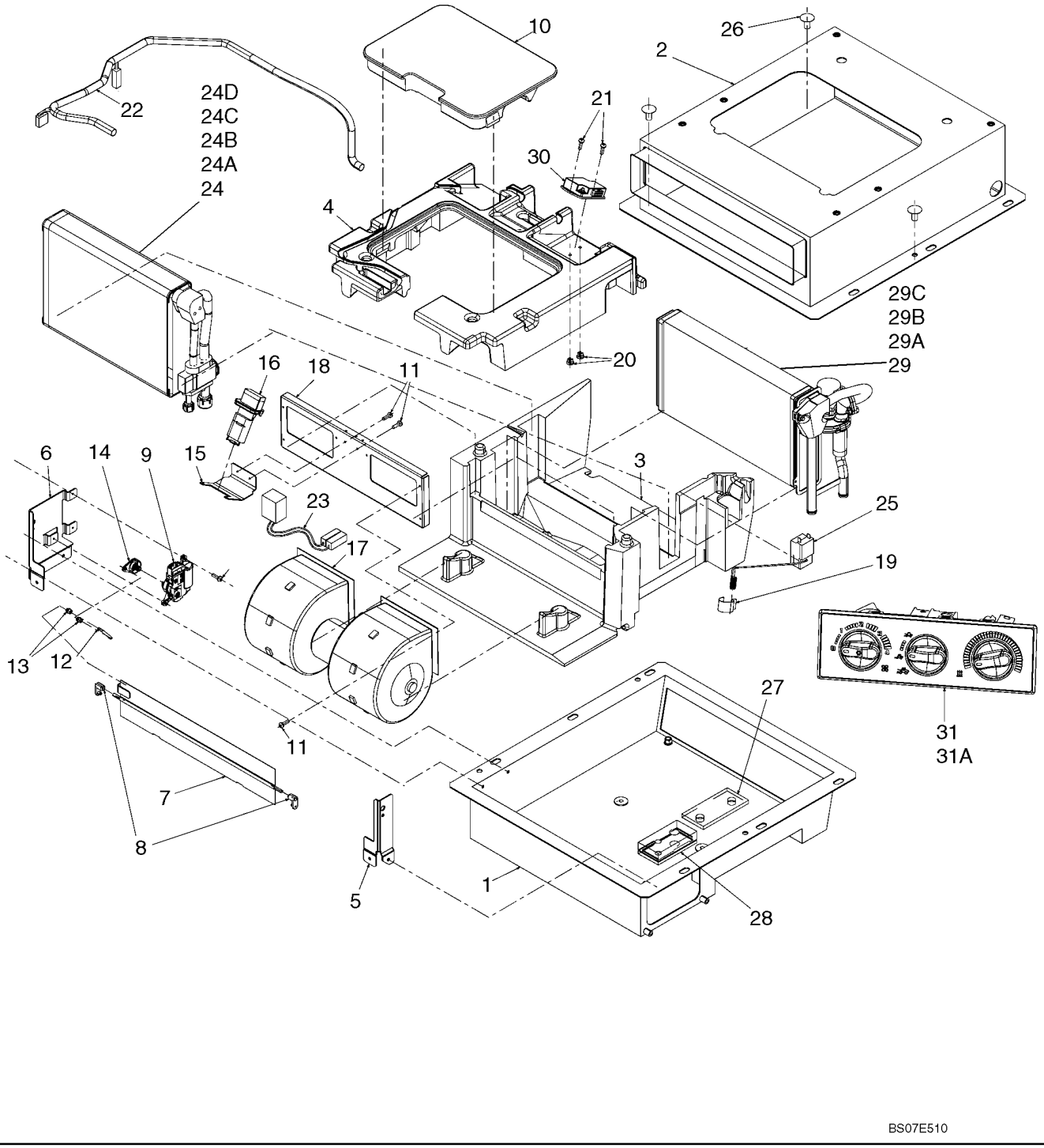

**CLIMATISATION**

| REF | FN | PART NUMBER | YR/SN | QTY | DESCRIPTION |
|---|---|---|---|---|---|
| 27 | | NSS | | 1 | NON FOURNI SEPAREMENT, Seal |
| 28 | | 87577361 | | 1 | MOUSSE, Seal |
| 29 | | 87529289 | | 1 | CHAUFFAGE (ASSEMBLE), Incl. Refs. 29A - 29C |
| 29A | | 87529444 | | 1 | TUBE DE CHAUFFAGE |
| 29B | | 87529447 | | 1 | NOYAU, Heater |
| 29C | | 87529627 | | 1 | SOUPAPE, Water |
| 30 | | 87529487 | | 1 | SOLENOIDE |
| 31 | | 87529463 | | 1 | GROUPE REGULATEUR, Manual Climate Control, Heater With A/C, Incl. Ref. 31A |
| 31A | | 87529474 | | 1 | COMMANDE, Lighting Flange |

| 09-48 | | p1 | 08/07 |
|---|---|---|---|

**CLIMATISATION - CONDENSEUR**

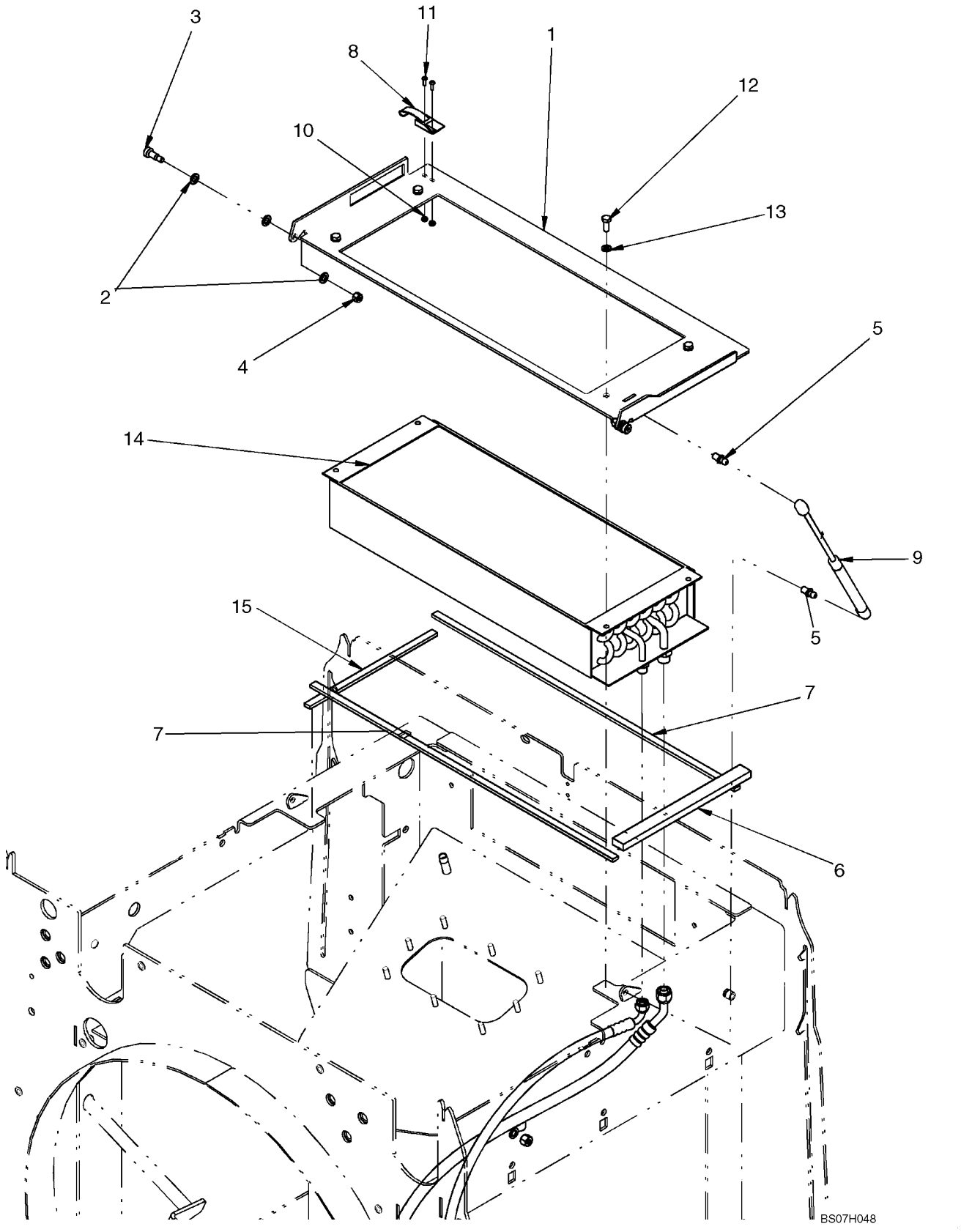

**CLIMATISATION - CONDENSEUR**

| REF | FN | PART NUMBER | YR/SN | QTY | DESCRIPTION |
|---|---|---|---|---|---|
| | | REF | | | NOTICE, AIR CONDITIONING CONDENSER MOUNTING |
| 1 | | 8602725 | | 1 | PLAQUE (ASSEMBLEE), Condenser |
| 2 | | 895-18010 | | 6 | RONDELLE, M10 x 18 x 1.6 |
| 3 | | 561-703 | | 2 | VIS, Hex Soc, Shoulder, M8 10 X 16mm, Cl 12.9 |
| 4 | | 832-10408 | | 2 | CONTRE-ECROU, M8 x 1.25, Cl 8 |
| 5 | | 350662A1 | | 2 | GOUJON, Ball |
| 6 | | 8602498 | | 1 | JOINT |
| 7 | | 8500133 | | 2 | JOINT, Oil Cooler; Side |
| 8 | | 60-4640T1 | | 1 | LOQUET |
| 9 | | 252550A2 | | 1 | COMPAS, Cylinder |
| 10 | | 225-14108 | | 2 | ECROU, #8-32 |
| 11 | | 440-1088 | | 2 | VIS, Cross Pan Hd, #8-32 x 1/2" |
| 12 | | 627-8020 | | 4 | BOULON, Hex, M8 x 20, 10.9 |
| 13 | | 892-11008 | | 4 | RONDELLE FREIN, M8 |
| 14 | | 8500878 | | 1 | CONDENSATEUR, Air Conditioning |
| 15 | | 87432328 | | 1 | JOINT, Latch |

**CLIMATISATION**

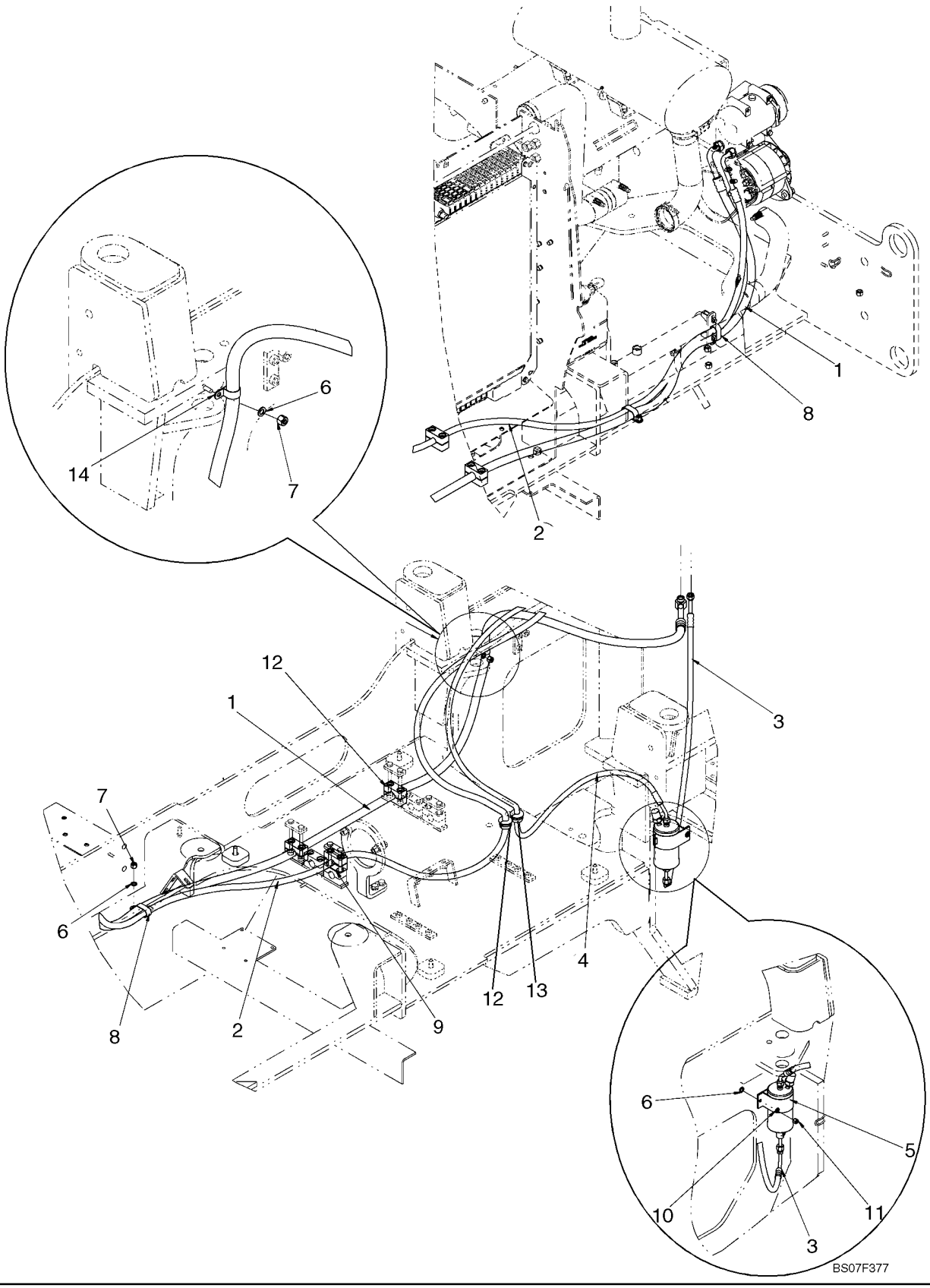

**CLIMATISATION**

| REF | FN | PART NUMBER | YR/SN | QTY | DESCRIPTION |
|---|---|---|---|---|---|
| 1 | | 87440551 | | 1 | FLEXIBLE (ASSEMBLE), Cab to Compressor; 3715 mm (146 in) |
| 2 | | 87629992 | | 1 | FLEXIBLE, Compressor to Condensor; 3658 (144 in) |
| 3 | | 87651217 | | 1 | FLEXIBLE, Dryer to Cab; 1052 (41 - 13/32 in) |
| 4 | | 8602469 | | 1 | FLEXIBLE (ASSEMBLE), Condensor to Dryer; 2000 mm (79 in) |
| 5 | | 87404588 | | 1 | RECEVEUR-DÉSHYDRAT., A/C Dryer Kit |
| 6 | | 895-18010 | | 3 | RONDELLE, M10 x 18 x 1.6 |
| 7 | | 832-10410 | | 2 | CONTRE-ECROU, M10 x 1.5, Cl 8 |
| 8 | | 31-1081 | | 2 | CLAMP/Retired |
| 9 | | 379374A1 | | 1 | BLOC |
| 10 | | 895-11008 | | 1 | RONDELLE, M8 x 16 x 1.6 |
| 11 | | 832-10408 | | 1 | CONTRE-ECROU, M8 x 1.25, Cl 8 |
| 12 | | 198826C1 | | 1 | PASSE-FIL |
| 13 | | 198825C1 | | 1 | PASSE-FIL |
| 14 | | 515-22254 | | 1 | BRIDE, 1", Insul, 5/16" Bolt |

**CONTREPOIDS**

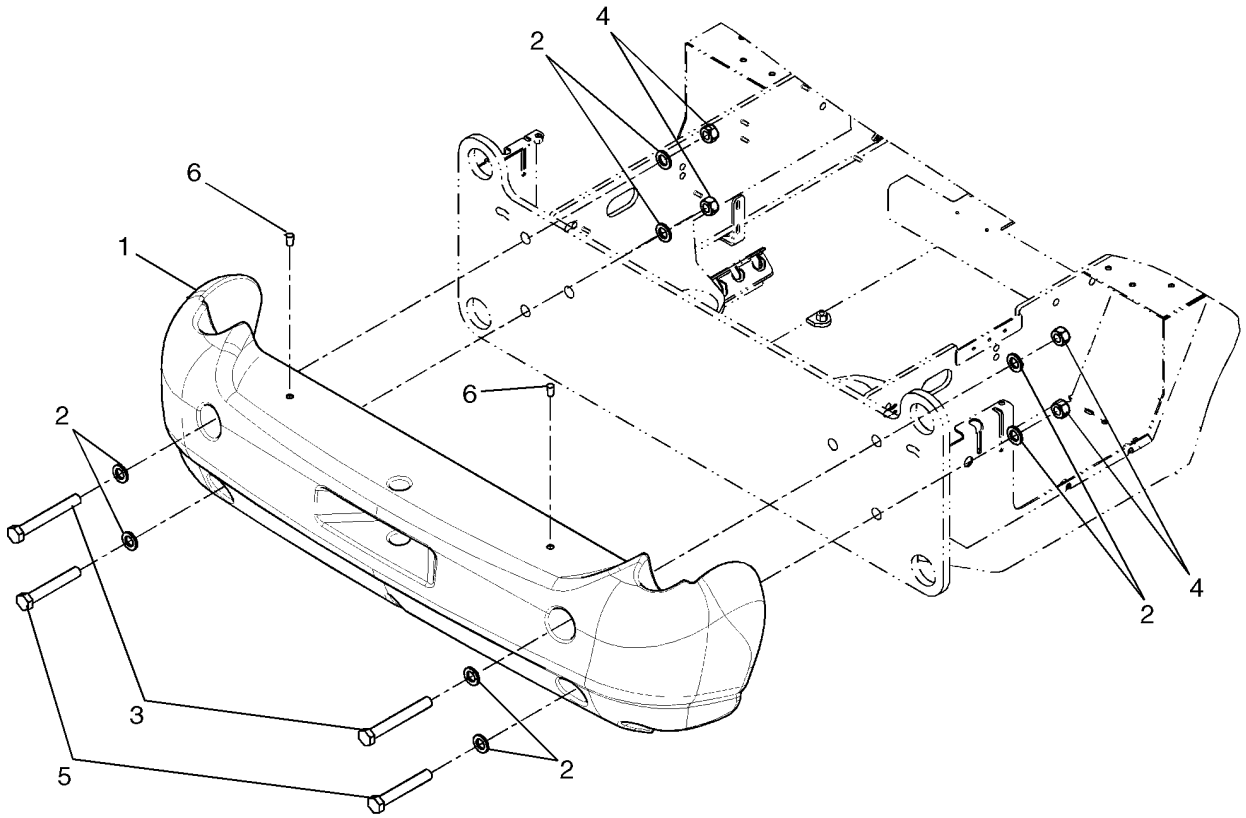


BS07E448

**CONTREPOIDS**

| REF | FN | PART NUMBER | YR/SN | QTY | DESCRIPTION |
|---|---|---|---|---|---|
| 1 | | 87577182 | | 1 | MASSELOTTE, 499 kg (1100 lb) |
| 2 | | 896-11024 | | 8 | RONDELLE, M24 x 44.5 x 5, HT |
| 3 | | 827-24190 | | 2 | BOULON, Hex, M24 x 190, 10.9 |
| 4 | | 829-1424 | | 4 | ECROU, M24, Cl 10 |
| 5 | | 827-24160 | | 2 | BOULON, Hex, M24 x 160, 10.9 |
| 6 | | 87308200 | | 2 | BOUCHON PLASTIQUE |

**CONTREPOIDS - SERVICE SEVERE**

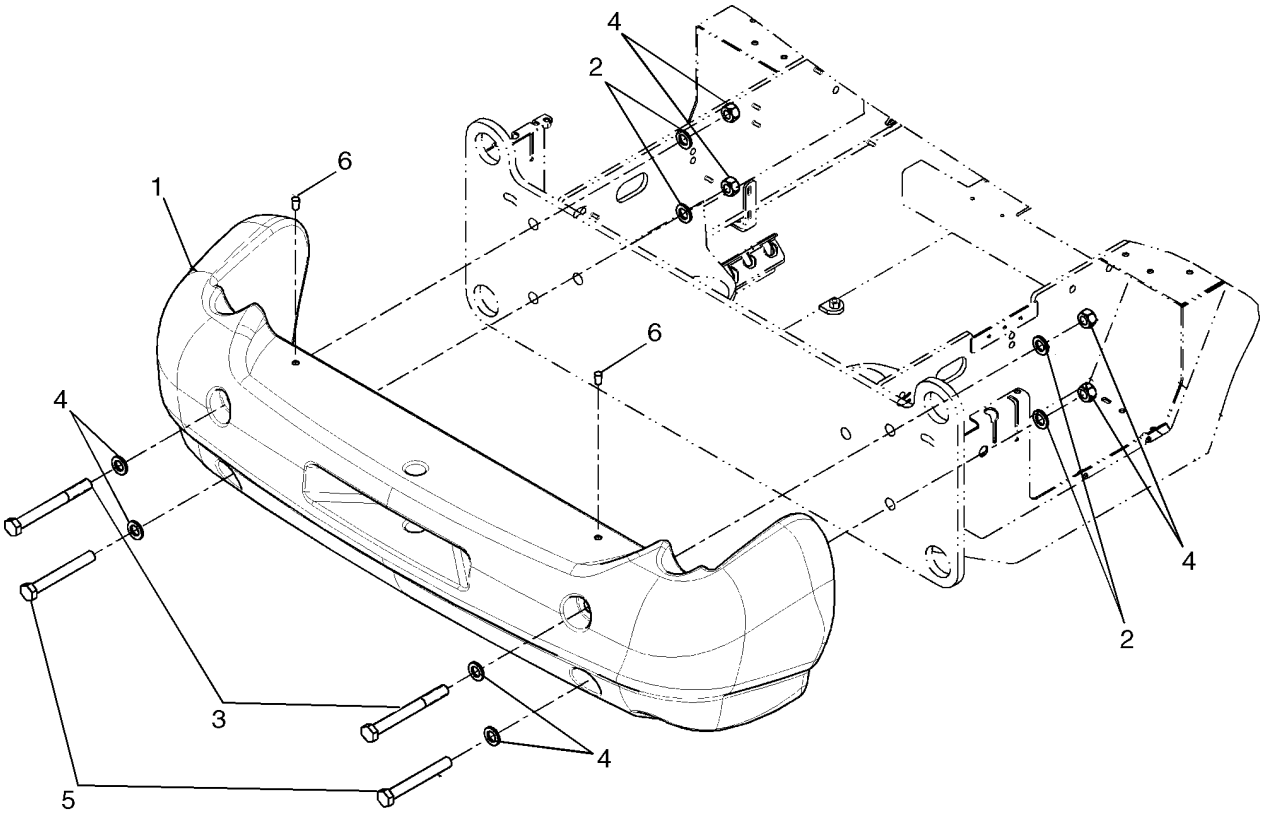


BS07E447

**CONTREPOIDS - SERVICE SEVERE**

| REF | FN | PART NUMBER | YR/SN | QTY | DESCRIPTION |
|---|---|---|---|---|---|
| | | REF | | | NOTICE, HEAVY DUTY COUNTERWEIGHT |
| 1 | | 87577184 | | 1 | MASSELOTTE, 885 kg (1950 lb) |
| 2 | | 896-11024 | | 8 | RONDELLE, M24 x 44.5 x 5, HT |
| 3 | | 827-24230 | | 2 | BOULON |
| 4 | | 829-1424 | | 4 | ECROU, M24, Cl 10 |
| 5 | | 827-24190 | | 2 | BOULON, Hex, M24 x 190, 10.9 |
| 6 | | 87308200 | | 2 | BOUCHON PLASTIQUE |

This Page Left Intentionally Blank

Page blanche

Esta página se queda en blanco intencionadamente

**EXTINCTEUR**

| REF | FN | PART NUMBER | YR/SN | QTY | DESCRIPTION |
|---|---|---|---|---|---|
| 1 | | L302850 | | 1 | EXTINCTEUR, Mount Bracket in Cab |

| 09-52 | | p1 | 06/07 |
|---|---|---|---|

**BOITE A OUTILS**

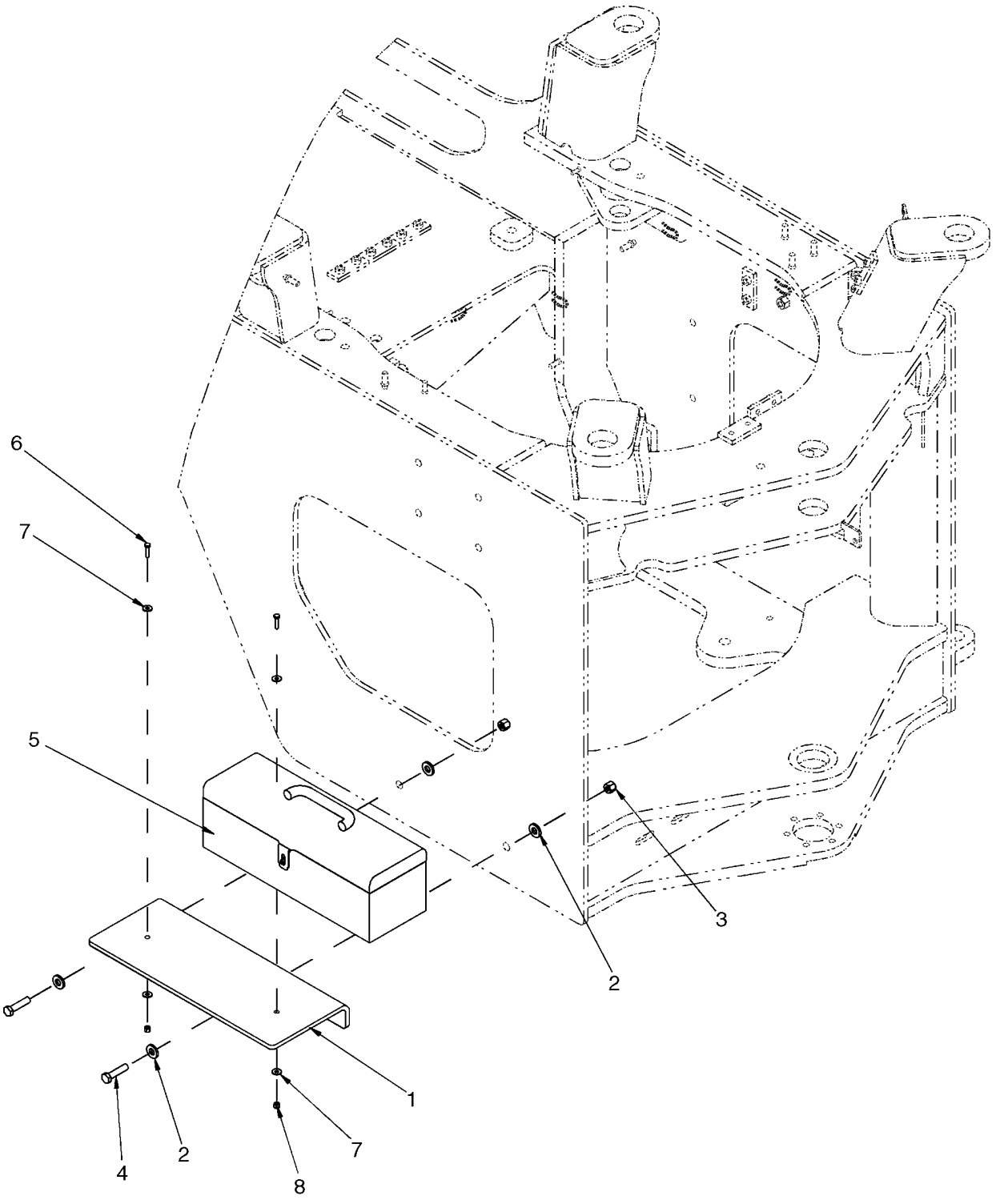


BS07F292

**BOITE A OUTILS**

| REF | FN | PART NUMBER | YR/SN | QTY | DESCRIPTION |
|---|---|---|---|---|---|
| 1 | | {87657832} | | 1 | PLATE, Toolbox Mounting |
| 2 | | 896-15012 | | 4 | RONDELLE, M12 x 28.5 x 4, HT |
| 3 | | 832-10412 | | 2 | CONTRE-ECROU, M12 x 1.75, Cl 8 |
| 4 | | 827-12050 | | 2 | BOULON, Hex, M12 x 50, 10.9 |
| 5 | | A181436 | | 1 | CAISSE A OUTILS |
| 6 | | 627-6025 | | 2 | BOULON, Hex, M6 x 25, 10.9 |
| 7 | | 895-25006 | | 4 | RONDELLE, M6 x 18 x 1.6 |
| 8 | | 832-10406 | | 2 | CONTRE-ECROU, M6 x 1, Cl 8 |

| 09-53 | | p1 | 06/07 |
|---|---|---|---|

**PLAQUE DE POLICE SUPPORT**

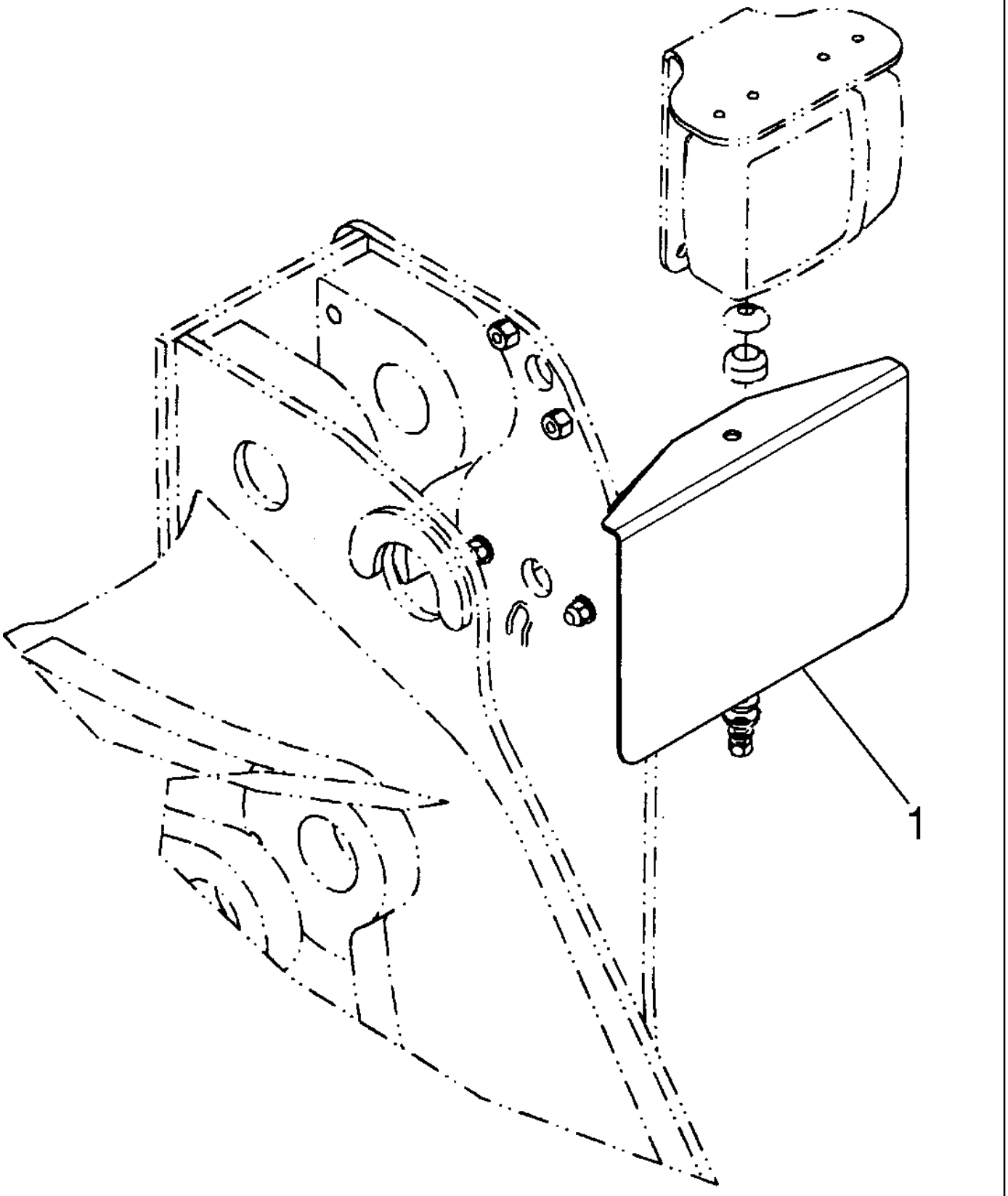

**PLAQUE DE POLICE SUPPORT**

| REF | FN | PART NUMBER | YR/SN | QTY | DESCRIPTION |
|---|---|---|---|---|---|
| | | REF | | | NOTICE, TO MOUNT PLATE USE EXISTING HARDWARE FROM LIGHT |
| 1 | | 87571546 | | 1 | PLAQUE, License Plate Mounting Plate |

**AUTOCOLLANTS - MODÈLE**

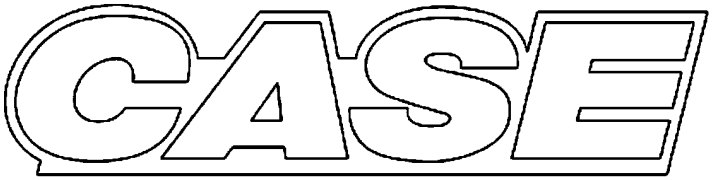


1

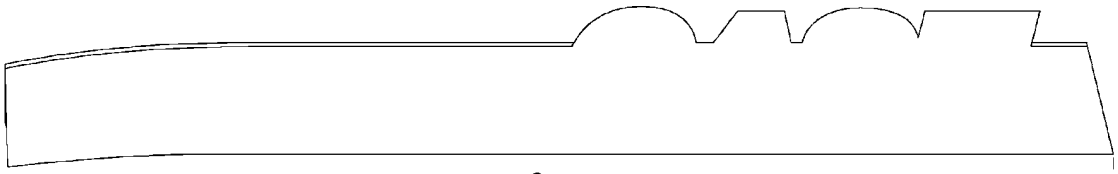

2

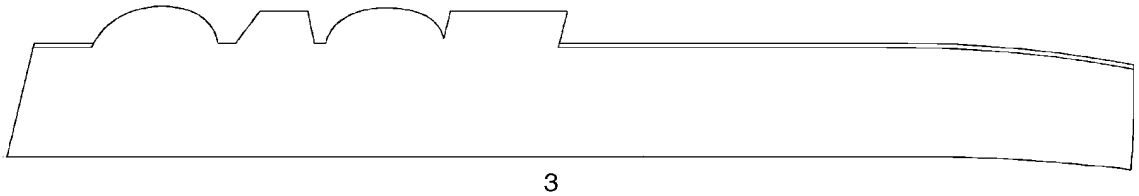

3




4

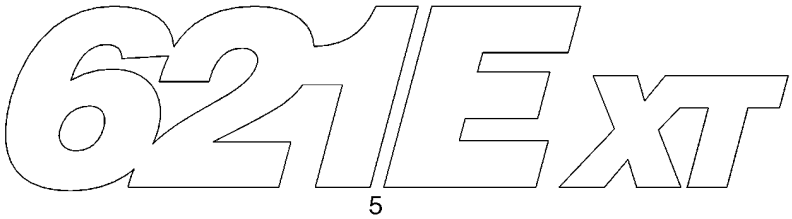


5




6

BS07D273

**AUTOCOLLANTS - MODÈLE**

| REF | FN | PART NUMBER | YR/SN | QTY | DESCRIPTION |
|---|---|---|---|---|---|
| 1 | | 87519006 | | 2 | DECALCOMANIE, Case Logo |
| 2 | | 87519004 | | 1 | DECALCOMANIE, LH Hood |
| 3 | | 87519005 | | 1 | DECALCOMANIE, RH Hood |
| 4 | | 87586610 | | 2 | DECALCOMANIE, 621E; If Used |
| 5 | | 87586611 | | 2 | DECALCOMANIE, 621E XT; Case Power Tan; If Used |
| 5 | | 87586612 | | 2 | DECALCOMANIE, 621E XT; Gray; If Used |
| 6 | | 87597331 | | 2 | DECALCOMANIE, 621E XR; If Used |

## AUTOCOLLANTS - COMMUN VERS MODÈLE

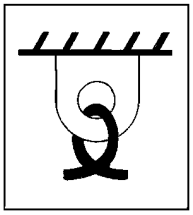

1




2

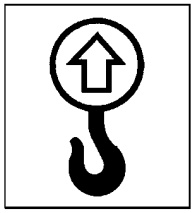

3

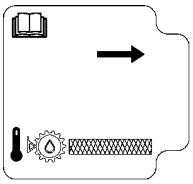

4

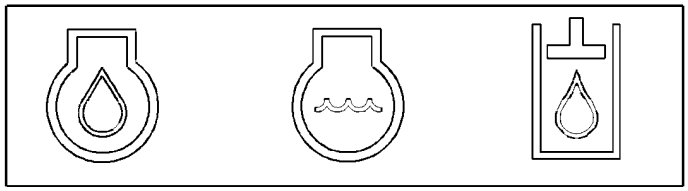

5

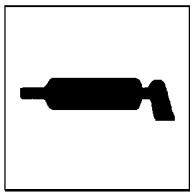

6

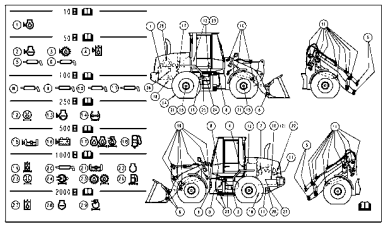

7



8

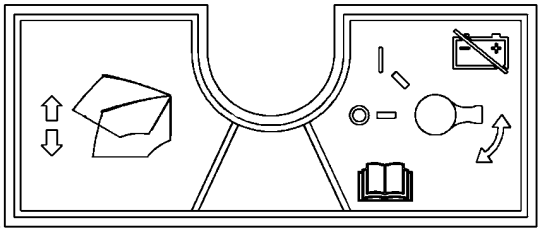

9

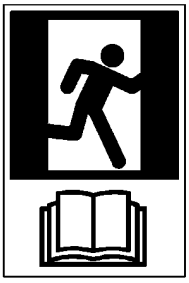

10

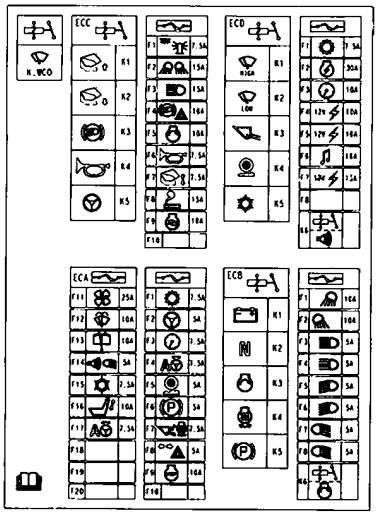


11

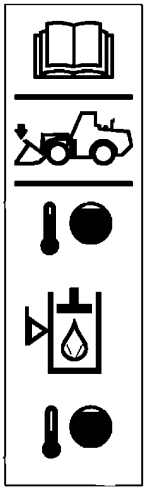

14

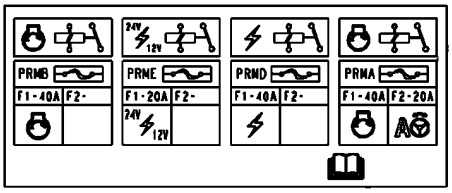


12

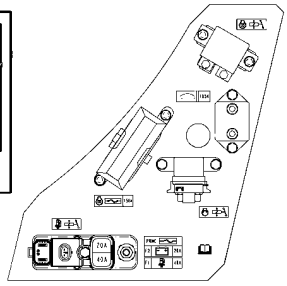

13




15




16

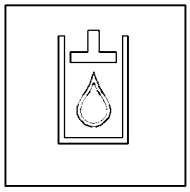

17

BS07D272

**AUTOCOLLANTS - COMMUN VERS MODÈLE**

| REF | FN | PART NUMBER | YR/SN | QTY | DESCRIPTION |
|---|---|---|---|---|---|
| 1 | | 139728A1 | | 4 | DECALCOMANIE, Tie Down |
| 2 | | 387147A1 | | 1 | DECALCOMANIE, Hy-Transmission Ultra |
| 3 | | 139729A1 | | 4 | DECALCOMANIE, Lift |
| 4 | | 87586616 | | 1 | DECALCOMANIE, Transmission Oil Level |
| 5 | | 387149A1 | | 1 | DECALCOMANIE, Fluid Drains |
| 6 | | 187864A1 | | 2 | DECALCOMANIE, Lube Point |
| 7 | | 87397079 | | 1 | DECALCOMANIE, Maintenance Chart |
| 8 | | E134402 | | 1 | DECALCOMANIE, No Step |
| 9 | | 87524649 | | 1 | DECALCOMANIE, Disconnect Switch |
| 10 | | 329051A1 | | 1 | DECALCOMANIE, Emergency Exit |
| 11 | | 87647668 | | 1 | DECALCOMANIE, Fuse |
| 12 | | 87397077 | | 1 | DECALCOMANIE, Fuse |
| 13 | | 87397078 | | 1 | DECALCOMANIE, Fuse and Relay |
| 14 | | 386741A2 | | 1 | DECALCOMANIE, Hydraulic Fluid Temperature |
| 15 | | 87415931 | | 6 | DECALCOMANIE, Case - Engine |
| 16 | | 87429186 | | 1 | EMBLÈME, Engine Medallion |
| 17 | | 395895A1 | | 1 | DECALCOMANIE, Hydraulic Oil |

**AUTOCOLLANTS - CABINE**

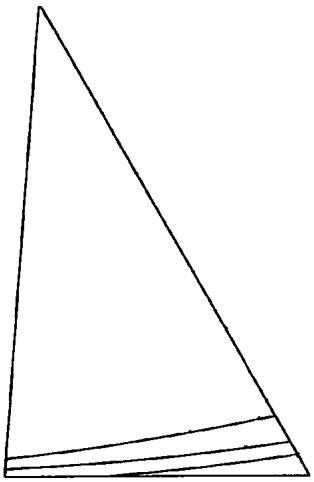

1

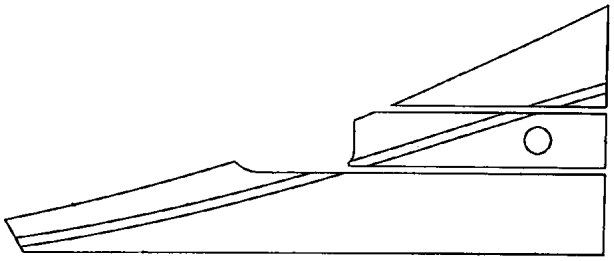

2

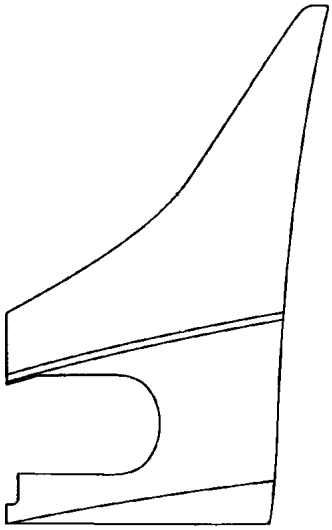

3

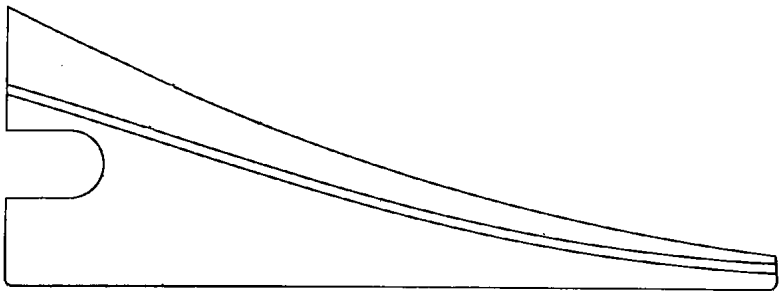

4

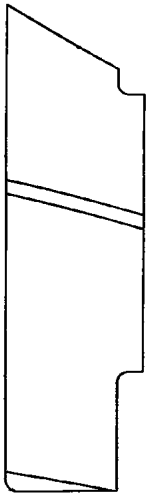

5




6

BS06G020

**AUTOCOLLANTS - CABINE**

| REF | FN | PART NUMBER | YR/SN | QTY | DESCRIPTION |
|---|---|---|---|---|---|
| 1 | | 87546325 | | 1 | DECALCOMANIE, Cab, LH Side |
| 2 | | 87546326 | | 1 | DECALCOMANIE, Cab, LH Door |
| 3 | | 87546327 | | 1 | DECALCOMANIE, Cab, LH Rear |
| 4 | | 87546328 | | 1 | DECALCOMANIE, Cab, RH Door |
| 5 | | 87546329 | | 1 | DECALCOMANIE, Cab, RH Rear |
| 6 | | 87546330 | | 1 | DECALCOMANIE, Cab, Visor Fritting |

## AUTOCOLLANTS - ANGLAIS

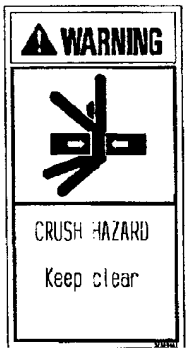

1



2

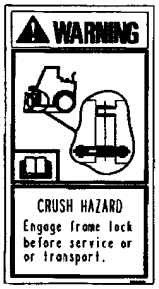

3

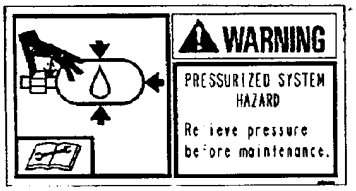

4

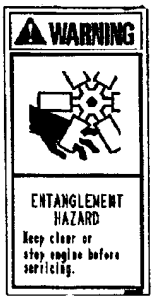

5

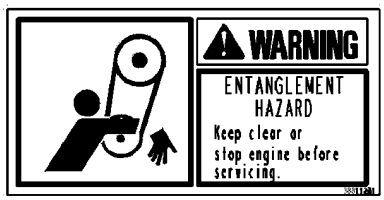

6

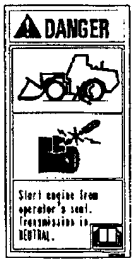

7

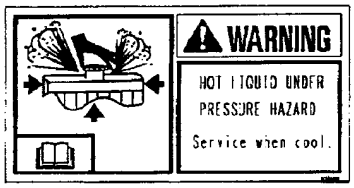

8



9

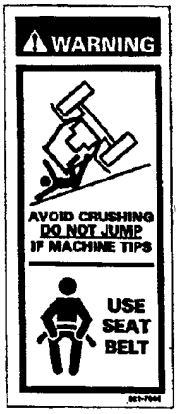

10

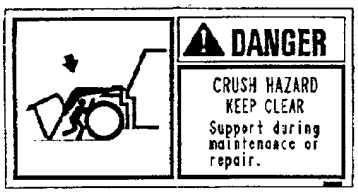

11

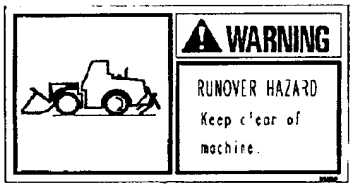

12



13



14

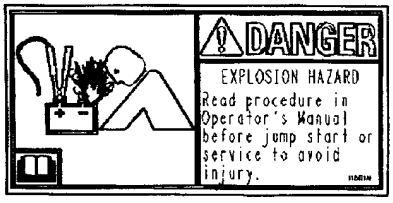

15

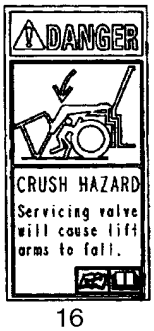

16

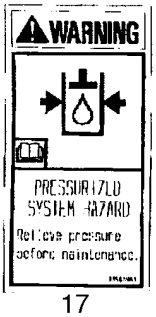

17

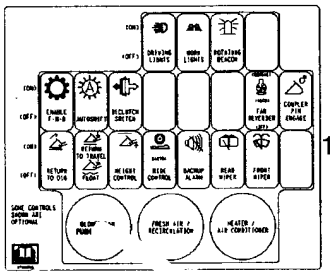
18

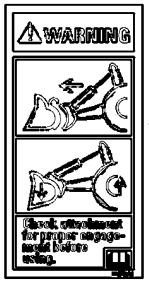

19



20



21

BS07E454

**AUTOCOLLANTS - ANGLAIS**

| REF | FN | PART NUMBER | YR/SN | QTY | DESCRIPTION |
|---|---|---|---|---|---|
| 1 | | 323694A1 | | 2 | DECALCOMANIE, Warning; Crush Hazard |
| 2 | | 407737A2 | | 1 | DECALCOMANIE, Lift Arm Support; If Used |
| 3 | | 329047A1 | | 1 | DECALCOMANIE, Warning; Crush Hazard |
| 4 | | 328904A1 | | 2 | DECALCOMANIE, Warning; Pressurized System Hazard |
| 5 | | 332512A1 | | 2 | DECALCOMANIE, Warning; Fan |
| 6 | | 388112A1 | | 1 | DECALCOMANIE, Warning; Belt Entanglement |
| 7 | | 334456A1 | | 1 | DECALCOMANIE, Danger; Starting In Gear |
| 8 | | 329044A1 | | 1 | DECALCOMANIE, Warning; Hot Liquid Hazard |
| 9 | | 382622A1 | | 1 | DECALCOMANIE, Warning; Read The Operator's Manual |
| 10 | | 321-7030 | | 1 | DECALCOMANIE, Warning; Do Not Jump |
| 11 | | 328754A1 | | 1 | DECALCOMANIE, Danger; Crush Hazard |
| 12 | | 328752A1 | | 1 | DECALCOMANIE, Warning; Runover Hazard |
| 13 | | 329049A1 | | 1 | DECALCOMANIE, Caution; Block Wheels |
| 14 | | 304083A1 | | 1 | DECALCOMANIE, Ride Control |
| 15 | | 412471A1 | | 2 | DECALCOMANIE, Danger; Battery Explosion Hazard |
| 16 | | 87453132 | | 2 | DECALCOMANIE, Danger; Crush Hazard |
| 17 | | 335889A1 | | 2 | DECALCOMANIE, Warning; Pressurized System Hazard |
| 18 | | 87588859 | | 1 | DECALCOMANIE, Switch |
| 19 | | 364742A1 | | 1 | DECALCOMANIE, Attachment Test |
| 20 | | 87586617 | | 1 | DECALCOMANIE, Warning; Pressurized System Hazard |
| 21 | | 8603092 | | 1 | DECALCOMANIE, Ether Explosion |

## AUTOCOLLANTS - FRANÇAIS CANADIEN



1

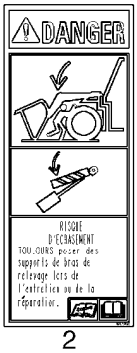

2

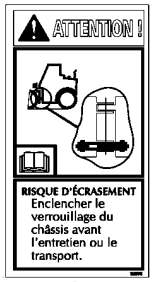

3

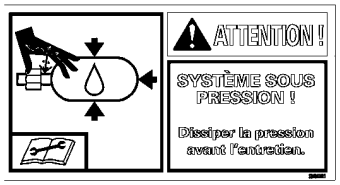

4



5



6



7

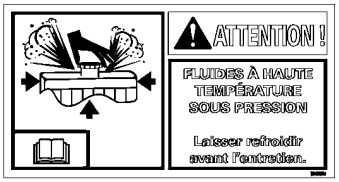

8



9



10

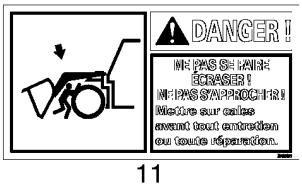

11



12

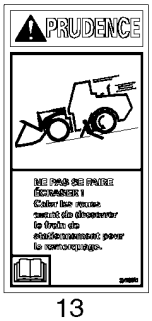

13



14



15



16

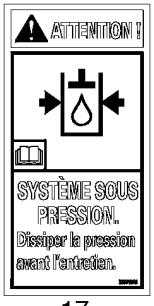

17

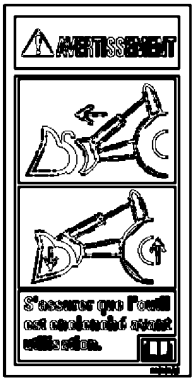

18



19

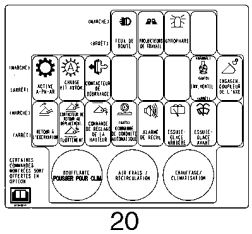
20

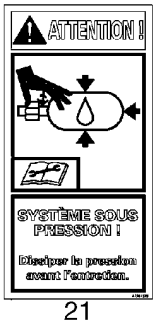

21

BS07E453

**AUTOCOLLANTS - FRANÇAIS CANADIEN**

| REF | FN | PART NUMBER | YR/SN | QTY | DESCRIPTION |
|---|---|---|---|---|---|
| 1 | | 334577A1 | | 2 | DECALCOMANIE, Warning; Crush Hazard |
| 2 | | 407738A2 | | 1 | DECALCOMANIE, Lift Arm Support; If Used |
| 3 | | 334574A1 | | 1 | DECALCOMANIE, Warning; Crush Hazard |
| 4 | | 334012A1 | | 2 | DECALCOMANIE, Warning; Pressurized System Hazard |
| 5 | | 334033A1 | | 2 | DECALCOMANIE, Warning; Fan |
| 6 | | 388157A1 | | 1 | DECALCOMANIE, Warning; Belt Entanglement |
| 7 | | 334568A1 | | 1 | DECALCOMANIE, Danger; Starting In Gear |
| 8 | | 334663A1 | | 1 | DECALCOMANIE, Warning; Hot Liquid Hazard |
| 9 | | 333999A2 | | 1 | DECALCOMANIE, Warning; Read The Operator's Manual |
| 10 | | 124269A1 | | 1 | DECALCOMANIE, Do Not Jump |
| 11 | | 334678A1 | | 1 | DECALCOMANIE, Danger; Crush Hazard |
| 12 | | 334686A1 | | 1 | DECALCOMANIE, Warning; Runover Hazard |
| 13 | | 334706A1 | | 1 | DECALCOMANIE, Caution; Block Wheels |
| 14 | | 304083A1 | | 1 | DECALCOMANIE, Ride Control |
| 15 | | 412473A1 | | 2 | DECALCOMANIE, Danger; Battery Explosion Hazard |
| 16 | | 87453133 | | 2 | DECALCOMANIE, Danger; Crush Hazard |
| 17 | | 336010A1 | | 4 | DECALCOMANIE, Warning; Pressurized System Hazard |
| 18 | | 364919A1 | | 1 | DECALCOMANIE, Attachment Test |
| 19 | | 8603093 | | 1 | DECALCOMANIE, Ether Explosion |
| 20 | | {87599217} | | 1 | DECAL, Rocker Switch |
| 21 | | 87597328 | | 1 | DECALCOMANIE, Fluid Under Pressure |

## AUTOCOLLANTS - ESPAGNOL D'AMÉRIQUE LATINE



1



2



3

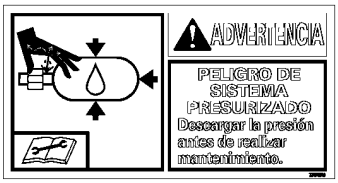

4



5

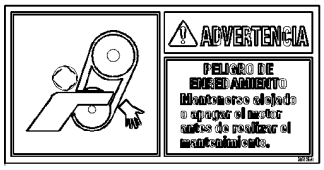

6



7

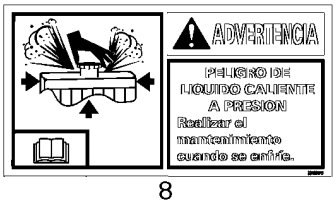

8



9



10



11



12



13



14



15



16



17

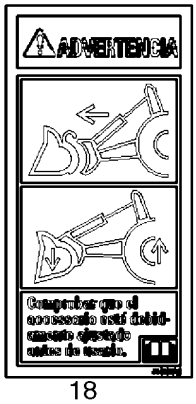

18



19



20

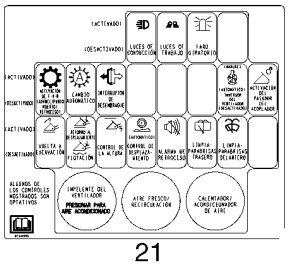
21



22

BS07E452

**AUTOCOLLANTS - ESPAGNOL D'AMÉRIQUE LATINE**

| REF | FN | PART NUMBER | YR/SN | QTY | DESCRIPTION |
|---|---|---|---|---|---|
| 1 | | 334576A1 | | 2 | DECALCOMANIE, Warning; Crush Hazard |
| 2 | | 407739A2 | | 1 | DECALCOMANIE, Lift Arm Support |
| 3 | | 334573A1 | | 1 | DECALCOMANIE, Warning; Crush Hazard |
| 4 | | 334015A1 | | 2 | DECALCOMANIE, Warning; Pressurized System Hazard |
| 5 | | 334034A1 | | 2 | DECALCOMANIE, Warning; Fan |
| 6 | | 388158A1 | | 2 | DECALCOMANIE, Warning; Belt Entanglement |
| 7 | | 334567A1 | | 2 | DECALCOMANIE, Danger; Starting In Gear |
| 8 | | 334664A1 | | 1 | DECALCOMANIE, Warning; Hot Liquid Hazard |
| 9 | | 334000A2 | | 1 | DECALCOMANIE, Warning; Read The Operator's Manual |
| 10 | | 124271A1 | | 1 | DECALCOMANIE, Warning; Do Not Jump |
| 11 | | 334677A1 | | 1 | DECALCOMANIE, Danger; Crush Hazard |
| 12 | | 334688A1 | | 1 | DECALCOMANIE, Warning; Runover Hazard |
| 13 | | 334704A1 | | 1 | DECALCOMANIE, Caution; Block Wheels |
| 14 | | 304083A1 | | 1 | DECALCOMANIE, Ride Control |
| 15 | | 412474A1 | | 2 | DECALCOMANIE, Danger; Battery Explosion Hazard |
| 16 | | 87453134 | | AR | DECALCOMANIE, Danger; Crush Hazard |
| 17 | | 336011A1 | | 3 | DECALCOMANIE, Warning; Pressurized System Hazard |
| 18 | | 364918A1 | | 1 | DECALCOMANIE, Attachment Test |
| 19 | | 87453134 | | 1 | DECALCOMANIE, Crush Hazard |
| 20 | | 8603094 | | 2 | DECALCOMANIE, Warning, Ether Explosion |
| 21 | | {87599220} | | 1 | DECAL, Rocker Switch |
| 22 | | 87597329 | | 1 | DECALCOMANIE, Fluid Under Pressure |

| Number | Figure | Sequence | Ref. |
|---|---|---|---|
| {14778414} | 09-31 | | 10 |
| {2820302} | 02-15 | | 18 |
| {2853815} | 02-26 | | 4 |
| {2853816} | 02-26 | | 5 |
| {2856309} | 02-36 | | 4 |
| {2856458} | 02-33 | | 2 |
| | 02-33A | | |
| {2856459} | 02-33A | | 3 |
| {2856460} | 02-33A | | 1 |
| {2858402} | 02-16 | | 6 |
| {345-101-B} | 09-29 | | 5 |
| {388540A1} | 09-09A | | |
| {402700A1} | 09-09 | | |
| {418470A1} | 09-11 | | 1 |
| {418471A1} | 09-10 | | 1 |
| {418472A1} | 09-11 | | 1 |
| {428432A1} | 09-11 | | 1 |
| {428433A1} | 09-10 | | 1 |
| {428434A1} | 09-11 | | 1 |
| {428436A1} | 09-10 | | 1 |
| {428437A1} | 09-11 | | 1 |
| {434536A1} | 09-11 | | 1 |
| {434537A1} | 09-10 | | 1 |
| {75048955} | 05-02 | | 17 |
| {76195212} | 03-06 | | 12 |
| {76303013} | 09-31 | | 3 |
| {76303042} | 09-31 | | 2 |
| {76303249} | 09-34 | | 19 |
| {76303295} | 05-02A | | 3 |
| {76303425} | 09-31 | | 4 |
| {76303478} | 05-03 | | 18 |
| {76303488} | 04-04 | | 25 |
| {76303494} | 09-43A | | 23 |
| {76303495} | 09-43A | | 15 |
| {76303500} | 09-31A | | 13 |
| | 09-43 | | 22 |
| {76303502} | 09-43A | | 12 |
| {76303504} | 09-43 | | 23 |
| {76303516} | 05-03 | | 19 |
| {76303541} | 09-43 | | 12 |
| {76303546} | 09-43 | | 10 |
| {76303549} | 09-43A | | 13 |
| {76303606} | 04-04 | | 8 |
| {76303609} | 09-43 | | 20 |
| {76303614} | 09-43 | | 18 |
| {76303615} | 09-43 | | 9 |
| {76303617} | 09-43 | | 17 |
| {779-14825} | 09-43 | | 19 |
| {8603547} | 06-22C | | 7 |
| {864-5055} | 08-27A | | 21 |
| | 08-27B | | 21 |
| | 08-28A | | 21 |
| | 08-28B | | 21 |
| {86509545} | 04-04 | | 24 |
| {87310653} | 09-07B | | 3 |
| {87318617} | 04-14 | | 6 |
| {87321451} | 09-35A | | 24 |
| {87324751} | 09-29 | | 7 |
| | 09-30 | | 5 |
| {87333866} | 09-14 | | 11 |
| {87337003} | 09-29 | | 6 |
| | 09-30 | | 4 |
| | 09-35A | | 23 |
| {87358700} | 06-23E | | 16 |
| {87371084} | 04-13 | | 16 |
| {87407966} | 09-09A | | |
| {87434293} | 08-16 | | |
| | 08-17 | | |
| {87446140} | 09-09C | | |
| {87446143} | 09-09C | | |
| {87451631} | 09-09B | | |
| {87452364} | 05-10 | | |
| {87516291} | 09-39 | | 10 |
| {87517128} | 05-03 | | 12 |
| {87519285} | 03-02 | | |
| {87525205} | 05-02 | | 2 |
| {87525216} | 05-02 | | 3 |
| {87525218} | 05-02 | | 19 |
| {87525220} | 05-02 | | 20 |
| {87525221} | 05-02 | | 22 |
| {87525493} | 04-04 | | 33 |
| | 09-36 | | 15 |
| {87526283} | 05-02 | | 14 |
| {87528282} | 09-35A | | 22 |
| {87547661} | 09-19 | | 10 |
| {87561073} | 09-47 | | 9 |
| {87567527} | 09-42A | | 10 |
| | 09-42C | | 10 |
| {87567829} | 09-42D | | 25 |
| {87567880} | 04-13 | | 13 |
| {87572375} | 02-03 | | 3 |
| {87572378} | 02-03 | | 4 |
| {87579996} | 04-24A | | 10 |
| {87579997} | 04-24A | | 11 |
| {87579998} | 04-24 | | 4 |
| {87583725} | 09-42A | | |
| {87583729} | 09-42A | | 11 |
| | 09-42C | | 11 |
| {87583731} | 09-42A | | 27 |
| | 09-42C | | 27 |
| {87583733} | 09-42A | | 1 |
| | 09-42C | | 1 |
| {87583734} | 09-42A | | 3 |
| {87583736} | 09-42A | | 41 |
| {87583737} | 09-42A | | 51 |
| | 09-42C | | 51 |
| {87583738} | 09-42C | | 55 |
| {87583739} | 09-42A | | 42 |
| | 09-42C | | 42 |
| {87583741} | 09-42A | | 50 |
| {87583747} | 09-42A | | 28 |
| | 09-42C | | 28 |
| {87583748} | 09-42A | | 13 |
| | 09-42A | | 49 |
| | 09-42C | | 13 |
| | 09-42C | | 49 |
| | 09-42C | | 77 |
| {87583752} | 09-42C | | 53 |
| {87583755} | 09-42C | | 56 |
| {87583757} | 09-42A | | 20 |
| | 09-42C | | 20 |
| {87583762} | 09-42A | | 24 |
| | 09-42C | | 24 |
| {87583839} | 09-42B | | 40A |
| {87583841} | 09-42B | | |
| {87583846} | 09-42B | | |
| {87583847} | 09-42B | | |
| {87583849} | 09-42B | | 42 |
| {87583854} | 09-42B | | 17 |
| {87583859} | 09-42B | | 43 |
| | 09-42D | | 53 |
| {87583860} | 09-42B | | 44 |
| {87584095} | 09-42D | | |
| {87584097} | 09-42C | | 2 |
| {87584099} | 09-42C | | 41 |
| {87584100} | 09-42D | | 48 |
| {87584101} | 09-42C | | |
| {87584102} | 09-42D | | 27 |
| {87584103} | 09-42D | | 50 |
| {87584172} | 09-42D | | 13 |
| {87584704} | 09-42A | | 23 |
| | 09-42C | | 23 |
| {87585037} | 09-42D | | |
| {87585124} | 09-42D | | 4 |
| {87586627} | 08-15 | | 1 |
| {87586628} | 08-15 | | 3A |
| {87586629} | 08-15 | | 3 |
| {87586630} | 08-15 | | 4A |
| {87586631} | 08-15 | | 4 |
| {87598751} | 08-15 | | |
| {87599217} | 09-58 | | 20 |
| {87599220} | 09-59 | | 21 |
| {87610804} | 09-43A | | 5 |
| {87610848} | 09-43A | | 25 |
| {87613497} | 04-21 | | 3 |
| {87613715} | 04-09 | | 1 |

| Number | Figure | Sequence | Ref. |
|---|---|---|---|
| {87617168} | 08-24A | | 10 |
| {87617169} | 08-24A | | 8 |
| {87617170} | 08-24A | | 11 |
| {87619954} | 09-43A | | 22 |
| {87619955} | 09-43A | | 24 |
| {87619956} | 09-43A | | 21 |
| {87619957} | 09-43A | | 16 |
| {87628359} | 09-34 | | 31 |
| {87628360} | 09-34 | | 32 |
| {87628362} | 09-34 | | 34 |
| {87628364} | 09-34 | | 37 |
| {87629047} | 09-33A | | 34 |
| | 09-34 | | 33 |
| {87632741} | 09-16 | | 11 |
| {87644535} | 09-33 | | 1 |
| | 09-33A | | |
| {87652920} | 09-19 | | 3 |
| {87652921} | 09-19 | | 3 |
| {87657832} | 09-52 | | 1 |
| {87658720} | 08-19B | | 11 |
| {87658721} | 08-19B | | 3 |
| {87658722} | 08-19B | | 7 |
| {87658723} | 07-03A | | 5 |
| | 07-03D | | 12 |
| {87658724} | 07-03B | | 3 |
| {87658725} | 07-03B | | 5 |
| {87661964} | 04-14 | | 19 |
| {87664046} | 09-32 | | 12 |
| {87664047} | 09-32 | | 6 |
| {87664048} | 09-32 | | 10 |
| | 09-33A | | 8 |
| | 09-35 | | 7 |
| | 09-35A | | 14 |
| {87664049} | 09-33 | | 3 |
| | 09-33A | | 11 |
| | 09-34 | | 8 |
| | 09-35A | | 10 |
| | 09-43 | | 4 |
| {87664050} | 09-32 | | 5 |
| {87664051} | 09-32 | | 7 |
| | 09-43 | | 2 |
| {885180004} | 04-14 | | 15 |
| {961-8075} | 08-27 | | 2 |
| | 08-28 | | 2 |
| {962-8055} | 08-27 | | 2 |
| | 08-28 | | 2 |
| 100-21244 | 05-10 | | 5 |
| 10519604 | 09-43 | | 24 |
| 10794011 | 04-15 | | 8 |
| 10902024 | 09-33A | | 10 |
| | 09-35A | | 15 |
| 10902224 | 09-33 | | 2 |
| 10902624 | 09-33A | | 25 |
| 109171C1 | 09-34 | | 35 |
| 116893A1 | 09-07B | | 26 |
| 117025A1 | 09-07B | | 27 |
| 120229A1 | 04-27 | | 6 |
| 121411A1 | 04-05 | | 21 |
| 121412A1 | 04-07 | | 27 |
| | 04-24 | | 5 |
| | 09-42 | | 5 |
| 121413A1 | 09-41 | | 1 |
| 124269A1 | 09-58 | | 10 |
| 124271A1 | 09-59 | | 10 |
| 124639A1 | 08-14 | | 1D |
| 1251791C1 | 03-04 | | 2F |
| 126268A1 | 09-14 | | 3 |
| 126844A1 | 04-13 | | 18 |
| 127555A1 | 09-10 | | 6B |
| 129-667 | 08-02A | | 4 |
| 131-1402 | 09-40 | | 3 |
| 131-141 | 08-01 | | 13 |
| 131-431 | 04-20 | | 8 |
| 131-53 | 09-07B | | 28 |
| 13272111 | 04-15 | | 6 |
| 13311217 | 09-34 | | 16 |
| 13313017 | 09-31B | | 4 |
| | 09-31B | | 5 |
| 1332154C1 | 09-28 | | 2 |
| 13797721 | 05-02 | | 23 |
| 139728A1 | 09-55 | | 1 |
| 139729A1 | 09-55 | | 3 |
| 14304731 | 04-15 | | 4 |
| 14306621 | 05-02 | | 6 |
| 14496201 | 04-15 | | 7 |
| 14496231 | 05-02 | | 15 |
| 14496301 | 04-15 | | 15 |
| 14496821 | 05-02 | | 9 |
| 14778411 | 05-03 | | 13 |
| 14778814 | 05-03 | | 20 |
| 1498088 | 09-33A | | 20 |
| | 09-34 | | 30 |
| | 09-35 | | 13 |
| 1542830C2 | 08-23A | | 2 |
| | 08-24A | | 7 |
| 1542831C1 | 05-07 | | 7 |
| | 05-07 | | 9 |
| 1542833C1 | 08-24A | | 2 |
| 1542875C1 | 05-10 | | 9 |
| 1542879C1 | 08-15 | | 3C |
| | 08-18 | | 5C |
| 1542881C1 | 08-16 | | 2B |
| | 08-17 | | 2B |
| 1546477C1 | 04-02 | | 14 |
| 1546485C1 | 04-07 | | 11 |
| 1546497C1 | 09-01 | | 5 |
| | 09-02 | | 5 |
| 1546498C1 | 09-03 | | 8 |
| | 09-04 | | 1 |
| | 09-05 | | 1 |
| | 09-06 | | 1 |
| 1547924C1 | 08-01 | | 23 |
| 15896214 | 09-32 | | 11 |
| 15896411 | 04-15 | | 16 |
| 16043231 | 09-42A | | 46 |
| | 09-42C | | 46 |
| 16043424 | 09-32 | | 9 |
| 16043624 | 09-32 | | 8 |
| | 09-43 | | 1 |
| 16043824 | 09-43 | | 7 |
| 16044024 | 09-33A | | 12 |
| | 09-34 | | 9 |
| | 09-35A | | 11 |
| 16044324 | 09-43 | | 5 |
| 16101721 | 05-02 | | 16 |
| 16104111 | 05-02 | | 4 |
| 16104411 | 05-02 | | 7 |
| 16745024 | 02-37 | | 12 |
| 178889A1 | 08-03 | | 34 |
| 182721A2 | 04-24A | | 1 |
| 186814A1 | 03-04A | | 1 |
| 186989A1 | 04-20 | | 7 |
| 187281A1 | 04-24A | | 2 |
| 187864A1 | 09-55 | | 6 |
| 19-135 | 04-03 | | 7 |
| | 04-03A | | 7 |
| 19-6247 | 06-24 | | 11 |
| 190117A1 | 07-03C | | 14 |
| | 07-03D | | 18 |
| | 08-03 | | 22 |
| | 08-29 | | 10 |
| | 08-30 | | 9 |
| | 08-31 | | 9 |
| | 08-32 | | 22 |
| 190119A1 | 08-25 | | 9 |
| 193446A1 | 04-27 | | 1 |
| 195-81023 | 09-34 | | 36 |
| 1954736C1 | 09-46 | | 6 |
| 196466A1 | 02-42 | | 4 |
| 1964725C1 | 04-02 | | 28 |
| 1964726C1 | 04-02 | | 27 |
| 1964727C1 | 04-02 | | 26 |
| 1964729C1 | 04-02 | | 31 |
| 1964730C1 | 04-02 | | 21 |
| 1964731C1 | 04-02 | | 1 |
| 1964736C1 | 04-02 | | 32 |

| Number | Figure | Sequence | Ref. |
|---|---|---|---|
| 1964737C1 | 04-02 | | 3 |
| 1964738C1 | 04-02 | | 13 |
| 1964748C1 | 04-02 | | 29 |
| 1964750C1 | 04-02 | | 30 |
| 1964831C2 | 04-15 | | 18 |
| 1964860C1 | 04-02 | | |
| | 04-02A | | 2 |
| | 04-02B | | 2 |
| 1964964C1 | 04-02 | | 19 |
| 1964965C1 | 04-02 | | 16 |
| 1964966C1 | 04-02 | | 18 |
| 1964968C1 | 04-02 | | 10 |
| 1964969C1 | 04-02 | | 5 |
| 1975801C1 | 09-46 | | 8 |
| 198823C1 | 04-10 | | 13 |
| 198824C1 | 08-01 | | 37 |
| 198825C1 | 03-01 | | 36 |
| | 08-02 | | 5 |
| | 09-49 | | 13 |
| 198826C1 | 03-01 | | 35 |
| | 08-01 | | 20 |
| | 09-49 | | 12 |
| 198828C1 | 08-01A | | 2 |
| 201-110 | 07-03D | | 16 |
| 201-145 | 08-29 | | 8 |
| | 08-30 | | 7 |
| | 08-31 | | 7 |
| | 08-32 | | 20 |
| 201-308 | 06-02 | | 12 |
| 214-1406 | 03-01 | | 7 |
| | 03-04A | | 5 |
| | 08-01 | | 16 |
| | 09-47 | | 6 |
| 214-1410 | 02-02 | | 24 |
| 214-14104 | 08-05 | | 27 |
| 214-1416 | 02-06 | | 23 |
| 214-1436 | 02-02 | | 15 |
| 214-1444 | 09-43A | | 26 |
| 214-1472 | 05-09 | | 13 |
| 214-1480 | 02-07 | | 4 |
| 214-1488 | 08-06 | | 15 |
| 214-1496 | 08-05 | | 26 |
| 214-1704 | 02-02 | | 19 |
| | 08-01 | | 39 |
| 214-3188 | 02-06 | | 15 |
| 217-1035 | 02-02 | | 29 |
| 217-1227 | 02-06A | | 7 |
| 217-132 | 03-04A | | 7 |
| 217-152 | 02-02 | | 30 |
| 217-191 | 02-02 | | 27 |
| 217-292 | 02-02 | | 18 |
| 217-372 | 03-01 | | 24 |
| 217-425 | 09-46 | | 1 |
| 217-445 | 08-02 | | 4 |
| 217-92 | 03-01 | | 25 |
| 218-1251 | 02-01 | | 10 |
| 218-1255 | 02-02 | | 23 |
| 218-1256 | 08-01 | | 33 |
| 218-335 | 08-01 | | 34 |
| 218-5209 | 08-23A | | 3 |
| | 08-24A | | 12 |
| 218-755 | 02-02 | | 22 |
| 218-756 | 02-01 | | 11 |
| 219-1 | 05-09 | | 19 |
| | 05-10 | | 22 |
| | 08-18 | | 7 |
| | 09-07 | | 22 |
| | 09-07A | | 22 |
| | 09-07B | | 22 |
| | 09-08 | | 11 |
| | 09-08A | | 6 |
| | 09-15 | | 9 |
| 219-20 | 06-24 | | 24A |
| 219-8 | 06-24 | | 24B |
| | 09-07 | | 31B |
| | 09-07A | | 31B |
| 220068A1 | 08-26B | | 7 |
| 225-14108 | 09-44B | | 10 |
| 225-14108 | 09-48 | | 10 |
| 231-1446 | 08-20 | | 6 |
| 231-4248 | 04-02A | | 11 |
| | 04-02B | | 9 |
| 231-46110 | 04-02 | | 23 |
| 232-2448 | 02-05 | | 4 |
| 232364A1 | 04-14 | | 3 |
| 233792A1 | 09-10 | | 6A |
| 237-6006 | 08-02A | | 6 |
| 237-6012 | 05-04 | | 24B |
| 237-6016 | 06-02 | | 12A |
| 238-5011 | 08-02A | | 7 |
| 238-5210 | 03-04 | | 2A |
| 238-5214 | 03-04 | | 2B |
| 238-5228 | 06-23 | | 5 |
| 238-5231 | 05-10 | | 13 |
| 238-5232 | 08-03 | | 4 |
| 238-5233 | 05-10 | | 12 |
| 238-5243 | 08-18 | | 5F |
| 238-5244 | 08-18 | | 5G |
| 238-5245 | 08-15 | | 3F |
| 238-5246 | 08-15 | | 3G |
| 238-5247 | 08-16 | | 2F |
| | 08-17 | | 2F |
| 238-5248 | 08-16 | | 2G |
| | 08-17 | | 2G |
| 238-6011 | 05-04 | | 12B |
| | 05-04 | | 13B |
| | 05-05 | | 24B |
| | 05-05 | | 7A |
| | 07-03C | | 15 |
| | 08-03 | | 20A |
| | 08-03 | | 21A |
| | 08-03 | | 23A |
| | 08-03 | | 24A |
| | 08-25 | | 4A |
| | 08-26 | | 4A |
| | 08-26 | | 5A |
| | 08-26 | | 6A |
| | 08-26A | | 4A |
| | 08-26A | | 5A |
| | 08-26A | | 6A |
| | 08-26B | | 4A |
| | 08-26B | | 5A |
| | 08-26B | | 6A |
| | 08-29 | | 6B |
| | 08-29 | | 8A |
| | 08-29 | | 9A |
| | 08-30 | | 4A |
| | 08-30 | | 7A |
| | 08-30 | | 8A |
| | 08-31 | | 5B |
| | 08-31 | | 8A |
| | 08-32 | | 21A |
| | 08-32 | | 22A |
| | 08-32 | | 7A |
| 238-6012 | 02-05 | | 10A |
| | 02-05 | | 12A |
| | 07-03C | | 5A |
| | 07-03D | | 10A |
| | 07-03D | | 26B |
| | 07-03D | | 33A |
| | 07-03D | | 9 |
| | 08-05 | | 7 |
| | 08-11 | | 10A |
| | 08-12 | | 10A |
| | 08-13 | | 12A |
| | 08-14 | | 10A |
| | 08-14 | | 11B |
| | 08-14 | | 3B |
| | 08-25 | | 11A |
| | 08-25 | | 5A |
| | 08-25 | | 7A |
| | 08-25 | | 8A |
| | 08-29 | | 5A |
| | 08-29 | | 7A |
| | 08-29 | | 8B |
| | 08-30 | | 5A |

| Number | Figure | Sequence | Ref. |
|---|---|---|---|
| 238-6012 | 08-30 | | 6A |
| | 08-30 | | 7B |
| | 08-31 | | 4A |
| | 08-31 | | 6A |
| | 08-31 | | 7A |
| | 08-32 | | 13A |
| | 08-32 | | 14A |
| | 08-32 | | 19A |
| | 08-32 | | 20A |
| | 08-32 | | 8A |
| 238-6014 | 05-04 | | 24A |
| | 05-09 | | 2B |
| | 05-09 | | 32B |
| | 05-09 | | 33B |
| | 05-09 | | 35A |
| | 05-09 | | 6A |
| | 07-03A | | 12A |
| | 07-03A | | 13A |
| | 07-03A | | 1A |
| | 07-03A | | 2A |
| | 07-03A | | 3A |
| | 07-03D | | 20A |
| | 07-03D | | 21B |
| | 07-03D | | 22A |
| 238-6016 | 05-04 | | 10A |
| | 05-04 | | 2B |
| | 05-04 | | 3A |
| | 05-05 | | 26A |
| | 05-05 | | 27A |
| | 05-05 | | 6A |
| | 05-05 | | 8A |
| | 05-09 | | 3A |
| | 05-09 | | 5 |
| | 07-03 | | 2A |
| | 07-03C | | 3A |
| | 07-03D | | 4A |
| | 07-03D | | 5 |
| | 08-03 | | 12A |
| | 08-19B | | 13A |
| | 08-19B | | 1B |
| 238-6018 | 02-05 | | 11A |
| | 02-05 | | 9A |
| | 07-03B | | 14A |
| | 07-03B | | 6A |
| | 07-03C | | 11 |
| | 07-03C | | 4A |
| | 07-03D | | 19A |
| | 08-02 | | 3A |
| | 08-03 | | 11B |
| | 08-08 | | 7A |
| | 08-09 | | 8A |
| | 08-10 | | 12A |
| | 08-19 | | 1A |
| | 08-19A | | 1A |
| | 08-23 | | 5B |
| | 08-23 | | 6A |
| | 08-24 | | 2B |
| | 08-24 | | 6A |
| 238-6021 | 05-05 | | 48A |
| | 05-05 | | 9A |
| | 06-02 | | 12B |
| | 07-03 | | 3A |
| | 08-03 | | 14A |
| | 08-05 | | 10A |
| | 08-05 | | 12B |
| | 08-05 | | 13A |
| | 08-05 | | 2A |
| | 08-05 | | 9A |
| | 08-06 | | 16A |
| | 08-06 | | 17A |
| | 08-06 | | 18A |
| | 08-06 | | 8 |
| | 08-07 | | 10 |
| | 08-07 | | 14A |
| | 08-07 | | 15A |
| | 08-07 | | 16A |
| | 08-07 | | 17A |
| | 08-07 | | 24A |
| 238-6021 | 08-07A | | 12A |
| | 08-07A | | 13A |
| | 08-07A | | 20A |
| | 08-07A | | 8 |
| | 08-08 | | 5B |
| | 08-08 | | 6A |
| | 08-09 | | 5B |
| | 08-09 | | 7 |
| | 08-10 | | 13A |
| | 08-10 | | 4A |
| | 08-10 | | 6A |
| | 08-20 | | 15A |
| | 08-20 | | 17A |
| | 08-20 | | 9B |
| | 08-21 | | 1A |
| | 08-03 | | 15 |
| 238-6222 | 04-15 | | 5 |
| 238270A1 | 05-02A | | 2 |
| | 04-23 | | 4 |
| 248-1169 | 04-23A | | 8 |
| | 06-02 | | 10 |
| 248-1185 | 04-18 | | 13 |
| 248-2376 | 09-42 | | 6 |
| 249116A1 | 09-42 | | 12 |
| 249117A1 | 09-44B | | 8 |
| 252550A2 | 09-48 | | 9 |
| | 04-03 | | 14 |
| 253347A1 | 04-03A | | 14 |
| | 04-04 | | 20 |
| | 04-05 | | 4 |
| | 04-17 | | 7 |
| | 04-26 | | 15 |
| | 05-02A | | 10 |
| | 02-02 | | 26 |
| 254026A1 | 08-03 | | 10 |
| | 09-10 | | 6B |
| 254822A1 | 09-10 | | 6B |
| 254823A1 | 09-10 | | 6 |
| 254825A1 | 02-07 | | |
| 258541A1 | 09-41 | | 7 |
| 265-14512 | 04-05 | | 12 |
| 279492A1 | 03-04 | | 2G |
| 282709A1 | 04-15 | | 9 |
| 282775A1 | 05-03 | | 5 |
| | 02-20 | | |
| 2830076 | 02-21 | | 1 |
| | 02-35 | | 4 |
| 2830158 | 02-15 | | 14 |
| 2830301 | 02-15 | | 19 |
| 2830303 | 02-15 | | 17 |
| 2830304 | 02-15 | | 15 |
| 2830307 | 02-38 | | 3 |
| 2830444 | 02-12 | | 10 |
| 2830559 | 02-15 | | 20 |
| 2830592 | 02-23 | | 4 |
| 2830704 | 02-23 | | 4 |
| 2830705 | 03-03 | | 14 |
| 2830711 | 03-03 | | 2 |
| 2830733 | 02-23 | | 1 |
| 2831274 | 02-24 | | |
| | 02-24 | | |
| 2831278 | 02-24 | | |
| 2831279 | 02-36 | | 3 |
| 2831287 | 02-36 | | |
| 2831297 | 05-01 | | 4 |
| 2831298 | 02-35 | | 4 |
| 283484A1 | 02-18 | | 2 |
| 2852037 | 03-11 | | 2 |
| 2852047 | 02-18 | | 1 |
| 2852100 | 02-09 | | 1 |
| 2852114 | 02-31 | | 1 |
| 2852122 | 02-21 | | 5 |
| 2852175 | 02-37 | | 11 |
| 2852202 | 02-13 | | 7A |
| 2852212 | 02-28 | | 2 |
| 2852217 | 02-28 | | 3 |
| 2852219 | 03-05 | | 13 |
| 2852221 | | | |
| 2852234 | | | |

| Number | Figure | Sequence | Ref. | Number | Figure | Sequence | Ref. |
|---|---|---|---|---|---|---|---|
| 2852237 | 02-13 | | 11 | 2854543 | 03-08 | | 5 |
| 2852238 | 02-13 | | 12 | 2854544 | 03-08 | | 2 |
| 2852305 | 02-26 | | 1 | 2854549 | 03-08 | | 1 |
| 2852325 | 02-39 | | 1 | 2854552 | 03-08 | | 3 |
| 2852392 | 02-39 | | 3 | 2854593 | 03-09 | | 9 |
| 2852396 | 02-19 | | 2 | 2854594 | 03-09 | | 1 |
| 2852397 | 02-19 | | 3 | 2854595 | 03-09 | | |
| 2852398 | 02-19 | | 1 | 2854596 | 03-09 | | 2 |
| 2852407 | 02-17 | | 7 | 2854598 | 03-10 | | 1 |
| 2852419 | 02-13 | | 4 | 2854599 | 03-10 | | 4 |
| 2852420 | 02-13 | | 6 | 2854600 | 03-10 | | 6 |
| 2852425 | 02-29 | | 6 | 2854603 | 02-35 | | 4 |
| 2852426 | 02-29 | | 2 | 2854604 | 02-34 | | 5 |
| 2852427 | 02-33 | | 8 | 2854606 | 03-07 | | 2 |
| 2852428 | 02-33 | | 11 | 2854608 | 03-07 | | 5 |
| 2852434 | 03-08 | | 10 | 2854609 | 03-07 | | 6 |
| 2852436 | 03-03 | | | 2854700 | 02-37 | | 4 |
| 2852440 | 03-06 | | 1 | 2854701 | 02-37 | | 5 |
| 2852443 | 03-06 | | 2 | | 04-11A | | 2 |
| 2852446 | 03-06 | | 3 | 2854702 | 02-37 | | 6 |
| 2852449 | 03-06 | | 5 | 2854866 | 02-37 | | 10 |
| 2852451 | 03-06 | | 7 | | 02-40 | | 5 |
| 2852452 | 03-06 | | 8 | 2855124 | 02-17 | | 1 |
| 2852457 | 03-11 | | 4 | 2855125 | 03-11 | | 1 |
| 2852458 | 03-11 | | 5 | 2855150 | 03-09 | | 6 |
| 2852463 | 02-09 | | | 2855519 | 02-35 | | 1 |
| 2852464 | 02-09 | | 2 | 2856132 | 02-09 | | 6 |
| 2852468 | 02-39 | | 5 | 2856543 | 02-40 | | 3 |
| 2852473 | 02-40 | | 4 | 297850A1 | 04-04 | | 21 |
| 2852476 | 04-01 | | 3 | 297865A1 | 04-04 | | 18 |
| 2852484 | 03-10 | | 5 | 298591A1 | 05-06 | | 3 |
| 2852486 | 03-09 | | 13 | 299456A1 | 02-08 | | 7 |
| 2852488 | 03-05 | | 3 | 301803R1 | 09-46 | | 2 |
| 2852496 | 02-39 | | 6 | 302456A1 | 09-41 | | 2 |
| | 02-39 | | 8 | 302862A1 | 04-24A | | 4 |
| 2852500 | 03-10 | | 2 | 304083A1 | 09-57 | | 14 |
| 2852602 | 02-33 | | 6 | | 09-58 | | 14 |
| 2852729 | 02-22 | | 2 | | 09-59 | | 14 |
| 2852744 | 02-38 | | 6 | 307149A1 | 08-01 | | 28 |
| 2852770 | 02-13 | | 7 | 3079389R1 | 04-02 | | 4 |
| 2852772 | 02-15 | | 6 | 3079392R91 | 04-02 | | 9 |
| 2852773 | 02-25 | | 3 | 3079410R1 | 04-02 | | 20 |
| 2852774 | 02-25 | | 4 | 31-1081 | 09-46 | | 7 |
| 2852776 | 02-33 | | 7 | | 09-49 | | 8 |
| 2852791 | 03-03 | | 12 | 31-2369 | 04-23 | | 5 |
| 2852793 | 03-03 | | 11 | 31-2370 | 04-28 | | 2 |
| 2852794 | 03-06 | | 6 | 31-2582 | 04-23A | | 9 |
| 2852801 | 02-16 | | 6A | 31-2940 | 08-01 | | 45 |
| 2852804 | 03-05 | | 10 | 321-7030 | 09-57 | | 10 |
| 2852805 | 03-05 | | 11 | 321446A1 | 04-05 | | 26 |
| 2852817 | 03-09 | | 19 | | 04-10 | | 4 |
| 2852818 | 03-09 | | 12 | 322197950 | 04-04 | | 34 |
| 2852820 | 03-09 | | 17A | | 09-29 | | 4 |
| 2852821 | 03-09 | | 24 | | 09-30 | | 2 |
| 2852825 | 03-09 | | 11 | | 09-35A | | 5 |
| 2853410 | 02-09 | | 9 | 3222214R1 | 06-22A | | 17 |
| 2853412 | 02-09 | | 10 | | 06-23A | | 18 |
| 2853537 | 03-08 | | 8 | 323694A1 | 09-57 | | 1 |
| 2853591 | 02-10 | | 1 | 324201A1 | 05-04 | | 4 |
| 2853604 | 02-12 | | 9 | | 05-05 | | 28 |
| 2853728 | 02-13 | | 8 | 324203A1 | 04-28 | | 6 |
| 2853780 | 02-12 | | | 326-1488 | 09-28 | | 3 |
| 2853781 | 02-12 | | 3 | 328082A1 | 05-09 | | 28 |
| 2853784 | 02-25 | | 6 | | 09-07 | | 26 |
| 2853788 | 02-33 | | 5 | | 09-07A | | 26 |
| 2854030 | 02-35 | | 3 | | 09-07B | | 40 |
| 2854072 | 02-39 | | 2 | 328186A1 | 08-01A | | 6 |
| 2854075 | 02-09 | | 8 | 328752A1 | 09-57 | | 12 |
| 2854079 | 03-09 | | 3 | 328754A1 | 09-57 | | 11 |
| 2854282 | 03-09 | | 14 | 328904A1 | 09-57 | | 4 |
| 2854292 | 03-09 | | 5 | 329-1014 | 09-28 | | 4 |
| 2854375 | 02-16 | | 7 | 329044A1 | 09-57 | | 8 |
| | 02-25 | | 8 | 329047A1 | 09-57 | | 3 |
| 2854491 | 02-40 | | 7 | 329049A1 | 09-57 | | 13 |
| 2854530 | 02-33 | | 4 | 329051A1 | 09-55 | | 10 |
| 2854534 | 02-37 | | 1 | 329483A1 | 08-24A | | 9A |
| 2854540 | 03-08 | | | 331-329 | 09-15 | | 5 |
| 2854542 | 03-08 | | 6 | 332512A1 | 09-57 | | 5 |

| Number | Figure | Sequence | Ref. | Number | Figure | Sequence | Ref. |
|---|---|---|---|---|---|---|---|
| 333999A2 | 09-58 | | 9 | 353036A1 | 07-03 | | 12 |
| 334000A2 | 09-59 | | 9 | 358981A1 | 09-28 | | 1 |
| 334012A1 | 09-58 | | 4 | 358982A1 | 09-28 | | 5 |
| 334015A1 | 09-59 | | 4 | 360939A1 | 09-10 | | 2 |
| 334033A1 | 09-58 | | 5 | | 09-11 | | 2 |
| 334034A1 | 09-59 | | 5 | 360982A1 | 08-18 | | 9 |
| 334456A1 | 09-57 | | 7 | 360984A1 | 08-17 | | |
| 334567A1 | 09-59 | | 7 | 361128A1 | 09-07 | | 10 |
| 334568A1 | 09-58 | | 7 | | 09-07A | | 10 |
| 334573A1 | 09-59 | | 3 | | 09-07B | | 14 |
| 334574A1 | 09-58 | | 3 | 361133A2 | 09-07 | | 11 |
| 334576A1 | 09-59 | | 1 | | 09-07A | | 11 |
| 334577A1 | 09-58 | | 1 | | 09-07B | | 13 |
| 334663A1 | 09-58 | | 8 | 361139A2 | 09-07 | | 12 |
| 334664A1 | 09-59 | | 8 | | 09-07A | | 12 |
| 334677A1 | 09-59 | | 11 | | 09-08 | | 2 |
| 334678A1 | 09-58 | | 11 | 361187A1 | 06-01 | | 7 |
| 334686A1 | 09-58 | | 12 | 361811A1 | 02-01 | | 4 |
| 334688A1 | 09-59 | | 12 | 364376A1 | 05-10 | | 18 |
| 334704A1 | 09-59 | | 13 | 364444A2 | 04-13 | | 8 |
| 334706A1 | 09-58 | | 13 | 364741A1 | 09-41 | | 3 |
| 335889A1 | 09-57 | | 17 | 364742A1 | 09-57 | | 19 |
| 336010A1 | 09-58 | | 17 | 364918A1 | 09-59 | | 18 |
| 336011A1 | 09-59 | | 17 | 364919A1 | 09-58 | | 18 |
| 336029A1 | 08-18 | | 3B | 365191A1 | 04-25 | | 2 |
| 336030A1 | 08-16 | | 4C | 365353A1 | 09-07 | | 24 |
| | 08-17 | | 4C | | 09-07A | | 24 |
| 336041A1 | 08-15 | | 3D | 365354A1 | 09-07 | | 25 |
| | 08-18 | | 5D | | 09-07A | | 25 |
| 336042A1 | 08-16 | | 2D | 365355A1 | 09-07 | | 23 |
| | 08-17 | | 2D | | 09-07A | | 23 |
| 336045A1 | 08-18 | | 3D | 365356A1 | 09-08 | | 8 |
| 336046A1 | 08-16 | | 4D | 365357A1 | 04-25 | | 3 |
| | 08-17 | | 4D | | 04-25A | | 3 |
| 336378A1 | 08-18 | | 5A | 365516A2 | 08-03 | | 27 |
| 336379A1 | 08-18 | | 5 | 365935A2 | 04-24A | | 8 |
| 339508A1 | 08-16 | | 4A | 366904A1 | 03-04 | | 8 |
| | 08-17 | | 4A | 366905A1 | 03-04 | | 7 |
| 339510A1 | 08-16 | | 4 | 367489A1 | 05-04 | | 6 |
| | 08-17 | | 4 | | 05-05 | | 35 |
| 339511A1 | 08-16 | | 2A | | 07-03B | | 8 |
| | 08-17 | | 2A | | 07-03D | | 8 |
| 339512A1 | 08-16 | | 2 | | 08-05 | | 4 |
| | 08-17 | | 2 | | 08-06 | | 7 |
| 339520A1 | 08-16 | | 3 | | 08-07 | | 9 |
| 339521A1 | 08-16 | | 3A | | 08-07A | | 7 |
| | 08-17 | | 3A | | 08-08 | | 3 |
| 339525A1 | 08-16 | | 1 | | 08-09 | | 3 |
| | 08-17 | | 1 | | 08-19 | | 2 |
| 341968A1 | 08-18 | | 3A | | 08-19A | | 2 |
| 341971A1 | 08-18 | | 3 | | 08-19B | | 4 |
| 345-49 | 06-24 | | 25 | | 09-46 | | 3 |
| 345-62 | 04-01 | | 4 | 367658A1 | 05-04 | | 7 |
| 345-75 | 04-01 | | 5 | | 05-05 | | 36 |
| 345-87 | 02-02 | | 32 | | 07-03 | | 15 |
| | 09-46 | | 5 | | 07-03B | | 11 |
| 345125A1 | 09-42D | | 43 | | 07-03D | | 6 |
| 345749A1 | 09-42A | | 14 | | 08-05 | | 3 |
| | 09-42C | | 14 | | 08-06 | | 19 |
| 345752A1 | 09-42A | | 15 | | 08-07 | | 18 |
| | 09-42C | | 15 | | 08-07A | | 14 |
| 345753A1 | 09-42A | | 16 | | 08-08 | | 8 |
| | 09-42C | | 16 | | 08-09 | | 9 |
| 345754A1 | 09-42A | | 17 | | 08-10 | | 10 |
| | 09-42C | | 17 | | 08-13 | | 2 |
| 345776A1 | 09-42A | | 19 | | 08-33 | | 2 |
| | 09-42C | | 19 | 368055A1 | 04-18 | | 2 |
| 345783A1 | 09-42A | | 45 | | 04-19 | | |
| | 09-42C | | 45 | 368056A1 | 04-18 | | 1 |
| 347613A1 | 02-03 | | 2 | | 04-19 | | |
| 347615A3 | 03-01 | | 1 | 368140A1 | 06-23 | | 7 |
| 349372A1 | 05-02A | | 4 | 368141A1 | 06-23 | | 7 |
| 350662A1 | 08-01 | | 38 | 368142A1 | 06-23 | | 7 |
| | 09-44B | | 5 | 368526A1 | 09-10 | | 8 |
| | 09-48 | | 5 | 368775A1 | 09-07B | | 33 |
| 353-414 | 08-19 | | 8 | 368836A2 | 09-07B | | 34 |
| | 09-44B | | 12 | 369432A2 | 09-07B | | 2A |
| 353036A1 | 06-02 | | 8 | 371185A1 | 04-28 | | 1 |

| Number | Figure | Sequence | Ref. |
|---|---|---|---|
| 371883A1 | 09-07A | | 2A |
| 372081A1 | 09-11 | | 6 |
| 372082A2 | 09-11 | | 5 |
| 372102A3 | 08-08 | | 6 |
| 372359A1 | 08-05 | | 18 |
| | 08-05 | | 19 |
| 372453A1 | 08-08 | | 4 |
| | 08-09 | | 4 |
| | 08-10 | | 3 |
| 373040A2 | 08-33 | | 1 |
| 373354A1 | 09-10 | | 5 |
| 374421A4 | 04-13 | | 6 |
| 374424A2 | 04-15 | | 10 |
| | 05-03 | | 16 |
| 374426A2 | 04-15 | | 11 |
| | 05-03 | | 7 |
| 374429A2 | 04-13 | | 14 |
| 374430A2 | 04-13 | | 3 |
| | 04-22 | | 4 |
| 374431A2 | 04-13 | | 5 |
| 374433A3 | 04-13 | | 13 |
| 374434A2 | 04-15 | | 12 |
| | 05-03 | | 6 |
| 375326A2 | 09-07 | | 15 |
| | 09-07A | | 15 |
| | 09-08 | | 1 |
| 375328A1 | 09-07 | | 13 |
| | 09-07A | | 13 |
| 375330A1 | 09-07 | | 14 |
| | 09-07A | | 14 |
| 375516A1 | 09-08 | | 9 |
| 375517A1 | 09-07 | | 33 |
| | 09-07A | | 33 |
| | 09-08 | | 10 |
| 375518A1 | 09-07B | | 23 |
| | 09-08 | | 7 |
| | 09-08A | | 8 |
| 377608A1 | 08-03 | | 1 |
| | 08-04 | | |
| 377899A1 | 04-10 | | 3 |
| 379070A2 | 09-07B | | 15 |
| 379139A1 | 08-14 | | 1 |
| 379149A2 | 09-04 | | 2 |
| | 09-05 | | 2 |
| | 09-06 | | 2 |
| 379191A2 | 09-07B | | 2B |
| 379197A2 | 09-07B | | 16 |
| 379374A1 | 07-03B | | 7 |
| | 07-03D | | 27 |
| | 08-11 | | 1 |
| | 08-12 | | 2 |
| | 08-13 | | 1 |
| | 09-49 | | 9 |
| 379587A2 | 08-01 | | 44 |
| 379611A1 | 06-01 | | 8 |
| 379770A2 | 09-08A | | 1 |
| 38-33264 | 09-07B | | 35 |
| 3805086 | 09-35A | | 19 |
| 3805129 | 09-33A | | 16 |
| | 09-34 | | 26 |
| | 09-35 | | 3 |
| 3805251 | 09-33A | | 30 |
| 380912A1 | 08-25 | | 1 |
| 381232A1 | 02-02 | | 5 |
| 382189A1 | 02-02 | | 17 |
| 382495A1 | 09-17 | | 12 |
| 382622A1 | 09-57 | | 9 |
| 383868A1 | 07-02 | | 4 |
| 383869A2 | 07-02 | | 6 |
| | 07-05 | | 3 |
| 384138A1 | 04-28 | | 2A |
| 384774A1 | 08-01 | | 10 |
| 384985A1 | 05-01 | | 5 |
| 386040R1 | 02-03 | | 12 |
| 386735A1 | 07-03A | | 4 |
| 386741A2 | 09-55 | | 14 |
| 386823A1 | 07-03A | | 11 |
| 387147A1 | 09-55 | | 2 |
| 387149A1 | 09-55 | | 5 |
| 388112A1 | 09-57 | | 6 |
| 388157A1 | 09-58 | | 6 |
| 388158A1 | 09-59 | | 6 |
| 388509A1 | 08-03 | | 5 |
| 388555A2 | 08-03 | | 19 |
| 388556A1 | 08-03 | | 9 |
| 388558A1 | 08-03 | | 25 |
| 388744A1 | 08-24A | | 4 |
| 388813A1 | 04-24A | | 7 |
| 389049A1 | 08-05 | | 16 |
| 389161A1 | 08-05 | | 28 |
| | 08-05 | | 29 |
| 389349A1 | 08-07 | | 3 |
| 389351A1 | 08-07 | | 5 |
| 389487A1 | 04-15 | | 3 |
| | 05-03 | | 8 |
| 390208A2 | 08-03 | | 30 |
| 391133A1 | 08-05 | | 25 |
| | 08-06 | | 14 |
| 391276A1 | 09-15 | | 14 |
| 391278A1 | 09-15 | | 15 |
| 391280A1 | 09-15 | | 10 |
| 391281A1 | 09-15 | | 6 |
| 391859A1 | 08-25 | | 6 |
| 392059A1 | 08-25 | | 3 |
| 393126A1 | 08-13 | | 11 |
| 393632A1 | 02-02 | | 25 |
| 394799A1 | 04-08 | | 3 |
| 395185A1 | 04-08 | | 3A |
| 39519 | 09-22 | | 4 |
| 395895A1 | 08-02 | | 7 |
| | 09-55 | | 17 |
| 396-41094 | 09-28 | | 6 |
| 396471A1 | 04-03 | | 4 |
| | 04-03A | | 4 |
| 397437A1 | 02-01 | | 9 |
| 397547A1 | 08-20 | | 22 |
| 398148A1 | 09-42D | | |
| 398771A1 | 04-26 | | 5 |
| 398888A1 | 04-17 | | 2 |
| | 05-05 | | 12 |
| 399350A1 | 08-17 | | 3 |
| 400833A2 | 08-32 | | 10 |
| 401525A1 | 08-03 | | 36 |
| 401526A1 | 08-03 | | 35 |
| | 08-25 | | 22 |
| 401527A2 | 08-03 | | 37 |
| 402390A1 | 08-32 | | 12 |
| 404635A1 | 04-07 | | 19 |
| 406347A1 | 09-12 | | 7 |
| | 09-13 | | 7 |
| 406390A1 | 09-12 | | 8 |
| | 09-13 | | 8 |
| 407632A1 | 02-14 | | 1 |
| 407737A2 | 09-57 | | 2 |
| 407738A2 | 09-58 | | 2 |
| 407739A2 | 09-59 | | 2 |
| 407869A2 | 08-32 | | 2 |
| | 08-32A | | 1 |
| 408142A1 | 04-19 | | 2 |
| 408143A1 | 04-19 | | 3 |
| 410108A1 | 08-29A | | |
| 410566A1 | 08-29A | | |
| 410939A1 | 04-19 | | 4 |
| 410940A1 | 04-19 | | 5 |
| 410941A1 | 04-19 | | 7 |
| 410942A1 | 04-19 | | 6 |
| 412067A1 | 09-14 | | 2 |
| 412152 | 09-34 | | 25 |
| 412471A1 | 09-57 | | 15 |
| 412473A1 | 09-58 | | 15 |
| 412474A1 | 09-59 | | 15 |
| 419792A2 | 02-02 | | 33 |
| 420-21236 | 09-10 | | 3 |
| | 09-11 | | 3 |
| 420-21244 | 09-10 | | 9 |
| | 09-11 | | 7 |

| Number | Figure | Sequence | Ref. |
|---|---|---|---|
| 4227144 | 09-33A | | 5 |
| | 09-34 | | 6 |
| | 09-35A | | 6 |
| 4227178 | 09-33 | | 8 |
| | 09-35 | | 6 |
| 422721300 | 09-43 | | 8 |
| 4227225 | 05-02 | | 8 |
| 4227226 | 05-02 | | 5 |
| 425-107 | 04-02A | | 16 |
| | 04-02B | | 14 |
| | 04-05 | | 23 |
| 425-1310 | 07-03 | | 7 |
| 425-145 | 04-20 | | 5 |
| 425-1612 | 09-10 | | 10 |
| | 09-10 | | 4 |
| | 09-11 | | 4 |
| | 09-11 | | 8 |
| 426-1244 | 09-10 | | 12 |
| 426-1252 | 09-10 | | 11 |
| 426-8104 | 04-02A | | 10 |
| | 04-02B | | 8 |
| 426-820 | 04-02A | | 20 |
| | 04-02B | | 18 |
| 427501A1 | 08-29A | | 6 |
| 432444A1 | 09-19 | | 5 |
| 432765A1 | 09-15 | | 19 |
| 432909A1 | 09-15 | | 23 |
| 433264A1 | 09-15 | | 16 |
| 437523A1 | 08-09 | | 6 |
| 440-1088 | 09-44B | | 11 |
| | 09-48 | | 11 |
| 440038A1 | 04-11 | | 4 |
| 441822A1 | 09-07B | | 24 |
| | 09-08A | | 9 |
| 442702A1 | 05-10 | | 1 |
| 442703A1 | 05-10 | | 6 |
| 442704A1 | 05-10 | | |
| 442711A1 | 05-10 | | 4 |
| 442713A1 | 05-10 | | 8 |
| 442717A1 | 05-10 | | 20 |
| 443565A1 | 06-01 | | 18 |
| 444931A1 | 09-16 | | 14 |
| 445786A1 | 04-10 | | 5 |
| 446178A1 | 08-15 | | 3E |
| 446183A1 | 08-20 | | 23 |
| 446195A1 | 08-15 | | 4D |
| 446481A1 | 08-15 | | 4C |
| 449527A1 | 08-32A | | |
| 449528A1 | 08-32A | | |
| 449529A1 | 08-32A | | |
| 449530A1 | 08-32A | | |
| 449533A1 | 08-32A | | |
| 449555A1 | 08-32A | | |
| 47124903 | 09-42A | | 38 |
| | 09-42A | | 7 |
| | 09-42C | | 38 |
| | 09-42C | | 7 |
| 47335175 | 09-42D | | 42 |
| 4890088 | 03-05 | | 6 |
| 4890189 | 03-09 | | 22 |
| 4890190 | 03-09 | | 17 |
| 4890193 | 03-09 | | 21 |
| 4890634 | 03-05 | | 7 |
| 4890635 | 03-05 | | 14 |
| 4890700 | 03-05 | | 4 |
| 4890832 | 02-32 | | 4 |
| 4890833 | 02-29 | | 8 |
| 4890926 | 03-07 | | 5B |
| 4890929 | 03-07 | | 3 |
| 4890964 | 03-03 | | 8 |
| | 03-09 | | 7 |
| 4891024 | 02-23 | | 2 |
| 4891025 | 02-23 | | 3 |
| 4891209 | 02-32 | | 5 |
| 4891252 | 02-18 | | 1 |
| 4891288 | 02-16 | | 4 |
| 4891353 | 02-20 | | 6 |
| 4891385 | 03-05 | | 8 |
| 4892255 | 03-09 | | 18 |
| 4892708 | 02-36 | | 2 |
| 4892712 | 02-35 | | 2 |
| 4892715 | 02-36 | | 4 |
| 4892867 | 02-27 | | 3 |
| 4892871 | 02-15 | | |
| 4892893 | 02-27 | | 2 |
| 4892915 | 02-29 | | 2 |
| 4893036 | 02-24 | | 7 |
| | 02-37 | | 10 |
| | 02-40 | | 5 |
| 4893234 | 02-15 | | 21 |
| 4893244 | 02-24 | | 13A |
| | 02-24 | | 14A |
| 4893386 | 02-26 | | 2 |
| 4893389 | 03-05 | | 12 |
| 4893464 | 03-03 | | 7 |
| 4893487 | 02-33A | | 2 |
| 4893739 | 03-07 | | 4 |
| 4893936 | 02-25 | | 5 |
| 4893962 | 03-05 | | 9 |
| 4894095 | 03-06 | | 10A |
| | 03-06 | | 1A |
| | 03-06 | | 2A |
| | 03-06 | | 3A |
| | 03-11 | | 1A |
| 4894100 | 02-41 | | 1 |
| 4894139 | 02-13 | | 5 |
| 4894410 | 02-41 | | 2 |
| 4894641 | 02-28 | | 1 |
| 4894721 | 03-03 | | 13 |
| 4895017 | 02-26 | | 4 |
| 4895031 | 02-33 | | 3 |
| 4895037 | 02-09 | | 11 |
| 4895038 | 02-20 | | 4 |
| 4895039 | 02-20 | | 3 |
| 4895040 | 02-20 | | 7 |
| 4895045 | 02-12 | | 5 |
| 4895049 | 02-21 | | 7 |
| 4895051 | 02-24 | | 2 |
| 4895052 | 02-24 | | 3 |
| 4895073 | 02-24 | | 5 |
| 4895074 | 02-24 | | 6 |
| 4895078 | 02-39 | | 10 |
| | 02-40 | | 6 |
| 4895079 | 02-39 | | 9 |
| 4895080 | 02-39 | | 11 |
| 4895082 | 02-39 | | 11A |
| 4895085 | 02-24 | | 9 |
| 4895089 | 02-16 | | 8 |
| | 02-24 | | 10 |
| 4895098 | 02-17 | | 4 |
| 4895107 | 02-16 | | 2 |
| 4895131 | 02-40 | | 2 |
| 4895132 | 02-17 | | 2 |
| 4895141 | 02-17 | | 6 |
| 4895155 | 02-29 | | 3 |
| 4895157 | 03-09 | | 16 |
| 4895219 | 02-38 | | 5 |
| 4895228 | 02-20 | | 5 |
| 4895291 | 02-13 | | 13 |
| 4895294 | 02-37 | | 11 |
| 4895336 | 02-38 | | 4 |
| 4895378 | 02-29 | | 4 |
| 4895379 | 02-29 | | 5 |
| 4895392 | 02-21 | | 4 |
| 4895393 | 02-21 | | 4A |
| | 02-39 | | 6A |
| 4895406 | 02-24 | | 11 |
| 4895407 | 02-24 | | 12 |
| 4895408 | 02-24 | | 9 |
| 4895414 | 02-26 | | 5 |
| 4895424 | 02-37 | | 8 |
| 4895432 | 02-33 | | 1 |
| | 02-37 | | 2 |
| 4895462 | 03-06 | | 11 |
| 4895477 | 03-09 | | 21A |
| 4895483 | 03-07 | | 1 |

| Number | Figure | Sequence | Ref. | Number | Figure | Sequence | Ref. |
|---|---|---|---|---|---|---|---|
| 4895576 | 02-39 | | 4 | 4899076 | 02-29 | | 2 |
| 4895605 | 02-21 | | 2 | 4899078 | 02-30 | | 3 |
| 4895610 | 02-09 | | 5 | | 02-32 | | 2 |
| | 02-13 | | 10 | | 03-09 | | 8 |
| 4895623 | 02-39 | | 7 | 4899079 | 02-16 | | 1 |
| 4895625 | 02-39 | | 7A | | 02-18 | | 3 |
| 4895817 | 03-09 | | 25 | | 02-34 | | 1 |
| 4895910 | 02-25 | | 1 | | 02-41 | | 4 |
| 4895919 | 02-20 | | 8 | 4899080 | 02-34 | | 6 |
| 4895921 | 02-20 | | 2 | 4899081 | 02-24 | | 1 |
| 4896263 | 02-37 | | 14 | 4899085 | 02-38 | | 7 |
| 4896329 | 03-11 | | 3 | 4899086 | 02-17 | | 3 |
| 4896380 | 02-34 | | 2 | 4899087 | 02-17 | | 5 |
| 4896404 | 02-12 | | 4 | 4899089 | 02-33 | | 12 |
| 4896407 | 02-12 | | 9 | 4899090 | 02-10 | | 2 |
| 4896409 | 02-12 | | 8 | 4899092 | 02-15 | | 13 |
| 4896410 | 02-12 | | 7 | 4899093 | 02-30 | | 4 |
| 4896542 | 03-09 | | 4 | 4899107 | 02-16 | | 2A |
| 4896543 | 03-03 | | 9 | 4899108 | 02-16 | | 2B |
| 4896650 | 02-38 | | 2 | 4899109 | 02-29 | | 2 |
| 4896651 | 02-38 | | 1 | 4899110 | 02-40 | | 1 |
| 4896773 | 02-27 | | 1 | | 03-09 | | 20 |
| 4896884 | 03-08 | | 9 | 4899115 | 02-21 | | 2A |
| 4896897 | 02-31 | | 2 | 4899124 | 03-09 | | 15 |
| 4896939 | 02-30 | | 6 | 4899219 | 02-15 | | |
| 4896952 | 03-05 | | 2 | 4899239 | 02-25 | | 7 |
| 4896991 | 02-16 | | 7 | 4899240 | 02-15 | | 9 |
| | 02-25 | | 8 | 4899242 | 02-15 | | 10 |
| 4896996 | 03-06 | | 4 | 4899243 | 02-15 | | 11 |
| 4897024 | 02-32 | | 1 | 4899245 | 02-33 | | 10 |
| 4897106 | 02-24 | | 13 | 4899257 | 02-33 | | 9 |
| 4897224 | 03-03 | | 5 | 4899377 | 02-16 | | 10 |
| | 03-09 | | 23 | 4899436 | 02-16 | | 5 |
| 4897277 | 03-06 | | 9 | 4899566 | 02-12 | | 2 |
| 4897330 | 02-09 | | 4 | 4899679 | 02-30 | | 1 |
| | 02-13 | | 9 | 4899689 | 03-07 | | 5A |
| 4897457 | 02-34 | | 4 | 4899803 | 02-21 | | 6 |
| 4897481 | 02-10 | | 1 | 4899815 | 03-10 | | 3 |
| 4897499 | 02-29 | | 2 | 4899824 | 02-39 | | 8A |
| 4897534 | 02-15 | | 1 | 4899921 | 02-37 | | 9 |
| 4897536 | 02-15 | | 5 | 4899926 | 02-15 | | 7 |
| 4897537 | 02-15 | | 4 | 492-11044 | 04-02A | | 15 |
| 4897546 | 02-15 | | 2 | | 04-02B | | 13 |
| 4897547 | 02-15 | | 3 | 493-21020 | 08-02A | | 5 |
| 4897578 | 02-24 | | 14 | 495-11053 | 09-40 | | 2 |
| 4897766 | 02-37 | | 13 | 495-21063 | 04-02 | | 22 |
| 4897817 | 03-06 | | 10 | 495-81144 | 09-16 | | 12 |
| 4897838 | 03-03 | | 10 | 495-81145 | 09-16 | | 7 |
| 4898283 | 02-25 | | 2 | 496-11081 | 09-10 | | 13 |
| 4898301 | 02-13 | | 3 | 496-21053 | 02-05 | | 3 |
| 4898372 | 02-15 | | 16 | 496-81025 | 02-01 | | 15 |
| 4898439 | 02-15 | | 12 | | 05-09 | | 25 |
| 4898758 | 03-03 | | 4 | | 09-07 | | 17 |
| 4898876 | 03-03 | | 6 | | 09-07A | | 17 |
| 4898921 | 03-05 | | | | 09-07B | | 19 |
| 4899003 | 02-16 | | 9 | | 09-08 | | 4 |
| | 03-05 | | 1 | | 09-08A | | 3 |
| 4899009 | 02-21 | | 3 | | 09-15 | | 2 |
| 4899019 | 02-12 | | 1 | 514-1107 | 06-22A | | 1 |
| | 02-13 | | 2 | | 06-23A | | 1 |
| 4899020 | 02-09 | | 7 | 514-1315 | 06-22 | | 2 |
| | 02-13 | | 1 | | 06-23 | | 2 |
| | 03-08 | | 7 | 515-21190 | 04-03 | | 6 |
| 4899026 | 02-29 | | 1 | | 04-03A | | 6 |
| | 02-30 | | 2 | | 04-10 | | 2 |
| 4899032 | 02-22 | | 1 | 515-21302 | 04-06 | | 7 |
| 4899035 | 02-12 | | 6 | 515-22127 | 04-06 | | 18 |
| 4899036 | 02-09 | | 3 | 515-22190 | 02-02 | | 12 |
| 4899037 | 02-31 | | 3 | | 08-01 | | 18 |
| | 02-41 | | 3 | 515-22254 | 09-49 | | 14 |
| 4899039 | 02-37 | | 3 | 515-23143 | 08-01 | | 43 |
| 4899046 | 02-26 | | 3 | 515-23159 | 08-13 | | 4 |
| 4899057 | 03-09 | | 10 | 515-23206 | 04-06 | | 12 |
| 4899063 | 02-32 | | 3 | | 04-07 | | 18 |
| 4899068 | 02-29 | | 7 | 515-23222 | 04-05 | | 11 |
| | 02-34 | | 3 | 515-23270 | 04-05 | | 9 |
| 4899072 | 02-21 | | 3A | | 04-06 | | 11 |
| 4899073 | 02-30 | | 5 | 515-23317 | 08-01 | | 31 |

| Number | Figure | Sequence | Ref. |
|---|---|---|---|
| 515-2379 | 04-05 | | 16 |
| 515-24190 | 04-17 | | 10 |
| 515-24222 | 07-03A | | 8 |
| 515-24238 | 04-05 | | 20 |
| | 07-03A | | 14 |
| | 09-46 | | 4 |
| 515-2495 | 04-17 | | 8 |
| | 06-24 | | 20 |
| | 09-07 | | 28 |
| | 09-07A | | 28 |
| 515-25127 | 03-01 | | 20 |
| 515-25159 | 03-01 | | 19 |
| | 05-04 | | 9 |
| | 05-05 | | 33 |
| | 08-11 | | 3 |
| | 08-12 | | 1 |
| 515-25190 | 03-01 | | 28 |
| 515-25254 | 08-19A | | 6 |
| 540-711 | 08-32 | | 16 |
| 540-719 | 08-29 | | 12 |
| | 08-30 | | 11 |
| | 08-31 | | 11 |
| | 08-32 | | 17 |
| 543-708 | 04-23A | | 7 |
| 561-703 | 02-03 | | 13 |
| | 09-44B | | 3 |
| | 09-48 | | 3 |
| 60-4640T1 | 09-44B | | 9 |
| | 09-48 | | 8 |
| 60-6359T1 | 04-22 | | 6 |
| 612-6 | 09-22 | | 23 |
| 614-10020 | 09-36 | | 3 |
| 614-12040 | 04-18 | | 6 |
| 614-6012 | 09-31 | | 14 |
| 614-6016 | 09-34 | | 24 |
| | 09-35 | | 8 |
| | 09-39 | | 7 |
| 614-6020 | 04-27 | | 3 |
| | 05-02A | | 16 |
| | 09-43 | | 14 |
| | 09-43A | | 29 |
| 614-8020 | 09-45 | | 6 |
| | 09-47 | | 8 |
| 614-8025 | 04-18 | | 11 |
| 614-8035 | 09-43A | | 19 |
| 626-10025 | 07-01 | | 6 |
| 627-10020 | 05-09 | | 17 |
| | 08-07 | | 13 |
| | 08-07A | | 11 |
| | 09-03 | | 6 |
| | 09-04 | | 4 |
| | 09-05 | | 4 |
| 627-10025 | 02-06 | | 3 |
| | 04-05 | | 19 |
| | 06-24 | | 16 |
| | 08-33 | | 7 |
| | 09-03 | | 9 |
| | 09-06 | | 5 |
| | 09-07B | | 39 |
| 627-10030 | 02-14 | | 3 |
| | 03-04 | | 5 |
| | 03-04 | | 6 |
| | 04-03 | | 9 |
| | 04-03A | | 9 |
| | 05-01 | | 3 |
| | 05-04 | | 16 |
| | 05-05 | | 19 |
| | 07-03A | | 6 |
| | 08-03 | | 39 |
| | 08-26 | | 3 |
| | 08-26A | | 3 |
| | 08-26B | | 3 |
| | 09-01 | | 10 |
| | 09-02 | | 10 |
| | 09-22 | | 6 |
| | 09-42 | | 9 |
| 627-10035 | 06-24 | | 12 |
| | 08-10 | | 16 |
| 627-10035 | 09-03 | | 5 |
| | 09-21 | | 11 |
| | 09-24 | | 7 |
| | 09-25 | | 7 |
| | 09-42 | | 15 |
| 627-10040 | 02-06 | | 18 |
| | 09-12 | | 5 |
| | 09-13 | | 5 |
| | 09-22 | | 7 |
| | 09-42 | | 2 |
| 627-10065 | 04-10 | | 12 |
| 627-12020 | 09-12 | | 9 |
| | 09-13 | | 9 |
| 627-12025 | 04-05 | | 25 |
| | 09-01 | | 7 |
| | 09-02 | | 7 |
| 627-12030 | 02-06 | | 22 |
| | 09-15 | | 32 |
| 627-12035 | 02-08 | | 5 |
| | 03-01 | | 16 |
| | 05-05 | | 4 |
| | 07-03 | | 8 |
| | 09-01 | | 11 |
| | 09-02 | | 11 |
| | 09-12 | | 13 |
| | 09-13 | | 13 |
| | 09-22 | | 17 |
| 627-12040 | 02-05 | | 7 |
| | 02-06 | | 21 |
| | 03-04 | | 4 |
| | 08-03 | | 8 |
| | 09-17 | | 8 |
| 627-12045 | 02-01 | | 5 |
| | 09-14 | | 10 |
| | 09-21 | | 9 |
| | 09-24 | | 9 |
| | 09-25 | | 9 |
| | 09-27 | | 7 |
| 627-14045 | 08-03 | | 18 |
| 627-16035 | 05-09 | | 26 |
| | 09-15 | | 1 |
| 627-16040 | 09-07 | | 19 |
| | 09-07A | | 19 |
| | 09-07B | | 21 |
| | 09-17 | | 14 |
| 627-16045 | 06-01 | | 10 |
| | 08-03 | | 3 |
| 627-16050 | 03-01 | | 13 |
| | 09-07 | | 18 |
| | 09-07A | | 18 |
| | 09-07B | | 20 |
| | 09-08 | | 5 |
| 627-20050 | 06-01 | | 6 |
| 627-6020 | 04-07 | | 8 |
| | 04-09 | | 4 |
| | 04-11 | | 5 |
| | 04-26 | | 19 |
| | 09-44 | | 5 |
| | 09-44A | | 5 |
| 627-6025 | 04-07 | | 15 |
| | 09-16 | | 16 |
| | 09-52 | | 6 |
| 627-8016 | 02-03 | | 10 |
| | 04-06 | | 17 |
| 627-8020 | 02-42 | | 3 |
| | 03-01 | | 29 |
| | 04-07 | | 21 |
| | 04-11A | | 8 |
| | 09-48 | | 12 |
| 627-8025 | 02-02 | | 10 |
| | 02-03 | | 14 |
| | 02-06 | | 14 |
| | 03-01 | | 31 |
| | 03-04A | | 4 |
| | 04-05 | | 15 |
| | 04-06 | | 2 |
| | 04-07 | | 16 |
| | 04-09 | | 6 |

| Number | Figure | Sequence | Ref. | Number | Figure | Sequence | Ref. |
|---|---|---|---|---|---|---|---|
| 627-8025 | 04-12 | | 4 | 637-64236 | 07-03D | | 19B |
| | 05-05 | | 15 | | 08-02 | | 3B |
| | 08-01 | | 12 | | 08-03 | | 11A |
| | 08-19 | | 6 | | 08-05 | | 10B |
| | 09-16 | | 18 | | 08-05 | | 9B |
| | 09-19 | | 7 | | 08-06 | | 16B |
| 627-8030 | 07-03B | | 20 | | 08-06 | | 17B |
| | 07-03D | | 23 | | 08-08 | | 5A |
| | 08-01 | | 22 | | 08-09 | | 5A |
| | 09-20 | | 13 | | 08-10 | | 4B |
| | 09-20A | | 13 | | 08-19 | | 1B |
| | 09-22 | | 21 | | 08-19A | | 1B |
| 627-8035 | 02-02 | | 14 | | 08-19B | | 13B |
| | 06-02 | | 4 | | 08-19B | | 1A |
| | 08-01A | | 4 | | 08-23 | | 5A |
| | 09-20 | | 8 | | 08-24 | | 2A |
| | 09-20A | | 8 | | 08-26B | | 7A |
| 637-63093 | 05-04 | | 12A | 637-64296 | 07-03 | | 3B |
| | 05-05 | | 7B | | 08-03 | | 14B |
| | 08-03 | | 23B | | 08-05 | | 12A |
| 637-63113 | 02-05 | | 10B | | 08-05 | | 13B |
| | 05-04 | | 13A | | 08-07 | | 14B |
| | 05-05 | | 24A | | 08-07 | | 16B |
| | 07-03D | | 33B | | 08-20 | | 15B |
| | 08-03 | | 20B | | 08-20 | | 9A |
| | 08-03 | | 34A | | 08-21 | | 1B |
| | 08-14 | | 11A | 637-64386 | 08-03 | | 31 |
| | 08-14 | | 3A | 700-101 | 08-14 | | 3 |
| | 08-25 | | 5B | | 08-29 | | 5 |
| | 08-25 | | 6A | | 08-30 | | 5 |
| | 08-26 | | 4B | | 08-31 | | 4 |
| | 08-26 | | 6B | | 08-32 | | 8 |
| | 08-26A | | 4B | 700-102 | 07-03A | | 13 |
| | 08-26A | | 6B | 700-103 | 05-04 | | 2 |
| | 08-26B | | 4B | | 05-05 | | 8 |
| | 08-26B | | 6B | | 07-03 | | 2 |
| | 08-29 | | 5B | 700-104 | 08-19 | | 1 |
| | 08-29 | | 6A | | 08-19A | | 1 |
| | 08-29 | | 7B | 700-105 | 07-03 | | 3 |
| | 08-30 | | 4B | | 08-07 | | 14 |
| | 08-30 | | 5B | | 08-07A | | 12 |
| | 08-30 | | 6B | 700-115 | 05-09 | | 3 |
| | 08-31 | | 4B | | 07-03C | | 3 |
| | 08-31 | | 5A | 700-153 | 05-04 | | 13 |
| | 08-31 | | 6B | | 08-03 | | 20 |
| | 08-31 | | 7B | | 08-25 | | 5 |
| | 08-32 | | 19B | | 08-26 | | 4 |
| | 08-32 | | 20B | | 08-26A | | 4 |
| | 08-32 | | 7B | | 08-26B | | 4 |
| | 08-32 | | 8B | | 08-29 | | 6 |
| 637-63133 | 07-03C | | 5B | | 08-30 | | 4 |
| | 07-03D | | 22B | | 08-31 | | 5 |
| | 07-03D | | 26A | | 08-32 | | 7 |
| 637-63153 | 05-09 | | 2A | 700-157 | 07-03D | | 26 |
| | 05-09 | | 33A | 700-166 | 08-06 | | 16 |
| | 05-09 | | 3B | | 08-08 | | 5 |
| | 07-03A | | 12B | | 08-09 | | 5 |
| | 07-03A | | 13B | | 08-10 | | 4 |
| | 07-03A | | 1B | 700-169 | 07-03D | | 22 |
| | 07-03A | | 3B | 700-303 | 05-04 | | 12 |
| | 07-03C | | 3B | | 05-05 | | 7 |
| | 07-03D | | 21A | 700-304 | 08-14 | | 11 |
| 637-63193 | 02-05 | | 9B | 700-305 | 07-03A | | 1 |
| | 05-04 | | 10B | 700-307 | 07-03B | | 6 |
| | 05-04 | | 2A | | 07-03C | | 4 |
| | 05-05 | | 26B | | 07-03D | | 19 |
| | 05-05 | | 8B | | 08-19B | | 13 |
| | 05-09 | | 32A | | 08-23 | | 5 |
| | 05-09 | | 35B | | 08-24 | | 2 |
| | 07-03 | | 2B | 700-308 | 08-07 | | 16 |
| | 08-03 | | 12B | | 08-20 | | 9 |
| | 08-03 | | 29 | | 08-21 | | 1 |
| 637-64236 | 02-05 | | 11B | 700-313 | 05-05 | | 48 |
| | 05-05 | | 48B | | 08-06 | | 17 |
| | 05-05 | | 6B | 700-315 | 07-03D | | 33 |
| | 07-03B | | 14B | | 08-25 | | 2 |
| | 07-03B | | 6B | | 08-32 | | 19 |
| | 07-03C | | 4B | 700-316 | 05-04 | | 10 |

| Number | Figure | Sequence | Ref. |
|---|---|---|---|
| 700-316 | 05-05 | | 26 |
| 700-368 | 07-03C | | 5 |
| 700-378 | 05-05 | | 24 |
| | 08-26 | | 6 |
| | 08-26A | | 6 |
| | 08-26B | | 6 |
| 700-387 | 07-03B | | 14 |
| 700-406 | 08-29 | | 7 |
| | 08-30 | | 6 |
| | 08-31 | | 6 |
| 700-407 | 08-20 | | 15 |
| 700-412 | 07-03A | | 12 |
| 701-320 | 07-03A | | 3 |
| | 07-03D | | 21 |
| 701-329 | 08-25 | | 4 |
| | 08-26 | | 5 |
| | 08-26A | | 5 |
| | 08-26B | | 5 |
| | 08-29 | | 9 |
| | 08-30 | | 8 |
| | 08-31 | | 8 |
| | 08-32 | | 21 |
| 701-342 | 08-23 | | 6 |
| | 08-24 | | 6 |
| 701-361 | 07-03D | | 4 |
| 701-366 | 08-07 | | 15 |
| | 08-07A | | 13 |
| | 08-10 | | 6 |
| 701-410 | 08-06 | | 18 |
| | 08-07 | | 17 |
| 701-416 | 07-03A | | 2 |
| | 07-03D | | 20 |
| 701-418 | 08-20 | | 17 |
| 701-421 | 08-03 | | 21 |
| 701-422 | 08-14 | | 10 |
| | 08-25 | | 7 |
| | 08-32 | | 14 |
| 701-433 | 05-04 | | 3 |
| | 05-05 | | 27 |
| 701-434 | 08-25 | | 8 |
| 701-907 | 05-04 | | 28 |
| 701-908 | 08-07 | | 24 |
| | 08-07A | | 20 |
| | 08-10 | | 13 |
| 701-909 | 07-03D | | 10 |
| | 08-25 | | 11 |
| 701-911 | 08-11 | | 10 |
| | 08-12 | | 10 |
| | 08-13 | | 12 |
| 701-914 | 08-08 | | 7 |
| | 08-09 | | 8 |
| | 08-10 | | 12 |
| 703-902 | 07-03D | | 17 |
| 71405746 | 05-02A | | 19 |
| 71476260 | 05-02A | | 21 |
| 71480988 | 04-24A | | 9 |
| 71485202 | 04-04 | | 16 |
| 71485274 | 09-33 | | 6 |
| | 09-35 | | 10 |
| 71485317 | 09-43A | | 20 |
| 71486982 | 09-42D | | |
| 71491410 | 09-42A | | |
| | 09-42C | | |
| 71491411 | 09-42A | | |
| | 09-42C | | |
| 72114876 | 09-36 | | 8 |
| 728-1240 | 09-17 | | 15 |
| 732-1610 | 09-33 | | 5 |
| | 09-35 | | 14 |
| 733-3220 | 09-16 | | 19 |
| | 09-17 | | 16 |
| 733-3232 | 07-03 | | 6 |
| 760-14113 | 04-24A | | 6 |
| | 06-24 | | 26 |
| | 09-43A | | 1A |
| 760-14413 | 09-26 | | 4 |
| 760-17316 | 09-38 | | 2 |
| 76041998 | 04-22 | | 2 |
| 76043510 | 09-33A | | 19 |
| | 09-34 | | 29 |
| | 09-35 | | 5 |
| 76043511 | 09-36 | | 14 |
| 76043538 | 09-33A | | 27 |
| 76043560 | 04-04 | | 31 |
| 76043957 | 05-04 | | 15 |
| | 05-05 | | 32 |
| 76043977 | 04-23 | | 3 |
| 76046110 | 05-02A | | 15 |
| | 05-03 | | 10 |
| | 09-31 | | 11 |
| 76047278 | 09-45 | | 2 |
| | 09-47 | | 2 |
| 76048391 | 05-02 | | 12 |
| 76048394 | 05-02 | | 13 |
| 76048628 | 09-36 | | 12 |
| 76048849 | 09-41 | | 5 |
| 76048869 | 09-36 | | 5 |
| 76048924 | 05-03 | | 23 |
| 76048930 | 05-02 | | 11 |
| 76048941 | 05-02 | | 21 |
| 76048980 | 09-43A | | 2 |
| 76053295 | 04-08 | | 2 |
| 76067422 | 09-39 | | 1 |
| 76067753 | 09-36 | | 11 |
| 76079036 | 09-43A | | 1 |
| 76081690 | 05-02A | | 20 |
| 76081747 | 09-35A | | 16 |
| 76082151 | 09-10 | | 7 |
| 761-17325 | 04-24A | | 3 |
| 76300020 | 05-02 | | 24 |
| 76300038 | 05-02 | | 18 |
| 76301020 | 09-31A | | 12 |
| 76303017 | 05-03 | | 1 |
| 76303019 | 05-03 | | 2 |
| 76303020 | 05-03 | | 3 |
| 76303021 | 05-03 | | 4 |
| 76303022 | 09-39 | | 2 |
| 76303023 | 09-43A | | 14 |
| 76303024 | 09-32 | | 1 |
| 76303025 | 09-32 | | 4 |
| 76303027 | 09-43 | | 6 |
| 76303029 | 09-31A | | 11 |
| 76303030 | 04-13 | | 17 |
| 76303033 | 09-31 | | 1 |
| 76303036 | 09-31A | | 3 |
| 76303037 | 09-31A | | 1 |
| 76303038 | 09-31A | | 4 |
| 76303039 | 09-31A | | 2 |
| 76303040 | 09-31 | | 13 |
| 76303154 | 09-33A | | 7 |
| | 09-35A | | 13 |
| 76303157 | 09-33 | | 9 |
| | 09-35 | | 12 |
| 76303159 | 09-33A | | 3 |
| 76303170 | 09-35A | | 3 |
| 76303171 | 09-30 | | 1 |
| 76303174 | 09-37 | | 1 |
| 76303192 | 09-33A | | 18 |
| | 09-34 | | 7 |
| 76303193 | 09-33A | | 14 |
| | 09-34 | | 3 |
| 76303194 | 09-32 | | 2 |
| 76303195 | 09-32 | | 3 |
| 76303210 | 09-33A | | 9 |
| 76303211 | 09-35A | | 8 |
| 76303212 | 09-35A | | 4 |
| 76303224 | 09-35A | | 1 |
| 76303225 | 09-35A | | 17 |
| 76303227 | 09-35A | | 9 |
| 76303230 | 09-33A | | 1 |
| 76303231 | 09-33A | | 6 |
| 76303237 | 09-29 | | 1 |
| 76303238 | 09-29 | | 2 |
| 76303239 | 09-29 | | 3 |
| 76303240 | 09-34 | | 2 |
| 76303242 | 09-33A | | 2 |

| Number | Figure | Sequence | Ref. | Number | Figure | Sequence | Ref. |
|---|---|---|---|---|---|---|---|
| 76303244 | 04-23A | | 2 | 82034881 | 09-42A | | 48 |
| 76303246 | 04-23 | | 2 | | 09-42A | | 9 |
| 76303248 | 09-33A | | 15 | | 09-42C | | 48 |
| | 09-34 | | 4 | | 09-42C | | 9 |
| 76303250 | 09-33A | | 22 | 82034888 | 09-42C | | 66 |
| 76303253 | 09-35A | | 18 | 82034893 | 09-42C | | 50 |
| 76303258 | 04-04 | | 3 | 82034894 | 09-42A | | 12 |
| 76303260 | 04-04 | | 7 | | 09-42A | | 50 |
| 76303261 | 04-04 | | 35 | | 09-42C | | 12 |
| 76303265 | 09-43A | | 7 | | 09-42C | | 50 |
| 76303266 | 09-36 | | 1 | 82034897 | 09-42C | | 58 |
| 76303267 | 09-36 | | 2 | 82034900 | 09-42C | | 67 |
| 76303277 | 05-02 | | 1 | 82034901 | 09-42C | | 69 |
| 76303279 | 05-02 | | 10 | 82034909 | 09-42A | | 33 |
| 76303300 | 09-38 | | 1 | | 09-42C | | 33 |
| 76303305 | 09-43 | | 11 | 82034910 | 09-42A | | 32 |
| 76303317 | 09-37 | | 2 | | 09-42C | | 32 |
| 76303319 | 04-04 | | 14 | 82034911 | 09-42A | | 39 |
| | 09-43A | | 8 | | 09-42C | | 39 |
| 76303320 | 04-04 | | 12 | 82034912 | 09-42A | | 40 |
| | 09-43A | | 9 | | 09-42C | | 40 |
| 76303321 | 04-04 | | 13 | | 09-42C | | 65 |
| | 09-43A | | 6 | 82034916 | 09-42A | | 37 |
| 76303323 | 09-33A | | 24 | | 09-42C | | 37 |
| 76303325 | 04-04 | | 2 | 82034917 | 09-42A | | 36 |
| 76303327 | 04-23A | | 6 | | 09-42C | | 36 |
| 76303331 | 09-43A | | 3 | 82034919 | 09-42C | | 61 |
| 76303337 | 09-39 | | 4 | 82034920 | 09-42C | | 75 |
| 76303338 | 09-39 | | 3 | 82034921 | 09-42C | | 41A |
| 76303347 | 04-04 | | 17 | 82034923 | 09-42C | | 41B |
| 76303352 | 09-45 | | 1 | 82034944 | 09-42C | | |
| 76303422 | 09-31 | | 5 | 82034945 | 09-42C | | |
| 76303450 | 05-03 | | 11 | 82034947 | 09-42C | | 57 |
| 76303455 | 09-34 | | 22 | 82034948 | 09-42C | | |
| 76303458 | 09-34 | | 17 | 82034949 | 09-42C | | |
| 76303459 | 09-34 | | 18 | 82034952 | 09-42C | | |
| 76303460 | 09-34 | | 1 | 82034958 | 09-42C | | 78 |
| 76303461 | 09-34 | | 12 | 82034961 | 09-42C | | 62 |
| 76303463 | 09-34 | | 11 | 82034962 | 09-42C | | 64 |
| 76303481 | 09-31B | | 1 | 82034963 | 09-42A | | |
| 76303489 | 04-04 | | 4 | | 09-42C | | |
| 76303496 | 09-43A | | 27 | 82034964 | 09-42A | | 35 |
| | 09-43A | | 30 | | 09-42C | | 35 |
| | 09-45 | | 3 | 82034969 | 09-42A | | 31 |
| | 09-47 | | 3 | | 09-42C | | 31 |
| 76303497 | 09-45 | | 4 | 82034977 | 09-42C | | |
| | 09-47 | | 4 | 82034997 | 09-42A | | 2 |
| 76303498 | 04-04 | | 6 | | 09-42A | | 4 |
| 76303499 | 09-43A | | 4 | | 09-42C | | 3 |
| 76303501 | 09-43A | | 11 | | 09-42C | | 4 |
| 76303505 | 09-43A | | 10 | | 09-42C | | 60 |
| 76303521 | 09-31B | | 6 | 82035025 | 09-42B | | 34 |
| 76303522 | 09-31B | | 7 | 82035027 | 09-42B | | 30 |
| 76303582 | 09-30 | | 3 | 82035028 | 09-42B | | 39 |
| 76303588 | 09-36 | | 9 | 82035029 | 09-42B | | 35 |
| 76303589 | 09-35 | | 11 | 82035030 | 09-42B | | 19 |
| 76303590 | 09-33 | | 7 | 82035031 | 09-42B | | 16 |
| 76303592 | 09-47 | | 1 | 82035032 | 09-42B | | 26 |
| 76303594 | 09-43 | | 3 | 82035033 | 09-42B | | 31 |
| 76303605 | 09-35A | | 20 | 82035034 | 09-42B | | 29 |
| 79028421 | 04-10 | | 8 | 82035035 | 09-42B | | 40 |
| 79076208 | 09-31B | | 3 | 82035036 | 09-42B | | 21 |
| 800-2190 | 06-12 | | 6 | 82035037 | 09-42B | | 25 |
| | 06-13 | | 6 | 82035039 | 09-42B | | 37 |
| 800-44012 | 07-02 | | 5 | 82035040 | 09-42B | | 6 |
| 806-10030 | 06-24 | | 18 | 82035043 | 09-42B | | 23 |
| 811-12025 | 09-04 | | 5 | 82035052 | 09-42D | | 3 |
| | 09-05 | | 5 | 82035054 | 09-42B | | |
| | 09-06 | | 3 | 82035057 | 09-42D | | 35 |
| 814-5030 | 04-06 | | 13 | 82035064 | 09-42C | | 54 |
| 814-6110 | 05-04 | | 21 | 82035065 | 09-42D | | 22 |
| | 05-05 | | 17 | | 09-42D | | 8 |
| 814-8140 | 08-24 | | 3 | 82035069 | 09-42B | | 20 |
| 816213301 | 09-33A | | 4 | 82035071 | 09-42D | | 54 |
| | 09-34 | | 5 | 82035073 | 09-42D | | |
| | 09-35A | | 7 | 82035075 | 09-42D | | 32 |
| 82022857 | 04-23A | | 3 | 82035077 | 09-42D | | 49 |
| 82024562 | 04-07 | | 12 | 82035078 | 09-42D | | |

| Number | Figure | Sequence | Ref. |
|---|---|---|---|
| 82035079 | 09-42D | | |
| 82035081 | 09-42D | | 10 |
| 82035082 | 09-42D | | |
| 82035086 | 09-42D | | |
| 82035087 | 09-42D | | 17 |
| | 09-42D | | 7 |
| 82035094 | 09-42B | | 11 |
| 82035095 | 09-42D | | 1 |
| 82035106 | 09-42D | | 31 |
| 82035111 | 09-42D | | |
| 82035116 | 09-42D | | 26 |
| 82035122 | 09-42D | | |
| 82035123 | 09-42D | | |
| 82035125 | 09-42B | | 1 |
| 82035126 | 09-42D | | 34 |
| 82035127 | 09-42B | | 13 |
| 82035128 | 09-42B | | 7 |
| 82035130 | 09-42D | | 39 |
| 824-1404 | 04-02A | | 18 |
| | 04-02B | | 16 |
| | 04-05 | | 22 |
| 824-1405 | 05-02A | | 17 |
| | 08-01 | | 3 |
| 825-1404 | 04-14 | | 17 |
| 825-1405 | 09-33A | | 36 |
| 825-1406 | 04-20 | | 4 |
| | 09-33A | | 26 |
| | 09-35 | | 9 |
| 825-1408 | 04-23A | | 4 |
| | 09-43A | | 18 |
| 827-10040 | 03-01 | | 9 |
| | 08-11 | | 2 |
| | 08-12 | | 5 |
| | 08-19A | | 8 |
| 827-10045 | 04-02A | | 7 |
| | 04-02B | | 6 |
| 827-10050 | 06-01 | | 12 |
| 827-10060 | 08-13 | | 3 |
| | 08-33 | | 9 |
| | 09-42 | | 10 |
| | 09-42 | | 16 |
| 827-10070 | 03-01 | | 23 |
| | 05-04 | | 8 |
| | 05-05 | | 34 |
| | 07-03 | | 14 |
| | 08-07 | | 11 |
| | 08-07A | | 9 |
| | 08-08 | | 9 |
| | 08-09 | | 10 |
| 827-10075 | 07-03 | | 13 |
| 827-10080 | 08-33 | | 8 |
| 827-10090 | 06-02 | | 5 |
| | 08-07 | | 12 |
| | 08-07A | | 10 |
| | 08-10 | | 18 |
| | 08-19B | | 10 |
| 827-10100 | 07-03D | | 7 |
| | 08-05 | | 23 |
| | 08-06 | | 10 |
| | 08-10 | | 11 |
| 827-10110 | 04-02A | | 14 |
| | 04-02B | | 12 |
| | 08-05 | | 24 |
| | 08-06 | | 9 |
| | 08-33 | | 4 |
| 827-10130 | 08-33 | | 3 |
| 827-10150 | 07-03B | | 12 |
| | 07-03D | | 29 |
| 827-12050 | 09-19A | | 6 |
| | 09-20 | | 5 |
| | 09-20A | | 5 |
| | 09-52 | | 4 |
| 827-12060 | 06-24 | | 9 |
| | 09-14 | | 7 |
| 827-12070 | 09-15 | | 31 |
| 827-12080 | 09-15 | | 7 |
| 827-12090 | 09-01 | | 8 |
| | 09-02 | | 8 |
| 827-12100 | 09-15 | | 26 |
| 827-12140 | 09-17 | | 6 |
| 827-12220 | 09-17 | | 11 |
| 827-16060 | 09-17 | | 19 |
| 827-16070 | 09-21 | | 4 |
| | 09-22 | | 10 |
| 827-16080 | 09-07 | | 20 |
| | 09-07A | | 20 |
| | 09-08A | | 4 |
| 827-16090 | 09-08A | | 12 |
| 827-16120 | 02-01 | | 2 |
| 827-20190 | 09-07B | | 30 |
| 827-22120 | 06-01 | | 9 |
| 827-24090 | 06-21 | | 3 |
| 827-24130 | 06-22 | | 4 |
| 827-24160 | 09-50 | | 5 |
| 827-24190 | 09-50 | | 3 |
| | 09-50A | | 5 |
| 827-24230 | 09-50A | | 3 |
| 827-6040 | 09-39 | | 8 |
| 827-6050 | 04-07 | | 7 |
| | 08-14 | | 7 |
| 827-6060 | 09-33A | | 28 |
| 827-8040 | 09-20 | | 12 |
| | 09-20A | | 12 |
| 827-8050 | 06-01 | | 17 |
| 827-8060 | 04-07 | | 14 |
| | 04-09 | | 9 |
| | 07-05 | | 8 |
| 827-8070 | 03-01 | | 30 |
| 827-8100 | 04-02A | | 22 |
| | 08-23 | | 2 |
| 82848105 | 09-42D | | |
| 829-1406 | 04-07 | | 10 |
| | 04-14 | | 13 |
| | 04-27 | | 8 |
| 829-1408 | 04-11 | | 11 |
| | 04-18 | | 12 |
| | 07-05 | | 9 |
| | 08-27 | | 43 |
| | 08-28 | | 43 |
| | 09-19 | | 8 |
| 829-1410 | 04-05 | | 17 |
| | 04-10 | | 11 |
| | 09-46 | | 11 |
| 829-1412 | 02-08 | | 4 |
| | 04-18 | | 7 |
| | 08-29A | | 5 |
| | 09-20 | | 6 |
| | 09-20A | | 6 |
| | 09-22 | | 18 |
| 829-1416 | 09-17 | | 18 |
| | 09-21 | | 5 |
| | 09-22 | | 11 |
| 829-1420 | 09-07B | | 31 |
| 829-1424 | 06-21 | | 4 |
| | 06-22 | | 6 |
| | 09-50 | | 4 |
| | 09-50A | | 4 |
| 829-1510 | 06-04 | | 5 |
| 829-2310 | 04-01 | | 2 |
| 829-23414 | 05-01 | | 8 |
| 829-4410 | 09-36 | | 10 |
| 832-10405 | 05-02A | | 9 |
| | 09-34 | | 21 |
| 832-10406 | 04-03 | | 12 |
| | 04-03A | | 12 |
| | 04-06 | | 5 |
| | 04-07 | | 5 |
| | 04-09 | | 5 |
| | 04-10 | | 7 |
| | 04-11 | | 3 |
| | 04-11A | | 5 |
| | 04-27 | | 5 |
| | 05-04 | | 23 |
| | 05-05 | | 30 |
| | 08-14 | | 8 |
| | 08-29 | | 14 |

| Number | Figure | Sequence | Ref. |
|---|---|---|---|
| 832-10406 | 08-30 | | 13 |
| | 08-31 | | 13 |
| | 08-32 | | 5 |
| | 09-16 | | 22 |
| | 09-33A | | 29 |
| | 09-34 | | 25 |
| | 09-43 | | 16 |
| | 09-52 | | 8 |
| 832-10408 | 02-02 | | 13 |
| | 03-01 | | 32 |
| | 04-05 | | 13 |
| | 04-06 | | 4 |
| | 04-07 | | 17 |
| | 04-09 | | 8 |
| | 04-12 | | 2 |
| | 04-25 | | 5 |
| | 04-25A | | 5 |
| | 04-26 | | 4 |
| | 04-28 | | 3 |
| | 05-05 | | 31 |
| | 05-09 | | 21 |
| | 07-03B | | 18 |
| | 07-03D | | 25 |
| | 08-01 | | 30 |
| | 08-23 | | 4 |
| | 08-24 | | 4 |
| | 09-20 | | 10 |
| | 09-20A | | 10 |
| | 09-22 | | 22 |
| | 09-33A | | 13 |
| | 09-34 | | 10 |
| | 09-35A | | 12 |
| | 09-43A | | 18 |
| | 09-44A | | 8 |
| | 09-44B | | 4 |
| | 09-48 | | 4 |
| | 09-49 | | 11 |
| 832-10410 | 02-06 | | 17 |
| | 02-14 | | 4 |
| | 03-01 | | 11 |
| | 03-04 | | 9 |
| | 04-02A | | 13 |
| | 04-02B | | 11 |
| | 04-03 | | 10 |
| | 04-03A | | 10 |
| | 04-05 | | 6 |
| | 04-06 | | 10 |
| | 04-10 | | 10 |
| | 05-05 | | 21 |
| | 06-24 | | 22 |
| | 07-03A | | 9 |
| | 08-03 | | 40 |
| | 08-05 | | 22 |
| | 08-06 | | 4 |
| | 08-07 | | 25 |
| | 08-07A | | 21 |
| | 08-10 | | 15 |
| | 08-11 | | 5 |
| | 08-12 | | 4 |
| | 08-13 | | 9 |
| | 08-14 | | 5 |
| | 08-19B | | 9 |
| | 08-20 | | 4 |
| | 08-33 | | 6 |
| | 09-07 | | 30 |
| | 09-07A | | 30 |
| | 09-16 | | 9 |
| | 09-17 | | 10 |
| | 09-21 | | 12 |
| | 09-22 | | 8 |
| | 09-24 | | 6 |
| | 09-25 | | 6 |
| | 09-33A | | 17 |
| | 09-34 | | 28 |
| | 09-42 | | 13 |
| | 09-42 | | 7 |
| | 09-44 | | 8 |
| | 09-49 | | 7 |
| 832-10412 | 02-05 | | 5 |
| | 06-24 | | 10 |
| | 07-03B | | 17 |
| | 09-14 | | 12 |
| | 09-52 | | 3 |
| 832-10416 | 02-01 | | 8 |
| | 03-01 | | 15 |
| | 09-07 | | 21 |
| | 09-07A | | 21 |
| | 09-08 | | 6 |
| | 09-08A | | 5 |
| | 09-35 | | 4 |
| | 05-02A | | 5 |
| | 05-03 | | 9 |
| | 09-31 | | 12 |
| | 09-31A | | 8 |
| | 09-31B | | 2 |
| | 09-38 | | 3 |
| | 09-44 | | 2 |
| | 09-44A | | 2 |
| 833-40408 | 08-01 | | 8 |
| | 09-19 | | 4 |
| 837-6035 | 04-02A | | 5 |
| | 04-02B | | 4 |
| 840-1312 | 04-04 | | 27 |
| 840-1412 | 05-03 | | 15 |
| 840-1420 | 04-04 | | 28 |
| 840-1512 | 04-04 | | 22 |
| 840-1516 | 04-16 | | 2 |
| | 09-39 | | 5 |
| 840-1520 | 05-02A | | 6 |
| 840-1612 | 04-14 | | 14 |
| | 09-31A | | 7 |
| 840-1616 | 04-04 | | 11 |
| | 04-14 | | 20 |
| | 05-02A | | 14 |
| | 05-03 | | 21 |
| | 09-31A | | 10 |
| | 09-36 | | 6 |
| 840-1620 | 04-04 | | 10 |
| 840-1625 | 08-32 | | 6 |
| 840-1630 | 08-29 | | 13 |
| | 08-30 | | 12 |
| | 08-31 | | 12 |
| | 09-31 | | 6 |
| | 09-31A | | 5 |
| 840-1820 | 09-34 | | 14 |
| | 09-43 | | 21 |
| 843-2625 | 05-03 | | 14 |
| 844-10025 | 09-23 | | 8 |
| 844-10035 | 08-20 | | 11 |
| | 09-18 | | 3 |
| 844-8025 | 07-02 | | 2 |
| 847-3616 | 09-31 | | 8 |
| 84989383 | 05-09 | | 33 |
| 84989392 | 02-05 | | 8 |
| 84989411 | 08-03 | | 24 |
| 8500083 | 02-02 | | 3 |
| 8500084 | 02-02 | | 6 |
| 8500105 | 02-05 | | 1 |
| 8500133 | 08-01 | | 6 |
| | 09-44B | | 7 |
| | 09-48 | | 7 |
| 8500136 | 08-01 | | 4 |
| 8500143 | 02-03 | | 8 |
| 8500144 | 02-03 | | 7 |
| 8500164 | 08-01 | | 46 |
| 8500165 | 08-01 | | 19 |
| 8500167 | 02-03 | | 5 |
| | 08-02 | | 6 |
| 8500173 | 09-12 | | 6 |
| | 09-13 | | 6 |
| 8500186 | 08-01 | | 47 |
| | 08-02 | | 2 |
| 8500206 | 06-02 | | 2 |
| | 08-01 | | 7 |
| | 08-01A | | 5 |
| | 08-19 | | 7 |

| Number | Figure | Sequence | Ref. |
|---|---|---|---|
| 8500209 | 07-03B | | 2 |
| | 07-03D | | 11 |
| 8500210 | 07-03B | | 10 |
| | 08-19B | | 14 |
| 8500311 | 09-07B | | 32 |
| 8500375 | 09-16 | | 4 |
| 8500379 | 09-16 | | 5 |
| 8500382 | 09-16 | | 10 |
| 8500403 | 02-06 | | 8 |
| 8500460 | 05-09 | | 11 |
| 8500471 | 02-05 | | 2 |
| 8500483 | 05-09 | | 12 |
| 8500562 | 08-23 | | 1 |
| | 08-23A | | |
| 8500565 | 08-24 | | 1 |
| | 08-24A | | |
| 8500576 | 06-02 | | 6 |
| 8500583 | 06-02 | | 7 |
| 8500621 | 07-03 | | 18 |
| 8500692 | 05-04 | | 18 |
| | 05-05 | | 23 |
| 8500795 | 04-02A | | 8 |
| 8500858 | 07-03 | | 16 |
| | 08-07 | | 19 |
| | 08-07A | | 15 |
| | 08-10 | | 17 |
| 8500877 | 08-19A | | 5 |
| 8500878 | 09-48 | | 14 |
| 8500909 | 03-04 | | 2 |
| 8501022 | 09-44 | | 1 |
| 8501024 | 09-44A | | 1 |
| 8501036 | 09-16 | | 24 |
| 8501047 | 08-25 | | 10 |
| 8501052 | 07-03D | | 28 |
| 8501088 | 05-09 | | 22 |
| 8501098 | 04-02A | | 12 |
| | 04-02B | | 10 |
| 8501151 | 09-17 | | 3 |
| 8501205 | 02-06 | | 9 |
| 8501295 | 06-02 | | 1 |
| 8501296 | 08-01A | | 1 |
| 8501311 | 04-11 | | 9 |
| 8501315 | 07-03B | | 13 |
| 8501321 | 08-19A | | 4 |
| 8501329 | 08-19 | | 4 |
| 85811350 | 09-42A | | 29 |
| | 09-42C | | 29 |
| 85811351 | 09-42A | | 34 |
| | 09-42A | | 6 |
| | 09-42C | | 34 |
| | 09-42C | | 6 |
| 85811352 | 09-42A | | 18 |
| | 09-42C | | 18 |
| 85811353 | 09-42C | | 73 |
| 85817428 | 09-42B | | 41 |
| 85817429 | 09-42B | | 15 |
| 85817430 | 09-42B | | 4 |
| 85817433 | 09-42B | | 33 |
| 85817434 | 09-42B | | 28 |
| 85817435 | 09-42B | | 38 |
| 85817440 | 09-42B | | 27A |
| 85817441 | 09-42B | | 27 |
| 85817442 | 09-42B | | 18 |
| 85817444 | 09-42B | | 10 |
| 85817445 | 09-42B | | 12 |
| 85817448 | 09-42B | | 2 |
| 85817449 | 09-42B | | 3 |
| 85817451 | 09-42B | | |
| 85817458 | 09-42A | | 22 |
| | 09-42A | | 26 |
| | 09-42A | | 43 |
| | 09-42A | | 49 |
| | 09-42C | | 22 |
| | 09-42C | | 26 |
| | 09-42C | | 43 |
| | 09-42C | | 49 |
| 85817467 | 09-42C | | 52 |
| 85817486 | 09-42D | | 9 |
| 85817489 | 09-42C | | 71 |
| 85817492 | 09-42D | | 29 |
| 85817496 | 09-42D | | 24 |
| 85817560 | 09-42D | | 19 |
| 85819815 | 09-42C | | 63 |
| | 09-42D | | 30 |
| 86000535 | 04-15 | | 13 |
| 8602005 | 02-42 | | 1 |
| 8602302 | 02-01 | | 3 |
| 8602303 | 02-01 | | 14 |
| 8602304 | 02-01 | | 12 |
| 8602342 | 05-09 | | 14 |
| 8602421 | 02-02 | | 1 |
| 8602469 | 09-49 | | 4 |
| 8602473 | 02-06 | | 12 |
| 8602476 | 09-16 | | 20 |
| 8602478 | 02-06 | | 11 |
| 8602498 | 09-44B | | 6 |
| | 09-48 | | 6 |
| 8602537 | 03-01 | | 22 |
| 8602538 | 03-01 | | 4 |
| 8602542 | 03-01 | | 8 |
| 8602589 | 05-09 | | 10 |
| 8602590 | 05-09 | | 8 |
| 8602680 | 04-02B | | 19 |
| 8602725 | 09-48 | | 1 |
| 8602727 | 09-44B | | 1 |
| 8602791 | 09-18 | | 4 |
| 8602844 | 08-04 | | 6 |
| 8602913 | 08-27 | | 12 |
| | 08-28 | | 12 |
| 8602915 | 08-27 | | 9 |
| | 08-28 | | 9 |
| 8602916 | 08-27 | | 10 |
| | 08-28 | | 10 |
| 8602925 | 08-27 | | 7 |
| | 08-28 | | 7 |
| 8603001 | 05-06 | | 4 |
| 8603020 | 07-03B | | 1 |
| 8603092 | 09-57 | | 21 |
| 8603093 | 09-58 | | 19 |
| 8603094 | 09-59 | | 20 |
| 8603162 | 06-22D | | 12 |
| | 06-23D | | 12 |
| 8603163 | 06-22D | | 9 |
| | 06-23D | | 9 |
| 8603166 | 06-22D | | 1 |
| | 06-23D | | 1 |
| 8603171 | 04-17 | | 1 |
| | 05-05 | | 11 |
| 8603179 | 06-17 | | |
| | 06-18 | | |
| 8603180 | 06-16 | | 4 |
| 8603181 | 06-18 | | 2 |
| 8603182 | 06-16 | | 9 |
| 8603183 | 06-18 | | 6 |
| 8603184 | 06-16 | | 1 |
| 8603185 | 06-16 | | 2 |
| 8603187 | 06-06 | | 2 |
| 8603200 | 06-22A | | 12 |
| | 06-23A | | 13 |
| 8603201 | 06-22A | | 13 |
| | 06-23 | | 11 |
| | 06-23A | | 14 |
| 8603202 | 06-22A | | 3 |
| | 06-23A | | 3 |
| 8603205 | 06-23B | | 7 |
| 8603206 | 06-22A | | 4 |
| 8603207 | 06-22A | | 23 |
| | 06-22A | | 27 |
| | 06-23A | | 24 |
| | 06-23A | | 28 |
| 8603208 | 06-22A | | 10 |
| | 06-22A | | 8 |
| | 06-22E | | 22 |
| | 06-23A | | 11 |
| | 06-23A | | 9 |
| | 06-23E | | 22 |

| Number | Figure | Sequence | Ref. | Number | Figure | Sequence | Ref. |
|---|---|---|---|---|---|---|---|
| 8603209 | 06-11 | | 11 | 8603296 | 06-05 | | 1 |
| 8603210 | 06-22A | | 19 | 8603297 | 06-05 | | 2 |
| | 06-23A | | 20 | 8603298 | 06-05 | | 3 |
| 8603214 | 06-06 | | 11 | 8603299 | 06-05 | | 4 |
| 8603215 | 06-17 | | 3 | 8603300 | 06-05 | | 5 |
| 8603216 | 06-20 | | 5 | 8603301 | 06-05 | | 6 |
| 8603217 | 06-03 | | 6 | | 06-10 | | 10 |
| 8603218 | 06-17 | | 18 | | 06-14 | | 2 |
| 8603219 | 06-14 | | 6 | 8603302 | 06-05 | | 7 |
| 8603220 | 06-14 | | 7 | 8603304 | 06-06 | | 6 |
| 8603221 | 06-14 | | 8 | 8603305 | 06-06 | | 7 |
| 8603222 | 06-22B | | 6 | 8603306 | 06-06 | | 8 |
| 8603223 | 06-14 | | 3 | | 06-07 | | 4 |
| 8603239 | 06-22B | | 3 | 8603307 | 06-06 | | 12 |
| 8603240 | 06-22B | | 3 | 8603308 | 06-06 | | 13 |
| 8603241 | 06-22B | | 3 | | 06-16 | | 6 |
| 8603242 | 06-22B | | 3 | 8603309 | 06-06 | | 14 |
| 8603243 | 06-22B | | 3 | 8603310 | 06-06 | | 15 |
| 8603244 | 06-22B | | 3 | 8603311 | 06-03 | | 4 |
| 8603247 | 06-22B | | 10 | | 06-06 | | 16 |
| 8603250 | 06-22C | | 4 | 8603312 | 06-06 | | 17 |
| 8603251 | 06-22C | | 5 | 8603313 | 06-06 | | 18 |
| 8603252 | 06-22C | | 9 | 8603315 | 06-06 | | 20 |
| 8603253 | 06-22C | | 10 | | 06-16 | | 8 |
| 8603254 | 06-22C | | 12 | 8603316 | 06-06 | | 21 |
| 8603255 | 06-22C | | 13 | 8603317 | 06-06 | | 22 |
| 8603256 | 06-22A | | 9 | 8603318 | 06-06 | | 23 |
| | 06-23A | | 10 | | 06-06 | | 25 |
| 8603257 | 06-22B | | 2 | 8603319 | 06-06 | | 24 |
| | 06-23B | | 2 | 8603320 | 06-07 | | 1 |
| 8603258 | 06-22B | | 4 | 8603323 | 06-07 | | 5 |
| 8603259 | 06-22B | | 5 | 8603324 | 06-14 | | 1 |
| | 06-23B | | 3 | 8603325 | 06-14 | | 9 |
| 8603260 | 06-22B | | 5 | 8603326 | 06-14 | | 4 |
| | 06-23B | | 3 | 8603327 | 07-01 | | 5 |
| 8603261 | 06-22B | | 5 | 8603328 | 07-01 | | 4 |
| | 06-23B | | 3 | 8603347 | 07-01 | | 14 |
| 8603262 | 06-22B | | 5 | 8603348 | 07-01 | | 21 |
| | 06-23B | | 3 | 8603352 | 06-15 | | 2 |
| 8603263 | 06-22B | | 7 | 8603353 | 06-15 | | 3 |
| 8603264 | 06-22B | | 5 | 8603354 | 06-15 | | 4 |
| | 06-23B | | 3 | 8603355 | 06-15 | | 10 |
| 8603265 | 06-22B | | 8 | 8603357 | 06-16 | | 11 |
| 8603266 | 06-22B | | 13 | 8603358 | 06-16 | | 12 |
| 8603267 | 06-22C | | 11 | 8603359 | 06-17 | | 19 |
| 8603268 | 06-22C | | 15 | 8603360 | 06-17 | | 23 |
| 8603271 | 06-22C | | 3 | 8603361 | 06-17 | | 22 |
| | 06-23C | | 16 | 8603362 | 06-17 | | 24 |
| 8603272 | 06-22C | | 8 | 8603363 | 06-18 | | 3 |
| 8603274 | 06-15 | | 7 | 8603365 | 06-17 | | 1 |
| 8603277 | 06-22C | | 7 | 8603366 | 06-17 | | 2 |
| 8603278 | 06-22C | | 7 | 8603367 | 06-17 | | 4 |
| 8603279 | 06-22C | | 7 | 8603368 | 06-17 | | 5 |
| 8603280 | 06-22C | | 7 | 8603369 | 06-17 | | 6 |
| 8603281 | 06-01 | | 13 | 8603370 | 06-17 | | 7 |
| | 06-03 | | 7 | 8603371 | 06-17 | | 8 |
| 8603282 | 06-22C | | 6 | 8603372 | 06-17 | | 9 |
| 8603283 | 06-22B | | 5 | 8603374 | 06-17 | | 10 |
| | 06-23B | | 3 | 8603375 | 06-17 | | 12 |
| 8603284 | 06-22B | | 5 | 8603376 | 06-17 | | 14 |
| | 06-23B | | 3 | 8603377 | 06-17 | | 15 |
| 8603285 | 06-22B | | 5 | 8603380 | 06-19 | | 3 |
| | 06-23B | | 3 | 8603381 | 06-19 | | 4 |
| 8603286 | 06-22B | | 5 | 8603382 | 06-19 | | 5 |
| | 06-23B | | 3 | 8603383 | 06-19 | | 6 |
| 8603287 | 06-22B | | 5 | 8603384 | 06-19 | | 7 |
| | 06-23B | | 3 | 8603385 | 06-19 | | 8 |
| 8603288 | 06-22B | | 5 | 8603386 | 06-19 | | 9 |
| | 06-23B | | 3 | 8603387 | 06-19 | | 10 |
| 8603289 | 06-22B | | 5 | 8603388 | 06-19 | | 11 |
| | 06-23B | | 3 | 8603389 | 06-19 | | 13 |
| 8603290 | 06-22B | | 5 | 8603390 | 06-19 | | 12 |
| | 06-23B | | 3 | 8603391 | 06-19 | | 14 |
| 8603291 | 06-22B | | 5 | 8603392 | 06-19 | | 15 |
| | 06-23B | | 3 | 8603393 | 06-20 | | 1 |
| 8603292 | 06-04 | | 1 | 8603395 | 06-20 | | 2 |
| 8603293 | 06-04 | | 2 | 8603396 | 06-03 | | 5 |
| 8603294 | 06-04 | | 8 | | 06-20 | | 3 |

| Number | Figure | Sequence | Ref. | Number | Figure | Sequence | Ref. |
|---|---|---|---|---|---|---|---|
| 8603397 | 06-20 | | 4 | 8603551 | 06-22A | | 14 |
| 8603398 | 06-20 | | 6 | | 06-23A | | 15 |
| 8603399 | 06-20 | | 7 | 8603552 | 06-22A | | 16 |
| 8603400 | 06-20 | | 8 | | 06-23A | | 17 |
| 8603401 | 06-20 | | 9 | 8603555 | 06-22A | | 29 |
| 8603402 | 06-20 | | 11 | 8603559 | 06-22E | | 3 |
| 8603403 | 06-03 | | 2 | | 06-23E | | 3 |
| 8603404 | 06-03 | | 3 | 8603560 | 06-22E | | 4 |
| 8603405 | 06-04 | | 13 | | 06-23E | | 4 |
| 8603406 | 06-08 | | 1 | 8603562 | 06-22E | | 6 |
| 8603407 | 06-08 | | 2 | | 06-23E | | 6 |
| | 06-09 | | 2 | 8603563 | 06-22E | | 7 |
| | 06-10 | | 2 | 8603564 | 06-22E | | 8 |
| | 06-11 | | 2 | 8603565 | 06-22E | | 10 |
| | 06-12 | | 2 | | 06-23E | | 10 |
| | 06-13 | | 2 | 8603566 | 06-22E | | 11 |
| 8603430 | 06-08 | | 4 | | 06-23E | | 11 |
| 8603431 | 06-08 | | 5 | 8603567 | 06-22E | | 12 |
| 8603432 | 06-08 | | 6 | | 06-23E | | 12 |
| 8603434 | 06-08 | | 9 | 8603568 | 06-22E | | 14 |
| 8603435 | 06-08 | | 10 | | 06-23E | | 14 |
| | 06-09 | | 10 | 8603571 | 06-22E | | 17 |
| | 06-10 | | 9 | | 06-23E | | 17 |
| | 06-11 | | 12 | 8603572 | 06-22E | | 18 |
| | 06-12 | | 9 | | 06-23E | | 18 |
| | 06-13 | | 9 | 8603575 | 06-22E | | 21 |
| 8603436 | 06-08 | | 11 | | 06-23E | | 21 |
| | 06-09 | | 11 | 8603577 | 06-22D | | 3 |
| | 06-10 | | 11 | | 06-23D | | 3 |
| | 06-11 | | 13 | 8603579 | 06-22D | | 5 |
| | 06-12 | | 10 | | 06-23D | | 5 |
| | 06-13 | | 10 | 8603580 | 06-22D | | 6 |
| 8603437 | 06-09 | | 1 | | 06-23D | | 6 |
| 8603438 | 06-09 | | 4 | 8603582 | 06-22D | | 8 |
| | 06-10 | | 4 | | 06-23D | | 8 |
| | 06-11 | | 7 | 8603583 | 06-22D | | 10 |
| 8603439 | 06-09 | | 5 | | 06-23D | | 10 |
| | 06-10 | | 5 | 8603584 | 06-22D | | 11 |
| | 06-11 | | 6 | | 06-23D | | 11 |
| 8603440 | 06-09 | | 6 | 8603585 | 06-22D | | 14 |
| | 06-10 | | 6 | | 06-23D | | 14 |
| | 06-11 | | 5 | 8603594 | 06-22B | | 14 |
| 8603441 | 06-09 | | 7 | 8603619 | 06-22A | | 25 |
| | 06-10 | | 7 | | 06-23A | | 26 |
| | 06-11 | | 8 | 8603622 | 06-20 | | 10 |
| 8603442 | 06-09 | | 9 | 8603623 | 06-17 | | 11 |
| 8603443 | 06-10 | | 1 | 8603624 | 06-17 | | 16 |
| 8603444 | 06-10 | | 8 | 8603625 | 06-17 | | 20 |
| 8603445 | 06-11 | | 1 | 8603628 | 06-18 | | 5 |
| 8603446 | 06-11 | | 3 | 8603629 | 06-20 | | 6A |
| 8603447 | 06-11 | | 9 | 8603630 | 07-01 | | |
| 8603448 | 06-12 | | 1 | 8603631 | 07-01 | | 25 |
| 8603449 | 06-12 | | 3 | 8603633 | 06-04 | | 6 |
| | 06-13 | | 3 | 8603635 | 06-04 | | 12 |
| 8603450 | 06-12 | | 4 | 8603636 | 06-04 | | 14 |
| | 06-13 | | 4 | 8603637 | 06-04 | | 15 |
| 8603452 | 06-12 | | 7 | 8603640 | 06-06 | | 5 |
| | 06-13 | | 7 | 8603643 | 06-08 | | 7 |
| 8603457 | 06-13 | | 1 | 8603645 | 06-09 | | 8 |
| 8603466 | 06-04 | | 4 | 8603646 | 06-11 | | 10 |
| 8603469 | 06-06 | | 4 | 8603649 | 07-01 | | 2 |
| 8603499 | 06-13 | | 11 | 8603650 | 07-01 | | 3 |
| 8603527 | 06-15 | | 6 | 8603651 | 06-14 | | 5 |
| | 06-22E | | 13 | 8603652 | 07-01 | | 8 |
| | 06-23E | | 13 | 8603653 | 07-01 | | 9 |
| 8603533 | 06-16 | | 14 | 8603654 | 07-01 | | 10 |
| 8603534 | 06-16 | | 13 | 8603655 | 06-15 | | 1 |
| 8603537 | 06-16 | | 10 | 8603656 | 06-15 | | 5 |
| 8603538 | 06-17 | | 17 | 8603657 | 06-15 | | 8 |
| 8603542 | 07-01 | | 27 | 8603658 | 06-15 | | 9 |
| 8603543 | 06-22B | | 1 | 8603664 | 06-08 | | 3 |
| 8603545 | 06-22C | | 2 | 8603665 | 06-09 | | 3 |
| 8603546 | 06-22C | | 1 | | 06-10 | | 3 |
| 8603548 | 06-22C | | 14 | 8603666 | 06-12 | | 8 |
| 8603549 | 06-22A | | 5 | | 06-13 | | 8 |
| | 06-23A | | 6 | 8603668 | 06-22A | | 28 |
| 8603550 | 06-22A | | 7 | 8603669 | 06-22A | | 30 |
| | 06-23A | | 8 | | 06-23A | | 32 |

| Number | Figure | Sequence | Ref. | Number | Figure | Sequence | Ref. |
|---|---|---|---|---|---|---|---|
| 8603670 | 06-22A | | 2 | 8603748 | 06-23B | | 10 |
| | 06-23A | | 2 | 8603749 | 06-23B | | 10 |
| 8603673 | 06-22E | | 2 | 8603750 | 06-23B | | 10 |
| | 06-23E | | 2 | 8603751 | 06-23B | | 10 |
| 8603674 | 06-22E | | 5 | 8603752 | 06-23B | | 10 |
| | 06-23E | | 5 | 8603753 | 06-23B | | 10 |
| 8603675 | 06-22E | | 9 | 8603754 | 06-23B | | 10 |
| | 06-23E | | 9 | 8603755 | 06-23B | | 10 |
| 8603677 | 06-23B | | 1 | 8603756 | 06-23B | | 10 |
| 8603678 | 06-23B | | 4 | 8603757 | 06-23B | | 10 |
| 8603679 | 06-23B | | 5 | 8603758 | 06-23B | | 10 |
| 8603680 | 06-23B | | 6 | 8603759 | 06-23B | | 10 |
| 8603681 | 06-23B | | 9 | 8603760 | 06-23B | | 10 |
| 8603682 | 06-23B | | 13 | 8603761 | 06-23B | | 10 |
| 8603683 | 06-23B | | 14 | 8603762 | 06-23B | | 10 |
| 8603684 | 06-23B | | 12 | 8603763 | 06-23B | | 10 |
| 8603685 | 06-23B | | 11 | 8603764 | 06-23B | | 10 |
| 8603687 | 06-23A | | 4 | 8603765 | 06-23B | | 10 |
| 8603690 | 06-23A | | 31 | 8603766 | 06-23B | | 10 |
| 8603691 | 06-23E | | 7 | 8603767 | 06-23B | | 10 |
| 8603692 | 06-23E | | 8 | 8603768 | 06-23B | | 10 |
| 8603694 | 06-22A | | 26 | 8603769 | 06-23B | | 10 |
| | 06-23A | | 27 | 8603770 | 06-23B | | 10 |
| 8603695 | 06-23A | | 5 | 8603771 | 06-23B | | 10 |
| 8603696 | 06-22A | | 22 | 8603772 | 06-23B | | 10 |
| | 06-23A | | 23 | 8603773 | 06-23B | | 10 |
| 8603699 | 07-01 | | 11 | 8603774 | 06-23B | | 10 |
| 8603700 | 07-01 | | 12 | 8603775 | 06-23B | | 10 |
| 8603701 | 07-01 | | 13 | 8603776 | 06-23B | | 10 |
| 8603702 | 07-01 | | 15 | 8603778 | 06-05 | | 8 |
| 8603703 | 07-01 | | 16 | | 06-19 | | 1 |
| 8603704 | 07-01 | | 17 | 8603779 | 06-06 | | 1A |
| 8603705 | 07-01 | | 18 | 8603786 | 06-17 | | 13 |
| 8603706 | 07-01 | | 19 | 8603787 | 06-17 | | 21 |
| 8603707 | 07-01 | | 20 | 8603788 | 06-22D | | 13 |
| 8603708 | 07-01 | | 22 | | 06-23D | | 13 |
| 8603709 | 07-01 | | 23 | 8603789 | 06-22B | | 3 |
| 8603710 | 07-01 | | 24 | 8603791 | 06-22B | | 3 |
| 8603711 | 07-01 | | 26 | 8603792 | 06-22B | | 3 |
| 8603713 | 06-23C | | 3 | 8603793 | 06-22B | | 3 |
| 8603714 | 06-23C | | 5 | 8603794 | 06-22B | | 3 |
| 8603715 | 06-23C | | 6 | 8603795 | 06-22B | | 9 |
| 8603716 | 06-23C | | 7 | | 06-23B | | 8 |
| 8603717 | 06-23C | | 8 | 8603796 | 06-22D | | 15 |
| 8603718 | 06-23C | | 9 | | 06-23D | | 15 |
| 8603719 | 06-23C | | 10 | 8603798 | 06-06 | | 3 |
| 8603720 | 06-23C | | 11 | 8603799 | 06-22A | | 20 |
| 8603721 | 06-23C | | 12 | | 06-23A | | 21 |
| 8603722 | 06-23C | | 13 | 8604229 | 06-04 | | 17 |
| 8603723 | 06-23C | | 14 | 8604231 | 02-06A | | 6 |
| 8603724 | 06-23C | | 15 | 8604255 | 08-30A | | |
| 8603725 | 06-22A | | 24 | | 08-31A | | |
| | 06-23A | | 25 | 8604270 | 06-25 | | 4 |
| 8603727 | 06-22A | | 15 | 8604284 | 05-06 | | 6 |
| | 06-22A | | 6 | 8604285 | 05-06 | | 5 |
| | 06-23A | | 16 | 8604430 | 05-06 | | 2 |
| 8603728 | 06-23A | | 7 | 8604432 | 06-28 | | 1 |
| 8603730 | 06-22A | | 30 | 8604443 | 03-04 | | 2C |
| | 06-23A | | 32 | 8604506 | 07-05 | | 4 |
| 8603731 | 06-22A | | 30 | 8604521 | 08-29B | | |
| | 06-23A | | 32 | 8604522 | 08-29B | | 6 |
| 8603732 | 06-22A | | 30 | 8604523 | 08-29B | | 7 |
| | 06-23A | | 32 | 8604525 | 08-29B | | 9 |
| 8603733 | 06-23B | | 10 | 8604527 | 08-29A | | 29 |
| 8603734 | 06-23B | | 10 | 8604528 | 08-29A | | 7 |
| 8603735 | 06-23B | | 10 | 8604529 | 08-29A | | 8 |
| 8603736 | 06-23B | | 10 | 8604530 | 08-29A | | |
| 8603737 | 06-23B | | 10 | 8604531 | 08-29A | | |
| 8603738 | 06-23B | | 10 | 8604532 | 08-29A | | 19 |
| 8603739 | 06-23B | | 10 | 8604533 | 08-29A | | 20 |
| 8603740 | 06-23B | | 10 | 8604534 | 08-29A | | 21 |
| 8603741 | 06-23B | | 10 | 8604535 | 08-29A | | 22 |
| 8603742 | 06-23B | | 10 | 8604536 | 08-29A | | |
| 8603743 | 06-23B | | 10 | 8604537 | 08-29A | | 26 |
| 8603744 | 06-23B | | 10 | 8604538 | 08-29A | | 27 |
| 8603745 | 06-23B | | 10 | 8604539 | 08-29A | | 28 |
| 8603746 | 06-23B | | 10 | 8604540 | 08-29B | | |
| 8603747 | 06-23B | | 10 | 8604541 | 08-29B | | 17 |

| Number | Figure | Sequence | Ref. |
|---|---|---|---|
| 8604542 | 08-29B | | 18 |
| 8604543 | 08-30A | | 1 |
| | 08-31A | | 1 |
| 8604544 | 08-30A | | 2 |
| | 08-31A | | 2 |
| 8604545 | 08-30A | | 14 |
| | 08-31A | | 14 |
| 8604546 | 08-30A | | |
| | 08-31A | | |
| 8604548 | 08-30A | | 20 |
| | 08-31A | | 20 |
| 8604549 | 08-30A | | 21 |
| | 08-31A | | 21 |
| 8604550 | 08-29B | | 13 |
| 8604551 | 08-32A | | |
| 8604552 | 08-32A | | 6 |
| 8604553 | 08-32A | | 7 |
| 8604554 | 08-32A | | |
| 8604555 | 08-32A | | 12 |
| 8604556 | 08-32A | | 13 |
| 8604557 | 08-32A | | 11 |
| 8604566 | 08-27B | | 40 |
| | 08-28B | | 40 |
| 8604567 | 08-27 | | 4 |
| | 08-27B | | 4 |
| | 08-28 | | 4 |
| | 08-28B | | 4 |
| 8604568 | 08-27 | | 5 |
| | 08-28 | | 5 |
| 8604574 | 08-27 | | 14 |
| | 08-28 | | 14 |
| 8604575 | 08-27 | | 15 |
| | 08-27A | | 15 |
| | 08-28 | | 15 |
| | 08-28A | | 15 |
| 8604576 | 08-27A | | 16 |
| | 08-28A | | 16 |
| 8604578 | 08-27A | | 22 |
| | 08-28A | | 22 |
| 8604579 | 08-27A | | 25 |
| | 08-27B | | 25 |
| | 08-28A | | 25 |
| | 08-28B | | 25 |
| 8604580 | 08-27A | | 26 |
| | 08-27B | | 26 |
| | 08-28A | | 26 |
| | 08-28B | | 26 |
| 8604581 | 08-27A | | 27 |
| | 08-28A | | 27 |
| 8604582 | 08-27A | | 28 |
| | 08-27B | | 28 |
| | 08-28A | | 28 |
| | 08-28B | | 28 |
| 8604583 | 08-27A | | 29 |
| | 08-27B | | 29 |
| | 08-28A | | 29 |
| | 08-28B | | 29 |
| 8604584 | 08-27A | | 33 |
| | 08-28A | | 33 |
| 8604586 | 08-27A | | 35 |
| | 08-28A | | 35 |
| 8604588 | 08-27 | | 6 |
| | 08-28 | | 6 |
| 8604590 | 08-27 | | 8 |
| | 08-28 | | 8 |
| 8604592 | 08-27 | | 13 |
| | 08-28 | | 13 |
| 8604593 | 08-30A | | |
| | 08-31A | | |
| 8604594 | 08-32A | | |
| 8604598 | 08-32A | | 16 |
| 8604599 | 08-32A | | 19 |
| 8604607 | 08-32A | | 17 |
| 8604608 | 08-32A | | 18 |
| 8604674 | 06-25 | | 2 |
| 8604675 | 06-25 | | 1 |
| | 06-26 | | 1 |
| | 06-27 | | 1 |
| 8604676 | 06-04 | | 3 |
| 8604677 | 06-04 | | 7 |
| 8604678 | 06-04 | | 10 |
| 8604714 | 06-06 | | 19 |
| | 06-16 | | 7 |
| 8604716 | 06-12 | | 5 |
| | 06-13 | | 5 |
| 8604758 | 08-27B | | 22 |
| | 08-28B | | 22 |
| 8604781 | 08-27B | | 27 |
| | 08-28B | | 27 |
| 8604802 | 08-02A | | |
| 8604876 | 08-30A | | 25 |
| | 08-31A | | 25 |
| 8604958 | 08-04 | | 29 |
| 8604959 | 08-04 | | 33 |
| 8604960 | 08-04 | | 5 |
| 8604962 | 08-04 | | 3 |
| 8604963 | 08-04 | | 9 |
| 8604964 | 08-04 | | 8 |
| 8604965 | 08-04 | | 7 |
| 8604993 | 09-26 | | 3 |
| 8605005 | 08-04 | | 1 |
| 8605006 | 08-04 | | 2 |
| 8605008 | 08-04 | | 4 |
| 8605010 | 08-04 | | 10 |
| 8605011 | 08-04 | | 11 |
| 8605012 | 08-04 | | 13 |
| 8605013 | 08-04 | | 14 |
| 8605014 | 08-04 | | 15 |
| 8605015 | 08-04 | | 16 |
| 8605016 | 08-04 | | 17 |
| 8605017 | 08-04 | | 18 |
| 8605018 | 08-04 | | 19 |
| 8605019 | 08-04 | | 20 |
| 8605020 | 08-04 | | 21 |
| 8605021 | 08-04 | | 22 |
| 8605022 | 08-04 | | 23 |
| 8605023 | 08-04 | | 24 |
| 8605024 | 08-04 | | 25 |
| 8605025 | 08-04 | | 26 |
| 8605026 | 08-04 | | 27 |
| 8605027 | 08-04 | | 28 |
| 8605029 | 08-04 | | 30 |
| 8605030 | 08-04 | | 31 |
| 8605031 | 08-04 | | 32 |
| 8605033 | 08-04 | | 34 |
| 8605034 | 08-04 | | 35 |
| 8605036 | 08-04 | | 37 |
| 8605037 | 08-04 | | 38 |
| 8605038 | 08-04 | | 39 |
| 8605039 | 08-04 | | 40 |
| 8605040 | 08-04 | | 41 |
| 8605041 | 08-04 | | 42 |
| 8605053 | 08-24A | | 1 |
| 8605056 | 08-24A | | 3 |
| 8605059 | 08-24A | | 5 |
| 8605062 | 08-24A | | 6 |
| 8605066 | 08-24A | | 9 |
| 8605070 | 08-23A | | 4 |
| 8605073 | 08-23A | | 1 |
| 8605078 | 02-06A | | 4 |
| 8605079 | 02-06A | | 5 |
| 8605139 | 02-06A | | 3 |
| 8605140 | 02-06A | | 2 |
| 8605158 | 05-08 | | 2 |
| 8605159 | 05-08 | | |
| 8605160 | 05-08 | | |
| 8605161 | 05-08 | | 16 |
| 8605163 | 05-08 | | |
| 8605216 | 08-14 | | 1C |
| 8605218 | 08-04 | | 36 |
| 8605261 | 05-10 | | |
| 8605272 | 06-22B | | |
| | 06-22C | | |
| 8605273 | 06-22B | | 15 |
| 8605274 | 06-23B | | |
| | 06-23C | | 1 |

| Number | Figure | Sequence | Ref. |
|---|---|---|---|
| 8605275 | 06-23B | | 15 |
| 8605279 | 06-04 | | 16 |
| 8605280 | 06-07 | | 2 |
| 8605281 | 06-07 | | 3 |
| 8605282 | 06-08 | | 8 |
| 8605283 | 06-06 | | 1 |
| 8605314 | 06-22D | | 2 |
| | 06-23D | | 2 |
| 8605315 | 06-22D | | 4 |
| | 06-23D | | 4 |
| 8605359 | 06-23C | | 2 |
| 8605367 | 08-05 | | 14 |
| 8605369 | 08-05 | | 17 |
| 8605371 | 09-17 | | 5 |
| 8605372 | 09-17 | | 4 |
| 8605484 | 09-26 | | 2 |
| 8605485 | 09-26 | | 1 |
| 8605577 | 08-27A | | 18 |
| | 08-28A | | 18 |
| 8605616 | 06-22B | | 12 |
| 8605631 | 06-23C | | 17 |
| 8605632 | 06-23C | | 18 |
| 8605633 | 06-23C | | 19 |
| 8605634 | 06-23C | | 20 |
| 8605635 | 06-23B | | 12 |
| 8605636 | 06-22A | | 15 |
| | 06-22A | | 6 |
| | 06-23A | | 16 |
| 8605637 | 06-23B | | 1 |
| 8605638 | 06-23A | | 30 |
| 8605639 | 06-23A | | 29 |
| 8605738 | 04-03 | | 5 |
| | 04-03A | | 5 |
| 8605784 | 04-01 | | 1 |
| 8605846 | 09-16 | | 6 |
| 8605898 | 09-12 | | 2 |
| | 09-13 | | 2 |
| 8606002 | 07-03 | | 17 |
| 8606005 | 08-01 | | 42 |
| 8606006 | 08-01 | | 41 |
| 8606092 | 08-05 | | 6 |
| | 08-06 | | 2 |
| 8606096 | 08-21 | | 4 |
| 8606098 | 08-05 | | 8 |
| | 08-06 | | 5 |
| 8606100 | 08-05 | | 5 |
| | 08-06 | | 6 |
| 8606124 | 09-15 | | 4 |
| 863-16070 | 06-23 | | 10 |
| 864-10025 | 09-23 | | 6 |
| 864-5016 | 08-01 | | 9 |
| 864-5020 | 05-02A | | 13 |
| 864-5060 | 08-27A | | 19 |
| | 08-28A | | 19 |
| 864-8025 | 07-05 | | 5 |
| 864-8030 | 07-05 | | 6 |
| 864-8080 | 08-31A | | 26 |
| 86503049 | 09-31 | | 9 |
| 86511825 | 04-14 | | 18 |
| 86511830 | 09-35A | | 21 |
| 86521965 | 08-01 | | 40 |
| 86579671 | 02-05 | | 10 |
| 86579678 | 05-09 | | 32 |
| 86579681 | 02-05 | | 9 |
| 86579682 | 02-05 | | 11 |
| 86579686 | 02-05 | | 12 |
| 86579691 | 05-09 | | 2 |
| 86579692 | 05-09 | | 35 |
| 86579694 | 05-05 | | 47 |
| 86579697 | 08-02 | | 3 |
| | 08-03 | | 11 |
| 86580179 | 08-05 | | 13 |
| 86580180 | 08-03 | | 14 |
| | 08-05 | | 12 |
| 86593173 | 08-03 | | 23 |
| 86597760 | 05-04 | | 24 |
| | 05-05 | | 6 |
| | 08-19B | | 1 |
| 86598102 | 05-05 | | 47A |
| 86636814 | 09-07 | | 31A |
| | 09-07A | | 31A |
| 86637954 | 06-25 | | 5 |
| 86639051 | 08-05 | | 9 |
| 86639053 | 08-03 | | 12 |
| 86639080 | 05-09 | | 6 |
| 86639083 | 05-09 | | 7 |
| 86639315 | 08-32 | | 15 |
| 86642312 | 08-16 | | 7 |
| | 08-17 | | 7 |
| | 08-18 | | 8 |
| 86982439 | 05-10 | | 21 |
| 86982444 | 08-15 | | 7 |
| | 08-16 | | 5 |
| | 08-17 | | 5 |
| | 08-18 | | 4 |
| 86983366 | 08-05 | | 11 |
| 86983386 | 08-05 | | 30 |
| | 08-05 | | 31 |
| 86983387 | 08-06 | | 21 |
| 86983688 | 08-08 | | 1 |
| | 08-09 | | 1 |
| 86983689 | 08-08 | | 2 |
| | 08-09 | | 2 |
| 86985567 | 08-03 | | 16 |
| 86988366 | 06-01 | | 16 |
| | 08-01 | | 15 |
| 86990311 | 06-24 | | 2 |
| | 06-27 | | |
| 86990312 | 06-24 | | 3 |
| | 06-26 | | |
| 86991231 | 06-23 | | 8 |
| 86991683 | 02-05 | | 1A |
| 87010650 | 08-05 | | 10 |
| 87016914 | 08-05 | | 2 |
| 87026656 | 04-24A | | 12 |
| 87300128 | 04-11A | | 1 |
| 87304560 | 09-03 | | 1 |
| 87304926 | 08-07 | | 21 |
| | 08-07A | | 17 |
| 87304928 | 08-07 | | 20 |
| | 08-07A | | 16 |
| 87304930 | 08-10 | | 9 |
| 87304933 | 08-10 | | 8 |
| 87307060 | 05-04 | | 1 |
| | 05-05 | | 3 |
| | 05-06 | | |
| 87307240 | 04-03 | | 3 |
| | 04-03A | | 3 |
| 87307825 | 03-01 | | 18 |
| 87307982 | 08-26 | | 1 |
| | 08-27 | | |
| 87307983 | 08-26A | | 1 |
| | 08-27 | | |
| 87307984 | 08-26B | | 1 |
| | 08-27 | | |
| 87307986 | 08-26 | | 1A |
| | 08-28 | | |
| 87307988 | 08-26A | | 1A |
| | 08-28 | | |
| 87307990 | 08-26B | | 1A |
| | 08-28 | | |
| 87308200 | 09-50 | | 6 |
| | 09-50A | | 6 |
| 87308338 | 08-25 | | 12 |
| 87308388 | 09-16 | | 13 |
| 87308668 | 09-16 | | 3 |
| 87308682 | 09-16 | | 2 |
| 87308853 | 05-09 | | 20 |
| 87308928 | 08-02A | | |
| | 08-21 | | 3 |
| 87308929 | 08-02A | | |
| 87308933 | 08-02A | | 10 |
| 87310689 | 09-03 | | 7 |
| 87311889 | 08-27 | | 1 |
| | 08-28 | | 1 |
| 87311891 | 08-27 | | 2 |

| Number | Figure | Sequence | Ref. | Number | Figure | Sequence | Ref. |
|---|---|---|---|---|---|---|---|
| 87311891 | 08-28 | | 2 | 87341835 | 06-23D | | 7 |
| 87311898 | 08-28A | | 23 | 87341862 | 04-04 | | 15 |
| 87311965 | 08-27 | | 11 | 87342166 | 07-03 | | 1 |
| | 08-28 | | 11 | | 07-04 | | |
| 87311972 | 08-27A | | 17 | 87342638 | 02-06 | | 24 |
| | 08-28A | | 17 | 87343733 | 09-07 | | 1 |
| 87311974 | 08-27A | | 20 | 87344091 | 09-07B | | 1 |
| | 08-28A | | 20 | 87344104 | 09-07B | | 11 |
| 87311975 | 08-27A | | 23 | 87344111 | 09-07B | | 10 |
| | 08-27B | | 39 | 87344119 | 09-07A | | 1 |
| | 08-28B | | 39 | 87347864 | 08-01 | | 35 |
| 87311976 | 08-27A | | 24 | 87347865 | 08-01 | | 36 |
| | 08-28A | | 24 | 87348711 | 04-07 | | 1 |
| 87311984 | 08-27A | | 30 | 87348713 | 04-11 | | 7 |
| | 08-27B | | 30 | 87349019 | 08-29 | | 4 |
| | 08-28A | | 30 | 87350044 | 04-13 | | 4 |
| | 08-28B | | 30 | 87350045 | 04-13 | | 9 |
| 87311985 | 08-27A | | 31 | 87350047 | 04-13 | | 11 |
| | 08-28A | | 31 | 87350048 | 04-13 | | 10 |
| 87311986 | 08-27A | | 32 | 87350049 | 04-13 | | 7 |
| | 08-28A | | 32 | 87350052 | 04-13 | | 2 |
| 87311988 | 08-27A | | 34 | 87350054 | 04-13 | | 1 |
| | 08-28A | | 34 | 87350055 | 04-13 | | 12 |
| 87311990 | 08-27A | | 36 | 87350062 | 04-11 | | 6 |
| | 08-28A | | 36 | 87350064 | 04-07 | | 25 |
| 87311991 | 08-27A | | 37 | 87350066 | 04-07 | | 24 |
| | 08-28A | | 37 | 87350087 | 04-06 | | 16 |
| 87312068 | 08-01 | | 5 | 87351646 | 05-09 | | 23 |
| 87312626 | 04-07 | | 26 | 87351705 | 04-18 | | 10 |
| 87315250 | 04-14 | | 5 | | 04-18 | | 4 |
| 87315269 | 04-07 | | 4 | 87351718 | 04-18 | | 9 |
| 87318062 | 08-15 | | 2 | 87351752 | 04-05 | | 1 |
| 87318612 | 04-14 | | 8 | 87351908 | 04-07 | | 2 |
| 87318620 | 04-14 | | 7 | 87352565 | 08-28A | | 23 |
| 87318627 | 04-07 | | 9 | 87353999 | 04-07 | | 3 |
| | 04-14 | | 4 | 87354000 | 04-11 | | 1 |
| 87318825 | 04-24A | | 5 | | 04-11A | | 4 |
| 87319529 | 05-06 | | 1 | 87354290 | 07-03C | | 12 |
| 87323556 | 08-01 | | 32 | | 07-03D | | 31 |
| 87323827 | 03-01 | | 12 | 87354477 | 08-32 | | 13 |
| 87323866 | 09-23 | | 7 | 87354480 | 07-03C | | 8 |
| 87324042 | 02-02 | | 2 | 87354481 | 07-03C | | 7 |
| 87324389 | 08-32 | | 11 | 87355957 | 09-20 | | 1 |
| 87324722 | 04-26 | | 10 | | 09-20A | | 1 |
| 87324868 | 04-26 | | 8 | 87355960 | 09-20A | | 2 |
| 87324875 | 04-26 | | 9 | 87355962 | 09-20A | | 3 |
| 87324906 | 08-05 | | 15 | 87358043 | 03-01 | | 3 |
| 87324979 | 04-26 | | 11 | 87358580 | 06-22 | | 1 |
| 87325208 | 02-02 | | 9 | | 06-22A | | |
| 87325760 | 04-08 | | 4 | | 06-22B | | |
| 87325996 | 07-03D | | 14 | | 06-22C | | |
| 87325997 | 07-03C | | 10 | | 06-22D | | |
| 87325999 | 07-03D | | 13 | | 06-22E | | |
| 87326000 | 07-03D | | 32 | 87358583 | 06-23 | | 1 |
| 87326008 | 07-03B | | 15 | | 06-23A | | |
| 87326262 | 07-03D | | 2 | | 06-23B | | |
| 87326263 | 07-03D | | 1 | | 06-23C | | |
| 87326268 | 07-03D | | 3 | | 06-23D | | |
| 87326981 | 08-19B | | 2 | | 06-23E | | |
| 87327335 | 04-07 | | 23 | 87358680 | 06-22D | | |
| | 04-14 | | 9 | | 06-22E | | |
| 87327346 | 04-07 | | 22 | 87358681 | 06-23D | | |
| | 04-14 | | 10 | | 06-23E | | |
| 87328377 | 08-19B | | 2A | 87358695 | 06-22E | | 19 |
| 87329253 | 04-26 | | 6 | | 06-23E | | 19 |
| 87330150 | 09-07 | | 2 | 87358698 | 06-22E | | 20 |
| | 09-07A | | 2 | | 06-23E | | 20 |
| 87331925 | 09-42B | | | 87358699 | 06-22E | | 15 |
| 87340015 | 02-04 | | 4 | | 06-23E | | 15 |
| 87340016 | 08-29 | | 1 | 87358702 | 06-22E | | 16 |
| | 08-29A | | | 87360067 | 07-03C | | 1 |
| | 08-29B | | | | 07-05 | | |
| 87340017 | 08-30 | | 1 | 87360593 | 09-23 | | 3 |
| | 08-30A | | | 87360602 | 09-23 | | 3 |
| 87340019 | 08-31 | | 1 | 87360678 | 09-23 | | 4 |
| | 08-31A | | | 87360690 | 09-23 | | 4 |
| 87340284 | 02-04 | | 3 | 87360870 | 04-06 | | 1 |
| 87341835 | 06-22D | | 7 | 87362185 | 08-19B | | 12 |

| Number | Figure | Sequence | Ref. |
|---|---|---|---|
| 87362190 | 08-19A | | 3 |
| 87362307 | 08-27 | | 14 |
| | 08-28 | | 14 |
| 87364063 | 07-04 | | |
| 87364605 | 04-14 | | 2 |
| 87365409 | 05-07 | | 2 |
| 87365413 | 05-07 | | 3 |
| 87365418 | 05-07 | | 4 |
| 87365420 | 05-07 | | 5 |
| 87365422 | 05-07 | | 6 |
| 87365425 | 05-07 | | 8 |
| 87365427 | 05-07 | | 10 |
| 87365429 | 05-07 | | 11 |
| | 05-07 | | 13 |
| 87365430 | 05-07 | | 12 |
| 87365709 | 02-08 | | 2 |
| 87365731 | 02-08 | | 1 |
| 87366688 | 08-16 | | |
| | 09-07 | | 3 |
| 87366695 | 08-17 | | |
| | 09-07A | | 4 |
| 87372088 | 08-29A | | 1 |
| 87372240 | 04-04 | | 5 |
| 87372241 | 04-14 | | 1 |
| 87372246 | 04-23 | | 1 |
| 87372247 | 04-23A | | 1 |
| 87372804 | 04-15 | | 2 |
| | 05-03 | | 17 |
| 87372814 | 04-15 | | 1 |
| | 05-02A | | 1 |
| 87373112 | 07-03 | | 5 |
| 87376662 | 04-04 | | 1 |
| 87377313 | 07-03C | | 6 |
| 87377337 | 07-03 | | 11 |
| 87377350 | 07-03 | | 10 |
| | 07-03B | | 4 |
| 87381953 | 02-03 | | 1 |
| 87382200 | 04-12 | | 1 |
| 87385246 | 05-09 | | 34 |
| 87389172 | 08-05 | | 1 |
| | 08-06 | | 3 |
| 87389199 | 09-19 | | 2 |
| 87389200 | 09-19 | | 2 |
| 87389202 | 09-19 | | 1 |
| 87389203 | 09-19 | | 1 |
| 87389244 | 08-21 | | 2 |
| 87389423 | 08-20 | | 20 |
| 87389871 | 07-03 | | 4 |
| 87393431 | 08-20 | | 10 |
| | 08-20A | | 1 |
| 87393434 | 08-20 | | 7 |
| 87393456 | 03-02 | | |
| 87393646 | 08-20 | | 1 |
| 87395399 | 09-07 | | 5 |
| | 09-07A | | 3 |
| 87396449 | 09-42D | | |
| 87396450 | 09-42D | | 44 |
| 87397077 | 09-55 | | 12 |
| 87397078 | 09-55 | | 13 |
| 87397079 | 09-55 | | 7 |
| 87397102 | 04-22 | | 1 |
| 87397416 | 04-02A | | 4 |
| 87398039 | 09-42 | | 1 |
| | 09-42A | | |
| 87398040 | 09-42 | | 4 |
| | 09-42C | | |
| | 09-42D | | |
| 87398113 | 07-05 | | 1 |
| 87398114 | 07-05 | | 2 |
| 87398116 | 07-05 | | 10 |
| 87398558 | 04-11A | | 3 |
| 87398773 | 09-17 | | 1 |
| 87400460 | 03-01 | | 6 |
| 87403305 | 08-11 | | 4 |
| 87403347 | 08-20 | | 8 |
| 87403649 | 08-15 | | 4B |
| 87403964 | 09-01 | | 1 |
| | 09-02 | | 1 |
| 87403965 | 09-01 | | 2 |
| 87403966 | 09-01 | | 4 |
| | 09-02 | | 4 |
| 87403968 | 09-02 | | 2 |
| 87403985 | 08-11 | | 9 |
| | 08-12 | | 9 |
| 87404018 | 08-14 | | 2 |
| 87404138 | 09-19A | | 3 |
| 87404588 | 09-49 | | 5 |
| 87405436 | 08-12 | | 8 |
| 87410351 | 06-04 | | 11 |
| 87415931 | 09-55 | | 15 |
| 87426452 | 02-01 | | 13 |
| 87427823 | 05-04 | | 19 |
| | 05-05 | | 22 |
| 87429186 | 09-55 | | 16 |
| 87430084 | 09-12 | | 10 |
| 87432252 | 09-16 | | 1 |
| 87432328 | 09-44B | | 13 |
| | 09-48 | | 15 |
| 87432563 | 08-29B | | |
| 87433494 | 05-05 | | 9 |
| 87434472 | 09-24 | | 4 |
| | 09-25 | | 4 |
| 87435224 | 03-04 | | 2D |
| 87435505 | 03-04 | | 2E |
| 87435526 | 03-02 | | 1 |
| 87436733 | 06-22A | | 21 |
| | 06-23A | | 22 |
| 87437102 | 09-04 | | 6 |
| | 09-05 | | 6 |
| | 09-06 | | 4 |
| 87437274 | 09-08A | | 7 |
| 87437916 | 06-22E | | 1 |
| | 06-23E | | 1 |
| 87439461 | 04-28 | | 1A |
| 87440551 | 09-49 | | 1 |
| 87441328 | 06-22D | | 8A |
| | 06-23D | | 8A |
| 87441342 | 09-07B | | 42 |
| 87441374 | 09-07B | | 36 |
| 87441882 | 09-07B | | 2C |
| 87442555 | 08-18 | | |
| | 09-07B | | 12 |
| 87442557 | 08-18 | | 1 |
| 87442559 | 08-18 | | 2 |
| 87442965 | 08-16 | | |
| 87443659 | 09-03 | | 2 |
| 87444057 | 09-07B | | 43 |
| 87444440 | 08-10 | | 2 |
| 87445353 | 09-07B | | 4 |
| 87445354 | 09-07B | | 9 |
| 87445798 | 08-07 | | 6 |
| 87445800 | 08-07A | | 4 |
| 87445804 | 08-07A | | 5 |
| 87445806 | 08-07 | | 7 |
| 87445809 | 08-10 | | 5 |
| 87446950 | 02-02 | | 7 |
| 87447892 | 08-07A | | 1 |
| 87447893 | 08-07 | | 1 |
| 87447895 | 08-07 | | 2 |
| 87447897 | 08-07A | | 2 |
| 87448548 | 08-06 | | 1 |
| 87448550 | 08-06 | | 20 |
| 87448665 | 08-13 | | 6 |
| 87448666 | 08-13 | | 5 |
| 87450043 | 06-23 | | 4 |
| 87450063 | 09-13 | | 10 |
| 87452278 | 08-20 | | 12 |
| 87452279 | 08-20 | | 16 |
| 87452280 | 08-20 | | 18 |
| 87452287 | 08-20 | | 19 |
| 87452362 | 05-09 | | 1 |
| | 05-10 | | |
| 87452365 | 05-10 | | 16 |
| 87452370 | 09-07B | | 2 |
| 87452603 | 08-07 | | 4 |
| 87452605 | 08-07A | | 3 |

| Number | Figure | Sequence | Ref. |
|---|---|---|---|
| 87452607 | 08-10 | | 7 |
| 87452747 | 08-07 | | 8 |
| | 08-07A | | 6 |
| | 08-10 | | 1 |
| 87453132 | 09-57 | | 16 |
| 87453133 | 09-58 | | 16 |
| 87453134 | 09-59 | | 16 |
| | 09-59 | | 19 |
| 87453761 | 08-20A | | 1A |
| 87453762 | 08-20A | | 1B |
| 87453765 | 08-20A | | 1C |
| 87453766 | 08-20A | | 1D |
| 87453767 | 08-20A | | 1E |
| 87453768 | 08-20A | | 1F |
| 87453769 | 08-20A | | 1G |
| 87453770 | 08-20A | | 1H |
| 87453771 | 08-20A | | 1J |
| 87453772 | 08-20A | | 1K |
| 87515559 | 08-32 | | 3 |
| 87515619 | 04-22 | | 5 |
| 87516506 | 08-29 | | 2 |
| | 08-30 | | 2 |
| | 08-31 | | 2 |
| 87517052 | 04-08 | | 1 |
| 87519004 | 09-54 | | 2 |
| 87519005 | 09-54 | | 3 |
| 87519006 | 09-54 | | 1 |
| 87519307 | 03-02 | | 2 |
| 87519452 | 06-03 | | 1 |
| 87519793 | 05-04 | | 26 |
| | 05-05 | | 37 |
| 87519795 | 05-09 | | 9 |
| 87521823 | 07-03D | | 15 |
| 87522101 | 06-24 | | 17 |
| 87522593 | 09-33A | | 23 |
| 87523729 | 08-32 | | 9 |
| 87524648 | 09-41 | | 6 |
| 87524649 | 09-55 | | 9 |
| 87525153 | 09-35A | | 2 |
| 87525374 | 03-01 | | 5 |
| 87528687 | 09-45A | | 17 |
| | 09-47A | | 17 |
| 87528688 | 09-45A | | 16 |
| | 09-47A | | 16 |
| 87528689 | 09-45A | | 9 |
| | 09-47A | | 9 |
| 87528970 | 09-44 | | 3 |
| | 09-44A | | 6 |
| 87528973 | 09-44 | | 6 |
| | 09-44A | | 3 |
| 87529279 | 07-03C | | 13 |
| | 07-03D | | 30 |
| 87529289 | 09-45A | | 27 |
| | 09-47A | | 29 |
| 87529444 | 09-45A | | 27A |
| | 09-47A | | 29A |
| 87529447 | 09-45A | | 27B |
| | 09-47A | | 29B |
| 87529453 | 09-45A | | 1 |
| | 09-47A | | 1 |
| 87529457 | 09-45A | | 2 |
| | 09-47A | | 2 |
| 87529458 | 09-45A | | 3 |
| | 09-47A | | 3 |
| 87529459 | 09-45A | | 4 |
| | 09-47A | | 4 |
| 87529462 | 09-45A | | 10 |
| | 09-47A | | 10 |
| 87529463 | 09-47A | | 31 |
| 87529474 | 09-47A | | 31A |
| 87529485 | 09-45A | | 22 |
| | 09-47A | | 22 |
| 87529487 | 09-45A | | 28 |
| | 09-47A | | 30 |
| 87529493 | 09-47A | | 24 |
| 87529495 | 09-47A | | 24A |
| 87529498 | 09-47A | | 24B |
| 87529505 | 09-47A | | 24C |
| 87529508 | 09-47A | | 24D |
| 87529536 | 09-45A | | 29 |
| 87529617 | 09-45A | | 14 |
| | 09-47A | | 14 |
| 87529621 | 09-47A | | 25 |
| 87529627 | 09-45A | | 27C |
| | 09-47A | | 29C |
| 87531205 | 09-17 | | 17 |
| 87532611 | 09-19 | | 9 |
| 87533290 | 08-20A | | 1L |
| 87534053 | 08-32 | | 1 |
| 87535471 | 02-06 | | 1 |
| 87535472 | 02-06 | | 16 |
| 87535473 | 02-06 | | 7 |
| 87536075 | 08-01 | | 17 |
| 87536091 | 02-02 | | 31 |
| 87537993 | 09-34 | | 13 |
| 87541330 | 08-01 | | 27 |
| 87542219 | 07-02 | | 3 |
| 87542710 | 03-04 | | 10 |
| | 04-06 | | 15 |
| 87545658 | 09-42 | | 17 |
| | 09-42C | | 44 |
| 87546325 | 09-56 | | 1 |
| 87546326 | 09-56 | | 2 |
| 87546327 | 09-56 | | 3 |
| 87546328 | 09-56 | | 4 |
| 87546329 | 09-56 | | 5 |
| 87546330 | 09-56 | | 6 |
| 87547181 | 04-02A | | 1 |
| | 04-02B | | 1 |
| 87547373 | 09-12 | | 1 |
| 87547376 | 09-13 | | 1 |
| 87549248 | 03-04A | | 6 |
| 87549589 | 04-03 | | 2 |
| | 04-03A | | 2 |
| 87550115 | 03-04 | | 1 |
| 87552485 | 02-02 | | 8 |
| 87552495 | 02-02 | | 4 |
| 87552496 | 02-04 | | 1 |
| 87552499 | 02-02 | | 20 |
| 87552502 | 03-01 | | 2 |
| 87552958 | 06-01 | | 3 |
| 87552959 | 06-01 | | 4 |
| 87552960 | 06-01 | | 2 |
| 87553862 | 06-24 | | 1 |
| | 06-28 | | |
| 87553865 | 06-24 | | 4 |
| | 06-25 | | |
| 87553867 | 06-24 | | 14 |
| 87553873 | 07-03A | | 10 |
| 87557216 | 02-06 | | 6 |
| 87557521 | 06-29 | | 1 |
| 87559559 | 05-04 | | 14 |
| | 05-05 | | 46 |
| 87559561 | 05-09 | | 18 |
| 87559562 | 05-09 | | 31 |
| 87559564 | 08-22 | | 2 |
| 87559565 | 08-22 | | 1 |
| 87559567 | 08-19 | | 3 |
| 87559571 | 09-14 | | 8 |
| 87559792 | 09-22 | | 3 |
| 87559793 | 09-22 | | 12 |
| 87559794 | 09-22 | | 13 |
| 87559796 | 09-24 | | 1 |
| 87559798 | 09-24 | | 2 |
| | 09-25 | | 2 |
| 87559816 | 09-22 | | 14 |
| 87559817 | 09-22 | | 15 |
| 87563048 | 08-29B | | 8 |
| 87567830 | 09-42D | | 36 |
| 87568400 | 07-02 | | 1 |
| 87571546 | 09-53 | | 1 |
| 87572394 | 06-01 | | 1 |
| | 06-03 | | |
| | 06-04 | | |
| | 06-05 | | |
| | 06-06 | | |

| Number | Figure | Sequence | Ref. |
|---|---|---|---|
| 87572394 | 06-07 | | |
| | 06-08 | | |
| | 06-09 | | |
| | 06-10 | | |
| | 06-11 | | |
| | 06-12 | | |
| | 06-13 | | |
| | 06-14 | | |
| | 06-15 | | |
| | 06-16 | | |
| | 06-17 | | |
| | 06-18 | | |
| | 06-19 | | |
| | 06-20 | | |
| | 07-01 | | |
| 87573767 | 04-16 | | 1 |
| 87577168 | 08-19B | | 6 |
| 87577181 | 08-03 | | 26 |
| 87577182 | 09-50 | | 1 |
| 87577184 | 09-50A | | 1 |
| 87577360 | 09-47A | | 19 |
| 87577361 | 09-45A | | 26 |
| | 09-47A | | 28 |
| 87577649 | 08-15 | | |
| | 09-07 | | 4 |
| | 09-07A | | 5 |
| | 09-07B | | 17 |
| 87578052 | 06-02 | | 9 |
| 87578053 | 06-02 | | 11 |
| 87578654 | 04-20 | | 1 |
| 87579384 | 09-21 | | 7 |
| 87579386 | 09-25 | | 1 |
| 87579400 | 02-01 | | 1 |
| | 02-09 | | |
| | 02-10 | | |
| | 02-11 | | |
| | 02-12 | | |
| | 02-13 | | |
| | 02-15 | | |
| | 02-16 | | |
| | 02-17 | | |
| | 02-18 | | |
| | 02-19 | | |
| | 02-20 | | |
| | 02-21 | | |
| | 02-22 | | |
| | 02-23 | | |
| | 02-24 | | |
| | 02-25 | | |
| | 02-26 | | |
| | 02-27 | | |
| | 02-28 | | |
| | 02-29 | | |
| | 02-30 | | |
| | 02-31 | | |
| | 02-32 | | |
| | 02-33 | | |
| | 02-33A | | |
| | 02-34 | | |
| | 02-35 | | |
| | 02-36 | | |
| | 02-37 | | |
| | 02-38 | | |
| | 02-39 | | |
| | 02-40 | | |
| | 02-41 | | |
| | 03-03 | | |
| | 03-05 | | |
| | 03-06 | | |
| | 03-07 | | |
| | 03-08 | | |
| | 03-09 | | |
| | 03-10 | | |
| | 03-11 | | |
| 87579405 | 09-20 | | 2 |
| 87579406 | 09-20 | | 3 |
| 87580058 | 04-24 | | 1 |
| 87580853 | 09-41 | | 4 |
| 87581480 | 05-05 | | 1 |
| | 05-08 | | |
| 87581481 | 05-08 | | 1 |
| 87581937 | 08-14 | | 12 |
| 87581938 | 09-03 | | 10 |
| 87582901 | 04-13 | | 19 |
| | 08-32 | | 18 |
| 87585139 | 08-01 | | 29 |
| 87585843 | 09-18 | | 1 |
| 87585844 | 09-18 | | 2 |
| 87586610 | 09-54 | | 4 |
| 87586611 | 09-54 | | 5 |
| 87586612 | 09-54 | | 5 |
| 87586616 | 09-55 | | 4 |
| 87586617 | 09-57 | | 20 |
| 87587637 | 09-47 | | 5 |
| 87588276 | 04-18 | | 3 |
| 87588859 | 09-57 | | 18 |
| 87590238 | 02-06 | | 4 |
| | 02-06A | | |
| 87591165 | 04-26 | | 20 |
| 87591668 | 04-20 | | 2 |
| 87591692 | 09-23 | | 1 |
| 87592785 | 04-10 | | 1 |
| 87597328 | 09-58 | | 21 |
| 87597329 | 09-59 | | 22 |
| 87597331 | 09-54 | | 6 |
| 87597587 | 09-23 | | 2 |
| 87597594 | 09-27 | | 2 |
| 87597597 | 09-27 | | 3 |
| 87597598 | 09-27 | | 4 |
| 87598264 | 09-27 | | 1 |
| 87598267 | 09-27 | | 8 |
| 87598730 | 08-01 | | 1 |
| 87600838 | 09-19A | | 2 |
| 87600841 | 04-17 | | 11 |
| 87605272 | 06-21 | | 1 |
| 87607227 | 07-03C | | 2 |
| 87609806 | 05-05 | | 2 |
| | 05-07 | | 1 |
| 87610851 | 09-43 | | 15 |
| 87613427 | 09-07B | | 3A |
| 87613429 | 09-07 | | 2A |
| 87613430 | 09-07 | | 5A |
| | 09-07A | | 3A |
| 87613431 | 09-07B | | 4B |
| 87613432 | 09-07B | | 3B |
| 87613435 | 09-07B | | 4A |
| 87613439 | 09-07 | | 1A |
| | 09-07A | | 1A |
| | 09-07B | | 1B |
| 87613442 | 09-07B | | 1C |
| 87613443 | 09-07B | | 1D |
| 87613444 | 09-07 | | 1B |
| | 09-07A | | 1B |
| 87613445 | 09-07B | | 1A |
| 87613498 | 04-21 | | 2 |
| | 09-40 | | 1 |
| 87617016 | 09-07B | | 3C |
| 87617083 | 03-04 | | 10A |
| | 04-06 | | 15A |
| 87620692 | 04-13 | | 15 |
| 87620991 | 09-20 | | 11 |
| | 09-20A | | 11 |
| 87623437 | 09-15 | | 17 |
| 87623438 | 09-15 | | 25 |
| 87625613 | 08-16 | | 1A |
| | 08-17 | | 1A |
| 87625614 | 08-18 | | 1A |
| 87625615 | 08-15 | | 1A |
| 87625616 | 09-17 | | 2 |
| 87627057 | 04-21 | | 1 |
| | 09-40 | | 4 |
| 87627075 | 09-35 | | 1 |
| | 09-35A | | |
| 87629990 | 08-03 | | 32 |
| 87629991 | 08-03 | | 13 |
| 87629992 | 09-49 | | 2 |

| Number | Figure | Sequence | Ref. |
|---|---|---|---|
| 87629993 | 05-04 | | 11 |
| 87638910 | 08-29 | | 3 |
| 87638911 | 08-30 | | 3 |
| 87638912 | 08-31 | | 3 |
| 87641237 | 09-17 | | 20 |
| 87643954 | 09-45A | | 12 |
| | 09-47A | | 12 |
| 87643955 | 09-45A | | 13 |
| | 09-47A | | 13 |
| 87643957 | 09-45A | | 8 |
| | 09-47A | | 8 |
| 87643958 | 09-45A | | 7 |
| | 09-47A | | 7 |
| 87644742 | 02-04 | | 2 |
| 87647668 | 09-55 | | 11 |
| 87651073 | 09-45 | | 7 |
| 87651217 | 09-49 | | 3 |
| 87651218 | 08-25 | | 13 |
| 87651219 | 08-25 | | 14 |
| 87651220 | 08-25 | | 15 |
| 87651221 | 08-25 | | 16 |
| 87651222 | 08-25 | | 17 |
| 87651223 | 08-25 | | 18 |
| 87651224 | 08-25 | | 19 |
| 87651225 | 08-25 | | 20 |
| 87651226 | 08-25 | | 21 |
| 87651227 | 05-04 | | 29 |
| 87652903 | 09-22 | | 1 |
| 87652904 | 09-22 | | 2 |
| 87652909 | 09-21 | | 1 |
| 87652910 | 09-21 | | 2 |
| 87653595 | 09-14 | | 1 |
| 87653616 | 06-01 | | 15 |
| 87653634 | 09-19A | | 1 |
| 87653912 | 05-05 | | 10 |
| 87653913 | 05-05 | | 13 |
| 87653914 | 05-05 | | 45 |
| 87653915 | 05-05 | | 43 |
| 87653917 | 05-05 | | 41 |
| 87653919 | 05-05 | | 39 |
| 87653921 | 05-05 | | 42 |
| 87653923 | 05-04 | | 27 |
| | 05-05 | | 38 |
| 87653924 | 04-17 | | 3 |
| 87653928 | 05-05 | | 44 |
| 87653975 | 05-05 | | 40 |
| 87655474 | 04-03 | | 1 |
| | 04-03A | | 1 |
| 87663487 | 09-24 | | 3 |
| 87663490 | 09-25 | | 3 |
| 87664495 | 05-09 | | 4 |
| 87664498 | 05-09 | | 36 |
| 87803200 | 03-03 | | 1 |
| 87803261 | 02-11 | | 1 |
| 892-11004 | 04-02A | | 17 |
| | 04-02B | | 15 |
| 892-11006 | 04-20 | | 3 |
| | 04-27 | | 7 |
| | 05-02A | | 18 |
| | 09-16 | | 15 |
| | 09-44 | | 4 |
| | 09-44A | | 4 |
| 892-11008 | 02-02 | | 11 |
| | 02-03 | | 9 |
| | 04-11 | | 10 |
| | 06-02 | | 3 |
| | 07-05 | | 7 |
| | 08-01 | | 11 |
| | 08-01A | | 3 |
| | 08-19 | | 5 |
| | 08-27 | | 3 |
| | 08-28 | | 3 |
| | 09-16 | | 17 |
| | 09-48 | | 13 |
| 892-11010 | 03-01 | | 27 |
| | 05-09 | | 16 |
| | 08-10 | | 19 |
| | 09-03 | | 4 |
| 892-11010 | 09-04 | | 3 |
| | 09-05 | | 3 |
| | 09-06 | | 6 |
| | 09-07B | | 38 |
| | 09-12 | | 4 |
| | 09-13 | | 4 |
| 892-11012 | 04-22 | | 3 |
| | 09-12 | | 12 |
| | 09-13 | | 12 |
| | 09-14 | | 6 |
| | 09-27 | | 6 |
| 893-11010 | 05-01 | | 2 |
| 895-11003 | 04-04 | | 26 |
| 895-11004 | 04-04 | | 29 |
| | 04-14 | | 16 |
| 895-11005 | 04-06 | | 14 |
| | 05-02A | | 7 |
| | 08-01 | | 2 |
| | 09-33 | | 4 |
| | 09-34 | | 20 |
| | 09-35 | | 15 |
| 895-11006 | 04-03 | | 11 |
| | 04-03A | | 11 |
| | 04-04 | | 9 |
| | 04-06 | | 6 |
| | 04-07 | | 6 |
| | 04-10 | | 6 |
| | 04-11 | | 2 |
| | 04-11A | | 6 |
| | 04-14 | | 12 |
| | 05-02A | | 12 |
| | 05-03 | | 22 |
| | 09-31 | | 7 |
| | 09-31A | | 9 |
| | 09-34 | | 23 |
| | 09-36 | | 7 |
| | 09-39 | | 9 |
| | 09-43 | | 13 |
| | 09-43A | | 28 |
| 895-11008 | 04-06 | | 3 |
| | 04-07 | | 13 |
| | 04-09 | | 7 |
| | 04-11A | | 7 |
| | 04-12 | | 3 |
| | 04-18 | | 8 |
| | 04-23A | | 5 |
| | 04-26 | | 3 |
| | 05-05 | | 14 |
| | 08-01 | | 21 |
| | 09-43 | | 4 |
| | 09-43A | | 17 |
| | 09-45 | | 5 |
| | 09-46 | | 10 |
| | 09-47 | | 7 |
| | 09-49 | | 10 |
| 895-11010 | 04-03 | | 8 |
| | 04-03A | | 8 |
| | 04-05 | | 10 |
| | 04-17 | | 12 |
| | 05-01 | | 1 |
| | 06-24 | | 21 |
| | 07-01 | | 7 |
| | 07-03A | | 7 |
| | 08-03 | | 28 |
| | 08-05 | | 20 |
| | 08-06 | | 22 |
| | 08-07 | | 22 |
| | 08-07A | | 18 |
| | 08-10 | | 14 |
| | 08-11 | | 7 |
| | 08-12 | | 3 |
| | 08-13 | | 8 |
| | 08-19B | | 8 |
| | 08-33 | | 5 |
| | 09-03 | | 3 |
| | 09-07 | | 29 |
| | 09-07A | | 29 |
| | 09-07B | | 37 |

| Number | Figure | Sequence | Ref. |
|---|---|---|---|
| 895-11010 | 09-12 | | 3 |
| | 09-13 | | 3 |
| | 09-21 | | 10 |
| | 09-22 | | 5 |
| | 09-24 | | 5 |
| | 09-25 | | 5 |
| | 09-34 | | 27 |
| | 09-36 | | 4 |
| | 09-42 | | 3 |
| 895-11012 | 04-02B | | 7 |
| | 08-03 | | 7 |
| | 09-36 | | 13 |
| 895-11014 | 05-01 | | 7 |
| | 08-03 | | 17 |
| 895-15006 | 04-27 | | 2 |
| | 09-16 | | 21 |
| 895-15008 | 03-01 | | 37 |
| | 03-04A | | 3 |
| | 04-05 | | 14 |
| | 04-07 | | 20 |
| | 04-25 | | 4 |
| | 04-25A | | 4 |
| | 04-28 | | 5 |
| | 07-03B | | 19 |
| | 07-03D | | 24 |
| | 08-01 | | 24 |
| | 08-23 | | 3 |
| | 08-24 | | 5 |
| | 09-19 | | 6 |
| | 09-22 | | 20 |
| | 09-44 | | 7 |
| | 09-44A | | 7 |
| 895-15010 | 02-03 | | 11 |
| | 02-14 | | 2 |
| | 04-05 | | 5 |
| | 04-06 | | 9 |
| | 04-10 | | 9 |
| | 05-04 | | 17 |
| | 05-05 | | 25 |
| | 07-03A | | 15 |
| | 08-03 | | 38 |
| | 08-05 | | 21 |
| | 08-07 | | 23 |
| | 08-07A | | 19 |
| | 08-14 | | 4 |
| | 08-19A | | 7 |
| | 09-16 | | 23 |
| 895-15012 | 09-14 | | 5 |
| 895-18010 | 04-05 | | 18 |
| | 05-05 | | 20 |
| | 09-16 | | 8 |
| | 09-42 | | 14 |
| | 09-42 | | 8 |
| | 09-44B | | 2 |
| | 09-48 | | 2 |
| | 09-49 | | 6 |
| 895-18012 | 05-05 | | 5 |
| 895-25005 | 05-02A | | 8 |
| | 09-33A | | 35 |
| 895-25006 | 04-09 | | 3 |
| | 04-26 | | 18 |
| | 04-27 | | 4 |
| | 05-04 | | 22 |
| | 05-05 | | 16 |
| | 08-14 | | 6 |
| | 08-29 | | 11 |
| | 08-30 | | 10 |
| | 08-31 | | 10 |
| | 08-32 | | 4 |
| | 09-31A | | 6 |
| | 09-52 | | 7 |
| 895-25008 | 09-20 | | 9 |
| | 09-20A | | 9 |
| | 09-22 | | 19 |
| 895-25010 | 09-23 | | 5 |
| 896-11006 | 05-04 | | 20 |
| | 05-05 | | 18 |
| 896-11008 | 02-06 | | 13 |
| 896-11008 | 02-42 | | 2 |
| | 04-02A | | 21 |
| 896-11010 | 03-01 | | 10 |
| | 04-02A | | 6 |
| | 04-02B | | 5 |
| | 05-09 | | 15 |
| | 06-24 | | 6 |
| | 09-01 | | 9 |
| | 09-02 | | 9 |
| 896-11012 | 02-01 | | 6 |
| | 02-05 | | 6 |
| | 02-06 | | 19 |
| | 02-08 | | 3 |
| | 03-01 | | 17 |
| | 04-02A | | 19 |
| | 04-02A | | 9 |
| | 04-05 | | 24 |
| | 04-18 | | 5 |
| | 04-26 | | 2 |
| | 06-24 | | 8 |
| | 07-03 | | 9 |
| | 09-01 | | 6 |
| | 09-02 | | 6 |
| | 09-12 | | 11 |
| | 09-13 | | 11 |
| | 09-14 | | 9 |
| | 09-15 | | 8 |
| | 09-17 | | 9 |
| | 09-19A | | 5 |
| | 09-22 | | 16 |
| 896-11016 | 02-01 | | 7 |
| | 03-01 | | 14 |
| | 06-01 | | 11 |
| | 06-23 | | 9 |
| | 08-03 | | 2 |
| | 09-08A | | 11 |
| | 09-17 | | 13 |
| | 09-21 | | 3 |
| | 09-22 | | 9 |
| | 09-42 | | 11 |
| | 09-42 | | 18 |
| 896-11020 | 06-01 | | 5 |
| | 09-07B | | 29 |
| 896-11022 | 06-22 | | 3 |
| | 06-23 | | 3 |
| 896-11024 | 06-21 | | 2 |
| | 06-22 | | 5 |
| | 09-50 | | 2 |
| | 09-50A | | 2 |
| 896-15010 | 02-06 | | 2 |
| | 03-01 | | 21 |
| | 06-24 | | 15 |
| | 08-13 | | 7 |
| | 08-20 | | 3 |
| | 08-26 | | 2 |
| | 08-26A | | 2 |
| | 08-26B | | 2 |
| 896-15012 | 03-04 | | 3 |
| | 06-24 | | 19 |
| | 07-03B | | 16 |
| | 08-11 | | 8 |
| | 08-12 | | 6 |
| | 08-20 | | 2 |
| | 09-07 | | 27 |
| | 09-07A | | 27 |
| | 09-17 | | 7 |
| | 09-20 | | 4 |
| | 09-20A | | 4 |
| | 09-21 | | 8 |
| | 09-24 | | 8 |
| | 09-25 | | 8 |
| | 09-27 | | 5 |
| | 09-52 | | 2 |
| 896-16006 | 09-39 | | 6 |
| 97399C1 | 09-33A | | 31 |
| 9960692 | 09-42A | | 21 |
| | 09-42A | | 25 |
| | 09-42A | | 47 |

| Number | Figure | Sequence | Ref. |
|---|---|---|---|
| 9960692 | 09-42C | | 21 |
| | 09-42C | | 25 |
| | 09-42C | | 47 |
| 9960755 | 09-42B | | 16A |
| 9966146 | 09-42B | | |
| 9992069 | 05-05 | | 47B |
| 9993141 | 02-05 | | 8A |
| A170241 | 02-02 | | 1A |
| A171099 | 08-01 | | 26 |
| A176482 | 04-25 | | 1 |
| A181436 | 09-52 | | 5 |
| A184395 | 08-01 | | 25 |
| A186194 | 04-02 | | 12 |
| A187504 | 04-02 | | 17 |
| A189616 | 04-02A | | 3 |
| | 04-02B | | 3 |
| A19101 | 06-29 | | 2 |
| A20058 | 06-29 | | 3 |
| A30338 | 09-14 | | 4 |
| A57658 | 06-23 | | 6 |
| D121972 | 04-09 | | 2 |
| D137626 | 06-24 | | 5 |
| D137627 | 06-24 | | 13 |
| D35859 | 09-19A | | 4 |
| D44696 | 02-06 | | 20 |
| D55216 | 09-21 | | 6 |
| | 09-22 | | 24 |
| D95143 | 05-10 | | 14 |
| D95145 | 08-18 | | 6 |
| | 09-07B | | 8 |
| D95146 | 08-15 | | 3B |
| | 08-15 | | 5 |
| | 08-18 | | 5B |
| | 09-07 | | 6 |
| | 09-07A | | 6 |
| | 09-07B | | 5 |
| D95147 | 08-16 | | 6 |
| | 08-17 | | 6 |
| | 09-07 | | 7 |
| | 09-07A | | 7 |
| | 09-07B | | 6 |
| D95148 | 08-16 | | 2C |
| | 08-17 | | 2C |
| | 09-07 | | 8 |
| | 09-07A | | 8 |
| | 09-07B | | 7 |
| E134402 | 09-55 | | 8 |
| E135229 | 06-01 | | 14 |
| F22316 | 04-14 | | 11 |
| F53473 | 05-09 | | 27 |
| | 06-24 | | 23 |
| | 09-07 | | 32 |
| | 09-07A | | 32 |
| | 09-07B | | 41 |
| F64046 | 09-33A | | 21 |
| | 09-34 | | 27 |
| | 09-35 | | 2 |
| F64198 | 09-33A | | 32 |
| | 09-34 | | 15 |
| G100444 | 05-10 | | 17 |
| G100449 | 05-10 | | 19 |
| G101995 | 08-18 | | 3C |
| G102092 | 08-16 | | 4B |
| | 08-17 | | 4B |
| G102425 | 05-10 | | 10 |
| G107970 | 08-16 | | 2E |
| | 08-17 | | 2E |
| G109298 | 05-10 | | 11 |
| G109300 | 08-18 | | 5E |
| G109395 | 08-15 | | 6 |
| H434163 | 05-04 | | 5 |
| | 05-05 | | 29 |
| J903652 | 02-08 | | 6 |
| J911901 | 02-02 | | 28 |
| J918275 | 04-02 | | 34 |
| L101181 | 03-01 | | 33 |
| L106070 | 06-25 | | 3 |
| L11541 | 02-02 | | 21 |
| L11541 | 02-42 | | 5 |
| | 03-02 | | 4 |
| | 03-04A | | 8 |
| | 04-03A | | 15 |
| | 04-06 | | 8 |
| | 04-08 | | 5 |
| | 04-09 | | 11 |
| | 04-10 | | 14 |
| | 04-11 | | 8 |
| | 04-17 | | 9 |
| | 04-28 | | 4 |
| | 05-09 | | 29 |
| | 07-03B | | 9 |
| | 07-03C | | 9 |
| | 08-14 | | 13 |
| | 09-03 | | 11 |
| | 09-07B | | 44 |
| L115548 | 02-02 | | 16 |
| | 08-03 | | 33 |
| L115549 | 02-03 | | 6 |
| | 02-04 | | 5 |
| L116943 | 06-24 | | 7 |
| L118978 | 09-15 | | 18 |
| L118980 | 09-15 | | 28 |
| L118982 | 09-15 | | 29 |
| L118983 | 09-15 | | 27 |
| L118986 | 09-15 | | 13 |
| L118987 | 09-15 | | 11 |
| L118989 | 09-15 | | 21 |
| L118990 | 09-15 | | 20 |
| L119202 | 09-15 | | 12 |
| L119203 | 09-15 | | 22 |
| L124221 | 04-25A | | 2 |
| L125100 | 05-09 | | 24 |
| | 09-07 | | 16 |
| | 09-07A | | 16 |
| | 09-07B | | 18 |
| | 09-08 | | 3 |
| | 09-08A | | 2 |
| | 09-15 | | 3 |
| L125836 | 08-01 | | 14 |
| L125983 | 09-01 | | 3 |
| | 09-02 | | 3 |
| L126051 | 04-05 | | 2 |
| | 04-26 | | 13 |
| L126168 | 09-15 | | 24 |
| L126256 | 04-26 | | 7 |
| L126713 | 04-17 | | 5 |
| | 04-26 | | 17 |
| L126936 | 03-01 | | 26 |
| | 04-09 | | 10 |
| L127108 | 09-07B | | 25 |
| | 09-08 | | 12 |
| | 09-08A | | 10 |
| L127553 | 04-05 | | 7 |
| L127554 | 04-03 | | 13 |
| | 04-03A | | 13 |
| | 04-04 | | 19 |
| | 04-05 | | 3 |
| | 04-17 | | 6 |
| | 04-26 | | 14 |
| | 05-02A | | 11 |
| L127555 | 04-05 | | 8 |
| L127676 | 04-26 | | 12 |
| L127771 | 02-06 | | 10 |
| L127996 | 05-01 | | 6 |
| L128375 | 09-15 | | 30 |
| L128472 | 08-20 | | 5 |
| L128515 | 08-02 | | 1 |
| L129303 | 05-05 | | 49 |
| L129707 | 04-17 | | 4 |
| L14386 | 08-03 | | 6 |
| L18331 | 04-04 | | 30 |
| | 04-26 | | 16 |
| | 04-27 | | 9 |
| | 08-11 | | 6 |
| | 08-12 | | 7 |
| | 08-13 | | 10 |

| Number | Figure | Sequence | Ref. |
|---|---|---|---|
| L18331 | 09-17 | | 21 |
| L302850 | 09-51 | | 1 |
| L30669 | 02-07 | | 3 |
| L30671 | 02-07 | | 2 |
| L51769 | 04-25A | | 1 |
| L54694 | 05-09 | | 30 |
| | 06-24 | | 24 |
| | 09-07 | | 31 |
| | 09-07A | | 31 |
| N7673 | 04-20 | | 6 |
| NSS | 02-06A | | 1 |
| | 02-07 | | 1 |
| | 02-15 | | 8 |
| | 02-20 | | 1 |
| | 02-24 | | 8 |
| | 02-33A | | 4 |
| | 02-33A | | 5 |
| | 02-36 | | 1 |
| | 03-02 | | 3 |
| | 03-03 | | 3 |
| | 03-05 | | 5 |
| | 03-08 | | 4 |
| | 04-15 | | 14 |
| | 04-15 | | 17 |
| | 04-19 | | 1 |
| | 04-24 | | 2 |
| | 04-24 | | 3 |
| | 05-02 | | 25 |
| | 05-08 | | 10 |
| | 05-08 | | 11 |
| | 05-08 | | 12 |
| | 05-08 | | 13 |
| | 05-08 | | 14 |
| | 05-08 | | 15 |
| | 05-08 | | 3 |
| | 05-08 | | 4 |
| | 05-08 | | 5 |
| | 05-08 | | 6 |
| | 05-08 | | 7 |
| | 05-08 | | 8 |
| | 05-08 | | 9 |
| | 05-10 | | 3 |
| | 06-22A | | 18 |
| | 06-23A | | 19 |
| | 06-25 | | 6 |
| | 07-01 | | 28 |
| | 07-04 | | 1 |
| | 07-04 | | 10 |
| | 07-04 | | 11 |
| | 07-04 | | 12 |
| | 07-04 | | 13 |
| | 07-04 | | 14 |
| | 07-04 | | 15 |
| | 07-04 | | 16 |
| | 07-04 | | 17 |
| | 07-04 | | 18 |
| | 07-04 | | 2 |
| | 07-04 | | 3 |
| | 07-04 | | 4 |
| | 07-04 | | 5 |
| | 07-04 | | 6 |
| | 07-04 | | 7 |
| | 07-04 | | 8 |
| | 07-04 | | 9 |
| | 07-05 | | 10A |
| | 07-05 | | 10B |
| | 07-05 | | 10C |
| | 08-02A | | 1 |
| | 08-02A | | 11 |
| | 08-02A | | 2 |
| | 08-02A | | 3 |
| | 08-04 | | 12 |
| | 08-14 | | 1A |
| | 08-14 | | 1B |
| | 08-15 | | |
| | 08-15 | | |
| | 08-15 | | 7A |
| | 08-16 | | 5A |
| NSS | 08-17 | | 5A |
| | 08-18 | | |
| | 08-18 | | |
| | 08-18 | | 4A |
| | 08-27 | | 10A |
| | 08-27 | | 10B |
| | 08-27 | | 10C |
| | 08-27 | | 10D |
| | 08-27 | | 11A |
| | 08-27 | | 13A |
| | 08-27 | | 13B |
| | 08-27 | | 13C |
| | 08-27 | | 13D |
| | 08-27 | | 13E |
| | 08-27 | | 13F |
| | 08-27 | | 15A |
| | 08-27 | | 15B |
| | 08-27 | | 41 |
| | 08-27 | | 42 |
| | 08-27 | | 6A |
| | 08-27 | | 6B |
| | 08-27 | | 6C |
| | 08-27 | | 6D |
| | 08-27 | | 6E |
| | 08-27 | | 6F |
| | 08-27 | | 8A |
| | 08-27 | | 8B |
| | 08-27 | | 8C |
| | 08-27 | | 8D |
| | 08-27 | | 8E |
| | 08-27 | | 8F |
| | 08-27A | | 15A |
| | 08-27A | | 15B |
| | 08-27B | | 16 |
| | 08-27B | | 40A |
| | 08-27B | | 40B |
| | 08-27B | | 40C |
| | 08-27B | | 40D |
| | 08-27B | | 42 |
| | 08-28 | | 10A |
| | 08-28 | | 10B |
| | 08-28 | | 10C |
| | 08-28 | | 10D |
| | 08-28 | | 11A |
| | 08-28 | | 13A |
| | 08-28 | | 13B |
| | 08-28 | | 13C |
| | 08-28 | | 13D |
| | 08-28 | | 13E |
| | 08-28 | | 13F |
| | 08-28 | | 15A |
| | 08-28 | | 15B |
| | 08-28 | | 41 |
| | 08-28 | | 42 |
| | 08-28 | | 6A |
| | 08-28 | | 6B |
| | 08-28 | | 6C |
| | 08-28 | | 6D |
| | 08-28 | | 6E |
| | 08-28 | | 6F |
| | 08-28 | | 8A |
| | 08-28 | | 8B |
| | 08-28 | | 8C |
| | 08-28 | | 8D |
| | 08-28 | | 8E |
| | 08-28 | | 8F |
| | 08-28A | | 15A |
| | 08-28A | | 15B |
| | 08-28B | | 16 |
| | 08-28B | | 40A |
| | 08-28B | | 40B |
| | 08-28B | | 40C |
| | 08-28B | | 40D |
| | 08-28B | | 42 |
| | 08-29A | | 10 |
| | 08-29A | | 11 |
| | 08-29A | | 12 |
| | 08-29A | | 13 |

| Number | Figure | Sequence | Ref. | Number | Figure | Sequence | Ref. |
|---|---|---|---|---|---|---|---|
| NSS | 08-29A | | 14 | NSS | 09-42B | | 5 |
| | 08-29A | | 15 | | 09-42B | | 8 |
| | 08-29A | | 16 | | 09-42B | | 9 |
| | 08-29A | | 17 | | 09-42C | | 30 |
| | 08-29A | | 18 | | 09-42C | | 5 |
| | 08-29A | | 23 | | 09-42C | | 59 |
| | 08-29A | | 24 | | 09-42C | | 68 |
| | 08-29A | | 25 | | 09-42C | | 70 |
| | 08-29A | | 9 | | 09-42C | | 72 |
| | 08-29B | | 1 | | 09-42C | | 74 |
| | 08-29B | | 10 | | 09-42C | | 76 |
| | 08-29B | | 11 | | 09-42D | | 11 |
| | 08-29B | | 12 | | 09-42D | | 12 |
| | 08-29B | | 14 | | 09-42D | | 14 |
| | 08-29B | | 15 | | 09-42D | | 15 |
| | 08-29B | | 16 | | 09-42D | | 16 |
| | 08-29B | | 2 | | 09-42D | | 18 |
| | 08-29B | | 3 | | 09-42D | | 2 |
| | 08-29B | | 4 | | 09-42D | | 20 |
| | 08-29B | | 5 | | 09-42D | | 21 |
| | 08-30A | | 10 | | 09-42D | | 23 |
| | 08-30A | | 11 | | 09-42D | | 28 |
| | 08-30A | | 12 | | 09-42D | | 33 |
| | 08-30A | | 13 | | 09-42D | | 37 |
| | 08-30A | | 15 | | 09-42D | | 38 |
| | 08-30A | | 16 | | 09-42D | | 40 |
| | 08-30A | | 17 | | 09-42D | | 41 |
| | 08-30A | | 18 | | 09-42D | | 45 |
| | 08-30A | | 19 | | 09-42D | | 46 |
| | 08-30A | | 22 | | 09-42D | | 47 |
| | 08-30A | | 23 | | 09-42D | | 5 |
| | 08-30A | | 24 | | 09-42D | | 51 |
| | 08-30A | | 3 | | 09-42D | | 52 |
| | 08-30A | | 4 | | 09-42D | | 6 |
| | 08-30A | | 5 | | 09-45A | | 11 |
| | 08-30A | | 6 | | 09-45A | | 15 |
| | 08-30A | | 7 | | 09-45A | | 18 |
| | 08-30A | | 8 | | 09-45A | | 20 |
| | 08-30A | | 9 | | 09-45A | | 21 |
| | 08-31A | | 10 | | 09-45A | | 23 |
| | 08-31A | | 11 | | 09-45A | | 24 |
| | 08-31A | | 12 | | 09-45A | | 25 |
| | 08-31A | | 13 | | 09-45A | | 5 |
| | 08-31A | | 15 | | 09-45A | | 6 |
| | 08-31A | | 16 | | 09-47A | | 11 |
| | 08-31A | | 17 | | 09-47A | | 15 |
| | 08-31A | | 18 | | 09-47A | | 18 |
| | 08-31A | | 19 | | 09-47A | | 20 |
| | 08-31A | | 22 | | 09-47A | | 21 |
| | 08-31A | | 23 | | 09-47A | | 23 |
| | 08-31A | | 24 | | 09-47A | | 26 |
| | 08-31A | | 3 | | 09-47A | | 27 |
| | 08-31A | | 4 | | 09-47A | | 5 |
| | 08-31A | | 5 | | 09-47A | | 6 |
| | 08-31A | | 6 | P0236317R | 06-11 | | 4 |
| | 08-31A | | 7 | R54047 | 09-33A | | 33 |
| | 08-31A | | 8 | R54363 | 04-26 | | 1 |
| | 08-31A | | 9 | R55242 | 09-46 | | 9 |
| | 08-32A | | 10 | REF | 02-05 | | |
| | 08-32A | | 14 | | 02-07 | | |
| | 08-32A | | 15 | | 04-11 | | |
| | 08-32A | | 2 | | 04-21 | | |
| | 08-32A | | 3 | | 04-24 | | |
| | 08-32A | | 4 | | 04-24A | | |
| | 08-32A | | 5 | | 05-04 | | |
| | 08-32A | | 8 | | 05-05 | | |
| | 08-32A | | 9 | | 07-02 | | |
| | 09-10 | | | | 07-03A | | |
| | 09-42A | | 30 | | 07-03A | | |
| | 09-42A | | 41A | | 07-03B | | |
| | 09-42A | | 41B | | 07-03C | | |
| | 09-42A | | 44 | | 08-03 | | |
| | 09-42A | | 5 | | 08-05 | | |
| | 09-42B | | 14 | | 08-06 | | |
| | 09-42B | | 22 | | 08-07 | | |
| | 09-42B | | 24 | | 08-07A | | |
| | 09-42B | | 32 | | 08-08 | | |
| | 09-42B | | 36 | | 08-09 | | |

| Number | Figure | Sequence | Ref. |
|---|---|---|---|
| REF | 08-10 | | |
| | 08-11 | | |
| | 08-12 | | |
| | 08-13 | | |
| | 08-15 | | |
| | 08-16 | | |
| | 08-17 | | |
| | 08-18 | | |
| | 08-19A | | |
| | 08-21 | | |
| | 08-23 | | |
| | 08-24 | | |
| | 08-25 | | |
| | 08-26 | | |
| | 08-26 | | 4C |
| | 08-26A | | |
| | 08-26A | | 4C |
| | 08-26B | | |
| | 08-26B | | 4C |
| | 08-27 | | |
| | 08-27A | | |
| | 08-27B | | |
| | 08-28 | | |
| | 08-28A | | |
| | 08-28B | | |
| | 08-32A | | |
| | 08-33 | | |
| | 08-33 | | |
| | 09-07 | | |
| | 09-07A | | |
| | 09-07B | | |
| | 09-08 | | |
| | 09-08A | | |
| | 09-09 | | |
| | 09-09 | | 1 |
| | 09-09 | | 2 |
| | 09-09 | | 3 |
| | 09-09 | | 4 |
| | 09-09 | | 5 |
| | 09-09 | | 6 |
| | 09-09 | | 7 |
| | 09-09 | | 8 |
| | 09-09 | | 8A |
| | 09-09 | | 8B |
| | 09-09 | | 8C |
| | 09-09 | | 9 |
| | 09-09A | | |
| | 09-09A | | 1 |
| | 09-09A | | 10 |
| | 09-09A | | 11 |
| | 09-09A | | 12 |
| | 09-09A | | 13 |
| | 09-09A | | 2 |
| | 09-09A | | 3 |
| | 09-09A | | 4 |
| | 09-09A | | 5 |
| | 09-09A | | 6 |
| | 09-09A | | 7 |
| | 09-09A | | 8 |
| | 09-09A | | 9 |
| | 09-09B | | |
| | 09-09B | | 1 |
| | 09-09B | | 2 |
| | 09-09B | | 3 |
| | 09-09B | | 4 |
| | 09-09B | | 5 |
| | 09-09B | | 6 |
| | 09-09B | | 7 |
| | 09-09B | | 8 |
| | 09-09B | | 8A |
| | 09-09B | | 8B |
| | 09-09B | | 8C |
| | 09-09C | | |
| | 09-09C | | 1 |
| | 09-09C | | 10 |
| | 09-09C | | 11 |
| | 09-09C | | 12 |
| | 09-09C | | 13 |
| REF | 09-09C | | 14 |
| | 09-09C | | 15 |
| | 09-09C | | 16 |
| | 09-09C | | 2 |
| | 09-09C | | 3 |
| | 09-09C | | 4 |
| | 09-09C | | 5 |
| | 09-09C | | 6 |
| | 09-09C | | 7 |
| | 09-09C | | 8 |
| | 09-09C | | 9 |
| | 09-10 | | |
| | 09-10 | | |
| | 09-10 | | |
| | 09-11 | | |
| | 09-11 | | |
| | 09-11 | | |
| | 09-13 | | |
| | 09-16 | | |
| | 09-22 | | |
| | 09-23 | | |
| | 09-42 | | |
| | 09-42 | | |
| | 09-42 | | |
| | 09-42 | | |
| | 09-42A | | |
| | 09-42C | | |
| | 09-44 | | |
| | 09-44A | | |
| | 09-44B | | |
| | 09-45 | | |
| | 09-45A | | |
| | 09-47 | | |
| | 09-47A | | |
| | 09-48 | | |
| | 09-50A | | |
| | 09-53 | | |
| S92653 | 09-07 | | 9 |
| | 09-07A | | 9 |
| T103750 | 03-04A | | 2 |

# CATÁLOGO DE PIEZAS

## CARGADORA DE RUEDAS

## 621E
## TIER 3



BD07G056-01

Bur • Publicado en 01Sept07
Impreso en EE.UU. • Número de libro/formulario 87519729 LAS
Copyright © 2007. CNH America, LLC. Todos los derechos reservados.

CNH America LLC se reserva el derecho a mejorar el diseño o cambiar las especificaciones en cualquier momento sin incurrir por ello en la obligación de actualizar correspondientemente las unidades vendidas previamente.

Todos los datos de esta publicación están sujetos a variaciones en la producción. Las dimensiones y los pesos son sólo aproximados. Las ilustraciones no muestran necesariamente productos con su dotación estándar. Para obtener información exacta sobre cualquier producto en particular, ponerse en contacto con el distribuidor.

| HISTORIAL DE REVISIONES | | | |
|---|---|---|---|
| Publicación | Fecha de publicación | Máquinas aplicables | Observaciones |
| Primera edición | 01Sept07 | 621E Tier 3 Cargadora de Ruedas | 87519729 LAS |

Se prohíbe terminantemente el uso del contenido editorial o gráfico sin el consentimiento expreso por escrito de
CNH America LLC. Carol Stream, IL 60188 EE.UU.

# TABLE OF CONTENTS


| | |
|---|---|
| 02-01 | MONTAJE, MOTOR |
| 02-02 | RADIADOR - MANGUERAS Y TUBOS |
| 02-03 | REFRIGERADOR, CARGA DE AIRE |
| 02-04 | REFRIGERADOR, CARGA DE AIRE - MANGUERAS Y TUBOS |
| 02-05 | TRANSMISION DE VENTILADOR |
| 02-06 | FILTRO DE AIRE - PIEZAS DE ENTRADA DE AIRE |
| 02-06A | CONJUNTO DEL PURIFICADOR DE AIRE |
| 02-07 | CONJUNTO DEL DEPURADOR DE AIRE - CONJUNTO DEL PREDEPURADOR DE AIRE |
| 02-08 | SILENCIADOR - SISTEMA DE ESCAPE |
| 02-09 | LLENADO DE ACEITE, MOTOR |
| 02-10 | BOMBA DE ACEITE - MOTOR |
| 02-11 | FILTRO DE ACEITE - MOTOR |
| 02-12 | FILTRO Y REFRIGERADOR DE ACEITE |
| 02-13 | BOMBA DE ACEITE, BANDEJA |
| 02-14 | BOMBA DE ACEITE, BANDEJA - LÍNEA DE DRENAJE - CUBIERTA |
| 02-15 | RESPIRADERO - MOTOR |
| 02-16 | TURBOCOMPRESOR - LÍNEA DE DRENAJE |
| 02-17 | TURBOCOMPRESOR |
| 02-18 | BOMBA DE AGUA |
| 02-19 | BOMBA DE AGUA - CONJUNTO DEL TENSOR |
| 02-20 | BLOQUE DE CILINDROS |
| 02-21 | BLOQUE DE CILINDROS - CONJUNTO DEL TAPÓN |
| 02-22 | BLOQUE DE CILINDROS - CONTROL DE RUIDO |
| 02-23 | CULATA DEL CILINDROS |
| 02-24 | CULATA DEL CILINDROS - MONTAJE |
| 02-25 | TAPAS CULATA |
| 02-26 | CIGUENAL |
| 02-27 | CIGUENAL - POLEA |
| 02-28 | VOLANTE MOTOR |
| 02-29 | ALOJAMIENTO DEL VOLANTE |
| 02-30 | TAPA DE ENGRANAJES - ALOJAMIENTO TRASERO |
| 02-31 | TAPA DE ENGRANAJES- PLACA |
| 02-32 | CUBIERTA DEL ENGRANDAJE DELANTERO |
| 02-33 | BRAZOS BASCULANTES |
| 02-33A | BRAZOS BASCULANTES - MONTAJE |
| 02-34 | EJE DE LEVAS |
| 02-35 | PISTONES |
| 02-36 | VARILLAS CONECTORAS |
| 02-37 | COLLECTOR DE ASPIRACION |
| 02-38 | COLECTOR DE ESCAPE |
| 02-39 | SISTEMA DE REFRIGERACIÓN - MOTOR |
| 02-40 | TERMOSTATO - REFRIGERACION DEL MOTOR |
| 02-41 | GANCHOS DE MANOIBRA - MOTOR |
| 02-42 | MOTOR - CALENTADOR DEL BLOQUE |
| 03-01 | LINEA DE COMBUSTIBLE - REFRIGERADOR, COMBUSTIBLE |
| 03-02 | FILTRO, COMBUSTIBLE - AGUA SEPERATOR |
| 03-03 | FILTRO, COMBUSTIBLE |
| 03-04 | RELLENO DEL DEPOSITO DE COMBUSTILE - EMISOR |
| 03-04A | DEPOSITO DE COMBUSTIBLE - RESPIRADERO |
| 03-05 | BOMBA DE INYECCION |

# TABLE OF CONTENTS


| | |
|---|---|
| 03-06 | SISTEMA DE INYECCION DE COMBUSTIBLE |
| 03-07 | SISTEMA DE INYECCION DE COMBUSTIBLE - INYECTOR |
| 03-08 | SISTEMA DE INYECCION DE COMBUSTIBLE - COMBUSTIBLE, SUMINISTRO |
| 03-09 | SISTEMA DE INYECCION DE COMBUSTIBLE - MODULO, CONTROL DEL MOTOR |
| 03-10 | SISTEMA DE INYECCION DE COMBUSTIBLE - MAZO DE CABLES, MOTOR |
| 03-11 | SISTEMA DE INYECCION DE COMBUSTIBLE - LÍNEA DE DRENAJE |
| 04-01 | ARRANQUE |
| 04-02 | ALTERNADOR |
| 04-02A | ALTERNADOR - SOPORTE CON AIRE ACONICIONADO |
| 04-02B | ALTERNADOR - SOPORTE SIN AIRE ACONICIONADO |
| 04-03 | MAZO DE CABLES, DELANTERO - Z-BAR |
| 04-03A | MAZO DE CABLES, DELANTERO - XT |
| 04-04 | MAZO DE CABLES - PANEL, CONTROL |
| 04-05 | MAZO DE CABLES, MOTOR |
| 04-06 | MAZO DE CABLES, MOTOR - CONTROL DEL ACELERADOR |
| 04-07 | MAZO DE CABLES, MOTOR - FUSIBLES Y RELÉS |
| 04-08 | MAZO DE CABLES - TECHO DE LA CABINA |
| 04-09 | MAZO DE CABLES, CAPO - ALARMA DE RETROCESO |
| 04-10 | MAZO DE CABLES, TRANSMISION |
| 04-11 | MAZO DE CABLES - LA CALENTADORA DE LA CUADRÍCULA |
| 04-11A | LA CALENTADORA DE LA CUADRÍCULA |
| 04-12 | BOCINA, DELANTERA |
| 04-13 | PANEL, CONTROL - INTERRUPTOR |
| 04-14 | PANEL, CONTROL - FUSIBLE Y RELÉ SOPORTE |
| 04-15 | ELECTRICO - TUBO DE LA DIRECCION / GRUPO DE INSTRUMENTOS |
| 04-16 | ELECTRICO - CONTROL DE TRANSMISION |
| 04-17 | ELECTRICO - DIRECCION, AUXILIAR |
| 04-18 | SOPORTE - LUCES, DELANTERAS |
| 04-19 | CONJUNTO DE LA LAMPARA - LUZ, DELANTERA |
| 04-20 | SOPORTE - LUCES, COMBINACION TRASERA |
| 04-21 | CABINA - LUCES |
| 04-22 | CONJUNTO DEL FARO, ROTATORIO - SOPORTE |
| 04-23 | CABINA - LIMPIAPARABRISAS, DELANTERO |
| 04-23A | CABINA - LIMPIAPARABRISAS, TRASERO |
| 04-24 | RADIO - 12 VOLT |
| 04-24A | RADIO - 12 VOLT INSTALACIÓN |
| 04-25 | FIJACIÓN DE LAS BATERÍAS |
| 04-25A | FIJACIÓN DE LAS BATERÍAS - TAREAS PESADAS |
| 04-26 | BATERIA - CABLES |
| 04-27 | LUCES DE MATRICULA |
| 04-28 | LIMPIADOR DEL LIMPIAPARABRISAS MONTAJE |
| 05-01 | VOLANTE - COLUMNA |
| 05-02 | TUBO DE LA DIRECCION |
| 05-02A | TUBO DE LA DIRECCION - ACCESORIO |
| 05-03 | TUBO DE LA DIRECCION - COMPENSACIÓN |
| 05-04 | HIDRAULICA - DIRECCION |
| 05-05 | DIRECCION - AUXILIAR - HIDRAULICA |
| 05-06 | VÁLVULA DE CONTROL DE LA DIRECCIÓN |
| 05-07 | DIRECCION - AUXILIAR - CONJUNTO DEL BLOQUE |
| 05-08 | DIRECCION - AUXILIAR - BOMBA |
| 05-09 | DIRECCION - CILINDRO - HIDRAULICA |

# TABLE OF CONTENTS


| | |
|---|---|
| 05-10 | DIRECCION - CONJUNTO DE CILINDRO |
| 06-01 | SOPORTE - TRANSMISION - TUBERIA DE LLENADO DE LA TRANSMISION |
| 06-02 | HIDRAULICA - TRANSMISION |
| 06-03 | TRANSMISION - FILTRO, CUBIERTA DE ACEITE Y DE RELLENO |
| 06-04 | TRANSMISION - CONVERTIDOR, CUBIERTA Y EJE DE ENTRADA |
| 06-05 | TRANSMISION - EJE DE ENTRADA |
| 06-06 | CONJUNTO DE LA TRANSMISION - ALOJAMIENTO |
| 06-07 | CONJUNTO DE LA TRANSMISION - TUBOS DEL ALOJAMIENTO |
| 06-08 | TRANSMISION - CONJUNTO DEL EMBRAGUE, PRIMERO |
| 06-09 | TRANSMISION - CONJUNTO DEL EMBRAGUE, SEGUNDO |
| 06-10 | TRANSMISION - CONJUNTO DEL EMBRAGUE, TERCERO |
| 06-11 | TRANSMISION - CONJUNTO DEL EMBRAGUE, CUARTO |
| 06-12 | TRANSMISION - CONJUNTO DEL EMBRAGUE, AVANCE |
| 06-13 | TRANSMISION - CONJUNTO DEL EMBRAGUE, RETROCESO |
| 06-14 | TRANSMISION - EJE, SALIDA |
| 06-15 | TRANSMISION - TOMA DE FUERZA |
| 06-16 | TRANSMISION - PLACAS DE LAS VALVULAS |
| 06-17 | TRANSMISION - VALVULA, CONTROL |
| 06-18 | TRANSMISION - VALVULA, CONTROL |
| 06-19 | TRANSMISION - VALVULA, REGULADOR Y BOMBA DE ACEITE |
| 06-20 | TRANSMISION - SENSOR, CUBIERTA DE LA BOMBA Y VELOCIDADES |
| 06-21 | EJE, TRASERO - PARAR |
| 06-22 | EJE, DELANTERO - SOPORTE |
| 06-22A | EJE, DELANTERO - ALOJAMIENTO |
| 06-22B | EJE, DELANTERO - PORTADOR DEL DIFERENCIAL |
| 06-22C | EJE, DELANTERO - DIFERENCIAL |
| 06-22D | EJE, DELANTERO - FRENO |
| 06-22E | EJE, DELANTERO - CUBO, PLANETARIO |
| 06-23 | EJE, TRASERO - SOPORTE |
| 06-23A | EJE, TRASERO - ALOJAMIENTO |
| 06-23B | EJE, TRASERO - PORTADOR DEL DIFERENCIAL |
| 06-23C | EJE, TRASERO - DIFERENCIAL |
| 06-23D | EJE, TRASERO - FRENO |
| 06-23E | EJE, TRASERO - CUBO, PLANETARIO |
| 06-24 | EJE DE TRANSMISION MONTAJE |
| 06-25 | EJE DE LA TRANSMISION, DELANTERO |
| 06-26 | EJE DE LA TRANSMISION, CENTRAL |
| 06-27 | EJE DE LA TRANSMISION, TRASERO |
| 06-28 | EJE DE TRANSMISIÓN, MOTOR |
| 06-29 | RUEDAS |
| 07-01 | FRENO, ESTACIONAMIENTO |
| 07-02 | FRENO PEDALES |
| 07-03 | HIDRAULICA - FRENO, PRINCIPAL - BOMBA |
| 07-03A | HIDRAULICA - FRENO, PRINCIPAL - EJE |
| 07-03B | HIDRAULICA - FRENO, PRINCIPAL - ACUMULADOR |
| 07-03C | HIDRAULICA - FRENO, PRINCIPAL - FRENO DE PARQUE |
| 07-03D | HIDRAULICA - FRENO, PRINCIPAL - DEPÓSITO |
| 07-04 | HIDRAULICA - FRENO - CONJUNTO DE LA BOMBA |
| 07-05 | CONJUNTO DE LA VALVULA - FRENO |
| 08-01 | DEPOSITO HIDRAULICO - MONTAJE |
| 08-01A | HIDRAULICA - REFRIGERADOR DE ACEITE SOPORTE |

# TABLE OF CONTENTS


| | |
|---|---|
| 08-02 | DEPOSITO HIDRAULICO - FILTRO |
| 08-02A | HIDRAULICA - FILTRO, ACEITE |
| 08-03 | HIDRAULICA - DEPOSITO A LA BOMBA HIDRAULICA |
| 08-04 | BOMBA |
| 08-05 | HIDRAULICA - ELEVACIÓN DE LA CARGADORA Y CUCHARÓN (Z-BAR, XR CARGADORA) |
| 08-06 | HIDRAULICA - ELEVADOR DE LA CARGADORA (XT CARGADORA) |
| 08-07 | HIDRAULICA - CUCHARON DE LA CARGADORA (XT CARGADORA) |
| 08-07A | HIDRAULICA - CUCHARON DE LA CARGADORA (XT CARGADORA) |
| 08-08 | HIDRAULICA - AUXILIAR DE CARGADORA (Z CARGADORA) |
| 08-09 | HIDRAULICA - AUXILIAR DE CARGADORA (XR) |
| 08-10 | HIDRAULICA - AUXILIAR DE CARGADORA (XT CARGADORA) - SI SE USA |
| 08-11 | HIDRAULICA - ACOMPLAMIENTO (Z CHARGEUSE) |
| 08-12 | HIDRAULICA - ACOMPLAMIENTO (XR CHARGEUSE) |
| 08-13 | HIDRAULICA - ACOMPLAMIENTO (XT CARGADORA) |
| 08-14 | SISTEMA HIDRÁULICO – BLOQUEO DEL ACOPLADOR |
| 08-15 | CONJUNTO DE CILINDRO - CUCHARON DE LA CARGADORA |
| 08-16 | CONJUNTO DE CILINDRO - CUCHARON DE LA CARGADORA (Z CARGADORA) |
| 08-17 | CONJUNTO DE CILINDRO - CUCHARON DE LA CARGADORA (XR CARGADORA) |
| 08-18 | CONJUNTO DE CILINDRO - ELEVADOR DE LA CARGADORA (XT CARGADORA) |
| 08-19 | HIDRAULICO - DERIVACIÓN ESTÁNDAR |
| 08-19A | HIDRAULICO - SIN DESVIACIÓN |
| 08-19B | HIDRAULICO - DESVIACIÓN TÉRMICA |
| 08-20 | HIDRAULICA - DISPOSITIVO ANTICABECEO |
| 08-20A | CONJUNTO DE LA VALVULA - DIRECCIONAL DEL CONTROL DE MARCHA (RSM2-16) |
| 08-21 | HIDRAULICA - SIN-DISPOSITIVO ANTICABECEO |
| 08-22 | HIDRAULICA - TRANSMISIÓN DE VENTILADOR |
| 08-23 | CONJUNTO DE LA VALVULA, VENTILADOR DESCARGA - MONTAJE |
| 08-23A | CONJUNTO DE LA VALVULA, VENTILADOR DESCARGA |
| 08-24 | CONJUNTO DE LA VALVULA, VENTILADOR - MARCHA ATRÁS Y VELOCIDAD VARIABLE - MONTAJE |
| 08-24A | CONJUNTO DE LA VALVULA, VENTILADOR - MARCHA ATRÁS Y VELOCIDAD VARIABLE |
| 08-25 | HIDRAULICA - CONTROL DE LA CARGADORA, REMOTO |
| 08-26 | VALVULA DE CONTROL - SOPORTE, DOS CORREDERAS - (Z-BAR/XR/XT) |
| 08-26A | VALVULA DE CONTROL - SOPORTE, TRES CORREDERAS - (Z-BAR/XR/XT) |
| 08-26B | VALVULA DE CONTROL - SOPORTE, CUATRO CORREDERAS - (Z-BAR/XR/XT) |
| 08-27 | CONJUNTO DE LA VALVULA - CONTROL DE LA CARGADORA - DOS, TRES, CUATRO CORREDERAS - (Z-BAR/XR) |
| 08-27A | CONJUNTO DE LA VALVULA - EJE DEL PISTÓN - (Z-BAR/XR) |
| 08-27B | CONJUNTO DE LA VALVULA - CONTROL DE LA CARGADORA - SECCION DE LA VALVULA - (Z-BAR/XR) |
| 08-28 | CONJUNTO DE LA VALVULA - CONTROL DE LA CARGADORA - DOS, TRES, CUATRO CORREDERAS - (XT) |
| 08-28A | CONJUNTO DE LA VALVULA - EJE DEL PISTÓN - (XT) |
| 08-28B | CONJUNTO DE LA VALVULA - CONTROL DE LA CARGADORA - SECCION DE LA VALVULA - (XT) |
| 08-29 | HIDRAULICA - PALANCA DE CONTROL SOPORTE |
| 08-29A | CONJUNTO DE LA VALVULA - PALANCA DE CONTROL |
| 08-29B | CONJUNTO DE LA VALVULA - PALANCA DE CONTROL |

# TABLE OF CONTENTS


| | |
|---|---|
| 08-30 | CONTROL DE LA CARGADORA - PALANCA DE MANDO CON UNA SOLA PALANCA - MONTAJE |
| 08-30A | CONTROL DE LA CARGADORA - PALANCA DE MANDO CON UNA SOLA PALANCA |
| 08-31 | CONTROL DE LA CARGADORA, REMOTO - PALANCA DE MANDO CON DOS PALANCAS SOPORTE |
| 08-31A | CONJUNTO DE LA VALVULA - PALANCA DE MANDO CON DOS PALANCAS |
| 08-32 | CONTROL DE LA CARGADORA - TRES PALANCAS SOPORTE |
| 08-32A | CONJUNTO DE LA VALVULA - CONTROL DE LA CARGADORA CON 3 PALANCAS |
| 08-33 | MONTAJE DEL BLOQUE - ACOPLADOR, MANGUERAS DE TRES BOBINAS |
| 09-01 | CONTROL - RETORNO A EXCAVACION (Z-BAR) |
| 09-02 | CONTROL - RETORNO A EXCAVACION (XR) |
| 09-03 | CONTROL - RETORNO A EXCAVACION - XT |
| 09-04 | CONTROLES - ALTURA DEL CUCHARON Y RETORNO-A-TRANSPORTE - Z-BAR |
| 09-05 | CONTROLES - ALTURA DEL CUCHARON Y RETORNO-A-TRANSPORTE (XR) |
| 09-06 | CONTROLES - ALTURA DEL CUCHARON Y RETORNO-A-TRANSPORTE - XT |
| 09-07 | MARCO - ELEVADOR DE LA CARGADORA (Z CARGADORA) |
| 09-07A | MARCO - ELEVADOR DE LA CARGADORA (XR) |
| 09-07B | MARCO - ELEVADOR DE LA CARGADORA (XT) |
| 09-08 | CUCHARON - EQUIPO (Z CARGADORA) |
| 09-08A | CUCHARON - EQUIPO (XT CARGADORA) |
| 09-09 | ACOPLAMIENTO, HIDRAULICO - Z-BAR - JRB |
| 09-09A | ACOPLAMIENTO, HIDRAULICO - Z-BAR - ACS |
| 09-09B | ACOPLAMIENTO, HIDRAULICO - XT - JRB |
| 09-09C | ACOPLAMIENTO, HIDRAULICO - XT - ACS |
| 09-10 | CUCHARON DE LA CARGADORA - DENTADO, SEGMENTOS Y ALMOHADILLAS DE DESLIZAMIENTO |
| 09-11 | CUCHARON DE LA CARGADORA - CON PERNO EN EL BORDE Y ALMOHADILLAS DE DESLIZAMIENTO |
| 09-12 | CHASIS, DELANTERO (Z-BAR, XR) |
| 09-13 | CHASIS, DELANTERO (XT) |
| 09-14 | CHASIS, TRASERO |
| 09-15 | EMPALME DE LA ARTICULACIÓN |
| 09-16 | CAPO |
| 09-17 | CAPÓ, MOTOR - MONTAJE |
| 09-18 | CUBIERTAS - CAJA DE LA BATERIA |
| 09-19 | CUBIERTAS - CABINA Y TOLDO, INFERIOR |
| 09-19A | CUBIERTAS - CHASIS, TRASERO |
| 09-20 | PARACHOCHES, DELANTERO |
| 09-20A | PARACHOCHES, DELANTERO - ANCHURA |
| 09-21 | PARACHOQUES, TRASERO - ESTANDAR |
| 09-22 | PARACHOQUES, TRASERO - ANCHURA |
| 09-23 | PARACHOQUES, TRASERO -PROTECTOR |
| 09-24 | PELDAÑOS - IZQUIERDO |
| 09-25 | PELDAÑOS - DERECHO |
| 09-26 | ANTISONORO - MOTOR |
| 09-27 | PLACA DE DESLIZAMIENTO |
| 09-28 | CABINA - MONTAJE |
| 09-29 | CABINA - VIDRIO, DELANTERO |
| 09-30 | CABINA - VIDRIO, TRASERO |
| 09-31 | CABINA - REVESTIMIENTO INTERIOR |
| 09-31A | CABINA - REVESTIMIENTO INTERIOR |

# TABLE OF CONTENTS


| | |
|---|---|
| 09-31B | CABINA - REVESTIMIENTO INTERIOR - TECHO |
| 09-32 | CABINA - GUARNICION EXTERNA |
| 09-33 | CABINA - VENTANILLA, DERECHA |
| 09-33A | CABINA - VENTANILLA, DERECHA |
| 09-34 | CABINA - VENTANILLA, DERECHA |
| 09-35 | CABINA - MONTAJE DE LA PUERTA |
| 09-35A | CABINA - PUERTA |
| 09-36 | CABINA - ESPEJOS RETROVISORES |
| 09-37 | CABINA - ALFOMBRILLA |
| 09-38 | CABINA - PARASOL |
| 09-39 | CABINA - COMPONENTES |
| 09-40 | CABINA - LUCES |
| 09-41 | CABINA - CONVENIENCIA PAQUETE |
| 09-42 | ASIENTO - SOPORTE/CINTURONES DE SEGURIDAD |
| 09-42A | CONJUNTO DEL ASIENTO, SUSPENSION MECANICA |
| 09-42B | CONJUNTO DEL ASIENTO, SUSPENSION MECANICA |
| 09-42C | CONJUNTO DEL ASIENTO, SUSPENSION DE AIRE |
| 09-42D | CONJUNTO DEL ASIENTO, SUSPENSION DE AIRE |
| 09-43 | CABINA - DUCTOS DEL CALENTADOR Y AIRE ACONDICIONADO |
| 09-43A | CABINA - DUCTOS DEL CALENTADOR Y AIRE ACONDICIONADO |
| 09-44 | CUBIERTAS - CORREA DE TRANSMISIÓN (MODELOS CON AIRE ACONDICIONADO) |
| 09-44A | CUBIERTAS - CORREA DE TRANSMISIÓN (MODELOS SIN AIRE ACONDICIONADO) |
| 09-44B | CUBIERTAS - CABINA - SIN AIRE ACONICIONADO |
| 09-45 | CALENTADOR - MONTAJE |
| 09-45A | CALENTADOR |
| 09-46 | CALEFACCION |
| 09-47 | AIRE ACONDICIONADO - MONTAJE |
| 09-47A | AIRE ACONDICIONADO |
| 09-48 | AIRE ACONDICIONADO - CONDENSADOR |
| 09-49 | AIRE ACONDICIONADO |
| 09-50 | CONTRAPESOS |
| 09-50A | CONTRAPESOS - TAREAS PESADAS |
| 09-51 | EXTINTOR DE INCENDIOS |
| 09-52 | CAJA DE HERRAMIENTAS |
| 09-53 | MATRICULA SOPORTE |
| 09-54 | CALCOMANIAS - MODEL |
| 09-55 | CALCOMANIAS - COMÚN EN EL MODELO |
| 09-56 | CALCOMANIAS - CABINA |
| 09-57 | CALCOMANIAS - INGLES |
| 09-58 | CALCOMANIAS - FRANCES CANADIENSE |
| 09-59 | CALCOMANIAS - CASTELLANO PARA LATINOAMERICA |

# INFORMACIÓN GENERAL

## NOTA DE PATENTE

El contenido de este manual es propiedad de esta compañía. La reproducción o el uso de cualquier parte para cualquier otro propósito que no sea el funcionamiento y mantenimiento de nuestro equipo está permitido solamente si se autoriza expresamente por escrito.

Pueden obtenerse copias adicionales en su concesionario. Dirigir sus pedidos a su concesionario y hacer referencia al número de publicación que aparece en la parte inferior de la contraportada o en la cubierta de su manual.

## POLÍTICA DE LA COMPAÑÍA

La política de la compañía, de mejora continua, se reserva el derecho a cambiar los precios y a realizar cambios en el diseño y las especificaciones en cualquier momento sin previo aviso ni obligación de modificar las unidades fabricadas con anterioridad.

Todos los datos que se dan en este libro están sujetos a variaciones de producción. Las dimensiones y los pesos son aproximados solamente y las ilustraciones no muestran necesariamente las máquinas en condiciones estándar. Para información exacta sobre cualquier máquina en particular, ponerse en contacto con el concesionario.

## PIEZAS Y ACCESORIOS

Se han diseñado piezas y accesorios específicamente para estas máquinas.

Quisiéramos señalar que la compañía NO ha examinado y aprobado otras piezas y accesorios “no genuinos”. La instalación y/o el uso de tales productos puede tener efectos negativos en las características de diseño de su máquina y, por lo tanto, afectar su seguridad. La compañía no se responsabiliza por los daños causados por el uso de piezas y accesorios “no genuinos”.

## MEJORAS

Estamos continuamente intentando mejorar nuestros productos. Se reserva el derecho a mejorar el diseño o realizar cambios cuando resulte práctico y posible llevarlo a cabo, sin incurrir por ello en la obligación de realizar estos cambios o actualizar las unidades vendidas previamente.

## CÓDIGOS DE LOS MODELOS

El rango de las máquinas que se incluyen puede que no esté disponible en todos los países o mercados. Por lo tanto, para obtener la información más actualizada consultar con su concesionario local.

## AYUDA AL PROPIETARIO

Deseamos que esté completamente satisfecho con su inversión. Normalmente, cualquier problema con el equipo, será resuelto por el departamento de mantenimiento del concesionario. Sin embargo, pueden producirse malentendidos. Si el problema no ha sido resuelto a su satisfacción, le sugerimos lo siguiente:

1. Hablar con el propietario o gerente general del concesionario, explicar el problema y solicitar su ayuda. Cuando se necesite de ayuda especial, el concesionario tiene acceso directo con nuestras oficinas.
2. Proporcione al concesionario la siguiente información:
   - Su nombre, dirección y número de teléfono
   - Modelo de la máquina y número de serie
   - Nombre del concesionario y dirección
   - Fecha de compra de la máquina y tiempo de uso
   - Naturaleza del problema

Recuerde que el problema probablemente será resuelto en el concesionario, utilizando las instalaciones, equipo y personal del mismo. Así que es importante que el primer contacto sea con el concesionario.

## PIEZAS DE REPUESTO

Para mantener la eficacia operativa, usar piezas de repuesto originales.

Al pedir piezas, proporcionar la siguiente información:

- Modelo de la máquina
- Números de serie de la máquina y el motor
- Número de pieza del catálogo de piezas

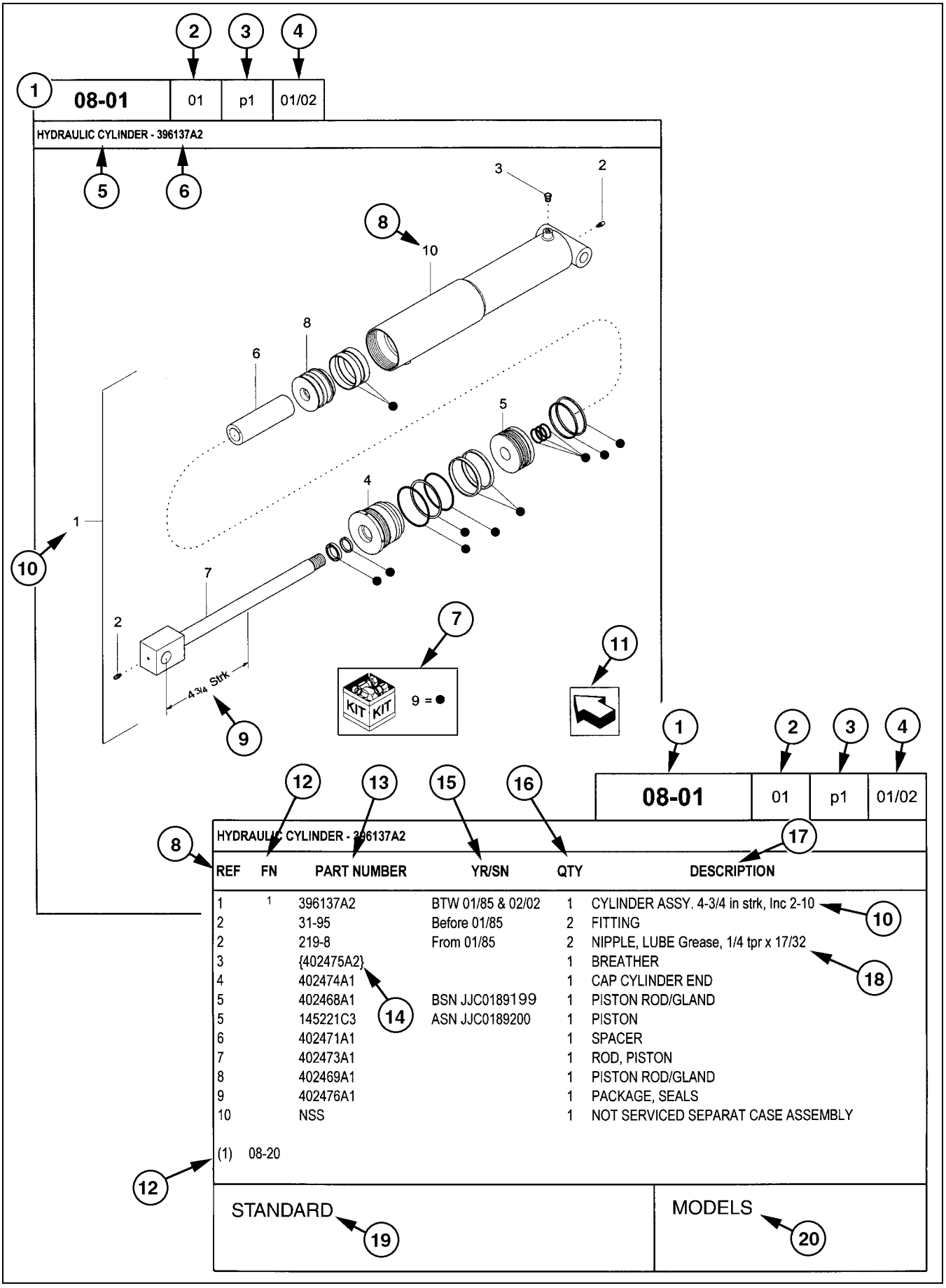


| REF | FN | PART NUMBER | YR/SN | QTY | DESCRIPTION |
|---|---|---|---|---|---|
| 1 | 1 | 396137A2 | BTW 01/85 & 02/02 | 1 | CYLINDER ASSY. 4-3/4 in strk, Inc 2-10 |
| 2 | | 31-95 | Before 01/85 | 2 | FITTING |
| 2 | | 219-8 | From 01/85 | 2 | NIPPLE, LUBE Grease, 1/4 tpr x 17/32 |
| 3 | | {402475A2} | | 1 | BREATHER |
| 4 | | 402474A1 | | 1 | CAP CYLINDER END |
| 5 | | 402468A1 | BSN JJC0189199 | 1 | PISTON ROD/GLAND |
| 5 | | 145221C3 | ASN JJC0189200 | 1 | PISTON |
| 6 | | 402471A1 | | 1 | SPACER |
| 7 | | 402473A1 | | 1 | ROD, PISTON |
| 8 | | 402469A1 | | 1 | PISTON ROD/GLAND |
| 9 | | 402476A1 | | 1 | PACKAGE, SEALS |
| 10 | | NSS | | 1 | NOT SERVICED SEPARAT CASE ASSEMBLY |

(1) 08-20

STANDARD

MODELS

# CÓMO USAR EL CATÁLOGO DE PIEZAS

1. Número de figura
2. Código de secuencia con número de figura
3. Número de página en el código de secuencia
4. Fecha de impresión (mes/año)
5. Descripción de la figura
6. Información general sobre la figura
7. Piezas suministradas en los juegos de reparación según la referencia del símbolo
8. Leyenda de referencia del número de pieza (REF)
9. Especificaciones técnicas referentes a la pieza indicada
10. Leyenda de figura que incluye artículos en paréntesis, los artículos incluidos pueden encontrarse también en el área de descripción adicional
11. Orientación – La flecha muestra la parte delantera de la máquina.
12. Pie de página – Información adicional referente al número de pieza. En este ejemplo, 08-20 equivale a otra figura en la que se muestra esta pieza.
13. Número de pieza
    NSS = Piezas que no reciben mantenimiento por separado (piezas sin mantenimiento)
    Números en paréntesis = No disponibles como piezas de mantenimiento en este mercado
14. No disponibles como piezas de mantenimiento en este mercado
15. YR/SN

    Año
    Antes de 01/85 = Pieza en fabricación en enero de 1985 y anteriormente
    Desde 01/85 = Pieza en fabricación desde enero de 1985 y posteriormente
    BTW 01/85 & 02/02 = Pieza válida para máquinas fabricadas entre enero de 1985 y febrero de 2002

    Número de serie (N.I.P.)
    BSN JJC0268800 = Pieza válida para el número de serie JJC0268800 y anteriores
    ASN JJC0268800 = Pieza válida para el número de serie JJC0268800 y posteriores
    BTW JJC0178000 & JJC0179000 = Pieza válida para los números de serie entre JJC0178000 y JJC0179000
16. Cantidad total de piezas referidas en la página. La cantidad puede reemplazarse por las siguientes instrucciones:
    SR = Según se requiera
    X = Según se requiera
17. Descripción de la pieza
18. Información adicional sobre la pieza para ayudar a confirmar la identificación
19. Notas de figura
20. Número(s) de modelo

## LADO DERECHO E IZQUIERDO

La referencia al lado derecho e izquierdo en este catálogo se identifica con el operador de pie en la parte trasera de la unidad básica (sin accesorio trasero), mirando hacia el frente de la máquina (con desplazamiento de avance normal).

Para las páginas que cubren los accesorios de la máquina, el lado derecho e izquierdo se definen con el operador sentado en la posición correcta de funcionamiento del accesorio.

## DIMENSIONES

Las dimensiones métricas e imperiales de la tornillería no muestran el número de medida de roscas anchas estándares. El número después de un punto y coma (;) es la clase o el grado de la tornillería. Una coma (,) representa el punto decimal (.) usando en dimensiones imperiales (EE.UU.).

# EXPLICACIÓN DE LAS ABREVIATURAS

| | |
|---|---|
| AC | corriente alterna |
| adj | ajustable |
| amp | amperios |
| AR | según sea necesario |
| ASN | número de serie y posterior<br>NIP y posterior |

| | |
|---|---|
| blkhd | mamparo |
| br | sucursal |
| BSN | antes del número de serie<br>antes del NIP |
| BTW | entre |

| | |
|---|---|
| cc | centímetros cúbicos |
| cl | clase |
| cmprsn | compresión |
| cn pt | punto de cono |
| cp pt | punto de copa |
| CRS | acero de aleación de cromo |
| CST | acero al carbono |
| cu yd | yarda cúbica |

| | |
|---|---|
| DC | corriente continua |
| deg | grados |
| dg pt | punto de garra |
| dia | diámetro |
| dr type | tipo de transmisión |

| | |
|---|---|
| fc | superficie |
| fc sl | superficie de sellado |
| fem | hembra |
| fem PT | rosca hembra de tubería |
| fl | ensanche |
| flat pt | punto plano |
| ft | pies (o pie) |

| | |
|---|---|
| ga | calibre |
| gal | galón o galones |
| gpm | galones por minuto |
| gr | grado |

| | |
|---|---|
| hd | cabeza |
| hdg pt | punto de media garra |
| hp | potencia en C.V. |
| ID | diámetro interior |
| in | pulgada o pulgadas |
| Incl. | incluye |
| inv fl | ensanche invertido |

| | |
|---|---|
| K | kilo |
| kg | kilogramo |
| km/h | kilómetros por hora |

| | |
|---|---|
| L | litro |
| lb | libras |
| lb-ft | libra pie |
| lg | largo |
| LH | lado izquierdo |
| LH thd | rosca izquierda |

| | |
|---|---|
| M | (prefijo) tamaño de rosca en métrico |
| m | metro |
| ml | milímetro |
| mm | milímetros |

| | |
|---|---|
| NF | National Fine |
| No. | número |
| NPT | National Pipe Thread |
| NS | National Super Fine |

| | |
|---|---|
| OD | diámetro exterior |
| ohm | unidad eléctrica de resistencia |
| Or | junta tórica |
| ORB | refuerzo de junta tórica |
| ORFS | superficie de sellado de junta tórica |
| ov cntr | sobre el centro |
| ov pt | punto oval |
| oz | onza |

| | |
|---|---|
| P | pitch |
| psi | libras por pulgada cuadrada |
| pt | pinta |
| PT | rosca de la tubería |

| | |
|---|---|
| rd | redondo/a |
| rd holes | agujeros redondos |
| RH | lado derecho |
| RH thd | rosca derecha |
| rpm | revoluciones por minuto |

| | |
|---|---|
| sl | autobloqueante |
| sq | cuadrado/a |
| SST | acero inoxidable |
| st | autorroscante |
| strk | carrera |
| sw | balancín |

| | |
|---|---|
| T | dientes |
| thk | grueso/a |
| tpr | ahusado/a |
| tube OD | diámetro exterior del tubo |

| | |
|---|---|
| V | voltio o voltios |
| W | vatio o vatios |
| X | según sea necesario |
| yd | yardas |

# SECTION INDEX
## Motor


| | |
|---|---|
| 02-01 | MONTAJE, MOTOR |
| 02-02 | RADIADOR - MANGUERAS Y TUBOS |
| 02-03 | REFRIGERADOR, CARGA DE AIRE |
| 02-04 | REFRIGERADOR, CARGA DE AIRE - MANGUERAS Y TUBOS |
| 02-05 | TRANSMISION DE VENTILADOR |
| 02-06 | FILTRO DE AIRE - PIEZAS DE ENTRADA DE AIRE |
| 02-06A | CONJUNTO DEL PURIFICADOR DE AIRE |
| 02-07 | CONJUNTO DEL DEPURADOR DE AIRE - CONJUNTO DEL PREDEPURADOR DE AIRE |
| 02-08 | SILENCIADOR - SISTEMA DE ESCAPE |
| 02-09 | LLENADO DE ACEITE, MOTOR |
| 02-10 | BOMBA DE ACEITE - MOTOR |
| 02-11 | FILTRO DE ACEITE - MOTOR |
| 02-12 | FILTRO Y REFRIGERADOR DE ACEITE |
| 02-13 | BOMBA DE ACEITE, BANDEJA |
| 02-14 | BOMBA DE ACEITE, BANDEJA - LÍNEA DE DRENAJE - CUBIERTA |
| 02-15 | RESPIRADERO - MOTOR |
| 02-16 | TURBOCOMPRESOR - LÍNEA DE DRENAJE |
| 02-17 | TURBOCOMPRESOR |
| 02-18 | BOMBA DE AGUA |
| 02-19 | BOMBA DE AGUA - CONJUNTO DEL TENSOR |
| 02-20 | BLOQUE DE CILINDROS |
| 02-21 | BLOQUE DE CILINDROS - CONJUNTO DEL TAPÓN |
| 02-22 | BLOQUE DE CILINDROS - CONTROL DE RUIDO |
| 02-23 | CULATA DEL CILINDROS |
| 02-24 | CULATA DEL CILINDROS - MONTAJE |
| 02-25 | TAPAS CULATA |
| 02-26 | CIGUENAL |
| 02-27 | CIGUENAL - POLEA |
| 02-28 | VOLANTE MOTOR |
| 02-29 | ALOJAMIENTO DEL VOLANTE |
| 02-30 | TAPA DE ENGRANAJES - ALOJAMIENTO TRASERO |
| 02-31 | TAPA DE ENGRANAJES- PLACA |
| 02-32 | CUBIERTA DEL ENGRANDAJE DELANTERO |
| 02-33 | BRAZOS BASCULANTES |
| 02-33A | BRAZOS BASCULANTES - MONTAJE |
| 02-34 | EJE DE LEVAS |
| 02-35 | PISTONES |
| 02-36 | VARILLAS CONECTORAS |
| 02-37 | COLLECTOR DE ASPIRACION |
| 02-38 | COLECTOR DE ESCAPE |
| 02-39 | SISTEMA DE REFRIGERACIÓN - MOTOR |
| 02-40 | TERMOSTATO - REFRIGERACION DEL MOTOR |
| 02-41 | GANCHOS DE MANOIBRA - MOTOR |
| 02-42 | MOTOR - CALENTADOR DEL BLOQUE |

**MONTAJE, MOTOR**

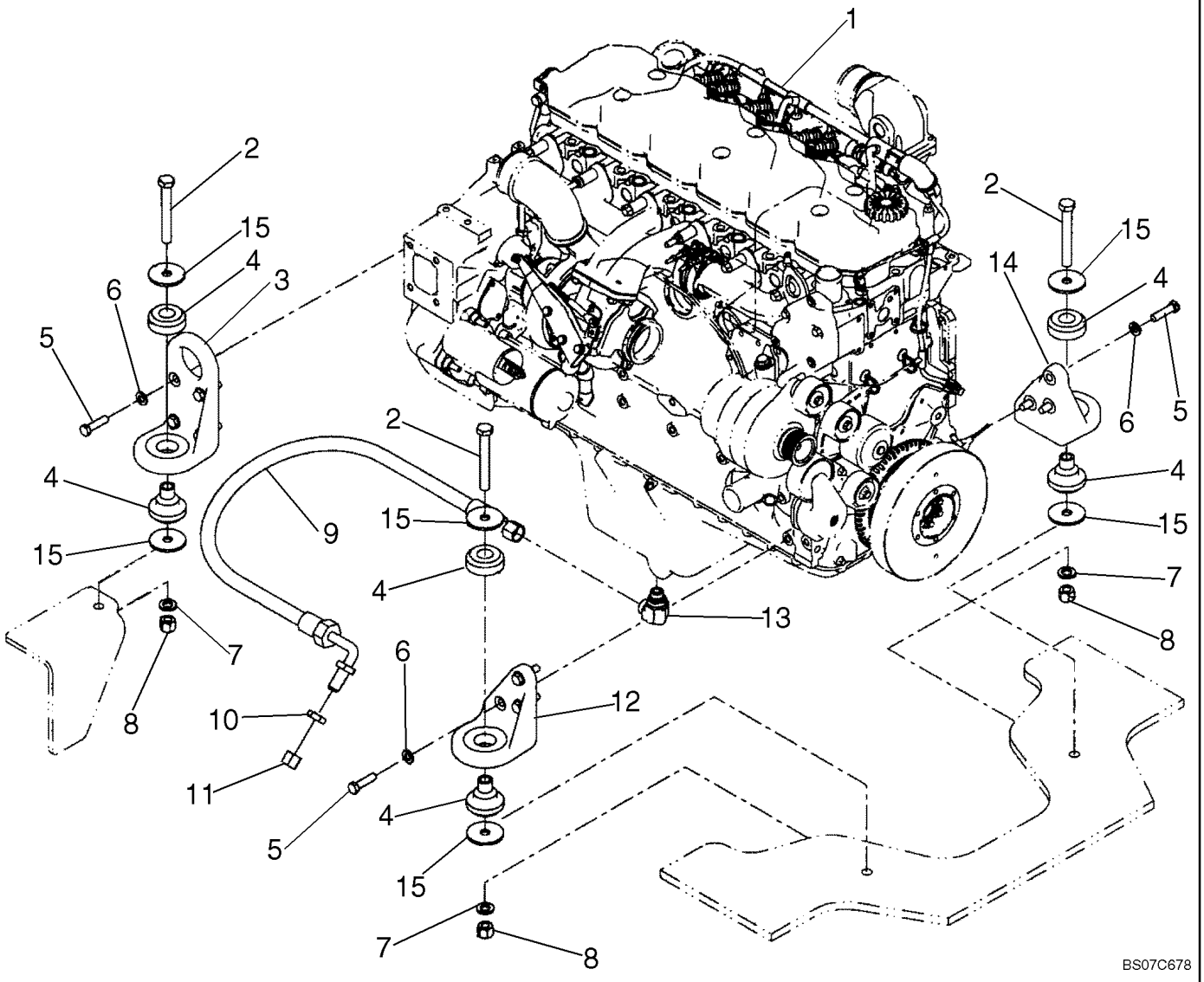

**MONTAJE, MOTOR**

| REF | FN | PART NUMBER | YR/SN | QTY | DENOMINACION |
|---|---|---|---|---|---|
| 1 | | 87579400 | | 1 | MOTOR, 6 Cylinder 6.7L Turbo, Tier III; See Figures 02-09 - 02-13, 02-15 - 02-41, 03-05 - 03-11 |
| 2 | | 827-16120 | | 4 | TORNILLO, Hex, M16 x 120, 10.9 |
| 3 | | 8602302 | | 2 | SOPORTE MOTOR, Flywheel Housing |
| 4 | | 361811A1 | | 4 | AISLADOR |
| 5 | | 627-12045 | | 14 | TORNILLO, Hex, M12 x 45, 10.9, Full Thd |
| 6 | | 896-11012 | | 14 | ARANDELA, M13.5 x 24.5 x 3, HT |
| 7 | | 896-11016 | | 4 | ARANDELA, M17.5 x 30 x 4, HT |
| 8 | | 832-10416 | | 4 | CONTRA TUERCA, M16 x 2, Cl 8 |
| 9 | | 397437A1 | | 1 | MANGUERA (CONJUNTO) |
| 10 | | 218-1251 | | 1 | CONTRA TUERCA, Blkhd, 7/8"-14 |
| 11 | | 218-756 | | 1 | TAPON DEL DEPOSITO, 37º, 7/8"-14 |
| 12 | | 8602304 | | 1 | SOPORTE MOTOR, Rear Left |
| 13 | | 87426452 | | 1 | CONEXION |
| 14 | | 8602303 | | 1 | SOPORTE MOTOR, Rear Right |
| 15 | | 496-81025 | | 8 | ARANDELA, 21/32" x 2 1/2" x .188", HDN |

**RADIADOR - MANGUERAS Y TUBOS**

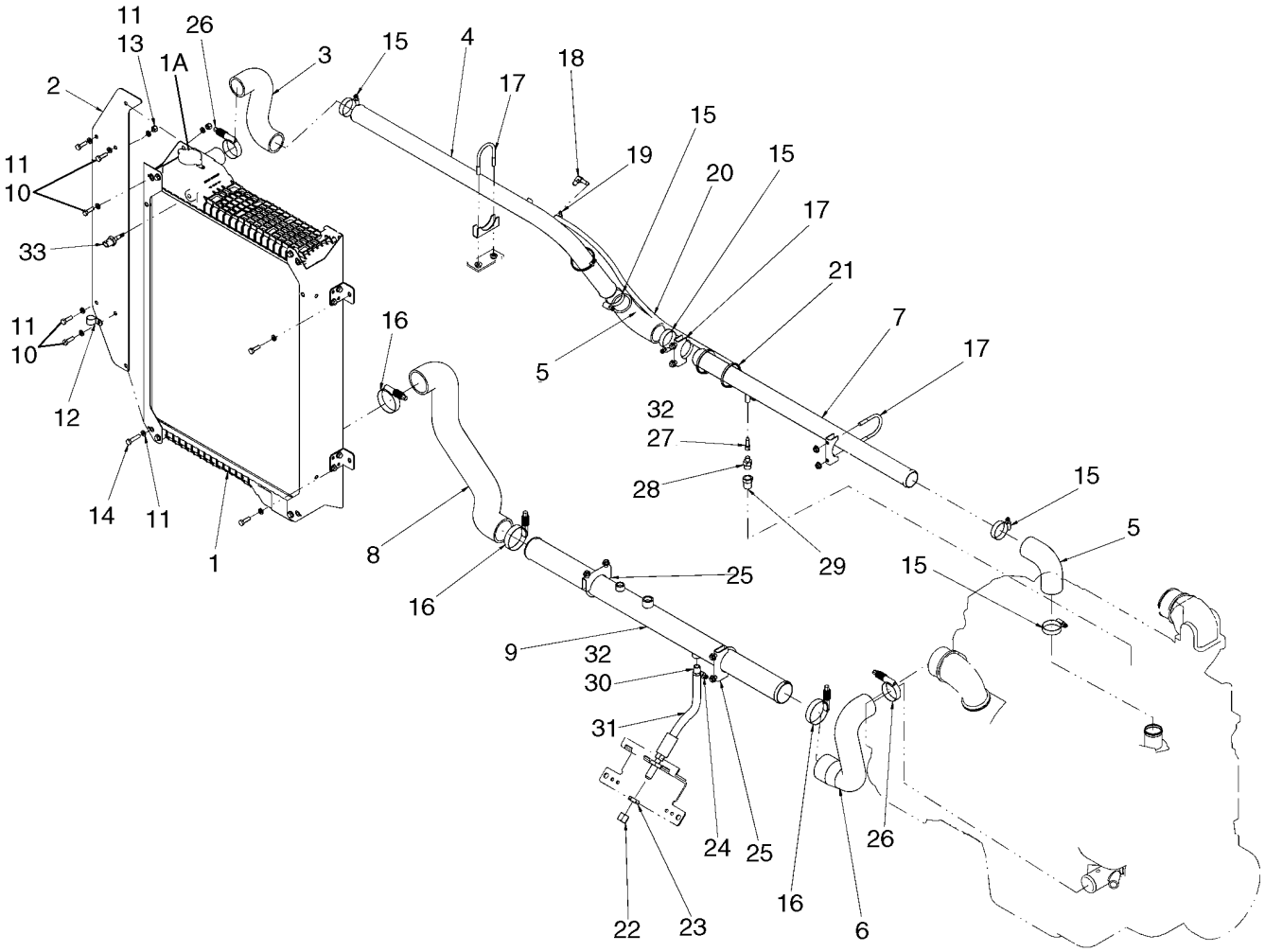

**RADIADOR - MANGUERAS Y TUBOS**

| REF | FN | PART NUMBER | YR/SN | QTY | DENOMINACION |
|---|---|---|---|---|---|
| 1 | | 8602421 | | 1 | RADIADOR, Incl. Ref. 1A |
| 1A | | A170241 | | 1 | TAPON RADIADOR |
| 2 | | 87324042 | | 1 | PLACA, Radiator |
| 3 | | 8500083 | | 1 | MANGA, Radiator Top |
| 4 | | 87552495 | | 1 | TUBO, Top Coolant |
| 5 | | 381232A1 | | 2 | MANGA, Elbow |
| 6 | | 8500084 | | 1 | MANGA, Engine Bottom |
| 7 | | 87446950 | | 1 | TUBO, Top Coolant |
| 8 | | 87552485 | | 1 | MANGA, Radiator Bottom |
| 9 | | 87325208 | | 1 | TUBO, Bottom Coolant |
| 10 | | 627-8025 | | 7 | TORNILLO, Hex, M8 x 25, 10.9 |
| 11 | | 892-11008 | | 12 | ARANDELA DE FRENO, M8 |
| 12 | | 515-22190 | | 4 | BORNE, 3/4", Insul, 5/16" Bolt |
| 13 | | 832-10408 | | 4 | CONTRA TUERCA, M8 x 1.25, Cl 8 |
| 14 | | 627-8035 | | 1 | TORNILLO, Hex, M8 x 35, 10.9 |
| 15 | | 214-1436 | | 5 | ABRAZADERA MANGUERA, #36, 1.81/2.75 Type F Worm |
| 16 | | L115548 | | 3 | COLLAR |
| 17 | | 382189A1 | | 3 | BORNE |
| 18 | | 217-292 | | 1 | CONEXION, 90º, 1/4" Hose x 1/8" NPTF, Barbed |
| 19 | | 214-1704 | | 2 | ABRAZADERA MANGUERA, #4, 0.25/0.62 Type M Worm |
| 20 | | 87552499 | | 1 | MANGA, Coolant Breather, 885 mm (33 - 1/2 in) |
| 21 | | L11541 | | 3 | BANDA |
| 22 | | 218-755 | | 1 | TAPON DEL DEPOSITO, 37º, 3/4"-16 |
| 23 | | 218-1255 | | 1 | CONTRA TUERCA, Blkhd, 3/4"-16 |
| 24 | | 214-1410 | | 1 | ABRAZADERA MANGUERA, #10, 0.56/1.06 Type F Worm |
| 25 | | 393632A1 | | 2 | TORNILLO DE SUJECTIO |
| 26 | | 254026A1 | | 2 | COLLAR |
| 27 | | 217-191 | | 1 | CONEXION, 1/4" Hose x 1/8" NPTF, Fem, Barbed |
| 28 | | J911901 | | 1 | VALVULA ANTIRRETORNO |
| 29 | | 217-1035 | | 1 | REDUCTOR, 1/2"-14 Male NPTF x 3/8"-18 Female NPTF |
| 30 | | 217-152 | | 1 | CONEXION, 1/2" Hose X 3/8" NPTF Beaded |

**RADIADOR - MANGUERAS Y TUBOS**

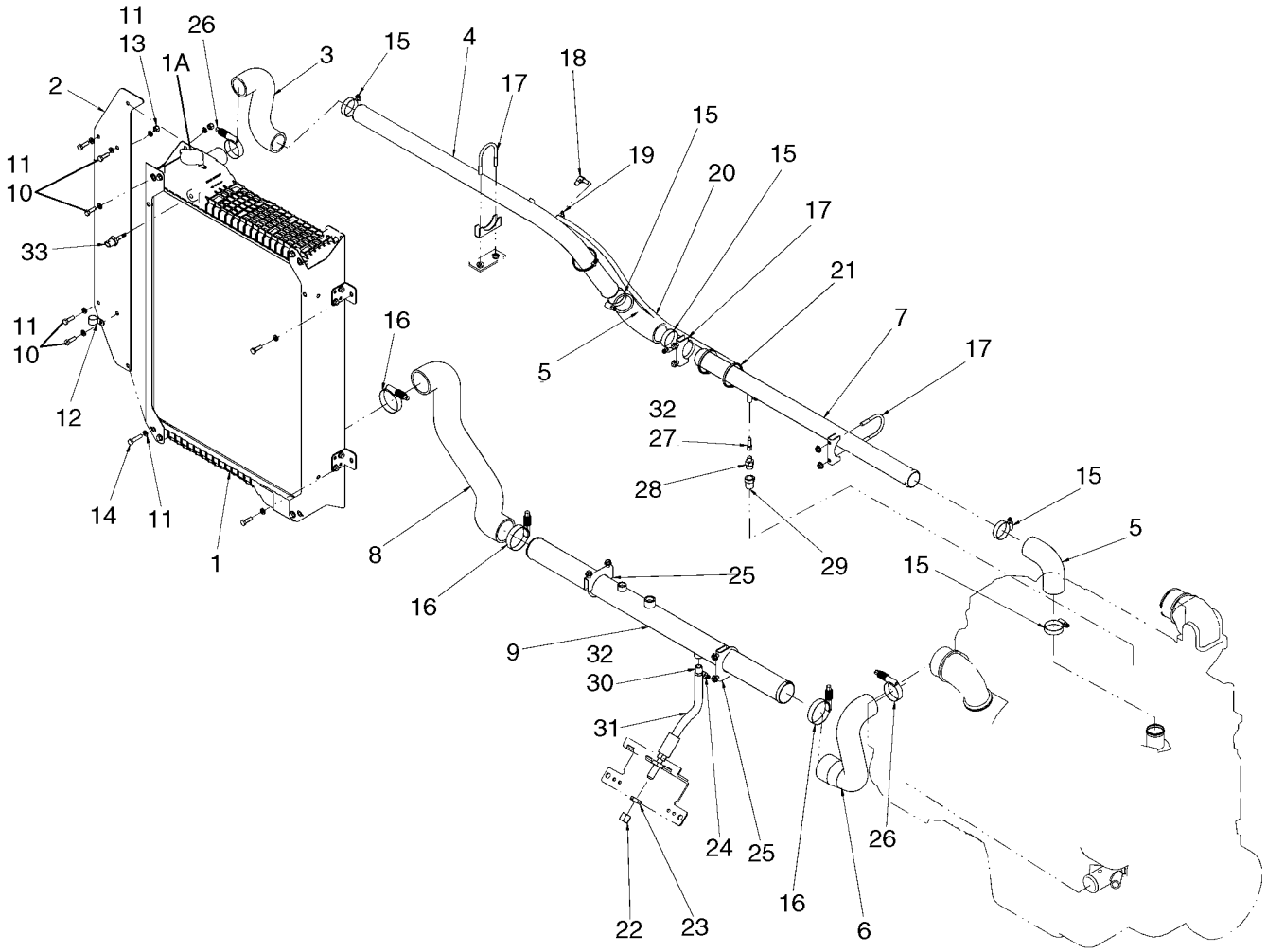

**RADIADOR - MANGUERAS Y TUBOS**

| REF | FN | PART NUMBER | YR/SN | QTY | DENOMINACION |
|---|---|---|---|---|---|
| 31 | | 87536091 | | 1 | MANGUERA (CONJUNTO), Remote Coolant Drain, 330 mm (13 in) |
| 32 | | 345-87 | | AR | LOCTITE |
| 33 | | 419792A2 | | 1 | CAPTADOR, Coolant Level |

| 02-03 | | p1 | 03/07 |
|---|---|---|---|

**REFRIGERADOR, CARGA DE AIRE**

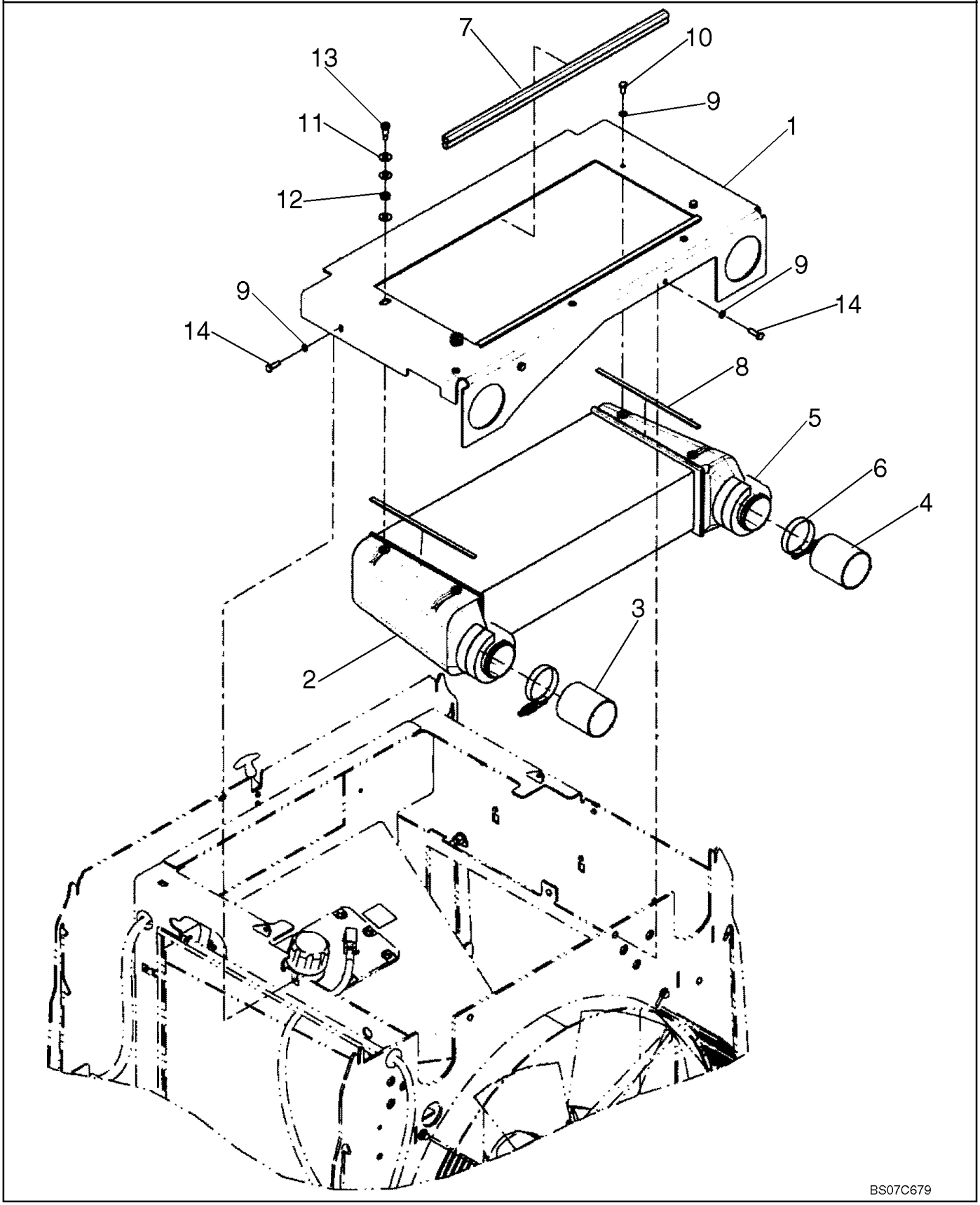

**REFRIGERADOR, CARGA DE AIRE**

| REF | FN | PART NUMBER | YR/SN | QTY | DENOMINACION |
|---|---|---|---|---|---|
| 1 | | 87381953 | | 1 | PLACA (CONJUNTO), Charge Air |
| 2 | | 347613A1 | | 1 | ENFRIADOR, Charge Air |
| 3 | | {87572375} | | 1 | HOSE, Air Intake |
| 4 | | {87572378} | | 1 | HOSE, Air Intake |
| 5 | | 8500167 | | 2 | ANILLO DE CIERRE |
| 6 | | L115549 | | 2 | BORNE |
| 7 | | 8500144 | | 2 | ANILLO DE CIERRE |
| 8 | | 8500143 | | 2 | ANILLO DE CIERRE, Foam |
| 9 | | 892-11008 | | 6 | ARANDELA DE FRENO, M8 |
| 10 | | 627-8016 | | 2 | TORNILLO, Hex, M8 x 16, 10.9 |
| 11 | | 895-15010 | | 6 | ARANDELA, M11 x 24 x 2 |
| 12 | | 386040R1 | | 2 | RESORTE |
| 13 | | 561-703 | | 2 | TORNILLO, Hex Soc, Shoulder, M8 10 X 16mm, Cl 12.9 |
| 14 | | 627-8025 | | 4 | TORNILLO, Hex, M8 x 25, 10.9 |

**REFRIGERADOR, CARGA DE AIRE - MANGUERAS Y TUBOS**

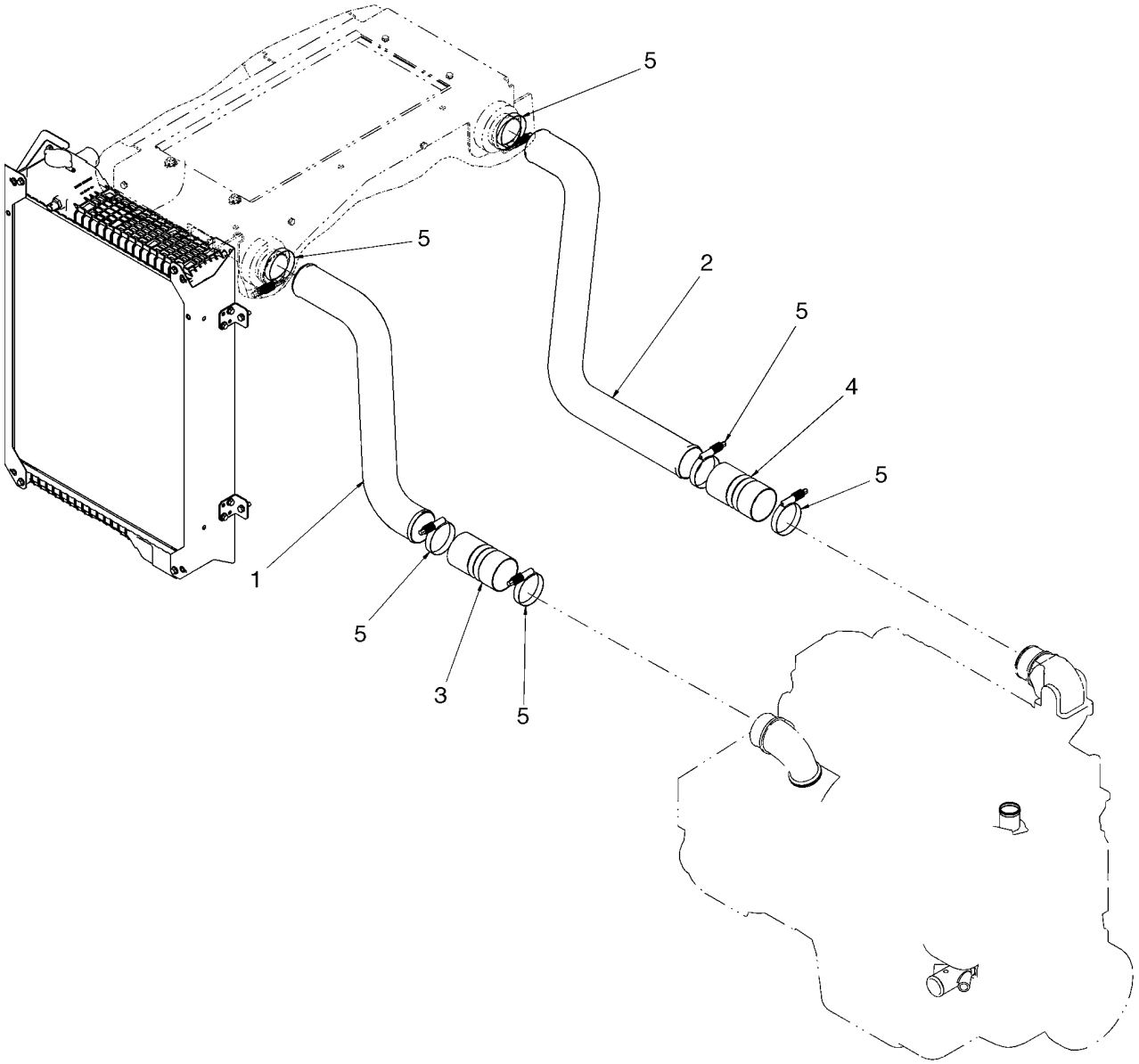

**REFRIGERADOR, CARGA DE AIRE - MANGUERAS Y TUBOS**

| REF | FN | PART NUMBER | YR/SN | QTY | DENOMINACION |
|---|---|---|---|---|---|
| 1 | | 87552496 | | 1 | TUBO, Charge Air - Turbo |
| 2 | | 87644742 | | 1 | TUBO ADMISIÓN DE AIRE, Charge Air - Intake |
| 3 | | 87340284 | | 1 | MANGA, Charge Air, 76X140 mm |
| 4 | | 87340015 | | 1 | MANGA, Air Intake, 76X140 mm |
| 5 | | L115549 | | 6 | BORNE |

**TRANSMISION DE VENTILADOR**

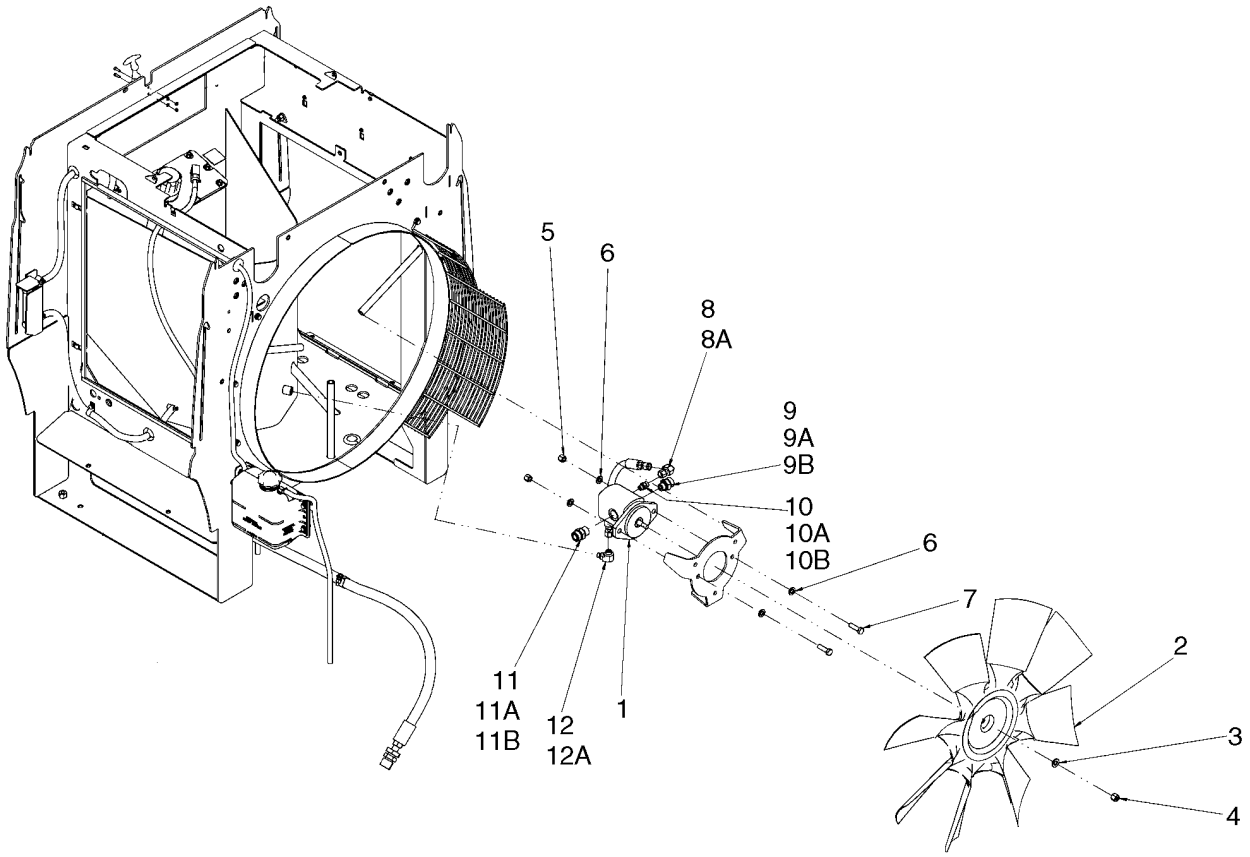


BS07D041

**TRANSMISION DE VENTILADOR**

| REF | FN | PART NUMBER | YR/SN | QTY | DENOMINACION |
|---|---|---|---|---|---|
| | | REF | | | MANUAL, FAN DRIVE MOUNTING, FOR HYDRAULICS AND FAN VALVES SEE FIGURES 08-22 - 08-24A |
| 1 | | 8500105 | | 1 | MOTOR-HIDRÁULICO, Reversible Fan; Incl. 1A |
| 1A | | 86991683 | | 1 | JEUGO, Seals, For Fan Drive Motor; Not Illustrated |
| 2 | | 8500471 | | 1 | VENTILADOR |
| 3 | | 496-21053 | | 1 | ARANDELA, 17/32" x 1 1/6" x .134" |
| 4 | | 232-2448 | | 1 | CONTRA TUERCA, 1/2"-20, GC |
| 5 | | 832-10412 | | 2 | CONTRA TUERCA, M12 x 1.75, Cl 8 |
| 6 | | 896-11012 | | 4 | ARANDELA, M13.5 x 24.5 x 3, HT |
| 7 | | 627-12040 | | 2 | TORNILLO, Hex, M12 x 40, 10.9, Full Thd |
| 8 | | 84989392 | | 1 | CODO, 90º, 11/16"-16 ORFS x 11/16"-16 Fem Sw, Incl. Ref. 8A |
| 8A | | 9993141 | | 1 | JUNTA HERMETICA, -012, 90 Duro, .364" ID x .070" Thk |
| 9 | | 86579681 | | 1 | RACOR, 1 3/16"-12 ORFS x M22 x 1.5 ORB, Incl. Refs. 9A, 9B |
| 9A | | 238-6018 | | 1 | JUNTA HERMETICA, -018, 90 Duro, .739" ID x .070" Thk, Face Seal |
| 9B | | 637-63193 | | 1 | JUNTA HERMETICA, Cl 6, 19.3MM ID x 2.2 Thk, Boss Seal |
| 10 | | 86579671 | | 1 | RACOR, 11/16"-16 ORFS x M14 x 1.5 ORB |
| 10A | | 238-6012 | | 1 | JUNTA HERMETICA, -012, 90 Duro, .364" ID x .070" Thk, Face Seal |
| 10B | | 637-63113 | | 1 | JUNTA HERMETICA, Cl 6, 11.3MM ID x 2.2 Thk, Boss Seal |
| 11 | | 86579682 | | 1 | RACOR, 1 3/16"-12 ORFS x M27 x 2 ORB, Incl. Refs. 11A, 11B |
| 11A | | 238-6018 | | 1 | JUNTA HERMETICA, -018, 90 Duro, .739" ID x .070" Thk, Face Seal |
| 11B | | 637-64236 | | 1 | JUNTA HERMETICA, Cl 6, 23.6MM ID x 2.9 Thk, Boss Seal |
| 12 | | 86579686 | | 1 | CODO, 90º, 11/16"-18 ORFS x M14 x 1.5 ORB, Incl. Ref. 12A |

**TRANSMISION DE VENTILADOR**

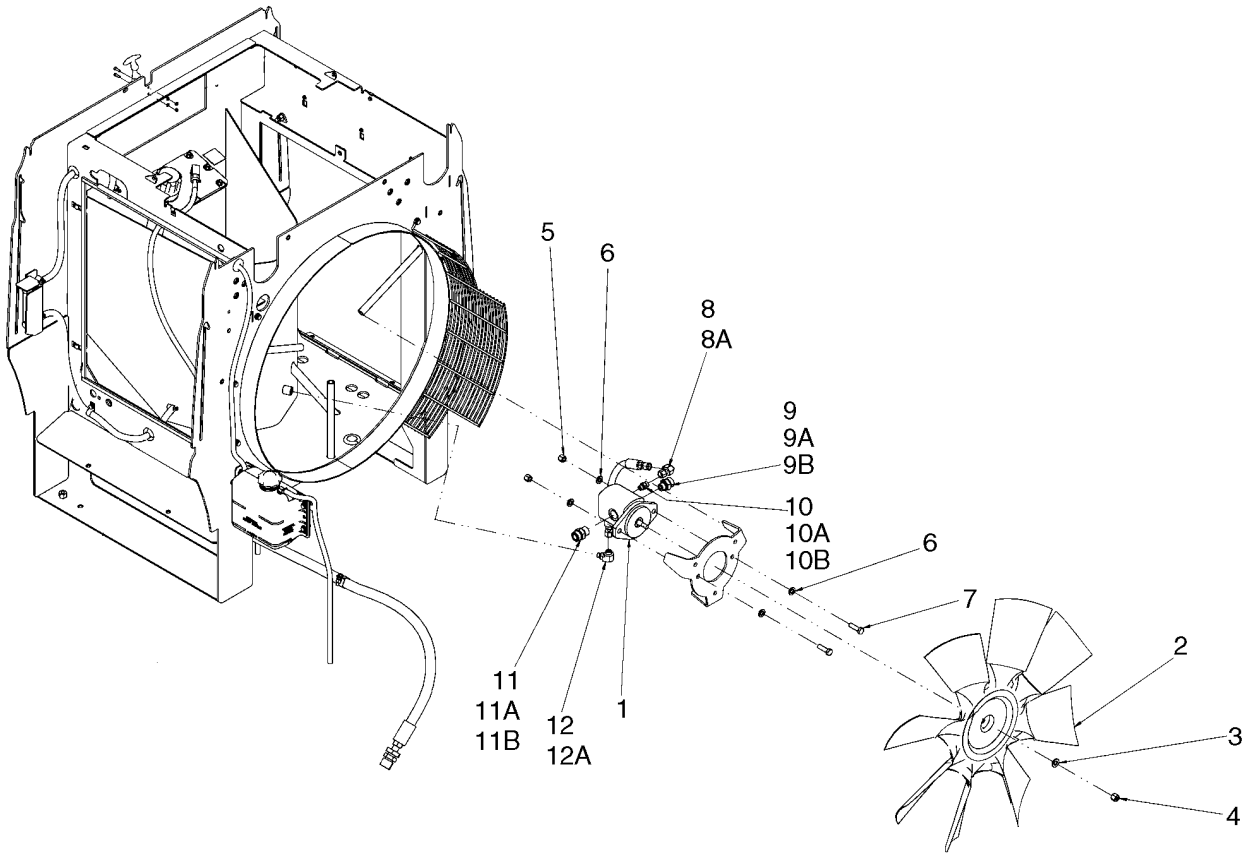

**TRANSMISION DE VENTILADOR**

| REF | FN | PART NUMBER | YR/SN | QTY | DENOMINACION |
|---|---|---|---|---|---|
| 12A | | 238-6012 | | 1 | JUNTA HERMETICA, -012, 90 Duro, .364" ID x .070" Thk, Face Seal |

**FILTRO DE AIRE - PIEZAS DE ENTRADA DE AIRE**

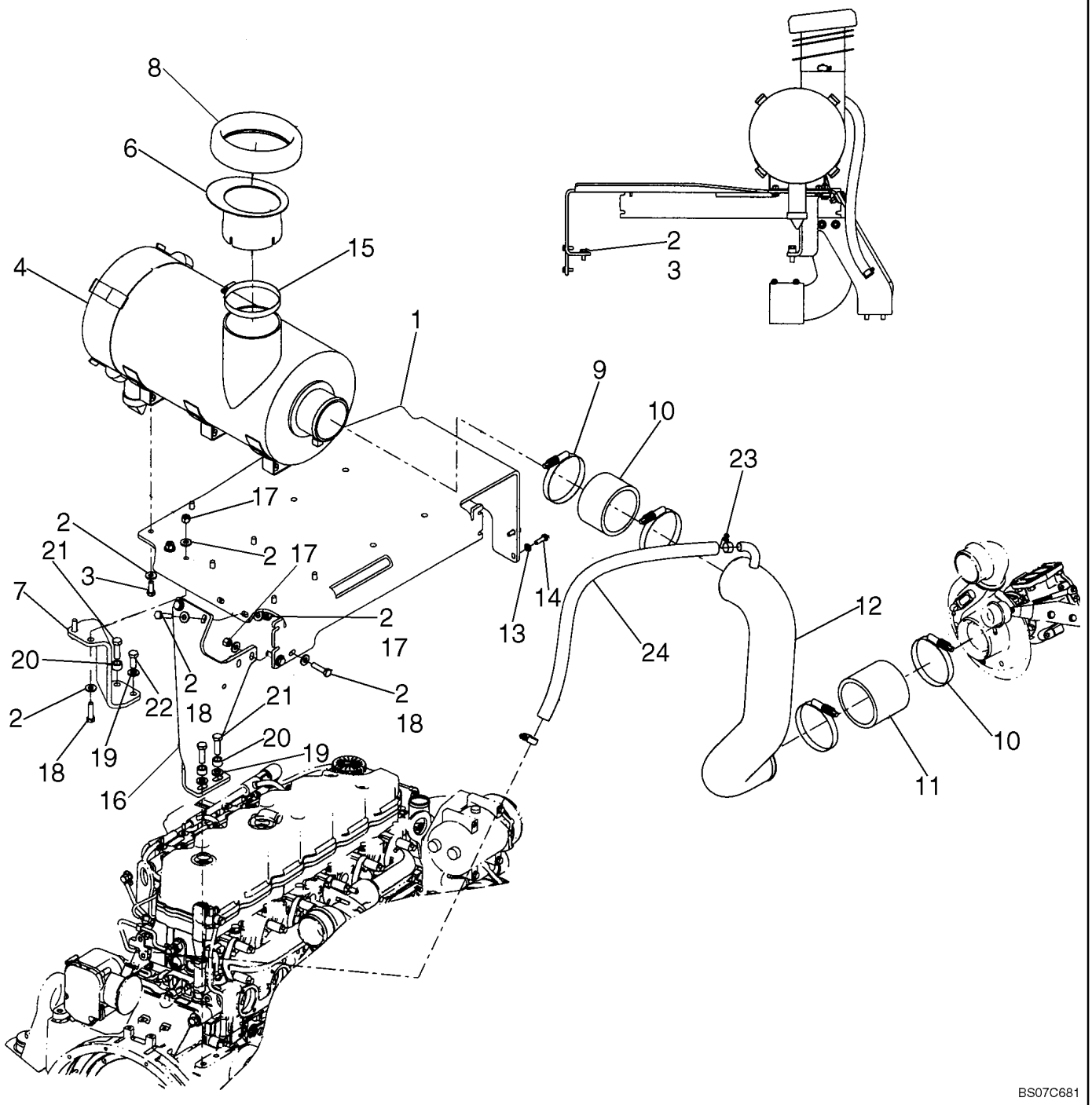

**FILTRO DE AIRE - PIEZAS DE ENTRADA DE AIRE**

| REF | FN | PART NUMBER | YR/SN | QTY | DENOMINACION |
|---|---|---|---|---|---|
| 1 | | 87535471 | | 1 | SOPORTE, Air Cleaner |
| 2 | | 896-15010 | | 20 | ARANDELA, M10 x 24.5 x 3, HT |
| 3 | | 627-10025 | | 8 | TORNILLO, Hex, M10 x 25, 10.9, Full Thd |
| 4 | | 87590238 | | 1 | DEPURADOR, See Figure 02-06A |
| 6 | | 87557216 | | 1 | TUBO, Under Hood Intake |
| 7 | | 87535473 | | 1 | SOPORTE, Air Cleaner |
| 8 | | 8500403 | | 1 | ANILLO DE CIERRE |
| 9 | | 8501205 | | 1 | MANGA, 73 mm ( 2 7/8 in ); Air Cleaner |
| 10 | | L127771 | | 4 | COLLAR |
| 11 | | 8602478 | | 1 | MANGA, 100 mm ( 4 in ); Air Cleaner |
| 12 | | 8602473 | | 1 | TUBO, Air Cleaner Intake |
| 13 | | 896-11008 | | 2 | ARANDELA, M8 x 17.5 x 2, HT |
| 14 | | 627-8025 | | 2 | TORNILLO, Hex, M8 x 25, 10.9 |
| 15 | | 214-3188 | | 1 | ABRAZADERA MANGUERA, 4.75/6.625 HD Worm |
| 16 | | 87535472 | | 1 | SOPORTE, Left |
| 17 | | 832-10410 | | 6 | CONTRA TUERCA, M10 x 1.5, Cl 8 |
| 18 | | 627-10040 | | 6 | TORNILLO, Hex, M10 x 40, 10.9, Full Thd |
| 19 | | 896-11012 | | 3 | ARANDELA, M13.5 x 24.5 x 3, HT |
| 20 | | D44696 | | 2 | CASQUILLO, 1/2 Pipe x 1/2 |
| 21 | | 627-12040 | | 3 | TORNILLO, Hex, M12 x 40, 10.9, Full Thd |
| 22 | | 627-12030 | | 1 | TORNILLO, Hex, M12 x 30, 10.9 |
| 23 | | 214-1416 | | 2 | ABRAZADERA MANGUERA, #16, 0.81/1.50 Type F Worm |
| 24 | | 87342638 | | 1 | MANGA, 800 mm ( 31-1/2in ); Crankcase Ventilation |

**CONJUNTO DEL PURIFICADOR DE AIRE**

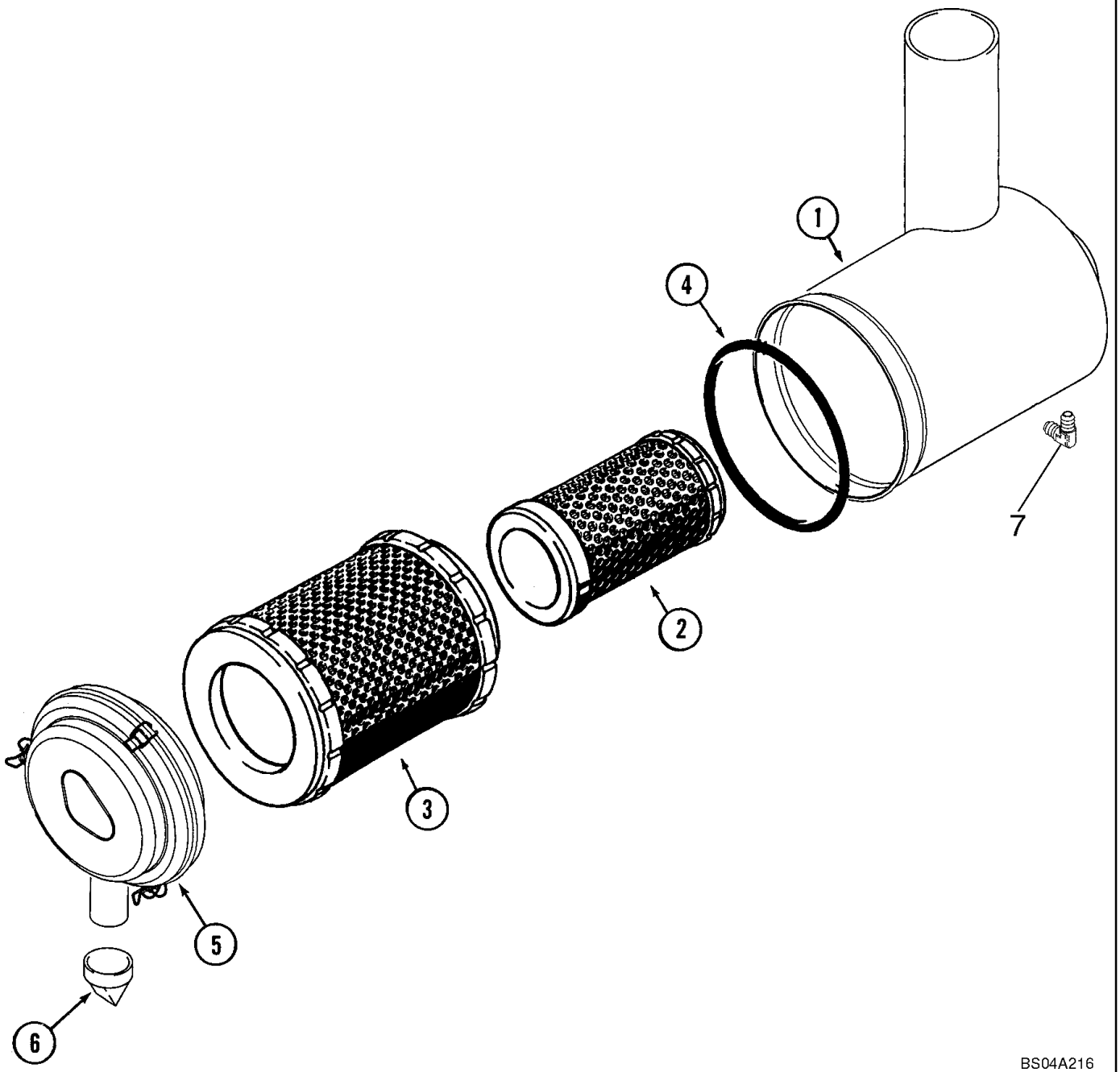

**CONJUNTO DEL PURIFICADOR DE AIRE**

| REF | FN | PART NUMBER | YR/SN | QTY | DENOMINACION |
|---|---|---|---|---|---|
| | | 87590238 | | 1 | DEPURADOR, Incl. Refs. 1 - 7 |
| 1 | | NSS | | 1 | NO SE REPARA SEPARADAM., Body |
| 2 | | 8605140 | | 1 | FILTRO DE AIRE, Secondary |
| 3 | | 8605139 | | 1 | FILTRO DE AIRE, Primary |
| 4 | | 8605078 | | 1 | JUNTA HERMETICA |
| 5 | | 8605079 | | 1 | TAPA |
| 6 | | 8604231 | | 1 | VALVULA |
| 7 | | 217-1227 | | 1 | CODO, 90º, 1/8"-27 Male |

**CONJUNTO DEL DEPURADOR DE AIRE - CONJUNTO DEL PREDEPURADOR DE AIRE**

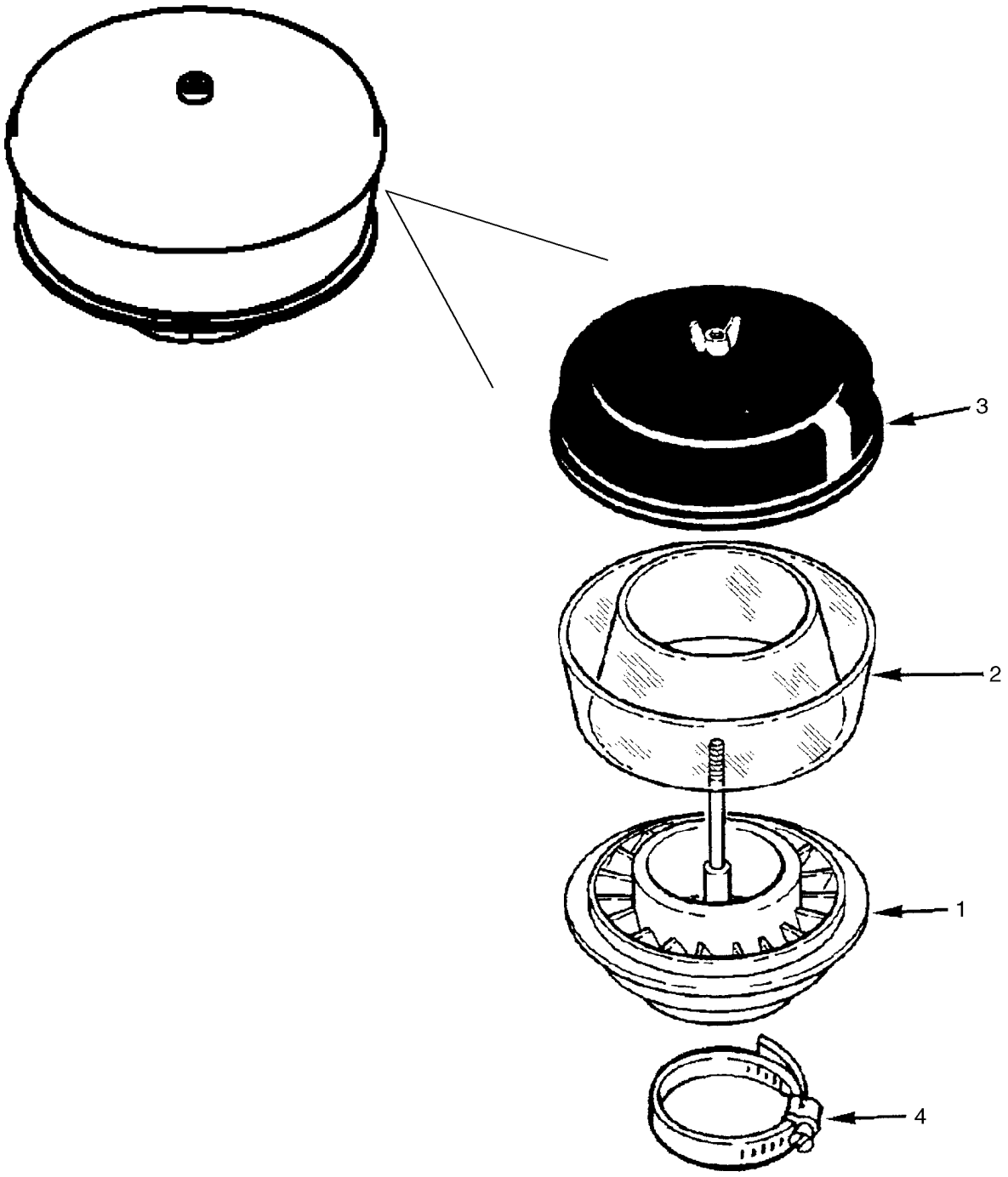

**CONJUNTO DEL DEPURADOR DE AIRE - CONJUNTO DEL PREDEPURADOR DE AIRE**

| REF | FN | PART NUMBER | YR/SN | QTY | DENOMINACION |
|---|---|---|---|---|---|
| | | REF | | | MANUAL, PRECLEANER COMPONENT PARTS |
| | | 258541A1 | | 1 | PREFILTRO, Incl. Refs. 1 - 4 |
| 1 | | NSS | | 1 | NO SE REPARA SEPARADAM., Base |
| 2 | | L30671 | | 1 | CAVIDAD |
| 3 | | L30669 | | 1 | TAPA |
| 4 | | 214-1480 | | 1 | ABRAZADERA MANGUERA, #80, 4.62/5.50 Type F Worm |

**SILENCIADOR - SISTEMA DE ESCAPE**

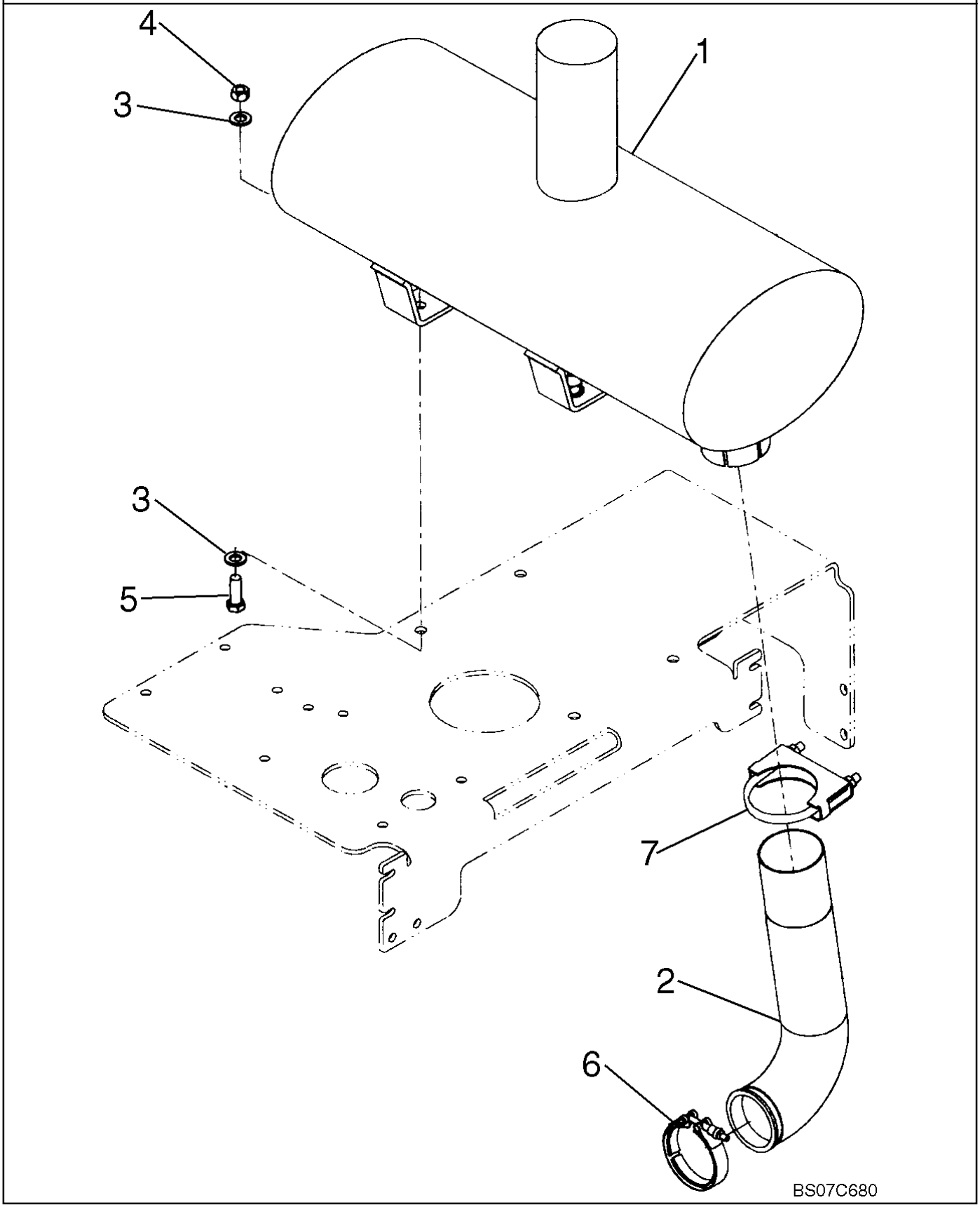

**SILENCIADOR - SISTEMA DE ESCAPE**

| REF | FN | PART NUMBER | YR/SN | QTY | DENOMINACION |
|---|---|---|---|---|---|
| 1 | | 87365731 | | 1 | AUSPUFFTOPF |
| 2 | | 87365709 | | 1 | TUBO, Exhaust |
| 3 | | 896-11012 | | 8 | ARANDELA, M13.5 x 24.5 x 3, HT |
| 4 | | 829-1412 | | 4 | TUERCA, M12, Cl 10 |
| 5 | | 627-12035 | | 4 | TORNILLO, Hex, M12 x 35, 10.9 |
| 6 | | J903652 | | 1 | COLLAR |
| 7 | | 299456A1 | | 1 | ARGOLLA DE CIERRE |

**LLENADO DE ACEITE, MOTOR**

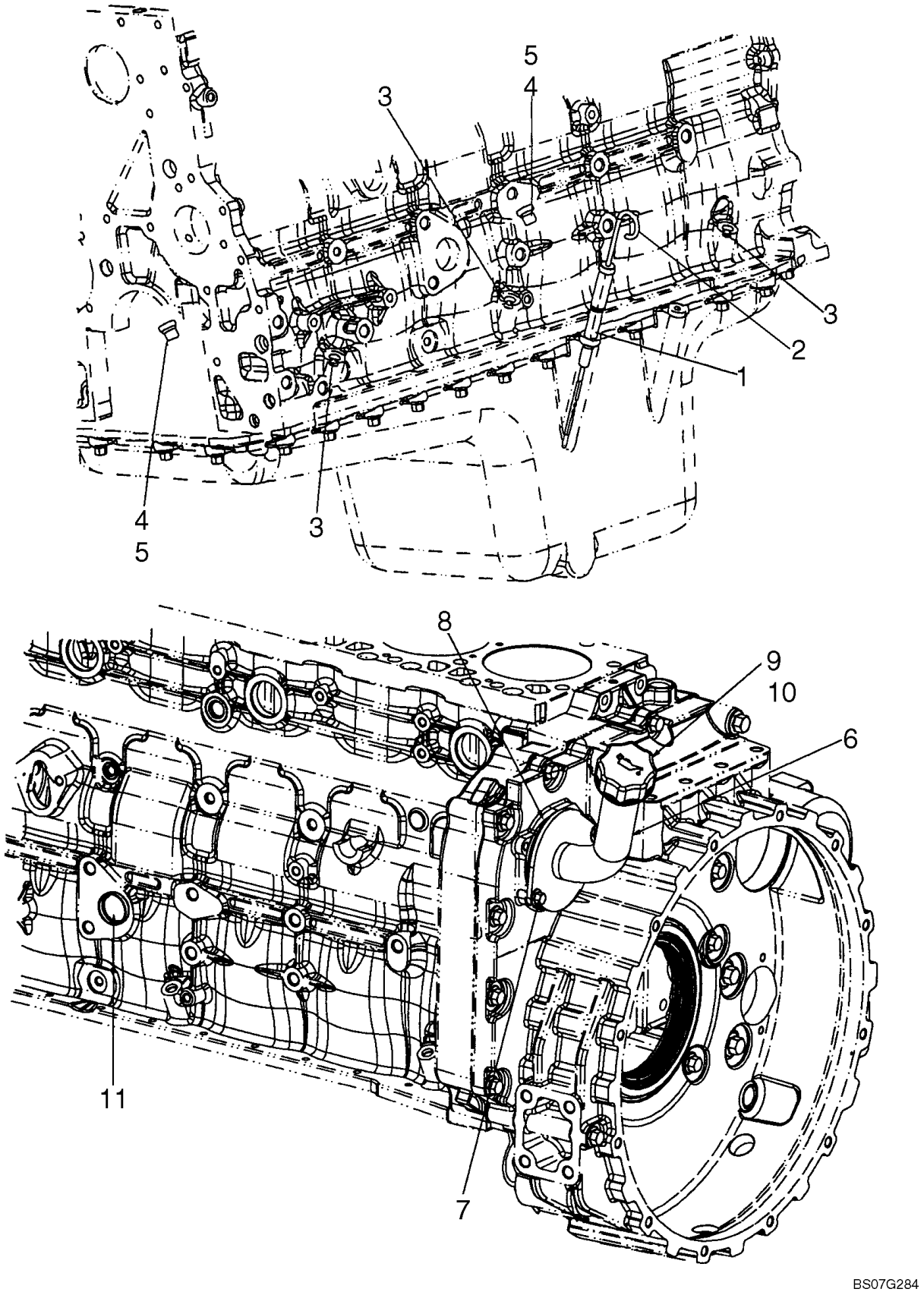


BS07G284

**LLENADO DE ACEITE, MOTOR**

| REF | FN | PART NUMBER | YR/SN | QTY | DENOMINACION |
|---|---|---|---|---|---|
| | | 87579400 | | 1 | MOTOR, 6 Cylinder 6.7L Turbo, Tier III; Includes Figures 02-09 - 02-13, 02-15 - 02-41, 03-05 - 03-11; Incl. Refs. 1 - 11 |
| | | 2852463 | | 1 | VARILLA DE NIVEL, ASSY. Incl. Refs. 1, 2 |
| 1 | | 2852122 | | 1 | TUBO RIGIDO |
| 2 | | 2852464 | | 1 | VARILLA DE NIVEL |
| 3 | | 4899036 | | 3 | TAPÓN, Expansion |
| 4 | | 4897330 | | 4 | TAPÓN, ASSY. Incl. Ref. 5 |
| 5 | | 4895610 | | 1 | JUNTA HERMETICA |
| 6 | | 2856132 | | 1 | CUELLO LIENADOR |
| 7 | | 4899020 | | 2 | TORNILLO |
| 8 | | 2854075 | | 1 | JUNTA HERMETICA |
| 9 | | 2853410 | | 1 | TAPON DE LLENADO, ASSY. Incl. Ref. 10 |
| 10 | | 2853412 | | 1 | JUNTA HERMETICA |
| 11 | | 4895037 | | 1 | TAPÓN |

**BOMBA DE ACEITE - MOTOR**

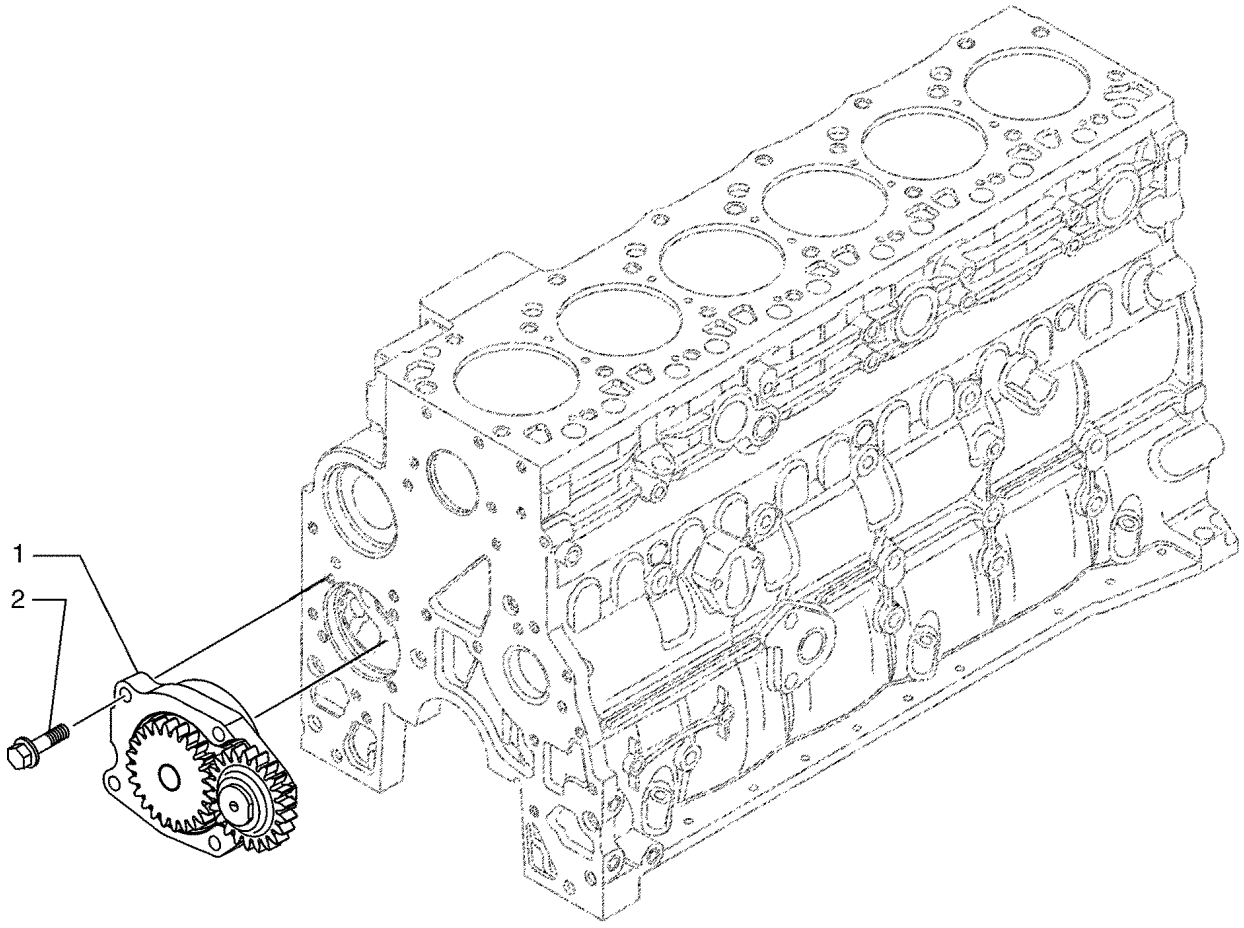


BS03N088

**BOMBA DE ACEITE - MOTOR**

| REF | FN | PART NUMBER | YR/SN | QTY | DENOMINACION |
|---|---|---|---|---|---|
| | | 87579400 | | 1 | MOTOR, 6 Cylinder 6.7L Turbo, Tier III; Includes Figures 02-09 - 02-13, 02-15 - 02-41, 03-05 - 03-11; Incl. Refs. 1 - 2 |
| 1 | | 4897481 | | 1 | BOMBA DE ACEITE |
| 1 | | 2853591 | | 1 | BOMBA DE ACEITE, In Alternative |
| 2 | | 4899090 | | 4 | TORNILLO, Hex Flg, M8 x 1.25 x 30 |

**FILTRO DE ACEITE - MOTOR**

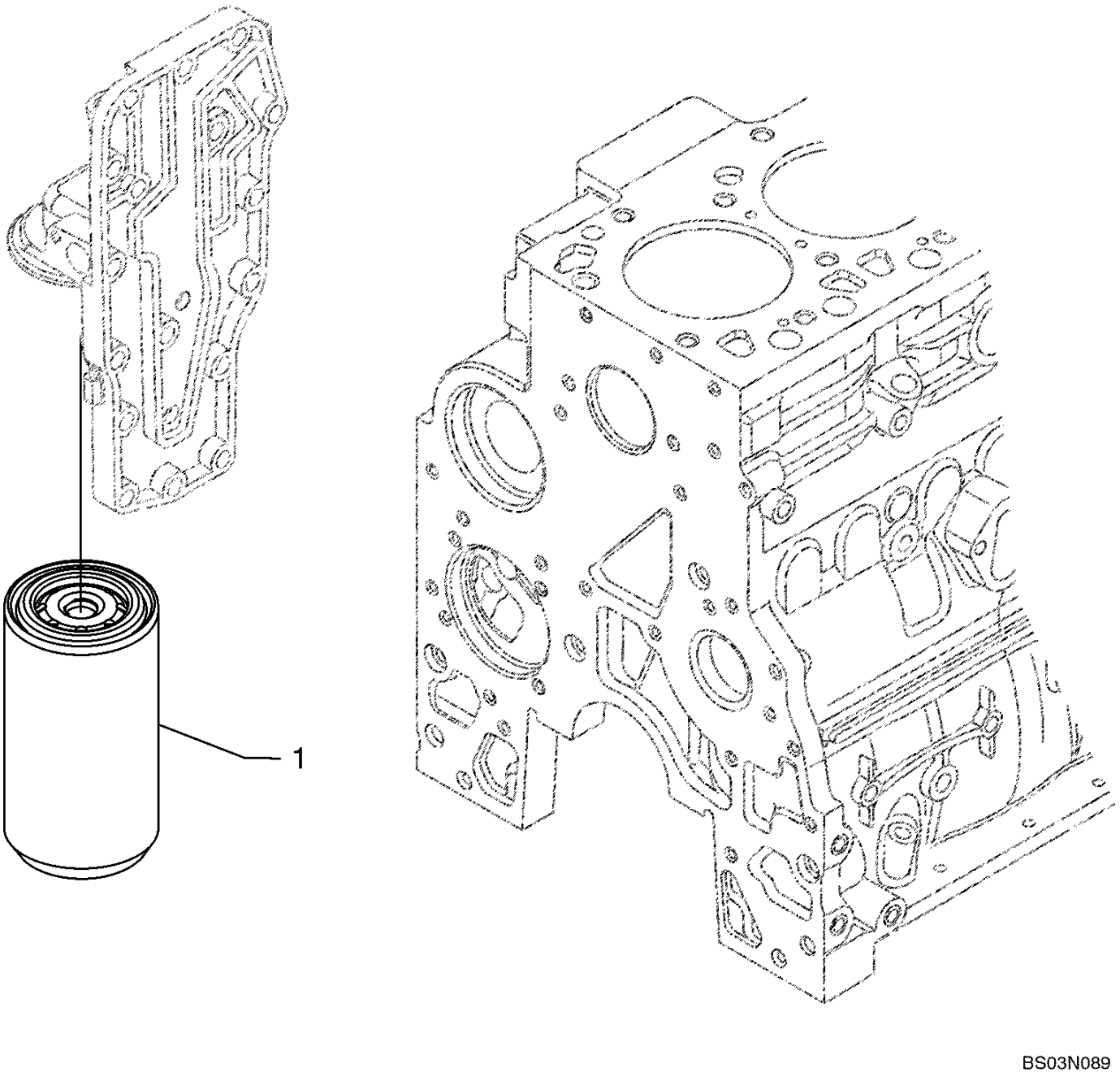

**FILTRO DE ACEITE - MOTOR**

| REF | FN | PART NUMBER | YR/SN | QTY | DENOMINACION |
|---|---|---|---|---|---|
| | | 87579400 | | 1 | MOTOR, 6 Cylinder 6.7L Turbo, Tier III; Includes Figures 02-09 - 02-13, 02-15 - 02-41, 03-05 - 03-11; Incl. Ref. 1 |
| 1 | | 87803261 | | 1 | FILTRO DE ACEITE |

| 02-12 | | p1 | 07/07 |
|---|---|---|---|

**FILTRO Y REFRIGERADOR DE ACEITE**

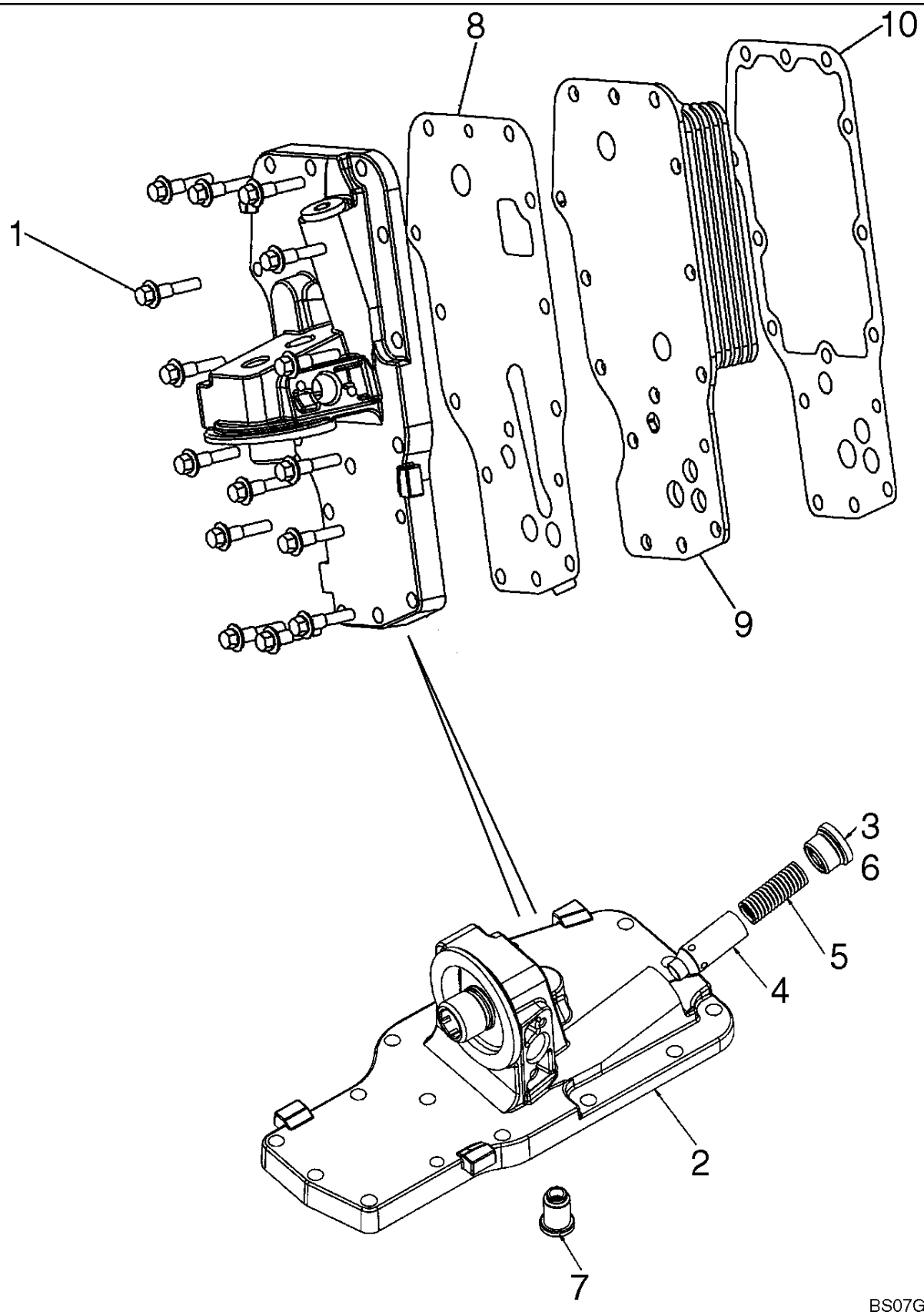

**FILTRO Y REFRIGERADOR DE ACEITE**

| REF | FN | PART NUMBER | YR/SN | QTY | DENOMINACION |
|---|---|---|---|---|---|
| | | 87579400 | | 1 | MOTOR, 6 Cylinder 6.7L Turbo, Tier III; Includes Figures 02-09 - 02-13, 02-15 - 02-41, 03-05 - 03-11; Incl. Refs. 1 - 10 |
| 1 | | 4899019 | | 15 | TORNILLO, Hex Flg, M8 x 1.25 x 35 |
| | | 2853780 | | 1 | CABEZA DE FILTRO, Housing Assy. Incl. Refs. 2 - 7 |
| 2 | | 4899566 | | 1 | CAMBIADOR DE CALOR, Housing |
| 3 | | 2853781 | | 1 | TAPÓN, Incl. Ref. 6 |
| 4 | | 4896404 | | 1 | EMBOLO, Pressure Reg. |
| 5 | | 4895045 | | 1 | RESORTE |
| 6 | | 4899035 | | 1 | JUNTA HERMETICA |
| 7 | | 4896410 | | 1 | VÁLVULA, DESCARGA |
| 8 | | 4896409 | | 1 | JUNTA HERMETICA |
| 9 | | 4896407 | | 1 | RADIADOR |
| 9 | | 2853604 | | 1 | RADIADOR ACEITE, In Alterative |
| 10 | | 2830559 | | 1 | JUNTA HERMETICA |

| 02-13 | | p1 | 07/07 |
|---|---|---|---|

**BOMBA DE ACEITE, BANDEJA**

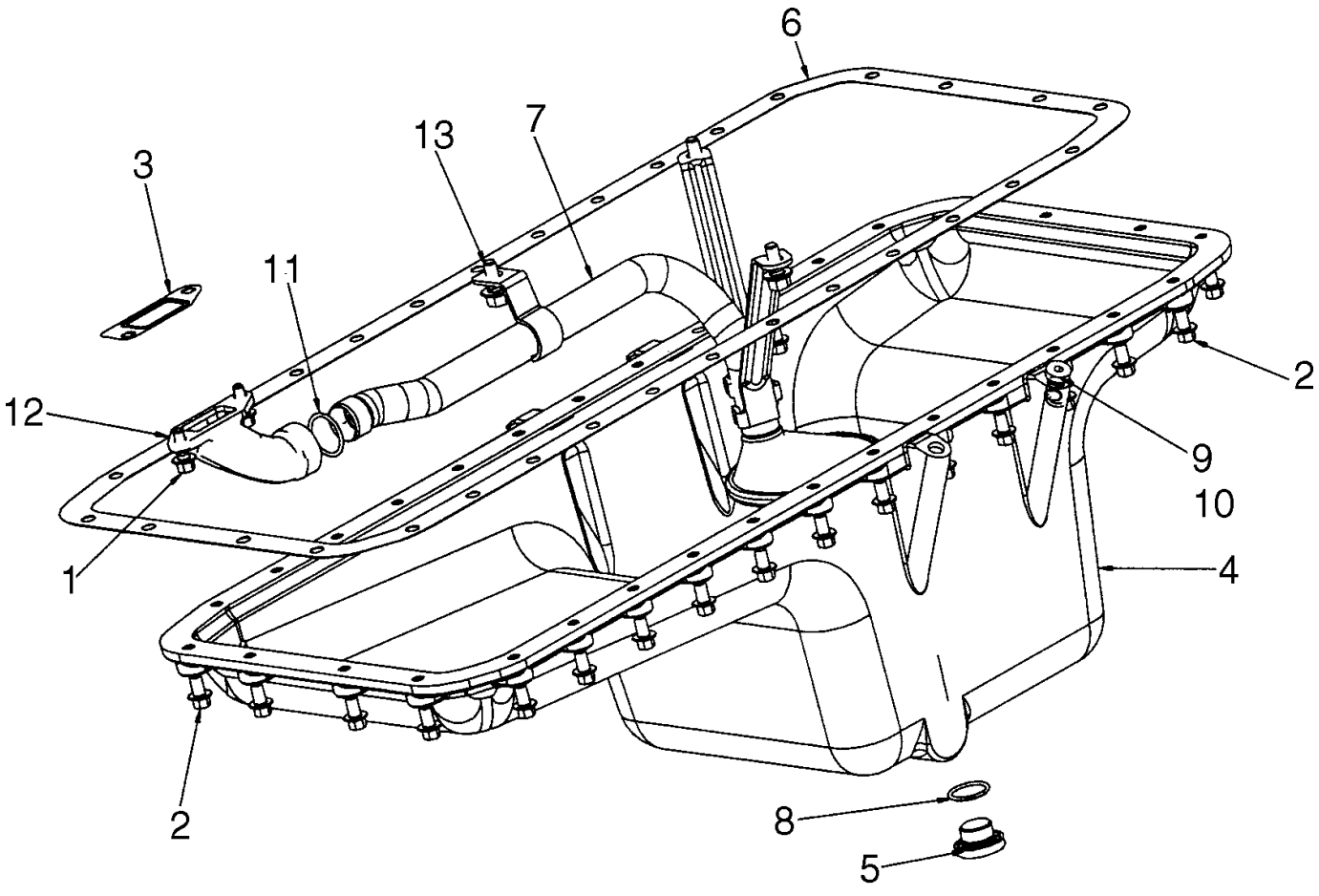

**BOMBA DE ACEITE, BANDEJA**

| REF | FN | PART NUMBER | YR/SN | QTY | DENOMINACION |
|---|---|---|---|---|---|
| | | 87579400 | | 1 | MOTOR, 6 Cylinder 6.7L Turbo, Tier III; Includes Figures 02-09 - 02-13, 02-15 - 02-41, 03-05 - 03-11; Incl. Refs. 1 - 13 |
| 1 | | 4899020 | | 2 | TORNILLO, M8 x 1.25 x 20 |
| 2 | | 4899019 | | 32 | TORNILLO, Hex Flg, M8 x 1.25 x 35 |
| 3 | | 4898301 | | 1 | JUNTA HERMETICA |
| 4 | | 2852419 | | 1 | CARTER DE ACEITE |
| 5 | | 4894139 | | 1 | TAPÓN |
| 6 | | 2852420 | | 1 | JUNTA HERMETICA |
| 7 | | 2852770 | | 1 | TAMIZ DE ALCACHOFA, PIPE, Oil Suction, Incl. Ref. 7A |
| 7A | | 2852217 | | 1 | RED, ASSY, Gasket And Gauze Oil Strainer, Not Illustrated |
| 8 | | 2853728 | | 1 | JUNTA HERMETICA |
| 9 | | 4897330 | | 1 | TAPÓN |
| 10 | | 4895610 | | 1 | JUNTA HERMETICA, 9.3 ID x 2.2 |
| 11 | | 2852237 | | 1 | JUNTA HERMETICA, 26.64 ID x 2.62 |
| 12 | | 2852238 | | 1 | TUBO RIGIDO |
| 13 | | 4895291 | | 3 | TORNILLO, Hex Flg, M10 x 1.5 x 20 |

**BOMBA DE ACEITE, BANDEJA - LÍNEA DE DRENAJE - CUBIERTA**

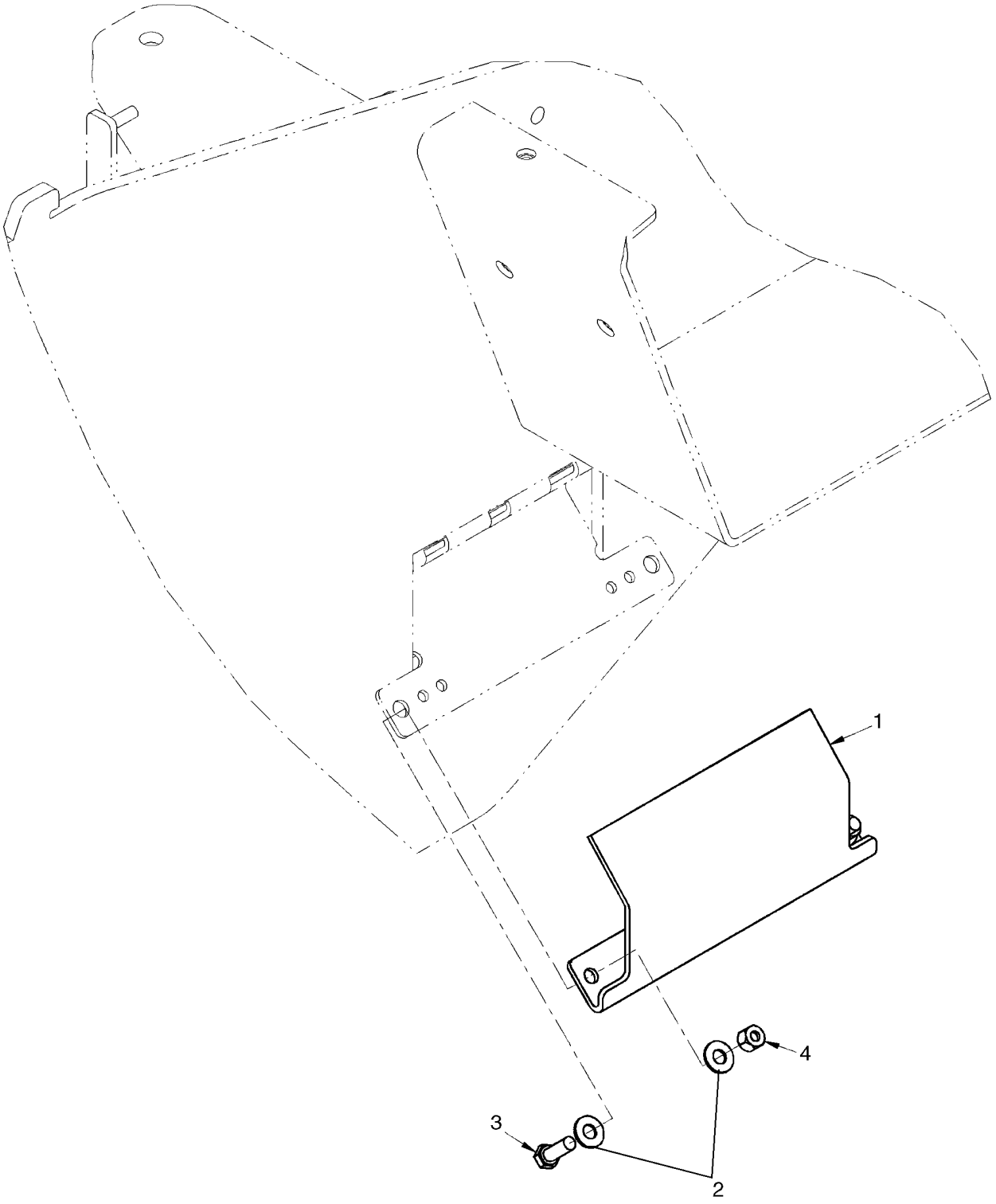

**BOMBA DE ACEITE, BANDEJA - LÍNEA DE DRENAJE - CUBIERTA**

| REF | FN | PART NUMBER | YR/SN | QTY | DENOMINACION |
|---|---|---|---|---|---|
| 1 | | 407632A1 | | 1 | TAPA, Remote Drain |
| 2 | | 895-15010 | | 4 | ARANDELA, M11 x 24 x 2 |
| 3 | | 627-10030 | | 2 | TORNILLO, Hex, M10 x 30, 10.9, Full Thd |
| 4 | | 832-10410 | | 2 | CONTRA TUERCA, M10 x 1.5, Cl 8 |

**RESPIRADERO - MOTOR**

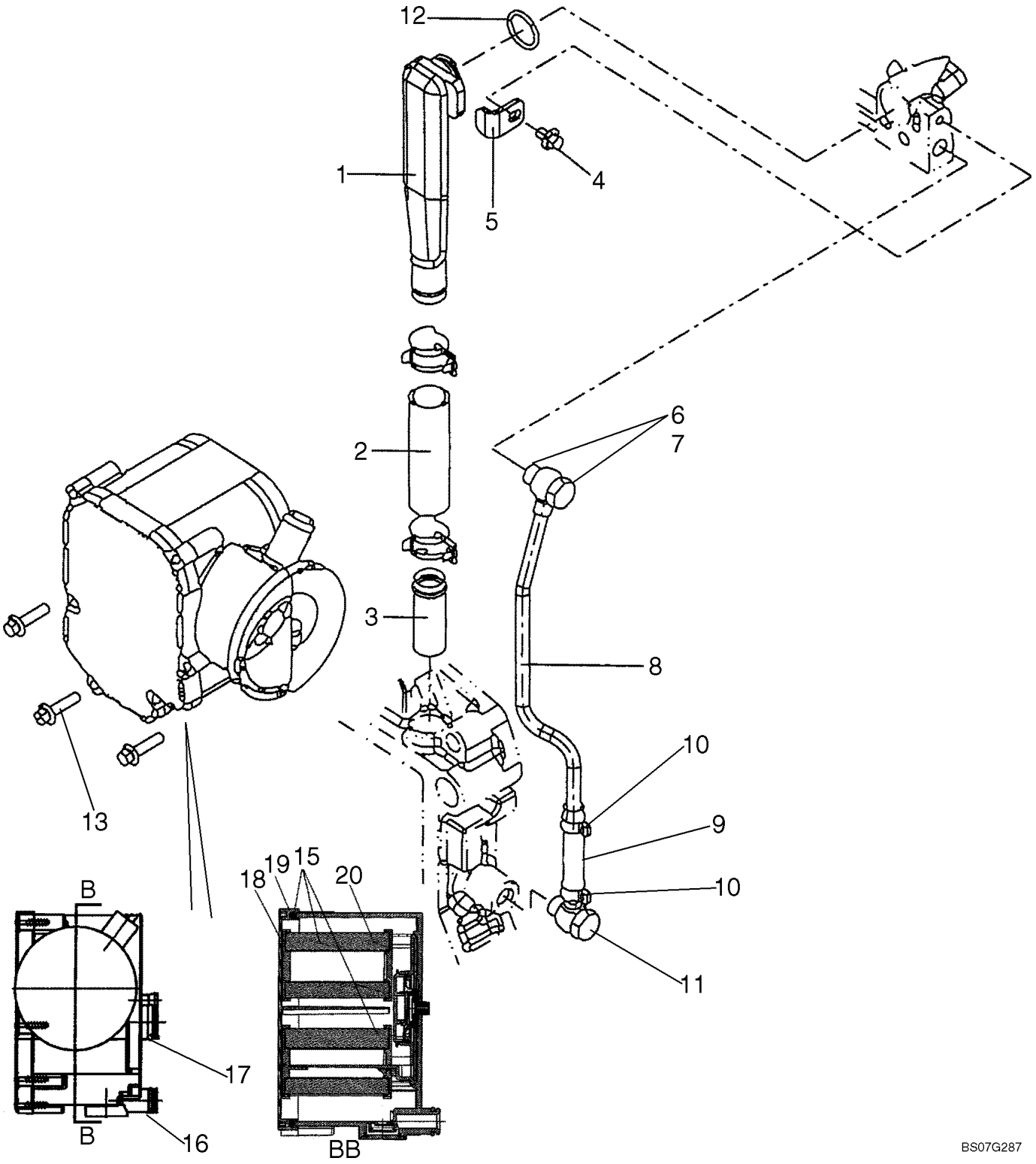

**RESPIRADERO - MOTOR**

| REF | FN | PART NUMBER | YR/SN | QTY | DENOMINACION |
|---|---|---|---|---|---|
| | | 87579400 | | 1 | MOTOR, 6 Cylinder 6.7L Turbo, Tier III; Includes Figures 02-09 - 02-13, 02-15 - 02-41, 03-05 - 03-11; Incl. Refs. 1 - 21 |
| 1 | | 4897534 | | 1 | TUBO RIGIDO, Breather |
| 2 | | 4897546 | | 1 | MANGUITO, Tube |
| 3 | | 4897547 | | 1 | TUBO RIGIDO, Connector |
| 4 | | 4897537 | | 1 | TORNILLO |
| 5 | | 4897536 | | 1 | PIEZA DE SOPORTE |
| | | 4899219 | | 1 | TUBO RIGIDO, Breather Assy. Incl. Refs. 6 - 11 |
| 6 | | 2852772 | | 2 | BOQUILLA |
| 7 | | 4899926 | | 4 | JUNTA HERMETICA |
| 8 | | NSS | | 1 | NO SE REPARA SEPARADAM., Hose |
| 9 | | 4899240 | | 1 | MANGA, Plain |
| 10 | | 4899242 | | 2 | BORNE |
| 11 | | 4899243 | | 1 | RACOR |
| 12 | | 4898439 | | 1 | JUNTA HERMETICA |
| 13 | | 4899092 | | 3 | TORNILLO, Hex Flg, M6 x 1 x 25 |
| | | 4892871 | | 1 | RESPIRADERO, Assy. Incl. Refs. 14 - 21 |
| 14 | | 2830301 | | 6 | TORNILLO, Breather Case, Not Illustrated |
| 15 | | 2830307 | | 1 | RESPIRADERO, Crankcase |
| 16 | | 4898372 | | 1 | JUNTA HERMETICA |
| 17 | | 2830304 | | 1 | JUNTA HERMETICA |
| 18 | | {2820302} | | 1 | COVER, Protective |
| 19 | | 2830303 | | 1 | JUNTA HERMETICA, Breather |
| 20 | | 2830592 | | 2 | FILTRO, Breather |
| 21 | | 4893234 | | 2 | PLACA DE SUJECION, Not Illustrated |

**TURBOCOMPRESOR - LÍNEA DE DRENAJE**

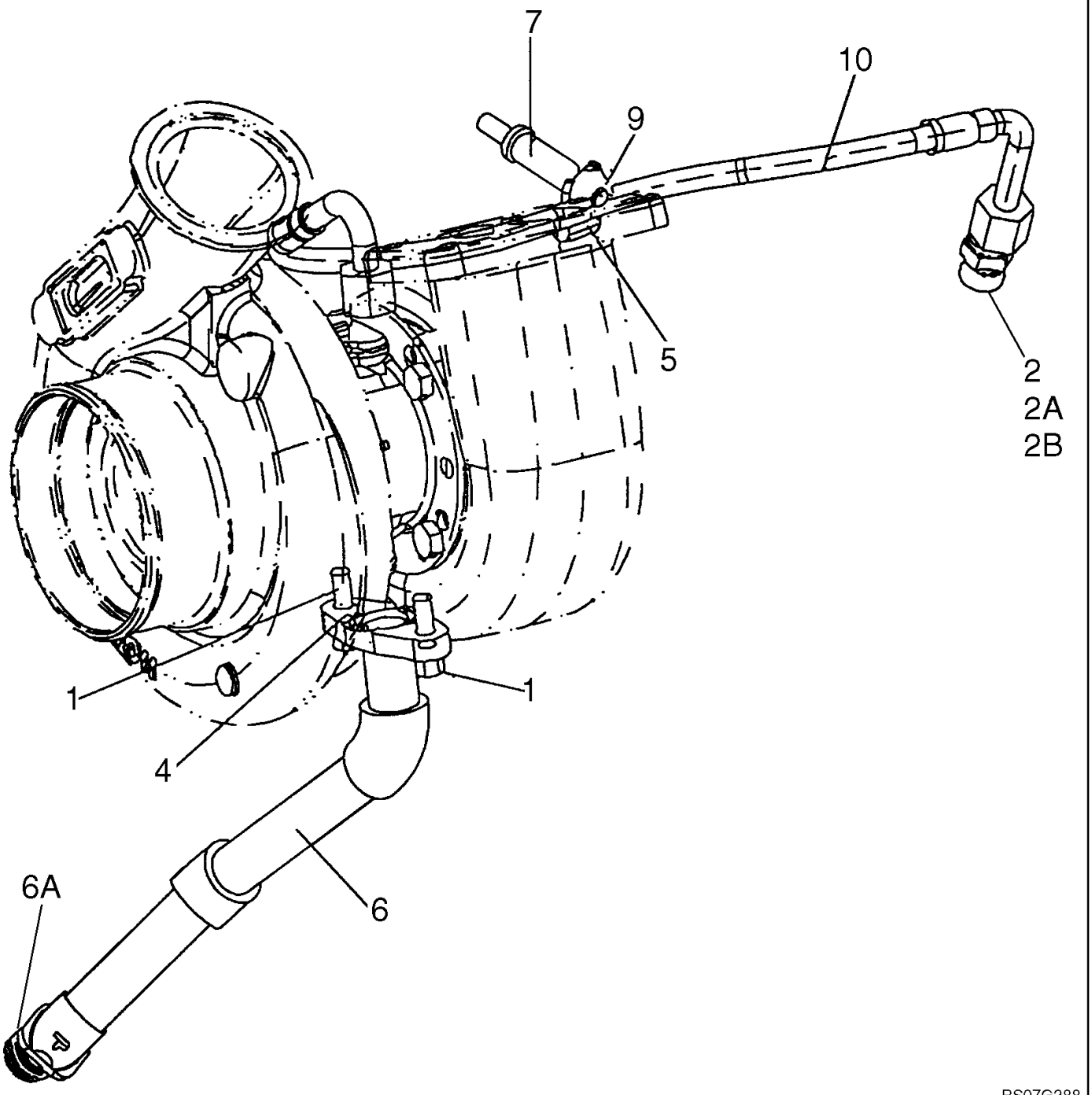

**TURBOCOMPRESOR - LÍNEA DE DRENAJE**

| REF | FN | PART NUMBER | YR/SN | QTY | DENOMINACION |
|---|---|---|---|---|---|
| | | 87579400 | | 1 | MOTOR, 6 Cylinder 6.7L Turbo, Tier III; Includes Figures 02-09 - 02-13, 02-15 - 02-41, 03-05 - 03-11; Incl. Refs. 1 - 9 |
| 1 | | 4899079 | | 2 | TORNILLO, Hex Flg, M8 x 1.25 x 25 |
| 2 | | 4895107 | | 1 | RACOR, Incl. Refs. 2A, 2B |
| 2A | | 4899107 | | 1 | JUNTA HERMETICA |
| 2B | | 4899108 | | 1 | JUNTA HERMETICA |
| 4 | | 4891288 | | 1 | JUNTA HERMETICA |
| 5 | | 4899436 | | 1 | BORNE |
| 6 | | {2858402} | | 1 | PIPE ASSY. Turbo Oil Drain, Incl. Ref. 6A |
| 6A | | 2852801 | | 1 | JUNTA HERMETICA |
| 7 | | 4896991 | | 1 | TORNILLO |
| 7 | | 2854375 | | 1 | PRISIONERO, In Alternative |
| 8 | | 4895089 | | 1 | TAPÓN, Not Illustrated |
| 9 | | 4899003 | | 1 | TUERCA, M8X1.25 |
| 10 | | 4899377 | | 1 | MANGA, Flexible |

**TURBOCOMPRESOR**

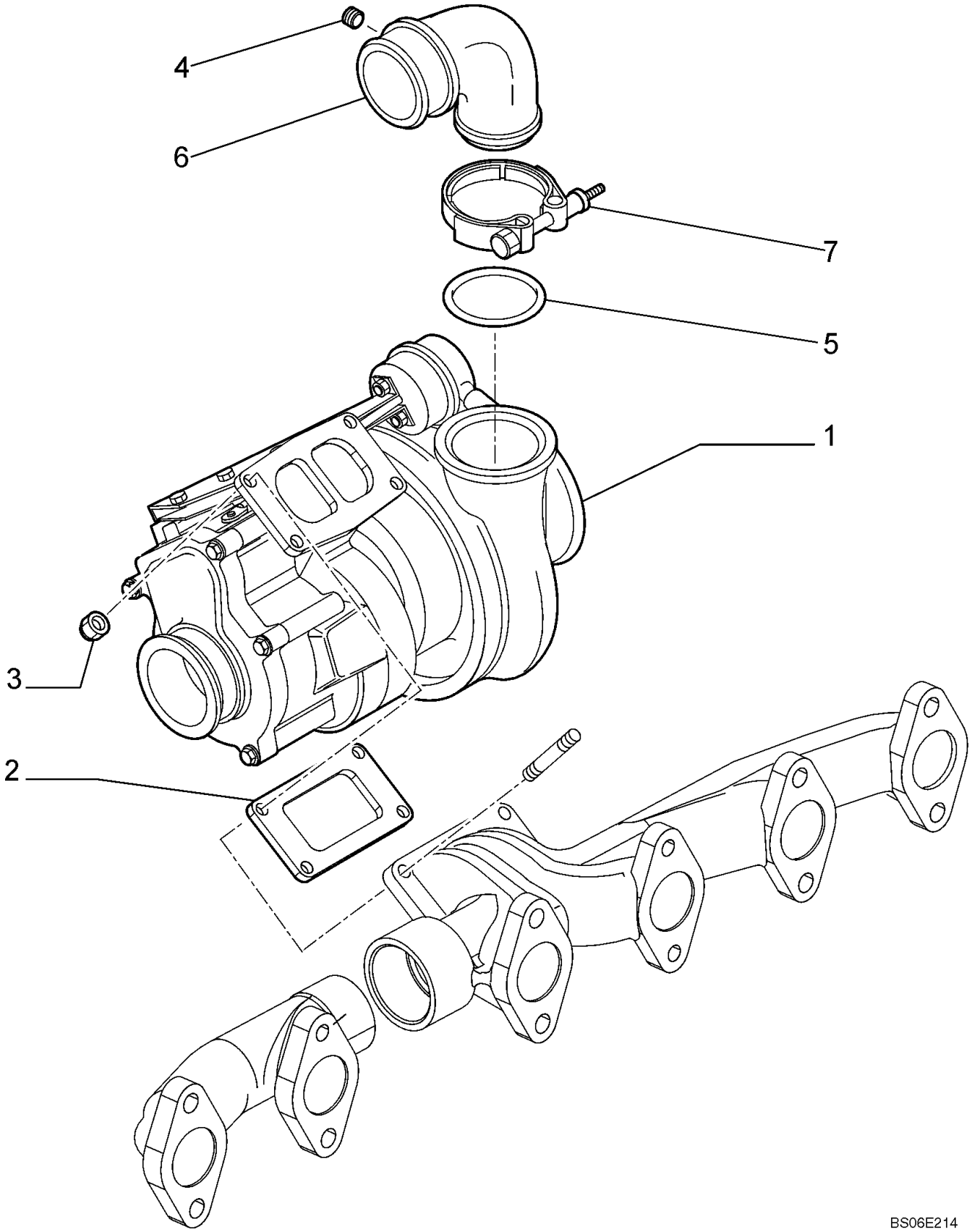

**TURBOCOMPRESOR**

| REF | FN | PART NUMBER | YR/SN | QTY | DENOMINACION |
|---|---|---|---|---|---|
| | | 87579400 | | 1 | MOTOR, 6 Cylinder 6.7L Turbo, Tier III; Includes Figures 02-09 - 02-13, 02-15 - 02-41, 03-05 - 03-11; Incl. Refs. 1 - 7 |
| 1 | | 2855124 | | 1 | TURBOCOMPRESOR |
| 2 | | 4895132 | | 1 | JUNTA HERMETICA |
| 3 | | 4899086 | | 4 | TUERCA |
| 4 | | 4895098 | | 1 | TAPÓN |
| 5 | | 4899087 | | 1 | JUNTA HERMETICA |
| 6 | | 4895141 | | 1 | CODO |
| 7 | | 2852407 | | 1 | ARGOLLA DE CIERRE |

**BOMBA DE AGUA**

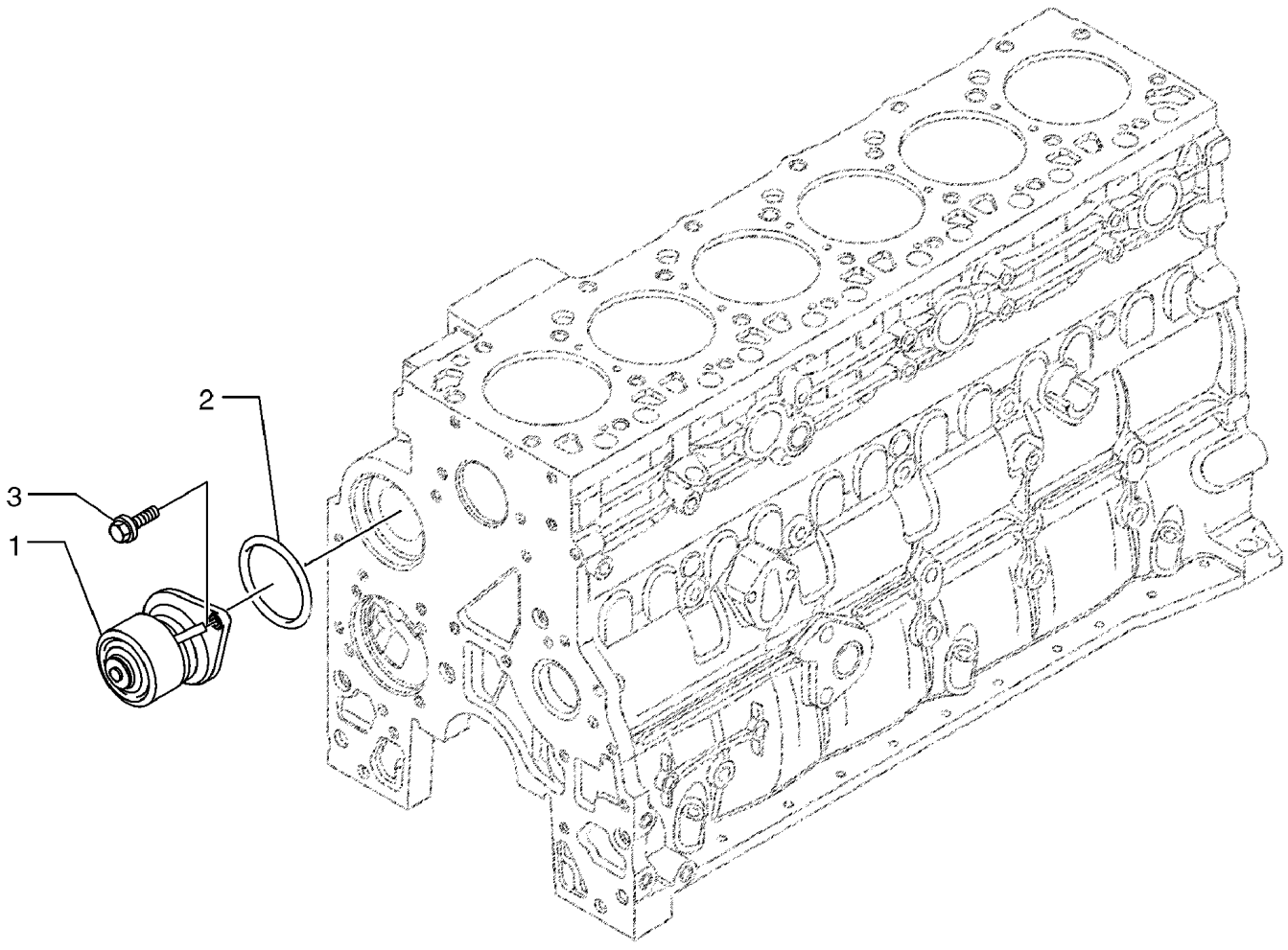


BC03N020

**BOMBA DE AGUA**

| REF | FN | PART NUMBER | YR/SN | QTY | DENOMINACION |
|---|---|---|---|---|---|
| | | 87579400 | | 1 | MOTOR, 6 Cylinder 6.7L Turbo, Tier III; Includes Figures 02-09 - 02-13, 02-15 - 02-41, 03-05 - 03-11; Incl. Refs. 1 - 3 |
| 1 | | 4891252 | | 1 | BOMBA DE AGUA |
| 1 | | 2852114 | | 1 | BOMBA DE AGUA, In Alternative |
| 2 | | 2852047 | | 1 | JUNTA HERMETICA |
| 3 | | 4899079 | | 2 | TORNILLO, Hex Flg, M8 x 1.25 x 25 |

**BOMBA DE AGUA - CONJUNTO DEL TENSOR**

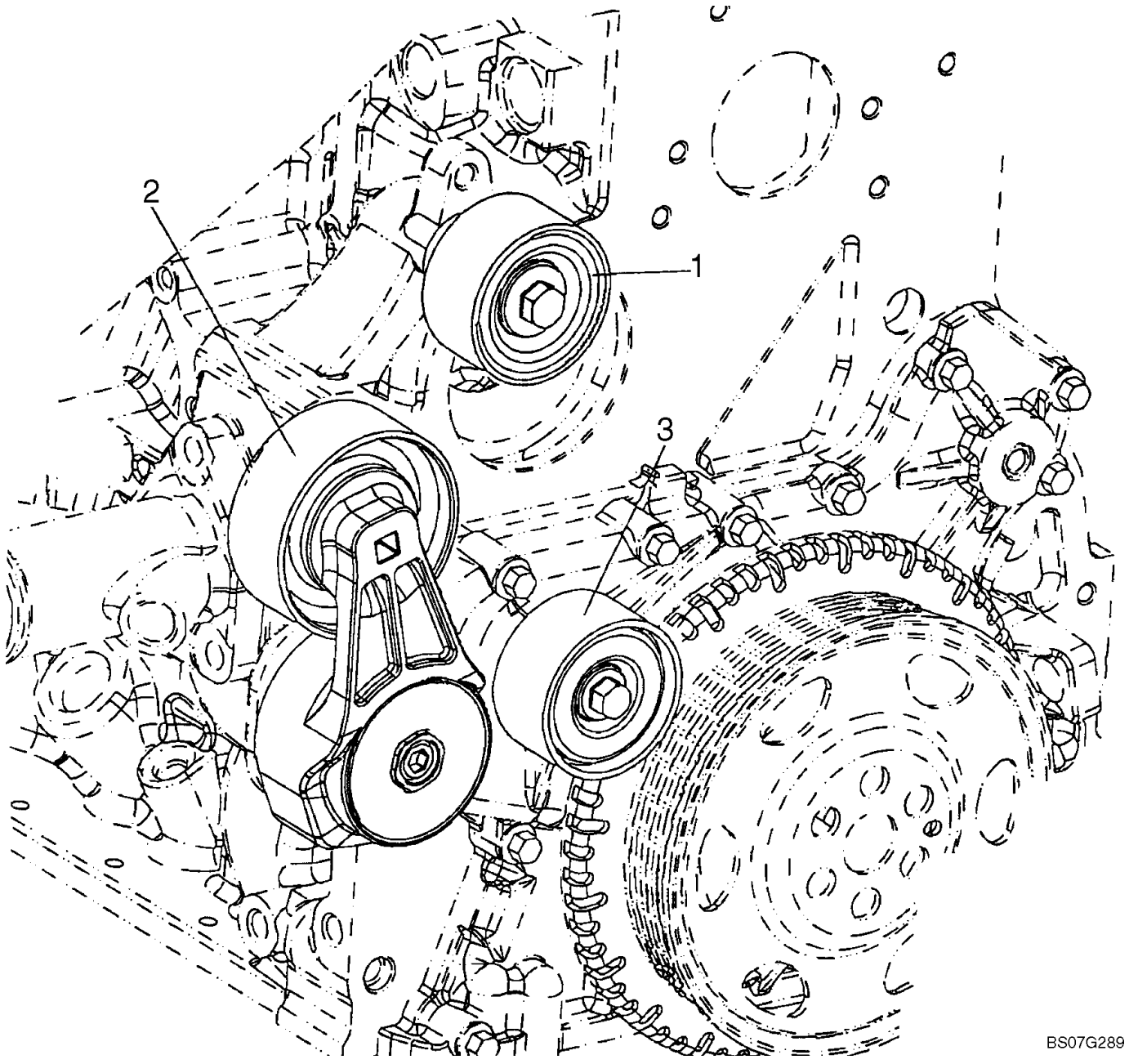

**BOMBA DE AGUA - CONJUNTO DEL TENSOR**

| REF | FN | PART NUMBER | YR/SN | QTY | DENOMINACION |
|---|---|---|---|---|---|
| | | 87579400 | | 1 | MOTOR, 6 Cylinder 6.7L Turbo, Tier III; Includes Figures 02-09 - 02-13, 02-15 - 02-41, 03-05 - 03-11; Incl. Refs. 1 - 3 |
| 1 | | 2852398 | | 1 | TENSOR DE CORREA |
| 2 | | 2852396 | | 1 | TENSOR DE CORREA |
| 3 | | 2852397 | | 1 | RODILLO CAMBIADOR |

**BLOQUE DE CILINDROS**

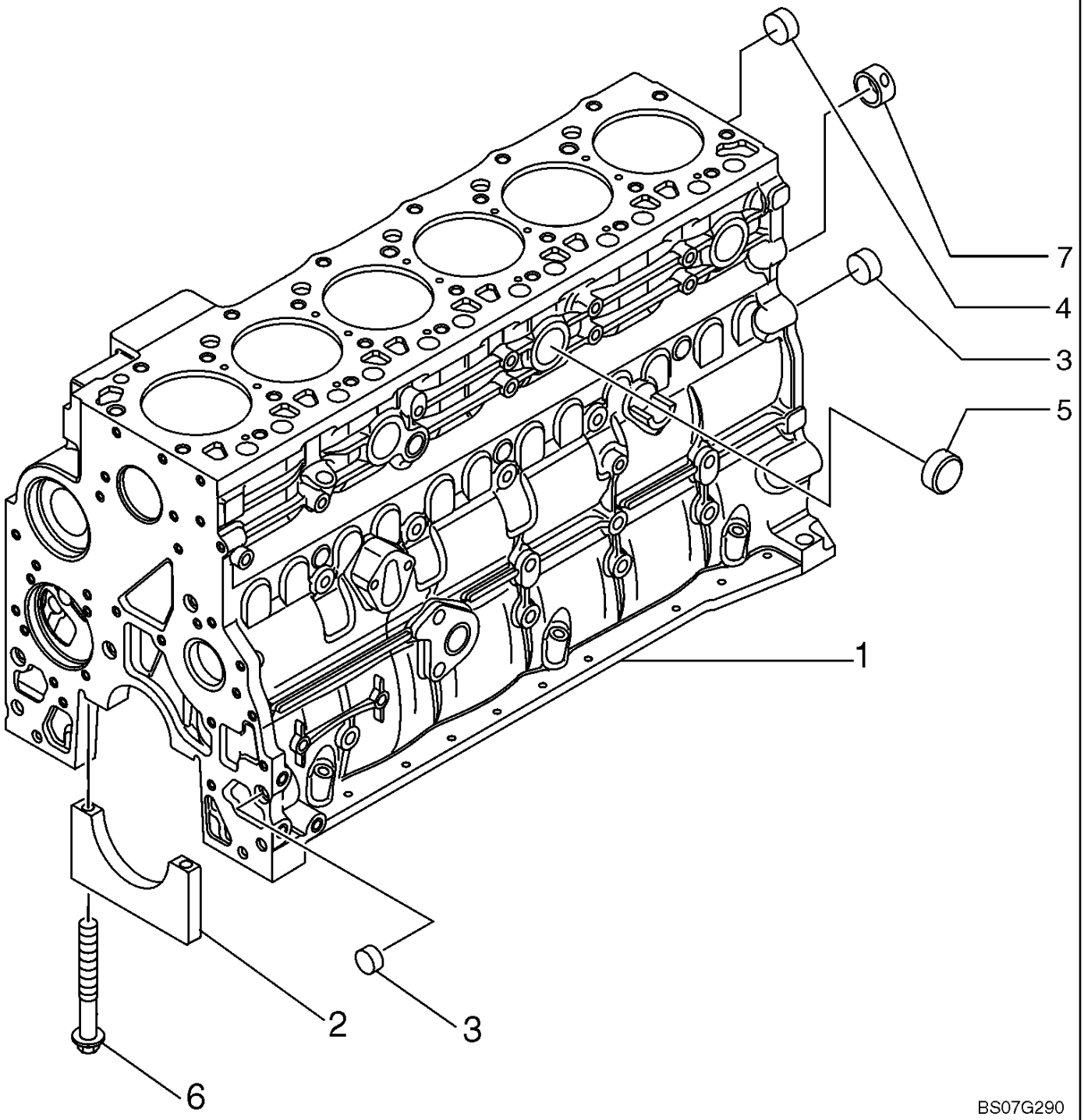

**BLOQUE DE CILINDROS**

| REF | FN | PART NUMBER | YR/SN | QTY | DENOMINACION |
|---|---|---|---|---|---|
| | | 87579400 | | 1 | MOTOR, 6 Cylinder 6.7L Turbo, Tier III; Includes Figures 02-09 - 02-13, 02-15 - 02-41, 03-05 - 03-11; Incl. Refs. 1 - 8 |
| | | 2830076 | | 1 | BLOQUE DE CILINDROS, ASSY. Incl. Refs. 1 - 8 |
| 1 | | NSS | | 1 | NO SE REPARA SEPARADAM., Cylinder Block |
| 2 | | 4895921 | | 1 | COJINETTE CIGUENAL |
| 3 | | 4895039 | | 3 | TAPÓN |
| 4 | | 4895038 | | 6 | TAPÓN |
| 5 | | 4895228 | | 3 | TAPÓN |
| 6 | | 4891353 | | 14 | TORNILLO, Flg Hd, M12 x 1.5 x 120 |
| 7 | | 4895040 | | 1 | CASQUILLO |
| 8 | | 4895919 | | 6 | COJINETTE CIGUENAL, Not Illustrated |

**BLOQUE DE CILINDROS - CONJUNTO DEL TAPÓN**

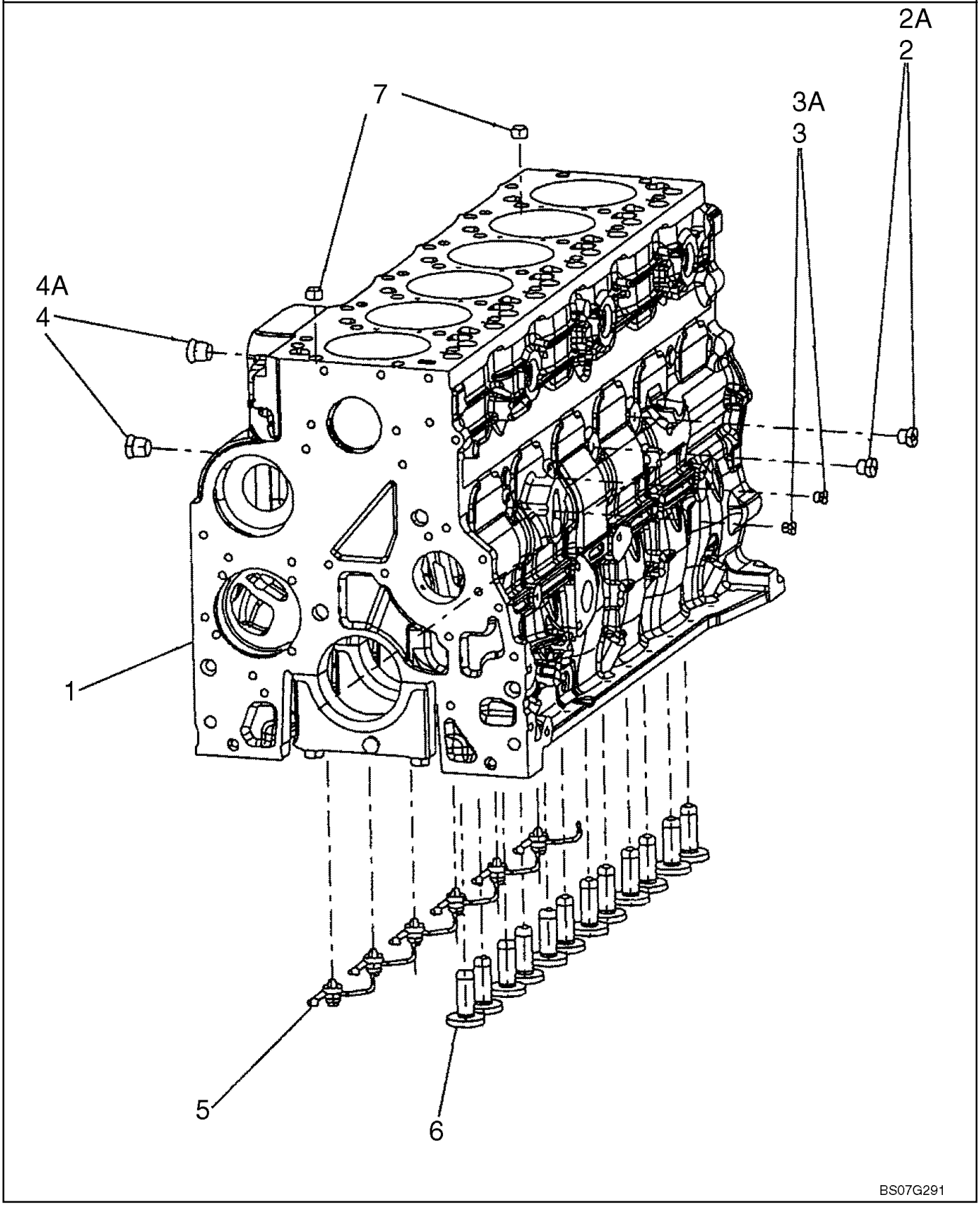

**BLOQUE DE CILINDROS - CONJUNTO DEL TAPÓN**

| REF | FN | PART NUMBER | YR/SN | QTY | DENOMINACION |
|---|---|---|---|---|---|
| | | 87579400 | | 1 | MOTOR, 6 Cylinder 6.7L Turbo, Tier III; Includes Figures 02-09 - 02-13, 02-15 - 02-41, 03-05 - 03-11; Incl. Refs. 1 - 7 |
| 1 | | 2830076 | | 1 | BLOQUE DE CILINDROS, ASSY. See Figure 02-20 |
| 2 | | 4895605 | | 2 | TAPÓN, M14 x 1.5, Incl. Ref. 2A |
| 2A | | 4899115 | | 1 | JUNTA HERMETICA |
| 3 | | 4899009 | | 2 | TAPÓN, M10 x 1.5, Incl. Ref. 3A |
| 3A | | 4899072 | | 1 | JUNTA HERMETICA |
| 4 | | 4895392 | | 2 | TAPÓN, M18 x 1.5, Incl. Ref. 4A |
| 4A | | 4895393 | | 1 | JUNTA HERMETICA |
| 5 | | 2852202 | | 6 | TOBERA |
| 6 | | 4899803 | | 12 | EMPUJADOR |
| 7 | | 4895049 | | 2 | PITON |

**BLOQUE DE CILINDROS - CONTROL DE RUIDO**

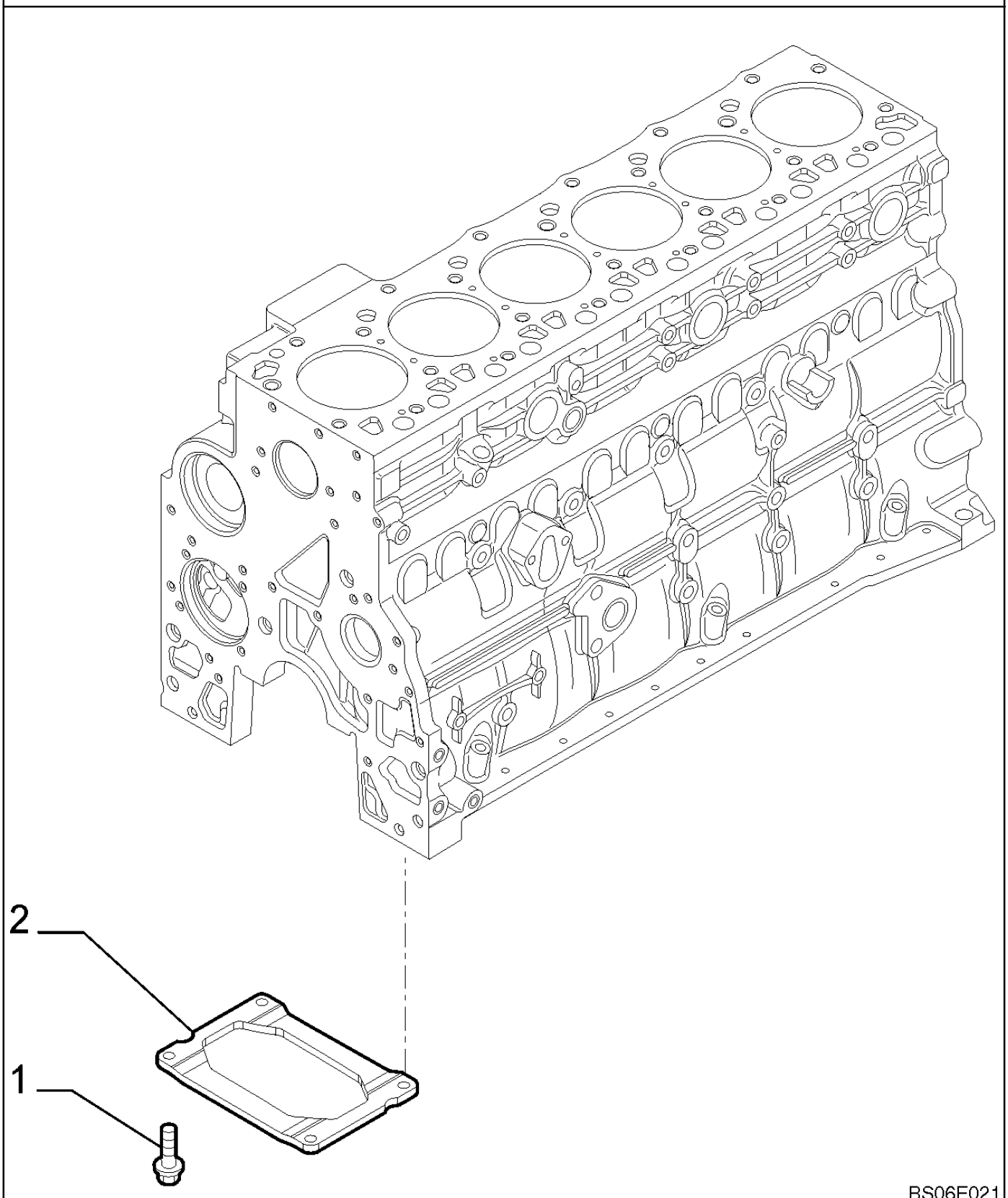

**BLOQUE DE CILINDROS - CONTROL DE RUIDO**

| REF | FN | PART NUMBER | YR/SN | QTY | DENOMINACION |
|---|---|---|---|---|---|
| | | 87579400 | | 1 | MOTOR, 6 Cylinder 6.7L Turbo, Tier III; Includes Figures 02-09 - 02-13, 02-15 - 02-41, 03-05 - 03-11; Incl. Refs. 1 - 2 |
| 1 | | 4899032 | | 4 | TORNILLO, Hex Flg, M10 x 1.5 x 25 |
| 2 | | 2852729 | | 1 | REFUERZO |

**CULATA DEL CILINDROS**

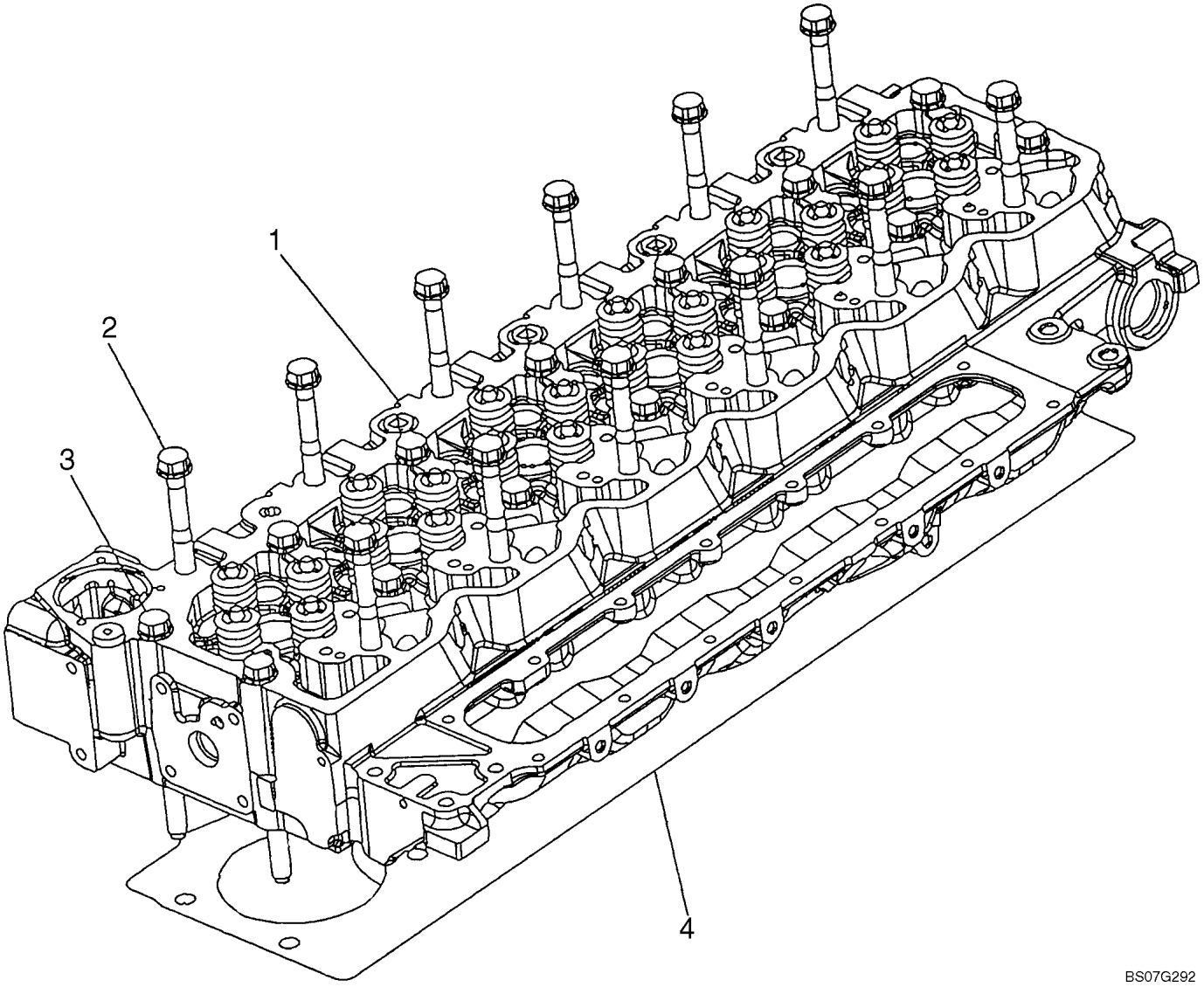

**CULATA DEL CILINDROS**

| REF | FN | PART NUMBER | YR/SN | QTY | DENOMINACION |
|---|---|---|---|---|---|
| | | 87579400 | | 1 | MOTOR, 6 Cylinder 6.7L Turbo, Tier III; Includes Figures 02-09 - 02-13, 02-15 - 02-41, 03-05 - 03-11; Incl. Refs. 1 - 4 |
| 1 | | 2831274 | | 1 | CULATA, Cylinder Head Assembly, See Figure 02-24 |
| 2 | | 4891024 | | 12 | TORNILLO, M12 x 130 |
| 3 | | 4891025 | | 14 | TORNILLO, M12 x 150 |
| 4 | | 2830704 | | 1 | JUNTA DE CULATA, 1.25 mm, If Used |
| 4 | | 2830705 | | 1 | JUNTA DE CULATA, 1.15 mm, If Used |

**CULATA DEL CILINDROS - MONTAJE**

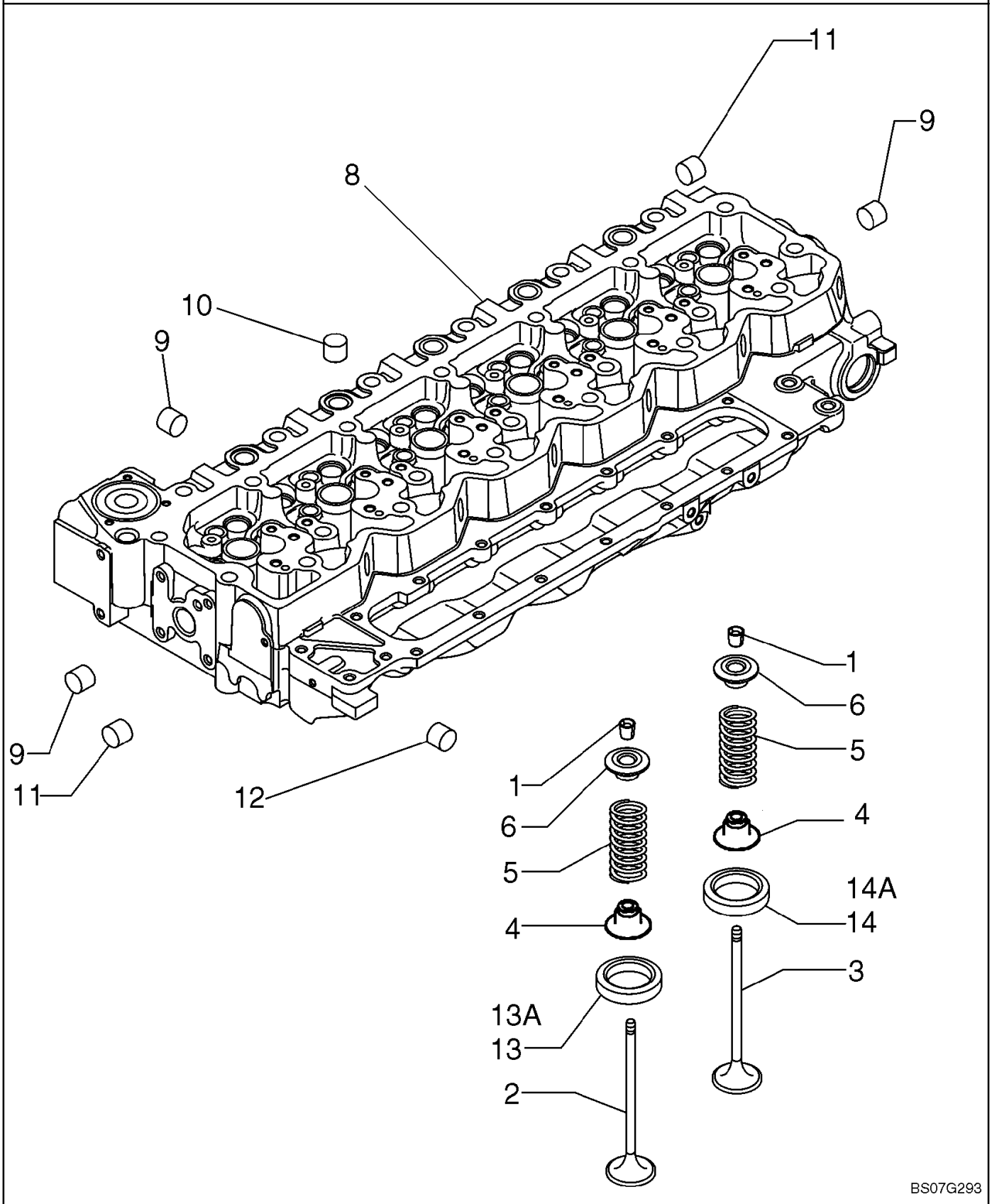

**CULATA DEL CILINDROS - MONTAJE**

| REF | FN | PART NUMBER | YR/SN | QTY | DENOMINACION |
|---|---|---|---|---|---|
| | | 87579400 | | 1 | MOTOR, 6 Cylinder 6.7L Turbo, Tier III; Includes Figures 02-09 - 02-13, 02-15 - 02-41, 03-05 - 03-11; Incl. Refs. 1 - 14A |
| | | 2831274 | | 1 | CULATA, Cylinder Head Assembly; Incl. Refs. 1 - 14 |
| 1 | | 4899081 | | 48 | CHAVETA CONICA |
| 2 | | 4895051 | | 12 | VALVULA DE ESCAPE |
| 3 | | 4895052 | | 12 | VÁLVULA DE ADMISIÓN, Intake |
| 4 | | 2831287 | | 24 | RESORTE DE ASIENTO, Valve Stem Seal |
| 5 | | 4895073 | | 24 | MUELLE, VALVULA |
| 6 | | 4895074 | | 24 | TAZA, Retainer |
| 7 | | 4893036 | | 1 | TAPÓN, Pipe, 3/4 in - 14 NPTF, Not Illustrated |
| | | 2831278 | | 1 | CULATA, Assy. Incl. Refs. 8 - 12, 13, 14 |
| | | 2831279 | | 1 | CULATA, Assy. Incl. Refs. 8 - 12, 13A, 14A; In Alternative |
| 8 | | NSS | | 1 | NO SE REPARA SEPARADAM., Cylinder Head |
| 9 | | 4895085 | | 13 | TAPÓN, 25.74mm |
| 9 | | 4895408 | | 2 | TAPÓN, .511" OD |
| 10 | | 4895089 | | 11 | TAPÓN, .886" OD |
| 11 | | 4895406 | | 7 | TAPÓN, 9.8mm OD |
| 12 | | 4895407 | | 2 | TAPÓN, 38.28mm OD |
| 13 | | 4897106 | | 12 | ASIENTO DE VALVULA, Used on Cylinder Head Assy. 2831278 |
| 13A | | 4893244 | | 12 | ASIENTO DE VALVULA, Used on Cylinder Head Assy. 2831279 |
| 14 | | 4897578 | | 12 | ASIENTO DE VALVULA, Used on Cylinder Head Assy. 2831278 |
| 14A | | 4893244 | | 12 | ASIENTO DE VALVULA, Used on Cylinder Head Assy. 2831279 |

**TAPAS CULATA**

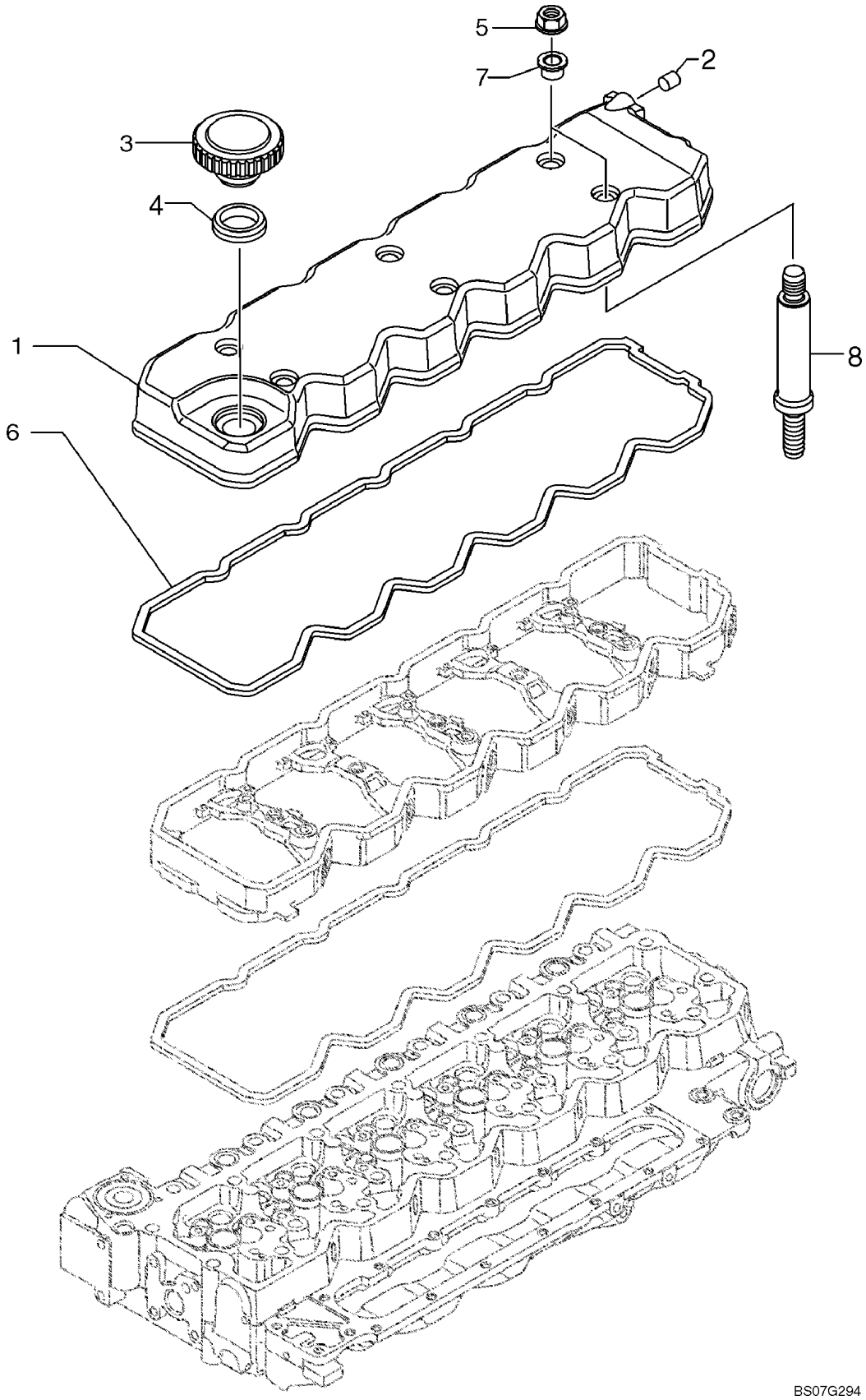

**TAPAS CULATA**

| REF | FN | PART NUMBER | YR/SN | QTY | DENOMINACION |
|---|---|---|---|---|---|
| | | 87579400 | | 1 | MOTOR, 6 Cylinder 6.7L Turbo, Tier III; Includes Figures 02-09 - 02-13, 02-15 - 02-41, 03-05 - 03-11; Incl. Refs. 1 - 8 |
| 1 | | 4895910 | | 1 | TAPADERA, Valve, Incl. Ref. 2 |
| 2 | | 4898283 | | 1 | TAPÓN |
| 3 | | 2852773 | | 1 | TAPON DE LLENADO, Oil Fill Assembly, Incl. Ref. 4 |
| 4 | | 2852774 | | 1 | JUNTA HERMETICA, Cap |
| 5 | | 4893936 | | 6 | TUERCA, M8 x 1.25 |
| 6 | | 2853784 | | 1 | JUNTA HERMETICA |
| 7 | | 4899239 | | 6 | JUNTA HERMETICA |
| 8 | | 4896991 | | 6 | TORNILLO |
| 8 | | 2854375 | | 6 | PRISIONERO, Used In Alternative |

**CIGUENAL**

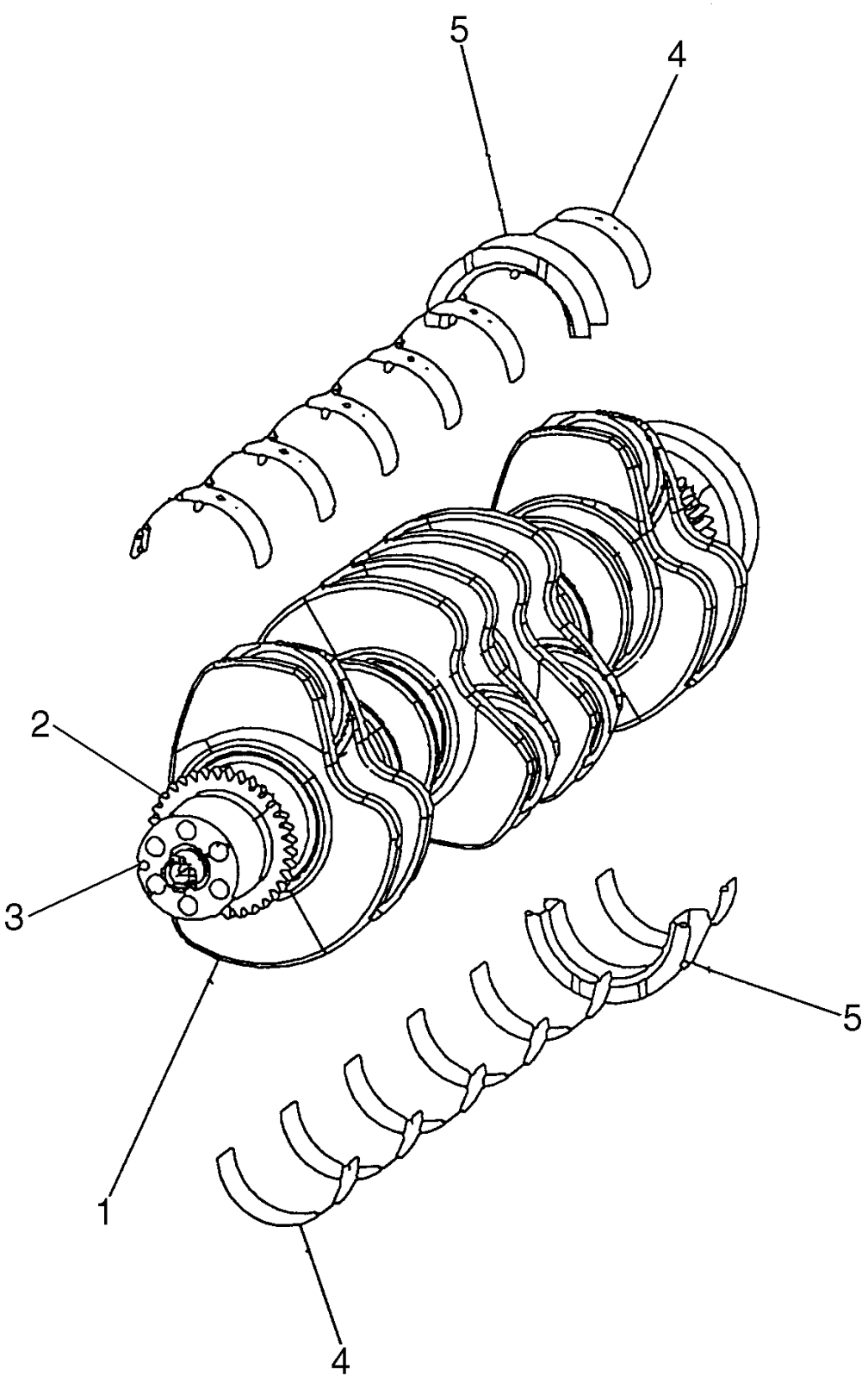


BS07G296

**CIGUENAL**

| REF | FN | PART NUMBER | YR/SN | QTY | DENOMINACION |
|---|---|---|---|---|---|
| | | 87579400 | | 1 | MOTOR, 6 Cylinder 6.7L Turbo, Tier III; Includes Figures 02-09 - 02-13, 02-15 - 02-41, 03-05 - 03-11; Incl. Refs. 1 - 5 |
| 1 | | 2852305 | | 1 | CIGÜEÑAL, ASSY. Incl. Refs. 2 - 3 |
| 2 | | 4893386 | | 1 | ENGRANAJE |
| 3 | | 4899046 | | 1 | PITON |
| 4 | | 4895017 | | 6 | COJINETTE CIGUENAL, Main, If Used |
| 4 | | {2853815} | | 6 | BEARING, CRANKSHAFT, Main, If Used |
| 5 | | 4895414 | | 1 | COJINETTE CIGUENAL, Thrust; If Used |
| 5 | | {2853816} | | 1 | BEARING, CRANKSHAFT, Thrust; If Used |

**CIGUENAL - POLEA**

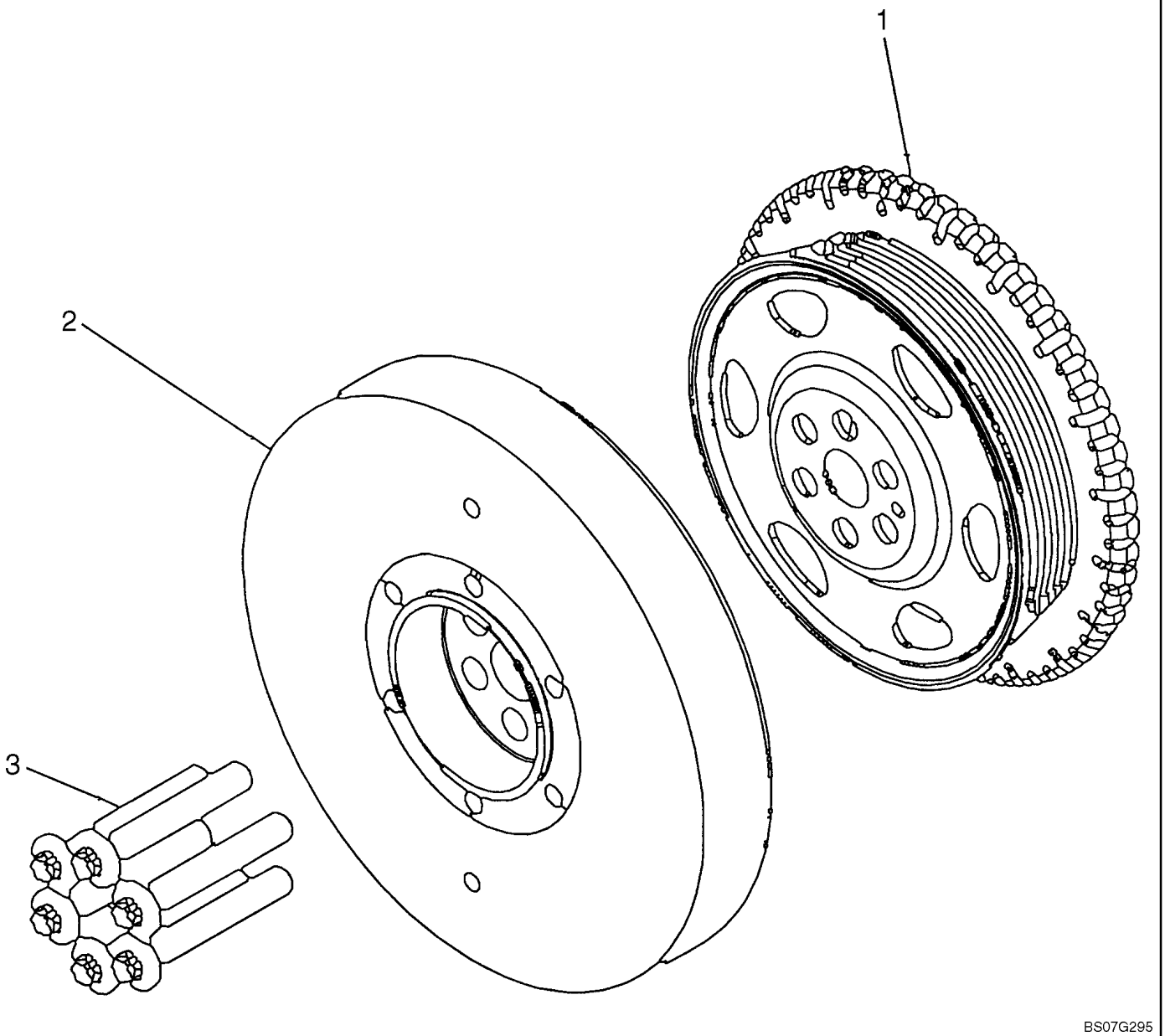

**CIGUENAL - POLEA**

| REF | FN | PART NUMBER | YR/SN | QTY | DENOMINACION |
|---|---|---|---|---|---|
| | | 87579400 | | 1 | MOTOR, 6 Cylinder 6.7L Turbo, Tier III; Includes Figures 02-09 - 02-13, 02-15 - 02-41, 03-05 - 03-11; Incl. Refs. 1 - 3 |
| 1 | | 4896773 | | 1 | POLEA, Crankshaft |
| 2 | | 4892893 | | 1 | ANTIVIBRADOR, Vibration |
| 3 | | 4892867 | | 6 | TORNILLO, Torx Wash Hd, M12 x 1.25 x 78.5 |

**VOLANTE MOTOR**

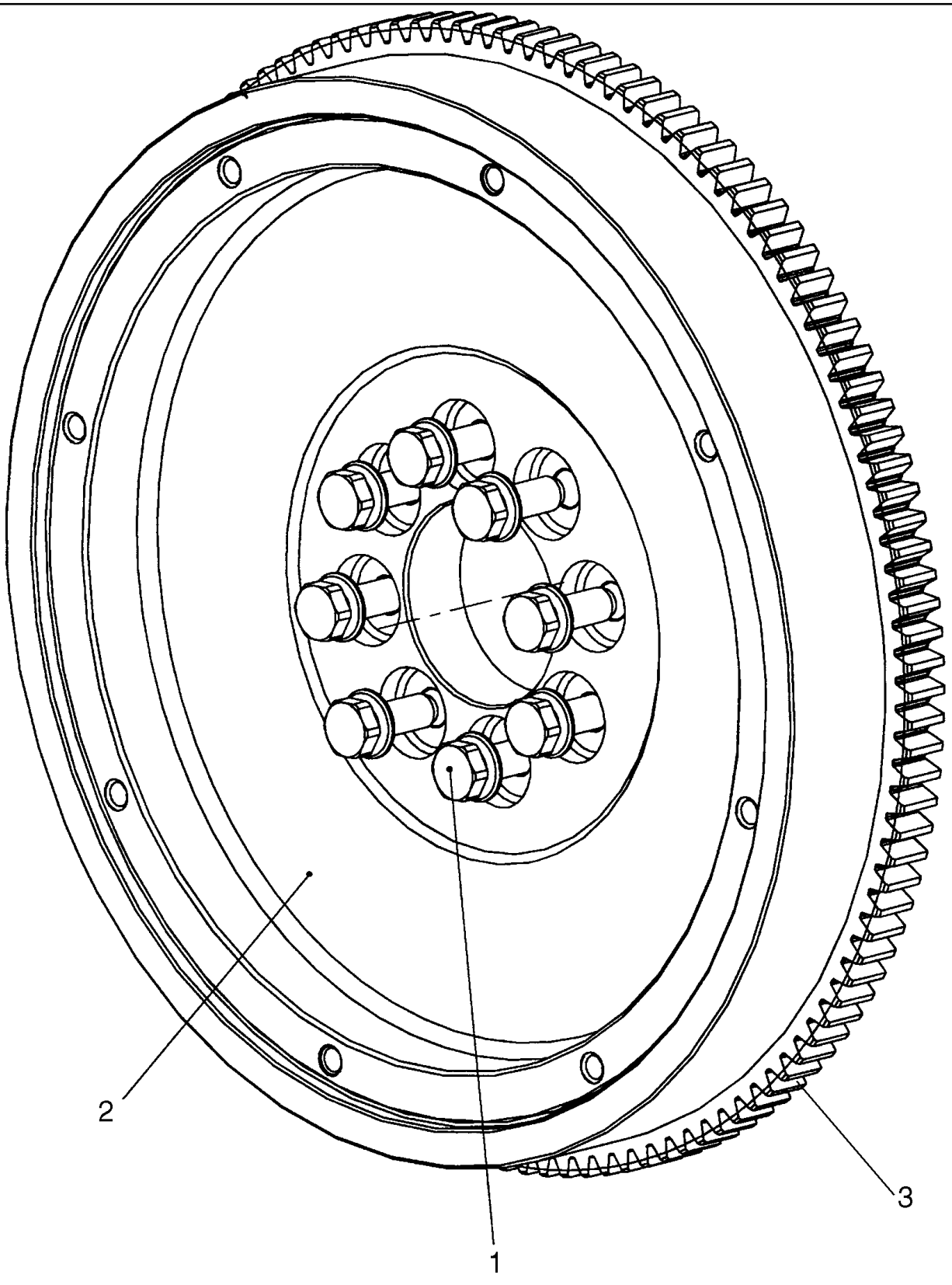

**VOLANTE MOTOR**

| REF | FN | PART NUMBER | YR/SN | QTY | DENOMINACION |
|---|---|---|---|---|---|
| | | 87579400 | | 1 | MOTOR, 6 Cylinder 6.7L Turbo, Tier III; Includes Figures 02-09 - 02-13, 02-15 - 02-41, 03-05 - 03-11; Incl. Refs. 1 - 3 |
| 1 | | 4894641 | | 8 | TORNILLO, Wash Hd, M12 x 1.25 x 31 |
| 2 | | 2852219 | | 1 | VOLANTE DEL MOTOR, Assembly, Incl. Ref. 3 |
| 3 | | 2852221 | | 1 | CORONA DENTADA |

**ALOJAMIENTO DEL VOLANTE**

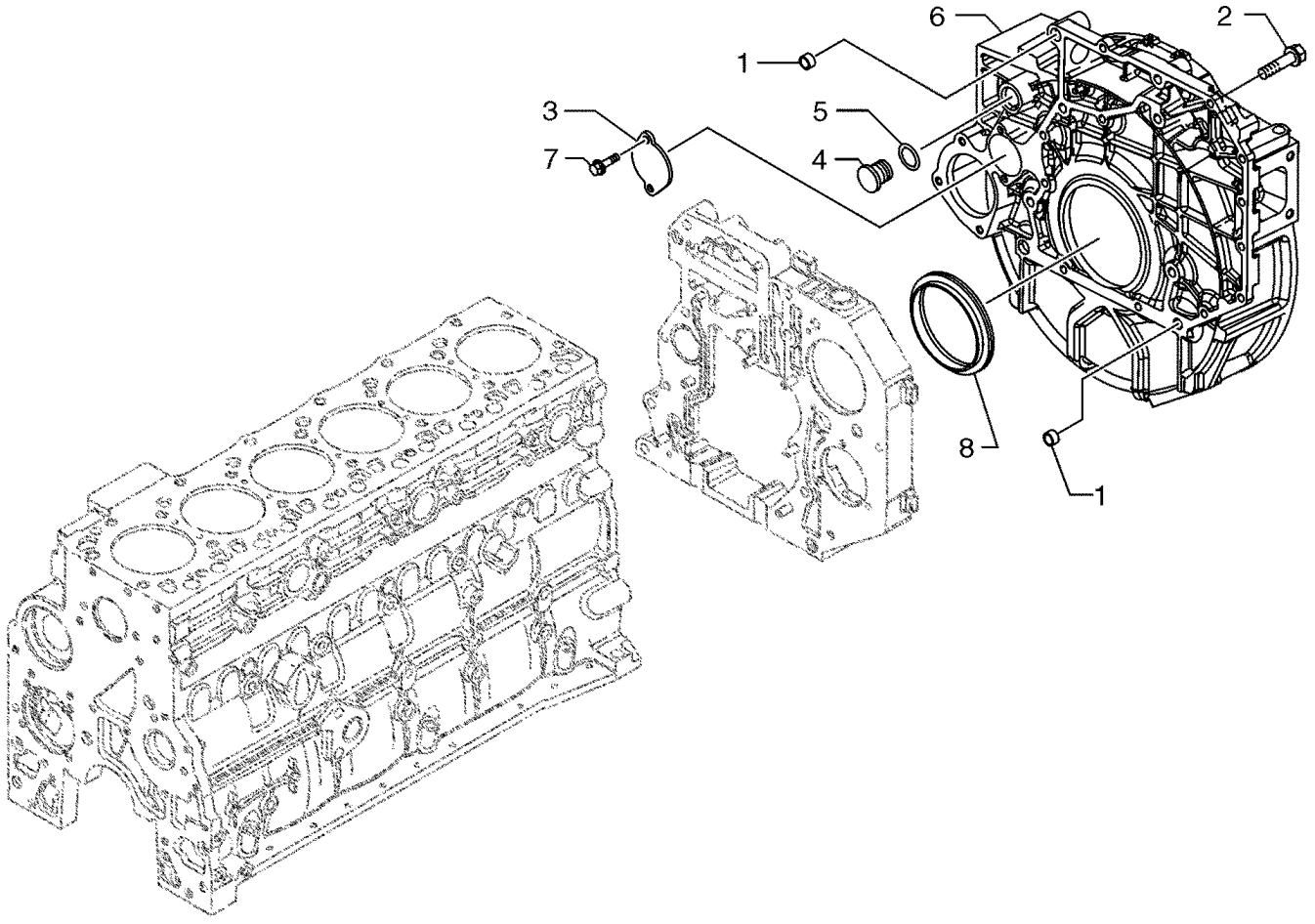


BS03N027

**ALOJAMIENTO DEL VOLANTE**

| REF | FN | PART NUMBER | YR/SN | QTY | DENOMINACION |
|---|---|---|---|---|---|
| | | 87579400 | | 1 | MOTOR, 6 Cylinder 6.7L Turbo, Tier III; Includes Figures 02-09 - 02-13, 02-15 - 02-41, 03-05 - 03-11; Incl. Refs. 1 - 8 |
| 1 | | 4899026 | | 2 | PITON |
| 2 | | 4899109 | | 2 | TORNILLO, Hex, M10 x 1.5 x 80 |
| 2 | | 4899076 | | 6 | TORNILLO, Hex Flg, M12 x 1.75 x 80 |
| 2 | | 2852426 | | 2 | TORNILLO, M12 x 110; If Used |
| 2 | | 4897499 | | 2 | TORNILLO, M12 x 110; If Used |
| 2 | | 4892915 | | 10 | TORNILLO, M10 x 40; If Used |
| 3 | | 4895155 | | 1 | TAPADERA |
| 4 | | 4895378 | | 1 | TAPÓN, D=29 |
| 5 | | 4895379 | | 1 | JUNTA HERMETICA |
| 6 | | 2852425 | | 1 | TAPADERA, Flywheel |
| 7 | | 4899068 | | 2 | TORNILLO, Hex Flg, M8 x 1.25 x 16 |
| 8 | | 4890833 | | 1 | ANILLO DE CIERRE |

**TAPA DE ENGRANAJES - ALOJAMIENTO TRASERO**

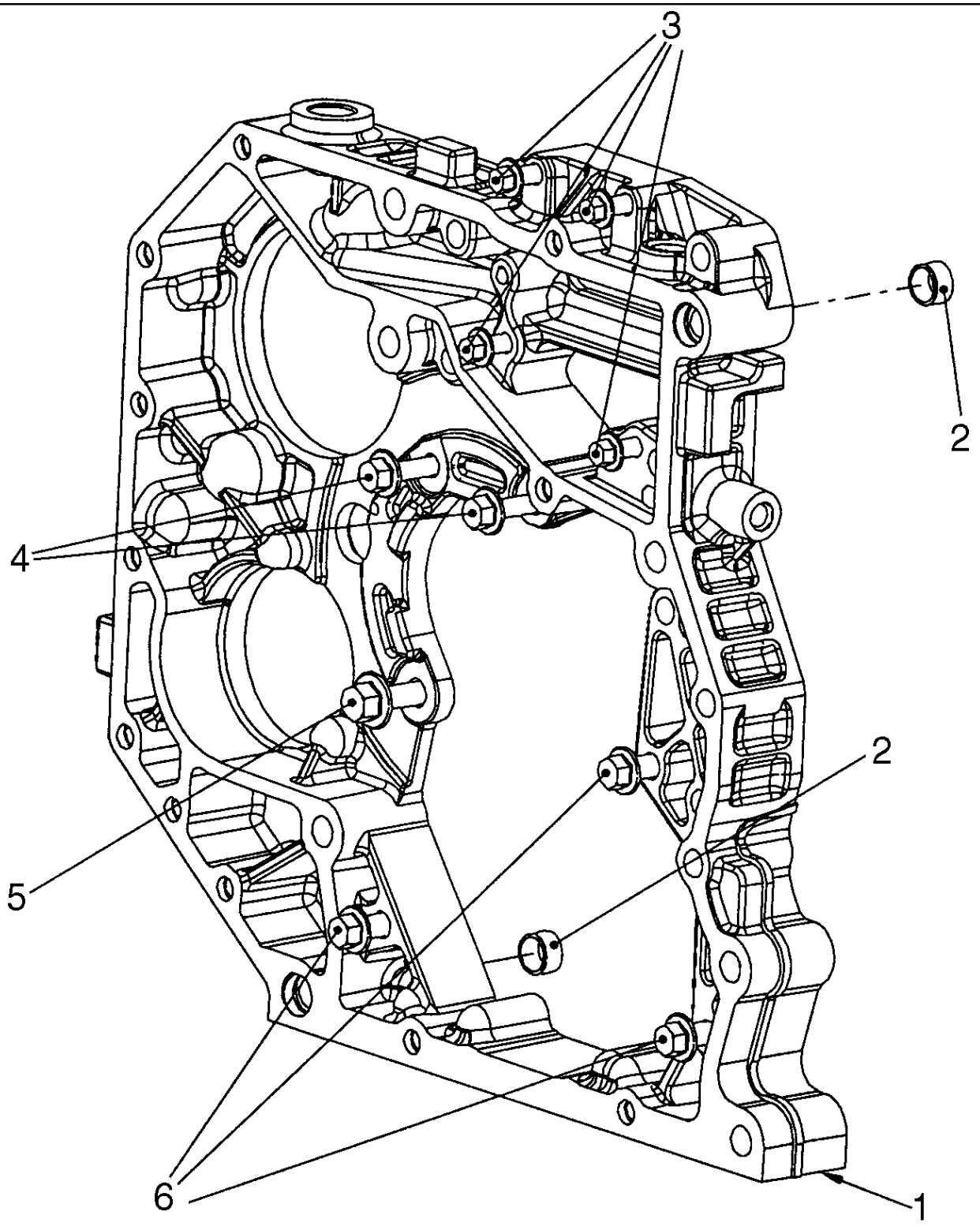


BS07G298

**TAPA DE ENGRANAJES - ALOJAMIENTO TRASERO**

| REF | FN | PART NUMBER | YR/SN | QTY | DENOMINACION |
|---|---|---|---|---|---|
| | | 87579400 | | 1 | MOTOR, 6 Cylinder 6.7L Turbo, Tier III; Includes Figures 02-09 - 02-13, 02-15 - 02-41, 03-05 - 03-11; Incl. Refs. 1 - 6 |
| 1 | | 4899679 | | 1 | TAPADERA, Rear Gear Housing |
| 2 | | 4899026 | | 2 | PITON, Ring |
| 3 | | 4899078 | | 4 | TORNILLO, Hex Flg, M8 x 1.25 x 45 |
| 4 | | 4899093 | | 2 | TORNILLO, Hex Flg, M10 x 1.5 x 30 |
| 5 | | 4899073 | | 1 | TORNILLO, Hex Flg, M12 x 1.75 x 30 |
| 6 | | 4896939 | | 3 | TORNILLO, Hex Flg, M10 x 1.5 x 50 |

**TAPA DE ENGRANAJES- PLACA**

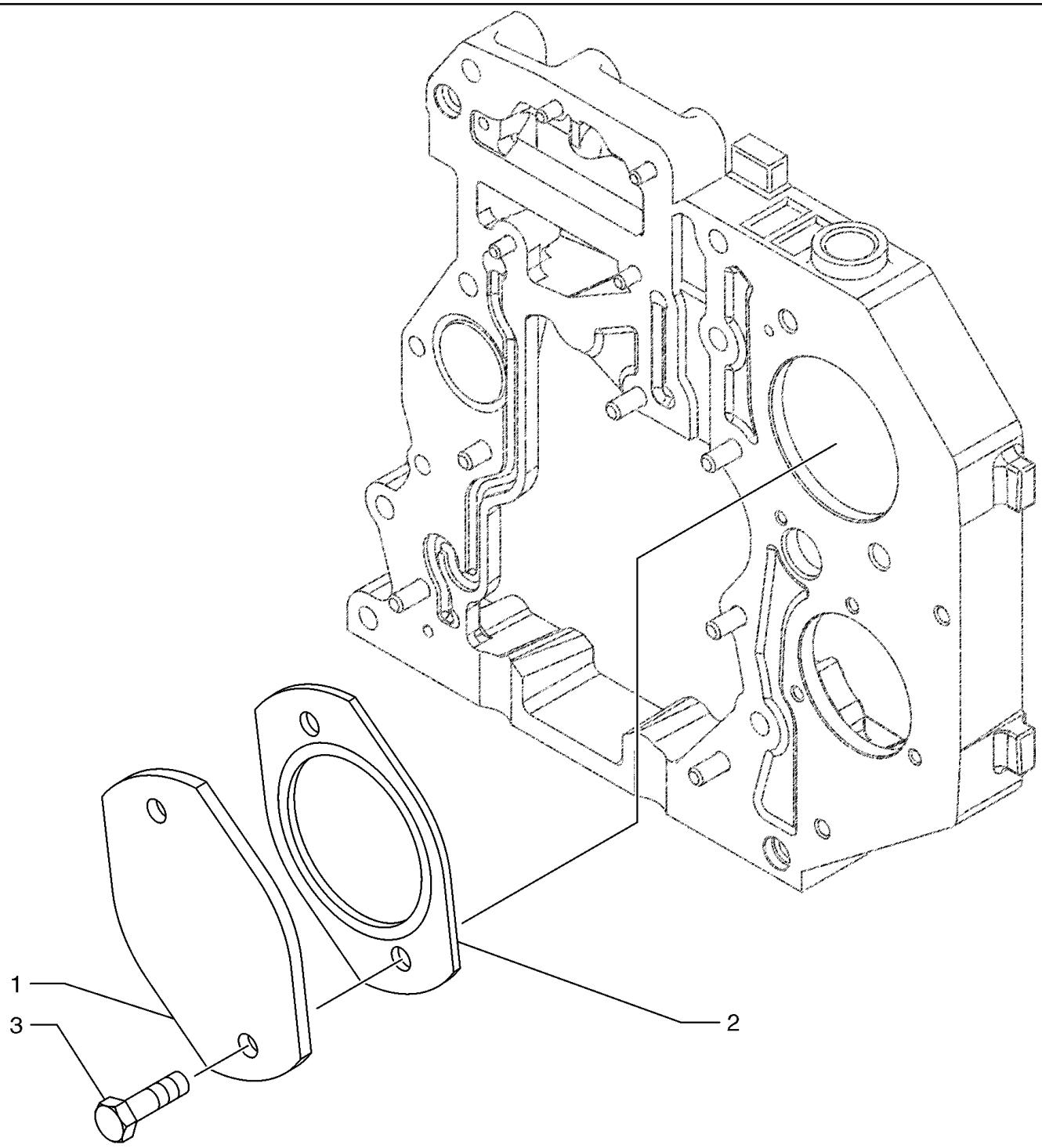


BS04A022

**TAPA DE ENGRANAJES- PLACA**

| REF | FN | PART NUMBER | YR/SN | QTY | DENOMINACION |
|---|---|---|---|---|---|
| | | 87579400 | | 1 | MOTOR, 6 Cylinder 6.7L Turbo, Tier III; Includes Figures 02-09 - 02-13, 02-15 - 02-41, 03-05 - 03-11; Incl. Refs. 1 - 3 |
| 1 | | 2852175 | | 1 | TAPADERA |
| 2 | | 4896897 | | 1 | JUNTA HERMETICA |
| 3 | | 4899037 | | 2 | TORNILLO, Hex Flg, M12 x 1.75 x 25 |

**CUBIERTA DEL ENGRANDAJE DELANTERO**

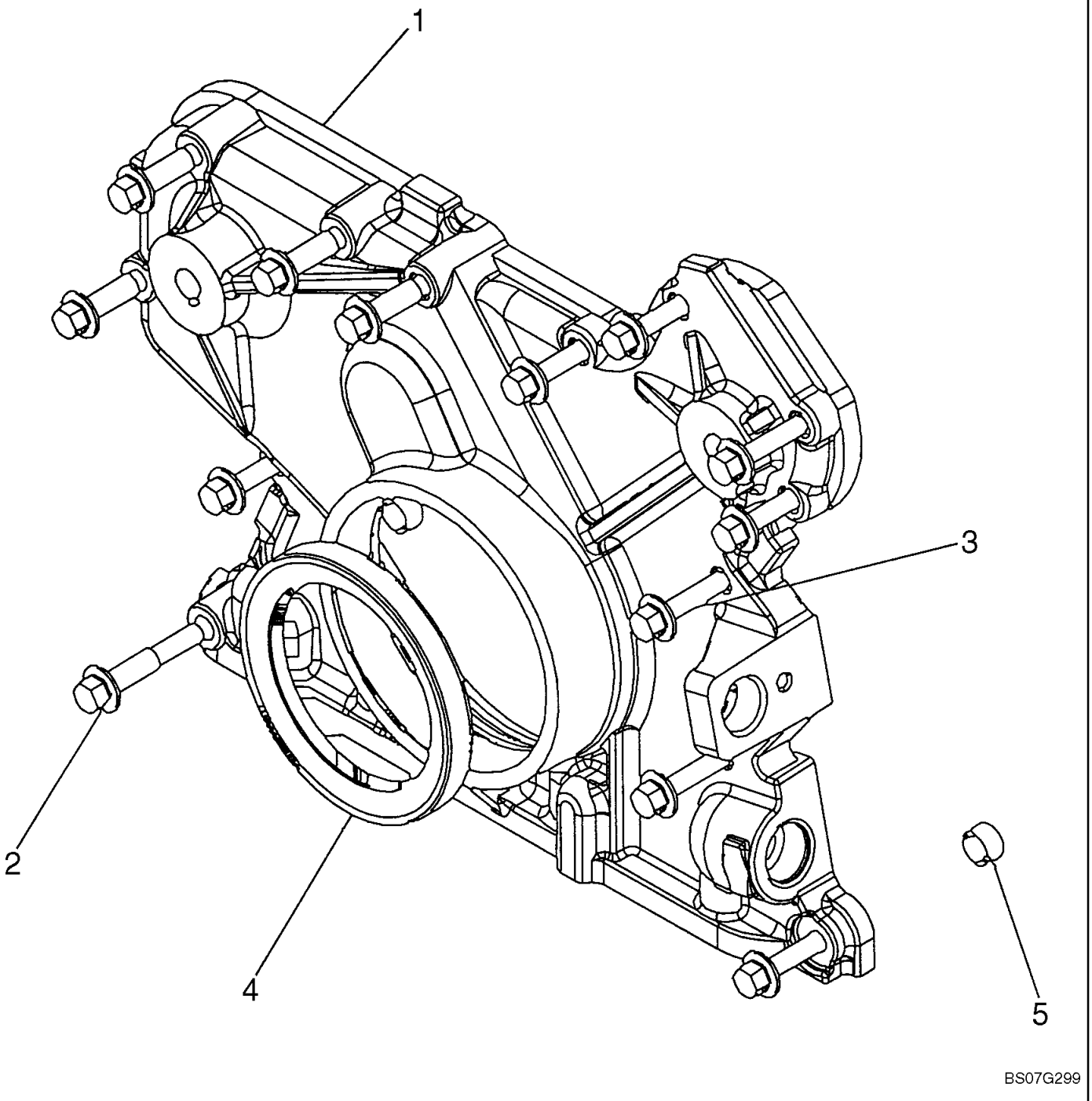

**CUBIERTA DEL ENGRANDAJE DELANTERO**

| REF | FN | PART NUMBER | YR/SN | QTY | DENOMINACION |
|---|---|---|---|---|---|
| | | 87579400 | | 1 | MOTOR, 6 Cylinder 6.7L Turbo, Tier III; Includes Figures 02-09 - 02-13, 02-15 - 02-41, 03-05 - 03-11; Incl. Refs. 1 - 5 |
| 1 | | 4897024 | | 1 | TAPADERA |
| 2 | | 4899078 | | 5 | TORNILLO, Hex Flg, M8 x 1.25 x 45 |
| 3 | | 4899063 | | 8 | TORNILLO, Hex Flg, M8 x 1.25 x 30 |
| 4 | | 4890832 | | 1 | ANILLO DE CIERRE |
| 5 | | 4891209 | | 2 | PITON |

**BRAZOS BASCULANTES**

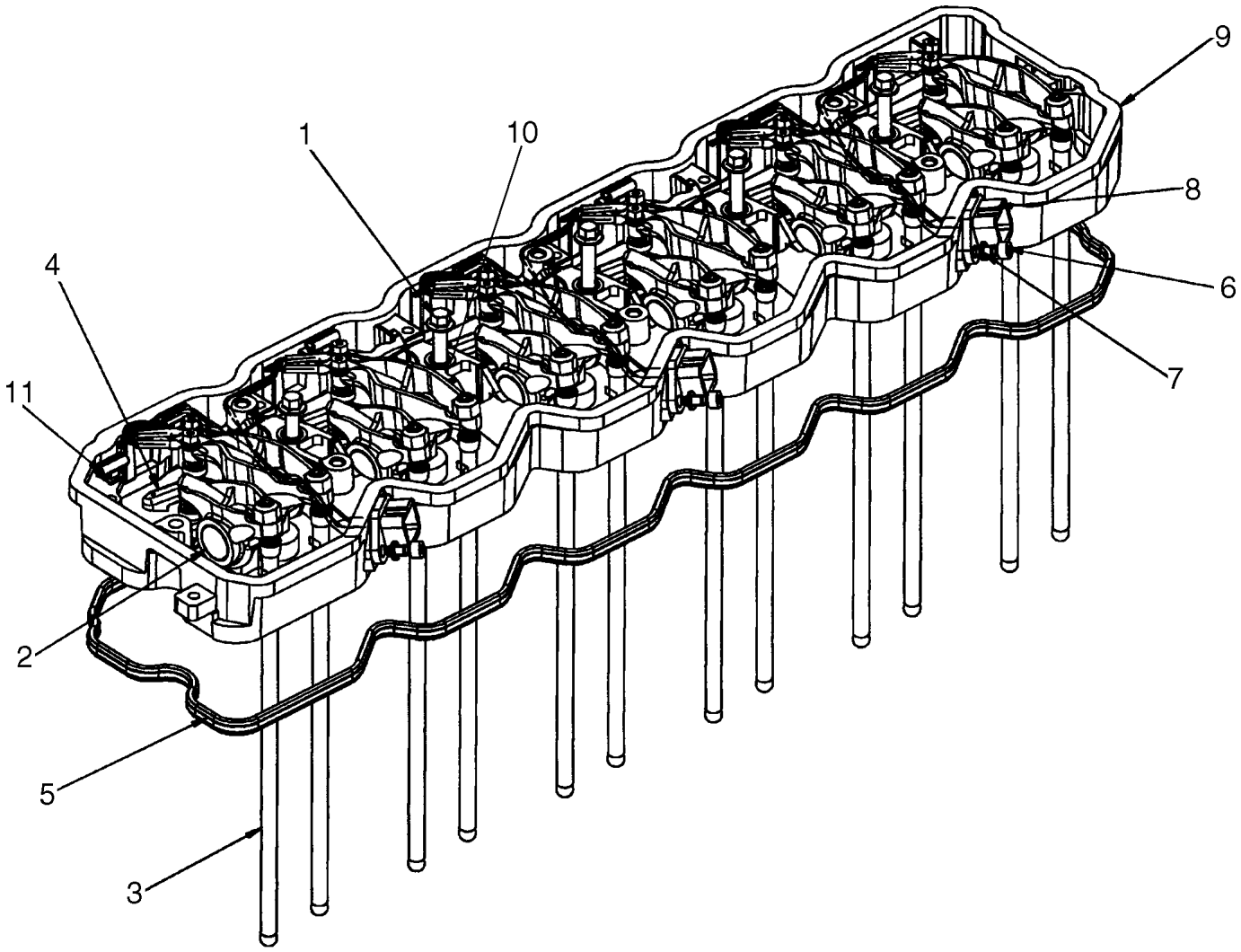

**BRAZOS BASCULANTES**

| REF | FN | PART NUMBER | YR/SN | QTY | DENOMINACION |
|---|---|---|---|---|---|
| | | 87579400 | | 1 | MOTOR, 6 Cylinder 6.7L Turbo, Tier III; Includes Figures 02-09 - 02-13, 02-15 - 02-41, 03-05 - 03-11; Incl. Refs. 1 - 12 |
| 1 | | 4895432 | | 5 | TORNILLO, M8 x 1.25 x 70 |
| 2 | | {2856458} | | 6 | ROCKER ARM, Assy. See Figure 02-33A |
| 3 | | 4895031 | | 12 | VARILLA DE EMPUJE |
| 4 | | 2854530 | | 12 | LAMINA DE CONEXION |
| 5 | | 2853788 | | 1 | JUNTA HERMETICA, Rocker Lever Housing |
| 6 | | 2852602 | | 3 | TORNILLO, Socket Head Cap |
| 7 | | 2852776 | | 3 | ARANDELA, M6 x 11 x 1.6 |
| 8 | | 2852427 | | 3 | CABLE ELECTRICO, Harness |
| 9 | | 4899257 | | 1 | CAVIDAD, ASSY. Rocker Lever, Incl. Ref. 10 |
| 10 | | 4899245 | | 5 | PITON, Sleeve |
| 11 | | 2852428 | | 6 | SUJETADOR, Wire Retaining |
| 12 | | 4899089 | | 2 | TORNILLO, Hex Flg, M8 x 1.25 x 50, Not Illustrated |

**BRAZOS BASCULANTES - MONTAJE**

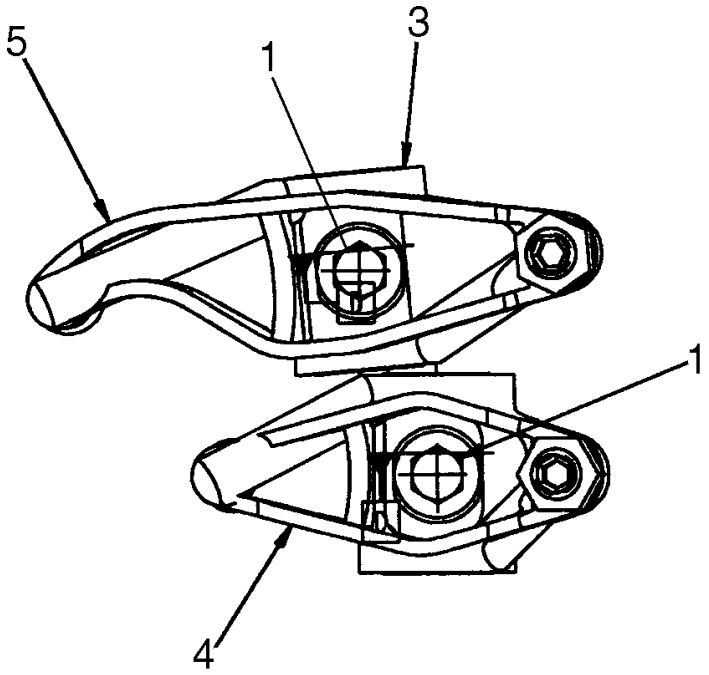


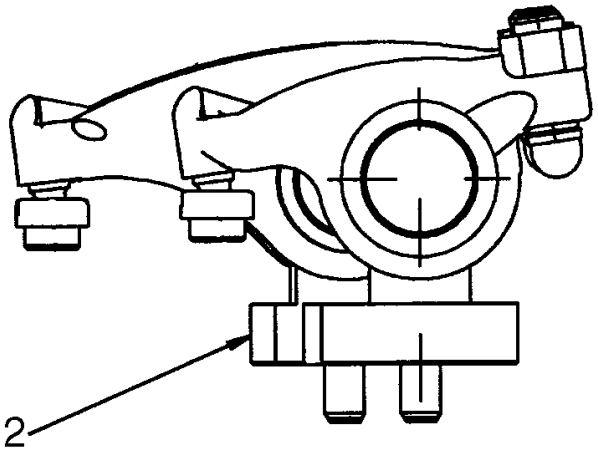


BS07G301

**BRAZOS BASCULANTES - MONTAJE**

| REF | FN | PART NUMBER | YR/SN | QTY | DENOMINACION |
|---|---|---|---|---|---|
| | | 87579400 | | 1 | MOTOR, 6 Cylinder 6.7L Turbo, Tier III; Includes Figures 02-09 - 02-13, 02-15 - 02-41, 03-05 - 03-11; Incl. Refs. 1 - 5 |
| | | {2856458} | | 6 | ROCKER ARM, ASSY. Incl. Refs. 1 - 5 |
| 1 | | {2856460} | | 2 | SCREW, Shoulder |
| 2 | | 4893487 | | 1 | SOPORTE, Rocker Lever |
| 3 | | {2856459} | | 2 | SHAFT, Rocker Lever |
| 4 | | NSS | | 1 | NO SE REPARA SEPARADAM., LEVER, ROCKER, Intake |
| 5 | | NSS | | 1 | NO SE REPARA SEPARADAM., LEVER, ROCKER, Exhaust |

**EJE DE LEVAS**

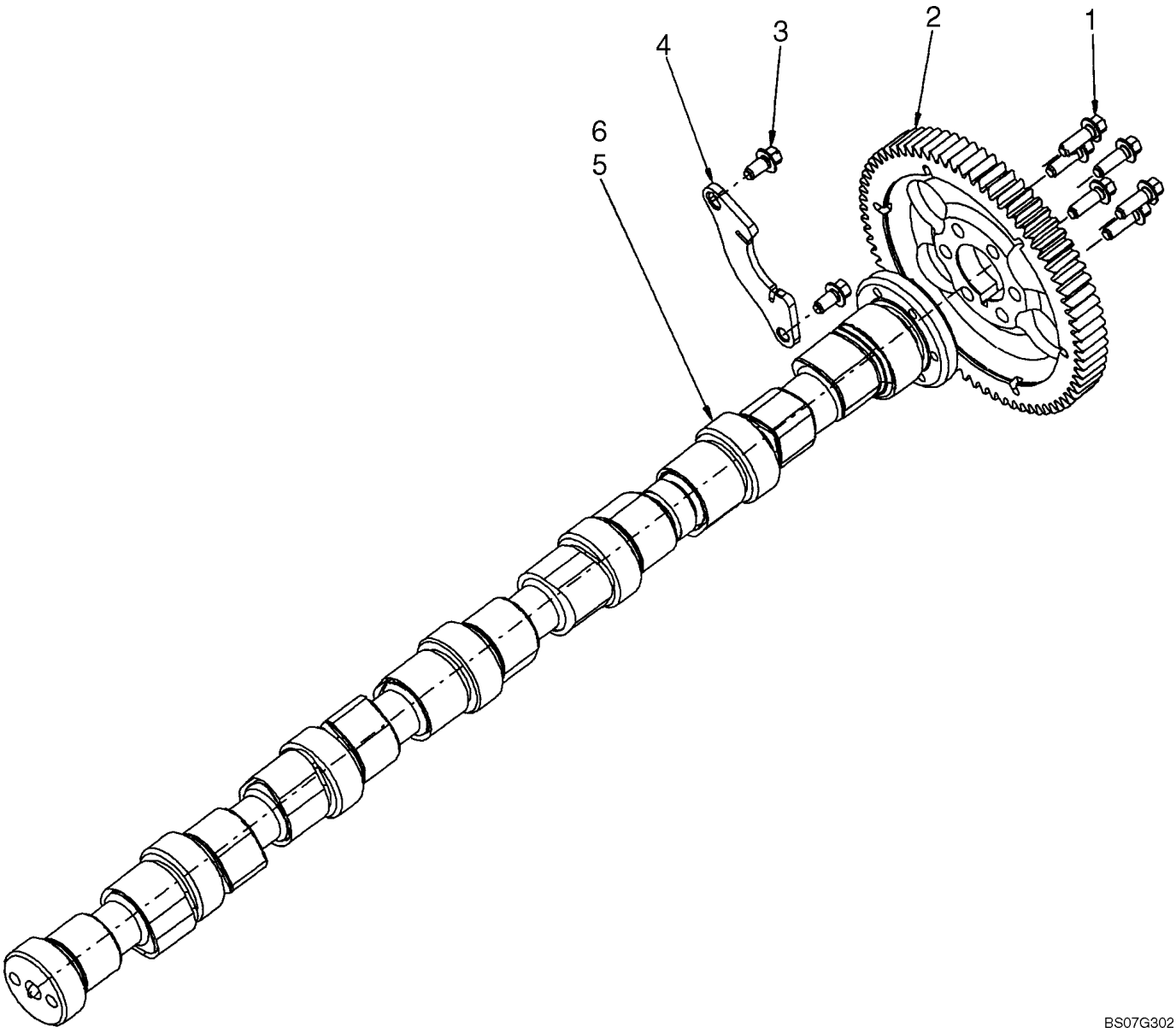

**EJE DE LEVAS**

| REF | FN | PART NUMBER | YR/SN | QTY | DENOMINACION |
|---|---|---|---|---|---|
| | | 87579400 | | 1 | MOTOR, 6 Cylinder 6.7L Turbo, Tier III; Includes Figures 02-09 - 02-13, 02-15 - 02-41, 03-05 - 03-11; Incl. Refs. 1 - 6 |
| 1 | | 4899079 | | 6 | TORNILLO, Hex Flg, M8 x 1.25 x 25 |
| 2 | | 4896380 | | 1 | PINON CONDUCIDO |
| 3 | | 4899068 | | 2 | TORNILLO, Hex Flg, M8 x 1.25 x 16 |
| 4 | | 4897457 | | 1 | BRIDA |
| 5 | | 2854604 | | 1 | ARBOL DE LEVAS, Incl. Ref. 6 |
| 6 | | 4899080 | | 1 | PITON, Not Illustrated |

**PISTONES**

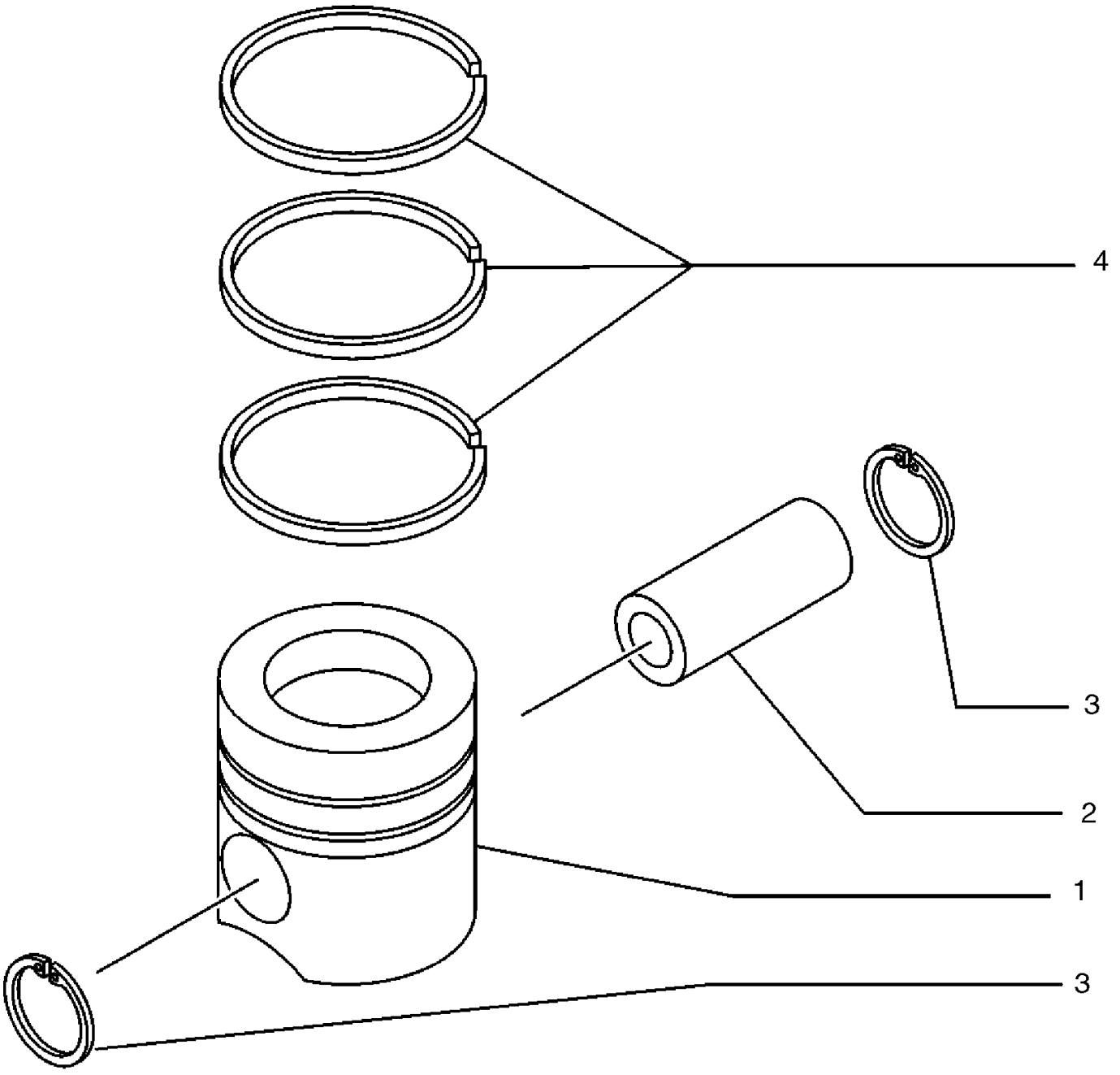

**PISTONES**

| REF | FN | PART NUMBER | YR/SN | QTY | DENOMINACION |
|---|---|---|---|---|---|
| | | 87579400 | | 1 | MOTOR, 6 Cylinder 6.7L Turbo, Tier III; Includes Figures 02-09 - 02-13, 02-15 - 02-41, 03-05 - 03-11; Incl. Refs. 1 - 4 |
| 1 | | 2855519 | | 6 | JUEGO DE REVISION, PISTON |
| 2 | | 4892712 | | 1 | BULON DEL EMBOLO |
| 3 | | 2854030 | | 2 | ANILLO DE FRENO |
| 4 | | 2854603 | | 1 | EQUIPO, RING, PISTON SEALING |
| 4 | | 2830158 | | 1 | ARO DE EMBOLO |
| 4 | | 2852037 | | 1 | ARO RASCADOR DE ACEITE |

**VARILLAS CONECTORAS**

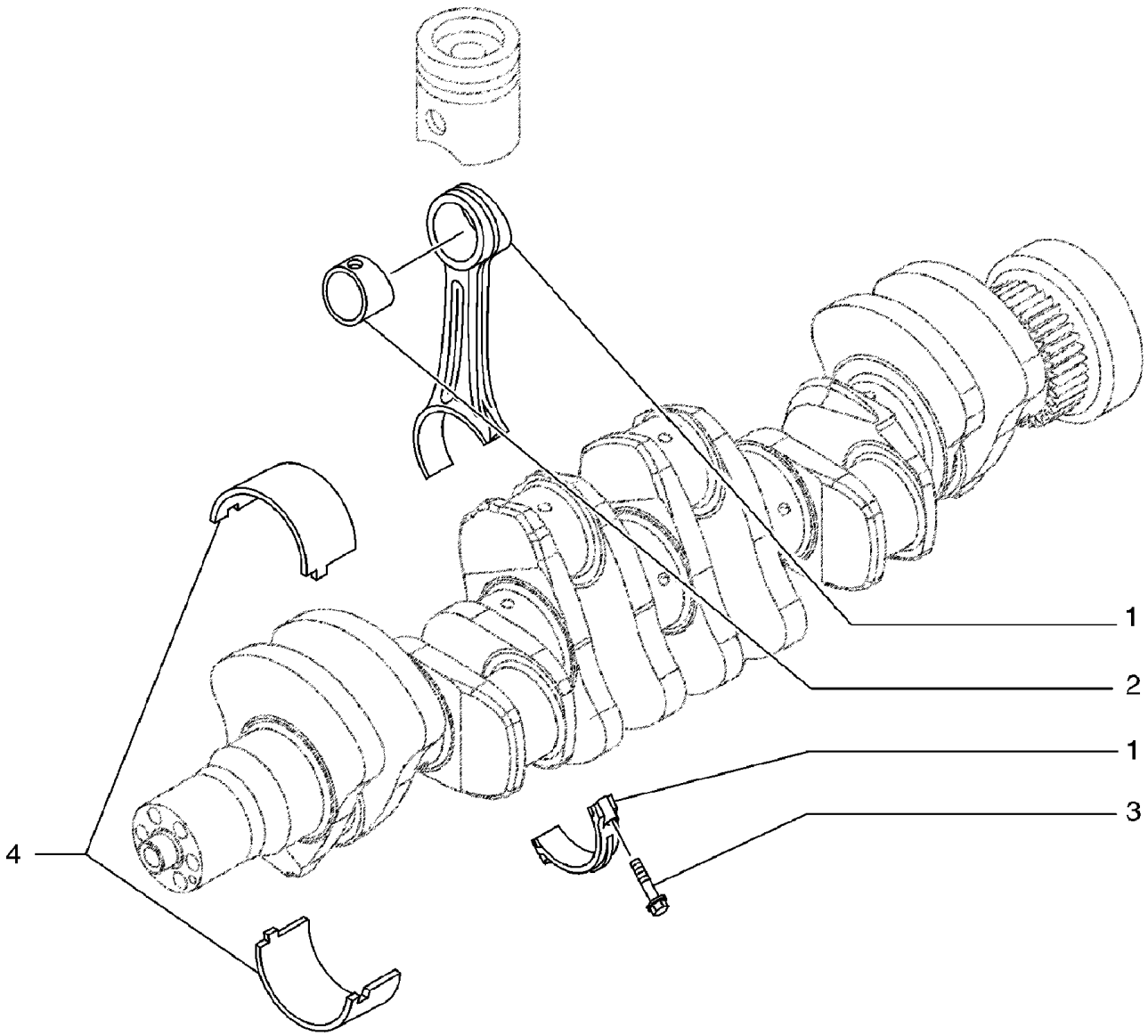

**VARILLAS CONECTORAS**

| REF | FN | PART NUMBER | YR/SN | QTY | DENOMINACION |
|---|---|---|---|---|---|
| | | 87579400 | | 1 | MOTOR, 6 Cylinder 6.7L Turbo, Tier III; Includes Figures 02-09 - 02-13, 02-15 - 02-41, 03-05 - 03-11; Incl. Refs. 1 - 4 |
| | | 2831298 | | 6 | BIELA DE EMBOLO, ASSY. Incl. Refs. 1 - 3 |
| 1 | | NSS | | 1 | NO SE REPARA SEPARADAM., CONNECTING ROD, Arm |
| 2 | | 4892708 | | 1 | CASQUILLO |
| 3 | | 2831297 | | 2 | TORNILLO |
| 4 | | 4892715 | | 6 | COJINETTE CIGUENAL, If Used |
| 4 | | {2856309} | | 6 | BEARING, CRANKSHAFT, If Used |

**COLLECTOR DE ASPIRACION**

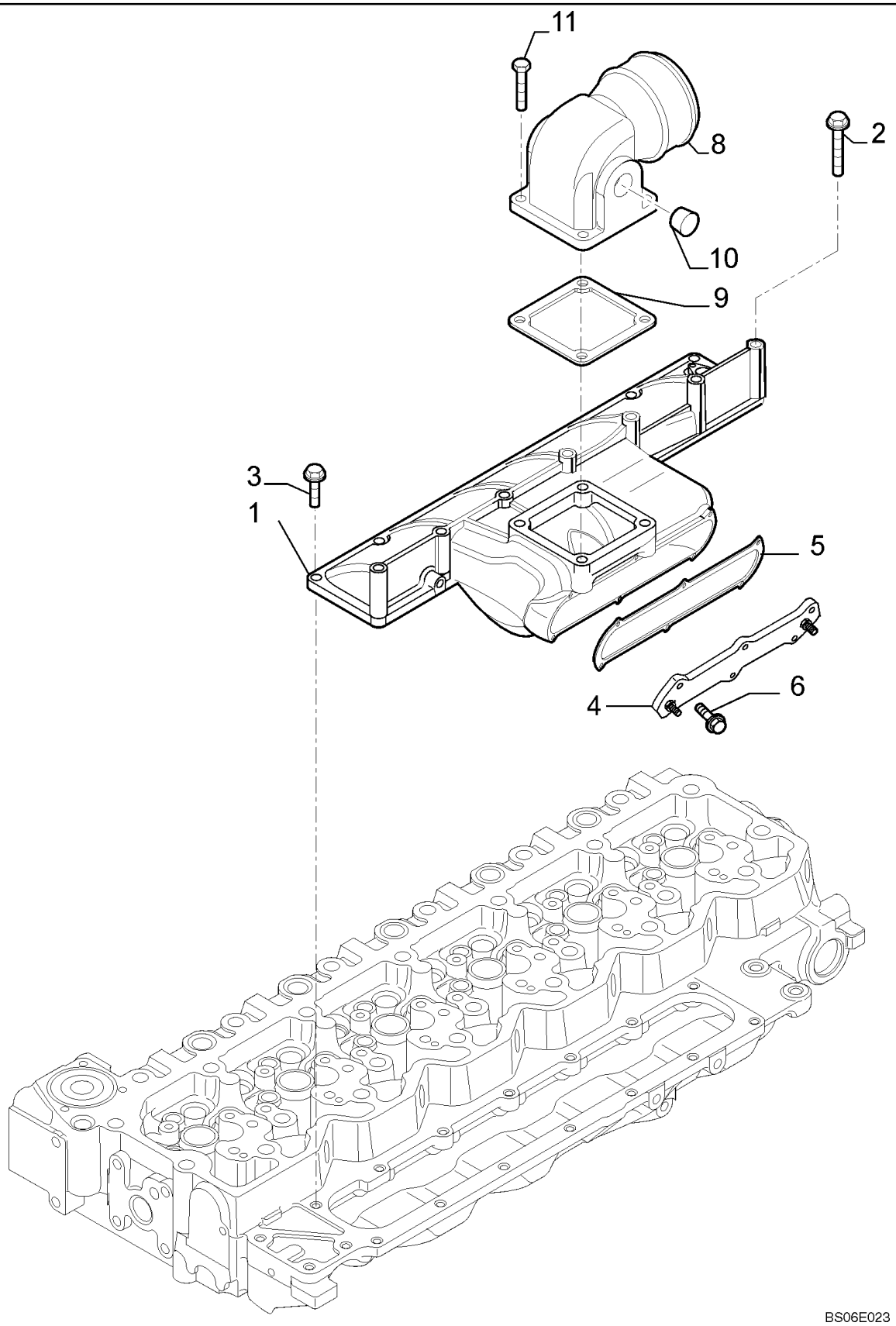

**COLLECTOR DE ASPIRACION**

| REF | FN | PART NUMBER | YR/SN | QTY | DENOMINACION |
|---|---|---|---|---|---|
| | | 87579400 | | 1 | MOTOR, 6 Cylinder 6.7L Turbo, Tier III; Includes Figures 02-09 - 02-13, 02-15 - 02-41, 03-05 - 03-11; Incl. Refs. 1 - 14 |
| 1 | | 2854534 | | 1 | COLECTOR DE ADMISION |
| 2 | | 4895432 | | 3 | TORNILLO |
| 3 | | 4899039 | | 7 | TORNILLO, Hex Flg, M8 x 1.25 x 25 |
| 4 | | 2854700 | | 1 | TAPADERA |
| 5 | | 2854701 | | 1 | JUNTA HERMETICA |
| 6 | | 2854702 | | 6 | TORNILLO |
| 8 | | 4895424 | | 1 | COLECTOR DE ADMISION |
| 9 | | 4899921 | | 1 | JUNTA HERMETICA |
| 10 | | 4893036 | | 2 | TAPÓN, Alternate Part |
| 10 | | 2854866 | | 2 | TAPÓN, Alternate Part |
| 11 | | 2852212 | | 4 | TORNILLO, Alternate Part |
| 11 | | 4895294 | | 4 | TORNILLO, Alternate Part |
| 12 | | 16745024 | | 1 | PRISIONERO, Not Illustrated |
| 13 | | 4897766 | | 1 | CABLE. MASA, Not Illustrated |
| 14 | | 4896263 | | 1 | CASQUETE, Not Illustrated |

**COLECTOR DE ESCAPE**

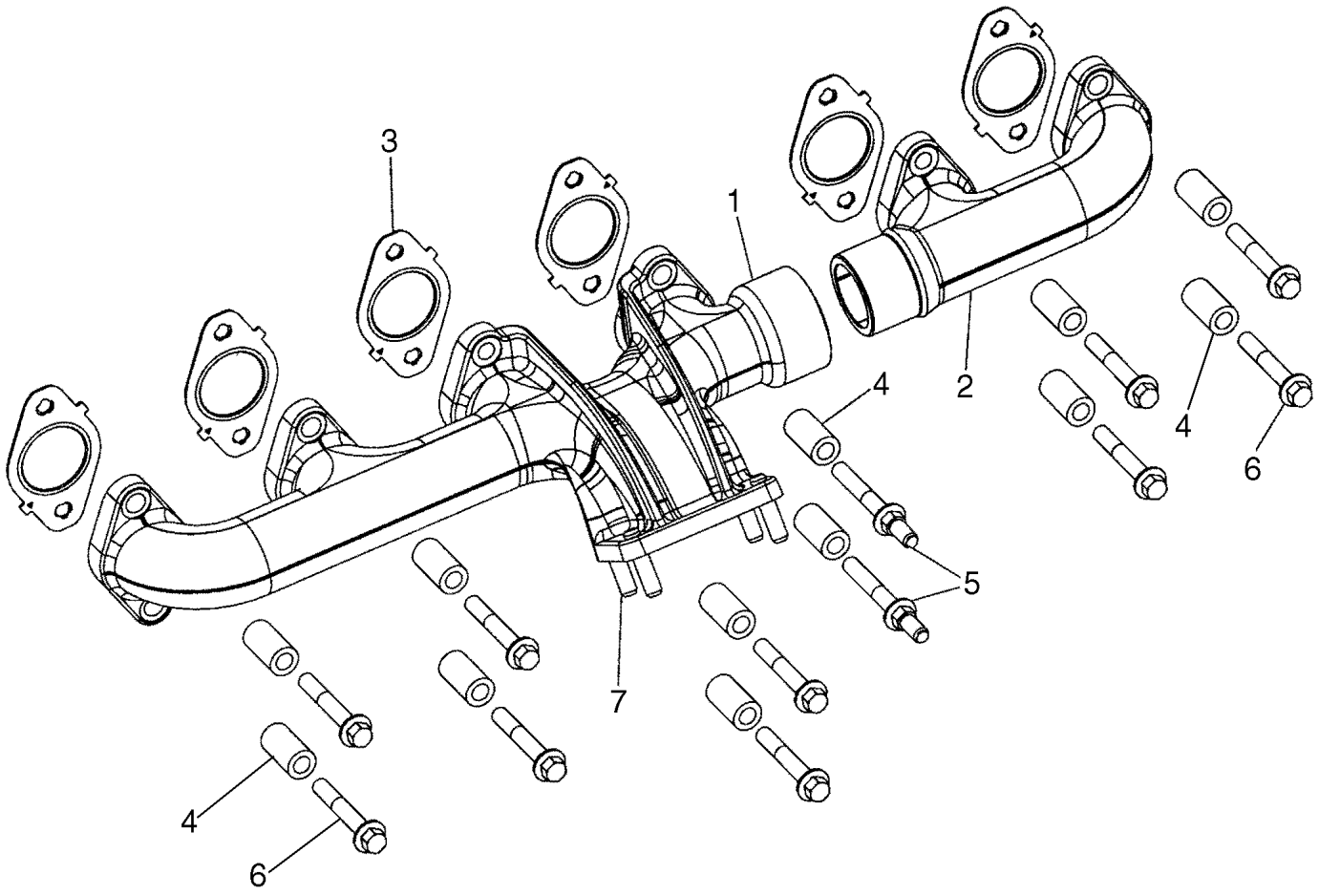


BS07G305

**COLECTOR DE ESCAPE**

| REF | FN | PART NUMBER | YR/SN | QTY | DENOMINACION |
|---|---|---|---|---|---|
| | | 87579400 | | 1 | MOTOR, 6 Cylinder 6.7L Turbo, Tier III; Includes Figures 02-09 - 02-13, 02-15 - 02-41, 03-05 - 03-11; Incl. Refs. 1 - 7 |
| 1 | | 4896651 | | 1 | COLECTOR DE ESCAPE |
| 2 | | 4896650 | | 1 | COLECTOR DE ESCAPE |
| 3 | | 2830444 | | 6 | JUNTA HERMETICA |
| 4 | | 4895336 | | 12 | SEPARADOR |
| 5 | | 4895219 | | 2 | PRISIONERO |
| 6 | | 2852744 | | 10 | TORNILLO |
| 7 | | 4899085 | | 4 | PRISIONERO |

**SISTEMA DE REFRIGERACIÓN - MOTOR**

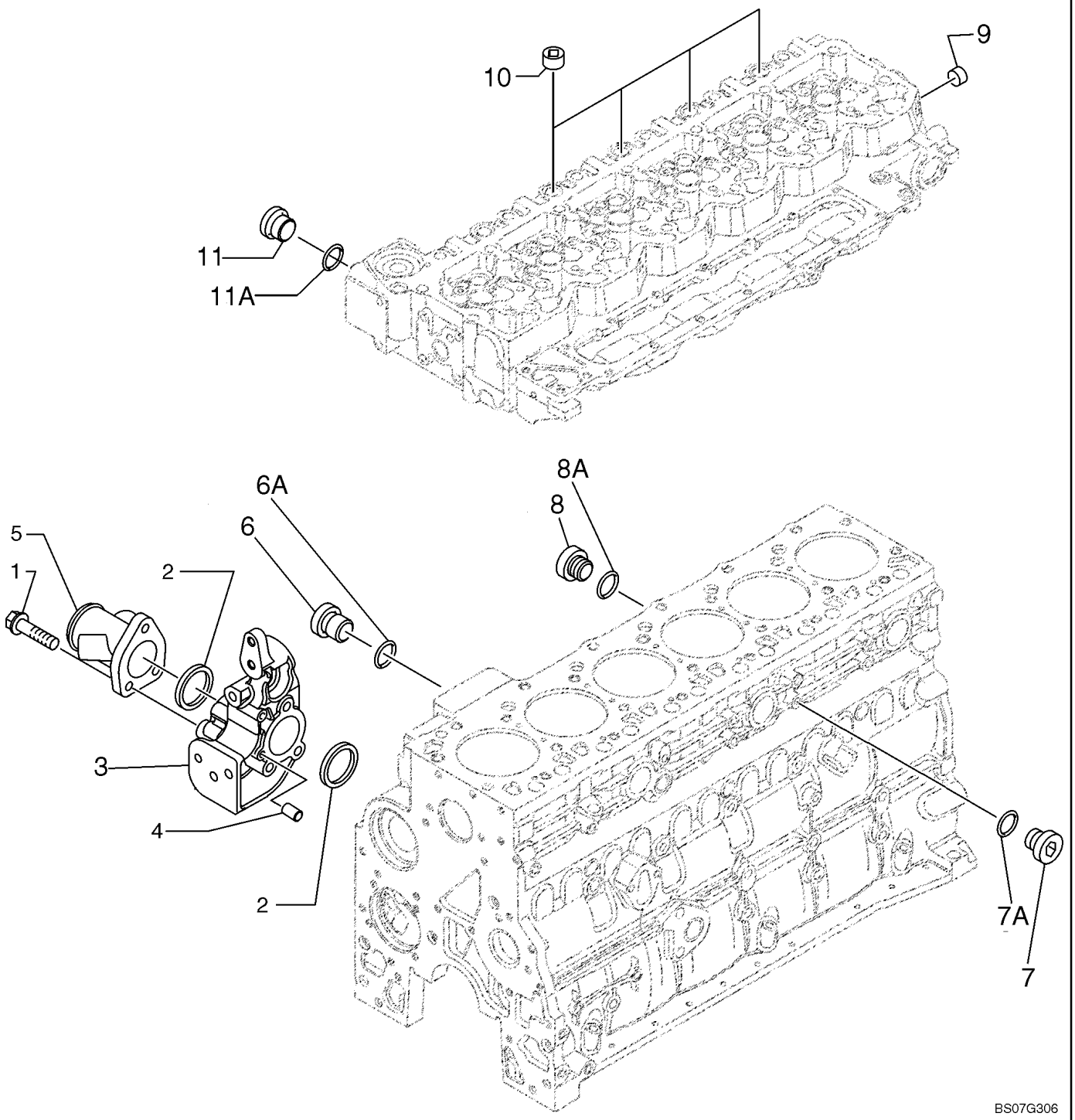

**SISTEMA DE REFRIGERACIÓN - MOTOR**

| REF | FN | PART NUMBER | YR/SN | QTY | DENOMINACION |
|---|---|---|---|---|---|
| | | 87579400 | | 1 | MOTOR, 6 Cylinder 6.7L Turbo, Tier III; Includes Figures 02-09 - 02-13, 02-15 - 02-41, 03-05 - 03-11; Incl. Refs. 1 - 11A |
| 1 | | 2852325 | | 3 | TORNILLO, M10 x 80 |
| 2 | | 2854072 | | 2 | JUNTA HERMETICA |
| 3 | | 2852392 | | 1 | SOPORTE, Incl. Ref. 4 |
| 4 | | 4895576 | | 2 | PITON |
| 5 | | 2852468 | | 1 | TUBO RIGIDO |
| 6 | | 2852496 | | 1 | TAPÓN, Incl. Ref. 6A |
| 6A | | 4895393 | | 1 | JUNTA HERMETICA |
| 7 | | 4895623 | | 1 | TAPÓN, Incl. Ref. 7A |
| 7A | | 4895625 | | 1 | JUNTA HERMETICA |
| 8 | | 2852496 | | 2 | TAPÓN, Incl. Ref. 8A |
| 8A | | 4899824 | | 2 | JUNTA HERMETICA |
| 9 | | 4895079 | | 2 | TAPÓN |
| 10 | | 4895078 | | 4 | TAPÓN |
| 11 | | 4895080 | | 1 | TAPÓN, Incl. Ref. 11A |
| 11A | | 4895082 | | 1 | JUNTA HERMETICA |

**TERMOSTATO - REFRIGERACION DEL MOTOR**

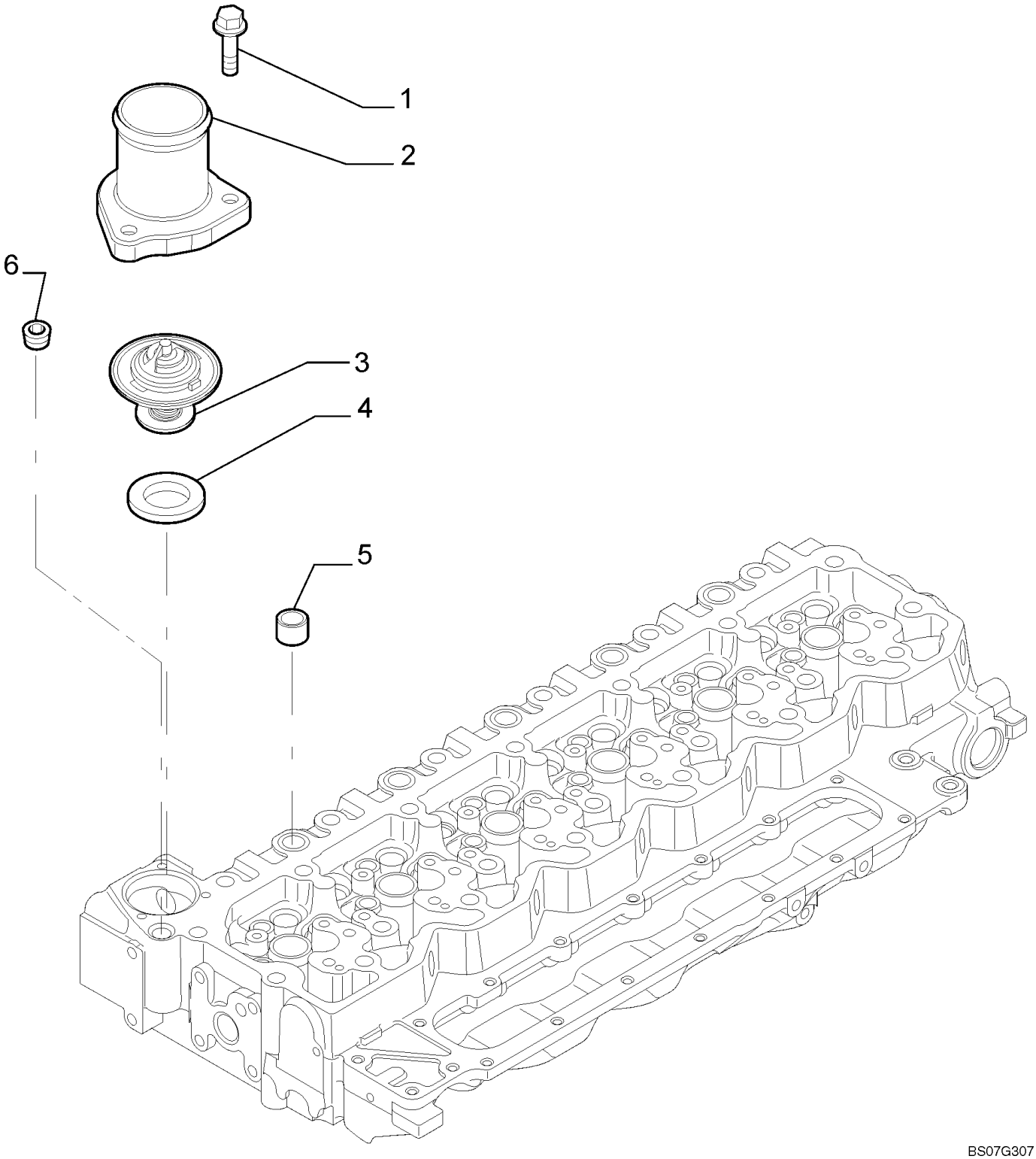

**TERMOSTATO - REFRIGERACION DEL MOTOR**

| REF | FN | PART NUMBER | YR/SN | QTY | DENOMINACION |
|---|---|---|---|---|---|
| | | 87579400 | | 1 | MOTOR, 6 Cylinder 6.7L Turbo, Tier III; Includes Figures 02-09 - 02-13, 02-15 - 02-41, 03-05 - 03-11; Incl. Refs. 1 - 6 |
| 1 | | 4899110 | | 3 | TORNILLO, Hex Flg, M6 x 1 x 20 |
| 2 | | 4895131 | | 1 | CAVIDAD |
| 3 | | 2856543 | | 1 | TERMOSTATO, ASSY. Incl. Ref. 4 |
| 4 | | 2852473 | | 1 | JUNTA HERMETICA |
| 5 | | 4893036 | | 1 | TAPÓN, Alternate Part |
| 5 | | 2854866 | | 1 | TAPÓN, Alternate Part |
| 6 | | 4895078 | | 4 | TAPÓN |
| 7 | | 2854491 | | 1 | TAPÓN, Engine Cooland Vent, Not Illustrated |

**GANCHOS DE MANOIBRA - MOTOR**

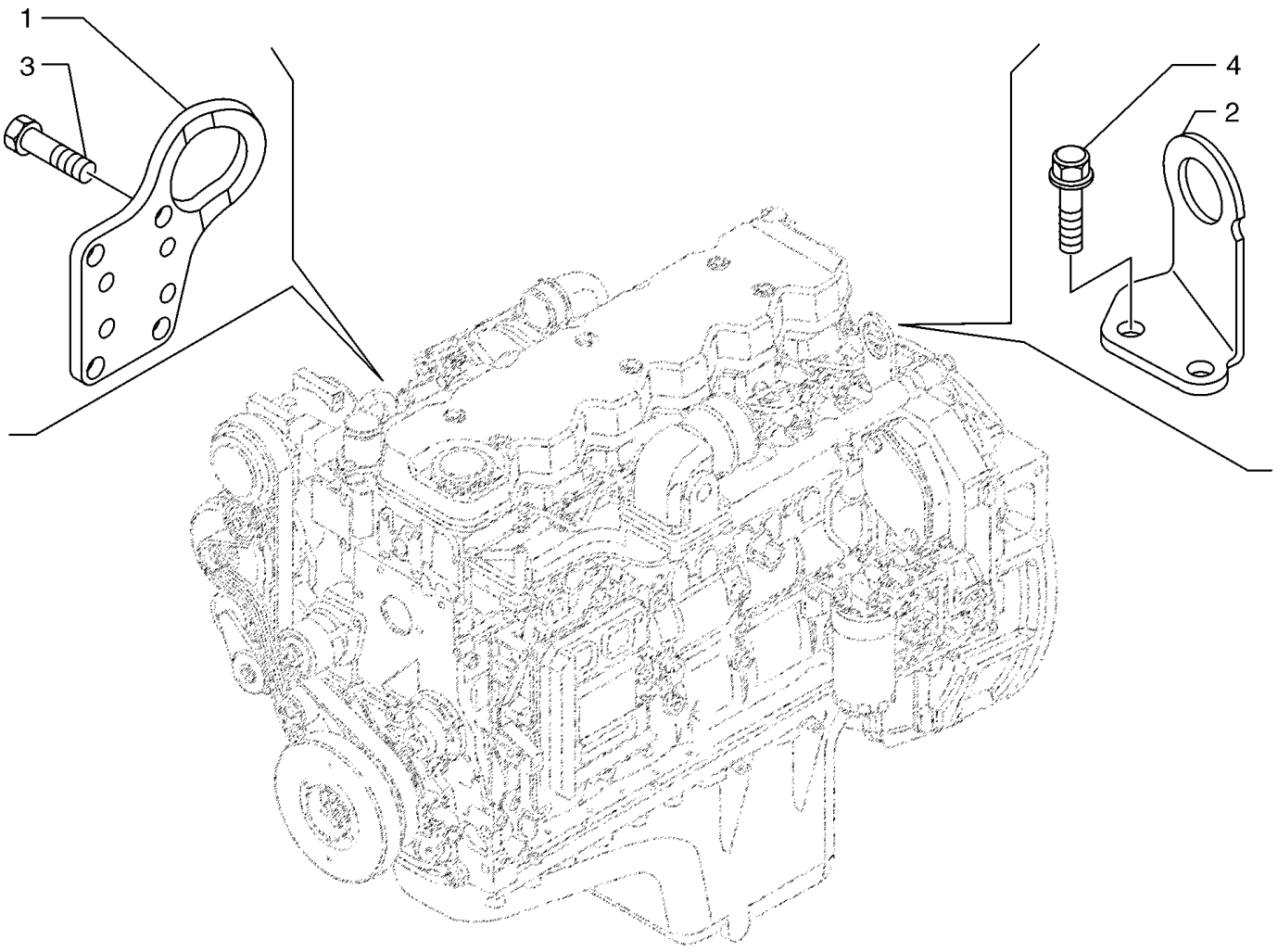

**GANCHOS DE MANOIBRA - MOTOR**

| REF | FN | PART NUMBER | YR/SN | QTY | DENOMINACION |
|---|---|---|---|---|---|
| | | 87579400 | | 1 | MOTOR, 6 Cylinder 6.7L Turbo, Tier III; Includes Figures 02-09 - 02-13, 02-15 - 02-41, 03-05 - 03-11; Incl. Refs. 1 - 4 |
| 1 | | 4894100 | | 1 | GANCHO |
| 2 | | 4894410 | | 1 | GANCHO |
| 3 | | 4899037 | | 2 | TORNILLO, Hex Flg, M12 x 1.75 x 25 |
| 4 | | 4899079 | | 4 | TORNILLO, Hex Flg, M8 x 1.25 x 25 |

**MOTOR - CALENTADOR DEL BLOQUE**

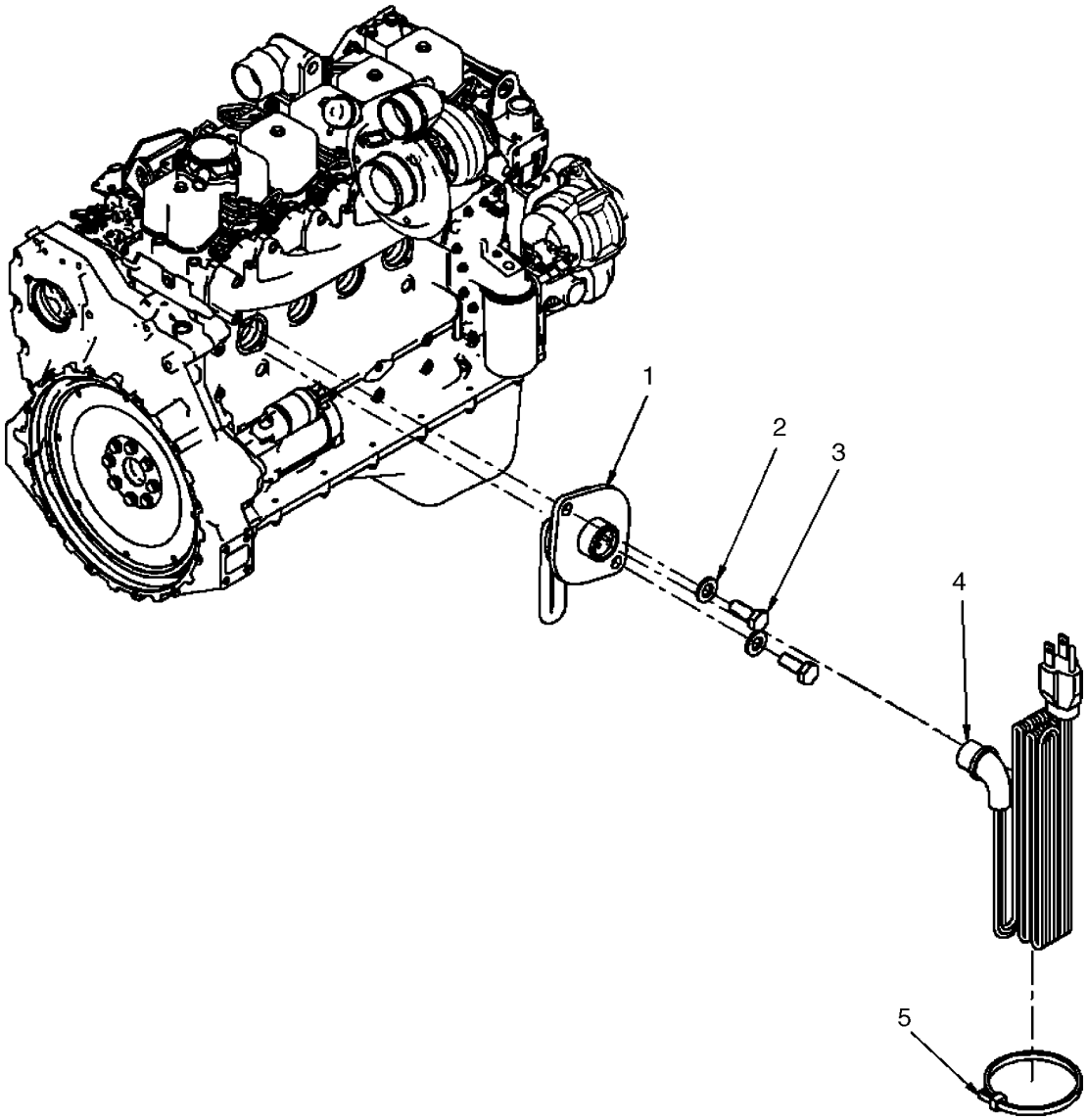


BS07G079

**MOTOR - CALENTADOR DEL BLOQUE**

| REF | FN | PART NUMBER | YR/SN | QTY | DENOMINACION |
|---|---|---|---|---|---|
| 1 | | 8602005 | | 1 | RECALENTADOR, 750W, 120V |
| 2 | | 896-11008 | | 2 | ARANDELA, M8 x 17.5 x 2, HT |
| 3 | | 627-8020 | | 2 | TORNILLO, Hex, M8 x 20, 10.9 |
| 4 | | 196466A1 | | 1 | CABLE ELECTRICO, Engine Heater |
| 5 | | L11541 | | 1 | BANDA |

## NOTAS

# SECTION INDEX
## Sistema de Combustible


| | |
|---|---|
| 03-01 | LINEA DE COMBUSTIBLE - REFRIGERADOR, COMBUSTIBLE |
| 03-02 | FILTRO, COMBUSTIBLE - AGUA SEPERATOR |
| 03-03 | FILTRO, COMBUSTIBLE |
| 03-04 | RELLENO DEL DEPOSITO DE COMBUSTILE - EMISOR |
| 03-04A | DEPOSITO DE COMBUSTIBLE - RESPIRADERO |
| 03-05 | BOMBA DE INYECCION |
| 03-06 | SISTEMA DE INYECCION DE COMBUSTIBLE |
| 03-07 | SISTEMA DE INYECCION DE COMBUSTIBLE - INYECTOR |
| 03-08 | SISTEMA DE INYECCION DE COMBUSTIBLE - COMBUSTIBLE, SUMINISTRO |
| 03-09 | SISTEMA DE INYECCION DE COMBUSTIBLE - MODULO, CONTROL DEL MOTOR |
| 03-10 | SISTEMA DE INYECCION DE COMBUSTIBLE - MAZO DE CABLES, MOTOR |
| 03-11 | SISTEMA DE INYECCION DE COMBUSTIBLE - LÍNEA DE DRENAJE |

| 03-01 | | p1 | 07/07 |
|---|---|---|---|

**LINEA DE COMBUSTIBLE - REFRIGERADOR, COMBUSTIBLE**

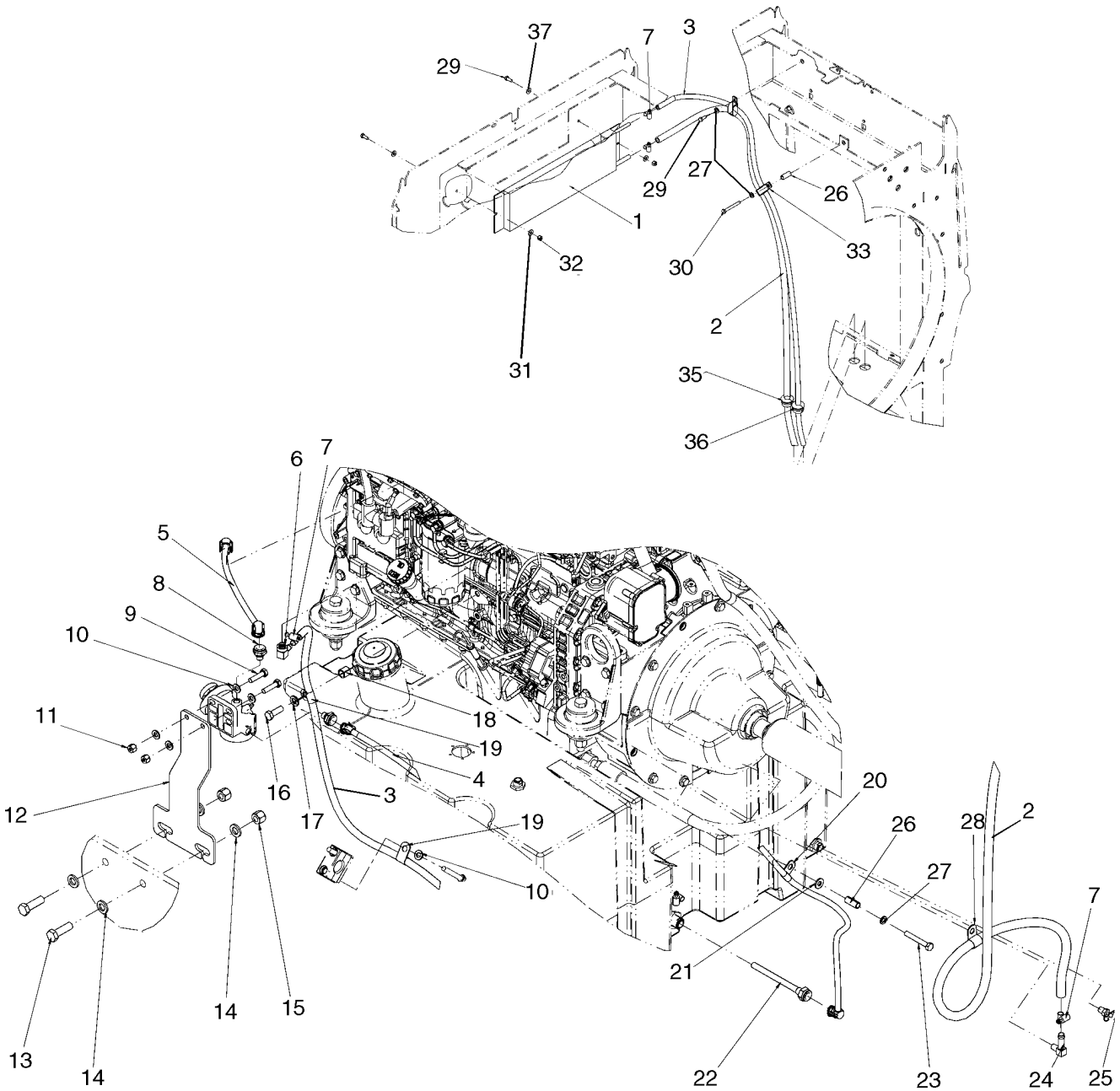


BS07D396

**LINEA DE COMBUSTIBLE - REFRIGERADOR, COMBUSTIBLE**

| REF | FN | PART NUMBER | YR/SN | QTY | DENOMINACION |
|---|---|---|---|---|---|
| 1 | | 347615A3 | | 1 | ENFRIADOR, Fuel |
| 2 | | 87552502 | | 1 | MANGA, Fuel Cooler to Tank; 2744 mm (108 in) |
| 3 | | 87358043 | | 1 | TUBO (METROS), Engine to Fuel Cooler; 2870 mm (113 in) |
| 4 | | 8602538 | | 1 | TUBO (CONJUNTO), Tank to Prefilter |
| 5 | | 87525374 | | 1 | TUBO (CONJUNTO), Prefilter to Engine |
| 6 | | 87400460 | | 1 | CONEXION, 90 Degree |
| 7 | | 214-1406 | | 6 | ABRAZADERA MANGUERA, #06, .44/.78 Type F Worm |
| 8 | | 8602542 | | 2 | ADAPTOR |
| 9 | | 827-10040 | | 2 | TORNILLO, Hex, M10 x 40, 10.9, Full Thd |
| 10 | | 896-11010 | | 5 | ARANDELA, M10 x 21.5 x 2.5, HT |
| 11 | | 832-10410 | | 2 | CONTRA TUERCA, M10 x 1.5, Cl 8 |
| 12 | | 87323827 | | 1 | PIEZA DE SOPORTE, Pre-Filter Mounting |
| 13 | | 627-16050 | | 2 | TORNILLO, Hex, M16 x 50, 10.9 |
| 14 | | 896-11016 | | 4 | ARANDELA, M17.5 x 30 x 4, HT |
| 15 | | 832-10416 | | 2 | CONTRA TUERCA, M16 x 2, Cl 8 |
| 16 | | 627-12035 | | 1 | TORNILLO, Hex, M12 x 35, 10.9 |
| 17 | | 896-11012 | | 1 | ARANDELA, M13.5 x 24.5 x 3, HT |
| 18 | | 87307825 | | 1 | SEPARADOR |
| 19 | | 515-25159 | | 2 | BORNE, 5/8", Insul, 1/2" Bolt |
| 20 | | 515-25127 | | 1 | BORNE, 1/2", Insul, 1/2" Bolt |
| 21 | | 896-15010 | | 1 | ARANDELA, M10 x 24.5 x 3, HT |
| 22 | | 8602537 | | 1 | TUBO, Tank Draw |
| 23 | | 827-10070 | | 1 | TORNILLO, Hex, M10 x 70, 10.9 |
| 24 | | 217-372 | | 1 | CONEXION, 90°, 1/2" Hose x 1/4" NPTF Beaded |
| 25 | | 217-92 | | 1 | LLAVE DE PASO |
| 26 | | L126936 | | 2 | ESPACIADOR |
| 27 | | 892-11010 | | 3 | ARANDELA DE FRENO, M10 |
| 28 | | 515-25190 | | 1 | BORNE, 3/4", Insul, 1/2" Bolt |
| 29 | | 627-8020 | | 3 | TORNILLO, Hex, M8 x 20, 10.9 |
| 30 | | 827-8070 | | 1 | TORNILLO, Hex, M8 x 70, 10.9 |
| 31 | | 627-8025 | | 1 | TORNILLO, Hex, M8 x 25, 10.9 |
| 32 | | 832-10408 | | 2 | CONTRA TUERCA, M8 x 1.25, Cl 8 |
| 33 | | L101181 | | 2 | BORNE |

| 03-01 | | p2 | 07/07 |
|---|---|---|---|

**LINEA DE COMBUSTIBLE - REFRIGERADOR, COMBUSTIBLE**

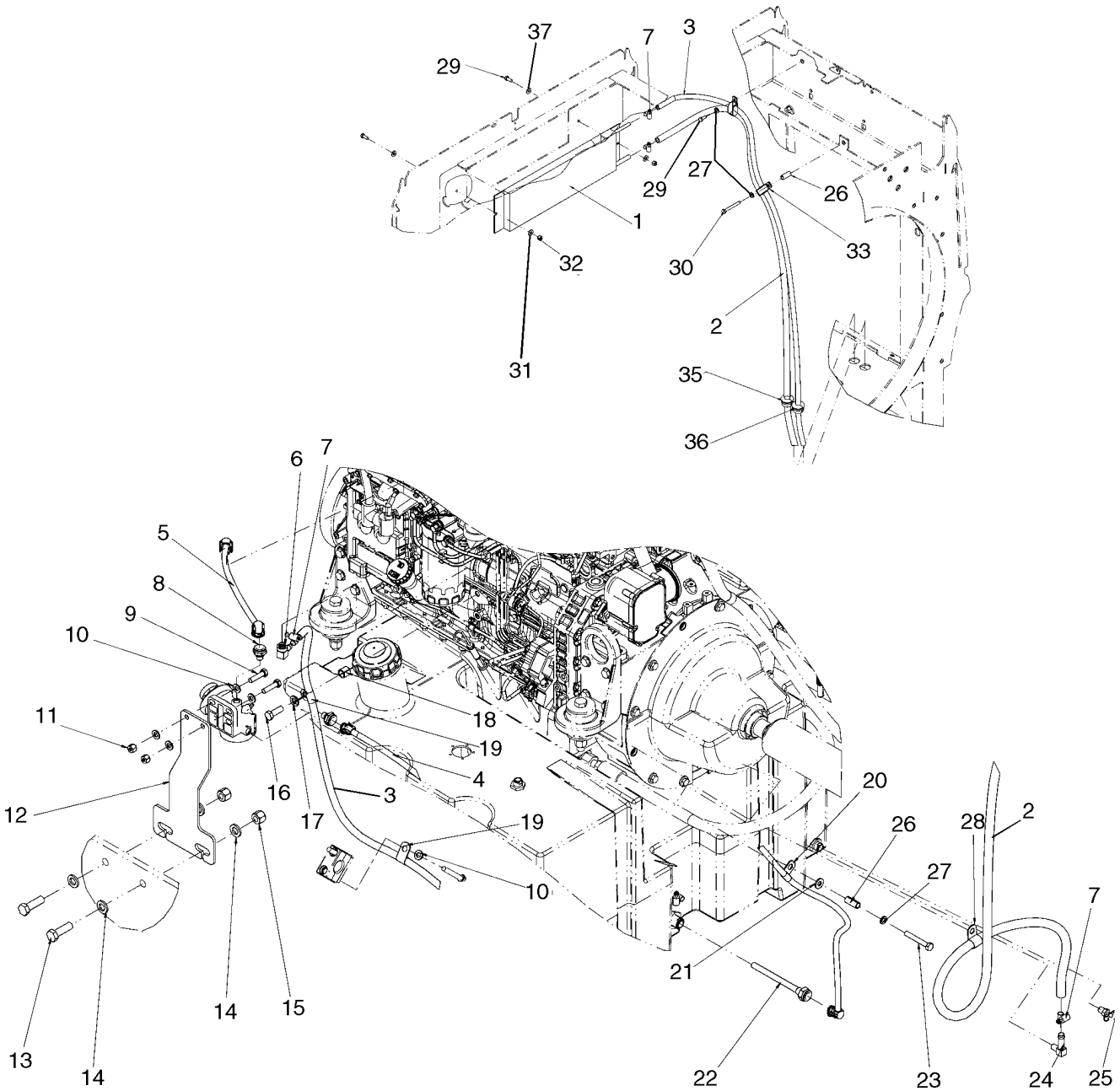


BS07D396

**LINEA DE COMBUSTIBLE - REFRIGERADOR, COMBUSTIBLE**

| REF | FN | PART NUMBER | YR/SN | QTY | DENOMINACION |
|---|---|---|---|---|---|
| 35 | | 198826C1 | | 1 | PASACABLES |
| 36 | | 198825C1 | | 1 | PASACABLES |
| 37 | | 895-15008 | | 5 | ARANDELA, M8 x 20 x 1.6 |

| 03-02 | | p1 | 07/07 |
|---|---|---|---|

**FILTRO, COMBUSTIBLE - AGUA SEPERATOR**

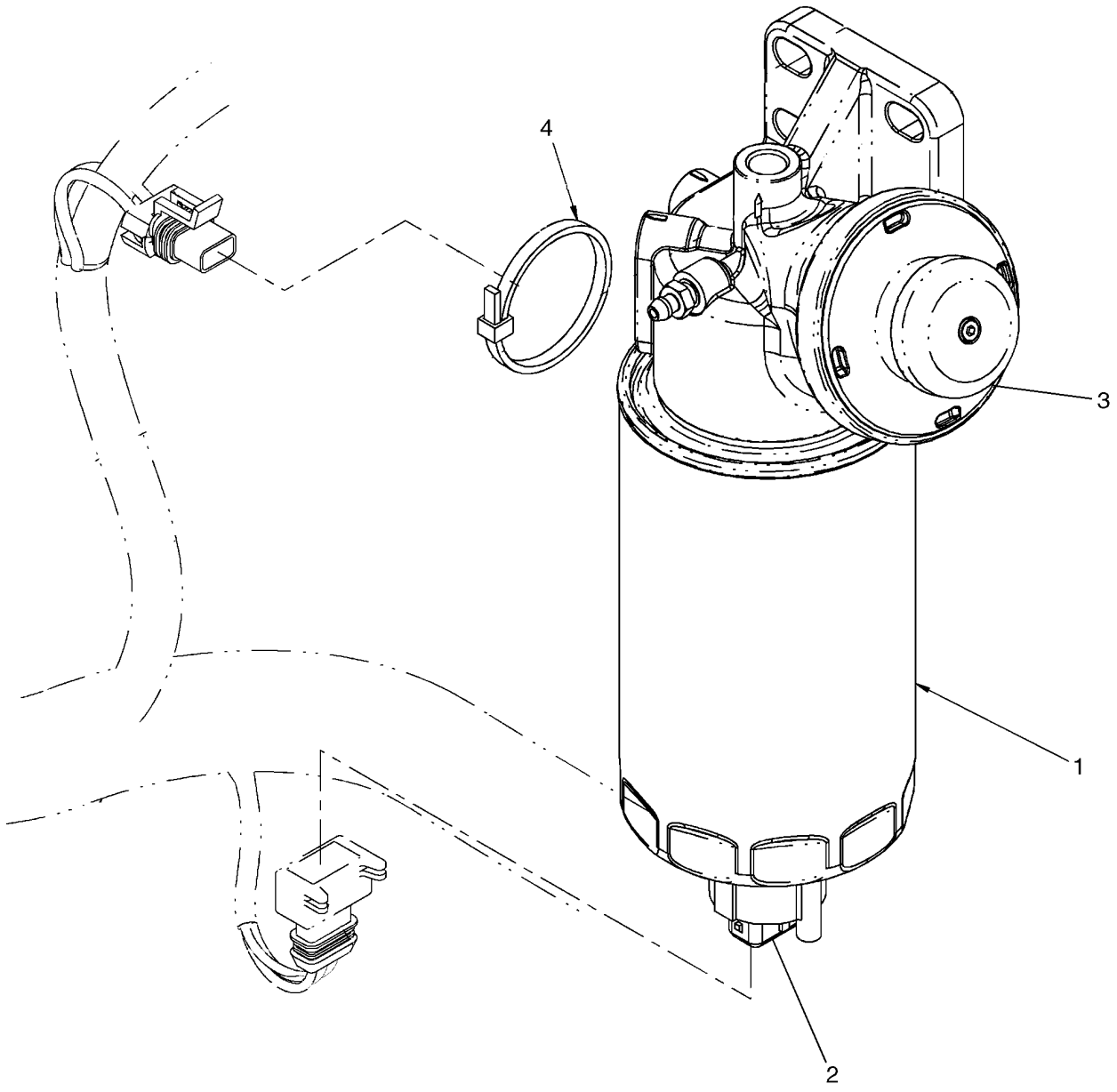

**FILTRO, COMBUSTIBLE - AGUA SEPERATOR**

| REF | FN | PART NUMBER | YR/SN | QTY | DENOMINACION |
|---|---|---|---|---|---|
| | | {87519285} | | 1 | FILTER ASSY. Without Heater, Incl. Refs. 1 - 3 |
| | | 87393456 | | 1 | FILTRO CONJ, With Heater, Incl. Refs. 1 - 3 |
| 1 | | 87435526 | | 1 | FILTRO DE COMBUSTIBLE, Cartridge |
| 2 | | 87519307 | | 1 | SENSOR, Water |
| 3 | | NSS | | 1 | NO SE REPARA SEPARADAM., Filter Head |
| 4 | | L11541 | | 1 | BANDA, Wire Tie; If Used |

| 03-03 | | p1 | 07/07 |
|---|---|---|---|

**FILTRO, COMBUSTIBLE**

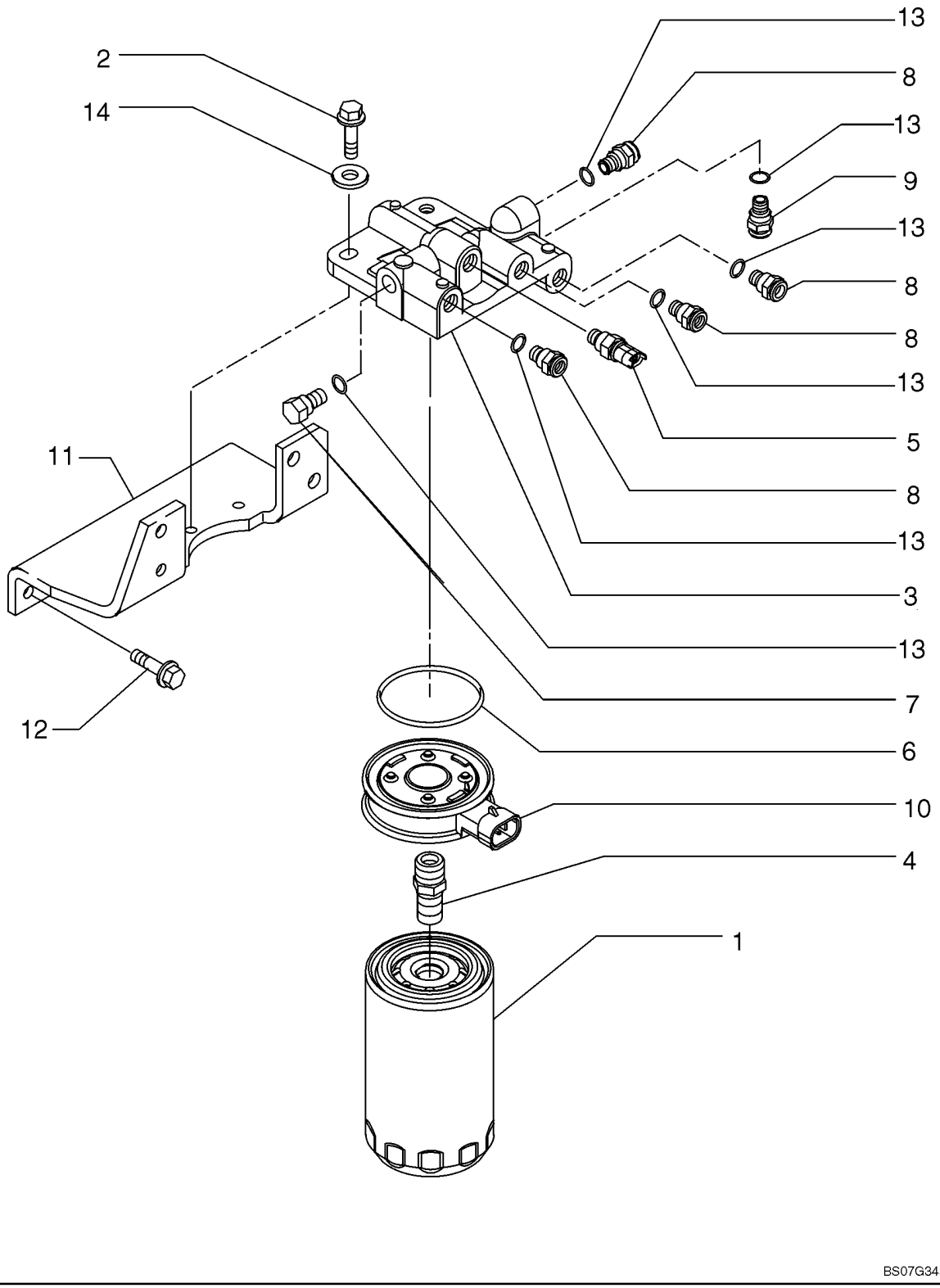

**FILTRO, COMBUSTIBLE**

| REF | FN | PART NUMBER | YR/SN | QTY | DENOMINACION |
|---|---|---|---|---|---|
| | | 87579400 | | 1 | MOTOR, 6 Cylinder 6.7L Turbo, Tier III; Includes Figures 02-09 - 02-13, 02-15 - 02-41, 03-05 - 03-11; Incl. Refs. 1 - 14 |
| 1 | | 87803200 | | 1 | FILTRO DE COMBUSTIBLE |
| 2 | | 2830733 | | 2 | TORNILLO, M8 x 25 |
| | | 2852436 | | 1 | CULATA, ASSY. With Heater, Incl. Refs. 3 - 10, 13 |
| 3 | | NSS | | 1 | NO SE REPARA SEPARADAM., Fuel Filter Head |
| 4 | | 4898758 | | 1 | RACOR |
| 5 | | 4897224 | | 1 | SENSOR, Temperature |
| 6 | | 4898876 | | 1 | JUNTA HERMETICA |
| 7 | | 4893464 | | 1 | TAPÓN, Threaded |
| 8 | | 4890964 | | 4 | CONEXION |
| 9 | | 4896543 | | 1 | CONEXION |
| 10 | | 4897838 | | 1 | RECALENTADOR |
| 11 | | 2852793 | | 1 | PIEZA DE SOPORTE, Fuel Filter Head Mounting |
| 12 | | 2852791 | | 4 | TORNILLO, M8 x 20 |
| 13 | | 4894721 | | 6 | JUNTA HERMETICA |
| 14 | | 2830711 | | 2 | ARANDELA |

| 03-04 | | p1 | 07/07 |
|---|---|---|---|

**RELLENO DEL DEPOSITO DE COMBUSTILE - EMISOR**

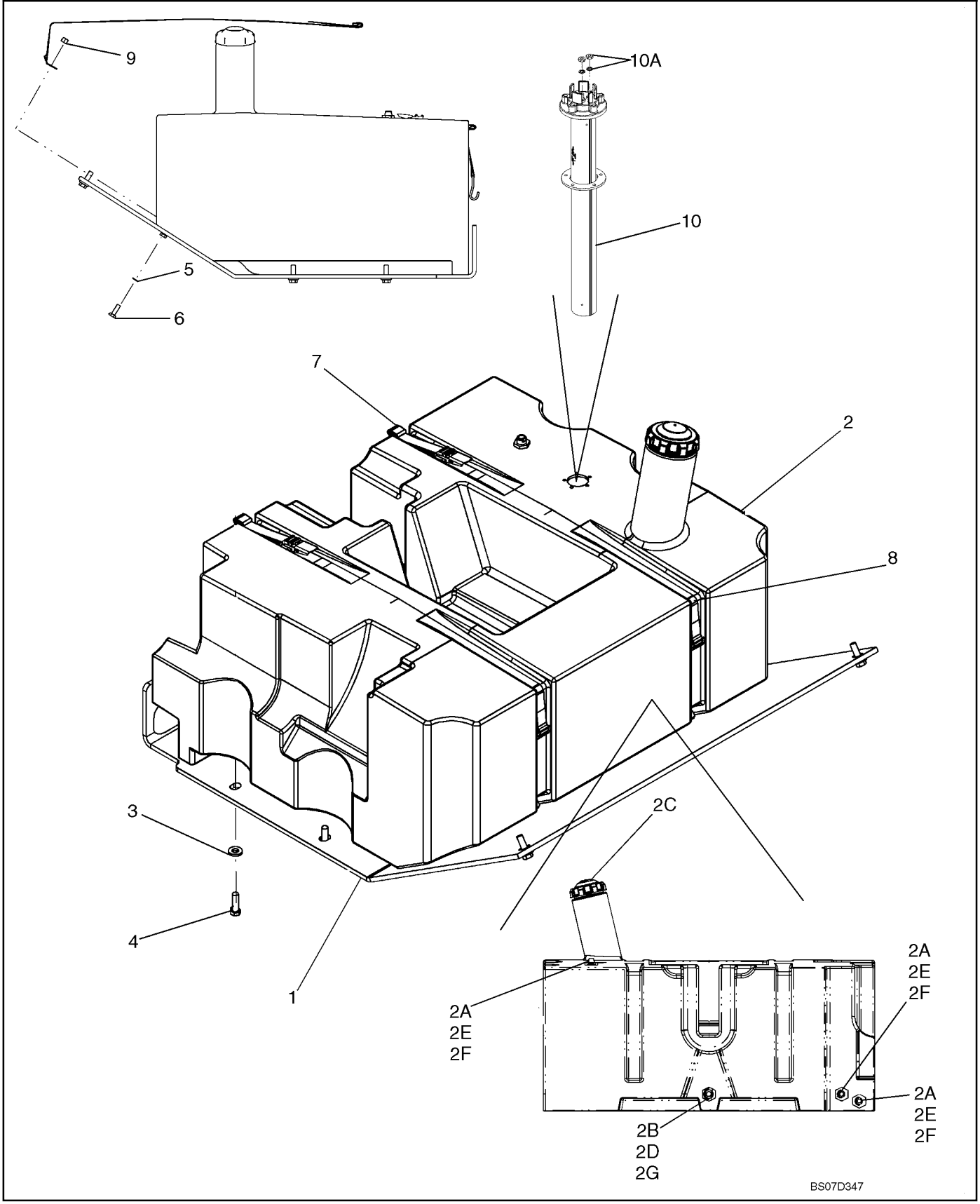

**RELLENO DEL DEPOSITO DE COMBUSTILE - EMISOR**

| REF | FN | PART NUMBER | YR/SN | QTY | DENOMINACION |
|---|---|---|---|---|---|
| 1 | | 87550115 | | 1 | PLACA, Fuel Tank |
| 2 | | 8500909 | | 1 | TANQUE COMBUSTIBLE, Incl. Refs. 2A - 2G |
| 2A | | 238-5210 | | 3 | JUNTA HERMETICA, -210, 70 Duro, .734" ID x .139" Thk |
| 2B | | 238-5214 | | 1 | JUNTA HERMETICA, -214, 70 Duro, .984" ID x .139" Thk |
| 2C | | 8604443 | | 1 | TAPON DEL DEPOSITO |
| 2D | | 87435224 | | 1 | CONEXION |
| 2E | | 87435505 | | 3 | CONEXION |
| 2F | | 1251791C1 | | 3 | TUERCA |
| 2G | | 282709A1 | | 1 | TUERCA |
| 3 | | 896-15012 | | 6 | ARANDELA, M12 x 28.5 x 4, HT |
| 4 | | 627-12040 | | 6 | TORNILLO, Hex, M12 x 40, 10.9, Full Thd |
| 5 | | 627-10030 | | 2 | TORNILLO, Hex, M10 x 30, 10.9, Full Thd |
| 6 | | 627-10030 | | 2 | TORNILLO, Hex, M10 x 30, 10.9, Full Thd |
| 7 | | 366905A1 | | 2 | CORREA, 476 mm (18 - 3/4in) |
| 8 | | 366904A1 | | 2 | CORREA, 1342 mm (52 - 13/16in) |
| 9 | | 832-10410 | | 2 | CONTRA TUERCA, M10 x 1.5, Cl 8 |
| 10 | | 87542710 | | 1 | CONTACTOR, Fuel Level |
| 10A | | 87617083 | | 1 | EQUIPO, Nut Pack |

**DEPOSITO DE COMBUSTIBLE - RESPIRADERO**

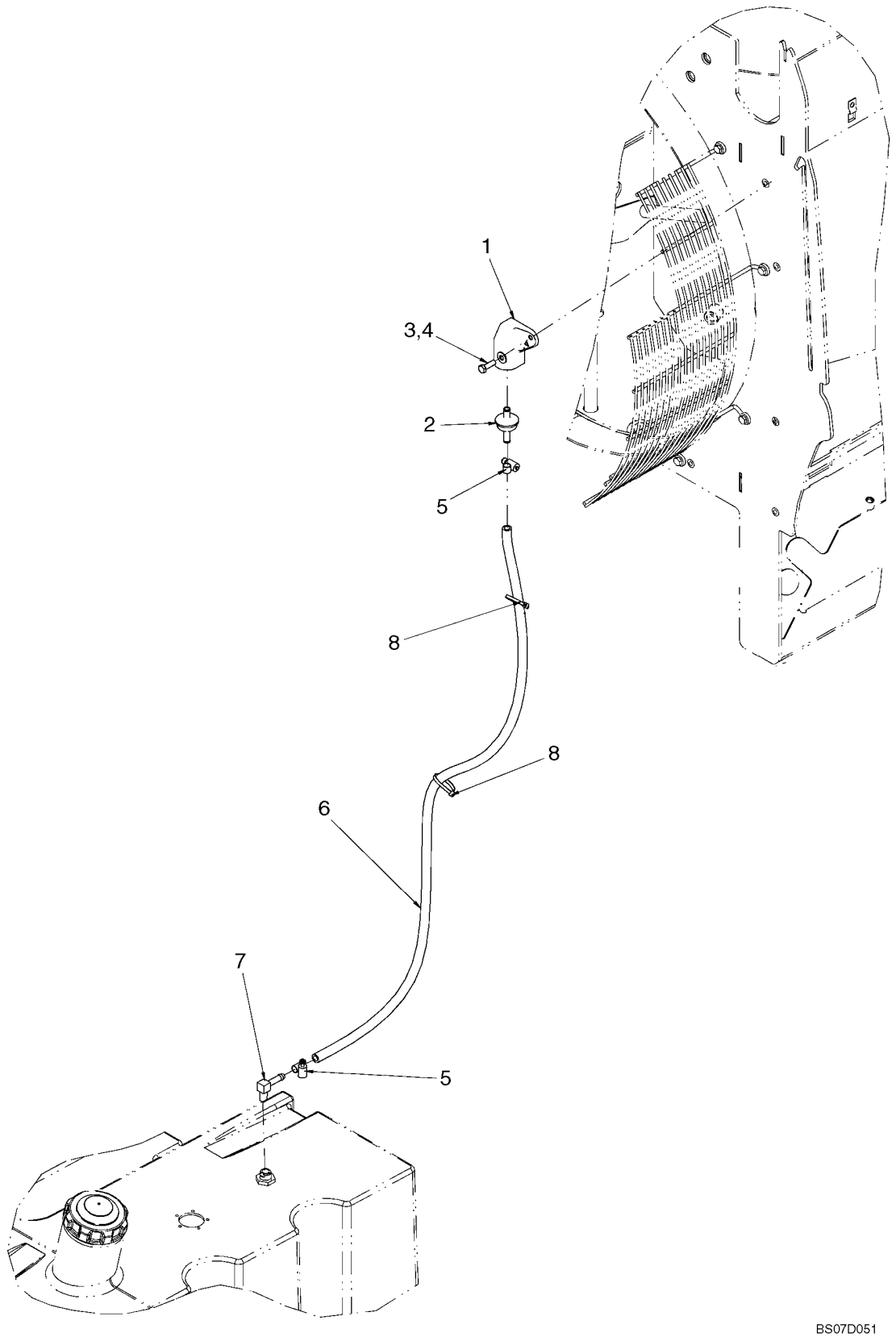

**DEPOSITO DE COMBUSTIBLE - RESPIRADERO**

| REF | FN | PART NUMBER | YR/SN | QTY | DENOMINACION |
|---|---|---|---|---|---|
| 1 | | 186814A1 | | 1 | TAPON DEL DEPOSITO, Fuel Tank Vent |
| 2 | | T103750 | | 1 | VALVULA DE CIERRE |
| 3 | | 895-15008 | | 5 | ARANDELA, M8 x 20 x 1.6 |
| 4 | | 627-8025 | | 1 | TORNILLO, Hex, M8 x 25, 10.9 |
| 5 | | 214-1406 | | 6 | ABRAZADERA MANGUERA, #06, .44/.78 Type F Worm |
| 6 | | 87549248 | | 1 | TUBO (METROS), Fuel Tank Breather; 1300 mm (51 - 3/8 in) |
| 7 | | 217-132 | | 1 | CODO, 90º, 3/8" Hose x 1/4" NPTF Beaded |
| 8 | | L11541 | | 2 | BANDA |

**BOMBA DE INYECCION**

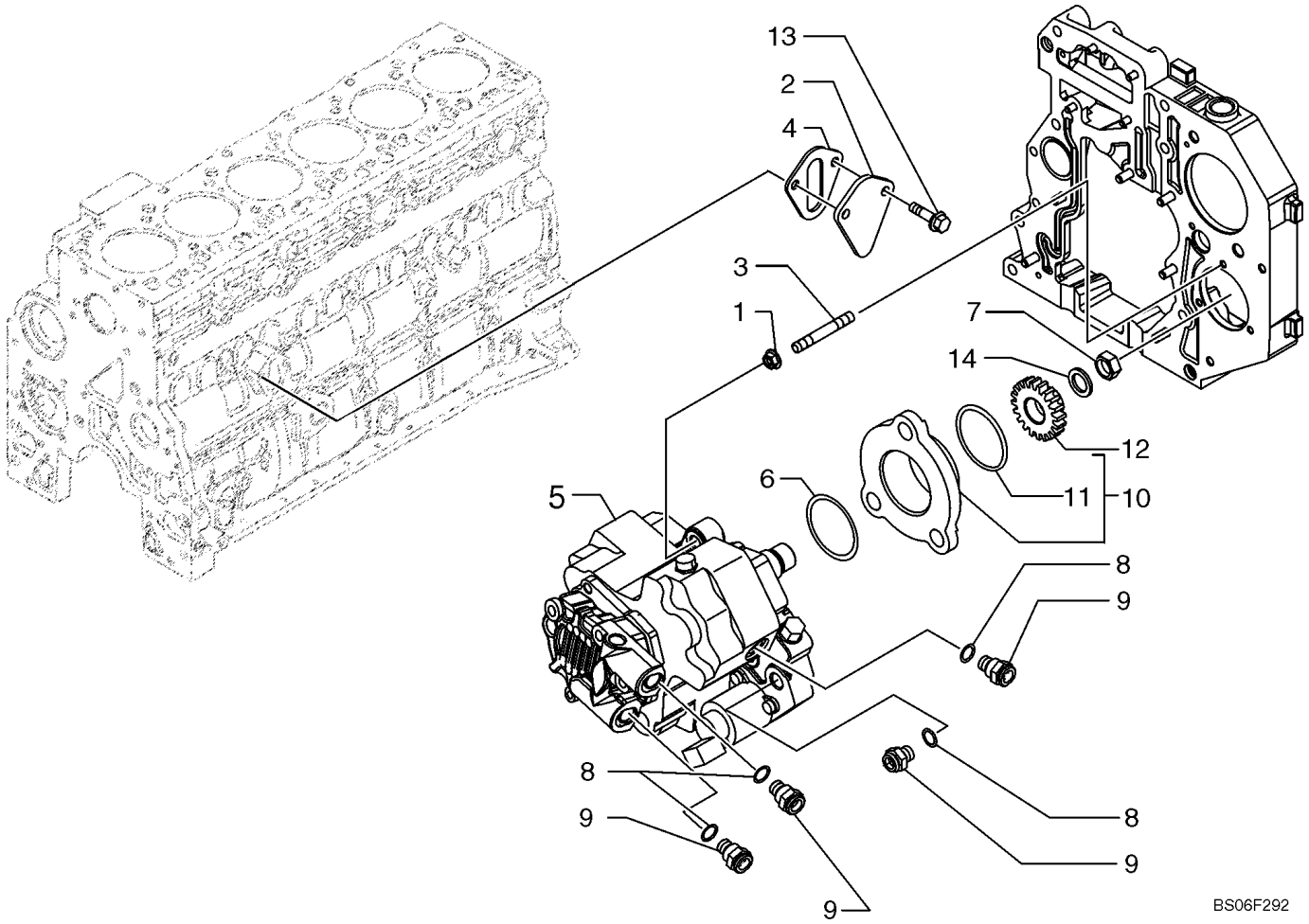

**BOMBA DE INYECCION**

| REF | FN | PART NUMBER | YR/SN | QTY | DENOMINACION |
|---|---|---|---|---|---|
| | | 87579400 | | 1 | MOTOR, 6 Cylinder 6.7L Turbo, Tier III; Includes Figures 02-09 - 02-13, 02-15 - 02-41, 03-05 - 03-11; Incl. Refs. 1 - 14 |
| 1 | | 4899003 | | 3 | TUERCA, M8 |
| 2 | | 4896952 | | 1 | TAPADERA |
| 3 | | 2852488 | | 3 | PRISIONERO, M8 x 1.25 x 50 |
| 4 | | 4890700 | | 1 | JUNTA HERMETICA |
| | | 4898921 | | 1 | BOMBA DE ALIMENTACION, Incl. Refs. 5 - 9, 14 |
| 5 | | NSS | | 1 | NO SE REPARA SEPARADAM., FUEL PUMP |
| 6 | | 4890088 | | 1 | JUNTA HERMETICA |
| 7 | | 4890634 | | 1 | TUERCA, M18X1.5 |
| 8 | | 4891385 | | 4 | JUNTA HERMETICA |
| 9 | | 4893962 | | 4 | EMPALME RAPIDO |
| 10 | | 2852804 | | 1 | CUBO, ASSY. Incl. Ref. 11 |
| 11 | | 2852805 | | 1 | JUNTA HERMETICA |
| 12 | | 4893389 | | 1 | PINON CONDUCIDO |
| 13 | | 2852234 | | 2 | TORNILLO, Hex Flg, M8 x 1.25 x 20 |
| 14 | | 4890635 | | 1 | ARANDELA |

**SISTEMA DE INYECCION DE COMBUSTIBLE**

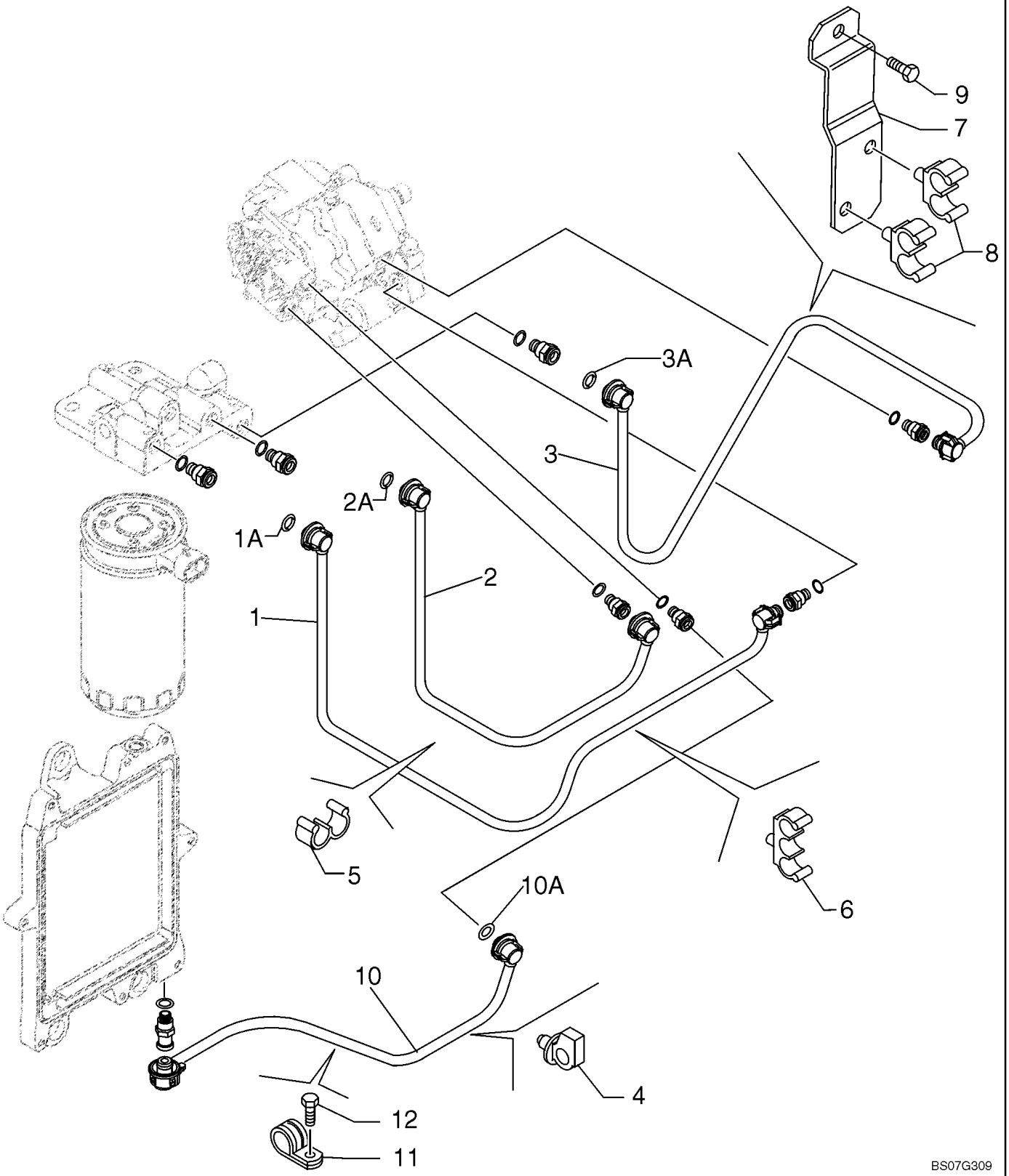

**SISTEMA DE INYECCION DE COMBUSTIBLE**

| REF | FN | PART NUMBER | YR/SN | QTY | DENOMINACION |
|---|---|---|---|---|---|
| | | 87579400 | | 1 | MOTOR, 6 Cylinder 6.7L Turbo, Tier III; Includes Figures 02-09 - 02-13, 02-15 - 02-41, 03-05 - 03-11; Incl. Refs. 1 - 12 |
| 1 | | 2852440 | | 1 | TUBO RIGIDO, Fuel Supply, Incl. Ref. 1A |
| 1A | | 4894095 | | 2 | JUNTA HERMETICA |
| 2 | | 2852443 | | 1 | TUBO RIGIDO, Fuel Supply, Incl. Ref. 2A |
| 2A | | 4894095 | | 2 | JUNTA HERMETICA |
| 3 | | 2852446 | | 1 | TUBO RIGIDO, Fuel Return, Incl. Ref. 3A |
| 3A | | 4894095 | | 2 | JUNTA HERMETICA |
| 4 | | 4896996 | | 1 | BORNE |
| 5 | | 2852449 | | 2 | BORNE |
| 6 | | 2852794 | | 1 | UNION CABLE |
| 7 | | 2852451 | | 1 | PIEZA DE SOPORTE, Fuel Plumbing |
| 8 | | 2852452 | | 2 | UNION CABLE |
| 9 | | 4897277 | | 1 | TORNILLO |
| 10 | | 4897817 | | 1 | TUBO RIGIDO, Fuel Supply, Incl. Ref. 10A |
| 10A | | 4894095 | | 2 | JUNTA HERMETICA |
| 11 | | 4895462 | | 1 | BORNE |
| 12 | | {76195212} | | 1 | SCREW |

**SISTEMA DE INYECCION DE COMBUSTIBLE - INYECTOR**

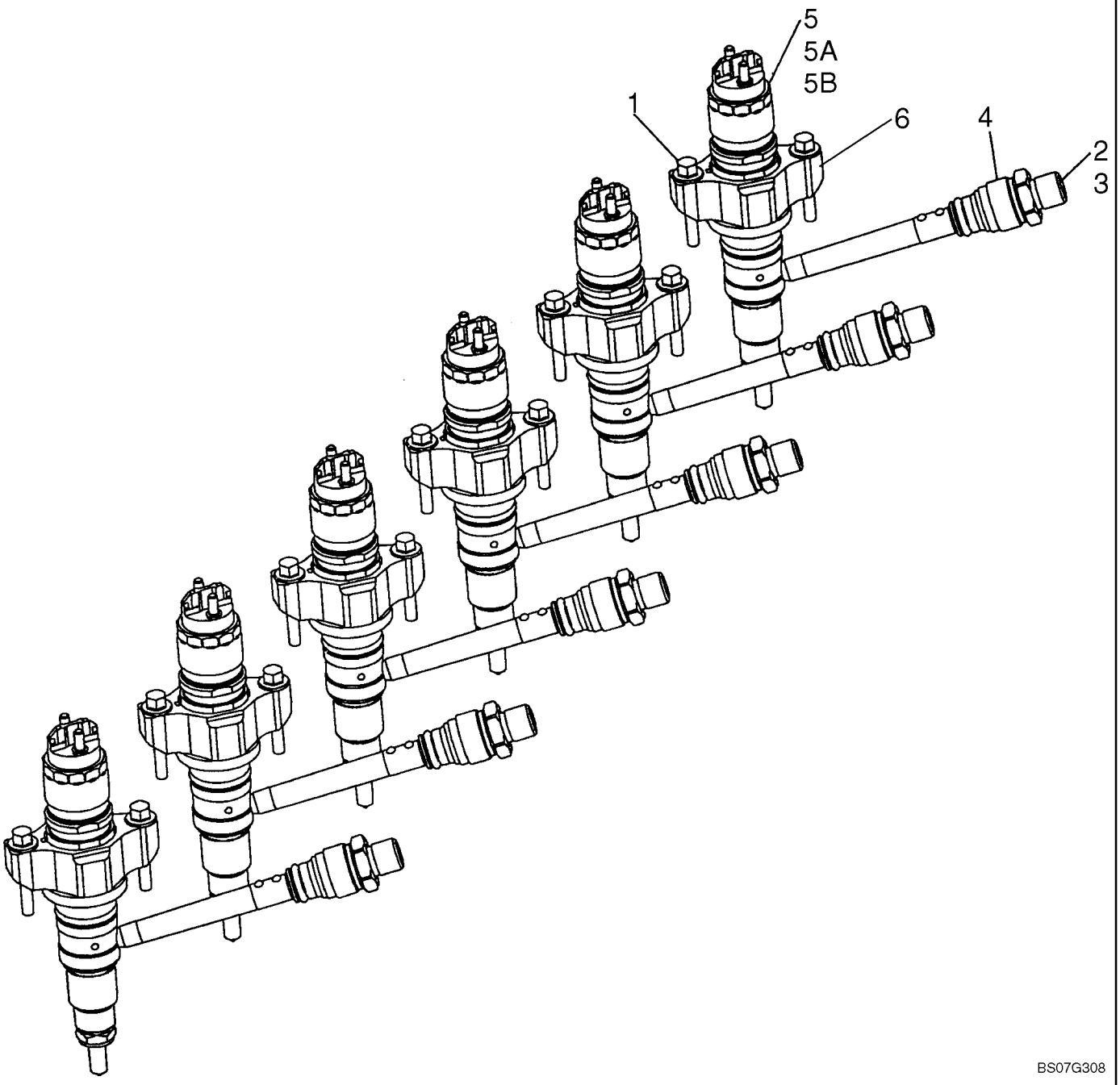

**SISTEMA DE INYECCION DE COMBUSTIBLE - INYECTOR**

| REF | FN | PART NUMBER | YR/SN | QTY | DENOMINACION |
|---|---|---|---|---|---|
| | | 87579400 | | 1 | MOTOR, 6 Cylinder 6.7L Turbo, Tier III; Includes Figures 02-09 - 02-13, 02-15 - 02-41, 03-05 - 03-11; Incl. Refs. 1 - 6 |
| 1 | | 4895483 | | 12 | TORNILLO, M6 x 35 |
| 2 | | 2854606 | | 6 | CONEXION, ASSY. Incl. Ref. 3 |
| 3 | | 4890929 | | 1 | JUNTA HERMETICA |
| 4 | | 4893739 | | 6 | TUERCA DE TUBERÍA |
| 5 | | 2854608 | | 6 | INYECTOR, Incl. Refs. 5A, 5B |
| 5A | | 4899689 | | 1 | JUNTA HERMETICA |
| 5B | | 4890926 | | 1 | JUNTA HERMETICA, 20.9 ID x 3.0 DIA |
| 6 | | 2854609 | | 6 | PIEZA DE SOPORTE, Retainer |

**SISTEMA DE INYECCION DE COMBUSTIBLE - COMBUSTIBLE, SUMINISTRO**

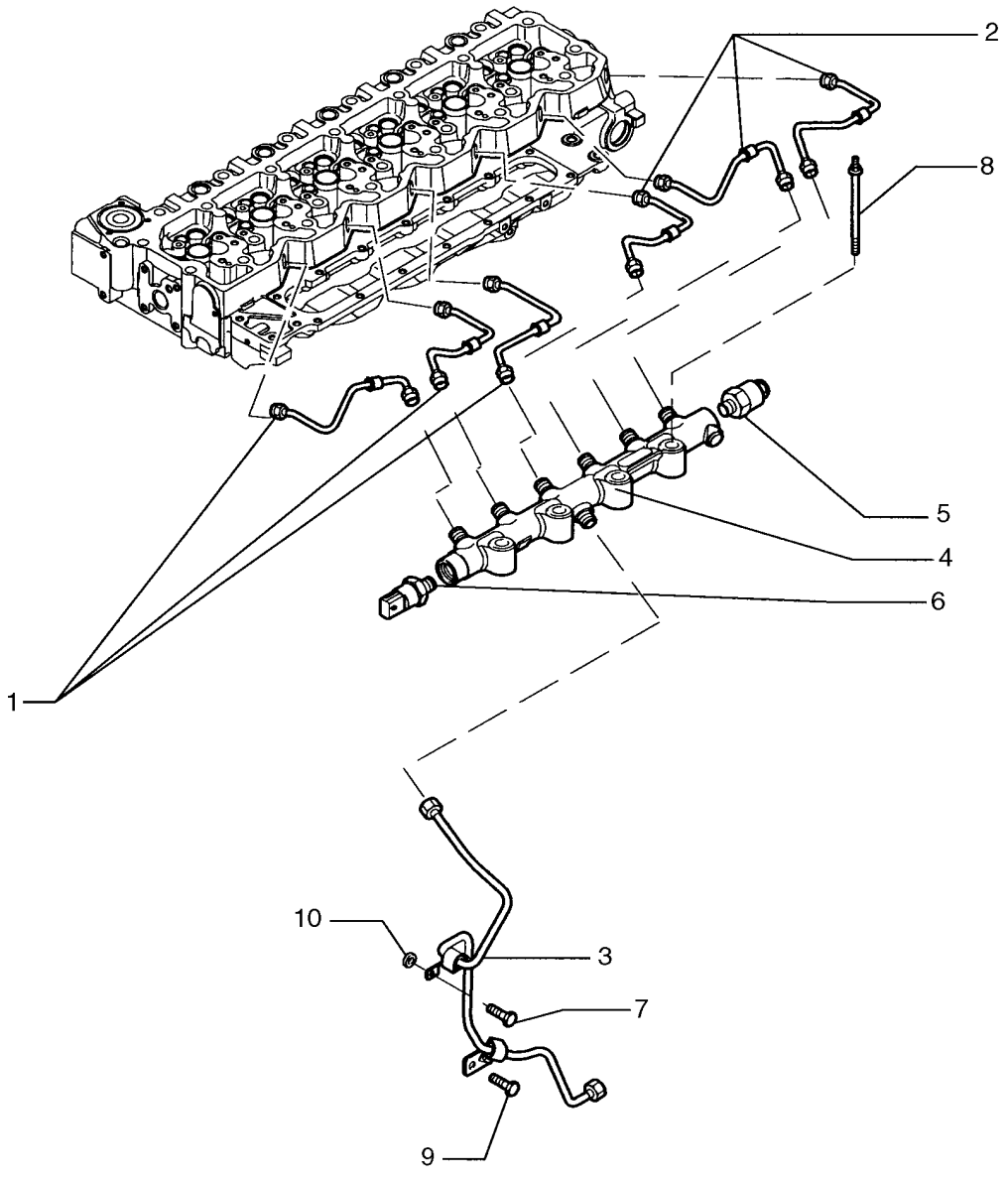


BS07G346

**SISTEMA DE INYECCION DE COMBUSTIBLE - COMBUSTIBLE, SUMINISTRO**

| REF | FN | PART NUMBER | YR/SN | QTY | DENOMINACION |
|---|---|---|---|---|---|
| | | 87579400 | | 1 | MOTOR, 6 Cylinder 6.7L Turbo, Tier III; Includes Figures 02-09 - 02-13, 02-15 - 02-41, 03-05 - 03-11; Incl. Refs. 1 - 10 |
| 1 | | 2854549 | | 3 | TUBO RIGIDO, Fuel Supply |
| 2 | | 2854544 | | 3 | CUELLO DE CARGA, Fuel Supply |
| 3 | | 2854552 | | 1 | CUELLO DE CARGA, Fuel Supply |
| | | 2854540 | | 1 | COLECTOR, FUEL ASSY. Incl. Refs. 4 - 6 |
| 4 | | NSS | | 1 | NO SE REPARA SEPARADAM., MANIFOLD, Fuel Rail |
| 5 | | 2854543 | | 1 | VÁLVULA, DESCARGA |
| 6 | | 2854542 | | 1 | SENSOR, Fuel Supply Pressure |
| 7 | | 4899020 | | 1 | TORNILLO, Hex Flg, M8 x 1.25 x 20 |
| 8 | | 2853537 | | 4 | TORNILLO |
| 9 | | 4896884 | | 1 | TORNILLO, Hex Flg, M8 x 1.25 x 16 |
| 10 | | 2852434 | | 1 | SEPARADOR |

**SISTEMA DE INYECCION DE COMBUSTIBLE - MODULO, CONTROL DEL MOTOR**

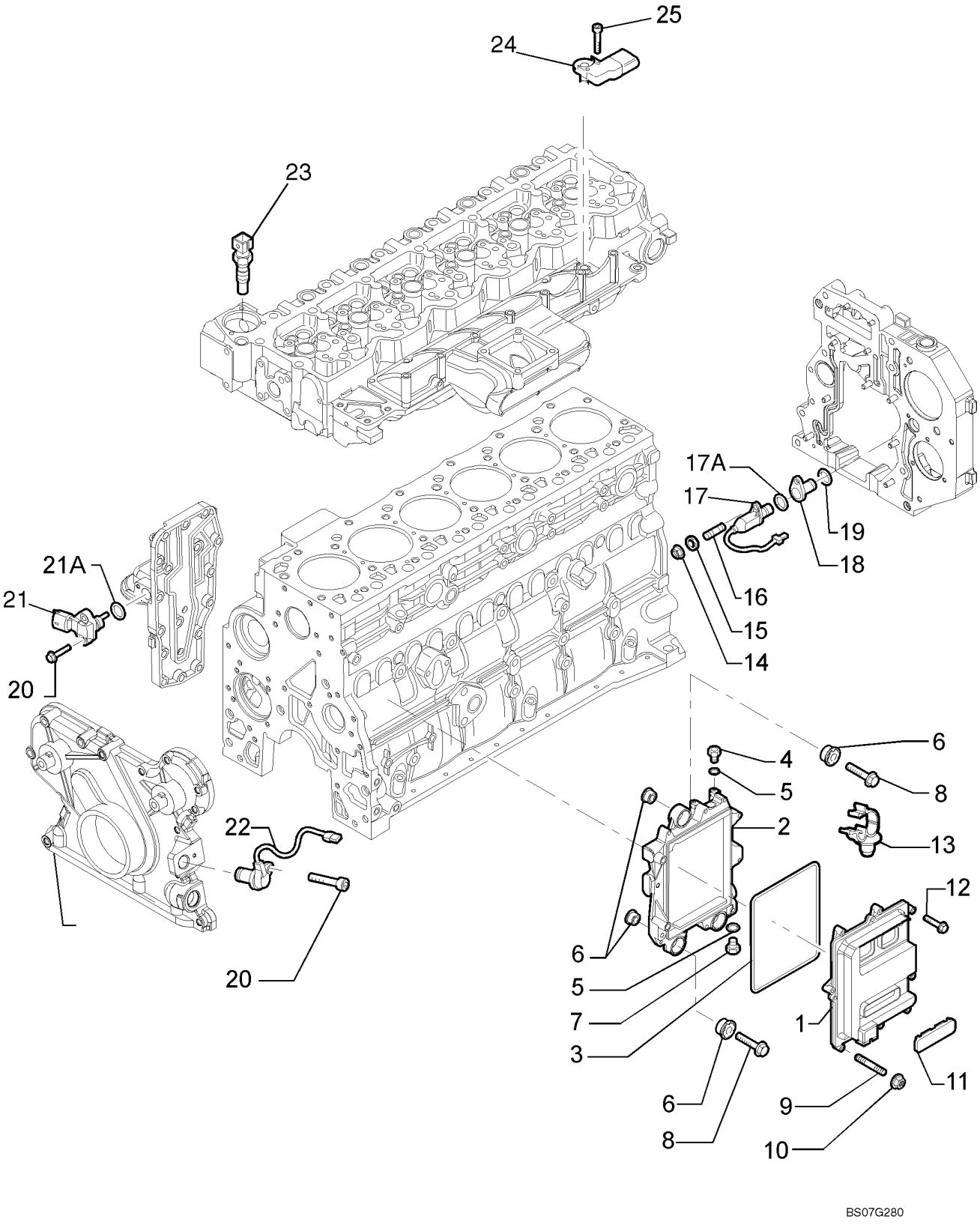

**SISTEMA DE INYECCION DE COMBUSTIBLE - MODULO, CONTROL DEL MOTOR**

| REF | FN | PART NUMBER | YR/SN | QTY | DENOMINACION |
|---|---|---|---|---|---|
| | | 87579400 | | 1 | MOTOR, 6 Cylinder 6.7L Turbo, Tier III; Includes Figures 02-09 - 02-13, 02-15 - 02-41, 03-05 - 03-11; Incl. Refs. 1 - 25 |
| 1 | | 2854594 | | 1 | CAJA ELECTRONICA |
| | | 2854595 | | 1 | PIEZA DE SOPORTE, ASSY. Incl. Refs. 2 - 7 |
| 2 | | 2854596 | | 1 | PIEZA DE SOPORTE, Support, Electronic Unit |
| 3 | | 2854079 | | 1 | JUNTA HERMETICA |
| 4 | | 4896542 | | 1 | RACOR, M12X1.5 |
| 5 | | 2854292 | | 2 | JUNTA HERMETICA |
| 6 | | 2855150 | | 6 | PLOT DE SUSPENSIÓN, Stop |
| 7 | | 4890964 | | 1 | CONEXION |
| 8 | | 4899078 | | 3 | TORNILLO, Hex Flg, M8 x 1.25 x 45 |
| 9 | | 2854593 | | 1 | PRISIONERO |
| 10 | | 4899057 | | 1 | TUERCA |
| 11 | | 2852825 | | 1 | TAPÓN PLÁSTICO |
| 12 | | 2852818 | | 7 | TORNILLO, M6X30 |
| 13 | | 2852486 | | 2 | UNION CABLE |
| 14 | | 2854282 | | 1 | TUERCA, M6X1 |
| 15 | | 4899124 | | 1 | ARANDELA |
| 16 | | 4895157 | | 1 | PRISIONERO |
| 17 | | 4890190 | | 1 | CONTACTOR, Speed, Incl. Ref. 17A |
| 17A | | 2852820 | | 1 | JUNTA HERMETICA, 17.17 x 1.78MM |
| 18 | | 4892255 | | 1 | CAVIDAD, Sender Unit |
| 19 | | 2852817 | | 1 | JUNTA HERMETICA, 23.5 x 1.7MM |
| 20 | | 4899110 | | 3 | TORNILLO, Hex Flg, M6 x 1 x 20 |
| 21 | | 4890193 | | 1 | CONTACTOR, Temperature, Incl. Ref, 21A |
| 21A | | 4895477 | | 1 | JUNTA HERMETICA |
| 22 | | 4890189 | | 1 | CONTACTOR, Speed |
| 23 | | 4897224 | | 1 | SENSOR, Temperature |
| 24 | | 2852821 | | 1 | SENSOR, ECM |
| 25 | | 4895817 | | 1 | TORNILLO, Hex Flg, M6 x 1.0 x 20 |

**SISTEMA DE INYECCION DE COMBUSTIBLE - MAZO DE CABLES, MOTOR**

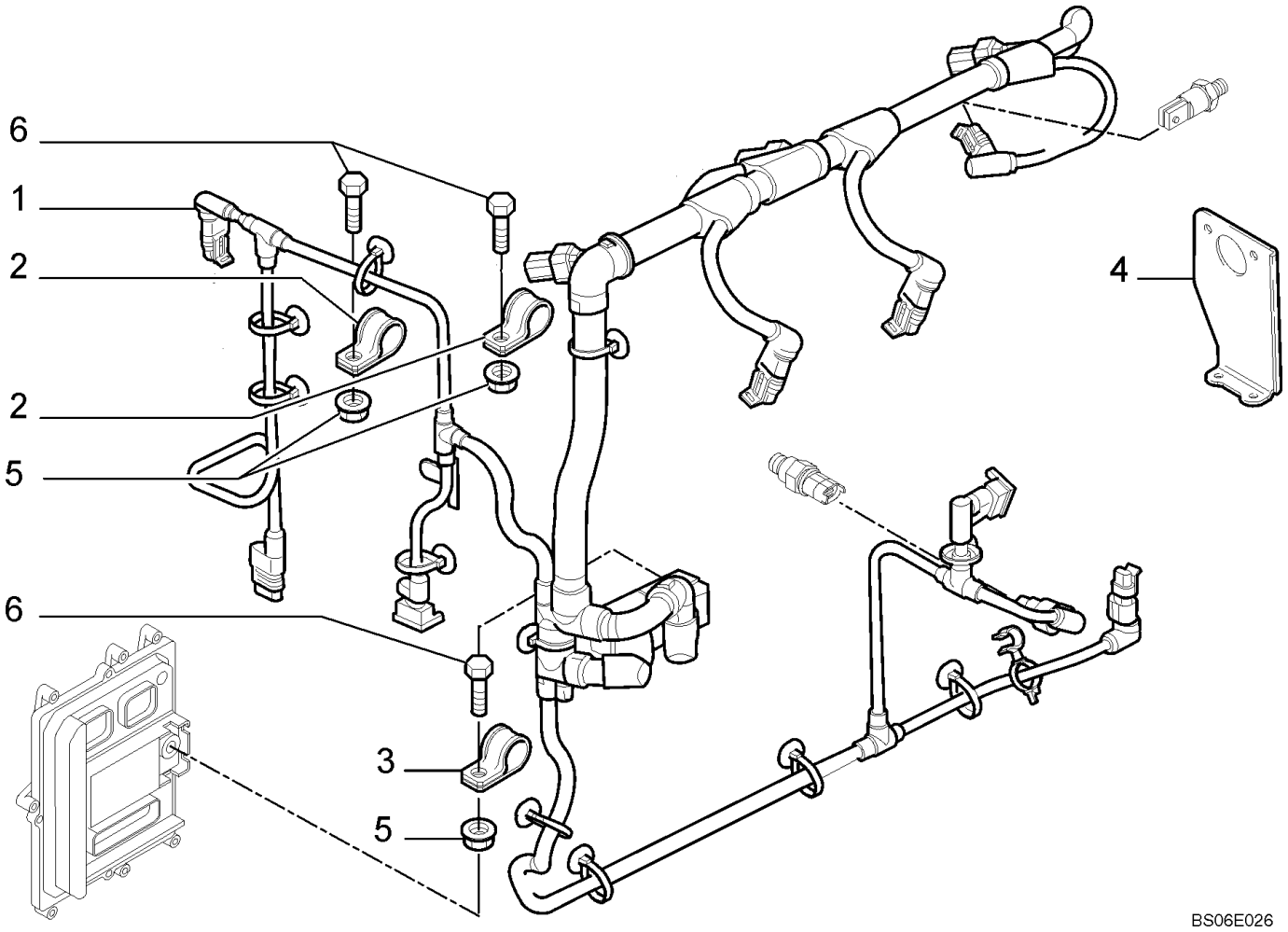

**SISTEMA DE INYECCION DE COMBUSTIBLE - MAZO DE CABLES, MOTOR**

| REF | FN | PART NUMBER | YR/SN | QTY | DENOMINACION |
|---|---|---|---|---|---|
| | | 87579400 | | 1 | MOTOR, 6 Cylinder 6.7L Turbo, Tier III; Includes Figures 02-09 - 02-13, 02-15 - 02-41, 03-05 - 03-11; Incl. Refs. 1 - 6 |
| 1 | | 2854598 | | 1 | GRUPO DE CABLES, Engine Control |
| 2 | | 2852500 | | 2 | PLACA DE SUJECION |
| 3 | | 4899815 | | 1 | PLACA DE SUJECION |
| 4 | | 2854599 | | 1 | PIEZA DE SOPORTE, Wiring Harness |
| 5 | | 2852484 | | 3 | TUERCA |
| 6 | | 2854600 | | 3 | TORNILLO |

**SISTEMA DE INYECCION DE COMBUSTIBLE - LÍNEA DE DRENAJE**

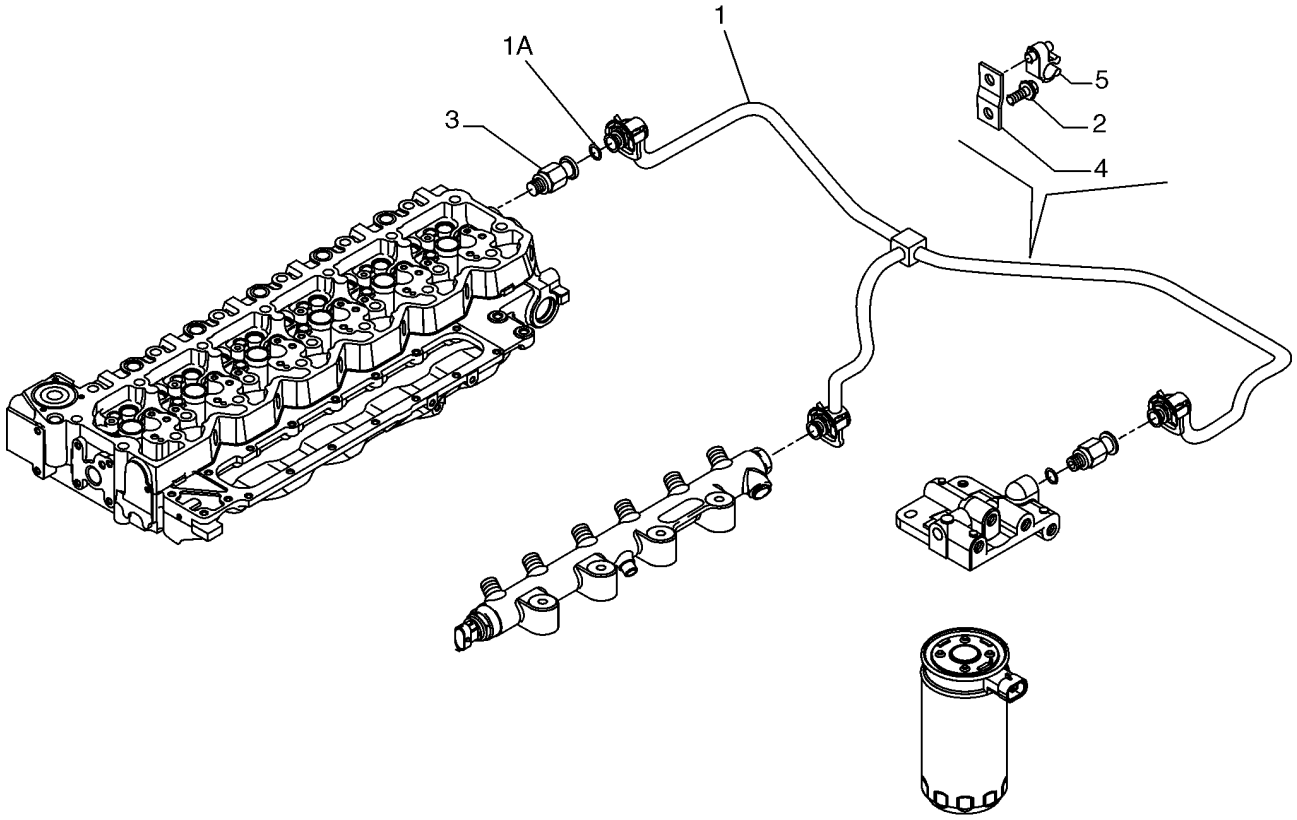


BS07G347

**SISTEMA DE INYECCION DE COMBUSTIBLE - LÍNEA DE DRENAJE**

| REF | FN | PART NUMBER | YR/SN | QTY | DENOMINACION |
|---|---|---|---|---|---|
| | | 87579400 | | 1 | MOTOR, Incl. Refs. 1 - 5, Also Incl. Parts On Figures |
| 1 | | 2855125 | | 1 | CUELLO DE CARGA, Fuel Return, Incl. Ref. 1A |
| 1A | | 4894095 | | 3 | JUNTA HERMETICA |
| 2 | | 2852100 | | 1 | TORNILLO, M8 x 16 |
| 3 | | 4896329 | | 1 | VÁLVULA, DESCARGA |
| 4 | | 2852457 | | 1 | PLACA DE SUJECION |
| 5 | | 2852458 | | 1 | BORNE, Cable |

## NOTAS

# SECTION INDEX
# Sistema Eléctrico


| | |
|---|---|
| 04-01 | ARRANQUE |
| 04-02 | ALTERNADOR |
| 04-02A | ALTERNADOR - SOPORTE CON AIRE ACONICIONADO |
| 04-02B | ALTERNADOR - SOPORTE SIN AIRE ACONICIONADO |
| 04-03 | MAZO DE CABLES, DELANTERO - Z-BAR |
| 04-03A | MAZO DE CABLES, DELANTERO - XT |
| 04-04 | MAZO DE CABLES - PANEL, CONTROL |
| 04-05 | MAZO DE CABLES, MOTOR |
| 04-06 | MAZO DE CABLES, MOTOR - CONTROL DEL ACELERADOR |
| 04-07 | MAZO DE CABLES, MOTOR - FUSIBLES Y RELÉS |
| 04-08 | MAZO DE CABLES - TECHO DE LA CABINA |
| 04-09 | MAZO DE CABLES, CAPO - ALARMA DE RETROCESO |
| 04-10 | MAZO DE CABLES, TRANSMISION |
| 04-11 | MAZO DE CABLES - LA CALENTADORA DE LA CUADRÍCULA |
| 04-11A | LA CALENTADORA DE LA CUADRÍCULA |
| 04-12 | BOCINA, DELANTERA |
| 04-13 | PANEL, CONTROL - INTERRUPTOR |
| 04-14 | PANEL, CONTROL - FUSIBLE Y RELÉ SOPORTE |
| 04-15 | ELECTRICO - TUBO DE LA DIRECCION / GRUPO DE INSTRUMENTOS |
| 04-16 | ELECTRICO - CONTROL DE TRANSMISION |
| 04-17 | ELECTRICO - DIRECCION, AUXILIAR |
| 04-18 | SOPORTE - LUCES, DELANTERAS |
| 04-19 | CONJUNTO DE LA LAMPARA - LUZ, DELANTERA |
| 04-20 | SOPORTE - LUCES, COMBINACION TRASERA |
| 04-21 | CABINA - LUCES |
| 04-22 | CONJUNTO DEL FARO, ROTATORIO - SOPORTE |
| 04-23 | CABINA - LIMPIAPARABRISAS, DELANTERO |
| 04-23A | CABINA - LIMPIAPARABRISAS, TRASERO |
| 04-24 | RADIO - 12 VOLT |
| 04-24A | RADIO - 12 VOLT INSTALACIÓN |
| 04-25 | FIJACIÓN DE LAS BATERÍAS |
| 04-25A | FIJACIÓN DE LAS BATERÍAS - TAREAS PESADAS |
| 04-26 | BATERIA - CABLES |
| 04-27 | LUCES DE MATRICULA |
| 04-28 | LIMPIADOR DEL LIMPIAPARABRISAS MONTAJE |

**ARRANQUE**

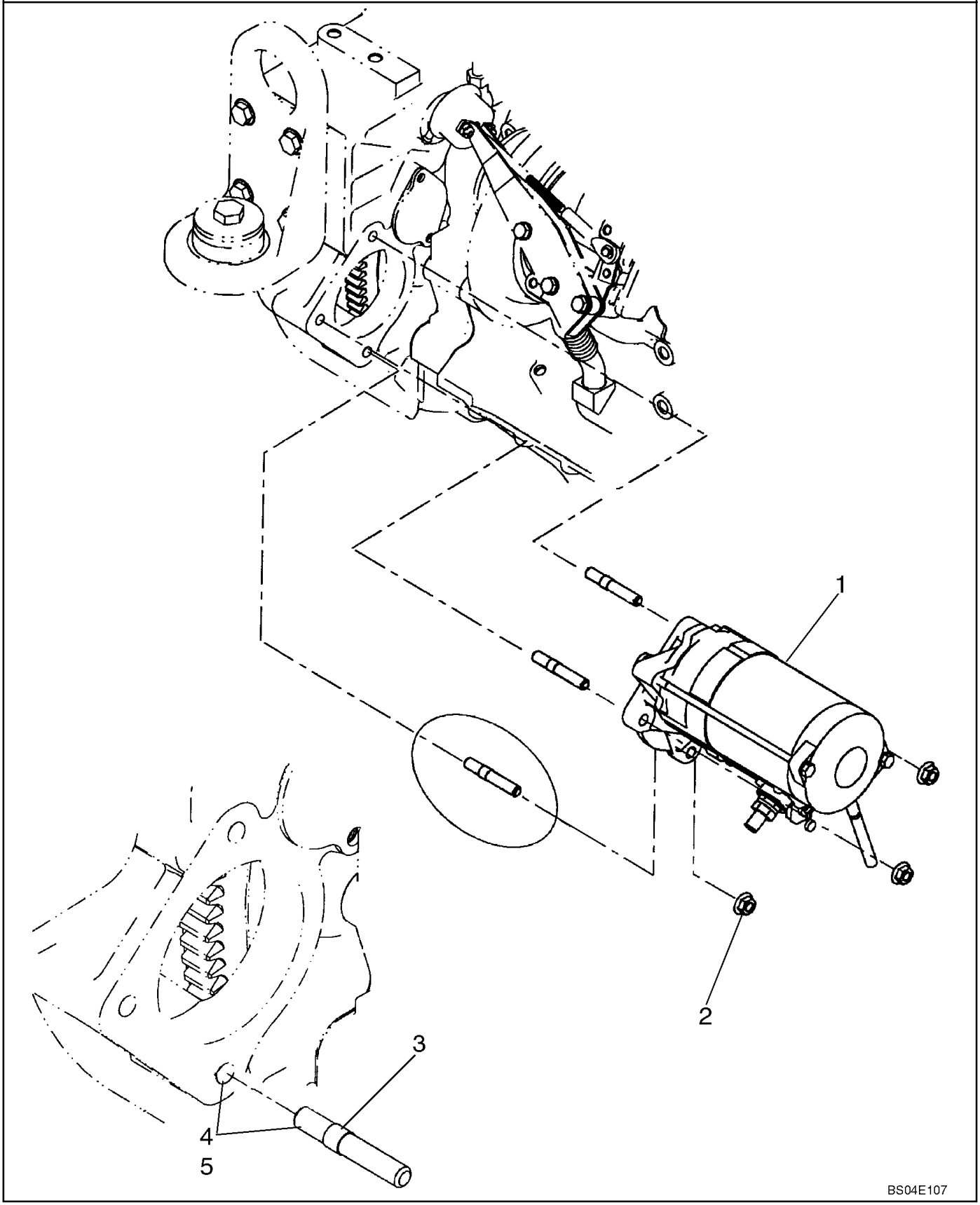

**ARRANQUE**

| REF | FN | PART NUMBER | YR/SN | QTY | DENOMINACION |
|---|---|---|---|---|---|
| 1 | | 8605784 | | 1 | ARRANCADOR, Denso, No Component Parts Available At Time Of Printing |
| 2 | | 829-2310 | | 3 | TUERCA, M10 x 1.5, Flg, Cl 10, M10 |
| 3 | | 2852476 | | 3 | PRISIONERO, Starter; 10mm |
| 4 | | 345-62 | | AR | LOCTITE, 747 |
| 5 | | 345-75 | | AR | LOCTITE, 271 Thread Adhesive |

**ALTERNADOR**

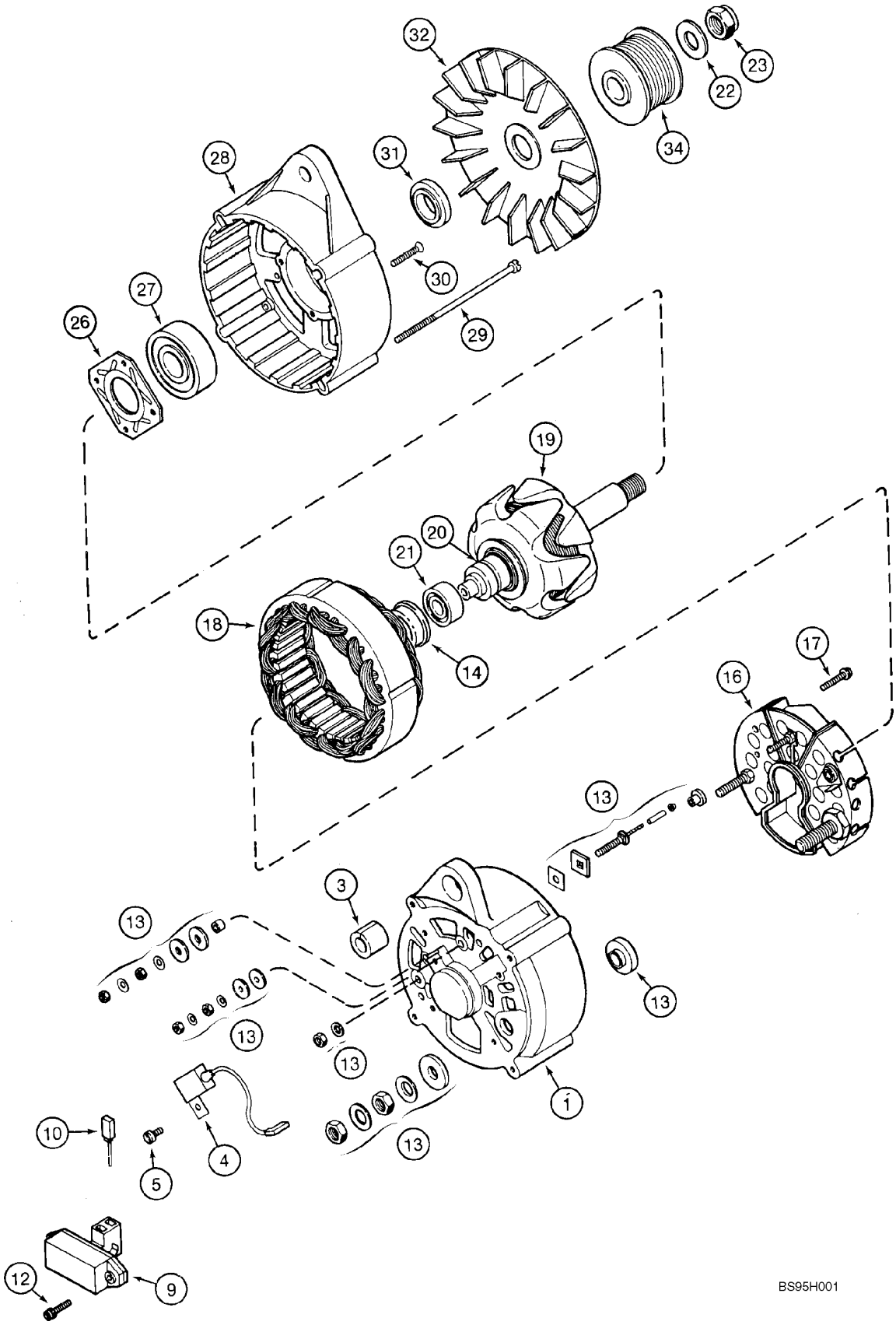
32
23
22
34
31
28
30
29
27
26
19
20
21
18
14
17
16
13
3
13
13
13
13
13
1
10
5
4
12
9
BS95H001

**ALTERNADOR**

| REF | FN | PART NUMBER | YR/SN | QTY | DENOMINACION |
|---|---|---|---|---|---|
| | | 1964860C1 | | 1 | ALTERNADOR, 24V, 65 amp; Incl. Refs. 1 - 32 |
| 1 | | 1964731C1 | | 1 | CAVIDAD |
| 3 | | 1964737C1 | | 1 | CASQUILLO |
| 4 | | 3079389R1 | | 1 | CAPACITADOR |
| 5 | | 1964969C1 | | 1 | TORNILLO |
| 9 | | 3079392R91 | | 1 | REGULADOR DE VELOCID, Voltage; Incl. 10 |
| 10 | | 1964968C1 | | 1 | ESCOBILLA |
| 12 | | A186194 | | 2 | TORNILLO, Sltd Truss Hd, M4 x 18, w/LW |
| 13 | | 1964738C1 | | 1 | JUEGO DE REPARACION, Hardware |
| 14 | | 1546477C1 | | 1 | BUJE |
| 16 | | 1964965C1 | | 1 | RECTIFICADOR |
| 17 | | A187504 | | 2 | TORNILLO |
| 18 | | 1964966C1 | | 1 | ESTATOR |
| 19 | | 1964964C1 | | 1 | ROTOR |
| 20 | | 3079410R1 | | 1 | ANILLO |
| 21 | | 1964730C1 | | 1 | RODAMIENTO DE BOLAS |
| 22 | | 495-21063 | | 1 | ARANDELA, 9/16" |
| 23 | | 231-46110 | | 1 | CONTRA TUERCA, 5/8"-18, GB |
| 26 | | 1964727C1 | | 1 | PLACA |
| 27 | | 1964726C1 | | 1 | RODAMIENTO DE BOLAS, Drive End |
| 28 | | 1964725C1 | | 1 | CAVIDAD |
| 29 | | 1964748C1 | | 4 | TORNILLO, M5 x 132 |
| 30 | | 1964750C1 | | 4 | TORNILLO, M4 x 30 |
| 31 | | 1964729C1 | | 1 | SEPARADOR |
| 32 | | 1964736C1 | | 1 | VENTILADOR |
| 34 | | J918275 | | 1 | POLEA |

**ALTERNADOR - SOPORTE CON AIRE ACONICIONADO**

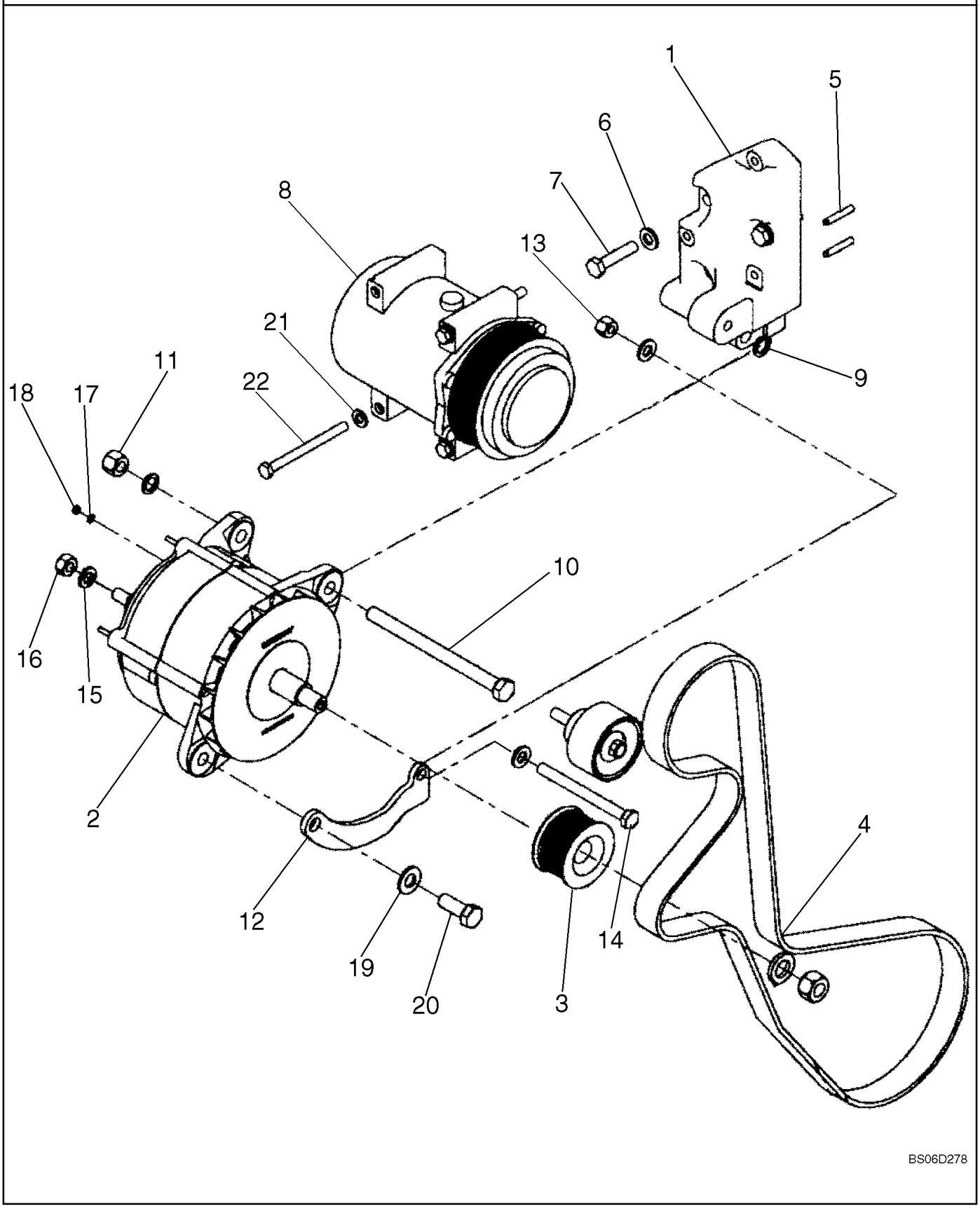

**ALTERNADOR - SOPORTE CON AIRE ACONICIONADO**

| REF | FN | PART NUMBER | YR/SN | QTY | DENOMINACION |
|---|---|---|---|---|---|
| 1 | | 87547181 | | 1 | PIEZA DE SOPORTE, Alternator |
| 2 | | 1964860C1 | | 1 | ALTERNADOR, 24V, 65 amp; See Figure 04-02 |
| 3 | | A189616 | | 1 | POLEA, Alternator |
| 4 | | 87397416 | | 1 | CORREA, With A/C |
| 5 | | 837-6035 | | 2 | PITON, M6 x 35 |
| 6 | | 896-11010 | | 5 | ARANDELA, M10 x 21.5 x 2.5, HT |
| 7 | | 827-10045 | | 3 | TORNILLO, Hex, M10 x 45, 10.9 |
| 8 | | 8500795 | | 1 | COMPRESOR DE AIRE |
| 9 | | 896-11012 | | 1 | ARANDELA, M13.5 x 24.5 x 3, HT |
| 10 | | 426-8104 | | 1 | TORNILLO, Hex, 1/2"-13 x 6 1/2", G8 |
| 11 | | 231-4248 | | 1 | CONTRA TUERCA, 1/2"-13, GB |
| 12 | | 8501098 | | 1 | TENSOR |
| 13 | | 832-10410 | | 1 | CONTRA TUERCA, M10 x 1.5, Cl 8 |
| 14 | | 827-10110 | | 1 | TORNILLO, Hex, M10 x 110, 10.9 |
| 15 | | 492-11044 | | 1 | ARANDELA DE FRENO, 7/16" |
| 16 | | 425-107 | | 1 | TUERCA, 7/16"-14, G5 |
| 17 | | 892-11004 | | 1 | ARANDELA DE FRENO, M4 |
| 18 | | 824-1404 | | 1 | TUERCA, M4, Cl 5 |
| 19 | | 896-11012 | | 1 | ARANDELA, M13.5 x 24.5 x 3, HT |
| 20 | | 426-820 | | 1 | TORNILLO, Hex, 1/2"-13 x 1 1/4", G8, Full Thd |
| 21 | | 896-11008 | | 5 | ARANDELA, M8 x 17.5 x 2, HT |
| 22 | | 827-8100 | | 3 | TORNILLO, Hex, M8 x 100, 10.9 |

**ALTERNADOR - SOPORTE SIN AIRE ACONICIONADO**

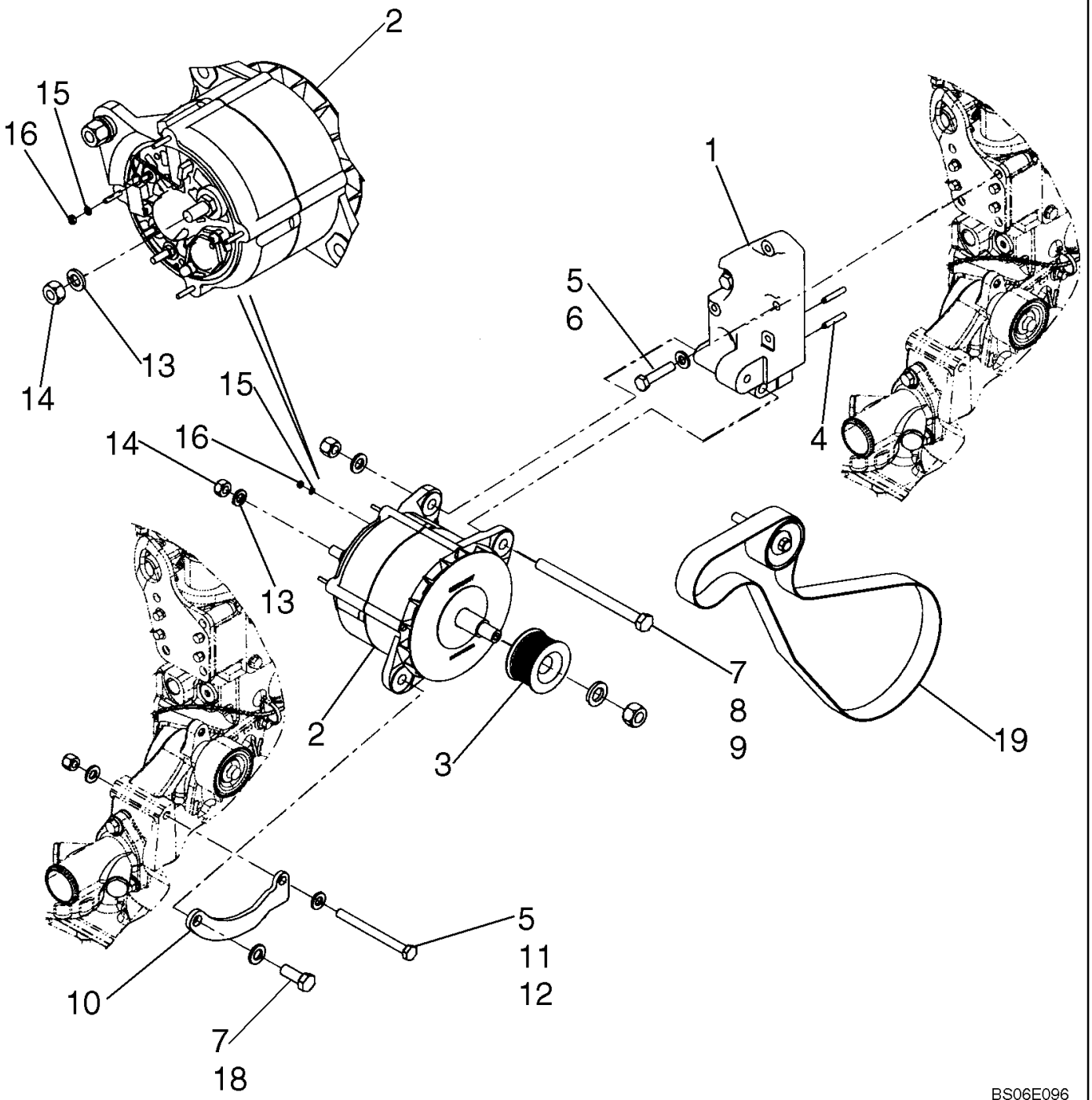

**ALTERNADOR - SOPORTE SIN AIRE ACONICIONADO**

| REF | FN | PART NUMBER | YR/SN | QTY | DENOMINACION |
|---|---|---|---|---|---|
| 1 | | 87547181 | | 1 | PIEZA DE SOPORTE, Alternator |
| 2 | | 1964860C1 | | 1 | ALTERNADOR, 24V, 65 amp; See Figure 04-02 |
| 3 | | A189616 | | 1 | POLEA, Alternator |
| 4 | | 837-6035 | | 2 | PITON, M6 x 35 |
| 5 | | 896-11010 | | 5 | ARANDELA, M10 x 21.5 x 2.5, HT |
| 6 | | 827-10045 | | 3 | TORNILLO, Hex, M10 x 45, 10.9 |
| 7 | | 895-11012 | | 2 | ARANDELA, M12 x 24 x 2.5 |
| 8 | | 426-8104 | | 1 | TORNILLO, Hex, 1/2"-13 x 6 1/2", G8 |
| 9 | | 231-4248 | | 1 | CONTRA TUERCA, 1/2"-13, GB |
| 10 | | 8501098 | | 1 | TENSOR |
| 11 | | 832-10410 | | 1 | CONTRA TUERCA, M10 x 1.5, Cl 8 |
| 12 | | 827-10110 | | 1 | TORNILLO, Hex, M10 x 110, 10.9 |
| 13 | | 492-11044 | | 1 | ARANDELA DE FRENO, 7/16" |
| 14 | | 425-107 | | 1 | TUERCA, 7/16"-14, G5 |
| 15 | | 892-11004 | | 1 | ARANDELA DE FRENO, M4 |
| 16 | | 824-1404 | | 1 | TUERCA, M4, Cl 5 |
| 18 | | 426-820 | | 1 | TORNILLO, Hex, 1/2"-13 x 1 1/4", G8, Full Thd |
| 19 | | 8602680 | | 1 | CORREA, Without A/C |

**MAZO DE CABLES, DELANTERO - Z-BAR**

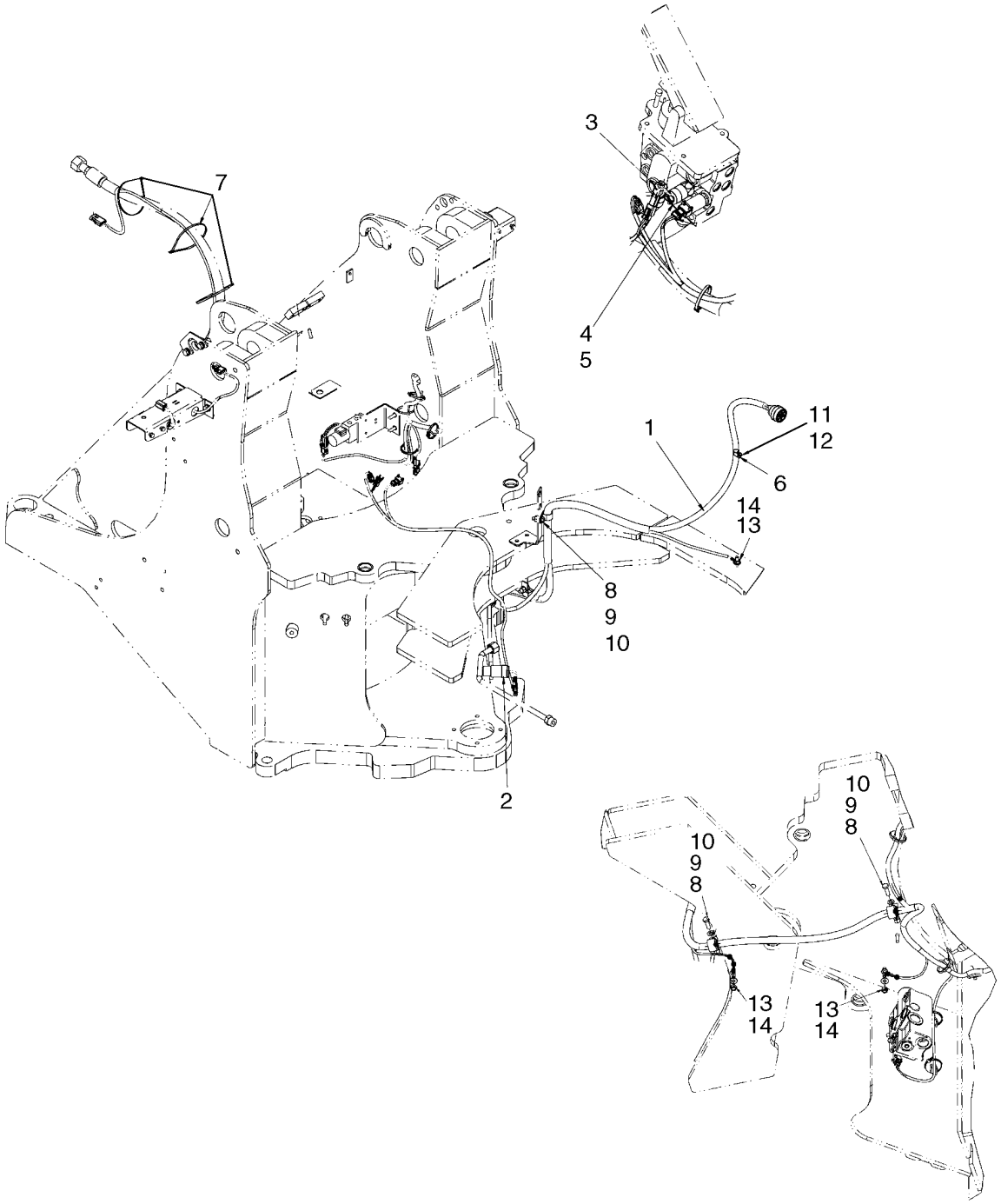


BS07D394

**MAZO DE CABLES, DELANTERO - Z-BAR**

| REF | FN | PART NUMBER | YR/SN | QTY | DENOMINACION |
|---|---|---|---|---|---|
| 1 | | 87655474 | | 1 | HAZ, Front Chassis, Z-Bar |
| 2 | | 87549589 | | 1 | CONTACTOR, Brake Declutch |
| 3 | | 87307240 | | 1 | INTERRUPTOR DE PRESION, Brake Light Pressure |
| 4 | | 396471A1 | | 1 | ANILLO DE CIERRE, 12 mm |
| 5 | | 8605738 | | 1 | INTERRUPTOR DE PRESION, Brake Warning Pressure |
| 6 | | 515-21190 | | 1 | BORNE, 3/4", Insul, 1/4" Bolt |
| 7 | | 19-135 | | 8 | BANDA |
| 8 | | 895-11010 | | 6 | ARANDELA, M10 x 20 x 2 |
| 9 | | 627-10030 | | 3 | TORNILLO, Hex, M10 x 30, 10.9, Full Thd |
| 10 | | 832-10410 | | 3 | CONTRA TUERCA, M10 x 1.5, Cl 8 |
| 11 | | 895-11006 | | 1 | ARANDELA, M6 |
| 12 | | 832-10406 | | 1 | CONTRA TUERCA, M6 x 1, Cl 8 |
| 13 | | L127554 | | 3 | ARANDELA |
| 14 | | 253347A1 | | 3 | TUERCA |

**MAZO DE CABLES, DELANTERO - XT**

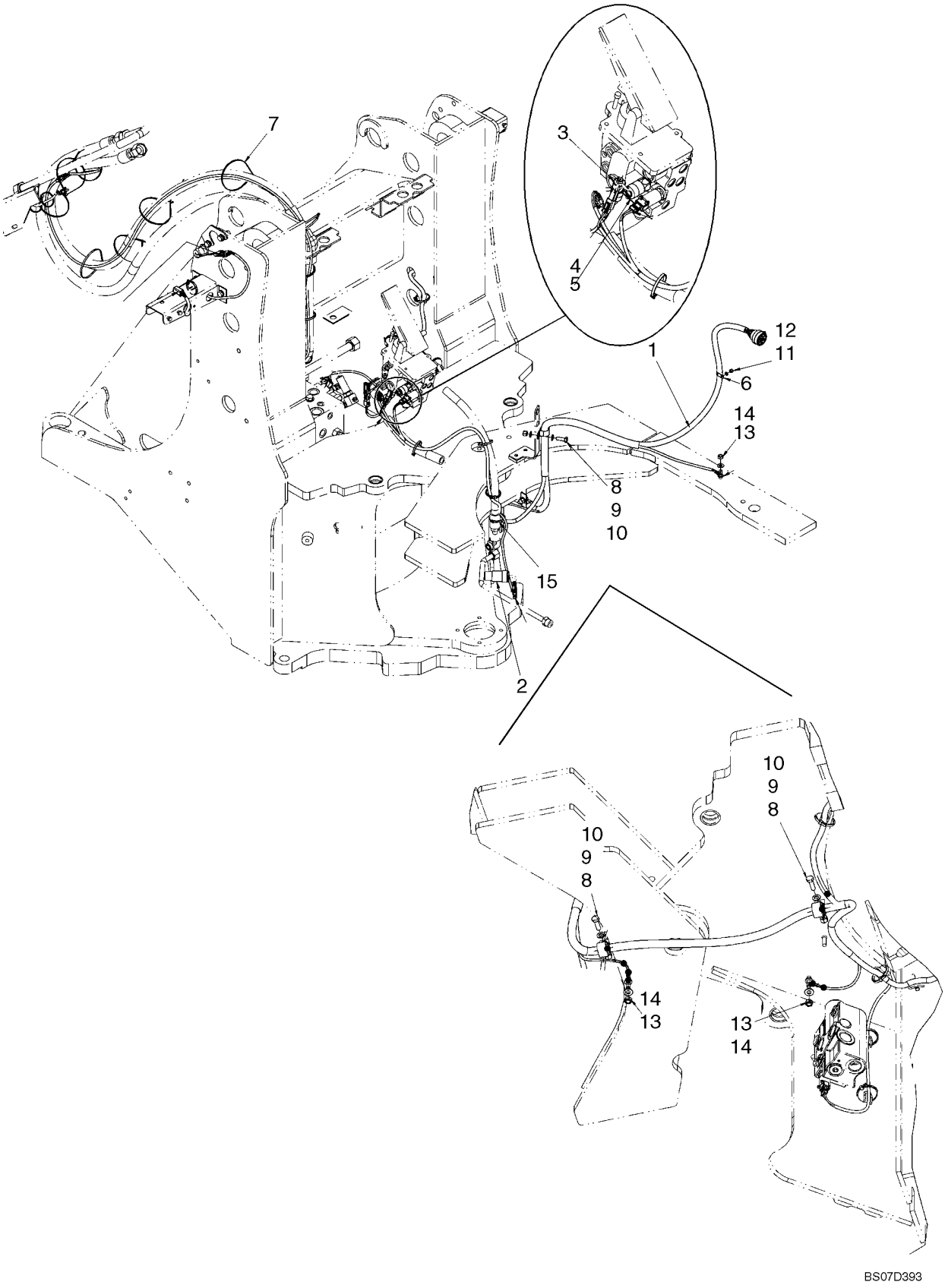

**MAZO DE CABLES, DELANTERO - XT**

| REF | FN | PART NUMBER | YR/SN | QTY | DENOMINACION |
|---|---|---|---|---|---|
| 1 | | 87655474 | | 1 | HAZ, Front Chassis XT |
| 2 | | 87549589 | | 1 | CONTACTOR, Brake Declutch |
| 3 | | 87307240 | | 1 | INTERRUPTOR DE PRESION, Brake Light Pressure |
| 4 | | 396471A1 | | 1 | ANILLO DE CIERRE, 12 mm |
| 5 | | 8605738 | | 1 | INTERRUPTOR DE PRESION, Brake Warning Pressure |
| 6 | | 515-21190 | | 1 | BORNE, 3/4", Insul, 1/4" Bolt |
| 7 | | 19-135 | | 8 | BANDA |
| 8 | | 895-11010 | | 6 | ARANDELA, M10 x 20 x 2 |
| 9 | | 627-10030 | | 3 | TORNILLO, Hex, M10 x 30, 10.9, Full Thd |
| 10 | | 832-10410 | | 3 | CONTRA TUERCA, M10 x 1.5, Cl 8 |
| 11 | | 895-11006 | | 1 | ARANDELA, M6 |
| 12 | | 832-10406 | | 1 | CONTRA TUERCA, M6 x 1, Cl 8 |
| 13 | | L127554 | | 3 | ARANDELA |
| 14 | | 253347A1 | | 3 | TUERCA |
| 15 | | L11541 | | 22 | BANDA |

| 04-04 | | p1 | 06/07 |
|---|---|---|---|

**MAZO DE CABLES - PANEL, CONTROL**

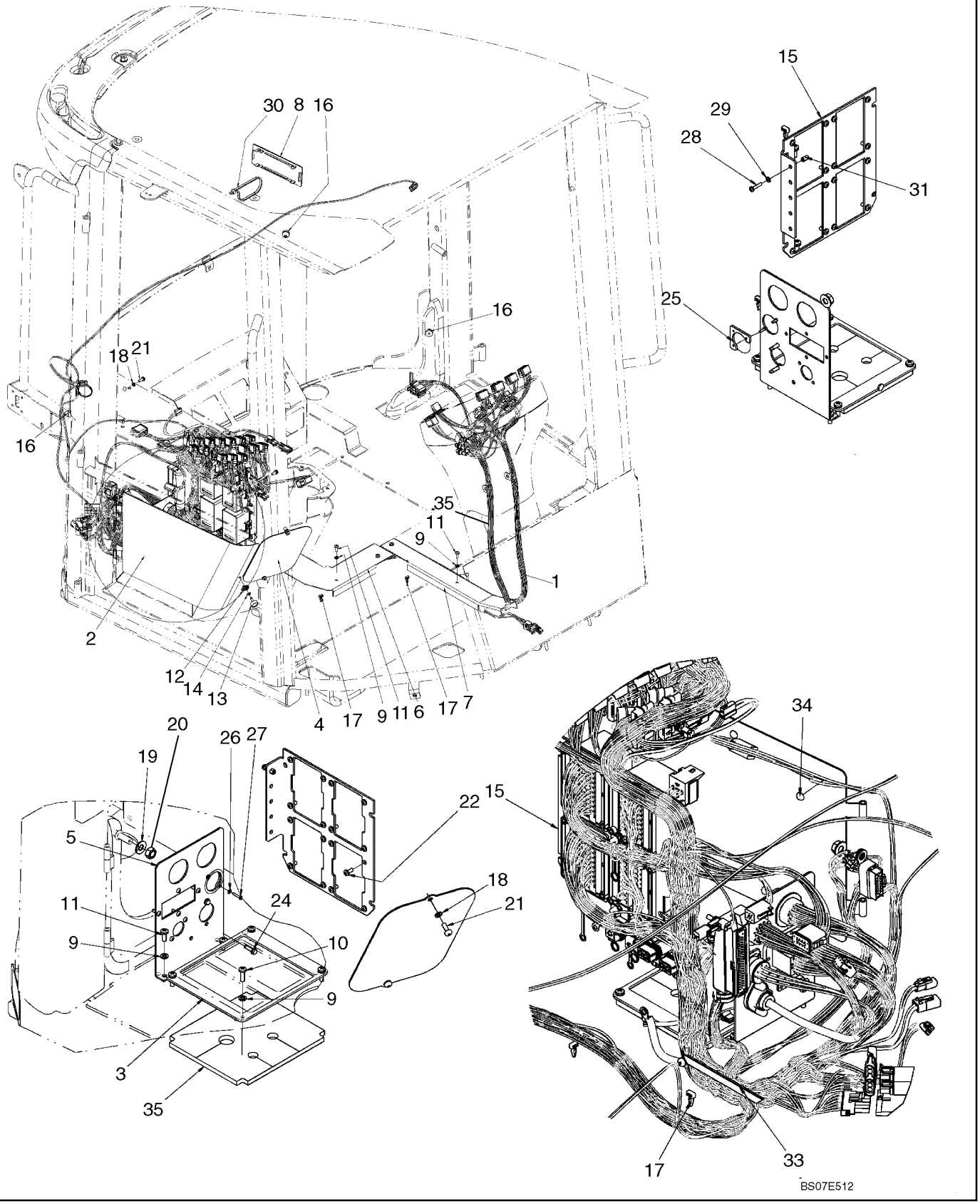

**MAZO DE CABLES - PANEL, CONTROL**

| REF | FN | PART NUMBER | YR/SN | QTY | DENOMINACION |
|---|---|---|---|---|---|
| 1 | | 87376662 | | 1 | GRUPO DE CABLES, Cab Control Panel |
| 2 | | 76303325 | | 1 | TAPADO, Electrical Access |
| 3 | | 76303258 | | 1 | PLACA |
| 4 | | 76303489 | | 1 | TAPADERA, Console Access |
| 5 | | 87372240 | | 1 | PLACA |
| 6 | | 76303498 | | 1 | PIEZA DE SOPORTE |
| 7 | | 76303260 | | 1 | TAPADERA, Central Cable |
| 8 | | {76303606} | | 1 | COVER, Radio |
| 9 | | 895-11006 | | 11 | ARANDELA, M6 |
| 10 | | 840-1620 | | 4 | TORNILLO, Cross Pan Hd, M6 x 20 |
| 11 | | 840-1616 | | 7 | TORNILLO, Cross Pan Hd, M6 x 16 |
| 12 | | 76303320 | | 1 | SUJETADOR |
| 13 | | 76303321 | | 1 | PERNO |
| 14 | | 76303319 | | 1 | ARANDELA |
| 15 | | 87341862 | | 1 | PLACA |
| 16 | | 71485202 | | 3 | FUNDA |
| 17 | | 76303347 | | 5 | ABRAZADERA |
| 18 | | 297865A1 | | 8 | ARANDELA |
| 19 | | L127554 | | 1 | ARANDELA |
| 20 | | 253347A1 | | 1 | TUERCA |
| 21 | | 297850A1 | | 8 | TORNILLO, Cross Pan Hd, M6 x 16 |
| 22 | | 840-1512 | | 16 | TORNILLO, Cross Pan Hd, M5 x 12 |
| 24 | | {86509545} | | 2 | SCREW |
| 25 | | {76303488} | | 1 | PLATE, Connector |
| 26 | | 895-11003 | | 2 | ARANDELA, M3 |
| 27 | | 840-1312 | | 2 | TORNILLO, Cross Pan Hd, M3 x 12 |
| 28 | | 840-1420 | | 1 | TORNILLO, Cross Pan Hd, M4 x 20 |
| 29 | | 895-11004 | | 1 | ARANDELA, M4 |
| 30 | | L18331 | | 1 | CIERRA CABLES |
| 31 | | 76043560 | | 1 | ROSCA POSTIZA |
| 33 | | {87525493} | | 1 | GASKET, Wire Protection |
| 34 | | 322197950 | | 6 | SEPARADOR |
| 35 | | 76303261 | | 1 | ESPACIADOR |

**MAZO DE CABLES, MOTOR**

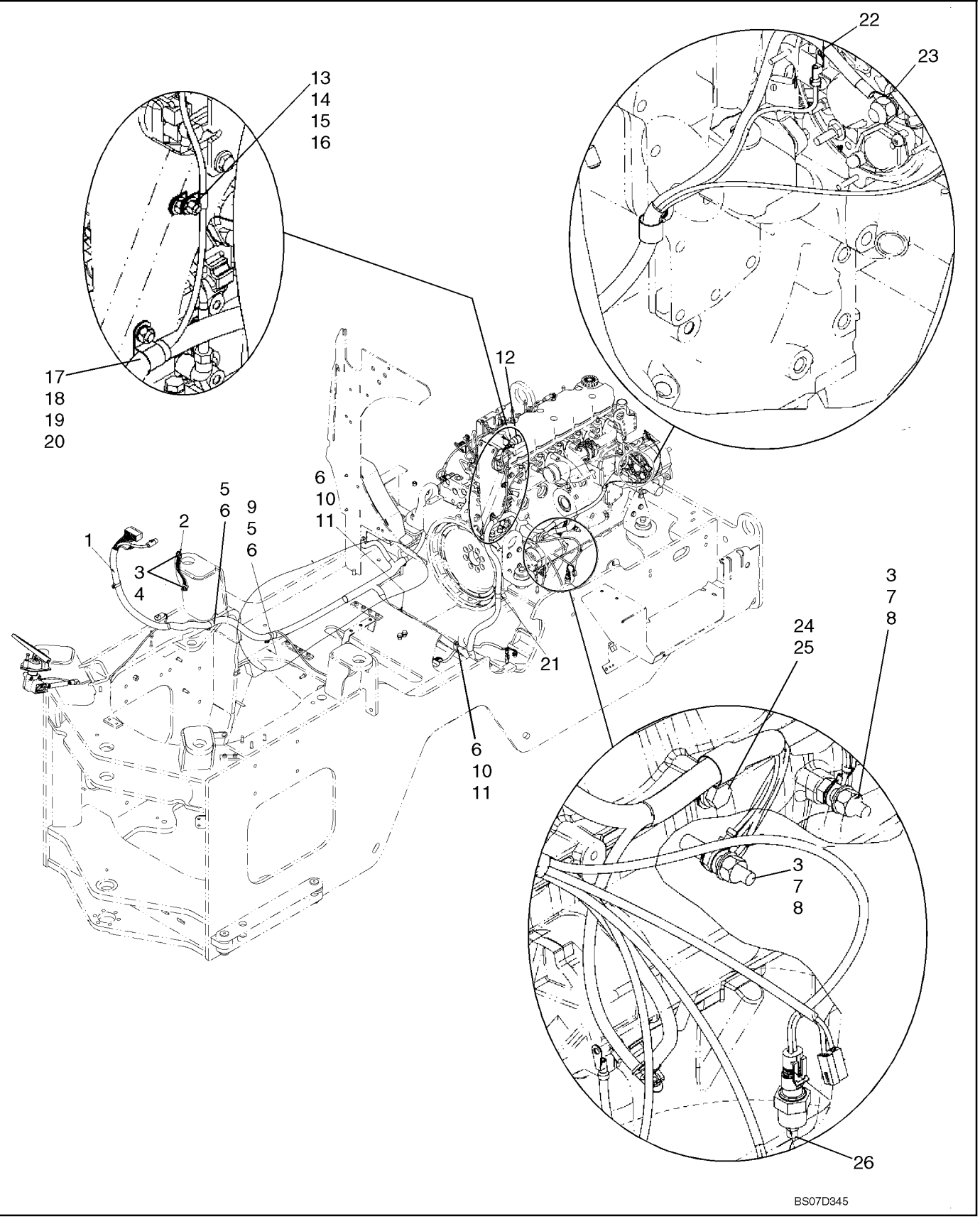

**MAZO DE CABLES, MOTOR**

| REF | FN | PART NUMBER | YR/SN | QTY | DENOMINACION |
|---|---|---|---|---|---|
| 1 | | 87351752 | | 1 | GRUPO DE CABLES, Engine |
| 2 | | L126051 | | 1 | CABLE DE MASA |
| 3 | | L127554 | | 4 | ARANDELA, Brass |
| 4 | | 253347A1 | | 2 | TUERCA |
| 5 | | 895-15010 | | 2 | ARANDELA, M11 x 24 x 2 |
| 6 | | 832-10410 | | 3 | CONTRA TUERCA, M10 x 1.5, Cl 8 |
| 7 | | L127553 | | 2 | PRISIONERO |
| 8 | | L127555 | | 2 | TUERCA |
| 9 | | 515-23270 | | 2 | BORNE, 1 1/16", Insul, 3/8" Bolt |
| 10 | | 895-11010 | | 2 | ARANDELA, M10 x 20 x 2 |
| 11 | | 515-23222 | | 2 | BORNE, 7/8", Insul, 3/8" Bolt |
| 12 | | 279492A1 | | 1 | CONTACTOR, Air Restriction |
| 13 | | 832-10408 | | 1 | CONTRA TUERCA, M8 x 1.25, Cl 8 |
| 14 | | 895-15008 | | 2 | ARANDELA, M8 x 20 x 1.6 |
| 15 | | 627-8025 | | 1 | TORNILLO, Hex, M8 x 25, 10.9 |
| 16 | | 515-2379 | | 1 | BORNE, 5/16", Insul, 3/8" Bolt |
| 17 | | 829-1410 | | 1 | TUERCA, M10, Cl 10 |
| 18 | | 895-18010 | | 1 | ARANDELA, M10 x 18 x 1.6 |
| 19 | | 627-10025 | | 1 | TORNILLO, Hex, M10 x 25, 10.9, Full Thd |
| 20 | | 515-24238 | | 1 | BORNE, 15/16", Insul, 7/16" Bolt |
| 21 | | 121411A1 | | 1 | FUSIBLE, 7.5 Amp |
| 22 | | 824-1404 | | 1 | TUERCA, M4, Cl 5 |
| 23 | | 425-107 | | 1 | TUERCA, 7/16"-14, G5 |
| 24 | | 896-11012 | | 2 | ARANDELA, M13.5 x 24.5 x 3, HT |
| 25 | | 627-12025 | | 1 | TORNILLO, Hex, M12 x 25, 10.9 |
| 26 | | 321446A1 | | 1 | CONTACTOR, Engine Coolant |

**MAZO DE CABLES, MOTOR - CONTROL DEL ACELERADOR**

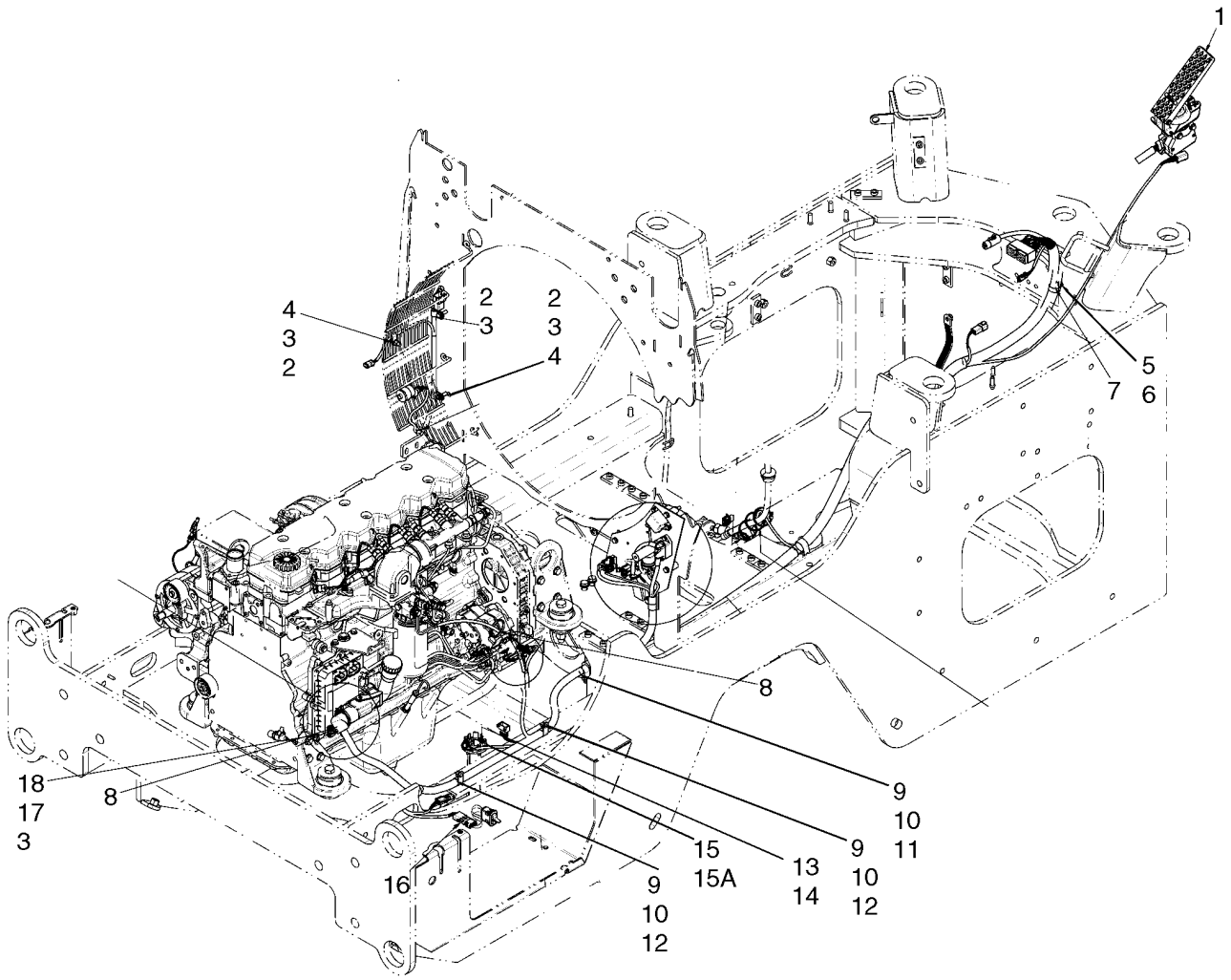

**MAZO DE CABLES, MOTOR - CONTROL DEL ACELERADOR**

| REF | FN | PART NUMBER | YR/SN | QTY | DENOMINACION |
|---|---|---|---|---|---|
| 1 | | 87360870 | | 1 | ABERTURA DE GASES, Analog Throttle Control |
| 2 | | 627-8025 | | 3 | TORNILLO, Hex, M8 x 25, 10.9 |
| 3 | | 895-11008 | | 6 | ARANDELA, M8 x 16 x 1.6 |
| 4 | | 832-10408 | | 2 | CONTRA TUERCA, M8 x 1.25, Cl 8 |
| 5 | | 832-10406 | | 1 | CONTRA TUERCA, M6 x 1, Cl 8 |
| 6 | | 895-11006 | | 1 | ARANDELA, M6 |
| 7 | | 515-21302 | | 1 | BORNE, 1 3/16", Insul, 1/4" Bolt |
| 8 | | L11541 | | 5 | BANDA |
| 9 | | 895-15010 | | 3 | ARANDELA, M11 x 24 x 2 |
| 10 | | 832-10410 | | 3 | CONTRA TUERCA, M10 x 1.5, Cl 8 |
| 11 | | 515-23270 | | 1 | BORNE, 1 1/16", Insul, 3/8" Bolt |
| 12 | | 515-23206 | | 2 | BORNE, 13/16", Insul, 3/8" Bolt |
| 13 | | 814-5030 | | 5 | TORNILLO, Hex, M5 x 30, 8.8 |
| 14 | | 895-11005 | | 5 | ARANDELA, M5 x 10 x 1 |
| 15 | | 87542710 | | 1 | CONTACTOR, Fuel, Incl. Ref. 15A; See Figure 03-04 |
| 15A | | 87617083 | | 1 | EQUIPO, Nut Pack |
| 16 | | 87350087 | | 1 | INTERRUPTOR, Hood Lift |
| 17 | | 627-8016 | | 1 | TORNILLO, Hex, M8 x 16, 10.9 |
| 18 | | 515-22127 | | 1 | BORNE, 1/2", Insul, 5/16" Bolt |

**MAZO DE CABLES, MOTOR - FUSIBLES Y RELÉS**

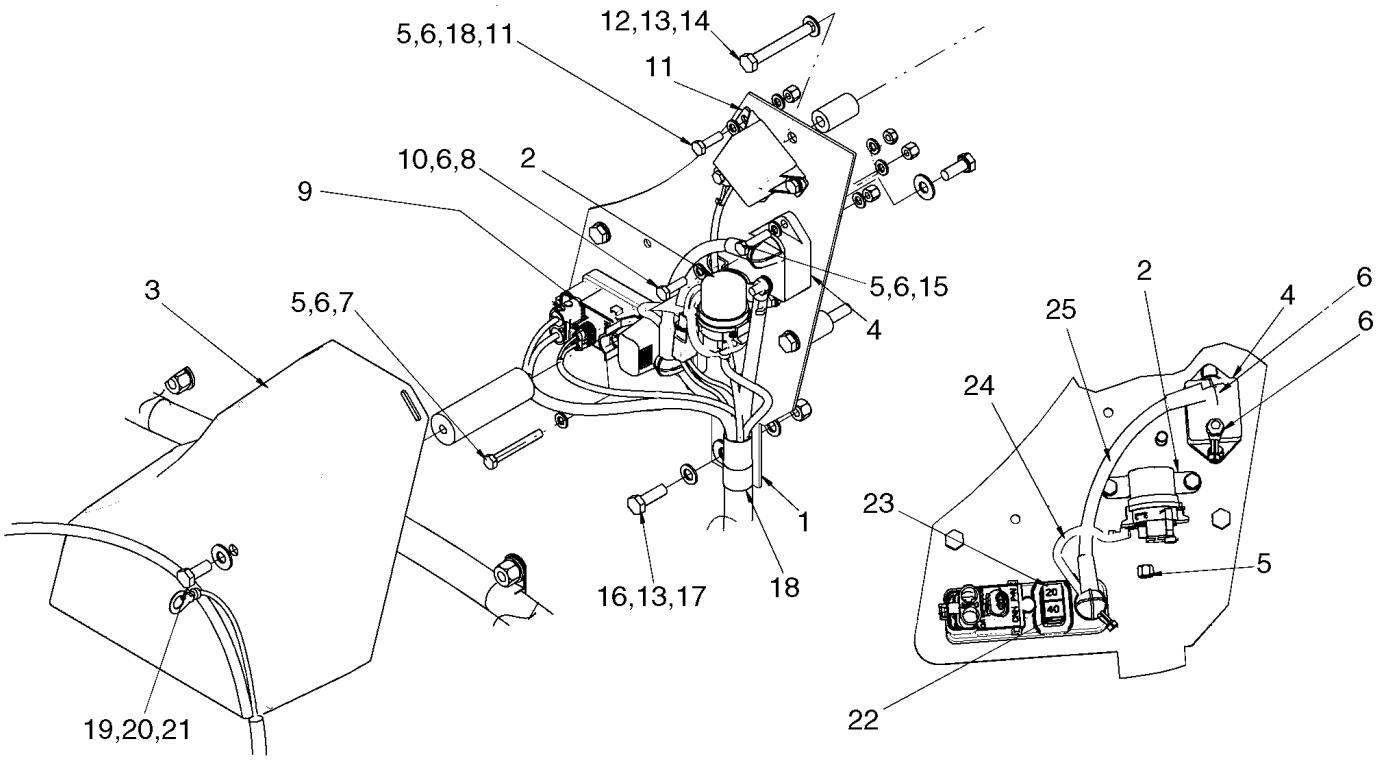


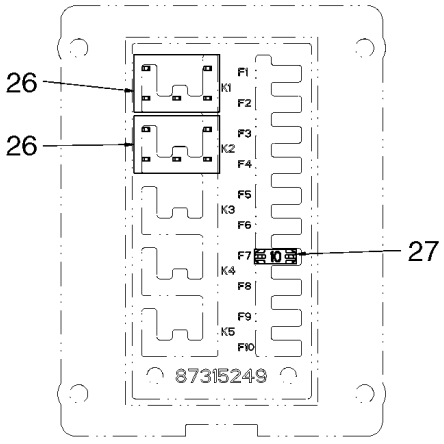


BS07G313

**MAZO DE CABLES, MOTOR - FUSIBLES Y RELÉS**

| REF | FN | PART NUMBER | YR/SN | QTY | DENOMINACION |
|---|---|---|---|---|---|
| 1 | | 87348711 | | 1 | PLACA, Electrical Mounting |
| 2 | | 87351908 | | 1 | SOLENOIDE |
| 3 | | 87353999 | | 1 | TAPADERA, Relay |
| 4 | | 87315269 | | 1 | DISYUNTOR DE CORRIEN, 105A Auto Reset |
| 5 | | 832-10406 | | 7 | CONTRA TUERCA, M6 x 1, Cl 8 |
| 6 | | 895-11006 | | 18 | ARANDELA, M6 |
| 7 | | 827-6050 | | 1 | TORNILLO, Hex, M6 x 50, 10.9 |
| 8 | | 627-6020 | | 4 | TORNILLO, Hex, M6 x 20, 10.9 |
| 9 | | 87318627 | | 1 | CONECTOR, Power Relay Module |
| 10 | | 829-1406 | | 2 | TUERCA, M6, Cl 10 |
| 11 | | 1546485C1 | | 1 | CONECTADOR |
| 12 | | 82024562 | | 3 | SEPARADOR |
| 13 | | 895-11008 | | 3 | ARANDELA, M8 x 16 x 1.6 |
| 14 | | 827-8060 | | 3 | TORNILLO, Hex, M8 x 60, 10.9 |
| 15 | | 627-6025 | | 2 | TORNILLO, Hex, M6 x 25, 10.9 |
| 16 | | 627-8025 | | 1 | TORNILLO, Hex, M8 x 25, 10.9 |
| 17 | | 832-10408 | | 1 | CONTRA TUERCA, M8 x 1.25, Cl 8 |
| 18 | | 515-23206 | | 1 | BORNE, 13/16", Insul, 3/8" Bolt |
| 19 | | 404635A1 | | 1 | ESPACIADOR |
| 20 | | 895-15008 | | 2 | ARANDELA, M8 x 20 x 1.6 |
| 21 | | 627-8020 | | 2 | TORNILLO, Hex, M8 x 20, 10.9 |
| 22 | | 87327346 | | 1 | FUSIBLE, 32V, 20A |
| 23 | | 87327335 | | 1 | FUSIBLE, 32V, 20A |
| 24 | | 87350066 | | 1 | CABLE, Starter Relay |
| 25 | | 87350064 | | 1 | CABLE, Cab, B+ |
| 26 | | 87312626 | | 2 | CONECTADOR, Micro 5-Pin, 280 Series |
| 27 | | 121412A1 | | 1 | FUSIBLE, 10 Amp |

**MAZO DE CABLES - TECHO DE LA CABINA**

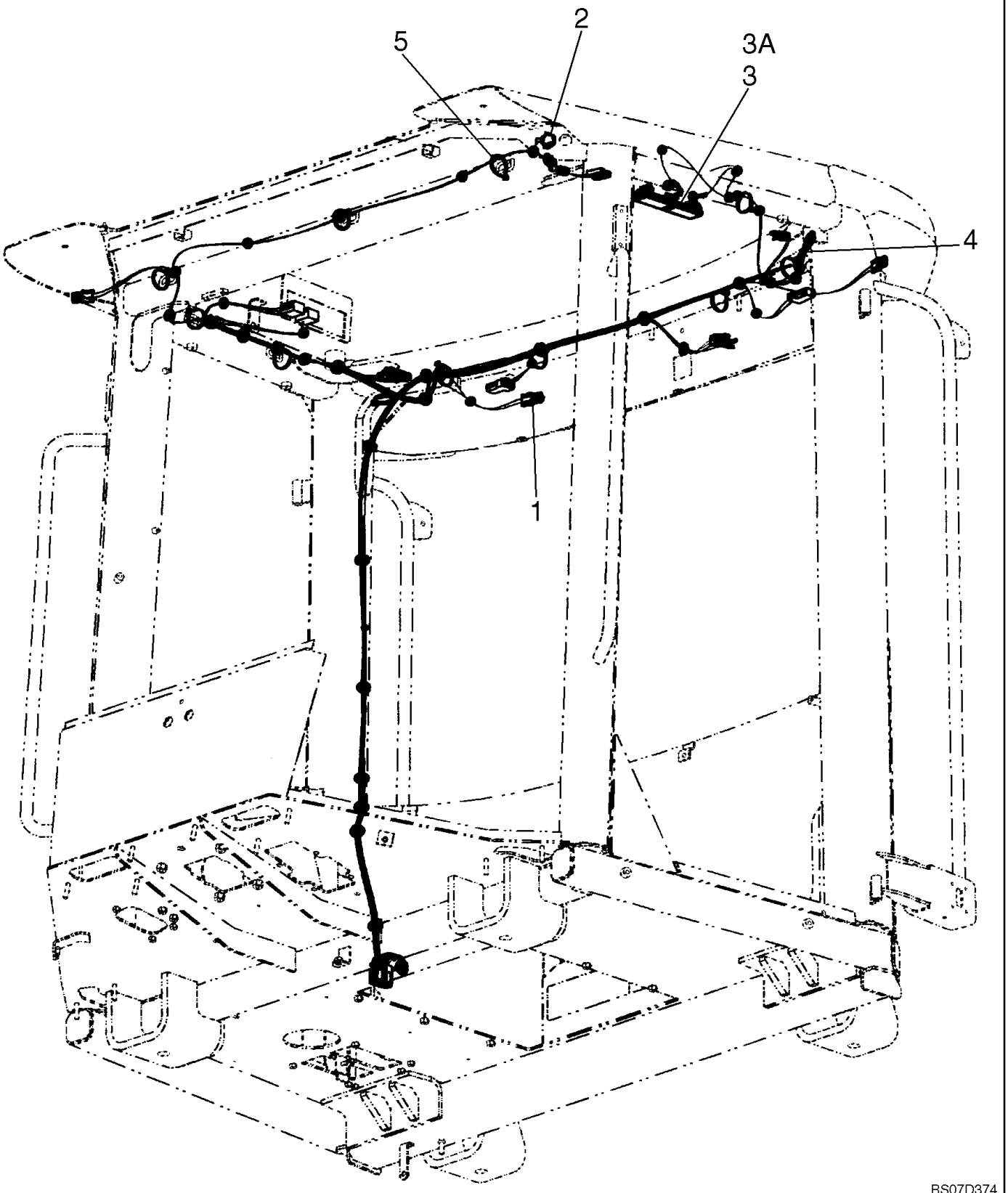

**MAZO DE CABLES - TECHO DE LA CABINA**

| REF | FN | PART NUMBER | YR/SN | QTY | DENOMINACION |
|---|---|---|---|---|---|
| 1 | | 87517052 | | 1 | GRUPO DE CABLES, Cab Roof |
| 2 | | 76053295 | | 1 | ENCHUFFE DE CORRIENT |
| 3 | | 394799A1 | | 1 | FARO (CONJ), Incl. Ref. 3A |
| 3A | | 395185A1 | | 1 | AMPOLLA, 24V |
| 4 | | 87325760 | | 1 | CONTACTOR, Door |
| 5 | | L11541 | | 11 | BANDA |

| 04-09 | | p1 | 07/07 |
|---|---|---|---|

**MAZO DE CABLES, CAPO - ALARMA DE RETROCESO**

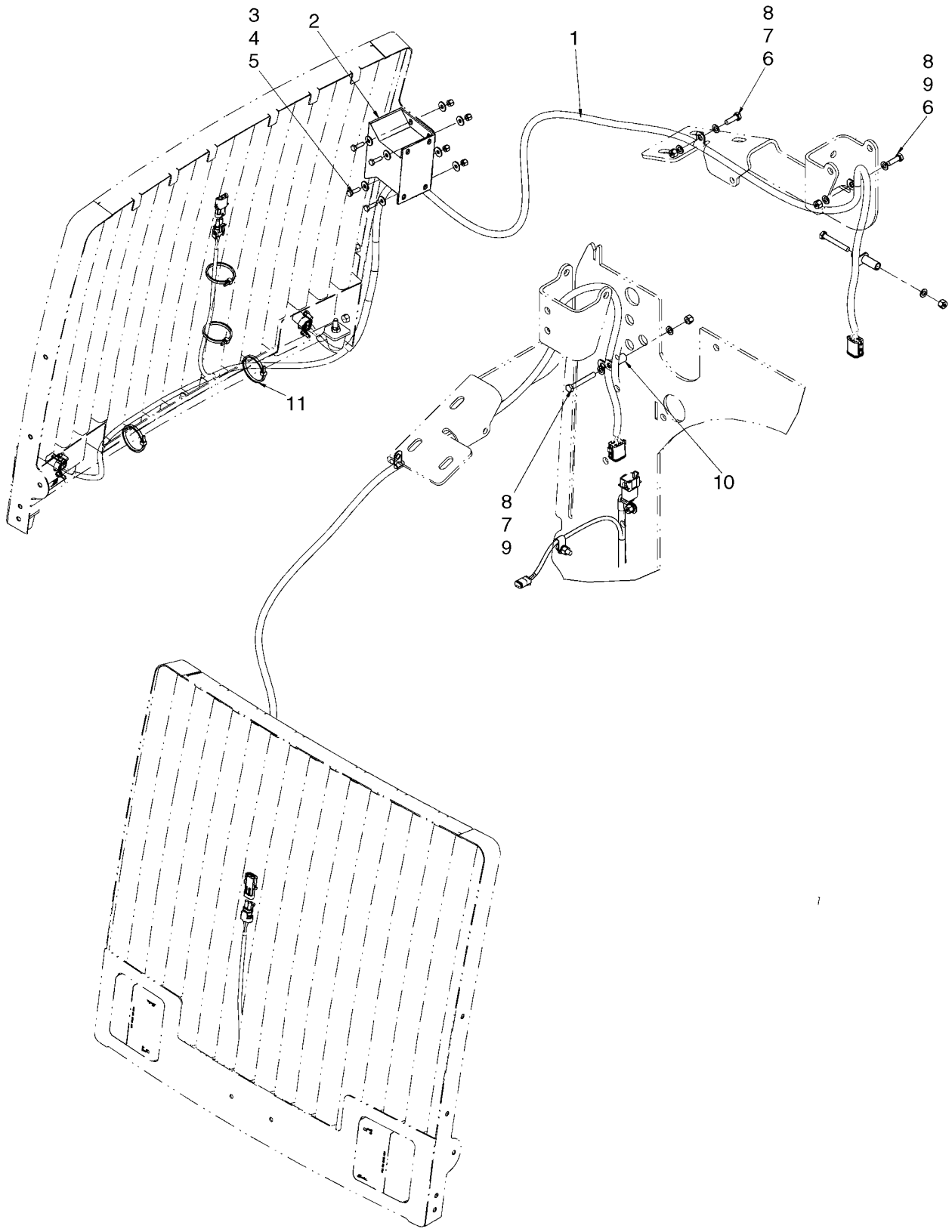

**MAZO DE CABLES, CAPO - ALARMA DE RETROCESO**

| REF | FN | PART NUMBER | YR/SN | QTY | DENOMINACION |
|---|---|---|---|---|---|
| 1 | | {87613715} | | 1 | HARNESS, Hood |
| 2 | | D121972 | | 1 | ALARMA, Back-Up |
| 3 | | 895-25006 | | 8 | ARANDELA, M6 x 18 x 1.6 |
| 4 | | 627-6020 | | 4 | TORNILLO, Hex, M6 x 20, 10.9 |
| 5 | | 832-10406 | | 4 | CONTRA TUERCA, M6 x 1, Cl 8 |
| 6 | | 627-8025 | | 2 | TORNILLO, Hex, M8 x 25, 10.9 |
| 7 | | 895-11008 | | 6 | ARANDELA, M8 x 16 x 1.6 |
| 8 | | 832-10408 | | 3 | CONTRA TUERCA, M8 x 1.25, Cl 8 |
| 9 | | 827-8060 | | 1 | TORNILLO, Hex, M8 x 60, 10.9 |
| 10 | | L126936 | | 1 | ESPACIADOR |
| 11 | | L11541 | | 3 | BANDA |

**MAZO DE CABLES, TRANSMISION**

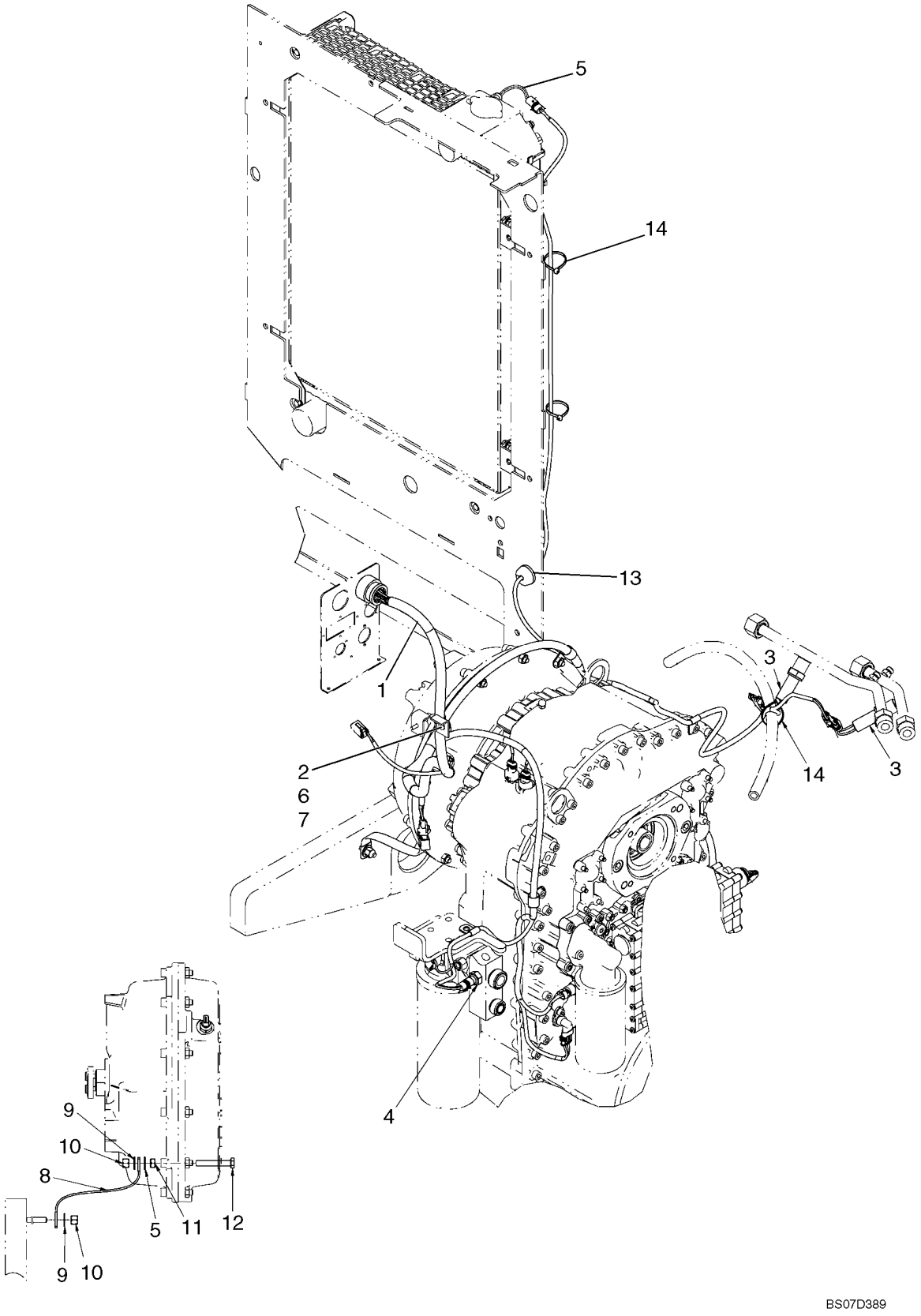

**MAZO DE CABLES, TRANSMISION**

| REF | FN | PART NUMBER | YR/SN | QTY | DENOMINACION |
|---|---|---|---|---|---|
| 1 | | 87592785 | | 1 | HAZ, Transmission |
| 2 | | 515-21190 | | 1 | BORNE, 3/4", Insul, 1/4" Bolt |
| 3 | | 377899A1 | | 2 | CONTACTOR, Redundant Brake |
| 4 | | 321446A1 | | 1 | CONTACTOR, Engine Coolant |
| 5 | | 445786A1 | | 1 | HAZ, Sealed Jumper |
| 6 | | 895-11006 | | 1 | ARANDELA, M6 |
| 7 | | 832-10406 | | 1 | CONTRA TUERCA, M6 x 1, Cl 8 |
| 8 | | 79028421 | | 1 | CABLE. MASA |
| 9 | | 895-15010 | | 3 | ARANDELA, M11 x 24 x 2 |
| 10 | | 832-10410 | | 2 | CONTRA TUERCA, M10 x 1.5, Cl 8 |
| 11 | | 829-1410 | | 1 | TUERCA, M10, Cl 10 |
| 12 | | 627-10065 | | 1 | TORNILLO, Hex, M10 x 65, 10.9, Full Thd |
| 13 | | 198823C1 | | 1 | PASACABLES |
| 14 | | L11541 | | 3 | BANDA |

**MAZO DE CABLES - LA CALENTADORA DE LA CUADRÍCULA**

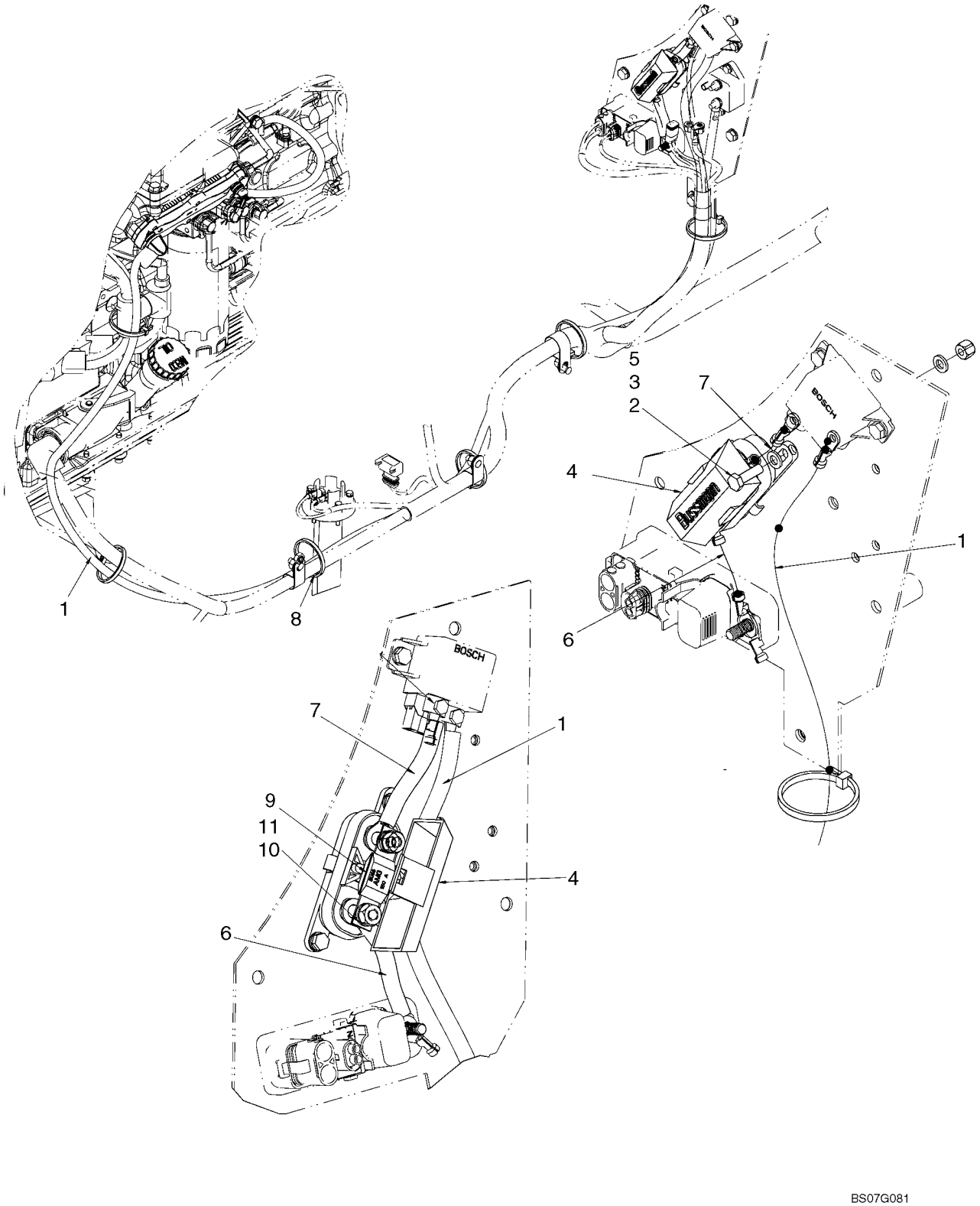

**MAZO DE CABLES - LA CALENTADORA DE LA CUADRÍCULA**

| REF | FN | PART NUMBER | YR/SN | QTY | DENOMINACION |
|---|---|---|---|---|---|
| | | REF | | | MANUAL, GRID HEATER CABLES, FUSE BOX |
| 1 | | 87354000 | | 1 | CABLE, Grid Heater; Power |
| 2 | | 895-11006 | | 4 | ARANDELA, M6 |
| 3 | | 832-10406 | | 2 | CONTRA TUERCA, M6 x 1, Cl 8 |
| 4 | | 440038A1 | | 1 | CONEXION, Fuse |
| 5 | | 627-6020 | | 2 | TORNILLO, Hex, M6 x 20, 10.9 |
| 6 | | 87350062 | | 1 | CABLE, Grid Heater B+ |
| 7 | | 87348713 | | 1 | CABLE, Grid Heater |
| 8 | | L11541 | | 6 | BANDA, Wire Tie |
| 9 | | 8501311 | | 1 | FUSIBLE, 150 Amp |
| 10 | | 892-11008 | | 2 | ARANDELA DE FRENO, M8 |
| 11 | | 829-1408 | | 2 | TUERCA, M8, Cl 10 |

**LA CALENTADORA DE LA CUADRÍCULA**

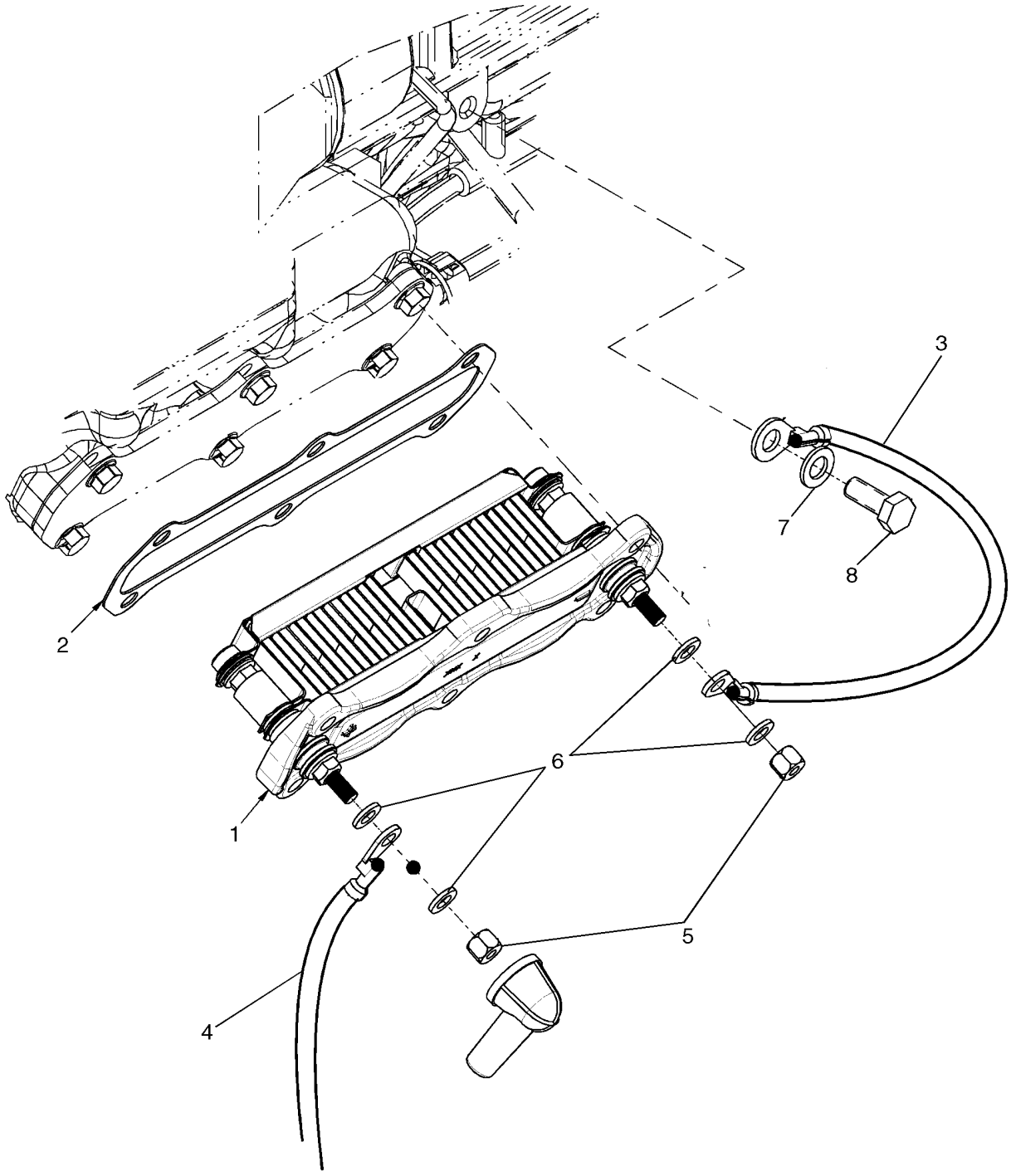

**LA CALENTADORA DE LA CUADRÍCULA**

| REF | FN | PART NUMBER | YR/SN | QTY | DENOMINACION |
|---|---|---|---|---|---|
| 1 | | 87300128 | | 1 | RECALENTADOR, ASSY. Iveco 24V |
| 2 | | 2854701 | | 1 | JUNTA HERMETICA |
| 3 | | 87398558 | | 1 | CABLE, Grid Heater Ground |
| 4 | | 87354000 | | 1 | CABLE, Grid Heater Power |
| 5 | | 832-10406 | | 2 | CONTRA TUERCA, M6 x 1, Cl 8 |
| 6 | | 895-11006 | | 4 | ARANDELA, M6 |
| 7 | | 895-11008 | | 1 | ARANDELA, M8 x 16 x 1.6 |
| 8 | | 627-8020 | | 1 | TORNILLO, Hex, M8 x 20, 10.9 |

**BOCINA, DELANTERA**

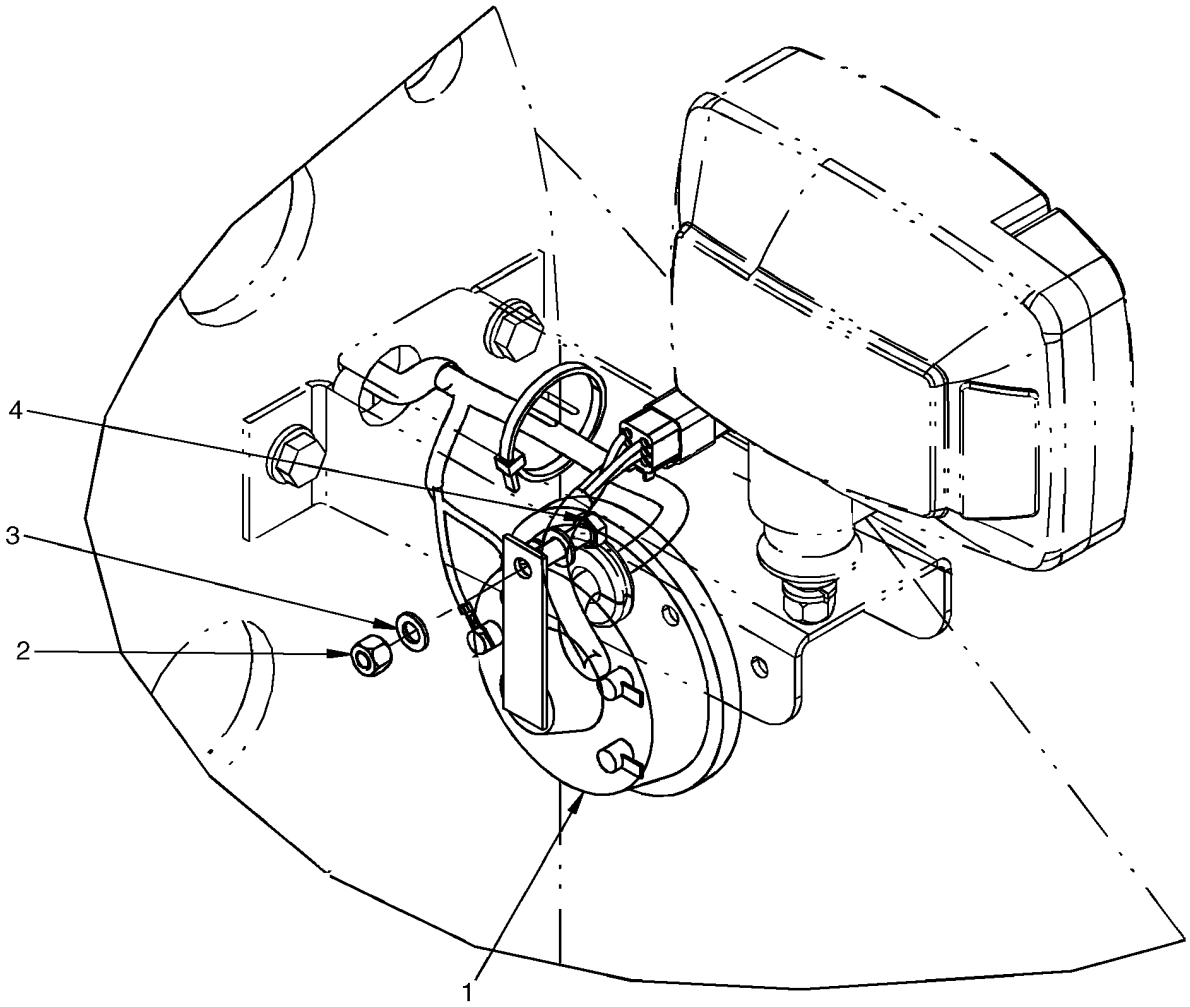


BS07D392

**BOCINA, DELANTERA**

| REF | FN | PART NUMBER | YR/SN | QTY | DENOMINACION |
|---|---|---|---|---|---|
| 1 | | 87382200 | | 1 | BOCINA, 109 Db |
| 2 | | 832-10408 | | 1 | CONTRA TUERCA, M8 x 1.25, Cl 8 |
| 3 | | 895-11008 | | 2 | ARANDELA, M8 x 16 x 1.6 |
| 4 | | 627-8025 | | 1 | TORNILLO, Hex, M8 x 25, 10.9 |

**PANEL, CONTROL - INTERRUPTOR**

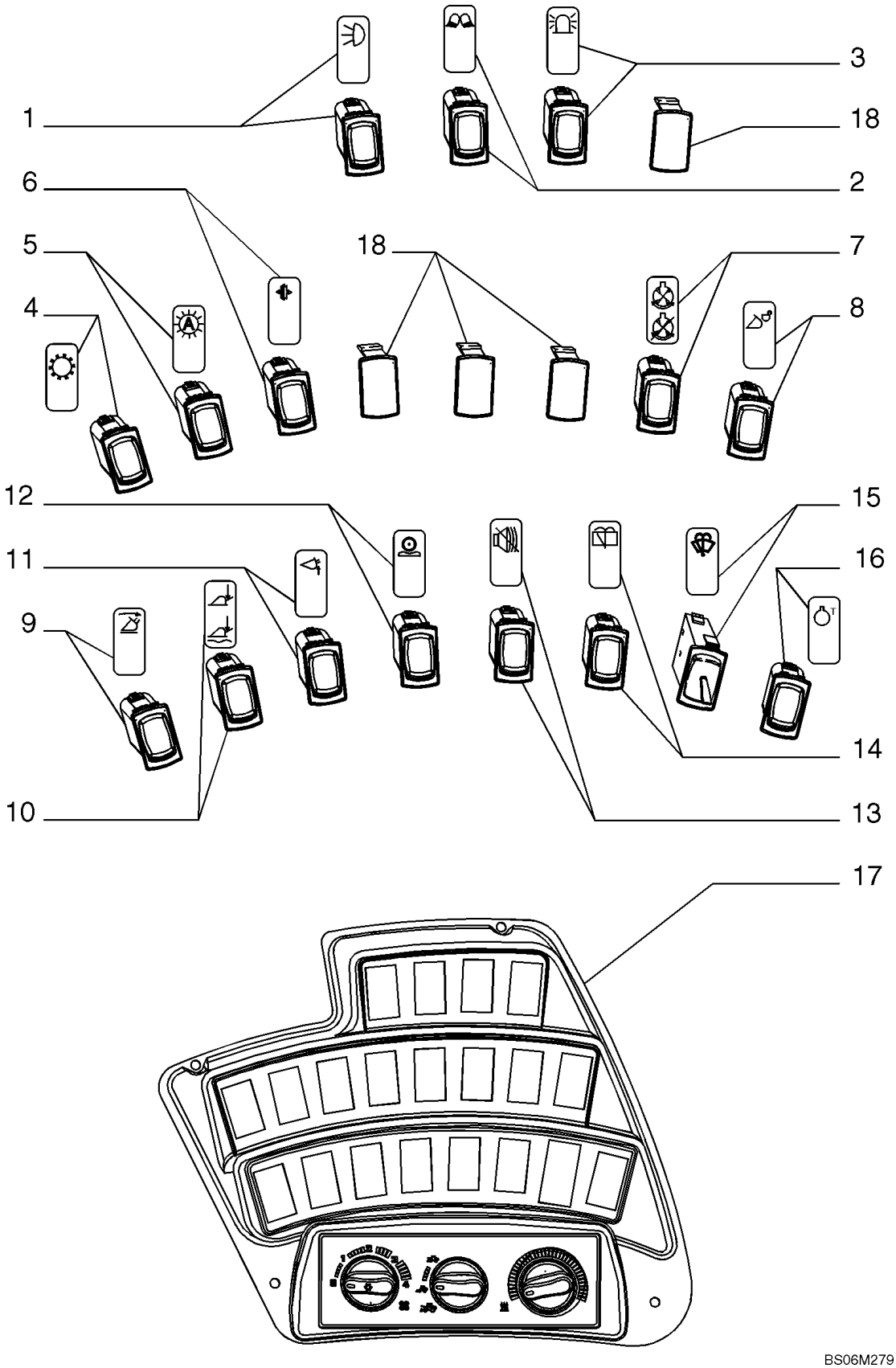

**PANEL, CONTROL - INTERRUPTOR**

| REF | FN | PART NUMBER | YR/SN | QTY | DENOMINACION |
|---|---|---|---|---|---|
| 1 | | 87350054 | | 1 | CONTACTOR, Drive Lights |
| 2 | | 87350052 | | 1 | CONTACTOR, Work Lights |
| 3 | | 374430A2 | | 1 | CONTACTOR, Rotating Beacon |
| 4 | | 87350044 | | 1 | CONTACTOR, Transmission Enable |
| 5 | | 374431A2 | | 1 | CONTACTOR, Transmission Auto |
| 6 | | 374421A4 | | 1 | CONTACTOR, Declutch |
| 7 | | 87350049 | | 1 | CONTACTOR, Fan Control |
| 8 | | 364444A2 | | 1 | CONTACTOR, Pin Engage |
| 9 | | 87350045 | | 1 | CONTACTOR, Return to Dig |
| 10 | | 87350048 | | 1 | CONTACTOR, Return to Travel/Float |
| 11 | | 87350047 | | 1 | CONTACTOR, Height Control, High |
| 12 | | 87350055 | | 1 | INTERRUPTOR DE PALANCA, Ride Control |
| 13 | | 374433A3 | | 1 | CONTACTOR, Back Up Alarm |
| 13 | | {87567880} | | 1 | SWITCH, Back Up Alarm; Used On European Models Only |
| 14 | | 374429A2 | | 1 | CONTACTOR, Rear Wiper |
| 15 | | 87620692 | | 1 | CONTACTOR, SWITCH, Front Wiper; Replaces 87350085 |
| 16 | | {87371084} | | 1 | SWITCH, Idle |
| 17 | | 76303030 | | 1 | CONTRAPANEL, Switch Panel |
| 18 | | 126844A1 | | 4-6 | TAPÓN |
| 19 | | 87582901 | | 4 | TORNILLO, Not Illustrated |

| 04-14 | | p1 | 08/07 |
|---|---|---|---|

**PANEL, CONTROL - FUSIBLE Y RELÉ SOPORTE**

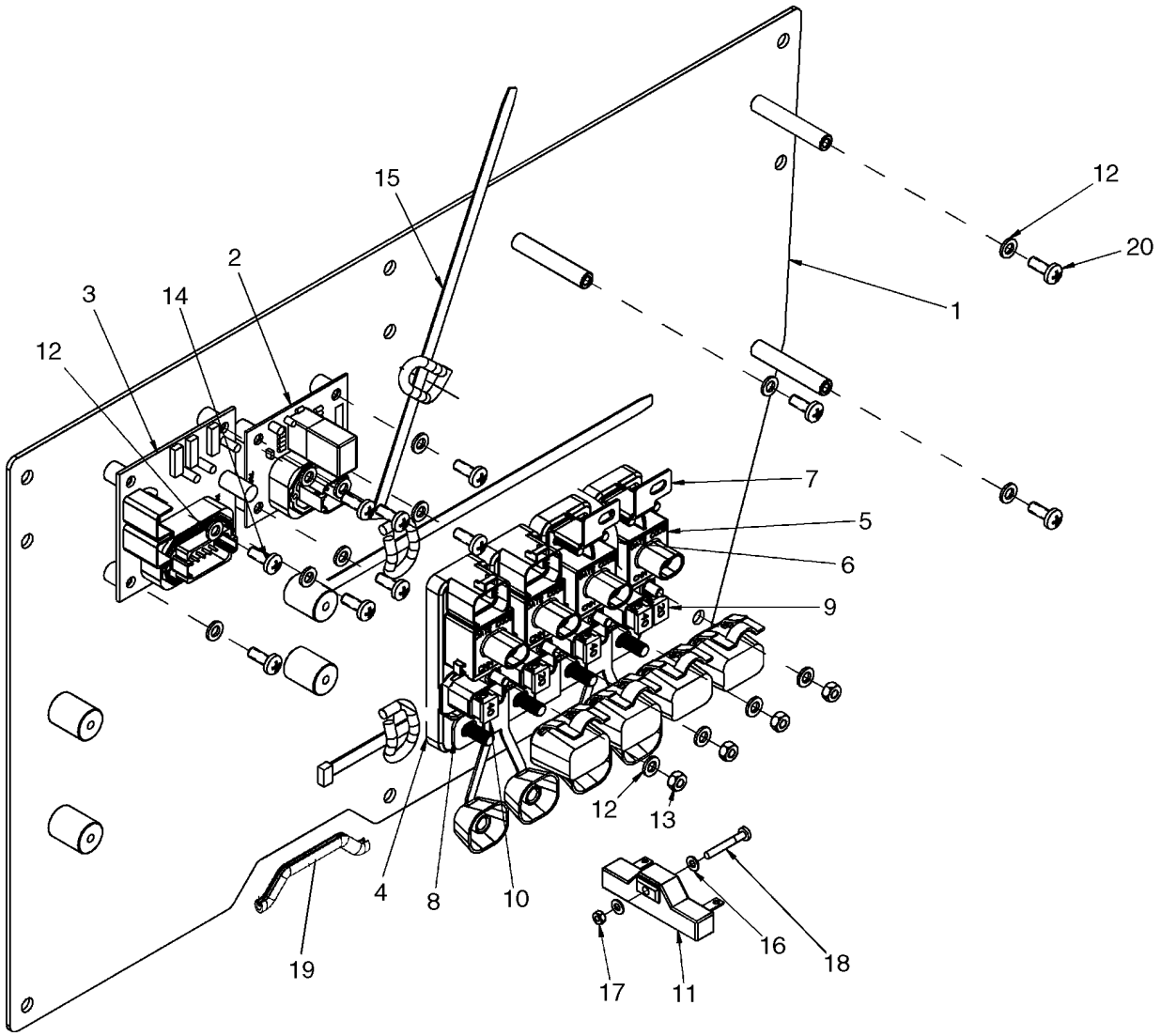

**PANEL, CONTROL - FUSIBLE Y RELÉ SOPORTE**

| REF | FN | PART NUMBER | YR/SN | QTY | DENOMINACION |
|---|---|---|---|---|---|
| 1 | | 87372241 | | 1 | PLACA, Right Console |
| 2 | | 87364605 | | 1 | TIMER |
| 3 | | 232364A1 | | 4 | CONJUNTO INTERMITENT |
| 4 | | 87318627 | | 4 | CONECTOR, D.6 |
| 5 | | 87315250 | | 1 | MODULE, Electrical Center |
| 6 | | {87318617} | | 16 | JOINER, PRM |
| 7 | | 87318620 | | 3 | BARRA, RTMR to PRM Bus Bar |
| 8 | | 87318612 | | 3 | BARRA (CONJUNTO), PRM Input Bus Bar |
| 9 | | 87327335 | | 4 | FUSIBLE, 32 Volt, 20 Amp |
| 10 | | 87327346 | | 4 | FUSIBLE, 32 Volt, 40 Amp |
| 11 | | F22316 | | 2 | RESISTENCIA |
| 12 | | 895-11006 | | 2 | ARANDELA, M6 |
| 13 | | 829-1406 | | 1 | TUERCA, M6, Cl 10 |
| 14 | | 840-1612 | | 8 | TORNILLO, Cross Pan Hd, M6 x 12 |
| 15 | | {885180004} | | 2 | CABLE |
| 16 | | 895-11004 | | 2 | ARANDELA, M4 |
| 17 | | 825-1404 | | 1 | TUERCA, M4, Cl 8 |
| 18 | | 86511825 | | 1 | TORNILLO, Cross Pan Hd, M4 x 30 |
| 19 | | {87661964} | | 1 | GASKET |
| 20 | | 840-1616 | | 3 | TORNILLO, Cross Pan Hd, M6 x 16 |

| 04-15 | | p1 | 07/07 |
|---|---|---|---|

**ELECTRICO - TUBO DE LA DIRECCION / GRUPO DE INSTRUMENTOS**

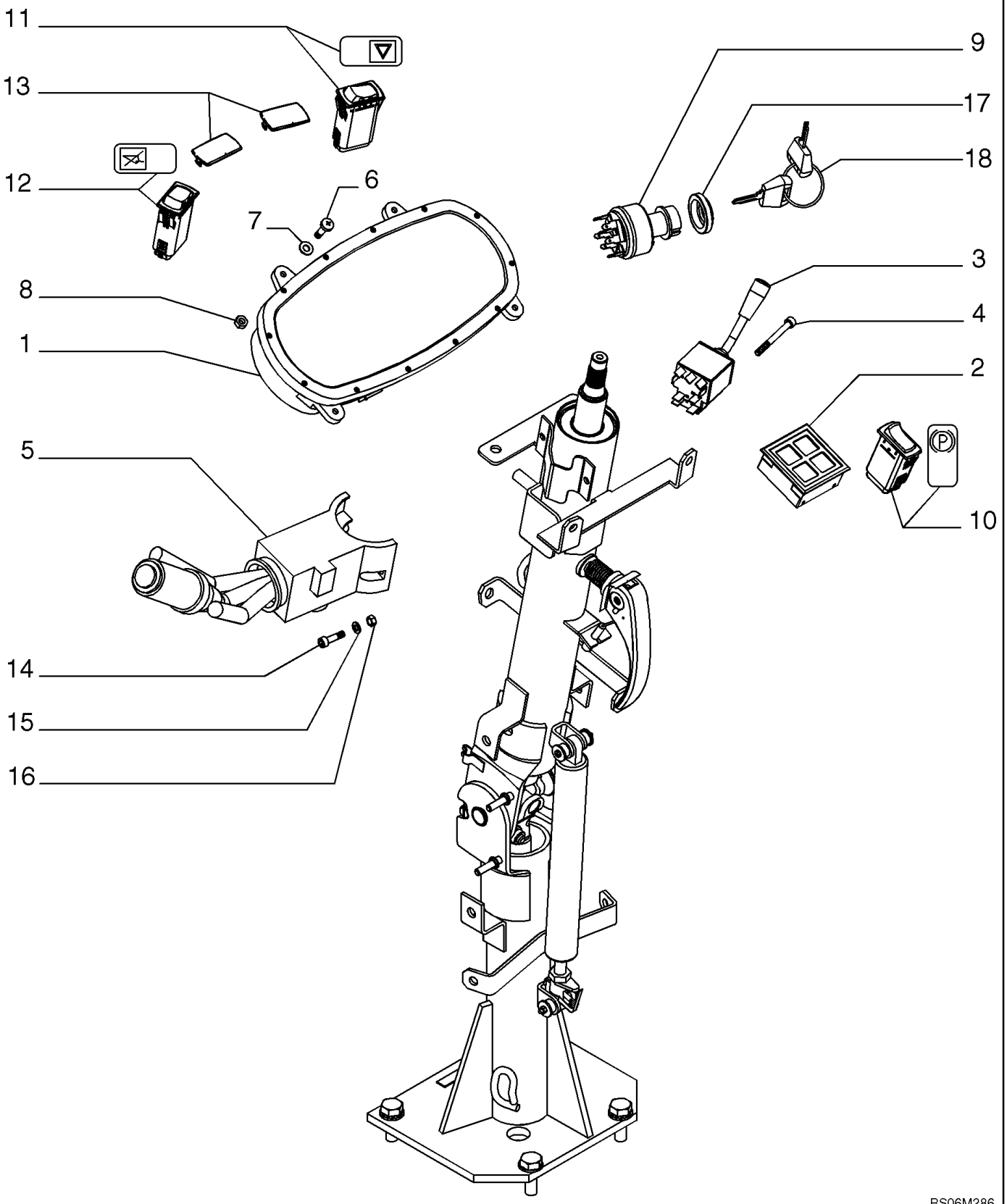

**ELECTRICO - TUBO DE LA DIRECCION / GRUPO DE INSTRUMENTOS**

| REF | FN | PART NUMBER | YR/SN | QTY | DENOMINACION |
|---|---|---|---|---|---|
| 1 | | 87372814 | | 1 | CUADRO DE SENAL.MULTIPLE, Case |
| 2 | | 87372804 | | 1 | TACO, Key |
| 3 | | 389487A1 | | 1 | INTERRUPTOR |
| 4 | | 14304731 | | 2 | TORNILLO, Hex Soc Hd, M5 x 50, 10.9 |
| 5 | | 238270A1 | | 1 | MANDO, Selector |
| 6 | | 13272111 | | 4 | TORNILLO, Pan Hd, M4 x 14, 5.8 |
| 7 | | 14496201 | | 4 | ARANDELA, D4 |
| 8 | | 10794011 | | 4 | TUERCA, M4, Cl 8 |
| 9 | | 282775A1 | | 1 | CONMUTADOR DE ARRANQ, Incl. Refs. 17, 18 |
| 10 | | 374424A2 | | 1 | CONTACTOR, Parking Brake |
| 11 | | 374426A2 | | 1 | CONTACTOR, Hazard |
| 12 | | 374434A2 | | 1 | CONTACTOR, Pilot Control |
| 13 | | 86000535 | | 2 | TAPÓN, 1.427" x .62", Plastic |
| 14 | | NSS | | 2 | NO SE REPARA SEPARADAM., SCREW, M5 x 20 |
| 15 | | 14496301 | | 4 | ARANDELA |
| 16 | | 15896411 | | 4 | TUERCA, M5, Cl 8 |
| 17 | | NSS | | 1 | NO SE REPARA SEPARADAM., Ignition Switch Cap |
| 18 | | 1964831C2 | | 1 | JUEGO DE 2 LLAVES, Padded |

**ELECTRICO - CONTROL DE TRANSMISION**

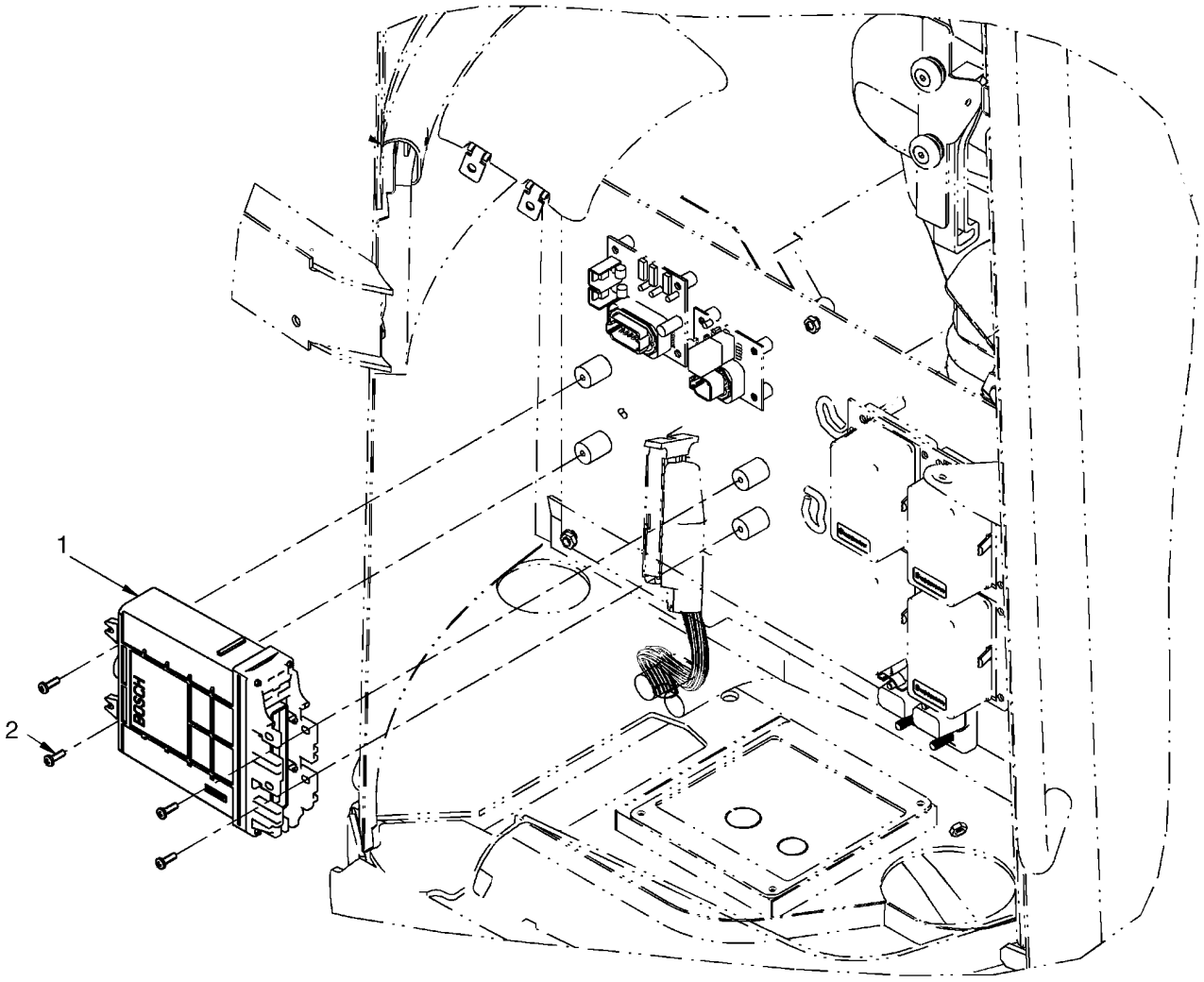


BS07G084

**ELECTRICO - CONTROL DE TRANSMISION**

| REF | FN | PART NUMBER | YR/SN | QTY | DENOMINACION |
|---|---|---|---|---|---|
| 1 | | 87573767 | | 1 | GRUPO REGULADOR, Transmission Control |
| 2 | | 840-1516 | | 4 | TORNILLO, Cross Pan Hd, M5 x 16 |

**ELECTRICO - DIRECCION, AUXILIAR**

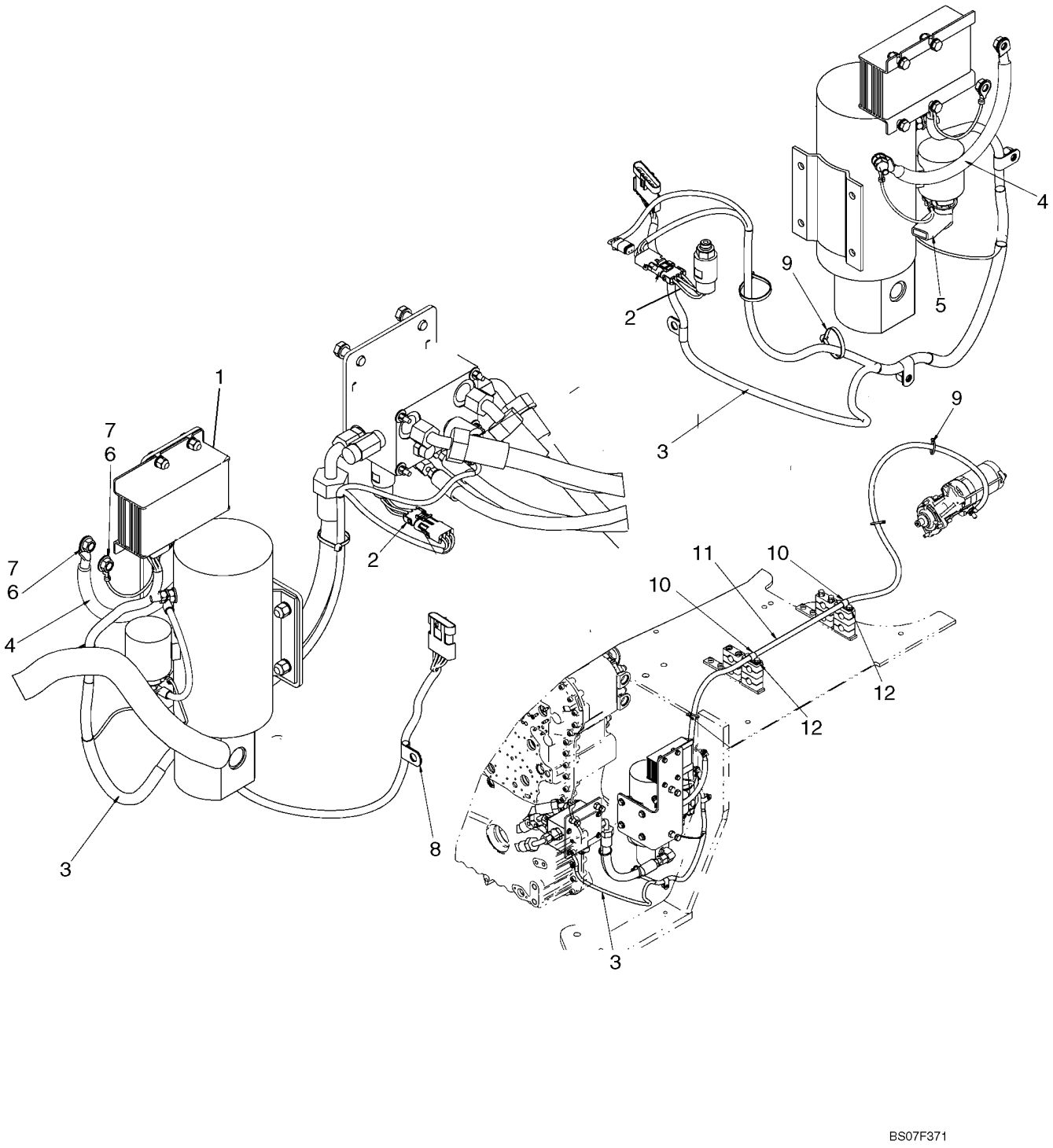

**ELECTRICO - DIRECCION, AUXILIAR**

| REF | FN | PART NUMBER | YR/SN | QTY | DENOMINACION |
|---|---|---|---|---|---|
| 1 | | 8603171 | | 1 | MODULE, Auxiliary Steering |
| 2 | | 398888A1 | | 1 | CONTACTOR, Auxiliary Steering Pressure Switch |
| 3 | | 87653924 | | 1 | HAZ, Secondary Steering Module |
| 4 | | L129707 | | 1 | CABLE, Battery, Negative |
| 5 | | L126713 | | 1 | CASQUETE, Electrical |
| 6 | | L127554 | | 2 | ARANDELA |
| 7 | | 253347A1 | | 2 | TUERCA |
| 8 | | 515-2495 | | 1 | BORNE, 3/8", Insul, 7/16" Bolt |
| 9 | | L11541 | | 6 | BANDA |
| 10 | | 515-24190 | | 2 | BORNE, 3/4", Insul, 7/16" Bolt |
| 11 | | 87600841 | | 1 | CABLE, Auxiliary Steering |
| 12 | | 895-11010 | | 2 | ARANDELA, M10 x 20 x 2 |

| 04-18 | | p1 | 06/07 |
|---|---|---|---|

**SOPORTE - LUCES, DELANTERAS**

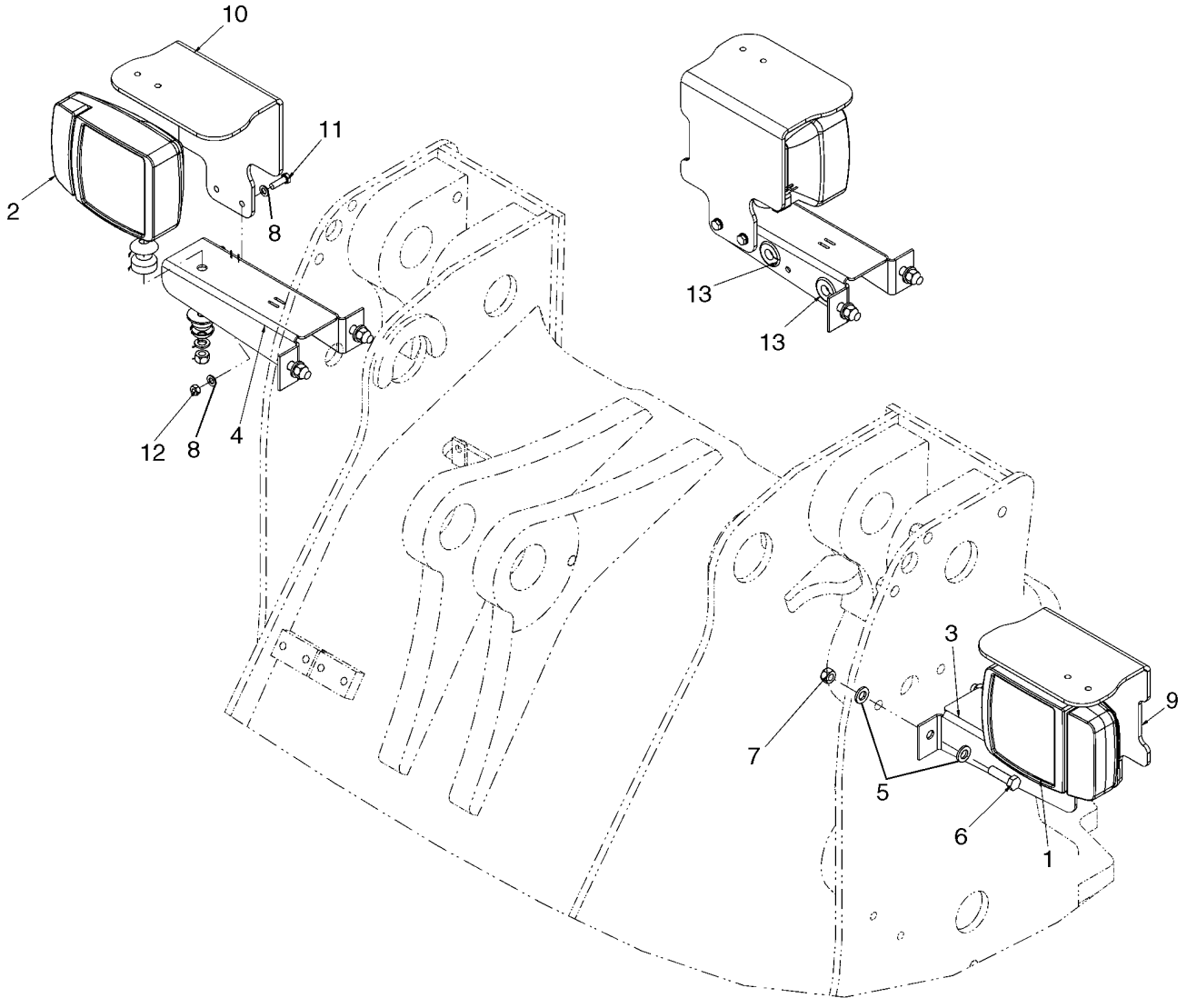

**SOPORTE - LUCES, DELANTERAS**

| REF | FN | PART NUMBER | YR/SN | QTY | DENOMINACION |
|---|---|---|---|---|---|
| 1 | | 368056A1 | | 1 | PILOTO, Combination Left; See Figure 04-19 |
| 2 | | 368055A1 | | 1 | PILOTO, Combination Right; See Figure 04-19 |
| 3 | | 87588276 | | 1 | PIEZA DE SOPORTE, Light Mounting Arm, LH; Light Mounting Bracket |
| 4 | | 87351705 | | 1 | PIEZA DE SOPORTE, Light Mounting Arm, RH; Light Mounting Bracket |
| 5 | | 896-11012 | | 8 | ARANDELA, M13.5 x 24.5 x 3, HT |
| 6 | | 614-12040 | | 4 | TORNILLO, Hex, M12 x 40, 8.8, Full Thd |
| 7 | | 829-1412 | | 4 | TUERCA, M12, Cl 10 |
| 8 | | 895-11008 | | 8 | ARANDELA, M8 x 16 x 1.6 |
| 9 | | 87351718 | | 1 | PROTECCION, Light |
| 10 | | 87351705 | | 1 | PIEZA DE SOPORTE, Light Shield |
| 11 | | 614-8025 | | 4 | TORNILLO, Hex, M8 x 25, 8.8 |
| 12 | | 829-1408 | | 4 | TUERCA, M8, Cl 10 |
| 13 | | 248-2376 | | 3 | PASACABLES, 5/8" ID x 1 1/4" Groove Dia, Str Cut, LH Light Bracket Only |

| 04-19 | | p1 | 06/07 |
|---|---|---|---|

**CONJUNTO DE LA LAMPARA - LUZ, DELANTERA**

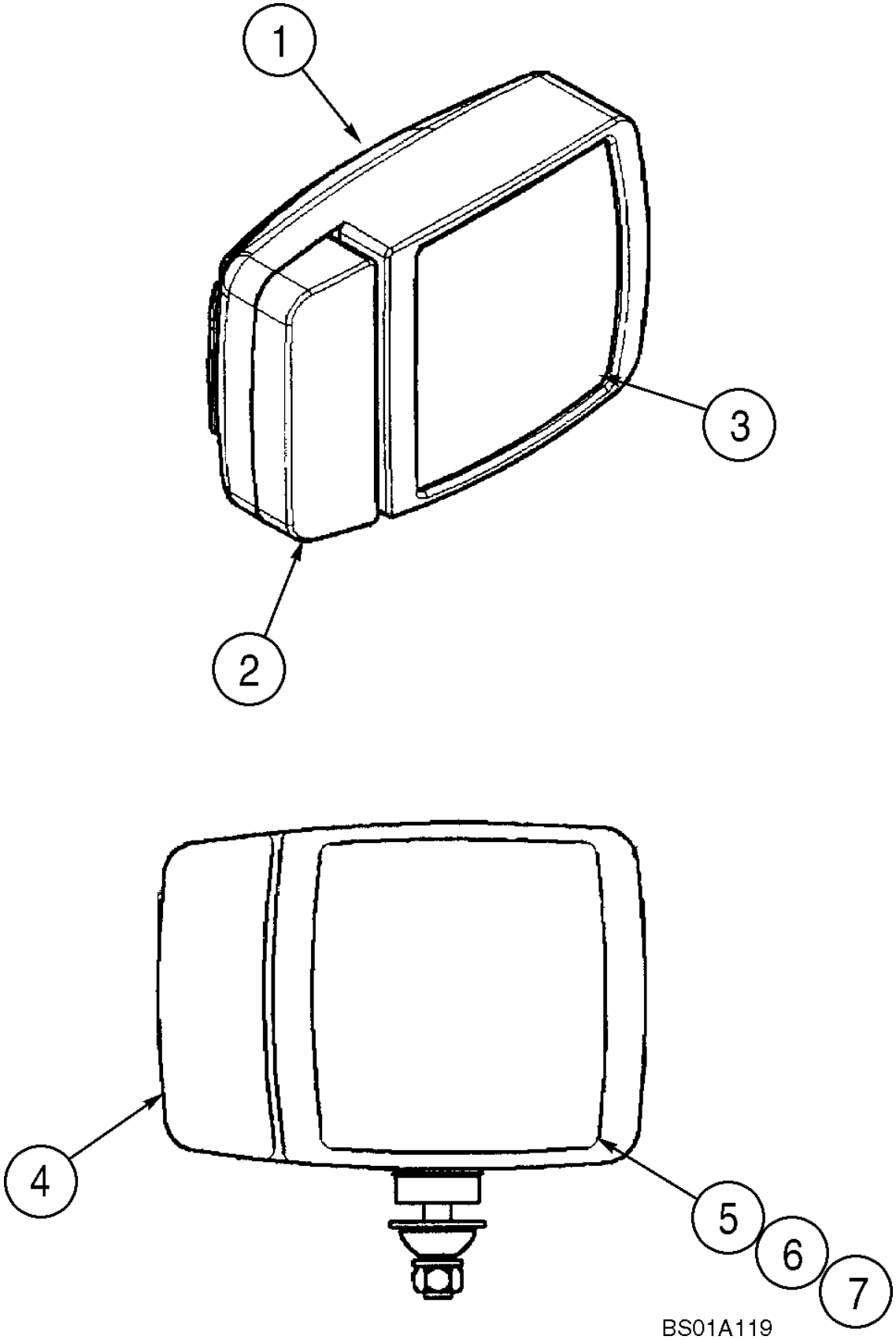

**CONJUNTO DE LA LAMPARA - LUZ, DELANTERA**

| REF | FN | PART NUMBER | YR/SN | QTY | DENOMINACION |
|---|---|---|---|---|---|
| | | 368055A1 | | 1 | PILOTO, Combination; Right Hand; Includes Hardware; Incl. 1 - 7 |
| | | 368056A1 | | 1 | PILOTO, Combination; Left Hand; Includes Hardware; Incl. 1 - 7 |
| 1 | | NSS | | 1 | NO SE REPARA SEPARADAM., Housing |
| 2 | | 408142A1 | | 1 | TAPA TRANSLUCIDA, Turn Signal and Flasher |
| 3 | | 408143A1 | | 1 | TAPA TRANSLUCIDA, Head Light |
| 4 | | 410939A1 | | 1 | AMPOLLA, 24V; Turn Signal and Flasher |
| 5 | | 410940A1 | | 1 | AMPOLLA, 24V; Position |
| 6 | | 410942A1 | | 1 | AMPOLLA, 24V; High Beam |
| 7 | | 410941A1 | | 1 | AMPOLLA, 24V; Low Beam |

| 04-20 | | p1 | 08/07 |
|---|---|---|---|

**SOPORTE - LUCES, COMBINACION TRASERA**

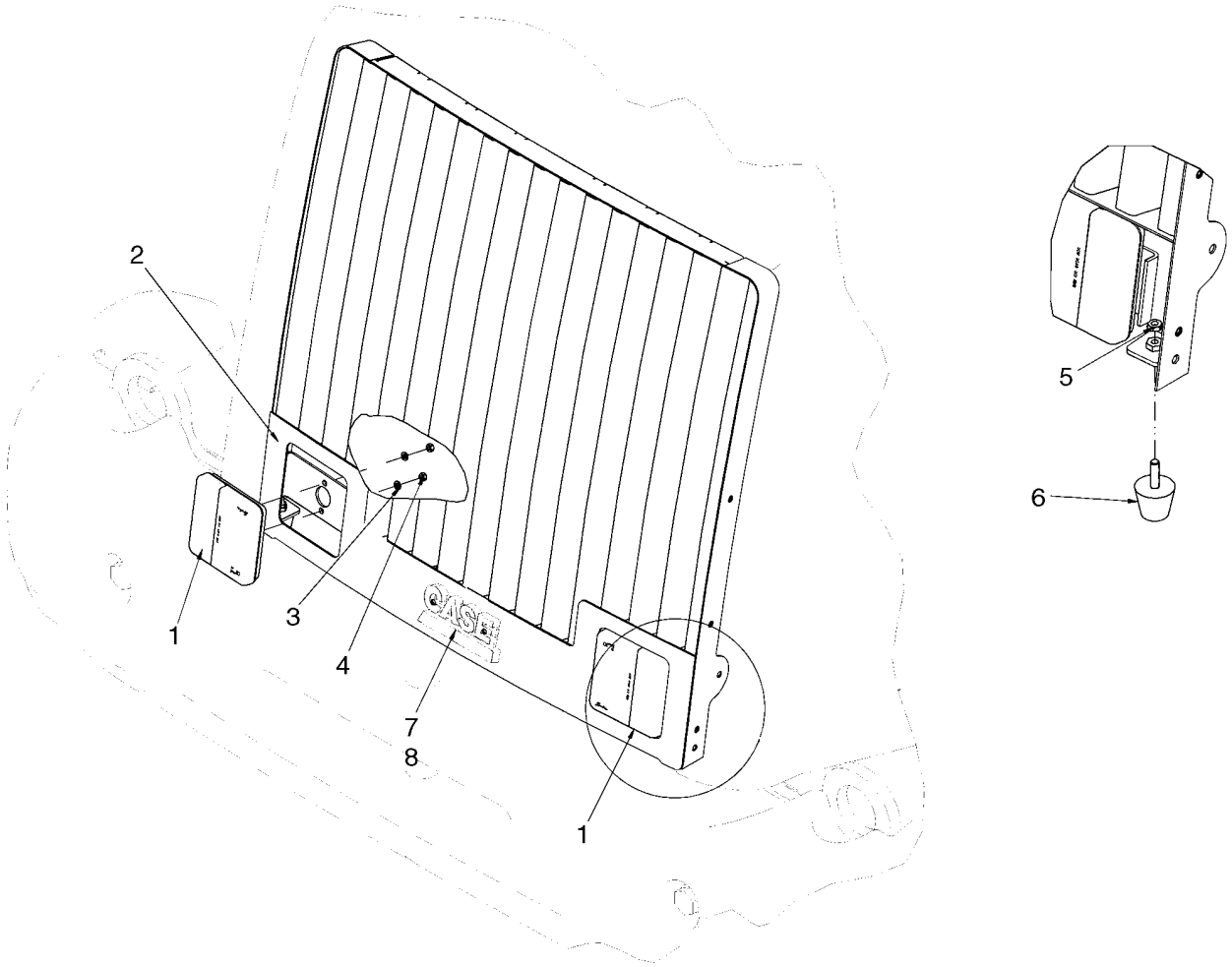


BS07D278

**SOPORTE - LUCES, COMBINACION TRASERA**

| REF | FN | PART NUMBER | YR/SN | QTY | DENOMINACION |
|---|---|---|---|---|---|
| 1 | | 87578654 | | 2 | LUZ POSTERIOR, Sealed, Rear Combination; Component Parts Not Serviced Separately |
| 2 | | 87591668 | | 1 | CALANDRIA, Rear, CNH Black |
| 3 | | 892-11006 | | 4 | ARANDELA DE FRENO, M6 |
| 4 | | 825-1406 | | 4 | TUERCA, M6, Cl 8 |
| 5 | | 425-145 | | 2 | TUERCA, Jam, 5/16"-18, G5 |
| 6 | | N7673 | | 2 | PARACHOQUES, GOMMA |
| 7 | | 186989A1 | | 1 | PLACA, Case Logo |
| 8 | | 131-431 | | 2 | CONTRA TUERCA, Self, Threading, 1/4" |

**CABINA - LUCES**

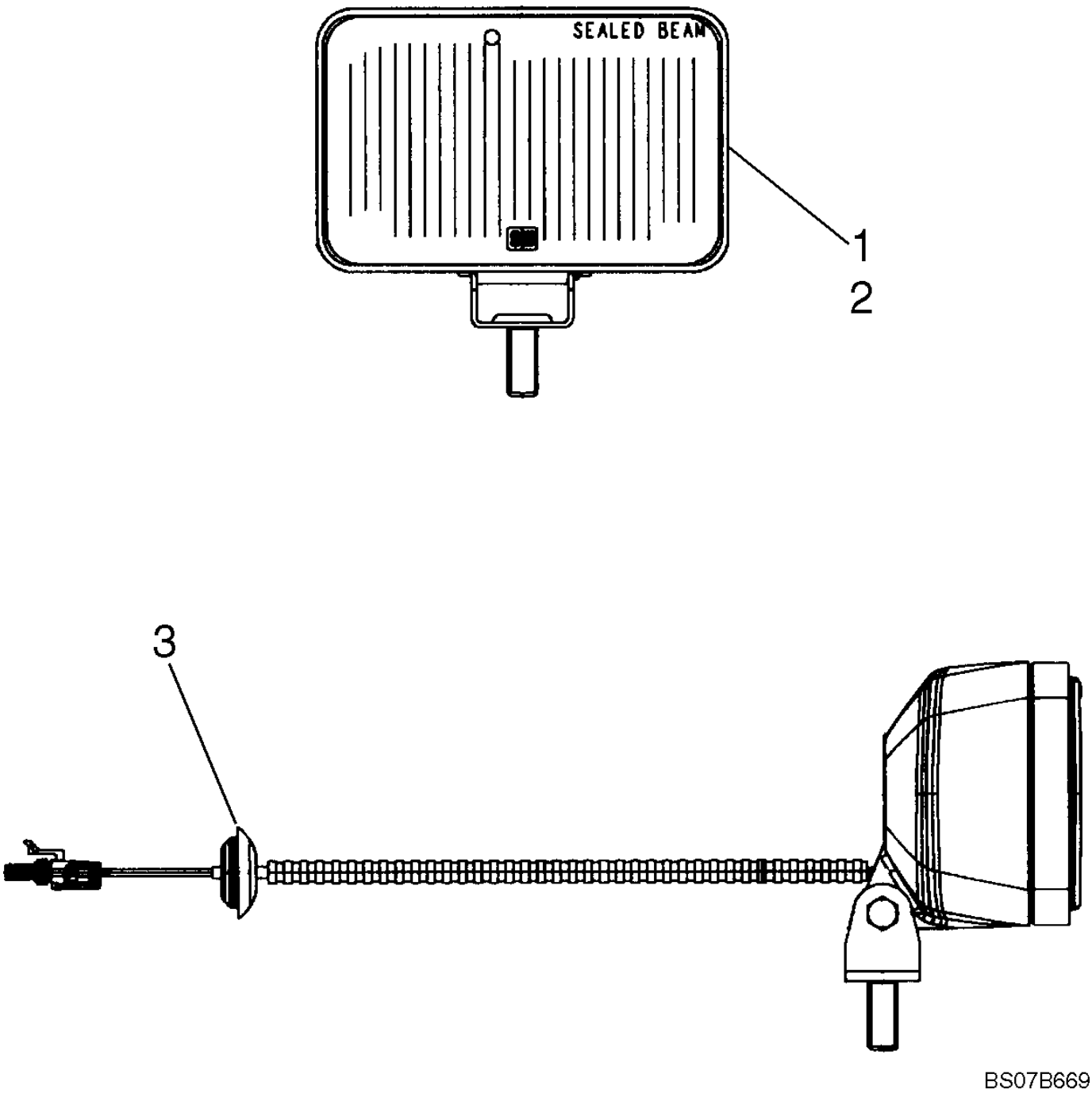

**CABINA - LUCES**

| REF | FN | PART NUMBER | YR/SN | QTY | DENOMINACION |
|---|---|---|---|---|---|
| | | REF | | | MANUAL, CAB FLOOD LAMPS, SEE FIGURE 09-40 FOR MOUNTING HARDWARE |
| 1 | | 87627057 | | 2 | FARO POSTERIOR, Front; Incl. Ref. 3 |
| 2 | | 87613498 | | 2 | FARO POSTERIOR, Rear; Incl. Ref. 3 |
| 3 | | {87613497} | | 1 | GROMMET |

| 04-22 | | p1 | 07/07 |
|---|---|---|---|

**CONJUNTO DEL FARO, ROTATORIO - SOPORTE**

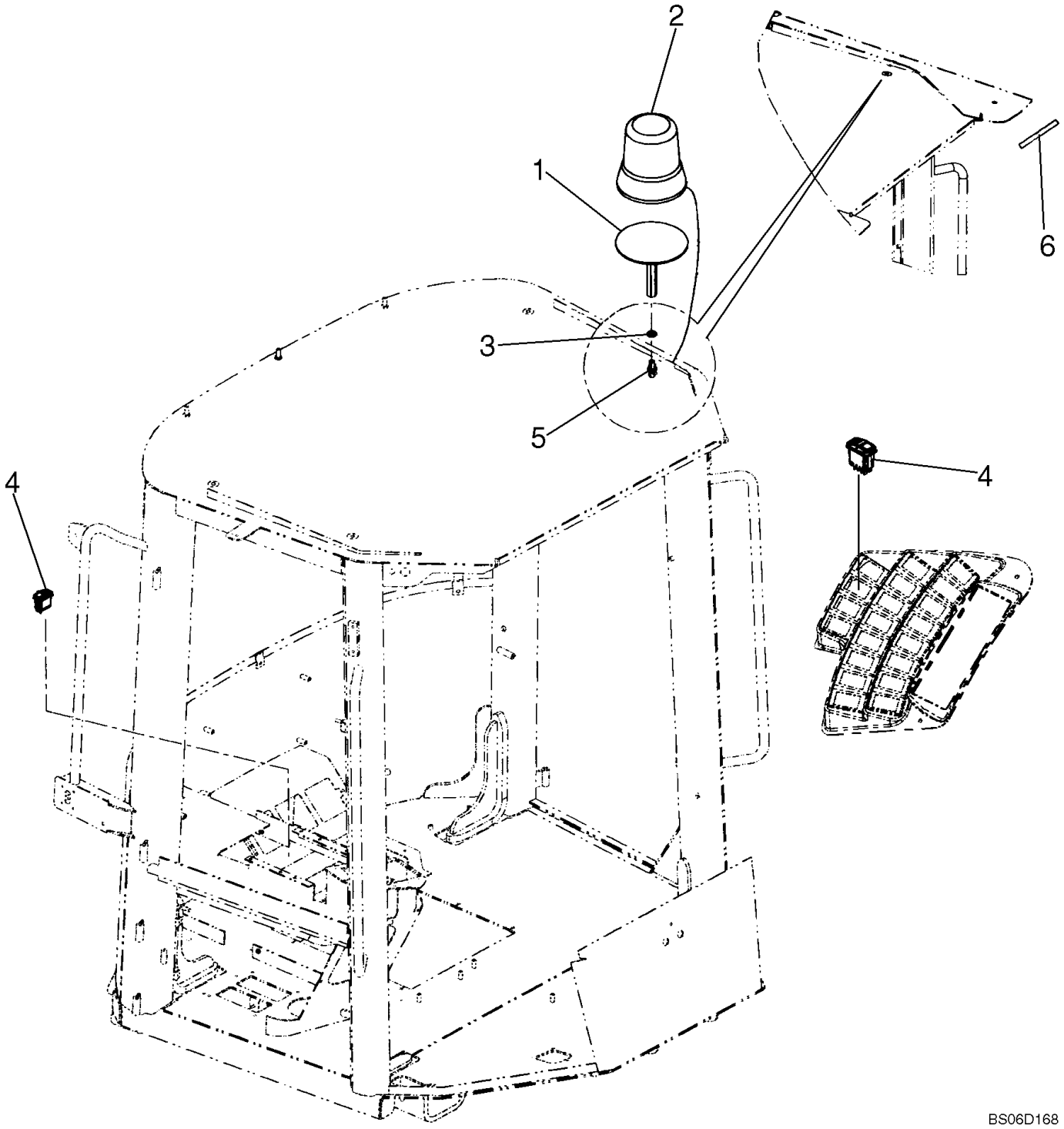

**CONJUNTO DEL FARO, ROTATORIO - SOPORTE**

| REF | FN | PART NUMBER | YR/SN | QTY | DENOMINACION |
|---|---|---|---|---|---|
| 1 | | 87397102 | | 1 | SOPORTE, Rotating Beacon |
| 2 | | 76041998 | | 1 | RELE DE INTERMITENCIA, Rotating Beacon |
| 3 | | 892-11012 | | 1 | ARANDELA DE FRENO, M12 |
| 4 | | 374430A2 | | 1 | CONTACTOR, Rotating Beacon |
| 5 | | 87515619 | | 1 | TORNILLO, Double Sided Thread |
| 6 | | 60-6359T1 | | 1 | JUNTA HERMETICA, 7-5/8 inch, Cut to Fit From F64277 47 Foot Bulk Roll |

**CABINA - LIMPIAPARABRISAS, DELANTERO**

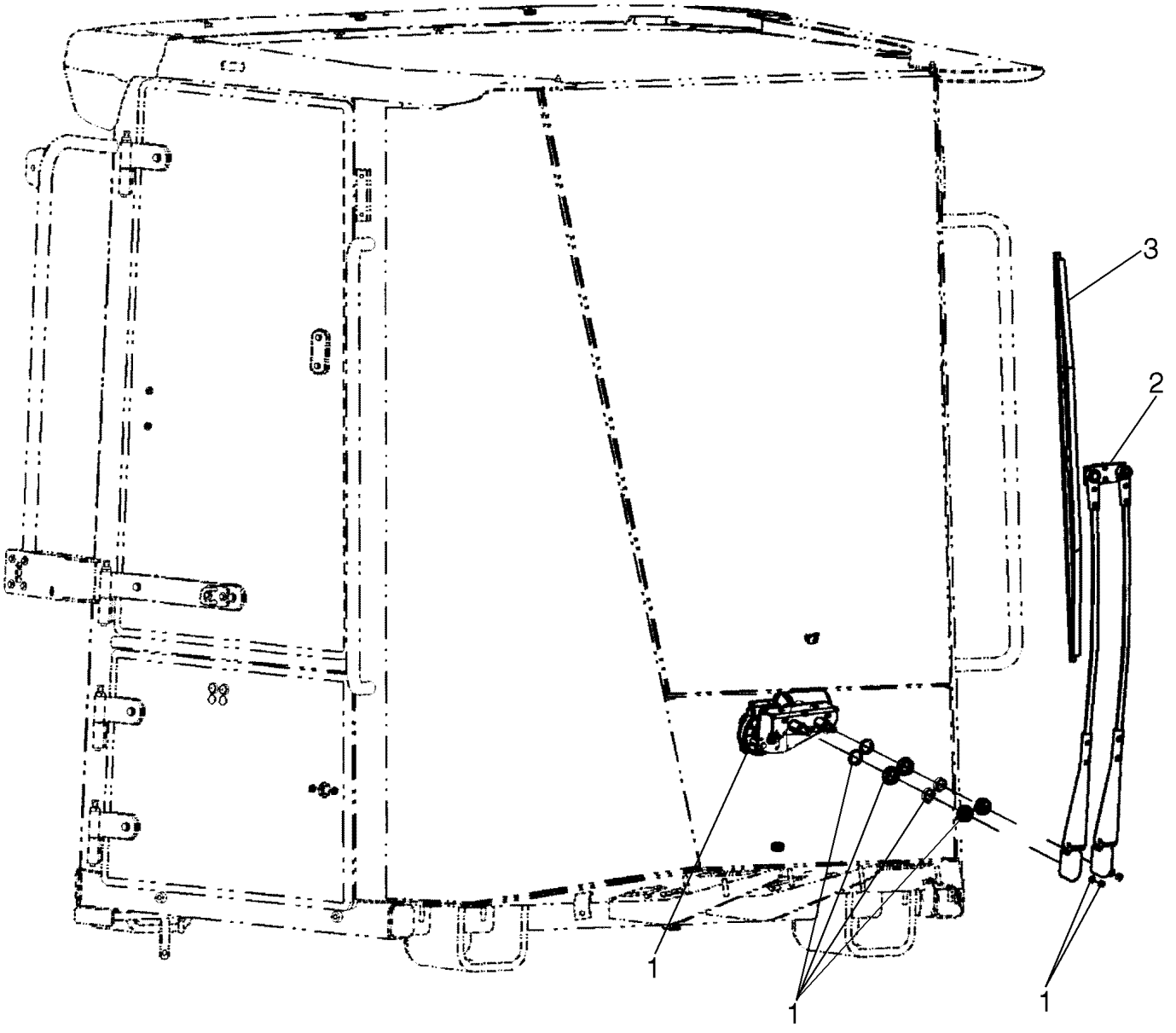

**CABINA - LIMPIAPARABRISAS, DELANTERO**

| REF | FN | PART NUMBER | YR/SN | QTY | DENOMINACION |
|---|---|---|---|---|---|
| 1 | | 87372246 | | 1 | LIMPIA-PARABRISAS, Front; Wiper Arm Mounting Hardware Supplied In Motor Assy. |
| 2 | | 76303246 | | 1 | BRAZO LIMPIAPARABRISAS, Front |
| 3 | | 76043977 | | 1 | ESCOBILLA, 800mm |
| 4 | | 248-1169 | | 1 | PASACABLES, 3/8" ID x 5/8" Groove Dia, Not Illustrated |
| 5 | | 31-2369 | | 1 | MANGA, Front Windshield Washer; Not Illustrated |

**CABINA - LIMPIAPARABRISAS, TRASERO**

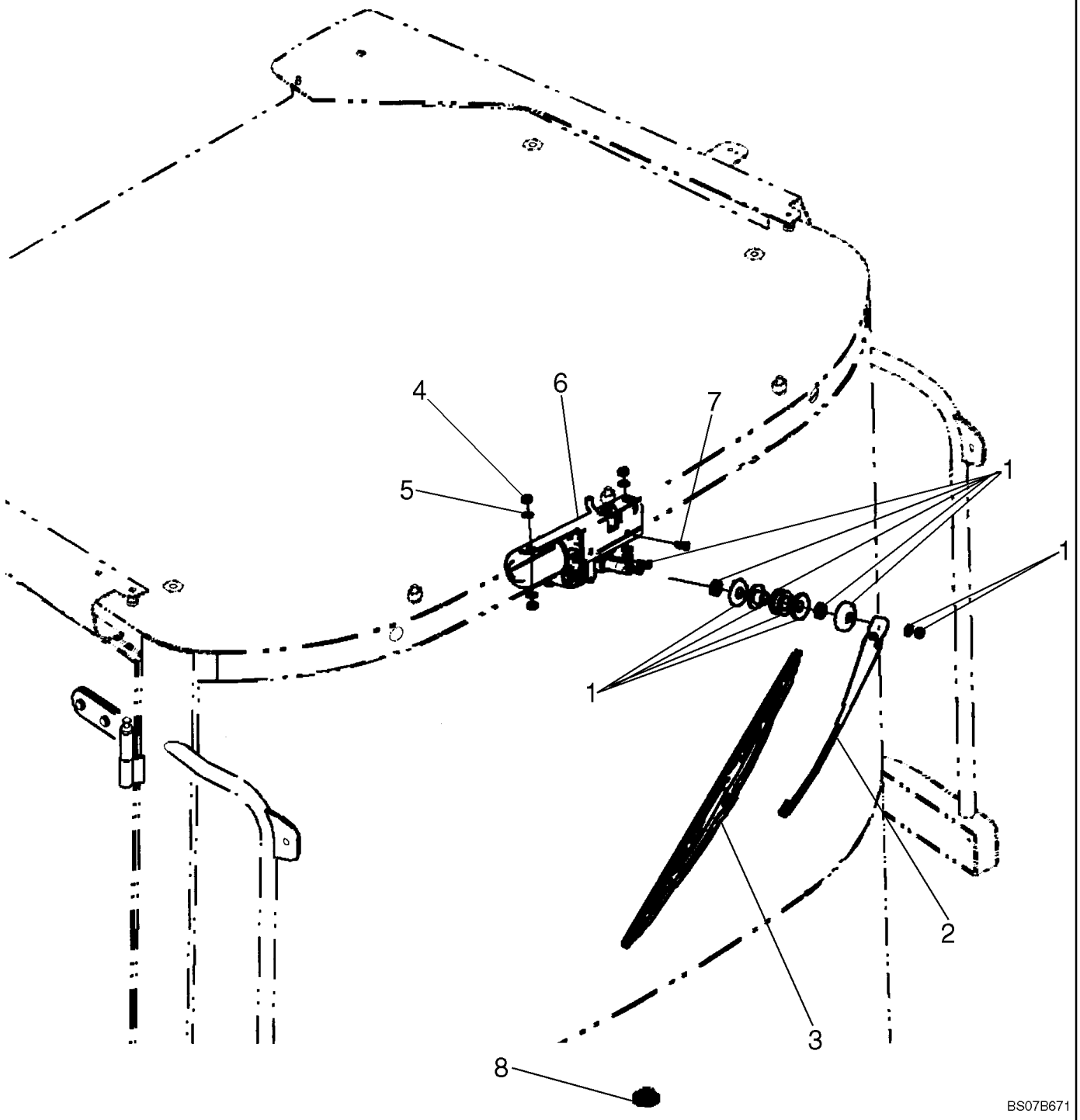

**CABINA - LIMPIAPARABRISAS, TRASERO**

| REF | FN | PART NUMBER | YR/SN | QTY | DENOMINACION |
|---|---|---|---|---|---|
| 1 | | 87372247 | | 1 | LIMPIA-PARABRISAS, Rear; Wiper Arm Mounting Hardware Included In Motor Assy. |
| 2 | | 76303244 | | 1 | BRAZO LIMPIAPARABRISAS, 350 mm |
| 3 | | 82022857 | | 1 | RASQUETA LIMPIAPARABR., 500 mm |
| 4 | | 825-1408 | | 1 | TUERCA, M8, Cl 8 |
| 5 | | 895-11008 | | 1 | ARANDELA, M8 x 16 x 1.6, Wiper Motor |
| 6 | | 76303327 | | 1 | PIEZA DE SOPORTE |
| 7 | | 543-708 | | 1 | TORNILLO, Phil Flat Hd, M6 x 20, 4.8 |
| 8 | | 248-1169 | | 1 | PASACABLES, 3/8" ID x 5/8" Groove Dia |
| 9 | | 31-2582 | | 1 | MANGA, 3962 mm (156 in) Not Illustrated |

**RADIO - 12 VOLT**

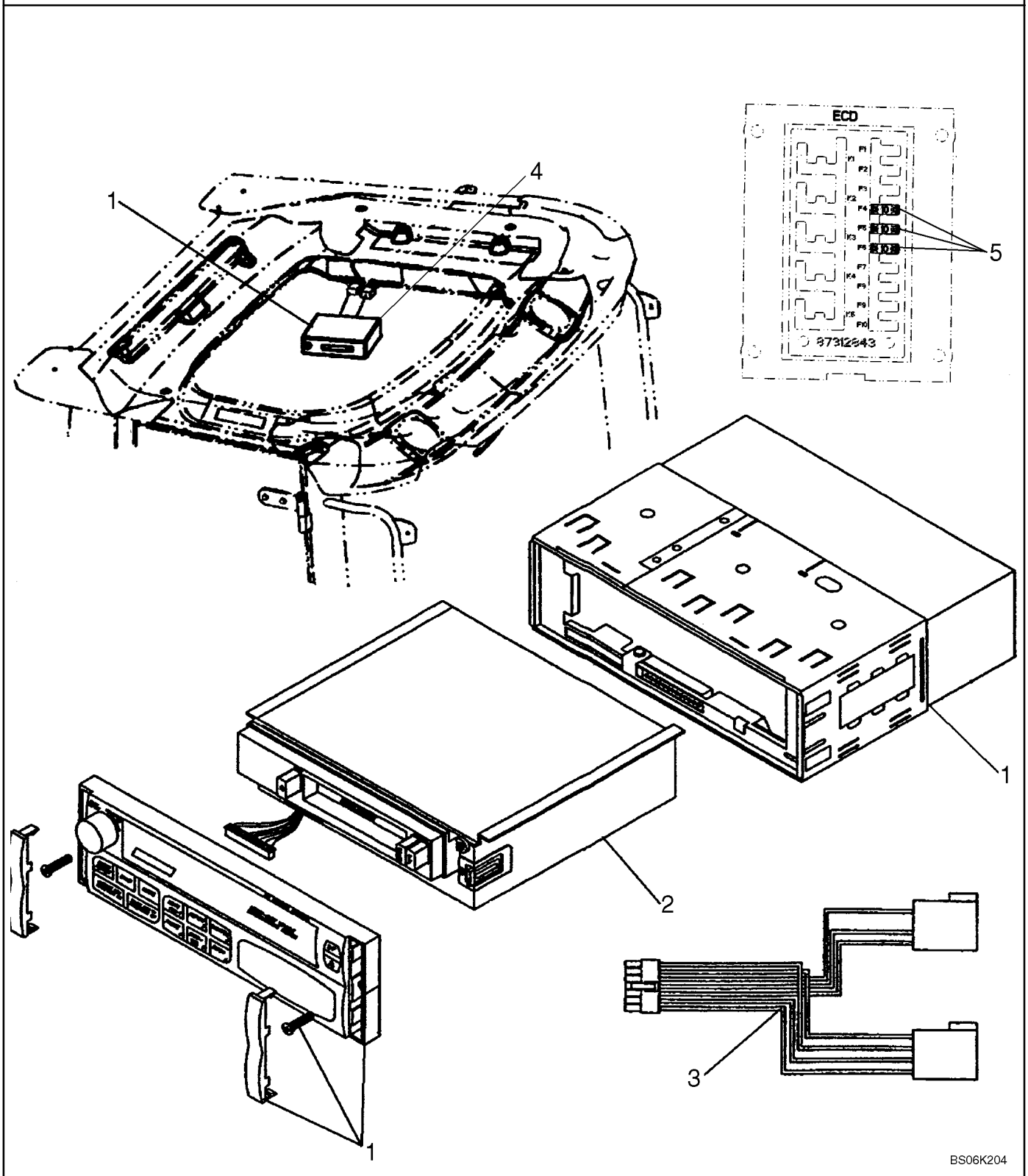

**RADIO - 12 VOLT**

| REF | FN | PART NUMBER | YR/SN | QTY | DENOMINACION |
|---|---|---|---|---|---|
| | | REF | | | MANUAL, RADIO 12 VOLT |
| 1 | | 87580058 | | 1 | RADIO |
| 2 | | NSS | | 1 | NO SE REPARA SEPARADAM., Cassette |
| 3 | | NSS | | 1 | NO SE REPARA SEPARADAM., Harness |
| 4 | | {87579998} | | 1 | BEZEL |
| 5 | | 121412A1 | | 3 | FUSIBLE, Mini 10 Amp |

**RADIO - 12 VOLT INSTALACIÓN**

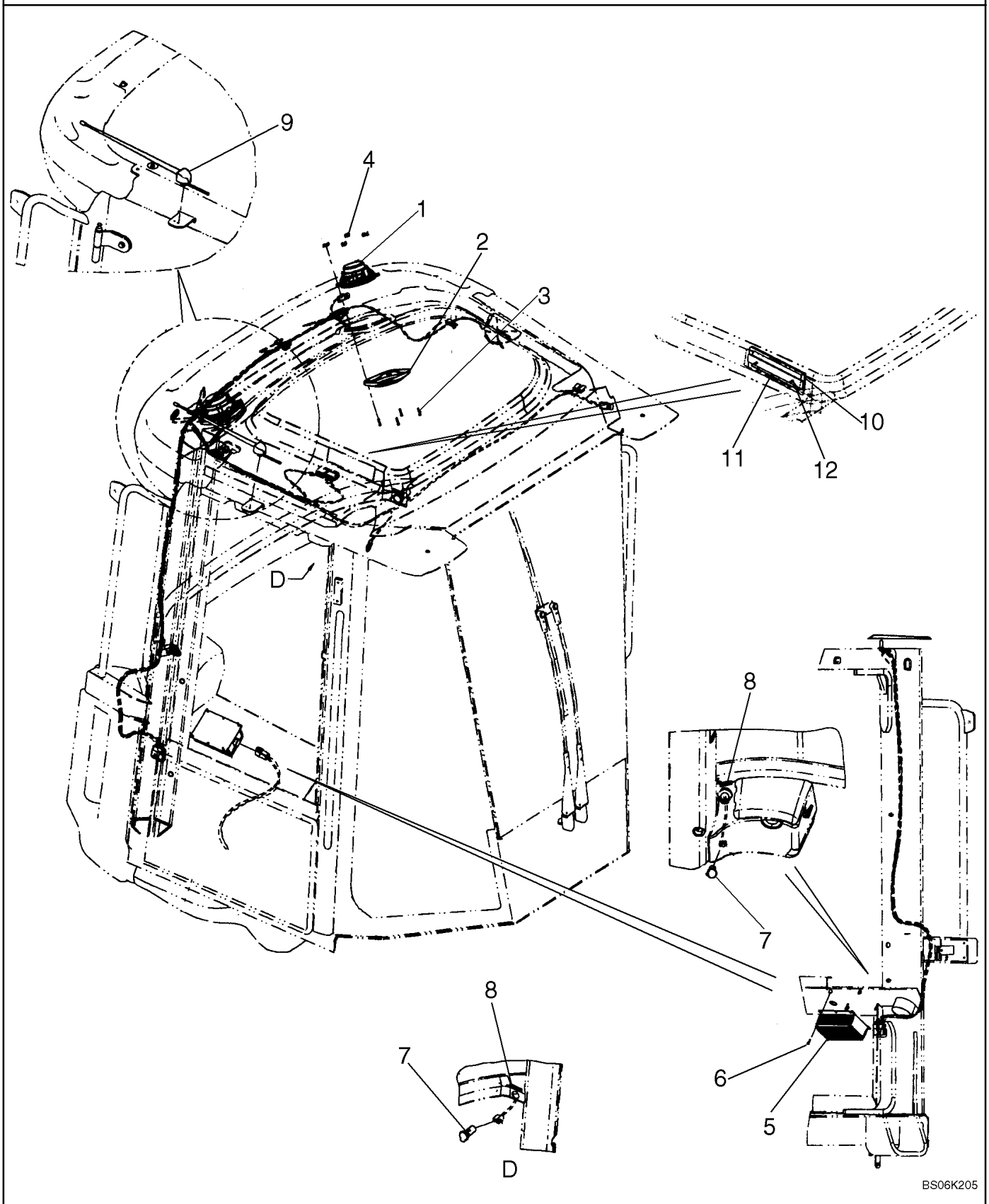

**RADIO - 12 VOLT INSTALACIÓN**

| REF | FN | PART NUMBER | YR/SN | QTY | DENOMINACION |
|---|---|---|---|---|---|
| | | REF | | | MANUAL, RADIO 12 VOLT INSTALLATION |
| 1 | | 182721A2 | | 2 | ALTAVOZ, 4 OHM |
| 2 | | 187281A1 | | 2 | TAPA, Grill |
| 3 | | 761-17325 | | 8 | TORNILLO AUTOROSCANTE, Pan Hd, M4.2 x 25 |
| 4 | | 302862A1 | | 8 | TUERCA |
| 5 | | 87318825 | | 1 | CONVERTIDOR, 24V/12V |
| 6 | | 760-14113 | | 4 | TORNILLO AUTOROSCANTE, Pan Hd, M3.5 x 13 |
| 7 | | 388813A1 | | 2 | SALIDA, Power |
| 8 | | 365935A2 | | 2 | CALCOMANIA, 12V; 10A |
| 9 | | 71480988 | | 1 | ANTENA ELECTRICA, Kit |
| 10 | | {87579996} | | 1 | COVER, RADIO; If Used: Not Used If Radio Is Installed |
| 11 | | {87579997} | | 1 | BRACKET, RADIO COVER; If Used: Not Used If Radio Is Installed |
| 12 | | 87026656 | | 2 | TORNILLO, Cross Pan Hd, M5 x 25, If Used: Not Used If Radio Is Installed |

| 04-25 | | p1 | 07/07 |
|---|---|---|---|

**FIJACIÓN DE LAS BATERÍAS**

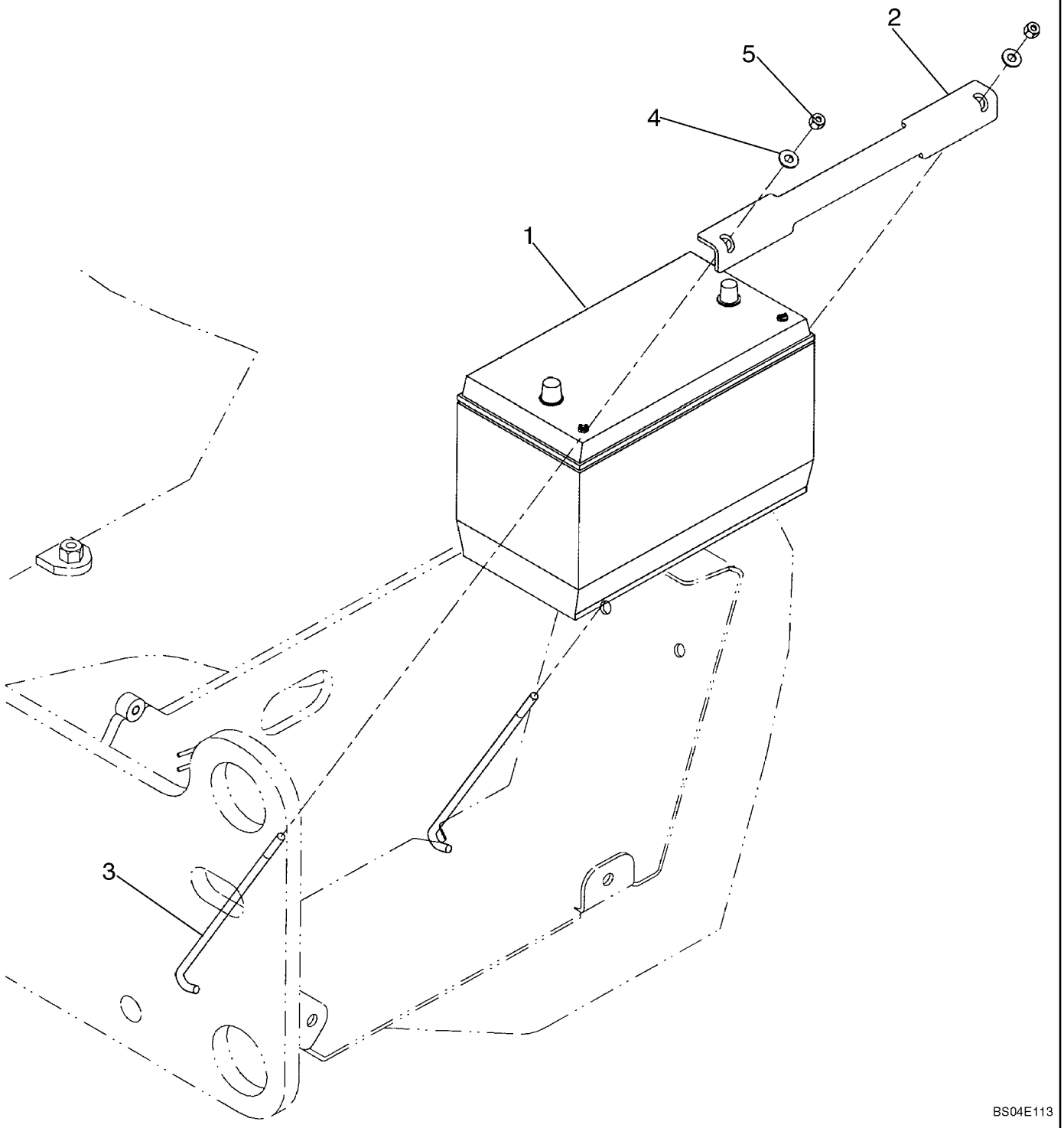

**FIJACIÓN DE LAS BATERÍAS**

| REF | FN | PART NUMBER | YR/SN | QTY | DENOMINACION |
|---|---|---|---|---|---|
| 1 | | A176482 | | 2 | BATERIA CARGA HUMEDA, BMF31E |
| 2 | | 365191A1 | | 2 | BANDA, Battery |
| 3 | | 365357A1 | | 4 | VARILLA, Hold Down |
| 4 | | 895-15008 | | 4 | ARANDELA, M8 x 20 x 1.6 |
| 5 | | 832-10408 | | 4 | CONTRA TUERCA, M8 x 1.25, Cl 8 |

**FIJACIÓN DE LAS BATERÍAS - TAREAS PESADAS**

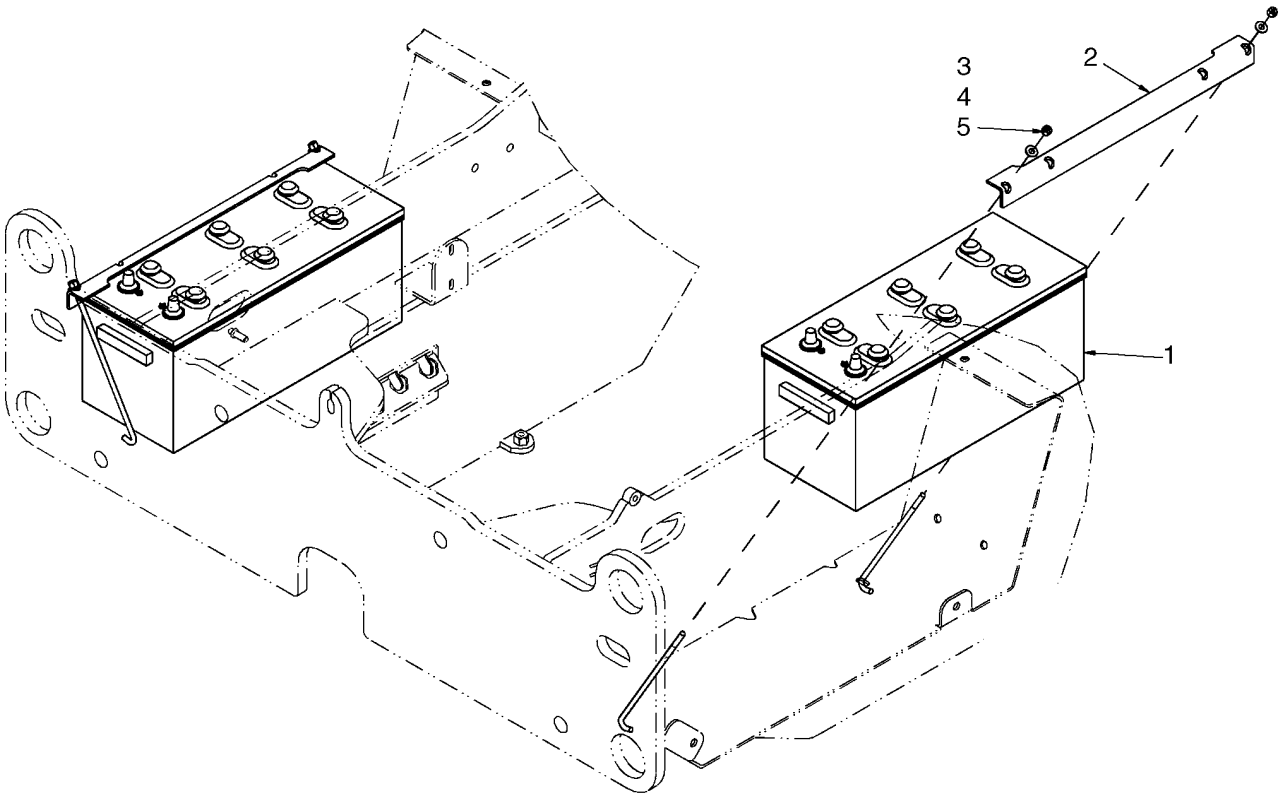


BS07G078

**FIJACIÓN DE LAS BATERÍAS - TAREAS PESADAS**

| REF | FN | PART NUMBER | YR/SN | QTY | DENOMINACION |
|---|---|---|---|---|---|
| 1 | | L51769 | | 2 | BATERIA CARGA HUMEDA |
| 2 | | L124221 | | 2 | APOYADERO, Battery Bracket |
| 3 | | 365357A1 | | 4 | VARILLA, Hold Down |
| 4 | | 895-15008 | | 4 | ARANDELA, M8 x 20 x 1.6, 9 x 20 x 1.6mm |
| 5 | | 832-10408 | | 4 | CONTRA TUERCA, M8 x 1.25, Cl 8 |

| 04-26 | | p1 | 07/07 |
|---|---|---|---|

**BATERIA - CABLES**

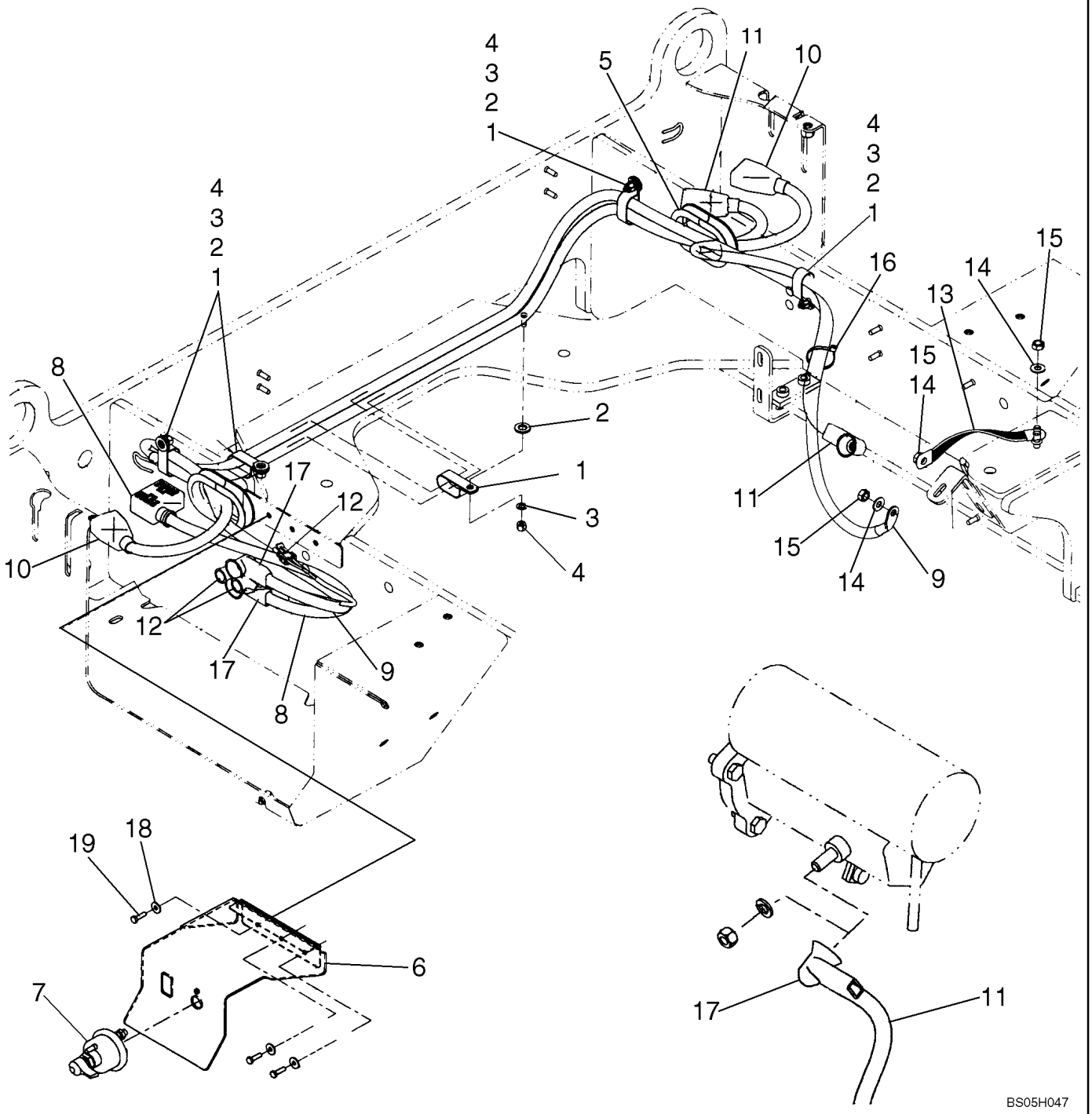

**BATERIA - CABLES**

| REF | FN | PART NUMBER | YR/SN | QTY | DENOMINACION |
|---|---|---|---|---|---|
| 1 | | R54363 | | 5 | COLLAR, Double |
| 2 | | 896-11012 | | 5 | ARANDELA, M13.5 x 24.5 x 3, HT |
| 3 | | 895-11008 | | 5 | ARANDELA, M8 x 16 x 1.6 |
| 4 | | 832-10408 | | 5 | CONTRA TUERCA, M8 x 1.25, Cl 8 |
| 5 | | 398771A1 | | 2 | TUBERIA, Battery Cable |
| 6 | | 87329253 | | 1 | PIEZA DE SOPORTE, Hood Switch/ Master Disconnect |
| 7 | | L126256 | | 1 | CONTACTOR, Master Disconnect |
| 8 | | 87324868 | | 1 | ATADURA, Negative To Disconnect |
| 9 | | 87324875 | | 1 | CABLE, Ground |
| 10 | | 87324722 | | 1 | CABLE ELECTRICO, Crossover |
| 11 | | 87324979 | | 1 | CABLE ELECTRICO, Positive To Starter |
| 12 | | L127676 | | 1 | HAZ, Disconnect |
| 13 | | L126051 | | 1 | CABLE DE MASA, Engine Block |
| 14 | | L127554 | | 3 | ARANDELA, Brass |
| 15 | | 253347A1 | | 3 | TUERCA, 3/8; Brass |
| 16 | | L18331 | | 1 | CIERRA CABLES |
| 17 | | L126713 | | 3 | CASQUETE, Electrical |
| 18 | | 895-25006 | | 3 | ARANDELA, M6 x 18 x 1.6 |
| 19 | | 627-6020 | | 3 | TORNILLO, Hex, M6 x 20, 10.9 |
| 20 | | 87591165 | | 1 | ANILLO DE CIERRE, For Hood Swich/Master Disconnect Bracket, Not Illustrated |

**LUCES DE MATRICULA**

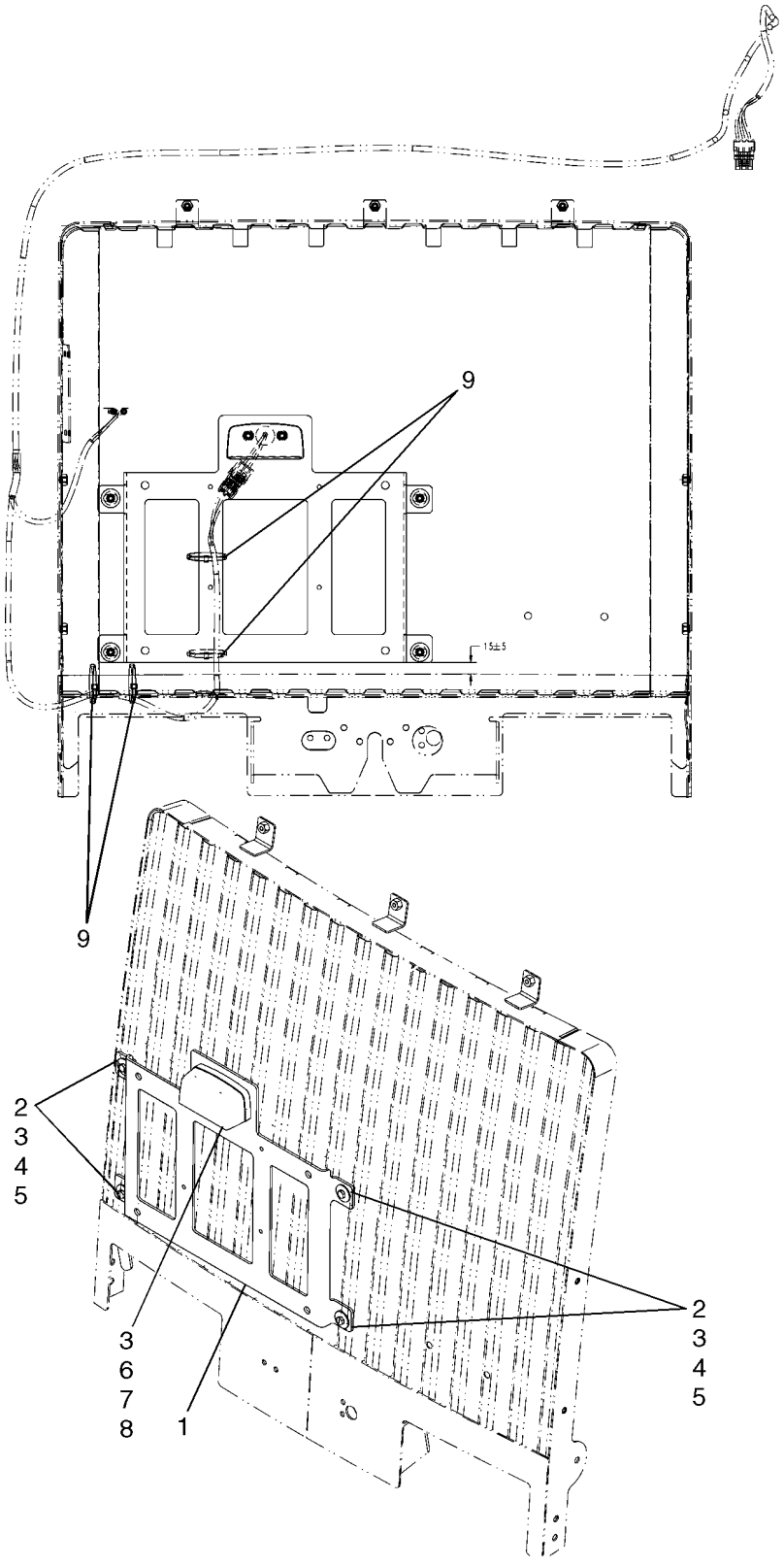


BS07G077

**LUCES DE MATRICULA**

| REF | FN | PART NUMBER | YR/SN | QTY | DENOMINACION |
|---|---|---|---|---|---|
| 1 | | 193446A1 | | 1 | PLACA, License Plate |
| 2 | | 895-15006 | | 4 | ARANDELA, M6 x 25 x 1.6 |
| 3 | | 614-6020 | | 6 | TORNILLO, Hex, M6 x 20, 8.8 |
| 4 | | 895-25006 | | 4 | ARANDELA, M6 x 18 x 1.6 |
| 5 | | 832-10406 | | 4 | CONTRA TUERCA, M6 x 1, Cl 8 |
| 6 | | 120229A1 | | 1 | PILOTO, License Plate |
| 7 | | 892-11006 | | 2 | ARANDELA DE FRENO, M6 |
| 8 | | 829-1406 | | 2 | TUERCA, M6, Cl 10 |
| 9 | | L18331 | | 4 | CIERRA CABLES, 15 in |

| 04-28 | | p1 | 07/07 |
|---|---|---|---|

**LIMPIADOR DEL LIMPIAPARABRISAS MONTAJE**

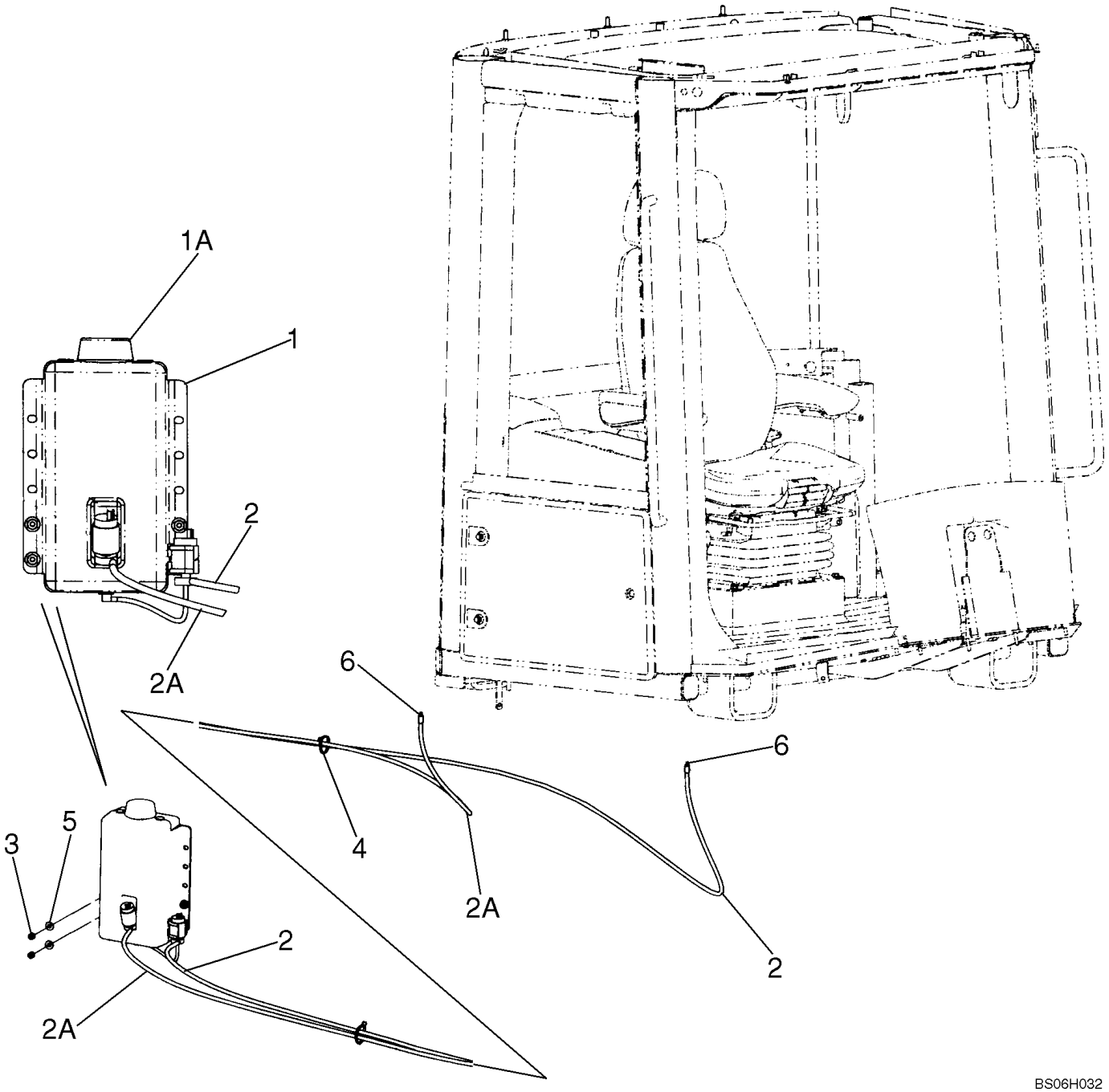

**LIMPIADOR DEL LIMPIAPARABRISAS MONTAJE**

| REF | FN | PART NUMBER | YR/SN | QTY | DENOMINACION |
|---|---|---|---|---|---|
| 1 | | 371185A1 | | 1 | DEPOSITO, Windshield Washer; Front; Incl. Ref. 1A |
| 1A | | 87439461 | | 1 | TAPON DEL DEPOSITO |
| 2 | | 31-2370 | | 1 | MANGA, Front Windshield, 3302 mm (130 in) |
| 2A | | 384138A1 | | 1 | MANGUERA (CONJUNTO), Rear Windshield, 2591 mm (102 in) |
| 3 | | 832-10408 | | 3 | CONTRA TUERCA, M8 x 1.25, Cl 8 |
| 4 | | L11541 | | 2 | BANDA, 7-8 Inch. Nylon |
| 5 | | 895-15008 | | 3 | ARANDELA, M8 x 20 x 1.6 |
| 6 | | 324203A1 | | 2 | VALVULA DE CIERRE, Washer Fluid |

## NOTAS

# SECTION INDEX
## Dirección


| | |
|---|---|
| 05-01 | VOLANTE - COLUMNA |
| 05-02 | TUBO DE LA DIRECCION |
| 05-02A | TUBO DE LA DIRECCION - ACCESORIO |
| 05-03 | TUBO DE LA DIRECCION - COMPENSACIÓN |
| 05-04 | HIDRAULICA - DIRECCION |
| 05-05 | DIRECCION - AUXILIAR - HIDRAULICA |
| 05-06 | VÁLVULA DE CONTROL DE LA DIRECCIÓN |
| 05-07 | DIRECCION - AUXILIAR - CONJUNTO DEL BLOQUE |
| 05-08 | DIRECCION - AUXILIAR - BOMBA |
| 05-09 | DIRECCION - CILINDRO - HIDRAULICA |
| 05-10 | DIRECCION - CONJUNTO DE CILINDRO |

**VOLANTE - COLUMNA**

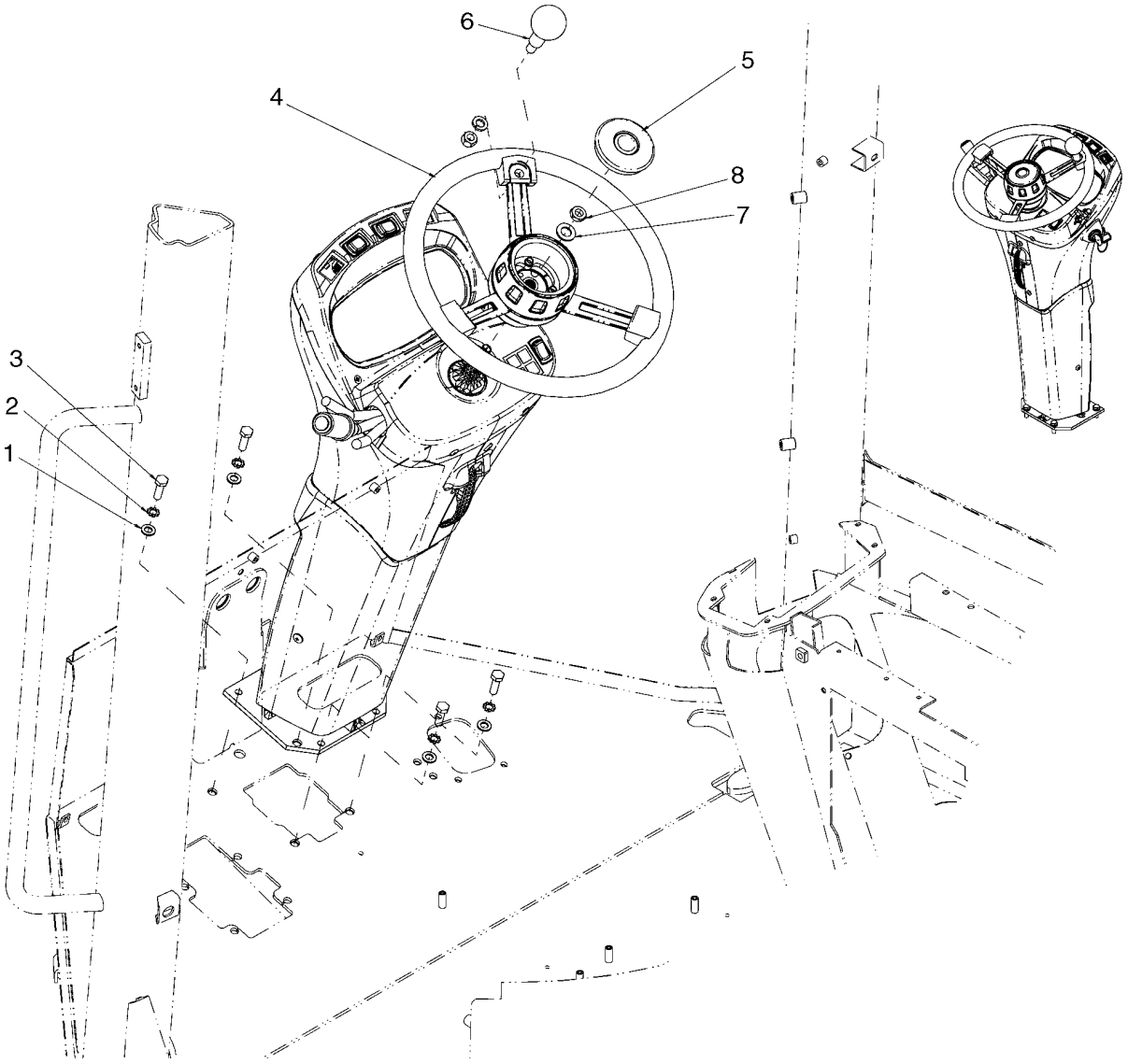

**VOLANTE - COLUMNA**

| REF | FN | PART NUMBER | YR/SN | QTY | DENOMINACION |
|---|---|---|---|---|---|
| 1 | | 895-11010 | | 4 | ARANDELA, M10 x 20 x 2 |
| 2 | | 893-11010 | | 4 | ARANDELA DE FRENO, Ext Tooth, M10 |
| 3 | | 627-10030 | | 4 | TORNILLO, Hex, M10 x 30, 10.9, Full Thd |
| 4 | | 283484A1 | | 1 | VOLANTE DIRECCION |
| 5 | | 384985A1 | | 1 | TAPON DEL DEPOSITO, Center |
| 6 | | L127996 | | 1 | POMO, Steering |
| 7 | | 895-11014 | | 1 | ARANDELA, M14 x 28 x 2.5 |
| 8 | | 829-23414 | | 1 | TUERCA, Thin, M14 x 1.5, Cl 05 |

| 05-02 | | p1 | 07/07 |
|---|---|---|---|

**TUBO DE LA DIRECCION**

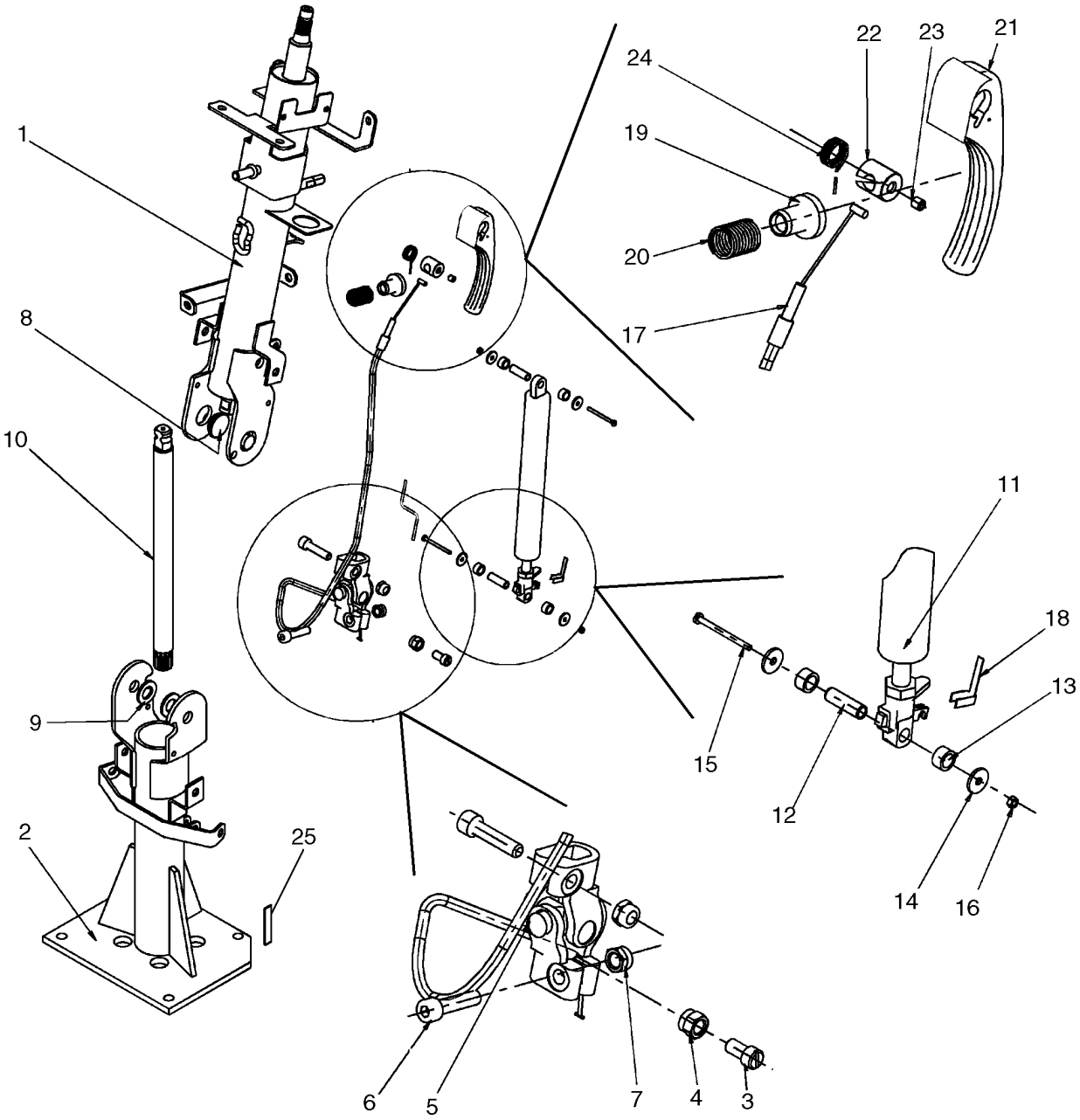

**TUBO DE LA DIRECCION**

| REF | FN | PART NUMBER | YR/SN | QTY | DENOMINACION |
|---|---|---|---|---|---|
| 1 | | 76303277 | | 1 | COLUMNA DE DIRECCION, Upper |
| 2 | | {87525205} | | 1 | STEERING COLUMN, Lower |
| 3 | | {87525216} | | 1 | PIN |
| 4 | | 16104111 | | 1 | CONTRA TUERCA, M8 x 1.25, Cl 8 |
| 5 | | 4227226 | | 1 | JUNTA DE CARDAN |
| 6 | | 14306621 | | 2 | TORNILLO, Hex Soc Hd, M8 x 35, 8.8 |
| 7 | | 16104411 | | 2 | CONTRA TUERCA, M8 x 1.25, Cl 4 |
| 8 | | 4227225 | | 2 | PERNO |
| 9 | | 14496821 | | 2 | ARANDELA, M14 x 28 x 2.5 |
| 10 | | 76303279 | | 1 | EJE |
| 11 | | 76048930 | | 1 | COMPAS |
| 12 | | 76048391 | | 2 | PASADOR TUBOLAR |
| 13 | | 76048394 | | 4 | SEPARADOR |
| 14 | | {87526283} | | 4 | NUT |
| 15 | | 14496231 | | 2 | ARANDELA |
| 16 | | 16101721 | | 2 | TUERCA, M3, Cl 10 |
| 17 | | {75048955} | | 1 | CABLE |
| 18 | | 76300038 | | 1 | PLACA |
| 19 | | {87525218} | | 1 | COMPRESSOR, SPRING |
| 20 | | {87525220} | | 1 | SPRING |
| 21 | | 76048941 | | 1 | MANECILLA |
| 22 | | {87525221} | | 1 | PIN, PIVOT |
| 23 | | 13797721 | | 1 | TORNILLO DE AJUSTE, Hex Soc, M6 x 8, Cone Pt |
| 24 | | 76300020 | | 1 | RESORTE |
| 25 | | NSS | | 1 | NO SE REPARA SEPARADAM., Identification Plate |

| 05-02A | | p1 | 05/07 |
|---|---|---|---|

**TUBO DE LA DIRECCION - ACCESORIO**

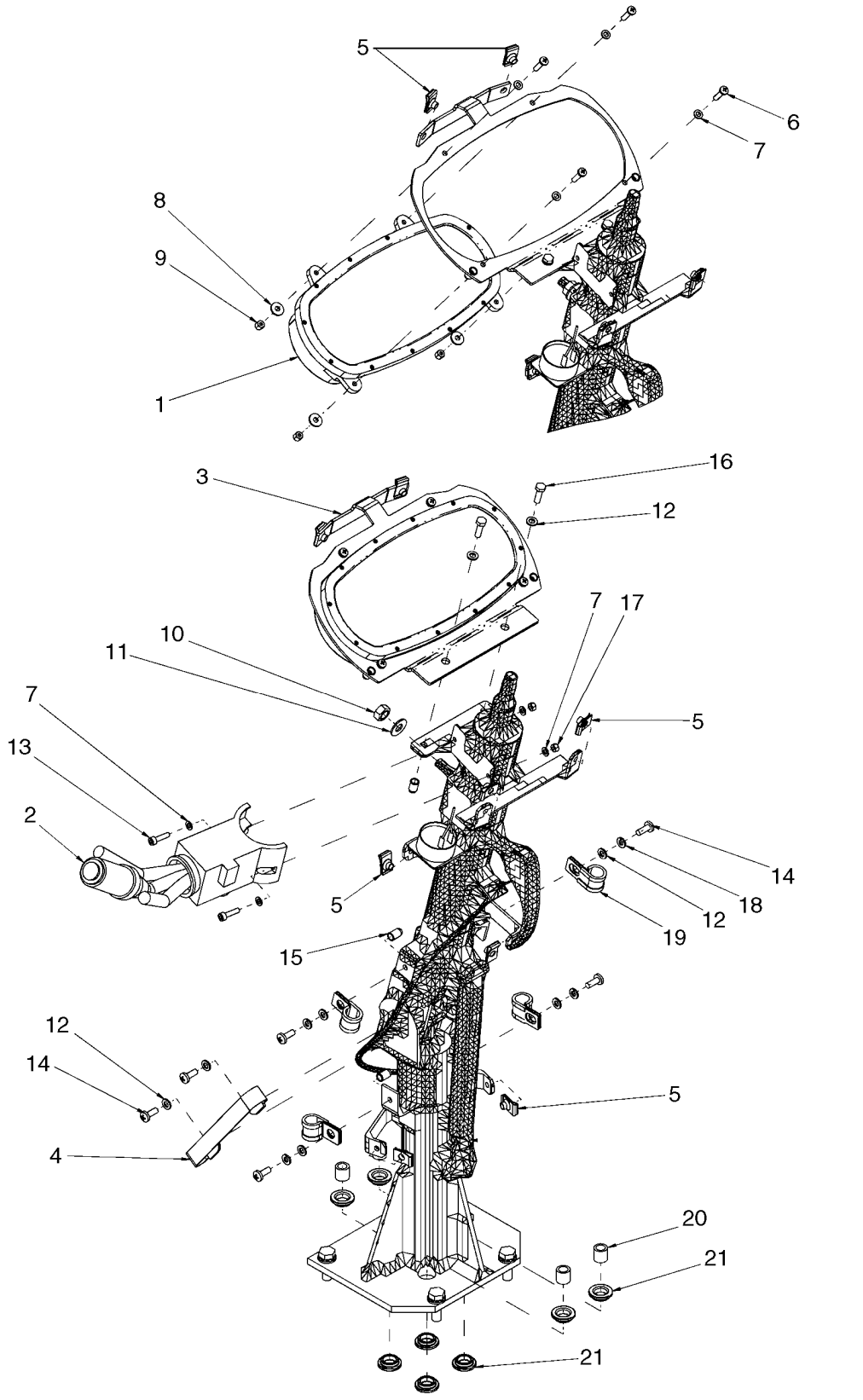

**TUBO DE LA DIRECCION - ACCESORIO**

| REF | FN | PART NUMBER | YR/SN | QTY | DENOMINACION |
|---|---|---|---|---|---|
| 1 | | 87372814 | | 1 | CUADRO DE SENAL.MULTIPLE |
| 2 | | 238270A1 | | 1 | MANDO |
| 3 | | {76303295} | | 1 | BRACKET |
| 4 | | 349372A1 | | 1 | CABLE, Ground |
| 5 | | 833-40306 | | 11 | TUERCA, M6, U |
| 6 | | 840-1520 | | 4 | TORNILLO, Cross Pan Hd, M5 x 20 |
| 7 | | 895-11005 | | 8 | ARANDELA, M5 x 10 x 1 |
| 8 | | 895-25005 | | 4 | ARANDELA, M5 x 15 x 1.6 |
| 9 | | 832-10405 | | 4 | CONTRA TUERCA, M5 x .8, Cl 8 |
| 10 | | 253347A1 | | 1 | TUERCA |
| 11 | | L127554 | | 1 | ARANDELA |
| 12 | | 895-11006 | | 10 | ARANDELA, M6 |
| 13 | | 864-5020 | | 2 | TORNILLO, Hex Soc Hd, M5 x 20, 8.8 |
| 14 | | 840-1616 | | 6 | TORNILLO, Cross Pan Hd, M6 x 16 |
| 15 | | 76046110 | | 10 | PASACABLES |
| 16 | | 614-6020 | | 2 | TORNILLO, Hex, M6 x 20, 8.8 |
| 17 | | 824-1405 | | 2 | TUERCA, M5, Cl 5 |
| 18 | | 892-11006 | | 4 | ARANDELA DE FRENO, M6 |
| 19 | | 71405746 | | 4 | SUJETADOR |
| 20 | | 76081690 | | 4 | SEPARADOR |
| 21 | | 71476260 | | 8 | SEPARADOR |

| 05-03 | | p1 | 07/07 |
|---|---|---|---|

**TUBO DE LA DIRECCION - COMPENSACIÓN**

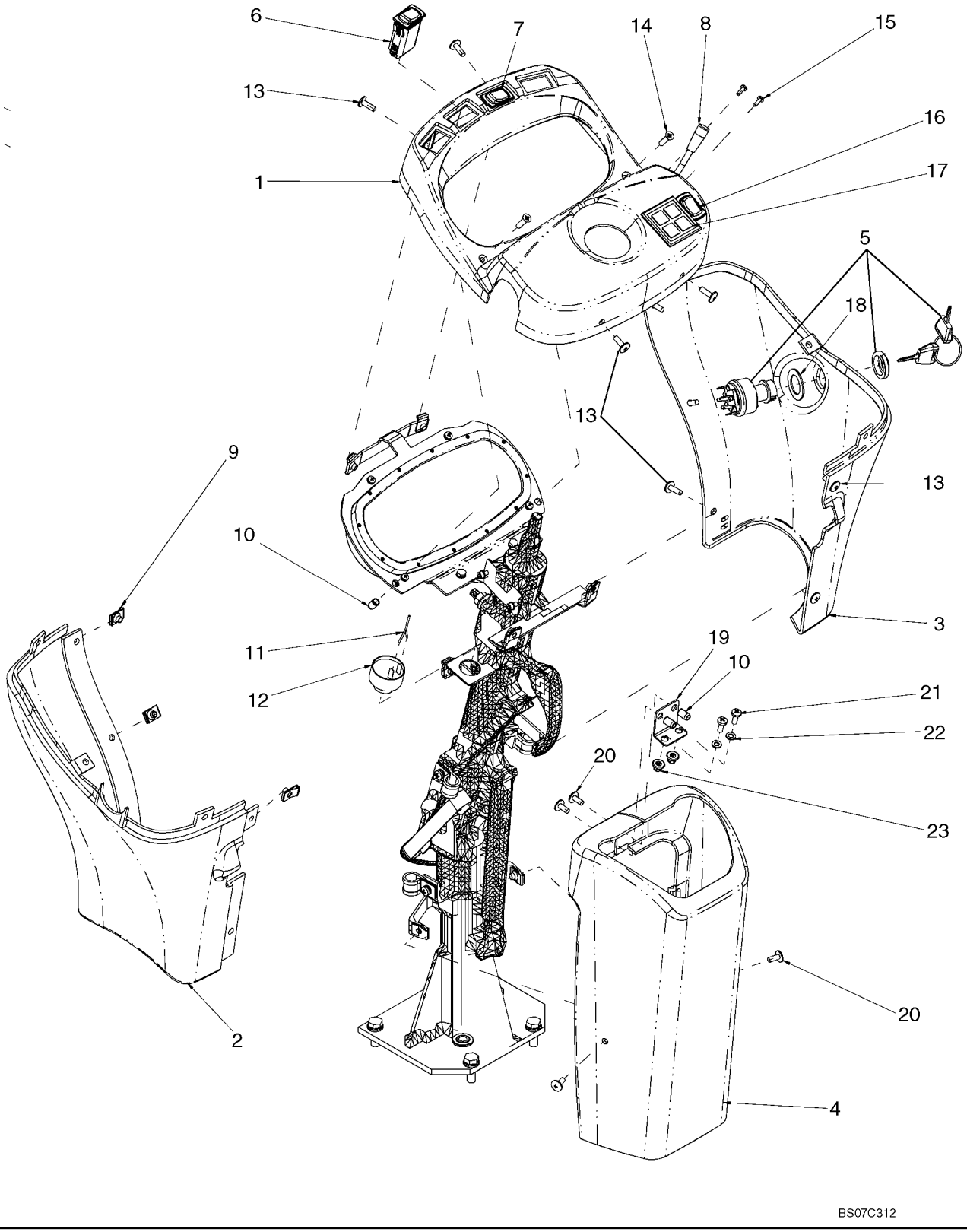

**TUBO DE LA DIRECCION - COMPENSACIÓN**

| REF | FN | PART NUMBER | YR/SN | QTY | DENOMINACION |
|---|---|---|---|---|---|
| 1 | | 76303017 | | 1 | TAPADERA, Dashboard Trim |
| 2 | | 76303019 | | 1 | TAPADERA, LH |
| 3 | | 76303020 | | 1 | TAPADERA, RH |
| 4 | | 76303021 | | 1 | TAPADERA, Lower Steering Column |
| 5 | | 282775A1 | | 1 | CONMUTADOR DE ARRANQ, Includes Padded Keys 1964831C2 |
| 6 | | 374434A2 | | 1 | CONTACTOR, Pilot Control |
| 7 | | 374426A2 | | 1 | CONTACTOR, Hazard |
| 8 | | 389487A1 | | 1 | INTERRUPTOR |
| 9 | | 833-40306 | | 3 | TUERCA, M6, U |
| 10 | | 76046110 | | 4 | PASACABLES, M6 |
| 11 | | 76303450 | | 1 | TIMBRE ZUMBADOR, Harness |
| 12 | | {87517128} | | 1 | BUZZER |
| 13 | | 14778411 | | 9 | TORNILLO, Cheese Hd, M6 x 20 |
| 14 | | 843-2625 | | 2 | TORNILLO, Phil Flat Hd, M6 x 25, 4.8 |
| 15 | | 840-1412 | | 2 | TORNILLO, Cross Pan Hd, M4 x 12 |
| 16 | | 374424A2 | | 1 | CONTACTOR |
| 17 | | 87372804 | | 1 | TACO, Key |
| 18 | | {76303478} | | 1 | WASHER, Nylon |
| 19 | | {76303516} | | 1 | BRACKET |
| 20 | | 14778814 | | 4 | TORNILLO, Cheese Hd, M6 x 16 |
| 21 | | 840-1616 | | 8 | TORNILLO, Cross Pan Hd, M6 x 16 |
| 22 | | 895-11006 | | 10 | ARANDELA, M6 |
| 23 | | 76048924 | | 2 | CASQUILLO, Threaded |

**HIDRAULICA - DIRECCION**

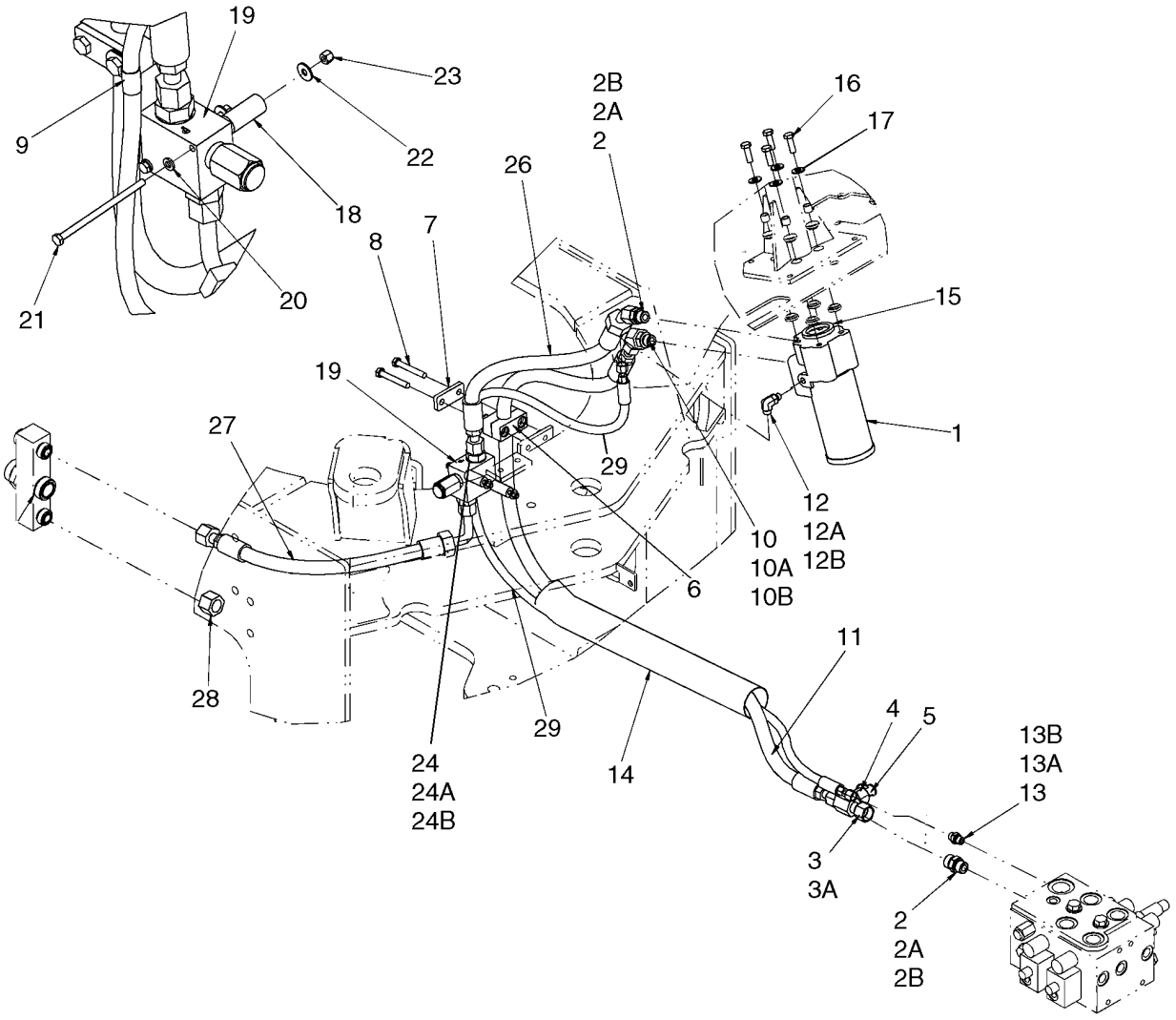


BS07F372

**HIDRAULICA - DIRECCION**

| REF | FN | PART NUMBER | YR/SN | QTY | DENOMINACION |
|---|---|---|---|---|---|
| | | REF | | | MANUAL, STANDARD STEERING, STEERING PRESSURE AND RETURN |
| 1 | | 87307060 | | 1 | VALVULA HIDRAULICA, Steering; See Figure 05-06 |
| 2 | | 700-103 | | 2 | RACOR, 1"-14 ORFS x M22 x 1.5 ORB, Incl. Refs. 2A, 2B |
| 2A | | 637-63193 | | 2 | JUNTA HERMETICA, Cl 6, 19.3MM ID x 2.2 Thk, Boss Seal |
| 2B | | 238-6016 | | 2 | JUNTA HERMETICA, -016, 90 Duro, .614" ID x .070" Thk, Face Seal |
| 3 | | 701-433 | | 1 | RACOR-T, 1"-14 ORFS x 1"-14 Fem Sw Run, Incl. Ref. 3A |
| 3A | | 238-6016 | | 2 | JUNTA HERMETICA, -016, 90 Duro, .614" ID x .070" Thk, Face Seal |
| 4 | | 324201A1 | | 1 | TAPÓN, Diagnostic |
| 5 | | H434163 | | 1 | TAPON DEL DEPOSITO |
| 6 | | 367489A1 | | 1 | BLOQUE MOTOR |
| 7 | | 367658A1 | | 1 | PLACA |
| 8 | | 827-10070 | | 2 | TORNILLO, Hex, M10 x 70, 10.9 |
| 9 | | 515-25159 | | 1 | BORNE, 5/8", Insul, 1/2" Bolt |
| 10 | | 700-316 | | 2 | CODO, 45º, 1"-14 ORFS x M22 x 1.5 ORB, Incl. Refs. 10A, 10B |
| 10A | | 238-6016 | | 1 | JUNTA HERMETICA, -016, 90 Duro, .614" ID x .070" Thk, Face Seal |
| 10B | | 637-63193 | | 1 | JUNTA HERMETICA, Cl 6, 19.3MM ID x 2.2 Thk, Boss Seal |
| 11 | | 87629993 | | 1 | MANGA, Steering Pressure; 1785 mm (70 - 1/4 in) |
| 12 | | 700-303 | | 1 | CODO, 90º, 9/16"-18 ORFS x M12 x 1.5 ORB, Incl. Refs. 12A, 12B |
| 12A | | 637-63093 | | 1 | JUNTA HERMETICA, Cl 6, 9.3MM ID x 2.2 Thk, Boss Seal |
| 12B | | 238-6011 | | 1 | JUNTA HERMETICA, -011, 90 Duro, .301" ID x .070" Thk, Face Seal |
| 13 | | 700-153 | | 1 | RACOR, 9/16"-18 ORFS x M14 x 1.5 ORB, Incl. 13A, 13B |
| 13A | | 637-63113 | | 1 | JUNTA HERMETICA, Cl 6, 11.3MM ID x 2.2 Thk |

**HIDRAULICA - DIRECCION**

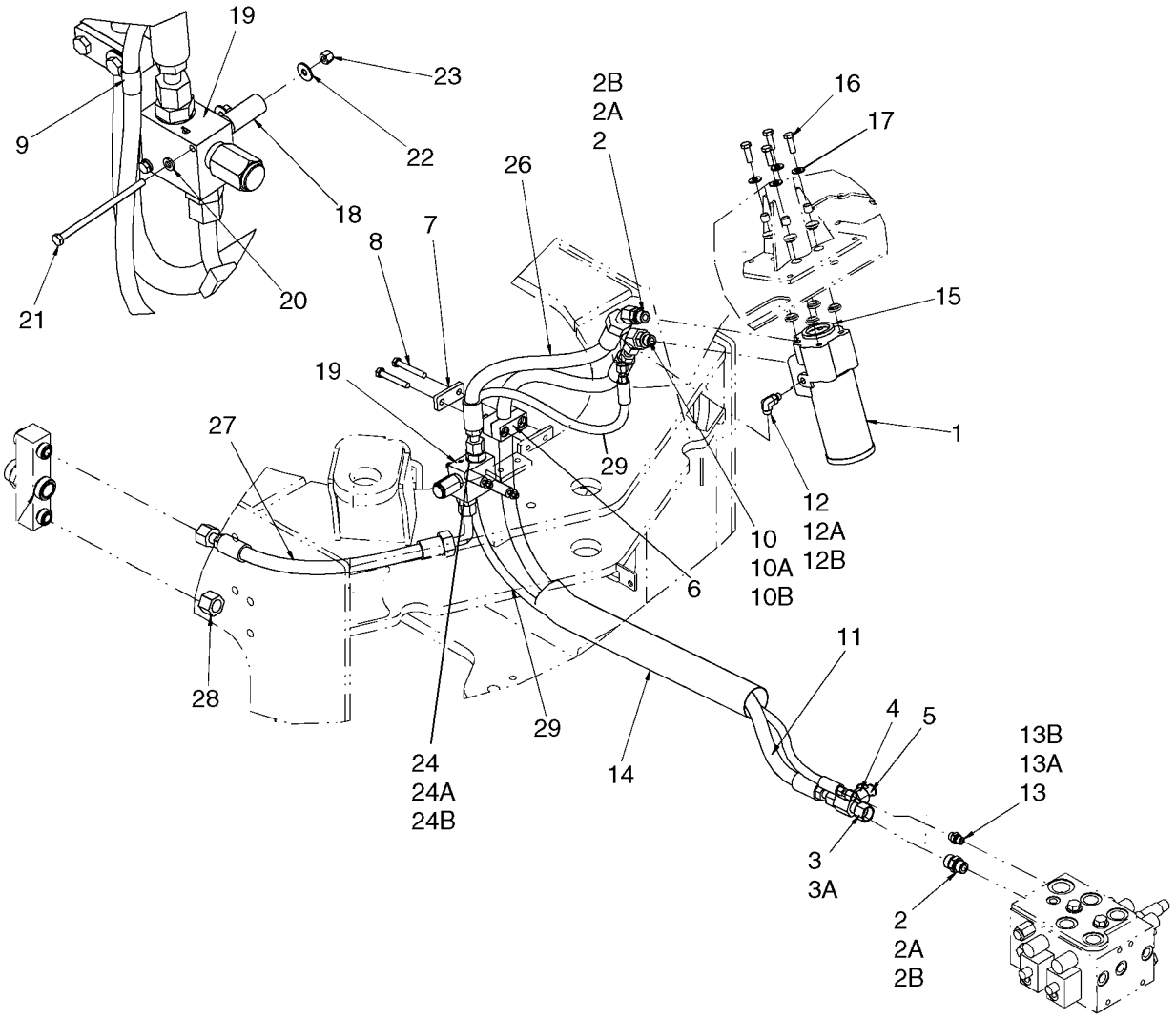


BS07F372

**HIDRAULICA - DIRECCION**

| REF | FN | PART NUMBER | YR/SN | QTY | DENOMINACION |
|---|---|---|---|---|---|
| 13B | | 238-6011 | | 1 | JUNTA HERMETICA, -011, 90 Duro, .301" ID x .070" Thk, Face Seal |
| 14 | | 87559559 | | 1 | PROTECTOR DE TUBO, Hose, 60 x 554 mm |
| 15 | | 76043957 | | 1 | JUNTA HERMETICA |
| 16 | | 627-10030 | | 4 | TORNILLO, Hex, M10 x 30, 10.9, Full Thd |
| 17 | | 895-15010 | | 4 | ARANDELA, M11 x 24 x 2 |
| 18 | | 8500692 | | 2 | ESPACIADOR |
| 19 | | 87427823 | | 1 | VÁLVULA, DESCARGA |
| 20 | | 896-11006 | | 2 | ARANDELA, M6 x 13 x 2, HT |
| 21 | | 814-6110 | | 2 | TORNILLO, Hex, M6 x 110, 8.8 |
| 22 | | 895-25006 | | 2 | ARANDELA, M6 x 18 x 1.6 |
| 23 | | 832-10406 | | 2 | CONTRA TUERCA, M6 x 1, Cl 8 |
| 24 | | 86597760 | | 1 | RACOR, 1"-14 ORFS x M27 x 2 ORB, Inc. Refs. 24A, 24B |
| 24A | | 238-6014 | | 1 | JUNTA HERMETICA, -014, 90 Duro, .489" ID x .070" Thk |
| 24B | | 237-6012 | | 1 | JUNTA HERMETICA, 12-1, 90 Duro, .924 ID x .118" Thk |
| 26 | | 87519793 | | 1 | MANGUERA (CONJUNTO), Steering Return, Control Valve to Relief Valve; 599 mm (23 - 9/16 in) |
| 27 | | 87653923 | | 1 | MANGA, Steering Return, Relief Valve to Filter; 544 mm (24 - 13/32 in) |
| 28 | | 701-907 | | 1 | TAPON DEL DEPOSITO, 1 3/16"-12 ORFS |
| 29 | | 87651227 | | 1 | MANGA, Steering Load Sense; 2100 mm (82 - 3/4 in) |

| 05-05 | | p1 | 07/07 |
|---|---|---|---|

**DIRECCION - AUXILIAR - HIDRAULICA**

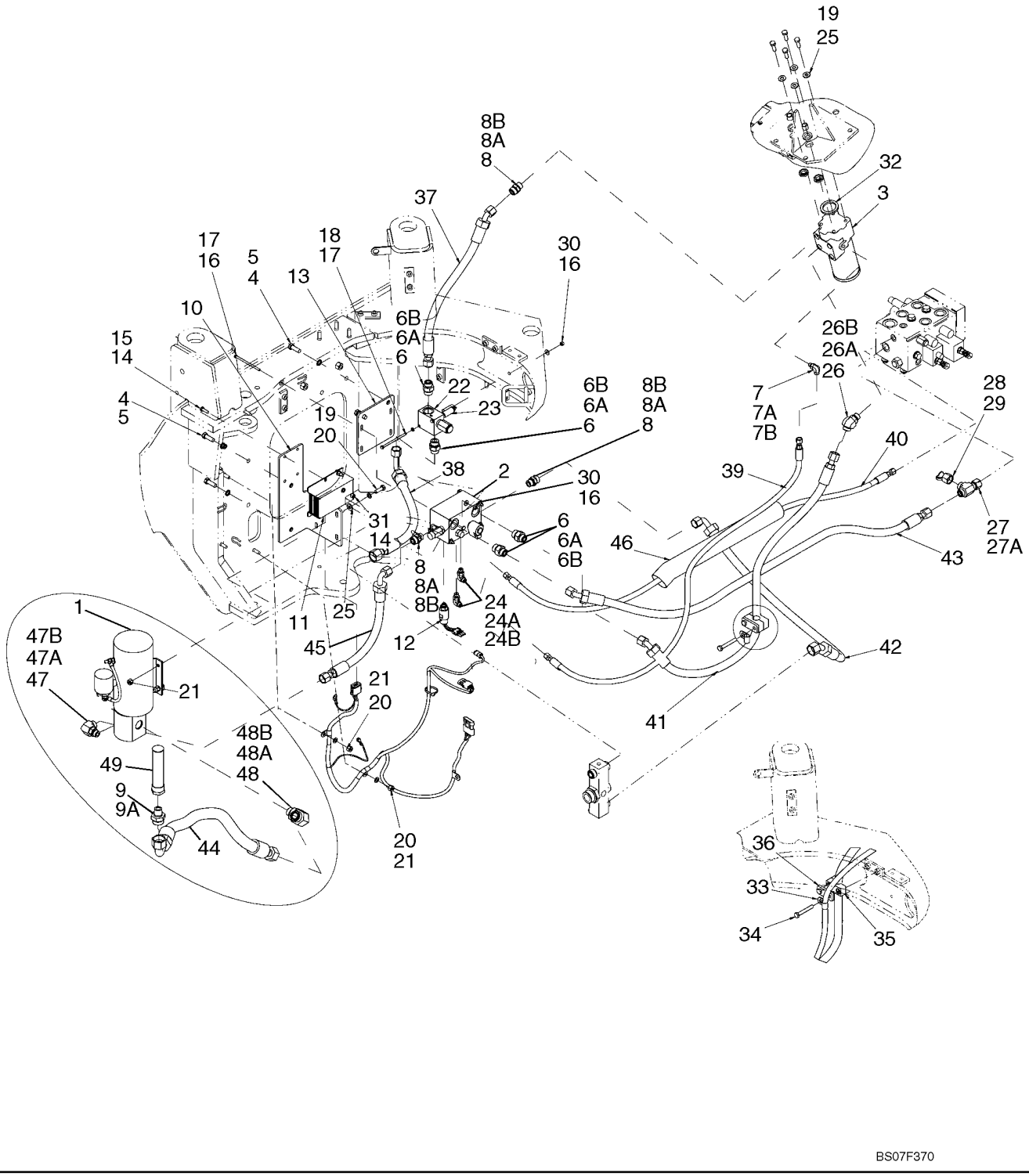

**DIRECCION - AUXILIAR - HIDRAULICA**

| REF | FN | PART NUMBER | YR/SN | QTY | DENOMINACION |
|---|---|---|---|---|---|
| | | REF | | | MANUAL, AUXILIARY STEERING HYDRAULICS, FOR ELECTRICAL COMPONENTS, SEE FIGURE 04-17 |
| 1 | | 87581480 | | 1 | BOMBA ELECTRICA, Auxiliary Steering; See Figure 05-08 |
| 2 | | 87609806 | | 1 | COLECTOR, Auxillary Steering; See Figure 05-07 |
| 3 | | 87307060 | | 1 | VALVULA HIDRAULICA, Steering Control; See Figure 05-06 |
| 4 | | 627-12035 | | 4 | TORNILLO, Hex, M12 x 35, 10.9 |
| 5 | | 895-18012 | | 4 | ARANDELA, M12 x 20 x 2 |
| 6 | | 86597760 | | 4 | RACOR, 1"-14 ORFS x M27 x 2 ORB, Incl. Refs. 6A, 6B |
| 6A | | 238-6016 | | 1 | JUNTA HERMETICA, -016, 90 Duro, .614" ID x .070" Thk, Face Seal |
| 6B | | 637-64236 | | 1 | JUNTA HERMETICA, Cl 6, 23.6MM ID x 2.9 Thk, Boss Seal |
| 7 | | 700-303 | | 1 | CODO, 90º, 9/16"-18 ORFS x M12 x 1.5 ORB, Incl. Refs. 7A, 7B |
| 7A | | 238-6011 | | 1 | JUNTA HERMETICA, -011, 90 Duro, .301" ID x .070" Thk, Face Seal |
| 7B | | 637-63093 | | 1 | JUNTA HERMETICA, Cl 6, 9.3MM ID x 2.2 Thk, Boss Seal |
| 8 | | 700-103 | | 3 | RACOR, 1"-14 ORFS x M22 x 1.5 ORB, Incl. Refs. 8A, 8B |
| 8A | | 238-6016 | | 1 | JUNTA HERMETICA, -016, 90 Duro, .614" ID x .070" Thk, Face Seal |
| 8B | | 637-63193 | | 1 | JUNTA HERMETICA, Cl 6, 19.3MM ID x 2.2 Thk, Boss Seal |
| 9 | | 87433494 | | 1 | RACOR, Straight Thread ORFS To NPT; Incl. Refs. 9A |
| 9A | | 238-6021 | | 1 | JUNTA HERMETICA, -021, 90 Duro, .926" ID x .070" Thk, Face Seal |
| 10 | | 87653912 | | 1 | PIEZA DE SOPORTE, Aux. Steering Mount |
| 11 | | 8603171 | | 1 | MODULE, Secondary Steering |
| 12 | | 398888A1 | | 1 | CONTACTOR, Aux. Steering Pressure |

**DIRECCION - AUXILIAR - HIDRAULICA**

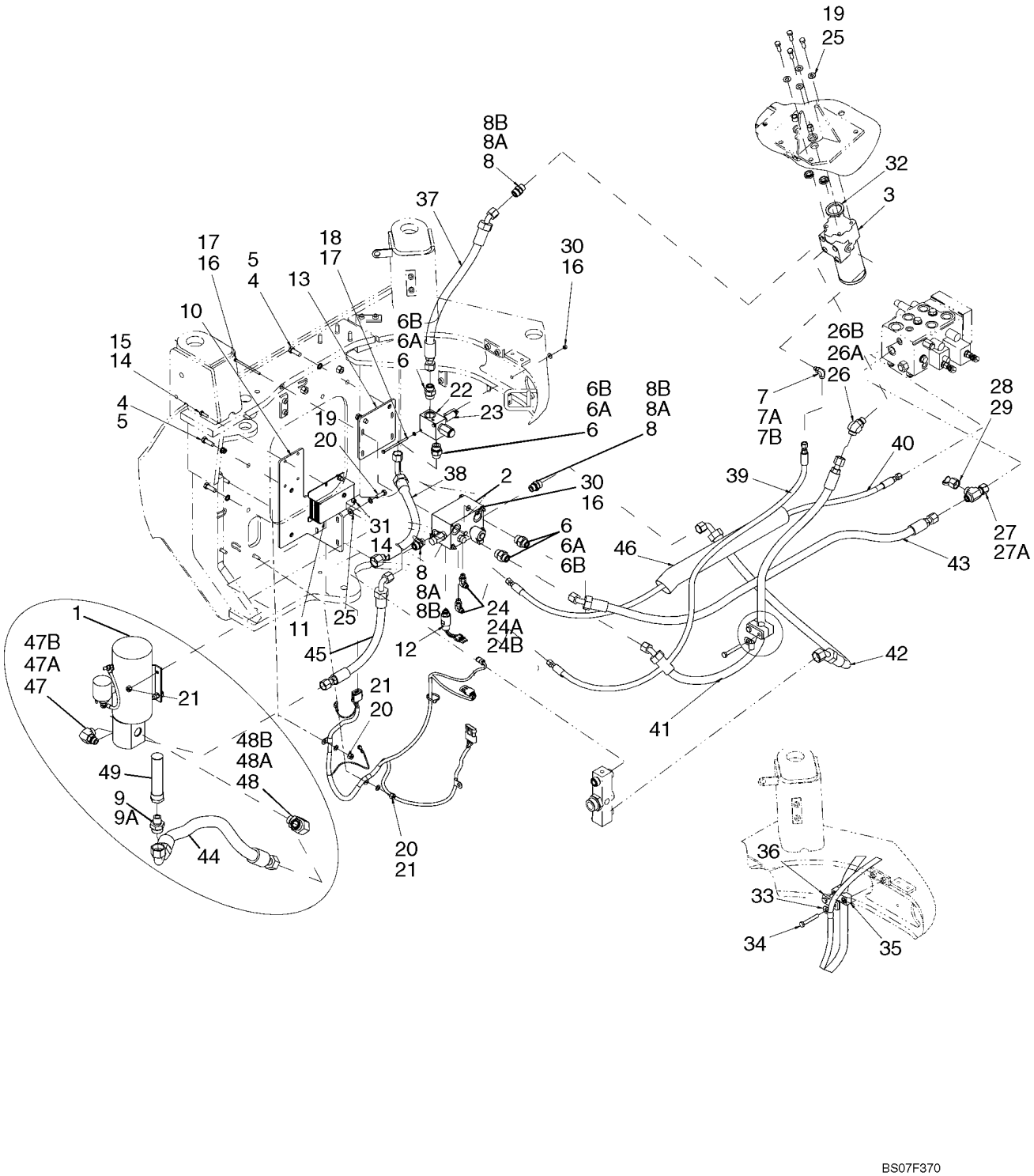

**DIRECCION - AUXILIAR - HIDRAULICA**

| REF | FN | PART NUMBER | YR/SN | QTY | DENOMINACION |
|---|---|---|---|---|---|
| 13 | | 87653913 | | 1 | PIEZA DE SOPORTE, Aux. Steering Valve Mount |
| 14 | | 895-11008 | | 8 | ARANDELA, M8 x 16 x 1.6 |
| 15 | | 627-8025 | | 4 | TORNILLO, Hex, M8 x 25, 10.9 |
| 16 | | 895-25006 | | 10 | ARANDELA, M6 x 18 x 1.6 |
| 17 | | 814-6110 | | 6 | TORNILLO, Hex, M6 x 110, 8.8 |
| 18 | | 896-11006 | | 2 | ARANDELA, M6 x 13 x 2, HT |
| 19 | | 627-10030 | | 8 | TORNILLO, Hex, M10 x 30, 10.9, Full Thd |
| 20 | | 895-18010 | | 6 | ARANDELA, M10 x 18 x 1.6 |
| 21 | | 832-10410 | | 6 | CONTRA TUERCA, M10 x 1.5, Cl 8 |
| 22 | | 87427823 | | 1 | VÁLVULA, DESCARGA |
| 23 | | 8500692 | | 2 | ESPACIADOR |
| 24 | | 700-378 | | 2 | CODO, 90º, 9/16"-18 ORFS x M14 x 1.5 ORB, Incl. Refs. 24A, 24B |
| 24A | | 637-63113 | | 1 | JUNTA HERMETICA, Cl 6, 11.3MM ID x 2.2 Thk |
| 24B | | 238-6011 | | 1 | JUNTA HERMETICA, -011, 90 Duro, .301" ID x .070" Thk, Face Seal |
| 25 | | 895-15010 | | 8 | ARANDELA, M11 x 24 x 2 |
| 26 | | 700-316 | | 1 | CODO, 45º, 1"-14 ORFS x M22 x 1.5 ORB, Incl. Ref. 26A, 26B |
| 26A | | 238-6016 | | 1 | JUNTA HERMETICA, -016, 90 Duro, .614" ID x .070" Thk, Face Seal |
| 26B | | 637-63193 | | 1 | JUNTA HERMETICA, Cl 6, 19.3MM ID x 2.2 Thk, Boss Seal |
| 27 | | 701-433 | | 1 | RACOR-T, 1"-14 ORFS x 1"-14 Fem Sw Run, Incl. Ref. 27A |
| 27A | | 238-6016 | | 1 | JUNTA HERMETICA, -016, 90 Duro, .614" ID x .070" Thk |
| 28 | | 324201A1 | | 1 | TAPÓN, Diagnostic |
| 29 | | H434163 | | 1 | TAPON DEL DEPOSITO, Dust |
| 30 | | 832-10406 | | 6 | CONTRA TUERCA, M6 x 1, Cl 8 |
| 31 | | 832-10408 | | 4 | CONTRA TUERCA, M8 x 1.25, Cl 8 |
| 32 | | 76043957 | | 1 | JUNTA HERMETICA, Steering Control Valve |
| 33 | | 515-25159 | | 1 | BORNE, 5/8", Insul, 1/2" Bolt |
| 34 | | 827-10070 | | 2 | TORNILLO, Hex, M10 x 70, 10.9 |
| 35 | | 367489A1 | | 1 | BLOQUE MOTOR |

**DIRECCION - AUXILIAR - HIDRAULICA**

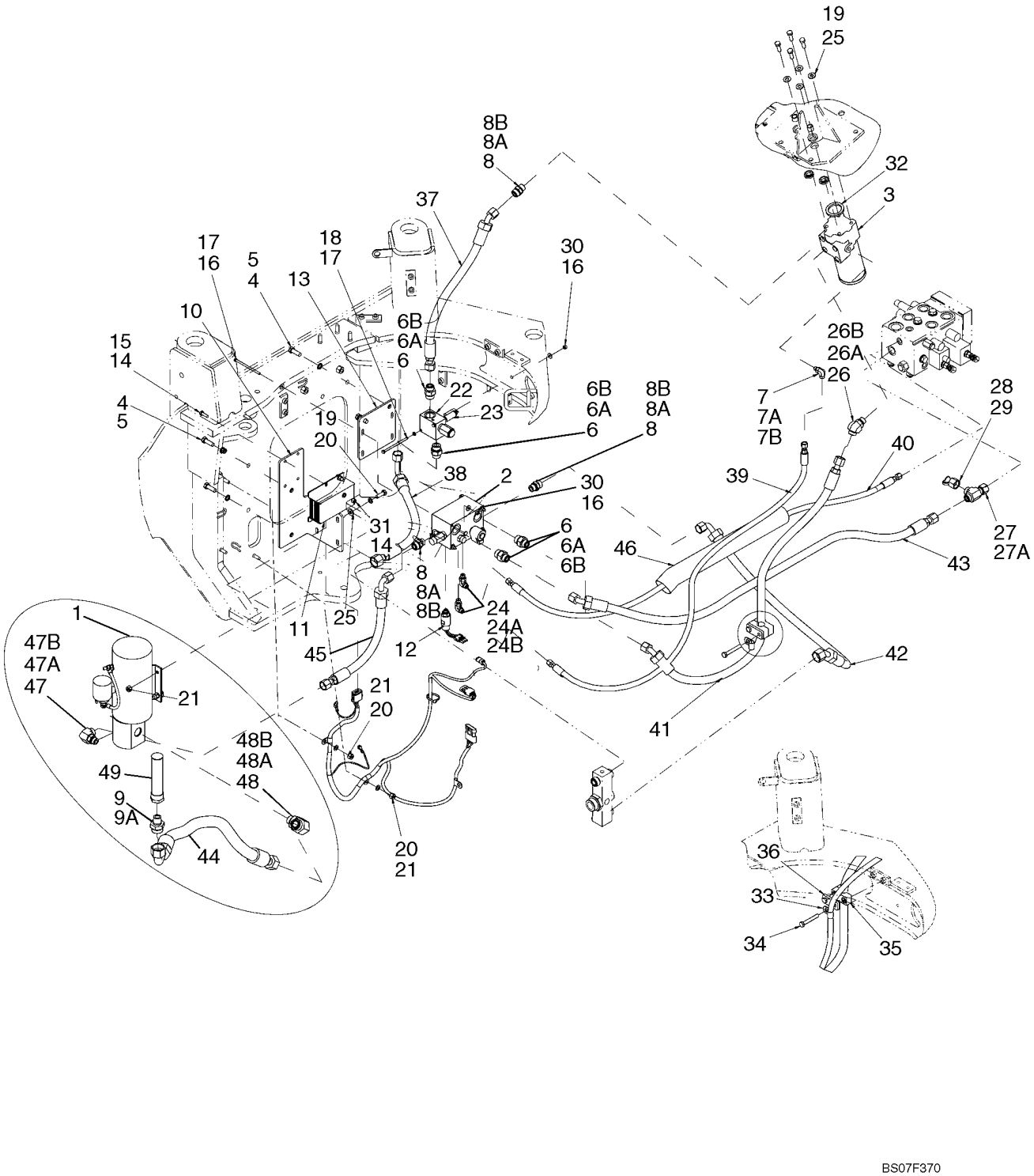

**DIRECCION - AUXILIAR - HIDRAULICA**

| REF | FN | PART NUMBER | YR/SN | QTY | DENOMINACION |
|---|---|---|---|---|---|
| 36 | | 367658A1 | | 1 | PLACA |
| 37 | | 87519793 | | 1 | MANGUERA (CONJUNTO), Steering Control Valve to Relief Valve; 599 mm (23 - 19/32 in) |
| 38 | | 87653923 | | 1 | MANGA, Relief Valve to Filter; 544 mm (21 - 13/32 in) |
| 39 | | 87653919 | | 1 | MANGA, Steering Load Sense; 1454 mm (57 - 1/4 in) |
| 40 | | 87653975 | | 1 | MANGA, Steering Load Sense; 1513 mm (59 - 1/2 in) |
| 41 | | 87653917 | | 1 | MANGA, Steering Pressure; 1240 mm (48 - 13/16 in) |
| 42 | | 87653921 | | 1 | MANGA, Filter Manifold; 1076 mm (42 - 1/3 in) |
| 43 | | 87653915 | | 1 | MANGA, Steering Relief Valve to Filter; 1423 mm (56 in) |
| 44 | | 87653928 | | 1 | MANGA, Auxiliary Suction; 965 mm (38 in) |
| 45 | | 87653914 | | 1 | MANGA, Auxiliary Pressure; 482 mm (19 in) |
| 46 | | 87559559 | | 1 | PROTECTOR DE TUBO, 60 x 554 mm (2-1/3 x 21-13/16 in) |
| 47 | | 86579694 | | 1 | CODO, 90º, 1"-14 ORFS x M22 x 1.5 ORB, Incl. Refs. 47A, 47B |
| 47A | | 86598102 | | 1 | JUNTA HERMETICA, Cl 6, 19.3MM ID x 2.2 Thk |
| 47B | | 9992069 | | 1 | JUNTA HERMETICA, -016, 90 Duro, .614" ID x .070" Thk |
| 48 | | 700-313 | | 1 | CODO, 90º, 1 7/16"-12 ORFS x M27 x 2 ORB, Incl. Refs. 48A, 48B |
| 48A | | 238-6021 | | 1 | JUNTA HERMETICA, -021, 90 Duro, .926" ID x .070" Thk, Face Seal |
| 48B | | 637-64236 | | 1 | JUNTA HERMETICA, Cl 6, 23.6MM ID x 2.9 Thk, Boss Seal |
| 49 | | L129303 | | 1 | FILTRO, Hydraulic Tank |

**VÁLVULA DE CONTROL DE LA DIRECCIÓN**

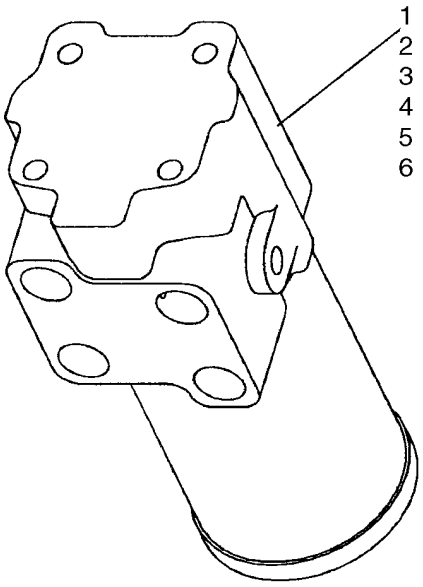


BS07F373

**VÁLVULA DE CONTROL DE LA DIRECCIÓN**

| REF | FN | PART NUMBER | YR/SN | QTY | DENOMINACION |
|---|---|---|---|---|---|
| | | 87307060 | | 1 | VALVULA HIDRAULICA, Steering Control; Incl. Refs. 1 - 6 |
| 1 | | 87319529 | | 1 | JEUGO, Seals |
| 2 | | 8604430 | | 1 | RESORTE, Centering |
| 3 | | 298591A1 | | 1 | PERNO, Centering |
| 4 | | 8603001 | | 7 | TORNILLO, Cap |
| 5 | | 8604285 | | 2 | PISTA DE RODAMIENTO, Bearing |
| 6 | | 8604284 | | 1 | RODAMIENTO DE RPDILLOS |

**DIRECCION - AUXILIAR - CONJUNTO DEL BLOQUE**

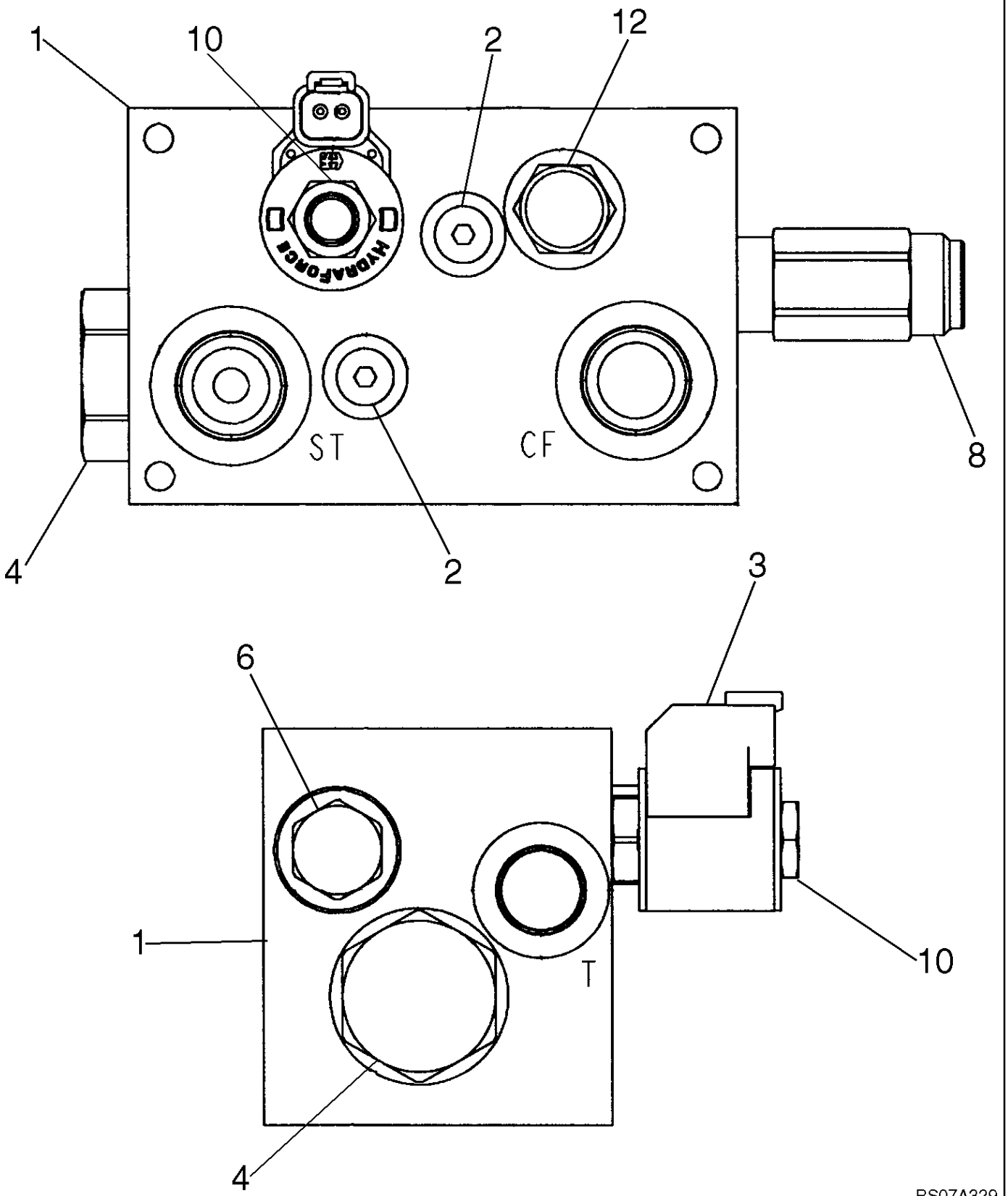

**DIRECCION - AUXILIAR - CONJUNTO DEL BLOQUE**

| REF | FN | PART NUMBER | YR/SN | QTY | DENOMINACION |
|---|---|---|---|---|---|
| 1 | | 87609806 | | 1 | COLECTOR, Auxiliary Steering; Incl. Refs. 2 - 13 |
| 2 | | 87365409 | | 1 | TAPÓN, Orifice |
| 3 | | 87365413 | | 1 | BOBINA, Solenoid |
| 4 | | 87365418 | | 1 | VALVULA DE CIERRE, Incl. Ref. 5 |
| 5 | | 87365420 | | 1 | SERIE DE JUNTAS, Check Valve; Not Illustrated |
| 6 | | 87365422 | | 1 | VALVULA DE CIERRE, Incl. Ref. 7 |
| 7 | | 1542831C1 | | 1 | SERIE DE JUNTAS, Not Illustrated |
| 8 | | 87365425 | | 1 | VÁLVULA, DESCARGA, Incl. Ref. 9 |
| 9 | | 1542831C1 | | 1 | SERIE DE JUNTAS, Not Illustrated |
| 10 | | 87365427 | | 1 | PISTONCILLO, Incl. Ref. 11 |
| 11 | | 87365429 | | 1 | SERIE DE JUNTAS, Not Illustrated |
| 12 | | 87365430 | | 1 | ELEMENTO, Logic; Incl. Ref. 13 |
| 13 | | 87365429 | | 1 | SERIE DE JUNTAS, Not Illustrated |

**DIRECCION - AUXILIAR - BOMBA**

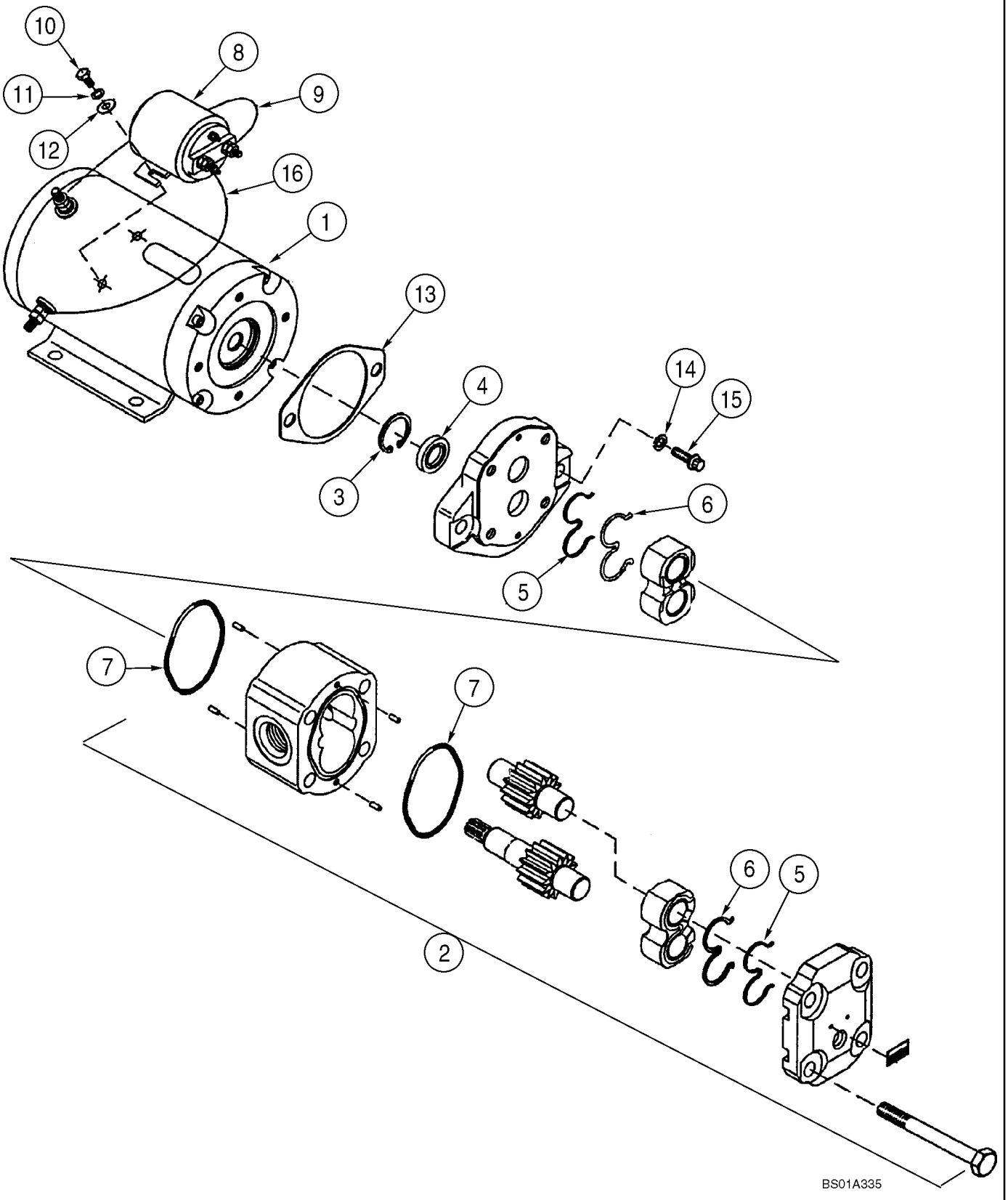

**DIRECCION - AUXILIAR - BOMBA**

| REF | FN | PART NUMBER | YR/SN | QTY | DENOMINACION |
|---|---|---|---|---|---|
| | | 87581480 | | 1 | BOMBA ELECTRICA, Auxillary Steering; Incl. Refs. 1 - 16 |
| 1 | | 87581481 | | 1 | MOTOR ELECTRICO |
| 2 | | 8605158 | | 1 | BOMBA HIDRÁULICA |
| | | 8605163 | | 1 | SERIE DE JUNTAS, Incl. Refs. 3 - 7 |
| 3 | | NSS | | 1 | NO SE REPARA SEPARADAM., Ring, Retaining |
| 4 | | NSS | | 1 | NO SE REPARA SEPARADAM., Seal |
| 5 | | NSS | | 2 | NO SE REPARA SEPARADAM., Ring, Backup |
| 6 | | NSS | | 2 | NO SE REPARA SEPARADAM., Seal |
| 7 | | NSS | | 2 | NO SE REPARA SEPARADAM., O-Ring |
| | | 8605159 | | 1 | EQUIPO, Starting Switch; Incl. Refs. 8 - 12 |
| 8 | | NSS | | 1 | NO SE REPARA SEPARADAM., Switch |
| 9 | | NSS | | 1 | NO SE REPARA SEPARADAM., Cable |
| 10 | | NSS | | 2 | NO SE REPARA SEPARADAM., Screw |
| 11 | | NSS | | 2 | NO SE REPARA SEPARADAM., Washer, Lock |
| 12 | | NSS | | 2 | NO SE REPARA SEPARADAM., Washer |
| | | 8605160 | | 1 | EQUIPO, Mounting; Incl. Refs. 13 - 16 |
| 13 | | NSS | | 1 | NO SE REPARA SEPARADAM., Gasket, Mounting |
| 14 | | NSS | | 2 | NO SE REPARA SEPARADAM., Washer, Lock |
| 15 | | NSS | | 2 | NO SE REPARA SEPARADAM., Screw |
| 16 | | 8605161 | | 1 | ALAMBRE DE ACERO, Primary |

| 05-09 | | p1 | 07/07 |
|---|---|---|---|

**DIRECCION - CILINDRO - HIDRAULICA**

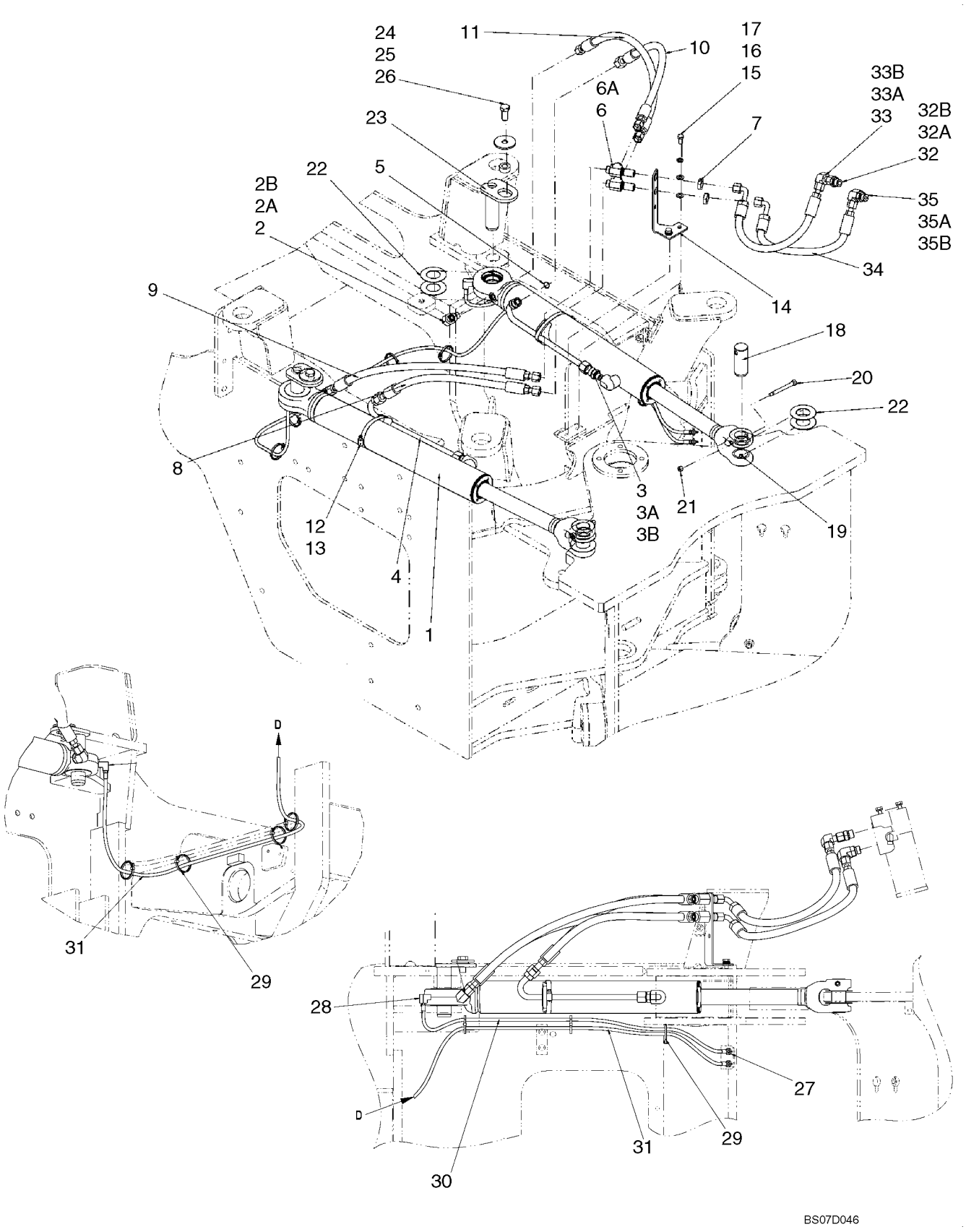

**DIRECCION - CILINDRO - HIDRAULICA**

| REF | FN | PART NUMBER | YR/SN | QTY | DENOMINACION |
|---|---|---|---|---|---|
| 1 | | 87452362 | | 2 | CILINDRO DIRECTION, See Figure 05-10 |
| 2 | | 86579691 | | 2 | CODO, 90º, 13/16"-18 ORFS x M18 x 1.5 ORB, Incl. 2A, 2B |
| 2A | | 637-63153 | | 1 | JUNTA HERMETICA, Cl 6, 15.3MM ID x 2.2 Thk |
| 2B | | 238-6014 | | 1 | JUNTA HERMETICA, -014, 90 Duro, .489" ID x .070" Thk, Face Seal |
| 3 | | 700-115 | | 2 | RACOR, 1"-14 ORFS x M18 x 1.5 ORB, Ref. 3A, 3B |
| 3A | | 238-6016 | | 1 | JUNTA HERMETICA, -016, 90 Duro, .614" ID x .070" Thk, Face Seal |
| 3B | | 637-63153 | | 1 | JUNTA HERMETICA, Cl 6, 15.3MM ID x 2.2 Thk, Boss |
| 4 | | 87664495 | | 1 | TUBO, Steering Cylinder RH |
| 5 | | 238-6016 | | 2 | JUNTA HERMETICA, -016, 90 Duro, .614" ID x .070" Thk |
| 6 | | 86639080 | | 2 | RACOR-T, 13/16"-16 ORFS, Blkd Run, Incl. Ref. 6A |
| 6A | | 238-6014 | | 3 | JUNTA HERMETICA, -014, 90 Duro, .489" ID x .070" Thk |
| 7 | | 86639083 | | 2 | CONTRA TUERCA, 13/16"-16, ORFS Blkhd, Steering Base LH |
| 8 | | 8602590 | | 1 | MANGA, Right Side Rod; 555 mm (21 - 7/8 in) |
| 9 | | 87519795 | | 1 | MANGUERA (CONJUNTO), Right Side Base; 752 mm (29 - 2/3 in) |
| 10 | | 8602589 | | 1 | MANGA, Left Side Rod; 715 mm (28 - 5/32 in) |
| 11 | | 8500460 | | 1 | MANGA, Left Side Base; 872 mm (34 - 1/3 in) |
| 12 | | 8500483 | | 2 | BLOQUE MOTOR |
| 13 | | 214-1472 | | 2 | ABRAZADERA MANGUERA, #72, 4.06/5.00 Type F Worm |
| 14 | | 8602342 | | 1 | PIEZA DE SOPORTE |
| 15 | | 896-11010 | | 4 | ARANDELA, M10 x 21.5 x 2.5, HT |
| 16 | | 892-11010 | | 2 | ARANDELA DE FRENO, M10 |
| 17 | | 627-10020 | | 2 | TORNILLO, Hex, M10 x 20, 10.9, Full Thd |
| 18 | | 87559561 | | 2 | PERNO, Steering |
| 19 | | 219-1 | | 2 | ENGRASADOR, 1/8"-27 x .66 lg |
| 20 | | 87308853 | | 2 | TORNILLO |
| 21 | | 832-10408 | | 2 | CONTRA TUERCA, M8 x 1.25, Cl 8 |

| 05-09 | | p2 | 07/07 |
|---|---|---|---|

**DIRECCION - CILINDRO - HIDRAULICA**

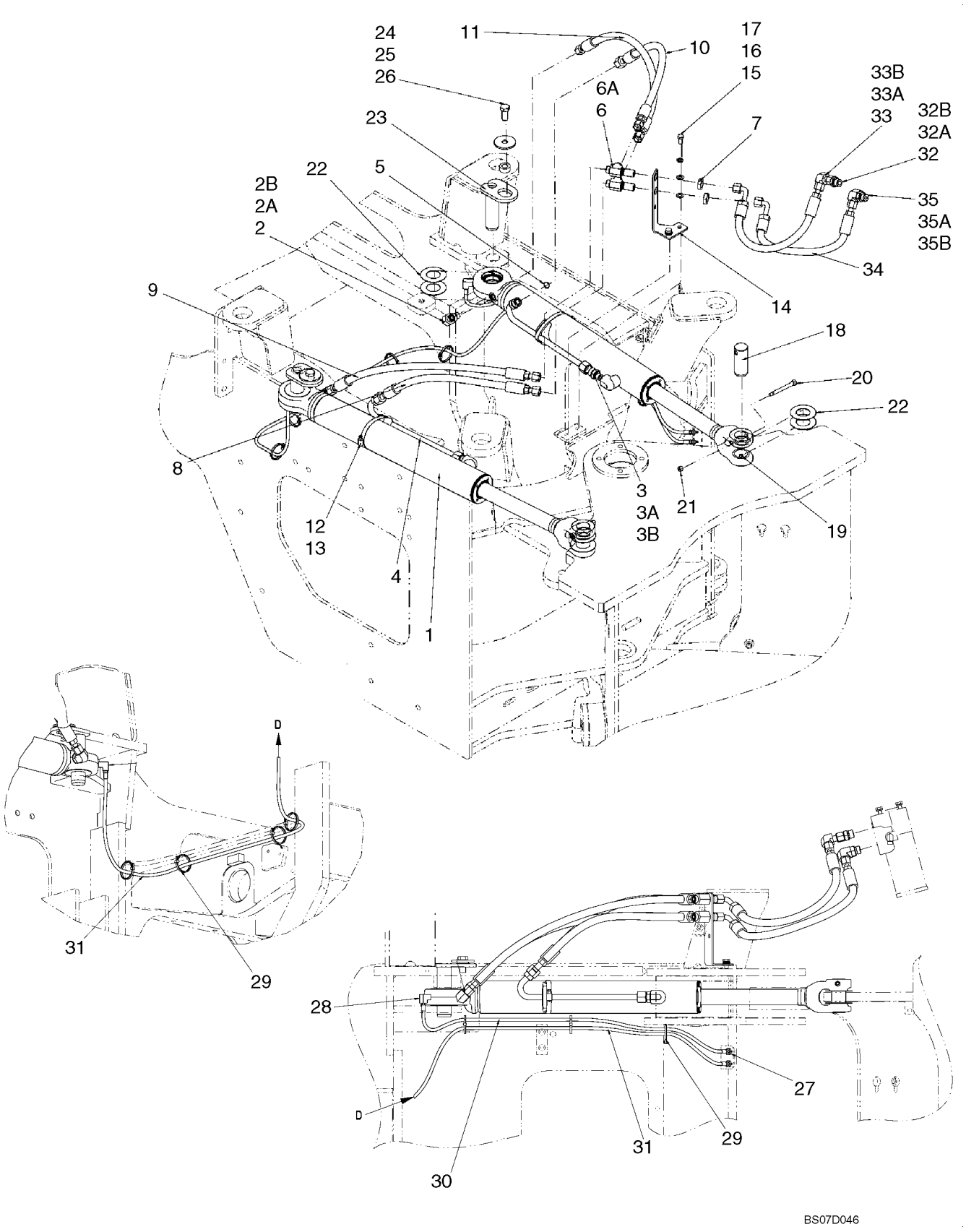

**DIRECCION - CILINDRO - HIDRAULICA**

| REF | FN | PART NUMBER | YR/SN | QTY | DENOMINACION |
|---|---|---|---|---|---|
| 22 | | 8501088 | | 8 | ARANDELA |
| 23 | | 87351646 | | 2 | PERNO |
| 24 | | L125100 | | 2 | ESPACIADOR |
| 25 | | 496-81025 | | 2 | ARANDELA, 21/32" x 2 1/2" x .188", HDN |
| 26 | | 627-16035 | | 2 | TORNILLO, Hex, M16 x 35, 10.9 |
| 27 | | F53473 | | 2 | TUERCA |
| 28 | | 328082A1 | | 2 | CODO |
| 29 | | L11541 | | 7 | BANDA |
| 30 | | L54694 | | 1 | MANGA, Grease, Rear Trunnion; 1041 mm (41 in) |
| 31 | | 87559562 | | 1 | MANGA, Rear Steering Grease; 2324 mm (91 - 1/2 in) |
| 32 | | 86579678 | | 1 | RACOR, 13/16"-16 ORFS x M22 x 1.5 ORB, Incl. Ref. 32A, 32B |
| 32A | | 637-63193 | | 1 | JUNTA HERMETICA, Cl 6, 19.3MM ID x 2.2 Thk, Boss |
| 32B | | 238-6014 | | 1 | JUNTA HERMETICA, -014, 90 Duro, .489" ID x .070" Thk, Face Seal |
| 33 | | 84989383 | | 1 | CODO, 90º, 13/16"-16 ORFS x 13/16"-16 Fem Sw, Incl. Ref. 33A, 33B |
| 33A | | 637-63153 | | 1 | JUNTA HERMETICA, Cl 6, 15.3MM ID x 2.2 Thk, Boss |
| 33B | | 238-6014 | | 1 | JUNTA HERMETICA, -014, 90 Duro, .489" ID x .070" Thk, Face Seal |
| 34 | | 87385246 | | 2 | MANGUERA (CONJUNTO), Steering Cylinder; 569 mm (22 - 13/32 in) |
| 35 | | 86579692 | | 1 | CODO, 90º, 13/16"-18 ORFS x M22 x 1.5 ORB, Incl. Refs. 35A, 35B |
| 35A | | 238-6014 | | 1 | JUNTA HERMETICA, -014, 90 Duro, .489" ID x .070" Thk, Face Seal |
| 35B | | 637-63193 | | 1 | JUNTA HERMETICA, Cl 6, 19.3MM ID x 2.2 Thk, Boss |
| 36 | | 87664498 | | 1 | TUBO, Steering Cylinder LH |

**DIRECCION - CONJUNTO DE CILINDRO**

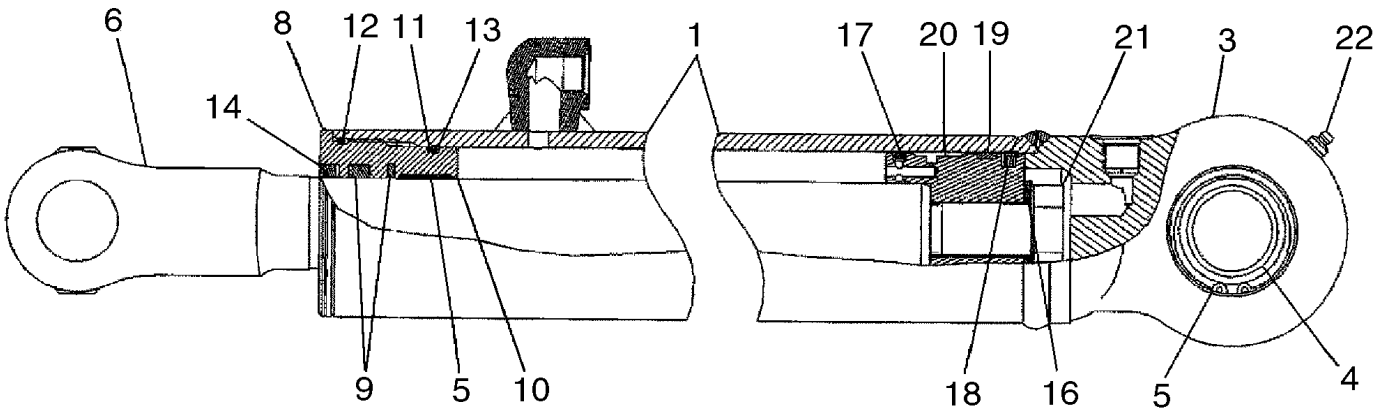


BS04A124

**DIRECCION - CONJUNTO DE CILINDRO**

| REF | FN | PART NUMBER | YR/SN | QTY | DENOMINACION |
|---|---|---|---|---|---|
| | | 87452362 | | 2 | CILINDRO DIRECTION, 76 ID x 485 strk; Incl. Refs. 1 - 22 And 8605261 Seal Kit |
| 1 | | 442702A1 | | 1 | CILINDRO DE GATO, Tube Weldment ; Incl. Refs. 3 - 5 |
| 3 | | NSS | | 1 | NO SE REPARA SEPARADAM., Eye |
| 4 | | 442711A1 | | 1 | COJINETE |
| 5 | | 100-21244 | | 2 | ANILLO DE RESORTE, 2.44", Int, #244 |
| 6 | | 442703A1 | | 1 | VASTAGO CILINDRO, Rod Weldment |
| | | 442704A1 | | 1 | EMPAQUETADURA, Assembly; Incl. Refs. 8 - 14 |
| 8 | | 442713A1 | | 1 | EMPAQUETADURA |
| 9 | | 1542875C1 | | 1 | JUEGO DE PIEZAS, Rod and Buffer Seals |
| 10 | | G102425 | | 1 | CASQUILLO |
| 11 | | G109298 | | 1 | ANILLO |
| 12 | | 238-5233 | | 1 | JUNTA HERMETICA, -233, 70 Duro, 2.859" ID x .139" Thk |
| 13 | | 238-5231 | | 1 | JUNTA HERMETICA, -231, 70 Duro, 2.609" ID x .139" Thk |
| 14 | | D95143 | | 1 | ANILLO DE CIERRE |
| | | {87452364} | | 1 | PISTON Assembly; Incl. Refs. 16 - 20 |
| 16 | | 87452365 | | 1 | VASTAGO CILINDRO, Flange 7.19mm Thick |
| 17 | | G100444 | | 1 | ANILLO DE CIERRE |
| 18 | | 364376A1 | | 1 | ANILLO |
| 19 | | G100449 | | 1 | ANILLO DE DESGASTE |
| 20 | | 442717A1 | | 1 | ANILLO DE CIERRE, Piston |
| 21 | | 86982439 | | 1 | PERNO ESPECIAL, 1 x 4 In; Bolt and Washer Assy |
| 22 | | 219-1 | | 1 | ENGRASADOR, 1/8"-27 x .66 lg |
| | | 8605261 | | 1 | JUEGO JUNTAS, Incl. Refs. 9 - 14, 17 - 19; And G102288 Seal, Not used in this Assembly |

## NOTAS

# SECTION INDEX
## Cadena Cinemática


| | |
|---|---|
| 06-01 | SOPORTE - TRANSMISION - TUBERIA DE LLENADO DE LA TRANSMISION |
| 06-02 | HIDRAULICA - TRANSMISION |
| 06-03 | TRANSMISION - FILTRO, CUBIERTA DE ACEITE Y DE RELLENO |
| 06-04 | TRANSMISION - CONVERTIDOR, CUBIERTA Y EJE DE ENTRADA |
| 06-05 | TRANSMISION - EJE DE ENTRADA |
| 06-06 | CONJUNTO DE LA TRANSMISION - ALOJAMIENTO |
| 06-07 | CONJUNTO DE LA TRANSMISION - TUBOS DEL ALOJAMIENTO |
| 06-08 | TRANSMISION - CONJUNTO DEL EMBRAGUE, PRIMERO |
| 06-09 | TRANSMISION - CONJUNTO DEL EMBRAGUE, SEGUNDO |
| 06-10 | TRANSMISION - CONJUNTO DEL EMBRAGUE, TERCERO |
| 06-11 | TRANSMISION - CONJUNTO DEL EMBRAGUE, CUARTO |
| 06-12 | TRANSMISION - CONJUNTO DEL EMBRAGUE, AVANCE |
| 06-13 | TRANSMISION - CONJUNTO DEL EMBRAGUE, RETROCESO |
| 06-14 | TRANSMISION - EJE, SALIDA |
| 06-15 | TRANSMISION - TOMA DE FUERZA |
| 06-16 | TRANSMISION - PLACAS DE LAS VALVULAS |
| 06-17 | TRANSMISION - VALVULA, CONTROL |
| 06-18 | TRANSMISION - VALVULA, CONTROL |
| 06-19 | TRANSMISION - VALVULA, REGULADOR Y BOMBA DE ACEITE |
| 06-20 | TRANSMISION - SENSOR, CUBIERTA DE LA BOMBA Y VELOCIDADES |
| 06-21 | EJE, TRASERO - PARAR |
| 06-22 | EJE, DELANTERO - SOPORTE |
| 06-22A | EJE, DELANTERO - ALOJAMIENTO |
| 06-22B | EJE, DELANTERO - PORTADOR DEL DIFERENCIAL |
| 06-22C | EJE, DELANTERO - DIFERENCIAL |
| 06-22D | EJE, DELANTERO - FRENO |
| 06-22E | EJE, DELANTERO - CUBO, PLANETARIO |
| 06-23 | EJE, TRASERO - SOPORTE |
| 06-23A | EJE, TRASERO - ALOJAMIENTO |
| 06-23B | EJE, TRASERO - PORTADOR DEL DIFERENCIAL |
| 06-23C | EJE, TRASERO - DIFERENCIAL |
| 06-23D | EJE, TRASERO - FRENO |
| 06-23E | EJE, TRASERO - CUBO, PLANETARIO |
| 06-24 | EJE DE TRANSMISION MONTAJE |
| 06-25 | EJE DE LA TRANSMISION, DELANTERO |
| 06-26 | EJE DE LA TRANSMISION, CENTRAL |
| 06-27 | EJE DE LA TRANSMISION, TRASERO |
| 06-28 | EJE DE TRANSMISIÓN, MOTOR |
| 06-29 | RUEDAS |

**SOPORTE - TRANSMISION - TUBERIA DE LLENADO DE LA TRANSMISION**

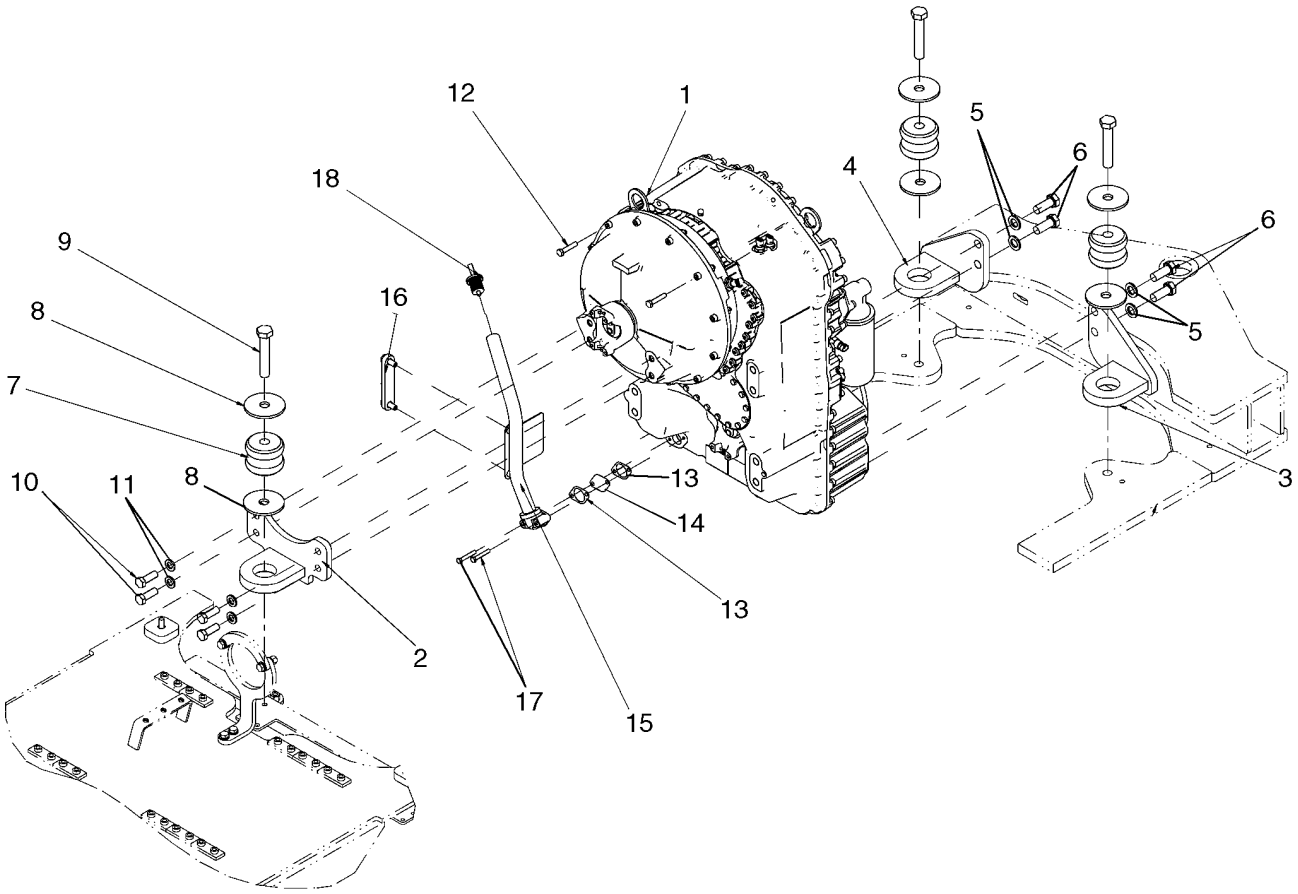


BS07F291

**SOPORTE - TRANSMISION - TUBERIA DE LLENADO DE LA TRANSMISION**

| REF | FN | PART NUMBER | YR/SN | QTY | DENOMINACION |
|---|---|---|---|---|---|
| 1 | | 87572394 | | 1 | CAMBIO DE VELOCIDAD, WG-160 4-Speed Transmission, Includes Parts on Figures 06-03 - 06-20, 07-01 |
| 2 | | 87552960 | | 1 | PIEZA DE SOPORTE, Top, Transmission Mount |
| 3 | | 87552958 | | 1 | PIEZA DE SOPORTE, Right, Transmission Mount |
| 4 | | 87552959 | | 1 | PIEZA DE SOPORTE, Left, Transmission Mount |
| 5 | | 896-11020 | | 4 | ARANDELA, M20 x 37.5 x 4, HT |
| 6 | | 627-20050 | | 4 | TORNILLO, Hex, M20 x 50, 10.9 |
| 7 | | 361187A1 | | 3 | AISLADOR, Transmission Bracket |
| 8 | | 379611A1 | | 6 | ARANDELA |
| 9 | | 827-22120 | | 3 | TORNILLO, Hex, M22 x 120, 10.9 |
| 10 | | 627-16045 | | 4 | TORNILLO, Hex, M16 x 45, 10.9 |
| 11 | | 896-11016 | | 4 | ARANDELA, M17.5 x 30 x 4, HT |
| 12 | | 827-10050 | | 2 | TORNILLO, Hex, M10 x 50, 10.9 |
| 13 | | 8603281 | | 2 | JUNTA HERMETICA |
| 14 | | E135229 | | 2 | REJILLA |
| 15 | | 87653616 | | 1 | TUBO, Transmission Fill |
| 16 | | 86988366 | | 1 | VISOR DE NIVEL, Oil Level |
| 17 | | 827-8050 | | 2 | TORNILLO, Hex, M8 x 50, 10.9 |
| 18 | | 443565A1 | | 1 | TAPON DEL DEPOSITO, Transmission Fill |

**HIDRAULICA - TRANSMISION**

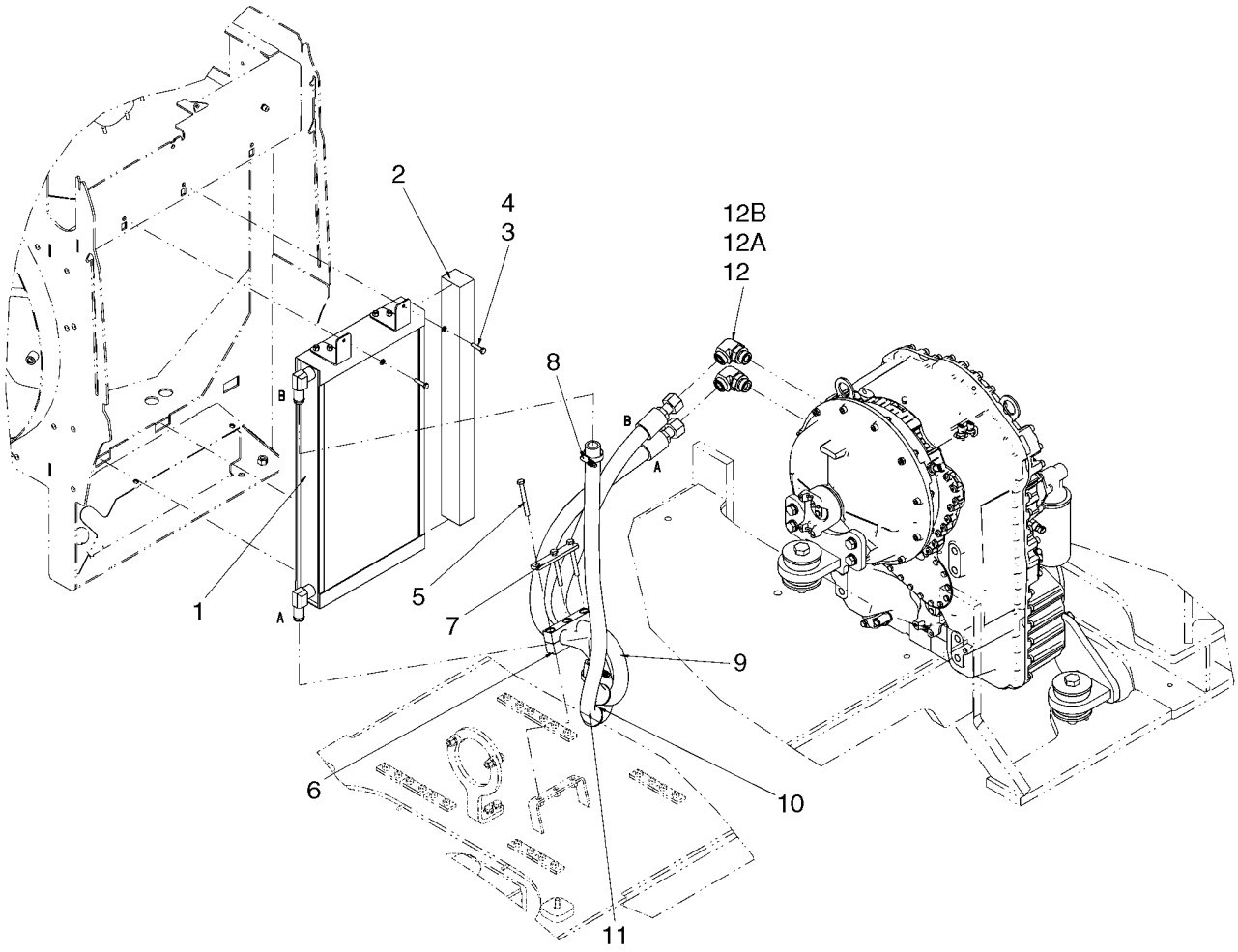


BS07F290

**HIDRAULICA - TRANSMISION**

| REF | FN | PART NUMBER | YR/SN | QTY | DENOMINACION |
|---|---|---|---|---|---|
| 1 | | 8501295 | | 1 | RADIADOR ACEITE |
| 2 | | 8500206 | | 1 | ANILLO DE CIERRE |
| 3 | | 892-11008 | | 2 | ARANDELA DE FRENO, M8 |
| 4 | | 627-8035 | | 2 | TORNILLO, Hex, M8 x 35, 10.9 |
| 5 | | 827-10090 | | 3 | TORNILLO, Hex, M10 x 90, 10.9 |
| 6 | | 8500576 | | 1 | BORNE |
| 7 | | 8500583 | | 1 | PLACA |
| 8 | | 353036A1 | | 2 | COLLAR |
| 9 | | 87578052 | | 1 | MANGA, Cooler to Transmission; 1490 mm (58 - 2/3 in) |
| 10 | | 248-1185 | | 2 | PASACABLES, 1 1/2" ID x 1 3/4" Groove Dia |
| 11 | | 87578053 | | 1 | MANGA, Transmission to Cooler; 2260 mm (89 in) |
| 12 | | 201-308 | | 2 | CODO, 90º, 1 7/16"-12 x 1 5/8"-12, Adj, ORFS, Incl. Refs. 12A, 12B |
| 12A | | 237-6016 | | 1 | JUNTA HERMETICA, 16-1, 90 Duro, 1.171" ID x .118" Thk, Boss Seal |
| 12B | | 238-6021 | | 1 | JUNTA HERMETICA, -021, 90 Duro, .926" ID x .070" Thk, Face Seal |

**TRANSMISION - FILTRO, CUBIERTA DE ACEITE Y DE RELLENO**

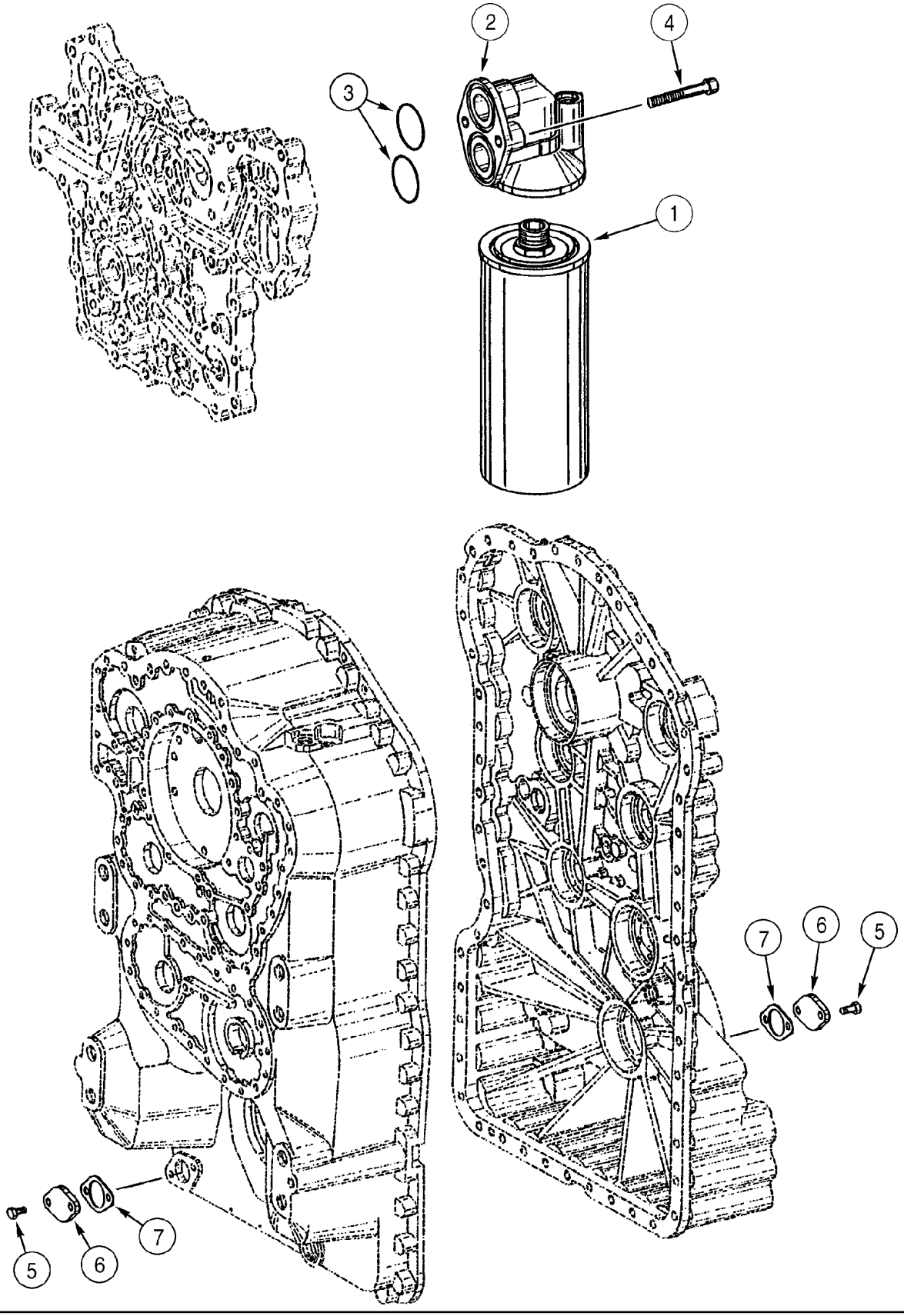

**TRANSMISION - FILTRO, CUBIERTA DE ACEITE Y DE RELLENO**

| REF | FN | PART NUMBER | YR/SN | QTY | DENOMINACION |
|---|---|---|---|---|---|
| | | 87572394 | | 1 | CAMBIO DE VELOCIDAD, See Figure(s) 06-03 - 06-20, 07-01; Incl. Refs. 1 - 7 |
| 1 | | 87519452 | | 1 | FILTRO, ACEITE HIDRAULICO |
| 2 | | 8603403 | | 1 | FILTRO CONJ |
| 3 | | 8603404 | | 2 | JUNTA HERMETICA |
| 4 | | 8603311 | | 2 | TORNILLO |
| 5 | | 8603396 | | 4 | TORNILLO, M8 x 18 |
| 6 | | 8603217 | | 2 | TAPADERA |
| 7 | | 8603281 | | 2 | JUNTA HERMETICA |

**TRANSMISION - CONVERTIDOR, CUBIERTA Y EJE DE ENTRADA**

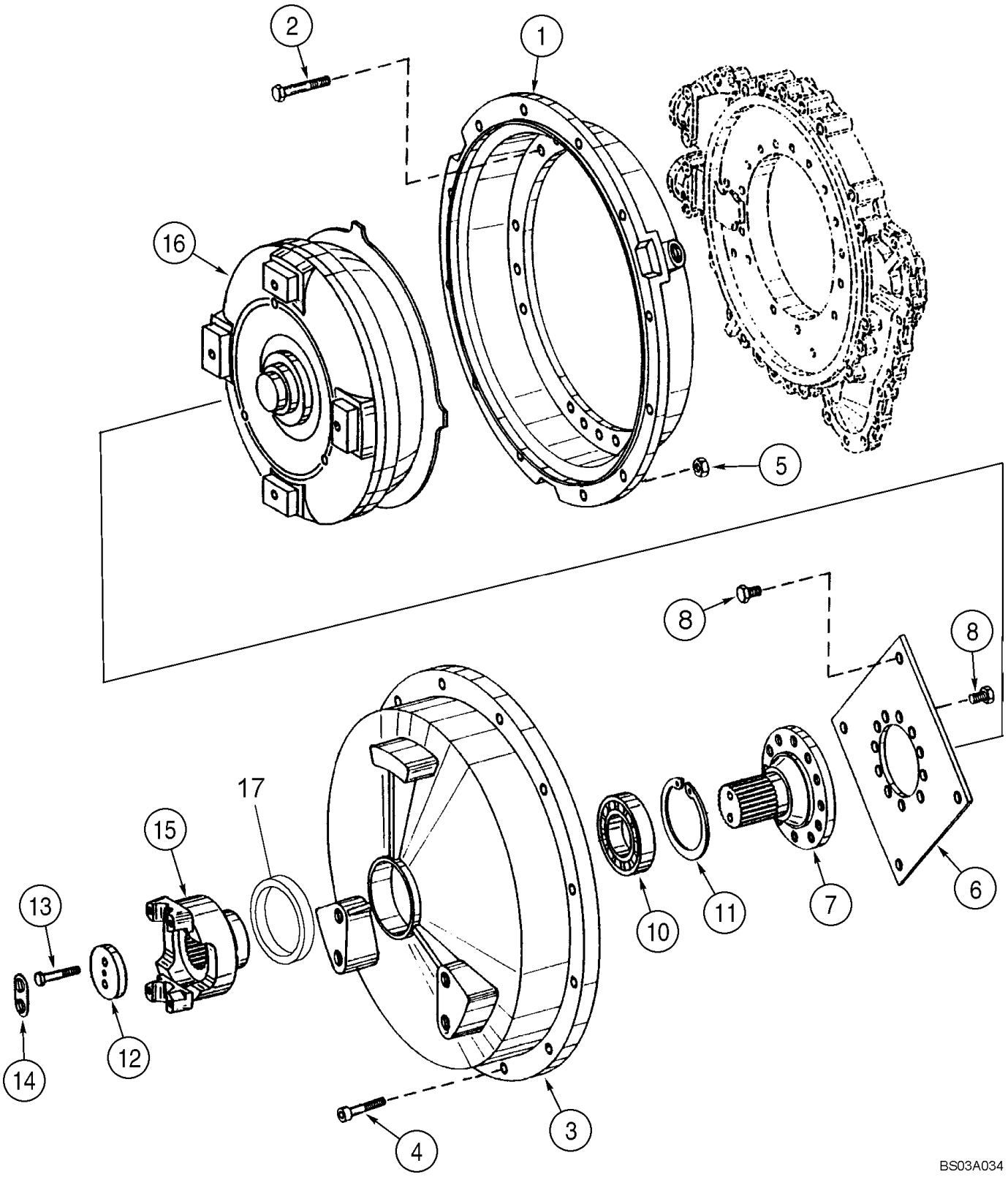

**TRANSMISION - CONVERTIDOR, CUBIERTA Y EJE DE ENTRADA**

| REF | FN | PART NUMBER | YR/SN | QTY | DENOMINACION |
|---|---|---|---|---|---|
| | | 87572394 | | 1 | CAMBIO DE VELOCIDAD, See Figure(s) 06-03 - 06-20, 07-01; Incl. Refs. 1 - 17 |
| 1 | | 8603292 | | 1 | CAMPANA |
| 2 | | 8603293 | | 18 | TORNILLO, M10 x 65 |
| 3 | | 8604676 | | 1 | TAPADERA |
| 4 | | 8603466 | | 12 | TORNILLO, M10 x 40 |
| 5 | | 829-1510 | | 12 | TUERCA, M10, Cl 10 |
| 6 | | 8603633 | | 1 | DIAFRAGMA DE RESORTE |
| 7 | | 8604677 | | 1 | EJE, Input |
| 8 | | 8603294 | | 20 | TORNILLO, M12 x 18 |
| 10 | | 8604678 | | 1 | RODAMIENTO DE BOLAS |
| 11 | | 87410351 | | 1 | ANILLO |
| 12 | | 8603635 | | 1 | ARANDELA |
| 13 | | 8603405 | | 2 | TORNILLO, M8 X 50 |
| 14 | | 8603636 | | 1 | ARANDELA |
| 15 | | 8603637 | | 1 | HORQUILLA |
| 16 | | 8605279 | | 1 | CONVERTIDOR DE PAR, Torque |
| 17 | | 8604229 | | 1 | ANILLO |

**TRANSMISION - EJE DE ENTRADA**

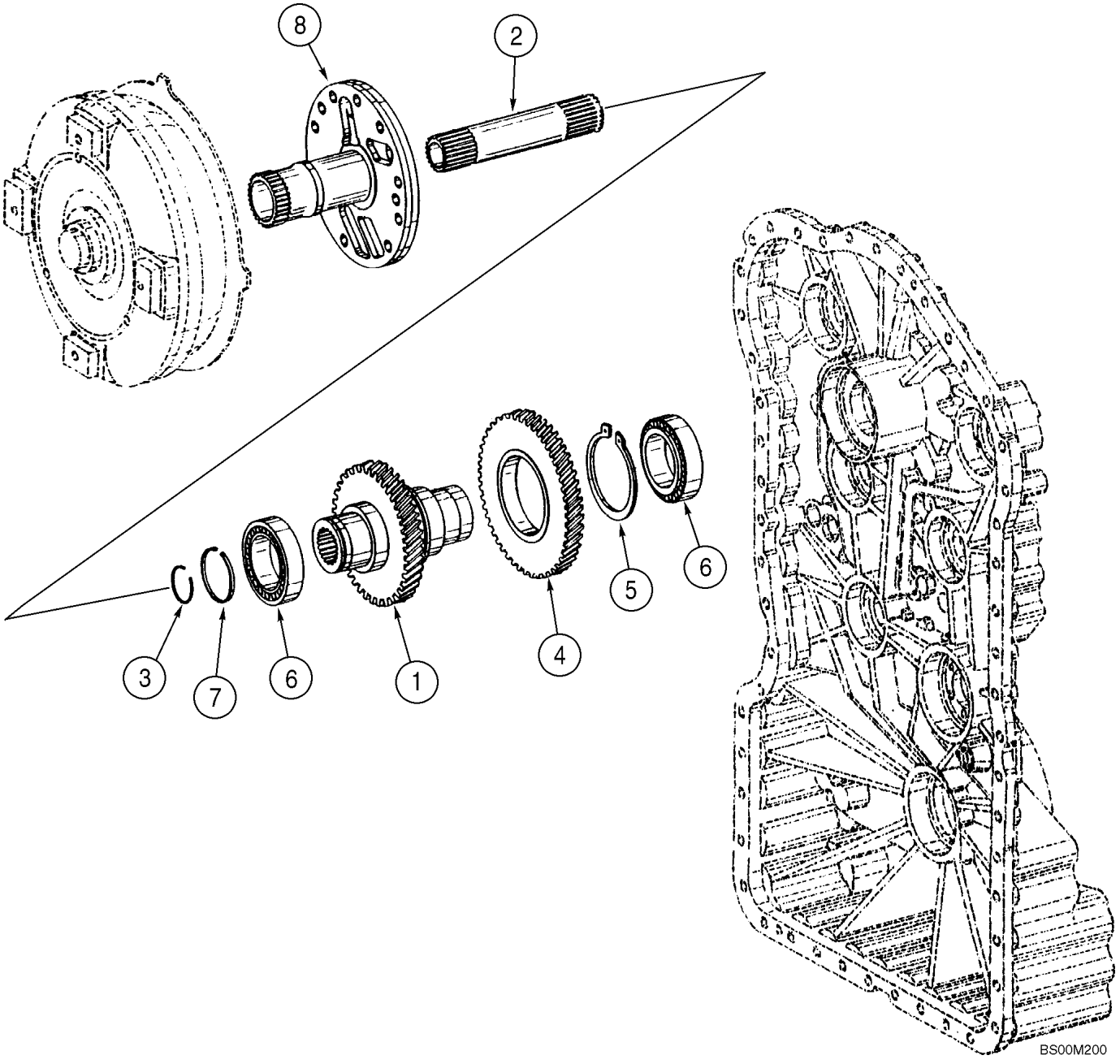

**TRANSMISION - EJE DE ENTRADA**

| REF | FN | PART NUMBER | YR/SN | QTY | DENOMINACION |
|---|---|---|---|---|---|
| | | 87572394 | | 1 | CAMBIO DE VELOCIDAD, See Figure(s) 06-03 - 06-20, 07-01; Incl. Refs. 1 - 8 |
| 1 | | 8603296 | | 1 | EJE, Input |
| 2 | | 8603297 | | 1 | EJE, Turbine |
| 3 | | 8603298 | | 1 | ANILLO DE RESORTE |
| 4 | | 8603299 | | 1 | PINON CONDUCTOR, Input |
| 5 | | 8603300 | | 1 | ANILLO |
| 6 | | 8603301 | | 2 | RODAMIENTO DE RODILLOS |
| 7 | | 8603302 | | 1 | ANILLO |
| 8 | | 8603778 | | 1 | EJE, Input |

**CONJUNTO DE LA TRANSMISION - ALOJAMIENTO**

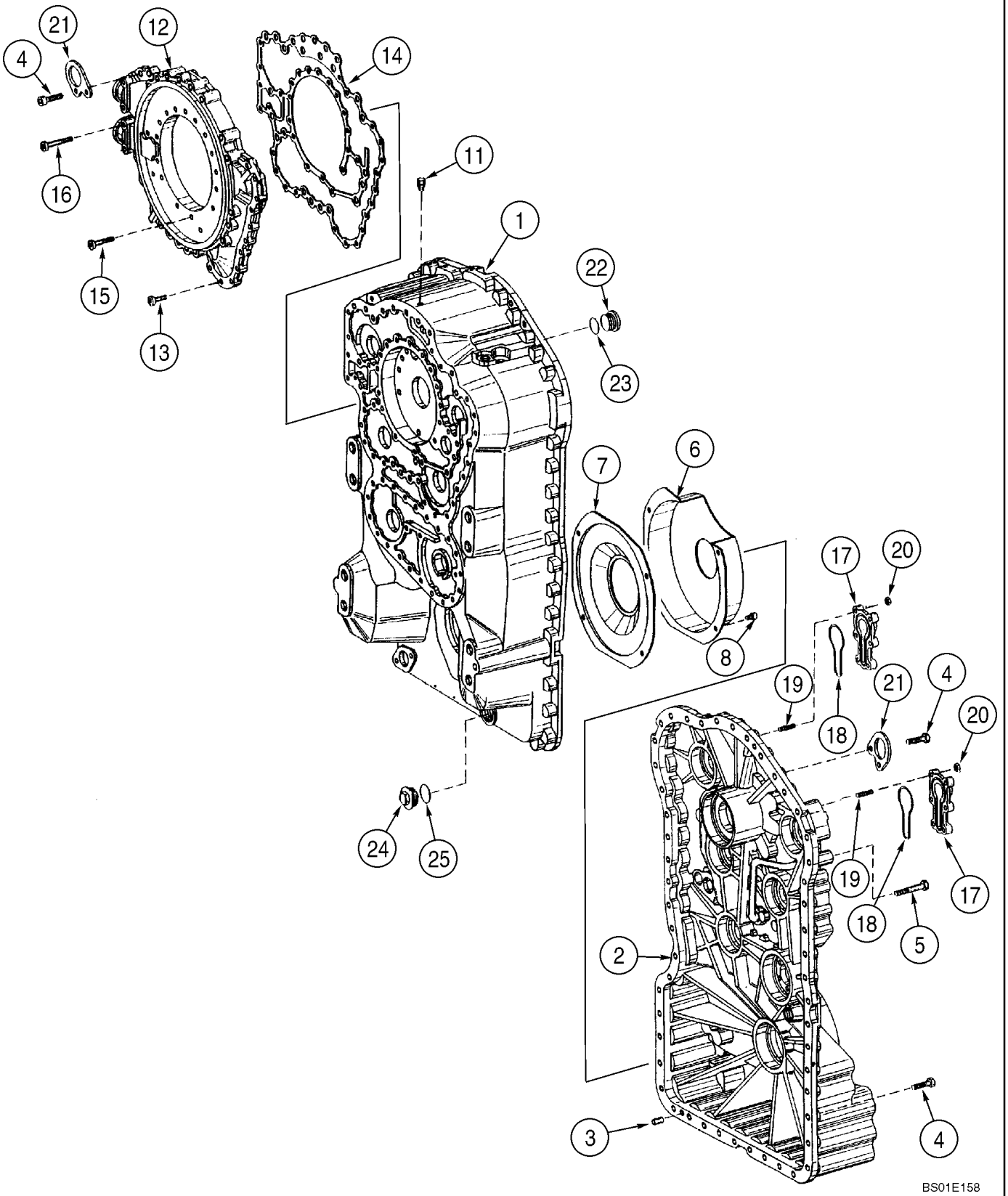

**CONJUNTO DE LA TRANSMISION - ALOJAMIENTO**

| REF | FN | PART NUMBER | YR/SN | QTY | DENOMINACION |
|---|---|---|---|---|---|
| | | 87572394 | | 1 | CAMBIO DE VELOCIDAD, See Figure(s) 06-03 - 06-20, 07-01; Incl. Refs. 1 - 25 |
| 1 | | 8605283 | | 1 | CAVIDAD, Front |
| 1A | | 8603779 | | 1 | VÁLVULA, DESCARGA, Not Illustrated |
| 2 | | 8603187 | | 1 | CAVIDAD, Rear |
| 3 | | 8603798 | | 2 | PERNO |
| 4 | | 8603469 | | 46 | TORNILLO, M10 x 65 |
| 5 | | 8603640 | | 7 | TORNILLO, M10 x 65 |
| 6 | | 8603304 | | 1 | FILTRO, Gear |
| 7 | | 8603305 | | 1 | FILTRO |
| 8 | | 8603306 | | 4 | TORNILLO |
| 11 | | 8603214 | | 1 | RESPIRADERO |
| 12 | | 8603307 | | 1 | CAVIDAD |
| 13 | | 8603308 | | 15 | TORNILLO |
| 14 | | 8603309 | | 1 | JUNTA HERMETICA |
| 15 | | 8603310 | | 21 | TORNILLO |
| 16 | | 8603311 | | 4 | TORNILLO |
| 17 | | 8603312 | | 2 | TAPADERA |
| 18 | | 8603313 | | 2 | JUNTA HERMETICA |
| 19 | | 8604714 | | 12 | PRISIONERO, M8 x 25 |
| 20 | | 8603315 | | 12 | TUERCA, M8 |
| 21 | | 8603316 | | 2 | MULETILLA DE FIJACION |
| 22 | | 8603317 | | 1 | TAPÓN, Incl. 23 |
| 23 | | 8603318 | | 1 | JUNTA HERMETICA |
| 24 | | 8603319 | | 1 | TAPÓN, Incl. 25 |
| 25 | | 8603318 | | 1 | JUNTA HERMETICA |

**CONJUNTO DE LA TRANSMISION - TUBOS DEL ALOJAMIENTO**

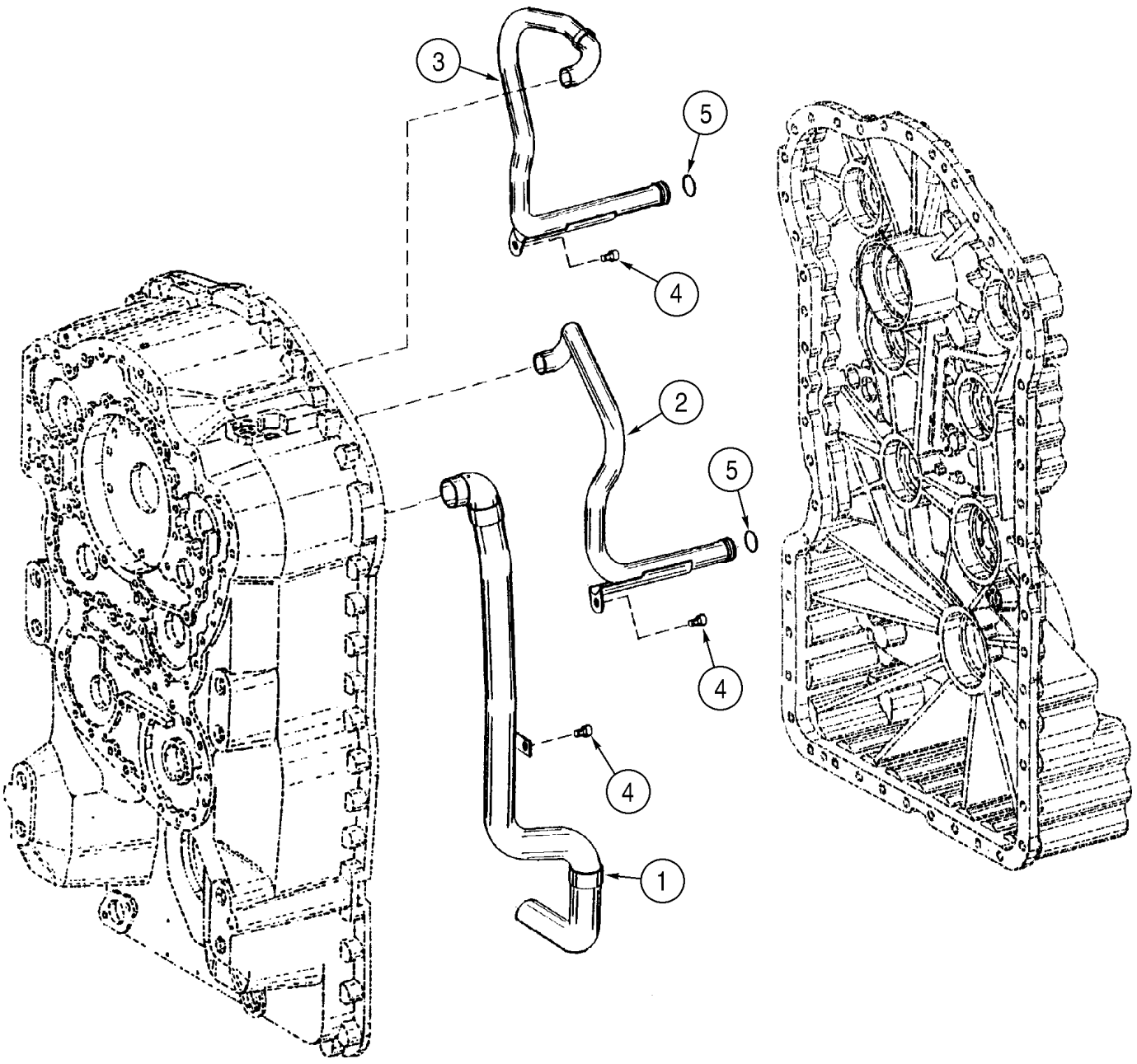

**CONJUNTO DE LA TRANSMISION - TUBOS DEL ALOJAMIENTO**

| REF | FN | PART NUMBER | YR/SN | QTY | DENOMINACION |
|---|---|---|---|---|---|
| | | 87572394 | | 1 | CAMBIO DE VELOCIDAD, See Figure(s) 06-03 - 06-20, 07-01; Incl. Refs. 1 - 5 |
| 1 | | 8603320 | | 1 | TUBO, Suction |
| 2 | | 8605280 | | 1 | TUBO |
| 3 | | 8605281 | | 1 | TUBO |
| 4 | | 8603306 | | 3 | TORNILLO |
| 5 | | 8603323 | | 2 | JUNTA HERMETICA |

**TRANSMISION - CONJUNTO DEL EMBRAGUE, PRIMERO**

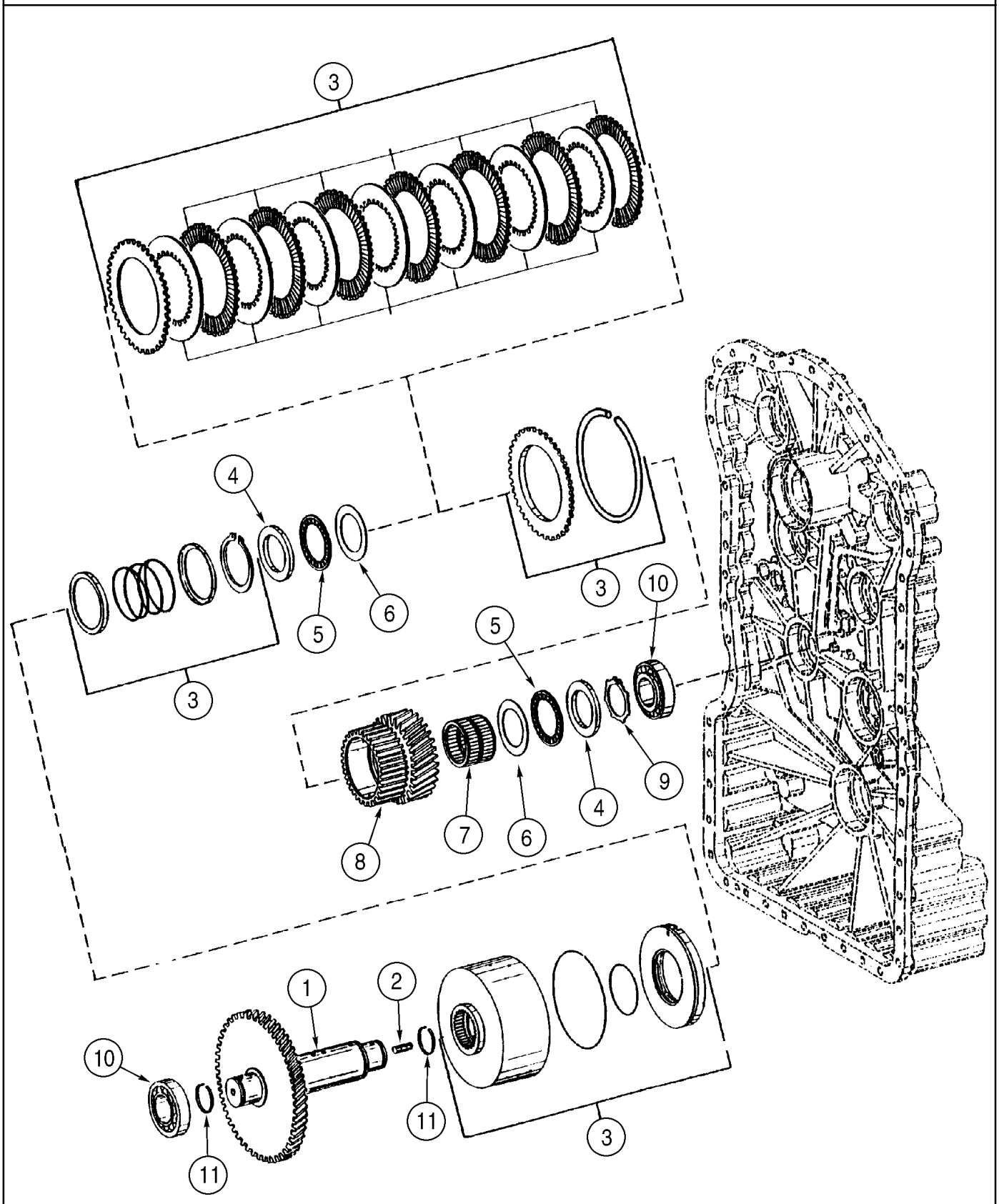

**TRANSMISION - CONJUNTO DEL EMBRAGUE, PRIMERO**

| REF | FN | PART NUMBER | YR/SN | QTY | DENOMINACION |
|---|---|---|---|---|---|
| | | 87572394 | | 1 | CAMBIO DE VELOCIDAD, See Figure(s) 06-03 - 06-20, 07-01; Incl. Refs. 1 - 11 |
| 1 | | 8603406 | | 1 | EJE |
| 2 | | 8603407 | | 1 | PRISIONERO, M10 x 16 |
| 3 | | 8603664 | | 1 | EMBRAGUE |
| 4 | | 8603430 | | 2 | DISCO |
| 5 | | 8603431 | | 2 | RODAMIENTO DE RPDILLOS |
| 6 | | 8603432 | | 2 | ARANDELA |
| 7 | | 8603643 | | 1 | RODAMIENTO DE RPDILLOS |
| 8 | | 8605282 | | 1 | ENGRANAJE |
| 9 | | 8603434 | | 1 | ANILLO DE RESORTE |
| 10 | | 8603435 | | 2 | RODAMIENTO DE RODILLOS |
| 11 | | 8603436 | | 2 | SEGMENTO |

**TRANSMISION - CONJUNTO DEL EMBRAGUE, SEGUNDO**

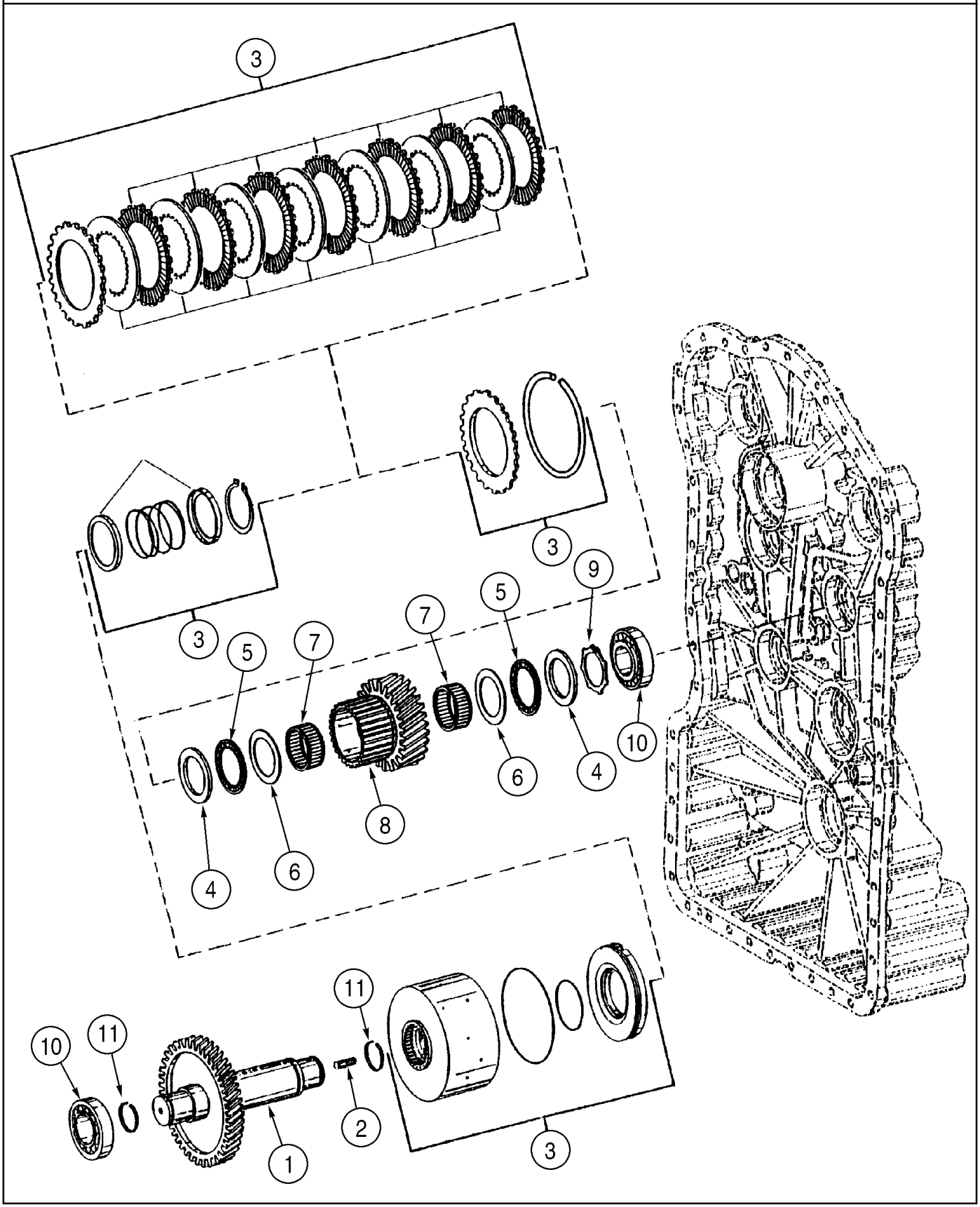

**TRANSMISION - CONJUNTO DEL EMBRAGUE, SEGUNDO**

| REF | FN | PART NUMBER | YR/SN | QTY | DENOMINACION |
|---|---|---|---|---|---|
| | | 87572394 | | 1 | CAMBIO DE VELOCIDAD, See Figure(s) 06-03 - 06-20, 07-01; Incl. Refs. 1 - 11 |
| 1 | | 8603437 | | 1 | EJE |
| 2 | | 8603407 | | 1 | PRISIONERO, M10 x 16 |
| 3 | | 8603665 | | 1 | EMBRAGUE |
| 4 | | 8603438 | | 2 | DISCO |
| 5 | | 8603439 | | 2 | RODAMIENTO DE RODILLOS |
| 6 | | 8603440 | | 2 | ARANDELA |
| 7 | | 8603441 | | 2 | RODAMIENTO DE RODILLOS |
| 8 | | 8603645 | | 1 | ENGRANAJE |
| 9 | | 8603442 | | 1 | RETENEDOR |
| 10 | | 8603435 | | 2 | RODAMIENTO DE RODILLOS |
| 11 | | 8603436 | | 2 | SEGMENTO |

**TRANSMISION - CONJUNTO DEL EMBRAGUE, TERCERO**

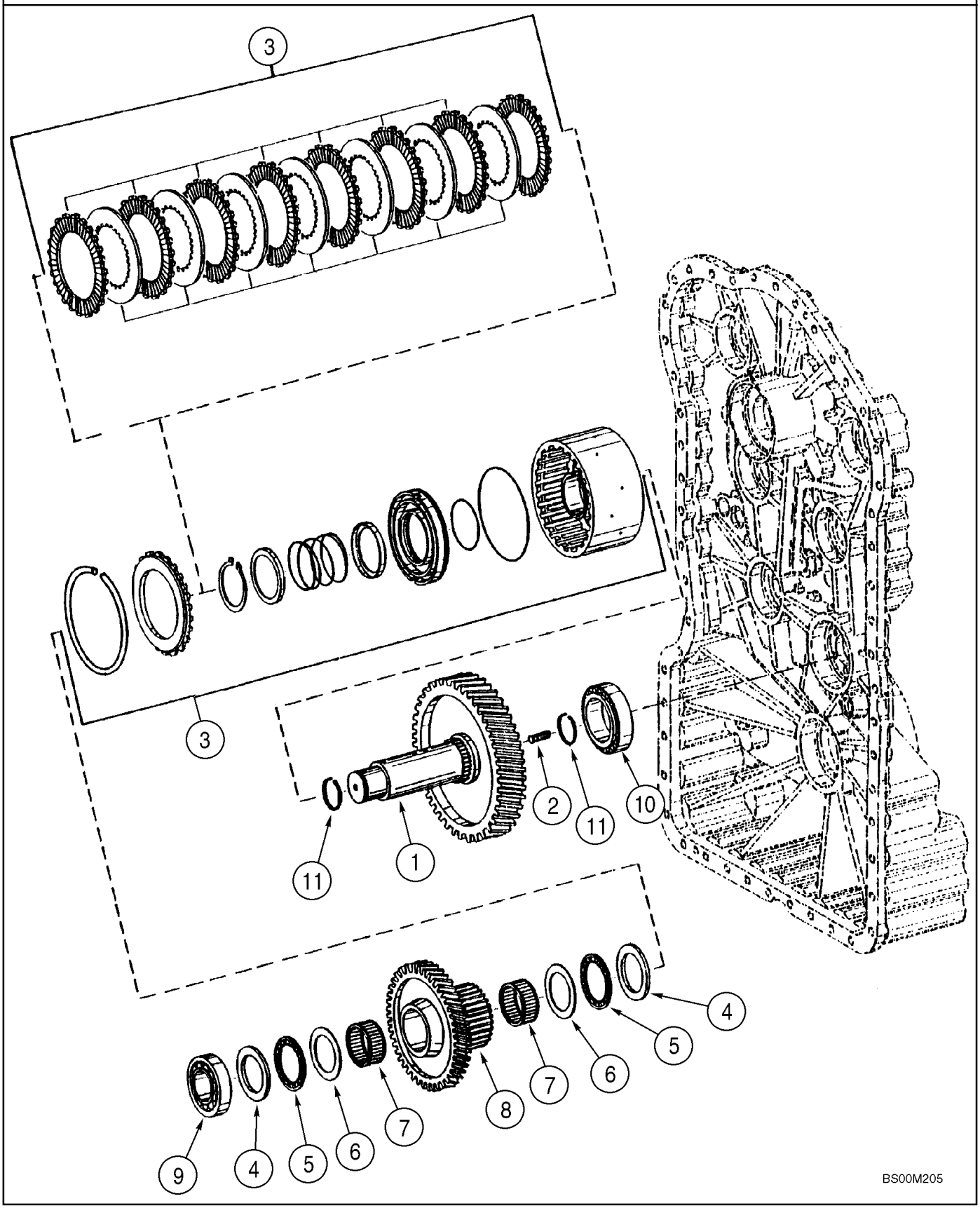

**TRANSMISION - CONJUNTO DEL EMBRAGUE, TERCERO**

| REF | FN | PART NUMBER | YR/SN | QTY | DENOMINACION |
|---|---|---|---|---|---|
| | | 87572394 | | 1 | CAMBIO DE VELOCIDAD, See Figure(s) 06-03 - 06-20, 07-01; Incl. Refs. 1 - 11 |
| 1 | | 8603443 | | 1 | EJE |
| 2 | | 8603407 | | 1 | PRISIONERO, M10 x 16 |
| 3 | | 8603665 | | 1 | EMBRAGUE |
| 4 | | 8603438 | | 2 | DISCO |
| 5 | | 8603439 | | 2 | RODAMIENTO DE RODILLOS |
| 6 | | 8603440 | | 2 | ARANDELA |
| 7 | | 8603441 | | 2 | RODAMIENTO DE RODILLOS |
| 8 | | 8603444 | | 1 | PIÑÓN LOCO |
| 9 | | 8603435 | | 1 | RODAMIENTO DE RODILLOS |
| 10 | | 8603301 | | 1 | RODAMIENTO DE RODILLOS |
| 11 | | 8603436 | | 2 | SEGMENTO |

**TRANSMISION - CONJUNTO DEL EMBRAGUE, CUARTO**

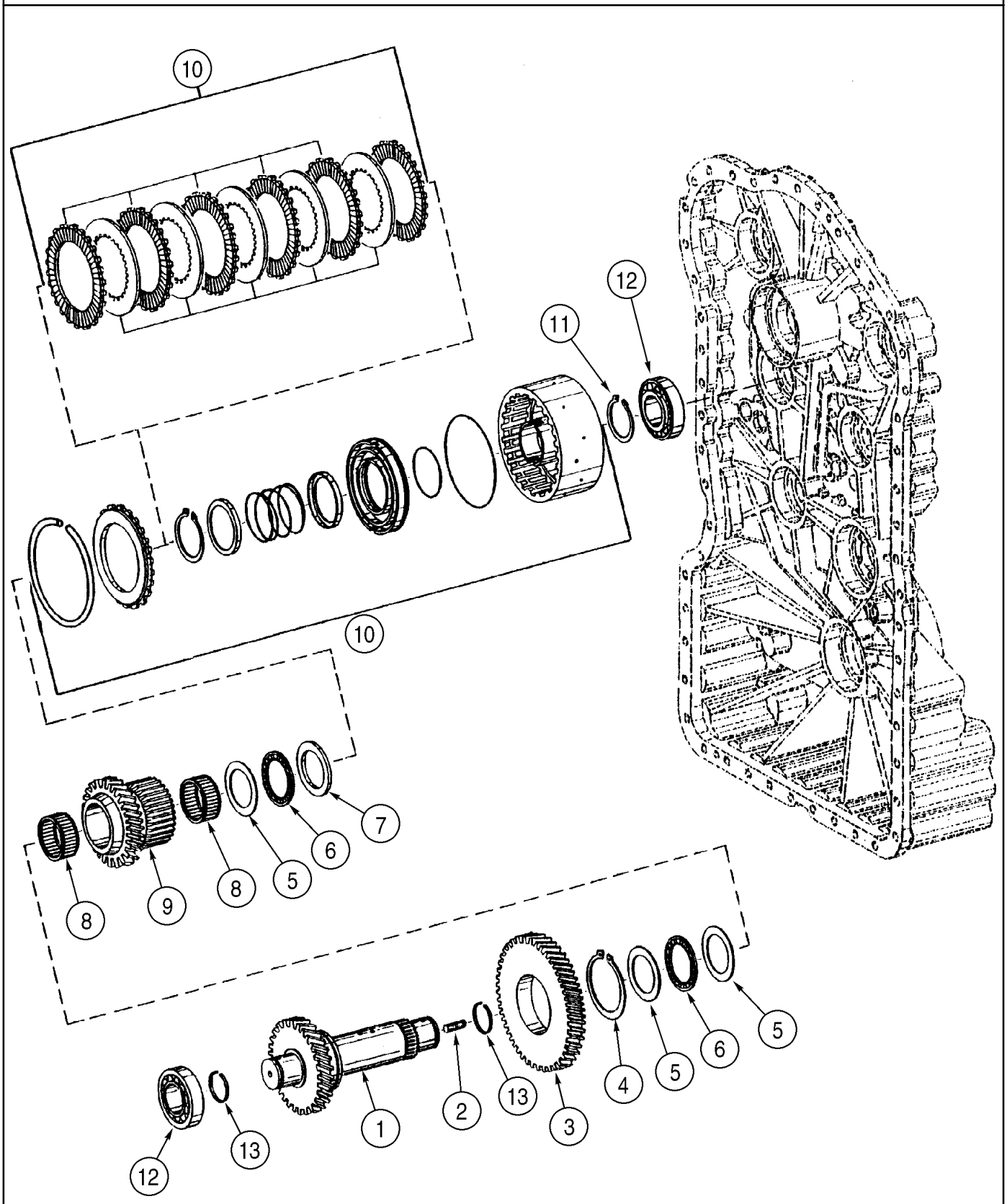

**TRANSMISION - CONJUNTO DEL EMBRAGUE, CUARTO**

| REF | FN | PART NUMBER | YR/SN | QTY | DENOMINACION |
|---|---|---|---|---|---|
| | | 87572394 | | 1 | CAMBIO DE VELOCIDAD, See Figure(s) 06-03 - 06-20, 07-01; Incl. Refs. 1 - 13 |
| 1 | | 8603445 | | 1 | EJE |
| 2 | | 8603407 | | 1 | PRISIONERO, M10 x 16 |
| 3 | | 8603446 | | 1 | ENGRANAJE |
| 4 | | P0236317R | | 1 | ANILLO DE RESORTE |
| 5 | | 8603440 | | 3 | ARANDELA |
| 6 | | 8603439 | | 2 | RODAMIENTO DE RODILLOS |
| 7 | | 8603438 | | 1 | DISCO |
| 8 | | 8603441 | | 2 | RODAMIENTO DE RODILLOS |
| 9 | | 8603447 | | 1 | PIÑÓN LOCO |
| 10 | | 8603646 | | 1 | EMBRAGUE |
| 11 | | 8603209 | | 1 | ANILLO DE RESORTE |
| 12 | | 8603435 | | 2 | RODAMIENTO DE RODILLOS |
| 13 | | 8603436 | | 2 | SEGMENTO |

**TRANSMISION - CONJUNTO DEL EMBRAGUE, AVANCE**

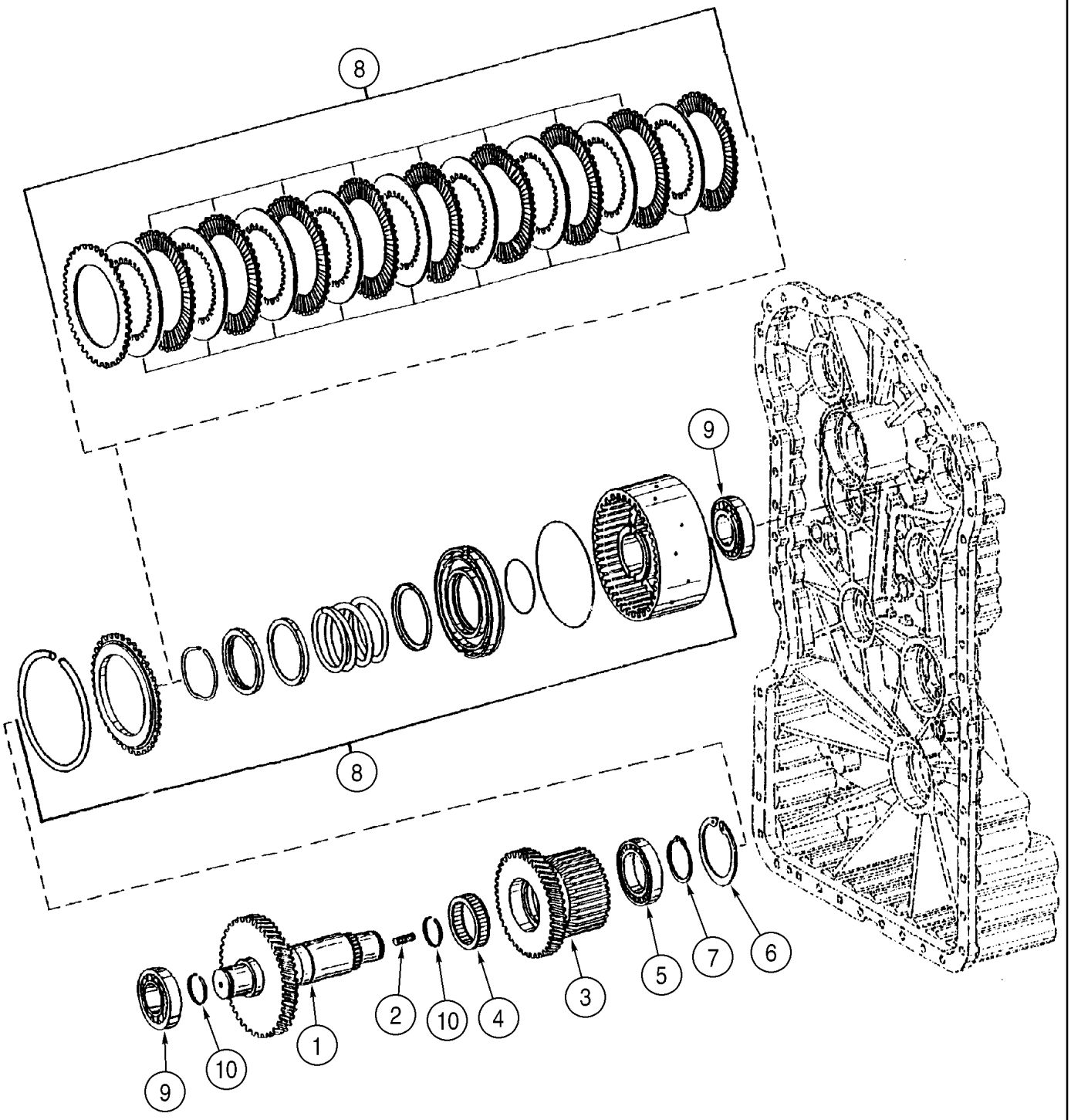

**TRANSMISION - CONJUNTO DEL EMBRAGUE, AVANCE**

| REF | FN | PART NUMBER | YR/SN | QTY | DENOMINACION |
|---|---|---|---|---|---|
| | | 87572394 | | 1 | CAMBIO DE VELOCIDAD, See Figure(s) 06-03 - 06-20, 07-01; Incl. Refs. 1 - 10 |
| 1 | | 8603448 | | 1 | EJE |
| 2 | | 8603407 | | 1 | PRISIONERO, M10 x 16 |
| 3 | | 8603449 | | 1 | PIÑÓN LOCO |
| 4 | | 8603450 | | 1 | RODAMIENTO DE RODILLOS |
| 5 | | 8604716 | | 1 | RODAMIENTO DE BOLAS |
| 6 | | 800-2190 | | 1 | ANILLO DE RESORTE, M90, Int |
| 7 | | 8603452 | | 1 | RETENEDOR |
| 8 | | 8603666 | | 1 | EMBRAGUE |
| 9 | | 8603435 | | 2 | RODAMIENTO DE RODILLOS |
| 10 | | 8603436 | | 2 | SEGMENTO |

**TRANSMISION - CONJUNTO DEL EMBRAGUE, RETROCESO**

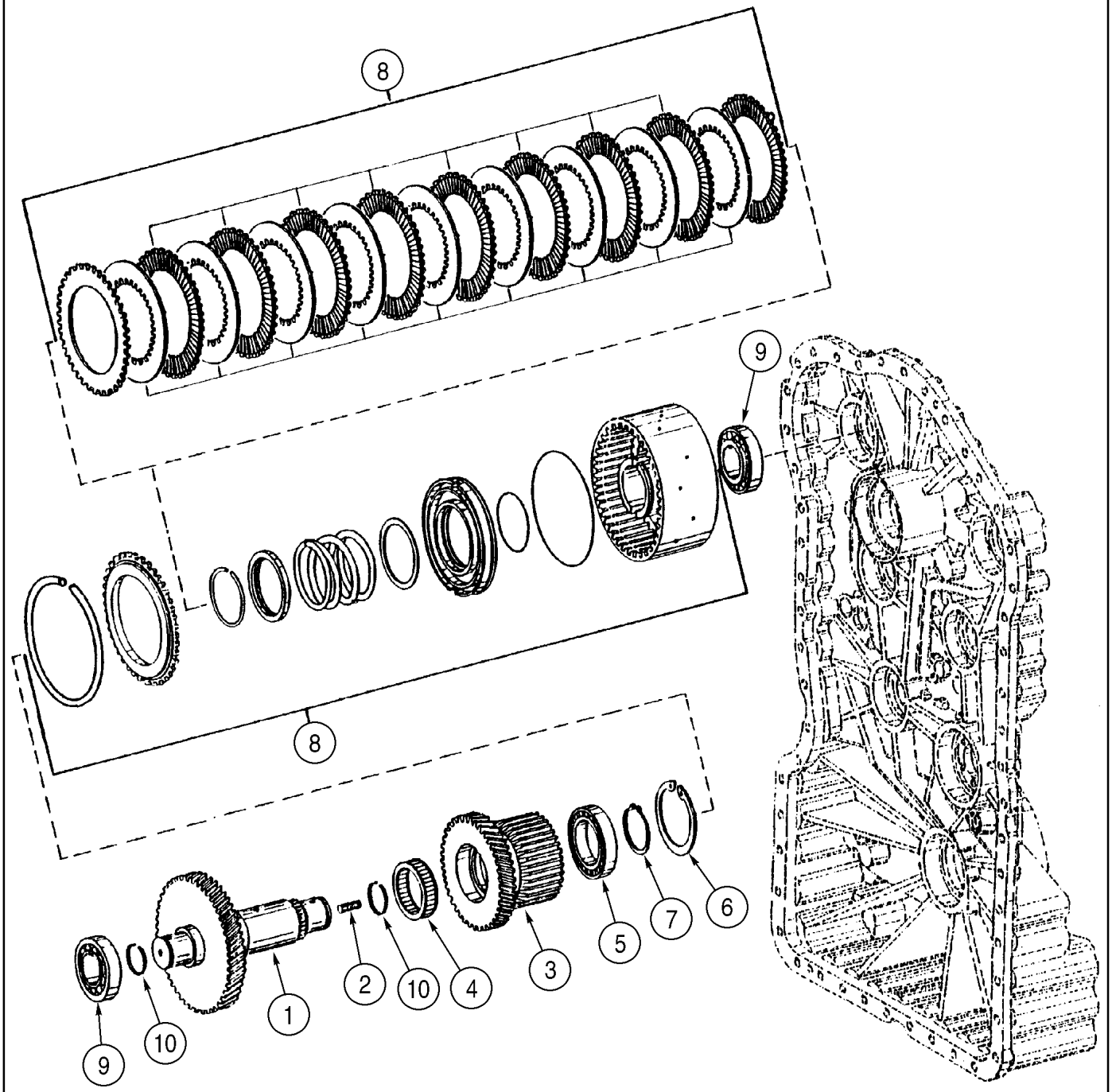

**TRANSMISION - CONJUNTO DEL EMBRAGUE, RETROCESO**

| REF | FN | PART NUMBER | YR/SN | QTY | DENOMINACION |
|---|---|---|---|---|---|
| | | 87572394 | | 1 | CAMBIO DE VELOCIDAD, See Figure(s) 06-03 - 06-20, 07-01; Incl. Refs. 1 - 11 |
| 1 | | 8603457 | | 1 | EJE |
| 2 | | 8603407 | | 1 | PRISIONERO, M10 x 16 |
| 3 | | 8603449 | | 1 | PIÑÓN LOCO |
| 4 | | 8603450 | | 1 | RODAMIENTO DE RODILLOS |
| 5 | | 8604716 | | 1 | RODAMIENTO DE BOLAS |
| 6 | | 800-2190 | | 1 | ANILLO DE RESORTE, M90, Int |
| 7 | | 8603452 | | 1 | RETENEDOR |
| 8 | | 8603666 | | 1 | EMBRAGUE |
| 9 | | 8603435 | | 2 | RODAMIENTO DE RODILLOS |
| 10 | | 8603436 | | 2 | SEGMENTO |
| 11 | | 8603499 | | 1 | ANILLO DE RESORTE, Not Illustrated |

**TRANSMISION - EJE, SALIDA**

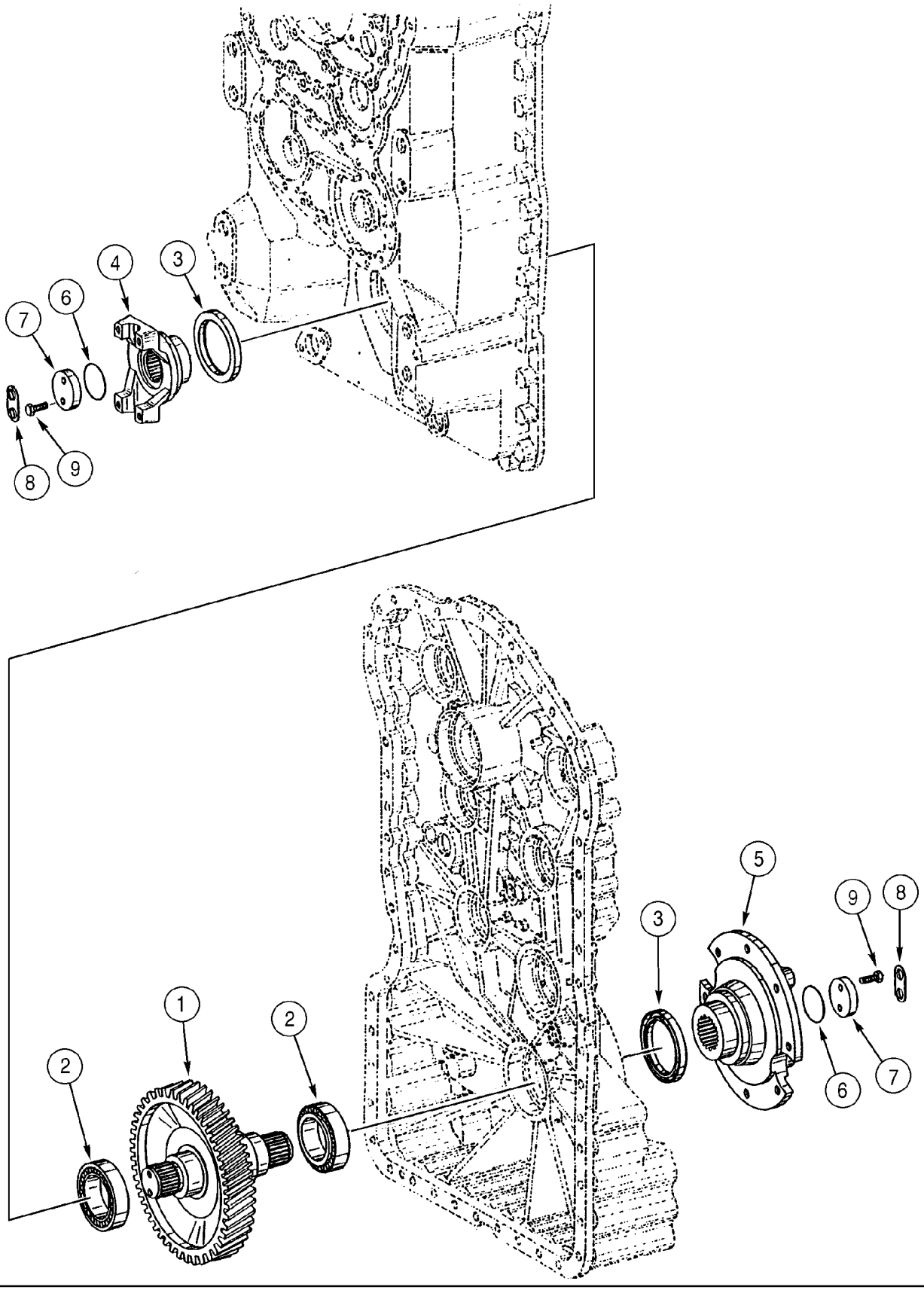

**TRANSMISION - EJE, SALIDA**

| REF | FN | PART NUMBER | YR/SN | QTY | DENOMINACION |
|---|---|---|---|---|---|
| | | 87572394 | | 1 | CAMBIO DE VELOCIDAD, See Figure(s) 06-03 - 06-20, 07-01; Incl. Refs. 1 - 9 |
| 1 | | 8603324 | | 1 | EJE |
| 2 | | 8603301 | | 2 | RODAMIENTO DE RODILLOS |
| 3 | | 8603223 | | 2 | ANILLO DE CIERRE |
| 4 | | 8603326 | | 1 | BRIDA, Output; Rear |
| 5 | | 8603651 | | 1 | HORQUILLA, Output Flange; For Parking Brake Assembly, See Figure 07-01 |
| 6 | | 8603219 | | 2 | JUNTA HERMETICA |
| 7 | | 8603220 | | 2 | ARANDELA |
| 8 | | 8603221 | | 2 | ARANDELA |
| 9 | | 8603325 | | 4 | TORNILLO, 8 x 25 |

**TRANSMISION - TOMA DE FUERZA**

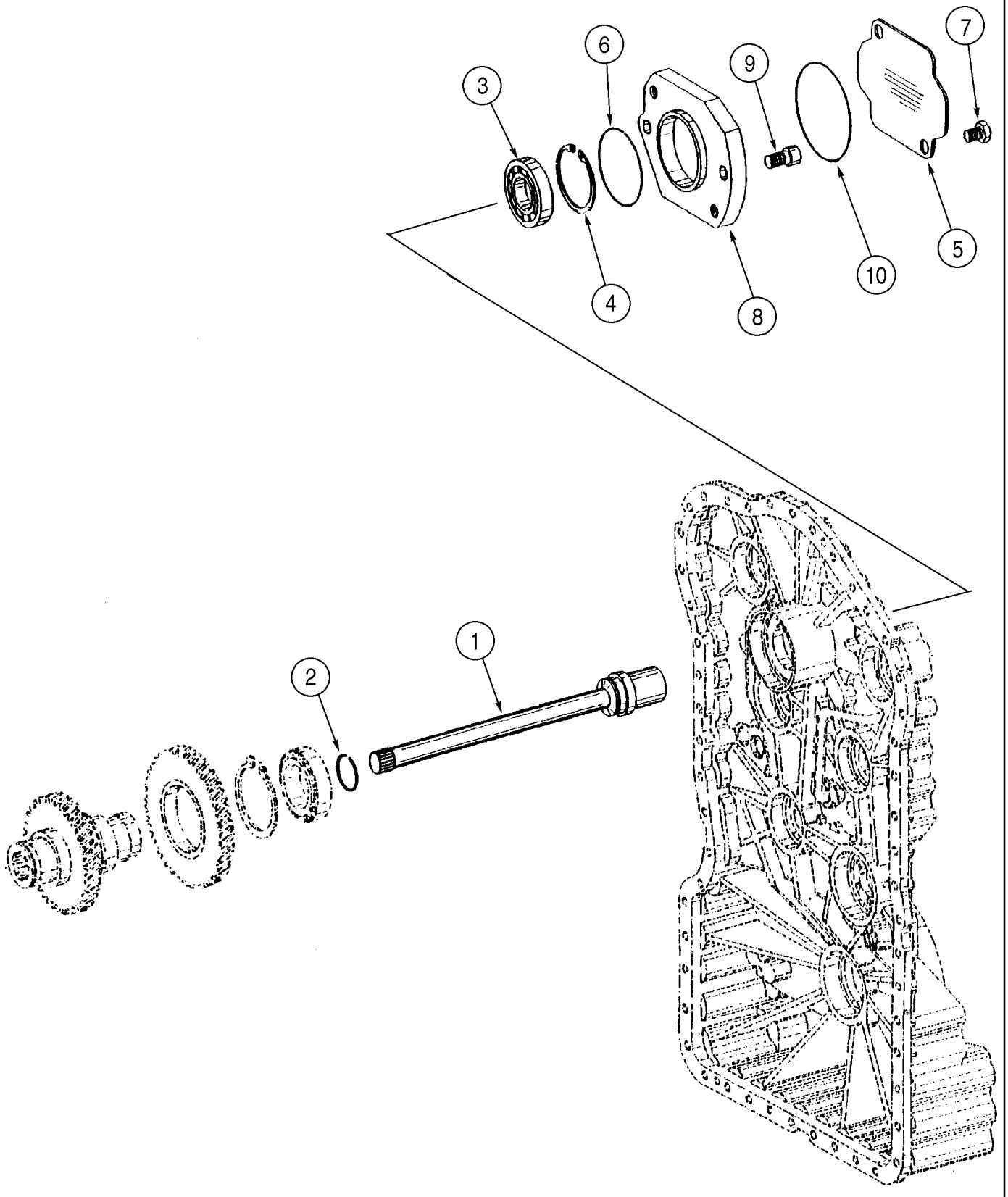

**TRANSMISION - TOMA DE FUERZA**

| REF | FN | PART NUMBER | YR/SN | QTY | DENOMINACION |
|---|---|---|---|---|---|
| | | 87572394 | | 1 | CAMBIO DE VELOCIDAD, See Figure(s) 06-03 - 06-20, 07-01; Incl. Refs. 1 - 10 |
| 1 | | 8603655 | | 1 | EJE, Pump |
| 2 | | 8603352 | | 1 | ANILLO DE RESORTE |
| 3 | | 8603353 | | 1 | RODAMIENTO DE BOLAS |
| 4 | | 8603354 | | 1 | ANILLO DE RESORTE |
| 5 | | 8603656 | | 1 | PLAQUITA |
| 6 | | 8603527 | | 1 | JUNTA HERMETICA |
| 7 | | 8603274 | | 2 | TORNILLO |
| 8 | | 8603657 | | 1 | BRIDA |
| 9 | | 8603658 | | 2 | TORNILLO, M16 x 30 |
| 10 | | 8603355 | | 1 | JUNTA HERMETICA |

**TRANSMISION - PLACAS DE LAS VALVULAS**

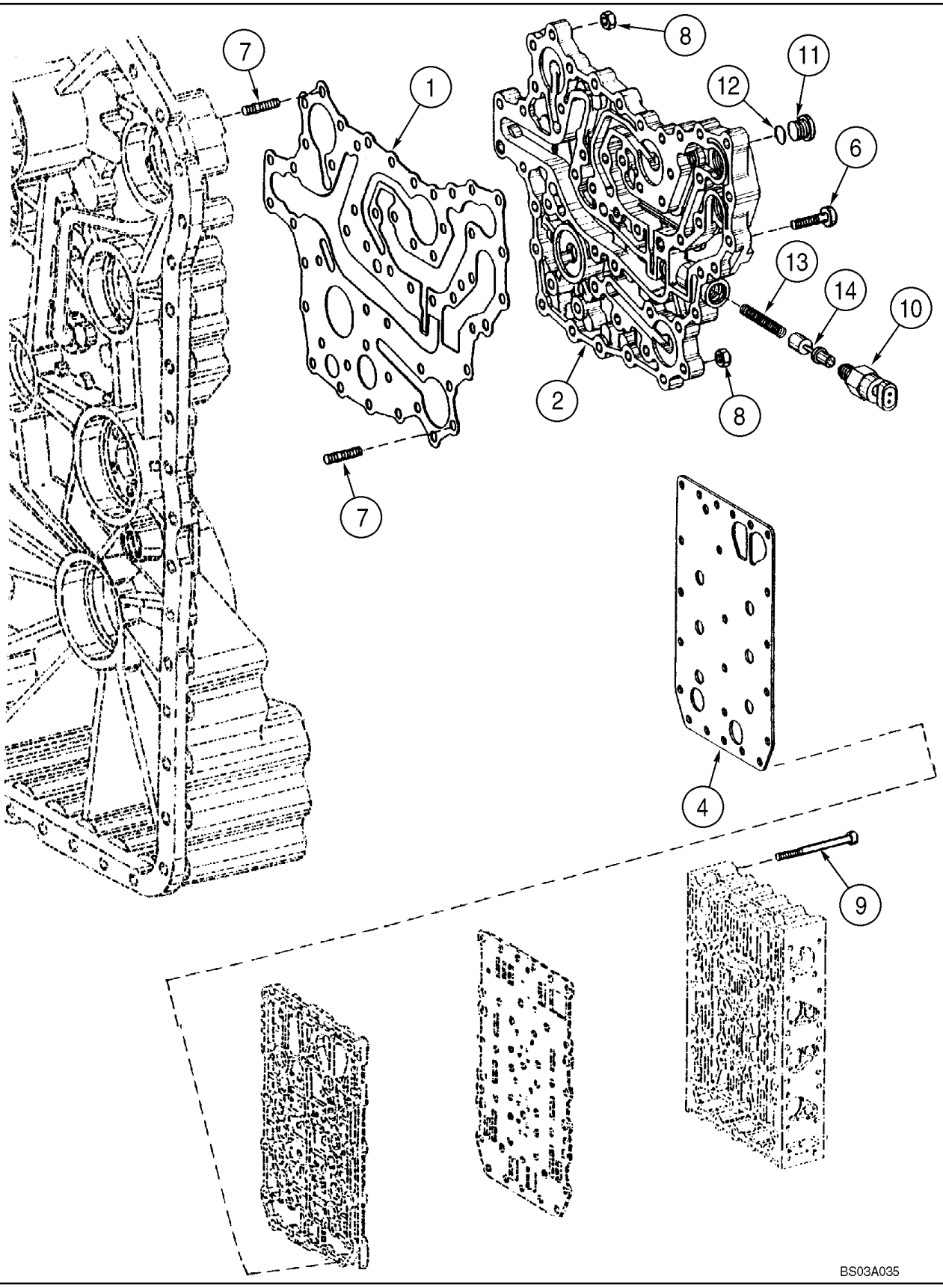

**TRANSMISION - PLACAS DE LAS VALVULAS**

| REF | FN | PART NUMBER | YR/SN | QTY | DENOMINACION |
|---|---|---|---|---|---|
| | | 87572394 | | 1 | CAMBIO DE VELOCIDAD, See Figure(s) 06-03 - 06-20, 07-01; Incl. Refs. 1 - 14 |
| 1 | | 8603184 | | 1 | ANILLO DE CIERRE |
| 2 | | 8603185 | | 1 | COLECTOR |
| 4 | | 8603180 | | 1 | LAMINA |
| 6 | | 8603308 | | 37 | TORNILLO |
| 7 | | 8604714 | | 14 | PRISIONERO, M8 x 25 |
| 8 | | 8603315 | | 14 | TUERCA, M8 |
| 9 | | 8603182 | | 23 | TORNILLO, M6 x 76 |
| 10 | | 8603537 | | 1 | CONTACTOR, Filter Maintenance |
| 11 | | 8603357 | | 1 | TAPÓN, M16 x 1,5; Incl. 12 |
| 12 | | 8603358 | | 1 | JUNTA HERMETICA |
| 13 | | 8603534 | | 1 | MUELLE COMPRESOR |
| 14 | | 8603533 | | 1 | EMBOLO |

**TRANSMISION - VALVULA, CONTROL**

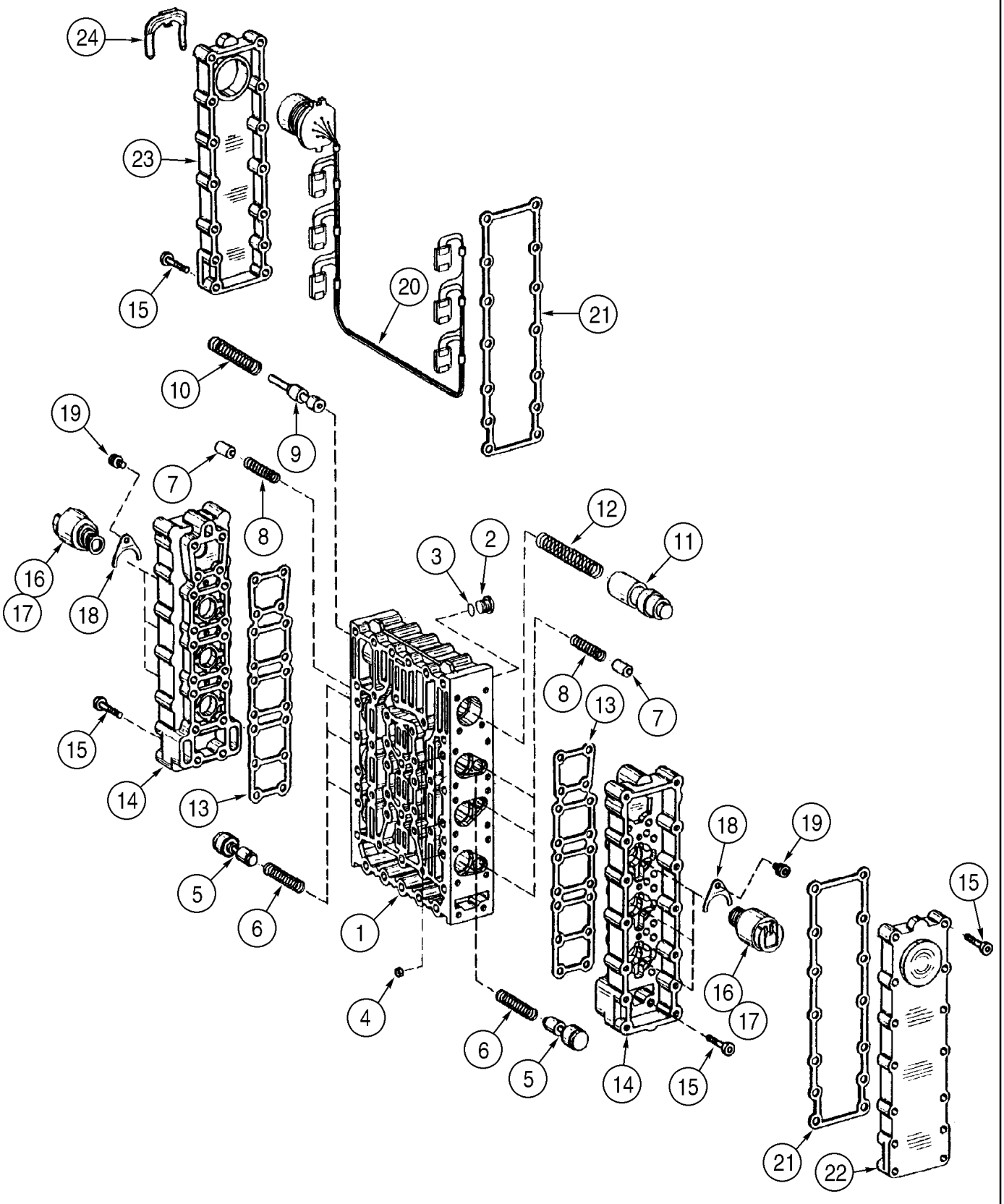

**TRANSMISION - VALVULA, CONTROL**

| REF | FN | PART NUMBER | YR/SN | QTY | DENOMINACION |
|---|---|---|---|---|---|
| | | 87572394 | | 1 | CAMBIO DE VELOCIDAD, See Figure(s) 06-03 - 06-20, 07-01; Incl. Refs. 1 - 24 |
| | | 8603179 | | 1 | VALVULA HIDRAULICA, Incl. 1 - 24; Incl. Figure 06-18 |
| 1 | | 8603365 | | 1 | CUERPO DE VALVULA |
| 2 | | 8603366 | | 8 | TAPÓN, M10 x 1; Incl. 3 |
| 3 | | 8603215 | | 1 | JUNTA HERMETICA |
| 4 | | 8603367 | | 6 | ORIFICIO |
| 5 | | 8603368 | | 6 | EMBOLO |
| 6 | | 8603369 | | 6 | COMPRESOR PARA RESORTES |
| 7 | | 8603370 | | 6 | EMBOLO |
| 8 | | 8603371 | | 6 | COMPRESOR PARA RESORTES |
| 9 | | 8603372 | | 1 | EMBOLO |
| 10 | | 8603374 | | 1 | COMPRESOR PARA RESORTES |
| 11 | | 8603623 | | 1 | EMBOLO |
| 12 | | 8603375 | | 1 | COMPRESOR PARA RESORTES |
| 13 | | 8603786 | | 2 | JUNTA HERMETICA |
| 14 | | 8603376 | | 2 | CAVIDAD |
| 15 | | 8603377 | | 64 | TORNILLO |
| 16 | | 8603624 | | 6 | DISPOS.DE REGULACION, Pressure; Incl. 17 |
| 17 | | 8603538 | | 1 | JUNTA HERMETICA |
| 18 | | 8603218 | | 6 | PLACA, Locating |
| 19 | | 8603359 | | 6 | TORNILLO |
| 20 | | 8603625 | | 1 | HAZ |
| 21 | | 8603787 | | 2 | JUNTA HERMETICA |
| 22 | | 8603361 | | 1 | TAPADERA, Closed |
| 23 | | 8603360 | | 1 | TAPADERA, Harness Adapter |
| 24 | | 8603362 | | 1 | BORNE |

**TRANSMISION - VALVULA, CONTROL**

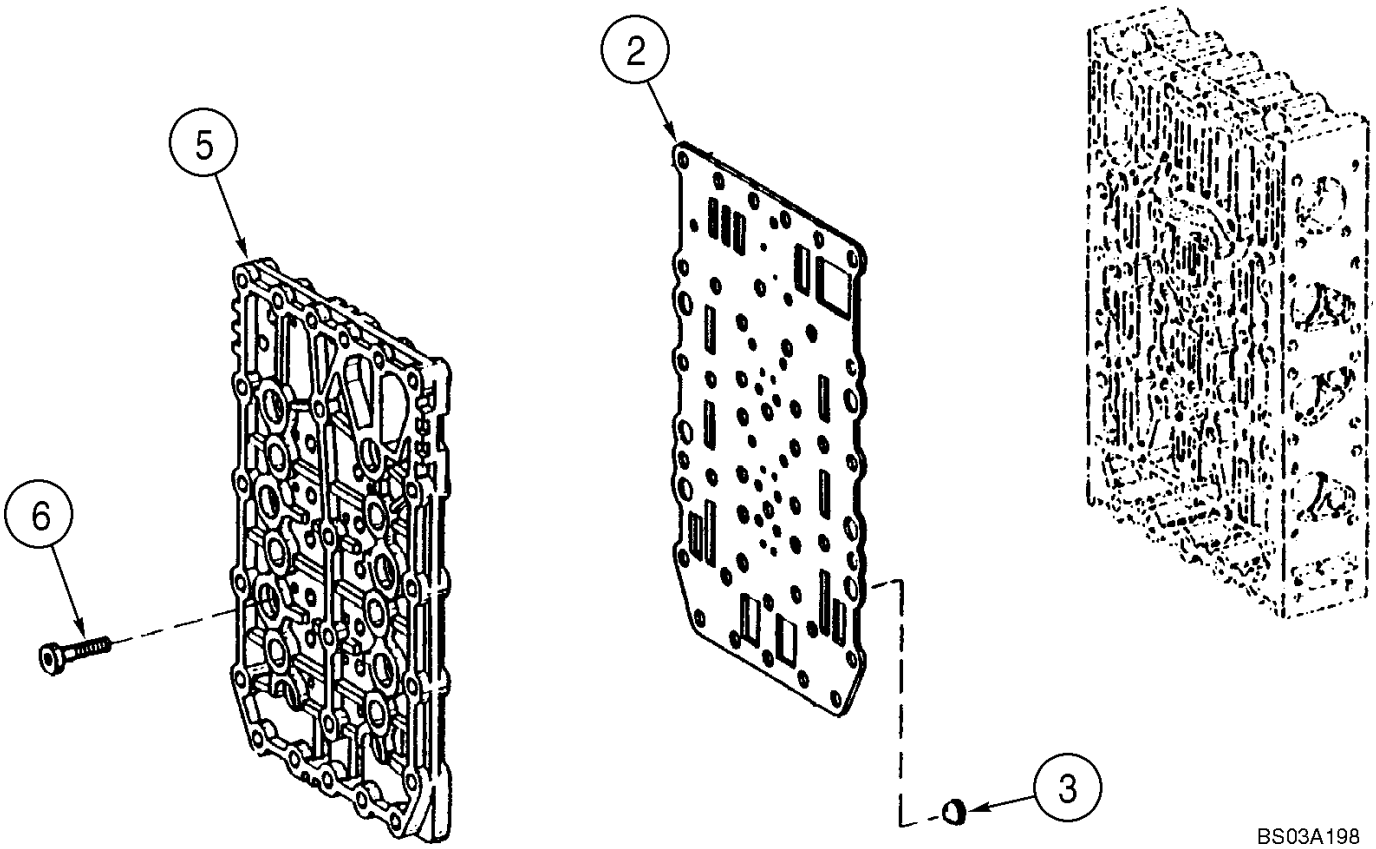

**TRANSMISION - VALVULA, CONTROL**

| REF | FN | PART NUMBER | YR/SN | QTY | DENOMINACION |
|---|---|---|---|---|---|
| | | 87572394 | | 1 | CAMBIO DE VELOCIDAD, See Figure(s) 06-03 - 06-20, 07-01; Incl. Refs. 2 - 6 |
| | | 8603179 | | 1 | VALVULA HIDRAULICA, Incl. 2 - 6; Incl. Figure 06-17 |
| 2 | | 8603181 | | 1 | LAMINA |
| 3 | | 8603363 | | 6 | PANTALLA PROTECTORA, Filter |
| 5 | | 8603628 | | 1 | PLACA, Distribution |
| 6 | | 8603183 | | 18 | TORNILLO, M6 x 23 |

**TRANSMISION - VALVULA, REGULADOR Y BOMBA DE ACEITE**

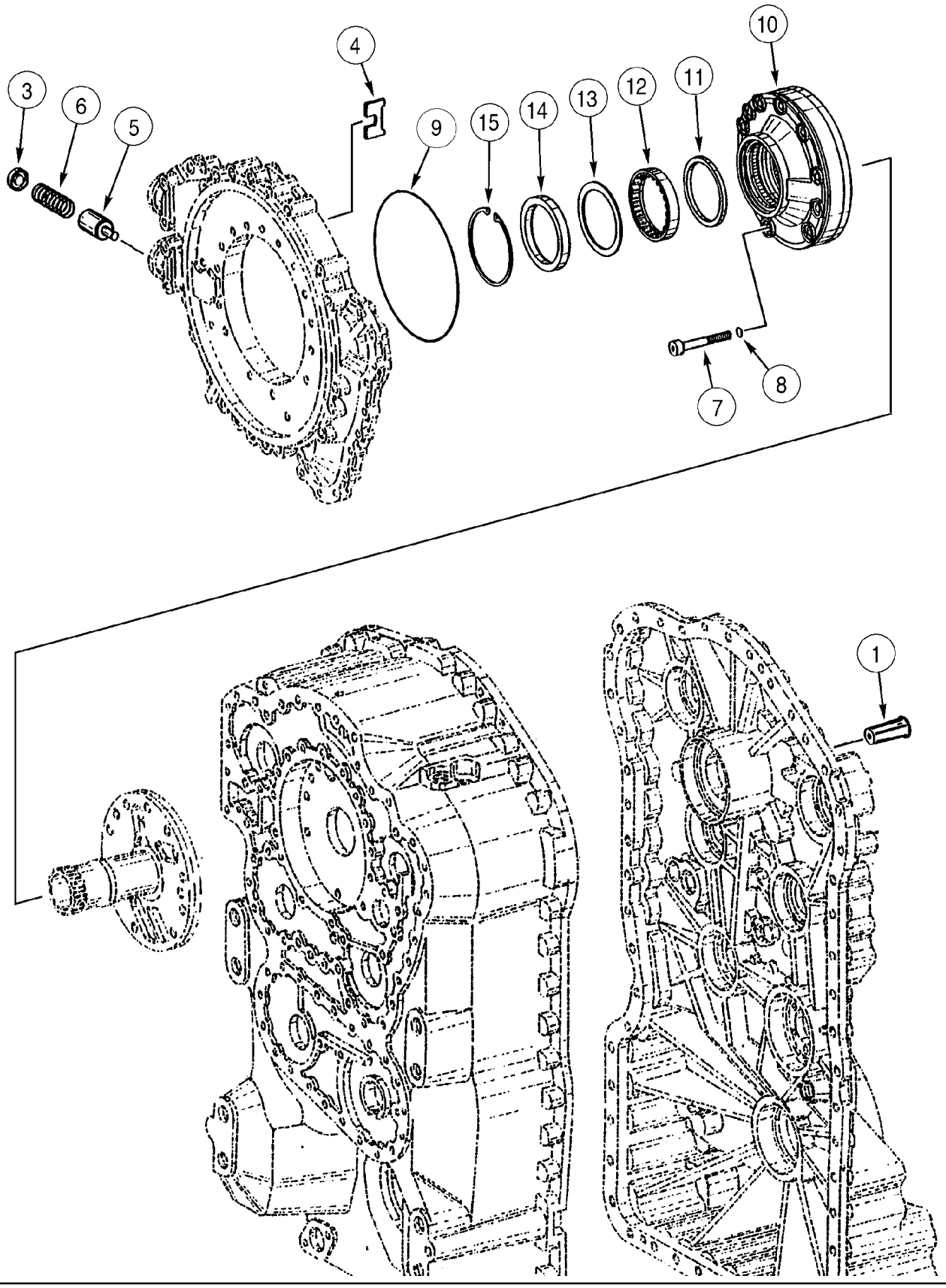

**TRANSMISION - VALVULA, REGULADOR Y BOMBA DE ACEITE**

| REF | FN | PART NUMBER | YR/SN | QTY | DENOMINACION |
|---|---|---|---|---|---|
| | | 87572394 | | 1 | CAMBIO DE VELOCIDAD, See Figure(s) 06-03 - 06-20, 07-01; Incl. Refs. 1 - 15 |
| 1 | | 8603778 | | 1 | EJE |
| 3 | | 8603380 | | 1 | PLACA DE FRENO, Pressure |
| 4 | | 8603381 | | 1 | ARANDELA |
| 5 | | 8603382 | | 1 | EMBOLO |
| 6 | | 8603383 | | 1 | COMPRESOR PARA RESORTES |
| 7 | | 8603384 | | 10 | TORNILLO, Incl. 8 |
| 8 | | 8603385 | | 10 | JUNTA HERMETICA |
| 9 | | 8603386 | | 1 | JUNTA HERMETICA |
| 10 | | 8603387 | | 1 | BOMBA HIDRÁULICA, Oil Pressure |
| 11 | | 8603388 | | 1 | ANILLO |
| 12 | | 8603390 | | 1 | RODAMIENTO DE RPDILLOS |
| 13 | | 8603389 | | 1 | SUPLEMENTO |
| 14 | | 8603391 | | 1 | JUNTA HERMETICA |
| 15 | | 8603392 | | 1 | ANILLO DE RESORTE |

**TRANSMISION - SENSOR, CUBIERTA DE LA BOMBA Y VELOCIDADES**

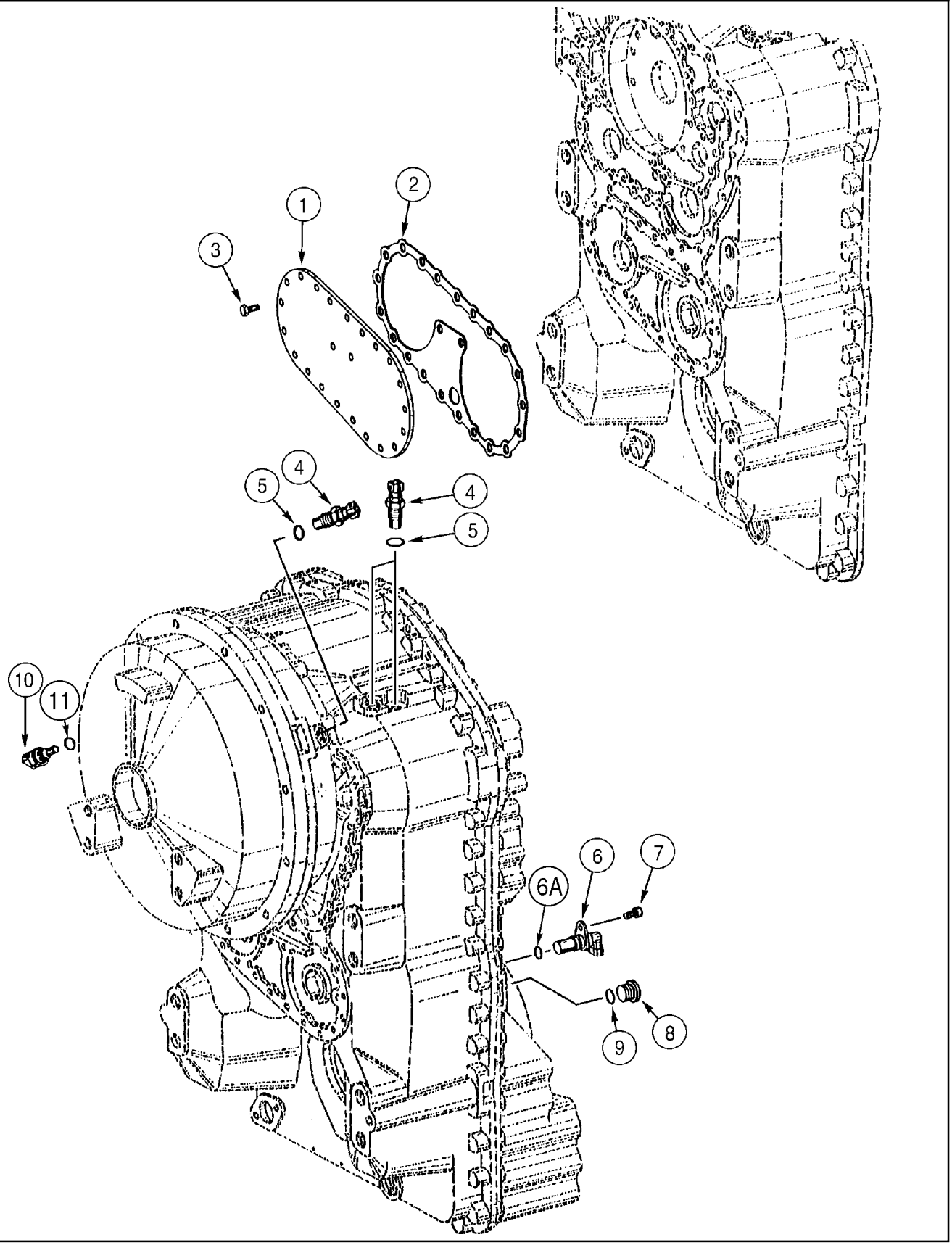

**TRANSMISION - SENSOR, CUBIERTA DE LA BOMBA Y VELOCIDADES**

| REF | FN | PART NUMBER | YR/SN | QTY | DENOMINACION |
|---|---|---|---|---|---|
| | | 87572394 | | 1 | CAMBIO DE VELOCIDAD, See Figure(s) 06-03 - 06-20, 07-01; Incl. Refs. 1 - 11 |
| 1 | | 8603393 | | 1 | TAPADERA, Steering Pump |
| 2 | | 8603395 | | 1 | JUNTA HERMETICA |
| 3 | | 8603396 | | 23 | TORNILLO, M8 x 18 |
| 4 | | 8603397 | | 3 | SENSOR, Inductive Coupling |
| 5 | | 8603216 | | 3 | JUNTA HERMETICA |
| 6 | | 8603398 | | 1 | SENSOR, Speed; Incl. 6A |
| 6A | | 8603629 | | 1 | JUNTA HERMETICA |
| 7 | | 8603399 | | 1 | TORNILLO |
| 8 | | 8603400 | | 1 | TAPÓN, Incl. 9 |
| 9 | | 8603401 | | 1 | JUNTA HERMETICA |
| 10 | | 8603622 | | 1 | SENSOR, Temperature; Incl. 11 |
| 11 | | 8603402 | | 1 | JUNTA HERMETICA |

**EJE, TRASERO - PARAR**

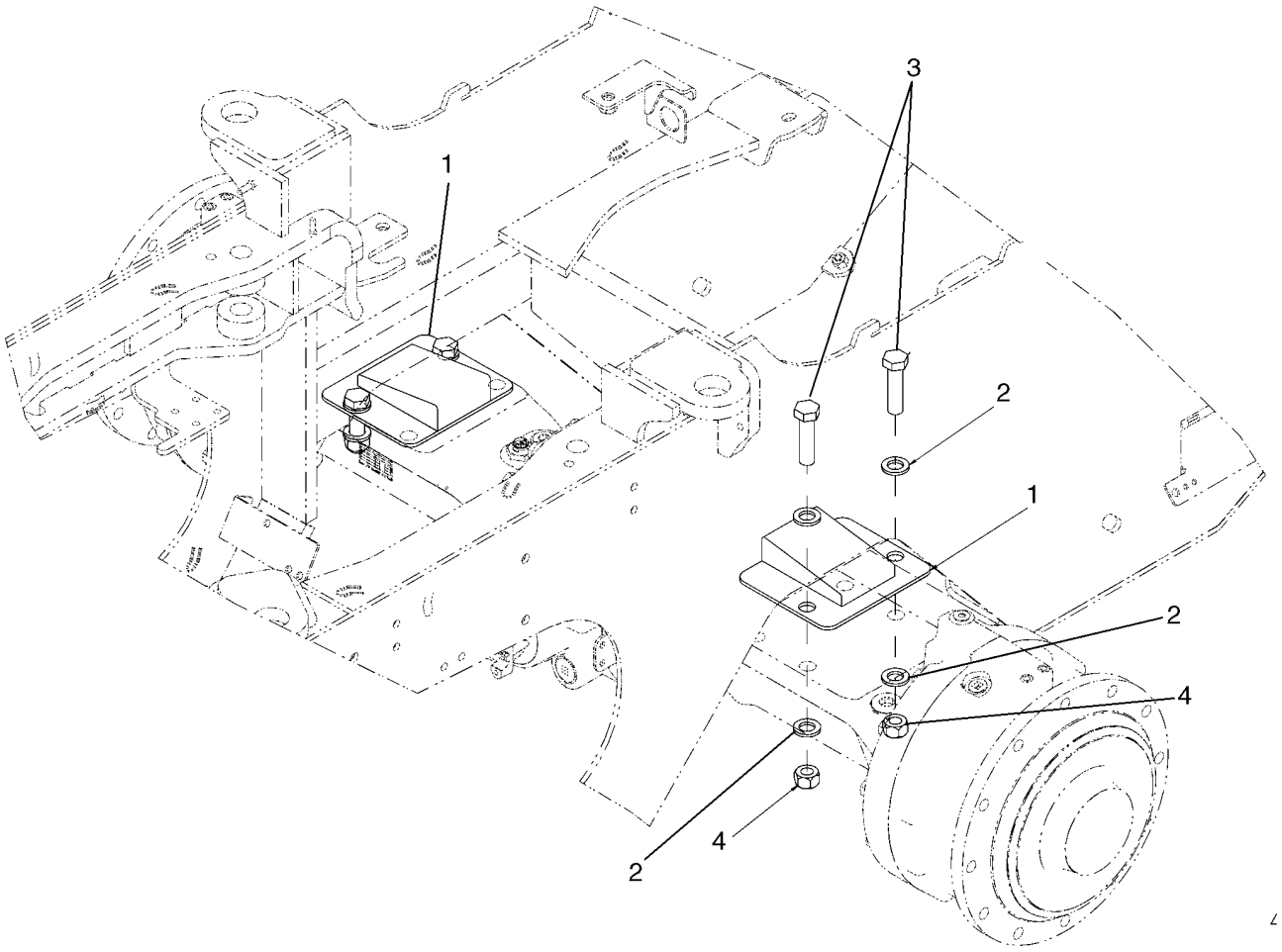


BS07F487

**EJE, TRASERO - PARAR**

| REF | FN | PART NUMBER | YR/SN | QTY | DENOMINACION |
|---|---|---|---|---|---|
| 1 | | 87605272 | | 2 | DISPOSITIVO DE TOPE, 8 Degree Axle Stop |
| 2 | | 896-11024 | | 8 | ARANDELA, M24 x 44.5 x 5, HT |
| 3 | | 827-24090 | | 4 | TORNILLO, Hex, M24 x 90, 10.9 |
| 4 | | 829-1424 | | 4 | TUERCA, M24, Cl 10 |

**EJE, DELANTERO - SOPORTE**

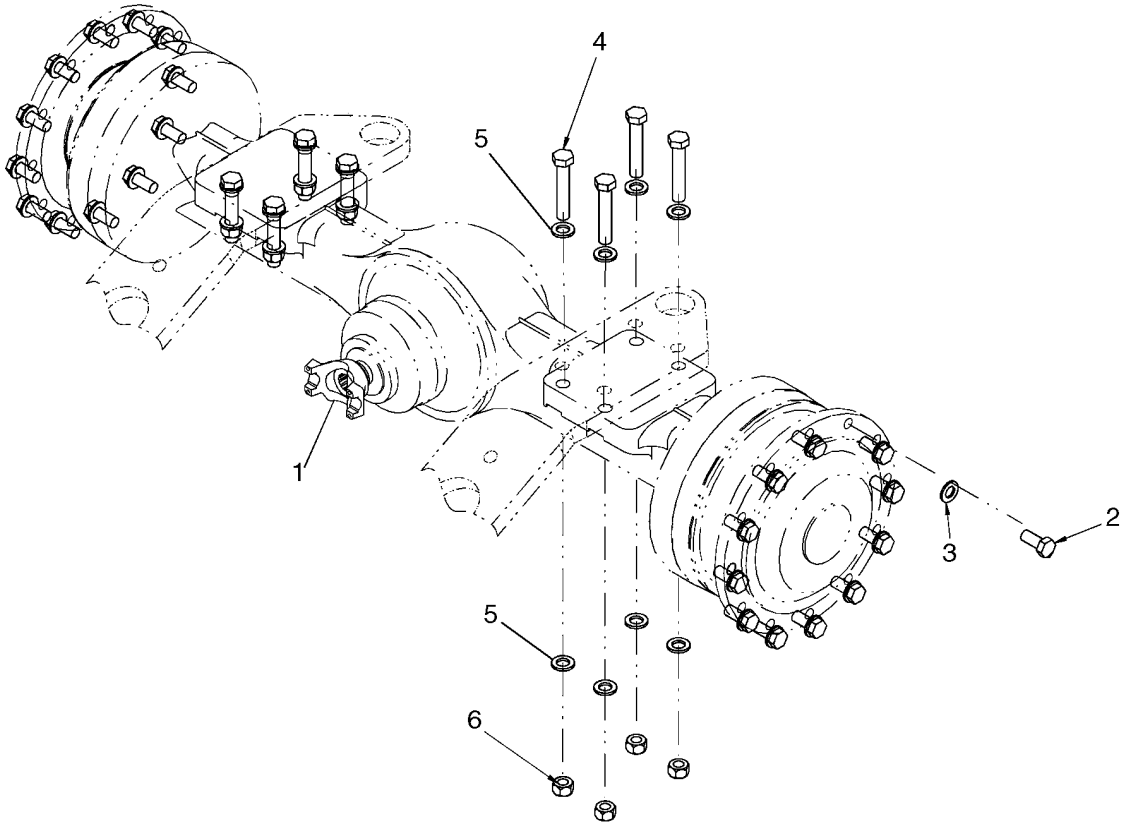


BS07D395

**EJE, DELANTERO - SOPORTE**

| REF | FN | PART NUMBER | YR/SN | QTY | DENOMINACION |
|---|---|---|---|---|---|
| 1 | | 87358580 | | 1 | EJE DE LAS RUEDAS, See Figures 06-22A - 06-22E |
| 2 | | 514-1315 | | 24 | TORNILLO, Hex, M22 x 1.5 x 50, 10.9 |
| 3 | | 896-11022 | | 24 | ARANDELA, M22 x 44 x 4, HT |
| 4 | | 827-24130 | | 8 | TORNILLO, Hex, M24 x 130, 10.9 |
| 5 | | 896-11024 | | 16 | ARANDELA, M24 x 44.5 x 5, HT |
| 6 | | 829-1424 | | 8 | TUERCA, M24, Cl 10 |

| 06-22A | | p1 | 07/07 |
|---|---|---|---|

**EJE, DELANTERO - ALOJAMIENTO**

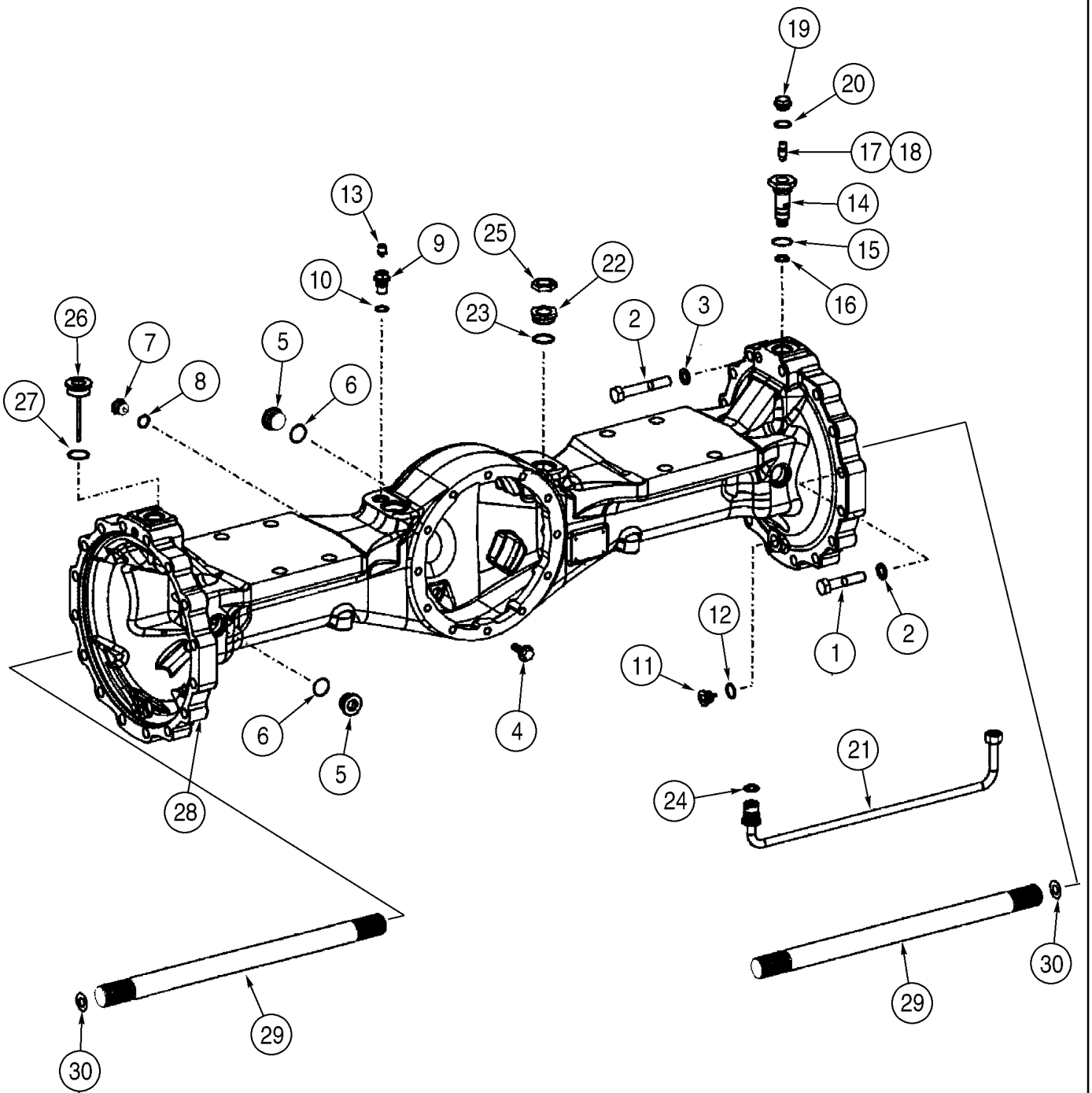

**EJE, DELANTERO - ALOJAMIENTO**

| REF | FN | PART NUMBER | YR/SN | QTY | DENOMINACION |
|---|---|---|---|---|---|
| | | 87358580 | | 1 | EJE DE LAS RUEDAS, Limited Slip; Incl. Figures 06-22A - 06-22E; Incl. Refs. 1 - 30 |
| 1 | | 514-1107 | | 28 | TORNILLO, Hex, M18 x 1.5 x 85, 10.9 |
| 2 | | 8603670 | | 4 | TORNILLO, M18 x 115 |
| 3 | | 8603202 | | 32 | ARANDELA |
| 4 | | 8603206 | | 12 | TORNILLO |
| 5 | | 8603549 | | 2 | TAPÓN |
| 6 | | 8605636 | | 2 | JUNTA HERMETICA, 33 x 2.2; If Used |
| 6 | | 8603727 | | 2 | JUNTA HERMETICA, 33 x 2; If Used |
| 7 | | 8603550 | | 1 | TAPÓN |
| 8 | | 8603208 | | 1 | JUNTA HERMETICA |
| 9 | | 8603256 | | 1 | TAPÓN |
| 10 | | 8603208 | | 1 | JUNTA HERMETICA |
| 12 | | 8603200 | | 2 | JUNTA HERMETICA |
| 13 | | 8603201 | | 1 | RESPIRADERO |
| 14 | | 8603551 | | 2 | CONEXION |
| 15 | | 8605636 | | 2 | JUNTA HERMETICA, 33 x 2.2; If Used |
| 15 | | 8603727 | | 2 | JUNTA HERMETICA, 33 x 2; If Used |
| 16 | | 8603552 | | 2 | CONEXION |
| 17 | | 3222214R1 | | 2 | VALVULA, Breather; Incl. 18 |
| 18 | | NSS | | 2 | NO SE REPARA SEPARADAM., Dust Cap |
| 19 | | 8603210 | | 2 | TAPÓN, M26 - 1,5 |
| 20 | | 8603799 | | 2 | ANILLO, 26 x 31 mm |
| 21 | | 87436733 | | 2 | TUBO, Internal Brake |
| 22 | | 8603696 | | 2 | CONEXION, Incl. 23 |
| 23 | | 8603207 | | 2 | JUNTA HERMETICA |
| 24 | | 8603725 | | 2 | ANILLO |
| 25 | | 8603619 | | 2 | TUERCA |
| 26 | | 8603694 | | 1 | VARILLA DE NIVEL, Oil |
| 27 | | 8603207 | | 1 | JUNTA HERMETICA |
| 28 | | 8603668 | | 1 | CÁRTER DE PUENTE |
| 29 | | 8603555 | | 2 | SEMIEJE |
| 30 | | 8603669 | | AR | SUPLEMENTO, 0,4 mm |
| 30 | | 8603730 | | AR | SUPLEMENTO, 0,2 mm |
| 30 | | 8603731 | | AR | SUPLEMENTO, 1,00 mm |

| 06-22A | | p2 | 07/07 |
|---|---|---|---|

**EJE, DELANTERO - ALOJAMIENTO**

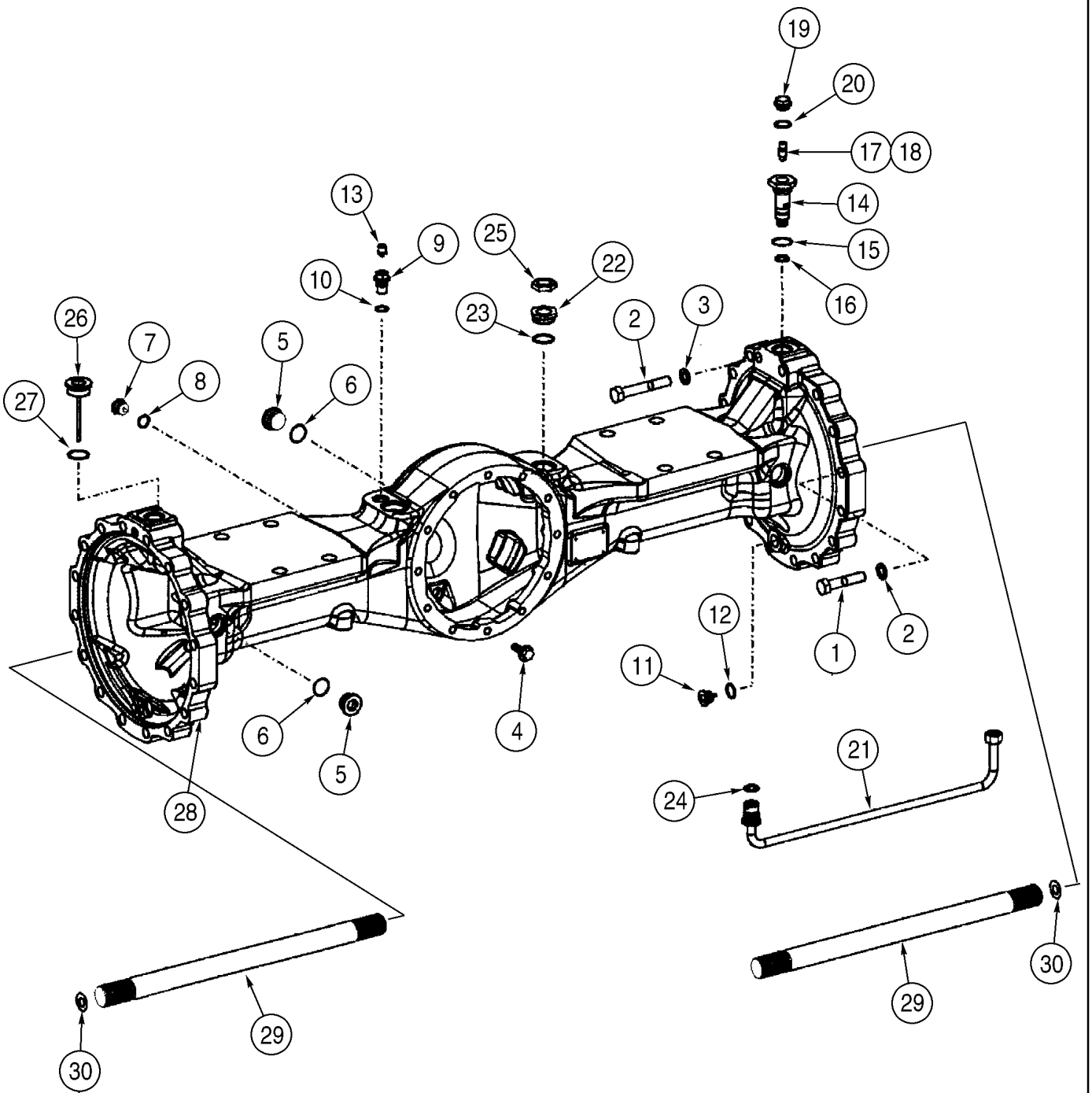

**EJE, DELANTERO - ALOJAMIENTO**

| REF | FN | PART NUMBER | YR/SN | QTY | DENOMINACION |
|---|---|---|---|---|---|
| 30 | | 8603732 | | AR | SUPLEMENTO, 1.5 mm; If Used |

**EJE, DELANTERO - PORTADOR DEL DIFERENCIAL**

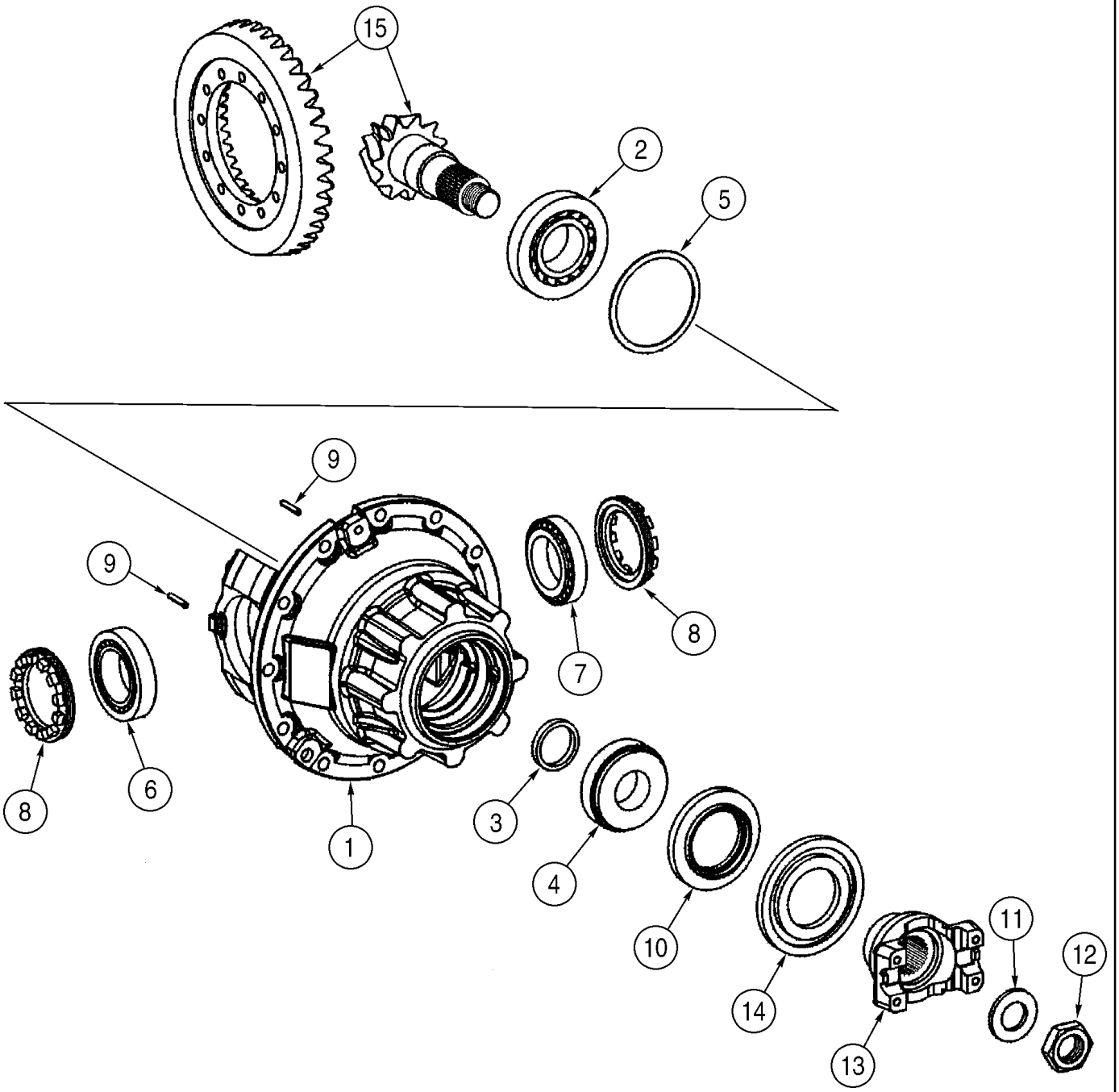

**EJE, DELANTERO - PORTADOR DEL DIFERENCIAL**

| REF | FN | PART NUMBER | YR/SN | QTY | DENOMINACION |
|---|---|---|---|---|---|
| | | 87358580 | | 1 | EJE DE LAS RUEDAS, Limited Slip; Incl. Figures 06-22A - 06-22E; Incl. Refs. 1 - 15 |
| | | 8605272 | | 1 | PORTA CARGA (CJTO), Limited Slip; Incl. Refs. 1 - 15 |
| 1 | | 8603543 | | 1 | CAVIDAD |
| 2 | | 8603257 | | 1 | RODAMIENTO DE RODILLOS |
| 3 | | 8603239 | | AR | ARANDELA, 8,8 mm |
| 3 | | 8603789 | | AR | SEPARADOR, 8,7 mm |
| 3 | | 8603794 | | AR | SEPARADOR, 8,6 mm |
| 3 | | 8603793 | | AR | SEPARADOR, 8,5 mm |
| 3 | | 8603792 | | AR | SEPARADOR, 8,4 mm |
| 3 | | 8603791 | | AR | SEPARADOR, 8,3 mm |
| 3 | | 8603240 | | AR | ARANDELA, 8,9 mm |
| 3 | | 8603241 | | AR | ARANDELA, 9,1 mm |
| 3 | | 8603242 | | AR | ARANDELA, 9,2 mm |
| 3 | | 8603243 | | AR | ARANDELA, 9,3 mm |
| 3 | | 8603244 | | AR | ARANDELA, 9,4 mm |
| 4 | | 8603258 | | 1 | RODAMIENTO DE RODILLOS |
| 5 | | 8603259 | | AR | SUPLEMENTO, ,7 mm |
| 5 | | 8603260 | | AR | SUPLEMENTO, ,8 mm |
| 5 | | 8603261 | | AR | SUPLEMENTO, ,9 mm |
| 5 | | 8603262 | | AR | SUPLEMENTO, 1,0 mm |
| 5 | | 8603291 | | AR | SUPLEMENTO, 1,2 mm |
| 5 | | 8603290 | | AR | SUPLEMENTO, 1,3 mm |
| 5 | | 8603289 | | AR | SUPLEMENTO, 1,4 mm |
| 5 | | 8603288 | | AR | SUPLEMENTO, 1,5 mm |
| 5 | | 8603287 | | AR | SUPLEMENTO, 1,6 mm |
| 5 | | 8603286 | | AR | SUPLEMENTO, 1,7 mm |
| 5 | | 8603285 | | AR | SUPLEMENTO, 1,8 mm |
| 5 | | 8603284 | | AR | SUPLEMENTO, 1,9 mm |
| 5 | | 8603283 | | AR | SUPLEMENTO, 2,0 mm |
| 5 | | 8603264 | | AR | SUPLEMENTO, 1,1 mm |
| 6 | | 8603222 | | 1 | RODAMIENTO DE RODILLOS |
| 7 | | 8603263 | | 1 | RODAMIENTO DE RODILLOS |
| 8 | | 8603265 | | 2 | TUERCA |

**EJE, DELANTERO - PORTADOR DEL DIFERENCIAL**

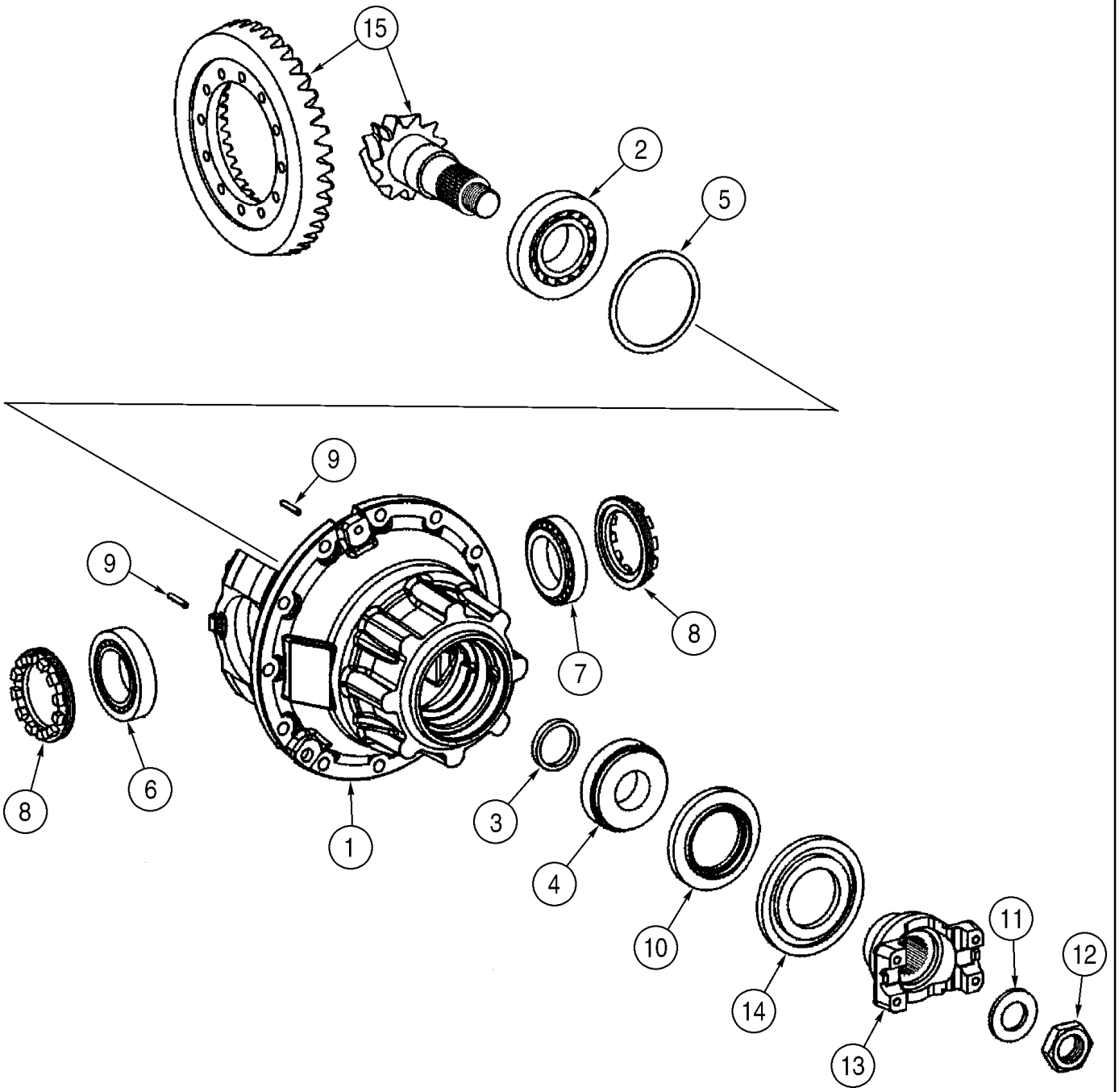

**EJE, DELANTERO - PORTADOR DEL DIFERENCIAL**

| REF | FN | PART NUMBER | YR/SN | QTY | DENOMINACION |
|---|---|---|---|---|---|
| 9 | | 8603795 | | 2 | PASADOR TUBOLAR, 6 x 36 |
| 10 | | 8603247 | | 1 | JUNTA HERMETICA |
| 12 | | 8605616 | | 1 | TUERCA |
| 13 | | 8603266 | | 1 | BRIDA |
| 14 | | 8603594 | | 1 | DISCO (CONJUNTO) |
| 15 | | 8605273 | | 1 | PAR CONICO, Bevel Gear |

**EJE, DELANTERO - DIFERENCIAL**

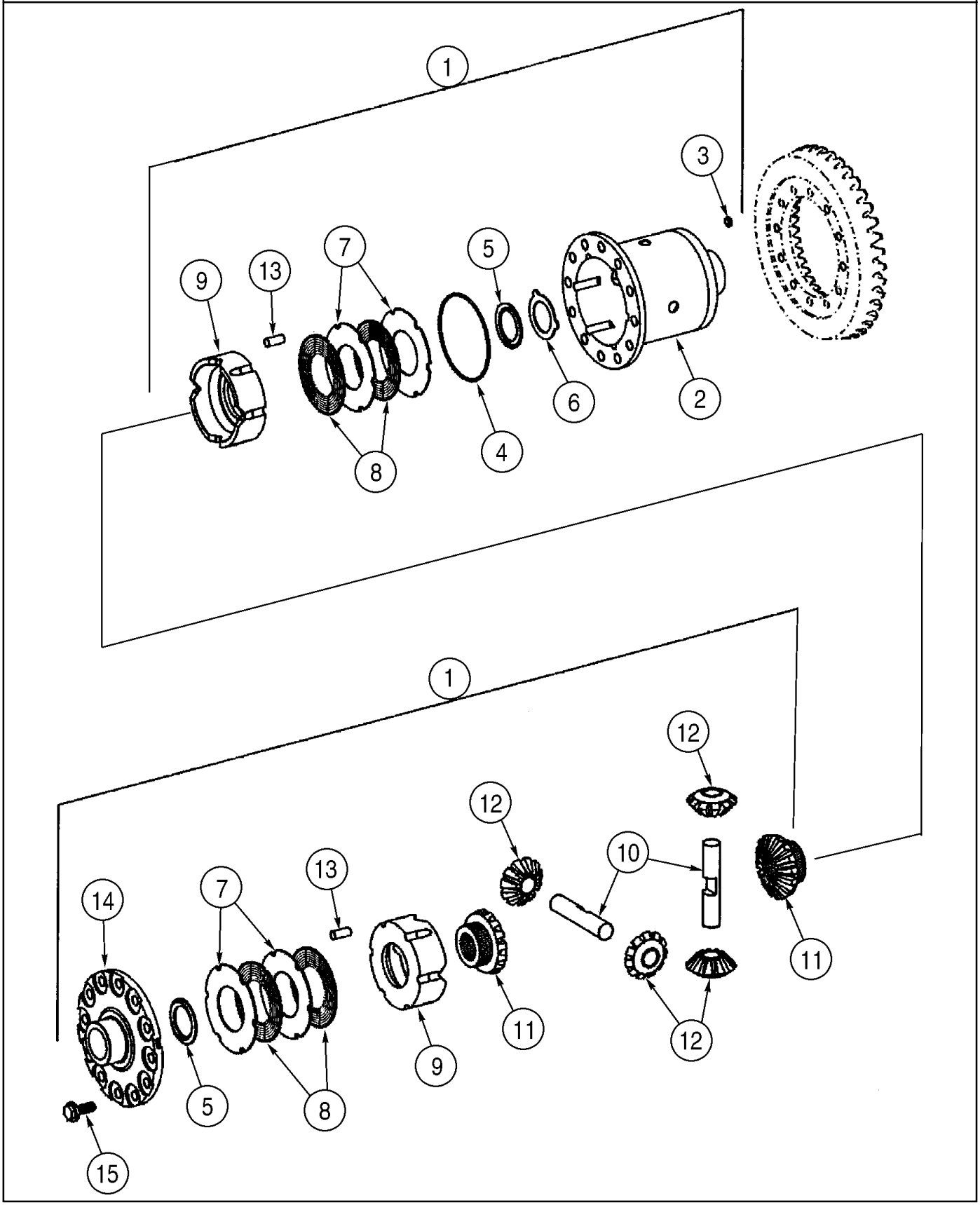

**EJE, DELANTERO - DIFERENCIAL**

| REF | FN | PART NUMBER | YR/SN | QTY | DENOMINACION |
|---|---|---|---|---|---|
| | | 87358580 | | 1 | EJE DE LAS RUEDAS, Limited Slip; Incl. Refs. 1 - 15; Incl. Figures 06-22A - 22E |
| | | 8605272 | | 1 | PORTA CARGA (CJTO), Limited Slip; Incl. Refs. 2 - 15 |
| 1 | | 8603546 | | 1 | EJE, DIFFERENCIAL, Incl. Refs. 2 - 15 |
| 2 | | 8603545 | | 1 | CAVIDAD |
| 3 | | 8603271 | | 6 | JUNTA HERMETICA |
| 4 | | 8603250 | | 1 | RETENEDOR |
| 5 | | 8603251 | | 2 | ARANDELA |
| 6 | | 8603282 | | 1 | ARANDELA |
| 7 | | 8603277 | | AR | DISCO, EMBRAG., 2,2 mm |
| 7 | | {8603547} | | AR | CLUTCH, PLATE, 2,1 mm; Outer |
| 7 | | 8603278 | | AR | DISCO, EMBRAG., 2,3 mm |
| 7 | | 8603279 | | AR | DISCO, EMBRAG., 2,4 mm |
| 7 | | 8603280 | | AR | DISCO, EMBRAG., 2,5 mm |
| 8 | | 8603272 | | 4 | DISCO |
| 9 | | 8603252 | | 2 | ANILLO DE RESORTE |
| 10 | | 8603253 | | 2 | EJE |
| 11 | | 8603267 | | 2 | ENGRANAJE, 16T |
| 12 | | 8603254 | | 4 | PINON, 11T |
| 13 | | 8603255 | | 12 | PERNO |
| 14 | | 8603548 | | 1 | TAPADERA |
| 15 | | 8603268 | | 12 | TORNILLO |

**EJE, DELANTERO - FRENO**

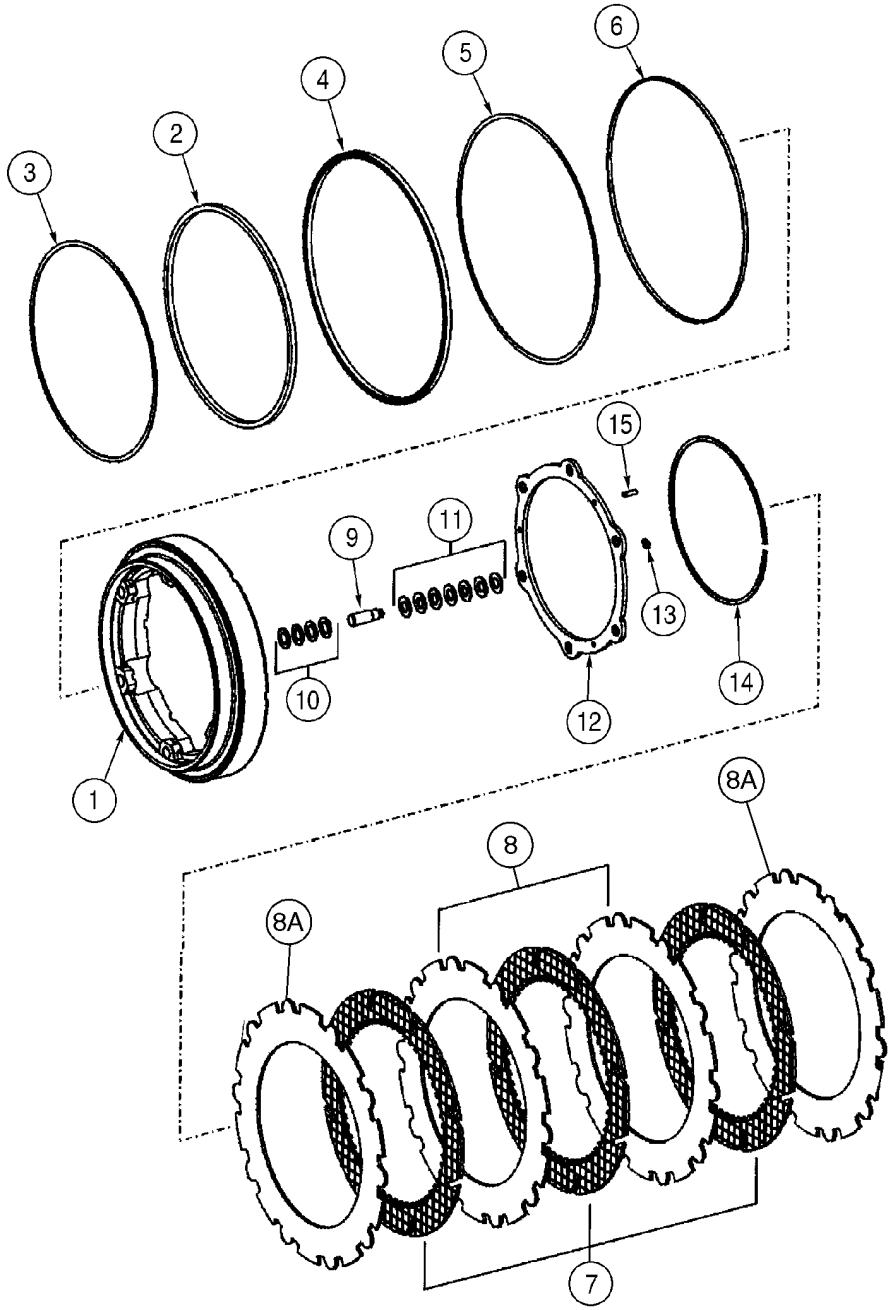


B0000000

**EJE, DELANTERO - FRENO**

| REF | FN | PART NUMBER | YR/SN | QTY | DENOMINACION |
|---|---|---|---|---|---|
| | | 87358580 | | 1 | EJE DE LAS RUEDAS, Limited Slip; See Figures 06-22A - 22E; Incl. Refs. 1 - 15 |
| | | 87358680 | | 1 | FINAL(CONJ), Incl. Refs. 1 - 15; Incl. Figure 06-22E |
| 1 | | 8603166 | | 1 | EMBOLO |
| 2 | | 8605314 | | 1 | ANILLO DE CIERRE |
| 3 | | 8603577 | | 1 | ANILLO DE RESORTE |
| 4 | | 8605315 | | 1 | ANILLO DE CIERRE |
| 5 | | 8603579 | | 1 | ANILLO DE RESORTE |
| 6 | | 8603580 | | 1 | ANILLO DE RESORTE |
| 7 | | 87341835 | | 4 | DISCO DE FRENO |
| 8 | | 8603582 | | 2 | COPA DE FRENO |
| 8A | | 87441328 | | 2 | PLAQUETA |
| 9 | | 8603163 | | 6 | PERNO |
| 10 | | 8603583 | | 24 | ANILLO DE RESORTE |
| 11 | | 8603584 | | 42 | ARANDELA |
| 12 | | 8603162 | | 1 | SUPLEMENTO |
| 13 | | 8603788 | | 6 | ANILLO DE RESORTE |
| 14 | | 8603585 | | 1 | ANILLO DE RESORTE |
| 15 | | 8603796 | | 6 | PASADOR TUBOLAR, 6 x 20 mm |

**EJE, DELANTERO - CUBO, PLANETARIO**

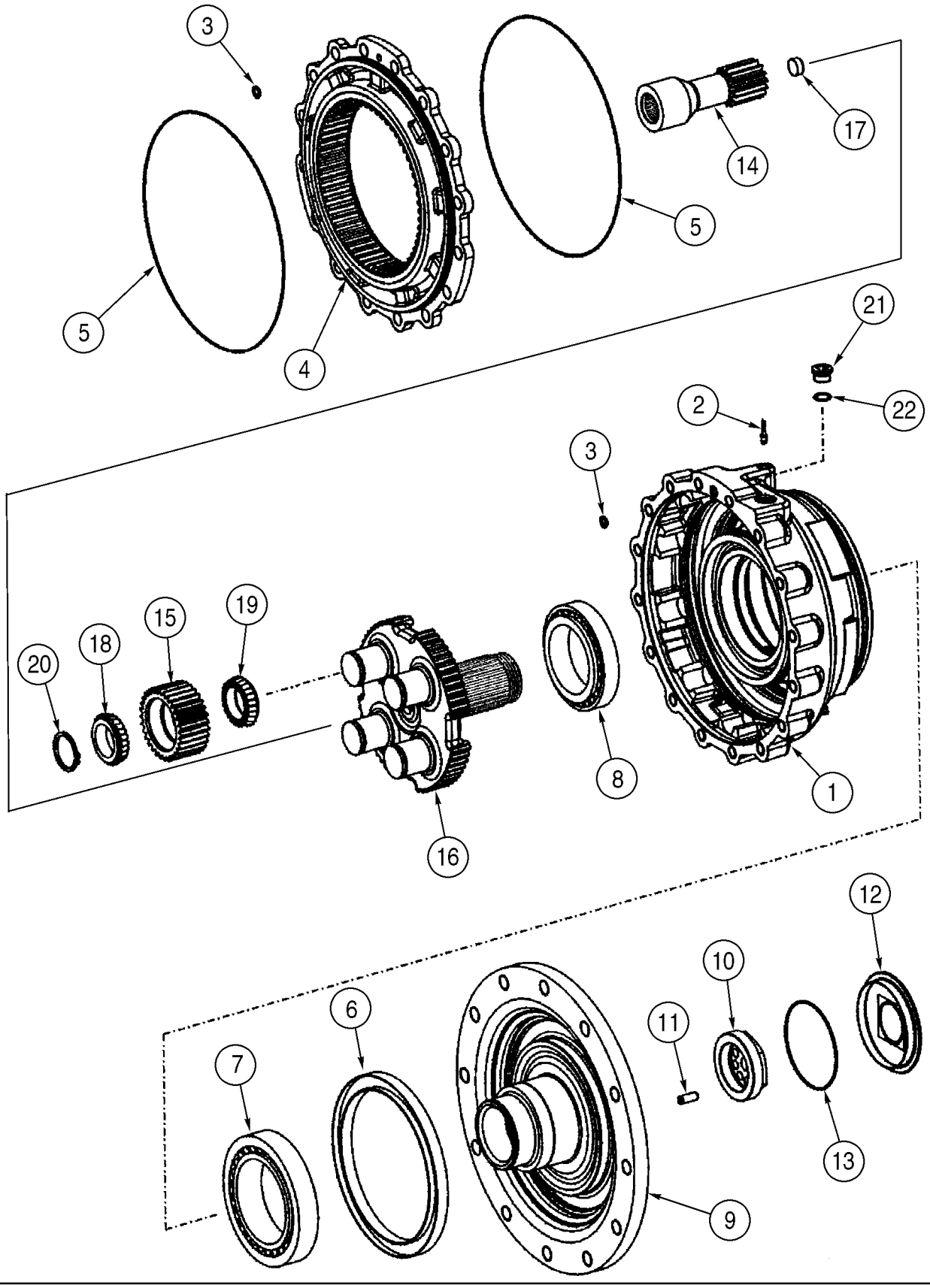

**EJE, DELANTERO - CUBO, PLANETARIO**

| REF | FN | PART NUMBER | YR/SN | QTY | DENOMINACION |
|---|---|---|---|---|---|
| | | 87358580 | | 1 | EJE DE LAS RUEDAS, Limited Slip; See Figures 06-22A - 22E; Incl. Refs. 1 - 22 |
| | | 87358680 | | 1 | FINAL(CONJ), Incl. Refs. 1 - 22; Incl. Figure 06-22D |
| 1 | | 87437916 | | 1 | CAVIDAD |
| 2 | | 8603673 | | 1 | TAPÓN |
| 3 | | 8603559 | | 2 | JUNTA HERMETICA |
| 4 | | 8603560 | | 1 | ENGRANAJE |
| 5 | | 8603674 | | 2 | JUNTA HERMETICA |
| 6 | | 8603562 | | 1 | JUNTA HERMETICA |
| 7 | | 8603563 | | 1 | RODAMIENTO DE RODILLOS, Outer |
| 8 | | 8603564 | | 1 | RODAMIENTO DE RODILLOS, Inner |
| 9 | | 8603675 | | 1 | BRIDA, M22 x 1,5; Output |
| 10 | | 8603565 | | 1 | TUERCA |
| 11 | | 8603566 | | 1 | PERNO |
| 12 | | 8603567 | | 1 | TAPADERA |
| 13 | | 8603527 | | 1 | JUNTA HERMETICA |
| 14 | | 8603568 | | 1 | ENGRANAJE |
| 15 | | 87358699 | | 3 | ENGRANAJE |
| 16 | | 87358702 | | 1 | EJE DE SATELITES |
| 17 | | 8603571 | | 1 | TAPÓN |
| 18 | | 8603572 | | 4 | CONO, Outer |
| 19 | | 87358695 | | 3 | CONO |
| 20 | | 87358698 | | 4 | ANILLO DE RESORTE |
| 21 | | 8603575 | | 1 | TAPÓN |
| 22 | | 8603208 | | 1 | JUNTA HERMETICA |

**EJE, TRASERO - SOPORTE**

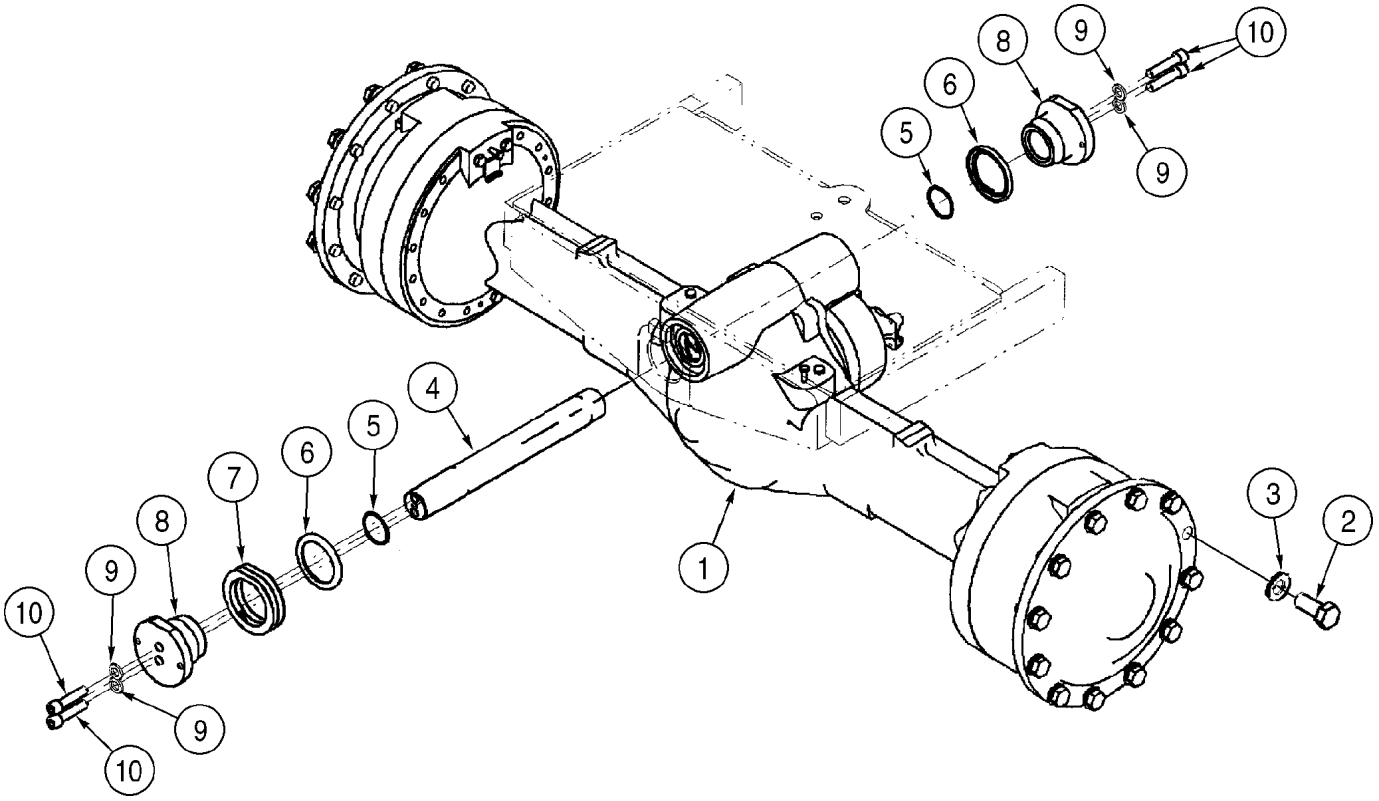

**EJE, TRASERO - SOPORTE**

| REF | FN | PART NUMBER | YR/SN | QTY | DENOMINACION |
|---|---|---|---|---|---|
| 1 | | 87358583 | | 1 | PUENTE POSTERIOR, Limited Slip; Incl. Figures 06-23A - 06-23E |
| 2 | | 514-1315 | | 24 | TORNILLO, Hex, M22 x 1.5 x 50, 10.9 |
| 3 | | 896-11022 | | 24 | ARANDELA, M22 x 44 x 4, HT |
| 4 | | 87450043 | | 1 | PERNO, Pivot |
| 5 | | 238-5228 | | 2 | JUNTA HERMETICA, -228, 70 Duro, 2.234" ID x .139" Thk |
| 6 | | A57658 | | 2 | ANILLO DE CIERRE |
| 7 | | 368140A1 | | AR | SUPLEMENTO, 0,5 mm |
| 7 | | 368141A1 | | AR | SUPLEMENTO, 1,0 mm |
| 7 | | 368142A1 | | AR | SUPLEMENTO, 1,5 mm |
| 8 | | 86991231 | | 2 | TAPON DEL DEPOSITO |
| 9 | | 896-11016 | | 4 | ARANDELA, M17.5 x 30 x 4, HT |
| 10 | | 863-16070 | | 4 | TORNILLO, Hex Soc Hd, M16 x 70, 12.9 |
| 11 | | 8603201 | | 2 | RESPIRADERO, Valve; Not Illustrated |

| 06-23A | | p1 | 08/07 |
|---|---|---|---|

**EJE, TRASERO - ALOJAMIENTO**

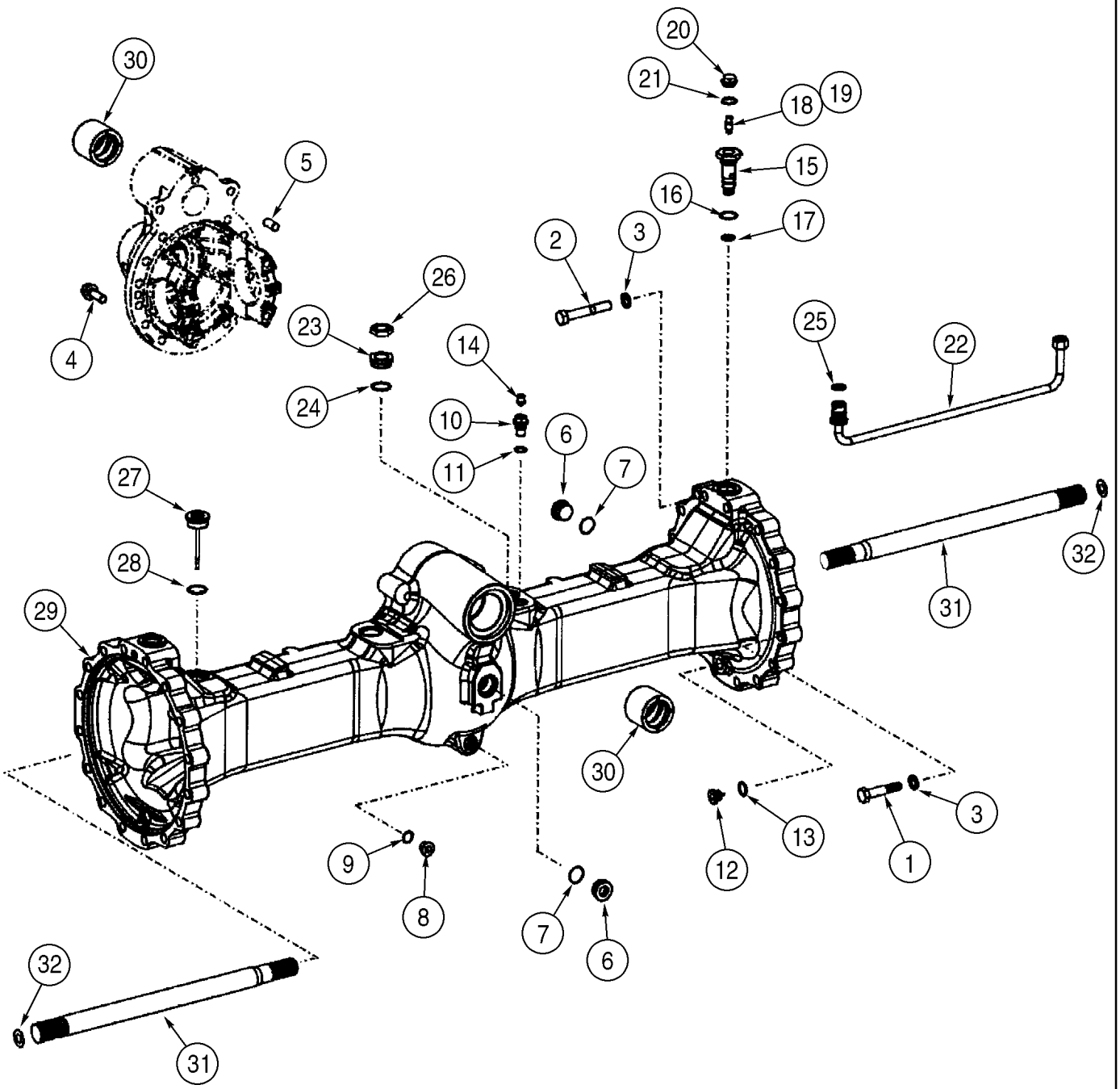

**EJE, TRASERO - ALOJAMIENTO**

| REF | FN | PART NUMBER | YR/SN | QTY | DENOMINACION |
|---|---|---|---|---|---|
| | | 87358583 | | 1 | PUENTE POSTERIOR, Limited Slip; Incl. Refs. 1 - 32; Incl. Figures 06-23A - 06-23E |
| 1 | | 514-1107 | | 28 | TORNILLO, Hex, M18 x 1.5 x 85, 10.9 |
| 2 | | 8603670 | | 4 | TORNILLO, M18 x 115 |
| 3 | | 8603202 | | 32 | ARANDELA |
| 4 | | 8603687 | | 15 | TORNILLO |
| 5 | | 8603695 | | 3 | PITON, M6 x 30 |
| 6 | | 8603549 | | 2 | TAPÓN |
| 7 | | 8603728 | | 2 | JUNTA HERMETICA, 33 x 2,5 |
| 8 | | 8603550 | | 1 | TAPÓN |
| 9 | | 8603208 | | 1 | JUNTA HERMETICA |
| 10 | | 8603256 | | 1 | TAPÓN |
| 11 | | 8603208 | | 1 | JUNTA HERMETICA |
| 13 | | 8603200 | | 2 | JUNTA HERMETICA |
| 14 | | 8603201 | | 1 | RESPIRADERO |
| 15 | | 8603551 | | 2 | CONEXION |
| 16 | | 8605636 | | 2 | JUNTA HERMETICA, M33 x 2,2; If Used |
| 16 | | 8603727 | | 2 | JUNTA HERMETICA, M33 x 2: If Used |
| 17 | | 8603552 | | 2 | CONEXION |
| 18 | | 3222214R1 | | 2 | VALVULA, Bleeder; Incl. 19 |
| 19 | | NSS | | 2 | NO SE REPARA SEPARADAM., Dust Cap |
| 20 | | 8603210 | | 2 | TAPÓN, M26 - 1,5 |
| 21 | | 8603799 | | 2 | ANILLO, 26 x 31 mm |
| 22 | | 87436733 | | 2 | TUBO, Internal Brake |
| 23 | | 8603696 | | 2 | CONEXION, M42 x 1,5; Incl. 24 |
| 24 | | 8603207 | | 2 | JUNTA HERMETICA |
| 25 | | 8603725 | | 2 | ANILLO |
| 26 | | 8603619 | | 2 | TUERCA |
| 27 | | 8603694 | | 1 | VARILLA DE NIVEL, Oil |
| 28 | | 8603207 | | 1 | JUNTA HERMETICA |
| 29 | | 8605639 | | 1 | CÁRTER DE PUENTE |
| 30 | | 8605638 | | 2 | CASQUILLO |
| 31 | | 8603690 | | 2 | EJE |
| 32 | | 8603669 | | AR | SUPLEMENTO, 0,4 mm |
| 32 | | 8603730 | | AR | SUPLEMENTO, 0,2 mm |

| 06-23A | | p2 | 08/07 |
|---|---|---|---|

**EJE, TRASERO - ALOJAMIENTO**

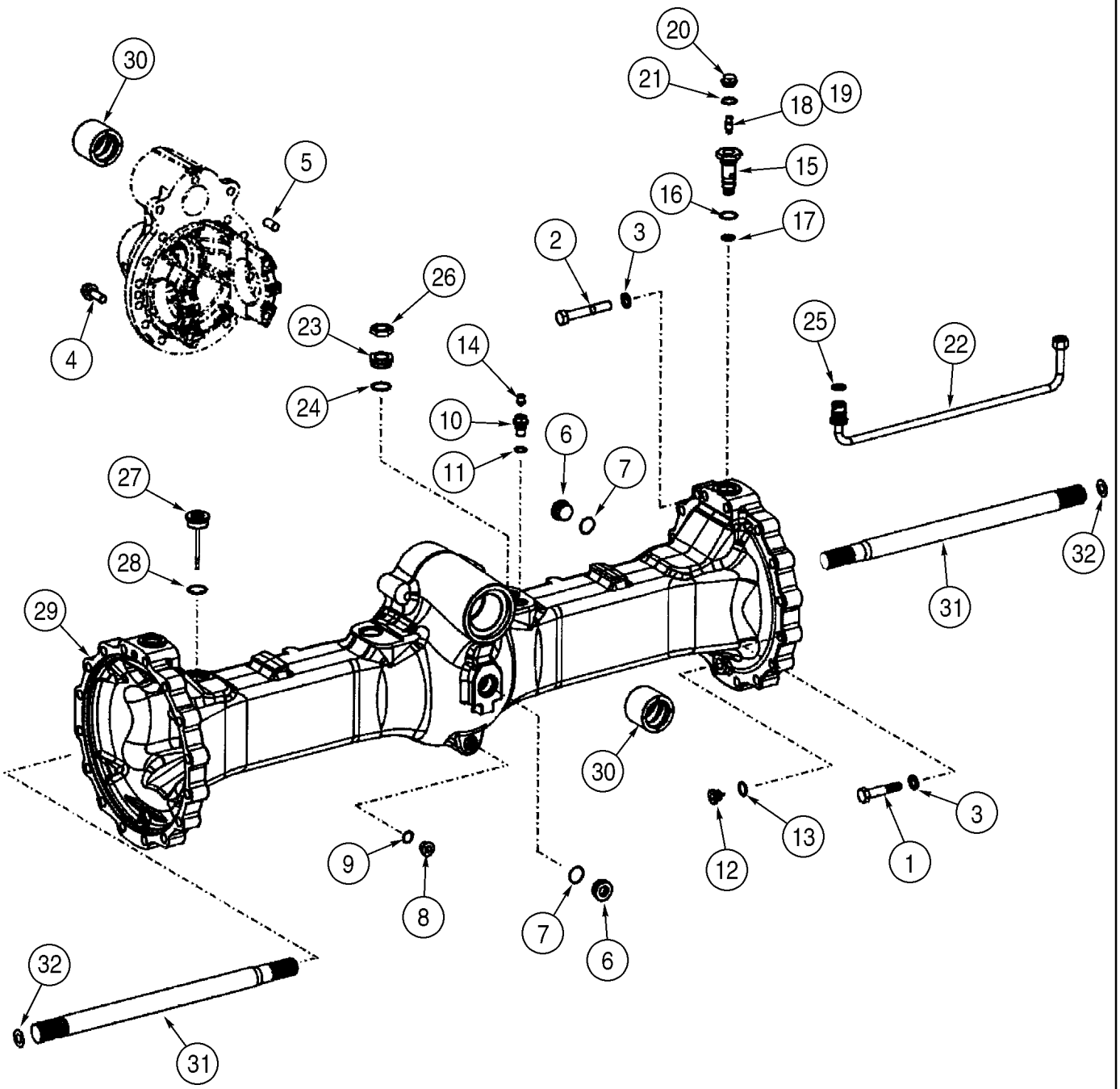

**EJE, TRASERO - ALOJAMIENTO**

| REF | FN | PART NUMBER | YR/SN | QTY | DENOMINACION |
|---|---|---|---|---|---|
| 32 | | 8603731 | | AR | SUPLEMENTO, 1,0 mm |
| 32 | | 8603732 | | AR | SUPLEMENTO, 1,5 mm |

**EJE, TRASERO - PORTADOR DEL DIFERENCIAL**

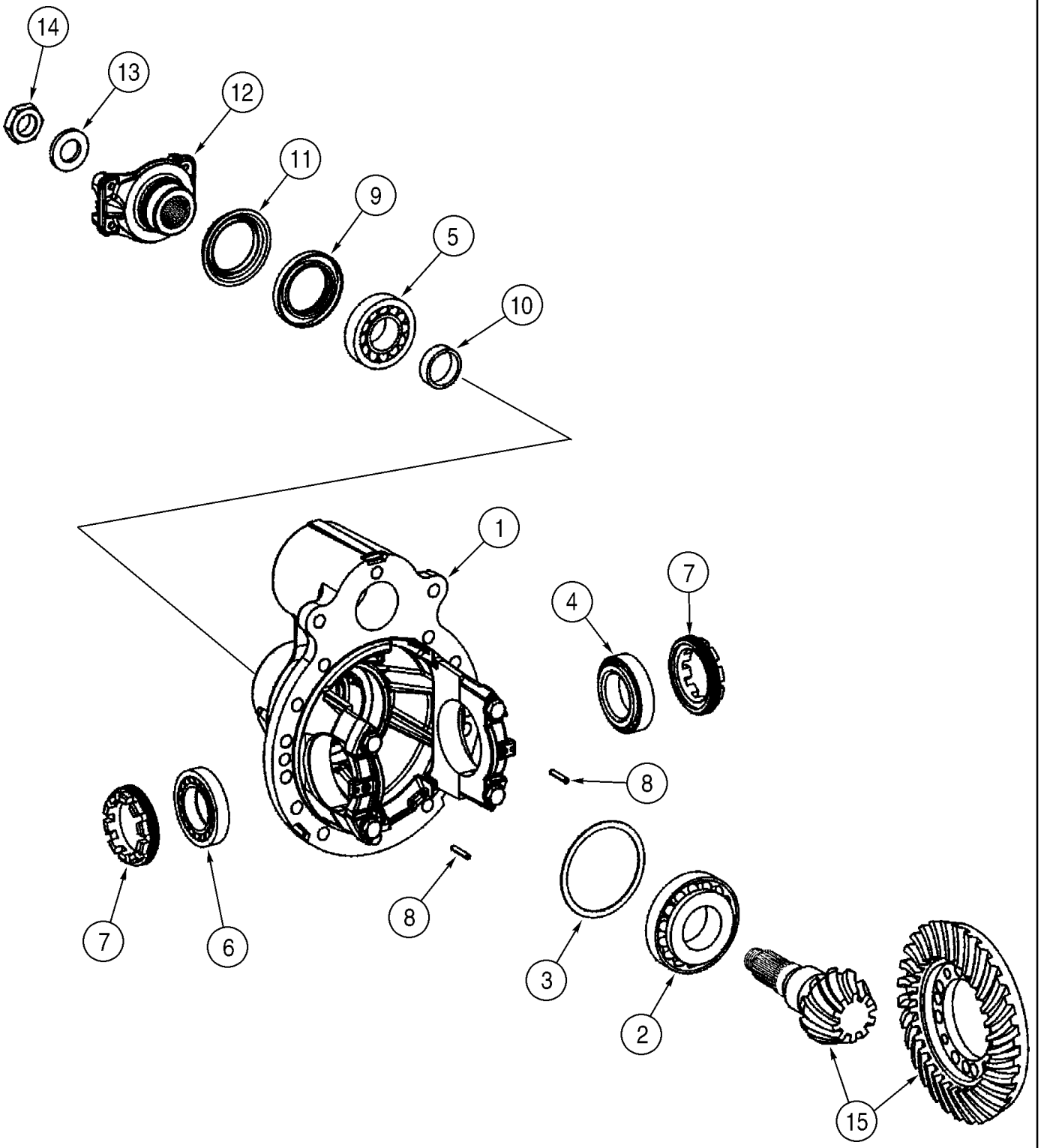

**EJE, TRASERO - PORTADOR DEL DIFERENCIAL**

| REF | FN | PART NUMBER | YR/SN | QTY | DENOMINACION |
|---|---|---|---|---|---|
| | | 87358583 | | 1 | PUENTE POSTERIOR, Limited Slip; Incl. Figures 06-23A - 06-23E; Incl. Refs. 1 - 15 |
| | | 8605274 | | 1 | DIFERENCIAL, Rear Limited Slip; Incl. Refs. 1 - 15 |
| 1 | | 8605637 | | 1 | CAVIDAD |
| 1 | | 8603677 | | 1 | EJE DE SATELITES |
| 2 | | 8603257 | | 1 | RODAMIENTO DE RODILLOS, Inner |
| 3 | | 8603259 | | AR | SUPLEMENTO, 0,7 mm |
| 3 | | 8603260 | | AR | SUPLEMENTO, 0,8 mm |
| 3 | | 8603261 | | AR | SUPLEMENTO, 0,9 mm |
| 3 | | 8603262 | | AR | SUPLEMENTO, 1,0 mm |
| 3 | | 8603291 | | AR | SUPLEMENTO, 1,2 mm |
| 3 | | 8603290 | | AR | SUPLEMENTO, 1,3 mm |
| 3 | | 8603289 | | AR | SUPLEMENTO, 1,4 mm |
| 3 | | 8603288 | | AR | SUPLEMENTO, 1,5 mm |
| 3 | | 8603287 | | AR | SUPLEMENTO, 1,6 mm |
| 3 | | 8603286 | | AR | SUPLEMENTO, 1,7 mm |
| 3 | | 8603285 | | AR | SUPLEMENTO, 1,8 mm |
| 3 | | 8603284 | | AR | SUPLEMENTO, 1,9 mm |
| 3 | | 8603283 | | AR | SUPLEMENTO, 2,0 mm |
| 3 | | 8603264 | | AR | SUPLEMENTO, 1,1 mm |
| 4 | | 8603678 | | 1 | RODAMIENTO DE RODILLOS, Right |
| 5 | | 8603679 | | 1 | RODAMIENTO DE RODILLOS, Outer |
| 6 | | 8603680 | | 1 | RODAMIENTO DE RODILLOS, Left |
| 7 | | 8603205 | | 2 | TUERCA |
| 8 | | 8603795 | | 2 | PASADOR TUBOLAR, 6 x 36 |
| 9 | | 8603681 | | 1 | ANILLO DE CIERRE |
| 10 | | 8603733 | | AR | SUPLEMENTO, 16,9 mm |
| 10 | | 8603734 | | AR | SUPLEMENTO, 16.1 mm |
| 10 | | 8603735 | | AR | SUPLEMENTO, 16,2 mm |
| 10 | | 8603736 | | AR | SUPLEMENTO, 16,3 mm |
| 10 | | 8603737 | | AR | SUPLEMENTO, 16,4 mm |
| 10 | | 8603738 | | AR | SUPLEMENTO, 16,5 mm |
| 10 | | 8603739 | | AR | SUPLEMENTO, 16,6 mm |
| 10 | | 8603740 | | AR | SUPLEMENTO, 16,7 mm |
| 10 | | 8603741 | | AR | SUPLEMENTO, 16,8 mm |

**EJE, TRASERO - PORTADOR DEL DIFERENCIAL**

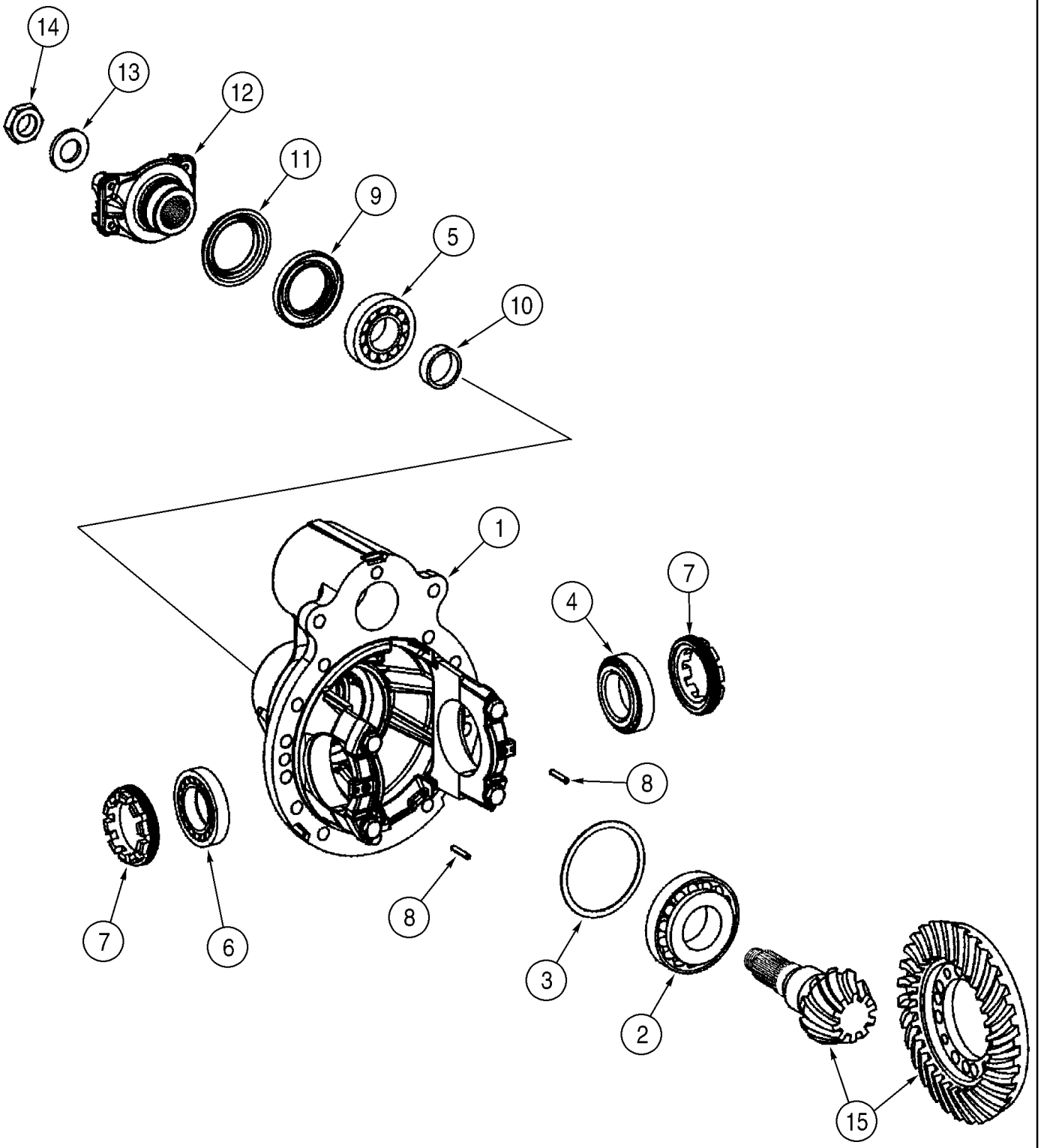

**EJE, TRASERO - PORTADOR DEL DIFERENCIAL**

| REF | FN | PART NUMBER | YR/SN | QTY | DENOMINACION |
|---|---|---|---|---|---|
| 10 | | 8603742 | | AR | SUPLEMENTO, 16,92 mm |
| 10 | | 8603743 | | AR | SUPLEMENTO, 17,1 mm |
| 10 | | 8603744 | | AR | SUPLEMENTO, 17,2 mm |
| 10 | | 8603745 | | AR | SUPLEMENTO, 17,3 mm |
| 10 | | 8603746 | | AR | SUPLEMENTO, 17,4 mm |
| 10 | | 8603747 | | AR | SUPLEMENTO, 16,68 mm |
| 10 | | 8603748 | | AR | SUPLEMENTO, 16,98 mm |
| 10 | | 8603749 | | AR | SUPLEMENTO, 17,04 mm |
| 10 | | 8603750 | | AR | SUPLEMENTO, 16,56 mm |
| 10 | | 8603751 | | AR | SUPLEMENTO, 16,62 mm |
| 10 | | 8603752 | | AR | SUPLEMENTO, 16,64 mm |
| 10 | | 8603753 | | AR | SUPLEMENTO, 16,68 mm |
| 10 | | 8603754 | | AR | SUPLEMENTO, 16,72 mm |
| 10 | | 8603755 | | AR | SUPLEMENTO, 16,74 mm |
| 10 | | 8603756 | | AR | SUPLEMENTO, 16,76 mm |
| 10 | | 8603757 | | AR | SUPLEMENTO, 16,78 mm |
| 10 | | 8603758 | | AR | SUPLEMENTO, 16,82 mm |
| 10 | | 8603759 | | AR | SUPLEMENTO, 16,84 mm |
| 10 | | 8603760 | | AR | SUPLEMENTO, 16,88 mm |
| 10 | | 8603761 | | AR | SUPLEMENTO, 16,9 mm |
| 10 | | 8603762 | | AR | SUPLEMENTO, 16,94 mm |
| 10 | | 8603763 | | AR | SUPLEMENTO, 16,66 mm |
| 10 | | 8603764 | | AR | SUPLEMENTO, 16,96 mm |
| 10 | | 8603765 | | AR | SUPLEMENTO, 17,0 mm |
| 10 | | 8603766 | | AR | SUPLEMENTO, 17,02 mm |
| 10 | | 8603767 | | AR | SUPLEMENTO, 17,06 mm |
| 10 | | 8603768 | | AR | SUPLEMENTO, 17,08 mm |
| 10 | | 8603769 | | AR | SUPLEMENTO, 17,12 mm |
| 10 | | 8603770 | | AR | SUPLEMENTO, 17,14 mm |
| 10 | | 8603771 | | AR | SUPLEMENTO, 17,16 mm |
| 10 | | 8603772 | | AR | SUPLEMENTO, 17,18 mm |
| 10 | | 8603773 | | AR | SUPLEMENTO, 17,22 mm |
| 10 | | 8603774 | | AR | SUPLEMENTO, 17,24 mm |
| 10 | | 8603775 | | AR | SUPLEMENTO, 17,26 mm |
| 10 | | 8603776 | | AR | SUPLEMENTO, 17,28 mm |

**EJE, TRASERO - PORTADOR DEL DIFERENCIAL**

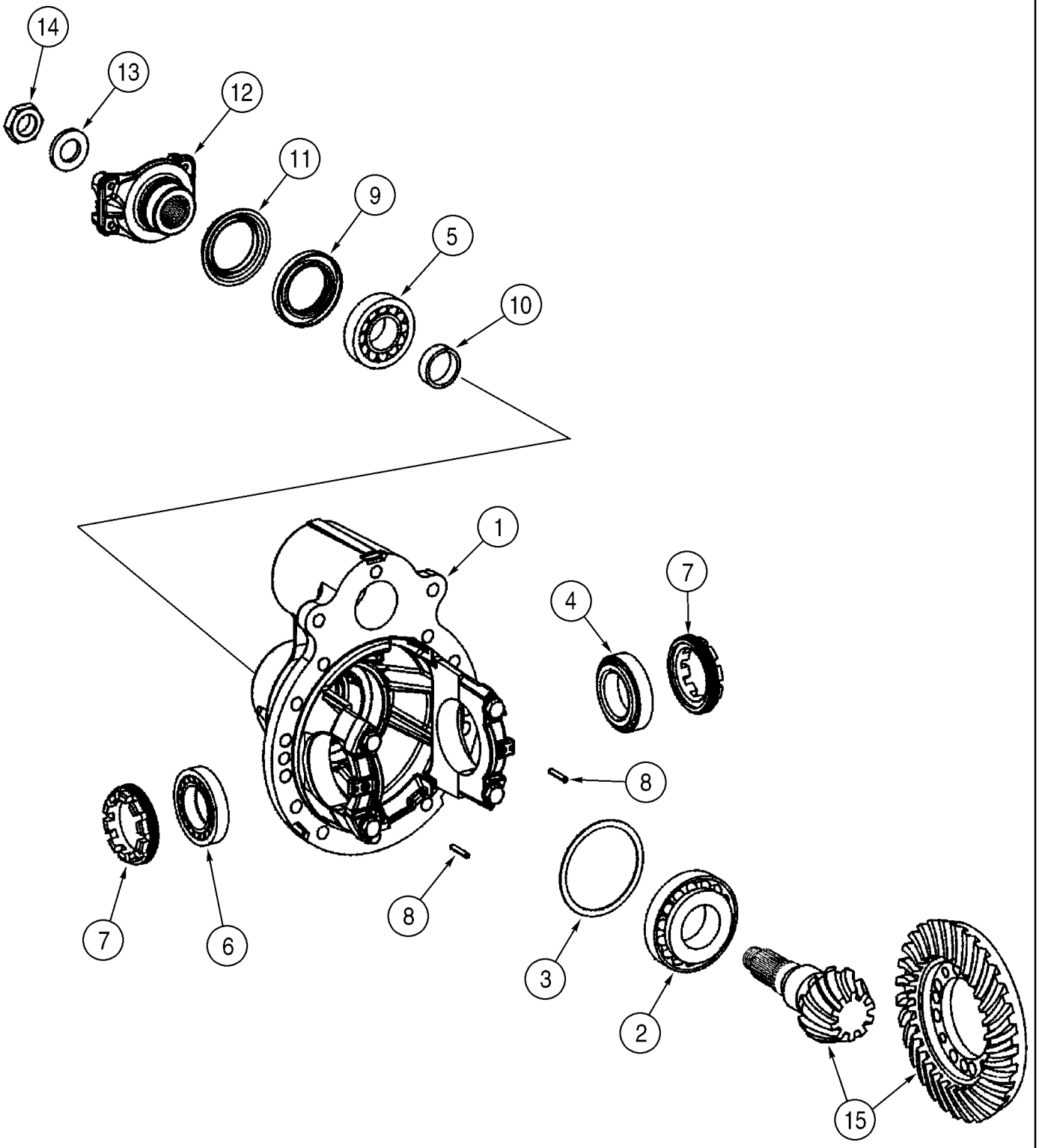

**EJE, TRASERO - PORTADOR DEL DIFERENCIAL**

| REF | FN | PART NUMBER | YR/SN | QTY | DENOMINACION |
|---|---|---|---|---|---|
| 11 | | 8603685 | | 1 | COBERTURA |
| 12 | | 8605635 | | 1 | BRIDA, If Used |
| 12 | | 8603684 | | 1 | HORQUILLA, If Used |
| 13 | | 8603682 | | 1 | ARANDELA |
| 14 | | 8603683 | | 1 | TUERCA, M30 x 1,5 |
| 15 | | 8605275 | | 1 | PAR CONICO, Ring and Pinion; Bevel Gear Set |

**EJE, TRASERO - DIFERENCIAL**

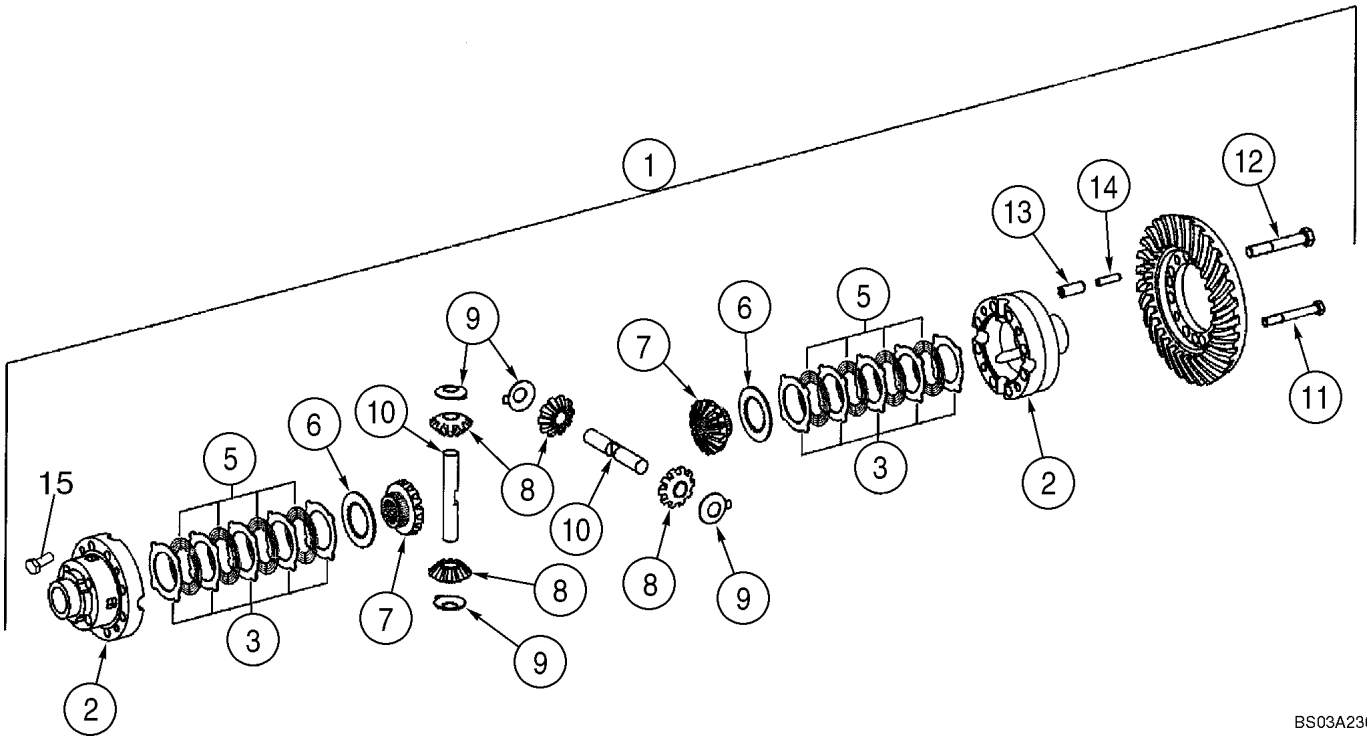

**EJE, TRASERO - DIFERENCIAL**

| REF | FN | PART NUMBER | YR/SN | QTY | DENOMINACION |
|---|---|---|---|---|---|
| | | 87358583 | | 1 | PUENTE POSTERIOR, Limited Slip; Incl. Refs. 1 - 20; Incl. Figure(s) 06-23A - 23E |
| 1 | | 8605274 | | 1 | DIFERENCIAL, Incl. Refs. 2 - 20 |
| 2 | | 8605359 | | 1 | CAVIDAD, If Used |
| 3 | | 8603713 | | 10 | PLACA, 1,4 mm; Separator; If Used |
| 5 | | 8603714 | | 8 | PLACA, Friction |
| 6 | | 8603715 | | 2 | PLACA, 3,0 mm; Pressure |
| 7 | | 8603716 | | 2 | ENGRANAJE, 16T |
| 8 | | 8603717 | | 4 | ENGRANAJE, 11T |
| 9 | | 8603718 | | 4 | ANILLO DE APOYO |
| 10 | | 8603719 | | 2 | EJE |
| 11 | | 8603720 | | 4 | TORNILLO, M12 x 1,5 x 95 |
| 12 | | 8603721 | | 8 | TORNILLO, M16 x 1,5 x 100 |
| 13 | | 8603722 | | 4 | PERNO, 16 x 40 |
| 14 | | 8603723 | | 4 | PERNO, 10 x 40 |
| 15 | | 8603724 | | 4 | TORNILLO |
| 16 | | 8603271 | | 1 | JUNTA HERMETICA, Front Bevel Gear; Not Illustrated |
| 17 | | 8605631 | | AR | DISCO, EMBRAG., If Used; Not Illustrated |
| 18 | | 8605632 | | AR | DISCO, EMBRAG., If Used; Not Illustrated |
| 19 | | 8605633 | | AR | DISCO, EMBRAG., If Used; Not Illustrated |
| 20 | | 8605634 | | 8 | ARANDELA, If Used; Not Illustrated |

**EJE, TRASERO - FRENO**

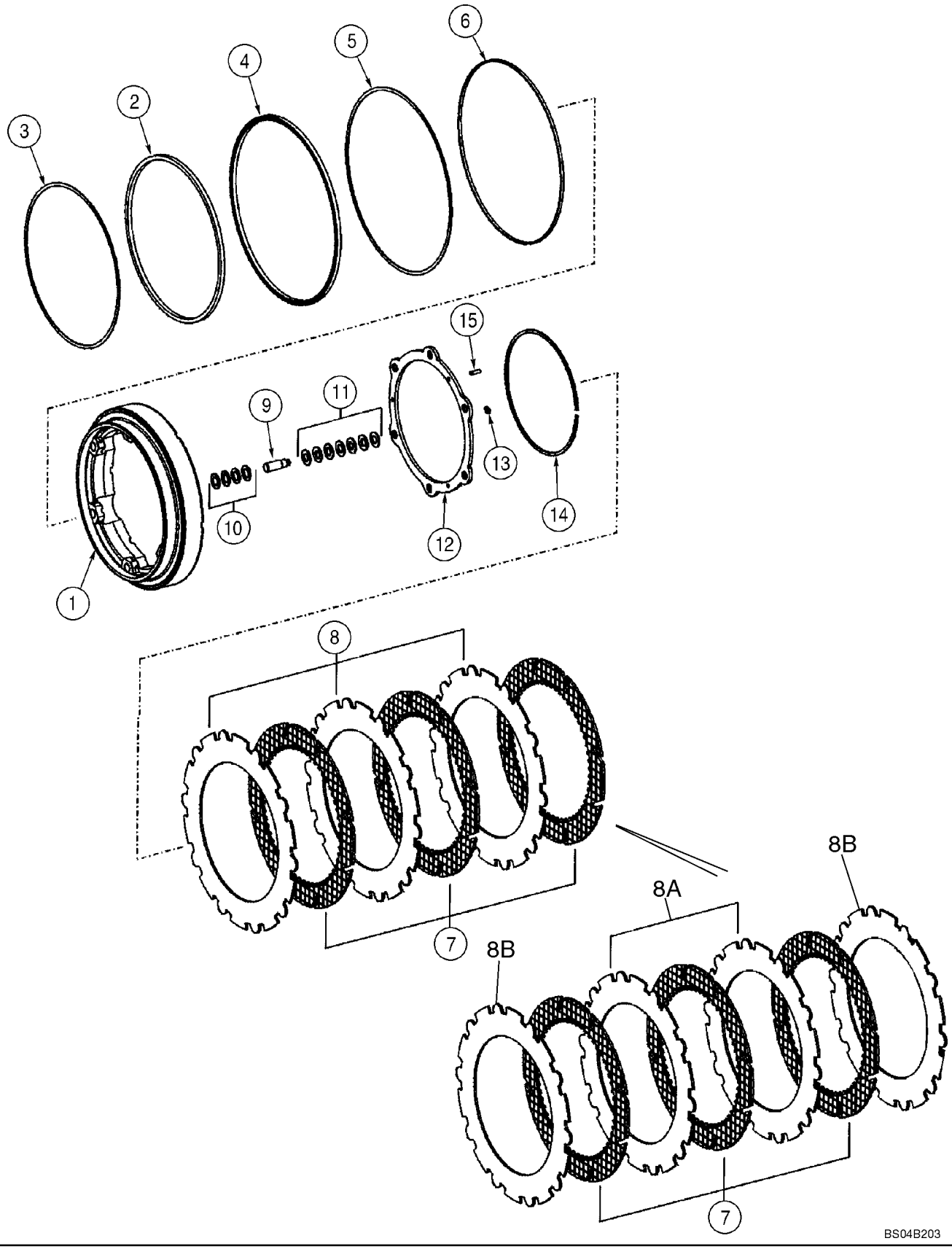

**EJE, TRASERO - FRENO**

| REF | FN | PART NUMBER | YR/SN | QTY | DENOMINACION |
|---|---|---|---|---|---|
| | | 87358583 | | 1 | PUENTE POSTERIOR, Limited Slip; Incl. Figures 06-23A - 06-23E; Incl. Refs. 1 - 15 |
| | | 87358681 | | 1 | FINAL(CONJ), Incl. Refs. 1 - 15; Incl. Figure 06-23E |
| 1 | | 8603166 | | 1 | EMBOLO |
| 2 | | 8605314 | | 1 | ANILLO DE CIERRE |
| 3 | | 8603577 | | 1 | ANILLO DE RESORTE |
| 4 | | 8605315 | | 1 | ANILLO DE CIERRE |
| 5 | | 8603579 | | 1 | ANILLO DE RESORTE |
| 6 | | 8603580 | | 1 | ANILLO DE RESORTE |
| 7 | | 87341835 | | 4 | DISCO DE FRENO |
| 8 | | 8603582 | | 3 | COPA DE FRENO |
| 8A | | 87441328 | | 2 | PLAQUETA |
| 9 | | 8603163 | | 6 | PERNO |
| 10 | | 8603583 | | 24 | ANILLO DE RESORTE |
| 11 | | 8603584 | | 42 | ARANDELA |
| 12 | | 8603162 | | 1 | SUPLEMENTO |
| 13 | | 8603788 | | 6 | ANILLO DE RESORTE |
| 14 | | 8603585 | | 1 | ANILLO DE RESORTE |
| 15 | | 8603796 | | 6 | PASADOR TUBOLAR, 6 x 20 mm |

| 06-23E | | p1 | 07/07 |
|---|---|---|---|

**EJE, TRASERO - CUBO, PLANETARIO**

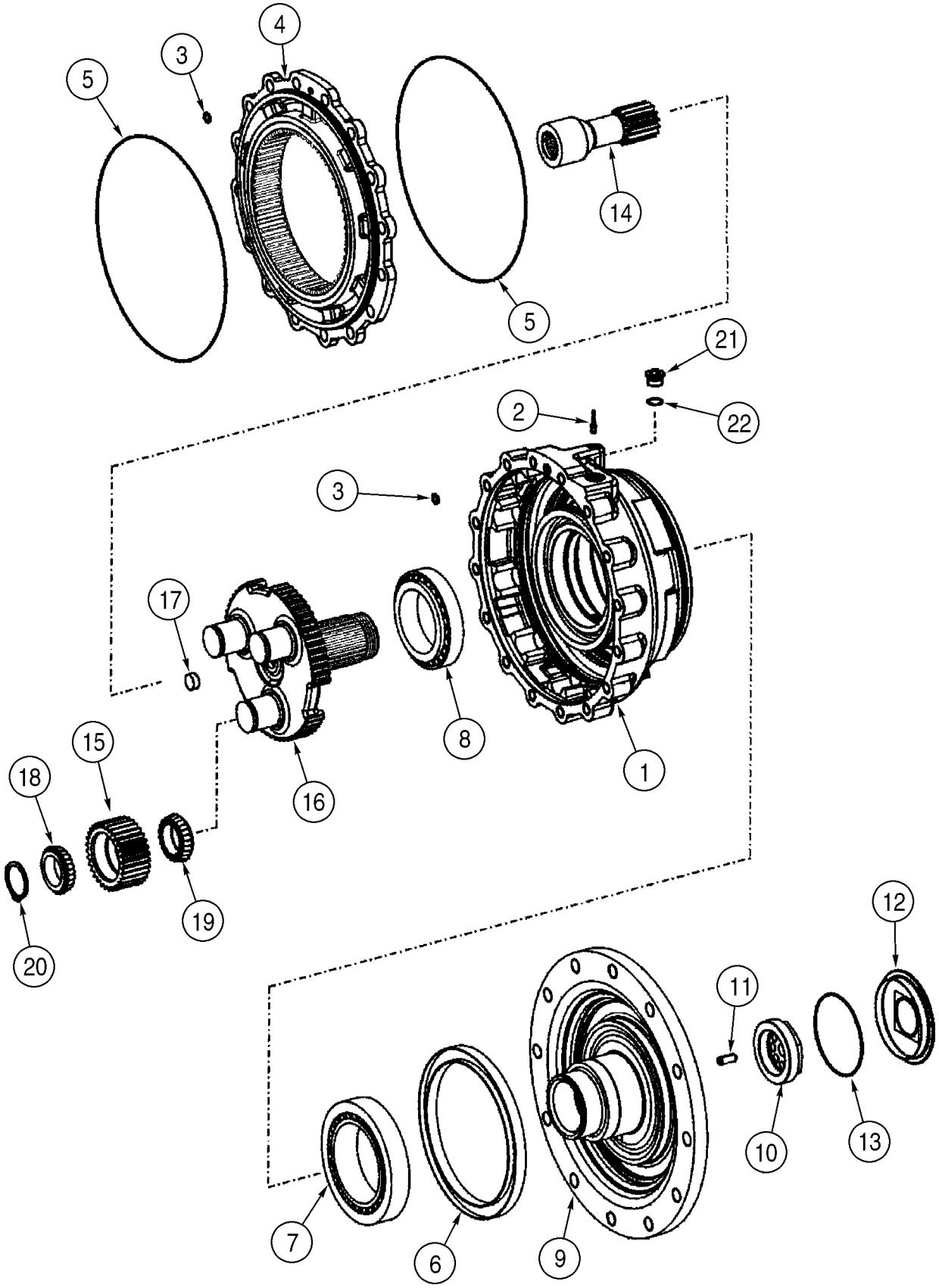

**EJE, TRASERO - CUBO, PLANETARIO**

| REF | FN | PART NUMBER | YR/SN | QTY | DENOMINACION |
|---|---|---|---|---|---|
| | | 87358583 | | 1 | PUENTE POSTERIOR, Limited Slip; Incl. Figures 06-23A - 06-23E; Incl. Refs. 1 - 22 |
| | | 87358681 | | 1 | FINAL(CONJ), Incl. Refs. 1 - 22; Incl. Figure 06-23D |
| 1 | | 87437916 | | 1 | CAVIDAD |
| 2 | | 8603673 | | 1 | TAPÓN |
| 3 | | 8603559 | | 2 | JUNTA HERMETICA |
| 4 | | 8603560 | | 1 | ENGRANAJE |
| 5 | | 8603674 | | 2 | JUNTA HERMETICA, 360 x 2,5 |
| 6 | | 8603562 | | 1 | JUNTA HERMETICA |
| 7 | | 8603691 | | 1 | RODAMIENTO DE RODILLOS, Outer |
| 8 | | 8603692 | | 1 | RODAMIENTO DE RODILLOS, Inner |
| 9 | | 8603675 | | 1 | BRIDA, M22 x 1,5; Output |
| 10 | | 8603565 | | 1 | TUERCA |
| 11 | | 8603566 | | 1 | PERNO |
| 12 | | 8603567 | | 1 | TAPADERA |
| 13 | | 8603527 | | 1 | JUNTA HERMETICA |
| 14 | | 8603568 | | 1 | ENGRANAJE |
| 15 | | 87358699 | | 3 | ENGRANAJE |
| 16 | | {87358700} | | 1 | CARRIER, PANETARY |
| 17 | | 8603571 | | 1 | TAPÓN |
| 18 | | 8603572 | | 3 | CONO, Outer |
| 19 | | 87358695 | | 3 | CONO |
| 20 | | 87358698 | | 4 | ANILLO DE RESORTE |
| 21 | | 8603575 | | 1 | TAPÓN, Incl. 22 |
| 22 | | 8603208 | | 1 | JUNTA HERMETICA |

**EJE DE TRANSMISION MONTAJE**

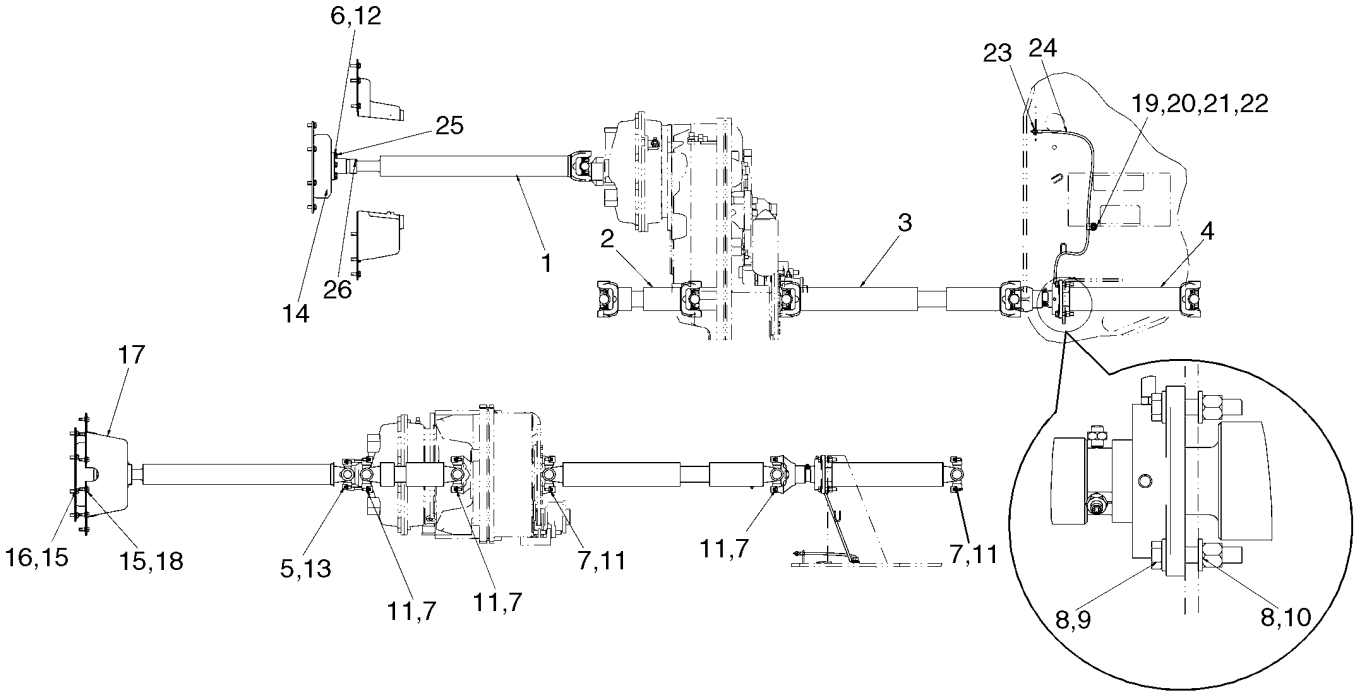


BS07D050

**EJE DE TRANSMISION MONTAJE**

| REF | FN | PART NUMBER | YR/SN | QTY | DENOMINACION |
|---|---|---|---|---|---|
| 1 | | 87553862 | | 1 | ARBOL DE MANDO, Engine; See Figure 06-28 |
| 2 | | 86990311 | | 1 | ARBOL DE MANDO, Rear; See Figure 06-27 |
| 3 | | 86990312 | | 1 | ARBOL DE MANDO, Center; See Figure 06-26 |
| 4 | | 87553865 | | 1 | ARBOL DE MANDO, Front; See Figure 06-25 |
| 5 | | D137626 | | 2 | COLLAR |
| 6 | | 896-11010 | | 6 | ARANDELA, M10 x 21.5 x 2.5, HT |
| 7 | | L116943 | | 10 | COLLAR |
| 8 | | 896-11012 | | 8 | ARANDELA, M13.5 x 24.5 x 3, HT |
| 9 | | 827-12060 | | 4 | TORNILLO, Hex, M12 x 60, 10.9 |
| 10 | | 832-10412 | | 4 | CONTRA TUERCA, M12 x 1.75, Cl 8 |
| 11 | | 19-6247 | | 20 | TORNILLO |
| 12 | | 627-10035 | | 6 | TORNILLO, Hex, M10 x 35, 10.9, Full Thd |
| 13 | | D137627 | | 4 | TORNILLO |
| 14 | | 87553867 | | 1 | ELEMENTO DE ACOPLAM. |
| 15 | | 896-15010 | | 18 | ARANDELA, M10 x 24.5 x 3, HT |
| 16 | | 627-10025 | | 8 | TORNILLO, Hex, M10 x 25, 10.9, Full Thd |
| 17 | | 87522101 | | 1 | COBERTURA |
| 18 | | 806-10030 | | 10 | TORNILLO, Hex, Lock, M10 x 30, Cl 10.9 |
| 19 | | 896-15012 | | 1 | ARANDELA, M12 x 28.5 x 4, HT |
| 20 | | 515-2495 | | 1 | BORNE, 3/8", Insul, 7/16" Bolt |
| 21 | | 895-11010 | | 1 | ARANDELA, M10 x 20 x 2 |
| 22 | | 832-10410 | | 1 | CONTRA TUERCA, M10 x 1.5, Cl 8 |
| 23 | | F53473 | | 1 | TUERCA |
| 24 | | L54694 | | 1 | MANGA, Grease; 1041 mm (41 in); Incl. 24A, 24B |
| 24A | | 219-20 | | 1 | ENGRASADOR, 1/4"-28 x .52" lg, Not Illustrated |
| 24B | | 219-8 | | 1 | ENGRASADOR, 1/4"-28 NPT x .54" lg, Not Illustrated |
| 25 | | 345-49 | | AR | LOCTITE, Pilot Line |
| 26 | | 760-14113 | | 2 | TORNILLO AUTOROSCANTE, Pan Hd, M3.5 x 13 |

**EJE DE LA TRANSMISION, DELANTERO**

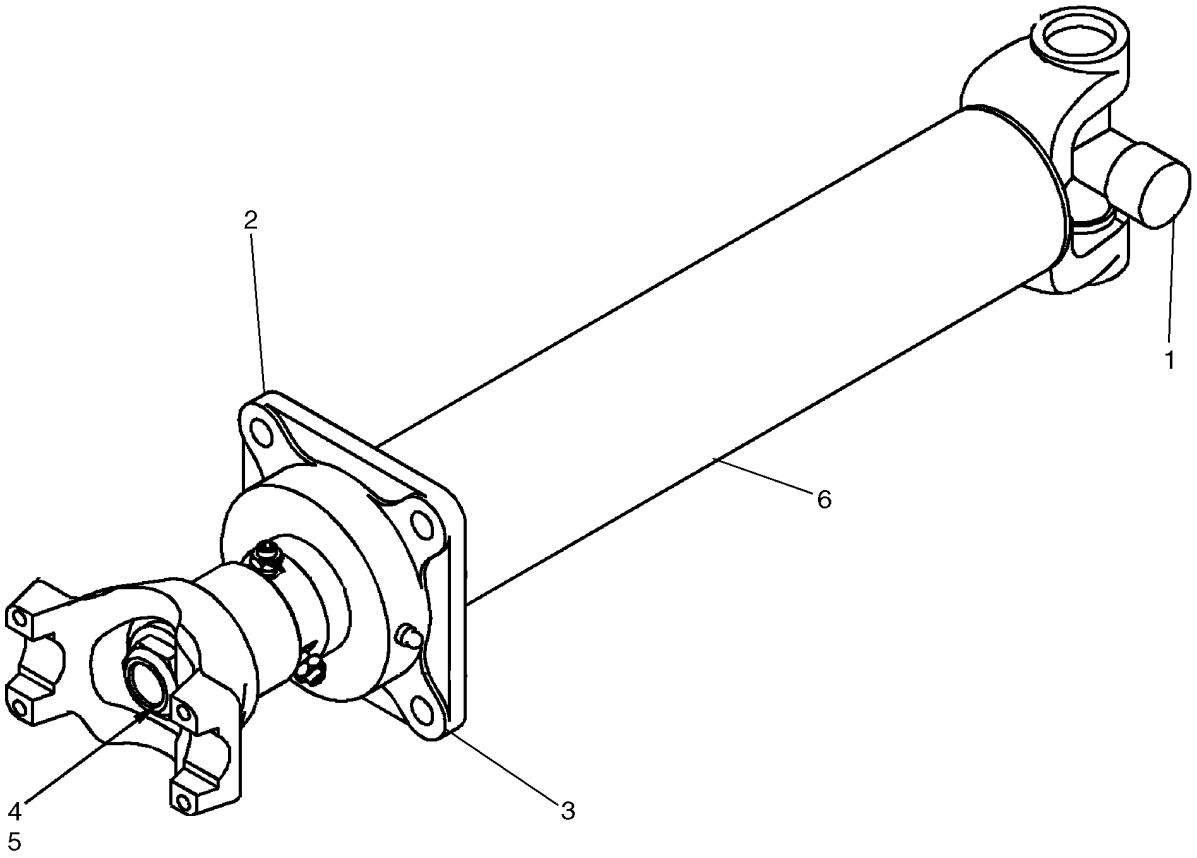


BS07D271

**EJE DE LA TRANSMISION, DELANTERO**

| REF | FN | PART NUMBER | YR/SN | QTY | DENOMINACION |
|---|---|---|---|---|---|
| | | 87553865 | | 1 | ARBOL DE MANDO, Front; Incl. Refs. 1 - 6 |
| 1 | | 8604675 | | 1 | COJINETE, W/ Spider |
| 2 | | 8604674 | | 1 | HORQUILLA |
| 3 | | L106070 | | 1 | COJINETE, Carrier |
| 4 | | 8604270 | | 1 | CONTRA TUERCA |
| 5 | | 86637954 | | 1 | ARANDELA, 1 1/16" x 2" x .209" |
| 6 | | NSS | | 1 | NO SE REPARA SEPARADAM., TUBE |

**EJE DE LA TRANSMISION, CENTRAL**

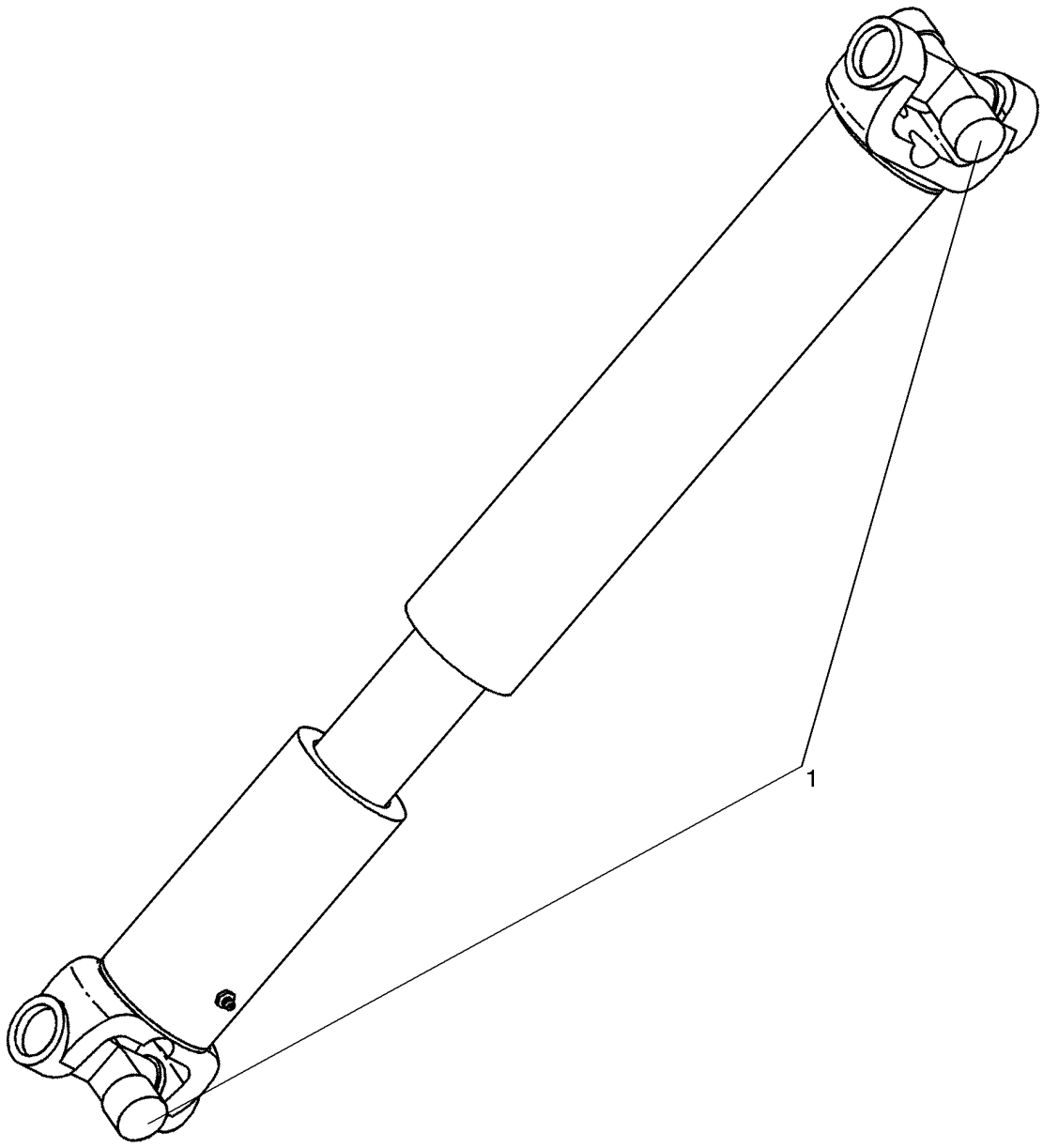

**EJE DE LA TRANSMISION, CENTRAL**

| REF | FN | PART NUMBER | YR/SN | QTY | DENOMINACION |
|---|---|---|---|---|---|
| | | 86990312 | | 1 | ARBOL DE MANDO, Center; Incl. Ref. 1 |
| 1 | | 8604675 | | 2 | COJINETE, W/ Spider |

**EJE DE LA TRANSMISION, TRASERO**

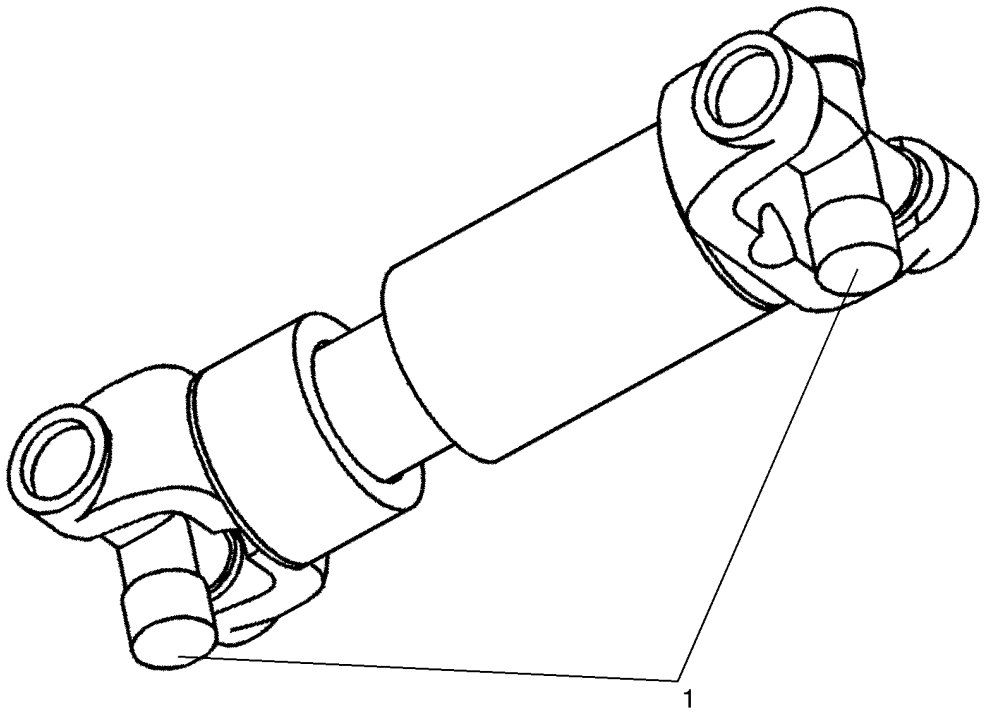


BS07D048

**EJE DE LA TRANSMISION, TRASERO**

| REF | FN | PART NUMBER | YR/SN | QTY | DENOMINACION |
|---|---|---|---|---|---|
| | | 86990311 | | | ARBOL DE MANDO, Rear; Incl. Ref. 1 |
| 1 | | 8604675 | | 2 | COJINETE, W/ Spider |

**EJE DE TRANSMISIÓN, MOTOR**

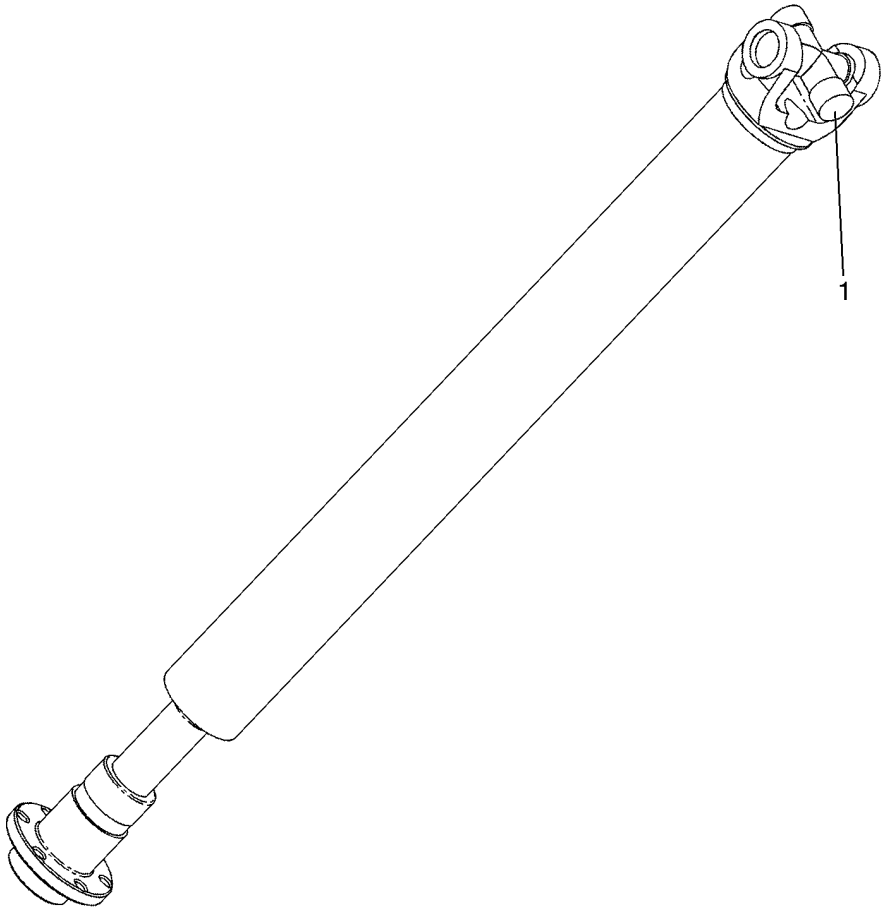


BS07D045

**EJE DE TRANSMISIÓN, MOTOR**

| REF | FN | PART NUMBER | YR/SN | QTY | DENOMINACION |
|---|---|---|---|---|---|
| | | 87553862 | | 1 | ARBOL DE MANDO, Engine; Incl. Ref. 1 |
| 1 | | 8604432 | | 1 | COJINETE, Spider |

**RUEDAS**

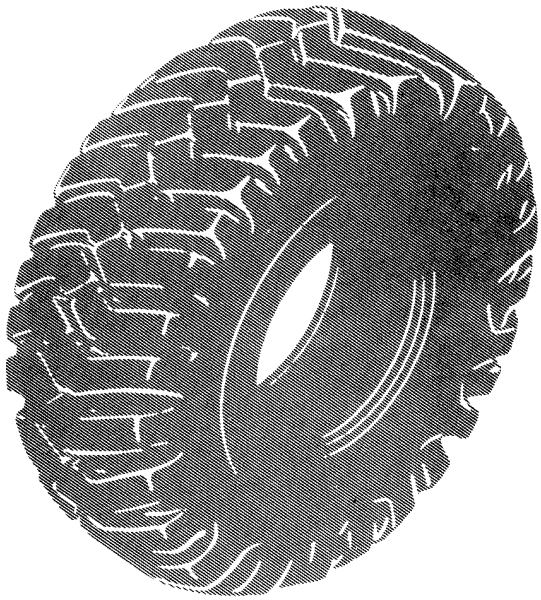

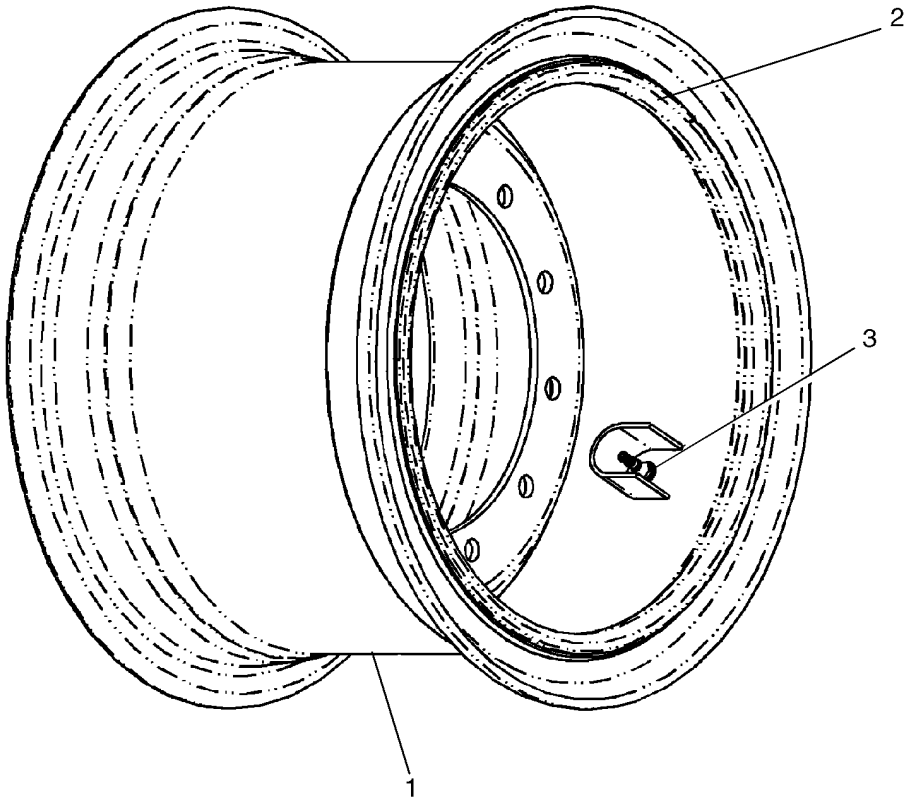


BS07G240

**RUEDAS**

| REF | FN | PART NUMBER | YR/SN | QTY | DENOMINACION |
|---|---|---|---|---|---|
| 1 | | 87557521 | | 4 | RUEDA COMPLETA, Case Power Tan, 25 x 17 in; Includes Rim, Sidering, and Lockring; Used W/ Axle Assy's 87358580 and 87358583 |
| 2 | | A19101 | | 1 | JUNTA HERMETICA, Wheel |
| 3 | | A20058 | | 1 | VASTAGO DE VALVULA |

## NOTAS

# SECTION INDEX
## Frenos


| | |
|---|---|
| 07-01 | FRENO, ESTACIONAMIENTO |
| 07-02 | FRENO PEDALES |
| 07-03 | HIDRAULICA - FRENO, PRINCIPAL - BOMBA |
| 07-03A | HIDRAULICA - FRENO, PRINCIPAL - EJE |
| 07-03B | HIDRAULICA - FRENO, PRINCIPAL - ACUMULADOR |
| 07-03C | HIDRAULICA - FRENO, PRINCIPAL - FRENO DE PARQUE |
| 07-03D | HIDRAULICA - FRENO, PRINCIPAL - DEPÓSITO |
| 07-04 | HIDRAULICA - FRENO - CONJUNTO DE LA BOMBA |
| 07-05 | CONJUNTO DE LA VALVULA - FRENO |

**FRENO, ESTACIONAMIENTO**

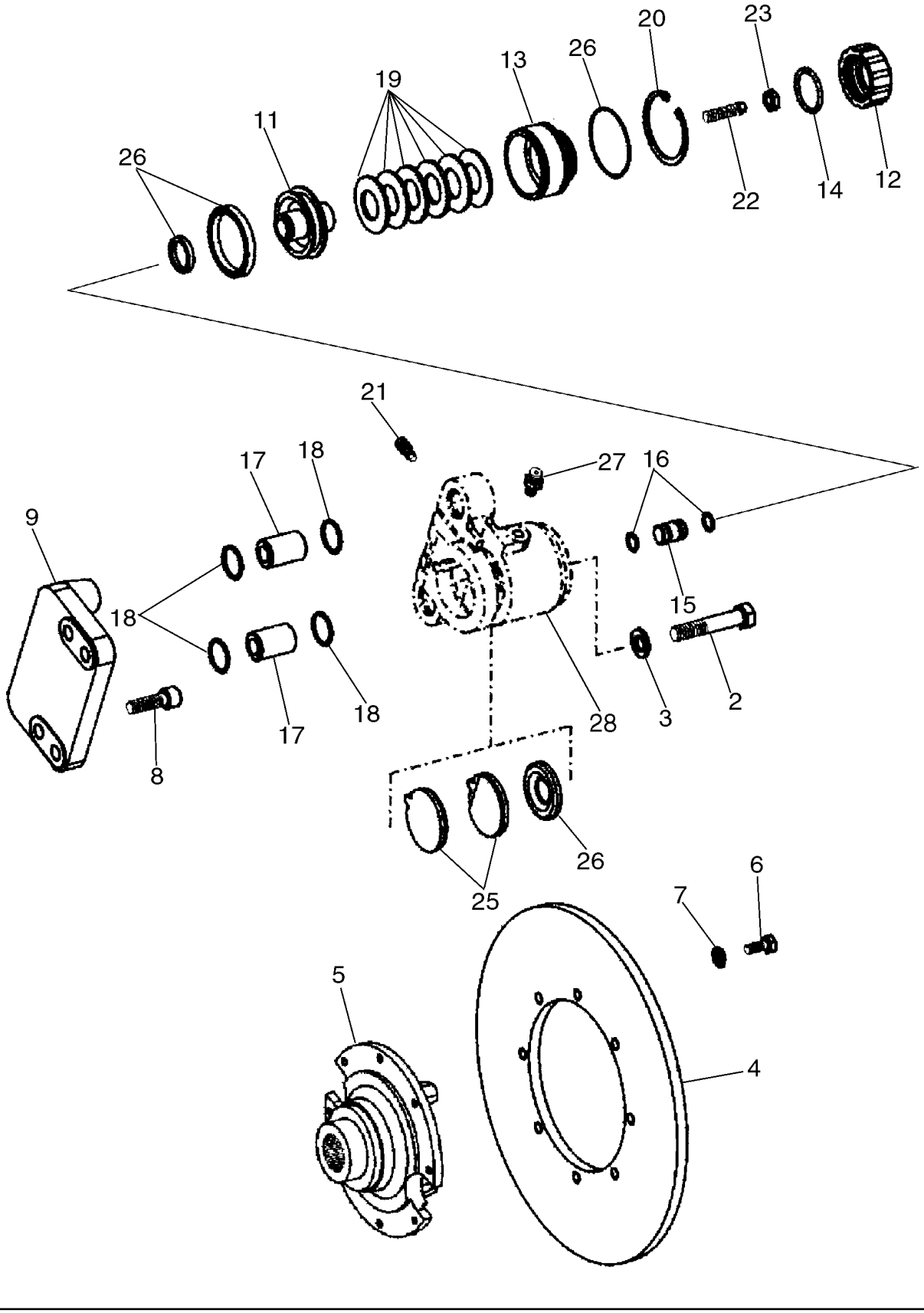

**FRENO, ESTACIONAMIENTO**

| REF | FN | PART NUMBER | YR/SN | QTY | DENOMINACION |
|---|---|---|---|---|---|
| | | 87572394 | | 1 | CAMBIO DE VELOCIDAD, See Figure(s) 06-03 - 06-20, 07-01; Incl. Refs. 2 - 28 |
| | | 8603630 | | 1 | FRENO, Incl. 11 - 26, 28; Includes Caliper Which Is Not Serviced Separately |
| 2 | | 8603649 | | 2 | TORNILLO, M16 x 85 |
| 3 | | 8603650 | | 2 | ARANDELA |
| 4 | | 8603328 | | 1 | DISCO DE FRENO |
| 5 | | 8603327 | | 1 | BRIDA, Output |
| 6 | | 626-10025 | | 8 | TORNILLO, Hex, M10 x 25, 10.9, Full Thd |
| 7 | | 895-11010 | | 8 | ARANDELA, M10 x 20 x 2 |
| 8 | | 8603652 | | 4 | PRISIONERO, M14 x 45 |
| 9 | | 8603653 | | 1 | PLACA |
| 10 | | 8603654 | | 1 | TORNILLO, Not Illustrated |
| 11 | | 8603699 | | 1 | EMBOLO |
| 12 | | 8603700 | | 1 | TAPON DEL DEPOSITO |
| 13 | | 8603701 | | 1 | ANILLO, Pressure |
| 14 | | 8603347 | | 1 | JUNTA HERMETICA |
| 15 | | 8603702 | | 1 | PERNO, Pressure |
| 16 | | 8603703 | | 2 | JUNTA HERMETICA |
| 17 | | 8603704 | | 2 | CASQUILLO |
| 18 | | 8603705 | | 4 | JUNTA HERMETICA |
| 19 | | 8603706 | | 6 | RESORTE |
| 20 | | 8603707 | | 1 | ANILLO, Retaining |
| 21 | | 8603348 | | 1 | RESPIRADERO |
| 22 | | 8603708 | | 1 | TORNILLO DE REGLAGE |
| 23 | | 8603709 | | 1 | TUERCA |
| 24 | | 8603710 | | 1 | TAPÓN, Not Illustrated |
| 25 | | 8603631 | | 1 | EQUIPO |
| 26 | | 8603711 | | 1 | SERIE DE JUNTAS, Park Brake |
| 27 | | 8603542 | | 1 | MANGUITO |
| 28 | | NSS | | 1 | NO SE REPARA SEPARADAM., BRAKE CALIPER |

**FRENO PEDALES**

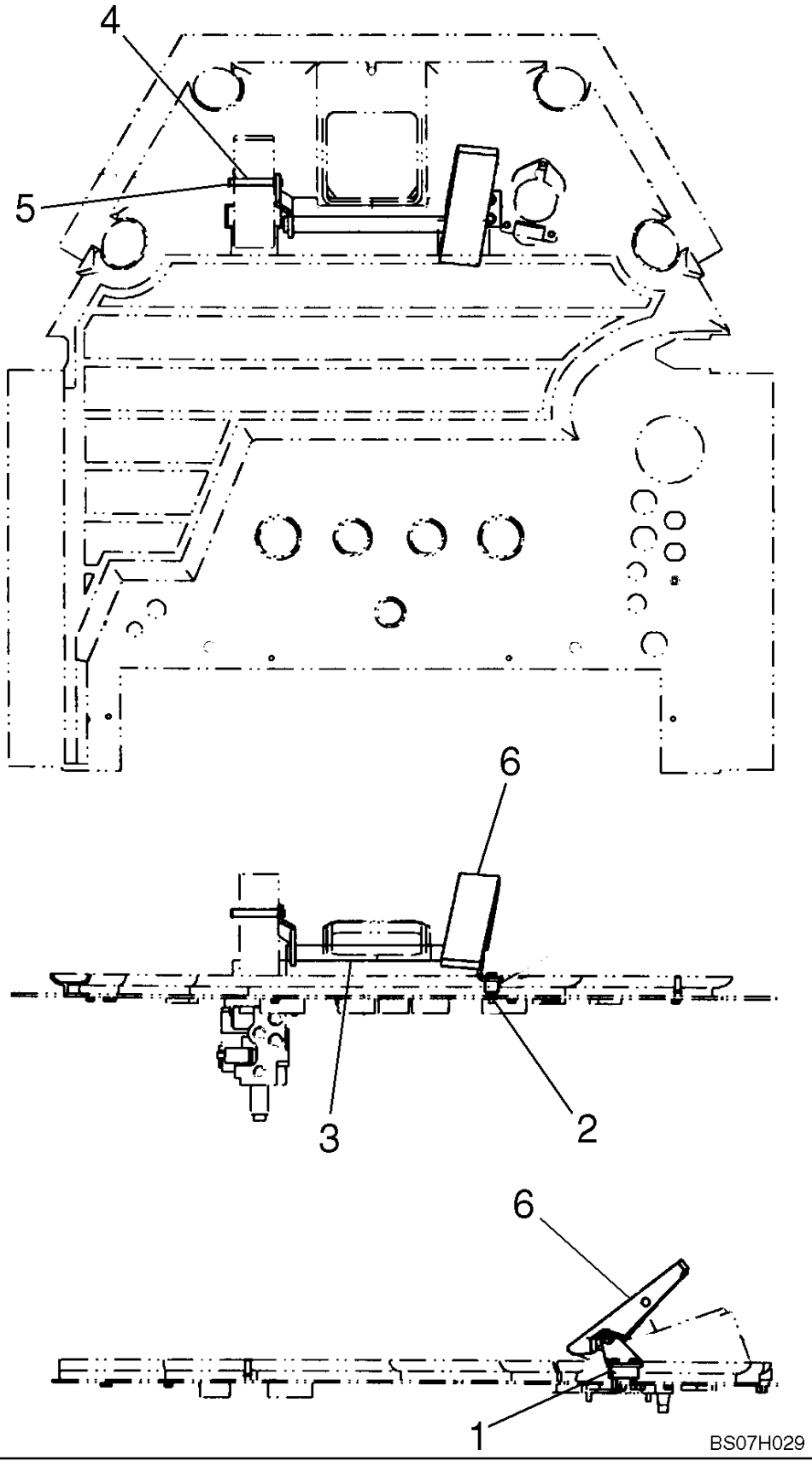

**FRENO PEDALES**

| REF | FN | PART NUMBER | YR/SN | QTY | DENOMINACION |
|---|---|---|---|---|---|
| | | REF | | | MANUAL, RIGHT HAND PEDAL |
| 1 | | 87568400 | | 1 | PIEZAS DE FIJACIÓN |
| 2 | | 844-8025 | | 2 | TORNILLO, Hex Flg, M8 x 25, 8.8 |
| 3 | | 87542219 | | 1 | PEDAL (CONJUNTO), Tag-Along Pedal |
| 4 | | 383868A1 | | 1 | PERNO |
| 5 | | 800-44012 | | 2 | ANILLO DE RESORTE, M12, Ext |
| 6 | | 383869A2 | | 1 | PEDAL |

**HIDRAULICA - FRENO, PRINCIPAL - BOMBA**

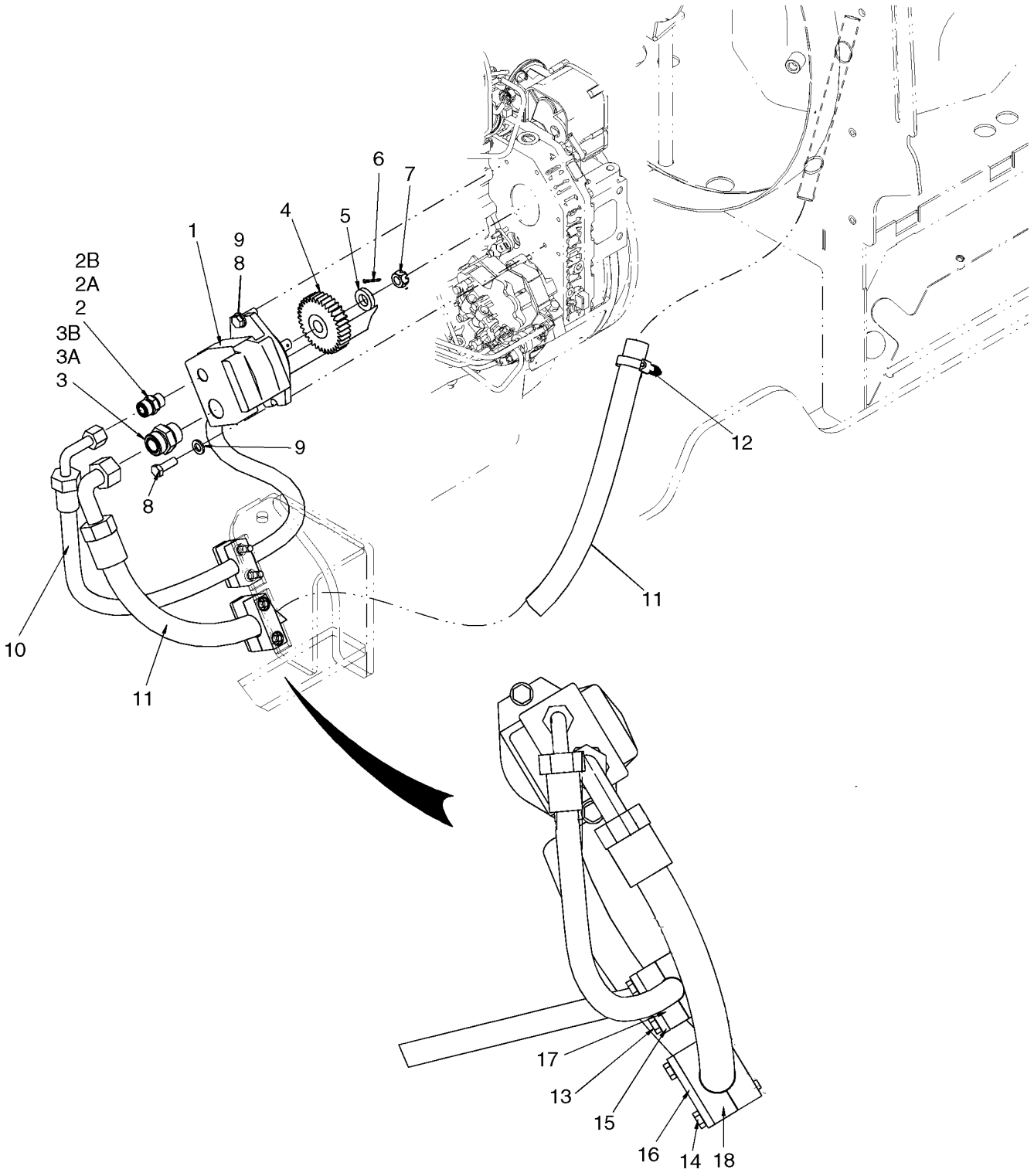

**HIDRAULICA - FRENO, PRINCIPAL - BOMBA**

| REF | FN | PART NUMBER | YR/SN | QTY | DENOMINACION |
|---|---|---|---|---|---|
| 1 | | 87342166 | | 1 | BOMBA HIDRÁULICA, Brake; See Figure 07-04 |
| 2 | | 700-103 | | 1 | RACOR, 1"-14 ORFS x M22 x 1.5 ORB, Incl. 2A, 2B |
| 2A | | 238-6016 | | 1 | JUNTA HERMETICA, -016, 90 Duro, .614" ID x .070" Thk, Face Seal |
| 2B | | 637-63193 | | 1 | JUNTA HERMETICA, Cl 6, 19.3MM ID x 2.2 Thk, Boss Seal |
| 3 | | 700-105 | | 1 | RACOR, 1 7/16"-12 ORFS x M22 x 2 ORB, Incl. 3A, 3B |
| 3A | | 238-6021 | | 1 | JUNTA HERMETICA, -021, 90 Duro, .926" ID x .070" Thk, Face Seal |
| 3B | | 637-64296 | | 1 | JUNTA HERMETICA, Cl 6, 29.6MM ID x 2.9 Thk, Boss Seal |
| 4 | | 87389871 | | 1 | ENGRANAJE, Accessory Drive |
| 5 | | 87373112 | | 1 | ARANDELA, Gear Mounting |
| 6 | | 733-3232 | | 1 | PASADOR ABIERTO, M3.2 x 32 |
| 7 | | 425-1310 | | 1 | TUERCA ENTALLADA, 5/8"-18, G5 |
| 8 | | 627-12035 | | 2 | TORNILLO, Hex, M12 x 35, 10.9 |
| 9 | | 896-11012 | | 2 | ARANDELA, M13.5 x 24.5 x 3, HT |
| 10 | | 87377350 | | 1 | MANGUERA (CONJUNTO), Brake Pump Pressure; 2491 mm (98-1/16 in) |
| 11 | | 87377337 | | 1 | MANGUERA (CONJUNTO), Brake Pump Suction; 1043mm (41 in) |
| 12 | | 353036A1 | | 1 | COLLAR, Constant Torque |
| 13 | | 827-10075 | | 2 | TORNILLO, Hex, M10 x 75, 10.9 |
| 14 | | 827-10070 | | 2 | TORNILLO, Hex, M10 x 70, 10.9 |
| 15 | | 367658A1 | | 1 | PLACA, Clamp Cover |
| 16 | | 8500858 | | 1 | PLACA, Clamp Cover |
| 17 | | 8606002 | | 1 | PLACA DE SUJECION, Hose Mounting |
| 18 | | 8500621 | | 1 | BLOQUE MOTOR, Hose Mounting |

**HIDRAULICA - FRENO, PRINCIPAL - EJE**

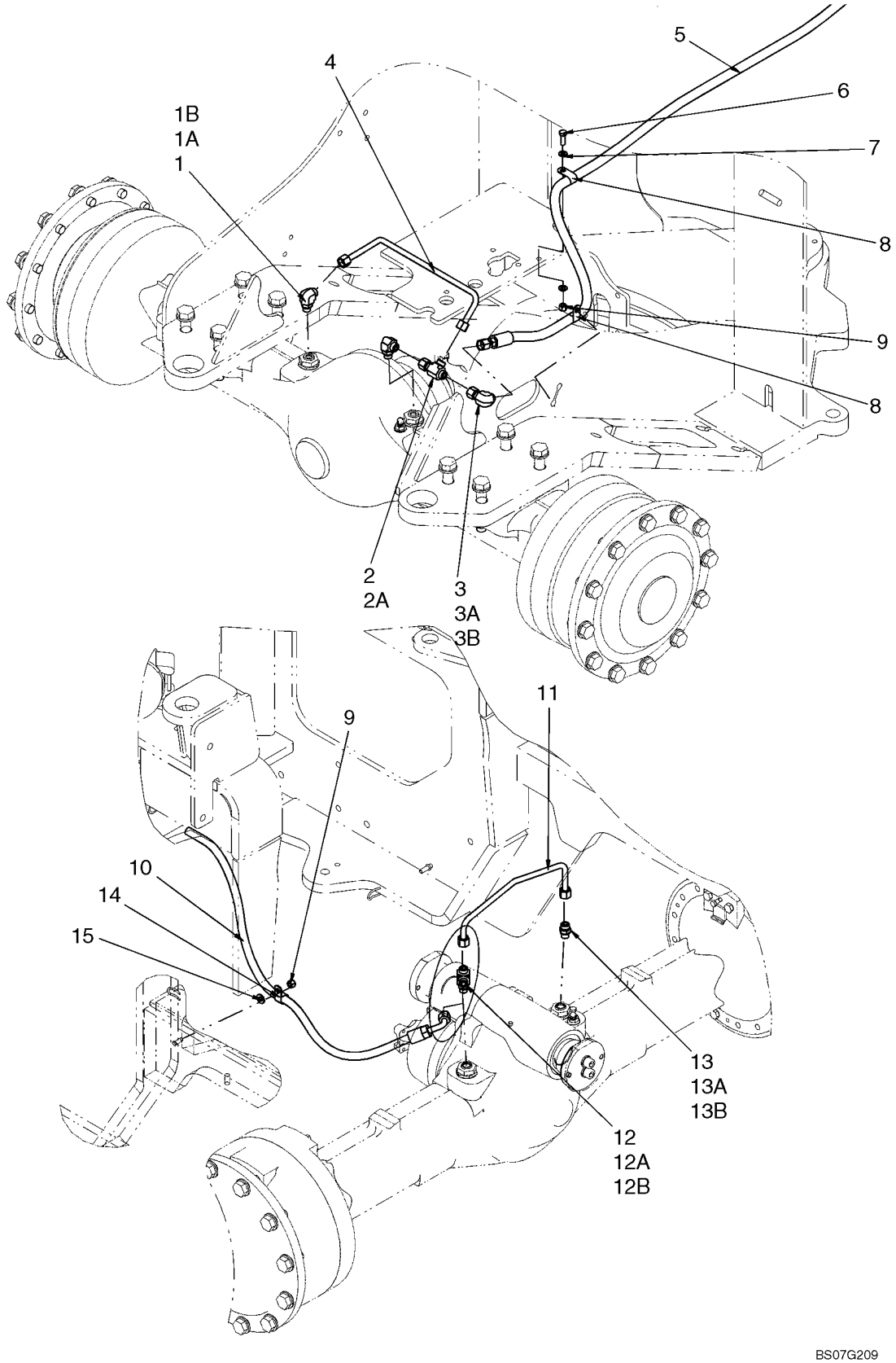

**HIDRAULICA - FRENO, PRINCIPAL - EJE**

| REF | FN | PART NUMBER | YR/SN | QTY | DENOMINACION |
|---|---|---|---|---|---|
| | | REF | | | MANUAL, TOP VIEW - FRONT AXLE |
| | | REF | | | MANUAL, BOTTOM VIEW - REAR AXLE |
| 1 | | 700-305 | | 2 | CODO, 90º, 13/16"-18 ORFS x M18 x 1.5 ORB, Incl. Refs. 1A, 1B |
| 1A | | 238-6014 | | 1 | JUNTA HERMETICA, -014, 90 Duro, .489" ID x .070" Thk, Face Seal |
| 1B | | 637-63153 | | 1 | JUNTA HERMETICA, Cl 6, 15.3MM ID x 2.2 Thk |
| 2 | | 701-416 | | 1 | RACOR-T, 13/16"-16 ORFS x 13/16"-16 Fem Sw Run, Incl. Refs. 2A |
| 2A | | 238-6014 | | 2 | JUNTA HERMETICA, -014, 90 Duro, .489" ID x .070" Thk, Face Seal |
| 3 | | 701-320 | | 1 | CODO, 90º, 13/16"-16 ORFS x 13/16"-16 Fem Sw, Incl. Refs. 3A, 3B |
| 3A | | 238-6014 | | 1 | JUNTA HERMETICA, -014, 90 Duro, .489" ID x .070" Thk, Face Seal |
| 3B | | 637-63153 | | 1 | JUNTA HERMETICA, Cl 6, 15.3MM ID x 2.2 Thk |
| 4 | | 386735A1 | | 1 | TUBO (CONJUNTO), Front Axle Brake |
| 5 | | {87658723} | | 1 | HOSE ASSY. Front Axle Brake; 3168mm ( 124 - 3/4 in ) |
| 6 | | 627-10030 | | 1 | TORNILLO, Hex, M10 x 30, 10.9, Full Thd |
| 7 | | 895-11010 | | 2 | ARANDELA, M10 x 20 x 2 |
| 8 | | 515-24222 | | 2 | BORNE, 7/8", Insul, 7/16" Bolt |
| 9 | | 832-10410 | | 2 | CONTRA TUERCA, M10 x 1.5, Cl 8 |
| 10 | | 87553873 | | 1 | MANGA, Rear Axle Brake; 1081 mm (42 - 9/16 in) |
| 11 | | 386823A1 | | 1 | TUBO (CONJUNTO), Rear Axle Brake |
| 12 | | 700-412 | | 1 | RACOR-T, 13/16"-16 ORFS x M18 x 1.5 ORB Run, Incl. Refs. 12A, 12B |
| 12A | | 238-6014 | | 2 | JUNTA HERMETICA, -014, 90 Duro, .489" ID x .070" Thk, Face Seal |
| 12B | | 637-63153 | | 1 | JUNTA HERMETICA, Cl 6, 15.3MM ID x 2.2 Thk |
| 13 | | 700-102 | | 1 | RACOR, 13/16"-16 ORFS x M18 x 1.5 ORB, Incl. Refs. 13A, 13B |
| 13A | | 238-6014 | | 1 | JUNTA HERMETICA, -014, 90 Duro, .489" ID x .070" Thk, Face Seal |
| 13B | | 637-63153 | | 1 | JUNTA HERMETICA, Cl 6, 15.3MM ID x 2.2 Thk |

**HIDRAULICA - FRENO, PRINCIPAL - EJE**

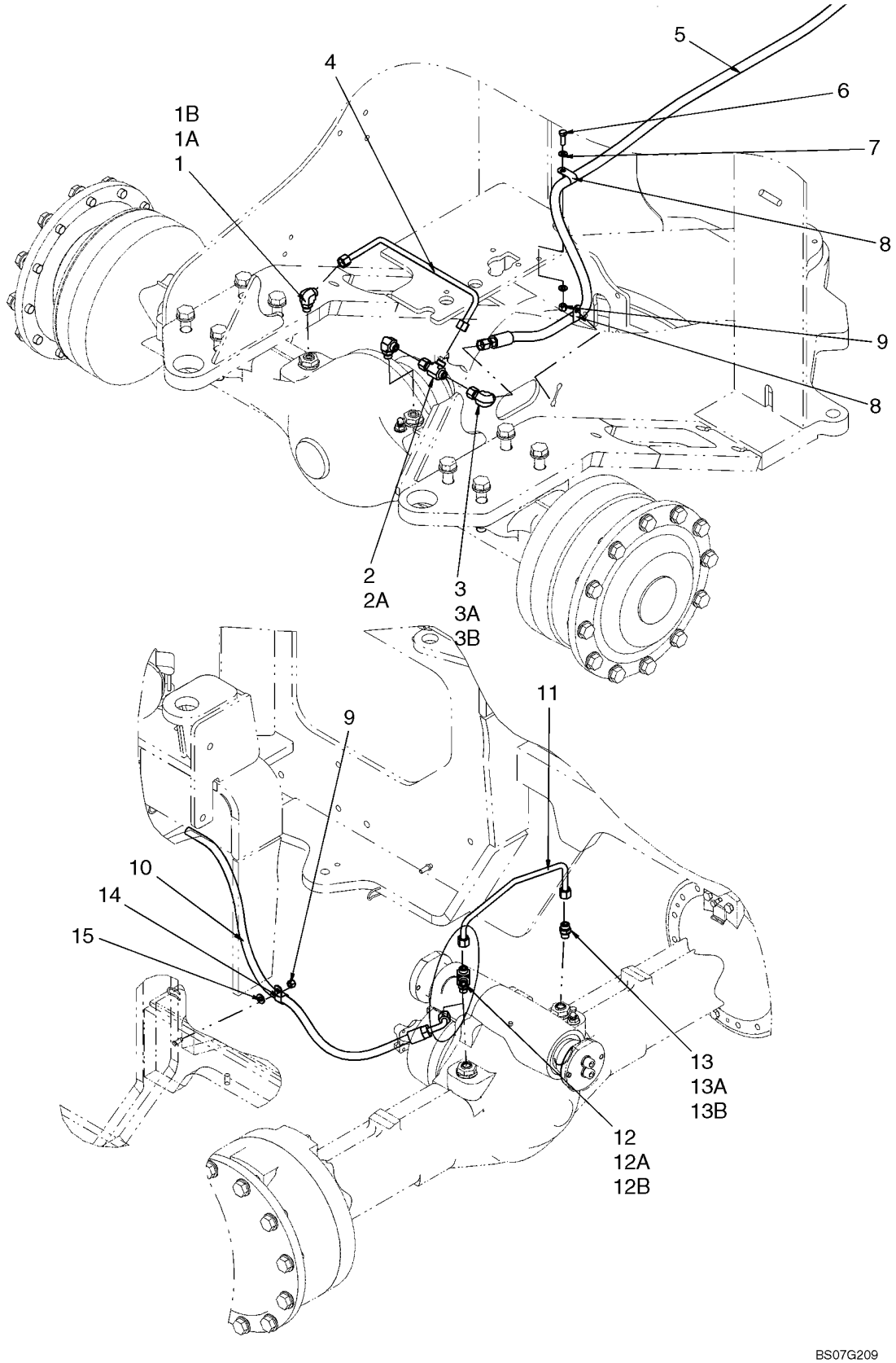

**HIDRAULICA - FRENO, PRINCIPAL - EJE**

| REF | FN | PART NUMBER | YR/SN | QTY | DENOMINACION |
|---|---|---|---|---|---|
| 14 | | 515-24238 | | 1 | BORNE, 15/16", Insul, 7/16" Bolt |
| 15 | | 895-15010 | | 1 | ARANDELA, M11 x 24 x 2 |

**HIDRAULICA - FRENO, PRINCIPAL - ACUMULADOR**

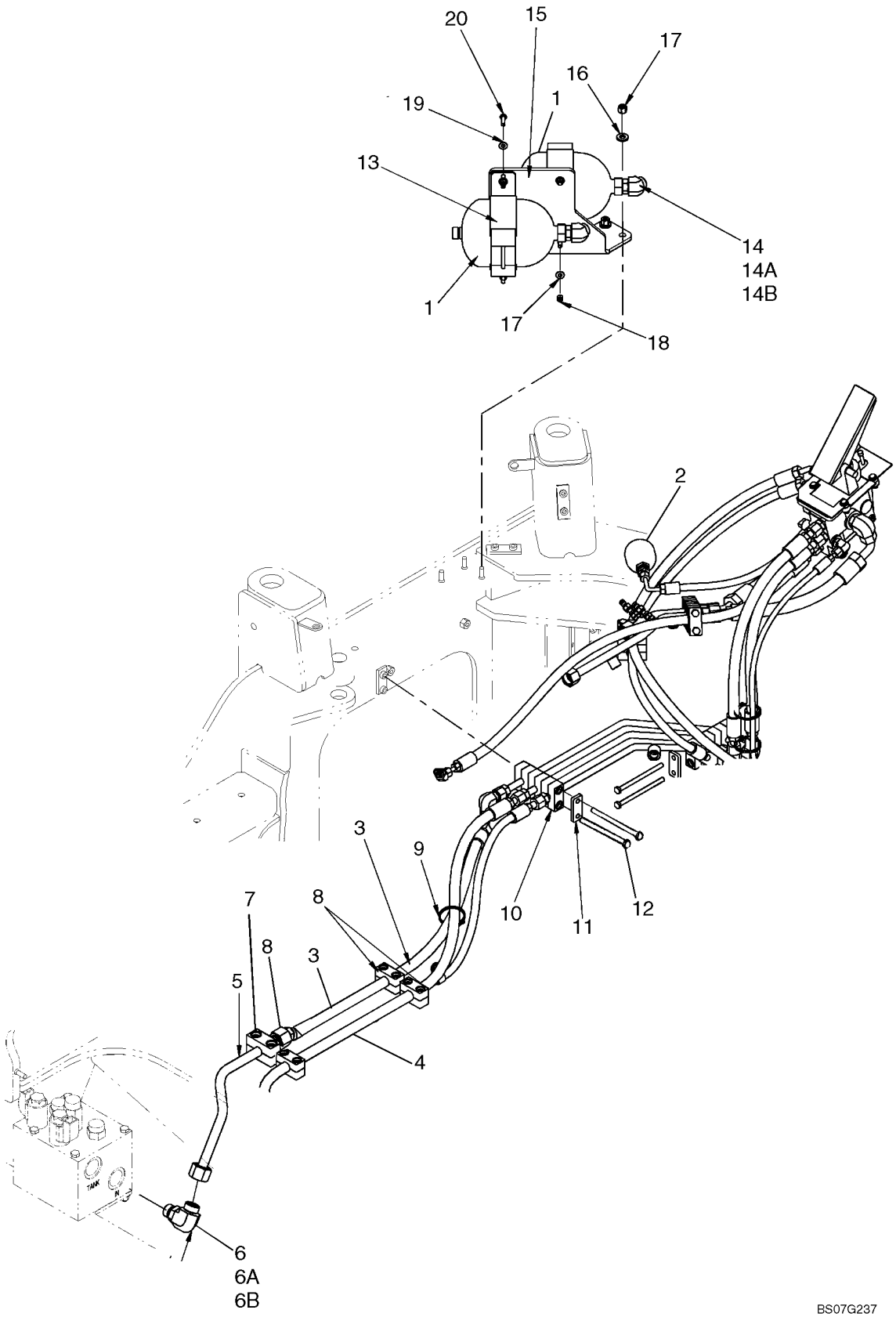

**HIDRAULICA - FRENO, PRINCIPAL - ACUMULADOR**

| REF | FN | PART NUMBER | YR/SN | QTY | DENOMINACION |
|---|---|---|---|---|---|
| | | REF | | | MANUAL, SERVICE AND PARKING BRAKE ACCUMULATORS, FAN SUPPLY AND PUMP PRESSURE LINE MOUNTING |
| 1 | | 8603020 | | 2 | ACUMULADOR, Service Brake |
| 2 | | 8500209 | | 1 | ACUMULADOR, Parking Brake |
| 3 | | {87658724} | | 1 | HOSE ASSY. Fan Supply; 1049 mm ( 41 - 5/16 in) |
| 4 | | 87377350 | | 1 | MANGUERA (CONJUNTO), Brake Pump Pressure; 2491 mm (98 - 1/16 in) |
| 5 | | {87658725} | | 1 | TUBE ASSY. Fan Supply |
| 6 | | 700-307 | | 2 | CODO, 90º, 1 3/16"-12 ORFS x M27 x 2 ORB, Incl. Refs. 6A, 6B |
| 6A | | 238-6018 | | 1 | JUNTA HERMETICA, -018, 90 Duro, .739" ID x .070" Thk, Face Seal |
| 6B | | 637-64236 | | 1 | JUNTA HERMETICA, Cl 6, 23.6MM ID x 2.9 Thk, Boss Seal |
| 7 | | 379374A1 | | 1 | BLOQUE MOTOR, Hose Mounting |
| 8 | | 367489A1 | | 3 | BLOQUE MOTOR, Hose Mounting |
| 9 | | L11541 | | 1 | BANDA |
| 10 | | 8500210 | | 5 | BORNE, Tube Mounting |
| 11 | | 367658A1 | | 1 | PLACA, Clamp Cover |
| 12 | | 827-10150 | | 4 | TORNILLO, Hex, M10 x 150, 10.9 |
| 13 | | 8501315 | | 2 | COLLAR, Accumulator |
| 14 | | 700-387 | | 1 | CODO, 45º, 1 3/16"-12 ORFS x M27 x 2 ORB, Incl. Refs. 14A, 14B |
| 14A | | 238-6018 | | 1 | JUNTA HERMETICA, -018, 90 Duro, .739" ID x .070" Thk, Face Seal |
| 14B | | 637-64236 | | 1 | JUNTA HERMETICA, Cl 6, 23.6MM ID x 2.9 Thk, Boss Seal |
| 15 | | 87326008 | | 1 | PIEZA DE SOPORTE, Accumulator |
| 16 | | 896-15012 | | 3 | ARANDELA, M12 x 28.5 x 4, HT |
| 17 | | 832-10412 | | 3 | CONTRA TUERCA, M12 x 1.75, Cl 8 |
| 18 | | 832-10408 | | 4 | CONTRA TUERCA, M8 x 1.25, Cl 8 |
| 19 | | 895-15008 | | 8 | ARANDELA, M8 x 20 x 1.6 |
| 20 | | 627-8030 | | 4 | TORNILLO, Hex, M8 x 30, 10.9 |

**HIDRAULICA - FRENO, PRINCIPAL - FRENO DE PARQUE**

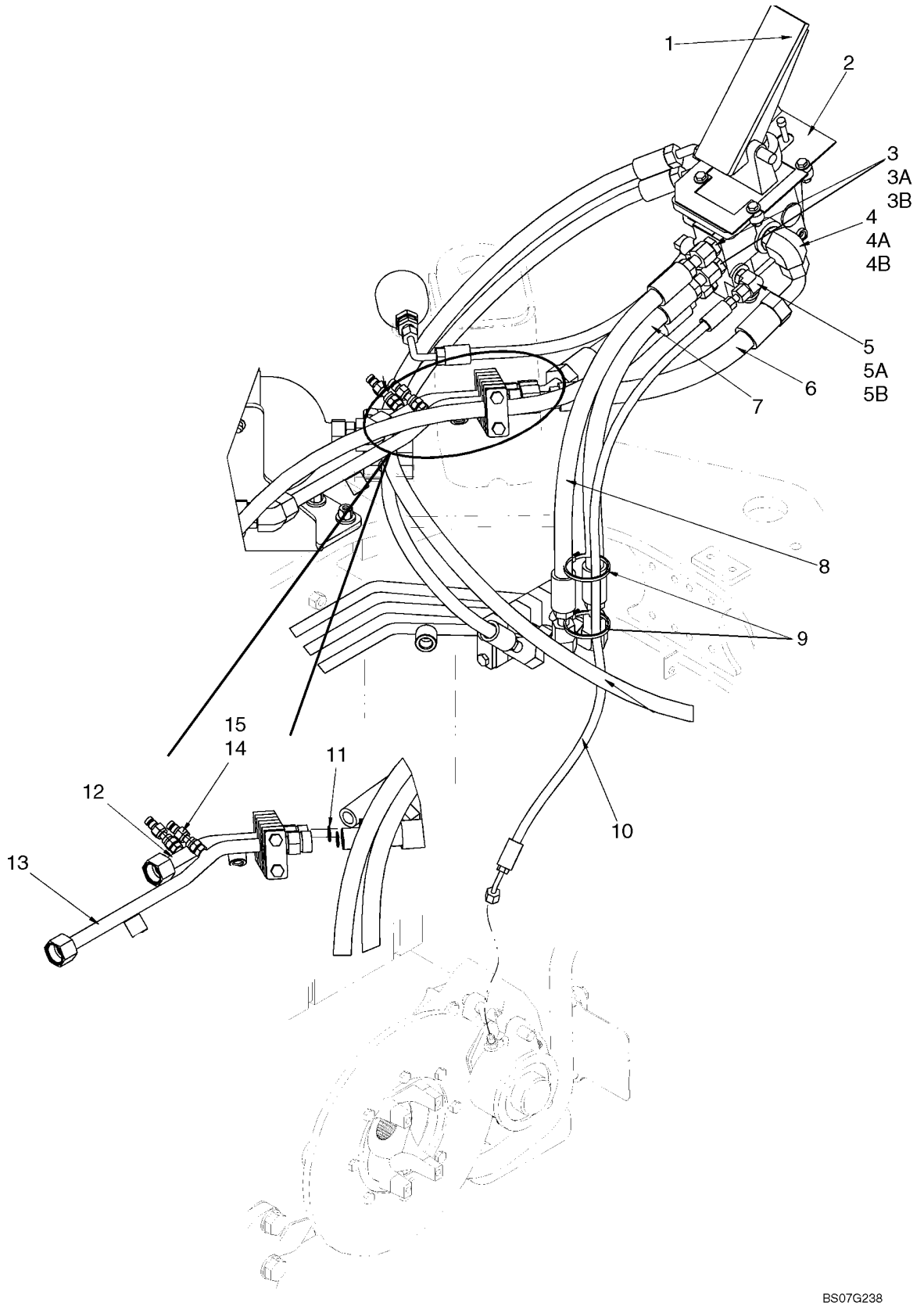

**HIDRAULICA - FRENO, PRINCIPAL - FRENO DE PARQUE**

| REF | FN | PART NUMBER | YR/SN | QTY | DENOMINACION |
|---|---|---|---|---|---|
| | | REF | | | MANUAL, BRAKE VALVE TO PARKING BRAKE, BRAKE VALVE AND PUMP DISCHARGE HOSING, REAR ACCUMULATOR HOSING |
| 1 | | 87360067 | | 1 | VÁLVULA DE FRENO, See Figure 07-05 |
| 2 | | 87607227 | | 1 | PLACA, Brake Valve |
| 3 | | 700-115 | | 2 | RACOR, 1"-14 ORFS x M18 x 1.5 ORB, Incl. 3A, 3B |
| 3A | | 238-6016 | | 1 | JUNTA HERMETICA, -016, 90 Duro, .614" ID x .070" Thk, Face Seal |
| 3B | | 637-63153 | | 1 | JUNTA HERMETICA, Cl 6, 15.3MM ID x 2.2 Thk |
| 4 | | 700-307 | | 1 | CODO, 90º, 1 3/16"-12 ORFS x M27 x 2 ORB, Incl. 4A, 4B |
| 4A | | 238-6018 | | 1 | JUNTA HERMETICA, -018, 90 Duro, .739" ID x .070" Thk, Face Seal |
| 4B | | 637-64236 | | 1 | JUNTA HERMETICA, Cl 6, 23.6MM ID x 2.9 Thk, Boss Seal |
| 5 | | 700-368 | | 1 | CODO, 90º, 11/16"-18 ORFS x M16 x 1.5 ORB, Incl. 5A, 5B |
| 5A | | 238-6012 | | 1 | JUNTA HERMETICA, -012, 90 Duro, .364" ID x .070" Thk, Face Seal |
| 5B | | 637-63133 | | 1 | JUNTA HERMETICA, Cl 6, 13.3MM ID x 2.2 Thk, Boss Seal |
| 6 | | 87377313 | | 1 | MANGUERA (CONJUNTO), Rear Accumulator; 448mm (17-1/2 in) |
| 7 | | 87354481 | | 1 | MANGUERA (CONJUNTO), Brake Pump Discharge; 618mm (24-1/3 in) |
| 8 | | 87354480 | | 1 | MANGUERA (CONJUNTO), Brake Valve Discharge; 668mm (26-1/4 in) |
| 9 | | L11541 | | 2 | BANDA |
| 10 | | 87325997 | | 1 | MANGUERA (CONJUNTO), Parking Brake; 1070mm (43 in) |
| 11 | | 238-6018 | | 2 | JUNTA HERMETICA, -018, 90 Duro, .739" ID x .070" Thk, Face Seal |
| 12 | | 87354290 | | 1 | TUBO (CONJUNTO), Front Brake Accumulator |
| 13 | | 87529279 | | 1 | TUBO (CONJUNTO), Rear Brake Accumulator |
| 14 | | 190117A1 | | 2 | CARDAN, Diagnostic |

**HIDRAULICA - FRENO, PRINCIPAL - FRENO DE PARQUE**

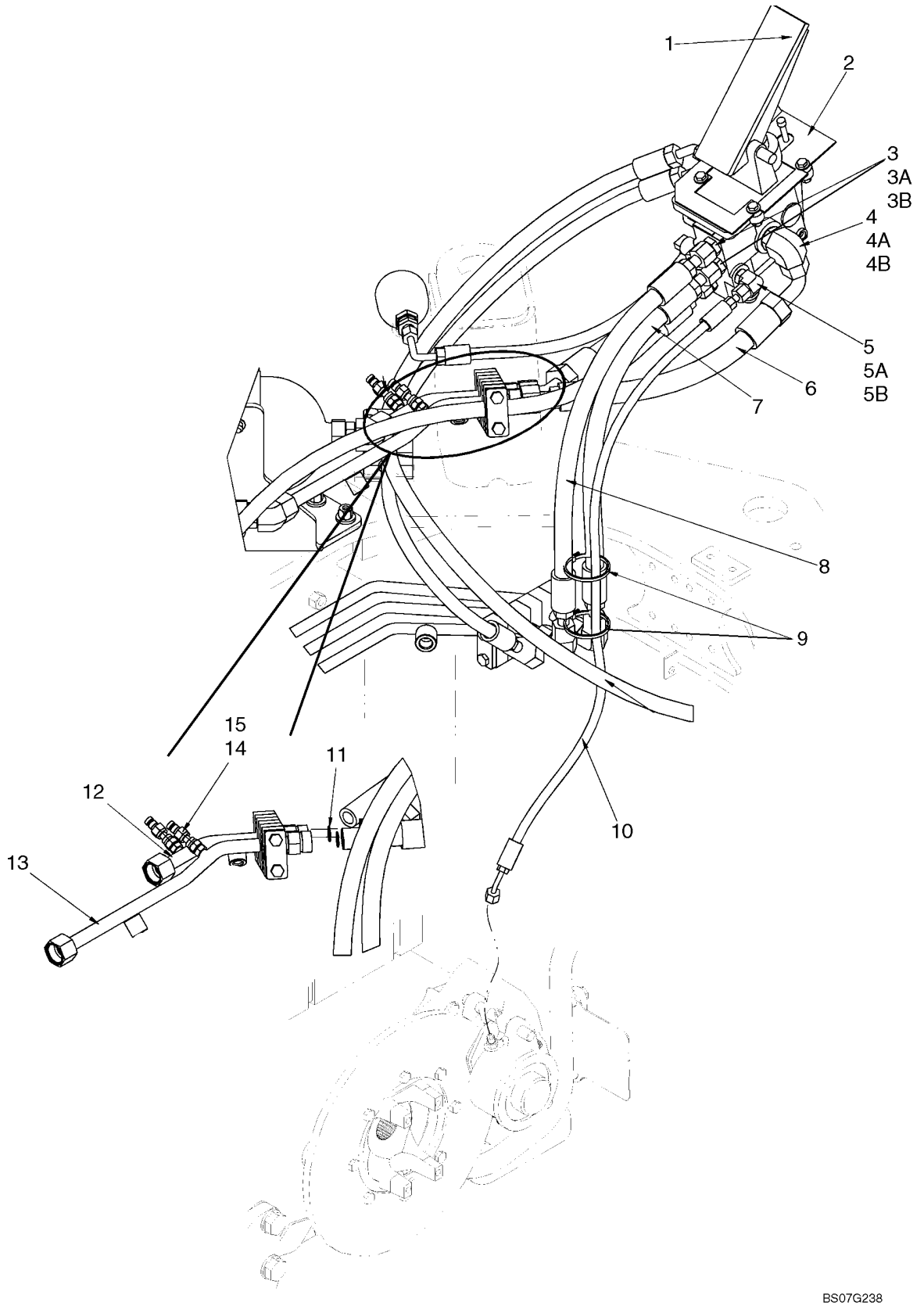

**HIDRAULICA - FRENO, PRINCIPAL - FRENO DE PARQUE**

| REF | FN | PART NUMBER | YR/SN | QTY | DENOMINACION |
|---|---|---|---|---|---|
| 15 | | 238-6011 | | 2 | JUNTA HERMETICA, -011, 90 Duro, .301" ID x .070" Thk |

**HIDRAULICA - FRENO, PRINCIPAL - DEPÓSITO**

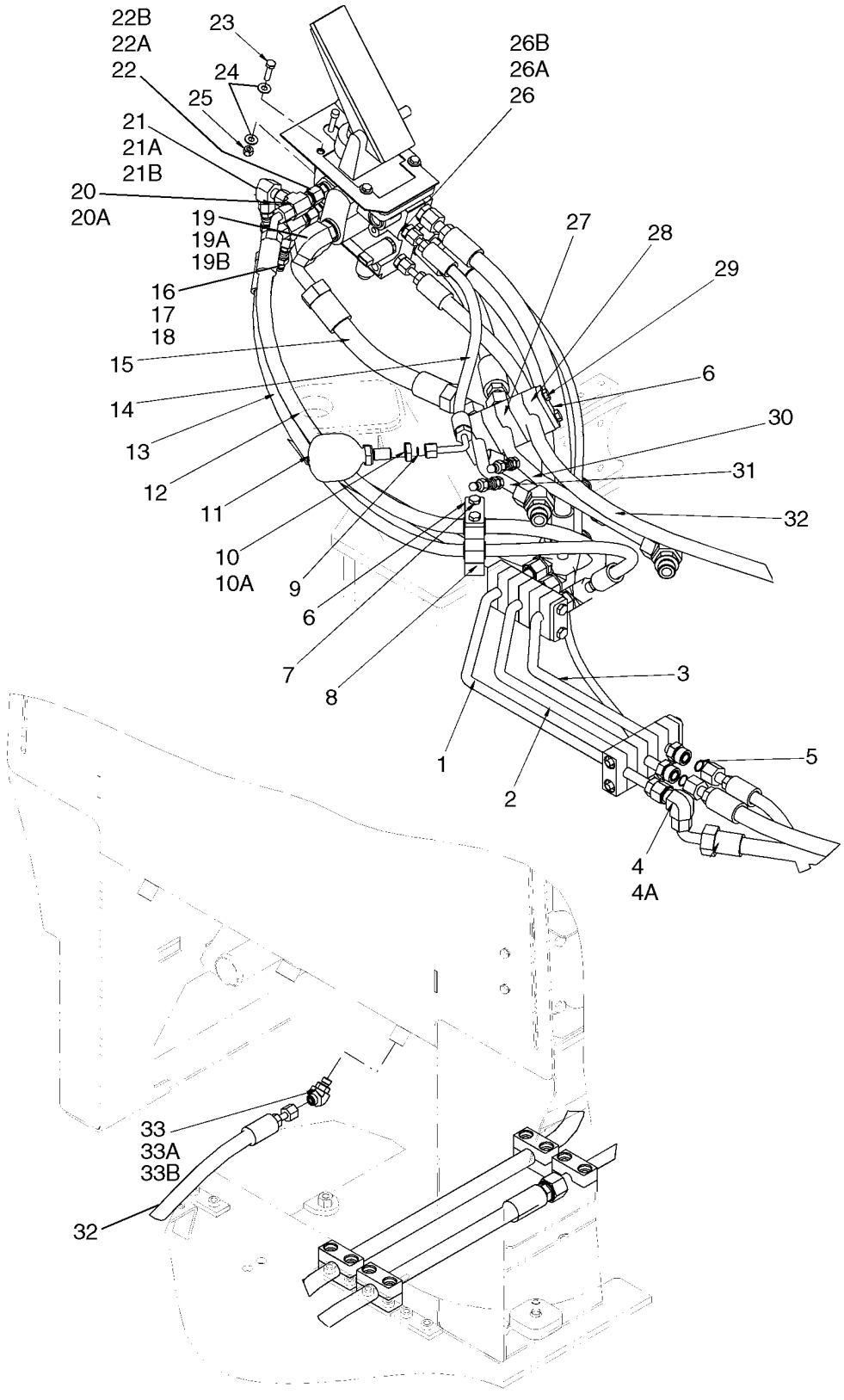

**HIDRAULICA - FRENO, PRINCIPAL - DEPÓSITO**

| REF | FN | PART NUMBER | YR/SN | QTY | DENOMINACION |
|---|---|---|---|---|---|
| 1 | | 87326263 | | 1 | TUBO (CONJUNTO), Fan Supply |
| 2 | | 87326262 | | 1 | TUBO (CONJUNTO), Brake Supply |
| 3 | | 87326268 | | 1 | TUBO (CONJUNTO), Rear Axle Brake |
| 4 | | 701-361 | | 1 | CODO, 90º, 1"-14 ORFS x 1"-14 Fem Sw |
| 4A | | 238-6016 | | 1 | JUNTA HERMETICA, -016, 90 Duro, .614" ID x .070" Thk, Face Seal |
| 5 | | 238-6016 | | 3 | JUNTA HERMETICA, -016, 90 Duro, .614" ID x .070" Thk, Face Seal |
| 6 | | 367658A1 | | 3 | PLACA, Clamp Cover |
| 7 | | 827-10100 | | 2 | TORNILLO, Hex, M10 x 100, 10.9 |
| 8 | | 367489A1 | | 2 | BLOQUE MOTOR, Tube Mounting |
| 9 | | 238-6012 | | 1 | JUNTA HERMETICA, -012, 90 Duro, .364" ID x .070" Thk, Face Seal |
| 10 | | 701-909 | | 1 | CONTRA TUERCA, 11/16"-16, Blkhd, Incl. Ref. 10A |
| 10A | | 238-6012 | | 1 | JUNTA HERMETICA, -012, 90 Duro, .364" ID x .070" Thk, Face Seal |
| 11 | | 8500209 | | 1 | ACUMULADOR, Parking Brake |
| 12 | | {87658723} | | 1 | HOSE ASSY. Front Axle Brake; 3168 mm ( 124 - 3/4 in ) |
| 13 | | 87325999 | | 1 | MANGUERA (CONJUNTO), Rear Axle Brake; 1206mm ( 47 - 1/2 in ) |
| 14 | | 87325996 | | 1 | MANGUERA (CONJUNTO), 461 mm (18-1/4 in); Parking Brake Accumulator |
| 15 | | 87521823 | | 1 | MANGUERA (CONJUNTO), Front Accumulator; 411mm ( 16-1/4 in ) |
| 16 | | 201-110 | | 2 | REDUCTOR, 9/16"-18 Male x 13/16"-16 Fem, ORFS |
| 17 | | 703-902 | | 2 | TUERCA DE TUBERÍA, 13/16"-16, ORFS |
| 18 | | 190117A1 | | 2 | CARDAN, Diagnostic |
| 19 | | 700-307 | | 1 | CODO, 90º, 1 3/16"-12 ORFS x M27 x 2 ORB, Incl. Refs. 19A, 19B |
| 19A | | 238-6018 | | 1 | JUNTA HERMETICA, -018, 90 Duro, .739" ID x .070" Thk, Face Seal |
| 19B | | 637-64236 | | 1 | JUNTA HERMETICA, Cl 6, 23.6MM ID x 2.9 Thk, Boss Seal |

**HIDRAULICA - FRENO, PRINCIPAL - DEPÓSITO**

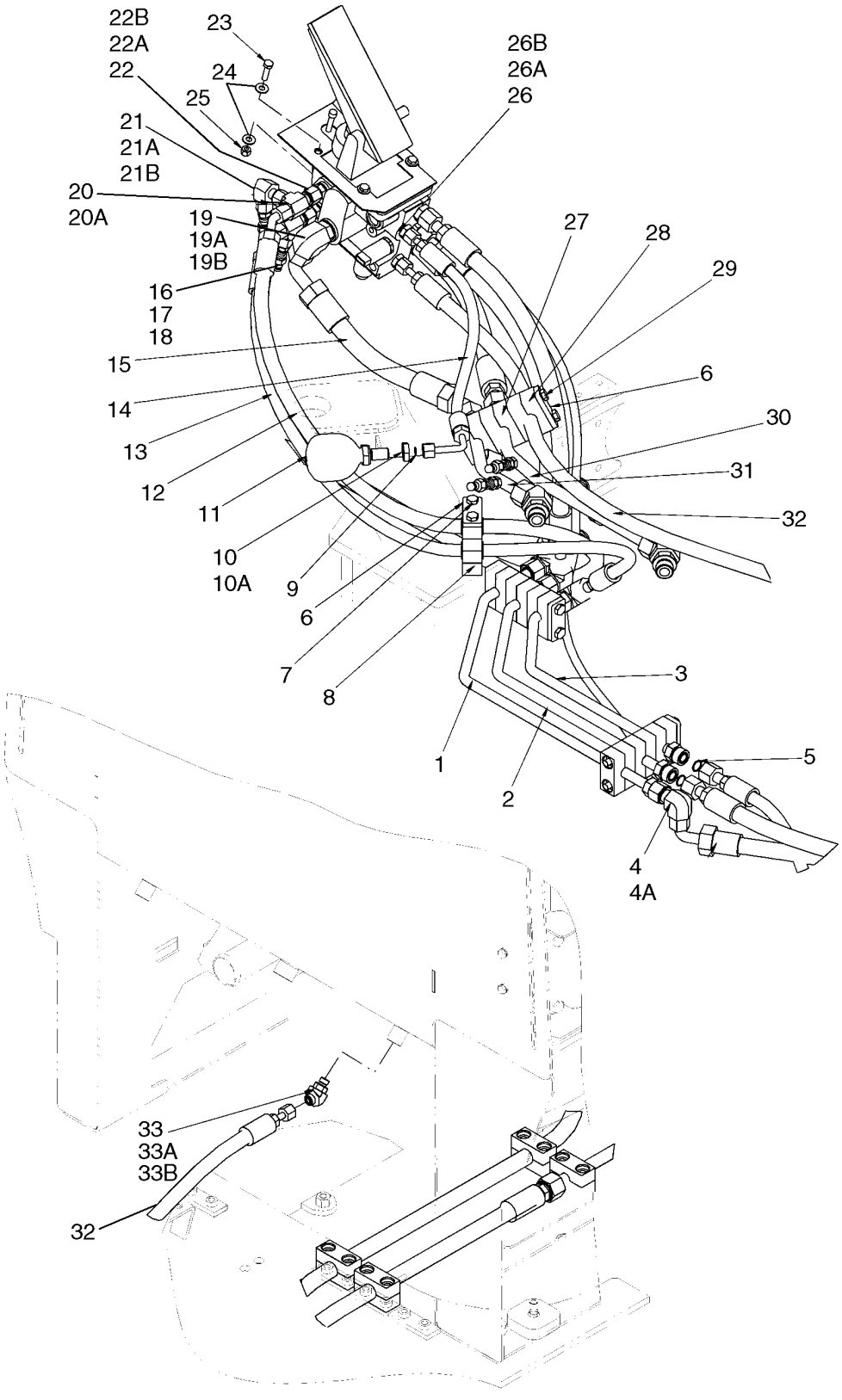

**HIDRAULICA - FRENO, PRINCIPAL - DEPÓSITO**

| REF | FN | PART NUMBER | YR/SN | QTY | DENOMINACION |
|---|---|---|---|---|---|
| 20 | | 701-416 | | 2 | RACOR-T, 13/16"-16 ORFS x 13/16"-16 Fem Sw Run, Incl. Ref. 20A |
| 20A | | 238-6014 | | 1 | JUNTA HERMETICA, -014, 90 Duro, .489" ID x .070" Thk, Face Seal |
| 21 | | 701-320 | | 1 | CODO, 90º, 13/16"-16 ORFS x 13/16"-16 Fem Sw, Incl. Refs. 21A, 21B |
| 21A | | 637-63153 | | 1 | JUNTA HERMETICA, Cl 6, 15.3MM ID x 2.2 Thk |
| 21B | | 238-6014 | | 1 | JUNTA HERMETICA, -014, 90 Duro, .489" ID x .070" Thk, Face Seal |
| 22 | | 700-169 | | 2 | RACOR, 13/16"-16 ORFS x M16 x 1.5 ORB, Incl. Refs. 22A, 22B |
| 22A | | 238-6014 | | 1 | JUNTA HERMETICA, -014, 90 Duro, .489" ID x .070" Thk, Face Seal |
| 22B | | 637-63133 | | 1 | JUNTA HERMETICA, Cl 6, 13.3MM ID x 2.2 Thk, Boss Seal |
| 23 | | 627-8030 | | 4 | TORNILLO, Hex, M8 x 30, 10.9 |
| 24 | | 895-15008 | | 8 | ARANDELA, M8 x 20 x 1.6 |
| 25 | | 832-10408 | | 4 | CONTRA TUERCA, M8 x 1.25, Cl 8 |
| 26 | | 700-157 | | 2 | RACOR, 11/16"-16 ORFS x M16 x 1.5 ORB, Incl. Refs. 26A, 26B |
| 26A | | 637-63133 | | 1 | JUNTA HERMETICA, Cl 6, 13.3MM ID x 2.2 Thk |
| 26B | | 238-6012 | | 1 | JUNTA HERMETICA, -012, 90 Duro, .364" ID x .070" Thk |
| 27 | | 379374A1 | | 2 | BLOQUE MOTOR, Tube Mounting |
| 28 | | 8501052 | | 1 | ABRAZADERA, Tube Mounting |
| 29 | | 827-10150 | | 2 | TORNILLO, Hex, M10 x 150, 10.9 |
| 30 | | 87529279 | | 1 | TUBO (CONJUNTO), Rear Brake Accumulator |
| 31 | | 87354290 | | 1 | TUBO (CONJUNTO), Front Brake Accumulator |
| 32 | | 87326000 | | 1 | MANGUERA (CONJUNTO), Tank Reference; 1291mm ( 51 in ) |
| 33 | | 700-315 | | 1 | CODO, 45º, 11/16"-18 ORFS x M14 x 1.5 ORB, Incl. Refs. 33A, 33B |
| 33A | | 238-6012 | | 1 | JUNTA HERMETICA, -012, 90 Duro, .364" ID x .070" Thk, Face Seal |
| 33B | | 637-63113 | | 1 | JUNTA HERMETICA, Cl 6, 11.3MM ID x 2.2 Thk |

**HIDRAULICA - FRENO - CONJUNTO DE LA BOMBA**

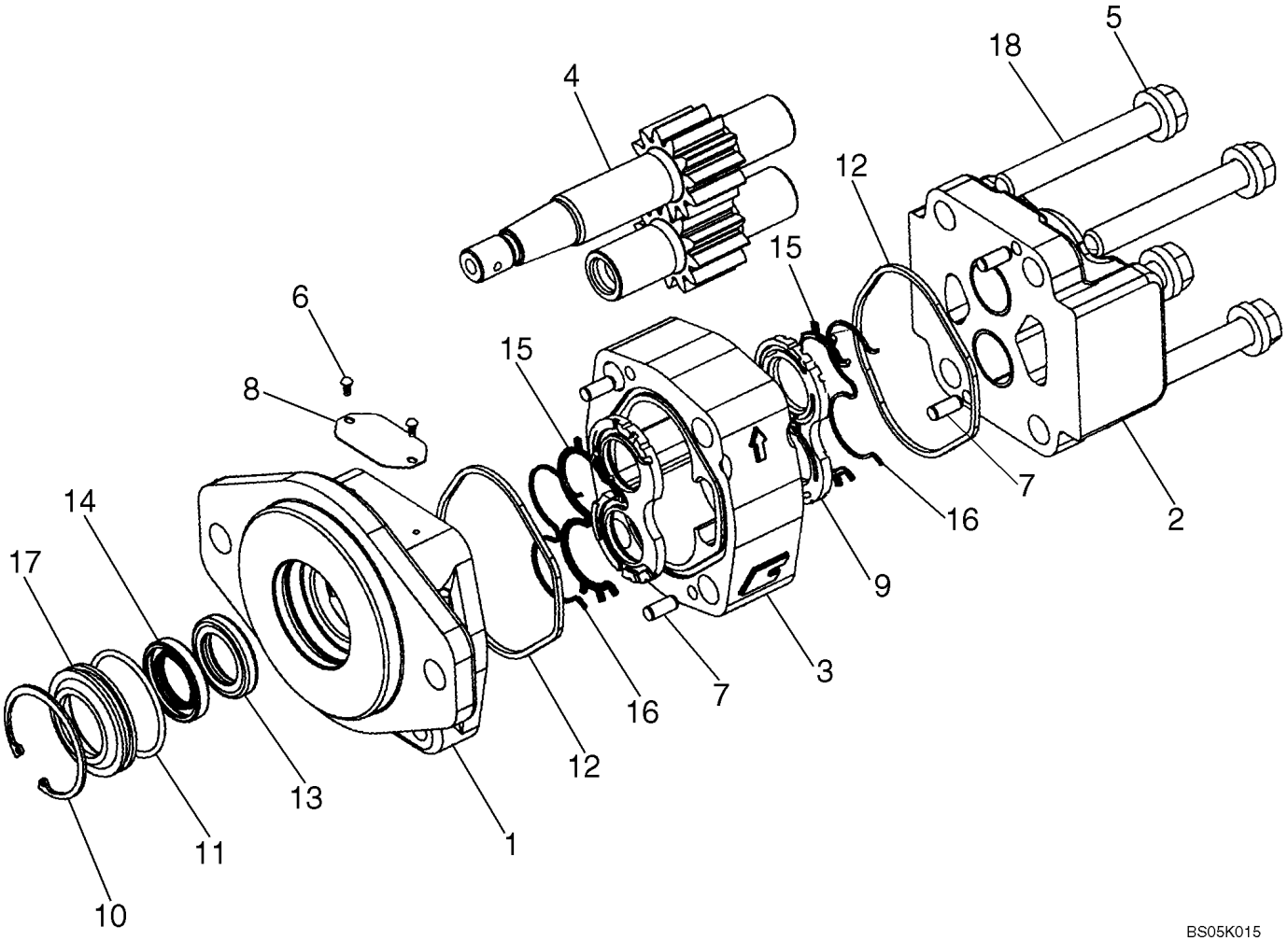

**HIDRAULICA - FRENO - CONJUNTO DE LA BOMBA**

| REF | FN | PART NUMBER | YR/SN | QTY | DENOMINACION |
|---|---|---|---|---|---|
| | | 87342166 | | | BOMBA HIDRÁULICA, Brake |
| | | 87364063 | | | SERIE DE JUNTAS, Incl. Refs. 9 - 12, 15 - 17 |
| 1 | | NSS | | 1 | NO SE REPARA SEPARADAM., HOUSING |
| 2 | | NSS | | 1 | NO SE REPARA SEPARADAM., HOUSING |
| 3 | | NSS | | 1 | NO SE REPARA SEPARADAM., HOUSING |
| 4 | | NSS | | 1 | NO SE REPARA SEPARADAM., SET GEAR SHAFT |
| 5 | | NSS | | 4 | NO SE REPARA SEPARADAM., CAP SCREW |
| 6 | | NSS | | 2 | NO SE REPARA SEPARADAM., SCREW, DRIVE |
| 7 | | NSS | | 4 | NO SE REPARA SEPARADAM., DOWEL PIN |
| 8 | | NSS | | 1 | NO SE REPARA SEPARADAM., NAME PLATE |
| 9 | | NSS | | 2 | NO SE REPARA SEPARADAM., PLATE, THRUST |
| 10 | | NSS | | 1 | NO SE REPARA SEPARADAM., RING; RETAINER |
| 11 | | NSS | | 1 | NO SE REPARA SEPARADAM., SEAL, O-RING |
| 12 | | NSS | | 2 | NO SE REPARA SEPARADAM., SEAL - SSQUARE |
| 13 | | NSS | | 1 | NO SE REPARA SEPARADAM., SEAL, LIP |
| 14 | | NSS | | 1 | NO SE REPARA SEPARADAM., SEAL, LIP |
| 15 | | NSS | | 2 | NO SE REPARA SEPARADAM., SEAL, CHANNEL |
| 16 | | NSS | | 2 | NO SE REPARA SEPARADAM., SEAL, BACK UP |
| 17 | | NSS | | 1 | NO SE REPARA SEPARADAM., RETAINER SEAL |
| 18 | | NSS | | 4 | NO SE REPARA SEPARADAM., WASHER |

**CONJUNTO DE LA VALVULA - FRENO**

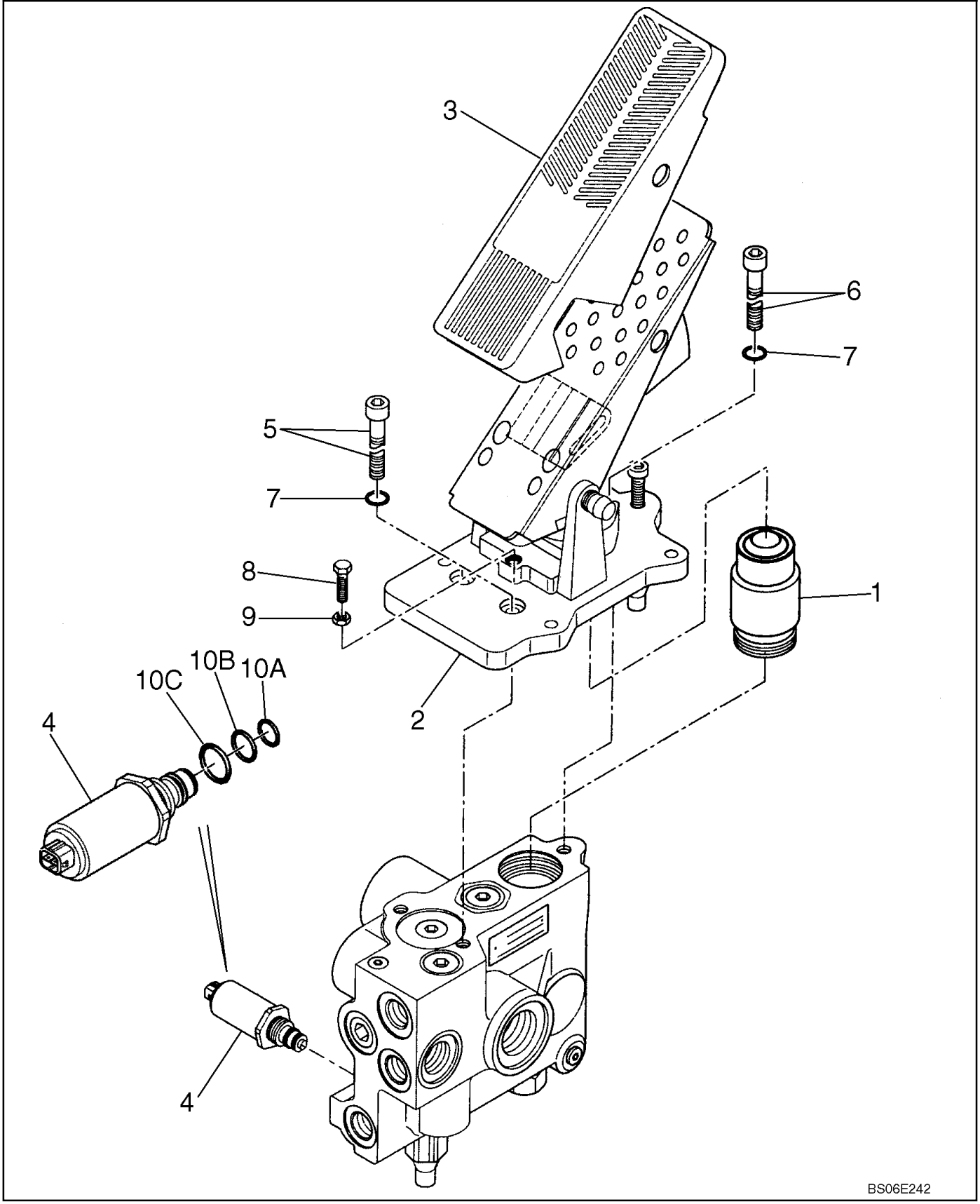

**CONJUNTO DE LA VALVULA - FRENO**

| REF | FN | PART NUMBER | YR/SN | QTY | DENOMINACION |
|---|---|---|---|---|---|
| | | 87360067 | | 1 | VÁLVULA DE FRENO, Incl. Refs. 1 - 10 |
| 1 | | 87398113 | | 1 | MECANISMO DE MANDO |
| 2 | | 87398114 | | 1 | PEDAL |
| 3 | | 383869A2 | | 1 | PEDAL |
| 4 | | 8604506 | | 1 | CARTUCHO |
| 5 | | 864-8025 | | 2 | TORNILLO, Hex Soc Hd, M8 x 25, 8.8 |
| 6 | | 864-8030 | | 1 | TORNILLO, Hex Soc Hd, M8 x 30, 8.8 |
| 7 | | 892-11008 | | 1 | ARANDELA DE FRENO, M8 |
| 8 | | 827-8060 | | 1 | TORNILLO, Hex, M8 x 60, 10.9 |
| 9 | | 829-1408 | | 1 | TUERCA, M8, Cl 10 |
| 10 | | 87398116 | | 1 | SERIE DE JUNTAS, Incl. Refs. 10A - 10C |
| 10A | | NSS | | 1 | NO SE REPARA SEPARADAM., O-RING 8.9 x 1.5 |
| 10B | | NSS | | 1 | NO SE REPARA SEPARADAM., O-RING 10.72 x 1.78 |
| 10C | | NSS | | 1 | NO SE REPARA SEPARADAM., O-RING 15 x 2 |

## NOTAS

# SECTION INDEX
# Sistema Hidráulico


| | |
|---|---|
| 08-01 | DEPOSITO HIDRAULICO - MONTAJE |
| 08-01A | HIDRAULICA - REFRIGERADOR DE ACEITE SOPORTE |
| 08-02 | DEPOSITO HIDRAULICO - FILTRO |
| 08-02A | HIDRAULICA - FILTRO, ACEITE |
| 08-03 | HIDRAULICA - DEPOSITO A LA BOMBA HIDRAULICA |
| 08-04 | BOMBA |
| 08-05 | HIDRAULICA - ELEVACIÓN DE LA CARGADORA Y CUCHARÓN (Z-BAR, XR CARGADORA) |
| 08-06 | HIDRAULICA - ELEVADOR DE LA CARGADORA (XT CARGADORA) |
| 08-07 | HIDRAULICA - CUCHARON DE LA CARGADORA (XT CARGADORA) |
| 08-07A | HIDRAULICA - CUCHARON DE LA CARGADORA (XT CARGADORA) |
| 08-08 | HIDRAULICA - AUXILIAR DE CARGADORA (Z CARGADORA) |
| 08-09 | HIDRAULICA - AUXILIAR DE CARGADORA (XR) |
| 08-10 | HIDRAULICA - AUXILIAR DE CARGADORA (XT CARGADORA) - SI SE USA |
| 08-11 | HIDRAULICA - ACOMPLAMIENTO (Z CHARGEUSE) |
| 08-12 | HIDRAULICA - ACOMPLAMIENTO (XR CHARGEUSE) |
| 08-13 | HIDRAULICA - ACOMPLAMIENTO (XT CARGADORA) |
| 08-14 | SISTEMA HIDRÁULICO – BLOQUEO DEL ACOPLADOR |
| 08-15 | CONJUNTO DE CILINDRO - CUCHARON DE LA CARGADORA |
| 08-16 | CONJUNTO DE CILINDRO - CUCHARON DE LA CARGADORA (Z CARGADORA) |
| 08-17 | CONJUNTO DE CILINDRO - CUCHARON DE LA CARGADORA (XR CARGADORA) |
| 08-18 | CONJUNTO DE CILINDRO - ELEVADOR DE LA CARGADORA (XT CARGADORA) |
| 08-19 | HIDRAULICO - DERIVACIÓN ESTÁNDAR |
| 08-19A | HIDRAULICO - SIN DESVIACIÓN |
| 08-19B | HIDRAULICO - DESVIACIÓN TÉRMICA |
| 08-20 | HIDRAULICA - DISPOSITIVO ANTICABECEO |
| 08-20A | CONJUNTO DE LA VALVULA - DIRECCIONAL DEL CONTROL DE MARCHA (RSM2-16) |
| 08-21 | HIDRAULICA - SIN-DISPOSITIVO ANTICABECEO |
| 08-22 | HIDRAULICA - TRANSMISIÓN DE VENTILADOR |
| 08-23 | CONJUNTO DE LA VALVULA, VENTILADOR DESCARGA - MONTAJE |
| 08-23A | CONJUNTO DE LA VALVULA, VENTILADOR DESCARGA |
| 08-24 | CONJUNTO DE LA VALVULA, VENTILADOR - MARCHA ATRÁS Y VELOCIDAD VARIABLE - MONTAJE |
| 08-24A | CONJUNTO DE LA VALVULA, VENTILADOR - MARCHA ATRÁS Y VELOCIDAD VARIABLE |
| 08-25 | HIDRAULICA - CONTROL DE LA CARGADORA, REMOTO |
| 08-26 | VALVULA DE CONTROL - SOPORTE, DOS CORREDERAS - (Z-BAR/XR/XT) |
| 08-26A | VALVULA DE CONTROL - SOPORTE, TRES CORREDERAS - (Z-BAR/XR/XT) |
| 08-26B | VALVULA DE CONTROL - SOPORTE, CUATRO CORREDERAS - (Z-BAR/XR/XT) |
| 08-27 | CONJUNTO DE LA VALVULA - CONTROL DE LA CARGADORA - DOS, TRES, CUATRO CORREDERAS - (Z-BAR/XR) |
| 08-27A | CONJUNTO DE LA VALVULA - EJE DEL PISTÓN - (Z-BAR/XR) |
| 08-27B | CONJUNTO DE LA VALVULA - CONTROL DE LA CARGADORA - SECCION DE LA VALVULA - (Z-BAR/XR) |
| 08-28 | CONJUNTO DE LA VALVULA - CONTROL DE LA CARGADORA - DOS, TRES, CUATRO CORREDERAS - (XT) |
| 08-28A | CONJUNTO DE LA VALVULA - EJE DEL PISTÓN - (XT) |
| 08-28B | CONJUNTO DE LA VALVULA - CONTROL DE LA CARGADORA - SECCION DE LA VALVULA - (XT) |
| 08-29 | HIDRAULICA - PALANCA DE CONTROL SOPORTE |

# SECTION INDEX
## Sistema Hidráulico


| | |
|---|---|
| 08-29A | CONJUNTO DE LA VALVULA - PALANCA DE CONTROL |
| 08-29B | CONJUNTO DE LA VALVULA - PALANCA DE CONTROL |
| 08-30 | CONTROL DE LA CARGADORA - PALANCA DE MANDO CON UNA SOLA PALANCA - MONTAJE |
| 08-30A | CONTROL DE LA CARGADORA - PALANCA DE MANDO CON UNA SOLA PALANCA |
| 08-31 | CONTROL DE LA CARGADORA, REMOTO - PALANCA DE MANDO CON DOS PALANCAS SOPORTE |
| 08-31A | CONJUNTO DE LA VALVULA - PALANCA DE MANDO CON DOS PALANCAS |
| 08-32 | CONTROL DE LA CARGADORA - TRES PALANCAS SOPORTE |
| 08-32A | CONJUNTO DE LA VALVULA - CONTROL DE LA CARGADORA CON 3 PALANCAS |
| 08-33 | MONTAJE DEL BLOQUE - ACOPLADOR, MANGUERAS DE TRES BOBINAS |

## NOTAS

| 08-01 | | p1 | 08/07 |
|---|---|---|---|

**DEPOSITO HIDRAULICO - MONTAJE**

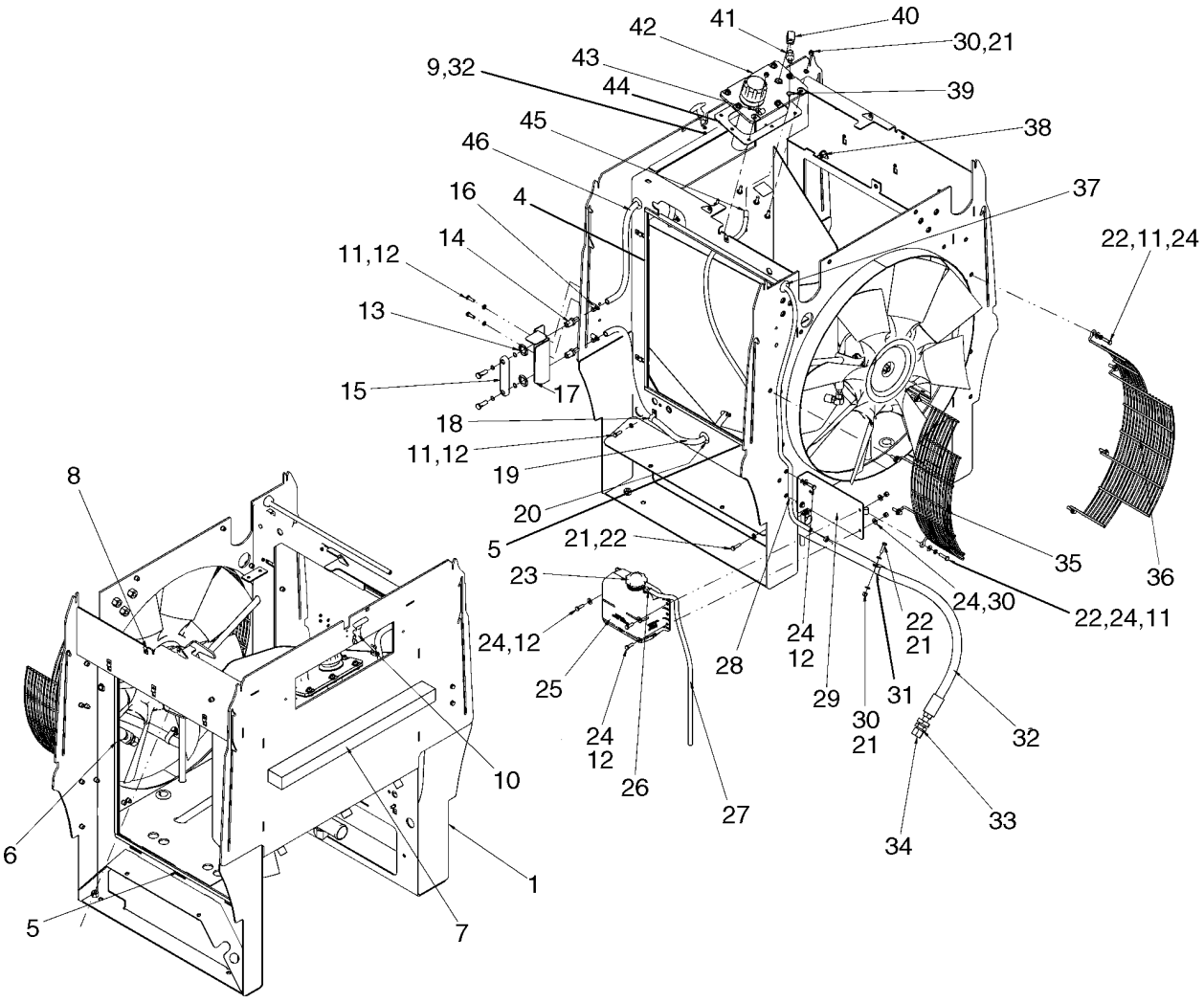


BS07D040

**DEPOSITO HIDRAULICO - MONTAJE**

| REF | FN | PART NUMBER | YR/SN | QTY | DENOMINACION |
|---|---|---|---|---|---|
| 1 | | 87598730 | | 1 | ESTRUCTURA, Cooling |
| 2 | | 895-11005 | | 2 | ARANDELA, M5 x 10 x 1 |
| 3 | | 824-1405 | | 2 | TUERCA, M5, Cl 5 |
| 4 | | 8500136 | | 2 | ANILLO DE CIERRE, 725 mm (28-9/16 in); Cut From 198573C2 Bulk; Radiator Side |
| 5 | | 87312068 | | 4 | ANILLO DE CIERRE, 630 mm (24-13/16 in); Cut From 198573C2 Bulk; Oil Cooler Header |
| 6 | | 8500133 | | 2 | ANILLO DE CIERRE, 698 mm (27-1/2 in); Cut From 198573C2 Bulk; Oil Cooler Side |
| 7 | | 8500206 | | 1 | ANILLO DE CIERRE, Cooler |
| 8 | | 833-40408 | | 10 | TUERCA, M8, U |
| 9 | | 864-5016 | | 2 | TORNILLO, Hex Soc Hd, M5 x 16, 8.8 |
| 10 | | 384774A1 | | 1 | PESTILLO |
| 11 | | 892-11008 | | 11 | ARANDELA DE FRENO, M8 |
| 12 | | 627-8025 | | 8 | TORNILLO, Hex, M8 x 25, 10.9 |
| 13 | | 131-141 | | 2 | TUERCA, .74", Push-on |
| 14 | | L125836 | | 2 | CONEXION |
| 15 | | 86988366 | | 1 | VISOR DE NIVEL, Oil Level |
| 16 | | 214-1406 | | 4 | ABRAZADERA MANGUERA, #06, .44/.78 Type F Worm |
| 17 | | 87536075 | | 1 | PIEZA DE SOPORTE, Sight Gauge |
| 18 | | 515-22190 | | 1 | BORNE, 3/4", Insul, 5/16" Bolt |
| 19 | | 8500165 | | 1 | MANGA, Sight Gauge; 1800 mm (70-7/8 in) |
| 20 | | 198826C1 | | 2 | PASACABLES |
| 21 | | 895-11008 | | 11 | ARANDELA, M8 x 16 x 1.6 |
| 22 | | 627-8030 | | 10 | TORNILLO, Hex, M8 x 30, 10.9 |
| 23 | | 1547924C1 | | 1 | TAPON DEL DEPOSITO, Reservoir |
| 24 | | 895-15008 | | 16 | ARANDELA, M8 x 20 x 1.6 |
| 25 | | A184395 | | 1 | DEPÓSITO, Coolant; Not Serviced With Cap, Order Seperately |
| 26 | | A171099 | | 3 | ABRAZADERA MANGUERA |
| 27 | | 87541330 | | 1 | TUBO (METROS), Reservoir Drain; 695mm (27-1/3 in) |
| 28 | | 307149A1 | | 1 | TUBO (METROS), Recovery; 1676 mm (66 in) |
| 29 | | 87585139 | | 1 | PLACA DE FONDO, Coolant Overflow |

**DEPOSITO HIDRAULICO - MONTAJE**

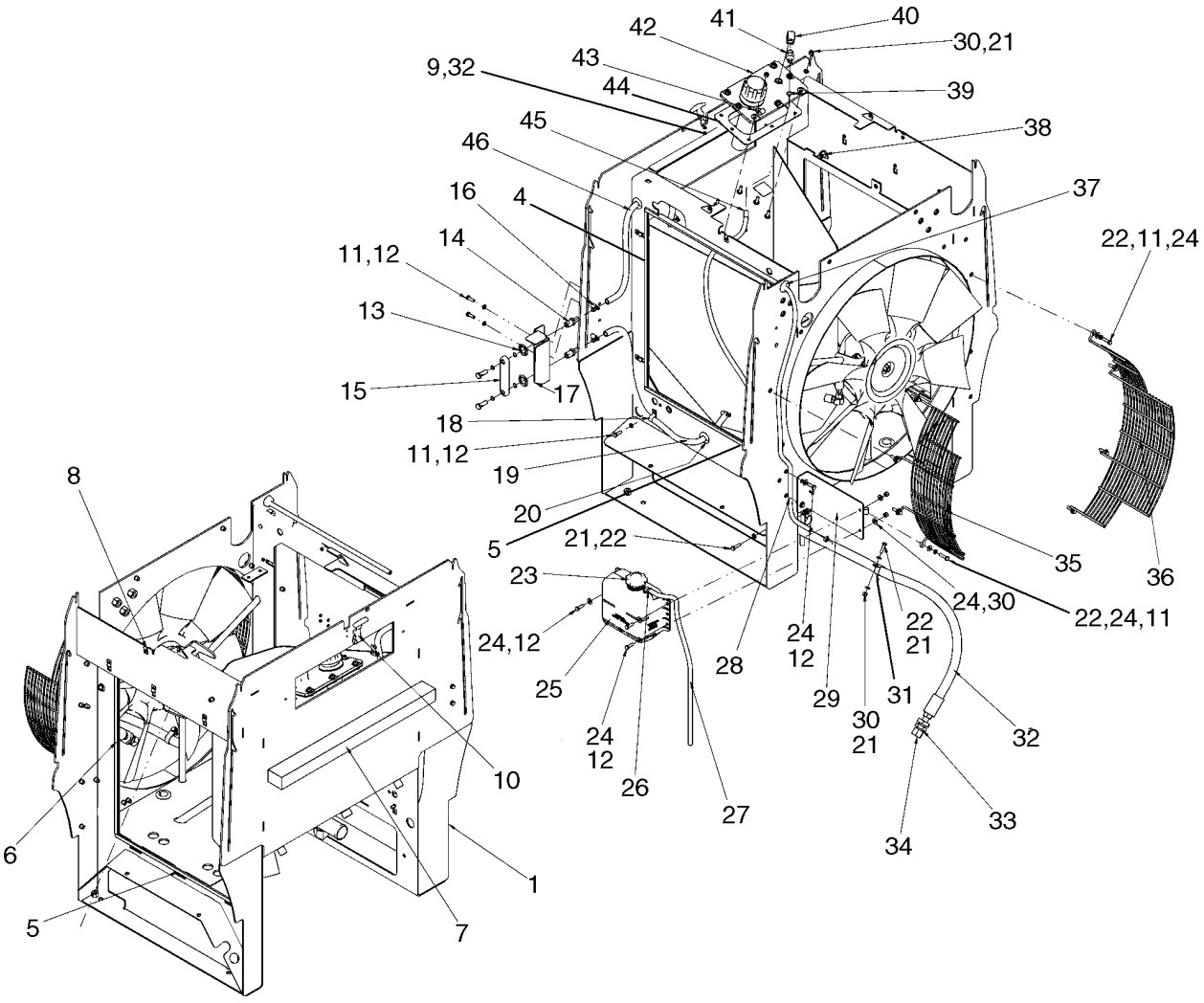

**DEPOSITO HIDRAULICO - MONTAJE**

| REF | FN | PART NUMBER | YR/SN | QTY | DENOMINACION |
|---|---|---|---|---|---|
| 30 | | 832-10408 | | 13 | CONTRA TUERCA, M8 x 1.25, Cl 8 |
| 31 | | 515-23317 | | 2 | BORNE, 1 1/4", Insul, 3/8" Bolt |
| 32 | | 87323556 | | 1 | MANGUERA (CONJUNTO), Hydraulic Drain; 1610 mm (63 - 3/8 in) |
| 33 | | 218-1256 | | 1 | CONTRA TUERCA, Blkhd, 1 1/16"-12 |
| 34 | | 218-335 | | 1 | TAPON DEL DEPOSITO, 37º, 1 1/16"-12 |
| 35 | | 87347864 | | 1 | DEFENSA, Fan |
| 36 | | 87347865 | | 1 | DEFENSA, Fan |
| 37 | | 198824C1 | | 1 | PASACABLES |
| 38 | | 350662A1 | | 1 | PRISIONERO |
| 39 | | 214-1704 | | 1 | ABRAZADERA MANGUERA, #4, 0.25/0.62 Type M Worm |
| 40 | | 86521965 | | 1 | CODO, 90º, 3/8"-18 Female x 3/8"-18 Male |
| 41 | | 8606006 | | 1 | VALVULA ANTIRRETORNO |
| 42 | | 8606005 | | 1 | CACHUCHA (CONJUNTO) |
| 43 | | 515-23143 | | 2 | BORNE, 9/16", Insul, 3/8" Bolt |
| 44 | | 379587A2 | | 1 | JUNTA HERMETICA |
| 45 | | 31-2940 | | 1 | MANGA, Breather, Hydraulic Tank; 55 mm (2-3/16 in) |
| 46 | | 8500164 | | 1 | MANGA, Sight Guage, Upper; 710 mm (27-15/16 in) |
| 47 | | 8500186 | | 2 | PASACABLES |

| 08-01A | | p1 | 07/07 |
|---|---|---|---|

**HIDRAULICA - REFRIGERADOR DE ACEITE SOPORTE**

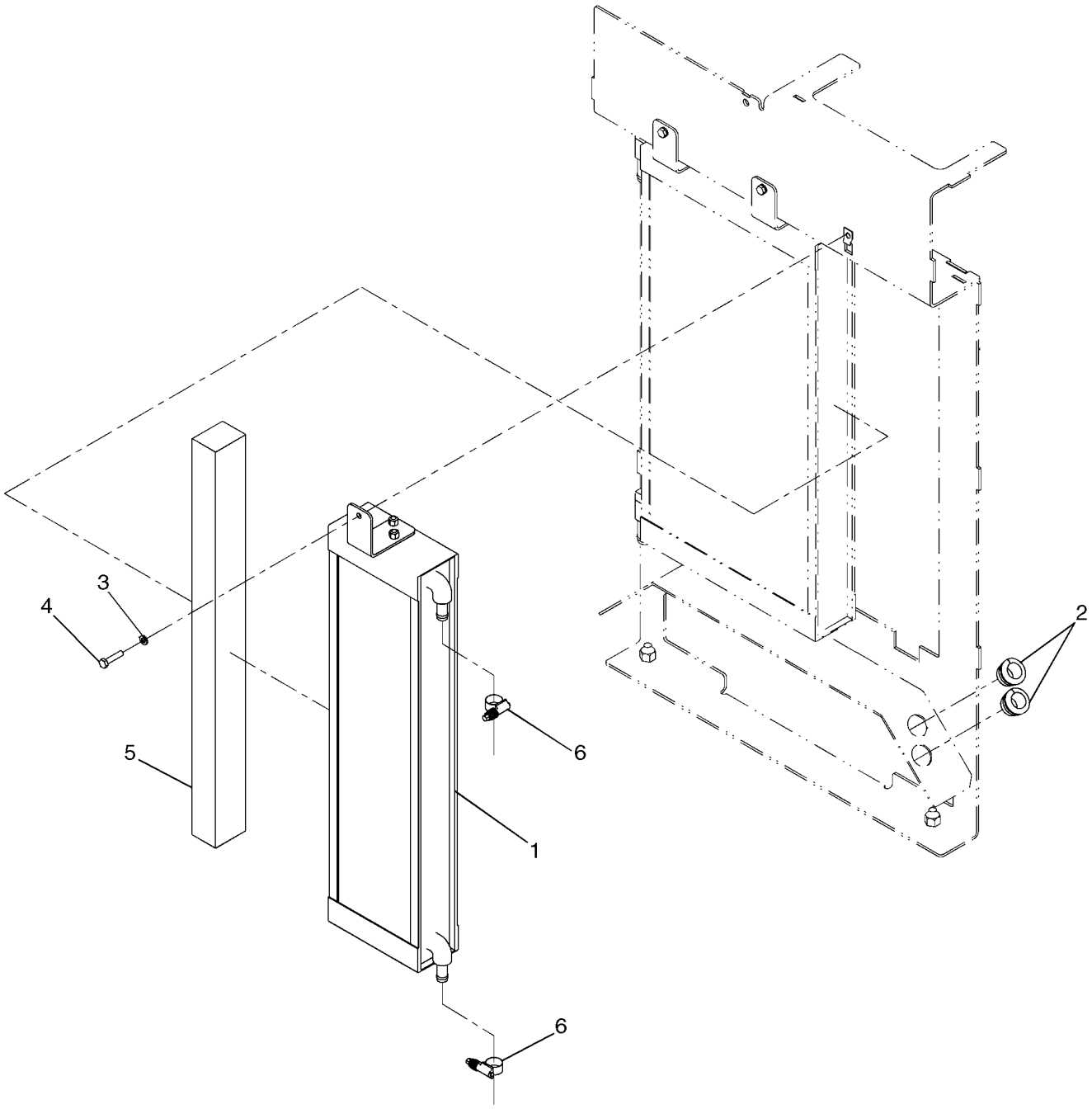

**HIDRAULICA - REFRIGERADOR DE ACEITE SOPORTE**

| REF | FN | PART NUMBER | YR/SN | QTY | DENOMINACION |
|---|---|---|---|---|---|
| 1 | | 8501296 | | 1 | RADIADOR ACEITE, Hydraulic |
| 2 | | 198828C1 | | 1 | PASACABLES |
| 3 | | 892-11008 | | 4 | ARANDELA DE FRENO, M8 |
| 4 | | 627-8035 | | 4 | TORNILLO, Hex, M8 x 35, 10.9 |
| 5 | | 8500206 | | 1 | ANILLO DE CIERRE, Oil Cooler |
| 6 | | 328186A1 | | 2 | ABRAZADERA MANGUERA |

**DEPOSITO HIDRAULICO - FILTRO**

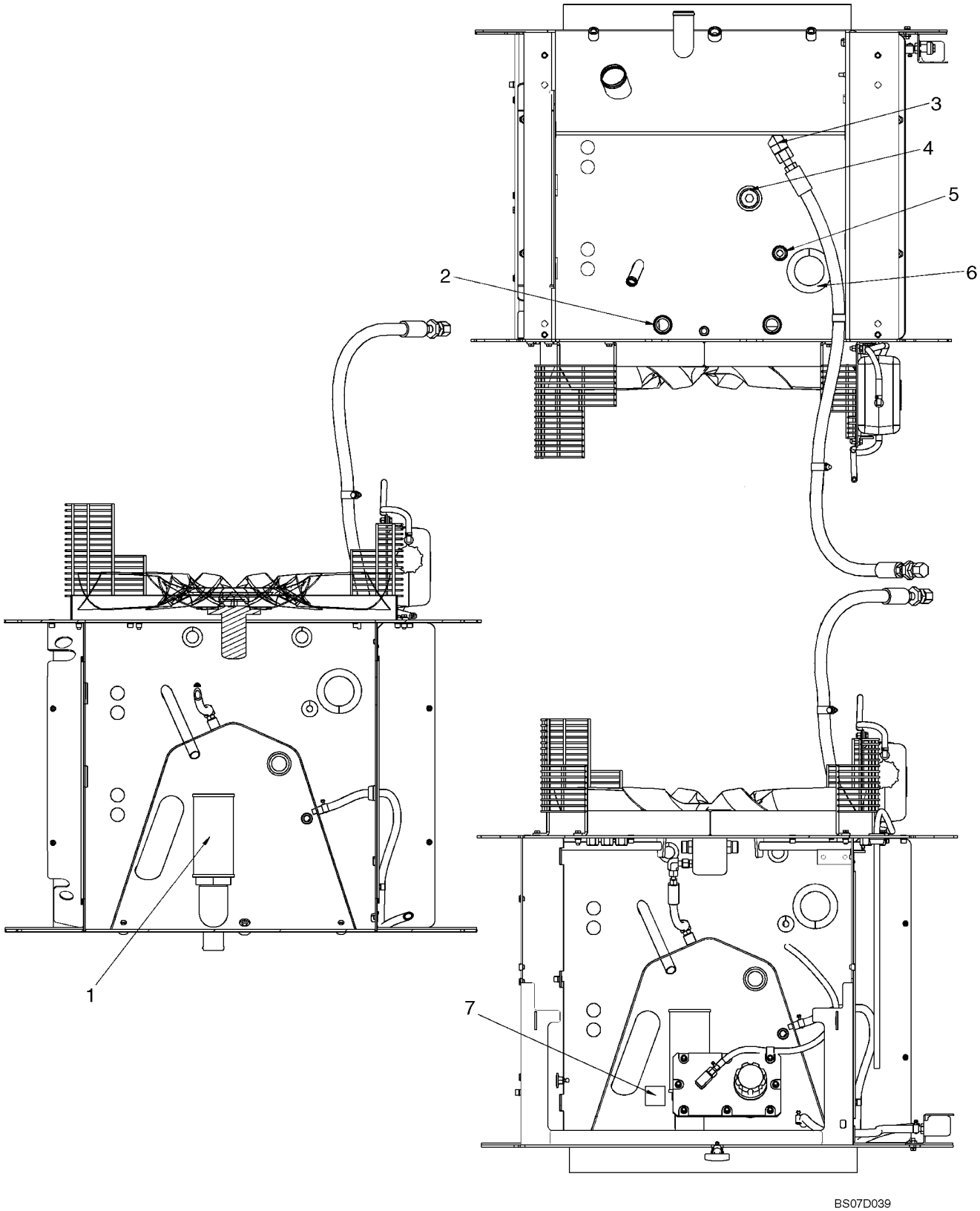

**DEPOSITO HIDRAULICO - FILTRO**

| REF | FN | PART NUMBER | YR/SN | QTY | DENOMINACION |
|---|---|---|---|---|---|
| 1 | | L128515 | | 1 | TAMIZ DE ALCACHOFA, Hydraulic Tank |
| 2 | | 8500186 | | 2 | PASACABLES |
| 3 | | 86579697 | | 1 | CODO, 90º, 1 3/16"-12 ORFS x M27 x 2 ORB, Incl. Refs. 3A, 3B |
| 3A | | 238-6018 | | 1 | JUNTA HERMETICA, -018, 90 Duro, .739" ID x .070" Thk, Face Seal, Not Illustrated |
| 3B | | 637-64236 | | 1 | JUNTA HERMETICA, Cl 6, 23.6MM ID x 2.9 Thk, Boss Seal, Not Illustrated |
| 4 | | 217-445 | | 1 | TAPÓN, Hex Soc, 1 1/4"-11 1/2 NPTF |
| 5 | | 198825C1 | | 1 | PASACABLES |
| 6 | | 8500167 | | 1 | ANILLO DE CIERRE |
| 7 | | 395895A1 | | 1 | CALCOMANIA, Hydraulic Oil |

**HIDRAULICA - FILTRO, ACEITE**

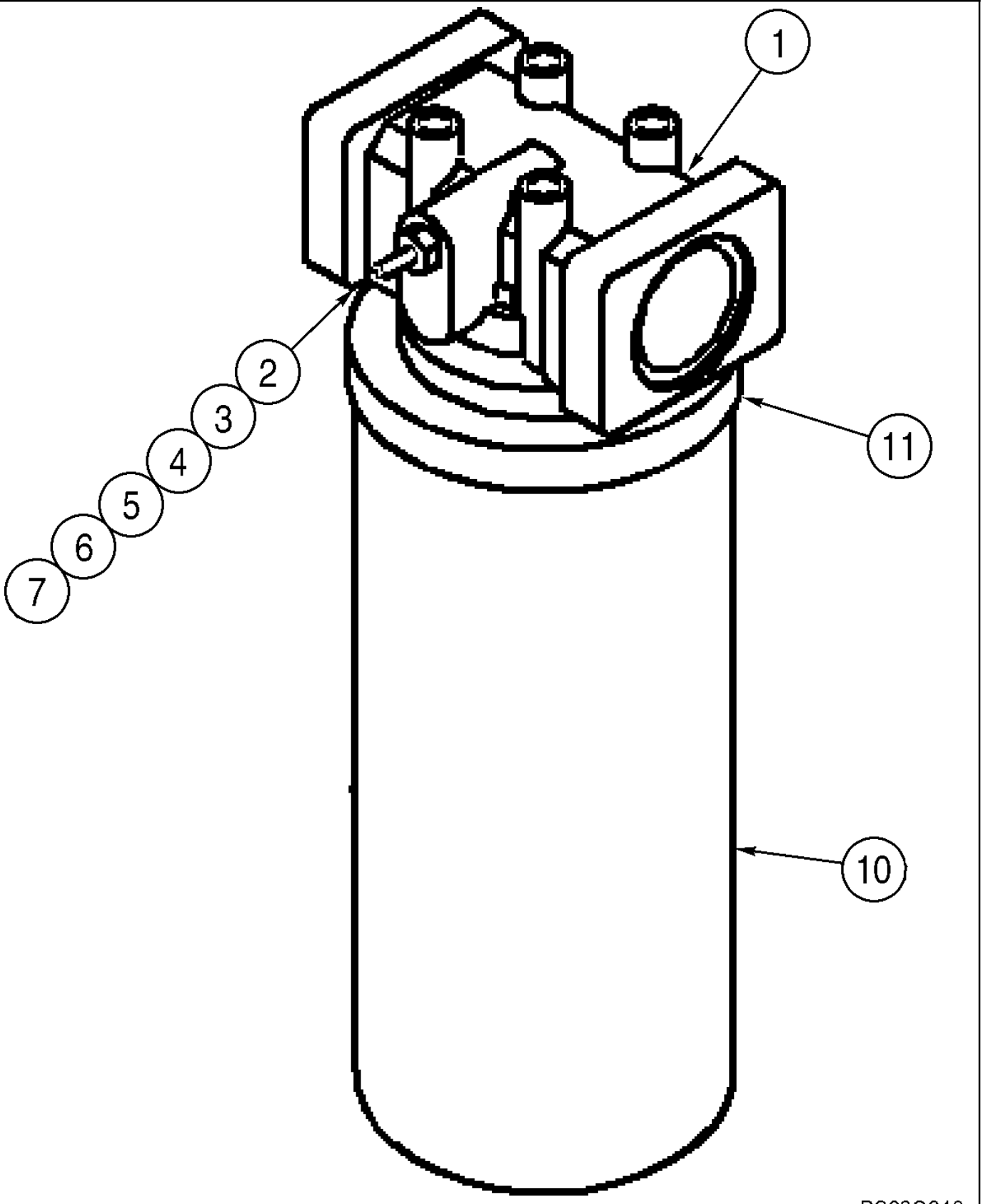

**HIDRAULICA - FILTRO, ACEITE**

| REF | FN | PART NUMBER | YR/SN | QTY | DENOMINACION |
|---|---|---|---|---|---|
| | | 87308929 | | 1 | FILTRO CONJ, With Reverse Flow; Models With Ride Control; Incl. 1 - 11 |
| | | 87308928 | | 1 | FILTRO CONJ, Without Reverse Flow: Models Without Ride Control, Incl 1 - 11 |
| 1 | | NSS | | 1 | NO SE REPARA SEPARADAM., Head |
| | | 8604802 | | 1 | INTERRUPTOR DE PRESION, Incl. 2 - 7 |
| 2 | | NSS | | 1 | NO SE REPARA SEPARADAM., Indicator |
| 3 | | NSS | | 1 | NO SE REPARA SEPARADAM., Washer, Special; Red/White |
| 4 | | 129-667 | | 2 | TUERCA, #10-32, LH |
| 5 | | 493-21020 | | 1 | ARANDELA DE FRENO, Int Tooth, #10, 3/16 |
| 6 | | 237-6006 | | 1 | JUNTA HERMETICA, 6-1, 90 Duro, .468" ID x .078" Thk |
| 7 | | 238-5011 | | 1 | JUNTA HERMETICA, -011, 70 Duro, .301" ID x .070" Thk |
| 10 | | 87308933 | | 1 | FILTRO, ACEITE HIDRAULICO, For Models With Or Without Ride Control; Incl. 10A |
| 11 | | NSS | | 1 | NO SE REPARA SEPARADAM., O-RING |

| 08-03 | | p1 | 07/07 |
|---|---|---|---|

**HIDRAULICA - DEPOSITO A LA BOMBA HIDRAULICA**

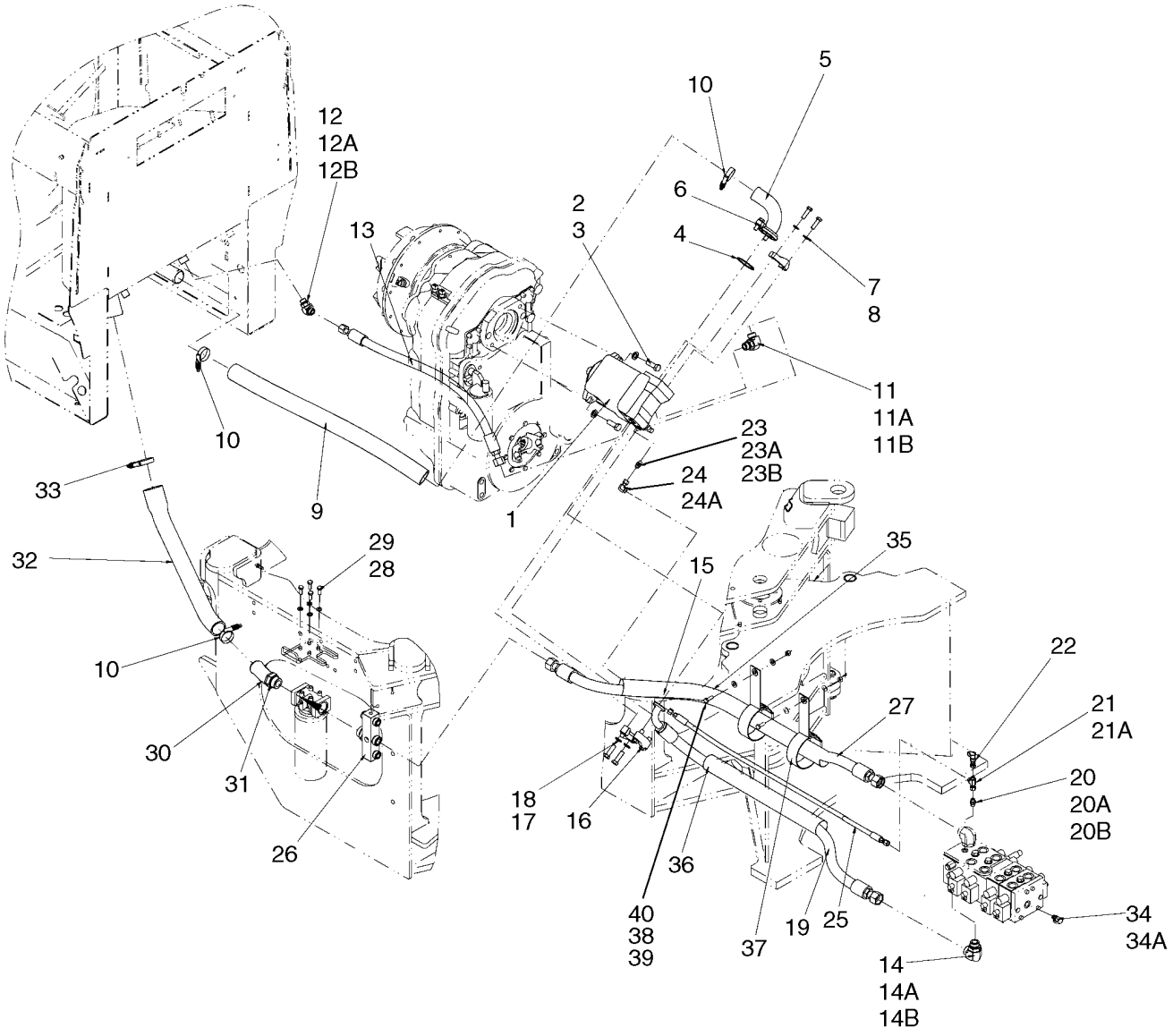


BS07D042

**HIDRAULICA - DEPOSITO A LA BOMBA HIDRAULICA**

| REF | FN | PART NUMBER | YR/SN | QTY | DENOMINACION |
|---|---|---|---|---|---|
| | | REF | | | MANUAL, RESERVOIR TO PUMP AND LOADER CONTROL VALVE |
| 1 | | 377608A1 | | 1 | BOMBA, See Figure 08-04 |
| 2 | | 896-11016 | | 2 | ARANDELA, M17.5 x 30 x 4, HT |
| 3 | | 627-16045 | | 2 | TORNILLO, Hex, M16 x 45, 10.9 |
| 4 | | 238-5232 | | 1 | JUNTA HERMETICA, -232, 70 Duro, 2.734" ID x .139" Thk |
| 5 | | 388509A1 | | 1 | TUBO (CONJUNTO), Pump Suction |
| 6 | | L14386 | | 2 | BORNE |
| 7 | | 895-11012 | | 4 | ARANDELA, M12 x 24 x 2.5 |
| 8 | | 627-12040 | | 4 | TORNILLO, Hex, M12 x 40, 10.9, Full Thd |
| 9 | | 388556A1 | | 1 | MANGUERA (CONJUNTO), Suction, Reservoir To Pump Inlet; 860 mm (33-7/8 in) |
| 10 | | 254026A1 | | 3 | COLLAR, Constant Torque |
| 11 | | 86579697 | | 1 | CODO, 90º, 1 3/16"-12 ORFS x M27 x 2 ORB, Incl. Refs. 11A, 11B |
| 11A | | 637-64236 | | 1 | JUNTA HERMETICA, CI 6, 23.6MM ID x 2.9 Thk, Boss |
| 11B | | 238-6018 | | 1 | JUNTA HERMETICA, -018, 90 Duro, .739" ID x .070" Thk, Face Seal |
| 12 | | 86639053 | | 1 | CODO, 45º, 1"-14 ORFS x M22 x 1.5 ORB, Incl. Refs. 12A, 12B |
| 12A | | 238-6016 | | 1 | JUNTA HERMETICA, -016, 90 Duro, .614" ID x .070" Thk, Face Seal |
| 12B | | 637-63193 | | 1 | JUNTA HERMETICA, CI 6, 19.3MM ID x 2.2 Thk, Boss |
| 13 | | 87629991 | | 1 | MANGA, Case Drain; 838 mm (33 in) |
| 14 | | 86580180 | | 1 | CODO, 90º, 1 7/16"-12 ORFS x M33 x 2 ORB, Incl. Refs. 14A, 14B |
| 14A | | 238-6021 | | 1 | JUNTA HERMETICA, -021, 90 Duro, .926" ID x .070" Thk, Face Seal |
| 14B | | 637-64296 | | 1 | JUNTA HERMETICA, CI 6, 29.6MM ID x 2.9 Thk, Boss |
| 15 | | 238-6222 | | 1 | JUNTA HERMETICA, -222, 90 Duro, 1.484" ID x .139" Thk |

**HIDRAULICA - DEPOSITO A LA BOMBA HIDRAULICA**

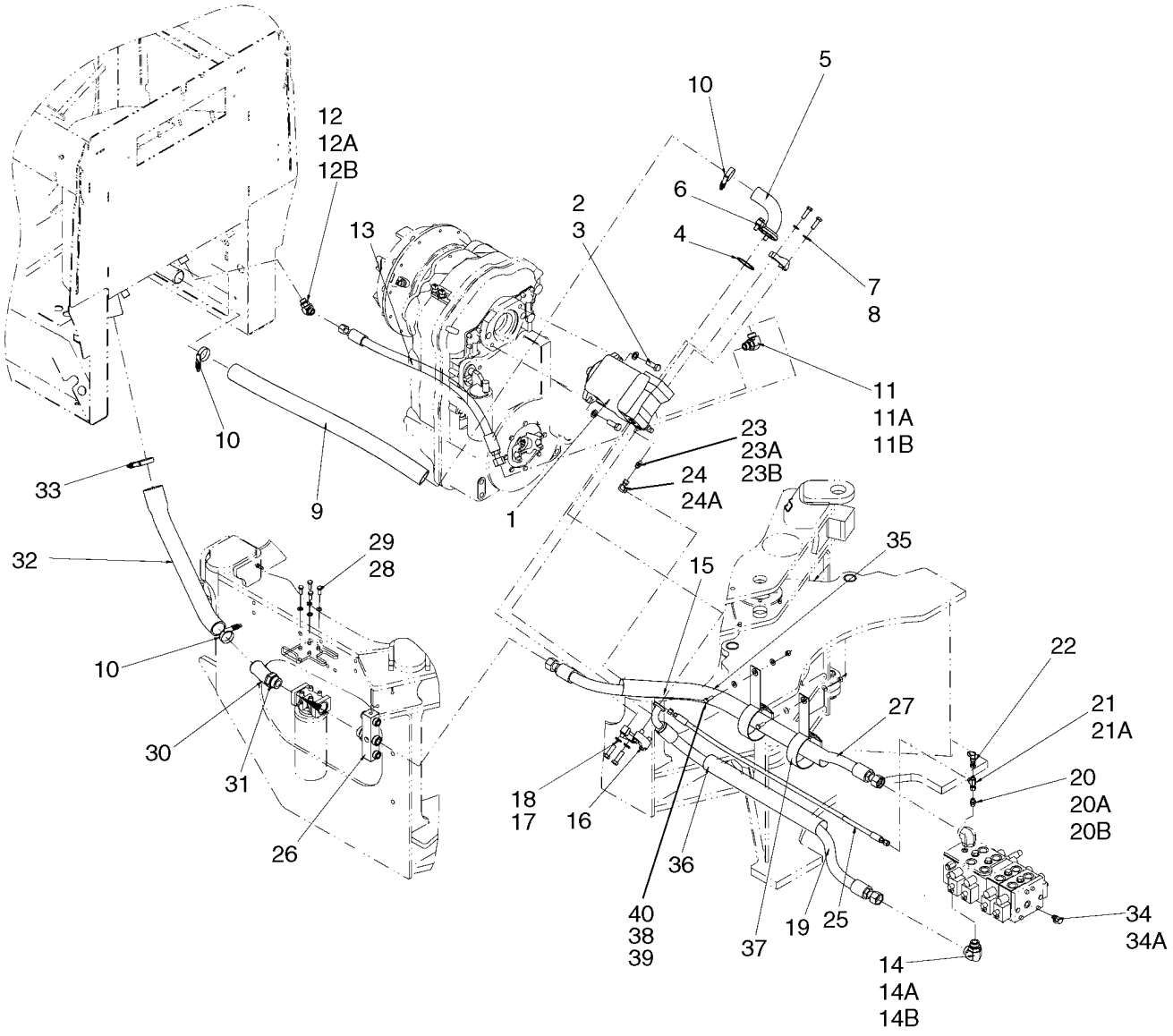


BS07D042

**HIDRAULICA - DEPOSITO A LA BOMBA HIDRAULICA**

| REF | FN | PART NUMBER | YR/SN | QTY | DENOMINACION |
|---|---|---|---|---|---|
| 16 | | 86985567 | | 2 | BRIDA |
| 17 | | 895-11014 | | 4 | ARANDELA, M14 x 28 x 2.5 |
| 18 | | 627-14045 | | 4 | TORNILLO, Hex, M14 x 45, 10.9, Full Thd |
| 19 | | 388555A2 | | 1 | MANGUERA (CONJUNTO), 1337 mm (52-5/8 in); Pressure |
| 20 | | 700-153 | | 1 | RACOR, 9/16"-18 ORFS x M14 x 1.5 ORB, Incl. Refs. 20A, 20B |
| 20A | | 238-6011 | | 1 | JUNTA HERMETICA, -011, 90 Duro, .301" ID x .070" Thk, Face Seal |
| 20B | | 637-63113 | | 1 | JUNTA HERMETICA, Cl 6, 11.3MM ID x 2.2 Thk, Boss |
| 21 | | 701-421 | | 1 | RACOR-T, 9/16"-18 ORFS x 9/16"-18 Fem Sw Run, Incl. Ref. 21A |
| 21A | | 238-6011 | | 2 | JUNTA HERMETICA, -011, 90 Duro, .301" ID x .070" Thk, Face Seal |
| 22 | | 190117A1 | | 1 | CARDAN |
| 23 | | 86593173 | | 1 | RACOR, 9/16"-18 ORFS x M12 x 1.5 ORB, Incl. Refs. 23A, 23B |
| 23A | | 238-6011 | | 1 | JUNTA HERMETICA, -011, 90 Duro, .301" ID x .070" Thk, Face Seal |
| 23B | | 637-63093 | | 1 | JUNTA HERMETICA, Cl 6, 9.3MM ID x 2.2 Thk, Boss |
| 24 | | 84989411 | | 1 | CODO, 90º, 9/16"-18 ORFS x 9/16"-18 Fem Sw, Incl. Refs. 24A |
| 24A | | 238-6011 | | 1 | JUNTA HERMETICA, -011, 90 Duro, .301" ID x .070" Thk, Face Seal |
| 25 | | 388558A1 | | 1 | MANGUERA (CONJUNTO), Load Sensing; 1327 mm (52-1/4 in) |
| 26 | | 87577181 | | 1 | BLOQUE COLECTOR, Filter |
| 27 | | 365516A2 | | 1 | MANGUERA (CONJUNTO), Valve Return; 1613 mm (63 - 1/2 in) |
| 28 | | 895-11010 | | 4 | ARANDELA, M10 x 20 x 2 |
| 29 | | 637-63193 | | 4 | JUNTA HERMETICA, Cl 6, 19.3MM ID x 2.2 Thk, Boss |
| 30 | | 390208A2 | | 1 | ADAPTOR |
| 31 | | 637-64386 | | 1 | JUNTA HERMETICA, Cl 6, 38.6MM ID x 2.9 Thk |

**HIDRAULICA - DEPOSITO A LA BOMBA HIDRAULICA**

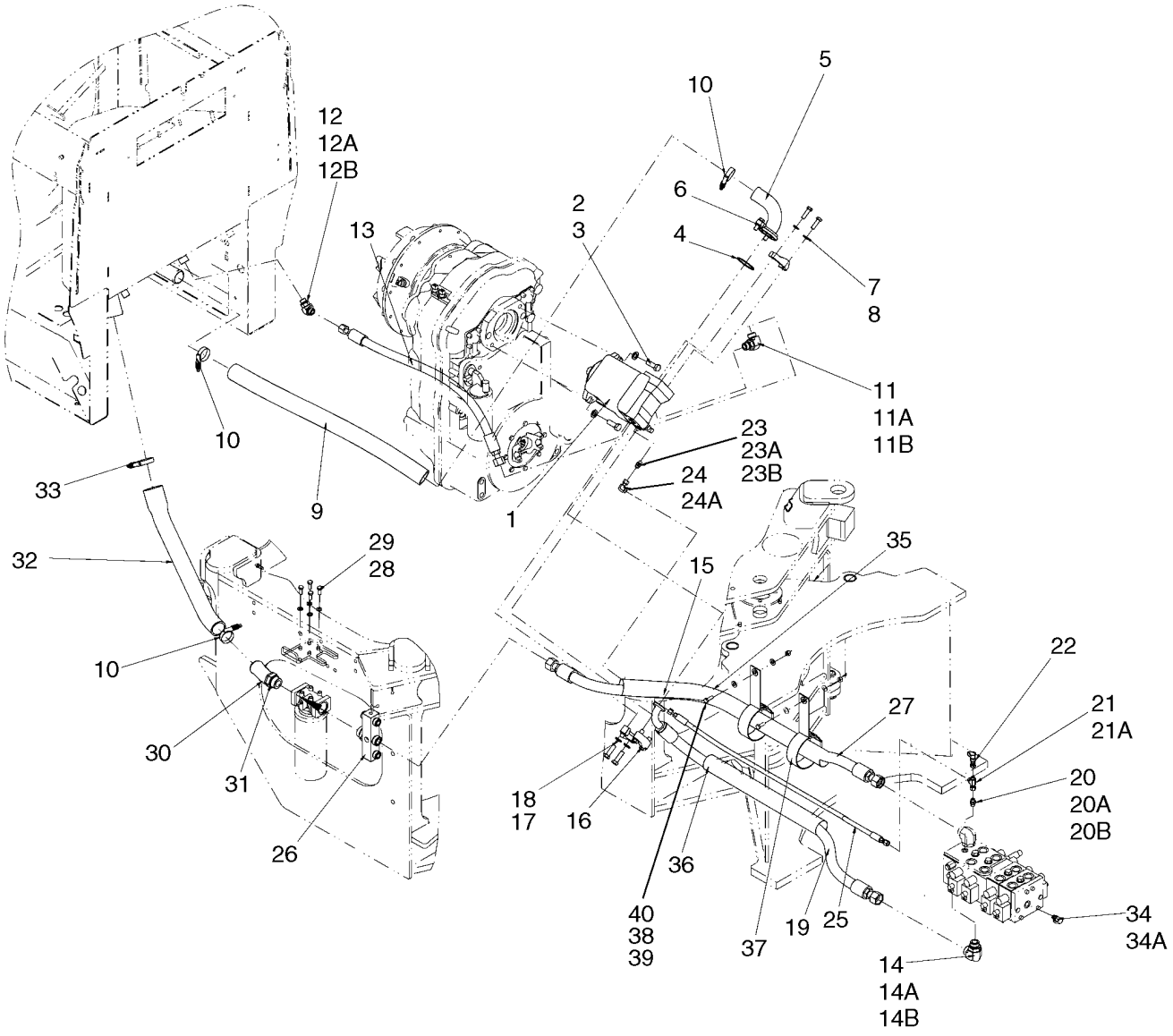


BS07D042

**HIDRAULICA - DEPOSITO A LA BOMBA HIDRAULICA**

| REF | FN | PART NUMBER | YR/SN | QTY | DENOMINACION |
|---|---|---|---|---|---|
| 32 | | 87629990 | | 1 | MANGA, Filter Return; 561mm (22 - 3/32in) |
| 33 | | L115548 | | 1 | COLLAR |
| 34 | | 178889A1 | | 1 | CONEXION, Diagnostic; Incl. Ref. 34A |
| 34A | | 637-63113 | | 1 | JUNTA HERMETICA, Cl 6, 11.3MM ID x 2.2 Thk |
| 35 | | 401526A1 | | 1 | PROTECTOR DE TUBO, 60 x 1200 mm |
| 36 | | 401525A1 | | 1 | PROTECTOR DE TUBO, 60 x 600 mm |
| 37 | | 401527A2 | | 2 | BANDA, Articulation Hoses |
| 38 | | 895-15010 | | 2 | ARANDELA, M11 x 24 x 2 |
| 39 | | 627-10030 | | 1 | TORNILLO, Hex, M10 x 30, 10.9, Full Thd |
| 40 | | 832-10410 | | 1 | CONTRA TUERCA, M10 x 1.5, Cl 8 |

**BOMBA**

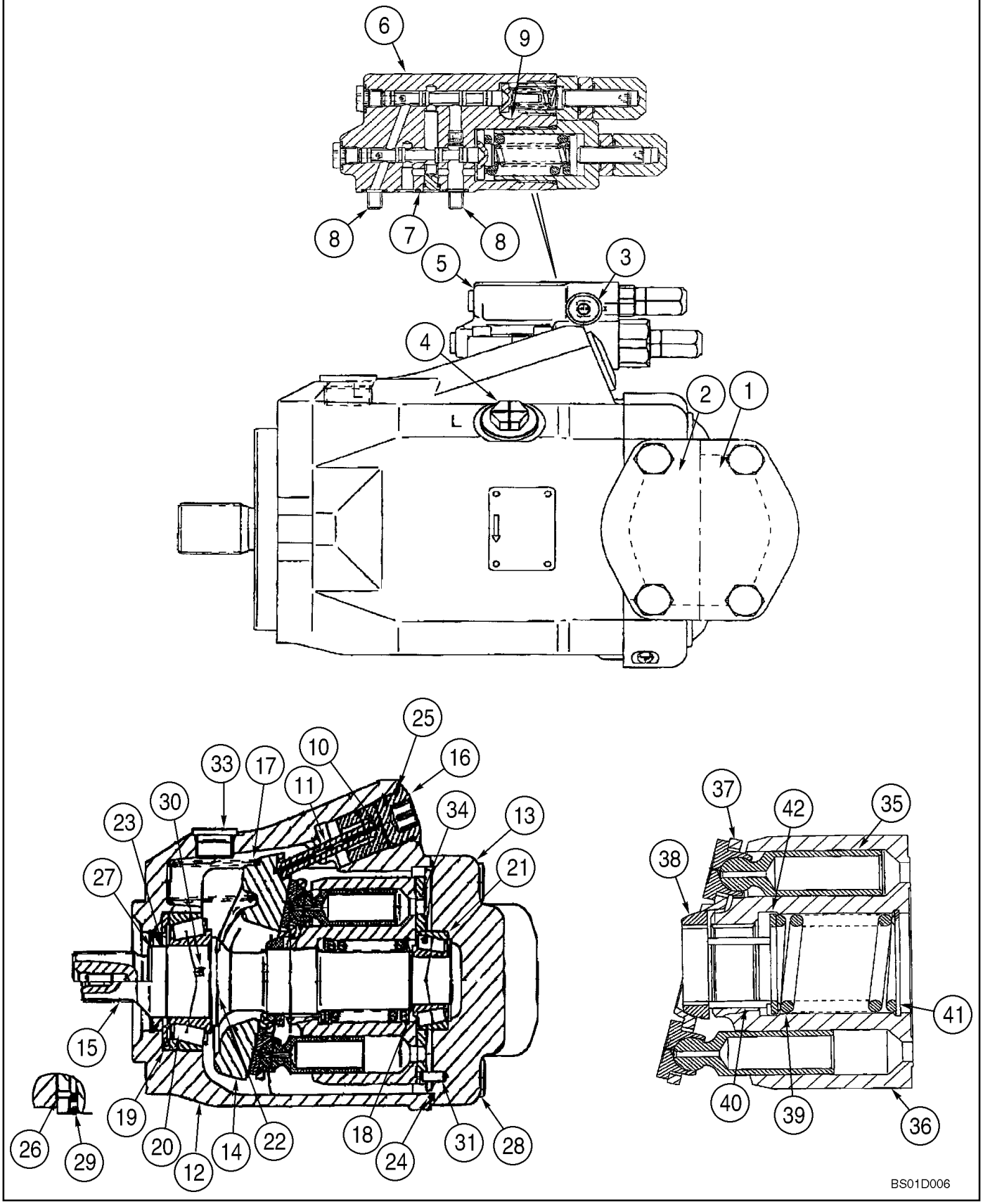
6
9
8
7
8
5
3
4
2
1
25
16
10
33
17
11
30
34
13
23
21
27
15
19
20
12
14
22
18
24
31
28
26
29
37
42
35
38
41
40
39
36
BS01D006

**BOMBA**

| REF | FN | PART NUMBER | YR/SN | QTY | DENOMINACION |
|---|---|---|---|---|---|
| | | 377608A1 | | 1 | BOMBA, Main Hydraulic, Incl. Refs. 1 - 42 |
| 1 | | 8605005 | | 1 | TAPADERA, Flange |
| 2 | | 8605006 | | 1 | TAPADERA, Flange |
| 3 | | 8604962 | | 1 | TORNILLO |
| 4 | | 8605008 | | 1 | TAPÓN, Seal |
| 5 | | 8604960 | | 1 | VALVULA HIDRAULICA, Pilot; Incl. 6 - 9 |
| 6 | | 8602844 | | 1 | VALVULA HIDRAULICA, Pilot Body |
| 7 | | 8604965 | | 3 | JUNTA HERMETICA, 7,65 x 1,78 |
| 8 | | 8604964 | | 4 | TORNILLO, M6 x 30; 10,9 |
| 9 | | 8604963 | | 1 | TAPÓN, M12 x 1,5 |
| 10 | | 8605010 | | 1 | EMBOLO, Control |
| 11 | | 8605011 | | 1 | VARILLA, Piston |
| 12 | | NSS | | 1 | NO SE REPARA SEPARADAM., Housing |
| 13 | | 8605012 | | 1 | PLACA, Port |
| 14 | | 8605013 | | 1 | PLACA, Swash |
| 15 | | 8605014 | | 1 | EJE, Drive |
| 16 | | 8605015 | | 11 | TAPÓN, Pump |
| 17 | | 8605016 | | 1 | RESORTE, Pump |
| 18 | | 8605017 | | 1 | SUPLEMENTO |
| 19 | | 8605018 | | 1 | ANILLO, Stop |
| 20 | | 8605019 | | 1 | RODAMIENTO DE RODILLOS |
| 21 | | 8605020 | | 1 | RODAMIENTO DE RODILLOS |
| 22 | | 8605021 | | 2 | COQUILLA, Cradle |
| 23 | | 8605022 | | 1 | ANILLO DE CIERRE |
| 24 | | 8605023 | | 1 | JUNTA HERMETICA |
| 25 | | 8605024 | | 1 | JUNTA HERMETICA |
| 26 | | 8605025 | | 2 | JUNTA HERMETICA |
| 27 | | 8605026 | | 1 | ANILLO |
| 28 | | 8605027 | | 4 | TAPÓN |
| 29 | | 8604958 | | 3 | TAPÓN, Tear-Off |
| 30 | | 8605029 | | 1 | ORIFICIO |
| 31 | | 8605030 | | 1 | PERNO, Dowel |
| 32 | | 8605031 | | 1 | TAPÓN, Not Illustrated |
| 33 | | 8604959 | | 2 | TORNILLO, Countersink |
| 34 | | 8605033 | | 1 | PLACA |

**BOMBA**

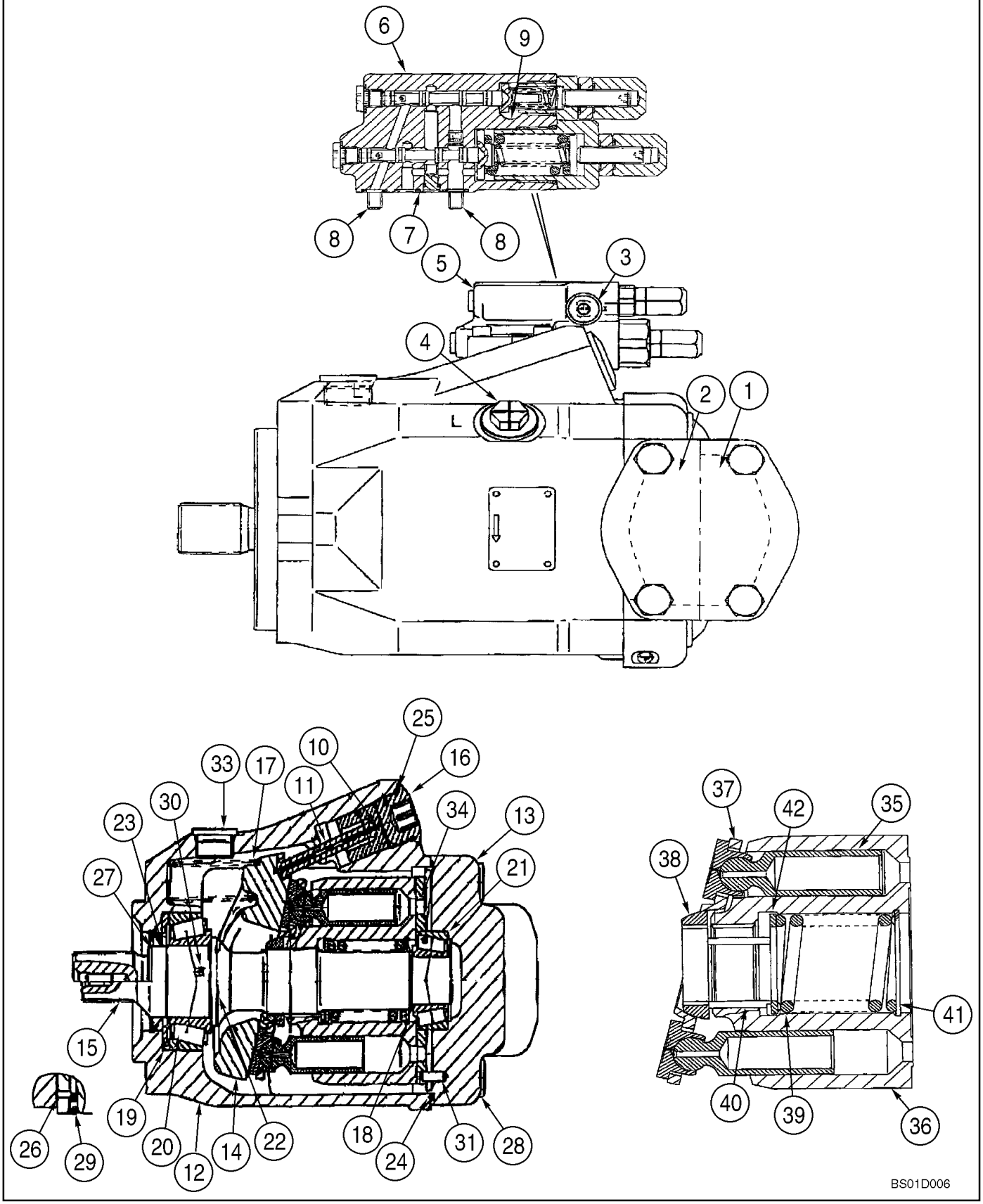
6
9
8
7
8
5
3
4
2
1
25
16
10
33
17
11
30
23
34
13
27
21
15
19
20
12
14
22
18
24
31
28
26
29
37
42
35
38
41
40
39
36
BS01D006

**BOMBA**

| REF | FN | PART NUMBER | YR/SN | QTY | DENOMINACION |
|---|---|---|---|---|---|
| 35 | | 8605034 | | 9 | EMBOLO |
| 36 | | 8605218 | | 1 | CUERPO DE CILINDRO |
| 37 | | 8605036 | | 1 | PLACA, Retaining |
| 38 | | 8605037 | | 1 | JAULA DE COJINETTE, Retaining |
| 39 | | 8605038 | | 1 | RESORTE |
| 40 | | 8605039 | | 3 | PERNO, Press |
| 41 | | 8605040 | | 1 | ANILLO, Seeger |
| 42 | | 8605041 | | 2 | ANILLO, Thrust |

**HIDRAULICA - ELEVACIÓN DE LA CARGADORA Y CUCHARÓN (Z-BAR, XR CARGADORA)**

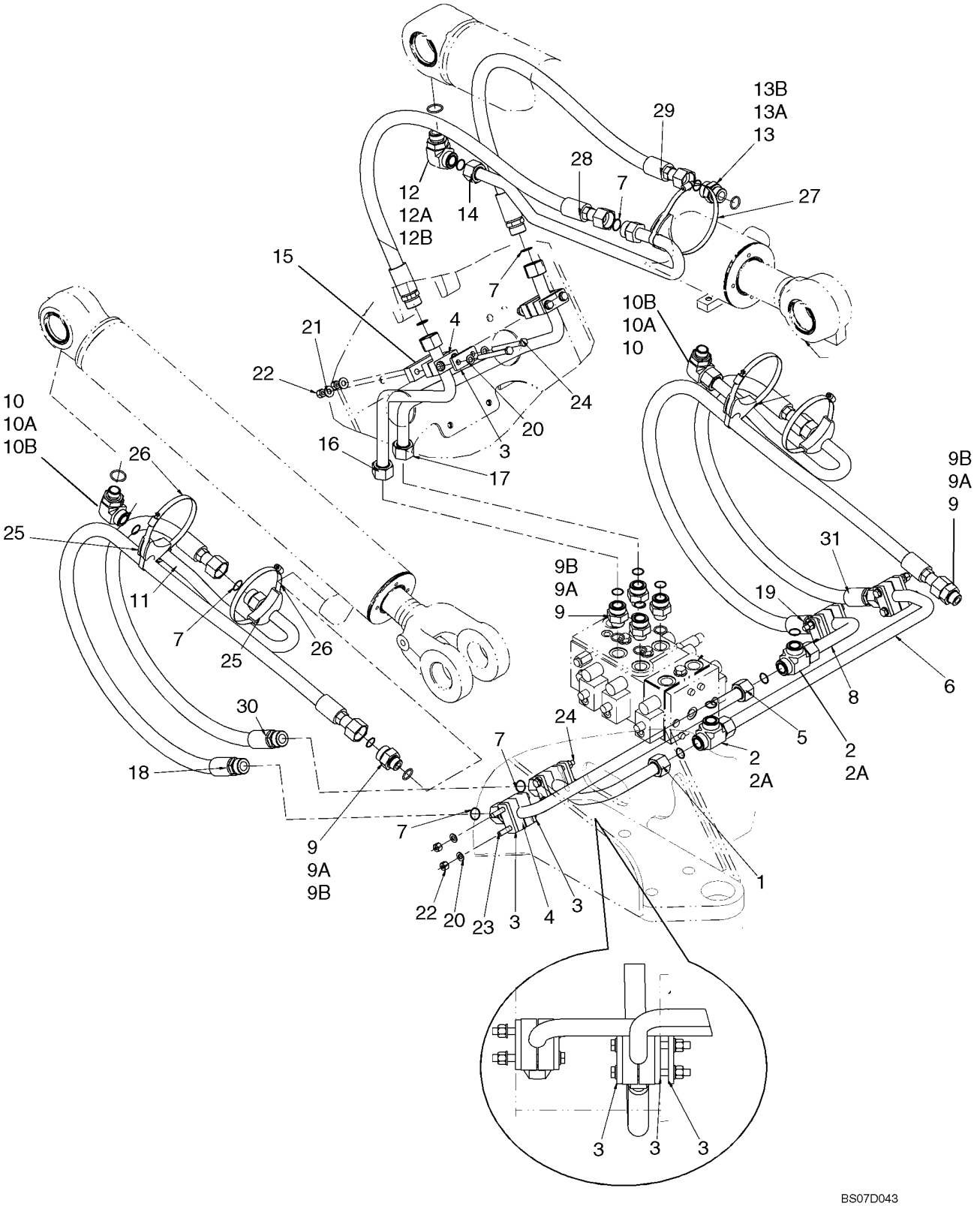

**HIDRAULICA - ELEVACIÓN DE LA CARGADORA Y CUCHARÓN (Z-BAR, XR CARGADORA)**

| REF | FN | PART NUMBER | YR/SN | QTY | DENOMINACION |
|---|---|---|---|---|---|
| | | REF | | | MANUAL, Z-BAR LOADER, XR LOADER |
| 1 | | 87389172 | | 1 | TUBERIA HIDRAULICO, Lift Head End, RH |
| 2 | | 87016914 | | 2 | RACOR-T, 1 7/16"-12 ORFS, Incl. Ref. 2A |
| 2A | | 238-6021 | | 3 | JUNTA HERMETICA, -021, 90 Duro, .926" ID x .070" Thk, Face Seal |
| 3 | | 367658A1 | | 12 | PLACA, Clamp Cover |
| 4 | | 367489A1 | | 6 | BLOQUE MOTOR, Tube Mounting |
| 5 | | 8606100 | | 1 | TUBO (CONJUNTO), Lift Rod End, RH |
| 6 | | 8606092 | | 1 | TUBO (CONJUNTO), Lift Head End, LH |
| 7 | | 238-6012 | | 9 | JUNTA HERMETICA, -012, 90 Duro, .364" ID x .070" Thk |
| 8 | | 8606098 | | 1 | TUBO (CONJUNTO), Lift Rod End, LH |
| 9 | | 86639051 | | 6 | RACOR, 1 7/16"-12 ORFS x M27 x 1.5 ORB, Incl. Refs 9A, 9B |
| 9A | | 238-6021 | | 1 | JUNTA HERMETICA, -021, 90 Duro, .926" ID x .070" Thk, Face Seal |
| 9B | | 637-64236 | | 1 | JUNTA HERMETICA, Cl 6, 23.6MM ID x 2.9 Thk, Boss |
| 10 | | 87010650 | | 2 | CODO, 90º, 1 7/16"-12 ORFS x M27 x 2 ORB, Incl. Refs. 10A, 10B |
| 10A | | 238-6021 | | 1 | JUNTA HERMETICA, -021, 90 Duro, .926" ID x .070" Thk, Face Seal |
| 10B | | 637-64236 | | 1 | JUNTA HERMETICA, Cl 6, 23.6MM ID x 2.9 Thk, Boss |
| 11 | | 86983366 | | 2 | TUBO, Lift Cylinder |
| 12 | | 86580180 | | 1 | CODO, 90º, 1 7/16"-12 ORFS x M33 x 2 ORB, Incl. Refs. 12A, 12B |
| 12A | | 637-64296 | | 1 | JUNTA HERMETICA, Cl 6, 29.6MM ID x 2.9 Thk, Boss |
| 12B | | 238-6021 | | 1 | JUNTA HERMETICA, -021, 90 Duro, .926" ID x .070" Thk, Face Seal |
| 13 | | 86580179 | | 1 | RACOR, 1 7/16"-12 ORFS x M22 x 2 ORB, Incl. Refs. 13A, 13B |
| 13A | | 238-6021 | | 1 | JUNTA HERMETICA, -021, 90 Duro, .926" ID x .070" Thk, Face Seal |

**HIDRAULICA - ELEVACIÓN DE LA CARGADORA Y CUCHARÓN (Z-BAR, XR CARGADORA)**

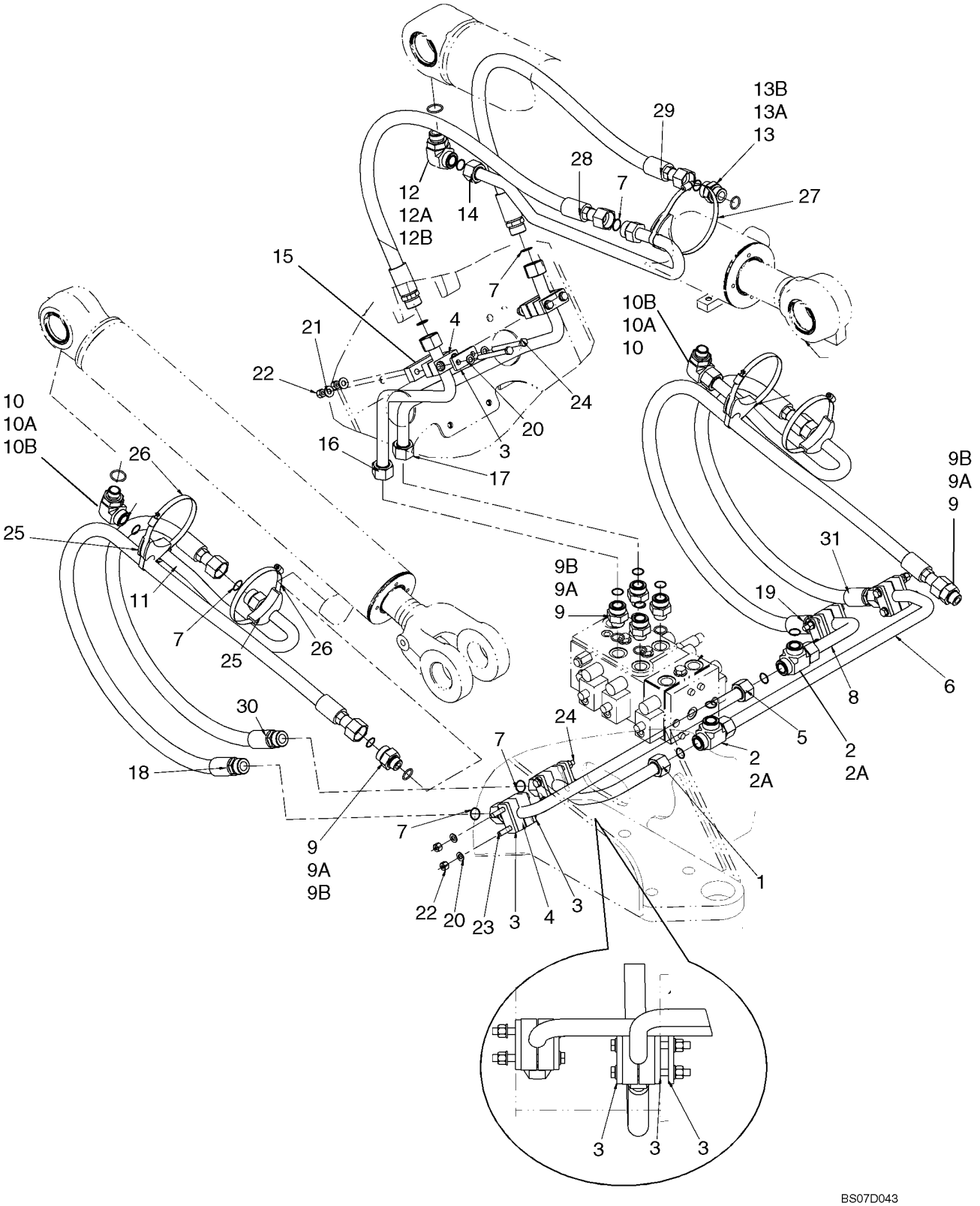

**HIDRAULICA - ELEVACIÓN DE LA CARGADORA Y CUCHARÓN (Z-BAR, XR CARGADORA)**

| REF | FN | PART NUMBER | YR/SN | QTY | DENOMINACION |
|---|---|---|---|---|---|
| 13B | | 637-64296 | | 1 | JUNTA HERMETICA, Cl 6, 29.6MM ID x 2.9 Thk, Boss |
| 14 | | 8605367 | | 1 | TUBO (CONJUNTO), Tilt Cylinder |
| 15 | | 87324906 | | 2 | SEPARADOR |
| 16 | | 389049A1 | | 1 | TUBO (CONJUNTO), Tilt Head End |
| 17 | | 8605369 | | 1 | TUBO (CONJUNTO), Tilt Rod End |
| 18 | | 372359A1 | | 1 | MANGUERA (CONJUNTO), Lift Cylinder; 1760 mm (69 - 5/16 in) |
| 19 | | 372359A1 | | 1 | MANGUERA (CONJUNTO), Lift Cylinder; 1760 mm (69 - 5/16 in) |
| 20 | | 895-11010 | | 20 | ARANDELA, M10 x 20 x 2 |
| 21 | | 895-15010 | | 4 | ARANDELA, M11 x 24 x 2 |
| 22 | | 832-10410 | | 12 | CONTRA TUERCA, M10 x 1.5, Cl 8 |
| 23 | | 827-10100 | | 4 | TORNILLO, Hex, M10 x 100, 10.9 |
| 24 | | 827-10110 | | 8 | TORNILLO, Hex, M10 x 110, 10.9 |
| 25 | | 391133A1 | | 5 | COLLAR |
| 26 | | 214-1496 | | 4 | ABRAZADERA MANGUERA, #96, 5.56/6.50 Type F Worm, W/liner |
| 27 | | 214-14104 | | 1 | ABRAZADERA MANGUERA, #104, 6.12/7.00 Type F Worm |
| 28 | | 389161A1 | | 1 | MANGUERA (CONJUNTO), Tilt Cylinder; 1161 mm (45-11/16 in) |
| 29 | | 389161A1 | | 1 | MANGUERA (CONJUNTO), Tilt Cylinder; 1161 mm (45-11/16 in) |
| 30 | | 86983386 | | 1 | MANGA FLEXIBLE, Lift Cylinder; 1145 mm (45 - 1/16 in) |
| 31 | | 86983386 | | 1 | MANGA FLEXIBLE, Lift Cylinder; 1145 mm (45 - 1/16 in) |

**HIDRAULICA - ELEVADOR DE LA CARGADORA (XT CARGADORA)**

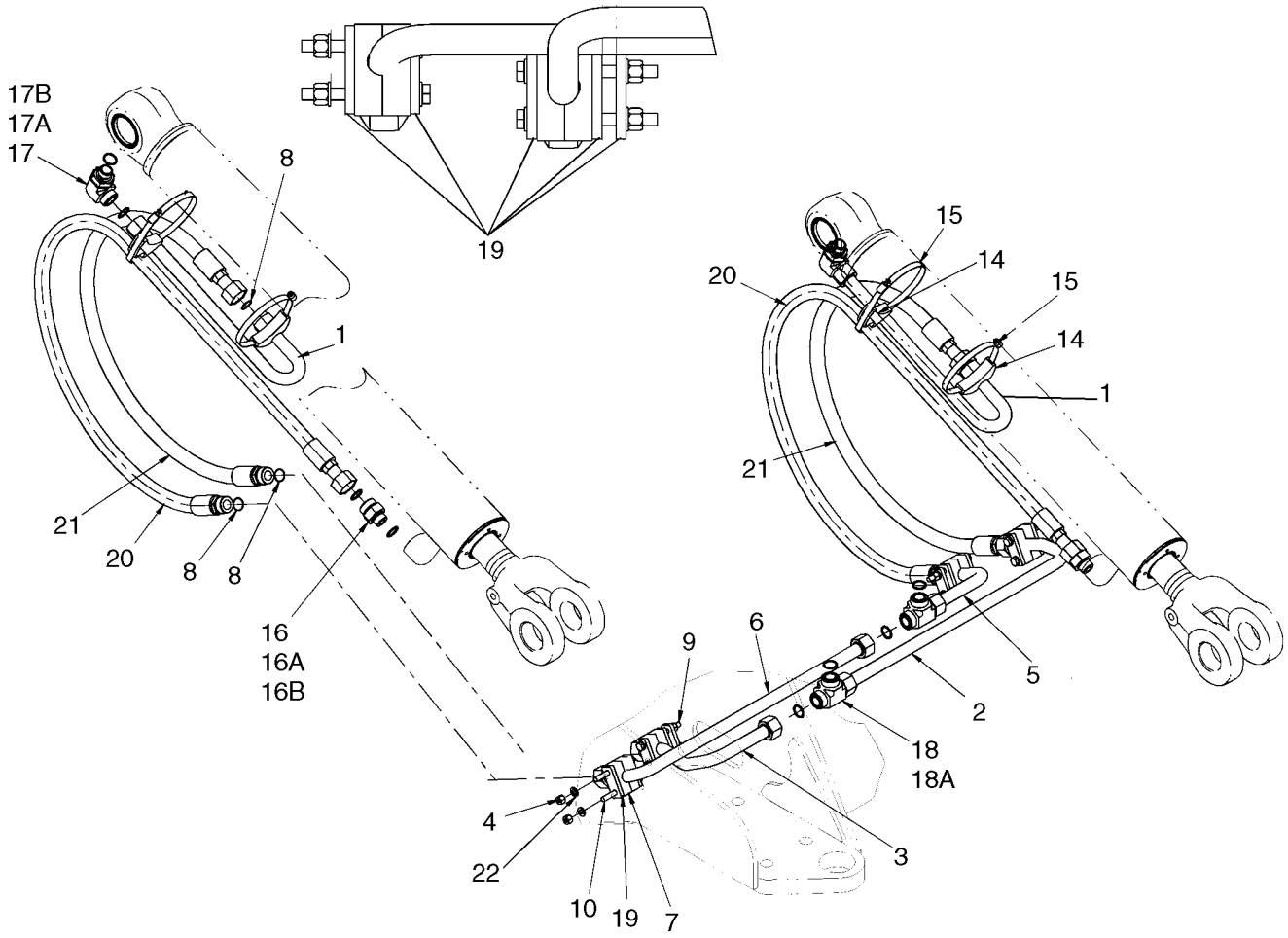

**HIDRAULICA - ELEVADOR DE LA CARGADORA (XT CARGADORA)**

| REF | FN | PART NUMBER | YR/SN | QTY | DENOMINACION |
|---|---|---|---|---|---|
| | | REF | | | MANUAL, LOADER LIFT; XT-LOADER |
| 1 | | 87448548 | | 2 | TUBO (CONJUNTO), Lift Cylinder |
| 2 | | 8606092 | | 1 | TUBO (CONJUNTO), Left Hand; Head End |
| 3 | | 87389172 | | 1 | TUBERIA HIDRAULICO, Right Hand; Head End |
| 4 | | 832-10410 | | 8 | CONTRA TUERCA, M10 x 1.5, Cl 8 |
| 5 | | 8606098 | | 1 | TUBO (CONJUNTO), Rod End; Left Hand |
| 6 | | 8606100 | | 1 | TUBO (CONJUNTO), Rod End; Right Hand |
| 7 | | 367489A1 | | 4 | BLOQUE MOTOR, Mounting |
| 8 | | 238-6021 | | 6 | JUNTA HERMETICA, -021, 90 Duro, .926" ID x .070" Thk, Face Seal |
| 9 | | 827-10110 | | 4 | TORNILLO, Hex, M10 x 110, 10.9 |
| 10 | | 827-10100 | | 4 | TORNILLO, Hex, M10 x 100, 10.9 |
| 14 | | 391133A1 | | 4 | COLLAR |
| 15 | | 214-1488 | | 4 | ABRAZADERA MANGUERA, #88, 5.12/6.00 Type F Worm |
| 16 | | 700-166 | | 2 | RACOR, 1 7/16"-12 ORFS x M27 x 1.5 ORB, Incl. Refs. 16A, 16B |
| 16A | | 238-6021 | | 1 | JUNTA HERMETICA, -021, 90 Duro, .926" ID x .070" Thk, Face Seal |
| 16B | | 637-64236 | | 1 | JUNTA HERMETICA, Cl 6, 23.6MM ID x 2.9 Thk, Boss Seal |
| 17 | | 700-313 | | 2 | CODO, 90º, 1 7/16"-12 ORFS x M27 x 2 ORB, Incl. Refs. 17A, 17B |
| 17A | | 238-6021 | | 1 | JUNTA HERMETICA, -021, 90 Duro, .926" ID x .070" Thk, Face Seal |
| 17B | | 637-64236 | | 1 | JUNTA HERMETICA, Cl 6, 23.6MM ID x 2.9 Thk, Boss Seal |
| 18 | | 701-410 | | 2 | RACOR-T, 1 7/16"-12 ORFS, Incl. Refs. 18A |
| 18A | | 238-6021 | | 3 | JUNTA HERMETICA, -021, 90 Duro, .926" ID x .070" Thk, Face Seal |
| 19 | | 367658A1 | | 10 | PLACA, Clamp Cover |
| 20 | | 87448550 | | 2 | MANGUERA (CONJUNTO), 1802 mm ( 70 7/8 in); Lift Cylinder |
| 21 | | 86983387 | | 2 | MANGUERA (CONJUNTO), 1320 mm ( 52 in ); Lift Cylinder |

**HIDRAULICA - ELEVADOR DE LA CARGADORA (XT CARGADORA)**

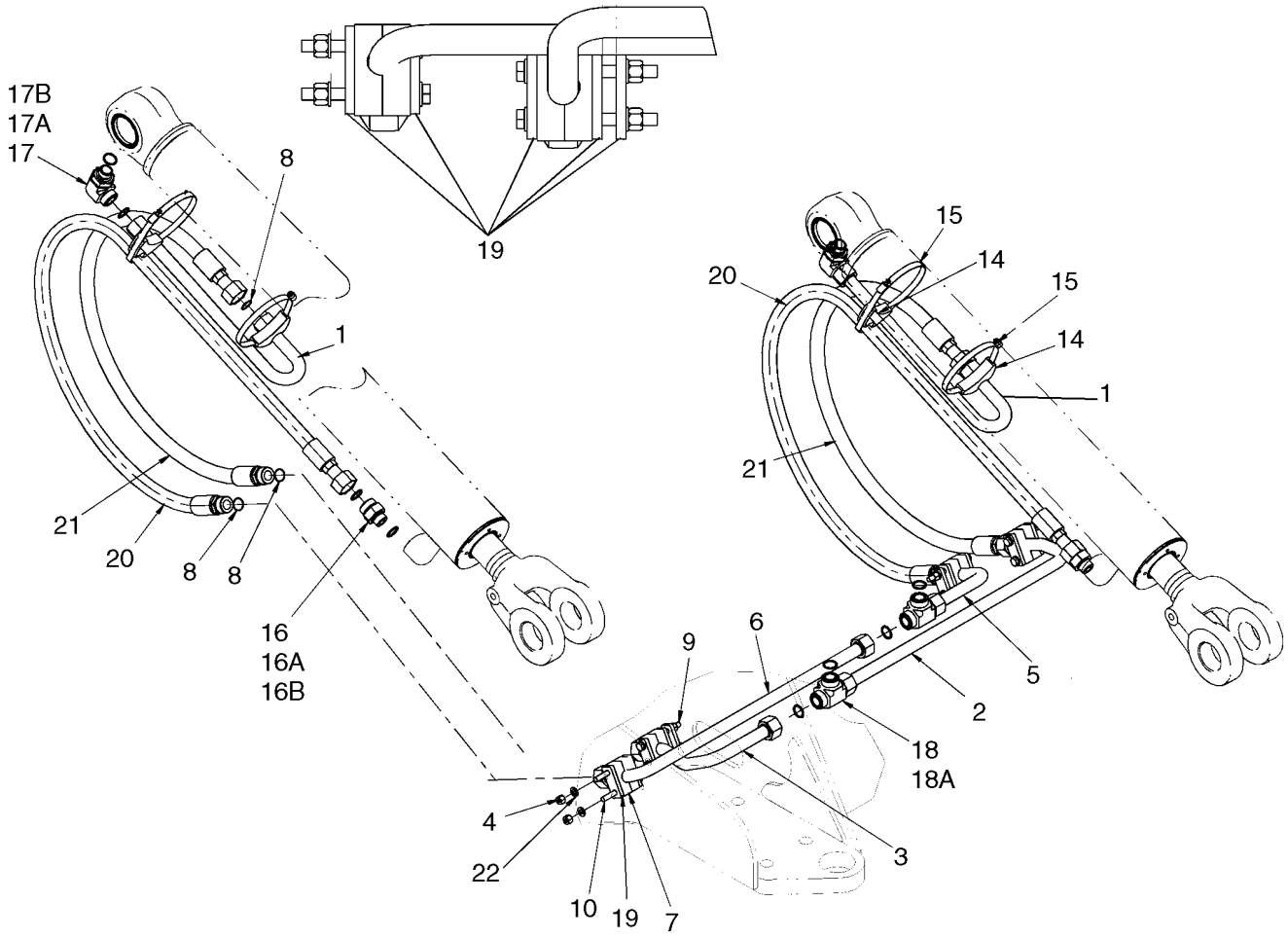

**HIDRAULICA - ELEVADOR DE LA CARGADORA (XT CARGADORA)**

| REF | FN | PART NUMBER | YR/SN | QTY | DENOMINACION |
|---|---|---|---|---|---|
| 22 | | 895-11010 | | 16 | ARANDELA, M10 x 20 x 2 |

| 08-07 | | p1 | 07/07 |
|---|---|---|---|

**HIDRAULICA - CUCHARON DE LA CARGADORA (XT CARGADORA)**

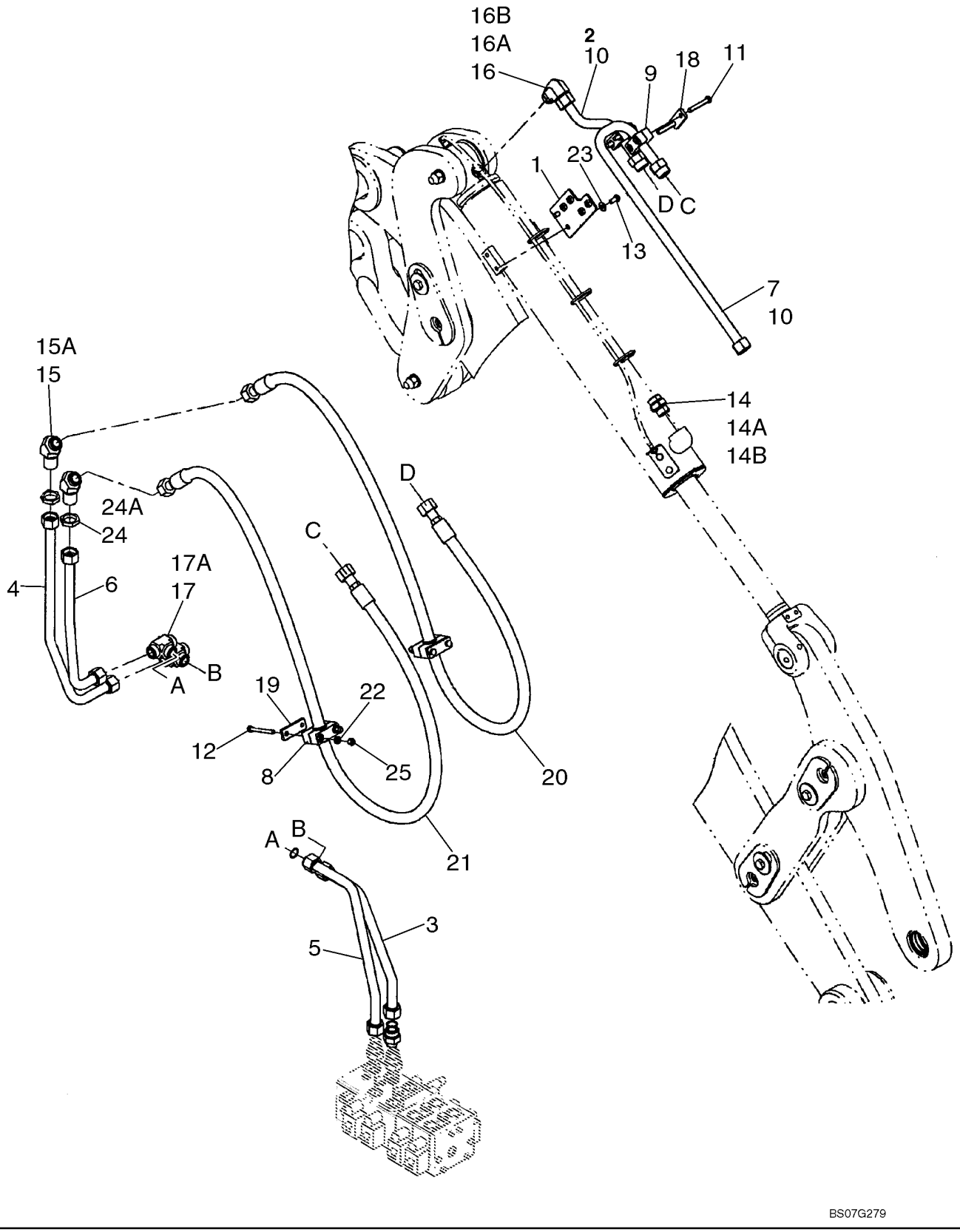

**HIDRAULICA - CUCHARON DE LA CARGADORA (XT CARGADORA)**

| REF | FN | PART NUMBER | YR/SN | QTY | DENOMINACION |
|---|---|---|---|---|---|
| | | REF | | | MANUAL, XT LOADER BUCKET |
| 1 | | 87447893 | | 1 | PIEZA DE SOPORTE, Tilt Tubes Right Side |
| 2 | | 87447895 | | 1 | TUBO (CONJUNTO), Tilt Base Right Side |
| 3 | | 389349A1 | | 1 | TUBO (CONJUNTO), Tilt Head End Right Side |
| 4 | | 87452603 | | 1 | TUBO (CONJUNTO), Tilt Head Right Side |
| 5 | | 389351A1 | | 1 | TUBO (CONJUNTO), Tilt Rod End Right Side |
| 6 | | 87445798 | | 1 | TUBO (CONJUNTO), Tilt Rod End Right Side |
| 7 | | 87445806 | | 1 | TUBO (CONJUNTO), Tilt Rod Right Right Side |
| 8 | | 87452747 | | 2 | BLOQUE MOTOR, Tube Mounting |
| 9 | | 367489A1 | | 2 | BLOQUE MOTOR, Mounting |
| 10 | | 238-6021 | | 2 | JUNTA HERMETICA, -021, 90 Duro, .926" ID x .070" Thk, Face Seal |
| 11 | | 827-10070 | | 4 | TORNILLO, Hex, M10 x 70, 10.9 |
| 12 | | 827-10090 | | 4 | TORNILLO, Hex, M10 x 90, 10.9 |
| 13 | | 627-10020 | | 2 | TORNILLO, Hex, M10 x 20, 10.9, Full Thd |
| 14 | | 700-105 | | 1 | RACOR, 1 7/16"-12 ORFS x M22 x 2 ORB, Incl. Refs. 14A, 14B |
| 14A | | 238-6021 | | 1 | JUNTA HERMETICA, -021, 90 Duro, .926" ID x .070" Thk, Face Seal |
| 14B | | 637-64296 | | 1 | JUNTA HERMETICA, Cl 6, 29.6MM ID x 2.9 Thk, Boss End |
| 15 | | 701-366 | | 2 | CODO, 45º, 1 7/16"-12. ORFS, Blkhd, Incl. Refs. 15A |
| 15A | | 238-6021 | | 2 | JUNTA HERMETICA, -021, 90 Duro, .926" ID x .070" Thk, Face Seal |
| 16 | | 700-308 | | 2 | CODO, 90º, 1 7/16"-12 ORFS x M33 x 2 ORB, Incl. Refs. 16A, 16B |
| 16A | | 238-6021 | | 1 | JUNTA HERMETICA, -021, 90 Duro, .926" ID x .070" Thk, Face Seal |
| 16B | | 637-64296 | | 1 | JUNTA HERMETICA, Cl 6, 29.6MM ID x 2.9 Thk, Boss End |
| 17 | | 701-410 | | 2 | RACOR-T, 1 7/16"-12 ORFS, Incl. Ref. 17A |
| 17A | | 238-6021 | | 3 | JUNTA HERMETICA, -021, 90 Duro, .926" ID x .070" Thk, Face Seal |
| 18 | | 367658A1 | | 2 | PLACA, Clamp Cover |
| 19 | | 8500858 | | 2 | PLACA, Clamp Cover |

**HIDRAULICA - CUCHARON DE LA CARGADORA (XT CARGADORA)**

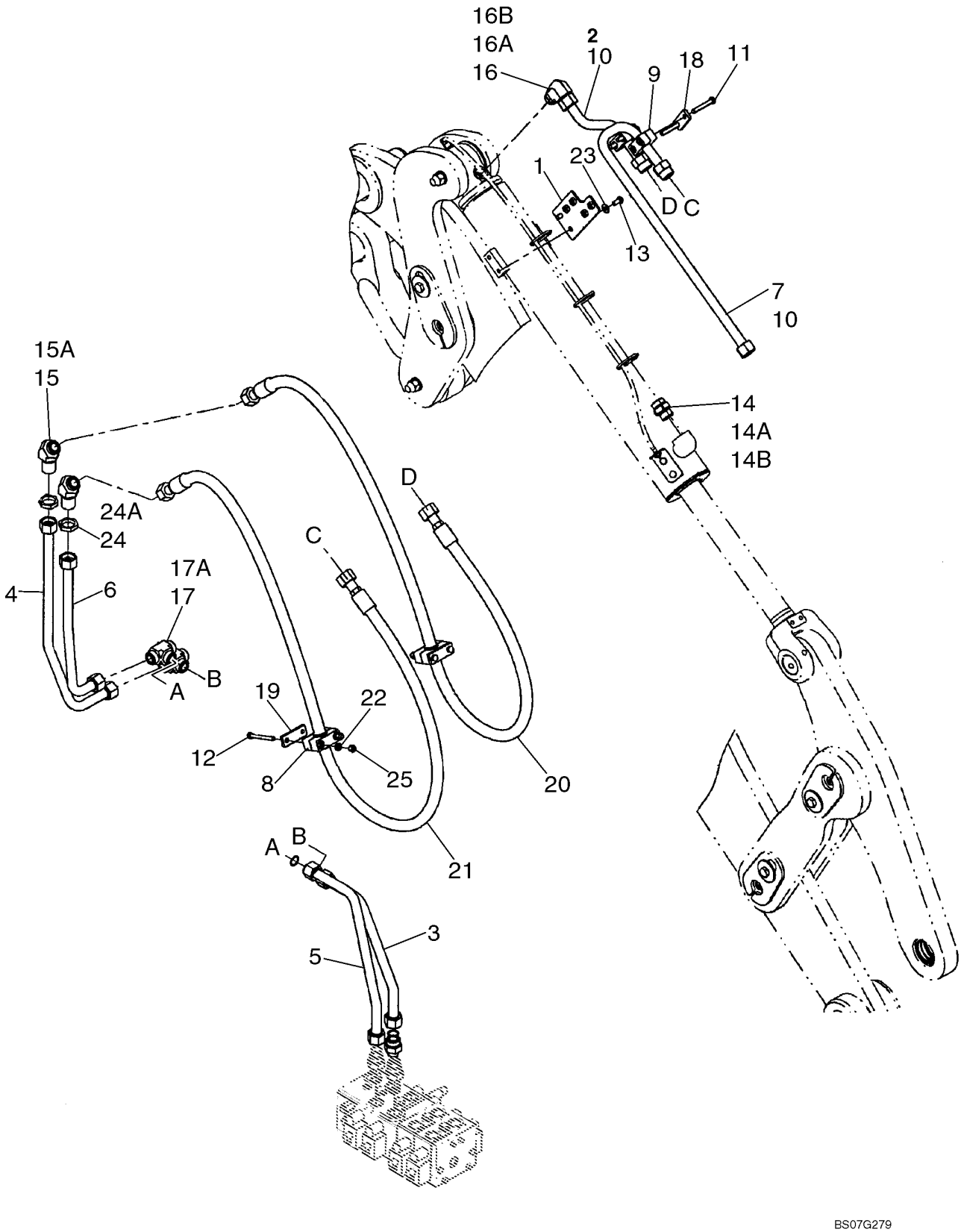

**HIDRAULICA - CUCHARON DE LA CARGADORA (XT CARGADORA)**

| REF | FN | PART NUMBER | YR/SN | QTY | DENOMINACION |
|---|---|---|---|---|---|
| 20 | | 87304928 | | 1 | MANGUERA (CONJUNTO), Tilt Base; 2273mm ( 89-1/2 in ) |
| 21 | | 87304926 | | 1 | MANGUERA (CONJUNTO), Tilt Rod; 2252mm ( 88-3/4 in ) |
| 22 | | 895-11010 | | 4 | ARANDELA, M10 x 20 x 2 |
| 23 | | 895-15010 | | 2 | ARANDELA, M11 x 24 x 2 |
| 24 | | 701-908 | | 2 | CONTRA TUERCA, 1 7/16"-12, ORFS Blkhd, Incl. Ref. 24A |
| 24A | | 238-6021 | | 1 | JUNTA HERMETICA, -021, 90 Duro, .926" ID x .070" Thk, Face Seal |
| 25 | | 832-10410 | | 4 | CONTRA TUERCA, M10 x 1.5, Cl 8 |

| 08-07A | | p1 | 06/07 |
|---|---|---|---|

**HIDRAULICA - CUCHARON DE LA CARGADORA (XT CARGADORA)**

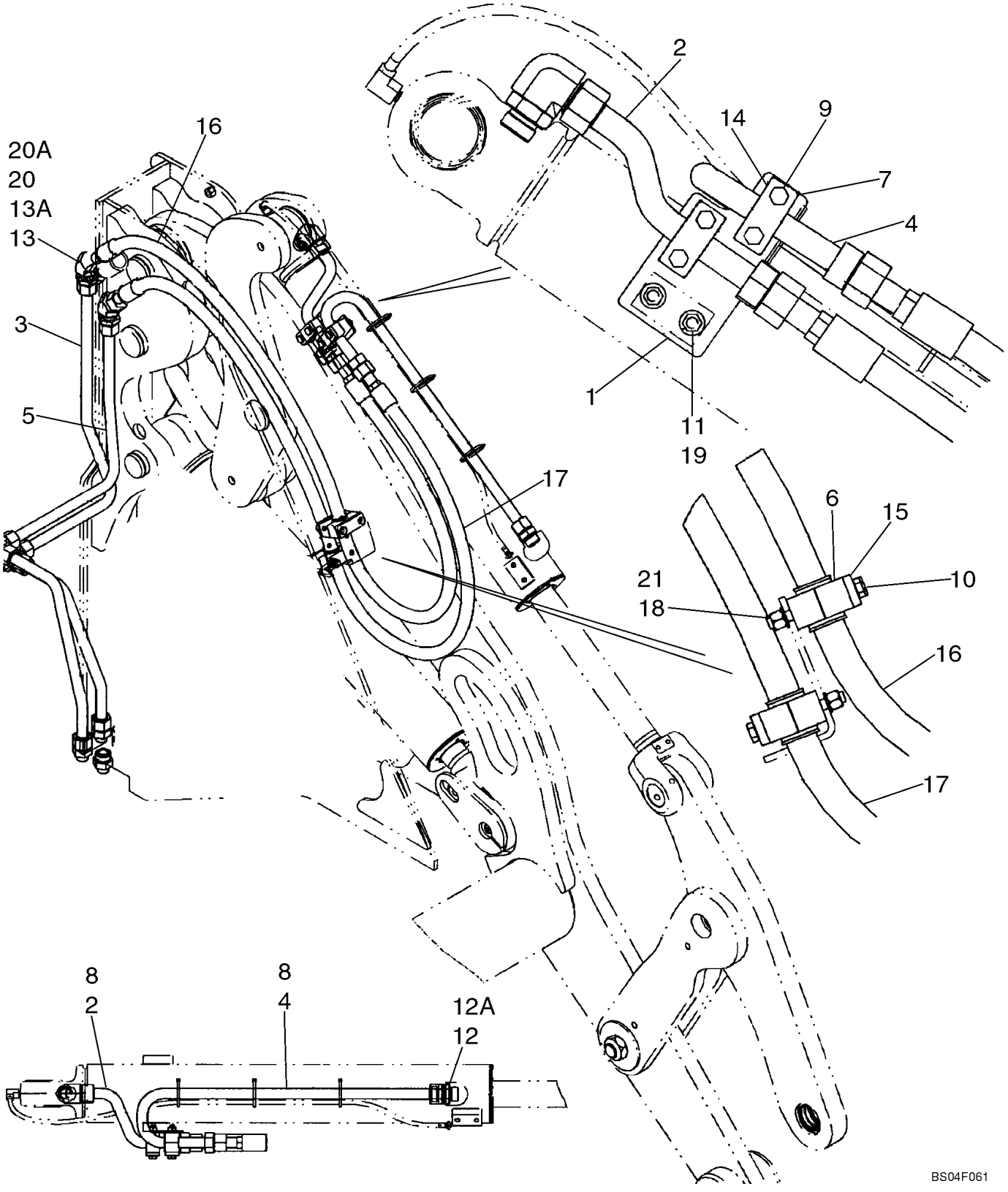

**HIDRAULICA - CUCHARON DE LA CARGADORA (XT CARGADORA)**

| REF | FN | PART NUMBER | YR/SN | QTY | DENOMINACION |
|---|---|---|---|---|---|
| | | REF | | | MANUAL, XT LOADER BUCKET |
| 1 | | 87447892 | | 1 | PIEZA DE SOPORTE, Tilt Tubes Left Side |
| 2 | | 87447897 | | 1 | TUBO (CONJUNTO), Tilt Base Left Side |
| 3 | | 87452605 | | 1 | TUBO (CONJUNTO), Tilt Head Left Side |
| 4 | | 87445800 | | 1 | TUBO (CONJUNTO), Tilt Rod End Left Side |
| 5 | | 87445804 | | 1 | TUBO (CONJUNTO), Tilt Rod Right Left Side |
| 6 | | 87452747 | | 2 | BLOQUE MOTOR, Tube Mounting |
| 7 | | 367489A1 | | 2 | BLOQUE MOTOR, Mounting |
| 8 | | 238-6021 | | 2 | JUNTA HERMETICA, -021, 90 Duro, .926" ID x .070" Thk, Face Seal |
| 9 | | 827-10070 | | 4 | TORNILLO, Hex, M10 x 70, 10.9 |
| 10 | | 827-10090 | | 4 | TORNILLO, Hex, M10 x 90, 10.9 |
| 11 | | 627-10020 | | 2 | TORNILLO, Hex, M10 x 20, 10.9, Full Thd |
| 12 | | 700-105 | | 1 | RACOR, 1 7/16"-12 ORFS x M22 x 2 ORB, Incl. Ref. 12A |
| 12A | | 238-6021 | | 1 | JUNTA HERMETICA, -021, 90 Duro, .926" ID x .070" Thk, Face Seal |
| 13 | | 701-366 | | 2 | CODO, 45º, 1 7/16"-12. ORFS, Blkhd, Incl. Ref. 13A |
| 13A | | 238-6021 | | 2 | JUNTA HERMETICA, -021, 90 Duro, .926" ID x .070" Thk, Face Seal |
| 14 | | 367658A1 | | 2 | PLACA, Clamp Cover |
| 15 | | 8500858 | | 2 | PLACA, Clamp Cover |
| 16 | | 87304928 | | 1 | MANGUERA (CONJUNTO), Tilt Base; 2273mm ( 89-1/2 in ) |
| 17 | | 87304926 | | 1 | MANGUERA (CONJUNTO), Tilt Rod; 2252mm ( 88-3/4 in ) |
| 18 | | 895-11010 | | 4 | ARANDELA, M10 x 20 x 2 |
| 19 | | 895-15010 | | 2 | ARANDELA, M11 x 24 x 2 |
| 20 | | 701-908 | | 2 | CONTRA TUERCA, 1 7/16"-12, ORFS Blkhd, Incl. Ref. 20A |
| 20A | | 238-6021 | | 1 | JUNTA HERMETICA, -021, 90 Duro, .926" ID x .070" Thk, Face Seal |
| 21 | | 832-10410 | | 4 | CONTRA TUERCA, M10 x 1.5, Cl 8 |

**HIDRAULICA - AUXILIAR DE CARGADORA (Z CARGADORA)**

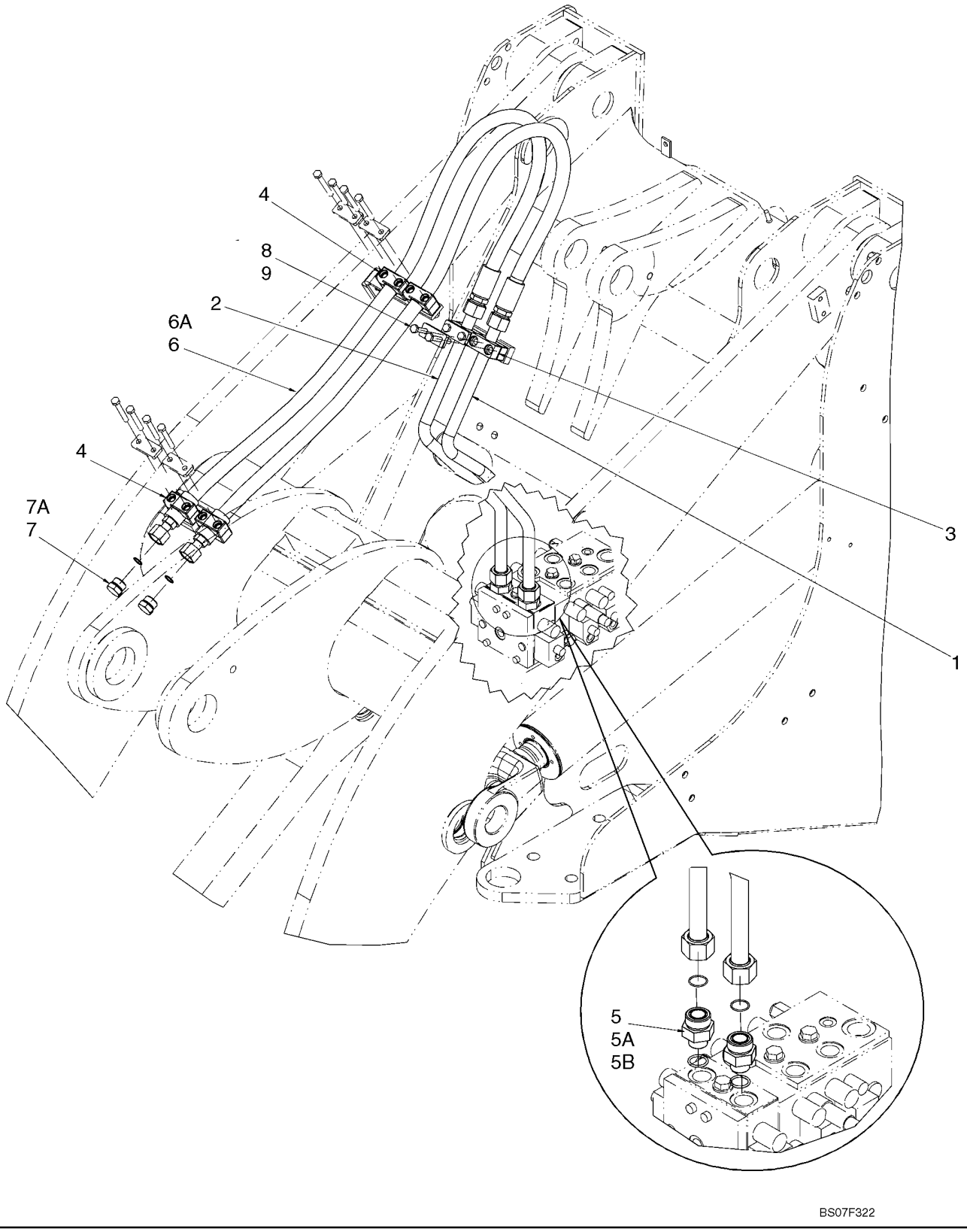

**HIDRAULICA - AUXILIAR DE CARGADORA (Z CARGADORA)**

| REF | FN | PART NUMBER | YR/SN | QTY | DENOMINACION |
|---|---|---|---|---|---|
| | | REF | | | MANUAL, Z-BAR LOADER, THIRD SPOOL HYDRAULICS |
| 1 | | 86983688 | | 1 | TUBO, Left Hand |
| 2 | | 86983689 | | 1 | TUBO, Right Hand |
| 3 | | 367489A1 | | 2 | BLOQUE MOTOR, Tube Mounting |
| 4 | | 372453A1 | | 2 | BLOQUE MOTOR, Tube Mounting |
| 5 | | 700-166 | | 2 | RACOR, 1 7/16"-12 ORFS x M27 x 1.5 ORB, Incl. Refs. 5A, 5B |
| 5A | | 637-64236 | | 1 | JUNTA HERMETICA, Cl 6, 23.6MM ID x 2.9 Thk, Boss Seal |
| 5B | | 238-6021 | | 1 | JUNTA HERMETICA, -021, 90 Duro, .926" ID x .070" Thk, Face Seal |
| 6 | | 372102A3 | | 2 | MANGUERA (CONJUNTO), Incl. Ref. 6A |
| 6A | | 238-6021 | | 1 | JUNTA HERMETICA, -021, 90 Duro, .926" ID x .070" Thk, Face Seal |
| 7 | | 701-914 | | 2 | TAPÓN, 1 3/16"-12 ORFS, Incl. Ref. 7A |
| 7A | | 238-6018 | | 2 | JUNTA HERMETICA, -018, 90 Duro, .739" ID x .070" Thk, Face Seal |
| 8 | | 367658A1 | | 2 | PLACA, Clamp Cover |
| 9 | | 827-10070 | | 4 | TORNILLO, Hex, M10 x 70, 10.9 |

**HIDRAULICA - AUXILIAR DE CARGADORA (XR)**

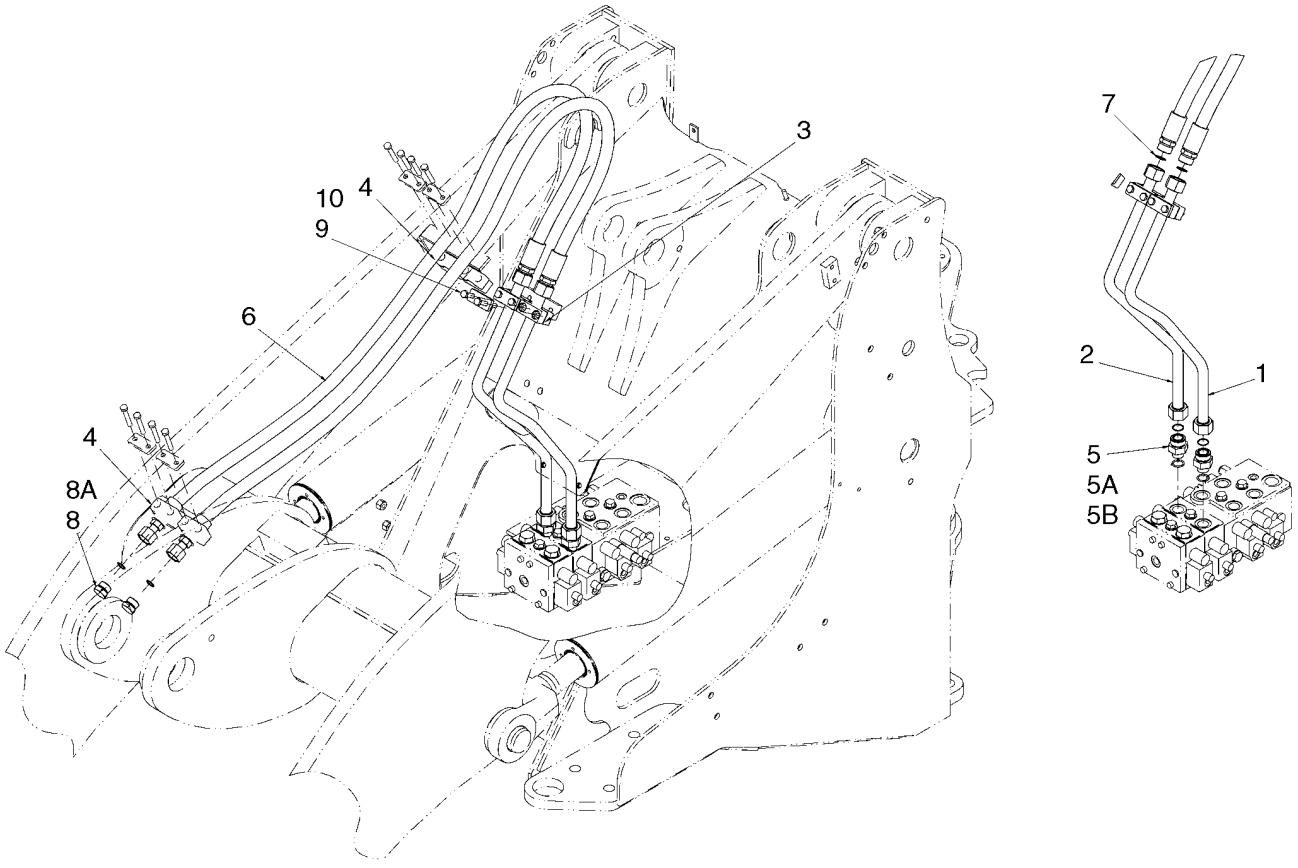


BS07F323

**HIDRAULICA - AUXILIAR DE CARGADORA (XR)**

| REF | FN | PART NUMBER | YR/SN | QTY | DENOMINACION |
|---|---|---|---|---|---|
| | | REF | | | MANUAL, XR LOADER, THIRD SPOOL HYDRAULICS |
| 1 | | 86983688 | | 1 | TUBO, Left Hand |
| 2 | | 86983689 | | 1 | TUBO, Right Hand |
| 3 | | 367489A1 | | 2 | BLOQUE MOTOR |
| 4 | | 372453A1 | | 4 | BLOQUE MOTOR |
| 5 | | 700-166 | | 2 | RACOR, 1 7/16"-12 ORFS x M27 x 1.5 ORB, Incl. Refs. 5A, 5B |
| 5A | | 637-64236 | | 1 | JUNTA HERMETICA, CI 6, 23.6MM ID x 2.9 Thk, Boss Seal |
| 5B | | 238-6021 | | 1 | JUNTA HERMETICA, -021, 90 Duro, .926" ID x .070" Thk, Face Seal |
| 6 | | 437523A1 | | 2 | MANGUERA (CONJUNTO), Third Spool; 2143 mm (84 - 3/8 in) |
| 7 | | 238-6021 | | 2 | JUNTA HERMETICA, -021, 90 Duro, .926" ID x .070" Thk |
| 8 | | 701-914 | | 2 | TAPÓN, 1 3/16"-12 ORFS, Incl. Ref. 8A |
| 8A | | 238-6018 | | 1 | JUNTA HERMETICA, -018, 90 Duro, .739" ID x .070" Thk |
| 9 | | 367658A1 | | 2 | PLACA |
| 10 | | 827-10070 | | 4 | TORNILLO, Hex, M10 x 70, 10.9 |

**HIDRAULICA - AUXILIAR DE CARGADORA (XT CARGADORA) - SI SE USA**

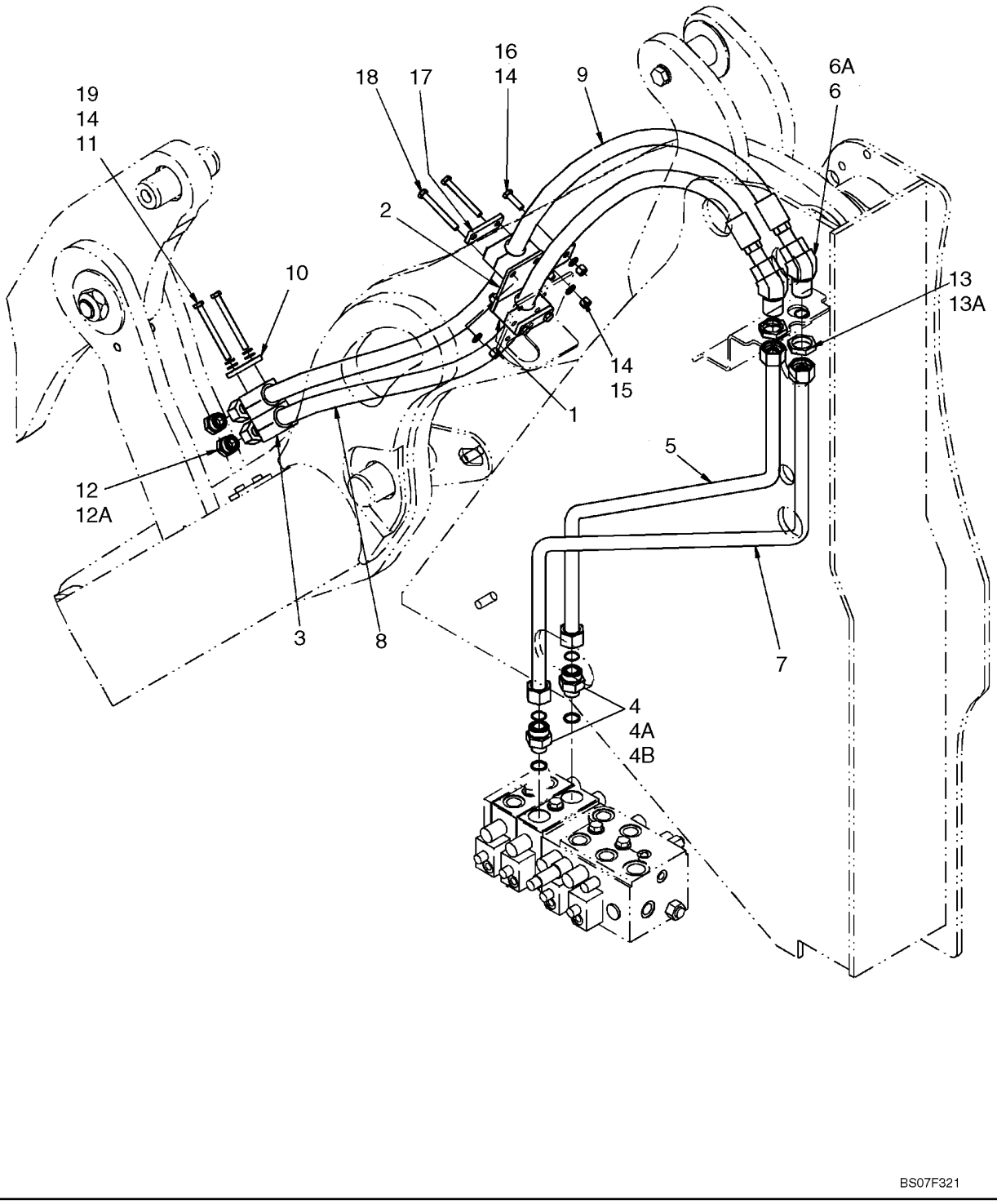

**HIDRAULICA - AUXILIAR DE CARGADORA (XT CARGADORA) - SI SE USA**

| REF | FN | PART NUMBER | YR/SN | QTY | DENOMINACION |
|---|---|---|---|---|---|
| | | REF | | | MANUAL, XT LOADER, THIRD SPOOL HYDRAULICS |
| 1 | | 87452747 | | 2 | BLOQUE MOTOR, Tube Mounting |
| 2 | | 87444440 | | 1 | PIEZA DE SOPORTE, Accessory Hose Mounting |
| 3 | | 372453A1 | | 2 | BLOQUE MOTOR, Tube Mounting |
| 4 | | 700-166 | | 2 | RACOR, 1 7/16"-12 ORFS x M27 x 1.5 ORB, Incl. Refs.4A, 4B |
| 4A | | 238-6021 | | 1 | JUNTA HERMETICA, -021, 90 Duro, .926" ID x .070" Thk, Face Seal |
| 4B | | 637-64236 | | 1 | JUNTA HERMETICA, Cl 6, 23.6MM ID x 2.9 Thk, Boss Seal |
| 5 | | 87445809 | | 1 | TUBO (CONJUNTO), Right Hand; Third Spool |
| 6 | | 701-366 | | 2 | CODO, 45º, 1 7/16"-12. ORFS, Blkhd, Incl. Refs. 6A |
| 6A | | 238-6021 | | 2 | JUNTA HERMETICA, -021, 90 Duro, .926" ID x .070" Thk, Face Seal |
| 7 | | 87452607 | | 1 | TUBO (CONJUNTO), Left Hand; Third Spool |
| 8 | | 87304933 | | 1 | MANGUERA (CONJUNTO), XT Accessory, Lower; 2006 mm (78 - 31/32 in) |
| 9 | | 87304930 | | 1 | MANGUERA (CONJUNTO), XT Accessory, Upper; 2145 mm (84 - 7/16 in) |
| 10 | | 367658A1 | | 1 | PLACA, Clamp Cover |
| 11 | | 827-10100 | | 2 | TORNILLO, Hex, M10 x 100, 10.9 |
| 12 | | 701-914 | | 2 | TAPÓN, 1 3/16"-12 ORFS, Incl. Ref. 12A |
| 12A | | 238-6018 | | 1 | JUNTA HERMETICA, -018, 90 Duro, .739" ID x .070" Thk, Face Seal |
| 13 | | 701-908 | | 2 | CONTRA TUERCA, 1 7/16"-12, ORFS Blkhd, Incl. Ref. 13A |
| 13A | | 238-6021 | | 1 | JUNTA HERMETICA, -021, 90 Duro, .926" ID x .070" Thk, Face Seal |
| 14 | | 895-11010 | | 10 | ARANDELA, M10 x 20 x 2 |
| 15 | | 832-10410 | | 6 | CONTRA TUERCA, M10 x 1.5, Cl 8 |
| 16 | | 627-10035 | | 2 | TORNILLO, Hex, M10 x 35, 10.9, Full Thd |
| 17 | | 8500858 | | 2 | PLACA, Clamp Cover |
| 18 | | 827-10090 | | 4 | TORNILLO, Hex, M10 x 90, 10.9 |
| 19 | | 892-11010 | | 2 | ARANDELA DE FRENO, M10, M10 |

**HIDRAULICA - ACOMPLAMIENTO (Z CHARGEUSE)**

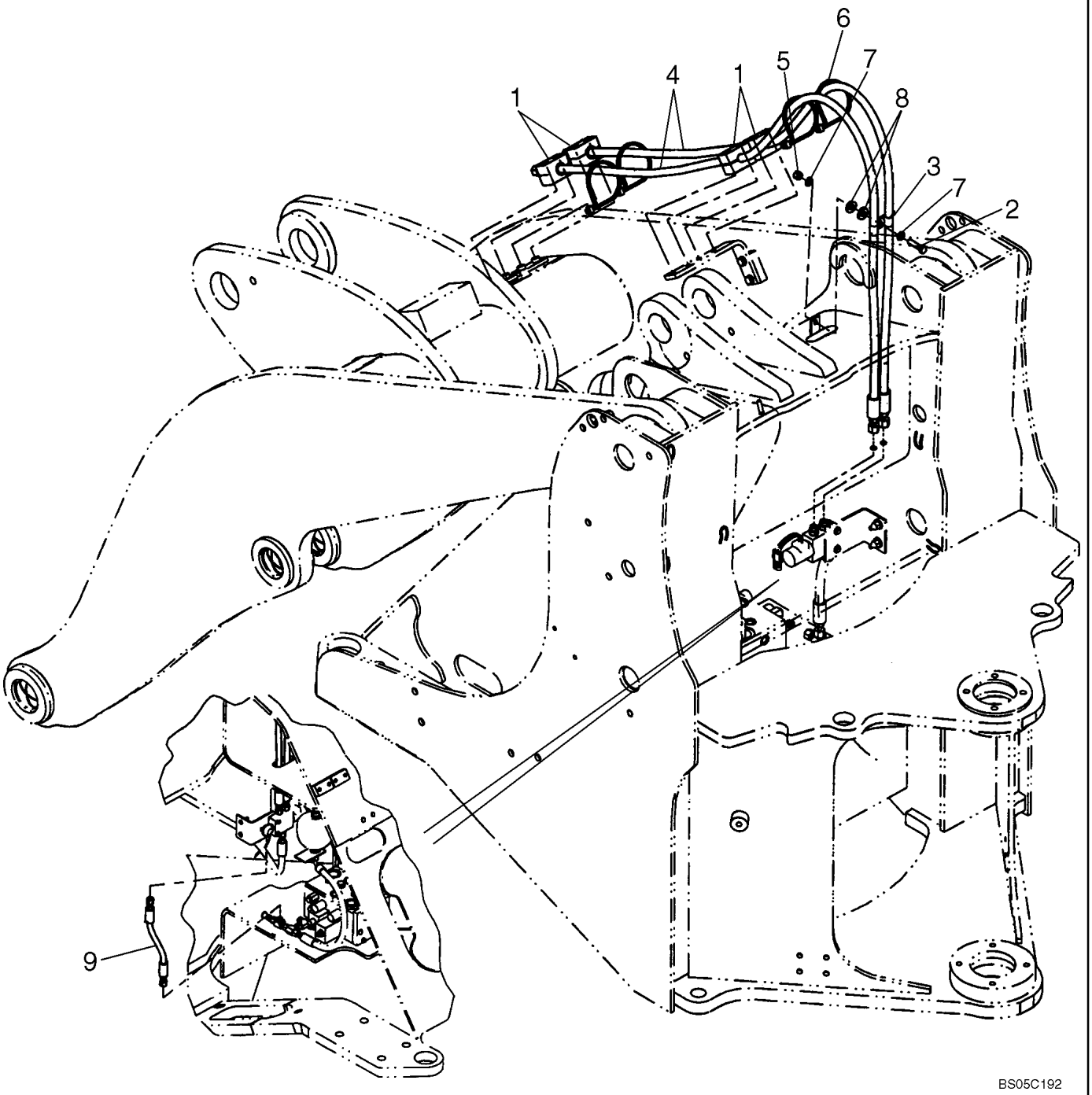

**HIDRAULICA - ACOMPLAMIENTO (Z CHARGEUSE)**

| REF | FN | PART NUMBER | YR/SN | QTY | DENOMINACION |
|---|---|---|---|---|---|
| | | REF | | | MANUAL, Z-BAR LOADER |
| 1 | | 379374A1 | | 4 | BLOQUE MOTOR, Mounting |
| 2 | | 827-10040 | | 1 | TORNILLO, Hex, M10 x 40, 10.9, Full Thd |
| 3 | | 515-25159 | | 2 | BORNE, 5/8", Insul, 1/2" Bolt |
| 4 | | 87403305 | | 2 | MANGA, Coupler; 2088 mm (82-13/64 in) |
| 5 | | 832-10410 | | 1 | CONTRA TUERCA, M10 x 1.5, Cl 8 |
| 6 | | L18331 | | 4 | CIERRA CABLES |
| 7 | | 895-11010 | | 2 | ARANDELA, M10 x 20 x 2 |
| 8 | | 896-15012 | | 2 | ARANDELA, M12 x 28.5 x 4, HT |
| 9 | | 87403985 | | 1 | MANGA, Coupler Pressure; 308mm (12-1/8 in ) |
| 10 | | 701-911 | | 1 | TAPÓN, 11/16"-16 ORFS, Incl. Ref. 10A; Not Illustrated |
| 10A | | 238-6012 | | 1 | JUNTA HERMETICA, -012, 90 Duro, .364" ID x .070" Thk, Face Seal; Not Illustrated |

**HIDRAULICA - ACOMPLAMIENTO (XR CHARGEUSE)**

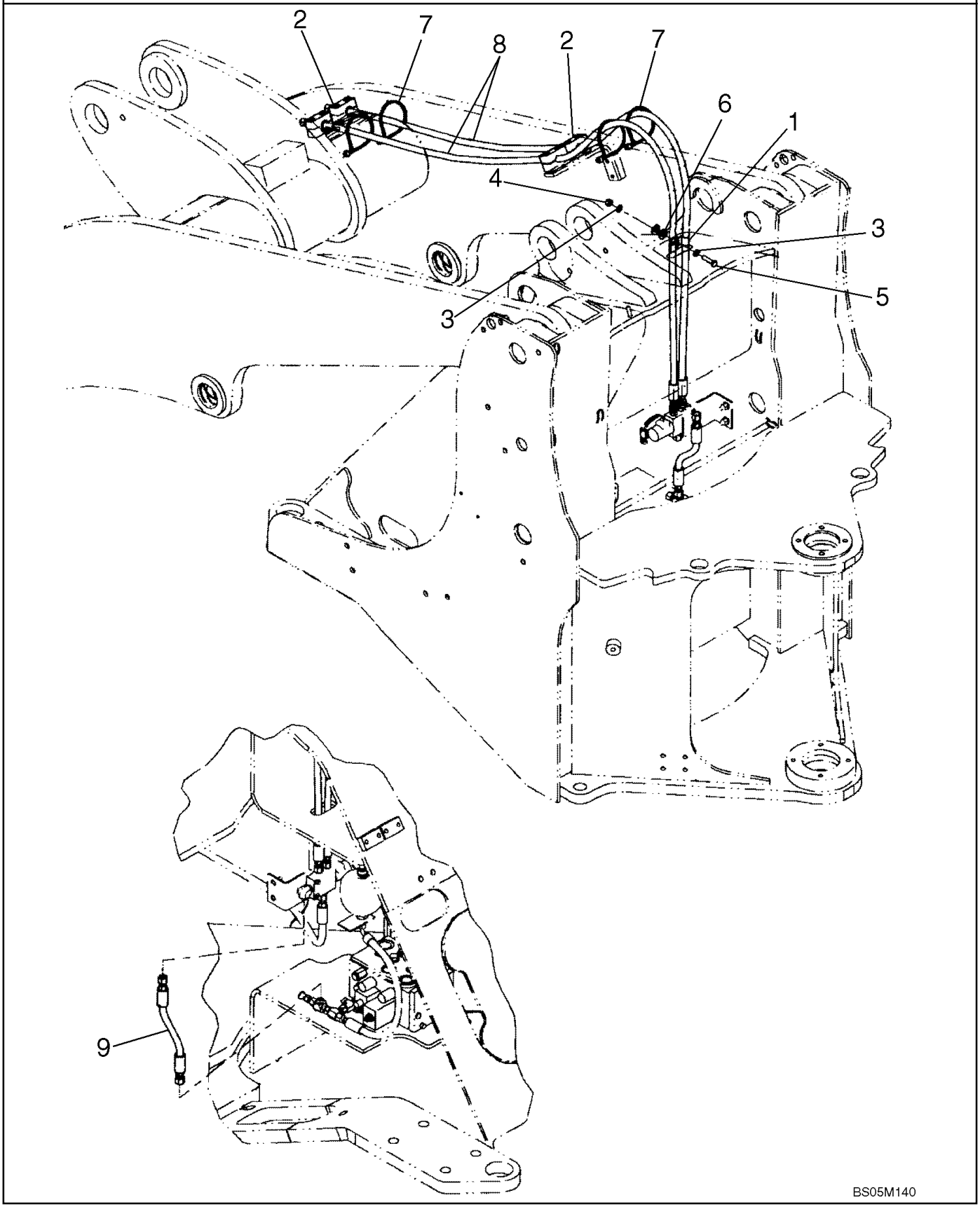

**HIDRAULICA - ACOMPLAMIENTO (XR CHARGEUSE)**

| REF | FN | PART NUMBER | YR/SN | QTY | DENOMINACION |
|---|---|---|---|---|---|
| | | REF | | | MANUAL, XR LOADER |
| 1 | | 515-25159 | | 2 | BORNE, 5/8", Insul, 1/2" Bolt |
| 2 | | 379374A1 | | 4 | BLOQUE MOTOR, Mounting |
| 3 | | 895-11010 | | 2 | ARANDELA, M10 x 20 x 2 |
| 4 | | 832-10410 | | 1 | CONTRA TUERCA, M10 x 1.5, Cl 8 |
| 5 | | 827-10040 | | 1 | TORNILLO, Hex, M10 x 40, 10.9, Full Thd |
| 6 | | 896-15012 | | 2 | ARANDELA, M12 x 28.5 x 4, HT |
| 7 | | L18331 | | 4 | CIERRA CABLES |
| 8 | | 87405436 | | 2 | MANGA, XR Coupler; 2229 mm ( 87-3/4 in ) |
| 9 | | 87403985 | | 1 | MANGA, Coupler Pressure; 308mm (12-1/8 in ) |
| 10 | | 701-911 | | 1 | TAPÓN, 11/16"-16 ORFS, Incl. Ref 10A; Not Illustrated |
| 10A | | 238-6012 | | 1 | JUNTA HERMETICA, -012, 90 Duro, .364" ID x .070" Thk, Face Seal; Not Illustrated |

**HIDRAULICA - ACOMPLAMIENTO (XT CARGADORA)**

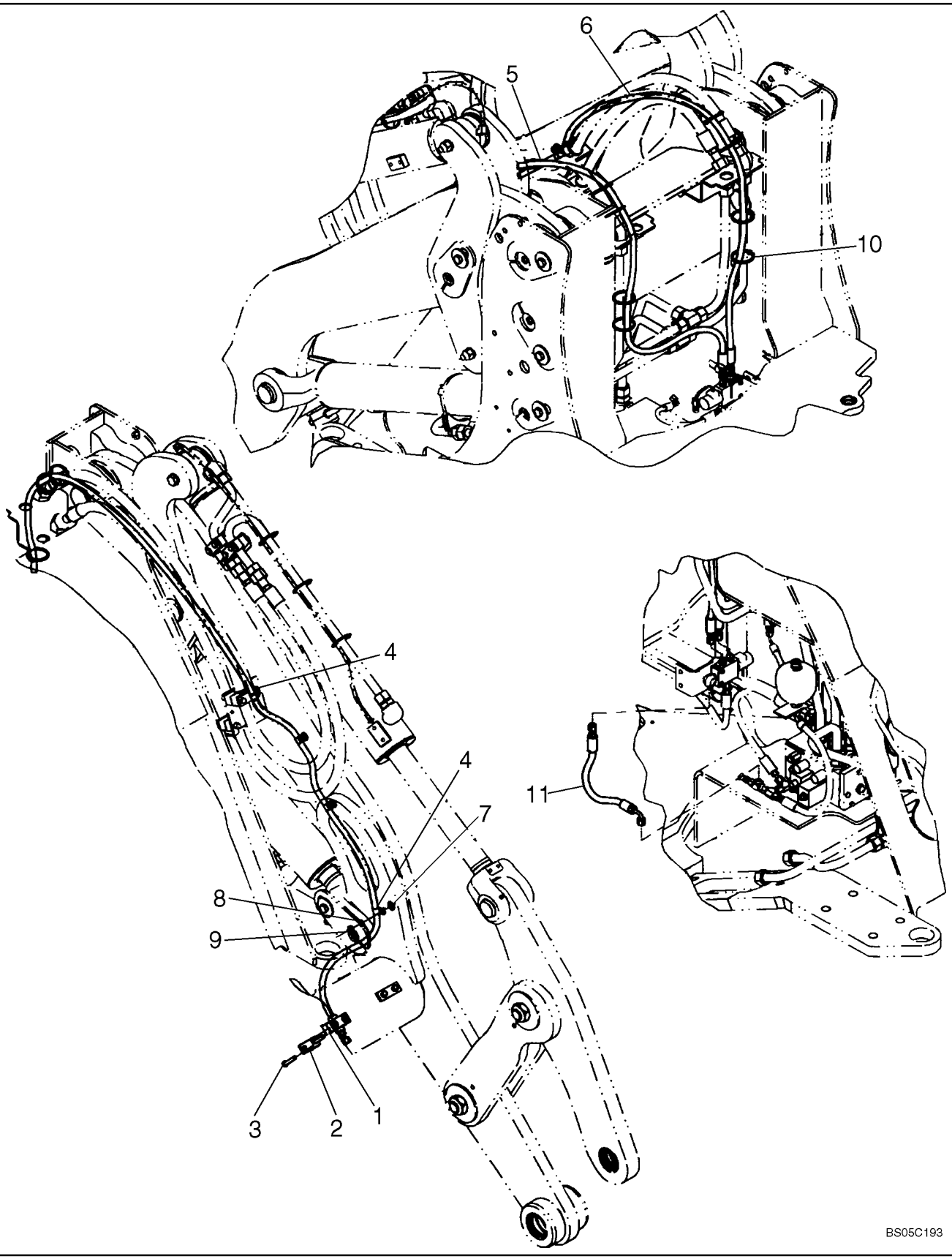

**HIDRAULICA - ACOMPLAMIENTO (XT CARGADORA)**

| REF | FN | PART NUMBER | YR/SN | QTY | DENOMINACION |
|---|---|---|---|---|---|
| | | REF | | | MANUAL, XT LOADER |
| 1 | | 379374A1 | | 2 | BLOQUE MOTOR, Mounting |
| 2 | | 367658A1 | | 2 | PLACA, Clamp Cover |
| 3 | | 827-10060 | | 4 | TORNILLO, Hex, M10 x 60, 10.9 |
| 4 | | 515-23159 | | 8 | BORNE, 5/8", Insul, 3/8" Bolt |
| 5 | | 87448666 | | 1 | MANGUERA (CONJUNTO), XT Coupler; Left; 353mm ( 14 in ) |
| 6 | | 87448665 | | 1 | MANGUERA (CONJUNTO), XT Coupler; Right; 323 (12-3/4 in ) |
| 7 | | 896-15010 | | 6 | ARANDELA, M10 x 24.5 x 3, HT |
| 8 | | 895-11010 | | 6 | ARANDELA, M10 x 20 x 2 |
| 9 | | 832-10410 | | 6 | CONTRA TUERCA, M10 x 1.5, Cl 8 |
| 10 | | L18331 | | 8 | CIERRA CABLES |
| 11 | | 393126A1 | | 1 | MANGUERA (CONJUNTO), Coupler Pressure; 483mm ( 19 in ) |
| 12 | | 701-911 | | 1 | TAPÓN, 11/16"-16 ORFS, Incl. Ref. 12A; Not Illustrated |
| 12A | | 238-6012 | | 1 | JUNTA HERMETICA, -012, 90 Duro, .364" ID x .070" Thk, Face Seal; Not Illustrated |

**SISTEMA HIDRÁULICO – BLOQUEO DEL ACOPLADOR**

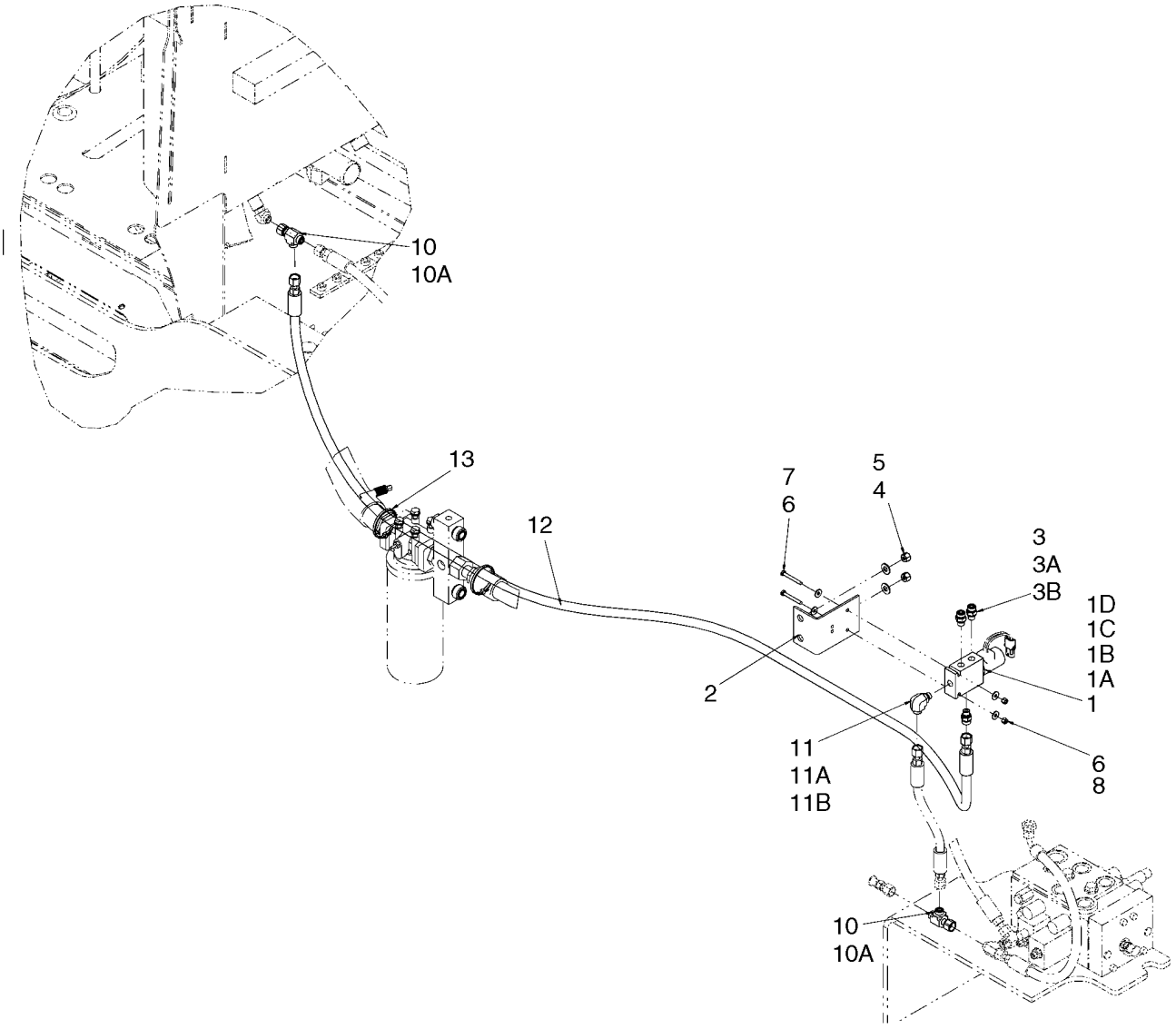

**SISTEMA HIDRÁULICO – BLOQUEO DEL ACOPLADOR**

| REF | FN | PART NUMBER | YR/SN | QTY | DENOMINACION |
|---|---|---|---|---|---|
| 1 | | 379139A1 | | 1 | VALVULA, Coupler Locking; Incl. Refs. 1A - 1C |
| 1A | | NSS | | 1 | NO SE REPARA SEPARADAM., Body |
| 1B | | NSS | | 1 | NO SE REPARA SEPARADAM., Coil |
| 1C | | 8605216 | | 1 | SOLENOIDE, Valve; Component Parts Not Serviced Separately; Order 8605153 Seal Kit; Incl. 1C |
| 1D | | 124639A1 | | 1 | EMPAQUE DE JUNTAS, Seal Kit; Includes (4) O-Rings and (6) Backup Rings, Which Are Not Serviced Separately |
| 2 | | 87404018 | | 1 | PIEZA DE SOPORTE, Coupler Solenoid |
| 3 | | 700-101 | | 3 | RACOR, 11/16"-16 ORFS x M14 x 1.5 ORB, Incl. Ref. 3A, 3B |
| 3A | | 637-63113 | | 1 | JUNTA HERMETICA, Cl 6, 11.3MM ID x 2.2 Thk |
| 3B | | 238-6012 | | 1 | JUNTA HERMETICA, -012, 90 Duro, .364" ID x .070" Thk |
| 4 | | 895-15010 | | 2 | ARANDELA, M11 x 24 x 2 |
| 5 | | 832-10410 | | 2 | CONTRA TUERCA, M10 x 1.5, Cl 8 |
| 6 | | 895-25006 | | 4 | ARANDELA, M6 x 18 x 1.6 |
| 7 | | 827-6050 | | 2 | TORNILLO, Hex, M6 x 50, 10.9 |
| 8 | | 832-10406 | | 2 | CONTRA TUERCA, M6 x 1, Cl 8 |
| 10 | | 701-422 | | 2 | RACOR-T, 11/16"-16 ORFS x 11/16"-16 Fem Sw Run, Incl. Ref. 10A |
| 10A | | 238-6012 | | 3 | JUNTA HERMETICA, -012, 90 Duro, .364" ID x .070" Thk |
| 11 | | 700-304 | | 1 | CODO, 90º, 11/16"-18 ORFS x M14 x 1.5 ORB, Incl. Refs. 11A, 11B |
| 11A | | 637-63113 | | 1 | JUNTA HERMETICA, Cl 6, 11.3MM ID x 2.2 Thk |
| 11B | | 238-6012 | | 1 | JUNTA HERMETICA, -012, 90 Duro, .364" ID x .070" Thk |
| 12 | | 87581937 | | 1 | MANGA, 2558 mm (100 - 11/16 in); Coupler Tank |
| 13 | | L11541 | | 2 | BANDA, Wire Tie |

**CONJUNTO DE CILINDRO - CUCHARON DE LA CARGADORA**

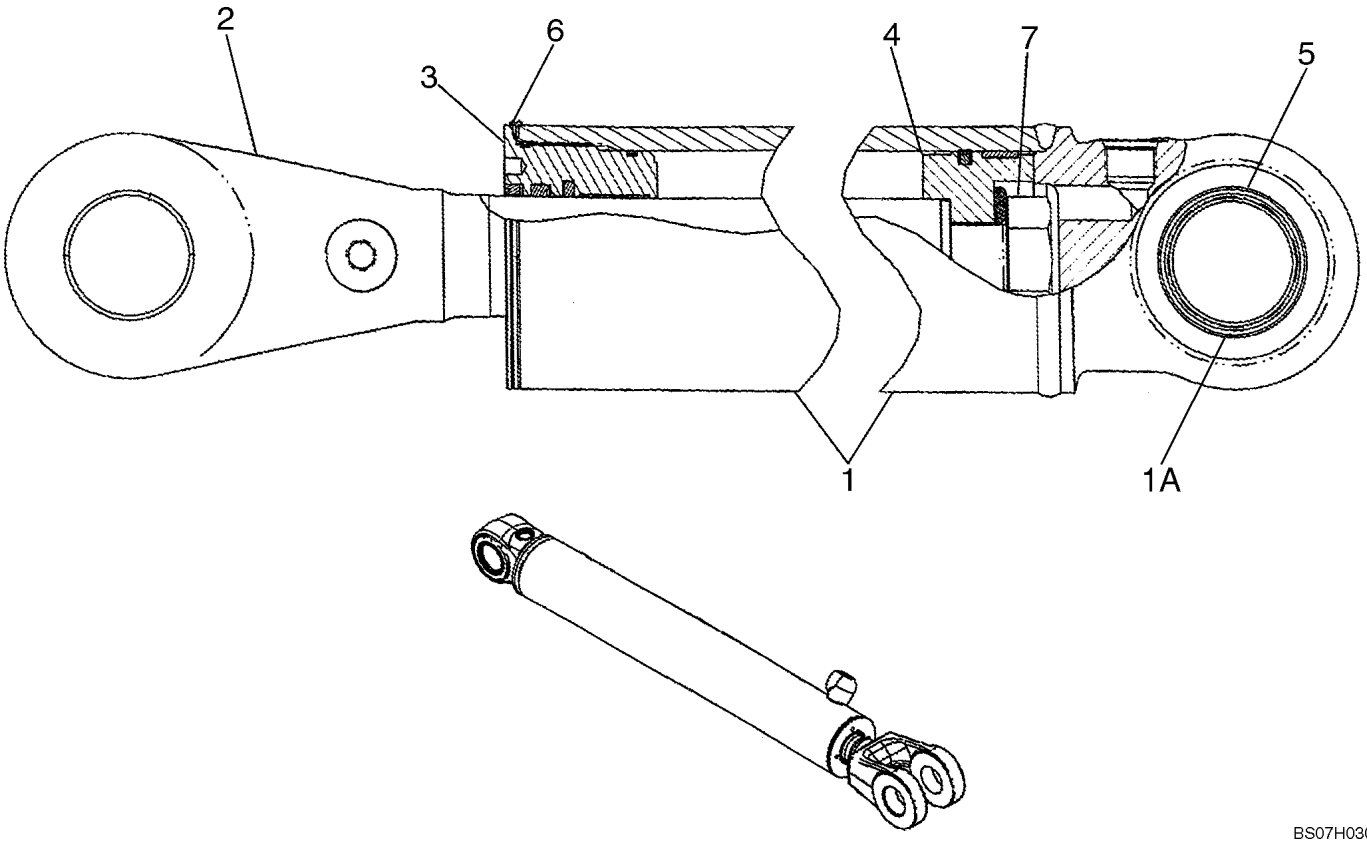


BS07H030

**CONJUNTO DE CILINDRO - CUCHARON DE LA CARGADORA**

| REF | FN | PART NUMBER | YR/SN | QTY | DENOMINACION |
|---|---|---|---|---|---|
| | | REF | | | MANUAL, Z-BAR, XR, XT LOADER LIFT |
| | | 87577649 | | 2 | CILINDRO DE ELEVADOR, 120.65 mm ID x 787.6 mm strk; Incl. Refs. 1 - 7 |
| | | {87598751} | | 1 | KIT, SEALS, Cylinder Service; Incl. Refs. 3B - 3G, 4C - 4D |
| 1 | | {87586627} | | 1 | TUBE Incl. 1A |
| 1A | | 87625615 | | 2 | CASQUILLO |
| 2 | | 87318062 | | 1 | VASTAGO CILINDRO, 63.5 Diameter |
| 3 | | {87586629} | | 1 | GLAND ASSY. Cylinder; Incl. Refs. 3A -3G |
| 3A | | {87586628} | | 1 | GLAND, Not Illustrated |
| 3B | | D95146 | | 1 | LIMPIADOR, Not Illustrated |
| 3C | | 1542879C1 | | 1 | SERIE DE JUNTAS, Seal; Incl. Buffer Seal, Rod Seal, Not Illustrated |
| | | NSS | | 1 | NO SE REPARA SEPARADAM., Seal, Buffer |
| | | NSS | | 1 | NO SE REPARA SEPARADAM., Seal, Rod |
| 3D | | 336041A1 | | 1 | COJINETE, Not Illustrated |
| 3E | | 446178A1 | | 1 | ANILLO DE CIERRE, Not Illustrated |
| 3F | | 238-5245 | | 1 | JUNTA HERMETICA, -245, 70 Duro, 4.359" ID x .139" Thk, Not Illustrated |
| 3G | | 238-5246 | | 1 | JUNTA HERMETICA, -246, 70 Duro, 4.484" ID x .139" Thk, Not Illustrated |
| 4 | | {87586631} | | 1 | PISTON ASSY. Incl. Refs. 4A-4D |
| 4A | | {87586630} | | 1 | PISTON, 120.7 x 63.5, Not Illustrated |
| 4B | | 87403649 | | 1 | ANILLO DE CIERRE, Loader; 4.75 Bore, Not Illustrated |
| 4C | | 446481A1 | | 1 | ANILLO DE CIERRE, Piston, Not Illustrated |
| 4D | | 446195A1 | | 1 | ANILLO DE CIERRE, Wear Ring, Not Illustrated |
| 5 | | D95146 | | 2 | LIMPIADOR |
| 6 | | G109395 | | 1 | TORNILLO AUTOROSCANTE |
| 7 | | 86982444 | | 1 | PERNO ESPECIAL, Incl. Ref. 7A |
| 7A | | NSS | | 1 | NO SE REPARA SEPARADAM., Washer, Not Illustrated |

**CONJUNTO DE CILINDRO - CUCHARON DE LA CARGADORA (Z CARGADORA)**

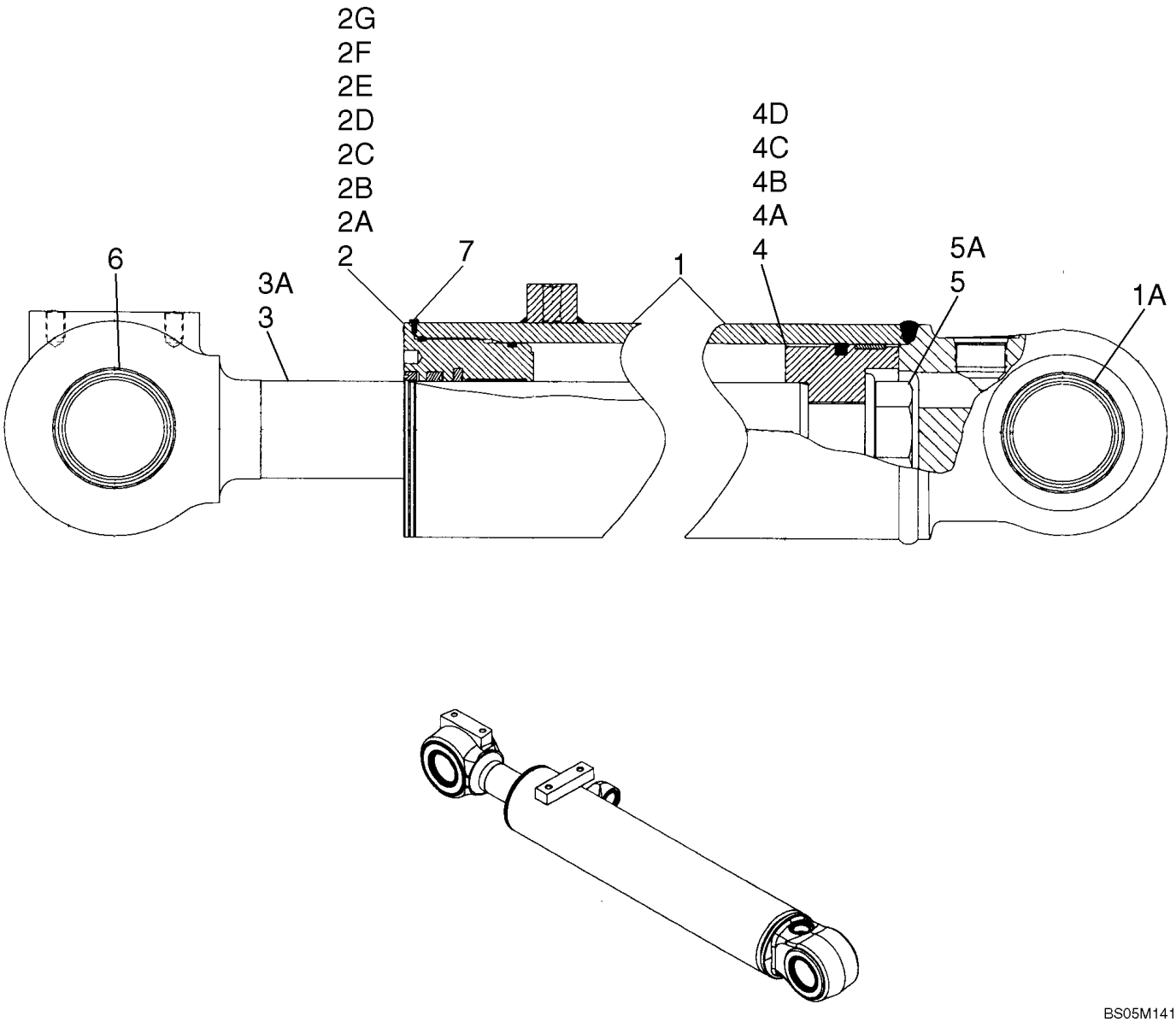

**CONJUNTO DE CILINDRO - CUCHARON DE LA CARGADORA (Z CARGADORA)**

| REF | FN | PART NUMBER | YR/SN | QTY | DENOMINACION |
|---|---|---|---|---|---|
| | | REF | | | MANUAL, Z-BAR LOADER |
| | | 87366688 | | 1 | CILINDRO (CONJUNTO), 114 ID x 529 mm strk; Bucket; Incl. Refs.1 - 20 |
| | | {87434293} | | 1 | KIT, SEALS; Incl. Refs. 2B-2G, 4B, 4D, And Expandable Seal 1986753C1 |
| 1 | | 339525A1 | | 1 | CAMISA, Incl. 1A |
| 1A | | 87625613 | | 2 | CASQUILLO |
| 2 | | 339512A1 | | 1 | EMPAQUETADURA, Assembly; Incl. Refs. 2A - 2G |
| 2A | | 339511A1 | | 1 | EMPAQUETADURA, Packing |
| 2B | | 1542881C1 | | 1 | EMPAQUE DE JUNTAS, Incl. Rod And Buffer Seals |
| 2C | | D95148 | | 1 | LIMPIADOR |
| 2D | | 336042A1 | | 1 | CASQUILLO, Bearing; Dia. 76.20 |
| 2E | | G107970 | | 1 | ANILLO, Backup |
| 2F | | 238-5247 | | 1 | JUNTA HERMETICA, -247, 70 Duro, 4.609" ID x .139" Thk |
| 2G | | 238-5248 | | 1 | JUNTA HERMETICA, -248, 70 Duro, 4.734" ID x .139" Thk |
| 3 | | 339520A1 | | 1 | VARILLA (CONJUNTO), 76.2 Dia; Incl. Ref. 3A |
| 3A | | 339521A1 | | 2 | CASQUILLO, 69.8 Dia. |
| 4 | | 339510A1 | | 1 | EMBOLO, Incl. Refs. 4A - 4D |
| 4A | | 339508A1 | | 1 | EMBOLO, 127.0 Dia Cylinder; 76.2 Dia Rod |
| 4B | | G102092 | | 1 | ANILLO, 127.0 Dia. |
| 4C | | 336030A1 | | 1 | ANILLO DE CIERRE, 127.0 Dia. |
| 4D | | 336046A1 | | 1 | ANILLO, Wear |
| 5 | | 86982444 | | 1 | PERNO ESPECIAL, Incl. Ref. 5A |
| 5A | | NSS | | 1 | NO SE REPARA SEPARADAM., Washer |
| 6 | | D95147 | | 4 | LIMPIADOR |
| 7 | | 86642312 | | 1 | TORNILLO AUTOROSCANTE, Hex Hd, #8 x 3/8" |
| | | 87442965 | | 1 | SERIE DE JUNTAS, Seal; Incl. Refs. 2B - 2G, 4B, 4D |

**CONJUNTO DE CILINDRO - CUCHARON DE LA CARGADORA (XR CARGADORA)**

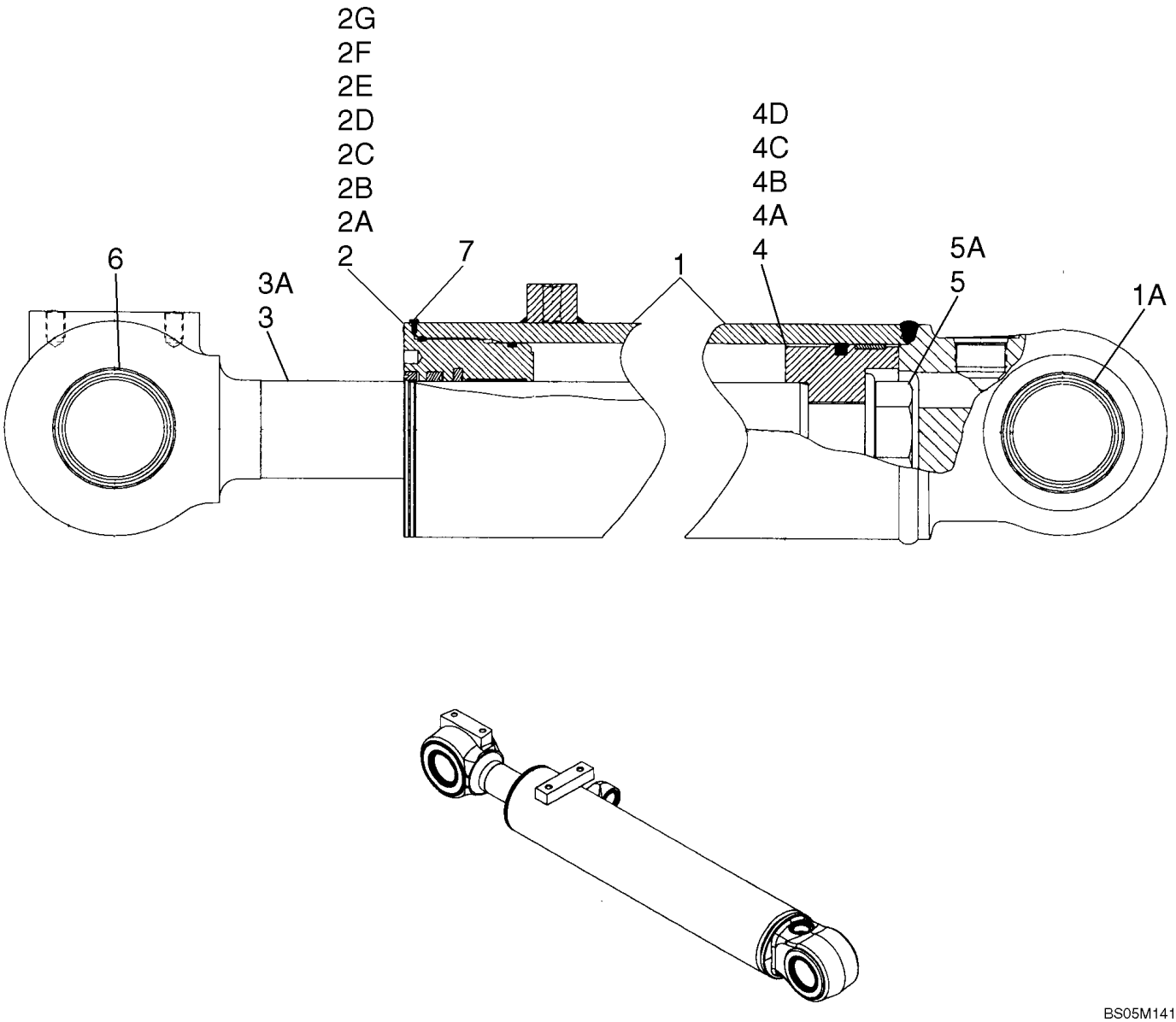

**CONJUNTO DE CILINDRO - CUCHARON DE LA CARGADORA (XR CARGADORA)**

| REF | FN | PART NUMBER | YR/SN | QTY | DENOMINACION |
|---|---|---|---|---|---|
| | | REF | | | MANUAL, XR LOADER BUCKET TILT |
| | | 87366695 | | 1 | CILINDRO (CONJUNTO), 127 ID x 620 mm strk; Bucket Tilt; Incl. 1 - 20 |
| | | {87434293} | | 1 | KIT, SEALS; Incl. Refs. 3B-3G, 4C, 4D, And Expandable Seal 1986753C1 |
| 1 | | 339525A1 | | 1 | CAMISA, Incl. 1A |
| 1A | | 87625613 | | 2 | CASQUILLO |
| 2 | | 339512A1 | | 1 | EMPAQUETADURA, Assembly; Incl. Refs. 2A - 2G |
| 2A | | 339511A1 | | 1 | EMPAQUETADURA, Packing |
| 2B | | 1542881C1 | | 1 | EMPAQUE DE JUNTAS, Incl. Rod And Buffer Seals |
| 2C | | D95148 | | 1 | LIMPIADOR |
| 2D | | 336042A1 | | 1 | CASQUILLO, Bearing; Dia. 76.20 |
| 2E | | G107970 | | 1 | ANILLO, Backup |
| 2F | | 238-5247 | | 1 | JUNTA HERMETICA, -247, 70 Duro, 4.609" ID x .139" Thk |
| 2G | | 238-5248 | | 1 | JUNTA HERMETICA, -248, 70 Duro, 4.734" ID x .139" Thk |
| 3 | | 399350A1 | | 1 | VARILLA (CONJUNTO), 76.2 Dia; Incl. Ref. 3A |
| 3A | | 339521A1 | | 2 | CASQUILLO, 69.8 Dia. |
| 4 | | 339510A1 | | 1 | EMBOLO, Incl. Refs. 4A - 4D |
| 4A | | 339508A1 | | 1 | EMBOLO, 127.0 Dia Cylinder; 76.2 Dia Rod |
| 4B | | G102092 | | 1 | ANILLO, 127.0 Dia. |
| 4C | | 336030A1 | | 1 | ANILLO DE CIERRE, 127.0 Dia. |
| 4D | | 336046A1 | | 1 | ANILLO, Wear |
| 5 | | 86982444 | | 1 | PERNO ESPECIAL, Incl. Ref. 5A |
| 5A | | NSS | | 1 | NO SE REPARA SEPARADAM., Washer |
| 6 | | D95147 | | 4 | LIMPIADOR |
| 7 | | 86642312 | | 1 | TORNILLO AUTOROSCANTE, Hex Hd, #8 x 3/8" |
| | | 360984A1 | | 1 | JEUGO, Seal; Incl. Refs. 2B - 2G, 4B, 4D |

**CONJUNTO DE CILINDRO - ELEVADOR DE LA CARGADORA (XT CARGADORA)**

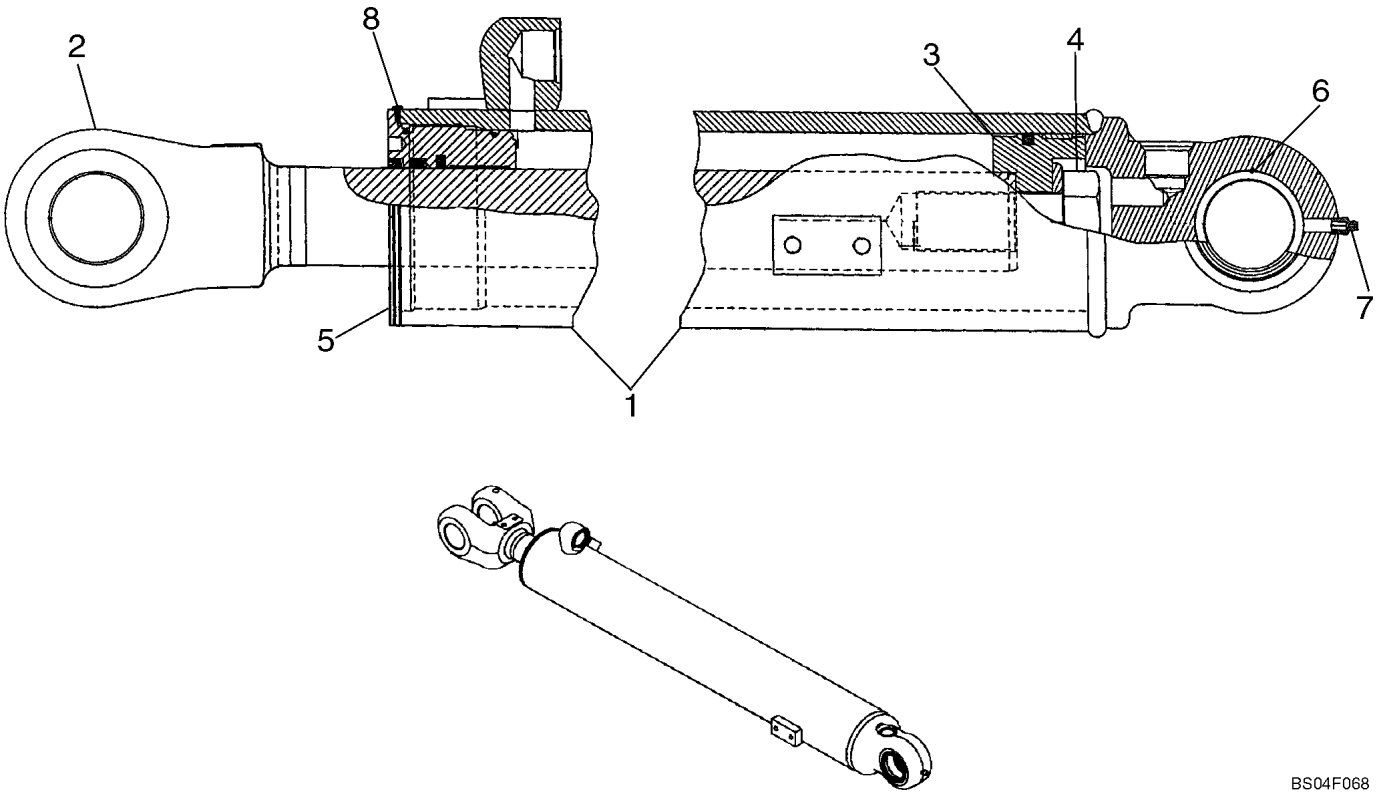


BS04F068

**CONJUNTO DE CILINDRO - ELEVADOR DE LA CARGADORA (XT CARGADORA)**

| REF | FN | PART NUMBER | YR/SN | QTY | DENOMINACION |
|---|---|---|---|---|---|
| | | REF | | | MANUAL, XT LOADER |
| | | 87442555 | | 2 | CILINDRO DE ELEVADOR, 114 ID x 819.9 mm strk; Lift; CNH CE Gray; Incl. 1 - 9 |
| 1 | | 87442557 | | 1 | TUBO (CONJUNTO), Incl. Ref. 1A |
| 1A | | 87625614 | | 2 | CASQUILLO, Not Illustrated |
| 2 | | 87442559 | | 1 | VARILLA (CONJUNTO), 63,5 mm dia |
| 3 | | 341971A1 | | 1 | EMBOLO, Incl. Refs. 3A-3D |
| 3A | | 341968A1 | | 1 | EMBOLO, Not Illustrated |
| 3B | | 336029A1 | | 1 | ANILLO DE CIERRE, Not Illustrated |
| 3C | | G101995 | | 1 | JUNTA HERMETICA, Not Illustrated |
| 3D | | 336045A1 | | 1 | ANILLO, Not Illustrated |
| 4 | | 86982444 | | 1 | PERNO ESPECIAL, Incl. Ref. 4A |
| 4A | | NSS | | 1 | NO SE REPARA SEPARADAM., Washer, Not Illustrated |
| 5 | | 336379A1 | | 1 | EMPAQUETADURA, Cylinder; Incl. Refs. 5A -5G |
| 5A | | 336378A1 | | 1 | EMPAQUETADURA, Not Illustrated |
| 5B | | D95146 | | 1 | LIMPIADOR, Not Illustrated |
| 5C | | 1542879C1 | | 1 | SERIE DE JUNTAS, Incl. Rod Seal, Buffer Seal, Not Illustrated |
| | | NSS | | 1 | NO SE REPARA SEPARADAM., Seal, Rod, Not Illustrated |
| | | NSS | | 1 | NO SE REPARA SEPARADAM., Seal, Buffer, Not Illustrated |
| 5D | | 336041A1 | | 1 | COJINETE, Not Illustrated |
| 5E | | G109300 | | 1 | ANILLO, Not Illustrated |
| 5F | | 238-5243 | | 1 | JUNTA HERMETICA, -243, 70 Duro, 4.109" ID x .139" Thk, Not Illustrated |
| 5G | | 238-5244 | | 1 | JUNTA HERMETICA, -244, 70 Duro, 4.234" ID x .139" Thk, Not Illustrated |
| 6 | | D95145 | | 2 | LIMPIADOR |
| 7 | | 219-1 | | 1 | ENGRASADOR, 1/8"-27 x .66 lg |
| 8 | | 86642312 | | 1 | TORNILLO AUTOROSCANTE, Hex Hd, #8 x 3/8", Self Tapping |

**CONJUNTO DE CILINDRO - ELEVADOR DE LA CARGADORA (XT CARGADORA)**

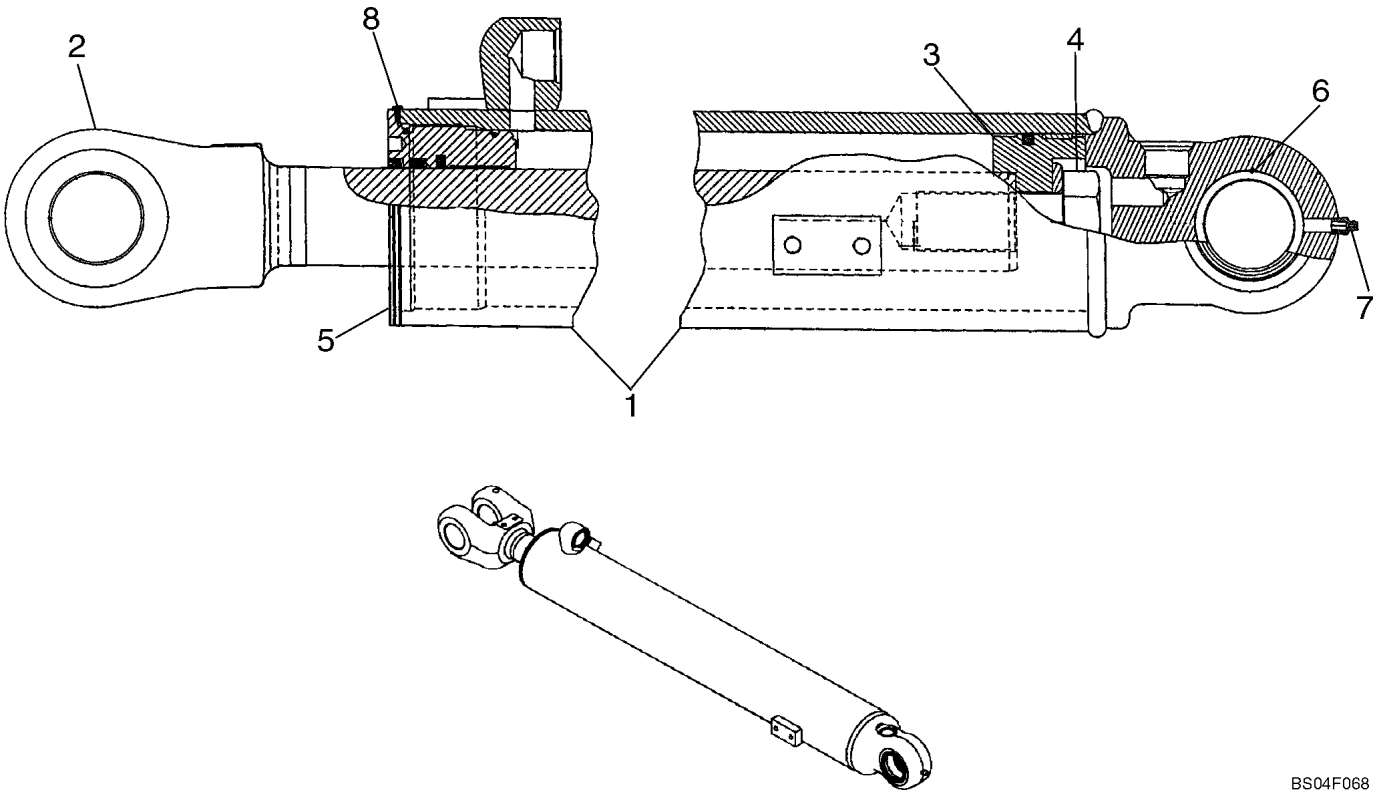


BS04F068

**CONJUNTO DE CILINDRO - ELEVADOR DE LA CARGADORA (XT CARGADORA)**

| REF | FN | PART NUMBER | YR/SN | QTY | DENOMINACION |
|---|---|---|---|---|---|
| 9 | | 360982A1 | | 1 | JEUGO, Seal; Incl. Refs. 3C, 3D, 5B - 5G; Includes 361000A1 Expandable Seal Ring For Service Replacement Of Ref. 3B Piston Seal; Not Illustrated |

**HIDRAULICO - DERIVACIÓN ESTÁNDAR**

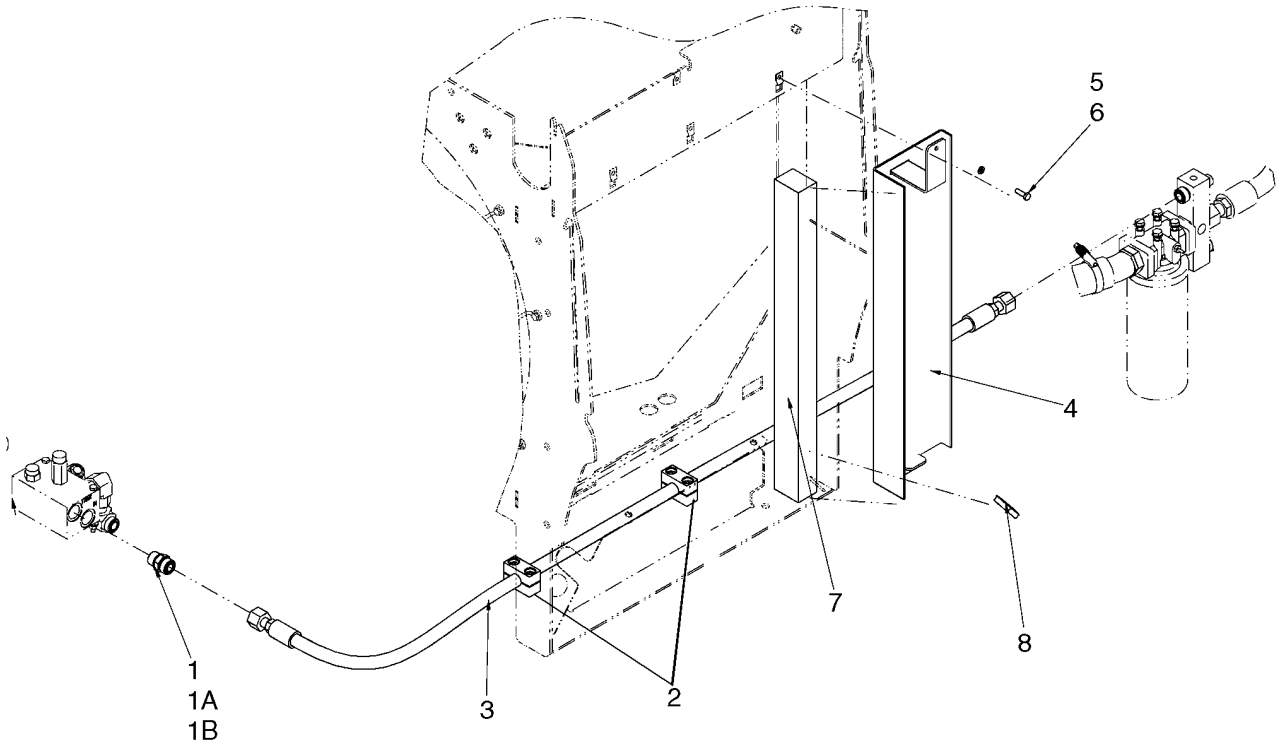

**HIDRAULICO - DERIVACIÓN ESTÁNDAR**

| REF | FN | PART NUMBER | YR/SN | QTY | DENOMINACION |
|---|---|---|---|---|---|
| 1 | | 700-104 | | 1 | RACOR, 1 3/16"-12 ORFS x M27 x 2 ORB, Incl. Refs. 1A, 1B |
| 1A | | 238-6018 | | 1 | JUNTA HERMETICA, -018, 90 Duro, .739" ID x .070" Thk, Face Seal |
| 1B | | 637-64236 | | 1 | JUNTA HERMETICA, Cl 6, 23.6MM ID x 2.9 Thk, Boss Seal |
| 2 | | 367489A1 | | 2 | BLOQUE MOTOR |
| 3 | | 87559567 | | 1 | MANGA, Cooler Bypass, 1902 mm (74 - 7/8 in) |
| 4 | | 8501329 | | 1 | PLACA DE MONTAJE |
| 5 | | 892-11008 | | 1 | ARANDELA DE FRENO, M8 |
| 6 | | 627-8025 | | 1 | TORNILLO, Hex, M8 x 25, 10.9 |
| 7 | | 8500206 | | 1 | ANILLO DE CIERRE |
| 8 | | 353-414 | | 2 | TAPÓN, Dome, 1.375" hole, Nylon |

**HIDRAULICO - SIN DESVIACIÓN**

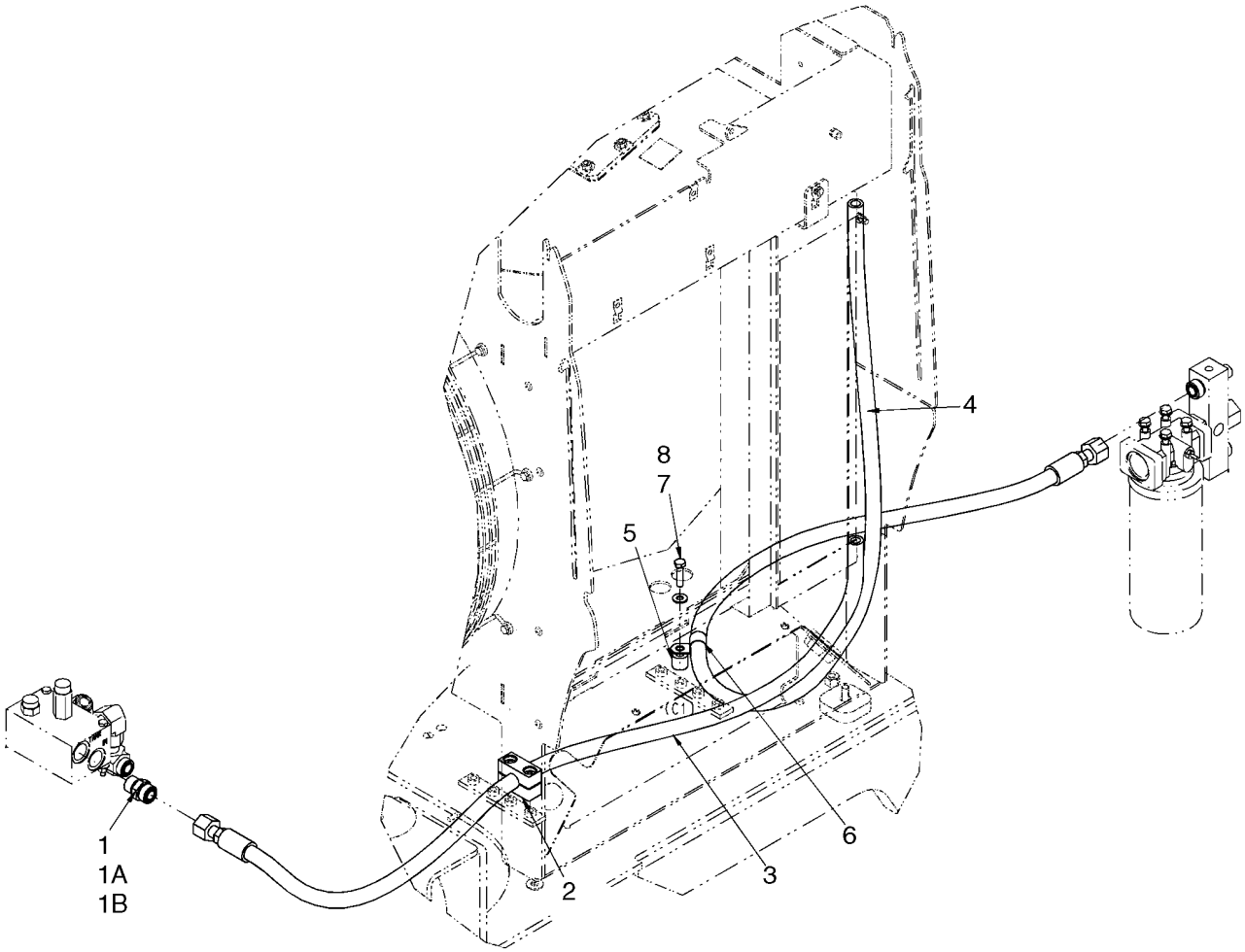

**HIDRAULICO - SIN DESVIACIÓN**

| REF | FN | PART NUMBER | YR/SN | QTY | DENOMINACION |
|---|---|---|---|---|---|
| | | REF | | | MANUAL, FAN VALVE TO COOLER AND COOLER RETURN HOSES, WITHOUT BYPASS |
| 1 | | 700-104 | | 1 | RACOR, 1 3/16"-12 ORFS x M27 x 2 ORB, Incl. Refs. 1A, 1B |
| 1A | | 238-6018 | | 1 | JUNTA HERMETICA, -018, 90 Duro, .739" ID x .070" Thk, Face Seal |
| 1B | | 637-64236 | | 1 | JUNTA HERMETICA, Cl 6, 23.6MM ID x 2.9 Thk, 23, 6 ID x 2,9; Boss Seal |
| 2 | | 367489A1 | | 1 | BLOQUE MOTOR |
| 3 | | 87362190 | | 1 | MANGUERA (CONJUNTO), Fan Valve to Cooler; 1530 mm (60 1/4 in) |
| 4 | | 8501321 | | 1 | MANGA, Cooler Return to Filter; 2102 mm (82 - 3/4 in) |
| 5 | | 8500877 | | 1 | SEPARADOR |
| 6 | | 515-25254 | | 1 | BORNE, 1", Insul, 1/2" Bolt |
| 7 | | 895-15010 | | 1 | ARANDELA, M11 x 24 x 2 |
| 8 | | 827-10040 | | 1 | TORNILLO, Hex, M10 x 40, 10.9, Full Thd |

| 08-19B | | p1 | 07/07 |
|---|---|---|---|

**HIDRAULICO - DESVIACIÓN TÉRMICA**

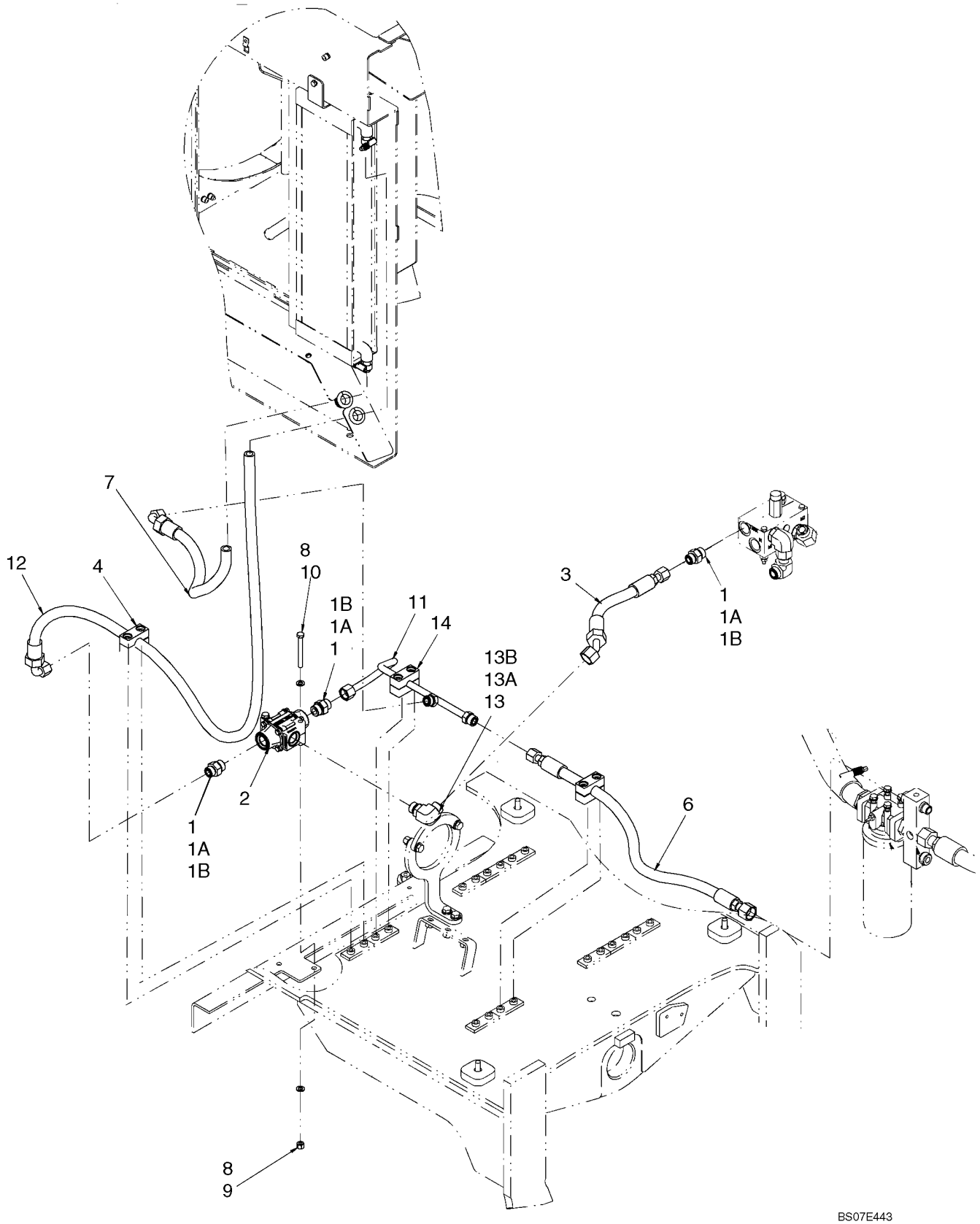

**HIDRAULICO - DESVIACIÓN TÉRMICA**

| REF | FN | PART NUMBER | YR/SN | QTY | DENOMINACION |
|---|---|---|---|---|---|
| 1 | | 86597760 | | 3 | RACOR, 1"-14 ORFS x M27 x 2 ORB, Incl. Refs. 1A, 1B |
| 1A | | 637-64236 | | 1 | JUNTA HERMETICA, Cl 6, 23.6MM ID x 2.9 Thk |
| 1B | | 238-6016 | | 1 | JUNTA HERMETICA, -016, 90 Duro, .614" ID x .070" Thk |
| 2 | | 87326981 | | 1 | VÁLVULA BYPASS, Thermal; Incl. Ref. 2A |
| 2A | | 87328377 | | 1 | JUEGO DE REPARACION, For 87326981 Thermal Bypass Valve; Contains: Thermal Element Assy And Seals; Not Illustrated |
| 3 | | {87658721} | | 1 | HOSE ASSY. Fan To Bypass; 387 mm (15 - 1/4 in) |
| 4 | | 367489A1 | | 2 | BLOQUE MOTOR, Mounting |
| 6 | | 87577168 | | 1 | MANGA, Junction to Filter; 1037 mm ( 40 -13/16 in) |
| 7 | | {87658722} | | 1 | HOSE, Cooler to Junction; 700 mm (27 - 9/16 in) |
| 8 | | 895-11010 | | 4 | ARANDELA, M10 x 20 x 2 |
| 9 | | 832-10410 | | 2 | CONTRA TUERCA, M10 x 1.5, Cl 8 |
| 10 | | 827-10090 | | 2 | TORNILLO, Hex, M10 x 90, 10.9 |
| 11 | | {87658720} | | 1 | TUBE ASSY. Thermal Bypass |
| 12 | | 87362185 | | 1 | MANGUERA (CONJUNTO), Bypass to Cooler; 1936 mm (76 - 7/32 in) |
| 13 | | 700-307 | | 1 | CODO, 90º, 1 3/16"-12 ORFS x M27 x 2 ORB, Incl. Refs. 13A, 13B |
| 13A | | 238-6016 | | 1 | JUNTA HERMETICA, -016, 90 Duro, .614" ID x .070" Thk |
| 13B | | 637-64236 | | 1 | JUNTA HERMETICA, Cl 6, 23.6MM ID x 2.9 Thk, Boss Seal |
| 14 | | 8500210 | | 1 | BORNE, Tube Mounting |

**HIDRAULICA - DISPOSITIVO ANTICABECEO**

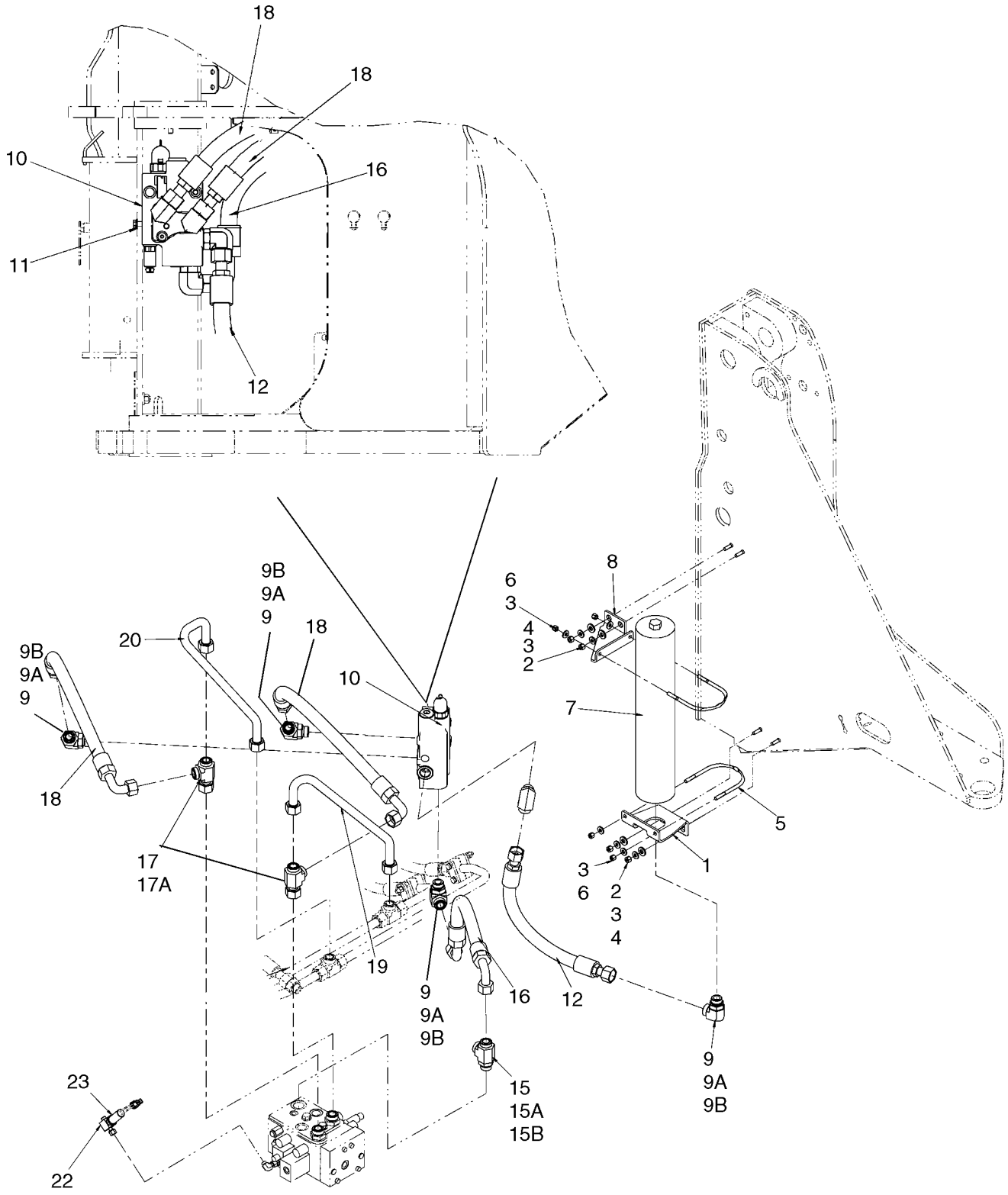

**HIDRAULICA - DISPOSITIVO ANTICABECEO**

| REF | FN | PART NUMBER | YR/SN | QTY | DENOMINACION |
|---|---|---|---|---|---|
| 1 | | 87393646 | | 1 | PIEZA DE SOPORTE, Accumulator |
| 2 | | 896-15012 | | 4 | ARANDELA, M12 x 28.5 x 4, HT |
| 3 | | 896-15010 | | 8 | ARANDELA, M10 x 24.5 x 3, HT |
| 4 | | 832-10410 | | 4 | CONTRA TUERCA, M10 x 1.5, Cl 8 |
| 5 | | L128472 | | 2 | HORQUILLA |
| 6 | | 231-1446 | | 4 | CONTRA TUERCA, 3/8"-16, GB |
| 7 | | 87393434 | | 1 | ACUMULADOR, Ride Control |
| 8 | | 87403347 | | 1 | PIEZA DE SOPORTE, Accumulator |
| 9 | | 700-308 | | 5 | CODO, 90º, 1 7/16"-12 ORFS x M33 x 2 ORB, Incl. Refs. 9A, 9B |
| 9A | | 637-64296 | | 1 | JUNTA HERMETICA, Cl 6, 29.6MM ID x 2.9 Thk |
| 9B | | 238-6021 | | 1 | JUNTA HERMETICA, -021, 90 Duro, .926" ID x .070" Thk, Face Seal |
| 10 | | 87393431 | | 1 | VALVULA, Ride Control; See Figure 08-20A |
| 11 | | 844-10035 | | 2 | TORNILLO, Hex Flg, M10 x 35, 8.8 |
| 12 | | 87452278 | | 1 | MANGUERA (CONJUNTO), Ride Control Accumulator; 588 mm (23 - 1/8 in) |
| 15 | | 700-407 | | 1 | RACOR-T, 1 7/16"-12 ORFS x M33 x 2 ORB Run, Incl. Refs. 15A, 15B |
| 15A | | 238-6021 | | 2 | JUNTA HERMETICA, -021, 90 Duro, .926" ID x .070" Thk, Face Seal |
| 15B | | 637-64296 | | 1 | JUNTA HERMETICA, Cl 6, 29.6MM ID x 2.9 Thk, Boss Seal |
| 16 | | 87452279 | | 1 | MANGUERA (CONJUNTO), Ride Control Tank; 723 mm (28 - 15/32 in) |
| 17 | | 701-418 | | 2 | RACOR-T, 1 7/16"-12 ORFS x 1 7/16"-12 Fem Sw Run, Incl. Ref. 17A |
| 17A | | 238-6021 | | 3 | JUNTA HERMETICA, -021, 90 Duro, .926" ID x .070" Thk, Face Seal |
| 18 | | 87452280 | | 2 | MANGUERA (CONJUNTO), Head Or Rod; 873mm ( 34-3/8 in ) |
| 19 | | 87452287 | | 1 | TUBO (CONJUNTO) |
| 20 | | 87389423 | | 1 | TUBERIA HIDRAULICO |
| 22 | | 397547A1 | | 1 | CONEXION, Pressure Switch |
| 23 | | 446183A1 | | 1 | INTERRUPTOR DE PRESION, Rollback |

**CONJUNTO DE LA VALVULA - DIRECCIONAL DEL CONTROL DE MARCHA (RSM2-16)**

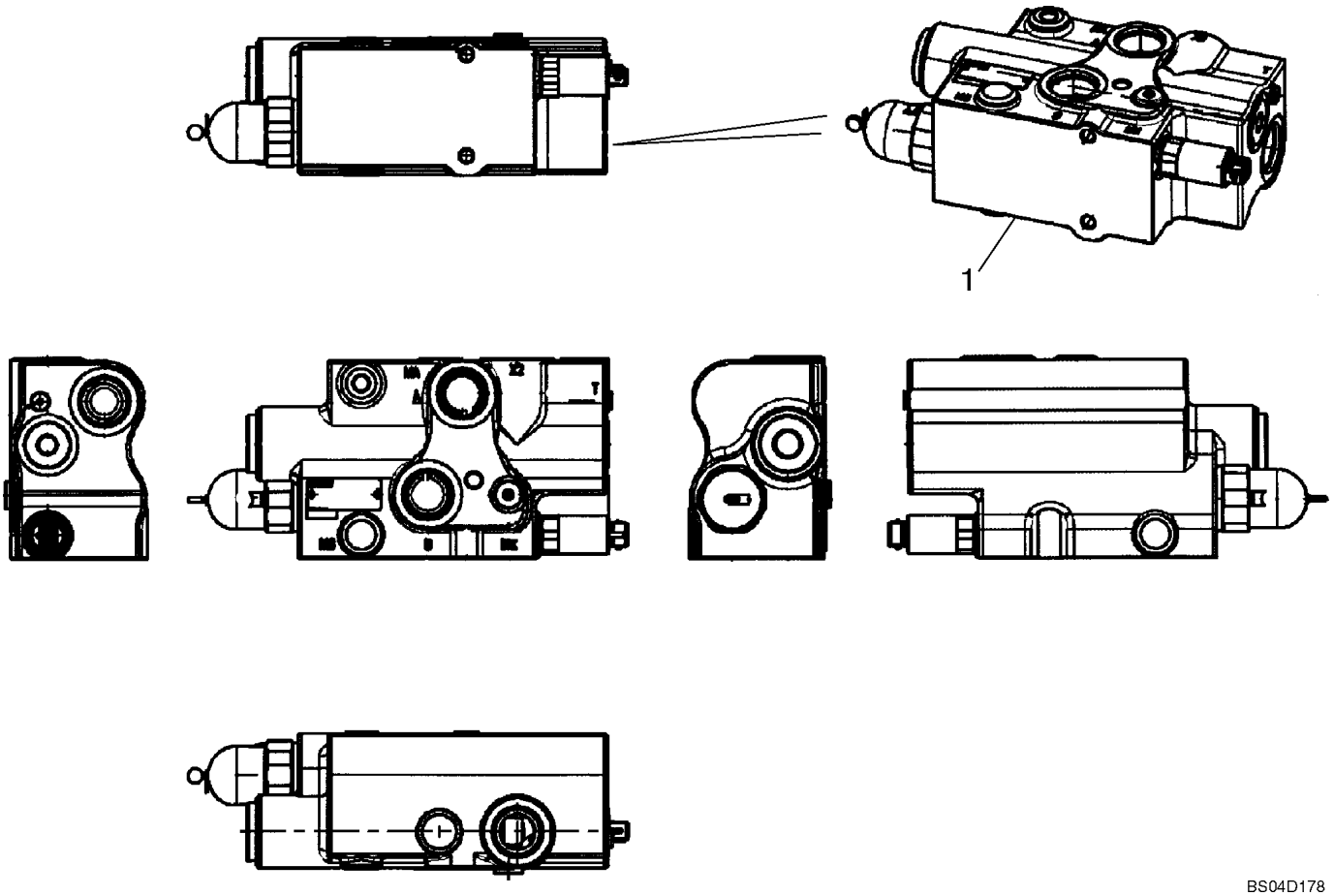

**CONJUNTO DE LA VALVULA - DIRECCIONAL DEL CONTROL DE MARCHA (RSM2-16)**

| REF | FN | PART NUMBER | YR/SN | QTY | DENOMINACION |
|---|---|---|---|---|---|
| 1 | | 87393431 | | 1 | VALVULA, Ride Control RSM2; Includes The Following Parts, Which Are Not Illustrated |
| 1A | | 87453761 | | 1 | CASQUILLO |
| 1B | | 87453762 | | 1 | RESORTE |
| 1C | | 87453765 | | 1 | TORNILLO DE PURGA |
| 1D | | 87453766 | | 1 | RESORTE |
| 1E | | 87453767 | | 1 | RESORTE |
| 1F | | 87453768 | | 1 | TAPÓN, 3/4 in |
| 1G | | 87453769 | | 1 | TAPÓN, 1 in |
| 1H | | 87453770 | | 1 | TAPÓN, M14 x 1.5 |
| 1J | | 87453771 | | 1 | TORNILLO |
| 1K | | 87453772 | | 1 | ELECTROVÁLVULA |
| 1L | | 87533290 | | 1 | VÁLVULA, DESCARGA |

**HIDRAULICA - SIN-DISPOSITIVO ANTICABECEO**

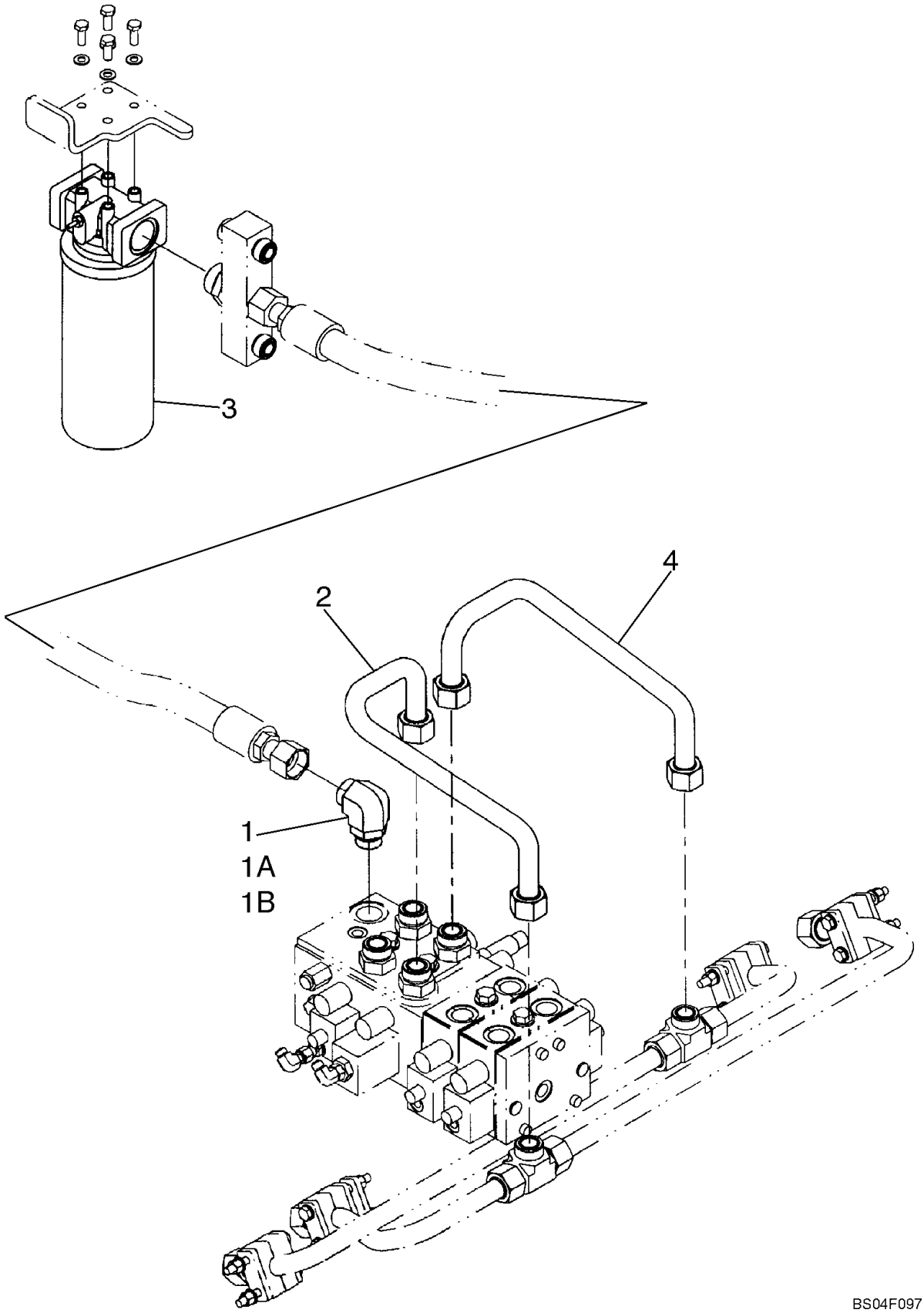

**HIDRAULICA - SIN-DISPOSITIVO ANTICABECEO**

| REF | FN | PART NUMBER | YR/SN | QTY | DENOMINACION |
|---|---|---|---|---|---|
| | | REF | | | MANUAL, NO RIDE CONTROL - VALVE TO FILTER |
| 1 | | 700-308 | | 1 | CODO, 90º, 1 7/16"-12 ORFS x M33 x 2 ORB, Incl. 1A, 1B |
| 1A | | 238-6021 | | 1 | JUNTA HERMETICA, -021, 90 Duro, .926" ID x .070" Thk, Face Seal |
| 1B | | 637-64296 | | 1 | JUNTA HERMETICA, Cl 6, 29.6MM ID x 2.9 Thk, Boss Seal |
| 2 | | 87389244 | | 1 | TUBERIA HIDRAULICO, Head |
| 3 | | 87308928 | | 1 | FILTRO CONJ, Without Reverse Flow; See Figure 08-02A |
| 4 | | 8606096 | | 1 | TUBO (CONJUNTO), Rod |

**HIDRAULICA - TRANSMISIÓN DE VENTILADOR**

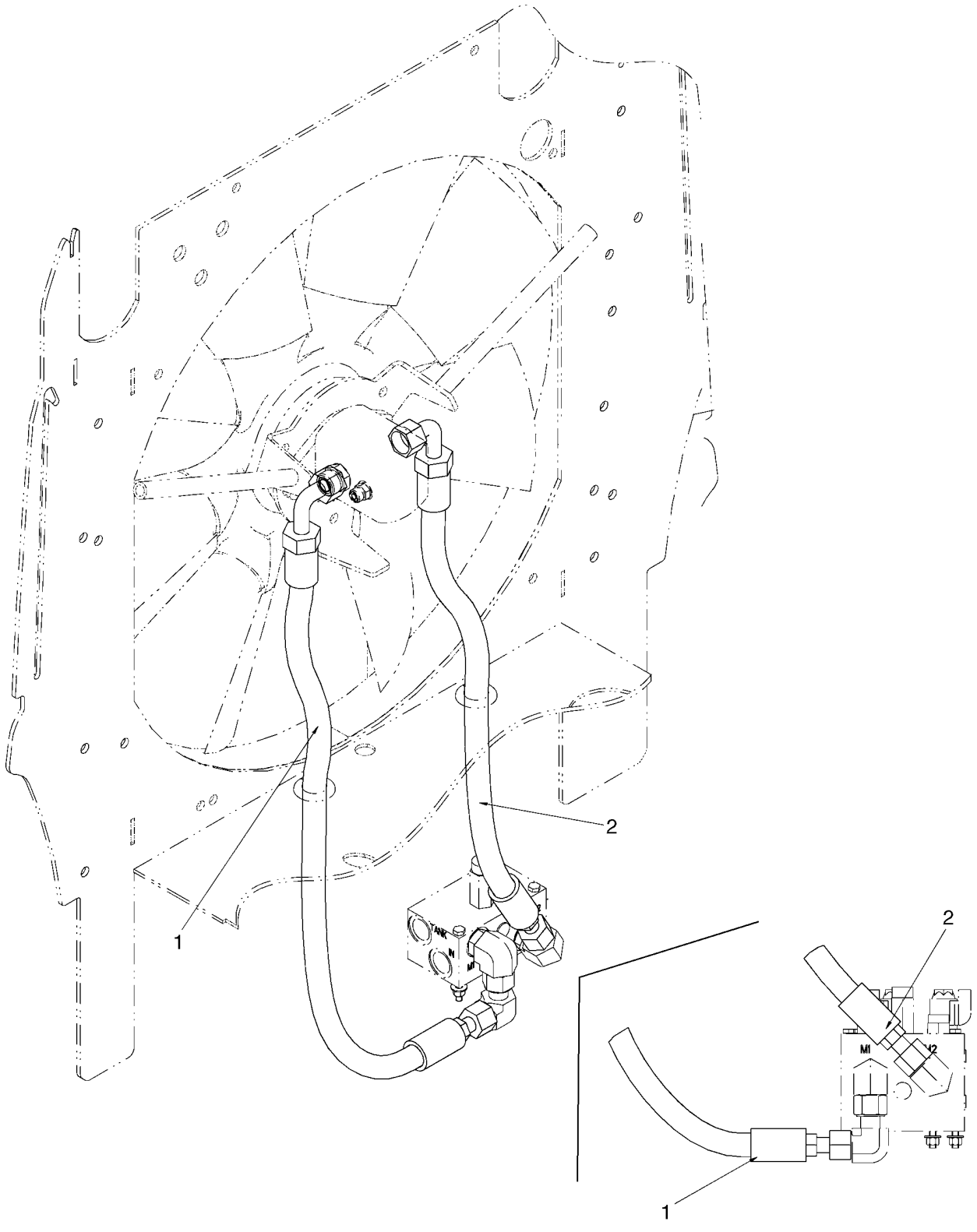

**HIDRAULICA - TRANSMISIÓN DE VENTILADOR**

| REF | FN | PART NUMBER | YR/SN | QTY | DENOMINACION |
|---|---|---|---|---|---|
| 1 | | 87559565 | | 1 | MANGA, Fan Reverse |
| 2 | | 87559564 | | 1 | MANGA, Fan Forward |

**CONJUNTO DE LA VALVULA, VENTILADOR DESCARGA - MONTAJE**

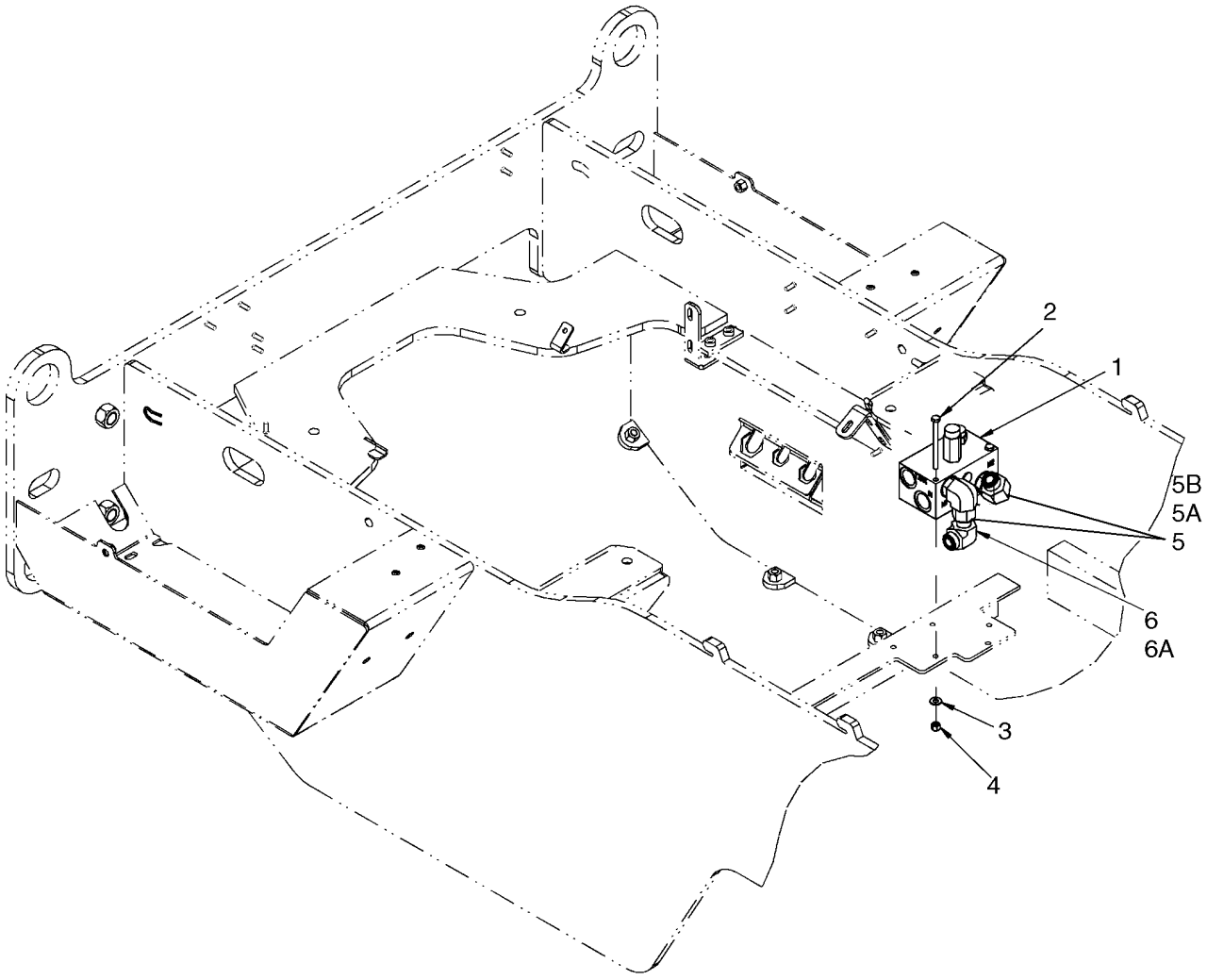


BS07G087

**CONJUNTO DE LA VALVULA, VENTILADOR DESCARGA - MONTAJE**

| REF | FN | PART NUMBER | YR/SN | QTY | DENOMINACION |
|---|---|---|---|---|---|
| | | REF | | | MANUAL, FAN RELIEF VALVE MOUNTING |
| 1 | | 8500562 | | 1 | VALVULA HIDRAULICA, Fan Relief; See Figure 08-23A |
| 2 | | 827-8100 | | 2 | TORNILLO, Hex, M8 x 100, 10.9 |
| 3 | | 895-15008 | | 2 | ARANDELA, M8 x 20 x 1.6 |
| 4 | | 832-10408 | | 2 | CONTRA TUERCA, M8 x 1.25, Cl 8 |
| 5 | | 700-307 | | 2 | CODO, 90º, 1 3/16"-12 ORFS x M27 x 2 ORB, Incl. Refs. 5A, 5B |
| 5A | | 637-64236 | | 1 | JUNTA HERMETICA, Cl 6, 23.6MM ID x 2.9 Thk, Boss |
| 5B | | 238-6018 | | 1 | JUNTA HERMETICA, -018, 90 Duro, .739" ID x .070" Thk, Face End |
| 6 | | 701-342 | | 1 | CODO, 90º, 1 3/16"-12 ORFS x 1 3/16"-12 Fem Sw, Incl. Refs. 6A |
| 6A | | 238-6018 | | 1 | JUNTA HERMETICA, -018, 90 Duro, .739" ID x .070" Thk, Face Seal |

**CONJUNTO DE LA VALVULA, VENTILADOR DESCARGA**

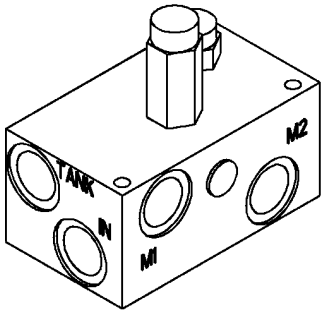


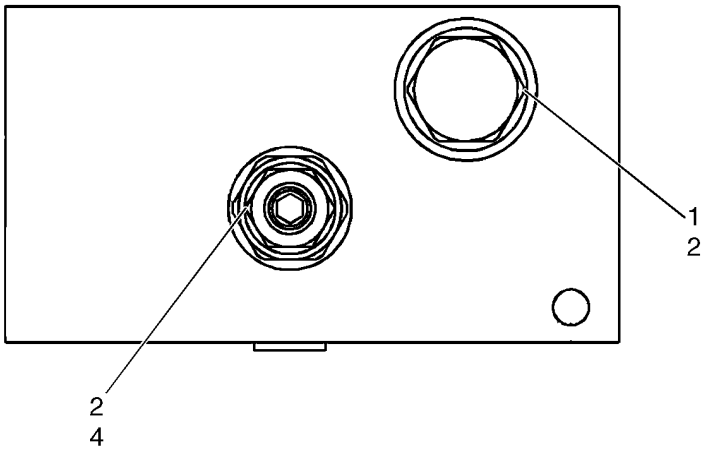


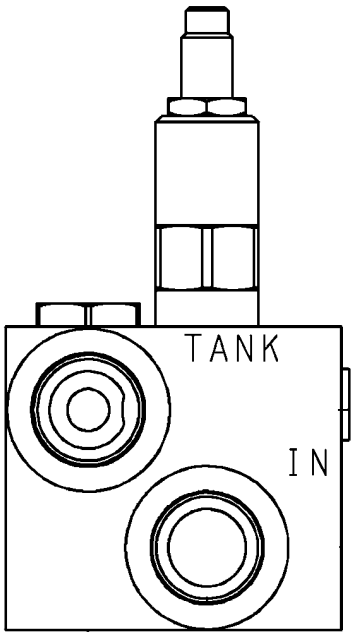


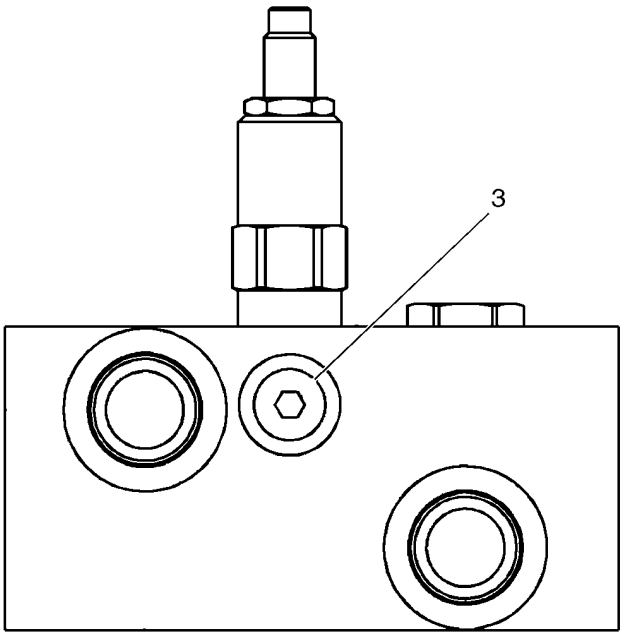


BS06M399

**CONJUNTO DE LA VALVULA, VENTILADOR DESCARGA**

| REF | FN | PART NUMBER | YR/SN | QTY | DENOMINACION |
|---|---|---|---|---|---|
| | | 8500562 | | 1 | VALVULA HIDRAULICA, Fan Relief; Incl. Refs, 1-4, If Used |
| 1 | | 8605073 | | 1 | VALVULA ANTIRRETORNO, Incl. Ref. 2 |
| 2 | | 1542830C2 | | 2 | EMPAQUE DE JUNTAS |
| 3 | | 218-5209 | | 1 | TAPÓN, Hex Soc, 9/16"-18 ORB |
| 4 | | 8605070 | | 1 | VÁLVULA, DESCARGA, Pilot Operated; Incl. Ref. 2 |

**CONJUNTO DE LA VALVULA, VENTILADOR - MARCHA ATRÁS Y VELOCIDAD VARIABLE - MONTAJE**

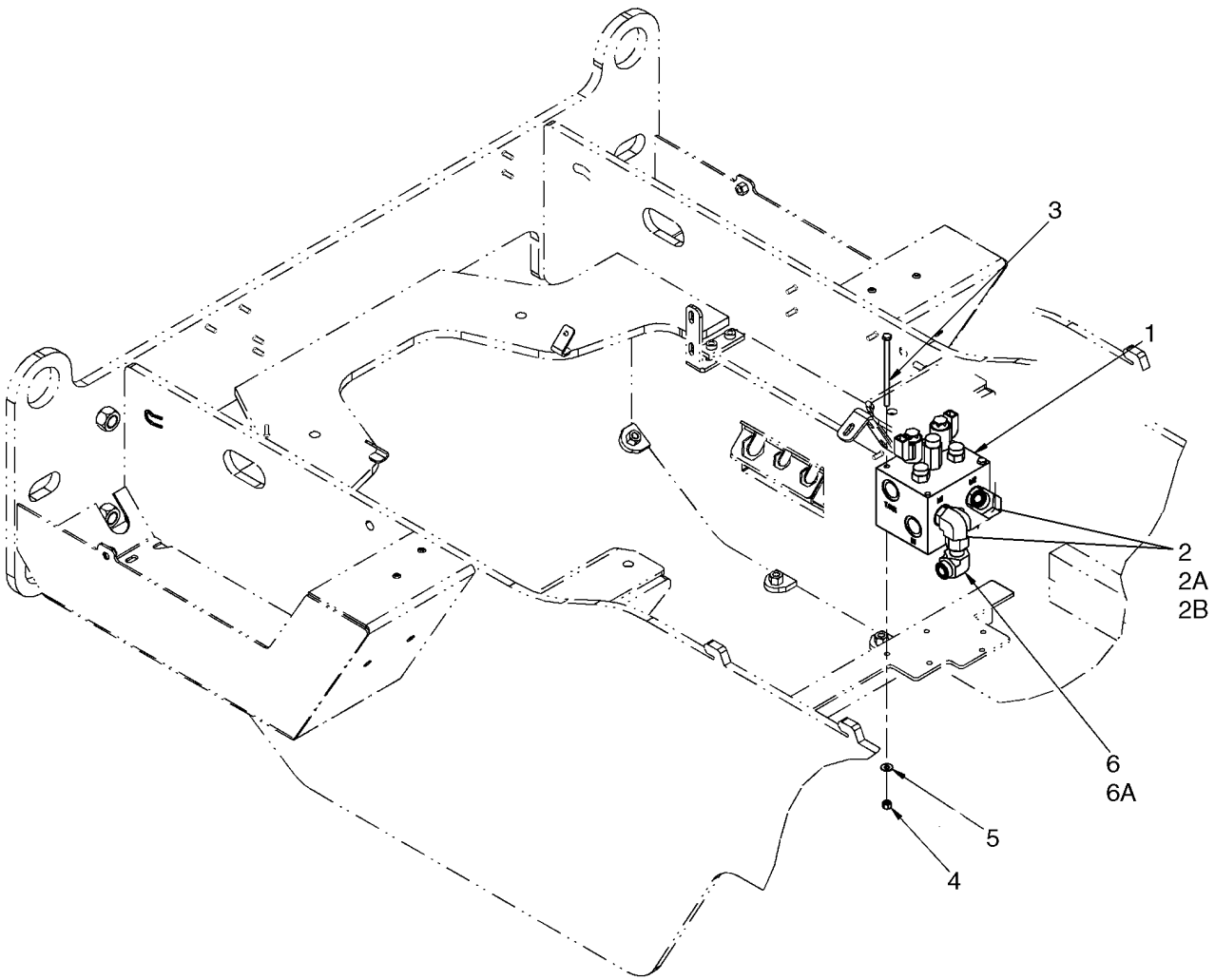

**CONJUNTO DE LA VALVULA, VENTILADOR - MARCHA ATRÁS Y VELOCIDAD VARIABLE - MONTAJE**

| REF | FN | PART NUMBER | YR/SN | QTY | DENOMINACION |
|---|---|---|---|---|---|
| | | REF | | | MANUAL, FAN SPEED AND REVERSER |
| 1 | | 8500565 | | 1 | VALVULA HIDRAULICA, Fan Speed and Reverser; See Figure 08-24A |
| 2 | | 700-307 | | 2 | CODO, 90º, 1 3/16"-12 ORFS x M27 x 2 ORB, Incl. Refs. 2A, 2B |
| 2A | | 637-64236 | | 1 | JUNTA HERMETICA, Cl 6, 23.6MM ID x 2.9 Thk, Boss |
| 2B | | 238-6018 | | 1 | JUNTA HERMETICA, -018, 90 Duro, .739" ID x .070" Thk, Face Seal |
| 3 | | 814-8140 | | 3 | TORNILLO, Hex, M8 x 140, 8.8 |
| 4 | | 832-10408 | | 3 | CONTRA TUERCA, M8 x 1.25, Cl 8 |
| 5 | | 895-15008 | | 3 | ARANDELA, M8 x 20 x 1.6 |
| 6 | | 701-342 | | 1 | CODO, 90º, 1 3/16"-12 ORFS x 1 3/16"-12 Fem Sw, Incl. Ref. 6A |
| 6A | | 238-6018 | | 1 | JUNTA HERMETICA, -018, 90 Duro, .739" ID x .070" Thk, Face Seal |

**CONJUNTO DE LA VALVULA, VENTILADOR - MARCHA ATRÁS Y VELOCIDAD VARIABLE**

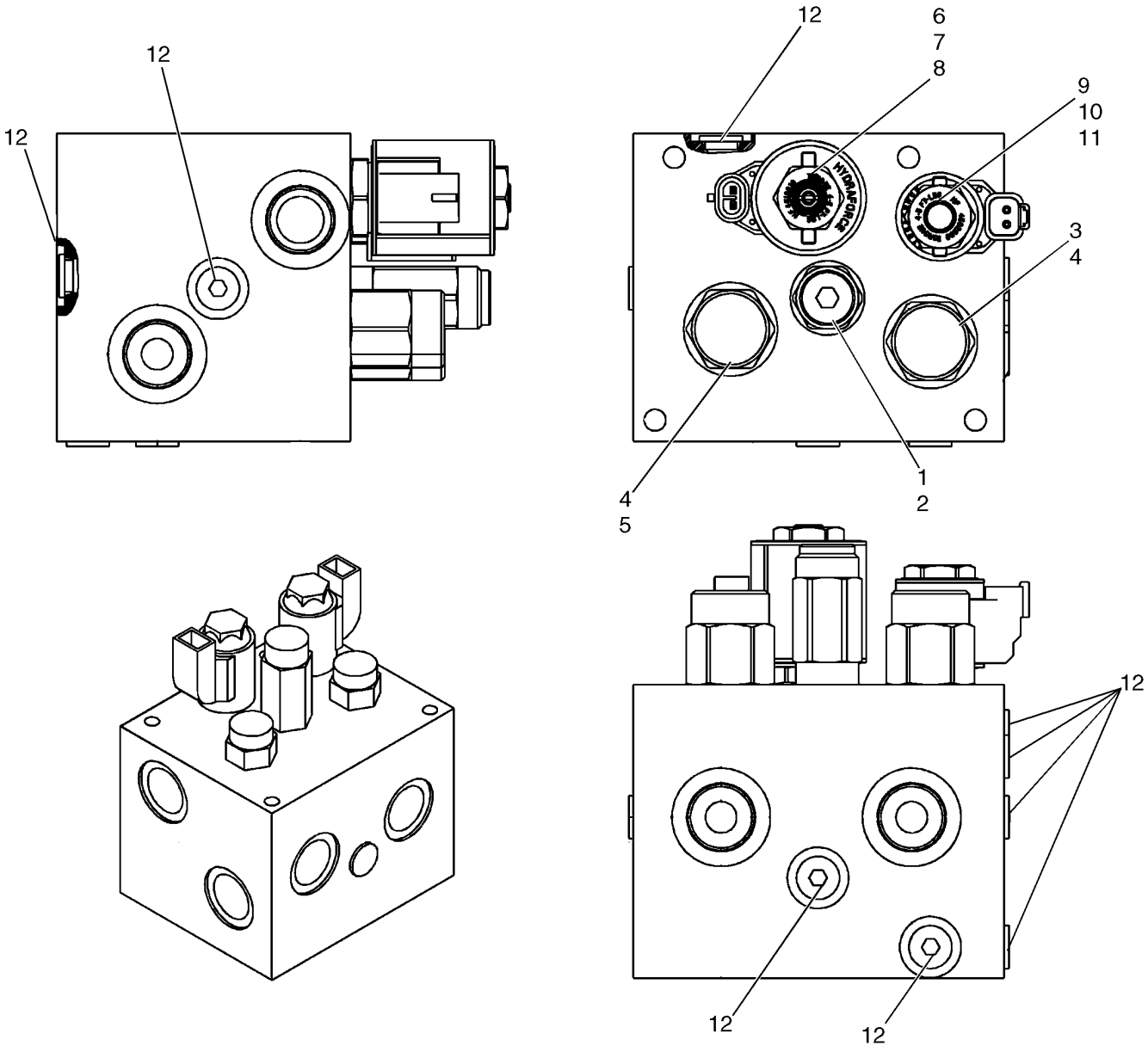


BS06M400

**CONJUNTO DE LA VALVULA, VENTILADOR - MARCHA ATRÁS Y VELOCIDAD VARIABLE**

| REF | FN | PART NUMBER | YR/SN | QTY | DENOMINACION |
|---|---|---|---|---|---|
| | | 8500565 | | 1 | VALVULA HIDRAULICA, Fan Speed and Reverser; Incl. Refs. 1-12 |
| 1 | | 8605053 | | 1 | VÁLVULA, DESCARGA, Incl. Ref. 2 |
| 2 | | 1542833C1 | | 1 | JUEGO JUNTAS |
| 3 | | 8605056 | | 1 | VÁLVULA DE PILOTAJE, Directional; Incl. Ref. 4 |
| 4 | | 388744A1 | | 2 | JEUGO, Seal; Includes (4) O-Rings and (6) Back-Up Rings |
| 5 | | 8605059 | | 1 | VÁLVULA DE PILOTAJE, Directional; Incl. Ref. 4 |
| 6 | | 8605062 | | 1 | VÁLVULA, DESCARGA, Pilot Operated Relief; Incl. Ref. 7 |
| 7 | | 1542830C2 | | 1 | EMPAQUE DE JUNTAS |
| 8 | | {87617169} | | 1 | COIL, Electronic |
| 9 | | 8605066 | | 1 | VÁLVULA, DESCARGA, Solenoid Cartridge; Incl. Ref. 9A |
| 9A | | 329483A1 | | 1 | EMPAQUE DE JUNTAS, Not Illustrated |
| 10 | | {87617168} | | 1 | KIT, GASKET, Includes (3) O-Rings and (4) Back-Up Rings |
| 11 | | {87617170} | | 1 | COIL, Electronic |
| 12 | | 218-5209 | | 9 | TAPÓN, Hex Soc, 9/16"-18 ORB |

| 08-25 | | p1 | 07/07 |
|---|---|---|---|

**HIDRAULICA - CONTROL DE LA CARGADORA, REMOTO**

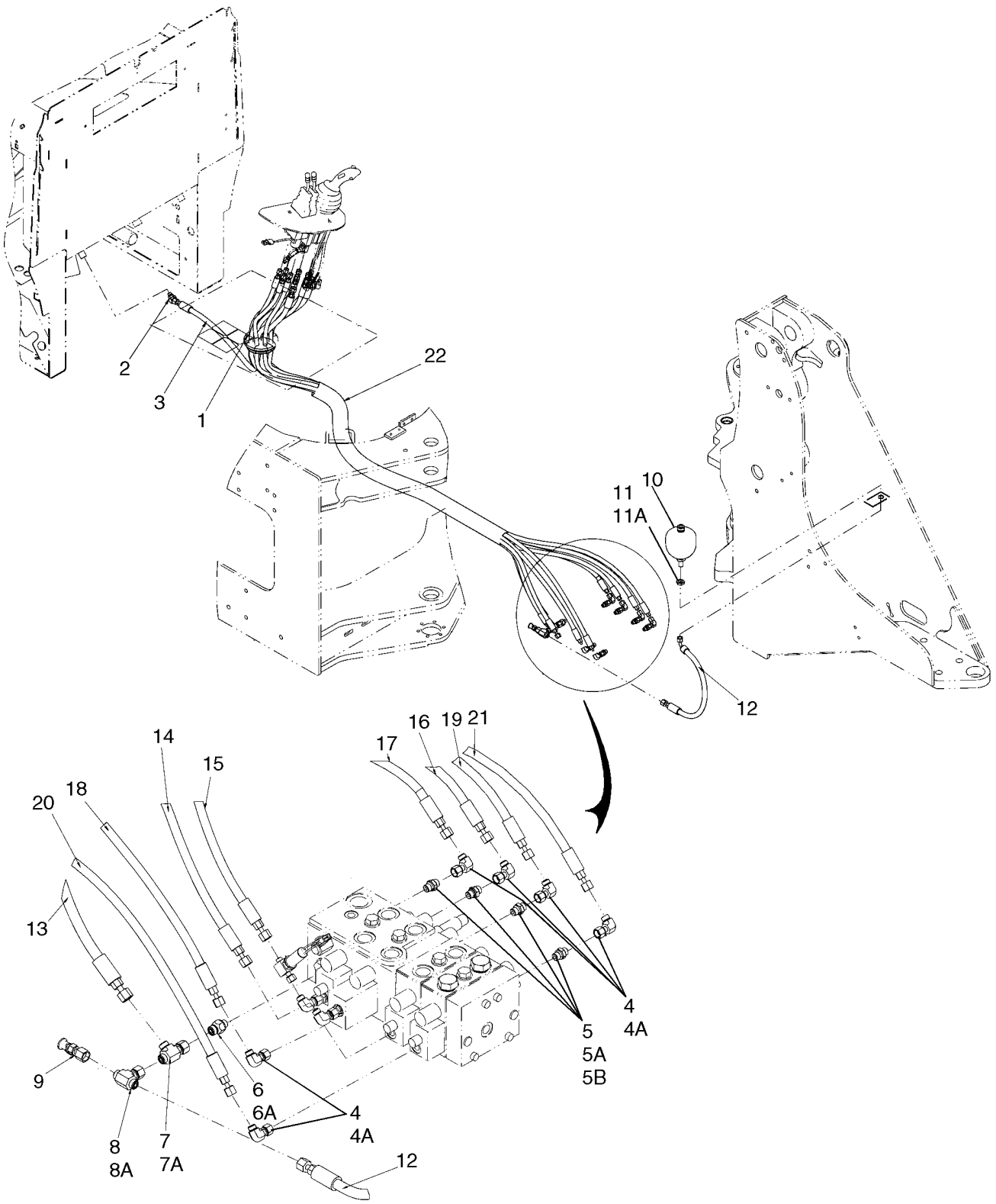

**HIDRAULICA - CONTROL DE LA CARGADORA, REMOTO**

| REF | FN | PART NUMBER | YR/SN | QTY | DENOMINACION |
|---|---|---|---|---|---|
| | | REF | | | MANUAL, TWO, THREE, AND FOUR SPOOL LOADER CONTROL HYDRAULICS, PILOT SUPPLY ACCUMULATOR |
| 1 | | 380912A1 | | 2 | PASACABLES |
| 2 | | 700-315 | | 1 | CODO, 45º, 11/16"-18 ORFS x M14 x 1.5 ORB |
| 3 | | 392059A1 | | 1 | MANGUERA (CONJUNTO), Pilot to Tank; 1294 mm (50 - 15/16 in) |
| 4 | | 701-329 | | 2-6 | CODO, 90º, 9/16"-18 ORFS x 9/16"-18 Fem Sw, Incl. Ref. 4A |
| 4A | | 238-6011 | | 1 | JUNTA HERMETICA, -011, 90 Duro, .301" ID x .070" Thk |
| 5 | | 700-153 | | 2-6 | RACOR, 9/16"-18 ORFS x M14 x 1.5 ORB, Incl. Refs. 5A, 5B |
| 5A | | 238-6012 | | 1 | JUNTA HERMETICA, -012, 90 Duro, .364" ID x .070" Thk, Face Seal |
| 5B | | 637-63113 | | 1 | JUNTA HERMETICA, Cl 6, 11.3MM ID x 2.2 Thk |
| 6 | | 391859A1 | | 1 | VALVULA ANTIRRETORNO, Incl. Ref. 6A |
| 6A | | 637-63113 | | 1 | JUNTA HERMETICA, Cl 6, 11.3MM ID x 2.2 Thk |
| 7 | | 701-422 | | 1 | RACOR-T, 11/16"-16 ORFS x 11/16"-16 Fem Sw Run, Incl. Ref. 7A |
| 7A | | 238-6012 | | 1 | JUNTA HERMETICA, -012, 90 Duro, .364" ID x .070" Thk |
| 8 | | 701-434 | | 1 | RACOR-T, 11/16"-16 ORFS x 11/16"-16 Fem Sw Br, Incl. Ref. 8A |
| 8A | | 238-6012 | | 1 | JUNTA HERMETICA, -012, 90 Duro, .364" ID x .070" Thk |
| 9 | | 190119A1 | | 1 | CARDAN, Diagnostic |
| 10 | | 8501047 | | 1 | ACUMULADOR, Pilot Supply |
| 11 | | 701-909 | | 1 | CONTRA TUERCA, 11/16"-16, Blkhd, Incl. Ref. 11A |
| 11A | | 238-6012 | | 1 | JUNTA HERMETICA, -012, 90 Duro, .364" ID x .070" Thk |
| 12 | | 87308338 | | 1 | MANGUERA (CONJUNTO), Pilot Accumulator; 621 mm (24 - 7/16 in) |
| 13 | | 87651218 | | 1 | MANGA, Pilot Pressure; 2565 mm (101 in) |

**HIDRAULICA - CONTROL DE LA CARGADORA, REMOTO**

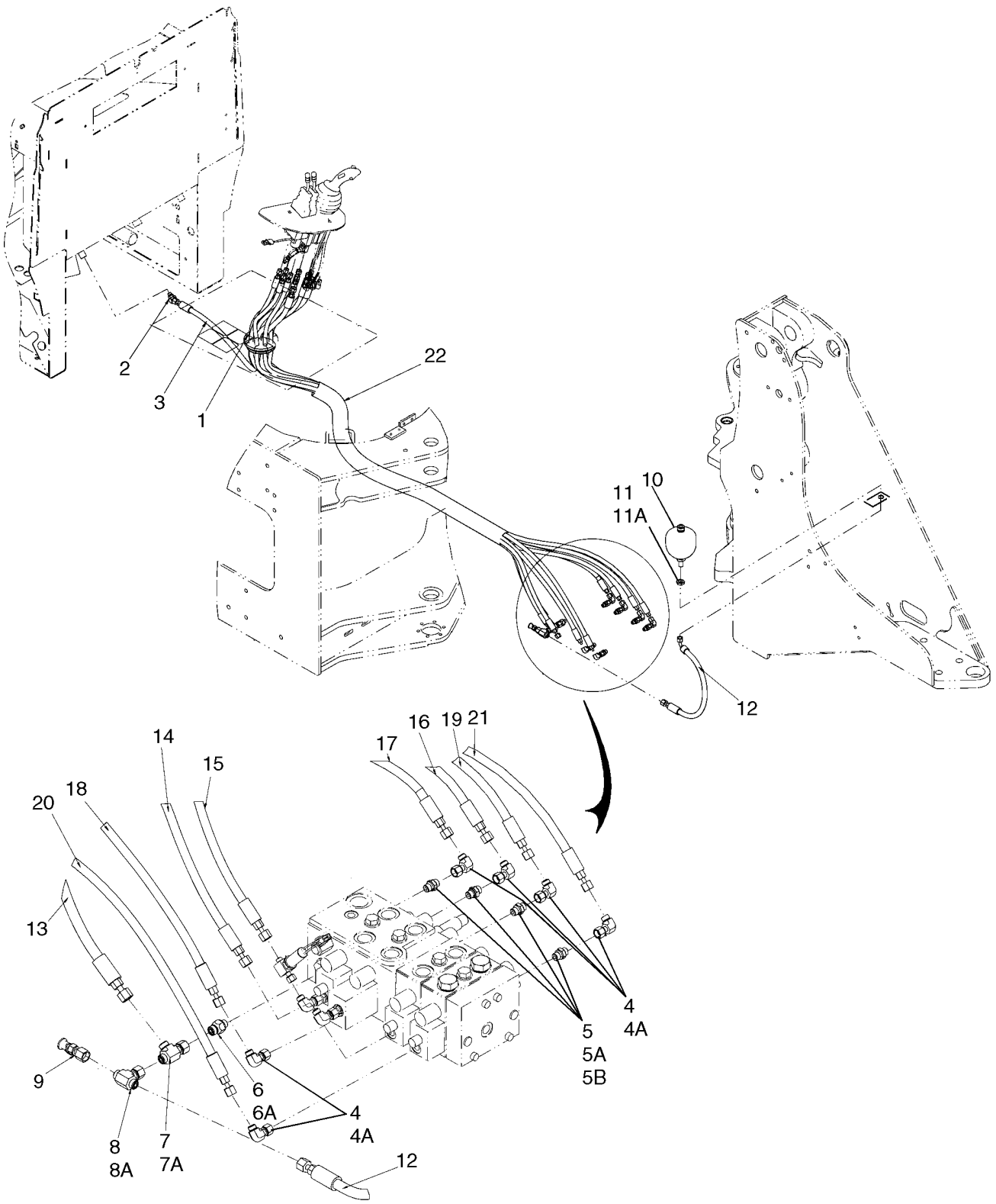

**HIDRAULICA - CONTROL DE LA CARGADORA, REMOTO**

| REF | FN | PART NUMBER | YR/SN | QTY | DENOMINACION |
|---|---|---|---|---|---|
| 14 | | 87651219 | | 1 | MANGA, Pilot Lift, Right; Yellow and Black Banding; 2742 mm (107 - 15/16 in) |
| 15 | | 87651220 | | 1 | MANGA, Pilot Tilt, Left; Orange and Black Banding; 2657 mm (104 - 19/32 in) |
| 16 | | 87651221 | | 1 | MANGA, Pilot Lift, Left; Red and Black Banding; 2672 mm (105 - 3/16 in) |
| 17 | | 87651222 | | 1 | MANGA, Pilot Tilt, Left; Green and Black Banding; 2577 mm (101 - 29/64 in) |
| 18 | | 87651223 | | 1 | MANGA, Pilot 3 Spool, Right; Red and White Banding; 2865 mm (112 - 3/4 in); If Used |
| 19 | | 87651224 | | 1 | MANGA, Pilot 3 Spool, Left; Yellow and White Banding; 2806 mm (110 - 1/2 in); If Used |
| 20 | | 87651225 | | 1 | MANGA, Pilot 4 Spool, Right; Green and White Banding; 2932 mm (115 - 7/16 in); If Used |
| 21 | | 87651226 | | 1 | MANGA, Pilot 4 Spool, Left; Orange and White Banding; 2917 mm (114 - 27/32 in); If Used |
| 22 | | 401526A1 | | 1 | PROTECTOR DE TUBO, 60 x 1200 mm |

**VALVULA DE CONTROL - SOPORTE, DOS CORREDERAS - (Z-BAR/XR/XT)**

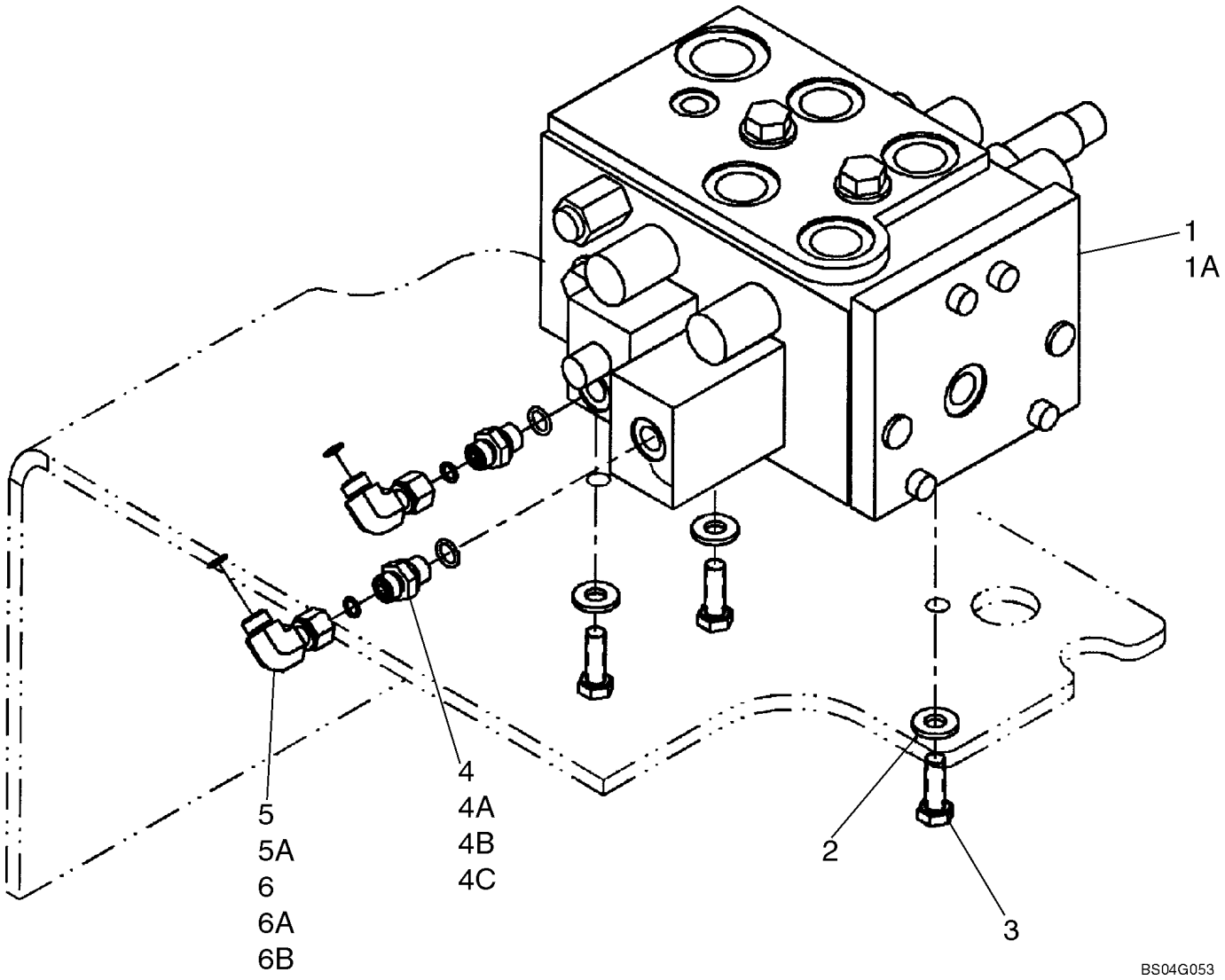

**VALVULA DE CONTROL - SOPORTE, DOS CORREDERAS - (Z-BAR/XR/XT)**

| REF | FN | PART NUMBER | YR/SN | QTY | DENOMINACION |
|---|---|---|---|---|---|
| | | REF | | | MANUAL, TWO SPOOL VALVE MOUNTING |
| 1 | | 87307982 | | 1 | VALVULA HIDRAULICA, Z-Bar/XR Loader, See Fig 08-27 - 08-27B |
| 1A | | 87307986 | | 1 | VALVULA HIDRAULICA, XT Loader, See Fig 08-28 - 08-28B |
| 2 | | 896-15010 | | 3 | ARANDELA, M10 x 24.5 x 3, HT |
| 3 | | 627-10030 | | 3 | TORNILLO, Hex, M10 x 30, 10.9, Full Thd |
| 4 | | 700-153 | | 2-1 | RACOR, 9/16"-18 ORFS x M14 x 1.5 ORB, Incl. 4A, 4B; If Used |
| 4A | | 238-6011 | | 1 | JUNTA HERMETICA, -011, 90 Duro, .301" ID x .070" Thk, Face Seal |
| 4B | | 637-63113 | | 1 | JUNTA HERMETICA, Cl 6, 11.3MM ID x 2.2 Thk |
| 4C | | REF | | | MANUAL, NOT USED IN THIS APPLICATION FOR XT MODELS |
| 5 | | 701-329 | | 2-1 | CODO, 90º, 9/16"-18 ORFS x 9/16"-18 Fem Sw, Incl. Ref. 5A; Used On Z-Bar/XR Loader |
| 5A | | 238-6011 | | 1 | JUNTA HERMETICA, -011, 90 Duro, .301" ID x .070" Thk, Face Seal |
| 6 | | 700-378 | | 1 | CODO, 90º, 9/16"-18 ORFS x M14 x 1.5 ORB, Incl. Refs. 6A, 6B; Used On XT Loader |
| 6A | | 238-6011 | | 1 | JUNTA HERMETICA, -011, 90 Duro, .301" ID x .070" Thk, Face Seal |
| 6B | | 637-63113 | | 1 | JUNTA HERMETICA, Cl 6, 11.3MM ID x 2.2 Thk |

**VALVULA DE CONTROL - SOPORTE, TRES CORREDERAS - (Z-BAR/XR/XT)**

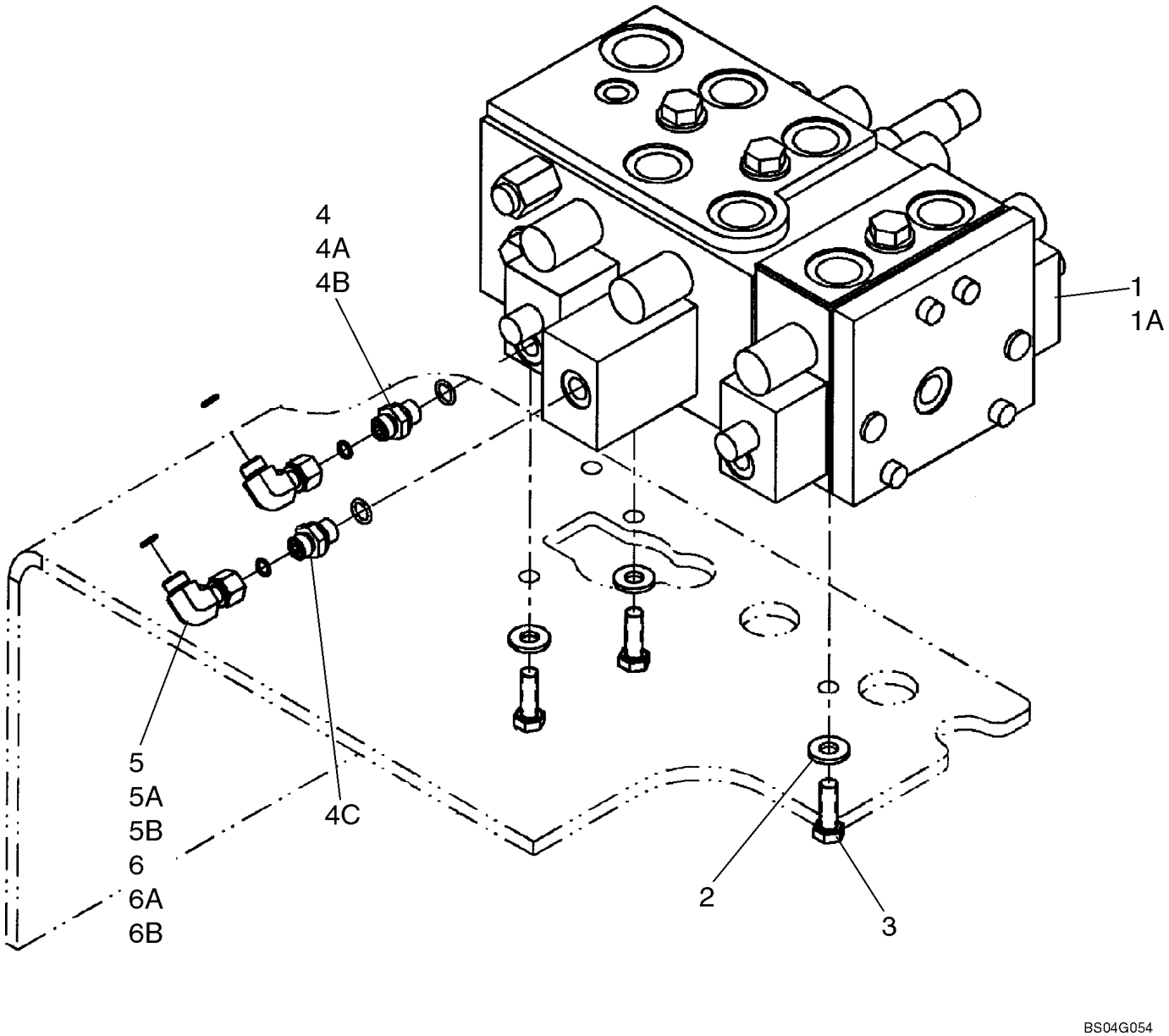

**VALVULA DE CONTROL - SOPORTE, TRES CORREDERAS - (Z-BAR/XR/XT)**

| REF | FN | PART NUMBER | YR/SN | QTY | DENOMINACION |
|---|---|---|---|---|---|
| | | REF | | | MANUAL, THREE SPOOL VALVE MOUNTING |
| 1 | | 87307983 | | 1 | VALVULA HIDRAULICA, Z-Bar/XR Loader, See Fig 08-27 - 08-27B |
| 1A | | 87307988 | | 1 | VALVULA HIDRAULICA, XT Loader, See Fig 08-28 - 08-28B |
| 2 | | 896-15010 | | 3 | ARANDELA, M10 x 24.5 x 3, HT |
| 3 | | 627-10030 | | 3 | TORNILLO, Hex, M10 x 30, 10.9, Full Thd |
| 4 | | 700-153 | | 2-1 | RACOR, 9/16"-18 ORFS x M14 x 1.5 ORB, Incl. 4A, 4B |
| 4A | | 238-6011 | | 1 | JUNTA HERMETICA, -011, 90 Duro, .301" ID x .070" Thk, Face Seal |
| 4B | | 637-63113 | | 1 | JUNTA HERMETICA, Cl 6, 11.3MM ID x 2.2 Thk |
| 4C | | REF | | | MANUAL, NOT USED IN THIS APPLICATION FOR XT MODELS |
| 5 | | 701-329 | | 2-1 | CODO, 90º, 9/16"-18 ORFS x 9/16"-18 Fem Sw, Incl. 5A; Used on Z-Bar Loader |
| 5A | | 238-6011 | | 1 | JUNTA HERMETICA, -011, 90 Duro, .301" ID x .070" Thk, Face Seal |
| 6 | | 700-378 | | 1 | CODO, 90º, 9/16"-18 ORFS x M14 x 1.5 ORB, Incl. 6A, 6B; Used On XT Loader |
| 6A | | 238-6011 | | 1 | JUNTA HERMETICA, -011, 90 Duro, .301" ID x .070" Thk, Face Seal |
| 6B | | 637-63113 | | 1 | JUNTA HERMETICA, Cl 6, 11.3MM ID x 2.2 Thk |

**VALVULA DE CONTROL - SOPORTE, CUATRO CORREDERAS - (Z-BAR/XR/XT)**

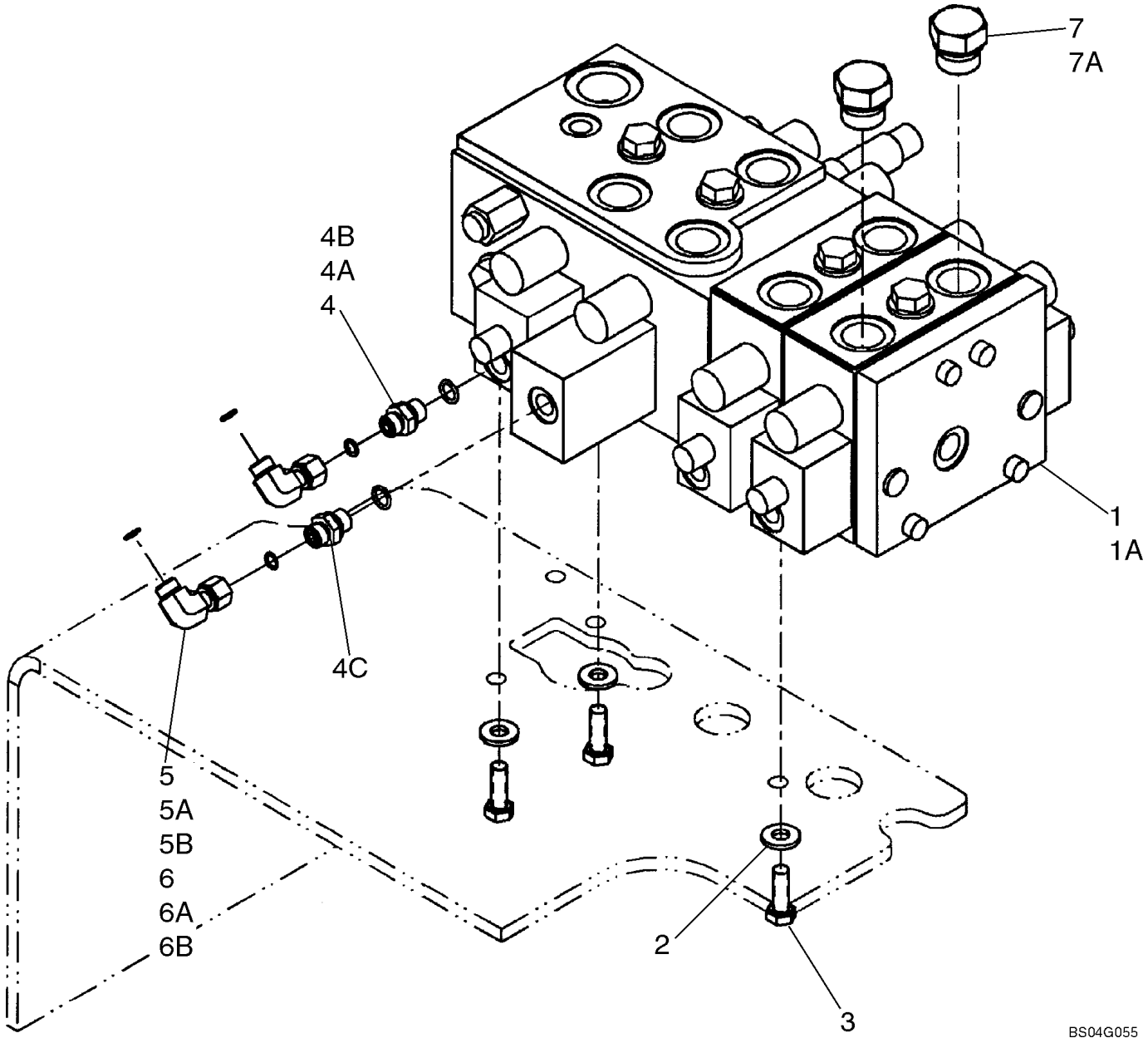

**VALVULA DE CONTROL - SOPORTE, CUATRO CORREDERAS - (Z-BAR/XR/XT)**

| REF | FN | PART NUMBER | YR/SN | QTY | DENOMINACION |
|---|---|---|---|---|---|
| | | REF | | | MANUAL, FOUR SPOOL VALVE MOUNTING |
| 1 | | 87307984 | | 1 | VALVULA HIDRAULICA, Z-Bar/XR Loader, See Fig 08-27 - 08-27B |
| 1A | | 87307990 | | 1 | VALVULA HIDRAULICA, XT Loader, See Fig 08-28 - 08-28B |
| 2 | | 896-15010 | | 3 | ARANDELA, M10 x 24.5 x 3, HT |
| 3 | | 627-10030 | | 3 | TORNILLO, Hex, M10 x 30, 10.9, Full Thd |
| 4 | | 700-153 | | 2-1 | RACOR, 9/16"-18 ORFS x M14 x 1.5 ORB, Incl. Refs. 4A, 4B |
| 4A | | 238-6011 | | 1 | JUNTA HERMETICA, -011, 90 Duro, .301" ID x .070" Thk, Face Seal |
| 4B | | 637-63113 | | 1 | JUNTA HERMETICA, Cl 6, 11.3MM ID x 2.2 Thk |
| 4C | | REF | | | MANUAL, NOT USED IN THIS APPLICATION FOR XT MODELS |
| 5 | | 701-329 | | 2-1 | CODO, 90º, 9/16"-18 ORFS x 9/16"-18 Fem Sw, Incl. Refs. 5A |
| 5A | | 238-6011 | | 1 | JUNTA HERMETICA, -011, 90 Duro, .301" ID x .070" Thk, Face Seal |
| 6 | | 700-378 | | 1 | CODO, 90º, 9/16"-18 ORFS x M14 x 1.5 ORB, Used With XT Loader; Incl. Refs. 6A, 6B |
| 6A | | 238-6011 | | 1 | JUNTA HERMETICA, -011, 90 Duro, .301" ID x .070" Thk, Face Seal |
| 6B | | 637-63113 | | 1 | JUNTA HERMETICA, Cl 6, 11.3MM ID x 2.2 Thk |
| 7 | | 220068A1 | | 2 | TAPÓN, M27 x 2, ORB, Used With Z-Bar Loader; Incl. Refs. 7A |
| 7A | | 637-64236 | | 1 | JUNTA HERMETICA, Cl 6, 23.6MM ID x 2.9 Thk, Boss Seal |

| 08-27 | | p1 | 08/07 |
|---|---|---|---|

**CONJUNTO DE LA VALVULA - CONTROL DE LA CARGADORA - DOS, TRES, CUATRO CORREDERAS - (Z-BAR/XR)**

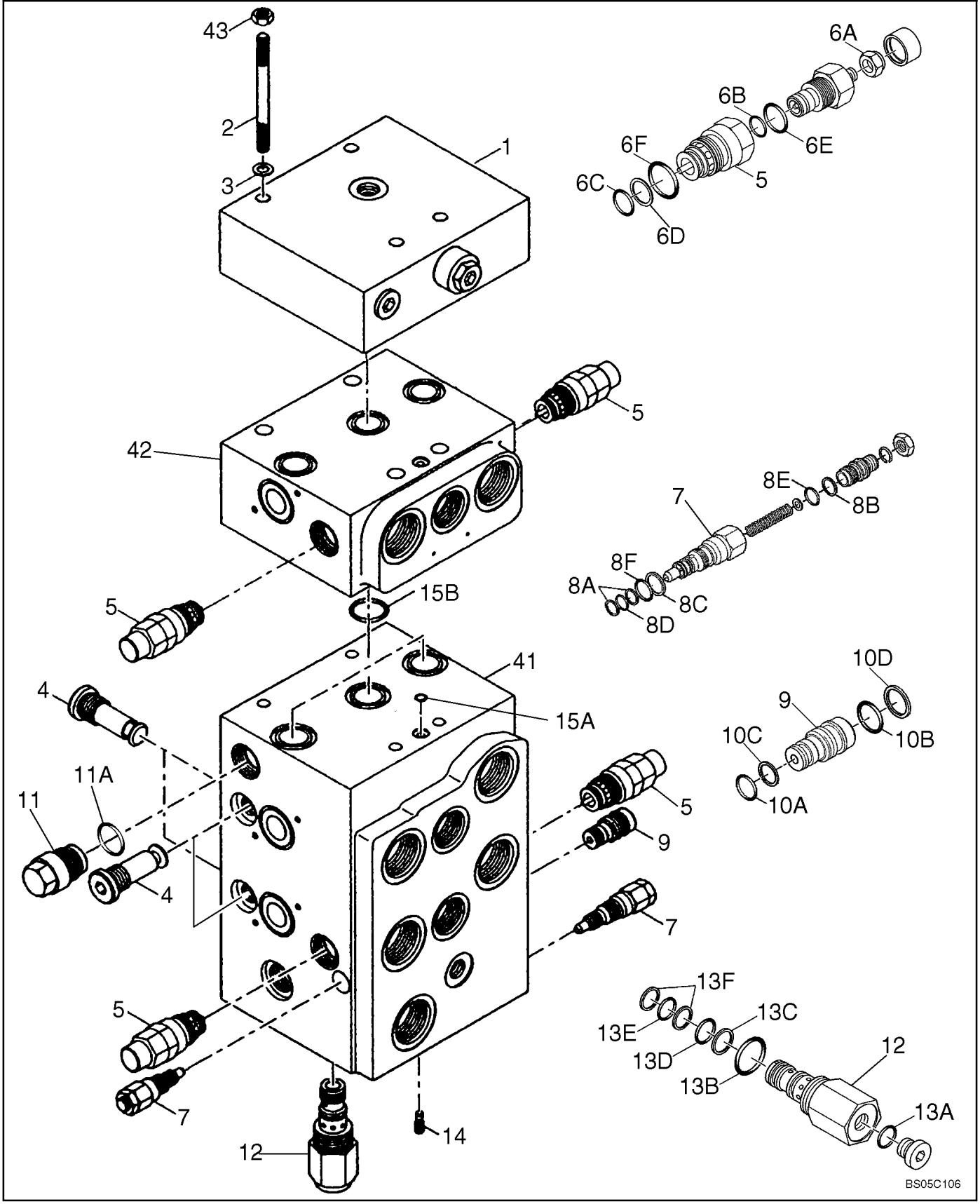

**CONJUNTO DE LA VALVULA - CONTROL DE LA CARGADORA - DOS, TRES, CUATRO CORREDERAS - (Z-BAR/XR)**

| REF | FN | PART NUMBER | YR/SN | QTY | DENOMINACION |
|---|---|---|---|---|---|
| | | REF | | | MANUAL, Z-BAR/XR LOADER; IF USED |
| | | 87307982 | | | VALVULA HIDRAULICA, Two Spool; Incl. 1 - 41; Also Includes Figure 08-27A |
| | | 87307983 | | | VALVULA HIDRAULICA, Three Spool; Incl. 1 - 42; Also Includes Figure(s) 08-27A, 27B |
| | | 87307984 | | | VALVULA HIDRAULICA, Four Spool; Incl. 1 - 43; Also Includes Figure(s) 08-27A, 27B |
| 1 | | 87311889 | | 1 | PLACA, Valve |
| 2 | | 87311891 | | 4 | PRISIONERO, M8 x 190; 10.9; Four Spool Valve |
| 2 | | {961-8075} | | 4 | M8 x 75; 10.9; Three Spool Valve; Not Illustrated |
| 2 | | {962-8055} | | 4 | M8 x 55; 10.9; Two Spool Valve; Not Illustrated |
| 3 | | 892-11008 | | 4 | ARANDELA DE FRENO, M8 |
| 4 | | 8604567 | | 4 | VALVULA ANTIRRETORNO |
| 5 | | 8604568 | | 2-6 | VALVULA HIDRAULICA, Anticavitation; Includes Spool, (3) O-Rings, Thrust Ring, Spool Seal And Lock-Nut |
| 6 | | 8604588 | | 1 | JEUGO, Anticavitation; For Ref 5; Incl 6A - 6F |
| 6A | | NSS | | 1 | NO SE REPARA SEPARADAM., Lock Nut; M10 |
| 6B | | NSS | | 1 | NO SE REPARA SEPARADAM., Spool Seal |
| 6C | | NSS | | 1 | NO SE REPARA SEPARADAM., O-Ring; 14 x 0.178 |
| 6D | | NSS | | 1 | NO SE REPARA SEPARADAM., Thrust Ring; 14 x 17 x 1 |
| 6E | | NSS | | 1 | NO SE REPARA SEPARADAM., O-Ring; 15.6 x 1.78 |
| 6F | | NSS | | 1 | NO SE REPARA SEPARADAM., O-Ring; 21.95 x 1.78 |
| 7 | | 8602925 | | 2 | VÁLVULA, DESCARGA, Pressure Relief |
| 8 | | 8604590 | | 1 | JEUGO, Pressure Relief Valve; For Ref 7; Incl 8A - 8F |
| 8A | | NSS | | 2 | NO SE REPARA SEPARADAM., Thrust Ring; 7.3/9.5 x 0.7 |
| 8B | | NSS | | 1 | NO SE REPARA SEPARADAM., Thrust Ring; 9.91 x 1.35 |
| 8C | | NSS | | 1 | NO SE REPARA SEPARADAM., Thrust Ring; 11.56 x 1.35 |
| 8D | | NSS | | 1 | NO SE REPARA SEPARADAM., O-Ring; 8.50 x 1.5 |
| 8E | | NSS | | 1 | NO SE REPARA SEPARADAM., O-Ring;9.25 x 1.78 |
| 8F | | NSS | | 1 | NO SE REPARA SEPARADAM., O-Ring; 10.82 x 1.78 |

**CONJUNTO DE LA VALVULA - CONTROL DE LA CARGADORA - DOS, TRES, CUATRO CORREDERAS - (Z-BAR/XR)**

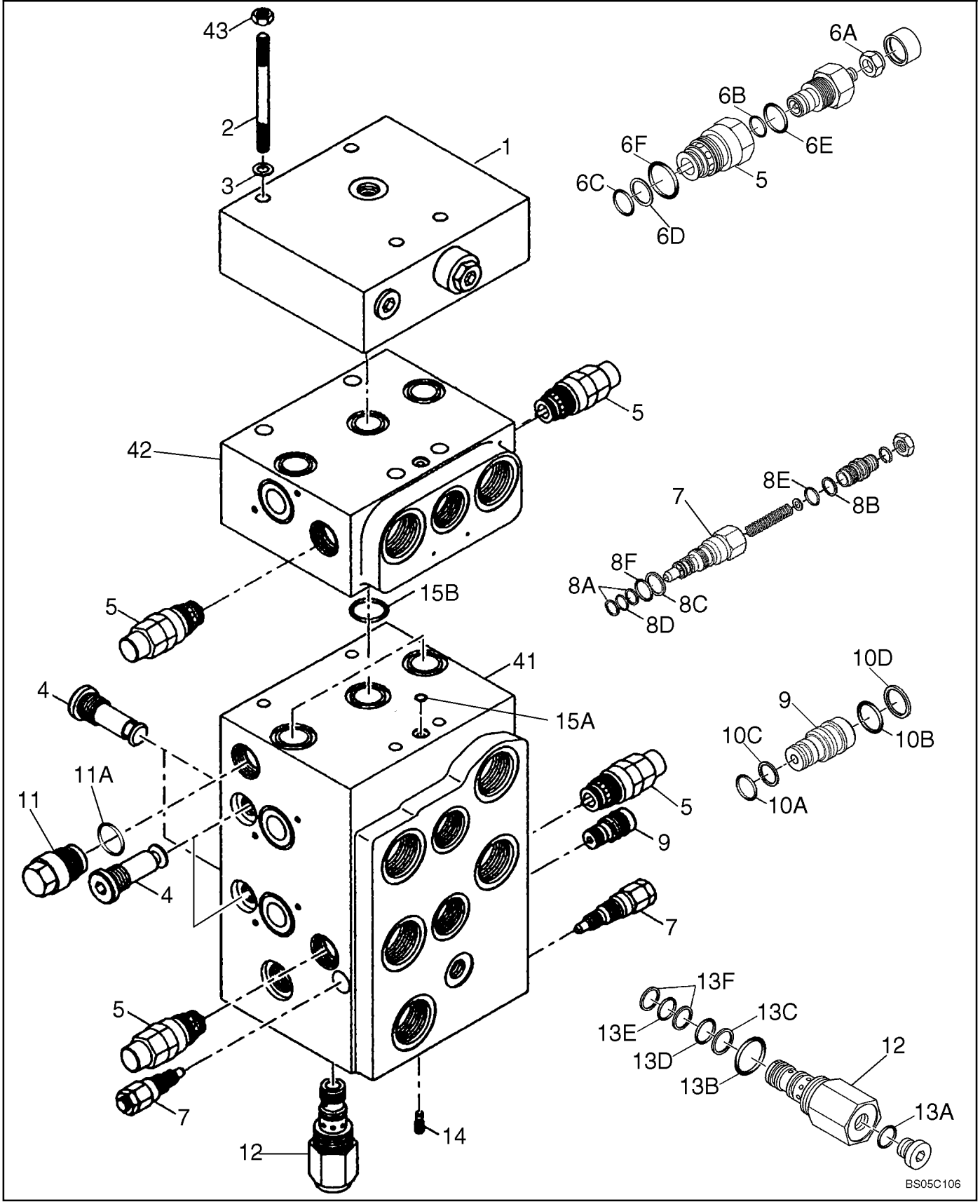

**CONJUNTO DE LA VALVULA - CONTROL DE LA CARGADORA - DOS, TRES, CUATRO CORREDERAS - (Z-BAR/XR)**

| REF | FN | PART NUMBER | YR/SN | QTY | DENOMINACION |
|---|---|---|---|---|---|
| 9 | | 8602915 | | 1 | VALVULA HIDRAULICA, Flow Limiting |
| 10 | | 8602916 | | 1 | SERIE DE JUNTAS, Flow Limiting Valve; For Ref 9; Incl. 10A - 10D |
| 10A | | NSS | | 1 | NO SE REPARA SEPARADAM., O-Ring; 8.5 x 1.5 |
| 10B | | NSS | | 1 | NO SE REPARA SEPARADAM., O-Ring; 10.82 x 1.78 |
| 10C | | NSS | | 2 | NO SE REPARA SEPARADAM., Thrust Ring; 7.3/9.5 x 0.7 |
| 10D | | NSS | | 1 | NO SE REPARA SEPARADAM., Thrust Ring; 11.56 x 1.35 |
| 11 | | 87311965 | | 1 | INTRODUCTOR, Pilot Pressure Insert; Incl. 11A |
| 11A | | NSS | | 1 | NO SE REPARA SEPARADAM., O-Ring; 23.47 x 2.62 |
| 12 | | 8602913 | | 1 | VALVULA HIDRAULICA, Flow Limiting |
| 13 | | 8604592 | | 1 | JEUGO, Flow Limiting Valve; For Ref 12; Incl. 13A - 13F |
| 13A | | NSS | | 1 | NO SE REPARA SEPARADAM., Profile Seal; M12 x 1.5 |
| 13B | | NSS | | 1 | NO SE REPARA SEPARADAM., O-Ring; 18.77 x 1.78 |
| 13C | | NSS | | 1 | NO SE REPARA SEPARADAM., Thrust Ring; 11.2/14 x 1 |
| 13D | | NSS | | 1 | NO SE REPARA SEPARADAM., O-Ring; 12.42 x 1.78 |
| 13E | | NSS | | 1 | NO SE REPARA SEPARADAM., O-Ring;10.82 x 1.78 |
| 13F | | NSS | | 2 | NO SE REPARA SEPARADAM., Thrust Ring; 10.2/13 x 1 |
| 14 | | 8604574 | | 1 | TORNILLO, PLUG |
| 14 | | 87362307 | | 1 | VALVULA DE CIERRE |
| 15 | | 8604575 | | 1 | EQUIPO, For Main Housing Block; Ref 41; Incl 15A, 15B |
| 15A | | NSS | | 1 | NO SE REPARA SEPARADAM., O-Ring; 7.65 x 1.78 |
| 15B | | NSS | | 3 | NO SE REPARA SEPARADAM., O-Ring; 18.64 x 3.53 |
| 41 | | NSS | | 1 | NO SE REPARA SEPARADAM., Main Housing |
| 42 | | NSS | | 1-2 | NO SE REPARA SEPARADAM., Section Housing |
| 43 | | 829-1408 | | 4 | TUERCA, M8, Cl 10, Four Spool Valve |

| 08-27A | | p1 | 08/07 |
|---|---|---|---|

**CONJUNTO DE LA VALVULA - EJE DEL PISTÓN - (Z-BAR/XR)**

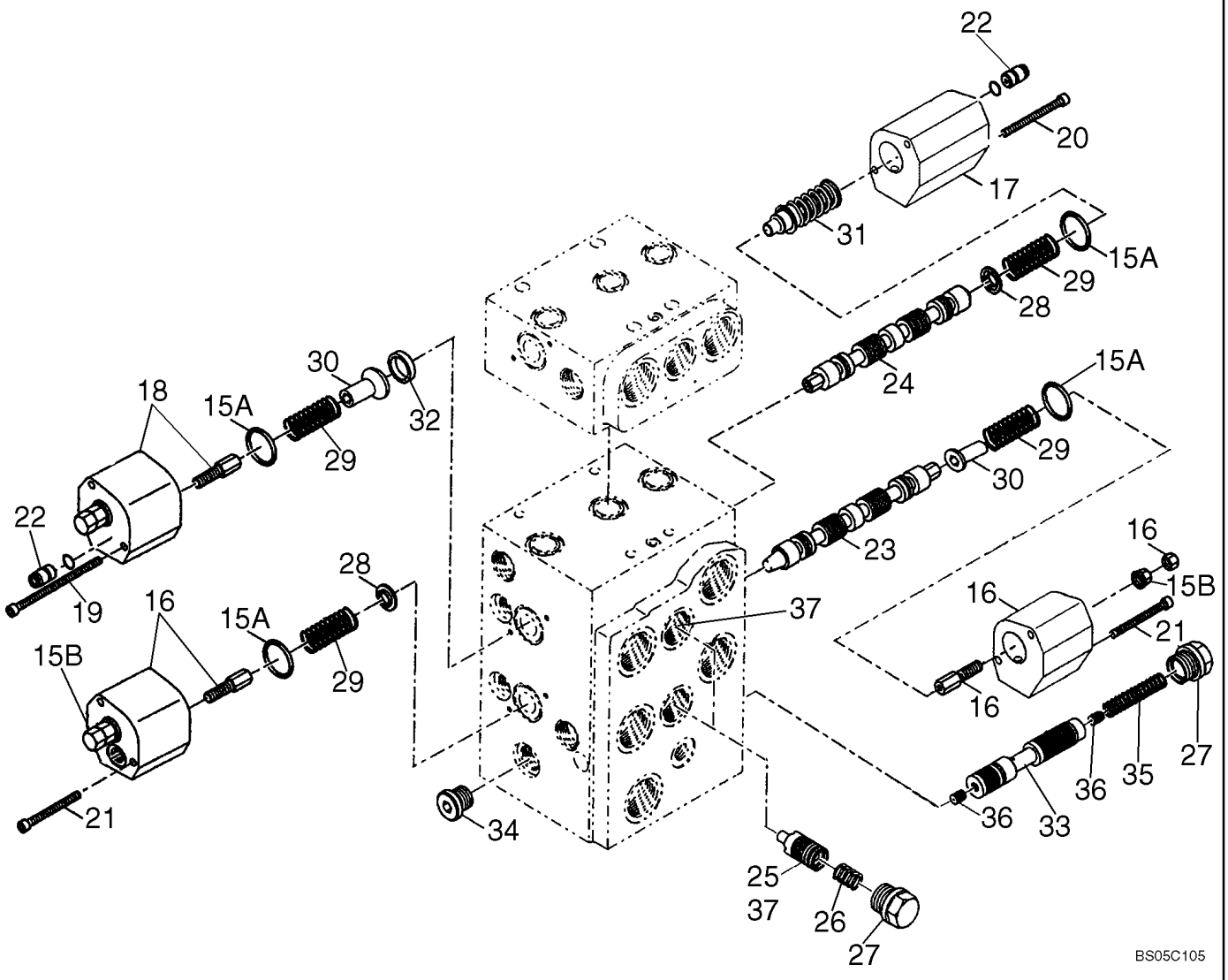

**CONJUNTO DE LA VALVULA - EJE DEL PISTÓN - (Z-BAR/XR)**

| REF | FN | PART NUMBER | YR/SN | QTY | DENOMINACION |
|---|---|---|---|---|---|
| | | REF | | | MANUAL, TWO, THREE, AND FOUR SPOOL VALVES FOR Z-BAR/XR MODELS |
| 15 | | 8604575 | | 1 | EQUIPO, Incl. 15A, 15B; For REF 16, 17, 18 |
| 15A | | NSS | | 4 | NO SE REPARA SEPARADAM., O-Ring; 25.07 x 2.62 |
| 15B | | NSS | | 2 | NO SE REPARA SEPARADAM., Lock Nut; M8 x 1 |
| 16 | | 8604576 | | 2 | TAPADERA |
| 17 | | 87311972 | | 1 | TAPADERA |
| 18 | | 8605577 | | 1 | TAPADERA |
| 19 | | 864-5060 | | 2 | TORNILLO, Hex Soc Hd, M5 x 60, 8.8, M5 X 60; 8.8 |
| 20 | | 87311974 | | 2 | TORNILLO, M5 x 85; 10.9 |
| 21 | | {864-5055} | | 4 | M5 x 55; 8.8 |
| 22 | | 8604578 | | 2 | VALVULA HIDRAULICA, Throttle Check Valve |
| 23 | | 87311975 | | 1 | PISTONCILLO |
| 24 | | 87311976 | | 1 | PISTONCILLO |
| 25 | | 8604579 | | 1 | EMBOLO |
| 26 | | 8604580 | | 2 | RESORTE, Compression |
| 27 | | 8604581 | | 3 | TORNILLO, Plug; M22 x 1.5 |
| 28 | | 8604582 | | 2 | RETENEDOR, Spring |
| 29 | | 8604583 | | 4 | RESORTE, Compression |
| 30 | | 87311984 | | 2 | RESORTE, Retanier |
| 31 | | 87311985 | | 1 | RESORTE |
| 32 | | 87311986 | | 1 | ANILLO |
| 33 | | 8604584 | | 1 | EMBOLO |
| 34 | | 87311988 | | 1 | TAPÓN |
| 35 | | 8604586 | | 1 | RESORTE, Compression |
| 36 | | 87311990 | | 2 | BOQUILLA |
| 37 | | 87311991 | | 1 | PISTONCILLO |

| 08-27B | | p1 | 08/07 |
|---|---|---|---|

**CONJUNTO DE LA VALVULA - CONTROL DE LA CARGADORA - SECCION DE LA VALVULA - (Z-BAR/XR)**

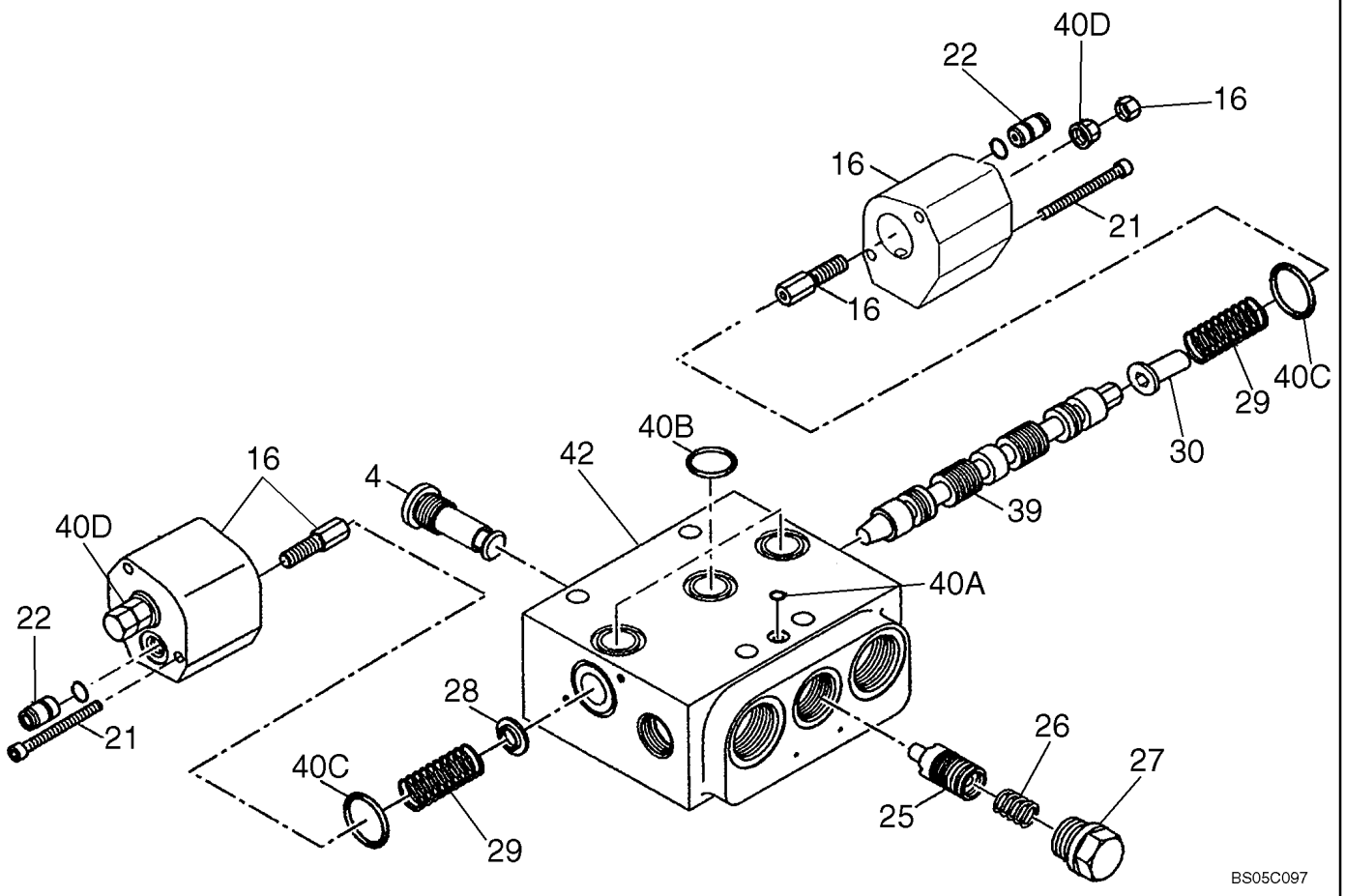

**CONJUNTO DE LA VALVULA - CONTROL DE LA CARGADORA - SECCION DE LA VALVULA - (Z-BAR/XR)**

| REF | FN | PART NUMBER | YR/SN | QTY | DENOMINACION |
|---|---|---|---|---|---|
| | | REF | | | MANUAL, FOR THREE SPOOL AND FOUR SPOOL VALVES; Z-BAR/XR |
| 4 | | 8604567 | | 1 | VALVULA ANTIRRETORNO |
| 16 | | NSS | | 1 | NO SE REPARA SEPARADAM., Housing |
| 21 | | {864-5055} | | 4 | M5 X 55; 8.8 |
| 22 | | 8604758 | | 2 | VALVULA ANTIRRETORNO |
| 25 | | 8604579 | | 1 | EMBOLO |
| 26 | | 8604580 | | 1 | RESORTE, Compression |
| 27 | | 8604781 | | 1 | VALVULA, Throttle Check |
| 28 | | 8604582 | | 1 | RETENEDOR, Spring |
| 29 | | 8604583 | | 2 | RESORTE, Compression |
| 30 | | 87311984 | | 1 | RESORTE, Retainer |
| 39 | | 87311975 | | 1 | PISTONCILLO |
| 40 | | 8604566 | | 1 | JEUGO, For Valve Section; Ref 43; Incl. 40A - 40D |
| 40A | | NSS | | 1 | NO SE REPARA SEPARADAM., O-Ring; 7.65 x 1.78 |
| 40B | | NSS | | 3 | NO SE REPARA SEPARADAM., O-Ring; 18.64 x 3.53 |
| 40C | | NSS | | 2 | NO SE REPARA SEPARADAM., O-Ring; 25.07 x 2.62 |
| 40D | | NSS | | 2 | NO SE REPARA SEPARADAM., Lock Nut; M8 x 1 |
| 42 | | NSS | | 1 | NO SE REPARA SEPARADAM., Valve Section |

| 08-28 | | p1 | 08/07 |
|---|---|---|---|

**CONJUNTO DE LA VALVULA - CONTROL DE LA CARGADORA - DOS, TRES, CUATRO CORREDERAS - (XT)**

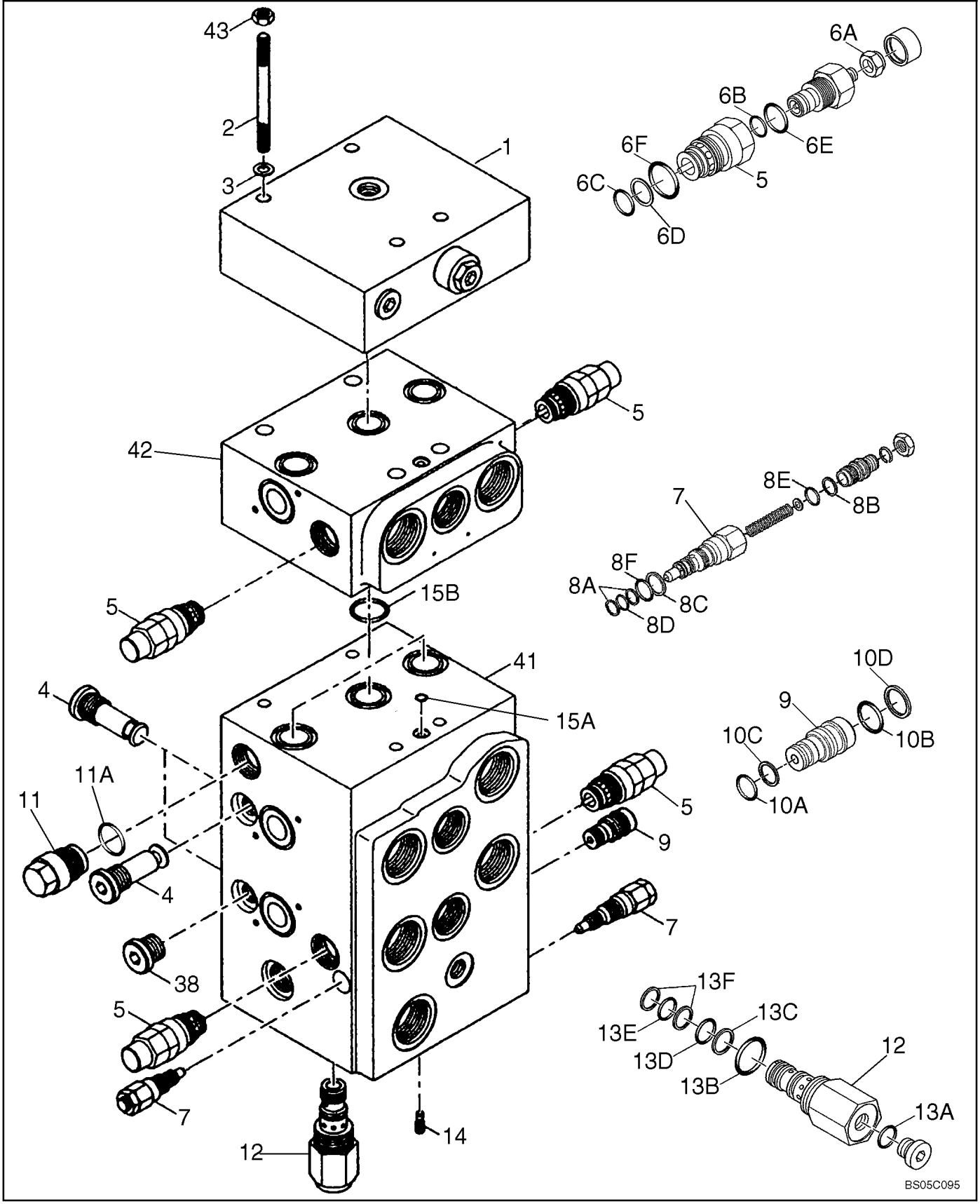

**CONJUNTO DE LA VALVULA - CONTROL DE LA CARGADORA - DOS, TRES, CUATRO CORREDERAS - (XT)**

| REF | FN | PART NUMBER | YR/SN | QTY | DENOMINACION |
|---|---|---|---|---|---|
| | | REF | | | MANUAL, XT LOADER |
| | | 87307986 | | | VALVULA HIDRAULICA, Two Spool; Incl. 1 - 41; Also Includes Figure 08-28A |
| | | 87307988 | | | VALVULA HIDRAULICA, Three Spool; Incl. 1 - 42; Also Includes Figure(s) 08-28A, 08-28B |
| | | 87307990 | | | VALVULA HIDRAULICA, Four Spool; Incl. 1 - 43; Also Includes Figure(s) 08-28A, 08-28B |
| 1 | | 87311889 | | 1 | PLACA, Valve |
| 2 | | 87311891 | | 4 | PRISIONERO, M8 x 190; 10.9; Four Spool Valve |
| 2 | | {961-8075} | | 4 | M8 x 75; 10.9; Three Spool Valve; Not Illustrated |
| 2 | | {962-8055} | | 4 | M8 x 55; 10.9; Two Spool Valve; Not Illustrated |
| 3 | | 892-11008 | | 4 | ARANDELA DE FRENO, M8 |
| 4 | | 8604567 | | 3 | VALVULA ANTIRRETORNO |
| 5 | | 8604568 | | 2-6 | VALVULA HIDRAULICA, Anticavitation; Includes Spool, (3) O-Rings, Thrust Ring, Spool Seal And Lock-Nut |
| 6 | | 8604588 | | 1 | JEUGO, Anticavitation; For Ref 5; Incl 6A - 6F |
| 6A | | NSS | | 1 | NO SE REPARA SEPARADAM., Lock Nut; M10 |
| 6B | | NSS | | 1 | NO SE REPARA SEPARADAM., Spool Seal |
| 6C | | NSS | | 1 | NO SE REPARA SEPARADAM., O-Ring; 14 x 0.178 |
| 6D | | NSS | | 1 | NO SE REPARA SEPARADAM., Thrust Ring; 14 x 17 x 1 |
| 6E | | NSS | | 1 | NO SE REPARA SEPARADAM., O-Ring; 15.6 x 1.78 |
| 6F | | NSS | | 1 | NO SE REPARA SEPARADAM., O-Ring; 21.95 x 1.78 |
| 7 | | 8602925 | | 2 | VÁLVULA, DESCARGA, Pressure Relief |
| 8 | | 8604590 | | 1 | JEUGO, Pressure Relief Valve; For Ref 7; Incl 8A - 8f |
| 8A | | NSS | | 2 | NO SE REPARA SEPARADAM., Thrust Ring; 7.3/9.5 x 0.7 |
| 8B | | NSS | | 1 | NO SE REPARA SEPARADAM., Thrust Ring; 9.91 x 1.35 |
| 8C | | NSS | | 1 | NO SE REPARA SEPARADAM., Thrust Ring; 11.56 x 1.35 |
| 8D | | NSS | | 1 | NO SE REPARA SEPARADAM., O-Ring; 8.50 x 1.5 |
| 8E | | NSS | | 1 | NO SE REPARA SEPARADAM., O-Ring;9.25 x 1.78 |
| 8F | | NSS | | 1 | NO SE REPARA SEPARADAM., O-Ring; 10.82 x 1.78 |

**CONJUNTO DE LA VALVULA - CONTROL DE LA CARGADORA - DOS, TRES, CUATRO CORREDERAS - (XT)**

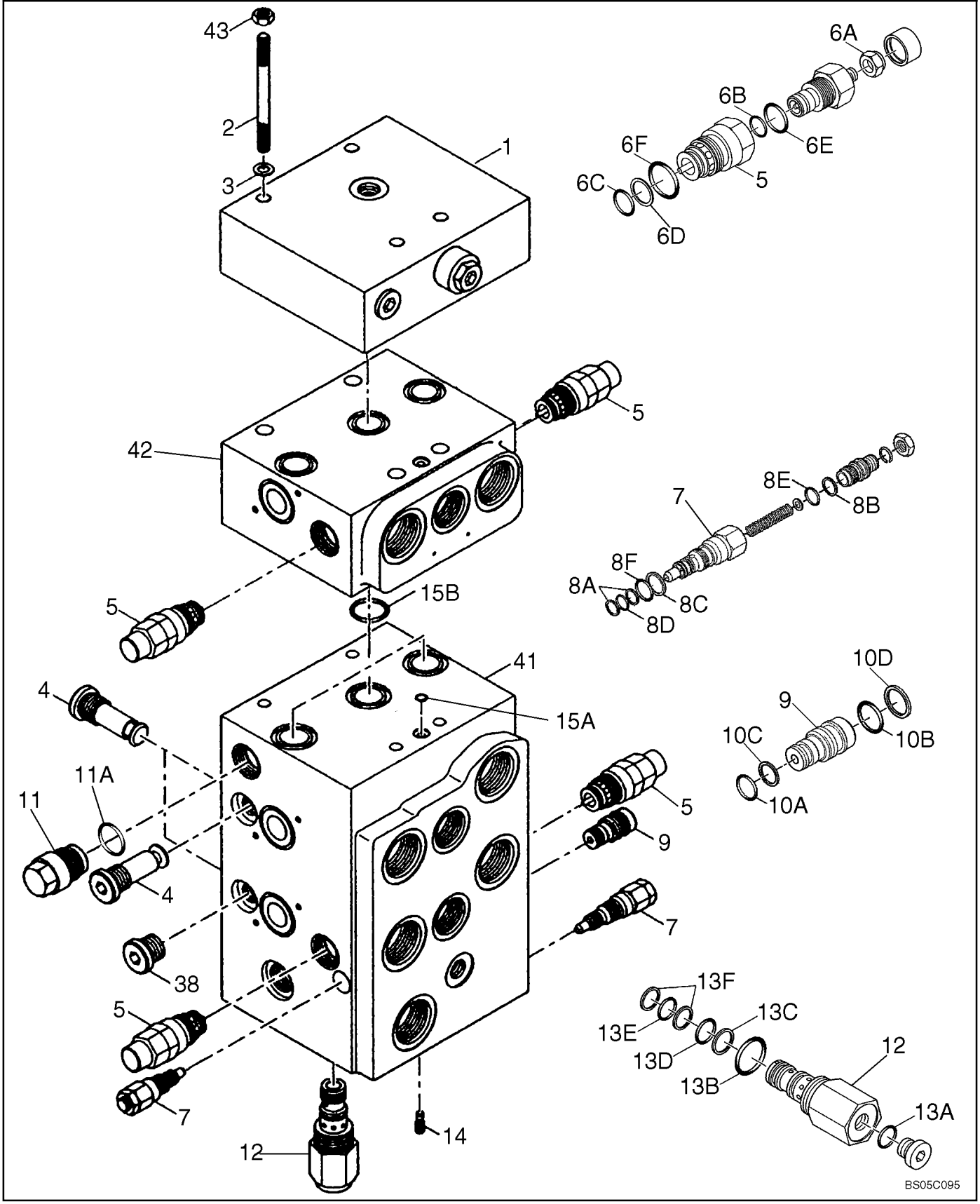

**CONJUNTO DE LA VALVULA - CONTROL DE LA CARGADORA - DOS, TRES, CUATRO CORREDERAS - (XT)**

| REF | FN | PART NUMBER | YR/SN | QTY | DENOMINACION |
|---|---|---|---|---|---|
| 9 | | 8602915 | | 1 | VALVULA HIDRAULICA, Flow Limiting |
| 10 | | 8602916 | | 1 | SERIE DE JUNTAS, Flow Limiting Valve; For Ref 9; Incl. 10A - 10D |
| 10A | | NSS | | 1 | NO SE REPARA SEPARADAM., O-Ring; 8.5 x 1.5 |
| 10B | | NSS | | 1 | NO SE REPARA SEPARADAM., O-Ring; 10.82 x 1.78 |
| 10C | | NSS | | 2 | NO SE REPARA SEPARADAM., Thrust Ring; 7.3/9.5 x 0.7 |
| 10D | | NSS | | 1 | NO SE REPARA SEPARADAM., Thrust Ring; 11.56 x 1.35 |
| 11 | | 87311965 | | 1 | INTRODUCTOR, Pilot Pressure Insert; Incl. 11A |
| 11A | | NSS | | 1 | NO SE REPARA SEPARADAM., O-Ring; 23.47 x 2.62 |
| 12 | | 8602913 | | 1 | VALVULA HIDRAULICA, Flow Limiting |
| 13 | | 8604592 | | 1 | JEUGO, Flow Limiting Valve; For Ref 12; Incl. 13A - 13f |
| 13A | | NSS | | 1 | NO SE REPARA SEPARADAM., Profile Seal; M12 x 1.5 |
| 13B | | NSS | | 1 | NO SE REPARA SEPARADAM., O-Ring; 18.77 x 1.78 |
| 13C | | NSS | | 1 | NO SE REPARA SEPARADAM., Thrust Ring; 11.2/14 x 1 |
| 13D | | NSS | | 1 | NO SE REPARA SEPARADAM., O-Ring; 12.42 x 1.78 |
| 13E | | NSS | | 1 | NO SE REPARA SEPARADAM., O-Ring;10.82 x 1.78 |
| 13F | | NSS | | 2 | NO SE REPARA SEPARADAM., Thrust Ring; 10.2/13 x 1 |
| 14 | | 8604574 | | 1 | TORNILLO |
| 14 | | 87362307 | | 1 | VALVULA DE CIERRE |
| 15 | | 8604575 | | 1 | EQUIPO, For Main Housing Block; Ref 41; Incl 15A, 15B |
| 15A | | NSS | | 1 | NO SE REPARA SEPARADAM., O-Ring; 7.65 x 1.78 |
| 15B | | NSS | | 3 | NO SE REPARA SEPARADAM., O-Ring; 18.64 x 3.53 |
| 41 | | NSS | | 1 | NO SE REPARA SEPARADAM., Main Housing |
| 42 | | NSS | | 1-2 | NO SE REPARA SEPARADAM., Section Housing |
| 43 | | 829-1408 | | 4 | TUERCA, M8, Cl 10, Four Spool Valve |

| 08-28A | | p1 | 08/07 |
|---|---|---|---|

**CONJUNTO DE LA VALVULA - EJE DEL PISTÓN - (XT)**

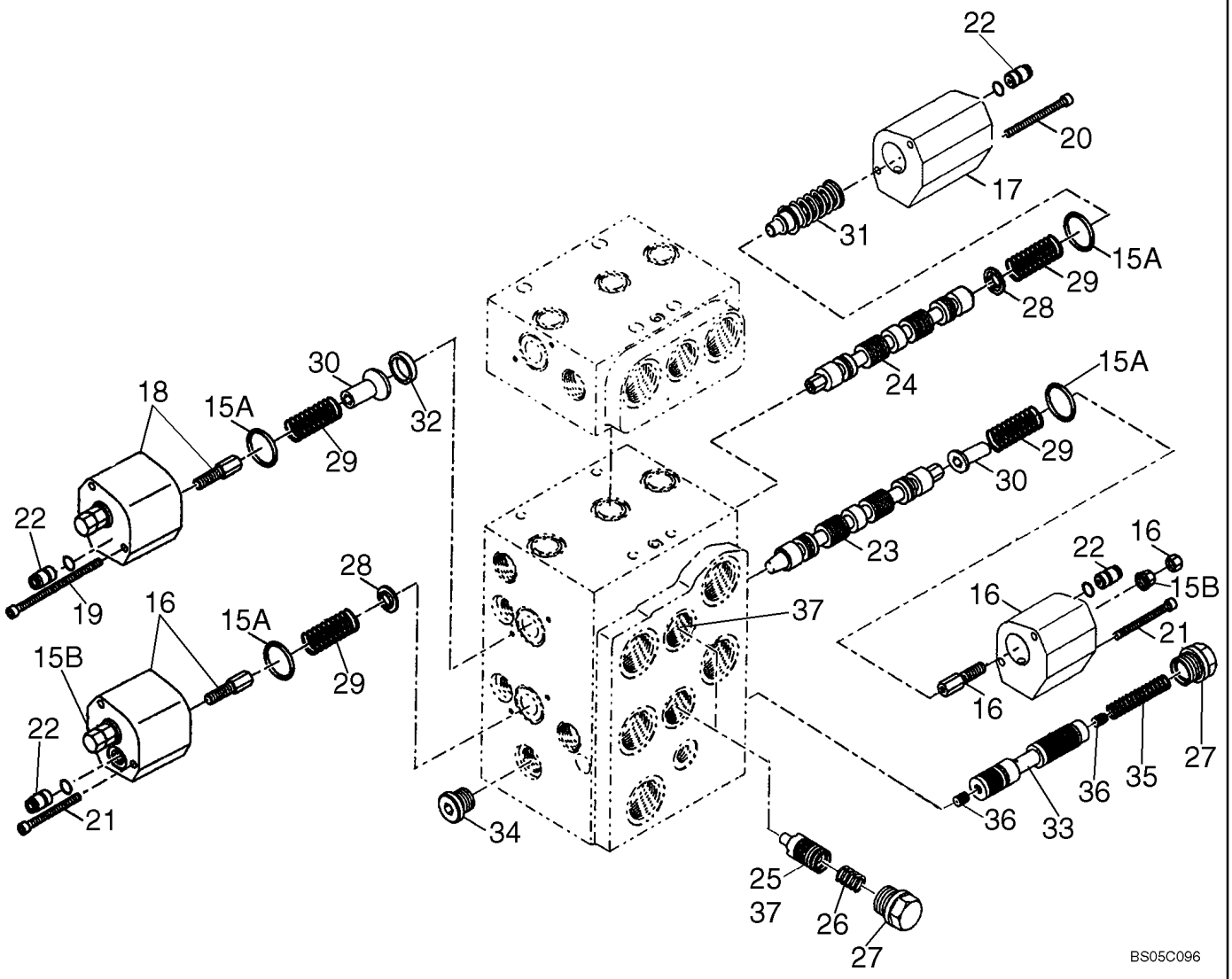

**CONJUNTO DE LA VALVULA - EJE DEL PISTÓN - (XT)**

| REF | FN | PART NUMBER | YR/SN | QTY | DENOMINACION |
|---|---|---|---|---|---|
| | | REF | | | MANUAL, TWO, THREE, AND FOUR SPOOL VALVES FOR XT MODELS |
| 15 | | 8604575 | | 1 | EQUIPO, Incl. 15A, 15B; For REF 16, 17, 18 |
| 15A | | NSS | | 4 | NO SE REPARA SEPARADAM., O-Ring; 25.07 x 2.62 |
| 15B | | NSS | | 2 | NO SE REPARA SEPARADAM., Lock Nut; M8 x 1 |
| 16 | | 8604576 | | 2 | TAPADERA |
| 17 | | 87311972 | | 1 | TAPADERA |
| 18 | | 8605577 | | 1 | TAPADERA |
| 19 | | 864-5060 | | 2 | TORNILLO, Hex Soc Hd, M5 x 60, 8.8, M5 X 60; 8.8 |
| 20 | | 87311974 | | 2 | TORNILLO, M5 x 85; 10.9 |
| 21 | | {864-5055} | | 4 | M5 x 55; 8.8 |
| 22 | | 8604578 | | 2 | VALVULA HIDRAULICA, Throttle Check Valve; 2 Have Been Removed From Ref 16 Covers. |
| 23 | | 87311898 | | 1 | PISTONCILLO |
| 23 | | 87352565 | | 1 | PISTONCILLO |
| 24 | | 87311976 | | 1 | PISTONCILLO |
| 25 | | 8604579 | | 1 | EMBOLO |
| 26 | | 8604580 | | 2 | RESORTE, Compression |
| 27 | | 8604581 | | 3 | TORNILLO, Plug; M22 x 1.5 |
| 28 | | 8604582 | | 2 | RETENEDOR, Spring |
| 29 | | 8604583 | | 4 | RESORTE, Compression |
| 30 | | 87311984 | | 2 | RESORTE, Retanier |
| 31 | | 87311985 | | 1 | RESORTE |
| 32 | | 87311986 | | 1 | ANILLO |
| 33 | | 8604584 | | 1 | EMBOLO |
| 34 | | 87311988 | | 1 | TAPÓN |
| 35 | | 8604586 | | 1 | RESORTE, Compression |
| 36 | | 87311990 | | 2 | BOQUILLA |
| 37 | | 87311991 | | 1 | PISTONCILLO |

| 08-28B | | p1 | 08/07 |
|---|---|---|---|

**CONJUNTO DE LA VALVULA - CONTROL DE LA CARGADORA - SECCION DE LA VALVULA - (XT)**

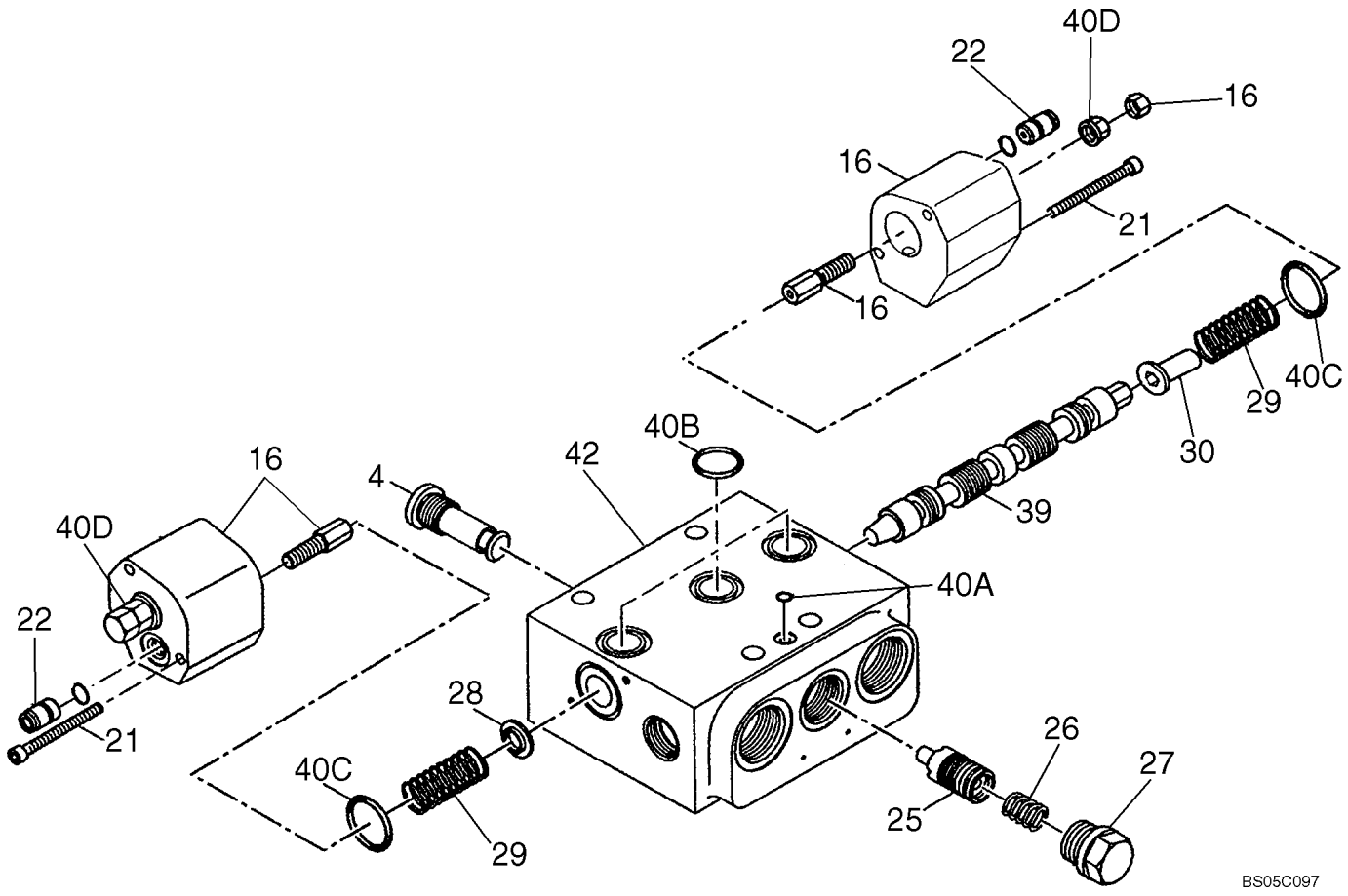

**CONJUNTO DE LA VALVULA - CONTROL DE LA CARGADORA - SECCION DE LA VALVULA - (XT)**

| REF | FN | PART NUMBER | YR/SN | QTY | DENOMINACION |
|---|---|---|---|---|---|
| | | REF | | | MANUAL, FOR THREE SPOOL AND FOUR SPOOL VALVES; XT |
| 4 | | 8604567 | | 1 | VALVULA ANTIRRETORNO |
| 16 | | NSS | | 1 | NO SE REPARA SEPARADAM., Housing |
| 21 | | {864-5055} | | 4 | M5 X 55; 8.8 |
| 22 | | 8604758 | | 2 | VALVULA ANTIRRETORNO |
| 25 | | 8604579 | | 1 | EMBOLO |
| 26 | | 8604580 | | 1 | RESORTE, Compression |
| 27 | | 8604781 | | 1 | VALVULA, Throttle Check |
| 28 | | 8604582 | | 1 | RETENEDOR, Spring |
| 29 | | 8604583 | | 2 | RESORTE, Compression |
| 30 | | 87311984 | | 1 | RESORTE, Retainer |
| 39 | | 87311975 | | 1 | PISTONCILLO |
| 40 | | 8604566 | | 1 | JEUGO, For Valve Section; Ref 43; Incl. 40A - 40D |
| 40A | | NSS | | 1 | NO SE REPARA SEPARADAM., O-Ring; 7.65 x 1.78 |
| 40B | | NSS | | 3 | NO SE REPARA SEPARADAM., O-Ring; 18.64 x 3.53 |
| 40C | | NSS | | 2 | NO SE REPARA SEPARADAM., O-Ring; 25.07 x 2.62 |
| 40D | | NSS | | 2 | NO SE REPARA SEPARADAM., Lock Nut; M8 x 1 |
| 42 | | NSS | | 1 | NO SE REPARA SEPARADAM., Valve Section |

**HIDRAULICA - PALANCA DE CONTROL SOPORTE**

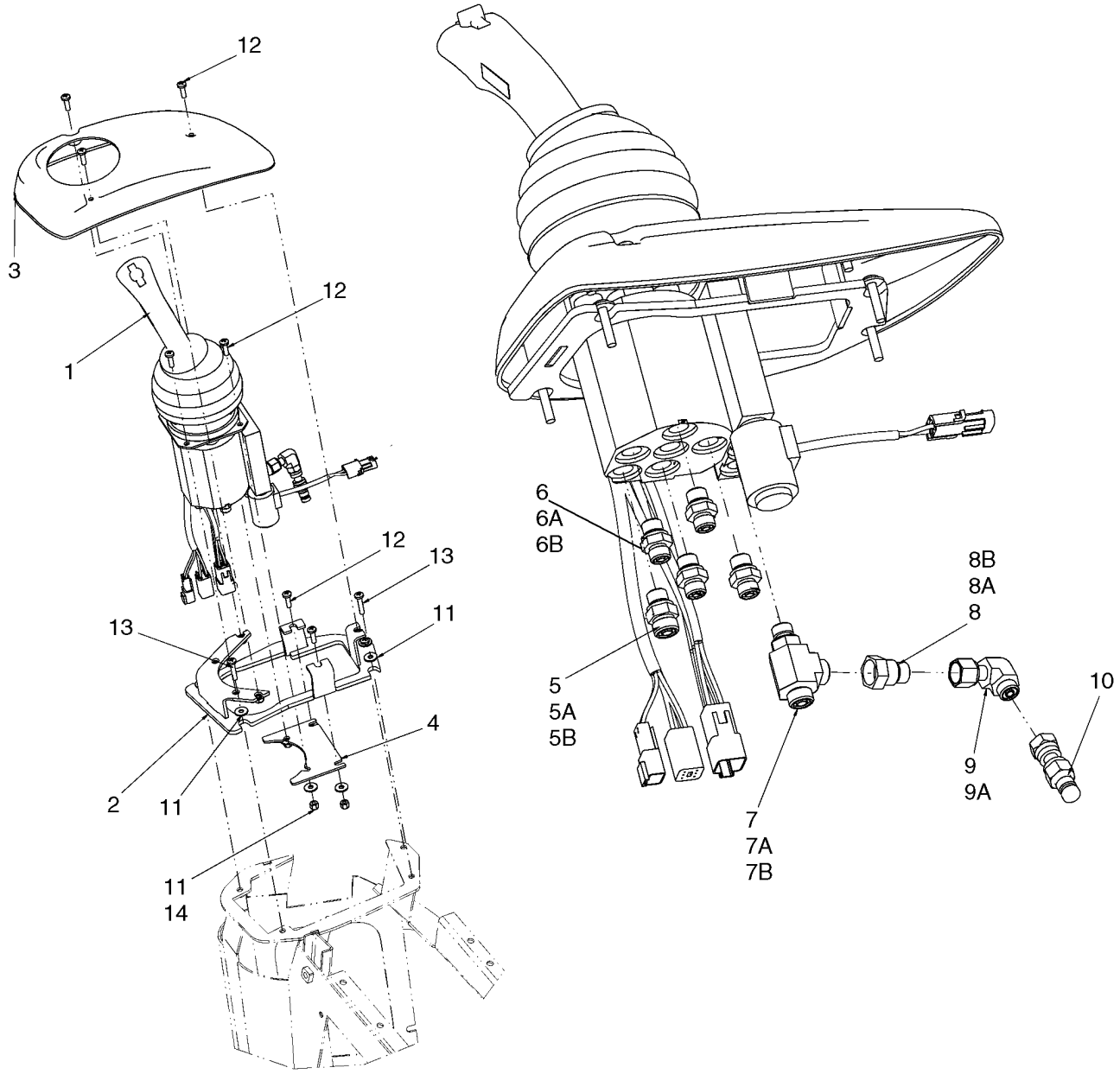

**HIDRAULICA - PALANCA DE CONTROL SOPORTE**

| REF | FN | PART NUMBER | YR/SN | QTY | DENOMINACION |
|---|---|---|---|---|---|
| 1 | | 87340016 | | 1 | JOYSTICK, See Figures 08-29A, 08-29B |
| 2 | | 87516506 | | 1 | ADAPTOR |
| 3 | | 87638910 | | 1 | MARCO, BRACKET |
| 4 | | 87349019 | | 1 | ADAPTOR |
| 5 | | 700-101 | | 6 | RACOR, 11/16"-16 ORFS x M14 x 1.5 ORB, Incl. Refs. 5A, 5B |
| 5A | | 238-6012 | | 1 | JUNTA HERMETICA, -012, 90 Duro, .364" ID x .070" Thk, Face Seal |
| 5B | | 637-63113 | | 1 | JUNTA HERMETICA, Cl 6, 11.3MM ID x 2.2 Thk |
| 6 | | 700-153 | | 4 | RACOR, 9/16"-18 ORFS x M14 x 1.5 ORB, Incl. Refs. 6A, 6B |
| 6A | | 637-63113 | | 1 | JUNTA HERMETICA, Cl 6, 11.3MM ID x 2.2 Thk |
| 6B | | 238-6011 | | 1 | JUNTA HERMETICA, -011, 90 Duro, .301" ID x .070" Thk, Face Seal |
| 7 | | 700-406 | | 1 | RACOR-T, 11/16"-16 ORFS x M14 x 1.5 ORB Run, Incl. Refs. 7A, 7B |
| 7A | | 238-6012 | | 2 | JUNTA HERMETICA, -012, 90 Duro, .364" ID x .070" Thk, Face Seal |
| 7B | | 637-63113 | | 1 | JUNTA HERMETICA, Cl 6, 11.3MM ID x 2.2 Thk |
| 8 | | 201-145 | | 1 | REDUCTOR, 9/16"-18 Male x 11/16"-16 Fem, ORFS, Incl. Refs. 8A, 8B |
| 8A | | 238-6011 | | 1 | JUNTA HERMETICA, -011, 90 Duro, .301" ID x .070" Thk, Face Seal |
| 8B | | 238-6012 | | 1 | JUNTA HERMETICA, -012, 90 Duro, .364" ID x .070" Thk, Face Seal |
| 9 | | 701-329 | | 1 | CODO, 90º, 9/16"-18 ORFS x 9/16"-18 Fem Sw, Incl. Ref. 9A |
| 9A | | 238-6011 | | 1 | JUNTA HERMETICA, -011, 90 Duro, .301" ID x .070" Thk |
| 10 | | 190117A1 | | 1 | CARDAN |
| 11 | | 895-25006 | | 4 | ARANDELA, M6 x 18 x 1.6 |
| 12 | | 540-719 | | 9 | TORNILLO, Cross Pan Hd, M6 x 20 |
| 13 | | 840-1630 | | 4 | TORNILLO, Cross Pan Hd, M6 x 30 |
| 14 | | 832-10406 | | 4 | CONTRA TUERCA, M6 x 1, Cl 8 |

| 08-29A | | p1 | 08/07 |
|---|---|---|---|

**CONJUNTO DE LA VALVULA - PALANCA DE CONTROL**

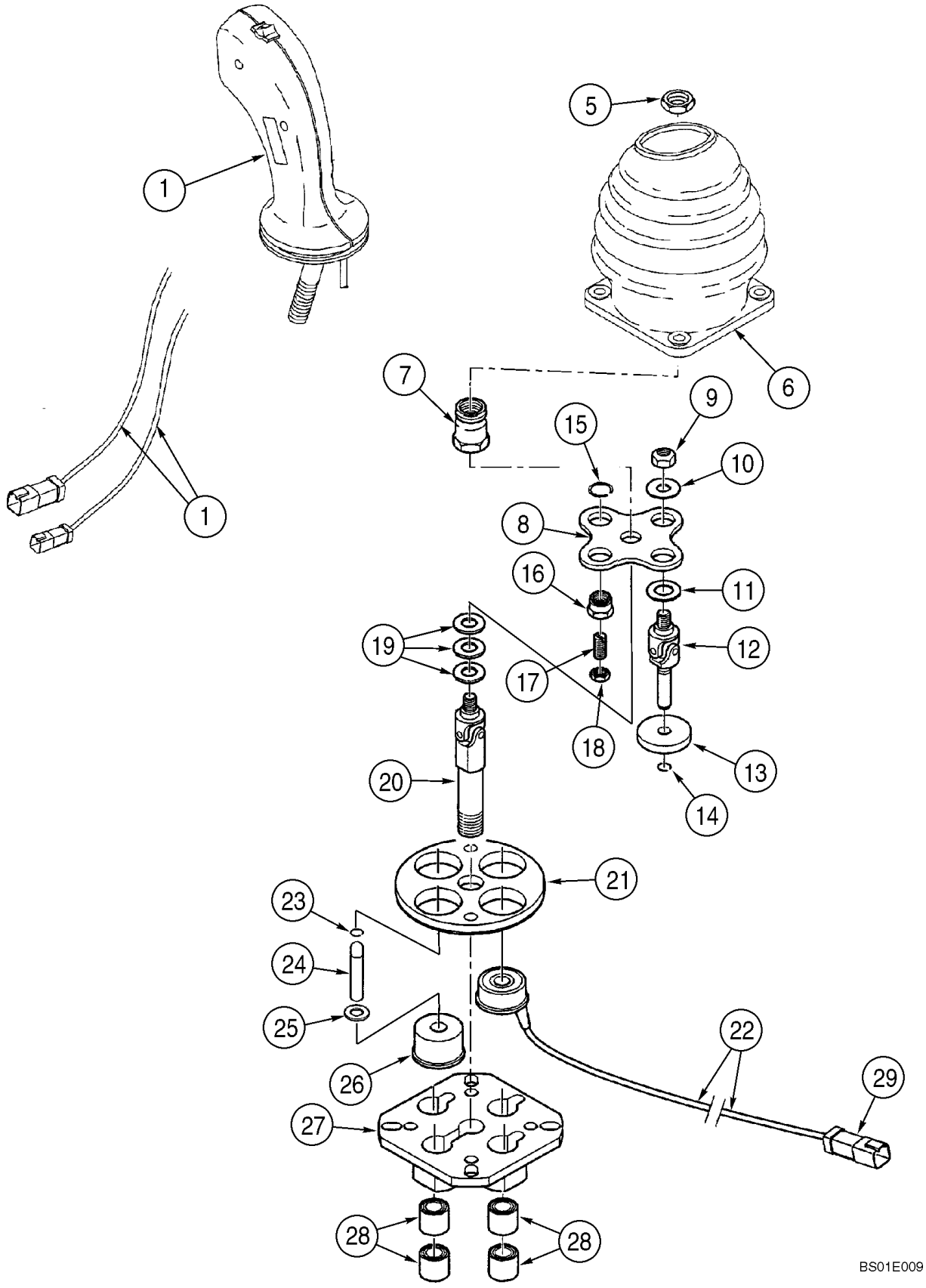

**CONJUNTO DE LA VALVULA - PALANCA DE CONTROL**

| REF | FN | PART NUMBER | YR/SN | QTY | DENOMINACION |
|---|---|---|---|---|---|
| | | 87340016 | | 1 | JOYSTICK, Joystick; Incl. 1 - 29; Incl. Figure 08-29B |
| | | 410108A1 | | 1 | JEUGO, Joystick |
| | | 410566A1 | | 1 | TUERCA, Locking |
| 1 | | 87372088 | | 1 | MANECILLA |
| 5 | | 829-1412 | | 1 | TUERCA, M12, Cl 10 |
| 6 | | 427501A1 | | 1 | PROTECTOR |
| 7 | | 8604528 | | 1 | TUERCA, M12 |
| 8 | | 8604529 | | 1 | PIEZA DE SOPORTE |
| | | 8604530 | | 3 | EQUIPO, Shaft Detent; Incl. Refs. 9 - 14 |
| 9 | | NSS | | 1 | NO SE REPARA SEPARADAM., Nut, Lock |
| 10 | | NSS | | 1 | NO SE REPARA SEPARADAM., Washer |
| 11 | | NSS | | 1 | NO SE REPARA SEPARADAM., Washer |
| 12 | | NSS | | 1 | NO SE REPARA SEPARADAM., Shaft |
| 13 | | NSS | | 1 | NO SE REPARA SEPARADAM., Armature |
| 14 | | NSS | | 1 | NO SE REPARA SEPARADAM., Ring, Snap |
| | | 8604531 | | 1 | EQUIPO, Non-Detent Plunger; Use In Non-Detent Port 2; Incl. Refs. 15 - 18 |
| 15 | | NSS | | 1 | NO SE REPARA SEPARADAM., Ring, Snap |
| 16 | | NSS | | 1 | NO SE REPARA SEPARADAM., M16, Screw |
| 17 | | NSS | | 1 | NO SE REPARA SEPARADAM., M8 x 16, Screw |
| 18 | | NSS | | 1 | NO SE REPARA SEPARADAM., Nut |
| 19 | | 8604532 | | 1 | SUPLEMENTO, Set Of Three |
| 20 | | 8604533 | | 1 | EJE |
| 21 | | 8604534 | | 1 | BRIDA |
| 22 | | 8604535 | | 3 | SOLENOIDE, 24V; Use In Detent Ports, 1, 3, 4; Component Parts Not Serviced Separately |
| | | 8604536 | | 1 | JUEGO DE REPARACION, Plunger; Incl. Refs. 23 - 25 |
| 23 | | NSS | | 1 | NO SE REPARA SEPARADAM., Ring, Snap |
| 24 | | NSS | | 1 | NO SE REPARA SEPARADAM., Plunger |
| 25 | | NSS | | 1 | NO SE REPARA SEPARADAM., Washer |
| 26 | | 8604537 | | 1 | GUIA, Plunger |
| 27 | | 8604538 | | 1 | PIEZA DE SOPORTE |
| 28 | | 8604539 | | 1 | CASQUILLO, Set Of Four |
| 29 | | 8604527 | | 1 | EQUIPO, 6 Pin Deutsch Connector |

| 08-29B | | p1 | 08/07 |
|---|---|---|---|

**CONJUNTO DE LA VALVULA - PALANCA DE CONTROL**

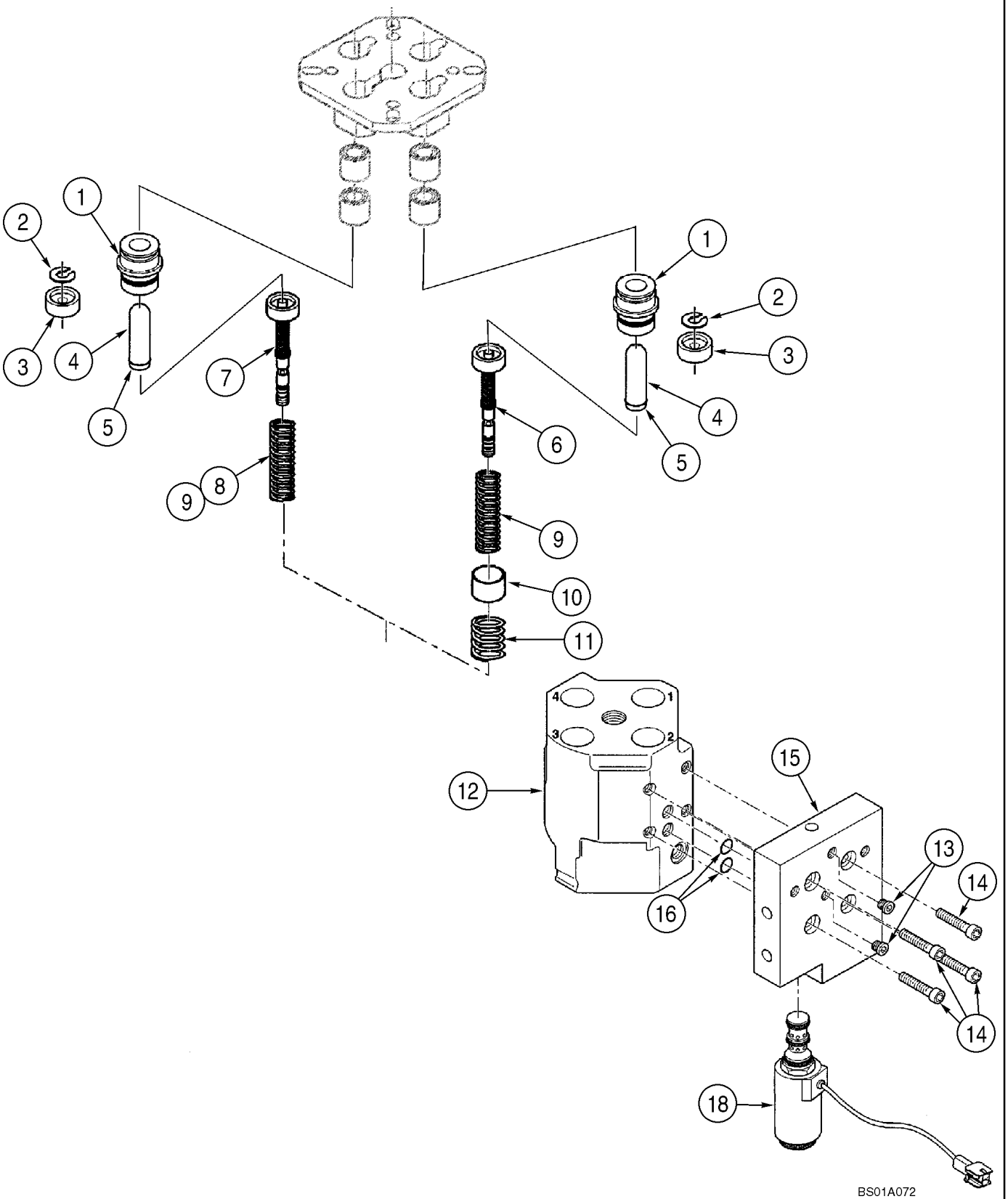

**CONJUNTO DE LA VALVULA - PALANCA DE CONTROL**

| REF | FN | PART NUMBER | YR/SN | QTY | DENOMINACION |
|---|---|---|---|---|---|
| | | 87340016 | | 1 | JOYSTICK, Joystick; Incl. 1 - 18; Incl. Figure 08-29A |
| | | 8604521 | | 4 | JEUGO, Plunger; Used In All Ports; Incl. Refs. 1 - 5 |
| 1 | | NSS | | 2 | NO SE REPARA SEPARADAM., Guide |
| 2 | | NSS | | 2 | NO SE REPARA SEPARADAM., Washer |
| 3 | | NSS | | 2 | NO SE REPARA SEPARADAM., Retainer |
| 4 | | NSS | | 2 | NO SE REPARA SEPARADAM., Plunger |
| 5 | | NSS | | 2 | NO SE REPARA SEPARADAM., Ring, Snap |
| 6 | | 8604522 | | 1 | REGULADOR, Use In Port 1 |
| 7 | | 8604523 | | 3 | REGULADOR, Use In Ports 2, 3, 4 |
| 8 | | 87563048 | | 1 | RESORTE, SPRING, Set of Two; Use In Ports 2, 4 |
| 9 | | 8604525 | | 1 | RESORTE, Set Of Two; Use In Ports 1, 3 |
| | | 87432563 | | 1 | SERIE DE JUNTAS, Springs; Prefeeling; For Ports 1, 3; Use With 8603083 Control Valve; Not Illustrated |
| 10 | | NSS | | 1 | NO SE REPARA SEPARADAM., Socket |
| 11 | | NSS | | 1 | NO SE REPARA SEPARADAM., Spring |
| 12 | | NSS | | 1 | NO SE REPARA SEPARADAM., Housing |
| 13 | | 8604550 | | 1 | JUEGO DE REPARACION, Plug; Set Of Two; If Used |
| | | 8604540 | | 1 | JUEGO DE REPARACION, Flange; Incl. Refs. 14 - 16 |
| 14 | | NSS | | 4 | NO SE REPARA SEPARADAM., M6 x 25, Screw |
| 15 | | NSS | | 1 | NO SE REPARA SEPARADAM., Flange |
| 16 | | NSS | | 2 | NO SE REPARA SEPARADAM., 1,5 x 11, O-Ring |
| 17 | | 8604541 | | 1 | JUEGO DE REPARACION, O-Ring; Set Of Two; Not Illustrated |
| 18 | | 8604542 | | 1 | VALVULA HIDRAULICA, 24V; Solenoid |

## CONTROL DE LA CARGADORA - PALANCA DE MANDO CON UNA SOLA PALANCA - MONTAJE

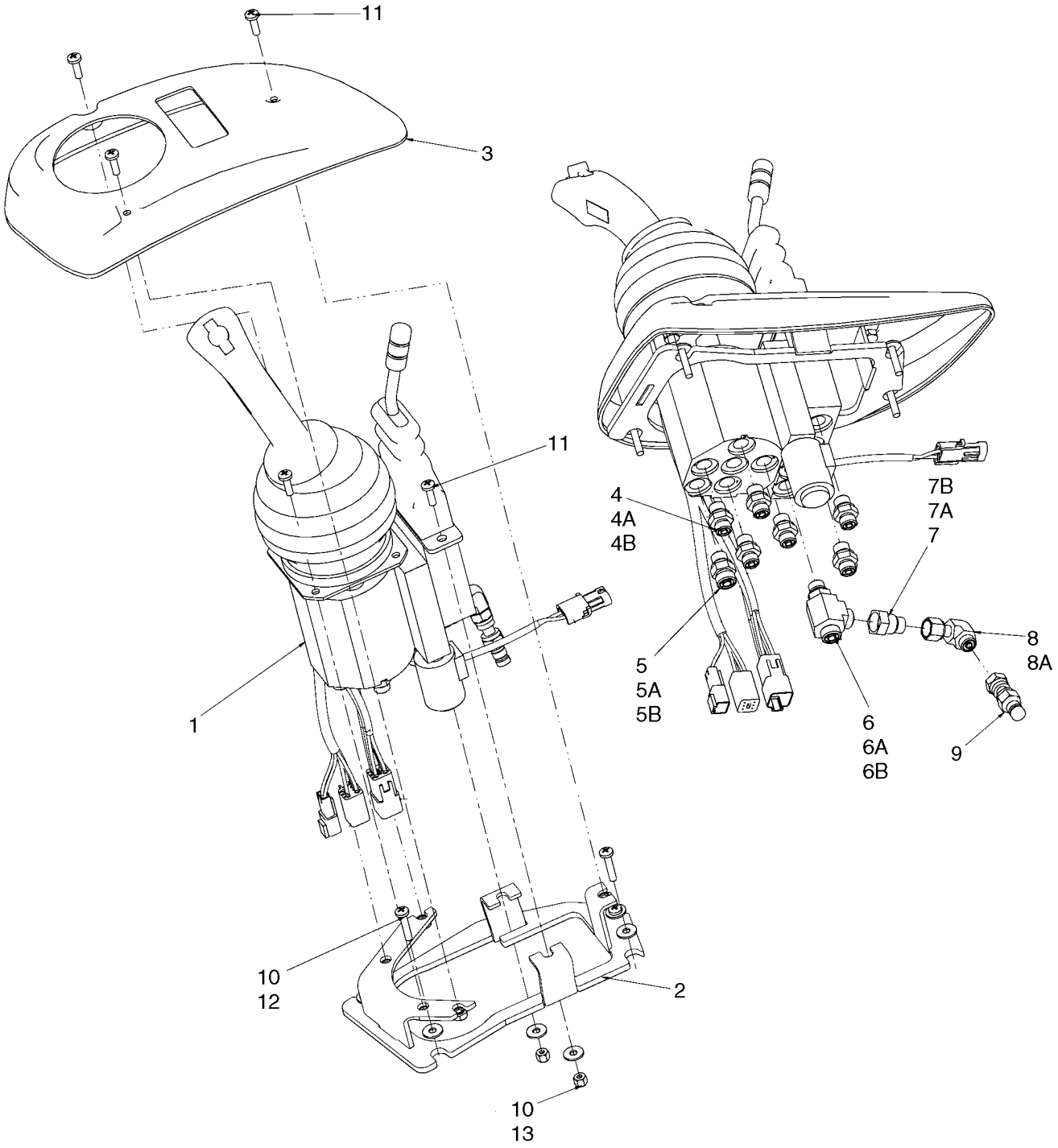

**CONTROL DE LA CARGADORA - PALANCA DE MANDO CON UNA SOLA PALANCA - MONTAJE**

| REF | FN | PART NUMBER | YR/SN | QTY | DENOMINACION |
|---|---|---|---|---|---|
| 1 | | 87340017 | | 1 | JOYSTICK, With One Lever; See Figure 08-30A |
| 2 | | 87516506 | | 1 | ADAPTOR, Joystick Controller |
| 3 | | 87638911 | | 1 | MARCO |
| 4 | | 700-153 | | 6 | RACOR, 9/16"-18 ORFS x M14 x 1.5 ORB, Incl. Refs. 4A, 4B |
| 4A | | 238-6011 | | 1 | JUNTA HERMETICA, -011, 90 Duro, .301" ID x .070" Thk, Face Seal |
| 4B | | 637-63113 | | 1 | JUNTA HERMETICA, Cl 6, 11.3MM ID x 2.2 Thk |
| 5 | | 700-101 | | 1 | RACOR, 11/16"-16 ORFS x M14 x 1.5 ORB, Incl. Refs. 5A, 5B |
| 5A | | 238-6012 | | 1 | JUNTA HERMETICA, -012, 90 Duro, .364" ID x .070" Thk, Face Seal |
| 5B | | 637-63113 | | 1 | JUNTA HERMETICA, Cl 6, 11.3MM ID x 2.2 Thk |
| 6 | | 700-406 | | 1 | RACOR-T, 11/16"-16 ORFS x M14 x 1.5 ORB Run, Incl. Refs. 6A, 6B |
| 6A | | 238-6012 | | 2 | JUNTA HERMETICA, -012, 90 Duro, .364" ID x .070" Thk, Face Seal |
| 6B | | 637-63113 | | 1 | JUNTA HERMETICA, Cl 6, 11.3MM ID x 2.2 Thk |
| 7 | | 201-145 | | 1 | REDUCTOR, 9/16"-18 Male x 11/16"-16 Fem, ORFS, Incl. Refs. 7A, 7B |
| 7A | | 238-6011 | | 1 | JUNTA HERMETICA, -011, 90 Duro, .301" ID x .070" Thk, Face Seal |
| 7B | | 238-6012 | | 1 | JUNTA HERMETICA, -012, 90 Duro, .364" ID x .070" Thk, Face Seal |
| 8 | | 701-329 | | 1 | CODO, 90º, 9/16"-18 ORFS x 9/16"-18 Fem Sw, Incl. Ref. 8A |
| 8A | | 238-6011 | | 1 | JUNTA HERMETICA, -011, 90 Duro, .301" ID x .070" Thk, Face Seal |
| 9 | | 190117A1 | | 1 | CARDAN |
| 10 | | 895-25006 | | 6 | ARANDELA, M6 x 18 x 1.6 |
| 11 | | 540-719 | | 7 | TORNILLO, Cross Pan Hd, M6 x 20 |
| 12 | | 840-1630 | | 4 | TORNILLO, Cross Pan Hd, M6 x 30 |
| 13 | | 832-10406 | | 2 | CONTRA TUERCA, M6 x 1, Cl 8 |

**CONTROL DE LA CARGADORA - PALANCA DE MANDO CON UNA SOLA PALANCA**

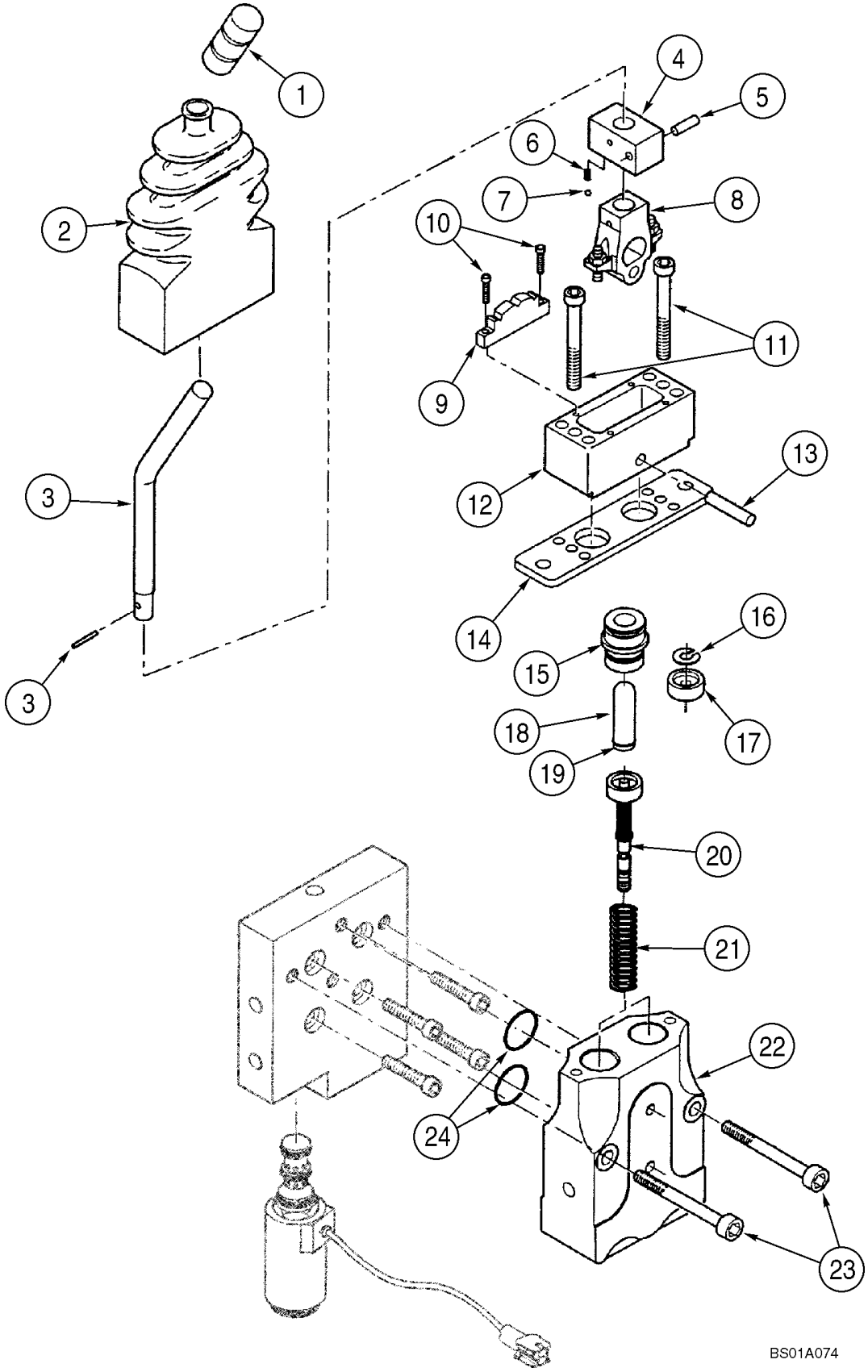

**CONTROL DE LA CARGADORA - PALANCA DE MANDO CON UNA SOLA PALANCA**

| REF | FN | PART NUMBER | YR/SN | QTY | DENOMINACION |
|---|---|---|---|---|---|
| | | 87340017 | | 1 | JOYSTICK, Valve Assembly; With Single Lever; Incl. Refs. 1 - 25 |
| | | 8604593 | | 1 | PALANCA, Assembly Valve; Incl. Refs. 1 - 21 |
| 1 | | 8604543 | | 1 | MANGO |
| 2 | | 8604544 | | 1 | CASQUETE, Rubber |
| | | 8604546 | | 1 | EQUIPO, M Operation; Incl. Refs. 3 - 13 |
| 3 | | NSS | | 1 | NO SE REPARA SEPARADAM., Lever |
| 4 | | NSS | | 1 | NO SE REPARA SEPARADAM., Body |
| 5 | | NSS | | 1 | NO SE REPARA SEPARADAM., Pin, Lock |
| 6 | | NSS | | 1 | NO SE REPARA SEPARADAM., Spring |
| 7 | | NSS | | 1 | NO SE REPARA SEPARADAM., Ball |
| 8 | | NSS | | 1 | NO SE REPARA SEPARADAM., Cam |
| 9 | | NSS | | 1 | NO SE REPARA SEPARADAM., Lock |
| 10 | | NSS | | 2 | NO SE REPARA SEPARADAM., M3 x 12, Screw |
| 11 | | NSS | | 2 | NO SE REPARA SEPARADAM., M6 x 50, Screw |
| 12 | | NSS | | 1 | NO SE REPARA SEPARADAM., Cover |
| 13 | | NSS | | 1 | NO SE REPARA SEPARADAM., Pin |
| 14 | | 8604545 | | 1 | PLACA, Retaining |
| | | 8604255 | | 2 | JUEGO DE REPARACION, Plunger; Incl. Refs. 15 - 19 |
| 15 | | NSS | | 1 | NO SE REPARA SEPARADAM., Guide |
| 16 | | NSS | | 1 | NO SE REPARA SEPARADAM., Washer |
| 17 | | NSS | | 1 | NO SE REPARA SEPARADAM., Retainer |
| 18 | | NSS | | 1 | NO SE REPARA SEPARADAM., Plunger |
| 19 | | NSS | | 1 | NO SE REPARA SEPARADAM., Ring, Snap |
| 20 | | 8604548 | | 2 | REGULADOR, Unit |
| 21 | | 8604549 | | 1 | EQUIPO, Return; Set Of Two |
| 22 | | NSS | | 1 | NO SE REPARA SEPARADAM., Housing |
| 23 | | NSS | | 2 | NO SE REPARA SEPARADAM., M8 x 45 Screw |
| 24 | | NSS | | 2 | NO SE REPARA SEPARADAM., O-Ring; 1,5 x 17,5; Order 8604876, Ref. 25 |
| 25 | | 8604876 | | 1 | JEUGO, Seal; Not Illustrated |

**CONTROL DE LA CARGADORA, REMOTO - PALANCA DE MANDO CON DOS PALANCAS SOPORTE**

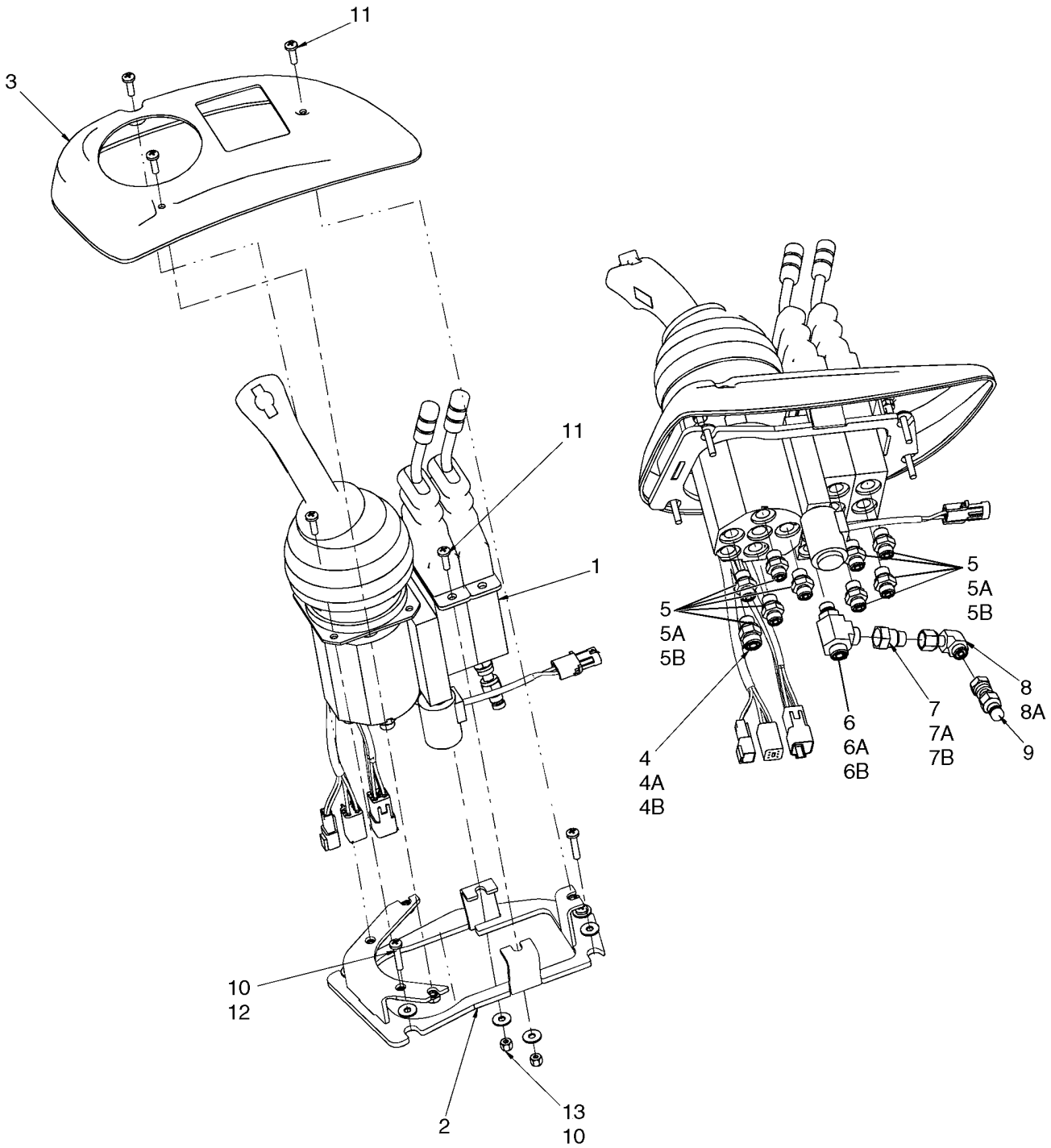

**CONTROL DE LA CARGADORA, REMOTO - PALANCA DE MANDO CON DOS PALANCAS SOPORTE**

| REF | FN | PART NUMBER | YR/SN | QTY | DENOMINACION |
|---|---|---|---|---|---|
| 1 | | 87340019 | | 1 | JOYSTICK, Control With 2 Levers; See Figures 08-31A |
| 2 | | 87516506 | | 1 | ADAPTOR |
| 3 | | 87638912 | | 1 | MARCO |
| 4 | | 700-101 | | 7 | RACOR, 11/16"-16 ORFS x M14 x 1.5 ORB, Incl. Refs. 4A, 4B |
| 4A | | 238-6012 | | 1 | JUNTA HERMETICA, -012, 90 Duro, .364" ID x .070" Thk, Face Seal |
| 4B | | 637-63113 | | 1 | JUNTA HERMETICA, Cl 6, 11.3MM ID x 2.2 Thk |
| 5 | | 700-153 | | 8 | RACOR, 9/16"-18 ORFS x M14 x 1.5 ORB, Incl. Refs. 5A, 5B |
| 5A | | 637-63113 | | 1 | JUNTA HERMETICA, Cl 6, 11.3MM ID x 2.2 Thk |
| 5B | | 238-6011 | | 1 | JUNTA HERMETICA, -011, 90 Duro, .301" ID x .070" Thk, Face Seal |
| 6 | | 700-406 | | 1 | RACOR-T, 11/16"-16 ORFS x M14 x 1.5 ORB Run, Incl. Refs. 6A, 6B |
| 6A | | 238-6012 | | 2 | JUNTA HERMETICA, -012, 90 Duro, .364" ID x .070" Thk, Face Seal |
| 6B | | 637-63113 | | 1 | JUNTA HERMETICA, Cl 6, 11.3MM ID x 2.2 Thk |
| 7 | | 201-145 | | 1 | REDUCTOR, 9/16"-18 Male x 11/16"-16 Fem, ORFS, Incl. Refs. 7A, 7B |
| 7A | | 238-6012 | | 1 | JUNTA HERMETICA, -012, 90 Duro, .364" ID x .070" Thk, Face Seal |
| 7B | | 637-63113 | | 1 | JUNTA HERMETICA, Cl 6, 11.3MM ID x 2.2 Thk |
| 8 | | 701-329 | | 1 | CODO, 90º, 9/16"-18 ORFS x 9/16"-18 Fem Sw, Incl. Ref. 8A |
| 8A | | 238-6011 | | 1 | JUNTA HERMETICA, -011, 90 Duro, .301" ID x .070" Thk |
| 9 | | 190117A1 | | 1 | CARDAN, Diagnostic |
| 10 | | 895-25006 | | 2 | ARANDELA, M6 x 18 x 1.6 |
| 11 | | 540-719 | | 7 | TORNILLO, Cross Pan Hd, M6 x 20 |
| 12 | | 840-1630 | | 4 | TORNILLO, Cross Pan Hd, M6 x 30 |
| 13 | | 832-10406 | | 2 | CONTRA TUERCA, M6 x 1, Cl 8 |

| 08-31A | | p1 | 07/07 |
|---|---|---|---|

**CONJUNTO DE LA VALVULA - PALANCA DE MANDO CON DOS PALANCAS**

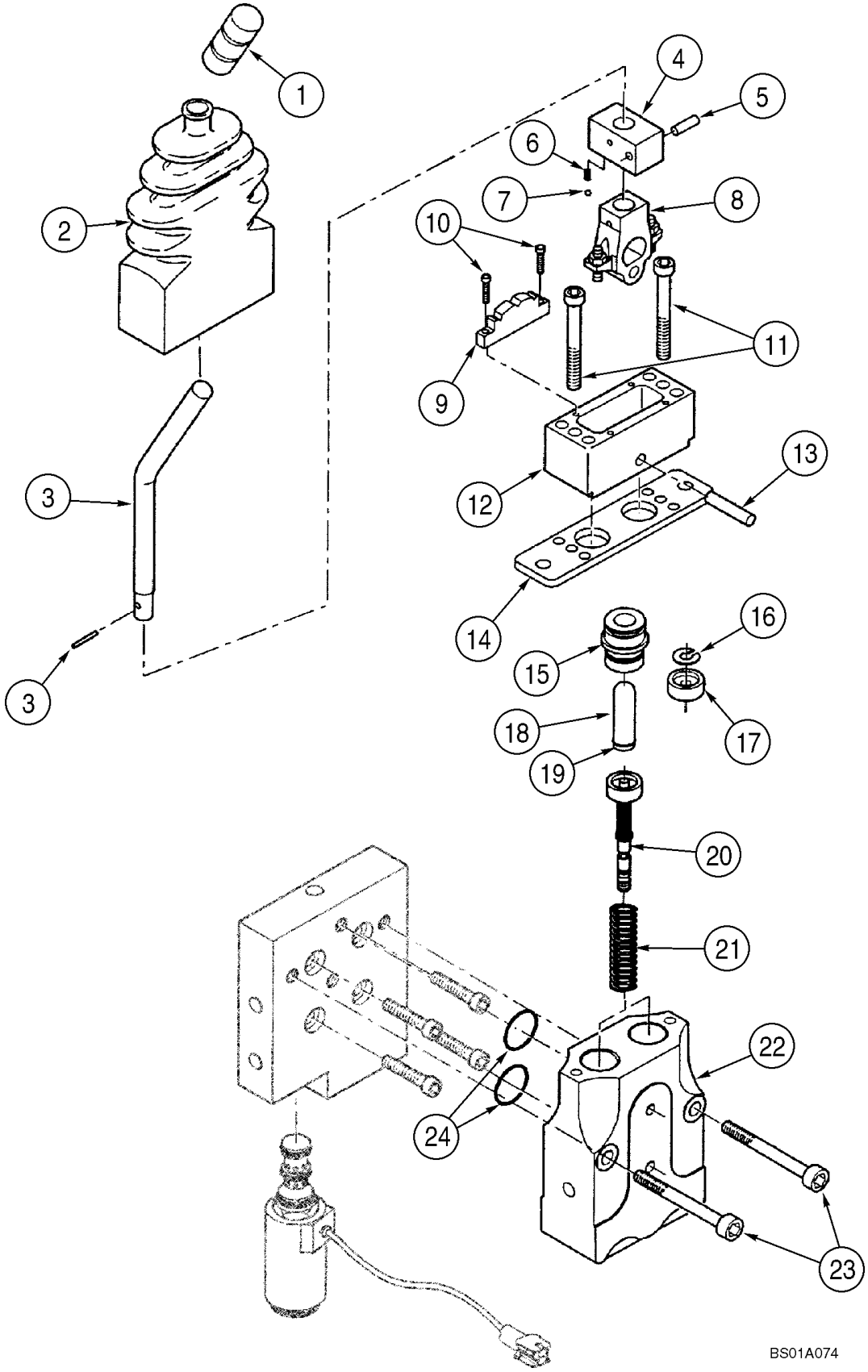

**CONJUNTO DE LA VALVULA - PALANCA DE MANDO CON DOS PALANCAS**

| REF | FN | PART NUMBER | YR/SN | QTY | DENOMINACION |
|---|---|---|---|---|---|
| | | 87340019 | | 1 | JOYSTICK, Joystick With Dual Lever; Incl. Refs. 1 - 25 |
| | | 8604593 | | 2 | PALANCA, Assembly Valve; Incl. Refs. 1 - 21 |
| 1 | | 8604543 | | 1 | MANGO |
| 2 | | 8604544 | | 1 | CASQUETE, Rubber |
| | | 8604546 | | 1 | EQUIPO, Operation; Incl. Refs. 3 - 13 |
| 3 | | NSS | | 1 | NO SE REPARA SEPARADAM., Lever |
| 4 | | NSS | | 1 | NO SE REPARA SEPARADAM., Body |
| 5 | | NSS | | 1 | NO SE REPARA SEPARADAM., Pin, Lock |
| 6 | | NSS | | 1 | NO SE REPARA SEPARADAM., Spring |
| 7 | | NSS | | 1 | NO SE REPARA SEPARADAM., Ball |
| 8 | | NSS | | 1 | NO SE REPARA SEPARADAM., Cam |
| 9 | | NSS | | 1 | NO SE REPARA SEPARADAM., Lock |
| 10 | | NSS | | 2 | NO SE REPARA SEPARADAM., M3 x 12, Screw |
| 11 | | NSS | | 2 | NO SE REPARA SEPARADAM., M6 x 50, Screw |
| 12 | | NSS | | 1 | NO SE REPARA SEPARADAM., Cover |
| 13 | | NSS | | 1 | NO SE REPARA SEPARADAM., Pin |
| 14 | | 8604545 | | 1 | PLACA |
| | | 8604255 | | 2 | JUEGO DE REPARACION, Plunger; Incl. Refs. 15 - 19 |
| 15 | | NSS | | 1 | NO SE REPARA SEPARADAM., Guide |
| 16 | | NSS | | 1 | NO SE REPARA SEPARADAM., Washer |
| 17 | | NSS | | 1 | NO SE REPARA SEPARADAM., Retainer |
| 18 | | NSS | | 1 | NO SE REPARA SEPARADAM., Plunger |
| 19 | | NSS | | 1 | NO SE REPARA SEPARADAM., Ring, Snap |
| 20 | | 8604548 | | 2 | REGULADOR, Plate; Retaining |
| 21 | | 8604549 | | 1 | EQUIPO, Set Of Two |
| 22 | | NSS | | 1 | NO SE REPARA SEPARADAM., Housing |
| 23 | | NSS | | 2 | NO SE REPARA SEPARADAM., M8 x 80 Screw |
| 24 | | NSS | | 2 | NO SE REPARA SEPARADAM., O-Ring, 1,5 x 17; Order Ref. 25 |
| 25 | | 8604876 | | 1 | JEUGO, Seal; Not Illustrated |
| 26 | | 864-8080 | | 2 | TORNILLO, Hex Soc Hd, M8 x 80, 8.8, See Ref 23 |

**CONTROL DE LA CARGADORA - TRES PALANCAS SOPORTE**

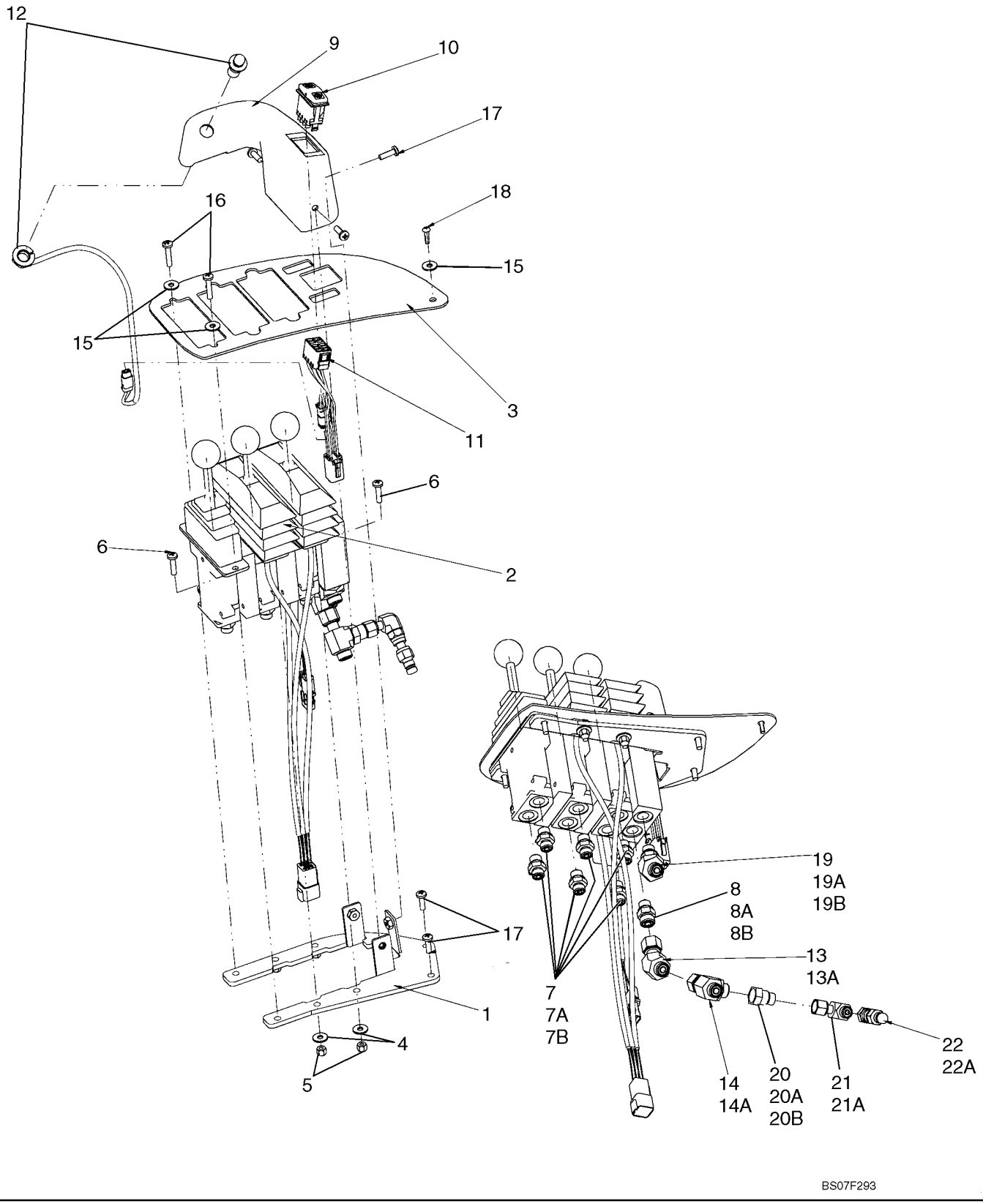

**CONTROL DE LA CARGADORA - TRES PALANCAS SOPORTE**

| REF | FN | PART NUMBER | YR/SN | QTY | DENOMINACION |
|---|---|---|---|---|---|
| 1 | | 87534053 | | 1 | PIEZA DE SOPORTE, Controller |
| 2 | | 407869A2 | | 1 | VALVULA DISTRIBUIDORA, 3 Lever Loader Control; See Figure 08-32A |
| 3 | | 87515559 | | 1 | PIEZA DE SOPORTE, 3 Lever Loader Control |
| 4 | | 895-25006 | | 4 | ARANDELA, M6 x 18 x 1.6 |
| 5 | | 832-10406 | | 4 | CONTRA TUERCA, M6 x 1, Cl 8 |
| 6 | | 840-1625 | | 4 | TORNILLO, Cross Pan Hd, M6 x 25 |
| 7 | | 700-153 | | 6 | RACOR, 9/16"-18 ORFS x M14 x 1.5 ORB, Incl. Refs. 7A, 7B |
| 7A | | 238-6011 | | | JUNTA HERMETICA, -011, 90 Duro, .301" ID x .070" Thk, Face Seal |
| 7B | | 637-63113 | | 1 | JUNTA HERMETICA, Cl 6, 11.3MM ID x 2.2 Thk |
| 8 | | 700-101 | | 1 | RACOR, 11/16"-16 ORFS x M14 x 1.5 ORB, Incl. Refs. 8A, 8B |
| 8A | | 238-6012 | | 1 | JUNTA HERMETICA, -012, 90 Duro, .364" ID x .070" Thk, Face Seal |
| 8B | | 637-63113 | | 1 | JUNTA HERMETICA, Cl 6, 11.3MM ID x 2.2 Thk |
| 9 | | 87523729 | | 1 | TAPADERA, Switch |
| 10 | | 400833A2 | | 1 | CONTACTOR, F-N-R |
| 11 | | 87324389 | | 1 | GRUPO DE CABLES, F-N-R Switch |
| 12 | | 402390A1 | | 1 | CONTACTOR, ASSY. Downshift |
| 13 | | 87354477 | | 1 | CODO, 45º, 11/16"-16 x 11/16"-16 Fem Sw, Incl. Refs. 13A |
| 13A | | 238-6012 | | 2 | JUNTA HERMETICA, -012, 90 Duro, .364" ID x .070" Thk, Face Seal |
| 14 | | 701-422 | | 1 | RACOR-T, 11/16"-16 ORFS x 11/16"-16 Fem Sw Run, Incl. Refs. 14A |
| 14A | | 238-6012 | | 2 | JUNTA HERMETICA, -012, 90 Duro, .364" ID x .070" Thk, Face Seal |
| 15 | | 86639315 | | 3 | ARANDELA |
| 16 | | 540-711 | | 2 | TORNILLO, Cross Pan Hd, M6 x 30 |
| 17 | | 540-719 | | 5 | TORNILLO, Cross Pan Hd, M6 x 20 |
| 18 | | 87582901 | | 1 | TORNILLO |
| 19 | | 700-315 | | 1 | CODO, 45º, 11/16"-18 ORFS x M14 x 1.5 ORB, Incl. Refs. 19A, 19B |

**CONTROL DE LA CARGADORA - TRES PALANCAS SOPORTE**

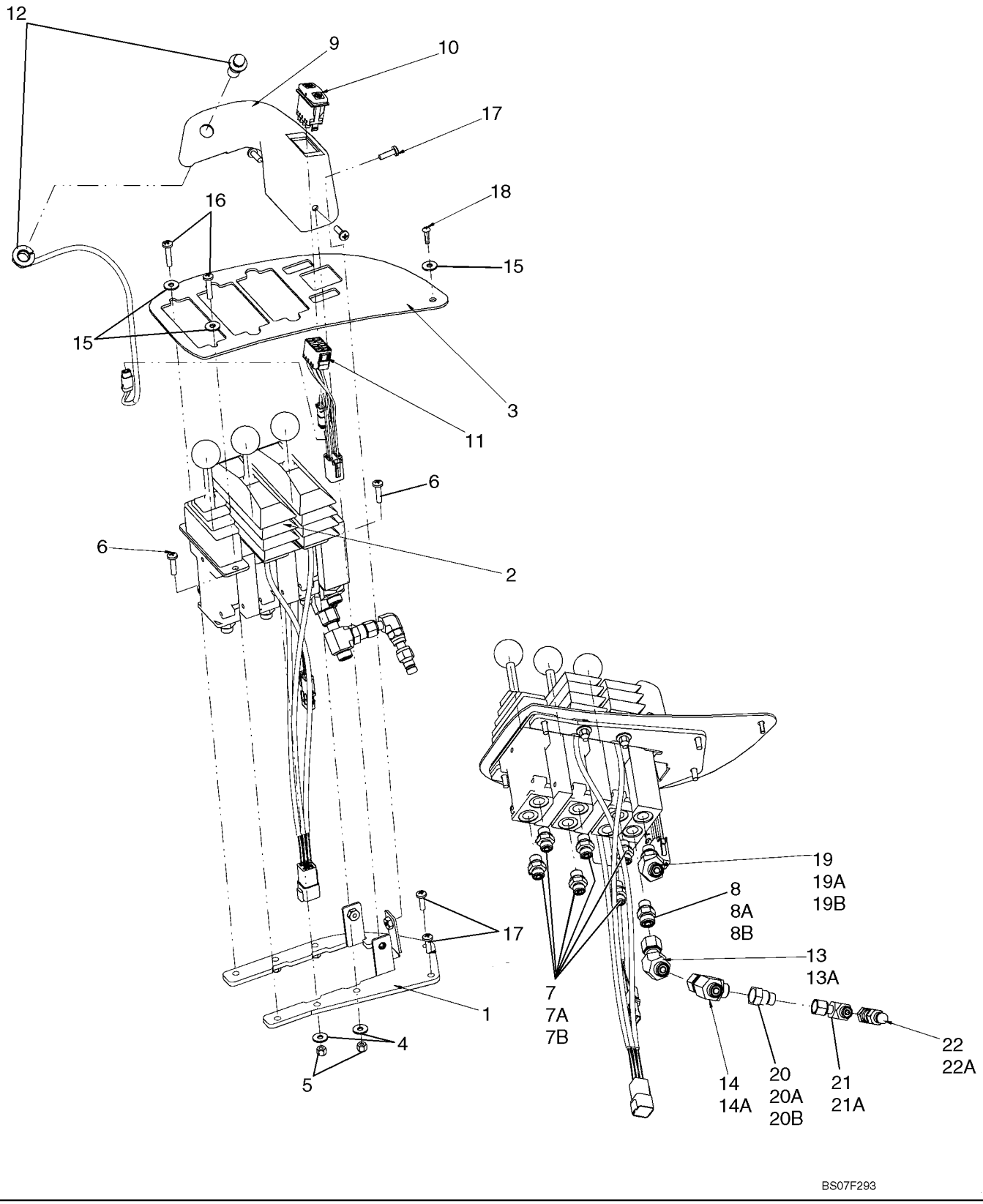

**CONTROL DE LA CARGADORA - TRES PALANCAS SOPORTE**

| REF | FN | PART NUMBER | YR/SN | QTY | DENOMINACION |
|---|---|---|---|---|---|
| 19A | | 238-6012 | | 1 | JUNTA HERMETICA, -012, 90 Duro, .364" ID x .070" Thk, Face Seal |
| 19B | | 637-63113 | | 1 | JUNTA HERMETICA, Cl 6, 11.3MM ID x 2.2 Thk |
| 20 | | 201-145 | | 1 | REDUCTOR, 9/16"-18 Male x 11/16"-16 Fem, ORFS, Incl. Refs. 20A, 20B |
| 20A | | 238-6012 | | | JUNTA HERMETICA, -012, 90 Duro, .364" ID x .070" Thk, Face Seal |
| 20B | | 637-63113 | | | JUNTA HERMETICA, Cl 6, 11.3MM ID x 2.2 Thk |
| 21 | | 701-329 | | 1 | CODO, 90º, 9/16"-18 ORFS x 9/16"-18 Fem Sw, Incl. Refs. 21A |
| 21A | | 238-6011 | | 1 | JUNTA HERMETICA, -011, 90 Duro, .301" ID x .070" Thk, Face Seal |
| 22 | | 190117A1 | | 1 | CARDAN, Incl. Refs. 22A |
| 22A | | 238-6011 | | 1 | JUNTA HERMETICA, -011, 90 Duro, .301" ID x .070" Thk |

**CONJUNTO DE LA VALVULA - CONTROL DE LA CARGADORA CON 3 PALANCAS**

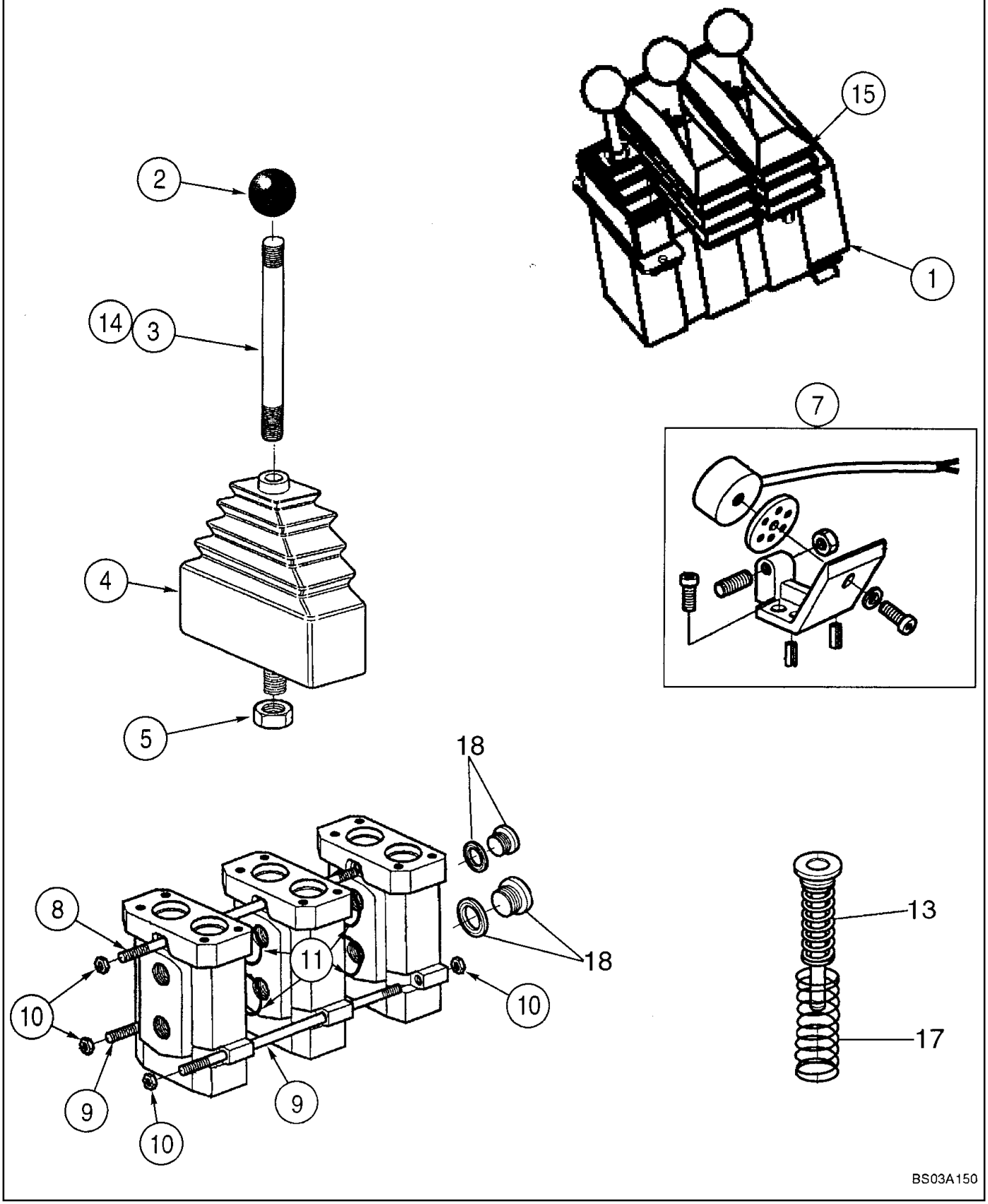

**CONJUNTO DE LA VALVULA - CONTROL DE LA CARGADORA CON 3 PALANCAS**

| REF | FN | PART NUMBER | YR/SN | QTY | DENOMINACION |
|---|---|---|---|---|---|
| 1 | | 407869A2 | | 1 | VALVULA DISTRIBUIDORA, Three Lever; Three Spool; Incl. Refs. 2 - 19 |
| | | 8604594 | | 1 | EQUIPO, Handle; Incl. Refs. 2 - 5 |
| 2 | | NSS | | 1 | NO SE REPARA SEPARADAM., Knob |
| 3 | | NSS | | 1 | NO SE REPARA SEPARADAM., Handle |
| 4 | | NSS | | 1 | NO SE REPARA SEPARADAM., Boot |
| 5 | | NSS | | 1 | NO SE REPARA SEPARADAM., Nut |
| 6 | | 8604552 | | 2 | SOLENOIDE, Regulator Unit; Not Illustrated |
| 7 | | 8604553 | | 2 | JUEGO DE REPARACION, Magnet |
| | | 8604554 | | 1 | JEUGO, Rod; Incl. Refs. 8 - 10 |
| 8 | | NSS | | 1 | NO SE REPARA SEPARADAM., Rod |
| 9 | | NSS | | 2 | NO SE REPARA SEPARADAM., Rod |
| 10 | | NSS | | 6 | NO SE REPARA SEPARADAM., Nut |
| 11 | | 8604557 | | 10 | ANILLO DE CIERRE, Inter-Section |
| 12 | | 8604555 | | 3 | EQUIPO, Pin; Not Illustrated |
| 13 | | 8604556 | | 3 | RESORTE, Pack |
| | | 8604551 | | 2 | JUEGO DE REPARACION, Handle; Incl. Refs. 2, 5, 14, 15 |
| 14 | | NSS | | 1 | NO SE REPARA SEPARADAM., Handle |
| 15 | | NSS | | 1 | NO SE REPARA SEPARADAM., Boot |
| 16 | | 8604598 | | 1 | VALVULA DISTRIBUIDORA, Section; Loader Control; Third; Not Illustrated |
| 17 | | 8604607 | | 1 | RESORTE, Pack |
| 18 | | 8604608 | | 3 | BUJIA MAGNETICA, Metric |
| 19 | | 8604599 | | 1 | SEPARADOR, Manifold; Not Illustrated |
| | | REF | | | MANUAL, FOLLOWING COMPONENTS MAY NOT BE ILLUSTRATED |
| | | 449527A1 | | 1 | RESORTE, Return; Parker # 91283768 |
| | | 449528A1 | | 1 | PALANCA, Bucket; Parker # 9120089536 |
| | | 449529A1 | | 1 | PALANCA, Boom; Parker # 9120089656 |
| | | 449530A1 | | 1 | PLACA, Mounting; Parker #9120089308 |
| | | 449533A1 | | 1 | JEUGO, Seal; Push Pin Set; Parker #9120089332 |
| | | 449555A1 | | 1 | PALANCA, Auxillary; Parker #9120089307 |

**MONTAJE DEL BLOQUE - ACOPLADOR, MANGUERAS DE TRES BOBINAS**

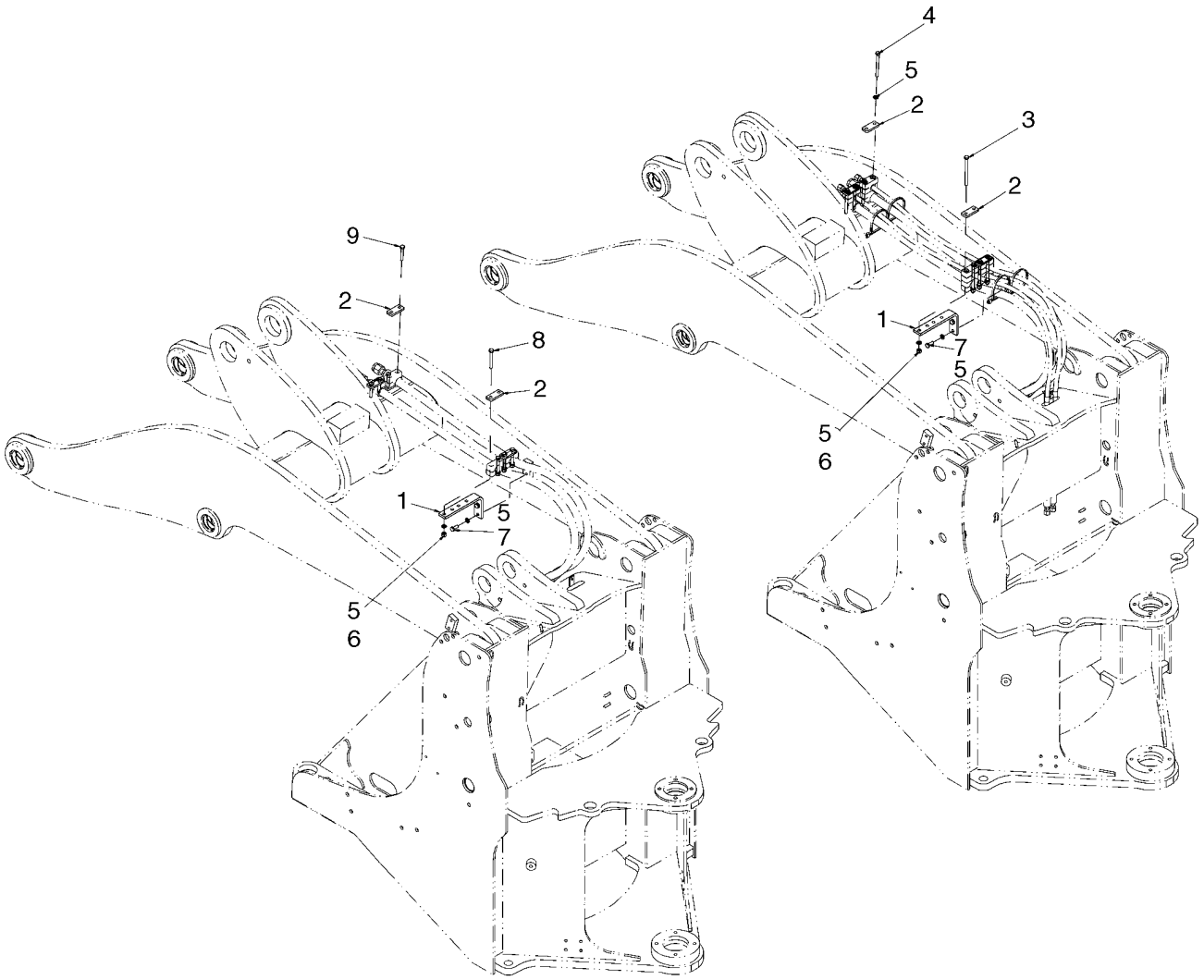

**MONTAJE DEL BLOQUE - ACOPLADOR, MANGUERAS DE TRES BOBINAS**

| REF | FN | PART NUMBER | YR/SN | QTY | DENOMINACION |
|---|---|---|---|---|---|
| | | REF | | | MANUAL, 2 BLOCK INSTALLATION FOR EITHER COUPLER OR 3RD SPOOL HOSES |
| | | REF | | | MANUAL, 3 BLOCK INSTALLATION FOR BOTH COUPLER AND 3RD SPOOL HOSES |
| 1 | | 373040A2 | | 1 | PIEZA DE SOPORTE, Hose Clamp |
| 2 | | 367658A1 | | 4 | PLACA, Clamp Cover |
| 3 | | 827-10130 | | 4 | TORNILLO, Hex, M10 x 130, 10.9 |
| 4 | | 827-10110 | | 4 | TORNILLO, Hex, M10 x 110, 10.9 |
| 5 | | 895-11010 | | 10 | ARANDELA, M10 x 20 x 2 |
| 6 | | 832-10410 | | 4 | CONTRA TUERCA, M10 x 1.5, Cl 8 |
| 7 | | 627-10025 | | 2 | TORNILLO, Hex, M10 x 25, 10.9, Full Thd |
| 8 | | 827-10080 | | 4 | TORNILLO, Hex, M10 x 80, 10.9 |
| 9 | | 827-10060 | | 4 | TORNILLO, Hex, M10 x 60, 10.9 |

## NOTAS

# SECTION INDEX
## Bastidor


| | |
|---|---|
| 09-01 | CONTROL - RETORNO A EXCAVACION (Z-BAR) |
| 09-02 | CONTROL - RETORNO A EXCAVACION (XR) |
| 09-03 | CONTROL - RETORNO A EXCAVACION - XT |
| 09-04 | CONTROLES - ALTURA DEL CUCHARON Y RETORNO-A-TRANSPORTE - Z-BAR |
| 09-05 | CONTROLES - ALTURA DEL CUCHARON Y RETORNO-A-TRANSPORTE (XR) |
| 09-06 | CONTROLES - ALTURA DEL CUCHARON Y RETORNO-A-TRANSPORTE - XT |
| 09-07 | MARCO - ELEVADOR DE LA CARGADORA (Z CARGADORA) |
| 09-07A | MARCO - ELEVADOR DE LA CARGADORA (XR) |
| 09-07B | MARCO - ELEVADOR DE LA CARGADORA (XT) |
| 09-08 | CUCHARON - EQUIPO (Z CARGADORA) |
| 09-08A | CUCHARON - EQUIPO (XT CARGADORA) |
| 09-09 | ACOPLAMIENTO, HIDRAULICO - Z-BAR - JRB |
| 09-09A | ACOPLAMIENTO, HIDRAULICO - Z-BAR - ACS |
| 09-09B | ACOPLAMIENTO, HIDRAULICO - XT - JRB |
| 09-09C | ACOPLAMIENTO, HIDRAULICO - XT - ACS |
| 09-10 | CUCHARON DE LA CARGADORA - DENTADO, SEGMENTOS Y ALMOHADILLAS DE DESLIZAMIENTO |
| 09-11 | CUCHARON DE LA CARGADORA - CON PERNO EN EL BORDE Y ALMOHADILLAS DE DESLIZAMIENTO |
| 09-12 | CHASIS, DELANTERO (Z-BAR, XR) |
| 09-13 | CHASIS, DELANTERO (XT) |
| 09-14 | CHASIS, TRASERO |
| 09-15 | EMPALME DE LA ARTICULACIÓN |
| 09-16 | CAPO |
| 09-17 | CAPÓ, MOTOR - MONTAJE |
| 09-18 | CUBIERTAS - CAJA DE LA BATERIA |
| 09-19 | CUBIERTAS - CABINA Y TOLDO, INFERIOR |
| 09-19A | CUBIERTAS - CHASIS, TRASERO |
| 09-20 | PARACHOCHES, DELANTERO |
| 09-20A | PARACHOCHES, DELANTERO - ANCHURA |
| 09-21 | PARACHOQUES, TRASERO - ESTANDAR |
| 09-22 | PARACHOQUES, TRASERO - ANCHURA |
| 09-23 | PARACHOQUES, TRASERO -PROTECTOR |
| 09-24 | PELDAÑOS - IZQUIERDO |
| 09-25 | PELDAÑOS - DERECHO |
| 09-26 | ANTISONORO - MOTOR |
| 09-27 | PLACA DE DESLIZAMIENTO |
| 09-28 | CABINA - MONTAJE |
| 09-29 | CABINA - VIDRIO, DELANTERO |
| 09-30 | CABINA - VIDRIO, TRASERO |
| 09-31 | CABINA - REVESTIMIENTO INTERIOR |
| 09-31A | CABINA - REVESTIMIENTO INTERIOR |
| 09-31B | CABINA - REVESTIMIENTO INTERIOR - TECHO |
| 09-32 | CABINA - GUARNICION EXTERNA |
| 09-33 | CABINA - VENTANILLA, DERECHA |
| 09-33A | CABINA - VENTANILLA, DERECHA |
| 09-34 | CABINA - VENTANILLA, DERECHA |
| 09-35 | CABINA - MONTAJE DE LA PUERTA |
| 09-35A | CABINA - PUERTA |
| 09-36 | CABINA - ESPEJOS RETROVISORES |
| 09-37 | CABINA - ALFOMBRILLA |

# SECTION INDEX
## Bastidor


| | |
|---|---|
| 09-38 | CABINA - PARASOL |
| 09-39 | CABINA - COMPONENTES |
| 09-40 | CABINA - LUCES |
| 09-41 | CABINA - CONVENIENCIA PAQUETE |
| 09-42 | ASIENTO - SOPORTE/CINTURONES DE SEGURIDAD |
| 09-42A | CONJUNTO DEL ASIENTO, SUSPENSION MECANICA |
| 09-42B | CONJUNTO DEL ASIENTO, SUSPENSION MECANICA |
| 09-42C | CONJUNTO DEL ASIENTO, SUSPENSION DE AIRE |
| 09-42D | CONJUNTO DEL ASIENTO, SUSPENSION DE AIRE |
| 09-43 | CABINA - DUCTOS DEL CALENTADOR Y AIRE ACONDICIONADO |
| 09-43A | CABINA - DUCTOS DEL CALENTADOR Y AIRE ACONDICIONADO |
| 09-44 | CUBIERTAS - CORREA DE TRANSMISIÓN (MODELOS CON AIRE ACONDICIONADO) |
| 09-44A | CUBIERTAS - CORREA DE TRANSMISIÓN (MODELOS SIN AIRE ACONDICIONADO) |
| 09-44B | CUBIERTAS - CABINA - SIN AIRE ACONICIONADO |
| 09-45 | CALENTADOR - MONTAJE |
| 09-45A | CALENTADOR |
| 09-46 | CALEFACCION |
| 09-47 | AIRE ACONDICIONADO - MONTAJE |
| 09-47A | AIRE ACONDICIONADO |
| 09-48 | AIRE ACONDICIONADO - CONDENSADOR |
| 09-49 | AIRE ACONDICIONADO |
| 09-50 | CONTRAPESOS |
| 09-50A | CONTRAPESOS - TAREAS PESADAS |
| 09-51 | EXTINTOR DE INCENDIOS |
| 09-52 | CAJA DE HERRAMIENTAS |
| 09-53 | MATRICULA SOPORTE |
| 09-54 | CALCOMANIAS - MODEL |
| 09-55 | CALCOMANIAS - COMÚN EN EL MODELO |
| 09-56 | CALCOMANIAS - CABINA |
| 09-57 | CALCOMANIAS - INGLES |
| 09-58 | CALCOMANIAS - FRANCES CANADIENSE |
| 09-59 | CALCOMANIAS - CASTELLANO PARA LATINOAMERICA |

## NOTAS

**CONTROL - RETORNO A EXCAVACION (Z-BAR)**

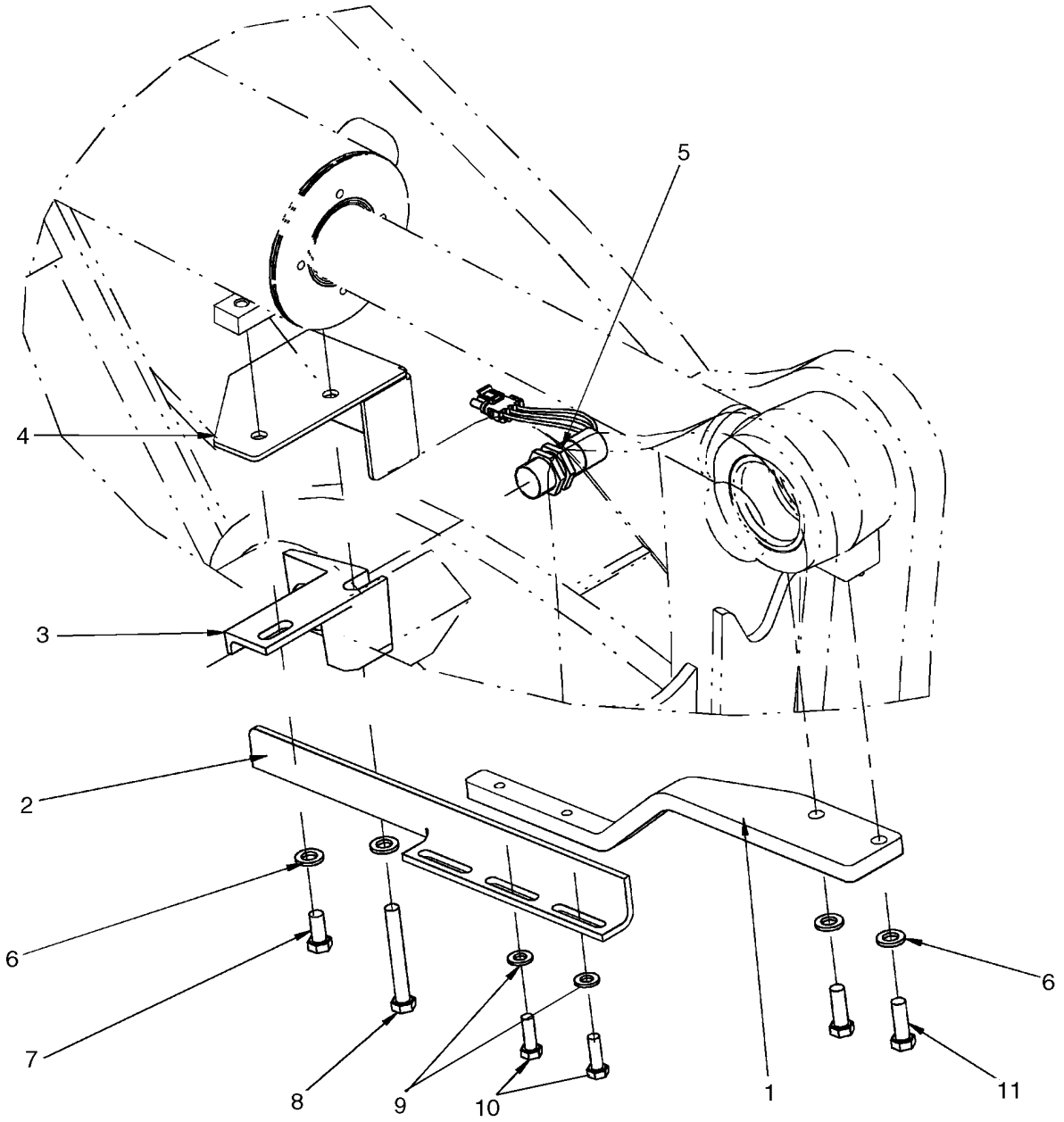

**CONTROL - RETORNO A EXCAVACION (Z-BAR)**

| REF | FN | PART NUMBER | YR/SN | QTY | DENOMINACION |
|---|---|---|---|---|---|
| 1 | | 87403964 | | 1 | PIEZA DE SOPORTE, Return to Dig |
| 2 | | 87403965 | | 1 | PIEZA DE SOPORTE, Target Return to Dig |
| 3 | | L125983 | | 1 | APOYADERO, Proximity Switch |
| 4 | | 87403966 | | 1 | TAPADERA, Proximity Switch |
| 5 | | 1546497C1 | | 1 | CONTACTOR, Proximity |
| 6 | | 896-11012 | | 4 | ARANDELA, M13.5 x 24.5 x 3, HT |
| 7 | | 627-12025 | | 1 | TORNILLO, Hex, M12 x 25, 10.9 |
| 8 | | 827-12090 | | 1 | TORNILLO, Hex, M12 x 90, 10.9 |
| 9 | | 896-11010 | | 2 | ARANDELA, M10 x 21.5 x 2.5, HT |
| 10 | | 627-10030 | | 2 | TORNILLO, Hex, M10 x 30, 10.9, Full Thd |
| 11 | | 627-12035 | | 2 | TORNILLO, Hex, M12 x 35, 10.9 |

**CONTROL - RETORNO A EXCAVACION (XR)**

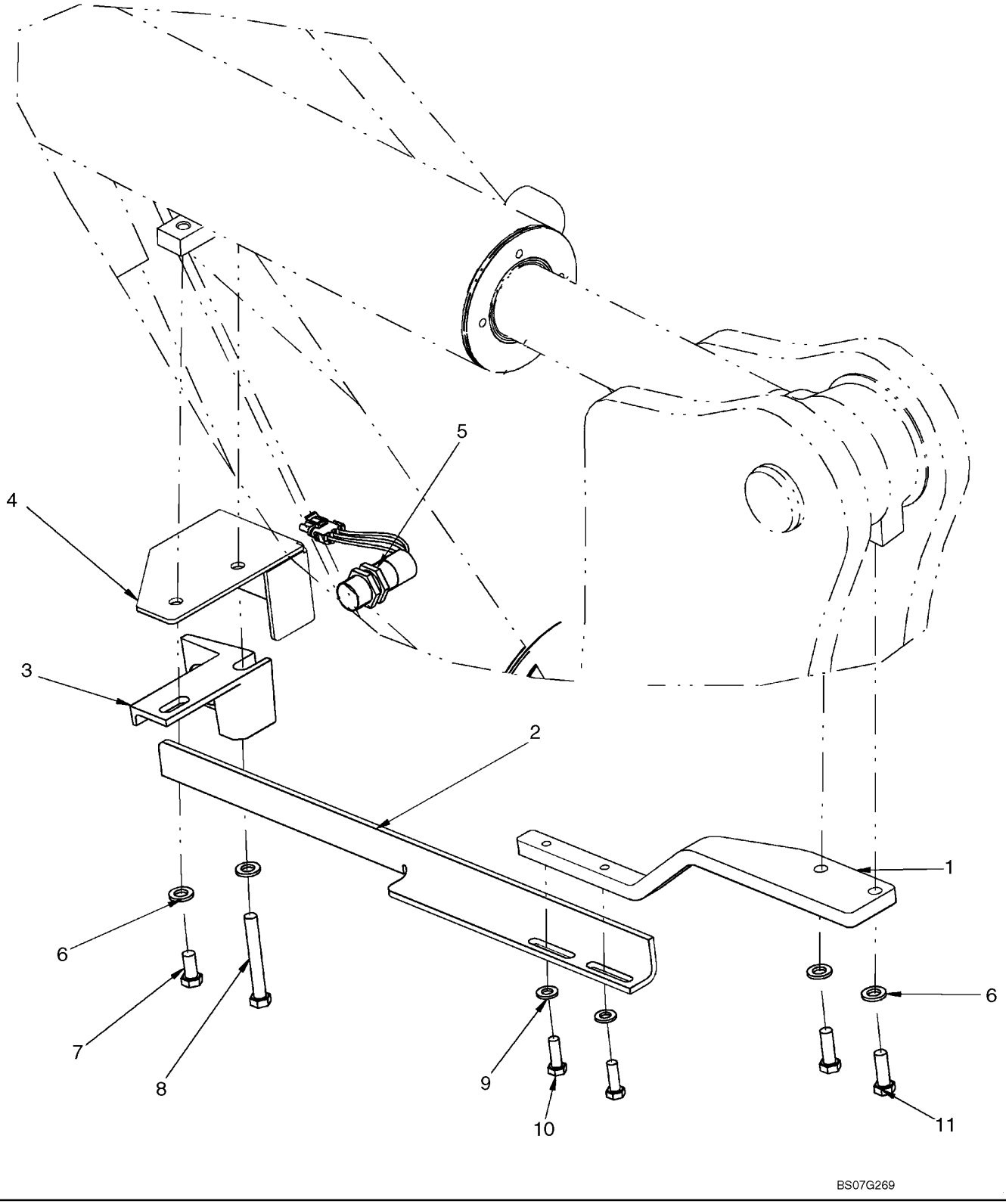

**CONTROL - RETORNO A EXCAVACION (XR)**

| REF | FN | PART NUMBER | YR/SN | QTY | DENOMINACION |
|---|---|---|---|---|---|
| 1 | | 87403964 | | 1 | PIEZA DE SOPORTE, Return to Dig |
| 2 | | 87403968 | | 1 | PIEZA DE SOPORTE, Target Return to Dig |
| 3 | | L125983 | | 1 | APOYADERO, Proximity Switch |
| 4 | | 87403966 | | 1 | TAPADERA, Proximity Switch |
| 5 | | 1546497C1 | | 1 | CONTACTOR, Proximity |
| 6 | | 896-11012 | | 4 | ARANDELA, M13.5 x 24.5 x 3, HT |
| 7 | | 627-12025 | | 1 | TORNILLO, Hex, M12 x 25, 10.9 |
| 8 | | 827-12090 | | 1 | TORNILLO, Hex, M12 x 90, 10.9 |
| 9 | | 896-11010 | | 2 | ARANDELA, M10 x 21.5 x 2.5, HT |
| 10 | | 627-10030 | | 2 | TORNILLO, Hex, M10 x 30, 10.9, Full Thd |
| 11 | | 627-12035 | | 2 | TORNILLO, Hex, M12 x 35, 10.9 |

**CONTROL - RETORNO A EXCAVACION - XT**

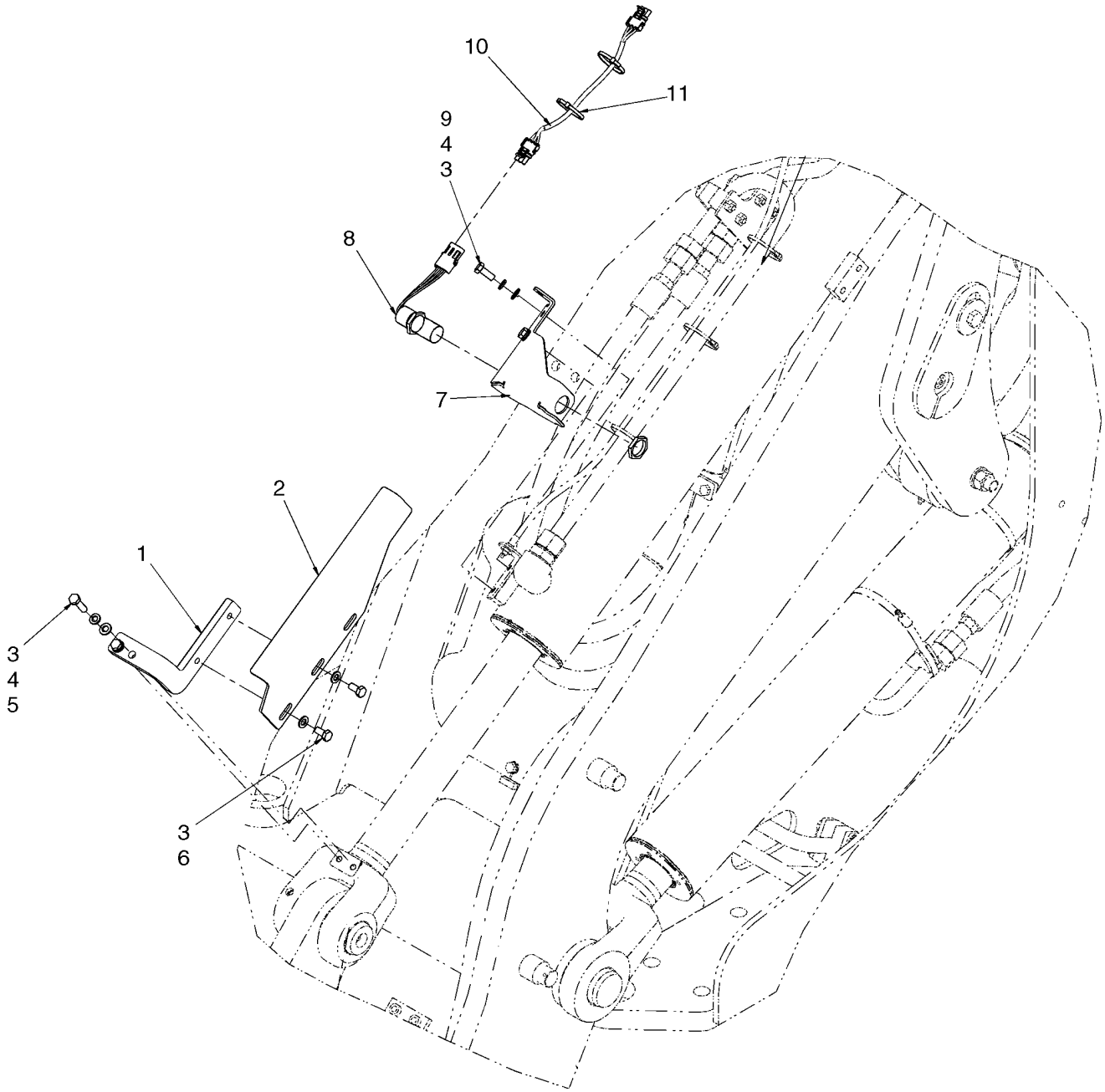

**CONTROL - RETORNO A EXCAVACION - XT**

| REF | FN | PART NUMBER | YR/SN | QTY | DENOMINACION |
|---|---|---|---|---|---|
| 1 | | 87304560 | | 1 | PIEZA DE SOPORTE, Return to Dig, Rod End |
| 2 | | 87443659 | | 1 | PIEZA DE SOPORTE, Return to Dig, Target |
| 3 | | 895-11010 | | 6 | ARANDELA, M10 x 20 x 2 |
| 4 | | 892-11010 | | 4 | ARANDELA DE FRENO, M10 |
| 5 | | 627-10035 | | 2 | TORNILLO, Hex, M10 x 35, 10.9, Full Thd |
| 6 | | 627-10020 | | 2 | TORNILLO, Hex, M10 x 20, 10.9, Full Thd |
| 7 | | 87310689 | | 1 | PIEZA DE SOPORTE, Switch Guard |
| 8 | | 1546498C1 | | 1 | CONTACTOR, Proximity |
| 9 | | 627-10025 | | 2 | TORNILLO, Hex, M10 x 25, 10.9, Full Thd |
| 10 | | 87581938 | | 1 | HAZ, Return to Dig, XT |
| 11 | | L11541 | | 2 | BANDA |

**CONTROLES - ALTURA DEL CUCHARON Y RETORNO-A-TRANSPORTE - Z-BAR**

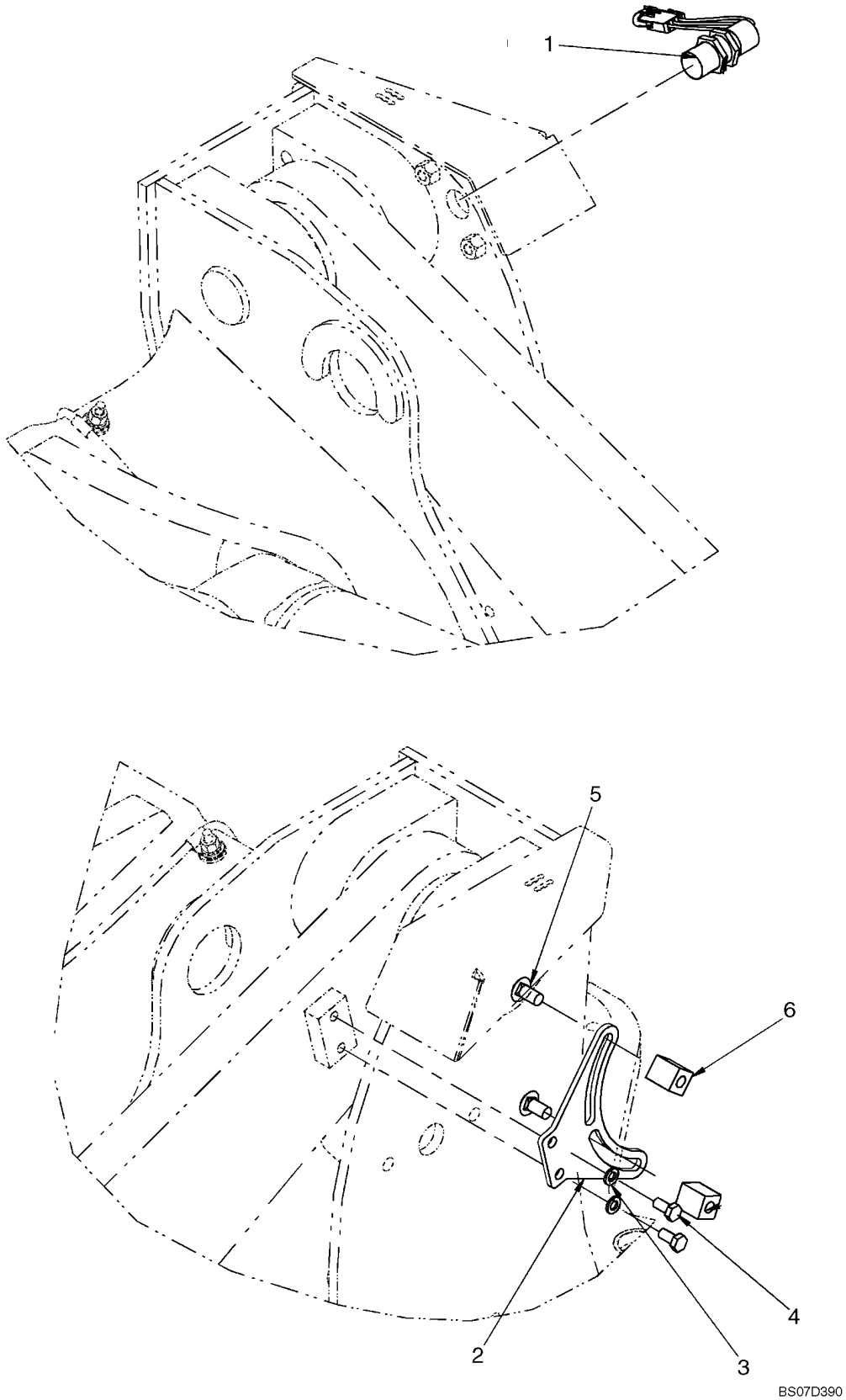

**CONTROLES - ALTURA DEL CUCHARON Y RETORNO-A-TRANSPORTE - Z-BAR**

| REF | FN | PART NUMBER | YR/SN | QTY | DENOMINACION |
|---|---|---|---|---|---|
| 1 | | 1546498C1 | | 1 | CONTACTOR, Proximity |
| 2 | | 379149A2 | | 1 | PLACA |
| 3 | | 892-11010 | | 2 | ARANDELA DE FRENO, M10 |
| 4 | | 627-10020 | | 2 | TORNILLO, Hex, M10 x 20, 10.9, Full Thd |
| 5 | | 811-12025 | | 2 | PERNO, CABEZA RONDA, Short NK, M12 x 25, Cl8.8, Full Thd |
| 6 | | 87437102 | | 2 | BLOQUE MOTOR |

**CONTROLES - ALTURA DEL CUCHARON Y RETORNO-A-TRANSPORTE (XR)**

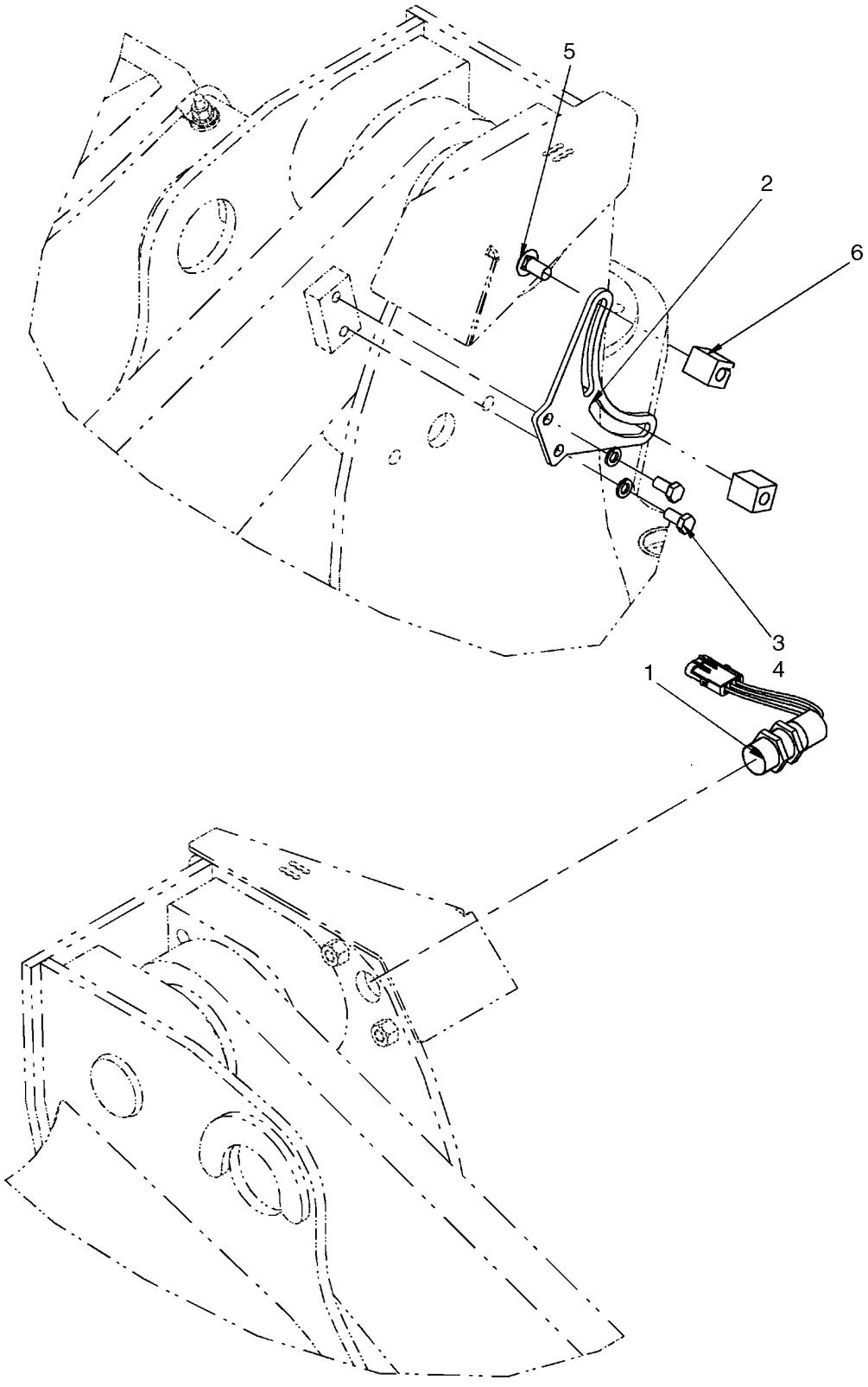

**CONTROLES - ALTURA DEL CUCHARON Y RETORNO-A-TRANSPORTE (XR)**

| REF | FN | PART NUMBER | YR/SN | QTY | DENOMINACION |
|---|---|---|---|---|---|
| 1 | | 1546498C1 | | 1 | CONTACTOR, Proximity |
| 2 | | 379149A2 | | 1 | PLACA |
| 3 | | 892-11010 | | 2 | ARANDELA DE FRENO, M10 |
| 4 | | 627-10020 | | 2 | TORNILLO, Hex, M10 x 20, 10.9, Full Thd |
| 5 | | 811-12025 | | 2 | PERNO, CABEZA RONDA, Short NK, M12 x 25, Cl8.8, Full Thd |
| 6 | | 87437102 | | 2 | BLOQUE MOTOR |

**CONTROLES - ALTURA DEL CUCHARON Y RETORNO-A-TRANSPORTE - XT**

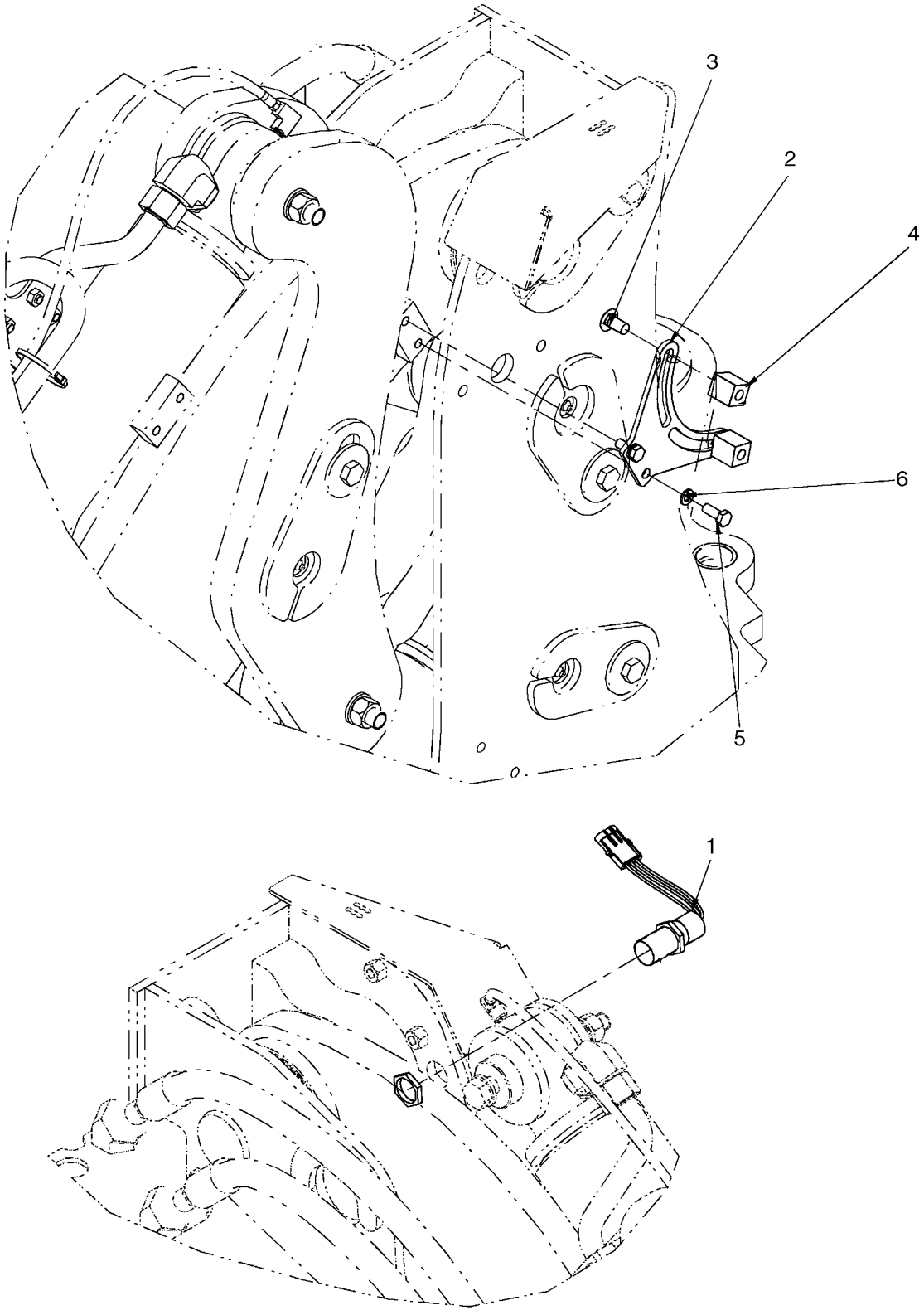


BS07G275

**CONTROLES - ALTURA DEL CUCHARON Y RETORNO-A-TRANSPORTE - XT**

| REF | FN | PART NUMBER | YR/SN | QTY | DENOMINACION |
|---|---|---|---|---|---|
| 1 | | 1546498C1 | | 1 | CONTACTOR, Proximity |
| 2 | | 379149A2 | | 1 | PLACA, Target Mounting |
| 3 | | 811-12025 | | 2 | PERNO, CABEZA RONDA, Short NK, M12 x 25, Cl8.8, Full Thd |
| 4 | | 87437102 | | 2 | BLOQUE MOTOR |
| 5 | | 627-10025 | | 2 | TORNILLO, Hex, M10 x 25, 10.9, Full Thd |
| 6 | | 892-11010 | | 2 | ARANDELA DE FRENO, M10 |

| 09-07 | | p1 | 08/07 |
|---|---|---|---|

**MARCO - ELEVADOR DE LA CARGADORA (Z CARGADORA)**

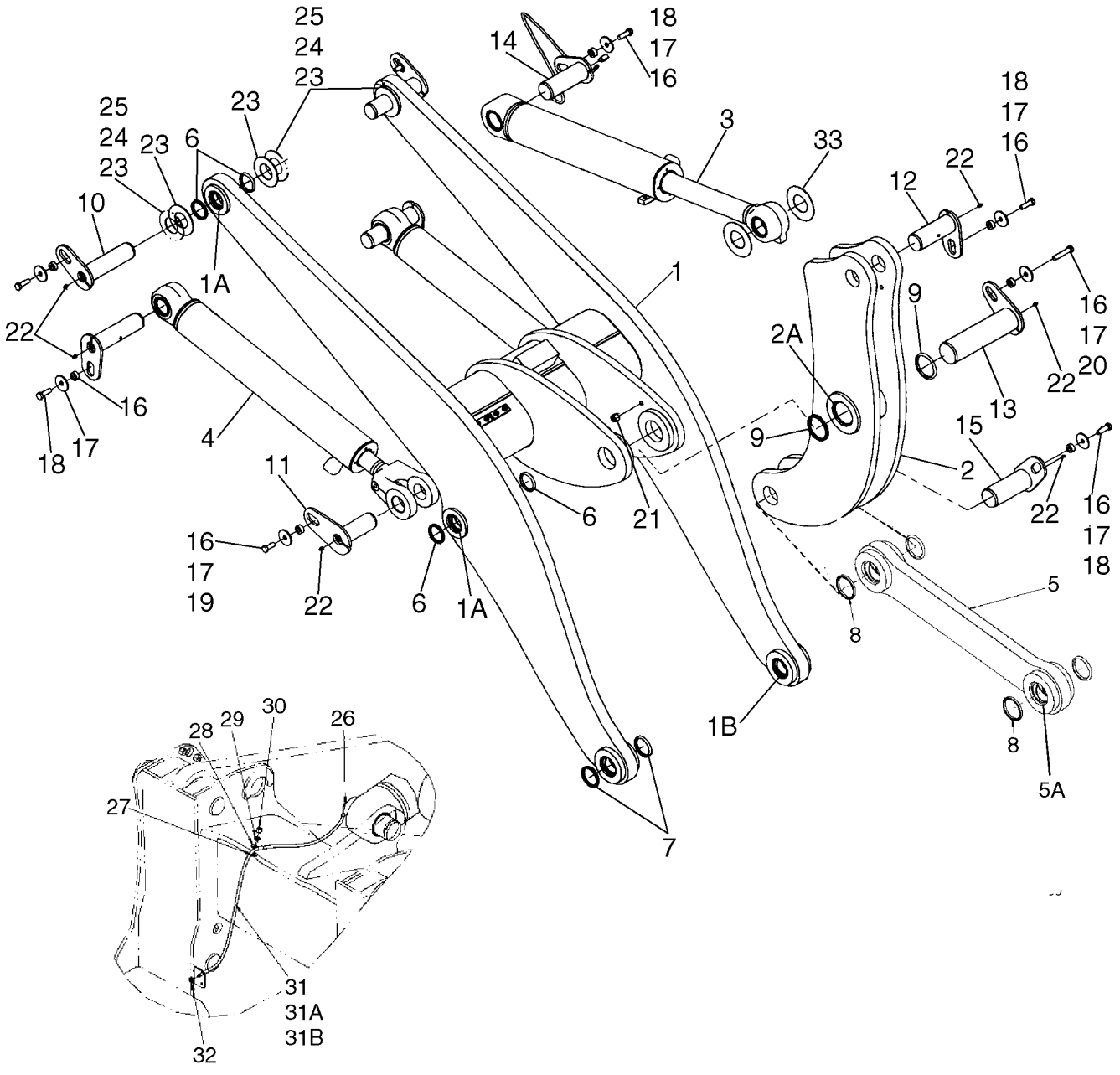

**MARCO - ELEVADOR DE LA CARGADORA (Z CARGADORA)**

| REF | FN | PART NUMBER | YR/SN | QTY | DENOMINACION |
|---|---|---|---|---|---|
| | | REF | | | MANUAL, Z-BAR LOADER |
| 1 | | 87343733 | | 1 | BRAZO DE ELEVACIÓN, Loader Lift; Incl. Refs. 1A - 1B |
| 1A | | 87613439 | | 4 | CASQUILLO, Lift Arm |
| 1B | | 87613444 | | 2 | CASQUILLO, Dump Link |
| 2 | | 87330150 | | 1 | CODO DE PALANCA, Incl. Ref. 2A |
| 2A | | 87613429 | | 2 | CASQUILLO, Bellcrank |
| 3 | | 87366688 | | 1 | CILINDRO (CONJUNTO), 127 ID x 620 mm strk; Bucket Tilt; See Figure 08-16 |
| 4 | | 87577649 | | 2 | CILINDRO DE ELEVADOR, 114.3 ID x 787.6 mm strk; Lift; See Figure 08-15 |
| 5 | | 87395399 | | 1 | ESLABON, Dump; Incl. Ref. 5A |
| 5A | | 87613430 | | 2 | CASQUILLO, Dump Link |
| 6 | | D95146 | | 8 | LIMPIADOR, 63.5 ID |
| 7 | | D95147 | | 4 | LIMPIADOR, 69.8 ID |
| 8 | | D95148 | | 4 | LIMPIADOR, 76.2 ID |
| 9 | | S92653 | | 2 | LIMPIADOR, 88.9 ID |
| 10 | | 361128A1 | | 4 | PERNO, Lift Arm Pivot Head; Case Power Tan |
| 11 | | 361133A2 | | 2 | PASADOR (CONJUNTO), Lift Arm Pivot Rod; Case Power Tan |
| 12 | | 361139A2 | | 1 | PASADOR (CONJUNTO), Dump Link Pivot; Case Power Tan |
| 13 | | 375328A1 | | 1 | PASADOR (CONJUNTO), Bellcrank Pivot; Case Power Tan |
| 14 | | 375330A1 | | 1 | PASADOR (CONJUNTO), Tilt Cylinder Pivot; Case Power Tan |
| 15 | | 375326A2 | | 1 | PASADOR (CONJUNTO), Dump Link Pivot; Case Power Tan |
| 16 | | L125100 | | 10 | ESPACIADOR, Plated |
| 17 | | 496-81025 | | 10 | ARANDELA, 21/32" x 2 1/2" x .188", HDN |
| 18 | | 627-16050 | | 7 | TORNILLO, Hex, M16 x 50, 10.9 |
| 19 | | 627-16040 | | 2 | TORNILLO, Hex, M16 x 40, 10.9 |
| 20 | | 827-16080 | | 1 | TORNILLO, Hex, M16 x 80, 10.9 |
| 21 | | 832-10416 | | 1 | CONTRA TUERCA, M16 x 2, Cl 8 |
| 22 | | 219-1 | | 9 | ENGRASADOR, 1/8"-27 x .66 lg |

| 09-07 | | p2 | 08/07 |
|---|---|---|---|

**MARCO - ELEVADOR DE LA CARGADORA (Z CARGADORA)**

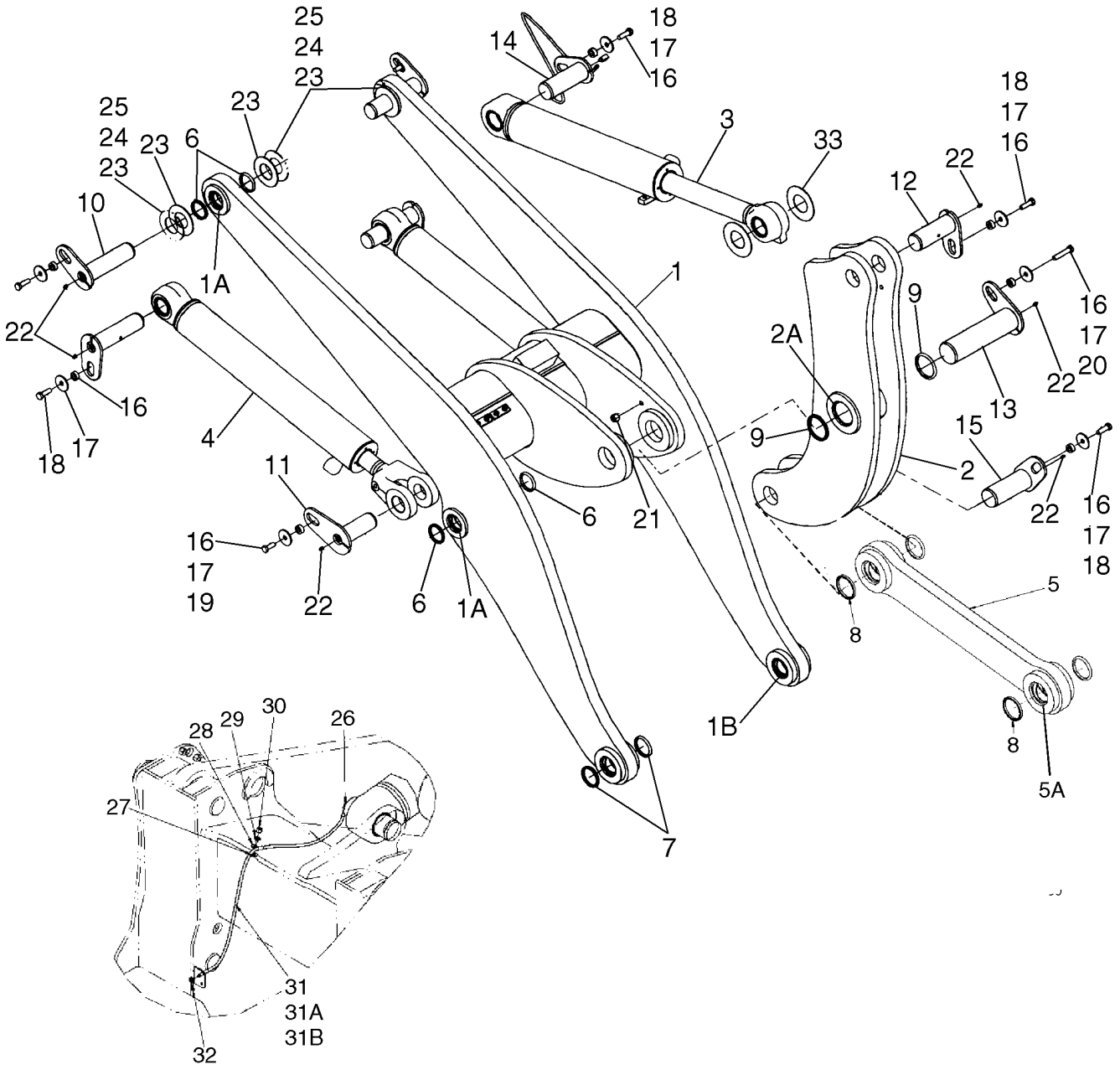

**MARCO - ELEVADOR DE LA CARGADORA (Z CARGADORA)**

| REF | FN | PART NUMBER | YR/SN | QTY | DENOMINACION |
|---|---|---|---|---|---|
| 23 | | 365355A1 | | AR | ARANDELA, 64.9 ID; 3.5 THK; Hardened |
| 24 | | 365353A1 | | AR | ARANDELA, 64.9 ID; 1.6 THK; Hardened |
| 25 | | 365354A1 | | AR | ARANDELA, 64.9 ID; 2.5 THK; Hardened |
| 26 | | 328082A1 | | 1 | CODO, 1/8 PT |
| 27 | | 896-15012 | | 1 | ARANDELA, M12 x 28.5 x 4, HT |
| 28 | | 515-2495 | | 1 | BORNE, 3/8", Insul, 7/16" Bolt |
| 29 | | 895-11010 | | 1 | ARANDELA, M10 x 20 x 2 |
| 30 | | 832-10410 | | 1 | CONTRA TUERCA, M10 x 1.5, Cl 8 |
| 31 | | L54694 | | 1 | MANGA, 1041 mm (41 in); Incl. Refs. 31A, 31B |
| 31A | | 86636814 | | 1 | ENGRASADOR, 1/4"-28 x .52" lg |
| 31B | | 219-8 | | 1 | ENGRASADOR, 1/4"-28 NPT x .54" lg |
| 32 | | F53473 | | 1 | TUERCA, 1/8 PT |
| 33 | | 375517A1 | | 2 | ARANDELA, 71,3 ID; 2.5 THK |

| 09-07A | | p1 | 08/07 |
|---|---|---|---|

**MARCO - ELEVADOR DE LA CARGADORA (XR)**

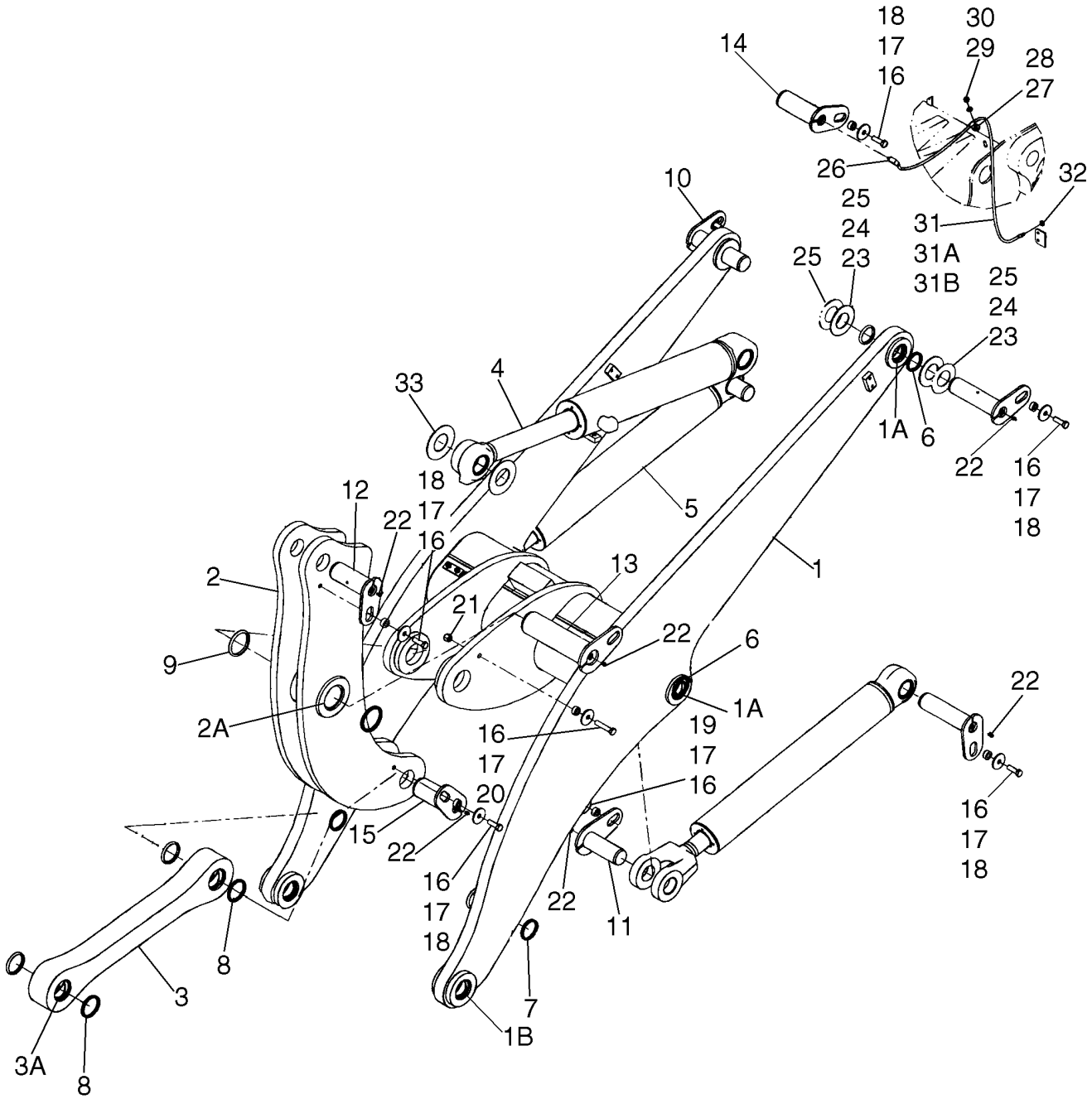


BS07G267

**MARCO - ELEVADOR DE LA CARGADORA (XR)**

| REF | FN | PART NUMBER | YR/SN | QTY | DENOMINACION |
|---|---|---|---|---|---|
| | | REF | | | MANUAL, XR LOADER |
| 1 | | 87344119 | | 1 | BRAZO DE ELEVACIÓN, Loader Lift; Incl. Refs. 1A - 1B |
| 1A | | 87613439 | | 4 | CASQUILLO, Lift Arm |
| 1B | | 87613444 | | 2 | CASQUILLO, Dump Link |
| 2 | | 87330150 | | 1 | CODO DE PALANCA, Bellcrank; Incl. Ref. 2A |
| 2A | | 371883A1 | | 2 | CASQUILLO, Bushing |
| 3 | | 87395399 | | 1 | ESLABON, Dump; Incl. Ref. 3A |
| 3A | | 87613430 | | 2 | CASQUILLO, Dump Link |
| 4 | | 87366695 | | 1 | CILINDRO (CONJUNTO), 127 ID x 620 mm strk; Bucket Tilt; See Figure 08-17 |
| 5 | | 87577649 | | 2 | CILINDRO DE ELEVADOR, Lift; 120.65 mm ID x 787.6 mm strk; See Figure 08-15 |
| 6 | | D95146 | | 8 | LIMPIADOR, 63.5 ID |
| 7 | | D95147 | | 4 | LIMPIADOR, 69.8 ID |
| 8 | | D95148 | | 4 | LIMPIADOR, 76.2 ID |
| 9 | | S92653 | | 2 | LIMPIADOR, 88.9 ID |
| 10 | | 361128A1 | | 4 | PERNO, Lift Arm Pivot; Head End; Case Power Tan |
| 11 | | 361133A2 | | 2 | PASADOR (CONJUNTO), Lift Arm Pivot; Rod End; Case Power Tan |
| 12 | | 361139A2 | | 1 | PASADOR (CONJUNTO), Dump Link Pivot; Case Power Tan |
| 13 | | 375328A1 | | 1 | PASADOR (CONJUNTO), Bellcrank Pivot; Case Power Tan |
| 14 | | 375330A1 | | 1 | PASADOR (CONJUNTO), Tilt Cylinder Pivot; Case Power Tan |
| 15 | | 375326A2 | | 1 | PASADOR (CONJUNTO), Dump Link Pivot; Case Power Tan |
| 16 | | L125100 | | 10 | ESPACIADOR, Plated |
| 17 | | 496-81025 | | 10 | ARANDELA, 21/32" x 2 1/2" x .188", HDN |
| 18 | | 627-16050 | | 7 | TORNILLO, Hex, M16 x 50, 10.9 |
| 19 | | 627-16040 | | 2 | TORNILLO, Hex, M16 x 40, 10.9 |
| 20 | | 827-16080 | | 1 | TORNILLO, Hex, M16 x 80, 10.9 |
| 21 | | 832-10416 | | 1 | CONTRA TUERCA, M16 x 2, Cl 8 |
| 22 | | 219-1 | | 9 | ENGRASADOR, 1/8"-27 x .66 lg |

**MARCO - ELEVADOR DE LA CARGADORA (XR)**

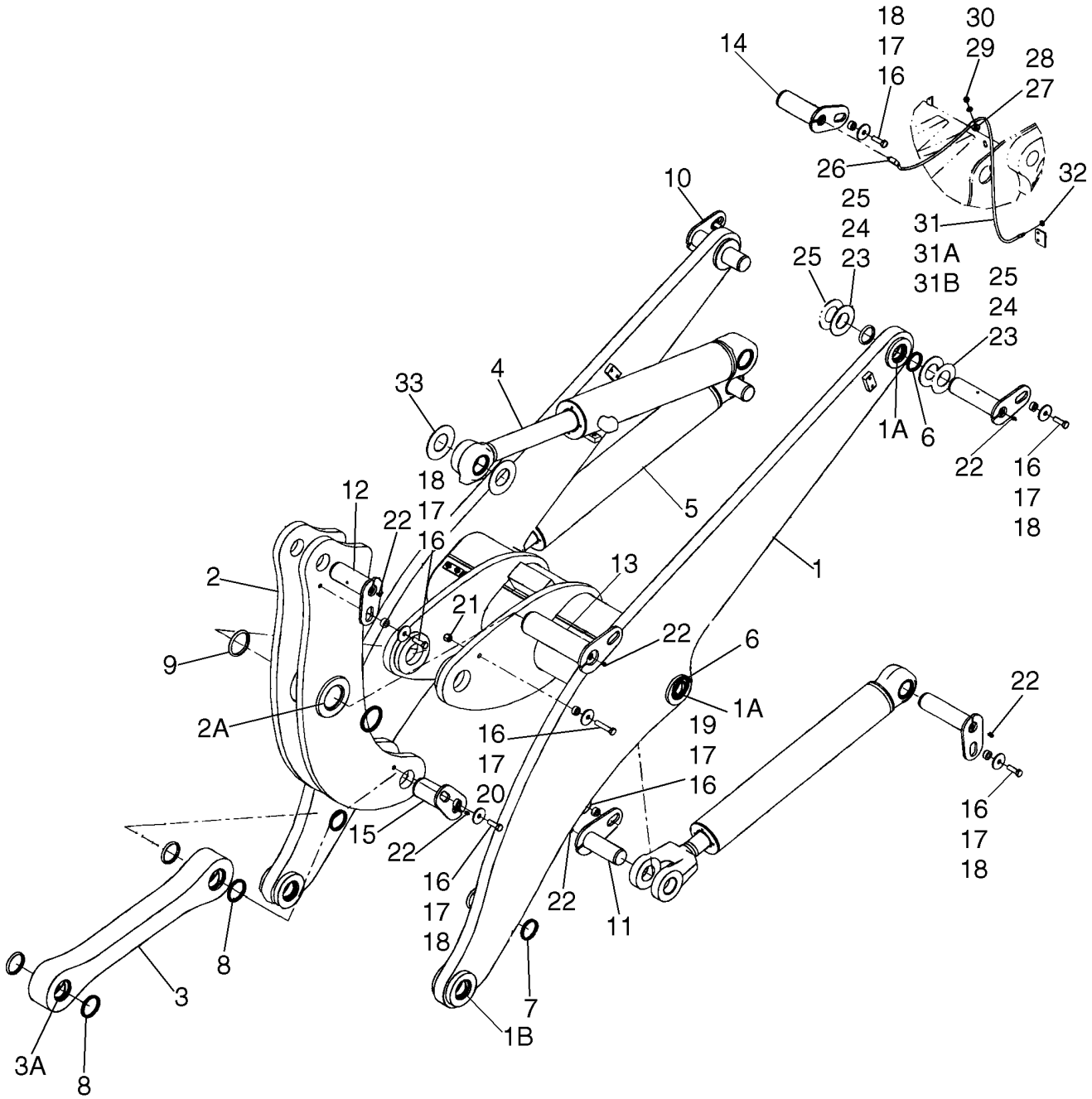

**MARCO - ELEVADOR DE LA CARGADORA (XR)**

| REF | FN | PART NUMBER | YR/SN | QTY | DENOMINACION |
|---|---|---|---|---|---|
| 23 | | 365355A1 | | AR | ARANDELA, 64.9 ID; 3.5 THK; Hardened |
| 24 | | 365353A1 | | AR | ARANDELA, 64.9 ID; 1.6 THK; Hardened |
| 25 | | 365354A1 | | AR | ARANDELA, 64.9 ID; 2.5 THK; Hardened |
| 26 | | 328082A1 | | 1 | CODO, 1/8 PT |
| 27 | | 896-15012 | | 1 | ARANDELA, M12 x 28.5 x 4, HT |
| 28 | | 515-2495 | | 1 | BORNE, 3/8", Insul, 7/16" Bolt |
| 29 | | 895-11010 | | 1 | ARANDELA, M10 x 20 x 2 |
| 30 | | 832-10410 | | 1 | CONTRA TUERCA, M10 x 1.5, Cl 8 |
| 31 | | L54694 | | 1 | MANGA, 1041 mm (41 in); Incl. Refs. 31A, 31B |
| 31A | | 86636814 | | 1 | ENGRASADOR, 1/4"-28 x .52" lg |
| 31B | | 219-8 | | 1 | ENGRASADOR, 1/4"-28 NPT x .54" lg |
| 32 | | F53473 | | 1 | TUERCA, 1/8 PT |
| 33 | | 375517A1 | | 2 | ARANDELA, 71,3 ID; 2.5 THK |

| 09-07B | | p1 | 08/07 |
|---|---|---|---|

**MARCO - ELEVADOR DE LA CARGADORA (XT)**

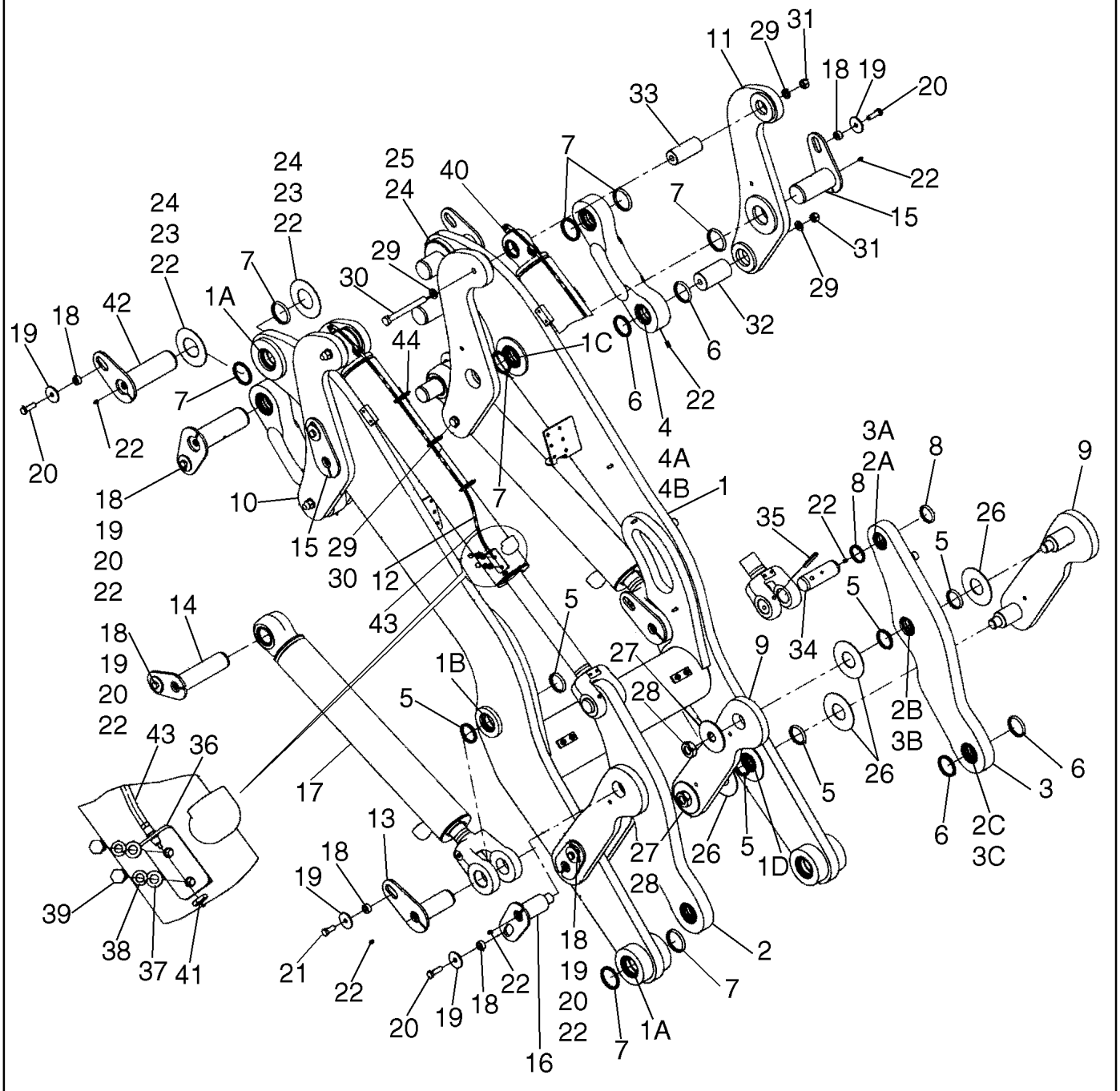

**MARCO - ELEVADOR DE LA CARGADORA (XT)**

| REF | FN | PART NUMBER | YR/SN | QTY | DENOMINACION |
|---|---|---|---|---|---|
| | | REF | | | MANUAL, XT LOADER |
| 1 | | 87344091 | | 1 | PUENTE, Lift XT; Incl. Refs. 1A -1D |
| 1A | | 87613445 | | 6 | CASQUILLO, Lift Arm |
| 1B | | 87613439 | | 2 | CASQUILLO, Lift, Arm Pivot |
| 1C | | 87613442 | | 2 | CASQUILLO, Lift Arm |
| 1D | | 87613443 | | 2 | CASQUILLO, Lift Arm |
| 2 | | 87452370 | | 1 | VARILLAJE, Dump XT; Incl. Refs. 2A - 2C |
| 2A | | 369432A2 | | 1 | CASQUILLO, Dump Link |
| 2B | | 379191A2 | | 1 | CASQUILLO, Lift Arm |
| 2C | | 87441882 | | 1 | CASQUILLO, Dump Link |
| 3 | | {87310653} | | 1 | LINKAGE, Dump XT; Incl. Refs. 3A - 3C |
| 3A | | 87613427 | | 1 | CASQUILLO, Dump Link |
| 3B | | 87613432 | | 1 | CASQUILLO, Lift Arm |
| 3C | | 87617016 | | 1 | CASQUILLO, Dump Link |
| 4 | | 87445353 | | 2 | VARILLAJE, Anchor XT; Incl. Refs. 4A, 4B |
| 4A | | 87613435 | | 1 | CASQUILLO, Anchor Link |
| 4B | | 87613431 | | 1 | CASQUILLO, Lift Arm |
| 5 | | D95146 | | 12 | LIMPIADOR, Rod; 63.5 |
| 6 | | D95147 | | 8 | LIMPIADOR, Rod; 69.8 |
| 7 | | D95148 | | 16 | LIMPIADOR, Rod; 76.2 |
| 8 | | D95145 | | 4 | LIMPIADOR, Rod; 57.125 |
| 9 | | 87445354 | | 4 | VARILLAJE, Guide XT |
| 10 | | 87344111 | | 2 | VARILLAJE, Bellcrank; Right Hand |
| 11 | | 87344104 | | 2 | VARILLAJE, Bellcrank; Left Hand |
| 12 | | 87442555 | | 2 | CILINDRO DE ELEVADOR, 114 ID x 819.9 mm strk; Bucket Tilt; See Figure 08-18 |
| 13 | | 361133A2 | | 2 | PASADOR (CONJUNTO), Lift Arm Pivot; Rod End; Case Power Tan |
| 14 | | 361128A1 | | 2 | PERNO, Lift Arm Pivot; Head End; Case Power Tan |
| 15 | | 379070A2 | | 2 | PERNO DE PIVOTE, Bellcrank Pivot; Case Power Tan |
| 16 | | 379197A2 | | 2 | PERNO, Guide Link Pivot; CNH CE Gray |
| 17 | | 87577649 | | 2 | CILINDRO DE ELEVADOR, 114.3 ID x 787.6 mm strk; Lift; See Figure 08-15 |
| 18 | | L125100 | | 14 | ESPACIADOR |

| 09-07B | | p2 | 08/07 |
|---|---|---|---|

**MARCO - ELEVADOR DE LA CARGADORA (XT)**

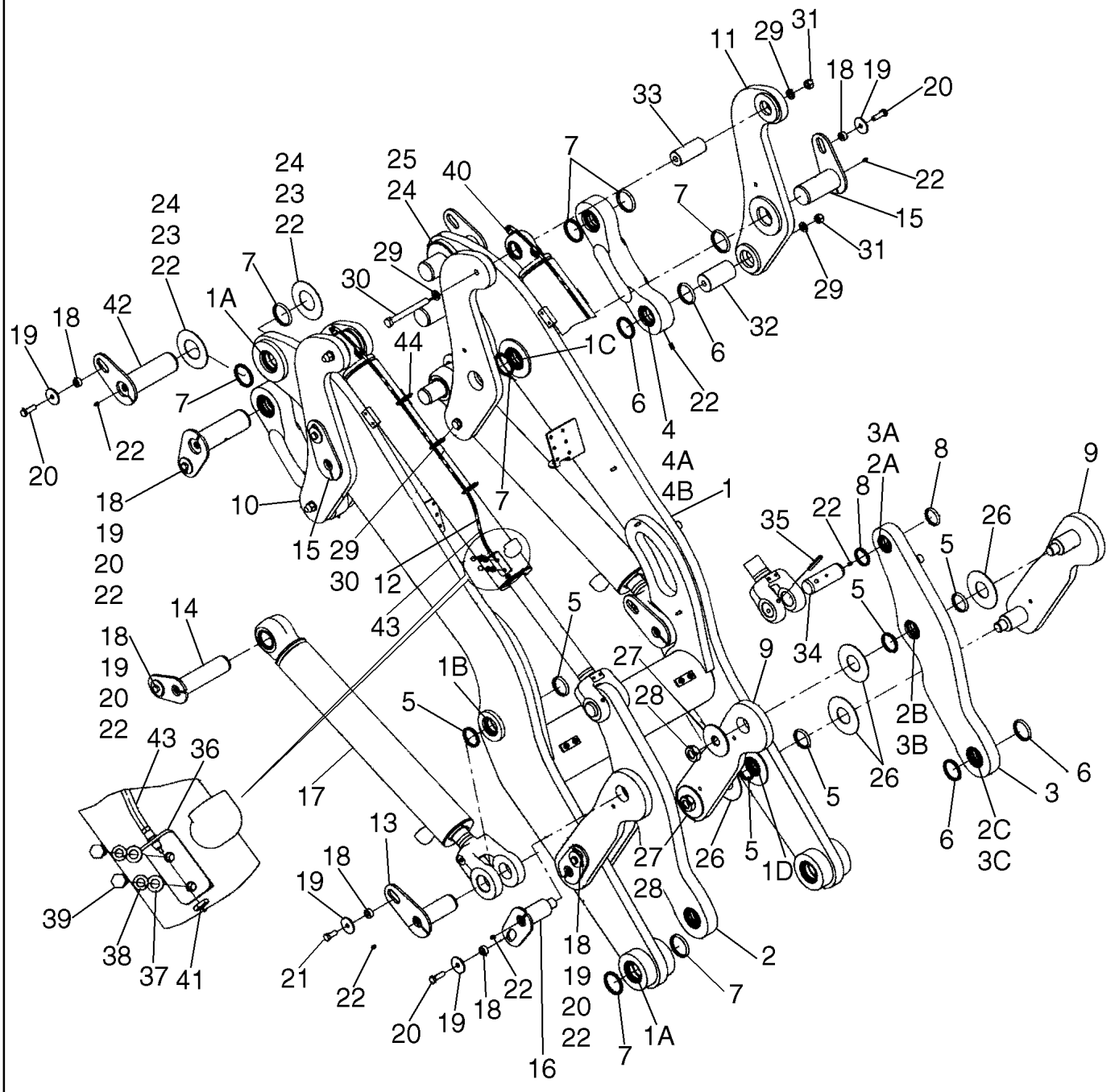

**MARCO - ELEVADOR DE LA CARGADORA (XT)**

| REF | FN | PART NUMBER | YR/SN | QTY | DENOMINACION |
|---|---|---|---|---|---|
| 19 | | 496-81025 | | 14 | ARANDELA, 21/32" x 2 1/2" x .188", HDN |
| 20 | | 627-16050 | | 12 | TORNILLO, Hex, M16 x 50, 10.9 |
| 21 | | 627-16040 | | 2 | TORNILLO, Hex, M16 x 40, 10.9 |
| 22 | | 219-1 | | 18 | ENGRASADOR, 1/8"-27 x .66 lg |
| 23 | | 375518A1 | | AR | ARANDELA, 77.6 ID 3.5thk |
| 24 | | 441822A1 | | AR | ARANDELA, 77.6 ID 1.6thk |
| 25 | | L127108 | | AR | ARANDELA, Lift Arm |
| 26 | | 116893A1 | | 8 | ARANDELA |
| 27 | | 117025A1 | | 4 | ARANDELA |
| 28 | | 131-53 | | 4 | CONTRA TUERCA, 1 1/2"-12 |
| 29 | | 896-11020 | | 8 | ARANDELA, M20 x 37.5 x 4, HT |
| 30 | | 827-20190 | | 4 | TORNILLO, Hex, M20 x 190, 10.9 |
| 31 | | 829-1420 | | 4 | TUERCA, M20, Cl 10 |
| 32 | | 8500311 | | 2 | PERNO, Bellcrank; Anchor Side |
| 33 | | 368775A1 | | 2 | PERNO, Bellcrank; Cylinder Side |
| 34 | | 368836A2 | | 2 | PERNO, Tilt Cylinder |
| 35 | | 38-33264 | | 2 | PERNO, 1/2" x 4", Coiled |
| 36 | | 87441374 | | 2 | PIEZA DE SOPORTE, Grease Hose |
| 37 | | 895-11010 | | 4 | ARANDELA, M10 x 20 x 2 |
| 38 | | 892-11010 | | 4 | ARANDELA DE FRENO, M10 |
| 39 | | 627-10025 | | 4 | TORNILLO, Hex, M10 x 25, 10.9, Full Thd |
| 40 | | 328082A1 | | 2 | CODO, 1/8 PT |
| 41 | | F53473 | | 2 | TUERCA, 1/8 PT |
| 42 | | 87441342 | | 4 | EJE CON CABEZA, Lift Arm Pivot; Case Power Tan |
| 43 | | 87444057 | | 2 | MANGUERA (CONJUNTO), Grease |
| 44 | | L11541 | | 6 | BANDA |

| 09-08 | | p1 | 06/07 |
|---|---|---|---|

**CUCHARON - EQUIPO (Z CARGADORA)**

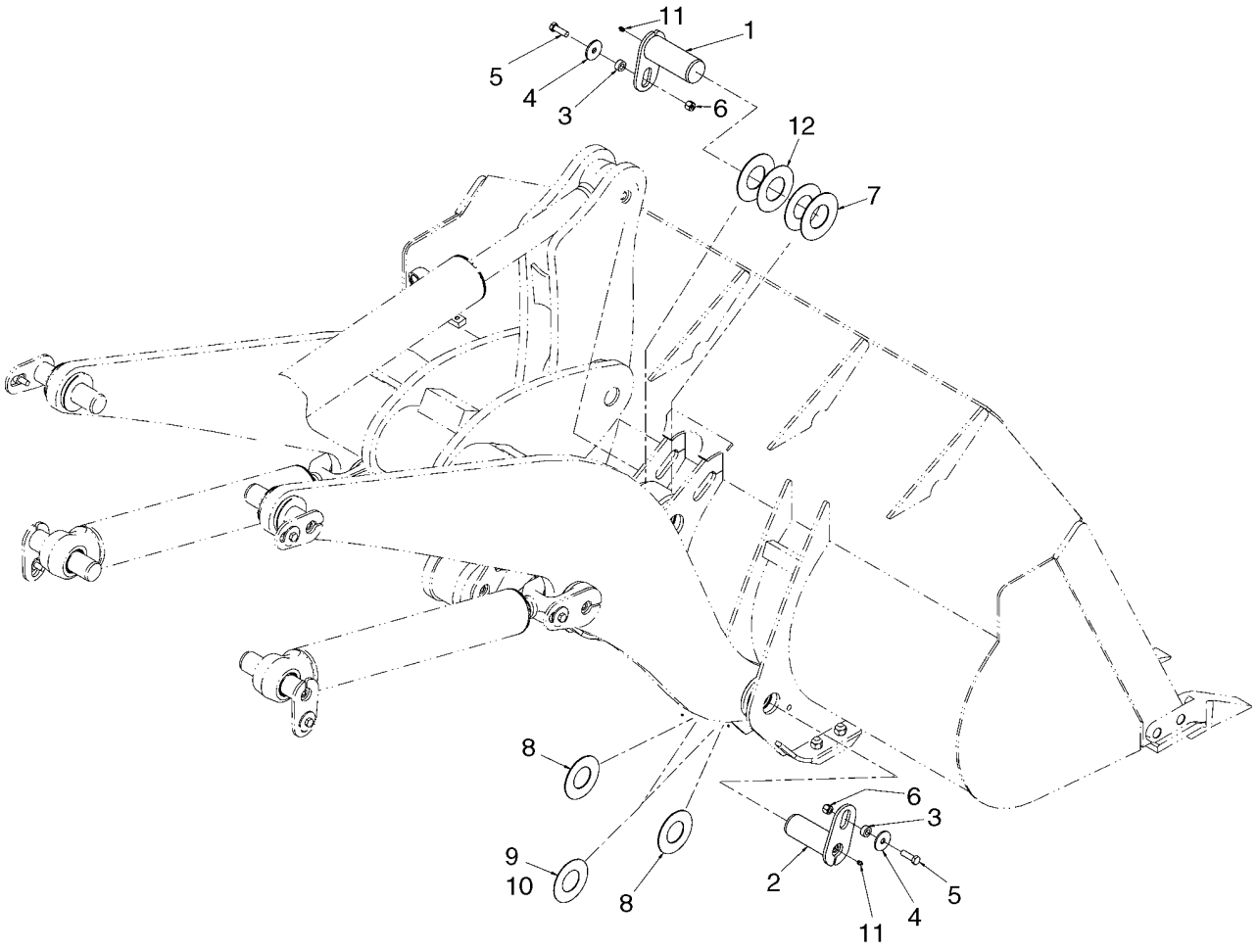


BS07E449

**CUCHARON - EQUIPO (Z CARGADORA)**

| REF | FN | PART NUMBER | YR/SN | QTY | DENOMINACION |
|---|---|---|---|---|---|
| | | REF | | | MANUAL, Z-BAR LOADER |
| 1 | | 375326A2 | | 1 | PASADOR (CONJUNTO), Dump Link Pivot |
| 2 | | 361139A2 | | 2 | PASADOR (CONJUNTO), Dump Link Pivot |
| 3 | | L125100 | | 3 | ESPACIADOR |
| 4 | | 496-81025 | | 3 | ARANDELA, 21/32" x 2 1/2" x .188", HDN |
| 5 | | 627-16050 | | 3 | TORNILLO, Hex, M16 x 50, 10.9 |
| 6 | | 832-10416 | | 3 | CONTRA TUERCA, M16 x 2, Cl 8 |
| 7 | | 375518A1 | | AR | ARANDELA |
| 8 | | 365356A1 | | AR | ARANDELA |
| 9 | | 375516A1 | | AR | ARANDELA |
| 10 | | 375517A1 | | AR | ARANDELA |
| 11 | | 219-1 | | 3 | ENGRASADOR, 1/8"-27 x .66 lg |
| 12 | | L127108 | | 2 | ARANDELA, Lift Arm |

| 09-08A | | p1 | 07/07 |
|---|---|---|---|

**CUCHARON - EQUIPO (XT CARGADORA)**

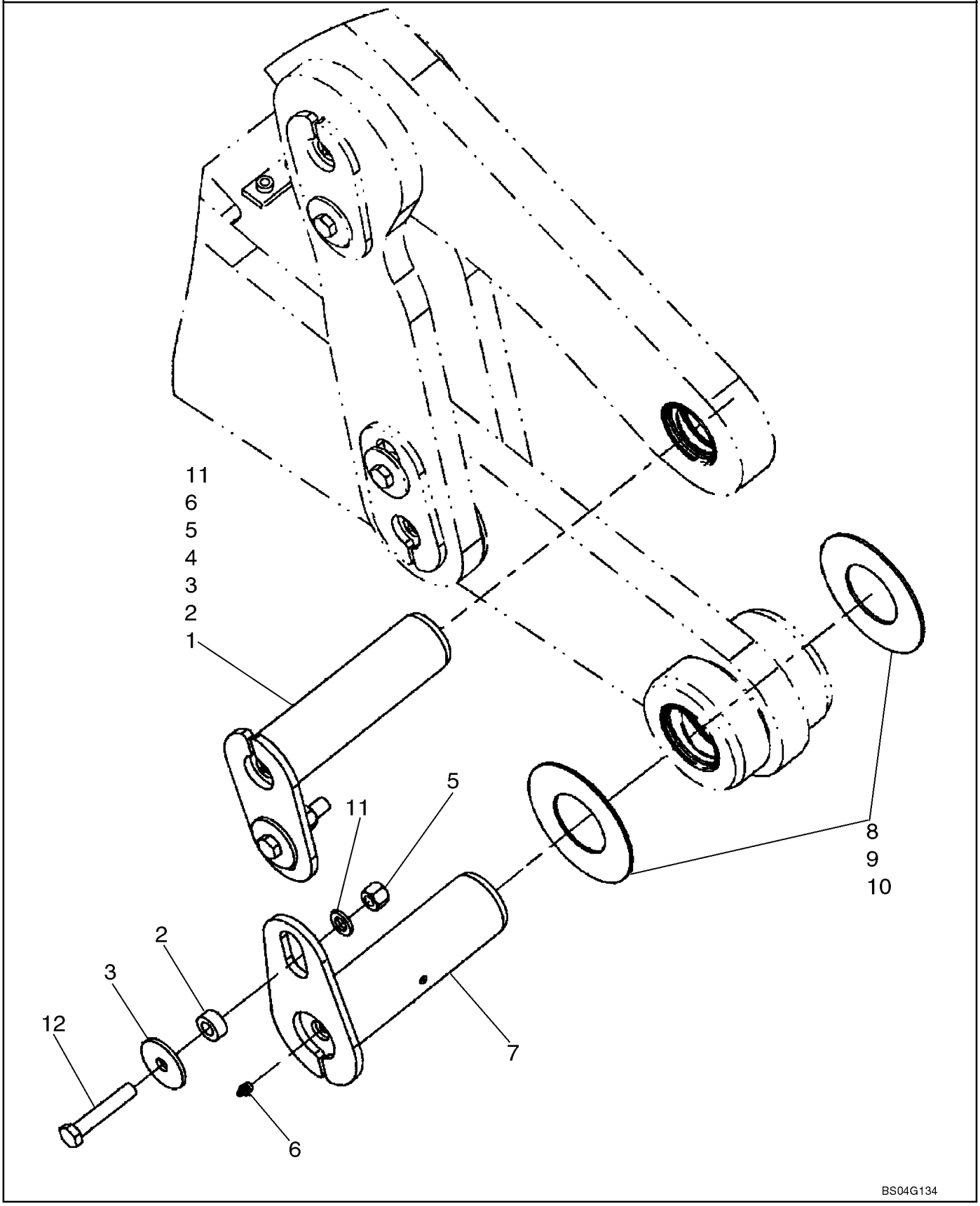

**CUCHARON - EQUIPO (XT CARGADORA)**

| REF | FN | PART NUMBER | YR/SN | QTY | DENOMINACION |
|---|---|---|---|---|---|
| | | REF | | | MANUAL, XT LOADER |
| 1 | | 379770A2 | | 2 | PERNO, Lift Arm |
| 2 | | L125100 | | 4 | ESPACIADOR |
| 3 | | 496-81025 | | 4 | ARANDELA, 21/32" x 2 1/2" x .188", HDN |
| 4 | | 827-16080 | | 2 | TORNILLO, Hex, M16 x 80, 10.9 |
| 5 | | 832-10416 | | 4 | CONTRA TUERCA, M16 x 2, Cl 8 |
| 6 | | 219-1 | | 4 | ENGRASADOR, 1/8"-27 x .66 lg |
| 7 | | 87437274 | | 2 | PASADOR (CONJUNTO), Lift Arm |
| 8 | | 375518A1 | | AR | ARANDELA, 77.6 ID x 3.5mm Thick; If Used |
| 9 | | 441822A1 | | AR | ARANDELA, 77.6ID x 1.6mm Thick; If Used |
| 10 | | L127108 | | AR | ARANDELA, Lift Arm; If Used |
| 11 | | 896-11016 | | 4 | ARANDELA, M17.5 x 30 x 4, HT |
| 12 | | 827-16090 | | 2 | TORNILLO, Hex, M16 x 90, 10.9 |

**ACOPLAMIENTO, HIDRAULICO - Z-BAR - JRB**

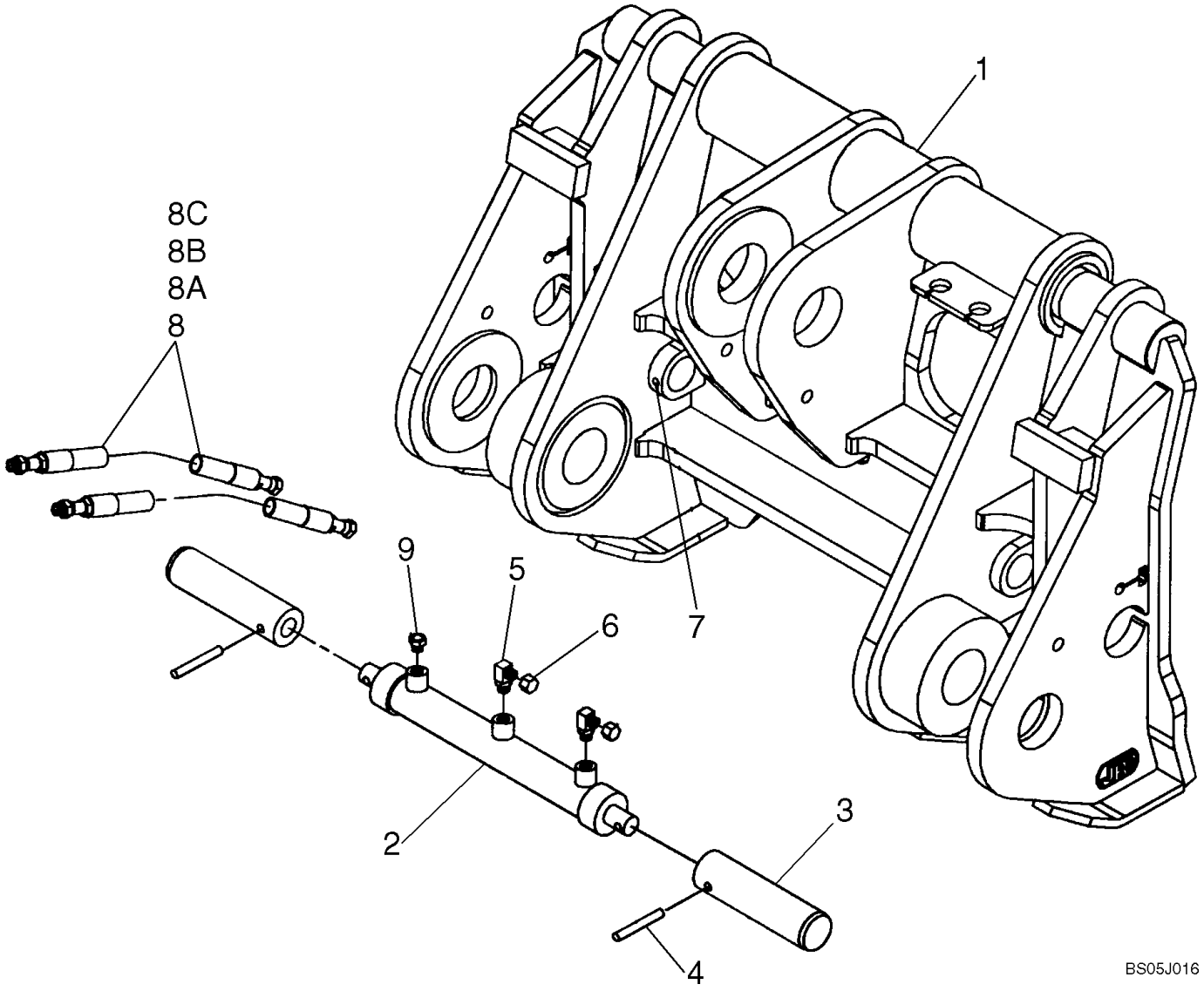

**ACOPLAMIENTO, HIDRAULICO - Z-BAR - JRB**

| REF | FN | PART NUMBER | YR/SN | QTY | DENOMINACION |
|---|---|---|---|---|---|
| | | {402700A1} | | | COUPLER ASSEMBLY WITH KIT; JRB; Z-BAR; Vendor Part Number; 90A2003 |
| 1 | | REF | | 1 | MANUAL, COUPLER ASSEMBLY; JRB; Z-BAR; Vendor Part Number; D19929 |
| | | REF | | 1 | MANUAL, HYDRAULIC KIT; JRB; Z-BAR; Vendor Part Number; 96A0056 Incl. 2 - 9 |
| 2 | | REF | | 1 | MANUAL, HYDRAULIC CYLINDER; JRB; Z-BAR; Vendor Part Number; B18865 |
| 3 | | REF | | 2 | MANUAL, PLUNGER; JRB; Z-BAR; Vendor Part Number; A23264 |
| 4 | | REF | | 2 | MANUAL, ROLLPIN; 3/8 X 1-3/4; JRB; Z-BAR; Vendor Part Number; 124038000175 |
| 5 | | REF | | 3 | MANUAL, STR THD CONNECTOR 90DEG; JRB; Z-BAR; Vendor Part Number; 46055-02 |
| 6 | | REF | | 3 | MANUAL, FITTING, CAP; JRB; Z-BAR; Vendor Part Number; 46070-02 |
| 7 | | REF | | 2 | MANUAL, GREASE ZERK; JRB; Z-BAR; Vendor Part Number; A31294-1 |
| 8 | | REF | | 2 | MANUAL, HOSE ASSEMBLY; JRB; Z-BAR; Vendor Part Number; 570046-48; Incl. 7A - 7C |
| 8A | | REF | | 1 | MANUAL, FITTING; JRB; Z-BAR; Vendor Part Number; 47036-02 |
| 8B | | REF | | | MANUAL, FITTING; JRB; Z-BAR; Vendor Part Number; 47020-02 |
| 8C | | REF | | | MANUAL, HOSE; JRB; Z-BAR; Vendor Part Number; 56 |
| 9 | | REF | | 1 | MANUAL, HEX PLUG; JRB; Z-BAR; Vendor Part Number; 46154-05 |

**ACOPLAMIENTO, HIDRAULICO - Z-BAR - ACS**

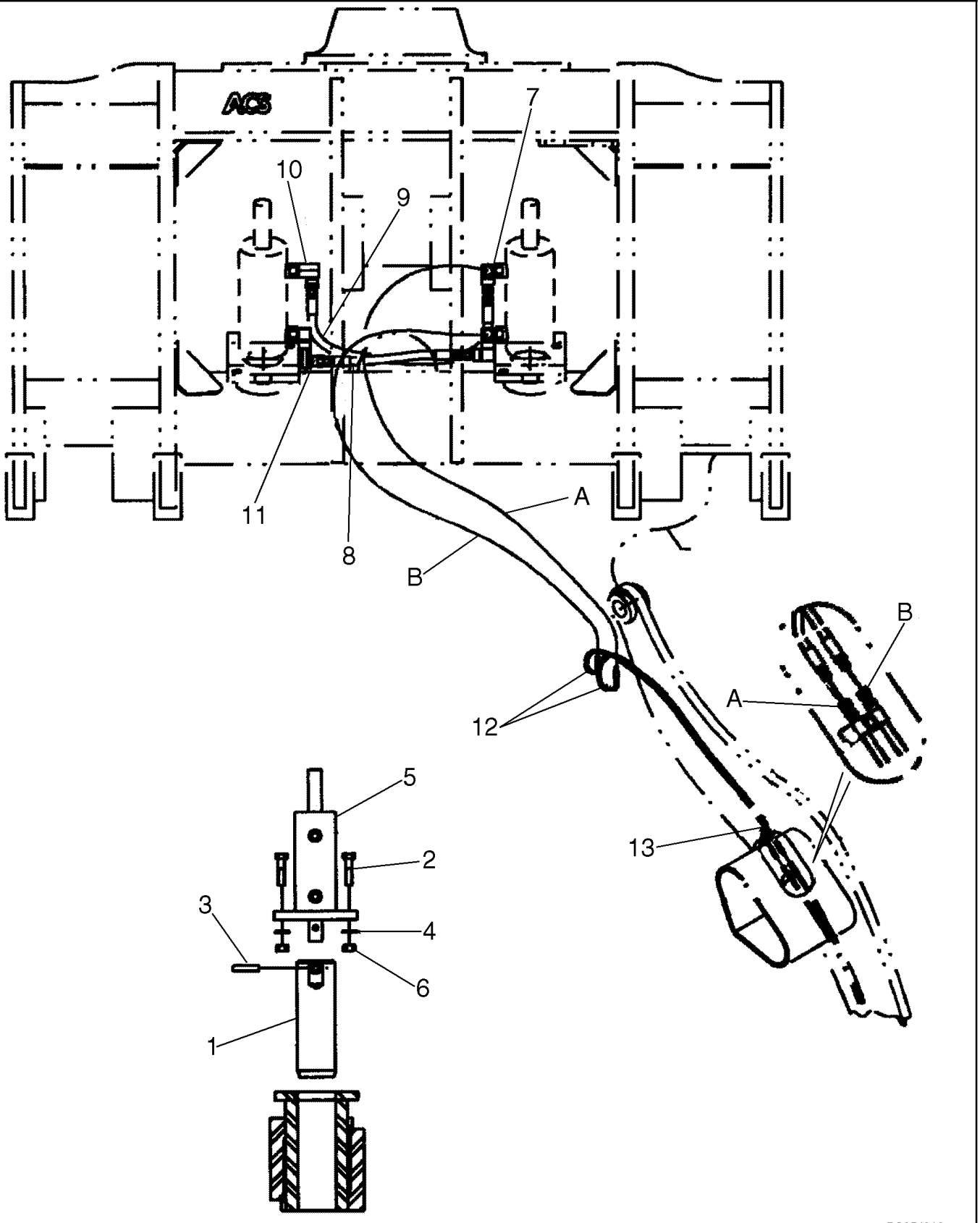

**ACOPLAMIENTO, HIDRAULICO - Z-BAR - ACS**

| REF | FN | PART NUMBER | YR/SN | QTY | DENOMINACION |
|---|---|---|---|---|---|
| | | {87407966} | | 1 | COUPLER; ACS PRO 2000 Size 30; Z-Bar; Includes Jump Hoses; Not Illustrated |
| | | {388540A1} | | 1 | PACKAGE; Manual; ACS PRO 2000 Size 30; Z-Bar; Not Illustrated |
| | | REF | | 1 | MANUAL, CYLINDER/PIN KIT; ACS; Z-BAR; Vendor Part Number; 65595535; Incl. 1 - 6 |
| 1 | | REF | | 2 | MANUAL, PIN, LOCKING; ACS; Z-BAR; Vendor Part Number; 40600850; 2 x 6-9/16 IN |
| 2 | | REF | | 4 | MANUAL, HEX BOLT; ACS; Z-BAR; Vendor Part Number; 60660520; 1/2-13 X 2 in |
| 3 | | REF | | 2 | MANUAL, PIN,ROLL; ACS; Z-BAR; Vendor Part Number; 40336700; 3/8 X 1-7/8 in |
| 4 | | REF | | 4 | MANUAL, WASHER; ACS; Z-BAR; Vendor Part Number; 60680180; 1/2 Lock |
| 5 | | REF | | 2 | MANUAL, CYLINDER; ACS; Z-BAR; Vendor Part Number; 50600775 |
| 6 | | REF | | 4 | MANUAL, NUT; ACS; Z-BAR; Vendor Part Number; 60481390; 1/2-13 NC |
| 7 | | REF | | 2 | MANUAL, FITTING, TEE; ACS; Z-BAR; Vendor Part Number; 52800539 |
| 8 | | REF | | 1 | MANUAL, HOSE; ACS; Z-BAR; Vendor Part Number; 54001217 |
| 9 | | REF | | 1 | MANUAL, HOSE; ACS; Z-BAR; Vendor Part Number; 54001106 |
| 10 | | REF | | 2 | MANUAL, FITTING, 90DEG; ACS; Z-BAR; Vendor Part Number; 52800553 |
| 11 | | REF | | 2 | MANUAL, FITTING, 90DEG; ACS; Z-BAR; Vendor Part Number; 52800593 |
| 12 | | REF | | 2 | MANUAL, HOSE; ACS; Z-BAR; Vendor Part Number; 54001316 |
| 13 | | REF | | 1 | MANUAL, RETAINER; ACS; Z-BAR; Vendor Part Number; 62640051 |

**ACOPLAMIENTO, HIDRAULICO - XT - JRB**

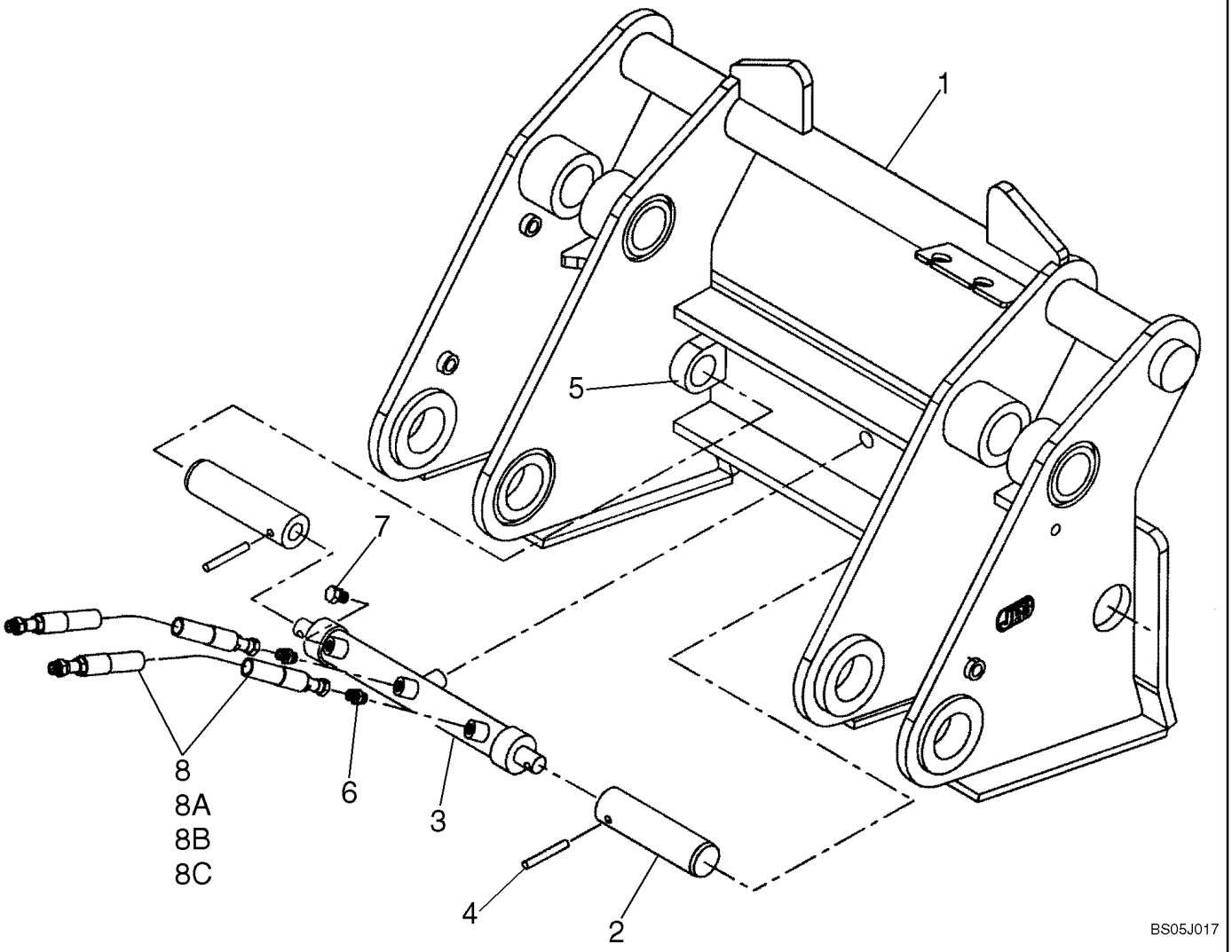

**ACOPLAMIENTO, HIDRAULICO - XT - JRB**

| REF | FN | PART NUMBER | YR/SN | QTY | DENOMINACION |
|---|---|---|---|---|---|
| | | {87451631} | | | COUPLER ASSEMBLY WITH KIT; JRB; XT; Vendor Part Number; 90A3032 |
| 1 | | REF | | 1 | MANUAL, COUPLER ASSEMBLY; JRB; XT; Vendor Part Number; D22295 |
| | | REF | | 1 | MANUAL, HYDRAULIC KIT; JRB; XT; Vendor Part Number; 96A0116 |
| 2 | | REF | | 2 | MANUAL, PLUNGER; JRB; XT; Vendor Part Number; A23264 |
| 3 | | REF | | 1 | MANUAL, HYDRAULIC CYLINDER; JRB; XT; Vendor Part Number; B18865 |
| 4 | | REF | | 2 | MANUAL, ROLLPIN; 3/8 X 1-3/4; JRB; XT; Vendor Part Number; 124038000175 |
| 5 | | REF | | 2 | MANUAL, GREASE ZERK; JRB; XT; Vendor Part Number; A31294-1 |
| 6 | | REF | | 2 | MANUAL, STR THD CONNECTOR; JRB; XT; Vendor Part Number; 46036-02 |
| 7 | | REF | | 1 | MANUAL, HEX PLUG; JRB; XT; Vendor Part Number; 46154-05 |
| 8 | | REF | | 2 | MANUAL, HOSE ASSEMBLY; JRB; XT; Vendor Part Number; 570046-51; Incl. 8A - 8C |
| 8A | | REF | | 1 | MANUAL, FITTING; JRB; XT; Vendor Part Number; 47036-02 |
| 8B | | REF | | | MANUAL, FITTING; JRB; XT; Vendor Part Number; 47020-02 |
| 8C | | REF | | | MANUAL, HOSE; JRB; XT; Vendor Part Number; 56 |

**ACOPLAMIENTO, HIDRAULICO - XT - ACS**

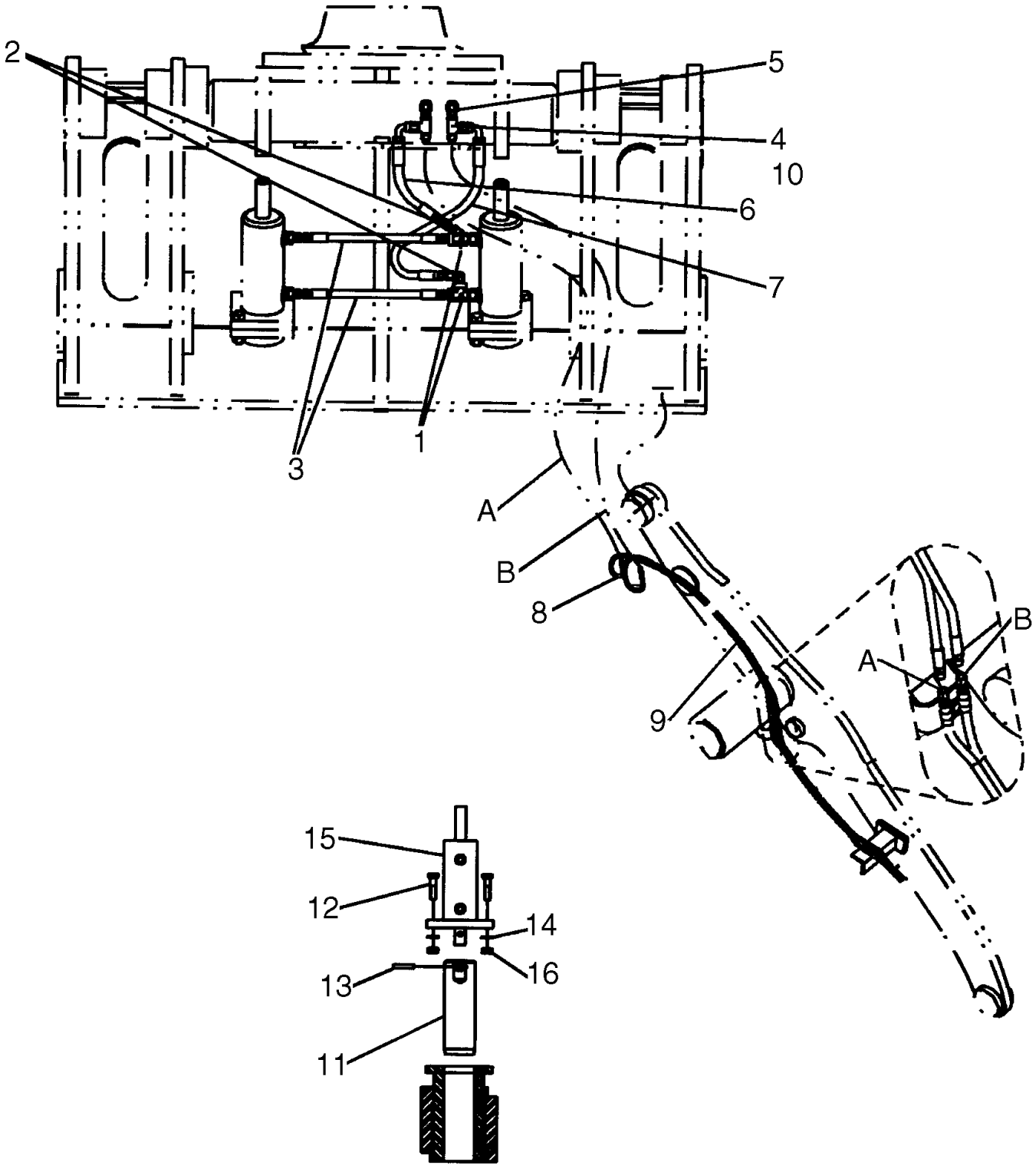

**ACOPLAMIENTO, HIDRAULICO - XT - ACS**

| REF | FN | PART NUMBER | YR/SN | QTY | DENOMINACION |
|---|---|---|---|---|---|
| | | {87446140} | | 1 | COUPLER; ACS PRO 2000 Size 30; XT; Includes Jump Hoses; Not Illustrated |
| | | {87446143} | | 1 | PACKAGE; Manual; ACS PRO 2000 Size 30; XT; Not Illustrated |
| | | REF | | 1 | MANUAL, CYLINDER/PIN KIT; ACS; XT; Vendor Part Number; 65595535; Incl. 11 - 16 |
| 1 | | REF | | 2 | MANUAL, FITTING, TEE; ACS; XT; Vendor Part Number; 52800540 |
| 2 | | REF | | 2 | MANUAL, FITTING, 90DEG; ACS; XT; Vendor Part Number; 52801119 |
| 3 | | REF | | 2 | MANUAL, HOSE; ACS; XT; Vendor Part Number; 54830114 |
| 4 | | REF | | 2 | MANUAL, FITTING, BULKHEAD TEE; ACS; XT; Vendor Part Number; 52800803 |
| 5 | | REF | | 2 | MANUAL, FITTING, CAP; ACS; XT; Vendor Part Number; 52800727 |
| 6 | | REF | | 1 | MANUAL, HOSE; ACS; XT; Vendor Part Number; 54830358 |
| 7 | | REF | | 1 | MANUAL, HOSE; ACS; XT; Vendor Part Number; 54001576 |
| 8 | | REF | | 2 | MANUAL, HOSE; ACS; XT; Vendor Part Number; 54823250 |
| 9 | | REF | | 4 | MANUAL, RETAINER; ACS; XT; Vendor Part Number; 62640051 |
| 10 | | REF | | 2 | MANUAL, NUT; BULKHEAD; ACS; XT; Vendor Part Number; 52001444 |
| 11 | | REF | | 2 | MANUAL, PIN, LOCKING; ACS; XT; Vendor Part Number; 40600850; 2 x 6-9/16 IN |
| 12 | | REF | | 4 | MANUAL, HEX BOLT; ACS; XT; Vendor Part Number; 60660520; 1/2-13 X 2 in |
| 13 | | REF | | 2 | MANUAL, PIN,ROLL; ACS; XT; Vendor Part Number; 40336700; 3/8 X 1-7/8 in |
| 14 | | REF | | 4 | MANUAL, WASHER; ACS; XT; Vendor Part Number; 60680180; 1/2 Lock |

**ACOPLAMIENTO, HIDRAULICO - XT - ACS**

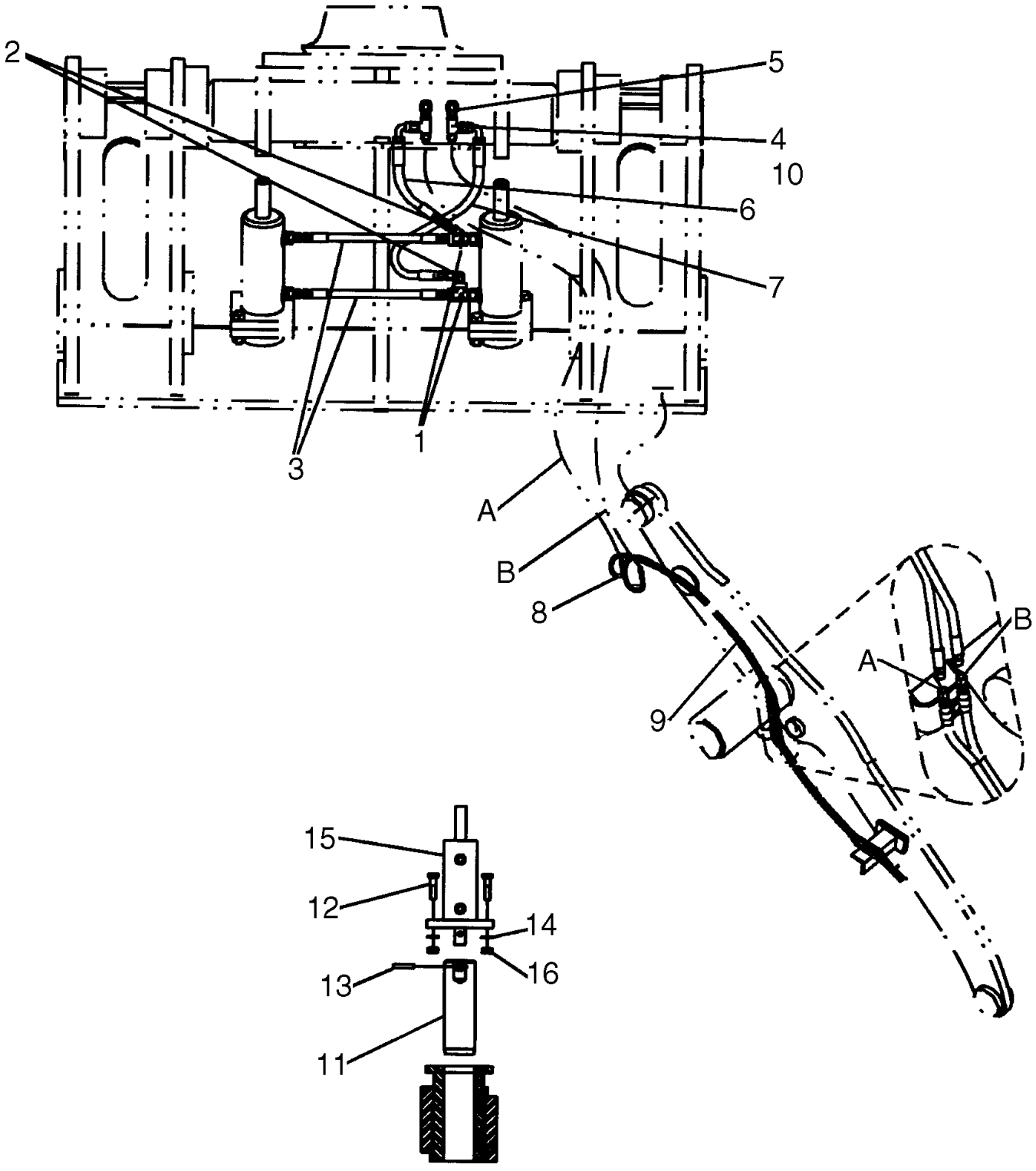

**ACOPLAMIENTO, HIDRAULICO - XT - ACS**

| REF | FN | PART NUMBER | YR/SN | QTY | DENOMINACION |
|---|---|---|---|---|---|
| 15 | | REF | | 2 | MANUAL, CYLINDER; ACS; XT; Vendor Part Number; 50600775 |
| 16 | | REF | | 4 | MANUAL, NUT; ACS; XT; Vendor Part Number; 60481390; 1/2-13 NC |

**CUCHARON DE LA CARGADORA - DENTADO, SEGMENTOS Y ALMOHADILLAS DE DESLIZAMIENTO**

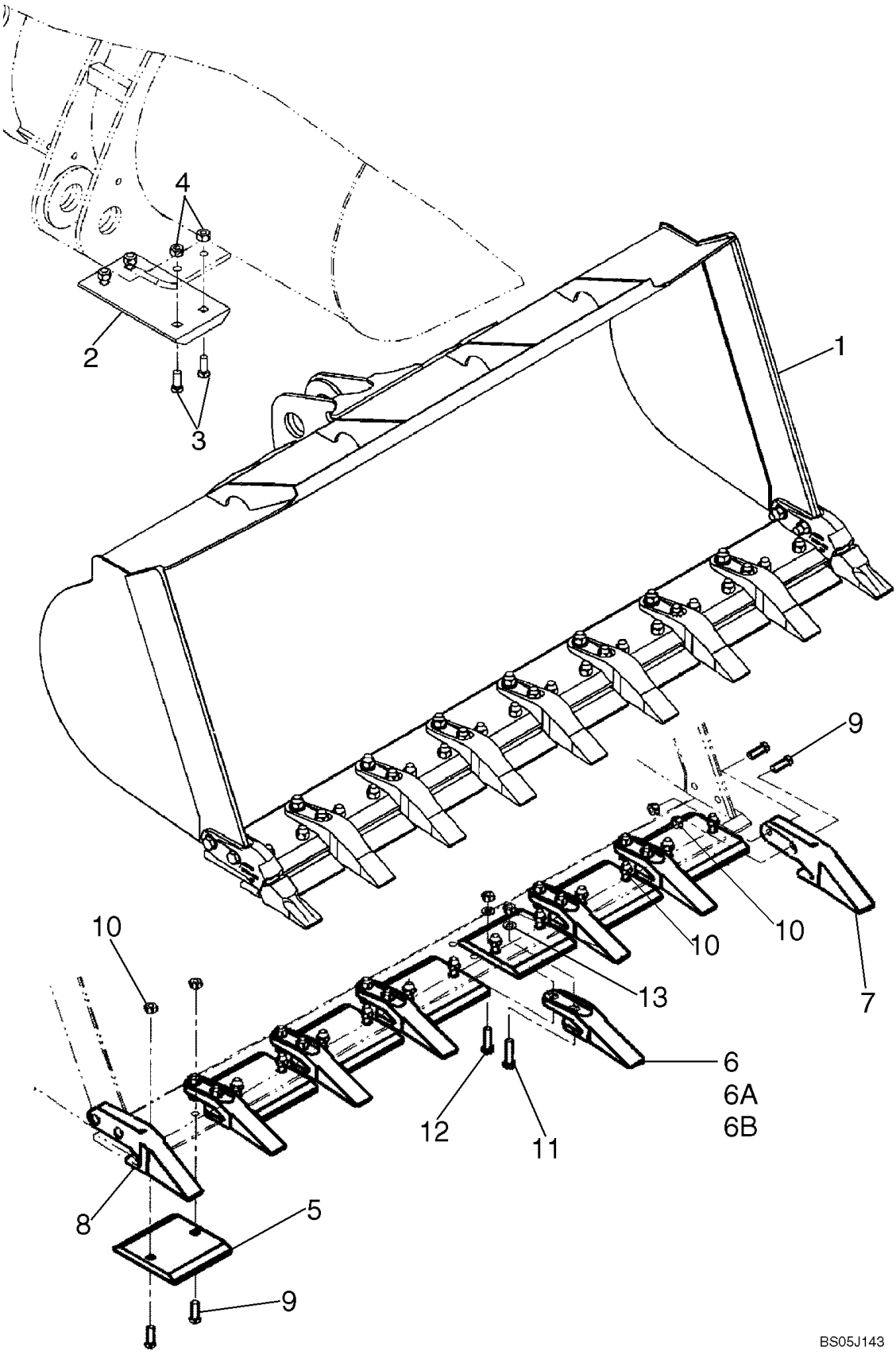

**CUCHARON DE LA CARGADORA - DENTADO, SEGMENTOS Y ALMOHADILLAS DE DESLIZAMIENTO**

| REF | FN | PART NUMBER | YR/SN | QTY | DENOMINACION |
|---|---|---|---|---|---|
| | | REF | | | MANUAL, WELDED ON BUCKET COMPONENTS ARE NOT SERVICED SEPARATELY |
| 1 | | {428433A1} | | 1 | BUCKET ASSEMBLY; 1.9 Cubic Meters ( 2.5 Cubic Yards ); Order From Whole Goods; Incl. 2-13 |
| 1 | | {428436A1} | | 1 | BUCKET ASSEMBLY; 2 Cubic Meters ( 2.75 Cubic Yards ); Order From Whole Goods; Incl. 2-13 |
| 1 | | {418471A1} | | 1 | BUCKET ASSEMBLY; 1.9 Cubic Meters ( 2.5 Cubic Yards ); Use With ACS Coupler;Order From Whole Goods; Incl. 2-13 |
| 1 | | {434537A1} | | 1 | BUCKET ASSEMBLY; 1.9 Cubic Meters ( 2.5 Cubic Yards ); Use With JRB Coupler;Order From Whole Goods; Incl. 2-13 |
| | | REF | | | MANUAL, BOLT ON SKID PAD |
| 2 | | 360939A1 | | 2 | PLACA, Bottom; Bolt On |
| 3 | | 420-21236 | | 8 | PERNO, CABEZA RONDA, 3/4"-10 x 2 1/4", G8 |
| 4 | | 425-1612 | | 8 | TUERCA, 3/4"-10, G5, Hvy |
| | | REF | | | MANUAL, BUCKET TEETH AND CUTTING EDGE SEGMENTS |
| 5 | | 373354A1 | | 7 | CUCHILLA DE ATAQUE |
| 6 | | 254825A1 | | 6 | DIENTES, Center; Standard Incl. 6A, 6B |
| 6A | | 233792A1 | | 1 | PERNO |
| | | NSS | | | NO SE REPARA SEPARADAM., Shank |
| 6B | | 127555A1 | | AR | DIENTE, Standard |
| 6B | | 254822A1 | | AR | DIENTE, Abrasion; Not Illustrated |
| 6B | | 254823A1 | | AR | DIENTE, Penetration; Not Illustrated |
| 7 | | 76082151 | | 1 | DIENTE, Corner; Left |
| 8 | | 368526A1 | | 1 | DIENTE, Corner; Right |
| 9 | | 420-21244 | | 18 | PERNO DE ARADO, 3/4"-10 x 2 3/4", G8 |
| 10 | | 425-1612 | | 30 | TUERCA, 3/4"-10, G5, Hvy |
| 11 | | 426-1252 | | 6 | TORNILLO, Hex, 3/4"-10 x 3 1/4", G8 |
| 12 | | 426-1244 | | 6 | TORNILLO, Hex, 3/4"-10 x 2 3/4", G8 |
| 13 | | 496-11081 | | 12 | ARANDELA, 13/16" x 1 1/2" x .065", HDN |

**CUCHARON DE LA CARGADORA - CON PERNO EN EL BORDE Y ALMOHADILLAS DE DESLIZAMIENTO**

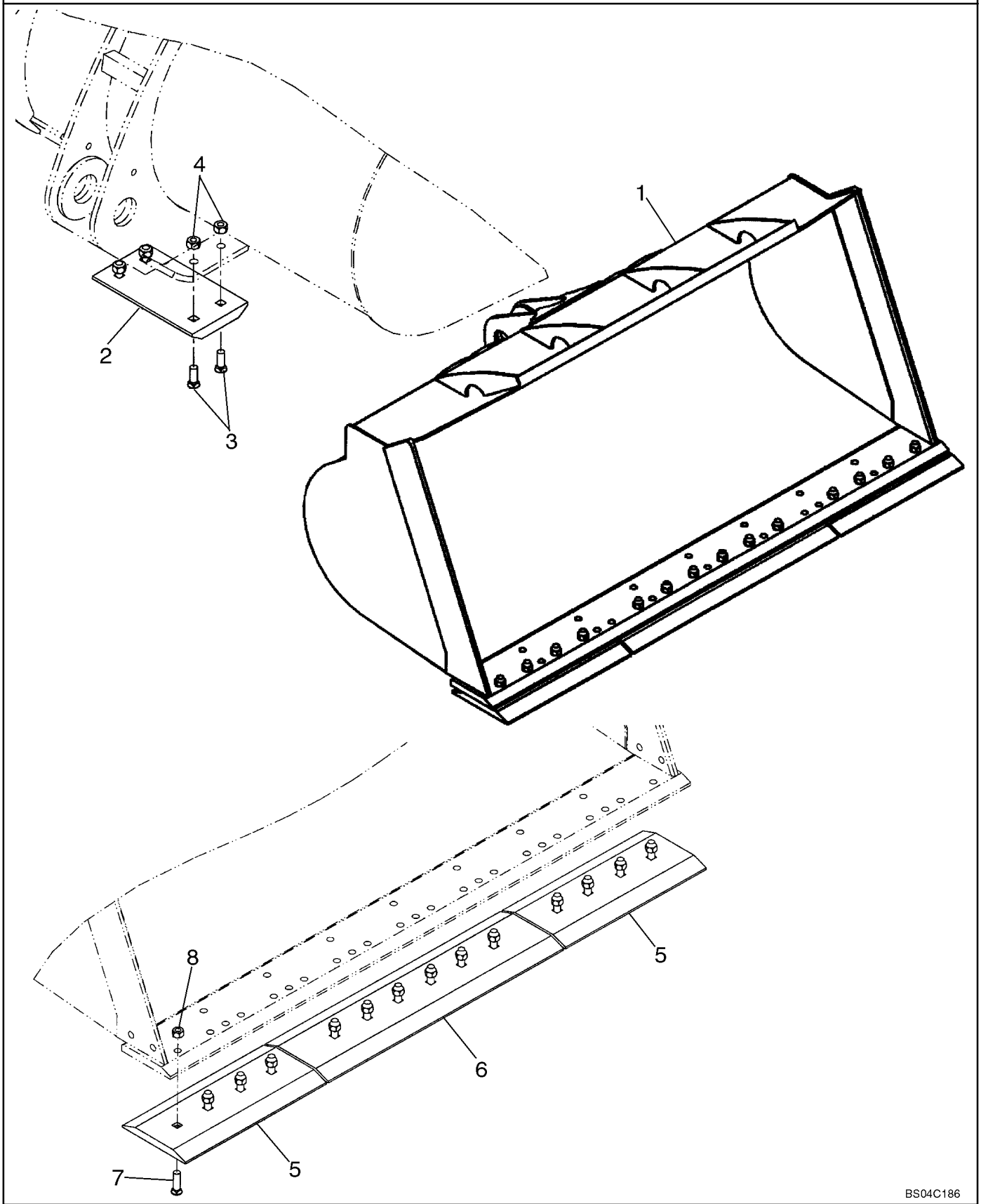

**CUCHARON DE LA CARGADORA - CON PERNO EN EL BORDE Y ALMOHADILLAS DE DESLIZAMIENTO**

| REF | FN | PART NUMBER | YR/SN | QTY | DENOMINACION |
|---|---|---|---|---|---|
| | | REF | | | MANUAL, WELDED ON BUCKET COMPONENTS ARE NOT SERVICED SEPARATELY |
| 1 | | {428434A1} | | 1 | BUCKET/A; 2 Cubic Meter ( 2.75 Cubic Yards ); Order From Whole Goods; Inc. 2 - 8 |
| 1 | | {428437A1} | | 1 | BUCKET/A; 2.25 Cubic Meter ( 3 Cubic Yards ); Order From Whole Goods; Inc. 2 - 8 |
| 1 | | {428432A1} | | 1 | BUCKET/A; 1.9 Cubic Meter ( 2.5 Cubic Yards ); Order From Whole Goods; Inc. 2 - 8 |
| 1 | | {418472A1} | | 1 | BUCKET/A; 2.25 Cubic Meter ( 3 Cubic Yards ); For Use With ASC Pro Series 2000 Size 30 Couplers; Order From Whole Goods; Inc. 2 - 8; |
| 1 | | {418470A1} | | 1 | BUCKET/A; 1.9 Cubic Meter ( 2.5 Cubic Yards ); For Use With ASC Pro Series 2000 Size 30 Couplers; Order From Whole Goods; Inc. 2 - 8 |
| 1 | | {434536A1} | | 1 | BUCKET/A; 1.9 Cubic Meter ( 2.5 Cubic Yards ); For Use With JRB Couplers; Order From Whole Goods; Inc. 2 - 8 |
| | | REF | | | MANUAL, BOLT ON SKID PAD |
| 2 | | 360939A1 | | 2 | PLACA, Bottom; Bolt On |
| 3 | | 420-21236 | | 8 | PERNO, CABEZA RONDA, 3/4"-10 x 2 1/4", G8, 3/4 x 2-1/4 in |
| 4 | | 425-1612 | | 8 | TUERCA, 3/4"-10, G5, Hvy, 3/4, Hardened |
| | | REF | | | MANUAL, BOLT ON CUTTING EDGES |
| 5 | | 372082A2 | | 2 | CUCHILLA DE ATAQUE, Outer; Bolt On |
| 6 | | 372081A1 | | 1 | CUCHILLA DE ATAQUE, Center; Bolt On |
| 7 | | 420-21244 | | 16 | PERNO DE ARADO, 3/4"-10 x 2 3/4", G8, #3; 3/4 x 2-3/4 in |
| 8 | | 425-1612 | | 16 | TUERCA, 3/4"-10, G5, Hvy, 3/4-10 |

| 09-12 | | p1 | 05/07 |
|---|---|---|---|

**CHASIS, DELANTERO (Z-BAR, XR)**

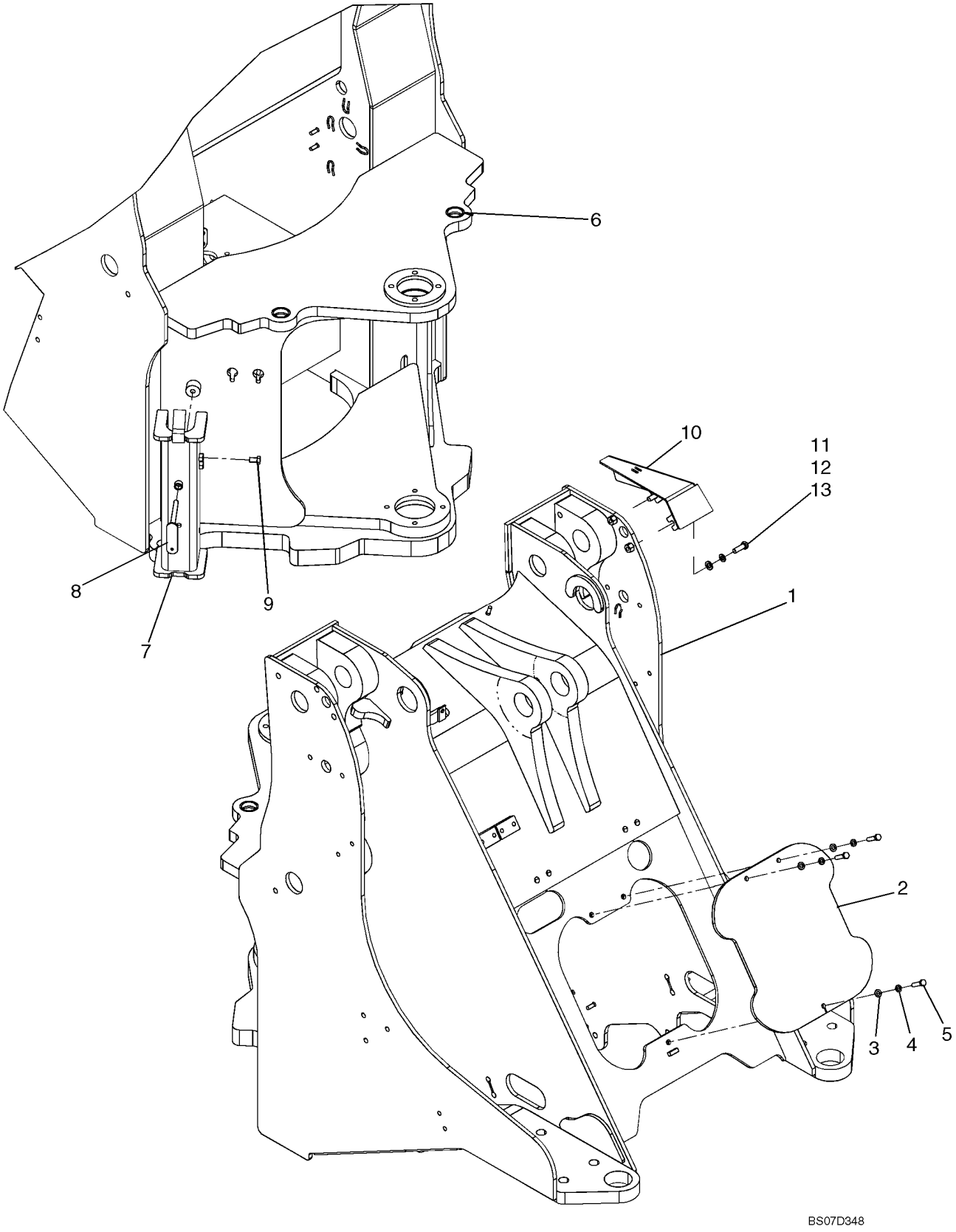

**CHASIS, DELANTERO (Z-BAR, XR)**

| REF | FN | PART NUMBER | YR/SN | QTY | DENOMINACION |
|---|---|---|---|---|---|
| 1 | | 87547373 | | 1 | ARMADURA-CARCASA, Front Chassis; Case Power Tan |
| 2 | | 8605898 | | 1 | TAPADERA, Valve |
| 3 | | 895-11010 | | 3 | ARANDELA, M10 x 20 x 2 |
| 4 | | 892-11010 | | 3 | ARANDELA DE FRENO, M10 |
| 5 | | 627-10040 | | 3 | TORNILLO, Hex, M10 x 40, 10.9, Full Thd |
| 6 | | 8500173 | | 2 | CASQUILLO |
| 7 | | 406347A1 | | 1 | APOYADERO (CONJUNTO), Linkage |
| 8 | | 406390A1 | | 1 | MANECILLA, Linkage Channel |
| 9 | | 627-12020 | | 1 | TORNILLO, Hex, M12 x 20, 10.9, Full Thd |
| 10 | | 87430084 | | 1 | TAPA, Proximity Switch |
| 11 | | 896-11012 | | 2 | ARANDELA, M13.5 x 24.5 x 3, HT |
| 12 | | 892-11012 | | 2 | ARANDELA DE FRENO, M12 |
| 13 | | 627-12035 | | 2 | TORNILLO, Hex, M12 x 35, 10.9 |

| 09-13 | | p1 | 05/07 |
|---|---|---|---|

**CHASIS, DELANTERO (XT)**

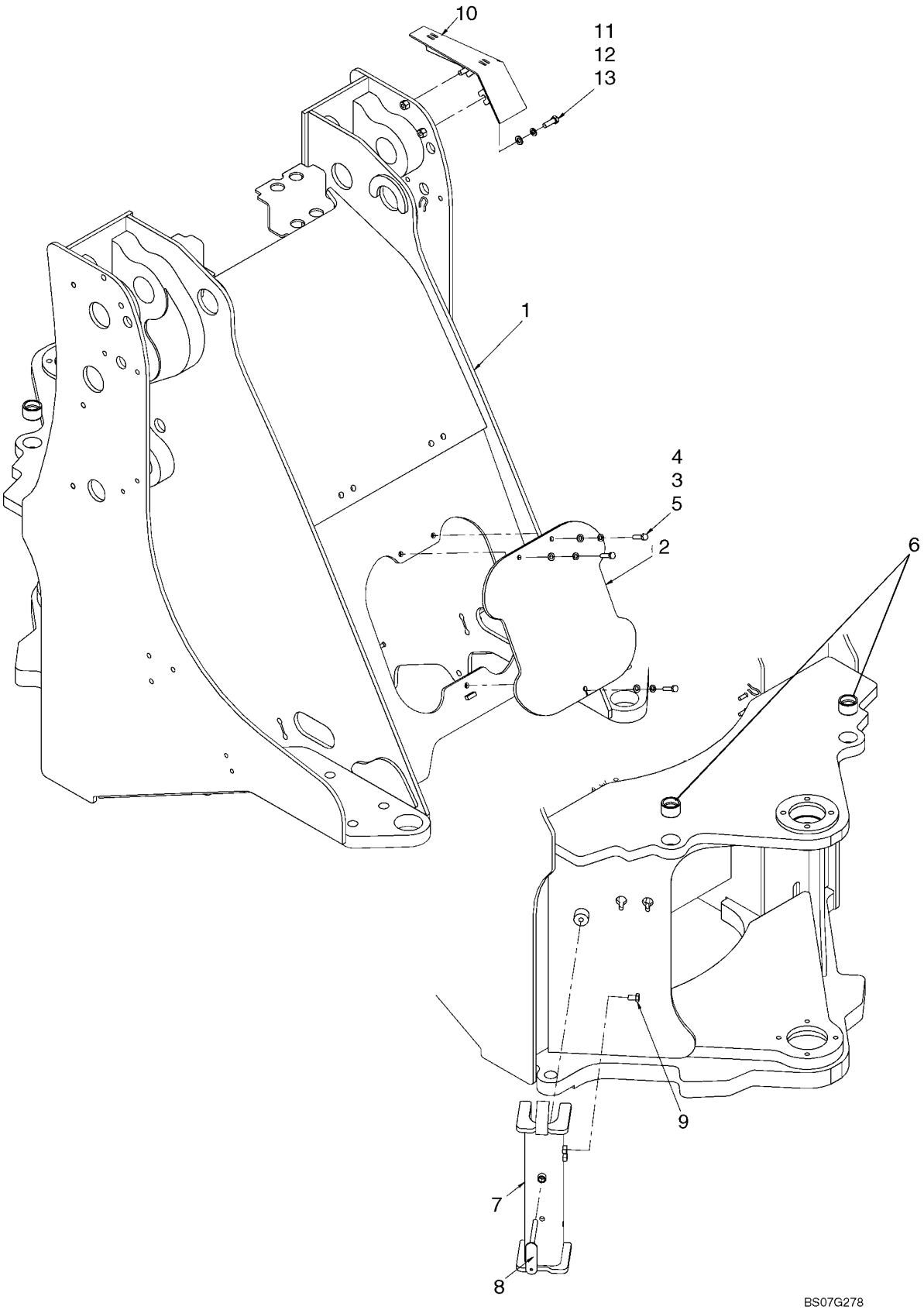

**CHASIS, DELANTERO (XT)**

| REF | FN | PART NUMBER | YR/SN | QTY | DENOMINACION |
|---|---|---|---|---|---|
| | | REF | | | MANUAL, XT LOADER |
| 1 | | 87547376 | | 1 | ARMADURA-CARCASA, Front Chassis |
| 2 | | 8605898 | | 1 | TAPADERA, Valve Case |
| 3 | | 895-11010 | | 3 | ARANDELA, M10 x 20 x 2 |
| 4 | | 892-11010 | | 3 | ARANDELA DE FRENO, M10 |
| 5 | | 627-10040 | | 3 | TORNILLO, Hex, M10 x 40, 10.9, Full Thd |
| 6 | | 8500173 | | 2 | CASQUILLO |
| 7 | | 406347A1 | | 1 | APOYADERO (CONJUNTO), Linkage |
| 8 | | 406390A1 | | 1 | MANECILLA |
| 9 | | 627-12020 | | 1 | TORNILLO, Hex, M12 x 20, 10.9, Full Thd |
| 10 | | 87450063 | | 1 | TAPADERA, Proximity Switch |
| 11 | | 896-11012 | | 2 | ARANDELA, M13.5 x 24.5 x 3, HT |
| 12 | | 892-11012 | | 2 | ARANDELA DE FRENO, M12 |
| 13 | | 627-12035 | | 2 | TORNILLO, Hex, M12 x 35, 10.9 |

| 09-14 | | p1 | 06/07 |
|---|---|---|---|

**CHASIS, TRASERO**

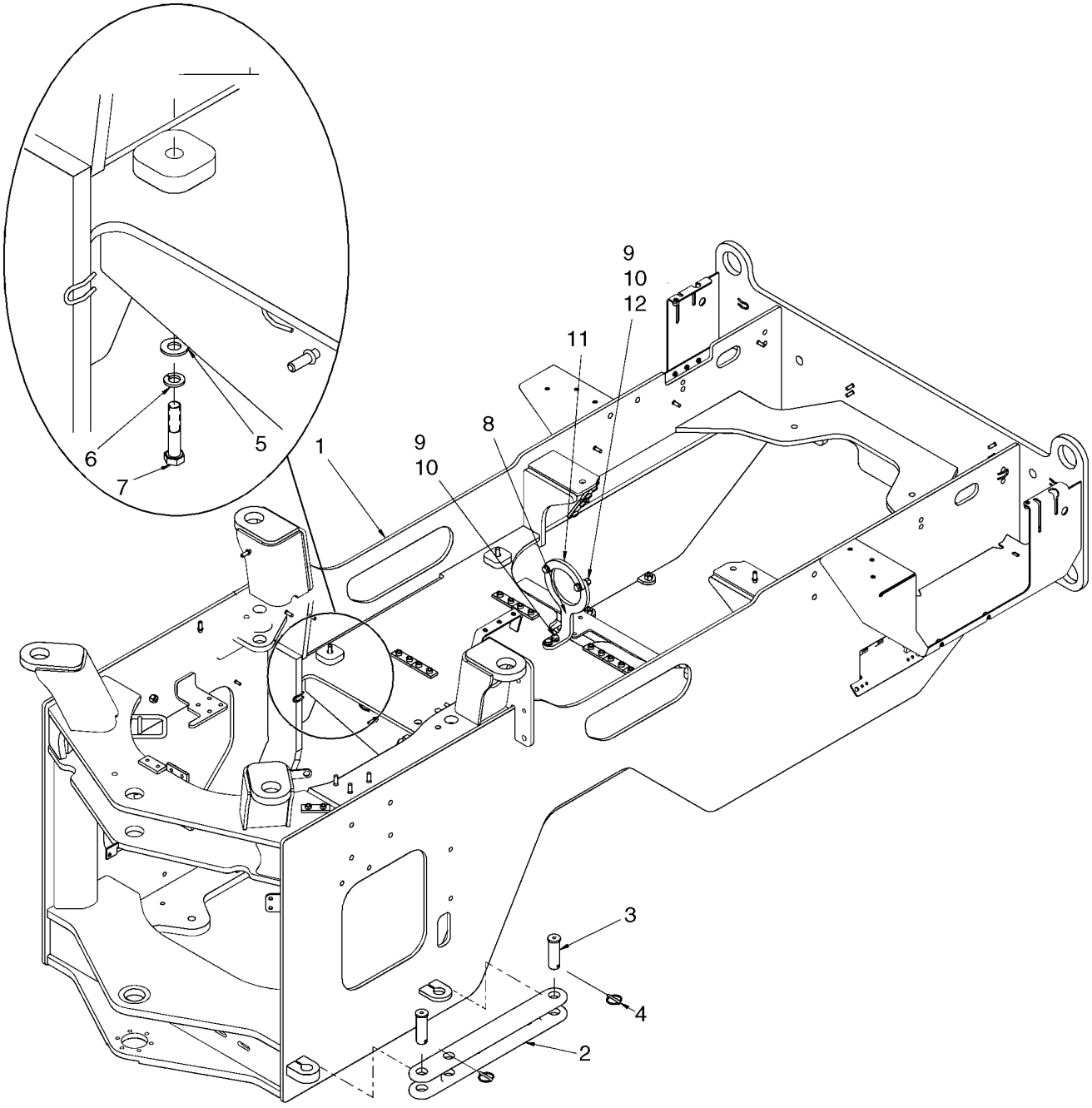

**CHASIS, TRASERO**

| REF | FN | PART NUMBER | YR/SN | QTY | DENOMINACION |
|---|---|---|---|---|---|
| 1 | | 87653595 | | 1 | BASTIDOR, Rear; Case Power Tan |
| 2 | | 412067A1 | | 1 | CERROJO |
| 3 | | 126268A1 | | 2 | BULON/PIN, LARGO |
| 4 | | A30338 | | 2 | PERNO |
| 5 | | 895-15012 | | 4 | ARANDELA, M12 x 28 x 2.5 |
| 6 | | 892-11012 | | 4 | ARANDELA DE FRENO, M12 |
| 7 | | 827-12060 | | 4 | TORNILLO, Hex, M12 x 60, 10.9 |
| 8 | | 87559571 | | 1 | DEFENSA |
| 9 | | 896-11012 | | 6 | ARANDELA, M13.5 x 24.5 x 3, HT |
| 10 | | 627-12045 | | 4 | TORNILLO, Hex, M12 x 45, 10.9, Full Thd |
| 11 | | {87333866} | | 1 | GUARD, Drive Shaft |
| 12 | | 832-10412 | | 2 | CONTRA TUERCA, M12 x 1.75, Cl 8 |

| 09-15 | | p1 | 06/07 |
|---|---|---|---|

**EMPALME DE LA ARTICULACIÓN**

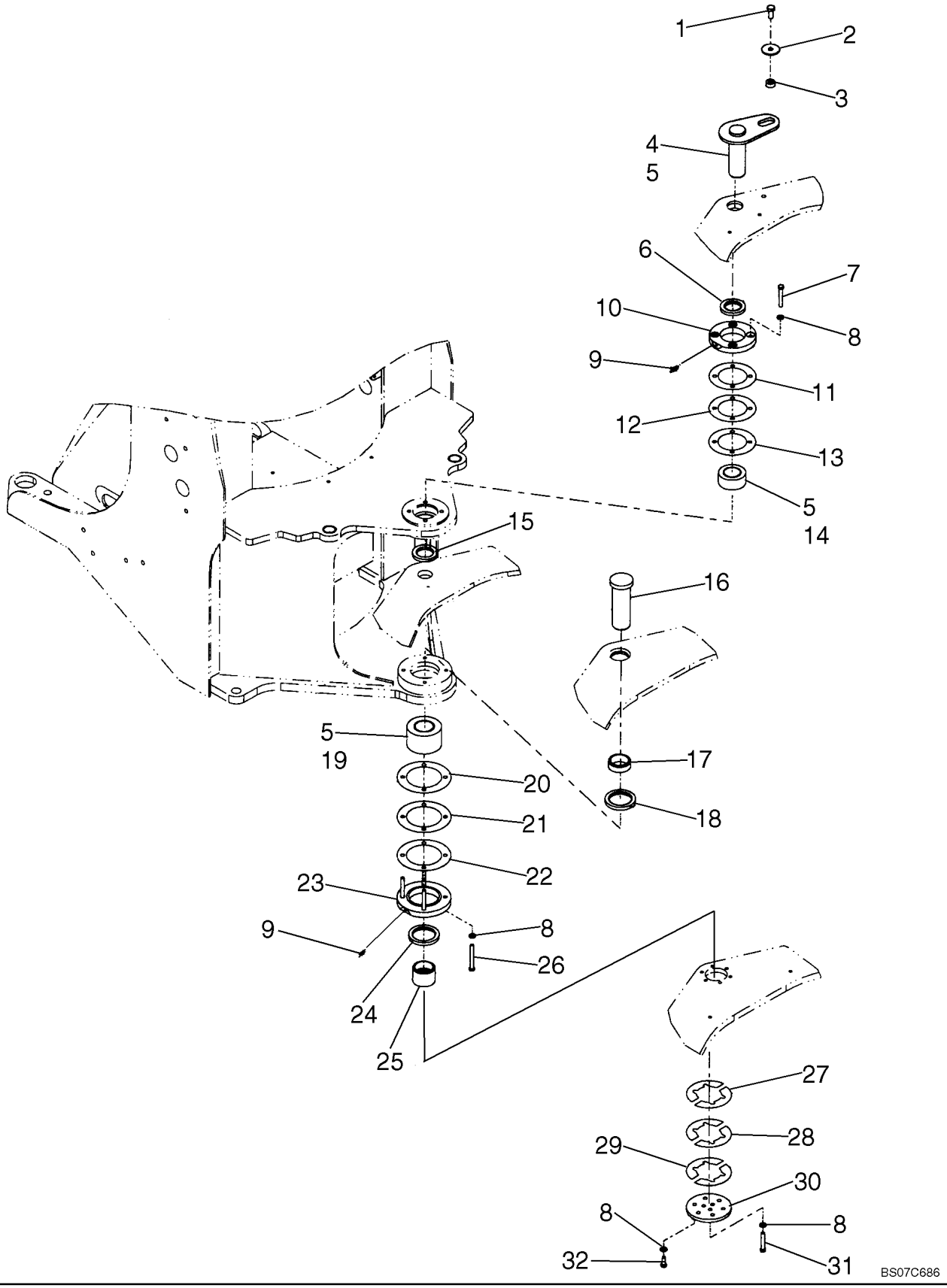

**EMPALME DE LA ARTICULACIÓN**

| REF | FN | PART NUMBER | YR/SN | QTY | DENOMINACION |
|---|---|---|---|---|---|
| 1 | | 627-16035 | | 1 | TORNILLO, Hex, M16 x 35, 10.9 |
| 2 | | 496-81025 | | 1 | ARANDELA, 21/32" x 2 1/2" x .188", HDN |
| 3 | | L125100 | | 1 | ESPACIADOR |
| 4 | | 8606124 | | 1 | PERNO |
| 5 | | 331-329 | | AR | GRASA, 1 Ounce Wheel Bearing Grease |
| 6 | | 391281A1 | | 1 | ANILLO DE CIERRE |
| 7 | | 827-12080 | | 4 | TORNILLO, Hex, M12 x 80, 10.9 |
| 8 | | 896-11012 | | 17 | ARANDELA, M13.5 x 24.5 x 3, HT |
| 9 | | 219-1 | | 2 | ENGRASADOR, 1/8"-27 x .66 lg |
| 10 | | 391280A1 | | 1 | RETENEDOR |
| 11 | | L118987 | | AR | SUPLEMENTO, .1 mm |
| 12 | | L119202 | | AR | SUPLEMENTO, .25 mm |
| 13 | | L118986 | | AR | SUPLEMENTO, .5 mm |
| 14 | | 391276A1 | | 1 | COJINETE |
| 15 | | 391278A1 | | 1 | ANILLO DE CIERRE |
| 16 | | 433264A1 | | 1 | PERNO |
| 17 | | 87623437 | | 1 | SEPARADOR, Lower Bearing |
| 18 | | L118978 | | 1 | ANILLO DE CIERRE |
| 19 | | 432765A1 | | 1 | COJINETE |
| 20 | | L118990 | | AR | SUPLEMENTO, .1 mm |
| 21 | | L118989 | | AR | SUPLEMENTO, .5 mm |
| 22 | | L119203 | | AR | SUPLEMENTO, .25 mm |
| 23 | | 432909A1 | | 1 | RETENEDOR |
| 24 | | L126168 | | 1 | ANILLO DE CIERRE |
| 25 | | 87623438 | | 1 | SEPARADOR, Lower Bearing |
| 26 | | 827-12100 | | 4 | TORNILLO, Hex, M12 x 100, 10.9 |
| 27 | | L118983 | | AR | SUPLEMENTO, .1 mm |
| 28 | | L118980 | | AR | SUPLEMENTO, .25 mm |
| 29 | | L118982 | | AR | SUPLEMENTO, .5 mm |
| 30 | | L128375 | | 1 | PLACA, Lower Pin |
| 31 | | 827-12070 | | 3 | TORNILLO, Hex, M12 x 70, 10.9 |
| 32 | | 627-12030 | | 6 | TORNILLO, Hex, M12 x 30, 10.9 |

| 09-16 | | p1 | 07/07 |
|---|---|---|---|

**CAPO**

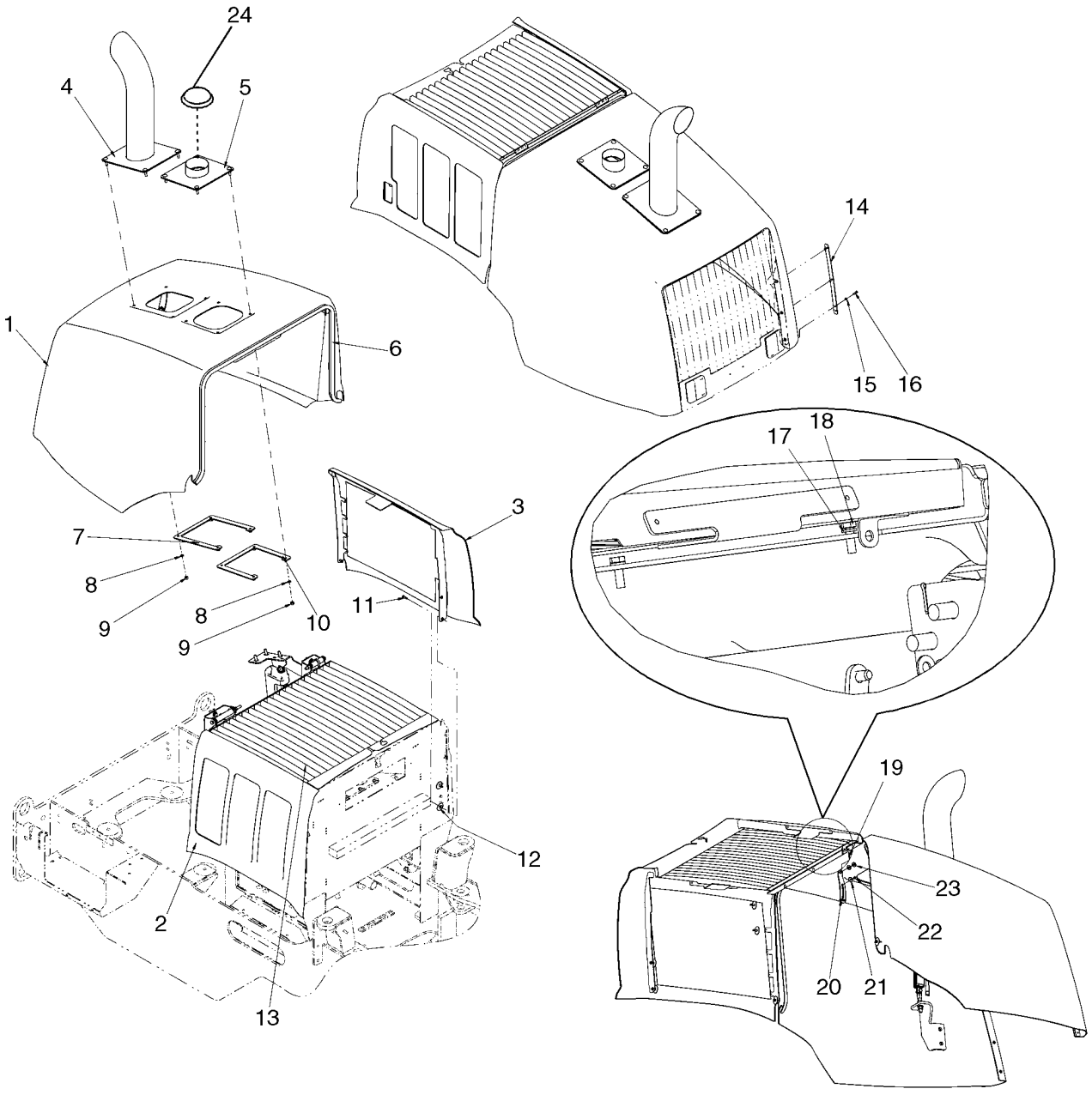

**CAPO**

| REF | FN | PART NUMBER | YR/SN | QTY | DENOMINACION |
|---|---|---|---|---|---|
| | | REF | | | MANUAL, ENGINE HOOD, FOR GRILLE AND REAR LIGHTS, SEE FIGURE 04-20 |
| 1 | | 87432252 | | 1 | CAPO, Case Power Tan |
| 2 | | 87308682 | | 1 | CONTRAPANEL, RH Hood; Case Power Tan |
| 3 | | 87308668 | | 1 | CONTRAPANEL, LH Hood; Case Power Tan |
| 4 | | 8500375 | | 1 | TUBO DE ESCAPE |
| 5 | | 8500379 | | 1 | TUBO (CONJUNTO), Intake |
| 6 | | 8605846 | | 1 | ANILLO DE CIERRE, Hood |
| 7 | | 495-81145 | | 1 | ARANDELA, 13/32" x 1 3/4" x .120" |
| 8 | | 895-18010 | | 8 | ARANDELA, M10 x 18 x 1.6 |
| 9 | | 832-10410 | | 8 | CONTRA TUERCA, M10 x 1.5, Cl 8 |
| 10 | | 8500382 | | 1 | PLACA |
| 11 | | {87632741} | | 6 | SCREW |
| 12 | | 495-81144 | | 6 | ARANDELA, 13/32" x 1 3/4" x .060" |
| 13 | | 87308388 | | 1 | PANTALLA PROTECTORA, Top |
| 14 | | 444931A1 | | 2 | PLACA |
| 15 | | 892-11006 | | 6 | ARANDELA DE FRENO, M6 |
| 16 | | 627-6025 | | 6 | TORNILLO, Hex, M6 x 25, 10.9 |
| 17 | | 892-11008 | | 3 | ARANDELA DE FRENO, M8 |
| 18 | | 627-8025 | | 3 | TORNILLO, Hex, M8 x 25, 10.9 |
| 19 | | 733-3220 | | 3 | PASADOR ABIERTO, M3.2 x 20 |
| 20 | | 8602476 | | 1 | BARRA METALICA |
| 21 | | 895-15006 | | 1 | ARANDELA, M6 x 25 x 1.6 |
| 22 | | 832-10406 | | 1 | CONTRA TUERCA, M6 x 1, Cl 8 |
| 23 | | 895-15010 | | 2 | ARANDELA, M11 x 24 x 2 |
| 24 | | 8501036 | | 1 | TAPON DEL DEPOSITO, Rain |

| 09-17 | | p1 | 07/07 |
|---|---|---|---|

**CAPÓ, MOTOR - MONTAJE**

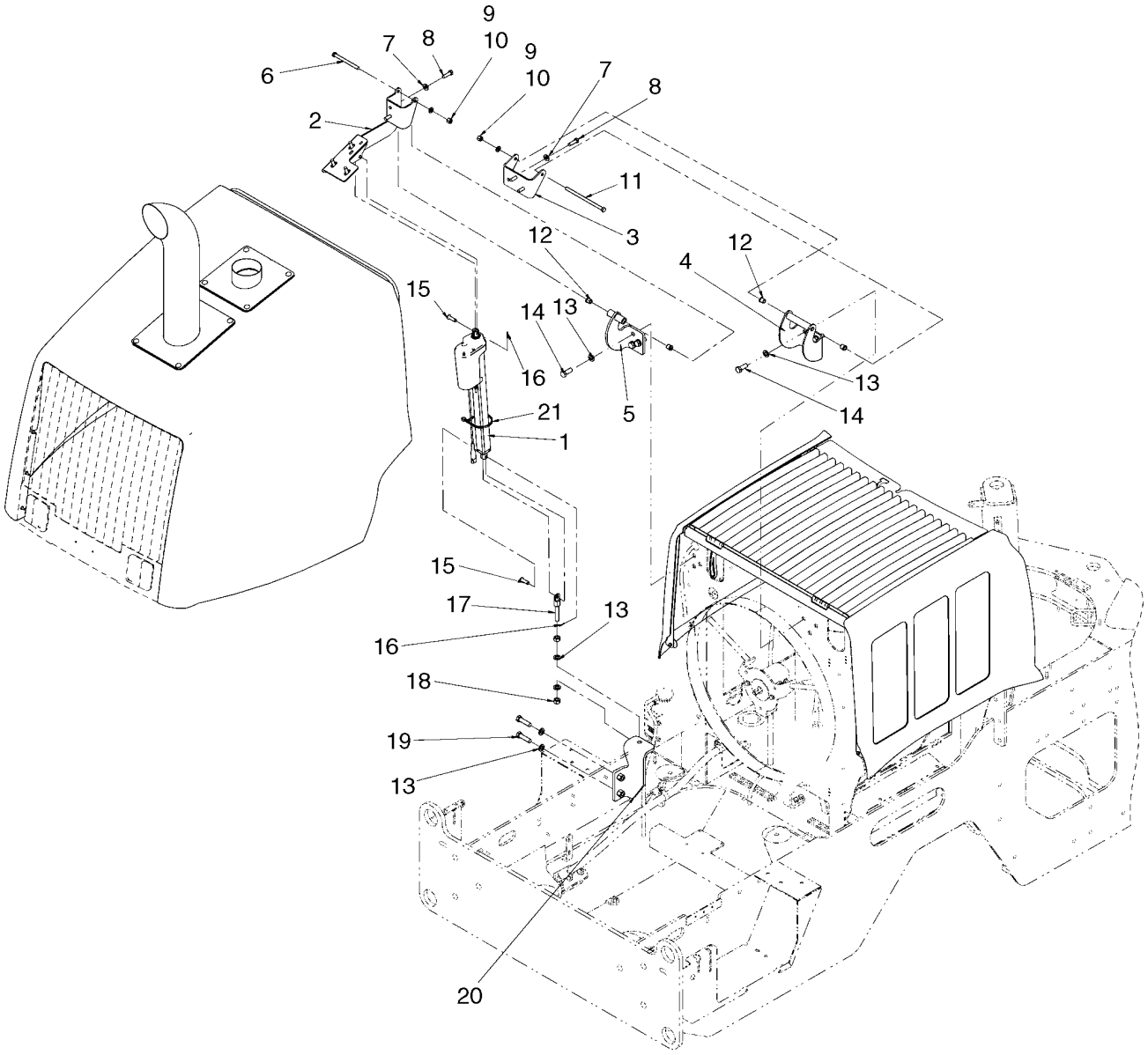

**CAPÓ, MOTOR - MONTAJE**

| REF | FN | PART NUMBER | YR/SN | QTY | DENOMINACION |
|---|---|---|---|---|---|
| 1 | | 87398773 | | 1 | MECANISMO DE MANDO, 400mm Stroke |
| 2 | | 87625616 | | 1 | PIEZA DE SOPORTE, Hood Left |
| 3 | | 8501151 | | 1 | BISAGRA, Hood Right |
| 4 | | 8605372 | | 1 | BISAGRA, Hood Mount Right |
| 5 | | 8605371 | | 1 | GANCHO DE BLOQUEO |
| 6 | | 827-12140 | | 1 | TORNILLO, Hex, M12 x 140, 10.9 |
| 7 | | 896-15012 | | 8 | ARANDELA, M12 x 28.5 x 4, HT |
| 8 | | 627-12040 | | 8 | TORNILLO, Hex, M12 x 40, 10.9, Full Thd |
| 9 | | 896-11012 | | 2 | ARANDELA, M13.5 x 24.5 x 3, HT |
| 10 | | 832-10410 | | 2 | CONTRA TUERCA, M10 x 1.5, Cl 8 |
| 11 | | 827-12220 | | 1 | TORNILLO, Hex, M12 x 220, 10.9 |
| 12 | | 382495A1 | | 4 | CASQUILLO |
| 13 | | 896-11016 | | 10 | ARANDELA, M17.5 x 30 x 4, HT |
| 14 | | 627-16040 | | 6 | TORNILLO, Hex, M16 x 40, 10.9 |
| 15 | | 728-1240 | | 2 | PASADOR DE HORQUILLA, M12 x 40 |
| 16 | | 733-3220 | | 3 | PASADOR ABIERTO, M3.2 x 20 |
| 17 | | 87531205 | | 1 | VARILLA, Adjuster |
| 18 | | 829-1416 | | 2 | TUERCA, M16, Cl 10 |
| 19 | | 827-16060 | | 2 | TORNILLO, Hex, M16 x 60, 10.9 |
| 20 | | 87641237 | | 1 | PIEZA DE SOPORTE, Jack Base |
| 21 | | L18331 | | 1 | CIERRA CABLES |

**CUBIERTAS - CAJA DE LA BATERIA**

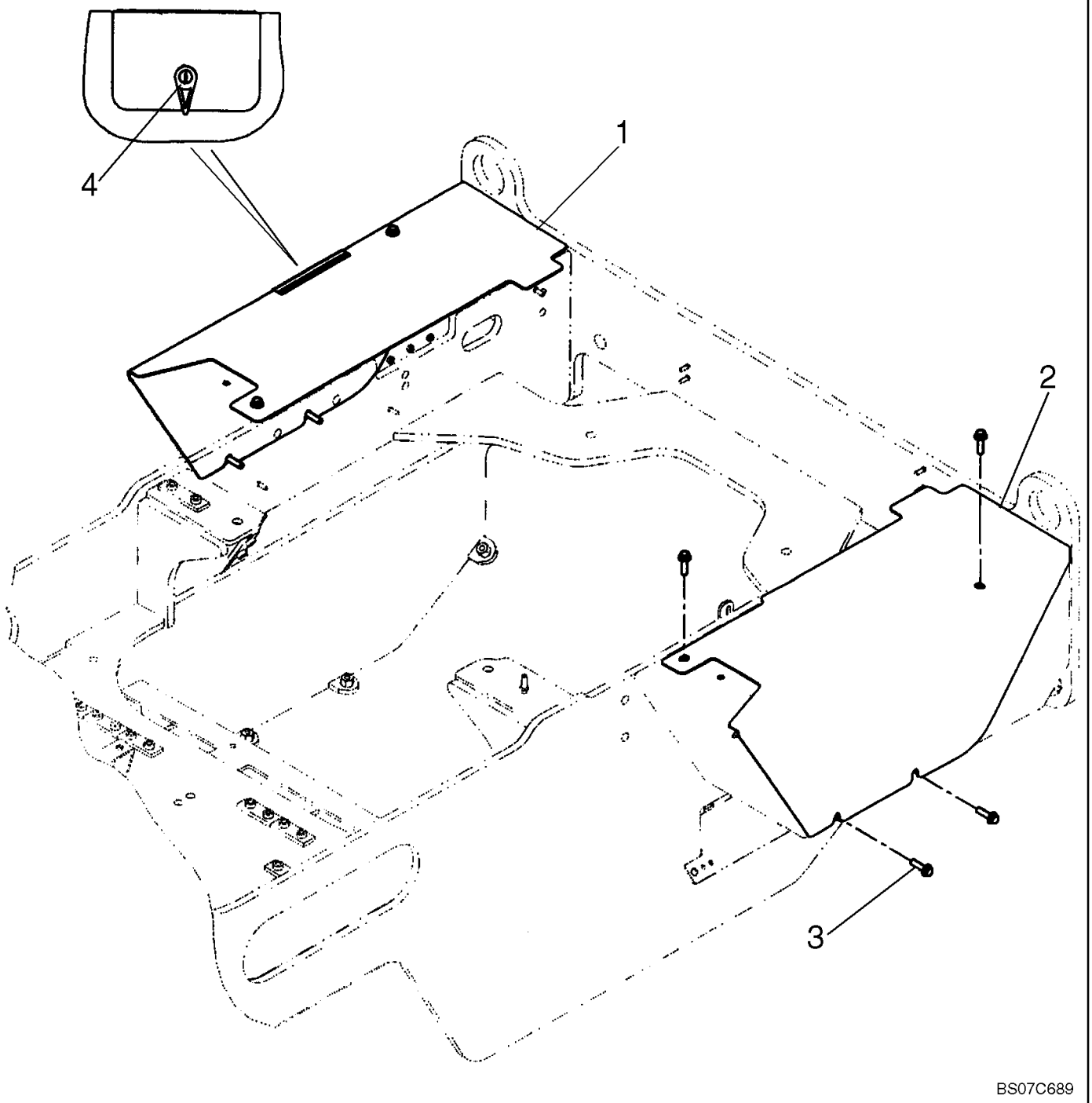

**CUBIERTAS - CAJA DE LA BATERIA**

| REF | FN | PART NUMBER | YR/SN | QTY | DENOMINACION |
|---|---|---|---|---|---|
| 1 | | 87585843 | | 1 | TAPADERA, Right Battery |
| 2 | | 87585844 | | 1 | TAPADERA, Left Battery |
| 3 | | 844-10035 | | 8 | TORNILLO, Hex Flg, M10 x 35, 8.8 |
| 4 | | 8602791 | | 1 | CERRADURA, Battery Box |

| 09-19 | | p1 | 08/07 |
|---|---|---|---|

**CUBIERTAS - CABINA Y TOLDO, INFERIOR**

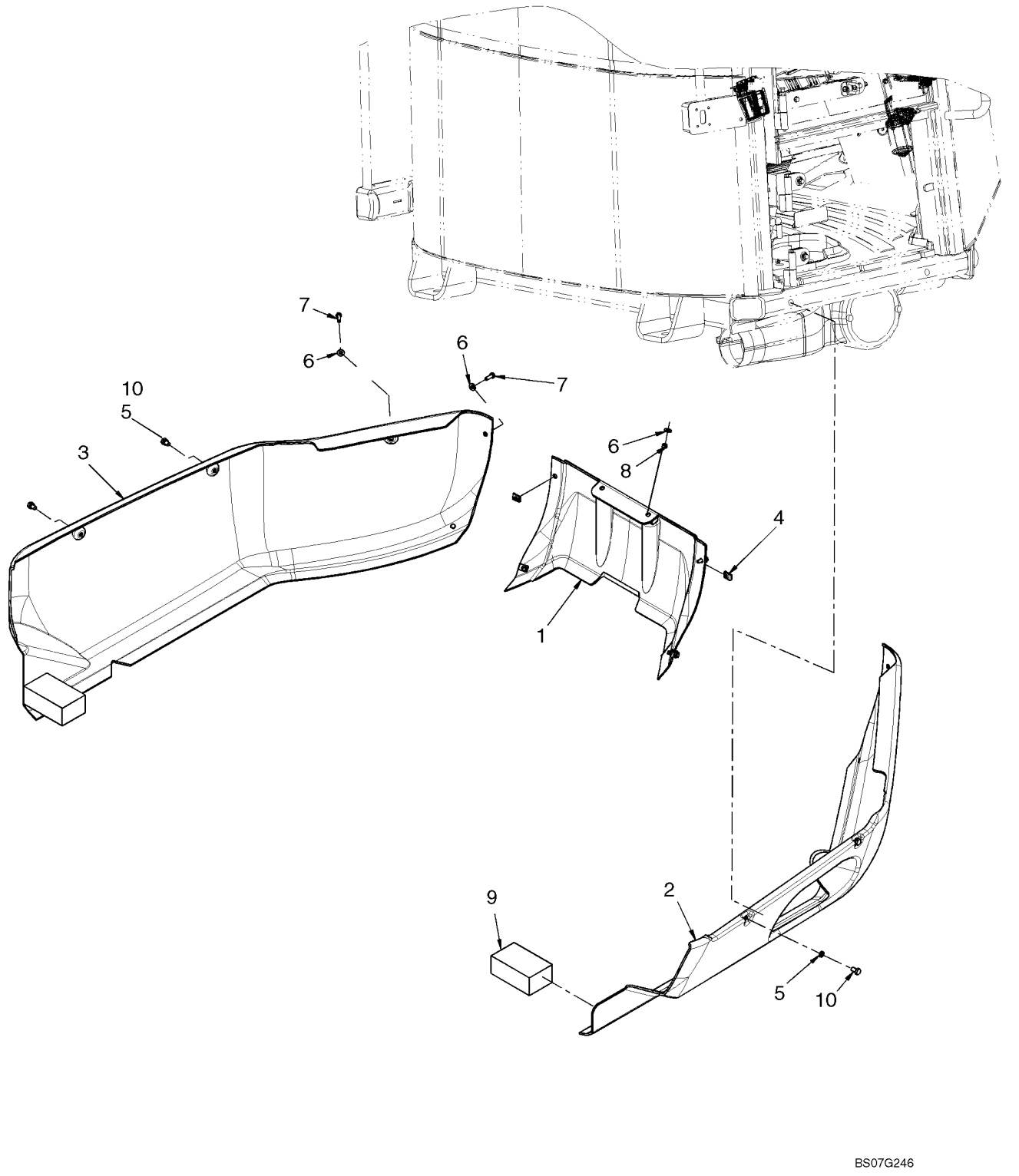

**CUBIERTAS - CABINA Y TOLDO, INFERIOR**

| REF | FN | PART NUMBER | YR/SN | QTY | DENOMINACION |
|---|---|---|---|---|---|
| 1 | | 87389202 | | 1 | HOJA, Center; CASE PowerTan |
| 1 | | 87389203 | | 1 | HOJA, Center; CNH CE Gray |
| 2 | | 87389199 | | 1 | HOJA, Right Hand; CASE PowerTan |
| 2 | | 87389200 | | 1 | HOJA, Right Hand; CNH CE Gray |
| 3 | | {87652920} | | 1 | PLASTIC, Left Hand; CASE PowerTan |
| 3 | | {87652921} | | 1 | PLASTIC, Left Hand; CNH CE Gray |
| 4 | | 833-40408 | | 4 | TUERCA, M8, U |
| 5 | | 432444A1 | | 4 | ESPACIADOR |
| 6 | | 895-15008 | | 8 | ARANDELA, M8 x 20 x 1.6 |
| 7 | | 627-8025 | | 6 | TORNILLO, Hex, M8 x 25, 10.9 |
| 8 | | 829-1408 | | 2 | TUERCA, M8, Cl 10 |
| 9 | | 87532611 | | 2 | JUNTA HERMETICA, Foam |
| 10 | | {87547661} | | 4 | BOLT, M10x16 |

| 09-19A | | p1 | 08/07 |
|---|---|---|---|

**CUBIERTAS - CHASIS, TRASERO**

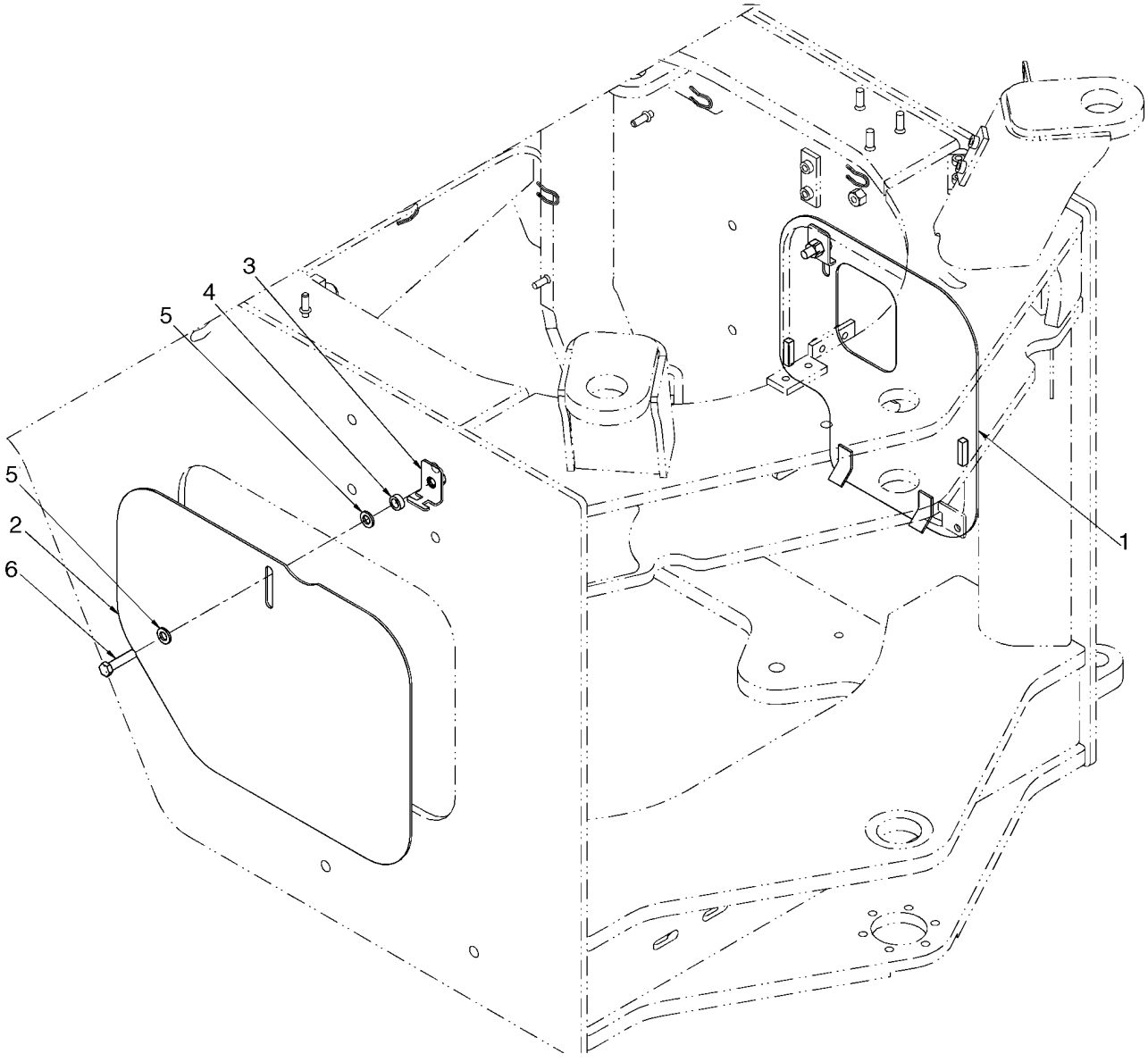

**CUBIERTAS - CHASIS, TRASERO**

| REF | FN | PART NUMBER | YR/SN | QTY | DENOMINACION |
|---|---|---|---|---|---|
| 1 | | 87653634 | | 1 | TAPADERA, Left Side |
| 2 | | 87600838 | | 1 | TAPADERA, Right Side |
| 3 | | 87404138 | | 2 | GRAPON, Side Cover |
| 4 | | D35859 | | 2 | ESPACIADOR |
| 5 | | 896-11012 | | 4 | ARANDELA, M13.5 x 24.5 x 3, HT |
| 6 | | 827-12050 | | 2 | TORNILLO, Hex, M12 x 50, 10.9 |

**PARACHOCHES, DELANTERO**

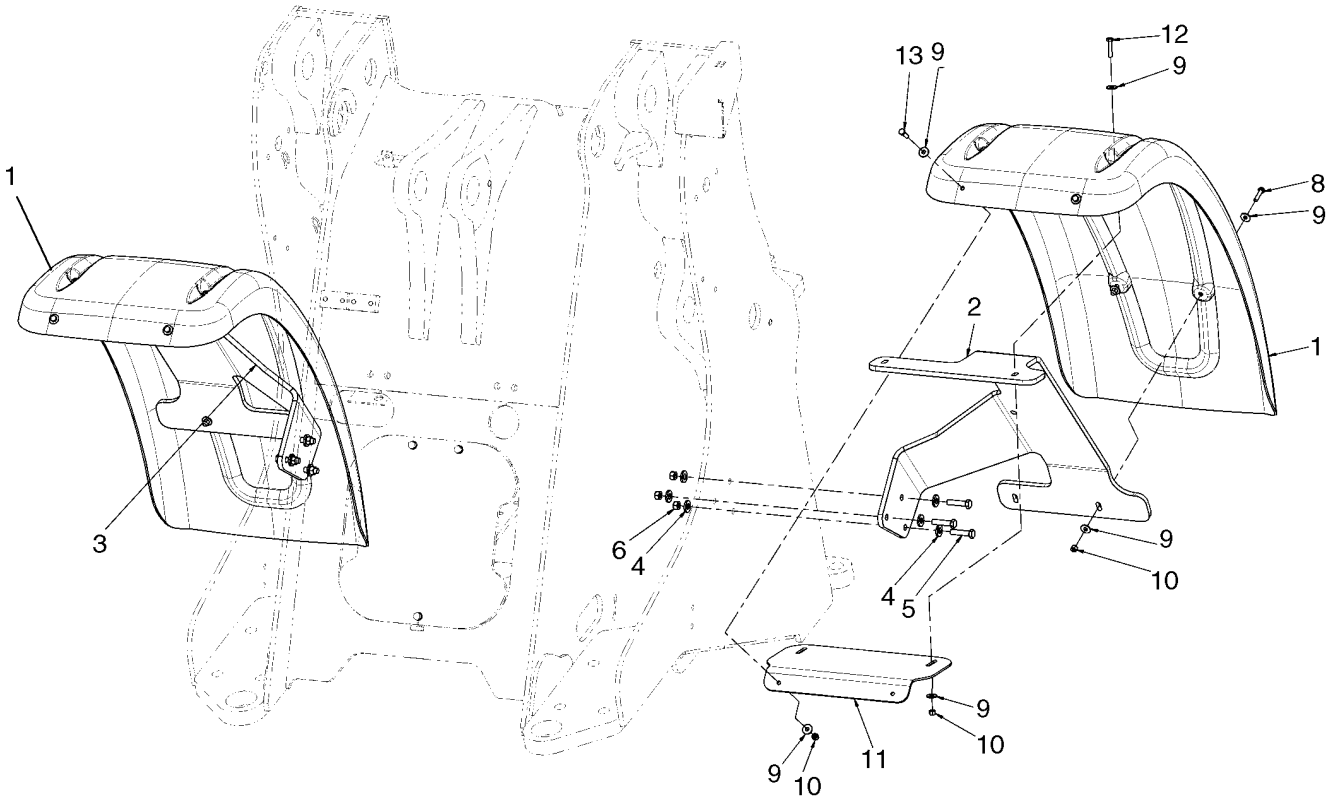


BS07F297

**PARACHOCHES, DELANTERO**

| REF | FN | PART NUMBER | YR/SN | QTY | DENOMINACION |
|---|---|---|---|---|---|
| 1 | | 87355957 | | 2 | GUARDABARROS, Front |
| 2 | | 87579405 | | 1 | PIEZA DE SOPORTE, LH Fender |
| 3 | | 87579406 | | 1 | PIEZA DE SOPORTE, RH Fender |
| 4 | | 896-15012 | | 12 | ARANDELA, M12 x 28.5 x 4, HT |
| 5 | | 827-12050 | | 6 | TORNILLO, Hex, M12 x 50, 10.9 |
| 6 | | 829-1412 | | 6 | TUERCA, M12, Cl 10 |
| 8 | | 627-8035 | | 4 | TORNILLO, Hex, M8 x 35, 10.9 |
| 9 | | 895-25008 | | 24 | ARANDELA, M8 x 20 x 1.6 |
| 10 | | 832-10408 | | 12 | CONTRA TUERCA, M8 x 1.25, Cl 8 |
| 11 | | 87620991 | | 2 | PIEZA DE SOPORTE, Front Fender |
| 12 | | 827-8040 | | 4 | TORNILLO, Hex, M8 x 40, 10.9 |
| 13 | | 627-8030 | | 4 | TORNILLO, Hex, M8 x 30, 10.9 |

**PARACHOCHES, DELANTERO - ANCHURA**

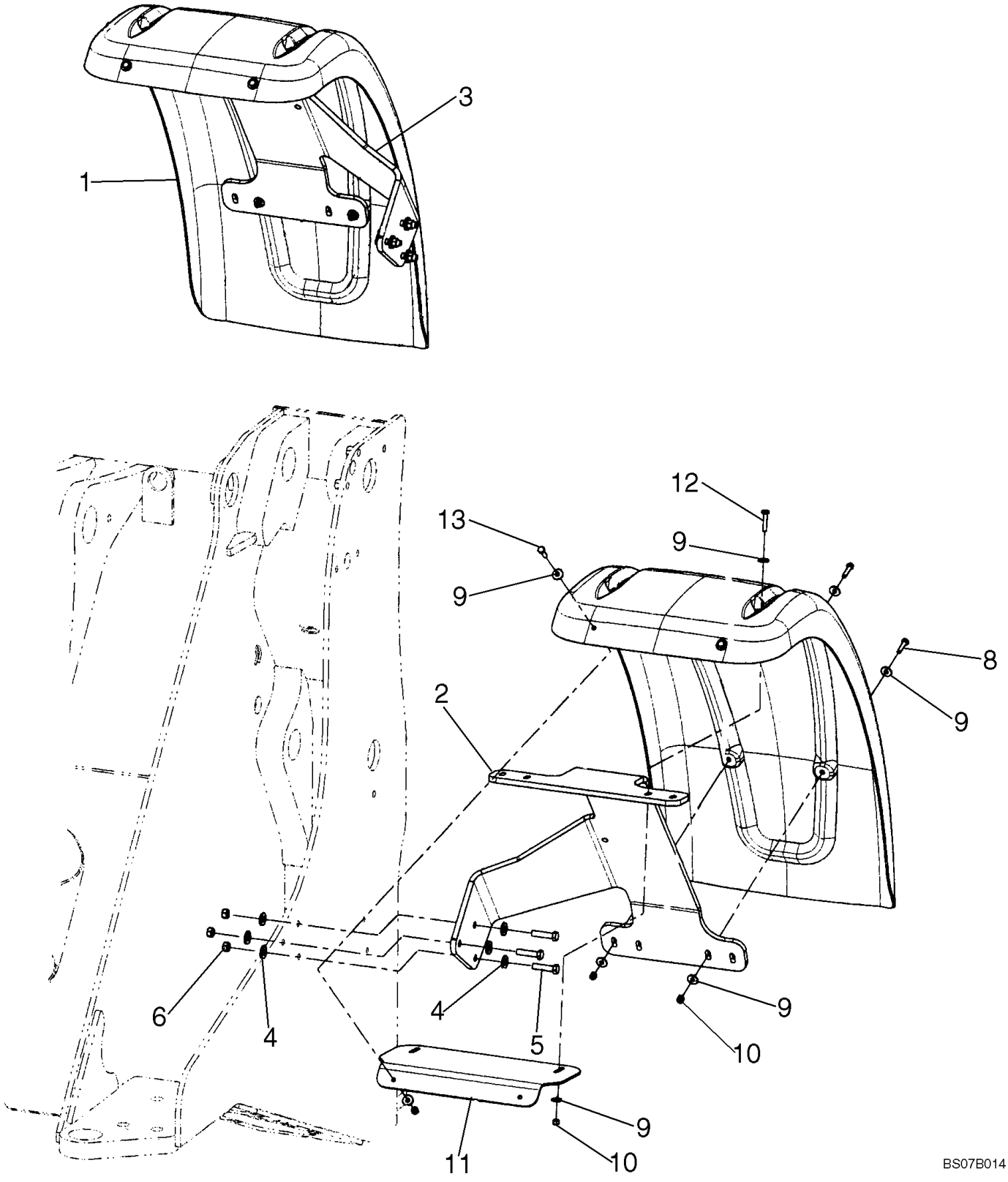

**PARACHOCHES, DELANTERO - ANCHURA**

| REF | FN | PART NUMBER | YR/SN | QTY | DENOMINACION |
|---|---|---|---|---|---|
| 1 | | 87355957 | | 2 | GUARDABARROS, Wide; If Used |
| 2 | | 87355960 | | 1 | PIEZA DE SOPORTE, Fender; LH |
| 3 | | 87355962 | | 1 | PIEZA DE SOPORTE, Fender; RH |
| 4 | | 896-15012 | | 12 | ARANDELA, M12 x 28.5 x 4, HT |
| 5 | | 827-12050 | | 6 | TORNILLO, Hex, M12 x 50, 10.9 |
| 6 | | 829-1412 | | 6 | TUERCA, M12, Cl 10 |
| 8 | | 627-8035 | | 4 | TORNILLO, Hex, M8 x 35, 10.9 |
| 9 | | 895-25008 | | 24 | ARANDELA, M8 x 20 x 1.6 |
| 10 | | 832-10408 | | 12 | CONTRA TUERCA, M8 x 1.25, Cl 8 |
| 11 | | 87620991 | | 2 | PIEZA DE SOPORTE, Fender; Wide |
| 12 | | 827-8040 | | 4 | TORNILLO, Hex, M8 x 40, 10.9 |
| 13 | | 627-8030 | | 4 | TORNILLO, Hex, M8 x 30, 10.9 |

| 09-21 | | p1 | 06/07 |
|---|---|---|---|

**PARACHOQUES, TRASERO - ESTANDAR**

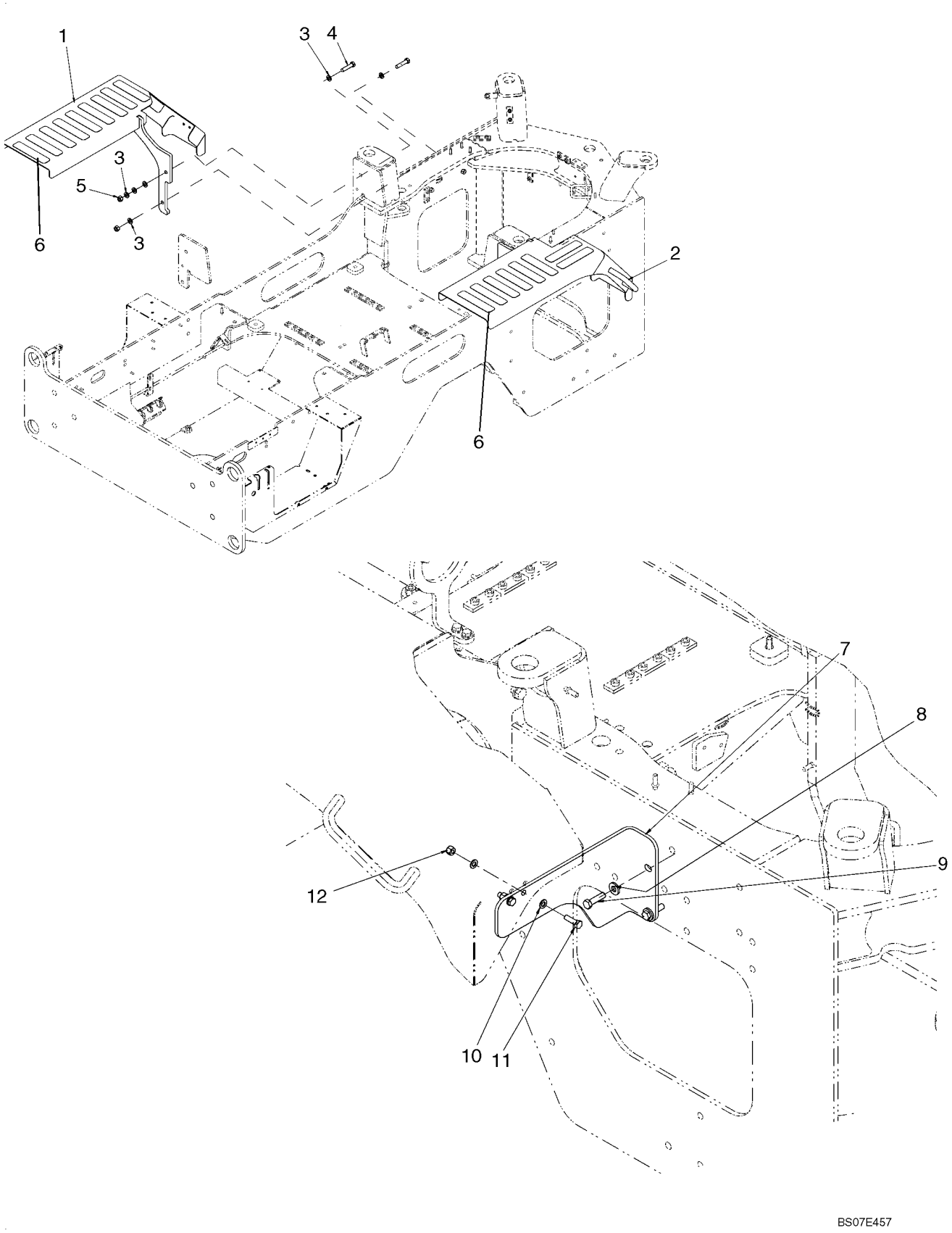

**PARACHOQUES, TRASERO - ESTANDAR**

| REF | FN | PART NUMBER | YR/SN | QTY | DENOMINACION |
|---|---|---|---|---|---|
| 1 | | 87652909 | | 1 | SOPORTE, LH Platform |
| 2 | | 87652910 | | 1 | SOPORTE, RH Platform |
| 3 | | 896-11016 | | 12 | ARANDELA, M17.5 x 30 x 4, HT |
| 4 | | 827-16070 | | 4 | TORNILLO, Hex, M16 x 70, 10.9 |
| 5 | | 829-1416 | | 4 | TUERCA, M16, Cl 10 |
| 6 | | D55216 | | 17 | TACO, Non-Slip |
| 7 | | 87579384 | | 1 | PIEZA DE SOPORTE, RH Step Support |
| 8 | | 896-15012 | | 2 | ARANDELA, M12 x 28.5 x 4, HT |
| 9 | | 627-12045 | | 2 | TORNILLO, Hex, M12 x 45, 10.9, Full Thd |
| 10 | | 895-11010 | | 4 | ARANDELA, M10 x 20 x 2 |
| 11 | | 627-10035 | | 2 | TORNILLO, Hex, M10 x 35, 10.9, Full Thd |
| 12 | | 832-10410 | | 2 | CONTRA TUERCA, M10 x 1.5, Cl 8 |

**PARACHOQUES, TRASERO - ANCHURA**

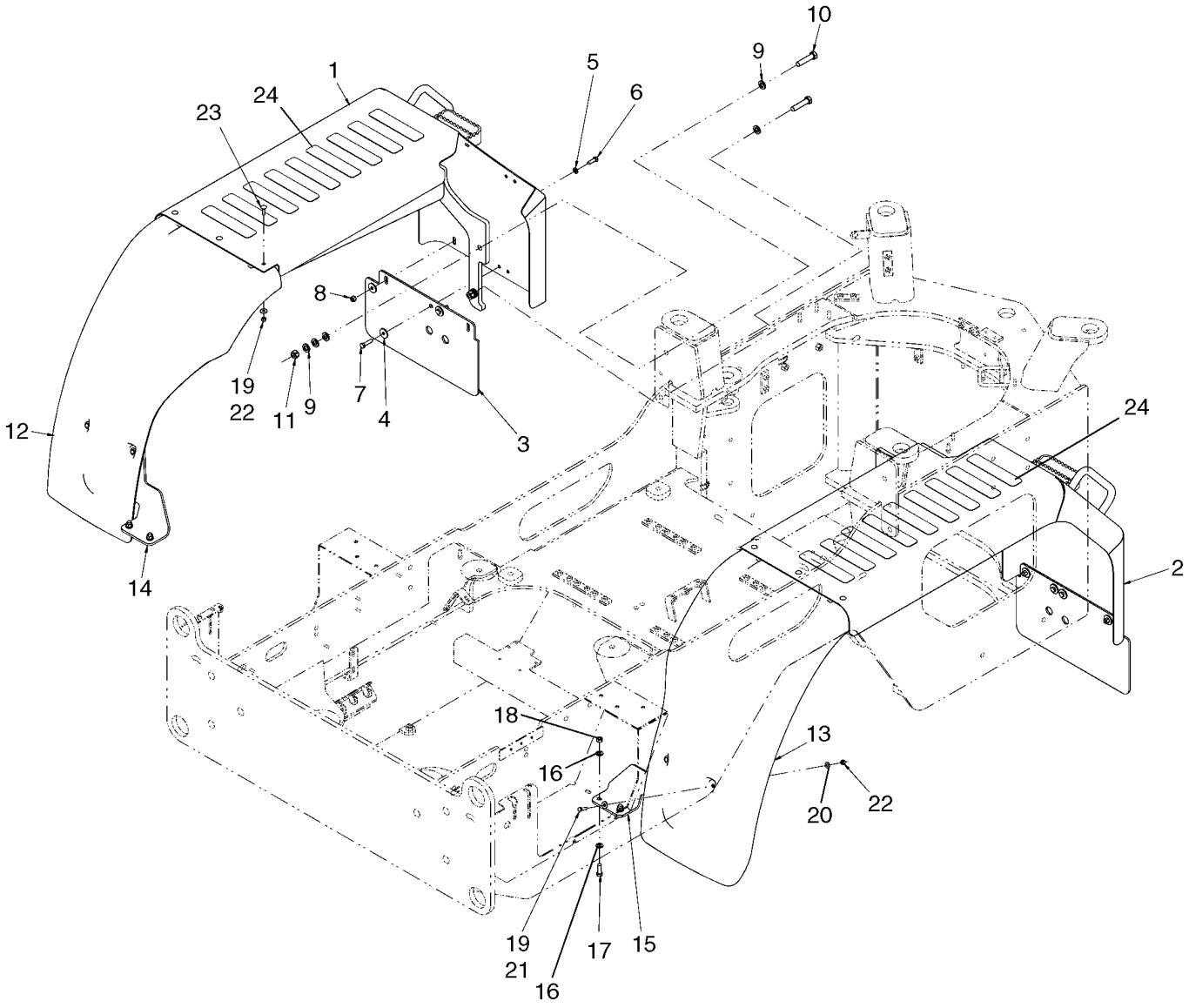

**PARACHOQUES, TRASERO - ANCHURA**

| REF | FN | PART NUMBER | YR/SN | QTY | DENOMINACION |
|---|---|---|---|---|---|
| | | REF | | | MANUAL, REAR FENDERS - WIDE |
| 1 | | 87652903 | | 1 | SOPORTE, Left Hand Platform |
| 2 | | 87652904 | | 1 | SOPORTE, Right Hand Platform |
| 3 | | 87559792 | | 2 | BABERO DE CAUCHO, Rear |
| 4 | | 39519 | | 8 | ARANDELA |
| 5 | | 895-11010 | | 4 | ARANDELA, M10 x 20 x 2 |
| 6 | | 627-10030 | | 4 | TORNILLO, Hex, M10 x 30, 10.9, Full Thd |
| 7 | | 627-10040 | | 4 | TORNILLO, Hex, M10 x 40, 10.9, Full Thd |
| 8 | | 832-10410 | | 4 | CONTRA TUERCA, M10 x 1.5, Cl 8 |
| 9 | | 896-11016 | | 16 | ARANDELA, M17.5 x 30 x 4, HT |
| 10 | | 827-16070 | | 4 | TORNILLO, Hex, M16 x 70, 10.9 |
| 11 | | 829-1416 | | 4 | TUERCA, M16, Cl 10 |
| 12 | | 87559793 | | 1 | GUARDABARROS, Wide Left |
| 13 | | 87559794 | | 1 | GUARDABARROS, Wide Right |
| 14 | | 87559816 | | 1 | PIEZA DE SOPORTE, Left Hand |
| 15 | | 87559817 | | 1 | PIEZA DE SOPORTE, Right Hand |
| 16 | | 896-11012 | | 8 | ARANDELA, M13.5 x 24.5 x 3, HT |
| 17 | | 627-12035 | | 4 | TORNILLO, Hex, M12 x 35, 10.9 |
| 18 | | 829-1412 | | 4 | TUERCA, M12, Cl 10 |
| 19 | | 895-25008 | | 10 | ARANDELA, M8 x 20 x 1.6 |
| 20 | | 895-15008 | | 4 | ARANDELA, M8 x 20 x 1.6 |
| 21 | | 627-8030 | | 4 | TORNILLO, Hex, M8 x 30, 10.9 |
| 22 | | 832-10408 | | 10 | CONTRA TUERCA, M8 x 1.25, Cl 8 |
| 23 | | 612-6 | | 6 | PERNO, CABEZA RONDA, Short NK, M8 x 30, Cl4.6, Full Thd |
| 24 | | D55216 | | 18 | TACO, Non-Slip |

**PARACHOQUES, TRASERO -PROTECTOR**

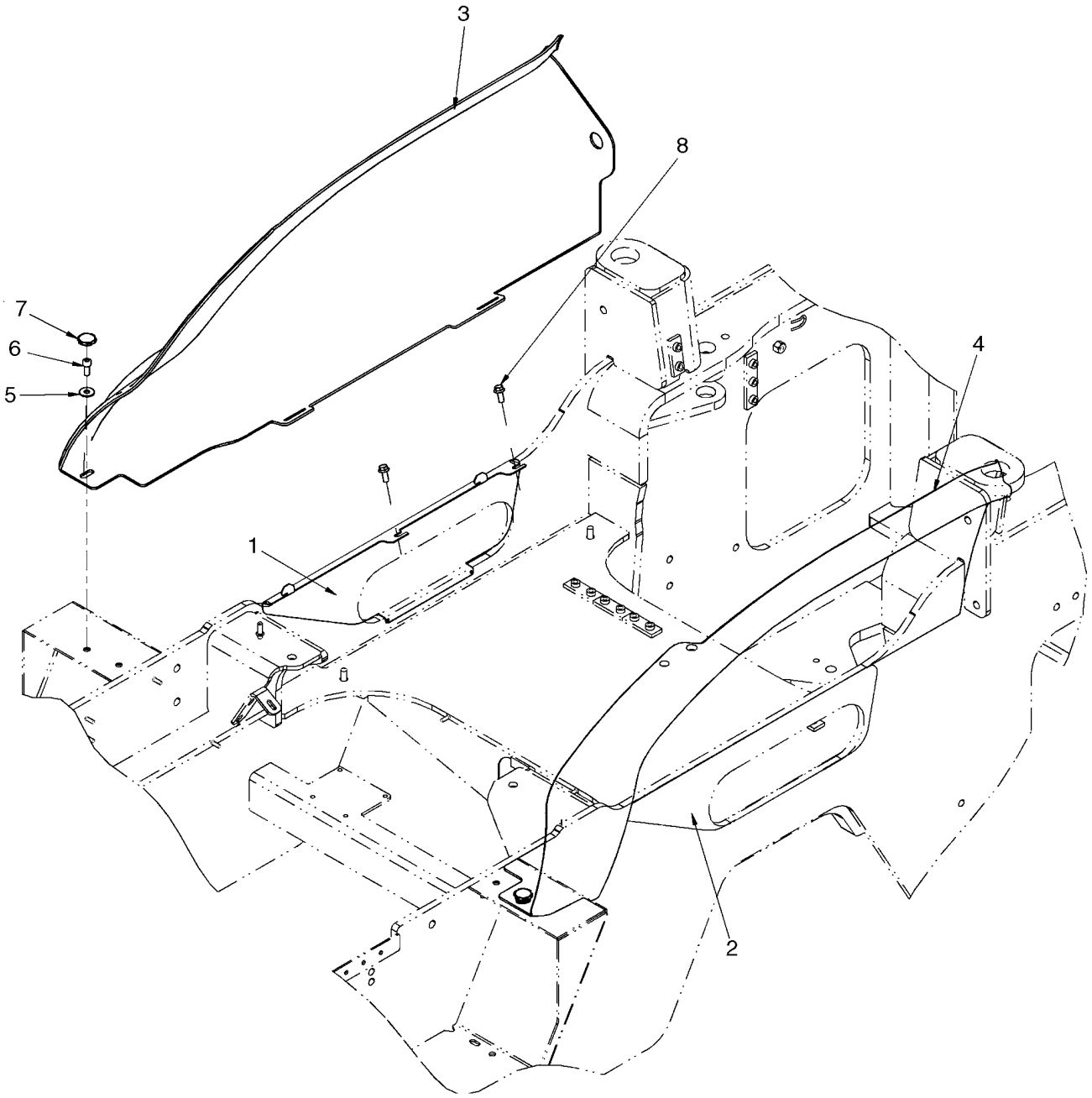

**PARACHOQUES, TRASERO -PROTECTOR**

| REF | FN | PART NUMBER | YR/SN | QTY | DENOMINACION |
|---|---|---|---|---|---|
| | | REF | | | MANUAL, WHEEL WELLS |
| 1 | | 87591692 | | 1 | DEFENSA, Left Side; Case Power Tan |
| 2 | | 87597587 | | 1 | DEFENSA, Right Side; Case Power Tan |
| 3 | | 87360593 | | 1 | GUARDABARROS, Right Side; Case Power Tan; If Used |
| 3 | | 87360602 | | 1 | GUARDABARROS, Right Side; CNH CE Gray; If Used |
| 4 | | 87360678 | | 1 | GUARDABARROS, Left Side; Case Power Tan; If Used |
| 4 | | 87360690 | | 1 | GUARDABARROS, Left Side; CNH CE Gray; If Used |
| 5 | | 895-25010 | | 2 | ARANDELA, M11 x 30 x 2.5 |
| 6 | | 864-10025 | | 2 | TORNILLO, Hex Soc Hd, M10 x 25, 8.8 |
| 7 | | 87323866 | | 2 | POMO, Fluted Black |
| 8 | | 844-10025 | | 4 | TORNILLO, Hex Flg, M10 x 25, 8.8, Full Thd |

| 09-24 | | p1 | 07/07 |
|---|---|---|---|

**PELDAÑOS - IZQUIERDO**

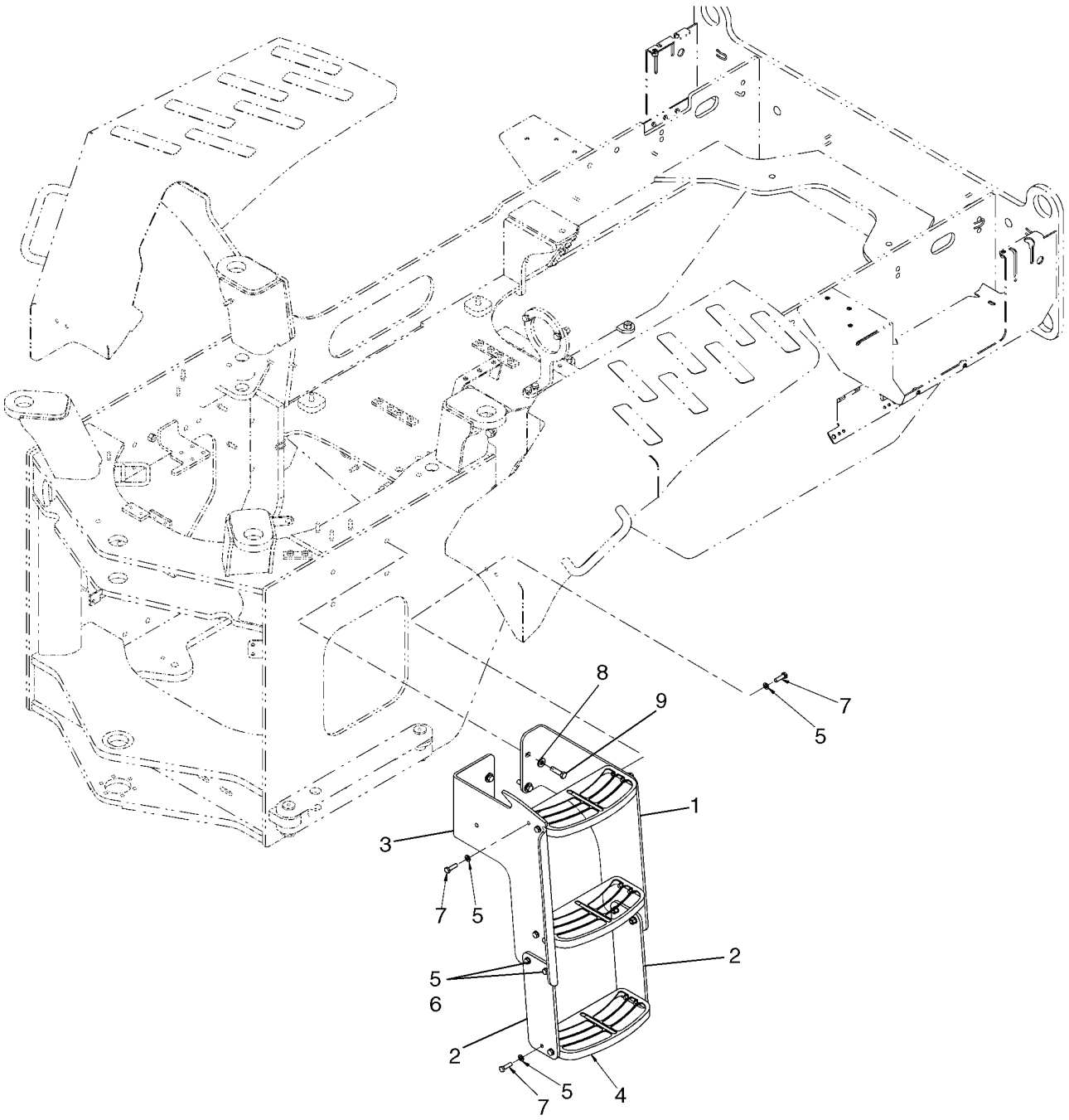

**PELDAÑOS - IZQUIERDO**

| REF | FN | PART NUMBER | YR/SN | QTY | DENOMINACION |
|---|---|---|---|---|---|
| 1 | | 87559796 | | 1 | PIEZA DE SOPORTE, LH Step Support |
| 2 | | 87559798 | | 2 | BANDA |
| 3 | | 87663487 | | 1 | PIEZA DE APOYO, LH Step Support |
| 4 | | 87434472 | | 3 | ESCALON |
| 5 | | 895-11010 | | 32 | ARANDELA, M10 x 20 x 2 |
| 6 | | 832-10410 | | 16 | CONTRA TUERCA, M10 x 1.5, Cl 8 |
| 7 | | 627-10035 | | 16 | TORNILLO, Hex, M10 x 35, 10.9, Full Thd |
| 8 | | 896-15012 | | 4 | ARANDELA, M12 x 28.5 x 4, HT |
| 9 | | 627-12045 | | 4 | TORNILLO, Hex, M12 x 45, 10.9, Full Thd |

| 09-25 | | p1 | 08/07 |
|---|---|---|---|

**PELDAÑOS - DERECHO**

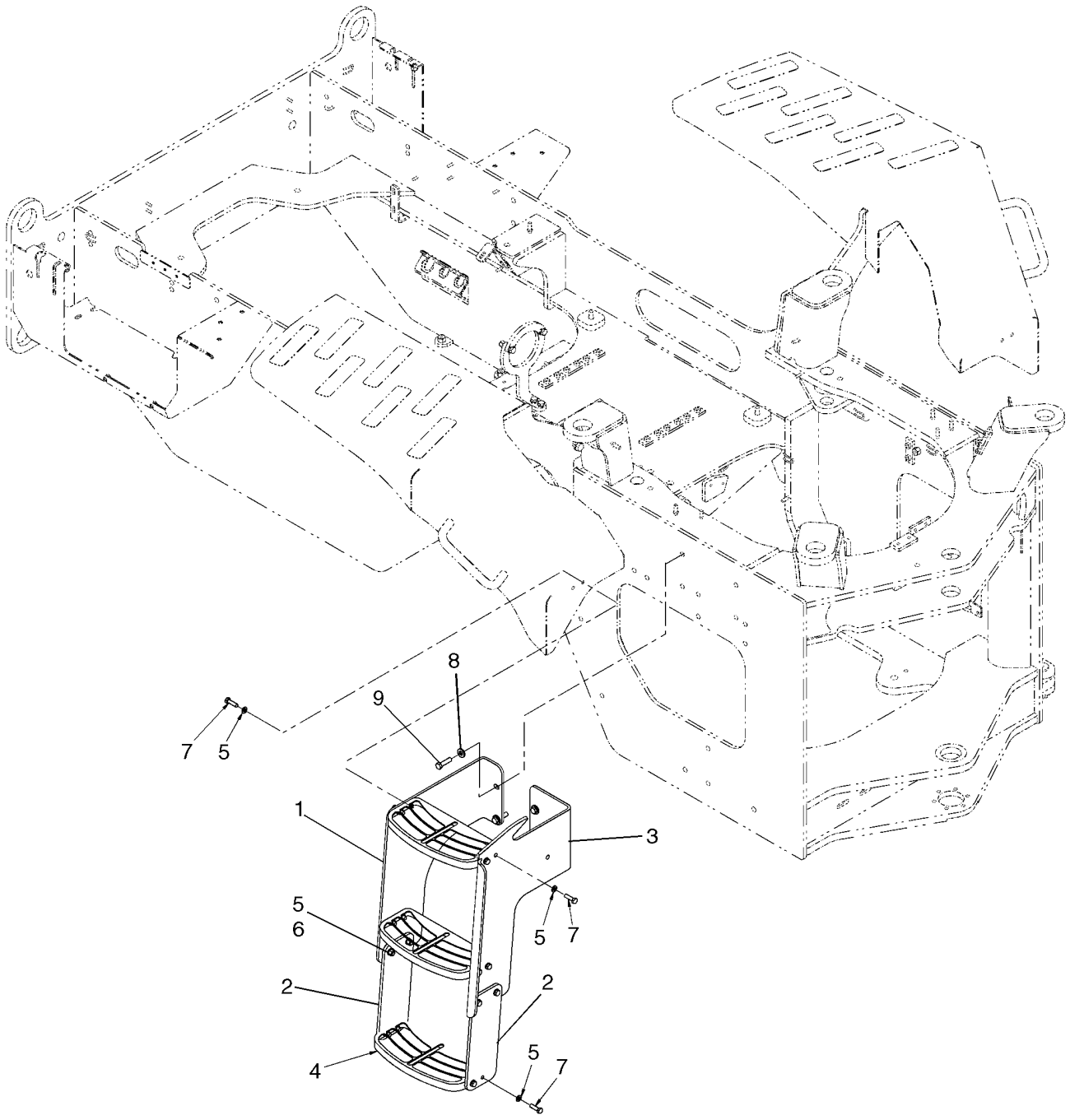

**PELDAÑOS - DERECHO**

| REF | FN | PART NUMBER | YR/SN | QTY | DENOMINACION |
|---|---|---|---|---|---|
| 1 | | 87579386 | | 1 | PIEZA DE SOPORTE, RH Step Support |
| 2 | | 87559798 | | 2 | BANDA |
| 3 | | 87663490 | | 1 | PIEZA DE APOYO, RH Step |
| 4 | | 87434472 | | 3 | ESCALON |
| 5 | | 895-11010 | | 32 | ARANDELA, M10 x 20 x 2 |
| 6 | | 832-10410 | | 16 | CONTRA TUERCA, M10 x 1.5, Cl 8 |
| 7 | | 627-10035 | | 16 | TORNILLO, Hex, M10 x 35, 10.9, Full Thd |
| 8 | | 896-15012 | | 4 | ARANDELA, M12 x 28.5 x 4, HT |
| 9 | | 627-12045 | | 4 | TORNILLO, Hex, M12 x 45, 10.9, Full Thd |

**ANTISONORO - MOTOR**

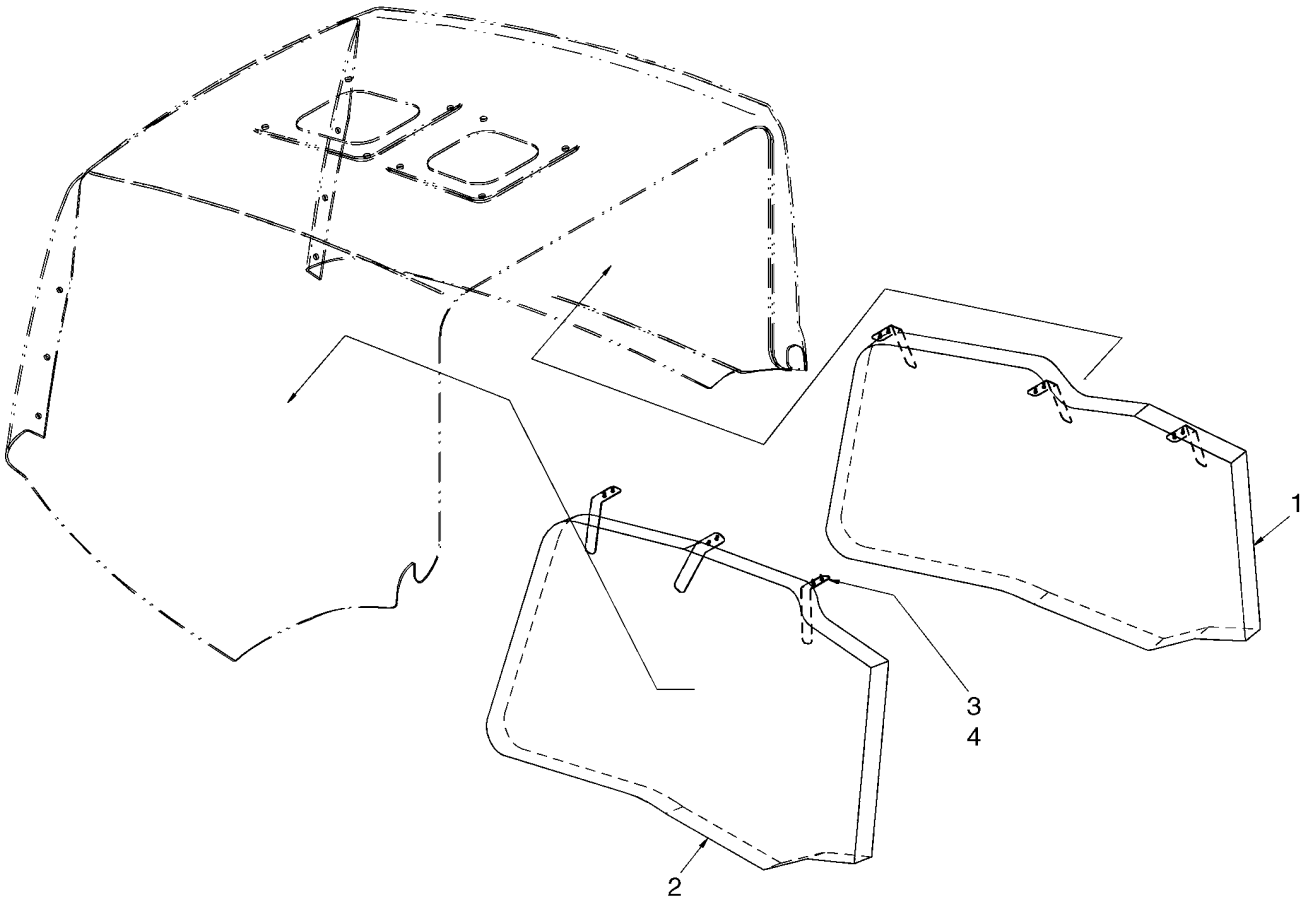


BS07G085

**ANTISONORO - MOTOR**

| REF | FN | PART NUMBER | YR/SN | QTY | DENOMINACION |
|---|---|---|---|---|---|
| 1 | | 8605485 | | 1 | ESPUMA AISLANTE, LH |
| 2 | | 8605484 | | 1 | ESPUMA AISLANTE, RH |
| 3 | | 8604993 | | 6 | PIEZA DE SOPORTE, Sound Insulation Hanger |
| 4 | | 760-14413 | | 12 | TORNILLO AUTOROSCANTE, Pan Hd, M4.8 x 13 |

| 09-27 | | p1 | 06/07 |
|---|---|---|---|

**PLACA DE DESLIZAMIENTO**

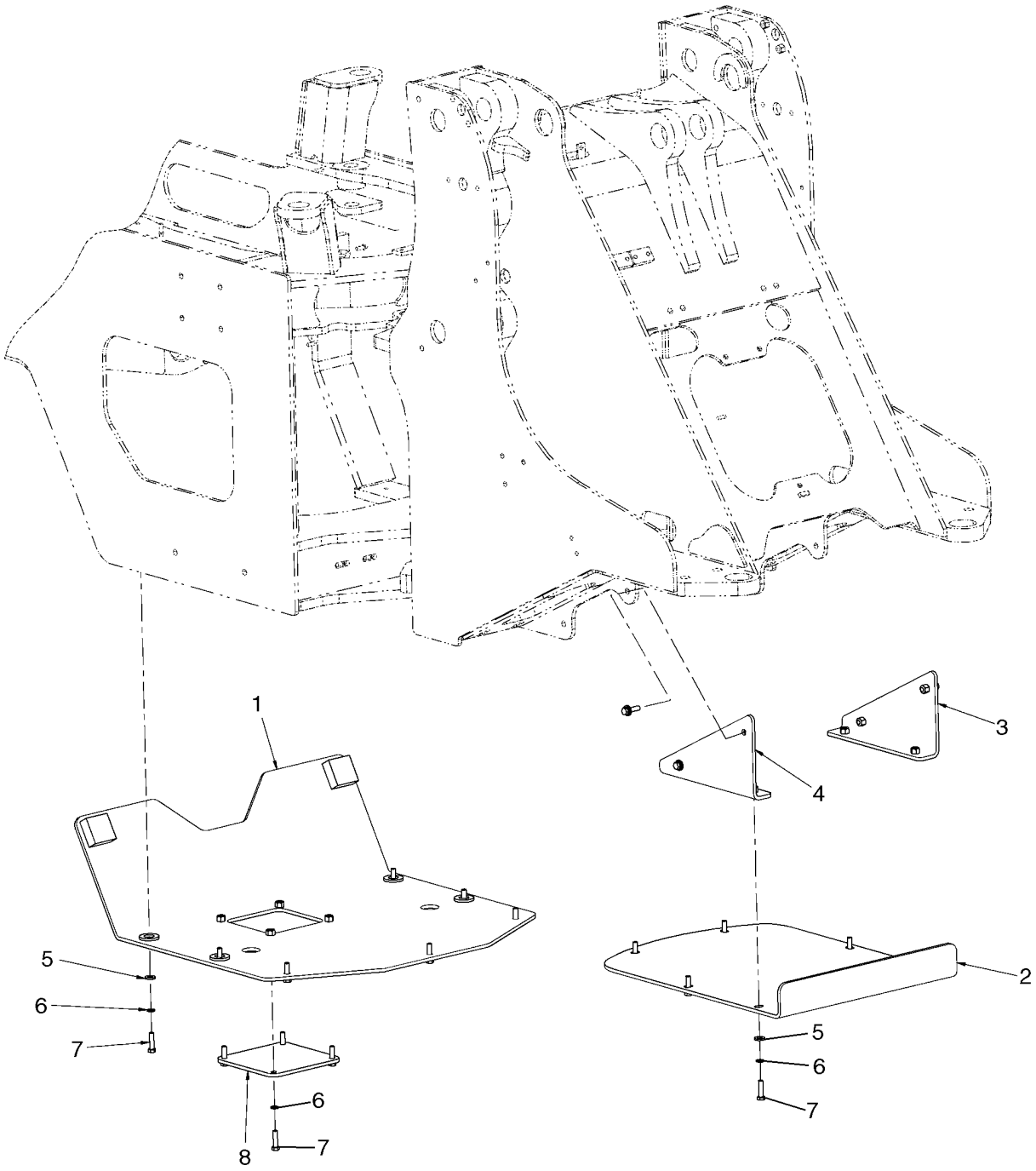

**PLACA DE DESLIZAMIENTO**

| REF | FN | PART NUMBER | YR/SN | QTY | DENOMINACION |
|---|---|---|---|---|---|
| 1 | | 87598264 | | 1 | CORREDERA, Rear |
| 2 | | 87597594 | | 1 | CORREDERA, Front |
| 3 | | 87597597 | | 1 | CORREDERA, Front Left |
| 4 | | 87597598 | | 1 | CORREDERA, Front Right |
| 5 | | 896-15012 | | 17 | ARANDELA, M12 x 28.5 x 4, HT |
| 6 | | 892-11012 | | 21 | ARANDELA DE FRENO, M12 |
| 7 | | 627-12045 | | 21 | TORNILLO, Hex, M12 x 45, 10.9, Full Thd |
| 8 | | 87598267 | | 1 | TAPADERA, Transmission Drain |

**CABINA - MONTAJE**

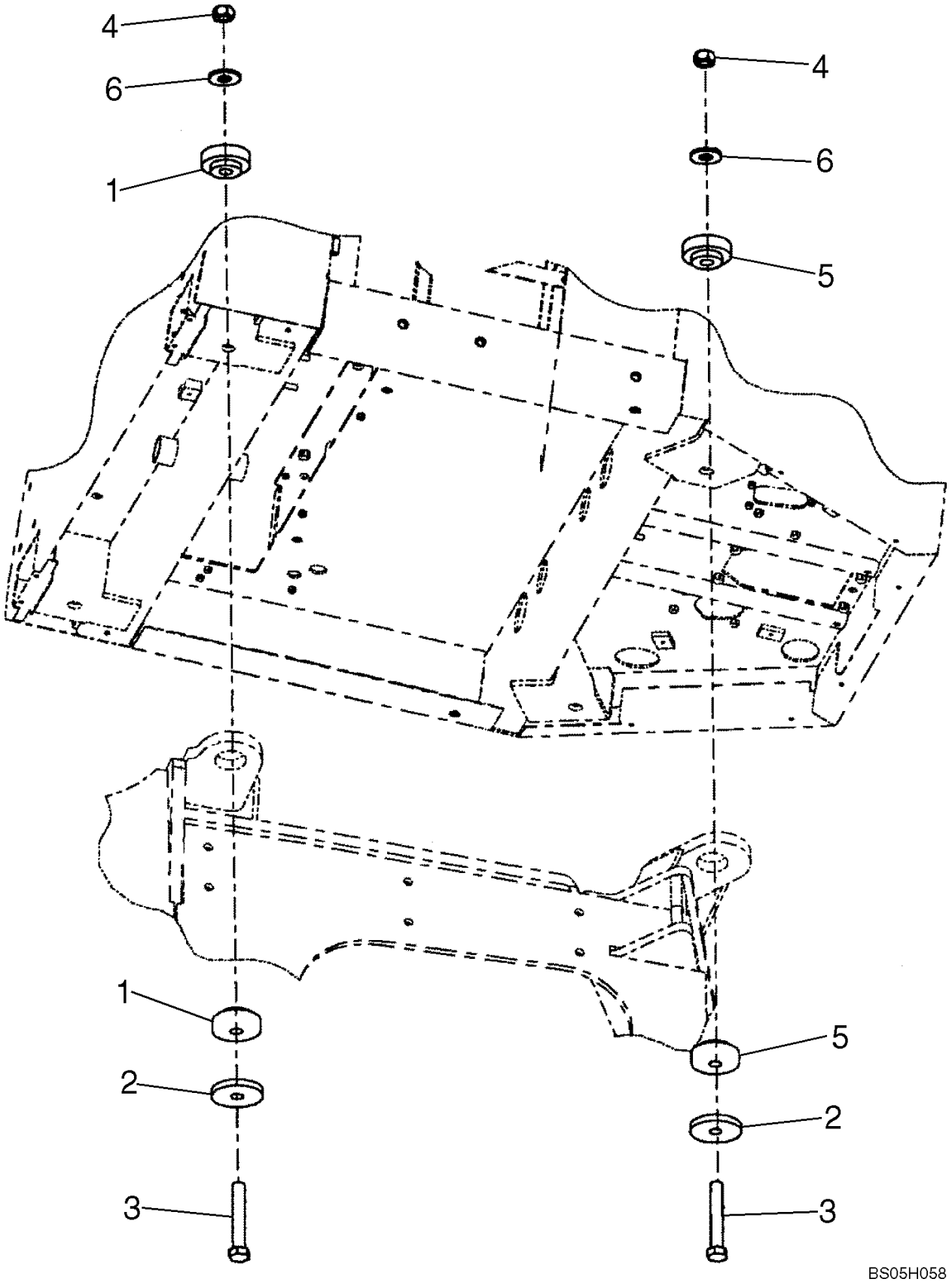

**CABINA - MONTAJE**

| REF | FN | PART NUMBER | YR/SN | QTY | DENOMINACION |
|---|---|---|---|---|---|
| 1 | | 358981A1 | | 4 | TEJUELO, GOMA, Cab/Canopy Support; Rear |
| 2 | | 1332154C1 | | 4 | ARANDELA, Special |
| 3 | | 326-1488 | | 4 | TORNILLO, Hex, 7/8"-9 x 5 1/2", G8 |
| 4 | | 329-1014 | | 4 | TUERCA, 7/8"-9, G8 |
| 5 | | 358982A1 | | 4 | TEJUELO, GOMA, Cab/Canopy Support; Front |
| 6 | | 396-41094 | | 4 | ARANDELA, 15/16" x 2 1/4" x .219", HDN |

**CABINA - VIDRIO, DELANTERO**

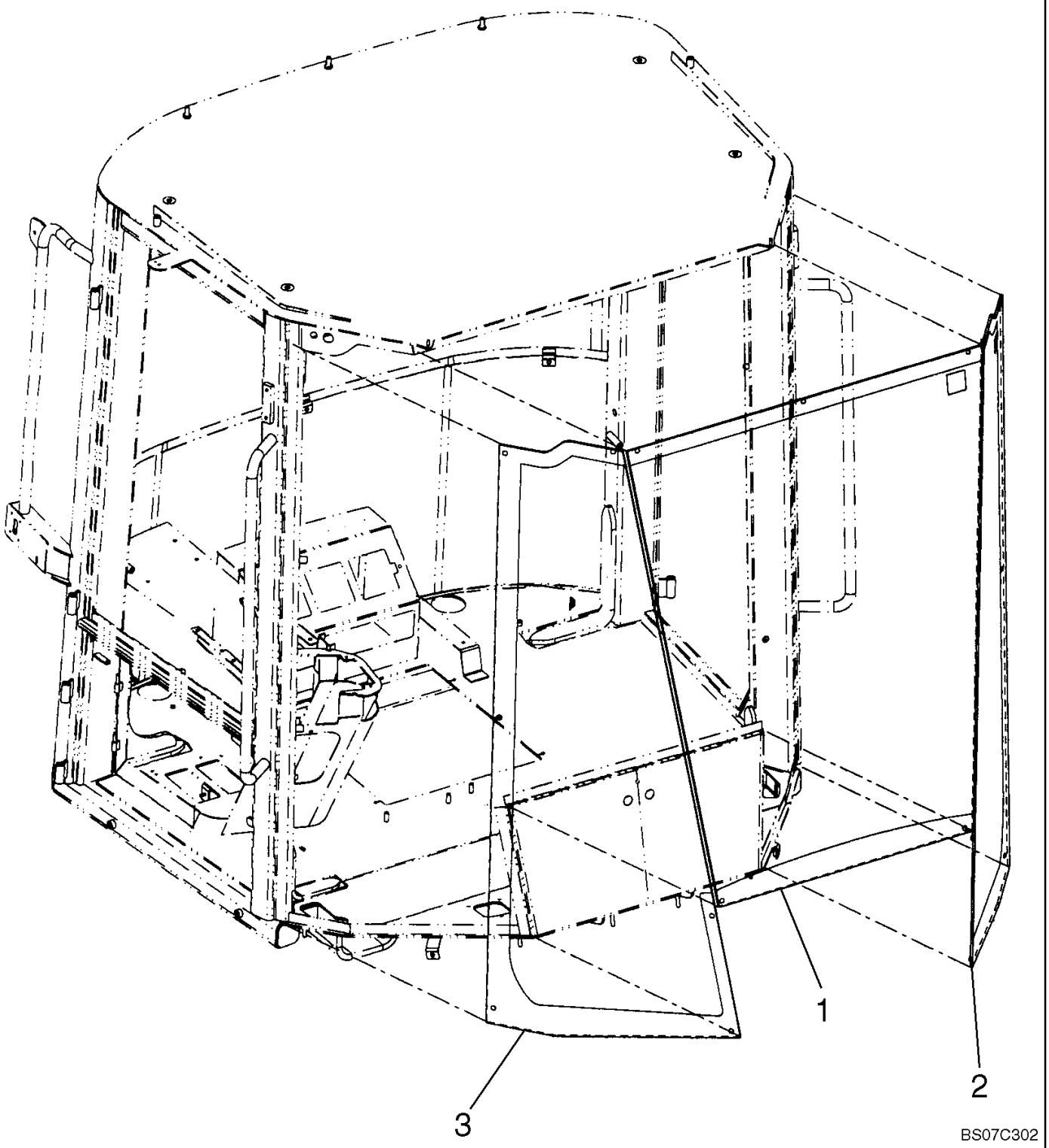

**CABINA - VIDRIO, DELANTERO**

| REF | FN | PART NUMBER | YR/SN | QTY | DENOMINACION |
|---|---|---|---|---|---|
| 1 | | 76303237 | | 1 | VIDRIO, Front Center |
| 2 | | 76303238 | | 1 | VIDRIO, Front Left |
| 3 | | 76303239 | | 1 | VIDRIO, Front Right |
| 4 | | 322197950 | | 17 | SEPARADOR, DIA. 11, Not Illustrated |
| 5 | | {345-101-B} | | AR | SEALANT, Dow 732RTV Silicone, Clear, Not Illustrated |
| 6 | | {87337003} | | AR | ADHESIVE, BULK, Not Illustrated |
| 7 | | {87324751} | | AR | ACTIVATOR, Sika UH-2, Not Illustrated |

**CABINA - VIDRIO, TRASERO**

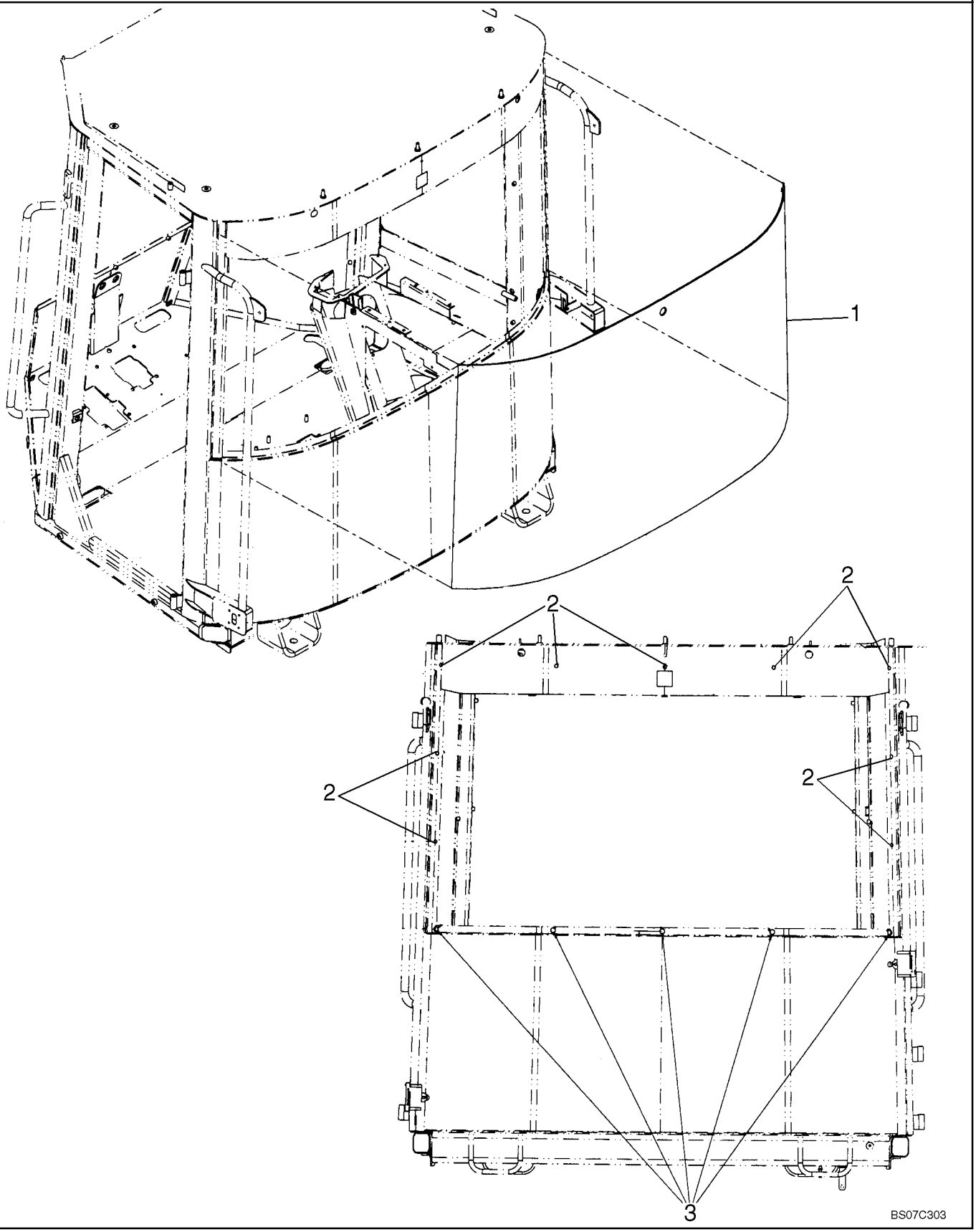

**CABINA - VIDRIO, TRASERO**

| REF | FN | PART NUMBER | YR/SN | QTY | DENOMINACION |
|---|---|---|---|---|---|
| 1 | | 76303171 | | 1 | VIDRIO, Rear |
| 2 | | 322197950 | | 9 | SEPARADOR, DIA. 11 |
| 3 | | 76303582 | | 5 | SEPARADOR, DIA. 16 |
| 4 | | {87337003} | | AR | ADHESIVE, BULK, Sika Tack Ultrafast, Not Illustrated |
| 5 | | {87324751} | | AR | ACTIVATOR, Sika UH-2 LUM, Not Illustrated |

| 09-31 | | p1 | 08/07 |
|---|---|---|---|

**CABINA - REVESTIMIENTO INTERIOR**

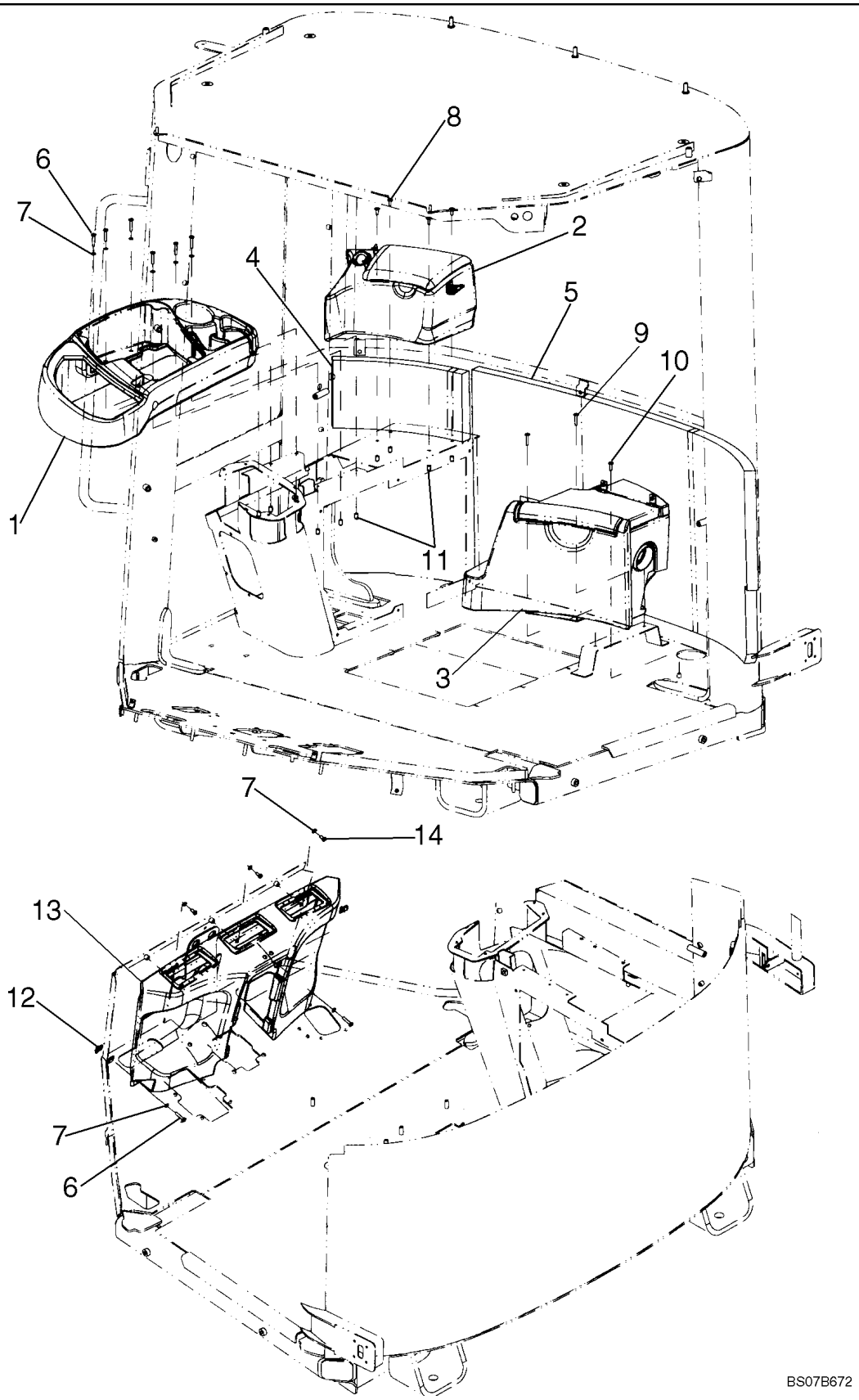

**CABINA - REVESTIMIENTO INTERIOR**

| REF | FN | PART NUMBER | YR/SN | QTY | DENOMINACION |
|---|---|---|---|---|---|
| 1 | | 76303033 | | 1 | REPISA, RH |
| 2 | | {76303042} | | 1 | STORAGE BOX |
| 3 | | {76303013} | | 1 | COOL BOX |
| 4 | | {76303425} | | 1 | REAR PANEL |
| 5 | | 76303422 | | 1 | CONTRAPANEL, Rear |
| 6 | | 840-1630 | | 8 | TORNILLO, Cross Pan Hd, M6 x 30 |
| 7 | | 895-11006 | | 11 | ARANDELA, M6 |
| 8 | | 847-3616 | | 4 | TORNILLO, Sltd Tr Hd, M6 x 16, 10.9, Serr |
| 9 | | 86503049 | | 2 | TORNILLO, Cross Oval Hd, M6 x 30 |
| 10 | | {14778414} | | 1 | SCREW, M6x20 |
| 11 | | 76046110 | | 10 | PASACABLES, M6 |
| 12 | | 833-40306 | | 2 | TUERCA, M6, U |
| 13 | | 76303040 | | 1 | REPISA, Front |
| 14 | | 614-6012 | | 3 | TORNILLO, Hex, M6 x 12, 8.8 |

**CABINA - REVESTIMIENTO INTERIOR**

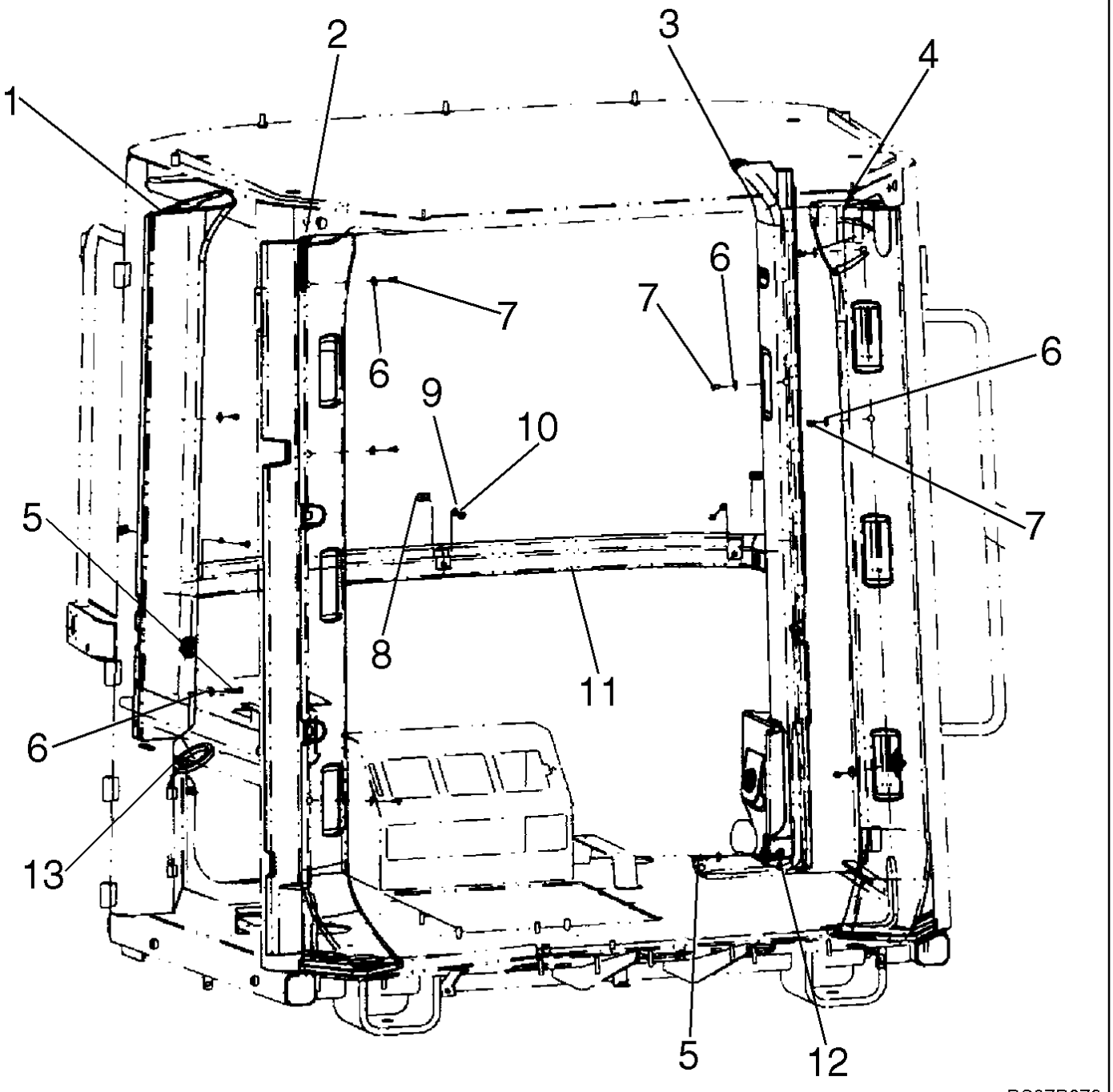

**CABINA - REVESTIMIENTO INTERIOR**

| REF | FN | PART NUMBER | YR/SN | QTY | DENOMINACION |
|---|---|---|---|---|---|
| 1 | | 76303037 | | 1 | TAPICERIA, Rear RH |
| 2 | | 76303039 | | 1 | MONTANTE, Front RH |
| 3 | | 76303036 | | 1 | TAPICERIA, Rear LH |
| 4 | | 76303038 | | 1 | TAPICERIA, Front LH |
| 5 | | 840-1630 | | 2 | TORNILLO, Cross Pan Hd, M6 x 30 |
| 6 | | 895-25006 | | 10 | ARANDELA, M6 x 18 x 1.6 |
| 7 | | 840-1612 | | 7 | TORNILLO, Cross Pan Hd, M6 x 12 |
| 8 | | 833-40306 | | 3 | TUERCA, M6, U |
| 9 | | 895-11006 | | 3 | ARANDELA, M6 |
| 10 | | 840-1616 | | 3 | TORNILLO, Cross Pan Hd, M6 x 16 |
| 11 | | 76303029 | | 1 | TAPADERA, Rear |
| 12 | | 76301020 | | 1 | TUERCA, Spring M6 |
| 13 | | {76303500} | | 1 | GASKET LH |

| 09-31B | | p1 | 07/07 |
|---|---|---|---|

**CABINA - REVESTIMIENTO INTERIOR - TECHO**

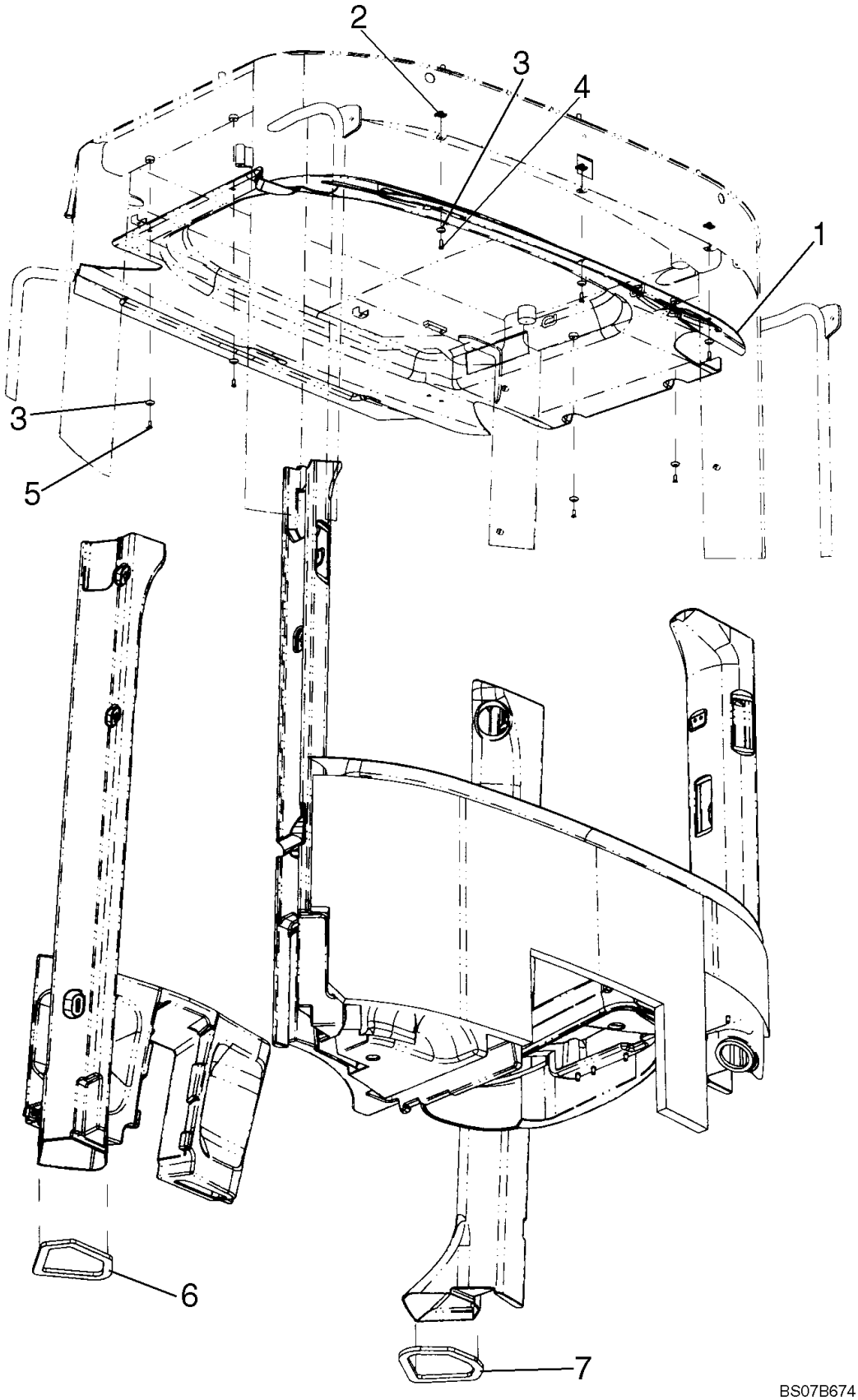

**CABINA - REVESTIMIENTO INTERIOR - TECHO**

| REF | FN | PART NUMBER | YR/SN | QTY | DENOMINACION |
|---|---|---|---|---|---|
| 1 | | 76303481 | | 1 | REVESTIMIENTO/TECHO |
| 2 | | 833-40306 | | 3 | TUERCA, M6, U |
| 3 | | 79076208 | | 7 | ARANDELA |
| 4 | | 13313017 | | 3 | TORNILLO, Cross Oval Hd, M6 x 16 |
| 5 | | 13313017 | | 4 | TORNILLO, Cross Oval Hd, M6 x 16 |
| 6 | | 76303521 | | 1 | JUNTA HERMETICA, LH |
| 7 | | 76303522 | | 1 | JUNTA HERMETICA, RH |

| 09-32 | | p1 | 07/07 |
|---|---|---|---|

**CABINA - GUARNICION EXTERNA**

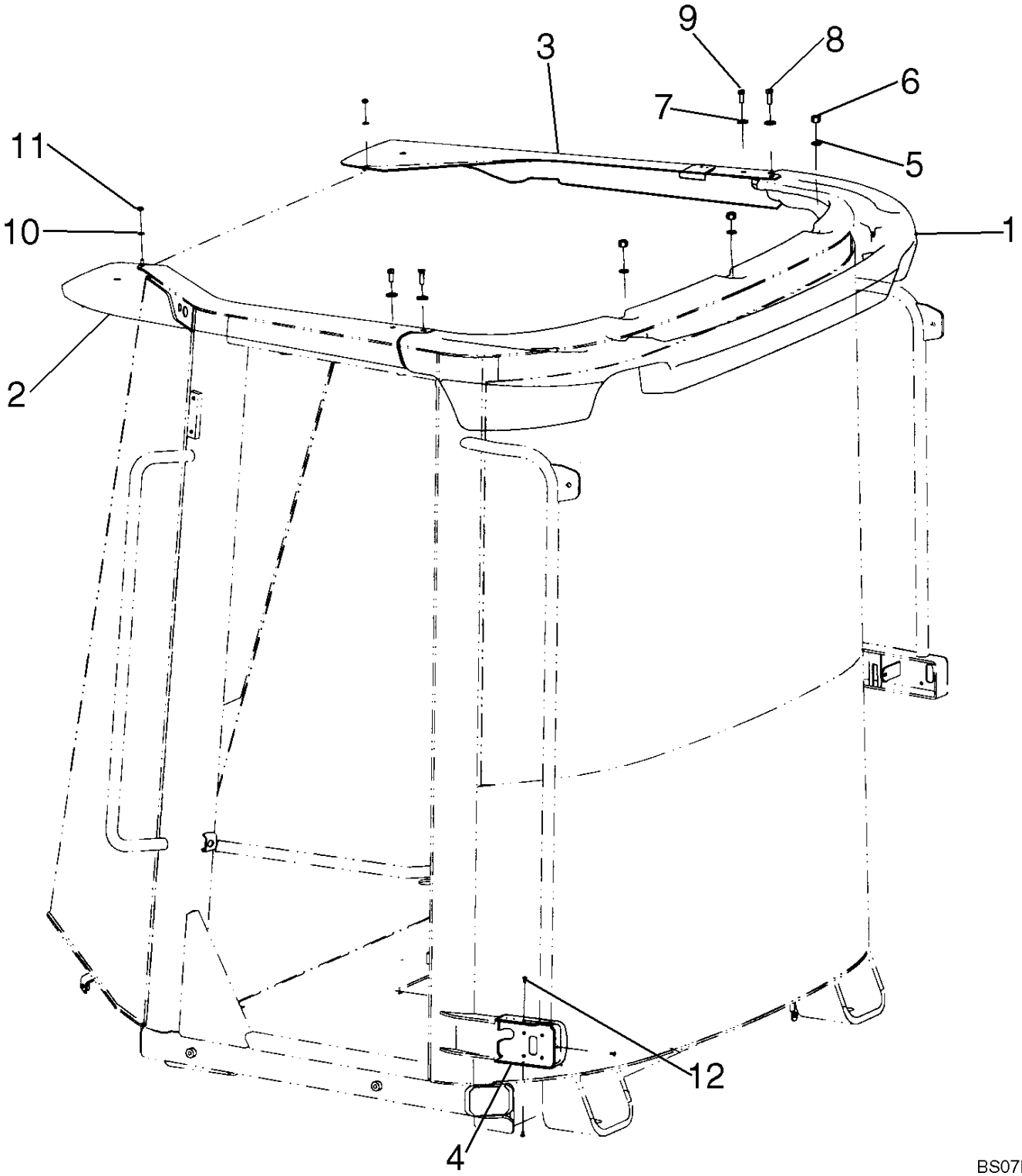

**CABINA - GUARNICION EXTERNA**

| REF | FN | PART NUMBER | YR/SN | QTY | DENOMINACION |
|---|---|---|---|---|---|
| 1 | | 76303024 | | 1 | UMBRAL DE PUERTA, Rear |
| 2 | | 76303194 | | 1 | UMBRAL DE PUERTA, Left Front |
| 3 | | 76303195 | | 1 | UMBRAL DE PUERTA, Right Front |
| 4 | | 76303025 | | 1 | PIEZA DE SOPORTE, Door Latch |
| 5 | | {87664050} | | 3 | WASHER, 11 x 20 x 2 mm |
| 6 | | {87664047} | | 3 | NUT, M10 CL8 |
| 7 | | {87664051} | | 4 | WASHER, 9 x 24 x 2 mm |
| 8 | | 16043624 | | 2 | TORNILLO, Hex, M8 x 25, 8.8, Full Thd |
| 9 | | 16043424 | | 2 | TORNILLO, Hex, M8 x 20, 8.8, Full Thd |
| 10 | | {87664048} | | 2 | WASHER, 6.6 x 12 x 1.6 mm |
| 11 | | 15896214 | | 2 | TUERCA, M6, Cl 8 |
| 12 | | {87664046} | | 3 | SCREW, M4 x 8 |

| 09-33 | | p1 | 08/07 |
|---|---|---|---|

**CABINA - VENTANILLA, DERECHA**

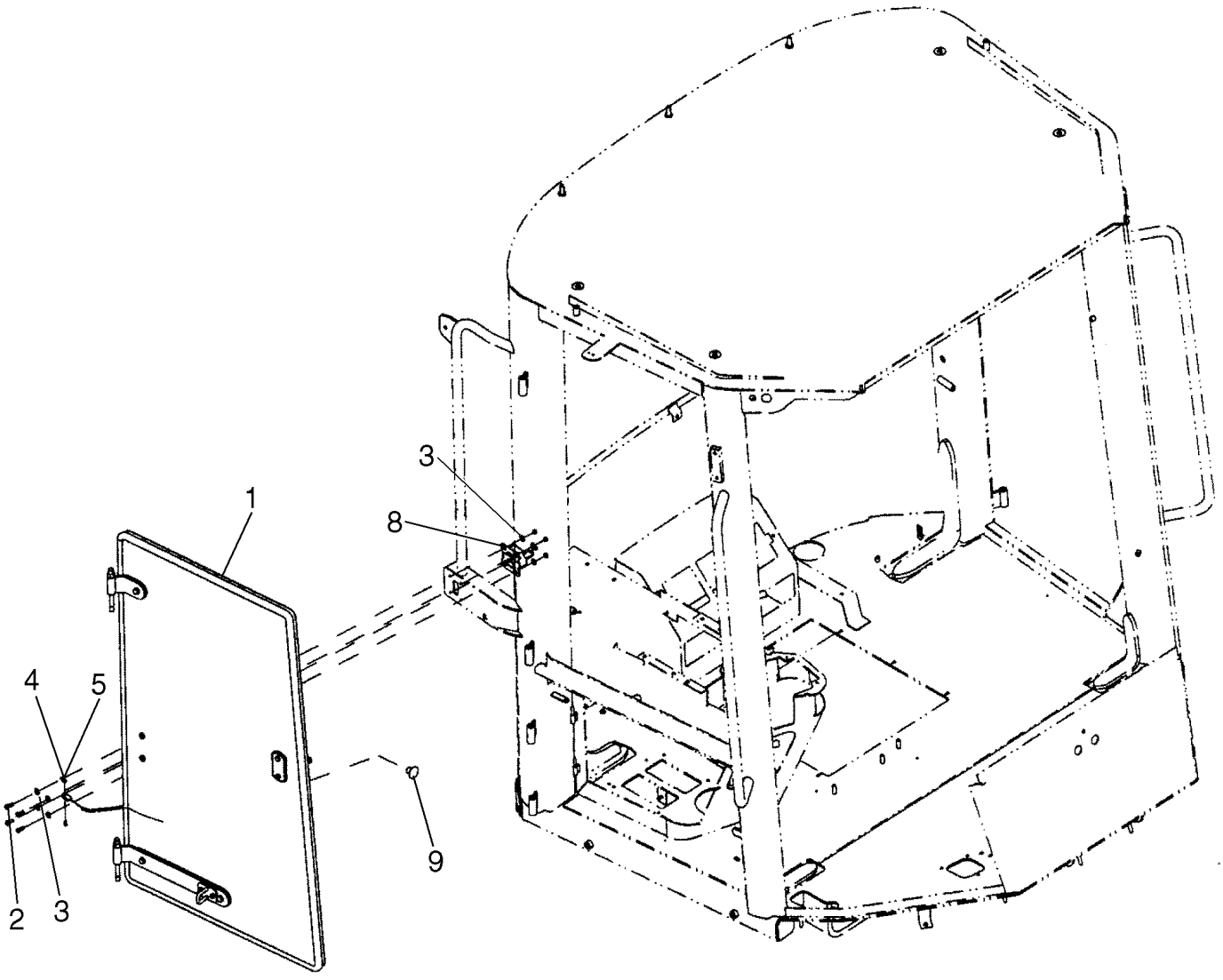

**CABINA - VENTANILLA, DERECHA**

| REF | FN | PART NUMBER | YR/SN | QTY | DENOMINACION |
|---|---|---|---|---|---|
| 1 | | {87644535} | | 1 | WINDOW ASSY. See Figure 09-33A |
| 2 | | 10902224 | | 4 | TORNILLO, Hex, M6 x 16, 8.8, Full Thd |
| 3 | | {87664049} | | 8 | WASHER |
| 4 | | 895-11005 | | 1 | ARANDELA, M5 x 10 x 1 |
| 5 | | 732-1610 | | 1 | PASADOR ABIERTO, M1.6 x 10 |
| 6 | | 71485274 | | 1 | PERNO |
| 7 | | 76303590 | | 1 | CABLE, Window Unlock; Not Illustrated |
| 8 | | 4227178 | | 1 | CERRADURA, Not Illustrated |
| 9 | | 76303157 | | 1 | POMO |

| 09-33A | | p1 | 07/07 |
|---|---|---|---|

**CABINA - VENTANILLA, DERECHA**

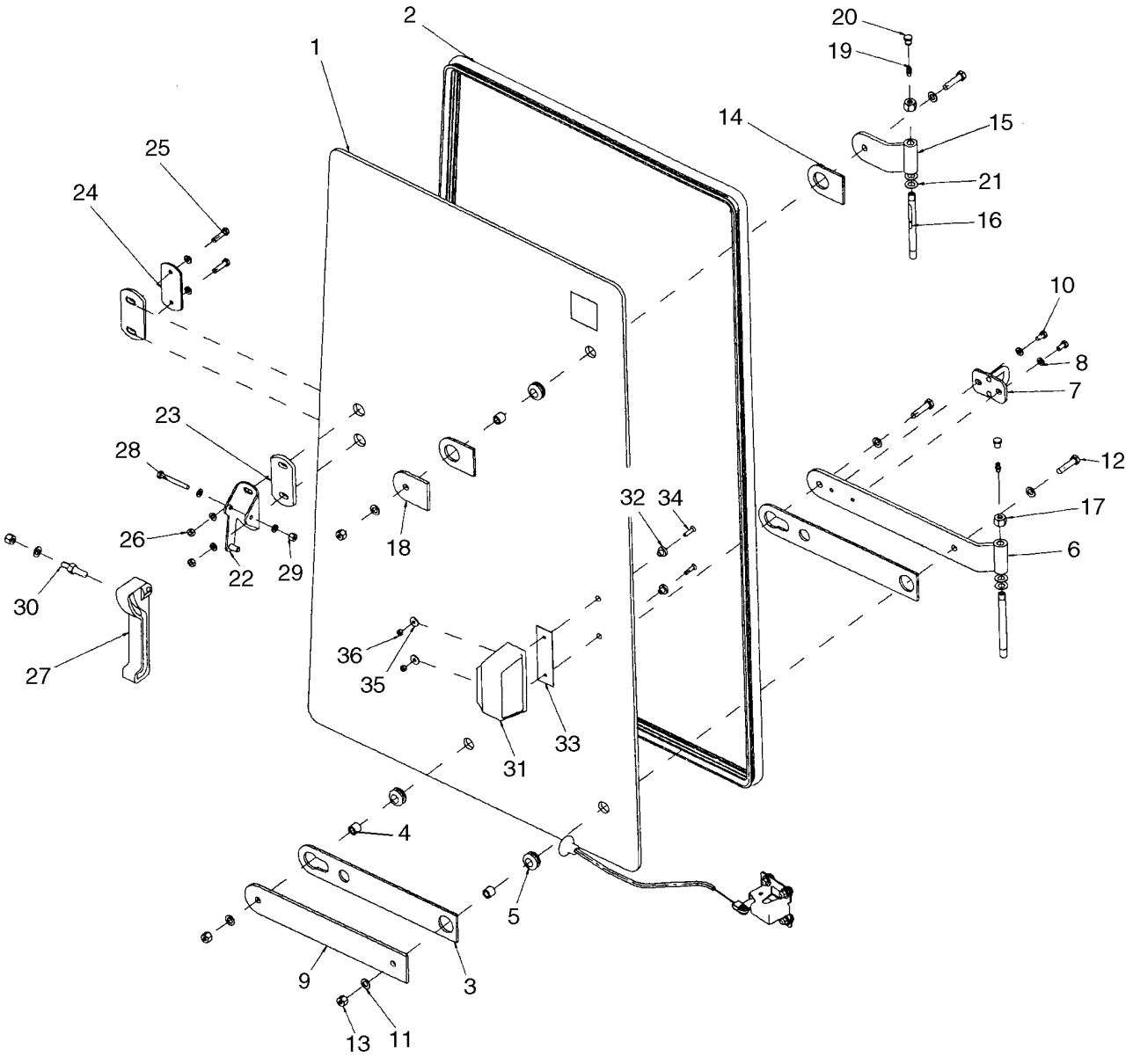

**CABINA - VENTANILLA, DERECHA**

| REF | FN | PART NUMBER | YR/SN | QTY | DENOMINACION |
|---|---|---|---|---|---|
| | | {87644535} | | 1 | WINDOW ASSY. Incl. Refs. 1 - 15, 18, 22 - 36 |
| 1 | | 76303230 | | 1 | VIDRIO |
| 2 | | 76303242 | | 1 | ANILLO DE CIERRE |
| 3 | | 76303159 | | 2 | JUNTA HERMETICA |
| 4 | | 816213301 | | 3 | SEPARADOR |
| 5 | | 4227144 | | 3 | GUARNICION DE CAUCHO |
| 6 | | 76303231 | | 1 | BISAGRA |
| 7 | | 76303154 | | 1 | PIEZA DE SOPORTE |
| 8 | | {87664048} | | 8 | WASHER, 6.6 x 12 x 1.6 mm |
| 9 | | 76303210 | | 1 | PLACA |
| 10 | | 10902024 | | 2 | TORNILLO, Hex, M6 x 12, 8.8, Full Thd |
| 11 | | {87664049} | | 7 | WASHER, 9 x 16 x 1.6 mm |
| 12 | | 16044024 | | 3 | TORNILLO, Hex, M8 x 40, 8.8 |
| 13 | | 832-10408 | | 4 | CONTRA TUERCA, M8 x 1.25, Cl 8 |
| 14 | | 76303193 | | 2 | JUNTA HERMETICA |
| 15 | | 76303248 | | 1 | BISAGRA |
| 16 | | 3805129 | | 2 | PERNO |
| 17 | | 832-10410 | | 2 | CONTRA TUERCA, M10 x 1.5, Cl 8 |
| 18 | | 76303192 | | 1 | PLACA |
| 19 | | 76043510 | | 2 | RACOR |
| 20 | | 1498088 | | 2 | LUBRICADOR, Grease |
| 21 | | F64046 | | 4 | ARANDELA, Thrust |
| 22 | | 76303250 | | 1 | PIEZA DE SOPORTE |
| 23 | | 87522593 | | 2 | JUNTA HERMETICA |
| 24 | | 76303323 | | 1 | PLACA |
| 25 | | 10902624 | | 2 | TORNILLO, Hex, M6 x 25, 8.8, Full Thd |
| 26 | | 825-1406 | | 6 | TUERCA, M6, Cl 8 |
| 27 | | 76043538 | | 1 | MANECILLA |
| 28 | | 827-6060 | | 1 | TORNILLO, Hex, M6 x 60, 10.9 |
| 29 | | 832-10406 | | 1 | CONTRA TUERCA, M6 x 1, Cl 8 |
| 30 | | 3805251 | | 1 | PERNO |
| 31 | | 97399C1 | | 1 | MANECILLA |
| 32 | | F64198 | | 2 | CASQUILLO |
| 33 | | R54047 | | 1 | TACO |
| 34 | | {87629047} | | 2 | SCREW, M5 x 20 |

| 09-33A | | p2 | 07/07 |
|---|---|---|---|

**CABINA - VENTANILLA, DERECHA**

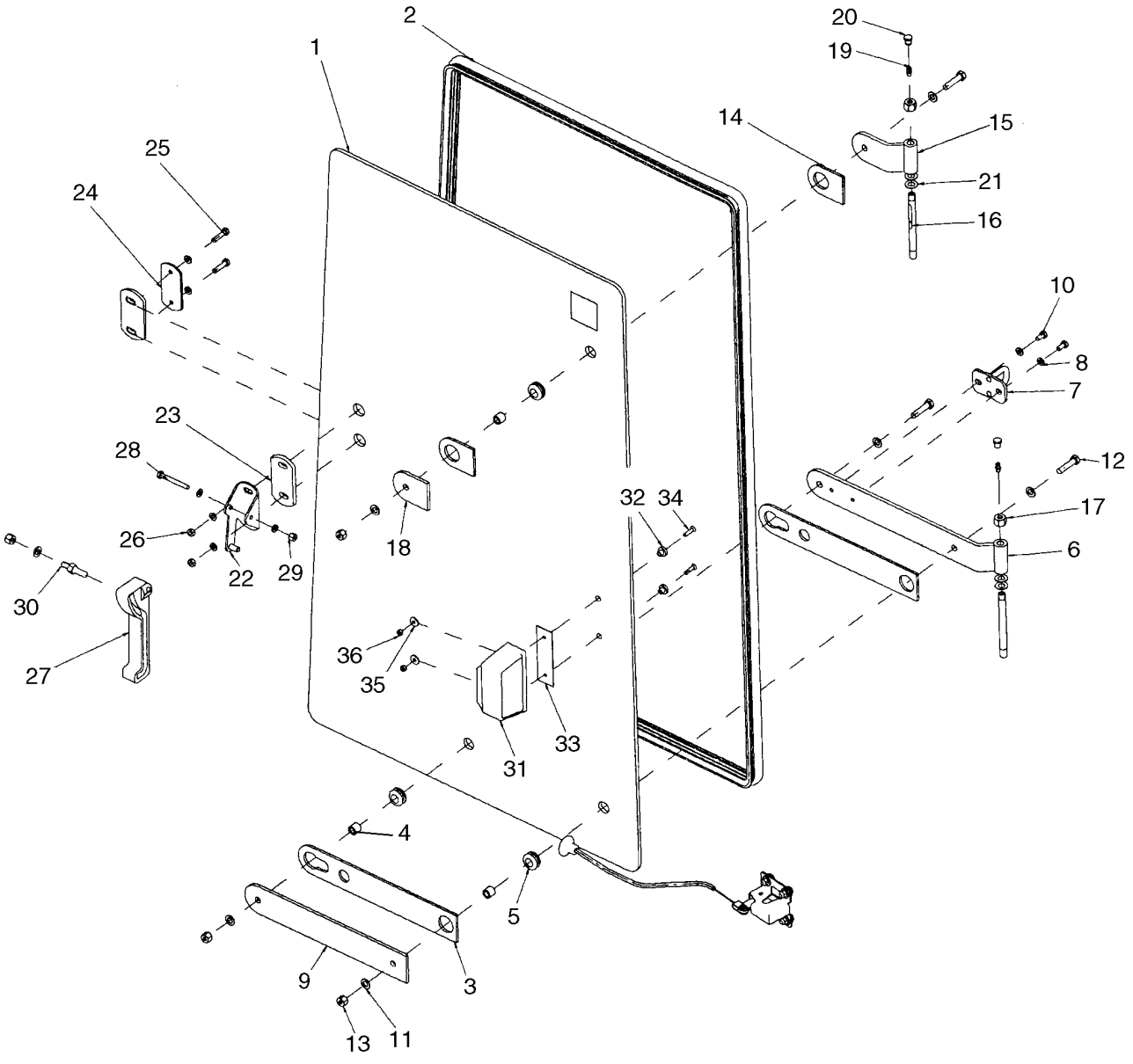

**CABINA - VENTANILLA, DERECHA**

| REF | FN | PART NUMBER | YR/SN | QTY | DENOMINACION |
|---|---|---|---|---|---|
| 35 | | 895-25005 | | 2 | ARANDELA, M5 x 15 x 1.6 |
| 36 | | 825-1405 | | 2 | TUERCA, M5, Cl 8 |

| 09-34 | | p1 | 07/07 |
|---|---|---|---|

**CABINA - VENTANILLA, DERECHA**

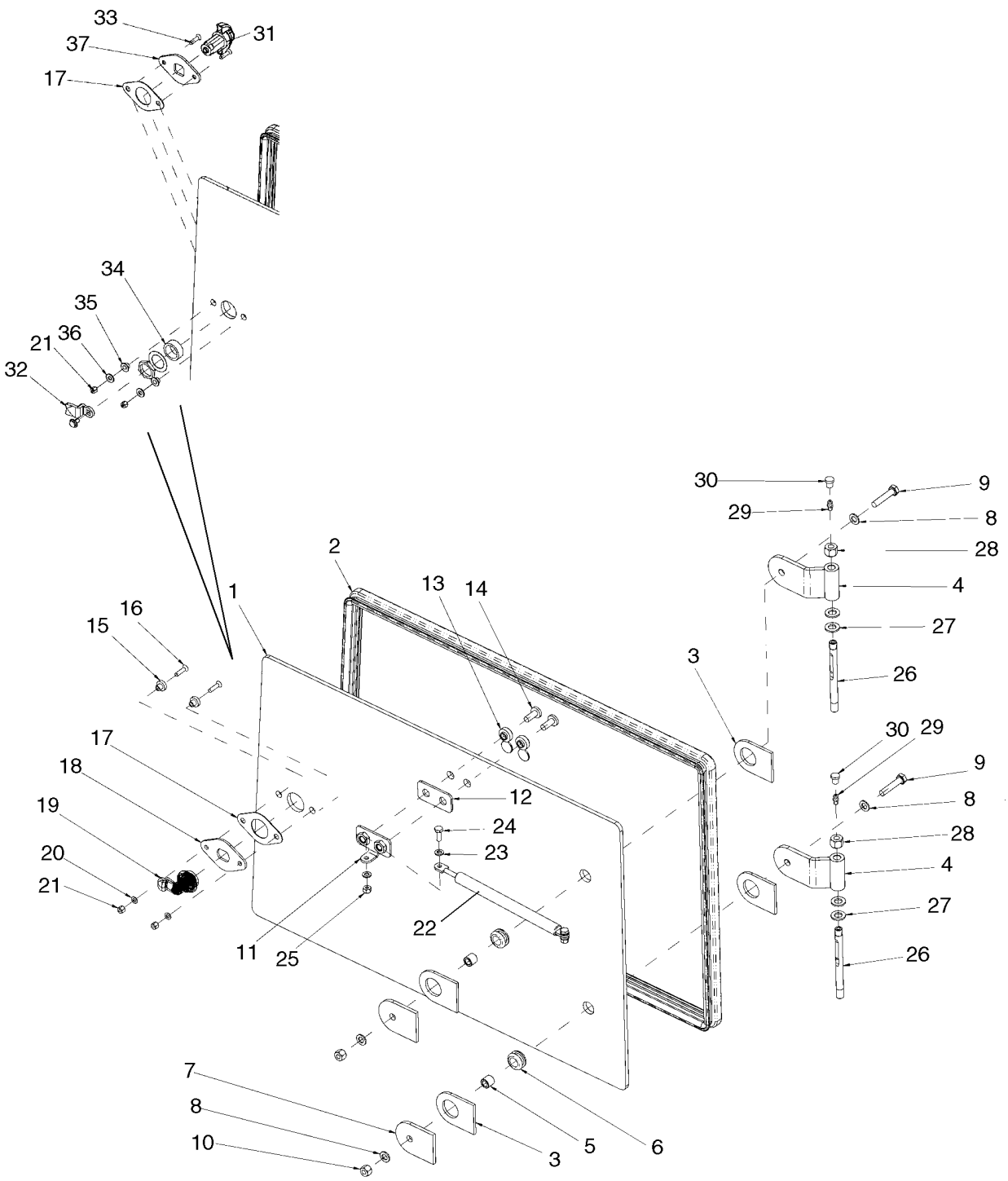

**CABINA - VENTANILLA, DERECHA**

| REF | FN | PART NUMBER | YR/SN | QTY | DENOMINACION |
|---|---|---|---|---|---|
| 1 | | 76303460 | | 1 | VIDRIO |
| 2 | | 76303240 | | 1 | ANILLO DE CIERRE |
| 3 | | 76303193 | | 4 | JUNTA HERMETICA |
| 4 | | 76303248 | | 2 | BISAGRA |
| 5 | | 816213301 | | 2 | SEPARADOR |
| 6 | | 4227144 | | 2 | GUARNICION DE CAUCHO |
| 7 | | 76303192 | | 2 | PLACA |
| 8 | | {87664049} | | 4 | WASHER |
| 9 | | 16044024 | | 2 | TORNILLO, Hex, M8 x 40, 8.8 |
| 10 | | 832-10408 | | 2 | CONTRA TUERCA, M8 x 1.25, Cl 8 |
| 11 | | 76303463 | | 1 | PIEZA DE SOPORTE |
| 12 | | 76303461 | | 1 | JUNTA HERMETICA |
| 13 | | 87537993 | | 2 | TAPON DEL DEPOSITO |
| 14 | | 840-1820 | | 2 | TORNILLO, Cross Pan Hd, M8 x 20 |
| 15 | | F64198 | | 2 | CASQUILLO |
| 16 | | 13311217 | | 2 | TORNILLO, Cross Oval Hd, M5 x 20 |
| 17 | | 76303458 | | 1 | JUNTA HERMETICA |
| 18 | | 76303459 | | 1 | PLACA |
| 19 | | {76303249} | | 1 | LOCK, DOOR |
| 20 | | 895-11005 | | 2 | ARANDELA, M5 x 10 x 1 |
| 21 | | 832-10405 | | 2 | CONTRA TUERCA, M5 x .8, Cl 8 |
| 22 | | 76303455 | | 1 | COMPAS |
| 23 | | 895-11006 | | 4 | ARANDELA, M6 |
| 24 | | 614-6016 | | 2 | TORNILLO, Hex, M6 x 16, 8.8 |
| 25 | | 412152 | | 2 | CONTRA TUERCA, M6 x 1, Cl 8.8 |
| 25 | | 832-10406 | | 2 | CONTRA TUERCA, M6 x 1, Cl 8, If Used |
| 26 | | 3805129 | | 2 | PERNO |
| 27 | | 895-11010 | | 4 | ARANDELA, M10 x 20 x 2 |
| 27 | | F64046 | | 4 | ARANDELA, Thrust, If Used |
| 28 | | 832-10410 | | 2 | CONTRA TUERCA, M10 x 1.5, Cl 8 |
| 29 | | 76043510 | | 2 | RACOR |
| 30 | | 1498088 | | 2 | LUBRICADOR |
| 31 | | {87628359} | | 1 | LATCH, DOOR |
| 32 | | {87628360} | | 1 | PAWL, Door Latch |
| 33 | | {87629047} | | 2 | SCREW |

**CABINA - VENTANILLA, DERECHA**

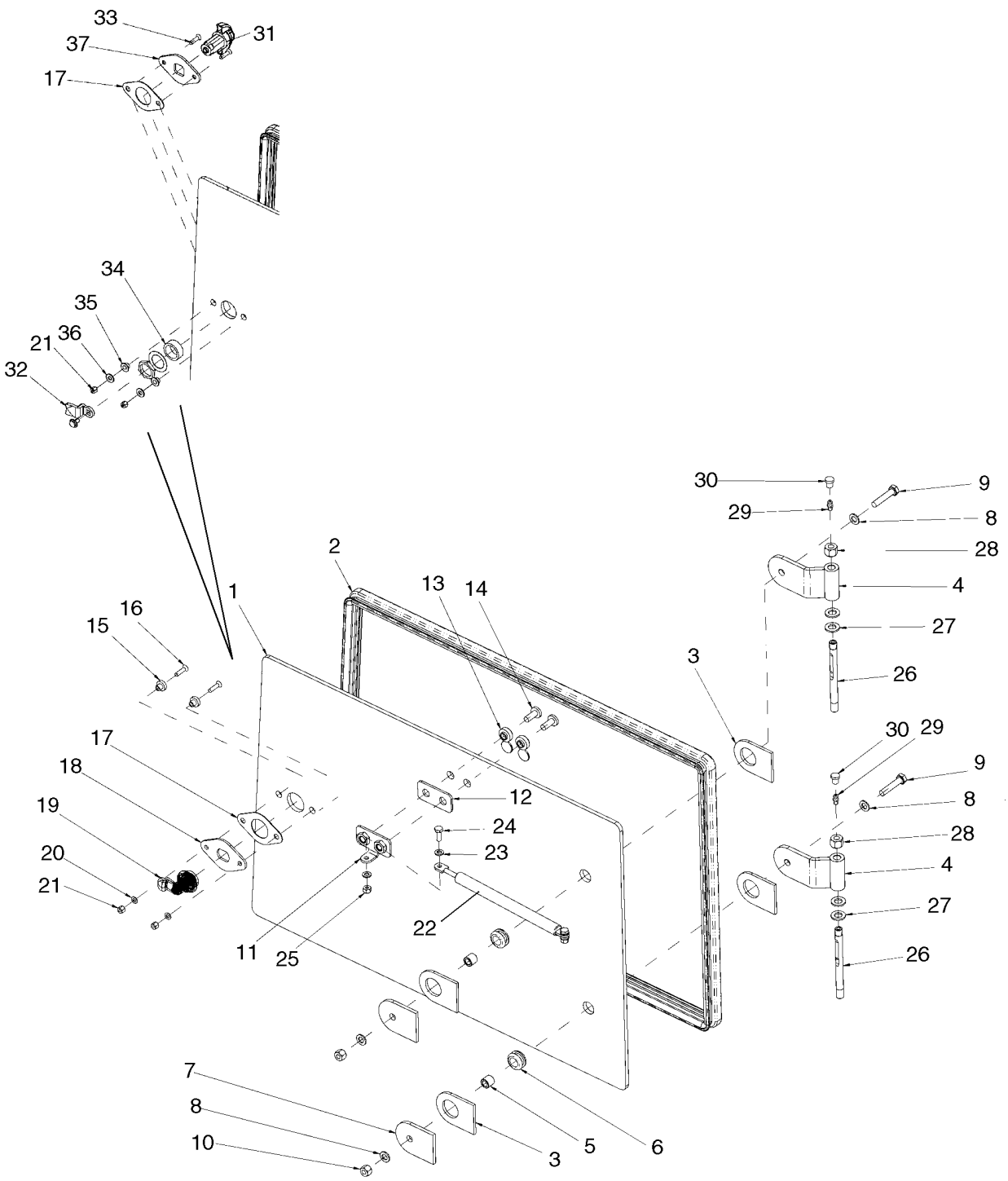

**CABINA - VENTANILLA, DERECHA**

| REF | FN | PART NUMBER | YR/SN | QTY | DENOMINACION |
|---|---|---|---|---|---|
| 34 | | {87628362} | | 1 | SPACER, Door Latch |
| 35 | | 109171C1 | | 2 | CASQUILLO |
| 36 | | 195-81023 | | 2 | ARANDELA, #12 |
| 37 | | {87628364} | | 1 | PLATE, Latch Mounting |

**CABINA - MONTAJE DE LA PUERTA**

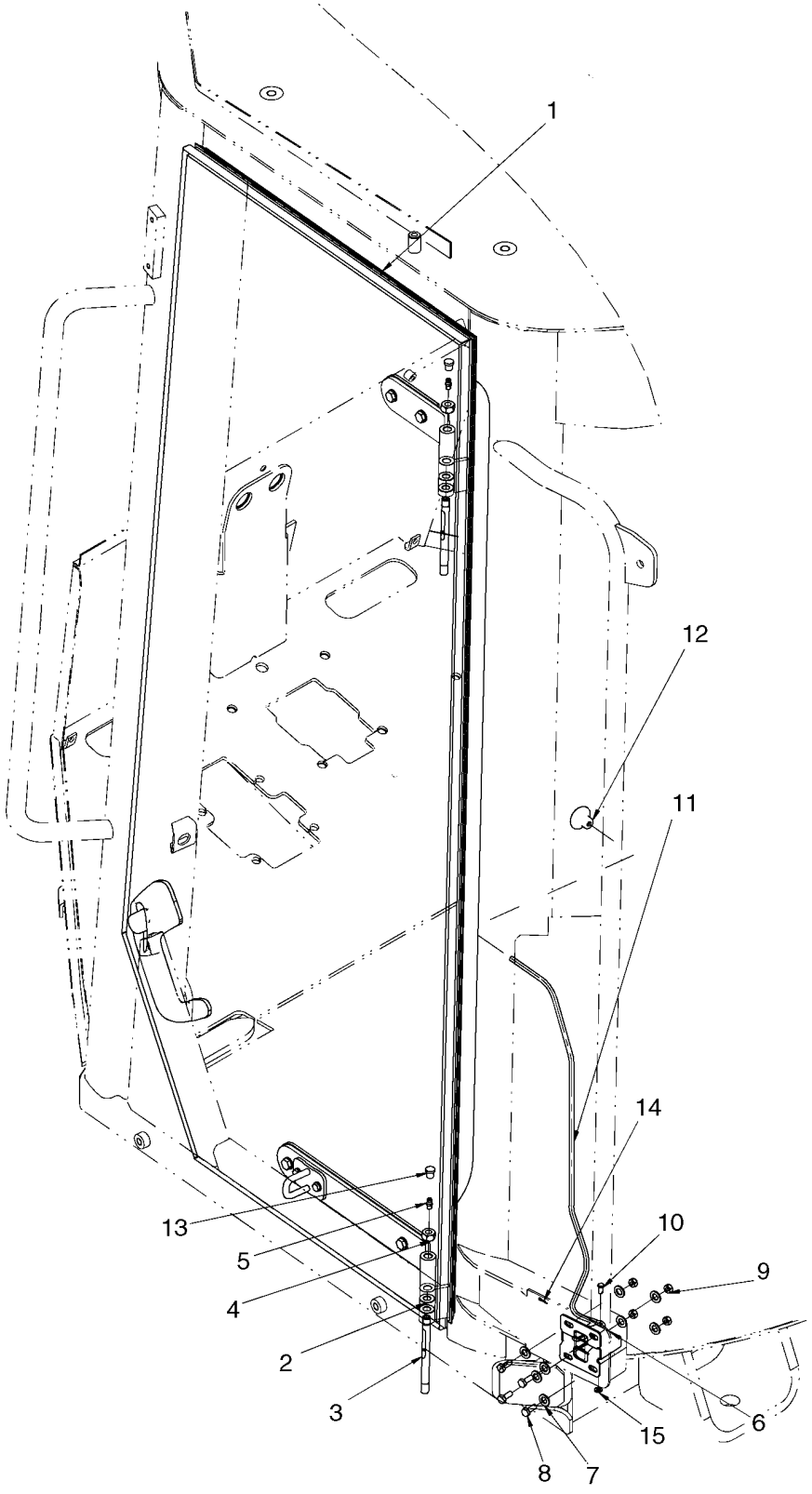

**CABINA - MONTAJE DE LA PUERTA**

| REF | FN | PART NUMBER | YR/SN | QTY | DENOMINACION |
|---|---|---|---|---|---|
| 1 | | 87627075 | | 1 | PUERTA, DOOR ASSY, See Figure 09-35A |
| 2 | | F64046 | | 4 | ARANDELA, Thrust |
| 3 | | 3805129 | | 2 | PERNO |
| 4 | | 832-46410 | | 2 | CONTRA TUERCA, M10 x 1.5, Cl 8 |
| 5 | | 76043510 | | 2 | RACOR |
| 6 | | 4227178 | | 1 | CERRADURA |
| 7 | | {87664048} | | 8 | WASHER, M6.6 x 12 x 1.6 |
| 8 | | 614-6016 | | 4 | TORNILLO, Hex, M6 x 16, 8.8 |
| 9 | | 825-1406 | | 4 | TUERCA, M6, Cl 8 |
| 10 | | 71485274 | | 1 | PERNO |
| 11 | | 76303589 | | 1 | CABLE |
| 12 | | 76303157 | | 1 | POMO |
| 13 | | 1498088 | | 2 | LUBRICADOR |
| 14 | | 732-1610 | | 1 | PASADOR ABIERTO, M1.6 x 10 |
| 15 | | 895-11005 | | 1 | ARANDELA, M5 x 10 x 1 |

| 09-35A | | p1 | 08/07 |
|---|---|---|---|

**CABINA - PUERTA**

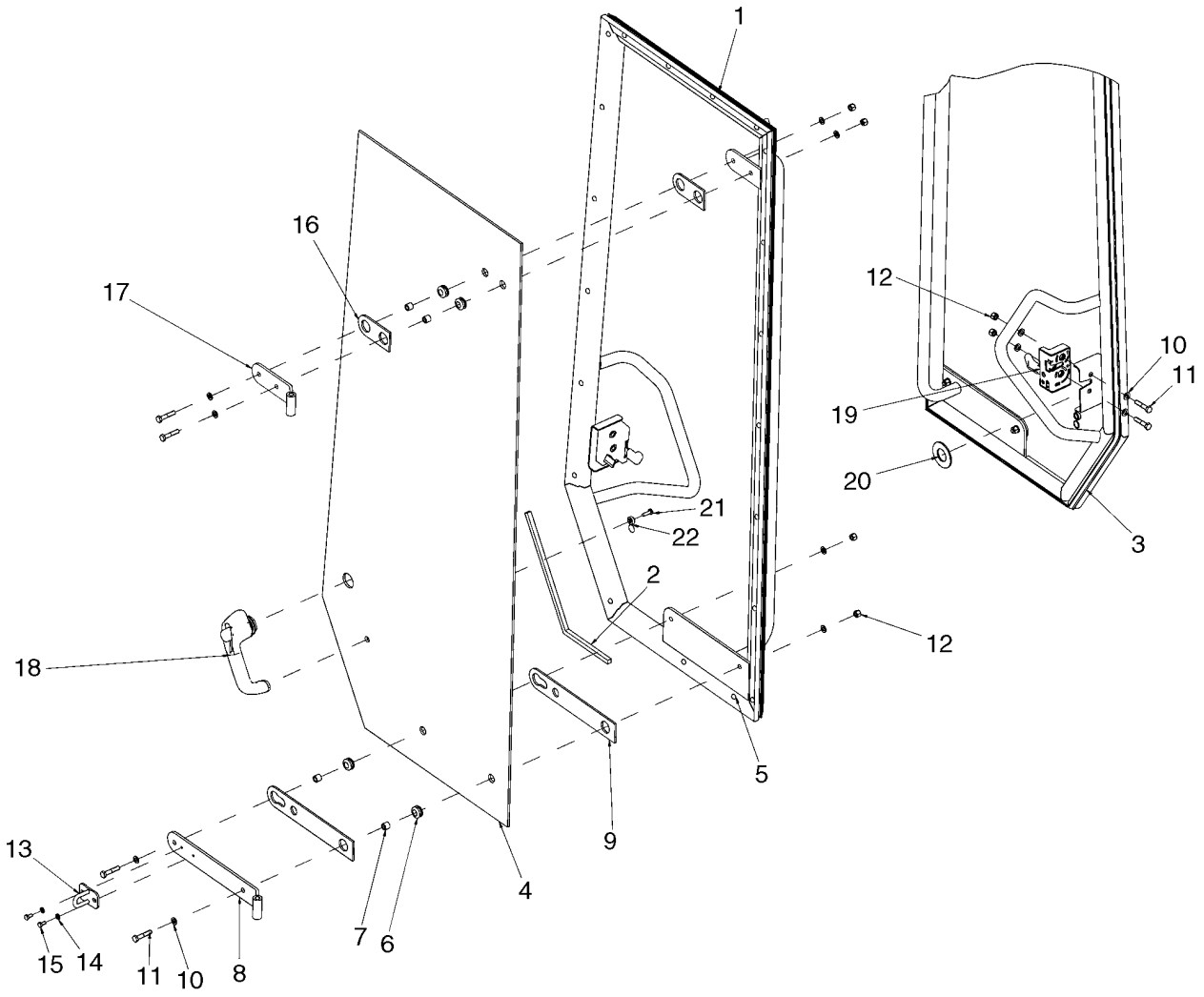


BS07C264

**CABINA - PUERTA**

| REF | FN | PART NUMBER | YR/SN | QTY | DENOMINACION |
|---|---|---|---|---|---|
| | | 87627075 | | | PUERTA, Left, Incl. Refs. 1 - 24 |
| 1 | | 76303224 | | 1 | BASTIDOR |
| 2 | | 87525153 | | 1 | ANILLO DE CIERRE, Door |
| 3 | | 76303170 | | 1 | JUNTA DE PUERTA |
| 4 | | 76303212 | | 1 | VIDRIO |
| 5 | | 322197950 | | 20 | SEPARADOR |
| 6 | | 4227144 | | 4 | GUARNICION DE CAUCHO |
| 7 | | 816213301 | | 4 | SEPARADOR |
| 8 | | 76303211 | | 1 | BISAGRA |
| 9 | | 76303227 | | 2 | ANILLO DE CIERRE |
| 10 | | {87664049} | | 12 | WASHER, 9 x 16 x 1.6 mm |
| 11 | | 16044024 | | 6 | TORNILLO, Hex, M8 x 40, 8.8 |
| 12 | | 832-10408 | | 6 | CONTRA TUERCA, M8 x 1.25, Cl 8 |
| 13 | | 76303154 | | 1 | PIEZA DE SOPORTE |
| 14 | | {87664048} | | 2 | WASHER, 6.6 x 12 x 1.6 mm |
| 15 | | 10902024 | | 2 | TORNILLO, Hex, M6 x 12, 8.8, Full Thd |
| 16 | | 76081747 | | 2 | JUNTA HERMETICA |
| 17 | | 76303225 | | 1 | BISAGRA |
| 18 | | 76303253 | | 1 | MANECILLA |
| 19 | | 3805086 | | 1 | CERRADURA (CONJUNTO) |
| 20 | | 76303605 | | 1 | ARANDELA ELASTICA |
| 21 | | 86511830 | | 1 | TORNILLO, Cross Pan Hd, M6 x 20 |
| 22 | | {87528282} | | 1 | COVER |
| 23 | | {87337003} | | AR | ADHESIVE, Sika Tack Ultrafast, Not Illustrated |
| 24 | | {87321451} | | AR | ACTIVATOR, Sika UH-2 LUM, Not Illustrated |

| 09-36 | | p1 | 05/07 |
|---|---|---|---|

**CABINA - ESPEJOS RETROVISORES**

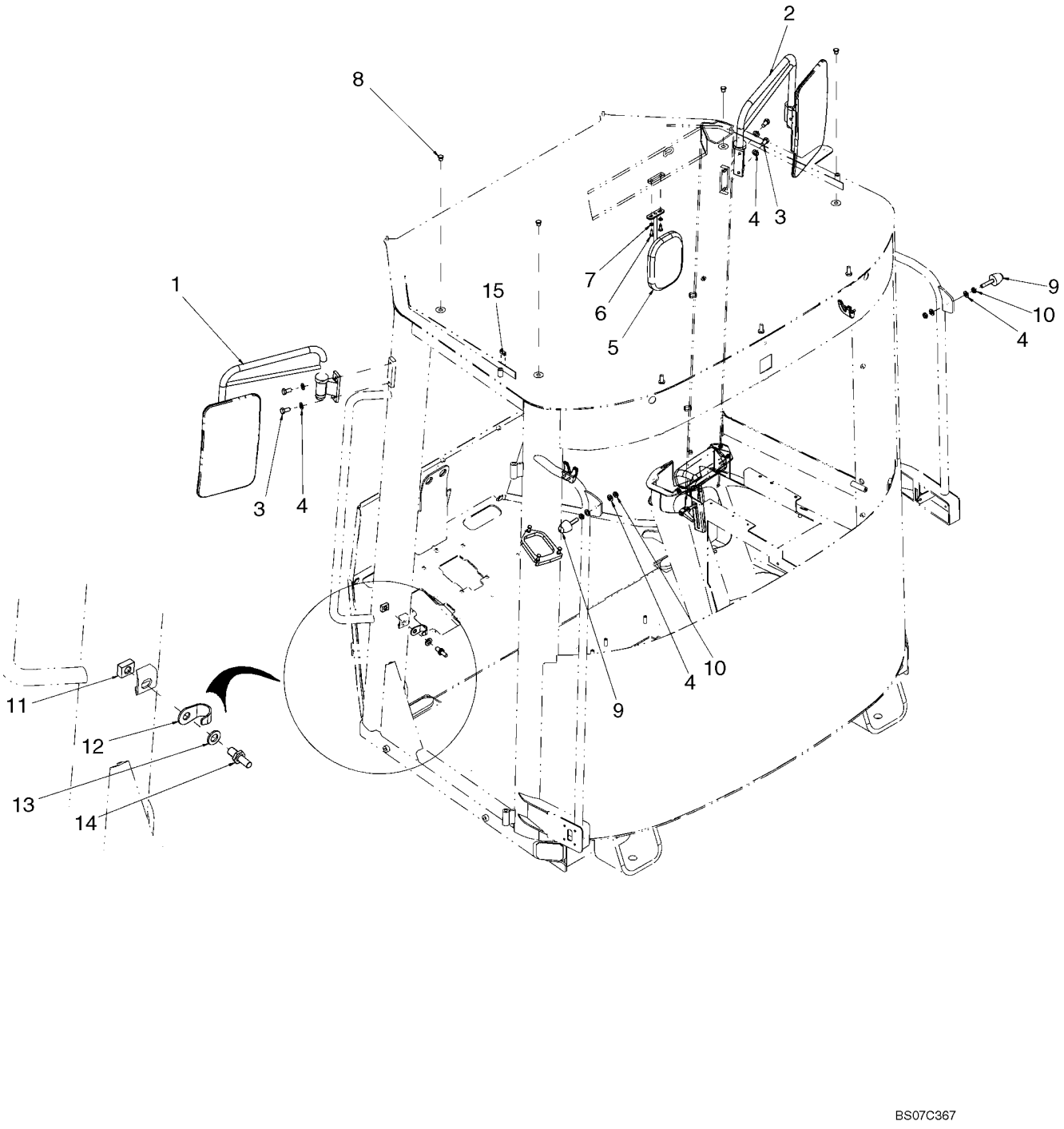

**CABINA - ESPEJOS RETROVISORES**

| REF | FN | PART NUMBER | YR/SN | QTY | DENOMINACION |
|---|---|---|---|---|---|
| 1 | | 76303266 | | 1 | ESPEJO |
| 2 | | 76303267 | | 1 | ESPEJO |
| 3 | | 614-10020 | | 4 | TORNILLO, Hex, M10 x 20, 8.8, Full Thd |
| 4 | | 895-11010 | | 8 | ARANDELA, M10 x 20 x 2 |
| 5 | | 76048869 | | 1 | ESPEJO RETROVISOR |
| 6 | | 840-1616 | | 2 | TORNILLO, Cross Pan Hd, M6 x 16 |
| 7 | | 895-11006 | | 2 | ARANDELA, M6 |
| 8 | | 72114876 | | 4 | TAPÓN |
| 9 | | 76303588 | | 2 | PLOT DE SUSPENSIÓN |
| 10 | | 829-4410 | | 4 | TUERCA, Thin, M10 x 1.5, Cl 05 |
| 11 | | 76067753 | | 1 | PLAQUITA |
| 12 | | 76048628 | | 1 | DEFENSA |
| 13 | | 895-11012 | | 1 | ARANDELA, M12 x 24 x 2.5 |
| 14 | | 76043511 | | 1 | PERNO |
| 15 | | {87525493} | | 1 | SEAL PROFILE |

**CABINA - ALFOMBRILLA**

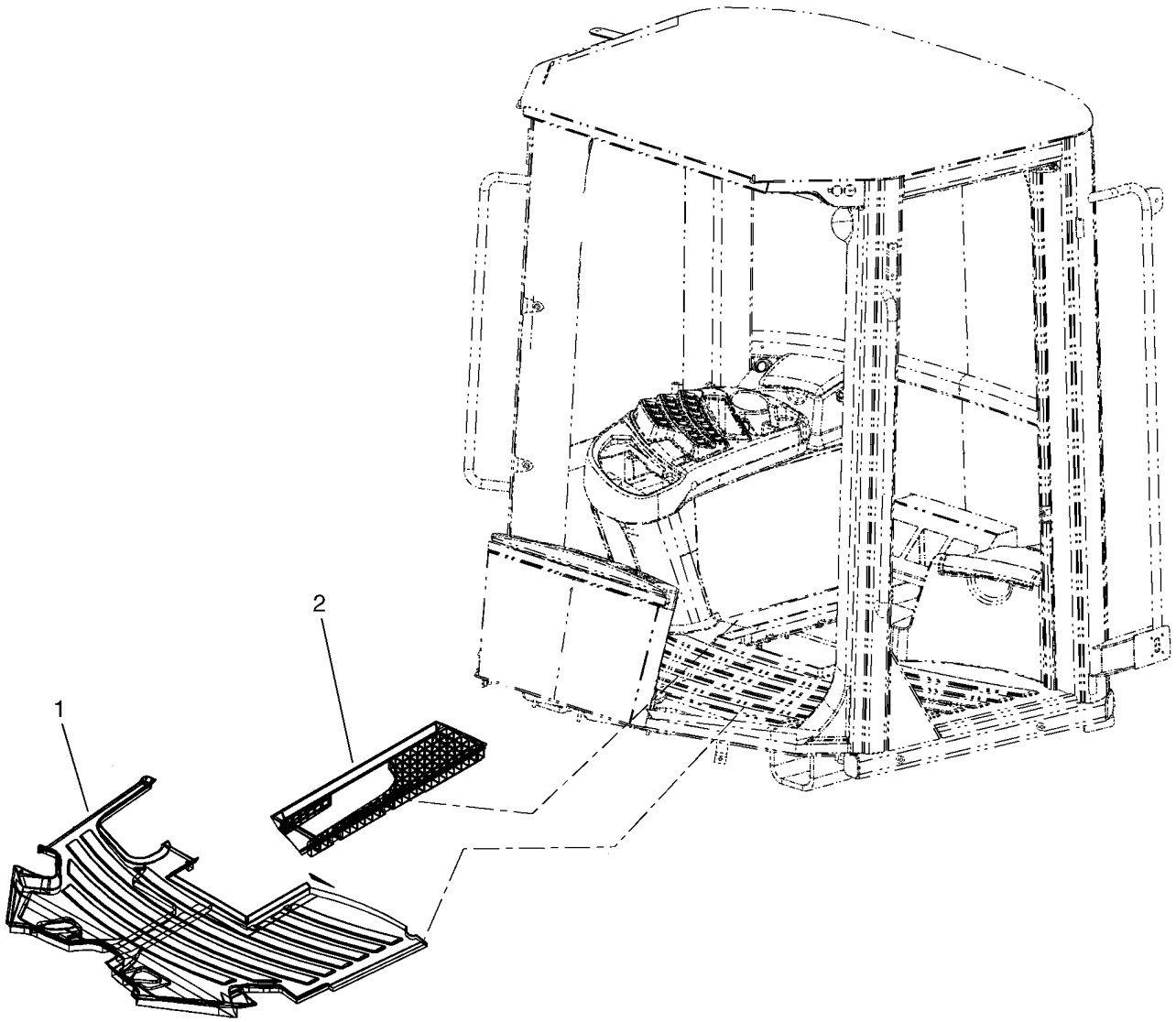


BS06K620

**CABINA - ALFOMBRILLA**

| REF | FN | PART NUMBER | YR/SN | QTY | DENOMINACION |
|---|---|---|---|---|---|
| 1 | | 76303174 | | 1 | ALFOMBRA, Front |
| 2 | | 76303317 | | 1 | ALFOMBRA, Rear |

**CABINA - PARASOL**

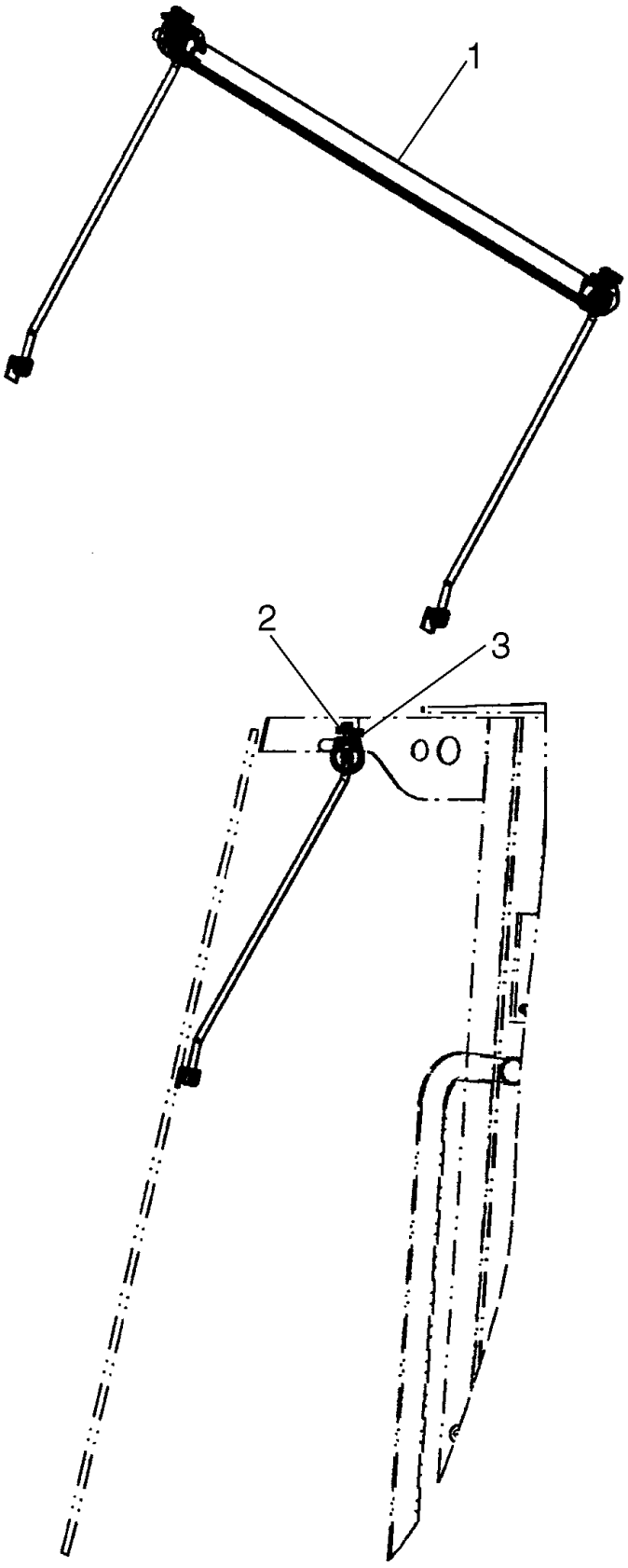


BS07B702

**CABINA - PARASOL**

| REF | FN | PART NUMBER | YR/SN | QTY | DENOMINACION |
|---|---|---|---|---|---|
| 1 | | 76303300 | | 1 | VISERA |
| 2 | | 760-17316 | | 2 | TORNILLO AUTOROSCANTE, Pan Hd, M4.2 x 16 |
| 3 | | 833-40306 | | 2 | TUERCA, M6, U |

**CABINA - COMPONENTES**

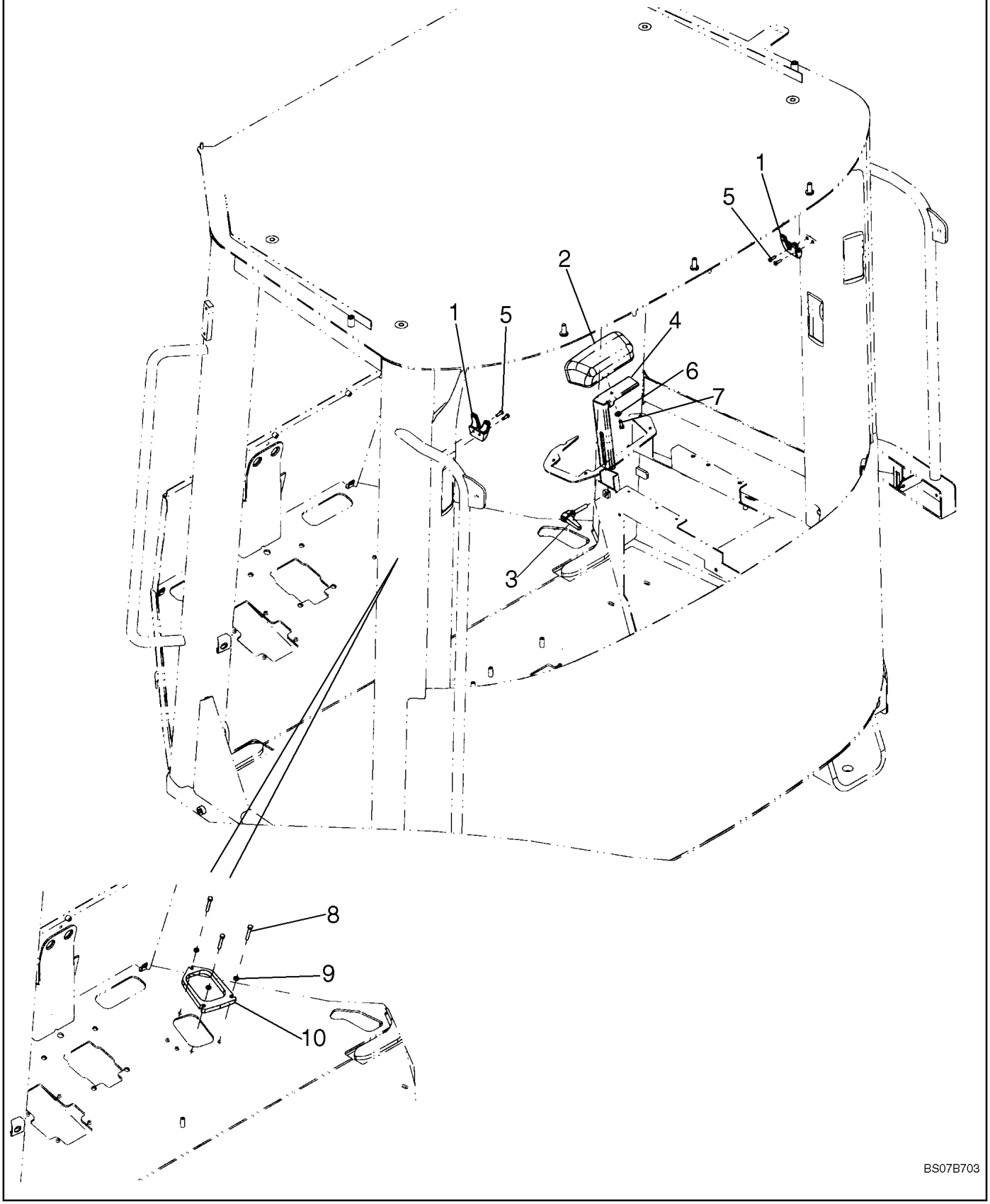

**CABINA - COMPONENTES**

| REF | FN | PART NUMBER | YR/SN | QTY | DENOMINACION |
|---|---|---|---|---|---|
| 1 | | 76067422 | | 2 | GANCHO, Coat |
| 2 | | 76303022 | | 1 | APOYABRAZOS |
| 3 | | 76303338 | | 1 | MANECILLA |
| 4 | | 76303337 | | 1 | SOPORTE |
| 5 | | 840-1516 | | 4 | TORNILLO, Cross Pan Hd, M5 x 16 |
| 6 | | 896-16006 | | 1 | ARANDELA, M6 x 14.5 x 2.5, HT |
| 7 | | 614-6016 | | 1 | TORNILLO, Hex, M6 x 16, 8.8 |
| 8 | | 827-6040 | | 3 | TORNILLO, Hex, M6 x 40, 10.9 |
| 9 | | 895-11006 | | 3 | ARANDELA, M6 |
| 10 | | {87516291} | | 1 | PLATE, Throttle Spacer |

| 09-40 | | p1 | 07/07 |
|---|---|---|---|

**CABINA - LUCES**

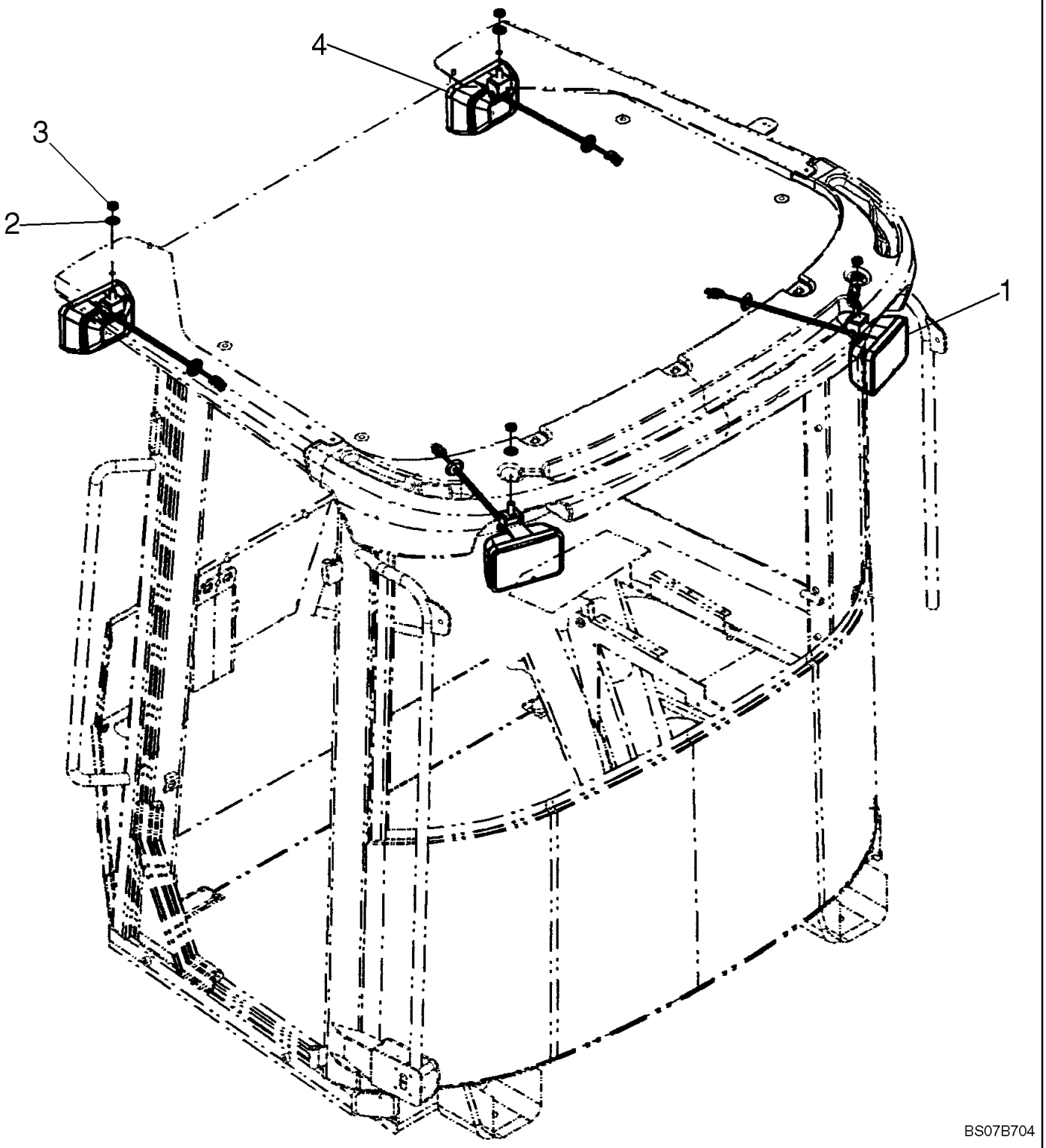

**CABINA - LUCES**

| REF | FN | PART NUMBER | YR/SN | QTY | DENOMINACION |
|---|---|---|---|---|---|
| 1 | | 87613498 | | 2 | FARO POSTERIOR, Rear; See Figure 04-21 |
| 2 | | 495-11053 | | 4 | ARANDELA, 1/2", SAE |
| 3 | | 131-1402 | | 4 | CONTRA TUERCA, 1/2"-13, GB, Thin |
| 4 | | 87627057 | | 2 | FARO POSTERIOR, Front; See Figure 04-21 |

**CABINA - CONVENIENCIA PAQUETE**

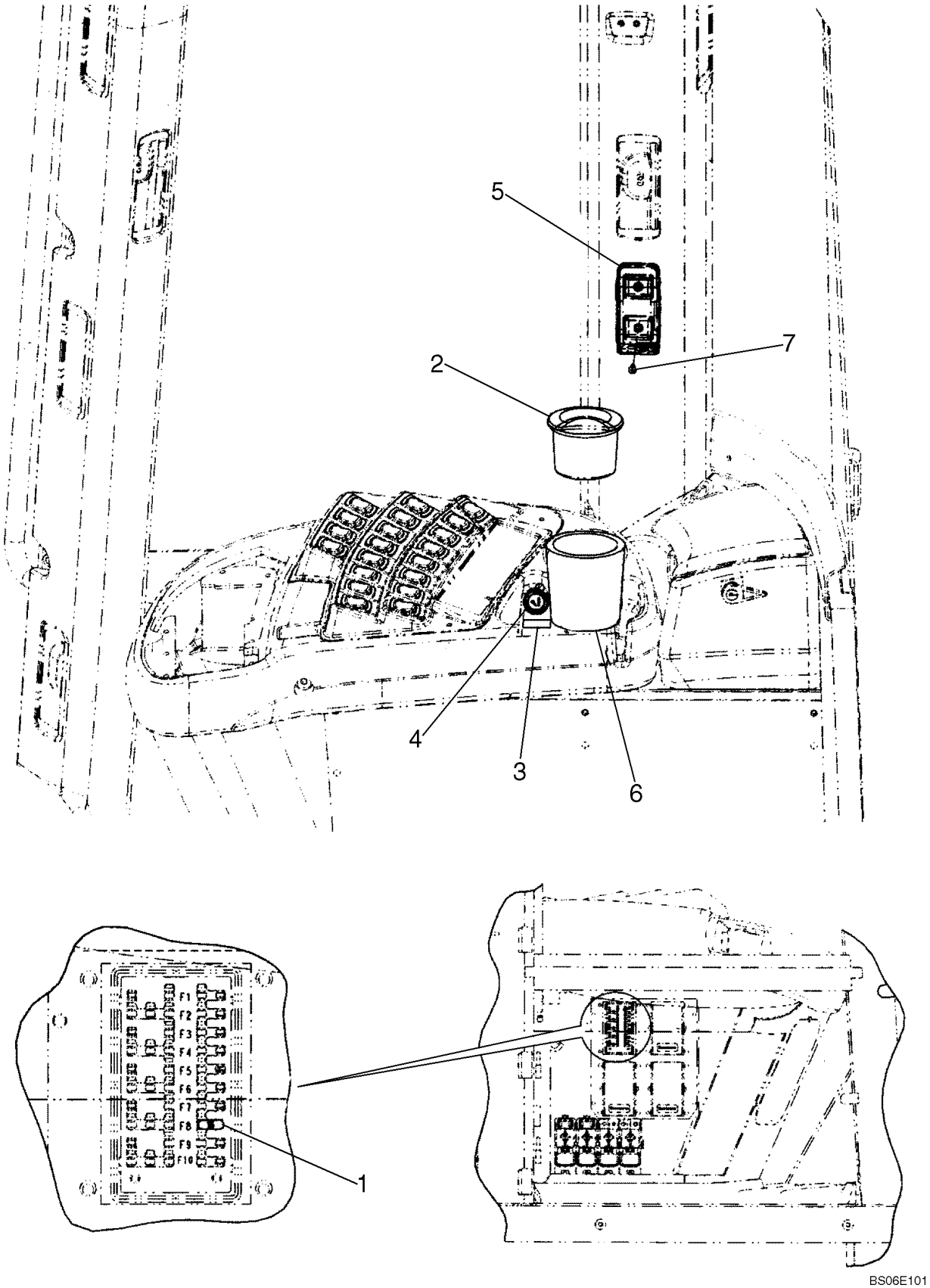

**CABINA - CONVENIENCIA PAQUETE**

| REF | FN | PART NUMBER | YR/SN | QTY | DENOMINACION |
|---|---|---|---|---|---|
| 1 | | 121413A1 | | 1 | FUSIBLE, 15A |
| 2 | | 302456A1 | | 1 | CENICERO |
| 3 | | 364741A1 | | 1 | CALCOMANIA, 24V - 10A |
| 4 | | 87580853 | | 1 | ENCENDEDOR DE CIGARILLOS, 24V |
| 5 | | 76048849 | | 1 | CAJA, Cell Phone |
| 6 | | 87524648 | | 1 | SOPORTE, Ashtray |
| 7 | | 265-14512 | | 2 | TORNILLO AUTOROSCANTE, Cross Oval Hd, #10 x 3/4" |

**ASIENTO - SOPORTE/CINTURONES DE SEGURIDAD**

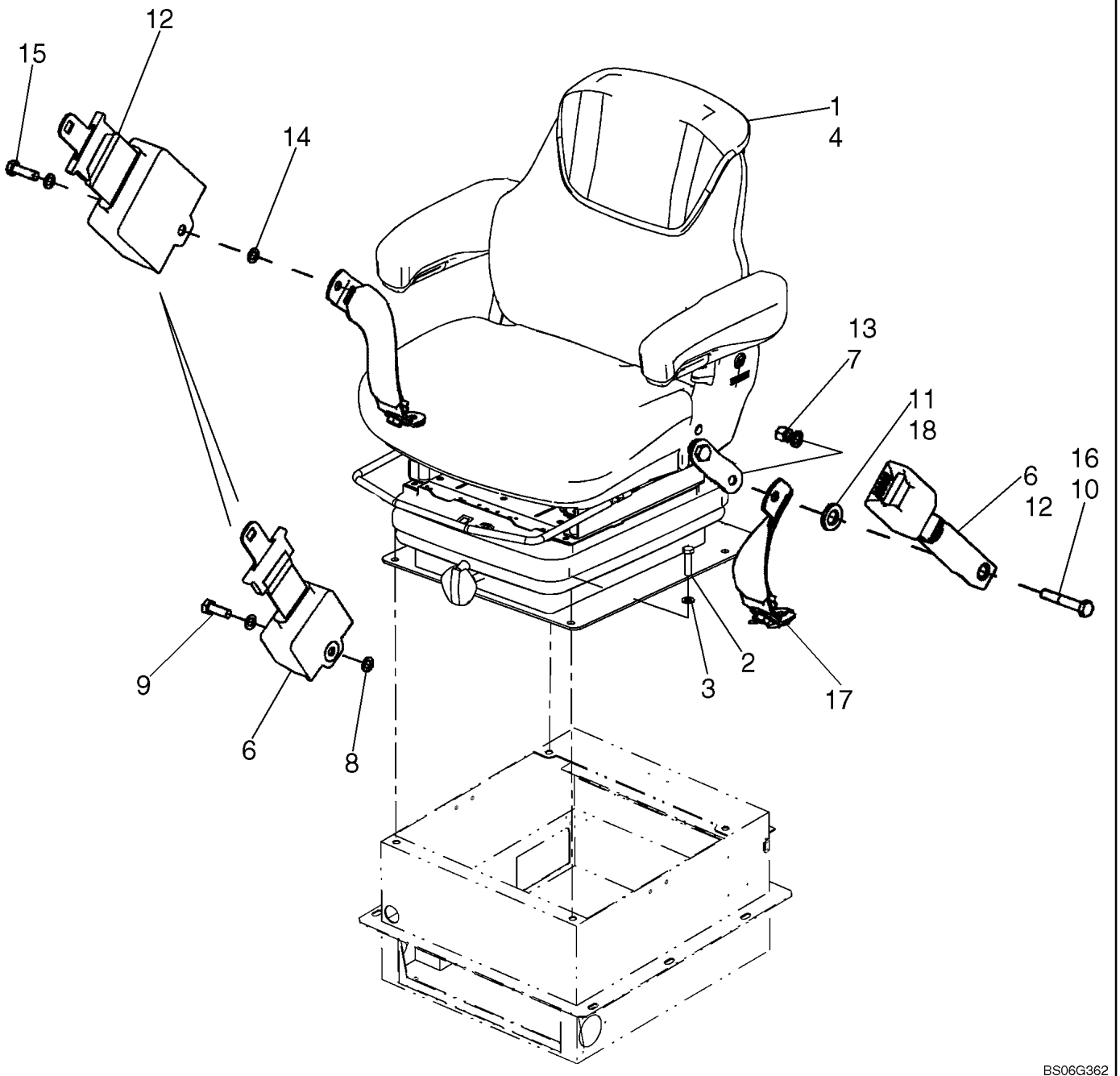

**ASIENTO - SOPORTE/CINTURONES DE SEGURIDAD**

| REF | FN | PART NUMBER | YR/SN | QTY | DENOMINACION |
|---|---|---|---|---|---|
| | | REF | | | MANUAL, MECHANICAL SUSPENSION SEAT |
| 1 | | 87398039 | | 1 | ASIENTO (CONJUNTO), Cloth; Mechanical Suspension; Use Refs. 2, 3 To Mount; See Figures 09-42A, 09-42B |
| 2 | | 627-10040 | | 4 | TORNILLO, Hex, M10 x 40, 10.9, Full Thd |
| 3 | | 895-11010 | | 4 | ARANDELA, M10 x 20 x 2 |
| | | REF | | | MANUAL, AIR SUSPENSION SEAT |
| 4 | | 87398040 | | 1 | ASIENTO (CONJUNTO), Cloth; Air Suspension: Use Refs. 2, 3 To Mount; See Figures 09-42C, 09-42D |
| 5 | | 121412A1 | | 1 | FUSIBLE, 10 amp; Air Suspension Seat Only; Not Illustrated |
| | | REF | | | MANUAL, SEAT BELT - 51 mm (2 Inch) WIDE RETRACTABLE SEAT BELT |
| 6 | | 249116A1 | | 1 | CINTURÓN, SEGURIDAD, 51 mm (2 inch) Wide; If Equipped; Uses Refs. 7 - 10 |
| 7 | | 832-10410 | | 2 | CONTRA TUERCA, M10 x 1.5, Cl 8 |
| 8 | | 895-18010 | | 4 | ARANDELA, M10 x 18 x 1.6 |
| 9 | | 627-10030 | | 1 | TORNILLO, Hex, M10 x 30, 10.9, Full Thd |
| 10 | | 827-10060 | | 1 | TORNILLO, Hex, M10 x 60, 10.9 |
| 11 | | 896-11016 | | 1 | ARANDELA, M17.5 x 30 x 4, HT |
| | | REF | | | MANUAL, SEAT BELT - 76 mm (3 Inch) WIDE RETRACTABLE SEAT BELT |
| 12 | | 249117A1 | | 1 | CINTURON, SECURITAD, 76 mm (3 inch) Wide; If Equipped; Uses Refs. 12 - 16 |
| 13 | | 832-10410 | | 2 | CONTRA TUERCA, M10 x 1.5, Cl 8 |
| 14 | | 895-18010 | | 4 | ARANDELA, M10 x 18 x 1.6 |
| 15 | | 627-10035 | | 1 | TORNILLO, Hex, M10 x 35, 10.9, Full Thd |
| 16 | | 827-10060 | | 1 | TORNILLO, Hex, M10 x 60, 10.9 |
| 17 | | 87545658 | | 1 | EQUIPO, Tether Belt; Hardware Included |
| 18 | | 896-11016 | | 1 | ARANDELA, M17.5 x 30 x 4, HT |

| 09-42A | | p1 | 06/07 |
|---|---|---|---|

**CONJUNTO DEL ASIENTO, SUSPENSION MECANICA**

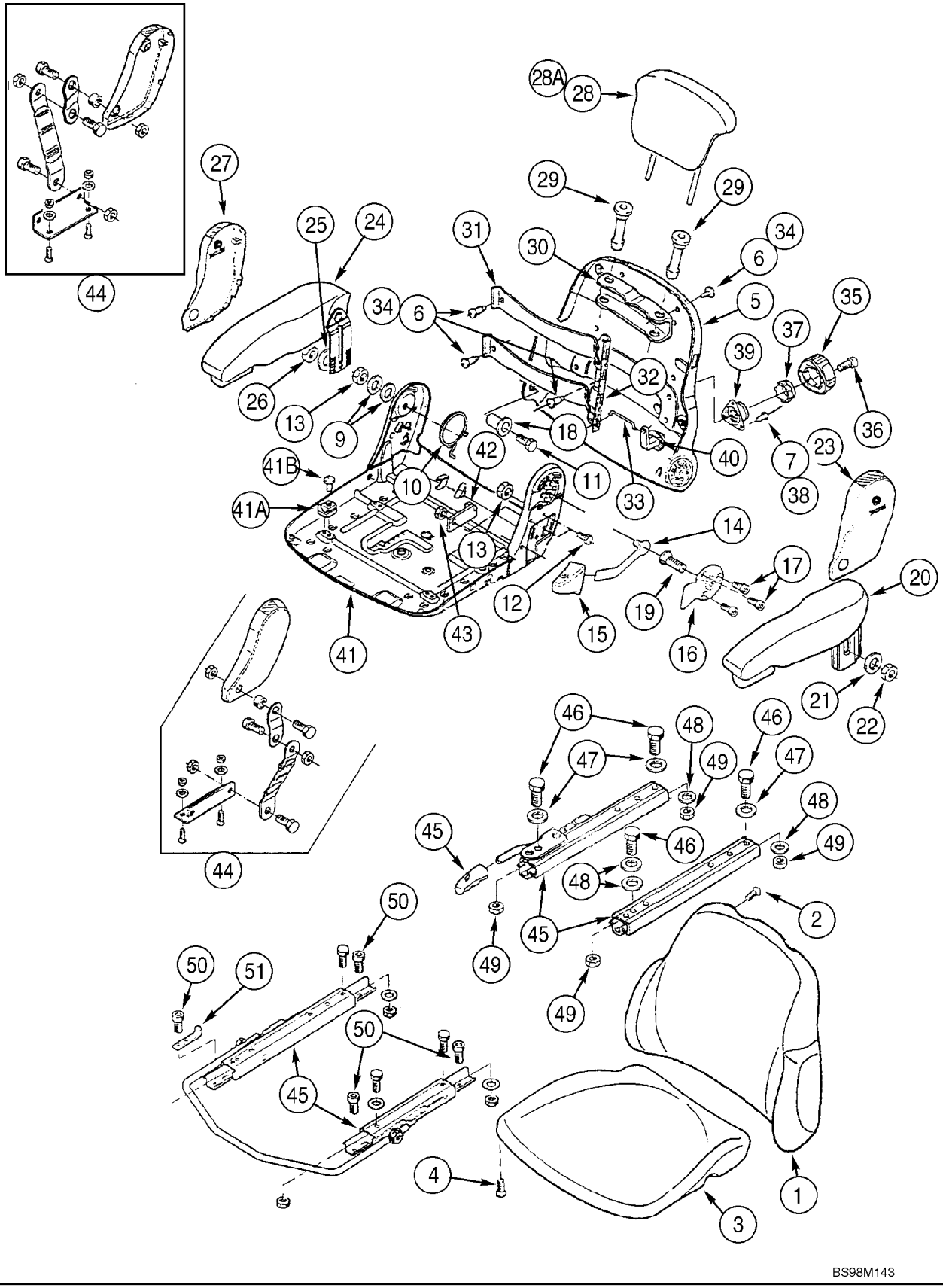

**CONJUNTO DEL ASIENTO, SUSPENSION MECANICA**

| REF | FN | PART NUMBER | YR/SN | QTY | DENOMINACION |
|---|---|---|---|---|---|
| | | REF | | | MANUAL, UPPER SEAT ASSEMBLY, MECHANICAL |
| | | 87398039 | | 1 | ASIENTO (CONJUNTO), Incl. Refs 1 - 51 , Incl. Parts on Figure 09-42B |
| | | {87583725} | | 1 | SEAT, Cloth; Upper Seat Assembly; Incl. 1 - 51 |
| 1 | | {87583733} | | 1 | CUSHION; Backrest |
| 2 | | 82034997 | | 4 | TORNILLO |
| 3 | | {87583734} | | 1 | CUSHION; Seat |
| 4 | | 82034997 | | 4 | TORNILLO |
| | | 71491410 | | 1 | ESTRUCTURA, Backrest, Incl. 5 - 7 |
| 5 | | NSS | | 1 | NO SE REPARA SEPARADAM., Cover |
| 6 | | 85811351 | | 3 | REMACHE |
| 7 | | 47124903 | | 3 | REMACHE |
| | | 71491411 | | 1 | EQUIPO, Hardware; Backrest Adjustment; Incl. 9 - 19 |
| 9 | | 82034881 | | 2 | ARANDELA |
| 10 | | {87567527} | | 1 | SPRING, Leg, RH |
| 11 | | {87583729} | | 1 | BOLT, Hex M8 x 40 |
| 12 | | 82034894 | | 2 | TORNILLO, M8 x 16 |
| 13 | | {87583748} | | 2 | NUT |
| 14 | | 345749A1 | | 1 | PALANCA |
| 15 | | 345752A1 | | 1 | MANECILLA |
| 16 | | 345753A1 | | 1 | PLACA, GRANDE |
| 17 | | 345754A1 | | 3 | TORNILLO, M6 x 10 |
| 18 | | 85811352 | | 1 | TUBO, Bushing |
| 19 | | 345776A1 | | 1 | TORNILLO, M8 x 18 |
| 20 | | {87583757} | | 1 | ARMREST ASSY. Left Hand; Incl. 21, 22 |
| 21 | | 9960692 | | 1 | SEPARADOR |
| 22 | | 85817458 | | 1 | TUERCA |
| 23 | | {87584704} | | 1 | COVER, Left Hand |
| 24 | | {87583762} | | 1 | ARMREST ASSY. Right Hand; Incl. 25, 26 |
| 25 | | 9960692 | | 1 | SEPARADOR |
| 26 | | 85817458 | | 1 | TUERCA |
| 27 | | {87583731} | | 1 | COVER, Right Hand |
| 28 | | {87583747} | | 1 | HEADREST |
| 29 | | 85811350 | | 2 | CASQUILLO |
| 30 | | NSS | | 1 | NO SE REPARA SEPARADAM., Retainer |

**CONJUNTO DEL ASIENTO, SUSPENSION MECANICA**

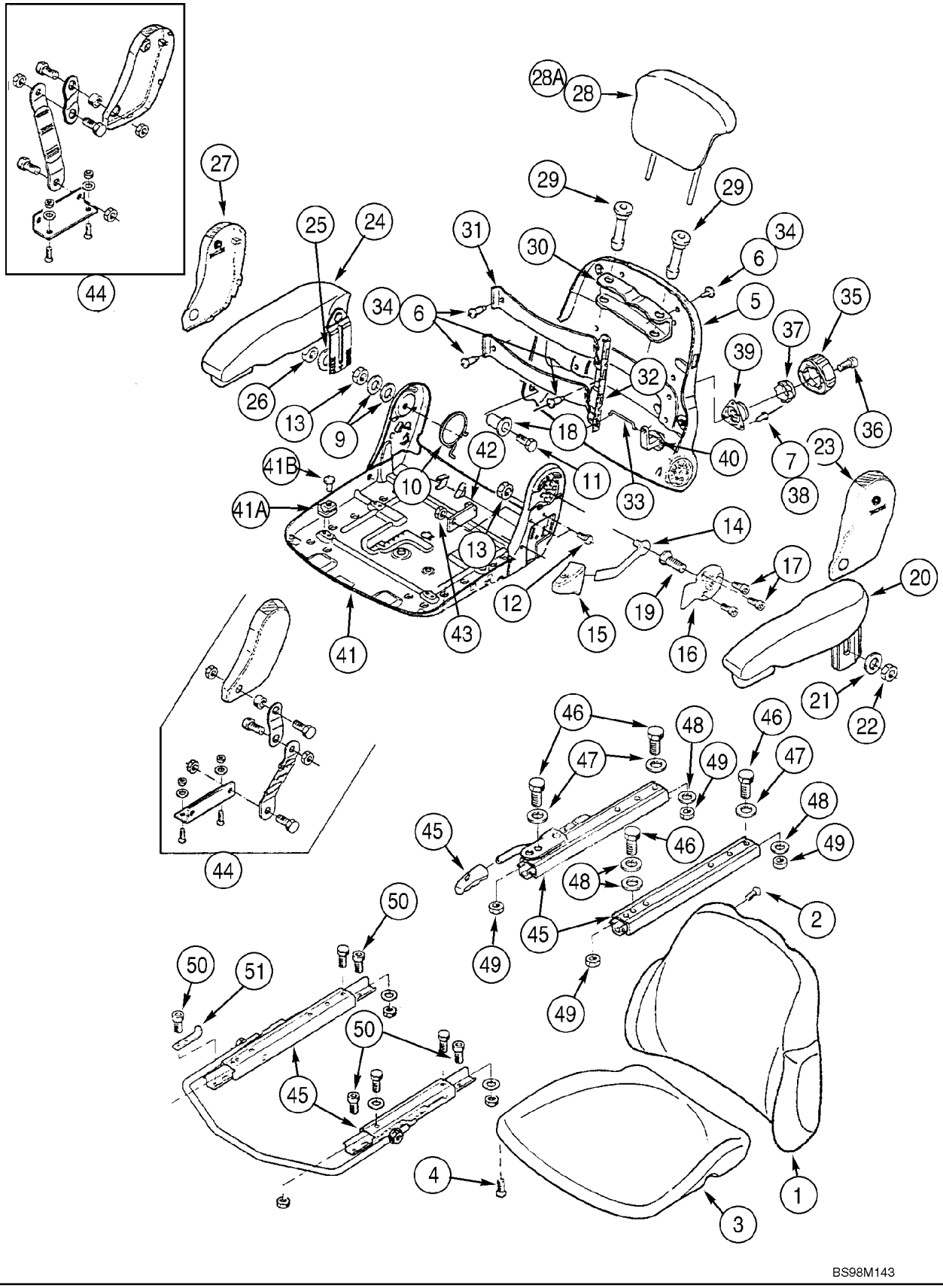

**CONJUNTO DEL ASIENTO, SUSPENSION MECANICA**

| REF | FN | PART NUMBER | YR/SN | QTY | DENOMINACION |
|---|---|---|---|---|---|
| | | 82034963 | | 1 | SOPORTE, Lumbar Support; Incl. 31 - 40 |
| 31 | | 82034969 | | 2 | PLACA, Lumbar |
| 32 | | 82034910 | | 1 | PLACA |
| 33 | | 82034909 | | 1 | VARILLA |
| 34 | | 85811351 | | 3 | REMACHE |
| 35 | | 82034964 | | 1 | MANECILLA, Incl. 36 |
| 36 | | 82034917 | | 1 | TORNILLO, M6 x 10 |
| 37 | | 82034916 | | 1 | TRINQUETE |
| 38 | | 47124903 | | 3 | REMACHE |
| 39 | | 82034911 | | 1 | DISPOSITIVO DE FRENO |
| 40 | | 82034912 | | 1 | EJE DE SATELITES |
| 41 | | {87583736} | | 1 | PAN, Seat, Incl. 41A, 41B |
| 41A | | NSS | | 4 | NO SE REPARA SEPARADAM., Guide |
| 41B | | NSS | | 4 | NO SE REPARA SEPARADAM., Rivet |
| 42 | | {87583739} | | 1 | STOP |
| 43 | | 85817458 | | 1 | TUERCA |
| 44 | | NSS | | 1 | NO SE REPARA SEPARADAM., Tether Belt |
| 45 | | 345783A1 | | 1 | CARRIL (CONJUNTO), Seat Slide Rails; See Figure 09-31 |
| 46 | | 16043231 | | 4 | TORNILLO, Hex, M8 x 16, 10.9 |
| 47 | | 9960692 | | 3 | SEPARADOR |
| 48 | | 82034881 | | 4 | ARANDELA |
| 49 | | {87583748} | | 4 | NUT, Hex M8; If Used |
| 49 | | 85817458 | | 4 | TUERCA, M8, If Used |
| 50 | | 82034894 | | 4 | TORNILLO, M8 x 16, If Used |
| 50 | | {87583741} | | 4 | SCREW; If Used |
| 51 | | {87583737} | | 1 | STOP, Slide Rail |

| 09-42B | | p1 | 08/07 |
|---|---|---|---|

**CONJUNTO DEL ASIENTO, SUSPENSION MECANICA**

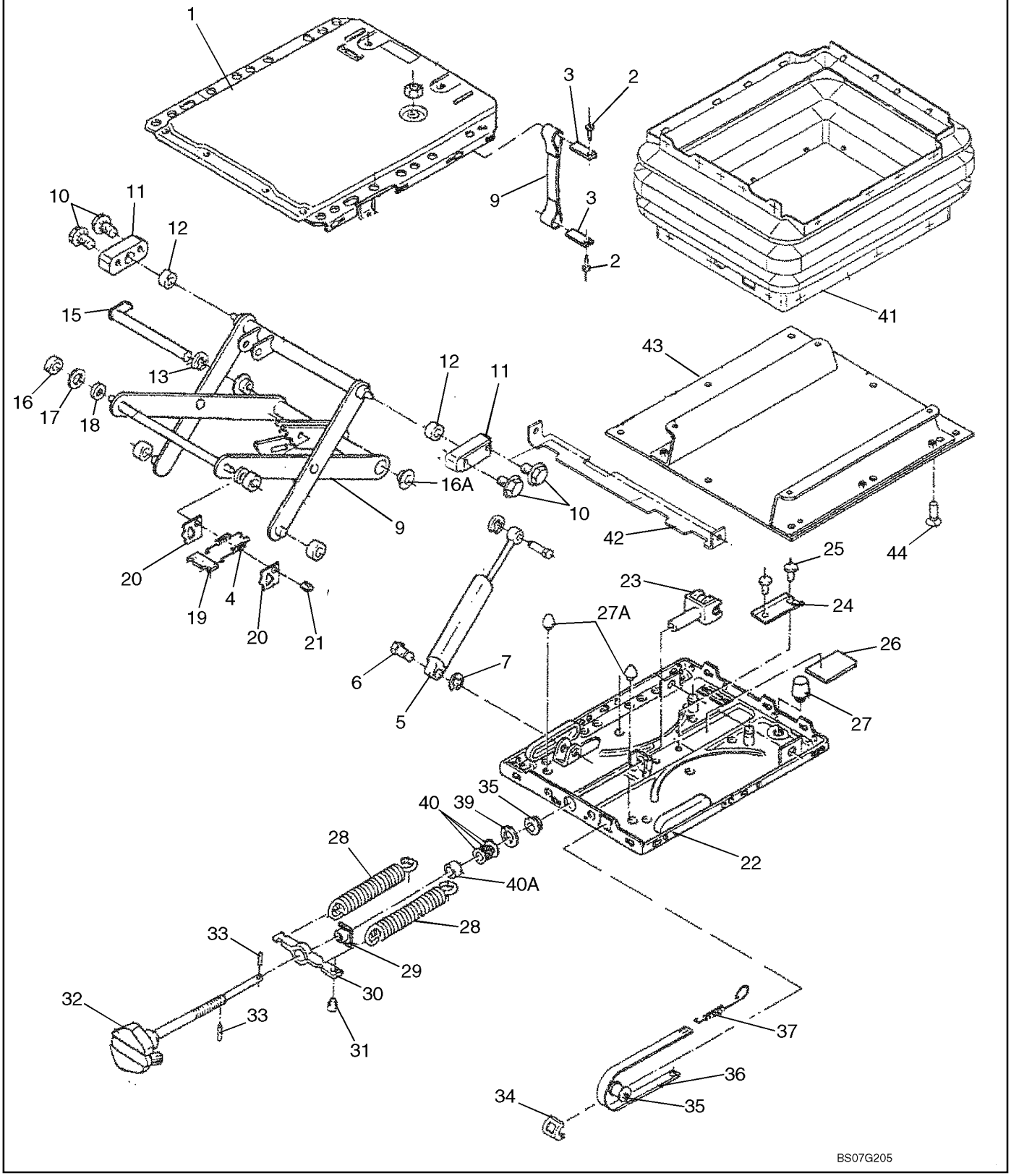

**CONJUNTO DEL ASIENTO, SUSPENSION MECANICA**

| REF | FN | PART NUMBER | YR/SN | QTY | DENOMINACION |
|---|---|---|---|---|---|
| 1 | | 82035125 | | 1 | SUSPENSION, Plate, Upper |
| | | {87583847} | | 1 | WEBBING, Incl. Refs. 2, 3, 8 |
| 2 | | 85817448 | | 2 | REMACHE |
| 3 | | 85817449 | | 2 | PLACA |
| 4 | | 85817430 | | 2 | RESORTE |
| | | 9966146 | | 1 | AMORTIGUADOR, Incl. Refs. 5 - 7 |
| 5 | | NSS | | 1 | NO SE REPARA SEPARADAM., Shock Absorber |
| 6 | | 82035040 | | 1 | TORNILLO |
| 7 | | 82035128 | | 2 | ARANDELA |
| 8 | | NSS | | 1 | NO SE REPARA SEPARADAM., BELT |
| | | {87583846} | | 1 | ARM, Swing Assy, Incl. Refs. 9 - 21 |
| 9 | | NSS | | 2 | NO SE REPARA SEPARADAM., ARM |
| 10 | | 85817444 | | 2 | TORNILLO |
| 11 | | 82035094 | | 2 | COJINETE, Roller |
| 12 | | 85817445 | | 2 | CASQUILLO |
| 13 | | 82035127 | | 1 | ARANDELA |
| 14 | | NSS | | 2 | NO SE REPARA SEPARADAM., Bushing |
| 15 | | 85817429 | | 1 | TORNILLO |
| 16 | | 82035031 | | 4 | RODILLO |
| 16A | | 9960755 | | 2 | CASQUILLO |
| 17 | | {87583854} | | 2 | WASHER |
| 18 | | 85817442 | | 2 | CASQUILLO |
| 19 | | 82035030 | | 1 | PLACA |
| 20 | | 82035069 | | 2 | PLACA, Release |
| 21 | | 82035036 | | 1 | TORNILLO |
| | | {87583841} | | 1 | HOUSING, Lower, Incl. Refs 22 - 27 |
| 22 | | NSS | | 1 | NO SE REPARA SEPARADAM., HOUSING |
| 23 | | 82035043 | | 1 | HORQUETA |
| | | 82035054 | | 1 | PERFIL, , Support, Incl. Refs. 24,25 |
| 24 | | NSS | | 1 | NO SE REPARA SEPARADAM., , Plate |
| 25 | | 82035037 | | 2 | REMACHE |
| 26 | | 82035032 | | 1 | PLACA |
| 27 | | 85817441 | | 1 | PARAGOLPES DE GOMA |
| 27A | | 85817440 | | 2 | PARAGOLPES DE GOMA |
| 28 | | 85817434 | | 2 | RESORTE |

| 09-42B | | p2 | 08/07 |
|---|---|---|---|

**CONJUNTO DEL ASIENTO, SUSPENSION MECANICA**

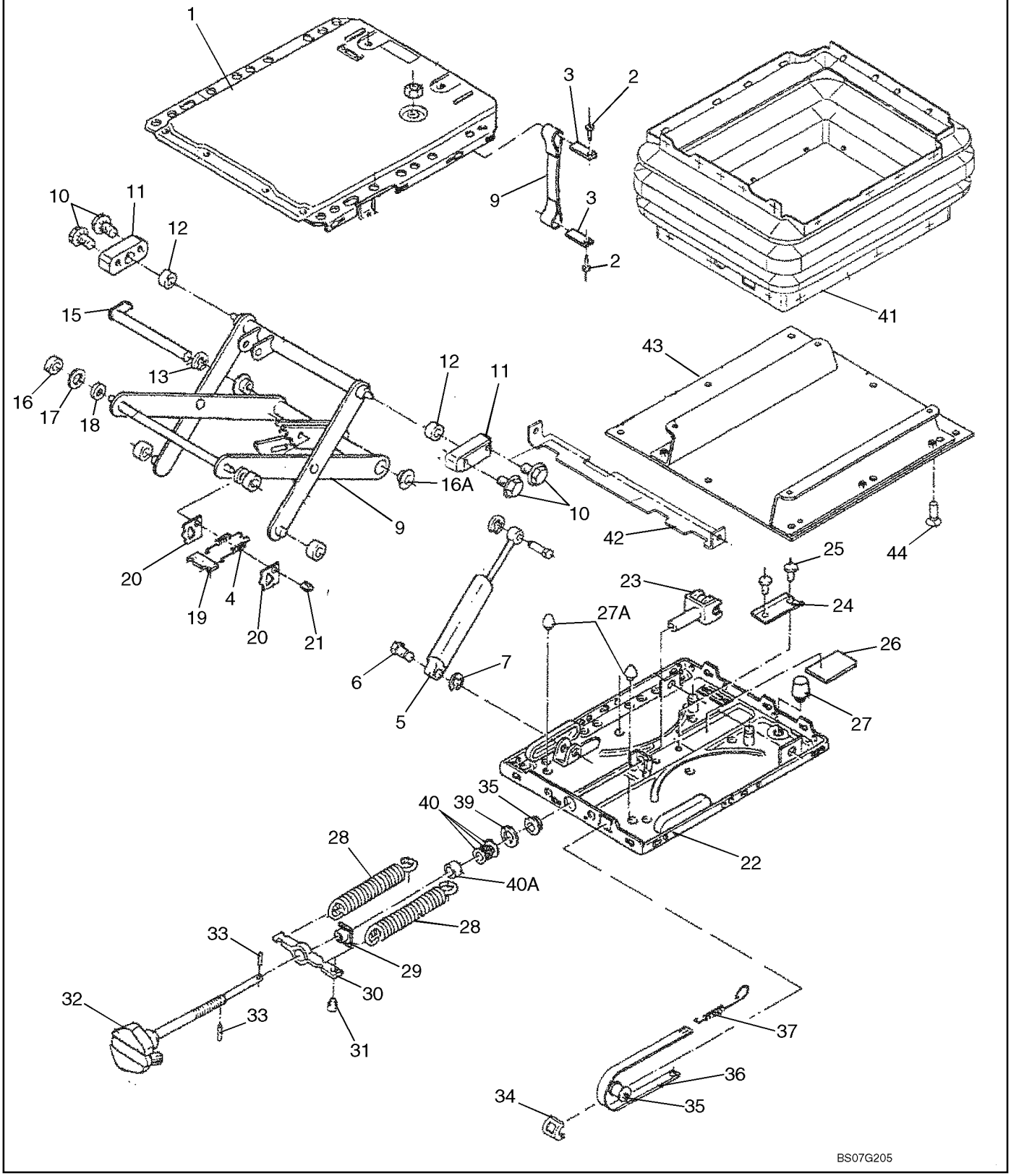

**CONJUNTO DEL ASIENTO, SUSPENSION MECANICA**

| REF | FN | PART NUMBER | YR/SN | QTY | DENOMINACION |
|---|---|---|---|---|---|
| 29 | | 82035034 | | 1 | TUERCA |
| 30 | | 82035027 | | 1 | PIEZA DE SOPORTE |
| 31 | | 82035033 | | 1 | RETENEDOR, Plug |
| | | 85817451 | | 1 | TORNILLO DE REGLAGE, Kit, Incl. Refs 22, 23 |
| 32 | | NSS | | 1 | NO SE REPARA SEPARADAM., Adjustment Screw Assy |
| 33 | | 85817433 | | 1 | PITON, Pin |
| | | 87331925 | | 1 | REGULADOR, Weight Adjustment Kit, Incl. Refs. 31, 34 - 37 |
| 34 | | 82035025 | | 1 | GUIA |
| 35 | | 82035029 | | 1 | RODILLO |
| 36 | | NSS | | 1 | NO SE REPARA SEPARADAM., Weight Adjustment |
| 37 | | 82035039 | | 1 | RESORTE |
| 38 | | 85817435 | | 1 | CASQUILLO |
| 39 | | 82035028 | | 1 | ARANDELA |
| 40 | | 82035035 | | 1 | JUEGO ARANDELAS |
| 40A | | {87583839} | | 1 | SPACER |
| 41 | | 85817428 | | 1 | FUELLE, Suspension |
| 42 | | {87583849} | | 2 | BRACE |
| 43 | | {87583859} | | 1 | CONSOLE |
| 44 | | {87583860} | | 4 | SCREW |

| 09-42C | | p1 | 06/07 |
|---|---|---|---|

**CONJUNTO DEL ASIENTO, SUSPENSION DE AIRE**

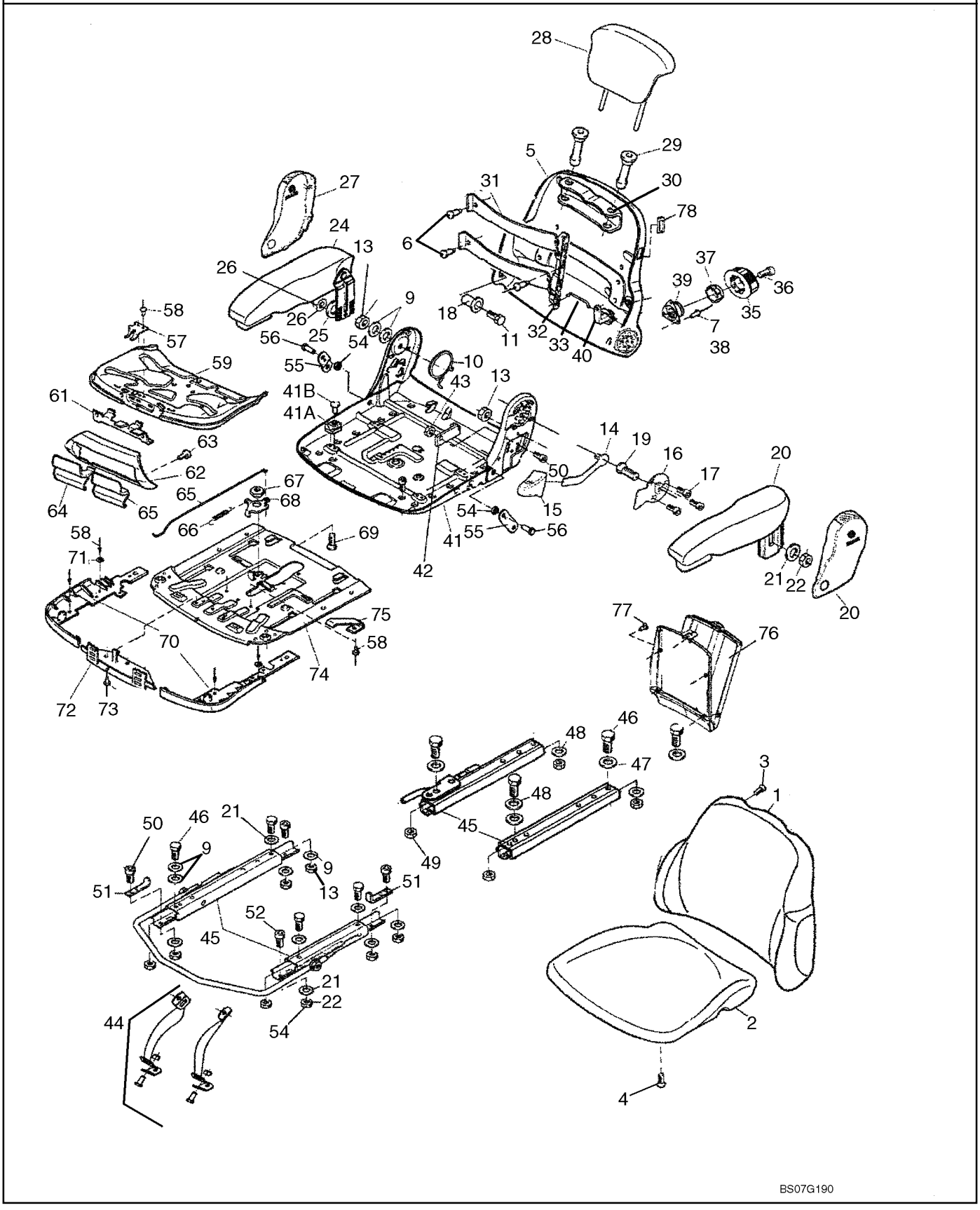

**CONJUNTO DEL ASIENTO, SUSPENSION DE AIRE**

| REF | FN | PART NUMBER | YR/SN | QTY | DENOMINACION |
|---|---|---|---|---|---|
| | | REF | | | MANUAL, UPPER SEAT ASSEMBLY, MECHANICAL |
| | | 87398040 | | 1 | ASIENTO (CONJUNTO), Incl. Refs 1 - 78 , Incl. Parts on Figure 09-42D |
| | | {87584101} | | 1 | SEAT, Cloth; Upper Seat Assembly; Incl. 1 - 78 |
| 1 | | {87583733} | | 1 | CUSHION; Backrest; Incl. Ref. 3 |
| 2 | | {87584097} | | 1 | CUSHION; Seat; Incl. Ref. 4 |
| 3 | | 82034997 | | 4 | TORNILLO |
| 4 | | 82034997 | | 4 | TORNILLO |
| | | 71491410 | | 1 | ESTRUCTURA, Backrest, Incl. 5 - 7 |
| 5 | | NSS | | 1 | NO SE REPARA SEPARADAM., Cover |
| 6 | | 85811351 | | 3 | REMACHE |
| 7 | | 47124903 | | 3 | REMACHE |
| | | 71491411 | | 1 | EQUIPO, Hardware; Backrest Adjustment; Incl. 9 - 19 |
| 9 | | 82034881 | | 2 | ARANDELA |
| 10 | | {87567527} | | 1 | SPRING, Leg, RH |
| 11 | | {87583729} | | 1 | BOLT, Hex M8 x 40 |
| 12 | | 82034894 | | 2 | TORNILLO, M8 x 16 |
| 13 | | {87583748} | | 2 | NUT |
| 14 | | 345749A1 | | 1 | PALANCA |
| 15 | | 345752A1 | | 1 | MANECILLA |
| 16 | | 345753A1 | | 1 | PLACA, GRANDE |
| 17 | | 345754A1 | | 3 | TORNILLO, M6 x 10 |
| 18 | | 85811352 | | 1 | TUBO, Bushing |
| 19 | | 345776A1 | | 1 | TORNILLO, M8 x 18 |
| 20 | | {87583757} | | 1 | ARMREST ASSY. Left Hand; Incl. 21, 22 |
| 21 | | 9960692 | | 6 | SEPARADOR |
| 22 | | 85817458 | | 6 | TUERCA |
| 23 | | {87584704} | | 1 | COVER, Left Hand |
| 24 | | {87583762} | | 1 | ARMREST ASSY. Right Hand; Incl. 25, 26 |
| 25 | | 9960692 | | 1 | SEPARADOR |
| 26 | | 85817458 | | 1 | TUERCA |
| 27 | | {87583731} | | 1 | COVER, Right Hand |
| 28 | | {87583747} | | 1 | HEADREST; Incl. 29 |
| 29 | | 85811350 | | 2 | CASQUILLO |
| 30 | | NSS | | 1 | NO SE REPARA SEPARADAM., Retainer |

| 09-42C | | p2 | 06/07 |
|---|---|---|---|

**CONJUNTO DEL ASIENTO, SUSPENSION DE AIRE**

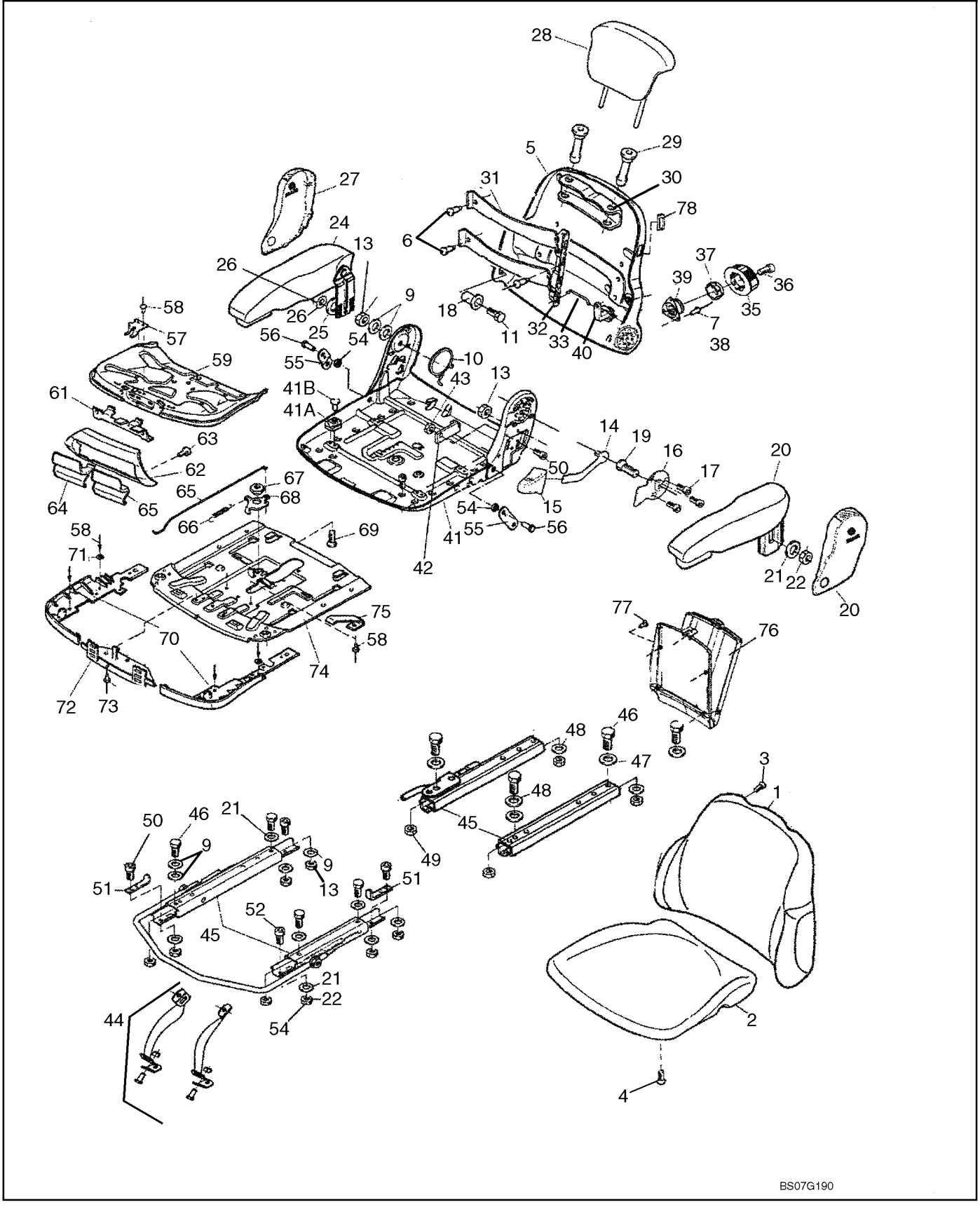

**CONJUNTO DEL ASIENTO, SUSPENSION DE AIRE**

| REF | FN | PART NUMBER | YR/SN | QTY | DENOMINACION |
|---|---|---|---|---|---|
| | | 82034963 | | 1 | SOPORTE, Lumbar Support; Incl. 31 - 40 |
| 31 | | 82034969 | | 2 | PLACA, Lumbar |
| 32 | | 82034910 | | 1 | PLACA |
| 33 | | 82034909 | | 1 | VARILLA |
| 34 | | 85811351 | | 3 | REMACHE |
| 35 | | 82034964 | | 1 | MANECILLA, Incl. 36 |
| 36 | | 82034917 | | 1 | TORNILLO, M6 x 10 |
| 37 | | 82034916 | | 1 | TRINQUETE |
| 38 | | 47124903 | | 3 | REMACHE |
| 39 | | 82034911 | | 1 | DISPOSITIVO DE FRENO |
| 40 | | 82034912 | | 1 | EJE DE SATELITES |
| 41 | | {87584099} | | 1 | PAN, Seat, Incl. 41A, 41B |
| 41A | | 82034921 | | 4 | GUIA, Guide |
| 41B | | 82034923 | | 4 | REMACHE, Rivet |
| 42 | | {87583739} | | 1 | STOP |
| 43 | | 85817458 | | 1 | TUERCA |
| 44 | | 87545658 | | 1 | EQUIPO, Tether Belt |
| 45 | | 345783A1 | | 1 | CARRIL (CONJUNTO), Seat Slide Rails |
| 46 | | 16043231 | | 4 | TORNILLO, Hex, M8 x 16, 10.9 |
| 47 | | 9960692 | | 3 | SEPARADOR |
| 48 | | 82034881 | | 4 | ARANDELA |
| 49 | | {87583748} | | 4 | NUT, Hex M8; If Used |
| 49 | | 85817458 | | 4 | TUERCA, M8, If Used |
| 50 | | 82034894 | | 4 | TORNILLO, M8 x 16, If Used |
| 50 | | 82034893 | | 4 | TORNILLO, If Used |
| 51 | | {87583737} | | 2 | STOP, Slide Rail |
| 52 | | 85817467 | | 3 | TORNILLO |
| 53 | | {87583752} | | 4 | SCREW, If Used |
| 54 | | 82035064 | | 2 | TUBO |
| 55 | | {87583738} | | 2 | BRACKET |
| 56 | | {87583755} | | 2 | BOLT |
| | | 82034949 | | 1 | COJIN, Incl. 57 - 60 |
| 57 | | 82034947 | | 1 | LAMINA, Incl. 58 (1) |
| 58 | | 82034897 | | 7 | REMACHE |
| 59 | | NSS | | 1 | NO SE REPARA SEPARADAM., Plate |

| 09-42C | | p3 | 06/07 |
|---|---|---|---|

**CONJUNTO DEL ASIENTO, SUSPENSION DE AIRE**

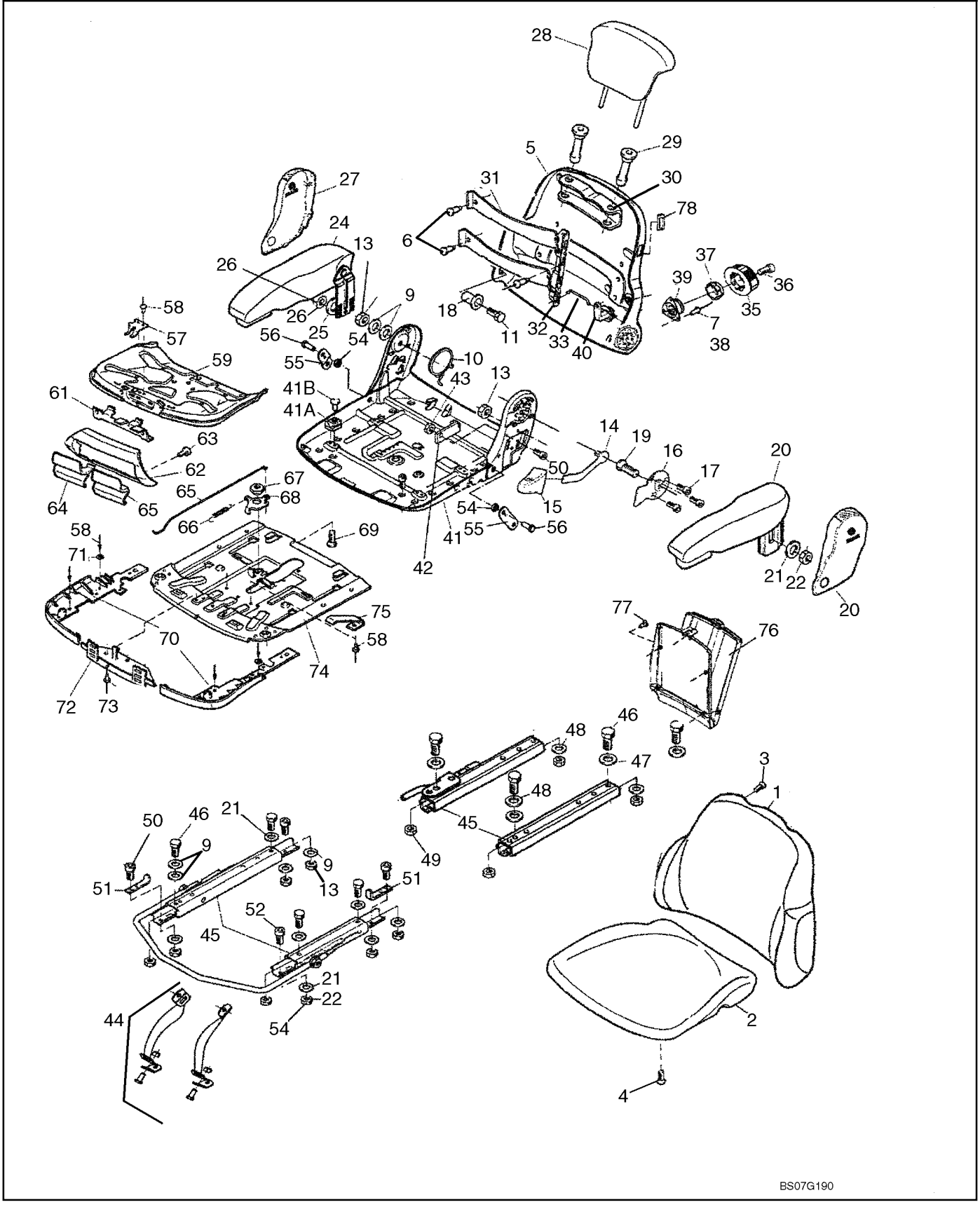

**CONJUNTO DEL ASIENTO, SUSPENSION DE AIRE**

| REF | FN | PART NUMBER | YR/SN | QTY | DENOMINACION |
|---|---|---|---|---|---|
| 60 | | 82034997 | | 4 | TORNILLO, Not Illustrated |
| 61 | | 82034919 | | 1 | PESTILLO, Seat |
| 62 | | 82034961 | | 1 | TAPADERA, Incl. Ref. 63 |
| 63 | | 85819815 | | 2 | TORNILLO |
| 64 | | 82034962 | | 1 | MANECILLA, Incl. 65 |
| 65 | | 82034912 | | 1 | EJE DE SATELITES |
| | | 82034944 | | 1 | PALANCA, Incl. 66 - 69 |
| 66 | | 82034888 | | 2 | RESORTE |
| 67 | | 82034900 | | 1 | CASQUILLO |
| 68 | | NSS | | 1 | NO SE REPARA SEPARADAM., Plate |
| 69 | | 82034901 | | 1 | TORNILLO |
| | | 82034952 | | 1 | TAPADERA, Side Cover Kit, Incl. 58 (4), 71 |
| 70 | | NSS | | 1 | NO SE REPARA SEPARADAM., Cover |
| 71 | | 85817489 | | 4 | ARANDELA |
| | | 82034945 | | 1 | PIEZA DE SOPORTE, Kit, Incl. 72, 73 |
| 72 | | NSS | | 1 | NO SE REPARA SEPARADAM., Bracket |
| 73 | | 85811353 | | 4 | REMACHE |
| | | 82034948 | | | PLACA, Adjustable Seat Kit, Incl. 58 (2), 74, 75; Also Incl. 82034945, Bracket Kit |
| 74 | | NSS | | 1 | NO SE REPARA SEPARADAM. |
| 75 | | 82034920 | | 1 | LAMINA |
| | | 82034977 | | | CAJA, Kit, Incl. Refs 76, 77 |
| 76 | | NSS | | 1 | NO SE REPARA SEPARADAM., Plastic Case |
| 77 | | {87583748} | | 5 | SCREW, M4 x 8 |
| 78 | | 82034958 | | 1 | TAPADERA, Seat Heat |

| 09-42D | | p1 | 07/07 |
|---|---|---|---|

**CONJUNTO DEL ASIENTO, SUSPENSION DE AIRE**

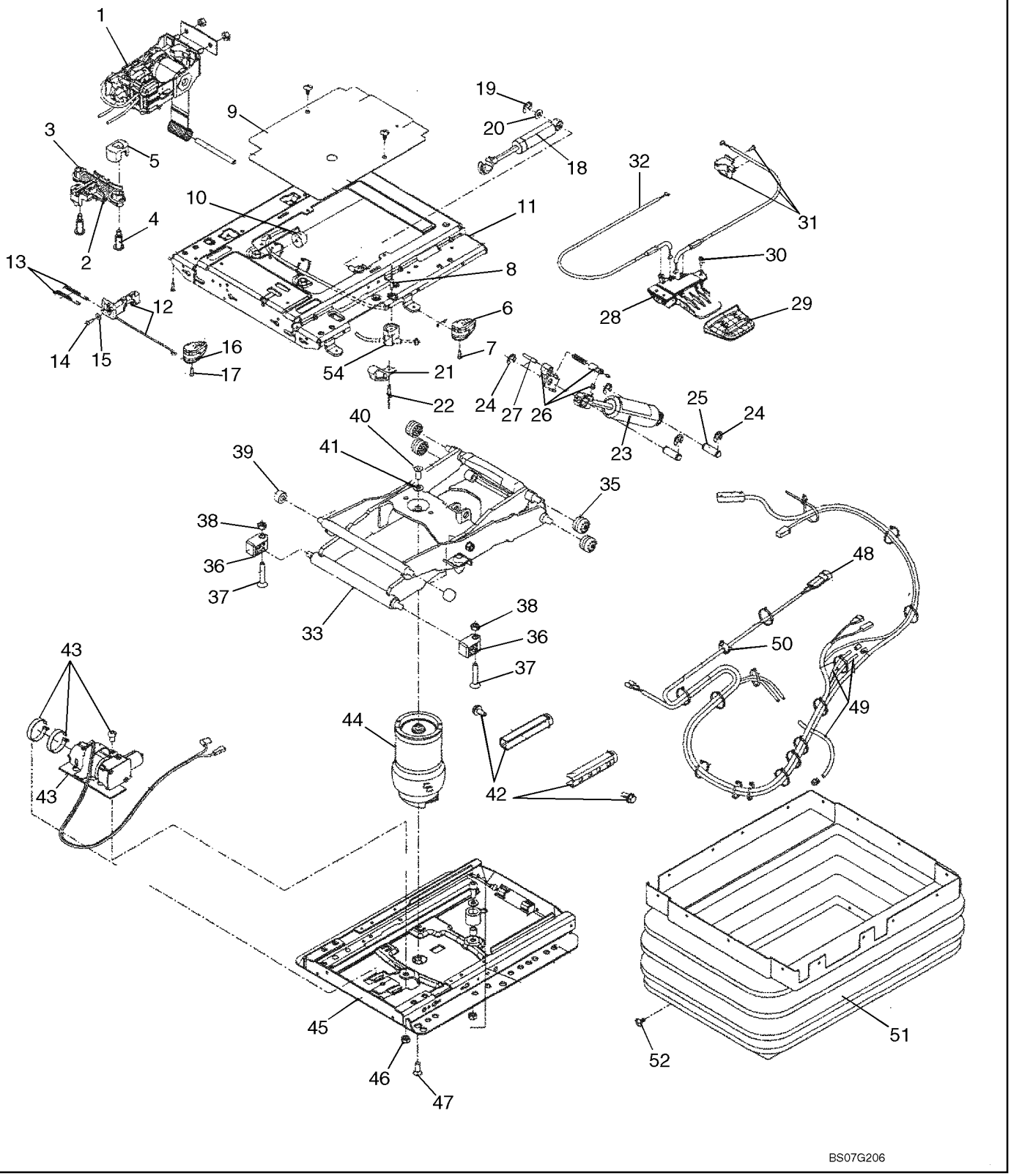

**CONJUNTO DEL ASIENTO, SUSPENSION DE AIRE**

| REF | FN | PART NUMBER | YR/SN | QTY | DENOMINACION |
|---|---|---|---|---|---|
| | | 87398040 | | 1 | ASIENTO (CONJUNTO), Incl. Refs. 1 - 54 , Incl. Parts on Figure 09-42C |
| | | {87584095} | | 1 | SEAT, CLoth, Lower Seat Assembly; Incl. Refs. 1 - 54 |
| 1 | | 82035095 | | 1 | MANDO, Kit, Incl. Control Mechanism, Mounting Parts |
| | | 82035111 | | 1 | AISLADOR, Kit, Incl. Refs 2 - 5 |
| 2 | | NSS | | 1 | NO SE REPARA SEPARADAM., Isolator |
| 3 | | 82035052 | | 2 | CASQUILLO |
| 4 | | {87585124} | | 2 | BOLT, Shoulder M8 x 33 |
| 5 | | NSS | | 1 | NO SE REPARA SEPARADAM., Guide |
| | | 82035123 | | 1 | MANECILLA, Kit, Incl. Refs. 6 - 8 |
| 6 | | NSS | | 1 | NO SE REPARA SEPARADAM., Handle |
| 7 | | 82035087 | | 2 | TORNILLO |
| 8 | | 82035065 | | 3 | REMACHE, 4 x 16.9 mm |
| 9 | | 85817486 | | 1 | TAPADERA, Kit, Incl. (2) Mounting Screws |
| | | 82035122 | | 1 | SUSPENSION, Kit, Incl. Refs. 10 - 15, Also Incl. (2) Roller Kits, (2) Single Rollers, and (2) 4 x 16.9 Rivets, Which Are Not Illustrated |
| 10 | | 82035081 | | 1 | TAPÓN |
| 11 | | NSS | | 1 | NO SE REPARA SEPARADAM., Suspension |
| | | 71486982 | | 1 | EJE CON PALANCA, Kit, Incl. Refs 12 - 15 |
| 12 | | NSS | | 1 | NO SE REPARA SEPARADAM., Lever and Pin |
| 13 | | {87584172} | | 2 | SPRING, Tension |
| 14 | | NSS | | 1 | NO SE REPARA SEPARADAM., Screw |
| 15 | | NSS | | 1 | NO SE REPARA SEPARADAM., Washer |
| | | 82035073 | | 1 | MANECILLA, Kit, Incl. Refs 16, 17 |
| 16 | | NSS | | 1 | NO SE REPARA SEPARADAM., Handle |
| 17 | | 82035087 | | 1 | TORNILLO |
| | | 82035079 | | 1 | AMORTIGUADOR, Kit, Incl. Refs. 18 - 20 |
| 18 | | NSS | | 1 | NO SE REPARA SEPARADAM., Shock Absorber |
| 19 | | 85817560 | | 1 | ARANDELA, E-Clip |
| 20 | | NSS | | 1 | NO SE REPARA SEPARADAM., Washer |
| | | 82035082 | | 2 | DISPOSITIVO DE TOPE, Kit, Incl. Refs. 21, 22 |
| 21 | | NSS | | 1 | NO SE REPARA SEPARADAM., Stop |
| 22 | | 82035065 | | 2 | REMACHE |
| | | {87585037} | | 1 | KIT, SHOCK ABSORBER, Incl. Refs. 23 - 26 |

| 09-42D | | p2 | 07/07 |
|---|---|---|---|

**CONJUNTO DEL ASIENTO, SUSPENSION DE AIRE**

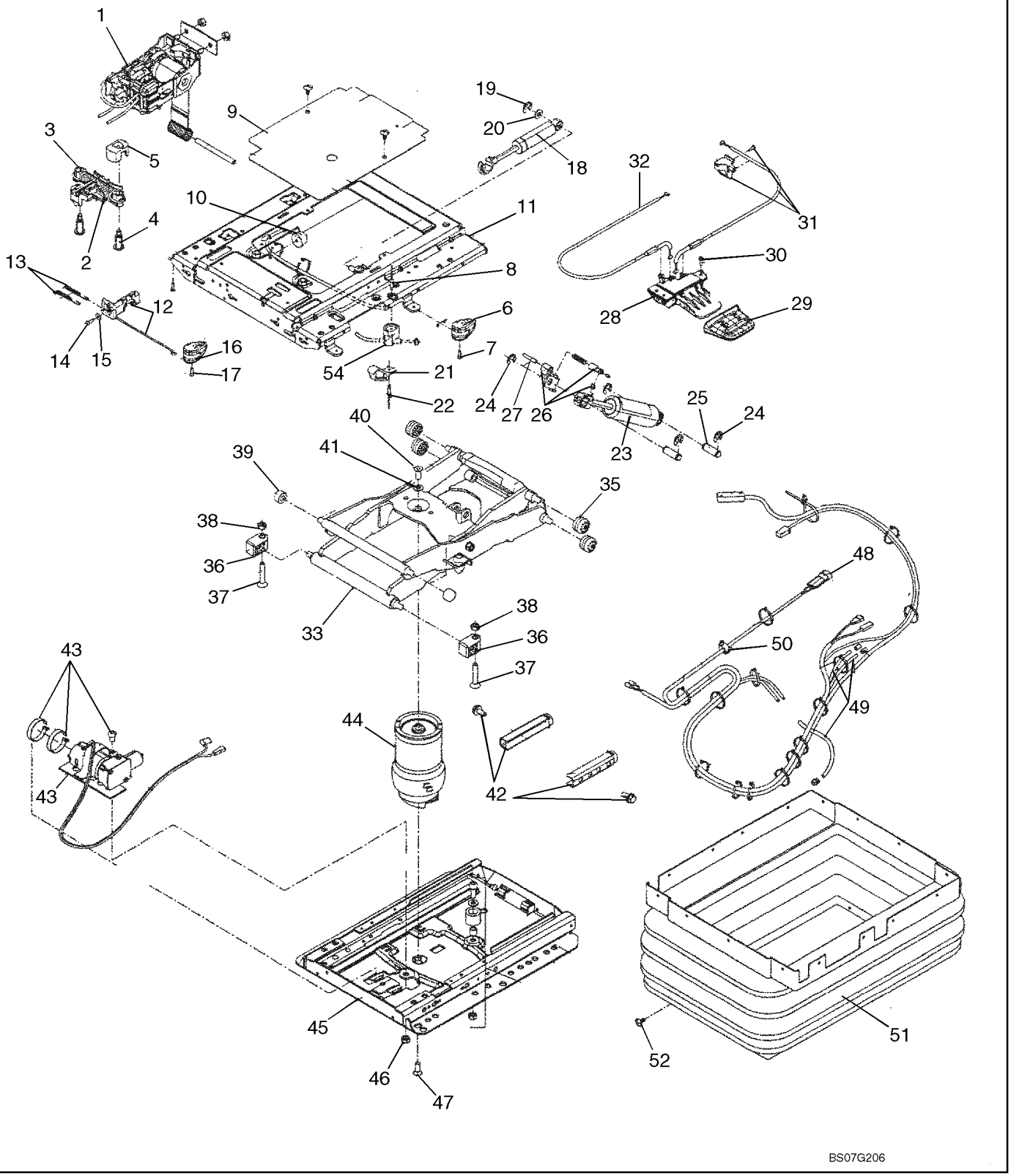

**CONJUNTO DEL ASIENTO, SUSPENSION DE AIRE**

| REF | FN | PART NUMBER | YR/SN | QTY | DENOMINACION |
|---|---|---|---|---|---|
| 23 | | NSS | | 1 | NO SE REPARA SEPARADAM., Shock Absorber |
| 24 | | 85817496 | | 4 | ARANDELA, E-Clip, 10mm |
| 25 | | {87567829} | | 2 | PIN, Clevis |
| 26 | | 82035116 | | 1 | COJINETE, Kit, Cable Connect |
| 27 | | {87584102} | | 1 | CABLE, Bowden |
| | | 82035086 | | 1 | PALANCA, Kit, Incl. Refs. 28 - 30 |
| 28 | | NSS | | 1 | NO SE REPARA SEPARADAM., Lever |
| 29 | | 85817492 | | 1 | MANECILLA |
| 30 | | 85819815 | | 3 | TORNILLO |
| 31 | | 82035106 | | 1 | CABLE, Kit |
| 32 | | 82035075 | | 1 | CABLE, Kit |
| | | 87396449 | | 1 | SUSPENSION, Kit, Incl. Refs. 33 - 41 |
| 33 | | NSS | | 1 | NO SE REPARA SEPARADAM., Suspension |
| 34 | | 82035126 | | 2 | PARACHOQUES |
| 35 | | 82035057 | | 4 | RODILLO |
| 36 | | 87567830 | | 2 | ACCESORIOS ASIENTO, BEARING, Thrust |
| 37 | | NSS | | 2 | NO SE REPARA SEPARADAM., Bolt |
| 38 | | NSS | | 2 | NO SE REPARA SEPARADAM., Nut |
| 39 | | 82035130 | | 2 | RODILLO |
| 40 | | NSS | | 2 | NO SE REPARA SEPARADAM., Screw |
| 41 | | NSS | | 2 | NO SE REPARA SEPARADAM., Washer |
| 42 | | 47335175 | | 1 | DISPOSITIVO DE TOPE, KIT, Stop, Incl. Mounting Hardware |
| 43 | | 345125A1 | | 1 | JEUGO, Compressor |
| 44 | | 87396450 | | 1 | RESORTE, Kit |
| | | 398148A1 | | 1 | APOYO, Kit, Incl. Refs. 35, 36, 42, 45 - 47 |
| 45 | | NSS | | 1 | NO SE REPARA SEPARADAM., Lower Suspension |
| 46 | | NSS | | 2 | NO SE REPARA SEPARADAM., Nut |
| 47 | | NSS | | 1 | NO SE REPARA SEPARADAM., Screw |
| 48 | | {87584100} | | 1 | CABLE, Connecting |
| 49 | | 82035077 | | 1 | AMPARO DE TUBOS |
| 50 | | {87584103} | | 1 | CLAMP, Cable |
| | | 82035078 | | 1 | FUELLE, Kit, Incl. Refs. 51, 52 |
| 51 | | NSS | | 1 | NO SE REPARA SEPARADAM., Bellows |
| 52 | | NSS | | 22 | NO SE REPARA SEPARADAM., Screw |

**CONJUNTO DEL ASIENTO, SUSPENSION DE AIRE**

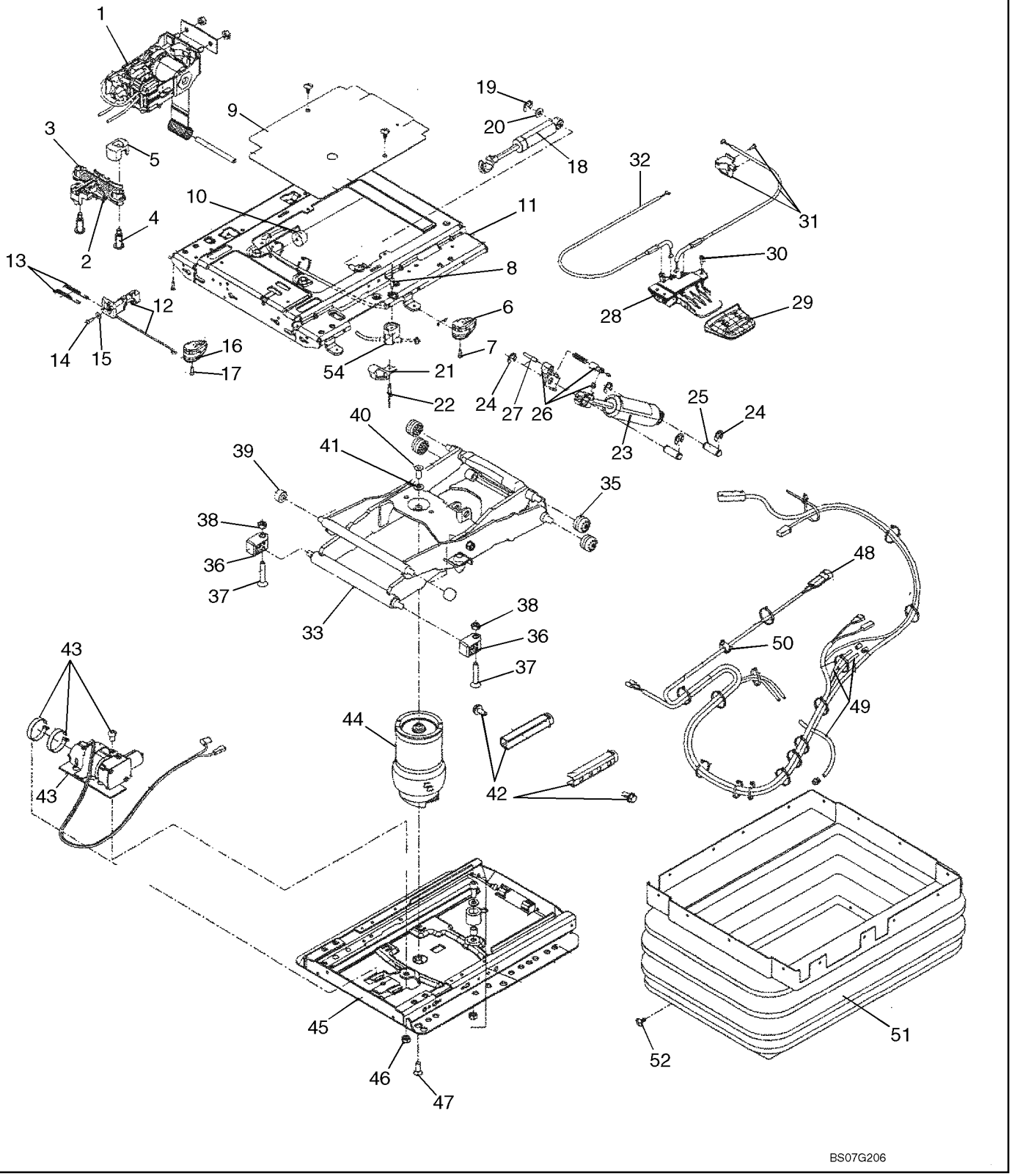

**CONJUNTO DEL ASIENTO, SUSPENSION DE AIRE**

| REF | FN | PART NUMBER | YR/SN | QTY | DENOMINACION |
|---|---|---|---|---|---|
| 53 | | {87583859} | | 1 | CONSOLE, Not Illustrated |
| 54 | | 82035071 | | 1 | GUIA, Cable Holder |
| | | 82848105 | | 1 | EQUIPO, Wear Parts, Incl. Refs. 3, 8, 10, 34, 35, 36, 39, 42, 46, 47, 52 |

| 09-43 | | p1 | 07/07 |
|---|---|---|---|

**CABINA - DUCTOS DEL CALENTADOR Y AIRE ACONDICIONADO**

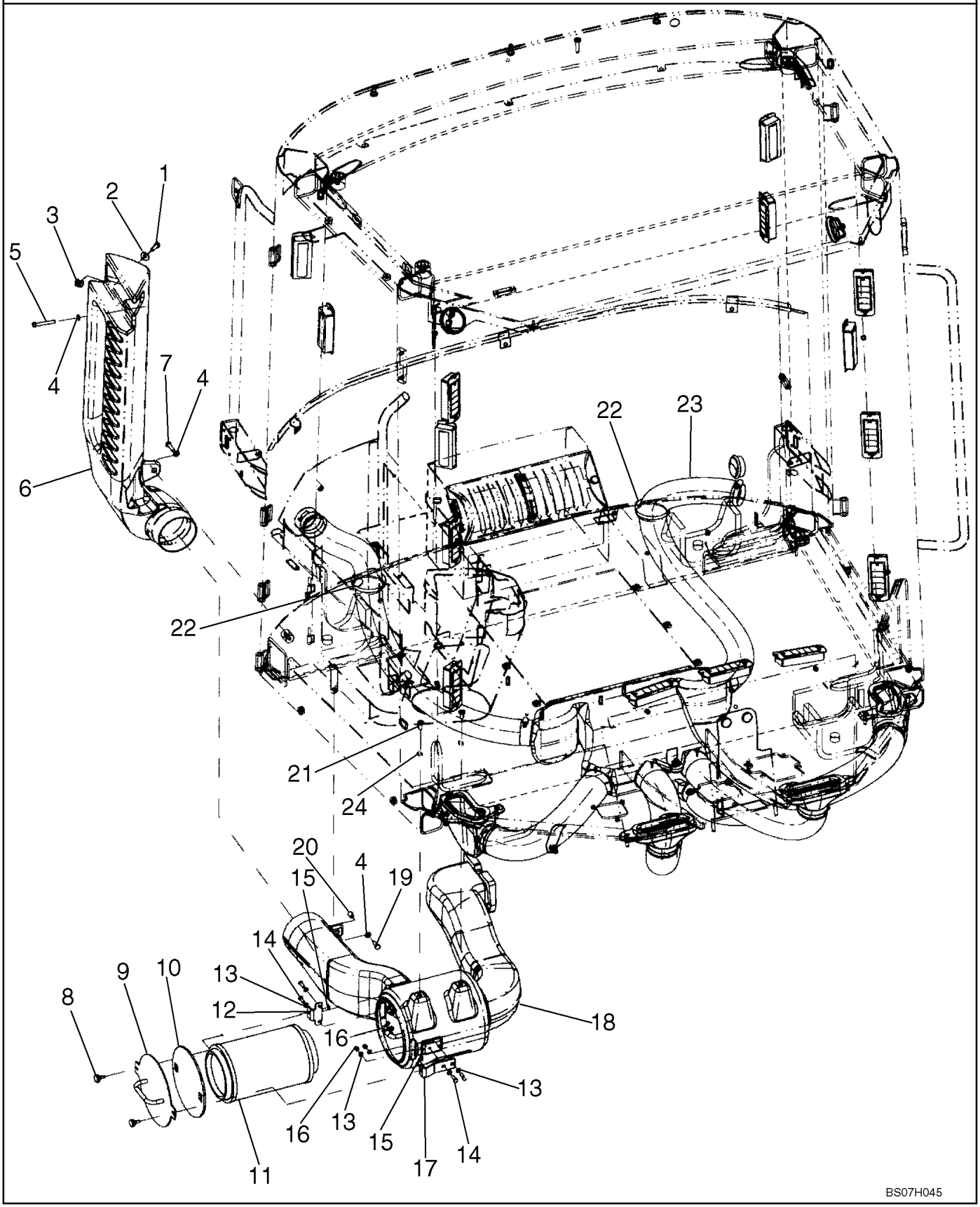

**CABINA - DUCTOS DEL CALENTADOR Y AIRE ACONDICIONADO**

| REF | FN | PART NUMBER | YR/SN | QTY | DENOMINACION |
|---|---|---|---|---|---|
| 1 | | 16043624 | | 1 | TORNILLO, Hex, M8 x 25, 8.8, Full Thd |
| 2 | | {87664051} | | 1 | WASHER, M9 x 24 x 2 |
| 3 | | 76303594 | | 1 | TUERCA, Square |
| 4 | | 895-11008 | | 3 | ARANDELA, M8 x 16 x 1.6 |
| 4 | | {87664049} | | 3 | WASHER, M9 x 16 x 1.6 |
| 5 | | 16044324 | | 1 | TORNILLO, Hex, M8 x 55, 8.8 |
| 6 | | 76303027 | | 1 | EMBUDO |
| 7 | | 16043824 | | 1 | TORNILLO, Hex, M8 x 30, 8.8, Full Thd |
| 8 | | 422721300 | | 2 | TORNILLO |
| 9 | | {76303615} | | 1 | COVER |
| 10 | | {76303546} | | 1 | SEAL |
| 11 | | 76303305 | | 1 | FILTRO DE AIRE |
| 12 | | {76303541} | | 1 | BRACKET |
| 13 | | 895-11006 | | 8 | ARANDELA, M6 |
| 14 | | 614-6020 | | 4 | TORNILLO, Hex, M6 x 20, 8.8, If Used |
| 15 | | 87610851 | | 2 | TUERCA, Selflocking |
| 16 | | 832-10406 | | 4 | CONTRA TUERCA, M6 x 1, Cl 8 |
| 17 | | {76303617} | | 1 | BRACKET |
| 18 | | {76303614} | | 1 | AIR DUCT |
| 19 | | {779-14825} | | 1 | SCREW, ST8 X 25 H/HD C TAP ZND |
| 20 | | {76303609} | | 1 | INSERT, M8; If Used |
| 21 | | 840-1820 | | 2 | TORNILLO, Cross Pan Hd, M8 x 20, If Used |
| 22 | | {76303500} | | 2 | GASKET |
| 23 | | {76303504} | | 1 | TUBE |
| 24 | | 10519604 | | 2 | ARANDELA, M8 x 17 x 2, If Used |

**CABINA - DUCTOS DEL CALENTADOR Y AIRE ACONDICIONADO**

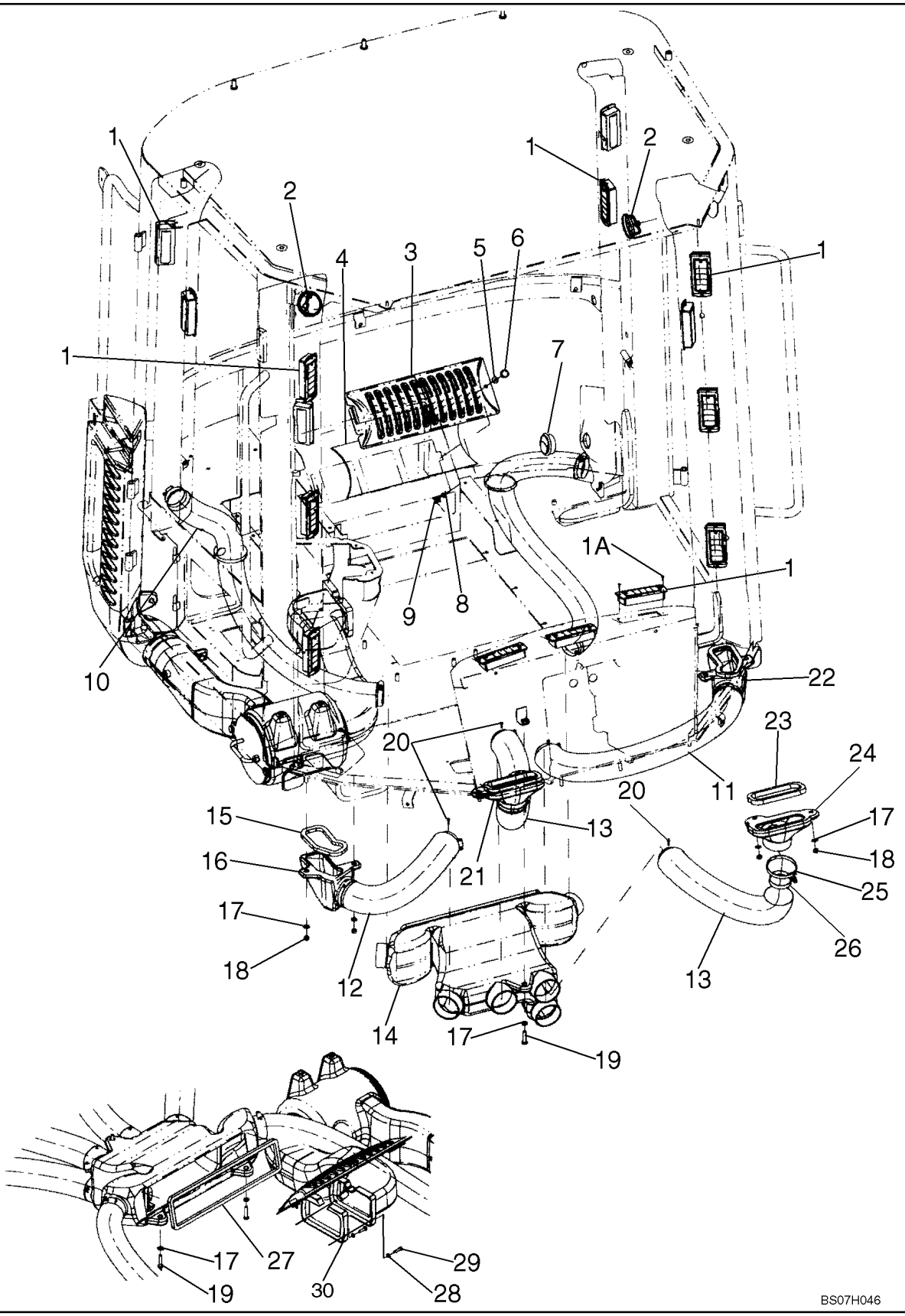

**CABINA - DUCTOS DEL CALENTADOR Y AIRE ACONDICIONADO**

| REF | FN | PART NUMBER | YR/SN | QTY | DENOMINACION |
|---|---|---|---|---|---|
| 1 | | 76079036 | | 15 | RESPIRADERO |
| 1A | | 760-14113 | | 30 | TORNILLO AUTOROSCANTE, Pan Hd, M3.5 x 13 |
| 2 | | 76048980 | | 2 | BOCA DE DESCARGA |
| 3 | | 76303331 | | 1 | CALANDRIA |
| 4 | | 76303499 | | 1 | FILTRO |
| 5 | | {87610804} | | 1 | WASHER, RUBBER, D6.4 x 17 |
| 6 | | 76303321 | | 1 | PERNO |
| 7 | | 76303265 | | 1 | VALVULA DESAHOGO |
| 8 | | 76303319 | | 1 | ARANDELA |
| 9 | | 76303320 | | 1 | SUJETADOR |
| 10 | | 76303505 | | 1 | MANGA |
| 11 | | 76303501 | | 1 | MANGA |
| 12 | | {76303502} | | 1 | TUBE |
| 13 | | {76303549} | | 2 | TUBE |
| 14 | | 76303023 | | 1 | CONDUCTO |
| 15 | | {76303495} | | 2 | GASKET |
| 16 | | {87619957} | | 1 | DUCT |
| 17 | | 895-11008 | | 14 | ARANDELA, M8 x 16 x 1.6 |
| 18 | | 825-1408 | | 8 | TUERCA, M8, Cl 8, If Used |
| 18 | | 832-10408 | | 8 | CONTRA TUERCA, M8 x 1.25, Cl 8, If Used |
| 19 | | 614-8035 | | 3 | TORNILLO, Hex, M8 x 35, 8.8 |
| 20 | | 71485317 | | 4 | TORNILLO |
| 21 | | {87619956} | | 1 | DUCT |
| 22 | | {87619954} | | 1 | DUCT |
| 23 | | {76303494} | | 2 | GASKET |
| 24 | | {87619955} | | 1 | DUCT |
| 25 | | {87610848} | | 4 | GASKET |
| 26 | | 214-1444 | | 12 | ABRAZADERA MANGUERA, #44, 2.31/3.25 Type F Worm |
| 27 | | 76303496 | | 1 | JUNTA HERMETICA, If Used |
| 28 | | 895-11006 | | 10 | ARANDELA, M6 |
| 29 | | 614-6020 | | 6 | TORNILLO, Hex, M6 x 20, 8.8 |
| 30 | | 76303496 | | 1 | JUNTA HERMETICA, If Used |

**CUBIERTAS - CORREA DE TRANSMISIÓN (MODELOS CON AIRE ACONDICIONADO)**

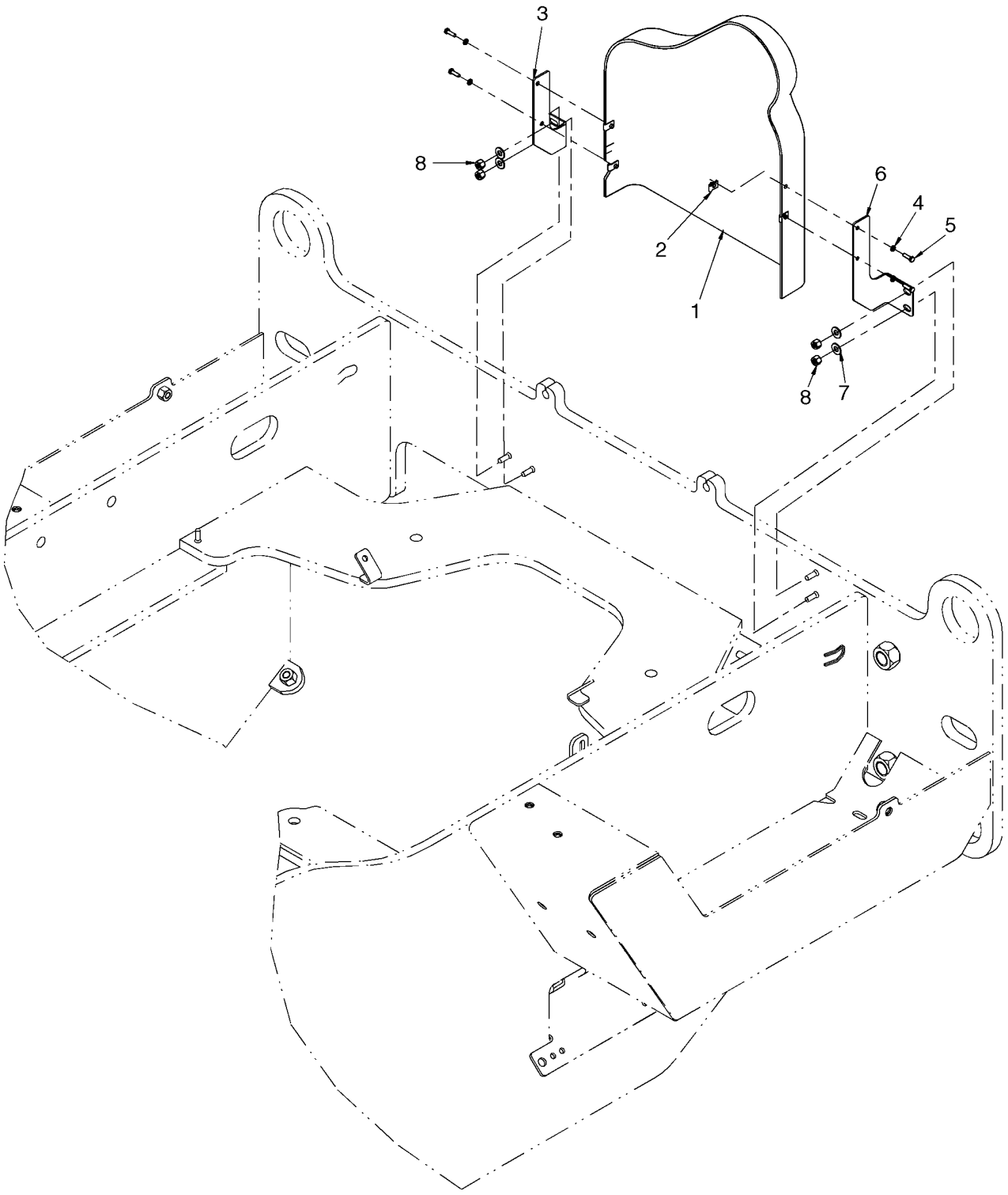

**CUBIERTAS - CORREA DE TRANSMISIÓN (MODELOS CON AIRE ACONDICIONADO)**

| REF | FN | PART NUMBER | YR/SN | QTY | DENOMINACION |
|---|---|---|---|---|---|
| | | REF | | | MANUAL, WITH AIR CONDITIONING |
| 1 | | 8501022 | | 1 | DEFENSA |
| 2 | | 833-40306 | | 4 | TUERCA, M6, U |
| 3 | | 87528970 | | 1 | PIEZA DE SOPORTE, Engine Guard; Right |
| 4 | | 892-11006 | | 4 | ARANDELA DE FRENO, M6 |
| 5 | | 627-6020 | | 4 | TORNILLO, Hex, M6 x 20, 10.9 |
| 6 | | 87528973 | | 1 | PIEZA DE SOPORTE, Engine Guard Mount |
| 7 | | 895-15008 | | 4 | ARANDELA, M8 x 20 x 1.6 |
| 8 | | 832-10410 | | 4 | CONTRA TUERCA, M10 x 1.5, Cl 8 |

**CUBIERTAS - CORREA DE TRANSMISIÓN (MODELOS SIN AIRE ACONDICIONADO)**

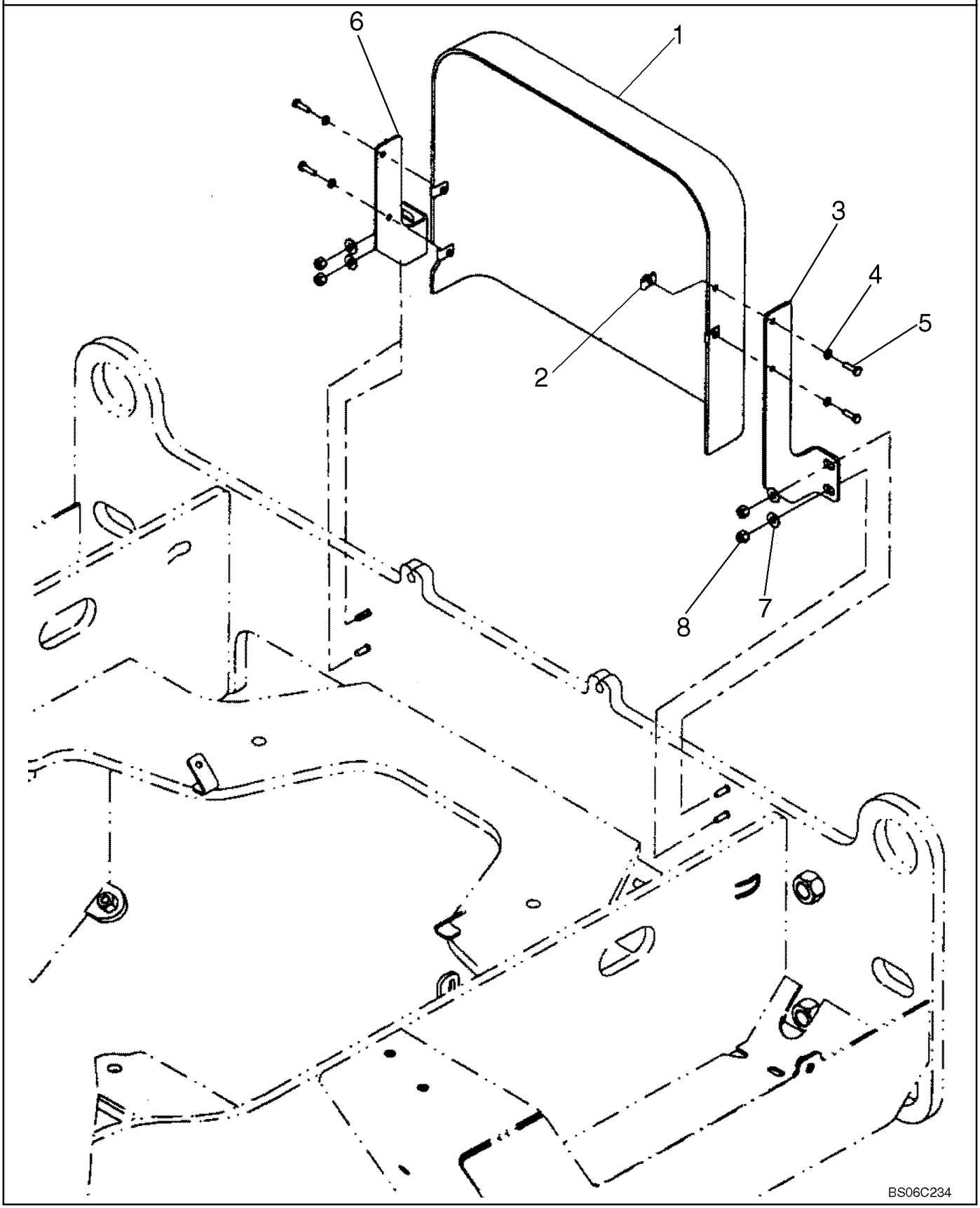

**CUBIERTAS - CORREA DE TRANSMISIÓN (MODELOS SIN AIRE ACONDICIONADO)**

| REF | FN | PART NUMBER | YR/SN | QTY | DENOMINACION |
|---|---|---|---|---|---|
| | | REF | | | MANUAL, WITHOUT AIR CONDITIONING |
| 1 | | 8501024 | | 1 | DEFENSA |
| 2 | | 833-40306 | | 4 | TUERCA, M6, U |
| 3 | | 87528973 | | 1 | PIEZA DE SOPORTE, Engine Guard Mounting; Left |
| 4 | | 892-11006 | | 4 | ARANDELA DE FRENO, M6 |
| 5 | | 627-6020 | | 4 | TORNILLO, Hex, M6 x 20, 10.9 |
| 6 | | 87528970 | | 1 | PIEZA DE SOPORTE, Engine Guard Mounting; Right |
| 7 | | 895-15008 | | 4 | ARANDELA, M8 x 20 x 1.6 |
| 8 | | 832-10408 | | 4 | CONTRA TUERCA, M8 x 1.25, Cl 8 |

| 09-44B | | p1 | 06/07 |
|---|---|---|---|

**CUBIERTAS - CABINA - SIN AIRE ACONICIONADO**

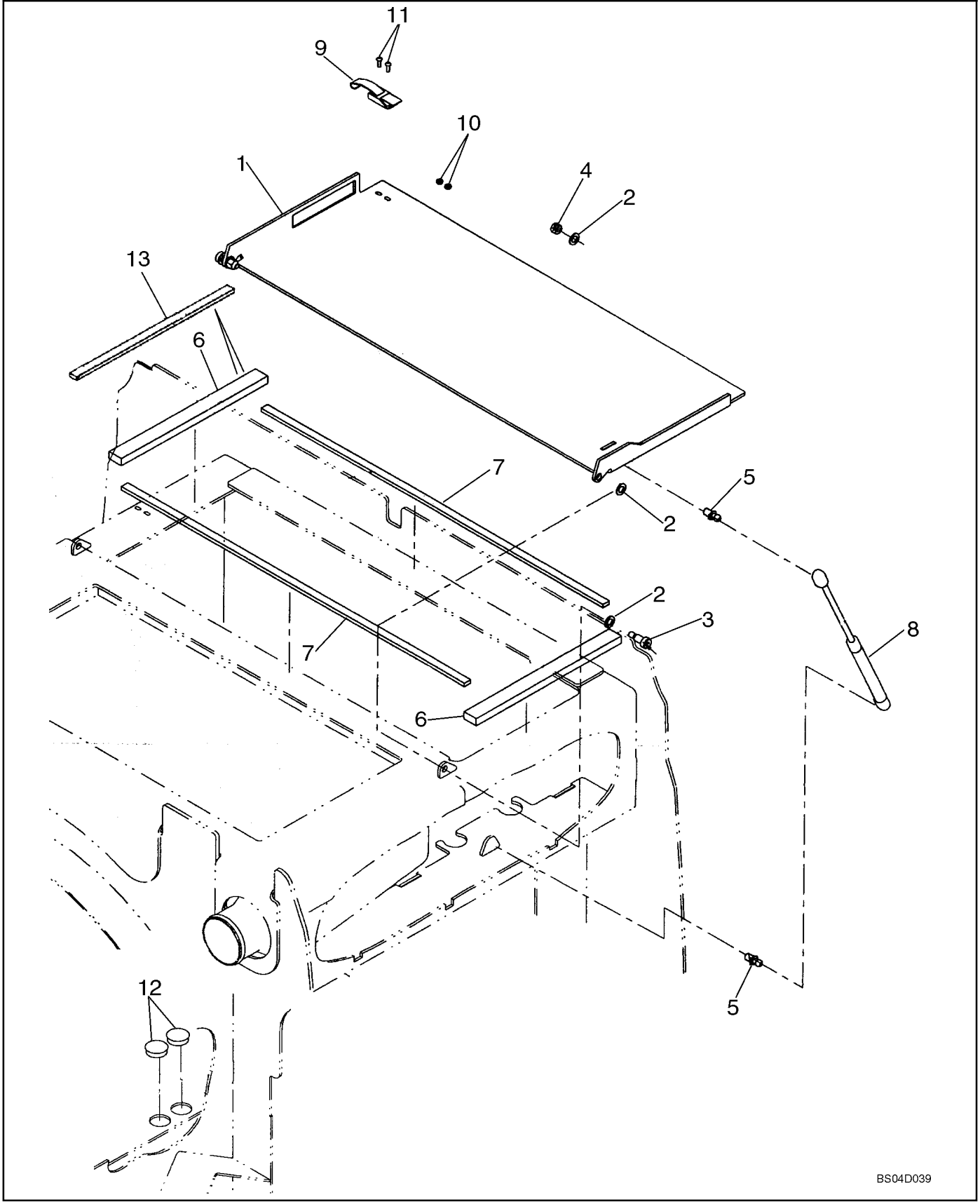

**CUBIERTAS - CABINA - SIN AIRE ACONICIONADO**

| REF | FN | PART NUMBER | YR/SN | QTY | DENOMINACION |
|---|---|---|---|---|---|
| | | REF | | | MANUAL, MODELS WITHOUT AIR CONDITIONING |
| 1 | | 8602727 | | 1 | PLACA (CONJUNTO) |
| 2 | | 895-18010 | | 6 | ARANDELA, M10 x 18 x 1.6 |
| 3 | | 561-703 | | 2 | TORNILLO, Hex Soc, Shoulder, M8 10 X 16mm, Cl 12.9 |
| 4 | | 832-10408 | | 2 | CONTRA TUERCA, M8 x 1.25, Cl 8 |
| 5 | | 350662A1 | | 2 | PRISIONERO |
| 6 | | 8602498 | | 1 | ANILLO DE CIERRE |
| 7 | | 8500133 | | 2 | ANILLO DE CIERRE, Oil Cooler; Side |
| 8 | | 252550A2 | | 1 | COMPAS, Cylinder |
| 9 | | 60-4640T1 | | 1 | PESTILLO |
| 10 | | 225-14108 | | 2 | TUERCA, #8-32 |
| 11 | | 440-1088 | | 2 | TORNILLO, Cross Pan Hd, #8-32 x 1/2" |
| 12 | | 353-414 | | 2 | TAPÓN, Dome, 1.375" hole, Nylon |
| 13 | | 87432328 | | 1 | ANILLO DE CIERRE |

| 09-45 | | p1 | 07/07 |
|---|---|---|---|

**CALENTADOR - MONTAJE**

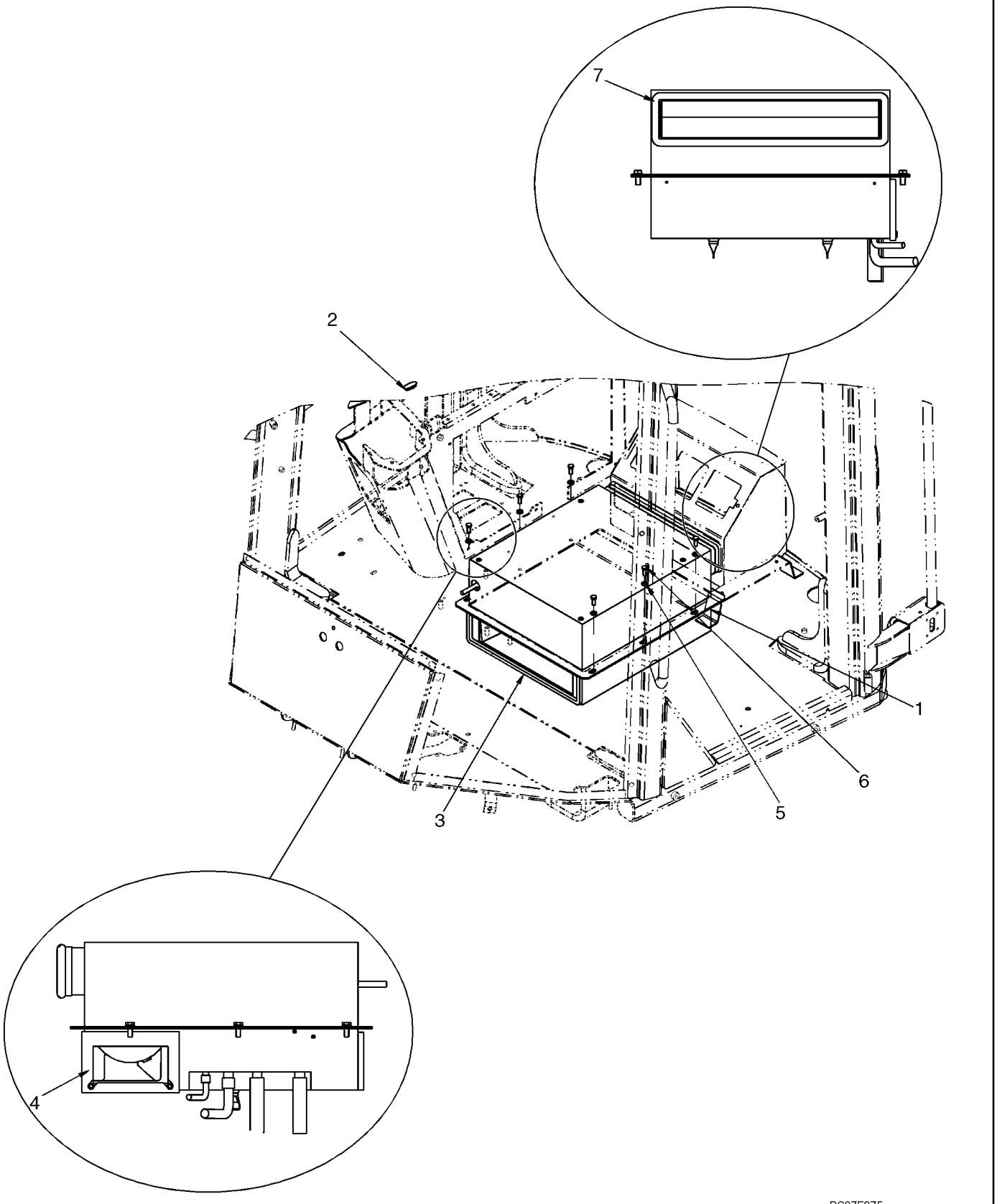

**CALENTADOR - MONTAJE**

| REF | FN | PART NUMBER | YR/SN | QTY | DENOMINACION |
|---|---|---|---|---|---|
| | | REF | | | MANUAL, UNITS WITH HEATER ONLY |
| 1 | | 76303352 | | 1 | RECALENTADOR, HVAC Heater Unit; Production Number Only, Order Component Parts; See Figure 09-45A |
| 2 | | 76047278 | | 1 | TAPÓN |
| 3 | | 76303496 | | 1 | JUNTA HERMETICA |
| 4 | | 76303497 | | 1 | JUNTA HERMETICA |
| 5 | | 895-11008 | | 6 | ARANDELA, M8 x 16 x 1.6 |
| 6 | | 614-8020 | | 6 | TORNILLO, Hex, M8 x 20, 8.8 |
| 7 | | 87651073 | | 1 | REBORDE DE GOMA, SEAL |

| 09-45A | | p1 | 07/07 |
|---|---|---|---|

**CALENTADOR**

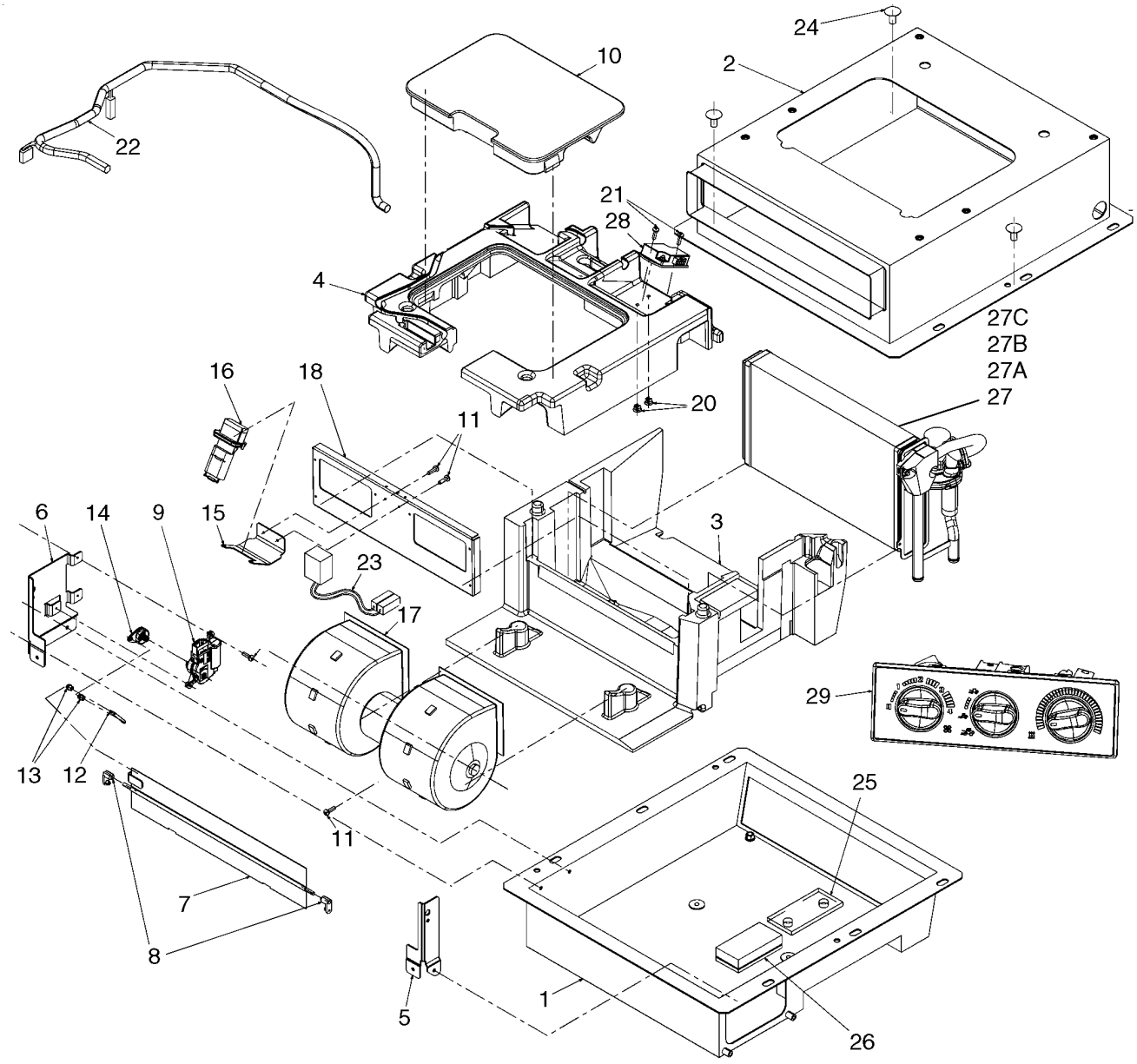

**CALENTADOR**

| REF | FN | PART NUMBER | YR/SN | QTY | DENOMINACION |
|---|---|---|---|---|---|
| | | REF | | | MANUAL, UNITS WITH HEATER ONLY |
| 1 | | 87529453 | | 1 | CAJA, Lower |
| 2 | | 87529457 | | 1 | CAJA, Upper |
| 3 | | 87529458 | | 1 | CAJA, Lower |
| 4 | | 87529459 | | 1 | CAJA, Upper |
| 5 | | NSS | | 1 | NO SE REPARA SEPARADAM., Right Fastening Bracket |
| 6 | | NSS | | 1 | NO SE REPARA SEPARADAM., Left Fastening Bracket |
| 7 | | 87643958 | | 1 | VISERA, Recirculation |
| 8 | | 87643957 | | 2 | CASQUILLO, For Recirculation Flap |
| 9 | | 87528689 | | 1 | MOTOR ELECTRICO |
| 10 | | 87529462 | | 1 | TAPADERA, Inspection Trapdoor |
| 11 | | NSS | | 13 | NO SE REPARA SEPARADAM., Screw |
| 12 | | 87643954 | | 1 | TIRANTE |
| 13 | | 87643955 | | 2 | CASQUILLO |
| 14 | | 87529617 | | 1 | PALANCA |
| 15 | | NSS | | 1 | NO SE REPARA SEPARADAM., Pipe Fastening Retainer |
| 16 | | 87528688 | | 1 | RESISTENCIA |
| 17 | | 87528687 | | 1 | VENTILADOR (CONJUNTO, Electric Fan |
| 18 | | NSS | | 1 | NO SE REPARA SEPARADAM., Bracket |
| 20 | | NSS | | 2 | NO SE REPARA SEPARADAM., Screw |
| 21 | | NSS | | 2 | NO SE REPARA SEPARADAM., Screw |
| 22 | | 87529485 | | 1 | CABLE |
| 23 | | NSS | | 1 | NO SE REPARA SEPARADAM., Fan Cable |
| 24 | | NSS | | 4 | NO SE REPARA SEPARADAM., Plug |
| 25 | | NSS | | 1 | NO SE REPARA SEPARADAM., Seal |
| 26 | | 87577361 | | 1 | ESPUMA, Seal |
| 27 | | 87529289 | | 1 | CALENTADOR (CJTO), Incl. Refs. 27A, 27B |
| 27A | | 87529444 | | 1 | TUBO DE CALEFACCION |
| 27B | | 87529447 | | 1 | NÚCLEO, Heater |
| 27C | | 87529627 | | 1 | VALVULA, Water |
| 28 | | 87529487 | | 1 | SOLENOIDE |
| 29 | | 87529536 | | 1 | MANDO, Manual Heater Control |

**CALEFACCION**

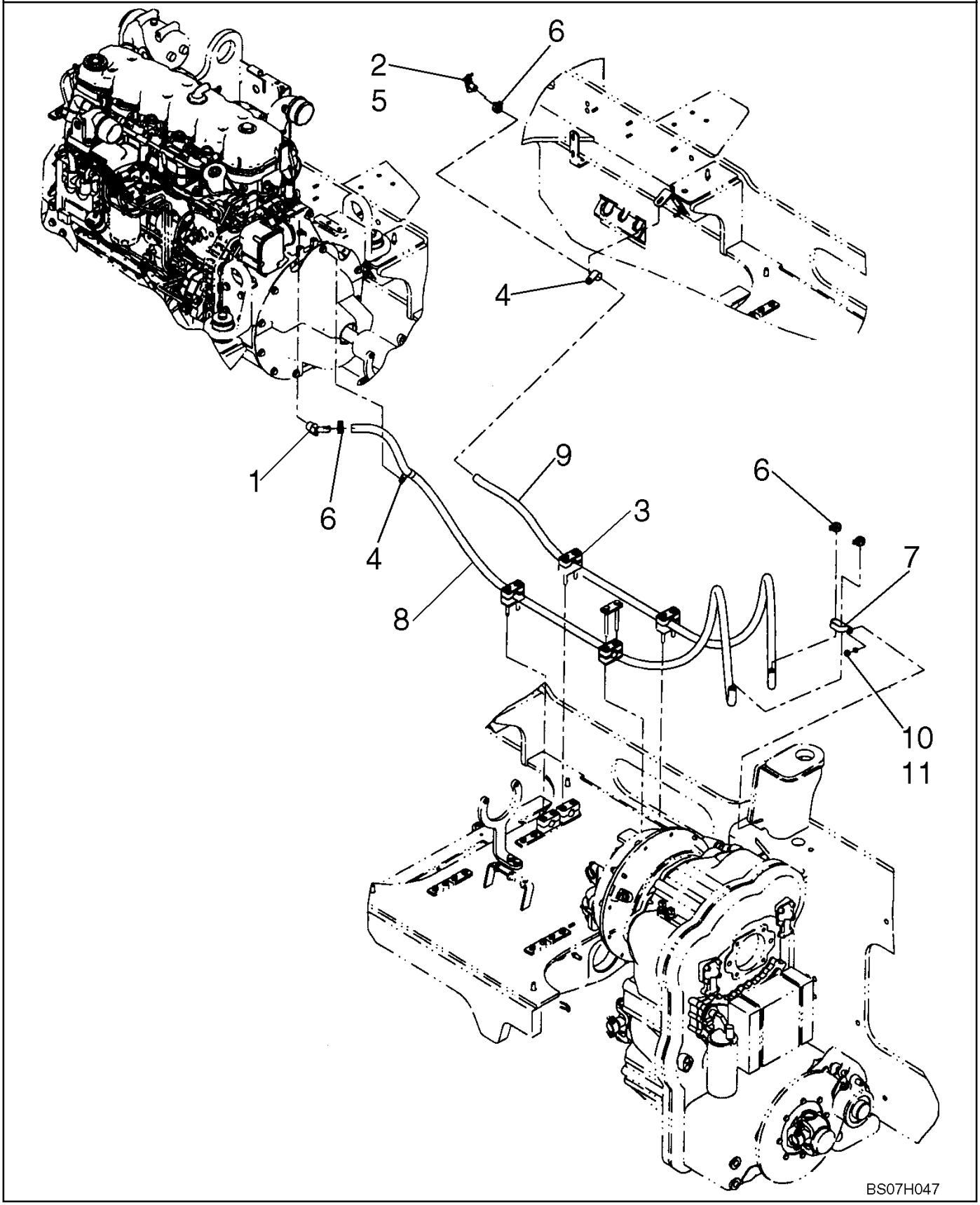

**CALEFACCION**

| REF | FN | PART NUMBER | YR/SN | QTY | DENOMINACION |
|---|---|---|---|---|---|
| 1 | | 217-425 | | 1 | CONEXION, 45º, 5/8" Hose x 3/4" NPTF Beaded |
| 2 | | 301803R1 | | 1 | VALVULA DE CIERRE |
| 3 | | 367489A1 | | 4 | BLOQUE MOTOR |
| 4 | | 515-24238 | | 4 | BORNE, 15/16", Insul, 7/16" Bolt |
| 5 | | 345-87 | | AR | LOCTITE, Loctite 592 |
| 6 | | 1954736C1 | | 2 | ABRAZADERA MANGUERA, No. 24 |
| 7 | | 31-1081 | | 2 | CLAMP/Retired |
| 8 | | 1975801C1 | | 1 | MANGUITO, Heater Supply |
| 9 | | R55242 | | 1 | MANGUITO, Heater Return |
| 10 | | 895-11008 | | 1 | ARANDELA, M8 x 16 x 1.6 |
| 11 | | 829-1410 | | 1 | TUERCA, M10, Cl 10 |

**AIRE ACONDICIONADO - MONTAJE**

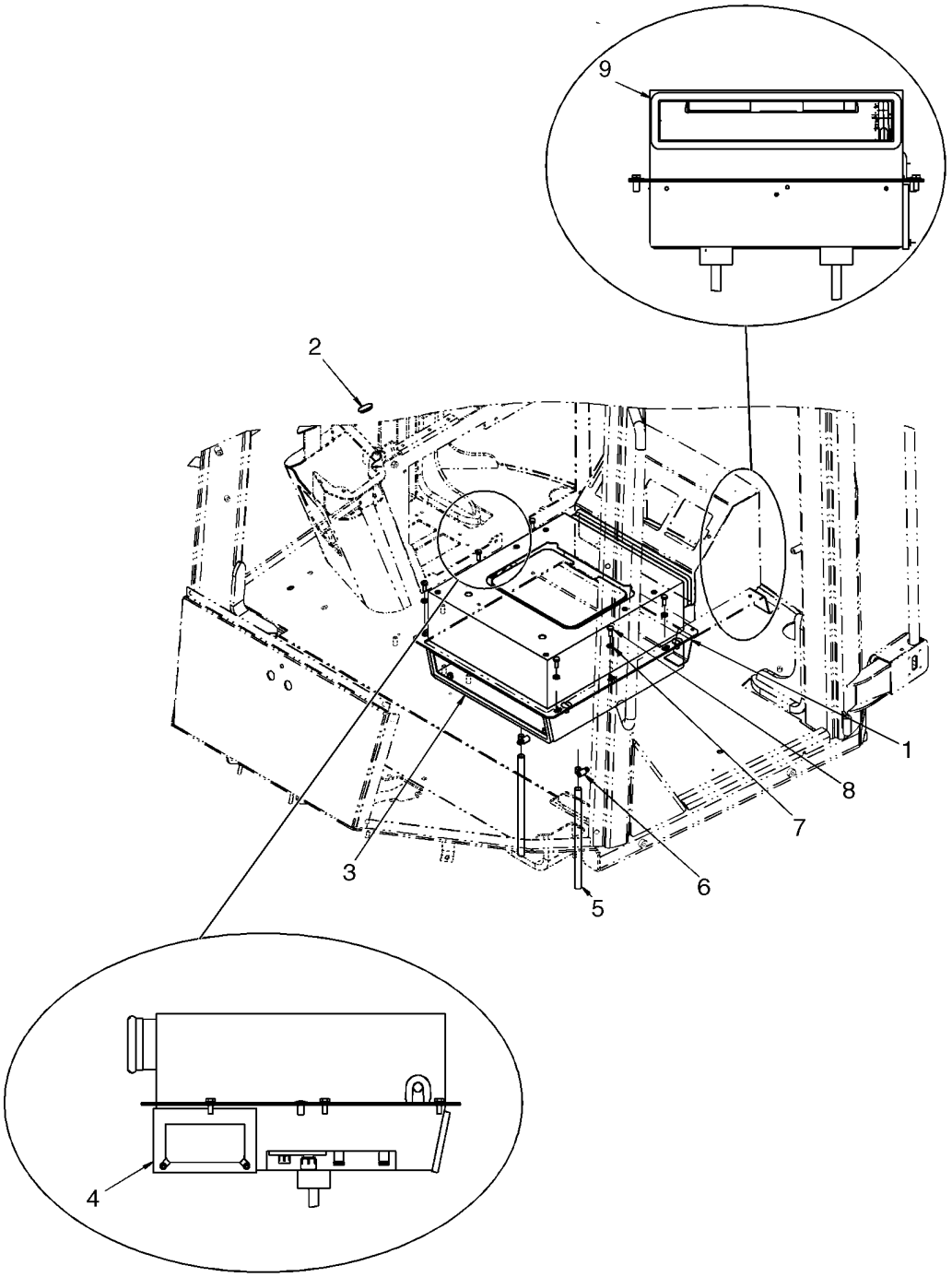


BS07F374

**AIRE ACONDICIONADO - MONTAJE**

| REF | FN | PART NUMBER | YR/SN | QTY | DENOMINACION |
|---|---|---|---|---|---|
| | | REF | | | MANUAL, UNITS WITH HEATER AND AIR CONDITIONING |
| 1 | | 76303592 | | 1 | CLIMATIZADOR, HVAC A/C And Heater Unit; Production Number Only, Order Component Parts; See Figure 09-47A |
| 2 | | 76047278 | | 1 | TAPÓN |
| 3 | | 76303496 | | 1 | JUNTA HERMETICA |
| 4 | | 76303497 | | 1 | JUNTA HERMETICA |
| 5 | | 87587637 | | 2 | FUNDA DE PLÁSTICO |
| 6 | | 214-1406 | | 2 | ABRAZADERA MANGUERA, #06, .44/.78 Type F Worm |
| 7 | | 895-11008 | | 6 | ARANDELA, M8 x 16 x 1.6 |
| 8 | | 614-8020 | | 6 | TORNILLO, Hex, M8 x 20, 8.8 |
| 9 | | {87561073} | | 1 | SEAL |

| 09-47A | | p1 | 06/07 |
|---|---|---|---|

**AIRE ACONDICIONADO**

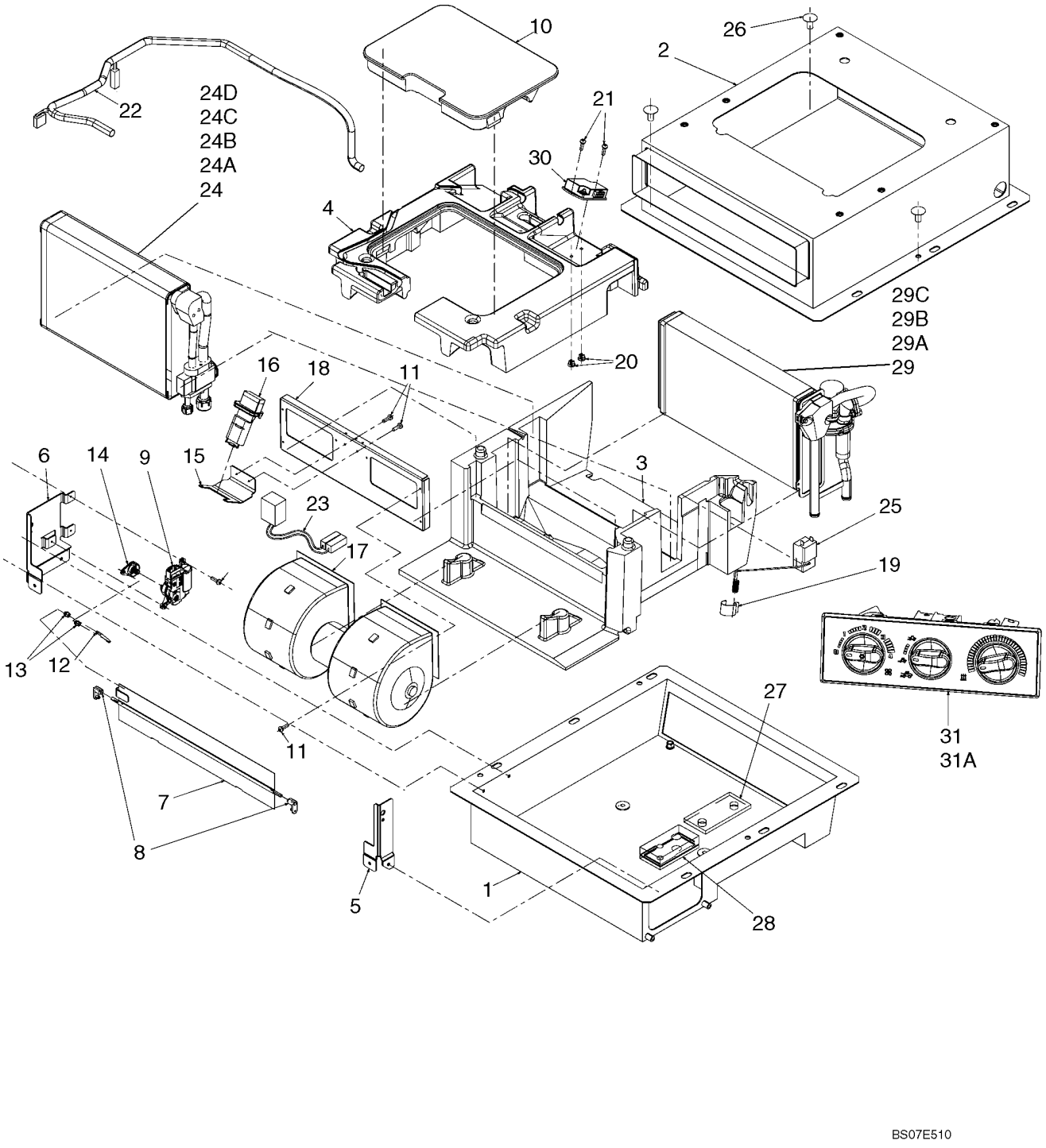

**AIRE ACONDICIONADO**

| REF | FN | PART NUMBER | YR/SN | QTY | DENOMINACION |
|---|---|---|---|---|---|
| | | REF | | | MANUAL, UNITS WITH HEATER AND AIR CONDITIONING |
| 1 | | 87529453 | | 1 | CAJA, Lower |
| 2 | | 87529457 | | 1 | CAJA, Upper |
| 3 | | 87529458 | | 1 | CAJA, Lower |
| 4 | | 87529459 | | 1 | CAJA, Upper |
| 5 | | NSS | | 1 | NO SE REPARA SEPARADAM., Right Fastening Bracket |
| 6 | | NSS | | 1 | NO SE REPARA SEPARADAM., Left Fastening Bracket |
| 7 | | 87643958 | | 1 | VISERA, Recirculation |
| 8 | | 87643957 | | 2 | CASQUILLO, For Recirculation Flap |
| 9 | | 87528689 | | 1 | MOTOR ELECTRICO |
| 10 | | 87529462 | | 1 | TAPADERA, Inspection Trapdoor |
| 11 | | NSS | | 13 | NO SE REPARA SEPARADAM., Screw |
| 12 | | 87643954 | | 1 | TIRANTE |
| 13 | | 87643955 | | 2 | CASQUILLO |
| 14 | | 87529617 | | 1 | PALANCA |
| 15 | | NSS | | 1 | NO SE REPARA SEPARADAM., Pipe Fastening Retainer |
| 16 | | 87528688 | | 1 | RESISTENCIA |
| 17 | | 87528687 | | 1 | VENTILADOR (CONJUNTO, Electric Fan |
| 18 | | NSS | | 1 | NO SE REPARA SEPARADAM., Bracket |
| 19 | | 87577360 | | 1 | SUJETADOR DE RESORTE |
| 20 | | NSS | | 2 | NO SE REPARA SEPARADAM., Screw |
| 21 | | NSS | | 2 | NO SE REPARA SEPARADAM., Screw |
| 22 | | 87529485 | | 1 | CABLE |
| 23 | | NSS | | 1 | NO SE REPARA SEPARADAM., Fan Cable |
| 24 | | 87529493 | | 1 | EVAPORADOR, Incl. Refs. 24A - 24D |
| 24A | | 87529495 | | 1 | VALVULA, Expansion |
| 24B | | 87529498 | | 1 | EVAPORADOR |
| 24C | | 87529505 | | 1 | TUBO, For Evaporator |
| 24D | | 87529508 | | 1 | CONEXION |
| 25 | | 87529621 | | 1 | TERMOSTATO |
| 26 | | NSS | | 4 | NO SE REPARA SEPARADAM., Plug |

| 09-47A | | p2 | 06/07 |
|---|---|---|---|

**AIRE ACONDICIONADO**

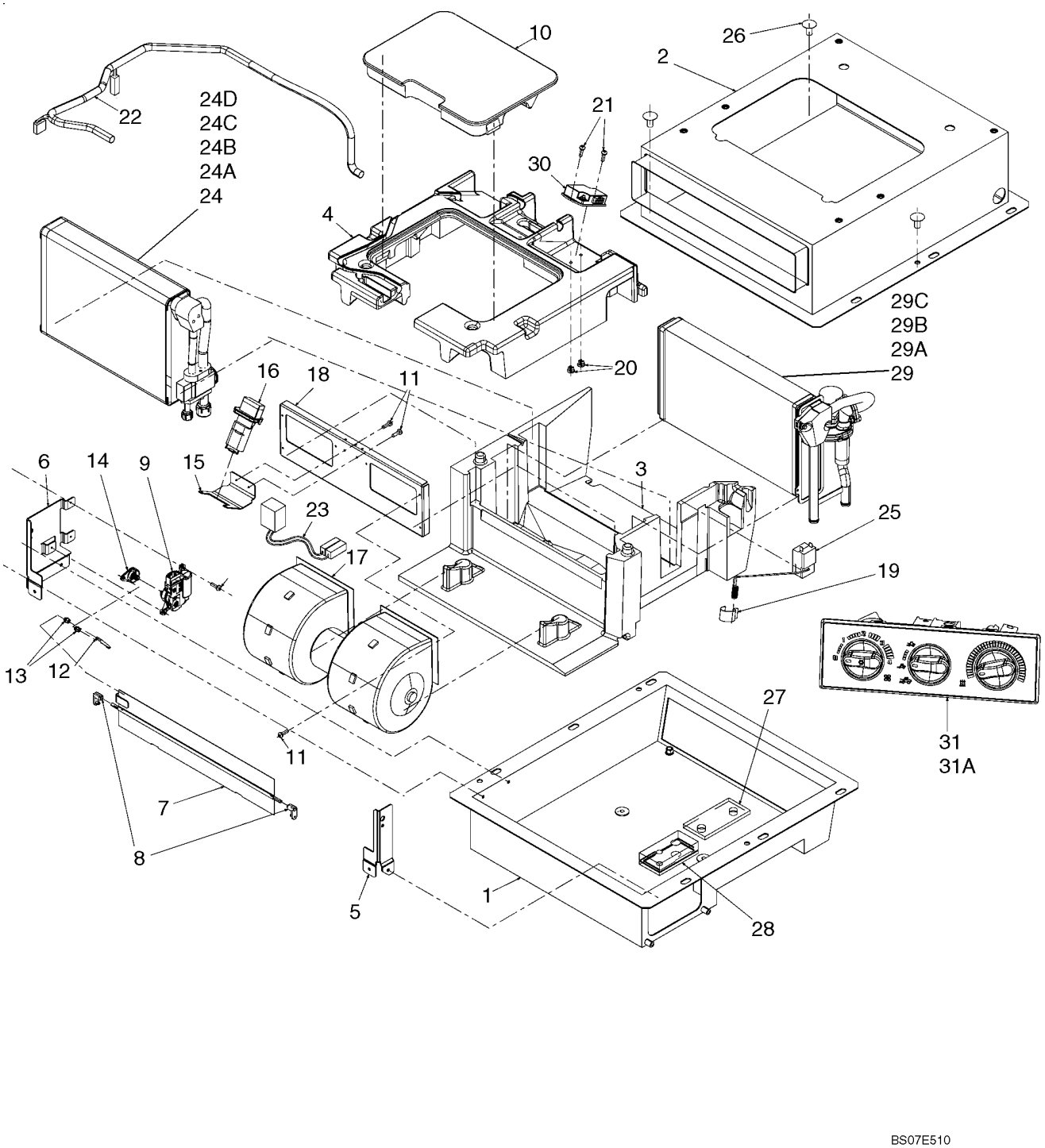

**AIRE ACONDICIONADO**

| REF | FN | PART NUMBER | YR/SN | QTY | DENOMINACION |
|---|---|---|---|---|---|
| 27 | | NSS | | 1 | NO SE REPARA SEPARADAM., Seal |
| 28 | | 87577361 | | 1 | ESPUMA, Seal |
| 29 | | 87529289 | | 1 | CALENTADOR (CJTO), Incl. Refs. 29A - 29C |
| 29A | | 87529444 | | 1 | TUBO DE CALEFACCION |
| 29B | | 87529447 | | 1 | NÚCLEO, Heater |
| 29C | | 87529627 | | 1 | VALVULA, Water |
| 30 | | 87529487 | | 1 | SOLENOIDE |
| 31 | | 87529463 | | 1 | GRUPO REGULADOR, Manual Climate Control, Heater With A/C, Incl. Ref. 31A |
| 31A | | 87529474 | | 1 | MANDO, Lighting Flange |

| 09-48 | | p1 | 08/07 |
|---|---|---|---|

**AIRE ACONDICIONADO - CONDENSADOR**

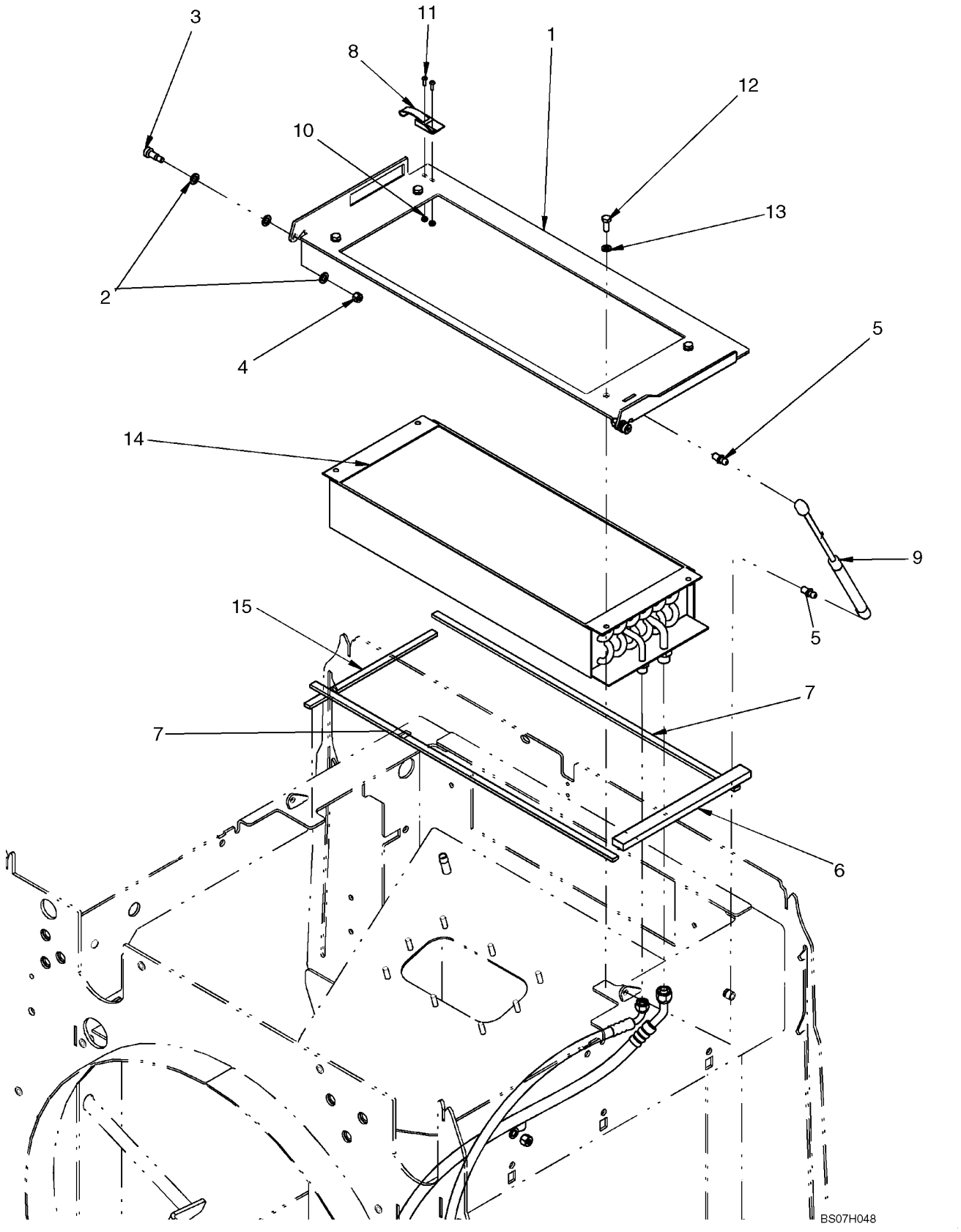

**AIRE ACONDICIONADO - CONDENSADOR**

| REF | FN | PART NUMBER | YR/SN | QTY | DENOMINACION |
|---|---|---|---|---|---|
| | | REF | | | MANUAL, AIR CONDITIONING CONDENSER MOUNTING |
| 1 | | 8602725 | | 1 | PLACA (CONJUNTO), Condenser |
| 2 | | 895-18010 | | 6 | ARANDELA, M10 x 18 x 1.6 |
| 3 | | 561-703 | | 2 | TORNILLO, Hex Soc, Shoulder, M8 10 X 16mm, Cl 12.9 |
| 4 | | 832-10408 | | 2 | CONTRA TUERCA, M8 x 1.25, Cl 8 |
| 5 | | 350662A1 | | 2 | PRISIONERO, Ball |
| 6 | | 8602498 | | 1 | ANILLO DE CIERRE |
| 7 | | 8500133 | | 2 | ANILLO DE CIERRE, Oil Cooler; Side |
| 8 | | 60-4640T1 | | 1 | PESTILLO |
| 9 | | 252550A2 | | 1 | COMPAS, Cylinder |
| 10 | | 225-14108 | | 2 | TUERCA, #8-32 |
| 11 | | 440-1088 | | 2 | TORNILLO, Cross Pan Hd, #8-32 x 1/2" |
| 12 | | 627-8020 | | 4 | TORNILLO, Hex, M8 x 20, 10.9 |
| 13 | | 892-11008 | | 4 | ARANDELA DE FRENO, M8 |
| 14 | | 8500878 | | 1 | CONDENSADOR, Air Conditioning |
| 15 | | 87432328 | | 1 | ANILLO DE CIERRE, Latch |

| 09-49 | | p1 | 05/07 |
|---|---|---|---|

**AIRE ACONDICIONADO**

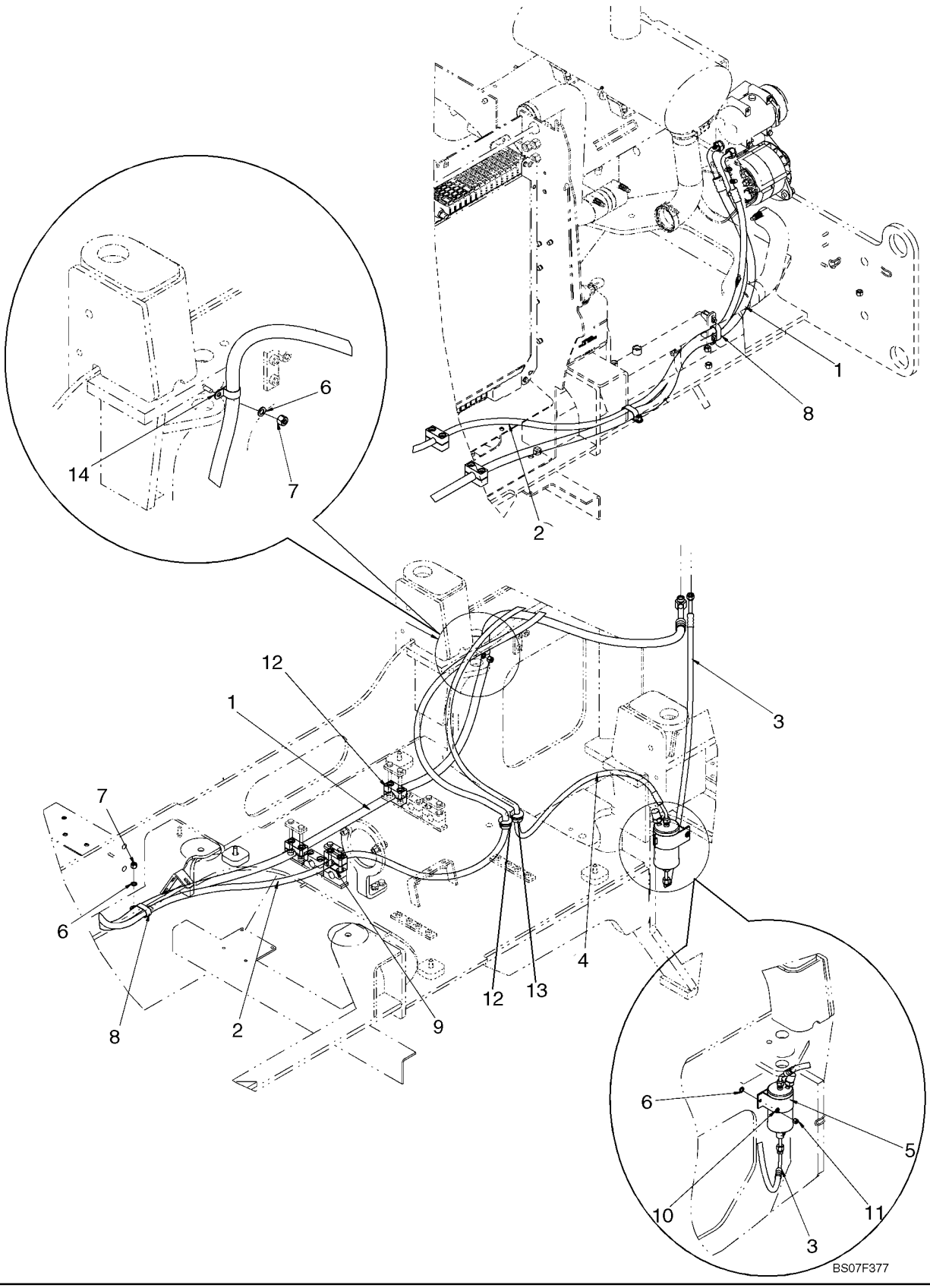

**AIRE ACONDICIONADO**

| REF | FN | PART NUMBER | YR/SN | QTY | DENOMINACION |
|---|---|---|---|---|---|
| 1 | | 87440551 | | 1 | MANGUERA (CONJUNTO), Cab to Compressor; 3715 mm (146 in) |
| 2 | | 87629992 | | 1 | MANGA, Compressor to Condensor; 3658 (144 in) |
| 3 | | 87651217 | | 1 | MANGA, Dryer to Cab; 1052 (41 - 13/32 in) |
| 4 | | 8602469 | | 1 | MANGUERA (CONJUNTO), Condensor to Dryer; 2000 mm (79 in) |
| 5 | | 87404588 | | 1 | RECEPTOR-DESHIDRAT., A/C Dryer Kit |
| 6 | | 895-18010 | | 3 | ARANDELA, M10 x 18 x 1.6 |
| 7 | | 832-10410 | | 2 | CONTRA TUERCA, M10 x 1.5, Cl 8 |
| 8 | | 31-1081 | | 2 | CLAMP/Retired |
| 9 | | 379374A1 | | 1 | BLOQUE MOTOR |
| 10 | | 895-11008 | | 1 | ARANDELA, M8 x 16 x 1.6 |
| 11 | | 832-10408 | | 1 | CONTRA TUERCA, M8 x 1.25, Cl 8 |
| 12 | | 198826C1 | | 1 | PASACABLES |
| 13 | | 198825C1 | | 1 | PASACABLES |
| 14 | | 515-22254 | | 1 | BORNE, 1", Insul, 5/16" Bolt |

**CONTRAPESOS**

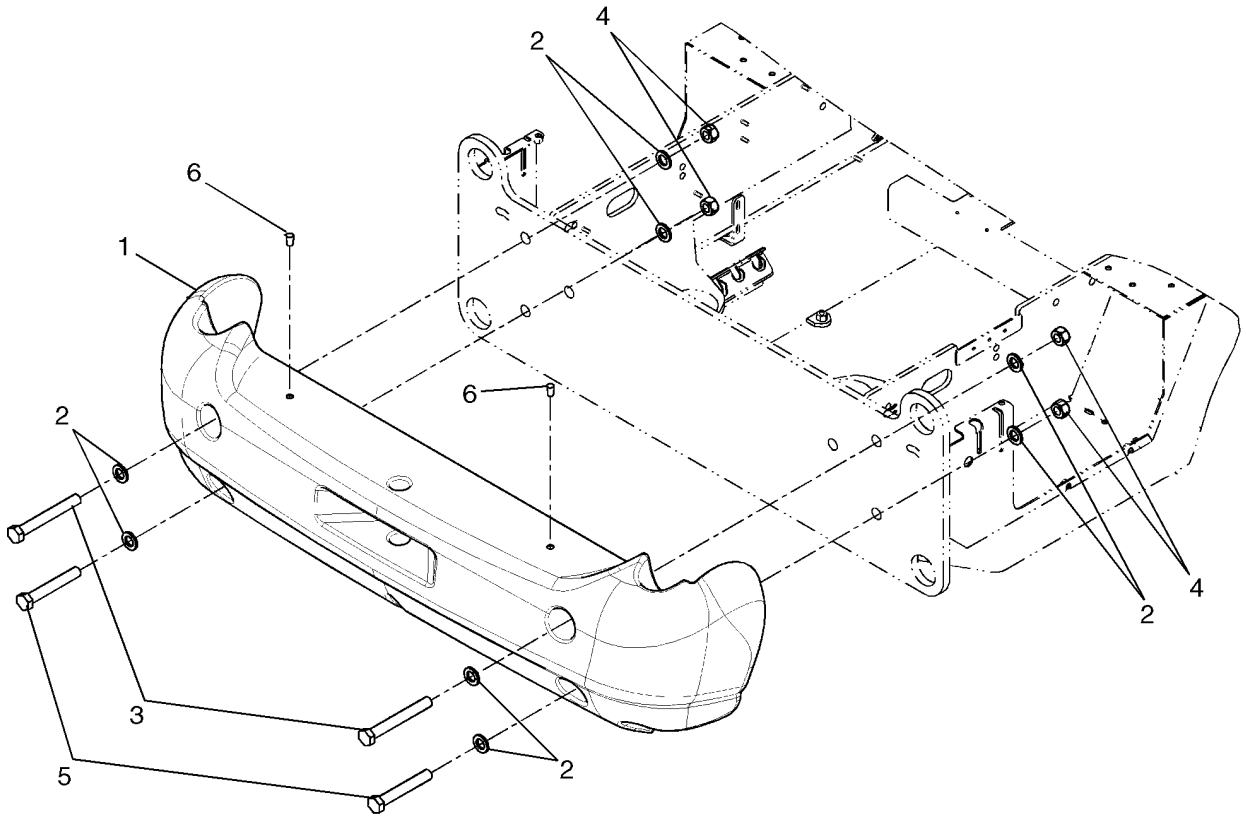


BS07E448

**CONTRAPESOS**

| REF | FN | PART NUMBER | YR/SN | QTY | DENOMINACION |
|---|---|---|---|---|---|
| 1 | | 87577182 | | 1 | CONTRAPESO, 499 kg (1100 lb) |
| 2 | | 896-11024 | | 8 | ARANDELA, M24 x 44.5 x 5, HT |
| 3 | | 827-24190 | | 2 | TORNILLO, Hex, M24 x 190, 10.9 |
| 4 | | 829-1424 | | 4 | TUERCA, M24, Cl 10 |
| 5 | | 827-24160 | | 2 | TORNILLO, Hex, M24 x 160, 10.9 |
| 6 | | 87308200 | | 2 | TAPÓN PLÁSTICO |

**CONTRAPESOS - TAREAS PESADAS**

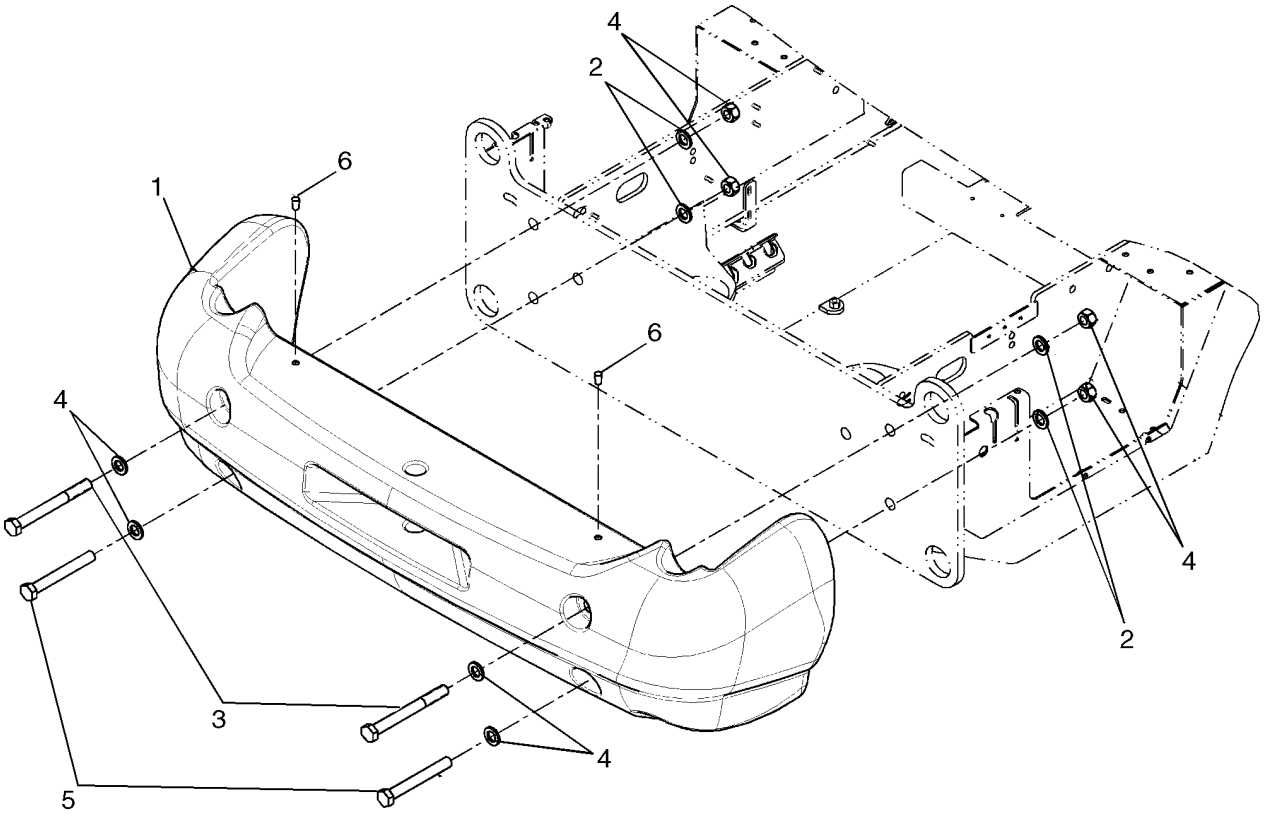


BS07E447

**CONTRAPESOS - TAREAS PESADAS**

| REF | FN | PART NUMBER | YR/SN | QTY | DENOMINACION |
|---|---|---|---|---|---|
| | | REF | | | MANUAL, HEAVY DUTY COUNTERWEIGHT |
| 1 | | 87577184 | | 1 | CONTRAPESO, 885 kg (1950 lb) |
| 2 | | 896-11024 | | 8 | ARANDELA, M24 x 44.5 x 5, HT |
| 3 | | 827-24230 | | 2 | TORNILLO |
| 4 | | 829-1424 | | 4 | TUERCA, M24, Cl 10 |
| 5 | | 827-24190 | | 2 | TORNILLO, Hex, M24 x 190, 10.9 |
| 6 | | 87308200 | | 2 | TAPÓN PLÁSTICO |

This Page Left Intentionally Blank

Page blanche

Esta página se queda en blanco intencionadamente

**EXTINTOR DE INCENDIOS**

| REF | FN | PART NUMBER | YR/SN | QTY | DENOMINACION |
|---|---|---|---|---|---|
| 1 | | L302850 | | 1 | EXTINTOR, Mount Bracket in Cab |

**CAJA DE HERRAMIENTAS**

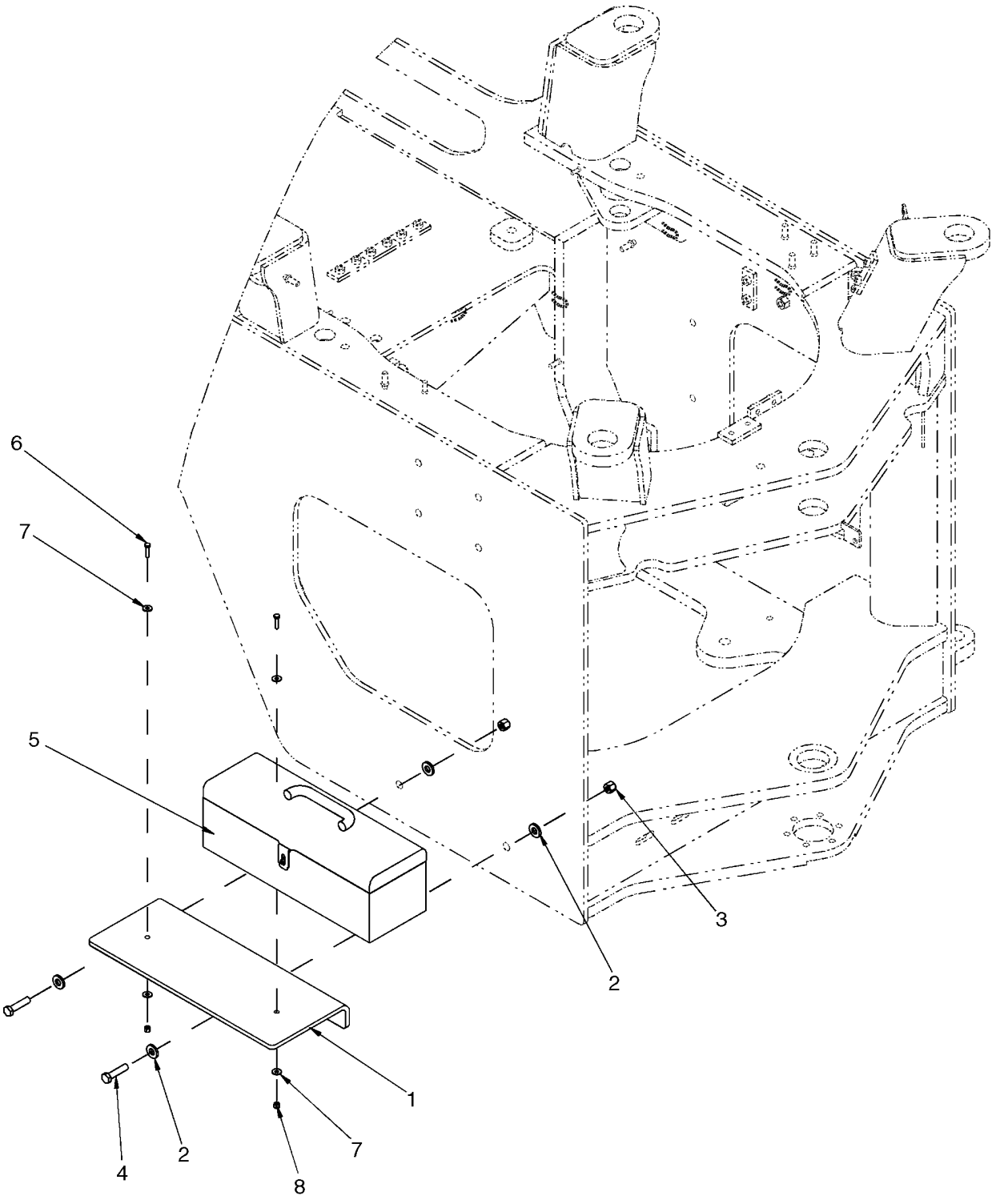

**CAJA DE HERRAMIENTAS**

| REF | FN | PART NUMBER | YR/SN | QTY | DENOMINACION |
|---|---|---|---|---|---|
| 1 | | {87657832} | | 1 | PLATE, Toolbox Mounting |
| 2 | | 896-15012 | | 4 | ARANDELA, M12 x 28.5 x 4, HT |
| 3 | | 832-10412 | | 2 | CONTRA TUERCA, M12 x 1.75, Cl 8 |
| 4 | | 827-12050 | | 2 | TORNILLO, Hex, M12 x 50, 10.9 |
| 5 | | A181436 | | 1 | CAJA DE HERRAMIENTAS |
| 6 | | 627-6025 | | 2 | TORNILLO, Hex, M6 x 25, 10.9 |
| 7 | | 895-25006 | | 4 | ARANDELA, M6 x 18 x 1.6 |
| 8 | | 832-10406 | | 2 | CONTRA TUERCA, M6 x 1, Cl 8 |

| 09-53 | | p1 | 06/07 |
|---|---|---|---|

**MATRICULA SOPORTE**

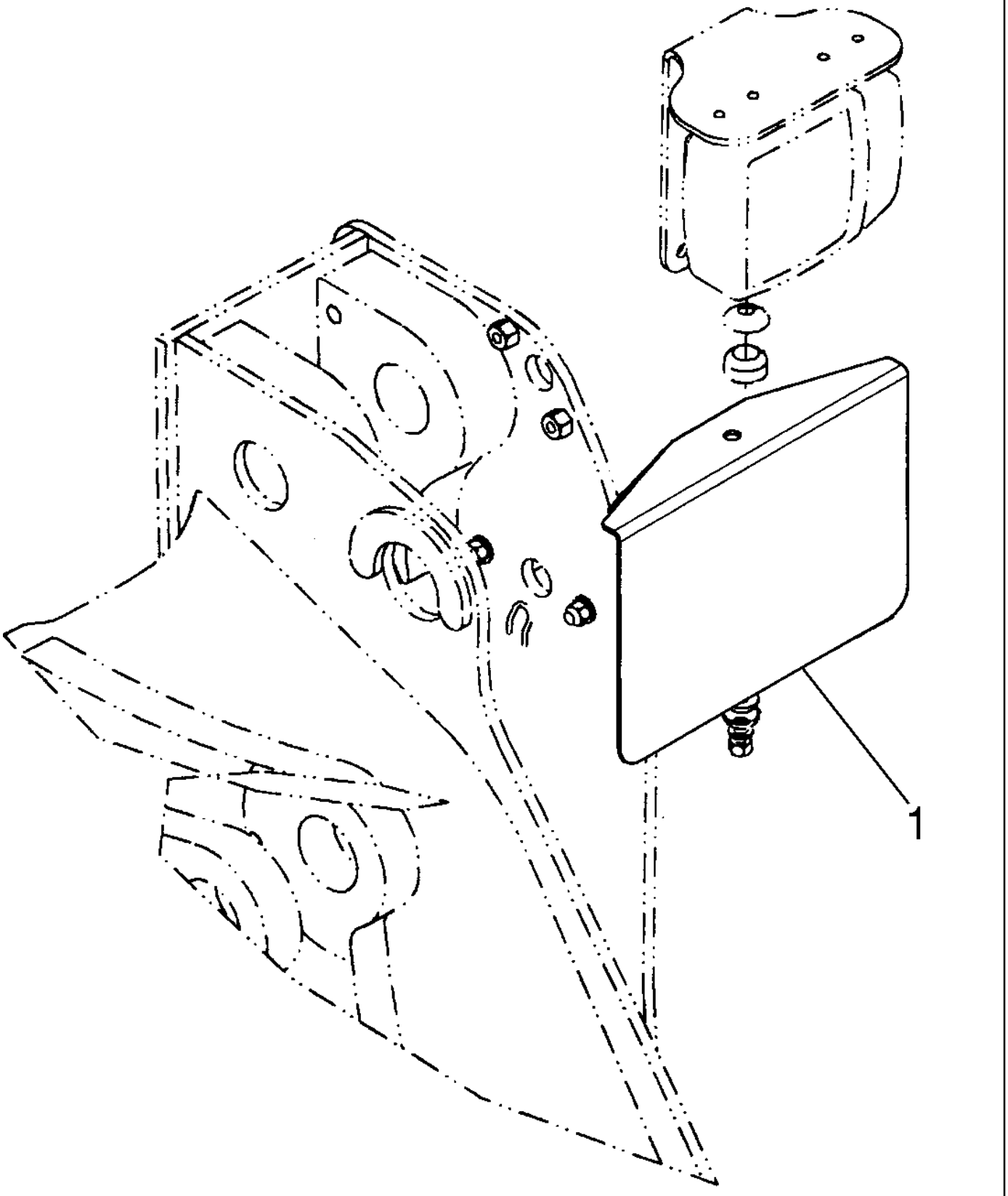

**MATRICULA SOPORTE**

| REF | FN | PART NUMBER | YR/SN | QTY | DENOMINACION |
|---|---|---|---|---|---|
| | | REF | | | MANUAL, TO MOUNT PLATE USE EXISTING HARDWARE FROM LIGHT |
| 1 | | 87571546 | | 1 | PLACA, License Plate Mounting Plate |

**CALCOMANIAS - MODEL**




1

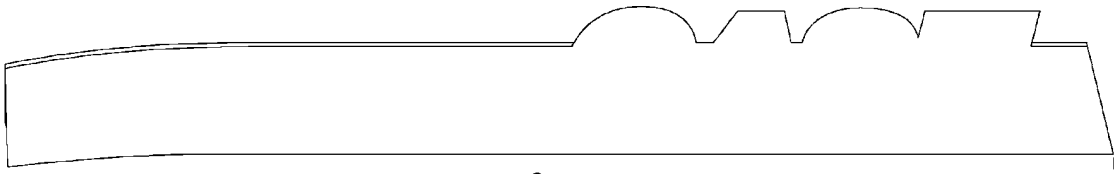

2

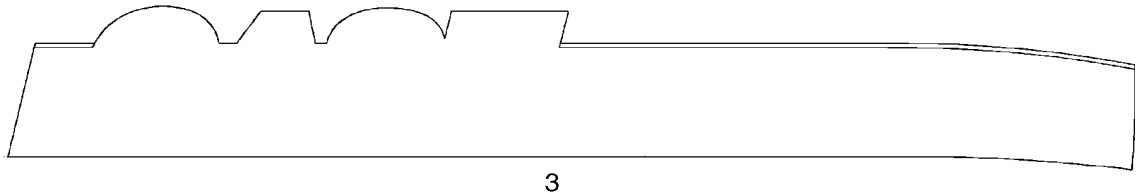

3




4

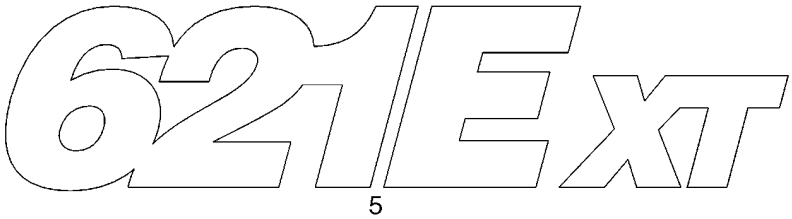


5




6

BS07D273

**CALCOMANIAS - MODEL**

| REF | FN | PART NUMBER | YR/SN | QTY | DENOMINACION |
|---|---|---|---|---|---|
| 1 | | 87519006 | | 2 | CALCOMANIA, Case Logo |
| 2 | | 87519004 | | 1 | CALCOMANIA, LH Hood |
| 3 | | 87519005 | | 1 | CALCOMANIA, RH Hood |
| 4 | | 87586610 | | 2 | CALCOMANIA, 621E; If Used |
| 5 | | 87586611 | | 2 | CALCOMANIA, 621E XT; Case Power Tan; If Used |
| 5 | | 87586612 | | 2 | CALCOMANIA, 621E XT; Gray; If Used |
| 6 | | 87597331 | | 2 | CALCOMANIA, 621E XR; If Used |

## CALCOMANIAS - COMÚN EN EL MODELO

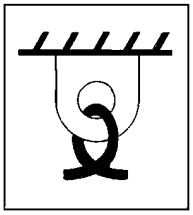

1




2

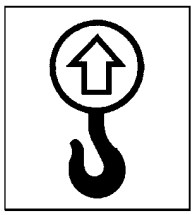

3

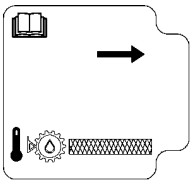

4

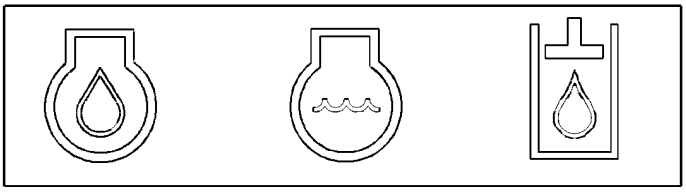

5

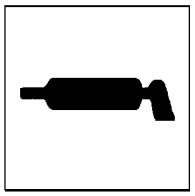

6

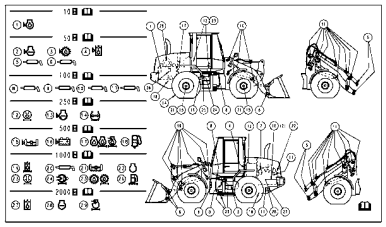

7



8

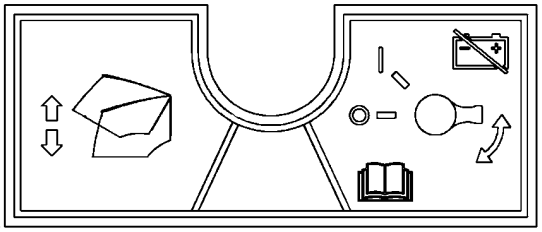

9

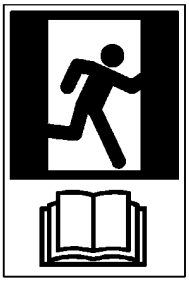

10

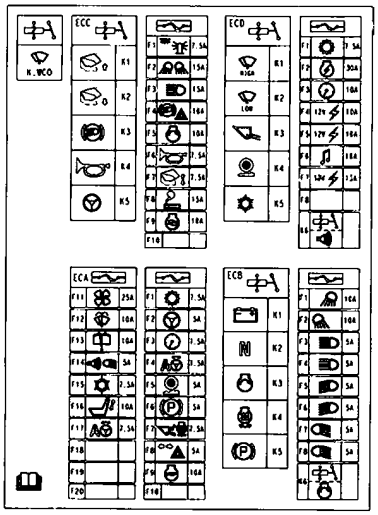


11

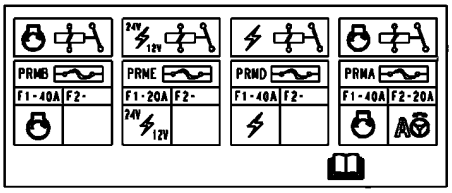


12

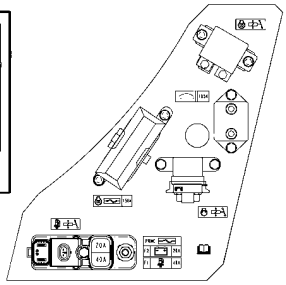

13

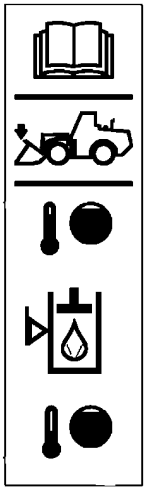

14




15




16

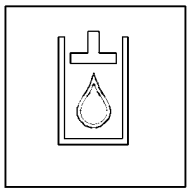

17

BS07D272

**CALCOMANIAS - COMÚN EN EL MODELO**

| REF | FN | PART NUMBER | YR/SN | QTY | DENOMINACION |
|---|---|---|---|---|---|
| 1 | | 139728A1 | | 4 | CALCOMANIA, Tie Down |
| 2 | | 387147A1 | | 1 | CALCOMANIA, Hy-Transmission Ultra |
| 3 | | 139729A1 | | 4 | CALCOMANIA, Lift |
| 4 | | 87586616 | | 1 | CALCOMANIA, Transmission Oil Level |
| 5 | | 387149A1 | | 1 | CALCOMANIA, Fluid Drains |
| 6 | | 187864A1 | | 2 | CALCOMANIA, Lube Point |
| 7 | | 87397079 | | 1 | CALCOMANIA, Maintenance Chart |
| 8 | | E134402 | | 1 | CALCOMANIA, No Step |
| 9 | | 87524649 | | 1 | CALCOMANIA, Disconnect Switch |
| 10 | | 329051A1 | | 1 | CALCOMANIA, Emergency Exit |
| 11 | | 87647668 | | 1 | CALCOMANIA, Fuse |
| 12 | | 87397077 | | 1 | CALCOMANIA, Fuse |
| 13 | | 87397078 | | 1 | CALCOMANIA, Fuse and Relay |
| 14 | | 386741A2 | | 1 | CALCOMANIA, Hydraulic Fluid Temperature |
| 15 | | 87415931 | | 6 | CALCOMANIA, Case - Engine |
| 16 | | 87429186 | | 1 | SIMBOLO, Engine Medallion |
| 17 | | 395895A1 | | 1 | CALCOMANIA, Hydraulic Oil |

**CALCOMANIAS - CABINA**

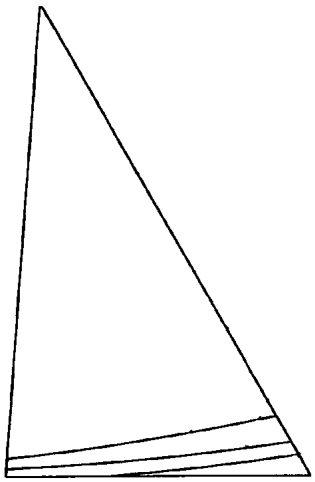

1

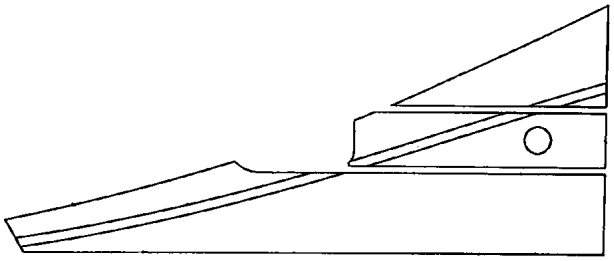

2

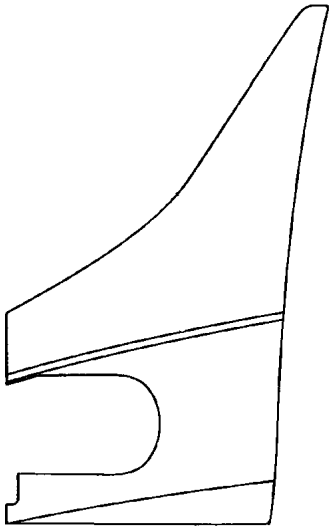

3

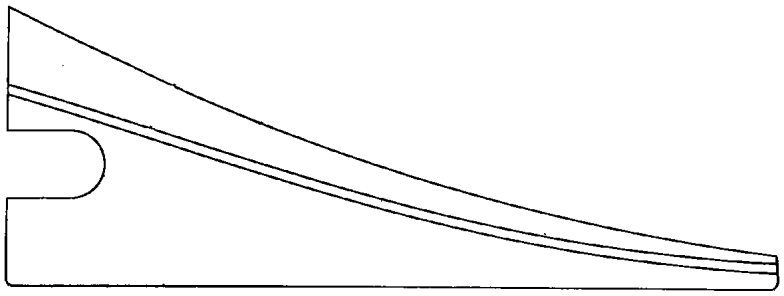

4

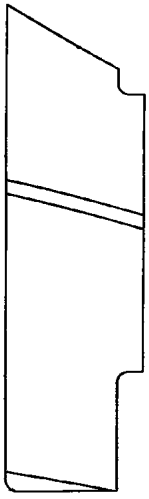

5




6

BS06G020

**CALCOMANIAS - CABINA**

| REF | FN | PART NUMBER | YR/SN | QTY | DENOMINACION |
|---|---|---|---|---|---|
| 1 | | 87546325 | | 1 | CALCOMANIA, Cab, LH Side |
| 2 | | 87546326 | | 1 | CALCOMANIA, Cab, LH Door |
| 3 | | 87546327 | | 1 | CALCOMANIA, Cab, LH Rear |
| 4 | | 87546328 | | 1 | CALCOMANIA, Cab, RH Door |
| 5 | | 87546329 | | 1 | CALCOMANIA, Cab, RH Rear |
| 6 | | 87546330 | | 1 | CALCOMANIA, Cab, Visor Fritting |

**CALCOMANIAS - INGLES**

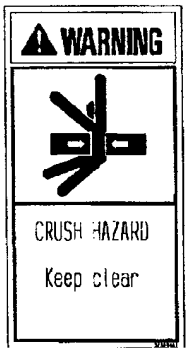

1



2

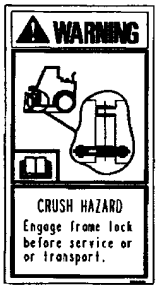

3

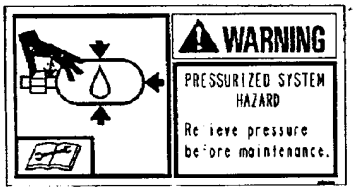

4

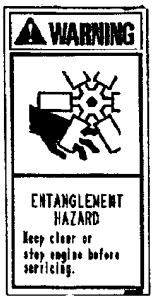

5

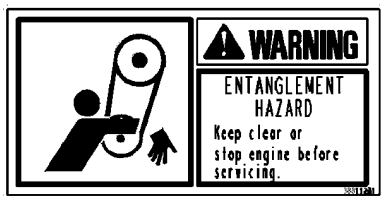

6

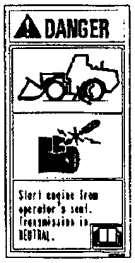

7

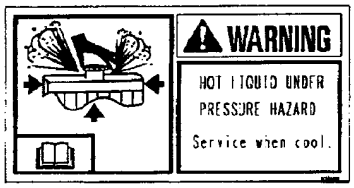

8



9

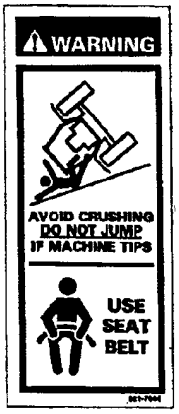

10

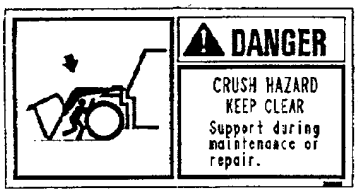

11

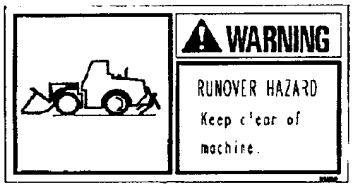

12



13



14

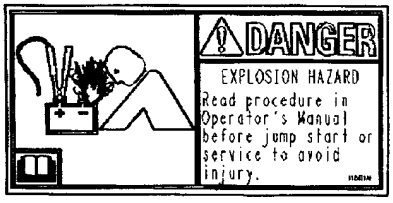

15

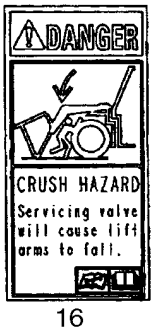

16

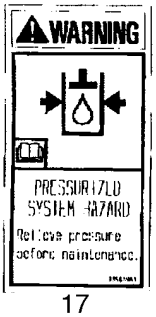

17

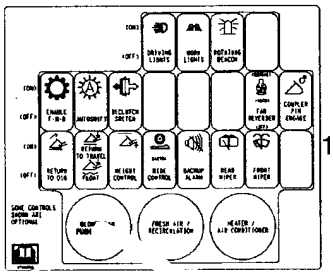
18

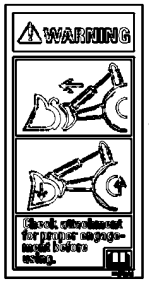

19



20



21

BS07E454

**CALCOMANIAS - INGLES**

| REF | FN | PART NUMBER | YR/SN | QTY | DENOMINACION |
|---|---|---|---|---|---|
| 1 | | 323694A1 | | 2 | CALCOMANIA, Warning; Crush Hazard |
| 2 | | 407737A2 | | 1 | CALCOMANIA, Lift Arm Support; If Used |
| 3 | | 329047A1 | | 1 | CALCOMANIA, Warning; Crush Hazard |
| 4 | | 328904A1 | | 2 | CALCOMANIA, Warning; Pressurized System Hazard |
| 5 | | 332512A1 | | 2 | CALCOMANIA, Warning; Fan |
| 6 | | 388112A1 | | 1 | CALCOMANIA, Warning; Belt Entanglement |
| 7 | | 334456A1 | | 1 | CALCOMANIA, Danger; Starting In Gear |
| 8 | | 329044A1 | | 1 | CALCOMANIA, Warning; Hot Liquid Hazard |
| 9 | | 382622A1 | | 1 | CALCOMANIA, Warning; Read The Operator's Manual |
| 10 | | 321-7030 | | 1 | CALCOMANIA, Warning; Do Not Jump |
| 11 | | 328754A1 | | 1 | CALCOMANIA, Danger; Crush Hazard |
| 12 | | 328752A1 | | 1 | CALCOMANIA, Warning; Runover Hazard |
| 13 | | 329049A1 | | 1 | CALCOMANIA, Caution; Block Wheels |
| 14 | | 304083A1 | | 1 | CALCOMANIA, Ride Control |
| 15 | | 412471A1 | | 2 | CALCOMANIA, Danger; Battery Explosion Hazard |
| 16 | | 87453132 | | 2 | CALCOMANIA, Danger; Crush Hazard |
| 17 | | 335889A1 | | 2 | CALCOMANIA, Warning; Pressurized System Hazard |
| 18 | | 87588859 | | 1 | CALCOMANIA, Switch |
| 19 | | 364742A1 | | 1 | CALCOMANIA, Attachment Test |
| 20 | | 87586617 | | 1 | CALCOMANIA, Warning; Pressurized System Hazard |
| 21 | | 8603092 | | 1 | CALCOMANIA, Ether Explosion |

## CALCOMANIAS - FRANCES CANADIENSE



1

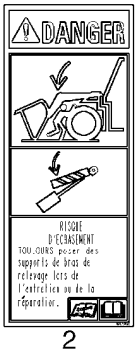

2

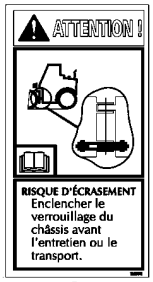

3

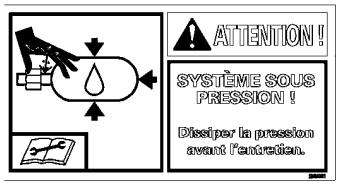

4



5



6



7

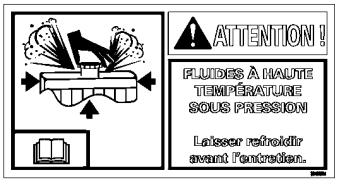

8



9



10

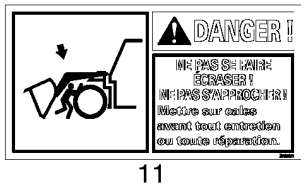

11



12

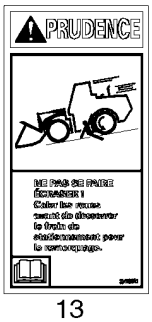

13



14



15



16

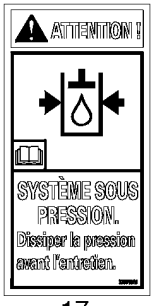

17

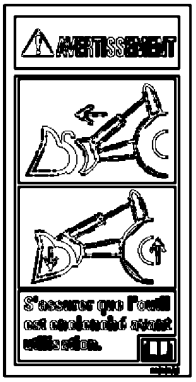

18



19

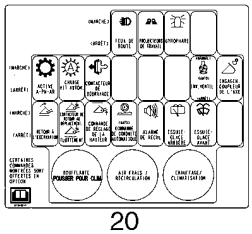
20

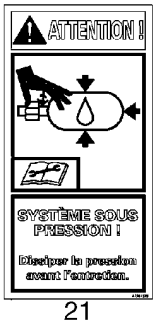

21

BS07E453

**CALCOMANIAS - FRANCES CANADIENSE**

| REF | FN | PART NUMBER | YR/SN | QTY | DENOMINACION |
|---|---|---|---|---|---|
| 1 | | 334577A1 | | 2 | CALCOMANIA, Warning; Crush Hazard |
| 2 | | 407738A2 | | 1 | CALCOMANIA, Lift Arm Support; If Used |
| 3 | | 334574A1 | | 1 | CALCOMANIA, Warning; Crush Hazard |
| 4 | | 334012A1 | | 2 | CALCOMANIA, Warning; Pressurized System Hazard |
| 5 | | 334033A1 | | 2 | CALCOMANIA, Warning; Fan |
| 6 | | 388157A1 | | 1 | CALCOMANIA, Warning; Belt Entanglement |
| 7 | | 334568A1 | | 1 | CALCOMANIA, Danger; Starting In Gear |
| 8 | | 334663A1 | | 1 | CALCOMANIA, Warning; Hot Liquid Hazard |
| 9 | | 333999A2 | | 1 | CALCOMANIA, Warning; Read The Operator's Manual |
| 10 | | 124269A1 | | 1 | CALCOMANIA, Do Not Jump |
| 11 | | 334678A1 | | 1 | CALCOMANIA, Danger; Crush Hazard |
| 12 | | 334686A1 | | 1 | CALCOMANIA, Warning; Runover Hazard |
| 13 | | 334706A1 | | 1 | CALCOMANIA, Caution; Block Wheels |
| 14 | | 304083A1 | | 1 | CALCOMANIA, Ride Control |
| 15 | | 412473A1 | | 2 | CALCOMANIA, Danger; Battery Explosion Hazard |
| 16 | | 87453133 | | 2 | CALCOMANIA, Danger; Crush Hazard |
| 17 | | 336010A1 | | 4 | CALCOMANIA, Warning; Pressurized System Hazard |
| 18 | | 364919A1 | | 1 | CALCOMANIA, Attachment Test |
| 19 | | 8603093 | | 1 | CALCOMANIA, Ether Explosion |
| 20 | | {87599217} | | 1 | DECAL, Rocker Switch |
| 21 | | 87597328 | | 1 | CALCOMANIA, Fluid Under Pressure |

## CALCOMANIAS - CASTELLANO PARA LATINOAMERICA



1



2



3

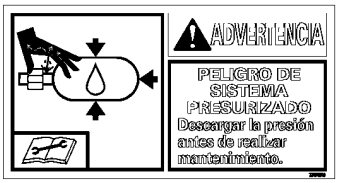

4



5

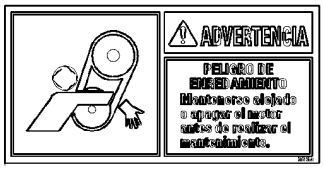

6



7



8



9



10



11



12



13



14



15



16



17

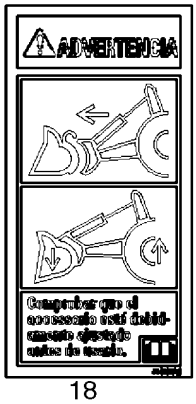

18



19



20

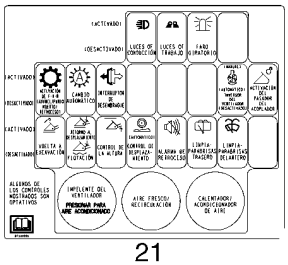
21



22

BS07E452

**CALCOMANIAS - CASTELLANO PARA LATINOAMERICA**

| REF | FN | PART NUMBER | YR/SN | QTY | DENOMINACION |
|---|---|---|---|---|---|
| 1 | | 334576A1 | | 2 | CALCOMANIA, Warning; Crush Hazard |
| 2 | | 407739A2 | | 1 | CALCOMANIA, Lift Arm Support |
| 3 | | 334573A1 | | 1 | CALCOMANIA, Warning; Crush Hazard |
| 4 | | 334015A1 | | 2 | CALCOMANIA, Warning; Pressurized System Hazard |
| 5 | | 334034A1 | | 2 | CALCOMANIA, Warning; Fan |
| 6 | | 388158A1 | | 2 | CALCOMANIA, Warning; Belt Entanglement |
| 7 | | 334567A1 | | 2 | CALCOMANIA, Danger; Starting In Gear |
| 8 | | 334664A1 | | 1 | CALCOMANIA, Warning; Hot Liquid Hazard |
| 9 | | 334000A2 | | 1 | CALCOMANIA, Warning; Read The Operator's Manual |
| 10 | | 124271A1 | | 1 | CALCOMANIA, Warning; Do Not Jump |
| 11 | | 334677A1 | | 1 | CALCOMANIA, Danger; Crush Hazard |
| 12 | | 334688A1 | | 1 | CALCOMANIA, Warning; Runover Hazard |
| 13 | | 334704A1 | | 1 | CALCOMANIA, Caution; Block Wheels |
| 14 | | 304083A1 | | 1 | CALCOMANIA, Ride Control |
| 15 | | 412474A1 | | 2 | CALCOMANIA, Danger; Battery Explosion Hazard |
| 16 | | 87453134 | | AR | CALCOMANIA, Danger; Crush Hazard |
| 17 | | 336011A1 | | 3 | CALCOMANIA, Warning; Pressurized System Hazard |
| 18 | | 364918A1 | | 1 | CALCOMANIA, Attachment Test |
| 19 | | 87453134 | | 1 | CALCOMANIA, Crush Hazard |
| 20 | | 8603094 | | 2 | CALCOMANIA, Warning, Ether Explosion |
| 21 | | {87599220} | | 1 | DECAL, Rocker Switch |
| 22 | | 87597329 | | 1 | CALCOMANIA, Fluid Under Pressure |

| Number | Figure | Sequence | Ref. |
|---|---|---|---|
| {14778414} | 09-31 | | 10 |
| {2820302} | 02-15 | | 18 |
| {2853815} | 02-26 | | 4 |
| {2853816} | 02-26 | | 5 |
| {2856309} | 02-36 | | 4 |
| {2856458} | 02-33 | | 2 |
| | 02-33A | | |
| {2856459} | 02-33A | | 3 |
| {2856460} | 02-33A | | 1 |
| {2858402} | 02-16 | | 6 |
| {345-101-B} | 09-29 | | 5 |
| {388540A1} | 09-09A | | |
| {402700A1} | 09-09 | | |
| {418470A1} | 09-11 | | 1 |
| {418471A1} | 09-10 | | 1 |
| {418472A1} | 09-11 | | 1 |
| {428432A1} | 09-11 | | 1 |
| {428433A1} | 09-10 | | 1 |
| {428434A1} | 09-11 | | 1 |
| {428436A1} | 09-10 | | 1 |
| {428437A1} | 09-11 | | 1 |
| {434536A1} | 09-11 | | 1 |
| {434537A1} | 09-10 | | 1 |
| {75048955} | 05-02 | | 17 |
| {76195212} | 03-06 | | 12 |
| {76303013} | 09-31 | | 3 |
| {76303042} | 09-31 | | 2 |
| {76303249} | 09-34 | | 19 |
| {76303295} | 05-02A | | 3 |
| {76303425} | 09-31 | | 4 |
| {76303478} | 05-03 | | 18 |
| {76303488} | 04-04 | | 25 |
| {76303494} | 09-43A | | 23 |
| {76303495} | 09-43A | | 15 |
| {76303500} | 09-31A | | 13 |
| | 09-43 | | 22 |
| {76303502} | 09-43A | | 12 |
| {76303504} | 09-43 | | 23 |
| {76303516} | 05-03 | | 19 |
| {76303541} | 09-43 | | 12 |
| {76303546} | 09-43 | | 10 |
| {76303549} | 09-43A | | 13 |
| {76303606} | 04-04 | | 8 |
| {76303609} | 09-43 | | 20 |
| {76303614} | 09-43 | | 18 |
| {76303615} | 09-43 | | 9 |
| {76303617} | 09-43 | | 17 |
| {779-14825} | 09-43 | | 19 |
| {8603547} | 06-22C | | 7 |
| {864-5055} | 08-27A | | 21 |
| | 08-27B | | 21 |
| | 08-28A | | 21 |
| | 08-28B | | 21 |
| {86509545} | 04-04 | | 24 |
| {87310653} | 09-07B | | 3 |
| {87318617} | 04-14 | | 6 |
| {87321451} | 09-35A | | 24 |
| {87324751} | 09-29 | | 7 |
| | 09-30 | | 5 |
| {87333866} | 09-14 | | 11 |
| {87337003} | 09-29 | | 6 |
| | 09-30 | | 4 |
| | 09-35A | | 23 |
| {87358700} | 06-23E | | 16 |
| {87371084} | 04-13 | | 16 |
| {87407966} | 09-09A | | |
| {87434293} | 08-16 | | |
| | 08-17 | | |
| {87446140} | 09-09C | | |
| {87446143} | 09-09C | | |
| {87451631} | 09-09B | | |
| {87452364} | 05-10 | | |
| {87516291} | 09-39 | | 10 |
| {87517128} | 05-03 | | 12 |
| {87519285} | 03-02 | | |
| {87525205} | 05-02 | | 2 |
| {87525216} | 05-02 | | 3 |
| {87525218} | 05-02 | | 19 |
| {87525220} | 05-02 | | 20 |
| {87525221} | 05-02 | | 22 |
| {87525493} | 04-04 | | 33 |
| | 09-36 | | 15 |
| {87526283} | 05-02 | | 14 |
| {87528282} | 09-35A | | 22 |
| {87547661} | 09-19 | | 10 |
| {87561073} | 09-47 | | 9 |
| {87567527} | 09-42A | | 10 |
| | 09-42C | | 10 |
| {87567829} | 09-42D | | 25 |
| {87567880} | 04-13 | | 13 |
| {87572375} | 02-03 | | 3 |
| {87572378} | 02-03 | | 4 |
| {87579996} | 04-24A | | 10 |
| {87579997} | 04-24A | | 11 |
| {87579998} | 04-24 | | 4 |
| {87583725} | 09-42A | | |
| {87583729} | 09-42A | | 11 |
| | 09-42C | | 11 |
| {87583731} | 09-42A | | 27 |
| | 09-42C | | 27 |
| {87583733} | 09-42A | | 1 |
| | 09-42C | | 1 |
| {87583734} | 09-42A | | 3 |
| {87583736} | 09-42A | | 41 |
| {87583737} | 09-42A | | 51 |
| | 09-42C | | 51 |
| {87583738} | 09-42C | | 55 |
| {87583739} | 09-42A | | 42 |
| | 09-42C | | 42 |
| {87583741} | 09-42A | | 50 |
| {87583747} | 09-42A | | 28 |
| | 09-42C | | 28 |
| {87583748} | 09-42A | | 13 |
| | 09-42A | | 49 |
| | 09-42C | | 13 |
| | 09-42C | | 49 |
| | 09-42C | | 77 |
| {87583752} | 09-42C | | 53 |
| {87583755} | 09-42C | | 56 |
| {87583757} | 09-42A | | 20 |
| | 09-42C | | 20 |
| {87583762} | 09-42A | | 24 |
| | 09-42C | | 24 |
| {87583839} | 09-42B | | 40A |
| {87583841} | 09-42B | | |
| {87583846} | 09-42B | | |
| {87583847} | 09-42B | | |
| {87583849} | 09-42B | | 42 |
| {87583854} | 09-42B | | 17 |
| {87583859} | 09-42B | | 43 |
| | 09-42D | | 53 |
| {87583860} | 09-42B | | 44 |
| {87584095} | 09-42D | | |
| {87584097} | 09-42C | | 2 |
| {87584099} | 09-42C | | 41 |
| {87584100} | 09-42D | | 48 |
| {87584101} | 09-42C | | |
| {87584102} | 09-42D | | 27 |
| {87584103} | 09-42D | | 50 |
| {87584172} | 09-42D | | 13 |
| {87584704} | 09-42A | | 23 |
| | 09-42C | | 23 |
| {87585037} | 09-42D | | |
| {87585124} | 09-42D | | 4 |
| {87586627} | 08-15 | | 1 |
| {87586628} | 08-15 | | 3A |
| {87586629} | 08-15 | | 3 |
| {87586630} | 08-15 | | 4A |
| {87586631} | 08-15 | | 4 |
| {87598751} | 08-15 | | |
| {87599217} | 09-58 | | 20 |
| {87599220} | 09-59 | | 21 |
| {87610804} | 09-43A | | 5 |
| {87610848} | 09-43A | | 25 |
| {87613497} | 04-21 | | 3 |
| {87613715} | 04-09 | | 1 |

| Number | Figure | Sequence | Ref. |
|---|---|---|---|
| {87617168} | 08-24A | | 10 |
| {87617169} | 08-24A | | 8 |
| {87617170} | 08-24A | | 11 |
| {87619954} | 09-43A | | 22 |
| {87619955} | 09-43A | | 24 |
| {87619956} | 09-43A | | 21 |
| {87619957} | 09-43A | | 16 |
| {87628359} | 09-34 | | 31 |
| {87628360} | 09-34 | | 32 |
| {87628362} | 09-34 | | 34 |
| {87628364} | 09-34 | | 37 |
| {87629047} | 09-33A | | 34 |
| | 09-34 | | 33 |
| {87632741} | 09-16 | | 11 |
| {87644535} | 09-33 | | 1 |
| | 09-33A | | |
| {87652920} | 09-19 | | 3 |
| {87652921} | 09-19 | | 3 |
| {87657832} | 09-52 | | 1 |
| {87658720} | 08-19B | | 11 |
| {87658721} | 08-19B | | 3 |
| {87658722} | 08-19B | | 7 |
| {87658723} | 07-03A | | 5 |
| | 07-03D | | 12 |
| {87658724} | 07-03B | | 3 |
| {87658725} | 07-03B | | 5 |
| {87661964} | 04-14 | | 19 |
| {87664046} | 09-32 | | 12 |
| {87664047} | 09-32 | | 6 |
| {87664048} | 09-32 | | 10 |
| | 09-33A | | 8 |
| | 09-35 | | 7 |
| | 09-35A | | 14 |
| {87664049} | 09-33 | | 3 |
| | 09-33A | | 11 |
| | 09-34 | | 8 |
| | 09-35A | | 10 |
| | 09-43 | | 4 |
| {87664050} | 09-32 | | 5 |
| {87664051} | 09-32 | | 7 |
| | 09-43 | | 2 |
| {885180004} | 04-14 | | 15 |
| {961-8075} | 08-27 | | 2 |
| | 08-28 | | 2 |
| {962-8055} | 08-27 | | 2 |
| | 08-28 | | 2 |
| 100-21244 | 05-10 | | 5 |
| 10519604 | 09-43 | | 24 |
| 10794011 | 04-15 | | 8 |
| 10902024 | 09-33A | | 10 |
| | 09-35A | | 15 |
| 10902224 | 09-33 | | 2 |
| 10902624 | 09-33A | | 25 |
| 109171C1 | 09-34 | | 35 |
| 116893A1 | 09-07B | | 26 |
| 117025A1 | 09-07B | | 27 |
| 120229A1 | 04-27 | | 6 |
| 121411A1 | 04-05 | | 21 |
| 121412A1 | 04-07 | | 27 |
| | 04-24 | | 5 |
| | 09-42 | | 5 |
| 121413A1 | 09-41 | | 1 |
| 124269A1 | 09-58 | | 10 |
| 124271A1 | 09-59 | | 10 |
| 124639A1 | 08-14 | | 1D |
| 1251791C1 | 03-04 | | 2F |
| 126268A1 | 09-14 | | 3 |
| 126844A1 | 04-13 | | 18 |
| 127555A1 | 09-10 | | 6B |
| 129-667 | 08-02A | | 4 |
| 131-1402 | 09-40 | | 3 |
| 131-141 | 08-01 | | 13 |
| 131-431 | 04-20 | | 8 |
| 131-53 | 09-07B | | 28 |
| 13272111 | 04-15 | | 6 |
| 13311217 | 09-34 | | 16 |
| 13313017 | 09-31B | | 4 |
| | 09-31B | | 5 |
| 1332154C1 | 09-28 | | 2 |
| 13797721 | 05-02 | | 23 |
| 139728A1 | 09-55 | | 1 |
| 139729A1 | 09-55 | | 3 |
| 14304731 | 04-15 | | 4 |
| 14306621 | 05-02 | | 6 |
| 14496201 | 04-15 | | 7 |
| 14496231 | 05-02 | | 15 |
| 14496301 | 04-15 | | 15 |
| 14496821 | 05-02 | | 9 |
| 14778411 | 05-03 | | 13 |
| 14778814 | 05-03 | | 20 |
| 1498088 | 09-33A | | 20 |
| | 09-34 | | 30 |
| | 09-35 | | 13 |
| 1542830C2 | 08-23A | | 2 |
| | 08-24A | | 7 |
| 1542831C1 | 05-07 | | 7 |
| | 05-07 | | 9 |
| 1542833C1 | 08-24A | | 2 |
| 1542875C1 | 05-10 | | 9 |
| 1542879C1 | 08-15 | | 3C |
| | 08-18 | | 5C |
| 1542881C1 | 08-16 | | 2B |
| | 08-17 | | 2B |
| 1546477C1 | 04-02 | | 14 |
| 1546485C1 | 04-07 | | 11 |
| 1546497C1 | 09-01 | | 5 |
| | 09-02 | | 5 |
| 1546498C1 | 09-03 | | 8 |
| | 09-04 | | 1 |
| | 09-05 | | 1 |
| | 09-06 | | 1 |
| 1547924C1 | 08-01 | | 23 |
| 15896214 | 09-32 | | 11 |
| 15896411 | 04-15 | | 16 |
| 16043231 | 09-42A | | 46 |
| | 09-42C | | 46 |
| 16043424 | 09-32 | | 9 |
| 16043624 | 09-32 | | 8 |
| | 09-43 | | 1 |
| 16043824 | 09-43 | | 7 |
| 16044024 | 09-33A | | 12 |
| | 09-34 | | 9 |
| | 09-35A | | 11 |
| 16044324 | 09-43 | | 5 |
| 16101721 | 05-02 | | 16 |
| 16104111 | 05-02 | | 4 |
| 16104411 | 05-02 | | 7 |
| 16745024 | 02-37 | | 12 |
| 178889A1 | 08-03 | | 34 |
| 182721A2 | 04-24A | | 1 |
| 186814A1 | 03-04A | | 1 |
| 186989A1 | 04-20 | | 7 |
| 187281A1 | 04-24A | | 2 |
| 187864A1 | 09-55 | | 6 |
| 19-135 | 04-03 | | 7 |
| | 04-03A | | 7 |
| 19-6247 | 06-24 | | 11 |
| 190117A1 | 07-03C | | 14 |
| | 07-03D | | 18 |
| | 08-03 | | 22 |
| | 08-29 | | 10 |
| | 08-30 | | 9 |
| | 08-31 | | 9 |
| | 08-32 | | 22 |
| 190119A1 | 08-25 | | 9 |
| 193446A1 | 04-27 | | 1 |
| 195-81023 | 09-34 | | 36 |
| 1954736C1 | 09-46 | | 6 |
| 196466A1 | 02-42 | | 4 |
| 1964725C1 | 04-02 | | 28 |
| 1964726C1 | 04-02 | | 27 |
| 1964727C1 | 04-02 | | 26 |
| 1964729C1 | 04-02 | | 31 |
| 1964730C1 | 04-02 | | 21 |
| 1964731C1 | 04-02 | | 1 |
| 1964736C1 | 04-02 | | 32 |

| Number | Figure | Sequence | Ref. |
|---|---|---|---|
| 1964737C1 | 04-02 | | 3 |
| 1964738C1 | 04-02 | | 13 |
| 1964748C1 | 04-02 | | 29 |
| 1964750C1 | 04-02 | | 30 |
| 1964831C2 | 04-15 | | 18 |
| 1964860C1 | 04-02 | | |
| | 04-02A | | 2 |
| | 04-02B | | 2 |
| 1964964C1 | 04-02 | | 19 |
| 1964965C1 | 04-02 | | 16 |
| 1964966C1 | 04-02 | | 18 |
| 1964968C1 | 04-02 | | 10 |
| 1964969C1 | 04-02 | | 5 |
| 1975801C1 | 09-46 | | 8 |
| 198823C1 | 04-10 | | 13 |
| 198824C1 | 08-01 | | 37 |
| 198825C1 | 03-01 | | 36 |
| | 08-02 | | 5 |
| | 09-49 | | 13 |
| 198826C1 | 03-01 | | 35 |
| | 08-01 | | 20 |
| | 09-49 | | 12 |
| 198828C1 | 08-01A | | 2 |
| 201-110 | 07-03D | | 16 |
| 201-145 | 08-29 | | 8 |
| | 08-30 | | 7 |
| | 08-31 | | 7 |
| | 08-32 | | 20 |
| 201-308 | 06-02 | | 12 |
| 214-1406 | 03-01 | | 7 |
| | 03-04A | | 5 |
| | 08-01 | | 16 |
| | 09-47 | | 6 |
| 214-1410 | 02-02 | | 24 |
| 214-14104 | 08-05 | | 27 |
| 214-1416 | 02-06 | | 23 |
| 214-1436 | 02-02 | | 15 |
| 214-1444 | 09-43A | | 26 |
| 214-1472 | 05-09 | | 13 |
| 214-1480 | 02-07 | | 4 |
| 214-1488 | 08-06 | | 15 |
| 214-1496 | 08-05 | | 26 |
| 214-1704 | 02-02 | | 19 |
| | 08-01 | | 39 |
| 214-3188 | 02-06 | | 15 |
| 217-1035 | 02-02 | | 29 |
| 217-1227 | 02-06A | | 7 |
| 217-132 | 03-04A | | 7 |
| 217-152 | 02-02 | | 30 |
| 217-191 | 02-02 | | 27 |
| 217-292 | 02-02 | | 18 |
| 217-372 | 03-01 | | 24 |
| 217-425 | 09-46 | | 1 |
| 217-445 | 08-02 | | 4 |
| 217-92 | 03-01 | | 25 |
| 218-1251 | 02-01 | | 10 |
| 218-1255 | 02-02 | | 23 |
| 218-1256 | 08-01 | | 33 |
| 218-335 | 08-01 | | 34 |
| 218-5209 | 08-23A | | 3 |
| | 08-24A | | 12 |
| 218-755 | 02-02 | | 22 |
| 218-756 | 02-01 | | 11 |
| 219-1 | 05-09 | | 19 |
| | 05-10 | | 22 |
| | 08-18 | | 7 |
| | 09-07 | | 22 |
| | 09-07A | | 22 |
| | 09-07B | | 22 |
| | 09-08 | | 11 |
| | 09-08A | | 6 |
| | 09-15 | | 9 |
| 219-20 | 06-24 | | 24A |
| 219-8 | 06-24 | | 24B |
| | 09-07 | | 31B |
| | 09-07A | | 31B |
| 220068A1 | 08-26B | | 7 |
| 225-14108 | 09-44B | | 10 |
| 225-14108 | 09-48 | | 10 |
| 231-1446 | 08-20 | | 6 |
| 231-4248 | 04-02A | | 11 |
| | 04-02B | | 9 |
| 231-46110 | 04-02 | | 23 |
| 232-2448 | 02-05 | | 4 |
| 232364A1 | 04-14 | | 3 |
| 233792A1 | 09-10 | | 6A |
| 237-6006 | 08-02A | | 6 |
| 237-6012 | 05-04 | | 24B |
| 237-6016 | 06-02 | | 12A |
| 238-5011 | 08-02A | | 7 |
| 238-5210 | 03-04 | | 2A |
| 238-5214 | 03-04 | | 2B |
| 238-5228 | 06-23 | | 5 |
| 238-5231 | 05-10 | | 13 |
| 238-5232 | 08-03 | | 4 |
| 238-5233 | 05-10 | | 12 |
| 238-5243 | 08-18 | | 5F |
| 238-5244 | 08-18 | | 5G |
| 238-5245 | 08-15 | | 3F |
| 238-5246 | 08-15 | | 3G |
| 238-5247 | 08-16 | | 2F |
| | 08-17 | | 2F |
| 238-5248 | 08-16 | | 2G |
| | 08-17 | | 2G |
| 238-6011 | 05-04 | | 12B |
| | 05-04 | | 13B |
| | 05-05 | | 24B |
| | 05-05 | | 7A |
| | 07-03C | | 15 |
| | 08-03 | | 20A |
| | 08-03 | | 21A |
| | 08-03 | | 23A |
| | 08-03 | | 24A |
| | 08-25 | | 4A |
| | 08-26 | | 4A |
| | 08-26 | | 5A |
| | 08-26 | | 6A |
| | 08-26A | | 4A |
| | 08-26A | | 5A |
| | 08-26A | | 6A |
| | 08-26B | | 4A |
| | 08-26B | | 5A |
| | 08-26B | | 6A |
| | 08-29 | | 6B |
| | 08-29 | | 8A |
| | 08-29 | | 9A |
| | 08-30 | | 4A |
| | 08-30 | | 7A |
| | 08-30 | | 8A |
| | 08-31 | | 5B |
| | 08-31 | | 8A |
| | 08-32 | | 21A |
| | 08-32 | | 22A |
| | 08-32 | | 7A |
| 238-6012 | 02-05 | | 10A |
| | 02-05 | | 12A |
| | 07-03C | | 5A |
| | 07-03D | | 10A |
| | 07-03D | | 26B |
| | 07-03D | | 33A |
| | 07-03D | | 9 |
| | 08-05 | | 7 |
| | 08-11 | | 10A |
| | 08-12 | | 10A |
| | 08-13 | | 12A |
| | 08-14 | | 10A |
| | 08-14 | | 11B |
| | 08-14 | | 3B |
| | 08-25 | | 11A |
| | 08-25 | | 5A |
| | 08-25 | | 7A |
| | 08-25 | | 8A |
| | 08-29 | | 5A |
| | 08-29 | | 7A |
| | 08-29 | | 8B |
| | 08-30 | | 5A |

| Number | Figure | Sequence | Ref. |
|---|---|---|---|
| 238-6012 | 08-30 | | 6A |
| | 08-30 | | 7B |
| | 08-31 | | 4A |
| | 08-31 | | 6A |
| | 08-31 | | 7A |
| | 08-32 | | 13A |
| | 08-32 | | 14A |
| | 08-32 | | 19A |
| | 08-32 | | 20A |
| | 08-32 | | 8A |
| 238-6014 | 05-04 | | 24A |
| | 05-09 | | 2B |
| | 05-09 | | 32B |
| | 05-09 | | 33B |
| | 05-09 | | 35A |
| | 05-09 | | 6A |
| | 07-03A | | 12A |
| | 07-03A | | 13A |
| | 07-03A | | 1A |
| | 07-03A | | 2A |
| | 07-03A | | 3A |
| | 07-03D | | 20A |
| | 07-03D | | 21B |
| | 07-03D | | 22A |
| 238-6016 | 05-04 | | 10A |
| | 05-04 | | 2B |
| | 05-04 | | 3A |
| | 05-05 | | 26A |
| | 05-05 | | 27A |
| | 05-05 | | 6A |
| | 05-05 | | 8A |
| | 05-09 | | 3A |
| | 05-09 | | 5 |
| | 07-03 | | 2A |
| | 07-03C | | 3A |
| | 07-03D | | 4A |
| | 07-03D | | 5 |
| | 08-03 | | 12A |
| | 08-19B | | 13A |
| | 08-19B | | 1B |
| 238-6018 | 02-05 | | 11A |
| | 02-05 | | 9A |
| | 07-03B | | 14A |
| | 07-03B | | 6A |
| | 07-03C | | 11 |
| | 07-03C | | 4A |
| | 07-03D | | 19A |
| | 08-02 | | 3A |
| | 08-03 | | 11B |
| | 08-08 | | 7A |
| | 08-09 | | 8A |
| | 08-10 | | 12A |
| | 08-19 | | 1A |
| | 08-19A | | 1A |
| | 08-23 | | 5B |
| | 08-23 | | 6A |
| | 08-24 | | 2B |
| | 08-24 | | 6A |
| 238-6021 | 05-05 | | 48A |
| | 05-05 | | 9A |
| | 06-02 | | 12B |
| | 07-03 | | 3A |
| | 08-03 | | 14A |
| | 08-05 | | 10A |
| | 08-05 | | 12B |
| | 08-05 | | 13A |
| | 08-05 | | 2A |
| | 08-05 | | 9A |
| | 08-06 | | 16A |
| | 08-06 | | 17A |
| | 08-06 | | 18A |
| | 08-06 | | 8 |
| | 08-07 | | 10 |
| | 08-07 | | 14A |
| | 08-07 | | 15A |
| | 08-07 | | 16A |
| | 08-07 | | 17A |
| | 08-07 | | 24A |
| 238-6021 | 08-07A | | 12A |
| | 08-07A | | 13A |
| | 08-07A | | 20A |
| | 08-07A | | 8 |
| | 08-08 | | 5B |
| | 08-08 | | 6A |
| | 08-09 | | 5B |
| | 08-09 | | 7 |
| | 08-10 | | 13A |
| | 08-10 | | 4A |
| | 08-10 | | 6A |
| | 08-20 | | 15A |
| | 08-20 | | 17A |
| | 08-20 | | 9B |
| | 08-21 | | 1A |
| | 08-03 | | 15 |
| 238-6222 | 04-15 | | 5 |
| 238270A1 | 05-02A | | 2 |
| | 04-23 | | 4 |
| 248-1169 | 04-23A | | 8 |
| | 06-02 | | 10 |
| 248-1185 | 04-18 | | 13 |
| 248-2376 | 09-42 | | 6 |
| 249116A1 | 09-42 | | 12 |
| 249117A1 | 09-44B | | 8 |
| 252550A2 | 09-48 | | 9 |
| | 04-03 | | 14 |
| 253347A1 | 04-03A | | 14 |
| | 04-04 | | 20 |
| | 04-05 | | 4 |
| | 04-17 | | 7 |
| | 04-26 | | 15 |
| | 05-02A | | 10 |
| | 02-02 | | 26 |
| 254026A1 | 08-03 | | 10 |
| | 09-10 | | 6B |
| 254822A1 | 09-10 | | 6B |
| 254823A1 | 09-10 | | 6 |
| 254825A1 | 02-07 | | |
| 258541A1 | 09-41 | | 7 |
| 265-14512 | 04-05 | | 12 |
| 279492A1 | 03-04 | | 2G |
| 282709A1 | 04-15 | | 9 |
| 282775A1 | 05-03 | | 5 |
| | 02-20 | | |
| 2830076 | 02-21 | | 1 |
| | 02-35 | | 4 |
| 2830158 | 02-15 | | 14 |
| 2830301 | 02-15 | | 19 |
| 2830303 | 02-15 | | 17 |
| 2830304 | 02-15 | | 15 |
| 2830307 | 02-38 | | 3 |
| 2830444 | 02-12 | | 10 |
| 2830559 | 02-15 | | 20 |
| 2830592 | 02-23 | | 4 |
| 2830704 | 02-23 | | 4 |
| 2830705 | 03-03 | | 14 |
| 2830711 | 03-03 | | 2 |
| 2830733 | 02-23 | | 1 |
| 2831274 | 02-24 | | |
| | 02-24 | | |
| 2831278 | 02-24 | | |
| 2831279 | 02-36 | | 3 |
| 2831287 | 02-36 | | |
| 2831297 | 05-01 | | 4 |
| 2831298 | 02-35 | | 4 |
| 283484A1 | 02-18 | | 2 |
| 2852037 | 03-11 | | 2 |
| 2852047 | 02-18 | | 1 |
| 2852100 | 02-09 | | 1 |
| 2852114 | 02-31 | | 1 |
| 2852122 | 02-21 | | 5 |
| 2852175 | 02-37 | | 11 |
| 2852202 | 02-13 | | 7A |
| 2852212 | 02-28 | | 2 |
| 2852217 | 02-28 | | 3 |
| 2852219 | 03-05 | | 13 |
| 2852221 | | | |
| 2852234 | | | |

| Number | Figure | Sequence | Ref. | Number | Figure | Sequence | Ref. |
|---|---|---|---|---|---|---|---|
| 2852237 | 02-13 | | 11 | 2854543 | 03-08 | | 5 |
| 2852238 | 02-13 | | 12 | 2854544 | 03-08 | | 2 |
| 2852305 | 02-26 | | 1 | 2854549 | 03-08 | | 1 |
| 2852325 | 02-39 | | 1 | 2854552 | 03-08 | | 3 |
| 2852392 | 02-39 | | 3 | 2854593 | 03-09 | | 9 |
| 2852396 | 02-19 | | 2 | 2854594 | 03-09 | | 1 |
| 2852397 | 02-19 | | 3 | 2854595 | 03-09 | | |
| 2852398 | 02-19 | | 1 | 2854596 | 03-09 | | 2 |
| 2852407 | 02-17 | | 7 | 2854598 | 03-10 | | 1 |
| 2852419 | 02-13 | | 4 | 2854599 | 03-10 | | 4 |
| 2852420 | 02-13 | | 6 | 2854600 | 03-10 | | 6 |
| 2852425 | 02-29 | | 6 | 2854603 | 02-35 | | 4 |
| 2852426 | 02-29 | | 2 | 2854604 | 02-34 | | 5 |
| 2852427 | 02-33 | | 8 | 2854606 | 03-07 | | 2 |
| 2852428 | 02-33 | | 11 | 2854608 | 03-07 | | 5 |
| 2852434 | 03-08 | | 10 | 2854609 | 03-07 | | 6 |
| 2852436 | 03-03 | | | 2854700 | 02-37 | | 4 |
| 2852440 | 03-06 | | 1 | 2854701 | 02-37 | | 5 |
| 2852443 | 03-06 | | 2 | | 04-11A | | 2 |
| 2852446 | 03-06 | | 3 | 2854702 | 02-37 | | 6 |
| 2852449 | 03-06 | | 5 | 2854866 | 02-37 | | 10 |
| 2852451 | 03-06 | | 7 | | 02-40 | | 5 |
| 2852452 | 03-06 | | 8 | 2855124 | 02-17 | | 1 |
| 2852457 | 03-11 | | 4 | 2855125 | 03-11 | | 1 |
| 2852458 | 03-11 | | 5 | 2855150 | 03-09 | | 6 |
| 2852463 | 02-09 | | | 2855519 | 02-35 | | 1 |
| 2852464 | 02-09 | | 2 | 2856132 | 02-09 | | 6 |
| 2852468 | 02-39 | | 5 | 2856543 | 02-40 | | 3 |
| 2852473 | 02-40 | | 4 | 297850A1 | 04-04 | | 21 |
| 2852476 | 04-01 | | 3 | 297865A1 | 04-04 | | 18 |
| 2852484 | 03-10 | | 5 | 298591A1 | 05-06 | | 3 |
| 2852486 | 03-09 | | 13 | 299456A1 | 02-08 | | 7 |
| 2852488 | 03-05 | | 3 | 301803R1 | 09-46 | | 2 |
| 2852496 | 02-39 | | 6 | 302456A1 | 09-41 | | 2 |
| | 02-39 | | 8 | 302862A1 | 04-24A | | 4 |
| 2852500 | 03-10 | | 2 | 304083A1 | 09-57 | | 14 |
| 2852602 | 02-33 | | 6 | | 09-58 | | 14 |
| 2852729 | 02-22 | | 2 | | 09-59 | | 14 |
| 2852744 | 02-38 | | 6 | 307149A1 | 08-01 | | 28 |
| 2852770 | 02-13 | | 7 | 3079389R1 | 04-02 | | 4 |
| 2852772 | 02-15 | | 6 | 3079392R91 | 04-02 | | 9 |
| 2852773 | 02-25 | | 3 | 3079410R1 | 04-02 | | 20 |
| 2852774 | 02-25 | | 4 | 31-1081 | 09-46 | | 7 |
| 2852776 | 02-33 | | 7 | | 09-49 | | 8 |
| 2852791 | 03-03 | | 12 | 31-2369 | 04-23 | | 5 |
| 2852793 | 03-03 | | 11 | 31-2370 | 04-28 | | 2 |
| 2852794 | 03-06 | | 6 | 31-2582 | 04-23A | | 9 |
| 2852801 | 02-16 | | 6A | 31-2940 | 08-01 | | 45 |
| 2852804 | 03-05 | | 10 | 321-7030 | 09-57 | | 10 |
| 2852805 | 03-05 | | 11 | 321446A1 | 04-05 | | 26 |
| 2852817 | 03-09 | | 19 | | 04-10 | | 4 |
| 2852818 | 03-09 | | 12 | 322197950 | 04-04 | | 34 |
| 2852820 | 03-09 | | 17A | | 09-29 | | 4 |
| 2852821 | 03-09 | | 24 | | 09-30 | | 2 |
| 2852825 | 03-09 | | 11 | | 09-35A | | 5 |
| 2853410 | 02-09 | | 9 | 3222214R1 | 06-22A | | 17 |
| 2853412 | 02-09 | | 10 | | 06-23A | | 18 |
| 2853537 | 03-08 | | 8 | 323694A1 | 09-57 | | 1 |
| 2853591 | 02-10 | | 1 | 324201A1 | 05-04 | | 4 |
| 2853604 | 02-12 | | 9 | | 05-05 | | 28 |
| 2853728 | 02-13 | | 8 | 324203A1 | 04-28 | | 6 |
| 2853780 | 02-12 | | | 326-1488 | 09-28 | | 3 |
| 2853781 | 02-12 | | 3 | 328082A1 | 05-09 | | 28 |
| 2853784 | 02-25 | | 6 | | 09-07 | | 26 |
| 2853788 | 02-33 | | 5 | | 09-07A | | 26 |
| 2854030 | 02-35 | | 3 | | 09-07B | | 40 |
| 2854072 | 02-39 | | 2 | 328186A1 | 08-01A | | 6 |
| 2854075 | 02-09 | | 8 | 328752A1 | 09-57 | | 12 |
| 2854079 | 03-09 | | 3 | 328754A1 | 09-57 | | 11 |
| 2854282 | 03-09 | | 14 | 328904A1 | 09-57 | | 4 |
| 2854292 | 03-09 | | 5 | 329-1014 | 09-28 | | 4 |
| 2854375 | 02-16 | | 7 | 329044A1 | 09-57 | | 8 |
| | 02-25 | | 8 | 329047A1 | 09-57 | | 3 |
| 2854491 | 02-40 | | 7 | 329049A1 | 09-57 | | 13 |
| 2854530 | 02-33 | | 4 | 329051A1 | 09-55 | | 10 |
| 2854534 | 02-37 | | 1 | 329483A1 | 08-24A | | 9A |
| 2854540 | 03-08 | | | 331-329 | 09-15 | | 5 |
| 2854542 | 03-08 | | 6 | 332512A1 | 09-57 | | 5 |

| Number | Figure | Sequence | Ref. | Number | Figure | Sequence | Ref. |
|---|---|---|---|---|---|---|---|
| 333999A2 | 09-58 | | 9 | 353036A1 | 07-03 | | 12 |
| 334000A2 | 09-59 | | 9 | 358981A1 | 09-28 | | 1 |
| 334012A1 | 09-58 | | 4 | 358982A1 | 09-28 | | 5 |
| 334015A1 | 09-59 | | 4 | 360939A1 | 09-10 | | 2 |
| 334033A1 | 09-58 | | 5 | | 09-11 | | 2 |
| 334034A1 | 09-59 | | 5 | 360982A1 | 08-18 | | 9 |
| 334456A1 | 09-57 | | 7 | 360984A1 | 08-17 | | |
| 334567A1 | 09-59 | | 7 | 361128A1 | 09-07 | | 10 |
| 334568A1 | 09-58 | | 7 | | 09-07A | | 10 |
| 334573A1 | 09-59 | | 3 | | 09-07B | | 14 |
| 334574A1 | 09-58 | | 3 | 361133A2 | 09-07 | | 11 |
| 334576A1 | 09-59 | | 1 | | 09-07A | | 11 |
| 334577A1 | 09-58 | | 1 | | 09-07B | | 13 |
| 334663A1 | 09-58 | | 8 | 361139A2 | 09-07 | | 12 |
| 334664A1 | 09-59 | | 8 | | 09-07A | | 12 |
| 334677A1 | 09-59 | | 11 | | 09-08 | | 2 |
| 334678A1 | 09-58 | | 11 | 361187A1 | 06-01 | | 7 |
| 334686A1 | 09-58 | | 12 | 361811A1 | 02-01 | | 4 |
| 334688A1 | 09-59 | | 12 | 364376A1 | 05-10 | | 18 |
| 334704A1 | 09-59 | | 13 | 364444A2 | 04-13 | | 8 |
| 334706A1 | 09-58 | | 13 | 364741A1 | 09-41 | | 3 |
| 335889A1 | 09-57 | | 17 | 364742A1 | 09-57 | | 19 |
| 336010A1 | 09-58 | | 17 | 364918A1 | 09-59 | | 18 |
| 336011A1 | 09-59 | | 17 | 364919A1 | 09-58 | | 18 |
| 336029A1 | 08-18 | | 3B | 365191A1 | 04-25 | | 2 |
| 336030A1 | 08-16 | | 4C | 365353A1 | 09-07 | | 24 |
| | 08-17 | | 4C | | 09-07A | | 24 |
| 336041A1 | 08-15 | | 3D | 365354A1 | 09-07 | | 25 |
| | 08-18 | | 5D | | 09-07A | | 25 |
| 336042A1 | 08-16 | | 2D | 365355A1 | 09-07 | | 23 |
| | 08-17 | | 2D | | 09-07A | | 23 |
| 336045A1 | 08-18 | | 3D | 365356A1 | 09-08 | | 8 |
| 336046A1 | 08-16 | | 4D | 365357A1 | 04-25 | | 3 |
| | 08-17 | | 4D | | 04-25A | | 3 |
| 336378A1 | 08-18 | | 5A | 365516A2 | 08-03 | | 27 |
| 336379A1 | 08-18 | | 5 | 365935A2 | 04-24A | | 8 |
| 339508A1 | 08-16 | | 4A | 366904A1 | 03-04 | | 8 |
| | 08-17 | | 4A | 366905A1 | 03-04 | | 7 |
| 339510A1 | 08-16 | | 4 | 367489A1 | 05-04 | | 6 |
| | 08-17 | | 4 | | 05-05 | | 35 |
| 339511A1 | 08-16 | | 2A | | 07-03B | | 8 |
| | 08-17 | | 2A | | 07-03D | | 8 |
| 339512A1 | 08-16 | | 2 | | 08-05 | | 4 |
| | 08-17 | | 2 | | 08-06 | | 7 |
| 339520A1 | 08-16 | | 3 | | 08-07 | | 9 |
| 339521A1 | 08-16 | | 3A | | 08-07A | | 7 |
| | 08-17 | | 3A | | 08-08 | | 3 |
| 339525A1 | 08-16 | | 1 | | 08-09 | | 3 |
| | 08-17 | | 1 | | 08-19 | | 2 |
| 341968A1 | 08-18 | | 3A | | 08-19A | | 2 |
| 341971A1 | 08-18 | | 3 | | 08-19B | | 4 |
| 345-49 | 06-24 | | 25 | | 09-46 | | 3 |
| 345-62 | 04-01 | | 4 | 367658A1 | 05-04 | | 7 |
| 345-75 | 04-01 | | 5 | | 05-05 | | 36 |
| 345-87 | 02-02 | | 32 | | 07-03 | | 15 |
| | 09-46 | | 5 | | 07-03B | | 11 |
| 345125A1 | 09-42D | | 43 | | 07-03D | | 6 |
| 345749A1 | 09-42A | | 14 | | 08-05 | | 3 |
| | 09-42C | | 14 | | 08-06 | | 19 |
| 345752A1 | 09-42A | | 15 | | 08-07 | | 18 |
| | 09-42C | | 15 | | 08-07A | | 14 |
| 345753A1 | 09-42A | | 16 | | 08-08 | | 8 |
| | 09-42C | | 16 | | 08-09 | | 9 |
| 345754A1 | 09-42A | | 17 | | 08-10 | | 10 |
| | 09-42C | | 17 | | 08-13 | | 2 |
| 345776A1 | 09-42A | | 19 | | 08-33 | | 2 |
| | 09-42C | | 19 | 368055A1 | 04-18 | | 2 |
| 345783A1 | 09-42A | | 45 | | 04-19 | | |
| | 09-42C | | 45 | 368056A1 | 04-18 | | 1 |
| 347613A1 | 02-03 | | 2 | | 04-19 | | |
| 347615A3 | 03-01 | | 1 | 368140A1 | 06-23 | | 7 |
| 349372A1 | 05-02A | | 4 | 368141A1 | 06-23 | | 7 |
| 350662A1 | 08-01 | | 38 | 368142A1 | 06-23 | | 7 |
| | 09-44B | | 5 | 368526A1 | 09-10 | | 8 |
| | 09-48 | | 5 | 368775A1 | 09-07B | | 33 |
| 353-414 | 08-19 | | 8 | 368836A2 | 09-07B | | 34 |
| | 09-44B | | 12 | 369432A2 | 09-07B | | 2A |
| 353036A1 | 06-02 | | 8 | 371185A1 | 04-28 | | 1 |

| Number | Figure | Sequence | Ref. |
|---|---|---|---|
| 371883A1 | 09-07A | | 2A |
| 372081A1 | 09-11 | | 6 |
| 372082A2 | 09-11 | | 5 |
| 372102A3 | 08-08 | | 6 |
| 372359A1 | 08-05 | | 18 |
| | 08-05 | | 19 |
| 372453A1 | 08-08 | | 4 |
| | 08-09 | | 4 |
| | 08-10 | | 3 |
| 373040A2 | 08-33 | | 1 |
| 373354A1 | 09-10 | | 5 |
| 374421A4 | 04-13 | | 6 |
| 374424A2 | 04-15 | | 10 |
| | 05-03 | | 16 |
| 374426A2 | 04-15 | | 11 |
| | 05-03 | | 7 |
| 374429A2 | 04-13 | | 14 |
| 374430A2 | 04-13 | | 3 |
| | 04-22 | | 4 |
| 374431A2 | 04-13 | | 5 |
| 374433A3 | 04-13 | | 13 |
| 374434A2 | 04-15 | | 12 |
| | 05-03 | | 6 |
| 375326A2 | 09-07 | | 15 |
| | 09-07A | | 15 |
| | 09-08 | | 1 |
| 375328A1 | 09-07 | | 13 |
| | 09-07A | | 13 |
| 375330A1 | 09-07 | | 14 |
| | 09-07A | | 14 |
| 375516A1 | 09-08 | | 9 |
| 375517A1 | 09-07 | | 33 |
| | 09-07A | | 33 |
| | 09-08 | | 10 |
| 375518A1 | 09-07B | | 23 |
| | 09-08 | | 7 |
| | 09-08A | | 8 |
| 377608A1 | 08-03 | | 1 |
| | 08-04 | | |
| 377899A1 | 04-10 | | 3 |
| 379070A2 | 09-07B | | 15 |
| 379139A1 | 08-14 | | 1 |
| 379149A2 | 09-04 | | 2 |
| | 09-05 | | 2 |
| | 09-06 | | 2 |
| 379191A2 | 09-07B | | 2B |
| 379197A2 | 09-07B | | 16 |
| 379374A1 | 07-03B | | 7 |
| | 07-03D | | 27 |
| | 08-11 | | 1 |
| | 08-12 | | 2 |
| | 08-13 | | 1 |
| | 09-49 | | 9 |
| 379587A2 | 08-01 | | 44 |
| 379611A1 | 06-01 | | 8 |
| 379770A2 | 09-08A | | 1 |
| 38-33264 | 09-07B | | 35 |
| 3805086 | 09-35A | | 19 |
| 3805129 | 09-33A | | 16 |
| | 09-34 | | 26 |
| | 09-35 | | 3 |
| 3805251 | 09-33A | | 30 |
| 380912A1 | 08-25 | | 1 |
| 381232A1 | 02-02 | | 5 |
| 382189A1 | 02-02 | | 17 |
| 382495A1 | 09-17 | | 12 |
| 382622A1 | 09-57 | | 9 |
| 383868A1 | 07-02 | | 4 |
| 383869A2 | 07-02 | | 6 |
| | 07-05 | | 3 |
| 384138A1 | 04-28 | | 2A |
| 384774A1 | 08-01 | | 10 |
| 384985A1 | 05-01 | | 5 |
| 386040R1 | 02-03 | | 12 |
| 386735A1 | 07-03A | | 4 |
| 386741A2 | 09-55 | | 14 |
| 386823A1 | 07-03A | | 11 |
| 387147A1 | 09-55 | | 2 |
| 387149A1 | 09-55 | | 5 |
| 388112A1 | 09-57 | | 6 |
| 388157A1 | 09-58 | | 6 |
| 388158A1 | 09-59 | | 6 |
| 388509A1 | 08-03 | | 5 |
| 388555A2 | 08-03 | | 19 |
| 388556A1 | 08-03 | | 9 |
| 388558A1 | 08-03 | | 25 |
| 388744A1 | 08-24A | | 4 |
| 388813A1 | 04-24A | | 7 |
| 389049A1 | 08-05 | | 16 |
| 389161A1 | 08-05 | | 28 |
| | 08-05 | | 29 |
| 389349A1 | 08-07 | | 3 |
| 389351A1 | 08-07 | | 5 |
| 389487A1 | 04-15 | | 3 |
| | 05-03 | | 8 |
| 390208A2 | 08-03 | | 30 |
| 391133A1 | 08-05 | | 25 |
| | 08-06 | | 14 |
| 391276A1 | 09-15 | | 14 |
| 391278A1 | 09-15 | | 15 |
| 391280A1 | 09-15 | | 10 |
| 391281A1 | 09-15 | | 6 |
| 391859A1 | 08-25 | | 6 |
| 392059A1 | 08-25 | | 3 |
| 393126A1 | 08-13 | | 11 |
| 393632A1 | 02-02 | | 25 |
| 394799A1 | 04-08 | | 3 |
| 395185A1 | 04-08 | | 3A |
| 39519 | 09-22 | | 4 |
| 395895A1 | 08-02 | | 7 |
| | 09-55 | | 17 |
| 396-41094 | 09-28 | | 6 |
| 396471A1 | 04-03 | | 4 |
| | 04-03A | | 4 |
| 397437A1 | 02-01 | | 9 |
| 397547A1 | 08-20 | | 22 |
| 398148A1 | 09-42D | | |
| 398771A1 | 04-26 | | 5 |
| 398888A1 | 04-17 | | 2 |
| | 05-05 | | 12 |
| 399350A1 | 08-17 | | 3 |
| 400833A2 | 08-32 | | 10 |
| 401525A1 | 08-03 | | 36 |
| 401526A1 | 08-03 | | 35 |
| | 08-25 | | 22 |
| 401527A2 | 08-03 | | 37 |
| 402390A1 | 08-32 | | 12 |
| 404635A1 | 04-07 | | 19 |
| 406347A1 | 09-12 | | 7 |
| | 09-13 | | 7 |
| 406390A1 | 09-12 | | 8 |
| | 09-13 | | 8 |
| 407632A1 | 02-14 | | 1 |
| 407737A2 | 09-57 | | 2 |
| 407738A2 | 09-58 | | 2 |
| 407739A2 | 09-59 | | 2 |
| 407869A2 | 08-32 | | 2 |
| | 08-32A | | 1 |
| 408142A1 | 04-19 | | 2 |
| 408143A1 | 04-19 | | 3 |
| 410108A1 | 08-29A | | |
| 410566A1 | 08-29A | | |
| 410939A1 | 04-19 | | 4 |
| 410940A1 | 04-19 | | 5 |
| 410941A1 | 04-19 | | 7 |
| 410942A1 | 04-19 | | 6 |
| 412067A1 | 09-14 | | 2 |
| 412152 | 09-34 | | 25 |
| 412471A1 | 09-57 | | 15 |
| 412473A1 | 09-58 | | 15 |
| 412474A1 | 09-59 | | 15 |
| 419792A2 | 02-02 | | 33 |
| 420-21236 | 09-10 | | 3 |
| | 09-11 | | 3 |
| 420-21244 | 09-10 | | 9 |
| | 09-11 | | 7 |

| Number | Figure | Sequence | Ref. |
|---|---|---|---|
| 4227144 | 09-33A | | 5 |
| | 09-34 | | 6 |
| | 09-35A | | 6 |
| 4227178 | 09-33 | | 8 |
| | 09-35 | | 6 |
| 422721300 | 09-43 | | 8 |
| 4227225 | 05-02 | | 8 |
| 4227226 | 05-02 | | 5 |
| 425-107 | 04-02A | | 16 |
| | 04-02B | | 14 |
| | 04-05 | | 23 |
| 425-1310 | 07-03 | | 7 |
| 425-145 | 04-20 | | 5 |
| 425-1612 | 09-10 | | 10 |
| | 09-10 | | 4 |
| | 09-11 | | 4 |
| | 09-11 | | 8 |
| 426-1244 | 09-10 | | 12 |
| 426-1252 | 09-10 | | 11 |
| 426-8104 | 04-02A | | 10 |
| | 04-02B | | 8 |
| 426-820 | 04-02A | | 20 |
| | 04-02B | | 18 |
| 427501A1 | 08-29A | | 6 |
| 432444A1 | 09-19 | | 5 |
| 432765A1 | 09-15 | | 19 |
| 432909A1 | 09-15 | | 23 |
| 433264A1 | 09-15 | | 16 |
| 437523A1 | 08-09 | | 6 |
| 440-1088 | 09-44B | | 11 |
| | 09-48 | | 11 |
| 440038A1 | 04-11 | | 4 |
| 441822A1 | 09-07B | | 24 |
| | 09-08A | | 9 |
| 442702A1 | 05-10 | | 1 |
| 442703A1 | 05-10 | | 6 |
| 442704A1 | 05-10 | | |
| 442711A1 | 05-10 | | 4 |
| 442713A1 | 05-10 | | 8 |
| 442717A1 | 05-10 | | 20 |
| 443565A1 | 06-01 | | 18 |
| 444931A1 | 09-16 | | 14 |
| 445786A1 | 04-10 | | 5 |
| 446178A1 | 08-15 | | 3E |
| 446183A1 | 08-20 | | 23 |
| 446195A1 | 08-15 | | 4D |
| 446481A1 | 08-15 | | 4C |
| 449527A1 | 08-32A | | |
| 449528A1 | 08-32A | | |
| 449529A1 | 08-32A | | |
| 449530A1 | 08-32A | | |
| 449533A1 | 08-32A | | |
| 449555A1 | 08-32A | | |
| 47124903 | 09-42A | | 38 |
| | 09-42A | | 7 |
| | 09-42C | | 38 |
| | 09-42C | | 7 |
| 47335175 | 09-42D | | 42 |
| 4890088 | 03-05 | | 6 |
| 4890189 | 03-09 | | 22 |
| 4890190 | 03-09 | | 17 |
| 4890193 | 03-09 | | 21 |
| 4890634 | 03-05 | | 7 |
| 4890635 | 03-05 | | 14 |
| 4890700 | 03-05 | | 4 |
| 4890832 | 02-32 | | 4 |
| 4890833 | 02-29 | | 8 |
| 4890926 | 03-07 | | 5B |
| 4890929 | 03-07 | | 3 |
| 4890964 | 03-03 | | 8 |
| | 03-09 | | 7 |
| 4891024 | 02-23 | | 2 |
| 4891025 | 02-23 | | 3 |
| 4891209 | 02-32 | | 5 |
| 4891252 | 02-18 | | 1 |
| 4891288 | 02-16 | | 4 |
| 4891353 | 02-20 | | 6 |
| 4891385 | 03-05 | | 8 |
| 4892255 | 03-09 | | 18 |
| 4892708 | 02-36 | | 2 |
| 4892712 | 02-35 | | 2 |
| 4892715 | 02-36 | | 4 |
| 4892867 | 02-27 | | 3 |
| 4892871 | 02-15 | | |
| 4892893 | 02-27 | | 2 |
| 4892915 | 02-29 | | 2 |
| 4893036 | 02-24 | | 7 |
| | 02-37 | | 10 |
| | 02-40 | | 5 |
| 4893234 | 02-15 | | 21 |
| 4893244 | 02-24 | | 13A |
| | 02-24 | | 14A |
| 4893386 | 02-26 | | 2 |
| 4893389 | 03-05 | | 12 |
| 4893464 | 03-03 | | 7 |
| 4893487 | 02-33A | | 2 |
| 4893739 | 03-07 | | 4 |
| 4893936 | 02-25 | | 5 |
| 4893962 | 03-05 | | 9 |
| 4894095 | 03-06 | | 10A |
| | 03-06 | | 1A |
| | 03-06 | | 2A |
| | 03-06 | | 3A |
| | 03-11 | | 1A |
| 4894100 | 02-41 | | 1 |
| 4894139 | 02-13 | | 5 |
| 4894410 | 02-41 | | 2 |
| 4894641 | 02-28 | | 1 |
| 4894721 | 03-03 | | 13 |
| 4895017 | 02-26 | | 4 |
| 4895031 | 02-33 | | 3 |
| 4895037 | 02-09 | | 11 |
| 4895038 | 02-20 | | 4 |
| 4895039 | 02-20 | | 3 |
| 4895040 | 02-20 | | 7 |
| 4895045 | 02-12 | | 5 |
| 4895049 | 02-21 | | 7 |
| 4895051 | 02-24 | | 2 |
| 4895052 | 02-24 | | 3 |
| 4895073 | 02-24 | | 5 |
| 4895074 | 02-24 | | 6 |
| 4895078 | 02-39 | | 10 |
| | 02-40 | | 6 |
| 4895079 | 02-39 | | 9 |
| 4895080 | 02-39 | | 11 |
| 4895082 | 02-39 | | 11A |
| 4895085 | 02-24 | | 9 |
| 4895089 | 02-16 | | 8 |
| | 02-24 | | 10 |
| 4895098 | 02-17 | | 4 |
| 4895107 | 02-16 | | 2 |
| 4895131 | 02-40 | | 2 |
| 4895132 | 02-17 | | 2 |
| 4895141 | 02-17 | | 6 |
| 4895155 | 02-29 | | 3 |
| 4895157 | 03-09 | | 16 |
| 4895219 | 02-38 | | 5 |
| 4895228 | 02-20 | | 5 |
| 4895291 | 02-13 | | 13 |
| 4895294 | 02-37 | | 11 |
| 4895336 | 02-38 | | 4 |
| 4895378 | 02-29 | | 4 |
| 4895379 | 02-29 | | 5 |
| 4895392 | 02-21 | | 4 |
| 4895393 | 02-21 | | 4A |
| | 02-39 | | 6A |
| 4895406 | 02-24 | | 11 |
| 4895407 | 02-24 | | 12 |
| 4895408 | 02-24 | | 9 |
| 4895414 | 02-26 | | 5 |
| 4895424 | 02-37 | | 8 |
| 4895432 | 02-33 | | 1 |
| | 02-37 | | 2 |
| 4895462 | 03-06 | | 11 |
| 4895477 | 03-09 | | 21A |
| 4895483 | 03-07 | | 1 |

| Number | Figure | Sequence | Ref. | Number | Figure | Sequence | Ref. |
|---|---|---|---|---|---|---|---|
| 4895576 | 02-39 | | 4 | 4899076 | 02-29 | | 2 |
| 4895605 | 02-21 | | 2 | 4899078 | 02-30 | | 3 |
| 4895610 | 02-09 | | 5 | | 02-32 | | 2 |
| | 02-13 | | 10 | | 03-09 | | 8 |
| 4895623 | 02-39 | | 7 | 4899079 | 02-16 | | 1 |
| 4895625 | 02-39 | | 7A | | 02-18 | | 3 |
| 4895817 | 03-09 | | 25 | | 02-34 | | 1 |
| 4895910 | 02-25 | | 1 | | 02-41 | | 4 |
| 4895919 | 02-20 | | 8 | 4899080 | 02-34 | | 6 |
| 4895921 | 02-20 | | 2 | 4899081 | 02-24 | | 1 |
| 4896263 | 02-37 | | 14 | 4899085 | 02-38 | | 7 |
| 4896329 | 03-11 | | 3 | 4899086 | 02-17 | | 3 |
| 4896380 | 02-34 | | 2 | 4899087 | 02-17 | | 5 |
| 4896404 | 02-12 | | 4 | 4899089 | 02-33 | | 12 |
| 4896407 | 02-12 | | 9 | 4899090 | 02-10 | | 2 |
| 4896409 | 02-12 | | 8 | 4899092 | 02-15 | | 13 |
| 4896410 | 02-12 | | 7 | 4899093 | 02-30 | | 4 |
| 4896542 | 03-09 | | 4 | 4899107 | 02-16 | | 2A |
| 4896543 | 03-03 | | 9 | 4899108 | 02-16 | | 2B |
| 4896650 | 02-38 | | 2 | 4899109 | 02-29 | | 2 |
| 4896651 | 02-38 | | 1 | 4899110 | 02-40 | | 1 |
| 4896773 | 02-27 | | 1 | | 03-09 | | 20 |
| 4896884 | 03-08 | | 9 | 4899115 | 02-21 | | 2A |
| 4896897 | 02-31 | | 2 | 4899124 | 03-09 | | 15 |
| 4896939 | 02-30 | | 6 | 4899219 | 02-15 | | |
| 4896952 | 03-05 | | 2 | 4899239 | 02-25 | | 7 |
| 4896991 | 02-16 | | 7 | 4899240 | 02-15 | | 9 |
| | 02-25 | | 8 | 4899242 | 02-15 | | 10 |
| 4896996 | 03-06 | | 4 | 4899243 | 02-15 | | 11 |
| 4897024 | 02-32 | | 1 | 4899245 | 02-33 | | 10 |
| 4897106 | 02-24 | | 13 | 4899257 | 02-33 | | 9 |
| 4897224 | 03-03 | | 5 | 4899377 | 02-16 | | 10 |
| | 03-09 | | 23 | 4899436 | 02-16 | | 5 |
| 4897277 | 03-06 | | 9 | 4899566 | 02-12 | | 2 |
| 4897330 | 02-09 | | 4 | 4899679 | 02-30 | | 1 |
| | 02-13 | | 9 | 4899689 | 03-07 | | 5A |
| 4897457 | 02-34 | | 4 | 4899803 | 02-21 | | 6 |
| 4897481 | 02-10 | | 1 | 4899815 | 03-10 | | 3 |
| 4897499 | 02-29 | | 2 | 4899824 | 02-39 | | 8A |
| 4897534 | 02-15 | | 1 | 4899921 | 02-37 | | 9 |
| 4897536 | 02-15 | | 5 | 4899926 | 02-15 | | 7 |
| 4897537 | 02-15 | | 4 | 492-11044 | 04-02A | | 15 |
| 4897546 | 02-15 | | 2 | | 04-02B | | 13 |
| 4897547 | 02-15 | | 3 | 493-21020 | 08-02A | | 5 |
| 4897578 | 02-24 | | 14 | 495-11053 | 09-40 | | 2 |
| 4897766 | 02-37 | | 13 | 495-21063 | 04-02 | | 22 |
| 4897817 | 03-06 | | 10 | 495-81144 | 09-16 | | 12 |
| 4897838 | 03-03 | | 10 | 495-81145 | 09-16 | | 7 |
| 4898283 | 02-25 | | 2 | 496-11081 | 09-10 | | 13 |
| 4898301 | 02-13 | | 3 | 496-21053 | 02-05 | | 3 |
| 4898372 | 02-15 | | 16 | 496-81025 | 02-01 | | 15 |
| 4898439 | 02-15 | | 12 | | 05-09 | | 25 |
| 4898758 | 03-03 | | 4 | | 09-07 | | 17 |
| 4898876 | 03-03 | | 6 | | 09-07A | | 17 |
| 4898921 | 03-05 | | | | 09-07B | | 19 |
| 4899003 | 02-16 | | 9 | | 09-08 | | 4 |
| | 03-05 | | 1 | | 09-08A | | 3 |
| 4899009 | 02-21 | | 3 | | 09-15 | | 2 |
| 4899019 | 02-12 | | 1 | 514-1107 | 06-22A | | 1 |
| | 02-13 | | 2 | | 06-23A | | 1 |
| 4899020 | 02-09 | | 7 | 514-1315 | 06-22 | | 2 |
| | 02-13 | | 1 | | 06-23 | | 2 |
| | 03-08 | | 7 | 515-21190 | 04-03 | | 6 |
| 4899026 | 02-29 | | 1 | | 04-03A | | 6 |
| | 02-30 | | 2 | | 04-10 | | 2 |
| 4899032 | 02-22 | | 1 | 515-21302 | 04-06 | | 7 |
| 4899035 | 02-12 | | 6 | 515-22127 | 04-06 | | 18 |
| 4899036 | 02-09 | | 3 | 515-22190 | 02-02 | | 12 |
| 4899037 | 02-31 | | 3 | | 08-01 | | 18 |
| | 02-41 | | 3 | 515-22254 | 09-49 | | 14 |
| 4899039 | 02-37 | | 3 | 515-23143 | 08-01 | | 43 |
| 4899046 | 02-26 | | 3 | 515-23159 | 08-13 | | 4 |
| 4899057 | 03-09 | | 10 | 515-23206 | 04-06 | | 12 |
| 4899063 | 02-32 | | 3 | | 04-07 | | 18 |
| 4899068 | 02-29 | | 7 | 515-23222 | 04-05 | | 11 |
| | 02-34 | | 3 | 515-23270 | 04-05 | | 9 |
| 4899072 | 02-21 | | 3A | | 04-06 | | 11 |
| 4899073 | 02-30 | | 5 | 515-23317 | 08-01 | | 31 |

| Number | Figure | Sequence | Ref. |
|---|---|---|---|
| 515-2379 | 04-05 | | 16 |
| 515-24190 | 04-17 | | 10 |
| 515-24222 | 07-03A | | 8 |
| 515-24238 | 04-05 | | 20 |
| | 07-03A | | 14 |
| | 09-46 | | 4 |
| 515-2495 | 04-17 | | 8 |
| | 06-24 | | 20 |
| | 09-07 | | 28 |
| | 09-07A | | 28 |
| 515-25127 | 03-01 | | 20 |
| 515-25159 | 03-01 | | 19 |
| | 05-04 | | 9 |
| | 05-05 | | 33 |
| | 08-11 | | 3 |
| | 08-12 | | 1 |
| 515-25190 | 03-01 | | 28 |
| 515-25254 | 08-19A | | 6 |
| 540-711 | 08-32 | | 16 |
| 540-719 | 08-29 | | 12 |
| | 08-30 | | 11 |
| | 08-31 | | 11 |
| | 08-32 | | 17 |
| 543-708 | 04-23A | | 7 |
| 561-703 | 02-03 | | 13 |
| | 09-44B | | 3 |
| | 09-48 | | 3 |
| 60-4640T1 | 09-44B | | 9 |
| | 09-48 | | 8 |
| 60-6359T1 | 04-22 | | 6 |
| 612-6 | 09-22 | | 23 |
| 614-10020 | 09-36 | | 3 |
| 614-12040 | 04-18 | | 6 |
| 614-6012 | 09-31 | | 14 |
| 614-6016 | 09-34 | | 24 |
| | 09-35 | | 8 |
| | 09-39 | | 7 |
| 614-6020 | 04-27 | | 3 |
| | 05-02A | | 16 |
| | 09-43 | | 14 |
| | 09-43A | | 29 |
| 614-8020 | 09-45 | | 6 |
| | 09-47 | | 8 |
| 614-8025 | 04-18 | | 11 |
| 614-8035 | 09-43A | | 19 |
| 626-10025 | 07-01 | | 6 |
| 627-10020 | 05-09 | | 17 |
| | 08-07 | | 13 |
| | 08-07A | | 11 |
| | 09-03 | | 6 |
| | 09-04 | | 4 |
| | 09-05 | | 4 |
| 627-10025 | 02-06 | | 3 |
| | 04-05 | | 19 |
| | 06-24 | | 16 |
| | 08-33 | | 7 |
| | 09-03 | | 9 |
| | 09-06 | | 5 |
| | 09-07B | | 39 |
| 627-10030 | 02-14 | | 3 |
| | 03-04 | | 5 |
| | 03-04 | | 6 |
| | 04-03 | | 9 |
| | 04-03A | | 9 |
| | 05-01 | | 3 |
| | 05-04 | | 16 |
| | 05-05 | | 19 |
| | 07-03A | | 6 |
| | 08-03 | | 39 |
| | 08-26 | | 3 |
| | 08-26A | | 3 |
| | 08-26B | | 3 |
| | 09-01 | | 10 |
| | 09-02 | | 10 |
| | 09-22 | | 6 |
| | 09-42 | | 9 |
| 627-10035 | 06-24 | | 12 |
| | 08-10 | | 16 |
| 627-10035 | 09-03 | | 5 |
| | 09-21 | | 11 |
| | 09-24 | | 7 |
| | 09-25 | | 7 |
| | 09-42 | | 15 |
| 627-10040 | 02-06 | | 18 |
| | 09-12 | | 5 |
| | 09-13 | | 5 |
| | 09-22 | | 7 |
| | 09-42 | | 2 |
| 627-10065 | 04-10 | | 12 |
| 627-12020 | 09-12 | | 9 |
| | 09-13 | | 9 |
| 627-12025 | 04-05 | | 25 |
| | 09-01 | | 7 |
| | 09-02 | | 7 |
| 627-12030 | 02-06 | | 22 |
| | 09-15 | | 32 |
| 627-12035 | 02-08 | | 5 |
| | 03-01 | | 16 |
| | 05-05 | | 4 |
| | 07-03 | | 8 |
| | 09-01 | | 11 |
| | 09-02 | | 11 |
| | 09-12 | | 13 |
| | 09-13 | | 13 |
| | 09-22 | | 17 |
| 627-12040 | 02-05 | | 7 |
| | 02-06 | | 21 |
| | 03-04 | | 4 |
| | 08-03 | | 8 |
| | 09-17 | | 8 |
| 627-12045 | 02-01 | | 5 |
| | 09-14 | | 10 |
| | 09-21 | | 9 |
| | 09-24 | | 9 |
| | 09-25 | | 9 |
| | 09-27 | | 7 |
| 627-14045 | 08-03 | | 18 |
| 627-16035 | 05-09 | | 26 |
| | 09-15 | | 1 |
| 627-16040 | 09-07 | | 19 |
| | 09-07A | | 19 |
| | 09-07B | | 21 |
| | 09-17 | | 14 |
| 627-16045 | 06-01 | | 10 |
| | 08-03 | | 3 |
| 627-16050 | 03-01 | | 13 |
| | 09-07 | | 18 |
| | 09-07A | | 18 |
| | 09-07B | | 20 |
| | 09-08 | | 5 |
| 627-20050 | 06-01 | | 6 |
| 627-6020 | 04-07 | | 8 |
| | 04-09 | | 4 |
| | 04-11 | | 5 |
| | 04-26 | | 19 |
| | 09-44 | | 5 |
| | 09-44A | | 5 |
| 627-6025 | 04-07 | | 15 |
| | 09-16 | | 16 |
| | 09-52 | | 6 |
| 627-8016 | 02-03 | | 10 |
| | 04-06 | | 17 |
| 627-8020 | 02-42 | | 3 |
| | 03-01 | | 29 |
| | 04-07 | | 21 |
| | 04-11A | | 8 |
| | 09-48 | | 12 |
| 627-8025 | 02-02 | | 10 |
| | 02-03 | | 14 |
| | 02-06 | | 14 |
| | 03-01 | | 31 |
| | 03-04A | | 4 |
| | 04-05 | | 15 |
| | 04-06 | | 2 |
| | 04-07 | | 16 |
| | 04-09 | | 6 |

| Number | Figure | Sequence | Ref. | Number | Figure | Sequence | Ref. |
|---|---|---|---|---|---|---|---|
| 627-8025 | 04-12 | | 4 | 637-64236 | 07-03D | | 19B |
| | 05-05 | | 15 | | 08-02 | | 3B |
| | 08-01 | | 12 | | 08-03 | | 11A |
| | 08-19 | | 6 | | 08-05 | | 10B |
| | 09-16 | | 18 | | 08-05 | | 9B |
| | 09-19 | | 7 | | 08-06 | | 16B |
| 627-8030 | 07-03B | | 20 | | 08-06 | | 17B |
| | 07-03D | | 23 | | 08-08 | | 5A |
| | 08-01 | | 22 | | 08-09 | | 5A |
| | 09-20 | | 13 | | 08-10 | | 4B |
| | 09-20A | | 13 | | 08-19 | | 1B |
| | 09-22 | | 21 | | 08-19A | | 1B |
| 627-8035 | 02-02 | | 14 | | 08-19B | | 13B |
| | 06-02 | | 4 | | 08-19B | | 1A |
| | 08-01A | | 4 | | 08-23 | | 5A |
| | 09-20 | | 8 | | 08-24 | | 2A |
| | 09-20A | | 8 | | 08-26B | | 7A |
| 637-63093 | 05-04 | | 12A | 637-64296 | 07-03 | | 3B |
| | 05-05 | | 7B | | 08-03 | | 14B |
| | 08-03 | | 23B | | 08-05 | | 12A |
| 637-63113 | 02-05 | | 10B | | 08-05 | | 13B |
| | 05-04 | | 13A | | 08-07 | | 14B |
| | 05-05 | | 24A | | 08-07 | | 16B |
| | 07-03D | | 33B | | 08-20 | | 15B |
| | 08-03 | | 20B | | 08-20 | | 9A |
| | 08-03 | | 34A | | 08-21 | | 1B |
| | 08-14 | | 11A | 637-64386 | 08-03 | | 31 |
| | 08-14 | | 3A | 700-101 | 08-14 | | 3 |
| | 08-25 | | 5B | | 08-29 | | 5 |
| | 08-25 | | 6A | | 08-30 | | 5 |
| | 08-26 | | 4B | | 08-31 | | 4 |
| | 08-26 | | 6B | | 08-32 | | 8 |
| | 08-26A | | 4B | 700-102 | 07-03A | | 13 |
| | 08-26A | | 6B | 700-103 | 05-04 | | 2 |
| | 08-26B | | 4B | | 05-05 | | 8 |
| | 08-26B | | 6B | | 07-03 | | 2 |
| | 08-29 | | 5B | 700-104 | 08-19 | | 1 |
| | 08-29 | | 6A | | 08-19A | | 1 |
| | 08-29 | | 7B | 700-105 | 07-03 | | 3 |
| | 08-30 | | 4B | | 08-07 | | 14 |
| | 08-30 | | 5B | | 08-07A | | 12 |
| | 08-30 | | 6B | 700-115 | 05-09 | | 3 |
| | 08-31 | | 4B | | 07-03C | | 3 |
| | 08-31 | | 5A | 700-153 | 05-04 | | 13 |
| | 08-31 | | 6B | | 08-03 | | 20 |
| | 08-31 | | 7B | | 08-25 | | 5 |
| | 08-32 | | 19B | | 08-26 | | 4 |
| | 08-32 | | 20B | | 08-26A | | 4 |
| | 08-32 | | 7B | | 08-26B | | 4 |
| | 08-32 | | 8B | | 08-29 | | 6 |
| 637-63133 | 07-03C | | 5B | | 08-30 | | 4 |
| | 07-03D | | 22B | | 08-31 | | 5 |
| | 07-03D | | 26A | | 08-32 | | 7 |
| 637-63153 | 05-09 | | 2A | 700-157 | 07-03D | | 26 |
| | 05-09 | | 33A | 700-166 | 08-06 | | 16 |
| | 05-09 | | 3B | | 08-08 | | 5 |
| | 07-03A | | 12B | | 08-09 | | 5 |
| | 07-03A | | 13B | | 08-10 | | 4 |
| | 07-03A | | 1B | 700-169 | 07-03D | | 22 |
| | 07-03A | | 3B | 700-303 | 05-04 | | 12 |
| | 07-03C | | 3B | | 05-05 | | 7 |
| | 07-03D | | 21A | 700-304 | 08-14 | | 11 |
| 637-63193 | 02-05 | | 9B | 700-305 | 07-03A | | 1 |
| | 05-04 | | 10B | 700-307 | 07-03B | | 6 |
| | 05-04 | | 2A | | 07-03C | | 4 |
| | 05-05 | | 26B | | 07-03D | | 19 |
| | 05-05 | | 8B | | 08-19B | | 13 |
| | 05-09 | | 32A | | 08-23 | | 5 |
| | 05-09 | | 35B | | 08-24 | | 2 |
| | 07-03 | | 2B | 700-308 | 08-07 | | 16 |
| | 08-03 | | 12B | | 08-20 | | 9 |
| | 08-03 | | 29 | | 08-21 | | 1 |
| 637-64236 | 02-05 | | 11B | 700-313 | 05-05 | | 48 |
| | 05-05 | | 48B | | 08-06 | | 17 |
| | 05-05 | | 6B | 700-315 | 07-03D | | 33 |
| | 07-03B | | 14B | | 08-25 | | 2 |
| | 07-03B | | 6B | | 08-32 | | 19 |
| | 07-03C | | 4B | 700-316 | 05-04 | | 10 |

| Number | Figure | Sequence | Ref. |
|---|---|---|---|
| 700-316 | 05-05 | | 26 |
| 700-368 | 07-03C | | 5 |
| 700-378 | 05-05 | | 24 |
| | 08-26 | | 6 |
| | 08-26A | | 6 |
| | 08-26B | | 6 |
| 700-387 | 07-03B | | 14 |
| 700-406 | 08-29 | | 7 |
| | 08-30 | | 6 |
| | 08-31 | | 6 |
| 700-407 | 08-20 | | 15 |
| 700-412 | 07-03A | | 12 |
| 701-320 | 07-03A | | 3 |
| | 07-03D | | 21 |
| 701-329 | 08-25 | | 4 |
| | 08-26 | | 5 |
| | 08-26A | | 5 |
| | 08-26B | | 5 |
| | 08-29 | | 9 |
| | 08-30 | | 8 |
| | 08-31 | | 8 |
| | 08-32 | | 21 |
| 701-342 | 08-23 | | 6 |
| | 08-24 | | 6 |
| 701-361 | 07-03D | | 4 |
| 701-366 | 08-07 | | 15 |
| | 08-07A | | 13 |
| | 08-10 | | 6 |
| 701-410 | 08-06 | | 18 |
| | 08-07 | | 17 |
| 701-416 | 07-03A | | 2 |
| | 07-03D | | 20 |
| 701-418 | 08-20 | | 17 |
| 701-421 | 08-03 | | 21 |
| 701-422 | 08-14 | | 10 |
| | 08-25 | | 7 |
| | 08-32 | | 14 |
| 701-433 | 05-04 | | 3 |
| | 05-05 | | 27 |
| 701-434 | 08-25 | | 8 |
| 701-907 | 05-04 | | 28 |
| 701-908 | 08-07 | | 24 |
| | 08-07A | | 20 |
| | 08-10 | | 13 |
| 701-909 | 07-03D | | 10 |
| | 08-25 | | 11 |
| 701-911 | 08-11 | | 10 |
| | 08-12 | | 10 |
| | 08-13 | | 12 |
| 701-914 | 08-08 | | 7 |
| | 08-09 | | 8 |
| | 08-10 | | 12 |
| 703-902 | 07-03D | | 17 |
| 71405746 | 05-02A | | 19 |
| 71476260 | 05-02A | | 21 |
| 71480988 | 04-24A | | 9 |
| 71485202 | 04-04 | | 16 |
| 71485274 | 09-33 | | 6 |
| | 09-35 | | 10 |
| 71485317 | 09-43A | | 20 |
| 71486982 | 09-42D | | |
| 71491410 | 09-42A | | |
| | 09-42C | | |
| 71491411 | 09-42A | | |
| | 09-42C | | |
| 72114876 | 09-36 | | 8 |
| 728-1240 | 09-17 | | 15 |
| 732-1610 | 09-33 | | 5 |
| | 09-35 | | 14 |
| 733-3220 | 09-16 | | 19 |
| | 09-17 | | 16 |
| 733-3232 | 07-03 | | 6 |
| 760-14113 | 04-24A | | 6 |
| | 06-24 | | 26 |
| | 09-43A | | 1A |
| 760-14413 | 09-26 | | 4 |
| 760-17316 | 09-38 | | 2 |
| 76041998 | 04-22 | | 2 |
| 76043510 | 09-33A | | 19 |
| | 09-34 | | 29 |
| | 09-35 | | 5 |
| 76043511 | 09-36 | | 14 |
| 76043538 | 09-33A | | 27 |
| 76043560 | 04-04 | | 31 |
| 76043957 | 05-04 | | 15 |
| | 05-05 | | 32 |
| 76043977 | 04-23 | | 3 |
| 76046110 | 05-02A | | 15 |
| | 05-03 | | 10 |
| | 09-31 | | 11 |
| 76047278 | 09-45 | | 2 |
| | 09-47 | | 2 |
| 76048391 | 05-02 | | 12 |
| 76048394 | 05-02 | | 13 |
| 76048628 | 09-36 | | 12 |
| 76048849 | 09-41 | | 5 |
| 76048869 | 09-36 | | 5 |
| 76048924 | 05-03 | | 23 |
| 76048930 | 05-02 | | 11 |
| 76048941 | 05-02 | | 21 |
| 76048980 | 09-43A | | 2 |
| 76053295 | 04-08 | | 2 |
| 76067422 | 09-39 | | 1 |
| 76067753 | 09-36 | | 11 |
| 76079036 | 09-43A | | 1 |
| 76081690 | 05-02A | | 20 |
| 76081747 | 09-35A | | 16 |
| 76082151 | 09-10 | | 7 |
| 761-17325 | 04-24A | | 3 |
| 76300020 | 05-02 | | 24 |
| 76300038 | 05-02 | | 18 |
| 76301020 | 09-31A | | 12 |
| 76303017 | 05-03 | | 1 |
| 76303019 | 05-03 | | 2 |
| 76303020 | 05-03 | | 3 |
| 76303021 | 05-03 | | 4 |
| 76303022 | 09-39 | | 2 |
| 76303023 | 09-43A | | 14 |
| 76303024 | 09-32 | | 1 |
| 76303025 | 09-32 | | 4 |
| 76303027 | 09-43 | | 6 |
| 76303029 | 09-31A | | 11 |
| 76303030 | 04-13 | | 17 |
| 76303033 | 09-31 | | 1 |
| 76303036 | 09-31A | | 3 |
| 76303037 | 09-31A | | 1 |
| 76303038 | 09-31A | | 4 |
| 76303039 | 09-31A | | 2 |
| 76303040 | 09-31 | | 13 |
| 76303154 | 09-33A | | 7 |
| | 09-35A | | 13 |
| 76303157 | 09-33 | | 9 |
| | 09-35 | | 12 |
| 76303159 | 09-33A | | 3 |
| 76303170 | 09-35A | | 3 |
| 76303171 | 09-30 | | 1 |
| 76303174 | 09-37 | | 1 |
| 76303192 | 09-33A | | 18 |
| | 09-34 | | 7 |
| 76303193 | 09-33A | | 14 |
| | 09-34 | | 3 |
| 76303194 | 09-32 | | 2 |
| 76303195 | 09-32 | | 3 |
| 76303210 | 09-33A | | 9 |
| 76303211 | 09-35A | | 8 |
| 76303212 | 09-35A | | 4 |
| 76303224 | 09-35A | | 1 |
| 76303225 | 09-35A | | 17 |
| 76303227 | 09-35A | | 9 |
| 76303230 | 09-33A | | 1 |
| 76303231 | 09-33A | | 6 |
| 76303237 | 09-29 | | 1 |
| 76303238 | 09-29 | | 2 |
| 76303239 | 09-29 | | 3 |
| 76303240 | 09-34 | | 2 |
| 76303242 | 09-33A | | 2 |

| Number | Figure | Sequence | Ref. | Number | Figure | Sequence | Ref. |
|---|---|---|---|---|---|---|---|
| 76303244 | 04-23A | | 2 | 82034881 | 09-42A | | 48 |
| 76303246 | 04-23 | | 2 | | 09-42A | | 9 |
| 76303248 | 09-33A | | 15 | | 09-42C | | 48 |
| | 09-34 | | 4 | | 09-42C | | 9 |
| 76303250 | 09-33A | | 22 | 82034888 | 09-42C | | 66 |
| 76303253 | 09-35A | | 18 | 82034893 | 09-42C | | 50 |
| 76303258 | 04-04 | | 3 | 82034894 | 09-42A | | 12 |
| 76303260 | 04-04 | | 7 | | 09-42A | | 50 |
| 76303261 | 04-04 | | 35 | | 09-42C | | 12 |
| 76303265 | 09-43A | | 7 | | 09-42C | | 50 |
| 76303266 | 09-36 | | 1 | 82034897 | 09-42C | | 58 |
| 76303267 | 09-36 | | 2 | 82034900 | 09-42C | | 67 |
| 76303277 | 05-02 | | 1 | 82034901 | 09-42C | | 69 |
| 76303279 | 05-02 | | 10 | 82034909 | 09-42A | | 33 |
| 76303300 | 09-38 | | 1 | | 09-42C | | 33 |
| 76303305 | 09-43 | | 11 | 82034910 | 09-42A | | 32 |
| 76303317 | 09-37 | | 2 | | 09-42C | | 32 |
| 76303319 | 04-04 | | 14 | 82034911 | 09-42A | | 39 |
| | 09-43A | | 8 | | 09-42C | | 39 |
| 76303320 | 04-04 | | 12 | 82034912 | 09-42A | | 40 |
| | 09-43A | | 9 | | 09-42C | | 40 |
| 76303321 | 04-04 | | 13 | | 09-42C | | 65 |
| | 09-43A | | 6 | 82034916 | 09-42A | | 37 |
| 76303323 | 09-33A | | 24 | | 09-42C | | 37 |
| 76303325 | 04-04 | | 2 | 82034917 | 09-42A | | 36 |
| 76303327 | 04-23A | | 6 | | 09-42C | | 36 |
| 76303331 | 09-43A | | 3 | 82034919 | 09-42C | | 61 |
| 76303337 | 09-39 | | 4 | 82034920 | 09-42C | | 75 |
| 76303338 | 09-39 | | 3 | 82034921 | 09-42C | | 41A |
| 76303347 | 04-04 | | 17 | 82034923 | 09-42C | | 41B |
| 76303352 | 09-45 | | 1 | 82034944 | 09-42C | | |
| 76303422 | 09-31 | | 5 | 82034945 | 09-42C | | |
| 76303450 | 05-03 | | 11 | 82034947 | 09-42C | | 57 |
| 76303455 | 09-34 | | 22 | 82034948 | 09-42C | | |
| 76303458 | 09-34 | | 17 | 82034949 | 09-42C | | |
| 76303459 | 09-34 | | 18 | 82034952 | 09-42C | | |
| 76303460 | 09-34 | | 1 | 82034958 | 09-42C | | 78 |
| 76303461 | 09-34 | | 12 | 82034961 | 09-42C | | 62 |
| 76303463 | 09-34 | | 11 | 82034962 | 09-42C | | 64 |
| 76303481 | 09-31B | | 1 | 82034963 | 09-42A | | |
| 76303489 | 04-04 | | 4 | | 09-42C | | |
| 76303496 | 09-43A | | 27 | 82034964 | 09-42A | | 35 |
| | 09-43A | | 30 | | 09-42C | | 35 |
| | 09-45 | | 3 | 82034969 | 09-42A | | 31 |
| | 09-47 | | 3 | | 09-42C | | 31 |
| 76303497 | 09-45 | | 4 | 82034977 | 09-42C | | |
| | 09-47 | | 4 | 82034997 | 09-42A | | 2 |
| 76303498 | 04-04 | | 6 | | 09-42A | | 4 |
| 76303499 | 09-43A | | 4 | | 09-42C | | 3 |
| 76303501 | 09-43A | | 11 | | 09-42C | | 4 |
| 76303505 | 09-43A | | 10 | | 09-42C | | 60 |
| 76303521 | 09-31B | | 6 | 82035025 | 09-42B | | 34 |
| 76303522 | 09-31B | | 7 | 82035027 | 09-42B | | 30 |
| 76303582 | 09-30 | | 3 | 82035028 | 09-42B | | 39 |
| 76303588 | 09-36 | | 9 | 82035029 | 09-42B | | 35 |
| 76303589 | 09-35 | | 11 | 82035030 | 09-42B | | 19 |
| 76303590 | 09-33 | | 7 | 82035031 | 09-42B | | 16 |
| 76303592 | 09-47 | | 1 | 82035032 | 09-42B | | 26 |
| 76303594 | 09-43 | | 3 | 82035033 | 09-42B | | 31 |
| 76303605 | 09-35A | | 20 | 82035034 | 09-42B | | 29 |
| 79028421 | 04-10 | | 8 | 82035035 | 09-42B | | 40 |
| 79076208 | 09-31B | | 3 | 82035036 | 09-42B | | 21 |
| 800-2190 | 06-12 | | 6 | 82035037 | 09-42B | | 25 |
| | 06-13 | | 6 | 82035039 | 09-42B | | 37 |
| 800-44012 | 07-02 | | 5 | 82035040 | 09-42B | | 6 |
| 806-10030 | 06-24 | | 18 | 82035043 | 09-42B | | 23 |
| 811-12025 | 09-04 | | 5 | 82035052 | 09-42D | | 3 |
| | 09-05 | | 5 | 82035054 | 09-42B | | |
| | 09-06 | | 3 | 82035057 | 09-42D | | 35 |
| 814-5030 | 04-06 | | 13 | 82035064 | 09-42C | | 54 |
| 814-6110 | 05-04 | | 21 | 82035065 | 09-42D | | 22 |
| | 05-05 | | 17 | | 09-42D | | 8 |
| 814-8140 | 08-24 | | 3 | 82035069 | 09-42B | | 20 |
| 816213301 | 09-33A | | 4 | 82035071 | 09-42D | | 54 |
| | 09-34 | | 5 | 82035073 | 09-42D | | |
| | 09-35A | | 7 | 82035075 | 09-42D | | 32 |
| 82022857 | 04-23A | | 3 | 82035077 | 09-42D | | 49 |
| 82024562 | 04-07 | | 12 | 82035078 | 09-42D | | |

| Number | Figure | Sequence | Ref. |
|---|---|---|---|
| 82035079 | 09-42D | | |
| 82035081 | 09-42D | | 10 |
| 82035082 | 09-42D | | |
| 82035086 | 09-42D | | |
| 82035087 | 09-42D | | 17 |
| | 09-42D | | 7 |
| 82035094 | 09-42B | | 11 |
| 82035095 | 09-42D | | 1 |
| 82035106 | 09-42D | | 31 |
| 82035111 | 09-42D | | |
| 82035116 | 09-42D | | 26 |
| 82035122 | 09-42D | | |
| 82035123 | 09-42D | | |
| 82035125 | 09-42B | | 1 |
| 82035126 | 09-42D | | 34 |
| 82035127 | 09-42B | | 13 |
| 82035128 | 09-42B | | 7 |
| 82035130 | 09-42D | | 39 |
| 824-1404 | 04-02A | | 18 |
| | 04-02B | | 16 |
| | 04-05 | | 22 |
| 824-1405 | 05-02A | | 17 |
| | 08-01 | | 3 |
| 825-1404 | 04-14 | | 17 |
| 825-1405 | 09-33A | | 36 |
| 825-1406 | 04-20 | | 4 |
| | 09-33A | | 26 |
| | 09-35 | | 9 |
| 825-1408 | 04-23A | | 4 |
| | 09-43A | | 18 |
| 827-10040 | 03-01 | | 9 |
| | 08-11 | | 2 |
| | 08-12 | | 5 |
| | 08-19A | | 8 |
| 827-10045 | 04-02A | | 7 |
| | 04-02B | | 6 |
| 827-10050 | 06-01 | | 12 |
| 827-10060 | 08-13 | | 3 |
| | 08-33 | | 9 |
| | 09-42 | | 10 |
| | 09-42 | | 16 |
| 827-10070 | 03-01 | | 23 |
| | 05-04 | | 8 |
| | 05-05 | | 34 |
| | 07-03 | | 14 |
| | 08-07 | | 11 |
| | 08-07A | | 9 |
| | 08-08 | | 9 |
| | 08-09 | | 10 |
| 827-10075 | 07-03 | | 13 |
| 827-10080 | 08-33 | | 8 |
| 827-10090 | 06-02 | | 5 |
| | 08-07 | | 12 |
| | 08-07A | | 10 |
| | 08-10 | | 18 |
| | 08-19B | | 10 |
| 827-10100 | 07-03D | | 7 |
| | 08-05 | | 23 |
| | 08-06 | | 10 |
| | 08-10 | | 11 |
| 827-10110 | 04-02A | | 14 |
| | 04-02B | | 12 |
| | 08-05 | | 24 |
| | 08-06 | | 9 |
| | 08-33 | | 4 |
| 827-10130 | 08-33 | | 3 |
| 827-10150 | 07-03B | | 12 |
| | 07-03D | | 29 |
| 827-12050 | 09-19A | | 6 |
| | 09-20 | | 5 |
| | 09-20A | | 5 |
| | 09-52 | | 4 |
| 827-12060 | 06-24 | | 9 |
| | 09-14 | | 7 |
| 827-12070 | 09-15 | | 31 |
| 827-12080 | 09-15 | | 7 |
| 827-12090 | 09-01 | | 8 |
| | 09-02 | | 8 |
| 827-12100 | 09-15 | | 26 |
| 827-12140 | 09-17 | | 6 |
| 827-12220 | 09-17 | | 11 |
| 827-16060 | 09-17 | | 19 |
| 827-16070 | 09-21 | | 4 |
| | 09-22 | | 10 |
| 827-16080 | 09-07 | | 20 |
| | 09-07A | | 20 |
| | 09-08A | | 4 |
| 827-16090 | 09-08A | | 12 |
| 827-16120 | 02-01 | | 2 |
| 827-20190 | 09-07B | | 30 |
| 827-22120 | 06-01 | | 9 |
| 827-24090 | 06-21 | | 3 |
| 827-24130 | 06-22 | | 4 |
| 827-24160 | 09-50 | | 5 |
| 827-24190 | 09-50 | | 3 |
| | 09-50A | | 5 |
| 827-24230 | 09-50A | | 3 |
| 827-6040 | 09-39 | | 8 |
| 827-6050 | 04-07 | | 7 |
| | 08-14 | | 7 |
| 827-6060 | 09-33A | | 28 |
| 827-8040 | 09-20 | | 12 |
| | 09-20A | | 12 |
| 827-8050 | 06-01 | | 17 |
| 827-8060 | 04-07 | | 14 |
| | 04-09 | | 9 |
| | 07-05 | | 8 |
| 827-8070 | 03-01 | | 30 |
| 827-8100 | 04-02A | | 22 |
| | 08-23 | | 2 |
| 82848105 | 09-42D | | |
| 829-1406 | 04-07 | | 10 |
| | 04-14 | | 13 |
| | 04-27 | | 8 |
| 829-1408 | 04-11 | | 11 |
| | 04-18 | | 12 |
| | 07-05 | | 9 |
| | 08-27 | | 43 |
| | 08-28 | | 43 |
| | 09-19 | | 8 |
| 829-1410 | 04-05 | | 17 |
| | 04-10 | | 11 |
| | 09-46 | | 11 |
| 829-1412 | 02-08 | | 4 |
| | 04-18 | | 7 |
| | 08-29A | | 5 |
| | 09-20 | | 6 |
| | 09-20A | | 6 |
| | 09-22 | | 18 |
| 829-1416 | 09-17 | | 18 |
| | 09-21 | | 5 |
| | 09-22 | | 11 |
| 829-1420 | 09-07B | | 31 |
| 829-1424 | 06-21 | | 4 |
| | 06-22 | | 6 |
| | 09-50 | | 4 |
| | 09-50A | | 4 |
| 829-1510 | 06-04 | | 5 |
| 829-2310 | 04-01 | | 2 |
| 829-23414 | 05-01 | | 8 |
| 829-4410 | 09-36 | | 10 |
| 832-10405 | 05-02A | | 9 |
| | 09-34 | | 21 |
| 832-10406 | 04-03 | | 12 |
| | 04-03A | | 12 |
| | 04-06 | | 5 |
| | 04-07 | | 5 |
| | 04-09 | | 5 |
| | 04-10 | | 7 |
| | 04-11 | | 3 |
| | 04-11A | | 5 |
| | 04-27 | | 5 |
| | 05-04 | | 23 |
| | 05-05 | | 30 |
| | 08-14 | | 8 |
| | 08-29 | | 14 |

| Number | Figure | Sequence | Ref. |
|---|---|---|---|
| 832-10406 | 08-30 | | 13 |
| | 08-31 | | 13 |
| | 08-32 | | 5 |
| | 09-16 | | 22 |
| | 09-33A | | 29 |
| | 09-34 | | 25 |
| | 09-43 | | 16 |
| | 09-52 | | 8 |
| 832-10408 | 02-02 | | 13 |
| | 03-01 | | 32 |
| | 04-05 | | 13 |
| | 04-06 | | 4 |
| | 04-07 | | 17 |
| | 04-09 | | 8 |
| | 04-12 | | 2 |
| | 04-25 | | 5 |
| | 04-25A | | 5 |
| | 04-26 | | 4 |
| | 04-28 | | 3 |
| | 05-05 | | 31 |
| | 05-09 | | 21 |
| | 07-03B | | 18 |
| | 07-03D | | 25 |
| | 08-01 | | 30 |
| | 08-23 | | 4 |
| | 08-24 | | 4 |
| | 09-20 | | 10 |
| | 09-20A | | 10 |
| | 09-22 | | 22 |
| | 09-33A | | 13 |
| | 09-34 | | 10 |
| | 09-35A | | 12 |
| | 09-43A | | 18 |
| | 09-44A | | 8 |
| | 09-44B | | 4 |
| | 09-48 | | 4 |
| | 09-49 | | 11 |
| 832-10410 | 02-06 | | 17 |
| | 02-14 | | 4 |
| | 03-01 | | 11 |
| | 03-04 | | 9 |
| | 04-02A | | 13 |
| | 04-02B | | 11 |
| | 04-03 | | 10 |
| | 04-03A | | 10 |
| | 04-05 | | 6 |
| | 04-06 | | 10 |
| | 04-10 | | 10 |
| | 05-05 | | 21 |
| | 06-24 | | 22 |
| | 07-03A | | 9 |
| | 08-03 | | 40 |
| | 08-05 | | 22 |
| | 08-06 | | 4 |
| | 08-07 | | 25 |
| | 08-07A | | 21 |
| | 08-10 | | 15 |
| | 08-11 | | 5 |
| | 08-12 | | 4 |
| | 08-13 | | 9 |
| | 08-14 | | 5 |
| | 08-19B | | 9 |
| | 08-20 | | 4 |
| | 08-33 | | 6 |
| | 09-07 | | 30 |
| | 09-07A | | 30 |
| | 09-16 | | 9 |
| | 09-17 | | 10 |
| | 09-21 | | 12 |
| | 09-22 | | 8 |
| | 09-24 | | 6 |
| | 09-25 | | 6 |
| | 09-33A | | 17 |
| | 09-34 | | 28 |
| | 09-42 | | 13 |
| | 09-42 | | 7 |
| | 09-44 | | 8 |
| | 09-49 | | 7 |
| 832-10412 | 02-05 | | 5 |
| | 06-24 | | 10 |
| | 07-03B | | 17 |
| | 09-14 | | 12 |
| | 09-52 | | 3 |
| 832-10416 | 02-01 | | 8 |
| | 03-01 | | 15 |
| | 09-07 | | 21 |
| | 09-07A | | 21 |
| | 09-08 | | 6 |
| | 09-08A | | 5 |
| | 09-35 | | 4 |
| | 05-02A | | 5 |
| | 05-03 | | 9 |
| | 09-31 | | 12 |
| | 09-31A | | 8 |
| | 09-31B | | 2 |
| | 09-38 | | 3 |
| | 09-44 | | 2 |
| | 09-44A | | 2 |
| 833-40408 | 08-01 | | 8 |
| | 09-19 | | 4 |
| 837-6035 | 04-02A | | 5 |
| | 04-02B | | 4 |
| 840-1312 | 04-04 | | 27 |
| 840-1412 | 05-03 | | 15 |
| 840-1420 | 04-04 | | 28 |
| 840-1512 | 04-04 | | 22 |
| 840-1516 | 04-16 | | 2 |
| | 09-39 | | 5 |
| 840-1520 | 05-02A | | 6 |
| 840-1612 | 04-14 | | 14 |
| | 09-31A | | 7 |
| 840-1616 | 04-04 | | 11 |
| | 04-14 | | 20 |
| | 05-02A | | 14 |
| | 05-03 | | 21 |
| | 09-31A | | 10 |
| | 09-36 | | 6 |
| 840-1620 | 04-04 | | 10 |
| 840-1625 | 08-32 | | 6 |
| 840-1630 | 08-29 | | 13 |
| | 08-30 | | 12 |
| | 08-31 | | 12 |
| | 09-31 | | 6 |
| | 09-31A | | 5 |
| 840-1820 | 09-34 | | 14 |
| | 09-43 | | 21 |
| 843-2625 | 05-03 | | 14 |
| 844-10025 | 09-23 | | 8 |
| 844-10035 | 08-20 | | 11 |
| | 09-18 | | 3 |
| 844-8025 | 07-02 | | 2 |
| 847-3616 | 09-31 | | 8 |
| 84989383 | 05-09 | | 33 |
| 84989392 | 02-05 | | 8 |
| 84989411 | 08-03 | | 24 |
| 8500083 | 02-02 | | 3 |
| 8500084 | 02-02 | | 6 |
| 8500105 | 02-05 | | 1 |
| 8500133 | 08-01 | | 6 |
| | 09-44B | | 7 |
| | 09-48 | | 7 |
| 8500136 | 08-01 | | 4 |
| 8500143 | 02-03 | | 8 |
| 8500144 | 02-03 | | 7 |
| 8500164 | 08-01 | | 46 |
| 8500165 | 08-01 | | 19 |
| 8500167 | 02-03 | | 5 |
| | 08-02 | | 6 |
| 8500173 | 09-12 | | 6 |
| | 09-13 | | 6 |
| 8500186 | 08-01 | | 47 |
| | 08-02 | | 2 |
| 8500206 | 06-02 | | 2 |
| | 08-01 | | 7 |
| | 08-01A | | 5 |
| | 08-19 | | 7 |

| Number | Figure | Sequence | Ref. |
|---|---|---|---|
| 8500209 | 07-03B | | 2 |
| | 07-03D | | 11 |
| 8500210 | 07-03B | | 10 |
| | 08-19B | | 14 |
| 8500311 | 09-07B | | 32 |
| 8500375 | 09-16 | | 4 |
| 8500379 | 09-16 | | 5 |
| 8500382 | 09-16 | | 10 |
| 8500403 | 02-06 | | 8 |
| 8500460 | 05-09 | | 11 |
| 8500471 | 02-05 | | 2 |
| 8500483 | 05-09 | | 12 |
| 8500562 | 08-23 | | 1 |
| | 08-23A | | |
| 8500565 | 08-24 | | 1 |
| | 08-24A | | |
| 8500576 | 06-02 | | 6 |
| 8500583 | 06-02 | | 7 |
| 8500621 | 07-03 | | 18 |
| 8500692 | 05-04 | | 18 |
| | 05-05 | | 23 |
| 8500795 | 04-02A | | 8 |
| 8500858 | 07-03 | | 16 |
| | 08-07 | | 19 |
| | 08-07A | | 15 |
| | 08-10 | | 17 |
| 8500877 | 08-19A | | 5 |
| 8500878 | 09-48 | | 14 |
| 8500909 | 03-04 | | 2 |
| 8501022 | 09-44 | | 1 |
| 8501024 | 09-44A | | 1 |
| 8501036 | 09-16 | | 24 |
| 8501047 | 08-25 | | 10 |
| 8501052 | 07-03D | | 28 |
| 8501088 | 05-09 | | 22 |
| 8501098 | 04-02A | | 12 |
| | 04-02B | | 10 |
| 8501151 | 09-17 | | 3 |
| 8501205 | 02-06 | | 9 |
| 8501295 | 06-02 | | 1 |
| 8501296 | 08-01A | | 1 |
| 8501311 | 04-11 | | 9 |
| 8501315 | 07-03B | | 13 |
| 8501321 | 08-19A | | 4 |
| 8501329 | 08-19 | | 4 |
| 85811350 | 09-42A | | 29 |
| | 09-42C | | 29 |
| 85811351 | 09-42A | | 34 |
| | 09-42A | | 6 |
| | 09-42C | | 34 |
| | 09-42C | | 6 |
| 85811352 | 09-42A | | 18 |
| | 09-42C | | 18 |
| 85811353 | 09-42C | | 73 |
| 85817428 | 09-42B | | 41 |
| 85817429 | 09-42B | | 15 |
| 85817430 | 09-42B | | 4 |
| 85817433 | 09-42B | | 33 |
| 85817434 | 09-42B | | 28 |
| 85817435 | 09-42B | | 38 |
| 85817440 | 09-42B | | 27A |
| 85817441 | 09-42B | | 27 |
| 85817442 | 09-42B | | 18 |
| 85817444 | 09-42B | | 10 |
| 85817445 | 09-42B | | 12 |
| 85817448 | 09-42B | | 2 |
| 85817449 | 09-42B | | 3 |
| 85817451 | 09-42B | | |
| 85817458 | 09-42A | | 22 |
| | 09-42A | | 26 |
| | 09-42A | | 43 |
| | 09-42A | | 49 |
| | 09-42C | | 22 |
| | 09-42C | | 26 |
| | 09-42C | | 43 |
| | 09-42C | | 49 |
| 85817467 | 09-42C | | 52 |
| 85817486 | 09-42D | | 9 |
| 85817489 | 09-42C | | 71 |
| 85817492 | 09-42D | | 29 |
| 85817496 | 09-42D | | 24 |
| 85817560 | 09-42D | | 19 |
| 85819815 | 09-42C | | 63 |
| | 09-42D | | 30 |
| 86000535 | 04-15 | | 13 |
| 8602005 | 02-42 | | 1 |
| 8602302 | 02-01 | | 3 |
| 8602303 | 02-01 | | 14 |
| 8602304 | 02-01 | | 12 |
| 8602342 | 05-09 | | 14 |
| 8602421 | 02-02 | | 1 |
| 8602469 | 09-49 | | 4 |
| 8602473 | 02-06 | | 12 |
| 8602476 | 09-16 | | 20 |
| 8602478 | 02-06 | | 11 |
| 8602498 | 09-44B | | 6 |
| | 09-48 | | 6 |
| 8602537 | 03-01 | | 22 |
| 8602538 | 03-01 | | 4 |
| 8602542 | 03-01 | | 8 |
| 8602589 | 05-09 | | 10 |
| 8602590 | 05-09 | | 8 |
| 8602680 | 04-02B | | 19 |
| 8602725 | 09-48 | | 1 |
| 8602727 | 09-44B | | 1 |
| 8602791 | 09-18 | | 4 |
| 8602844 | 08-04 | | 6 |
| 8602913 | 08-27 | | 12 |
| | 08-28 | | 12 |
| 8602915 | 08-27 | | 9 |
| | 08-28 | | 9 |
| 8602916 | 08-27 | | 10 |
| | 08-28 | | 10 |
| 8602925 | 08-27 | | 7 |
| | 08-28 | | 7 |
| 8603001 | 05-06 | | 4 |
| 8603020 | 07-03B | | 1 |
| 8603092 | 09-57 | | 21 |
| 8603093 | 09-58 | | 19 |
| 8603094 | 09-59 | | 20 |
| 8603162 | 06-22D | | 12 |
| | 06-23D | | 12 |
| 8603163 | 06-22D | | 9 |
| | 06-23D | | 9 |
| 8603166 | 06-22D | | 1 |
| | 06-23D | | 1 |
| 8603171 | 04-17 | | 1 |
| | 05-05 | | 11 |
| 8603179 | 06-17 | | |
| | 06-18 | | |
| 8603180 | 06-16 | | 4 |
| 8603181 | 06-18 | | 2 |
| 8603182 | 06-16 | | 9 |
| 8603183 | 06-18 | | 6 |
| 8603184 | 06-16 | | 1 |
| 8603185 | 06-16 | | 2 |
| 8603187 | 06-06 | | 2 |
| 8603200 | 06-22A | | 12 |
| | 06-23A | | 13 |
| 8603201 | 06-22A | | 13 |
| | 06-23 | | 11 |
| | 06-23A | | 14 |
| 8603202 | 06-22A | | 3 |
| | 06-23A | | 3 |
| 8603205 | 06-23B | | 7 |
| 8603206 | 06-22A | | 4 |
| 8603207 | 06-22A | | 23 |
| | 06-22A | | 27 |
| | 06-23A | | 24 |
| | 06-23A | | 28 |
| 8603208 | 06-22A | | 10 |
| | 06-22A | | 8 |
| | 06-22E | | 22 |
| | 06-23A | | 11 |
| | 06-23A | | 9 |
| | 06-23E | | 22 |

| Number | Figure | Sequence | Ref. | Number | Figure | Sequence | Ref. |
|---|---|---|---|---|---|---|---|
| 8603209 | 06-11 | | 11 | 8603296 | 06-05 | | 1 |
| 8603210 | 06-22A | | 19 | 8603297 | 06-05 | | 2 |
| | 06-23A | | 20 | 8603298 | 06-05 | | 3 |
| 8603214 | 06-06 | | 11 | 8603299 | 06-05 | | 4 |
| 8603215 | 06-17 | | 3 | 8603300 | 06-05 | | 5 |
| 8603216 | 06-20 | | 5 | 8603301 | 06-05 | | 6 |
| 8603217 | 06-03 | | 6 | | 06-10 | | 10 |
| 8603218 | 06-17 | | 18 | | 06-14 | | 2 |
| 8603219 | 06-14 | | 6 | 8603302 | 06-05 | | 7 |
| 8603220 | 06-14 | | 7 | 8603304 | 06-06 | | 6 |
| 8603221 | 06-14 | | 8 | 8603305 | 06-06 | | 7 |
| 8603222 | 06-22B | | 6 | 8603306 | 06-06 | | 8 |
| 8603223 | 06-14 | | 3 | | 06-07 | | 4 |
| 8603239 | 06-22B | | 3 | 8603307 | 06-06 | | 12 |
| 8603240 | 06-22B | | 3 | 8603308 | 06-06 | | 13 |
| 8603241 | 06-22B | | 3 | | 06-16 | | 6 |
| 8603242 | 06-22B | | 3 | 8603309 | 06-06 | | 14 |
| 8603243 | 06-22B | | 3 | 8603310 | 06-06 | | 15 |
| 8603244 | 06-22B | | 3 | 8603311 | 06-03 | | 4 |
| 8603247 | 06-22B | | 10 | | 06-06 | | 16 |
| 8603250 | 06-22C | | 4 | 8603312 | 06-06 | | 17 |
| 8603251 | 06-22C | | 5 | 8603313 | 06-06 | | 18 |
| 8603252 | 06-22C | | 9 | 8603315 | 06-06 | | 20 |
| 8603253 | 06-22C | | 10 | | 06-16 | | 8 |
| 8603254 | 06-22C | | 12 | 8603316 | 06-06 | | 21 |
| 8603255 | 06-22C | | 13 | 8603317 | 06-06 | | 22 |
| 8603256 | 06-22A | | 9 | 8603318 | 06-06 | | 23 |
| | 06-23A | | 10 | | 06-06 | | 25 |
| 8603257 | 06-22B | | 2 | 8603319 | 06-06 | | 24 |
| | 06-23B | | 2 | 8603320 | 06-07 | | 1 |
| 8603258 | 06-22B | | 4 | 8603323 | 06-07 | | 5 |
| 8603259 | 06-22B | | 5 | 8603324 | 06-14 | | 1 |
| | 06-23B | | 3 | 8603325 | 06-14 | | 9 |
| 8603260 | 06-22B | | 5 | 8603326 | 06-14 | | 4 |
| | 06-23B | | 3 | 8603327 | 07-01 | | 5 |
| 8603261 | 06-22B | | 5 | 8603328 | 07-01 | | 4 |
| | 06-23B | | 3 | 8603347 | 07-01 | | 14 |
| 8603262 | 06-22B | | 5 | 8603348 | 07-01 | | 21 |
| | 06-23B | | 3 | 8603352 | 06-15 | | 2 |
| 8603263 | 06-22B | | 7 | 8603353 | 06-15 | | 3 |
| 8603264 | 06-22B | | 5 | 8603354 | 06-15 | | 4 |
| | 06-23B | | 3 | 8603355 | 06-15 | | 10 |
| 8603265 | 06-22B | | 8 | 8603357 | 06-16 | | 11 |
| 8603266 | 06-22B | | 13 | 8603358 | 06-16 | | 12 |
| 8603267 | 06-22C | | 11 | 8603359 | 06-17 | | 19 |
| 8603268 | 06-22C | | 15 | 8603360 | 06-17 | | 23 |
| 8603271 | 06-22C | | 3 | 8603361 | 06-17 | | 22 |
| | 06-23C | | 16 | 8603362 | 06-17 | | 24 |
| 8603272 | 06-22C | | 8 | 8603363 | 06-18 | | 3 |
| 8603274 | 06-15 | | 7 | 8603365 | 06-17 | | 1 |
| 8603277 | 06-22C | | 7 | 8603366 | 06-17 | | 2 |
| 8603278 | 06-22C | | 7 | 8603367 | 06-17 | | 4 |
| 8603279 | 06-22C | | 7 | 8603368 | 06-17 | | 5 |
| 8603280 | 06-22C | | 7 | 8603369 | 06-17 | | 6 |
| 8603281 | 06-01 | | 13 | 8603370 | 06-17 | | 7 |
| | 06-03 | | 7 | 8603371 | 06-17 | | 8 |
| 8603282 | 06-22C | | 6 | 8603372 | 06-17 | | 9 |
| 8603283 | 06-22B | | 5 | 8603374 | 06-17 | | 10 |
| | 06-23B | | 3 | 8603375 | 06-17 | | 12 |
| 8603284 | 06-22B | | 5 | 8603376 | 06-17 | | 14 |
| | 06-23B | | 3 | 8603377 | 06-17 | | 15 |
| 8603285 | 06-22B | | 5 | 8603380 | 06-19 | | 3 |
| | 06-23B | | 3 | 8603381 | 06-19 | | 4 |
| 8603286 | 06-22B | | 5 | 8603382 | 06-19 | | 5 |
| | 06-23B | | 3 | 8603383 | 06-19 | | 6 |
| 8603287 | 06-22B | | 5 | 8603384 | 06-19 | | 7 |
| | 06-23B | | 3 | 8603385 | 06-19 | | 8 |
| 8603288 | 06-22B | | 5 | 8603386 | 06-19 | | 9 |
| | 06-23B | | 3 | 8603387 | 06-19 | | 10 |
| 8603289 | 06-22B | | 5 | 8603388 | 06-19 | | 11 |
| | 06-23B | | 3 | 8603389 | 06-19 | | 13 |
| 8603290 | 06-22B | | 5 | 8603390 | 06-19 | | 12 |
| | 06-23B | | 3 | 8603391 | 06-19 | | 14 |
| 8603291 | 06-22B | | 5 | 8603392 | 06-19 | | 15 |
| | 06-23B | | 3 | 8603393 | 06-20 | | 1 |
| 8603292 | 06-04 | | 1 | 8603395 | 06-20 | | 2 |
| 8603293 | 06-04 | | 2 | 8603396 | 06-03 | | 5 |
| 8603294 | 06-04 | | 8 | | 06-20 | | 3 |

| Number | Figure | Sequence | Ref. | Number | Figure | Sequence | Ref. |
|---|---|---|---|---|---|---|---|
| 8603397 | 06-20 | | 4 | 8603551 | 06-22A | | 14 |
| 8603398 | 06-20 | | 6 | | 06-23A | | 15 |
| 8603399 | 06-20 | | 7 | 8603552 | 06-22A | | 16 |
| 8603400 | 06-20 | | 8 | | 06-23A | | 17 |
| 8603401 | 06-20 | | 9 | 8603555 | 06-22A | | 29 |
| 8603402 | 06-20 | | 11 | 8603559 | 06-22E | | 3 |
| 8603403 | 06-03 | | 2 | | 06-23E | | 3 |
| 8603404 | 06-03 | | 3 | 8603560 | 06-22E | | 4 |
| 8603405 | 06-04 | | 13 | | 06-23E | | 4 |
| 8603406 | 06-08 | | 1 | 8603562 | 06-22E | | 6 |
| 8603407 | 06-08 | | 2 | | 06-23E | | 6 |
| | 06-09 | | 2 | 8603563 | 06-22E | | 7 |
| | 06-10 | | 2 | 8603564 | 06-22E | | 8 |
| | 06-11 | | 2 | 8603565 | 06-22E | | 10 |
| | 06-12 | | 2 | | 06-23E | | 10 |
| | 06-13 | | 2 | 8603566 | 06-22E | | 11 |
| 8603430 | 06-08 | | 4 | | 06-23E | | 11 |
| 8603431 | 06-08 | | 5 | 8603567 | 06-22E | | 12 |
| 8603432 | 06-08 | | 6 | | 06-23E | | 12 |
| 8603434 | 06-08 | | 9 | 8603568 | 06-22E | | 14 |
| 8603435 | 06-08 | | 10 | | 06-23E | | 14 |
| | 06-09 | | 10 | 8603571 | 06-22E | | 17 |
| | 06-10 | | 9 | | 06-23E | | 17 |
| | 06-11 | | 12 | 8603572 | 06-22E | | 18 |
| | 06-12 | | 9 | | 06-23E | | 18 |
| | 06-13 | | 9 | 8603575 | 06-22E | | 21 |
| 8603436 | 06-08 | | 11 | | 06-23E | | 21 |
| | 06-09 | | 11 | 8603577 | 06-22D | | 3 |
| | 06-10 | | 11 | | 06-23D | | 3 |
| | 06-11 | | 13 | 8603579 | 06-22D | | 5 |
| | 06-12 | | 10 | | 06-23D | | 5 |
| | 06-13 | | 10 | 8603580 | 06-22D | | 6 |
| 8603437 | 06-09 | | 1 | | 06-23D | | 6 |
| 8603438 | 06-09 | | 4 | 8603582 | 06-22D | | 8 |
| | 06-10 | | 4 | | 06-23D | | 8 |
| | 06-11 | | 7 | 8603583 | 06-22D | | 10 |
| 8603439 | 06-09 | | 5 | | 06-23D | | 10 |
| | 06-10 | | 5 | 8603584 | 06-22D | | 11 |
| | 06-11 | | 6 | | 06-23D | | 11 |
| 8603440 | 06-09 | | 6 | 8603585 | 06-22D | | 14 |
| | 06-10 | | 6 | | 06-23D | | 14 |
| | 06-11 | | 5 | 8603594 | 06-22B | | 14 |
| 8603441 | 06-09 | | 7 | 8603619 | 06-22A | | 25 |
| | 06-10 | | 7 | | 06-23A | | 26 |
| | 06-11 | | 8 | 8603622 | 06-20 | | 10 |
| 8603442 | 06-09 | | 9 | 8603623 | 06-17 | | 11 |
| 8603443 | 06-10 | | 1 | 8603624 | 06-17 | | 16 |
| 8603444 | 06-10 | | 8 | 8603625 | 06-17 | | 20 |
| 8603445 | 06-11 | | 1 | 8603628 | 06-18 | | 5 |
| 8603446 | 06-11 | | 3 | 8603629 | 06-20 | | 6A |
| 8603447 | 06-11 | | 9 | 8603630 | 07-01 | | |
| 8603448 | 06-12 | | 1 | 8603631 | 07-01 | | 25 |
| 8603449 | 06-12 | | 3 | 8603633 | 06-04 | | 6 |
| | 06-13 | | 3 | 8603635 | 06-04 | | 12 |
| 8603450 | 06-12 | | 4 | 8603636 | 06-04 | | 14 |
| | 06-13 | | 4 | 8603637 | 06-04 | | 15 |
| 8603452 | 06-12 | | 7 | 8603640 | 06-06 | | 5 |
| | 06-13 | | 7 | 8603643 | 06-08 | | 7 |
| 8603457 | 06-13 | | 1 | 8603645 | 06-09 | | 8 |
| 8603466 | 06-04 | | 4 | 8603646 | 06-11 | | 10 |
| 8603469 | 06-06 | | 4 | 8603649 | 07-01 | | 2 |
| 8603499 | 06-13 | | 11 | 8603650 | 07-01 | | 3 |
| 8603527 | 06-15 | | 6 | 8603651 | 06-14 | | 5 |
| | 06-22E | | 13 | 8603652 | 07-01 | | 8 |
| | 06-23E | | 13 | 8603653 | 07-01 | | 9 |
| 8603533 | 06-16 | | 14 | 8603654 | 07-01 | | 10 |
| 8603534 | 06-16 | | 13 | 8603655 | 06-15 | | 1 |
| 8603537 | 06-16 | | 10 | 8603656 | 06-15 | | 5 |
| 8603538 | 06-17 | | 17 | 8603657 | 06-15 | | 8 |
| 8603542 | 07-01 | | 27 | 8603658 | 06-15 | | 9 |
| 8603543 | 06-22B | | 1 | 8603664 | 06-08 | | 3 |
| 8603545 | 06-22C | | 2 | 8603665 | 06-09 | | 3 |
| 8603546 | 06-22C | | 1 | | 06-10 | | 3 |
| 8603548 | 06-22C | | 14 | 8603666 | 06-12 | | 8 |
| 8603549 | 06-22A | | 5 | | 06-13 | | 8 |
| | 06-23A | | 6 | 8603668 | 06-22A | | 28 |
| 8603550 | 06-22A | | 7 | 8603669 | 06-22A | | 30 |
| | 06-23A | | 8 | | 06-23A | | 32 |

| Number | Figure | Sequence | Ref. | Number | Figure | Sequence | Ref. |
|---|---|---|---|---|---|---|---|
| 8603670 | 06-22A | | 2 | 8603748 | 06-23B | | 10 |
| | 06-23A | | 2 | 8603749 | 06-23B | | 10 |
| 8603673 | 06-22E | | 2 | 8603750 | 06-23B | | 10 |
| | 06-23E | | 2 | 8603751 | 06-23B | | 10 |
| 8603674 | 06-22E | | 5 | 8603752 | 06-23B | | 10 |
| | 06-23E | | 5 | 8603753 | 06-23B | | 10 |
| 8603675 | 06-22E | | 9 | 8603754 | 06-23B | | 10 |
| | 06-23E | | 9 | 8603755 | 06-23B | | 10 |
| 8603677 | 06-23B | | 1 | 8603756 | 06-23B | | 10 |
| 8603678 | 06-23B | | 4 | 8603757 | 06-23B | | 10 |
| 8603679 | 06-23B | | 5 | 8603758 | 06-23B | | 10 |
| 8603680 | 06-23B | | 6 | 8603759 | 06-23B | | 10 |
| 8603681 | 06-23B | | 9 | 8603760 | 06-23B | | 10 |
| 8603682 | 06-23B | | 13 | 8603761 | 06-23B | | 10 |
| 8603683 | 06-23B | | 14 | 8603762 | 06-23B | | 10 |
| 8603684 | 06-23B | | 12 | 8603763 | 06-23B | | 10 |
| 8603685 | 06-23B | | 11 | 8603764 | 06-23B | | 10 |
| 8603687 | 06-23A | | 4 | 8603765 | 06-23B | | 10 |
| 8603690 | 06-23A | | 31 | 8603766 | 06-23B | | 10 |
| 8603691 | 06-23E | | 7 | 8603767 | 06-23B | | 10 |
| 8603692 | 06-23E | | 8 | 8603768 | 06-23B | | 10 |
| 8603694 | 06-22A | | 26 | 8603769 | 06-23B | | 10 |
| | 06-23A | | 27 | 8603770 | 06-23B | | 10 |
| 8603695 | 06-23A | | 5 | 8603771 | 06-23B | | 10 |
| 8603696 | 06-22A | | 22 | 8603772 | 06-23B | | 10 |
| | 06-23A | | 23 | 8603773 | 06-23B | | 10 |
| 8603699 | 07-01 | | 11 | 8603774 | 06-23B | | 10 |
| 8603700 | 07-01 | | 12 | 8603775 | 06-23B | | 10 |
| 8603701 | 07-01 | | 13 | 8603776 | 06-23B | | 10 |
| 8603702 | 07-01 | | 15 | 8603778 | 06-05 | | 8 |
| 8603703 | 07-01 | | 16 | | 06-19 | | 1 |
| 8603704 | 07-01 | | 17 | 8603779 | 06-06 | | 1A |
| 8603705 | 07-01 | | 18 | 8603786 | 06-17 | | 13 |
| 8603706 | 07-01 | | 19 | 8603787 | 06-17 | | 21 |
| 8603707 | 07-01 | | 20 | 8603788 | 06-22D | | 13 |
| 8603708 | 07-01 | | 22 | | 06-23D | | 13 |
| 8603709 | 07-01 | | 23 | 8603789 | 06-22B | | 3 |
| 8603710 | 07-01 | | 24 | 8603791 | 06-22B | | 3 |
| 8603711 | 07-01 | | 26 | 8603792 | 06-22B | | 3 |
| 8603713 | 06-23C | | 3 | 8603793 | 06-22B | | 3 |
| 8603714 | 06-23C | | 5 | 8603794 | 06-22B | | 3 |
| 8603715 | 06-23C | | 6 | 8603795 | 06-22B | | 9 |
| 8603716 | 06-23C | | 7 | | 06-23B | | 8 |
| 8603717 | 06-23C | | 8 | 8603796 | 06-22D | | 15 |
| 8603718 | 06-23C | | 9 | | 06-23D | | 15 |
| 8603719 | 06-23C | | 10 | 8603798 | 06-06 | | 3 |
| 8603720 | 06-23C | | 11 | 8603799 | 06-22A | | 20 |
| 8603721 | 06-23C | | 12 | | 06-23A | | 21 |
| 8603722 | 06-23C | | 13 | 8604229 | 06-04 | | 17 |
| 8603723 | 06-23C | | 14 | 8604231 | 02-06A | | 6 |
| 8603724 | 06-23C | | 15 | 8604255 | 08-30A | | |
| 8603725 | 06-22A | | 24 | | 08-31A | | |
| | 06-23A | | 25 | 8604270 | 06-25 | | 4 |
| 8603727 | 06-22A | | 15 | 8604284 | 05-06 | | 6 |
| | 06-22A | | 6 | 8604285 | 05-06 | | 5 |
| | 06-23A | | 16 | 8604430 | 05-06 | | 2 |
| 8603728 | 06-23A | | 7 | 8604432 | 06-28 | | 1 |
| 8603730 | 06-22A | | 30 | 8604443 | 03-04 | | 2C |
| | 06-23A | | 32 | 8604506 | 07-05 | | 4 |
| 8603731 | 06-22A | | 30 | 8604521 | 08-29B | | |
| | 06-23A | | 32 | 8604522 | 08-29B | | 6 |
| 8603732 | 06-22A | | 30 | 8604523 | 08-29B | | 7 |
| | 06-23A | | 32 | 8604525 | 08-29B | | 9 |
| 8603733 | 06-23B | | 10 | 8604527 | 08-29A | | 29 |
| 8603734 | 06-23B | | 10 | 8604528 | 08-29A | | 7 |
| 8603735 | 06-23B | | 10 | 8604529 | 08-29A | | 8 |
| 8603736 | 06-23B | | 10 | 8604530 | 08-29A | | |
| 8603737 | 06-23B | | 10 | 8604531 | 08-29A | | |
| 8603738 | 06-23B | | 10 | 8604532 | 08-29A | | 19 |
| 8603739 | 06-23B | | 10 | 8604533 | 08-29A | | 20 |
| 8603740 | 06-23B | | 10 | 8604534 | 08-29A | | 21 |
| 8603741 | 06-23B | | 10 | 8604535 | 08-29A | | 22 |
| 8603742 | 06-23B | | 10 | 8604536 | 08-29A | | |
| 8603743 | 06-23B | | 10 | 8604537 | 08-29A | | 26 |
| 8603744 | 06-23B | | 10 | 8604538 | 08-29A | | 27 |
| 8603745 | 06-23B | | 10 | 8604539 | 08-29A | | 28 |
| 8603746 | 06-23B | | 10 | 8604540 | 08-29B | | |
| 8603747 | 06-23B | | 10 | 8604541 | 08-29B | | 17 |

| Number | Figure | Sequence | Ref. |
|---|---|---|---|
| 8604542 | 08-29B | | 18 |
| 8604543 | 08-30A | | 1 |
| | 08-31A | | 1 |
| 8604544 | 08-30A | | 2 |
| | 08-31A | | 2 |
| 8604545 | 08-30A | | 14 |
| | 08-31A | | 14 |
| 8604546 | 08-30A | | |
| | 08-31A | | |
| 8604548 | 08-30A | | 20 |
| | 08-31A | | 20 |
| 8604549 | 08-30A | | 21 |
| | 08-31A | | 21 |
| 8604550 | 08-29B | | 13 |
| 8604551 | 08-32A | | |
| 8604552 | 08-32A | | 6 |
| 8604553 | 08-32A | | 7 |
| 8604554 | 08-32A | | |
| 8604555 | 08-32A | | 12 |
| 8604556 | 08-32A | | 13 |
| 8604557 | 08-32A | | 11 |
| 8604566 | 08-27B | | 40 |
| | 08-28B | | 40 |
| 8604567 | 08-27 | | 4 |
| | 08-27B | | 4 |
| | 08-28 | | 4 |
| | 08-28B | | 4 |
| 8604568 | 08-27 | | 5 |
| | 08-28 | | 5 |
| 8604574 | 08-27 | | 14 |
| | 08-28 | | 14 |
| 8604575 | 08-27 | | 15 |
| | 08-27A | | 15 |
| | 08-28 | | 15 |
| | 08-28A | | 15 |
| 8604576 | 08-27A | | 16 |
| | 08-28A | | 16 |
| 8604578 | 08-27A | | 22 |
| | 08-28A | | 22 |
| 8604579 | 08-27A | | 25 |
| | 08-27B | | 25 |
| | 08-28A | | 25 |
| | 08-28B | | 25 |
| 8604580 | 08-27A | | 26 |
| | 08-27B | | 26 |
| | 08-28A | | 26 |
| | 08-28B | | 26 |
| 8604581 | 08-27A | | 27 |
| | 08-28A | | 27 |
| 8604582 | 08-27A | | 28 |
| | 08-27B | | 28 |
| | 08-28A | | 28 |
| | 08-28B | | 28 |
| 8604583 | 08-27A | | 29 |
| | 08-27B | | 29 |
| | 08-28A | | 29 |
| | 08-28B | | 29 |
| 8604584 | 08-27A | | 33 |
| | 08-28A | | 33 |
| 8604586 | 08-27A | | 35 |
| | 08-28A | | 35 |
| 8604588 | 08-27 | | 6 |
| | 08-28 | | 6 |
| 8604590 | 08-27 | | 8 |
| | 08-28 | | 8 |
| 8604592 | 08-27 | | 13 |
| | 08-28 | | 13 |
| 8604593 | 08-30A | | |
| | 08-31A | | |
| 8604594 | 08-32A | | |
| 8604598 | 08-32A | | 16 |
| 8604599 | 08-32A | | 19 |
| 8604607 | 08-32A | | 17 |
| 8604608 | 08-32A | | 18 |
| 8604674 | 06-25 | | 2 |
| 8604675 | 06-25 | | 1 |
| | 06-26 | | 1 |
| | 06-27 | | 1 |
| 8604676 | 06-04 | | 3 |
| 8604677 | 06-04 | | 7 |
| 8604678 | 06-04 | | 10 |
| 8604714 | 06-06 | | 19 |
| | 06-16 | | 7 |
| 8604716 | 06-12 | | 5 |
| | 06-13 | | 5 |
| 8604758 | 08-27B | | 22 |
| | 08-28B | | 22 |
| 8604781 | 08-27B | | 27 |
| | 08-28B | | 27 |
| 8604802 | 08-02A | | |
| 8604876 | 08-30A | | 25 |
| | 08-31A | | 25 |
| 8604958 | 08-04 | | 29 |
| 8604959 | 08-04 | | 33 |
| 8604960 | 08-04 | | 5 |
| 8604962 | 08-04 | | 3 |
| 8604963 | 08-04 | | 9 |
| 8604964 | 08-04 | | 8 |
| 8604965 | 08-04 | | 7 |
| 8604993 | 09-26 | | 3 |
| 8605005 | 08-04 | | 1 |
| 8605006 | 08-04 | | 2 |
| 8605008 | 08-04 | | 4 |
| 8605010 | 08-04 | | 10 |
| 8605011 | 08-04 | | 11 |
| 8605012 | 08-04 | | 13 |
| 8605013 | 08-04 | | 14 |
| 8605014 | 08-04 | | 15 |
| 8605015 | 08-04 | | 16 |
| 8605016 | 08-04 | | 17 |
| 8605017 | 08-04 | | 18 |
| 8605018 | 08-04 | | 19 |
| 8605019 | 08-04 | | 20 |
| 8605020 | 08-04 | | 21 |
| 8605021 | 08-04 | | 22 |
| 8605022 | 08-04 | | 23 |
| 8605023 | 08-04 | | 24 |
| 8605024 | 08-04 | | 25 |
| 8605025 | 08-04 | | 26 |
| 8605026 | 08-04 | | 27 |
| 8605027 | 08-04 | | 28 |
| 8605029 | 08-04 | | 30 |
| 8605030 | 08-04 | | 31 |
| 8605031 | 08-04 | | 32 |
| 8605033 | 08-04 | | 34 |
| 8605034 | 08-04 | | 35 |
| 8605036 | 08-04 | | 37 |
| 8605037 | 08-04 | | 38 |
| 8605038 | 08-04 | | 39 |
| 8605039 | 08-04 | | 40 |
| 8605040 | 08-04 | | 41 |
| 8605041 | 08-04 | | 42 |
| 8605053 | 08-24A | | 1 |
| 8605056 | 08-24A | | 3 |
| 8605059 | 08-24A | | 5 |
| 8605062 | 08-24A | | 6 |
| 8605066 | 08-24A | | 9 |
| 8605070 | 08-23A | | 4 |
| 8605073 | 08-23A | | 1 |
| 8605078 | 02-06A | | 4 |
| 8605079 | 02-06A | | 5 |
| 8605139 | 02-06A | | 3 |
| 8605140 | 02-06A | | 2 |
| 8605158 | 05-08 | | 2 |
| 8605159 | 05-08 | | |
| 8605160 | 05-08 | | |
| 8605161 | 05-08 | | 16 |
| 8605163 | 05-08 | | |
| 8605216 | 08-14 | | 1C |
| 8605218 | 08-04 | | 36 |
| 8605261 | 05-10 | | |
| 8605272 | 06-22B | | |
| | 06-22C | | |
| 8605273 | 06-22B | | 15 |
| 8605274 | 06-23B | | |
| | 06-23C | | 1 |

| Number | Figure | Sequence | Ref. |
|---|---|---|---|
| 8605275 | 06-23B | | 15 |
| 8605279 | 06-04 | | 16 |
| 8605280 | 06-07 | | 2 |
| 8605281 | 06-07 | | 3 |
| 8605282 | 06-08 | | 8 |
| 8605283 | 06-06 | | 1 |
| 8605314 | 06-22D | | 2 |
| | 06-23D | | 2 |
| 8605315 | 06-22D | | 4 |
| | 06-23D | | 4 |
| 8605359 | 06-23C | | 2 |
| 8605367 | 08-05 | | 14 |
| 8605369 | 08-05 | | 17 |
| 8605371 | 09-17 | | 5 |
| 8605372 | 09-17 | | 4 |
| 8605484 | 09-26 | | 2 |
| 8605485 | 09-26 | | 1 |
| 8605577 | 08-27A | | 18 |
| | 08-28A | | 18 |
| 8605616 | 06-22B | | 12 |
| 8605631 | 06-23C | | 17 |
| 8605632 | 06-23C | | 18 |
| 8605633 | 06-23C | | 19 |
| 8605634 | 06-23C | | 20 |
| 8605635 | 06-23B | | 12 |
| 8605636 | 06-22A | | 15 |
| | 06-22A | | 6 |
| | 06-23A | | 16 |
| 8605637 | 06-23B | | 1 |
| 8605638 | 06-23A | | 30 |
| 8605639 | 06-23A | | 29 |
| 8605738 | 04-03 | | 5 |
| | 04-03A | | 5 |
| 8605784 | 04-01 | | 1 |
| 8605846 | 09-16 | | 6 |
| 8605898 | 09-12 | | 2 |
| | 09-13 | | 2 |
| 8606002 | 07-03 | | 17 |
| 8606005 | 08-01 | | 42 |
| 8606006 | 08-01 | | 41 |
| 8606092 | 08-05 | | 6 |
| | 08-06 | | 2 |
| 8606096 | 08-21 | | 4 |
| 8606098 | 08-05 | | 8 |
| | 08-06 | | 5 |
| 8606100 | 08-05 | | 5 |
| | 08-06 | | 6 |
| 8606124 | 09-15 | | 4 |
| 863-16070 | 06-23 | | 10 |
| 864-10025 | 09-23 | | 6 |
| 864-5016 | 08-01 | | 9 |
| 864-5020 | 05-02A | | 13 |
| 864-5060 | 08-27A | | 19 |
| | 08-28A | | 19 |
| 864-8025 | 07-05 | | 5 |
| 864-8030 | 07-05 | | 6 |
| 864-8080 | 08-31A | | 26 |
| 86503049 | 09-31 | | 9 |
| 86511825 | 04-14 | | 18 |
| 86511830 | 09-35A | | 21 |
| 86521965 | 08-01 | | 40 |
| 86579671 | 02-05 | | 10 |
| 86579678 | 05-09 | | 32 |
| 86579681 | 02-05 | | 9 |
| 86579682 | 02-05 | | 11 |
| 86579686 | 02-05 | | 12 |
| 86579691 | 05-09 | | 2 |
| 86579692 | 05-09 | | 35 |
| 86579694 | 05-05 | | 47 |
| 86579697 | 08-02 | | 3 |
| | 08-03 | | 11 |
| 86580179 | 08-05 | | 13 |
| 86580180 | 08-03 | | 14 |
| | 08-05 | | 12 |
| 86593173 | 08-03 | | 23 |
| 86597760 | 05-04 | | 24 |
| | 05-05 | | 6 |
| | 08-19B | | 1 |
| 86598102 | 05-05 | | 47A |
| 86636814 | 09-07 | | 31A |
| | 09-07A | | 31A |
| 86637954 | 06-25 | | 5 |
| 86639051 | 08-05 | | 9 |
| 86639053 | 08-03 | | 12 |
| 86639080 | 05-09 | | 6 |
| 86639083 | 05-09 | | 7 |
| 86639315 | 08-32 | | 15 |
| 86642312 | 08-16 | | 7 |
| | 08-17 | | 7 |
| | 08-18 | | 8 |
| 86982439 | 05-10 | | 21 |
| 86982444 | 08-15 | | 7 |
| | 08-16 | | 5 |
| | 08-17 | | 5 |
| | 08-18 | | 4 |
| 86983366 | 08-05 | | 11 |
| 86983386 | 08-05 | | 30 |
| | 08-05 | | 31 |
| 86983387 | 08-06 | | 21 |
| 86983688 | 08-08 | | 1 |
| | 08-09 | | 1 |
| 86983689 | 08-08 | | 2 |
| | 08-09 | | 2 |
| 86985567 | 08-03 | | 16 |
| 86988366 | 06-01 | | 16 |
| | 08-01 | | 15 |
| 86990311 | 06-24 | | 2 |
| | 06-27 | | |
| 86990312 | 06-24 | | 3 |
| | 06-26 | | |
| 86991231 | 06-23 | | 8 |
| 86991683 | 02-05 | | 1A |
| 87010650 | 08-05 | | 10 |
| 87016914 | 08-05 | | 2 |
| 87026656 | 04-24A | | 12 |
| 87300128 | 04-11A | | 1 |
| 87304560 | 09-03 | | 1 |
| 87304926 | 08-07 | | 21 |
| | 08-07A | | 17 |
| 87304928 | 08-07 | | 20 |
| | 08-07A | | 16 |
| 87304930 | 08-10 | | 9 |
| 87304933 | 08-10 | | 8 |
| 87307060 | 05-04 | | 1 |
| | 05-05 | | 3 |
| | 05-06 | | |
| 87307240 | 04-03 | | 3 |
| | 04-03A | | 3 |
| 87307825 | 03-01 | | 18 |
| 87307982 | 08-26 | | 1 |
| | 08-27 | | |
| 87307983 | 08-26A | | 1 |
| | 08-27 | | |
| 87307984 | 08-26B | | 1 |
| | 08-27 | | |
| 87307986 | 08-26 | | 1A |
| | 08-28 | | |
| 87307988 | 08-26A | | 1A |
| | 08-28 | | |
| 87307990 | 08-26B | | 1A |
| | 08-28 | | |
| 87308200 | 09-50 | | 6 |
| | 09-50A | | 6 |
| 87308338 | 08-25 | | 12 |
| 87308388 | 09-16 | | 13 |
| 87308668 | 09-16 | | 3 |
| 87308682 | 09-16 | | 2 |
| 87308853 | 05-09 | | 20 |
| 87308928 | 08-02A | | |
| | 08-21 | | 3 |
| 87308929 | 08-02A | | |
| 87308933 | 08-02A | | 10 |
| 87310689 | 09-03 | | 7 |
| 87311889 | 08-27 | | 1 |
| | 08-28 | | 1 |
| 87311891 | 08-27 | | 2 |

| Number | Figure | Sequence | Ref. |
|---|---|---|---|
| 87311891 | 08-28 | | 2 |
| 87311898 | 08-28A | | 23 |
| 87311965 | 08-27 | | 11 |
| | 08-28 | | 11 |
| 87311972 | 08-27A | | 17 |
| | 08-28A | | 17 |
| 87311974 | 08-27A | | 20 |
| | 08-28A | | 20 |
| 87311975 | 08-27A | | 23 |
| | 08-27B | | 39 |
| | 08-28B | | 39 |
| 87311976 | 08-27A | | 24 |
| | 08-28A | | 24 |
| 87311984 | 08-27A | | 30 |
| | 08-27B | | 30 |
| | 08-28A | | 30 |
| | 08-28B | | 30 |
| 87311985 | 08-27A | | 31 |
| | 08-28A | | 31 |
| 87311986 | 08-27A | | 32 |
| | 08-28A | | 32 |
| 87311988 | 08-27A | | 34 |
| | 08-28A | | 34 |
| 87311990 | 08-27A | | 36 |
| | 08-28A | | 36 |
| 87311991 | 08-27A | | 37 |
| | 08-28A | | 37 |
| 87312068 | 08-01 | | 5 |
| 87312626 | 04-07 | | 26 |
| 87315250 | 04-14 | | 5 |
| 87315269 | 04-07 | | 4 |
| 87318062 | 08-15 | | 2 |
| 87318612 | 04-14 | | 8 |
| 87318620 | 04-14 | | 7 |
| 87318627 | 04-07 | | 9 |
| | 04-14 | | 4 |
| 87318825 | 04-24A | | 5 |
| 87319529 | 05-06 | | 1 |
| 87323556 | 08-01 | | 32 |
| 87323827 | 03-01 | | 12 |
| 87323866 | 09-23 | | 7 |
| 87324042 | 02-02 | | 2 |
| 87324389 | 08-32 | | 11 |
| 87324722 | 04-26 | | 10 |
| 87324868 | 04-26 | | 8 |
| 87324875 | 04-26 | | 9 |
| 87324906 | 08-05 | | 15 |
| 87324979 | 04-26 | | 11 |
| 87325208 | 02-02 | | 9 |
| 87325760 | 04-08 | | 4 |
| 87325996 | 07-03D | | 14 |
| 87325997 | 07-03C | | 10 |
| 87325999 | 07-03D | | 13 |
| 87326000 | 07-03D | | 32 |
| 87326008 | 07-03B | | 15 |
| 87326262 | 07-03D | | 2 |
| 87326263 | 07-03D | | 1 |
| 87326268 | 07-03D | | 3 |
| 87326981 | 08-19B | | 2 |
| 87327335 | 04-07 | | 23 |
| | 04-14 | | 9 |
| 87327346 | 04-07 | | 22 |
| | 04-14 | | 10 |
| 87328377 | 08-19B | | 2A |
| 87329253 | 04-26 | | 6 |
| 87330150 | 09-07 | | 2 |
| | 09-07A | | 2 |
| 87331925 | 09-42B | | |
| 87340015 | 02-04 | | 4 |
| 87340016 | 08-29 | | 1 |
| | 08-29A | | |
| | 08-29B | | |
| 87340017 | 08-30 | | 1 |
| | 08-30A | | |
| 87340019 | 08-31 | | 1 |
| | 08-31A | | |
| 87340284 | 02-04 | | 3 |
| 87341835 | 06-22D | | 7 |
| 87341835 | 06-23D | | 7 |
| 87341862 | 04-04 | | 15 |
| 87342166 | 07-03 | | 1 |
| | 07-04 | | |
| 87342638 | 02-06 | | 24 |
| 87343733 | 09-07 | | 1 |
| 87344091 | 09-07B | | 1 |
| 87344104 | 09-07B | | 11 |
| 87344111 | 09-07B | | 10 |
| 87344119 | 09-07A | | 1 |
| 87347864 | 08-01 | | 35 |
| 87347865 | 08-01 | | 36 |
| 87348711 | 04-07 | | 1 |
| 87348713 | 04-11 | | 7 |
| 87349019 | 08-29 | | 4 |
| 87350044 | 04-13 | | 4 |
| 87350045 | 04-13 | | 9 |
| 87350047 | 04-13 | | 11 |
| 87350048 | 04-13 | | 10 |
| 87350049 | 04-13 | | 7 |
| 87350052 | 04-13 | | 2 |
| 87350054 | 04-13 | | 1 |
| 87350055 | 04-13 | | 12 |
| 87350062 | 04-11 | | 6 |
| 87350064 | 04-07 | | 25 |
| 87350066 | 04-07 | | 24 |
| 87350087 | 04-06 | | 16 |
| 87351646 | 05-09 | | 23 |
| 87351705 | 04-18 | | 10 |
| | 04-18 | | 4 |
| 87351718 | 04-18 | | 9 |
| 87351752 | 04-05 | | 1 |
| 87351908 | 04-07 | | 2 |
| 87352565 | 08-28A | | 23 |
| 87353999 | 04-07 | | 3 |
| 87354000 | 04-11 | | 1 |
| | 04-11A | | 4 |
| 87354290 | 07-03C | | 12 |
| | 07-03D | | 31 |
| 87354477 | 08-32 | | 13 |
| 87354480 | 07-03C | | 8 |
| 87354481 | 07-03C | | 7 |
| 87355957 | 09-20 | | 1 |
| | 09-20A | | 1 |
| 87355960 | 09-20A | | 2 |
| 87355962 | 09-20A | | 3 |
| 87358043 | 03-01 | | 3 |
| 87358580 | 06-22 | | 1 |
| | 06-22A | | |
| | 06-22B | | |
| | 06-22C | | |
| | 06-22D | | |
| | 06-22E | | |
| 87358583 | 06-23 | | 1 |
| | 06-23A | | |
| | 06-23B | | |
| | 06-23C | | |
| | 06-23D | | |
| | 06-23E | | |
| 87358680 | 06-22D | | |
| | 06-22E | | |
| 87358681 | 06-23D | | |
| | 06-23E | | |
| 87358695 | 06-22E | | 19 |
| | 06-23E | | 19 |
| 87358698 | 06-22E | | 20 |
| | 06-23E | | 20 |
| 87358699 | 06-22E | | 15 |
| | 06-23E | | 15 |
| 87358702 | 06-22E | | 16 |
| 87360067 | 07-03C | | 1 |
| | 07-05 | | |
| 87360593 | 09-23 | | 3 |
| 87360602 | 09-23 | | 3 |
| 87360678 | 09-23 | | 4 |
| 87360690 | 09-23 | | 4 |
| 87360870 | 04-06 | | 1 |
| 87362185 | 08-19B | | 12 |

| Number | Figure | Sequence | Ref. |
|---|---|---|---|
| 87362190 | 08-19A | | 3 |
| 87362307 | 08-27 | | 14 |
| | 08-28 | | 14 |
| 87364063 | 07-04 | | |
| 87364605 | 04-14 | | 2 |
| 87365409 | 05-07 | | 2 |
| 87365413 | 05-07 | | 3 |
| 87365418 | 05-07 | | 4 |
| 87365420 | 05-07 | | 5 |
| 87365422 | 05-07 | | 6 |
| 87365425 | 05-07 | | 8 |
| 87365427 | 05-07 | | 10 |
| 87365429 | 05-07 | | 11 |
| | 05-07 | | 13 |
| 87365430 | 05-07 | | 12 |
| 87365709 | 02-08 | | 2 |
| 87365731 | 02-08 | | 1 |
| 87366688 | 08-16 | | |
| | 09-07 | | 3 |
| 87366695 | 08-17 | | |
| | 09-07A | | 4 |
| 87372088 | 08-29A | | 1 |
| 87372240 | 04-04 | | 5 |
| 87372241 | 04-14 | | 1 |
| 87372246 | 04-23 | | 1 |
| 87372247 | 04-23A | | 1 |
| 87372804 | 04-15 | | 2 |
| | 05-03 | | 17 |
| 87372814 | 04-15 | | 1 |
| | 05-02A | | 1 |
| 87373112 | 07-03 | | 5 |
| 87376662 | 04-04 | | 1 |
| 87377313 | 07-03C | | 6 |
| 87377337 | 07-03 | | 11 |
| 87377350 | 07-03 | | 10 |
| | 07-03B | | 4 |
| 87381953 | 02-03 | | 1 |
| 87382200 | 04-12 | | 1 |
| 87385246 | 05-09 | | 34 |
| 87389172 | 08-05 | | 1 |
| | 08-06 | | 3 |
| 87389199 | 09-19 | | 2 |
| 87389200 | 09-19 | | 2 |
| 87389202 | 09-19 | | 1 |
| 87389203 | 09-19 | | 1 |
| 87389244 | 08-21 | | 2 |
| 87389423 | 08-20 | | 20 |
| 87389871 | 07-03 | | 4 |
| 87393431 | 08-20 | | 10 |
| | 08-20A | | 1 |
| 87393434 | 08-20 | | 7 |
| 87393456 | 03-02 | | |
| 87393646 | 08-20 | | 1 |
| 87395399 | 09-07 | | 5 |
| | 09-07A | | 3 |
| 87396449 | 09-42D | | |
| 87396450 | 09-42D | | 44 |
| 87397077 | 09-55 | | 12 |
| 87397078 | 09-55 | | 13 |
| 87397079 | 09-55 | | 7 |
| 87397102 | 04-22 | | 1 |
| 87397416 | 04-02A | | 4 |
| 87398039 | 09-42 | | 1 |
| | 09-42A | | |
| 87398040 | 09-42 | | 4 |
| | 09-42C | | |
| | 09-42D | | |
| 87398113 | 07-05 | | 1 |
| 87398114 | 07-05 | | 2 |
| 87398116 | 07-05 | | 10 |
| 87398558 | 04-11A | | 3 |
| 87398773 | 09-17 | | 1 |
| 87400460 | 03-01 | | 6 |
| 87403305 | 08-11 | | 4 |
| 87403347 | 08-20 | | 8 |
| 87403649 | 08-15 | | 4B |
| 87403964 | 09-01 | | 1 |
| | 09-02 | | 1 |
| 87403965 | 09-01 | | 2 |
| 87403966 | 09-01 | | 4 |
| | 09-02 | | 4 |
| 87403968 | 09-02 | | 2 |
| 87403985 | 08-11 | | 9 |
| | 08-12 | | 9 |
| 87404018 | 08-14 | | 2 |
| 87404138 | 09-19A | | 3 |
| 87404588 | 09-49 | | 5 |
| 87405436 | 08-12 | | 8 |
| 87410351 | 06-04 | | 11 |
| 87415931 | 09-55 | | 15 |
| 87426452 | 02-01 | | 13 |
| 87427823 | 05-04 | | 19 |
| | 05-05 | | 22 |
| 87429186 | 09-55 | | 16 |
| 87430084 | 09-12 | | 10 |
| 87432252 | 09-16 | | 1 |
| 87432328 | 09-44B | | 13 |
| | 09-48 | | 15 |
| 87432563 | 08-29B | | |
| 87433494 | 05-05 | | 9 |
| 87434472 | 09-24 | | 4 |
| | 09-25 | | 4 |
| 87435224 | 03-04 | | 2D |
| 87435505 | 03-04 | | 2E |
| 87435526 | 03-02 | | 1 |
| 87436733 | 06-22A | | 21 |
| | 06-23A | | 22 |
| 87437102 | 09-04 | | 6 |
| | 09-05 | | 6 |
| | 09-06 | | 4 |
| 87437274 | 09-08A | | 7 |
| 87437916 | 06-22E | | 1 |
| | 06-23E | | 1 |
| 87439461 | 04-28 | | 1A |
| 87440551 | 09-49 | | 1 |
| 87441328 | 06-22D | | 8A |
| | 06-23D | | 8A |
| 87441342 | 09-07B | | 42 |
| 87441374 | 09-07B | | 36 |
| 87441882 | 09-07B | | 2C |
| 87442555 | 08-18 | | |
| | 09-07B | | 12 |
| 87442557 | 08-18 | | 1 |
| 87442559 | 08-18 | | 2 |
| 87442965 | 08-16 | | |
| 87443659 | 09-03 | | 2 |
| 87444057 | 09-07B | | 43 |
| 87444440 | 08-10 | | 2 |
| 87445353 | 09-07B | | 4 |
| 87445354 | 09-07B | | 9 |
| 87445798 | 08-07 | | 6 |
| 87445800 | 08-07A | | 4 |
| 87445804 | 08-07A | | 5 |
| 87445806 | 08-07 | | 7 |
| 87445809 | 08-10 | | 5 |
| 87446950 | 02-02 | | 7 |
| 87447892 | 08-07A | | 1 |
| 87447893 | 08-07 | | 1 |
| 87447895 | 08-07 | | 2 |
| 87447897 | 08-07A | | 2 |
| 87448548 | 08-06 | | 1 |
| 87448550 | 08-06 | | 20 |
| 87448665 | 08-13 | | 6 |
| 87448666 | 08-13 | | 5 |
| 87450043 | 06-23 | | 4 |
| 87450063 | 09-13 | | 10 |
| 87452278 | 08-20 | | 12 |
| 87452279 | 08-20 | | 16 |
| 87452280 | 08-20 | | 18 |
| 87452287 | 08-20 | | 19 |
| 87452362 | 05-09 | | 1 |
| | 05-10 | | |
| 87452365 | 05-10 | | 16 |
| 87452370 | 09-07B | | 2 |
| 87452603 | 08-07 | | 4 |
| 87452605 | 08-07A | | 3 |

| Number | Figure | Sequence | Ref. |
|---|---|---|---|
| 87452607 | 08-10 | | 7 |
| 87452747 | 08-07 | | 8 |
| | 08-07A | | 6 |
| | 08-10 | | 1 |
| 87453132 | 09-57 | | 16 |
| 87453133 | 09-58 | | 16 |
| 87453134 | 09-59 | | 16 |
| | 09-59 | | 19 |
| 87453761 | 08-20A | | 1A |
| 87453762 | 08-20A | | 1B |
| 87453765 | 08-20A | | 1C |
| 87453766 | 08-20A | | 1D |
| 87453767 | 08-20A | | 1E |
| 87453768 | 08-20A | | 1F |
| 87453769 | 08-20A | | 1G |
| 87453770 | 08-20A | | 1H |
| 87453771 | 08-20A | | 1J |
| 87453772 | 08-20A | | 1K |
| 87515559 | 08-32 | | 3 |
| 87515619 | 04-22 | | 5 |
| 87516506 | 08-29 | | 2 |
| | 08-30 | | 2 |
| | 08-31 | | 2 |
| 87517052 | 04-08 | | 1 |
| 87519004 | 09-54 | | 2 |
| 87519005 | 09-54 | | 3 |
| 87519006 | 09-54 | | 1 |
| 87519307 | 03-02 | | 2 |
| 87519452 | 06-03 | | 1 |
| 87519793 | 05-04 | | 26 |
| | 05-05 | | 37 |
| 87519795 | 05-09 | | 9 |
| 87521823 | 07-03D | | 15 |
| 87522101 | 06-24 | | 17 |
| 87522593 | 09-33A | | 23 |
| 87523729 | 08-32 | | 9 |
| 87524648 | 09-41 | | 6 |
| 87524649 | 09-55 | | 9 |
| 87525153 | 09-35A | | 2 |
| 87525374 | 03-01 | | 5 |
| 87528687 | 09-45A | | 17 |
| | 09-47A | | 17 |
| 87528688 | 09-45A | | 16 |
| | 09-47A | | 16 |
| 87528689 | 09-45A | | 9 |
| | 09-47A | | 9 |
| 87528970 | 09-44 | | 3 |
| | 09-44A | | 6 |
| 87528973 | 09-44 | | 6 |
| | 09-44A | | 3 |
| 87529279 | 07-03C | | 13 |
| | 07-03D | | 30 |
| 87529289 | 09-45A | | 27 |
| | 09-47A | | 29 |
| 87529444 | 09-45A | | 27A |
| | 09-47A | | 29A |
| 87529447 | 09-45A | | 27B |
| | 09-47A | | 29B |
| 87529453 | 09-45A | | 1 |
| | 09-47A | | 1 |
| 87529457 | 09-45A | | 2 |
| | 09-47A | | 2 |
| 87529458 | 09-45A | | 3 |
| | 09-47A | | 3 |
| 87529459 | 09-45A | | 4 |
| | 09-47A | | 4 |
| 87529462 | 09-45A | | 10 |
| | 09-47A | | 10 |
| 87529463 | 09-47A | | 31 |
| 87529474 | 09-47A | | 31A |
| 87529485 | 09-45A | | 22 |
| | 09-47A | | 22 |
| 87529487 | 09-45A | | 28 |
| | 09-47A | | 30 |
| 87529493 | 09-47A | | 24 |
| 87529495 | 09-47A | | 24A |
| 87529498 | 09-47A | | 24B |
| 87529505 | 09-47A | | 24C |
| 87529508 | 09-47A | | 24D |
| 87529536 | 09-45A | | 29 |
| 87529617 | 09-45A | | 14 |
| | 09-47A | | 14 |
| 87529621 | 09-47A | | 25 |
| 87529627 | 09-45A | | 27C |
| | 09-47A | | 29C |
| 87531205 | 09-17 | | 17 |
| 87532611 | 09-19 | | 9 |
| 87533290 | 08-20A | | 1L |
| 87534053 | 08-32 | | 1 |
| 87535471 | 02-06 | | 1 |
| 87535472 | 02-06 | | 16 |
| 87535473 | 02-06 | | 7 |
| 87536075 | 08-01 | | 17 |
| 87536091 | 02-02 | | 31 |
| 87537993 | 09-34 | | 13 |
| 87541330 | 08-01 | | 27 |
| 87542219 | 07-02 | | 3 |
| 87542710 | 03-04 | | 10 |
| | 04-06 | | 15 |
| 87545658 | 09-42 | | 17 |
| | 09-42C | | 44 |
| 87546325 | 09-56 | | 1 |
| 87546326 | 09-56 | | 2 |
| 87546327 | 09-56 | | 3 |
| 87546328 | 09-56 | | 4 |
| 87546329 | 09-56 | | 5 |
| 87546330 | 09-56 | | 6 |
| 87547181 | 04-02A | | 1 |
| | 04-02B | | 1 |
| 87547373 | 09-12 | | 1 |
| 87547376 | 09-13 | | 1 |
| 87549248 | 03-04A | | 6 |
| 87549589 | 04-03 | | 2 |
| | 04-03A | | 2 |
| 87550115 | 03-04 | | 1 |
| 87552485 | 02-02 | | 8 |
| 87552495 | 02-02 | | 4 |
| 87552496 | 02-04 | | 1 |
| 87552499 | 02-02 | | 20 |
| 87552502 | 03-01 | | 2 |
| 87552958 | 06-01 | | 3 |
| 87552959 | 06-01 | | 4 |
| 87552960 | 06-01 | | 2 |
| 87553862 | 06-24 | | 1 |
| | 06-28 | | |
| 87553865 | 06-24 | | 4 |
| | 06-25 | | |
| 87553867 | 06-24 | | 14 |
| 87553873 | 07-03A | | 10 |
| 87557216 | 02-06 | | 6 |
| 87557521 | 06-29 | | 1 |
| 87559559 | 05-04 | | 14 |
| | 05-05 | | 46 |
| 87559561 | 05-09 | | 18 |
| 87559562 | 05-09 | | 31 |
| 87559564 | 08-22 | | 2 |
| 87559565 | 08-22 | | 1 |
| 87559567 | 08-19 | | 3 |
| 87559571 | 09-14 | | 8 |
| 87559792 | 09-22 | | 3 |
| 87559793 | 09-22 | | 12 |
| 87559794 | 09-22 | | 13 |
| 87559796 | 09-24 | | 1 |
| 87559798 | 09-24 | | 2 |
| | 09-25 | | 2 |
| 87559816 | 09-22 | | 14 |
| 87559817 | 09-22 | | 15 |
| 87563048 | 08-29B | | 8 |
| 87567830 | 09-42D | | 36 |
| 87568400 | 07-02 | | 1 |
| 87571546 | 09-53 | | 1 |
| 87572394 | 06-01 | | 1 |
| | 06-03 | | |
| | 06-04 | | |
| | 06-05 | | |
| | 06-06 | | |

| Number | Figure | Sequence | Ref. |
|---|---|---|---|
| 87572394 | 06-07 | | |
| | 06-08 | | |
| | 06-09 | | |
| | 06-10 | | |
| | 06-11 | | |
| | 06-12 | | |
| | 06-13 | | |
| | 06-14 | | |
| | 06-15 | | |
| | 06-16 | | |
| | 06-17 | | |
| | 06-18 | | |
| | 06-19 | | |
| | 06-20 | | |
| | 07-01 | | |
| 87573767 | 04-16 | | 1 |
| 87577168 | 08-19B | | 6 |
| 87577181 | 08-03 | | 26 |
| 87577182 | 09-50 | | 1 |
| 87577184 | 09-50A | | 1 |
| 87577360 | 09-47A | | 19 |
| 87577361 | 09-45A | | 26 |
| | 09-47A | | 28 |
| 87577649 | 08-15 | | |
| | 09-07 | | 4 |
| | 09-07A | | 5 |
| | 09-07B | | 17 |
| 87578052 | 06-02 | | 9 |
| 87578053 | 06-02 | | 11 |
| 87578654 | 04-20 | | 1 |
| 87579384 | 09-21 | | 7 |
| 87579386 | 09-25 | | 1 |
| 87579400 | 02-01 | | 1 |
| | 02-09 | | |
| | 02-10 | | |
| | 02-11 | | |
| | 02-12 | | |
| | 02-13 | | |
| | 02-15 | | |
| | 02-16 | | |
| | 02-17 | | |
| | 02-18 | | |
| | 02-19 | | |
| | 02-20 | | |
| | 02-21 | | |
| | 02-22 | | |
| | 02-23 | | |
| | 02-24 | | |
| | 02-25 | | |
| | 02-26 | | |
| | 02-27 | | |
| | 02-28 | | |
| | 02-29 | | |
| | 02-30 | | |
| | 02-31 | | |
| | 02-32 | | |
| | 02-33 | | |
| | 02-33A | | |
| | 02-34 | | |
| | 02-35 | | |
| | 02-36 | | |
| | 02-37 | | |
| | 02-38 | | |
| | 02-39 | | |
| | 02-40 | | |
| | 02-41 | | |
| | 03-03 | | |
| | 03-05 | | |
| | 03-06 | | |
| | 03-07 | | |
| | 03-08 | | |
| | 03-09 | | |
| | 03-10 | | |
| | 03-11 | | |
| 87579405 | 09-20 | | 2 |
| 87579406 | 09-20 | | 3 |
| 87580058 | 04-24 | | 1 |
| 87580853 | 09-41 | | 4 |
| 87581480 | 05-05 | | 1 |
| | 05-08 | | |
| 87581481 | 05-08 | | 1 |
| 87581937 | 08-14 | | 12 |
| 87581938 | 09-03 | | 10 |
| 87582901 | 04-13 | | 19 |
| | 08-32 | | 18 |
| 87585139 | 08-01 | | 29 |
| 87585843 | 09-18 | | 1 |
| 87585844 | 09-18 | | 2 |
| 87586610 | 09-54 | | 4 |
| 87586611 | 09-54 | | 5 |
| 87586612 | 09-54 | | 5 |
| 87586616 | 09-55 | | 4 |
| 87586617 | 09-57 | | 20 |
| 87587637 | 09-47 | | 5 |
| 87588276 | 04-18 | | 3 |
| 87588859 | 09-57 | | 18 |
| 87590238 | 02-06 | | 4 |
| | 02-06A | | |
| 87591165 | 04-26 | | 20 |
| 87591668 | 04-20 | | 2 |
| 87591692 | 09-23 | | 1 |
| 87592785 | 04-10 | | 1 |
| 87597328 | 09-58 | | 21 |
| 87597329 | 09-59 | | 22 |
| 87597331 | 09-54 | | 6 |
| 87597587 | 09-23 | | 2 |
| 87597594 | 09-27 | | 2 |
| 87597597 | 09-27 | | 3 |
| 87597598 | 09-27 | | 4 |
| 87598264 | 09-27 | | 1 |
| 87598267 | 09-27 | | 8 |
| 87598730 | 08-01 | | 1 |
| 87600838 | 09-19A | | 2 |
| 87600841 | 04-17 | | 11 |
| 87605272 | 06-21 | | 1 |
| 87607227 | 07-03C | | 2 |
| 87609806 | 05-05 | | 2 |
| | 05-07 | | 1 |
| 87610851 | 09-43 | | 15 |
| 87613427 | 09-07B | | 3A |
| 87613429 | 09-07 | | 2A |
| 87613430 | 09-07 | | 5A |
| | 09-07A | | 3A |
| 87613431 | 09-07B | | 4B |
| 87613432 | 09-07B | | 3B |
| 87613435 | 09-07B | | 4A |
| 87613439 | 09-07 | | 1A |
| | 09-07A | | 1A |
| | 09-07B | | 1B |
| 87613442 | 09-07B | | 1C |
| 87613443 | 09-07B | | 1D |
| 87613444 | 09-07 | | 1B |
| | 09-07A | | 1B |
| 87613445 | 09-07B | | 1A |
| 87613498 | 04-21 | | 2 |
| | 09-40 | | 1 |
| 87617016 | 09-07B | | 3C |
| 87617083 | 03-04 | | 10A |
| | 04-06 | | 15A |
| 87620692 | 04-13 | | 15 |
| 87620991 | 09-20 | | 11 |
| | 09-20A | | 11 |
| 87623437 | 09-15 | | 17 |
| 87623438 | 09-15 | | 25 |
| 87625613 | 08-16 | | 1A |
| | 08-17 | | 1A |
| 87625614 | 08-18 | | 1A |
| 87625615 | 08-15 | | 1A |
| 87625616 | 09-17 | | 2 |
| 87627057 | 04-21 | | 1 |
| | 09-40 | | 4 |
| 87627075 | 09-35 | | 1 |
| | 09-35A | | |
| 87629990 | 08-03 | | 32 |
| 87629991 | 08-03 | | 13 |
| 87629992 | 09-49 | | 2 |

| Number | Figure | Sequence | Ref. |
|---|---|---|---|
| 87629993 | 05-04 | | 11 |
| 87638910 | 08-29 | | 3 |
| 87638911 | 08-30 | | 3 |
| 87638912 | 08-31 | | 3 |
| 87641237 | 09-17 | | 20 |
| 87643954 | 09-45A | | 12 |
| | 09-47A | | 12 |
| 87643955 | 09-45A | | 13 |
| | 09-47A | | 13 |
| 87643957 | 09-45A | | 8 |
| | 09-47A | | 8 |
| 87643958 | 09-45A | | 7 |
| | 09-47A | | 7 |
| 87644742 | 02-04 | | 2 |
| 87647668 | 09-55 | | 11 |
| 87651073 | 09-45 | | 7 |
| 87651217 | 09-49 | | 3 |
| 87651218 | 08-25 | | 13 |
| 87651219 | 08-25 | | 14 |
| 87651220 | 08-25 | | 15 |
| 87651221 | 08-25 | | 16 |
| 87651222 | 08-25 | | 17 |
| 87651223 | 08-25 | | 18 |
| 87651224 | 08-25 | | 19 |
| 87651225 | 08-25 | | 20 |
| 87651226 | 08-25 | | 21 |
| 87651227 | 05-04 | | 29 |
| 87652903 | 09-22 | | 1 |
| 87652904 | 09-22 | | 2 |
| 87652909 | 09-21 | | 1 |
| 87652910 | 09-21 | | 2 |
| 87653595 | 09-14 | | 1 |
| 87653616 | 06-01 | | 15 |
| 87653634 | 09-19A | | 1 |
| 87653912 | 05-05 | | 10 |
| 87653913 | 05-05 | | 13 |
| 87653914 | 05-05 | | 45 |
| 87653915 | 05-05 | | 43 |
| 87653917 | 05-05 | | 41 |
| 87653919 | 05-05 | | 39 |
| 87653921 | 05-05 | | 42 |
| 87653923 | 05-04 | | 27 |
| | 05-05 | | 38 |
| 87653924 | 04-17 | | 3 |
| 87653928 | 05-05 | | 44 |
| 87653975 | 05-05 | | 40 |
| 87655474 | 04-03 | | 1 |
| | 04-03A | | 1 |
| 87663487 | 09-24 | | 3 |
| 87663490 | 09-25 | | 3 |
| 87664495 | 05-09 | | 4 |
| 87664498 | 05-09 | | 36 |
| 87803200 | 03-03 | | 1 |
| 87803261 | 02-11 | | 1 |
| 892-11004 | 04-02A | | 17 |
| | 04-02B | | 15 |
| 892-11006 | 04-20 | | 3 |
| | 04-27 | | 7 |
| | 05-02A | | 18 |
| | 09-16 | | 15 |
| | 09-44 | | 4 |
| | 09-44A | | 4 |
| 892-11008 | 02-02 | | 11 |
| | 02-03 | | 9 |
| | 04-11 | | 10 |
| | 06-02 | | 3 |
| | 07-05 | | 7 |
| | 08-01 | | 11 |
| | 08-01A | | 3 |
| | 08-19 | | 5 |
| | 08-27 | | 3 |
| | 08-28 | | 3 |
| | 09-16 | | 17 |
| | 09-48 | | 13 |
| 892-11010 | 03-01 | | 27 |
| | 05-09 | | 16 |
| | 08-10 | | 19 |
| | 09-03 | | 4 |
| 892-11010 | 09-04 | | 3 |
| | 09-05 | | 3 |
| | 09-06 | | 6 |
| | 09-07B | | 38 |
| | 09-12 | | 4 |
| | 09-13 | | 4 |
| 892-11012 | 04-22 | | 3 |
| | 09-12 | | 12 |
| | 09-13 | | 12 |
| | 09-14 | | 6 |
| | 09-27 | | 6 |
| 893-11010 | 05-01 | | 2 |
| 895-11003 | 04-04 | | 26 |
| 895-11004 | 04-04 | | 29 |
| | 04-14 | | 16 |
| 895-11005 | 04-06 | | 14 |
| | 05-02A | | 7 |
| | 08-01 | | 2 |
| | 09-33 | | 4 |
| | 09-34 | | 20 |
| | 09-35 | | 15 |
| 895-11006 | 04-03 | | 11 |
| | 04-03A | | 11 |
| | 04-04 | | 9 |
| | 04-06 | | 6 |
| | 04-07 | | 6 |
| | 04-10 | | 6 |
| | 04-11 | | 2 |
| | 04-11A | | 6 |
| | 04-14 | | 12 |
| | 05-02A | | 12 |
| | 05-03 | | 22 |
| | 09-31 | | 7 |
| | 09-31A | | 9 |
| | 09-34 | | 23 |
| | 09-36 | | 7 |
| | 09-39 | | 9 |
| | 09-43 | | 13 |
| | 09-43A | | 28 |
| 895-11008 | 04-06 | | 3 |
| | 04-07 | | 13 |
| | 04-09 | | 7 |
| | 04-11A | | 7 |
| | 04-12 | | 3 |
| | 04-18 | | 8 |
| | 04-23A | | 5 |
| | 04-26 | | 3 |
| | 05-05 | | 14 |
| | 08-01 | | 21 |
| | 09-43 | | 4 |
| | 09-43A | | 17 |
| | 09-45 | | 5 |
| | 09-46 | | 10 |
| | 09-47 | | 7 |
| | 09-49 | | 10 |
| 895-11010 | 04-03 | | 8 |
| | 04-03A | | 8 |
| | 04-05 | | 10 |
| | 04-17 | | 12 |
| | 05-01 | | 1 |
| | 06-24 | | 21 |
| | 07-01 | | 7 |
| | 07-03A | | 7 |
| | 08-03 | | 28 |
| | 08-05 | | 20 |
| | 08-06 | | 22 |
| | 08-07 | | 22 |
| | 08-07A | | 18 |
| | 08-10 | | 14 |
| | 08-11 | | 7 |
| | 08-12 | | 3 |
| | 08-13 | | 8 |
| | 08-19B | | 8 |
| | 08-33 | | 5 |
| | 09-03 | | 3 |
| | 09-07 | | 29 |
| | 09-07A | | 29 |
| | 09-07B | | 37 |

| Number | Figure | Sequence | Ref. |
|---|---|---|---|
| 895-11010 | 09-12 | | 3 |
| | 09-13 | | 3 |
| | 09-21 | | 10 |
| | 09-22 | | 5 |
| | 09-24 | | 5 |
| | 09-25 | | 5 |
| | 09-34 | | 27 |
| | 09-36 | | 4 |
| | 09-42 | | 3 |
| 895-11012 | 04-02B | | 7 |
| | 08-03 | | 7 |
| | 09-36 | | 13 |
| 895-11014 | 05-01 | | 7 |
| | 08-03 | | 17 |
| 895-15006 | 04-27 | | 2 |
| | 09-16 | | 21 |
| 895-15008 | 03-01 | | 37 |
| | 03-04A | | 3 |
| | 04-05 | | 14 |
| | 04-07 | | 20 |
| | 04-25 | | 4 |
| | 04-25A | | 4 |
| | 04-28 | | 5 |
| | 07-03B | | 19 |
| | 07-03D | | 24 |
| | 08-01 | | 24 |
| | 08-23 | | 3 |
| | 08-24 | | 5 |
| | 09-19 | | 6 |
| | 09-22 | | 20 |
| | 09-44 | | 7 |
| | 09-44A | | 7 |
| 895-15010 | 02-03 | | 11 |
| | 02-14 | | 2 |
| | 04-05 | | 5 |
| | 04-06 | | 9 |
| | 04-10 | | 9 |
| | 05-04 | | 17 |
| | 05-05 | | 25 |
| | 07-03A | | 15 |
| | 08-03 | | 38 |
| | 08-05 | | 21 |
| | 08-07 | | 23 |
| | 08-07A | | 19 |
| | 08-14 | | 4 |
| | 08-19A | | 7 |
| | 09-16 | | 23 |
| 895-15012 | 09-14 | | 5 |
| 895-18010 | 04-05 | | 18 |
| | 05-05 | | 20 |
| | 09-16 | | 8 |
| | 09-42 | | 14 |
| | 09-42 | | 8 |
| | 09-44B | | 2 |
| | 09-48 | | 2 |
| | 09-49 | | 6 |
| 895-18012 | 05-05 | | 5 |
| 895-25005 | 05-02A | | 8 |
| | 09-33A | | 35 |
| 895-25006 | 04-09 | | 3 |
| | 04-26 | | 18 |
| | 04-27 | | 4 |
| | 05-04 | | 22 |
| | 05-05 | | 16 |
| | 08-14 | | 6 |
| | 08-29 | | 11 |
| | 08-30 | | 10 |
| | 08-31 | | 10 |
| | 08-32 | | 4 |
| | 09-31A | | 6 |
| | 09-52 | | 7 |
| 895-25008 | 09-20 | | 9 |
| | 09-20A | | 9 |
| | 09-22 | | 19 |
| 895-25010 | 09-23 | | 5 |
| 896-11006 | 05-04 | | 20 |
| | 05-05 | | 18 |
| 896-11008 | 02-06 | | 13 |
| 896-11008 | 02-42 | | 2 |
| | 04-02A | | 21 |
| 896-11010 | 03-01 | | 10 |
| | 04-02A | | 6 |
| | 04-02B | | 5 |
| | 05-09 | | 15 |
| | 06-24 | | 6 |
| | 09-01 | | 9 |
| | 09-02 | | 9 |
| 896-11012 | 02-01 | | 6 |
| | 02-05 | | 6 |
| | 02-06 | | 19 |
| | 02-08 | | 3 |
| | 03-01 | | 17 |
| | 04-02A | | 19 |
| | 04-02A | | 9 |
| | 04-05 | | 24 |
| | 04-18 | | 5 |
| | 04-26 | | 2 |
| | 06-24 | | 8 |
| | 07-03 | | 9 |
| | 09-01 | | 6 |
| | 09-02 | | 6 |
| | 09-12 | | 11 |
| | 09-13 | | 11 |
| | 09-14 | | 9 |
| | 09-15 | | 8 |
| | 09-17 | | 9 |
| | 09-19A | | 5 |
| | 09-22 | | 16 |
| 896-11016 | 02-01 | | 7 |
| | 03-01 | | 14 |
| | 06-01 | | 11 |
| | 06-23 | | 9 |
| | 08-03 | | 2 |
| | 09-08A | | 11 |
| | 09-17 | | 13 |
| | 09-21 | | 3 |
| | 09-22 | | 9 |
| | 09-42 | | 11 |
| | 09-42 | | 18 |
| 896-11020 | 06-01 | | 5 |
| | 09-07B | | 29 |
| 896-11022 | 06-22 | | 3 |
| | 06-23 | | 3 |
| 896-11024 | 06-21 | | 2 |
| | 06-22 | | 5 |
| | 09-50 | | 2 |
| | 09-50A | | 2 |
| 896-15010 | 02-06 | | 2 |
| | 03-01 | | 21 |
| | 06-24 | | 15 |
| | 08-13 | | 7 |
| | 08-20 | | 3 |
| | 08-26 | | 2 |
| | 08-26A | | 2 |
| | 08-26B | | 2 |
| 896-15012 | 03-04 | | 3 |
| | 06-24 | | 19 |
| | 07-03B | | 16 |
| | 08-11 | | 8 |
| | 08-12 | | 6 |
| | 08-20 | | 2 |
| | 09-07 | | 27 |
| | 09-07A | | 27 |
| | 09-17 | | 7 |
| | 09-20 | | 4 |
| | 09-20A | | 4 |
| | 09-21 | | 8 |
| | 09-24 | | 8 |
| | 09-25 | | 8 |
| | 09-27 | | 5 |
| | 09-52 | | 2 |
| 896-16006 | 09-39 | | 6 |
| 97399C1 | 09-33A | | 31 |
| 9960692 | 09-42A | | 21 |
| | 09-42A | | 25 |
| | 09-42A | | 47 |

| Number | Figure | Sequence | Ref. |
|---|---|---|---|
| 9960692 | 09-42C | | 21 |
| | 09-42C | | 25 |
| | 09-42C | | 47 |
| 9960755 | 09-42B | | 16A |
| 9966146 | 09-42B | | |
| 9992069 | 05-05 | | 47B |
| 9993141 | 02-05 | | 8A |
| A170241 | 02-02 | | 1A |
| A171099 | 08-01 | | 26 |
| A176482 | 04-25 | | 1 |
| A181436 | 09-52 | | 5 |
| A184395 | 08-01 | | 25 |
| A186194 | 04-02 | | 12 |
| A187504 | 04-02 | | 17 |
| A189616 | 04-02A | | 3 |
| | 04-02B | | 3 |
| A19101 | 06-29 | | 2 |
| A20058 | 06-29 | | 3 |
| A30338 | 09-14 | | 4 |
| A57658 | 06-23 | | 6 |
| D121972 | 04-09 | | 2 |
| D137626 | 06-24 | | 5 |
| D137627 | 06-24 | | 13 |
| D35859 | 09-19A | | 4 |
| D44696 | 02-06 | | 20 |
| D55216 | 09-21 | | 6 |
| | 09-22 | | 24 |
| D95143 | 05-10 | | 14 |
| D95145 | 08-18 | | 6 |
| | 09-07B | | 8 |
| D95146 | 08-15 | | 3B |
| | 08-15 | | 5 |
| | 08-18 | | 5B |
| | 09-07 | | 6 |
| | 09-07A | | 6 |
| | 09-07B | | 5 |
| D95147 | 08-16 | | 6 |
| | 08-17 | | 6 |
| | 09-07 | | 7 |
| | 09-07A | | 7 |
| | 09-07B | | 6 |
| D95148 | 08-16 | | 2C |
| | 08-17 | | 2C |
| | 09-07 | | 8 |
| | 09-07A | | 8 |
| | 09-07B | | 7 |
| E134402 | 09-55 | | 8 |
| E135229 | 06-01 | | 14 |
| F22316 | 04-14 | | 11 |
| F53473 | 05-09 | | 27 |
| | 06-24 | | 23 |
| | 09-07 | | 32 |
| | 09-07A | | 32 |
| | 09-07B | | 41 |
| F64046 | 09-33A | | 21 |
| | 09-34 | | 27 |
| | 09-35 | | 2 |
| F64198 | 09-33A | | 32 |
| | 09-34 | | 15 |
| G100444 | 05-10 | | 17 |
| G100449 | 05-10 | | 19 |
| G101995 | 08-18 | | 3C |
| G102092 | 08-16 | | 4B |
| | 08-17 | | 4B |
| G102425 | 05-10 | | 10 |
| G107970 | 08-16 | | 2E |
| | 08-17 | | 2E |
| G109298 | 05-10 | | 11 |
| G109300 | 08-18 | | 5E |
| G109395 | 08-15 | | 6 |
| H434163 | 05-04 | | 5 |
| | 05-05 | | 29 |
| J903652 | 02-08 | | 6 |
| J911901 | 02-02 | | 28 |
| J918275 | 04-02 | | 34 |
| L101181 | 03-01 | | 33 |
| L106070 | 06-25 | | 3 |
| L11541 | 02-02 | | 21 |
| L11541 | 02-42 | | 5 |
| | 03-02 | | 4 |
| | 03-04A | | 8 |
| | 04-03A | | 15 |
| | 04-06 | | 8 |
| | 04-08 | | 5 |
| | 04-09 | | 11 |
| | 04-10 | | 14 |
| | 04-11 | | 8 |
| | 04-17 | | 9 |
| | 04-28 | | 4 |
| | 05-09 | | 29 |
| | 07-03B | | 9 |
| | 07-03C | | 9 |
| | 08-14 | | 13 |
| | 09-03 | | 11 |
| | 09-07B | | 44 |
| L115548 | 02-02 | | 16 |
| | 08-03 | | 33 |
| L115549 | 02-03 | | 6 |
| | 02-04 | | 5 |
| L116943 | 06-24 | | 7 |
| L118978 | 09-15 | | 18 |
| L118980 | 09-15 | | 28 |
| L118982 | 09-15 | | 29 |
| L118983 | 09-15 | | 27 |
| L118986 | 09-15 | | 13 |
| L118987 | 09-15 | | 11 |
| L118989 | 09-15 | | 21 |
| L118990 | 09-15 | | 20 |
| L119202 | 09-15 | | 12 |
| L119203 | 09-15 | | 22 |
| L124221 | 04-25A | | 2 |
| L125100 | 05-09 | | 24 |
| | 09-07 | | 16 |
| | 09-07A | | 16 |
| | 09-07B | | 18 |
| | 09-08 | | 3 |
| | 09-08A | | 2 |
| | 09-15 | | 3 |
| L125836 | 08-01 | | 14 |
| L125983 | 09-01 | | 3 |
| | 09-02 | | 3 |
| L126051 | 04-05 | | 2 |
| | 04-26 | | 13 |
| L126168 | 09-15 | | 24 |
| L126256 | 04-26 | | 7 |
| L126713 | 04-17 | | 5 |
| | 04-26 | | 17 |
| L126936 | 03-01 | | 26 |
| | 04-09 | | 10 |
| L127108 | 09-07B | | 25 |
| | 09-08 | | 12 |
| | 09-08A | | 10 |
| L127553 | 04-05 | | 7 |
| L127554 | 04-03 | | 13 |
| | 04-03A | | 13 |
| | 04-04 | | 19 |
| | 04-05 | | 3 |
| | 04-17 | | 6 |
| | 04-26 | | 14 |
| | 05-02A | | 11 |
| L127555 | 04-05 | | 8 |
| L127676 | 04-26 | | 12 |
| L127771 | 02-06 | | 10 |
| L127996 | 05-01 | | 6 |
| L128375 | 09-15 | | 30 |
| L128472 | 08-20 | | 5 |
| L128515 | 08-02 | | 1 |
| L129303 | 05-05 | | 49 |
| L129707 | 04-17 | | 4 |
| L14386 | 08-03 | | 6 |
| L18331 | 04-04 | | 30 |
| | 04-26 | | 16 |
| | 04-27 | | 9 |
| | 08-11 | | 6 |
| | 08-12 | | 7 |
| | 08-13 | | 10 |

| Number | Figure | Sequence | Ref. |
|---|---|---|---|
| L18331 | 09-17 | | 21 |
| L302850 | 09-51 | | 1 |
| L30669 | 02-07 | | 3 |
| L30671 | 02-07 | | 2 |
| L51769 | 04-25A | | 1 |
| L54694 | 05-09 | | 30 |
| | 06-24 | | 24 |
| | 09-07 | | 31 |
| | 09-07A | | 31 |
| N7673 | 04-20 | | 6 |
| NSS | 02-06A | | 1 |
| | 02-07 | | 1 |
| | 02-15 | | 8 |
| | 02-20 | | 1 |
| | 02-24 | | 8 |
| | 02-33A | | 4 |
| | 02-33A | | 5 |
| | 02-36 | | 1 |
| | 03-02 | | 3 |
| | 03-03 | | 3 |
| | 03-05 | | 5 |
| | 03-08 | | 4 |
| | 04-15 | | 14 |
| | 04-15 | | 17 |
| | 04-19 | | 1 |
| | 04-24 | | 2 |
| | 04-24 | | 3 |
| | 05-02 | | 25 |
| | 05-08 | | 10 |
| | 05-08 | | 11 |
| | 05-08 | | 12 |
| | 05-08 | | 13 |
| | 05-08 | | 14 |
| | 05-08 | | 15 |
| | 05-08 | | 3 |
| | 05-08 | | 4 |
| | 05-08 | | 5 |
| | 05-08 | | 6 |
| | 05-08 | | 7 |
| | 05-08 | | 8 |
| | 05-08 | | 9 |
| | 05-10 | | 3 |
| | 06-22A | | 18 |
| | 06-23A | | 19 |
| | 06-25 | | 6 |
| | 07-01 | | 28 |
| | 07-04 | | 1 |
| | 07-04 | | 10 |
| | 07-04 | | 11 |
| | 07-04 | | 12 |
| | 07-04 | | 13 |
| | 07-04 | | 14 |
| | 07-04 | | 15 |
| | 07-04 | | 16 |
| | 07-04 | | 17 |
| | 07-04 | | 18 |
| | 07-04 | | 2 |
| | 07-04 | | 3 |
| | 07-04 | | 4 |
| | 07-04 | | 5 |
| | 07-04 | | 6 |
| | 07-04 | | 7 |
| | 07-04 | | 8 |
| | 07-04 | | 9 |
| | 07-05 | | 10A |
| | 07-05 | | 10B |
| | 07-05 | | 10C |
| | 08-02A | | 1 |
| | 08-02A | | 11 |
| | 08-02A | | 2 |
| | 08-02A | | 3 |
| | 08-04 | | 12 |
| | 08-14 | | 1A |
| | 08-14 | | 1B |
| | 08-15 | | |
| | 08-15 | | |
| | 08-15 | | 7A |
| | 08-16 | | 5A |
| NSS | 08-17 | | 5A |
| | 08-18 | | |
| | 08-18 | | |
| | 08-18 | | 4A |
| | 08-27 | | 10A |
| | 08-27 | | 10B |
| | 08-27 | | 10C |
| | 08-27 | | 10D |
| | 08-27 | | 11A |
| | 08-27 | | 13A |
| | 08-27 | | 13B |
| | 08-27 | | 13C |
| | 08-27 | | 13D |
| | 08-27 | | 13E |
| | 08-27 | | 13F |
| | 08-27 | | 15A |
| | 08-27 | | 15B |
| | 08-27 | | 41 |
| | 08-27 | | 42 |
| | 08-27 | | 6A |
| | 08-27 | | 6B |
| | 08-27 | | 6C |
| | 08-27 | | 6D |
| | 08-27 | | 6E |
| | 08-27 | | 6F |
| | 08-27 | | 8A |
| | 08-27 | | 8B |
| | 08-27 | | 8C |
| | 08-27 | | 8D |
| | 08-27 | | 8E |
| | 08-27 | | 8F |
| | 08-27A | | 15A |
| | 08-27A | | 15B |
| | 08-27B | | 16 |
| | 08-27B | | 40A |
| | 08-27B | | 40B |
| | 08-27B | | 40C |
| | 08-27B | | 40D |
| | 08-27B | | 42 |
| | 08-28 | | 10A |
| | 08-28 | | 10B |
| | 08-28 | | 10C |
| | 08-28 | | 10D |
| | 08-28 | | 11A |
| | 08-28 | | 13A |
| | 08-28 | | 13B |
| | 08-28 | | 13C |
| | 08-28 | | 13D |
| | 08-28 | | 13E |
| | 08-28 | | 13F |
| | 08-28 | | 15A |
| | 08-28 | | 15B |
| | 08-28 | | 41 |
| | 08-28 | | 42 |
| | 08-28 | | 6A |
| | 08-28 | | 6B |
| | 08-28 | | 6C |
| | 08-28 | | 6D |
| | 08-28 | | 6E |
| | 08-28 | | 6F |
| | 08-28 | | 8A |
| | 08-28 | | 8B |
| | 08-28 | | 8C |
| | 08-28 | | 8D |
| | 08-28 | | 8E |
| | 08-28 | | 8F |
| | 08-28A | | 15A |
| | 08-28A | | 15B |
| | 08-28B | | 16 |
| | 08-28B | | 40A |
| | 08-28B | | 40B |
| | 08-28B | | 40C |
| | 08-28B | | 40D |
| | 08-28B | | 42 |
| | 08-29A | | 10 |
| | 08-29A | | 11 |
| | 08-29A | | 12 |
| | 08-29A | | 13 |

| Number | Figure | Sequence | Ref. | Number | Figure | Sequence | Ref. |
|---|---|---|---|---|---|---|---|
| NSS | 08-29A | | 14 | NSS | 09-42B | | 5 |
| | 08-29A | | 15 | | 09-42B | | 8 |
| | 08-29A | | 16 | | 09-42B | | 9 |
| | 08-29A | | 17 | | 09-42C | | 30 |
| | 08-29A | | 18 | | 09-42C | | 5 |
| | 08-29A | | 23 | | 09-42C | | 59 |
| | 08-29A | | 24 | | 09-42C | | 68 |
| | 08-29A | | 25 | | 09-42C | | 70 |
| | 08-29A | | 9 | | 09-42C | | 72 |
| | 08-29B | | 1 | | 09-42C | | 74 |
| | 08-29B | | 10 | | 09-42C | | 76 |
| | 08-29B | | 11 | | 09-42D | | 11 |
| | 08-29B | | 12 | | 09-42D | | 12 |
| | 08-29B | | 14 | | 09-42D | | 14 |
| | 08-29B | | 15 | | 09-42D | | 15 |
| | 08-29B | | 16 | | 09-42D | | 16 |
| | 08-29B | | 2 | | 09-42D | | 18 |
| | 08-29B | | 3 | | 09-42D | | 2 |
| | 08-29B | | 4 | | 09-42D | | 20 |
| | 08-29B | | 5 | | 09-42D | | 21 |
| | 08-30A | | 10 | | 09-42D | | 23 |
| | 08-30A | | 11 | | 09-42D | | 28 |
| | 08-30A | | 12 | | 09-42D | | 33 |
| | 08-30A | | 13 | | 09-42D | | 37 |
| | 08-30A | | 15 | | 09-42D | | 38 |
| | 08-30A | | 16 | | 09-42D | | 40 |
| | 08-30A | | 17 | | 09-42D | | 41 |
| | 08-30A | | 18 | | 09-42D | | 45 |
| | 08-30A | | 19 | | 09-42D | | 46 |
| | 08-30A | | 22 | | 09-42D | | 47 |
| | 08-30A | | 23 | | 09-42D | | 5 |
| | 08-30A | | 24 | | 09-42D | | 51 |
| | 08-30A | | 3 | | 09-42D | | 52 |
| | 08-30A | | 4 | | 09-42D | | 6 |
| | 08-30A | | 5 | | 09-45A | | 11 |
| | 08-30A | | 6 | | 09-45A | | 15 |
| | 08-30A | | 7 | | 09-45A | | 18 |
| | 08-30A | | 8 | | 09-45A | | 20 |
| | 08-30A | | 9 | | 09-45A | | 21 |
| | 08-31A | | 10 | | 09-45A | | 23 |
| | 08-31A | | 11 | | 09-45A | | 24 |
| | 08-31A | | 12 | | 09-45A | | 25 |
| | 08-31A | | 13 | | 09-45A | | 5 |
| | 08-31A | | 15 | | 09-45A | | 6 |
| | 08-31A | | 16 | | 09-47A | | 11 |
| | 08-31A | | 17 | | 09-47A | | 15 |
| | 08-31A | | 18 | | 09-47A | | 18 |
| | 08-31A | | 19 | | 09-47A | | 20 |
| | 08-31A | | 22 | | 09-47A | | 21 |
| | 08-31A | | 23 | | 09-47A | | 23 |
| | 08-31A | | 24 | | 09-47A | | 26 |
| | 08-31A | | 3 | | 09-47A | | 27 |
| | 08-31A | | 4 | | 09-47A | | 5 |
| | 08-31A | | 5 | | 09-47A | | 6 |
| | 08-31A | | 6 | P0236317R | 06-11 | | 4 |
| | 08-31A | | 7 | R54047 | 09-33A | | 33 |
| | 08-31A | | 8 | R54363 | 04-26 | | 1 |
| | 08-31A | | 9 | R55242 | 09-46 | | 9 |
| | 08-32A | | 10 | REF | 02-05 | | |
| | 08-32A | | 14 | | 02-07 | | |
| | 08-32A | | 15 | | 04-11 | | |
| | 08-32A | | 2 | | 04-21 | | |
| | 08-32A | | 3 | | 04-24 | | |
| | 08-32A | | 4 | | 04-24A | | |
| | 08-32A | | 5 | | 05-04 | | |
| | 08-32A | | 8 | | 05-05 | | |
| | 08-32A | | 9 | | 07-02 | | |
| | 09-10 | | | | 07-03A | | |
| | 09-42A | | 30 | | 07-03A | | |
| | 09-42A | | 41A | | 07-03B | | |
| | 09-42A | | 41B | | 07-03C | | |
| | 09-42A | | 44 | | 08-03 | | |
| | 09-42A | | 5 | | 08-05 | | |
| | 09-42B | | 14 | | 08-06 | | |
| | 09-42B | | 22 | | 08-07 | | |
| | 09-42B | | 24 | | 08-07A | | |
| | 09-42B | | 32 | | 08-08 | | |
| | 09-42B | | 36 | | 08-09 | | |

| Number | Figure | Sequence | Ref. |
|---|---|---|---|
| REF | 08-10 | | |
| | 08-11 | | |
| | 08-12 | | |
| | 08-13 | | |
| | 08-15 | | |
| | 08-16 | | |
| | 08-17 | | |
| | 08-18 | | |
| | 08-19A | | |
| | 08-21 | | |
| | 08-23 | | |
| | 08-24 | | |
| | 08-25 | | |
| | 08-26 | | |
| | 08-26 | | 4C |
| | 08-26A | | |
| | 08-26A | | 4C |
| | 08-26B | | |
| | 08-26B | | 4C |
| | 08-27 | | |
| | 08-27A | | |
| | 08-27B | | |
| | 08-28 | | |
| | 08-28A | | |
| | 08-28B | | |
| | 08-32A | | |
| | 08-33 | | |
| | 08-33 | | |
| | 09-07 | | |
| | 09-07A | | |
| | 09-07B | | |
| | 09-08 | | |
| | 09-08A | | |
| | 09-09 | | |
| | 09-09 | | 1 |
| | 09-09 | | 2 |
| | 09-09 | | 3 |
| | 09-09 | | 4 |
| | 09-09 | | 5 |
| | 09-09 | | 6 |
| | 09-09 | | 7 |
| | 09-09 | | 8 |
| | 09-09 | | 8A |
| | 09-09 | | 8B |
| | 09-09 | | 8C |
| | 09-09 | | 9 |
| | 09-09A | | |
| | 09-09A | | 1 |
| | 09-09A | | 10 |
| | 09-09A | | 11 |
| | 09-09A | | 12 |
| | 09-09A | | 13 |
| | 09-09A | | 2 |
| | 09-09A | | 3 |
| | 09-09A | | 4 |
| | 09-09A | | 5 |
| | 09-09A | | 6 |
| | 09-09A | | 7 |
| | 09-09A | | 8 |
| | 09-09A | | 9 |
| | 09-09B | | |
| | 09-09B | | 1 |
| | 09-09B | | 2 |
| | 09-09B | | 3 |
| | 09-09B | | 4 |
| | 09-09B | | 5 |
| | 09-09B | | 6 |
| | 09-09B | | 7 |
| | 09-09B | | 8 |
| | 09-09B | | 8A |
| | 09-09B | | 8B |
| | 09-09B | | 8C |
| | 09-09C | | |
| | 09-09C | | 1 |
| | 09-09C | | 10 |
| | 09-09C | | 11 |
| | 09-09C | | 12 |
| | 09-09C | | 13 |
| REF | 09-09C | | 14 |
| | 09-09C | | 15 |
| | 09-09C | | 16 |
| | 09-09C | | 2 |
| | 09-09C | | 3 |
| | 09-09C | | 4 |
| | 09-09C | | 5 |
| | 09-09C | | 6 |
| | 09-09C | | 7 |
| | 09-09C | | 8 |
| | 09-09C | | 9 |
| | 09-10 | | |
| | 09-10 | | |
| | 09-10 | | |
| | 09-11 | | |
| | 09-11 | | |
| | 09-11 | | |
| | 09-13 | | |
| | 09-16 | | |
| | 09-22 | | |
| | 09-23 | | |
| | 09-42 | | |
| | 09-42 | | |
| | 09-42 | | |
| | 09-42 | | |
| | 09-42A | | |
| | 09-42C | | |
| | 09-44 | | |
| | 09-44A | | |
| | 09-44B | | |
| | 09-45 | | |
| | 09-45A | | |
| | 09-47 | | |
| | 09-47A | | |
| | 09-48 | | |
| | 09-50A | | |
| | 09-53 | | |
| S92653 | 09-07 | | 9 |
| | 09-07A | | 9 |
| T103750 | 03-04A | | 2 |