624J UTILITY LOADER
TIER 3 (S.N. 611797-)

RUTHZIL TRATOR COMERCIAL DE PEÇAS LTDA 11 97083-6812 ROLANDO CITRANGULO

JOHN DEERE

MARÇO 2007

PARTS CATALOG

624J UTILITY LOADER
TIER 3 (S.N. 611797-)

PC10029 (Mar-07) English

Worldwide Construction and Forestry Division
Worldwide Edition
Litho in U.S.A. (Revised)
COPYRIGHT © 2007
DEERE & COMPANY
Moline, Illinois
All rights reserved

INTRODUCTION AND CUSTOMER INFORMATION

T194008A -UN-13NOV03



LEFT SIDE VIEW OF JOHN DEERE 624J LOADER
(MANUFACTURED 2007-)

TO THE CUSTOMER

THE PART NUMBERS IN THIS PARTS CATALOG WERE CORRECT AT THE TIME YOUR CATALOG WAS PUBLISHED. IT IS OUR POLICY TO CONSTANTLY IMPROVE OUR MACHINES, AND THEREFORE, PART NUMBERS MAY CHANGE. WHEN ORDERING PARTS, VERIFY PART NUMBERS THROUGH YOUR DEALER.

(SPECIFICATIONS AND DESIGN SUBJECT TO CHANGE WITHOUT NOTICE)

SERIAL NUMBER LOCATION

EACH 624J LOADER HAS SIX SERIAL NUMBER PLATES: ONE FOR THE PRODUCT IDENTIFICATION NUMBER, ONE FOR THE TRANSMISSION, ONE FOR THE HYDRAULIC PUMP, ONE FOR THE ENGINE SERIAL NUMBER, ONE FOR EACH AXLE, AND ONE FOR THE CONTROL VALVE.

THE PRODUCT IDENTIFICATION NUMBER PLATE IS LOCATED ON THE LEFT SIDE OF THE ENGINE FRAME NEAR THE TRANSMISSION OIL FILL.

THE TRANSMISSION SERIAL NUMBER PLATE IS LOCATED ON THE LOWER RIGHT REAR OF THE TRANSMISSION CASE.

THE HYDRAULIC PUMP SERIAL NUMBER PLATE IS LOCATED ON THE LOWER LEFT OF THE HYDRAULIC PUMP.

THE ENGINE SERIAL NUMBER PLATE IS LOCATED ON THE LEFT SIDE OF THE ENGINE NEAR THE WATER SEPERATOR.

THE AXLE SERIAL NUMBER PLATES ARE LOCATED ON THE INPUT SIDE OF EACH DIFFERENTIAL CASE.

THE CONTROL VALVE SERIAL NUMBER PLATE IS LOCATED ON THE REAR CENTER OF THE CONTROL VALVE.

LEFT, RIGHT, FRONT, AND REAR OF THE LOADER ARE REFERENCED BY FACING THE DIRECTION OF LOADER FORWARD TRAVEL.

WHENEVER SERIAL NUMBERS ARE REQUIRED ON WARRANTY CLAIMS OR CORRESPONDENCE PERTAINING TO THIS PRODUCT, IT IS EXTREMELY IMPORTANT THAT ALL CHARACTERS BE FURNISHED. THIS POINT CANNOT BE EMPHASIZED ENOUGH.

PRODUCT IDENTIFICATION NUMBER PLATE

TP16004 -UN-01JAN94

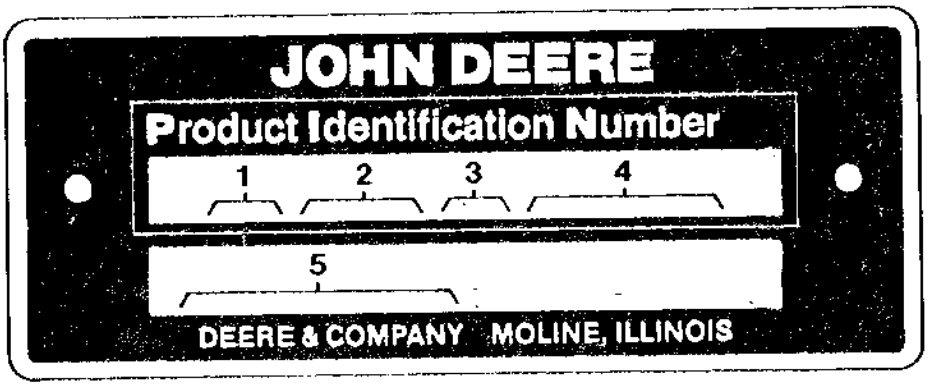

TP16004

1. DESIGNATES LOADER MANUFACTURER	DW - JOHN DEERE DAVENPORT WORKS
2. DESIGNATES LOADER MODEL	624J
3. DESIGNATES LOADER CONFIGURATION	Z WITH ZBAR H WITH HIGH LIFT T WITH TOOL CARRIER
4. DESIGNATES LOADER SERIAL NUMBER	XXXXXX
5. DESIGNATES UNIT TYPE	LOADER

ENGINE SERIAL NUMBER PLATE

RGP3513 -UN-01JAN94

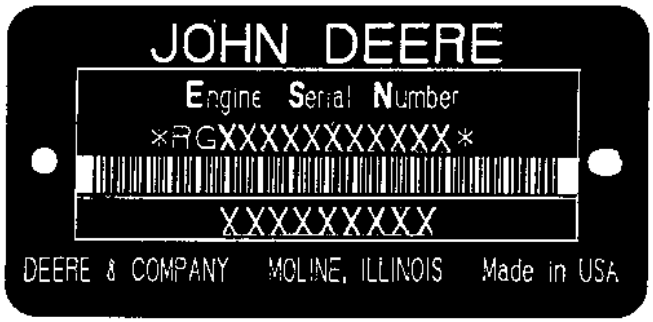

RGP3513

FIRST LINE (ENGINE SERIAL NUMBER)

	DEFINES
PE - JOHN DEERE TORREON ENGINE WORKS	MANUFACTURER
6	NUMBER OF CYLINDERS
068 (6.8 LITERS)	TOTAL DISPLACEMENT
H - TURBOCHARGED DIESEL WITH AIR-TO-AIR INTERCOOLER	TYPE OF ASPIRATION
XXXXXX	ENGINE SERIAL NUMBER

SECOND LINE (ENGINE MODEL NUMBER)

	DEFINES
6068HDW57	624J UTILITY LOADER
DW - JOHN DEERE DAVENPORT WORKS	USER FACTORY
57	SPECIFIC APPLICATION

SERIAL NUMBER LISTING INFORMATION

SERIAL NUMBER INFORMATION IS LISTED TO SHOW ON WHICH MACHINES EACH PART CAN BE USED; FOR EXAMPLE:

-	THE PART CAN BE USED ON ALL MACHINES.
XXXXXX-	THE PART CAN BE USED ON ALL MACHINES BEGINNING WITH THE SERIAL NUMBER LISTED.
-XXXXXX	THE PART CAN BE USED ON ALL MACHINES UP TO AND INCLUDING THE SERIAL NUMBER LISTED.
XXXXXX-XXXXXX	THE PART CAN BE USED ON ALL MACHINES BETWEEN AND INCLUDING THE SERIAL NUMBERS LISTED.

WHEN XXXXXX'S ARE LISTED IN PLACE OF A SERIAL NUMBER, A SERIAL NUMBER CHANGE WAS MADE BUT THE EXACT SERIAL NUMBER WAS NOT AVAILABLE WHEN THE CATALOG WAS PRODUCED.

DIRECTION ARROW

ARROWS ARE USED WITH ILLUSTRATIONS TO INDICATE THE FRONT OF THE UNIT. "RIGHT-HAND" AND "LEFT-HAND" SIDES ARE DETERMINED BY FACING IN THE DIRECTION OF MACHINE FORWARD TRAVEL.

BOX-ENCLOSED ILLUSTRATIONS

A KEY NUMBER, SHOWN IN THE PARTS LIST, IS ASSIGNED TO A BOX ENCLOSING ALL PARTS SOLD AS A SERVICE ASSEMBLY.

COMPLETE GOODS LISTINGS

COMPLETE GOODS ARE LISTED IN BOLD FACE TYPE. ORDER SEPARATELY. DO NOT INCLUDE ON REPLACEMENT PARTS ORDER.

SI UNITS OF MEASURE

METRIC DIMENSIONS ARE GIVEN, WHERE APPLICABLE, THROUGHOUT THIS PARTS CATALOG.

REMARKS AND ABBREVIATIONS

THE FOLLOWING REMARKS AND ABBREVIATIONS MAY APPEAR THROUGHOUT THE PARTS CATALOG. REFER TO THE FOLLOWING CHART FOR TRANSLATIONS TO LANGUAGES OTHER THAN ENGLISH.

REMARKS AND ABBREVIATIONS

TX1007193 -UN-04MAY06

PHRASE	ENGLISH	FRANCAIS	DEUTSCH	ITALIANO	ESPANOL	SVENSKA
ALSO ORDER, ORD W/	Also order	Commander aussi	Ebenso bestellen	Ordinare anche	Pedir también	Beställ även
AMP	Ampere	Ampère	Ampere	Ampere	Amperio	Ampere
APPL, APPL ONLY	This application only	Uniquement pour cette utilisation	Nur für diese Anwendung	Solo per questa applicazione	Solo para este propósito	Endast för denna användning
AR	As required	Selon le besoin	Nach Bedarf	Secondo necessità	Según necesidad	Vid behov
ASSY	Complete assembly	Ensemble complet	Kompl.-Zusammenbau	Gruppo completo	Montaje completo	Komplett montering
CA, CONVENIENCE ASSY	Convenience assembly	Ensemble convenance	Komfort-Zusammenbau	Montaggio pratico	Montaje de conveniencia	Lämplig montering
CCW	Counter-clockwise	Sens anti-horaire	Gegen Uhrzeigersinn	Senso antiorario	A la izquierda	Moturs
COMPLETE	Complete	Complet	Vollständig	Completo	Completo	Fullständig
COMPLETE GOODS	Complete goods	Compléter marchandises	Vollst. Waren	Merci complete	Mercancías completas	Kompletta varor
CTL CUT TO LENGTH	Cut to length	Couper à la longueur	Auf Länge zurechtschneiden	Tagliare alla lunghezza	Corte a la longitud	Skära till längd
CW	Clockwise	Sens horaire	Im Uhrzeigersinn	In senso orario	A la derecha	Medurs
FOR	For	Pour	Für	Per	Para	För
FRONT	Front	Avant	Vorn	Anteriore	Frente	Fram
GAS	Gasoline	Essence	Benzin	Benzina	Gasolina	Bensin
HP	Horsepower	Puissance en cv	Leistung	Potenza	Potencia	Hästkraft
HFWD	Hydraulic Front-wheel Drive	Traction Avant Hydraulique	Hydraulischer Vorderradantrieb	Trazione Anteriore Idraulica	Traccion Delantera Hidraulica	Hydraulisk Framhjulsdrift
HS, HEAD MARKED	High strength, head marked	Haute résistance, tête marquée	Hochfest, vorn gekennzeichnet	Contrassegnato in testa, ad alta resistenza	Alta fuerza, marca en cabeza	Hög styrka, huvudmärkt
ID	Inside diameter	Diamétre intérieur	Innendurch-messer	Diametro interno	Diá. interior	Innerdiameter
INCH	Inch	Pouce	In.	Pollice	Pulg.	Tum
INCL KEYS	Includes keys...	Comprend les positions...	Einschließlich Schlüssel...	Include le chiavette...	Incluye posiciones...	Inklusive nycklar...
INCL, INCLUDES	Includes...	Comprend...	Enthält...	Include...	Incluye...	Inkluderar...
INCLUDES PARTS/ ITEMS MARKED	Includes parts/items marked...	Comprend les pièces/articles marqués...	Enthält gekennzeichnete Teile/Pos. ...	Include i pezzi e gli elementi contrassegnati...	Incluye piezas marcadas...	Inkluderar markerade delar/artiklar...
INNER	Inner	Intérieur	Innerer	Interno	Interno	Inre, invändig
KIT	Kit	Kit	Kit	Kit	Juego	Sats
L	Number of links	Nombre de maillons	Anzahl der Glieder	Numero di maglie	Nº de eslabones	Antal länkar
LGTH	Length	Longueur	Länge	Lunghezza	Longitud	Längd
LGP	Low Ground Pressure	Faible Pression Au Sol	Niederer Bodendruck	Bassa Pressione Sul Suelo	Baja Presion Sobre El Suelo	Laagt Marktryck
LH	Left-hand	Gauche	Links	Sinistra	Izquierda	Vänster
LT	Long Track	Chenille Longue	Mit Langem Laufwerk	Cingolo Lungo	Cadena Largo	Laangt Larvband
LOW, LOWER	Lower	Inférieur	Unterer	Inferiore	Inferior	Nedre
MAKE FROM, MF	Make from	Faireavec	Herstellen von	Fabbricare da	Hacer de	Tillverka av
MARKED	Marked	Marqué	Markiert	Contrassegnato	Marcado	Märkt

TX1007193

REMARKS AND ABBREVIATIONS

TX1007195 -UN-04MAY06

PHRASE	ENGLISH	FRANCAIS	DEUTSCH	ITALIANO	ESPANOL	SVENSKA
MATCHED SET	Matched set	Ensemble assorti	Passender Satz	Set abbinato	Sistema emparejado	Anpassad sats
MFWD	Mechanical Front-Wheel Drive	Pont Avant	Allradantrieb	Ruota Motrice Meccanica Anteriore	Traccion Delantera Mecanica	Mekanisk Framhjulsdrift
NA, NOT USED THIS APPL	Not used this application	Ne sert pas pour cette application	In dieser Anwendung nicht benutzt	Non usato in questa applicazione	No se usa en esta aplicación	Ej använd i detta sammanhang
NLA	No longer available	Epuisé	Nicht mehr lieferbar	Non più disponibile	Descontinuado	Ej längre tillgänglig
NSEP	Not supplied separately	Non livré séparément	Nicht einzeln lieferbar	Non fornito separatamente	No se suministra por separado	Kan ej erhållas separat
OD	Outside diameter	Diamètre extérieur	Außendurch-messer	Diametro esterno	Diá. exterior	Ytterdiameter
OPTIONAL	Optional	En option	Wahlweise	Opzionale	Opcional	Valfri
OR	Or	Ou	Oder	Oppure	O	Eller
ORD, ORDER	Order	Commander	Bestellen	Ordinare	Pídase	Order
OS	Oversize	Sur-dimension	Übergröße	Maggiorato	Sobretamaño	Överdimension
OUTER	Outer	Externe	Äußerer	Esterno	Externo	Yttre, utvändig
PKG, PACKG	Package, Packet of	Emballage, paquet de	Verpackung, verpackt mit	In confezione da	Paquete de	I sats; paket
PTO	Power Take Off	Prise De Force	Zapfwelle	Presa Di Forza	Toma De Fuerza	Kraftuttag
RATIO	Ratio	Rapport	Übersetzungs-verhältnis	Rapporto	Índice	Förhållande
REAR	Rear	Arrière	Hinten	Posteriore	Trasero	Bak; bakre
REMAN	Remanufactured	Echange Standard	Generalveberholt	Refatto	Refabricador por	Renoverad
REPL	Replaces	Remplace	Ersetzt	Sostituisce	Sustituye	Ersätter
RH	Right-hand	Droit	Rechts	Destra	Derecha	Höger
SN	Serial number	Numéro de série	Seriennummer	Numero di serie	Nº de serie	Serienummer
STD	Standard	Standard	Standard	Standard	Normal	Standard
SUB	Replaced by	Remplacé par	Ersetzt durch	Sostituito da	Sustituido por	Ersatt med
SUB COMPONENTS	Substitute components (of the kit or assy)	Substituer les composants (du kit ou de l'ensemble)	Komponenten ersetzen (des Kits oder der Baugruppe)	Sostituire i componenti (del kito del gruppo)	Sustituir los componentes	Ersätta komponenterna (i satsen eller monteringen)
SUB FOR	Subsitutes for	Remplace	Ersatz für	Sostituisce	Sustitución para	Ersätter
TEETH, Z	Number of gear teeth	Nombre de dents d'engrenages	Zahl der Zahnradzähne	Numero di denti dell'ingranaggio	Nº de dientes de engranaje	Antal redskapständer
TK	Thickness	Épaisseur	Stärke	Spessore	Espesor	Tjocklek
UP, UPPER	Upper	Supérieur	Oberer	Superiore	Superior	Övre
US	Undersize	Sous-dimension	Untergröße	Minorato	Subtamaño	Underdimension
USE WITH	Use with	À utiliser avec	Verwenden mit	Usare con	Usar con	Använd med
USE UNTIL EXHAUSTED	Use until exhausted	Utilisation jusqu'à épuisé	Verwenden, bis erschöpft	Usare fino all'esaurimento	Usar hasta agotar	Använda till uttömd
W/	With	Avec	Mit	Con	Con	Med; inklusive
W/O	Without	Sans	Ohne	Senza	Sin	Utan; exklusive
WHOLE GOODS	Whole goods	Marchandises entières	Vollständige Waren	Merci intere	Mercancías enteras	Hela varor
XLT	Extra Long Track	Chenille Extra Longue	Mit Extra Langem Laufwerk	Cingolo Extra Lungo	Cadena Extra Larga	Extra Laangt Larvband
VEC	Vehicle Electronic Controller	Controleur Elektronisches Du Vehicule	Elektronisches Steuergeraet Des Fahrzeugs	Unità Di Comando Elettronica Del Veicolo	Unidad de Control Electronico del Vehiculo	Elektronisk Fordonsstyrenhet
VLC	Vehicle Load Center	Coffret De Repartition Du Vehicule	Verteilerstation Des Fahrzeugs	Centro Di Carico Del Veicolo	Centro De Cargas Del Vehiculo	Fordonets Elcentral

TX1007195

ALPHABETICAL INDEX

PAGE

A

A/C AND HEATER THERMOSTAT SWITCH 1833-4
A/C BLOWER MOTOR AND SWITCH....1833-4
A/C BRACKET 1832-2
A/C COMPRESSOR 1832-2
A/C CONDENSER 1833-12
A/C DELETE COVER 1833-10
A/C, DELETE COVER....1833-10
A/C, DUCTS....1831-8
ABSORBTION, SOUND 1913-6
ACCESS PANEL 1811-6
ACCESS PLATFORM AND STEPS....1822-4
ACCUMULATOR 2160-8
ACCUMULATOR, BRAKE....1064-2
ACCUMULATOR, RIDE CONTROL....3160-54
ACTUATOR, RETURN-TO-DIG 3166-2
ACTUATOR, RETURN-TO-DIG (FOR USE WITH PO WERLLEL LINKAGE)....3166-6
ADAPTER, OIL FILTER (8842) (HDW67) 0400-72
ADDITION OF AUXILIARY JOYSTICK TO JOYSTICK CONTROLLER KIT....3160-44
ADDITION OF AUXILIARY JOYSTICK TO JOYSTI CK CONTROLLER KIT 3160-46
ADDITION OF AUXILIARY TO JOYSTICK CONTROLLER KIT 3160-40
ADDITION OF AUXILIARY TO JOYSTICK CONTROLLER KIT (POWERLLEL™ LINKAGE)....3160-42
ADDITION OF AUXILIARY TO TWO LEVER CONTROLLER KIT 3160-34
ADDITION OF AUXILIARY TO TWO LEVER CONTROLLER KIT 3160-36
ADDITION OF AUXILIARY TO TWO LEVER CONTROLLER KIT (POWERLLEL™ LINKAGE)....3160-32
AIR CLEANER 0520-2
AIR CLEANER FILTER 0520-2
AIR CLEANER HOSE....0520-2
AIR CLEANER SENSOR....0520-2
AIR CONDITIONING COMPRESSOR BRACKET (7423) (HDW67) 0400-66
AIR FILTER RESTRICTION INDICATOR SENSOR 0520-2
AIR INTAKE (17BL) (HDW67)....0400-10
AIR PRECLEANER KIT 0520-4
AIR TEMPERATURE SENSOR (6721) (HDW67)....0400-64
ALARM SYSTEM....1676-2
ALARM, BACKUP 2004-4
ALARM, TRAVEL....2004-4
ALTERNATOR (80 AMP)....1672-2
ALTERNATOR ADJUSTING STRAP (6275) (HDW67)....0400-57
ALTERNATOR BELT (100 AMP) 1672-6
ALTERNATOR BELT TENSIONER (100 AMP) 1672-6
ALTERNATOR CAPACITOR (80 AMP) 1672-2
ALTERNATOR DRIVE BELT (80 AMP) 1672-2
ALTERNATOR MOUNTING BRACKETS (100 AMP)....1672-6
ALTERNATOR MOUNTING BRACKETS (6275) (HDW67)....0400-57
ALTERNATOR MOUNTING BRACKETS (80 AMP)....1672-2
ANTENNA, RADIO 2001-2
ANTI-SKID MAT, COUNTERWEIGHT 1749-2
ARM REST 1821-2
ARM REST, RIGHT....1816-8
ARM, ROCKER (4905) (HDW67)....0400-48
ARM, WINDSHIELD WIPER (FRONT) 1814-4
ASH TRAY 2006-2

PAGE

ASSEMBLY, CLUTCH (FORWARD CLUTCH) 0350-30
ASSEMBLY, CLUTCH, FIRST GEAR.... 0350-32
ASSEMBLY, CLUTCH, HIGH GEAR 0350-38
ASSEMBLY, CLUTCH, SECOND GEAR.... 0350-34
ASSEMBLY, CLUTCH, THIRD GEAR 0350-36
ASSEMBLY, U-JOINT.... 3162-8
ASSEMBLY,CLUTCH (REVERSE CLUTCH) 0350-30
ATTACHMENT COUPLER CYLINDER (POWERLLEL LINKAGE).... 3104-4
ATTACHMENT COUPLER CYLINDER (Z-BAR LINKAGE).... 3104-2
ATTACHMENT COUPLER, HI-VIS (Z-BAR LINKAGE).... 3104-8
ATTACHMENT COUPLER, Z-BAR LINKAGE 3104-2
ATTACHMENT HI-VIS COUPLER HYDRAULIC CYLINDER (POWERLLEL AND Z-BAR LINKAGE) 3104-14
ATTACHMENT LINKAGE, COUPLER, HI-VIS (POWERLLEL) 3104-6
AUXILIARY CONTROLLER DETENT KIT 3162-2
AUXILIARY CONTROLLER DETENT KIT 3162-4
AUXILIARY DRIVE COVER (5204) (HDW67).... 0400-54
AUXILIARY DUAL LEVER CONTROLLER COMPONEN TS.... 3162-4
AUXILIARY DUAL LEVER CONTROLLER REPAIR K IT 3162-4
AUXILIARY HYD, THIRD FUNCTION, HIGH LIFT BOOM TO COUPLER (Z-BAR LINKAGE).... 3163-4
AUXILIARY HYDRAULICS, FOURTH FUNCTION (POWERLLEL LINKAGE).... 3160-26
AUXILIARY HYDRAULICS, FOURTH FUNCTION (Z-BAR LINKAGE).... 3160-22
AUXILIARY HYDRAULICS, THIRD FUNCTION (POWERLLEL LINKAGE).... 3160-26
AUXILIARY HYDRAULICS, THIRD FUNCTION (POWERLLEL LINKAGE) (BOOM TO COUPLER) 3163-6
AUXILIARY HYDRAULICS, THIRD FUNCTION (Z-BAR LINKAGE).... 3160-22
AUXILIARY JOYSTICK PILOT CONTROLLER COMPONENTS.... 3162-10
AUXILIARY JOYSTICK PILOT CONTROLLER REPAIR KIT.... 3162-10
AUXILIARY SINGLE LEVER CONTROLLER COMPONENTS.... 3162-2
AUXILIARY SINGLE LEVER CONTROLLER REPAIR KIT.... 3162-2
AUXILIARY VALVE SECTION LOADER CONTROL VALVE 3160-12
AUXILIARY VALVE SECTION COMPONENTS LOADER CONTROL VALVE 3160-12
AUXILIARY VALVE, FIFTH FUNCTION 3160-16
AXLE ASSEMBLY, FRONT 0210-2
AXLE ASSEMBLY, REAR.... 0210-4
AXLE DRIVE SHAFTS.... 0325-2
AXLE HOUSING AND SHAFT (YZ120709).... 0210-10
AXLE HOUSING AND SHAFT (YZ120720).... 0210-12
AXLE STOP (8 DEGREE).... 0242-2
AXLE SUPPORTS, REAR 0242-4

B

BACKREST CUSHION 1821-2
BACKUP ALARM 2004-4
BAFFLE, ABSORBER.... 1913-6
BAR, FRAME LOCK 1913-4

ALPHABETICAL INDEX - CONTINUED

PAGE

BARREL ASSEMBLY, HI-VIS COUPLER CYLINDER (POWERLLEL AND Z-BAR LINKAGE) 3104-14
BASE SEAT 1811-12
BASE, SEAT 1811-14
BATTERY (950 CCA) 1671-2
BATTERY CABLES 1671-2
BATTERY COVERS 1671-4
BATTERY DISCONNECT 1671-2
BATTERY DISCONNECT SWITCH 1671-2
BEARING, CRANKSHAFT THRUST (4712) (HDW67) 0400-44
BEARING, DRIVELINE/PARKING BRAKE 1100-2
BEARINGS, CONNECTING ROD (4836) (HDW67) 0400-46
BEARINGS, MAIN (4712) (HDW67) 0400-44
BEARINGS, TRANSMISSION INPUT SHAFT 0350-6
BELT TENSIONER (80 AMP) 1672-2
BELT TENSIONER, ALTERNATOR (100 AMP) 1672-6
BELT TENSIONER, HARSH ENVIRONMENT ALTERN ATOR (100 AMP) 1672-8
BELT, ALTERNATOR (100 AMP) 1672-6
BELT, ALTERNATOR DRIVE (80 AMP) 1672-2
BELT, HARSH ENVIRONMENT ALTERNATOR (100 AMP) 1672-8
BLADE, WINDSHIELD WIPER (FRONT) 1814-4
BLADE, WINDSHIELD WIPER (REAR) 1814-6
BLADE,FAN 0510-6
BLOCK HEATER 0505-2
BLOCK, CYLINDER (4633) (PAGE 1) (HDW67) 0400-38
BLOCK, CYLINDER (4633) (PAGE 3) (HDW67) 0400-42
BLOWER MOTOR AND SWITCH, HEATER 1833-8
BLOWER MOTOR AND SWITCH, HEATER AND A/C 1833-4
BOOM CYLINDER 3165-4
BOOM CYLINDER (FOR USE WITH POWERLLEL LINKAGE) 3165-10
BOOM CYLINDER HYDRAULIC FITTINGS 3165-2
BOOM CYLINDER HYDRAULICS (FOR USE WITH Z -BAR LINKAGE) 3160-20
BOOM CYLINDER LOCK 3140-14
BOOM CYLINDER PIN, LOADER FRAME (POWERLLEL LINKAGE) 3140-4
BOOM CYLINDER PIN, LOADER FRAME (Z-BAR LINKAGE) 3140-2
BOOM CYLINDER PINS AND FITTINGS 3165-2
BOOM CYLINDER PINS AND FITTINGS, POWERLLEL LINKAGE 3165-8
BOOM CYLINDER ROD 3165-4
BOOM CYLINDER ROD (FOR USE WITH POWERLLEL LINKAGE) 3165-10
BOOM CYLINDER ROD SEAL KIT 3165-4
BOOM CYLINDER ROD SEAL KIT (FOR USE WITH POWERLLEL LINKAGE) 3165-10
BOOM KICKOUT/RETURN TO CARRY 3166-4
BOOM KICKOUT/RETURN TO CARRY, LOADER (POWERLLEL LINKAGE) 3166-8
BOOM LINKAGE, HIGH LIFT LOADER BOOM 3140-10
BOOM LINKAGE, LOADER 3140-10
BOOM LINKAGE, POWERLLEL 3140-12
BOOM PIVOT PIN (POWERLLEL LINKAGE) 3140-4
BOOM PIVOT PIN (Z-BAR LINKAGE) 3140-2
BOOM TO COUPLER PIN DISCONNECT HOSES (Z-BAR LINKAGE) 3160-62

PAGE

BOOM TO COUPLER THIRD FUNCTION HYDRAULIC HOSES (POWERLLEL LINKAGE) 3163-6
BOOM, HIGH LIFT, TO COUPLER, THIRD FUNCTION HOSES (Z-BAR LINKAGE) 3163-4
BOOM, LOADER 3140-6
BOOM, POWERLLEL LINKAGE 3140-8
BOOT 3162-8
BOOT, TWO LEVER PILOT CONTROLLER 3162-6
BORE KIT, BUCKET CYLINDER 3165-4
BORE KIT, BUCKET CYLINDER 3165-6
BORE KIT, BUCKET CYLINDER (FOR USE WITH POWERLLEL LINKAGE) 3165-10
BORE KIT, BUCKET CYLINDER (FOR USE WITH POWERLLEL LINKAGE) 3165-12
BORE SEAL KIT, HI-VIS COUPLER CYLINDER (POWERLLEL AND Z-BAR LINKAGE) 3104-14
BOTTOM GUARD, ABSORBER, ... 1913-6
BOTTOM GUARD, FRONT 1746-4
BOTTOM GUARD, FUEL TANK 1746-2
BOTTOM GUARD, TRANSMISSION 1746-4
BRACKET, A/C 1832-2
BRACKET, BRAKE PEDAL 1062-2
BRACKET, EXTINGUISHER 2003-2
BRACKET, FIRE EXTINGUISHER 1811-12
BRACKET, FIRE EXTINGUISHER 1811-14
BRACKET, LICENSE PLATE 1673-6
BRACKET, MUFFLER 0530-2
BRACKET, STEERING VALVE 0962-4
BRACKET,AIR CONDITIONING COMPRESSOR (7423) (HDW67) 0400-66
BRACKETS, ALTERNATOR ADJUSTING (6275) (HDW67) 0400-57
BRACKETS, MOUNTING, TRANSMISSION 0342-2
BRACKETS, SEAT 1821-2
BRACKETS, WIPER MOUNTING 1814-8
BRAKE ACCUMULATOR 1064-2
BRAKE LINES 1063-2
BRAKE PEDAL 1062-2
BRAKE PEDAL BRACKET 1062-2
BRAKE VALVE 1062-2
BRAKE VALVE FITTINGS 1062-2
BRAKE VALVE HYDRAULICS 1063-2
BRAKE VALVE SWITCH 1062-2
BRAKE, PARKING 1100-2
BRAKES, DUAL (YZ120713) 0210-19
BRAKES, DUAL (YZ120724) 0210-20
BREATHER, FRONT AXLE 0210-2
BREATHER, REAR AXLE 0210-4
BUCKET CUTTING EDGE 3102-2
BUCKET CUTTING EDGE (ATTACHMENT COUPLER) 3102-4
BUCKET CUTTING EDGE, LOADER 3101-4
BUCKET CYLINDER 3165-6
BUCKET CYLINDER (FOR USE WITH POWERLLEL LINKAGE) 3165-12
BUCKET CYLINDER BORE KIT 3165-4
BUCKET CYLINDER BORE KIT 3165-6
BUCKET CYLINDER BORE KIT (FOR USE WITH POWERLLEL LINKAGE) 3165-10
BUCKET CYLINDER BORE KIT (FOR USE WITH POWERLLEL LINKAGE) 3165-12
BUCKET CYLINDER HYDRAULIC FITTINGS 3165-2
BUCKET CYLINDER HYDRAULICS (FOR USE WITH Z-BAR LINKAGE) 3160-20
BUCKET CYLINDER HYDRAULICS TO LOADER CONTROL VALVE(POWERLLEL LINKAGE) 3160-24
BUCKET CYLINDER PIN, LOADER FRAME (POWERLLEL LINKAGE) 3140-4

ALPHABETICAL INDEX - CONTINUED

PAGE

BUCKET CYLINDER PIN, LOADER FRAME (Z-BAR LINKAGE) 3140-2
BUCKET CYLINDER PINS AND FITTINGS 3165-2
BUCKET CYLINDER ROD 3165-6
BUCKET CYLINDER ROD (FOR USE WITH POWERLLEL LINKAGE) 3165-12
BUCKET CYLINDER ROD SEAL KIT 3165-6
BUCKET CYLINDER ROD SEAL KIT (FOR USE WITH POWERLLEL LINKAGE) 3165-12
BUCKET LINKAGE 3140-10
BUCKET LINKAGE (POWERLLEL LINKAGE) 3140-12
BUCKET SECTION VALVE LOADER CONTROL VALVE 3160-10
BUCKET TEETH, LOADER 3101-2
BUCKET VALVE SECTION LOADER CONTROL VALVE 3160-10
BUCKET, CUTTING EDGE 3101-6
BUCKET, LOADER (ATTACHMENT COUPLER) 3102-4
BUCKET, LOADER (HI-VIS COUPLER) 3102-6
BUCKETS, LOADER 3102-2
BUMPER, BUTTON 1910-4
BUSHING, CAMSHAFT (4633) (HDW67) 0400-42
BUSHING, HI-VIS LINKAGE ATTACHMENT COUPLER (POWERLLEL) 3104-6
BUSHING, LOADER BOOM 3140-6
BUSHING, Z-BAR LINKAGE ATTACHMENT, HI-VIZ COUPLER 3104-8
BUSHINGS, POWERLLEL LINKAGE BOOM 3140-8
BUTTON BUMPER 1910-4

C

CAB 1811-6
CAB BACK PLATE 1811-12
CAB DOOR 1811-10
CAB DOOR HOLD OPEN LATCH 1811-6
CAB FLOOR 1811-12
CAB GLASS 1811-8
CAB LABELS AND DECALS 1322-4
CAB LEFT SIDE CONSOLE COVER 1816-2
CAB MONITOR CONSOLE 1831-2
CAB MOUNTS (FRONT AND REAR) 1810-2
CAB PEDESTAL 1831-6
CAB SHIELDS 1813-2
CAB WIRING HARNESS 1674-6
CAB, ALARM SYSTEM 1676-2
CAB, FLOOR MAT 1812-2
CAB, MONITOR 1676-2
CABLE, HEATER CONTROL 1833-2
CABLE, HEATER CONTROL 1833-6
CABLE, HI-VIS COUPLER HYDRAULIC HOSES 3163-2
CABLES, BATTERY 1671-2
CAM FOLLOWER (4905) (HDW67) 0400-48
CAMSHAFT (4633) (HDW67) 0400-42
CAMSHAFT GEAR (4633) (HDW67) 0400-42
CAMSHAFT KEY (4633) (HDW67) 0400-42
CANOPY 1811-2
CANOPY FLOOR 1811-14
CANOPY FRAME 1811-2
CANOPY HEADLINER 1811-2

PAGE

CANOPY LABELS AND DECALS 1322-10
CANOPY MONITOR CONSOLE 1831-4
CANOPY MONITOR HOUSING 1831-4
CANOPY PEDESTAL 1831-6
CANOPY REAR WINDOW 1811-2
CANOPY ROPS 1811-2
CANOPY, FLOOR MAT 1812-2
CAP, FUEL TANK 0560-2
CAP, RADIATOR 0510-2
CAP, RADIATOR 0510-8
CAP, WINDOW WASHER 1814-2
CAP,HYDRAULIC OIL RESERVOIR FILLER 2160-10
CAP,MAIN BEARING (4633) (HDW67) 0400-38
CAPACITOR, ALTERNATOR (80 AMP) 1672-2
CASE, DIFFERENTIAL (YZ120944) 0210-28
CASE, DIFFERENTIAL (YZ121182) 0210-29
CASSETTE PLAYER 2001-2
CD PLAYER 2001-2
CHARGE AIR COOLER 0510-2
CHARGE AIR COOLER 0510-8
CLAMP, HI LIFT BOOM TO COUPLER, THIRD FUNCTION HYD HOSES (Z-BAR LINKAGE) 3163-4
CLAMP, HI-VIS COUPLER HYDRAULIC HOSES 3163-2
CLAMP, ROCKER ARM SHAFT (4905) (HDW67) 0400-48
CLEANER,AIR 0520-2
CLOSE MOUNTED STEPS 1822-6
CLUTCH ASSEMBLY (FORWARD CLUTCH) 0350-30
CLUTCH ASSEMBLY (REVERSE CLUTCH) 0350-30
CLUTCH ASSEMBLY, FIRST GEAR 0350-32
CLUTCH ASSEMBLY, HIGH GEAR 0350-38
CLUTCH ASSEMBLY, SECOND GEAR 0350-34
CLUTCH ASSEMBLY, THIRD GEAR 0350-36
COAT HOOK 2013-2
COLD WEATHER STARTING AID (4327) (HDW67) 0400-34
COLUMN, LOWER STEERING 0962-4
COLUMN, STEERING 0962-2
COMPARTMENT, LOAD CENTER 1674-6
COMPONENTS, AUXILIARY JOYSTICK PILOT CONTROLLER 3162-10
COMPONENTS, AUXILIARY VALVE SECTION LOADER CONTROL VALVE 3160-12
COMPONENTS, DUAL AUXILIARY CONTROLLER 3162-4
COMPONENTS, FIFTH FUNCTION VALVE 3160-16
COMPONENTS, HVAC MODULE 1833-4
COMPONENTS, SINGLE AND DUAL AUXILIARY CONTROLLER 3162-2
COMPONENTS,HYDRAULIC OIL PRESSURE REGULATOR VALVE 2160-4
COMPRESSOR, A/C 1832-2
CONDENSER, A/C 1833-12
CONNECTING ROD BEARINGS (4836) (HDW67) 0400-46
CONSOLE CAB 1816-4
CONSOLE COVER, CAB LEFT SIDE 1816-2
CONSOLE, CANOPY MONITOR 1831-4
CONSOLE, CUPHOLDER 1816-4
CONSULE, MONITOR 1831-2
CONTOLLER, AUXILIARY DUAL LEVER 3162-4
CONTOLLER, AUXILIARY SINGLE LEVER 3162-2
CONTROL UNIT, TRANSMISSION 1674-6
CONTROL VALVE COVER, ABSORBER 1913-6
CONTROL VALVE MANIFOLD, TRANSMISSION 0350-18

ALPHABETICAL INDEX - CONTINUED

PAGE

CONTROL VALVE STUD ASSEMBLY, LOADER (2-SPOOL) 3160-2
CONTROL VALVE STUD ASSEMBLY, LOADER (4-SPOOL) 3160-6
CONTROL VALVE TIE BOLTS, LOADER (2-SPOOL) 3160-2
CONTROL VALVE TIE BOLTS, LOADER (3-SPOOL) 3160-4
CONTROL VALVE TIE BOLTS, LOADER (4-SPOOL) 3160-6
CONTROL VALVE, LOADER (2-SPOOL) 3160-2
CONTROL VALVE, LOADER (3-SPOOL) 3160-4
CONTROL VALVE, LOADER (4-SPOOL) 3160-6
CONTROL VALVE, TRANSMISSION 0350-20
CONTROL VAVLE STUD ASSEMBLY, LOADER (3-SPOOL) 3160-4
CONTROL, SPIN PRV 2160-6
CONTROL, TEMPERATURE 1833-2
CONTROL, TEMPERATURE 1833-6
CONTROL,RADIO REMOTE 2001-2
CONTROLLER, AUXILIARY JOYSTICK PILOT 3162-10
CONTROLLER, ENGINE (169Z) (HDW67) 0400-8
CONTROLLER, JOYSTICK PILOT 3162-8
CONTROLLER, TWO LEVER PILOT 3162-6
CONVERSION KIT, JOYSTICK FNR 3162-12
CONVERTER RELIEF VALVE 0350-24
CONVERTER, TORQUE 0350-4
CONVERTER, 10 AMP 1674-12
CONVERTER, 12 VOLT TO 24 VOLT 1674-12
COOLANT HEATER (2694) (HDW67) 0400-17
COOLANT HEATER, ENGINE 0505-2
COOLANT OVERFLOW RESERVOIR 0510-2
COOLANT OVERFLOW RESERVOIR 0510-8
COOLER, CHARGE AIR 0510-2
COOLER, CHARGE AIR 0510-8
COOLER, ENGINE OIL (5945) (HDW67) 0400-56
COOLING SYSTEM ACCESS PANELS 1910-6
COUNTERWEIGHT, LINKAGE COUPLER 1520-2
COUNTERWEIGHT, LINKAGE COUPLER 1520-4
COUNTERWEIGHT, MAIN 1749-2
COUPLER, ATTACHMENT (Z-BAR LINKAGE) 3104-2
COUPLER, HI-VIS, Z-BAR LINKAGE 3104-8
COUPLER, POWERLLEL LINKAGE 3104-4
COVER, A/C DELETE 1833-10
COVER, AUXILIARY DRIVE (5204) (HDW67) 0400-54
COVER, CAB LEFT SIDE CONSOLE 1816-2
COVER, CONSOLE SWITCH 1816-4
COVER, FRESH AIR HOUSING 1816-6
COVER, HI-VIS LINKAGE ATTACHMENT COUPLER (POWERLLEL) 3104-6
COVER, INJ. PUMP ACCESS (4440) (HDW67) 0400-36
COVER, INPUT (YZ120710) 0210-14
COVER, ROCKER ARM (1144) (HRW67) 0400-2
COVER, STEERING COLUMN 0962-6
COVER, THERMOSTAT (2154) (HDW67) 0400-15
COVER, TIMING GEAR (4440) (HDW67) 0400-36
COVER, TORQUE CONVERTER 0350-4
COVER, TRANSMISSION 0350-14
COVER, TRANSMISSION HOUSING 0350-8
COVER, VANDAL 1811-14
COVER, Z-BAR LINKAGE ATTACHMENT, COUPLER 3104-8
COVER,DRIVE DAMPER 0350-40
COVER,GEARBOX HOUSING 0350-8
COVERS, BATTERY 1671-4

PAGE

CRANKSHAFT (4712) (HDW67) 0400-44
CRANKSHAFT GEAR (4712) (HDW67) 0400-44
CRANKSHAFT POSITION SENSOR (6721) (HDW67) 0400-64
CRANKSHAFT PULLEY (1320) (HDW67) 0400-5
CRANKSHAFT THRUST BEARING (4712) (HDW67) 0400-44
CUPHOLDER CONSOLE 1816-4
CUSHION, BACKREST 1821-2
CUSHION, SEAT 1821-2
CUSHIONS, STEERING, ENGINE FRAME 1740-4
CUTTING EDGE 3101-4
CUTTING EDGE, JAGZ 3101-6
CUTTING EDGE, LOADER BUCKET 3101-4
CUTTING EDGE, LOADER BUCKET 3102-2
CUTTING EDGE,BUCKET 3102-2
CUTTING EDGE,BUCKET (ATTACHMENT COUPLER) 3102-4
CUTTING, EDGE 3101-6
CYLINDER BLOCK (4633) (PAGE 1) (HDW67) 0400-38
CYLINDER BLOCK (4633) (PAGE 3) (HDW67) 0400-42
CYLINDER BLOCK FITTINGS (4633) (PAGE 2) (HDW67) 0400-40
CYLINDER HEAD (5120) (HDW67) 0400-52
CYLINDER HEAD GASKET (5120) (HDW67) 0400-52
CYLINDER LINER O-RING KIT (4836) (HDW67) 0400-46
CYLINDER LOCK, BOOM 3140-14
CYLINDER, ATTACHMENT COUPLER (POWERLLEL LINKAGE) 3104-4
CYLINDER, ATTACHMENT COUPLER (Z-BAR LINKAGE) 3104-2
CYLINDER, ATTACHMENT HI-VIS COUPLER (POWERLLEL AND Z-BAR LINKAGE) 3104-14
CYLINDER, BOOM 3165-4
CYLINDER, BOOM (FOR USE WITH POWERLLEL LINKAGE) 3165-10
CYLINDER, BUCKET 3165-6
CYLINDER, BUCKET (FOR USE WITH POWERLLEL LINKAGE) 3165-12
CYLINDER, HI-VIS LINKAGE ATTACHMENT COUPLER (POWERLLEL) 3104-6
CYLINDER, POWERLLEL LINKAGE COUPLER 3104-4
CYLINDER, STEERING 0960-8
CYLINDER, Z-BAR ATTACHMENT COUPLER 3104-2
CYLINDER, Z-BAR LINKAGE ATTACHMENT, HI-VIZ COUPLER 3104-8

D

DAMPER,DRIVE 0350-40
DASH MODULE, WIRING, JOYSTICK 1674-10
DASH, WIRING 1674-10
DASH, WIRING JOYSTICK 1674-10
DECALS AND LABELS (CANOPY) 1322-10
DECALS AND LABELS (FRENCH) 1322-6
DECALS AND LABELS (SPANISH) 1322-8
DECALS AND LABELS, CAB 1322-4
DECALS AND TRADEMARKS (ENGLISH) 1322-2
DETENT KIT, AUXILIARY CONTROLLER 3162-2
DETENT KIT, AUXILIARY CONTROLLER 3162-4

ALPHABETICAL INDEX - CONTINUED

PAGE

DIFFERENTIAL CASE-1200 SERIES (YZ120944) 0210-28
DIFFERENTIAL DRIVE SHAFTS 0325-2
DIFFERENTIAL LOCK LINE, FRONT & REAR.....0263-2
DIFFERENTIAL LOCK SWITCH 0263-4
DIFFERENTIAL LOCK- 1400 CLOSED CIRCUIT 0210-24
DIFFERENTIAL LOCK- 1400 CLOSED CIRCUIT 0210-26
DIFFERENTIAL SUPPORTS AND LUBE LINES 0242-4
DIFFERENTIAL, STANDARD (YZ120988) 0210-22
DIODES, VEC.....1674-8
DIPSTICK, OIL (4017) (HDW67) 0400-32
DISCONNECT VALVE COMPONENTS,PIN AND AXLE.....3160-56
DISCONNECT VALVE, AXLE AND PIN.....3160-58
DISCONNECT, BATTERY.....1671-2
DOMELIGHT AND HEADLINER 1810-4
DOOR 1811-10
DOOR GLASS 1811-10
DOOR LATCH, BATTERY COVERS.....1671-4
DOOR, ACCESS.....1811-6
DOOR, BATTERY COVERS 1671-4
DOOR, DOMELIGHT SWITCH.....1673-8
DOOR, ENGINE SERVICE.....1910-4
DRAIN KIT, ENVIRONMENTAL 1369-2
DRIP RAIL 1811-4
DRIP, RAIL 1811-4
DRIVE DAMPER.....0350-40
DRIVE DAMPER COVER 0350-40
DRIVE HI-BEAM LAMP 1673-2
DRIVE SHAFT, ENGINE.....0325-2
DRIVE SHAFTS, AXLE DIFFERENTIALS.....0325-2
DRIVE SHAFTS, TRANSMISSION.....0325-2
DRIVE, FINAL (YZ120753).....0210-32
DRIVE, FINAL (YZ120946).....0210-30
DRIVELINE BEARNG/PARKING BRAKE.....1100-2
DUAL AUXILIARY CONTROLLER COMPONENTS.....3162-4
DUAL BRAKES (YZ120713).....0210-19
DUAL BRAKES (YZ120724).....0210-20
DUAL JOYSTICK PILOT CONTROLLER AND HYDRAULIC HOSES 3160-44
DUAL JOYSTICK PILOT CONTROLLER AND HYDRAULIC HOSES (POWERLLEL™ LINKAGE).....3160-46
DUCT, FRESH AIR 1833-2
DUCT, FRESH AIR 1833-6
DUCTS, A/C.....1831-8
DUCTS, HEATING 1831-8
DUCTS, HEATING AND AIR CONDITIONING.....1831-8
DUCTS, HVAC 1831-8

E

ECU, ELECTRONIC CONTROLL UNIT (169Z) (HDW67).....0400-8
EDGE, CUTTING.....3101-4
EDGE, CUTTING.....3101-6
EGR (8903) (HRW67).....0400-74
ELECTRIC FIFTH FUNCTION 3160-18
ELECTRICAL CENTER, VEHICLE.....1674-8
ELEMENT, A/C FILTER 1833-2
ELEMENT, OIL FILTER (8842) (HDW67.....0400-72
ELEMENT, TRANSMISSION OIL FILTER 0350-2
EMBLEM, SLOW MOVING.....2008-2
ENGINE AIR PLENUM 1910-4
ENGINE COMPARTMENT STEP 1822-2
ENGINE CONTROLLER (169Z) (HDW67) 0400-8
ENGINE COOLANT HEATER.....0505-2
ENGINE DOOR, ABSORBER 1913-6
ENGINE DRIVE SHAFT 0325-2

PAGE

ENGINE FRAME..... 1740-2
ENGINE FRAME PIN..... 1740-2
ENGINE FRAME STEERING CUSHIONS 1740-4
ENGINE FRAME WIRING HARNESS 1674-4
ENGINE MOUNTING SUPPORTS 0540-2
ENGINE MOUNTS..... 0540-2
ENGINE OIL BY-PASS VALVE (4633) (HDW67)..... 0400-38
ENGINE SIDE SHIELD LATCH..... 1910-4
ENGINE SIDE SHIELD PLATE 1910-4
ENGINE SIDE SHIELDS..... 1910-4
ENGINE SPEED CONTROL LINKAGE 0515-2
ENGINE SPEED CONTROL PEDAL 0515-2
ENGINE SPEED CONTROL SENSOR..... 0515-2
ENGINE SPEED, SENSOR (6721) (HDW67)..... 0400-64
ENGINE SUPPORT ISOLATOR..... 0540-2
ENVIRONMENTAL DRAIN KIT 1369-2
EXHAUST GAS RECIRCULATION (8903) (HRW67)..... 0400-74
EXHAUST MANIFOLD (2876) (HDW67)..... 0400-18
EXHAUST PIPE 0530-2
EXHAUST PIPE, CHROME 0530-2
EXHAUST VALVE (5120) (HDW67)..... 0400-52
EXTIGUISHER, FIRE..... 1811-14
EXTINGUISHER, FIRE 1811-12
EXTINGUISHER, FIRE 2003-2

F

FAN BLADE..... 0510-6
FAN BLADE HUB 0510-6
FAN BLADE HUB SUPPORT..... 0510-6
FAN DRIVE PULLEY (HDW67) (8718) 0400-71
FAN DRIVE, REVERSE, HYDRAULIC PUMP 0510-14
FAN DRIVE, REVERSE, HYDRAULIC PUMP (FACTORY)..... 0510-4
FAN DRIVE, REVERSE, MOTOR 0510-14
FAN DRIVE, REVERSE, MOTOR (FACTORY)..... 0510-4
FAN SHROUD..... 0510-2
FAN SHROUD..... 0510-8
FENDERS, FRONT..... 1927-2
FENDERS, FRONT FULL COVERAGE..... 1927-6
FIELD KIT, PIN DISCONNECT (Z-BAR LINKAGE)..... 3160-60
FIFTH FUNCTION VALVE SECTION..... 3160-16
FIFTH FUNTION KIT 3160-18
FILL TUBE, TRANSMISSION 0360-2
FILL, OIL (1229) (HDW67)..... 0400-4
FILLER NECK,FUEL TANK..... 0560-2
FILTER ELEMENT, TRANSMISSION OIL 0350-2
FILTER HEAD, TRANSMISSION OIL 0350-2
FILTER RESTRICTION SWITCH, TRANSMISSION OIL..... 0350-18
FILTER, FRESH AIR..... 1833-2
FILTER, FRESH AIR..... 1833-6
FILTER, HVAC RECIRCULATION..... 1833-4
FILTER, HVAC RECIRCULATION..... 1833-8
FILTER, HYDRAULIC OIL..... 2160-10
FILTER, OIL (8842) (HDW67) 0400-72
FILTER, TRANSMISSION OIL..... 0350-2
FILTER,AIR CLEANER 0520-2
FILTER,FUEL (35DZ) (HDW67)..... 0400-24

ALPHABETICAL INDEX - CONTINUED

PAGE

FINAL DRIVE (YZ120753) 0210-32
FINAL DRIVE (YZ120946) 0210-30
FIRE EXTINGUISHER 2003-2
FIRE EXTINGUISHER AND BRACKET 1811-12
FIRE EXTINGUISHER AND BRACKET 1811-14
FIRE EXTINGUISHER BRACKET 2003-2
FIRST GEAR CLUTCH ASSEMBLY 0350-32
FITTINGS, CYLINDER BLOCK (4633) (PAGE 2) (HDW67) 0400-40
FITTINGS, DUAL JOYSTICK PILOT CONTROLLER 3160-44
FITTINGS, DUAL JOYSTICK PILOT CONTROLLER (POWERLLEL™ LINKAGE) 3160-46
FITTINGS, HEATER 1831-10
FITTINGS, HI-VIS COUPLER HYDRAULIC HOSES 3163-2
FITTINGS, HYDRAULIC, BOOM CYLINDER 3165-2
FITTINGS, HYDRAULIC, BUCKET CYLINDER 3165-2
FITTINGS, JOYSTICK PILOT CONTROLLER WITH AUXILARY 3160-40
FITTINGS, JOYSTICK PILOT CONTROLLER WITH AUXILARY (POWERLLEL™ LINKAGE) 3160-42
FITTINGS, POWERLLEL LINKAGE BOOM CYLINDER 3165-8
FITTINGS, POWERLLEL LINKAGE TILT CYLINDER 3165-8
FITTINGS, PRESSURE REGULATOR VALVE 2160-8
FITTINGS, STEERING COMPENSATOR VALVE 0960-4
FITTINGS, STEERING VALVE 0960-2
FITTINGS, TRANSMISSION 0350-2
FITTINGS, TWO LEVER PILOT CONTROLLER 3160-28
FITTINGS, TWO LEVER PILOT CONTROLLER WITH AUXILARY 3160-34
FITTINGS, TWO LEVER PILOT CONTROLLER WITH AUXILARY 3160-36
FITTINGS, TWO LEVER PILOT CONTROLLER WITH AUXILARY (POWERLLEL™ LINKAGE) 3160-32
FLOOR MAT, CAB 1812-2
FLOOR MAT, CANOPY 1812-2
FLOOR, CAB 1811-12
FLOOR, CANOPY 1811-14
FLYWHEEL (1503) (HDW67) 0400-7
FLYWHEEL HOUSING (1405) (HDW67) 0400-6
FNR CONVERSION KIT 3162-12
FORKS, GUARD 3103-6
FORKS, PALLET 3103-2
FORKS, PALLET (HI-VIS) 3103-4
FORWARD CLUTCH ASSEMBLY 0350-30
FOUR SPOOL CONTROL VALVE, LOADER 3160-6
FOUR SPOOL LOADER CONTROL VALVE 3160-6
FOUR SPOOL VALVE, LOADER CONTROL 3160-6
FOURTH FUNCTION AUXILIARY HYDRAULICS (POWERLLEL LINKAGE) 3160-26
FOURTH FUNCTION AUXILIARY HYDRAULICS (Z-BAR LINKAGE) 3160-22
FRAME LOCK BAR 1913-4
FRAME, CANOPY 1811-2
FRAME, ENGINE 1740-2
FRAME, GUARD 3103-6
FRAME, LOADER (POWERLLEL LINKAGE) 3140-4
FRAME, LOADER (Z-BAR LINKAGE) 3140-2
FRAME, PALLET FORK 3103-2
FRAME, PALLET FORK (HI-VIS) 3103-4
FRENCH LABELS AND DECALS 1322-6
FRESH AIR DUCT 1833-2
FRESH AIR DUCT 1833-6
FRESH AIR FILTER 1833-2

PAGE

FRESH AIR FILTER 1833-6
FRESH AIR FILTER ELEMENT 1833-2
FRESH AIR FILTER ELEMENT 1833-6
FRESH AIR HOUSING COVER 1816-6
FRONT & REAR DIFFERENTIAL LOCK LINE 0263-2
FRONT AND REAR WINDOW WASHER 1814-2
FRONT AND REAR WORK LAMP 1673-4
FRONT AXLE ASSEMBLY 0210-2
FRONT AXLE ASSEMBLY BREATHER 0210-2
FRONT AXLE CAPSCREWS (POWERLLEL LINKAGE) 3140-4
FRONT AXLE CAPSCREWS (Z-BAR LINKAGE) 3140-2
FRONT AXLE MOUNTING (POWERLLEL LINKAGE) 3140-4
FRONT AXLE MOUNTING (Z-BAR LINKAGE) 3140-2
FRONT BOTTOM GUARD 1746-4
FRONT FENDERS 1927-2
FRONT FENDERS FULL COVERAGE 1927-6
FRONT LIGHT 1673-2
FRONT PLATE (3614) (HDW67) 0400-26
FRONT TURN AND MARKER LIGHT 1673-2
FRONT WINDSHIELD WIPER 1814-4
FUEL FILTER (35DZ) (HDW67) 0400-24
FUEL FILTER GASKET KIT (35DZ) (HDW67) 0400-24
FUEL FILTER LINES (6389) (HRW67) 0400-58
FUEL HOSES 0560-2
FUEL INJECTION LINES (169Z) (HDW67) 0400-8
FUEL INJECTION PUMP (169Z) (HDW67) 0400-8
FUEL TANK 0560-2
FUEL TANK BOTTOM GUARD 1746-2
FUEL TANK CAP 0560-2
FUEL TANK FILLER HOSE 0560-2
FUEL TANK FILLER NECK 0560-2
FUEL TANK SENDING UNIT 0560-2
FUEL TRANSFER PUMP (3713) (HDW67) 0400-28
FUEL, WATER SENSOR (WIF) (8159) (HDW67) 0400-68
FUSES, VEC 1674-8

G

GASKET, CYLINDER HEAD (5120) (HDW67) 0400-52
GASKET, ROCKER ARM (4905) (HDW67) 0400-48
GASKET, ROCKER ARM COVER (1144) (HRW67) 0400-2
GASKET, THERMOSTAT HOUSING (3917) (HDW67) 0400-30
GEAR SHIFT SYSTEM 0350-18
GEAR, CAMSHAFT (4633) (HDW67) 0400-42
GEAR, CRANKSHAFT (4712) (HDW67) 0400-44
GEAR, OIL PUMP (5024) (HDW67) 0400-50
GEAR, TRANSMISSION INPUT 0350-6
GEAR, UPPER IDLER (3614) (HDW67) 0400-26
GEARBOX HOUSING 0350-8
GEARBOX HOUSING COVER 0350-8
GLASS 1811-8

ALPHABETICAL INDEX - CONTINUED

PAGE

GUARD FORKS....3103-6
GUARD, BOTTOM, FUEL TANK....1746-2
GUARD, FRONT BOTTOM....1746-4
GUARD, LOADER BUCKET....3102-2
GUARD, TRANSMISSION BOTTOM....1746-4
GUARDS, TRANSMISSION....1913-2
GUIDE ASSEMBLY....3162-8

H

HANDLE, PILOT CONTROLLER....3162-8
HANDLE, REAR PLASTIC....1910-6
HANDLE, TWO LEVER PILOT CONTROLLER....3162-6
HARNESS, MAIN WIRING....1674-4
HARNESS, WIRING (8496) (HRW67)....0400-70
HARSH ENVIRONMENT ALTERNATOR BELT (100 A MP)....1672-8
HARSH ENVIRONMENT ALTERNATOR BELT TENSIO NER (100 AMP)....1672-8
HARSH ENVIRONMENT ALTERNATOR MOUNTING BR ACKETS (100 AMP)....1672-8
HEAD, CYLINDER (5120) (HDW67)....0400-52
HEADER, OIL FILTER (8842) (HDW67)....0400-72
HEADLINER AND DOMELIGHT....1810-4
HEADLINER, CANOPY....1811-2
HEADREST....1821-2
HEATER BLOWER MOTOR AND SWITCH....1833-4
HEATER BLOWER MOTOR AND SWITCH....1833-8
HEATER CONTROL CABLE....1833-2
HEATER CONTROL CABLE....1833-6
HEATER FITTINGS....1831-10
HEATER HOSES....1831-10
HEATER THERMOSTAT SWITCH....1833-8
HEATER, COOLANT (2694) (HDW67)....0400-17
HEATER, ENGINE COOLANT....0505-2
HEATING AND A/C LOUVERS....1831-2
HEATING AND AIR CONDITIONING, DUCTS....1831-8
HEATING, DUCTS....1831-8
HI-VIS COUPLER BUCKET....3102-6
HI-VIS COUPLER HYDRAULIC CYLINDER, ATTAC HMENT (POWERLLEL AND Z-BAR LINKAGE)....3104-14
HI-VIS LINKAGE ATTACHMENT COUPLER (POWERLLEL)....3104-6
HI-VIS LINKAGE COUPLER (POWERLLEL)....3104-6
HIGH GEAR CLUTCH ASSEMBLY....0350-38
HIGH LIFT BOOM TO COUPLER THIRD FUNCTION HOSES (Z-BAR LINKAGE)....3163-4
HIGH LIFT LOADER BOOM LINKAGE....3140-10
HITCH ASSEMBLY....1520-2
HITCH ASSEMBLY....1520-4
HITCH ASSEMBLY WITH 8" PROTECTION BUMPER....1520-2
HITCH ASSEMBLY WITH 8" PROTECTION BUMPER....1520-4
HOOD....1910-2
HOOD, ABSORBER....1913-6
HOOK, COAT....2013-2
HOOKS, LIFT....1330-2
HORN....2004-2
HORN SWITCH....0962-2
HOSE, A/C....1832-2
HOSE, FRONT & REAR DIFFERENTIAL LOCK....0263-2
HOSE, FUEL TANK FILLER....0560-2
HOSE, HYD, THIRD FUNCTION, BOOM TO COUPLER (Z-BAR LINKAGE)....3163-4
HOSE, HYD, THIRD FUNCTION, HIGH LIFT BOOM TO COUPLER (Z-BAR LINKAGE)....3163-4

PAGE

HOSE, HYDRAULIC, CONTROL VALVE TO BUCKET CYLINDER (POWERLLEL LINKAGE)....3160-24
HOSE, HYDRAULIC, CONTROL VALVE TO BOOM CYLINDER (POWERLLEL LINKAGE)....3160-24
HOSE, RADIATOR....0510-2
HOSE, RADIATOR....0510-8
HOSE, VENTILATING (2917) (HDW67)....0400-20
HOSE,AIR CLEANER....0520-2
HOSE,STEERING CYLINDER HYDRAULIC....0960-6
HOSES, DUAL JOYSTICK PILOT CONTROLLER....3160-44
HOSES, DUAL JOYSTICK PILOT CONTROLLER (P OWERLLEL™ LINKAGE)....3160-46
HOSES, ENVIRONMENTAL DRAIN....1369-2
HOSES, FUEL....0560-2
HOSES, HEATER....1831-10
HOSES, HYDRAULIC PIN DISCONNECT AND AXLE DISONNECT VALVE....3160-58
HOSES, HYDRAULIC, FOURTH FUNCTION (Z-BAR LINKAGE)....3160-22
HOSES, HYDRAULIC, HI-VIS COUPLER....3163-2
HOSES, HYDRAULIC, PIN DISCONNECT (FOR USE WITH POWERLLEL LINKAGE)....3160-64
HOSES, HYDRAULIC, PIN DISCONNECT (Z-BAR LINKAGE)....3160-60
HOSES, HYDRAULIC, RIDE CONTROL....3160-54
HOSES, HYDRAULIC, THIRD FUNCTION (POWERLLEL LINKAGE) (BOOM TO COUPLER)....3163-6
HOSES, HYDRAULIC, THIRD FUNCTION (Z-BAR LINKAGE)....3160-22
HOSES, JOYSTICK PILOT CONTROLLER WITH AUXILARY....3160-40
HOSES, JOYSTICK PILOT CONTROLLER WITH AUXILARY (POWERLLEL™ LINKAGE)....3160-42
HOSES, PIN DISCONNECT HYDRAULIC (BOOM TO COUPLER)(Z-BAR LINKAGE)....3160-62
HOSES, TWO LEVER PILOT CONTROLLER....3160-28
HOSES, TWO LEVER PILOT CONTROLLER WITH AUXILARY....3160-34
HOSES, TWO LEVER PILOT CONTROLLER WITH AUXILARY....3160-36
HOSES, TWO LEVER PILOT CONTROLLER WITH AUXILARY (POWERLLEL™ LINKAGE)....3160-32
HOSES, WINDOW WASHER....1814-2
HOSES,BOOM AND BUCKET CYLINDER HYDRAULIC (Z-BAR LINKAGE)....3160-20
HOUSING AND SHAFT (YZ120709)....0210-10
HOUSING AND SHAFT (YZ120720)....0210-12
HOUSING, CANOPY MONITOR....1831-4
HOUSING, FLYWHEEL (1405) (HDW67)....0400-6
HOUSING, GEARBOX....0350-8
HOUSING, HVAC....1833-4
HOUSING, HVAC....1833-8
HOUSING, MONITOR....1831-2
HOUSING, OIL PUMP (5024) (HDW67)....0400-50
HOUSING, STANDARD INPUT NON- OSC....0210-16
HOUSING, THERMOSTAT (3917) (HDW67)....0400-30
HOUSING, TORQUE CONVERTER....0350-4
HOUSING, TRANSMISSION....0350-8
HUB,FAN BLADE....0510-6
HVAC HOUSING....1833-4
HVAC HOUSING....1833-8
HVAC MODULE COMPONENTS....1833-4
HVAC RECIRCULATION FILTER....1833-4
HVAC RECIRCULATION FILTER....1833-8
HVAC WIRING....1674-2
HVAC, DUCTS....1831-8

ALPHABETICAL INDEX - CONTINUED

PAGE

HYDRAULIC CYLINDER, ATTACHMENT HI-VIS COUPLER (POWERLLEL AND Z-BAR LINKAGE) 3104-14
HYDRAULIC CYLINDER, HI-VIS LINKAGE ATTACHMENT COUPLER (POWERLLEL) 3104-6
HYDRAULIC CYLINDER, HI-VIZ LINKAGE ATTACHMENT COUPLER 3104-8
HYDRAULIC HOSES, HI-VIS COUPLER 3163-2
HYDRAULIC HOSES, PIN DISCONNECT (BOOM TO COUPLER)(Z-BAR LINKAGE) 3160-62
HYDRAULIC HOSES, REVERSE FAN DRIVE 0510-14
HYDRAULIC HOSES, REVERSE FAN DRIVE (FACTORY) 0510-4
HYDRAULIC HOSES, STANDARD FAN DRIVE 0510-10
HYDRAULIC HOSES, THIRD FUNCTION BOOM TO COUPLER (POWERLLEL LINKAGE) 3163-6
HYDRAULIC HOSES, THIRD FUNCTION, HIGH LIFT BOOM TO COUPLER, (Z-BAR LINKAGE) 3163-4
HYDRAULIC LINES, MAIN 2160-12
HYDRAULIC LINES, PARK BRAKE SOLENOID VALVE 1100-6
HYDRAULIC OIL COOLER 0510-2
HYDRAULIC OIL COOLER 0510-8
HYDRAULIC OIL FILTER 2160-10
HYDRAULIC OIL LEVEL GAUGE 2160-10
HYDRAULIC OIL PRESSURE REGULATOR VALVE 2160-4
HYDRAULIC OIL RESERVOIR 2160-10
HYDRAULIC OIL RESERVOIR FILLER CAP 2160-10
HYDRAULIC OIL TEMPERATURE SENSOR 2160-10
HYDRAULIC PUMP. STEERING 2160-2
HYDRAULIC PUMP, LOADER 2160-2
HYDRAULIC PUMP, LOADER AND STEERING 2160-2
HYDRAULIC PUMP, REVERSE FAN DRIVE 0510-14
HYDRAULIC PUMP, REVERSE FAN DRIVE (FACTORY) 0510-4
HYDRAULICS, BOOM CYLINDER (FOR USE WITH Z-BAR LINKAGE) 3160-20
HYDRAULICS, BRAKE VALVE 1063-2
HYDRAULICS, BUCKET CYLINDER TO LOADER CONTROL VALVE(POWERLLEL LINKAGE) 3160-24
HYDRAULICS,BUCKET CYLINDER(FOR USE WITH Z-BAR LINKAGE) 3160-20

I

IGNITION SWITCH 1674-6
INLET SECTION VALVE WITH RELIEF VALVE LOADER CONTROL VALVE 3160-8
INLET, WATER PUMP (5728) 0400-55
INPUT COVER (YZ120710) 0210-14
INPUT GEAR, TRANSMISSION 0350-6
INPUT HOUSING, STANDARD NON- OSC 0210-16
INPUT PINION AND RING GEAR SET 0210-6
INPUT PINION AND RING GEAR SET 0210-7
INPUT PINION, SPIRAL BEVEL 0210-6
INPUT PINION, SPIRAL BEVEL 0210-7
INPUT SHAFT, TORQUE CONVERTER 0350-4
INPUT SHAFT, TRANSMISSION 0350-6
INPUT YOKE (YZ120747) 0210-8
INPUT YOKE (YZ120750) 0210-9
INPUT YOKE, TORQUE CONVERTER SHAFT 0350-4
INSIDE REAR VIEW MIRROR 2002-2
INTAKE VALVE (5120) (HDW67) 0400-52
INTAKE, AIR (17BL) (HDW67) 0400-10
INTAKE, OIL PUMP (1946) (HDW67) 0400-12
ISOLATOR,ENGINE SUPPORT 0540-2

J

JAGZ, CUTTING EDGE 3101-6
JOYSTICK FNR CONVERSION KIT 3162-12
JOYSTICK PILOT CONTROLLER 3162-8
JOYSTICK PILOT CONTROLLER WITH AUXILARY 3160-40
JOYSTICK PILOT CONTROLLER WITH AUXILARY (POWERLLEL™ LINKAGE) 3160-42
JOYSTICK TO TWO LEVER CONVERSION KIT 3160-28
JOYSTICK WITH AUX. TO TWO LEVER WITH AUX. CONVERSION KIT 3160-32
JOYSTICK WITH AUX. TO TWO LEVER WITH AUX. CONVERSION KIT 3160-34
JOYSTICK WITH AUX. TO TWO LEVER WITH AUX. CONVERSION KIT 3160-36
JOYSTICK, DASH MODULE WIRING 1674-10

K

KEY, CAMSHAFT (4633) (HDW67) 0400-42
KICKDOWN SWITCH, TWO LEVER PILOT CONTROLLER 3162-6
KICKOUT,LOADER BOOM 3166-4
KICKOUT,LOADER BOOM (POWERLLEL LINKAGE) 3166-8
KIT, ADDITION OF AUXILIARY JOYSTICK TO JOYSTICK CONTROLLER 3160-44
KIT, ADDITION OF AUXILIARY JOYSTICK TO JOYSTICK CONTROLLER 3160-46
KIT, ADDITION OF AUXILIARY TO JOYSTICK CONTROLLER 3160-40
KIT, ADDITION OF AUXILIARY TO JOYSTICK CONTROLLER (POWERLLEL™ LINKAGE) 3160-42
KIT, ADDITION OF AUXILIARY TO TWO LEVER CONTROLLER 3160-34
KIT, ADDITION OF AUXILIARY TO TWO LEVER CONTROLLER 3160-36
KIT, ADDITION OF AUXILIARY TO TWO LEVER CONTROLLER (POWERLLEL™ LINKAGE) 3160-32
KIT, AUXILIARY DUAL LEVER CONTROLLER REP AIR 3162-4
KIT, AUXILIARY JOYSTICK PILOT CONTROLLER REPAIR 3162-10
KIT, AUXILIARY SINGLE LEVER CONTROLLER REPAIR 3162-2
KIT, BOOM CYLINDER ROD SEAL 3165-4
KIT, BOOM CYLINDER ROD SEAL (FOR USE WITH POWERLLEL LINKAGE) 3165-10
KIT, BOOM TO COUPLER, THIRD FUNCTION HYD HOSES (Z-BAR LINKAGE) 3163-4
KIT, BUCKET CYLINDER BORE 3165-4
KIT, BUCKET CYLINDER BORE 3165-6
KIT, BUCKET CYLINDER BORE (FOR USE WITH POWERLLEL LINKAGE) 3165-10
KIT, BUCKET CYLINDER BORE (FOR USE WITH POWERLLEL LINKAGE) 3165-12
KIT, BUCKET CYLINDER ROD SEAL 3165-6
KIT, BUCKET CYLINDER ROD SEAL (FOR USE WITH POWERLLEL LINKAGE) 3165-12
KIT, ENGINE COOLANT HEATER 0505-2
KIT, ENVIRONMENTAL DRAIN 1369-2
KIT, FITTING, QUICK-DISCONNECT (POWERLLEL LINKAGE) 3160-26
KIT, HI LIFT BOOM TO COUPLER, THIRD FUNCTION HYD HOSES (Z-BAR LINKAGE) 3163-4

ALPHABETICAL INDEX - CONTINUED

PAGE

KIT, JOYSTICK TO TWO LEVER CONVERSION 3160-28
KIT, JOYSTICK WITH AUX. TO TWO LEVER WITH AUX. CONVERSION....3160-32
KIT, JOYSTICK WITH AUX. TO TWO LEVER WITH AUX. CONVERSION....3160-34
KIT, JOYSTICK WITH AUX. TO TWO LEVER WITH AUX. CONVERSION....3160-36
KIT, OUTLET VALVE SECTION LOADER CONTROL VALVE 3160-14
KIT, PIN DISCONNECT (Z-BAR LINKAGE)....3160-60
KIT, REVERSE FAN DRIVE....0510-14
KIT, STANDARD FAN DRIVE....0510-10
KIT, STEERING COMPENSATOR VALVE SEAL....0960-4
KIT, TWO LEVER WITH AUX. TO JOYSTICK WITH AUX. CONVERSION....3160-40
KIT, TWO LEVER WITH AUX. TO JOYSTICK WITH AUX. CONVERSION....3160-42
KIT,STEERING CYLINDER REPAIR 0960-8
KITS, HI-VIS COUPLER HYDRAULIC HOSES....3163-2

L

LABEL AND DECALS (CANOPY) 1322-10
LABEL, STARTER (3041) (HDW67) 0400-22
LABELS AND DECALS (FRENCH)....1322-6
LABELS AND DECALS (SPANISH)....1322-8
LABELS AND DECALS, CAB 1322-4
LABELS AND TRADEMARKS (ENGLISH)....1322-2
LAMP, HI-BEAM, DRIVE....1673-2
LAMP, LICENSE PLATE....1673-6
LAMP, STOP 1673-10
LAMP, TAIL....1673-10
LAMP, TURN....1673-10
LATCH, BATTERY COVERS DOOR....1671-4
LATCH, DOOR....1811-10
LATCH, ENGINE SIDE SHIELD 1910-4
LATCH, HOOD....1910-2
LATCH,CAB DOOR HOLD-OPEN 1811-6
LEFT SIDE CONSOLE COVER (CAB)....1816-2
LICENSE PLATE BRACKET AND LIGHT....1673-6
LICENSE PLATE LAMP....1673-6
LICENSE PLATE LIGHT 1673-6
LICENSE PLATE LIGHT 1674-4
LIFT HOOKS....1330-2
LIFT STRAPS (9801) (HDW67)....0400-76
LIGHT, DOMELIGHT DOOR SWITCH....1673-8
LIGHT, FRONT....1673-2
LIGHT, LICENSE PLATE....1673-6
LIGHT, STOP 1673-10
LIGHT, TURN....1673-10
LIGHT, TURN AND MARKER....1673-2
LINE, FRONT & REAR DIFFERENTIAL LOCK....0263-2
LINER, CYLINDER (4836) (HDW67)....0400-46
LINES, FUEL FILTER (6389) (HRW67) 0400-58
LINES, FUEL INJECTION (169Z) (HDW67) 0400-8
LINES, HYDRAULIC, PIN DISCONNECT (BOOM TO COUPLER)(Z-BAR LINKAGE) 3160-62
LINES, HYDRAULIC, PIN DISCONNECT (FOR USE WITH POWERLLEL LINKAGE) 3160-64
LINES, HYDRAULIC, PIN DISCONNECT (Z-BAR LINKAGE)....3160-60
LINES, HYDRAULIC, RIDE CONTROL....3160-54

PAGE

LINES, JOYSTICK PILOT CONTROLLER WITH AUXILARY 3160-40
LINES, JOYSTICK PILOT CONTROLLER WITH AUXILARY (POWERLLEL™ LINKAGE).... 3160-42
LINES, MAIN HYDRAULIC 2160-12
LINES, TURBOCHARGER OIL (65ND) (HRW67).... 0400-60
LINES, TWO LEVER PILOT CONTROLLER WITH AUXILARY 3160-34
LINES, TWO LEVER PILOT CONTROLLER WITH AUXILARY 3160-36
LINES, TWO LEVER PILOT CONTROLLER WITH AUXILARY (POWERLLEL™ LINKAGE).... 3160-32
LINKAGE COUPLER COUNTERWEIGHT 1520-2
LINKAGE COUPLER COUNTERWEIGHT 1520-4
LINKAGE COUPLER, HI-VIS (POWERLLEL) 3104-6
LINKAGE COUPLER, POWERLLEL LINKAGE 3104-4
LINKAGE, BUCKET 3140-10
LINKAGE, BUCKET (POWERLLEL LINKAGE).... 3140-12
LINKAGE, HIGH LIFT LOADER BOOM.... 3140-10
LINKAGE, LOADER BOOM 3140-10
LINKAGE, POWERLLEL.... 3140-12
LINKAGE, STEERING COLUMN.... 0962-2
LINKAGE, Z-BAR, HI-VIS COUPLER.... 3104-8
LINKAGE,ENGINE SPEED CONTROL 0515-2
LOAD CENTER COMPARTMENT.... 1674-6
LOAD CENTER WIRING HARNESS.... 1674-6
LOADER ATTACHMENT COUPLER (Z-BAR LINKAGE).... 3104-2
LOADER ATTACHMENT COUPLER BUCKET.... 3102-4
LOADER BOOM 3140-6
LOADER BOOM BUSHING 3140-6
LOADER BOOM KICKOUT SENSOR 3166-4
LOADER BOOM KICKOUT SENSOR (POWERLLEL LINKAGE).... 3166-8
LOADER BOOM KICKOUT/RETURN TO CARRY 3166-4
LOADER BOOM KICKOUT/RETURN TO CARRY (POWERLLEL LINKAGE).... 3166-8
LOADER BOOM LINKAGE 3140-10
LOADER BOOM LINKAGE (POWERLLEL LINKAGE).... 3140-12
LOADER BOOM LINKAGE, HIGH LIFT.... 3140-10
LOADER BOOM PIN 3140-6
LOADER BOOM POWERLLEL LINKAGE 3140-12
LOADER BUCKET (ATTACHMENT COUPLER).... 3102-4
LOADER BUCKET (HI-VIS COUPLER).... 3102-6
LOADER BUCKET CUTTING EDGE.... 3101-4
LOADER BUCKET CUTTING EDGE.... 3102-2
LOADER BUCKET GUARD 3102-2
LOADER BUCKET PINS.... 3102-2
LOADER BUCKET TEETH 3101-2
LOADER BUCKETS.... 3102-2
LOADER CONTROL VALVE (FIFTH FUNCTION).... 3160-16
LOADER CONTROL VALVE (2-SPOOL) 3160-2
LOADER CONTROL VALVE (3-SPOOL) 3160-4
LOADER CONTROL VALVE (4-SPOOL) 3160-6
LOADER CONTROL VALVE STUD ASSEMBLY (2-SPOOL).... 3160-2
LOADER CONTROL VALVE STUD ASSEMBLY (3-SPOOL).... 3160-4
LOADER CONTROL VALVE STUD ASSEMBLY (4-SPOOL).... 3160-6
LOADER CONTROL VALVE TIE BOLTS (2-SPOOL).... 3160-2
LOADER CONTROL VALVE TIE BOLTS (3-SPOOL).... 3160-4

ALPHABETICAL INDEX - CONTINUED

PAGE

LOADER CONTROL VALVE TIE BOLTS (4-SPOOL) 3160-6
LOADER CONTROL VALVE TO BUCKET CYLINDER HYDRAULICS(POWERLLEL LINKAGE)....3160-24
LOADER FRAME (POWERLLEL LINKAGE)....3140-4
LOADER FRAME (Z-BAR LINKAGE)....3140-2
LOADER FRAME BOOM CYLINDER PIN (POWERLLEL LINKAGE)....3140-4
LOADER FRAME BOOM CYLINDER PIN (Z-BAR LINKAGE)....3140-2
LOADER FRAME BUCKET CYLINDER PIN (POWERLLEL LINKAGE)....3140-4
LOADER FRAME BUCKET CYLINDER PIN (Z-BAR LINKAGE)....3140-2
LOADER FRAME WIRING HARNESS....1674-4
LOADER LINKAGE....3140-10
LOADER LINKAGE (POWERLLEL LINKAGE)....3140-12
LOADER SHANKS....3101-2
LOCK BAR, FRAME....1913-4
LOCK LINE, FRONT & REAR DIFFERENTIAL....0263-2
LOCK MECHANISM, GUARD FORK....3103-6
LOCK MECHANISM, PALLET FORK (HI-VIS)....3103-4
LOCK, BOOM CYLINDER....3140-14
LOCK, DIFFERENTIAL (YZ120947)....0210-24
LOCK, DIFFERENTIAL (YZ121237)....0210-26
LOGGER RIM ASSEMBLY (ONE PIECE) (28 X 26)....0110-6
LOUVERS, HEATING AND A/C....1831-2
LOUVERS, VENTILATION....1831-2
LOWER STEERING COLUMN....0962-4
LUBRICATION LINES, DIFFERENTIAL SUPPORTS....0242-4

M

MAGNETIC PICK-UP SENSOR (6721) (HDW67)....0400-64
MAIN BEARING CAP (4633) (HDW67)....0400-38
MAIN BEARINGS (4712) (HDW67)....0400-44
MAIN COUNTERWEIGHT....1749-2
MAIN HYDRAULIC LINES....2160-12
MAIN WIRING HARNESS....1674-4
MANIFOLD AIR PRESSURE SENSOR (6721) (HDW67)....0400-64
MANIFOLD, EXHAUST (2876) (HDW67)....0400-18
MANIFOLD, TRANSMISSION CONTROL VALVE....0350-18
MAT, ANTI-SKID, COUNTERWEIGHT....1749-2
MIRROR, OUTSIDE....2002-4
MIRROR, REAR VIEW, INSIDE....2002-2
MODULE, HVAC....1833-4
MODULE, HVAC....1833-8
MONITOR CONSULE, CAB....1831-2
MONITOR CONS0LE, CANOPY....1831-4
MONITOR HOUSING....1831-2
MONITOR HOUSING, CANOPY....1831-4
MONITOR, CAB....1676-2
MOTOR AND SWITCH, HEATER....1833-8
MOTOR AND SWITCH, HEATER AND A/C BLOWER....1833-4
MOTOR, REVERSE FAN DRIVE....0510-14
MOTOR, REVERSE FAN DRIVE (FACTORY)....0510-4
MOTOR, WINDSHIELD WIPER (FRONT)....1814-4

PAGE

MOTOR, WINDSHIELD WIPER (REAR)....1814-6
MOUNTING BRACKETS, ALTERNATOR (100 AMP)....1672-6
MOUNTING BRACKETS, ALTERNATOR (80 AMP)....1672-2
MOUNTING BRACKETS, HARSH ENVIRONMENT ALT ERNATOR (100 AMP)....1672-8
MOUNTING BRACKETS, TRANSMISSION....0342-2
MOUNTING SUPPORTS, ENGINE....0540-2
MOUNTING, FRONT AXLE (POWERLLEL LINKAGE)....3140-4
MOUNTING, FRONT AXLE (Z-BAR LINKAGE)....3140-2
MOUNTS, CAB (FRONT AND REAR)....1810-2
MOUNTS, ENGINE....0540-2
MUFFLER....0530-2
MUFFLER BRACKET....0530-2

O

O'RINGS, HI-VIS COUPLER HYDRAULIC HOSES....3163-2
OIL COOLER, ENGINE (5945) (HDW67)....0400-56
OIL COOLER,HYDRAULIC....0510-2
OIL COOLER,HYDRAULIC....0510-8
OIL COOLER,TRANSMISSION....0510-2
OIL COOLER,TRANSMISSION....0510-8
OIL DIPSTICK (4017) (HDW67)....0400-32
OIL FILL (1229) (HDW67)....0400-4
OIL FILL, TRANSMISSION....0360-2
OIL FILTER (8842) (HDW67)....0400-72
OIL FILTER ELEMENT, TRANSMISSION....0350-2
OIL FILTER HEAD, TRANSMISSION....0350-2
OIL FILTER HEADER (8842) (HDW67)....0400-72
OIL FILTER RESTRICTION INDICATOR SWITCH, TRANSMISSION....0350-18
OIL FILTER, TRANSMISSION....0350-2
OIL LINES, TRANSMISSION INTERNAL....0350-16
OIL LINES, TURBOCHARGER (65ND) (HRW67)....0400-60
OIL PAN (1946) (HDW67)....0400-12
OIL PRESSURE SENSOR (7635) (HDW67)....0400-67
OIL PRESSURE SWITCH (7635) (HDW67)....0400-67
OIL PUMP (5024) (HDW67)....0400-50
OIL PUMP INTAKE (1946) (HDW67)....0400-12
OIL PUMP, TRANSMISSION....0350-12
OPERATOR STATION FRONT PEDESTAL....1831-6
OPTION 1144 ROCKER ARM COVER (HRW67)....0400-2
OPTION 1229 OIL FILL (HDW67)....0400-4
OPTION 1320 CRANKSHAFT PULLEY (HDW67)....0400-5
OPTION 1405 FLYWHEEL HOUSING (HDW67)....0400-6
OPTION 1503 FLYWHEEL (HDW67)....0400-7
OPTION 169Z FUEL INJECTION PUMP (HDW67)....0400-8
OPTION 17BL AIR INTAKE (HDW67)....0400-10
OPTION 1946 OIL PAN (HDW67)....0400-12
OPTION 2001 WATERPUMP PULLEY (HDW67)....0400-14
OPTION 2154 THERMOSTAT COVER (HDW67)....0400-15
OPTION 2255 THERMOSTAT (HDW67)....0400-16
OPTION 2694 COOLANT HEATER (HDW67)....0400-17
OPTION 2876 EXHAUST MANIFOLD (HDW67)....0400-18

ALPHABETICAL INDEX - CONTINUED

PAGE

OPTION 2917 VENTILATING SYSTEM (HDW67)....0400-20
OPTION 3041 STARTER 24V (HDW67)....0400-22
OPTION 35DZ FUEL FILTER (HDW67)....0400-24
OPTION 3614 FRONT PLATE & IDLER GEAR (HDW67)....0400-26
OPTION 3713 FUEL TRANSFER PUMP (HDW67) 0400-28
OPTION 3917 THERMOSTAT HOUSING (HDW67)....0400-30
OPTION 4017 OIL DIPSTICK (HDW67) 0400-32
OPTION 4327 STARTING AID (HDW67)....0400-34
OPTION 4440 TIMING GEAR COVER(HDW67) 0400-36
OPTION 4633 CYLINDER BLOCK (PAGE 1) (HDW67)....0400-38
OPTION 4633 CYLINDER BLOCK (PAGE 3) (HDW67)....0400-42
OPTION 4633 CYLINDER BLOCK FITTINGS (PAGE 2) (HDW67)....0400-40
OPTION 4712 CRANKSHAFT AND BEARINGS (HDW67)....0400-44
OPTION 4836 PISTON, CONNECTING ROD, CYLINDER LINER (HDW67)....0400-46
OPTION 4905 ROCKER ARMS AND PUSH RODS (HDW67)....0400-48
OPTION 5024 OIL PUMP (HDW67)....0400-50
OPTION 5120 CYLINDER HEAD (HDW67)....0400-52
OPTION 5204 AUXILIARY DRIVE COVER (HDW67)....0400-54
OPTION 5728 - WATER PUMP INLET 0400-55
OPTION 5945 OIL COOLER (HDW67)....0400-56
OPTION 6275 ALTERNATOR BRACKETS (HDW67)....0400-57
OPTION 6389 FUEL FILTER LINES (HRW67) 0400-58
OPTION 65ND TURBOCHARGER AND OIL LINES (HRW67) 0400-60
OPTION 6698 TEMPERATURE SENSOR (HDW67)....0400-62
OPTION 6721 ELECTRONIC TACH DRIVE (HDW67)....0400-64
OPTION 7423 COMPRESSOR SUPPORT (HDW67)....0400-66
OPTION 7635 OIL PRESSURE SWITCH SENSOR (HDW67) 0400-67
OPTION 8159 WATER SEPARATOR (HDW67)....0400-68
OPTION 8496 WIRING HARNESS (HRW67)....0400-70
OPTION 8718 FAN DRIVE TENSIONER (HDW67)....0400-71
OPTION 8842 OIL FILTER AND HEADER (HDW67)....0400-72
OPTION 8903 EGR (HRW67)....0400-74
OPTION 9801 LIFT STRAPS (HDW67)....0400-76
ORIFICE, PISTON COOLING (4633) (HDW67)....0400-38
OSCILLATING DIFFERENTIAL SUPPORT....0242-4
OUTLET SECTION LOADER CONTROL VALVE 3160-14
OUTLET SECTION COMPONENTS LOADER CONTROL VALVE 3160-14
OUTLET SECTION SEAL KIT LOADER CONTROL VALVE 3160-14
OUTPUT SHAFT,TRANSMISSION....0350-22
OUTSIDE MIRROR....2002-4

PAGE

OUTSIDE REAR VIEW MIRROR.... 2002-4

P

PALLET FORK ASSEMBLY 3103-2
PALLET FORK FRAME.... 3103-2
PALLET FORKS.... 3103-2
PALLET FORKS (HI-VIS).... 3103-4
PAN, OIL (1946) (HDW67) 0400-12
PARK BRAKE SOLENOID VALVE 1100-4
PARK BRAKE SOLENOID VALVE HYDRAULIC LINES 1100-6
PARKING BRAKE/ DRIVELINE BEARING 1100-2
PEDAL, BRAKE 1062-2
PEDAL,ENGINE SPEED CONTROL 0515-2
PEDESTAL, CAB 1831-6
PEDESTAL, CANOPY.... 1831-6
PEDESTAL, OPERATOR STATION FRONT 1831-6
PILOT CONTROLLER HANDLE.... 3162-8
PILOT CONTROLLER WITH AUXILARY, JOYSTICK.... 3160-40
PILOT CONTROLLER WITH AUXILARY, JOYSTICK (POWERLLEL™ LINKAGE) 3160-42
PILOT CONTROLLER, DUAL JOYSTICK.... 3160-44
PILOT CONTROLLER, DUAL JOYSTICK (POWERLL EL™ LINKAGE).... 3160-46
PILOT CONTROLLER, TWO LEVER 3160-28
PILOT CONTROLLER, TWO LEVER WITH AUXILARY.... 3160-36
PILOT CONTROLLER, TWO LEVER WITH AUXILARY (POWERLLEL™ LINKAGE).... 3160-32
PILOT CONTROLLER, TWO LEVER WITH AUXILAR Y 3160-34
PILOT LINES, JOYSTICK PILOT CONTROLLER WITH AUXILARY.... 3160-40
PILOT LINES, JOYSTICK PILOT CONTROLLER WITH AUXILARY (POWERLLEL™ LINKAGE).... 3160-42
PILOT LINES, TWO LEVER PILOT CONTROLLER.... 3160-28
PILOT LINES, TWO LEVER PILOT CONTROLLER WITH AUXILARY.... 3160-34
PILOT LINES, TWO LEVER PILOT CONTROLLER WITH AUXILARY.... 3160-36
PILOT LINES, TWO LEVER PILOT CONTROLLER WITH AUXILARY (POWERLLEL™ LINKAGE).... 3160-32
PIN AND AXLE DISCONNECT VALVE AND HYDRAULIC HOSES 3160-58
PIN AND AXLE DISCONNECT VALVE COMPONENTS.... 3160-56
PIN DISCONNECT HYDRAULIC HOSES (BOOM TO COUPLER)(Z-BAR LINKAGE) 3160-62
PIN DISCONNECT HYDRAULIC LINES (FOR USE WITH POWERLLEL LINKAGE).... 3160-64
PIN DISCONNECT HYDRAULIC LINES (Z-BAR LINKAGE).... 3160-60
PIN DISCONNECT KIT (FOR USE WITH POWERLLEL LINKAGE).... 3160-64
PIN DISCONNECT VALVE COMPONENTS.... 3160-56
PIN, BOOM PIVOT (POWERLLEL LINKAGE).... 3140-4
PIN, BOOM PIVOT (Z-BAR LINKAGE).... 3140-2
PIN, HI-VIS LINKAGE ATTACHMENT COUPLER (POWERLLEL) 3104-6
PIN, HITCH 1520-2
PIN, HITCH 1520-4
PIN, LOADER BOOM 3140-6
PIN, LOADER FRAME BOOM CYLINDER (POWERLLEL LINKAGE).... 3140-4

ALPHABETICAL INDEX - CONTINUED

PAGE

PIN, LOADER FRAME BOOM CYLINDER (Z-BAR LINKAGE) ... 3140-2
PIN, LOADER FRAME BUCKET CYLINDER (POWERLLEL LINKAGE) ... 3140-4
PIN, LOADER FRAME BUCKET CYLINDER (Z-BAR LINKAGE) ... 3140-2
PIN, STEERING CYLINDER (Z-BAR LINKAGE) ... 3140-2
PIN, Z-BAR LINKAGE ATTACHMENT COUPLER, HI-VIS ... 3104-8
PIN,ENGINE FRAME ... 1740-2
PIN,STEERING CYLINDER (POWERLLEL LINKAGE) ... 3140-4
PINS, BOOM CYLINDER ... 3165-2
PINS, BUCKET CYLINDER ... 3165-2
PINS, LOADER BUCKET ... 3102-2
PINS, POWERLLEL LINKAGE BOOM CYLINDER ... 3165-8
PINS, POWERLLEL LINKAGE TILT CYLINDER ... 3165-8
PIPE, EXHAUST ... 0530-2
PISTON COOLING ORIFICE (4633) (HDW67) ... 0400-38
PISTON RINGS (4836) (HDW67) ... 0400-46
PIVOT PIN ONLY (YZ120711) ... 0210-18
PIVOT PIN, BOOM (POWERLLEL LINKAGE) ... 3140-4
PIVOT PIN, BOOM (Z-BAR LINKAGE) ... 3140-2
PIVOT PIN, LOADER FRAME (POWERLLEL LINKAGE) ... 3140-4
PIVOT PIN, LOADER FRAME (Z-BAR LINKAGE) ... 3140-2
PLASTIC HANDLE, REAR ... 1910-6
PLATE, DUAL JOYSTICK PILOT CONTROLLER ... 3160-44
PLATE, DUAL JOYSTICK PILOT CONTROLLER (POWERLLEL™ LINKAGE) ... 3160-46
PLATE, ENGINE SIDE SHIELD ... 1910-4
PLATE, FRONT (3614) (HDW67) ... 0400-26
PLATE, JOYSTICK PILOT CONTROLLER WITH AUXILARY ... 3160-40
PLATE, JOYSTICK PILOT CONTROLLER WITH AUXILARY (POWERLLEL™ LINKAGE) ... 3160-42
PLATE, TWO LEVER PILOT CONTROLLER ... 3160-28
PLATE, TWO LEVER PILOT CONTROLLER WITH AUXILARY ... 3160-34
PLATE, TWO LEVER PILOT CONTROLLER WITH AUXILARY ... 3160-36
PLATE, TWO LEVER PILOT CONTROLLER WITH AUXILARY (POWERLLEL™ LINKAGE) ... 3160-32
PLATFORM, ACCESS ... 1822-4
PLENUM, ENGINE AIR ... 1910-4
PLUG, TRANSMISSION DRAIN ... 0350-8
POWER TAKE-OFF ... 0350-26
POWER TAKE-OFF SHAFT ... 0350-26
POWERLLEL LINKAGE ... 3140-12
POWERLLEL LINKAGE BOOM ... 3140-8
POWERLLEL LINKAGE BOOM CYLINDER PINS AND FITTINGS ... 3165-8
POWERLLEL LINKAGE COUPLER ... 3104-4
POWERLLEL LINKAGE CYLINDER PINS AND FITTINGS ... 3165-8
PRECLEANER, AIR, KIT ... 0520-4
PRESSURE REDUCING VALVE, COMPONENTS ... 2160-4
PRESSURE REGULATOR VALVE FITTINGS ... 2160-8
PRESSURE REGULATOR VALVE, HYDRAULIC OIL ... 2160-4
PRESSURE TRANSDUCER, PRV ... 2160-6
PRV FITTINGS ... 2160-8
PRV VALVE COMPONENTS ... 2160-4
PTO ... 0350-26
PULLEY AND CLUTCH KIT, A/C ... 1832-2
PULLEY, CRANKSHAFT (1320) (HDW67) ... 0400-5
PULLEY, FAN DRIVE (HDW67) (8718) ... 0400-71
PULLEY, TENSIONER (HDW67) (8718) ... 0400-71
PULLEY, WATERPUMP (2001) (HDW67) ... 0400-14
PUMP, FUEL INJECTION (169Z) (HDW67) ... 0400-8
PUMP, HYDRAULIC, LOADER ... 2160-2
PUMP, HYDRAULIC, REVERSE FAN DRIVE ... 0510-14
PUMP, HYDRAULIC, STEERING ... 2160-2
PUMP, INTAKE OIL (1946) (HDW67) ... 0400-12
PUMP, OIL (5024) (HDW67) ... 0400-50
PUMP, TRANSMISSION OIL ... 0350-12
PUMP, WINDOW WASHER ... 1814-2
PUMP,FUEL TRANSFER (3713) (HDW67) ... 0400-28
PUMP,SECONDARY STEERING ... 0930-4
PUSH PIN ASSEMBLY ... 3162-8
PUSH ROD (4905) (HDW67) ... 0400-48

Q

QUICK-DISCONNECT FITTING KIT (POWERLLEL LINKAGE) ... 3160-26

R

RADIATOR ... 0510-2
RADIATOR ... 0510-8
RADIATOR CAP ... 0510-2
RADIATOR CAP ... 0510-8
RADIATOR COOLANT LEVEL SENSOR ... 0510-2
RADIATOR COOLANT LEVEL SENSOR ... 0510-8
RADIATOR HOSE ... 0510-2
RADIATOR HOSE ... 0510-8
RADIATOR OVERFLOW TANK ... 0510-2
RADIATOR OVERFLOW TANK ... 0510-8
RADIO ... 2001-2
RADIO ANTENNA ... 2001-2
RADIO REMOTE CONTROL ... 2001-2
RADIO SPEAKER ... 2001-2
RAIL, DRIP ... 1811-4
REAR & FRONT DIFFERENTIAL LOCK LINES ... 0263-2
REAR AXLE ASSEMBLY ... 0210-4
REAR AXLE ASSEMBLYBREATHER ... 0210-4
REAR AXLE SUPPORTS ... 0242-4
REAR FRAME WIRING HARNESS ... 1674-4
REAR PLASTIC HANDLE ... 1910-6
REAR STEP ... 1822-2
REAR VIEW MIRROR (OUTSIDE) ... 2002-4
REAR WINDOW RETAINERS ... 1811-2
REAR WINDOW, CANOPY ... 1811-2
REAR WINDSHIELD WIPER ... 1814-6
RECIEVER-DRIER ... 1833-12
RECIRCULATION FILTER, HVAC ... 1833-4
RECIRCULATION FILTER, HVAC ... 1833-8
REDUCING VALVE, COMPONENTS ... 2160-4
REGULATING VALVE ... 3162-8
REGULATOR, VOLTAGE (80 AMP) ... 1672-2
RELAYS, VEC ... 1674-8
RELIEF VALVE, REVERSE FAN DRIVE ... 0510-12
RELIEF VALVE, VALVE INLET SECTION LOADER CONTROL VALVE ... 3160-8

ALPHABETICAL INDEX - CONTINUED

PAGE

RESERVOIR, COOLANT OVERFLOW 0510-2
RESERVOIR, COOLANT OVERFLOW 0510-8
RESERVOIR, HYDRAULIC OIL....2160-10
REST, RIGHT ARM....1816-8
RESTRICTION INDICATOR SENSOR, AIR FILTER 0520-2
RESTRICTION INDICATOR SWITCH, TRANSMISSION OIL FILTER 0350-18
RESTRICTION SWITCH, HYDRAULIC RETURN....2160-10
RETAINERS, REAR WINDOW 1811-2
RETURN TO CARRY SENSOR....3166-4
RETURN TO CARRY SENSOR, LOADER (POWERLLEL LINKAGE)....3166-8
RETURN-TO-DIG ACTUATOR 3166-2
RETURN-TO-DIG ACTUATOR (FOR USE WITH POW ERLLEL LINKAGE) 3166-6
RETURN-TO-DIG SENSOR 3166-2
RETURN-TO-DIG SENSOR (FOR USE WITH POWER LLEL LINKAGE) 3166-6
REVERSE CLUTCH ASSEMBLY 0350-30
REVERSE FAN DRIVE HYDRAULIC HOSES....0510-14
REVERSE FAN DRIVE HYDRAULIC HOSES (FACTORY) 0510-4
REVERSE FAN DRIVE HYDRAULIC PUMP (FACTORY) 0510-4
REVERSE FAN DRIVE KIT 0510-14
REVERSE FAN DRIVE MOTOR (FACTORY) 0510-4
REVERSE FAN DRIVE RELIEF VALVE 0510-12
REVERSE FAN DRIVE SOLENOID VALVE 0510-12
RIDE CONTROL AND HYDRAULIC HOSES 3160-54
RIDE CONTROL SOLENOID VALVE 3160-52
RIDE CONTROL VALVE....3160-52
RIM, WHEEL (THREE PIECE RIM) (25 X 17)....0110-2
RIM, WHEEL, LOGGER (ONE PIECE) (28 X 26)....0110-6
RING GEAR, FLYWHEEL (1503) (HDW67)....0400-7
RING, WHEEL, POWERLLEL LINKAGE....0110-6
RINGS, PISTON (4836) (HDW67)....0400-46
ROCKER ARM COVER (1144) (HRW67)....0400-2
ROCKER ARM SHAFT SUPPORT (4905) (HDW67)....0400-48
ROD SEAL KIT, BOOM CYLINDER....3165-4
ROD SEAL KIT, BOOM CYLINDER (FOR USE WITH POWERLLEL LINKAGE) 3165-10
ROD SEAL KIT, BUCKET CYLINDER....3165-6
ROD SEAL KIT, BUCKET CYLINDER (FOR USE WITH POWERLLEL LINKAGE) 3165-12
ROD SEAL KIT, HI-VIS COUPLER CYLINDER (POWERLLEL AND Z-BAR LINKAGE) 3104-14
ROD, BOOM CYLINDER 3165-4
ROD, BOOM CYLINDER (FOR USE WITH POWERLLEL LINKAGE) 3165-10
ROD, BUCKET CYLINDER....3165-6
ROD, BUCKET CYLINDER (FOR USE WITH POWERLLEL LINKAGE) 3165-12
ROD, CONNECTING (4836) (HDW67)....0400-46
ROOF....1810-6
ROPS....1811-6
ROPS, CANOPY....1811-2

S

SCREW, FLYWHEEL TO CRANKSHAFT (4712) (HDW67).... 0400-44
SEAL KIT, ATTACHMENT HI-VIS COUPLER CYLINDER (POWERLLEL AND Z-BAR LINKAGE) 3104-14
SEAL KIT, INLET SECTION LOADER CONTROL VALVE 3160-8
SEAL KIT, OUTLET VALVE SECTION LOADER CONTROL VALVE 3160-14
SEAL, SOUND ABSORBER 1913-6
SEALS, HI-VIS COUPLER HYDRAULIC HOSES 3163-2
SEAT BASE.... 1811-12
SEAT BASE.... 1811-14
SEAT BRACKETS 1821-2
SEAT CUSHION.... 1821-2
SEAT DECK 1811-12
SEAT DECK 1811-14
SEAT SUSPENSION.... 1821-2
SEAT SUSPENSION (AIR SUSPENSION).... 1821-4
SEAT, RIGHT ARM REST 1816-8
SEAT, SUSPENSION (AIR SUSPENSION).... 1821-4
SECOND GEAR CLUTCH ASSEMBLY 0350-34
SECONDARY STEERING 0930-4
SECONDARY STEERING PUMP.... 0930-4
SECONDARY STEERING SWITCH 0930-4
SECONDARY STEERING WIRE HARNESS.... 0930-4
SECTION, AUXILIARY LOADER CONTROL VALVE 3160-12
SECTION, VALVE, BUCKET LOADER CONTROL VALVE 3160-10
SECTION, VALVE, FIFTH FUNCTION.... 3160-16
SECTION, VALVE, INLET, WITH RELIEF VALVE LOADER CONTROL VALVE 3160-8
SENDER, FUEL TANK.... 0560-2
SENSOR, AIR FILTER RESTRICTION INDICATOR 0520-2
SENSOR, AIR TEMPERATURE (6721) (HDW67).... 0400-64
SENSOR, CRANKSHAFT POSITION (6721) (HDW67).... 0400-64
SENSOR, ENGINE SPEED (6721) (HDW67).... 0400-64
SENSOR, LOADER BOOM KICKOUT 3166-4
SENSOR, LOADER BOOM KICKOUT (POWERLLEL LINKAGE).... 3166-8
SENSOR, MAGNETIC PICK-UP (6721) (HDW67).... 0400-64
SENSOR, MANIFOLD AIR PRESSURE (6721) (HDW67).... 0400-64
SENSOR, OIL PRESSURE (7635) (HDW67) 0400-67
SENSOR, RETURN TO CARRY.... 3166-4
SENSOR, RETURN TO CARRY, LOADER (POWERLLEL LINKAGE).... 3166-8
SENSOR, RETURN-TO-DIG 3166-2
SENSOR, RETURN-TO-DIG (FOR USE WITH POWE RLLEL LINKAGE).... 3166-6
SENSOR, TEMPERATURE (6698) (HDW67).... 0400-62
SENSOR, TRANSMISSION SPEED 0350-10
SENSOR, TRANSMISSION TEMPERATURE.... 0350-20
SENSOR, WATER IN FUEL (WIF) (8159) (HDW67).... 0400-68
SENSOR,ENGINE SPEED CONTROL.... 0515-2
SENSOR,HYDRAULIC OIL TEMPERATURE.... 2160-10

ALPHABETICAL INDEX - CONTINUED

PAGE

SENSOR,RADIATOR COOLANT LEVEL 0510-2
SENSOR,RADIATOR COOLANT LEVEL 0510-8
SERVICE DOOR, ABSORBER....1913-6
SERVICE DOOR, ENGINE....1910-4
SHAFT AND AXLE HOUSING (YZ120709)....0210-10
SHAFT AND AXLE HOUSING (YZ120720)....0210-12
SHAFT AXLE DIFFERENTIALS....0325-2
SHAFT, ENGINE DRIVE....0325-2
SHAFT, POWER TAKE-OFF....0350-26
SHAFT, ROCKER ARM (4905) (HDW67)....0400-48
SHAFT, TORQUE CONVERTER....0350-4
SHAFT, TRANSMISSION DRIVE....0325-2
SHAFT, TRANSMISSION INPUT....0350-6
SHAFT,TRANSMISSION OUTPUT....0350-22
SHANKS, LOADER....3101-2
SHIELDS, CAB....1813-2
SHIELDS, TRANSMISSION....1913-2
SHIFTER ASSEMBLY TO JOYSTICK FNR CONVERSION KIT....3162-12
SHROUD,FAN....0510-2
SHROUD,FAN....0510-8
SIDE COUNTERWEIGHT....1749-2
SIDE SHIELD STRIKER BAR....1910-6
SIDE SHIELDS, COOLING....1910-6
SIDE SHIELDS, ENGINE....1910-4
SIDE SHIELDS, TRANSMISSION....1913-2
SIGHT GAUGE, TRANSMISSION....0360-2
SIGN, SLOW MOVING....2008-2
SINGLE AND DUAL AUXILIARY CONTROLLER COMPONENTS....3162-2
SLOW MOVING VEHICLE....2008-2
SLOW MOVING, EMBLEM....2008-2
SOLENOID ASSEMBLY....3162-8
SOLENOID VALVE, PARK BRAKE....1100-4
SOLENOID VALVE, REVERSE FAN DRIVE....0510-12
SOLENOID VALVE, RIDE CONTROL....3160-52
SOLENOID VALVE, STANDARD FAN DRIVE....0510-10
SOLENOID, TWO LEVER PILOT CONTROLLER....3162-6
SOUND ABSORBTION....1913-6
SOUND, ABSORBER....1913-6
SPACERS, HI-VIS LINKAGE ATTACHMENT COUPLER (POWERLLEL)....3104-6
SPACERS, Z-BAR LINKAGE ATTACHMENT, HI-VIS COUPLER....3104-8
SPANISH LABELS AND DECALS....1322-8
SPEAKER, RADIO....2001-2
SPEED SENSOR, TRANSMISSION....0350-10
SPIN CONTROL PRV....2160-6
SPIRAL BEVEL....0210-6
SPIRAL BEVEL....0210-7
SPIRAL BEVEL INPUT PINION AND RING GEAR SET (RE35709)....0210-7
SPIRAL BEVEL INPUT PINION AND RING GEAR SET (YZ120777)....0210-6
SPRING, ROCKER ARM SHAFT (4905) (HDW67)....0400-48
STANDARD DIFFERENTIAL (YZ120988)....0210-22
STANDARD DIFFERENTIAL (YZ121182)....0210-29
STANDARD FAN DRIVE HYDRAULIC HOSES....0510-10
STANDARD FAN DRIVE KIT....0510-10
STANDARD FAN DRIVE SOLENOID VALVE....0510-10
STANDARD INPUT HOUSING, NON-OSCILLATING (YZ121049)....0210-16
STARTER (3041) 24V (HDW67)....0400-22
STARTER LABEL (3041) (HDW67)....0400-22
STARTING AID (4327) (HDW67)....0400-34

PAGE

STATOR KIT, A/C....1832-2
STEERING COLUMN....0962-2
STEERING COLUMN COVER....0962-6
STEERING COLUMN LINKAGE....0962-2
STEERING COLUMN, LOWER....0962-4
STEERING COMPENSATOR VALVE....0960-4
STEERING COMPENSATOR VALVE FITTINGS....0960-4
STEERING COMPENSATOR VALVE SEAL KIT....0960-4
STEERING CUSHIONS....1740-4
STEERING CYLINDER....0960-8
STEERING CYLINDER HYDRAULIC HOSE....0960-6
STEERING CYLINDER PIN (POWERLLEL LINKAGE)....3140-4
STEERING CYLINDER PIN (Z-BAR LINKAGE)....3140-2
STEERING CYLINDER REPAIR KIT....0960-8
STEERING HOSES....0960-6
STEERING VALVE....0960-2
STEERING VALVE BRACKET....0962-4
STEERING VALVE FITTINGS....0960-2
STEERING WHEEL....0962-2
STEERING, SECONDARY....0930-4
STEP, ENGINE COMPARTMENT....1822-2
STEP, REAR....1822-2
STEPS....1822-4
STEPS,CLOSE MOUNTED....1822-6
STOP LAMP....1673-10
STOP LIGHT....1673-10
STOP, AXLE (8 DEGREE)....0242-2
STRAPS, LIFT (9801) (HDW67)....0400-76
STRIKER BAR, SIDE SHIELD....1910-6
STUD ASSEMBLY, LOADER CONTROL VALVE (2-SPOOL)....3160-2
STUD ASSEMBLY, LOADER CONTROL VALVE (3-SPOOL)....3160-4
STUD ASSEMBLY, LOADER CONTROL VALVE (4-SPOOL)....3160-6
SUN VISOR....2007-2
SUPPORT, ROCKER ARM SHAFT (4905) (HDW67)....0400-48
SUPPORT,FAN BLADE HUB....0510-6
SUPPORTS, DIFFERERNTIAL....0242-4
SUSPENSION SEAT (AIR SUSPENSION)....1821-4
SUSPENSION, SEAT....1821-2
SWITCH COVER CONSOLE....1816-4
SWITCH, A/C AND HEATER THERMOSTAT....1833-4
SWITCH, BATTERY DISCONNECT....1671-2
SWITCH, BRAKE VALVE....1062-2
SWITCH, DIFFERENTIAL LOCK....0263-4
SWITCH, DOMELIGHT, DOOR....1673-8
SWITCH, HEATER AND A/C BLOWER MOTOR....1833-4
SWITCH, HEATER BLOWER MOTOR....1833-8
SWITCH, HEATER THERMOSTAT....1833-8
SWITCH, HORN....0962-2
SWITCH, IGNITION....1674-6
SWITCH, KICKDOWN, TWO LEVER PILOT CONTROLLER....3162-6
SWITCH, OIL PRESSURE (7635) (HDW67)....0400-67
SWITCH, SECONDARY STEERING....0930-4
SWITCH, TRANSMISSION OIL FILTER RESTRICTION INDICATOR....0350-18
SYSTEM, ALARM....1676-2

ALPHABETICAL INDEX - CONTINUED

PAGE

T

TANK, FUEL....0560-2
TANK, WINDOW WASHER....1814-2
TANK,RADIATOR OVERFLOW....0510-2
TANK,RADIATOR OVERFLOW....0510-8
TEETH, LOADER BUCKET....3101-2
TEMPERATURE CONTROL....1833-2
TEMPERATURE CONTROL....1833-6
TEMPERATURE SENSOR (6698) (HDW67)....0400-62
TEMPERATURE SENSOR, HYDRAULIC OIL....2160-10
TEMPERATURE SENSOR, TRANSMISSION....0350-20
TENSIONER, BELT (80 AMP)....1672-2
TENSIONER, BELT, ALTERNATOR (100 AMP)....1672-6
TENSIONER, BELT, HARSH ENVIRONMENT ALTER NATOR (100 AMP)....1672-8
THERMOCOUPLE (6721) (HDW67)....0400-64
THERMOSTAT (2255) (HDW67)....0400-16
THERMOSTAT COVER (2154) (HDW67)....0400-15
THERMOSTAT HOUSING (3917) (HDW67)....0400-30
THERMOSTAT, A/C AND HEATER SWITCH....1833-4
THERMOSTAT, HEATER SWITCH....1833-8
THIRD FUNCTION AUXILIARY HYD, BOOM TO COUPLER (Z-BAR LINKAGE)....3163-4
THIRD FUNCTION AUXILIARY HYD, HIGH LIFT BOOM TO COUPLER (Z-BAR LINKAGE)....3163-4
THIRD FUNCTION AUXILIARY HYDRAULICS (POWERLLEL LINKAGE)....3160-26
THIRD FUNCTION AUXILIARY HYDRAULICS (POWERLLEL LINKAGE) (BOOM TO COUPLER)....3163-6
THIRD FUNCTION AUXILIARY HYDRAULICS (Z-BAR LINKAGE)....3160-22
THIRD FUNCTION BOOM TO COUPLER PLUMBING (POWERLLEL LINKAGE)....3163-6
THIRD FUNCTION HIGH LIFT BOOM TO COUPLER PLUMBING (Z-BAR LINKAGE)....3163-4
THIRD GEAR CLUTCH ASSEMBLY....0350-36
THREE SPOOL CONTROL VALVE, LOADER....3160-4
THREE SPOOL LOADER CONTROL VALVE....3160-4
THREE SPOOL VALVE, LOADER CONTROL....3160-4
TIE BOLTS, LOADER CONTROL VALVE (2-SPOOL)....3160-2
TIE BOLTS, LOADER CONTROL VALVE (3-SPOOL)....3160-4
TIE BOLTS, LOADER CONTROL VALVE (4-SPOOL)....3160-6
TILT CYLINDER PINS AND FITTINGS, POWERLLEL LINKAGE....3165-8
TIMING GEAR COVER (4440) (HDW67)....0400-36
TORQUE CONVERTER....0350-4
TORQUE CONVERTER COVER....0350-4
TORQUE CONVERTER DRIVE SHAFT....0350-4
TORQUE CONVERTER HOUSING....0350-4
TRADEMARKS AND LABELS (ENGLISH)....1322-2
TRANS. COVER, ABSORBER....1913-6
TRANSDUCER, PRESSURE, PRV....2160-6
TRANSMISSION....0350-2
TRANSMISSION BOTTOM GUARD....1746-4
TRANSMISSION CONTROL UNIT....1674-6
TRANSMISSION CONTROL VALVE....0350-20
TRANSMISSION CONTROL VALVE MANIFOLD....0350-18
TRANSMISSION COVER....0350-14
TRANSMISSION DRAIN PLUG....0350-8
TRANSMISSION DRIVE SHAFTS....0325-2
TRANSMISSION FITTINGS....0350-2

PAGE

TRANSMISSION GUARDS....1913-2
TRANSMISSION HOUSING....0350-8
TRANSMISSION HOUSING COVER....0350-8
TRANSMISSION INPUT GEAR....0350-6
TRANSMISSION INPUT SHAFT....0350-6
TRANSMISSION INTERNAL OIL LINES....0350-16
TRANSMISSION MOUNTING BRACKETS....0342-2
TRANSMISSION OIL COOLER....0510-2
TRANSMISSION OIL COOLER....0510-8
TRANSMISSION OIL FILL....0360-2
TRANSMISSION OIL FILTER....0350-2
TRANSMISSION OIL FILTER ELEMENT....0350-2
TRANSMISSION OIL FILTER HEAD....0350-2
TRANSMISSION OIL FILTER RESTRICTION INDICATOR SWITCH....0350-18
TRANSMISSION OIL LINES,INTERNAL....0350-16
TRANSMISSION OIL PUMP....0350-12
TRANSMISSION OUTPUT SHAFT....0350-22
TRANSMISSION SHIELDS....1913-2
TRANSMISSION SIDE SHIELDS....1913-2
TRANSMISSION SIGHT GAUGE....0360-2
TRANSMISSION SPEED SENSOR....0350-10
TRANSMISSION TEMPERATURE SENSOR....0350-20
TRANSMISSION WIRING HARNESS....1674-4
TRAVEL ALARM....2004-4
TRAY, ASH....2006-2
TUBE, OIL PUMP INTAKE (5024) (HDW67)....0400-50
TUBE, THERMOSTAT HOUSING (3917) (HDW67)....0400-30
TUBE, WATER PUMP BYPASS (2154) (HDW67)....0400-15
TURBOCHARGER (65ND) (HRW67)....0400-60
TURBOCHARGER OIL LINES (65ND) (HRW67)....0400-60
TURN AND MARKER LIGHT....1673-2
TURN LAMP....1673-10
TURN LIGHT....1673-10
TWO LEVER PILOT CONTROLLER....3160-28
TWO LEVER PILOT CONTROLLER....3162-6
TWO LEVER PILOT CONTROLLER BOOT....3162-6
TWO LEVER PILOT CONTROLLER COMPONENTS....3162-6
TWO LEVER PILOT CONTROLLER SOLENOID....3162-6
TWO LEVER PILOT CONTROLLER WITH AUXILARY....3160-34
TWO LEVER PILOT CONTROLLER WITH AUXILARY....3160-36
TWO LEVER PILOT CONTROLLER WITH AUXILARY (POWERLLEL™ LINKAGE)....3160-32
TWO LEVER WITH AUX. TO JOYSTICK WITH AUX. CONVERSION KIT....3160-40
TWO LEVER WITH AUX. TO JOYSTICK WITH AUX. CONVERSION KIT....3160-42
TWO SPOOL CONTROL VALVE, LOADER....3160-2
TWO SPOOL LOADER CONTROL VALVE....3160-2
TWO SPOOL VALVE, LOADER CONTROL....3160-2

U

U-JOINT ASSEMBLY....3162-8

V

VALVE COMPONENTS, AUXILIARY SECTION LOADER CONTROL VALVE....3160-12
VALVE COMPONENTS, PIN DISCONNECT....3160-56
VALVE COMPONENTS,PIN AND AXLE DISCONNECT....3160-56

ALPHABETICAL INDEX - CONTINUED

PAGE

VALVE MANIFOLD, TRANSMISSION CONTROL....0350-18
VALVE SECTION, BUCKET
LOADER CONTROL VALVE....3160-10
VALVE STEM, WHEEL RIM (THREE PIECE RIM)
(25 X 17)....0110-2
VALVE, AUXILIARY
LOADER CONTROL VALVE....3160-12
VALVE, BRAKE....1062-2
VALVE, BRAKE, HYDRAULICS....1063-2
VALVE, BUCKET SECTION
LOADER CONTROL VALVE....3160-10
VALVE, ENGINE OIL BY-PASS (4633)
(HDW67)....0400-38
VALVE, EXHAUST (5120)
(HDW67)....0400-52
VALVE, FIFTH FUNCTION SECTION....3160-16
VALVE, INLET SECTION WITH RELIEF VALVE
LOADER CONTROL VALVE....3160-8
VALVE, INTAKE (5120)
(HDW67)....0400-52
VALVE, LOADER CONTROL (2-SPOOL)....3160-2
VALVE, LOADER CONTROL (3-SPOOL)....3160-4
VALVE, LOADER CONTROL (4-SPOOL)....3160-6
VALVE, PIN AND AXLE DISCONNECT....3160-56
VALVE, PIN AND AXLE DISCONNECT....3160-58
VALVE, PRESSURE REGULATOR FITTINGS....2160-8
VALVE, REGULATING....3162-8
VALVE, REVERSE FAN DRIVE, RELIEF....0510-12
VALVE, REVERSE FAN DRIVE, SOLENOID....0510-12
VALVE, RIDE CONTROL....3160-52
VALVE, SOLENOID, PARK BRAKE....1100-4
VALVE, STEERING....0960-2
VALVE, STEERING COMPENSATOR....0960-4
VALVE, STEERING COMPENSATOR, KIT....0960-4
VALVE, STEERING, BRACKET....0962-4
VALVE,CONVERTER RELIEF....0350-24
VALVES, ENVIRONMENTAL DRAIN....1369-2
VANDAL COVER....1811-14
VEHICLE ELECTRICAL CENTER....1674-8
VENTILATING HOSE (2917) (HDW67)....0400-20
VENTILATION, LOUVERS....1831-2
VISOR, SUN....2007-2
VOLTAGE REGULATOR (80 AMP)....1672-2

W

WATER IN FUEL SENSOR (8159)
(HDW67)....0400-68
WATER PUMP (4440) (HDW67)....0400-36
WATER PUMP BYPASS TUBE (2154) (HDW67)....0400-15
WATER PUMP INLET (5728)....0400-55
WATERPUMP PULLEY (2001) (HDW67)....0400-14
WHEEL RIM ASSSEMBLY (THREE PIECE RIM)
(25 X 17)....0110-2
WHEEL RIM VALVE STEM (THREE PIECE RIM)
(25 X 17)....0110-2
WHEEL RIM, LOGGER (ONE PIECE)
(28 X 26)....0110-6
WHEEL RING, POWERLLEL LINKAGE....0110-6
WHEEL, STEERING....0962-2
WIF SENSOR (8159)
(HDW67)....0400-68
WINDOW WASHER CAP....1814-2
WINDOW WASHER HOSES....1814-2
WINDOW WASHER PUMP....1814-2
WINDOW WASHER TANK....1814-2

PAGE

WINDOW WASHER, FRONT AND REAR....1814-2
WINDOW, CANOPY REAR....1811-2
WINDOWS....1811-8
WINDSHIELD WIPER (FRONT)....1814-4
WINDSHIELD WIPER, (REAR)....1814-6
WIPER ARM, WINDSHIELD (FRONT)....1814-4
WIPER BLADE, WINDSHIELD (FRONT)....1814-4
WIPER BLADE, WINDSHIELD (REAR)....1814-6
WIPER MOUNTING BRACKETS....1814-8
WIRE HARNESS,SECONDARY STEERING....0930-4
WIRING HARNESS (8496) (HRW67)....0400-70
WIRING HARNESS, CAB....1674-6
WIRING HARNESS, ENGINE....1674-4
WIRING HARNESS, ENGINE FRAME....1674-4
WIRING HARNESS, LOAD CENTER....1674-6
WIRING HARNESS, LOADER FRAME....1674-4
WIRING HARNESS, MAIN....1674-4
WIRING HARNESS, REAR FRAME....1674-4
WIRING HARNESS, RIDE CONTROL....3160-54
WIRING HARNESS, TRANSMISSION....1674-4
WIRING, DASH MODULE....1674-10
WIRING, HVAC....1674-2
WORK LAMP, FRONT AND REAR....1673-4
WRIST ARM REST, RIGHT....1816-8

Y

YOKE WITH SLINGER (YZ120747)....0210-8
YOKE WITH SLINGER (YZ120750)....0210-9
YOKE, INPUT (YZ120747)....0210-8
YOKE, INPUT (YZ120750)....0210-9
YOKE, TORQUE CONVERTER INPUT SHAFT....0350-4

Z

Z-BAR LINKAGE ATTACHMENT COUPLER....3104-2
Z-BAR LINKAGE ATTACHMENT COUPLER, HI-VIS....3104-8

WHEEL RIM ASSEMBLY (25 X 17) (THREE PIECE)
JANTE DE ROUE (25 X 17) (TROIS PIECES)
CONJUNTO DE ARO DE RUEDA (25 X 17) (TRES PIEZAS)

T193567 -UN-18AUG03

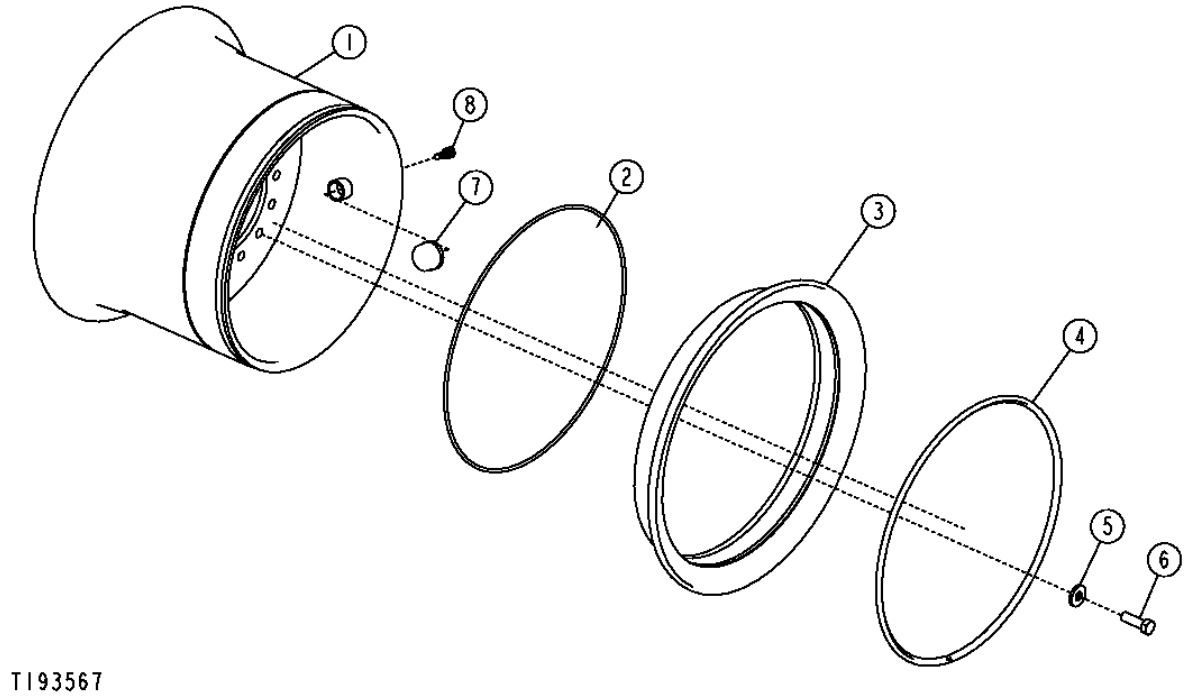

WHEEL RIM ASSEMBLY (25 X 17) (THREE PIECE)
JANTE DE ROUE (25 X 17) (TROIS PIECES)
CONJUNTO DE ARO DE RUEDA (25 X 17) (TRES PIEZAS)

KEY	*PART NO.*	*PART NAME*	*QTY.*	*SERIAL NO.*	*REMARKS*
1	AT317474	WHEEL	1		
2	T59933	O-RING	1		
3	T212453	WHEEL RING	1		
4	T212452	WHEEL RING	1		
5	T151797	WASHER	14		
6	19M8224	CAP SCREW	14		
7	15H709	FITTING	1		2"
8	AT25226	TIRE VALVE STEM	1		

LOGGER RIM ASSEMBLY (28 X 26) (1 PIECE)
JANTE DE FOURCHE A RONDINS (28 X 16) (MONOBLOC)
CONJUNTO DE ARO DE LA MANIPULADORA DE TRONCOS (28 X 26) (UNA PIEZA)

T195554 -UN-16OCT03

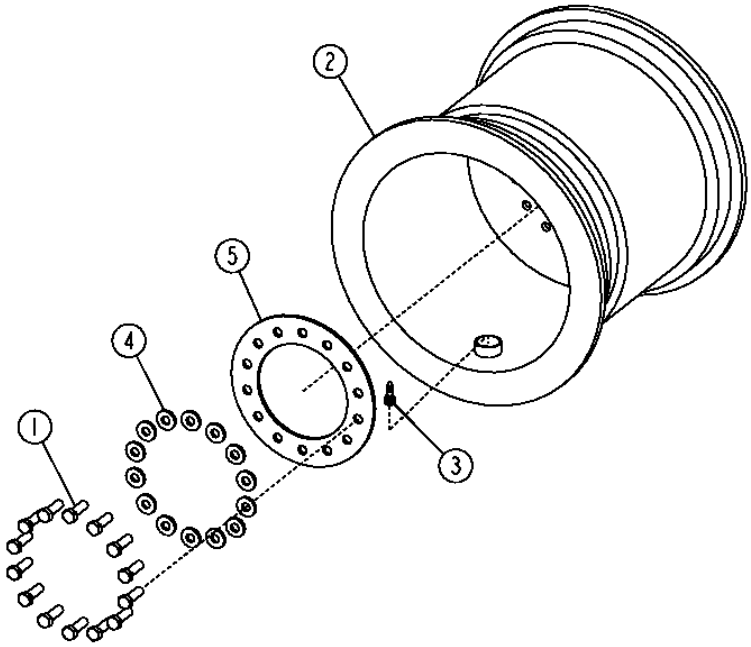

T195554

LOGGER RIM ASSEMBLY (28 X 26) (1 PIECE)
JANTE DE FOURCHE A RONDINS (28 X 16) (MONOBLOC)
CONJUNTO DE ARO DE LA MANIPULADORA DE TRONCOS (28 X 26) (UNA PIEZA)

KEY	*PART NO.*	*PART NAME*	*QTY.*	*SERIAL NO.*	*REMARKS*
1	19M8224	CAP SCREW	14		M20 X 60
2	AT103559	WHEEL	1		(711MM X 660MM) (30.5 INCH WIDE TIRE)
3	AT25226	TIRE VALVE STEM	1		
4	T151797	WASHER	14		
5	T213146	RING	1		(FOR USE WITH POWERLLEL™ LINKAGE)

FRONT AXLE
ESSIEU AVANT
EJE DELANTERO

TX1013056 -UN-16OCT06

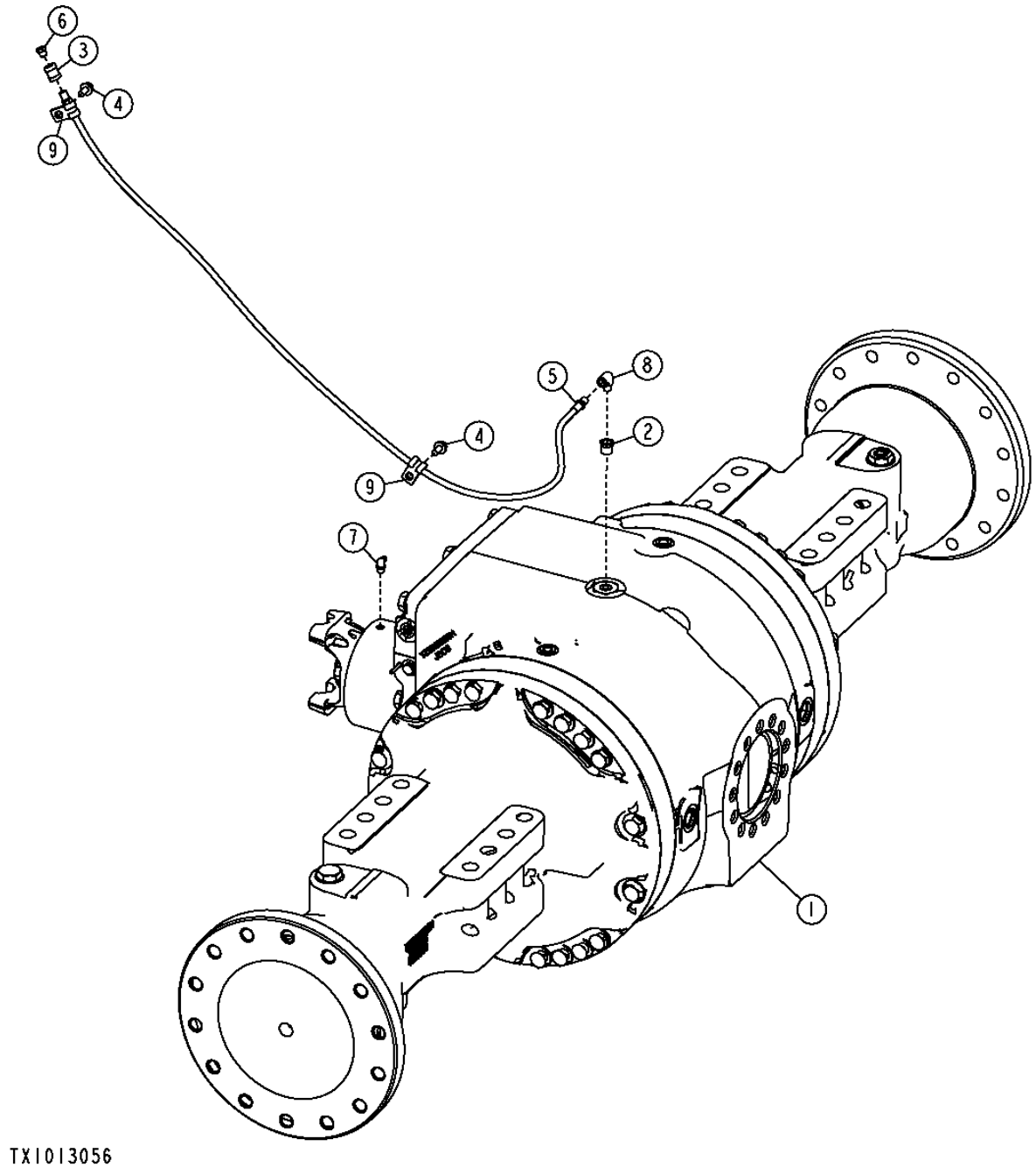

THIS PARTS LISTING IS CONTINUED

FRONT AXLE
ESSIEU AVANT
EJE DELANTERO

KEY	*PART NO.*	*PART NAME*	*QTY.*	*SERIAL NO.*	*REMARKS*
1	YZ18988	AXLE WITH DIFFERENTIAL	1		
2	15H511	PIPE BUSHING	1		1/8"
3	15H84	COUPLING	1		1/8"
4	19M7865	SCREW	2		M8 X 16
5	AT207023	HYDRAULIC HOSE	1		
6	AT208411	PRESSURE RELIEF VALVE	1		
7	JD7781	LUBRICATION FITTING	1		
8	T56112	ELBOW FITTING	1		
9	T78974	CLAMP	2		

REAR AXLES
ESSIEU ARRIERE
EJE TRASERO

TX1013061 -UN-16OCT06

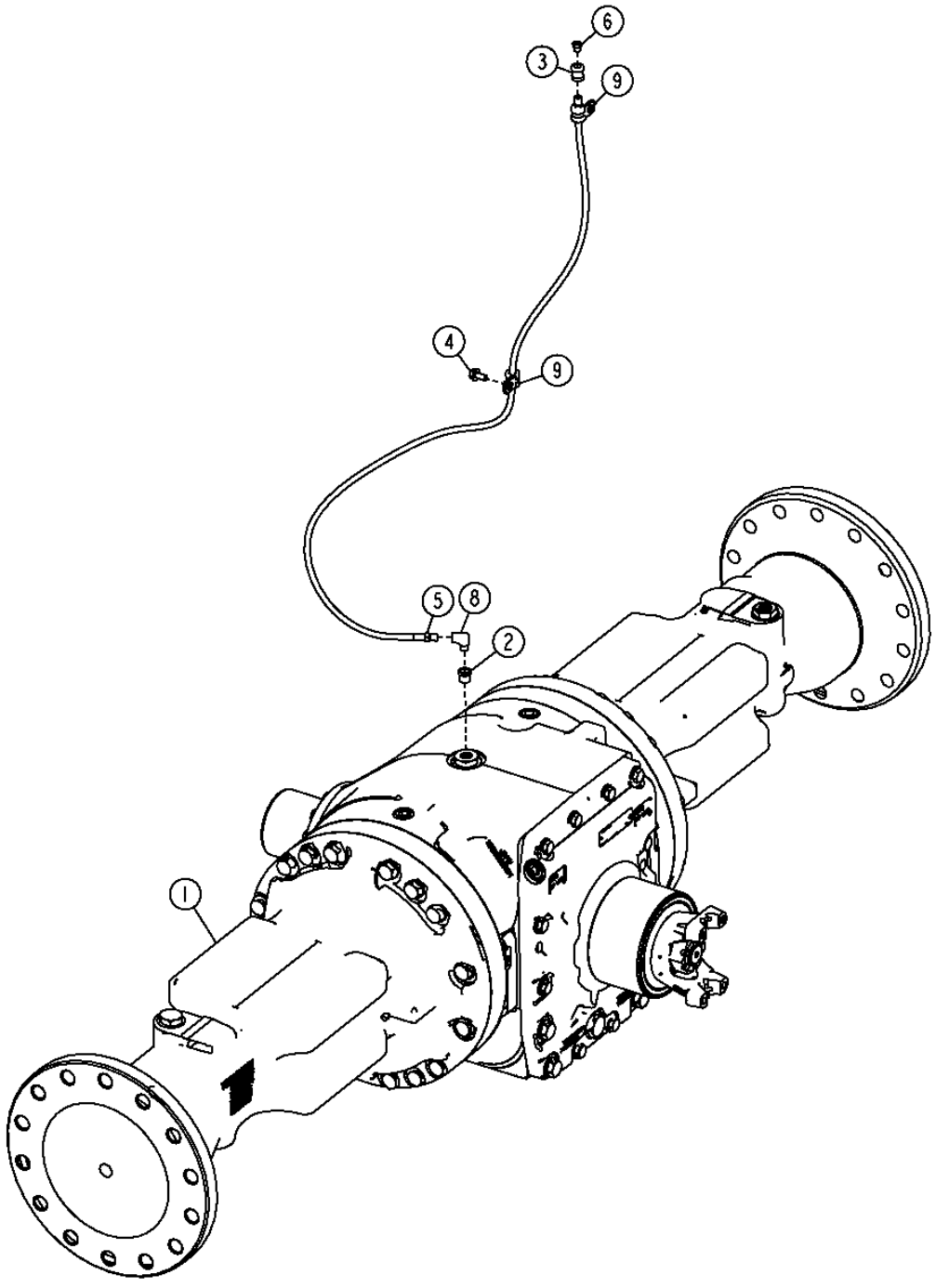

TX1013061

REAR AXLES
ESSIEU ARRIERE
EJE TRASERO

KEY	*PART NO.*	*PART NAME*	*QTY.*	*SERIAL NO.*	*REMARKS*
1	YZ18989	REAR AXLE	1		(STD)
	YZ18990	**REAR AXLE**	**1**		**(HYD)**
2	15H511	PIPE BUSHING	1		1/8"
3	15H84	COUPLING	1		1/8"
4	19M7865	SCREW	1		M8 X 16
5	AT207023	HYDRAULIC HOSE	1		1/8" X 1 250 MM X 1/8"
6	AT208411	PRESSURE RELIEF VALVE	1		
7	AT53541	HYDRAULIC HOSE	1		
8	T56112	ELBOW FITTING	1		
9	T75276	CLAMP	2		
10	R44302	TIE BAND	1		(NOT SHOWN)

SPIRAL BEVEL INPUT PINION AND RING GEAR SET (1200) (YZ120777)
JEU DE PIGNON D'ENTREE ET DE COURONNE (YZ120777)
CONJUNTO DEL PINON DE ENTRADA CONICO Y CORONA (YZ120777)
OPTION CODE B4 - ORDER CODE 1204

YZ120777PCD1 -UN-03MAY06

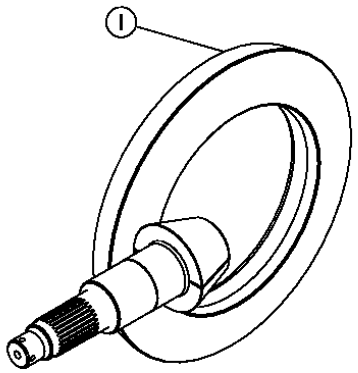

YZ120777PCD1

KEY	PART NO.	PART NAME	QTY.	AXLE SERIAL NO.	REMARKS
1	YZ120771	RING GEAR AND PINION	1		RH 4.778:1
	YZ120672	RING GEAR AND PINION	1		LH

SPIRAL BEVEL INPUT PINION AND RING GEAR SET(1400) (RE35709)
JEU DE PIGNON D'ENTREE ET DE COURONNE (RE35709)
CONJUNTO DEL PINON DE ENTRADA CONICO Y CORONA (RE35709)
OPTION CODE B2 - ORDER CODE 1202

RE33813PCD1 -UN-02MAY06

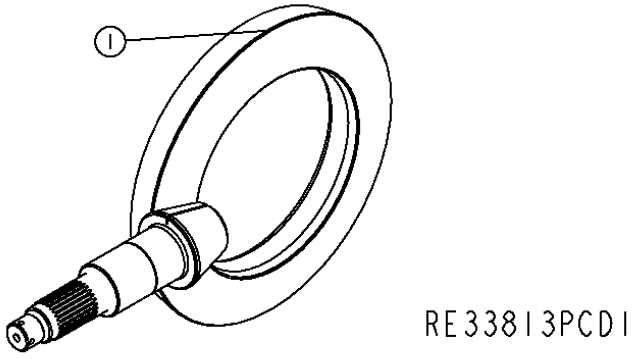

KEY	PART NO.	PART NAME	QTY.	AXLE SERIAL NO.	REMARKS
1	YZ120660	RING GEAR AND PINION	1		L.H. ASSEMBLY, (MARKED YZ120659 AND YZ120590) (ALSO ORDER RE50114)

INPUT YOKE (1200) (YZ120747)
CHAPE D'ENTREE (YZ120747)
HORQUILLA DE ENTRADA (YZ120747)
OPTION CODE B2 - ORDER CODE 1302

YZ120747PCD1 -UN-01NOV06

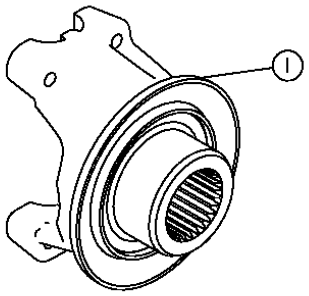

YZ120747PCD1

KEY	PART NO.	PART NAME	QTY.	AXLE SERIAL NO.	REMARKS
1	YZ120812	YOKE	1		1550 SERIES (ASSEMBLY)

INPUT YOKE (1400) (YZ120750)
CHAPE D'ENTREE (YZ120750)
HORQUILLA DE ENTRADA (YZ120750)
OPTION CODE B1 - ORDER CODE 1301

YZ120750PCD1 -UN-01NOV06

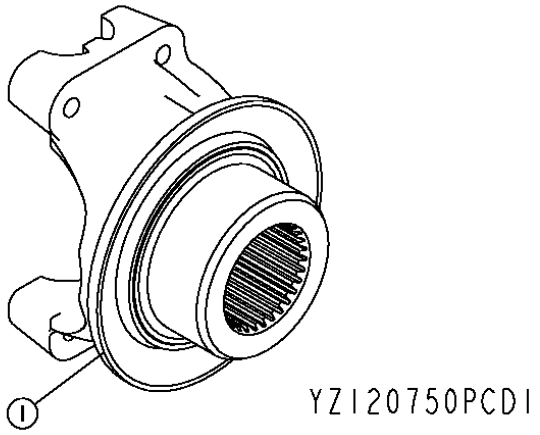

KEY	PART NO.	PART NAME	QTY.	AXLE SERIAL NO.	REMARKS
1	YZ120813	YOKE	1		1550 SERIES (ASSEMBLY)

AXLE HOUSING AND SHAFT (1200) (YZ120709)
CORPS DE PONT ET ARBRE (YZ120709)
CARCASA DEL EJE Y EJE (YZ120709)
OPTION CODE D2 -ORDER CODE 1412

YZ120709PCD2 -UN-12DEC06

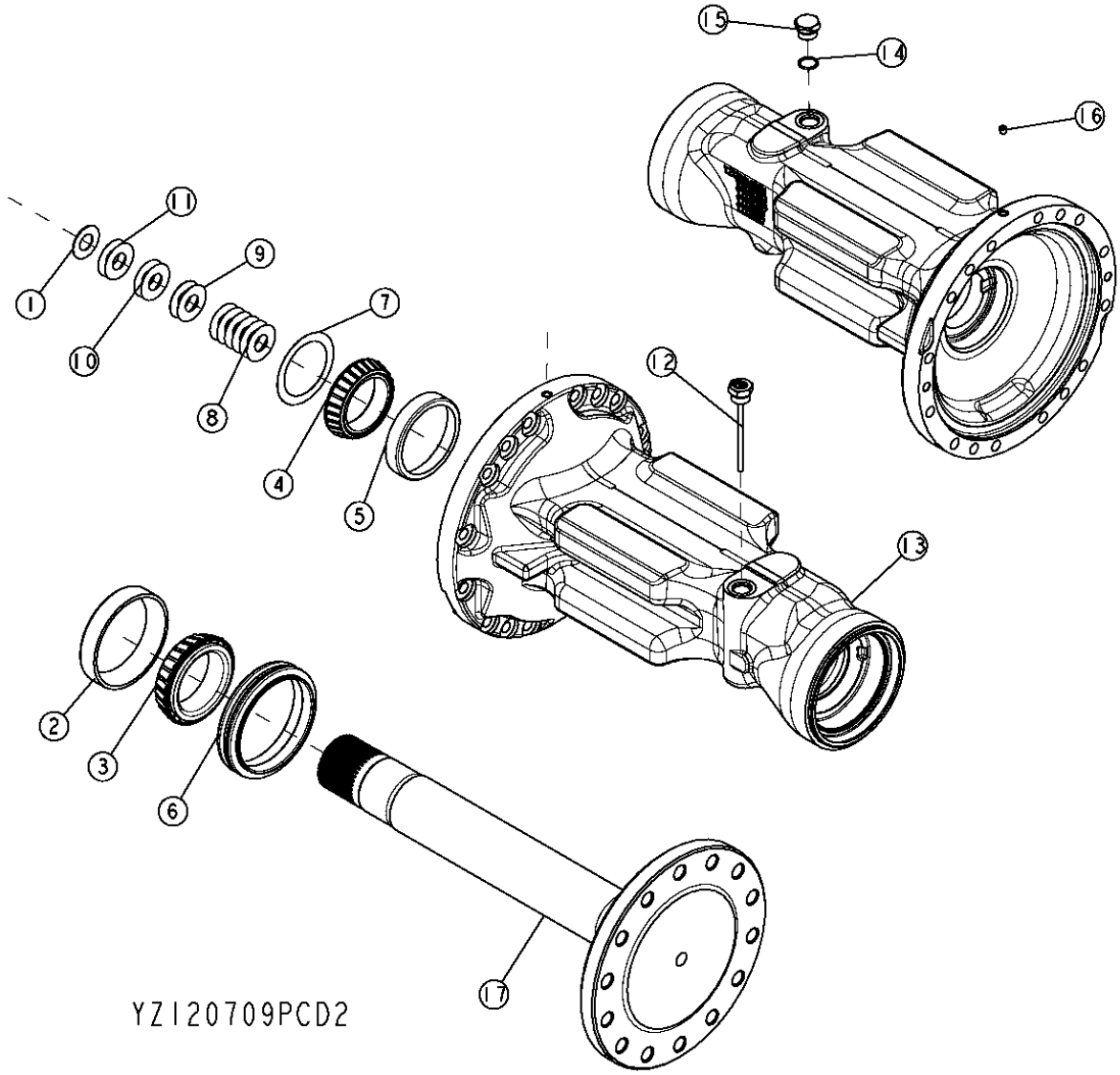

AXLE HOUSING AND SHAFT (1200) (YZ120709)
CORPS DE PONT ET ARBRE (YZ120709)
CARCASA DEL EJE Y EJE (YZ120709)
OPTION CODE D2 -ORDER CODE 1412

KEY	PART NO.	PART NAME	QTY.	AXLE SERIAL NO.	REMARKS
1	F2380R	WASHER	2		
2	JD8248	BEARING CUP	2		
3	JD9018	BEARING CONE	2		
4	JD9055	BEARING CONE	2		
5	JD9118	BEARING CUP	2		
6	YZ121062	SEAL	2		
7	R48437	WASHER	2		
8	R59439	SHIM	12		.13
9	R59440	SHIM	4		.51
10	R61461	SHIM	4		.076
11	R79989	SHIM	4		.178
12	YZ121220	DIPSTICK	1		
13	YZ120704	HOUSING	1		(SUB FOR YZ120703)
14	F3171R	O-RING	1		SERVICES YZ120916
	R27175	DRAIN PLUG	1		SERVICES YZ120916
	YZ120704	HOUSING	1		SERVICES YZ120916
15	RE58664	FITTING	1		
16	JD7759	LUBRICATION FITTING	2		
17	YZ120687	HALF AXLE	2		

AXLE HOUSING AND SHAFT (1400) (YZ120720)
CORPS DE PONT ET ARBRE (YZ120720)
CARCASA DEL EJE Y EJE (YZ120720)
OPTION CODE B3 - ORDER CODE 1403

YZ120720PCD2 -UN-12DEC06

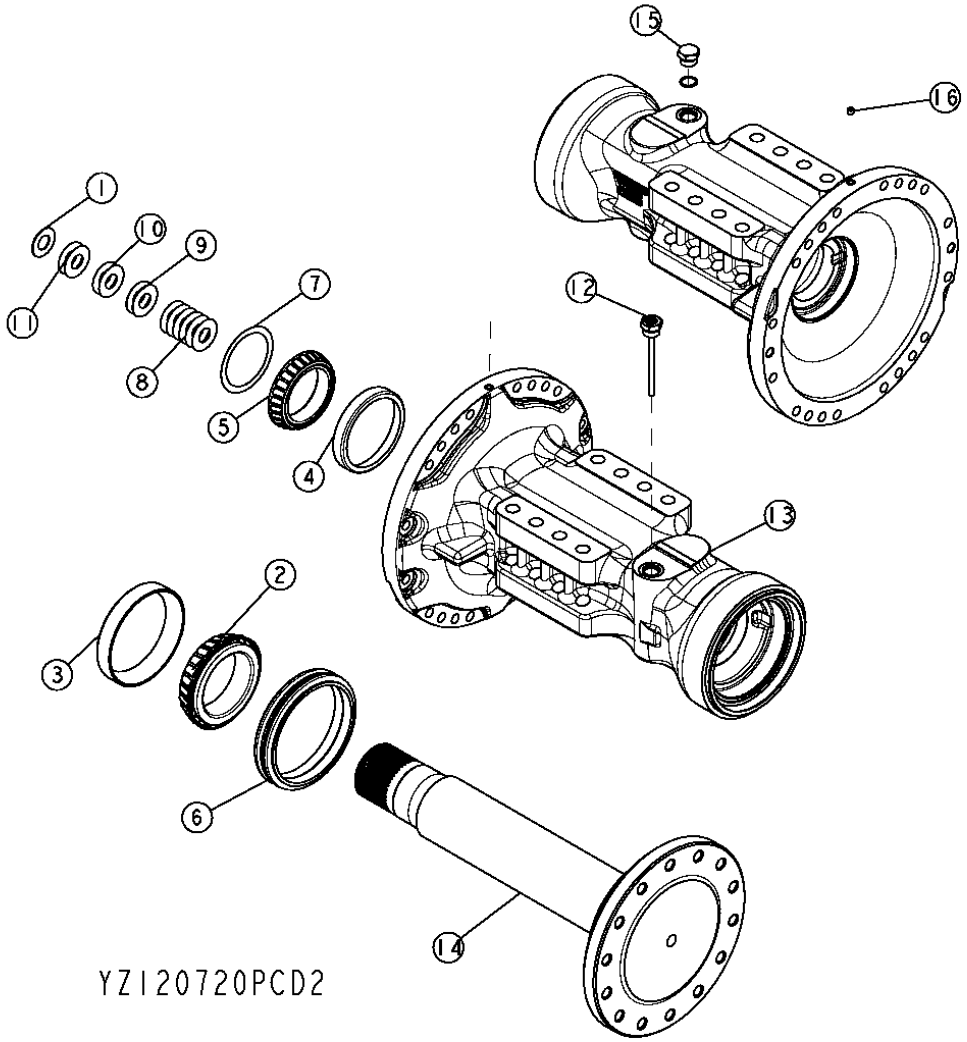

AXLE HOUSING AND SHAFT (1400) (YZ120720)
CORPS DE PONT ET ARBRE (YZ120720)
CARCASA DEL EJE Y EJE (YZ120720)
OPTION CODE B3 - ORDER CODE 1403

KEY	PART NO.	PART NAME	QTY.	AXLE SERIAL NO.	REMARKS
1	F2380R	WASHER	2		
2	JD10315	BEARING CONE	2		
3	JD10316	BEARING CUP	2		
4	JD8272	BEARING CUP	2		
5	JD8989	BEARING CONE	2		
6	YZ120453	SEAL	2		
7	R52389	WASHER	2		
8	R59439	SHIM	12		.13
9	R59440	SHIM	4		.51
10	R61461	SHIM	4		.076
11	R79989	SHIM	4		.178
12	YZ121220	DIPSTICK	1		
13	YZ121185	HOUSING	2		
14	YZ120688	HALF AXLE	2		
15	RE58664	FITTING	1		WITH O-RING
16	JD7759	LUBRICATION FITTING	2		

INPUT COVER (1200) (YZ120710)
COUVERCLE D'ENTRÉE (YZ120710)
TAPA DE ENTRADA (YZ120710)
OPTION CODE B1 - ORDER CODE 1501

YZ120710PCD2 -UN-12DEC06

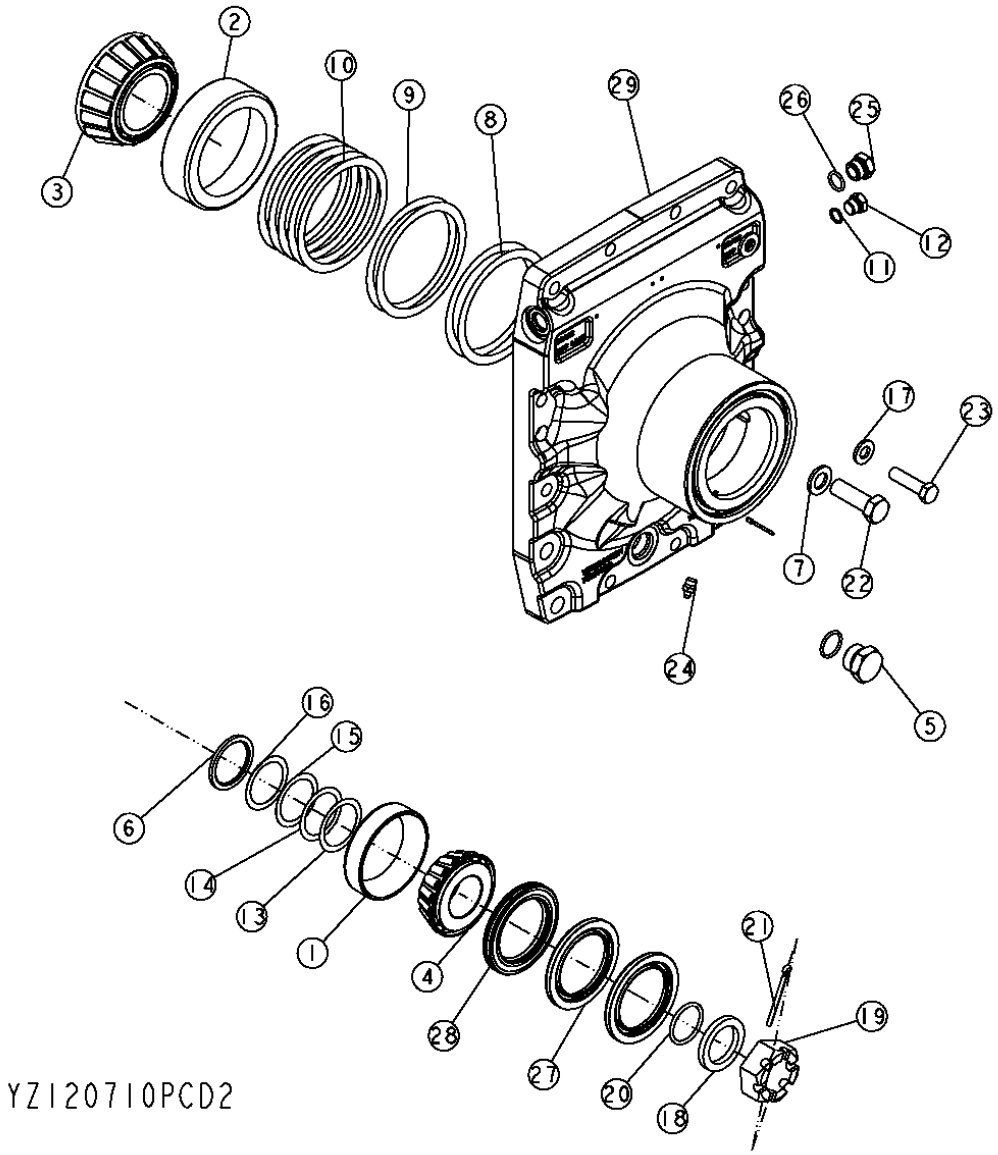

THIS PARTS LISTING IS CONTINUED

INPUT COVER (1200) (YZ120710)
COUVERCLE D'ENTRÉE (YZ120710)
TAPA DE ENTRADA (YZ120710)
OPTION CODE B1 - ORDER CODE 1501

KEY	PART NO.	PART NAME	QTY.	AXLE SERIAL NO.	REMARKS
1	JD8240	BEARING CUP	1		
2	JD8264	BEARING CUP	1		
3	JD8970	BEARING CONE	1		
4	JD8974	BEARING CONE	1		
5	RE58664	FITTING	1		
	F3171R	O-RING	1		
	R27175	DRAIN PLUG	1		
6	R135535	WASHER	1		
7	R135543	WASHER	4		
8	R26227	SHIM	2		.003
9	R26228	SHIM	2		.005
10	R26229	SHIM	5		.010
11	R26448	O-RING	1		
12	R27218	FITTING PLUG	1		
13	R45197	SHIM	1		.007
14	R45198	SHIM	1		.010
15	R45199	SHIM	1		.12
16	R45200	SHIM	1		.15
17	24M7240	WASHER	10		
18	YZ120167	WASHER	1		
19	R48776	NUT	1		
20	U10289	O-RING	1		
21	11M7032	COTTER PIN	1		
22	19M7409	CAP SCREW	4		
23	19M8902	CAP SCREW	10		
24	JD7759	LUBRICATION FITTING	1		
25	R33138	FITTING	2		
26	R375R	O-RING	2		
27	YZ120567	SEAL	2		
28	YZ120686	SEAL	1		
29	YZ120765	COVER	1		

STANDARD INPUT HOUSING, NON-OSCILLATING (1400) (YZ121049)
COUVERCLE D'ENTREE STANDARD NON PIVOTANT (YZ121049)
CAJA DE ENTRADA NO OSCILANTE (YZ121049)
OPTION CODE B1 - ORDER CODE 1521

YZ121049PCD4 -UN-14DEC06

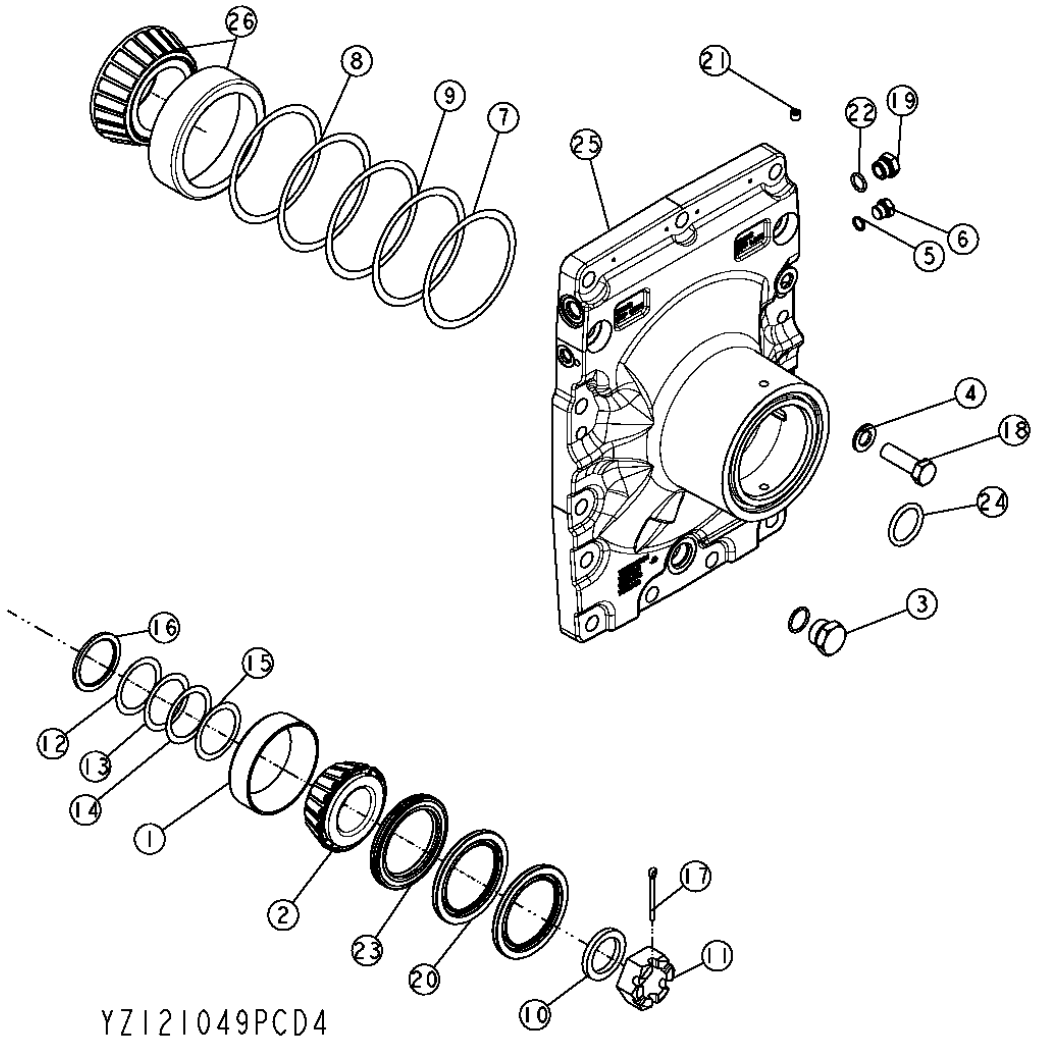

STANDARD INPUT HOUSING, NON-OSCILLATING (1400) (YZ121049)
COUVERCLE D'ENTREE STANDARD NON PIVOTANT (YZ121049)
CAJA DE ENTRADA NO OSCILANTE (YZ121049)
OPTION CODE B1 - ORDER CODE 1521

KEY	PART NO.	PART NAME	QTY.	AXLE SERIAL NO.	REMARKS
1	JD8255	BEARING CUP	1		
2	JD9078	BEARING CONE	1		
3	RE58664	FITTING	1		
	F3171R	O-RING	1		
	R27175	DRAIN PLUG	1		
4	R135543	WASHER	15		
5	R26448	O-RING	2		
6	R27218	FITTING PLUG	2		
7	R35365	SHIM	2		.003
8	R35366	SHIM	2		.005
9	R35367	SHIM	1		.010
10	YZ120167	WASHER	1		
11	R48776	NUT	1		
12	R51196	SHIM	1		.007
13	R51197	SHIM	1		.010
14	R51198	SHIM	1		.12
15	R51199	SHIM	1		.015
16	R56308	WASHER	1		(SPACER)
17	11M7032	COTTER PIN	1		
18	19M7409	CAP SCREW	15		
19	R33138	FITTING	2		
20	YZ120513	SEAL	2		
21	JD7759	LUBRICATION FITTING	2		
22	R375R	O-RING	2		
23	YZ120685	SEAL	1		
24	A4540R	O-RING	1		
25	YZ121055	COVER	1		
26	RE49486	TAPERED ROLLER BEARING	1		

PIVOT PIN ONLY (1200) (YZ120711)
AXE-PIVOT SEULEMENT (YZ120711)
SOLO BULON DE ARTICULACION (YZ120711)
OPTION CODE B1 - ORDER CODE 1601

YZ120711PCD3 -UN-12DEC06

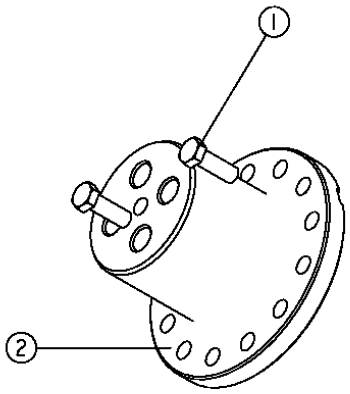

YZ120711PCD3

KEY	PART NO.	PART NAME	QTY.	AXLE SERIAL NO.	REMARKS
1	19M8634	CAP SCREW	13		
2	YZ121213	PIN	1		

DUAL BRAKES (1200) (YZ120713)
FREINS A DEUX CONDUITES (YZ120713)
FRENO DE TUBERIA DOBLE (YZ120713)
OPTION CODE B1 - ORDER CODE 1701

YZ120712PCD1 -UN-20JUL06

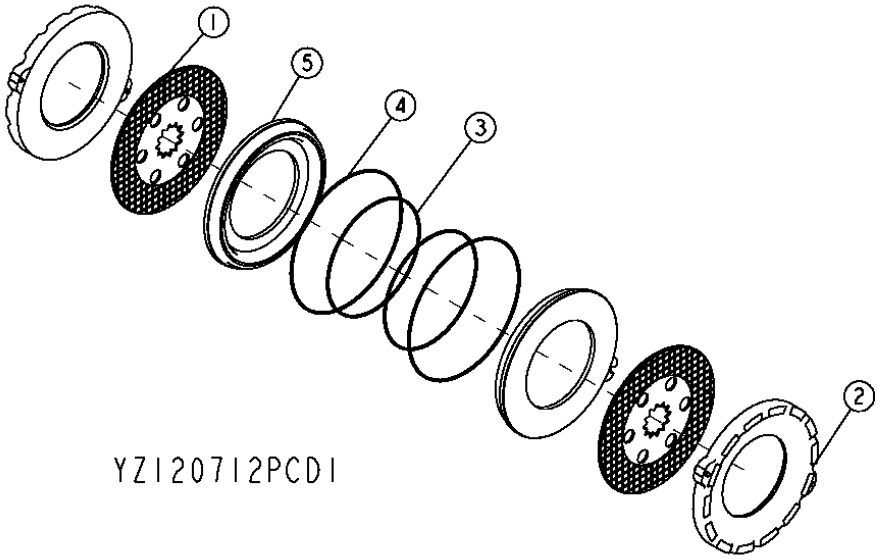

KEY	PART NO.	PART NAME	QTY.	AXLE SERIAL NO.	REMARKS
1	YZ120911	BRAKE DISK	2		WITH FACINGS
2	YZ121022	PLATE	2		
3	R122849	SEAL	2		I.D.
4	R132615	SEAL	2		O.D.
5	YZ121241	PISTON	2		

DUAL BRAKES (1400) (YZ120724)
FREINS A DEUX CONDUITES (YZ120724)
FRENO DE TUBERIA DOBLE (YZ120724)
OPTION CODE B1 - ORDER CODE 1701

YZ120724PCD1 -UN-21JUL06

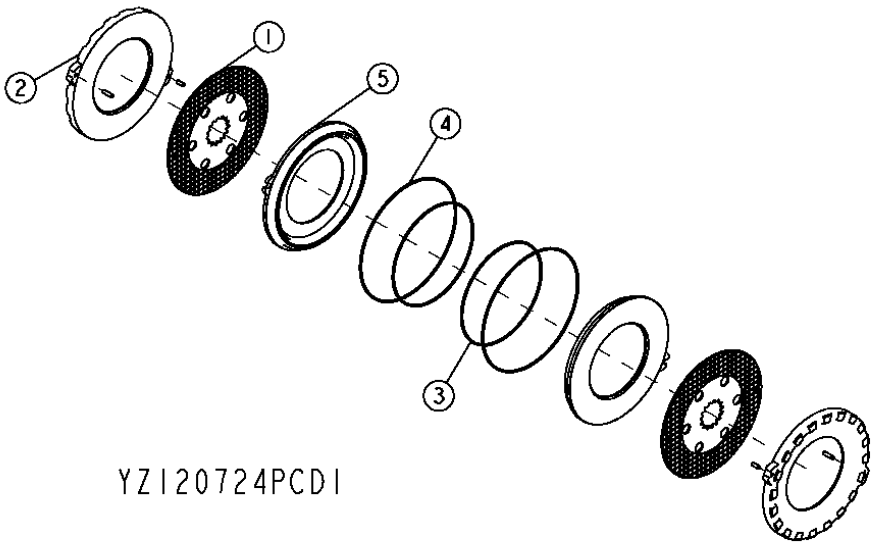

KEY	PART NO.	PART NAME	QTY.	AXLE SERIAL NO.	REMARKS
1	YZ120979	BRAKE DISK	2		WITH FACINGS
2	YZ121053	PLATE	2		
3	R131477	SEAL	2		I.D.
4	R131478	SEAL	2		O.D.
5	YZ121242	PISTON	2		

MEMORANDA
MEMORANDA
MEMORANDA

STANDARD DIFFERENTIAL (1200) (YZ120988)
DIFFERENTIEL STANDARD (YZ120988)
DIFERENCIAL ESTANDAR (YZ120988)
OPTION CODE B1 - ORDER CODE 1801

YZ120988APCD -UN-14DEC06

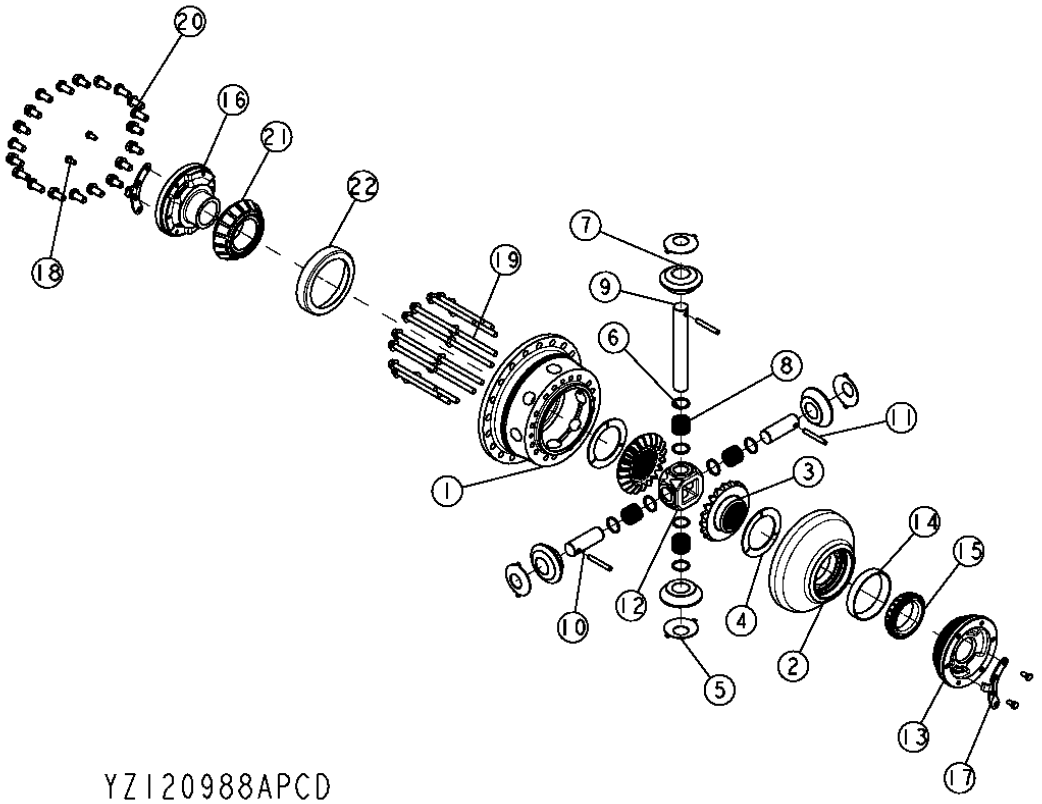

THIS PARTS LISTING IS CONTINUED

STANDARD DIFFERENTIAL (1200) (YZ120988)
DIFFERENTIEL STANDARD (YZ120988)
DIFERENCIAL ESTANDAR (YZ120988)
OPTION CODE B1 - ORDER CODE 1801

KEY	PART NO.	PART NAME	QTY.	AXLE SERIAL NO.	REMARKS
1	YZ120886	HOUSING	1		
2	YZ120984	HOUSING	1		
3	YZ120939	BEVEL GEAR	2		
4	R93623	THRUST WASHER	2		
5	R67811	THRUST WASHER	4		
6	YZ120982	THRUST WASHER	8		
7	YZ120938	PINION	4		
8	YZ120931	NEEDLE ROLLER	136		
9	YZ120929	PINION SHAFT	1		
10	YZ120930	PINION SHAFT	2		
11	W30317	SPRING PIN	3		
12	YZ120940	HUB	1		
13	YZ120895	BEARING HOUSING W/O BEARING	1		
14	JD8206	BEARING CUP	1		
15	JD8946	BEARING CONE	1		
16	YZ120894	BEARING HOUSING W/O BEARING	1		
17	YZ121015	LOCK PLATE	2		
18	R88246	CAP SCREW	4		
19	19M7944	SCREW	16		M10 X 120
20	R47172	WASHER	20		
21	YZ120936	BEARING CONE	1		
22	YZ120935	BEARING CUP	1		

DIFFERENTIAL LOCK- (1400) (YZ121256)
BLOCAGE DU DIFFERENTIEL - SERIE 1400 (YZ121256)
BLOQUEO DEL DIFERENCIAL - SERIE 1400 (YZ121256)
OPTION CODE B2- ORDER CODE 1802

YZ121256PCD2 -UN-13DEC06

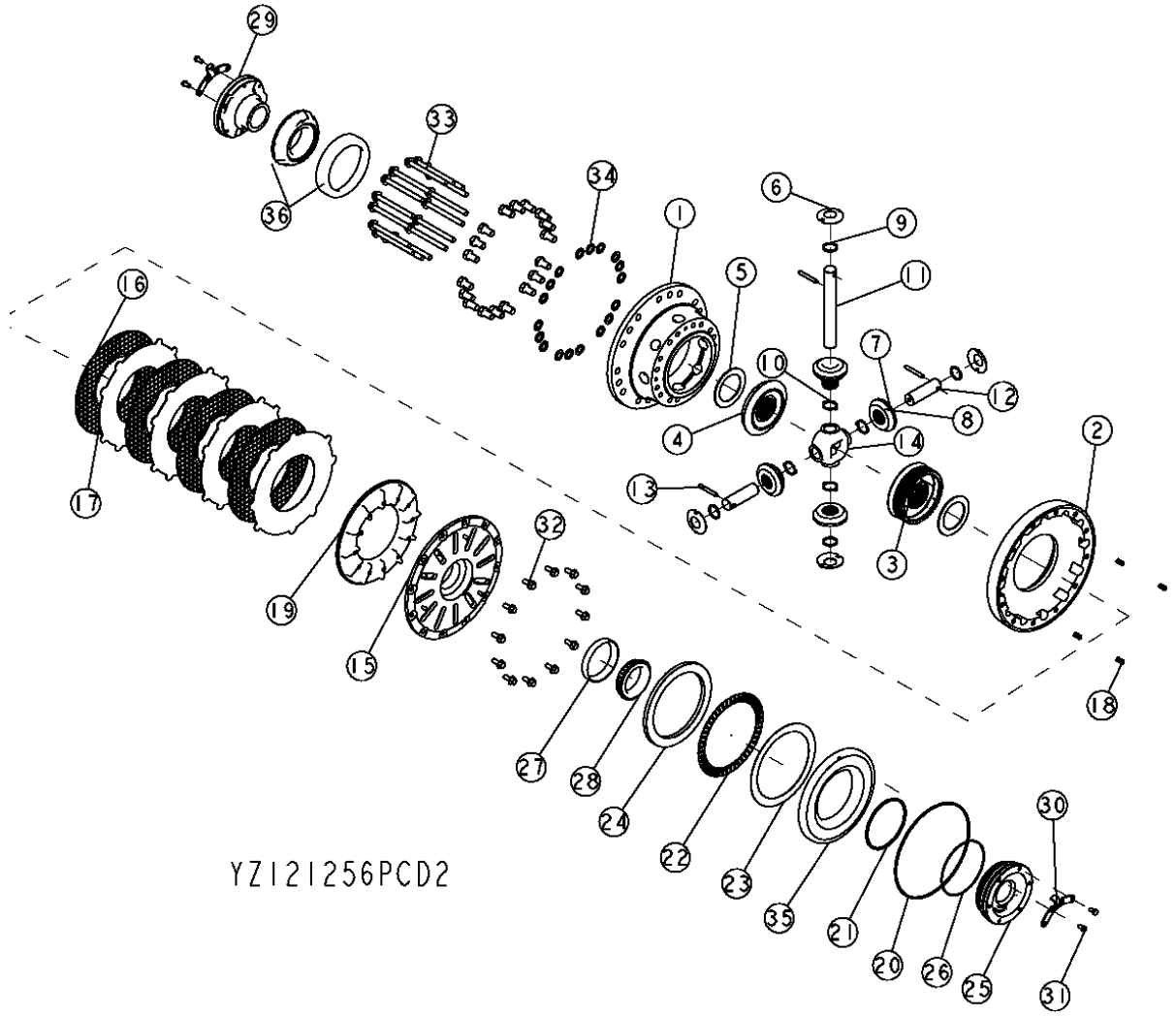

DIFFERENTIAL LOCK- (1400) (YZ121256)
BLOCAGE DU DIFFERENTIEL - SERIE 1400 (YZ121256)
BLOQUEO DEL DIFERENCIAL - SERIE 1400 (YZ121256)
OPTION CODE B2- ORDER CODE 1802

KEY	PART NO.	PART NAME	QTY.	AXLE SERIAL NO.	REMARKS
1	YZ121239	HOUSING	1		DIFFERENTIAL
2	YZ120954	HOUSING	1		DIFFERENTIAL HALF
3	YZ120386	BEVEL GEAR	1		
4	R59289	BEVEL GEAR	1		
5	R93623	THRUST WASHER	2		
6	R59460	THRUST WASHER	4		
7	R134726	PINION	1		
8	R70115	NEEDLE ROLLER	26		
9	R70112	THRUST WASHER	4		
10	R70113	THRUST WASHER	4		
11	R132827	PINION SHAFT	1		
12	R132828	PINION SHAFT	2		
13	W30317	SPRING PIN	3		
14	R132836	HUB	1		
15	YZ121230	COVER	1		ASSEMBLY WITH PINS
16	YZ120964	CLUTCH DISK	4		
17	YZ121110	CLUTCH PLATE	4		
18	YZ120902	COMPRESSION SPRING	4		
19	YZ121199	ACTUATOR	1		
20	YZ121090	SEAL	1		
21	YZ120968	SEAL	1		
22	YZ120970	NEEDLE BEARING	1		
23	YZ120971	THRUST WASHER	1		
24	YZ121228	THRUST WASHER	1		
25	YZ120961	BEARING HOUSING W/O BEARING	1		
26	R136314	O-RING	1		
27	JD8259	BEARING CUP	1		
28	JD8954	BEARING CONE	1		
29	YZ120960	BEARING HOUSING W/O BEARING	1		
30	YZ121016	LOCK PLATE	2		
31	R88246	CAP SCREW	4		
32	19M7785	SCREW	12		M10 X 25
33	19M7838	SCREW	16		
34	R85226	WASHER	18		
35	YZ121227	PISTON	1		
36	YZ121260	TAPERED ROLLER BEARING	1		

DIFFERENTIAL LOCK- (1200) (YZ121237)
BLOCAGE DU DIFFERENTIEL - SERIE 1200 (YZ121237)
BLOQUEO DEL DIFERENCIAL - SERIE 1200 (YZ121237)
OPTION CODE B2 - ORDER CODE 1802

YZ121237PCD2 -UN-12DEC06

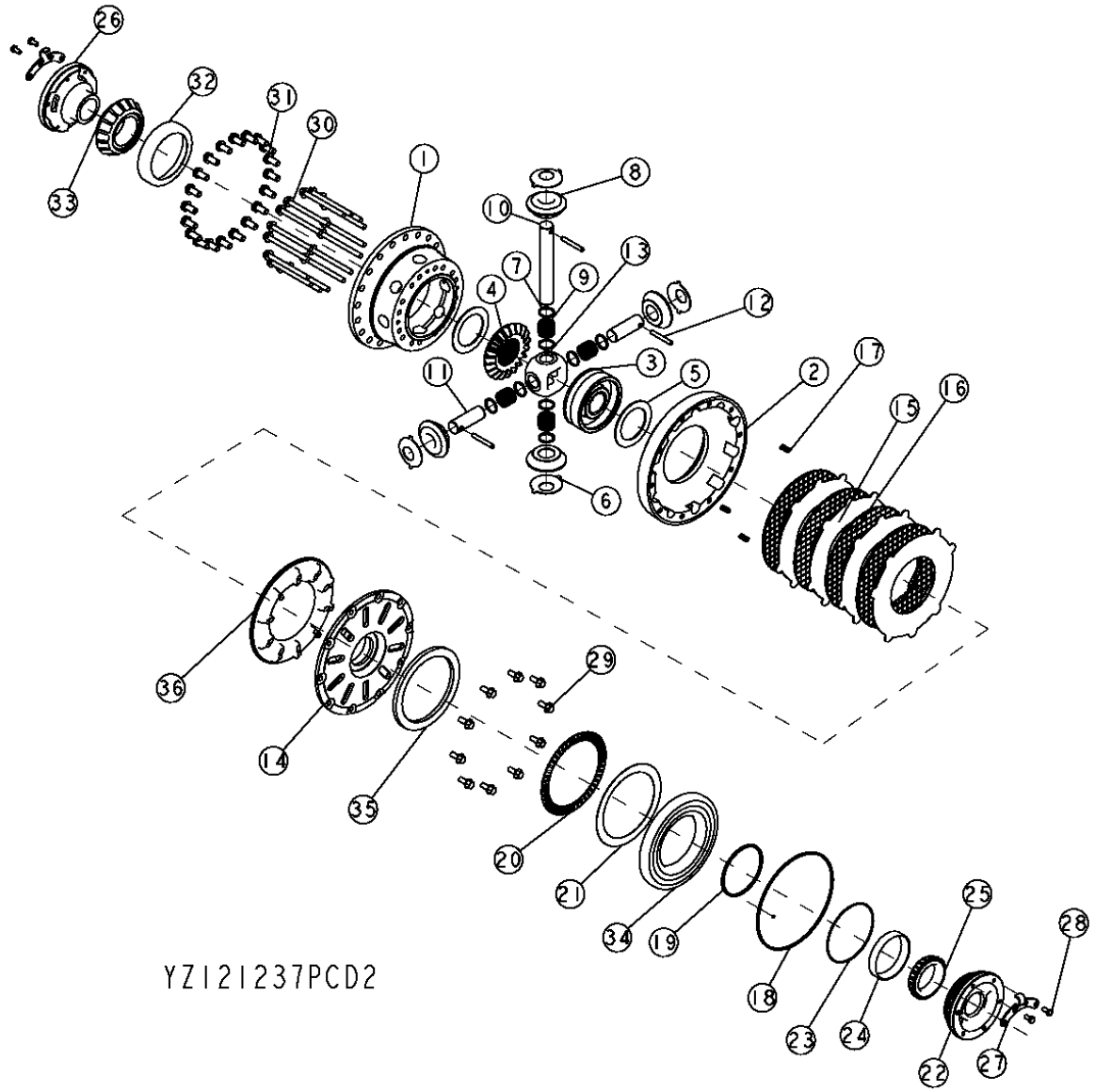

DIFFERENTIAL LOCK- (1200) (YZ121237)
BLOCAGE DU DIFFERENTIEL - SERIE 1200 (YZ121237)
BLOQUEO DEL DIFERENCIAL - SERIE 1200 (YZ121237)
OPTION CODE B2 - ORDER CODE 1802

KEY	PART NO.	PART NAME	QTY.	AXLE SERIAL NO.	REMARKS
1	YZ120886	HOUSING	1		DIFFERENTIAL
2	YZ120888	HOUSING	1		DIFFERENTIAL HALF
3	R74869	BEVEL GEAR	1		
4	YZ120939	BEVEL GEAR	1		
5	R93623	THRUST WASHER	2		
6	R67811	THRUST WASHER	4		
7	YZ120982	THRUST WASHER	8		
8	YZ120938	PINION	4		
9	YZ120931	NEEDLE ROLLER	136		
10	YZ120929	PINION SHAFT	1		
11	YZ120930	PINION SHAFT	2		
12	W30317	SPRING PIN	3		
13	YZ120940	HUB	1		
14	YZ120890	COVER	1		
15	YZ120899	CLUTCH DISK	4		
16	YZ120900	CLUTCH PLATE	4		
17	YZ120902	COMPRESSION SPRING	3		
18	YZ120903	SEAL	1		PISTON OD
19	YZ120904	SEAL	1		PISTON ID
20	YZ120906	NEEDLE BEARING	1		
21	YZ120907	THRUST WASHER	1		
22	YZ120895	BEARING HOUSING W/O BEARING	1		
23	R99038	O-RING	1		
24	JD8206	BEARING CUP	1		
25	JD8946	BEARING CONE	1		
26	YZ120894	BEARING HOUSING W/O BEARING	1		
27	YZ121015	LOCK PLATE	2		
28	R88246	CAP SCREW	4		
29	19M7785	SCREW	10		M10 X 25
30	19M7944	SCREW	16		
31	R47172	WASHER	20		
32	YZ120935	BEARING CUP	1		
33	YZ120936	BEARING CONE	1		
34	YZ121232	PISTON	1		
35	YZ121233	THRUST WASHER	1		
36	YZ121231	ACTUATOR	1		

STANDARD DIFFERENTIAL CASE (1200) (YZ120944)
CARTER DE DIFFERENTIEL STANDARD (YZ120944)
CAJA DEL DIFERENCIAL ESTANDAR (YZ120944)
OPTION CODE B1 - ORDER CODE 1901

YZ120944PCD3 -UN-14DEC06

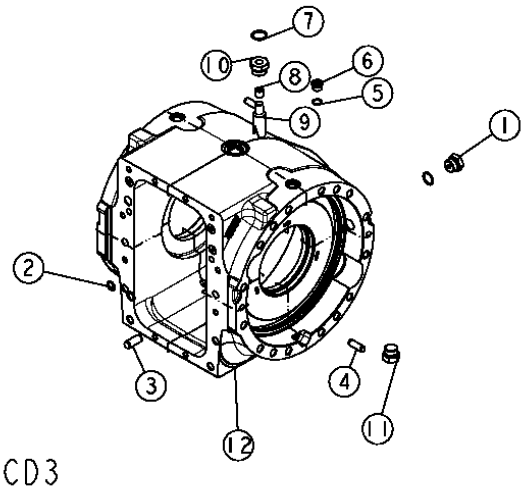

YZI20944PCD3

KEY	PART NO.	PART NAME	QTY.	AXLE SERIAL NO.	REMARKS
1	RE58664	FITTING	2		
	F3171R	O-RING	1		
	R27175	DRAIN PLUG	1		
2	R375R	O-RING	4		
3	R54380	DOWEL PIN	2		
4	T26565	DOWEL PIN	4		
5	R26375	O-RING	2		
6	R33138	FITTING	2		
7	U17409	O-RING	1		
8	15H563	PIPE PLUG	1		
	15H666	PIPE PLUG	1		
9	R132574	STRUCTURAL TUBING	1		
10	R112210	ADAPTER FITTING	1		
11	YZ121180	DRAIN PLUG	1		MAGNETIC
12	YZ121225	CASE	1		

STANDARD DIFFERENTIAL (YZ121182)
DIFFERENTIEL STANDARD (YZ121182)
DIFERENCIAL ESTANDAR (YZ121182)
OPTION CODE B3- ORDER CODE 1903

YZ121182PCD2 -UN-05DEC06

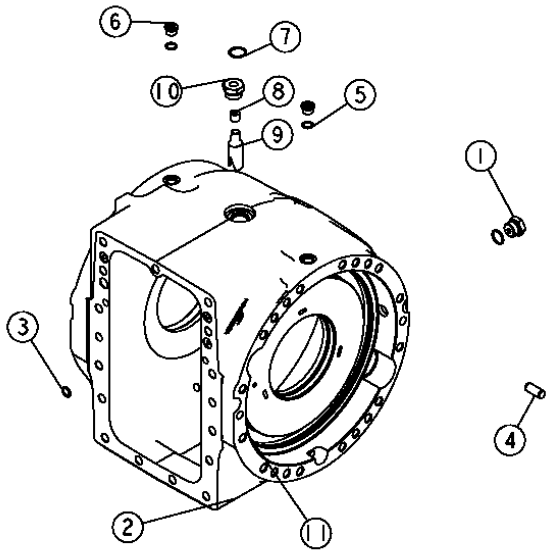

YZ121182PCD2

KEY	PART NO.	PART NAME	QTY.	AXLE SERIAL NO.	REMARKS
1	RE58664	FITTING	2		
	F3171R	O-RING	1		
	R27175	DRAIN PLUG	1		
2	YZ121224	CASE	1		
3	R375R	O-RING	4		
4	R54380	DOWEL PIN	6		
5	R26375	O-RING	2		
6	R33138	FITTING	2		
7	U17409	O-RING	1		
8	15H563	PIPE PLUG	1		9.525 MM
	15H666	PIPE PLUG	1		9.525 MM
9	R132574	STRUCTURAL TUBING	1		
10	R112210	ADAPTER FITTING	1		
11	YZ121180	DRAIN PLUG	1		

FINAL DRIVE (1200) (YZ120946)
DIFFERENTIEL (YZ120946)
DIFERENCIAL (YZ120946)
OPTION CODE B2 - ORDER CODE 2002

YZ120946APCD -UN-17NOV06

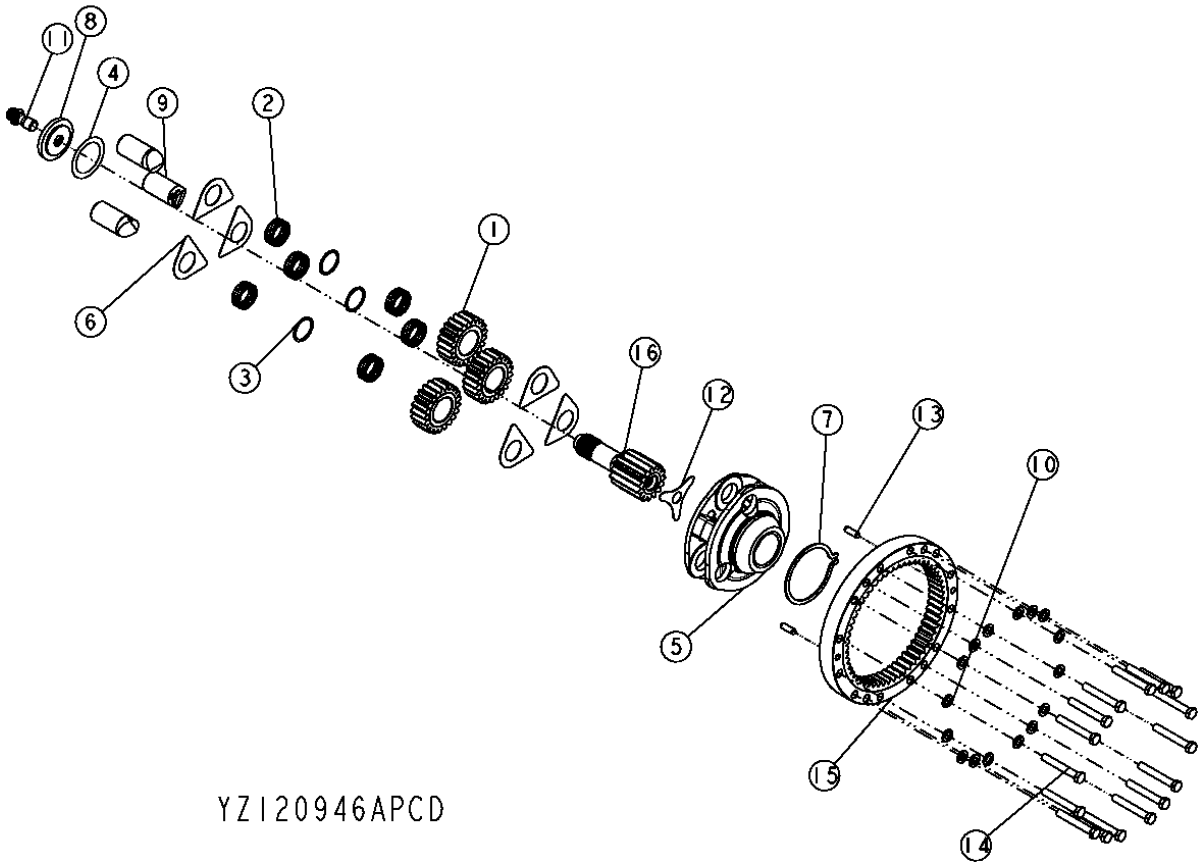

FINAL DRIVE (1200) (YZ120946)
DIFFERENTIEL (YZ120946)
DIFERENCIAL (YZ120946)
OPTION CODE B2 - ORDER CODE 2002

KEY	PART NO.	PART NAME	QTY.	AXLE SERIAL NO.	REMARKS
1	R109077	PLANET PINION	3		
2	R109123	NEEDLE ROLLER	186		
3	R109124	WASHER	3		SPACER
4	F2253R	WASHER	1		
5	R109127	PLANET PINION CARRIER	1		
6	R112078	THRUST WASHER	6		
7	R33033	SNAP RING	1		
8	R93173	SPACER	1		
9	R93364	PINION SHAFT	3		
10	R135543	WASHER	32		
11	YZ120470	SCREW	2		
12	YZ121118	LOCK PLATE	2		
13	T26565	DOWEL PIN	4		
14	19M8620	CAP SCREW	32		
15	YZ120763	GEAR	2		
16	YZ120898	PINION SHAFT	2		

FINAL DRIVE (1400) (YZ120753)
REDUCTION FINALE (YZ120753)
MANDO FINAL (YZ120753)
OPTION CODE B2 - ORDER CODE 2002

YZ120753PCD -UN-13DEC06

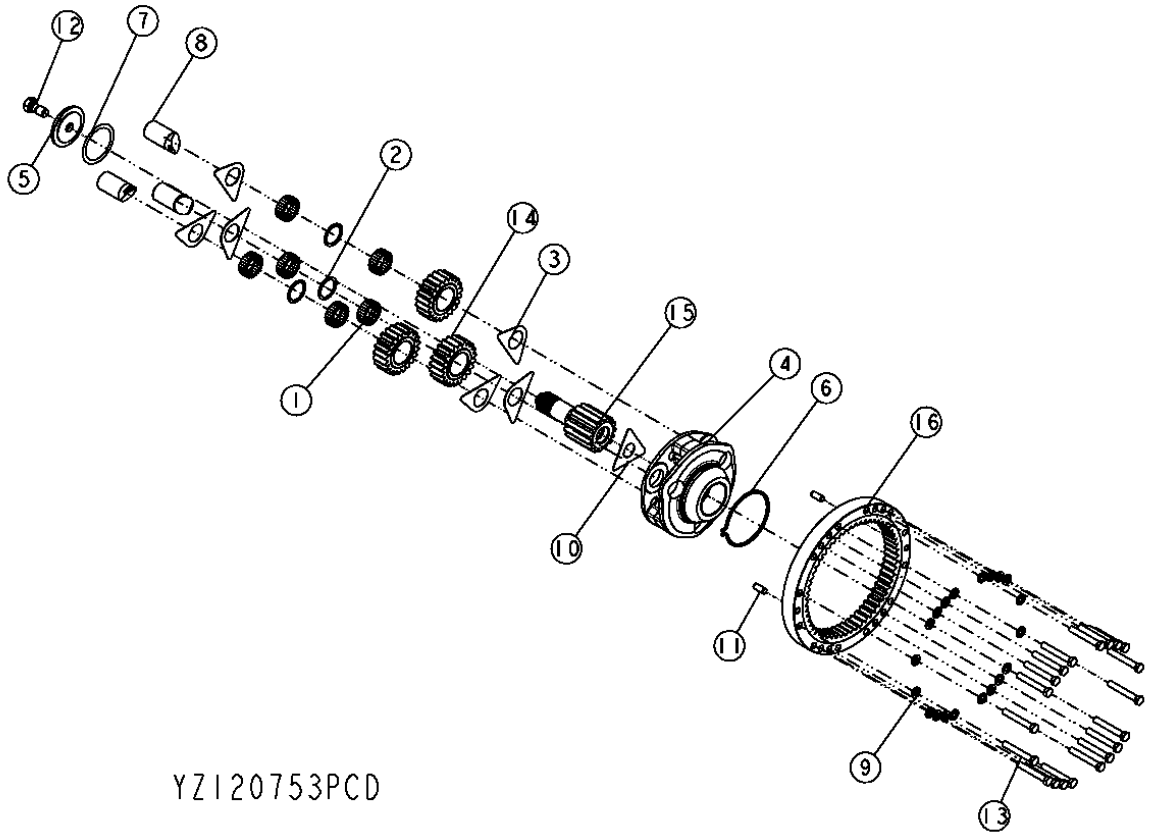

FINAL DRIVE (1400) (YZ120753)
REDUCTION FINALE (YZ120753)
MANDO FINAL (YZ120753)
OPTION CODE B2 - ORDER CODE 2002

KEY	PART NO.	PART NAME	QTY.	AXLE SERIAL NO.	REMARKS
1	R109082	NEEDLE ROLLER	144		
2	R109083	WASHER	3		
3	R112079	THRUST WASHER	6		
4	R116810	PLANET PINION CARRIER	1		
5	R119270	WASHER	1		
6	R33029	SNAP RING	1		
7	R52389	WASHER	1		
8	R97998	SHAFT	3		
9	R135543	WASHER	40		
10	YZ121119	LOCK PLATE	2		
11	R54380	DOWEL PIN	4		
12	R82175	CAP SCREW	2		
13	19M8620	CAP SCREW	40		
14	YZ121125	PLANET PINION	3		
15	YZ121129	PINION SHAFT	2		
16	YZ120647	GEAR	2		

AXLE STOP (8 DEGREE)
BUTEE D'ESSIEU (8 DEGRES)
TOPE DEL EJE (8 GRADOS)

TX1008640 -UN-09JUN06

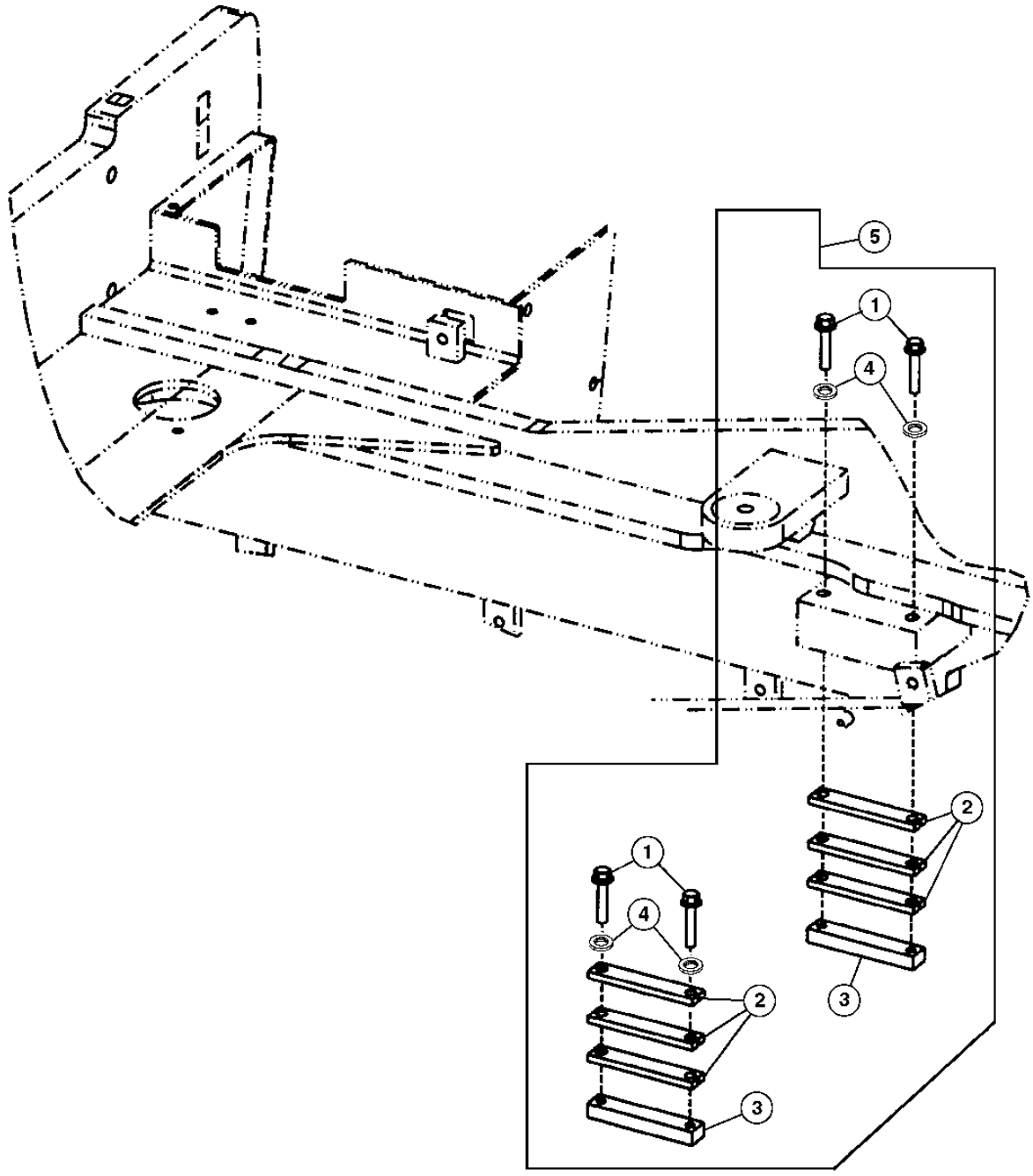

TX1008640

AXLE STOP (8 DEGREE)
BUTEE D'ESSIEU (8 DEGRES)
TOPE DEL EJE (8 GRADOS)

KEY	*PART NO.*	*PART NAME*	*QTY.*	*SERIAL NO.*	*REMARKS*
1	19M7884	CAP SCREW	4		M16 X 110
2	T168247	STRAP	2		
3	T157315	STRAP	6		
4	24M7241	WASHER	4		17 X 34 X 4 MM
5	**AT306603**	**FIELD INSTALLATION KIT**	**1**		

DIFFERENTIAL SUPPORTS AND LUBRICATION LINES
SUPPORTS ET CONDUITES GRAISSAGE DIFFERENTIEL
SOPORTES DEL DIFERENCIAL Y LINEAS DE LUBRICACION

TX1012998 -UN-11OCT06

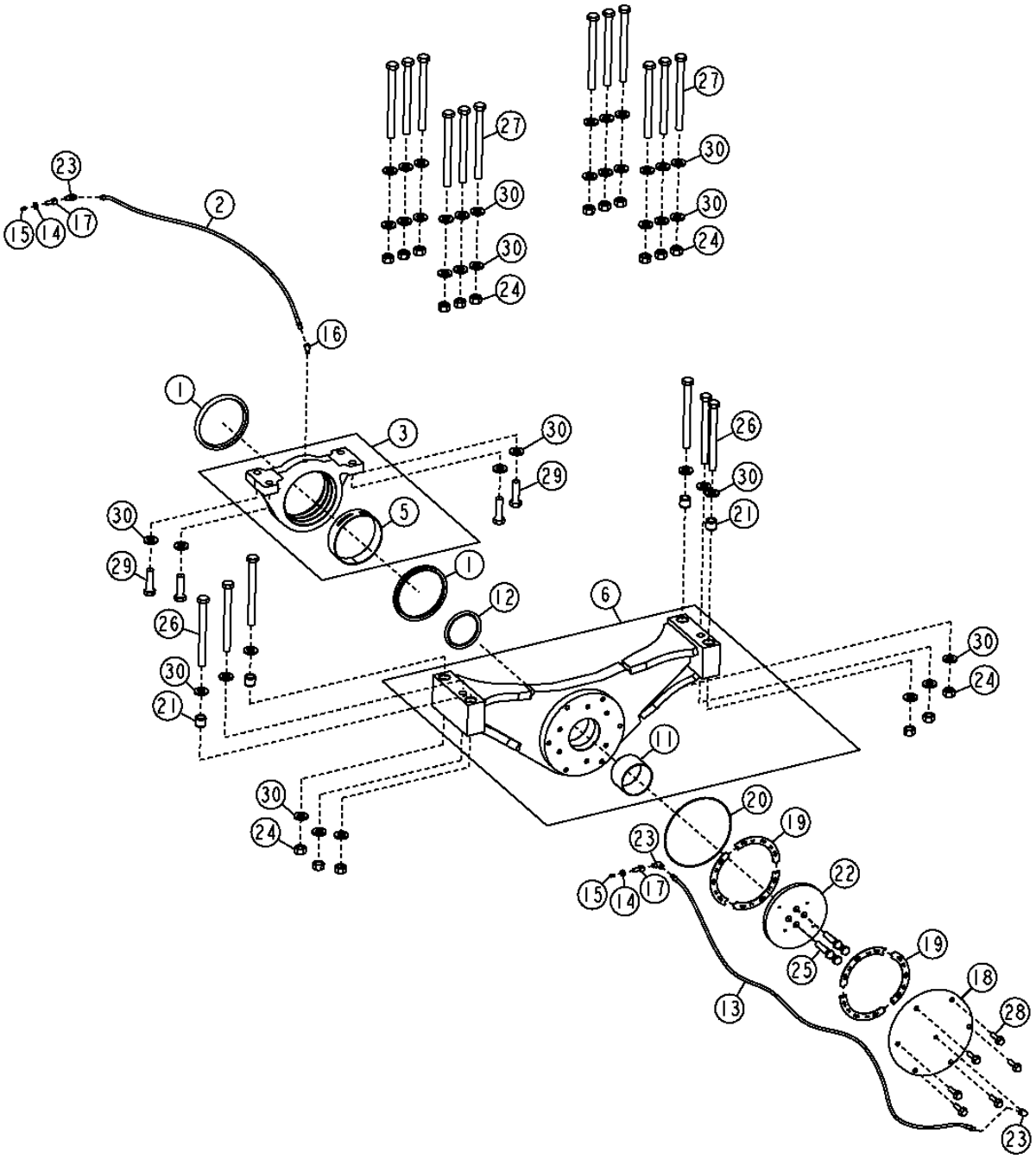

THIS PARTS LISTING IS CONTINUED

DIFFERENTIAL SUPPORTS AND LUBRICATION LINES
SUPPORTS ET CONDUITES GRAISSAGE DIFFERENTIEL
SOPORTES DEL DIFERENCIAL Y LINEAS DE LUBRICACION

KEY	PART NO.	PART NAME	QTY.	SERIAL NO.	REMARKS
1	AT206794	SEAL	2		
2	AT207022	HYDRAULIC HOSE	1		
3	AT210606	REAR AXLE SUPPORT	1		
5	T167837	BUSHING	1		
6	AT314290	REAR AXLE SUPPORT	1		
11	T212855	BUSHING	1		
12	AT49859	SEAL	1		
13	AT53541	HYDRAULIC HOSE	1		
14	E12379	NUT	2		3.175 MM
15	JD7797	LUBRICATION FITTING	2		
16	M45937	ELBOW FITTING	1		
17	R36311	FITTING	2		
18	T157056	COVER	1		
19	T167924	THRUST BEARING	6		
20	T169329	O-RING	1		
21	T174463	BUSHING	4		
22	T208791	DISK	1		
23	T56112	ELBOW FITTING	3		
24	14M7277	NUT	18		M20
25	19M7719	CAP SCREW	4		M16 X 70
26	19M7778	CAP SCREW	6		M20 X 220
27	19M7779	CAP SCREW	12		M20 X 240
28	19M7813	SCREW	6		M12 X 45
29	19M8639	CAP SCREW	4		M20 X 70
30	24M7242	WASHER	40		21.400 X 42 X 5 MM

FRONT AND REAR DIFFERENTIAL LOCK LINES
CONDUITE DE BLOCAGE TE TRABA DE DIFFERENTIEL AVANT
LINEA DE BLOQUEO Y TRABA DEL DIFERENCIAL DELANTERO

TX1013207 -UN-26OCT06

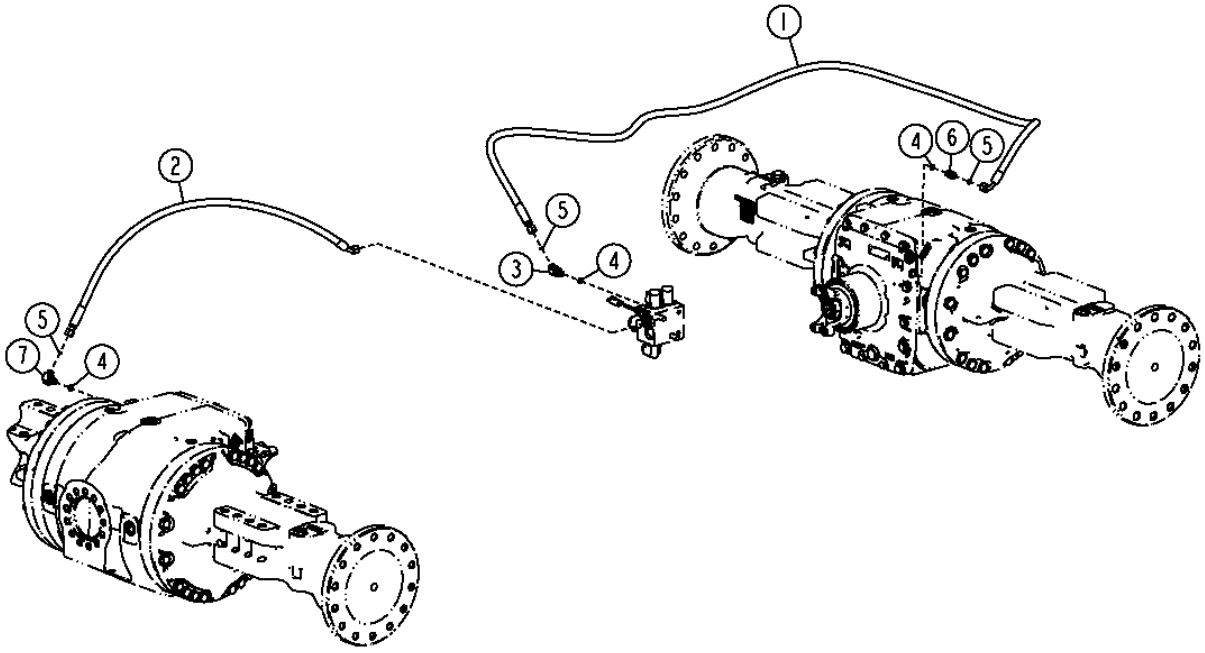

TX1013207

FRONT AND REAR DIFFERENTIAL LOCK LINES
CONDUITE DE BLOCAGE DE DIFFERENTIEL AVANT
LINEA DE BLOQUEO Y TRABA DEL DIFERENCIAL DELANTERO

KEY	*PART NO.*	*PART NAME*	*QTY.*	*SERIAL NO.*	*REMARKS*
1	AT316329	HYDRAULIC HOSE - FABRICATE	1		
2	AT315254	HYDRAULIC HOSE - FABRICATE	1		
3	38H1045	ELBOW FITTING	1		
4	R26448	O-RING	1		
5	T77613	O-RING	1		
6	38H1160	ADAPTER FITTING	1		
7	38H1004	ELBOW FITTING	1		

DIFFERENTIAL LOCK SWITCH
INTERRUPTEUR DE BLOCAGE DU DIFFERENTIEL
INTERRUPTOR DE TRABA DEL DIFERENCIAL

TX1012266 -UN-22SEP06

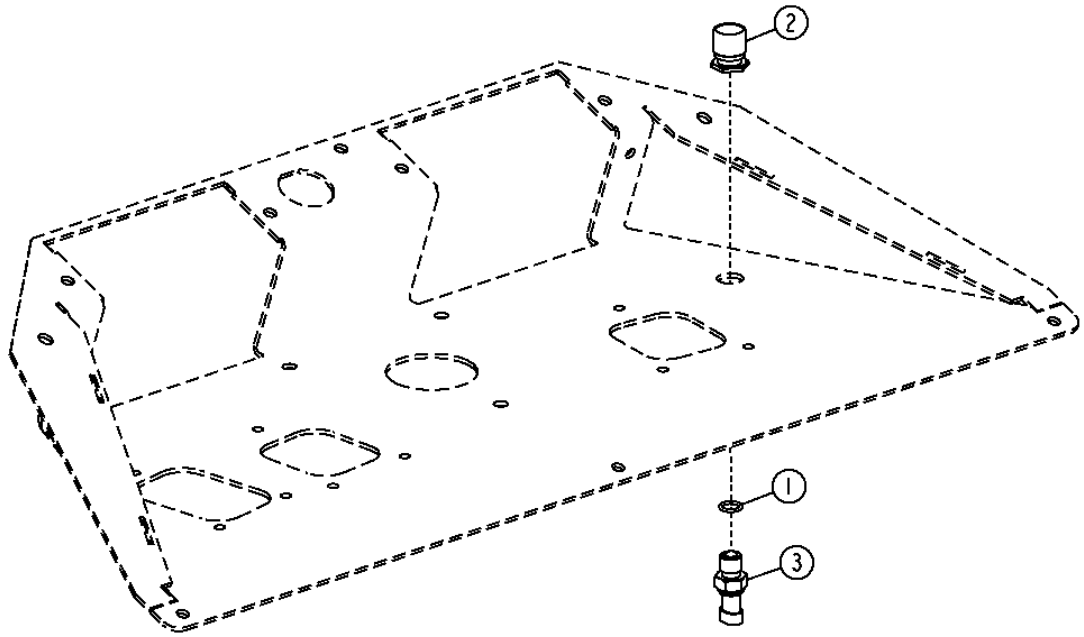

TX1012266

DIFFERENTIAL LOCK SWITCH
INTERRUPTEUR DE BLOCAGE DU DIFFERENTIEL
INTERRUPTOR DE TRABA DEL DIFERENCIAL

KEY	*PART NO.*	*PART NAME*	*QTY.*	*SERIAL NO.*	*REMARKS*
1	51M7042	O-RING	1		13.300 X 2.200 MM
2	RE43637	ACTUATOR	1		
3	RE46534	SWITCH	1		

DRIVE SHAFTS
ARBRES ENTRAINEMENT
EJES IMPULSORES

TX1013444 -UN-21DEC06

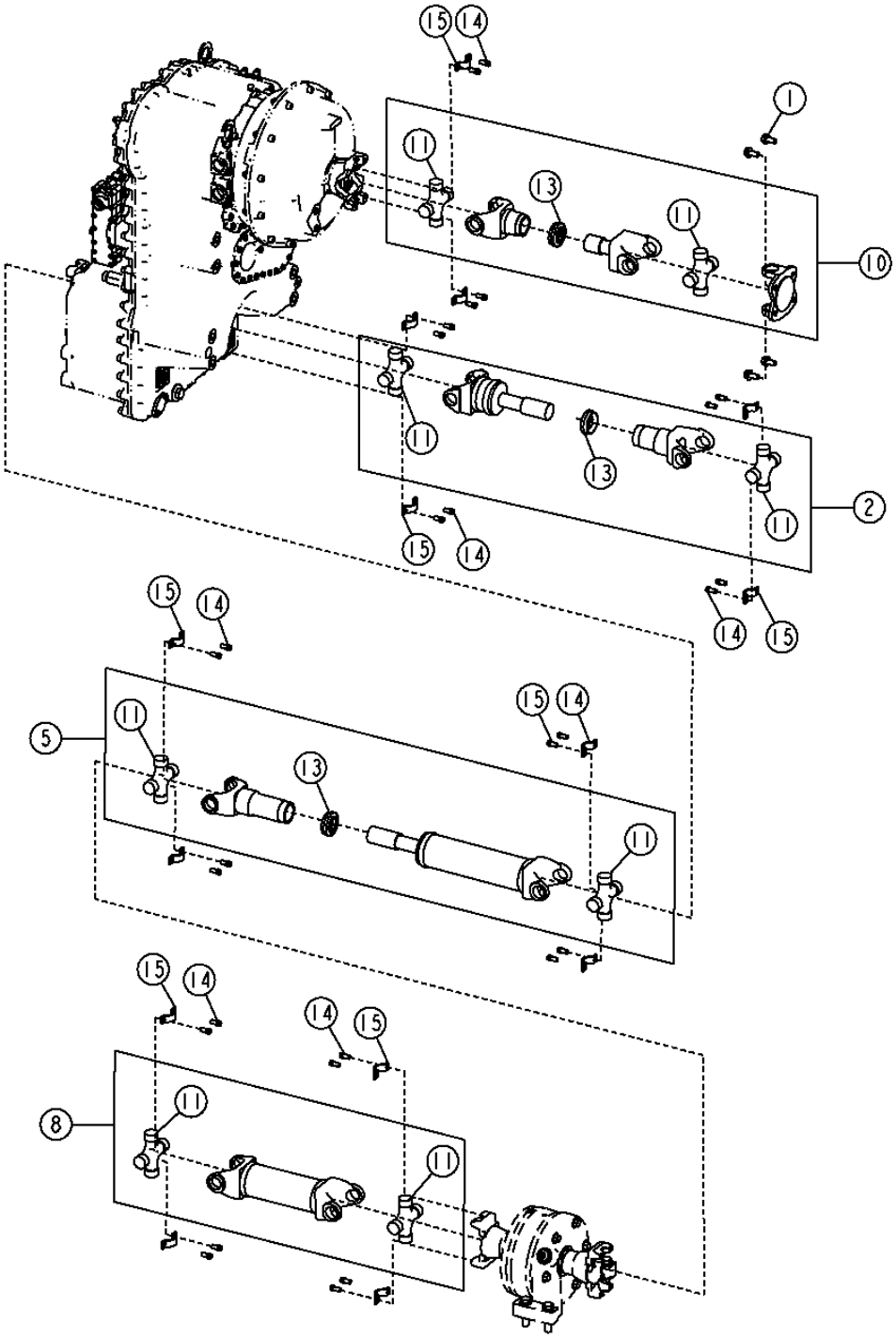

TX1013444

DRIVE SHAFTS
ARBRES ENTRAINEMENT
EJES IMPULSORES

KEY	*PART NO.*	*PART NAME*	*QTY.*	*SERIAL NO.*	*REMARKS*
1	19M7788	SCREW	4		M12 X 25
2	AT207329	UNIVERSAL DRIVESHAFT	1		
5	AT207333	DRIVE SHAFT	1		
8	AT207336	UNIVERSAL DRIVESHAFT	1		
10	AT211475	UNIVERSAL DRIVESHAFT	1		
11	AT207330	UNIVERSAL JOINT	2		
13	AT210344	CAP	1		
14	R85169	SCREW	28		
15	T203475	STRAP	14		

TRANSMISSION MOUNTING BRACKETS
SUPPORTS DE MONTAGE DE TRANSMISSION
ESCUADRAS DE MONTAJE DE TRANSMISION

TX1013281 -UN-16OCT06

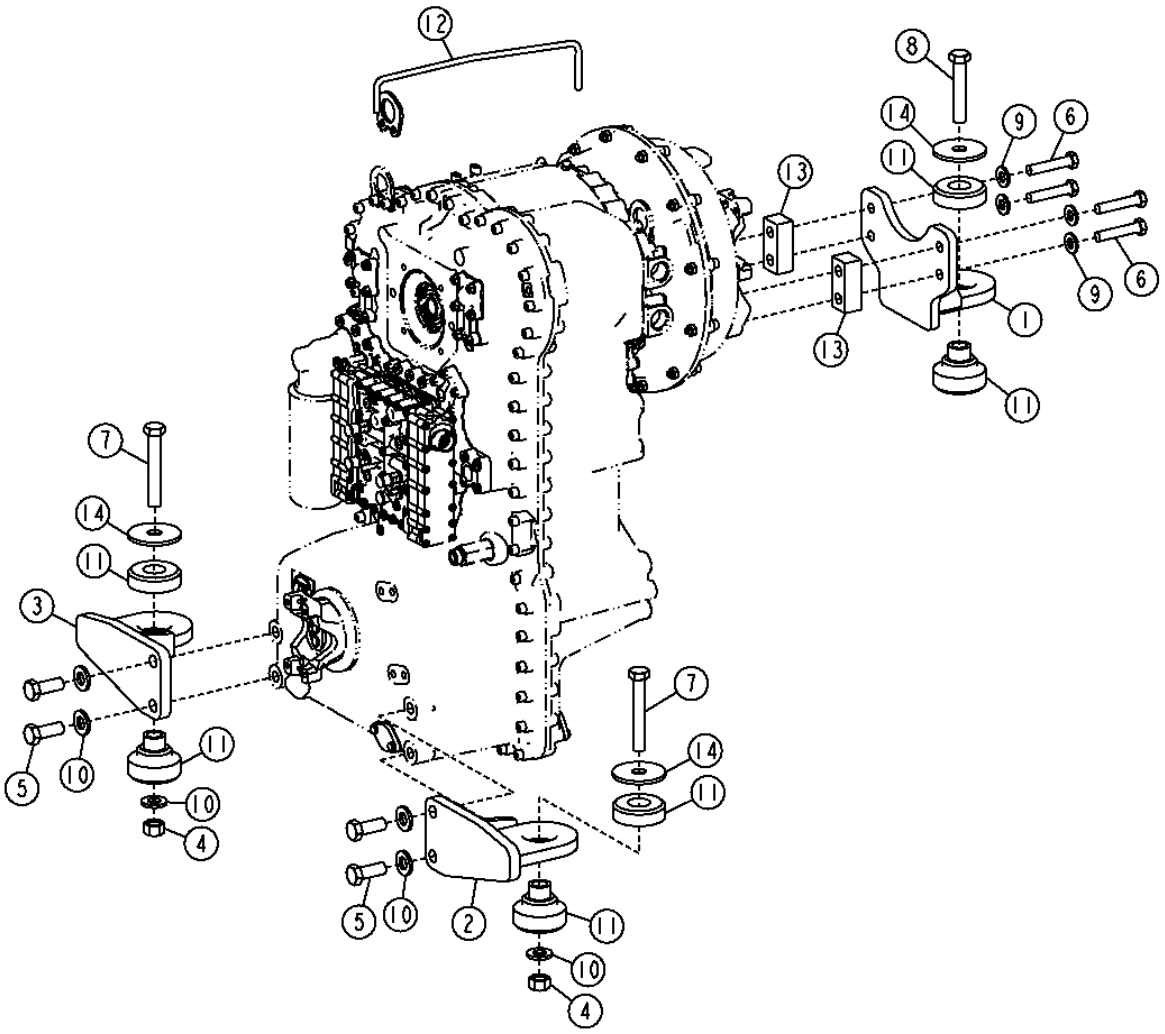

TX1013281

TRANSMISSION MOUNTING BRACKETS
SUPPORTS DE MONTAGE DE TRANSMISSION
ESCUADRAS DE MONTAJE DE TRANSMISION

KEY	*PART NO.*	*PART NAME*	*QTY.*	*SERIAL NO.*	*REMARKS*
1	AT209221	SUPPORT	1		
2	AT209703	SUPPORT	1		
3	AT209704	SUPPORT	1		
4	14M7277	NUT	2		M20
5	19M7597	CAP SCREW	4		M20 X 50
6	19M7720	CAP SCREW	4		M16 X 80
7	19M7968	CAP SCREW	2		M20 X 130
8	19M7969	CAP SCREW	1		M20 X 110
9	24M7241	WASHER	4		17 X 34 X 4 MM
10	24M7242	WASHER	6		21.400 X 42 X 5 MM
11	AT165288	ISOLATOR	3		
12	AT222054	GUIDE	1		
13	T171340	STRAP	2		
14	T42977	WASHER	3		23.012 X 88.900 X 6 MM

TRANSMISSION
BOITE DE VITESSES
TRANSMISION

TX1013398 -UN-23OCT06

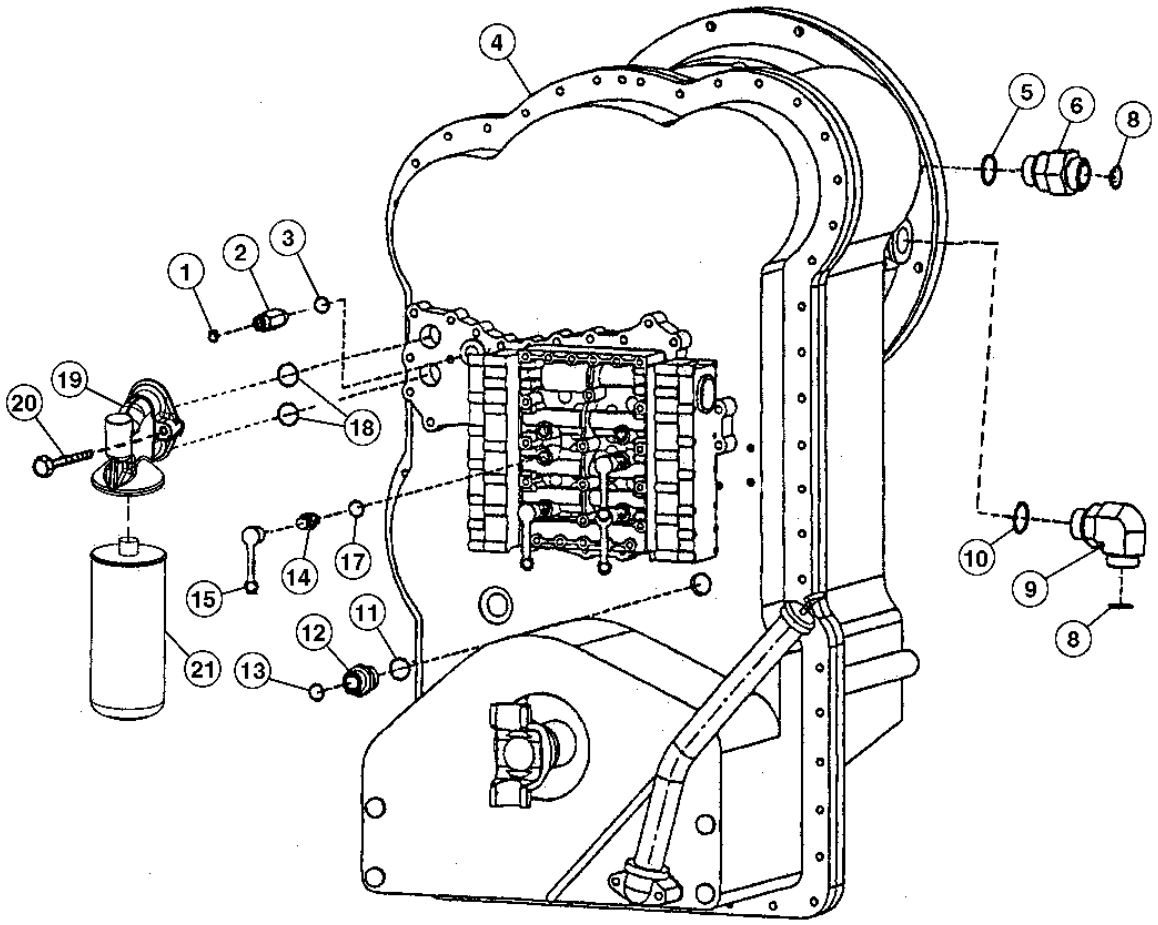

TX1013398

TRANSMISSION
BOITE DE VITESSES
TRANSMISION

KEY	PART NO.	PART NAME	QTY.	TRANSMISSION SERIAL NO.	REMARKS
1	T77613	O-RING	1		
2	38H5178	ADAPTER FITTING	1		
3	51M7042	O-RING	1		13.300 X 2.200 MM
4	AT305658	TRANSMISSION	1		(REMAN)
5	R29936	O-RING	1		
6	38H1164	ADAPTER FITTING	1		
8	T76938	O-RING	2		
9	38H1037	ELBOW FITTING	1		
10	51M7048	O-RING	1		
11	T24210	O-RING	1		
12	T172732	ADAPTER FITTING	1		
13	T77932	O-RING	1		
14	AT202955	DIAGNOSTIC COUPLING	4		
15	R77175	COVER	4		
17	51M7039	O-RING	4		8.100 X 1.600 MM
18	T172318	O-RING	2		
19	T177997	FILTER HEAD	1		
20	T173819	CAP SCREW	2		
21	AT222005	OIL FILTER	1		

TORQUE CONVERTER
CONVERTISSEUR DE COUPLE
CONVERTIDOR DE PAR

TX1012322 -UN-21SEP06

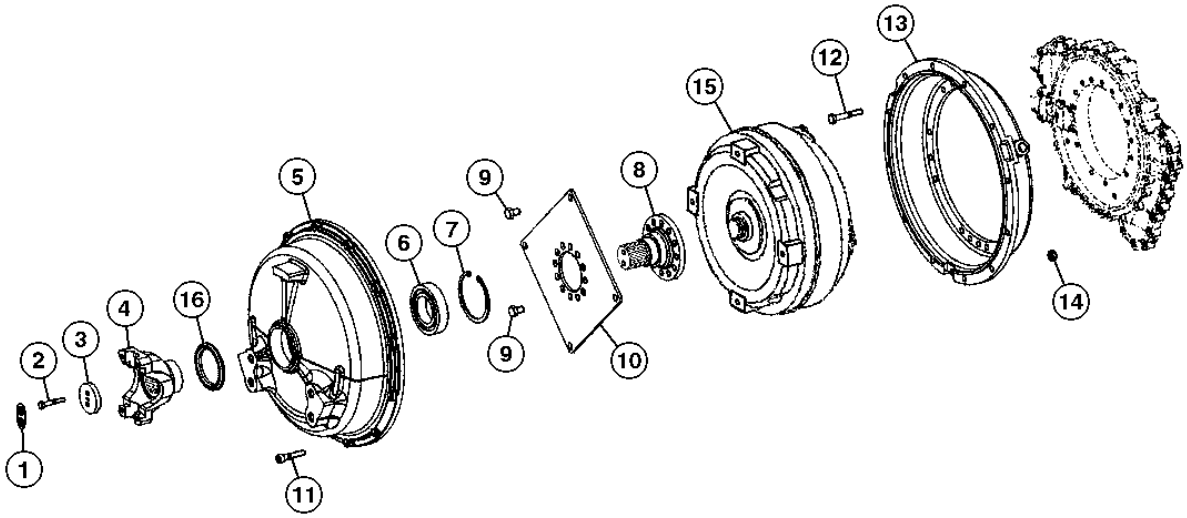

TX1012322

TORQUE CONVERTER
CONVERTISSEUR DE COUPLE
CONVERTIDOR DE PAR

KEY	PART NO.	PART NAME	QTY.	TRANSMISSION SERIAL NO.	REMARKS
1	T116613	WASHER	1		
2	19M8397	CAP SCREW	2		M8 X 50
3	T116516	SPACER	1		
4	T171730	YOKE WITH SHAFT	1		
5	T195240	HOUSING	1		
6	T195242	BALL BEARING	1		
7	T195243	SNAP RING	1		
8	T195241	UNIVERSAL DRIVESHAFT	1		
9	T174407	CAP SCREW	16		
10	T174386	DIAPHRAGM	1		
11	19M7179	CAP SCREW	12		M10 X 50
12	19M7742	CAP SCREW	18		M10 X 65
13	T179276	HOUSING	1		
14	14M7274	NUT	12		M10
15	AT225611	TORQUE CONVERTER	1		(REMAN)
16	T196792	SCREEN	1		

TRANSMISSION INPUT SHAFT
ARBRE D'ENTREE DE TRANSMISSION
EJE DE ENTRADA DE LA TRANSMISION

TX1012323 -UN-21SEP06

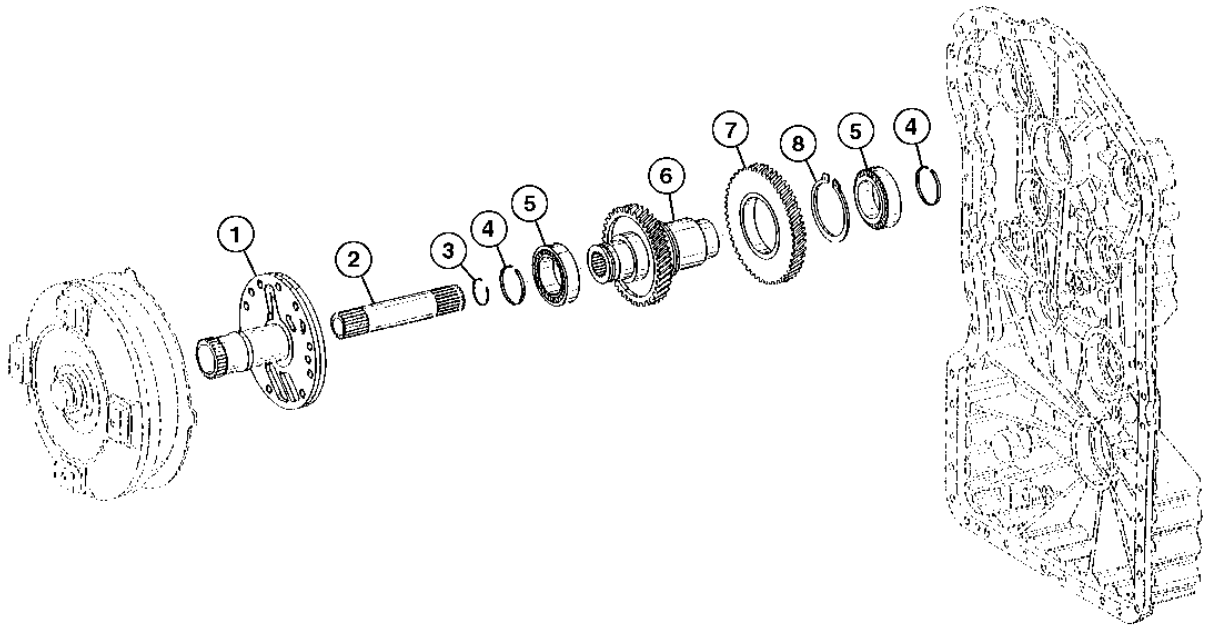

TX1012323

TRANSMISSION INPUT SHAFT
ARBRE D'ENTREE DE TRANSMISSION
EJE DE ENTRADA DE LA TRANSMISION

KEY	PART NO.	PART NAME	QTY.	TRANSMISSION SERIAL NO.	REMARKS
1	T195207	UNIVERSAL DRIVESHAFT	1		
2	T171114	PINION SHAFT	1		
3	T171178	SNAP RING	1		
4	T181535	PISTON RING	2		
5	T171126	BEARING	2		IMPORTANT-HIGH TOLERANCE BEARING REQUIRED IN THIS LOCATION. USE ONLY JOHN DEERE PARTS SOURCED BEARINGS.
6	T173807	SHAFT	1		
7	T173808	GEAR	1		
8	T173809	SNAP RING	1		

TRANSMISSION HOUSING
CARTER DE TRANSMISSION
CAJA DE LA TRANSMISION

TX1013400 -UN-23OCT06

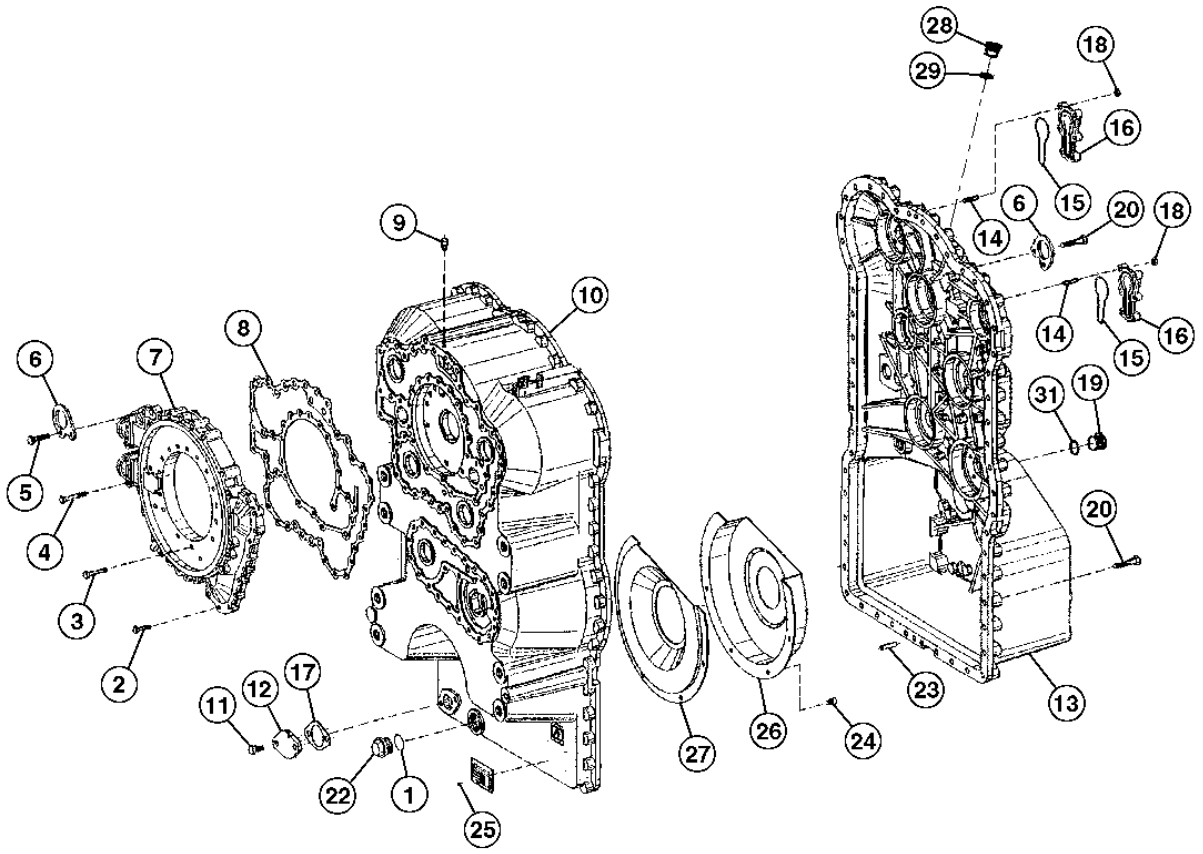

TX1013400

TRANSMISSION HOUSING
CARTER DE TRANSMISSION
CAJA DE LA TRANSMISION

KEY	PART NO.	PART NAME	QTY.	TRANSMISSION SERIAL NO.	REMARKS
1	T174107	O-RING	1		
2	T161208	CAP SCREW	15		
3	19M2972	CAP SCREW	21		M8 X 45
4	T173819	CAP SCREW	4		
5	19M8637	CAP SCREW	2		M10 X 40
6	T171112	PLATE	2		
7	T173063	MANIFOLD	1		
8	T172795	GASKET	1		
9	T116918	BREATHER	1		
10	T197461	TRANSMISSION CASE	1		
11	19M7284	CAP SCREW	2		M8 X 18
12	T144370	PLATE	1		
13	T181615	HOUSING	1		
14	T180884	STUD	12		
15	T174238	O-RING	2		
16	T171111	COVER	2		
17	T116604	GASKET	1		
18	14M7298	FLANGE NUT	12		M8
19	T173217	FITTING PLUG	1		
20	19M7658	CAP SCREW	53		M10 X 50
22	T172094	DRAIN PLUG	1		
23	T179318	PIN	2		
24	19M7964	CAP SCREW	5		M8 X 12
25	25M7021	GROOVE PIN	4		3 X 5 MM
26	T173812	SHROUD	1		
27	T173811	SHROUD	1		
28	T122803	FITTING PLUG	1		
29	T175864	O-RING	1		

TRANSMISSION SPEED SENSOR
CAPTEUR DE VITESSE DE TRANSMISSION
SENSOR DE VELOCIDAD DE LA TRANSMISION

TX1013410 -UN-19OCT06

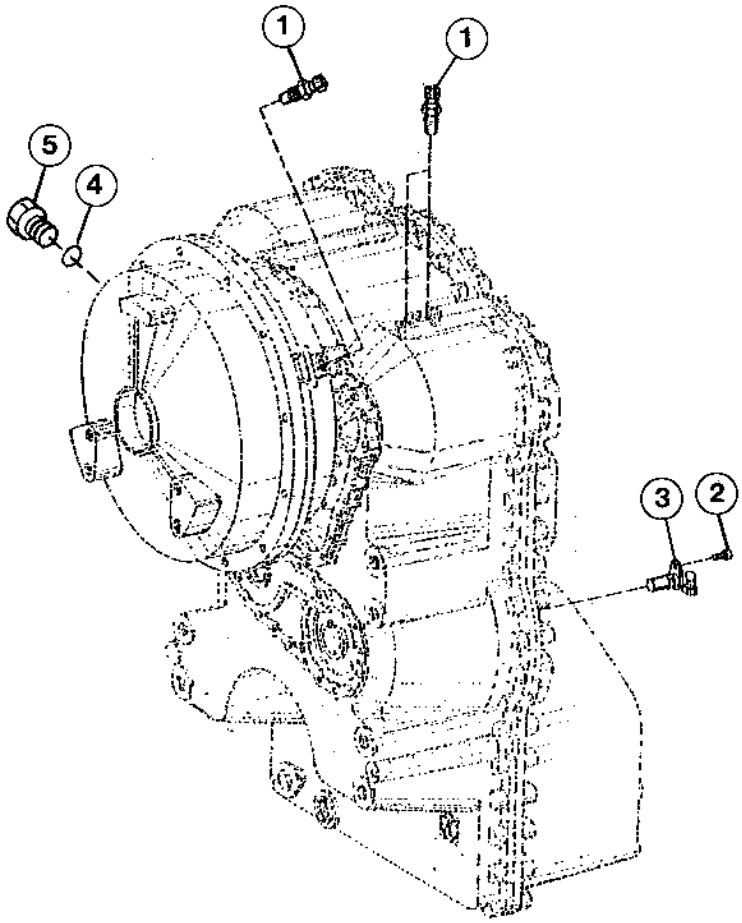

TX1013410

TRANSMISSION SPEED SENSOR
CAPTEUR DE VITESSE DE TRANSMISSION
SENSOR DE VELOCIDAD DE LA TRANSMISION

KEY	PART NO.	PART NAME	QTY.	TRANSMISSION SERIAL NO.	REMARKS
1	AT210773	SENSOR	3		
	R104558	O-RING	3		
2	19M7932	CAP SCREW	1		M8 X 16
3	T179510	SENSOR	1		
	R73599	O-RING	1		(NOT ILLUSTRATED)
4	T176796	O-RING	1		
5	AT175750	PLUG	1		

TRANSMISSION OIL PUMP
POMPE A HUILE DE BOITE
BOMBA DE ACEITE DE LA TRANSMISION

TX1012324 -UN-21SEP06

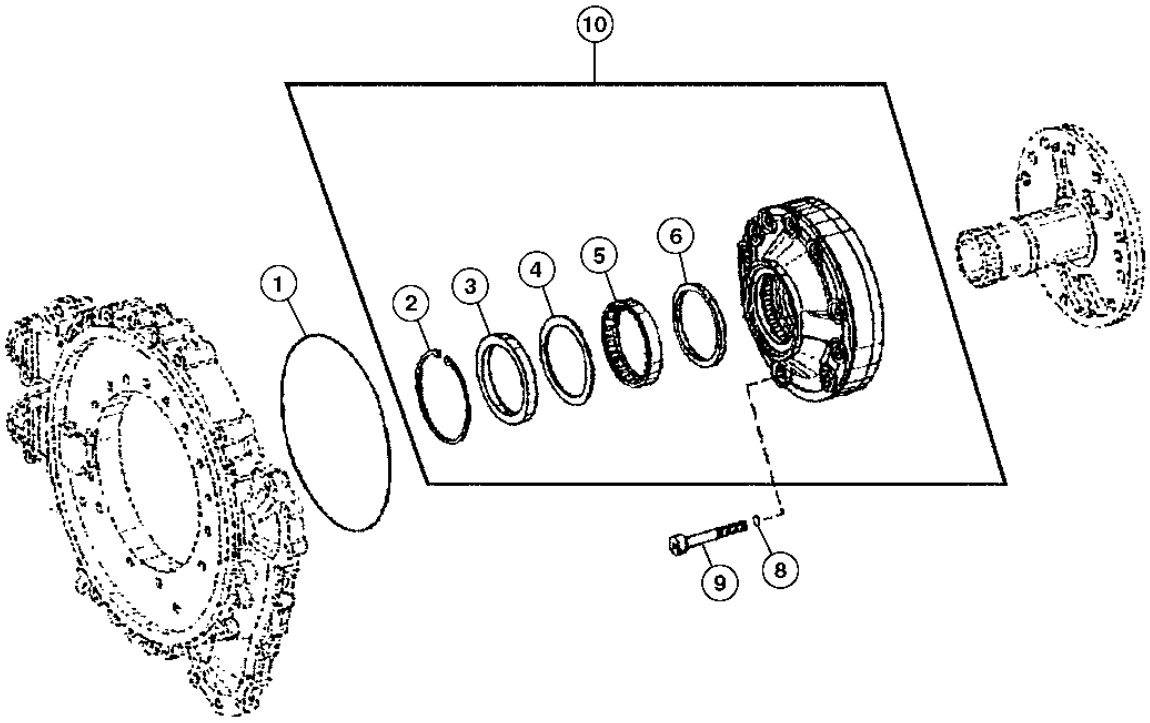

TX1012324

TRANSMISSION OIL PUMP
POMPE A HUILE DE BOITE
BOMBA DE ACEITE DE LA TRANSMISION

KEY	PART NO.	PART NAME	QTY.	TRANSMISSION SERIAL NO.	REMARKS
1	L40273	O-RING	1		
2	T173400	SNAP RING	1		
3	T173399	SEAL	1		
4	T173397	THRUST WASHER	1		
5	T173398	BEARING	1		
6	T173396	RING	1		
8	T174239	O-RING	10		
9	T207759	BOLT	10		
10	AT334451	FLOW CONTROL HYD. VALVE	1		

TRANSMISSION COVER AND GASKET
COUVERCLE DE TRANSMISSION
CUBIERTA DE LA TRANSMISION

TX1013273 -UN-20OCT06

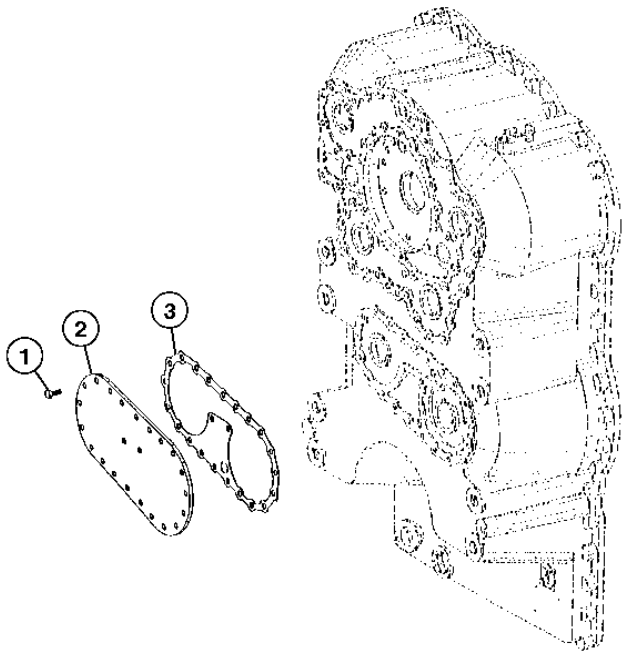

TX1013273

TRANSMISSION COVER AND GASKET
COUVERCLE DE TRANSMISSION
CUBIERTA DE LA TRANSMISION

KEY	PART NO.	PART NAME	QTY.	TRANSMISSION SERIAL NO.	REMARKS
1	19M7284	CAP SCREW	23		M8 X 18
2	T172814	COVER	1		
3	T181474	GASKET	1		

TRANSMISSION INTERNAL OIL LINES
CONDUITES D'HUILE INTERNES DE TRANSMISSION
LINEAS INTERNAS DE ACEITE DE LA TRANSMISION

TX1013413 -UN-20OCT06

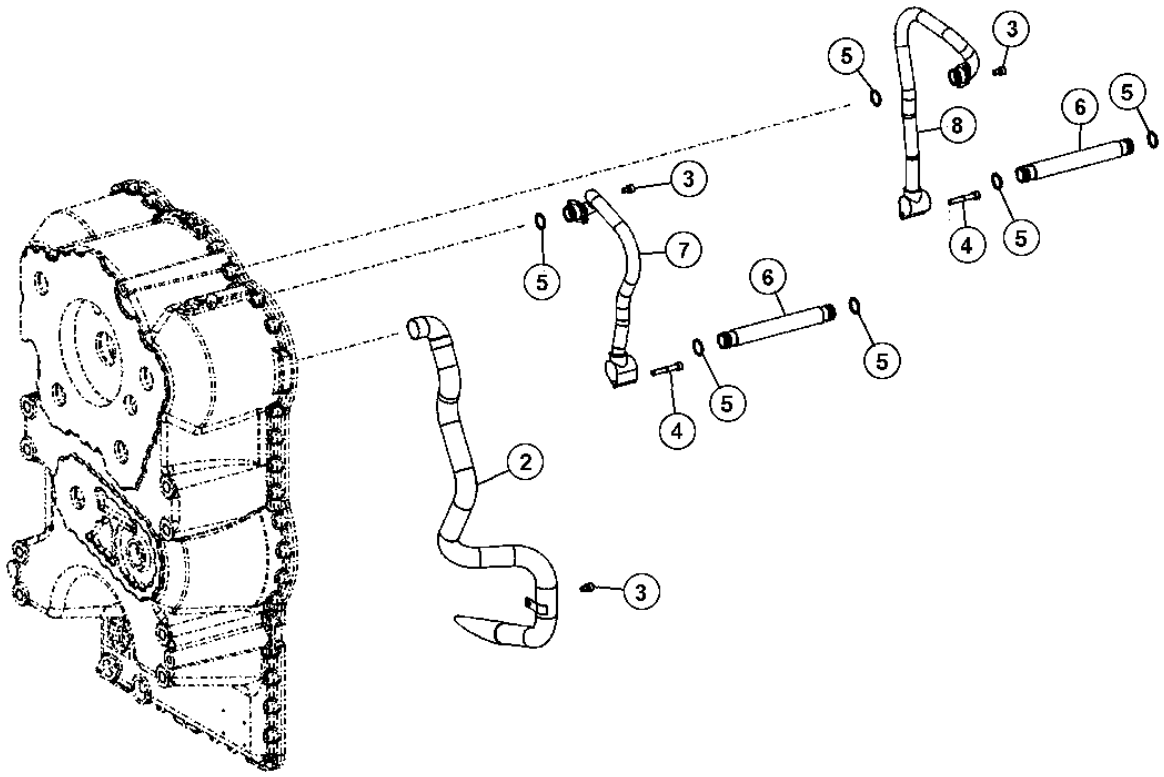

TX1013413

TRANSMISSION INTERNAL OIL LINES
CONDUITES D'HUILE INTERNES DE TRANSMISSION
LINEAS INTERNAS DE ACEITE DE LA TRANSMISION

KEY	PART NO.	PART NAME	QTY.	TRANSMISSION SERIAL NO.	REMARKS
2	T173822	TUBE	1		
3	19M7964	CAP SCREW	5		M8 X 12
4	T181455	CAP SCREW	2		
5	T174234	O-RING	6		
6	T174389	PIPE	2		
7	T197462	OIL TUBE	1		
8	T197463	OIL TUBE	1		

TRANSMISSION CONTROL VALVE MANIFOLD
COLLECTEUR DE DISTRIBUTEUR DE TRANSMISSION
COLECTOR DE LA VALVULA DE CONTROL DE TRANSMISION

TX1013414 -UN-19OCT06

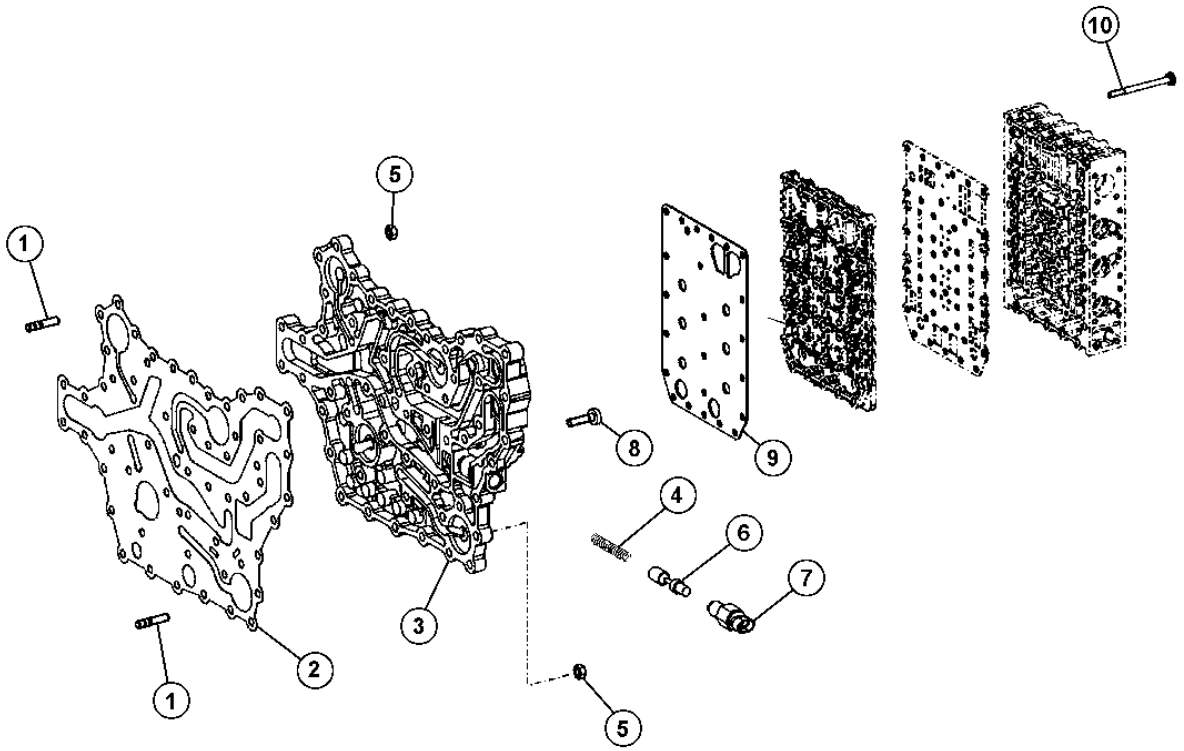

TX1013414

TRANSMISSION CONTROL VALVE MANIFOLD
COLLECTEUR DE DISTRIBUTEUR DE TRANSMISSION
COLECTOR DE LA VALVULA DE CONTROL DE TRANSMISION

KEY	PART NO.	PART NAME	QTY.	TRANSMISSION SERIAL NO.	REMARKS
1	T180884	STUD	14		
2	T180480	GASKET	1		
3	T180481	MANIFOLD	1		
4	T177979	SPRING	1		
5	14M7298	FLANGE NUT	14		M8
6	T203742	VALVE SPOOL	1		
7	T173873	PRESSURE SWITCH	1		(TRANSMISSION OIL FILTER RESTRICTION INDICATOR)
8	T161208	CAP SCREW	36		
9	T174393	PLATE	1		(ALSO ORDER T173870 AND T174394)
10	T173123	CAP SCREW	23		

TRANSMISSION CONTROL VALVE
DISTRIBUTEUR DE TRANSMISSION
VALVULA DE CONTROL DE TRANSMISION

TX1013415 -UN-19OCT06

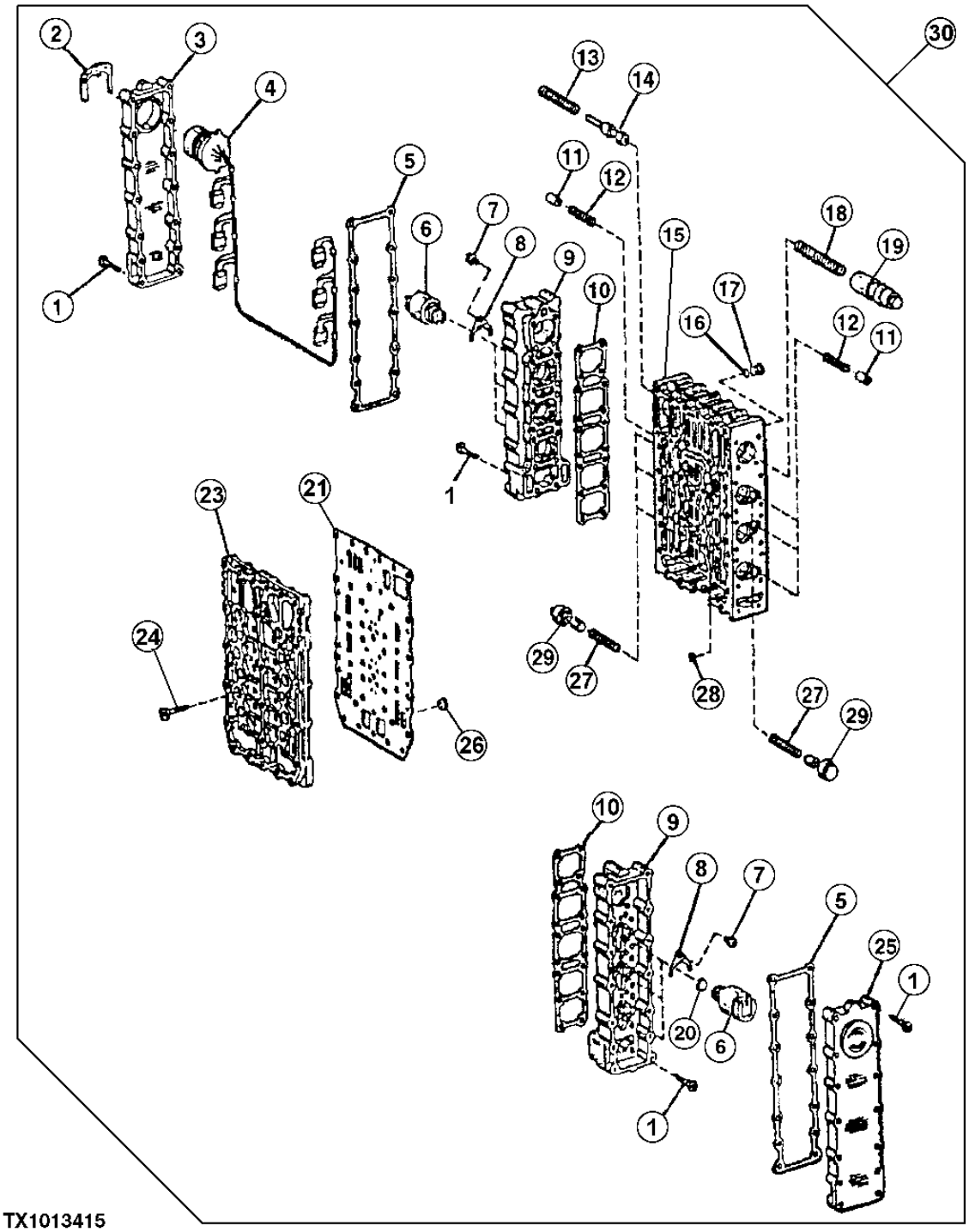

TRANSMISSION CONTROL VALVE
DISTRIBUTEUR DE TRANSMISSION
VALVULA DE CONTROL DE TRANSMISION

KEY	PART NO.	PART NAME	QTY.	TRANSMISSION SERIAL NO.	REMARKS
1	T173131	CAP SCREW	64		
2	T161207	CLAMP	1		
3	T173138	COVER	1		
4	T179721	WIRING HARNESS	1		(INCLUDES TRANSMISSION TEMPERATURE SENSOR)
5	T182254	GASKET	2		
6	T169607	SOLENOID VALVE	6		
7	19M7600	SCREW	6		M5 X 12
8	T144486	PLATE	6		
9	T177221	HOUSING	2		
10	T182196	GASKET	2		
11	T169766	PIN FASTENER	6		
12	T169712	COMPRESSION SPRING	6		
13	T173126	COMPRESSION SPRING	1		
14	T173125	PISTON	1		
15	T177219	FLOW CONTROL HYD. VALVE	1		
16	T116416	O-RING	8		
17	T175862	PLUG	8		
18	T173128	COMPRESSION SPRING	1		
19	T205369	PISTON	1		
20	T170196	O-RING	6		
21	T179532	PLATE	1		(ALSO ORDER T179531 AND T179533)
23	T203767	PLATE	1		
24	T195275	CAP SCREW	18		
25	T173139	COVER	1		
26	T174396	SCREEN	6		
27	T169711	COMPRESSION SPRING	6		
28	T169707	ORIFICE	6		
29	T173511	PISTON	6		
30	AT220039	HYD ACTUATED CONTROL VALVE	1		

TRANSMISSION OUTPUT SHAFT
ARBRE DE SORTIE DE TRANSMISSION
EJE DE SALIDA DE LA TRANSMISION

T193413 -UN-21AUG03

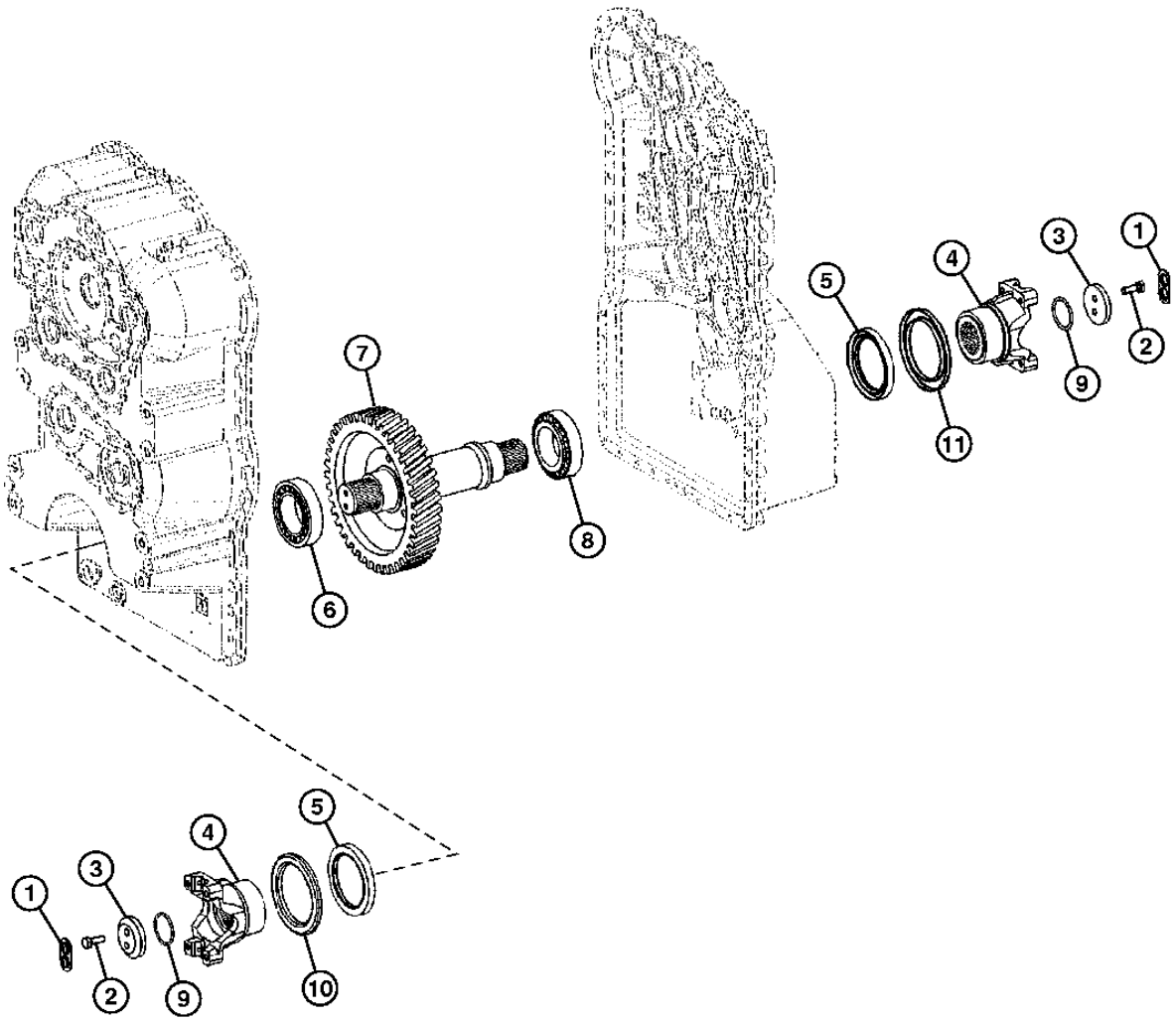

T193413

TRANSMISSION OUTPUT SHAFT
ARBRE DE SORTIE DE TRANSMISSION
EJE DE SALIDA DE LA TRANSMISION

KEY	PART NO.	PART NAME	QTY.	TRANSMISSION SERIAL NO.	REMARKS
1	T116928	WASHER	2		
2	19M7168	CAP SCREW	4		M10 X 30
3	T180957	WASHER	2		
4	T180328	YOKE	2		
	T225913	UNIVERSAL JOINT YOKE	2		HARSH ENVIRONMENT
5	T116915	SEAL	2		
6	T173847	BEARING	1		
7	T173865	SHAFT	1		
8	T173847	BEARING	1		
9	T174237	O-RING	2		
10	T180329	SCREEN	1		
11	T180753	SCREEN	1		

CONVERTER RELIEF AND MINIMUM PRESSURE VALVES
CLAPET DECHARGE ET PRESSION MINIMALE CONVERTISSEUR
VALVULAS DE PRESION MINIMA Y ALIVIO DEL CONVERTIDOR

T155456 -UN-03JUN02

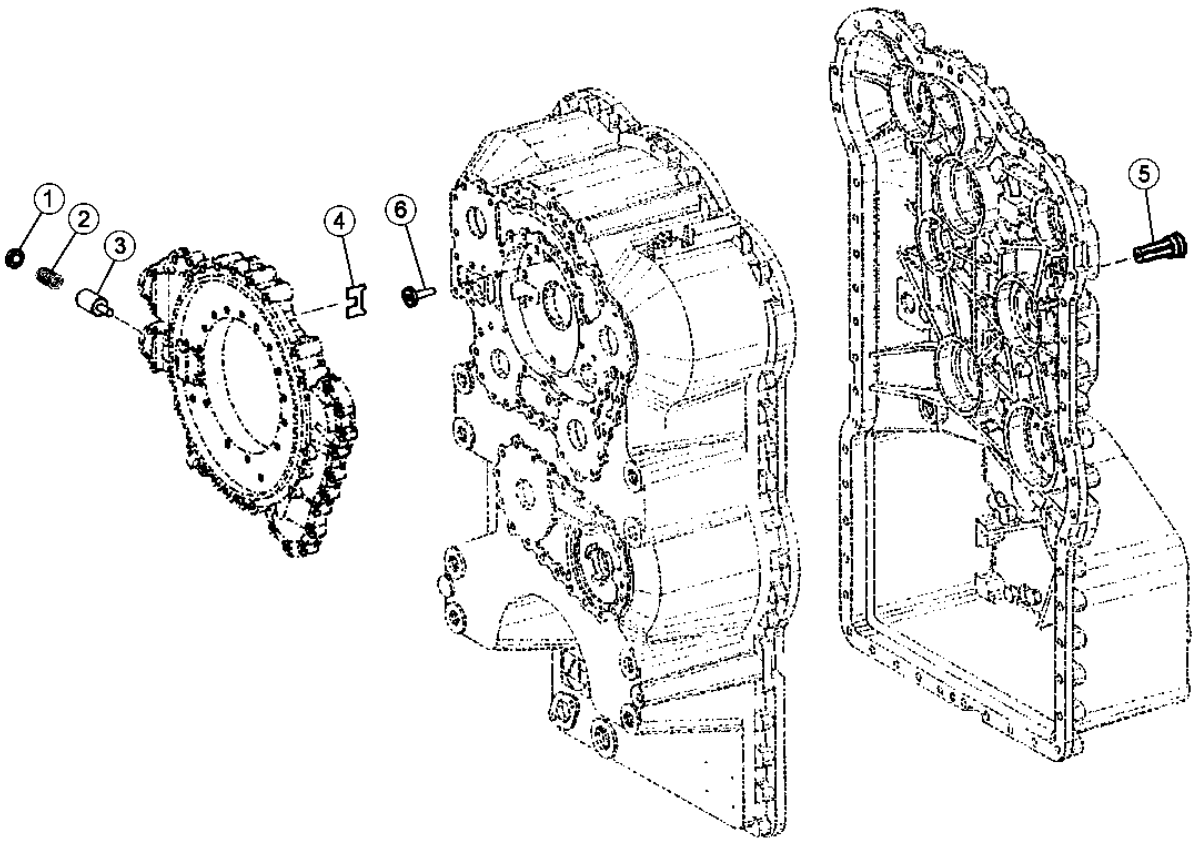

T155456

CONVERTER RELIEF AND MINIMUM PRESSURE VALVES
CLAPET DECHARGE ET PRESSION MINIMALE CONVERTISSEUR
VALVULAS DE PRESION MINIMA Y ALIVIO DEL CONVERTIDOR

KEY	*PART NO.*	*PART NAME*	*QTY.*	*TRANSMISSION SERIAL NO.*	*REMARKS*
1	T173145	PLATE	1		
2	T176528	COMPRESSION SPRING	1		
3	T176527	PISTON	1		
4	T173146	WASHER	1		
5	T176526	FLOW CONTROL HYD. VALVE	1		
6	T195270	PRESSURE RELIEF VALVE	1		

POWER TAKEOFF
PRISE DE FORCE
TOMA DE FUERZA

TX1012327 -UN-22SEP06

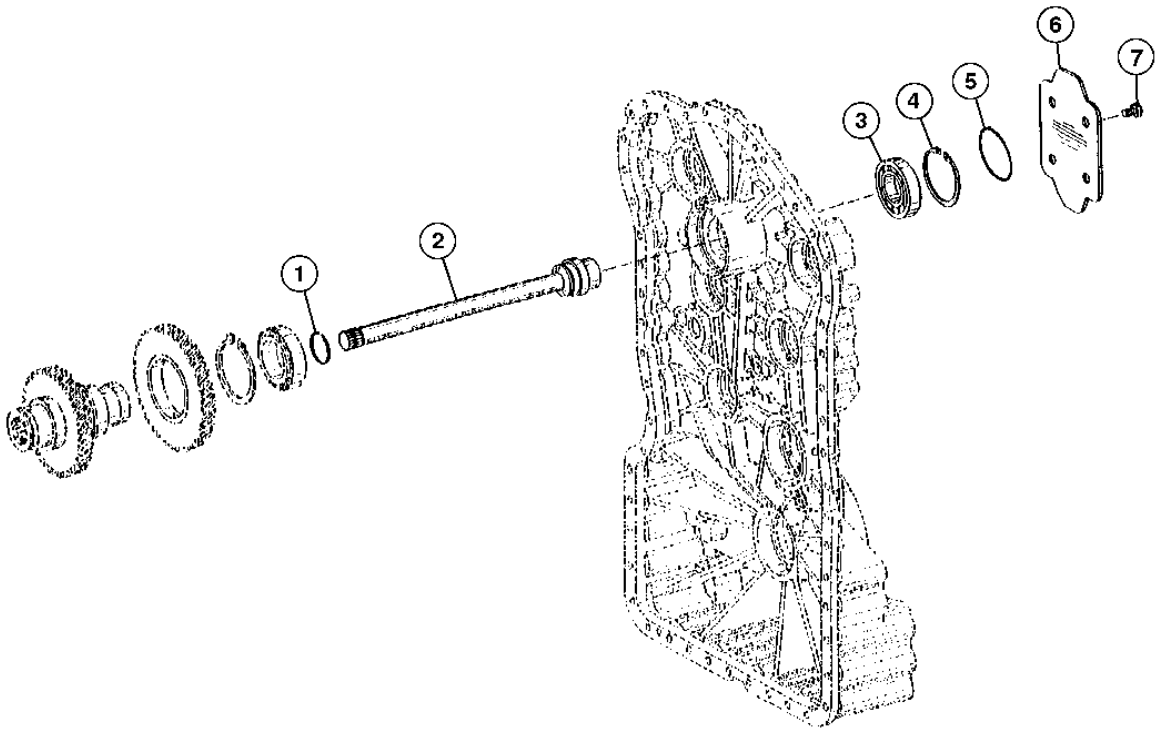

TX1012327

POWER TAKE-OFF
PRISE DE FORCE
TOMA DE FUERZA

KEY	PART NO.	PART NAME	QTY.	TRANSMISSION SERIAL NO.	REMARKS
1	T181535	PISTON RING	1		
2	T175292	SHAFT	1		
3	T171140	BALL BEARING	1		
4	40M1872	SNAP RING	1		
5	T174529	O-RING	1		
6	.....	PLATE	1		(T174405 NLA)
7	.....	CAP SCREW	4		(T174407 NLA)

CLUTCH ASSEMBLY (FORWARD AND REVERSE CLUTCH)
EMBRAYAGE (MARCHE AVANT ET MARCHE ARRIERE)
CONJUNTO DE EMBRAGUE (AVANCE Y RETROCESO)

TX1013419 -UN-20OCT06

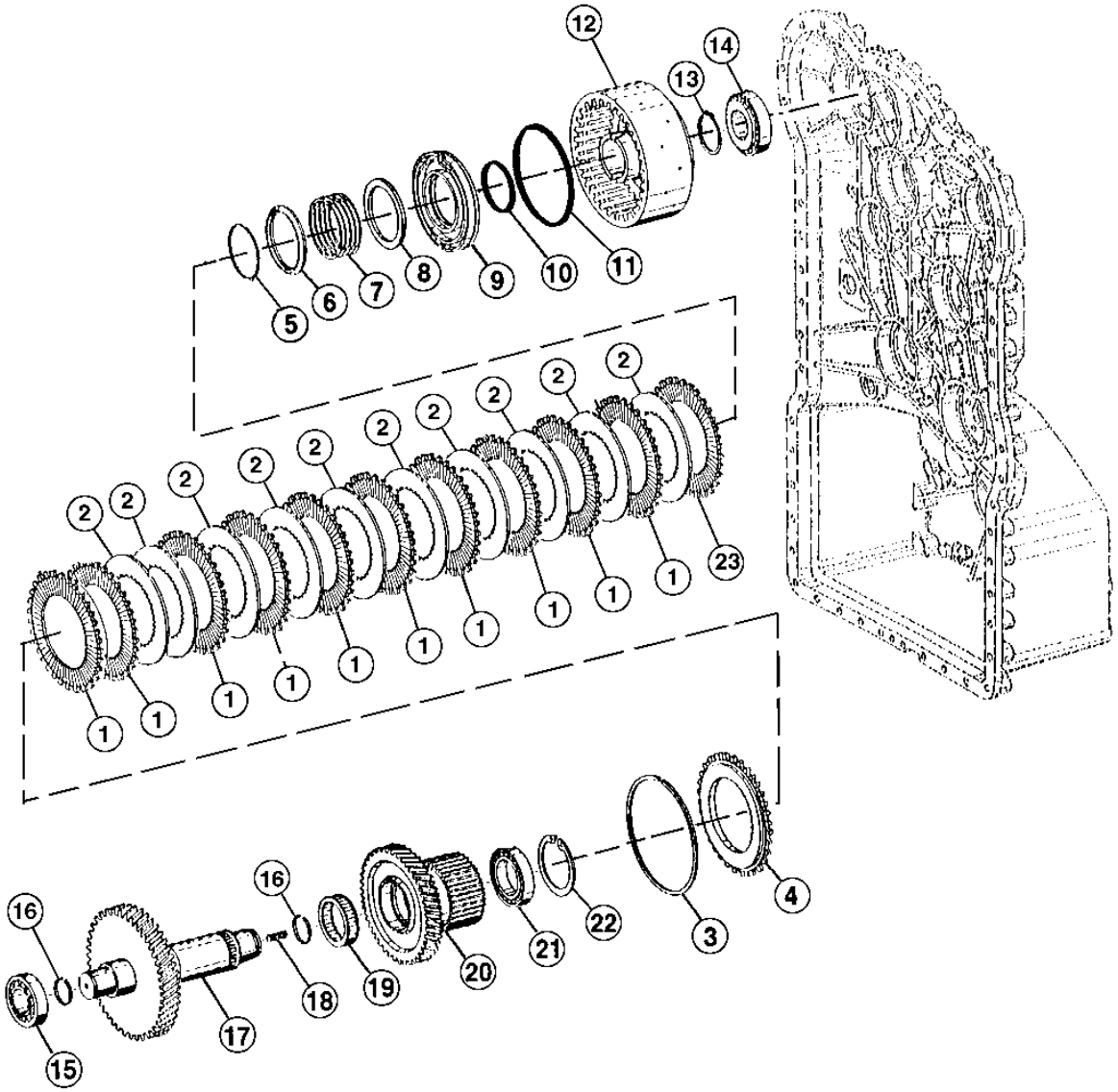

TX1013419

CLUTCH ASSEMBLY (FORWARD AND REVERSE CLUTCH)
EMBRAYAGE (MARCHE AVANT ET MARCHE ARRIERE)
CONJUNTO DE EMBRAGUE (AVANCE Y RETROCESO)

KEY	PART NO.	PART NAME	QTY.	TRANSMISSION SERIAL NO.	REMARKS
1	T173841	CLUTCH DISK	10		
2	T173842	CLUTCH DISK	10		
3	T173863	SNAP RING	AR		3.60 MM (.141")
	T173864	SNAP RING	AR		4.20 MM (.165")
	T181881	SNAP RING	AR		2.4 MM (.095")
	T181882	SNAP RING	AR		2.7 MM (.106")
	T181883	SNAP RING	AR		3.0 MM (.118")
	T181884	SNAP RING	AR		3.3 MM (.123")
4	T173844	SOLID SHIM	1		
5	T173067	SNAP RING	1		
6	T173066	SNAP RING	1		
7	T173065	COMPRESSION SPRING	1		
8	T173644	RING	1		
9	T173853	PISTON	1		
10	T173958	O-RING	1		
11	T173960	O-RING	1		
12	T173856	HOUSING	1		
13	T159519	SNAP RING	1		
14	T173849	BEARING	1		(REV ONLY) IMPORTANT-HIGH TOLERANCE BEARING REQUIRED IN THIS LOCATION. USE ONLY JOHN DEERE PARTS SOURCED BEARING.
15	T171156	BEARING	1		(FWD AND REV) IMPORTANT-HIGH TOLERANCE BEARING REQUIRED IN THIS LOCATION. USE ONLY JOHN DEERE PARTS SOURCED BEARING.
16	T172115	PISTON RING	2		
17	T173857	SHAFT	1		(REV)
	T173862	SHAFT	1		(FWD)
18	T171153	STUD	1		
19	T172302	NEEDLE BEARING	1		
20	T173848	IDLER	1		
21	T197553	BALL BEARING	1		
22	40M7060	SNAP RING	1		
23	T173840	CLUTCH DISK	1		

CLUTCH ASSEMBLY (FIRST GEAR)
EMBRAYAGE (PREMIÈRE VITESSE)
CONJUNTO DEL EMBRAGUE (PRIMERA MARCHA)

TX1013421 -UN-20OCT06

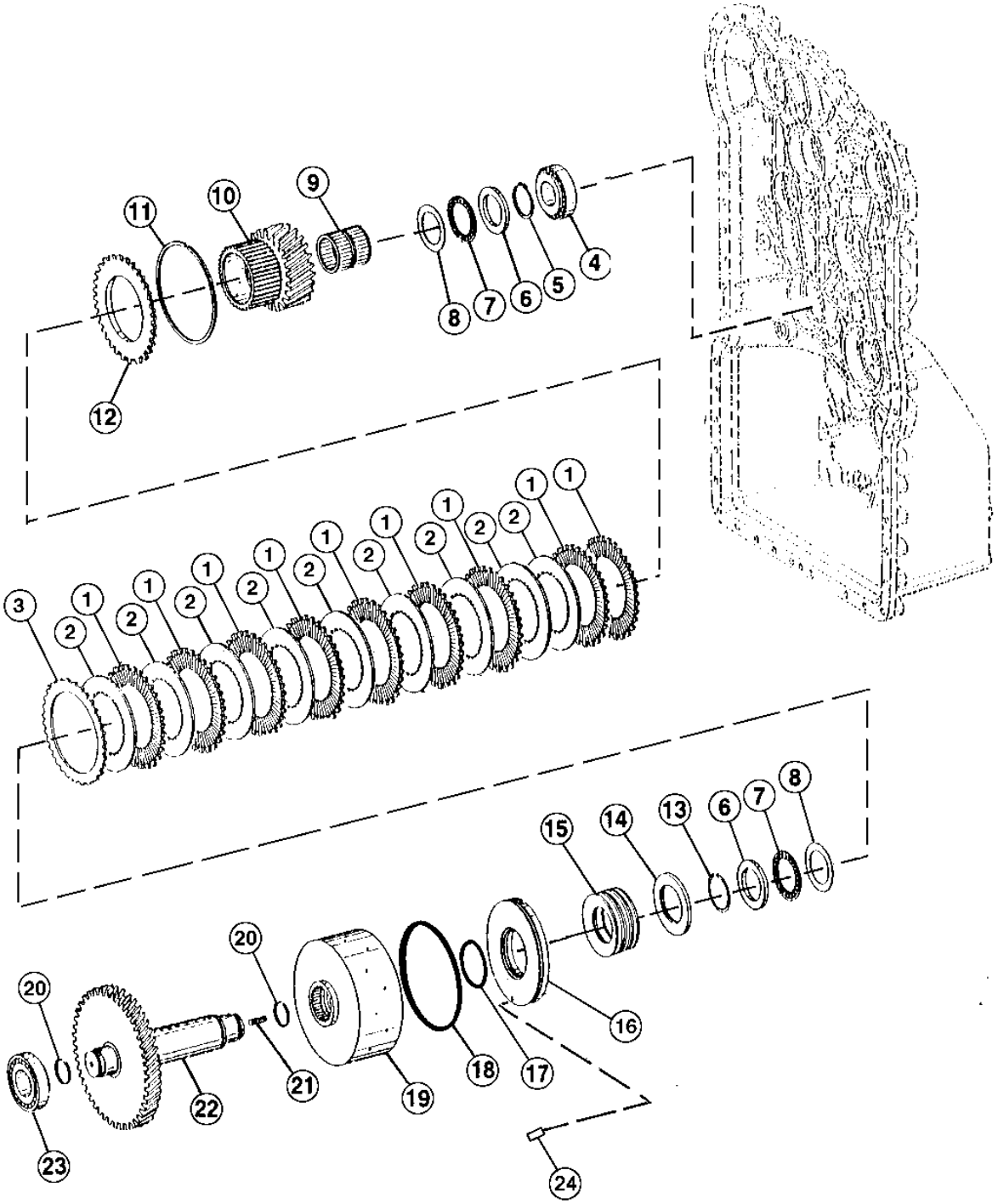

TX1013421

CLUTCH ASSEMBLY (FIRST GEAR)
EMBRAYAGE (PREMIÈRE VITESSE)
CONJUNTO DEL EMBRAGUE (PRIMERA MARCHA)

KEY	PART NO.	PART NAME	QTY.	TRANSMISSION SERIAL NO.	REMARKS
1	T173841	CLUTCH DISK	9		
2	T173842	CLUTCH DISK	9		
3	T173840	CLUTCH DISK	1		
4	T173849	BEARING	1		IMPORTANT-HIGH TOLERANCE BEARING REQUIRED IN THIS LOCATION. USE ONLY JOHN DEERE PARTS SOURCED BEARINGS.
5	T173036	SNAP RING	1		
6	T172104	DISK	2		
7	T172129	THRUST BEARING	2		
8	T172130	THRUST WASHER	2		
9	T179935	NEEDLE BEARING	1		
10	T173845	IDLER	1		
11	T173863	SNAP RING	AR		3.60 MM (.142")
	T173864	SNAP RING	AR		4.20 MM (.165")
	T181881	SNAP RING	AR		2.4 MM (.095")
	T181882	SNAP RING	AR		2.7 MM (.106")
	T181883	SNAP RING	AR		3.0 MM (.118")
	T181884	SNAP RING	AR		3.3 MM (.123")
12	T173844	SOLID SHIM	1		
13	T173067	SNAP RING	1		
14	T173066	SNAP RING	1		
15	T173839	SPRING	7		
16	T174418	PISTON	1		
17	T173958	O-RING	1		
18	T174413	O-RING	1		
19	T173837	HOUSING	1		
20	T172115	PISTON RING	2		
21	T171153	STUD	1		
22	T173843	SHAFT	1		
23	T173847	BEARING	1		IMPORTANT-HIGH TOLERANCE BEARING REQUIRED IN THIS LOCATION. DO NOT SUBSTITUTE STANDARD BEARING.
24	T176801	FLOW CONTROL HYD. VALVE	1		

CLUTCH ASSEMBLY (SECOND GEAR)
EMBRAYAGE (DEUXIÈME VITESSE)
CONJUNTO DEL EMBRAGUE (SEGUNDA MARCHA)

TX1013424 -UN-19OCT06

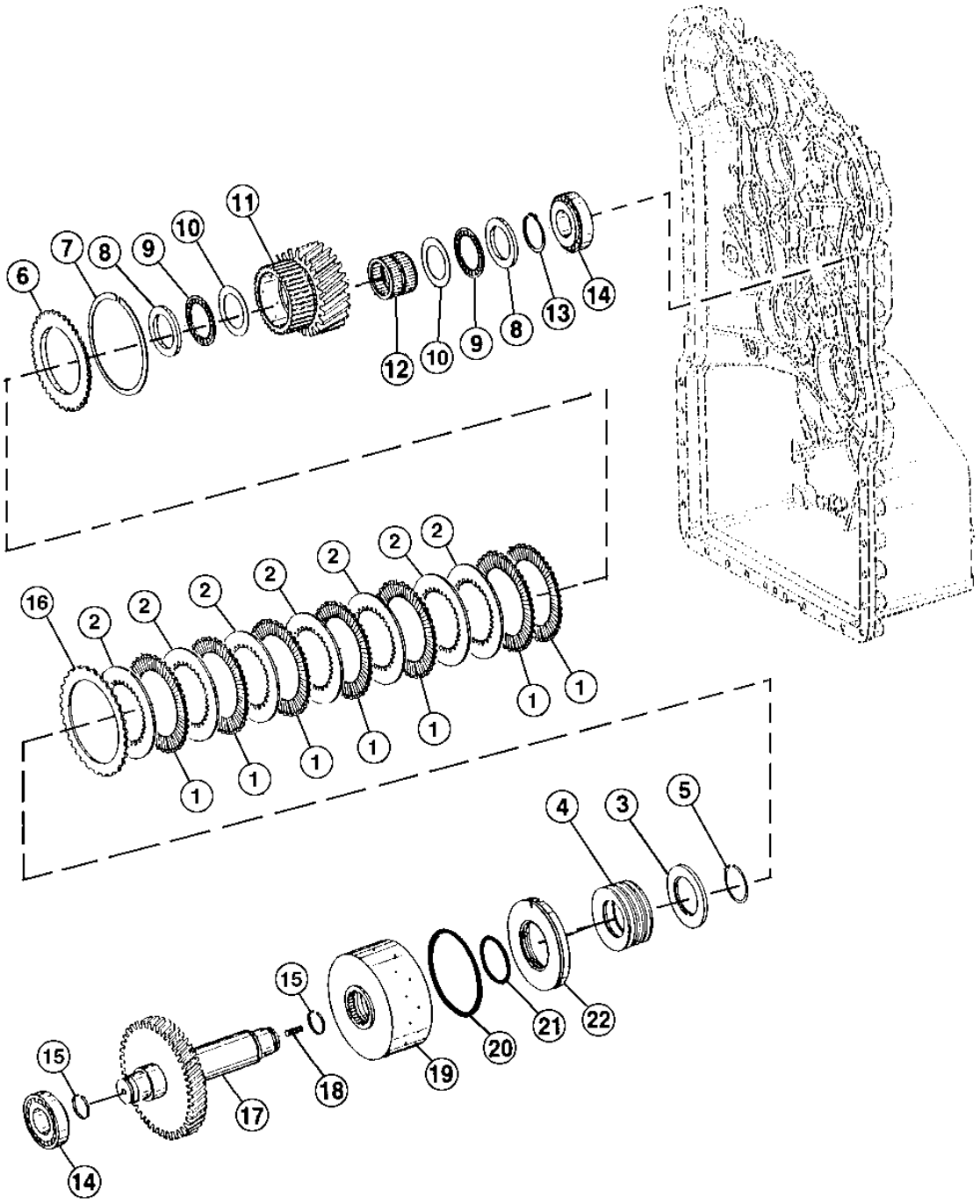

TX1013424

CLUTCH ASSEMBLY (SECOND GEAR)
EMBRAYAGE (DEUXIEME VITESSE)
CONJUNTO DEL EMBRAGUE (SEGUNDA MARCHA)

KEY	PART NO.	PART NAME	QTY.	TRANSMISSION SERIAL NO.	REMARKS
1	T173637	DISK WITH OUTER SPLINE	7		
2	T173638	DISK WITH INNER SPLINE	7		
3	T173066	SNAP RING	1		
4	T173839	SPRING	1		
5	T173067	SNAP RING	1		
6	T173639	SOLID SHIM	1		
7	T172247	SNAP RING	AR		3.60 MM (.141")
	T172251	SNAP RING	AR		4.20 MM (.165")
	T181873	SNAP RING	AR		2.4 MM (.095")
	T181874	SNAP RING	AR		2.7 MM (.106")
	T181875	SNAP RING	AR		3.0 MM (.118")
	T181876	SNAP RING	AR		3.3 MM (.123")
8	T172104	DISK	2		
9	T172129	THRUST BEARING	2		
10	T172130	THRUST WASHER	2		
11	T174392	IDLER	1		
12	T179594	NEEDLE BEARING	1		
13	T173036	SNAP RING	1		
14	T173849	BEARING	2		IMPORTANT-HIGH TOLERANCE BEARING REQUIRED IN THIS LOCATION. USE ONLY JOHN DEERE PARTS SOURCED BEARINGS.
15	T172115	PISTON RING	2		
16	T173636	DISK WITH OUTER SPLINE	1		
17	T173851	SHAFT	1		
18	T171153	STUD	1		
19	T173852	HOUSING	1		
20	T173960	O-RING	1		
21	T173958	O-RING	1		
22	T173853	PISTON	1		

CLUTCH ASSEMBLY (THIRD GEAR)
EMBRAYAGE (TROISIÈME VITESSE)
CONJUNTO DEL EMBRAGUE (TERCERA MARCHA)

TX1013427 -UN-20OCT06

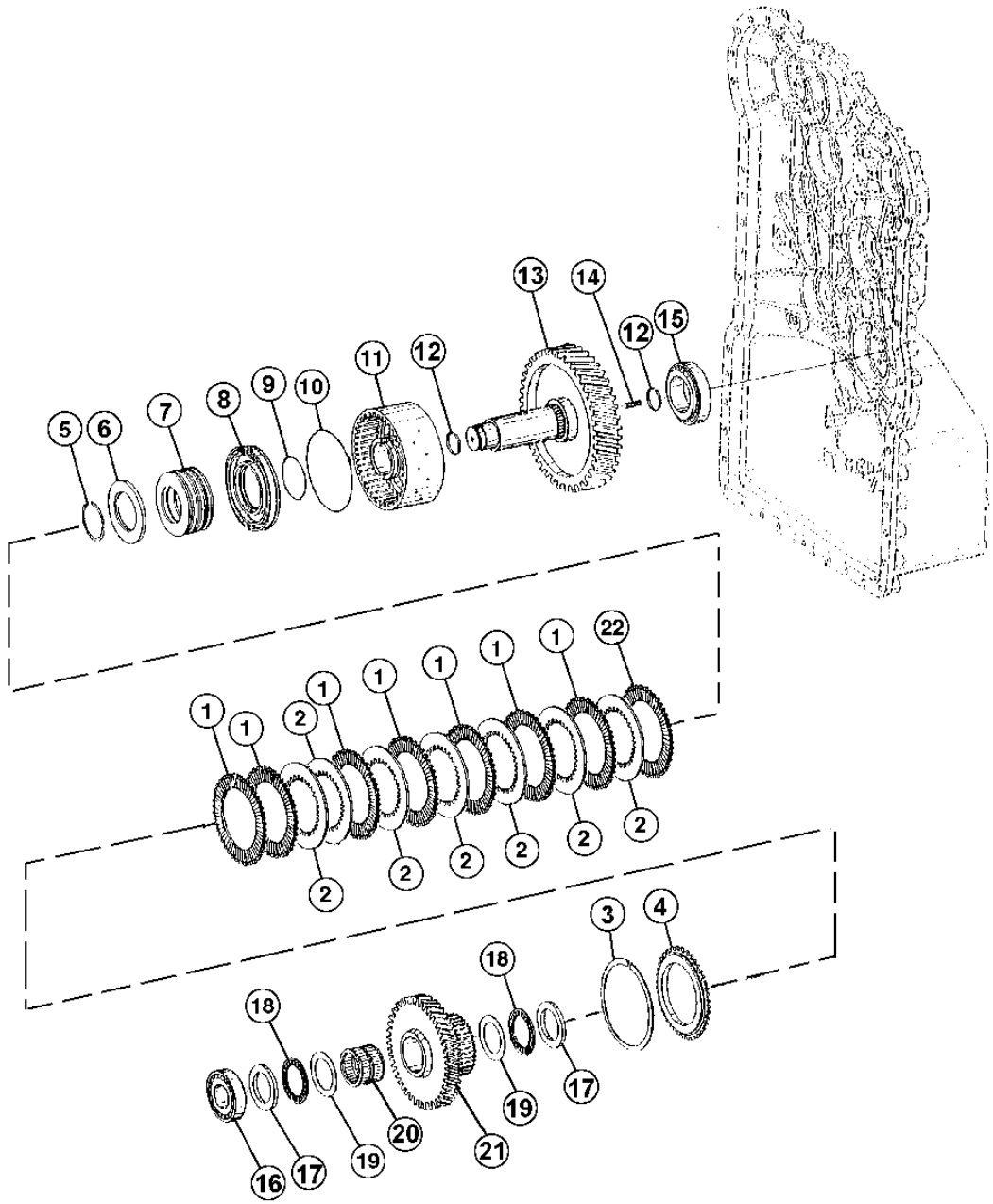

TX1013427

CLUTCH ASSEMBLY (THIRD GEAR)
EMBRAYAGE (TROISIÈME VITESSE)
CONJUNTO DEL EMBRAGUE (TERCERA MARCHA)

KEY	PART NO.	PART NAME	QTY.	TRANSMISSION SERIAL NO.	REMARKS
1	T173637	DISK WITH OUTER SPLINE	7		
2	T173638	DISK WITH INNER SPLINE	7		
3	T172247	SNAP RING	AR		3.60 MM (.141")
	T172251	SNAP RING	AR		4.20 MM (.165")
	T181873	SNAP RING	AR		2.4 MM(.095")
	T181874	SNAP RING	AR		2.7 MM (.106")
	T181875	SNAP RING	AR		3.0 MM (.118")
	T181876	SNAP RING	AR		3.3 MM (.123")
4	T173639	SOLID SHIM	1		
5	T173067	SNAP RING	1		
6	T173066	SNAP RING	1		
7	T173839	SPRING	1		
8	T173853	PISTON	1		
9	T173958	O-RING	1		
10	T173960	O-RING	1		
11	T173852	HOUSING	1		
12	T172115	PISTON RING	2		
13	T173858	SHAFT	1		
14	T171153	STUD	1		
15	T173847	BEARING	1		IMPORTANT-HIGH TOLERANCE BEARING REQUIRED IN IS LOCATION. USE ONLY JOHN DEERE PARTS SOURCED BEARINGS.
16	T173849	BEARING	1		
17	T172104	DISK	2		
18	T172129	THRUST BEARING	2		
19	T172130	THRUST WASHER	2		
20	T179594	NEEDLE BEARING	1		
21	T173806	IDLER	1		
22	T173636	DISK WITH OUTER SPLINE	1		

CLUTCH ASSEMBLY (HIGH RANGE)
EMBRAYAGE (RAPPORTS LONGS)
CONJUNTO DEL EMBRAGUE (REGIMEN ALTO)

TX1013428 -UN-19OCT06

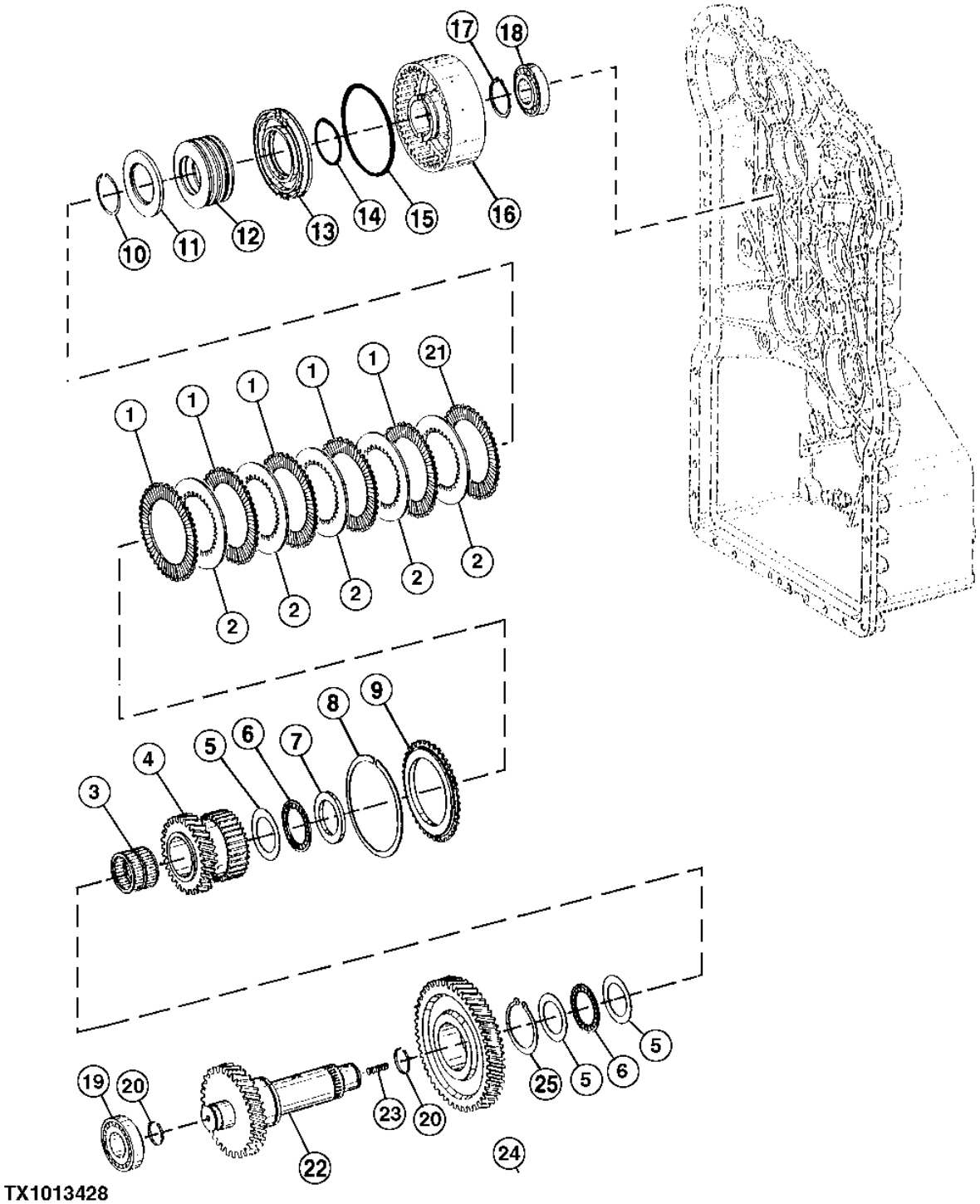

TX1013428

CLUTCH ASSEMBLY (HIGH RANGE)
EMBRAYAGE (RAPPORTS LONGS)
CONJUNTO DEL EMBRAGUE (REGIMEN ALTO)

KEY	PART NO.	PART NAME	QTY.	TRANSMISSION SERIAL NO.	REMARKS
1	T173637	DISK WITH OUTER SPLINE	5		
2	T173638	DISK WITH INNER SPLINE	5		
3	T179594	NEEDLE BEARING	1		
4	T173855	IDLER	1		
5	T172130	THRUST WASHER	3		
6	T172129	THRUST BEARING	2		
7	T172104	DISK	1		
8	T172247	SNAP RING	AR		
	T172251	SNAP RING	AR		
	T181873	SNAP RING	AR		
	T181874	SNAP RING	AR		
	T181875	SNAP RING	AR		
	T181876	SNAP RING	AR		
9	T173639	SOLID SHIM	1		
10	T173067	SNAP RING	1		
11	T173066	SNAP RING	1		
12	T173839	SPRING	7		
13	T173853	PISTON	1		
14	T173958	O-RING	1		
15	T173960	O-RING	1		
16	T173854	HOUSING	1		
17	T159519	SNAP RING	1		
18	T171156	BEARING	1		IMPORTANT-HIGH TOLERANCE BEARING REQUIRED IN THIS LOCATION. USE ONLY JOHN DEERE PARTS SOURCED BEARINGS.
19	T173849	BEARING	1		IMPORTANT-HIGH TOLERANCE BEARING REQUIRED IN THIS LOCATION. USE ONLY JOHN DEERE PARTS SOURCED BEARINGS.
20	T172115	PISTON RING	2		
21	T173636	DISK WITH OUTER SPLINE	1		
22	T173860	SHAFT	1		
23	T171153	STUD	1		
24	T173859	GEAR	1		
25	T158719	SNAP RING	1		

DRIVE DAMPER AND COVER
AMORTISSEUR ET COUVERCLE D'ENTRAINEMENT
CUBIERTA Y AMORTIGUADOR DE LINEA DE MANDO

TX1013430 -UN-19OCT06

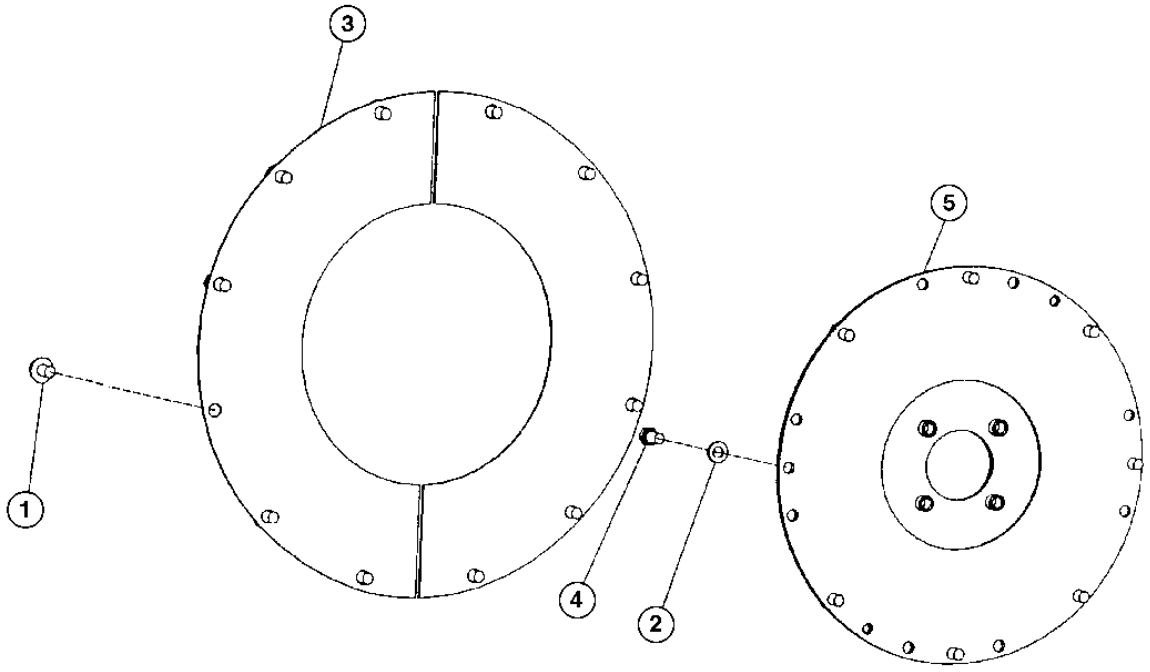

TX1013430

DRIVE DAMPER AND COVER
AMORTISSEUR ET COUVERCLE D'ENTRAINEMENT
CUBIERTA Y AMORTIGUADOR DE LINEA DE MANDO

KEY	*PART NO.*	*PART NAME*	*QTY.*	*SERIAL NO.*	*REMARKS*
1	19M7784	SCREW	12		M10 X 20
2	24H1864	WASHER	8		13/32" X 3/4" X 7/64"
3	T171354	COVER	2		
4	19H1648	CAP SCREW	8		3/8" X 3/4"
5	AT308994	TORSIONAL DAMPER	1		

TRANSMISSION LINES AND FITTINGS
REMPLISSAGE D'HUILE DE TRANSMISSION
LLENADO DE ACEITE DE LA TRANSMISION

TX1013447 -UN-24OCT06

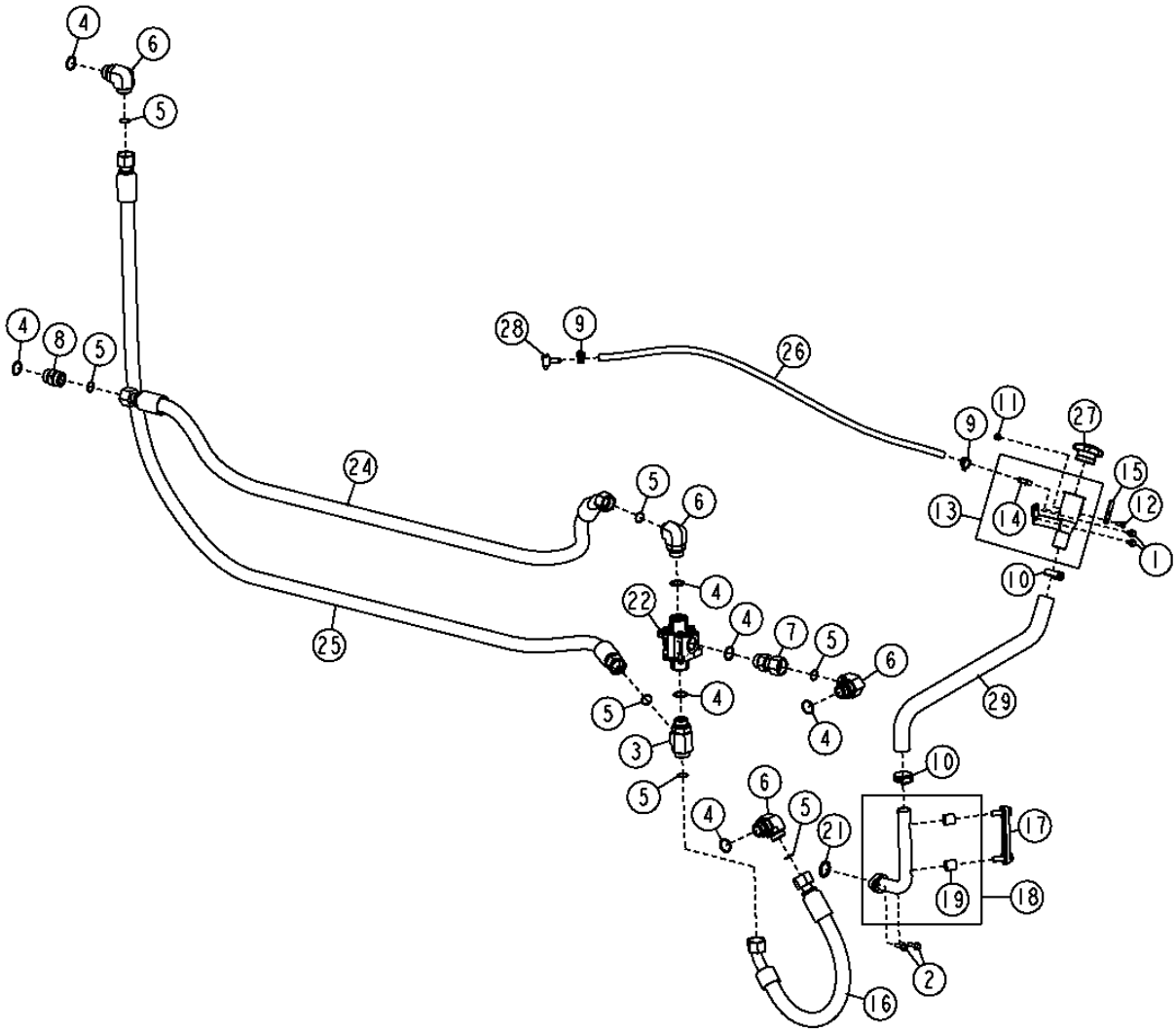

THIS PARTS LISTING IS CONTINUED

TRANSMISSION LINES AND FITTINGS
REMPLISSAGE D'HUILE DE TRANSMISSION
LLENADO DE ACEITE DE LA TRANSMISION

KEY	PART NO.	PART NAME	QTY.	SERIAL NO.	REMARKS
1	19M7864	SCREW	2		M8 X 12
2	19M7867	SCREW	2		M8 X 25
3	38H1027	TEE FITTING	1		
4	R29936	O-RING	1		
5	T76938	O-RING	2		
6	38H1037	ELBOW FITTING	1		
7	38H1071	ADAPTER FITTING	1		
8	38H1164	ADAPTER FITTING	1		
9	TY22464	CLAMP	2		
10	AR21839	CLAMP	2		
11	14M7426	LOCK NUT	1		M8
12	19M7932	CAP SCREW	1		M8 X 16
13	AT227248	FILLER NECK	1		
14	R134954	HOSE FITTING	1		
15	T196464	STRAP	1		
16	AT317251	HYDRAULIC HOSE - FABRICATE	1		
17	AT227279	LEVEL GAUGE	1		
18	AT324881	TUBE	1		
19	T121416	BUSHING	2		
21	R105415	O-RING	1		
22	AT325611	CONTROL VALVE	1		
24	AT334868	HYDRAULIC HOSE - FABRICATE	1		
25	AT334869	HYDRAULIC HOSE - FABRICATE	1		
26	.....	BULK HOSE	1		(ORDER M87571) CTL 10'
27	RE500250	FILLER CAP	1		
28	T196587	TEE FITTING	1		
29	T197665	HOSE	1		
30	.....	ADHESIVE	1		(ORDER DT5366) (NOT SHOWN)

1144 (ROCKER ARM COVER)
1144 (CULBUTEURS)
1144 (TAPA DE BALANCINES)
RE527023PCDB01 -UN-04MAY05

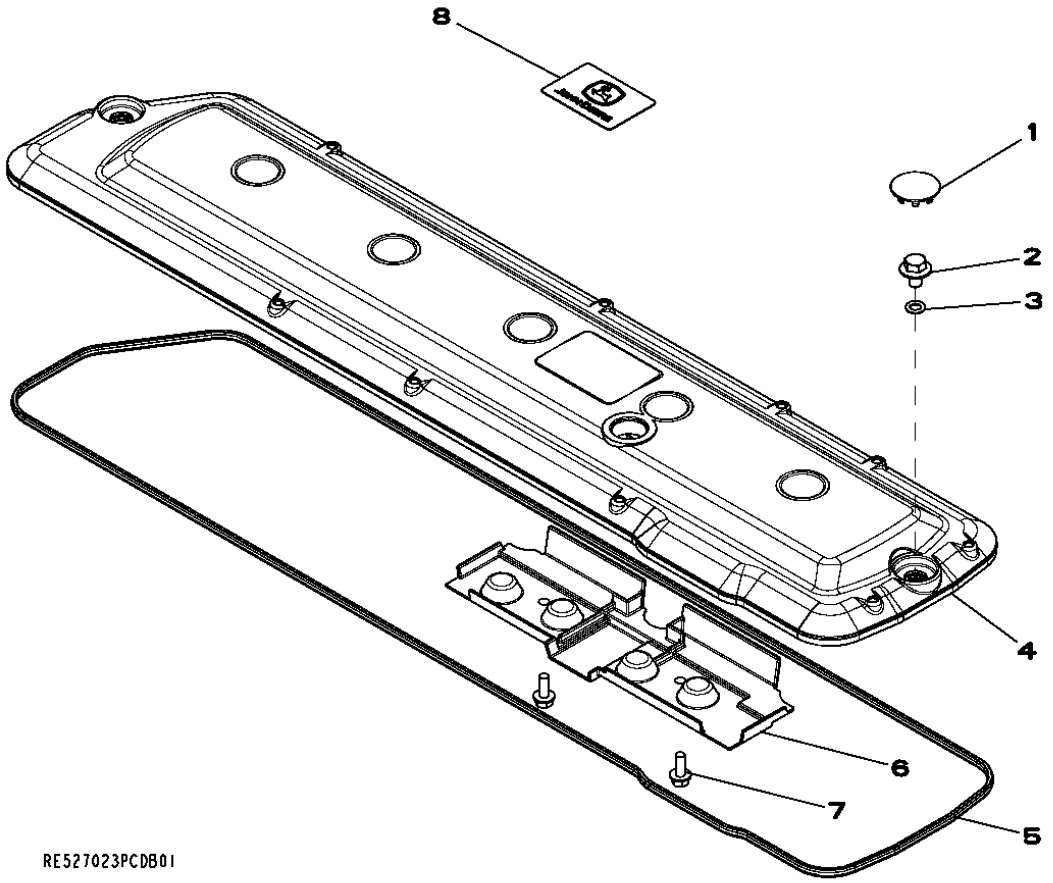

KEY	PART NO.	PART NAME	QTY.	ENGINE SERIAL NO.	REMARKS
1	H23125	PLUG	7		
2	R521390	SCREW	7		
3	R123575	O-RING	7		
4	R522198	VALVE COVER	1		
5	R504882	GASKET	1		
6	R515555	DEFLECTOR	1		
7	19M7775	SCREW	2		M6 X 16
8	R521401	MEDALLION	1		

1229 (OIL FILL)
1229 (REMPLISSAGE D'HUILE)
1229 (RECARGA DE ACEITE)

RE515712PCDD01 -UN-17OCT05

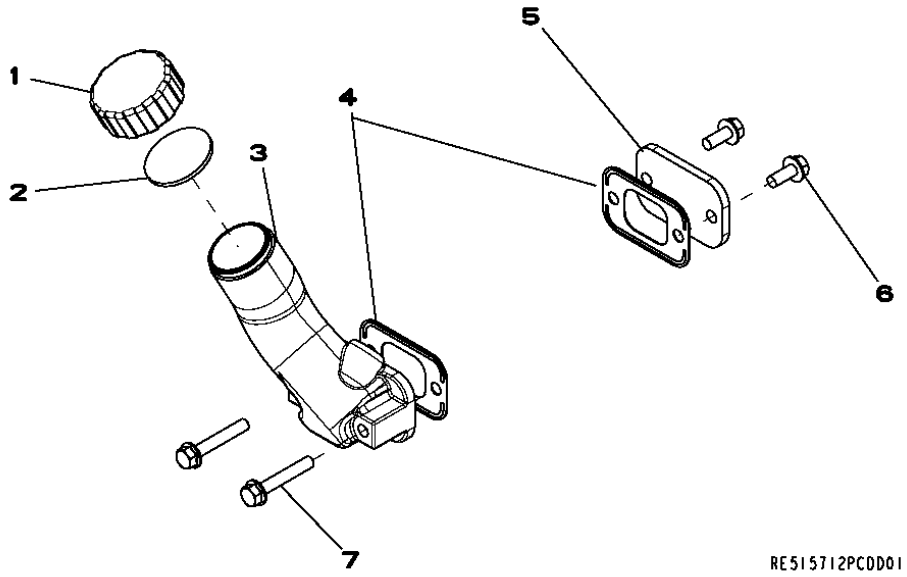

KEY	PART NO.	PART NAME	QTY.	ENGINE SERIAL NO.	REMARKS
1	R80136	FILLER CAP	1		
2	R80135	GASKET	1		
3	R517353	FILLER NECK	2		
4	R136495	GASKET	1		
5	R116296	COVER	2		
6	RE67238	SCREW	2		
7	RE67240	SCREW	1		

1320 (CRANKSHAFT PULLEY)
1320 (POULIE DU VILEBREQUIN)
1320 (POLEA DEL CIGUENAL)

RE508845PCDD01 -UN-21OCT04

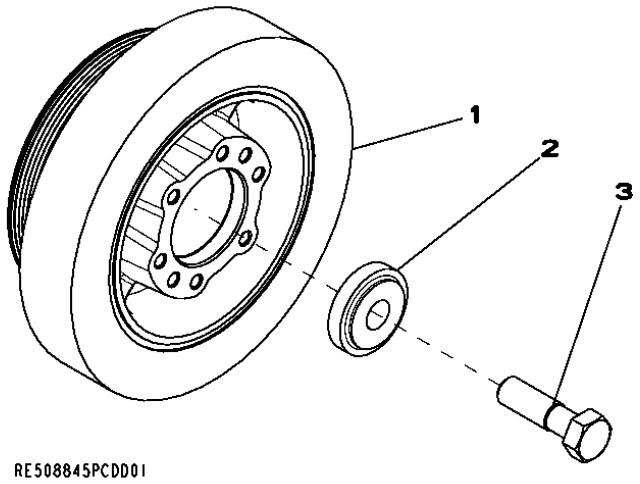

KEY	PART NO.	PART NAME	QTY.	ENGINE SERIAL NO.	REMARKS
1	RE508578	PULLEY	1		
2	R517237	BUSHING	1		
3	R516648	CAP SCREW	1		

1405 (FLYWHEEL HOUSING)
1405 (CARTER VOLANT)
1405 (CAJA DEL VOLANTE MOTOR)

RE59303PCDD01 -UN-26OCT04

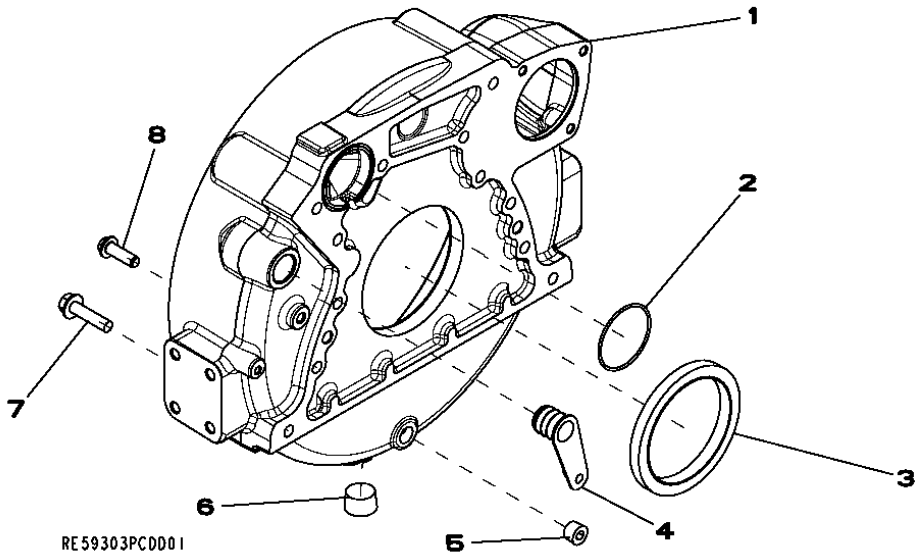

KEY	PART NO.	PART NAME	QTY.	ENGINE SERIAL NO.	REMARKS
1	R503450	HOUSING	1		
2	R61467	O-RING	1		
3	RE44574	SEAL	1		
4	R131769	PLUG	1		
5	15H624	PIPE PLUG	1		
6	15H562	PIPE PLUG	1		
7	19M8306	SCREW	4		M12 X 50
8	R135918	BOLT	8		

1503 (FLYWHEEL)
1503 (VOLANT)
1503 (VOLANTE MOTOR)

RE59281PCDD01 -UN-28OCT04

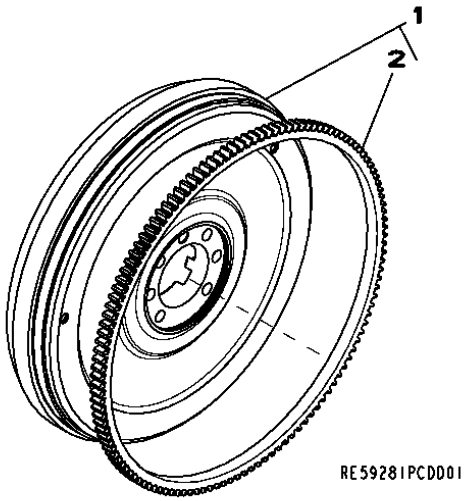

KEY	PART NO.	PART NAME	QTY.	ENGINE SERIAL NO.	REMARKS
1	RE500398	FLYWHEEL	1		
2	R28811	RING GEAR	1		
..	R135918	BOLT	6		(OPTION 4700)

169Z (FUEL INJECTION PUMP)
169Z (POMPE D'INJECTION)
169Z (BOMBA DE INYECCION)

RE524623PCDB01 -UN-12SEP05

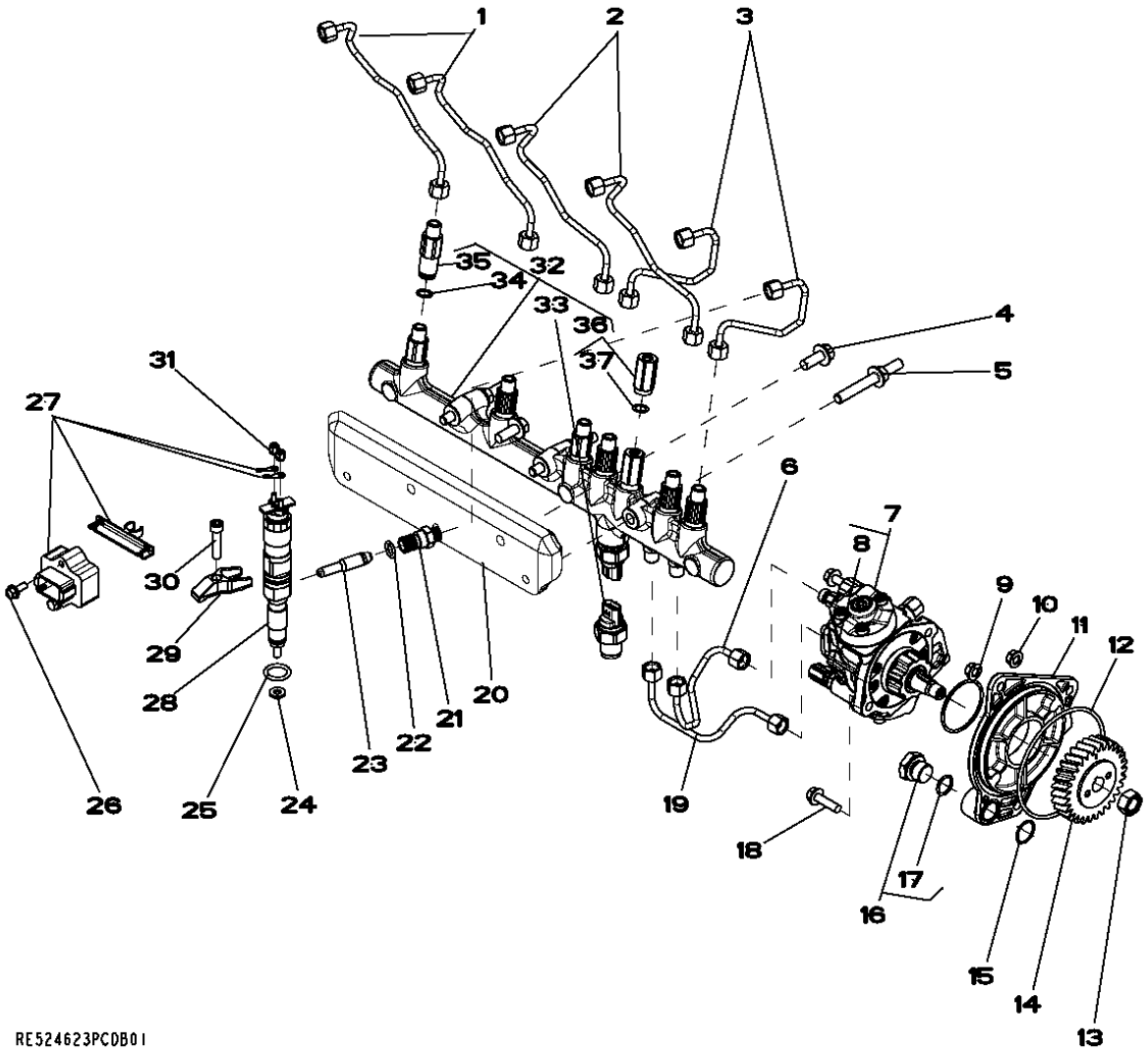

KEY	PART NO.	PART NAME	QTY.	ENGINE SERIAL NO.	REMARKS
1	RE523249	FUEL LINE	2		
2	RE507540	FUEL LINE	2		
3	RE507539	FUEL LINE	2		
4	19M7785	SCREW	2		M10 X 25
5	R521159	STUD	3		
6	RE507537	LINE	1		
7	RE522595	FUEL PUMP	1		
8	RE516336	FUEL TEMPERATURE SENSOR	1		
9	R516125	O-RING	1		
10	14M7298	FLANGE NUT	3		
11	R504577	ADAPTER FITTING	1		
12	R55453	O-RING	1		
13	R91360	NUT	1		
14	R502541	GEAR	1		
15	R116031	O-RING	1		
16	RE517370	FITTING	1		
17	51M7044	O-RING	1		
18	19M7868	SCREW	2		M8 X 30
19	RE507538	FUEL LINE	1		
20	R521530	BRACKET	1		
21	R515044	FITTING	6		
22	R65397	O-RING	6		
23	RE522594	TUBE	6		
24	R515535	WASHER	6		
25	R505452	O-RING	6		
26	19M7775	SCREW	2		M6 X 16
27	RE509093	WIRING HARNESS	1		
28	RE524382	INJECTION NOZZLE	6		
29	R518345	CLAMP	6		
30	R504781	CAP SCREW	6		
31	R134920	NUT	12		
32	RE522596	RAIL	1		
33	RE520930	SENSOR	1		
34	R515454	SHIM	6		
35	RE515636	RESTRICTOR	6		
36	RE516335	PRESSURE RELIEF VALVE	1		
37	R515454	SHIM	1		

17BL (AIR INLET)
17BL (ADMISSION D'AIR)
17BL (ENTRADA DE AIRE)

RE522131PCDB01 -UN-31MAR05

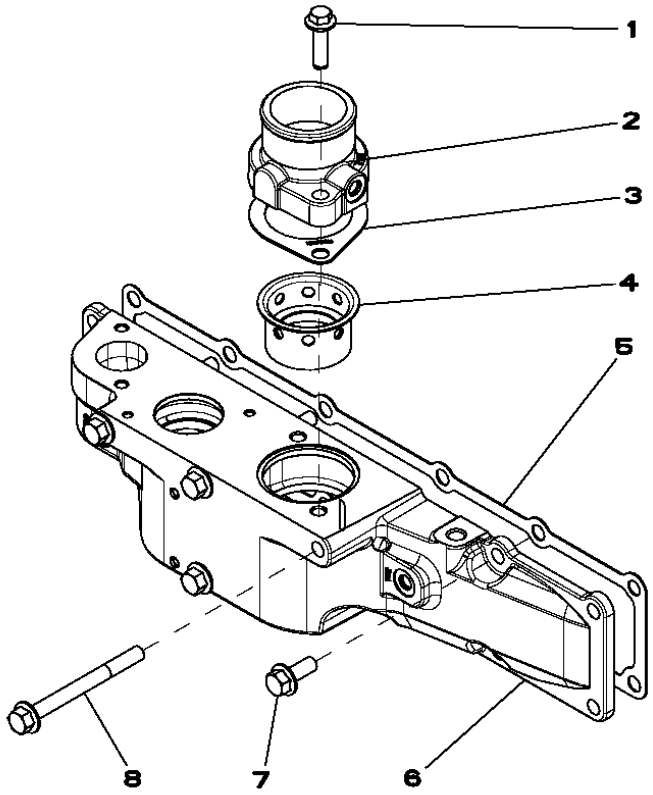

KEY	PART NO.	PART NAME	QTY.	ENGINE SERIAL NO.	REMARKS
1	R500394	SCREW	2		
2	R521060	AIR FLOW TUBE	1		
3	R521061	GASKET	1		
4	R521083	SLEEVE	1		
5	R515030	GASKET	1		
6	R519308	COVER	1		
7	19M7785	SCREW	8		M10 X 25
8	R522106	SCREW	4		

1946 (OIL PAN)
1946 (CARTER D'HUILE)
1946 (CARTER DE ACEITE)

RE502567PCDD01 -UN-17OCT05

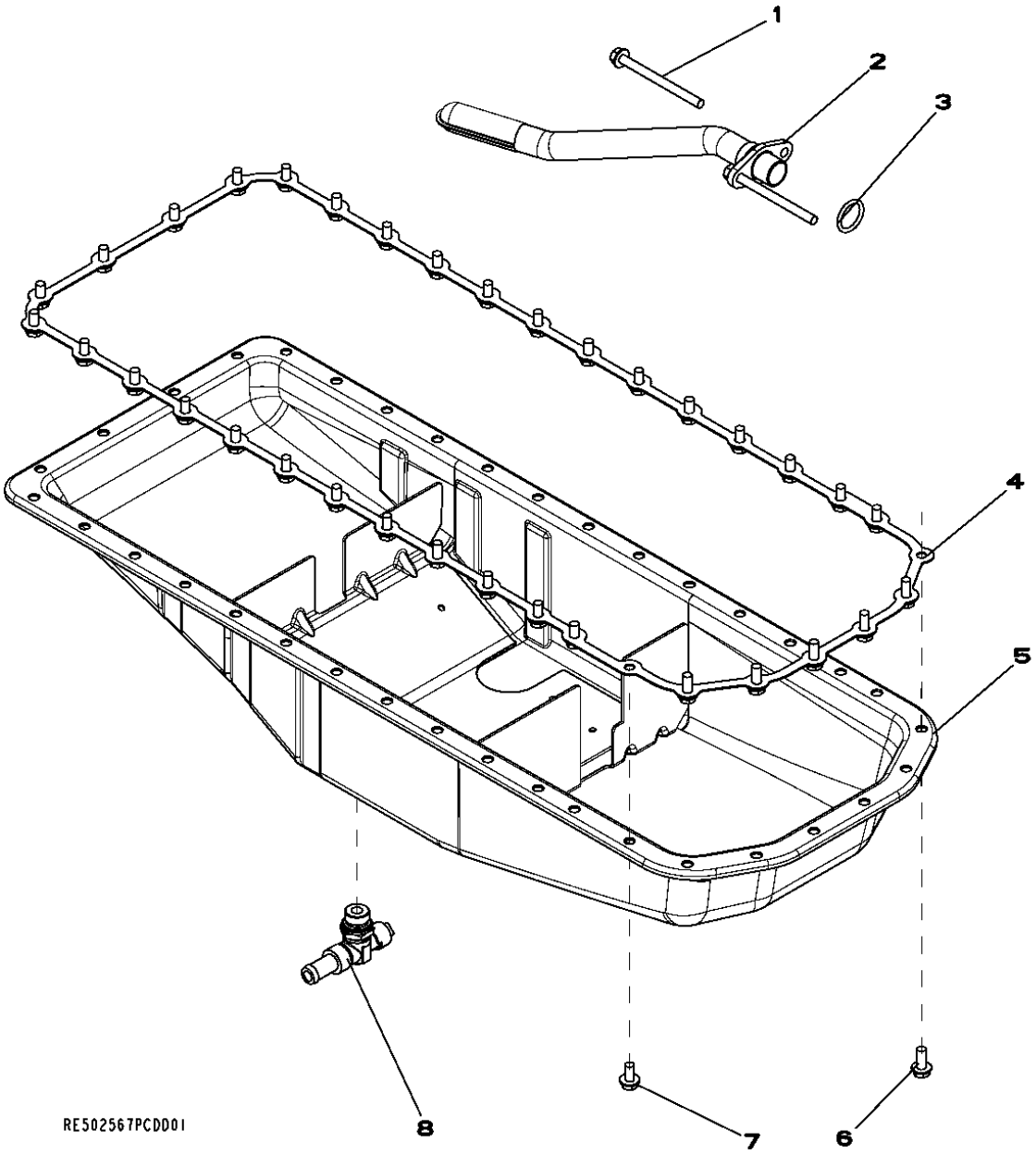

KEY	PART NO.	PART NAME	QTY.	ENGINE SERIAL NO.	REMARKS
1	19M8986	SCREW	2		M8 X 100
2	RE71143	OIL PUMP INTAKE	1		
3	R61871	O-RING	1		
4	R521498	GASKET	1		
5	RE500612	OIL PAN	2		
6	19M8062	SCREW	1		M8 X 20
7	19M8163	BOLT	1		M8 X 16
8	RE507950	DRAIN VALVE	6		

2001 (WATER PUMP)
2001 (POMPE A EAU)
2001 (BOMBA DE AGUA)

RE58175PCDD01 -UN-18JUL04

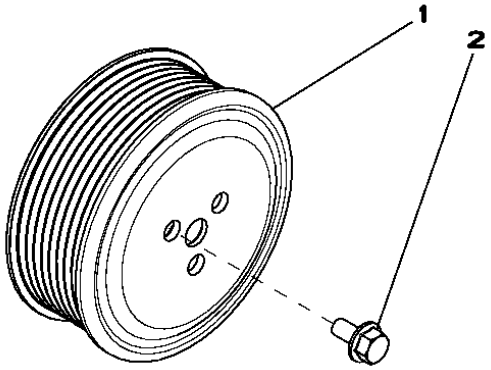

RE58175PCDD01

KEY	PART NO.	PART NAME	QTY.	ENGINE SERIAL NO.	REMARKS
1	R115250	PULLEY	1		
2	19M7774	SCREW	3		M6 X 12

2154 (THERMOSTAT COVER)
2154 (COUVERCLE DE THERMOSTAT)
2154 (TAPA TERMOSTATO)

RE522740PCDB01 -UN-08DEC05

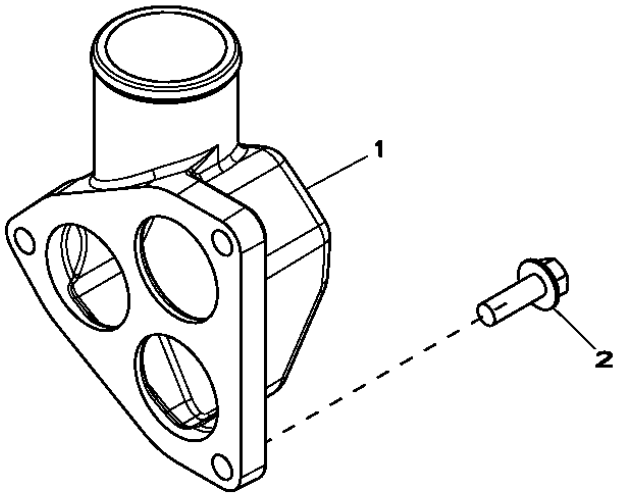

RE522740PCDB01

KEY	PART NO.	PART NAME	QTY.	ENGINE SERIAL NO.	REMARKS
1	R519491	COVER	1		
2	19M7786	SCREW	3		M10 X 30

2255 (THERMOSTAT)
2255 (THERMOSTAT)
2255 (TERMOSTATO)
RE522818PCDC02 -UN-08DEC05

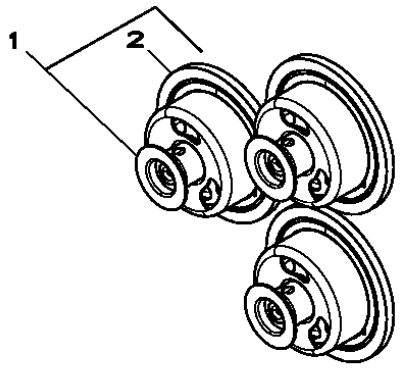

RE522818PCDC02

KEY	PART NO.	PART NAME	QTY.	ENGINE SERIAL NO.	REMARKS
1	RE528652	THERMOSTAT	3		82 DEGREES C (180 DEGREES F)
2	R521548	SEAL	1		82 DEGREES C (180 DEGREES F)

2694 (ENGINE COOLANT HEATER)
2694 (RECHAUFFEUR DU LIQUIDE DE REFROIDISSEMENT)
2694 (DISPOSITIVO PARA EL CALENTAMIENTO DEL LIQUIDO REFRIGERANTE)

RE527415PCDA01 -UN-31AUG05

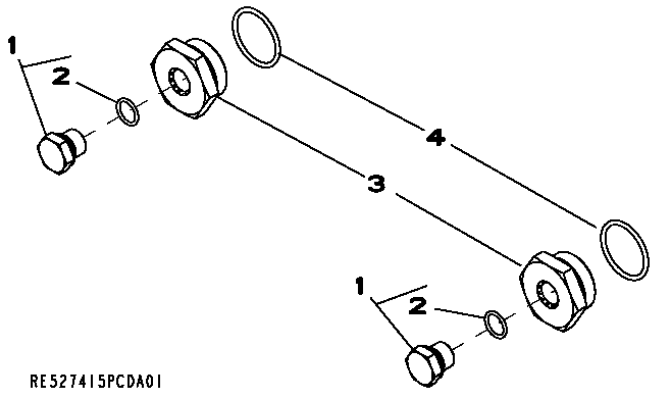

KEY	PART NO.	PART NAME	QTY.	ENGINE SERIAL NO.	REMARKS
1	RE46685	FITTING PLUG	1		
2	51M7043	O-RING	1		
3	R123616	PLUG	1		
4	U13639	O-RING	1		

2876 (EXHAUST MANIFOLD)
2876 (COLLECTEUR D'ECHAPPEMENT)
2876 (COLECTOR DE ESCAPE)

RE523564PCDB01 -UN-22DEC05

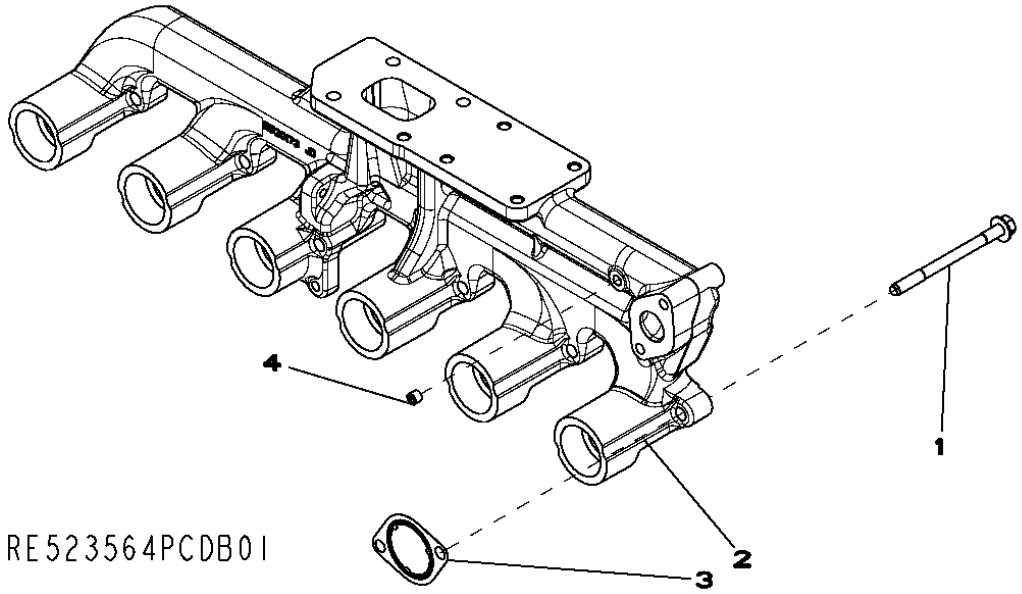

KEY	PART NO.	PART NAME	QTY.	ENGINE SERIAL NO.	REMARKS
1	R519486	CAP SCREW	12		
2	R520173	EXHAUST MANIFOLD	1		
3	R519488	GASKET	6		
4	R104592	PIPE PLUG	1		

MEMORANDA
MEMORANDA
MEMORANDA

2917 (VENTILATING SYSTEM)
2917 (SYSTEME DE VENTILATION)
2917 (SISTEMA DE VENTILACION)

RE501936PCDD01 -UN-18JUL04

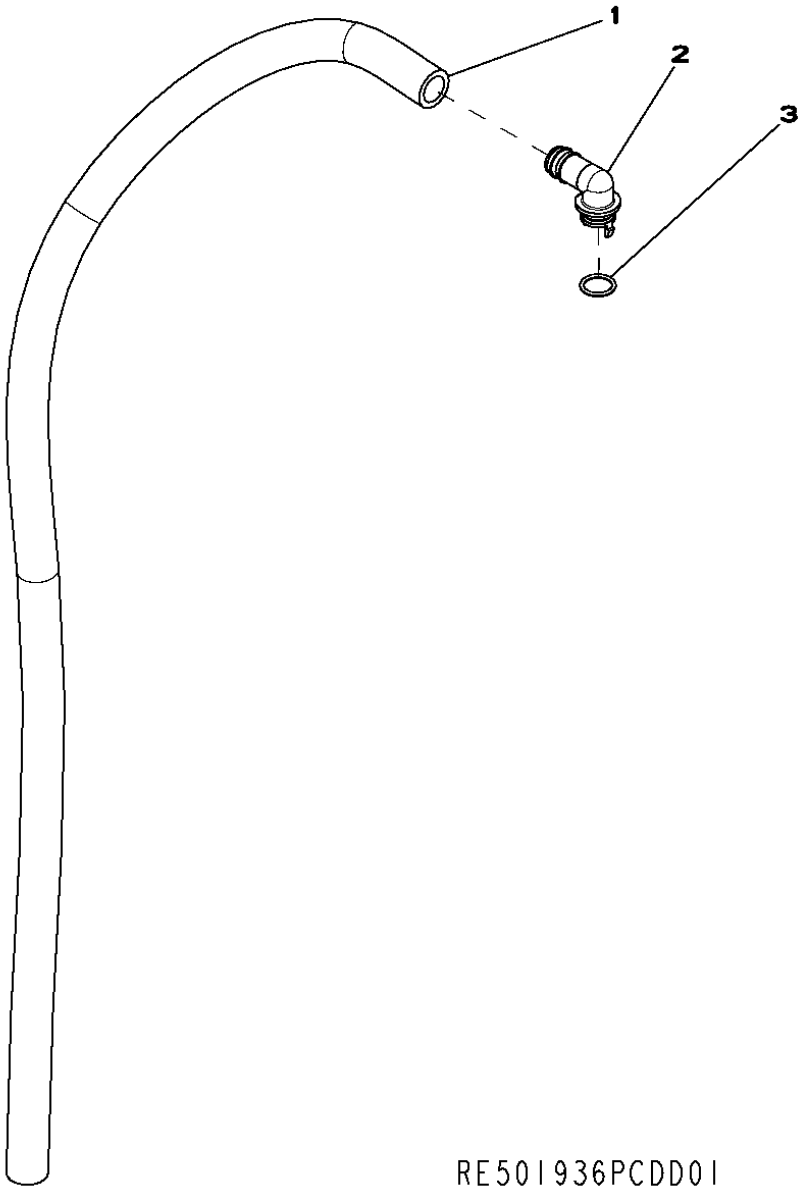

KEY	PART NO.	PART NAME	QTY.	ENGINE SERIAL NO.	REMARKS
1	TY22505	HOSE	1		
2	R120467	ELBOW FITTING	1		
3	R72328	O-RING	1		

3041 (STARTING MOTOR)
3041 (DEMARREUR)
3041 (MOTOR DA ARRANQUE)

RE501149PCDD01 -UN-05NOV04

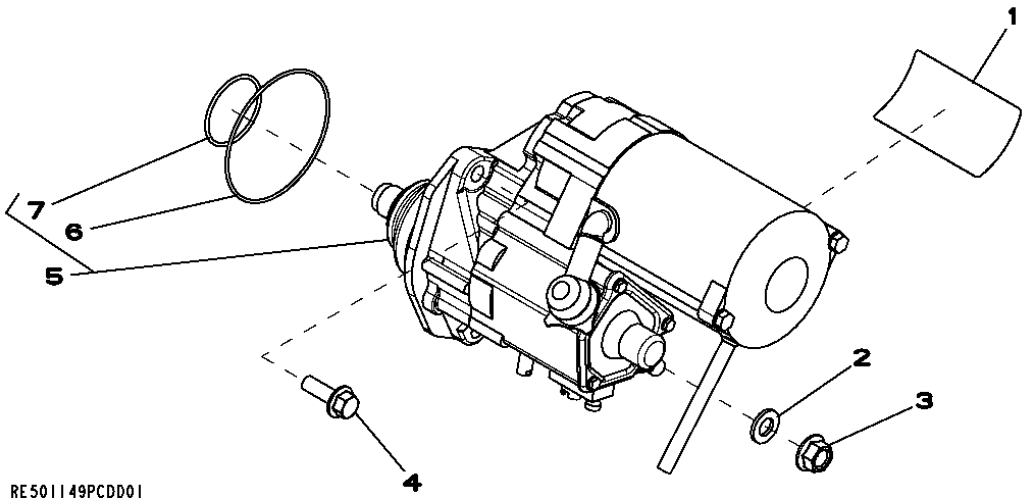

KEY	PART NO.	PART NAME	QTY.	ENGINE SERIAL NO.	REMARKS
1	T146102	LABEL	1		
2	24M7047	WASHER	1		
3	14M7299	FLANGE NUT	1		
4	19M7786	SCREW	3		
5	RE501150	STARTER MOTOR KIT	1		
	TY24443	STARTER MOTOR	1		(REMANUFACTURED)
	SE501406	STARTER MOTOR	1		REMANUFACTURED FOR TY24443
6	R135509	SEAL	1		
7	R135510	O-RING	1		

MEMORANDA
MEMORANDA
MEMORANDA

35DZ (FUEL FILTER)
35DZ (FILTRE A COMBUSTIBLE)
35DZ (FILTRO DE COMBUSTIBLE)

RE524695PCDA02 -UN-06APR05

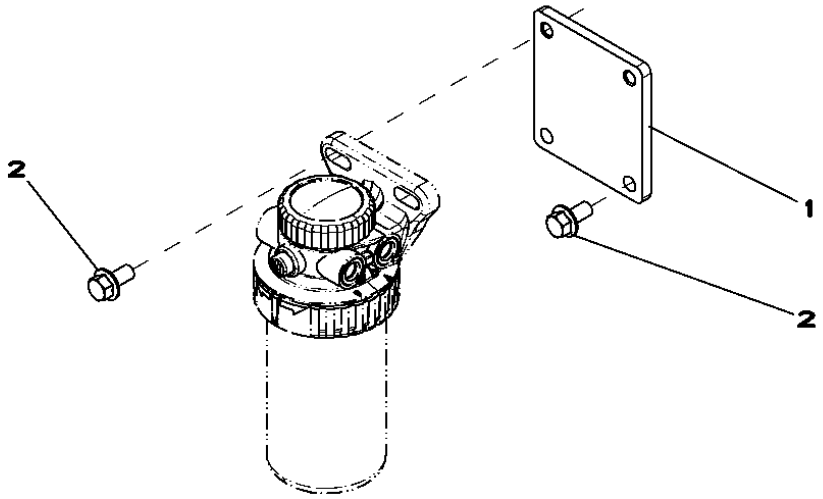

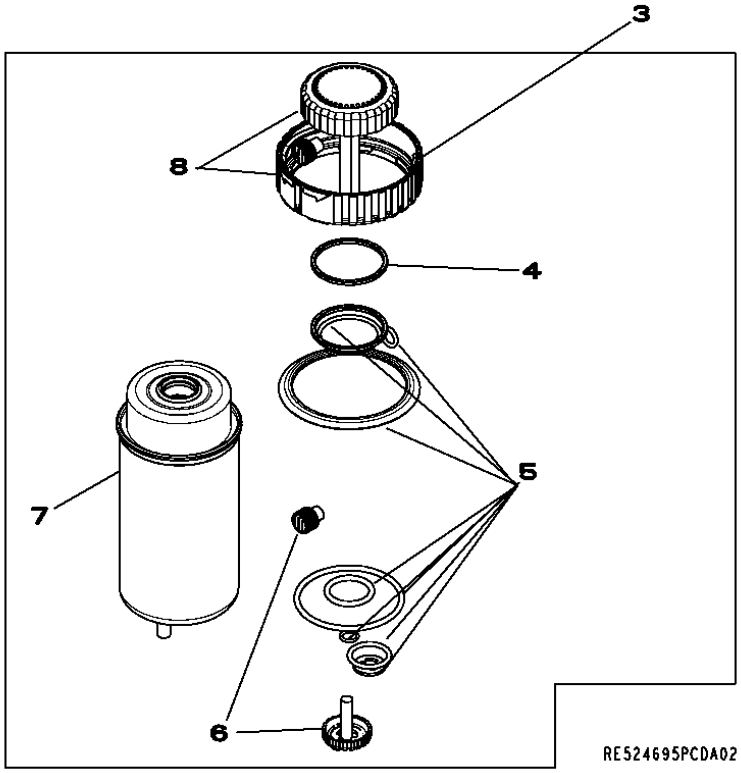

KEY	PART NO.	PART NAME	QTY.	ENGINE SERIAL NO.	REMARKS
1	R516437	BRACKET	1		
2	19M7784	SCREW	4		M10 X 20
3	RE524723	FILTER	1		
4	RE516512	O-RING KIT	1		
5	RE516553	SEAL KIT	1		
6	RE60854	DRAIN VALVE	1		
7	RE522878	FILTER ELEMENT	1		
8	RE526834	SEAL KIT	1		

3614 FRONT PLATE AND IDLE GEARS (UPPER AND LOWER)
3614 PLAQUE AVANT ET PIGNONS DE LA DISTRIBUTION (SUPERIEUR ET INFERIEUR)
3614 PLACA DELANTERA Y ENGRANAJE DE DISTRIBUCION (SUPERIOR Y INFERIOR)

RE506566PCDD03 -UN-17FEB06

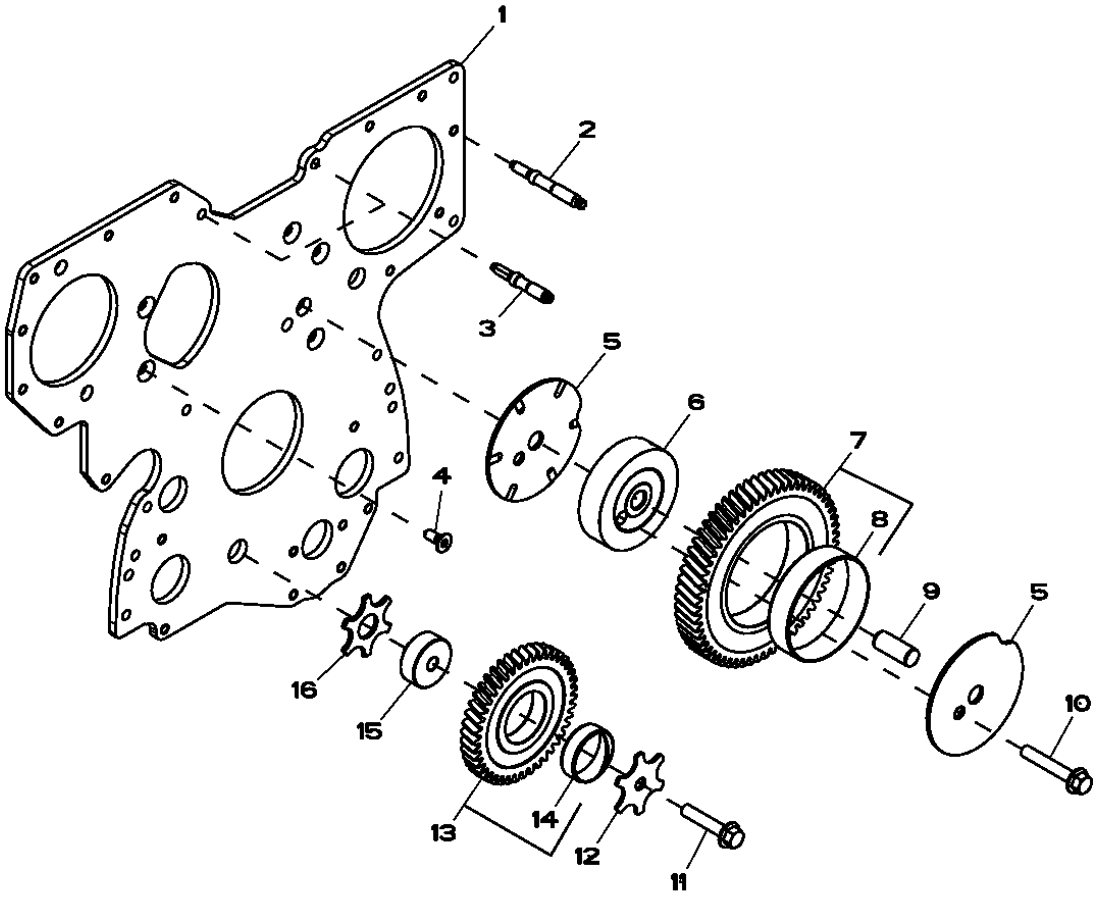

RE506566PCDD03

KEY	PART NO.	PART NAME	QTY.	ENGINE SERIAL NO.	REMARKS
1	R504282	PLATE	1		
2	R123584	STUD	7		
3	R134518	STUD	2		
4	R136475	SCREW	5		
5	R515494	LOCK WASHER	2		
6	R504843	SHAFT	1		
7	RE508489	GEAR	1		
8	RE508489	GEAR	1		
9	R515408	DOWEL PIN	1		
10	19M8844	SCREW	1		M10 X 60
11	19M8966	SCREW	1		M10 X 50
12	R131283	THRUST WASHER	1		
13	RE56369	GEAR	1		
14	R114193	BUSHING	1		
15	R114194	SHAFT	1		
16	R101225	THRUST WASHER	1		

3713 (FUEL TRANSFER PUMP)
3713 (POMPE D'ALIMENTATION)
3713 (BOMBA DE ALIMENTACION DE COMBUSTIBLE)

RE506491PCDD01 -UN-27JUL04

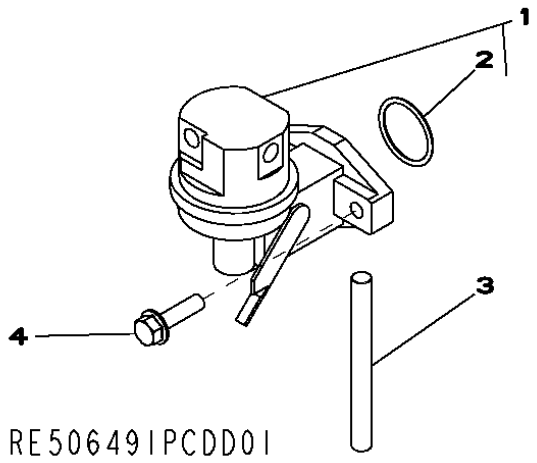

KEY	PART NO.	PART NAME	QTY.	ENGINE SERIAL NO.	REMARKS
1	RE517230	FUEL PUMP	1		
2	R123273	O-RING	1		
3	R133405	PIN	1		
4	RE504233	CAP SCREW	2		

MEMORANDA
MEMORANDA
MEMORANDA

3917 (THERMOSTAT HOUSING / BY PASS TUBE TO WATER PUMP)
3917 (BOITIER DE THERMOSTAT / TUBE DE DERIVATION A LA POMPE A EAU)
3917 (CARCASA DEL TERMOSTATO / TUBO DE DERIVACION A LA BOMBA DE AGUA)

RE522133PCDC02 -UN-07APR06

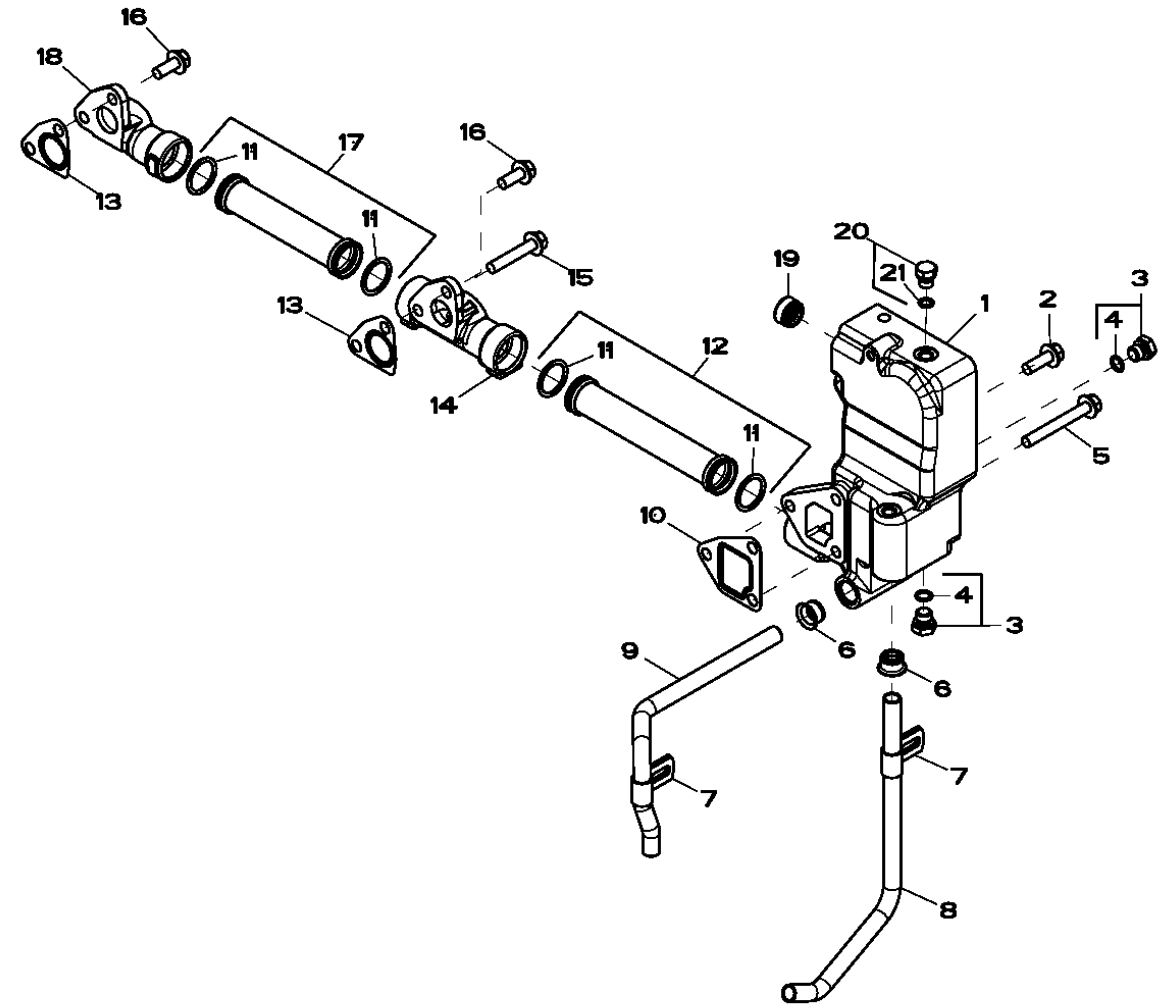

RE522133PCDC02

KEY	PART NO.	PART NAME	QTY.	ENGINE SERIAL NO.	REMARKS
1	R522776	HOUSING	1		
2	19M7786	SCREW	1		M10 X 30
3	RE46684	FITTING PLUG	4		
4	51M7041	O-RING	1		
5	19M7810	SCREW	2		M10 X 80
6	R123226	GASKET	2		
7	R123324	CLAMP	2		
8	R519517	TUBE	1		
9	R519025	TUBE	1		
10	R505479	GASKET	1		
11	R63185	O-RING	2		
12	RE516026	TUBE	1		
13	R505480	GASKET	2		
14	R519737	MANIFOLD	1		
15	19M8528	SCREW	1		M10 X 55
16	19M7785	SCREW	3		M10 X 25
17	RE523250	MANIFOLD	1		
18	R504754	MANIFOLD	1		
19	RE57190	SEAL	1		
20	RE46686	FITTING PLUG	1		
21	51M7040	O-RING	1		

4017 (ENGINE OIL DIPSTICK)
4017 (JAUGE A HUILE MOTEUR)
4017 (ASPILLA PARA MEDIR EL NIVEL DE ACEITE DEL MOTOR)

RE500925PCDD01 -UN-15NOV04

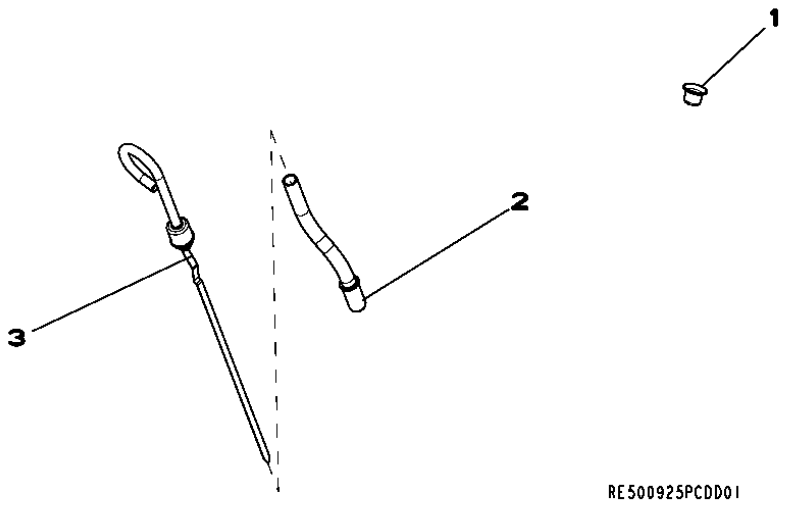

KEY	PART NO.	PART NAME	QTY.	ENGINE SERIAL NO.	REMARKS
1	R502725	PLUG	1		
2	R501252	DIPSTICK TUBE	1		
3	RE500168	DIPSTICK	1		

MEMORANDA
MEMORANDA
MEMORANDA

4327 (STARTING AID)
4327 (AIDE AU DEMARRAGE)
4327 (TERMOARRANQUE)

RE523855PCDB01 -UN-03MAY05

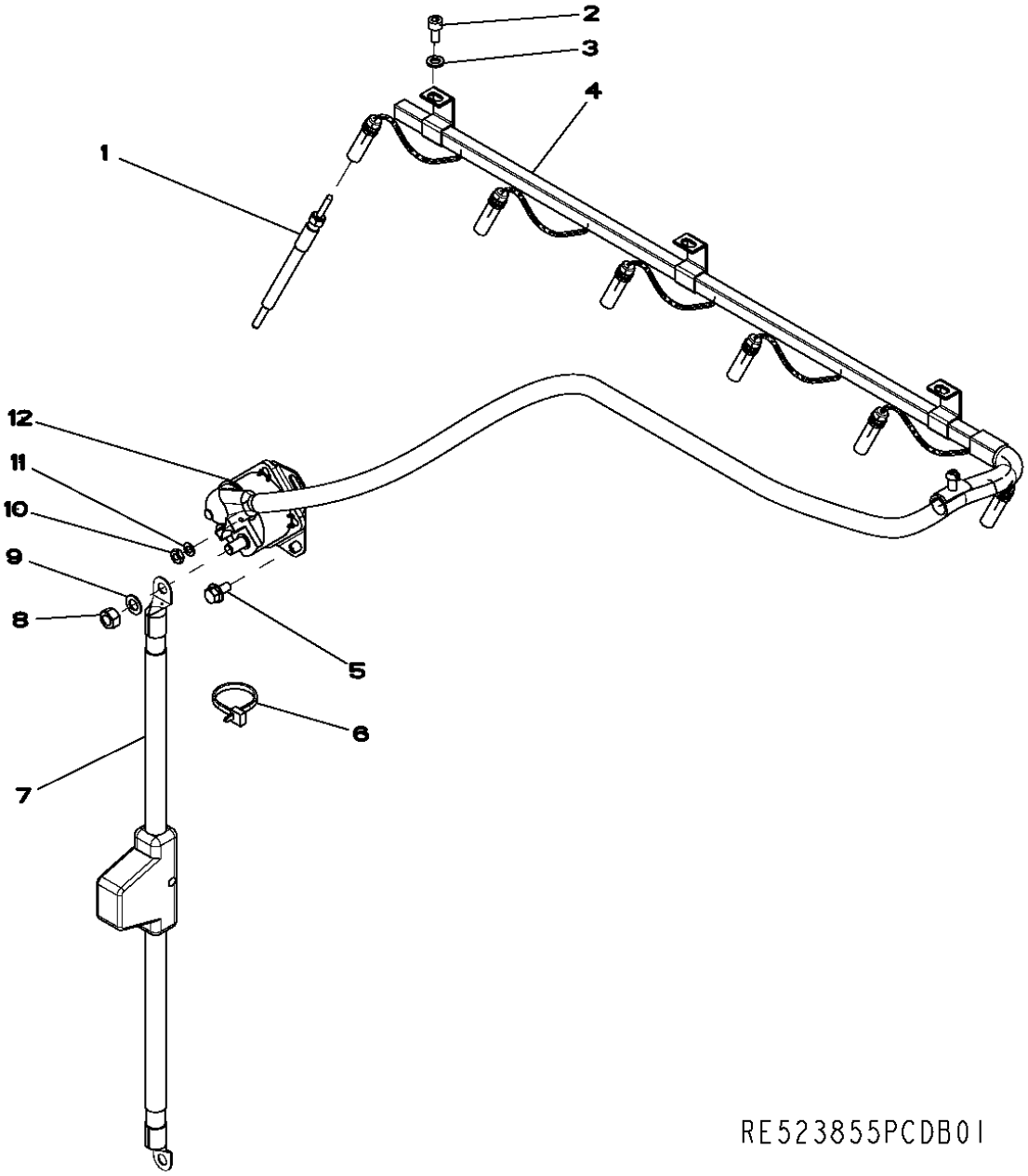

KEY	PART NO.	PART NAME	QTY.	ENGINE SERIAL NO.	REMARKS
1	RE504580	GLOW PLUG	6		
2	19M8618	SCREW	3		M6 X 12
3	24M7088	WASHER	3		6.600 X 12 X 1.600 MM
4	RE523892	WIRING HARNESS	1		
5	19M7774	SCREW	2		M6 X 12
6	R44302	TIE BAND	2		
7	RE518552	JUMPER	1		
8	14H785	NUT	2		5/16"
9	12M7032	LOCK WASHER	2		8.400 MM
10	14H631	NUT	2		0.190"
11	12M7060	WASHER	2		5.300 MM
12	RE164448	STARTER RELAY	1		

4440 (TIMING GEAR COVER)
4440 (COUVERCLE DE DISTRIBUTION)
4440 (TAPA DE LA DISTRIBUCION)

RE524576PCDA01 -UN-18OCT05

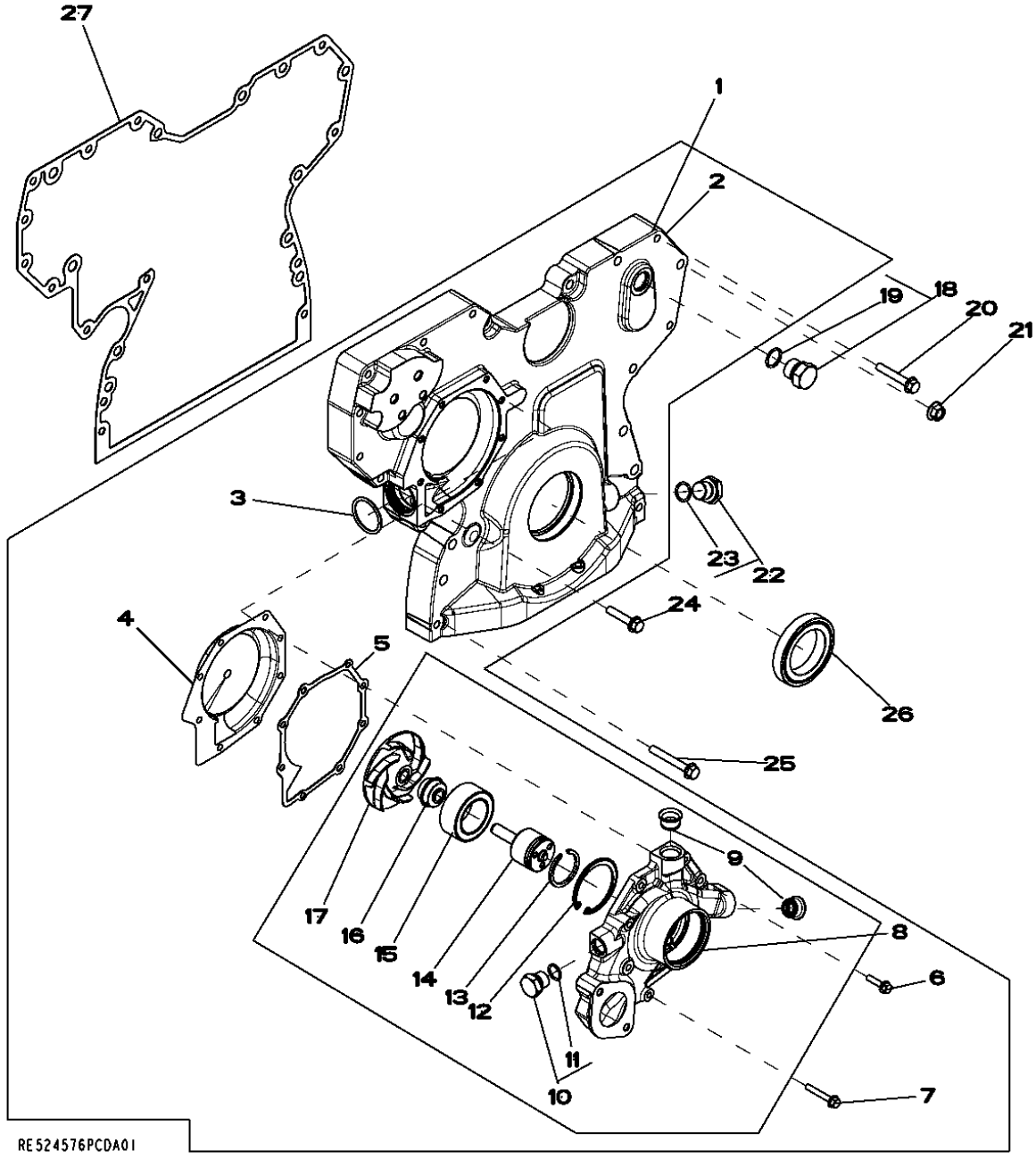

KEY	PART NO.	PART NAME	QTY.	ENGINE SERIAL NO.	REMARKS
1	RE523168	COVER	1		
2	R503596	COVER	1		
3	R504734	O-RING	1		
4	RE508566	KIT	1		
5	R123417	GASKET	1		
6	19M7863	SCREW	5		M6 X 25
7	19M7797	SCREW	3		M6 X 40
8	RE523169	WATER PUMP	1		
	SE501227	WATER PUMP	1		(REMAN SELECT ALTERNATE)
9	R123226	GASKET	2		
10	RE46685	FITTING PLUG	1		
11	51M7043	O-RING	1		
12	R71228	RING	1		
13	A364R	SNAP RING	1		
14	.....	SHAFT	1		(ORDER RE523169)
15	.....	BEARING	1		(ORDER RE523169)
16	.....	SEAL	1		(ORDER RE523169)
17	.....	IMPELLER	1		(ORDER RE523169)
18	RE46687	DRAIN PLUG	1		
19	51M7045	O-RING	1		
20	19M7800	SCREW	8		M8 X 50
21	14M7296	FLANGE NUT	9		M10
22	RE517370	FITTING	1		
23	51M7044	O-RING	1		
24	19M8317	SCREW	1		M8 X 40
25	19M7801	SCREW	3		M8 X 60
26	RE505515	SEAL	1		
27	R519657	GASKET	1		(SUB R523184)

4633 (CYLINDER BLOCK)
4633 (BLOC-CYLINDRES)
4633 (BLOQUE DE CILINDROS)

ARE522134PCDB1 -UN-06JAN06

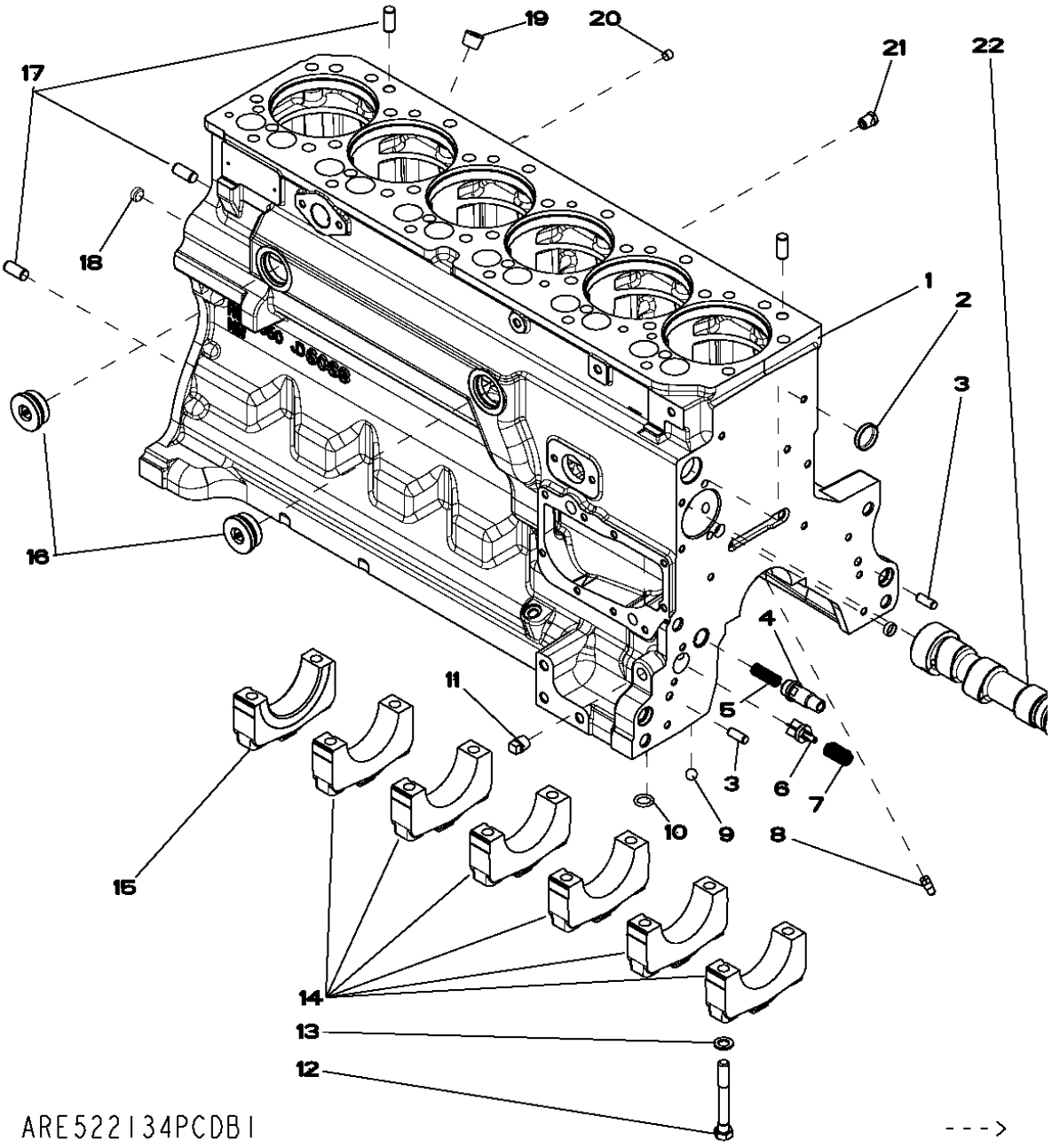

KEY	PART NO.	PART NAME	QTY.	ENGINE SERIAL NO.	REMARKS
1	.....	CYLINDER BLOCK	1		
2	R116466	PLUG	1		
3	R26650	DOWEL PIN	1		
4	RE505501	BLEED VALVE	1		
5	R131425	COMPRESSION SPRING	1		
6	R121043	VALVE	1		
7	R111137	SPRING	1		
8	R131182	ORIFICE	6		
9	D2361R	BALL	1		
10	R97185	O-RING	1		
11	15H695	PIPE PLUG	1		3/8"
12	T23474	CAP SCREW	14		12.700 X 95.250 MM (1/2" X 3-3/4")
13	T20168	WASHER	14		13.106 X 21.996 X 2.286 MM (33/64" X 0.866" X 0.090")
14	.....	BEARING CAP	6		(A)
15	.....	BEARING CAP	1		(B)
16	RE508185	FITTING	2		
17	R48685	DOWEL PIN	4		
18	.....	PLUG	2		NEXT PAGE
19	.....	PIPE PLUG	1		NEXT PAGE
20	.....	PLUG	1		NEXT PAGE
21	.....	PLUG	1		NEXT PAGE
22	.....	CAMSHAFT	1		NEXT PAGE

(A) CRANKSHAFT / BEARINGS
VILEBREQUIN / COUSSINETS
CIGUENAL / COJINETE

(B) THRUST BEARING
COUSSINETS DE BUTTE
COJINETE DE EMPUJE

4633 (CYLINDER BLOCK)
4633 (BLOC-CYLINDRES)
4633 (BLOQUE DE CILINDROS)

BRE522134PCDB1 -UN-06JAN06

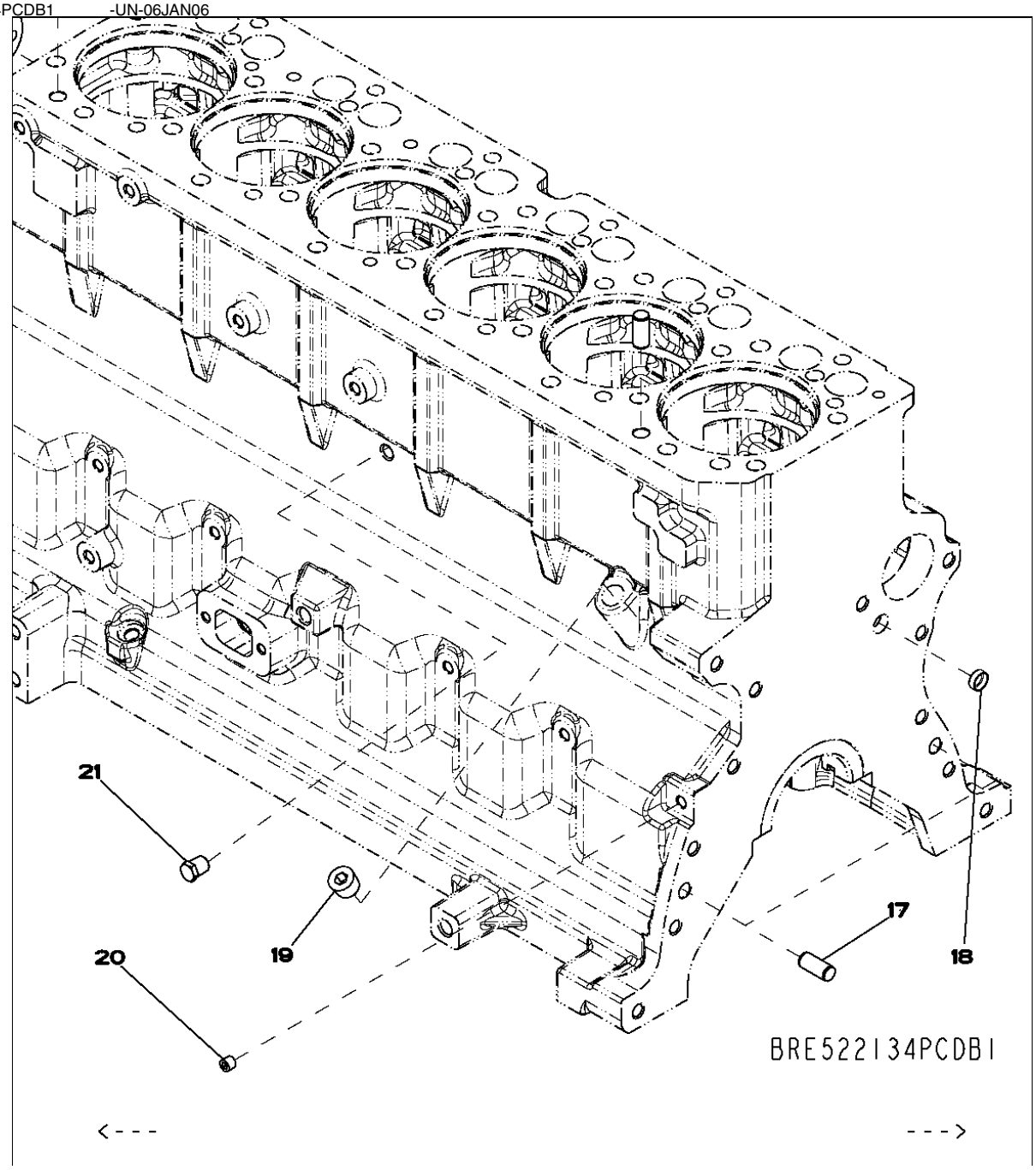

KEY	PART NO.	PART NAME	QTY.	ENGINE SERIAL NO.	REMARKS
17	R48685	DOWEL PIN	4		
18	T18891	PLUG	2		
19	15H624	PIPE PLUG	1		1/2"
20	R104592	PIPE PLUG	1		
21	R55233	PIPE PLUG	1		
22	R39741	DRAIN PLUG	1		

4633 (CYLINDER BLOCK)
4633 (BLOC-CYLINDRES)
4633 (BLOQUE DE CILINDROS)

CRE522134PCDB1 -UN-06JAN06

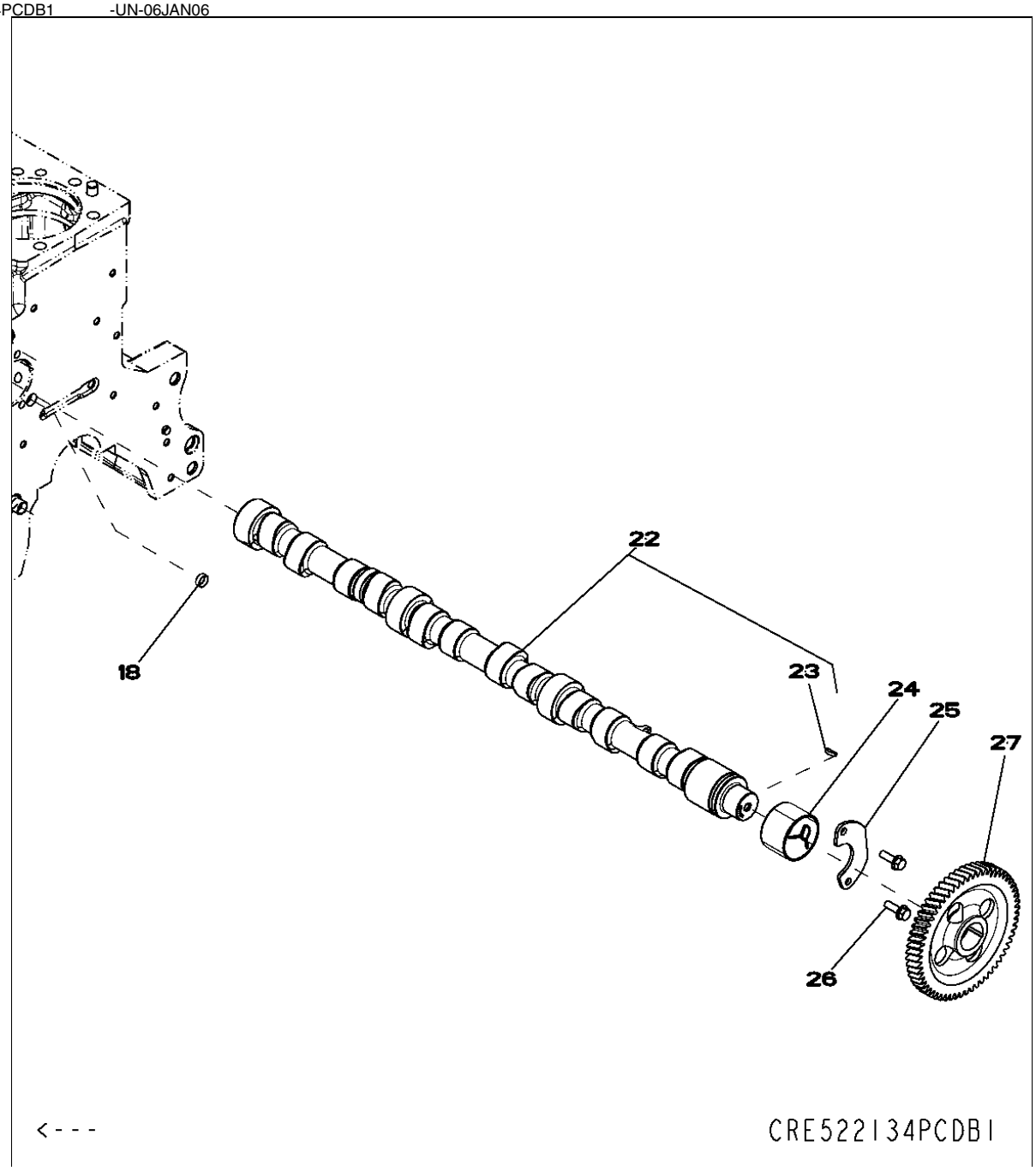

KEY	PART NO.	PART NAME	QTY.	ENGINE SERIAL NO.	REMARKS
18	T18891	PLUG	2		
22	RE528950	CAMSHAFT	1		(INCLUDES RE521603,, R516237,, R133303)
23	R133303	SHAFT KEY	1		
24	R119874	BUSHING	1		
25	R132518	PLATE	1		
26	19M8999	SCREW	2		M8 X 25
27	.....	GEAR	1		(FURNISHED WITH RE528950)

4712 (CRANKSHAFT / BEARINGS)
4712 (VILEBREQUIN / COUSSINETS)
4712 (CIGUENAL / COJINETE)

RE506346PCDD01 -UN-27JUL04

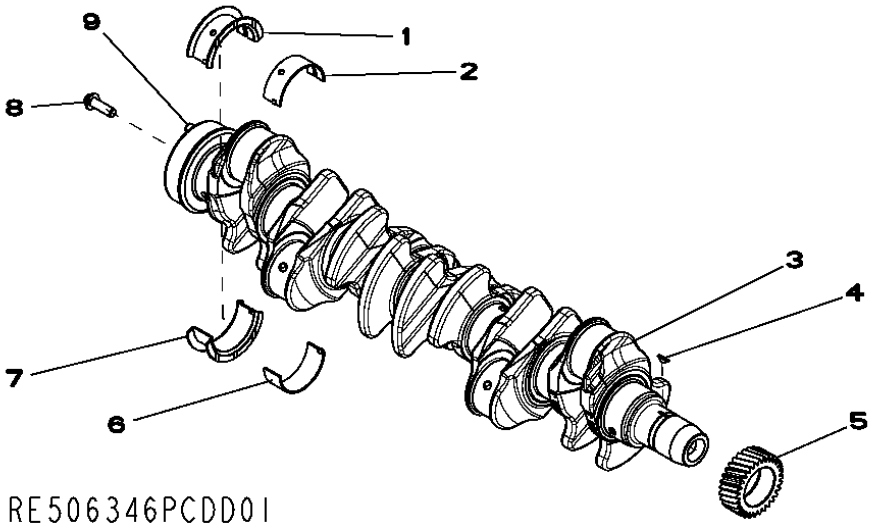

KEY	PART NO.	PART NAME	QTY.	ENGINE SERIAL NO.	REMARKS
1	AT21139	BEARING	1		
2	RE65165	BEARING KIT	6		
3	RE505921	CRANKSHAFT	1		
4	R505609	SHAFT KEY	1		
5	R120631	GEAR	1		
6	RE65165	BEARING KIT	6		
7	RE65168	THRUST BEARING	1		
8	R135918	BOLT	6		
9	R48685	DOWEL PIN	1		

MEMORANDA
MEMORANDA
MEMORANDA

4836 (CONNECTING RODS AND PISTONS)
4836 (BIELLES ET PISTONS)
4836 (BIELA Y PISTONES)

RE523565PCDA03 -UN-16SEP05

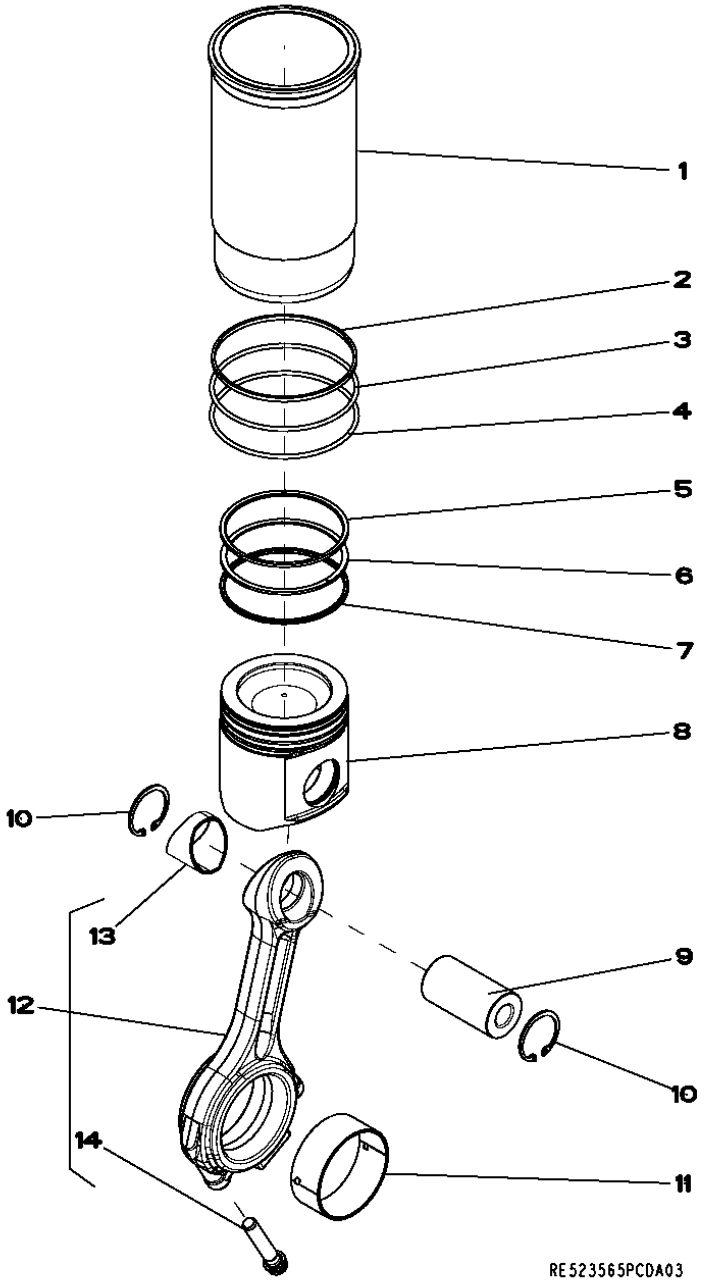

KEY	PART NO.	PART NAME	QTY.	ENGINE SERIAL NO.	REMARKS
1	RE516228	PISTON-LINER KIT	6		
2	R48767	PACKING	6		
3	AR65507	O-RING KIT	6		
4	AR65507	O-RING KIT	6		
5	RE524453	PISTON RING KIT	6		
6	RE507852	PISTON RING KIT	6		
7	RE507852	PISTON RING KIT	6		
8	RE516227	PISTON-LINER KIT	6		
9	R502755	PISTON PIN	6		
10	R54114	SNAP RING	12		
11	RE65908	BEARING	12		
12	RE500608	CONNECTING ROD	6		(MARKED R500335)
	SE501094	CONNECTING ROD	6		(REMANUFACTURED FOR RE500608)
13	R114082	BUSHING	1		
14	R501124	SCREW	2		

4905 (ROCKER ARM / SHAFT / TAPPET / PUSH ROD)
4905 (CULBUTEUR / ARBRE / POUSSOIR DE SOUPAPE / TIGE)
4905 (BALANCIN / ARBOL / BOTADOR / VARILLA DE EMPUJE)

RE522136PCDC01 -UN-22FEB05

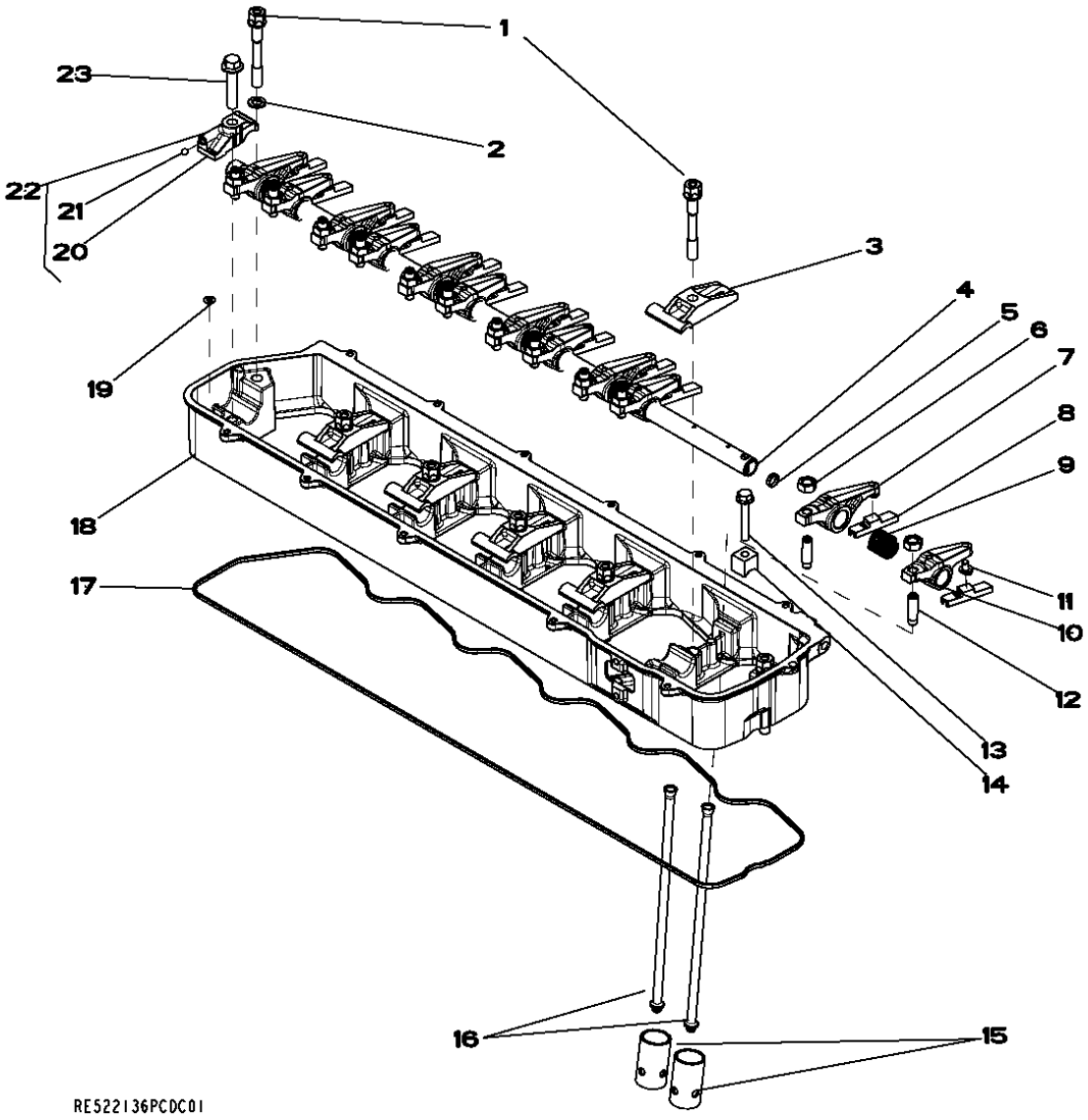

KEY	PART NO.	PART NAME	QTY.	ENGINE SERIAL NO.	REMARKS
1	R521458	SCREW	7		
2	24M7460	WASHER	2		
3	R516140	STRAP	5		
4	RE516491	ROCKER ARM SHAFT	1		
5	30M7004	PLUG	2		
6	14M7148	NUT	1		
7	RE504210	ROCKER ARM	6		
8	R502341	VALVE	12		
9	R505543	SPRING	6		
10	RE523023	ROCKER ARM	6		
11	RE68695	ROCKER ARM	1		
12	.....	SCREW	1		(INCLUDED WITH THE ROCKER ARM)
13	19M9170	SCREW	1		
14	R504631	CAP	1		
15	R123565	CAM FOLLOWER	12		
16	R504209	PUSH ROD	12		
17	R504882	GASKET	1		
18	R518809	ROCKER ARM SHAFT	1		
19	R520867	O-RING	1		
20	.....	CLAMP	1		(ORDER RE523032)
21	R69281	BALL	1		
22	RE523032	CAP	1		
23	19M8966	SCREW	1		M10 X 50

5024 (OIL PUMP)
5024 (POMPE A HUILE)
5024 (BOMBA DE ACEITE)

RE522137PCDA01 -UN-27JUL04

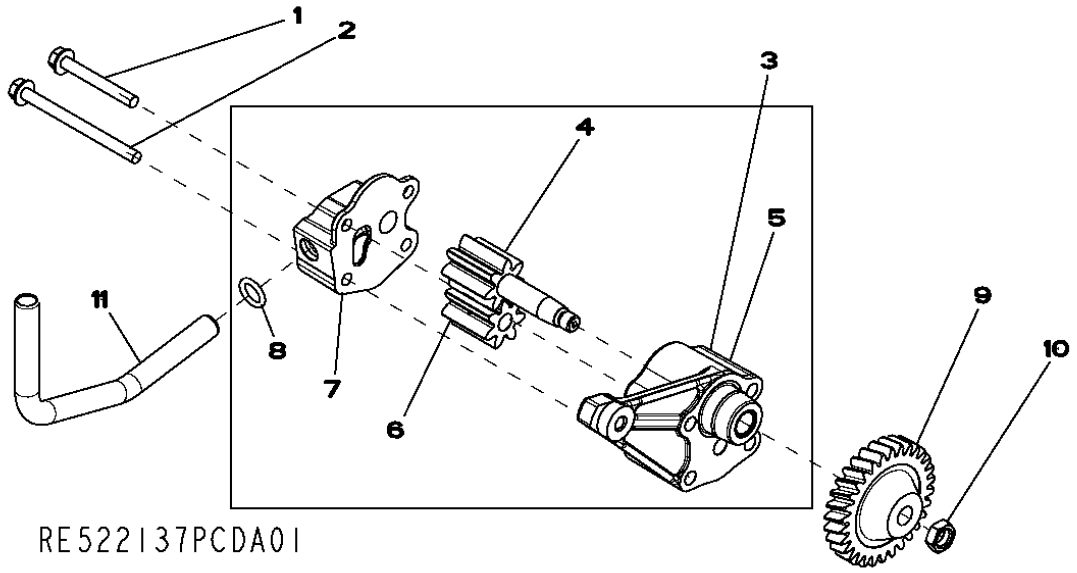

KEY	PART NO.	PART NAME	QTY.	ENGINE SERIAL NO.	REMARKS
1	19M7802	SCREW	2		M8 X 65
2	19M9355	SCREW	2		M8 X 105
3	RE521756	OIL PUMP	1		
4	.....	GEAR	1		(ORDER RE521756)
5	.....	HOUSING	1		(ORDER RE521756)
6	.....	GEAR	1		(ORDER RE521756)
7	.....	COVER	1		(ORDER RE521756)
8	R97185	O-RING	1		
9	R120638	GEAR	1		
10	14M7066	NUT	1		M12
11	R518880	OIL TUBE	1		

MEMORANDA
MEMORANDA
MEMORANDA

5120 (CYLINDER HEAD)
5120 (CULASSE)
5120 (CULATA)

RE522138PCDB02 -UN-31MAR05

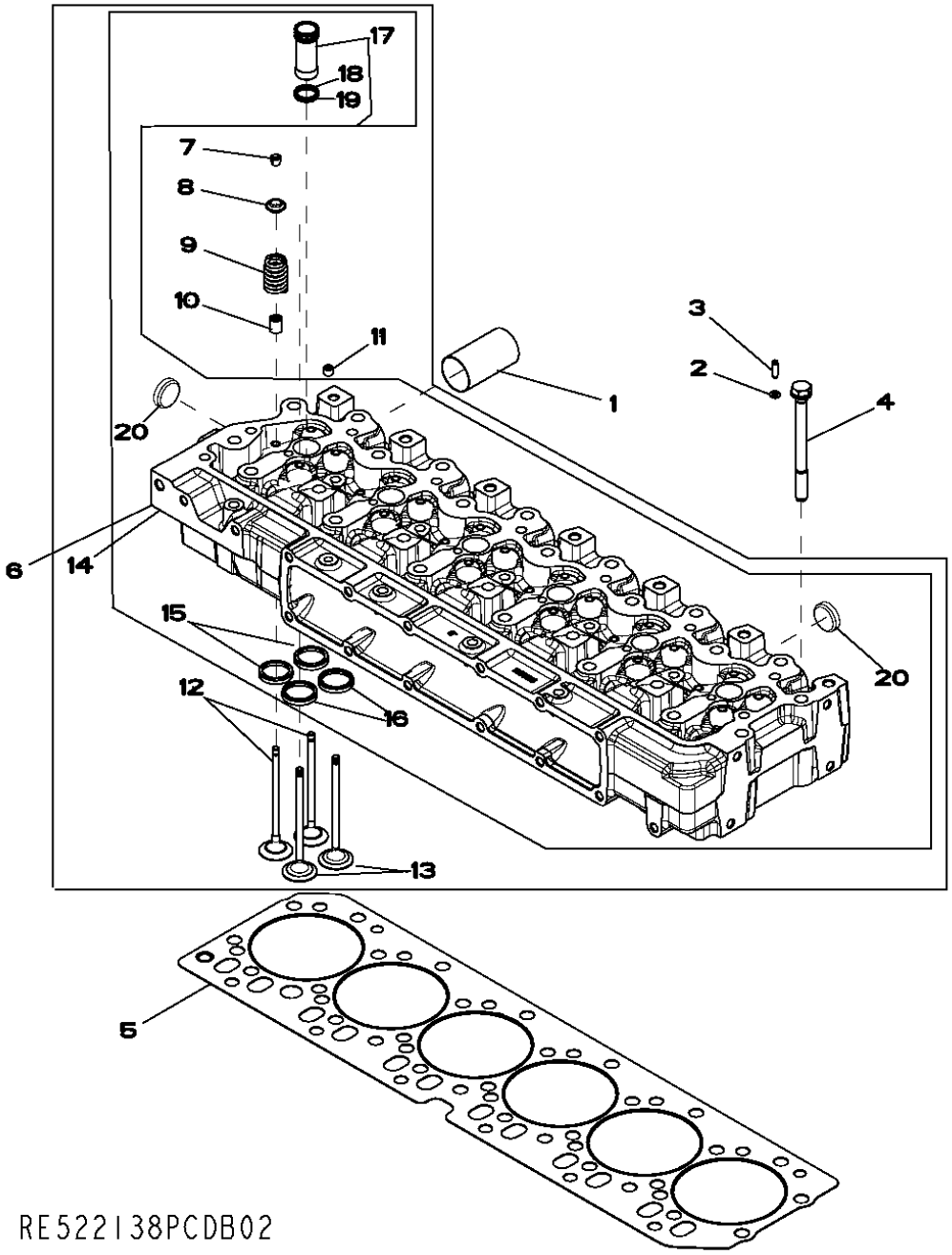

KEY	PART NO.	PART NAME	QTY.	ENGINE SERIAL NO.	REMARKS
1	R519582	SLEEVE	6		
2	R520867	O-RING	7		
3	R521544	BUSHING	2		
4	R502511	CAP SCREW	26		
5	R116516	ENGINE CYLINDER HEAD GASKET	1		
6	RE521639	CYLINDER HEAD	1		
7	R502371	RETAINER	48		
8	R502367	CAP	24		
9	R518872	SPRING	24		
10	RE526519	SEAL	24		
11	R104592	PIPE PLUG	1		
12	RE518081	EXHAUST VALVE	12		
13	R518806	INTAKE VALVE	12		
14	RE521639	CYLINDER HEAD	1		
15	R515033	VALVE SEAT INSERT	12		
16	R515034	VALVE SEAT INSERT	12		
17	RE517435	SLEEVE	6		
18	.....	O-RING	1		NSEP (ORDER RE517435)
19	.....	O-RING	1		NSEP (ORDER RE517435)
20	CD16284	PLUG	4		

5204 (AUXILIARY DRIVE)
5204 (ENTRAINEMENT AUXILIAIRE)
5204 (TRANSMISION ADICIONAL)

RE59264PCDD01 -UN-23SEP05

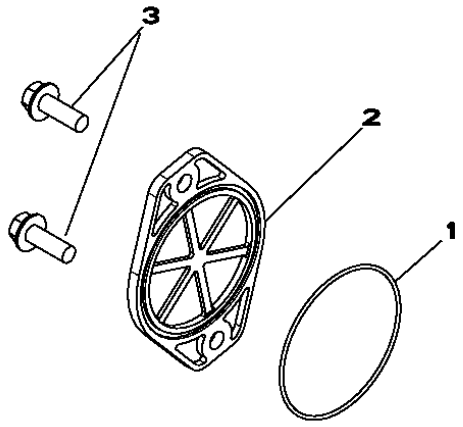

RE59264PCDD01

KEY	*PART NO.*	*PART NAME*	*QTY.*	*ENGINE SERIAL NO.*	*REMARKS*
1	T20758	O-RING	1		4.237" X 0.103"
2	R135757	COVER	1		
3	19M7790	SCREW	2		M12 X 35

5728 (WATER PUMP INLET)
5728 (ENTREE DE LA POMPE A EAU)
5728 (ENTRADA DE BOMBA DE AGUA)

RE530087PCDA02 -UN-31JAN06

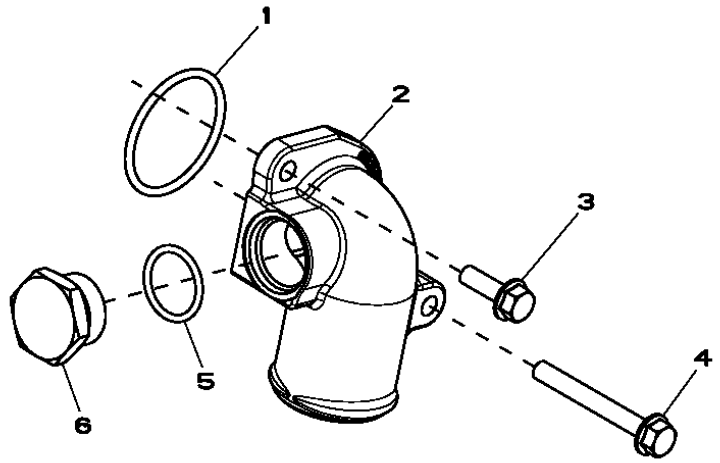

RE530087PCDA02

KEY	PART NO.	PART NAME	QTY.	ENGINE SERIAL NO.	REMARKS
1	R89944	O-RING	1		
2	R522686	ELBOW FITTING	1		
3	19M7867	SCREW	1		M8 X 25
4	19M7802	SCREW	1		M8 X 65
5	U17409	O-RING	1		
6	R82718	DRAIN PLUG	1		M30 X 2

5945 (OIL COOLER)
5945 (REFROIDISSEUR D'HUILE)
5945 (REFRIGERANTE DE ACEITE)

RE522847PCDB02 -UN-30MAY06

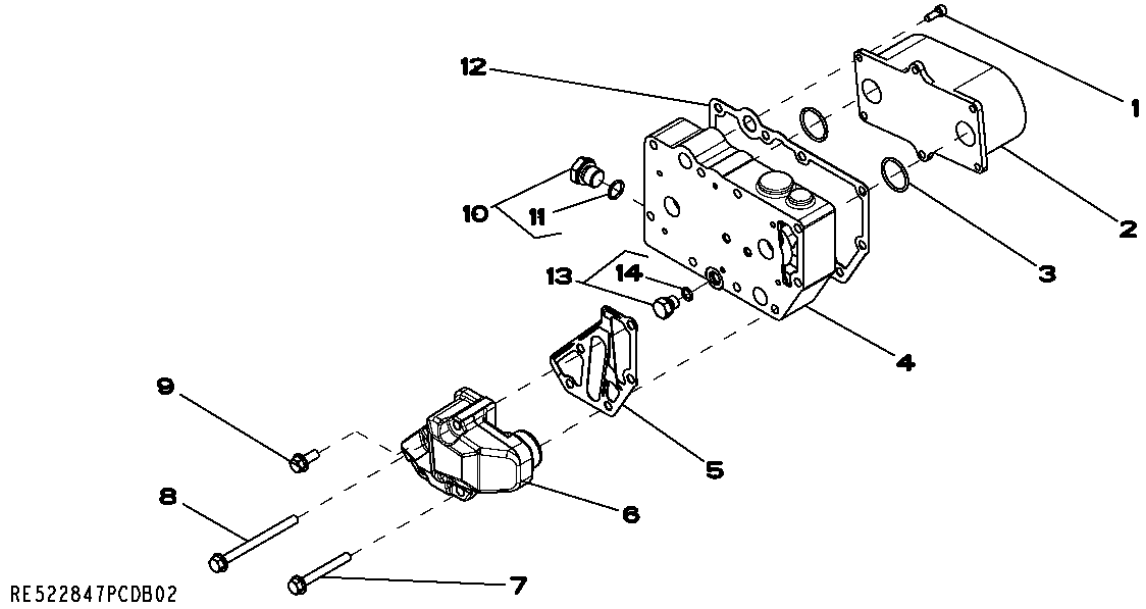

KEY	PART NO.	PART NAME	QTY.	ENGINE SERIAL NO.	REMARKS
1	RE67231	SCREW	6		
2	RE59298	OIL COOLER	1		
3	T122075	O-RING	2		
4	R520983	HOUSING	1		
5	R501428	GASKET	1		
6	RE508599	ADAPTER FITTING	1		
7	19M7802	SCREW	2		M8 X 65
8	19M7970	SCREW	2		M8 X 100
9	RE67238	SCREW	1		
10	RE46685	FITTING PLUG	1		
11	51M7043	O-RING	1		
12	R123501	GASKET	1		
13	RE46686	FITTING PLUG	1		
14	51M7040	O-RING	1		

6275 (ALTERNATOR BRACKETS)
6275 (SUPPORTS DE L'ALTERNATEUR)
6275 (SOPORTE DEL ALTERNADOR)

RE525095PCDA01 -UN-18OCT05

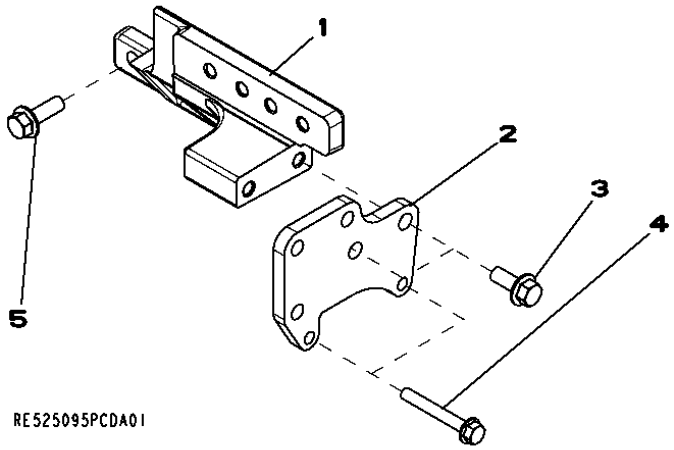

KEY	PART NO.	PART NAME	QTY.	ENGINE SERIAL NO.	REMARKS
1	R516584	BRACKET	1		
2	R516510	HOSE	1		
3	19M7785	SCREW	2		M10 X 25
4	19M7801	SCREW	1		M8 X 60
5	19M7786	SCREW	7		M10 X 30

6389 (FUEL LINES)
6389 (CONDUITES DE COMBUSTIBLE)
6389 (TUBERIA DE COMBUSTIBLE)

RE526654PCDA01 -UN-01NOV05

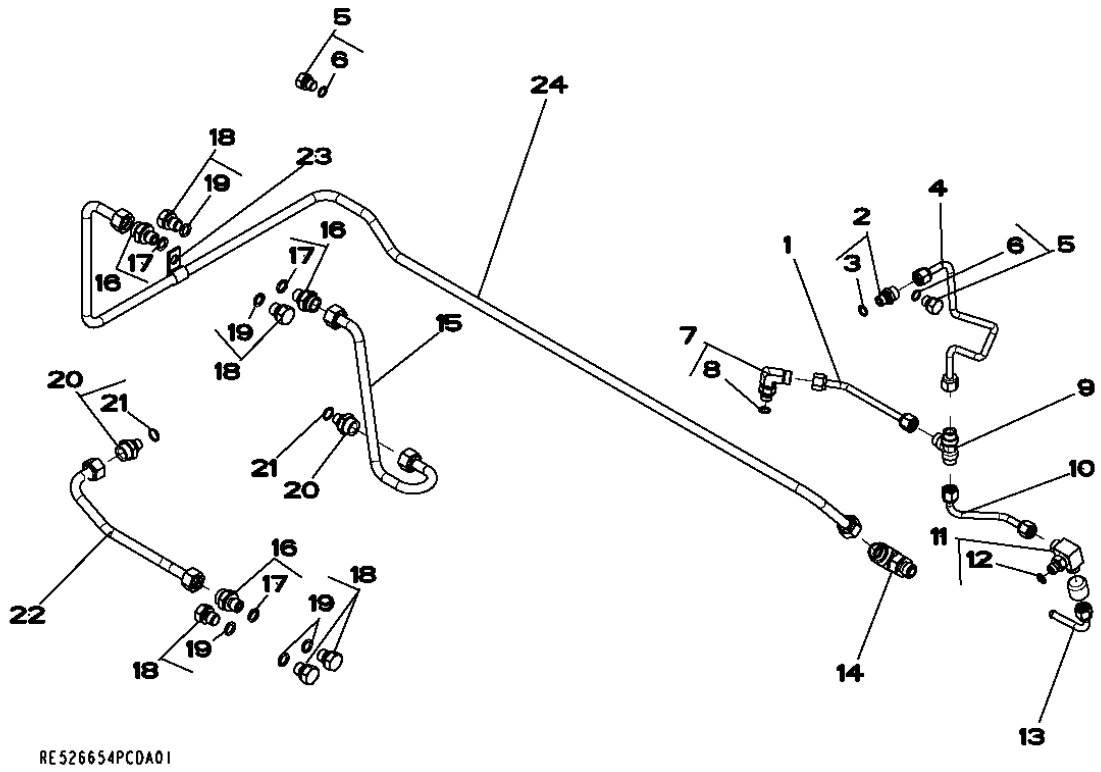

THIS PARTS LISTING IS CONTINUED

KEY	PART NO.	PART NAME	QTY.	ENGINE SERIAL NO.	REMARKS
1	RE523464	FUEL LINE	1		
2	RE60028	FITTING	1		
3	51M7039	O-RING	1		
4	RE523462	FUEL LINE	1		
5	RE60071	FITTING	2		
6	51M7039	O-RING	1		
7	RE502173	FITTING	1		
8	51M7039	O-RING	1		
9	R97061	TEE FITTING	1		
10	RE523629	FUEL LINE	1		
11	RE524220	FITTING	1		
12	51M7039	O-RING	1		
13	AR104650	FUEL LINE	1		
14	RE502174	ELBOW FITTING	1		
15	RE517245	FUEL LINE	1		
16	RE60030	FITTING	3		
17	51M7040	O-RING	1		
18	RE46686	FITTING PLUG	5		
19	51M7040	O-RING	1		
20	R516453	FITTING	2		
21	R500271	O-RING	2		
22	RE521604	FUEL LINE	1		
23	T13814	CLAMP	1		
24	RE522827	FUEL LINE	1		

65ND (TURBOCHARGER)
65ND (TURBOCOMPRESSEUR)
65ND (TURBOCARGADOR)

RE524984PCDD01 -UN-07NOV05

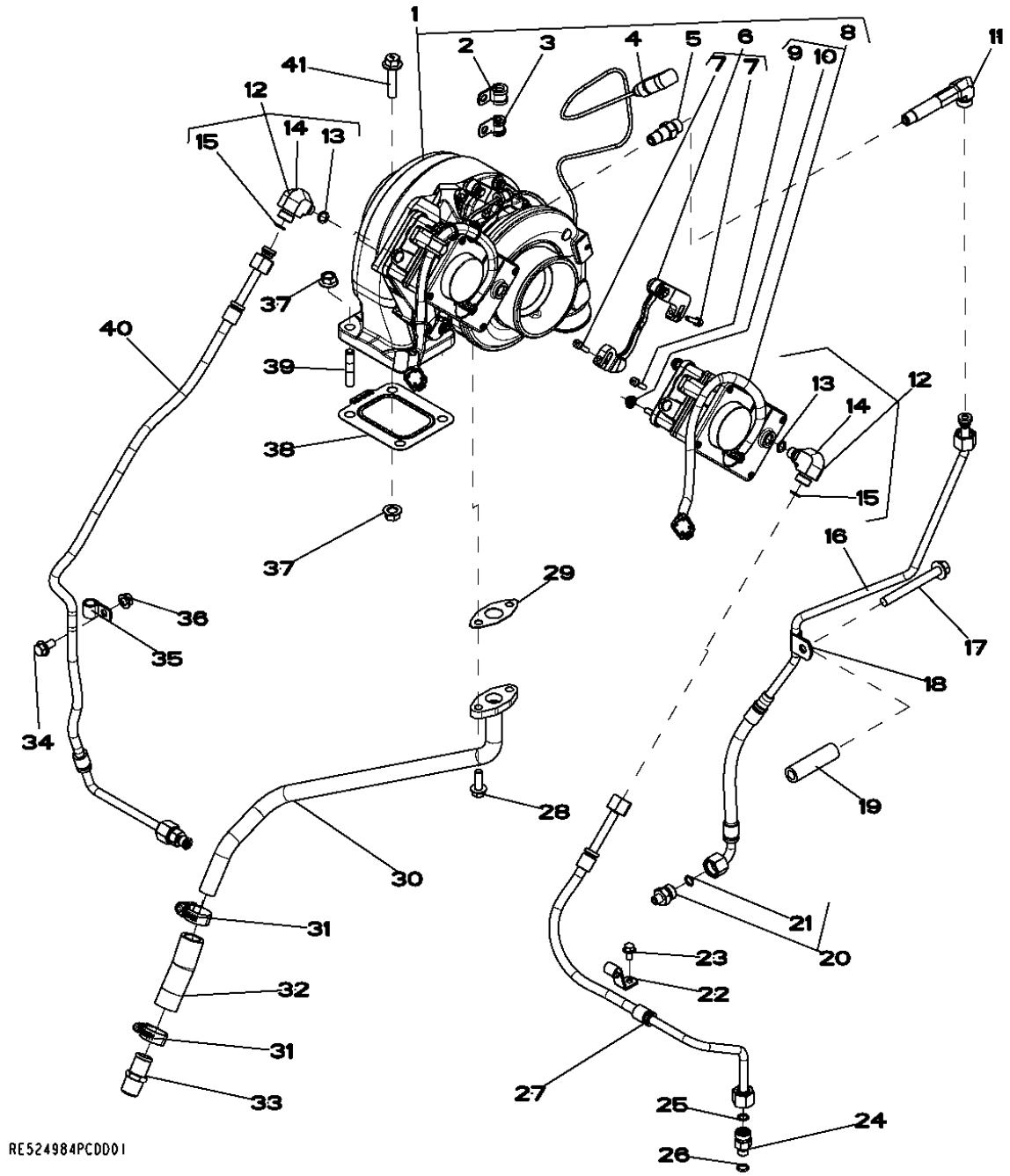

KEY	PART NO.	PART NAME	QTY.	ENGINE SERIAL NO.	REMARKS
1	RE524988	TURBOCHARGER	1		
2	R521407	CLAMP	1		
3	R521406	CLAMP	2		
4	RE523319	SENSOR	1		
5	RE524231	FITTING	1		
6	RE523819	LINKAGE	1		
7	RE528219	SCREW WITH WASHER	2		
8	RE523491	ACTUATOR	1		
9	RE528219	SCREW WITH WASHER	1		
10	E63524	NUT	4		
11	R522735	FITTING	1		
12	38H5022	ELBOW FITTING	1		
13	51M7040	O-RING	1		
14	61M5022	ELBOW FITTING	2		
15	T77613	O-RING	1		
16	RE528756	OIL LINE	1		
17	19M7811	SCREW	1		M10 X 90
18	T38545	CLAMP	1		
19	R520632	SPACER	1		
20	RE521531	ADAPTER FITTING	1		
21	R63548	O-RING	1		
22	R520856	CLAMP	1		
23	19M7774	SCREW	1		M6 X 12
24	38H5008	ADAPTER FITTING	1		
25	T77613	O-RING	1		
26	51M7040	O-RING	1		
27	RE528089	REFRIGERANT HOSE	1		
28	N275830	SCREW	2		
29	R521158	GASKET	1		
30	RE524901	OIL LINE	1		
31	RE65978	CLAMP	2		
32	R115138	HOSE	1		
33	RE54885	HOSE FITTING	1		
34	19M7865	SCREW	1		M8 X 16
35	AH80916	CLIP	1		
36	14M7298	FLANGE NUT	1		
37	14M7296	FLANGE NUT	4		
38	R519489	GASKET	1		
39	R521200	STUD	3		
40	RE528277	REFRIGERANT HOSE	1		
41	R519484	CAP SCREW	1		

6698 (WATER TEMPERATURE SENSOR)
6698 (CAPTEUR DE TEMPERATURE D'EAU)
6698 (TRANSDUCTOR, AGUA)

RE500556PCDD01 -UN-28JUL04

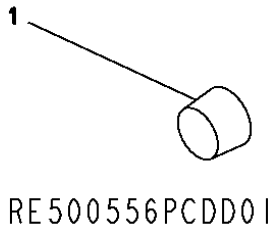

KEY	PART NO.	PART NAME	QTY.	ENGINE SERIAL NO.	REMARKS
1	15H624	PIPE PLUG	1		12.700 MM (1/2")

MEMORANDA
MEMORANDA
MEMORANDA

6721 (SENSORS)
6721 (CAPTEURS)
6721 (SENSORES)

RE526028PCDC02 -UN-19APR06

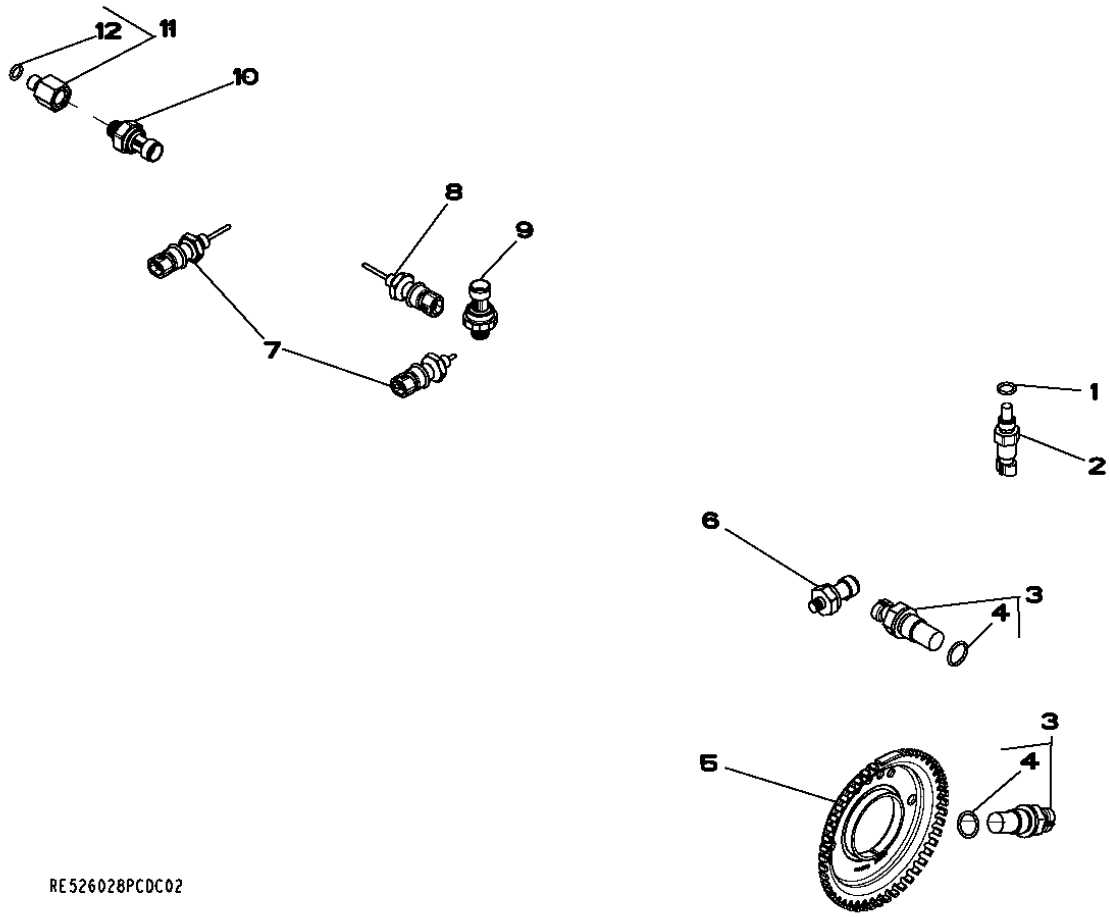

KEY	PART NO.	PART NAME	QTY.	ENGINE SERIAL NO.	REMARKS
1	51M7041	O-RING	1		
2	RE52722	SENSOR	1		
3	RE519144	SENSOR	2		
4	51M7044	O-RING	1		
5	R517471	WHEEL	1		
6	RE167207	PRESSURE SENSOR	1		
7	RE522824	TEMPERATURE SENSOR	1		
8	RE522823	TEMPERATURE SENSOR	2		
9	RE522723	MANIFOLD AIR PRESS. SENSOR	1		
10	RE522794	SENSOR	1		
11	RE523854	ADAPTER FITTING	1		
12	51M7040	O-RING	1		

7423 (AIR CONDITION MOUNTING)

RE523593PCDB01 -UN-31MAY05

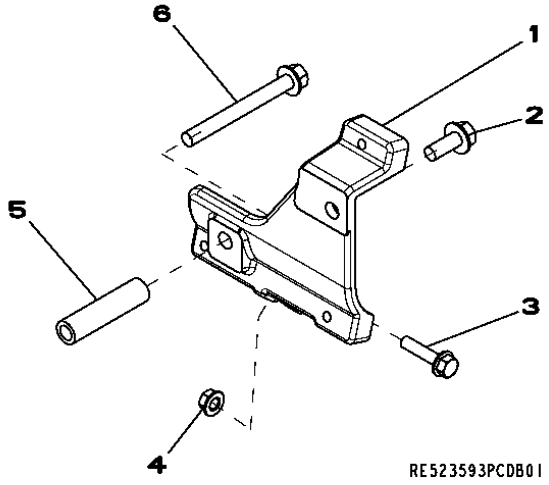

KEY	PART NO.	PART NAME	QTY.	ENGINE SERIAL NO.	REMARKS
1	R522653	BRACKET	1		
2	19M7785	SCREW	1		M10 X 25
3	19M7897	SCREW	1		M8 X 35
4	14M7298	FLANGE NUT	1		
5	28H2659	BUSHING	1		
6	R136508	SCREW	1		

7635 (SWITCH AND SENSOR, OIL PRESSURE)
7635 (CONTACTEUR ET CAPTEUR DE PRESSION D'HUILE)
7635 (INTERRUPTOR Y TRANSDUCTOR DE PRESION, ACEITE)

RE516046PCDD01 -UN-13SEP05

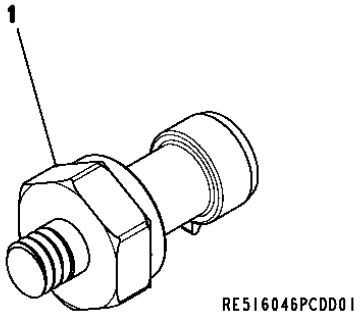

KEY	PART NO.	PART NAME	QTY.	ENGINE SERIAL NO.	REMARKS
1	RE167207	PRESSURE SENSOR	1		

8159 (FUEL AND WATER SEPARATOR)
8159
8159
RE522846PCDB01 -UN-25JUL05

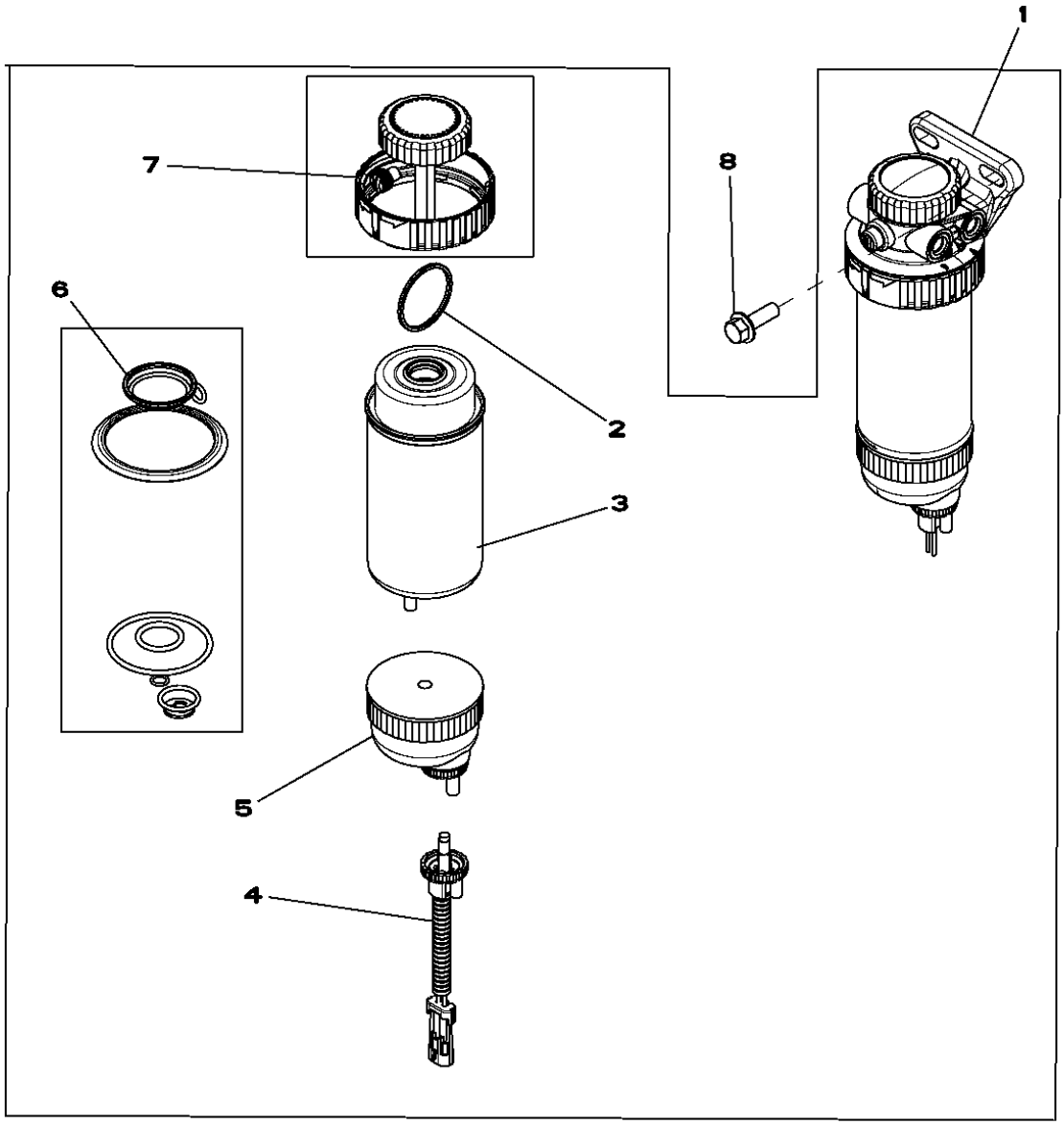

KEY	PART NO.	PART NAME	QTY.	ENGINE SERIAL NO.	REMARKS
1	RE524724	FUEL FILTER	1		
2	RE516512	O-RING KIT	1		
3	RE522966	FUEL FILTER	1		
4	RE519696	WIRING HARNESS	1		
5	RE51650	SEDIMENT BOWL	1		
6	RE516553	SEAL KIT	1		
7	RE526834	SEAL KIT	1		
8	19M7786	SCREW	2		M10 X 30

8496 (ENGINE WIRING HARNESS)
8496 (FAISCEAU MOTEUR)
8496 (GRUPO DE CABLES DEL MOTOR)

RE525958PCDB01 -UN-03NOV05

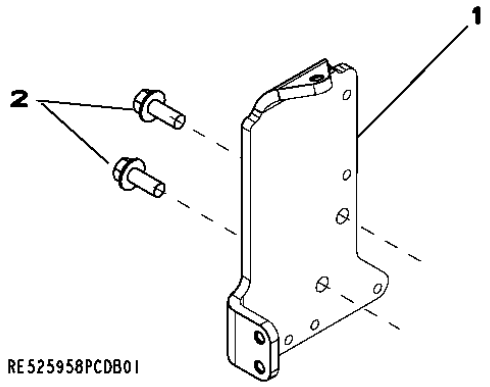

KEY	PART NO.	PART NAME	QTY.	ENGINE SERIAL NO.	REMARKS
1	R522771	BRACKET	1		
2	19M7785	SCREW	2		M10 X 25

8718 (BELT TENSIONER)
8718 (TENDEUR DE COURROIE)
8718 (TENSOR DE CORREA)

RE517336PCDD01 -UN-28JUL04

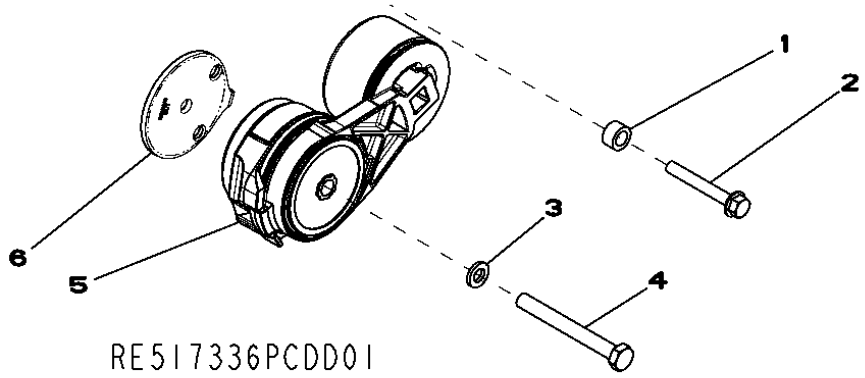

KEY	PART NO.	PART NAME	QTY.	ENGINE SERIAL NO.	REMARKS
1	28H860	WASHER	1		
2	19M7801	SCREW	1		M8 X 60
3	24M7106	WASHER	1		10 X 18 X 2.500 MM
4	19M8131	SCREW	1		
5	RE518097	TIGHTENER	1		
6	R518210	SPACER	1		

8842 (OIL FILTER)
8842 (FILTRE A HUILE)
8842 (FILTRO DE ACEITE)

RE508700PCDD01 -UN-27JUL04

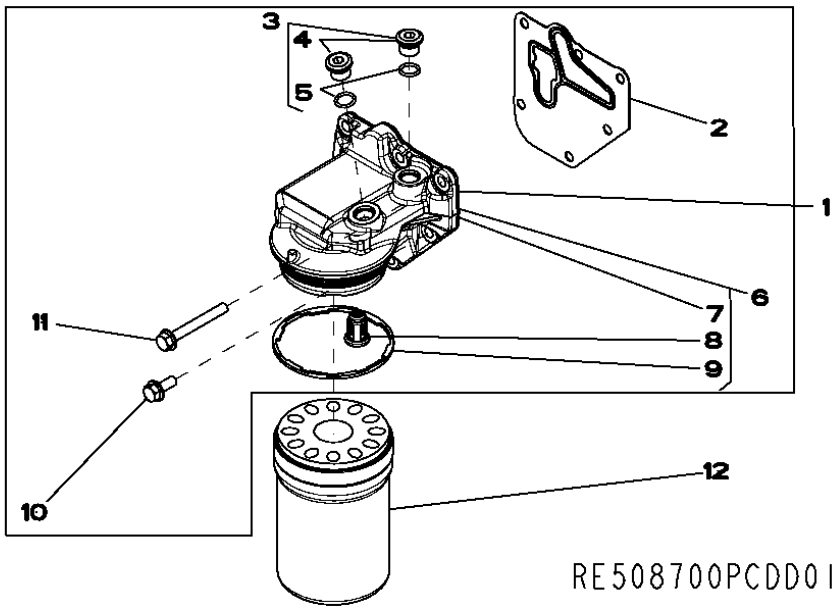

KEY	PART NO.	PART NAME	QTY.	ENGINE SERIAL NO.	REMARKS
1	RE508986	FILTER HEAD	1		
2	R501484	GASKET	1		
3	RE52242	DRAIN PLUG	2		
4	RE52242	DRAIN PLUG	1		
5	51M7042	O-RING	1		
6	RE504562	FILTER HEAD	1		
7	.....	FILTER HEAD	1		(ORDER RE504562)
8	RE504543	VALVE	1		
9	R502513	SEAL	1		
10	RE67238	SCREW	1		
11	19M7802	SCREW	5		M8 X 65
12	RE504836	OIL FILTER	1		

MEMORANDA
MEMORANDA
MEMORANDA

8903 (EXHAUST GAS RECIRCULATION (EGR))
8903 (RECIRCULATION DES GAZ D'ECHAPPEMENT (EGR))
8903 (RECIRCULACISN DEL GAS DE ESCAPE (EGR))

RE523567PCDC01 -UN-03NOV05

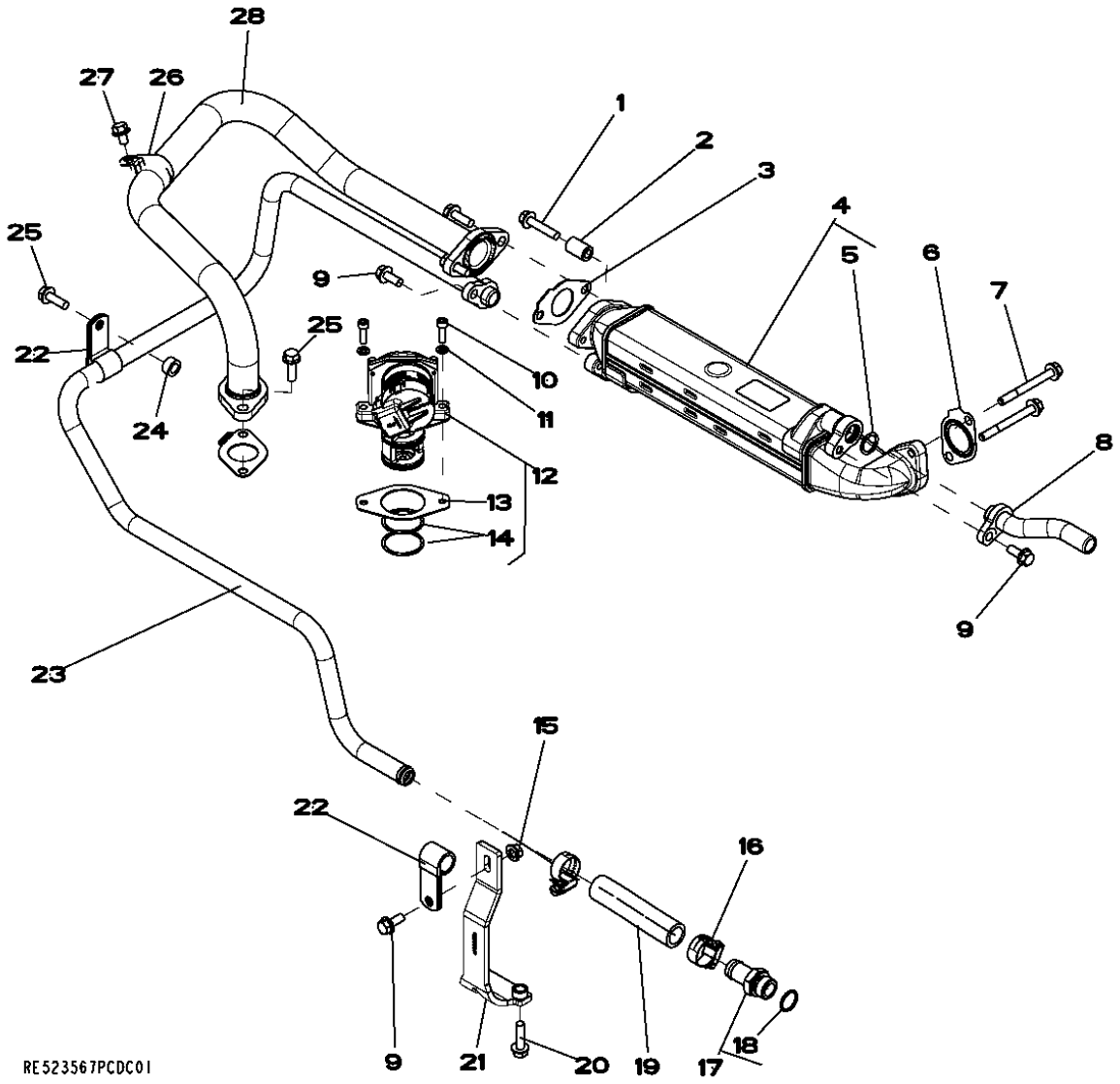

KEY	PART NO.	PART NAME	QTY.	ENGINE SERIAL NO.	REMARKS
1	19M7798	SCREW	1		M8 X 40
2	R518859	BUSHING	1		
3	R518858	GASKET	2		
4	RE522754	HEAT EXCHANGER	1		
5	R518543	O-RING	2		
6	R519487	GASKET	1		
7	R520672	CAP SCREW	2		
8	RE522948	TUBE	1		
9	19M7866	SCREW	7		M8 X 20
10	19M8627	SCREW	2		M6 X 20
11	24M7088	WASHER	2		6.600 X 12 X 1.600 MM
12	RE528472	VALVE	1		
13	R519398	GASKET	1		
14	R519989	O-RING	2		
15	14M7298	FLANGE NUT	1		M8
16	RE65978	CLAMP	1		
17	RE523483	FITTING	1		
18	51M7045	O-RING	1		
19	R519518	RADIATOR HOSE	1		
20	19M7868	SCREW	2		M8 X 30
21	RE523617	BRACKET	1		
22	T27523	CLAMP	2		
23	RE523554	TUBE	1		
24	T20280	WASHER	1		
25	19M7867	SCREW	1		M8 X 25
26	R519482	CLAMP	1		
27	19M7864	SCREW	1		M8 X 12
28	RE523553	TUBE	1		

9801 (LIFT STRAPS)
9801 (OEILLETS DE LEVAGE)
9801 (CINTAS DE ELEVACION)

RE53353PCDD01 -UN-24AUG04

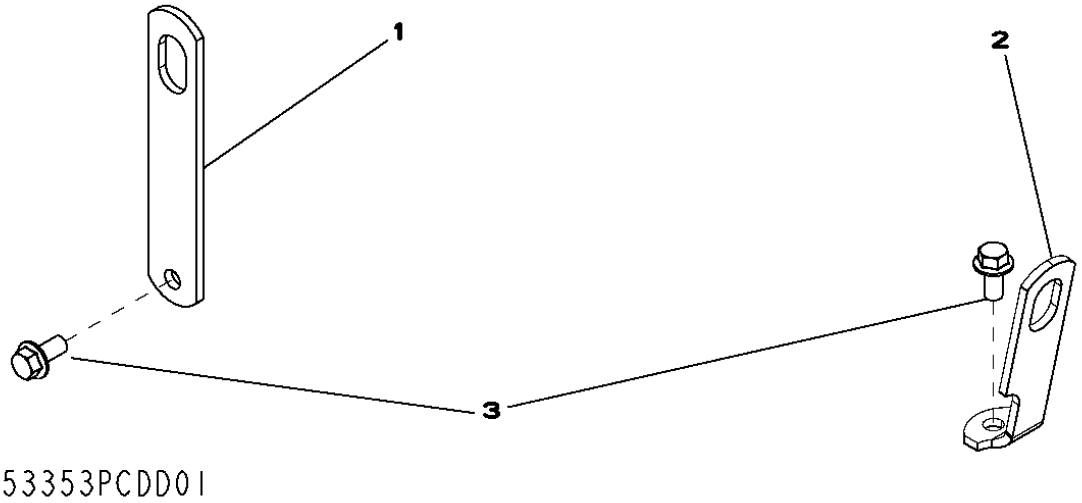

RE53353PCDD01

KEY	PART NO.	PART NAME	QTY.	ENGINE SERIAL NO.	REMARKS
1	R502329	STRAP	1		(REAR)
2	.....	STRAP	1		(FRONT) (ORDER THROUGH SERVICEGARD) (1-800-563-3373)
3	19M7788	SCREW	2		M12 X 25

MEMORANDA
MEMORANDA
MEMORANDA

ENGINE COOLANT HEATER
CHAUFFE-BLOC MOTEUR
CALEFACTOR DE REFRIGERANTE DE MOTOR

TX1012306 -UN-27OCT06

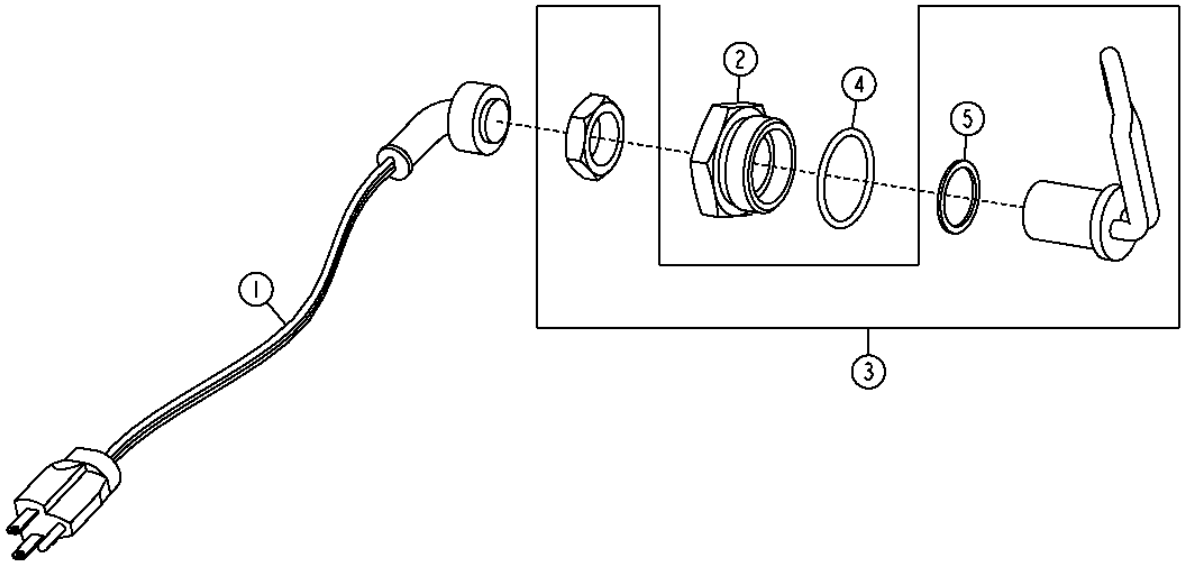

TX1012306

THIS PARTS LISTING IS CONTINUED

ENGINE COOLANT HEATER
CHAUFFE-BLOC MOTEUR
CALEFACTOR DE REFRIGERANTE DE MOTOR

KEY	*PART NO.*	*PART NAME*	*QTY.*	*SERIAL NO.*	*REMARKS*
1	AR50411	WIRING LEAD	1		
2	R54123	ADAPTER FITTING	1		
3	RE524676	HEATING ELEMENT	1		
4	U13639	O-RING	1		37.465 X 2.997 MM
5	R206883	WASHER	1		25.800 X 31.750 X 1.600 MM

COOLING PACKAGE
ENSEMBLE DE REFROIDISSEMENT
CONJUNTO DE ENFRIAMIENTO

TX1013512 -UN-01NOV06

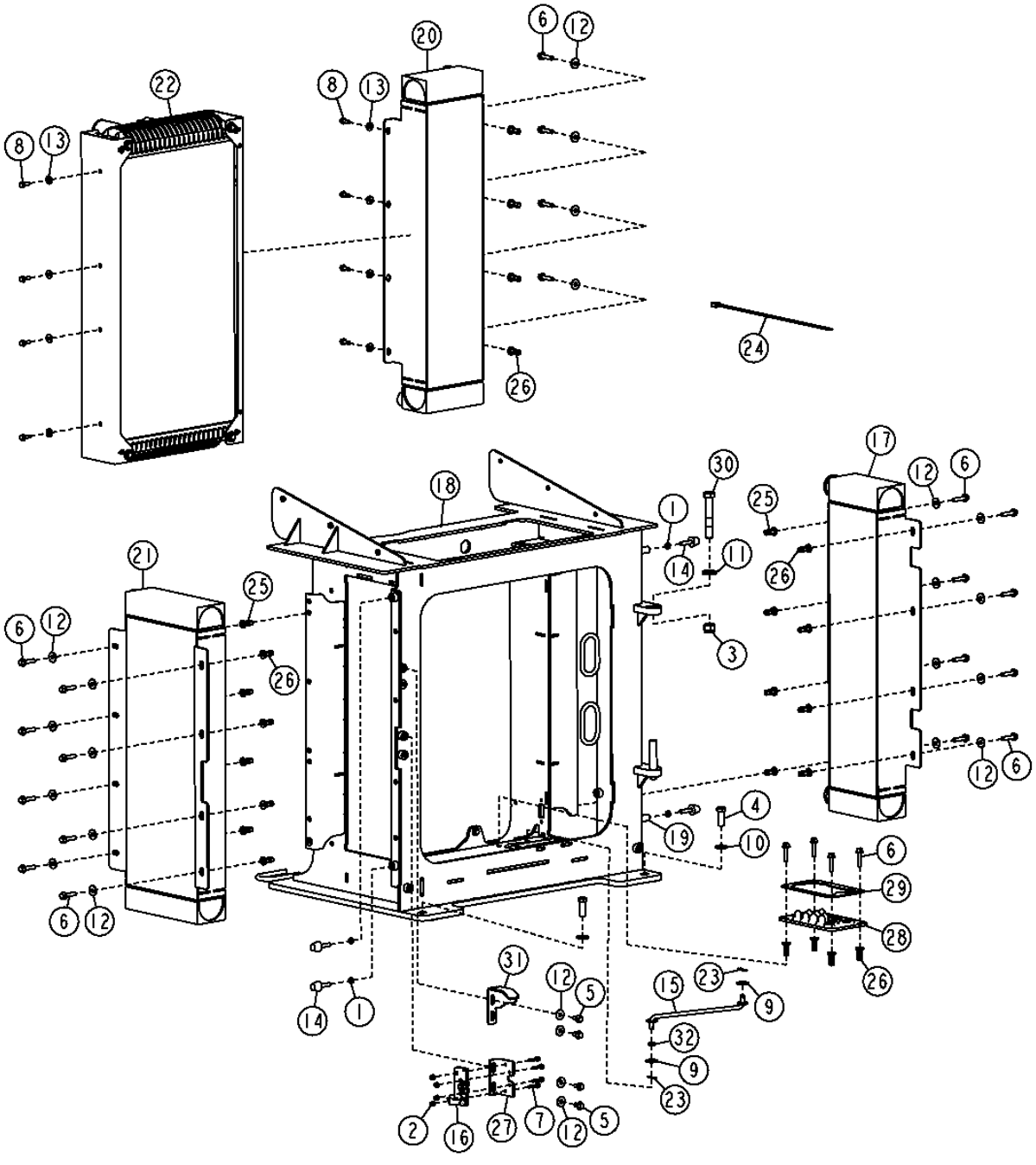

THIS PARTS LISTING IS CONTINUED

COOLING PACKAGE
ENSEMBLE DE REFROIDISSEMENT
CONJUNTO DE ENFRIAMIENTO

KEY	PART NO.	PART NAME	QTY.	SERIAL NO.	REMARKS
1	14M7152	NUT	4		M10
2	14M7397	LOCK NUT	4		M6
3	14M7554	LOCK NUT	1		M20
4	19M7489	CAP SCREW	4		M16 X 45
5	19M7784	SCREW	4		M10 X 20
6	19M7805	SCREW	24		M10 X 45
7	19M7833	SCREW	4		M6 X 35
8	19M7867	SCREW	10		M8 X 25
9	24H1330	WASHER	2		15/32" X 1-3/8" X 7/64"
10	24M7241	WASHER	4		17 X 34 X 4 MM
11	24M7242	WASHER	1		21.400 X 42 X 5 MM
12	24M7296	WASHER	100		10.500 X 30 X 2.500 MM
13	24M7298	WASHER	10		8.400 X 25 X 2 MM
14	AT306690	BUMPER	4		
15	AT312053	ROD	1		
16	AT318974	LATCH	1		
17	AT321505	AIR COOLER	1		(FUEL COOLER)
18	AT332612	FRAME	1		
19	T122329	BUSHING	2		
20	AT332614	OIL COOLER	1		
21	AT332648	OIL COOLER	1		
22	AT333696	RADIATOR	1		
23	J16931	PIN	2		
24	N189220	TIE BAND	1		
25	T148409	NUT	9		LH
26	T148410	NUT	19		RH
27	T182554	BRACKET	1		(TRANSMISSION)
28	T197427	GROMMET	1		
29	T201589	SEALING RING	1		
30	T224760	BOLT	1		
31	T226561	PLATE	1		(HYDRAULIC)
32	T27260	WASHER	1		
33	.....	ISOLATOR	1		(ORDER T66419) (CTL 120")

COOLING SYSTEM
CIRCUIT DE REFROIDISSEMENT
SISTEMA DE ENFRIAMIENTO

TX1013527 -UN-03NOV06

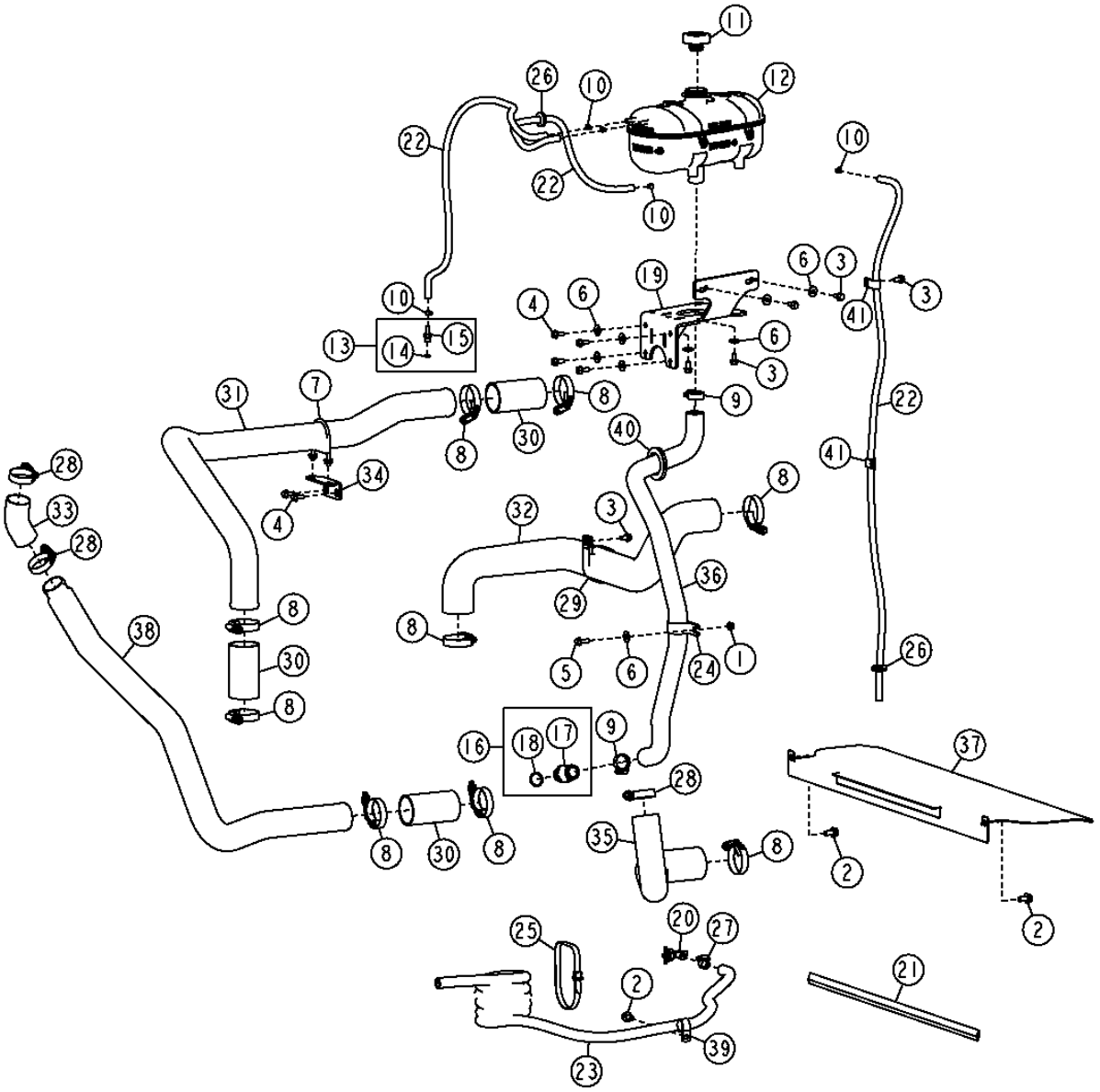

COOLING SYSTEM
CIRCUIT DE REFROIDISSEMENT
SISTEMA DE ENFRIAMIENTO

KEY	PART NO.	PART NAME	QTY.	SERIAL NO.	REMARKS
1	14M7298	FLANGE NUT	1		M8
2	19M7784	SCREW	3		M10 X 20
3	19M7865	SCREW	6		M8 X 16
4	19M7866	SCREW	6		M8 X 20
5	19M7867	SCREW	1		M8 X 25
6	24M7298	WASHER	10		8.400 X 25 X 2 MM
7	AA46694	CLAMP	1		
8	AH170895	CLAMP	9		
9	AR21839	CLAMP	2		
10	.....	CLAMP	5		(ORDER TY22462)
11	AT310335	FILLER CAP	1		
12	AT322957	TANK	1		
13	AT323961	ADAPTER FITTING	1		
14	51M7040	O-RING	1		9.300 X 2.200 MM
15	AT323961	ADAPTER FITTING	1		
16	AT326597	ADAPTER FITTING	1		
17	T223206	ADAPTER FITTING	1		
18	U17409	O-RING	1		
19	AT332096	SUPPORT	1		
20	AT35831	DRAIN VALVE	1		
21	.....	BULK HOSE	1		(ORDER T60811) (CTL 10')
22	.....	HOSE	1		(ORDER TY22324) (CTL 3.3', 3.3', 2.4')
23	.....	BULK HOSE	1		(ORDER TY22328) (CTL 9')
24	E69975	CLAMP	1		
25	N189220	TIE BAND	1		
26	R115350	GROMMET	2		
27	RE32361	HOSE CLAMP	1		
28	RE56098	CLAMP	3		
29	T162575	CLAMP	1		
30	T181778	HOSE	3		
31	T212470	TUBE	1		
32	T212471	RADIATOR HOSE	1		
33	T212898	HOSE	1		
34	T213531	BRACKET	1		
35	T218382	RADIATOR HOSE	1		
36	T218394	RADIATOR HOSE	1		
37	T225859	SHIELD	1		
38	T212469	TUBE	1		
39	T27550	CLIP	1		
40	T47338	GROMMET	1		
41	T74416	CLAMP	2		

FAN, FAN DOOR, AND FAN GUARD
VENTILATEUR, PORTIERE AVEC VENTILATEUR ET PROTECTION VENTILATEUR
VENTILADOR, PUERTA DEL VENTILADOR Y PROTECTOR DEL VENTILADOR

TX1013539 -UN-03NOV06

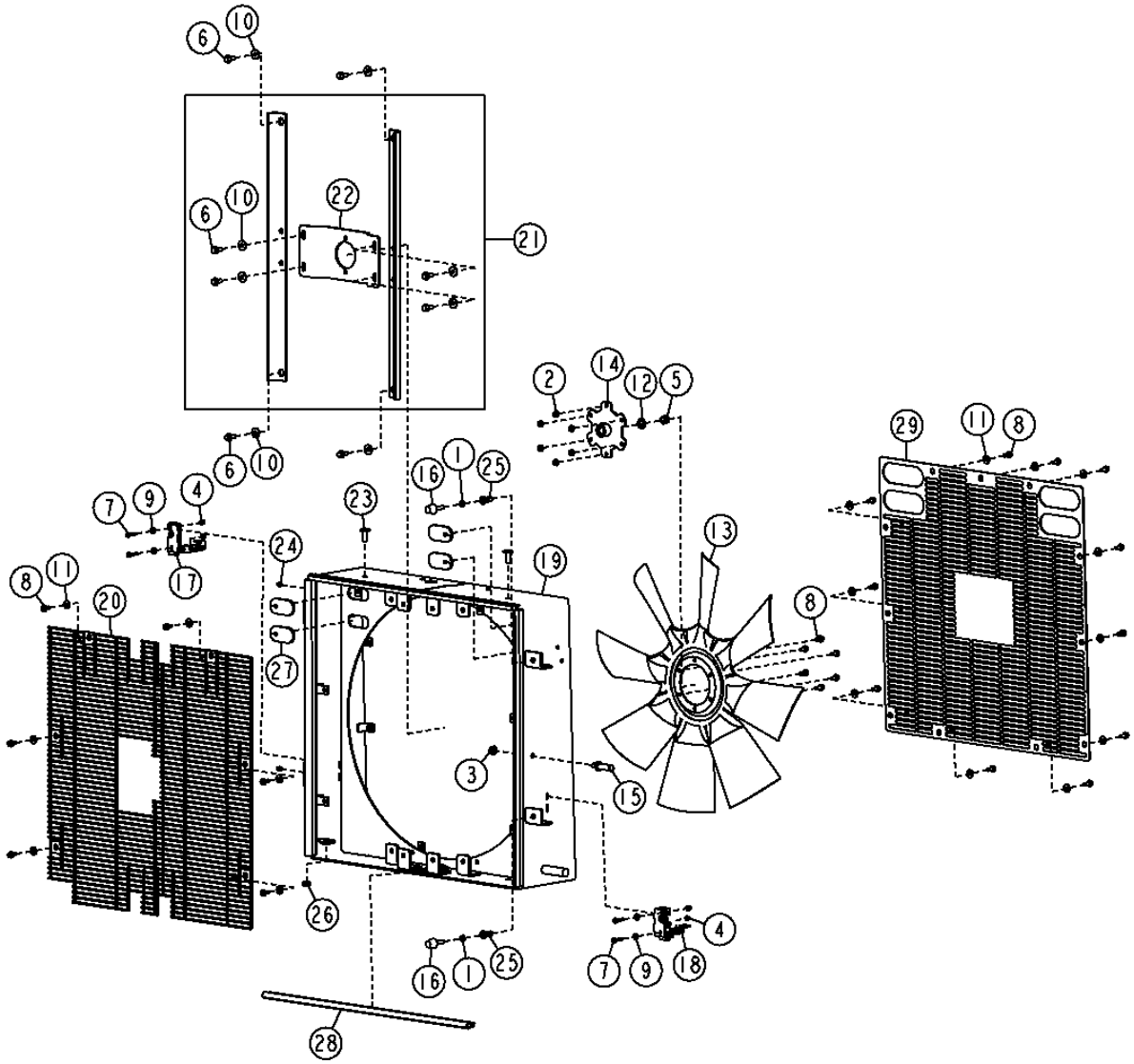

FAN, FAN DOOR, AND FAN GUARD
VENTILATEUR, PORTIERE AVEC VENTILATEUR ET PROTECTION VENTILATEUR
VENTILADOR, PUERTA DEL VENTILADOR Y PROTECTOR DEL VENTILADOR

KEY	*PART NO.*	*PART NAME*	*QTY.*	*SERIAL NO.*	*REMARKS*
1	14M7152	NUT	2		M10
2	14M7298	FLANGE NUT	6		M8
3	14M7299	FLANGE NUT	1		M12
4	14M7397	LOCK NUT	4		M6
5	14M7540	LOCK NUT	1		M14
6	19M7785	SCREW	4		M10 X 25
7	19M7833	SCREW	4		M6 X 35
8	19M7866	SCREW	23		M8 X 20
9	24M7139	WASHER	4		6.400 X 18 X 1.600 MM
10	24M7296	WASHER	4		10.500 X 30 X 2.500 MM
11	24M7298	WASHER	17		8.400 X 25 X 2 MM
12	24M7338	WASHER	1		17 X 30 X 3 MM, (FAN TORQUE SPECIFICATIONS)
13	AT208006	FAN	1		
14	AT210712	HUB	1		
15	AT301711	STRIKER	1		
16	AT306690	BUMPER	2		
17	AT306930	LATCH	1		
18	AT306931	LATCH	1		
19	AT332901	DOOR	1		
20	AT333796	GUARD	1		
21	AT333803	BRACKET	1		
22	T206643	PLATE	1		
23	H173411	NUT	2		
24	JD7759	LUBRICATION FITTING	2		
25	T148409	NUT	2		
26	T162238	GROMMET	1		
27	T201546	GROMMET	4		
28	T224770	ISOLATOR	4		
29	T225427	GUARD	1		

AXLE CIRCULATION HOSES WITH FACTORY INSTALLED AXLE COOLERS
RADIATEUR, FLEXIBLES RADIATEUR, REFROIDISSEUR HUILE ET CAPOT VENTILATEUR
RADIADOR, MANGUERAS DEL RADIADOR, ENFRIADOR DE ACEITE Y ENVUELTA DEL VENTILADOR

TX1013626 -UN-06DEC06

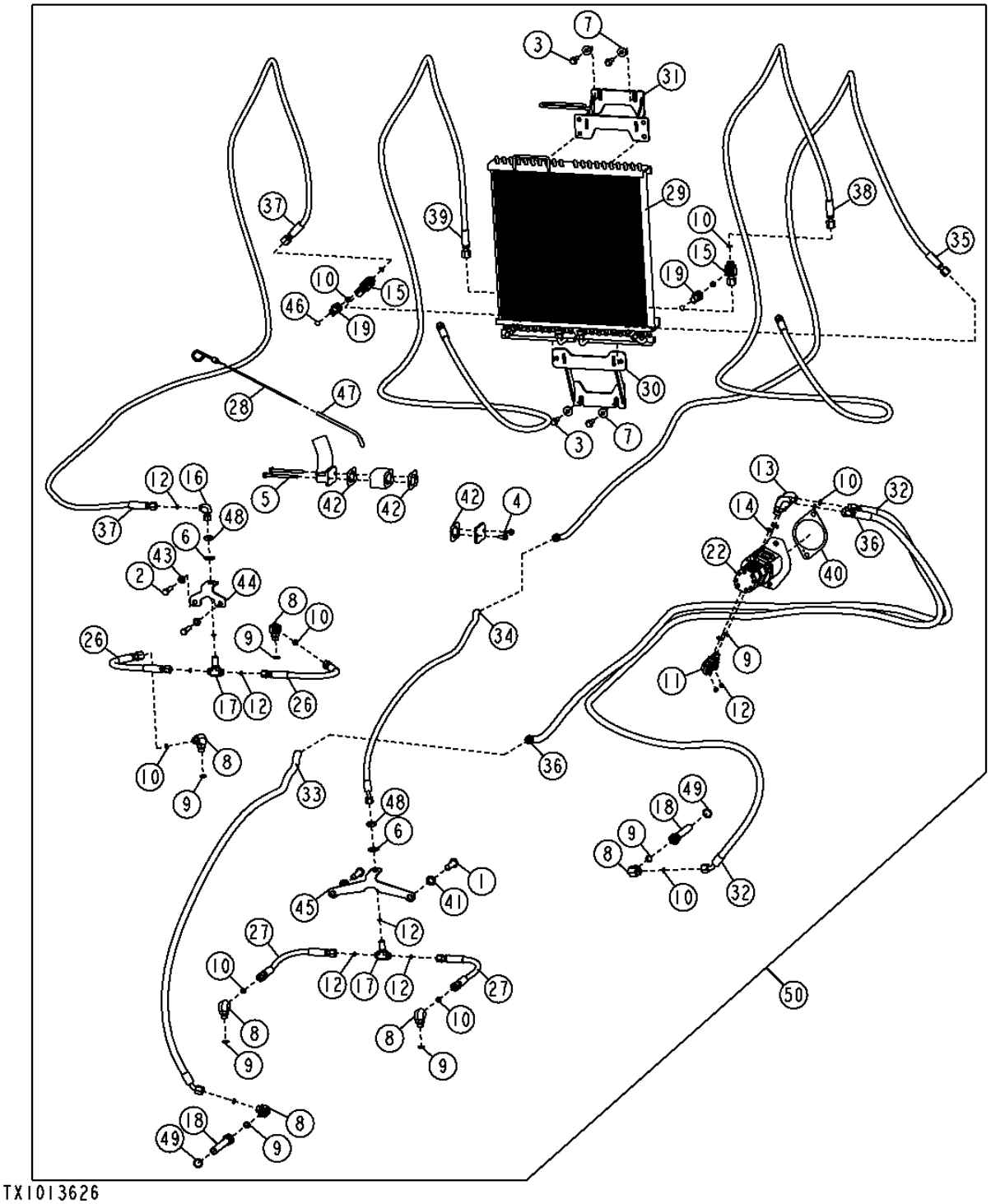

AXLE CIRCULATION HOSES WITH FACTORY INSTALLED AXLE COOLERS
RADIATEUR, FLEXIBLES RADIATEUR, REFROIDISSEUR HUILE ET CAPOT VENTILATEUR
RADIADOR, MANGUERAS DEL RADIADOR, ENFRIADOR DE ACEITE Y ENVUELTA DEL VENTILADOR

KEY	*PART NO.*	*PART NAME*	*QTY.*	*SERIAL NO.*	*REMARKS*
1	19M3212	CAP SCREW	2		M16 X 55
2	19M5266	CAP SCREW	2		M12 X 50
3	19M7835	SCREW	4		M10 X 35
4	19M7866	SCREW	2		M8 X 20
5	19M7873	SCREW	2		M8 X 110
6	24H1391	WASHER	2		25/32" X 1-5/16" X 0.060"
7	24M7296	WASHER	4		10.500 X 30 X 2.500 MM
8	38H1005	ELBOW FITTING	6		
9	R26375	O-RING	6		
10	T77857	O-RING	6		12.421 X 1.778 MM
11	38H1010	ELBOW FITTING	2		
12	T77613	O-RING	2		9.246 X 1.778 MM
13	38H1012	ELBOW FITTING	2		
14	R26906	O-RING	2		
15	38H1031	TEE FITTING	2		
16	38H1094	ELBOW FITTING	1		
17	38H1291	TEE FITTING	2		(FUEL COOLER)
18	AT220925	OIL FILTER	2		
19	AT312932	FITTING	2		
22	AT316466	OIL PUMP	1		
	AT318789	SEAL KIT	1		
	AT324290	OIL PUMP	1		
	AT324291	OIL PUMP	1		
26	AT318941	HYDRAULIC HOSE - FABRICATE	2		RH
27	AT319105	HYDRAULIC HOSE - FABRICATE	2		(TRANSMISSION)
28	AT329269	DIPSTICK	1		
29	AT330592	OIL COOLER	1		
30	AT330606	BRACKET	1		
31	AT330678	BRACKET	1		(HYDRAULIC)
32	AT330798	HYDRAULIC HOSE - FABRICATE	1		
33	AT332605	HYDRAULIC HOSE - FABRICATE	1		
34	AT333055	HYDRAULIC HOSE - FABRICATE	1		LH
35	AT333057	HYDRAULIC HOSE - FABRICATE	1		
36	AT333062	HYDRAULIC HOSE - FABRICATE	1		
37	AT334170	HYDRAULIC HOSE - FABRICATE	1		
38	AT334438	HYDRAULIC HOSE - FABRICATE	1		
39	AT334439	HYDRAULIC HOSE - FABRICATE	1		
40	R134465	GASKET	1		
41	R135543	WASHER	2		
42	R136495	GASKET	3		
43	R47172	WASHER	2		
44	T213827	PLATE	1		
45	T213828	PLATE	1		
46	T218003	LABEL	2		(ORDER TY22324) CTL
47	T225866	DIPSTICK TUBE	1		
48	T81029	NUT	2		
49	U12547	O-RING	2		
50	**AT334580**	**FIELD INSTALLATION KIT**	**1**		

STANDARD FAN PUMP, MOTOR AND PLUMBING
POMPE, MOTEUR ET FLEXIBLES HYDRAULIQUES COMMANDE VENTILATEUR
BOMBA HIDRAULICA DE MANDO DEL VENTILADOR, MOTOR Y MANGUERAS

TX1013654 -UN-03NOV06

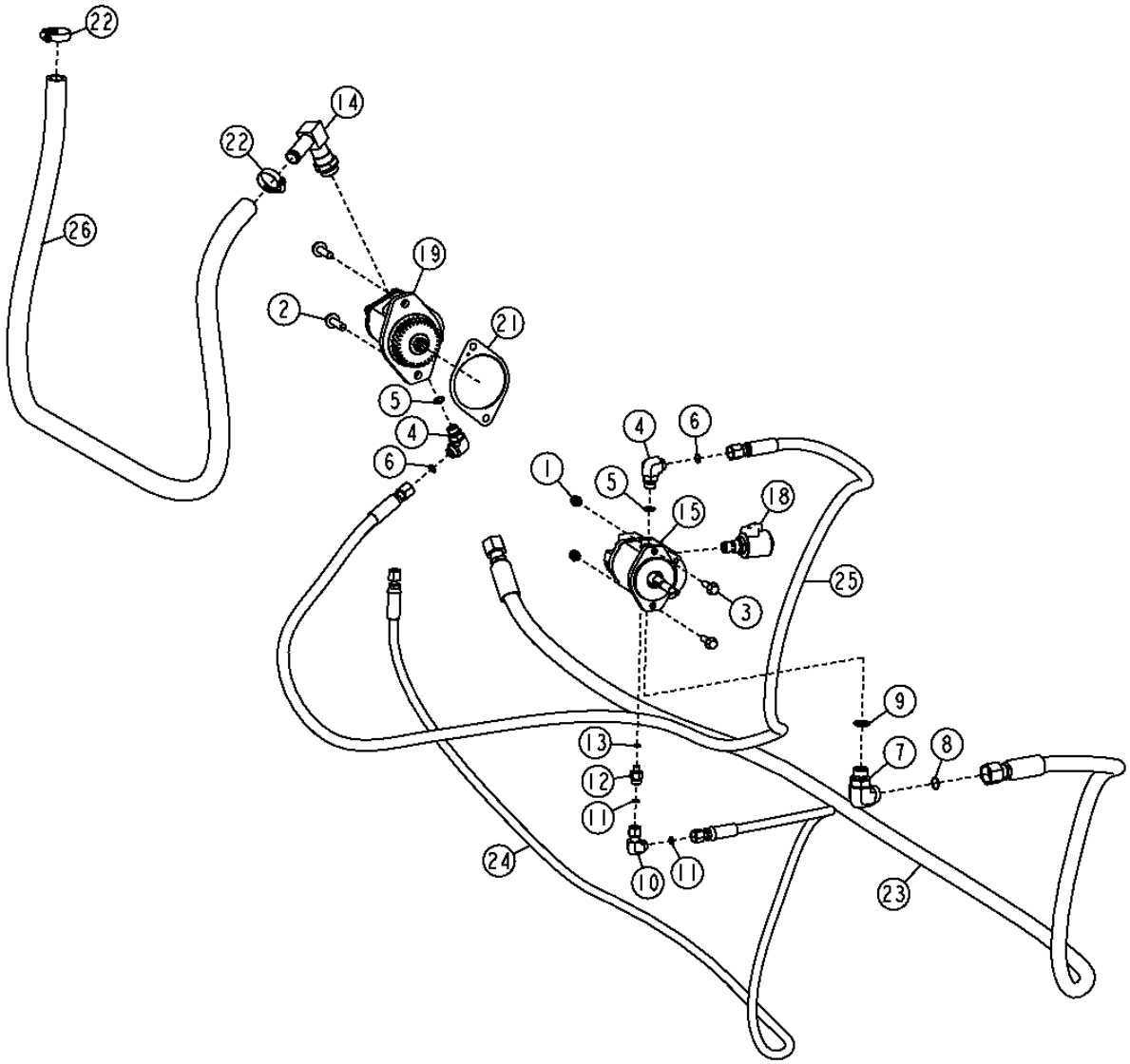

TX1013654

STANDARD FAN PUMP, MOTOR AND PLUMBING
POMPE, MOTEUR ET FLEXIBLES HYDRAULIQUES COMMANDE VENTILATEUR
BOMBA HIDRAULICA DE MANDO DEL VENTILADOR, MOTOR Y MANGUERAS

KEY	*PART NO.*	*PART NAME*	*QTY.*	*SERIAL NO.*	*REMARKS*
1	14M7517	LOCK NUT	2		M10
2	19M7813	SCREW	2		M12 X 45
3	19M7835	SCREW	2		M10 X 35
4	38H1005	ELBOW FITTING	1		
5	R26375	O-RING	1		
6	T77857	O-RING	1		
7	38H1007	ELBOW FITTING	1		
8	T77858	O-RING	1		
9	U12547	O-RING	1		
10	38H1094	ELBOW FITTING	1		
11	T77613	O-RING	1		
12	38H1309	ADAPTER FITTING	1		
13	R28782	O-RING	1		
14	AH96708	ELBOW FITTING	1		
15	AT225505	HYDRAULIC MOTOR	1		
	AT211381	SEAL KIT	1		(NOT SHOWN)
18	AT227509	PRESSURE RELIEF VALVE	1		
	AT211379	SEAL KIT	1		(NOT SHOWN)
19	AT316250	OIL PUMP	1		
	AT318742	SEAL KIT	1		(NOT SHOWN)
21	R134465	GASKET	1		
22	AR21839	CLAMP	2		
23	AT314989	HYDRAULIC HOSE - FABRICATE	1		
24	AT335032	HYDRAULIC HOSE - FABRICATE	1		
25	AT335164	HYDRAULIC HOSE - FABRICATE	1		
26	T208097	HYDRAULIC HOSE - FABRICATE	1		

REVERSE FAN PUMP, MOTOR AND PLUMBING
COMMANDE D'INVERSION DE SENS DE VENTILATEUR
BOMBA HIDRAULICA DE MANDO DE RETROCESO DEL VENTILADOR, MOTOR Y MANGUERAS

TX1013659 -UN-04NOV06

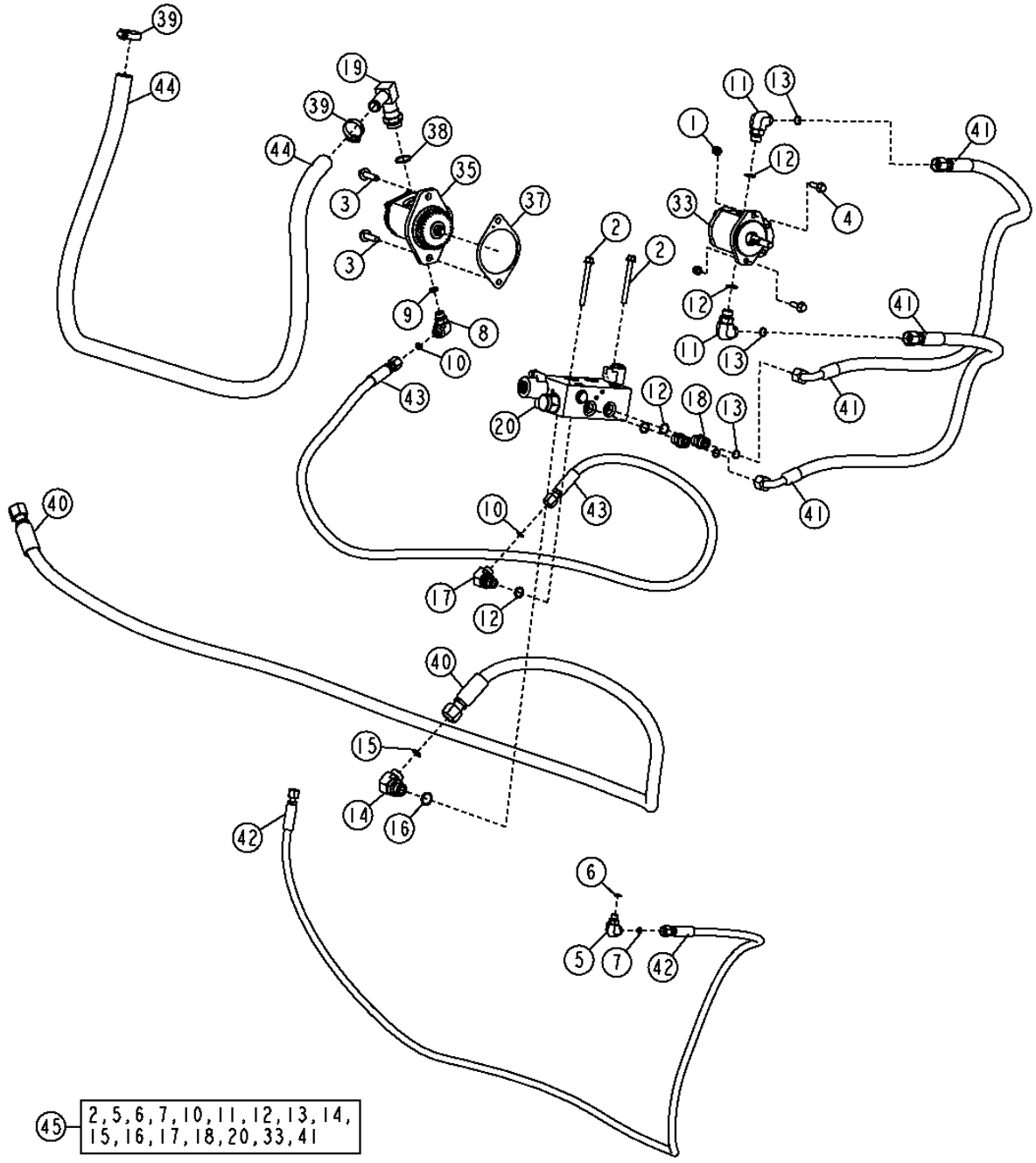

TX1013659

REVERSE FAN PUMP, MOTOR AND PLUMBING
COMMANDE D'INVERSION DE SENS DE VENTILATEUR
BOMBA HIDRAULICA DE MANDO DE RETROCESO DEL VENTILADOR, MOTOR Y MANGUERAS

KEY	*PART NO.*	*PART NAME*	*QTY.*	*SERIAL NO.*	*REMARKS*
1	14M7517	LOCK NUT	2		M10
2	19M7812	SCREW	2		M10 X 100
3	19M7813	SCREW	2		M12 X 45
4	19M7835	SCREW	2		M10 X 35
5	38H1004	ELBOW FITTING	1		
6	R26448	O-RING	1		
7	T77857	O-RING	1		
8	38H1005	ELBOW FITTING	1		
9	R26375	O-RING	1		
10	T77857	O-RING	1		
11	38H1006	ELBOW FITTING	1		
12	T26906	INSTRUCTIONS	1		
13	T77932	O-RING	1		
14	38H1007	ELBOW FITTING	1		
15	T77858	O-RING	1		
16	U12547	O-RING	1		
17	38H1012	ELBOW FITTING	1		
18	38H1162	ADAPTER FITTING	1		
19	AH96708	ELBOW FITTING	1		
20	AT225805	SOLENOID VALVE	1		
33	AT226404	HYDRAULIC MOTOR	1		
	AT317353	SEAL KIT	1		(NOT SHOWN)
35	AT316250	OIL PUMP	1		
	AT318742	SEAL KIT	1		(NOT SHOWN)
37	R134465	GASKET	1		
38	R29936	O-RING	1		
39	AR21839	CLAMP	2		
40	AT314989	HYDRAULIC HOSE - FABRICATE	1		
41	AT316333	HOSE	2		
42	AT335032	HYDRAULIC HOSE - FABRICATE	1		
43	AT335164	HYDRAULIC HOSE - FABRICATE	1		
44	T208097	HYDRAULIC HOSE - FABRICATE	1		
45	**AT321070**	**FIELD INSTALLATION KIT**	**1**		

REVERSE FAN DRIVE SOLENOID VALVE
ELECTROVANNE, COMMANDE D INVERSION DE SENS DE VENTILATEUR
VALVULA DE SOLENOIDE, MANDO DE RETROCESO DEL VENTILADOR

TX1014258 -UN-14NOV06

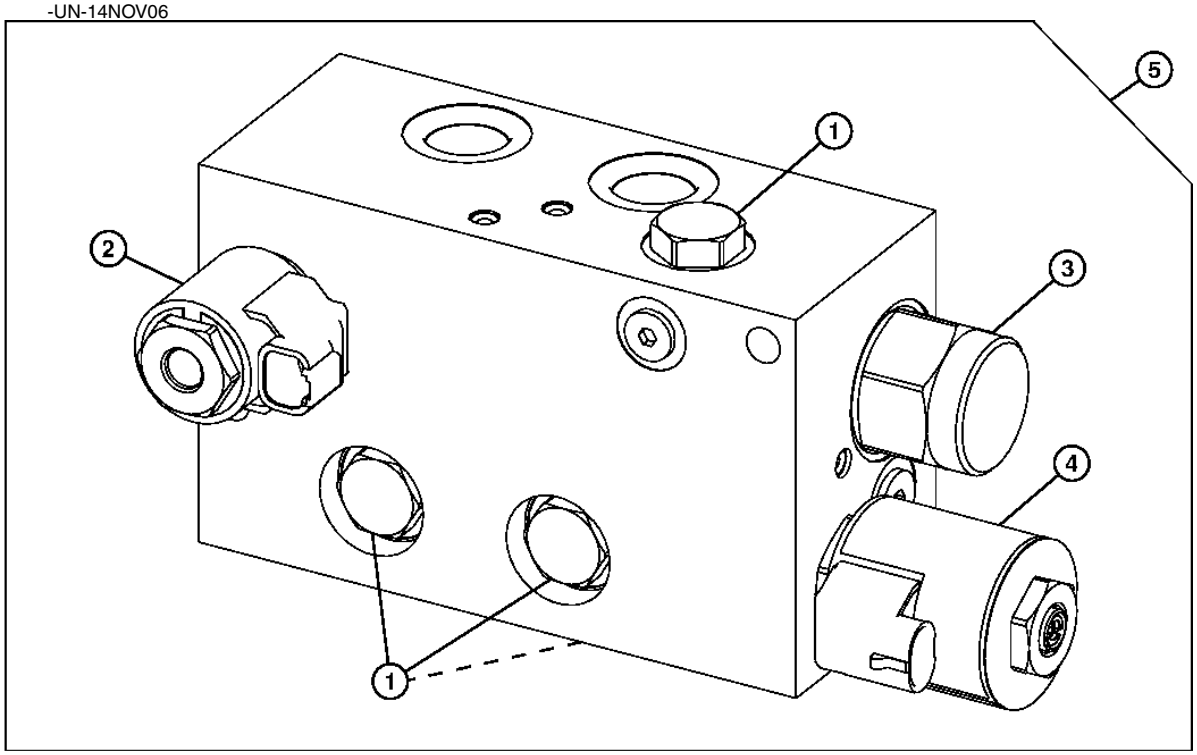

TX1014258

REVERSE FAN DRIVE SOLENOID VALVE
ELECTROVANNE, COMMANDE D INVERSION DE SENS DE VENTILATEUR
VALVULA DE SOLENOIDE, MANDO DE RETROCESO DEL VENTILADOR

KEY	*PART NO.*	*PART NAME*	*QTY.*	*SERIAL NO.*	*REMARKS*
1	AT224570	CHECK VALVE	4		
	AT224862	SEAL KIT	1		
2	AT224866	SOLENOID VALVE	1		
	AT224706	SEAL KIT	1		
	AT224865	SOLENOID VALVE COIL	1		
	T181306	NUT	1		
3	AT226109	SOLENOID HYDRAULIC VALVE	1		
	AT226110	SEAL KIT	1		
4	AT227509	PRESSURE RELIEF VALVE	1		
5	AT225805	SOLENOID VALVE	1		

ENGINE SPEED CONTROL AND SENSORS
COMMANDE ET CAPTEURS REGIME MOTEUR
CONTROL DE VELOCIDAD DEL MOTOR Y SENSORES

T195146 -UN-14OCT03

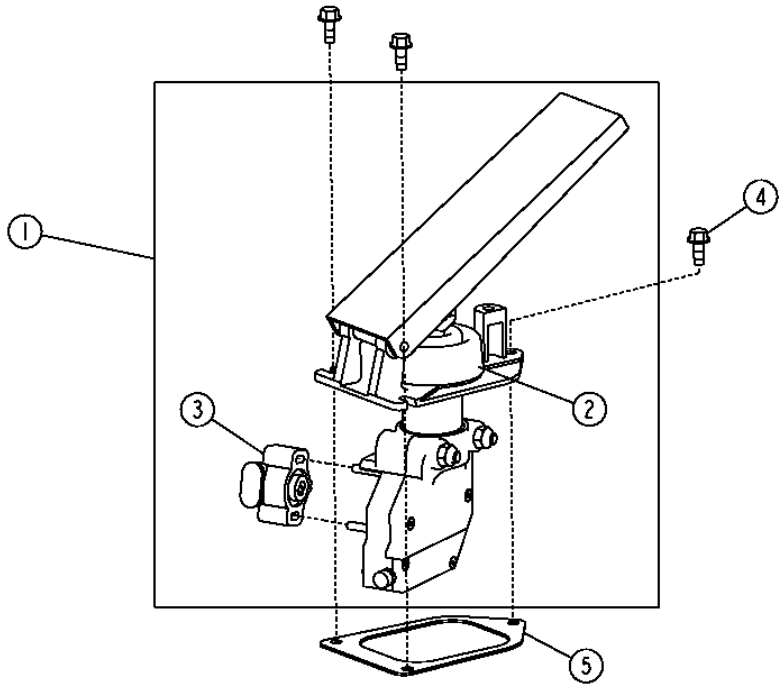

ENGINE SPEED CONTROL AND SENSORS
COMMANDE ET CAPTEURS REGIME MOTEUR
CONTROL DE VELOCIDAD DEL MOTOR Y SENSORES

KEY	*PART NO.*	*PART NAME*	*QTY.*	*SERIAL NO.*	*REMARKS*
1	AT323306	ACCELERATOR	1		
2	T174634	BOOT	1		
3	AT323307	SENSOR	1		
4	M113243	SCREW	3		
5	T172927	GASKET	1		

AIR CLEANER, AIR CLEANER FILTERS AND AIR CLEANER HOSE
FILTRE A AIR, FLEXIBLES DE FILTRE A AIR ET ELEMENTS DE FILTRE A AIR
FILTRO DE AIRE, MANGUERAS Y ELEMENTOS DEL FILTRO DE AIRE

TX1012527 -UN-05OCT06

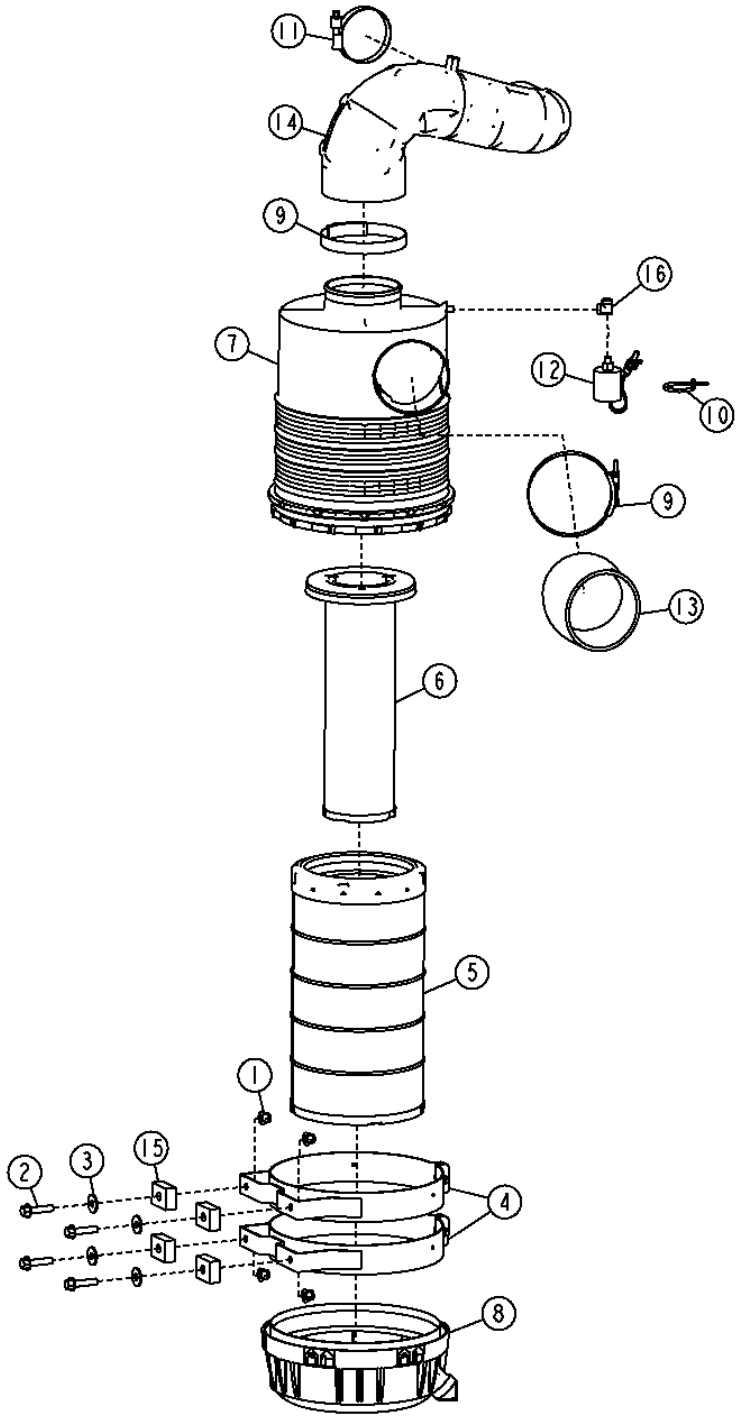

TX1012527

AIR CLEANER, AIR CLEANER FILTERS AND AIR CLEANER HOSE
FILTRE A AIR, FLEXIBLES DE FILTRE A AIR ET ELEMENTS DE FILTRE A AIR
FILTRO DE AIRE, MANGUERAS Y ELEMENTOS DEL FILTRO DE AIRE

KEY	*PART NO.*	*PART NAME*	*QTY.*	*SERIAL NO.*	*REMARKS*
1	14M7400	LOCK NUT	4		M10
2	19M7786	SCREW	4		M10 X 30
3	24M7296	WASHER	4		10.500 X 30 X 2.500 MM
4	AR85327	CLAMP	1		
5	AT300489	CLAMP	2		
6	AT300487	FILTER ELEMENT	1		
7	AT314583	FILTER ELEMENT	1		
8	AT329958	HOUSING	1		
9	T200280	HAND OPERATED VALVE	1		
10	T223372	COVER	1		
11	AT53439	HOSE CLAMP	1		
12	R44302	TIE BAND	1		
13	RE52703	HOSE CLAMP	1		
14	RE68255	SENSOR	1		
15	T200282	HOSE	1		
16	T211510	HOSE	1		
17	T219672	ELBOW FITTING	1		

AIR PRECLEANER
PREFILTRO DE AIRE
PREFILTRO DE AIRE

TX1017996 -UN-26JAN07

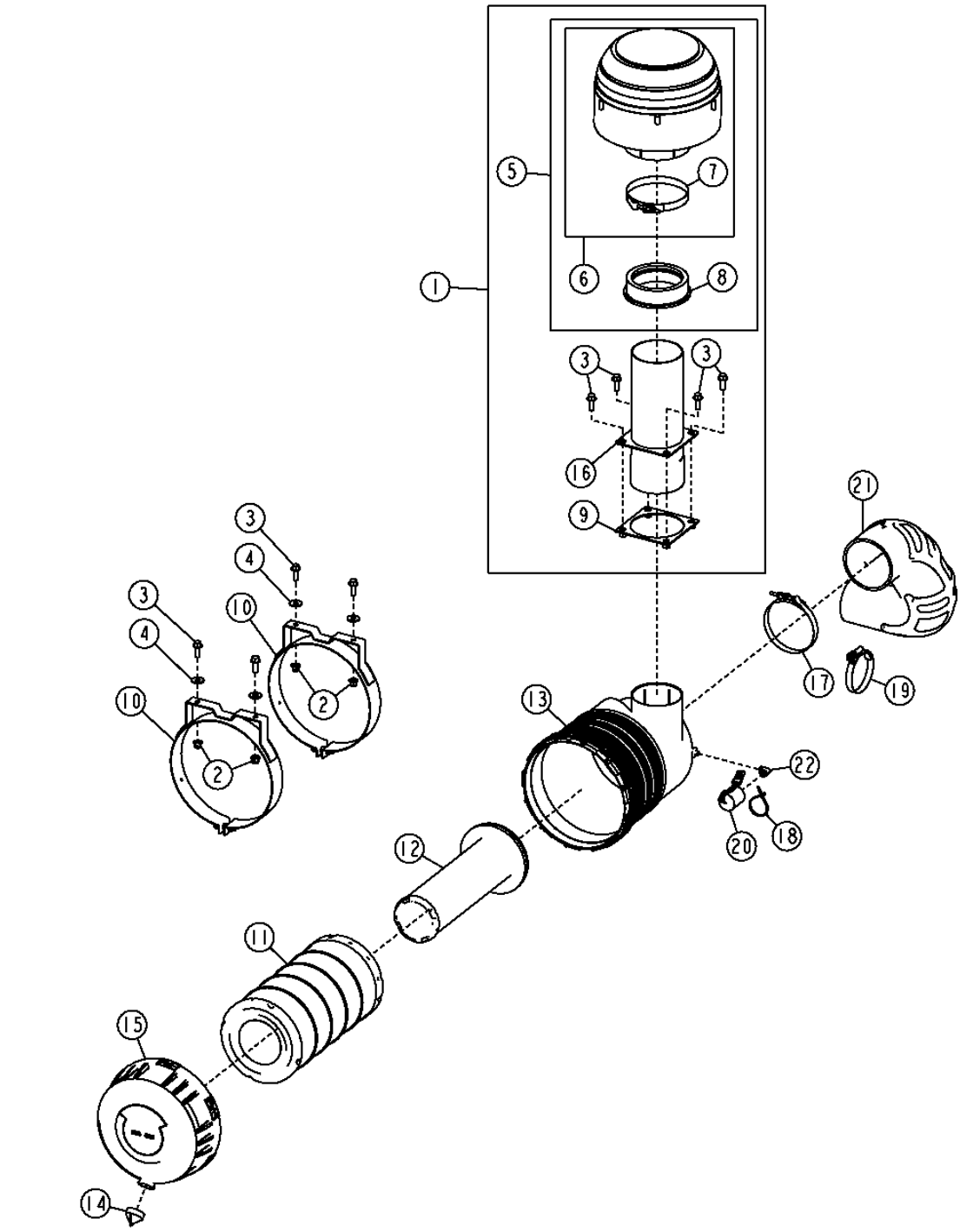

THIS PARTS LISTING IS CONTINUED

AIR PRECLEANER
PREFILTRO DE AIRE
PREFILTRO DE AIRE

KEY	*PART NO.*	*PART NAME*	*QTY.*	*SERIAL NO.*	*REMARKS*
1	AT330324	FIELD INSTALLATION KIT	1		
2	14M7400	LOCK NUT	4		M10
3	19M7786	SCREW	8		M10 X 30
4	24M7296	WASHER	4		10.500 X 30 X 2.500 MM
5	AT221487	PRECLEANER	1		
6	AT184015	PRECLEANER	1		
7	AT184016	SEPARATOR	1		
8	T177423	PIPE BUSHING	1		
9	AT227835	PLATE	1		
10	AT300489	CLAMP	2		
11	AT300487	FILTER ELEMENT	1		
12	AT314583	FILTER ELEMENT	1		
13	AT329958	HOUSING	1		
14	T200280	HAND OPERATED VALVE	1		
15	T223372	COVER	1		
16	AT333751	AIR INTAKE STACK	1		
17	AT53439	HOSE CLAMP	1		
18	R44302	TIE BAND	1		
19	R52703	BRACKET	1		
20	RE68255	SENSOR	1		
21	T211510	HOSE	1		
22	T219672	ELBOW FITTING	1		

MUFFLER AND EXHAUST PIPE
SILENCIEUX ET TUYAU D'ECHAPPEMENT
SILENCIADOR Y TUBO DE ESCAPE

TX1013642 -UN-04NOV06

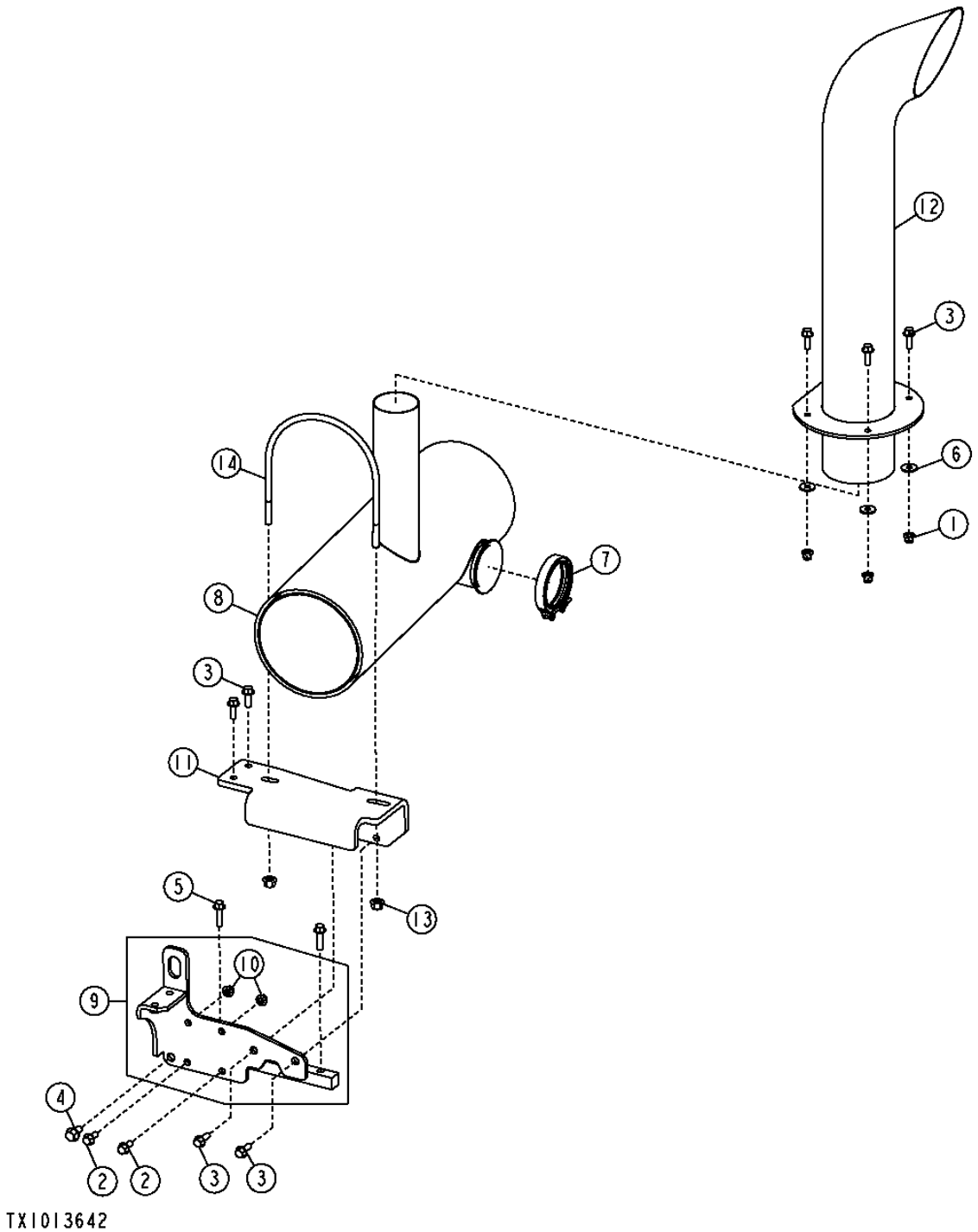

MUFFLER AND EXHAUST PIPE
SILENCIEUX ET TUYAU D'ECHAPPEMENT
SILENCIADOR Y TUBO DE ESCAPE

KEY	*PART NO.*	*PART NAME*	*QTY.*	*SERIAL NO.*	*REMARKS*
1	14M7400	LOCK NUT	4		M10
2	19M7785	SCREW	2		M10 X 25
3	19M7786	SCREW	8		M10 X 30
4	19M7788	SCREW	1		M12 X 25
5	19M7804	SCREW	2		M10 X 40
6	24M7296	WASHER	4		10.500 X 30 X 2.500 MM
7	AT222597	CLAMP	1		
8	AT307928	MUFFLER	1		
9	AT314121	BRACKET	1		
10	14M7296	FLANGE NUT	2		M10
11	AT314125	BRACKET	1		
12	AT320673	EXHAUST PIPE	1		
	AT320674	EXHAUST PIPE	1		(OPTIONAL CHROME)
13	E80242	LOCK NUT	2		
14	T201869	U-BOLT	1		

ENGINE MOUNTING BRACKETS
SUPPORTS DE MONTAGE DU MOTEUR
ESCUADRAS DE MONTAJE DEL MOTOR

T193484 -UN-19AUG03

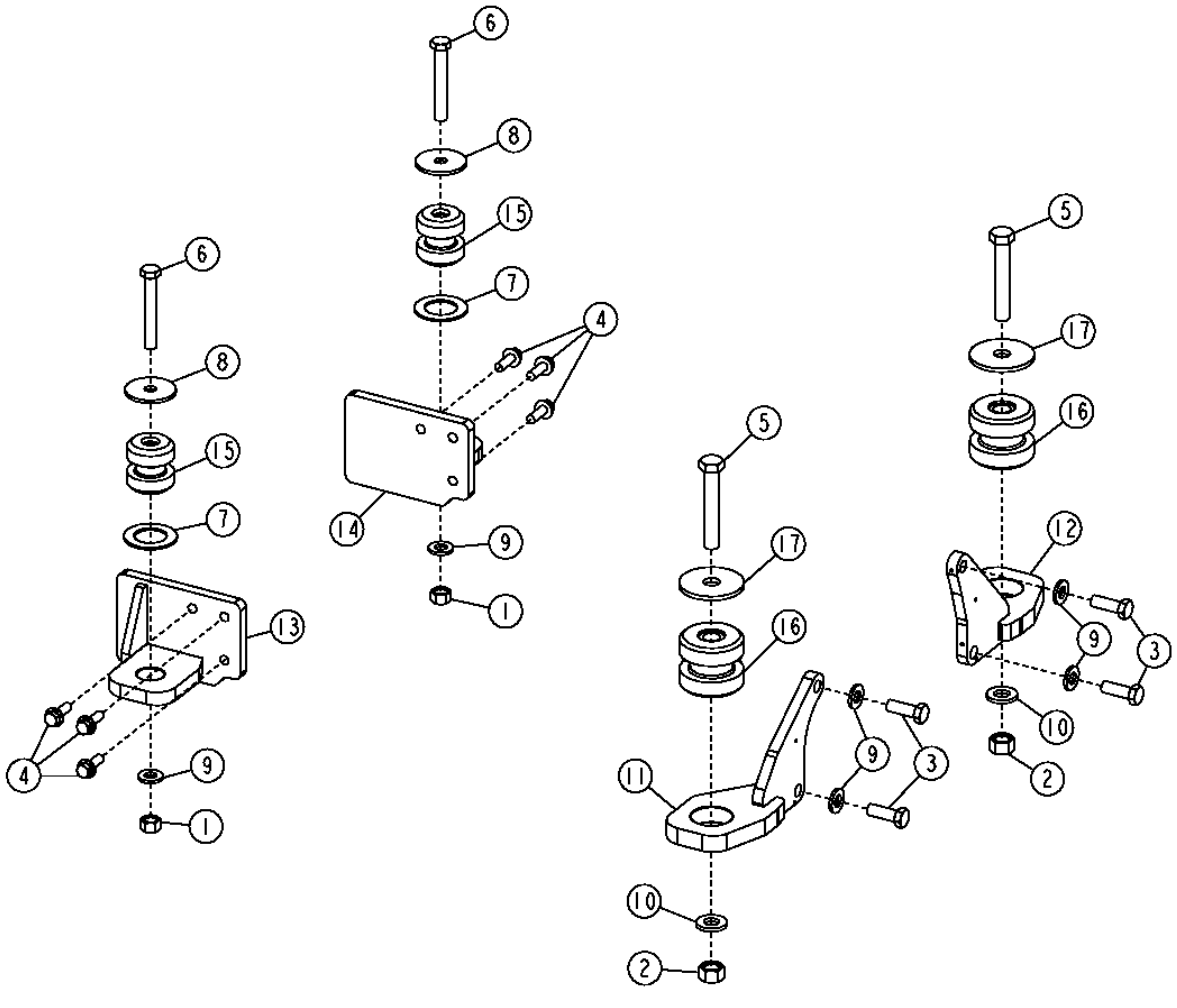

T193484

ENGINE MOUNTING BRACKETS
SUPPORTS DE MONTAGE DU MOTEUR
ESCUADRAS DE MONTAJE DEL MOTOR

KEY	*PART NO.*	*PART NAME*	*QTY.*	*SERIAL NO.*	*REMARKS*
1	14M7276	NUT	2		M16
2	14M7277	NUT	2		M20
3	19M7489	CAP SCREW	4		M16 X 45
4	19M7790	SCREW	6		M12 X 35
5	19M7883	SCREW	2		M20 X 120
6	19M7884	CAP SCREW	2		
7	24H1571	WASHER	2		1-25/32" X 2-7/8" X 0.120"
8	24H1852	WASHER	2		21/32" X 2-3/4" X 0.180"
9	24M7241	WASHER	6		17 X 34 X 4 MM
10	24M7242	WASHER	2		21.400 X 42 X 5 MM
11	AT206908	SUPPORT	1		
12	AT206909	SUPPORT	1		
13	AT206914	SUPPORT	1		
14	AT206915	SUPPORT	1		
15	AT227710	ISOLATOR	2		
16	AT227815	ISOLATOR	2		
17	T42977	WASHER	2		

FUEL TANK AND HOSES
FLEXIBLES DE RESERVOIR DE CARBURANT
MANGUERAS DEL TANQUE DE COMBUSTIBLE

TX1013648 -UN-15NOV06

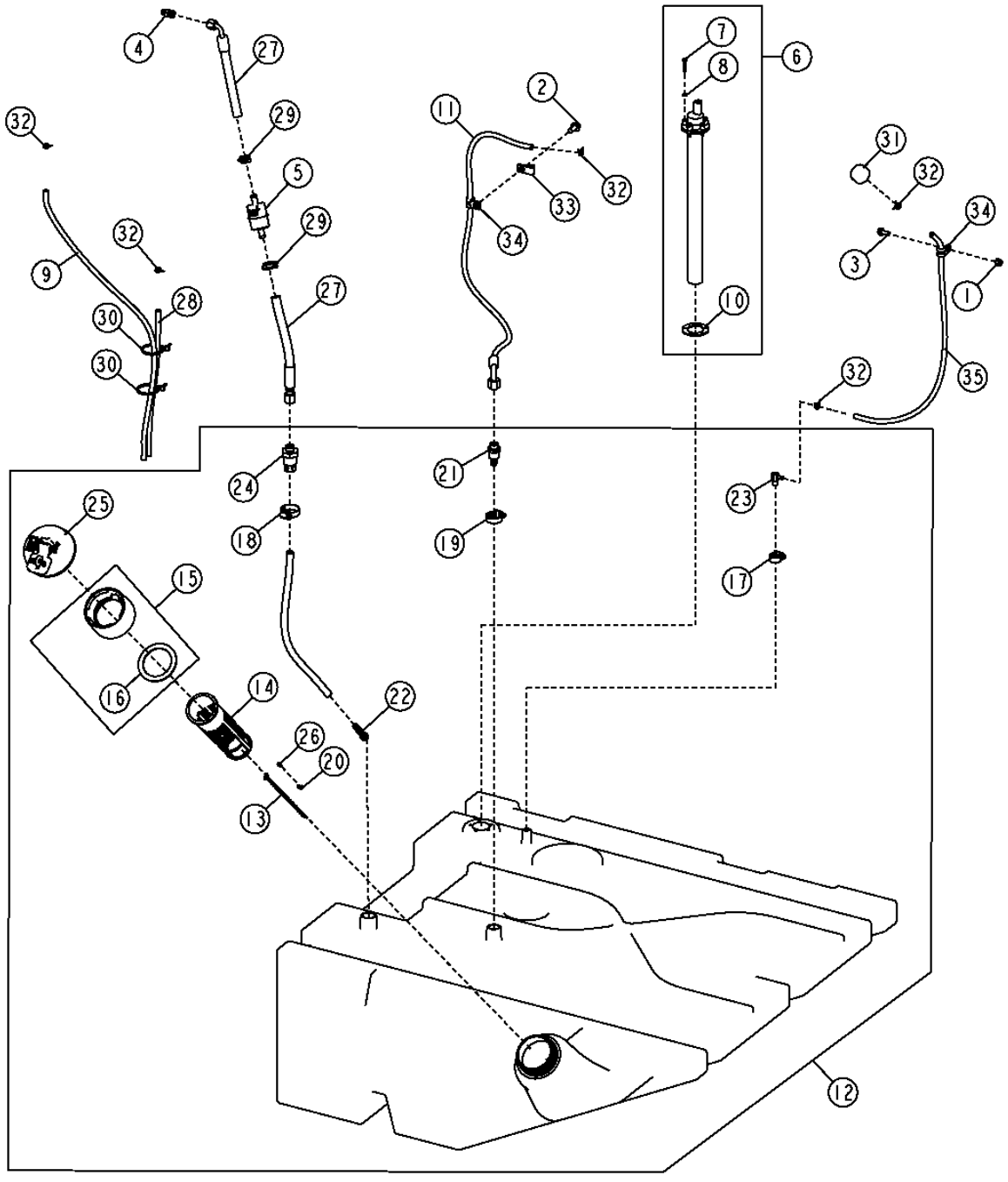

FUEL TANK AND HOSES
FLEXIBLES DE RESERVOIR DE CARBURANT
MANGUERAS DEL TANQUE DE COMBUSTIBLE

KEY	PART NO.	PART NAME	QTY.	SERIAL NO.	REMARKS
1	14M7396	LOCK NUT	1		M8
2	19M7785	SCREW	1		M10 X 25
3	19M7866	SCREW	1		M8 X 20
4	38H5008	ADAPTER FITTING	1		
5	AT223493	FUEL FILTER	1		
6	AT227937	FUEL SENDER	1		
7	19M7317	SCREW	5		M5 X 30
8	24M7027	WASHER	5		5.300 X 10 X 1 MM
9	AT340710	HOSE	1		
10	T196733	GASKET	1		
11	AT228627	HYDRAULIC HOSE - FABRICATE	1		
12	AT316311	FUEL TANK	1		
13	AH159448	LINK CHAIN	1		
14	AH162914	STRAINER	1		
15	AH165079	ADAPTER FITTING	1		
16	H172014	GASKET	1		
17	AR21837	CLAMP	1		
18	AR21839	CLAMP	1		
19	AR54815	CLAMP	1		
20	H174831	ANCHOR	1		
21	R193666	FITTING	1		
22	R194311	COMPRESSION SPRING	1		
23	RE179976	CHECK VALVE	1		
24	RE194040	FITTING	1		
25	RE234193	FILLER CAP	1		
26	T164203	SCREW	1		
27	AT323720	HYDRAULIC HOSE - FABRICATE	1		
28	.....	HOSE	1		(ORDER T79477) (CTL)
29	R184863	HOSE CLAMP	2		
30	R44302	TIE BAND	4		
31	RE52504	BREATHER	1		
32	T13254	CLAMP	5		
33	T75197	CLAMP	1		
34	T75276	CLAMP	2		
35	AT340157	HOSE	1		

SECONDARY STEERING
DIRECTION AUXILIAIRE
DIRECCION AUXILIAR

TX1014194 -UN-08JAN07

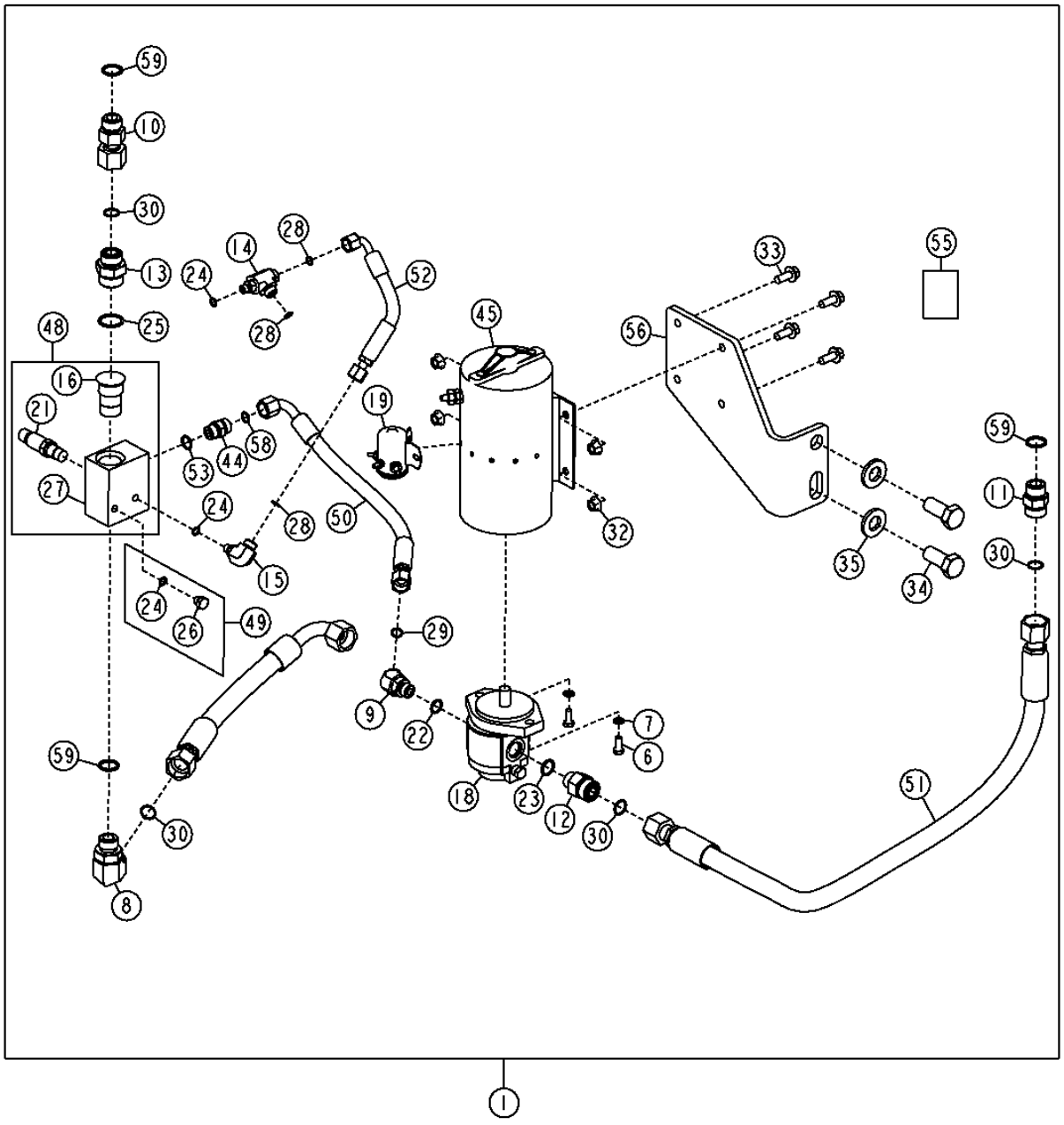

TX1014194

SECONDARY STEERING
DIRECTION AUXILIAIRE
DIRECCION AUXILIAR

KEY	PART NO.	PART NAME	QTY.	SERIAL NO.	REMARKS
1	AT332625	STEERING SYSTEM	1		
6	19H1900	CAP SCREW	2		5/16" X 3/4"
7	24M7095	WASHER	2		8.400 X 15 X 1.600 MM
8	38H1007	ELBOW FITTING	1		
9	38H1046	ELBOW FITTING	1		
10	38H1070	FITTING	1		
11	38H1163	ADAPTER FITTING	1		
12	38H1193	ADAPTER FITTING	1		
13	38H1194	ADAPTER FITTING	1		
14	38H1434	TEE FITTING	1		
15	38H1435	ELBOW FITTING	1		
16	AT116373	CHECK VALVE	1		
18	AT210092	PUMP	1		
19	AT210093	SOLENOID	1		
21	AT210399	SWITCH	1		
22	R26375	O-RING	1		16.358 X 2.210 MM (0.644" X 0.087")
23	R26906	O-RING	1		19.177 X 2.464 MM (0.755" X 0.097")
24	R28782	O-RING	3		8.915 X 1.829 MM (0.351" X 0.072")
25	R29936	O-RING	1		29.743 X 2.946 MM (1.171" X 0.116")
26	R51031	FITTING	1		
27	T173324	JUNCTION BLOCK	1		
28	T77613	O-RING	3		9.246 X 1.778 MM (0.364" X 0.070")
29	T77857	O-RING	1		12.421 X 1.778 MM (0.489" X 0.070")
30	T77858	O-RING	4		18.771 X 1.778 MM (0.739" X 0.070")
32	14M7296	FLANGE NUT	4		M10
33	19M7785	SCREW	4		M10 X 25
34	19M7950	CAP SCREW	2		M20 X 45
35	24M7242	WASHER	2		21.400 X 42 X 5 MM
44	AT141527	CHECK VALVE	1		
45	AT209537	PUMP	1		(INCLUDES 19H1900, 24M7095, AT210092, AT210093)
48	AT210207	SWITCH	1		
49	AT223648	FITTING	1		
50	AT330697	HYDRAULIC HOSE - FABRICATE	1		
51	AT335139	HYDRAULIC HOSE - FABRICATE	1		
52	AT335413	HYDRAULIC HOSE - FABRICATE	1		11/16" X 235 MM (9-1/4") X 11/16"
53	R26375	O-RING	1		16.358 X 2.210 MM (0.644" X 0.087")
55	T146443	SAFETY SIGN	1		
56	T173579	BRACKET	1		
58	T77857	O-RING	1		12.421 X 1.778 MM (0.489" X 0.070")
59	U12547	O-RING	3		23.470 X 2.946 MM (0.924" X 0.116")

STEERING VALVE AND FITTINGS
VERIN ET RACCORDS DE DIRECTION
ADAPTADORES Y VALVULA DE LA DIRECCION

TX1004541 -UN-13MAR06

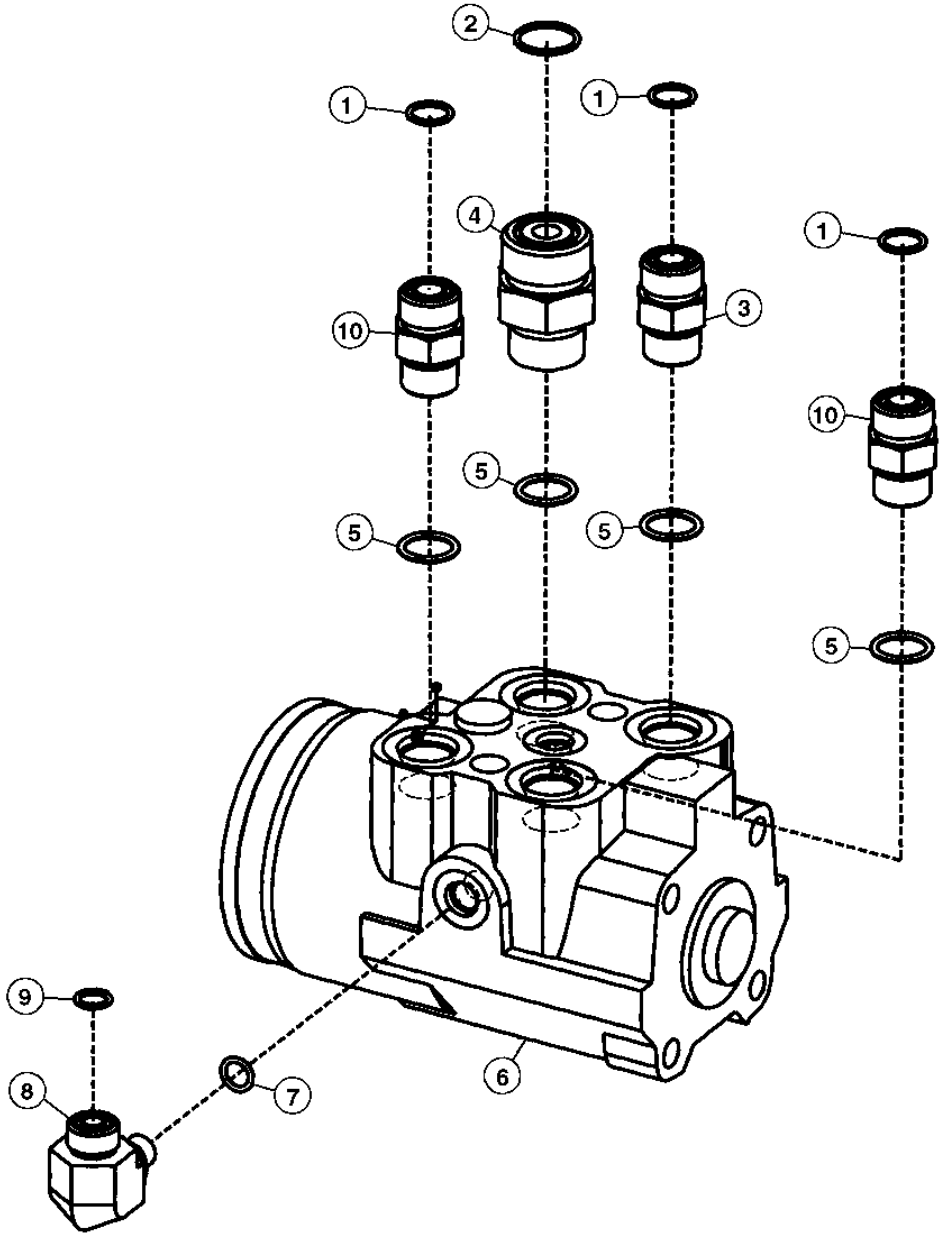

TX1004541

STEERING VALVE AND FITTINGS
VERIN ET RACCORDS DE DIRECTION
ADAPTADORES Y VALVULA DE LA DIRECCION

KEY	*PART NO.*	*PART NAME*	*QTY.*	*SERIAL NO.*	*REMARKS*
1	T77932	O-RING	3		15.596 X 1.778 MM (0.614" X 0.070")
2	T77858	O-RING	1		18.771 X 1.778 MM (0.739" X 0.070")
3	38H1317	FITTING	2		
4	38H1178	ADAPTER FITTING	1		
5	R26375	O-RING	4		16.358 X 2.210 MM (0.644" X 0.087")
6	AT320571	FLOW CONTROL HYD. VALVE	1		
7	R28782	O-RING	1		8.915 X 1.829 MM (0.351" X 0.072")
8	38H1435	ELBOW FITTING	1		
9	T77613	O-RING	1		9.246 X 1.778 MM (0.364" X 0.070")
10	38H1317	FITTING	2		

STEERING COMPENSATOR VALVE
SOUPAPE DE DIRECTION
VALVULA DE LA DIRECCION

TX1014476 -UN-17NOV06

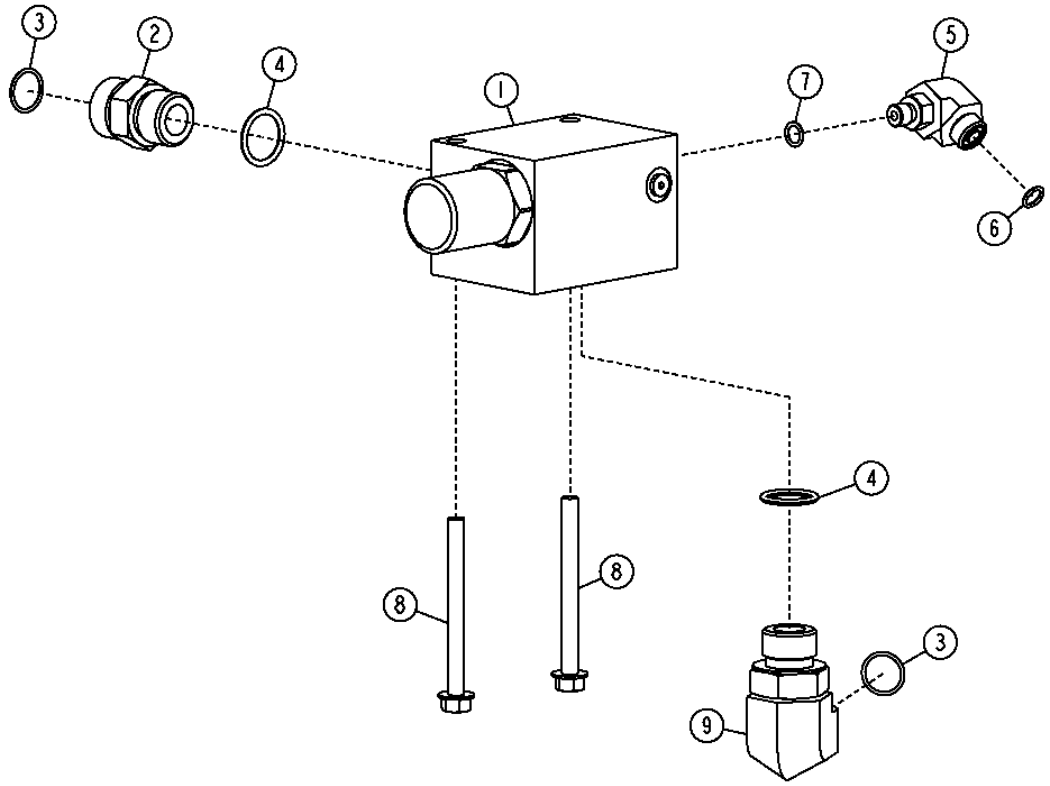

TX1014476

STEERING COMPENSATOR VALVE
SOUPAPE DE DIRECTION
VALVULA DE LA DIRECCION

KEY	*PART NO.*	*PART NAME*	*QTY.*	*SERIAL NO.*	*REMARKS*
1	AT329939	COMPENSATOR	1		
	AT330541	SEAL KIT	1		
2	38H1163	ADAPTER FITTING	2		
3	T77858	O-RING	2		18.771 X 1.778 MM (0.739" X 0.070")
4	U12547	O-RING	2		23.470 X 2.946 MM (0.924" X 0.116")
5	38H1435	ELBOW FITTING	1		
6	T77613	O-RING	1		9.246 X 1.778 MM (0.364" X 0.070")
7	R28782	O-RING	1		8.915 X 1.829 MM (0.351" X 0.072")
8	19M7913	SCREW	2		M8 X 90
9	38H1007	ELBOW FITTING	1		

STEERING CYLINDER HYDRAULIC HOSES
FLEXIBLES HYDRAULIQUES DE VERIN DE DIRECTION
MANGUERAS HIDRAULICAS DE CILINDROS DE LA DIRECCION

TX1002546 -UN-23JAN06

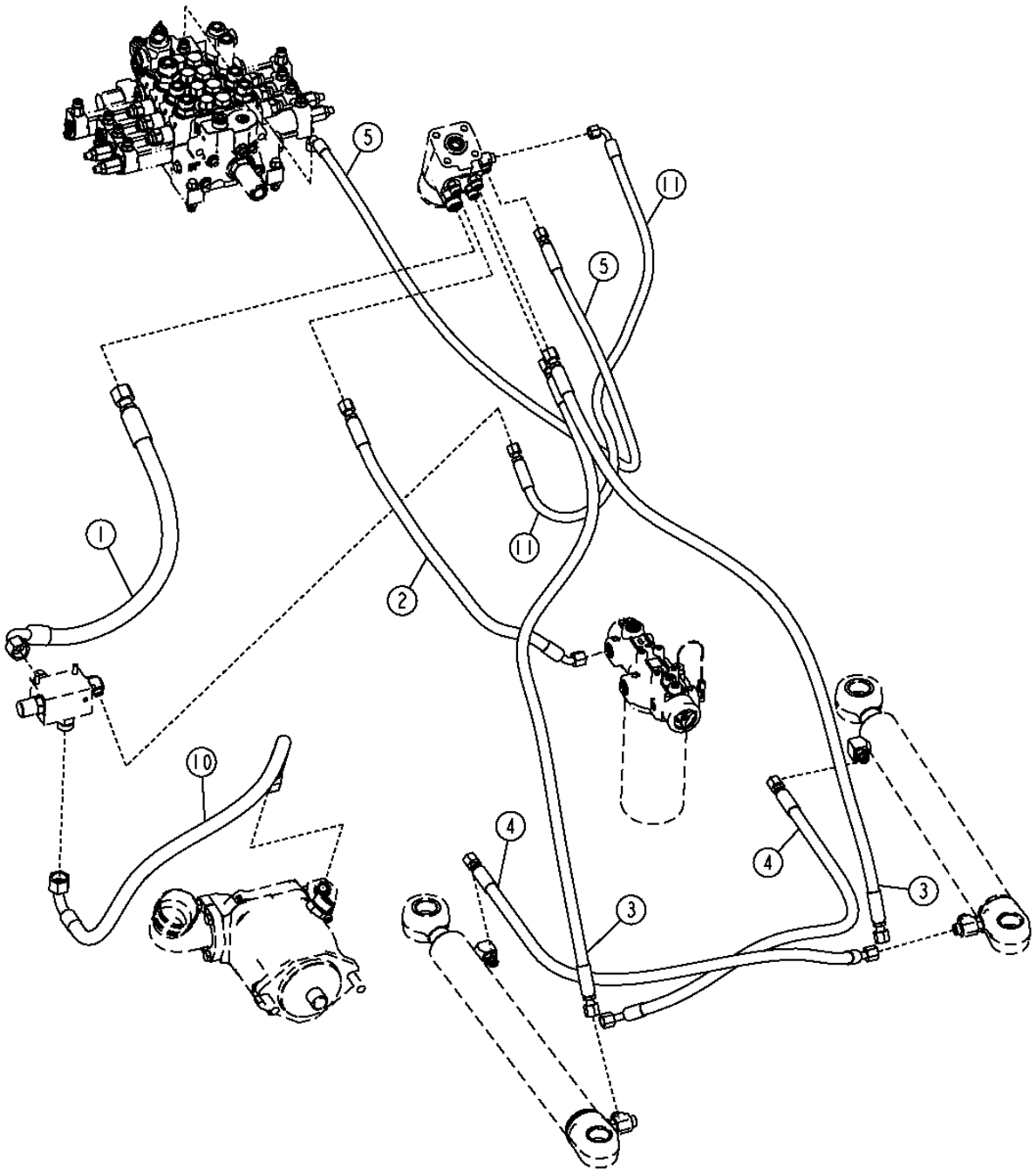

TX1002546

STEERING CYLINDER HYDRAULIC HOSES
FLEXIBLES HYDRAULIQUES DE VERIN DE DIRECTION
MANGUERAS HIDRAULICAS DE CILINDROS DE LA DIRECCION

KEY	*PART NO.*	*PART NAME*	*QTY.*	*SERIAL NO.*	*REMARKS*
1	AT332441	HYDRAULIC HOSE - FABRICATE	1		1-3/16" X 813 MM (32") X 1-3/16"
2	AT331840	HYDRAULIC HOSE - FABRICATE	1		13/16" X 1 100 MM (43-1/4") X 1"
3	AT203182	HYDRAULIC HOSE - FABRICATE	2		1" X 1 702 MM (67") X 1"
4	AT208694	HYDRAULIC HOSE - FABRICATE	2		13/16" X 1 321 MM (52") X 1"
5	AT314734	HYDRAULIC HOSE - FABRICATE	1		9/16" X 2 000 MM (78-3/4") X 9/16"
10	AT330752	HYDRAULIC HOSE - FABRICATE	1		1-3/16" X 381 MM (15") X 1-3/16"
11	AT330724	HYDRAULIC HOSE - FABRICATE	1		11/16" X 1 092 MM (43") X 11/16"

STEERING CYLINDER
VERIN DE DIRECTION
CILINDRO DE LA DIRECCION

T195544 -UN-21OCT03

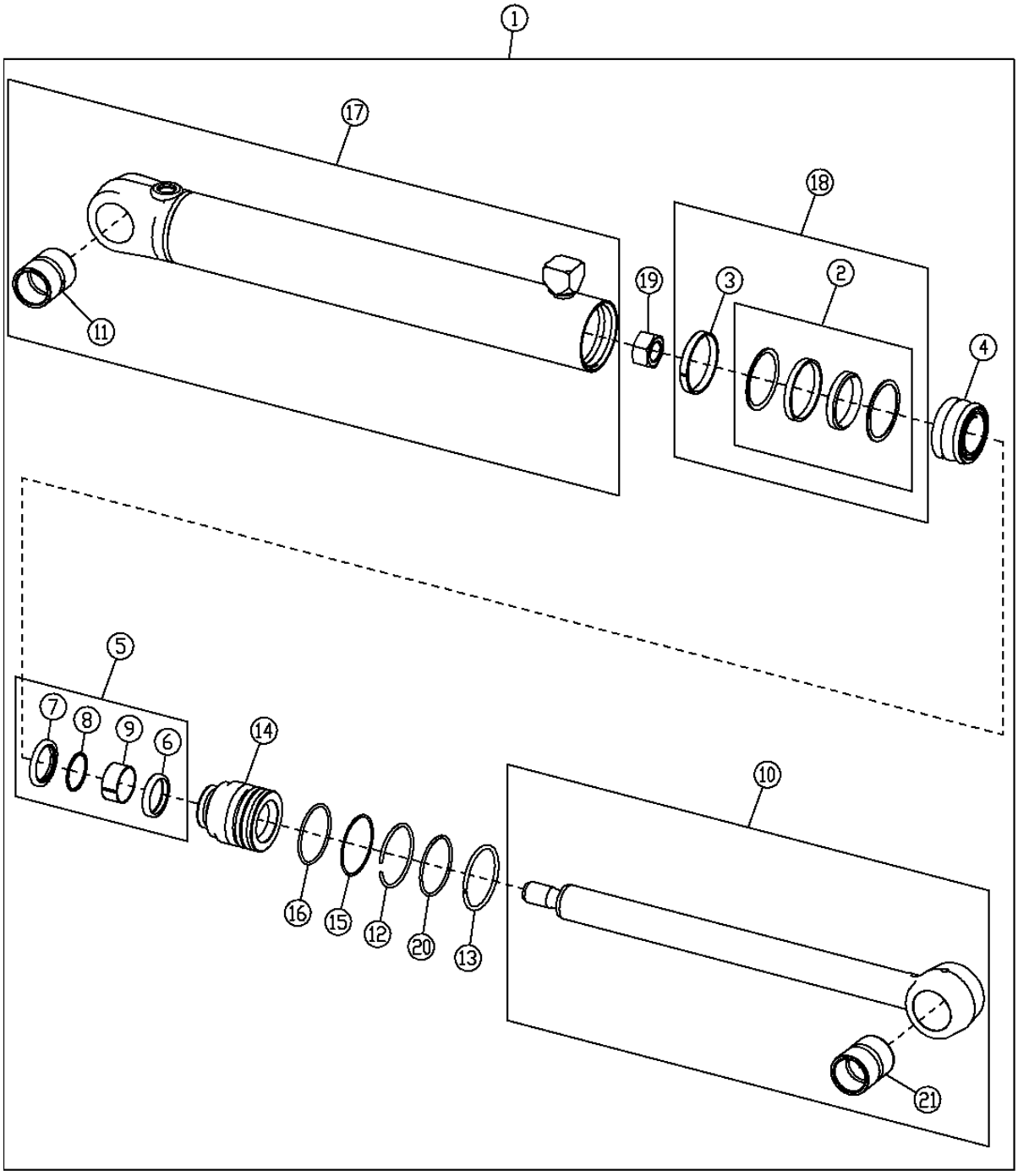

T195544

STEERING CYLINDER
VERIN DE DIRECTION
CILINDRO DE LA DIRECCION

KEY	*PART NO.*	*PART NAME*	*QTY.*	*SERIAL NO.*	*REMARKS*
1	AH212033	HYDRAULIC CYLINDER	1		
2	RE20342	SEAL	1		
3	R81774	SCRAPER RING	1		
4	H162141	PISTON	1		
5	AH149194	HYDRAULIC CYLINDER KIT	1		
6	AH150453	SEAL	1		
7	AH148608	SEAL	1		
8	H155655	SEAL	1		
9	H157897	WEAR RING	1		(SUB FOR H157947)
10	AH150396	ROD	1		
11	H143405	BUSHING	1		
12	H178765	SNAP RING	1		
13	H179657	SNAP RING	1		
14	H210939	HYDR. CYLINDER ROD GUIDE	1		
15	R81195	BACK-UP RING	1		
16	R83469	O-RING	1		
17	AH211239	HYDRAULIC CYLINDER BARREL	1		
18	AT186563	SEAL KIT	1		
19	H170538	NUT	1		
20	U12198	O-RING	1		
21	H158192	BUSHING	1		

STEERING WHEEL, COLUMN AND LINKAGE
VOLANT, COLONNE ET TRINGLERIE
VOLANTE, COLUMNA Y VARILLAJE

T195299 -UN-21OCT03

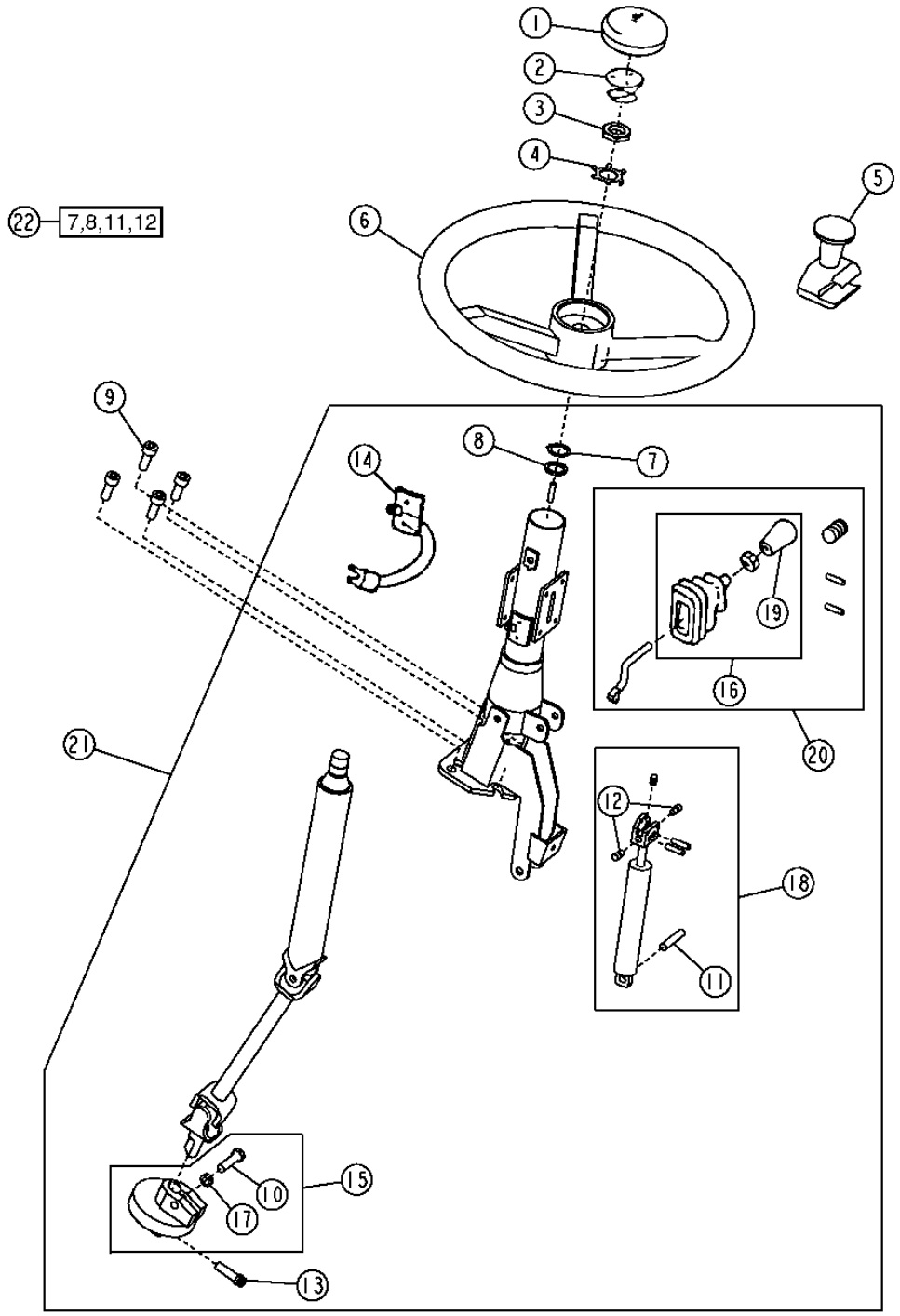

T195299

STEERING WHEEL, COLUMN AND LINKAGE
VOLANT, COLONNE ET TRINGLERIE
VOLANTE, COLUMNA Y VARILLAJE

KEY	PART NO.	PART NAME	QTY.	SERIAL NO.	REMARKS
1	T154131	COVER	1		
2	AT222153	SWITCH	1		
3	T13630	NUT	1		20.625 MM (13/16")
4	T17148	LOCK WASHER	1		
5	AT169849	KNOB	1		
6	AT139694	STEERING WHEEL	1		
7	.....	SNAP RING	1		
8	.....	SEALING WASHER	1		
9	19M8328	SCREW	4		M10 X 25
10	19H2544	CAP SCREW	1		3/8" X 1-1/2"
11	.....	DOWEL PIN	1		
12	.....	SCREW	2		
13	T39049	SCREW	1		9.525 X 31.242 MM (3/8" X 1.230")
14	AT162719	BRUSH SET	1		
15	AT220226	KIT	1		ISOLATOR
16	AT191487	KIT	1		KNOB
17	.....	WASHER	1		
18	AT160662	KIT	1		GAS CYLINDER ASSEMBLY
19	AT220223	KIT	1		KNOB
20	AT220224	KIT	1		TILT LEVER
21	AT300524	STEERING COLUMN	1		
22	RE56109	KIT	1		STEERING COLUMN

LOWER STEERING COLUMN
COLONNE DIRECTION INFERIEURE
COLUMNA INFERIOR DE LA DIRECCION

T212760 -UN-19JUL05

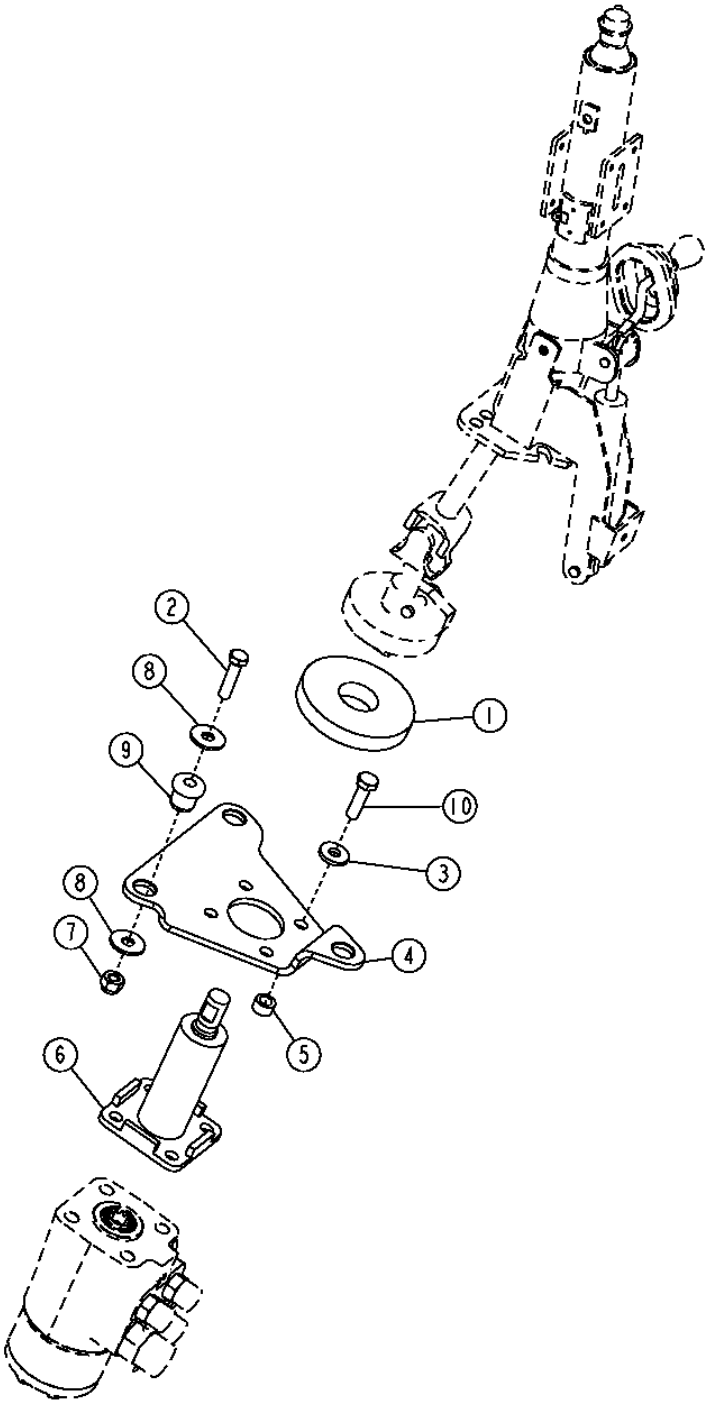

T212760

LOWER STEERING COLUMN
COLONNE DIRECTION INFERIEURE
COLUMNA INFERIOR DE LA DIRECCION

KEY	*PART NO.*	*PART NAME*	*QTY.*	*SERIAL NO.*	*REMARKS*
1	T131980	ISOLATOR	1		
2	19H2633	CAP SCREW	3		
3	24H1308	WASHER	4		13/32" X 1" X 0.134"
4	T168276	BRACKET	1		TO CAB FLOOR
5	28H860	WASHER	4		0.423" X 0.675" X 3/8"
6	AT156896	STEERING COLUMN	1		LOWER
7	14M7400	LOCK NUT	3		M10
8	24M7296	WASHER	6		10.500 X 30 X 2.500 MM
9	AT116162	ISOLATOR	3		
10	19M7550	CAP SCREW	4		M10 X 35

STEERING COLUMN COVERS
COUVERCLE DE COLONNE DE DIRECTION
CUBIERTA DE LA COLUMNA DE DIRECCION

TX1013213 -UN-18OCT06

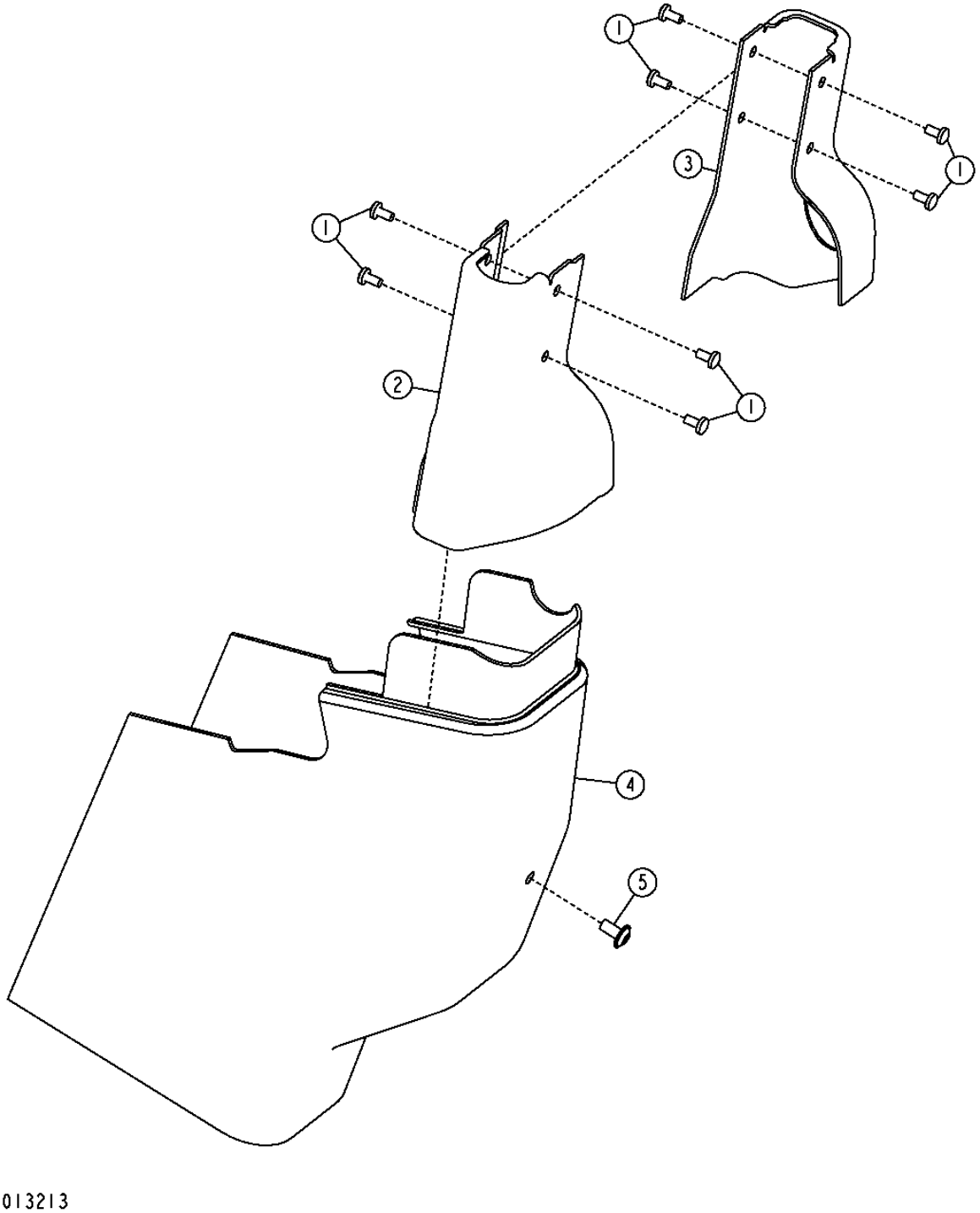

STEERING COLUMN COVERS
COUVERCLE DE COLONNE DE DIRECTION
CUBIERTA DE LA COLUMNA DE DIRECCION

KEY	*PART NO.*	*PART NAME*	*QTY.*	*SERIAL NO.*	*REMARKS*
1	21M7305	SCREW	8		M6 X 12
2	T173100	COVER	1		UPPER
	T211353	COVER	1		(FOR USE WITH JOYSTICK MOUNTED FNR)
3	T173099	COVER	1		UPPER
4	T156784	COVER	1		LOWER
5	19M8675	SCREW	1		M8 X 16

BRAKE VALVE, PEDALS AND LINKAGE
SOUPAPE, PEDALES ET TRINGLERIE DE FREIN
VALVULA DE FRENOS, PEDALES Y VARILLAJE

TX1017250 -UN-

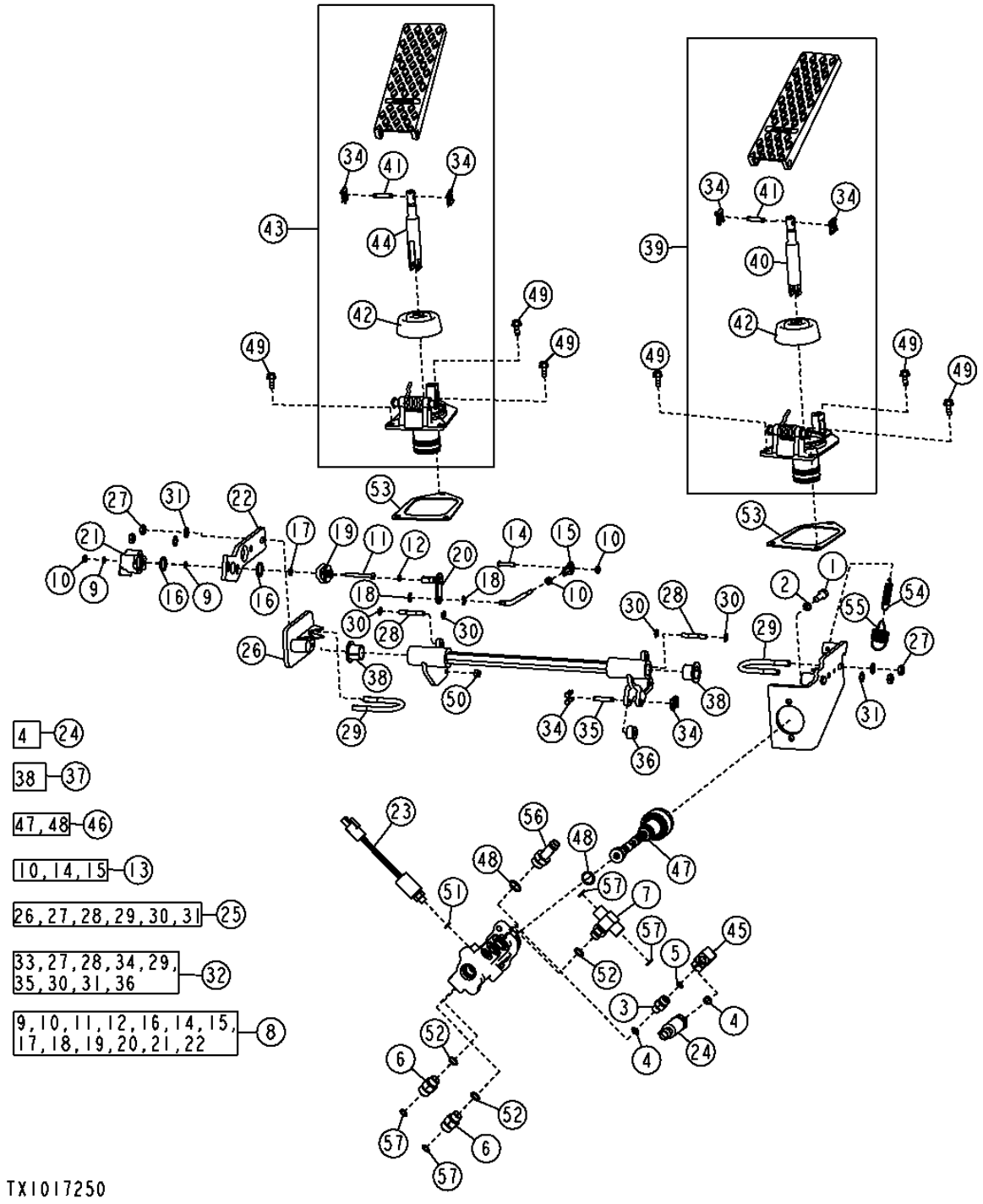

BRAKE VALVE, PEDALS AND LINKAGE (S.N. -604689)
SOUPAPE, PEDALES ET TRINGLERIE DE FREIN (S.N. -604689)
VALVULA DE FRENOS, PEDALES Y VARILLAJE (S.N. -604689)

KEY	PART NO.	PART NAME	QTY.	SERIAL NO.	REMARKS
1	19M7657	SCREW	2		
2	24M7313	WASHER	2		
3	T38282	HOSE FITTING	1		
4	AT181313	CHECK VALVE	2		
6	AT203457	PEDAL	1		(RIGHT)
7	AT208088	PUSH ROD	1		
8	T157212	CLIP	6		
9	T157258	PIN	2		
10	T174634	BOOT	2		
11	AT208085	KIT	1		(LEFT PEDAL BRACKET)
12	AT314267	SUPPORT	1		
13	R53317	LOCK NUT	4		
14	T157211	PIN	2		
15	T157220	CLAMP	2		
16	T170180	SNAP RING	4		
17	T170181	LOCK WASHER	4		
18	AT208086	HOSE KIT	1		(RIGHT PEDAL BRACKET)
20	T157257	PIN	1		
21	T175236	ROLLER	1		
22	AT208087	PEDAL	1		(LEFT)
23	AT208163	PUSH ROD	1		
25	AT208089	ROCKER ARM	1		
26	T157223	BEARING	2		
28	AT207529	CHECK VALVE	1		
29	AT210291	CLUTCH KIT	1		(CLUTCH CUTOFF)
31	14H631	NUT	2		4.826 MM
32	21H1390	SCREW	2		
33	A4365R	O-RING	1		6.071 X 1.778 MM
34	AT210877	LINKAGE	1		
35	14H631	NUT	1		4.826 MM
36	21H985	SCREW	1		
37	AH108055	LINK END	1		
38	P48347	O-RING	2		
39	R72654	SNAP RING	2		
40	R86457	SUPPORT	1		
41	RE24468	SHAFT	1		
42	RE69297	SENSOR	1		
43	T172274	SUPPORT	1		
44	AT331208	FLOW CONTROL HYD. VALVE	1		
45	AT207948	SEAL KIT	1		
46	AT207947	SEAL	1		
47	R26375	O-RING	1		
48	M113243	SCREW	6		
49	N203905	LOCK NUT	1		
50	R26287	O-RING	1		
51	R26375	O-RING	1		
52	R26448	O-RING	3		
54	T172927	GASKET	2		
55	T176108	SPRING	1		
56	T176111	SPRING	1		
57	T77613	O-RING	4		
59	AT223535	PRESSURE SWITCH	1		(STD)
	AT222372	SWITCH	1		(HARSH ENVIRONMENT)
60	AT314266	SUPPORT	1		
61	12M7060	WASHER	4		5.300 MM
62	R72653	SNAP RING	1		
63	38H1159	ADAPTER FITTING	1		
64	AT322982	TRANSDUCER	1		
65	AT326970	FITTING	1		

BRAKE VALVE HYDRAULICS
CIRCUIT HYDRAULIQUE SOUPAPE FREIN
SISTEMA HIDRAULICA DE LA VALVULA DE FRENOS

TX1014210 -UN-17NOV06

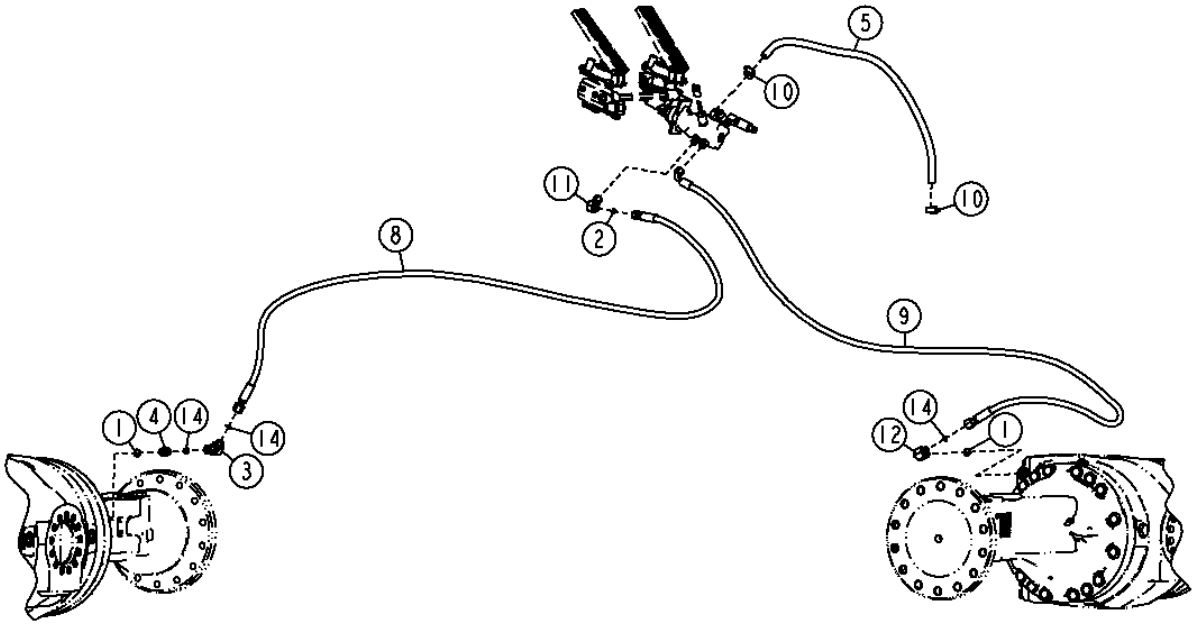

TX1014210

BRAKE VALVE HYDRAULICS
CIRCUIT HYDRAULIQUE SOUPAPE FREIN
SISTEMA HIDRAULICO DE LA VALVULA DE FRENOS

KEY	*PART NO.*	*PART NAME*	*QTY.*	*SERIAL NO.*	*REMARKS*
1	R26375	O-RING	3		16.358 X 2.210 MM (0.644" X 0.087")
2	T77613	O-RING	1		9.246 X 1.778 MM (0.364" X 0.070")
3	38H1095	ELBOW FITTING	1		
4	38H1161	ADAPTER FITTING	1		
5	T168383	HYDRAULIC HOSE - FABRICATE	1		
8	AT319145	HYDRAULIC HOSE - FABRICATE	1		11/16" X 2 350 MM (92-1/2") X 13/16"
9	AT319144	HYDRAULIC HOSE - FABRICATE	1		13/16" X 2 550 MM (100-1/2") X 11/16"
10	AR21837	CLAMP	2		
11	38H1094	ELBOW FITTING	1		
12	38H1005	ELBOW FITTING	1		
14	T77857	O-RING	1		12.421 X 1.778 MM (0.489" X 0.070")

BRAKE ACCUMULATOR
ACCUMULATEUR DE FREIN
ACUMULADOR DE FRENO

T194621 -UN-23SEP03

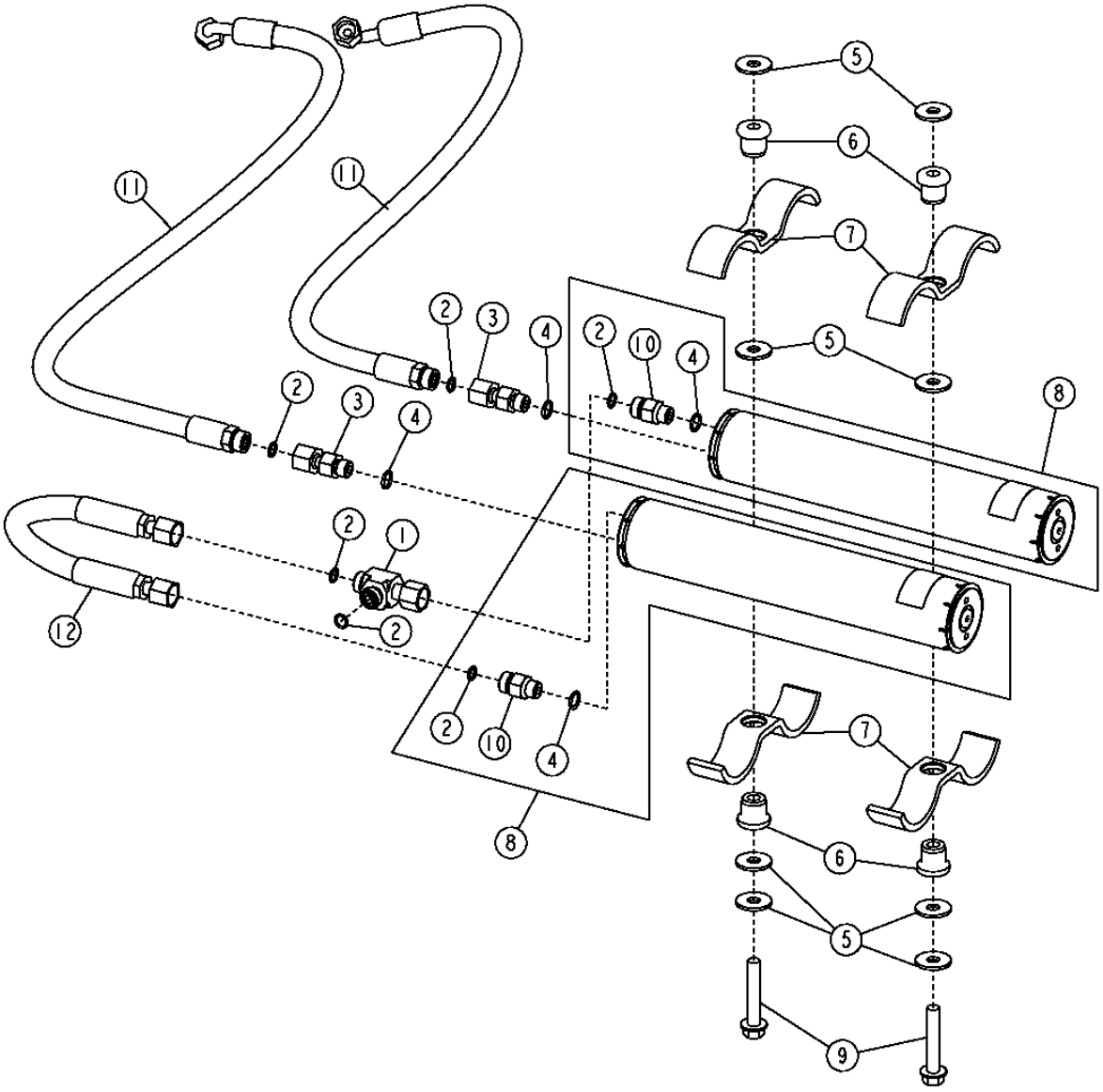

THIS PARTS LISTING IS CONTINUED

BRAKE ACCUMULATOR
ACCUMULATEUR DE FREIN
ACUMULADOR DE FRENO

KEY	*PART NO.*	*PART NAME*	*QTY.*	*SERIAL NO.*	*REMARKS*
1	38H1030	TEE FITTING	1		
2	T77613	O-RING	6		9.246 X 1.778 MM (0.364" X 0.070")
3	38H1067	ADAPTER FITTING	2		
4	R26448	O-RING	4		11.887 X 1.981 MM (0.468" X 5/64")
5	24M7296	WASHER	8		10.500 X 30 X 2.500 MM (0.413" X 1.181" X 0.098")
6	AT116162	ISOLATOR	4		
7	T168393	CLAMP	4		
8	AT224430	HYDRAULIC ACCUMULATOR	2		
9	19M7807	SCREW	2		M10 X 60
10	AT225573	CHECK VALVE	2		
11	AT222414	HYDRAULIC HOSE - FABRICATE	2		11/16" X 889 MM (35") X 11/16"
12	AT223768	HYDRAULIC HOSE - FABRICATE	1		11/16" X 356 MM (14") X 11/16"

DRIVELINE BEARING AND PARKING BRAKE
PALIER LIGNE ET FREIN STATIONNEMENT COMMANDE
COJINETE DE LINEA DE MANDO Y FRENO DE ESTACIONAMIENTO

TX1017474 -UN-18JAN07

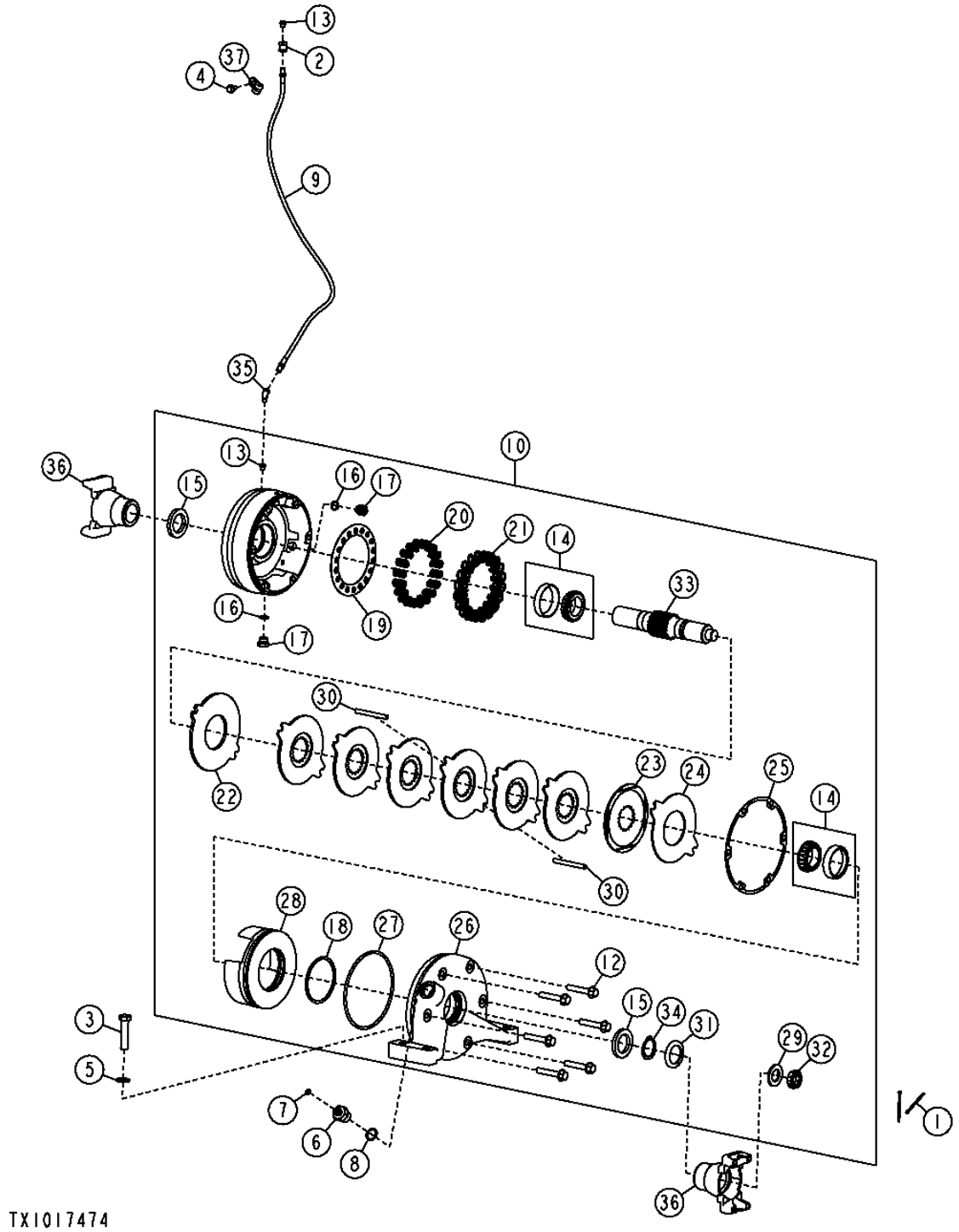

THIS PARTS LISTING IS CONTINUED

DRIVELINE BEARING AND PARKING BRAKE
PALIER LIGNE ET FREIN STATIONNEMENT COMMANDE
COJINETE DE LINEA DE MANDO Y FRENO DE ESTACIONAMIENTO

KEY	PART NO.	PART NAME	QTY.	SERIAL NO.	REMARKS
1	11M7025	COTTER PIN	2		4 X 63 MM
2	15H84	COUPLING	1		3.175 MM
3	19M7719	CAP SCREW	4		M16 X 70
4	19M7865	SCREW	1		M8 X 16
5	24M7338	WASHER	4		17 X 30 X 3 MM
6	38H1338	ADAPTER FITTING	1		
7	T77613	O-RING	1		9.246 X 1.778 MM
8	U12547	O-RING	1		23.470 X 2.946 MM
9	AT207022	HYDRAULIC HOSE	1		1/8" X 900 MM X 1/8"
10	**AT207839**	**BRAKE**	**1**		
12	19M7817	SCREW	6		M12 X 70
13	AT208411	PRESSURE RELIEF VALVE	2		
14	AT209496	BEARING	2		
15	AT225727	SEAL	2		
16	R26375	O-RING	2		16.358 X 2.210 MM
17	R39112	FITTING	2		
18	R74657	O-RING	1		100.965 X 5.334 MM
19	T169103	RETAINER	1		
20	T169104	COMPRESSION SPRING	18		
21	T169105	COMPRESSION SPRING	18		
22	T169107	BRAKE DISK	1		
23	T169108	BRAKE DISK	7		
24	T169109	BRAKE DISK	7		
25	T169110	GASKET	1		
26	T169111	PLATE	1		
27	T169116	O-RING	1		
28	T169290	PISTON	1		
29	T172856	WASHER	1		29.337 X 51.562 X 4.496 MM
30	T173230	PIN	2		
31	T173593	WASHER	1		
32	T226801	NUT	1		
33	T226804	SHAFT	1		
34	U12167	SNAP RING	1		
35	M45937	ELBOW FITTING	1		3.175 MM
36	T172968	YOKE	2		
37	T78974	CLAMP	1		

PARK BRAKE SOLENOID VALVE
ELECTROVANNE DE FREIN DE STATIONNEMENT
VALVULA DE SOLENOIDE DE FRENO DE ESTACIONAMIENTO

TX1013480 -UN-26OCT06

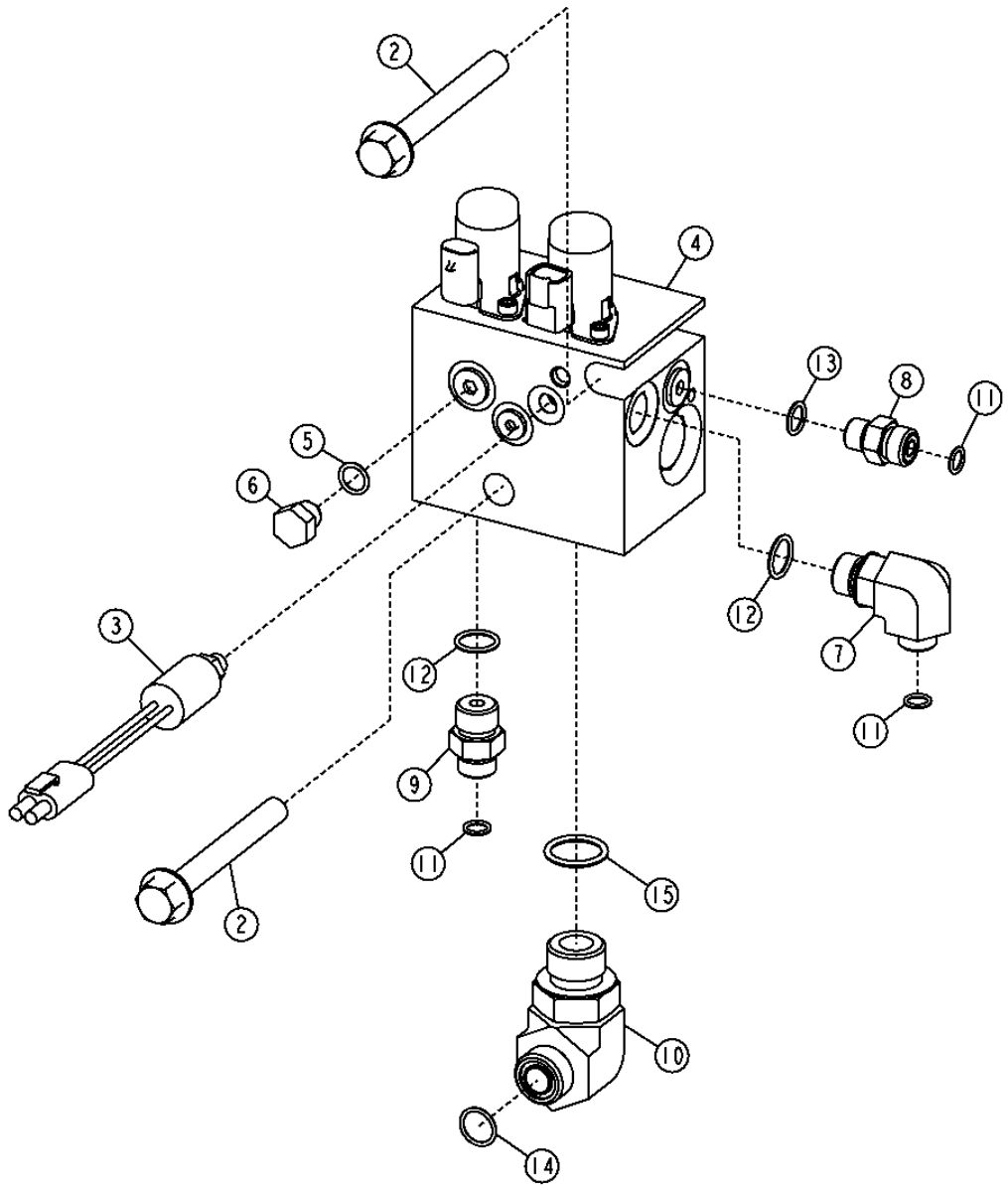

TX1013480

PARK BRAKE SOLENOID VALVE
ELECTROVANNE DE FREIN DE STATIONNEMENT
VALVULA DE SOLENOIDE DE FRENO DE ESTACIONAMIENTO

KEY	*PART NO.*	*PART NAME*	*QTY.*	*SERIAL NO.*	*REMARKS*
2	19M9150	SCREW	2		M5 X 8
3	AT223538	PRESSURE SWITCH	1		
	AT224497	FLOW CONTROL HYD. VALVE	1		(HARSH ENVIROMENT)
4	AT315072	VALVE	1		
5	R26448	O-RING	1		11.887 X 1.981 MM (0.468" X 5/64")
6	R27218	FITTING PLUG	1		
7	38H1010	ELBOW FITTING	1		
8	38H1160	ADAPTER FITTING	1		
9	38H1171	ADAPTER FITTING	1		
10	38H1404	ELBOW FITTING	1		
11	T77613	O-RING	3		9.246 X 1.778 MM (0.364" X 0.070")
12	R26375	O-RING	2		16.358 X 2.210 MM (0.644" X 0.087")
13	R26448	O-RING	1		11.887 X 1.981 MM (0.468" X 5/64")
14	T77932	O-RING	1		15.596 X 1.778 MM (0.614" X 0.070")
15	U12547	O-RING	1		23.470 X 2.946 MM (0.924" X 0.116")

PARK BRAKE SOLENOID VALVE HYDRAULIC LINES
CONDUITES HYDRAULIQUES DE L'ELECTROVANNE DU FREIN DE STATIONNEMENT
LINEAS HIDRAULICAS DE LA VALVULA DE SOLENOIDE DEL FRENO DE ESTACIONAMIENTO

TX1013578 -UN-09NOV06

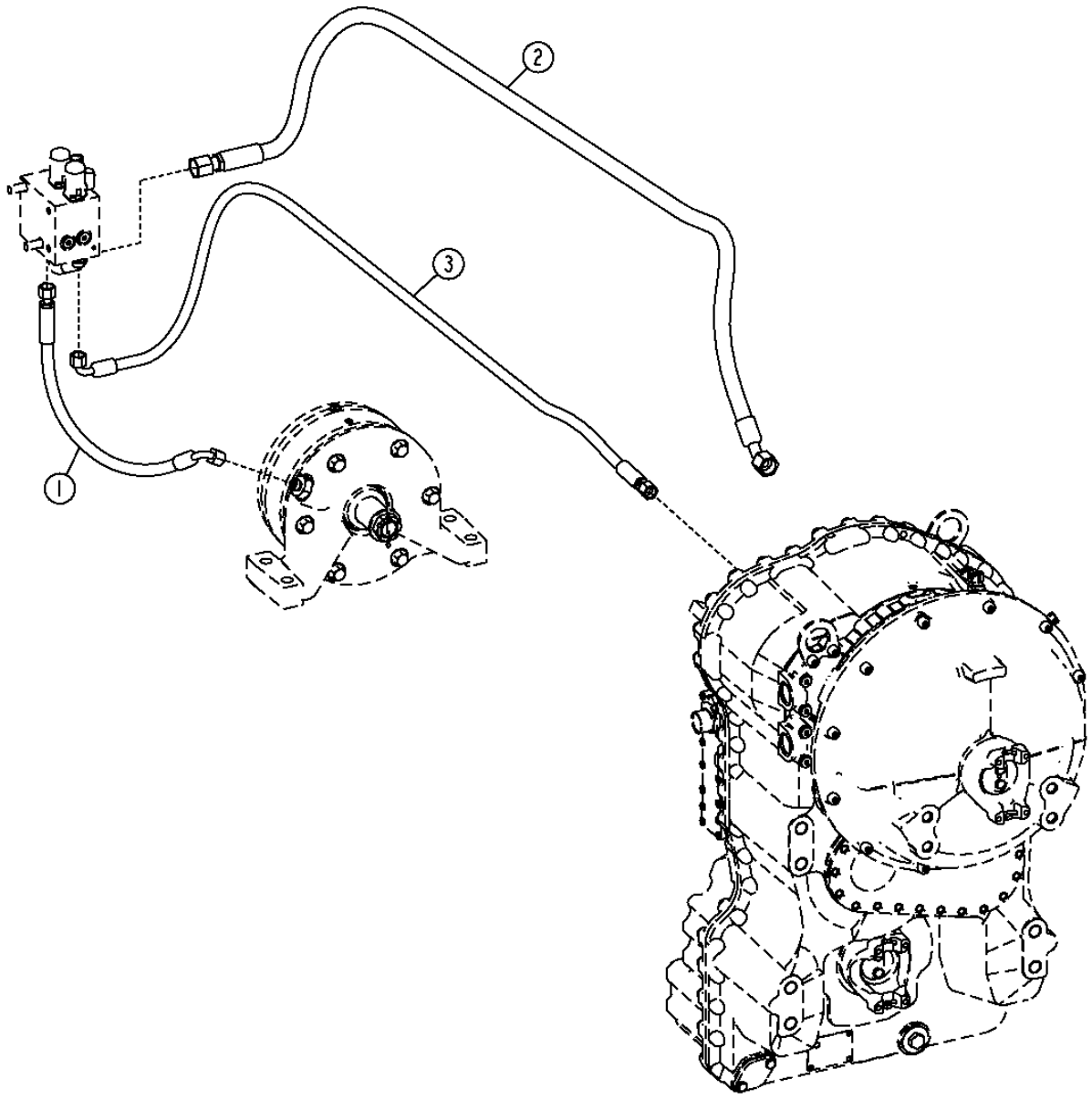

TX1013578

PARK BRAKE SOLENOID VALVE HYDRAULIC LINES
CONDUITES HYDRAULIQUES DE L'ELECTROVANNE DU FREIN DE STATIONNEMENT
LINEAS HIDRAULICAS DE LA VALVULA DE SOLENOIDE DEL FRENO DE ESTACIONAMIENTO

KEY	*PART NO.*	*PART NAME*	*QTY.*	*SERIAL NO.*	*REMARKS*
1	AT209907	HYDRAULIC HOSE - FABRICATE	1		11/16" X 66" X 11/16"
2	AT208015	HYDRAULIC HOSE - FABRICATE	1		1" X 70-3/4" X 1"
3	AT167553	HYDRAULIC HOSE - FABRICATE	1		11/16" X 24-3/4" X 11/16"

DECALS AND TRADEMARKS (ENGLISH)
AUTOCOLLANTS ET MARQUES COMMERCIALES (ANGLAIS)
CALCOMANIAS Y MARCAS REGISTRADAS (INGLESE)

TX1016636 -UN-18JAN07

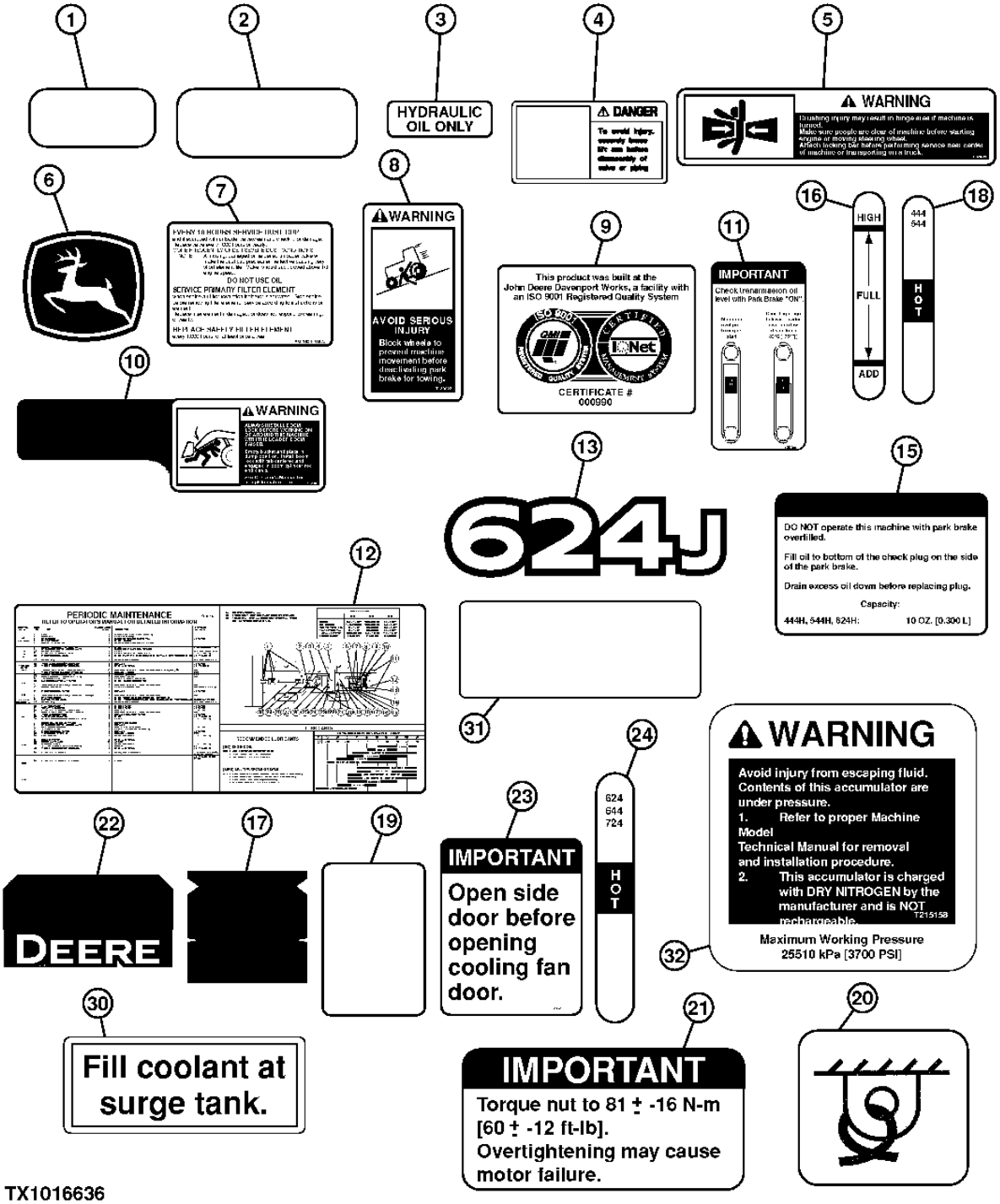

TX1016636

DECALS AND TRADEMARKS (ENGLISH)
AUTOCOLLANTS ET MARQUES COMMERCIALES (ANGLAIS)
CALCOMANIAS Y MARCAS REGISTRADAS (INGLESE)

KEY	PART NO.	PART NAME	QTY.	SERIAL NO.	REMARKS
1	H21259	MAT	3		(ANTI-SKID)
2	JD5902	REFLECTOR	2		(RED)
3	T218566	LABEL	1		(HYDRAULIC OIL)
4	T146175	SAFETY SIGN	1		(DANGER - CRUSHING BOOM)
5	T146436	SAFETY SIGN	2		(WARNING - CRUSHING ARTICULATION)
6	JD5749	LABEL	1		(LEAPING DEER)
7	T146605	LABEL	1		(AIR CLEANER)
8	T159028	LABEL	1		WARNING (PARK BRAKE)
9	T175744	LABEL	1		(ISO CERTIFICATION)
10	T182191	LABEL	2		WARNING (BOOM LOCK)
11	T200055	LABEL	1		(TRANSMISSION OIL CHECK)
12	T217012	LABEL	1		(PERIODIC MAINTENANCE)
13	T200012	LABEL	2		624J
15	T207741	LABEL	1		WARNING (PARK BRAKE OVERFILL)
16	T197300	LABEL	1		(HYDRAULIC RESERVOIR SIGHT GAUGE)
17	T203782	LABEL	2		
18	T200064	LABEL	1		(TRANSMISSION SIGHT GAUGE)
19	JD5906	REFLECTOR	2		(AMBER)
20	T153680	LABEL	2		(TIE DOWN)
21	T175135	LABEL	1		WARNING (FAN HUB)
22	T203695	LABEL	2		DEERE
23	T205211	LABEL	1		IMPORTANT
24	T200064	LABEL	1		
28	T225397	LABEL	1		(AXLE OIL LEVEL) (NOT ILLUSTRATED) (BLANK LABEL)
30	T208695	LABEL	1		FILL COOLANT AT SURGE TANK
31	M118611	LABEL	2		(WARNING-HOT SURFACE)
32	T215158	LABEL	1		(WARNING-ACCUMULATOR)

CAB LABELS AND DECALS
ETIQUETTES ET AUTOCOLLANTS CABINE
ETIQUETAS Y CALCOMANIAS DE LA CABINA

TX1016798 -UN-19DEC06

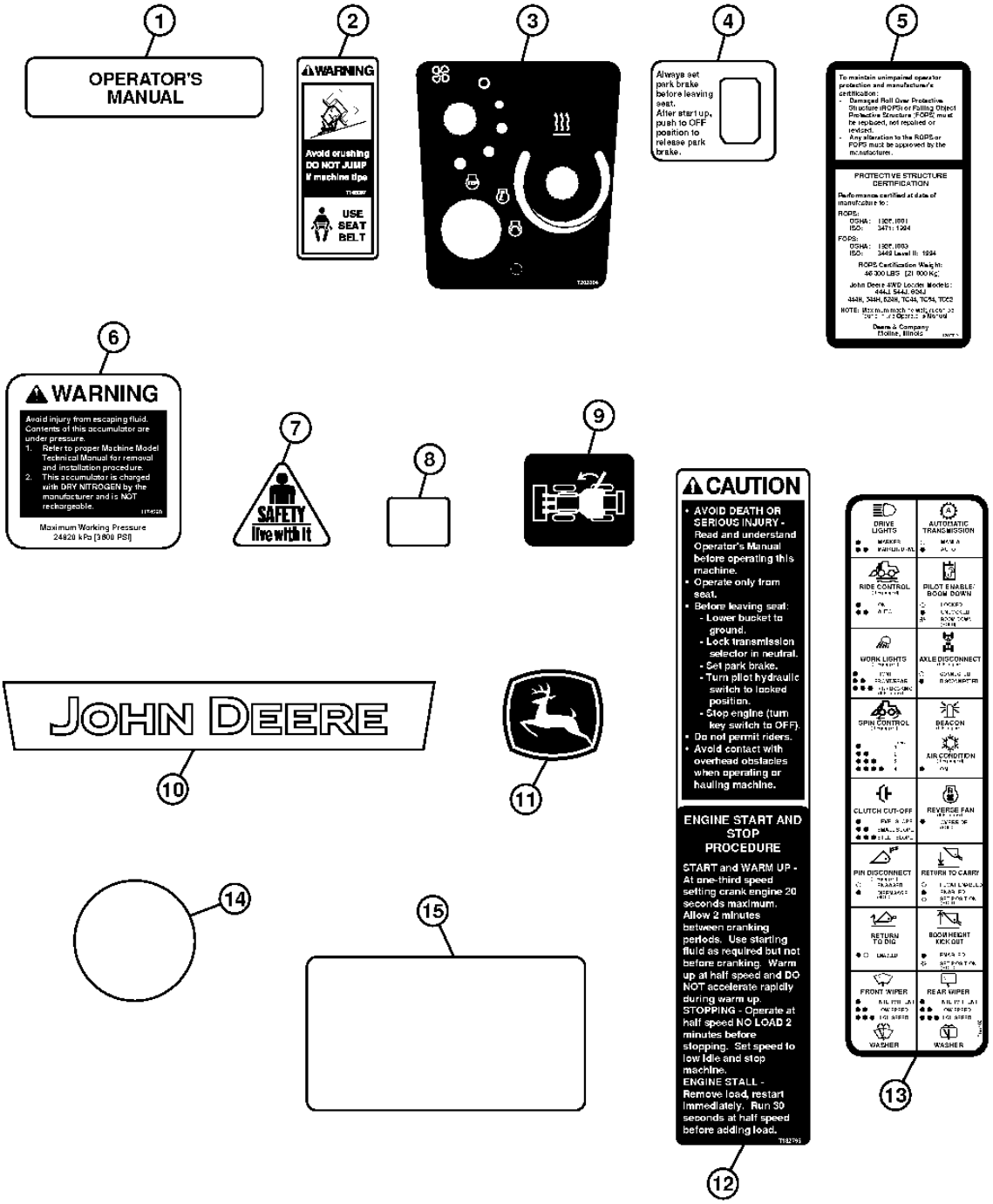

TX1016798

CAB LABELS AND DECALS
ETIQUETTES ET AUTOCOLLANTS CABINE
ETIQUETAS Y CALCOMANIAS DE LA CABINA

KEY	*PART NO.*	*PART NAME*	*QTY.*	*SERIAL NO.*	*REMARKS*
1	T148083	LABEL	1		(OPERATOR'S MANUAL)
2	T146097	LABEL	1		(WARNING - SEAT BELT)
3	T202884	LABEL	1		(KEY START/HVAC PANEL)
4	T171228	LABEL	1		(PARK BRAKE SWITCH)
5	T200712	LABEL	1		(ROPS /FOPS CERTIFICATION)
6	T215155	LABEL	2		(WARNING - BRAKE ACCUMULATOR)
7	H138955	LABEL	2		(SAFETY)
8	T171223	LABEL	1		(DOOR RELEASE) (LH)
9	T174735	LABEL	1		(DOOR RELEASE) (RH)
10	T215208	LABEL	1		(JOHN DEERE)
11	JD5822	LABEL	2		(LEAPING DEER)
12	T182795	SAFETY SIGN	1		(CAUTION - ENGINE START/STOP)
13	T197186	LABEL	1		(CONSOLE FUNCTION IDENTIFICATION)
14	T206106	LABEL	1		(GRAY CIRLCE)
15	T216386	LABEL	1		(LARGE GRAY RECTANGLE)

DECALS AND LABELS (FRENCH)
AUTOCOLLANTS (FRANCAIS)
CALCOMANIAS (FRANCES)

TX1016646 -UN-28DEC06

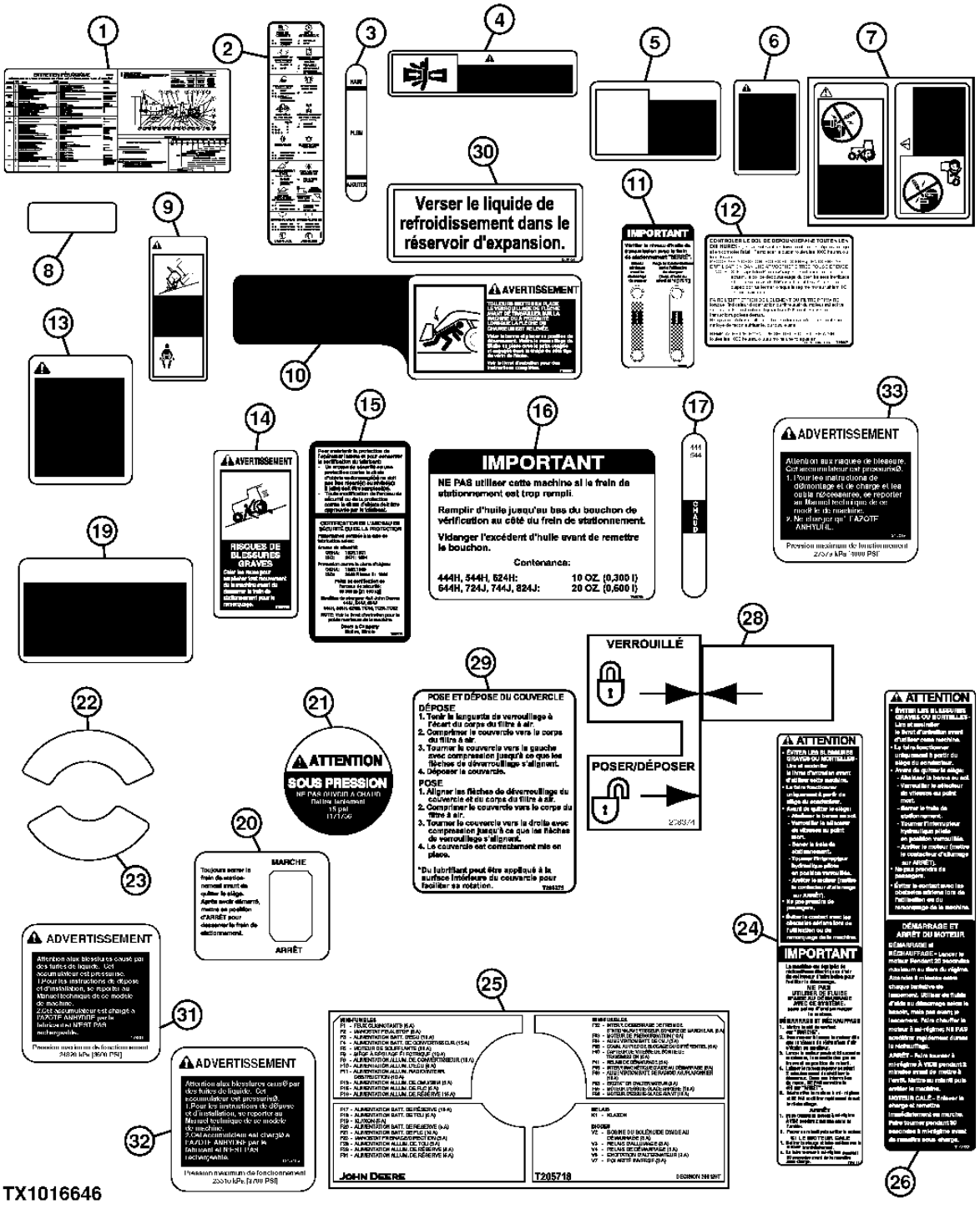

TX1016646

DECALS AND LABELS (FRENCH)
AUTOCOLLANTS (FRANCAIS)
CALCOMANIAS (FRANCES)

KEY	PART NO.	PART NAME	QTY.	SERIAL NO.	REMARKS
1	T227297	LABEL	1		(PERIODIC MAINTENANCE)
2	T200791	LABEL	1		(CONSOLE FUNCTION IDENTIFICATION)
3	T197323	LABEL	1		(HYDRAULIC RESERVOIR SIGHT GAUGE)
4	T146496	SAFETY SIGN	2		(WARNING) CRUSHING ARTICULATION
5	T146178	SAFETY SIGN	1		(DANGER) CRUSHING BOOM
6	T146494	SAFETY SIGN	1		(CAUTION - SECONDARY STEERING)
7	T146104	SAFETY SIGN	1		DANGER (BYPASS START)
8	T102618	LABEL	1		(HYDRAULIC OIL)
9	T146099	SAFETY SIGN	1		(WARNING - SEAT BELT)
10	T195857	LABEL	2		DANGER (BOOM LOCK)
11	T200056	LABEL	1		(TRANSMISSION OIL CHECK)
12	T146607	LABEL	1		(AIR CLEANER)
13	T146908	SAFETY SIGN	2		(WARNING - ACCUMULATOR)
14	T160762	LABEL	1		(WARNING - PARK BRAKE)
15	T200786	LABEL	1		(ROPS)
16	T207750	LABEL	1		IMPORTANT (PARK BRAKE OVERFILL)
17	T200065	LABEL	1		(TRANSMISSION SIGHT GAUGE)
19	T146495	SAFETY SIGN	2		CAUTION (BATTERIES)
20	T171750	LABEL	1		(PARK BRAKE SWITCH)
21	T171756	LABEL	1		CAUTION (PRESSURIZED) (RADIATOR CAP)
22	T63224	LABEL	1		BATTERY (DISCONNECT)
23	CD12569	LABEL	1		(OIL FILTER ELEMENT)
24	T208087	SAFETY SIGN	1		(CAUTION - ENGINE AIR HEATER)
25	T205718	LABEL	1		(VEC)
26	T195558	LABEL	1		(ENGINE START/STOP)
28	T208374	LABEL	1		(AIR CLEANER)
29	T208375	LABEL	1		(AIR CLEANER)
30	T208794	LABEL	1		(FILL COOLANT AT SURGE TANK)
31	T215156	LABEL	2		(WARNING-ACCUMULATOR, FRENCH)
32	T215159	LABEL	1		(WARNING-ACCUMULATOR, FRENCH)
33	T215216	LABEL	1		(WARNING-ACCUMULATOR, FRENCH)

DECALS AND LABELS (SPANISH)
AUTOCOLLANTS (ESPAGNOLE)
CALCOMANIAS (ESPANOL)

TX1016666 -UN-16JAN07

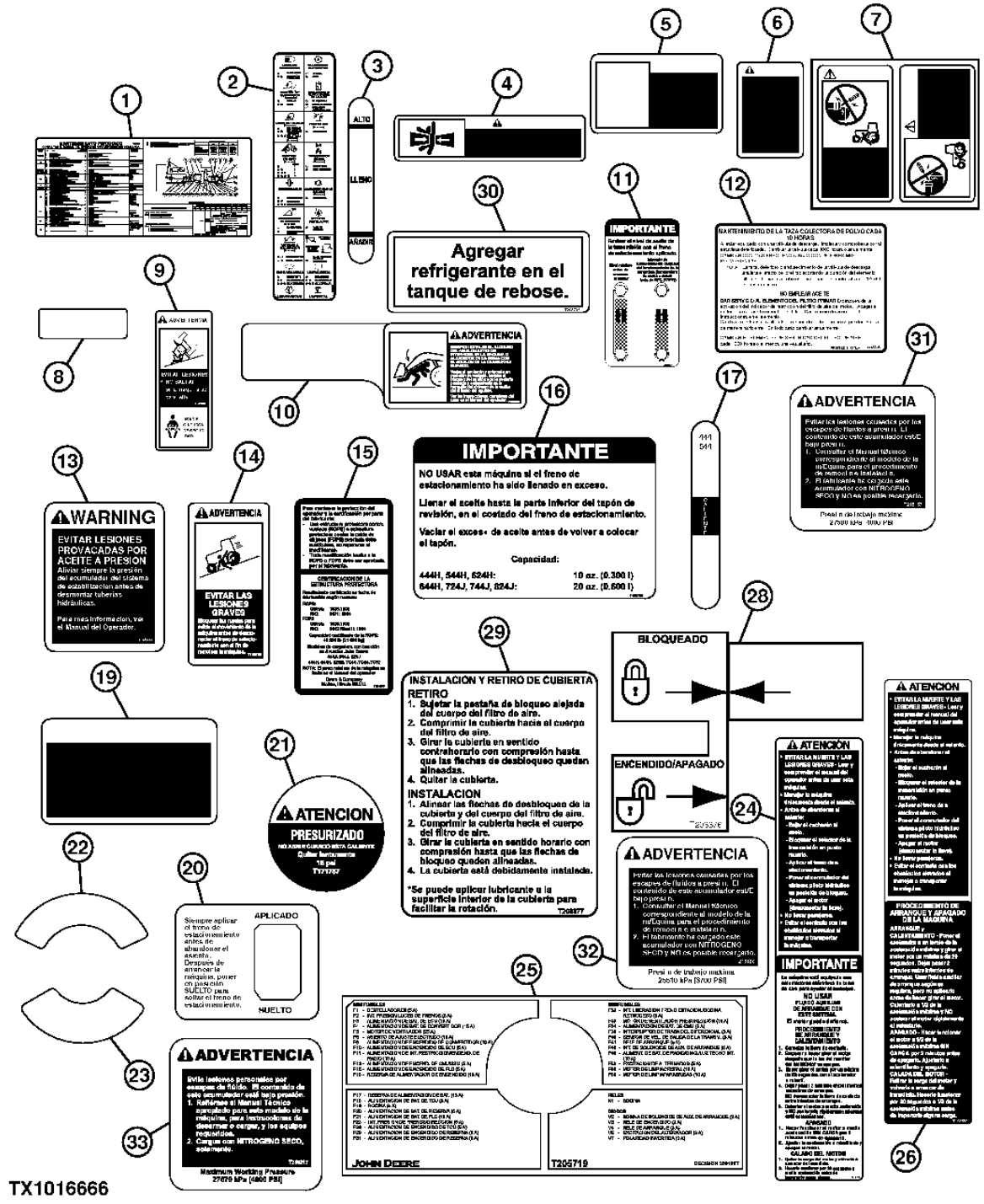

TX1016666

DECALS AND LABELS (SPANISH)
AUTOCOLLANTS (ESPAGNOLE)
CALCOMANIAS (ESPANOL)

KEY	PART NO.	PART NAME	QTY.	SERIAL NO.	REMARKS
1	T227296	LABEL	1		(PERIODIC MAINTENANCE)
2	T200818	LABEL	1		(CONSOLE FUNCTION IDENTIFICATION)
3	T197324	LABEL	1		(HYDRAULIC RESERVOIR SIGHT GAUGE)
4	T146504	SAFETY SIGN	1		(WARNING - ARTICULATION)
5	T146180	SAFETY SIGN	1		DANGER (CRUSHING BOOM)
6	T146502	SAFETY SIGN	1		(CAUTION - SECONDARY STEERING)
7	T146106	SAFETY SIGN	1		DANGER (BYPASS START)
8	T102620	LABEL	1		(HYDRAULIC OIL LEVEL)
9	T146098	SAFETY SIGN	1		(WARNING - SEAT BELT)
10	T195858	LABEL	1		DANGER (BOOM LOCK)
11	T200057	LABEL	1		(TRANSMISSION OIL CHECK)
12	T146606	LABEL	1		(AIR CLEANER)
13	T146911	LABEL	1		(WARNING - ACCUMULATOR)
14	T160769	SAFETY SIGN	1		(WARNING - PARK BRAKE)
15	T200814	LABEL	1		(ROPS)
16	T207751	LABEL	1		(PARK BRAKE OVERFILL)
17	T200066	LABEL	1		(TRANSMISSION SIGHT GAUGE)
19	T146503	SAFETY SIGN	2		CAUTION (BATTERIES)
20	T171751	LABEL	1		(PARK BRAKE SWITCH)
21	T171757	LABEL	1		CAUTION (PRESSURIZED) (RADIATOR CAP)
22	T63225	LABEL	1		(BATTERY DISCONNECT)
23	T64217	LABEL	1		(OIL FILTER ELEMENT)
24	T208086	SAFETY SIGN	1		CAUTION (ENGINE START/STOP)
25	T205719	LABEL	1		(VEC)
26	T195559	LABEL	1		(ENGINE START-STOP)
28	T208376	LABEL	1		(AIR CLEANER)
29	T208377	LABEL	1		(AIR CLEANER)
30	T208795	LABEL	1		(FILL COOLANT AT SURGE TANK)
31	T215157	LABEL	2		(WARNING-ACCUMULATOR, SPANISH)
32	T215160	LABEL	1		(WARNING-ACCUMULATOR, SPANISH)
33	T215217	LABEL	1		(WARNING-ACCUMULATOR, SPANISH)

CANOPY LABELS AND DECALS
ETIQUETTES ET AUTOCOLLANTS EVENT
ETIQUETAS Y CALCOMANIAS DEL DOSEL

T194879 -UN-15OCT03

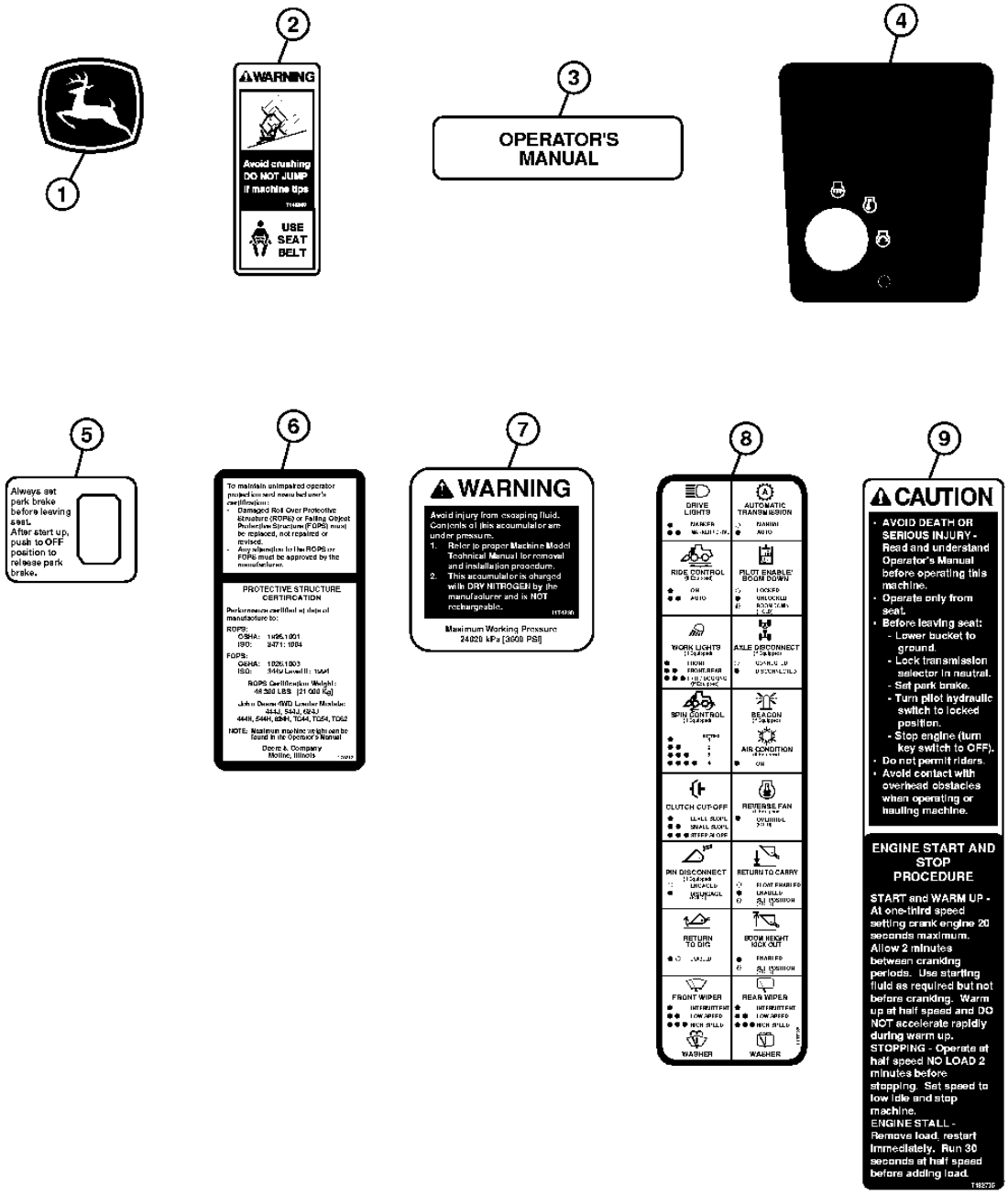

T194879

CANOPY LABELS AND DECALS
ETIQUETTES ET AUTOCOLLANTS EVENT
ETIQUETAS Y CALCOMANIAS DEL DOSEL

KEY	*PART NO.*	*PART NAME*	*QTY.*	*SERIAL NO.*	*REMARKS*
1	JD5822	LABEL	2		(LEAPING DEER)
2	T146097	LABEL	1		(WARNING - SEAT BELT)
3	T148083	LABEL	1		(OPERATOR'S MANUAL)
4	T203671	LABEL	1		(KEY START)
5	T171228	LABEL	1		(PARK BRAKE SWITCH)
6	T200712	LABEL	1		(ROPS)
7	T215155	LABEL	2		(SUB FOR T174298) (WARNING - ACCUMULATOR)
8	T197186	LABEL	1		CONSOLE FUNCTION IDENTIFICATION
9	T182795	SAFETY SIGN	1		(CAUTION - ENGINE START/STOP)

LIFT HOOKS
CROCHETS RELEVAGE
GANCHOS DE LEVANTE

TX1006284 -UN-27APR06

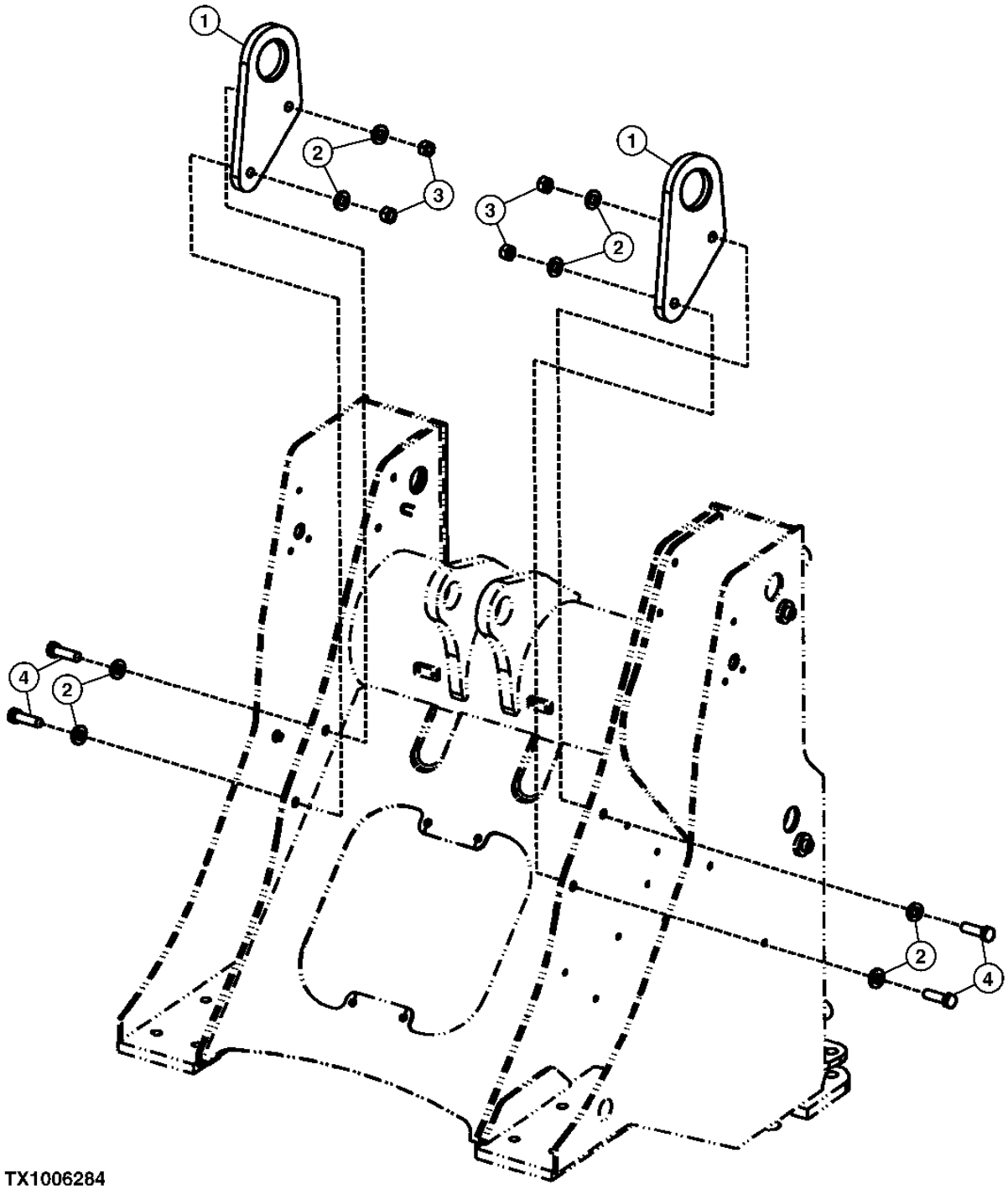

TX1006284

LIFT HOOKS
CROCHETS RELEVAGE
GANCHOS DE LEVANTE

KEY	PART NO.	PART NAME	QTY.	SERIAL NO.	REMARKS
1	T156995	PLATE	2		
2	24M7242	WASHER	8		21.400 X 42 X 5 MM
3	14M7277	NUT	4		M20
4	19M8639	CAP SCREW	4		M20 X 70

ENVIRONMENTAL DRAIN KIT
ENSEMBLE DE VIDANGE ECOLOGIQUE
CONJUNTO DE VACIADO AMBIENTAL

TX1014261 -UN-04DEC06

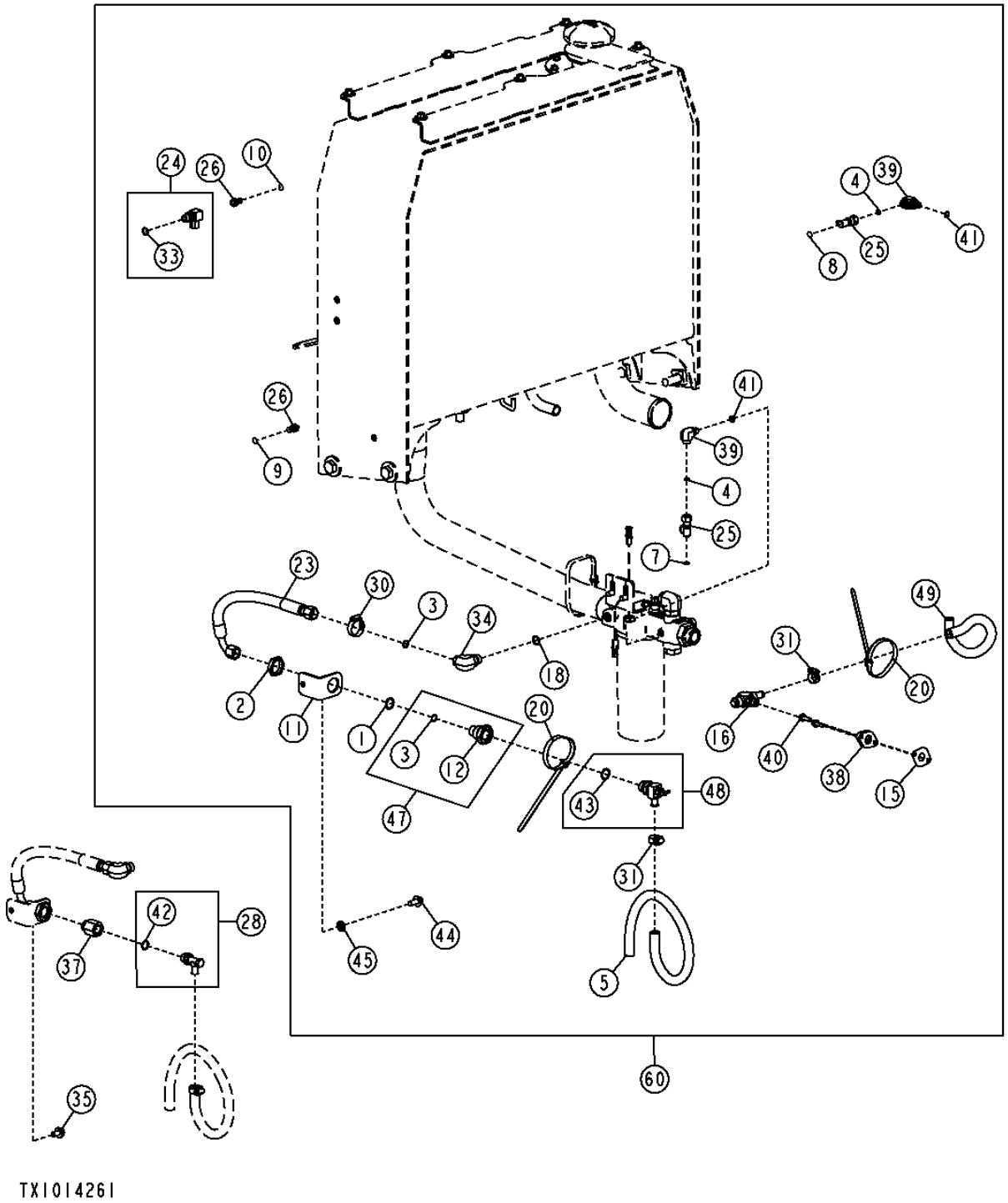

ENVIRONMENTAL DRAIN KIT
ENSEMBLE DE VIDANGE ECOLOGIQUE
CONJUNTO DE VACIADO AMBIENTAL

KEY	PART NO.	PART NAME	QTY.	SERIAL NO.	REMARKS
1	U12547	O-RING	1		23.470 X 2.946 MM (0.924" X 0.116")
2	T78715	NUT	1		36.525 MM (1-7/16")
3	T77932	O-RING	1		15.596 X 1.778 MM (0.614" X 0.070")
4	T77613	O-RING	1		9.246 X 1.778 MM (0.364" X 0.070")
5	T64688	HOSE	1		
7	T217792	LABEL	1		
8	T217791	LABEL	1		
9	T217790	LABEL	1		
10	T217789	LABEL	1		
11	T214661	ANGLE	1		
12	T210470	FITTING	1		
15	T116604	GASKET	1		
16	RE507950	DRAIN VALVE	1		
18	R26906	O-RING	1		19.177 X 2.464 MM (0.755" X 0.097")
20	N189220	TIE BAND	3		
23	AT333634	HYDRAULIC HOSE - FABRICATE	1		1" X 508 MM (20") X 1"
24	AT321264	FITTING	1		
25	AT320593	FITTING	2		
26	AT306133	FITTING	2		
28	AT152180	DRAIN VALVE	1		
30	AR21839	CLAMP	3		
31	AR21837	CLAMP	2		
33	51M7043	O-RING	1		15.300 X 2.200 MM
34	38H1006	ELBOW FITTING	1		
35	19M7787	SCREW	1		M12 X 20
37	T33309	FITTING	1		
38	T216182	ADAPTER FITTING	1		
39	38H1004	ELBOW FITTING	1		
40	19M7867	SCREW	2		M8 X 25
41	R26448	O-RING	1		11.887 X 1.981 MM (0.468" X 5/64")
42	R26906	O-RING	1		19.177 X 2.464 MM (0.755" X 0.097")
43	R56751	O-RING	1		23.470 X 2.946 MM (0.924" X 0.116")
44	19M7788	SCREW	1		M12 X 25
45	24M7240	WASHER	1		13 X 25 X 3 MM (0.512" X 0.984" X 0.118")
47	AT313477	TUBE NUT	1		
48	RE68323	VALVE	2		
49	T29384	HOSE	1		
60	**AT335462**	**FIELD INSTALLATION KIT**	**1**		

HITCH ASSEMBLY
ATTELAGE
CONJUNTO DE ENGANCHE

TX1014187 -UN-14NOV06

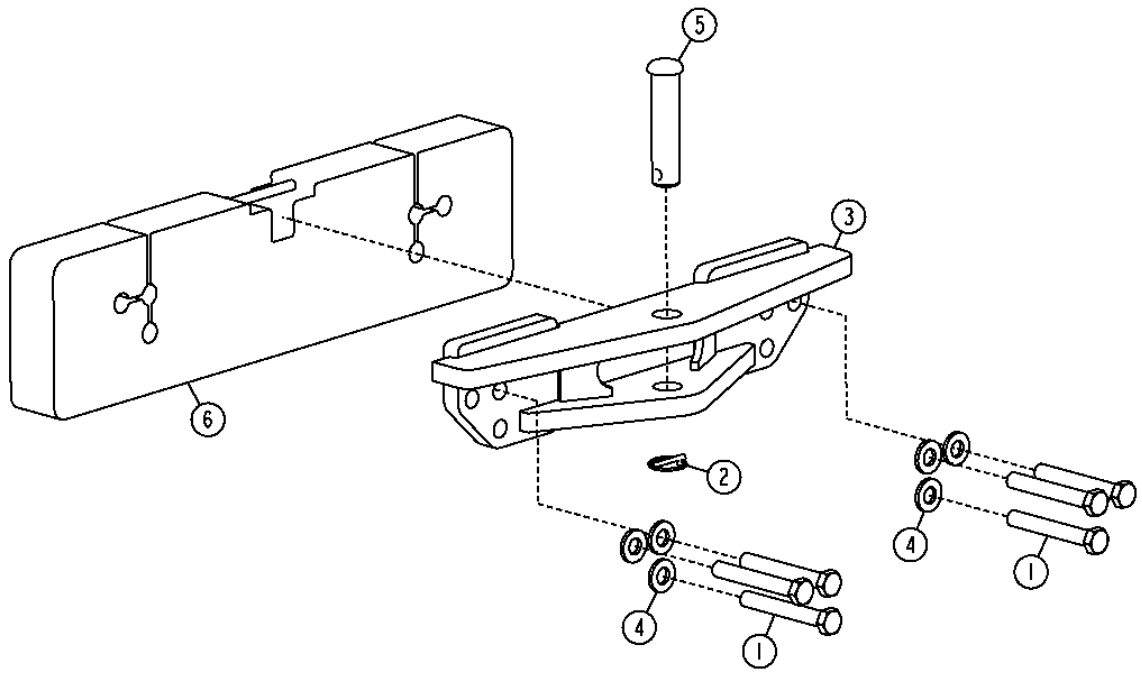

TX1014187

HITCH ASSEMBLY
ATTELAGE
CONJUNTO DE ENGANCHE

KEY	*PART NO.*	*PART NAME*	*QTY.*	*SERIAL NO.*	*REMARKS*
1	19M7907	SCREW	6		M20 X 140
	19M8639	CAP SCREW	6		M20 X 70
2	AA21292	QUICK LOCK PIN	1		
3	AT227738	DRAWBAR	1		
4	24M7242	WASHER	6		21.400 X 42 X 5 MM
5	T23914	PIN	1		
6	AT315001	COUNTERWEIGHT	1		(3")

HITCH ASSEMBLY
ATTELAGE
CONJUNTO DE ENGANCHE

TX1002613 -UN-18JAN06

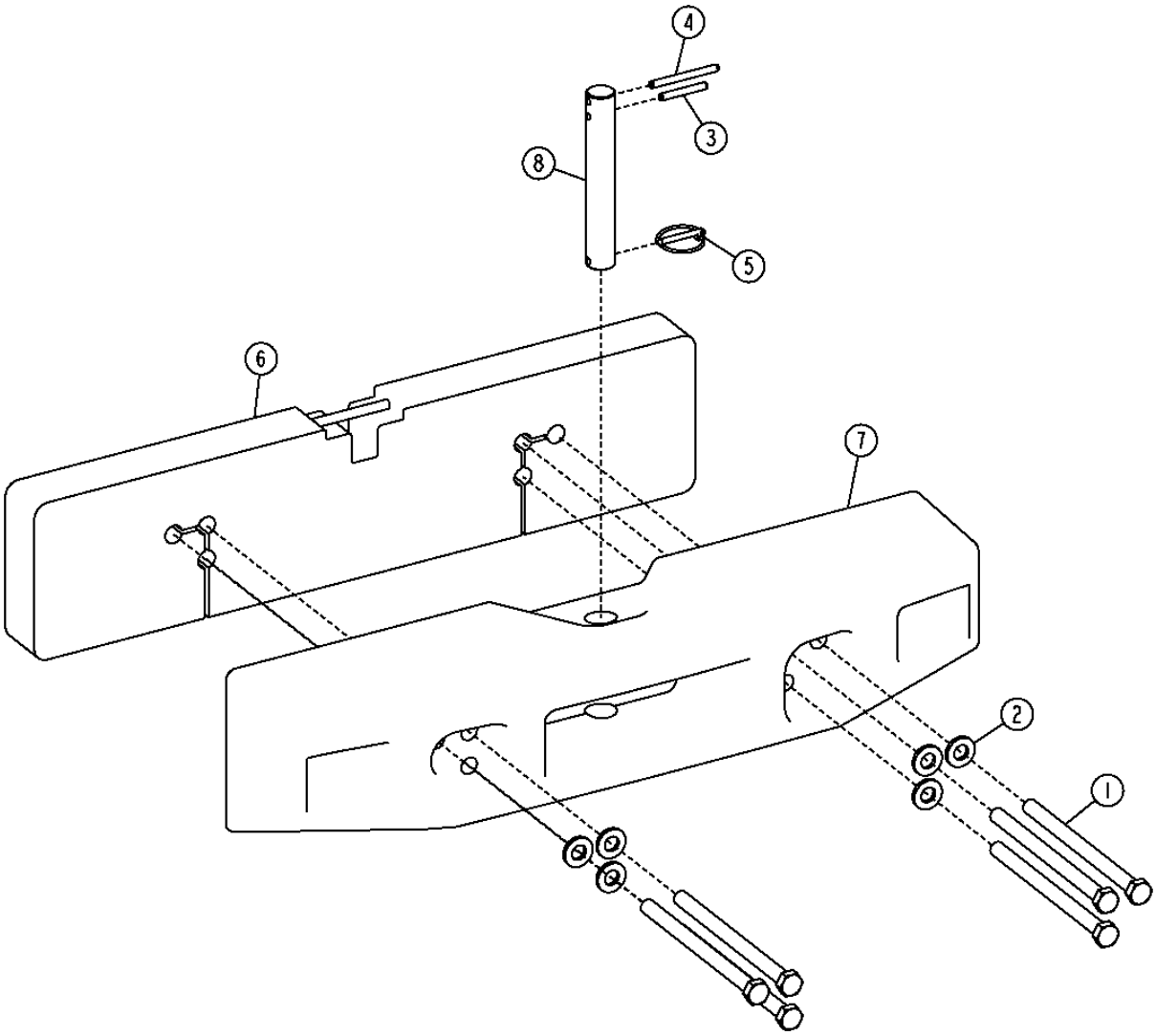

TX1002613

HITCH ASSEMBLY
ATTELAGE
CONJUNTO DE ENGANCHE

KEY	*PART NO.*	*PART NAME*	*QTY.*	*SERIAL NO.*	*REMARKS*
1	19M8389	CAP SCREW	6		M20 X 280, (WITH COUNTERWEIGHT)
	19M7645	SCREW	6		M20 X 200
2	24M7242	WASHER	6		21.400 X 42 X 5 MM
3	34H358	SPRING PIN	1		3/8" X 2-3/4"
4	34H363	SPRING PIN	1		3/8" X 4"
5	AR83396	QUICK LOCK PIN	1		
6	AT324715	COUNTERWEIGHT	1		
7	T215610	HITCH	1		
8	T216560	PIN FASTENER	1		38.100 X 255 MM (1-1/2" X 10.039") (DRAWBAR)

BATTERIES, BATTERY CABLES, AND BATTERY CLAMPS
BATTERIES, FILS DE BATTERIE ET COSSES DE BATTERIE
BATERIAS, CABLES DE LA BATERIA Y ABRAZADERAS DE LA BATERIA

T193752 -UN-31OCT03

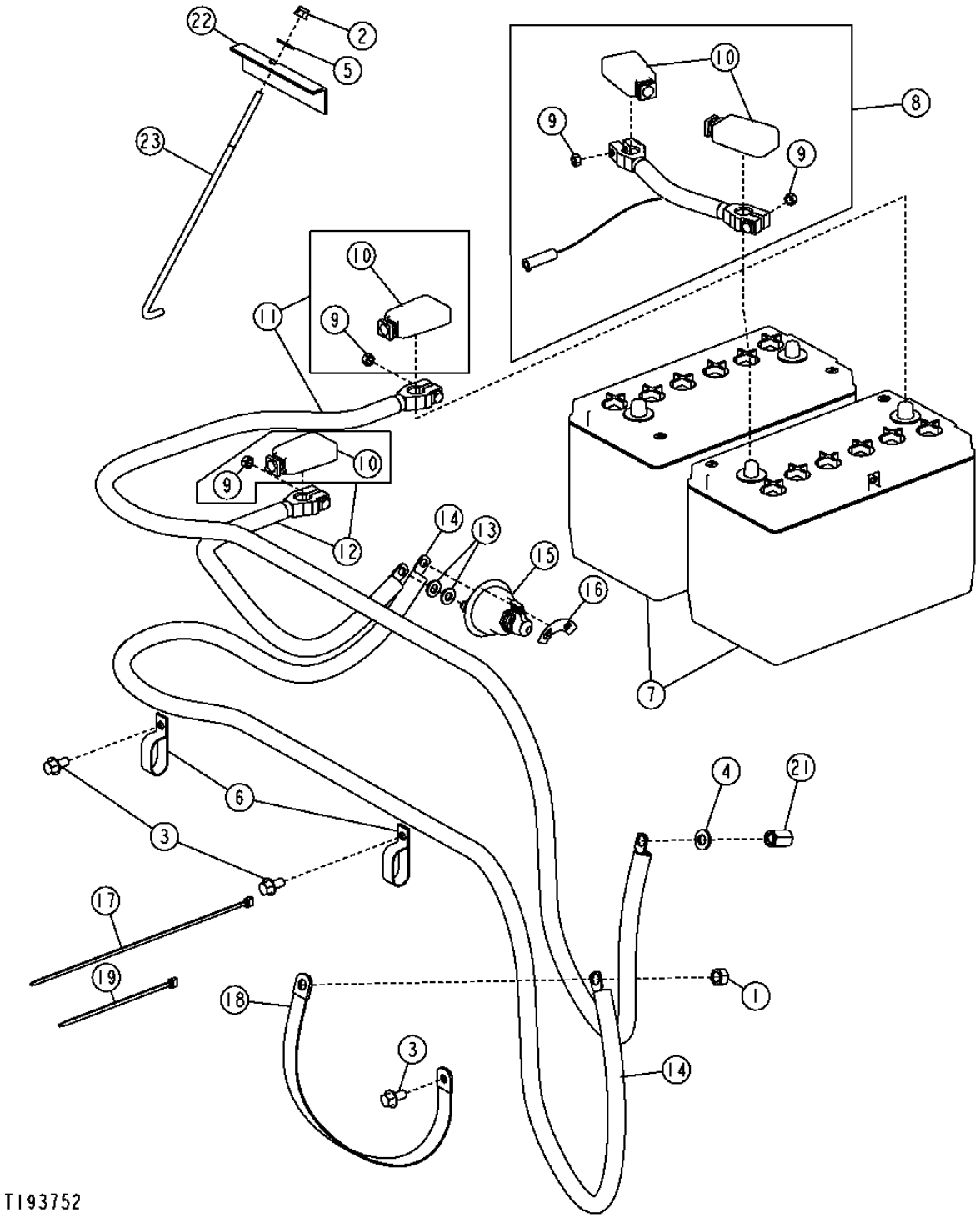

THIS PARTS LISTING IS CONTINUED

BATTERIES, BATTERY CABLES, AND BATTERY CLAMPS
BATTERIES, FILS DE BATTERIE ET COSSES DE BATTERIE
BATERIAS, CABLES DE LA BATERIA Y ABRAZADERAS DE LA BATERIA

KEY	*PART NO.*	*PART NAME*	*QTY.*	*SERIAL NO.*	*REMARKS*
1	14H1040	NUT	1		1/2"
2	14M7396	LOCK NUT	1		M8
3	19M7784	SCREW	3		M10 X 20
4	24M7240	WASHER	1		13 X 25 X 3 MM
5	24M7298	WASHER	1		8.400 X 25 X 2 MM
6	AH77869	CLIP	2		
7	TY21741	DRY CHARGED BATTERY	2		625 COLD CRANKING AMPS AT 0°F (-18°C), 160-MINUTE RESERVE CAPACITY AT 25 AMPS, (625 CCA)
	TY6128	DRY CHARGED BATTERY	2		925 COLD CRANKING AMPS AT 0°F (-18°C), 265-MINUTE RESERVE CAPACITY AT 25 AMPS, (950 CCA)
8	AT228312	BATTERY CABLE	1		228.600 MM (9")
9	14H785	NUT	4		5/16"
10	T107117	COVER	10		
11	AT228313	BATTERY CABLE	1		2 159 MM (85")
12	AT228407	BATTERY CABLE	1		533.400 MM (21")
13	24M7239	WASHER	2		10.700 X 21 X 2.500 MM
14	AT228311	BATTERY CABLE	1		2 159 MM (85")
15	AT41188	SWITCH	1		
16	T42199	LABEL	1		(DISCONNECT)
17	H77698	TIE BAND	3		
18	R36545	GROUND CABLE	1		406.400 MM (16")
19	R44302	TIE BAND	1		
20	T134104	COVER	1		(NOT ILLUSTRATED, TERMINAL COVER)
21	T174530	NUT	1		M12
22	T197467	ANGLE	1		
23	T79471	HOOK BOLT	1		

BATTERY COVERS
COUVERCLES DE BATTERIES
CUBIERTAS DE LA BATERIA

T196507 -UN-20NOV03

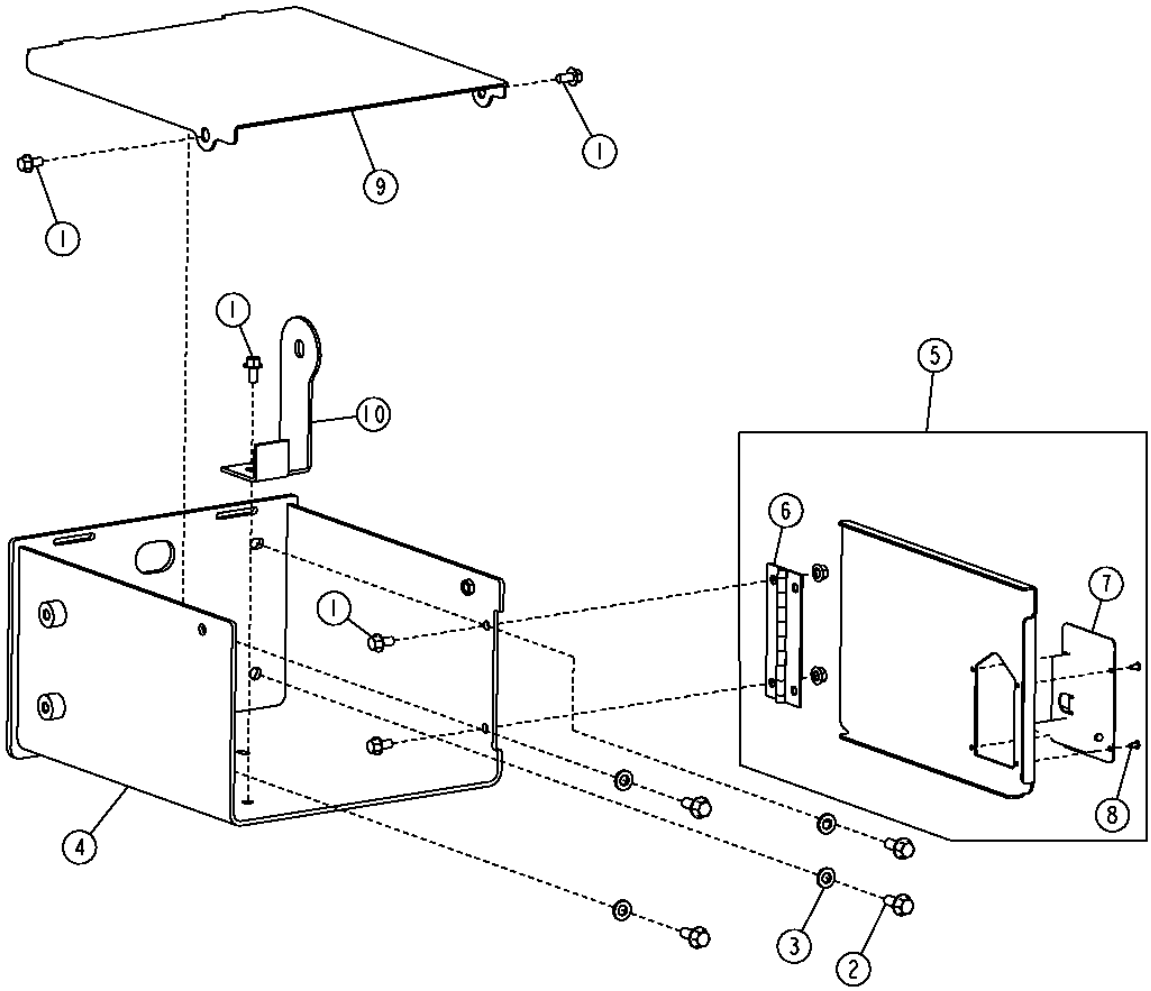

T196507

BATTERY COVERS
COUVERCLES DE BATTERIES
CUBIERTAS DE LA BATERIA

KEY	PART NO.	PART NAME	QTY.	SERIAL NO.	REMARKS
1	19M7784	SCREW	5		M10 X 20
2	19M7788	SCREW	4		M12 X 25
3	24M7240	WASHER	4		13 X 25 X 3 MM
4	AT226791	BATTERY BOX	1		
5	AT327535	DOOR	1		
6	AT162114	HINGE	1		
7	AT221696	LATCH	1		
8	H85233	RIVET	4		4.750 MM (3/16")
9	T195708	COVER	1		
10	T197667	BRACKET	1		

ALTERNATOR, REGULATOR AND CHARGING SYSTEM WIRING 1672

ALTERNATOR, MOUNTING BRACKETS, BELT AND BELT TENSIONER (80 AMP)
ALTERNATEUR, SUPPORTS MONTAGE, COURROIE ET TENDEUR DE COURROIE (80 AMP)
ALTERNADOR, ESCUADRAS DE MONTAJE, CORREA Y TENSOR DE CORREA (80 AMP)

TX1013198 -UN-19OCT06

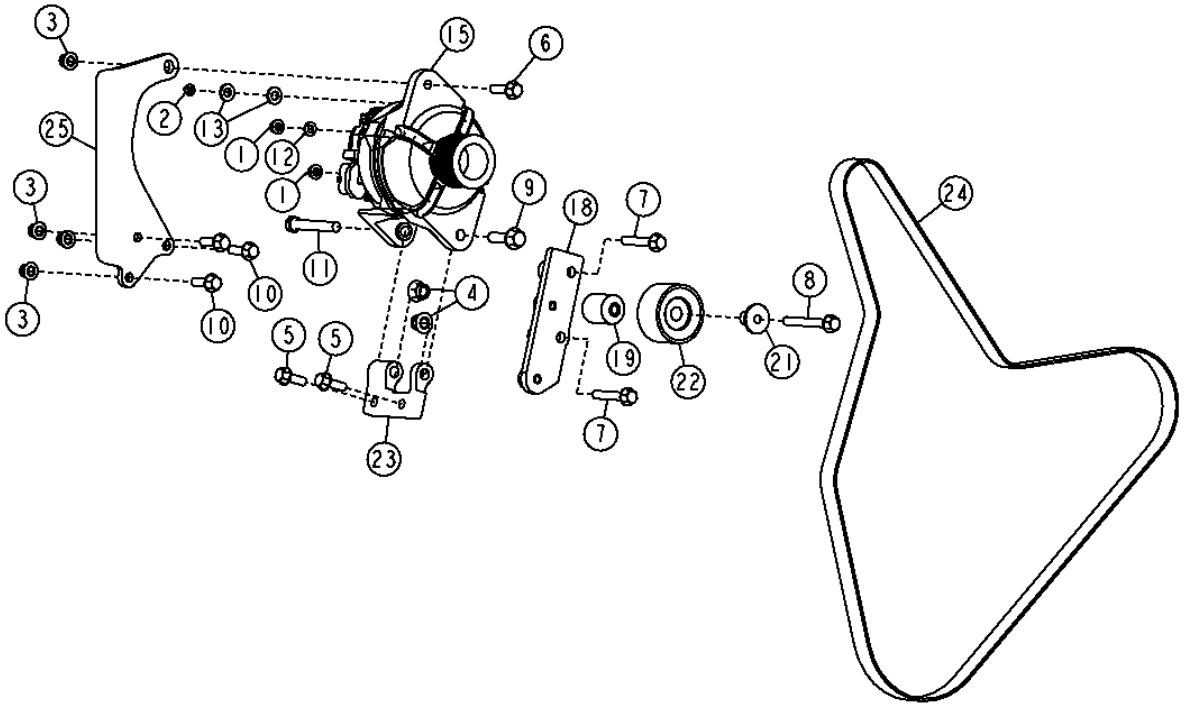

TX1013198

ALTERNATOR, MOUNTING BRACKETS, BELT AND BELT TENSIONER (80 AMP)
ALTERNATEUR, SUPPORTS MONTAGE, COURROIE ET TENDEUR DE COURROIE (80 AMP)
ALTERNADOR, ESCUADRAS DE MONTAJE, CORREA Y TENSOR DE CORREA (80 AMP)

KEY	PART NO.	PART NAME	QTY.	SERIAL NO.	REMARKS
1	14M7298	FLANGE NUT	2		M8
2	14M7303	FLANGE NUT	1		M6
3	14M7400	LOCK NUT	4		M10
4	14M7401	LOCK NUT	2		M12
5	19M7786	SCREW	2		M10 X 30
6	19M7804	SCREW	1		M10 X 40
7	19M7808	SCREW	2		M10 X 65
8	19M7811	SCREW	1		M10 X 90
9	19M7813	SCREW	1		M12 X 45
10	19M7835	SCREW	3		M10 X 35
11	19M8122	CAP SCREW	1		M12 X 85
12	24M7238	WASHER	1		8.700 X 17 X 2 MM
13	24M7239	WASHER	2		10.700 X 21 X 2.500 MM
15	AT303320	ALTERNATOR	1		
18	AT313536	BRACKET	1		
19	R133643	SPACER	1		
21	R502079	SLEEVE	1		
22	RE505264	PULLEY	1		(W/ A/C)
	AT211041	IDLER	1		(W/O A/C)
23	T179468	BRACKET	1		
24	T210568	V-BELT	1		(W/ A/C)
	R500384	V-BELT	1		(W/O A/C)
25	T213873	STRAP	1		

ALTERNATOR, MOUNTING BRACKETS, BELT AND BELT TENSIONER (100 AMP)
ALTERNATEUR, SUPPORTS MONTAGE, COURROIE ET TENDEUR DE COURROIE (100 AMP)
ALTERNADOR, ESCUADRAS DE MONTAJE, CORREA Y TENSOR DE CORREA (100 AMP)

TX1013053 -UN-16OCT06

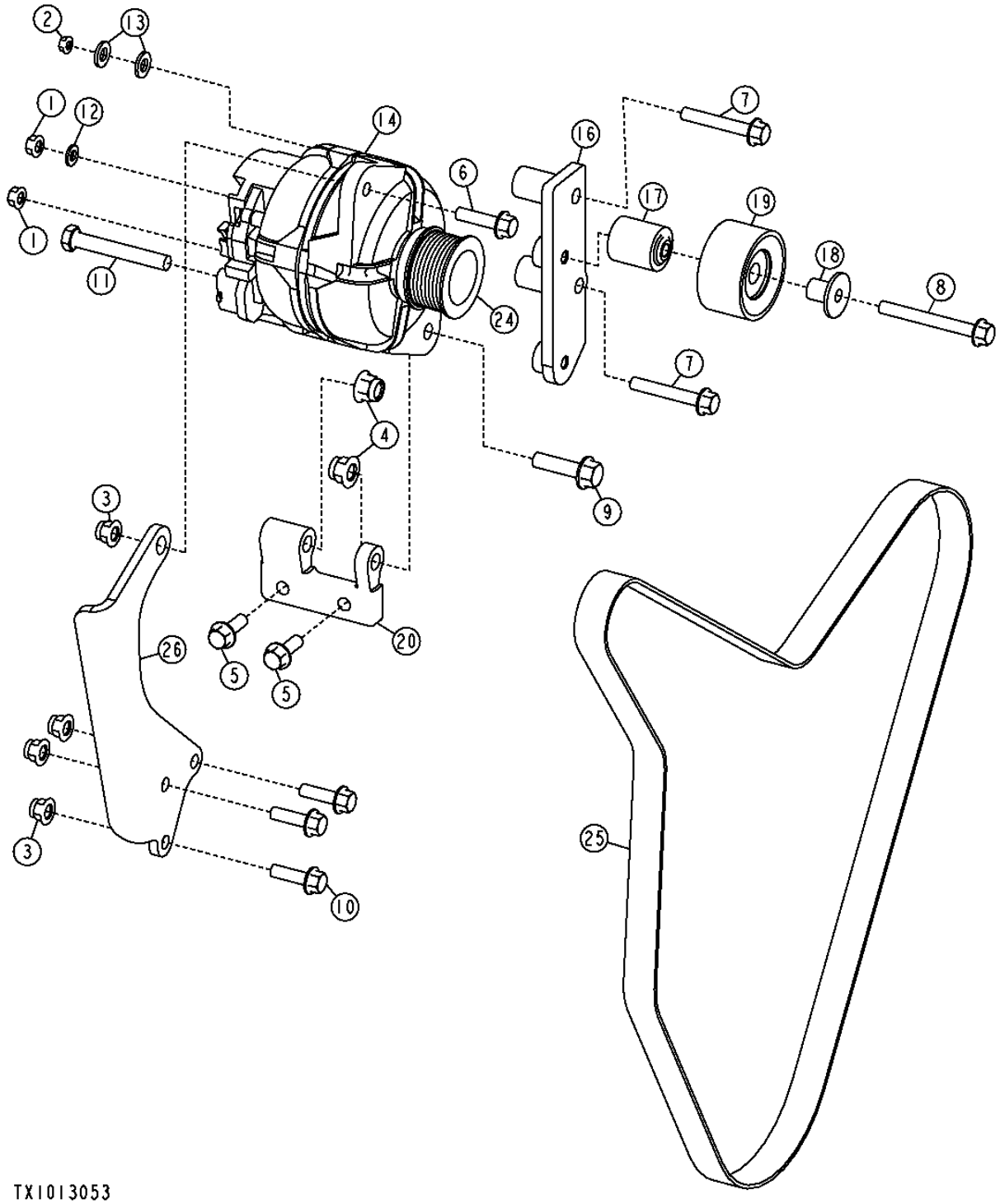

ALTERNATOR, MOUNTING BRACKETS, BELT AND BELT TENSIONER (100 AMP)
ALTERNATEUR, SUPPORTS MONTAGE, COURROIE ET TENDEUR DE COURROIE (100 AMP)
ALTERNADOR, ESCUADRAS DE MONTAJE, CORREA Y TENSOR DE CORREA (100 AMP)

KEY	PART NO.	PART NAME	QTY.	SERIAL NO.	REMARKS
1	14M7298	FLANGE NUT	2		M8
2	14M7303	FLANGE NUT	1		M6
3	14M7400	LOCK NUT	4		M10
4	14M7401	LOCK NUT	2		M12
5	19M7786	SCREW	2		M10 X 30
6	19M7804	SCREW	1		M10 X 40
7	19M7808	SCREW	2		M10 X 65
8	19M7811	SCREW	1		M10 X 90
9	19M7813	SCREW	1		M12 X 45
10	19M7835	SCREW	3		M10 X 35
11	19M8122	CAP SCREW	1		M12 X 85
12	24M7238	WASHER	1		8.700 X 17 X 2 MM
13	24M7239	WASHER	2		10.700 X 21 X 2.500 MM
14	AT300167	ALTERNATOR	1		
16	AT313536	BRACKET	1		
17	R133643	SPACER	1		
18	R502079	SLEEVE	1		
19	RE505264	PULLEY	1		(W/ A/C)
	AT211041	IDLER	1		(W/O A/C)
20	T179468	BRACKET	1		
24	T201538	PULLEY	1		
25	T210568	V-BELT	1		(W/ A/C)
	R500384	V-BELT	1		(W/O A/C)
26	T213873	STRAP	1		

HARSH ENVIRONMENT ALTERNATOR MOUNTING BRACKETS AND BELT (100 AMP)
SUPPORTS ET COURROIE MONTAGE ALTERNATEUR ENVIRONNEMENT DIFFICILE (100 AMP)
ESCUADRAS DE MONTAJE DEL ALTERNADOR PARA AMBIENTE CORROSIVO Y CORREA (100 AMP)

T194443 -UN-02SEP03

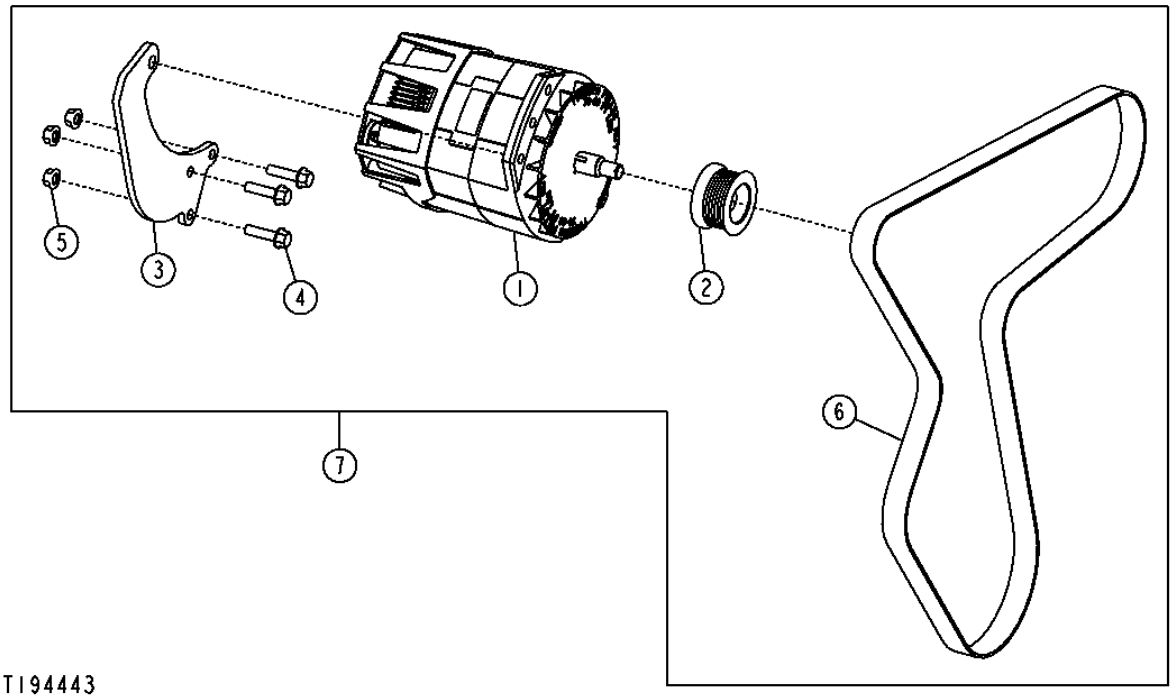

HARSH ENVIRONMENT ALTERNATOR MOUNTING BRACKETS AND BELT (100 AMP)
SUPPORTS ET COURROIE MONTAGE ALTERNATEUR ENVIRONNEMENT DIFFICILE (100 AMP)
ESCUADRAS DE MONTAJE DEL ALTERNADOR PARA AMBIENTE CORROSIVO Y CORREA (100 AMP)

KEY	*PART NO.*	*PART NAME*	*QTY.*	*SERIAL NO.*	*REMARKS*
1	AT226924	ALTERNATOR	1		
2	R128859	PULLEY	1		
3	T205944	STRAP	1		
4	19M8162	SCREW	3		M10 X 40
5	14M7296	FLANGE NUT	3		M10
6	T186776	V-BELT	1		(W/O A/C)
	T208891	V-BELT	1		(W/ A/C)
7	AT307485	ALTERNATOR	1		(HARSH ENVIRONMENT) (W/O A/C)
	AT307486	ALTERNATOR	1		(HARSH ENVIRONMENT) (W/ A/C)

FRONT LIGHTS AND BRACKETS
FEUX ET SUPPORTS AVANT
ESCUADRAS Y LUCES DELANTERAS

TX1007141 -UN-03MAY06

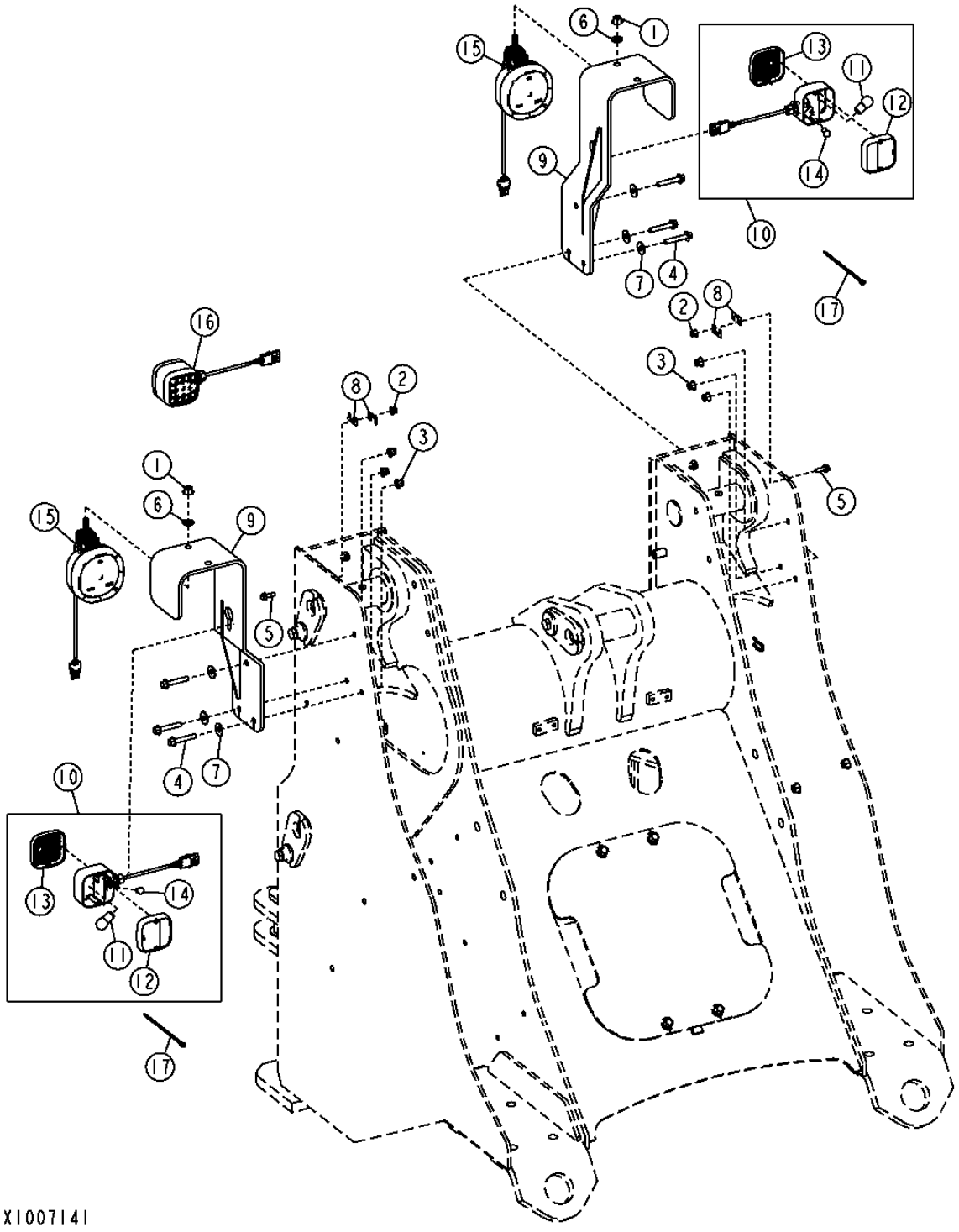

THIS PARTS LISTING IS CONTINUED

FRONT LIGHTS AND BRACKETS
FEUX ET SUPPORTS AVANT
ESCUADRAS Y LUCES DELANTERAS

KEY	*PART NO.*	*PART NAME*	*QTY.*	*SERIAL NO.*	*REMARKS*
1	14M7299	FLANGE NUT	2		M12
2	14M7396	LOCK NUT	2		M8
3	14M7400	LOCK NUT	6		M10
4	19M7806	SCREW	6		M10 X 50
5	19M7867	SCREW	2		M8 X 25
6	24M7240	WASHER	2		13 X 25 X 3 MM
7	24M7296	WASHER	6		10.500 X 30 X 2.500 MM
8	57M8736	ELEC. CONNECTOR ACCESSORY	4		
9	AT210246	SUPPORT	2		
10	AT309550	LAMP	2		(TURN SIGNAL)
11	AT210333	BULB	1		
12	T208364	LENS	1		
13	T208365	LENS	1		
14	U44537	BULB	1		
15	AT324484	SIDE LIGHT	2		
	AT135758	BULB	1		
16	AT307090	LAMP	1		(LED TURN SIGNAL)
17	R44302	TIE BAND	2		

FRONT AND REAR WORK LAMP
PROJECTEUR TRAVAIL AVANT ET ARRIERE
LUZ DE TRABAJO TRASERA Y DELANTERA

TX1017714 -UN-18JAN07

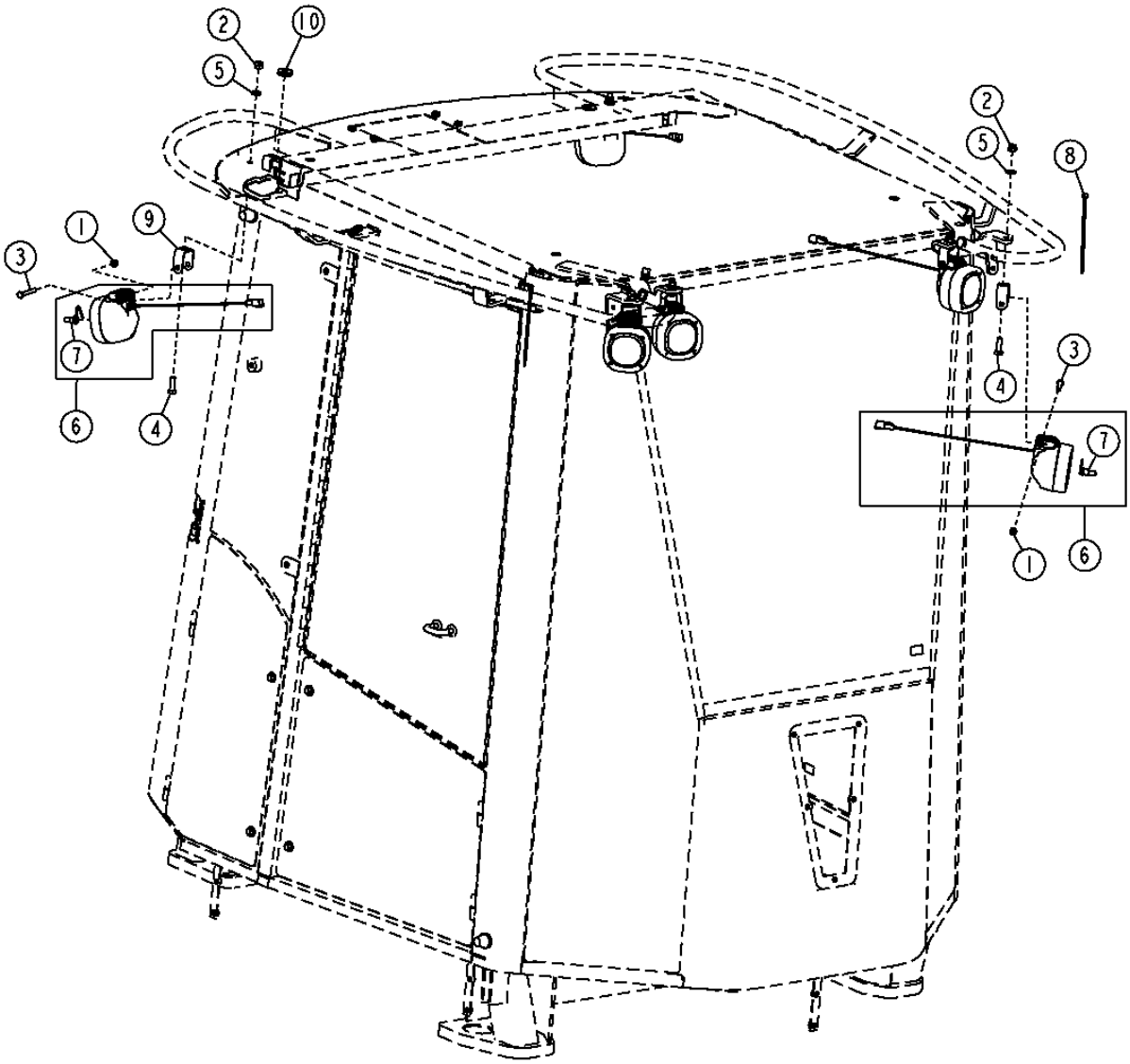

TX1017714

FRONT AND REAR WORK LAMP
PROJECTEUR TRAVAIL AVANT ET ARRIERE
LUZ DE TRABAJO TRASERA Y DELANTERA

KEY	*PART NO.*	*PART NAME*	*QTY.*	*SERIAL NO.*	*REMARKS*
1	14M7426	LOCK NUT	6		M8
2	14M7517	LOCK NUT	6		M10
3	19M7165	CAP SCREW	6		M8 X 55
4	19M7662	CAP SCREW	6		M10 X 30
5	24M7239	WASHER	6		10.700 X 21 X 2.500 MM
6	AT305931	FLOODLAMP	6		
7	AT135758	BULB	1		
8	R44302	TIE BAND	2		
9	T216731	BRACKET	6		
10	T65643	GROMMET	2		

LICENSE PLATE BRACKET AND LIGHT
SUPPORT ET ECLAIRAGE PLAQUE MINERALOGIQUE
ESCUADRA Y LUZ DE MATRICULA

T193972 -UN-13NOV03

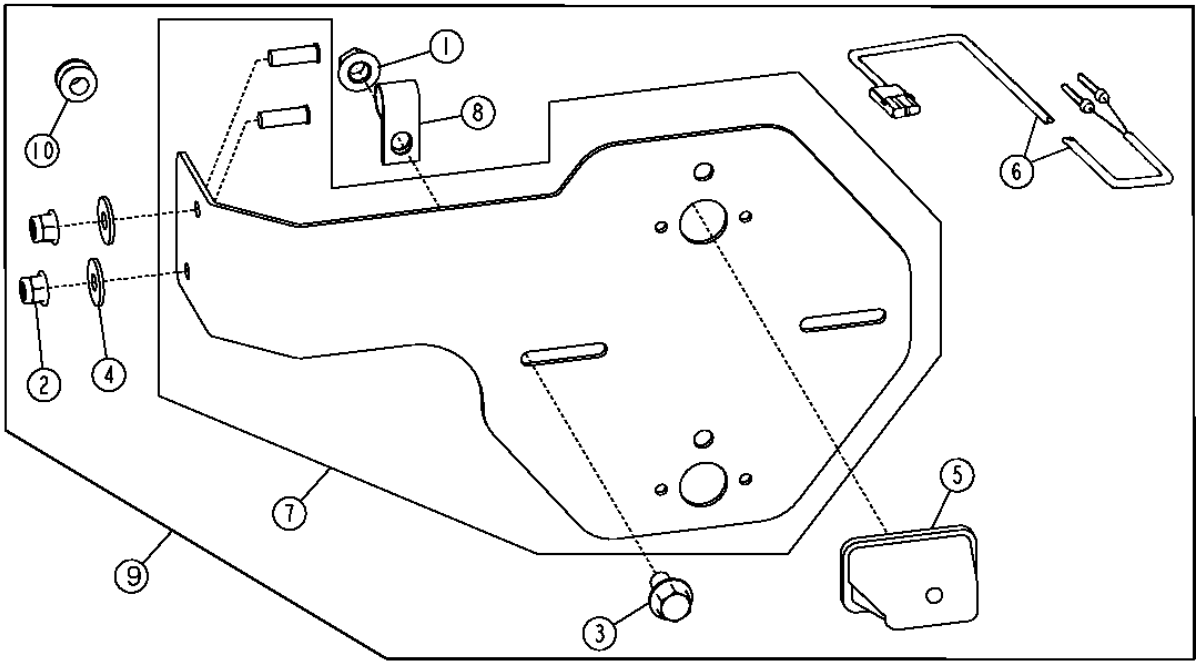

T193972

LICENSE PLATE BRACKET AND LIGHT
SUPPORT ET ECLAIRAGE PLAQUE MINERALOGIQUE
ESCUADRA Y LUZ DE MATRICULA

KEY	*PART NO.*	*PART NAME*	*QTY.*	*SERIAL NO.*	*REMARKS*
1	14M7296	FLANGE NUT	1		M10
2	14M7396	LOCK NUT	2		M8
3	19M7784	SCREW	1		M10 X 20
4	24M7298	WASHER	2		8.400 X 25 X 2 MM
5	AT202789	LAMP	1		(INCLUDES AT173354)
	AT173354	BULB	1		(NOT ILLUSTRATED)
6	AT203137	WIRING HARNESS	1		
7	AT301914	BRACKET	1		
8	T75197	CLAMP	1		
9	AT228289	KIT	1		(LICENSE PLATE WITH LIGHT)
10	T70154	GROMMET	1		

DOOR-ACTIVATED DOMELIGHT SWITCH
NTERRUPTEUR PLAFONNIER ACTIVE PAR OUVERTURE PORTE
INTERRUPTOR DE LA LUZ DE TECHO ACTIVADO CON LA PUERTA

TX1013233 -UN-18OCT06

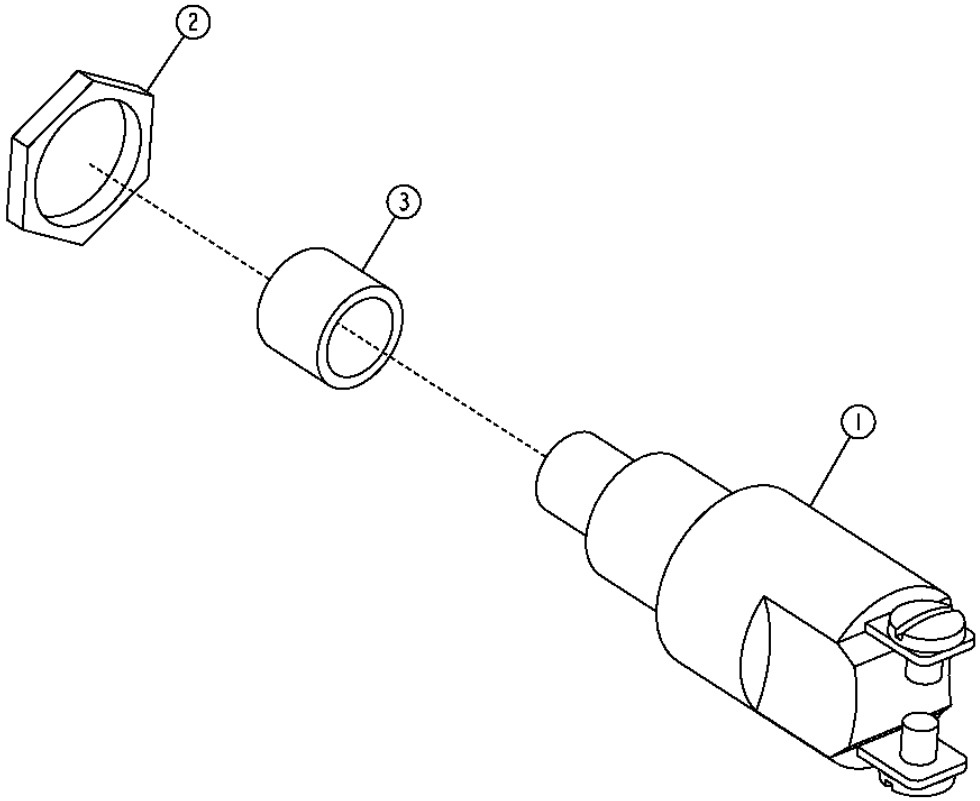

TX1013233

DOOR-ACTIVATED DOMELIGHT SWITCH
NTERRUPTEUR PLAFONNIER ACTIVE PAR OUVERTURE PORTE
INTERRUPTOR DE LA LUZ DE TECHO ACTIVADO CON LA PUERTA

KEY	*PART NO.*	*PART NAME*	*QTY.*	*SERIAL NO.*	*REMARKS*
1	RE51234	PUSH SWITCH	1		(CAB ONLY)
2	R44097	NUT	1		
3	T182914	CAP	1		(DOME SWITCH)

STOP, TURN, AND TAIL LIGHT
FEUX DE STOP, CLIGNOTANTS ET FEUX ARRIERE
LUZ DE PARE, VIRAJE Y COLA

TX1006286 -UN-27APR06

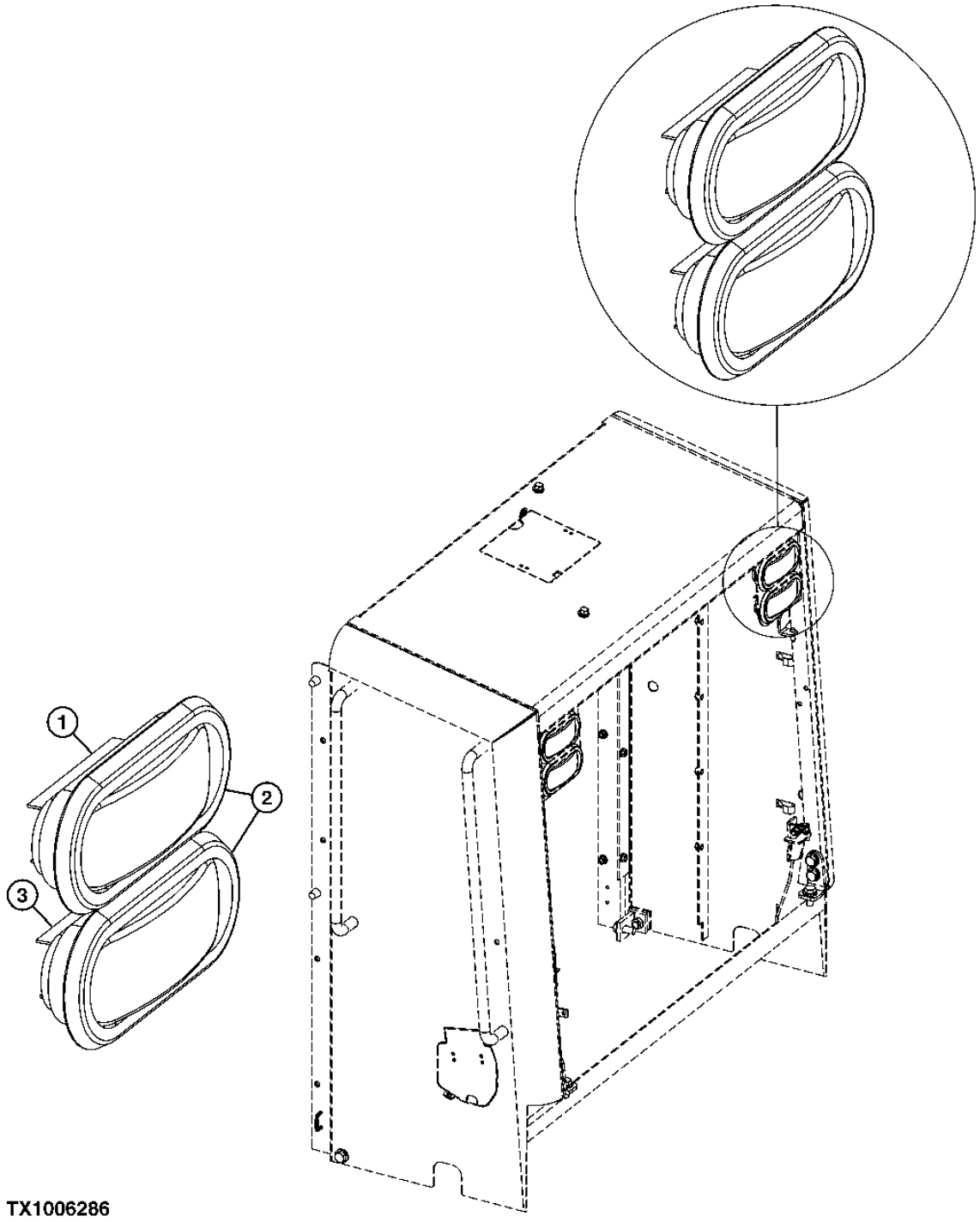

TX1006286

STOP, TURN, AND TAIL LIGHT
FEUX DE STOP, CLIGNOTANTS ET FEUX ARRIERE
LUZ DE PARE, VIRAJE Y COLA

KEY	*PART NO.*	*PART NAME*	*QTY.*	*SERIAL NO.*	*REMARKS*
1	T180074	TURN SIGNAL LAMP	2		HEAVY-DUTY (AMBER)
2	T178948	RETAINER	4		
3	T180075	TAIL LAMP	2		HEAVY-DUTY (RED)

HVAC WIRING
CABLAGE CHAUFFAGE, VENTILATION ET CLIMATISATION
ALAMBRADO DE CLIMATIZACION

TX1013219 -UN-19OCT06

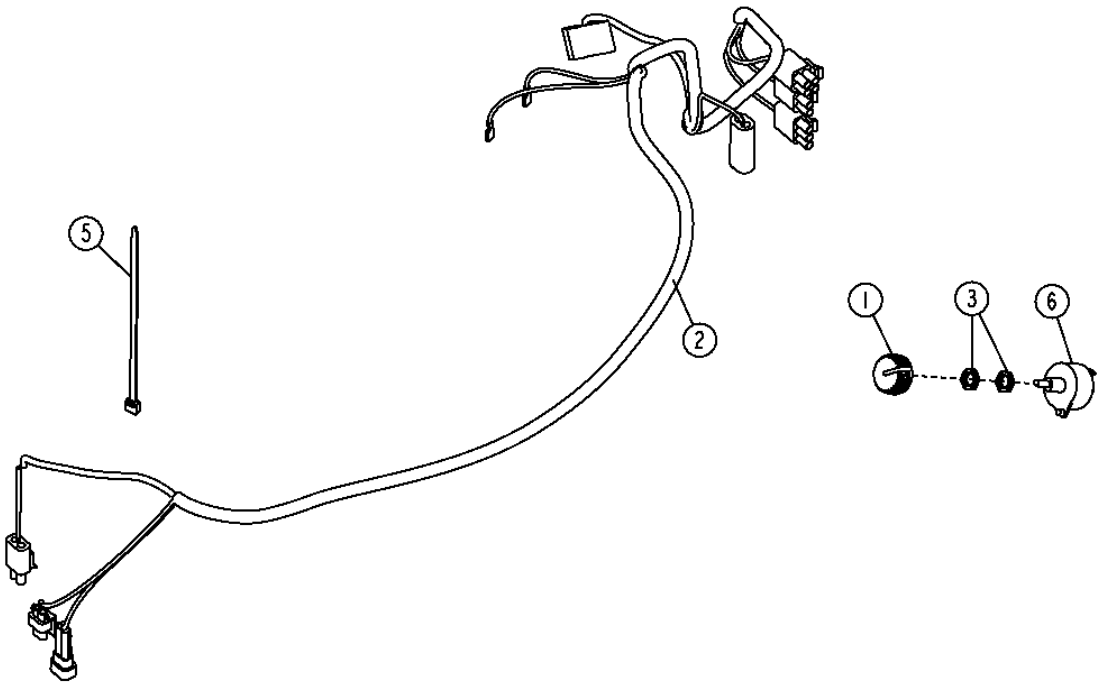

TX1013219

THIS PARTS LISTING IS CONTINUED

HVAC WIRING
CABLAGE CHAUFFAGE, VENTILATION ET CLIMATISATION
ALAMBRADO DE CLIMATIZACION

KEY	*PART NO.*	*PART NAME*	*QTY.*	*SERIAL NO.*	*REMARKS*
1	AL76568	KNOB	1		
2	AT202934	WIRING HARNESS	1		(A/C & BLOWER)
3	R44165	LOCK NUT	2		
5	R44302	TIE BAND	1		
6	RE43497	SWITCH	1		

MAIN WIRING HARNESS
FAISCEAU CABLAGE PRINCIPAL
ARNES DE ALAMBRADO PRINCIPAL

TX1014108 -UN-29NOV06

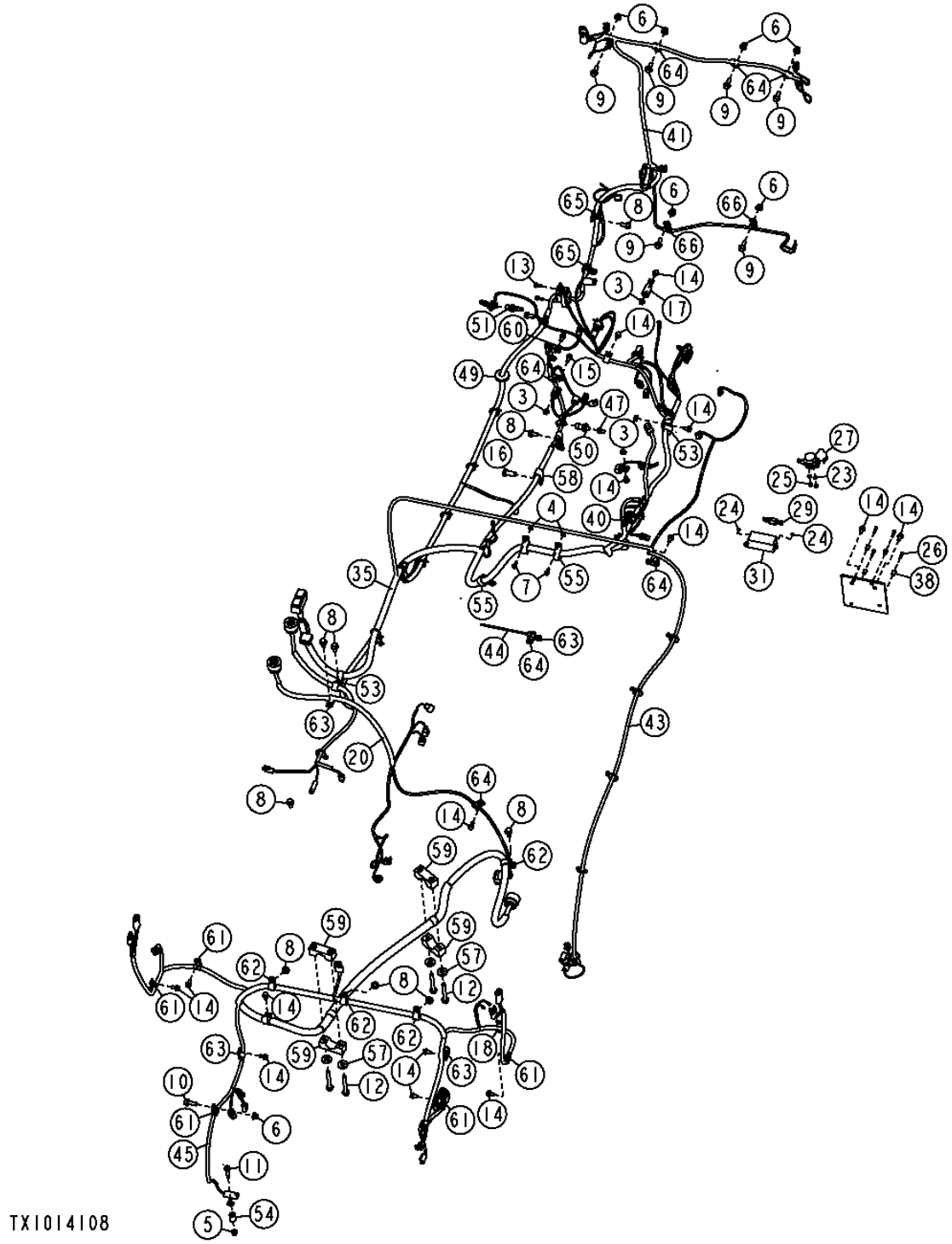

MAIN WIRING HARNESS
FAISCEAU CABLAGE PRINCIPAL
ARNES DE ALAMBRADO PRINCIPAL

KEY	PART NO.	PART NAME	QTY.	SERIAL NO.	REMARKS
3	14M7298	FLANGE NUT	1		M8
4	14M7303	FLANGE NUT	3		M6
5	14M7396	LOCK NUT	1		M8
6	14M7400	LOCK NUT	7		M10
7	19M7775	SCREW	3		M6 X 16
8	19M7784	SCREW	10		M10 X 20
9	19M7785	SCREW	6		M10 X 25
10	19M7786	SCREW	1		M10 X 30
11	19M7799	SCREW	1		M8 X 45
12	19M7810	SCREW	4		M10 X 80
13	19M7862	SCREW	2		M6 X 20
14	19M7865	SCREW	16		M8 X 16
15	19M7866	SCREW	2		M8 X 20
16	19M7877	CAP SCREW	1		M14 X 30
17	57M8736	ELEC. CONNECTOR ACCESSORY	2		
18	AH89557	CLIP	1		
20	AT301026	WIRING HARNESS	1		
23	12H297	LOCK WASHER	2		1/4"
24	12M7064	LOCK WASHER	2		5 MM
25	14M7272	NUT	2		M6
26	21M7022	SCREW	4		M5 X 20
27	AT145341	RELAY	1		
29	AT203566	FUSE	1		
31	AT206818	FUSE HOLDER	1		
35	AT316421	WIRING HARNESS	1		
38	T103238	NUT	4		
40	T75276	CLAMP	1		
41	AT316718	WIRING HARNESS	1		
43	AT316733	WIRING HARNESS	1		
45	AT320922	WIRING HARNESS	1		
47	P40098	ADAPTER FITTING	1		
49	R45210	GROMMET	1		
50	RE167207	PRESSURE SENSOR	1		
51	RE525016	THERMOCOUPLE	1		
53	T102934	CLAMP	3		
54	T147891	BUSHING	2		
55	T162675	CLAMP	4		
57	T29342	WASHER	4		
58	T64784	CLIP	1		
59	T67995	CLAMP	4		
60	T74410	CLAMP	1		
61	T74412	CLAMP	6		
62	T74416	CLAMP	8		
63	T75197	CLAMP	5		
64	T75276	CLAMP	9		
65	T76252	CLAMP	3		
66	T78974	CLAMP	2		

CAB WIRING HARNESS
FAISCEAU DE CABINE
ARNES DE CABINA

TX1013789 -UN-13NOV06

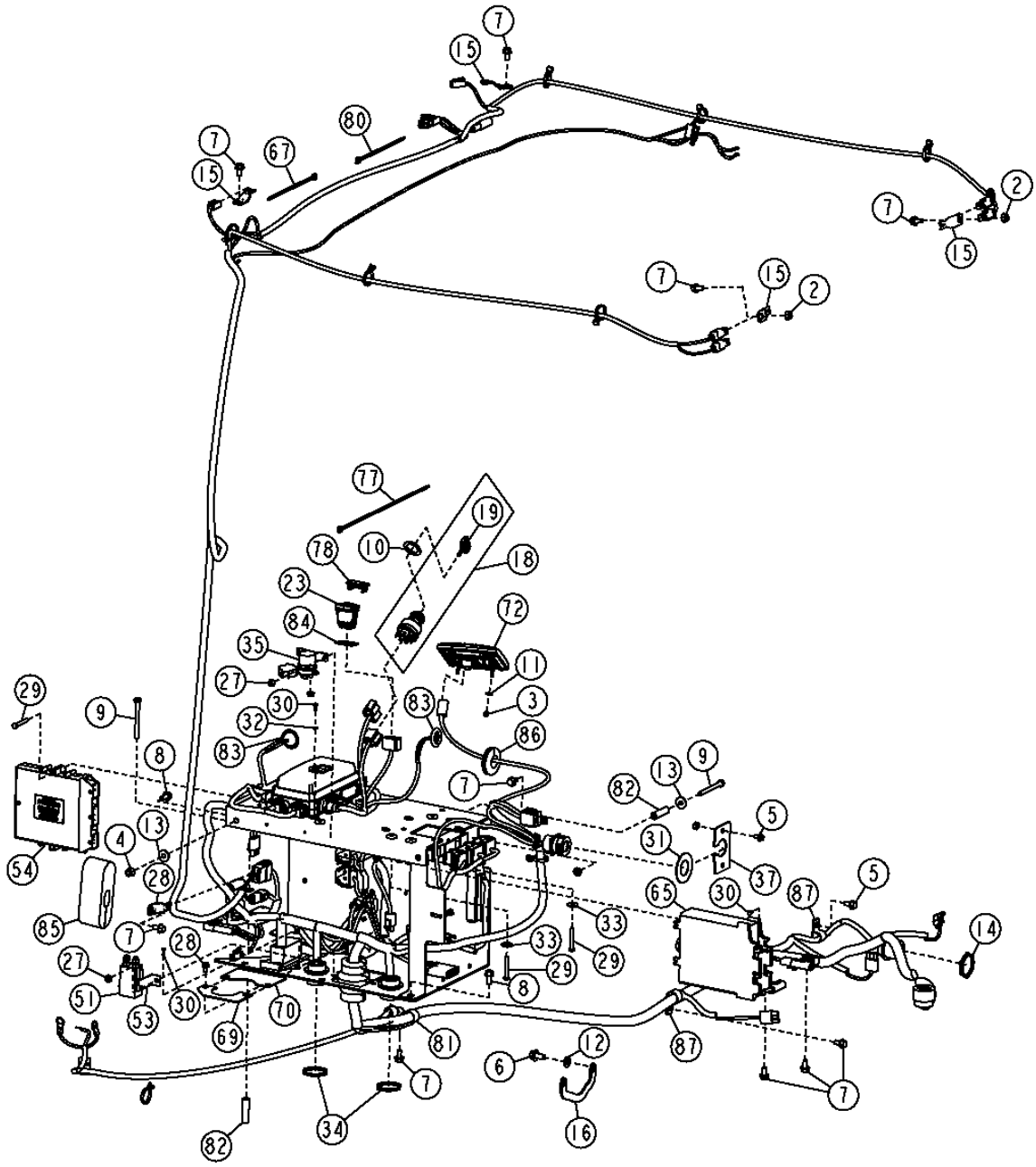

TX1013789

CAB WIRING HARNESS
FAISCEAU DE CABINE
ARNES DE CABINA

KEY	PART NO.	PART NAME	QTY.	SERIAL NO.	REMARKS
2	14M7298	FLANGE NUT	4		M8
3	14M7360	LOCK NUT	4		M5
4	14M7396	LOCK NUT	2		M8
5	19M7774	SCREW	2		M6 X 12
6	19M7784	SCREW	1		M10 X 20
7	19M7865	SCREW	14		M8 X 16
8	19M8504	CAP SCREW	6		M8 X 80
9	19M8504	CAP SCREW	2		M8 X 80
10	24H1441	WASHER	1		1-1/64" X 1-1/2" X 0.048"
11	24M7054	WASHER	4		6.400 X 12 X 1.600 MM
12	24M7239	WASHER	1		10.700 X 21 X 2.500 MM
13	24M7298	WASHER	3		8.400 X 25 X 2 MM
14	57M8035	NUT	1		
15	57M8736	ELEC. CONNECTOR ACCESSORY	9		
16	AP22660	GROUND CABLE	1		
18	AT195301	SWITCH	1		
19	AT195302	KEY	1		
23	AT304026	SWITCH	1		
24	AT311938	WIRING HARNESS	1		
27	14M7303	FLANGE NUT	6		M6
28	19M7774	SCREW	4		M6 X 12
29	19M8538	CAP SCREW	4		M6 X 45
30	21M7250	SCREW	10		M4 X 12
31	24H1500	WASHER	1		1-9/32" X 2-1/2" X 0.060"
32	24M7027	WASHER	4		5.300 X 10 X 1 MM
33	24M7100	WASHER	2		6.600 X 22 X 2 MM
34	57M8035	NUT	2		
35	AT145341	RELAY	1		
37	AT301498	PLATE	1		
51	AT317063	RELAY	1		
53	T200363	ANGLE	2		
54	AT328223	VEHICLE CONTROLLER	1		
65	AT336601	TRANSMISSION CONTROLLER	1		
67	R44302	TIE BAND	3		
69	T181604	PLATE	1		
70	AT334711	HOUSING	1		
72	AT320724	PUSH SWITCH	1		
77	H77698	TIE BAND	3		
78	M115279	PLUG	1		
80	R44302	TIE BAND	2		
81	T102934	CLAMP	2		
82	T167775	BUSHING	2		
83	T206624	PLUG	2		
84	T211678	SEAL	1		
85	T224069	PLUG	1		
86	T46876	GROMMET	1		
87	T74416	CLAMP	3		

VEHICLE ELECTRICAL CENTER (VEC)
CENTRE ELECTRIQUE DU VEHICULE (VEC)
CENTRO ELECTRICO DEL VEHICULO (VEC)

T209740 -UN-01APR05

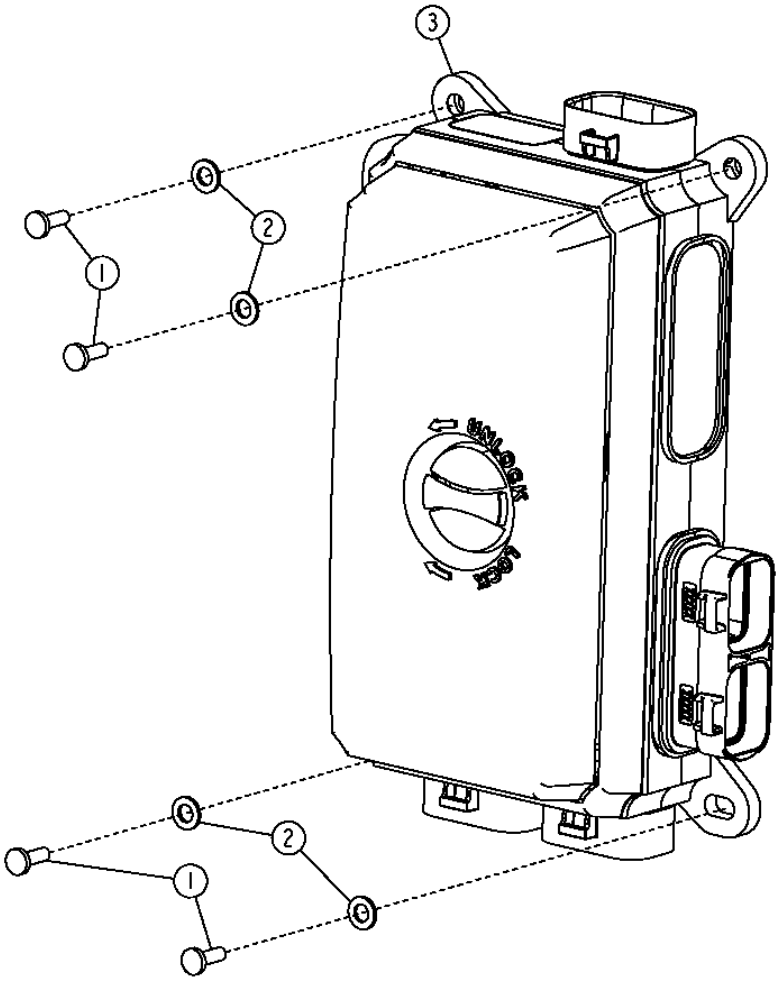

T209740

VEHICLE ELECTRICAL CENTER (VEC)
CENTRE ELECTRIQUE DU VEHICULE (VEC)
CENTRO ELECTRICO DEL VEHICULO (VEC)

KEY	*PART NO.*	*PART NAME*	*QTY.*	*SERIAL NO.*	*REMARKS*
1	21M7250	SCREW	4		M4 X 12
2	24M7087	WASHER	4		5.500 X 10 X 1 MM
3	**AT311903**		**1**		**(INCLUDES ALL FUSES, DIODES, AND RELAYS)**
4	57M7688	FUSE	18		5 AMP, (NOT ILLUSTRATED)
5	57M7689	FUSE	10		10 AMP, (NOT ILLUSTRATED)
6	57M7690	FUSE	3		15 AMP, (NOT ILLUSTRATED)
7	57M8623	FUSE	1		25 AMP, (NOT ILLUSTRATED)
8	57M8640	DIODE	5		(NOT ILLUSTRATED)
9	AT305389	RELAY	1		(NOT ILLUSTRATED) (24 VOLT)

DASH MODULE WIRING HARNESS
FAISCEAU CABLAGE MODULE TABLEAU BORD AVANT
ARNES DE ALAMBRADO DEL MODULO DEL TABLERO DELANTERO

TX1013258 -UN-05DEC06

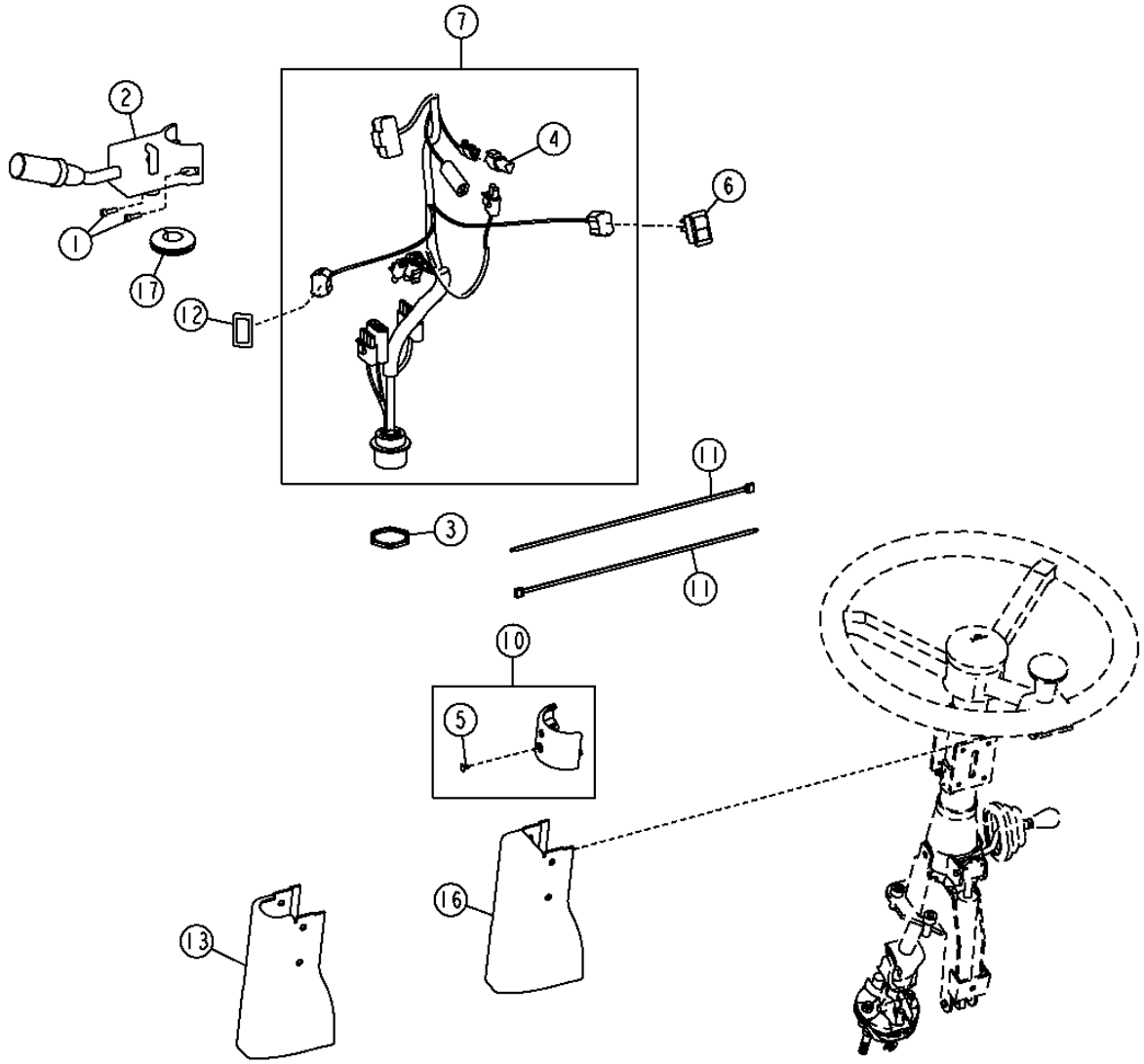

TX1013258

DASH MODULE WIRING HARNESS
FAISCEAU CABLAGE MODULE TABLEAU BORD AVANT
ARNES DE ALAMBRADO DEL MODULO DEL TABLERO DELANTERO

KEY	*PART NO.*	*PART NAME*	*QTY.*	*SERIAL NO.*	*REMARKS*
1	19M8581	SCREW	2		M5 X 20
2	AT176801	SWITCH	1		
3	57M8035	NUT	1		
4	57M8131	ELEC. CONNECTOR TERMINAL	1		
5	21M7258	SCREW	1		M4 X 8
6	AT208630	SWITCH	1		
7	AT227134	WIRING HARNESS	1		
10	AT300921	CLAMP	1		
11	H77698	TIE BAND	2		
12	M115279	PLUG	1		
13	T173100	COVER	1		
16	T211353	COVER	1		
17	T46876	GROMMET	1		

CONVERTER (10 AMP) (24 V TO 12 V)
CONVERTISSEUR (10 AMP) (24V A 12V)
CONVERTIDOR (10 AMP) (24V A 12V)

TX1013270 -UN-19OCT06

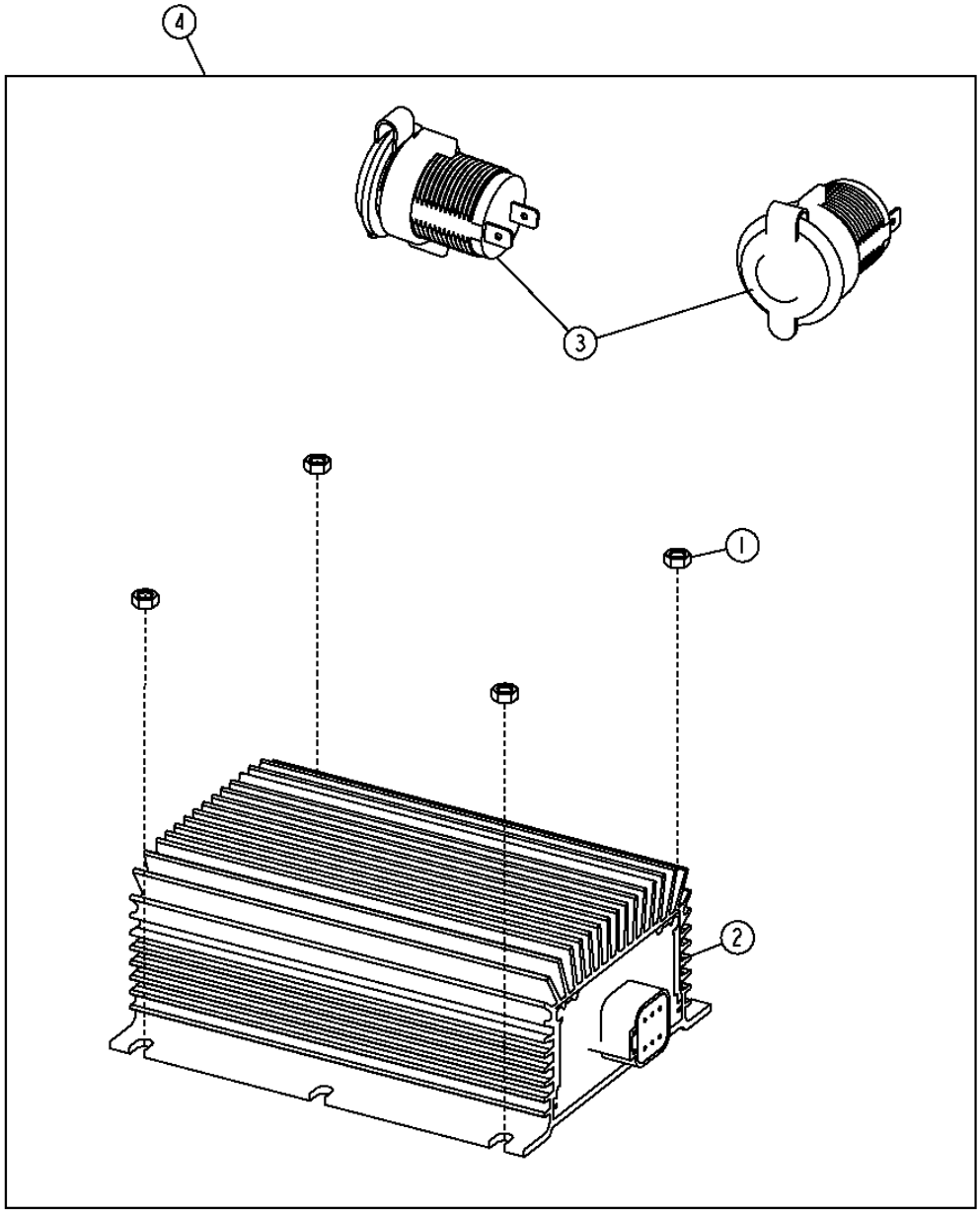

TX1013270

CONVERTER (10 AMP) (24 V TO 12 V)
CONVERTISSEUR (10 AMP) (24V A 12V)
CONVERTIDOR (10 AMP) (24V A 12V)

KEY	*PART NO.*	*PART NAME*	*QTY.*	*SERIAL NO.*	*REMARKS*
1	14M7100	NUT	4		M4
2	AT224894	CONVERTER	1		(10 AMP)
3	GY20126	SOCKET OUTLET	2		(POWER PLUG)
4	**AT306828**	**CONVERTER**	**1**		

CAB MONITOR AND ALARM
MONINTEUR ET ALARME CABINE
MONITOR Y ALARMA DE LA CABINA

TX1013266 -UN-19OCT06

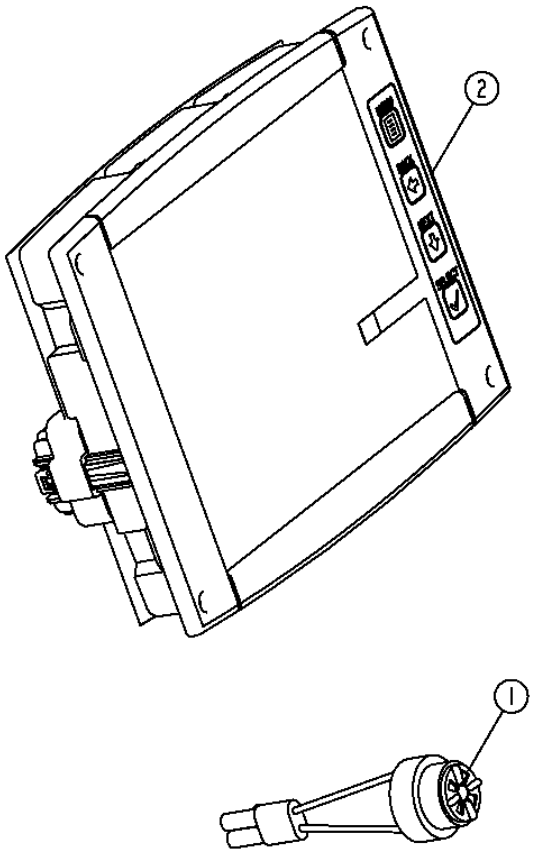

TX1013266

CAB MONITOR AND ALARM
MONINTEUR ET ALARME CABINE
MONITOR Y ALARMA DE LA CABINA

KEY	*PART NO.*	*PART NAME*	*QTY.*	*SERIAL NO.*	*REMARKS*
1	AT160480	ALARM SYSTEM	1		
2	AT312178	MONITOR	1		

ENGINE FRAME
CHASSIS DE MOTEUR
BASTIDOR DEL MOTOR

TX1014120 -UN-14NOV06

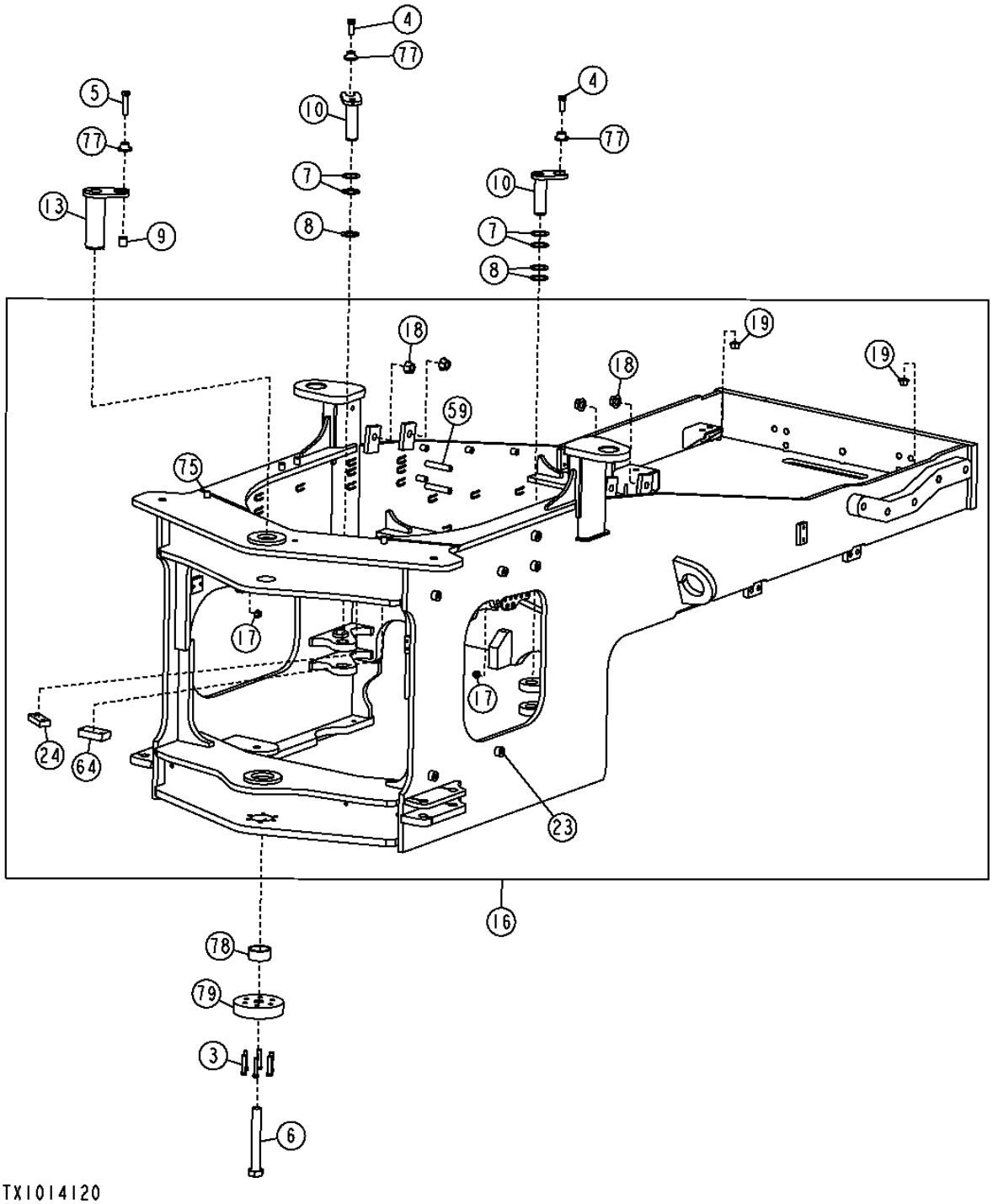

ENGINE FRAME
CHASSIS DE MOTEUR
BASTIDOR DEL MOTOR

KEY	PART NO.	PART NAME	QTY.	SERIAL NO.	REMARKS
3	19M7363	CAP SCREW	6		M12 X 60
4	19M7488	CAP SCREW	2		M16 X 40
5	19M7719	CAP SCREW	1		M16 X 70
6	19M9189	CAP SCREW	1		M30 X 220
7	24H1556	WASHER	4		41.681 X 60.325 X 1.219 MM
8	24H1558	WASHER	3		41.681 X 60.325 X 1.905 MM
9	28H3452	BUSHING	1		18.847 X 26.670 X 28.575 MM
10	AT203570	PIN	2		
13	AT206751	PIN	1		
16	**AT315111**	**FRAME**	**1**		
17	14M7443	FLANGE NUT	2		M12
18	14M7474	FLANGE NUT	4		M20
19	14M7482	FLANGE NUT	4		M16
23	T125546	BUSHING	11		
24	T133290	STRAP	1		
59	T195605	BOSS	2		
64	T203047	STRAP	1		
75	T72414	BUSHING	14		
77	T176064	BUSHING	3		16.300 X 28.600 X 21.900 MM
78	T182265	BUSHING	1		
79	T182446	COVER	1		

ENGINE FRAME STEERING CUSHIONS
COUSSINS DIRECTION BATI MOTEUR
AMORTIGUADORES DE LA DIRECCION DEL BASTIDOR DEL MOTOR

TX1006290 -UN-24APR06

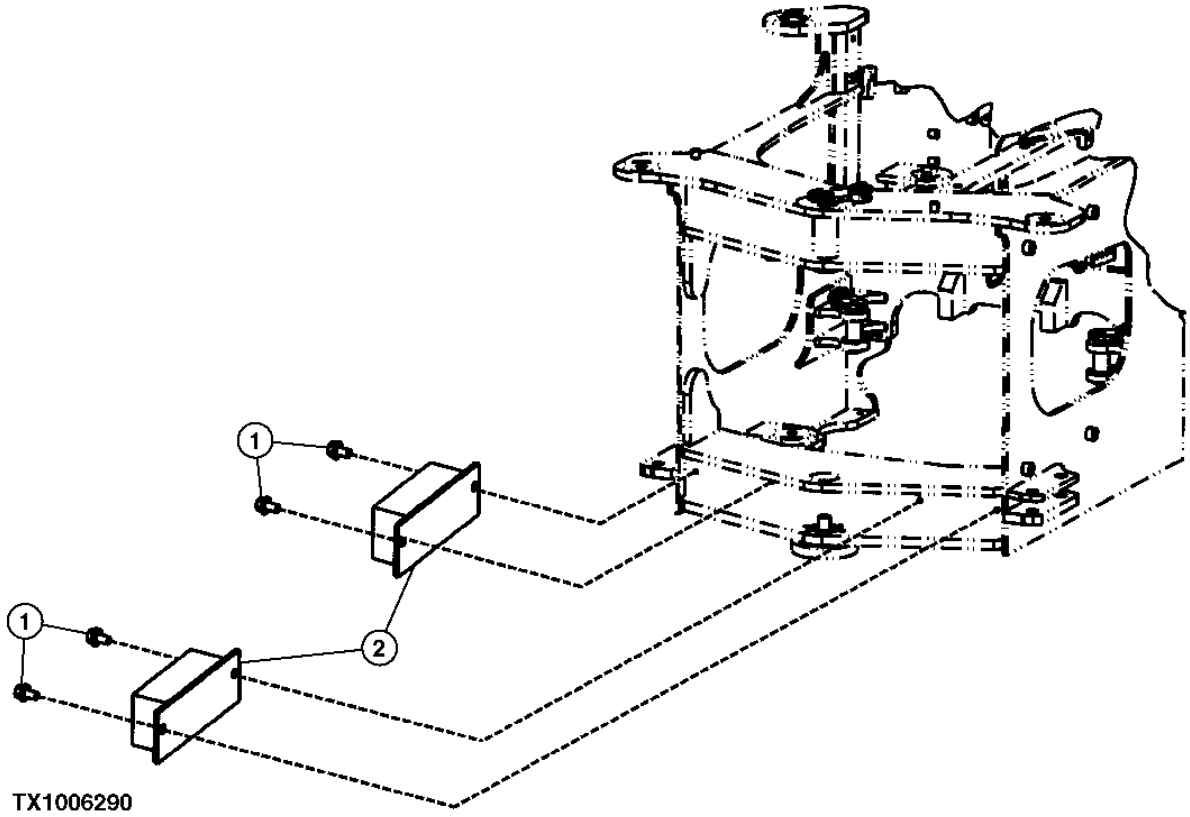

ENGINE FRAME STEERING CUSHIONS
COUSSINS DIRECTION BATI MOTEUR
AMORTIGUADORES DE LA DIRECCION DEL BASTIDOR DEL MOTOR

KEY	*PART NO.*	*PART NAME*	*QTY.*	*SERIAL NO.*	*REMARKS*
1	19M7788	SCREW	4		M12 X 25
2	AT143577	BUMPER	2		

FUEL TANK BOTTOM GUARD
PROTECTION INFERIEURE RESERVOIR CARBURANT
PROTECTOR DEL TANQUE DE COMBUSTIBLE INFERIOR

T193526 -UN-27AUG03

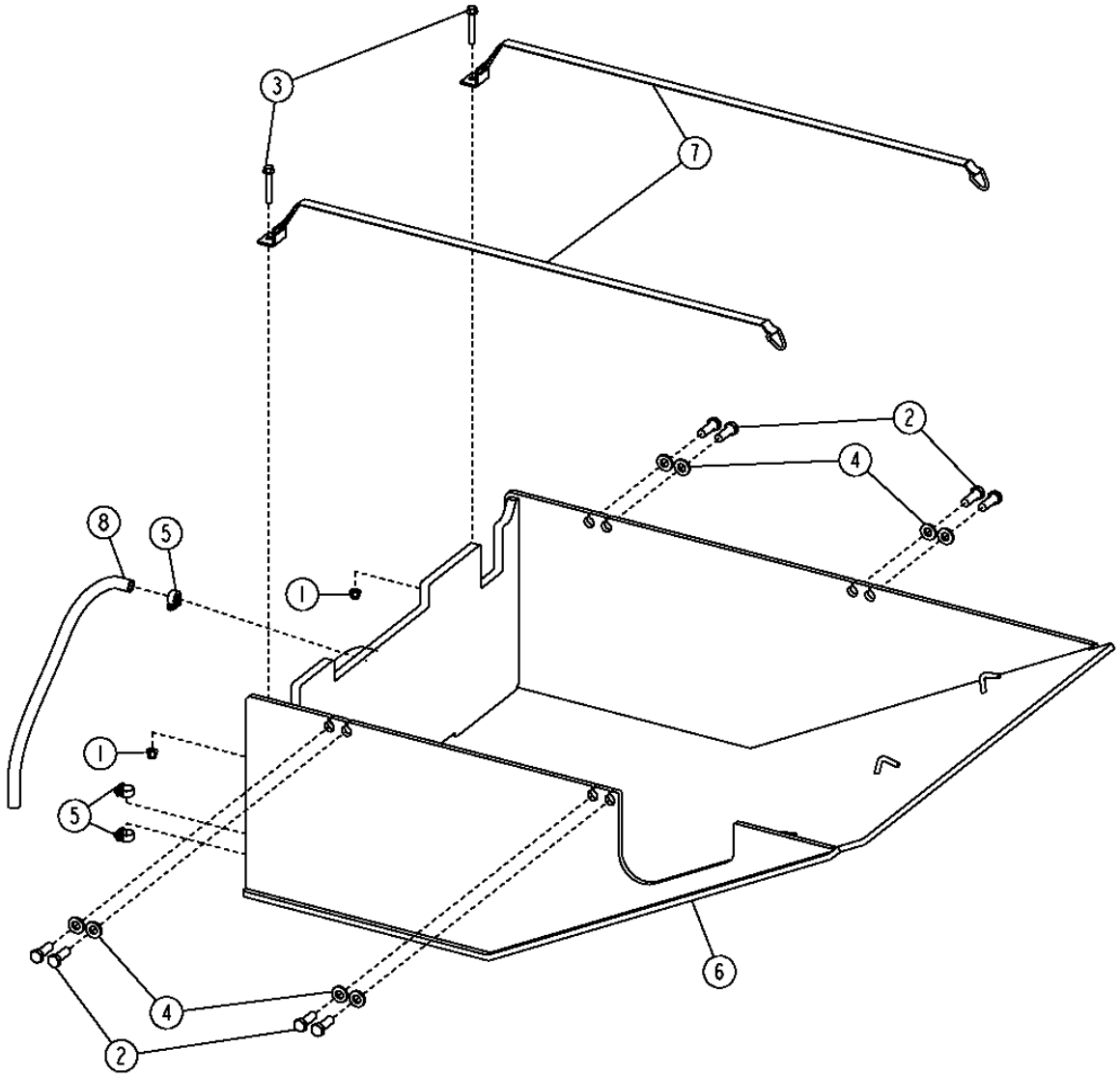

T193526

FUEL TANK BOTTOM GUARD
PROTECTION INFERIEURE RESERVOIR CARBURANT
PROTECTOR DEL TANQUE DE COMBUSTIBLE INFERIOR

KEY	*PART NO.*	*PART NAME*	*QTY.*	*SERIAL NO.*	*REMARKS*
1	14M7400	LOCK NUT	2		M10
2	19M7489	CAP SCREW	8		M16 X 45
3	19M8114	SCREW	2		M10 X 70
4	24M7241	WASHER	8		17 X 34 X 4 MM
5	AR21837	CLAMP	3		
6	AT320309	GUARD	1		
7	AT226563	STRAP	2		
8	T60811	BULK HOSE	AR		(CUT TO 3.5 FT)

TRANSMISSION BOTTOM,FRONT BOTTOM,BOOM GUARDS
PROTECTION INFERIEURE DE TRANSMISSION ET PROTECTION INFERIEURE AVANT
PROTECTOR INFERIOR DE LA TRANSMISION Y PROTECTOR INFERIOR DELANTERO

TX1013829 -UN-14NOV06

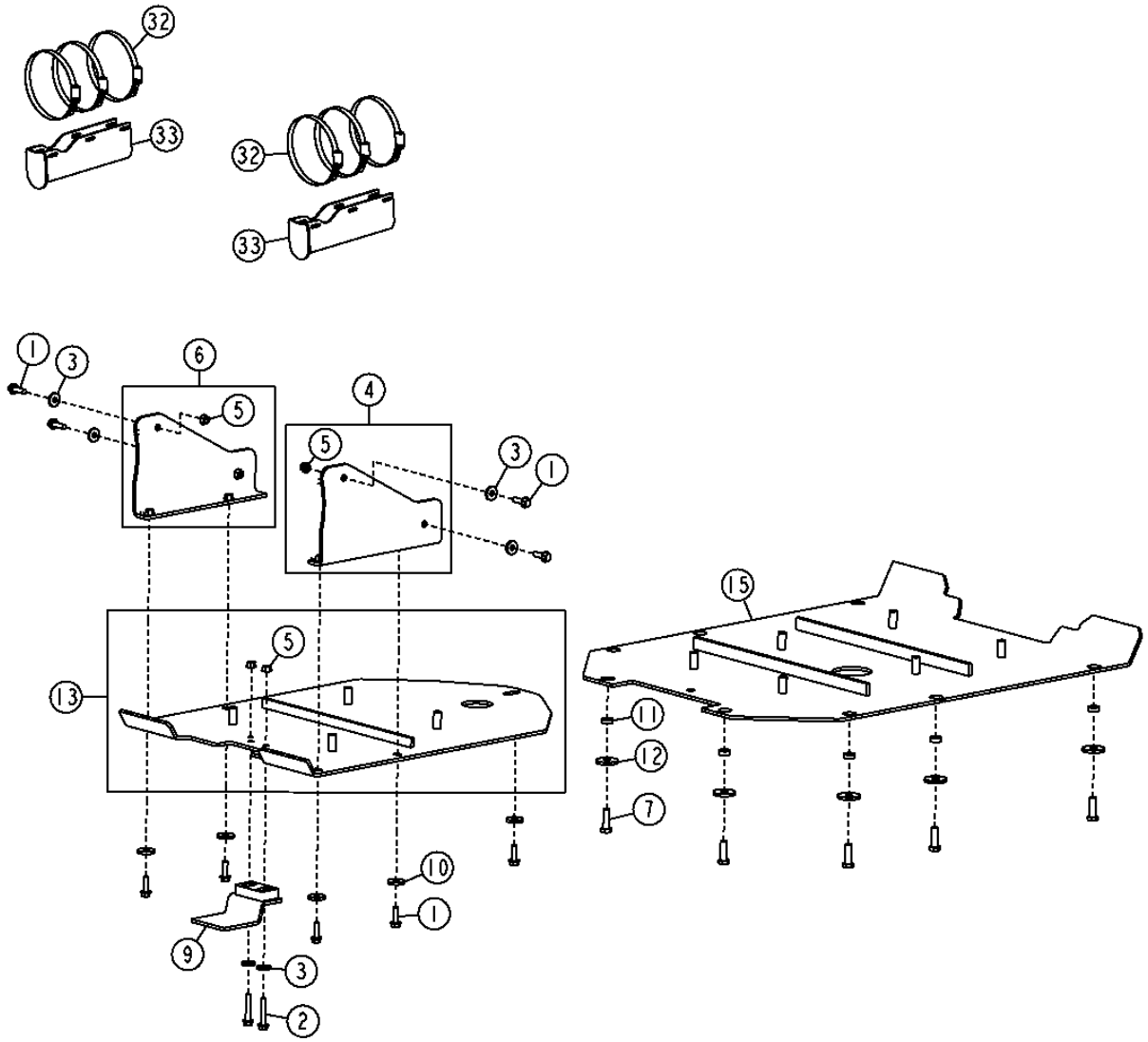

TX1013829

TRANSMISSION BOTTOM,FRONT BOTTOM,BOOM GUARDS
PROTECTION INFERIEURE DE TRANSMISSION ET PROTECTION INFERIEURE AVANT
PROTECTOR INFERIOR DE LA TRANSMISION Y PROTECTOR INFERIOR DELANTERO

KEY	*PART NO.*	*PART NAME*	*QTY.*	*SERIAL NO.*	*REMARKS*
1	19M7791	BOLT	9		M12 X 40
2	19M7818	SCREW	2		M12 X 80
3	24M7226	WASHER	10		13 X 35 X 5 MM
4	AT207432	SUPPORT	1		
5	14M7443	FLANGE NUT	4		M12
6	AT207433	SUPPORT	1		
7	19M7791	BOLT	17		M12 X 40
9	AT317472	GUARD	1		
10	T20217	WASHER	9		12.954 X 43.942 X 6.350 MM
11	T197569	BUSHING	8		16.300 X 28.500 X 10.300 MM
12	T177255	STRAP	1		
13	AT317174	GUARD	1		
15	AT317047	GUARD	1		
32	TY22495	HOSE CLAMP	2		
33	AT222013	COVER	2		

MAIN COUNTERWEIGHT
CONTREPOIDS PRINCIPAL
CONTRAPESO PRINCIPAL

TX1013660 -UN-15NOV06

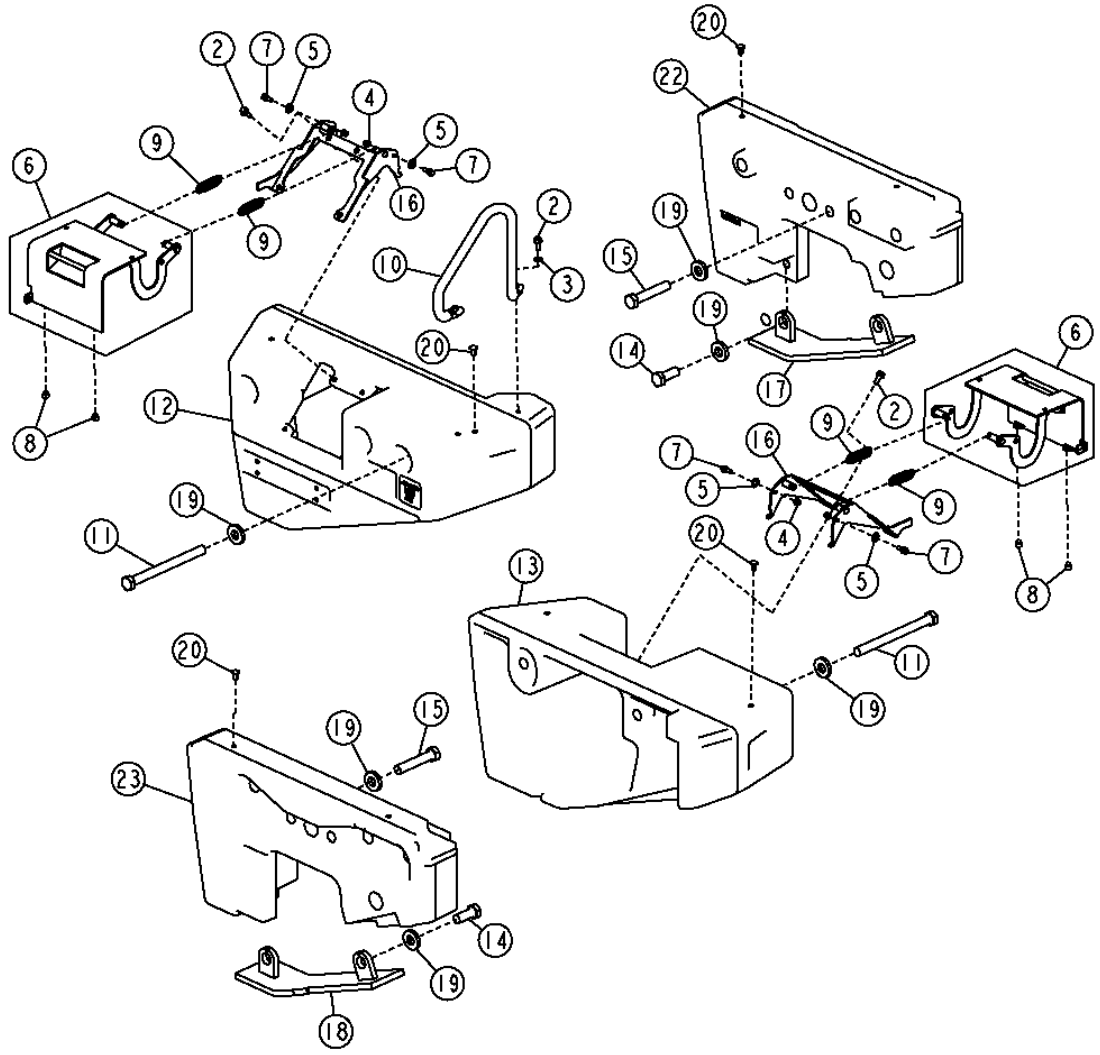

TX1013660

MAIN COUNTERWEIGHT
CONTREPOIDS PRINCIPAL
CONTRAPESO PRINCIPAL

KEY	PART NO.	PART NAME	QTY.	SERIAL NO.	REMARKS
2	19M7785	SCREW	10		M10 X 25
3	24M7239	WASHER	2		10.700 X 21 X 2.500 MM
4	14M7396	LOCK NUT	4		M8
5	24H1849	WASHER	4		17/32" X 1" X 0.036"
6	AT228414	DOOR	2		
7	H169568	SCREW	4		M8 X 25.300
8	T175361	GROMMET	4		
9	T203290	EXTENSION SPRING	4		
10	T197440	HANDLE	1		
11	19M8791	SCREW	6		M24 X 280
12	T195982	COUNTERWEIGHT	1		
13	T204109	COUNTERWEIGHT	1		
14	19M7888	CAP SCREW	4		M24 X 60
15	19M7936	CAP SCREW	4		M24 X 130
16	AT228426	COVER	2		
17	AT316716	COVER	1		
18	AT316717	COVER	1		
19	T152076	WASHER	14		26 X 55 X 9.500 MM
20	T174271	PLUG	8		
22	T226957	COUNTERWEIGHT	1		
23	T226958	COUNTERWEIGHT	1		

FRONT AND REAR CAB MOUNTS
MONTAGES CABINE AVANT ET ARRIERE
SOPORTES DE LA CABINA TRASERO Y DELANTERO

TX1006295 -UN-24APR06

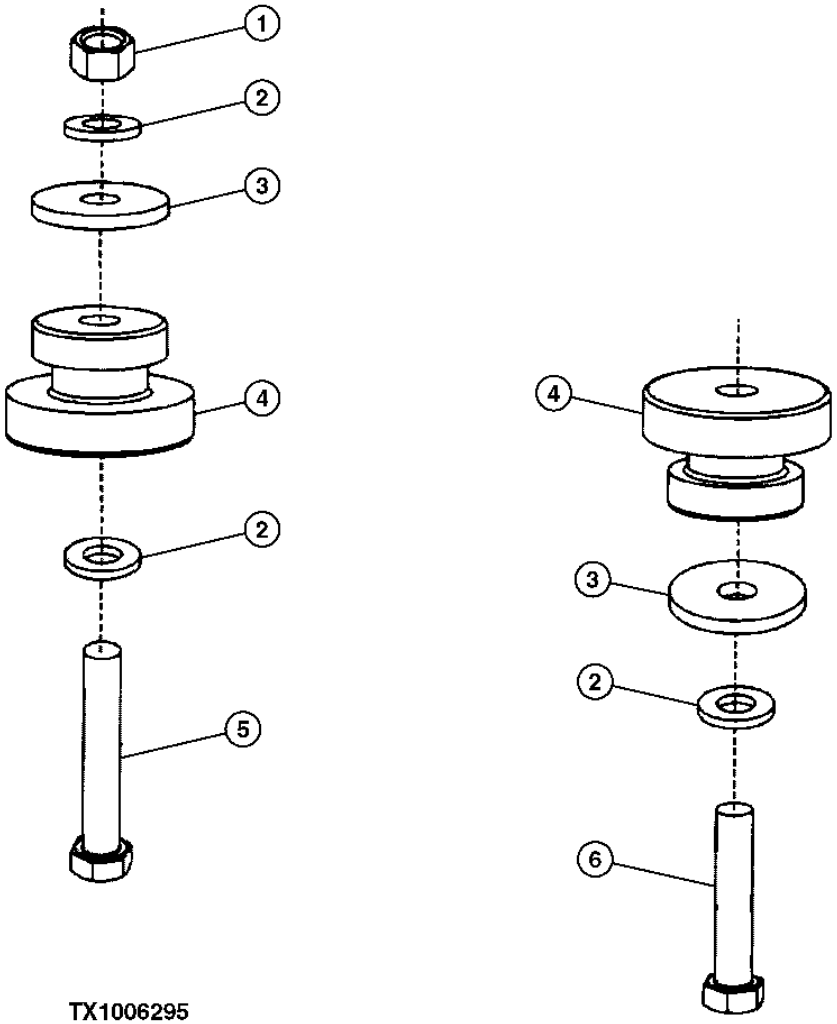

TX1006295

FRONT AND REAR CAB MOUNTS
MONTAGES CABINE AVANT ET ARRIERE
SOPORTES DE LA CABINA TRASERO Y DELANTERO

KEY	*PART NO.*	*PART NAME*	*QTY.*	*SERIAL NO.*	*REMARKS*
1	14M7278	NUT	2		M24
2	24M7243	WASHER	6		25.400 X 50 X 6 MM
3	T153535	WASHER	4		
4	AT170005	ISOLATOR	4		
5	19M7781	CAP SCREW	2		M24 X 150
6	19M7903	CAP SCREW	2		M24 X 120

HEADLINER AND DOMELIGHT
REVETEMENT DE TOIT ET PLAFONNIER
LUZ DE TECHO Y FORRO

T193652 -UN-08SEP03

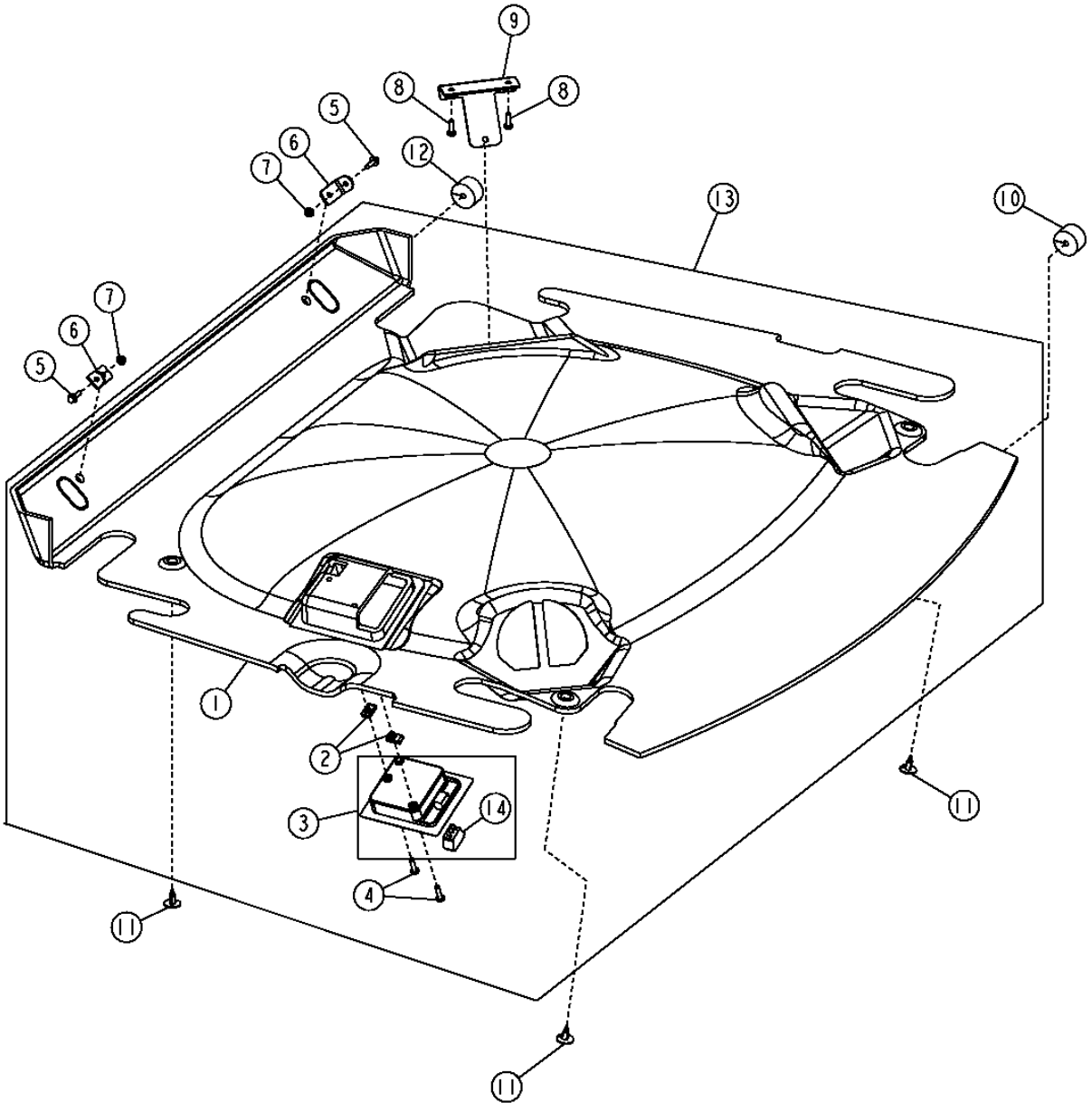

HEADLINER AND DOMELIGHT
REVETEMENT DE TOIT ET PLAFONNIER
LUZ DE TECHO Y FERRO

KEY	PART NO.	PART NAME	QTY.	SERIAL NO.	REMARKS
1	T181908	HEADLINER	1		(WITHOUT RADIO)
	T181520	HEADLINER	1		(WITH RADIO)
2	M84972	NUT	2		
3	AT224923	LAMP	1		INCLUDES BULB AND LENS
	AT173355	BULB	1		
4	T134895	SELF-LOCKING SCREW	2		
5	19M7862	SCREW	2		M6 X 20
6	T181050	ANGLE	2		
7	14M7303	FLANGE NUT	2		M6
8	19H1948	CAP SCREW	2		1/4" X 3/4"
9	T180418	STRAP	1		(WITHOUT RADIO)
10	T182870	ISOLATOR	1		(WITHOUT RADIO)
	T182870	ISOLATOR	1		(WITH RADIO)
11	T184892	RETAINER	4		
12	T182870	ISOLATOR	1		(WITHOUT RADIO)
	T65643	GROMMET	1		(WITH RADIO)
13	AT224234	HEADLINER	1		(WITHOUT RADIO)
	AT224233	HEADLINER	1		(WITH RADIO)
14	RE48838	TOGGLE/ROCKER SWITCH	1		(DOMELIGHT)

ROOF
TOIT
TECHO

TX1013309 -UN-19OCT06

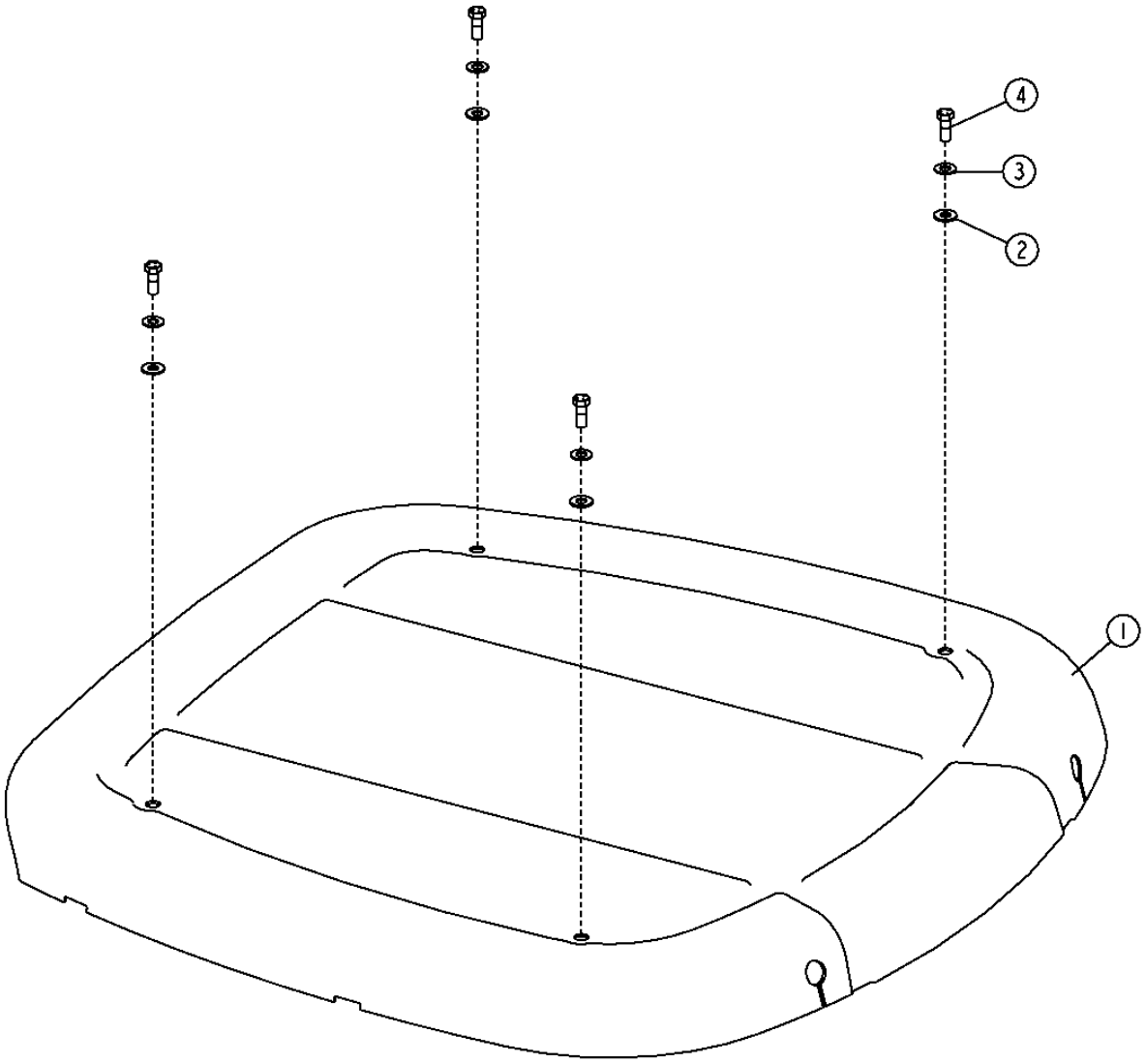

TX1013309

ROOF
TOIT
TECHO

KEY	PART NO.	PART NAME	QTY.	SERIAL NO.	REMARKS
1	AT226578	ROOF	1		(PLASTIC)
	AT227013	ROOF	1		(PAINTABLE)
2	T167659	WASHER	4		
3	24H1368	WASHER	4		21/32" X 1-5/16" X 0.090"
4	T182920	CAP SCREW	4		

CANOPY, REAR WINDOW, AND HEADLINER
AUVENT, GLACE ARRIERE ET REVETEMENT DE TOIT
DOSEL, FORRO Y VENTANA TRASERA

T193850 -UN-09SEP03

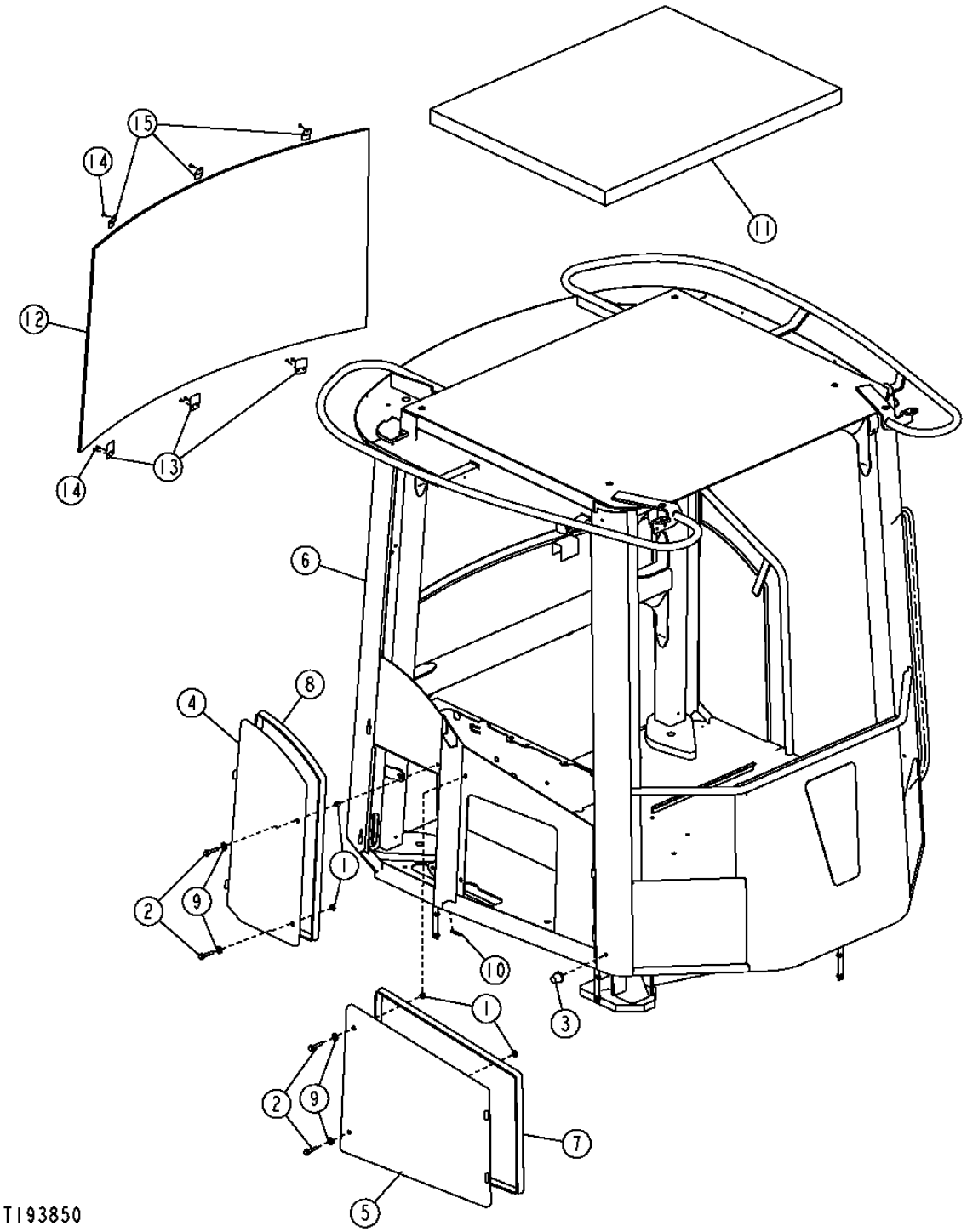

CANOPY, REAR WINDOW, AND HEADLINER
AUVENT, GLACE ARRIERE ET REVETEMENT DE TOIT
DOSEL, FORRO Y VENTANA TRASERA

KEY	PART NO.	PART NAME	QTY.	SERIAL NO.	REMARKS
1	14M7298	FLANGE NUT	4		M8
2	19M8318	SCREW	4		M8 X 45
3	AT211296	BUMPER	1		
4	AT224989	DOOR	1		(ACCESS PANEL, RIGHT HAND REAR)
5	AT224991	DOOR	1		(ACCESS PANEL, RIGHT HAND FRONT)
6	AT226377	CAB FRAME	1		
7	AT305130	ISOLATOR	1		
8	AT305130	ISOLATOR	1		(CTL 1918MM (75.5")
9	H110232	WASHER	4		0.406" X 0.890" X 0.059"
10	T203614	ISOLATOR	2		(1/4" CORD) (CTL 40 MM (1 9/16")
11	T180921	HEADLINER	1		
12	T167519	WINDOW	1		(REAR)
13	T182952	RETAINER	3		
14	AT44188	RIVET	9		
15	T182925	RETAINER	3		

DRIP RAIL
GOUTTIERE
RIEL DE VACIADO

TX1013307 -UN-05DEC06

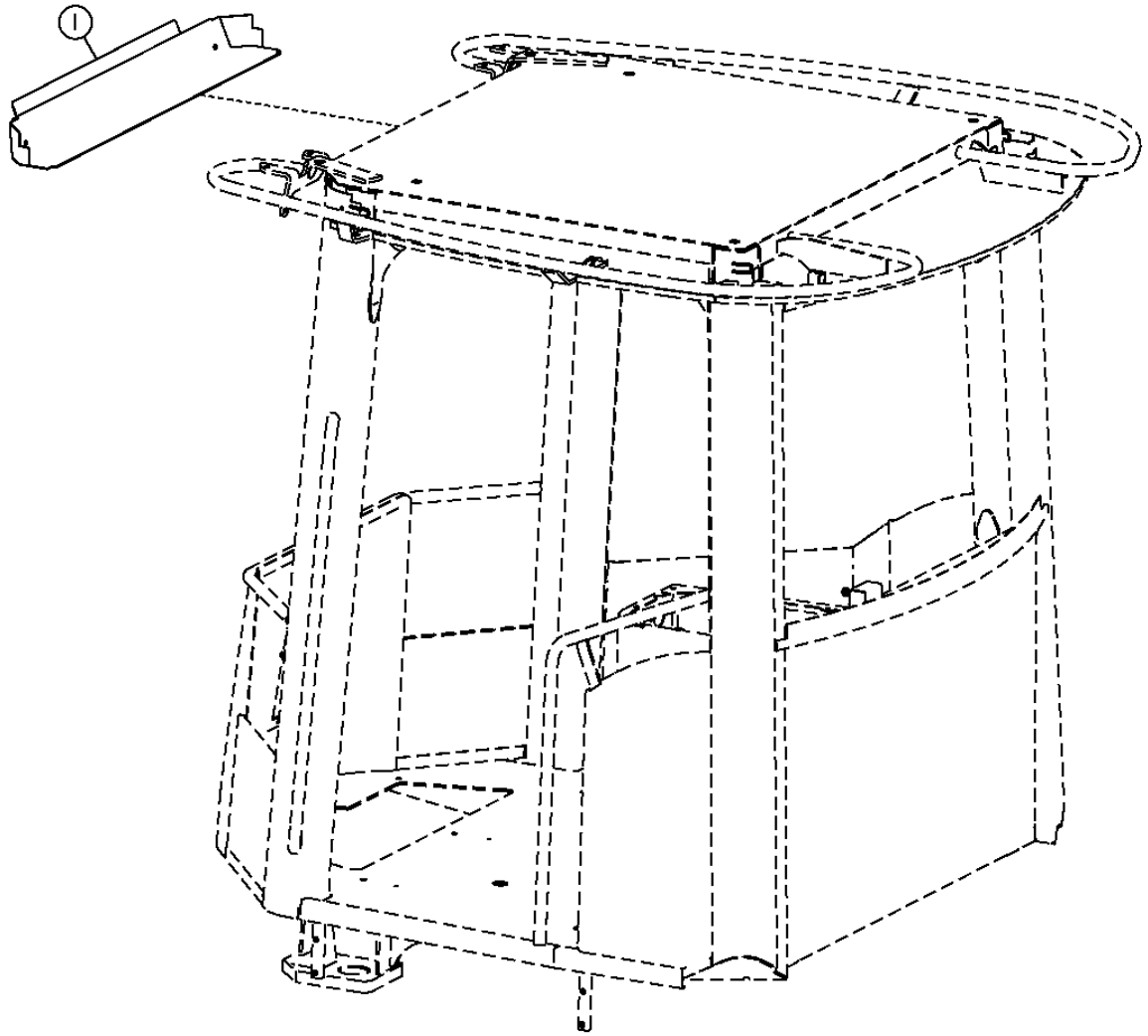

TX1013307

DRIP RAIL
GOUTTIERE
RIEL DE VACIADO

KEY	PART NO.	PART NAME	QTY.	SERIAL NO.	REMARKS
1	AT325643	RAIL	1		

CAB
CABINE
CABINA

T193727 -UN-16OCT03

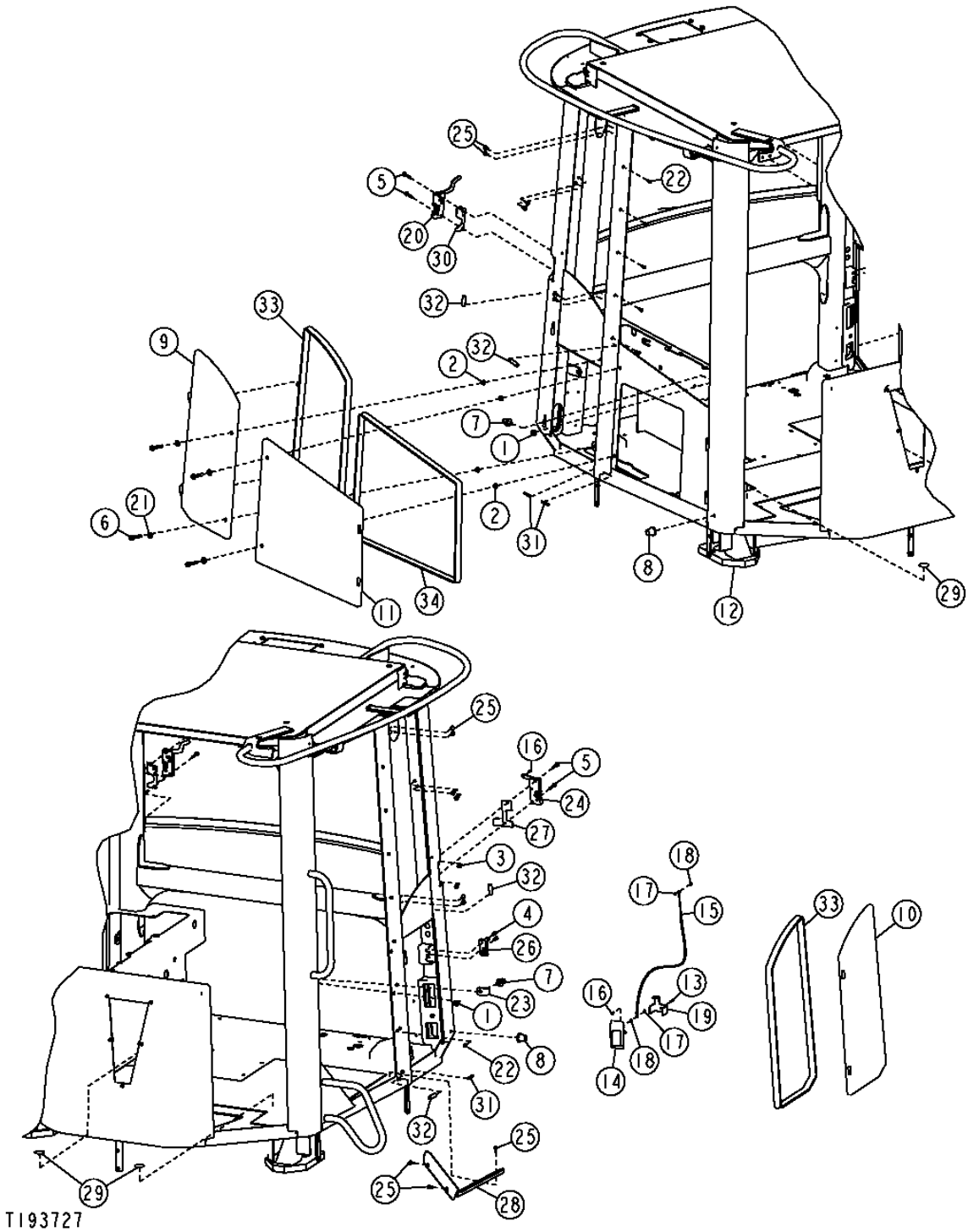

CAB
CABINE
CABINA

KEY	PART NO.	PART NAME	QTY.	SERIAL NO.	REMARKS
1	14H813	NUT	2		7/16"
2	14M7298	FLANGE NUT	4		M8
3	14M7397	LOCK NUT	4		M6
4	19H1948	CAP SCREW	2		1/4" X 3/4"
5	19M7797	SCREW	4		M6 X 40
6	19M8318	SCREW	4		M8 X 45
7	AR91896	STRIKER	2		
8	AT211296	BUMPER	2		
9	AT224989	DOOR	1		(ACCESS PANEL, RH REAR)
10	AT224990	DOOR	1		(ACCESS PANEL, LH REAR)
11	AT224991	DOOR	1		(ACCESS PANEL, RH FRONT)
12	AT315446	CAB FRAME	1		
13	19H3370	CAP SCREW	1		0.190" X 5/8"
14	AT227544	LATCH	1		
15	AT227545	PUSH PULL CABLE	1		
16	11M7093	COTTER PIN	2		
17	L985T	PIN FASTENER	2		
18	T178114	SPACER	2		
19	T196309	BRACKET	1		
20	AT315290	LATCH	1		
21	H110232	WASHER	4		0.406" X 0.890" X 0.059"
22	M114063	SCREW	15		M6 X 16
23	T135583	GUARD	1		
24	AT310702	LATCH	1		
25	TCU14336	SCREW	15		
26	T167658	LATCH	1		
27	T177505	BRACKET	1		
28	T180930	RETAINER	1		
29	T186793	LABEL	3		(GRAY CIRCLE)
30	T201708	PLATE	1		
31	T203614	ISOLATOR	3		
32	T203615	ISOLATOR	4		
33	AT305130	ISOLATOR	1		(CUT TO 75.5 IN.(1918 MM)
34	AT305130	ISOLATOR	1		

CAB GLASS
GLACE CABINE
VIDRIO DE LA CABINA

T193725 -UN-30SEP03

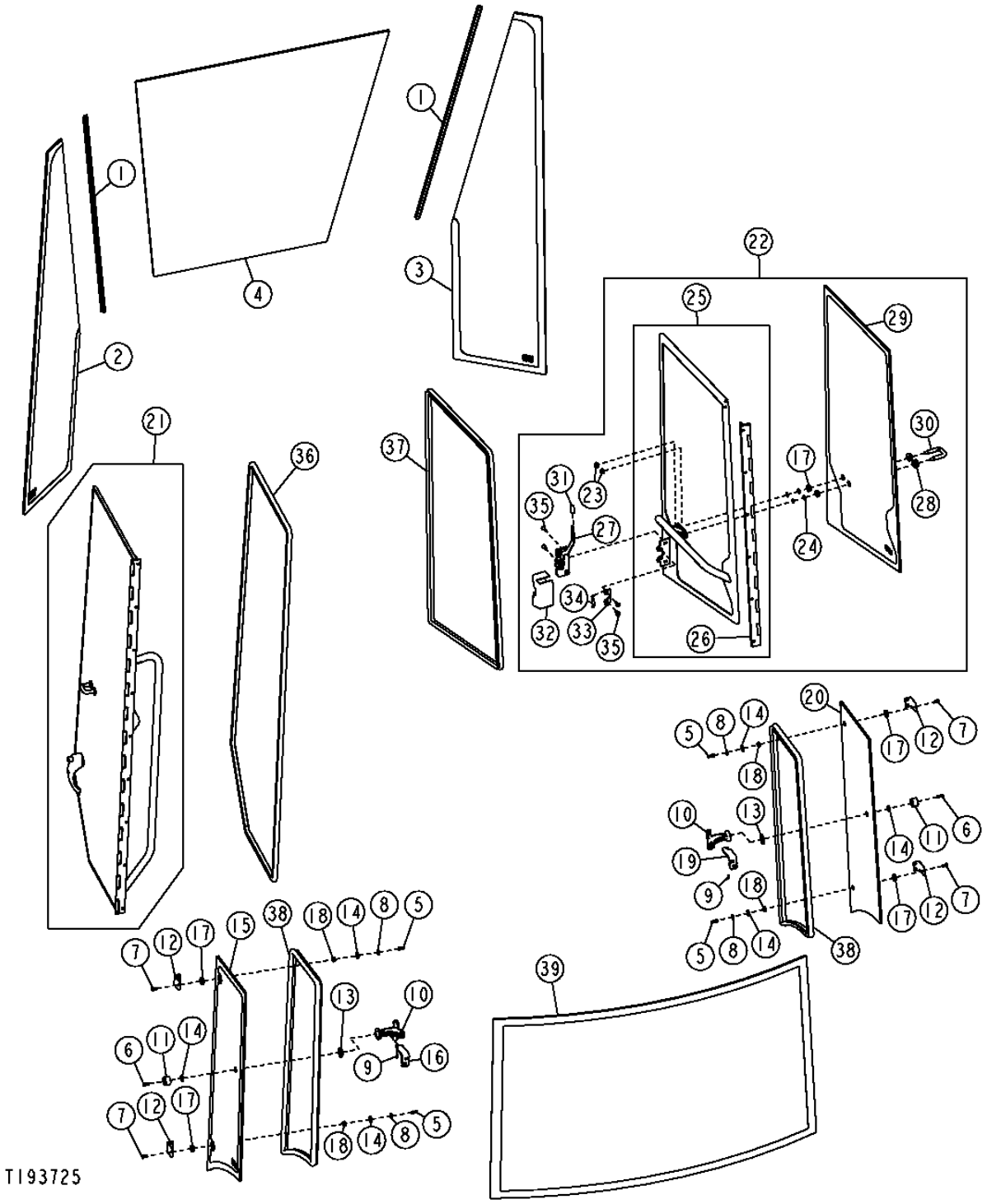

CAB GLASS
GLACE CABINE
VIDRIO DE LA CABINA

KEY	PART NO.	PART NAME	QTY.	SERIAL NO.	REMARKS
1	T182903	SEAL	2		
2	T182927	WINDOWPANE	1		(LH FRONT)
3	T182928	WINDOWPANE	1		(RH FRONT)
4	T196237	WINDSHIELD	1		(FRONT)
5	14M7376	LOCK NUT	4		M6
6	19M7768	SCREW	2		M6 X 16
7	19M8648	SCREW	4		M6 X 16
8	24M7251	WASHER	4		6.400 X 18 X 1.600 MM
9	34H275	SPRING PIN	2		3/16" X 1/2"
10	AT226000	LATCH	2		
11	T184135	BUMPER	2		
12	T167594	ANGLE	4		
	T167593	SCREW	8		(NOT ILLUSTRATED) (HINGE TO CAB FRAME)
13	T167659	WASHER	2		
14	T167683	WASHER	6		
15	T178221	WINDOWPANE	1		(LH VENT)
16	T178534	BRACKET	1		
17	T182899	WASHER	6		
18	T182902	BUSHING	4		
19	T177827	BRACKET	1		
20	T178220	WINDOWPANE	1		(RH VENT)
21	AT224994	DOOR	1		(LH)
22	AT226151	WINDOW	1		(RH)
23	14M7424	FLANGE NUT	2		M8
24	24M7362	WASHER	2		8.400 X 16 X 1.600 MM
25	AT226152	DOOR	1		(RIGHT HAND WINDOW FRAME)
26	T167505	HINGE	1		
27	AT226176	LATCH	1		
28	T167514	GROMMET	2		
29	T167527	WINDOWPANE	1		(RIGHT HAND DOOR)
30	T167546	STRIKER	1		
31	T167630	GRIP	1		
32	T182695	COVER	1		
33	T197455	BRACKET	1		
34	T197456	EXTENSION SPRING	1		
35	TCU14336	SCREW	4		M6 X 16
36	AT305126	ISOLATOR	1		
37	AT305126	ISOLATOR	1		(CTL 3048 MM (120"))
38	AT305126	ISOLATOR	1		(CTL 2184 MM (86"))
39	T167519	WINDOW	1		(REAR)

CAB DOOR
PORTE DE CABINE
PUERTA DE CABINA

T193726 -UN-30SEP03

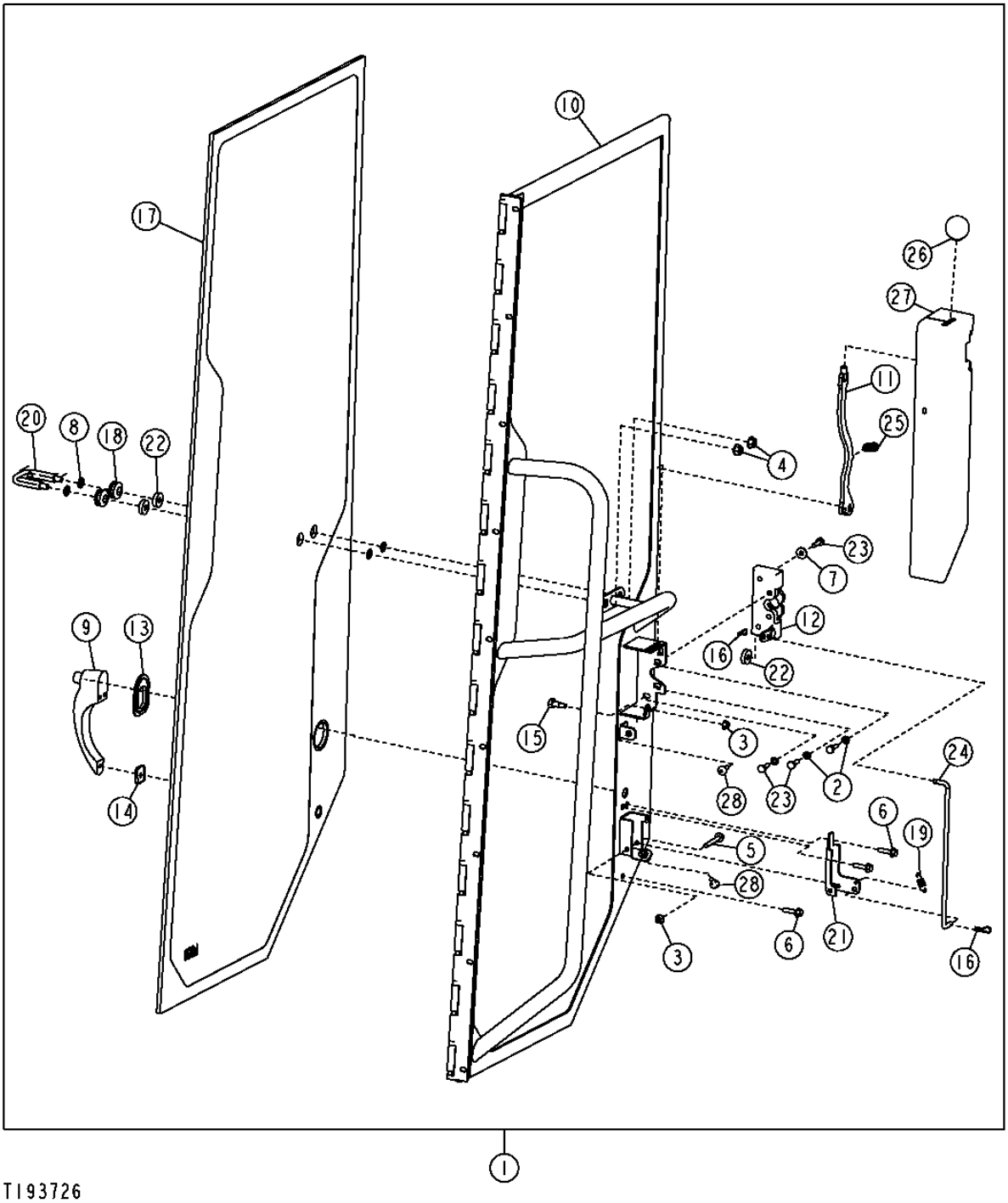

T193726

CAB DOOR
PORTE DE CABINE
PUERTA DE CABINA

KEY	PART NO.	PART NAME	QTY.	SERIAL NO.	REMARKS
1	AT224994	DOOR	1		(LH)
2	12M7006	LOCK WASHER	3		6 MM
3	14M7303	FLANGE NUT	2		M6
4	14M7424	FLANGE NUT	2		M8
5	19M7834	SCREW	1		M6 X 45
6	19M7863	SCREW	3		M6 X 25
7	24M7251	WASHER	1		6.400 X 18 X 1.600 MM
8	24M7362	WASHER	2		8.400 X 16 X 1.600 MM
9	AH121227	HANDLE	1		
10	AT224995	DOOR	1		(LH FRAME)
11	AT303493	CONTROL LEVER	1		
12	AT83105	LATCH	1		
13	H126081	BEZEL	1		
14	H126082	BEZEL	1		
15	19M7077	CAP SCREW	1		(AND T213560)
16	H132922	COTTER PIN	2		
17	T167508	WINDOWPANE	1		(LH)
18	T167514	GROMMET	2		
19	T167530	SPRING	1		
20	T167546	STRIKER	1		
21	T167618	ARM	1		
22	T182899	WASHER	3		
23	T182963	SCREW	4		
24	T182967	ROD	1		
25	H95874	SPRING	1		
26	T182969	KNOB	1		
27	T182972	COVER	1		
28	TCU14336	SCREW	2		

CAB TRIM, SEAT BASE AND FIRE EXTINGUISHER
GARNITURE CABINE, BASE SIEGE ET EXTINCTEUR
PIEZAS DE ADORNO DE LA CABINA, BASE DEL ASIENTO Y EXTINGUIDOR DE INCENDIOS

T193870 -UN-22SEP03

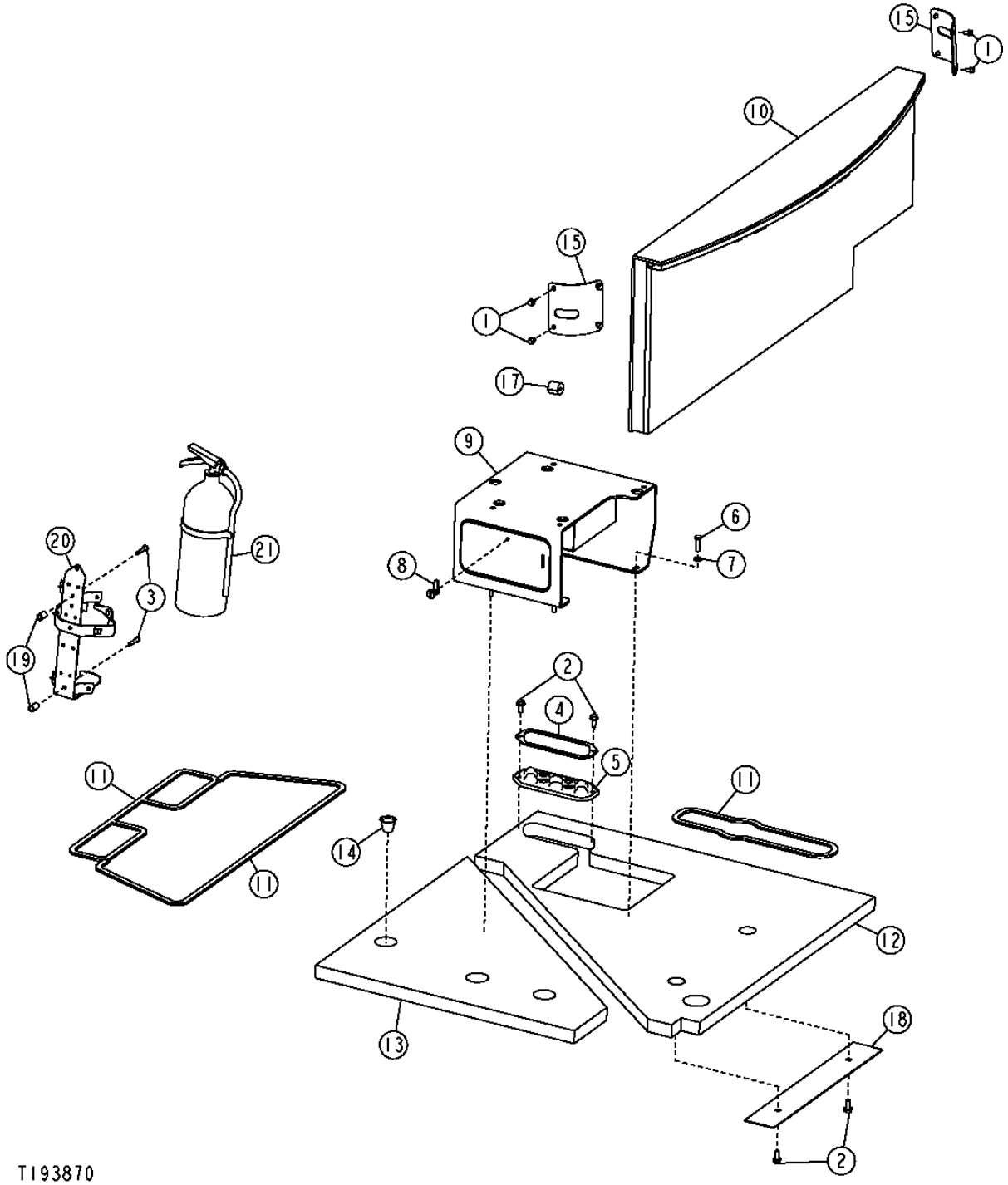

CAB TRIM, SEAT BASE AND FIRE EXTINGUISHER
GARNITURE CABINE, BASE SIEGE ET EXTINCTEUR
PIEZAS DE ADORNO DE LA CABINA, BASE DEL ASIENTO Y EXTINGUIDOR DE INCENDIOS

KEY	PART NO.	PART NAME	QTY.	SERIAL NO.	REMARKS
1	19M7774	SCREW	8		M6 X 12
2	19M7866	SCREW	4		M8 X 20
3	21M7247	SCREW	2		M6 X 35
4	T172991	PLATE	1		
5	T172992	GROMMET	1		
6	19M7868	SCREW	5		M8 X 30
7	24M7238	WASHER	5		8.700 X 17 X 2 MM
8	AT151931	LATCH	1		
9	AT224235	FLOOR	1		
10	AT225706	PAD	1		
11	H81330	ISOLATOR	12		
12	T167770	ISOLATOR	1		
13	T209094	ISOLATOR	1		
14	T180408	PLUG	1		
15	T205472	COVER	2		
17	T182860	ISOLATOR	1		
18	T182906	PLATE	1		
19	28H3423	BUSHING	2		0.364" X 0.540" X 7/8"
20	AT189390	BRACKET	1		
21	AT189487	FIRE EXTINGUISHER	1		

CANOPY TRIM, SEAT BASE AND FIRE EXTINGUISHER
GARNITURE AUVENT, BASE SIEGE ET EXTINCTEUR
ADORNO DEL DOSEL, BASE DEL ASIENTO Y EXTINGUIDOR DE INCENDIOS

TX1008150 -UN-24MAY06

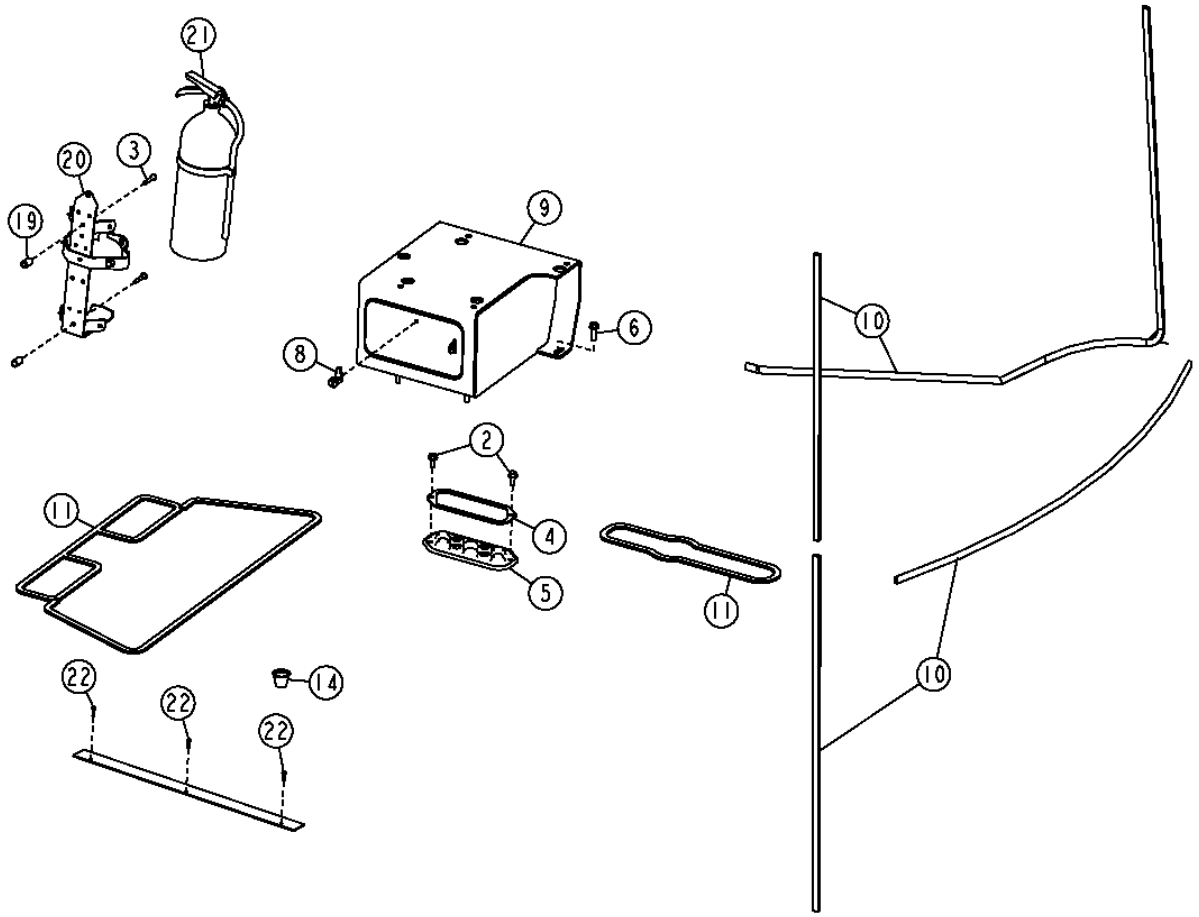

TX1008150

CANOPY TRIM, SEAT BASE AND FIRE EXTINGUISHER
GARNITURE AUVENT, BASE SIEGE ET EXTINCTEUR
ADORNO DEL DOSEL, BASE DEL ASIENTO Y EXTINGUIDOR DE INCENDIOS

KEY	*PART NO.*	*PART NAME*	*QTY.*	*SERIAL NO.*	*REMARKS*
2	19M7866	SCREW	2		M8 X 20
3	21M7247	SCREW	2		M6 X 35
4	T172991	PLATE	1		
5	T172992	GROMMET	1		
6	19M7868	SCREW	5		M8 X 30
8	AT151931	LATCH	1		
9	AT224237	FLOOR	1		
10	.....	SEALING TRIM	1		(MAKE FROM T180533) (CTL)
11	H81330	ISOLATOR	12		120"
14	T180408	PLUG	1		
19	28H3423	BUSHING	2		0.364" X 0.540" X 7/8"
20	AT189390	BRACKET	1		
21	AT189487	FIRE EXTINGUISHER	1		
22	T182888	SCREW	3		

CAB AND CANOPY FLOOR MAT
CABINE ET TAPIS PLANCHER AUVENT
FELPUDO DE CABINA Y DOSEL

TX1013319 -UN-18OCT06

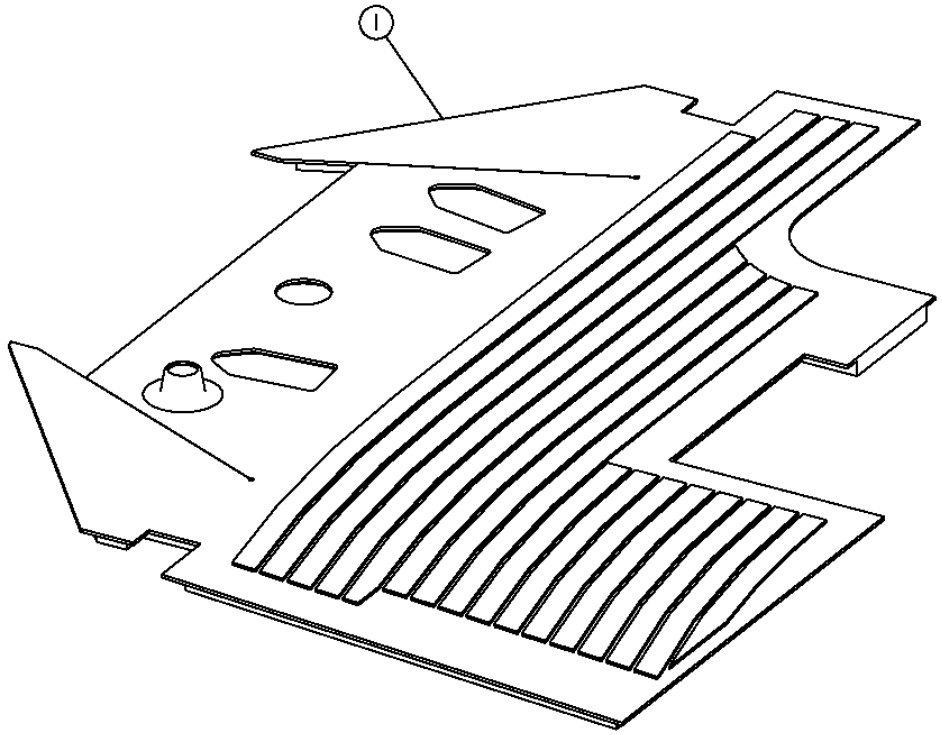

TX1013319

THIS PARTS LISTING IS CONTINUED

CAB AND CANOPY FLOOR MAT
CABINE ET TAPIS PLANCHER AUVENT
FELPUDO DE CABINA Y DOSEL

KEY	PART NO.	PART NAME	QTY.	SERIAL NO.	REMARKS
1	AT207144	MAT	1		

CAB SHIELDS
PROTECTIONS CABINE
ESCUDOS DE LA CABINA

TX1013308 -UN-19OCT06

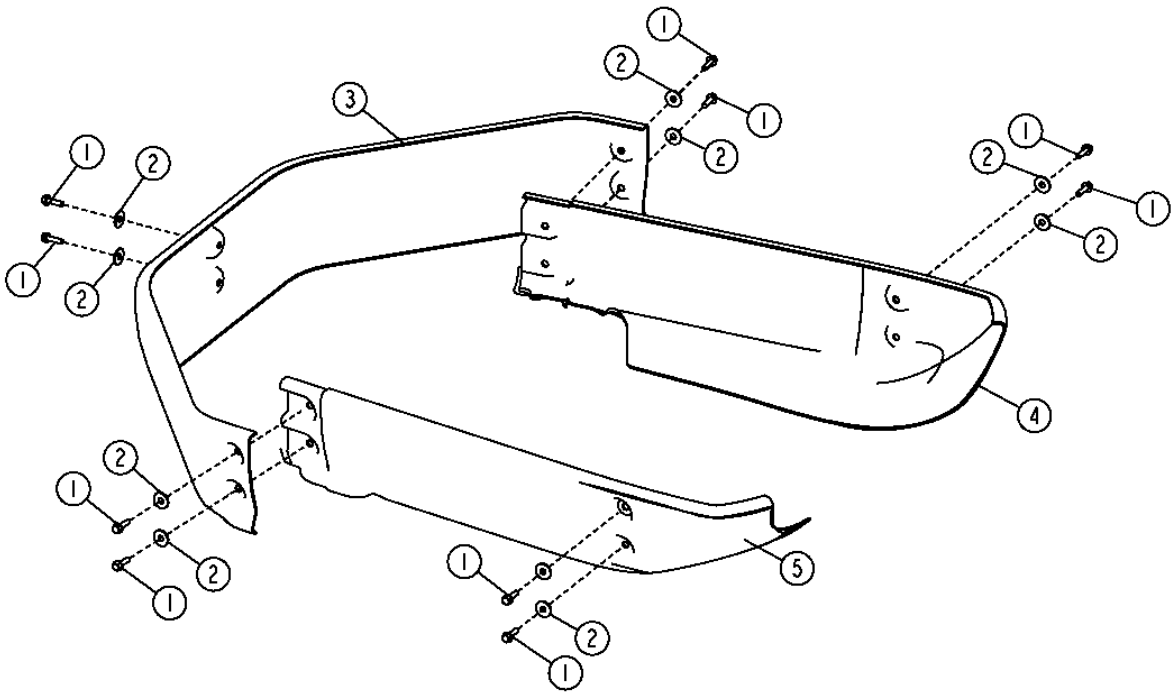

TX1013308

CAB SHIELDS
PROTECTIONS CABINE
ESCUDOS DE LA CABINA

KEY	PART NO.	PART NAME	QTY.	SERIAL NO.	REMARKS
1	19M7868	SCREW	10		
2	24M7296	WASHER	10		10.500 X 30 X 2.500 MM
3	T175015	SHIELD	1		
4	T175016	SHIELD	1		(RH) (GRAY)
5	T175017	SHIELD	1		(LH) (GRAY)

WINDOW WASHER AND HOSES
LAVEUR DE GLACE ET FLEXIBLES
MANGUERAS Y LAVAPARABRISAS

T193102 -UN-22AUG03

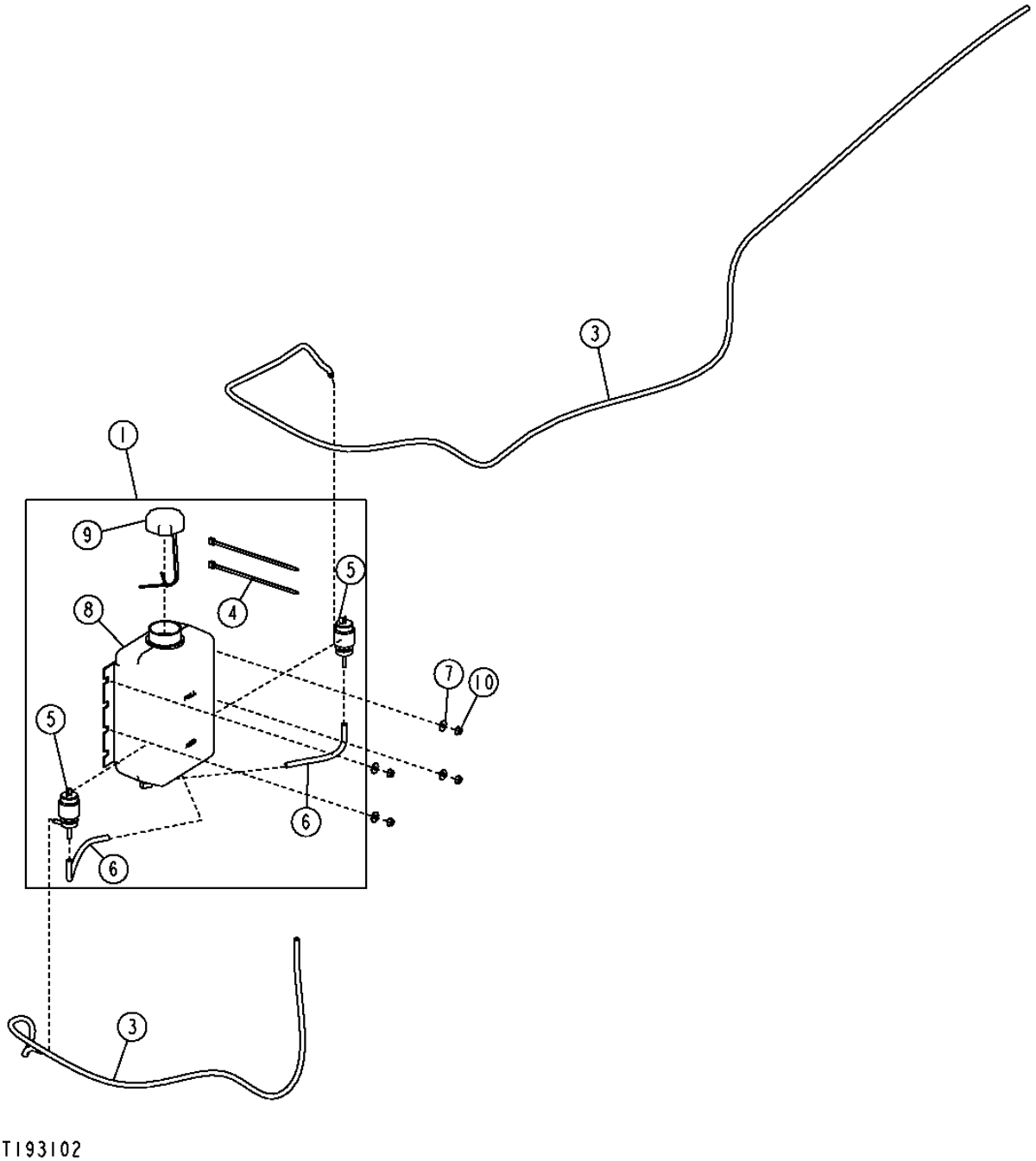

WINDOW WASHER AND HOSES
LAVEUR DE GLACE ET FLEXIBLES
MANGUERAS Y LAVAPARABRISAS

KEY	*PART NO.*	*PART NAME*	*QTY.*	*SERIAL NO.*	*REMARKS*
1	AT209947	TANK	1		
3	R120653	HOSE	AR		(CUT TO LENGTH)
4	R44302	TIE BAND	2		
5	AT106365	PUMP	2		
6	R120653	HOSE	AR		(CUT TO LENGTH)
7	24M7139	WASHER	4		6.400 X 18 X 1.600 MM, TO BOSSES ON ACCESS DOOR
8	T147618	TANK	1		
9	AT173193	CAP	1		
10	14M7303	FLANGE NUT	4		

FRONT WINDSHIELD WIPER
ESSUIE-GLACES AVANT
LIMPIAPARABRISAS FRONTAL

T188479 -UN-25MAR03

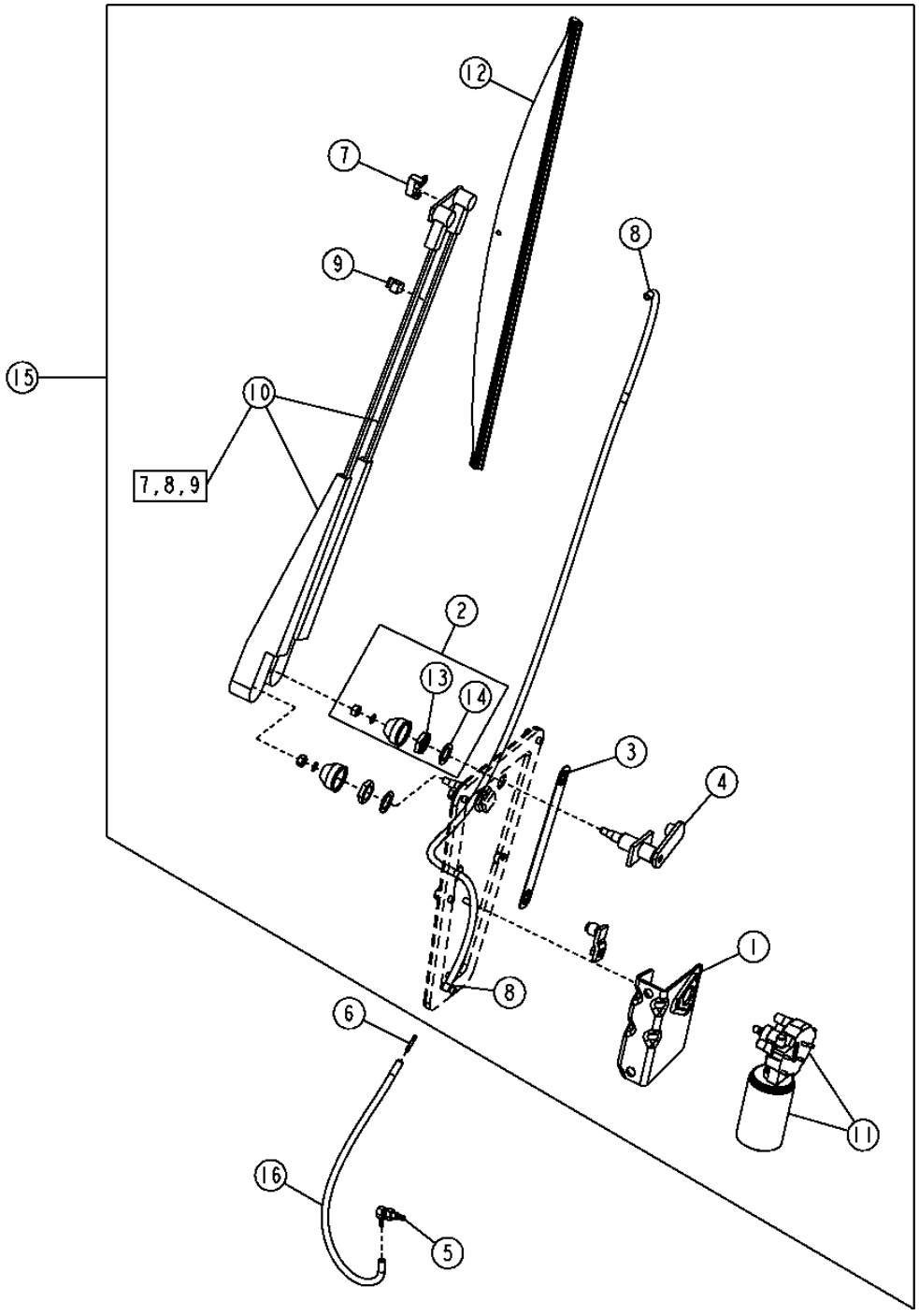

T188479

FRONT WINDSHIELD WIPER
ESSUIE-GLACES AVANT
LIMPIAPARABRISAS FRONTAL

KEY	PART NO.	PART NAME	QTY.	SERIAL NO.	REMARKS
1	RE16879	BRACKET	1		
2	RE40049	KIT	2		(WIPER MOUNTING HARDWARE)
3	T172652	LINK	1		
4	T202343	PIVOT	1		
5	AT116970	ELBOW FITTING	1		
6	T182919	FITTING	1		
7	AT137920	WINDSHIELD WASHER	1		
8	R54445	HOSE	1		
9	AT137921	CLIP	1		
10	AT209909	WIPER ARM	1		
11	AT209908	WIPER MOTOR	1		
12	AT324681	WIPER BLADE	1		
13	AT138180	NUT	2		
14	R63667	WASHER	2		
15	AT202726	WINDSHIELD WIPER	1		
16	R120653	HOSE	AR		(CTL) 15"

REAR WINDSHIELD WIPER
ESSUIE-GLACE ARRIERE
LIMPIADOR DE PARABRISAS TRASERO

T193133 -UN-18NOV03

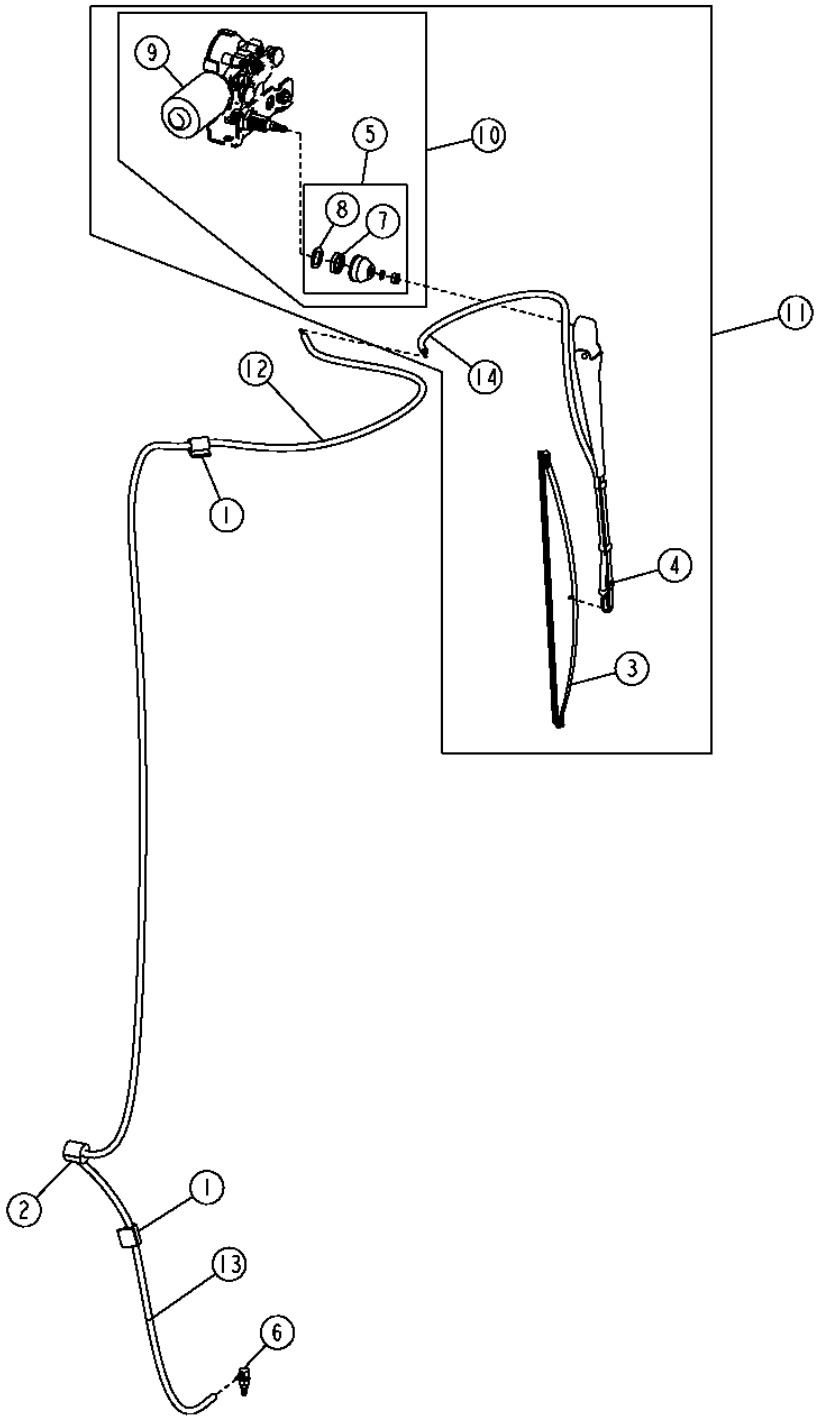

T193133

REAR WINDSHIELD WIPER
ESSUIE-GLACE ARRIERE
LIMPIADOR DE PARABRISAS TRASERO

KEY	*PART NO.*	*PART NAME*	*QTY.*	*SERIAL NO.*	*REMARKS*
1	T182909	CLIP	2		
2	T182860	ISOLATOR	1		
3	AL153660	WIPER BLADE	1		(INCLUDES R120653)
4	AT304633	WIPER ARM	1		
5	RE40049	KIT	1		(HARDWARE KIT)
6	AT116970	ELBOW FITTING	1		
7	AT138180	NUT	1		
8	R63667	WASHER	1		
9	AT209908	WIPER MOTOR	1		
10	AT324849	WIPER MOTOR	1		
11	.....	WINDSHIELD WIPER	1		
12	T182919	FITTING	1		
13	.....	BULK HOSE	AR		(MAKE FROM R120653) (CTL) 96"
14	R54445	HOSE	1		

WIPER MOUNTING BRACKETS
SUPPORTS MONTAGE ESSUIE-GLACE
ESCUADRAS DE MONTAJE DEL LIMPIAPARABRISAS

T193134 -UN-01AUG03

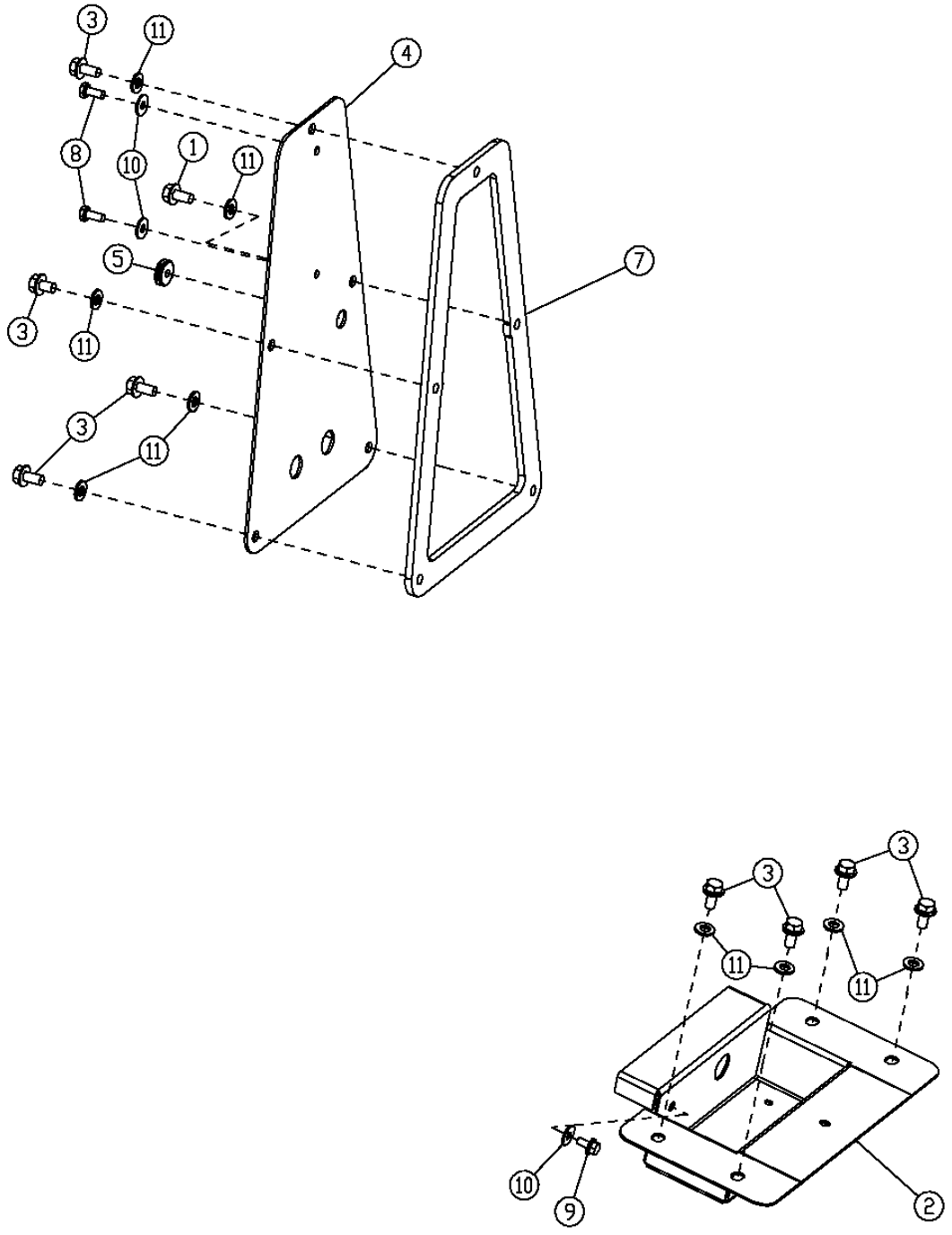

T193134

WIPER MOUNTING BRACKETS
SUPPORTS MONTAGE ESSUIE-GLACE
ESCUADRAS DE MONTAJE DEL LIMPIAPARABRISAS

KEY	*PART NO.*	*PART NAME*	*QTY.*	*SERIAL NO.*	*REMARKS*
1	19M7865	SCREW	1		M8 X 16
2	T181412	TRAY	1		BRACKET, REAR WIPER MOUNTING
3	19M7865	SCREW	8		M8 X 16
4	T181413	PLATE	1		
5	T182874	GROMMET	1		
7	T167754	SEAL	1		
8	19M7775	SCREW	2		
9	19M7774	SCREW	1		M6 X 12
10	24M7139	WASHER	3		6.400 X 18 X 1.600 MM
11	24M7238	WASHER	9		

CAB LEFT SIDE CONSOLE COVER
COUVERCLE CONSOLE GAUCHE CABINE
CUBIERTA DE CONSOLA DE LADO IZQUIERDO DE CABINA

T192999 -UN-20AUG03

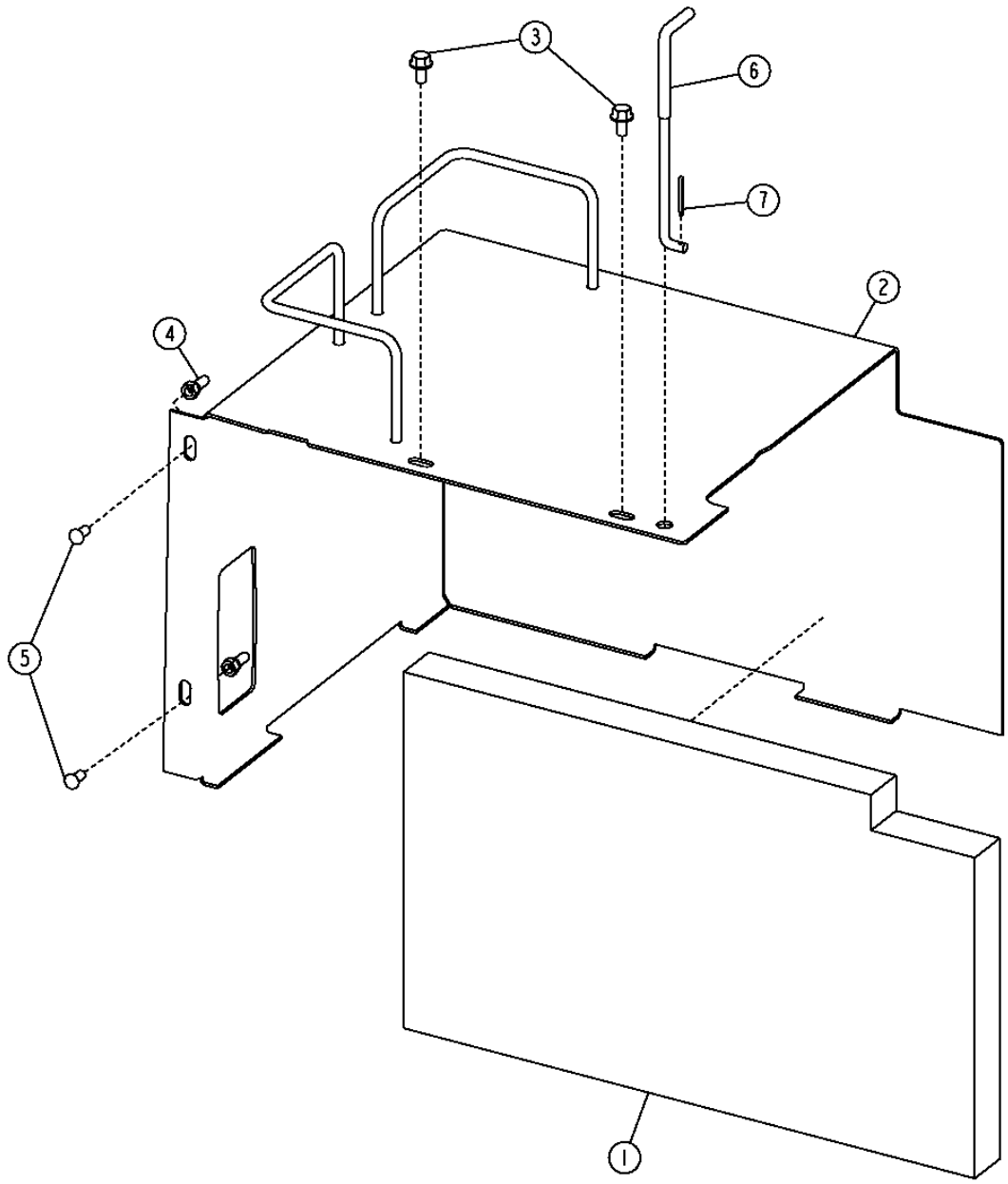

T192999

CAB LEFT SIDE CONSOLE COVER
COUVERCLE CONSOLE GAUCHE CABINE
CUBIERTA DE CONSOLA DE LADO IZQUIERDO DE CABINA

KEY	*PART NO.*	*PART NAME*	*QTY.*	*SERIAL NO.*	*REMARKS*
1	T171849	ISOLATOR	1		
2	AT227549	COVER	1		
3	19M7774	SCREW	2		M6 X 12
4	14M7376	LOCK NUT	2		M6
5	T167593	SCREW	2		
6	T167764	ROD	1		
7	11M7081	COTTER PIN	1		2.500 X 20 MM

RIGHT HAND CAB CONSOLE
CONSOLE CABINE DROITE
CONSOLA DE LA CABINA DEL LADO DERECHO

T216042 -UN-25OCT05

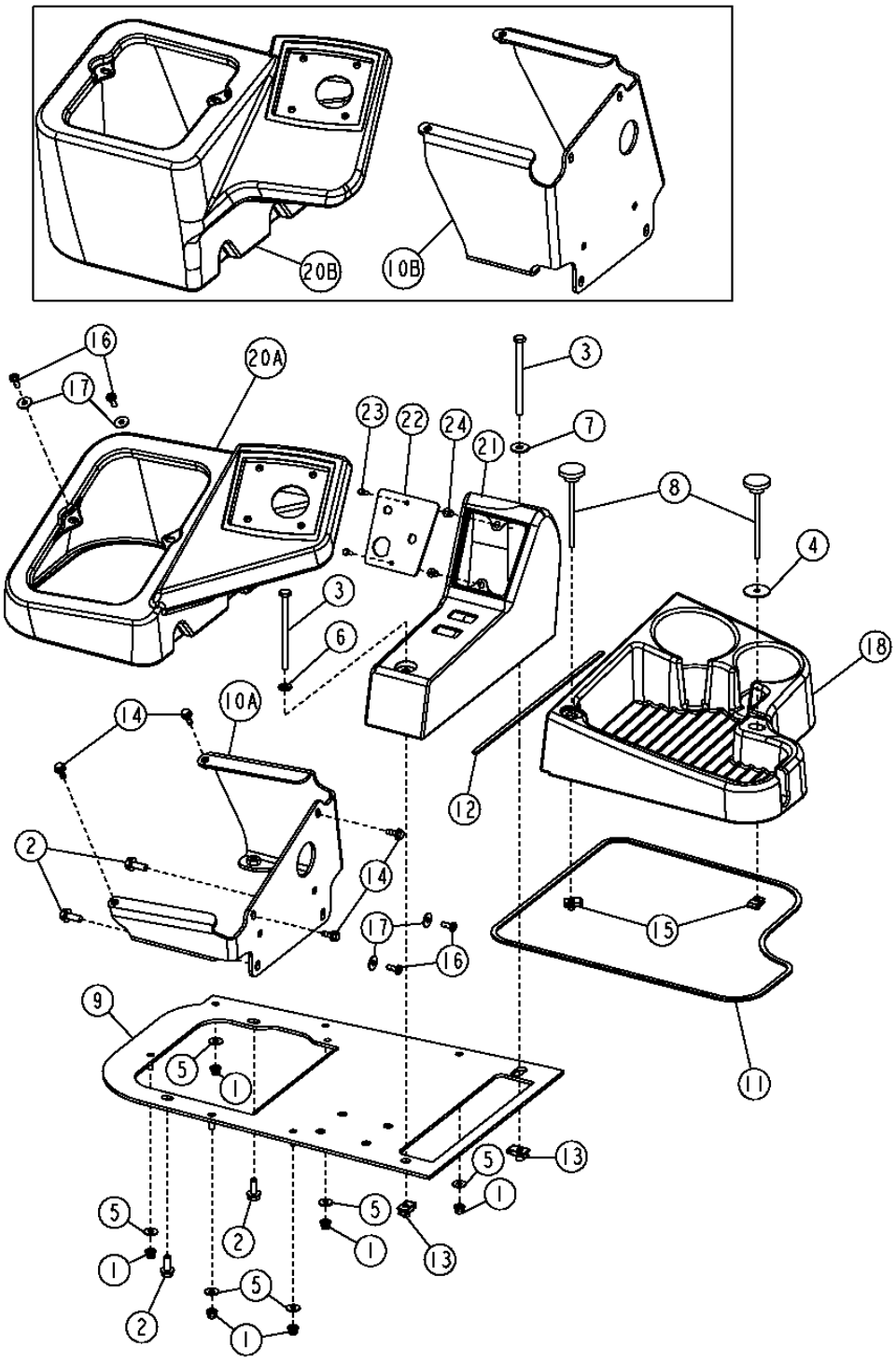

RIGHT HAND CAB CONSOLE
CONSOLE CABINE DROITE
CONSOLA DE LA CABINA DEL LADO DERECHO

KEY	PART NO.	PART NAME	QTY.	SERIAL NO.	REMARKS
1	14M7165	LOCK NUT	6		M6
2	19M7866	SCREW	4		M8 X 20
3	19M7997	CAP SCREW	2		M8 X 110
4	24H1695	WASHER	1		9/32" X 1-3/8" X 0.065"
5	24M7139	WASHER	6		6.400 X 18 X 1.600 MM
6	24M7238	WASHER	1		8.700 X 17 X 2 MM
7	24M7298	WASHER	1		8.400 X 25 X 2 MM
8	AT226334	KNOB	2		
9	AT310413	PLATE	1		
10A	AT310414	BRACKET	1		(SHORT)
10B	AT310412	BRACKET	1		(TALL)
11	.....	SEALING TRIM	1		(MAKE FROM T180533) (CTL)
12	T207925	ISOLATOR	1		CTL (4.25')
13	H156360	NUT	2		
14	M113243	SCREW	4		
15	M84972	NUT	2		
16	T133674	SELF-LOCKING SCREW	4		
17	24H1821	WASHER	4		
18	T182612	COVER	1		
20A	T200267	COVER	1		(SHORT)
20B	T196622	COVER	1		(TALL)
21	T202883	CONSOLE	1		
22	T203128	PLATE	1		
23	T82791	SCREW	2		
24	T82792	NUT	2		

FRESH AIR HOUSING COVER
COUVERCLE BATI FILTRE AIR FRAIS
CUBIERTA DE CAJA DE AIRE FRESCO

TX1013318 -UN-19OCT06

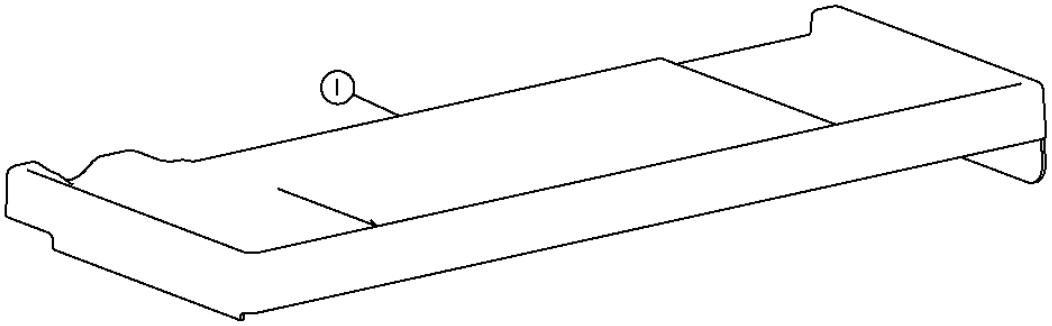

TX1013318

FRESH AIR HOUSING COVER
COUVERCLE BATI FILTRE AIR FRAIS
CUBIERTA DE CAJA DE AIRE FRESCO

KEY	*PART NO.*	*PART NAME*	*QTY.*	*SERIAL NO.*	*REMARKS*
1	AT222402	COVER	1		

RIGHT ARM REST
ACCOUDOIR DROIT
APOYABRAZOS DERECHO

T212897 -UN-26JUL05

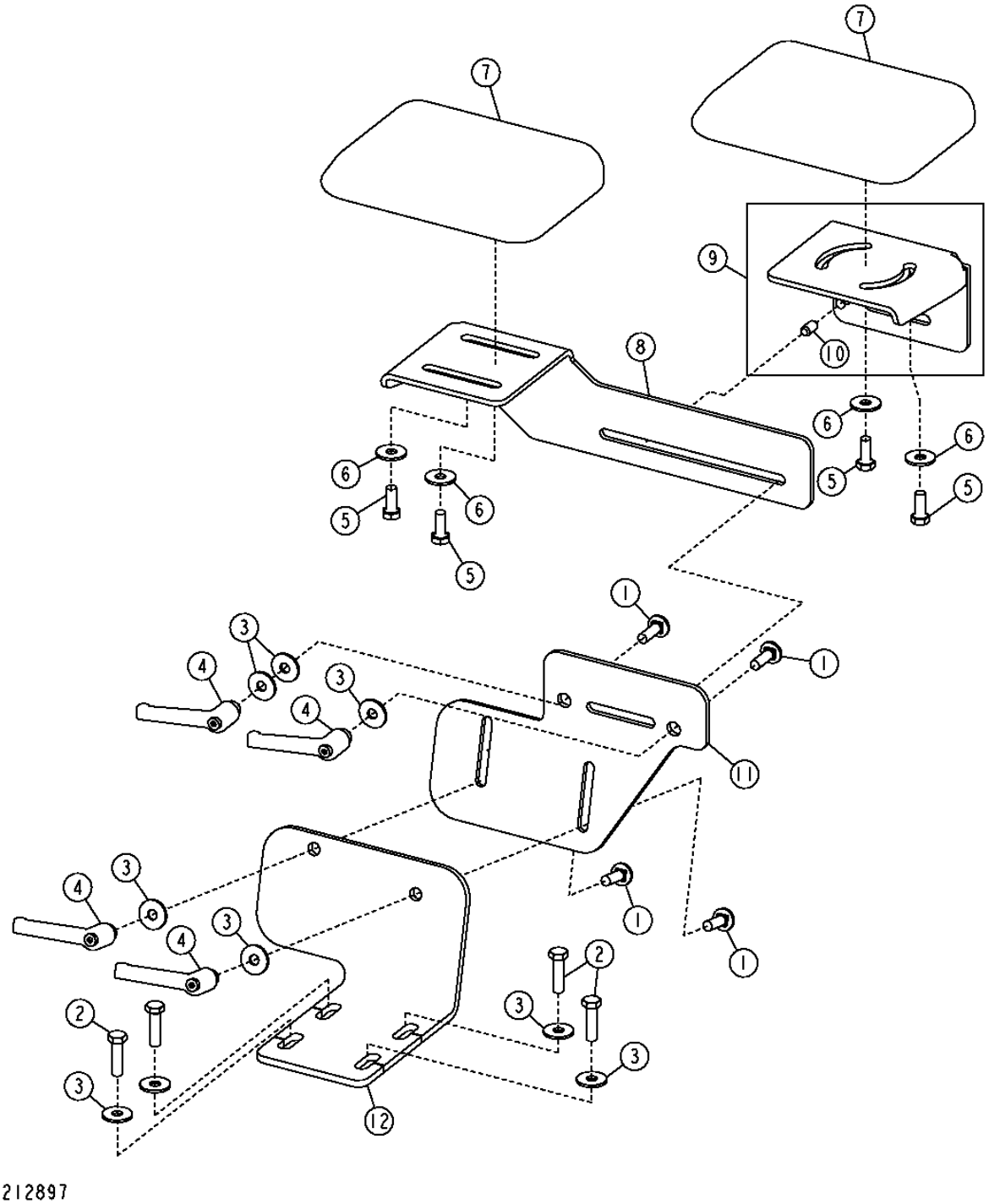

INSTURMENT & CONTROL MOUNTING STRUCTURE 1816

RIGHT ARM REST
ACCOUDOIR DROIT
APOYABRAZOS DERECHO

KEY	PART NO.	PART NAME	QTY.	SERIAL NO.	REMARKS
1	03M7185	BOLT	4		M8 X 25
2	19M7868	SCREW	4		M8 X 30
3	24M7298	WASHER	9		8.400 X 25 X 2 MM
4	AT227063	LEVER	4		
5	19M7866	SCREW	4		M8 X 20
6	24M7298	WASHER	4		8.400 X 25 X 2 MM
7	AT327621	CUSHION	2		
8	T200161	SUPPORT	1		
9	AT300115	BRACKET	1		
10	44M7027	PIN	1		
11	T209601	SUPPORT	1		(SINGLE LEVER CONTROLLER)
	T200158	SUPPORT	1		(TWO LEVER CONTROLLER)
12	T209602	SUPPORT	1		(SINGLE LEVER CONTROLLER)
	T200159	SUPPORT	1		(TWO LEVER CONTROLLER)

SEAT AND SEAT SUSPENSION
SIEGE ET SUSPENSION DE SIEGE
ASIENTO Y SUSPENSION DEL ASIENTO

T195239 -UN-21OCT03

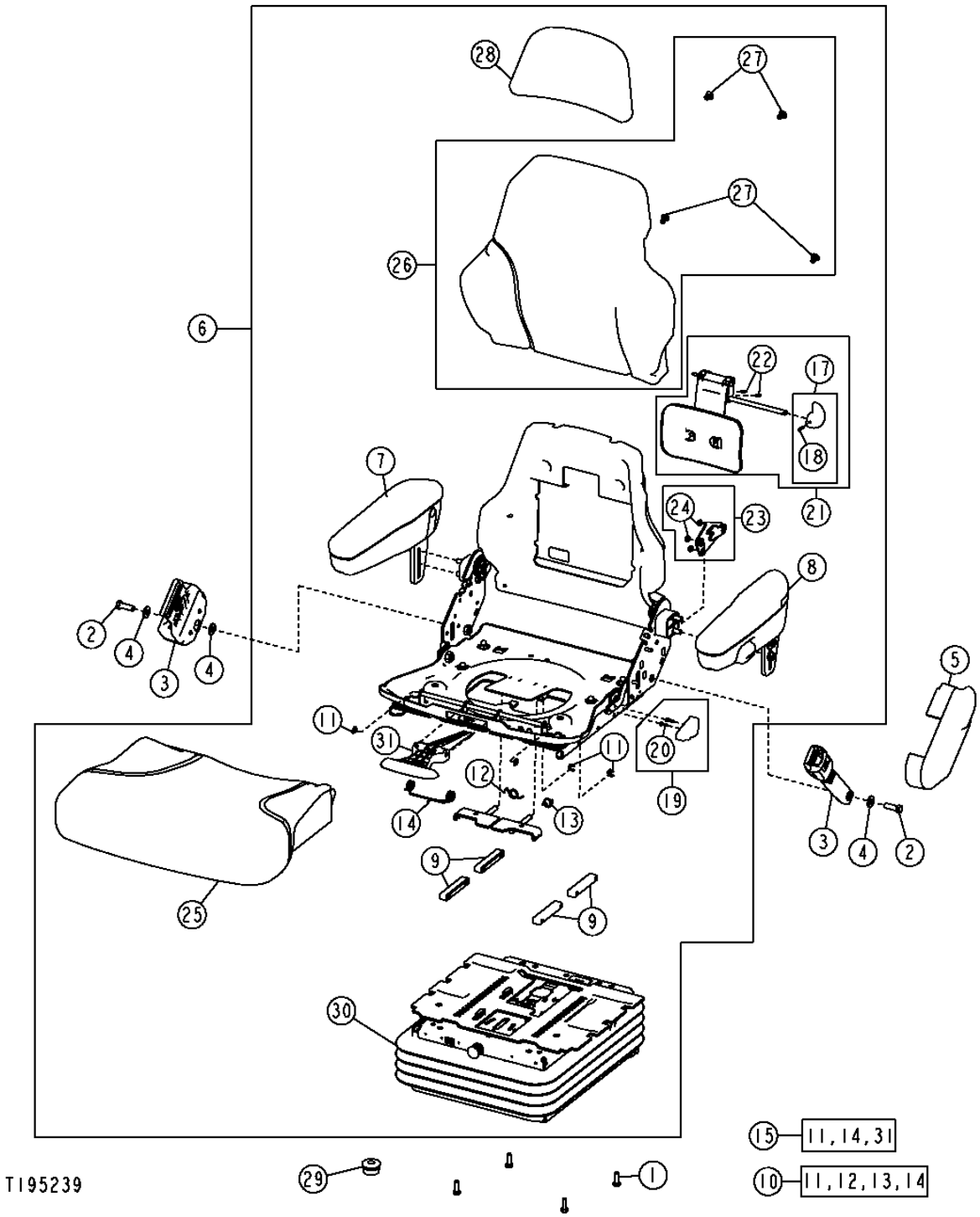

SEAT AND SEAT SUSPENSION
SIEGE ET SUSPENSION DE SIEGE
ASIENTO Y SUSPENSION DEL ASIENTO

KEY	PART NO.	PART NAME	QTY.	SERIAL NO.	REMARKS
1	19M7866	SCREW	4		
2	19H3569	CAP SCREW	2		
3	AT308199	SEAT BELT	1		
4	T105740	WASHER	4		
5	T163962	COVER	1		
6	AT311919	SEAT	1		GRAY VINYL
	AT310435	SEAT	1		GRAY CLOTH
7	AT195441	ARMREST KIT	1		(R.H.)
	AT315715	PAD	1		
8	AT195442	ARMREST KIT	1		(L.H.)
	AT315761	PAD	1		
9	AT209020	KIT	1		SLIDE PUCK KIT
10	AT209021	KIT	1		SLIDE SPRING KIT
11	R72655	SNAP RING	4		
12	T163334	SPRING	1		
13	T163335	SPRING	1		
14	T163336	TORSION SPRING	1		
15	AT209022	HOSE KIT	1		SLIDE CONTROL KIT
17	AT209024	KIT	1		LUMBAR KNOB KIT
18	34H262	SPRING PIN	1		
19	AT209025	KIT	1		RECLINER KNOB KIT
20	37H121	SCREW	1		
21	AT209026	KIT	1		LUMBAR SERVICE KIT
22	34H387	SPRING PIN	2		
23	AT209225	KIT	1		RECLINER SERVICE KIT (INCLUDES RECLINER KNOB KIT AND TORSION SPRING)
24	M453T	LOCK NUT	3		
25	AT221015	SEAT	1		GRAY VINYL
	AT308795	CUSHION	1		GRAY CLOTH
26	AT221016	PAD	1		GRAY VINYL
	AT308796	CUSHION	1		GRAY CLOTH
27	T171686	CLIP	4		
28	AT221017	CUSHION	1		GRAY VINYL
	AT308797	CUSHION	1		GRAY CLOTH
29	T182870	ISOLATOR	1		
30	AT311918	SEAT SUSPENSION	1		
31	.....	CONTROL	1		

SEAT SUSPENSION
SUSPENSION DE SIEGE
SUSPENSION DEL ASIENTO

T195125 -UN-25SEP03

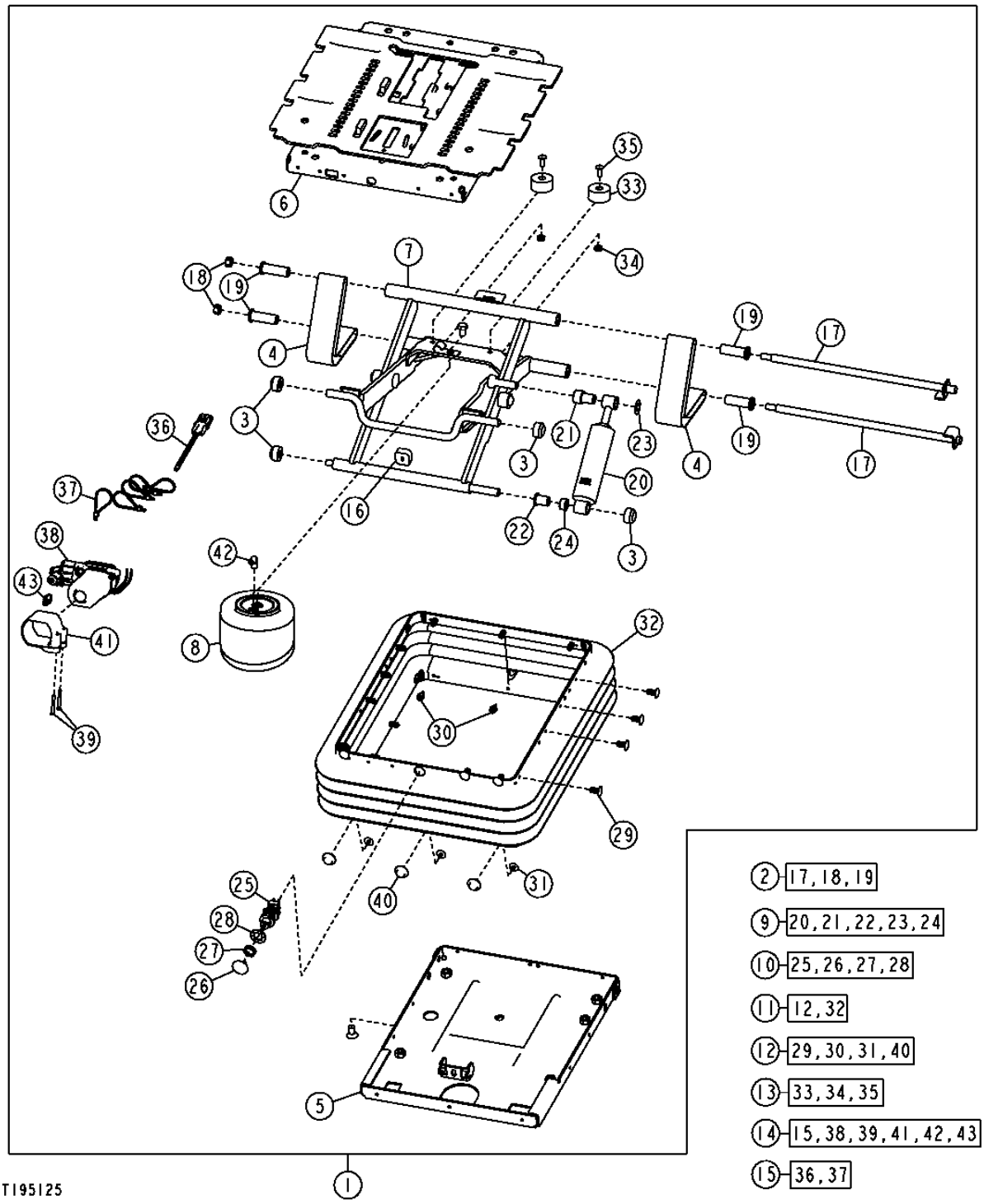

SEAT SUSPENSION
SUSPENSION DE SIEGE
SUSPENSION DEL ASIENTO

KEY	PART NO.	PART NAME	QTY.	SERIAL NO.	REMARKS
1	AT311918	SEAT SUSPENSION	1		
2	AT173313	SHAFT	1		
3	AT173314	SEAT BEARING ROLLER KIT	1		
4	AT173315	KIT	1		TETHER BELT SERVICE KIT
5	AT208483	HOUSING	1		
6	AT313399	HOUSING	1		
7	AT208485	ARM	1		
8	AT208486	ABSORBER	1		(AIR BLADDER SPRING)
9	AT208487	KIT	1		SUSPENSION SHOCK SERVICE KIT
10	AT208490	SELECTIVE CONTROL VALVE	1		
11	AT208491	KIT	1		(INCLUDES AT173321) BOOT SERVICE KIT
12	AT173321	SEAT SUSPENSION BOOT KIT	1		
13	AT209469	KIT	1		BUMPER SERVICE KIT
14	AT226676	COMPRESSOR	1		
15	AT208488	WIRING HARNESS	1		
16	T55224	BUMPER	1		
17	.....	SHAFT	2		(ORDER AT173313)
18	.....	LOCK NUT	2		(ORDER AT173313)
19	.....	BUSHING	4		(ORDER AT173313)
20	.....	SHOCK ABSORBER	1		(ORDER AT208487)
21	.....	BEARING	1		(ORDER AT208487)
22	.....	ECCENTRIC LOCKING COLLAR	1		(ORDER AT208487)
23	.....	PUSH NUT	1		(ORDER AT208487)
24	.....	SPACER	1		(ORDER AT208487)
25	.....	HYD ACTUATED CONTROL VALVE	1		(ORDER AT208490)
26	.....	KNOB	1		(ORDER AT208490)
27	.....	NUT	1		(ORDER AT208490)
28	.....	LOCK WASHER	1		(ORDER AT208490)
29	.....	CLIP	23		(ORDER AT173321)
30	.....	RIVET	3		(ORDER AT173321)
31	.....	RIVET	3		(ORDER AT173321)
32	.....	BOOT	1		(ORDER AT208491)
33	.....	BUMPER	2		(ORDER AT209469)
34	.....	LOCK NUT	2		(ORDER AT209469)
35	.....	SCREW	2		(ORDER AT209469)
36	.....	WIRING HARNESS	1		(ORDER AT208488)
37	.....	TIE BAND	4		(ORDER AT208488)
38	.....	COMPRESSOR	1		(ORDER AT226676)
39	.....	SPRING PIN	2		(ORDER AT226676)
40	.....	RIVET	6		(ORDER AT173321)
41	.....	CLAMP	1		(ORDER AT226676)
42	.....	PIPE ELBOW	1		(ORDER AT226676)
43	.....	TAB CONNECTOR BODY	1		(ORDER AT226676)

ENGINE COMPARTMENT STEP
MARCHE DE COMPARTIMENT MOTEUR
PELDANO DEL COMPARTIMIENTO DEL MOTOR

T193894 -UN-20AUG03

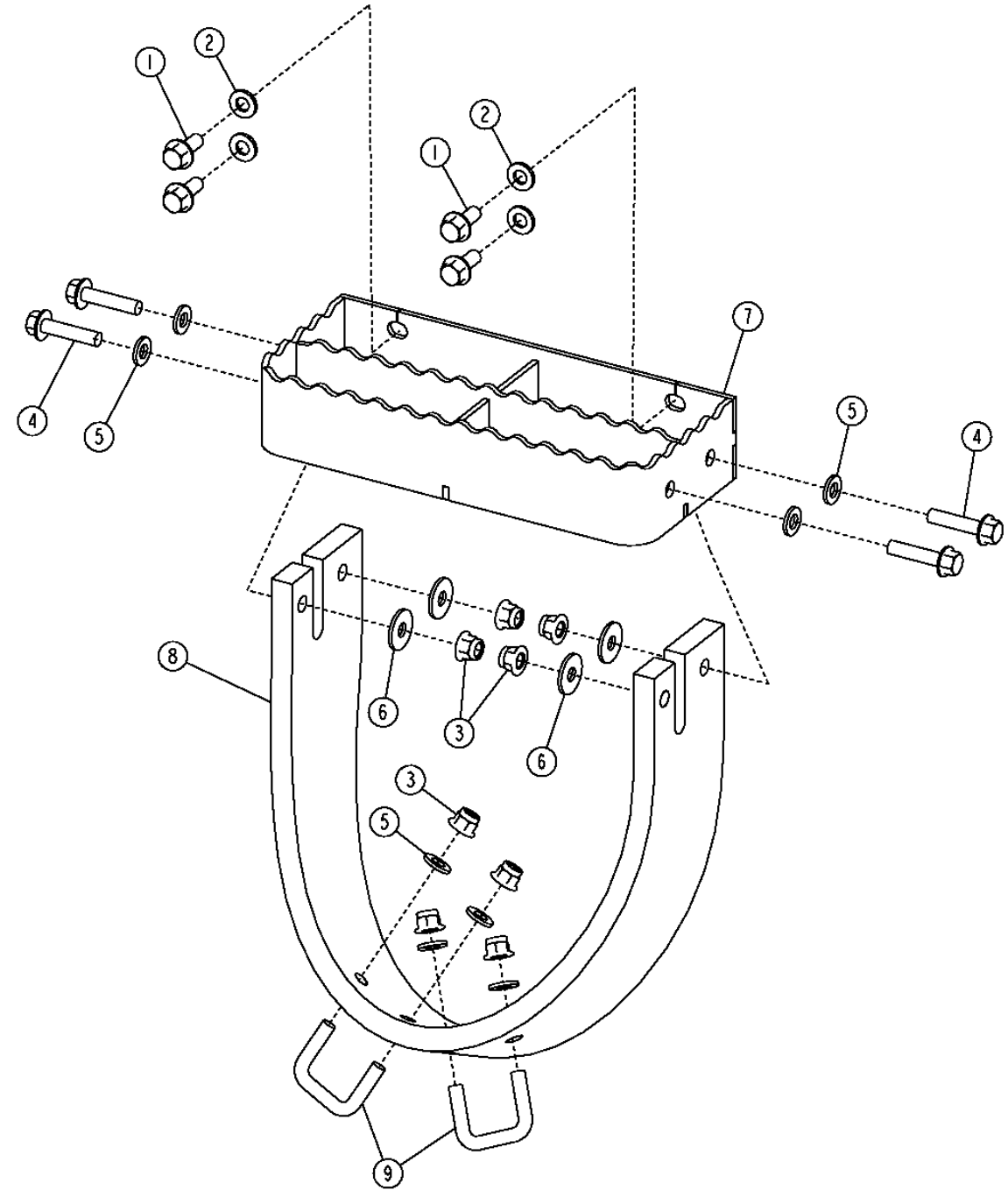

ENGINE COMPARTMENT STEP
MARCHE DE COMPARTIMENT MOTEUR
PELDANO DEL COMPARTIMIENTO DEL MOTOR

KEY	PART NO.	PART NAME	QTY.	SERIAL NO.	REMARKS
1	19M7785	SCREW	4		M10 X 25
2	24M7239	WASHER	4		10.700 X 21 X 2.500 MM
3	14M7400	LOCK NUT	8		M10, (RUBBER)
4	19M7806	SCREW	4		M10 X 50
5	24M7239	WASHER	8		10.700 X 21 X 2.500 MM
6	24M7296	WASHER	4		10.500 X 30 X 2.500 MM
7	AT228809	STEP	1		
8	T217427	STRAP	1		
9	W29909	U-BOLT	2		

ACCESS PLATFORM AND STEPS
PLATE-FORME ACCES ET MARCHES
PLATAFORMA DE ACCESO Y PELDANOS

T151369 -UN-14FEB02

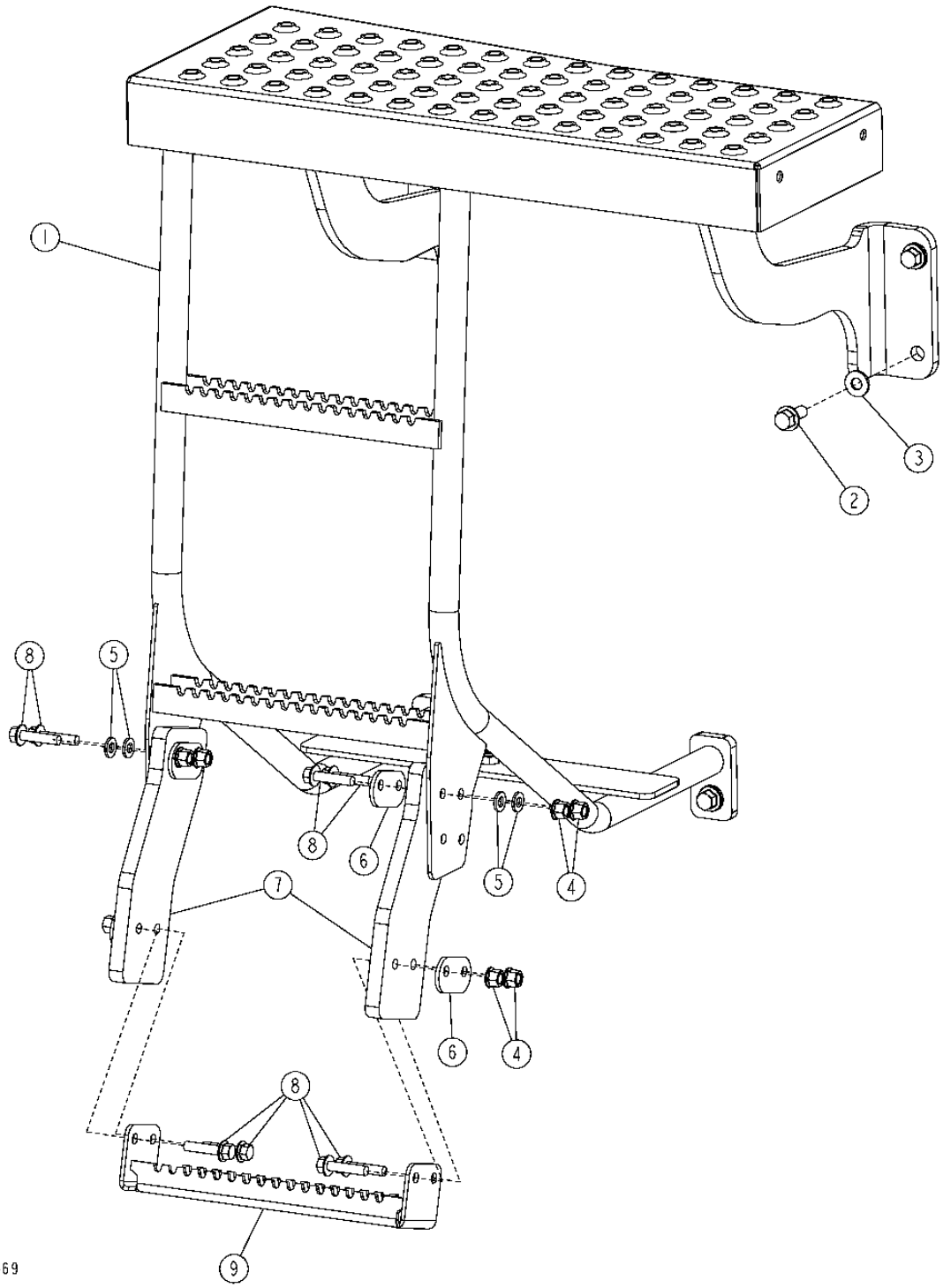

ACCESS PLATFORM AND STEPS
PLATE-FORME ACCES ET MARCHES
PLATAFORMA DE ACCESO Y PELDANOS

KEY	*PART NO.*	*PART NAME*	*QTY.*	*SERIAL NO.*	*REMARKS*
1	AT327500	LADDER	1		
2	19M7789	SCREW	5		M12 X 30
3	T178063	WASHER	5		
4	14M7400	LOCK NUT	8		
5	24M7239	WASHER	4		
6	T173779	STRAP	4		
7	T177503	STRAP	2		
8	19M7805	SCREW	8		
9	T176870	STEP	1		

CLOSE MOUNTED STEPS
MARCHES RAPPROCHEES
PELDANOS DE MONTAJE ESTRECHO

TX1013589 -UN-05DEC06

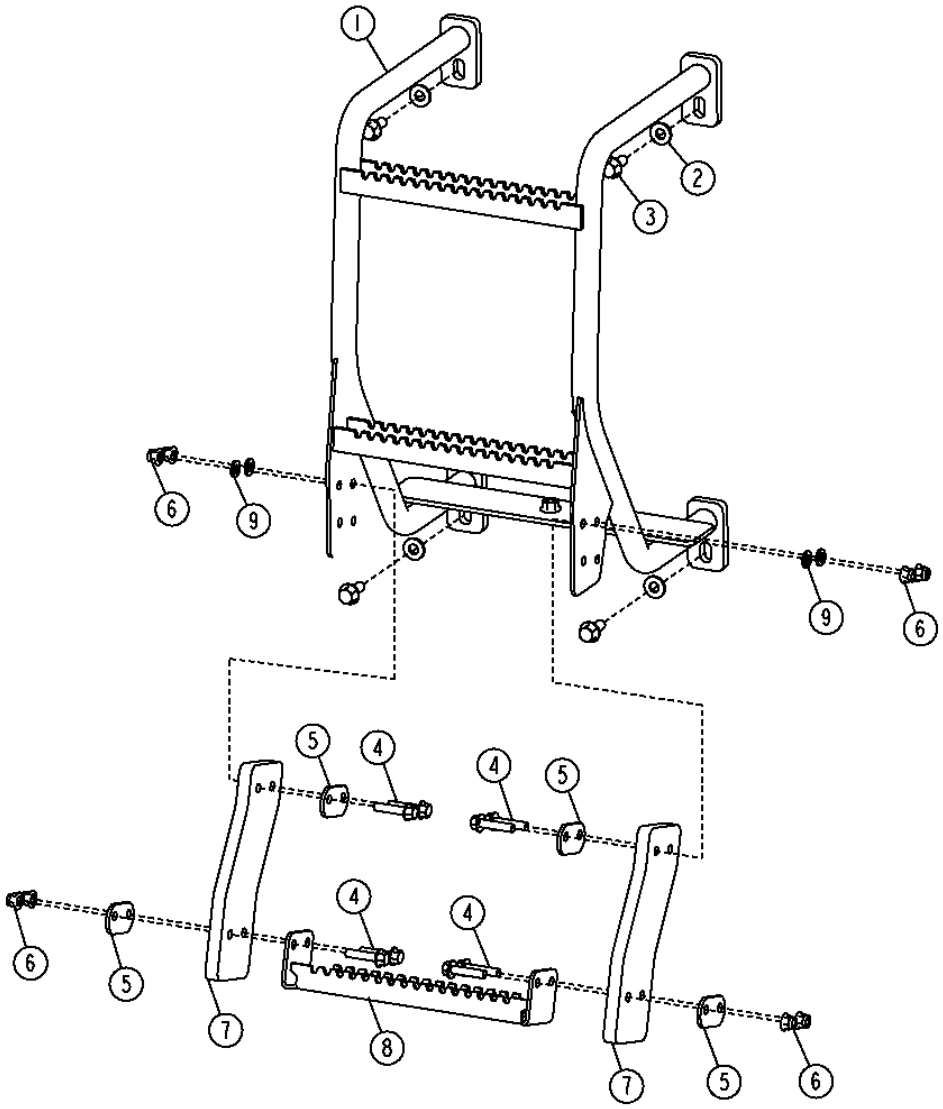

TX1013589

CLOSE MOUNTED STEPS
MARCHES RAPPROCHEES
PELDANOS DE MONTAJE ESTRECHO

KEY	PART NO.	PART NAME	QTY.	SERIAL NO.	REMARKS
1	AT209995	STEP	1		
2	T178063	WASHER	4		
3	19M7789	SCREW	4		M12 X 30
4	19M7805	SCREW	8		M10 X 45
5	T173779	STRAP	4		
6	14M7400	LOCK NUT	8		M10
7	T177503	STRAP	2		
8	T176870	STEP	1		
9	24M7239	WASHER	4		10.700 X 21 X 2.500 MM

CAB MONITOR CONSOLE
CONSOLE MONITEUR CABINE
CONSOLA DE MONITOR DE CABINA

T193669 -UN-24OCT03

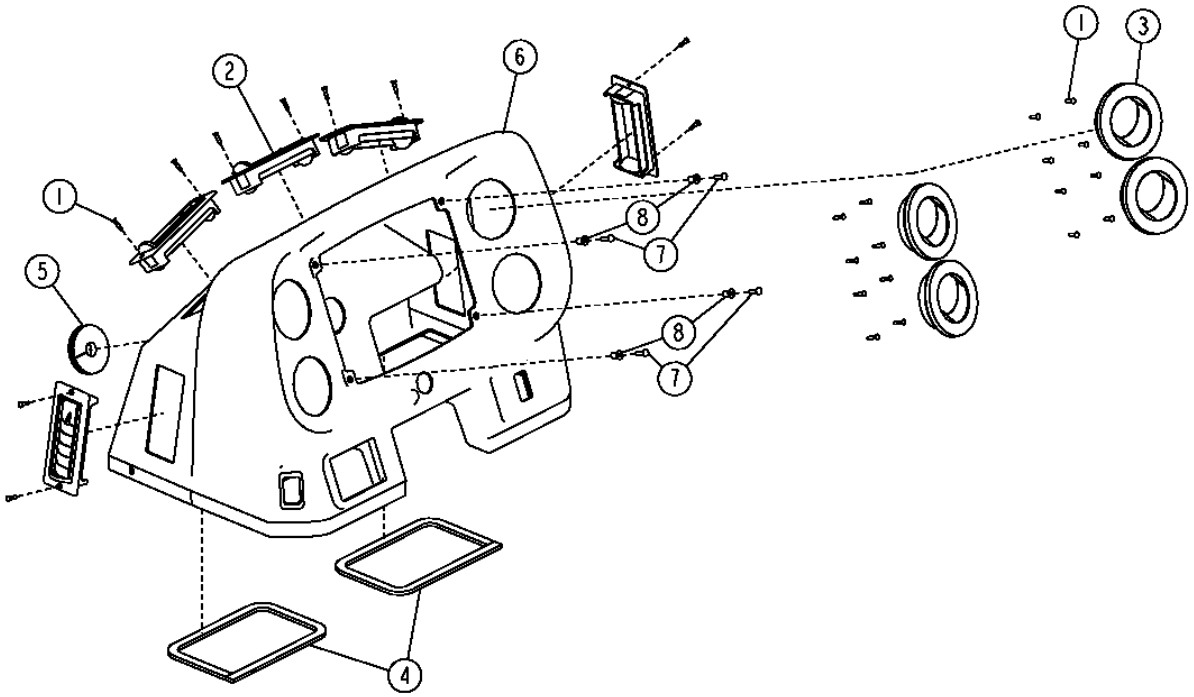

T193669

CAB MONITOR CONSOLE
CONSOLE MONITEUR CABINE
CONSOLA DE MONITOR DE CABINA

KEY	PART NO.	PART NAME	QTY.	SERIAL NO.	REMARKS
1	37M7333	SCREW	26		
2	AT227668	LOUVER	5		
3	AT227669	LOUVER	4		
4	H81330	ISOLATOR	2		
5	R117845	GROMMET	1		
6	T196471	CONSOLE	1		
7	T82791	SCREW	4		
8	T82792	NUT	4		

CANOPY MONITOR CONSOLE
CONSOLE MONITEUR EVENT
CONSOLA DEL MONITOR DEL DOSEL

T193739 -UN-19AUG03

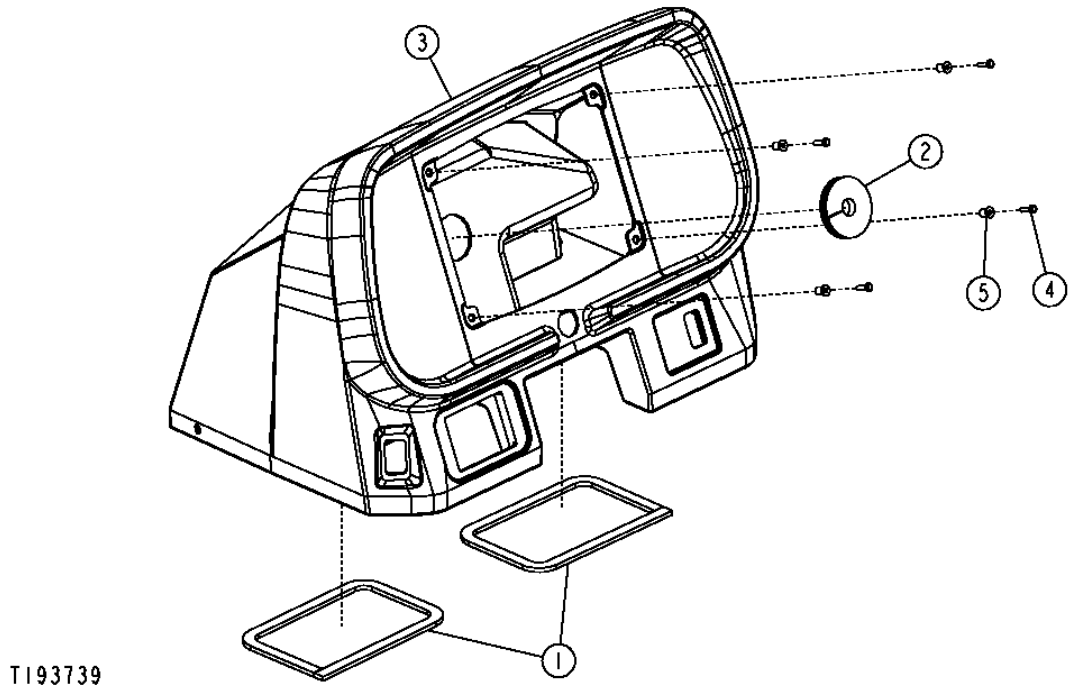

CANOPY MONITOR CONSOLE
CONSOLE MONITEUR EVENT
CONSOLA DEL MONITOR DEL DOSEL

KEY	PART NO.	PART NAME	QTY.	SERIAL NO.	REMARKS
1	H81330	ISOLATOR	2		
2	R117845	GROMMET	1		
3	T196621	CONSOLE	1		
4	T82791	SCREW	4		
5	T82792	NUT	4		

OPERATOR STATION FRONT PEDESTAL
SOCLE AVANT DE POSTE DE CONDUITE
PEDESTAL DELANTERO DEL PUESTO DEL OPERADOR

T193670 -UN-20AUG03

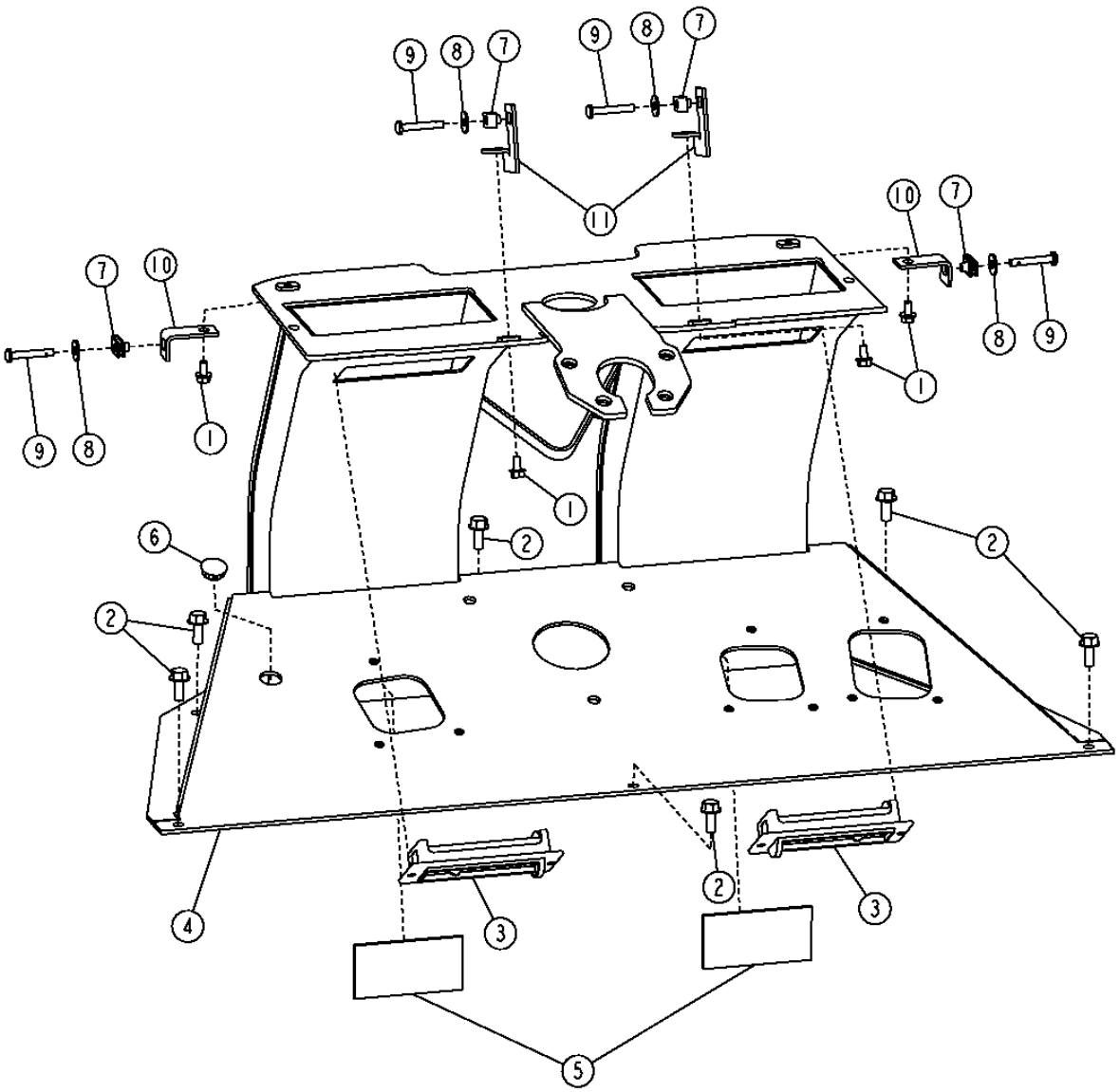

T193670

OPERATOR STATION FRONT PEDESTAL
SOCLE AVANT DE POSTE DE CONDUITE
PEDESTAL DELANTERO DEL PUESTO DEL OPERADOR

KEY	*PART NO.*	*PART NAME*	*QTY.*	*SERIAL NO.*	*REMARKS*
1	19M7774	SCREW	4		M6 X 12
2	19M7866	SCREW	6		M8 X 20
3	AT227668	LOUVER	2		
4	AT227965	PEDESTAL	1		
5	T66418	ISOLATOR	2		
6	H34597	PLUG	1		
7	M84972	NUT	4		
8	24H1821	WASHER	4		
9	T134874	SELF-LOCKING SCREW	4		
10	T196711	ANGLE	2		(BACK)
11	T196712	BRACKET	2		(FRONT)

HEATING AND AIR CONDITIONING OUTLET DUCTS
CONDUITS SORTIE CHAUFFAGE ET CLIMATISATION
REGISTROS DE SALIDA DEL CALEFACTOR Y ACONDICIONADOR DE AIRE

TX1013300 -UN-10OCT06

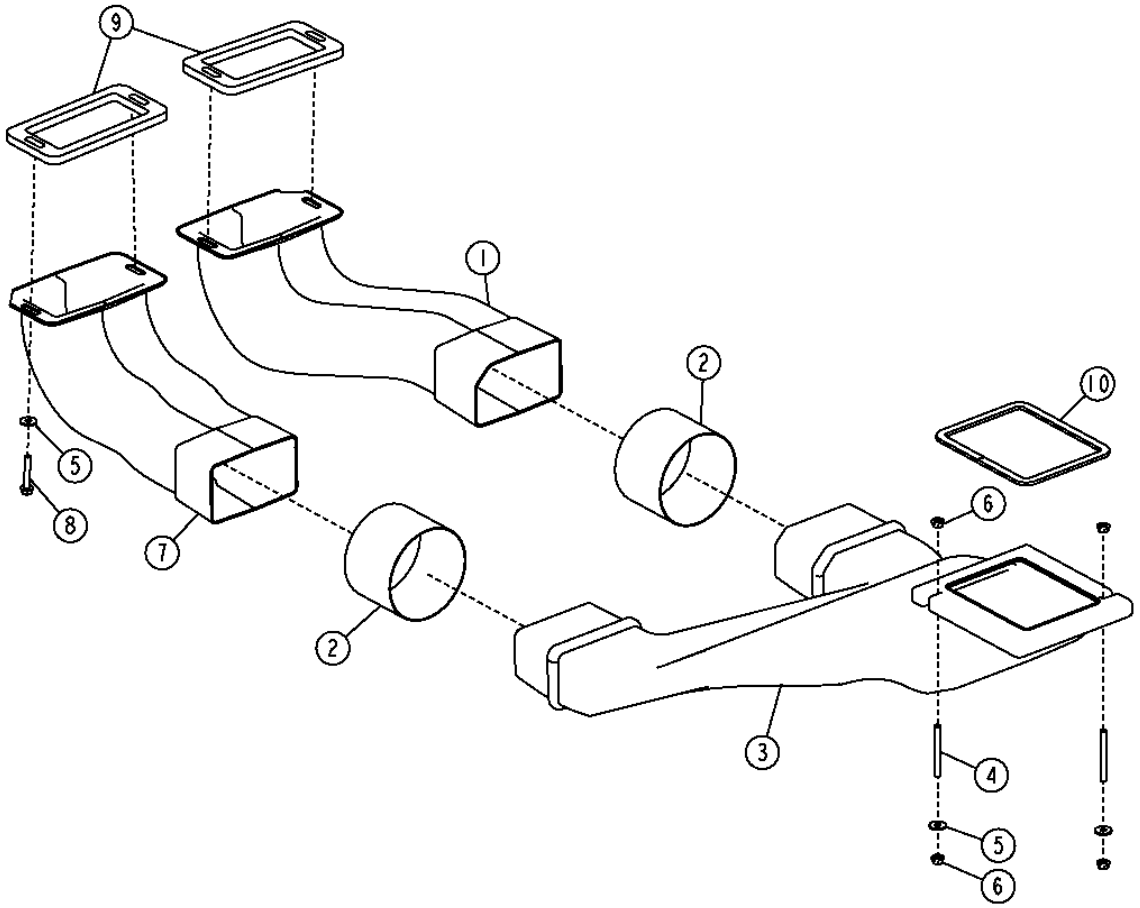

TX1013300

HEATING AND AIR CONDITIONING OUTLET DUCTS
CONDUITS SORTIE CHAUFFAGE ET CLIMATISATION
REGISTROS DE SALIDA DEL CALEFACTOR Y ACONDICIONADOR DE AIRE

KEY	*PART NO.*	*PART NAME*	*QTY.*	*SERIAL NO.*	*REMARKS*
1	T173768	AIR DUCT	1		
2	T171082	SEAL	2		
3	T207669	AIR DUCT	1		
4	T167759	STUD	2		
5	24M7298	WASHER	6		8.400 X 25 X 2 MM
6	14M7298	FLANGE NUT	2		M8
7	T156256	AIR DUCT	1		
8	19M7800	SCREW	4		M8 X 50
9	T182872	SEAL	2		
10	H81330	ISOLATOR	1		

HEATER HOSES AND FITTINGS
FLEXIBLES ET RACCORDS CHAUFFAGE
MANGUERAS Y ADAPTADORES DEL CALEFACTOR

T196750 -UN-18DEC03

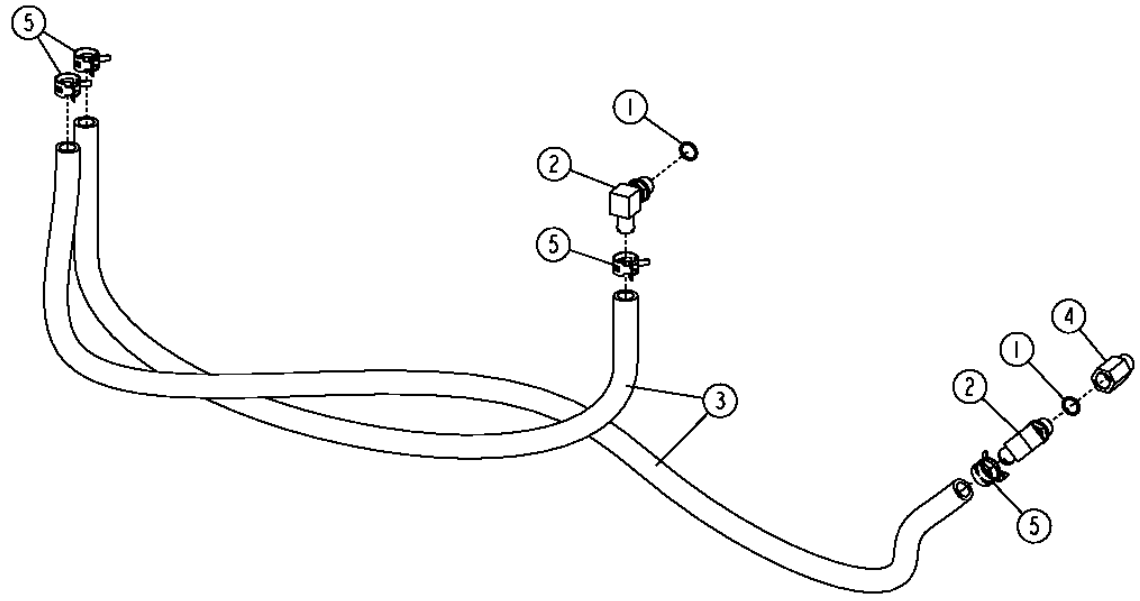

T196750

HEATER HOSES AND FITTINGS
FLEXIBLES ET RACCORDS CHAUFFAGE
MANGUERAS Y ADAPTADORES DEL CALEFACTOR

KEY	*PART NO.*	*PART NAME*	*QTY.*	*SERIAL NO.*	*REMARKS*
1	51M7043	O-RING	2		15.300 X 2.200 MM
2	AT174697	ELBOW FITTING	2		
3	TY22328	BULK HOSE	AR		(CUT TO LENGTH)
4	RE520229	ADAPTER FITTING	1		
5	T184924	HOSE CLAMP	4		

A/C COMPRESSOR
COMPRESSEUR DE CLIMATISATION
COMPRESOR DE ACONDICIONADOR DE AIRE

TX1013054 -UN-18OCT06

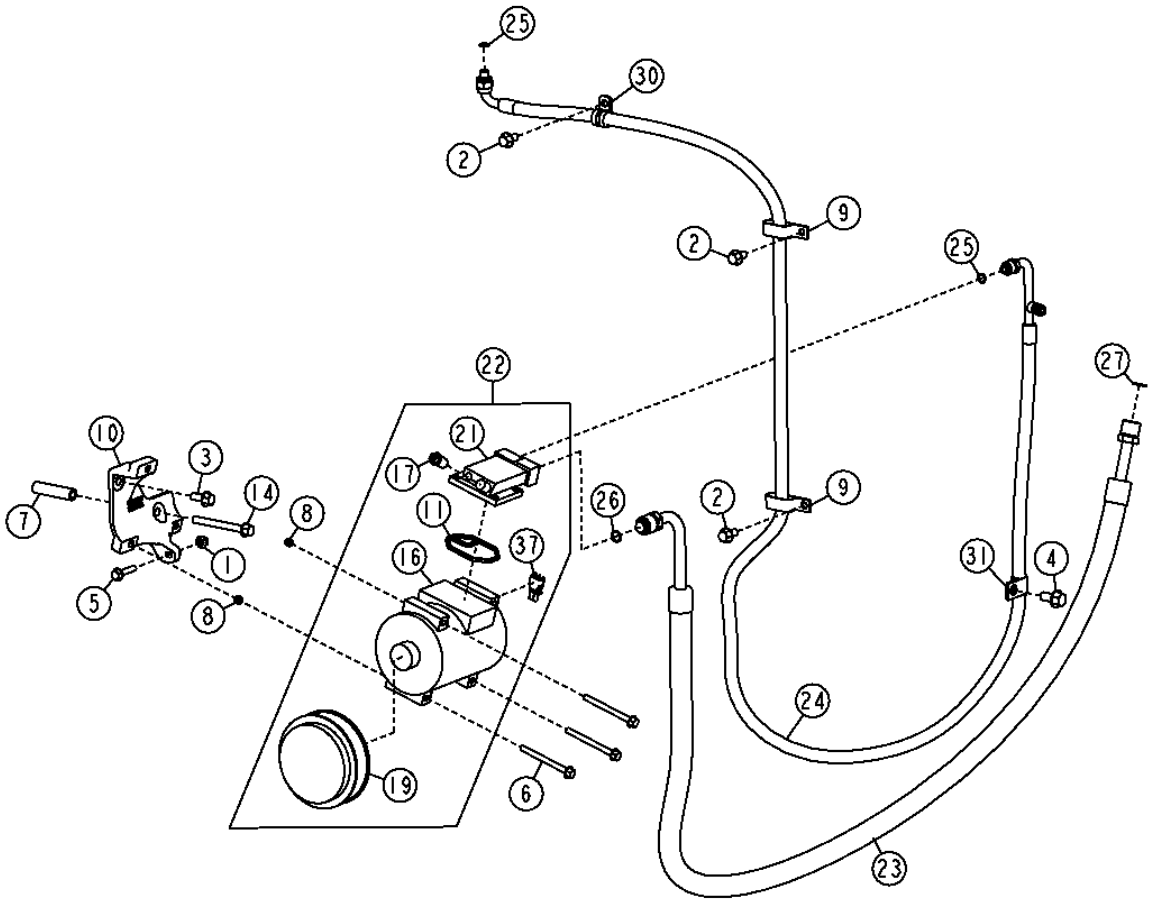

TX1013054

A/C COMPRESSOR
CONDENSEUR DE CLIMATISATION
COMPRESOR DE ACONDICIONADOR DE AIRE

KEY	PART NO.	PART NAME	QTY.	SERIAL NO.	REMARKS
1	14M7298	FLANGE NUT	1		M8
2	19M7784	SCREW	3		M10 X 20
3	19M7785	SCREW	1		M10 X 25
4	19M7788	SCREW	1		M12 X 25
5	19M7798	SCREW	1		M8 X 40
6	19M7913	SCREW	3		M8 X 90
7	28H2659	BUSHING	1		0.423" X 0.675" X 2-3/4"
8	34M7189	SPRING PIN	2		11 X 8 MM
9	R56171	CLIP	2		
10	T223616	BRACKET	1		
11	R115742	SEAL	1		
13	R115743	COVER	1		(NOT ILLUSTRATED)
14	R136508	SCREW	1		M10 X 95
16	RE52454	COMPRESSOR	1		
17	RE52506	FLOW CONTROL HYD. VALVE	1		
19	RE52508	KIT	1		(CLUTCH AND PULLEY) (INCLUDES AT163872 AND R115743)
21	RE55423	MANIFOLD	1		
22	AT226273	COMPRESSOR	1		
	AT163872	KIT	1		STATOR (NOT ILLUSTRATED)
	RE52507	KIT	1		HARDWARE (NOT ILLUSTRATED)
	RE52509	SEAL KIT	1		SHAFT SEAL (NOT ILLUSTRATED)
23	AT227754	REFRIGERANT HOSE	1		7/8" X 1 870 MM X 1-1/16"
24	AT332511	REFRIGERANT HOSE	1		3/4" X 3 093 MM X 3/4"
25	R113050	O-RING	2		10.820 X 1.778 MM
26	R33259	O-RING	1		13.995 X 1.778 MM
27	T143169	O-RING	1		17.170 X 1.778 MM
30	T76252	CLAMP	1		
31	T64784	CLIP	1		
35	R78057	ELEC. CONNECTOR TERMINAL	2		(NOT ILLUSTRATED)
36	R78059	ELEC. CONNECTOR SEAL	2		(NOT ILLUSTRATED)
37	RE12363	ELECTRICAL CONNECTOR ASSY	1		

HVAC MODULE
MODULE CHAUFFAGE, VENTILATION ET CLIMATISATION
MODULO DE CLIMATIZACION

T193582 -UN-21AUG03

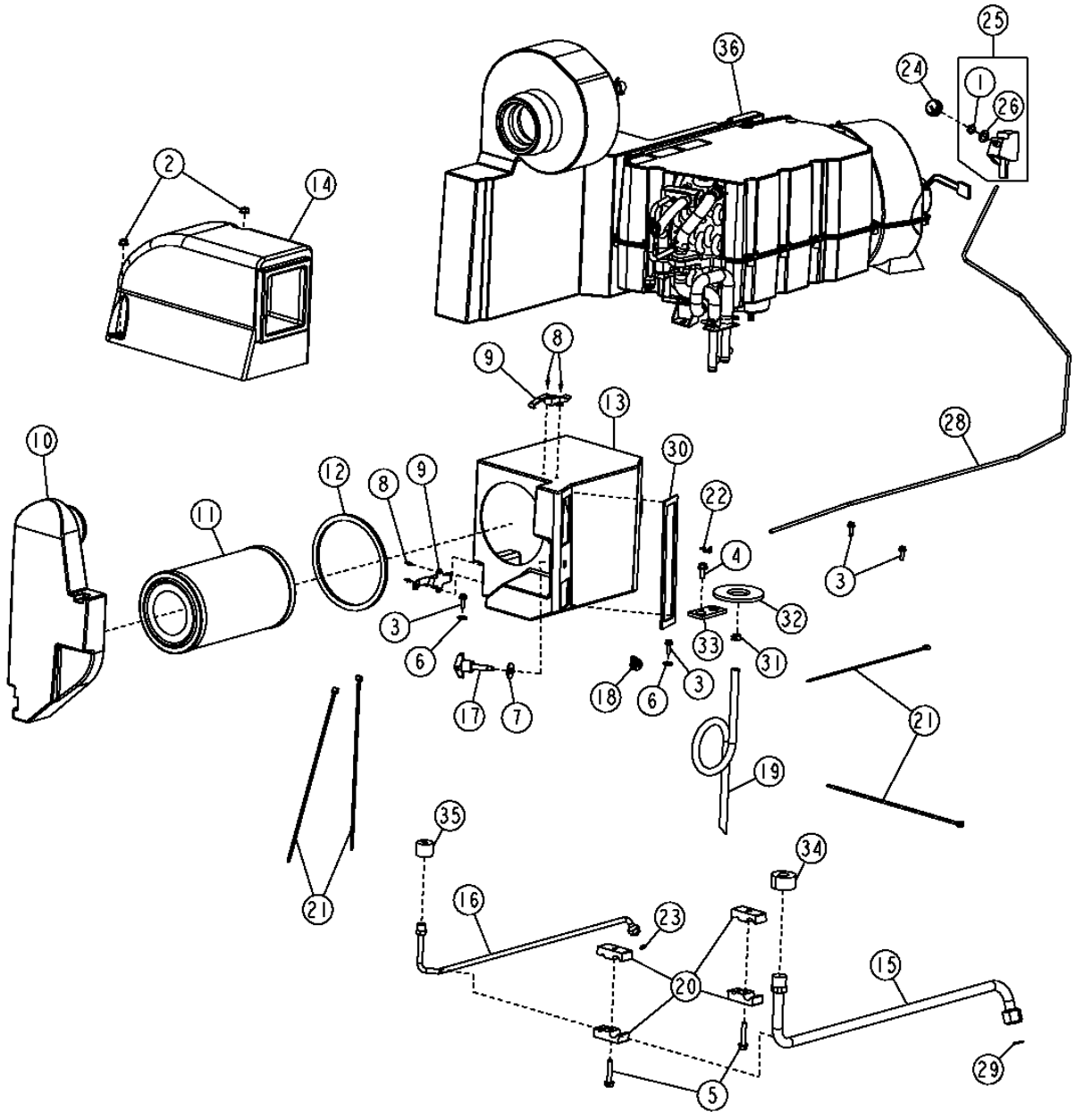

HVAC MODULE
MODULE CHAUFFAGE, VENTILATION ET CLIMATISATION
MODULO DE CLIMATIZACION

KEY	PART NO.	PART NAME	QTY.	SERIAL NO.	REMARKS
1	R203687	NUT	1		
2	14M7298	FLANGE NUT	2		M8
3	19M7862	SCREW	4		M6 X 20
4	19M7866	SCREW	3		M8 X 20
5	19M8318	SCREW	2		M8 X 45
6	24M7139	WASHER	2		6.400 X 18 X 1.600 MM
7	24M7296	WASHER	1		10.500 X 30 X 2.500 MM
8	H86981	RIVET	4		
9	R121465	LATCH	2		
10	T167945	AIR DUCT	1		
11	T168220	AIR FILTER	1		
	AT321942	ACTIVATED CARBON AIR FILTER	1		(ODOR REDUCING)
12	T170053	SEAL	1		
13	T171459	AIR DUCT	1		
14	AT209668	AIR DUCT	1		
15	AT210561	LINE	1		
16	AT306913	TUBE	1		
17	AT220953	KNOB	1		
18	AT226249	JUMPER	1		
19	Z59685	HOSE	1		(4.5 LIN. FT.)
20	H114865	CLAMP	4		
21	H77698	TIE BAND	4		
22	L57881	CLIP	1		
23	R10093	O-RING	1		
24	AL76568	KNOB	1		
25	RE46742	CONTROL	1		
26	12H292	LOCK WASHER	1		1/2"
28	RE58614	PUSH PULL CABLE	1		
29	T143169	O-RING	1		
30	T167676	SEAL	1		
31	T174427	CLAMP	1		
32	T182852	SEALING WASHER	1		
33	T182858	GASKET	1		
34	T182870	ISOLATOR	1		
35	T182871	ISOLATOR	1		
36	T182906	PLATE	1		

HVAC MODULE COMPONENTS
COMPOSANTS MODULE CHAUFFAGE, VENTILATION ET CLIMATISATION
COMPONENTES DEL MODULO DE CLIMATIZACION

TX1008275 -UN-14JUN06

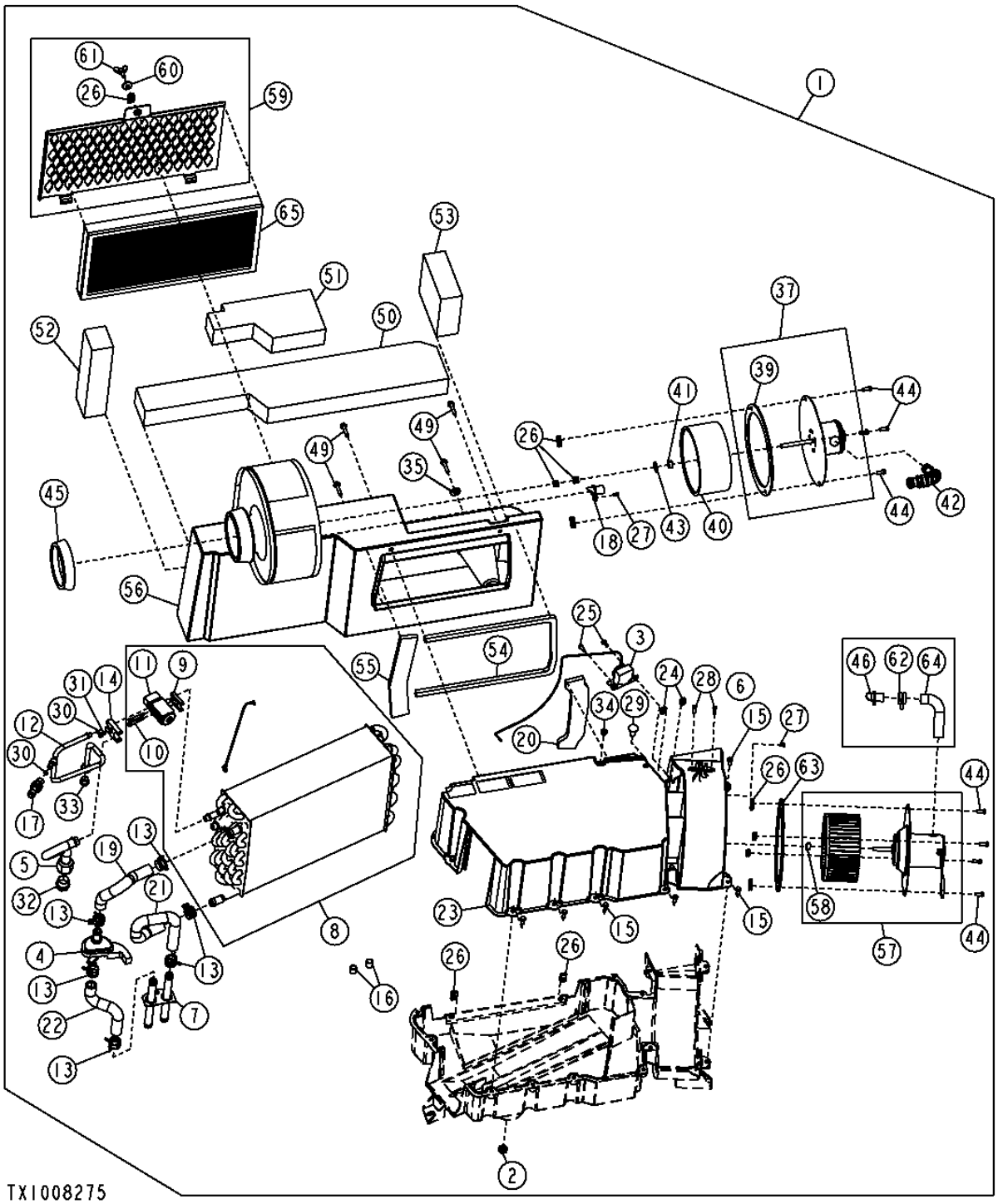

HVAC MODULE COMPONENTS
COMPOSANTS MODULE CHAUFFAGE, VENTILATION ET CLIMATISATION
COMPONENTES DEL MODULO DE CLIMATIZACION

KEY	PART NO.	PART NAME	QTY.	SERIAL NO.	REMARKS
1	AT329722	MODULE	1		
2	14H934	NUT	1		
3	RE198074	TEMPERATURE SWITCH	1		
4	AT193500	HAND OPERATED VALVE	1		
5	AT210086	STRUCTURAL TUBING	1		
6	AT318987	RESISTOR	1		
7	AT219778	HOSE	1		
8	AT329723	HEAT EXCHANGER	1		
9	L77943	PLATE	1		
10	PT11778	BOLT	2		
11	RE174764	VALVE	1		
12	AT226309	TUBE	1		
13	R117721	CLAMP	6		
14	R125223	PLATE	1		
15	R129110	SCREW	12		
16	R50770	CAP	2		
17	RE157329	SWITCH	1		
18	RE36133	TUBE	1		
19	T170133	HOSE	1		
20	T59937	ISOLATOR	1		
21	T172933	HOSE	1		
22	T172934	HOSE	1		
23	T174109	HOUSING	1		
24	T178115	CLEVIS	2		
25	T178116	CAP SCREW	2		
26	T178117	CLEVIS	13		
27	T178118	CAP SCREW	1		
28	T178119	CAP SCREW	2		
29	T178120	RIVET	1		
30	T178123	O-RING	2		
31	T178124	SCREW	1		
32	T178125	PLUG	1		
33	T178126	PLUG	1		
34	T178971	GROMMET	1		
35	24H1122	WASHER	1		
37	AT225451	BLOWER MOTOR	1		
39	R121664	SEAL	1		
40	R121666	IMPELLER	1		
41	R97332	CLIP	1		
42	T165169	HOSE	1		
43	T178127	PUSH NUT	1		
44	T178251	CAP SCREW	8		
45	R119171	SEAL	1		
46	RE36133	TUBE	1		
49	T178130	BOLT	4		
50	T178131	ISOLATOR	1		
51	T178132	ISOLATOR	1		
52	T178133	ISOLATOR	1		
53	T178134	ISOLATOR	1		
54	T178135	ISOLATOR	1		
55	T178136	ISOLATOR	1		
56	T180929	AIR PLENUM	1		
57	AT313282	KIT	1		BLOWER ASSEMBLY
58	R97332	CLIP	1		
59	AT305405	COVER	1		
60	24M7100	WASHER	1		
61	T181524	WING SCREW	1		
62	R117721	CLAMP	1		
63	R121664	SEAL	1		
64	R97336	HOSE	1		
65	T156471	AIR FILTER	1		

HVAC MODULE (HEATER ONLY)
MODULE CHAUFFAGE, VENTILATION ET CLIMATISATION (CHAUFFAGE SEULEMENT)
MODULO DE CLIMATIZACION (SOLO CALEFACTOR)

T193662 -UN-09SEP03

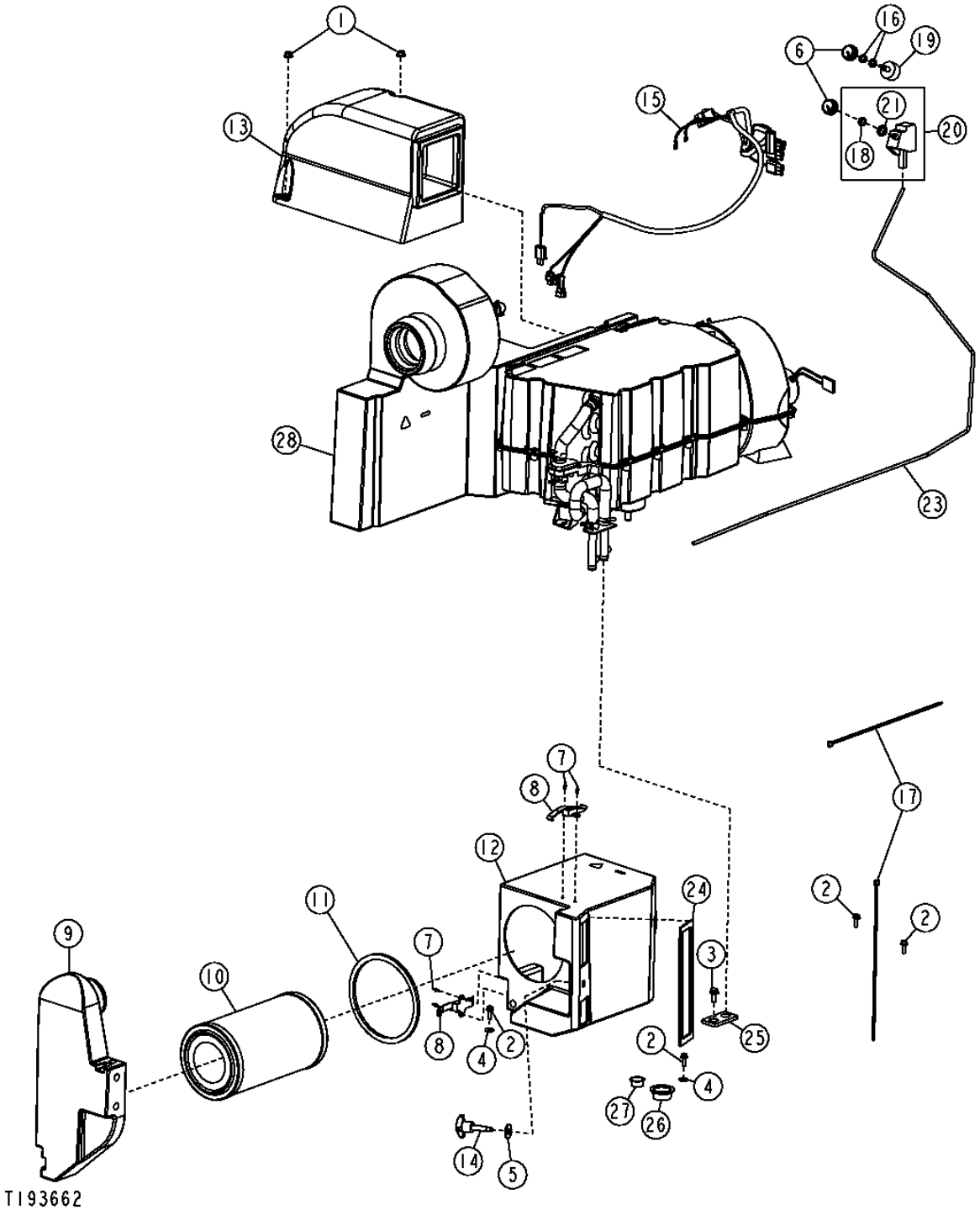

THIS PARTS LISTING IS CONTINUED

HVAC MODULE (HEATER ONLY)
MODULE CHAUFFAGE, VENTILATION ET CLIMATISATION (CHAUFFAGE SEULEMENT)
MODULO DE CLIMATIZACION (SOLO CALEFACTOR)

KEY	PART NO.	PART NAME	QTY.	SERIAL NO.	REMARKS
1	14M7298	FLANGE NUT	2		M8
2	19M7862	SCREW	4		M6 X 20
3	19M7866	SCREW	1		M8 X 20
4	24M7139	WASHER	2		6.400 X 18 X 1.600 MM
5	24M7296	WASHER	1		10.500 X 30 X 2.500 MM
6	AL76568	KNOB	2		
7	H86981	RIVET	4		
8	R121465	LATCH	2		
9	T167945	AIR DUCT	1		
10	T168220	AIR FILTER	1		
	AT321942	ACTIVATED CARBON AIR FILTER	1		(ODOR REDUCING)
11	T170053	SEAL	1		
12	T171459	AIR DUCT	1		
13	AT209668	AIR DUCT	1		
14	AT220953	KNOB	1		
15	AT202934	WIRING HARNESS	1		
16	R44165	LOCK NUT	2		
17	H77698	TIE BAND	1		
18	R203687	NUT	1		
19	RE43497	SWITCH	1		
20	RE46742	CONTROL	1		
21	12H292	LOCK WASHER	1		1/2"
23	RE58614	PUSH PULL CABLE	1		
24	T167676	SEAL	1		
25	T182858	GASKET	1		
26	T182876	PLUG	1		
27	T182877	PLUG	1		
28	AT329720	HEATER	1		

HVAC MODULE COMPONENTS (HEATER ONLY)
COMPOSANTS MODULE CHAUFFAGE, VENTILATION ET CLIMATISATION (CHAUFFAGE SEULEMENT)
COMPONENTES DEL MODULO DE CLIMATIZACION (SOLO CALEFACTOR)

T212762 -UN-25JUL05

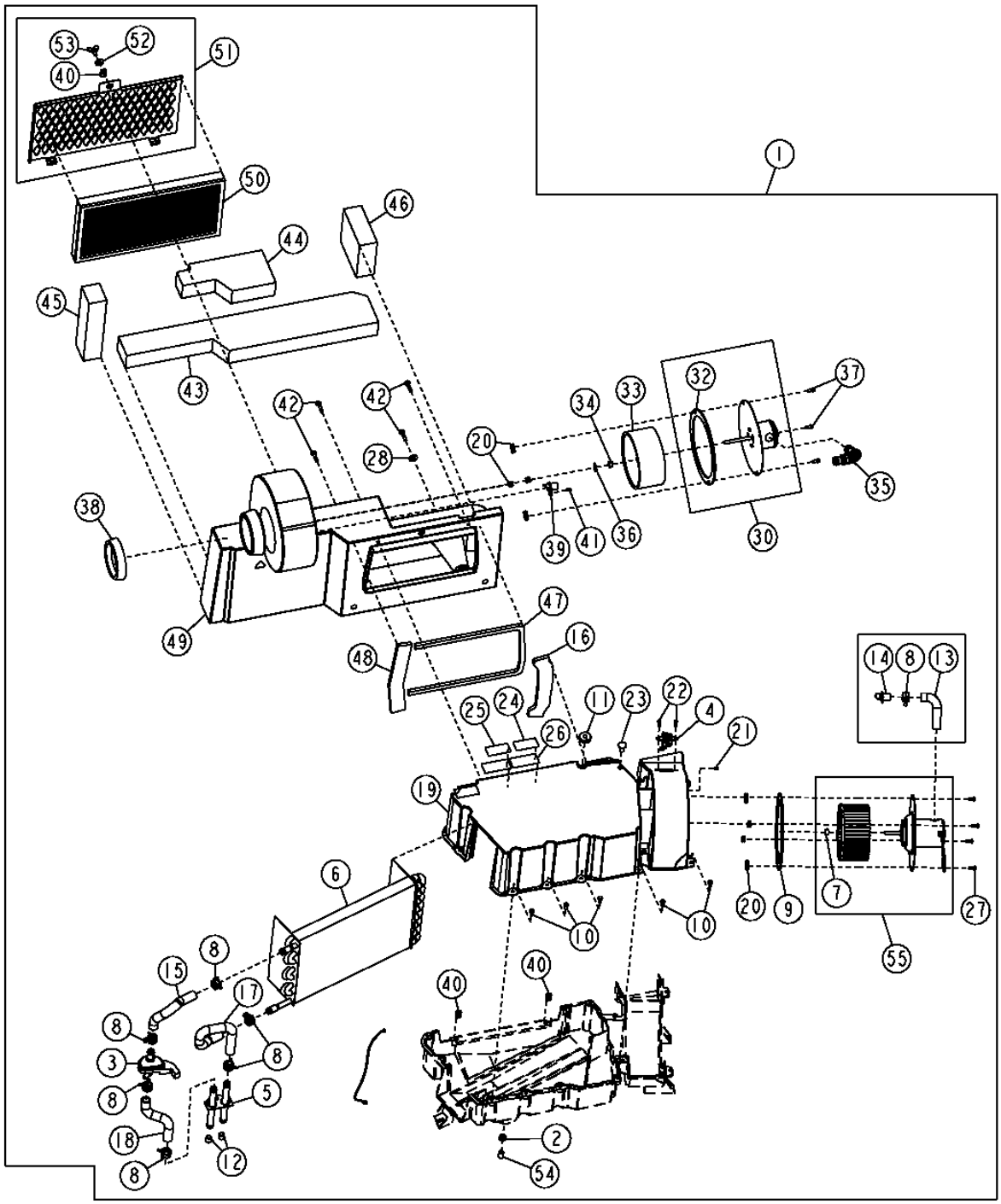

HVAC MODULE COMPONENTS (HEATER ONLY)
COMPOSANTS MODULE CHAUFFAGE, VENTILATION ET CLIMATISATION (CHAUFFAGE SEULEMENT)
COMPONENTES DEL MODULO DE CLIMATIZACION (SOLO CALEFACTOR)

KEY	PART NO.	PART NAME	QTY.	SERIAL NO.	REMARKS
1	AT329720	HEATER	1		
2	14H934	NUT	1		7/16"
3	AT193500	HAND OPERATED VALVE	1		
4	AT318987	RESISTOR	1		
5	AT219778	HOSE	1		
6	AT329721	HEATER	1		
7	R97332	CLIP	1		
8	R117721	CLAMP	6		
9	R121664	SEAL	1		
10	R129110	SCREW	12		
11	R41440	GROMMET	1		
12	R50770	CAP	2		
13	R97336	HOSE	1		
14	RE36133	TUBE	1		
15	T170133	HOSE	1		
16	T59937	ISOLATOR	1		
17	T172933	HOSE	1		
18	T172934	HOSE	1		
19	T174109	HOUSING	1		
20	T178117	CLEVIS	8		
21	T178118	CAP SCREW	1		
22	T178119	CAP SCREW	2		
23	T178120	RIVET	1		
24	T178248	LABEL	1		
25	T178249	LABEL	1		
26	T178250	LABEL	2		
27	T178251	CAP SCREW	4		
28	24H1122	WASHER	1		3/8" X 7/8" X 0.083"
30	AT225451	BLOWER MOTOR	1		
31	R117721	CLAMP	1		
32	R121664	SEAL	1		
33	R121666	IMPELLER	1		
34	R97332	CLIP	1		
35	T165169	HOSE	1		
36	T178127	PUSH NUT	1		
37	T178251	CAP SCREW	1		
38	R119171	SEAL	1		
39	RE36133	TUBE	1		
40	T178117	CLEVIS	5		
41	T178118	CAP SCREW	1		
42	T178130	BOLT	4		
43	T178131	ISOLATOR	1		
44	T178132	ISOLATOR	1		
45	T178133	ISOLATOR	1		
46	T178134	ISOLATOR	1		
47	T178135	ISOLATOR	1		
48	T178136	ISOLATOR	1		
49	T180929	AIR PLENUM	1		
50	AT227170	FILTER	1		
51	AT305405	COVER	1		
52	24M7100	WASHER	1		6.600 X 22 X 2 MM
53	T181524	WING SCREW	1		
54	T178252	CAP	1		
55	AT313282	KIT	1		

A/C DELETE COVER
SUPPRIMER COUVERCLE CLIMATISEUR
CUBIERTA ELIMINACION DE ACONDICIONADOR DE AIRE

T197233 -UN-07JAN04

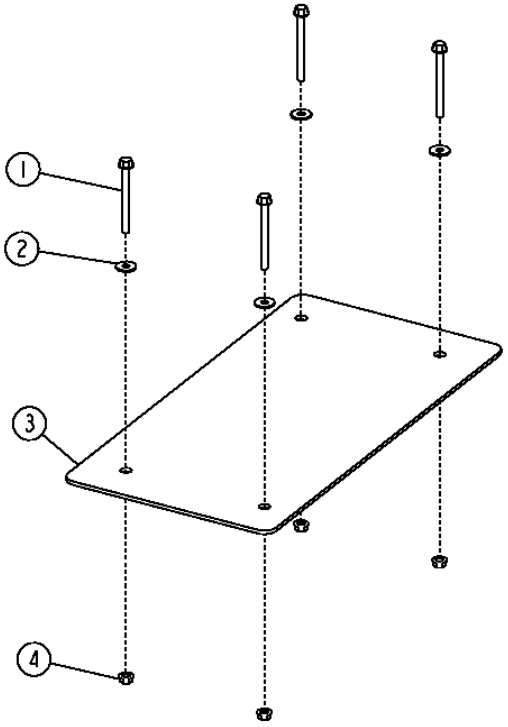

T197233

A/C DELETE COVER
SUPPRIMER COUVERCLE CLIMATISEUR
CUBIERTA ELIMINACION DE ACONDICIONADOR DE AIRE

KEY	PART NO.	PART NAME	QTY.	SERIAL NO.	REMARKS
1	19M7836	SCREW	4		M10 X 110
2	24M7296	WASHER	4		10.500 X 30 X 2.500 MM
3	T204150	COVER	1		
4	14M7296	FLANGE NUT	4		M10

A/C CONDENSER
CONDENSEUR DE CLIMATISATION
CONDENSADOR DE ACONDICIONADOR DE AIRE

TX1002412 -UN-12JAN06

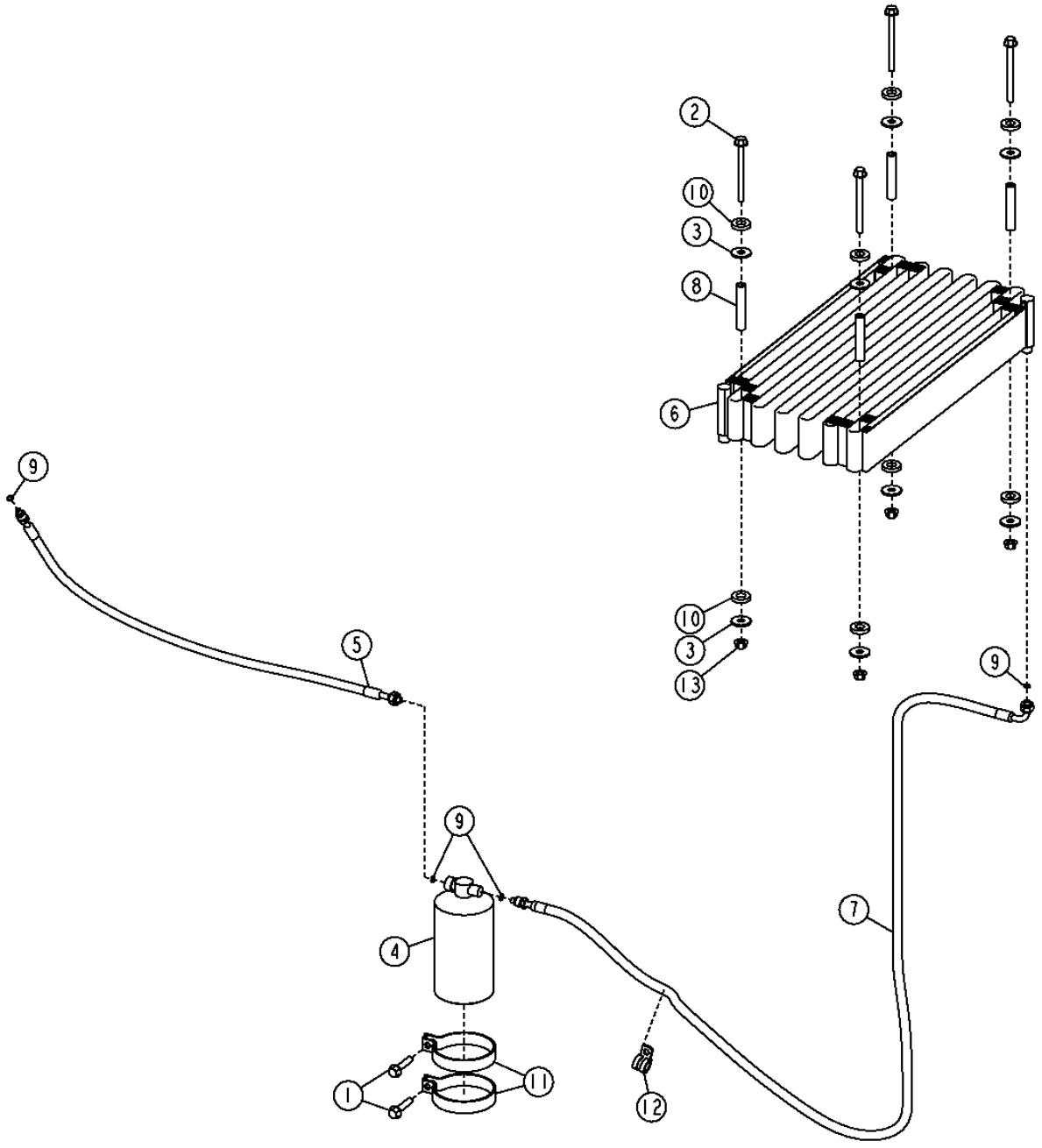

A/C CONDENSER
CONDENSEUR DE CLIMATISATION
CONDENSADOR DE ACONDICIONADOR DE AIRE

KEY	*PART NO.*	*PART NAME*	*QTY.*	*SERIAL NO.*	*REMARKS*
1	19M8292	SCREW	2		M10 X 50
2	19M7836	SCREW	4		M10 X 110
3	24M7101	WASHER	8		11 X 34 X 3 MM
4	AT162848	RECEIVER-DRYER	1		
5	AT324238	HOSE	1		
6	AT228240	VAPOR CONDENSER	1		
	AT307612	HEAT EXCHANGER	1		(HARSH ENVIRONMENT)
7	AT280631	REFRIGERANT HOSE	1		
8	N117290	SPACER	4		
9	R10093	O-RING	4		
10	T158424	WASHER	8		
11	T190513	CLAMP	2		
12	T76252	CLAMP	2		
13	14M7296	FLANGE NUT	4		M10

HOOD
CAPOT
CAPO

TX1013974 -UN-10NOV06

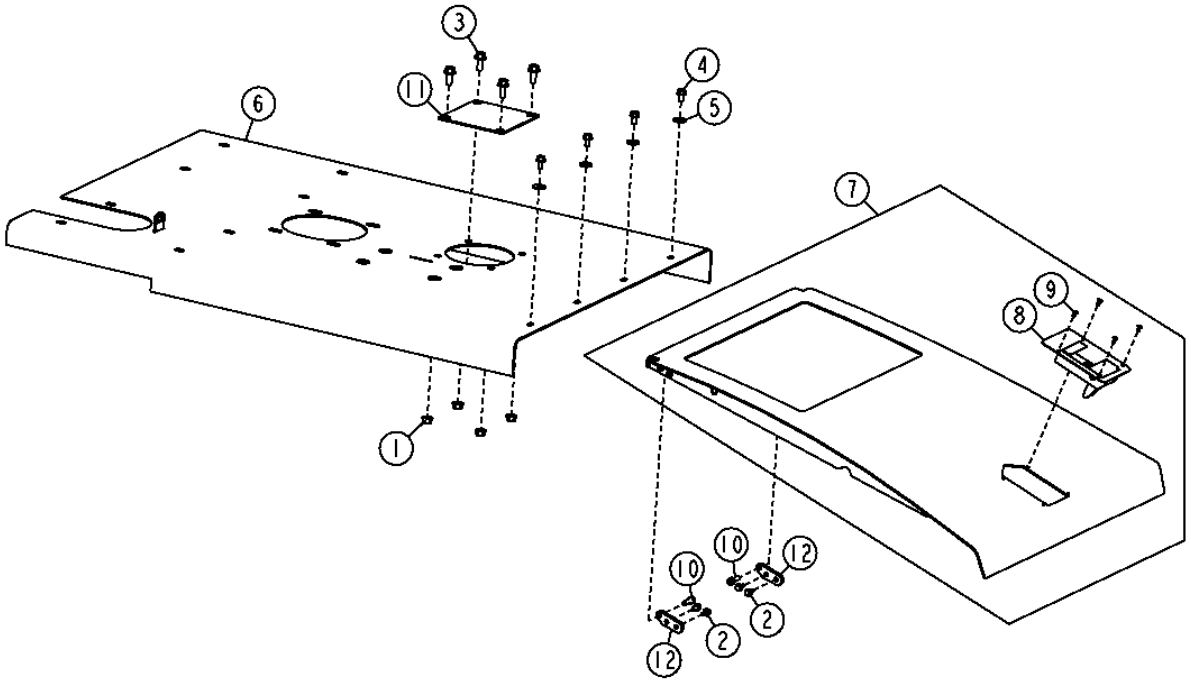

TX1013974

HOOD
CAPOT
CAPO

KEY	PART NO.	PART NAME	QTY.	SERIAL NO.	REMARKS
1	14M7296	FLANGE NUT	4		M10
2	19M7775	SCREW	4		M6 X 16
3	19M7785	SCREW	4		M10 X 25
4	19M7865	SCREW	4		M8 X 16
5	24M7207	WASHER	4		8.400 X 24 X 2 MM
6	AT316566	HOOD	1		
7	AT316328	HOOD	1		
8	AT280208	LATCH	1		
9	H85233	RIVET	4		4.750 MM
10	R186228	CAP SCREW	2		M8 X 25
11	T198109	REINFORCEMENT	1		
12	T208317	PLATE	2		

ENGINE SIDE SHIELDS
PANNEAUX LATERAUX DE MOTEUR
ESCUDOS LATERALES DEL MOTOR

T202405 -UN-23AUG04

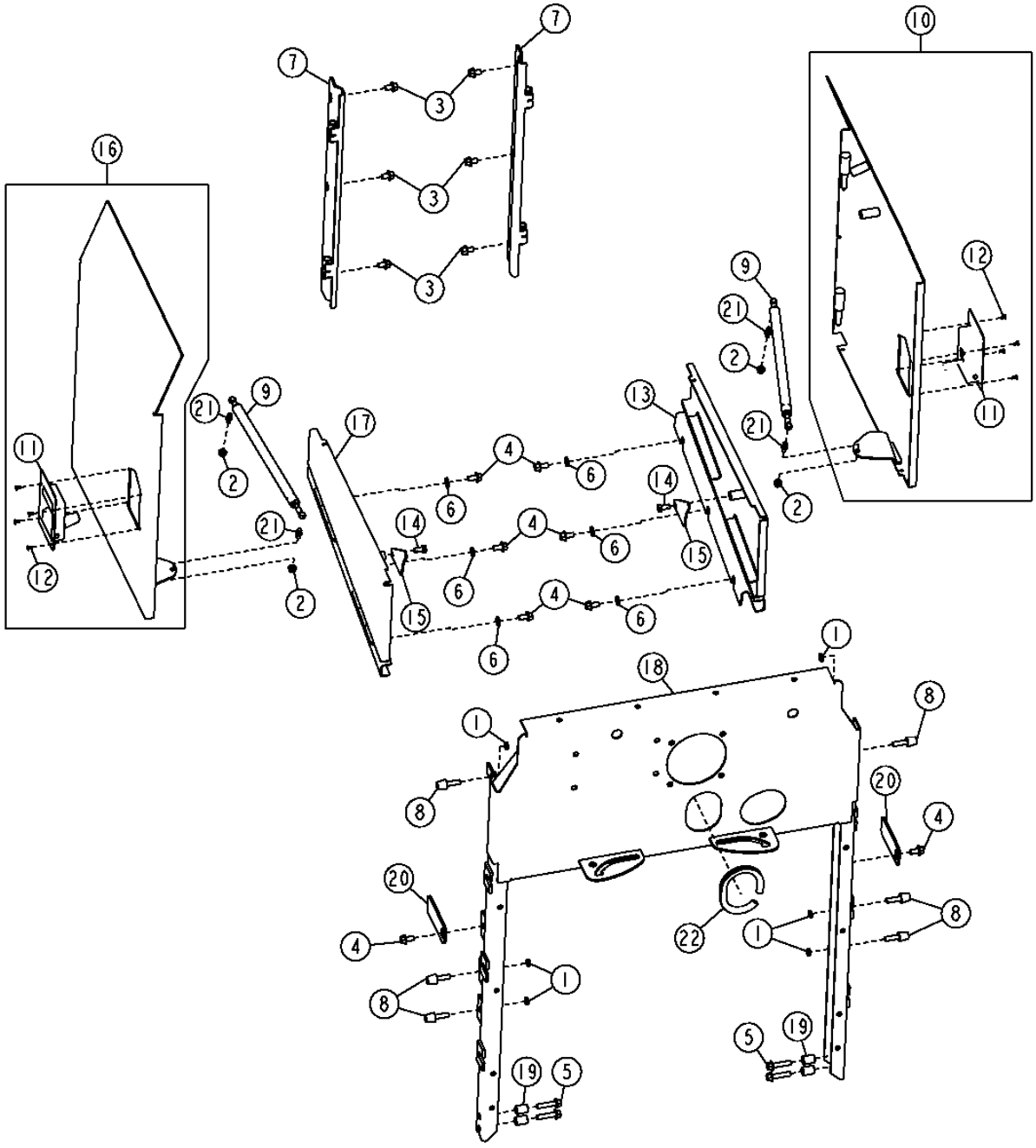

THIS PARTS LISTING IS CONTINUED

ENGINE SIDE SHIELDS
PANNEAUX LATERAUX DE MOTEUR
ESCUDOS LATERALES DEL MOTOR

KEY	*PART NO.*	*PART NAME*	*QTY.*	*SERIAL NO.*	*REMARKS*
1	14M7152	NUT	8		M10
2	14M7298	FLANGE NUT	4		M8
3	19M7783	SCREW	6		M10 X 16
4	19M7784	SCREW	10		M10 X 20
5	19M7805	SCREW	4		M10 X 45
6	24M7239	WASHER	6		10.700 X 21 X 2.500 MM
7	AT208159	HINGE	4		
8	AT219974	BUMPER	6		
9	AT226229	CYLINDER	2		
	T182758	CLIP	4		
10	AT316490	DOOR	1		
11	AT221696	LATCH	2		
12	H85233	RIVET	8		3/16"
13	AT316487	DOOR	1		
14	T105891	CAP SCREW	2		M10 X 20
15	T168119	PLATE	2		
16	AT316492	DOOR	1		
17	AT316489	DOOR	1		
18	AT316483	ISOLATOR	1		
19	T147891	BUSHING	4		10.414 X 19.050 X 27.305 MM
20	T168135	STRAP	2		
21	T177909	BALL STUD	4		
22	T66419	ISOLATOR	AR		

REAR SIDE PANELS
PANNEAUX LATERAUX ARRIERE
PANELES LATERALES TRASEROS

TX1015085 -UN-05DEC06

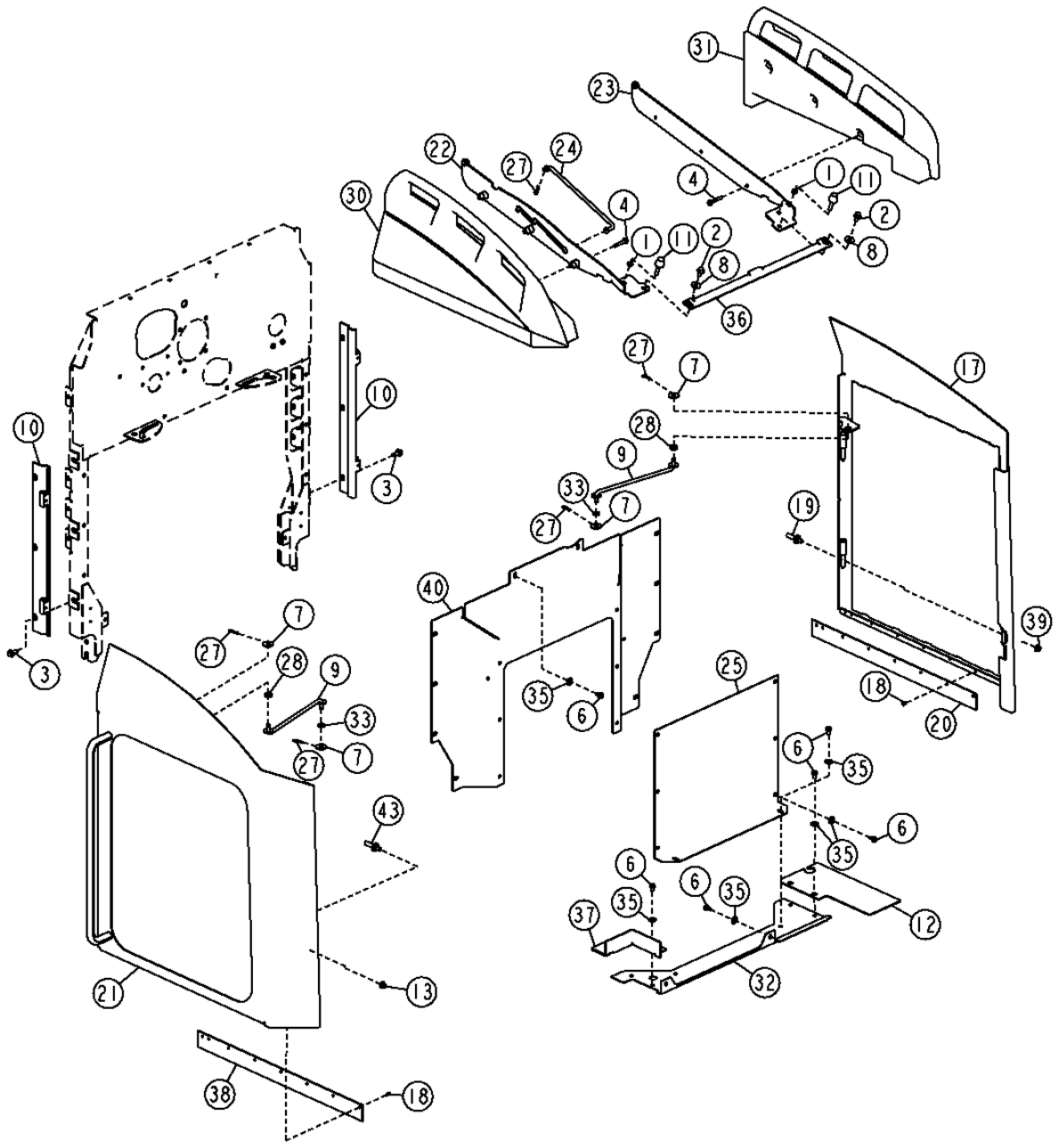

REAR SIDE PANELS
PANNEAUX LATERAUX ARRIERE
PANELES LATERALES TRASEROS

KEY	PART NO.	PART NAME	QTY.	SERIAL NO.	REMARKS
1	14M7152	NUT	8		M10
2	19M7784	SCREW	10		M10 X 20
3	19M7785	SCREW	6		M10 X 25
4	19M7800	SCREW	6		M8 X 50
6	19M7865	SCREW	24		M8 X 16
7	24H1330	WASHER	4		15/32" X 1-3/8" X 7/64"
8	24M7296	WASHER	2		10.500 X 30 X 2.500 MM
9	AT312053	ROD	2		
10	AT208159	HINGE	4		
11	AT306690	BUMPER	2		
12	T212888	FLOOR	1		
13	14M7296	FLANGE NUT	1		M10
17	AT323621	DOOR	1		
18	M68628	RIVET	8		4.775 MM
19	T201880	STUD	1		
20	T216516	FLAP	1		
21	AT323622	DOOR	1		
22	AT334250	BRACKET	1		
23	AT334251	BRACKET	1		
24	T208352	ROD	1		
25	T212321	SHEET	1		
27	J16931	PIN	5		
28	T162238	GROMMET	2		
30	T197100	HANDLE	1		
31	T197575	HANDLE	1		
32	AT317096	FLOOR	1		
33	T27260	WASHER	2		10.922 X 21.336 X 4.572 MM
35	24M7298	WASHER	25		8.400 X 25 X 2 MM
36	T211997	BRACKET	1		
37	AT335291	FLOOR	1		
38	T216516	FLAP	1		
39	14M7296	FLANGE NUT	1		M10
40	AT316494	SHEET	1		
43	T201880	STUD	1		

TRANSMISSION SHIELDS
PROTECTIONS DE TRANSMISSION
ESCUDOS DE LA TRANSMISION

TX1014884 -UN-04DEC06

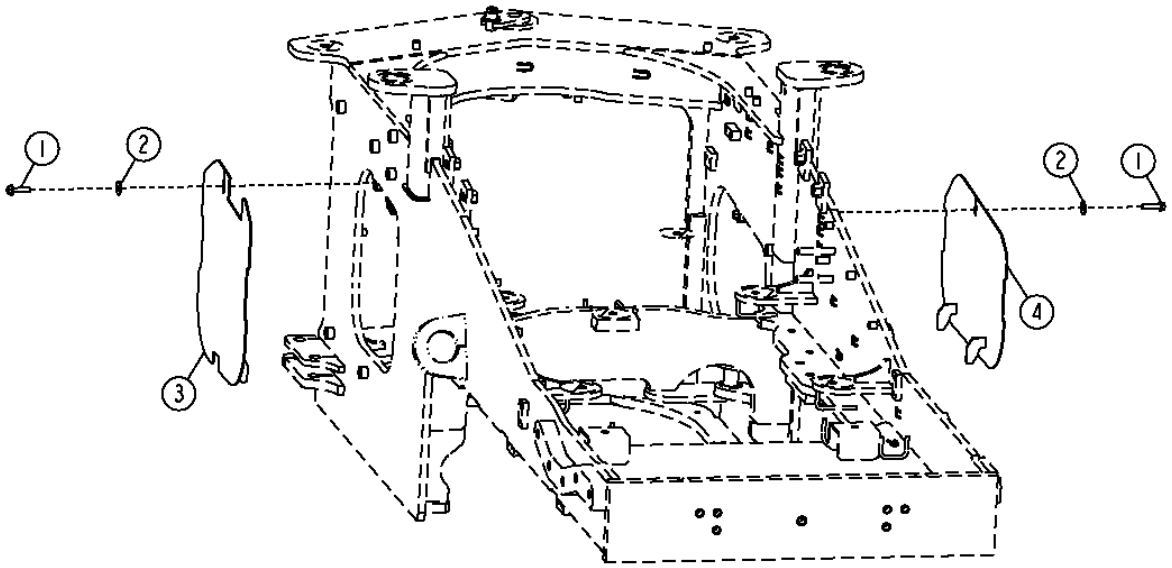

TX1014884

TRANSMISSION SHIELDS
PROTECTIONS DE TRANSMISSION
ESCUDOS DE LA TRANSMISION

KEY	*PART NO.*	*PART NAME*	*QTY.*	*SERIAL NO.*	*REMARKS*
1	19M7814	SCREW	2		M12 X 50
2	24M7180	WASHER	2		13 X 37 X 3 MM
3	AT323692	COVER	1		
4	AT227072	COVER	1		(LH)

FRAME LOCKING BAR
BARRE VERROUILLAGE BATI
BARRA DE BLOQUEO DEL CHASIS

TX1015073 -UN-27NOV06

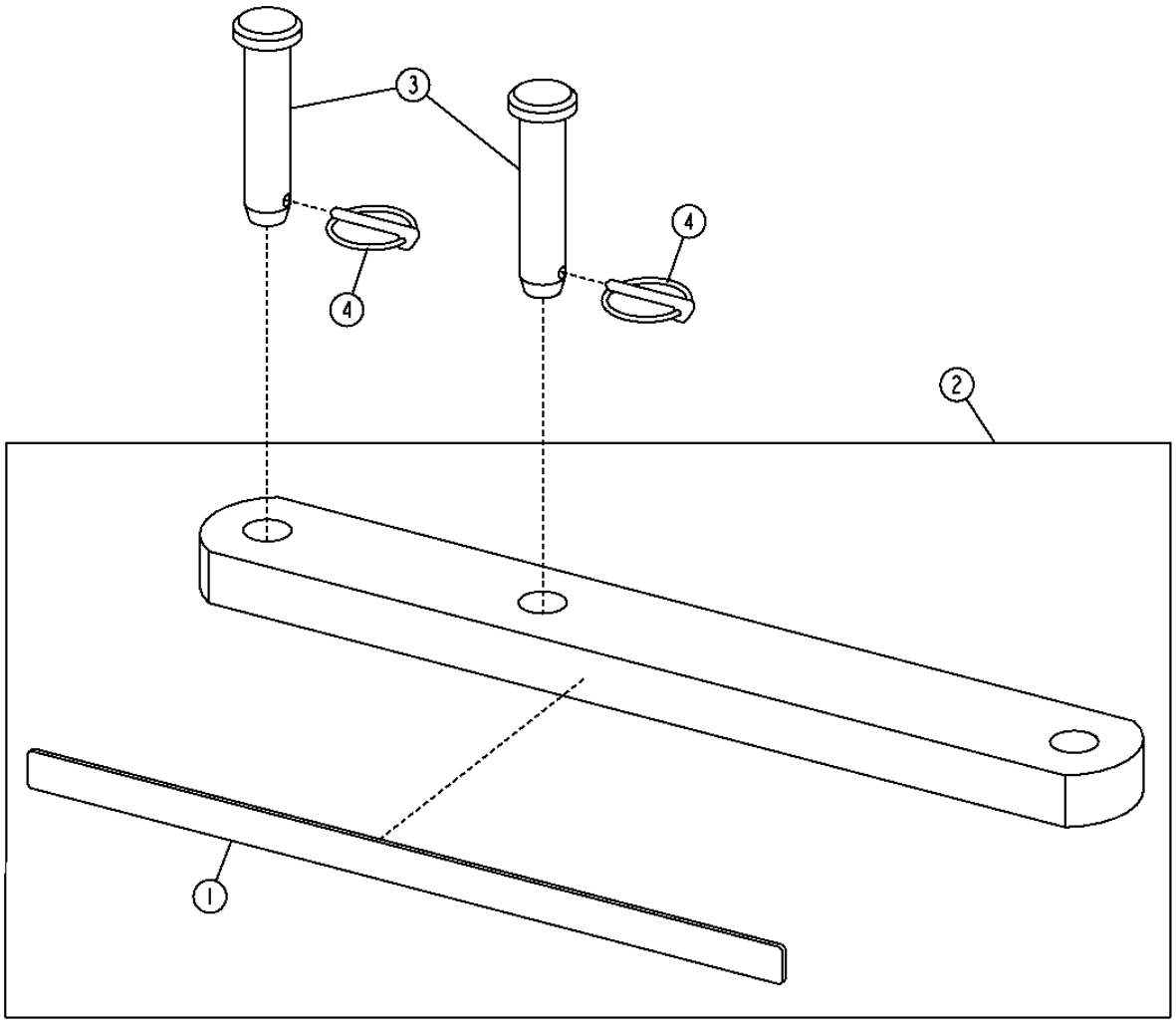

TX1015073

FRAME LOCKING BAR
BARRE VERROUILLAGE BATI
BARRA DE BLOQUEO DEL CHASIS

KEY	PART NO.	PART NAME	QTY.	SERIAL NO.	REMARKS
1	T182192	SAFETY SIGN	2		
2	R53296	PIN FASTENER	2		25.273 X 113.030 MM
3	AA21292	QUICK LOCK PIN	2		
4	AT226155	BAR	1		(LH)

SOUND ABSORBTION
ABSORPTION ACOUSTIQUE
ABSORCION DE SONIDO

T202826 -UN-29SEP04

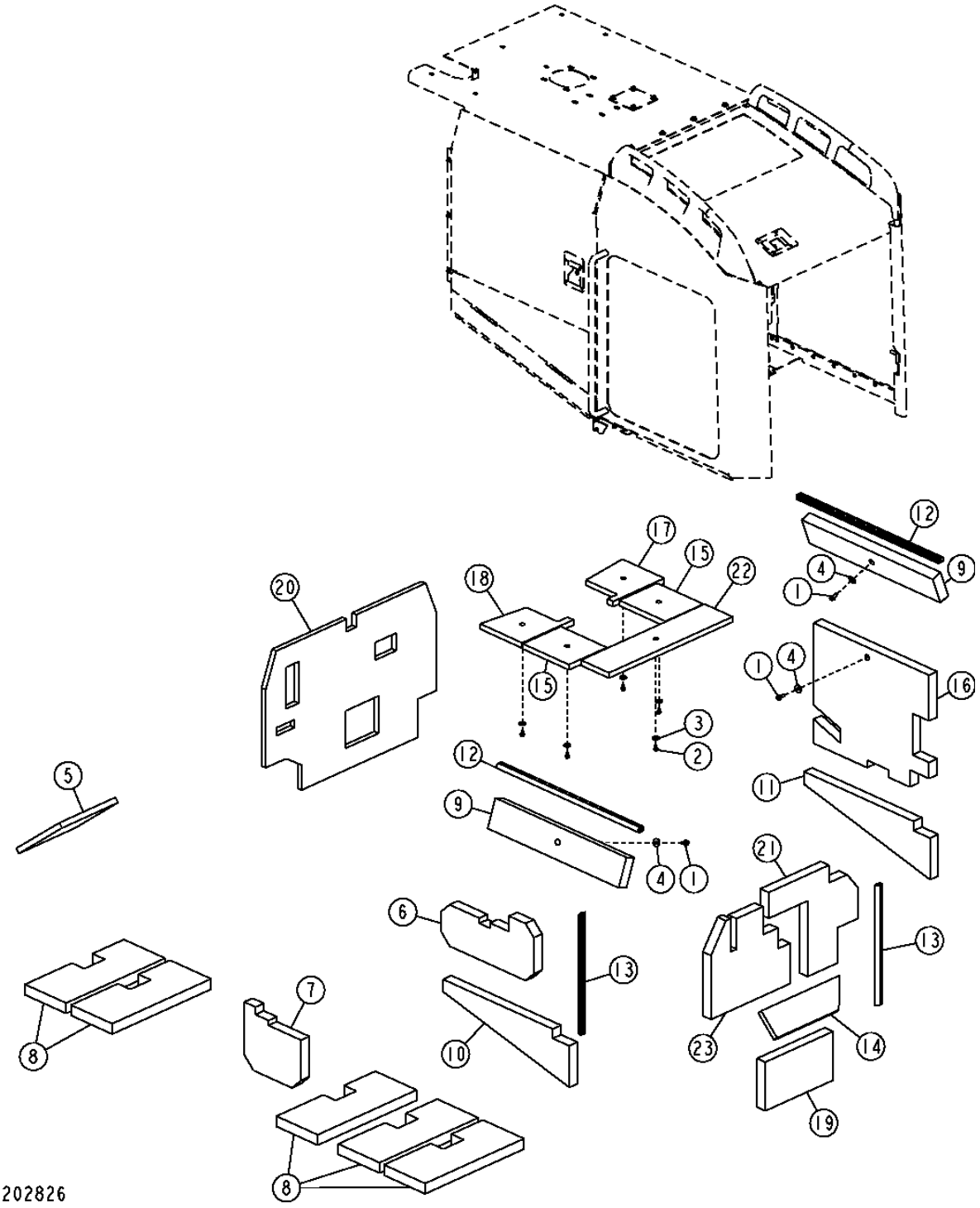

SOUND ABSORBTION
ABSORPTION ACOUSTIQUE
ABSORCION DE SONIDO

KEY	PART NO.	PART NAME	QTY.	SERIAL NO.	REMARKS
1	19M7785	SCREW	13		M10 X 25
2	19M7865	SCREW	5		M8 X 16
3	24M7024	WASHER	5		9 X 28 X 3 MM
4	24M7101	WASHER	13		11 X 34 X 3 MM
5	T206155	ISOLATOR	1		ABSORBER, CONTROL VALVE COVER
6	T206157	ISOLATOR	1		ABSORBER, RIGHT TRANS. COVER
7	T206158	ISOLATOR	1		ABSORBER, LEFT TRANS. COVER
8	T206159	ISOLATOR	5		ABSORBER, BOTTOM GUARD
9	T206783	ISOLATOR	2		ABSORBER, LEFT ENGINE DOOR
10	T206857	ISOLATOR	1		ABSORBER, LEFT SERVICE DOOR
11	T206858	ISOLATOR	1		ABSORBER, LEFT ENGINE DOOR
12	T206866	ISOLATOR	2		SEAL, ISOLATOR
13	T206873	ISOLATOR	2		SEAL, SOUND ABSORBER
14	T210399	ISOLATOR	1		ABSORBER, BAFFLE
15	T210426	ISOLATOR	2		ABSORBER, HOOD
16	T210488	ISOLATOR	1		ABSORBER, RIGHT DOOR
17	T210489	ISOLATOR	1		ABSORBER, HOOD
18	T210490	ISOLATOR	1		ABSORBER, HOOD
19	T210511	ISOLATOR	1		ABSORBER, BAFFLE
20	T210513	ISOLATOR	1		ABSORBER, SOUND
21	T210521	ISOLATOR	1		ABSORBER, SOUND
22	T210522	ISOLATOR	1		ABSORBER, SOUND
23	T210585	ISOLATOR	1		ABSORBER, BAFFLE

FRONT FENDERS
AILES AVANT
GUARDABARROS DELANTERO

T198059 -UN-09MAR04

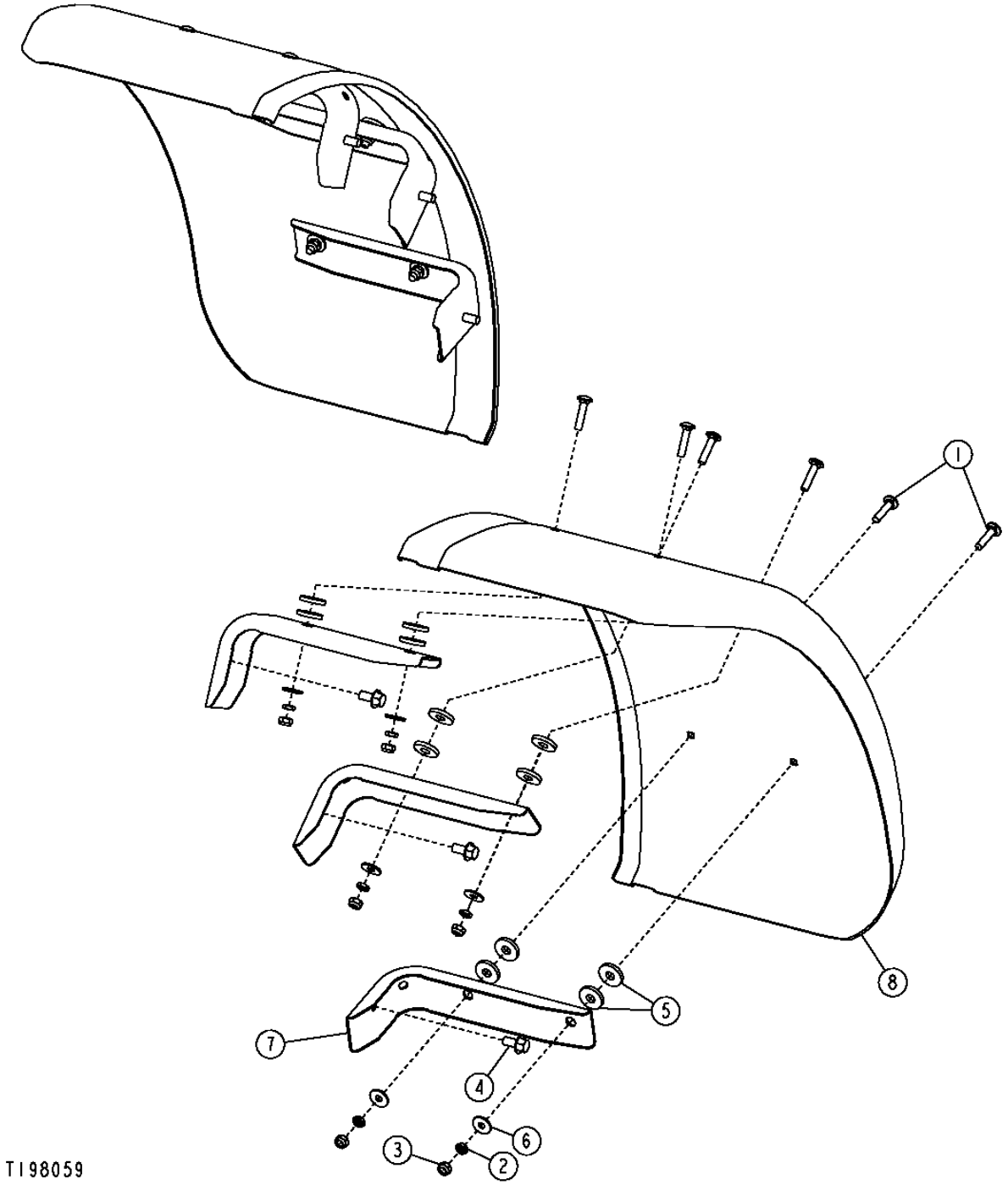

FRONT FENDERS
AILES AVANT
GUARDABARROS DELANTERO

KEY	PART NO.	PART NAME	QTY.	SERIAL NO.	REMARKS
1	03M7195	BOLT	12		M10 X 45
2	14M7152	NUT	12		M10
3	14M7167	LOCK NUT	12		M10
4	19M7788	SCREW	6		M12 X 25
5	T22381	WASHER	24		
6	24M7296	WASHER	12		10.500 X 30 X 2.500 MM
7	T178368	SUPPORT	6		
8	T205471	FENDER	2		

FULL COVERAGE FRONT FENDERS
AILES AVANT PLEINE COUVERTURE
GUARDABARROS DELANTEROS DE COBERTURA TOTAL

T198660 -UN-06APR04

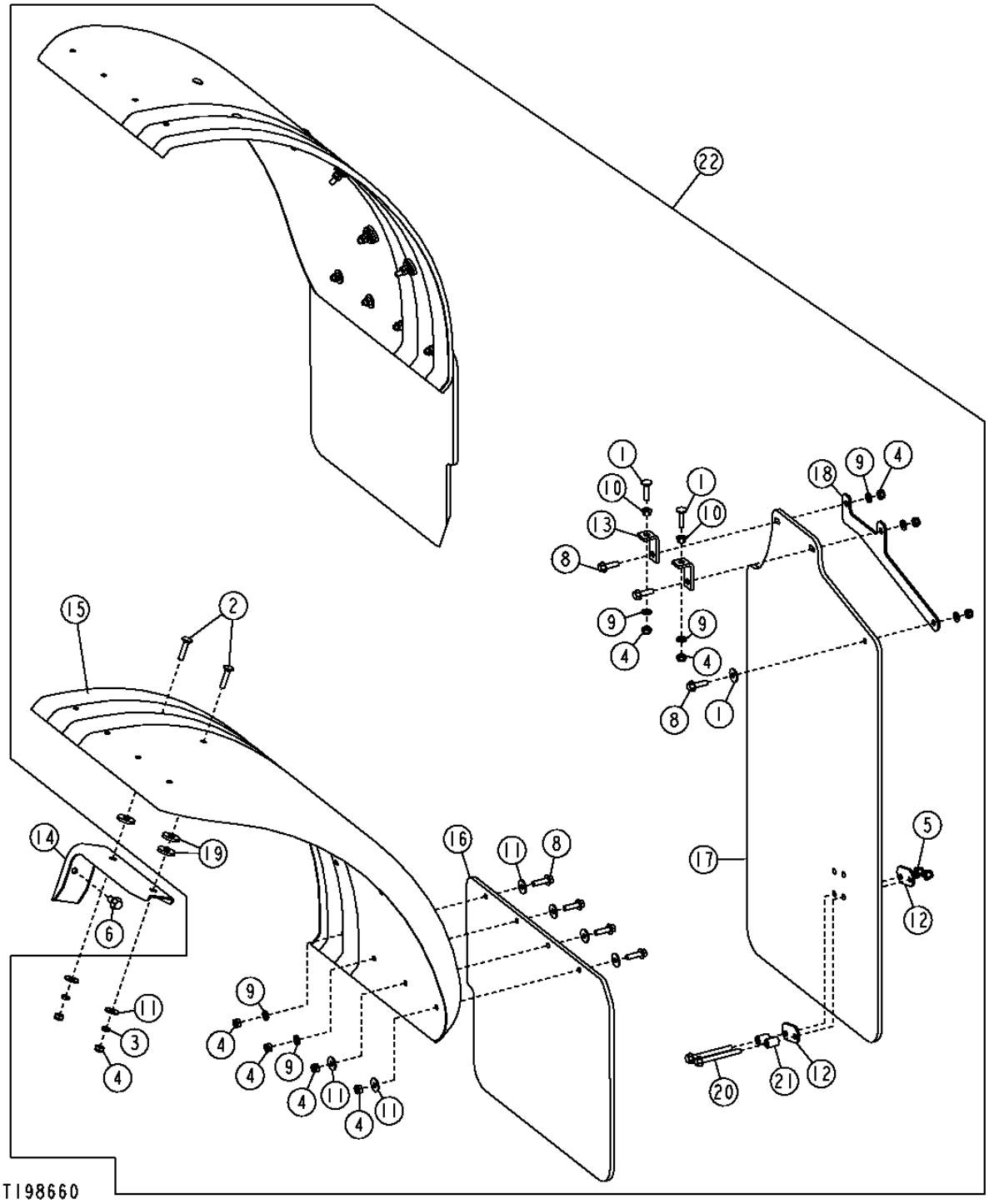

FULL COVERAGE FRONT FENDERS
AILES AVANT PLEINE COUVERTURE
GUARDABARROS DELANTEROS DE COBERTURA TOTAL

KEY	*PART NO.*	*PART NAME*	*QTY.*	*SERIAL NO.*	*REMARKS*
1	03M7195	BOLT	2		M10 X 45
2	03M7195	BOLT	12		M10 X 45
3	14M7152	NUT	12		M10
4	14M7167	LOCK NUT	25		M10
5	14M7400	LOCK NUT	2		M10
6	19M7788	SCREW	6		M12 X 25
7	19M7808	SCREW	2		M10 X 65
8	19M7835	SCREW	11		M10 X 35
9	24M7239	WASHER	9		10.700 X 21 X 2.500 MM
10	14M7296	FLANGE NUT	2		M10
11	24M7296	WASHER	25		10.500 X 30 X 2.500 MM
12	T173779	STRAP	2		
13	T176357	ANGLE	2		
14	T178368	SUPPORT	6		
15	T203075	FENDER	2		
16	T203077	SPLASH GUARDS	2		
17	T203966	SPLASH GUARDS	1		
18	T204744	PLATE	1		
19	T22381	WASHER	18		
20	19M7812	SCREW	2		M10 X 100
21	T147891	BUSHING	2		
22	**AT311822**	**KIT**	**1**		**(WHOLE GOODS)**

RADIO, RADIO SPEAKERS AND ANTENNA
RADIO, HAUTS-PARLEURS ET ANTENNE
RADIO, ALTAVOCES DEL RADIO Y ANTENA

T213273 -UN-31AUG05

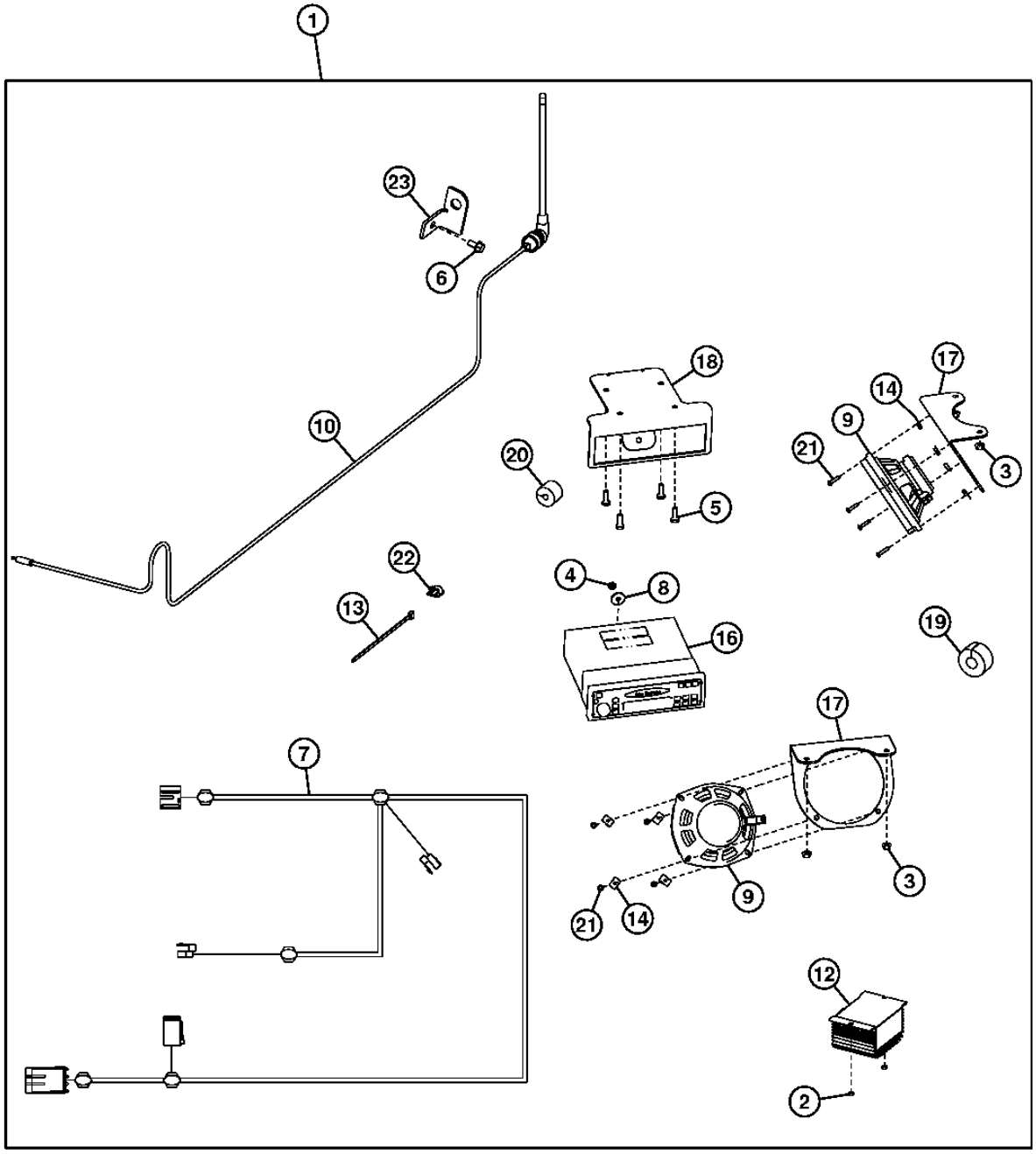

T213273

RADIO, RADIO SPEAKERS AND ANTENNA
RADIO, HAUTS-PARLEURS ET ANTENNE
RADIO, ALTAVOCES DEL RADIO Y ANTENA

KEY	*PART NO.*	*PART NAME*	*QTY.*	*SERIAL NO.*	*REMARKS*
1	AT306829	FIELD INSTALLATION KIT	1		AM/FM / WEATHERBAND
	AT306830	**FIELD INSTALLATION KIT**	**1**		**AM/FM / WEATHERBAND / CASSETTE**
	AT306831	**FIELD INSTALLATION KIT**	**1**		**AM/FM / COMPACT DISK**
2	14M7100	NUT	2		M4
3	14M7303	FLANGE NUT	4		M6
4	14M7375	FLANGE NUT	1		M5
5	19H1948	CAP SCREW	4		1/4" X 3/4"
6	19M7865	SCREW	1		M8 X 16
7	AT223870	RADIO SPEAKER WRG HARNESS	1		
8	24M7100	WASHER	1		6.600 X 22 X 2 MM
9	AT188759	SPEAKER	2		
10	AT199388	ANTENNA	1		
12	AT224893	CONVERTER	1		
13	R44302	TIE BAND	1		
14	R53528	NUT	8		
16	RE190139	RADIO	1		AM/FM / WEATHERBAND
	RE190140	RADIO	1		AM/FM / WEATHERBAND / CASSETTE
	RE227953	RADIO	1		AM/FM / COMPACT DISK
17	T180338	BRACKET	2		
18	T180420	BRACKET	1		
19	T182870	ISOLATOR	1		
20	T182871	ISOLATOR	1		
21	T182888	SCREW	8		
22	T182909	CLIP	6		
23	T204635	BRACKET	1		

INSIDE REAR VIEW MIRROR
INTERIEUR RETROVISEUR ARRIERE
ESPEJO RETROVISOR INTERIOR

TX1006817 -UN-27APR06

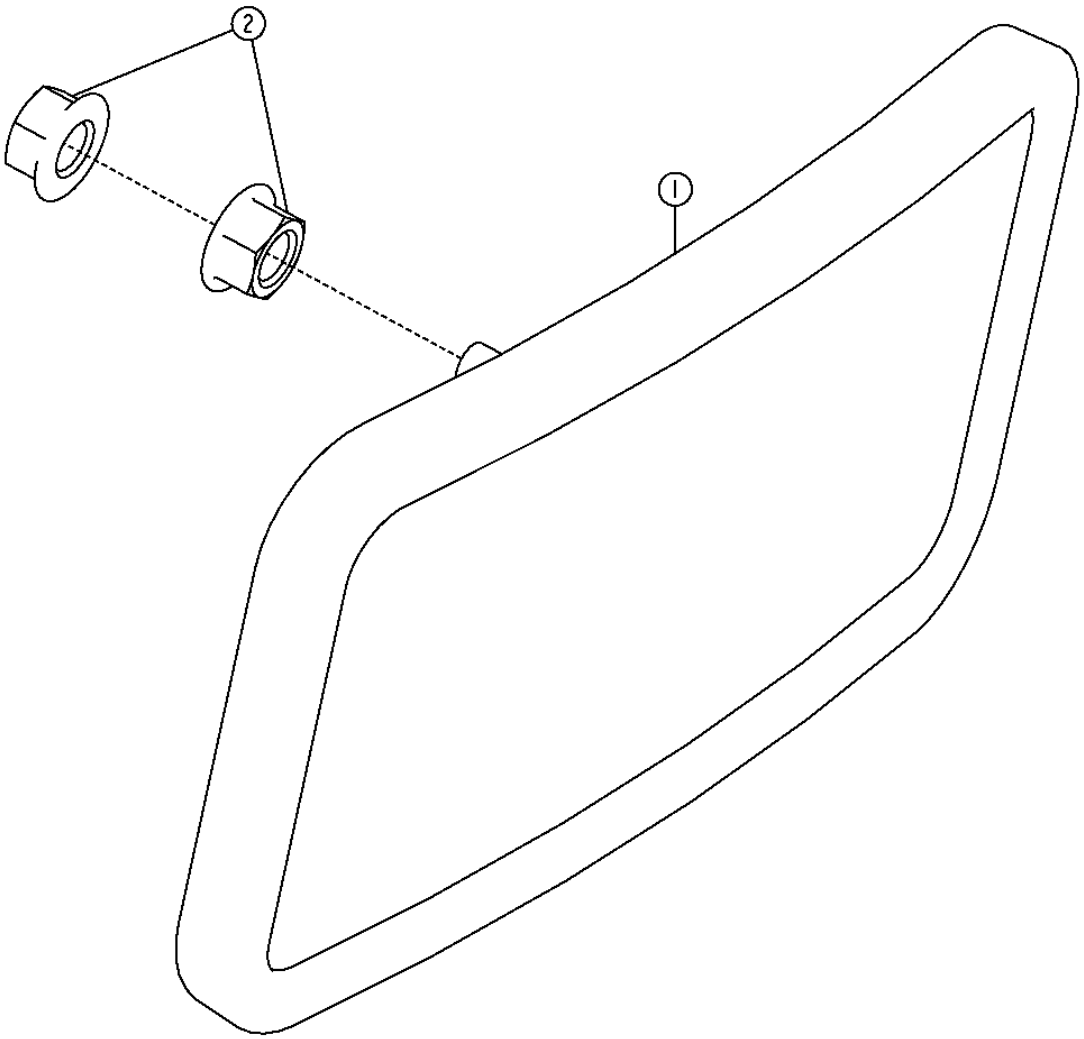

TX1006817

INSIDE REAR VIEW MIRROR
INTERIEUR RETROVISEUR ARRIERE
ESPEJO RETROVISOR INTERIOR

KEY	*PART NO.*	*PART NAME*	*QTY.*	*SERIAL NO.*	*REMARKS*
1	AT196427	REAR VIEW MIRROR	1		
2	14M7298	FLANGE NUT	2		M8

OUTSIDE MIRROR FOR CAB OR CANOPY
RETROVISEUR EXTERIEUR POUR CABINE ET AUVENT
ESPEJO RETROVISOR EXTERIOR PARA CABINA O DOSEL

TX1013314 -UN-18OCT06

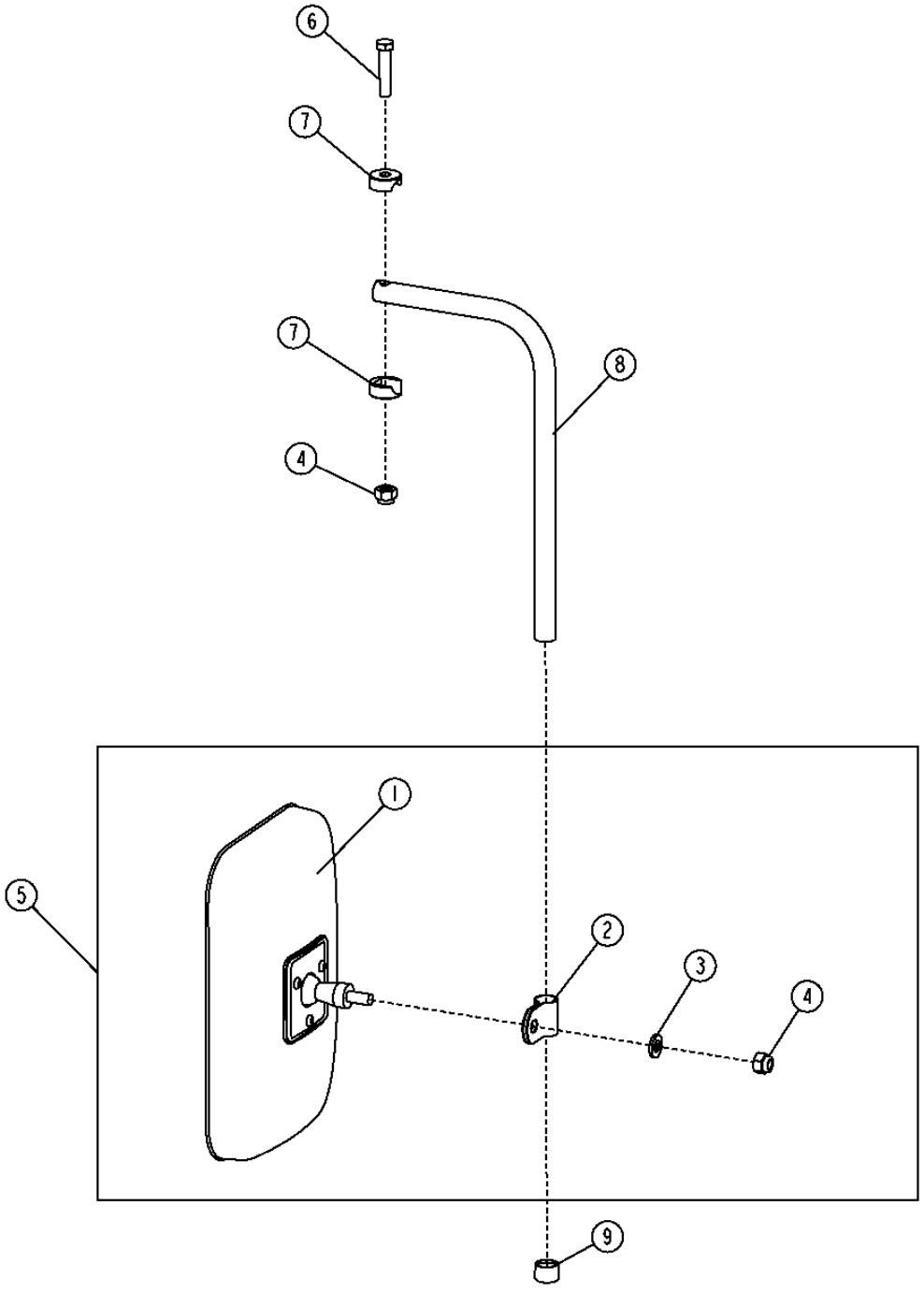

OUTSIDE MIRROR FOR CAB OR CANOPY
RETROVISEUR EXTERIEUR POUR CABINE ET AUVENT
ESPEJO RETROVISOR EXTERIOR PARA CABINA O DOSEL

KEY	*PART NO.*	*PART NAME*	*QTY.*	*SERIAL NO.*	*REMARKS*
1	AT157226	REAR VIEW MIRROR	1		
2	T119564	CLAMP	1		
3	24M7239	WASHER	1		10.700 X 21 X 2.500 MM
4	T11234	LOCK NUT	2		9.525 MM
5	AT103919	REAR VIEW MIRROR	1		
6	19H2791	CAP SCREW	1		3/8" X 1-3/4"
7	T115030	HALF CLAMP	2		
8	T115031	RIB	1		
9	T128437	CAP	1		

FIRE EXTINGUISHER
EXTINCTEUR
EXTINGUIDOR DE INCENDIOS

TX1014983 -UN-05DEC06

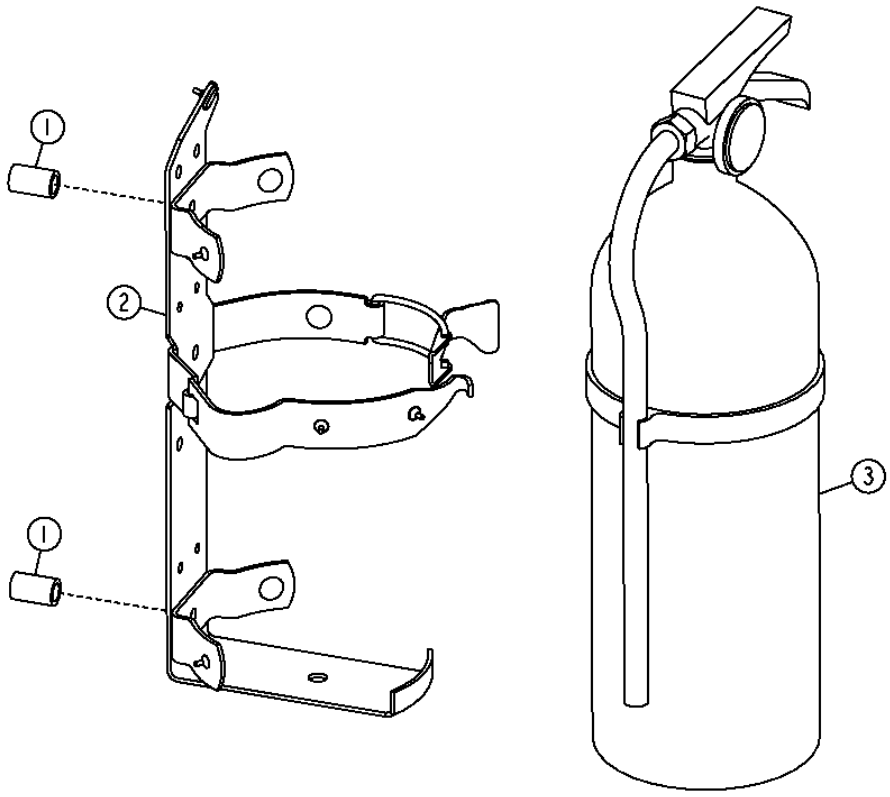

TX1014983

FIRE EXTINGUISHER
EXTINCTEUR
EXTINGUIDOR DE INCENDIOS

KEY	*PART NO.*	*PART NAME*	*QTY.*	*SERIAL NO.*	*REMARKS*
1	28H3423	BUSHING	2		
2	AT189390	BRACKET	1		
3	AT189487	FIRE EXTINGUISHER	1		

WARNING¦DEVICES¦INCLUDING¦HORN¦&¦REVERSE ALARM 2004

HORN
KLAXON
BOCINA

TX1013310 -UN-19OCT06

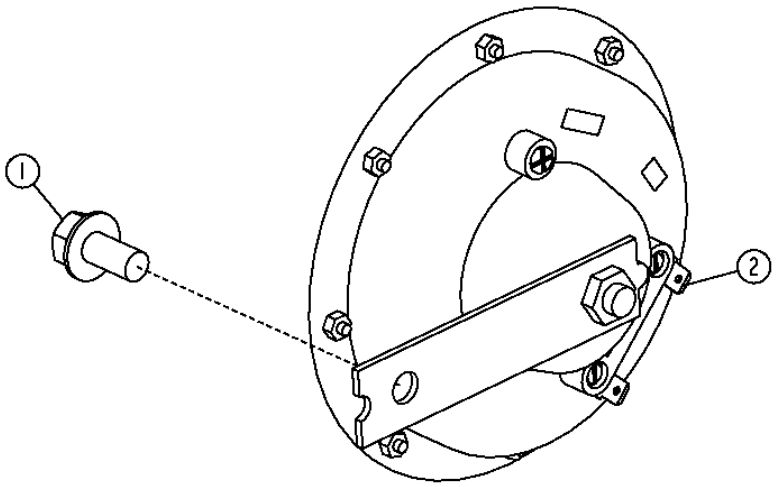

TX1013310

THIS PARTS LISTING IS CONTINUED

WARNING¦DEVICES¦INCLUDING¦HORN¦&¦REVERSE ALARM 2004

HORN
KLAXON
BOCINA

KEY	PART NO.	PART NAME	QTY.	SERIAL NO.	REMARKS
1	19M7865	SCREW	1		M8 X 16
2	AT226282	HORN	1		

WARNING¦DEVICES¦INCLUDING¦HORN¦&¦REVERSE ALARM 2004

BACKUP ALARM
AVERTISSEUR SONORE DE MARCHE ARRIERE
BOCINA DE RETROCESO

TX1013311 -UN-19OCT06

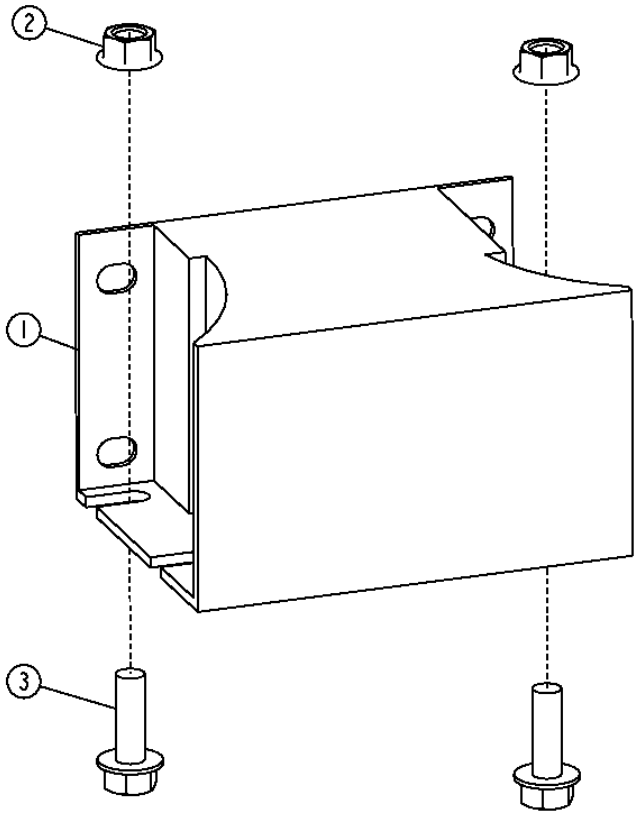

TX101331I

WARNING¦DEVICES¦INCLUDING¦HORN¦&¦REVERSE ALARM 2004

BACKUP ALARM
AVERTISSEUR SONORE DE MARCHE ARRIERE
BOCINA DE RETROCESO

KEY	*PART NO.*	*PART NAME*	*QTY.*	*SERIAL NO.*	*REMARKS*
1	AT120461	TRAVEL WARNING ALARM	1		
2	14M7298	FLANGE NUT	2		M8
3	19M7867	SCREW	2		M8 X 25

ASH TRAY
CENDRIER
CENICERO

TX1013316 -UN-18OCT06

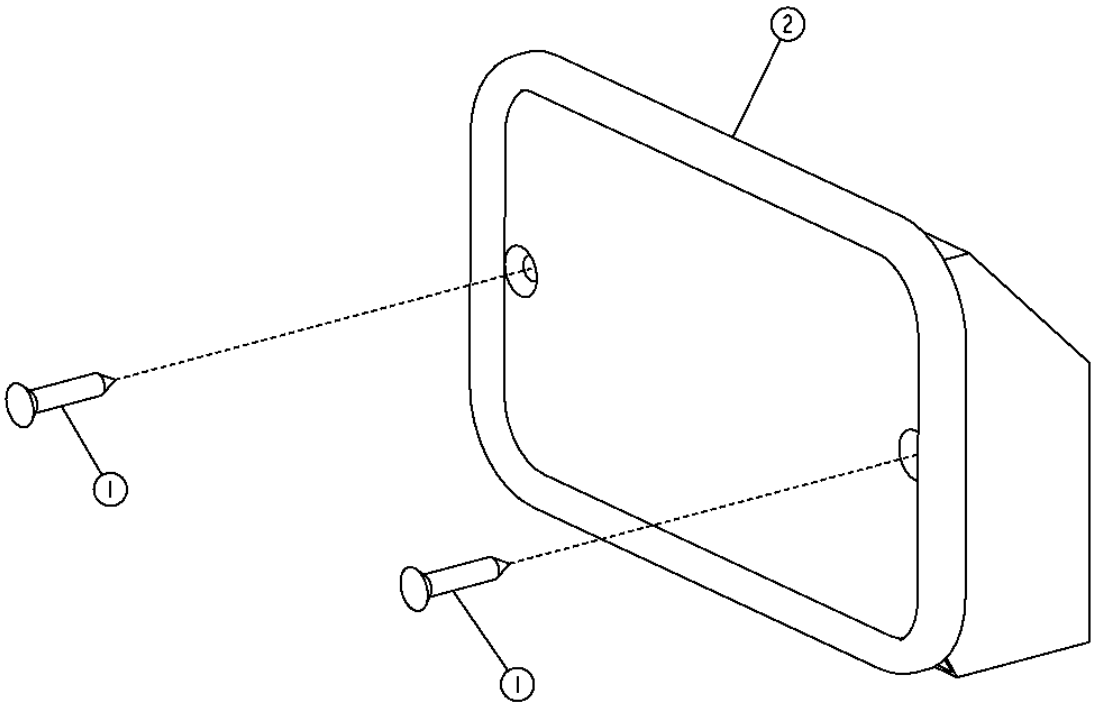

TX1013316

ASH TRAY
CENDRIER
CENICERO

KEY	PART NO.	PART NAME	QTY.	SERIAL NO.	REMARKS
1	37M7333	SCREW	2		
2	AT59892	ASHTRAY	1		

SUN VISOR
PARE-SOLEIL
PARASOL

TX1013321 -UN-29DEC06

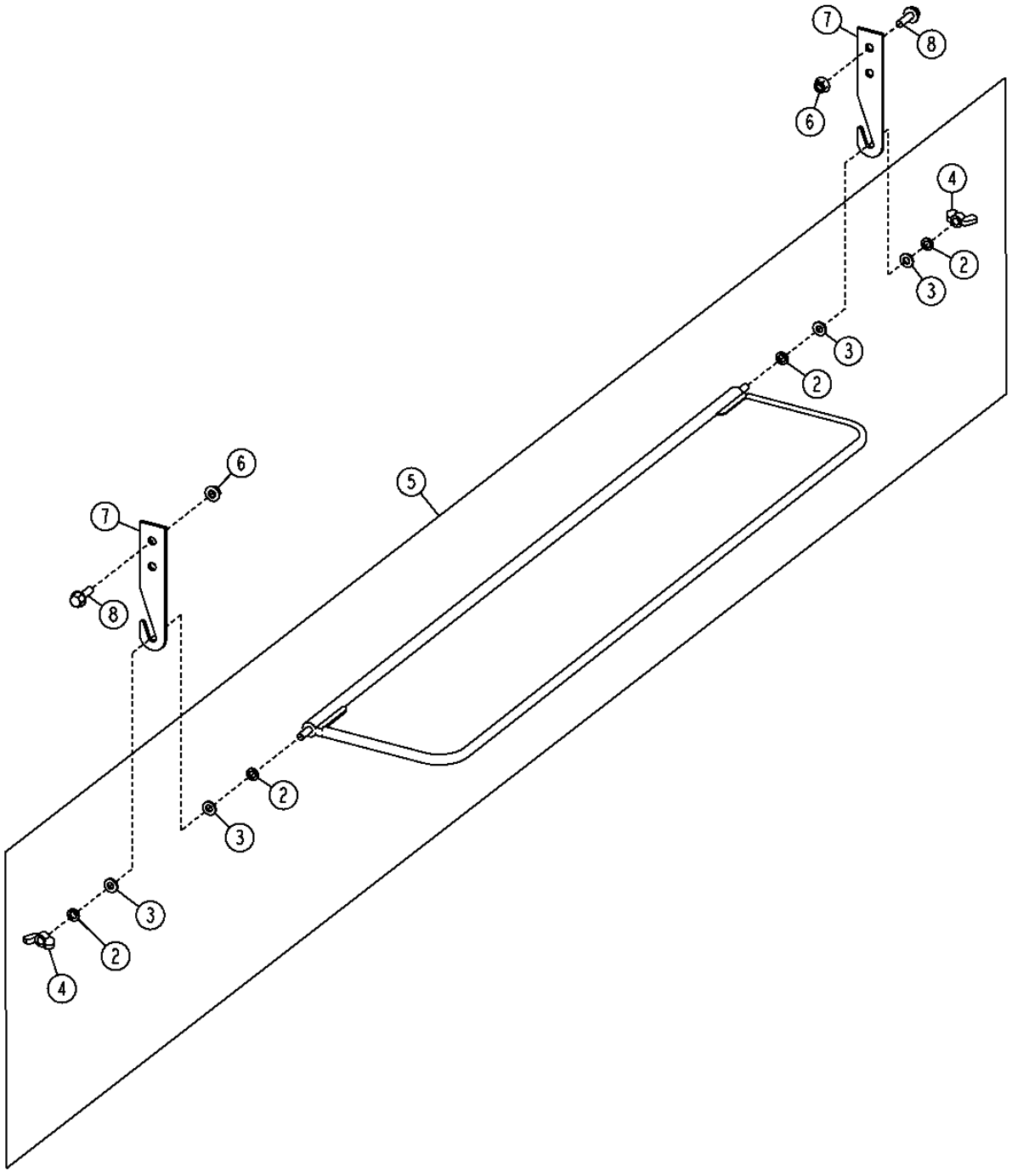

TX1013321

SUN VISOR
PARE-SOLEIL
PARASOL

KEY	*PART NO.*	*PART NAME*	*QTY.*	*SERIAL NO.*	*REMARKS*
2	24H1285	WASHER	4		17/64" X 7/16" X 0.065"
3	N218377	WASHER	4		
4	M47887	WING NUT	2		
5	**AT336621**	**SUN VISOR**	**1**		
6	19M7862	SCREW	2		M6 X 20
7	T181797	BRACKET	2		
8	14M7303	FLANGE NUT	2		M6

SLOW MOVING VEHICLE EMBLEM
SIGNAL DE VEHICULE LENT
ETIQUETA DE VEHICULO DE MOVIMIENTO LENTO

TX1013313 -UN-18OCT06

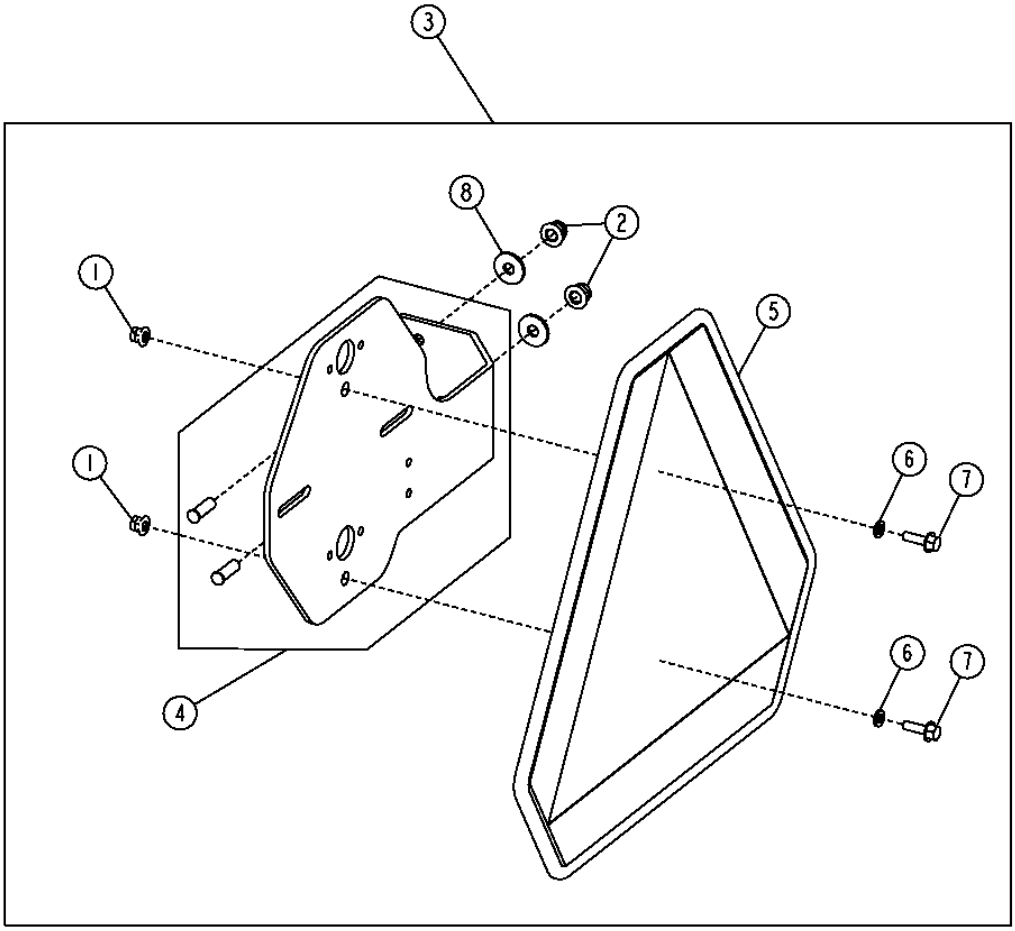

TX1013313

SLOW MOVING VEHICLE EMBLEM
SIGNAL DE VEHICULE LENT
ETIQUETA DE VEHICULO DE MOVIMIENTO LENTO

KEY	*PART NO.*	*PART NAME*	*QTY.*	*SERIAL NO.*	*REMARKS*
1	14M7397	LOCK NUT	2		M6
2	14M7396	LOCK NUT	2		M8
3	**AT301913**	**SMV EMBLEM**	**1**		**(WHOLE GOODS)**
4	AT301914	BRACKET	1		
5	JD5929	SMV EMBLEM	1		
6	24M7088	WASHER	2		6.600 X 12 X 1.600 MM
7	19M7862	SCREW	2		M6 X 20
8	24M7298	WASHER	2		8.400 X 25 X 2 MM

COAT HOOK
PATERE
GANCHO PARA ABRIGO

TX1013315 -UN-18OCT06

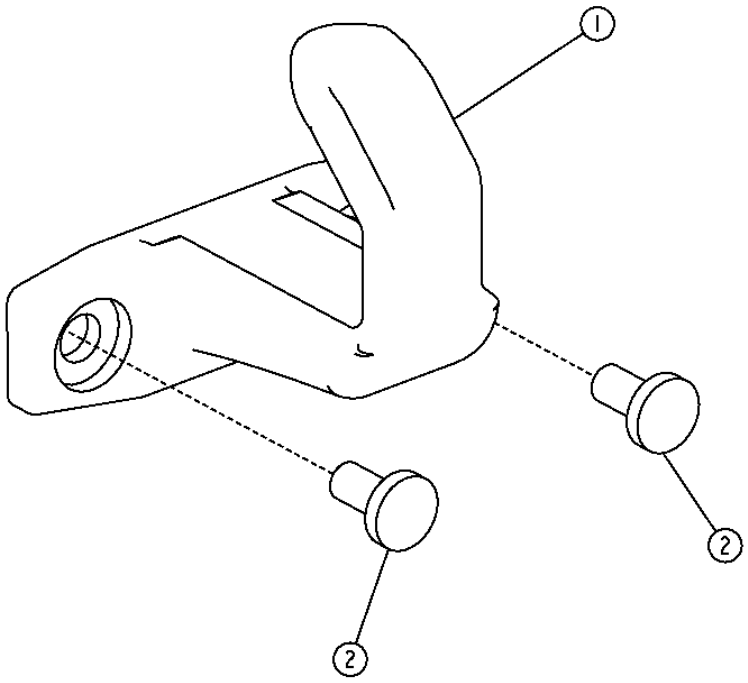

TX1013315

COAT HOOK
PATERE
GANCHO PARA ABRIGO

KEY	PART NO.	PART NAME	QTY.	SERIAL NO.	REMARKS
1	L102023	HOOK	1		
2	21M7305	SCREW	2		M6 X 12

HYDRAULIC PUMP
POMPE HYDRAULIQUE
BOMBA HIDRAULICA

TX1014872 -UN-09DEC06

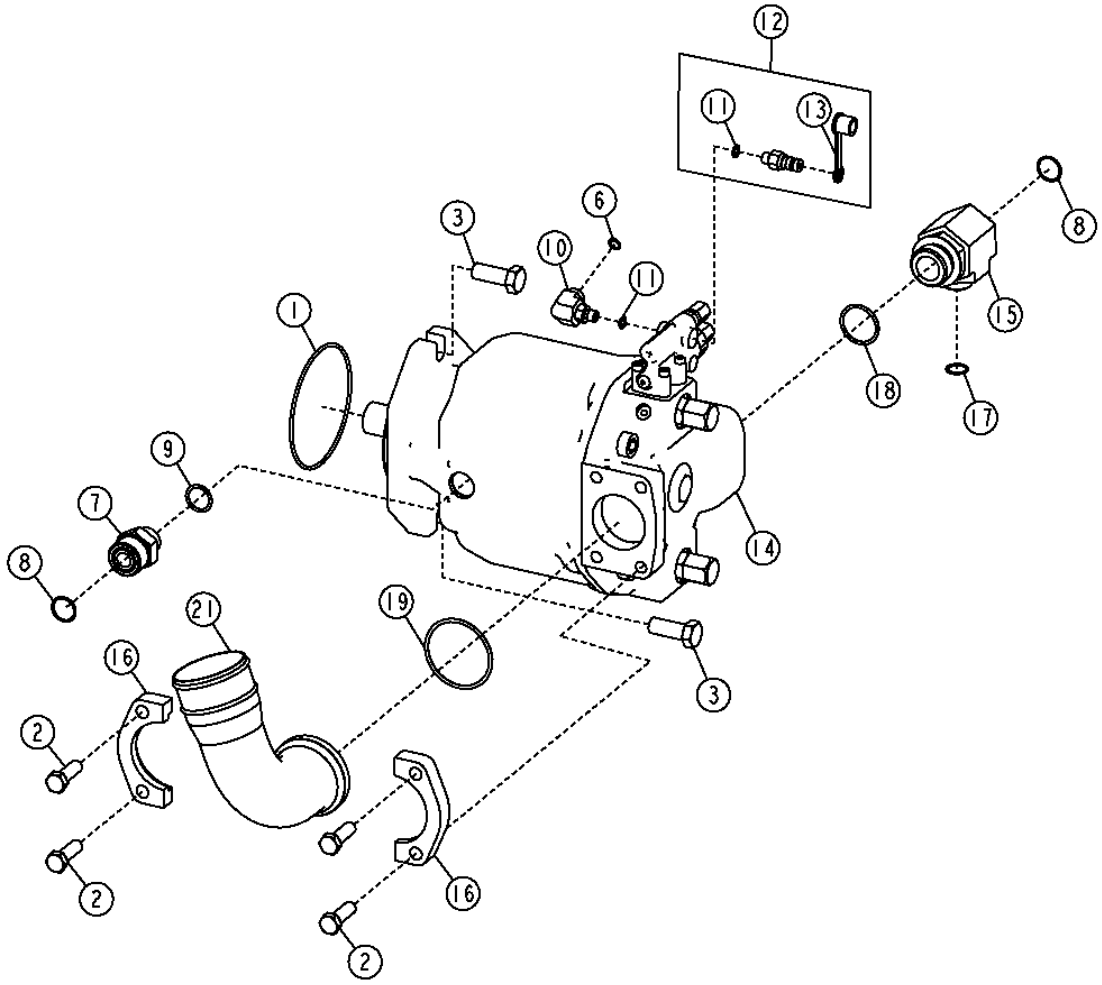

TX1014872

HYDRAULIC PUMP
POMPE HYDRAULIQUE
BOMBA HIDRAULICA

KEY	PART NO.	PART NAME	QTY.	SERIAL NO.	REMARKS
1	T107883	O-RING	1		
2	19H2993	CAP SCREW	4		1/2" X 1-1/2"
3	19M7488	CAP SCREW	2		M16 X 40
6	T77613	O-RING	1		9.246 X 1.778 MM (0.364" X 0.070")
7	38H1179	ADAPTER FITTING	1		
8	T76938	O-RING	2		23.520 X 1.778 MM (0.926" X 0.070")
9	U12547	O-RING	1		23.470 X 2.946 MM (0.924" X 0.116")
10	38H1435	ELBOW FITTING	1		
11	R28782	O-RING	2		8.915 X 1.829 MM (0.351" X 0.072")
12	AT180119	FITTING	1		
13	R77175	COVER	1		
14	AT323920	HYDRAULIC PUMP	1		
	T201525	SEAL	1		(SEAL RING FOR ADJUSTMENT CARTRIDGES)
	AT302144	SPOOL VALVE	1		(PUMP CONTROL VALVE)
	AT306219	SEAL KIT	1		(PUMP CONTROL VALVE SEAL KIT)
	T201521	GASKET	1		(CONTROL VALVE SEAL PLATE)
	AT302146	SEAL KIT	1		(HYDRAULIC PUMP SEAL KIT)
15	38H1574	TEE FITTING	1		
16	U44384	FLANGE FITTING	2		
17	T77858	O-RING	1		18.771 X 1.778 MM (0.739" X 0.070")
18	U13639	O-RING	1		37.465 X 2.997 MM (1.475" X 0.118")
19	U12331	O-RING	1		69.444 X 3.531 MM (2-47/64" X 0.139")
21	T204584	TUBE	1		

PRESSURE REGULATOR VALVE COMPONENTS
COMPOSANTS DU REGULATEUR DE PRESSION
COMPONENTES DE LA VALVULA REGULADORA DE PRESION

TX1014526 -UN-21NOV06

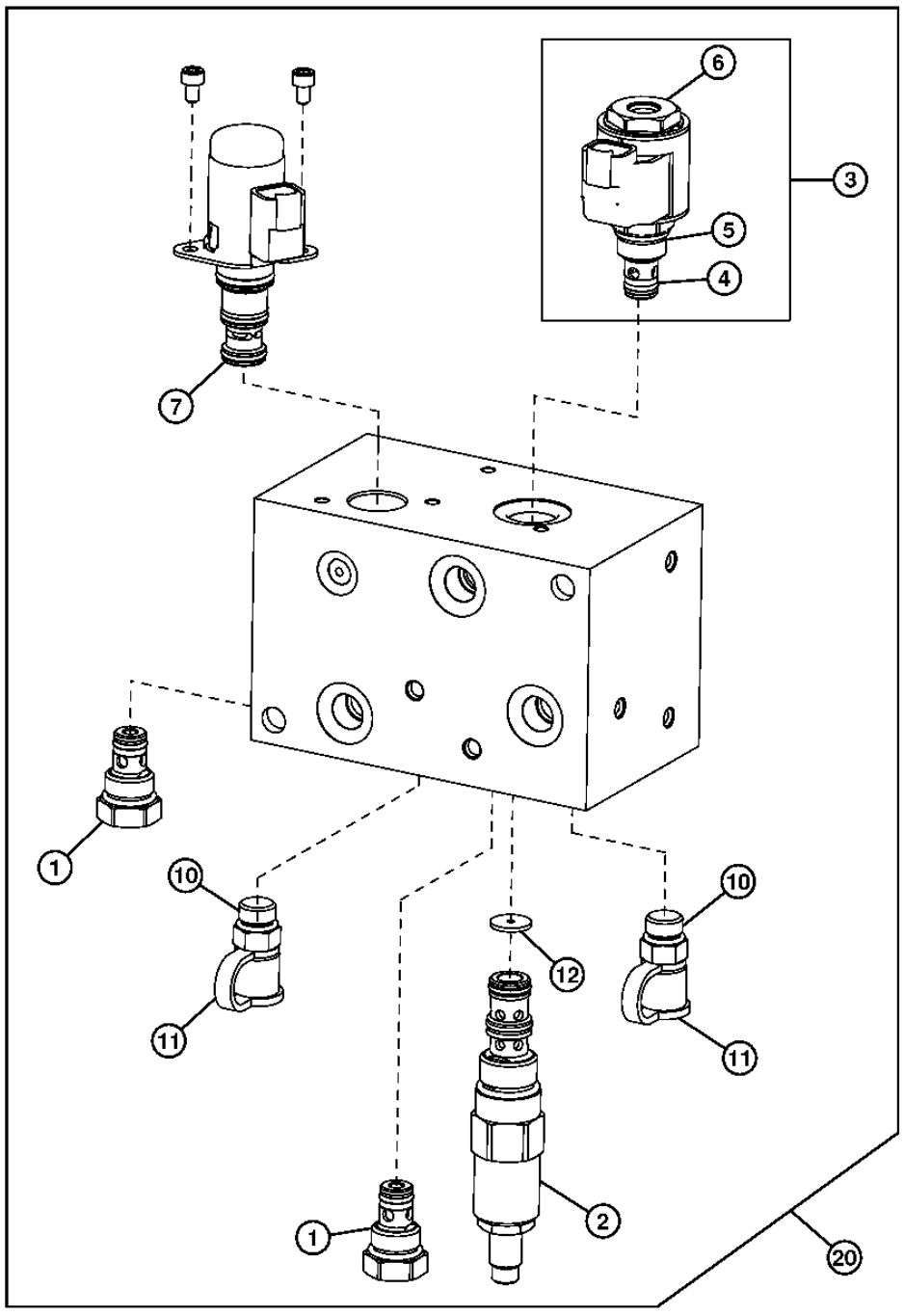

TX1014526

PRESSURE REGULATOR VALVE COMPONENTS
COMPOSANTS DU REGULATEUR DE PRESSION
COMPONENTES DE LA VALVULA REGULADORA DE PRESION

KEY	*PART NO.*	*PART NAME*	*QTY.*	*SERIAL NO.*	*REMARKS*
1	AT224570	CHECK VALVE	2		
	AT224862	SEAL KIT	1		
2	AT313708	OIL PRESSURE REG. VALVE	1		
	AT196943	SEAL KIT	1		
3	AT309494	SOLENOID VALVE	1		
4	AT307315	SOLENOID VALVE	1		
5	AT333811	SOLENOID VALVE COIL	1		
6	T225291	NUT	1		12.700 MM
7	AT313708	HYDRAULIC PRESSURE VALVE	1		
	AT224873	SEAL KIT	1		
10	AH125760	HYD. QUICK-CONNECT COUPLER	2		
11	R77175	COVER	2		
12	R26448	O-RING	1		11.887 X 1.981 MM
20	**AT333904**	**HYDRAULIC PRESSURE VALVE**	**1**		

SPIN CONTROL
CONTROLE PATINAGE
CONTROL DE GIRO

TX1014999 -UN-05DEC06

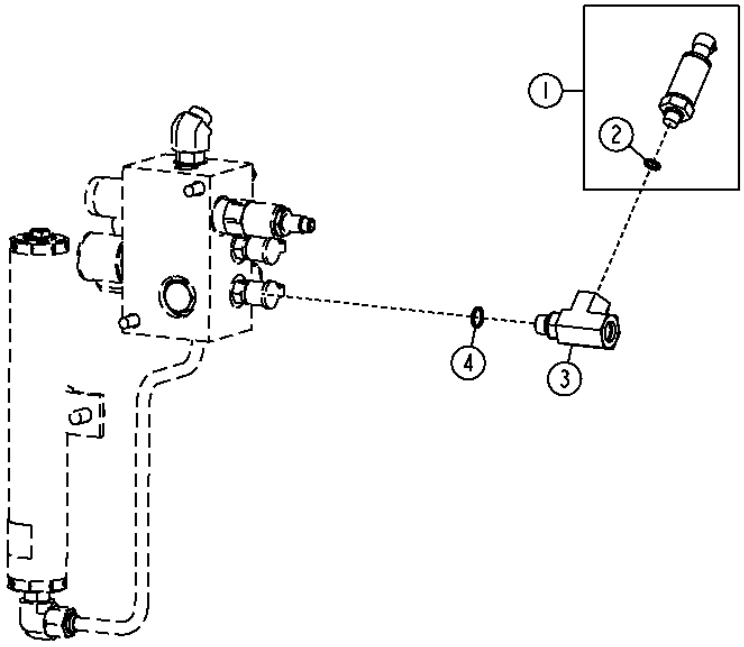

TX1014999

SPIN CONTROL
KITS REPARATION POMPE HYDRAULIQUE
JUEGOS DE REPARACION DE BOMBA HIDRAULICA

KEY	*PART NO.*	*PART NAME*	*QTY.*	*SERIAL NO.*	*REMARKS*
1	AT322982	TRANSDUCER	1		
2	R28782	O-RING	1		
3	AT326370	TEE FITTING	1		
4	R26448	O-RING	1		

PRESSURE REGULATOR VALVE FITTINGS
RACCORDS REGULATEUR PRESSION
ADAPTADORES DE LA VALVULA REGULADORA DE PRESION

TX1015000 -UN-15DEC06

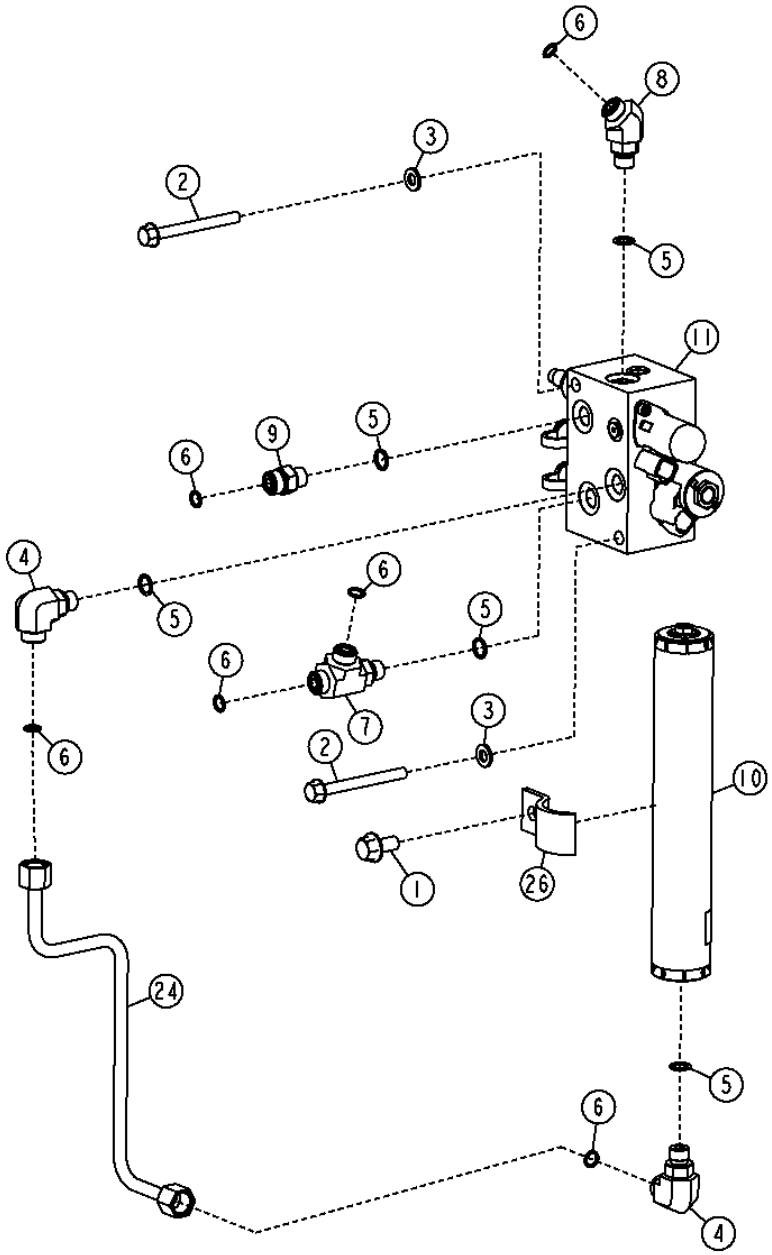

TX1015000

PRESSURE REGULATOR VALVE FITTINGS
RACCORDS REGULATEUR PRESSION
ADAPTADORES DE LA VALVULA REGULADORA DE PRESION

KEY	PART NO.	PART NAME	QTY.	SERIAL NO.	REMARKS
1	19M7784	SCREW	1		M10 X 20
2	19M8039	SCREW	2		M8 X 80
3	24M7238	WASHER	2		8.700 X 17 X 2 MM
4	38H1004	ELBOW FITTING	2		
5	R26448	O-RING	4		11.887 X 1.981 MM
6	T77613	O-RING	5		9.246 X 1.778 MM
7	38H1023	TEE FITTING	1		
8	38H1045	ELBOW FITTING	1		
9	38H1160	ADAPTER FITTING	1		
10	AT225574	HYDRAULIC ACCUMULATOR	1		
11	AT333904	HYDRAULIC PRESSURE VALVE	1		
24	AT334453	OIL LINE	1		
26	R68904	CLAMP	1		

HYDRAULIC OIL RESERVOIR
RESERVOIR HUILE HYDRAULIQUE
DEPOSITO DE ACEITE HIDRAULICO

TX1014555 -UN-29NOV06

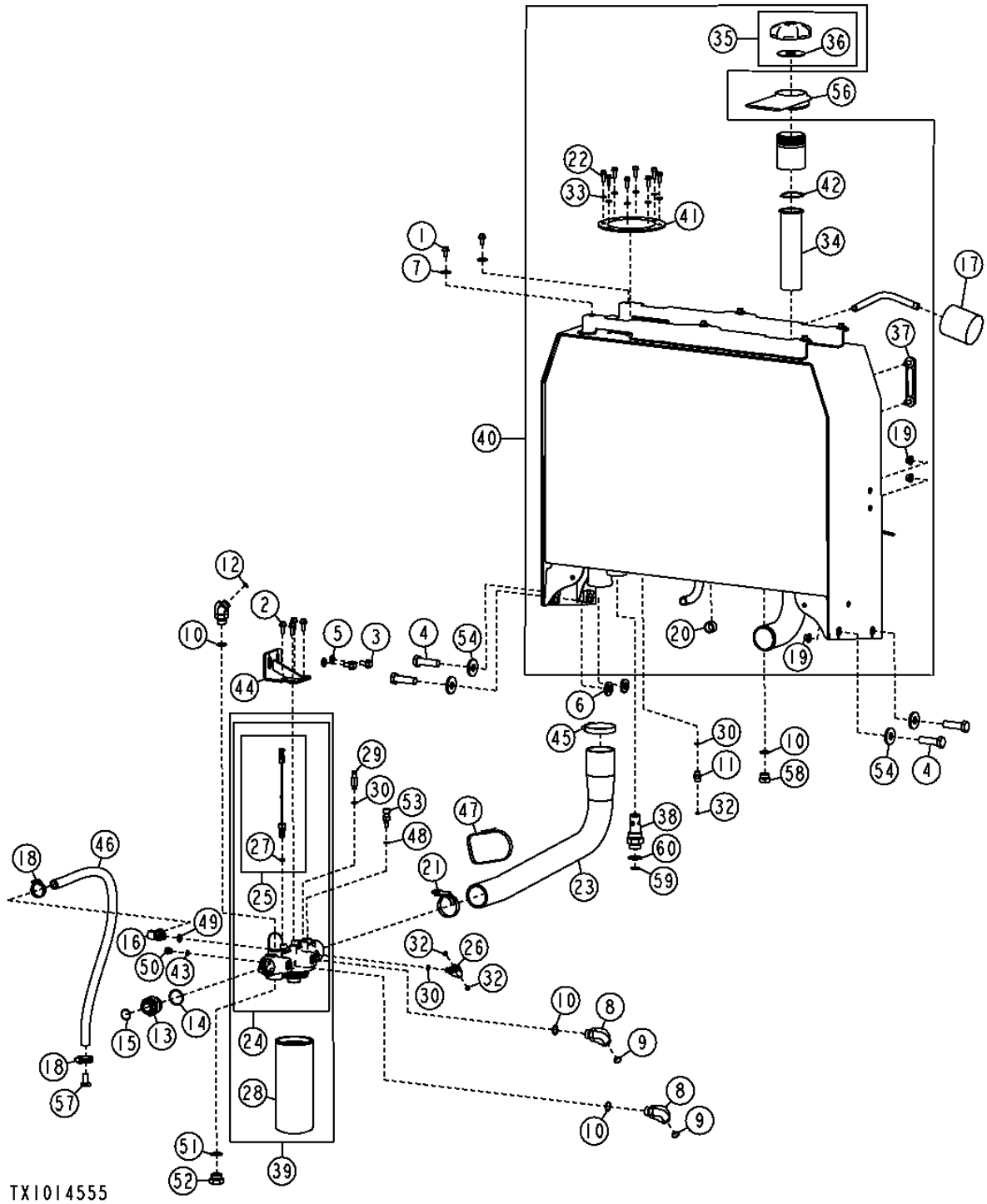

HYDRAULIC OIL RESERVOIR
RESERVOIR HUILE HYDRAULIQUE
DEPOSITO DE ACEITE HIDRAULICO

KEY	PART NO.	PART NAME	QTY.	SERIAL NO.	REMARKS
1	19M7784	SCREW	6		M10 X 20
2	19M7785	SCREW	4		M10 X 25
3	19M7788	SCREW	2		M12 X 25
4	19M8639	CAP SCREW	4		M20 X 70
5	24M7240	WASHER	2		13 X 25 X 3 MM
6	24M7242	WASHER	2		21.400 X 42 X 5 MM
7	24M7296	WASHER	6		10.500 X 30 X 2.500 MM
8	38H1007	ELBOW FITTING	1		
9	T77858	O-RING	1		18.771 X 1.778 MM
10	U12547	O-RING	3		23.470 X 2.946 MM
11	38H1160	ADAPTER FITTING	1		
12	T77932	O-RING	1		15.596 X 1.778 MM
13	38H1595	ADAPTER FITTING	1		
14	R26773	O-RING	1		43.688 X 2.997 MM
15	T78612	O-RING	1		29.870 X 1.778 MM
16	AH64349	HOSE FITTING	1		
17	AM39653	OIL FILTER	1		
18	AR21839	CLAMP	2		
19	14M7443	FLANGE NUT	8		M12
20	28H1642	BUSHING	1		1.049" X 1.315" X 3/4"
21	AH170895	CLAMP	1		
22	T81403	SCREW	8		M8 X 25
23	AT223658	HOSE	1		
24	AT224797	FILTER HEAD	1		
25	AT307045	PRESSURE SWITCH	1		
26	38H1016	TEE FITTING	1		
27	P46051	O-RING	1		10.770 X 2.616 MM
28	AT310905	OIL FILTER	1		
29	M72389	ADAPTER FITTING	1		
30	R26448	O-RING	3		11.887 X 1.981 MM
32	T77613	O-RING	3		9.246 X 1.778 MM
33	24H1136	WASHER	8		11/32" X 11/16" X 0.065"
34	AT161638	STRAINER	1		
35	AT177950	FILLER CAP	1		
36	H148166	WASHER	1		1.142" X 3.346" X 1/8"
37	AT227279	LEVEL GAUGE	1		
38	AT311570	CHECK VALVE	1		
39	AT319056	FILTER HEAD	1		
40	AT329810	HYDRAULIC RESERVOIR	1		
41	T106595	GASKET	1		
42	T39155	SNAP RING	1		
43	R26448	O-RING	1		11.887 X 1.981 MM
44	AT228747	BRACKET	1		
45	RE52702	CLAMP	1		
46	T148181	HOSE	1		
47	N189220	TIE BAND	1		
48	R26286	O-RING	1		10.516 X 1.829 MM
49	R26906	O-RING	1		19.177 X 2.464 MM
50	R27218	FITTING PLUG	1		
51	R29936	O-RING	1		29.743 X 2.946 MM
52	R36636	FITTING PLUG	1		
53	RE38310	SENSOR	1		
54	T128096	WASHER	4		
56	T196312	BOOT	1		
57	T203776	PLUG	1		
58	R27175	DRAIN PLUG	1		
59	T76938	O-RING	1		23.520 X 1.778 MM
60	U13639	O-RING	1		37.465 X 2.997 MM

MAIN HYDRAULIC LINES
CONDUITES HYDRAULIQUES PRINCIPALES
LINEAS HIDRAULICAS PRINCIPALES

TX1014545 -UN-17NOV06

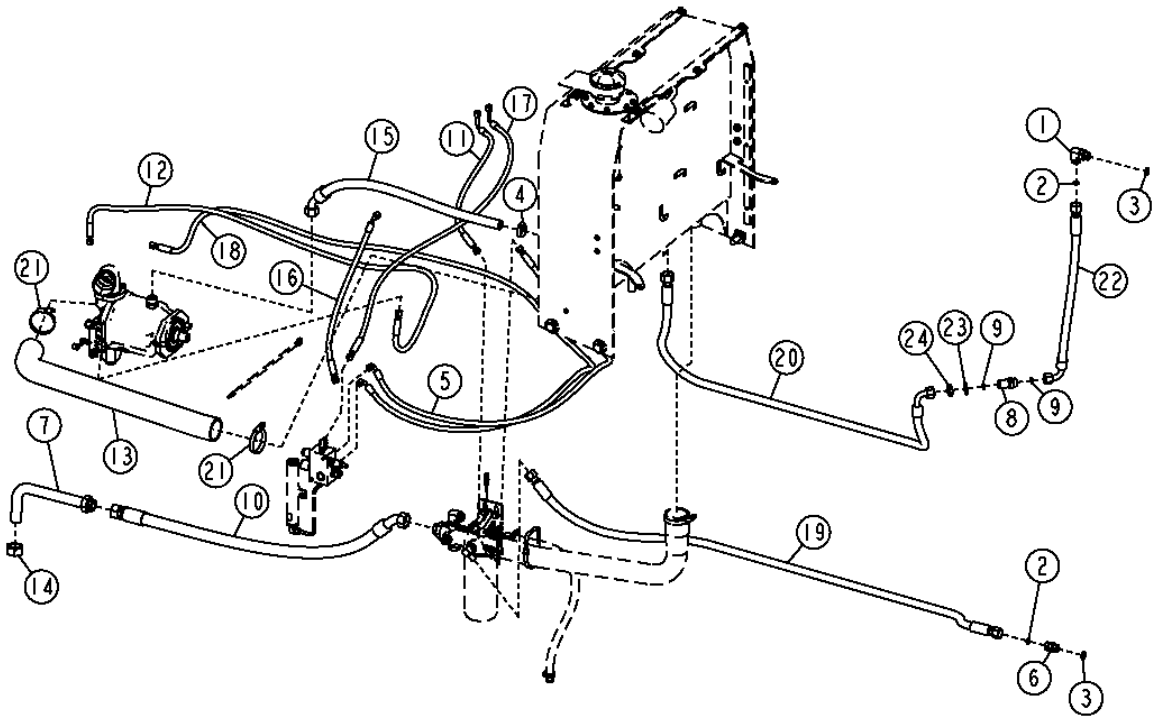

TX1014545

MAIN HYDRAULIC LINES
CONDUITES HYDRAULIQUES PRINCIPALES
LINEAS HIDRAULICAS PRINCIPALES

KEY	PART NO.	PART NAME	QTY.	SERIAL NO.	REMARKS
1	38H1007	ELBOW FITTING	1		
2	T77858	O-RING	2		18.771 X 1.778 MM (0.739" X 0.070")
3	U12547	O-RING	2		23.470 X 2.946 MM (0.924" X 0.116")
4	AR21839	CLAMP	1		
5	AT158098	HYDRAULIC HOSE - FABRICATE	1		11/16" X 1 829 MM (72") X 11/16"
6	38H1163	ADAPTER FITTING	1		
7	AT308426	OIL LINE	1		
8	38H1276	ADAPTER FITTING	1		
9	T77858	O-RING	2		18.771 X 1.778 MM (0.739" X 0.070")
10	AT226087	HYDRAULIC HOSE - FABRICATE	1		1-11/16" X 1 346 MM (53") X 1-11/16"
11	AT226614	HYDRAULIC HOSE - FABRICATE	1		11/16" X 762 MM (30") X 11/16"
12	AT169939	HYDRAULIC HOSE - FABRICATE	1		11/16" X 2 210 MM (87") X 11/16"
13	AT228616	SUCTION HOSE	1		
14	38H1360	TUBE NUT	1		
15	AT223173	HYDRAULIC HOSE - FABRICATE	1		1-7/16" X 1 067 MM (42") X 1"
16	AT310561	HYDRAULIC HOSE - FABRICATE	1		9/16" X 926 MM (36-1/2") X 9/16"
17	AT304899	HYDRAULIC HOSE - FABRICATE	1		9/16" X 1 575 MM (62") X 9/16"
18	AT322206	HYDRAULIC HOSE - FABRICATE	1		11/16" X 3 250 MM (128") X 11/16"
19	AT332314	HYDRAULIC HOSE - FABRICATE	1		1-3/16" X 2 464 MM (97") X 1-3/16"
20	AT332315	HYDRAULIC HOSE - FABRICATE	1		
21	RE52702	CLAMP	2		
22	AT334374	HYDRAULIC HOSE - FABRICATE	1		1-3/16" X 775 MM (30-1/2") X 1-3/16"
23	T174275	LOCK WASHER	1		30.950 MM (1.219")
24	T78707	NUT	1		30.175 MM (1-3/16")

LOADER BUCKET TEETH AND SHANKS
DENTS ET PORT-DENTS DE BENNE DE CHARGEUR
DIENTES Y VASTAGOS DEL CUCHARON DE LA CARGADORA

TX1014623 -UN-04DEC06

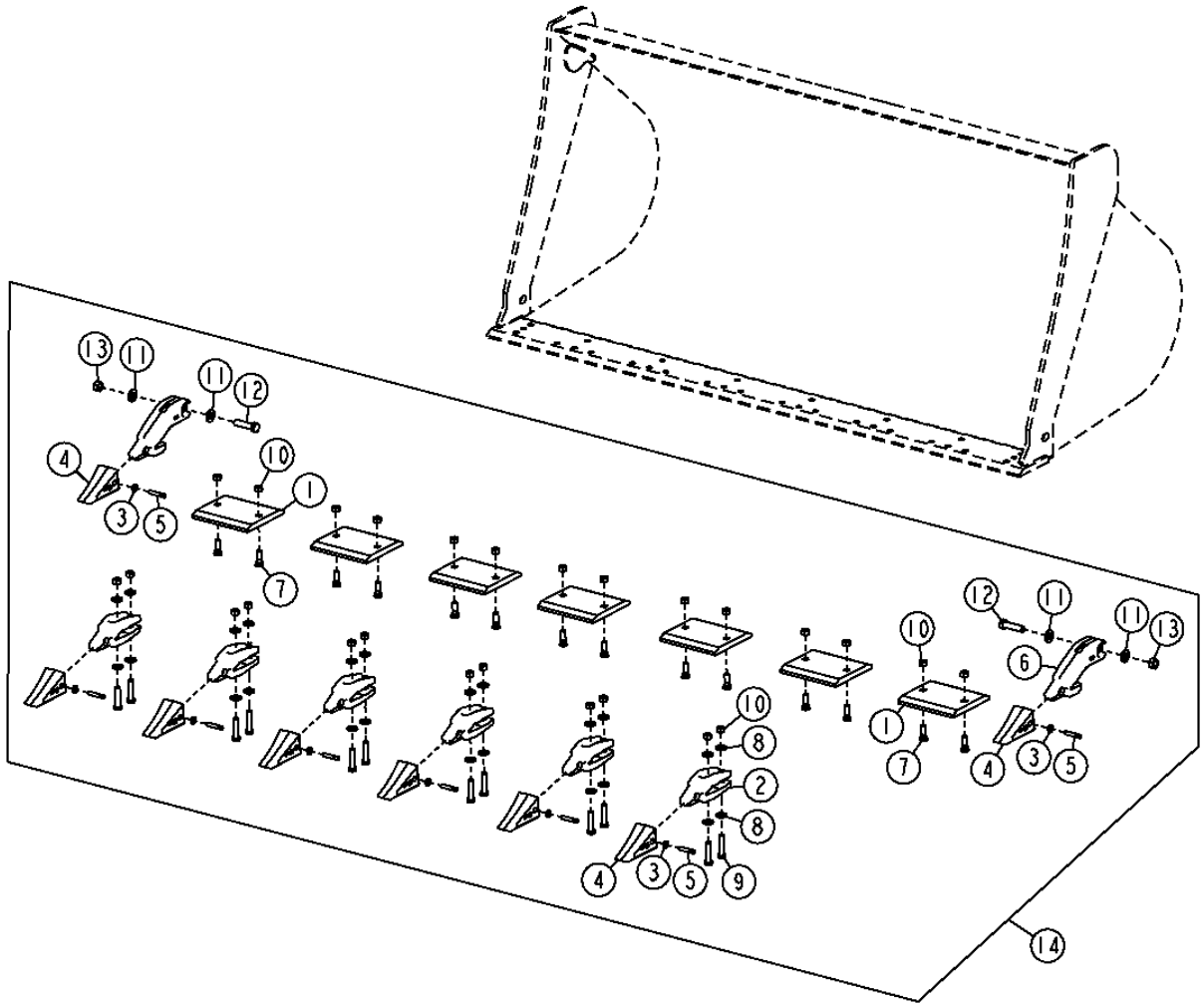

TX1014623

LOADER BUCKET TEETH AND SHANKS
DENTS ET PORT-DENTS DE BENNE DE CHARGEUR
DIENTES Y VASTAGOS DEL CUCHARON DE LA CARGADORA

KEY	*PART NO.*	*PART NAME*	*QTY.*	*SERIAL NO.*	*REMARKS*
1	T157493	CUTTING EDGE	7		
2	T25CA	BUCKET TOOTH ADAPTER	6		
3	T3G9609	WASHER	8		
4	TF1U3252L	TOOTH	8		(25 SERIES FANGGS™ LOADER)
5	T9J2258	PIN FASTENER	8		
6	T25EA	BUCKET TOOTH ADAPTER	2		
7	T146934	BOLT	14		
8	24M7242	WASHER	24		
9	19H3167	CAP SCREW	12		3/4" X 3-1/4"
10	14H1058	NUT	26		3/4"
11	24M7243	WASHER	4		25.400 X 50 X 6 MM
12	19M8288	CAP SCREW	2		M24 X 90
13	14M7278	NUT	2		M24
14	**AT209156**	**FIELD INSTALLATION KIT**	**1**		

LOADER BUCKET TEETH AND SHANKS
DENTS ET PORT-DENTS DE BENNE DE CHARGEUR
DIENTES Y VASTAGOS DEL CUCHARON DE LA CARGADORA

TX1014617 -UN-20NOV06

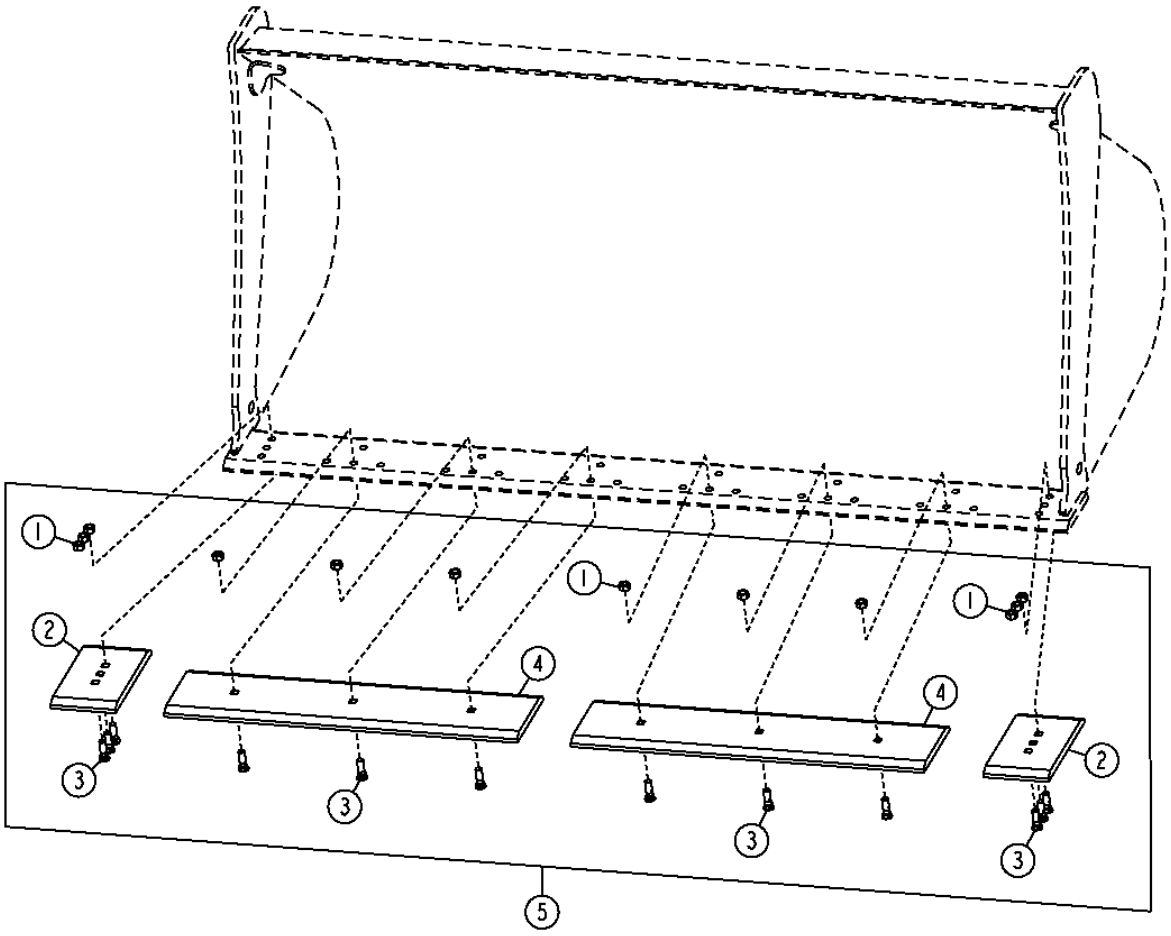

TX1014617

LOADER BUCKET TEETH AND SHANKS
DENTS ET PORT-DENTS DE BENNE DE CHARGEUR
DIENTES Y VASTAGOS DEL CUCHARON DE LA CARGADORA

KEY	*PART NO.*	*PART NAME*	*QTY.*	*SERIAL NO.*	*REMARKS*
1	14H1058	NUT	12		3/4"
2	T146672	CUTTING EDGE	2		
3	T146934	BOLT	12		3/4" X 2-1/2"
4	T157492	CUTTING EDGE	2		
5	**AT209155**	**FIELD INSTALLATION KIT**	**1**		

LOADER BUCKET TEETH AND SHANKS
DENTS ET PORT-DENTS DE BENNE DE CHARGEUR
DIENTES Y VASTAGOS DEL CUCHARON DE LA CARGADORA

TX1015564 -UN-27DEC06

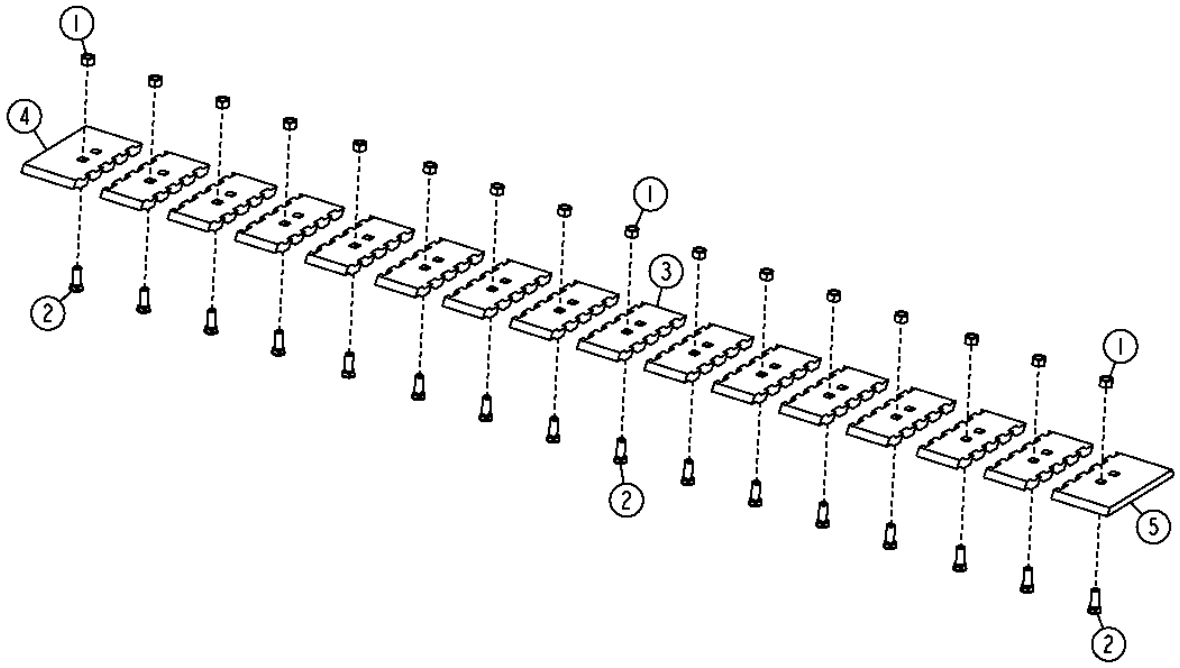

TX1015564

LOADER BUCKET TEETH AND SHANKS
DENTS ET PORT-DENTS DE BENNE DE CHARGEUR
DIENTES Y VASTAGOS DEL CUCHARON DE LA CARGADORA

KEY	PART NO.	PART NAME	QTY.	SERIAL NO.	REMARKS
1	14H1048	NUT	17		1"
2	T146933	BOLT	17		1" X 3"
3	T825100	CUTTING EDGE	15		
4	T825105	CUTTING EDGE	1		
5	T825106	CUTTING EDGE	1		

LOADER BUCKETS, BUCKET PINS, SPILLGUARD, AND CUTTING EDGE
BENNES DE CHARGEUR, AXES DE BENNE, PROTECTION CONTRE LES DEVERSEMENTS ET TRANCHANT
CUCHARONES CARGADORA, PASADORES CUCHARON, PROTECTOR CONTRA DERRAMES Y BORDE CORTANTE

T201455 -UN-07JUL04

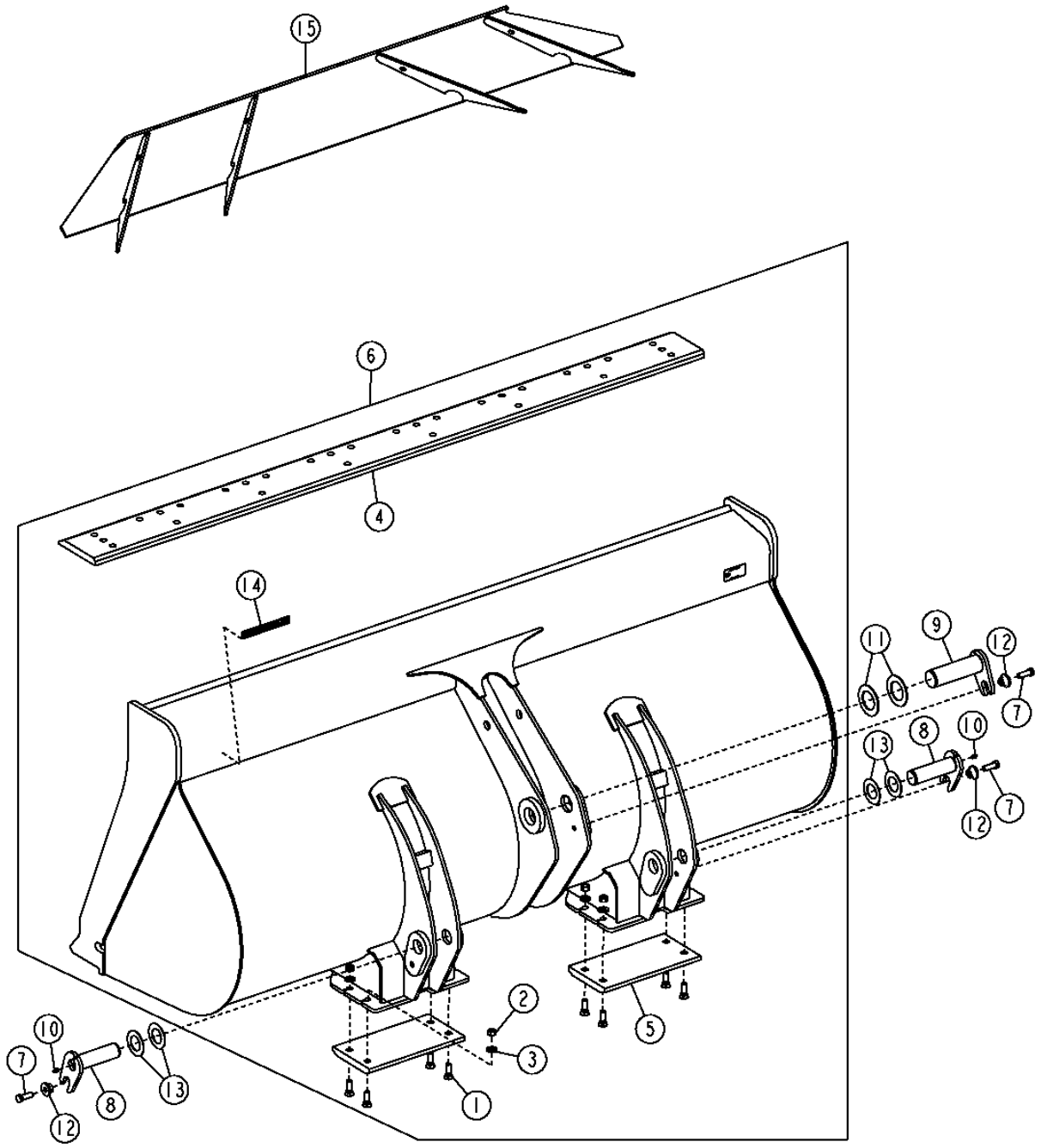

T201455

BUCKET (INCLUDING TEETH) 3102

LOADER BUCKETS, BUCKET PINS, SPILLGUARD, AND CUTTING EDGE
BENNES DE CHARGEUR, AXES DE BENNE, PROTECTION CONTRE LES DEVERSEMENTS ET TRANCHANT
CUCHARONES CARGADORA, PASADORES CUCHARON, PROTECTOR CONTRA DERRAMES Y BORDE CORTANTE

KEY	*PART NO.*	*PART NAME*	*QTY.*	*SERIAL NO.*	*REMARKS*
1	10H1040	BOLT	8		5/8" X 2"
2	14H1039	NUT	8		5/8"
3	24M7241	WASHER	8		17 X 34 X 4 MM
4	T157465	CUTTING EDGE	1		(2690 MM WIDE)
	T169128	CUTTING EDGE	1		(2690 MM WIDE) (FOR USE WITH JAGZ™ CUTTING EDGES)
5	T157457	SHOE	2		
6	**AT302080**	**LOADER BUCKET**	**1**		**(CONVENIENCE ASSY) (3.5 YD Z-BAR LINKAGE BUCKET) (2690 MM WIDE CUTTING EDGE)**
	AT302077	**LOADER BUCKET**	**1**		**(CONVENIENCE ASSY) (3.5 YD POWERLLEL™ LINKAGE BUCKET) (2690 MM WIDE CUTTING EDGE)**
7	19M7489	CAP SCREW	3		M16 X 45
8	AT308032	PIN	2		
9	AT308025	PIN	1		(USE WITH Z-BAR LINKAGE BUCKETS)
	AT301520	PIN FASTENER	1		(USE WITH POWERLLEL™ LINKAGE BUCKETS)
10	JD7759	LUBRICATION FITTING	2		
11	24H1240	WASHER	2		(USE WITH Z-BAR LINKAGE BUCKETS)
	T101480	WASHER	2		(USE WITH POWERLLEL™ LINKAGE BUCKETS)
12	T176064	BUSHING	3		
13	T102171	WASHER	4		
14	T213143	LABEL	1		"WORKSITE PRO™"
15	**AT203247**	**FIELD INSTALLATION KIT**	**1**		**(SPILLGUARD)**

LOADER ATTACHMENT COUPLER BUCKET
BENNE ACCOUPLEMENT ACCESSOIRE CHARGEUR
CUCHARON DEL ACOPLADOR DE SUJECION DE LA CARGADORA

T201457 -UN-07JUL04

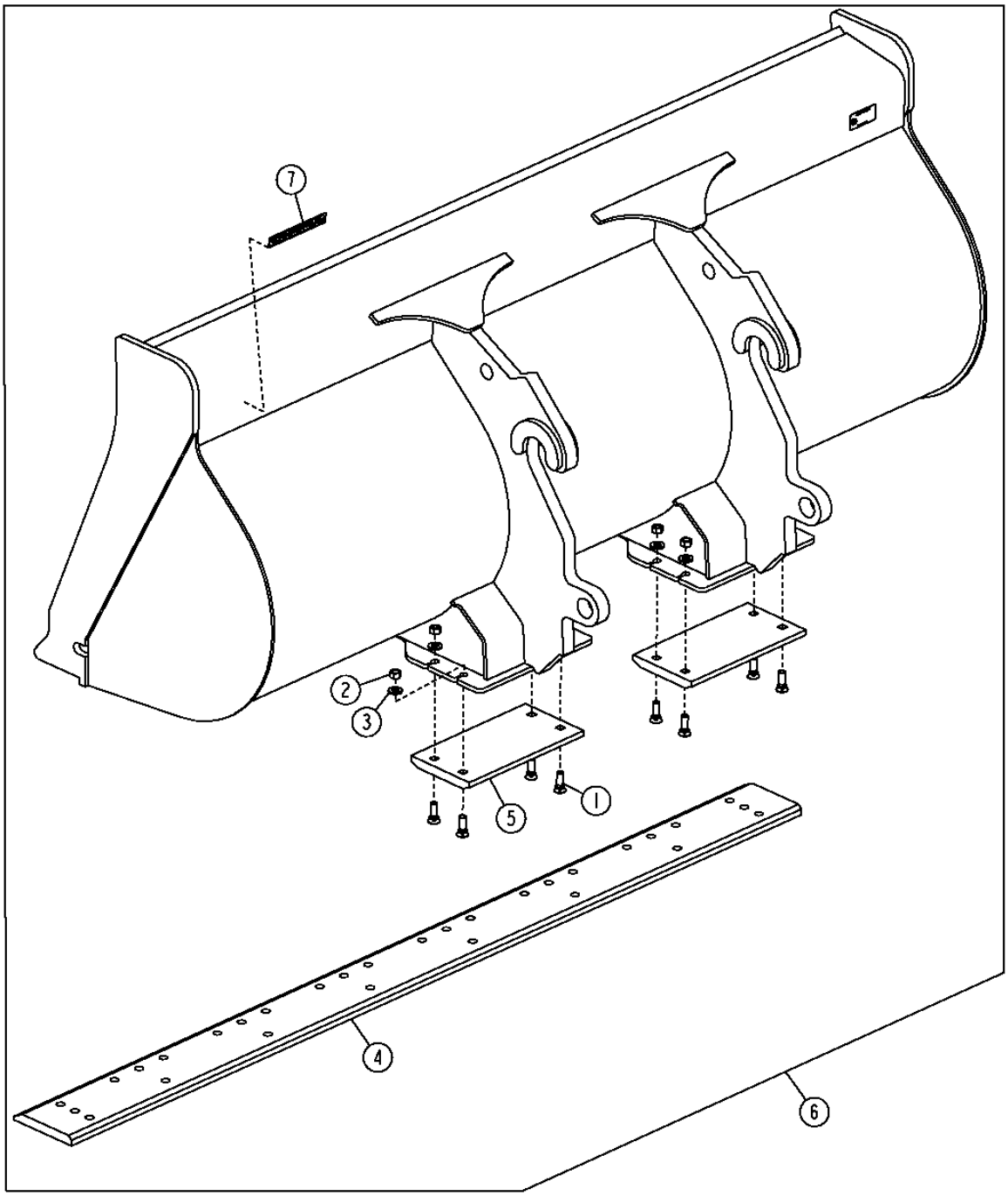

T201457

LOADER ATTACHMENT COUPLER BUCKET
BENNE ACCOUPLEMENT ACCESSOIRE CHARGEUR
CUCHARON DEL ACOPLADOR DE SUJECION DE LA CARGADORA

KEY	*PART NO.*	*PART NAME*	*QTY.*	*SERIAL NO.*	*REMARKS*
1	10H1040	BOLT	8		5/8" X 2"
2	14H1039	NUT	8		5/8"
3	24M7241	WASHER	8		17 X 34 X 4 MM
4	T157465	CUTTING EDGE	1		
5	T157457	SHOE	2		
6	**AT302059**	**LOADER BUCKET**	**1**		**(CONVENIENCE ASSY) (3.0 YD BUCKET) (2690 MM WIDE CUTTING EDGE)**
	AT302078	**LOADER BUCKET**	**1**		**(CONVENIENCE ASSY) (3.5 YD BUCKET) (2690 MM WIDE CUTTING EDGE)**
7	T213143	LABEL	1		

HI-VIS COUPLER BUCKET
BENNE COUPLEUR HI-VIS
CUCHARON DEL ACOPLADOR DE HI-VIS

TX1003203 -UN-31JAN06

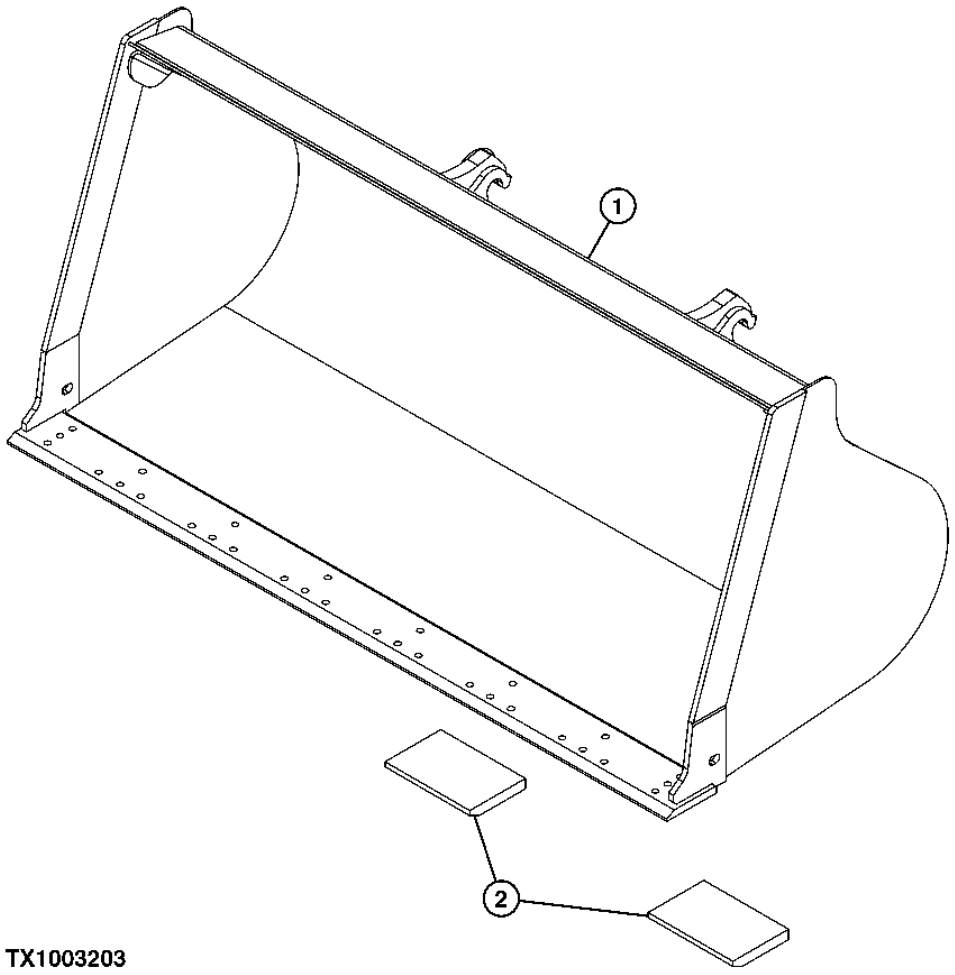

TX1003203

THIS PARTS LISTING IS CONTINUED

HI-VIS COUPLER BUCKET
BENNE COUPLEUR HI-VIS
CUCHARON DEL ACOPLADOR DE HI-VIS

KEY	*PART NO.*	*PART NAME*	*QTY.*	*SERIAL NO.*	*REMARKS*
1	AT326788	LOADER BUCKET	1		(CONVENIENCE ASSY) (3.5 YARD BUCKET)
	AT326789	**LOADER BUCKET**	**1**		**(CONVENIENCE ASSY) (3.0 YARD BUCKET)**
2	T217625	SKID PLATE	2		

PALLET FORKS
FOURCHES A PALETTES
HORQUILLAS PARA TARIMAS

TX1007110 -UN-01MAY06

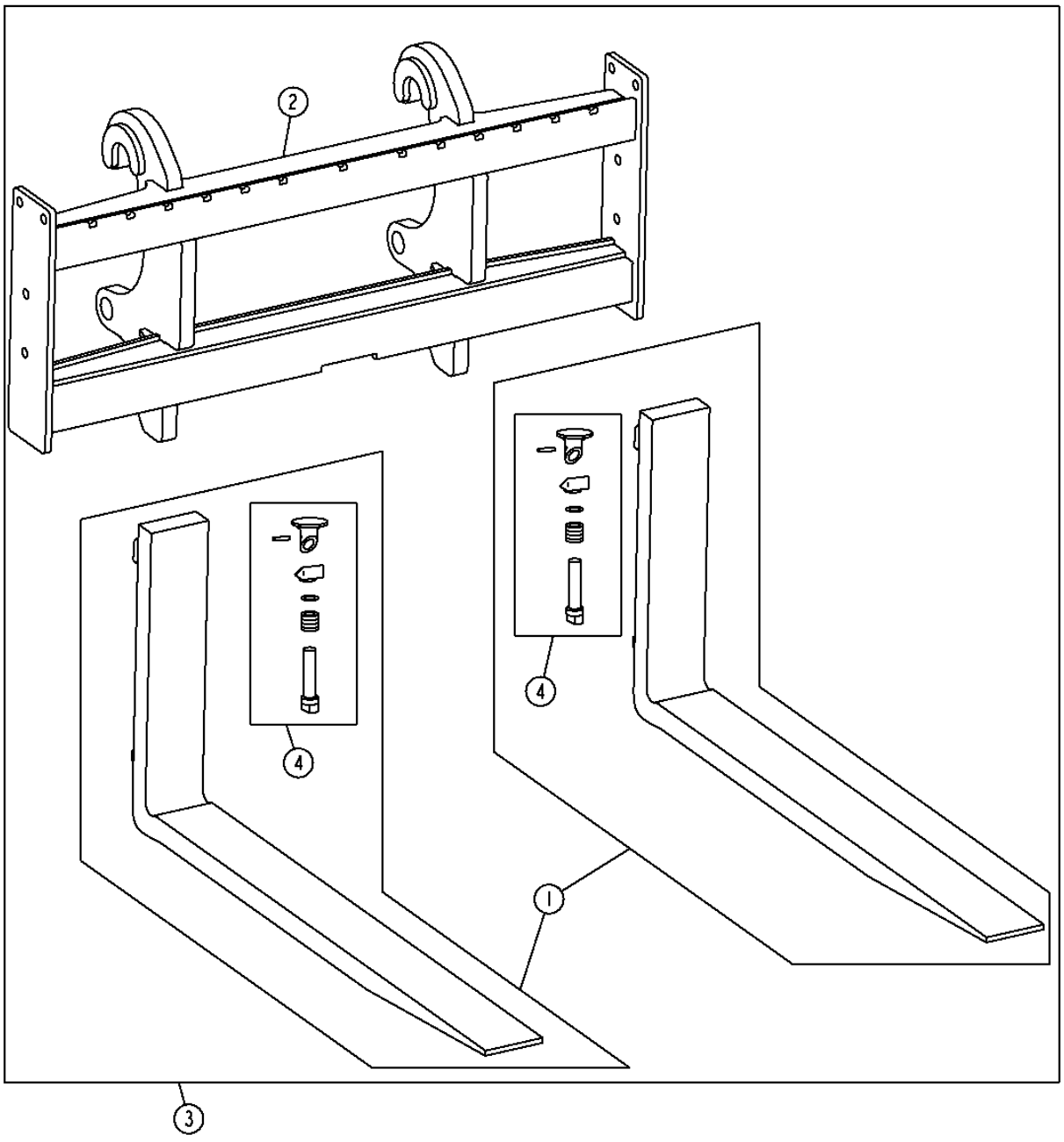

PALLET FORKS
FOURCHES A PALETTES
HORQUILLAS PARA TARIMAS

KEY	*PART NO.*	*PART NAME*	*QTY.*	*SERIAL NO.*	*REMARKS*
1	AT308065	FORK	2		(48")
	AT308066	**FORK**	**2**		**(60")**
2	**AT310060**	**FRAME**	**1**		**(60")**
	AT320193	**FRAME**	**1**		**(90")**
3	**AT300238**	**FIELD INSTALLATION KIT**	**1**		**(48" FORK) (60" FRAME)**
	AT300237	**FIELD INSTALLATION KIT**	**1**		**(60" FORK) (60" FRAME)**
	AT320620	**FIELD INSTALLATION KIT**	**1**		**(48" FORK) (90" FRAME)**
	AT320619	**FIELD INSTALLATION KIT**	**1**		**(60" FORK) (90" FRAME)**
4	AT308067	LOCK	2		

HI-VIS PALLET FORKS
FOURCHE A PALETTES HI-VIS
HORQUILLAS PARA TARIMAS DE HI-VIS

TX1017227 -UN-08JAN07

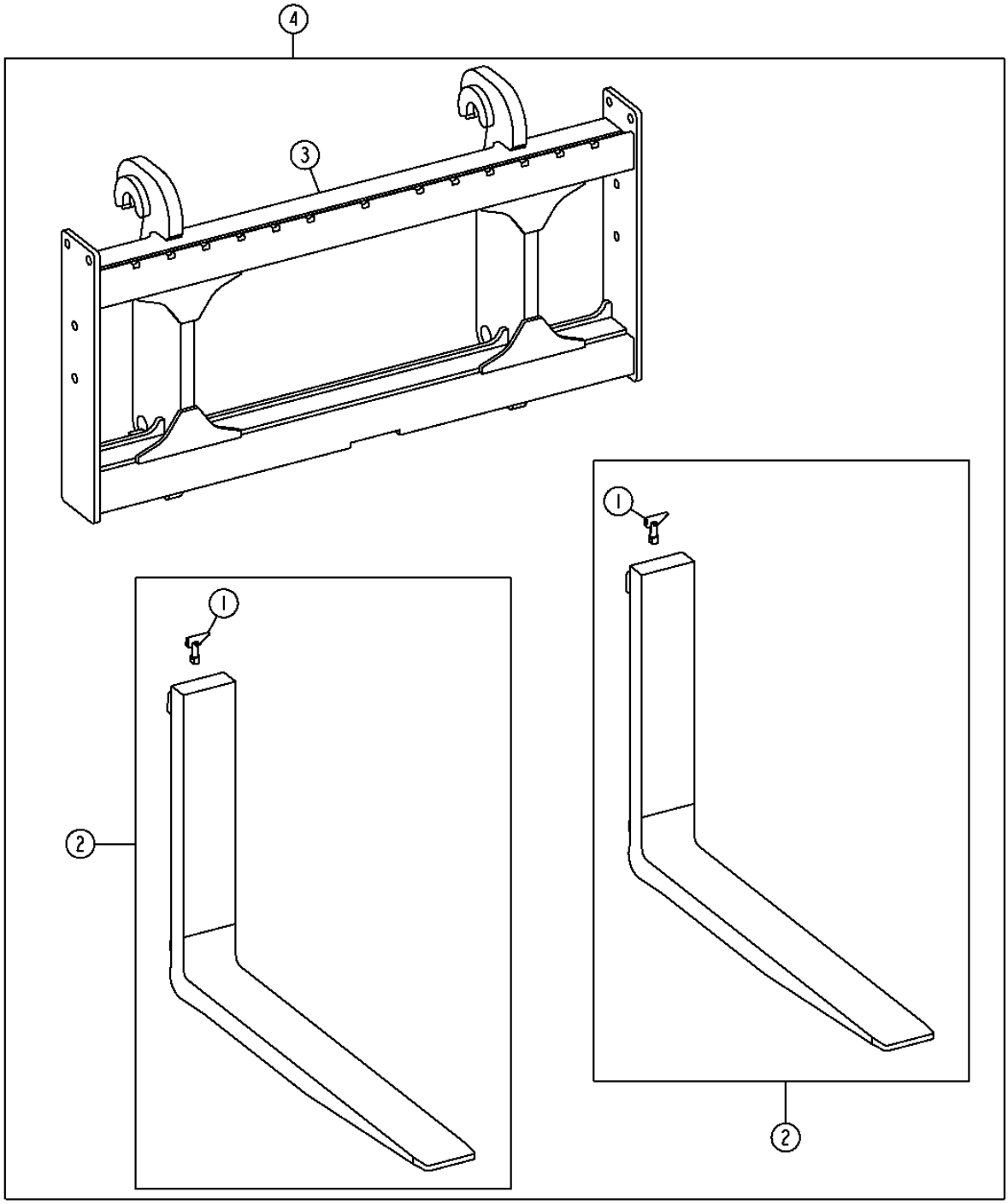

HI-VIS PALLET FORKS
FOURCHE A PALETTES HI-VIS
HORQUILLAS PARA TARIMAS DE HI-VIS

KEY	PART NO.	PART NAME	QTY.	SERIAL NO.	REMARKS
1	AT308067	LOCK	2		
2	**AT326640**	**TINE**	**2**		**(48 INCH) (CONVENIENCE ASSY)**
	AT326190	**TINE**	**2**		**(60 INCH) (CONVENIENCE ASSY)**
3	**AT326184**	**FRAME**	**1**		**(60 INCH) (CONVENIENCE ASSY)**
	AT326203	**FRAME**	**1**		**(90 INCH) (CONVENIENCE ASSY)**
4	**AT326792**	**FRAME**	**1**		**(60 INCH FRAME WITH 60 INCH TINES) (CONVENIENCE ASSY)**
	AT326793	**FRAME**	**1**		**(60 INCH FRAME WITH 48 INCH TINES) (CONVENIENCE ASSY)**
	AT326794	**FRAME**	**1**		**(90 INCH FRAME WITH 60 INCH TINES) (CONVENIENCE ASSY)**
	AT326795	**FRAME**	**1**		**(90 INCH FRAME WITH 48 INCH TINES) (CONVENIENCE ASSY)**

GUARD FORK FRAME
ARMATURE DE FOURCHETTE DE GARDE
MARCO DE LA BIFURCACION DEL PROTECTOR

TX1006179 -UN-11APR06

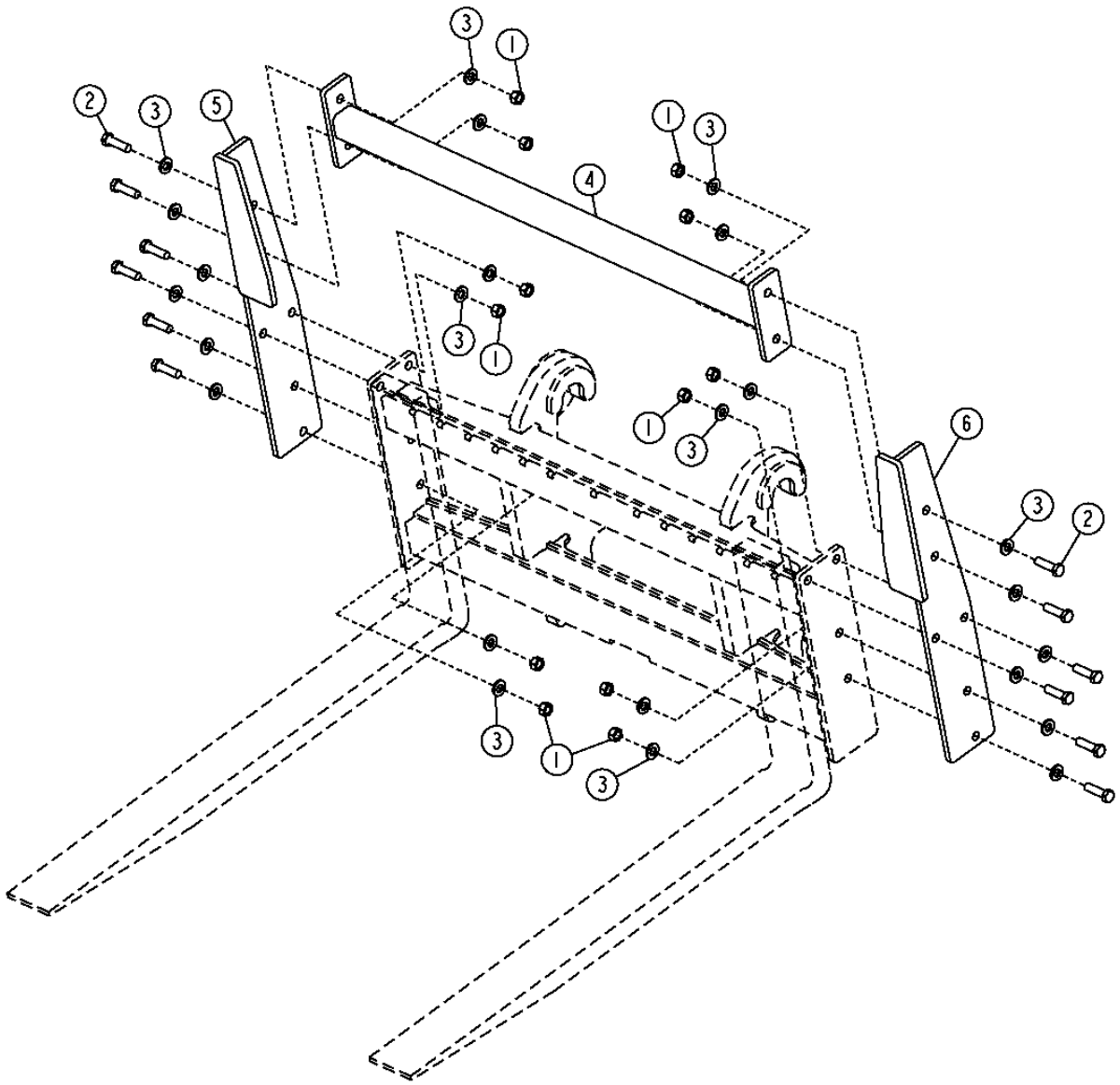

THIS PARTS LISTING IS CONTINUED

GUARD FORK FRAME
ARMATURE DE FOURCHETTE DE GARDE
MARCO DE LA BIFURCACION DEL PROTECTOR

KEY	*PART NO.*	*PART NAME*	*QTY.*	*SERIAL NO.*	*REMARKS*
1	14M7277	NUT	12		M20
2	19M8639	CAP SCREW	12		M20 X 70
3	24M7242	WASHER	24		21.400 X 42 X 5 MM
4	**AT323120**	**BRACKET KIT**	**1**		**(60 INCH ASSY)**
	AT323337	**BRACKET KIT**	**1**		**(90 INCH ASSY)**
5	AT323318	PLATE	1		
6	AT323319	PLATE	1		

Z-BAR LINKAGE ATTACHMENT COUPLER
COUPLEUR ACCESSOIRE TRINGLERIE CINEMATIQUE EN Z
ACOPLADOR DE SUJECION DE VARILLAJE DE BARRA EN Z

TX1016854 -UN-20DEC06

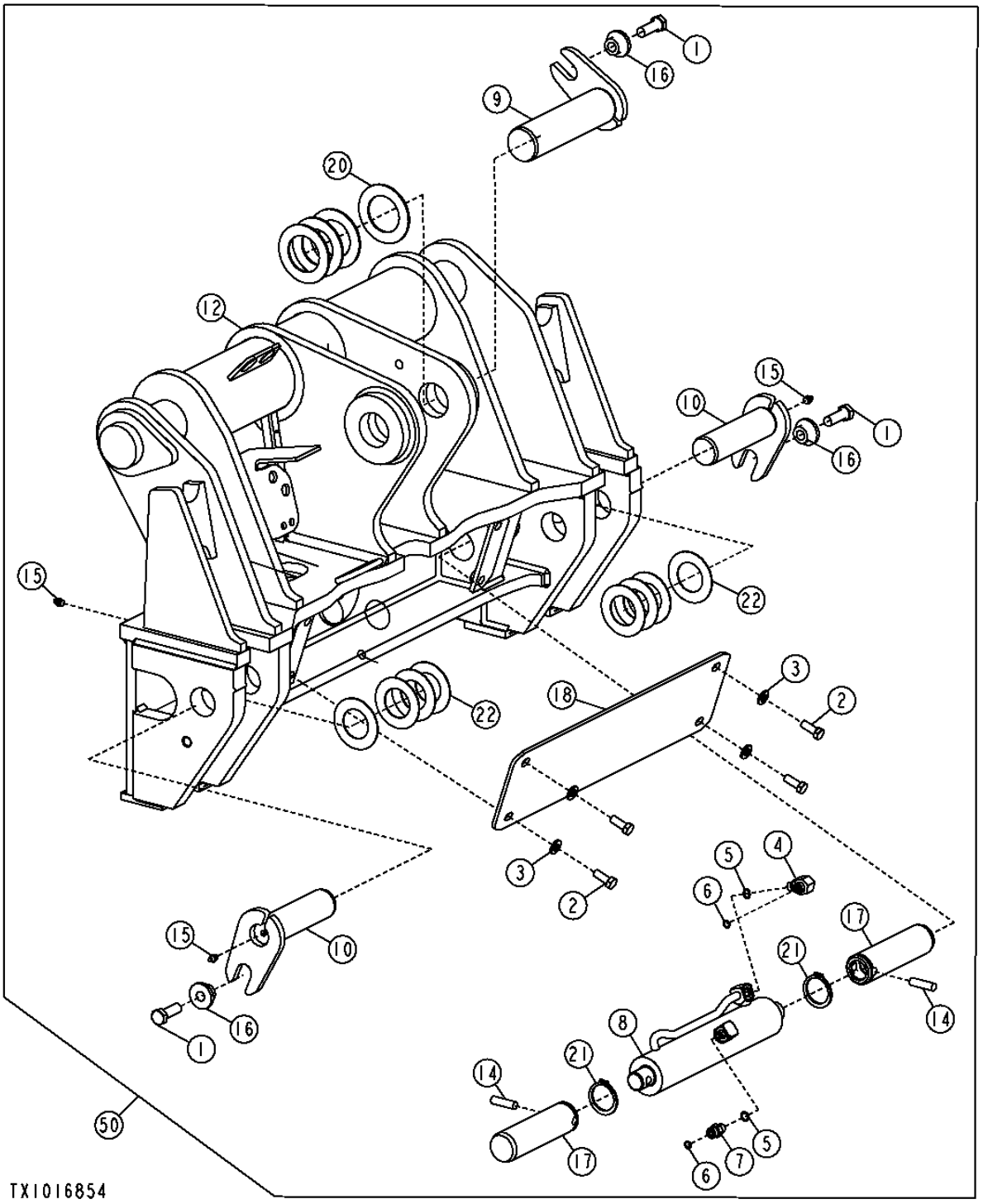

Z-BAR LINKAGE ATTACHMENT COUPLER
COUPLEUR ACCESSOIRE TRINGLERIE CINEMATIQUE EN Z
ACOPLADOR DE SUJECION DE VARILLAJE DE BARRA EN Z

KEY	*PART NO.*	*PART NAME*	*QTY.*	*SERIAL NO.*	*REMARKS*
1	19M7489	CAP SCREW	3		M16 X 45
2	19M8011	CAP SCREW	4		M12 X 30
3	24M7240	WASHER	4		13 X 25 X 3 MM
4	38H1004	ELBOW FITTING	1		
5	R26448	O-RING	2		11.887 X 1.981 MM (0.468" X 5/64")
6	T77613	O-RING	2		9.246 X 1.778 MM (0.364" X 0.070")
7	38H1160	ADAPTER FITTING	1		
8	AH223400	HYDRAULIC CYLINDER	1		
9	AT308025	PIN	1		
10	AT301543	PIN	2		
12	AT336452	QUICK COUPLER	1		
14	H89151	DOWEL PIN	2		12.700 X 45.720 MM
15	JD7759	LUBRICATION FITTING	4		
16	T176064	BUSHING	3		16.300 X 28.600 X 21.900 MM
17	T227405	PIN FASTENER	2		50.860 X 183 MM
18	T227552	PLATE	1		
20	24H1240	WASHER	4		76.987 X 114.300 X 2.667 MM
21	T61226	SNAP RING	2		
22	T102171	WASHER	8		66.500 X 108 X 3 MM
50	**AT311388**	**QUICK COUPLER**	**1**		

POWERLLEL™ LINKAGE ATTACHMENT COUPLER
COUPLEUR ACCESSOIRE TRINGLERIE POWERLLEL™
ACOPLADOR DE SUJECION DE VARILLAJE POWERLLEL™

TX1016856 -UN-20DEC06

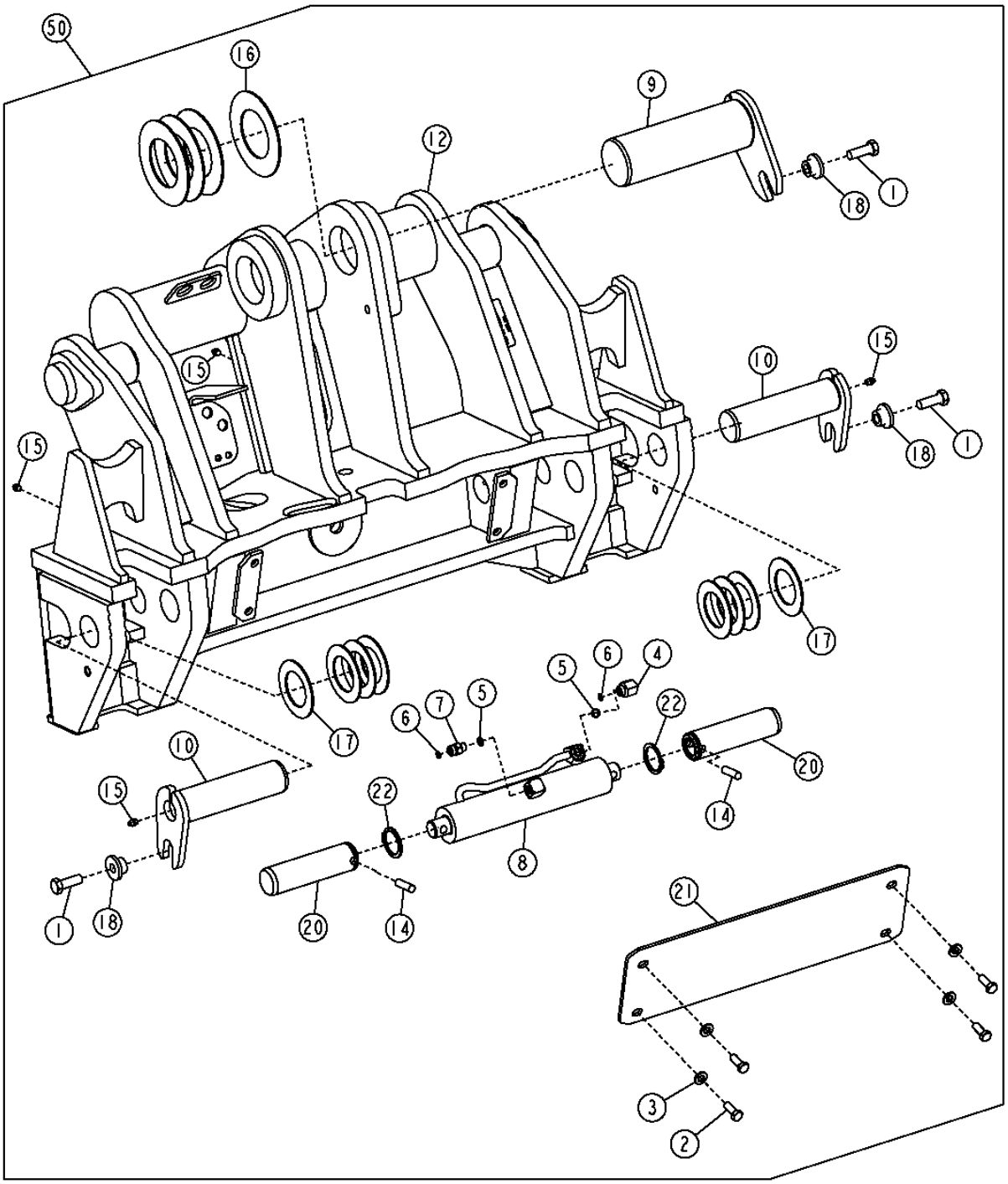

TX1016856

POWERLLEL™ LINKAGE ATTACHMENT COUPLER
COUPLEUR ACCESSOIRE TRINGLERIE POWERLLEL™
ACOPLADOR DE SUJECION DE VARILLAJE POWERLLEL™

KEY	*PART NO.*	*PART NAME*	*QTY.*	*SERIAL NO.*	*REMARKS*
1	14M7328	LOCK NUT	2		M16
2	19M8011	CAP SCREW	4		M12 X 30
3	24M7240	WASHER	4		13 X 25 X 3 MM
4	38H1004	ELBOW FITTING	1		
5	R26448	O-RING	2		11.887 X 1.981 MM
6	T77613	O-RING	2		9.246 X 1.778 MM
7	38H1160	ADAPTER FITTING	1		
8	AH223400	HYDRAULIC CYLINDER	1		
9	AT301520	PIN FASTENER	1		
10	AT301543	PIN	2		
12	AT336450	QUICK COUPLER	1		
14	H89151	DOWEL PIN	2		12.700 X 45.720 MM (1/2" X 1.800")
15	JD7759	LUBRICATION FITTING	4		
16	T101480	WASHER	4		91.500 X 160 X 3 MM
17	T102171	WASHER	8		66.500 X 108 X 3 MM
18	T176064	BUSHING	3		16.300 X 28.600 X 21.900 MM
20	T227405	PIN FASTENER	2		50.860 X 183 MM (2.002" X 7.205")
21	T227552	PLATE	1		
22	T61226	SNAP RING	2		
50	**AT320691**	**QUICK COUPLER**	**1**		

HI-VIS COUPLER POWERLLEL™ LINKAGE ATTACHMENT
ACCESSOIRE TRINGLERIE POWERLLEL™ COUPLEUR HI-VIS
SUJECION DE VARILLAJE POWERLLEL™ DEL ACOPLADOR DE HI-VIS

T217539 -UN-23JAN06

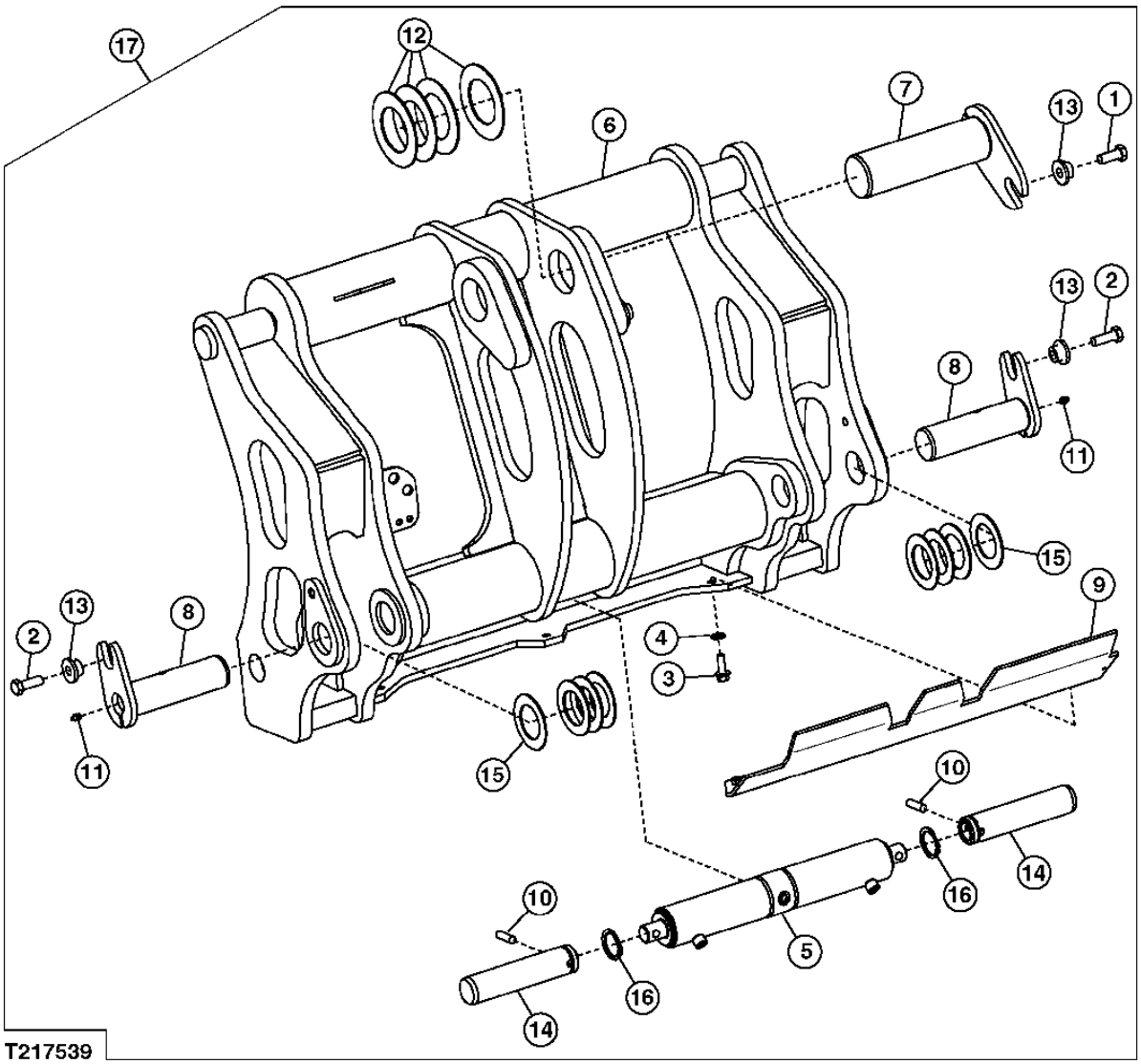

HI-VIS COUPLER POWERLLEL™ LINKAGE ATTACHMENT
ACCESSOIRE TRINGLERIE POWERLLEL™ COUPLEUR HI-VIS
SUJECION DE VARILLAJE POWERLLEL™ DE ACOPLADOR HI-VIS

KEY	*PART NO.*	*PART NAME*	*QTY.*	*SERIAL NO.*	*REMARKS*
1	19M7488	CAP SCREW	1		M16 X 40
2	19M7489	CAP SCREW	2		M16 X 45
3	19M7790	SCREW	3		M12 X 35
4	24M7240	WASHER	3		13 X 25 X 3 MM
5	AH222122	HYDRAULIC CYLINDER	1		
6	AT322717	QUICK COUPLER	1		
7	AT301520	PIN FASTENER	1		
8	AT322719	PIN FASTENER	2		
9	AT324222	COVER	1		
10	H89151	DOWEL PIN	2		12.700 X 45.720 MM
11	JD7759	LUBRICATION FITTING	2		
12	T101480	WASHER	4		91.500 X 160 X 3 MM
13	T176064	BUSHING	3		16.300 X 28.600 X 21.900 MM
14	T214207	PIN FASTENER	2		50.275 X 225 MM
15	T102171	WASHER	2		66.500 X 108 X 3 MM
16	T61226	SNAP RING	2		
17	**AT326786**	**KIT**	**1**		**(WHOLEGOODS)**

HI-VIS COUPLER Z-BAR LINKAGE ATTACHMENT
ACCESSOIRE TRINGLERIE CINEMATIQUE EN Z COUPLEUR HI-VIS
SUJECION DEL VARILLAJE DE BARRA EN Z DEL ACOPLADOR DE HI-VIS

T217540 -UN-23JAN06

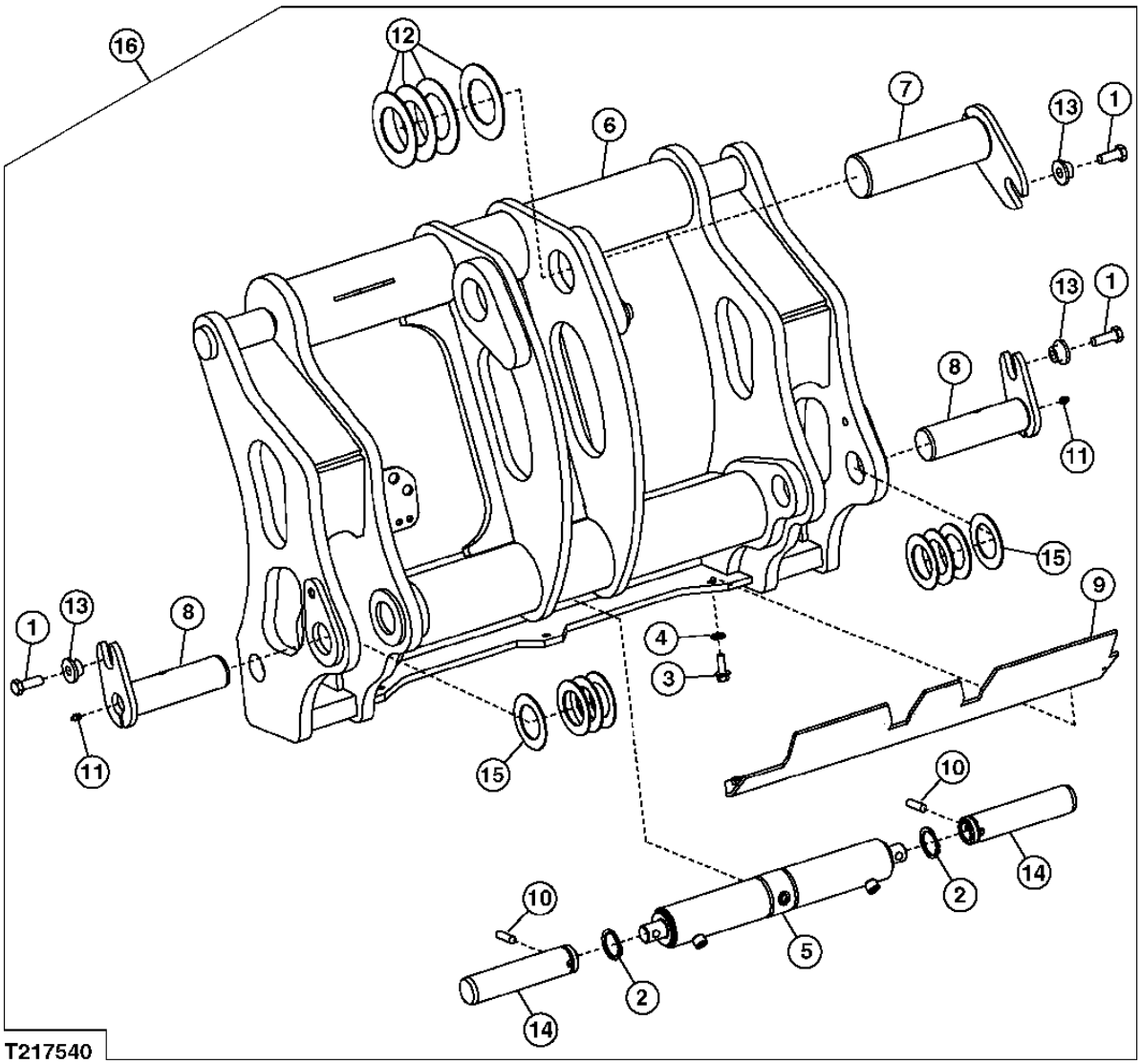

HI-VIS COUPLER Z-BAR LINKAGE ATTACHMENT
ACCESSOIRE TRINGLERIE CINEMATIQUE EN Z COUPLEUR HI-VIS
SUJECION DEL VARILLAJE DE BARRA EN Z DEL ACOPLADOR DE HI-VIS

KEY	*PART NO.*	*PART NAME*	*QTY.*	*SERIAL NO.*	*REMARKS*
1	19M7489	CAP SCREW	3		M16 X 45
2	T61226	SNAP RING	2		
3	19M7790	SCREW	3		M12 X 35
4	24M7240	WASHER	3		13 X 25 X 3 MM
5	AH222122	HYDRAULIC CYLINDER	1		
6	AT322723	QUICK COUPLER	1		
7	AT210275	PIN	1		
8	AT322719	PIN FASTENER	2		
9	AT324266	COVER	1		
10	H89151	DOWEL PIN	2		12.700 X 45.720 MM
11	JD7759	LUBRICATION FITTING	2		
12	24H1240	WASHER	4		3-1/32" X 4-1/2" X 0.105"
13	T176064	BUSHING	3		16.300 X 28.600 X 21.900 MM
14	T214207	PIN FASTENER	2		50.275 X 225 MM
15	T102171	WASHER	8		66.500 X 108 X 3 MM
16	**AT326787**	**KIT**	**1**		**(WHOLEGOODS) ALSO ORDER T223488 INSTALLATION INSTRUCTION**

ATTACHMENT HI-VIS COUPLER HYDRAULIC CYLINDER
VERIN HYDRAULIQUE ACCOUPLEMENT ACCESSOIRE HI-VIS
SUJECION DEL CILINDRO HIDRAULICO DEL ACOPLADOR DE HI-VIS

T217558 -UN-30JAN06

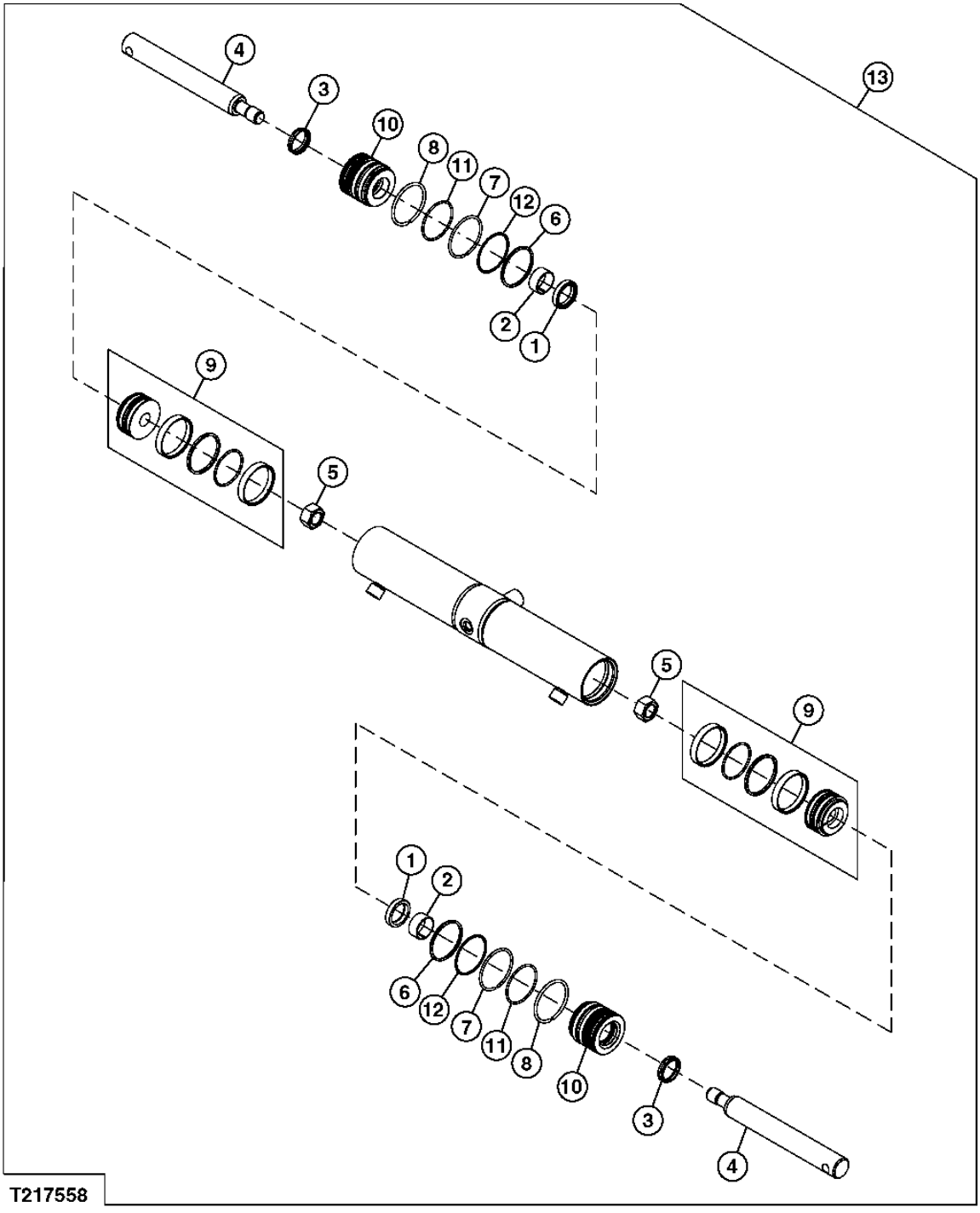

ATTACHMENT HI-VIS COUPLER HYDRAULIC CYLINDER
VERIN HYDRAULIQUE ACCOUPLEMENT ACCESSOIRE HI-VIS
SUJECION DEL CILINDRO HIDRAULICO DEL ACOPLADOR DE HI-VIS

KEY	*PART NO.*	*PART NAME*	*QTY.*	*SERIAL NO.*	*REMARKS*
1	H154514	SEAL	2		
2	H156058	WEAR RING	2		
3	H156586	SEAL	2		
4	H219217	ROD	2		
5	H170535	NUT	2		
6	R93633	O-RING	2		2-15/64" X 0.139"
7	H164982	SNAP RING	2		
8	H211156	SNAP RING	2		
9	AH142159	PISTON	2		
10	H210874	HYDR. CYLINDER ROD GUIDE	2		
11	H63262	O-RING	2		2.237" X 0.103"
12	U13461	BACK-UP RING	2		2.281" X 2.493" X 0.050"
13	AH222122	HYDRAULIC CYLINDER	1		

LOADER FRAME
BATI DE CHARGEUR
BASTIDOR DE CARGADORA

TX1008744 -UN-16JUN06

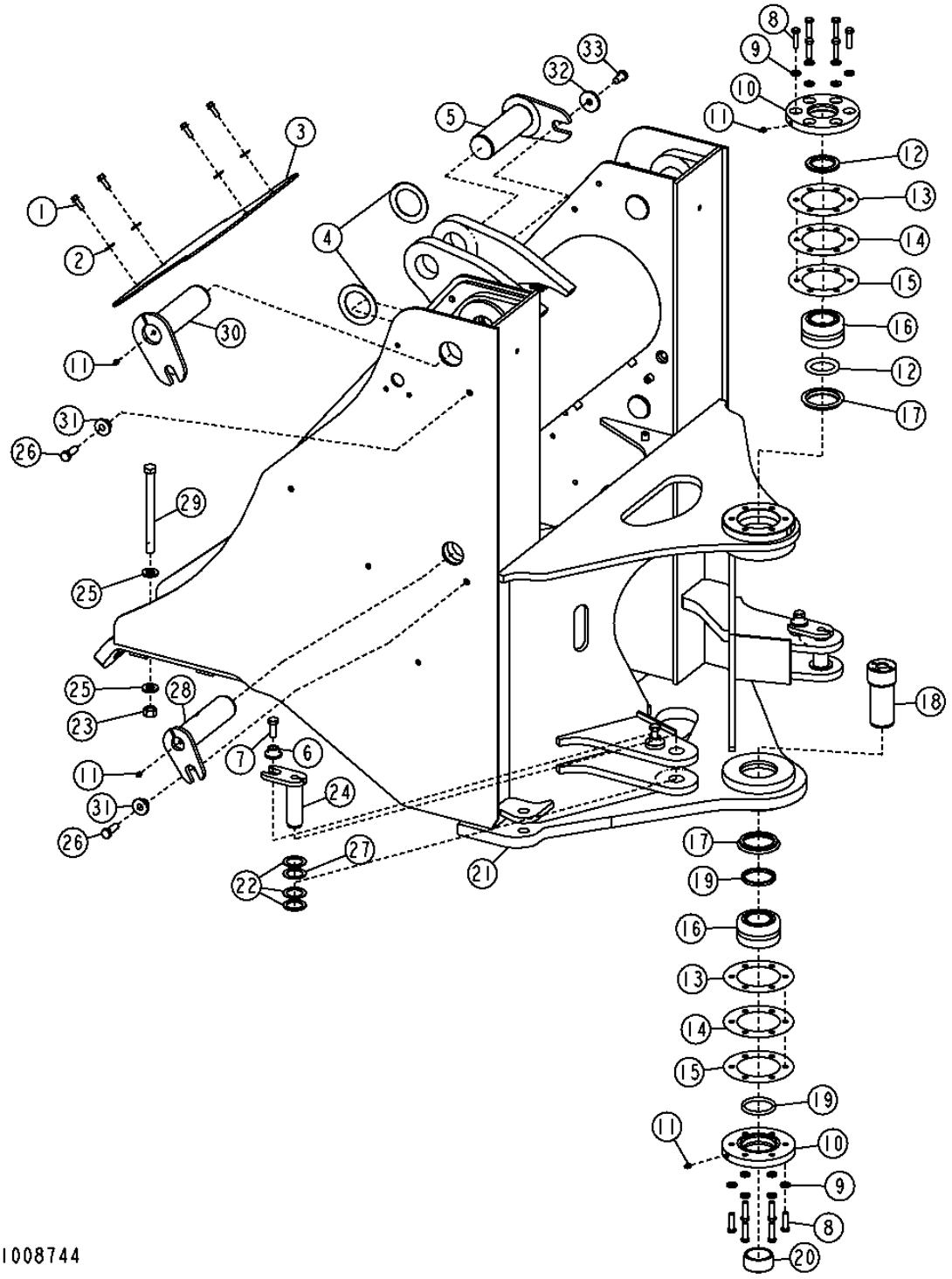

LOADER FRAME
BATI DE CHARGEUR
BASTIDOR DE CARGADORA

KEY	PART NO.	PART NAME	QTY.	SERIAL NO.	REMARKS
1	19M7786	SCREW	8		M10 X 30
2	24M7296	WASHER	8		10.500 X 30 X 2.500 MM
3	T157234	COVER	2		
4	T171734	WASHER	3		
5	AT207718	PIN	1		BUCKET CYLINDER
6	T176064	BUSHING	3		
7	19M7488	CAP SCREW	3		M16 X 40
8	19M7496	CAP SCREW	12		M12 X 45
9	24M7240	WASHER	12		13 X 25 X 3 MM
10	T200888	COVER	2		
11	JD7759	LUBRICATION FITTING	6		
12	T157029	SEAL	2		
13	T130057	SHIM	4		0.508 MM (0.020")
14	T130058	SHIM	2		0.254 MM (0.010")
15	T130059	SHIM	2		0.127 MM (0.005")
16	AT203483	BEARING	2		
17	T157030	SPACER	2		
18	T182516	PIN	1		
19	T60752	SEAL	2		LOWER ARTICULATION
20	T182265	BUSHING	1		
21	**AT207715**	**FRAME**	**1**		**(CONVENIENCE ASSY)**
22	24H1558	WASHER	6		1-41/64" X 2-3/8" X 0.075"
23	14M7277	NUT	12		M20, (FRONT AXLE TO FRAME)
24	AT203570	PIN	2		STEERING CYLINDER
25	24M7242	WASHER	24		21.400 X 42 X 5 MM, (FRONT AXLE TO FRAME)
26	19M7489	CAP SCREW	4		M16 X 45
27	24H1556	WASHER	2		1-41/64" X 2-3/8" X 0.048"
28	AT207719	PIN	2		(BOOM CYLINDER)
29	19M7779	CAP SCREW	12		M20 X 240, (FRONT AXLE TO FRAME)
30	AT318925	PIN	2		BOOM PIVOT
31	T176064	BUSHING	4		
32	T146246	WASHER	1		
33	19M8029	CAP SCREW	1		M16 X 30

POWERLLEL™ LINKAGE FRAME
BATI TRINGLERIE POWERLLEL™
BASTIDOR DE VARILLAJE POWERLLEL™

T204337 -UN-04NOV04

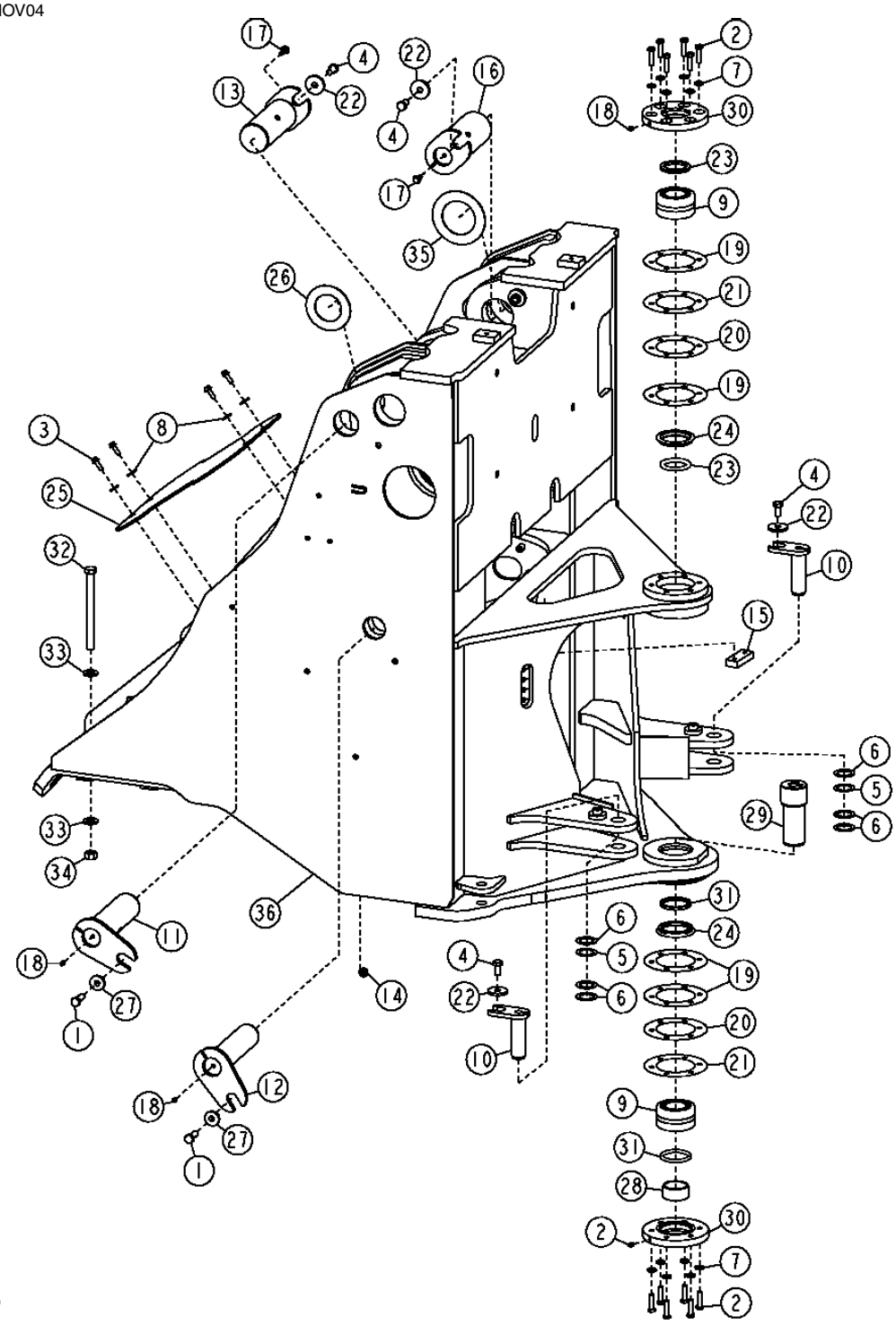

THIS PARTS LISTING IS CONTINUED

POWERLLEL™ LINKAGE FRAME
BATI TRINGLERIE POWERLLEL™
BASTIDOR DE VARILLAJE POWERLLEL™

KEY	PART NO.	PART NAME	QTY.	SERIAL NO.	REMARKS
1	19M7489	CAP SCREW	4		M16 X 45
2	19M7496	CAP SCREW	12		M12 X 45
3	19M7786	SCREW	4		M10 X 30
4	19M8029	CAP SCREW	4		M16 X 30
5	24H1556	WASHER	2		1-41/64" X 2-3/8" X 0.048"
6	24H1558	WASHER	6		1-41/64" X 2-3/8" X 0.075"
7	24M7240	WASHER	12		13 X 25 X 3 MM
8	24M7296	WASHER	4		10.500 X 30 X 2.500 MM
9	AT203483	BEARING	2		
10	AT203570	PIN	2		(STEERING CYLINDER)
11	AT318925	PIN	2		(BOOM PIVOT)
12	AT207719	PIN	2		(BOOM CYLINDER)
13	AT301818	PIN	1		(BUCKET CYLINDER)
14	14M7443	FLANGE NUT	8		M12
15	T133290	STRAP	1		
16	AT307818	PIN	2		(LEVELING LINK PIVOT)
17	E53801	ELBOW FITTING	3		3.175 MM (1/8")
18	JD7759	LUBRICATION FITTING	6		
19	T130057	SHIM	4		0.508 MM (0.020")
20	T130058	SHIM	2		0.254 MM (0.010")
21	T130059	SHIM	2		0.127 MM (0.005")
22	T146246	WASHER	5		17 X 57.100 X 6.500 MM
23	T157029	SEAL	2		
24	T157030	SPACER	2		
25	T157234	COVER	1		
26	T171734	WASHER	2		84.500 X 140 X 3.250 MM
27	T176064	BUSHING	4		
28	T182265	BUSHING	1		
29	T182516	PIN	1		
30	T200888	COVER	2		
31	T60752	SEAL	2		
32	19M7779	CAP SCREW	12		M20 X 240
33	24M7242	WASHER	24		21.400 X 42 X 5 MM
34	14M7277	NUT	12		M20
35	T54188	THRUST WASHER	2		
36	**AT323632**	**FRAME**	**1**		**(CONVENIENCE ASSY)**

LOADER BOOM
FLECHE CHARGEUR
AGUILON DE LA CARGADORA

TX1017434 -UN-17JAN07

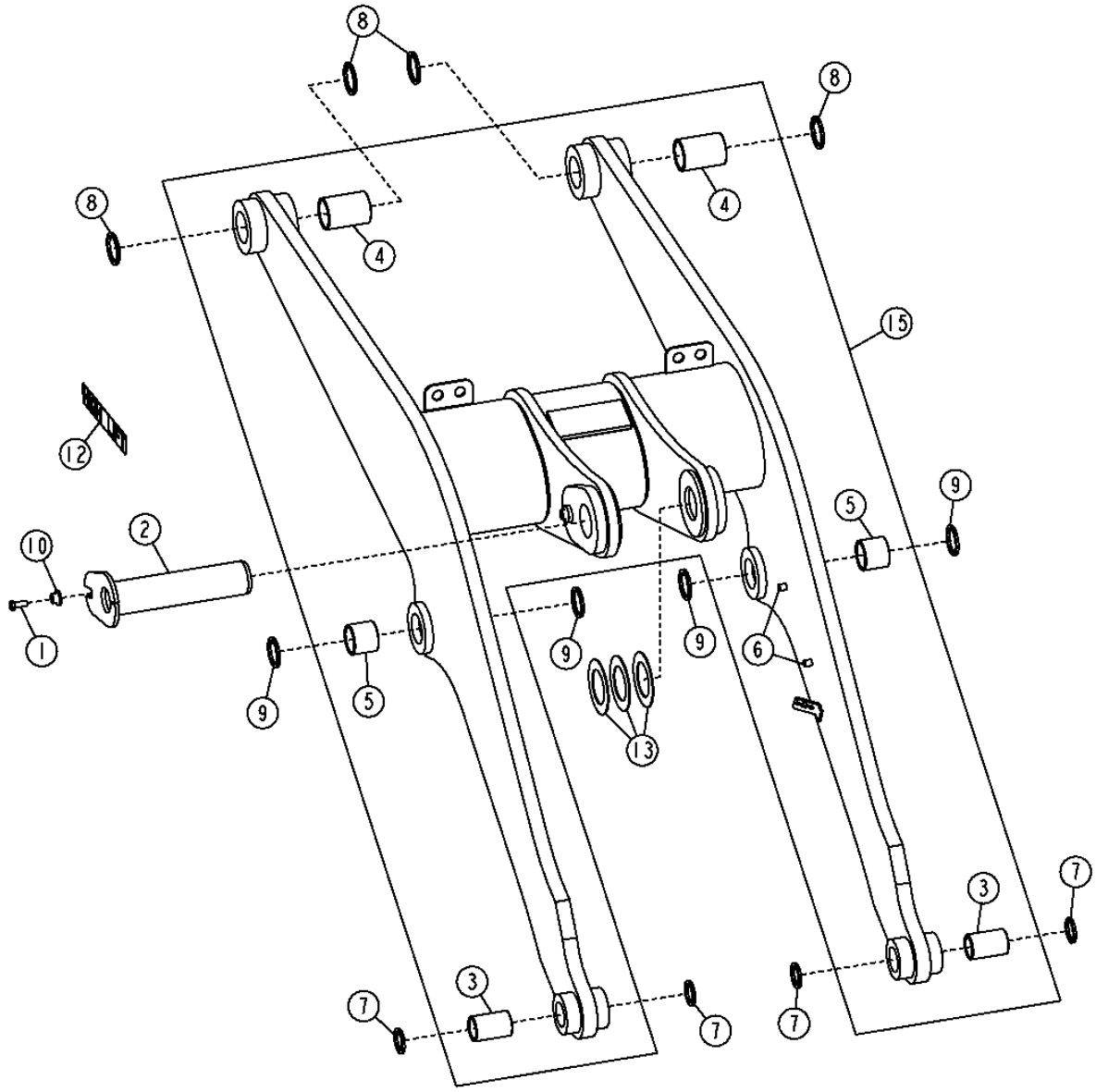

TX1017434

LOADER BOOM
FLECHE CHARGEUR
AGUILON DE LA CARGADORA

KEY	*PART NO.*	*PART NAME*	*QTY.*	*SERIAL NO.*	*REMARKS*
1	19M7488	CAP SCREW	1		M16 X 40, (CONVENIENCE ASSY)
2	AT207686	PIN	1		
3	T125543	BUSHING	2		59.780 X 75.130 X 113 MM
4	T169284	BUSHING	2		79.780 X 95.130 X 133 MM
5	T169286	BUSHING	2		74.780 X 90.130 X 76 MM
6	T72414	BUSHING	3		
7	T102135	SEAL	4		
8	T102137	SEAL	4		
9	T102207	SEAL	4		
10	T176064	BUSHING	1		
12	T210796	LABEL	2		(HIGH LIFT)
13	T54188	THRUST WASHER	3		104.648 X 166.116 X 3 MM (4.120" X 6.540" X 0.118")
15	**AT309079**	**LOADER BOOM**	**1**		**(CONVENIENCE ASSY) (INCLUDES (2) T125543, (2) T169284 AND (2) T169286)**
	AT309049	**LOADER BOOM**	**1**		**(HIGH LIFT) (CONVIENENCE ASSY) (INCLUDES (2) T125543, (2) T169284 AND (2) T169286)**

POWERLLEL™ LINKAGE BOOM
FLECHE TRINGLERIE POWERLLEL™
AGUILON DE VARILLAJE POWERLLEL™

TX1006462 -UN-21APR06

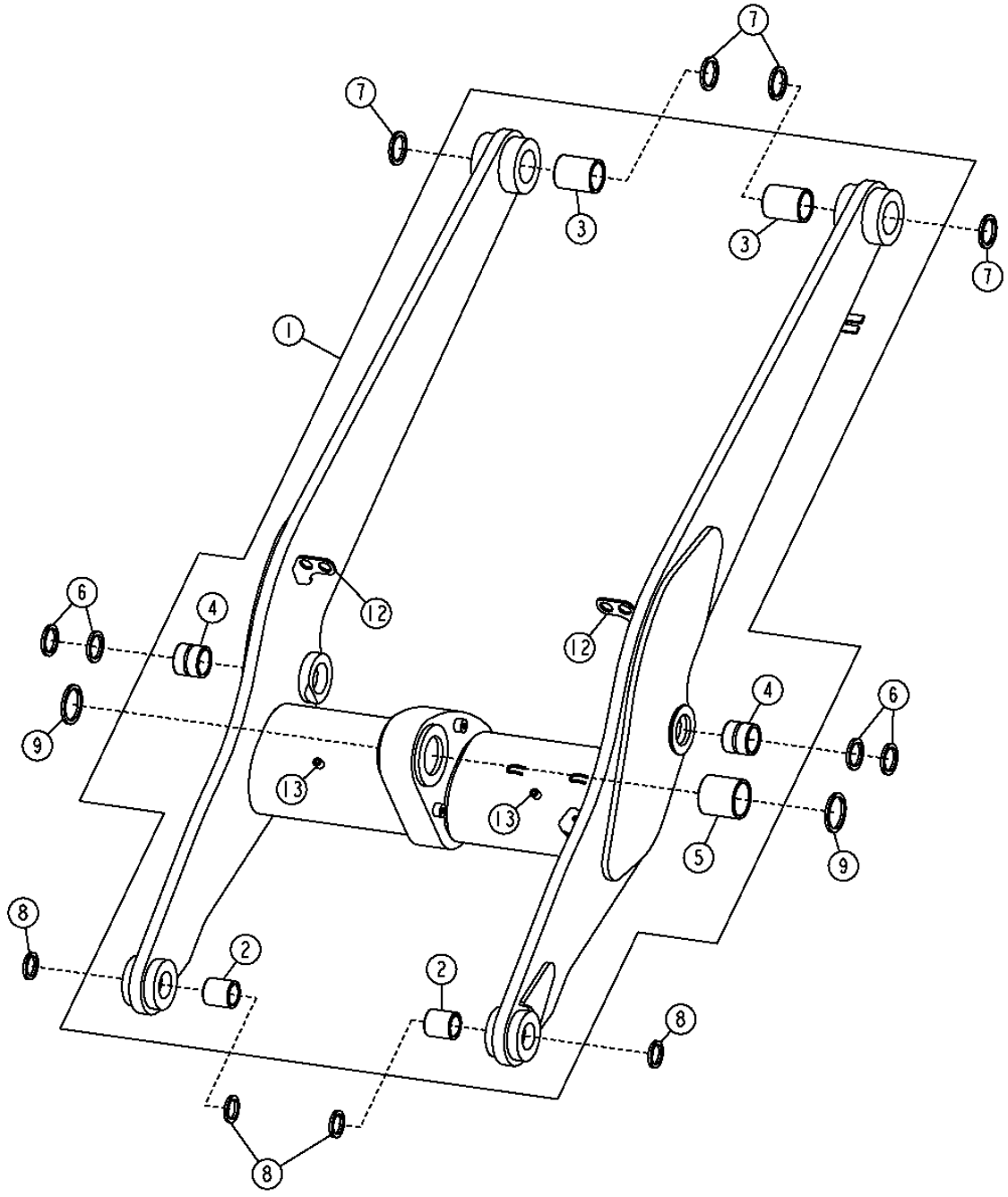

THIS PARTS LISTING IS CONTINUED

POWERLLEL™ LINKAGE BOOM
FLECHE TRINGLERIE POWERLLEL™
AGUILON DE VARILLAJE POWERLLEL™

KEY	PART NO.	PART NAME	QTY.	SERIAL NO.	REMARKS
1	AT301380	LOADER BOOM	1		(CONVENIENCE ASSY)
2	T125543	BUSHING	2		
3	T206130	BUSHING	2		
4	T206129	BUSHING	2		
5	T203131	BUSHING	1		
6	T102207	SEAL	4		
7	T102137	SEAL	4		
8	T102135	SEAL	4		
9	T102139	SEAL	4		
12	T210447	PLATE	2		
13	T72414	BUSHING	2		

LOADER LINKAGE
TRINGLERIE CHARGEUR
VARILLAJE DE LA CARGADORA

TX1008730 -UN-12JUN06

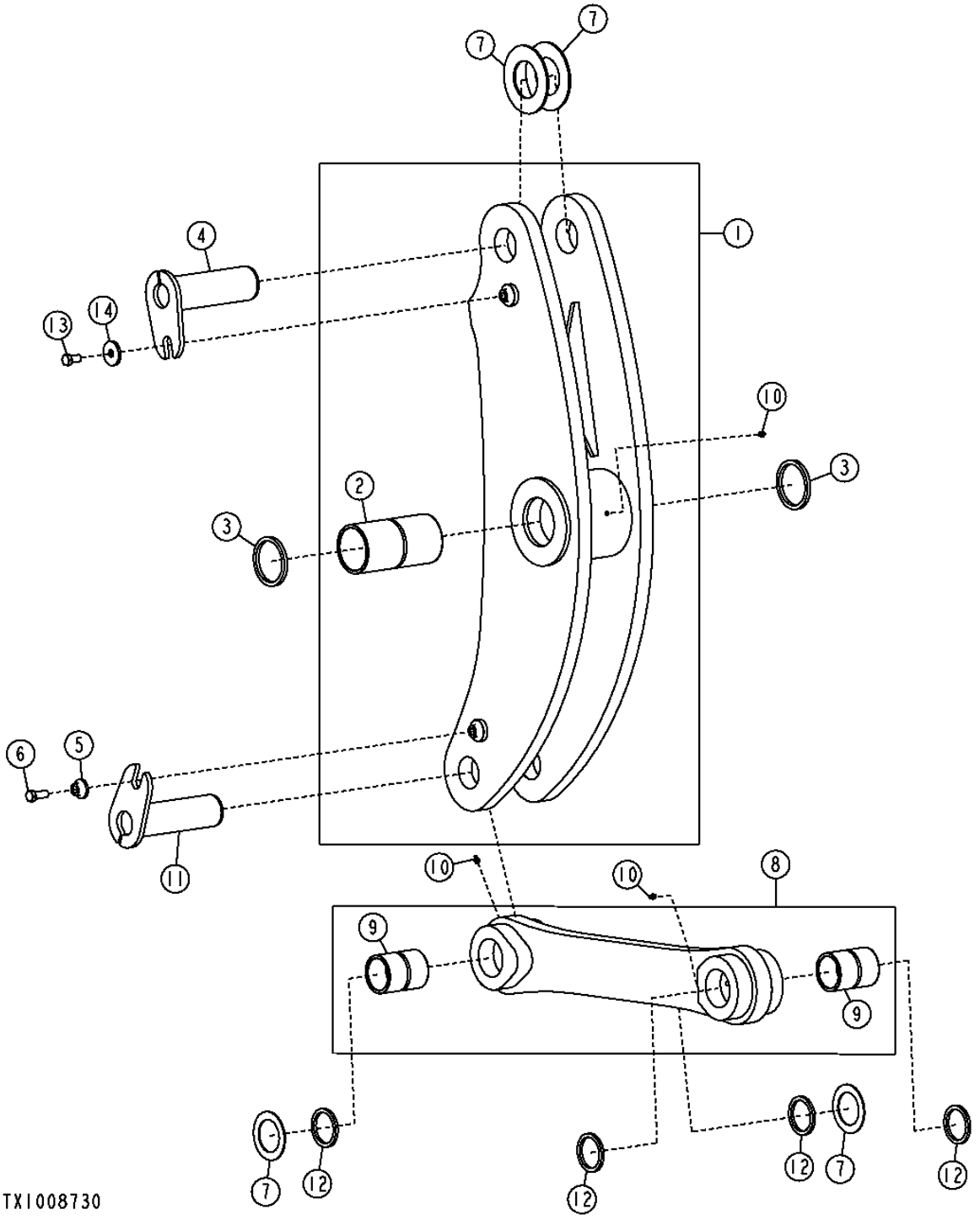

THIS PARTS LISTING IS CONTINUED

LOADER LINKAGE
TRINGLERIE CHARGEUR
VARILLAJE DE LA CARGADORA

KEY	PART NO.	PART NAME	QTY.	SERIAL NO.	REMARKS
1	AT307539	BELLCRANK	1		
2	T169305	BUSHING	1		
3	T102139	SEAL	2		
4	AT207718	PIN	1		
5	T176064	BUSHING	1		
6	19M7488	CAP SCREW	1		M16 X 40
7	24H1240	WASHER	4		3-1/32" X 4-1/2" X 0.105"
8	AT307538	LINK	1		
	AT311734	LINK	1		(HIGH LIFT) (NOT ILLIUSTRATED)
9	T102950	BUSHING	2		
10	JD7759	LUBRICATION FITTING	3		
11	AT102827	PIN FASTENER	1		
12	T102207	SEAL	4		
13	19M8029	CAP SCREW	1		M16 X 30
14	T146246	WASHER	1		17 X 57.100 X 6.500 MM

POWERLLEL™ LINKAGE
TRINGLERIE POWERLLEL™
VARILLAJE POWERLLEL™

T208986 -UN-25FEB05

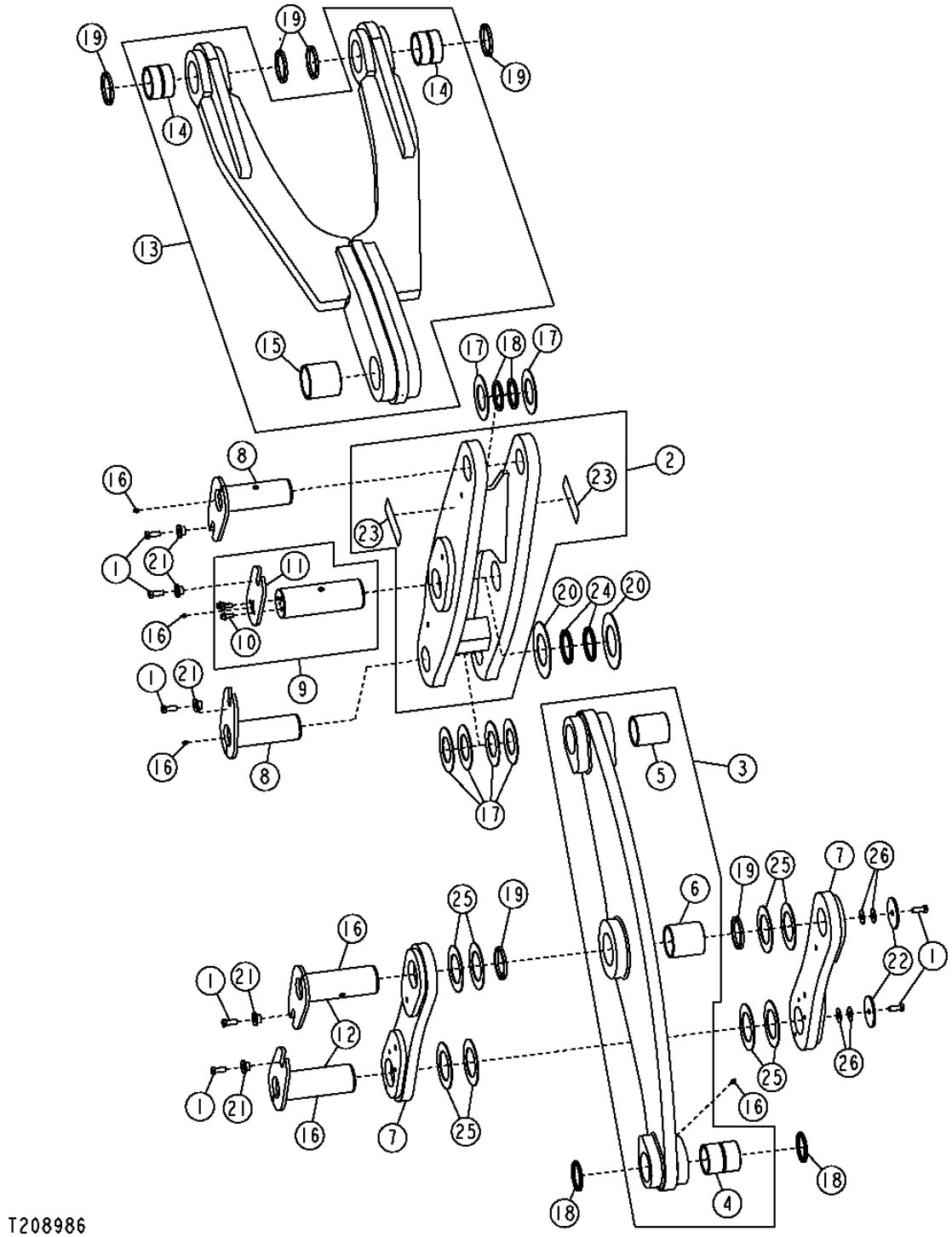

POWERLLEL™ LINKAGE
TRINGLERIE POWERLLEL™
VARILLAJE POWERLLEL™

KEY	PART NO.	PART NAME	QTY.	SERIAL NO.	REMARKS
1	19M7488	CAP SCREW	7		M16 X 40
2	**AT317062**	**BELLCRANK**	**1**		**(CONVENIENCE ASSY)**
3	AT301390	LINK	1		
4	T201030	BUSHING	1		89.780 X 105.130 X 118 MM
5	T201041	BUSHING	1		89.780 X 105.130 X 118 MM
6	T203131	BUSHING	1		99.780 X 115.130 X 118 MM
7	AT301421	LINK	2		
8	AT301539	PIN FASTENER	2		
9	AT301544	PIN FASTENER	1		
10	19M7789	SCREW	3		M12 X 30
11	T180931	PLATE	1		
12	AT301576	PIN FASTENER	2		
13	AT304736	LINK	1		
14	T203449	BUSHING	2		99.780 X 115.130 X 82.100 MM
15	T211616	BUSHING	1		104.780 X 120.130 X 114 MM
16	JD7759	LUBRICATION FITTING	6		
17	T101480	WASHER	6		91.500 X 160 X 3 MM
18	T102138	SEAL	4		
19	T102139	SEAL	6		
20	T102172	WASHER	2		111.500 X 200 X 3 MM
21	T176064	BUSHING	5		16.300 X 28.600 X 21.900 MM
22	T206578	PLATE	2		
23	T211390	SAFETY SIGN	2		
24	T211826	SEAL	2		
25	T54188	THRUST WASHER	8		104.648 X 166.116 X 3 MM
26	24H1626	WASHER	4		21/32" X 2" X 0.060"

BOOM CYLINDER LOCK
VERROUILLAGE DE VERIN DE FLECHE
BLOQUEO DEL CILINDRO DEL AGUILON

T192743 -UN-10JUL03

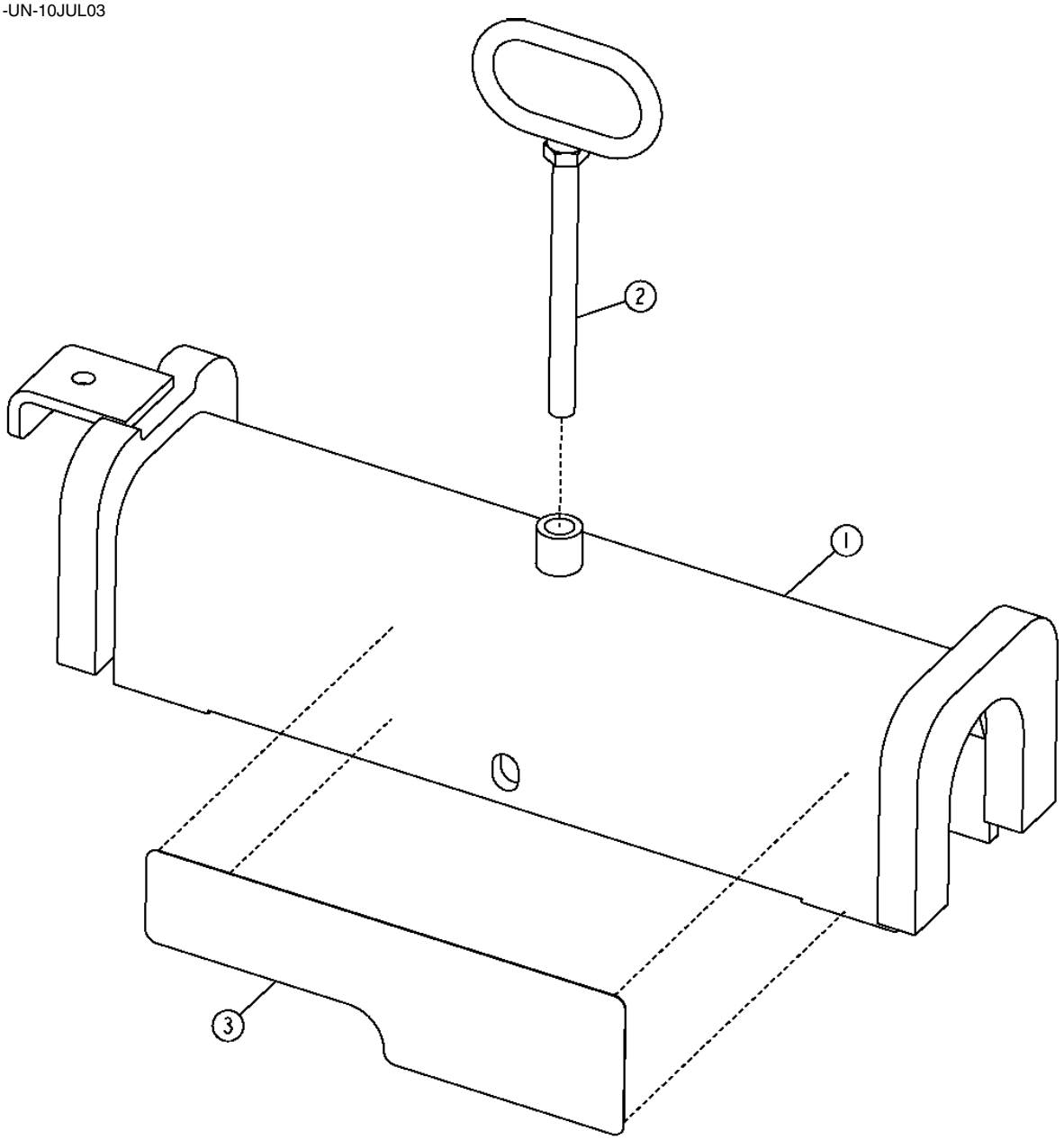

T192743

BOOM CYLINDER LOCK
VERROUILLAGE DE VERIN DE FLECHE
BLOQUEO DEL CILINDRO DEL AGUILON

KEY	*PART NO.*	*PART NAME*	*QTY.*	*SERIAL NO.*	*REMARKS*
1	AT225826	LOCK	1		
2	AT207287	HANDLE	1		
3	T182191	LABEL	2		

TWO SPOOL LOADER CONTROL VALVE
DISTRIBUTEUR CHARGEUR DEUX TIROIRS
VALVULA DE CONTROL DE LA CARGADORA DE DOS CARRETES

T208479 -UN-25FEB05

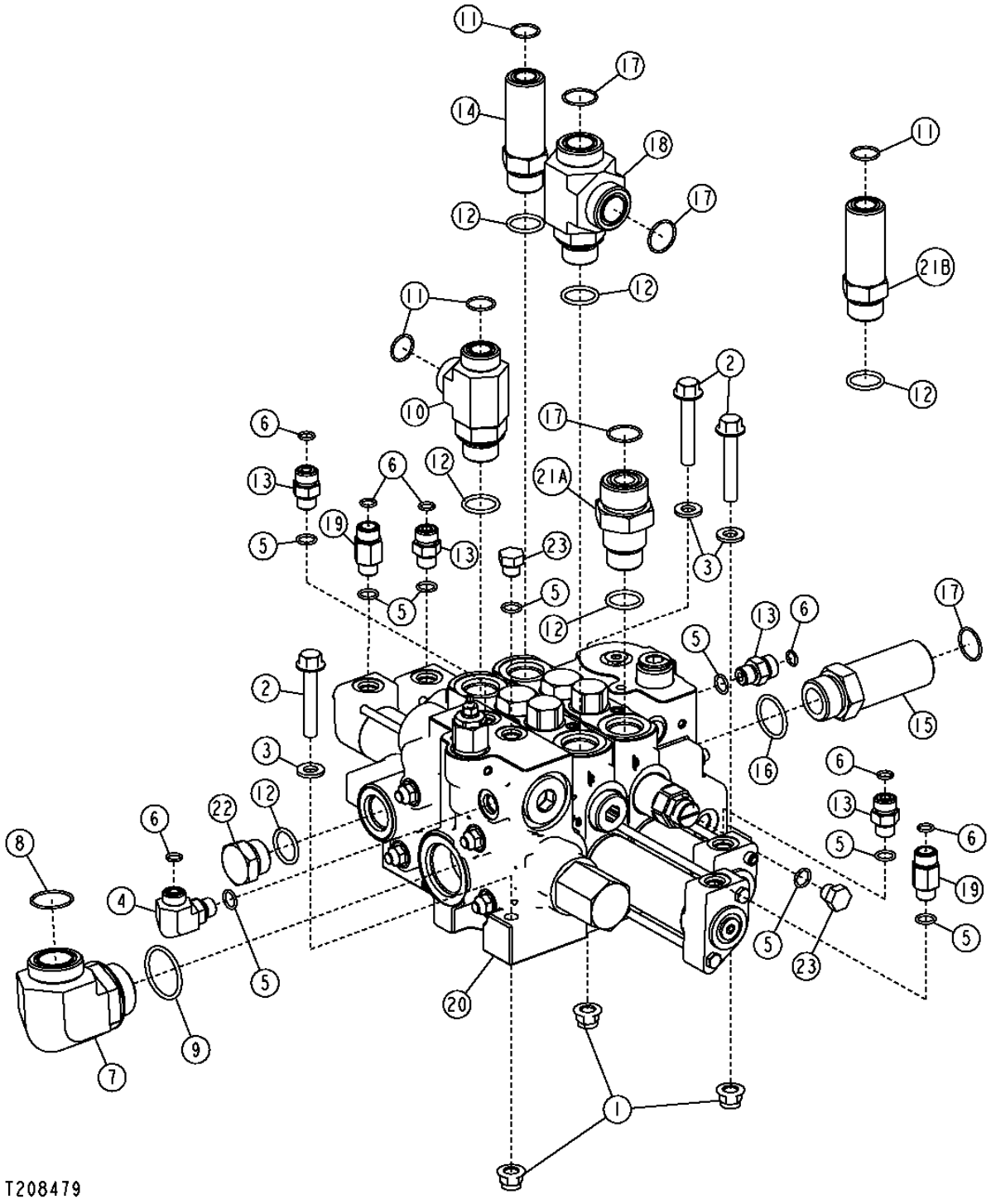

TWO SPOOL LOADER CONTROL VALVE
DISTRIBUTEUR CHARGEUR DEUX TIROIRS
VALVULA DE CONTROL DE LA CARGADORA DE DOS CARRETES

KEY	*PART NO.*	*PART NAME*	*QTY.*	*SERIAL NO.*	*REMARKS*
1	14M7400	LOCK NUT	3		M10
2	19M7807	SCREW	3		M10 X 60
3	24M7239	WASHER	3		10.700 X 21 X 2.500 MM
4	38H1004	ELBOW FITTING	1		
5	R26448	O-RING	9		0.468" X 5/64"
6	T77613	O-RING	7		0.364" X 0.070"
7	38H1090	ELBOW FITTING	1		
8	T78784	O-RING	1		1.489" X 0.070"
9	U13639	O-RING	1		1.475" X 0.118"
10	38H1026	TEE FITTING	1		
11	T77858	O-RING	3		0.739" X 0.070"
12	U12547	O-RING	5		
13	38H1160	ADAPTER FITTING	4		
14	38H1215	ADAPTER FITTING	1		
15	38H1216	ADAPTER FITTING	1		
16	R29936	O-RING	1		1.171" X 0.116"
17	T76938	O-RING	4		0.926" X 0.070"
18	38H1572	TEE FITTING	1		(USE WITH Z-BAR LINKAGE)
	AT317129	TEE FITTING	1		(USE WITH POWERLLEL™ LINKAGE)
19	AT220096	CHECK VALVE	2		
20	AT317146	HYD ACTUATED CONTROL VALVE	1		
21A	T210479	FITTING	1		(USE WITH POWERLLEL™ LINKAGE)
21B	38H1215	ADAPTER FITTING	1		(USE WITH Z-BAR LINKAGE)
22	R27175	DRAIN PLUG	1		
23	R27218	FITTING PLUG	2		
25	AT314048	ROD	1		(TWO SPOOL STUD ASSEMBLY) (NOT ILLUSTRATED)

THREE SPOOL LOADER CONTROL VALVE
DISTRIBUTEUR CHARGEUR TROIS TIROIRS
VALVULA DE CONTROL DE LA CARGADORA DE TRES CARRETES

T208480 -UN-25FEB05

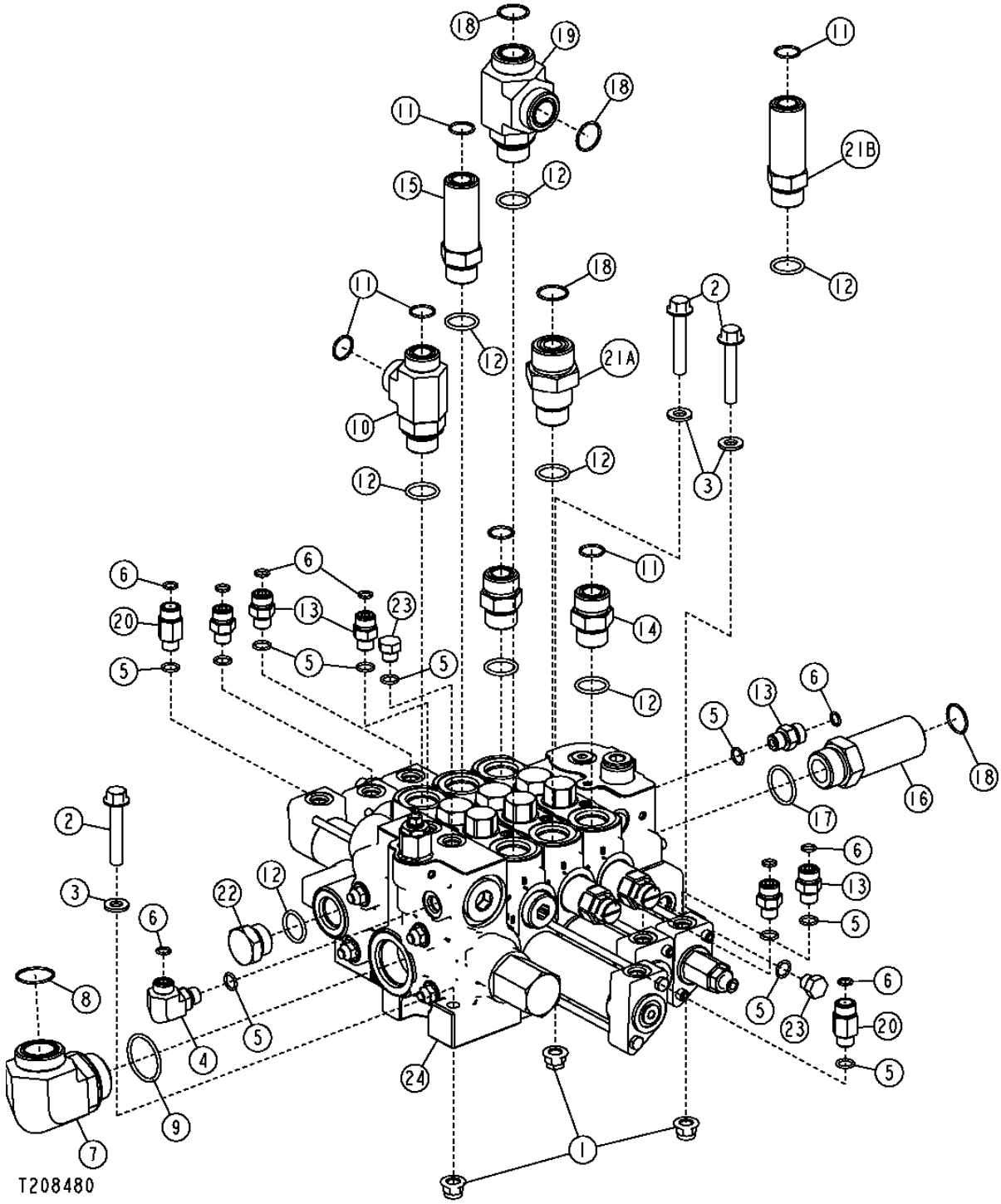

THREE SPOOL LOADER CONTROL VALVE
DISTRIBUTEUR CHARGEUR TROIS TIROIRS
VALVULA DE CONTROL DE LA CARGADORA DE TRES CARRETES

KEY	*PART NO.*	*PART NAME*	*QTY.*	*SERIAL NO.*	*REMARKS*
1	14M7400	LOCK NUT	3		M10
2	19M7807	SCREW	3		M10 X 60
3	24M7239	WASHER	3		10.700 X 21 X 2.500 MM
4	38H1004	ELBOW FITTING	1		
5	R26448	O-RING	6		11.887 X 1.981 MM
6	T77613	O-RING	4		9.246 X 1.778 MM
7	38H1090	ELBOW FITTING	1		
8	T78784	O-RING	1		37.821 X 1.778 MM
9	U13639	O-RING	1		37.465 X 2.997 MM
10	38H1026	TEE FITTING	1		
11	T77858	O-RING	3		18.771 X 1.778 MM
12	U12547	O-RING	6		23.470 X 2.946 MM
13	38H1160	ADAPTER FITTING	1		
14	38H1163	ADAPTER FITTING	1		
15	38H1215	ADAPTER FITTING	1		
16	38H1216	ADAPTER FITTING	1		
17	R29936	O-RING	1		29.743 X 2.946 MM
18	T76938	O-RING	4		23.520 X 1.778 MM
19	38H1572	TEE FITTING	1		(USE WITH Z-BAR LINKAGE)
	AT317129	TEE FITTING	1		(USE WITH POWERLLEL™ LINKAGE)
20	AT220096	CHECK VALVE	2		
21A	T210479	FITTING	1		(USE WITH POWERLLEL™ LINKAGE)
21B	38H1215	ADAPTER FITTING	1		(USE WITH Z-BAR LINKAGE)
22	R27175	DRAIN PLUG	1		
23	R27218	FITTING PLUG	2		
24	AT317147	HYD ACTUATED CONTROL VALVE	1		
25	AT105438	ROD	1		(THREE SPOOL STUD ASSEMBLY) (NOT ILLUSTRATED)

FOUR SPOOL LOADER CONTROL VALVE
DISTRIBUTEUR CHARGEUR QUATRE TIROIRS
VALVULA DE CONTROL DE LA CARGADORA DE CUATRO CARRETES

T208481 -UN-18FEB05

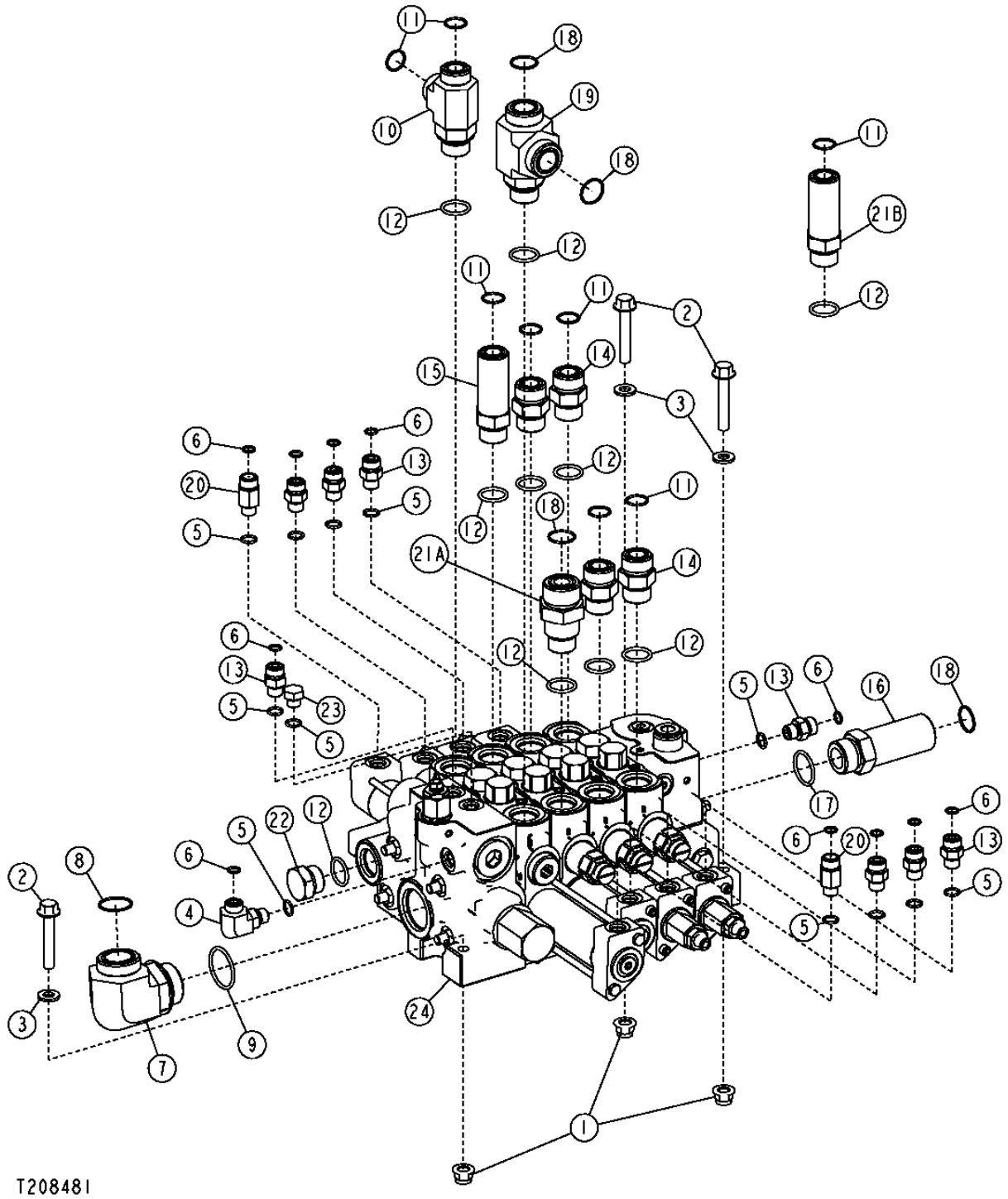

FOUR SPOOL LOADER CONTROL VALVE
DISTRIBUTEUR CHARGEUR QUATRE TIROIRS
VALVULA DE CONTROL DE LA CARGADORA DE CUATRO CARRETES

KEY	*PART NO.*	*PART NAME*	*QTY.*	*SERIAL NO.*	*REMARKS*
1	14M7400	LOCK NUT	3		M10
2	19M7807	SCREW	3		M10 X 60
3	24M7239	WASHER	3		10.700 X 21 X 2.500 MM
4	38H1004	ELBOW FITTING	1		
5	R26448	O-RING	6		0.468" X 5/64"
6	T77613	O-RING	4		0.364" X 0.070"
7	38H1090	ELBOW FITTING	1		
8	T78784	O-RING	1		1.489" X 0.070"
9	U13639	O-RING	1		1.475" X 0.118"
10	38H1026	TEE FITTING	1		
11	T77858	O-RING	4		18.771 X 1.778 MM
12	U12547	O-RING	6		
13	38H1160	ADAPTER FITTING	1		
14	38H1163	ADAPTER FITTING	1		
15	38H1215	ADAPTER FITTING	1		
16	38H1216	ADAPTER FITTING	1		
17	R29936	O-RING	1		
18	T76938	O-RING	3		
19	38H1572	TEE FITTING	1		(USE WITH Z-BAR LINKAGE)
	AT317129	TEE FITTING	1		(USE WITH POWERLLEL™ LINKAGE)
20	AT220096	CHECK VALVE	2		
21A	T210479	FITTING	1		(USE WITH POWERLLEL™ LINKAGE)
21B	38H1215	ADAPTER FITTING	1		(USE WITH Z-BAR LINKAGE)
22	R27175	DRAIN PLUG	1		
23	R27218	FITTING PLUG	2		
24	AT317148	HYD ACTUATED CONTROL VALVE	1		
25	AT314026	ROD	1		(FOUR SPOOL STUD ASSEMBLY) (NOT ILLUSTRATED)

INLET VALVE SECTION WITH RELIEF VALVE
SECTION DISTRIBUTEUR ENTREE AVEC CLAPET DECHARGE
SECCION DE VALVULA DE ENTRADA CON VALVULA DE ALIVIO

T202329 -UN-26AUG04

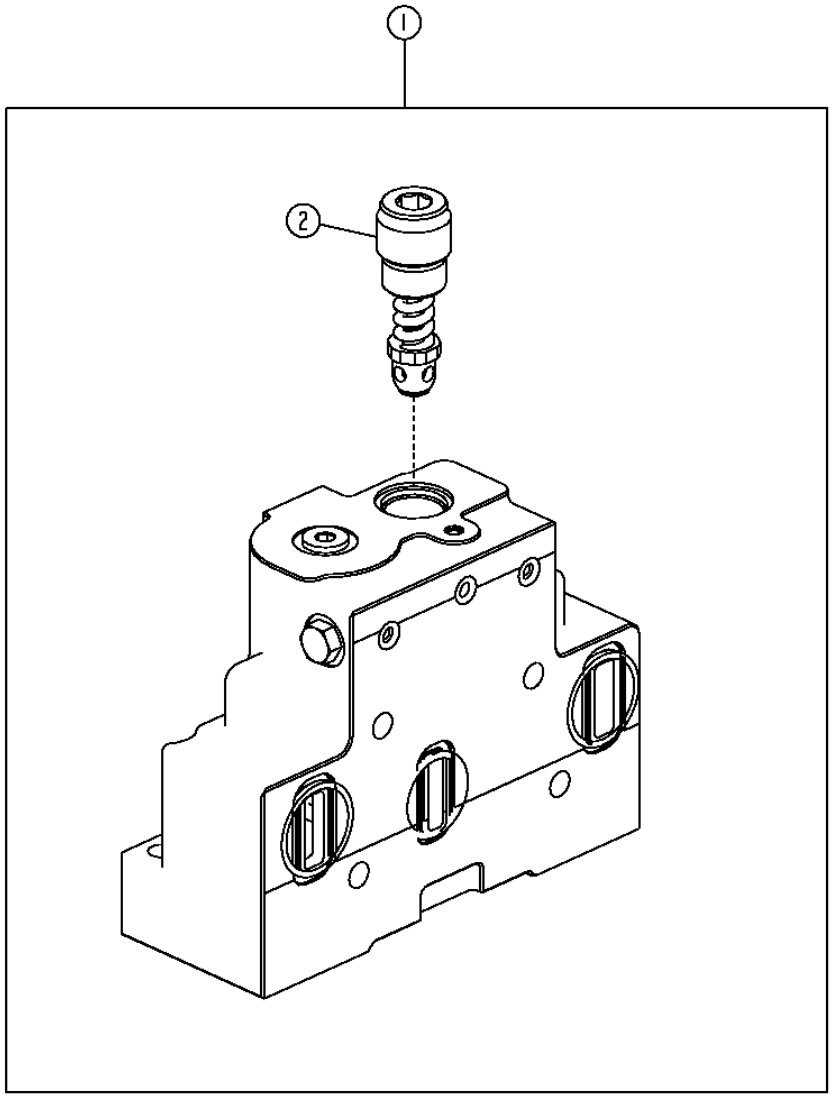

T202329

INLET VALVE SECTION WITH RELIEF VALVE
SECTION DISTRIBUTEUR ENTREE AVEC CLAPET DECHARGE
SECCION DE VALVULA DE ENTRADA CON VALVULA DE ALIVIO

KEY	*PART NO.*	*PART NAME*	*QTY.*	*SERIAL NO.*	*REMARKS*
1	AT314008	VALVE	1		
	AT314017	SEAL KIT	1		(INLET SECTION AND INTERFACE)
2	AT314015	PRESSURE RELIEF VALVE	1		
3	AT314016	ORIFICE	1		(NOT ILLUSTRATED)

BUCKET VALVE SECTION
SECTION SOUPAPE BENNE
SECCION DE LA VALVULA DEL CUCHARON

T202330 -UN-26AUG04

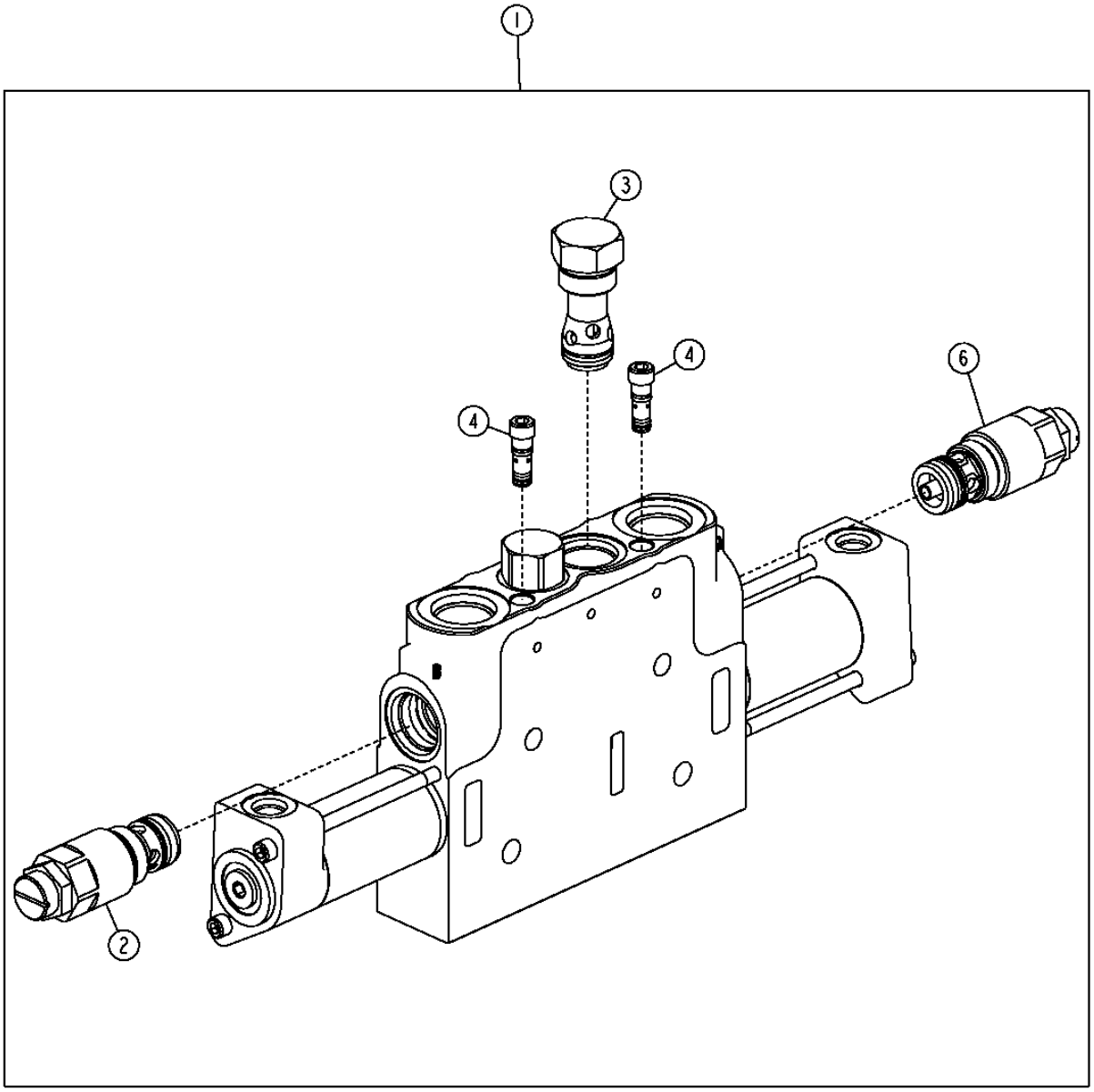

T202330

BUCKET VALVE SECTION
SECTION SOUPAPE BENNE
SECCION DE LA VALVULA DEL CUCHARON

KEY	*PART NO.*	*PART NAME*	*QTY.*	*SERIAL NO.*	*REMARKS*
1	AT314009	VALVE	1		
	AT314013	SEAL KIT	1		(WORK SECTION AND INTERFACE)
2	AT314010	BALL COCK VALVE	1		
3	AT314011	VALVE	1		
4	AT314012	VALVE	2		
6	AT315331	PRESSURE RELIEF VALVE	1		
10	AT314014	HYDRAULIC CYLINDER CAP	1		(PILOT END CAP SEAL KIT) (NOT ILLUSTRATED)

AUXILIARY VALVE SECTION
SECTION DISTRIBUTEUR AUXILIAIRE
SECCION DE VALVULA AUXILIAR

T202332 -UN-26AUG04

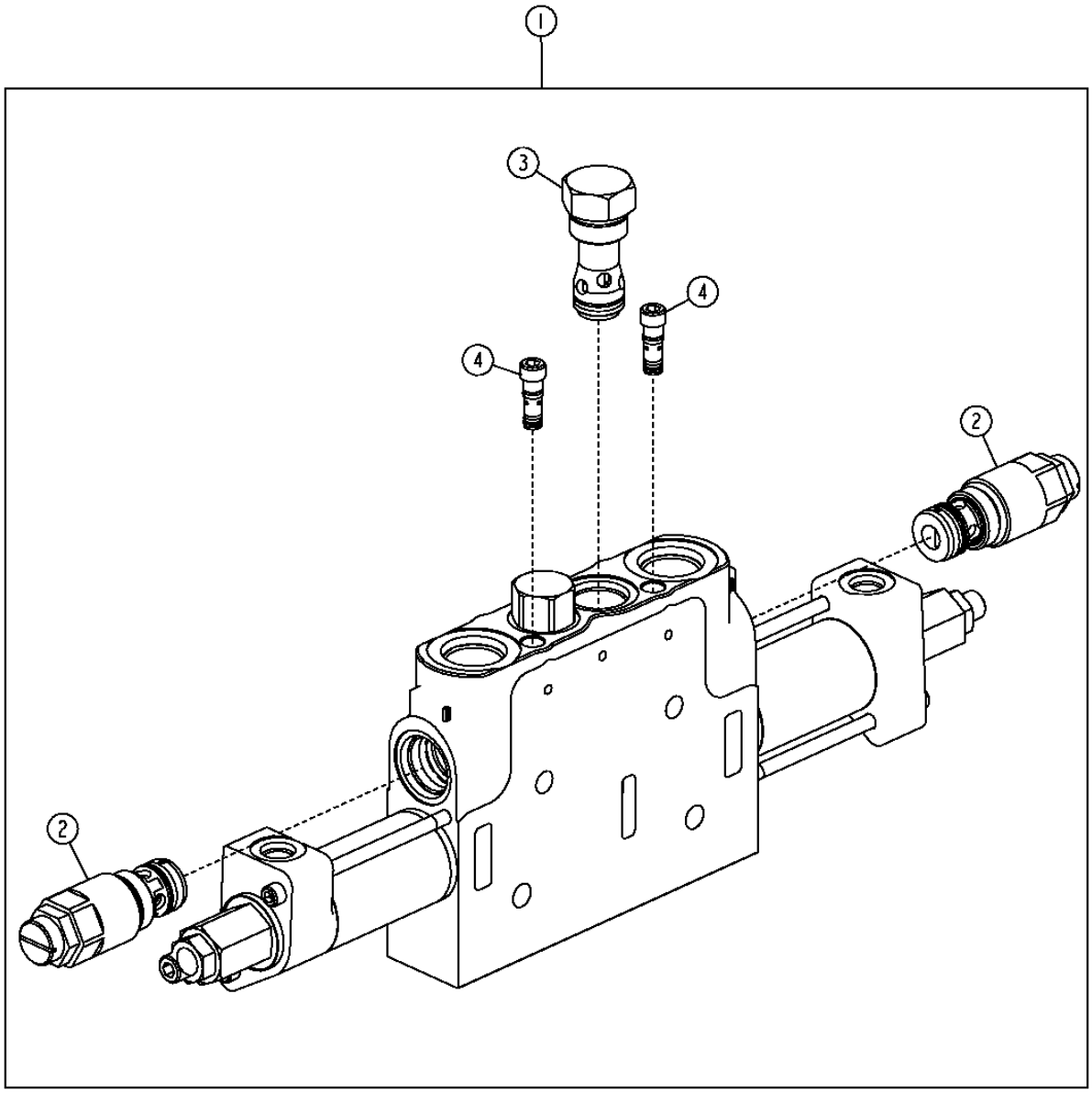

T202332

AUXILIARY VALVE SECTION
SECTION DISTRIBUTEUR AUXILIAIRE
SECCION DE VALVULA AUXILIAR

KEY	*PART NO.*	*PART NAME*	*QTY.*	*SERIAL NO.*	*REMARKS*
1	AT314046	VALVE	1		
	AT314013	SEAL KIT	1		(WORK SECTION AND INTERFACE)
2	AT209750	PRESSURE RELIEF VALVE	2		
	AT209748	SEAL KIT	2		(RELIEF VALVE)
3	AT314011	VALVE	1		
4	AT314012	VALVE	2		
10	AT314021	HYDRAULIC CYLINDER CAP	1		(PILOT CONTROL END CAP SEAL KIT) (NOT ILLUSTRATED)

OUTLET VALVE SECTION
SECTION SOUPAPE SORTIE
SECCION DE VALVULA DE SALIDA

T202333 -UN-26AUG04

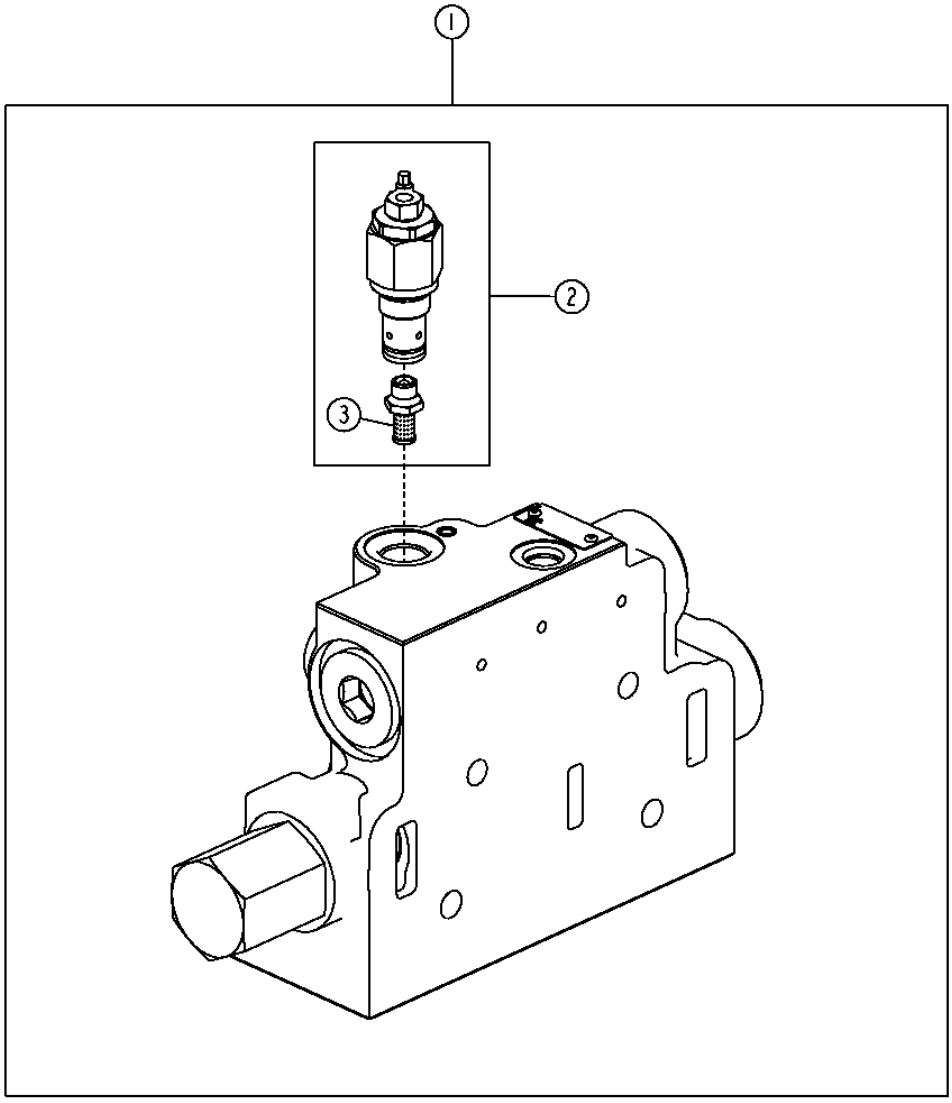

T202333

OUTLET VALVE SECTION
SECTION SOUPAPE SORTIE
SECCION DE VALVULA DE SALIDA

KEY	*PART NO.*	*PART NAME*	*QTY.*	*SERIAL NO.*	*REMARKS*
1	AT314022	FLOW CONTROL HYD. VALVE	1		
	AT314057	SEAL KIT	1		(OUTLET SECTION AND INTERFACE)
2	AT314023	PRESSURE RELIEF VALVE	1		
3	AT314025	SCREEN	1		

FIFTH FUNCTION VALVE SECTION
SECTION SOUPAPE CINQUIEME FONCTION
SECCION DE VALVULA DE QUINTA FUNCION

TX1014765 -UN-27NOV06

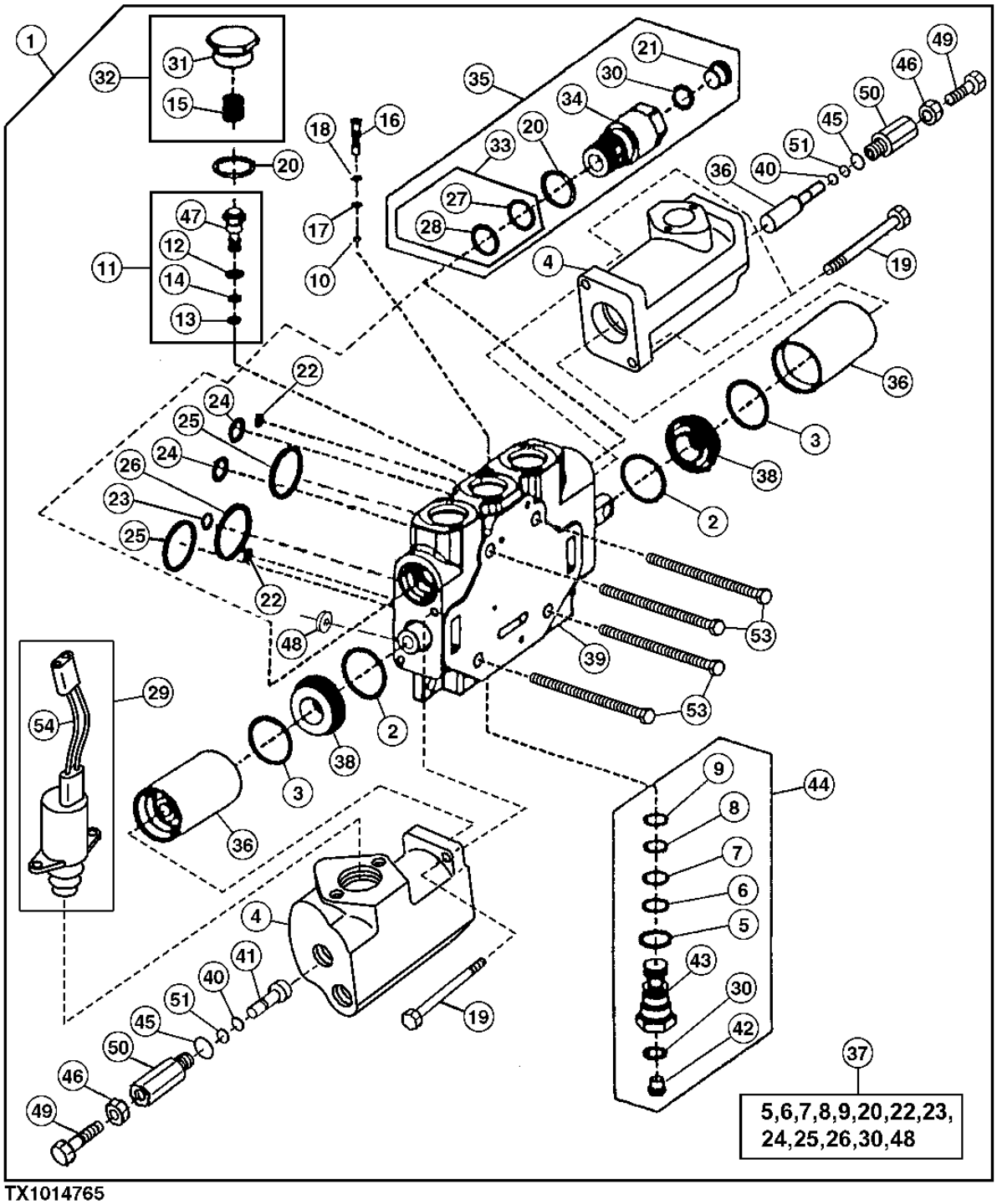

TX1014765

FIFTH FUNCTION VALVE SECTION
SECTION SOUPAPE CINQUIEME FONCTION
SECCION DE VALVULA DE QUINTA FUNCION

KEY	PART NO.	PART NAME	QTY.	SERIAL NO.	REMARKS
1	AT225143	FLOW CONTROL HYD. VALVE	1		
2	.....	O-RING	2		
3	.....	O-RING	2		
4	.....	CAP	2		(END)
5	.....	O-RING	1		
6	.....	BACK-UP RING	1		
7	.....	O-RING	1		
8	.....	O-RING	1		
9	.....	BACK-UP RING	1		
10	A4742R	BALL	1		
11	AT220827	COMPENSATOR	1		
12	.....	O-RING	1		
13	.....	O-RING	1		
14	.....	BACK-UP RING	1		
15	.....	SPRING	1		
16	T172562	CHECK VALVE	1		
17	.....	O-RING	1		
18	.....	BACK-UP RING	1		
19	T174025	CAP SCREW	4		
20	U12547	O-RING	2		
21	.....	PLUG	1		
22	U40962	O-RING	2		
23	.....	O-RING	1		
24	.....	O-RING	2		
25	.....	O-RING	2		
26	.....	O-RING	1		
27	T154187	BACK-UP RING	2		
28	AT124574	O-RING	2		
29	AT224850	SOLENOID VALVE	2		(INCLUDES WIRING HARNESS, AT326581)
30	R26287	O-RING	2		
31	.....	PLUG	1		
32	AT220831	HOSE KIT	1		
33	AT170991	O-RING KIT	2		(INCLUDES U12547)
	U12547	O-RING	1		
34	.....	VALVE	1		
35	AT209750	PRESSURE RELIEF VALVE	2		
36	.....	PLUNGER	2		
	.....	BUSHING	2		
37	AT210685	SEAL KIT	1		
38	.....	STRUCTURAL TUBING	2		
39	AT210684	SPOOL VALVE	1		
40	T77814	O-RING	2		
41	.....	PLUNGER	2		
42	.....	PLUG	1		
43	.....	SPOOL	1		
44	AT210686	CHECK VALVE	1		
45	R26906	O-RING	2		
46	14H856	NUT	2		1/2"
47	.....	COMPENSATOR	4		
48	.....	SHIM	1		(ONE ON EACH TIE-BOLT)
49	22H1022	SET SCREW	2		
50	AT220035	HOSE KIT	2		
51	R61463	BACK-UP RING	2		
52	**AT307774**	**FIELD INSTALLATION KIT**	**1**		**(WHOLE GOODS) (FIFTH FUNCTION) (CONTAINS ALL COMPONENTS NECESSARY FOR ADDING FIFTH AUXILIARY FUNCTION)**
53	AT325146	STUD	4		(TIE BOLT)
54	AT326581	MFWD SOLENOID WRG HARNESS	2		

ELECTRIC FIFTH FUNCTION
CINQUIEME FONCTION ELECTRIQUE
QUINTA FUNCION ELECTRICA

TX1014854 -UN-28DEC06

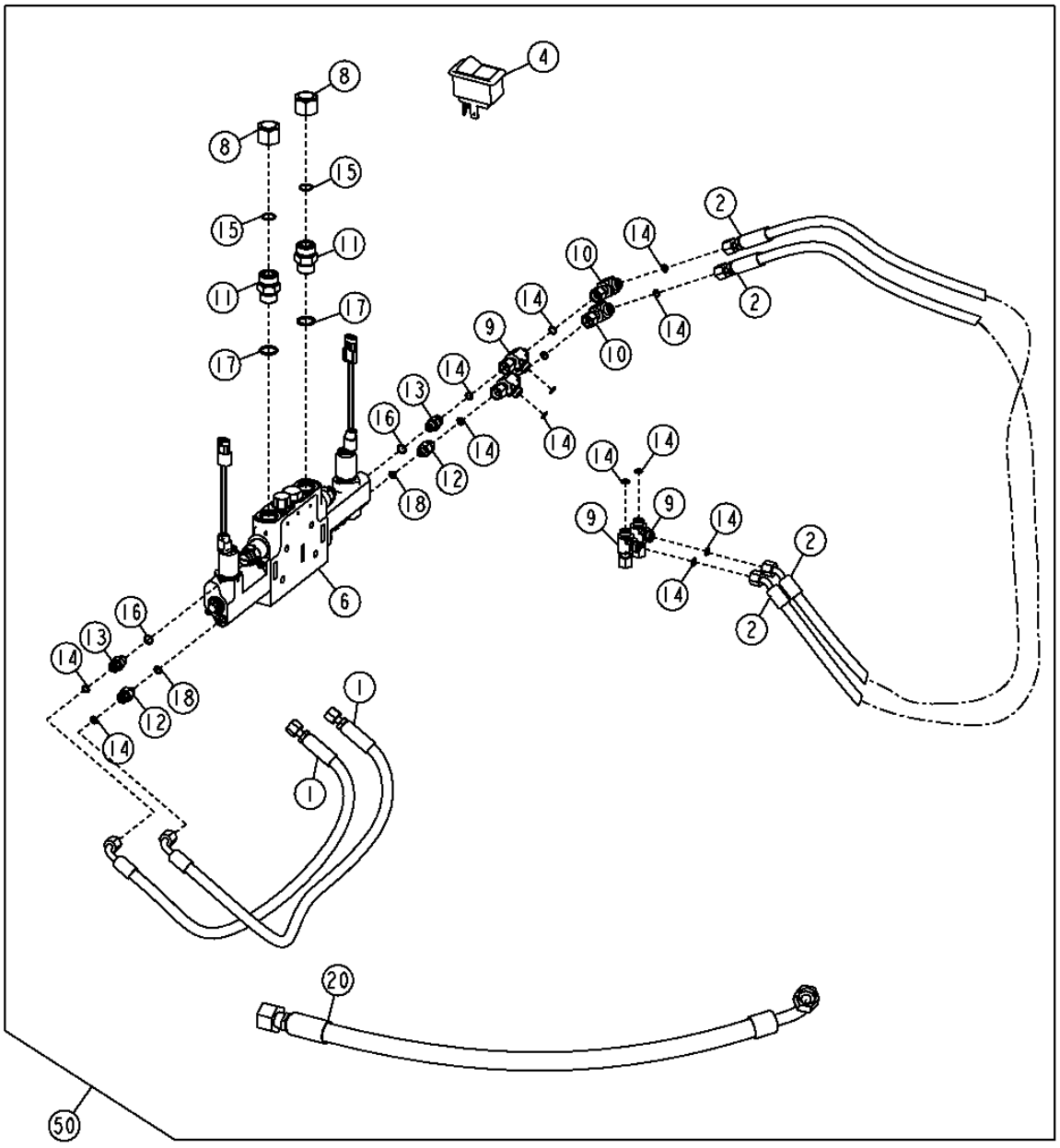

TX1014854

ELECTRIC FIFTH FUNCTION
CINQUIEME FONCTION ELECTRIQUE
QUINTA FUNCION ELECTRICA

KEY	PART NO.	PART NAME	QTY.	SERIAL NO.	REMARKS
1	AT166149	HYDRAULIC HOSE - FABRICATE	2		11/16" X 975 MM X 11/16"
2	AT207096	HYDRAULIC HOSE - FABRICATE	2		11/16" X 2 550 MM X 11/16"
3	AT211219	WIRING HARNESS	1		(NOT ILLUSTRATED)
4	AT219757	TOGGLE/ROCKER SWITCH	1		
	AT202786	SWITCH	1		
	AT220526	SWITCH	1		
5	AT314013	SEAL KIT	1		(NOT ILLUSTRATED)
6	AT316315	SOLENOID VALVE	1		
	AT325146	STUD	4		
	AT326581	MFWD SOLENOID WRG HARNESS	2		
7	AT318917	HYDRAULIC HOSE - FABRICATE	1		1-7/16" X 890 MM X 1-3/16", (NOT ILLUSTRATED)
8	38H1418	FITTING	2		
9	38H1030	TEE FITTING	4		
10	38H1094	ELBOW FITTING	2		
11	38H1163	ADAPTER FITTING	2		
12	38H1309	ADAPTER FITTING	2		
13	38H1160	ADAPTER FITTING	2		
14	T77613	O-RING	14		9.246 X 1.778 MM
15	T77858	O-RING	2		18.771 X 1.778 MM
16	R26448	O-RING	2		11.887 X 1.981 MM
17	U12547	O-RING	2		23.470 X 2.946 MM
18	R28782	O-RING	2		8.915 X 1.829 MM
19	AT318916	HYDRAULIC HOSE - FABRICATE	1		1-7/16" X 965 MM (38") X 1-3/16", (NOT ILLUSTRATED)
20	AT318915	HYDRAULIC HOSE - FABRICATE	1		1-7/16" X 1 115 MM (44") X 1-3/16"
50	**AT318912**	**FIELD INSTALLATION KIT**	**1**		

BOOM AND BUCKET CYLINDER HYDRAULICS (FOR USE WITH Z-BAR LINKAGE)
CIRCUIT HYDR. VERIN FLECHE BENNE (A UTILISER AVEC TRINGLERIE CINEMATIQUE EN Z)
SISTEMA HIDRAULICO CILINDRO CUCHARON AGUILON (PARA USO CON VARILLAJE BARRA EN Z)

T208705 -UN-04MAR05

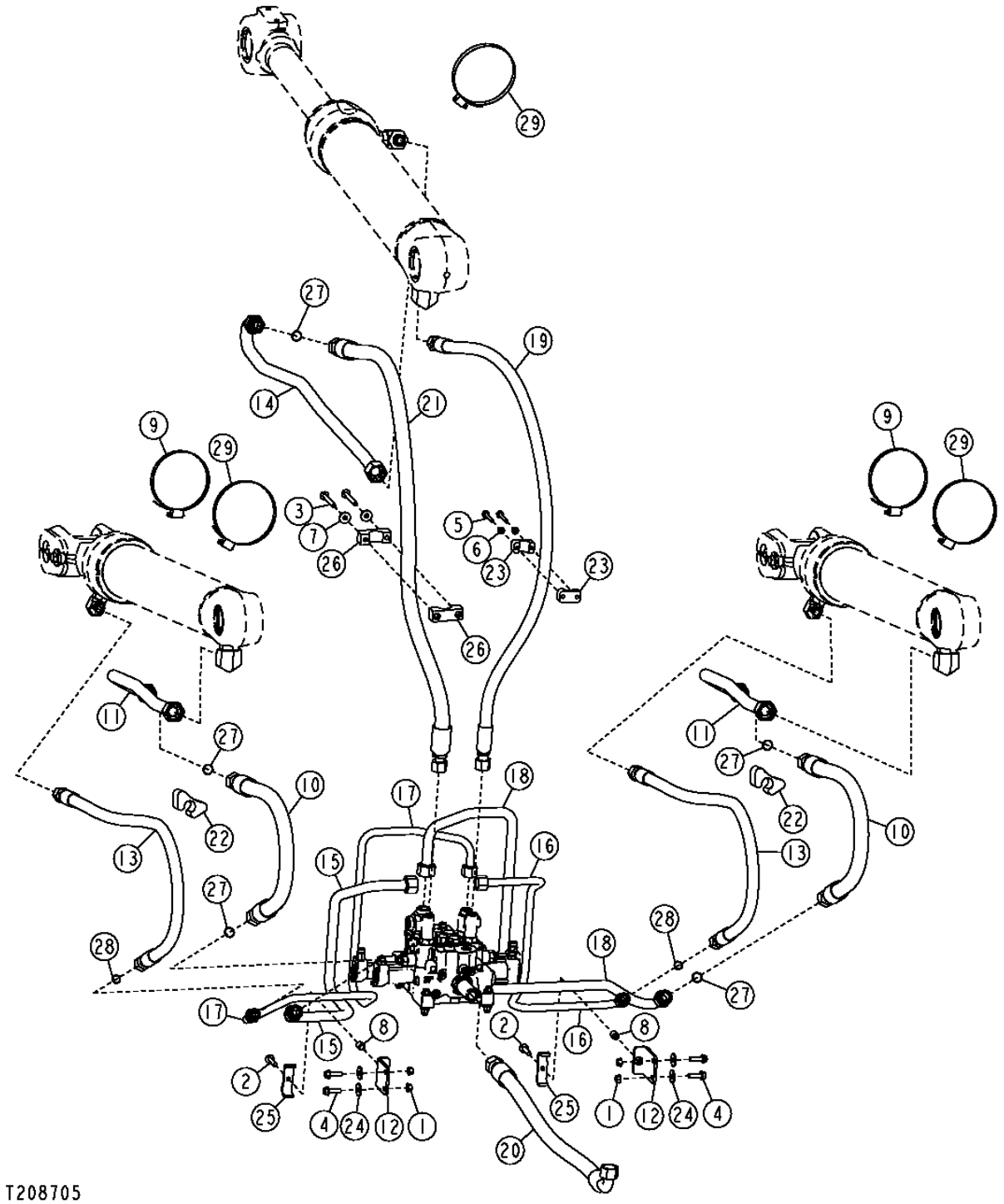

BOOM AND BUCKET CYLINDER HYDRAULICS (FOR USE WITH Z-BAR LINKAGE)
CIRCUIT HYDR. VERIN FLECHE BENNE (A UTILISER AVEC TRINGLERIE CINEMATIQUE EN Z)
SISTEMA HIDRAULICO CILINDRO CUCHARON AGUILON (PARA USO CON VARILLAJE BARRA EN Z)

KEY	*PART NO.*	*PART NAME*	*QTY.*	*SERIAL NO.*	*REMARKS*
1	14M7296	FLANGE NUT	4		M10
2	19M7805	SCREW	2		M10 X 45
3	19M7810	SCREW	2		M10 X 80
4	19M7835	SCREW	4		M10 X 35
5	19M7979	SCREW	2		M8 X 55
6	24M7238	WASHER	2		8.700 X 17 X 2 MM
7	24M7296	WASHER	2		10.500 X 30 X 2.500 MM
8	28H3383	BUSHING	2		0.493" X 0.675" X 3/4"
9	AR89602	CLAMP	2		
10	AT208691	HYDRAULIC HOSE - FABRICATE	2		1-7/16" X 1 060 MM X 1-7/16"
11	AT210400	OIL LINE	2		
12	AT224318	BRACKET	2		
13	AT228192	HYDRAULIC HOSE - FABRICATE	2		1-3/16" X 1 549 MM X 1-3/16"
14	AT307067	OIL LINE	1		
15	AT308284	OIL LINE	1		
16	AT308285	OIL LINE	1		
17	AT308286	OIL LINE	1		
18	AT308287	OIL LINE	1		
19	AT315175	HYDRAULIC HOSE - FABRICATE	1		13/16" X 1 759 MM X 13/16"
20	AT320168	HYDRAULIC HOSE - FABRICATE	1		1-7/16" X 1 092 MM X 1-7/16"
21	AT321007	HYDRAULIC HOSE	1		1-3/16" X 1 735 MM X 1-7/16"
22	T102005	GUIDE	2		
23	T147188	CLAMP	2		
24	24M7276	SHIM	4		0.300 MM
25	T167921	CLAMP	2		
26	T67995	CLAMP	2		
27	T76938	O-RING	5		23.520 X 1.778 MM
28	T77858	O-RING	2		18.771 X 1.778 MM
29	TY22494	HOSE CLAMP	3		

THIRD AND FOURTH FUNCTION AUXILIARY HYDRAULICS (SEE FOOTNOTE)
CIRCUIT HYDRAULIQUE AUXILIAIRE DE TROISIEME ET QUATRIEME FONCTION (VOIR APOSTILLE)
SISTEMA HIDRAULICO AUXILIAR DE TERCERA Y CUARTA FUNCION (VEALA NOTA DEL PIE)

T208706 -UN-04MAR05

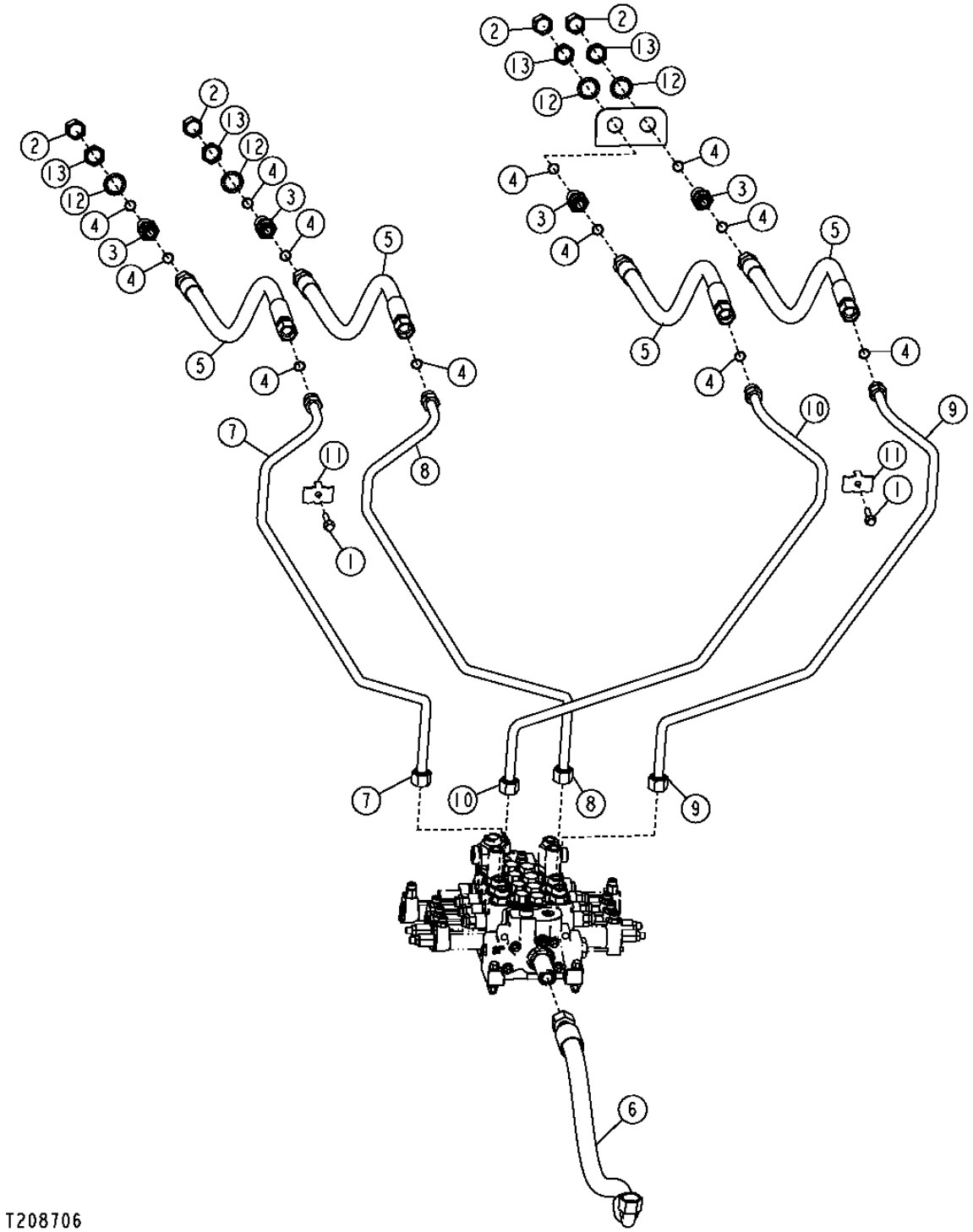

THIRD AND FOURTH FUNCTION AUXILIARY HYDRAULICS (FOR USE WITH Z-BAR LINKAGE)
CIRCUIT HYDRAULIQUE AUXILIAIRE DE TROISIEME ET QUATRIEME FONCTION (VOIR APOSTILLE)
SISTEMA HIDRAULICO AUXILIAR DE TERCERA Y CUARTA FUNCION (VEALA NOTA DEL PIE)

KEY	*PART NO.*	*PART NAME*	*QTY.*	*SERIAL NO.*	*REMARKS*
1	19M7786	SCREW	2		M10 X 30
2	38H1418	FITTING	4		
3	38H1276	ADAPTER FITTING	4		
4	T77858	O-RING	12		18.771 X 1.778 MM
5	AT191285	HYDRAULIC HOSE - FABRICATE	4		1-3/16" X 1 295 MM X 1-3/16"
6	AT223056	HYDRAULIC HOSE - FABRICATE	1		1-7/16" X 1 016 MM X 1-7/16"
7	AT316244	OIL LINE	1		
8	AT316245	OIL LINE	1		
9	AT316246	OIL LINE	1		
10	AT316247	OIL LINE	1		
11	T160549	CLAMP	2		
12	T174275	LOCK WASHER	4		30.950 MM
13	T78707	NUT	4		30.175 MM

FOR USE WITH Z-BAR LINKAGE
A UTILISER AVEC TRINGLERIE CINEMATIQUE EN Z
PARA USO CON VARILLAJE DE BARRA EN Z

CONTROL VALVE TO BUCKET AND BOOM CYLINDER HYDRAULICS (FOR USE WITH POWERLLEL™ LINKAGE)
CIRCUIT HYDRAULIQUE DISTRIBUTEUR A VERIN BENNE ET FLECHE (A UTILISER AVEC TRINGLERIE POWERLLEL™)
VALVULA CONTROL CUCHARON SISTEMA HIDRAULICO CILINDRO AGUILON (PARA USO CON VARILLAJE POWERLLEL™)

T202102 -UN-11AUG04

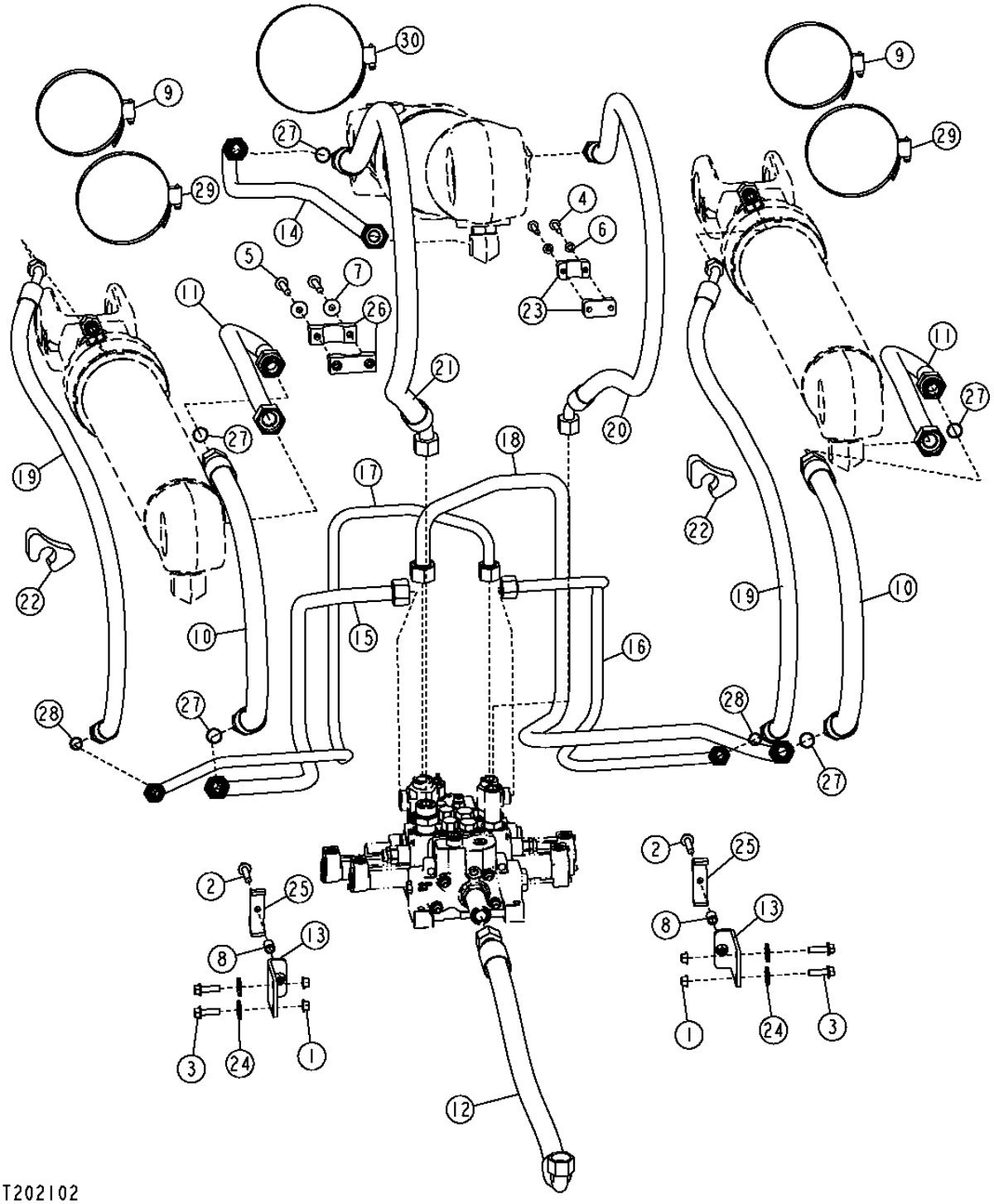

THIS PARTS LISTING IS CONTINUED

CONTROL VALVE TO BUCKET AND BOOM CYLINDER HYDRAULICS (FOR USE WITH POWERLLEL™ LINKAGE)
CIRCUIT HYDRAULIQUE DISTRIBUTEUR A VERIN BENNE ET FLECHE (A UTILISER AVEC TRINGLERIE POWERLLEL™)
VALVULA CONTROL CUCHARON SISTEMA HIDRAULICO CILINDRO AGUILON (PARA USO CON VARILLAJE POWERLLEL™)

KEY	PART NO.	PART NAME	QTY.	SERIAL NO.	REMARKS
1	14M7296	FLANGE NUT	4		M10
2	19M7805	SCREW	2		M10 X 45
3	19M7835	SCREW	4		M10 X 35
4	19M7979	SCREW	2		M8 X 55
5	19M7801	SCREW	2		M8 X 60
6	24M7238	WASHER	2		8.700 X 17 X 2 MM
7	24M7296	WASHER	2		10.500 X 30 X 2.500 MM
8	28H3383	BUSHING	2		0.493" X 0.675" X 3/4"
9	TY22493	HOSE CLAMP	2		
10	AT208691	HYDRAULIC HOSE - FABRICATE	2		1-7/16" X 41-3/4" X 1-7/16"
11	AT210400	OIL LINE	2		
12	AT320168	HYDRAULIC HOSE - FABRICATE	1		1-7/16" X 43" X 1-7/16"
13	AT224318	BRACKET	2		
14	AT305320	OIL LINE	1		
15	AT308284	OIL LINE	1		
16	AT308285	OIL LINE	1		
17	AT308286	OIL LINE	1		
18	AT308287	OIL LINE	1		
19	AT320974	HYDRAULIC HOSE - FABRICATE	2		1-3/16" X 1 750 MM (69") X 1-3/16"
20	AT315049	HYDRAULIC HOSE - FABRICATE	1		13/16" X 1 695 MM (66-3/4") X 13/16"
21	AT315050	HYDRAULIC HOSE - FABRICATE	1		1" X 1 685 MM (66-1/4") X 1"
22	T102005	GUIDE	4		
23	T147188	CLAMP	2		
24	24M7296	WASHER	4		10.500 X 30 X 2.500 MM
25	T167921	CLAMP	2		
26	T67995	CLAMP	2		
27	T76938	O-RING	5		23.520 X 1.778 MM
28	T77858	O-RING	2		18.771 X 1.778 MM
29	TY22494	HOSE CLAMP	2		
30	TY22496	HOSE CLAMP	1		

THIRD AND FOURTH FUNCTION AUXILIARY HYDRAULICS (FOR USE WITH POWERLLEL™ LINKAGE)
CIRCUIT HYDRAULIQUE AUXILIAIRE TROISIEME QUATRIEME FONCTION (UTILISER AVEC TRINGLERIE POWERLLEL™
SISTEMA HIDRAULICO AUXILIAR DE TERCERA Y CUARTA FUNCION (PARA USO CON VARILLAJE POWERLLEL™)

T208282 -UN-18FEB05

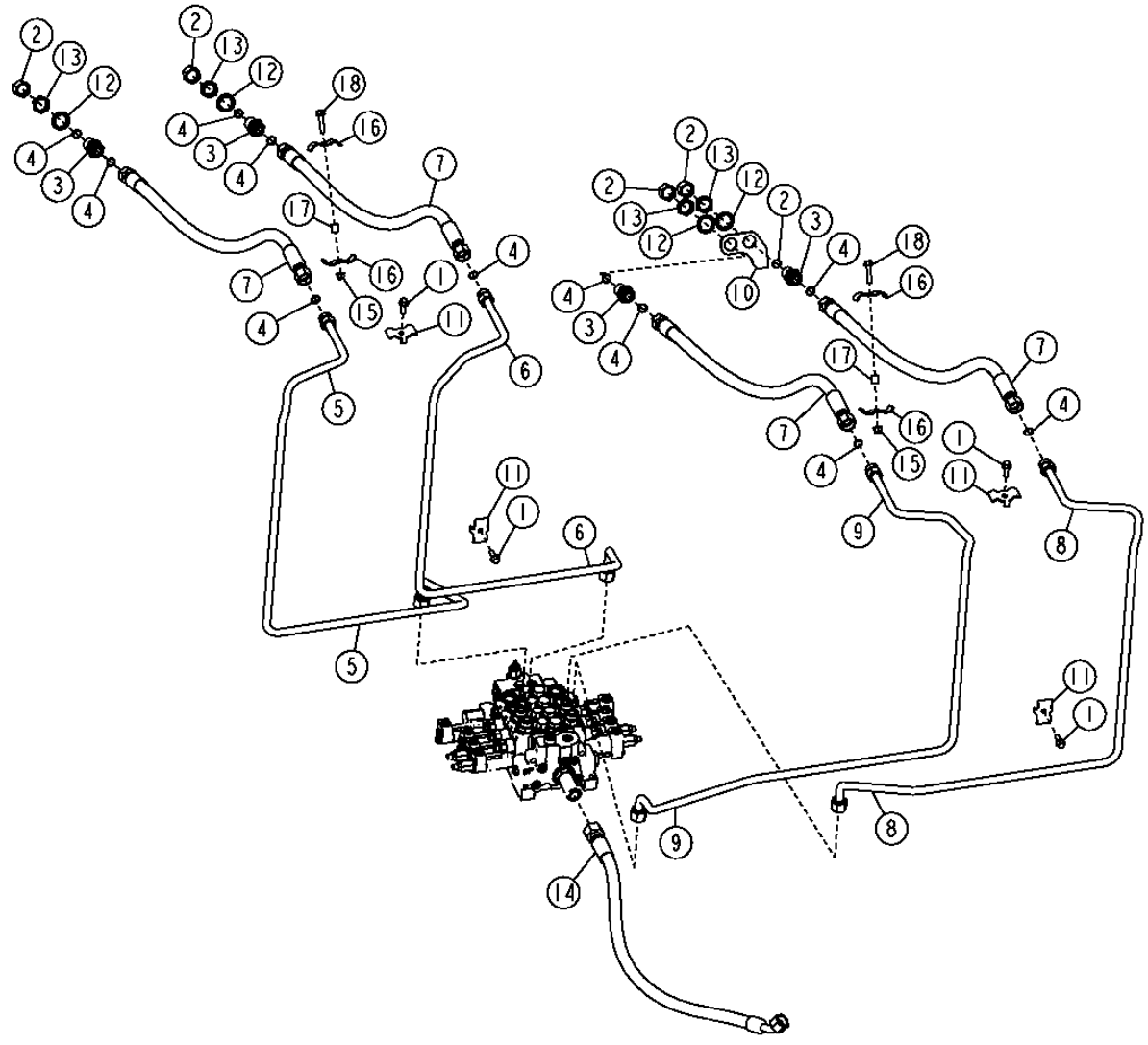

T208282

THIS PARTS LISTING IS CONTINUED

THIRD AND FOURTH FUNCTION AUXILIARY HYDRAULICS (FOR USE WITH POWERLLEL™ LINKAGE)
CIRCUIT HYDRAULIQUE AUXILIAIRE TROISIEME QUATRIEME FONCTION (UTILISER AVEC TRINGLERIE POWERLLEL™
SISTEMA HIDRAULICO AUXILIAR DE TERCERA Y CUARTA FUNCION (PARA USO CON VARILLAJE POWERLLEL™)

KEY	*PART NO.*	*PART NAME*	*QTY.*	*SERIAL NO.*	*REMARKS*
1	19M7786	SCREW	4		M10 X 30
2	38H1418	FITTING	4		
3	38H1276	ADAPTER FITTING	4		
4	T77858	O-RING	14		18.771 X 1.778 MM
5	AT322202	OIL LINE	1		
6	AT322203	OIL LINE	1		
7	AT313424	HYDRAULIC HOSE - FABRICATE	4		13/16" X 1 550 MM X 13/16"
8	AT322416	OIL LINE	1		
9	AT322442	OIL LINE	1		
10	T210447	PLATE	1		
11	T215434	CLAMP	4		
12	T174275	LOCK WASHER	4		30.950 MM
13	T78707	NUT	4		30.175 MM
14	AT223056	HYDRAULIC HOSE - FABRICATE	1		1-7/16" X 1 016 MM X 1-7/16"
15	14M7400	LOCK NUT	2		M10
16	U46753	HOSE CLAMP	4		
17	28H3383	BUSHING	2		0.493" X 0.675" X 3/4"
18	19M7805	SCREW	2		M10 X 45

TWO LEVER PILOT CONTROLLER
CONTROLEUR PILOTE DEUX LEVIERS
CONTROLADOR PILOTO DE DOS PALANCAS

TX1014774 -UN-18JAN07

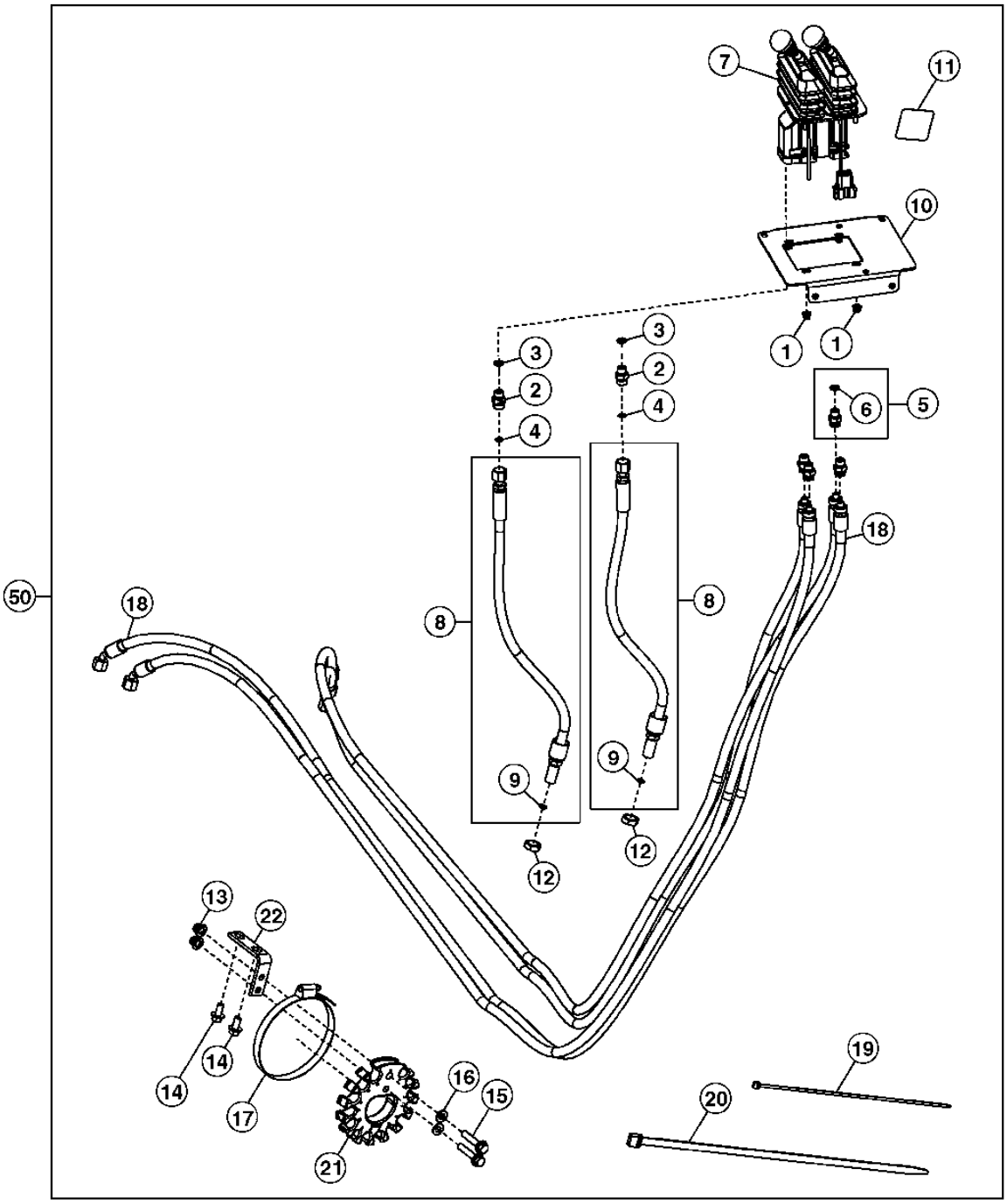

TX1014774

TWO LEVER PILOT CONTROLLER
CONTROLEUR PILOTE DEUX LEVIERS
CONTROLADOR PILOTO DE DOS PALANCAS

KEY	*PART NO.*	*PART NAME*	*QTY.*	*SERIAL NO.*	*REMARKS*
1	14M7397	LOCK NUT	4		M6
2	38H1160	ADAPTER FITTING	2		
3	R26448	O-RING	2		
4	T77613	O-RING	2		
5	63H1001	FITTING	4		
6	R26448	O-RING	4		
7	AT225425	HYDR./PILOT CONTROL VALVE	1		(COMPONENTS ON SEPARATE PAGE)
8	AT226454	HYDRAULIC HOSE - FABRICATE	2		
9	T77613	O-RING	2		
10	AT300936	PLATE	1		
11	T200729	LABEL	1		
12	T81029	NUT	2		
13	14M7400	LOCK NUT	2		M10
14	19M7784	SCREW	2		M10 X 20
15	19M7806	SCREW	2		M10 X 50
16	24M7239	WASHER	2		10.700 X 21 X 2.500 MM
17	TY22493	HOSE CLAMP	1		
18	AT226615	HYDRAULIC HOSE - FABRICATE	4		
19	H77698	TIE BAND	6		
20	N189220	TIE BAND	4		
21	T154342	RETAINER	1		
22	T157443	ANGLE	1		
50	**AT305687**	**FIELD INSTALLATION KIT**	**1**		**(WHOLE GOODS) (JOYSTICK TO TWO LEVER CONVERSION KIT)**

TWO LEVER PILOT CONTROLLER WITH AUXILARY (POWERLLEL™)
CONTROLEUR PILOTE DEUX LEVIERS AVEC AUXILIAIRE (POWERLLEL™)
CONTROLADOR PILOTO DE DOS PALANCAS CON MANDO AUXILIAR (POWERLLEL™)

TX1014776 -UN-05DEC06

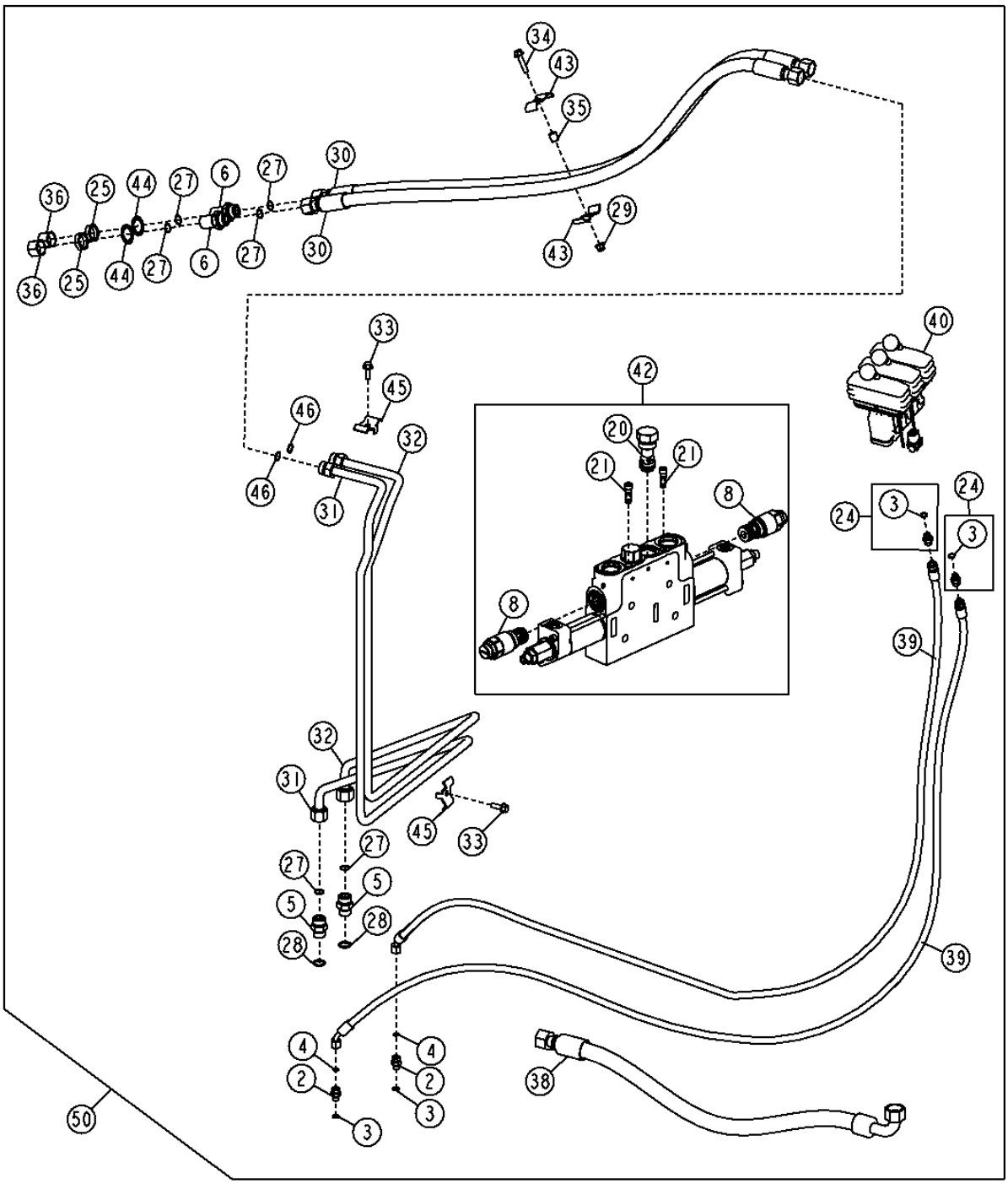

TX1014776

TWO LEVER PILOT CONTROLLER WITH AUXILARY (POWERLLEL™)
CONTROLEUR PILOTE DEUX LEVIERS AVEC AUXILIAIRE (POWERLLEL™)
CONTROLADOR PILOTO DE DOS PALANCAS CON MANDO AUXILIAR (POWERLLEL™)

KEY	*PART NO.*	*PART NAME*	*QTY.*	*SERIAL NO.*	*REMARKS*
2	38H1160	ADAPTER FITTING	1		
3	R26448	O-RING	2		11.887 X 1.981 MM
4	T77613	O-RING	1		9.246 X 1.778 MM
5	38H1163	ADAPTER FITTING	1		
6	38H1276	ADAPTER FITTING	1		
8	AT209750	PRESSURE RELIEF VALVE	2		
	AT209748	SEAL KIT	2		
15	AT227930	PLATE	2		(NOT ILLUSTRATED)
20	AT314011	VALVE	1		
21	AT314012	VALVE	1		
24	63H1001	FITTING	2		
25	T78707	NUT	2		30.175 MM
27	T77858	O-RING	5		18.771 X 1.778 MM
28	U12547	O-RING	1		23.470 X 2.946 MM
29	14M7400	LOCK NUT	1		
30	AT313424	HYDRAULIC HOSE - FABRICATE	2		13/16" X 1 550 MM X 13/16"
31	AT322202	OIL LINE	1		
32	AT322203	OIL LINE	1		
33	19M7786	SCREW	2		M10 X 30
34	19M7805	SCREW	1		M10 X 45
35	28H3383	BUSHING	1		0.493" X 0.675" X 3/4"
36	38H1418	FITTING	2		
38	AT223056	HYDRAULIC HOSE - FABRICATE	1		1-7/16" X 1 016 MM X 1-7/16"
39	AT226615	HYDRAULIC HOSE - FABRICATE	2		
40	AT300154	HYDR./PILOT CONTROL VALVE	1		
42	AT314046	VALVE	1		
	AT314013	SEAL KIT	1		
43	U46753	HOSE CLAMP	2		
44	T174275	LOCK WASHER	2		30.950 MM
45	T215434	CLAMP	2		
46	T77858	O-RING	2		18.771 X 1.778 MM
50	**AT314817**	**FIELD INSTALLATION KIT**	**1**		**(WHOLEGOODS) (ADDITION OF AUXILIARY TO POWERLLEL™ LINKAGE TWO LEVER CONTROLLER KIT)**

JOYSTICK WITH AUXILARY TO TWO LEVER WITH AUXILARY CONVERSION KIT
CONVERSION DE MANCHE A BALAI AVEC AUX. A DEUX LEVIERS AVEC AUX. CONVERSION
PALANCA CON AUX. A DOS PALANCAS CON CONVERSION AUX.

TX1015800 -UN-17JAN07

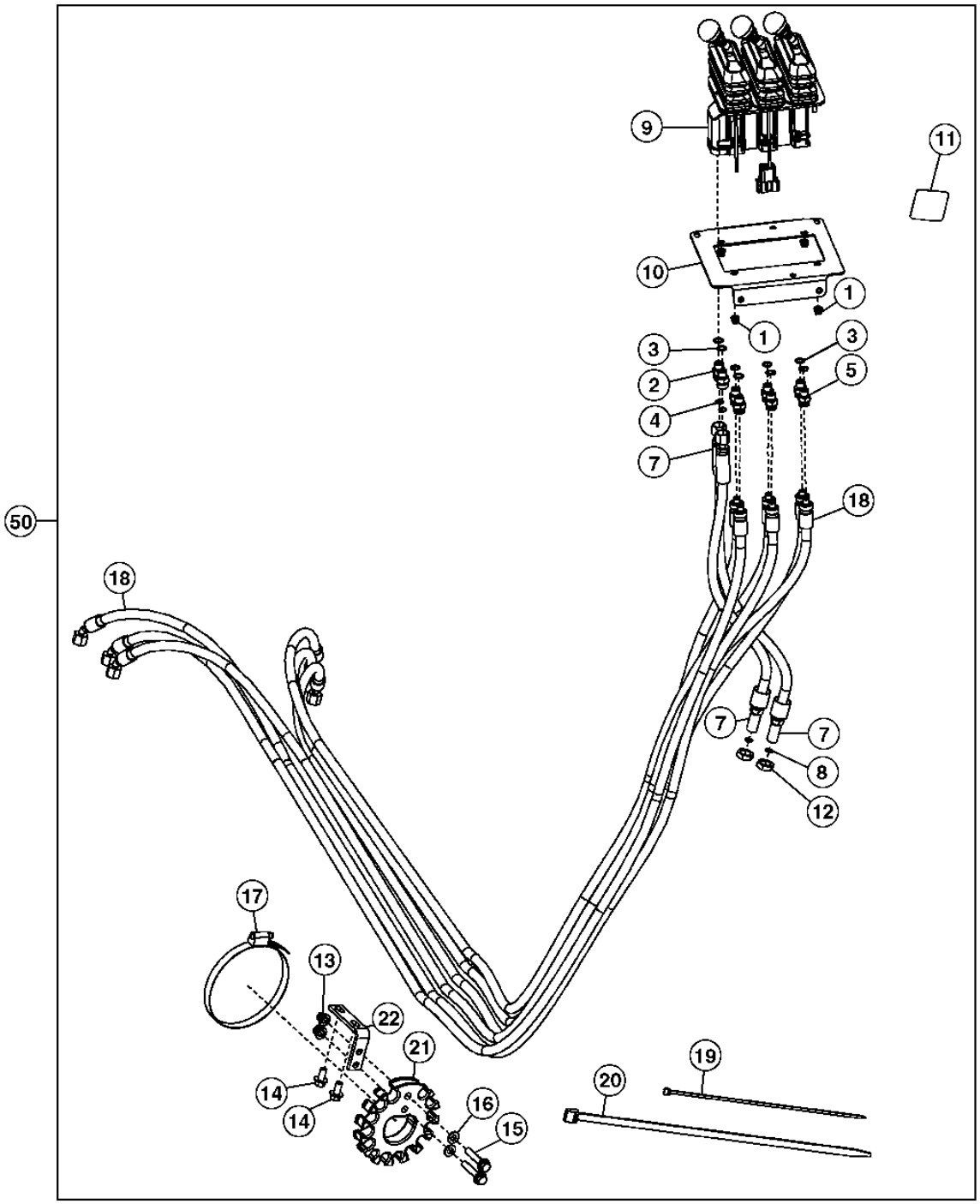

TX1015800

JOYSTICK WITH AUXILARY TO TWO LEVER WITH AUXILARY CONVERSION KIT
CONVERSION DE MANCHE A BALAI AVEC AUX. A DEUX LEVIERS AVEC AUX. CONVERSION
PALANCA CON AUX. A DOS PALANCAS CON CONVERSION AUX.

KEY	*PART NO.*	*PART NAME*	*QTY.*	*SERIAL NO.*	*REMARKS*
1	14M7397	LOCK NUT	4		M6
2	38H1160	ADAPTER FITTING	2		
3	R26448	O-RING	8		
4	T77613	O-RING	2		
5	63H1001	FITTING	6		
7	AT226454	HYDRAULIC HOSE - FABRICATE	2		
8	T77613	O-RING	2		
9	AT300154	HYDR./PILOT CONTROL VALVE	1		(COMPONENTS ON SEPARATE PAGE)
10	AT300156	PLATE	1		
11	T200729	LABEL	1		
12	T81029	NUT	2		
13	14M7400	LOCK NUT	2		M10
14	19M7784	SCREW	2		M10 X 20
15	19M7806	SCREW	2		M10 X 50
16	24M7239	WASHER	2		10.700 X 21 X 2.500 MM
17	TY22493	HOSE CLAMP	1		
18	AT226615	HYDRAULIC HOSE - FABRICATE	6		
19	H77698	TIE BAND	6		
20	N189220	TIE BAND	4		
21	T154342	RETAINER	1		
22	T157443	ANGLE	1		
50	**AT305692**	**FIELD INSTALLATION KIT**	**1**		**(JOYSTICK WITH AUX. TO TWO LEVER WITH AUX. CONVERSION KIT)**

TWO LEVER PILOT CONTROLLER WITH AUXILARY
CONTROLEUR PILOTE DEUX LEVIERS AVEC AUXILIAIRE
CONTROLADOR PILOTO DE DOS PALANCAS CON MANDO AUXILIAR

TX1015824 -UN-21DEC06

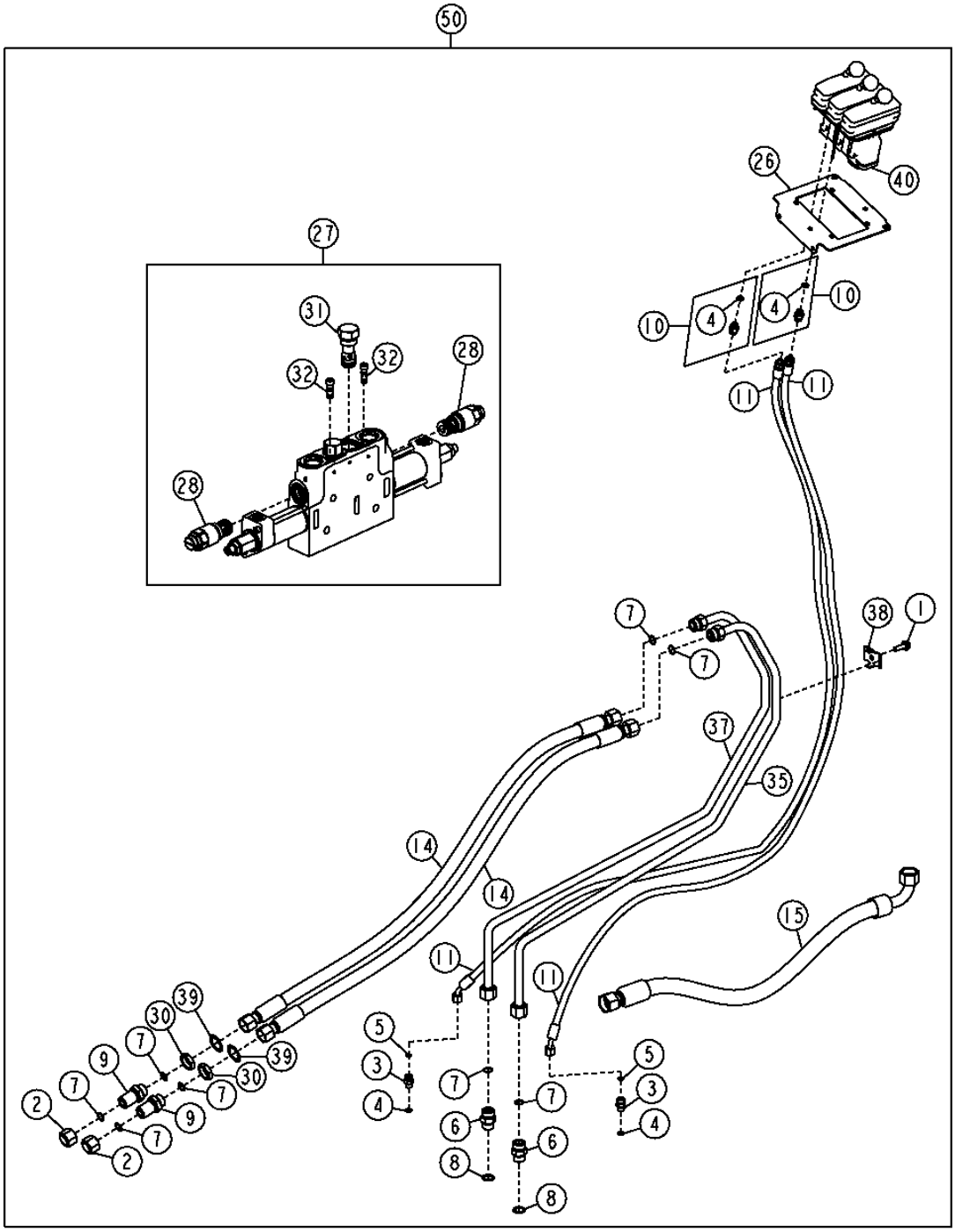

TX1015824

TWO LEVER PILOT CONTROLLER WITH AUXILARY
CONTROLEUR PILOTE DEUX LEVIERS AVEC AUXILIAIRE
CONTROLADOR PILOTO DE DOS PALANCAS CON MANDO AUXILIAR

KEY	*PART NO.*	*PART NAME*	*QTY.*	*SERIAL NO.*	*REMARKS*
1	19M7786	SCREW	2		M10 X 30
2	38H1418	FITTING	2		
3	38H1160	ADAPTER FITTING	1		
4	R26448	O-RING	2		11.887 X 1.981 MM (0.468" X 5/64")
5	T77613	O-RING	1		9.246 X 1.778 MM (0.364" X 0.070")
6	38H1163	ADAPTER FITTING	1		
7	T77858	O-RING	5		18.771 X 1.778 MM (0.739" X 0.070")
8	U12547	O-RING	1		23.470 X 2.946 MM (0.924" X 0.116")
9	38H1276	ADAPTER FITTING	1		
10	63H1001	FITTING	2		
11	AT226615	HYDRAULIC HOSE - FABRICATE	2		
14	AT191285	HYDRAULIC HOSE - FABRICATE	2		1-3/16" X 1 295 MM (51") X 1-3/16"
15	AT223056	HYDRAULIC HOSE - FABRICATE	1		1-7/16" X 1 016 MM (40") X 1-7/16"
26	AT300156	PLATE	1		
27	AT314046	VALVE	1		
28	AT209750	PRESSURE RELIEF VALVE	2		
30	T78707	NUT	2		
31	AT314011	VALVE	1		
32	AT314012	VALVE	1		
35	AT316244	OIL LINE	1		
37	AT316245	OIL LINE	1		
38	T160549	CLAMP	1		
39	T174275	LOCK WASHER	2		30.950 MM (1.219")
40	AT300154	HYDR./PILOT CONTROL VALVE	1		
50	**AT316652**	**FIELD INSTALLATION KIT**	**1**		**(WHOLE GOODS) (ADDITION OF AUX. TO TWO LEVER CONTROLLER KIT)**

JOYSTICK PILOT CONTROLLER WITH AUXILARY
CONTROLEUR PILOTE MANCHE BALAI AVEC AUXILIAIRE
UNIDAD DE CONTROL PILOTO DE LA PALANCA CON MANDO AUXILIAR

TX1014777 -UN-20DEC06

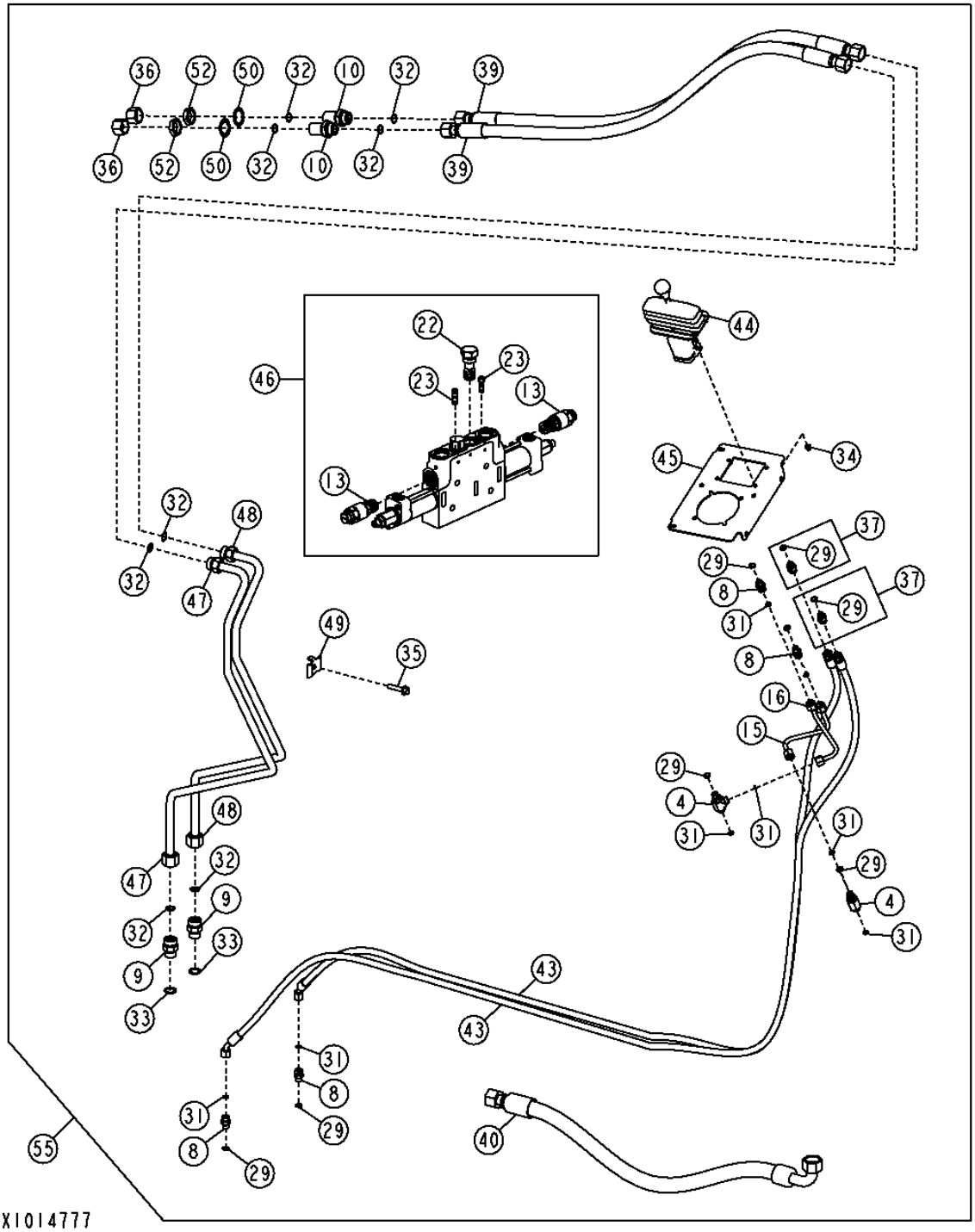

JOYSTICK PILOT CONTROLLER WITH AUXILARY
CONTROLEUR PILOTE MANCHE BALAI AVEC AUXILIAIRE
UNIDAD DE CONTROL PILOTO DE LA PALANCA CON MANDO AUXILIAR

KEY	*PART NO.*	*PART NAME*	*QTY.*	*SERIAL NO.*	*REMARKS*
4	38H1023	TEE FITTING	1		
8	38H1160	ADAPTER FITTING	1		
9	38H1163	ADAPTER FITTING	1		
10	38H1276	ADAPTER FITTING	1		
13	AT209750	PRESSURE RELIEF VALVE	2		
	AT209748	SEAL KIT	1		
15	AT226132	OIL LINE	1		
16	AT226133	OIL LINE	1		
22	AT314011	VALVE	1		
23	AT314012	VALVE	1		
29	R26448	O-RING	5		11.887 X 1.981 MM (0.468" X 5/64")
31	T77613	O-RING	4		9.246 X 1.778 MM (0.364" X 0.070")
32	T77858	O-RING	5		18.771 X 1.778 MM (0.739" X 0.070")
34	14M7397	LOCK NUT	4		M6
35	19M7805	SCREW	1		M10 X 45
36	38H1418	FITTING	2		
37	63H1001	FITTING	2		
39	AT191285	HYDRAULIC HOSE - FABRICATE	2		1-3/16" X 1 295 MM (51") X 1-3/16"
40	AT223056	HYDRAULIC HOSE - FABRICATE	1		1-7/16" X 1 016 MM (40") X 1-7/16"
43	AT226615	HYDRAULIC HOSE - FABRICATE	2		
44	AT228250	HYDR./PILOT CONTROL VALVE	1		
45	AT228261	PLATE	1		
46	AT314046	VALVE	1		
	AT314013	SEAL KIT	1		
47	AT316244	OIL LINE	1		
48	AT316245	OIL LINE	1		
49	T160549	CLAMP	1		
50	T174275	LOCK WASHER	2		30.950 MM (1.219")
52	T78707	NUT	2		30.175 MM (1-3/16")
55	**AT316650**	**FIELD INSTALLATION KIT**	**1**		**(ADDITION OF AUX.UX. TO JOYSTICK CONTROLLER KIT)**

JOYSTICK PILOT CONTROLLER WITH AUXILARY (POWERLLEL™)
CONTROLEUR PILOTE MANCHE BALAI AVEC AUXILIAIRE
UNIDAD DE CONTROL PILOTO DE LA PALANCA CON MANDO AUXILIAR

TX1015945 -UN-14DEC06

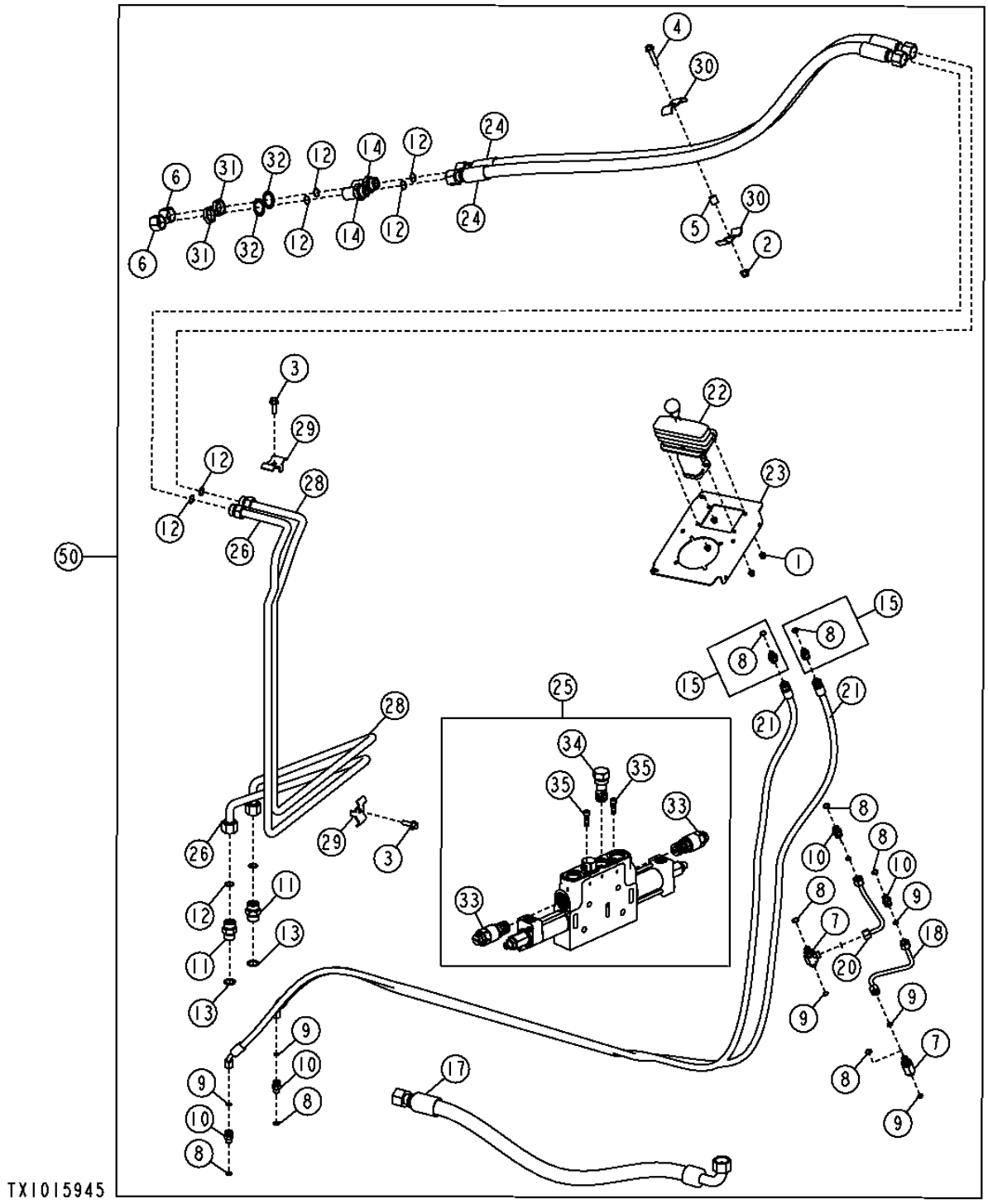

JOYSTICK PILOT CONTROLLER WITH AUXILARY (POWERLLEL™)
CONTROLEUR PILOTE MANCHE BALAI AVEC AUXILIAIRE
UNIDAD DE CONTROL PILOTO DE LA PALANCA CON MANDO AUXILIAR

KEY	PART NO.	PART NAME	QTY.	SERIAL NO.	REMARKS
1	14M7397	LOCK NUT	4		M6
2	14M7400	LOCK NUT	1		M10
3	19M7786	SCREW	2		M10 X 30
4	19M7805	SCREW	1		M10 X 45
5	28H3383	BUSHING	1		0.493" X 0.675" X 3/4"
6	38H1418	FITTING	2		
7	38H1023	TEE FITTING	1		
8	R26448	O-RING	3		11.887 X 1.981 MM (0.468" X 5/64")
9	T77613	O-RING	3		9.246 X 1.778 MM (0.364" X 0.070")
10	38H1160	ADAPTER FITTING	1		
11	38H1163	ADAPTER FITTING	1		
12	T77858	O-RING	5		18.771 X 1.778 MM (0.739" X 0.070")
13	U12547	O-RING	1		23.470 X 2.946 MM (0.924" X 0.116")
14	38H1276	ADAPTER FITTING	1		
15	63H1001	FITTING	2		
16	AT209749	ROD	4		(NOT ILLUSTRATED)
17	AT223056	HYDRAULIC HOSE - FABRICATE	1		1-7/16" X 1 016 MM (40") X 1-7/16"
18	AT226132	OIL LINE	1		
20	AT226133	OIL LINE	1		
21	AT226615	HYDRAULIC HOSE - FABRICATE	2		
22	**AT228250**	**HYDR./PILOT CONTROL VALVE**	**1**		
23	AT228261	PLATE	1		
24	AT313424	HYDRAULIC HOSE - FABRICATE	2		13/16" X 1 550 MM (61") X 13/16"
25	AT314046	VALVE	1		
	AT314013	SEAL KIT	1		
26	AT322202	OIL LINE	1		
28	AT322203	OIL LINE	1		
29	T215434	CLAMP	2		
30	U46753	HOSE CLAMP	2		
31	T78707	NUT	2		
32	T174275	LOCK WASHER	2		
33	AT209750	PRESSURE RELIEF VALVE	2		
	AT209748	SEAL KIT	1		
34	AT314011	VALVE	1		
35	AT314012	VALVE	1		
	AT314021	HYDRAULIC CYLINDER CAP	1		
50	**AT314647**	**FIELD INSTALLATION KIT**	**1**		**(ADDITION OF AUX. TO POWERLLEL™ LINKAGE JOYSTICK CONTROLLER KIT)**

DUAL JOYSTICK PILOT CONTROLLER
CONTROLEUR PILOTE MANCHE A BALAI DOUBLE
UNIDAD DE CONTROL PILOTO CON PALANCA DOBLE

TX1014778 -UN-05DEC06

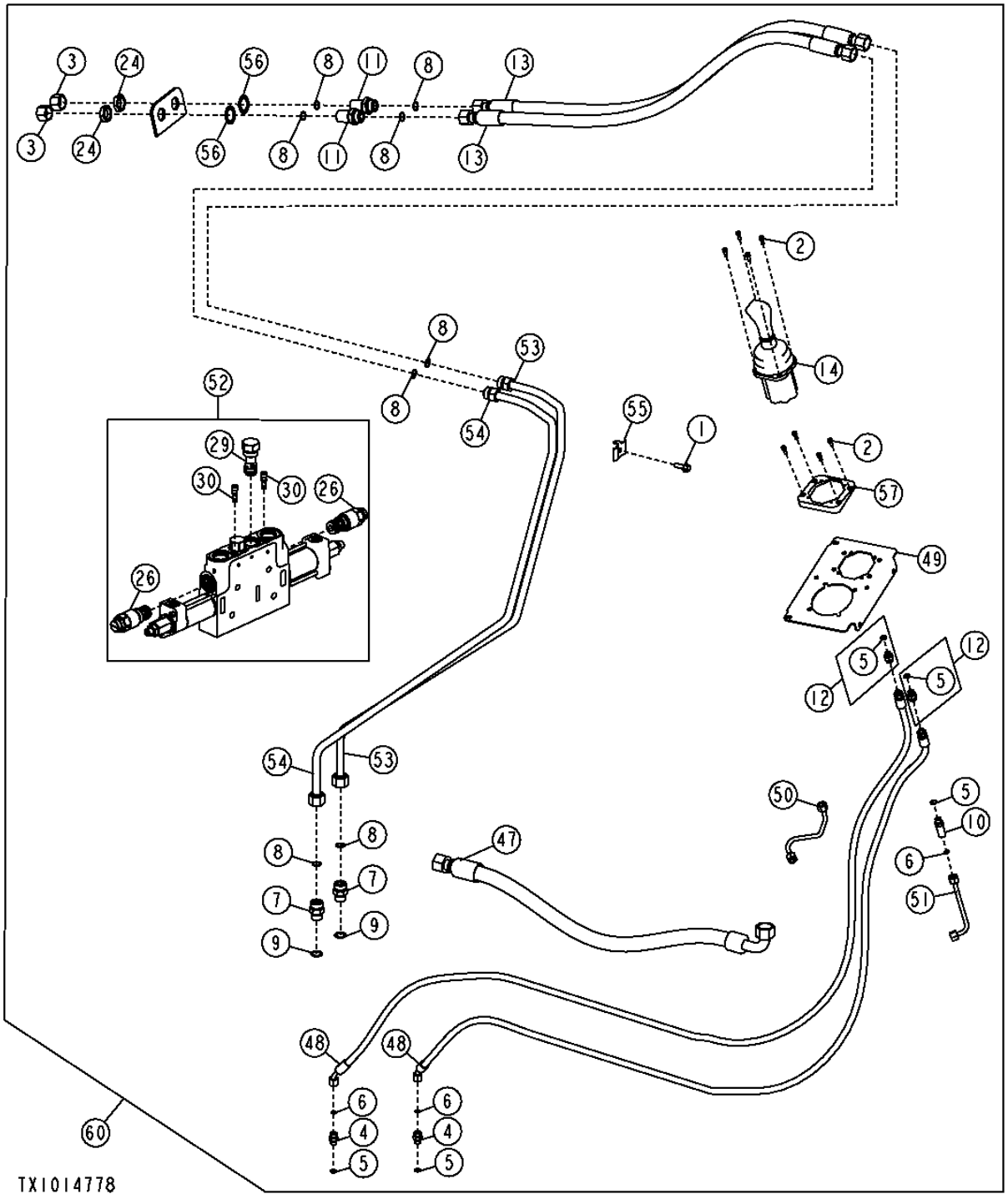

THIS PARTS LISTING IS CONTINUED

DUAL JOYSTICK PILOT CONTROLLER
CONTROLEUR PILOTE MANCHE A BALAI DOUBLE
UNIDAD DE CONTROL PILOTO CON PALANCA DOBLE

KEY	*PART NO.*	*PART NAME*	*QTY.*	*SERIAL NO.*	*REMARKS*
1	19M7786	SCREW	1		M10 X 30
2	19M8553	SCREW	8		M6 X 16
3	38H1418	FITTING	2		
4	38H1160	ADAPTER FITTING	1		
5	R26448	O-RING	3		11.887 X 1.981 MM (0.468" X 5/64")
6	T77613	O-RING	2		9.246 X 1.778 MM (0.364" X 0.070")
7	38H1163	ADAPTER FITTING	1		
8	T77858	O-RING	3		18.771 X 1.778 MM (0.739" X 0.070")
9	U12547	O-RING	1		23.470 X 2.946 MM (0.924" X 0.116")
10	38H1212	ADAPTER FITTING	1		
11	38H1276	ADAPTER FITTING	1		
12	63H1001	FITTING	2		
13	AT191285	HYDRAULIC HOSE - FABRICATE	2		1-3/16" X 1 295 MM (51") X 1-3/16"
14	AT208760	ELECTRONIC CONTROL UNIT	1		
24	T78707	NUT	2		30.175 MM (1-3/16")
26	AT209750	PRESSURE RELIEF VALVE	2		
	AT209748	SEAL KIT	1		
29	AT314011	VALVE	1		
30	AT314012	VALVE	1		
47	AT223056	HYDRAULIC HOSE - FABRICATE	1		1-7/16" X 1 016 MM (40") X 1-7/16"
48	AT226615	HYDRAULIC HOSE - FABRICATE	2		
49	AT228260	PLATE	1		
50	AT304880	OIL LINE	1		
51	AT304881	OIL LINE	1		
52	AT314046	VALVE	1		
	AT314013	SEAL KIT	1		
53	AT316246	OIL LINE	1		
54	AT316247	OIL LINE	1		
55	T160549	CLAMP	1		
56	T174275	LOCK WASHER	2		30.950 MM (1.219")
57	T201887	SPACER	1		
60	**AT316651**	**FIELD INSTALLATION KIT**	**1**		**(WHOLE GOODS) (ADDITION OF AUX. JOYSTICK TO JOYSTICK CONTROLLER KIT)**

DUAL JOYSTICK PILOT CONTROLLER (POWERLLEL™)
CONTROLEUR PILOTE MANCHE A BALAI DOUBLE
UNIDAD DE CONTROL PILOTO CON PALANCA DOBLE

TX1015868 -UN-18DEC06

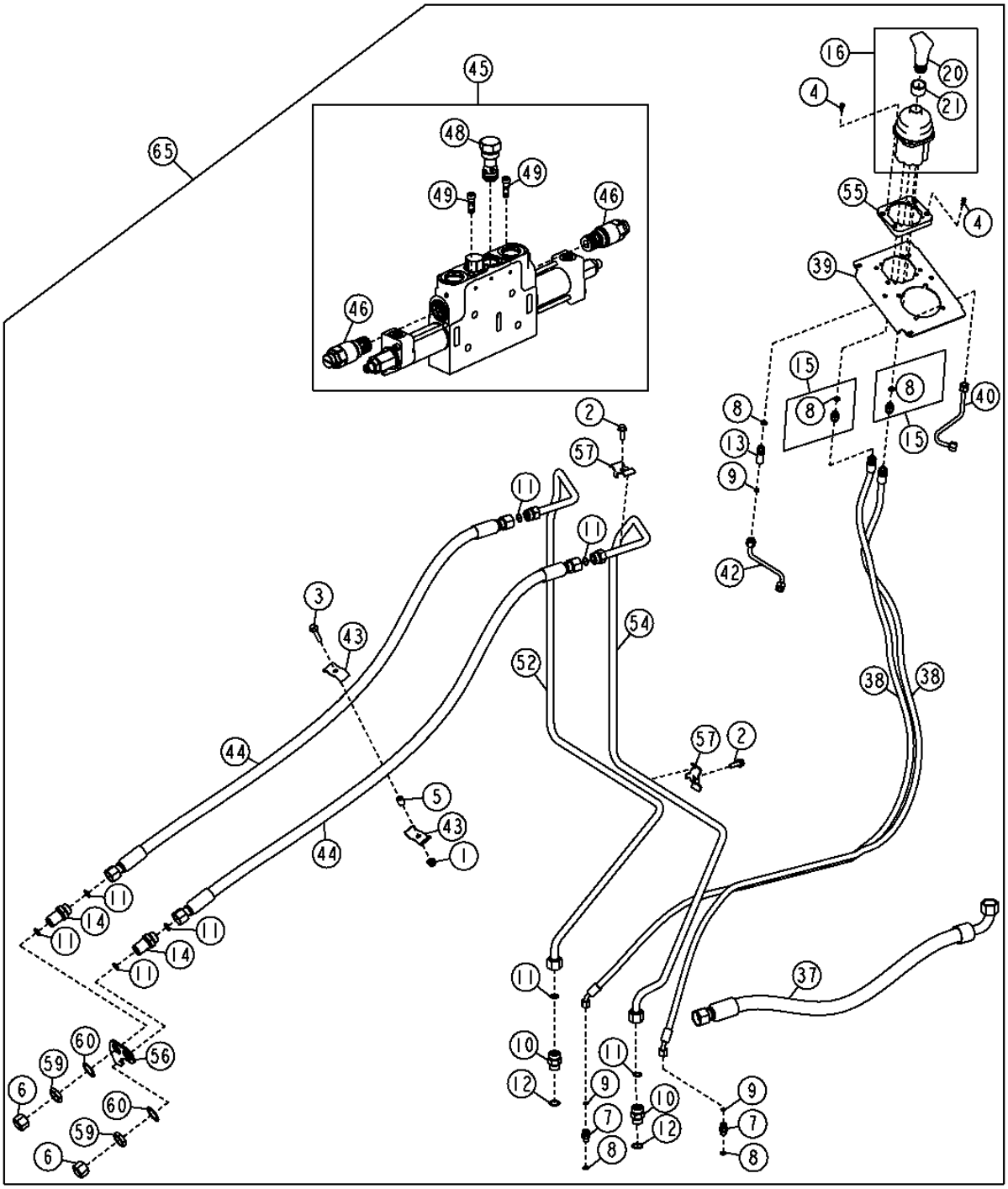

THIS PARTS LISTING IS CONTINUED

DUAL JOYSTICK PILOT CONTROLLER (POWERLLEL™)
CONTROLEUR PILOTE MANCHE A BALAI DOUBLE
UNIDAD DE CONTROL PILOTO CON PALANCA DOBLE

KEY	*PART NO.*	*PART NAME*	*QTY.*	*SERIAL NO.*	*REMARKS*
1	14M7400	LOCK NUT	1		M10
2	19M7786	SCREW	2		M10 X 30
3	19M7805	SCREW	1		M10 X 45
4	19M8553	SCREW	8		M6 X 16
5	28H1697	SPACER	1		12.522 X 17.145 X 19.050 MM (0.493" X 0.675" X 3/4")
6	38H1418	FITTING	2		
7	38H1160	ADAPTER FITTING	1		
8	R26448	O-RING	4		11.887 X 1.981 MM (0.468" X 5/64")
9	T77613	O-RING	2		9.246 X 1.778 MM (0.364" X 0.070")
10	38H1163	ADAPTER FITTING	1		
11	T77858	O-RING	3		18.771 X 1.778 MM (0.739" X 0.070")
12	U12547	O-RING	1		23.470 X 2.946 MM (0.924" X 0.116")
13	38H1212	ADAPTER FITTING	1		
14	38H1276	ADAPTER FITTING	1		
15	63H1001	FITTING	2		
16	AT208760	ELECTRONIC CONTROL UNIT	1		
20	AT172629	GRIP	2		
21	AT208911	RETAINER	1		
37	AT223056	HYDRAULIC HOSE - FABRICATE	1		1-7/16" X 1 016 MM (40") X 1-7/16"
38	AT226615	HYDRAULIC HOSE - FABRICATE	2		
39	AT228260	PLATE	1		
40	AT304880	OIL LINE	1		
42	AT304881	OIL LINE	1		
43	U46753	HOSE CLAMP	2		
44	AT313424	HYDRAULIC HOSE - FABRICATE	2		13/16" X 1 550 MM (61") X 13/16"
45	AT314046	VALVE	1		
	AT314013	SEAL KIT	1		
46	AT209750	PRESSURE RELIEF VALVE	2		
	AT209748	SEAL KIT	1		
48	AT314011	VALVE	1		
49	AT314012	VALVE	1		
52	AT322416	OIL LINE	1		
54	AT322442	OIL LINE	1		
55	T201887	SPACER	1		
56	T210447	PLATE	1		
57	T215434	CLAMP	2		
59	T78707	NUT	2		30.175 MM (1-3/16")
60	T174275	LOCK WASHER	2		30.950 MM (1.219")
65	**AT314764**	**FIELD INSTALLATION KIT**	**1**		**(WHOLE GOODS) (ADDITION OF AUX. JOYSTICK TO POWERLLEL™ LINKAGE JOYSTICK CONTROLLER KIT)**

RIDE CONTROL VALVE

T195623 -UN-22OCT03

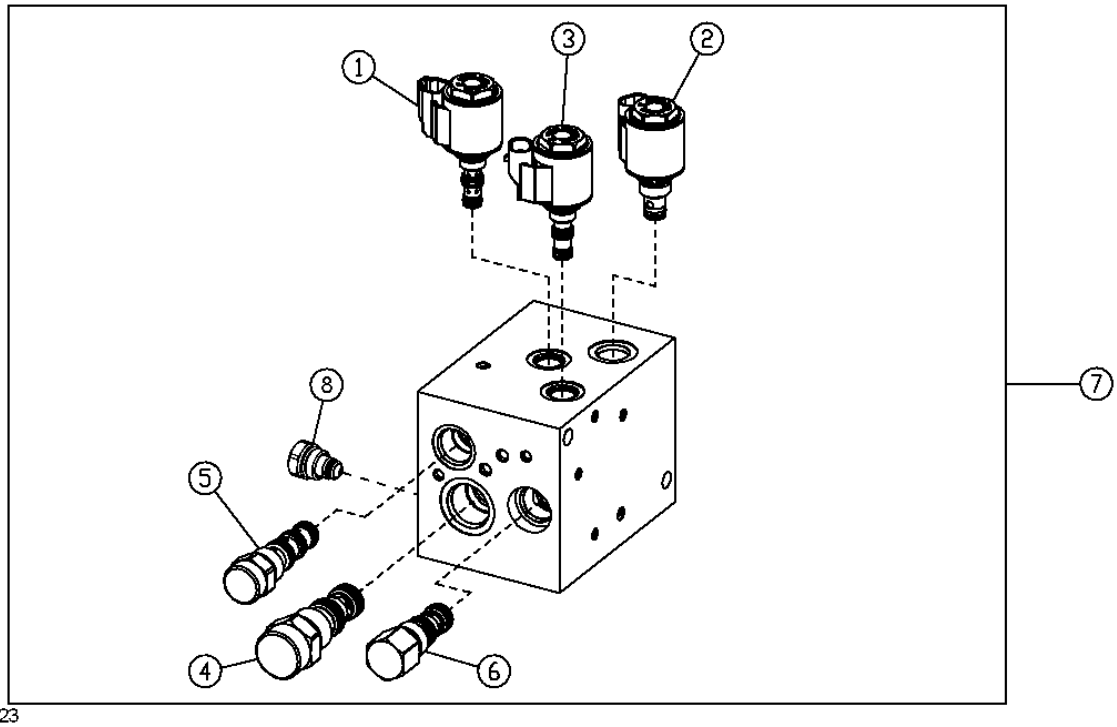

T195623

RIDE CONTROL VALVE

KEY	PART NO.	PART NAME	QTY.	SERIAL NO.	REMARKS
1	AT224866	SOLENOID VALVE	1		
	AT224706	SEAL KIT	1		
	AT224865	SOLENOID VALVE COIL	1		
	T181306	NUT	1		
2	AT224573	SOLENOID VALVE	1		
	AT224574	SOLENOID VALVE COIL	1		
	AT224862	SEAL KIT	1		
	T181306	NUT	1		
3	AT224705	FLOW CONTROL HYD. VALVE	1		
	AT224574	SOLENOID VALVE COIL	1		
	AT224706	SEAL KIT	1		
	T181306	NUT	1		
4	AT224867	FLOW CONTROL HYD. VALVE	1		
	AT224868	SEAL KIT	1		
5	AT225082	FLOW CONTROL HYD. VALVE	1		
	AT225083	SEAL KIT	1		
6	AT225084	FLOW CONTROL HYD. VALVE	1		
	AT225085	SEAL KIT	1		
	AT316532	KIT	1		(LOCKDOWN KIT)
7	**AT332291**	**HYD ACTUATED CONTROL VALVE**	**1**		
8	AN207183	CHECK VALVE	2		
	AN207184	SEAL KIT	1		

RIDE CONTROL AND HYDRAULIC HOSES
COMMANDE DE SUSPENSION ET FLEXIBLES HYDRAULIQUES
CONTROL DE SUSPENSION Y MANGUERAS HIDRAULICAS

TX1009703 -UN-12JUL06

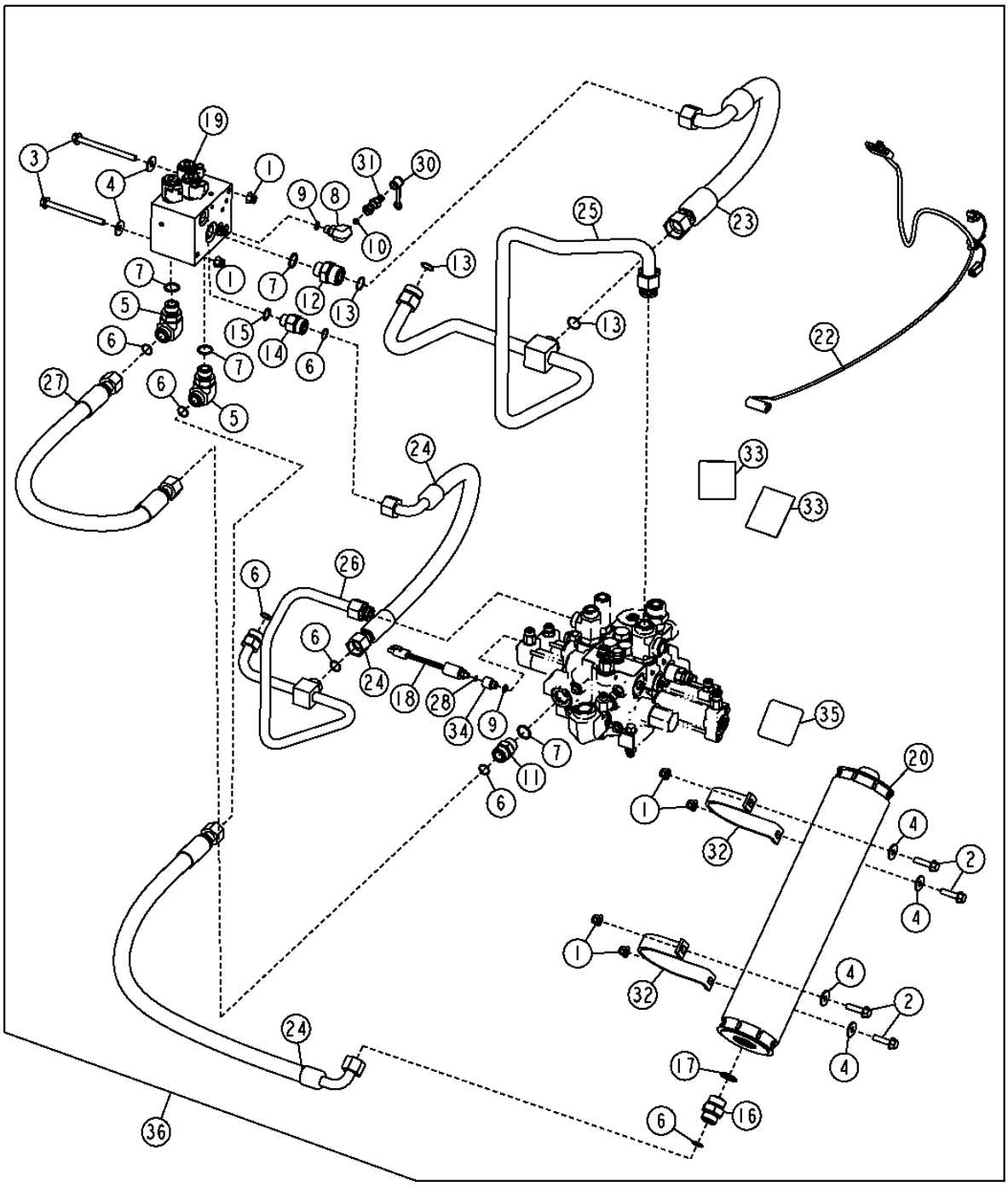

THIS PARTS LISTING IS CONTINUED

RIDE CONTROL AND HYDRAULIC HOSES
COMMANDE DE SUSPENSION ET FLEXIBLES HYDRAULIQUES
CONTROL DE SUSPENSION Y MANGUERAS HIDRAULICAS

KEY	*PART NO.*	*PART NAME*	*QTY.*	*SERIAL NO.*	*REMARKS*
1	14M7400	LOCK NUT	6		M10
2	19M7804	SCREW	4		M10 X 40
3	19M7898	SCREW	2		M10 X 130
4	24M7296	WASHER	6		10.500 X 30 X 2.500 MM
5	38H1007	ELBOW FITTING	1		
6	T77858	O-RING	6		
7	U12547	O-RING	4		
8	38H1009	ELBOW FITTING	1		
9	R26448	O-RING	2		
10	T77814	O-RING	1		
11	38H1163	ADAPTER FITTING	1		
12	38H1179	ADAPTER FITTING	1		
13	T76938	O-RING	3		
14	38H1193	ADAPTER FITTING	1		
15	R26906	O-RING	1		
16	38H1194	ADAPTER FITTING	1		
17	R29936	O-RING	1		
18	AT223535	PRESSURE SWITCH	1		(PRESSURE) (STD)
19	AT332291	HYD ACTUATED CONTROL VALVE	1		(RIDE CONTROL VALVE)
20	AT227717	HYDRAULIC ACCUMULATOR	1		(ALSO ORDER T180944 LABEL) (PRECHARGE TO 285 PSI)
	AT196760	KIT	1		(ACCUMULATOR REPAIR)
22	AT224600	WIRING HARNESS	1		(RIDE CONTROL HARNESS)
23	AT225446	HYDRAULIC HOSE - FABRICATE	1		
24	AT228199	HYDRAULIC HOSE - FABRICATE	2		
25	AT308419	OIL LINE	1		
26	AT308477	OIL LINE	2		
27	AT308533	HYDRAULIC HOSE	1		
28	R26287	O-RING	1		
30	R77175	COVER	1		
31	RE60700	DIAGNOSTIC COUPLING	1		
32	T146490	CLAMP	2		
33	T146792	SAFETY SIGN	2		(ACCUMULATOR WARNING)
34	T158047	ADAPTER FITTING	1		
35	T180944	LABEL	1		
36	**AT314600**	**FIELD INSTALLATION KIT**	**1**		

PIN AND AXLE DISCONNECT VALVE COMPONENTS

T197201 -UN-07JAN04

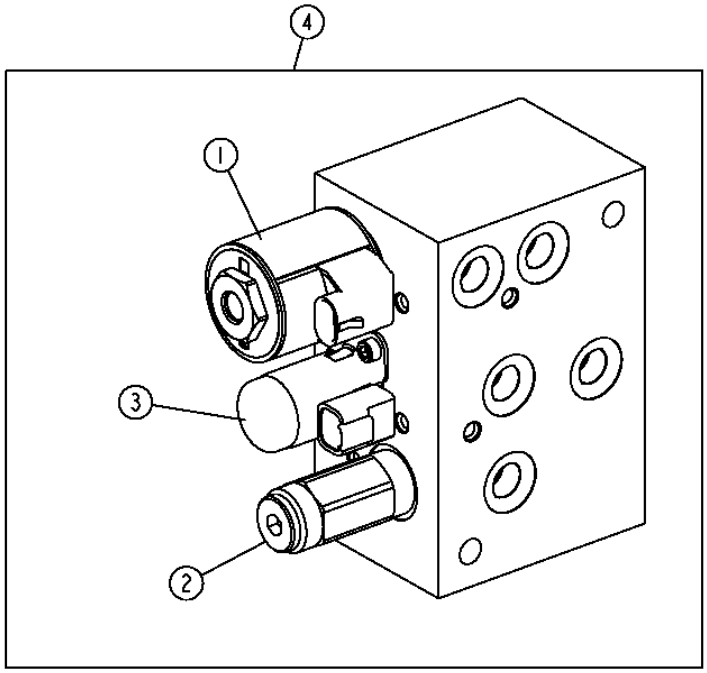

T197201

PIN AND AXLE DISCONNECT VALVE COMPONENTS

KEY	*PART NO.*	*PART NAME*	*QTY.*	*SERIAL NO.*	*REMARKS*
1	AT224703	SOLENOID VALVE COIL	1		
	AT226266	SOLENOID VALVE	1		
	AT225083	SEAL KIT	1		SOLENOID VALVE
2	AT226265	HYDRAULIC PRESSURE VALVE	1		
	AT225085	SEAL KIT	1		PRESSURE REDUCING VALVE
3	AT303799	VALVE	1		AXLE DISCONNECT CARTRIDGE
	AT224873	SEAL KIT	1		(AXLE DISCONNECT CARTRIDGE VALVE)
4	**AT225529**	**HYD ACTUATED CONTROL VALVE**	**1**		**PIN AND AXLE DISCONNECT**
	AT225530	**HYD ACTUATED CONTROL VALVE**	**1**		**PIN DISCONNECT**

PIN AND AXLE DISCONNECT VALVE AND HYDRAULIC HOSES
FLEXIBLES HYDRAULIQUES ET SOUPAPE RACCORD RAPIDE AXE ET ESSIEU
PASADOR, VALVULA DE DESCONEXION DEL EJE Y MANGUERAS HIDRAULICAS

T202068 -UN-12AUG04

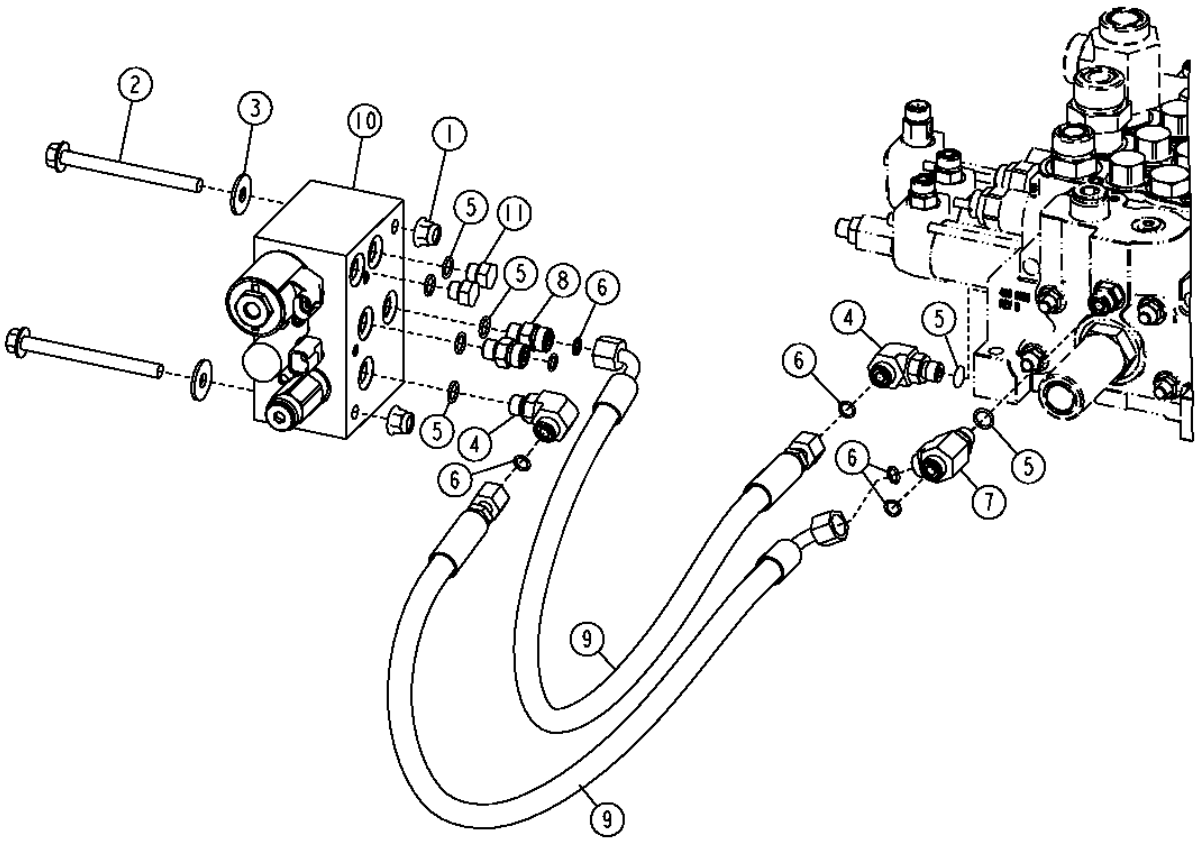

T202068

PIN AND AXLE DISCONNECT VALVE AND HYDRAULIC HOSES
FLEXIBLES HYDRAULIQUES ET SOUPAPE RACCORD RAPIDE AXE ET ESSIEU
PASADOR, VALVULA DE DESCONEXION DEL EJE Y MANGUERAS HIDRAULICAS

KEY	*PART NO.*	*PART NAME*	*QTY.*	*SERIAL NO.*	*REMARKS*
1	14M7400	LOCK NUT	2		M10
2	19M7836	SCREW	2		M10 X 110
3	24M7296	WASHER	2		10.500 X 30 X 2.500 MM
4	38H1004	ELBOW FITTING	2		
5	R26448	O-RING	9		
6	T77613	O-RING	7		
7	38H1023	TEE FITTING	1		
8	38H1160	ADAPTER FITTING	3		
9	AT167553	HYDRAULIC HOSE - FABRICATE	2		11/16" X 630 MM X 11/16"
10	AT225529	HYD ACTUATED CONTROL VALVE	1		(COMPONENTS LISTED ON ANOTHER PAGE)
	AT225530	HYD ACTUATED CONTROL VALVE	1		PIN DISCONNECT
11	R27218	FITTING PLUG	3		

PIN DISCONNECT HYDRAULIC LINES (FOR USE WITH HIGH LIFT Z-BAR LINKAGE)
CONDUITES HYDRAULIQUES RACCORD RAPIDE AXE (UTILISER AVEC TRINGLERIE CINEMATIQUE EN Z)
LINEAS HIDRAULICAS DESCONEXION PASADOR (PARA USO CON VARILLAJE BARRA EN Z)

TX1017314 -UN-10JAN07

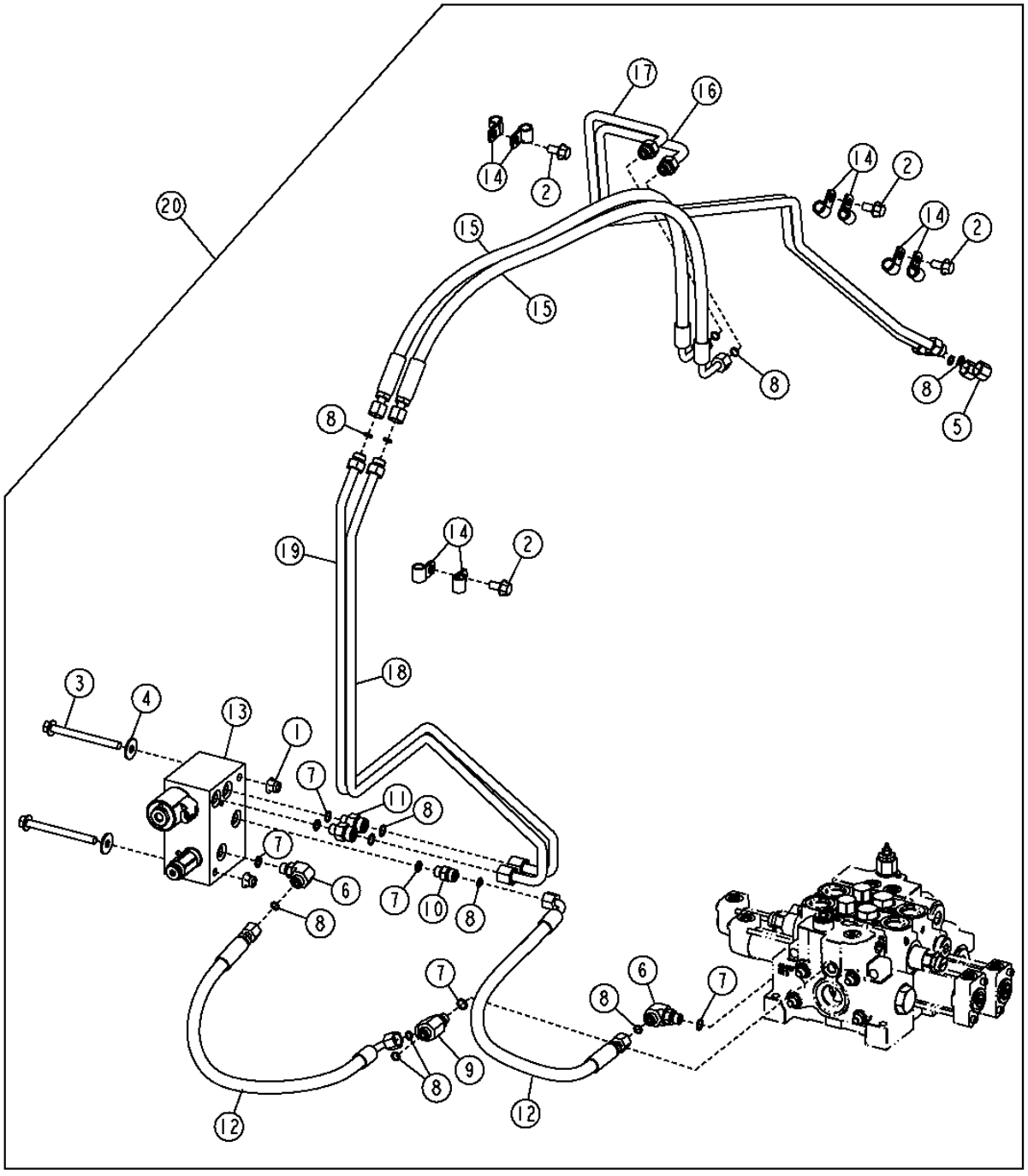

THIS PARTS LISTING IS CONTINUED

PIN DISCONNECT HYDRAULIC LINES (FOR USE WITH HIGH LIFT Z-BAR LINKAGE)
CONDUITES HYDRAULIQUES RACCORD RAPIDE AXE (UTILISER AVEC TRINGLERIE CINEMATIQUE EN Z)
LINEAS HIDRAULICAS DESCONEXION PASADOR (PARA USO CON VARILLAJE BARRA EN Z)

KEY	*PART NO.*	*PART NAME*	*QTY.*	*SERIAL NO.*	*REMARKS*
1	14M7400	LOCK NUT	2		M10
2	19M7784	SCREW	4		M10 X 20
3	19M7836	SCREW	2		M10 X 110
4	24M7296	WASHER	2		10.500 X 30 X 2.500 MM
5	38H1415	FITTING	2		
6	38H1004	ELBOW FITTING	2		
7	R26448	O-RING	6		11.887 X 1.981 MM (0.468" X 5/64")
8	T77613	O-RING	11		9.246 X 1.778 MM (0.364" X 0.070")
9	38H1023	TEE FITTING	1		
10	38H1160	ADAPTER FITTING	1		
11	38H1173	ADAPTER FITTING	2		
12	AT167553	HYDRAULIC HOSE - FABRICATE	2		11/16" X 630 MM (24-3/4") X 11/16"
13	AT225530	HYD ACTUATED CONTROL VALVE	1		
14	H75541	CLAMP	8		
15	AT301930	HYDRAULIC HOSE - FABRICATE	2		11/16" X 1 118 MM (44") X 11/16"
16	AT308841	OIL LINE	1		
17	AT308842	OIL LINE	1		
18	AT311093	OIL LINE	1		
19	AT311094	OIL LINE	1		
20	**AT317014**	**MOUNTING PARTS**	**1**		

BOOM TO COUPLER PIN DISCONNECT HYDRAULIC HOSES
FLEXIBLES HYDRAULIQUES DECONNEXION FLECHE AXE ACCOUPLEMENT
AGUILON MANGUERAS HIDRAULICAS DESCONEXION PASADOR ACOPLADOR

TX1015098 -UN-27NOV06

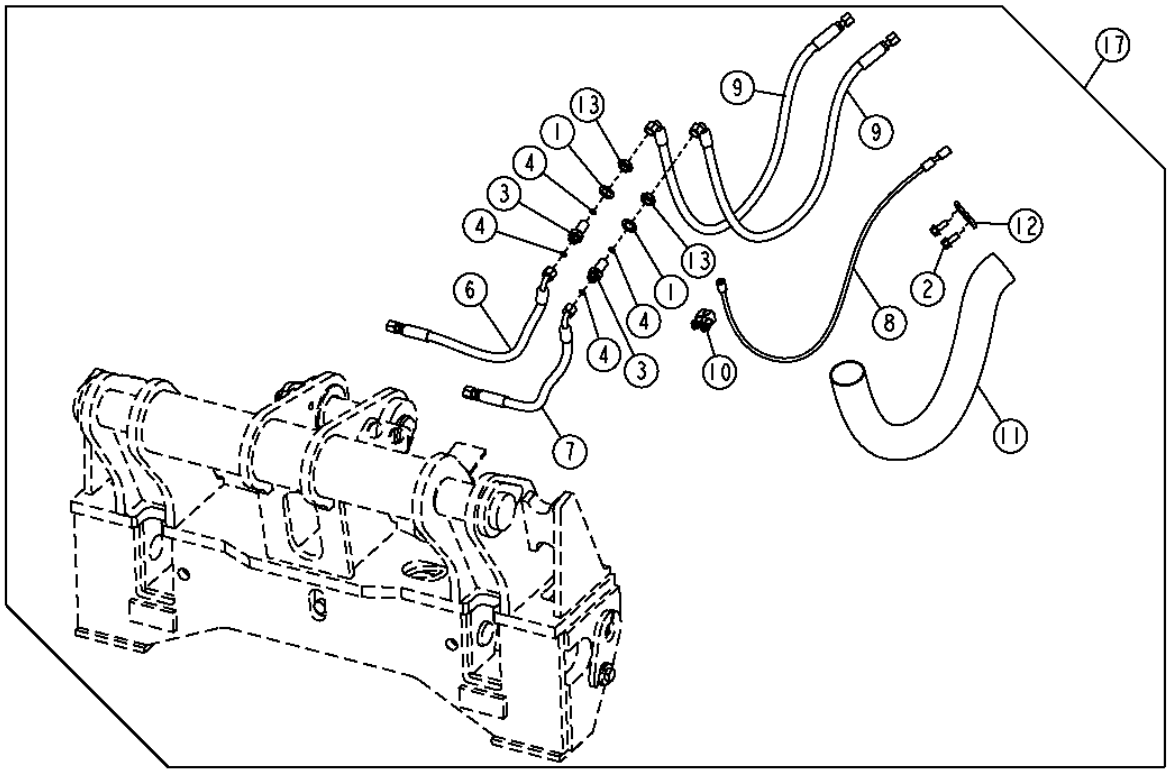

TX1015098

BOOM TO COUPLER PIN DISCONNECT HYDRAULIC HOSES
FLEXIBLES HYDRAULIQUES DECONNEXION FLECHE AXE ACCOUPLEMENT
AGUILON MANGUERAS HIDRAULICAS DESCONEXION PASADOR ACOPLADOR

KEY	*PART NO.*	*PART NAME*	*QTY.*	*SERIAL NO.*	*REMARKS*
1	12H327	LOCK WASHER	2		3/4"
2	19M7785	SCREW	2		M10 X 25
3	38H1285	UNION FITTING	1		
4	T77613	O-RING	2		9.246 X 1.778 MM
6	AT336825	HYDRAULIC HOSE - FABRICATE	1		11/16" X 18" X 11/16"
7	AT336826	HYDRAULIC HOSE - FABRICATE	1		11/16" X 20-1/4" X 11/16"
8	AT336880	CABLE	1		
	AT336881	CABLE	1		(HIGH LIFT)
9	AT336883	HYDRAULIC HOSE - FABRICATE	2		
	AT336882	HYDRAULIC HOSE - FABRICATE	2		11/16" X 50-1/2" X 11/16", (HIGH LIFT)
10	AT62123	CLAMP	1		
11	.....	HOSE GUARD	AR		(FURNISH PARKER PG-188) (CUT TO 30 INCHES)
	.....	HOSE GUARD	AR		(HIGH LIFT) (FURNISH PARKER PG-188) (CUT TO 45 INCHES)
12	T204315	PLATE	1		
13	T81029	NUT	2		11/16"
17	**AT336884**	**KIT**	**1**		**(WHOLEGOODS)**
	AT336885	**KIT**	**1**		**(FOR USE WITH HIGH LIFT MODELS ONLY) (WHOLEGOODS)**

PIN DISCONNECT HYDRAULIC LINES (FOR USE WITH POWERLLEL™ LINKAGE)
CONDUITES HYDRAULIQUES RACCORD RAPIDE AXE (A UTILISER AVEC TRINGLERIE POWERLLEL™)
LINEAS HIDRAULICAS DE DESCONEXION DEL PASADOR (PARA USO CON VARILLAJE POWERLLEL™)

T204013 -UN-15OCT04

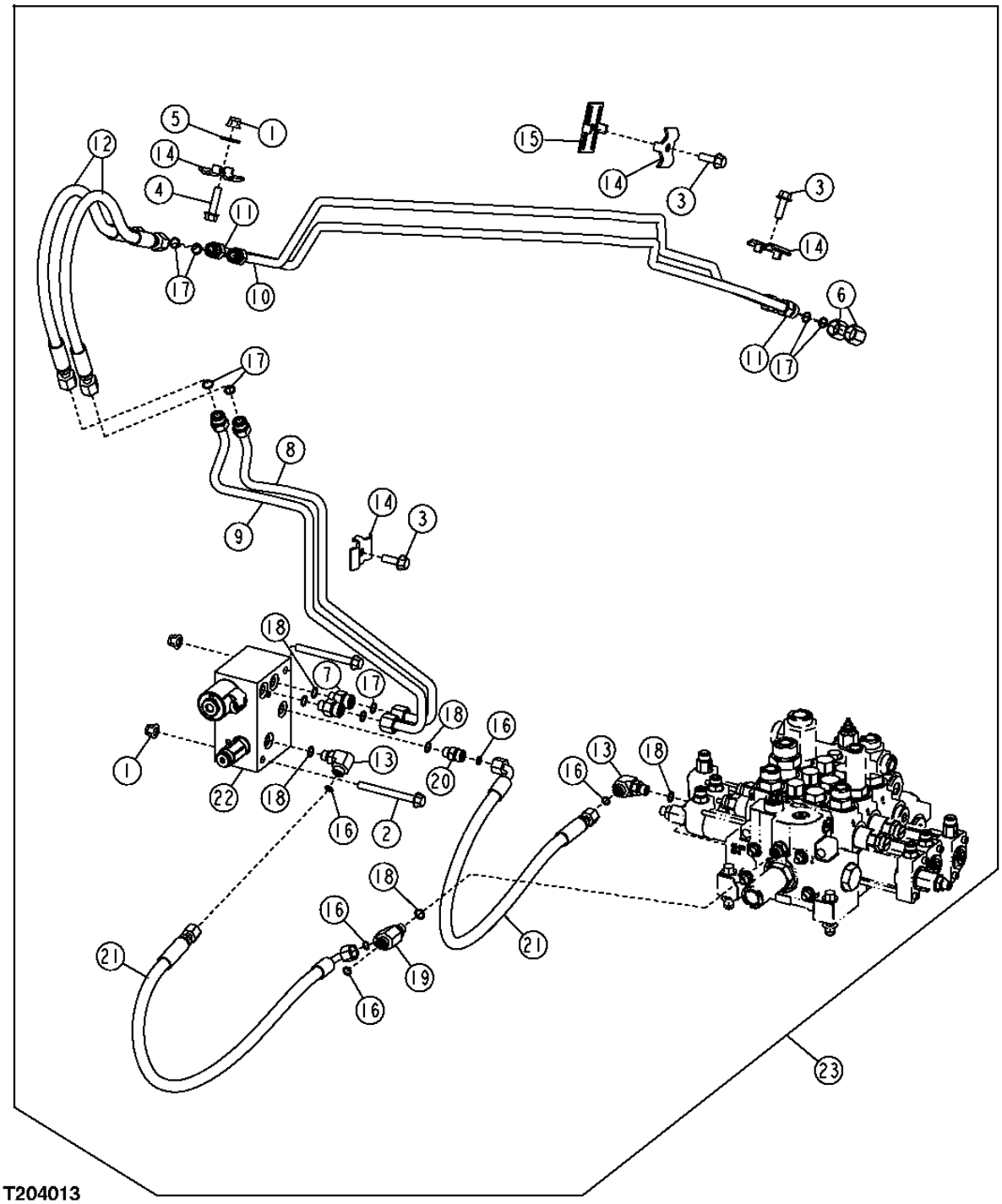

PIN DISCONNECT HYDRAULIC LINES (FOR USE WITH POWERLLEL™ LINKAGE)
CONDUITES HYDRAULIQUES RACCORD RAPIDE AXE (A UTILISER AVEC TRINGLERIE POWERLLEL™)
LINEAS HIDRAULICAS DE DESCONEXION DEL PASADOR (PARA USO CON VARILLAJE POWERLLEL™)

KEY	*PART NO.*	*PART NAME*	*QTY.*	*SERIAL NO.*	*REMARKS*
1	14M7400	LOCK NUT	3		M10
2	19M7812	SCREW	2		M10 X 100
3	19M7786	SCREW	3		M10 X 30
4	19M7804	SCREW	1		M10 X 40
5	24M7296	WASHER	1		10.500 X 30 X 2.500 MM
6	38H1416	FITTING	2		
7	38H1173	ADAPTER FITTING	2		
8	AT308487	OIL LINE	1		
9	AT308488	OIL LINE	1		
10	AT315833	OIL LINE	1		
11	AT315834	OIL LINE	1		
12	AT316085	HYDRAULIC HOSE - FABRICATE	2		13/16" X 775 MM (30-1/2") X 13/16"
13	38H1004	ELBOW FITTING	2		
14	T159950	CLAMP	4		
15	T159956	CLAMP	1		
16	T77613	O-RING	5		9.246 X 1.778 MM (0.364" X 0.070")
17	T77857	O-RING	8		12.421 X 1.778 MM (0.489" X 0.070")
18	R26448	O-RING	6		11.887 X 1.981 MM (0.468" X 5/64")
19	38H1023	TEE FITTING	1		
20	38H1160	ADAPTER FITTING	1		
21	AT167553	HYDRAULIC HOSE - FABRICATE	2		11/16" X 630 MM (24-3/4") X 11/16"
22	AT225530	HYD ACTUATED CONTROL VALVE	1		(COMPONENTS LISTED ON SEPARATE PAGE)
23	**AT337311**	**KIT**	**1**		**(PIN DISCONNECT) (WHOLEGOODS)**

SINGLE AUXILIARY CONTROLLER COMPONENTS
COMPOSANTS CONTROLEUR AUXILIAIRE SIMPLE ET DOUBLE
COMPONENTES DE UNIDAD DE CONTROL AUXILIAR SIMPLE Y DOBLE

TX1015999 -UN-14DEC06

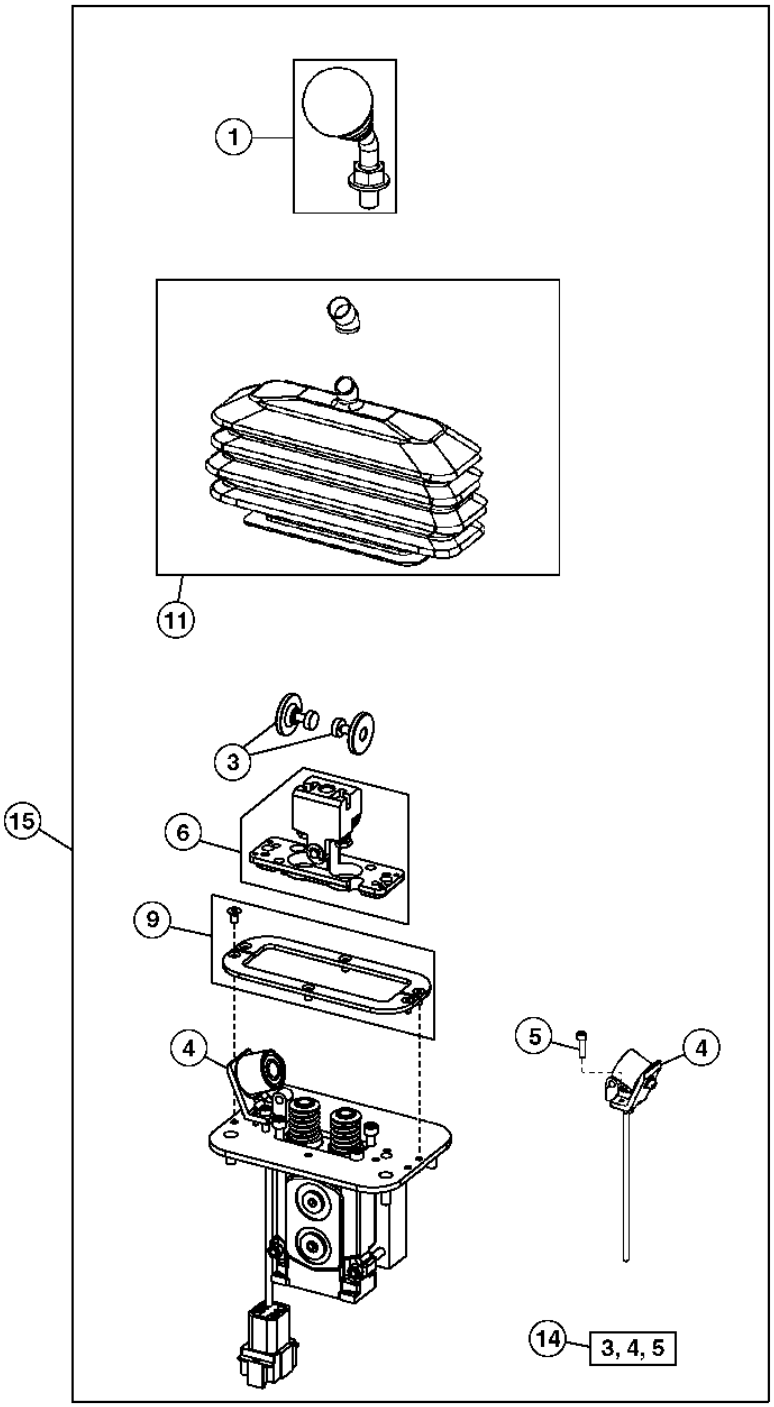

TX1015999

JOYSTICK PILOT CONTROLLER WITH AUXILARY
CONTROLEUR PILOTE MANCHE BALAI AVEC AUXILIAIRE
UNIDAD DE CONTROL PILOTO DE LA PALANCA CON MANDO AUXILIAR

KEY	*PART NO.*	*PART NAME*	*QTY.*	*SERIAL NO.*	*REMARKS*
1	AT227925	LEVER	1		
3	AT227928	ARMATURE	2		
4	AT227927	SOLENOID	2		
5	AT325612	BOLT	2		
6	AT227930	PLATE	1		
9	AT227933	PLATE	1		
11	AT303619	KIT	1		
14	**AT305603**	**FIELD INSTALLATION KIT**	**1**		**(DETENT)**
15	AT228250	HYDR./PILOT CONTROL VALVE	1		

DUAL AUXILIARY CONTROLLER COMPONENTS
COMPOSANTS CONTROLEUR AUXILIAIRE SIMPLE ET DOUBLE
COMPONENTES DE UNIDAD DE CONTROL AUXILIAR SIMPLE Y DOBLE

T212876 -UN-19JUL05

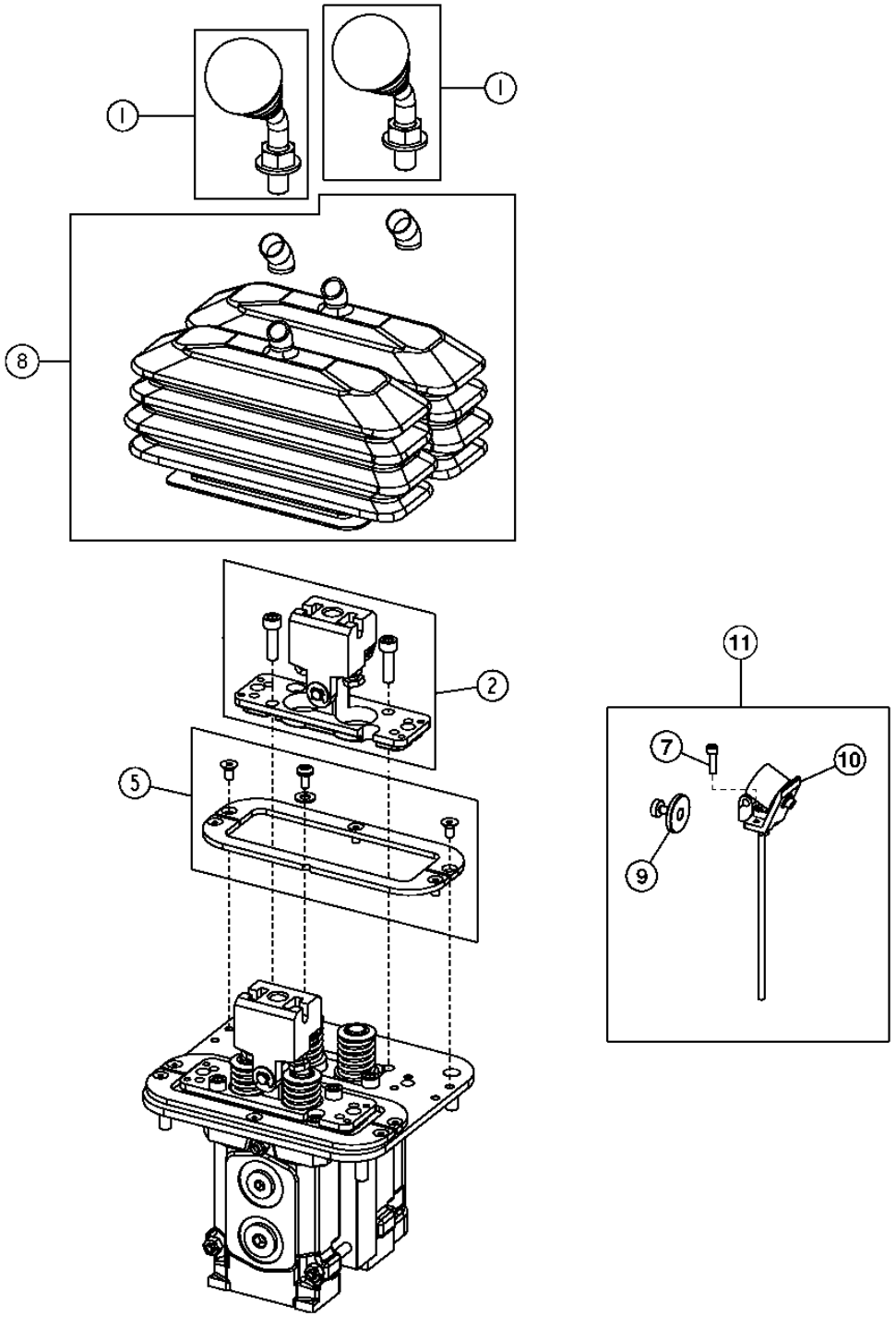

T212876

DUAL AUXILIARY CONTROLLER COMPONENTS
COMPOSANTS CONTROLEUR AUXILIAIRE SIMPLE ET DOUBLE
COMPONENTES DE UNIDAD DE CONTROL AUXILIAR SIMPLE Y DOBLE

KEY	*PART NO.*	*PART NAME*	*QTY.*	*SERIAL NO.*	*REMARKS*
1	AT227925	LEVER	1		(WITHOUT SWITCH)
	AT227926	LEVER	1		(WITH SWITCH)
2	AT227930	PLATE	1		
5	AT227933	PLATE	1		
7	AT325612	BOLT	2		
8	AT303619	KIT	1		BOOT ASSEMBLY
9	AT227928	ARMATURE	1		
10	AT227927	SOLENOID	1		
11	**AT305603**	**FIELD INSTALLATION KIT**	**1**		**(DETENT)**

TWO LEVER PILOT CONTROLLER COMPONENTS
COMPOSANTS DE CONTROLEUR PILOTE DEUX LEVIERS
COMPONENTES DEL CONTROLADOR PILOTO DE DOS PALANCAS

TX1003910 -UN-23FEB06

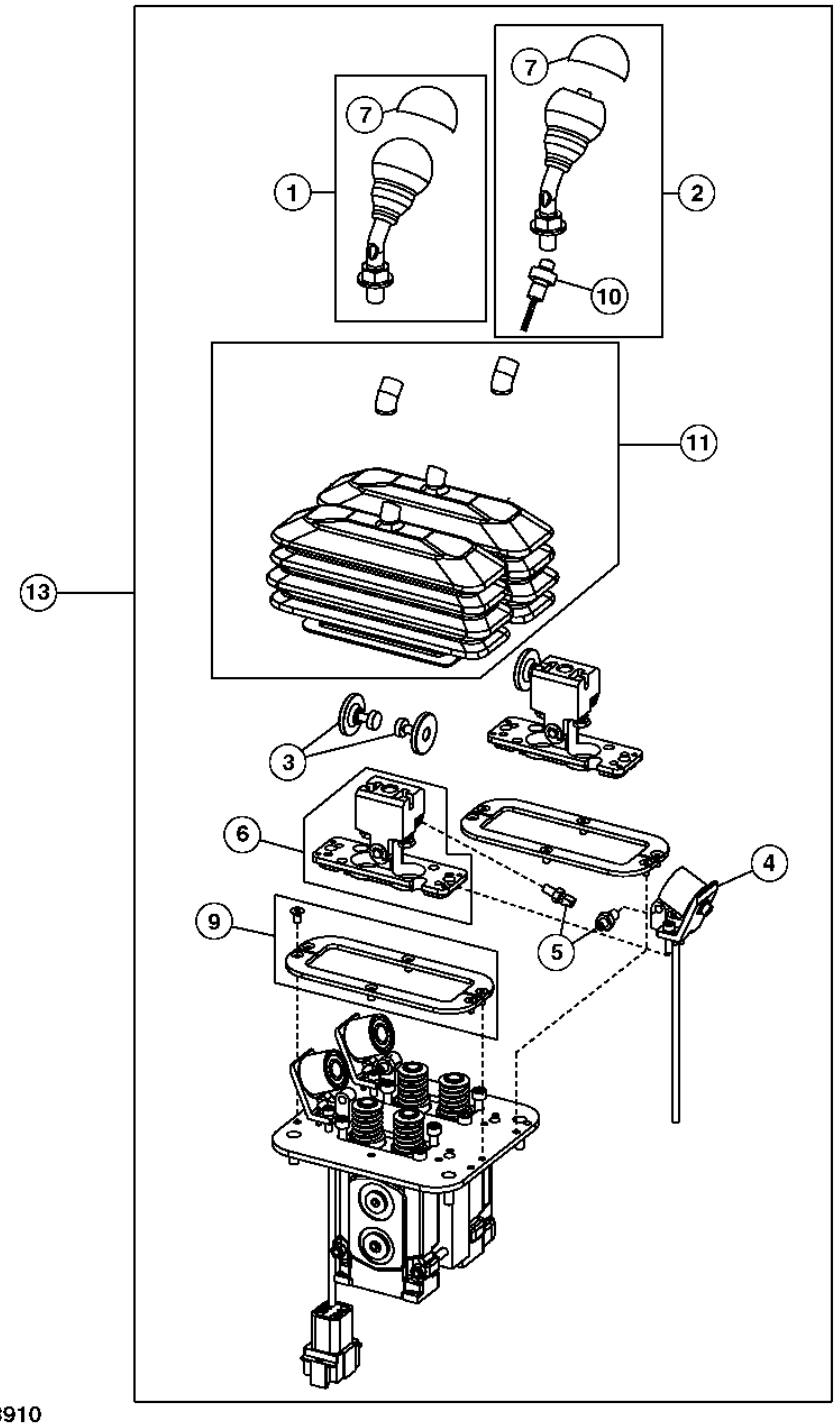

TX1003910

TWO LEVER PILOT CONTROLLER COMPONENTS
COMPOSANTS DE CONTROLEUR PILOTE DEUX LEVIERS
COMPONENTES DEL CONTROLADOR PILOTO DE DOS PALANCAS

KEY	*PART NO.*	*PART NAME*	*QTY.*	*SERIAL NO.*	*REMARKS*
1	AT227925	LEVER	1		
2	AT227926	LEVER	1		(USE WITH KICKDOWN SWITCH)
3	AT227928	ARMATURE	2		
4	AT227927	SOLENOID	2		
5	AT227929	HYDR./PILOT CONTROL VALVE	4		
6	AT227930	PLATE	2		
7	AT318123	BOOT	2		(KNOB)
9	AT227933	PLATE	2		
10	AT226119	SWITCH	1		(KICKDOWN)
11	AT303619	KIT	1		(BOOT ASSEMBLY)
13	AT225425	HYDR./PILOT CONTROL VALVE	1		

JOYSTICK PILOT CONTROLLER COMPONENTS
COMPOSANTS CONTROLEUR PILOTE MANCHE A BALAI
COMPONENTES DE UNIDAD DE CONTROL PILOTO DE PALANCA

T196147 -UN-13NOV03

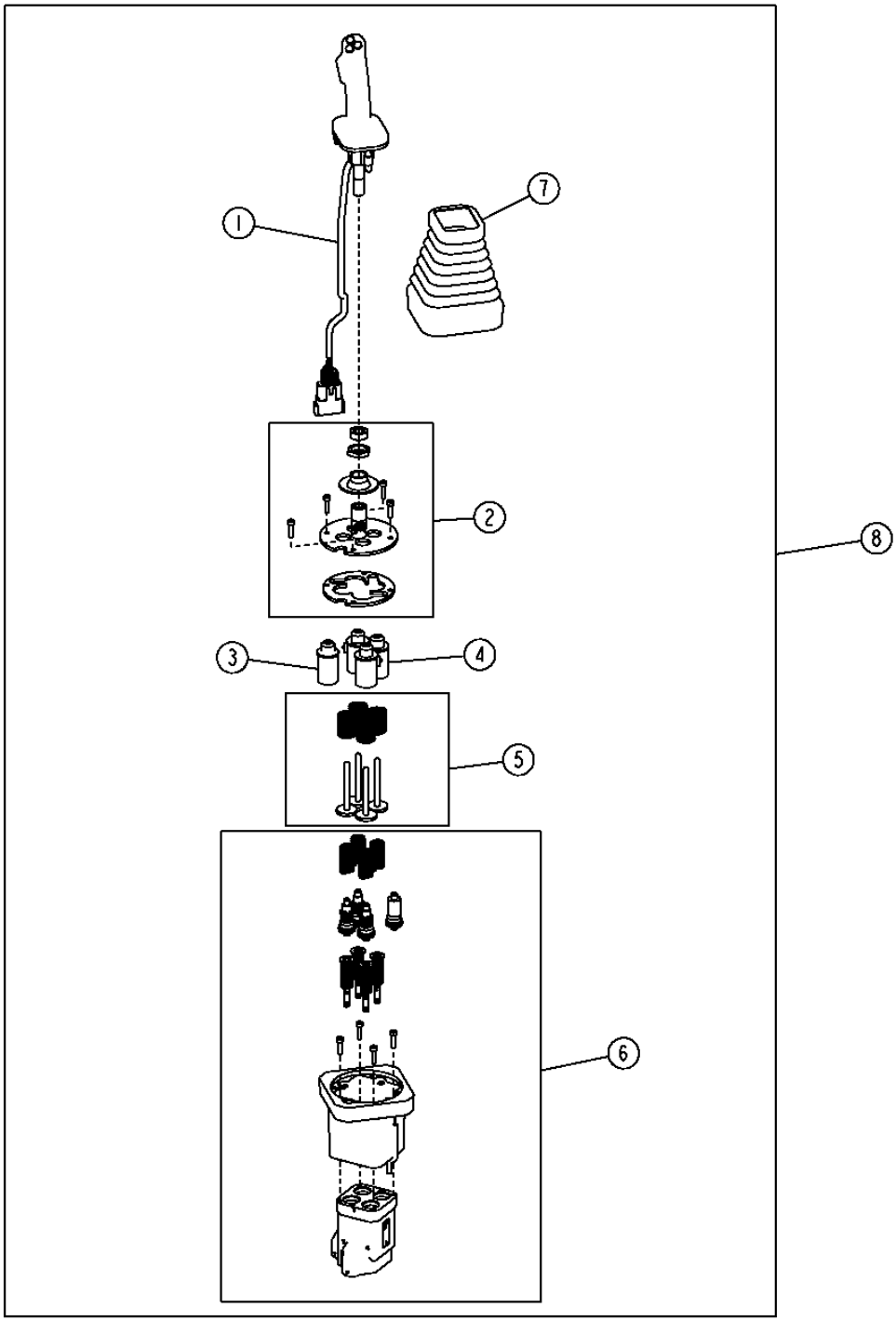

T196147

JOYSTICK PILOT CONTROLLER COMPONENTS
COMPOSANTS CONTROLEUR PILOTE MANCHE A BALAI
COMPONENTES DE UNIDAD DE CONTROL PILOTO DE PALANCA

KEY	*PART NO.*	*PART NAME*	*QTY.*	*SERIAL NO.*	*REMARKS*
1	AT315458	HANDLE	1		(W/O FNR)
	AT315459	HANDLE	1		(W/ FNR)
2	AT307636	UNIVERSAL JOINT	1		
3	AT307638	GUIDE	1		
4	AT307637	SOLENOID	3		(THREE USES - ORDER AS REQUIRED)
5	AT307640	PIN	1		
6	AT307641	OIL PRESSURE REG. VALVE	1		
7	T205941	BOOT	1		
8	AT315847	HYDR./PILOT CONTROL VALVE	1		(W/O FNR)
	AT315846	HYDR./PILOT CONTROL VALVE	1		(W/ FNR)

AUXILIARY JOYSTICK PILOT CONTROLLER COMPONENTS
COMPOSANTS CONTROLEUR PILOTE MANCHE BALAI AUXILIAIRE
COMPONENTES DE LA UNIDAD DE CONTROL PILOTO DE LA PALANCA AUXILIAR

TX1006297 -UN-24APR06

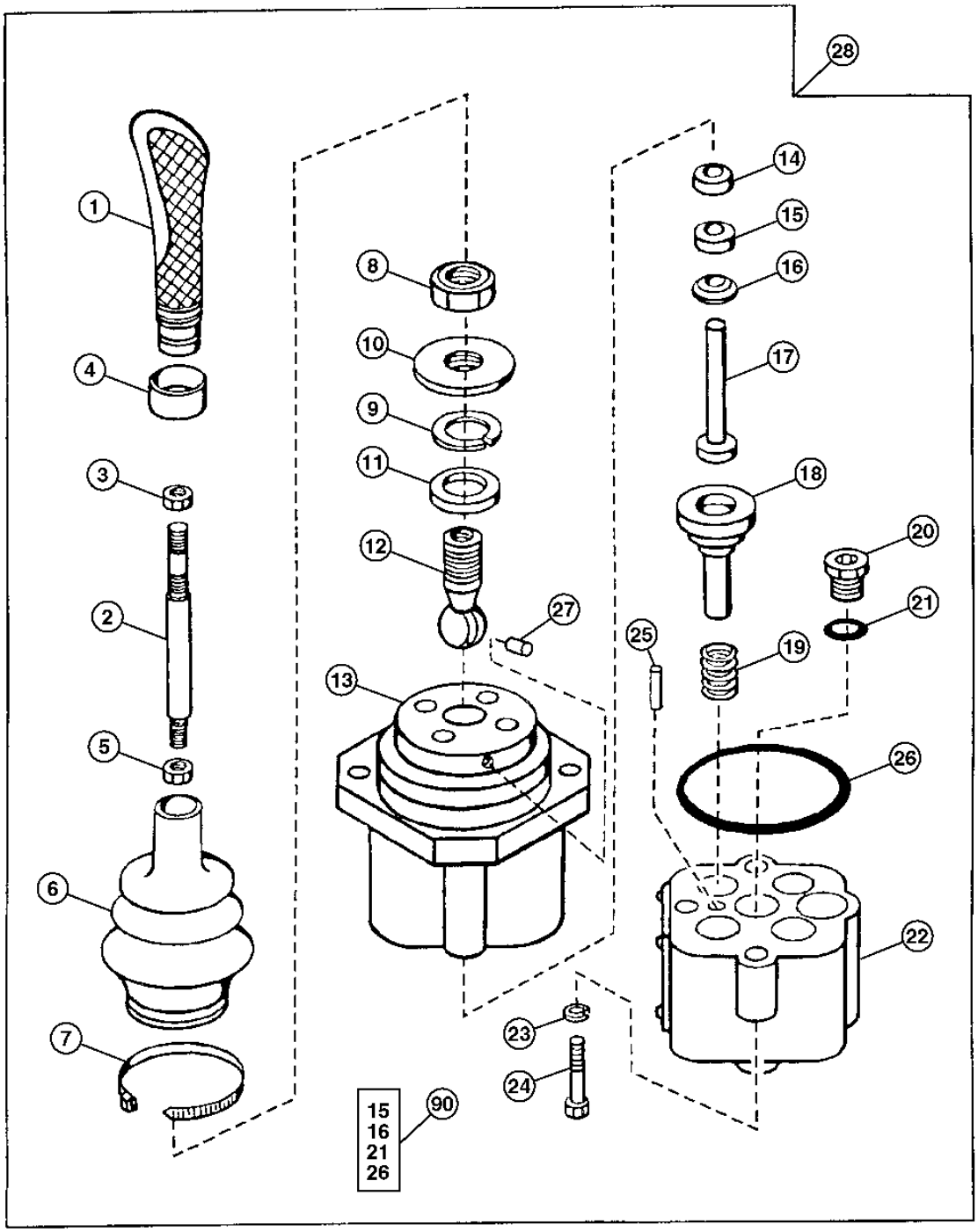

TX1006297

AUXILIARY JOYSTICK PILOT CONTROLLER COMPONENTS
COMPOSANTS CONTROLEUR PILOTE MANCHE BALAI AUXILIAIRE
COMPONENTES DE LA UNIDAD DE CONTROL PILOTO DE LA PALANCA AUXILIAR

KEY	*PART NO.*	*PART NAME*	*QTY.*	*SERIAL NO.*	*REMARKS*
1	AT172629	GRIP	1		(ALSO ORDER H77698 AND AT208911)
2	AT210145	LEVER	1		
3	T170269	NUT	1		M12
4	AT208911	RETAINER	1		
5	T172986	NUT	1		
6	T172988	BOOT	1		
7	H77698	TIE BAND	1		
8	T172985	NUT	1		
9	T172987	SNAP RING	1		
10	.....	PLATE	1		
11	AT119378	RETAINER	1		
12	.....	BALL	1		
13	.....	HOUSING	1		UPPER
14	T131617	RING	4		
15	.....	RETAINER	4		
16	.....	SEAL	4		
17	T102958	PLUNGER	4		
18	.....	SPOOL	4		
19	T131624	SPRING	4		
20	AT49216	FITTING PLUG	1		
21	R26448	O-RING	1		11.887 X 1.981 MM (0.468" X 5/64")
22	.....	HOUSING	1		LOWER
23	12M7133	LOCK WASHER	4		6 MM
24	19M7966	SCREW	4		M6 X 25
25	T102961	DOWEL PIN	1		3.183 X 15.875 MM (0.125" X 5/8")
26	.....	SEAL	1		
27	T102963	PIN FASTENER	1		ANTI-ROTATION
28	AT208760	ELECTRONIC CONTROL UNIT	1		
90	AT210247	SEAL KIT	1		

JOYSTICK FNR CONVERSION KIT
KIT CONVERSION SENS MARCHE MANCHE A BALAI
JUEGO DE CONVERSION DEL SELECTOR DE SENTIDO DE MARCHA DE PALANCA

T199696 -UN-05MAY04

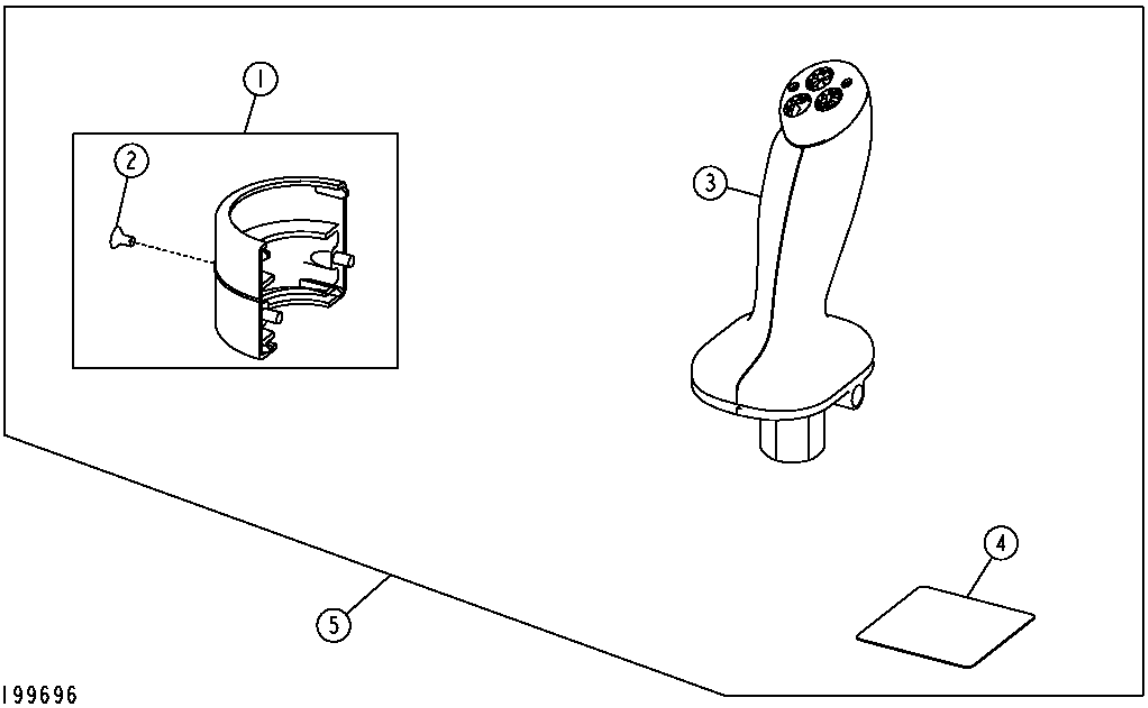

JOYSTICK FNR CONVERSION KIT
KIT CONVERSION SENS MARCHE MANCHE A BALAI
JUEGO DE CONVERSION DEL SELECTOR DE SENTIDO DE MARCHA DE PALANCA

KEY	*PART NO.*	*PART NAME*	*QTY.*	*SERIAL NO.*	*REMARKS*
1	AT300921	CLAMP	1		
2	21M7258	SCREW	1		M4 X 8
3	AT315459	HANDLE	1		
4	T197182	LABEL	1		
5	**AT313087**	**FIELD INSTALLATION KIT**	**1**		

HI-VIS COUPLER HYDRAULIC HOSES
FLEXIBLES HYDRAULIQUES COUPLEUR HI-VIS
MANGUERAS HIDRAULICAS DEL ACOPLADOR DE HI-VIS

TX1014900 -UN-06DEC06

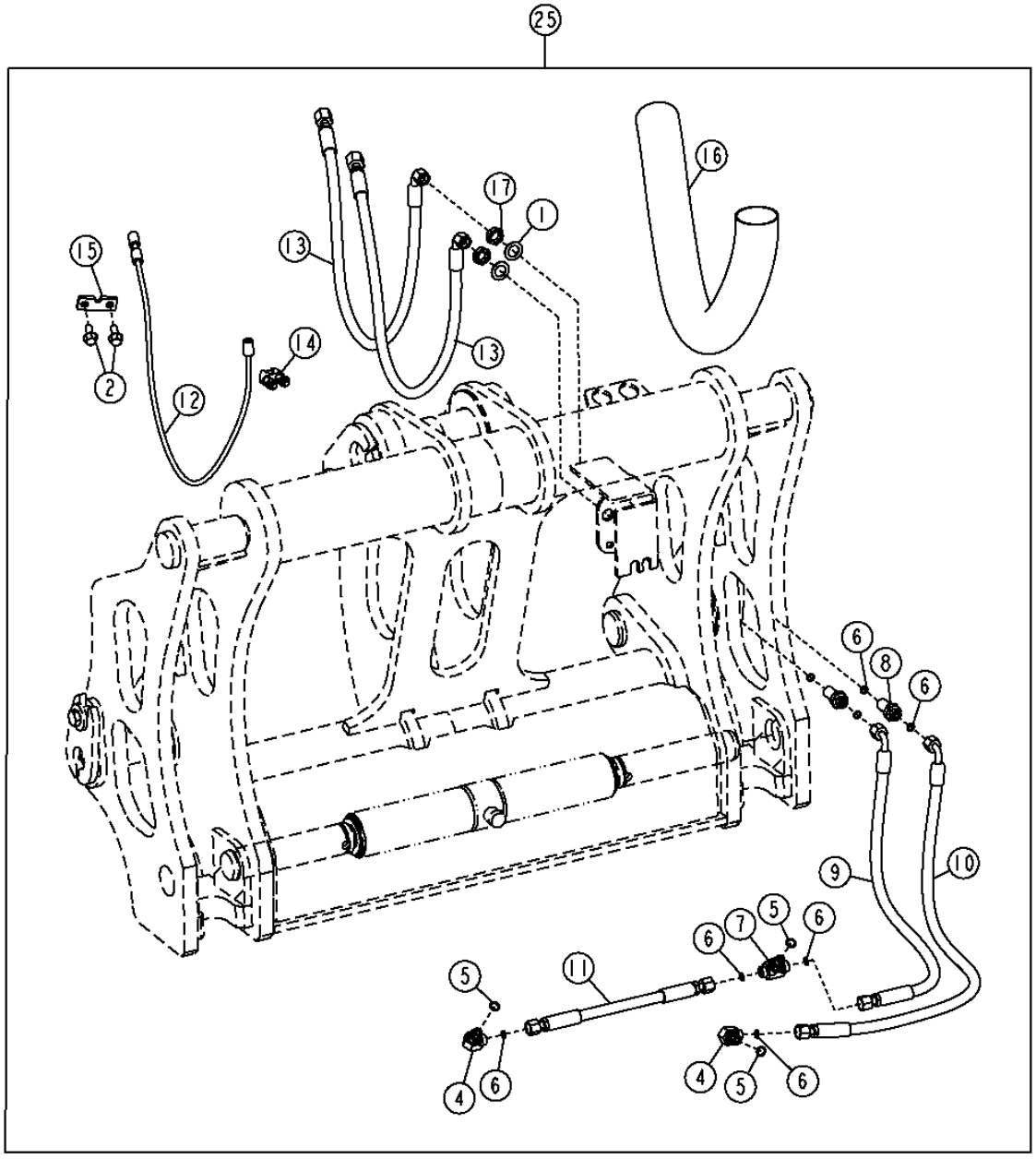

TX1014900

HI-VIS COUPLER HYDRAULIC HOSES
FLEXIBLES HYDRAULIQUES COUPLEUR HI-VIS
MANGUERAS HIDRAULICAS DEL ACOPLADOR DE HI-VIS

KEY	PART NO.	PART NAME	QTY.	SERIAL NO.	REMARKS
1	12H327	LOCK WASHER	2		
2	19M7785	SCREW	2		M10 X 25
4	38H1004	ELBOW FITTING	2		
5	R26448	O-RING	2		
6	T77613	O-RING	5		9.246 X 1.778 MM (0.364" X 0.070")
7	38H1016	TEE FITTING	1		
8	38H1285	UNION FITTING	1		
9	AT323757	HYDRAULIC HOSE - FABRICATE	1		11/16" X 600 MM (23-1/2") X 11/16"
10	AT323756	HYDRAULIC HOSE - FABRICATE	1		11/16" X 810 MM (32") X 11/16"
11	AT323817	HYDRAULIC HOSE - FABRICATE	1		11/16" X 330 MM (13") X 11/16"
12	AT324137	CABLE	1		(USE WITH AT330154)
	AT325194	CABLE	1		(USE WITH AT330155)
13	AT324641	HYDRAULIC HOSE - FABRICATE	2		11/16" X 885 MM (34-3/4") X 11/16", (USE WITH AT330154)
	AT325201	HYDRAULIC HOSE - FABRICATE	2		11/16" X 1 260 MM (49-1/2") X 11/16", (USE WITH AT330155)
14	AT327951	HYDRAULIC HOSE - FABRICATE	2		13/16" X 870 MM (34-1/4") X 11/16"
15	T204315	PLATE	1		
16	.....	HOSE GUARD	AR		(ORDER PARKER PG-188) CUT TO LENGTH
17	T81029	NUT	2		17.475 MM (11/16")
25	**AT330154**	**KIT**	**1**		**ALSO ORDER T223487 INSTALLATION INSTRUCTION**
	AT330155	**KIT**	**1**		**(WHOLE GOODS) USE WITH HIGH LIFT Z-BAR LINKAGE, ALSO ORDER T223487 INSTALLATION INSTRUCTION**

THIRD FUNCTION BOOM TO COUPLER PLUMBING (FOR USE WITH Z-BAR LINKAGE)
TUYAUTERIE FLECHE TROISIEME FONCTION A COUPLEUR (POUR TRINGLERIE CINEMATIQUE EN Z)
AGUILON DE TERCERA FUNCION A LA TUBERIA DEL ACOPLADOR (PARA USO CON VARILLAJE CON BARRA EN Z)

TX1015644 -UN-18DEC06

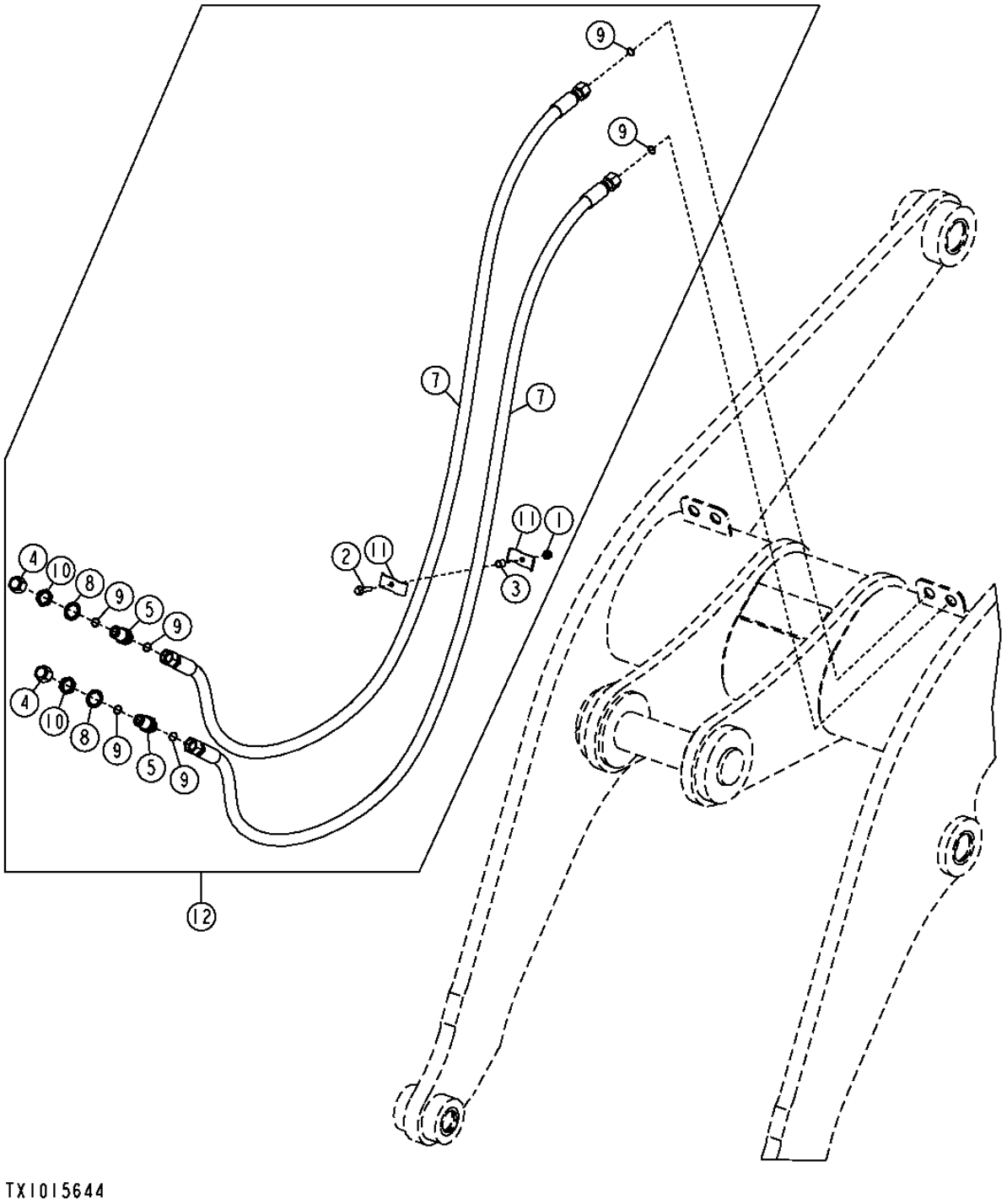

THIRD FUNCTION BOOM TO COUPLER PLUMBING (FOR USE WITH Z-BAR LINKAGE)
TUYAUTERIE FLECHE TROISIEME FONCTION A COUPLEUR (POUR TRINGLERIE CINEMATIQUE EN Z)
AGUILON DE TERCERA FUNCION A LA TUBERIA DEL ACOPLADOR (PARA USO CON VARILLAJE CON BARRA EN Z)

KEY	*PART NO.*	*PART NAME*	*QTY.*	*SERIAL NO.*	*REMARKS*
1	14M7400	LOCK NUT	1		M10, (FOR HIGH LIFT MODELS ONLY)
2	19M7805	SCREW	1		M10 X 45, (FOR HIGH LIFT MODELS ONLY)
3	28H1697	SPACER	1		12.522 X 17.145 X 19.050 MM (0.493" X 0.675" X 3/4")
4	38H1418	FITTING	2		
5	38H1276	ADAPTER FITTING	2		
7	AT317468	HYDRAULIC HOSE - FABRICATE	2		1-3/16" X 2 413 MM (95") X 1-3/16"
	AT321388	HYDRAULIC HOSE - FABRICATE	2		1-3/16" X 2 795 MM (110") X 1-3/16", (FOR HIGH LIFT MODELS ONLY)
8	T174275	LOCK WASHER	2		30.950 MM (1.219")
9	T77858	O-RING	6		18.771 X 1.778 MM (0.739" X 0.070")
10	T78707	NUT	2		30.175 MM (1-3/16")
11	U46753	HOSE CLAMP	2		(FOR HIGH LIFT MODELS ONLY)
12	**AT322224**	**MOUNTING PARTS**	**1**		**(WHOLE GOODS)**
	AT322227	**MOUNTING PARTS**	**1**		**(FOR HIGH LIFT MODELS ONLY) (WHOLE GOODS)**

THIRD FUNCTION BOOM TO COUPLER PLUMBING (FOR USE WITH POWERLLEL™ LINKAGE)
TUYAUTERIE FLECHE TROISIEME FONCTION A COUPLEUR (A UTILISER AVEC TRINGLERIE POWERLLEL™)
AGUILON DE TERCERA FUNCION A LA TUBERIA DEL ACOPLADOR (PARA USO CON VARILLAJE POWERLLEL™)

TX1015284 -UN-04DEC06

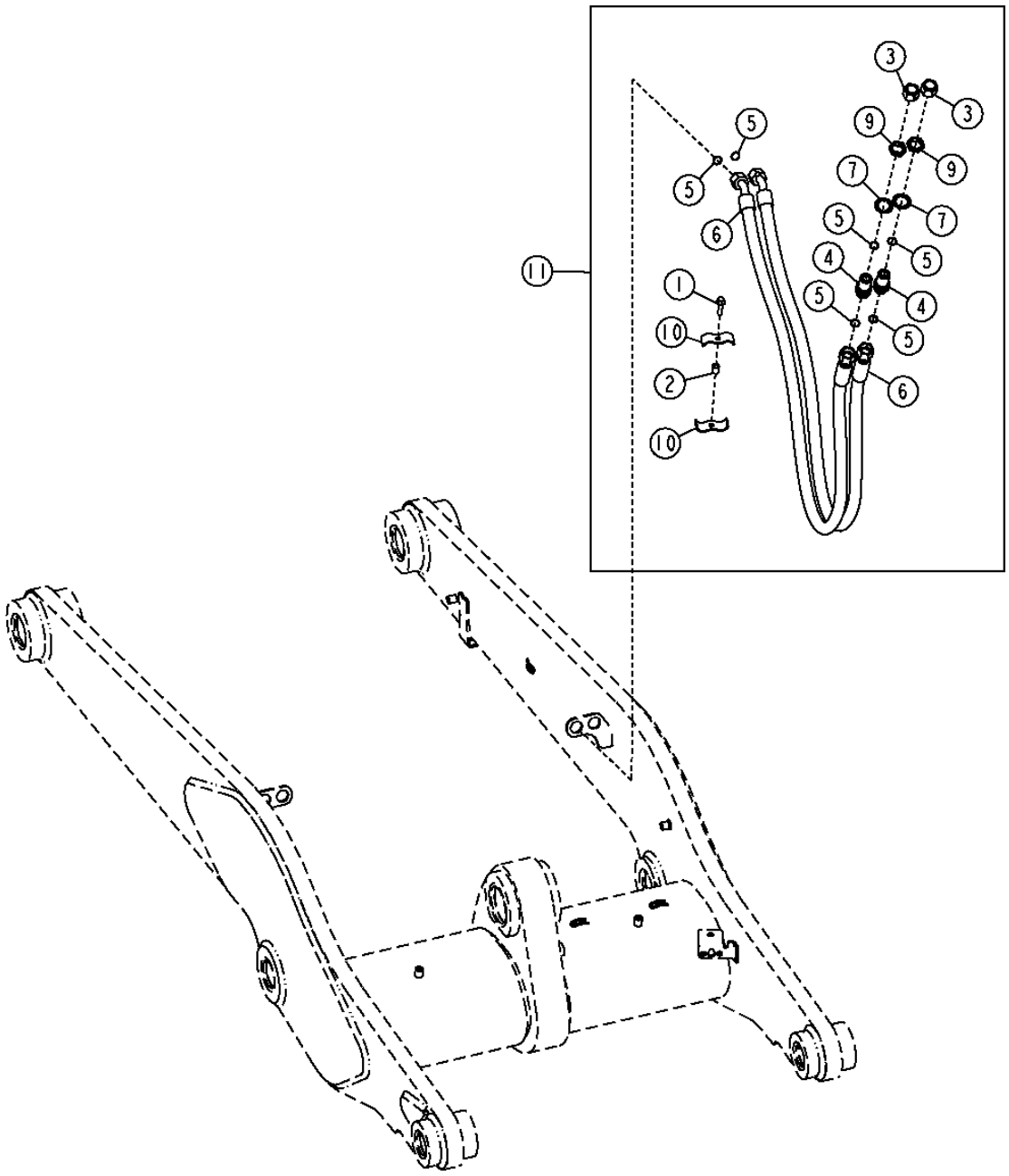

THIRD FUNCTION BOOM TO COUPLER PLUMBING (FOR USE WITH POWERLLEL™ LINKAGE)
TUYAUTERIE FLECHE TROISIEME FONCTION A COUPLEUR (A UTILISER AVEC TRINGLERIE POWERLLEL™)
AGUILON DE TERCERA FUNCION A LA TUBERIA DEL ACOPLADOR (PARA USO CON VARILLAJE POWERLLEL™)

KEY	*PART NO.*	*PART NAME*	*QTY.*	*SERIAL NO.*	*REMARKS*
1	19M8162	SCREW	1		M10 X 40
2	28H1697	SPACER	1		12.522 X 17.145 X 19.050 MM (0.493" X 0.675" X 3/4")
3	38H1418	FITTING	2		
4	38H1276	ADAPTER FITTING	2		
5	T77858	O-RING	4		18.771 X 1.778 MM (0.739" X 0.070")
6	AT317367	HYDRAULIC HOSE - FABRICATE	2		1-3/16" X 1 981 MM (78") X 1-3/16"
7	T174275	LOCK WASHER	2		30.950 MM (1.219")
9	T78707	NUT	2		30.175 MM (1-3/16")
10	U46753	HOSE CLAMP	2		
11	**AT322230**	**MOUNTING PARTS**	**1**		**(WHOLE GOODS)**

LOADER BUCKET AND BOOM CYLINDER PINS AND FITTINGS
AXES ET RACCORDS DE VERIN DE BENNE ET DE FLECHE DE CHARGEUR
CUCHARON DE CARGADORA Y PASADORES DEL CILINDRO DEL AGUILON Y ADAPTADORES

TX1014813 -UN-09DEC06

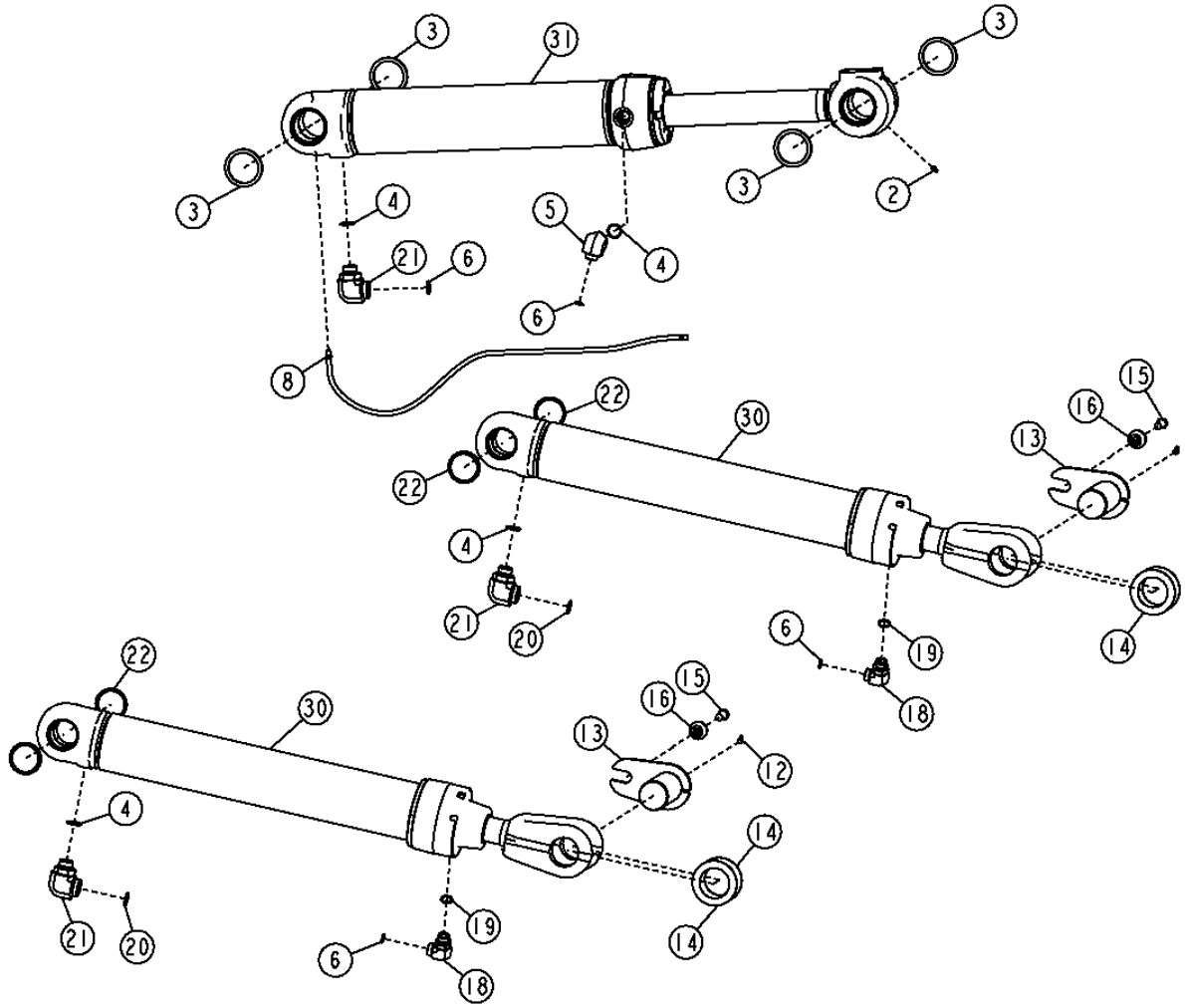

TX1014813

LOADER BUCKET AND BOOM CYLINDER PINS AND FITTINGS
AXES ET RACCORDS DE VERIN DE BENNE ET DE FLECHE DE CHARGEUR
CUCHARON DE CARGADORA Y PASADORES DEL CILINDRO DEL AGUILON Y ADAPTADORES

KEY	*PART NO.*	*PART NAME*	*QTY.*	*SERIAL NO.*	*REMARKS*
1	R44302	TIE BAND	1		
2	JD7759	LUBRICATION FITTING	1		
3	T102137	SEAL	4		
4	R29936	O-RING	2		29.743 X 2.946 MM
5	38H1052	ELBOW FITTING	1		
6	T77858	O-RING	2		18.771 X 1.778 MM
8	AT103107	HYDRAULIC HOSE	1		1/8" X 1 100 MM X 1/8"
12	JD7763	LUBRICATION FITTING	2		45° X 22.606 MM LONG
13	AT207927	PIN	2		
14	24H1240	WASHER	4		3-1/32" X 4-1/2" X 0.105"
15	19M7489	CAP SCREW	2		M16 X 45
16	T176064	BUSHING	2		16.300 X 28.600 X 21.900 MM
18	38H1007	ELBOW FITTING	1		
19	U12547	O-RING	1		23.470 X 2.946 MM
20	T78612	O-RING	1		29.870 X 1.778 MM
21	38H1053	ELBOW FITTING	1		
22	T157277	SEAL	4		
30	AH163630	HYDRAULIC CYLINDER	2		
31	AH225343	HYDRAULIC CYLINDER	1		

BOOM CYLINDER
VERIN DE FLECHE
CILINDRO DE AGUILON

TX1020026 -UN-

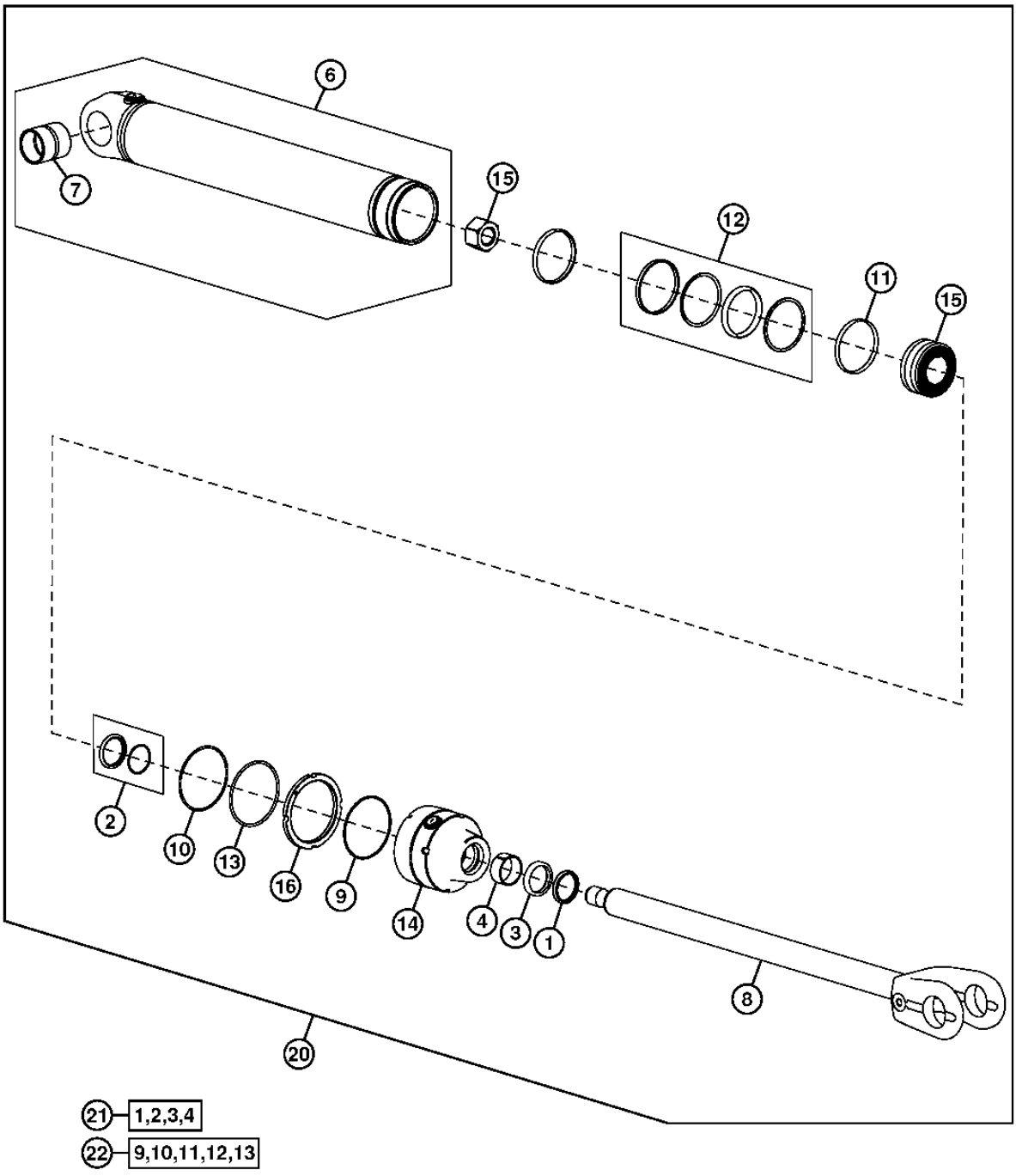

TX1020026

BOOM CYLINDER
VERIN DE FLECHE
CILINDRO DE AGUILON

KEY	PART NO.	PART NAME	QTY.	SERIAL NO.	REMARKS
1	AH146559	SEAL	1		
2	AH146563	SEAL	1		
3	H152205	SEAL	1		
4	H152796	WEAR RING	1		
6	AH156876	HYDRAULIC CYLINDER BARREL	1		
7	H151537	BUSHING	1		69.747 X 80.100 X 85 MM (2.746" X 3.154" X 3.346")
8	AH156877	HYDRAULIC CYLINDER ROD	1		
9	E52687	O-RING	1		139.294 X 3.531 MM (5-31/64" X 0.139")
10	H151890	BACK-UP RING	1		142.630 X 150.950 X 1.780 MM (5.615" X 5.943" X 0.070")
11	H170139	WEAR RING	1		
12	RE30162	SEAL	1		
13	R72032	O-RING	1		
14	H155770	HYDR. CYLINDER ROD GUIDE	1		
15	H169746	PISTON	1		
16	H180324	NUT	1		
17	H180324	NUT	1		
20	AH163630	HYDRAULIC CYLINDER	1		
21	AH149815	HYDRAULIC CYLINDER KIT	1		
22	AH163672	HYDRAULIC CYLINDER KIT	1		

BUCKET CYLINDER
CYLINDRE DE GODET
CILINDRO DE CUCHARON

TX1020027 -UN-

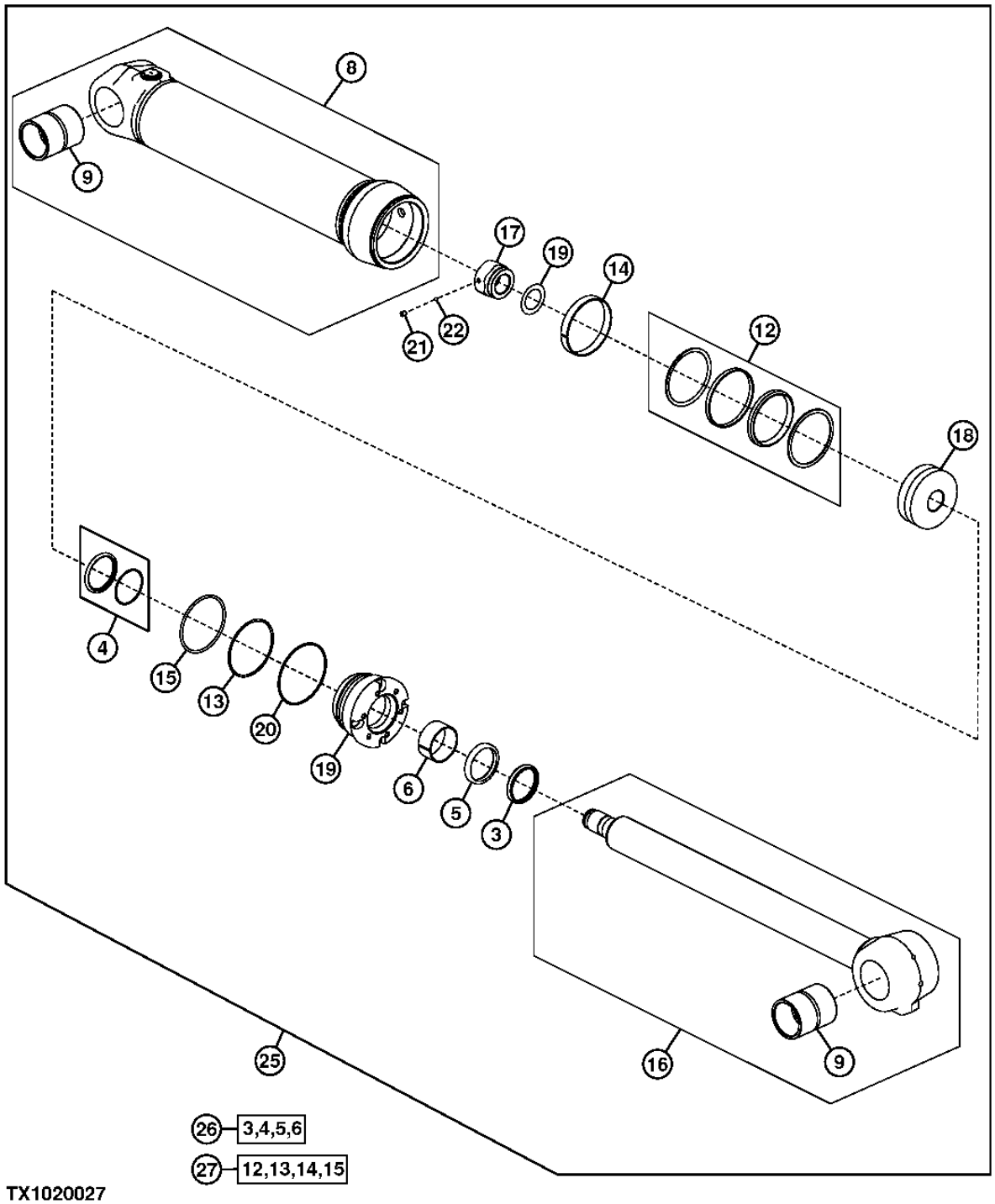

TX1020027

BUCKET CYLINDER
CYLINDRE DE GODET
CILINDRO DE CUCHARON

KEY	PART NO.	PART NAME	QTY.	SERIAL NO.	REMARKS
3	AH152445	SEAL	1		
4	AH152446	SEAL	1		
5	H159361	SEAL	1		
6	H159362	WEAR RING	1		
8	AH210134	HYDRAULIC CYLINDER BARREL	1		
9	H158397	BUSHING	1		79.760 X 95.110 X 113 MM (3.140" X 3.744" X 4.449")
12	RE25102	SEAL	1		
13	R78818	BACK-UP RING	1		
14	R85192	WEAR RING	2		
15	T38485	O-RING	1		
16	AH224571	ROD	1		
17	H158175	NUT	1		
18	H163598	PISTON	1		
19	H209168	HYDR. CYLINDER ROD GUIDE	1		
20	T20779	RING	1		142.469 X 3.531 MM (5-39/64" X 0.139")
21	22M7139	SET SCREW	1		M10 X 10
22	400R	BALL	1		6.350 MM (1/4")
25	AH225343	HYDRAULIC CYLINDER	1		
26	AH156874	HYDRAULIC CYLINDER KIT	1		
27	AH216299	HYDRAULIC CYLINDER KIT	1		

POWERLLEL™ LINKAGE BOOM AND TILT CYLINDER PINS AND FITTINGS
AXES ET RACCORDS VERIN INCLINAISON ET FLECHE TRINGLERIE POWERLLEL™
AGUILON DE VARILLAJE POWERLLEL™, ADAPTADORES Y PASADORES DEL CILINDRO DE INCLINACION

TX1015223 -UN-27NOV06

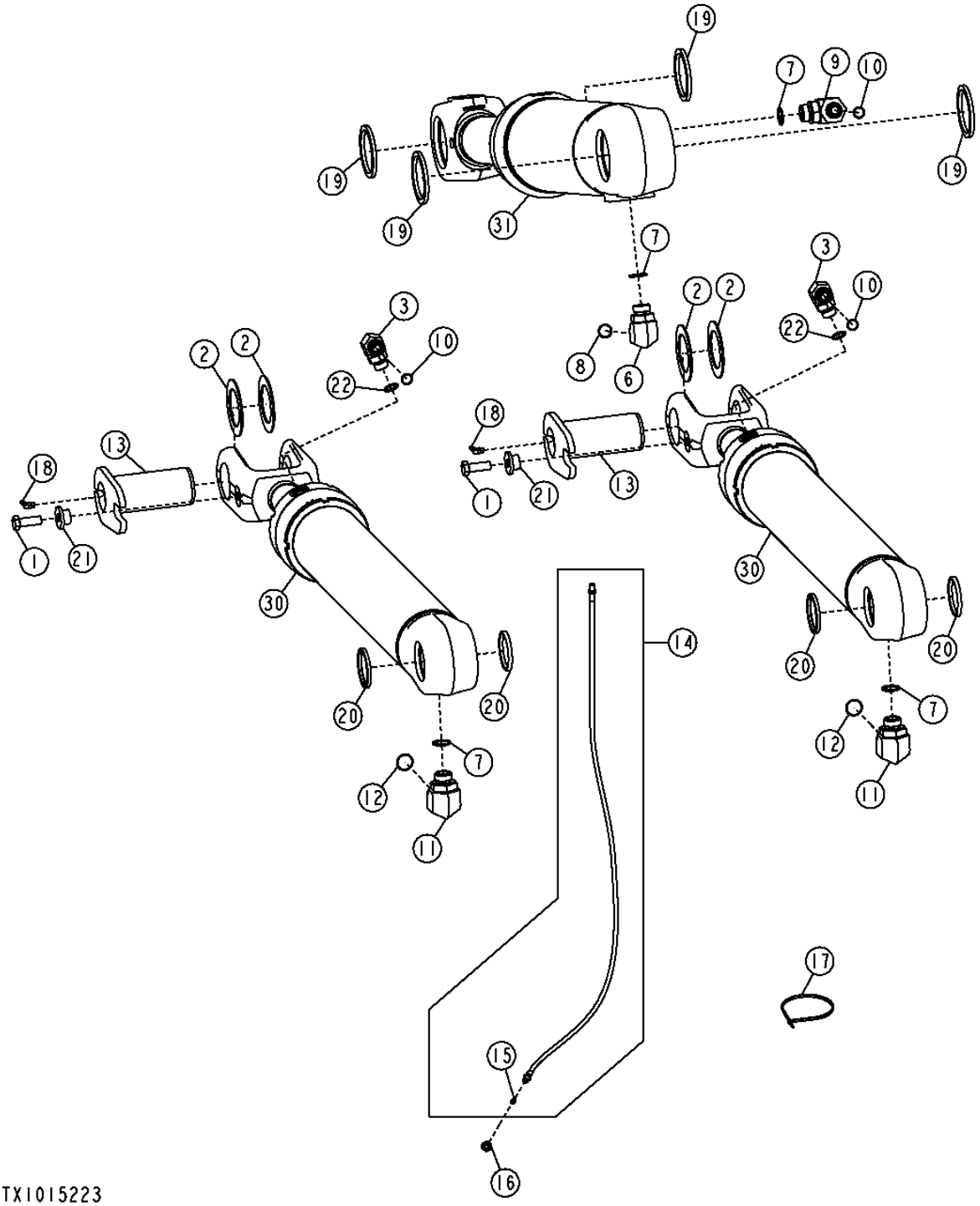

POWERLLEL™ LINKAGE BOOM AND TILT CYLINDER PINS AND FITTINGS
AXES ET RACCORDS VERIN INCLINAISON ET FLECHE TRINGLERIE POWERLLEL™
AGUILON DE VARILLAJE POWERLLEL™, ADAPTADORES Y PASADORES DEL CILINDRO DE INCLINACION

KEY	PART NO.	PART NAME	QTY.	SERIAL NO.	REMARKS
1	19M7489	CAP SCREW	2		M16 X 45
2	24H1240	WASHER	4		3-1/32" X 4-1/2" X 0.105"
3	38H1007	ELBOW FITTING	1		
6	38H1037	ELBOW FITTING	1		
7	R29936	O-RING	3		29.743 X 2.946 MM (1.171" X 0.116")
8	T76938	O-RING	1		23.520 X 1.778 MM (0.926" X 0.070")
9	38H1052	ELBOW FITTING	1		
10	T77858	O-RING	2		18.771 X 1.778 MM (0.739" X 0.070")
11	38H1053	ELBOW FITTING	1		
12	T78612	O-RING	1		29.870 X 1.778 MM (1.176" X 0.070")
13	AT207927	PIN	2		
14	AT307996	HYDRAULIC HOSE	3		1/8" X 1 524 MM (60") X 1/8"
15	JD7797	LUBRICATION FITTING	1		
16	E12379	NUT	3		3.175 MM (1/8")
17	H77698	TIE BAND	5		
18	JD7763	LUBRICATION FITTING	2		45° X 22.606 MM LONG (0.890" LONG)
19	T102138	SEAL	4		
20	T157277	SEAL	4		
21	T176064	BUSHING	2		16.300 X 28.600 X 21.900 MM (0.642" X 1.126" X 0.862")
22	U12547	O-RING	1		23.470 X 2.946 MM (0.924" X 0.116")
30	AH208687	HYDRAULIC CYLINDER	2		
31	AH225717	HYDRAULIC CYLINDER	1		

POWERLLEL™ LINKAGE BOOM CYLINDER
VERIN FLECHE TRINGLERIE POWERLLEL™
CILINDRO DEL AGUILON DE VARILLAJE POWERLLEL™

T202182 -UN-24AUG04

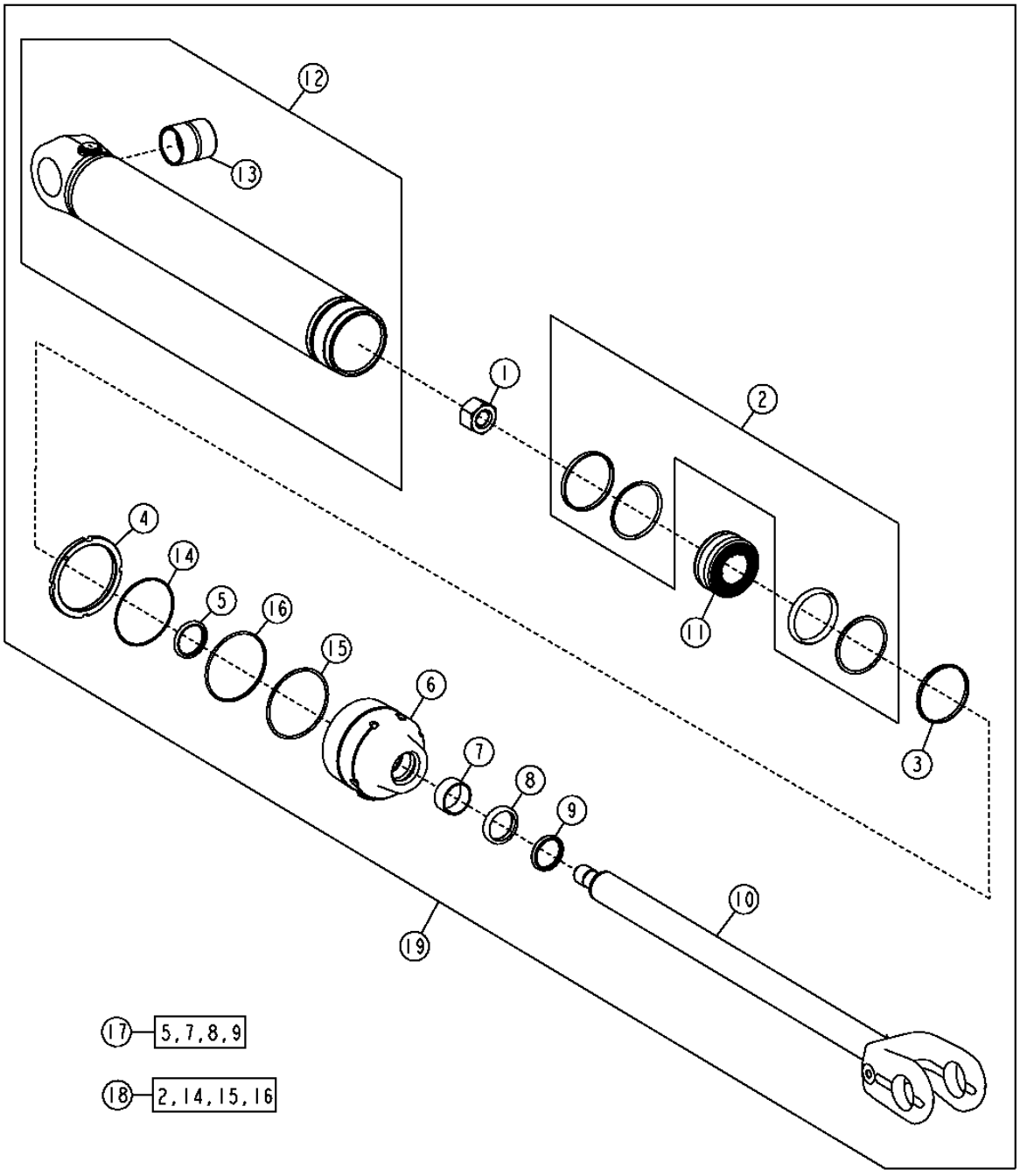

T202182

POWERLLEL™ LINKAGE BOOM CYLINDER
VERIN FLECHE TRINGLERIE POWERLLEL™
CILINDRO DEL AGUILON DE VARILLAJE POWERLLEL™

KEY	*PART NO.*	*PART NAME*	*QTY.*	*SERIAL NO.*	*REMARKS*
1	H155561	NUT	1		
2	RE30162	SEAL	1		
3	H208689	SCRAPER RING	1		
4	H180324	NUT	1		
5	AH146563	SEAL	1		
6	H155770	HYDR. CYLINDER ROD GUIDE	1		
7	H152796	WEAR RING	1		
8	H152205	SEAL	1		
9	AH146559	SEAL	1		
10	AH215766	ROD	1		
11	H216114	PISTON	1		
12	AH156876	HYDRAULIC CYLINDER BARREL	1		
13	H151537	BUSHING	1		
14	E52687	O-RING	1		
15	R72032	O-RING	1		
16	H151890	BACK-UP RING	1		
17	AH149815	HYDRAULIC CYLINDER KIT	1		(ROD SEAL)
18	AH149848	KIT	1		(BORE SEAL)
19	AH208687	HYDRAULIC CYLINDER	1		

POWERLLEL™ LINKAGE BUCKET CYLINDER
VERIN BENNE TRINGLERIE POWERLLEL™
CILINDRO DE CUCHARON DE VARILLAJE POWERLLEL™

T202184 -UN-25AUG04

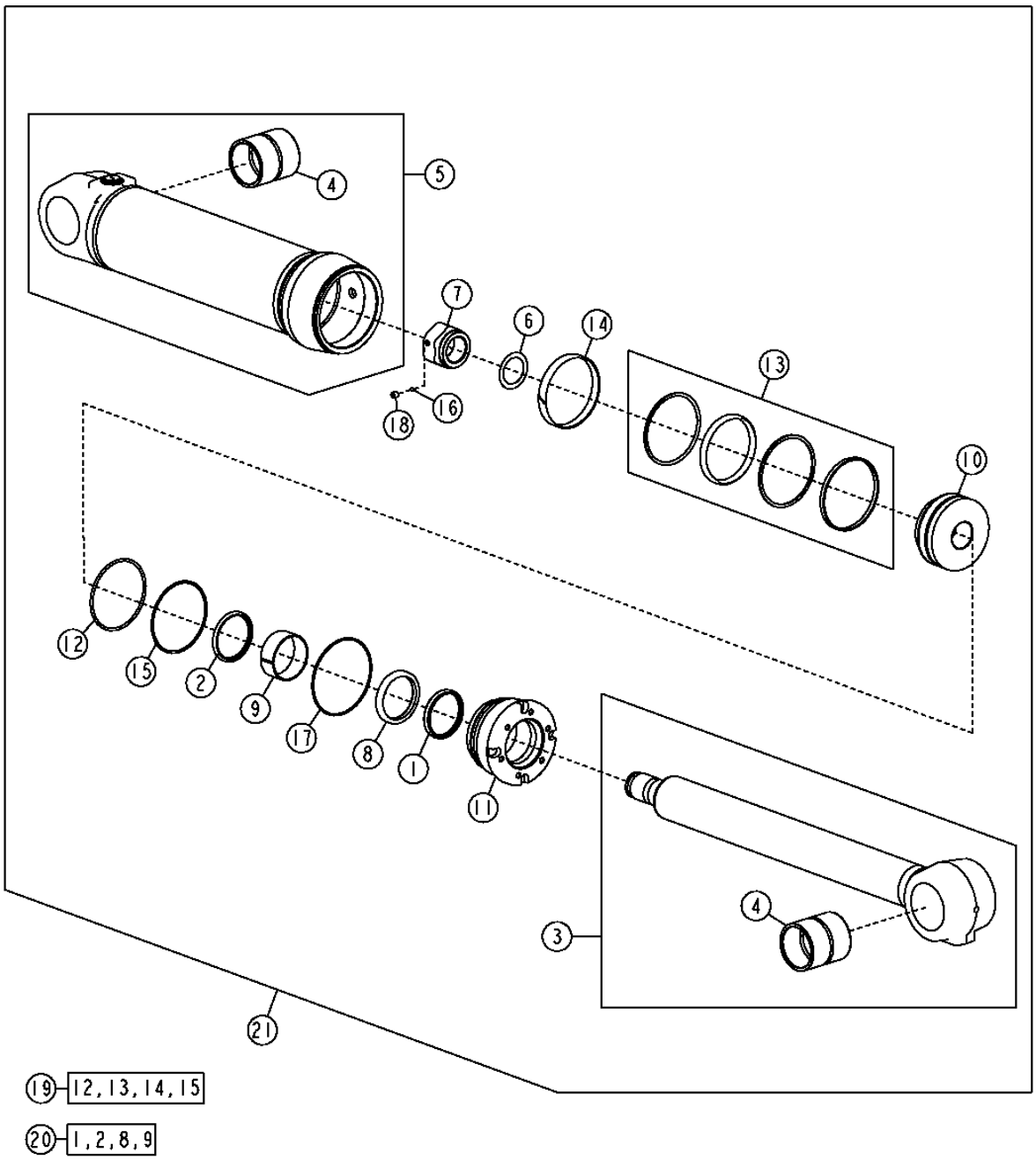

POWERLLEL™ LINKAGE BUCKET CYLINDER
VERIN BENNE TRINGLERIE POWERLLEL™
CILINDRO DE CUCHARON DE VARILLAJE POWERLLEL™

KEY	*PART NO.*	*PART NAME*	*QTY.*	*SERIAL NO.*	*REMARKS*
1	AH157291	SEAL	1		
2	AH157292	SEAL	1		
3	AH224533	ROD	1		
4	R85556	BUSHING	1		
5	AH215587	HYDRAULIC CYLINDER BARREL	1		
6	AT153937	SHIM	1		
7	H155879	NUT	1		
8	H163979	SEAL	1		
9	H163980	BUSHING	1		
10	H168220	PISTON	1		
11	H208519	HYDR. CYLINDER ROD GUIDE	1		
12	H88900	O-RING	1		
13	RE25146	SEAL	1		
14	R85228	WEAR RING	1		
15	R98669	BACK-UP RING	1		
16	T13624	BALL	1		
17	T41326	O-RING	1		
18	22M7009	SET SCREW	1		
19	AH137210	HYDRAULIC CYLINDER KIT	1		(BORE SEAL)
20	AH159192	KIT	1		(ROD SEAL)
21	AH225717	HYDRAULIC CYLINDER	1		

RETURN-TO-DIG ACTUATOR AND SENSOR
ACTIONNEUR ET CAPTEUR DE RETOUR EN POSITON DE CREUSEMENT
ACCIONADOR DE RETORNO PARA EXCAVAR Y SENSOR

T194864 -UN-28OCT03

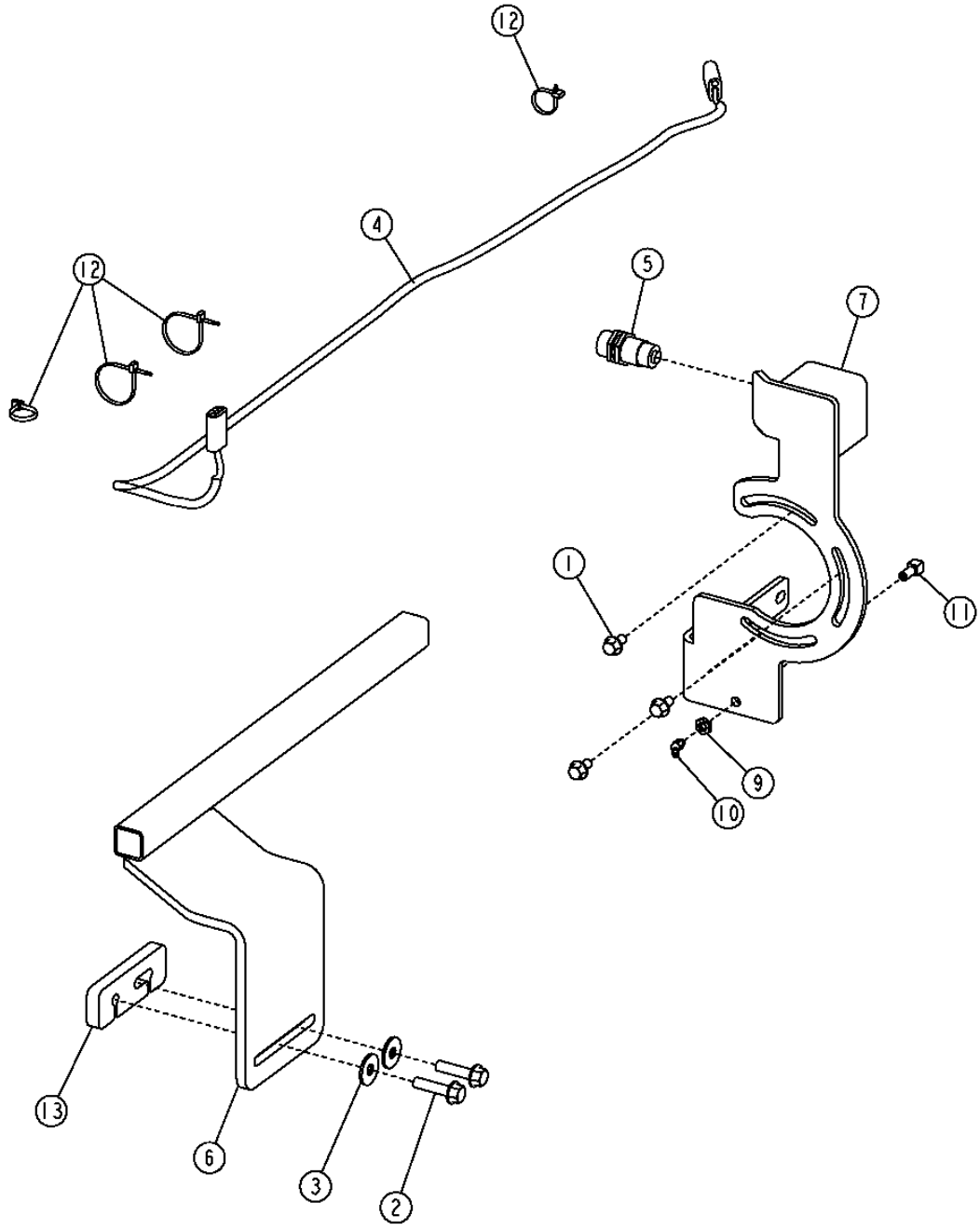

RETURN-TO-DIG ACTUATOR AND SENSOR
ACTIONNEUR ET CAPTEUR DE RETOUR EN POSITON DE CREUSEMENT
ACCIONADOR DE RETORNO PARA EXCAVAR Y SENSOR

KEY	*PART NO.*	*PART NAME*	*QTY.*	*SERIAL NO.*	*REMARKS*
1	19M7784	SCREW	3		M10 X 20
2	19M7814	SCREW	2		M12 X 50
3	24M7180	WASHER	2		13 X 37 X 3 MM (0.512" X 1.457" X 0.118")
4	AT202827	WIRING HARNESS	1		(RETURN-TO-DIG)
	AT221628	WIRING HARNESS	1		(RETURN-TO-DIG) (HARSH ENVIRONMENT)
5	AT203130	SENSOR	1		(STD)
	AT222366	SWITCH	1		(HARSH ENVIRONMENT)
6	AT307898	ACTUATOR	1		
7	AT305324	BRACKET	1		
9	E12379	NUT	1		3.175 MM (1/8")
10	JD7788	LUBRICATION FITTING	1		45° X 20.574 MM LONG (0.810" LONG)
11	R36311	FITTING	1		
12	R44302	TIE BAND	4		
13	T179609	STRAP	1		

LOADER BOOM KICKOUT / RETURN-TO-CARRY SENSOR
CAPTEUR DESENGAGEMENT / RETOUR EN POSITION TRANSPORT FLECHE CHARGEUR
SENSOR DE DESENGANCHE DE ALTURA DEL AGUILON DE CARGADORA / RETORNO A POSICION DE ACARREO

T195071 -UN-05NOV03

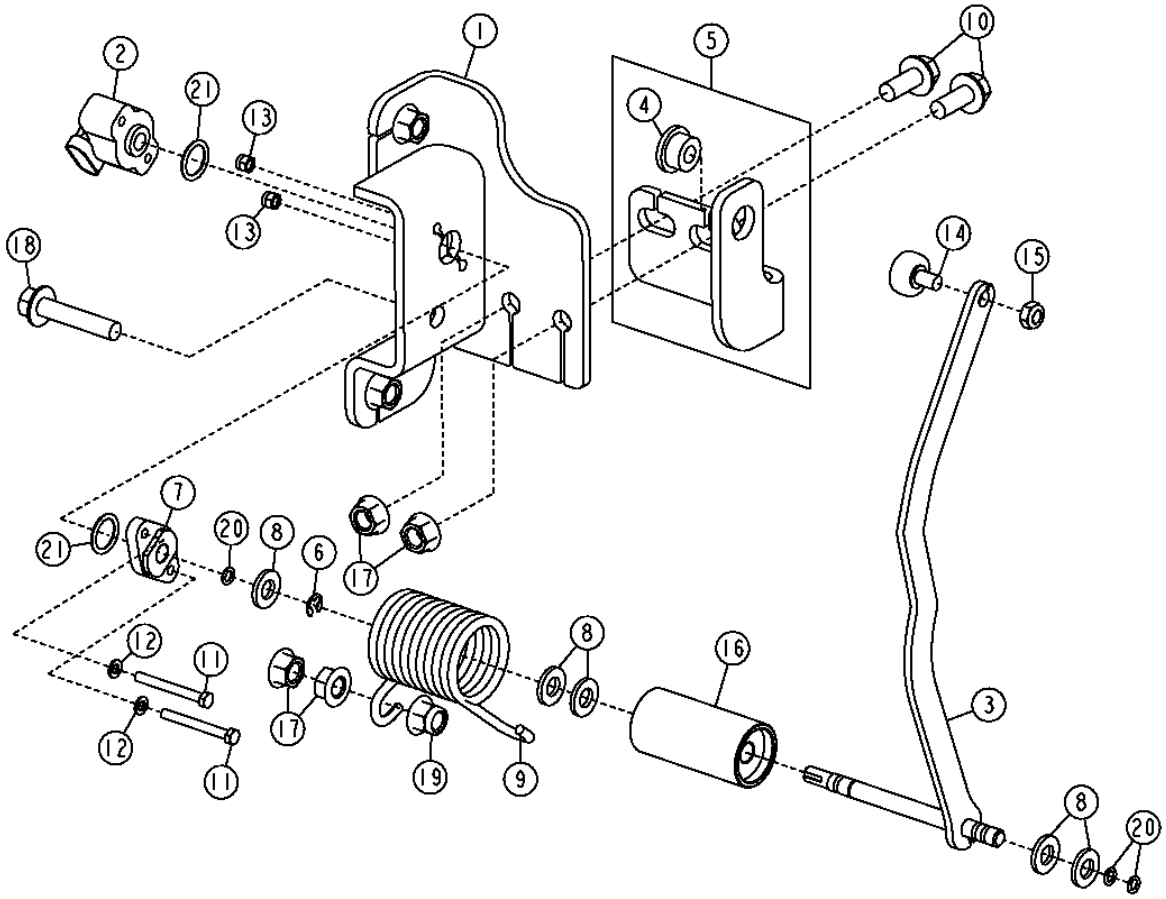

T195071

LOADER BOOM KICKOUT/ RETURN-TO-CARRY SENSOR
CAPTEUR DESENGAGEMENT / RETOUR EN POSITION TRANSPORT FLECHE CHARGEUR
SENSOR DE DESENGANCHE DE ALTURA DEL AGUILON DE CARGADORA / RETORNO A POSICION DE ACARREO

KEY	PART NO.	PART NAME	QTY.	SERIAL NO.	REMARKS
1	AT227530	BRACKET	1		
2	RE56165	POTENTIOMETER	1		
3	AT332233	ACTUATOR	1		
4	T82861	BUSHING	1		
5	AT226542	BRACKET	1		
6	R72653	SNAP RING	1		
7	R86457	SUPPORT	1		
8	24M7239	WASHER	5		10.700 X 21 X 2.500 MM
9	T195210	TORSION SPRING	1		
10	19M7785	SCREW	2		M10 X 25
11	19M8834	CAP SCREW	2		M5 X 45
12	24M7027	WASHER	2		5.300 X 10 X 1 MM
13	14M7360	LOCK NUT	2		M5
14	AT45678	CAM FOLLOWER	1		
15	R11151	LOCK NUT	1		7.925 MM (5/16")
16	T197144	BUSHING	1		
17	14M7296	FLANGE NUT	4		M10
18	19M7806	SCREW	1		M10 X 50
19	14M7400	LOCK NUT	1		M10
20	A4365R	O-RING	3		6.071 X 1.778 MM (0.239" X 0.070")
21	P48347	O-RING	2		17.120 X 2.616 MM (0.674" X 0.103")

LOADER RETURN-TO-DIG ACTUATOR AND SENSOR (FOR USE WITH POWERLLEL™ LINKAGE)
ACTIONNEUR CAPTEUR RETOUR EN POSITON DE CREUSEMENT DU CHARGEUR (A UTIL. AVEC TRINGL. POWERLLEL™)
SENSOR Y ACCIONADOR DE RETORNO PARA EXCAVAR DE LA CARGADORA (PARA USO CON VARILLAJE POWERLLEL™)

T205055 -UN-12JAN05

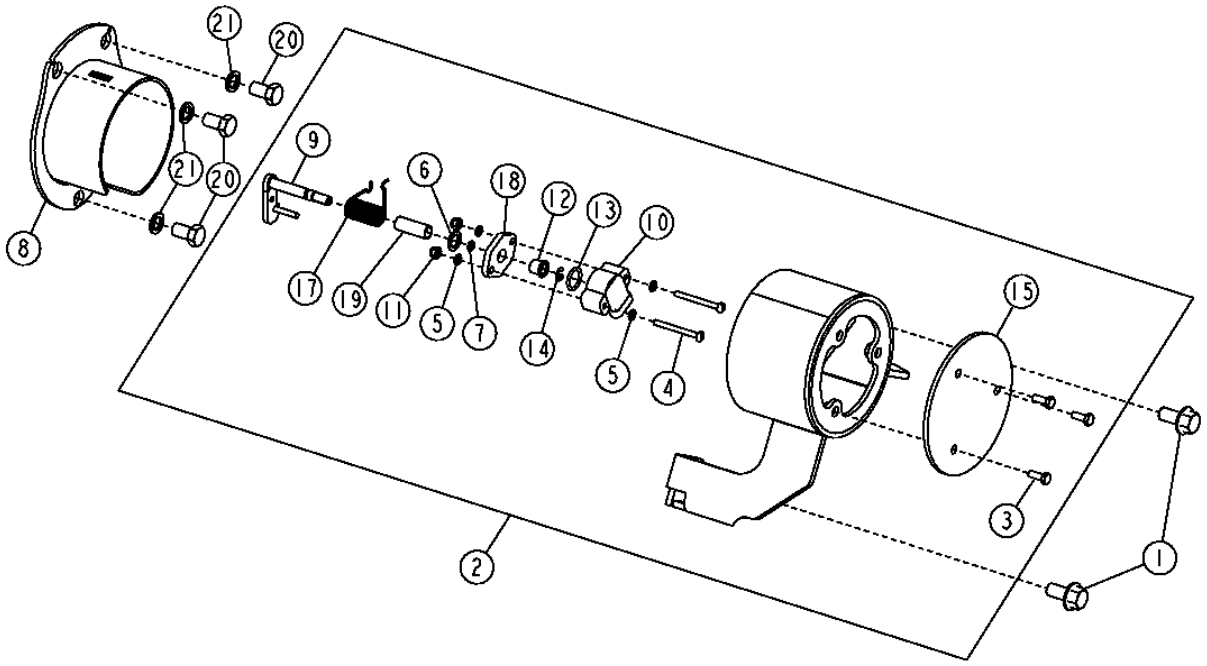

T205055

AUTOMATIC CONTROL FUNCTION 3166

LOADER RETURN-TO-DIG ACTUATOR AND SENSOR (FOR USE WITH POWERLLEL™ LINKAGE)
ACTIONNEUR CAPTEUR RETOUR EN POSITON DE CREUSEMENT DU CHARGEUR (A UTIL. AVEC TRINGL. POWERLLEL™)
SENSOR Y ACCIONADOR DE RETORNO PARA EXCAVAR DE LA CARGADORA (PARA USO CON VARILLAJE POWERLLEL™)

KEY	*PART NO.*	*PART NAME*	*QTY.*	*SERIAL NO.*	*REMARKS*
1	19M7788	SCREW	2		M12 X 25
2	AT312985	BRACKET	1		(STD)
3	19M7560	CAP SCREW	3		M6 X 16
4	21H1383	SCREW	2		0.190" X 2"
5	24M7027	WASHER	4		5.300 X 10 X 1 MM
6	24M7386	WASHER	1		13 X 19 X 1.500 MM
7	A4365R	O-RING	1		
8	AT312989	BRACKET	1		
9	AT312996	ARM	1		
10	AT313037	POTENTIOMETER	1		
11	M135542	LOCK NUT	2		
12	M88102	BUSHING	1		
13	P48347	O-RING	1		
14	R72653	SNAP RING	1		
15	T210258	PLATE	1		
17	T211396	TORSION SPRING	1		
18	T211404	PLATE	1		
19	T211405	SPACER	1		
20	19M8017	CAP SCREW	3		M12 X 20
21	24M7240	WASHER	3		13 X 25 X 3 MM

LOADER BOOM KICKOUT/RETURN-TO-CARRY SENSOR (SEE FOOTNOTE)
CAPTEUR DESENGAGEMENT/RETOUR POSITION TRANSPORT FLECHE CHARGEUR (VOIR APOSTILLE)
SENSOR DESENGANCHE ALTURA DEL AGUILON CARGADORA/RETORNO A POSICION DE ACARREO (VEA LA NOTA)

T202048 -UN-10AUG04

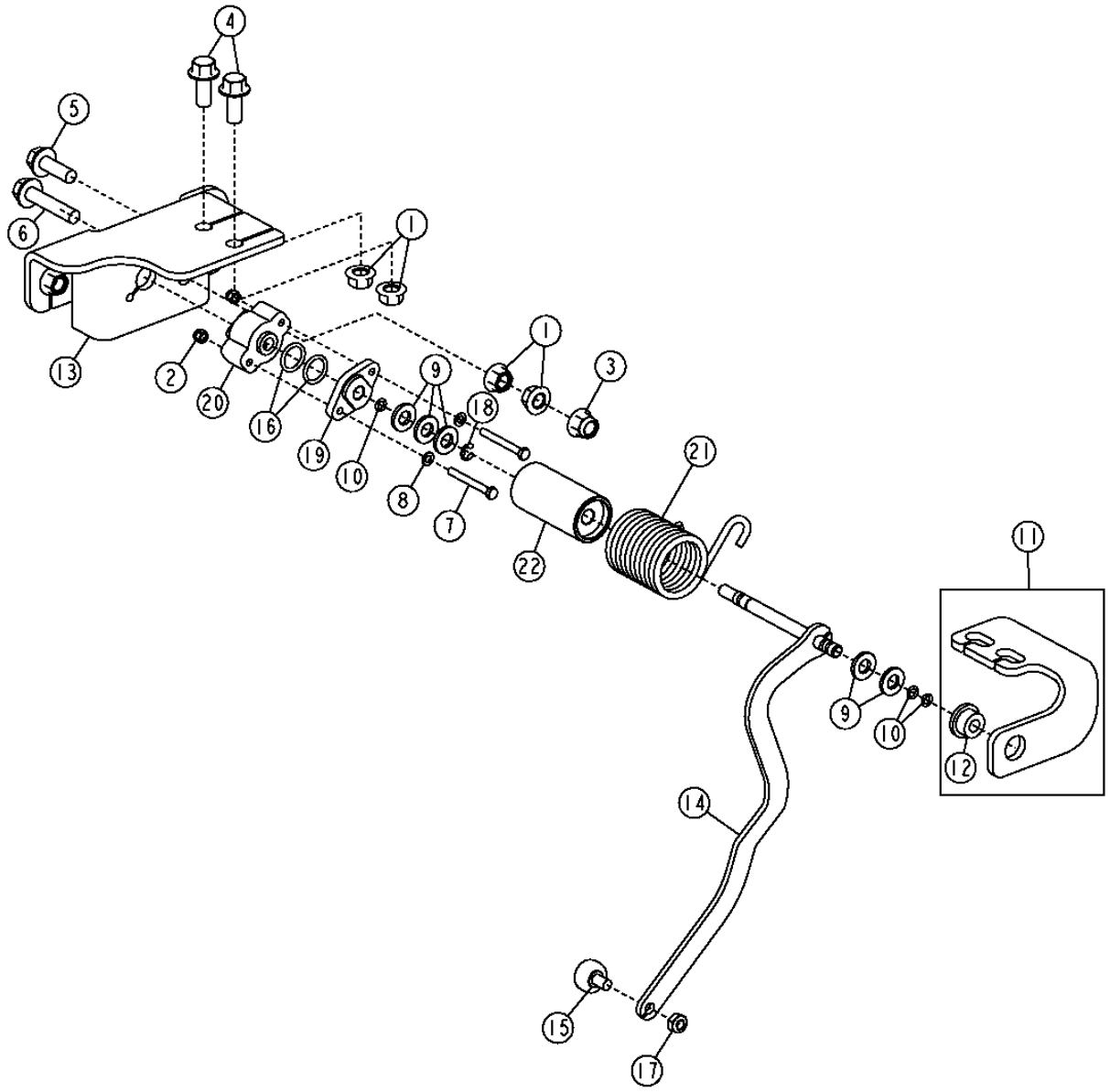

AUTOMATIC CONTROL FUNCTION 3166

LOADER BOOM KICK OUT / RETURN TO CARRY SENSOR (SEE FOOTNOTE)
CAPTEUR DESENGAGEMENT / RETOUR EN POSITION TRANSPORT FLECHE CHARGEUR (VOIR APOSTILLE)
SENSOR DESENGANCHE ALTURA DEL AGUILON CARGADORA / RETORNO A POSICION DE ACARREO (VEA LA NOTA)

KEY	*PART NO.*	*PART NAME*	*QTY.*	*SERIAL NO.*	*REMARKS*
1	14M7296	FLANGE NUT	4		M10
2	14M7360	LOCK NUT	2		M5
3	14M7400	LOCK NUT	1		M10
4	19M7785	SCREW	2		M10 X 25
5	19M7786	SCREW	1		M10 X 30
6	19M7806	SCREW	1		M10 X 50
7	19M8834	CAP SCREW	2		M5 X 45
8	24M7027	WASHER	2		5.300 X 10 X 1 MM
9	24M7239	WASHER	5		10.700 X 21 X 2.500 MM
10	A4365R	O-RING	3		6.071 X 1.778 MM
11	AT226542	BRACKET	1		
12	T82861	BUSHING	1		
13	AT227530	BRACKET	1		(POWERLLEL™)
	AT332233	ACTUATOR	1		(HIGH LIFT)
14	AT307950	ACTUATOR	1		
15	AT45678	CAM FOLLOWER	1		
16	P48347	O-RING	2		17.120 X 2.616 MM
17	R11151	LOCK NUT	1		7.925 MM
18	R72653	SNAP RING	1		
19	R86457	SUPPORT	1		
20	RE56165	POTENTIOMETER	1		
21	T195210	TORSION SPRING	1		
22	T197144	BUSHING	1		

MEMORANDA
MEMORANDA
MEMORANDA

NUMERICAL INDEX

PART NO.	KEY	PAGE
AA21292	2	1520-3
AA21292	3	1913-5
AA46694	7	0510-5
AH108055	37	1062-3
AH121227	9	1811-11
AH125760	10	2160-5
AH137210	19	3165-13
AH142159	9	3104-15
AH146559	1	3165-5
AH146559	9	3165-11
AH146563	2	3165-5
AH146563	5	3165-11
AH148608	7	0960-9
AH149194	5	0960-9
AH149815	21	3165-5
AH149815	17	3165-11
AH149848	18	3165-11
AH150396	10	0960-9
AH150453	6	0960-9
AH152445	3	3165-7
AH152446	4	3165-7
AH156874	26	3165-7
AH156876	6	3165-5
AH156876	12	3165-11
AH156877	8	3165-5
AH157291	1	3165-13
AH157292	2	3165-13
AH159192	20	3165-13
AH159448	13	0560-3
AH162914	14	0560-3
AH163630	30	3165-3
AH163630	20	3165-5
AH163672	22	3165-5
AH165079	15	0560-3
AH170895	8	0510-5
AH170895	21	2160-11
AH208687	30	3165-9
AH208687	19	3165-11
AH210134	8	3165-7
AH211239	17	0960-9
AH212033	1	0960-9
AH215587	5	3165-13
AH215766	10	3165-11
AH216299	27	3165-7
AH222122	5	3104-7
AH222122	5	3104-9
AH222122	13	3104-15
AH223400	8	3104-3
AH223400	8	3104-5
AH224533	3	3165-13
AH224571	16	3165-7
AH225343	31	3165-3
AH225343	25	3165-7
AH225717	31	3165-9
AH225717	21	3165-13
AH64349	16	2160-11
AH77869	6	1671-3
AH80916	35	0400-61
AH89557	18	1674-5
AH96708	14	0510-11
AH96708	19	0510-13
AL153660	3	1814-7
AL76568	1	1674-3
AL76568	24	1833-3
AL76568	6	1833-7
AM39653	17	2160-11
AND	15	1811-11
AN207183	8	3160-53
AN207184	8	3160-53
AP22660	16	1674-7
AR104650	13	0400-59
AR21837	17	0560-3
AR21837	10	1063-3
AR21837	31	1369-3
AR21837	5	1746-3
AR21839	10	0360-3
AR21839	9	0510-5
AR21839	22	0510-11
AR21839	39	0510-13
AR21839	18	0560-3
AR21839	30	1369-3
AR21839	18	2160-11
AR21839	4	2160-13
AR50411	1	0505-3
AR54815	19	0560-3
AR65507	3	0400-47
AR65507	4	0400-47
AR83396	5	1520-5
AR85327	4	0520-3
AR89602	9	3160-21
AR91896	7	1811-7
AT102827	11	3140-11
AT103107	8	3165-3
AT103559	2	0110-7
AT103919	5	2002-5
AT105438	25	3160-5
AT106365	5	1814-3
AT116162	9	0962-5
AT116162	6	1064-3
AT116373	16	0930-5
AT116970	5	1814-5
AT116970	6	1814-7
AT119378	11	3162-11
AT120461	1	2004-5
AT124574	28	3160-17
AT135758	15	1673-3
AT135758	7	1673-5
AT137920	7	1814-5
AT137921	9	1814-5
AT138180	13	1814-5
AT138180	7	1814-7
AT139694	6	0962-3
AT141527	44	0930-5
AT143577	2	1740-5
AT145341	27	1674-5
AT145341	35	1674-7
AT151931	8	1811-13
AT151931	8	1811-15
AT152180	28	1369-3
AT153937	6	3165-13
AT156896	6	0962-5
AT157226	1	2002-5
AT158098	5	2160-13
AT160480	1	1676-3
AT160662	18	0962-3
AT161638	34	2160-11
AT162114	6	1671-5
AT162719	14	0962-3
AT162848	4	1833-13
AT163872	19	1832-3
AT163872	22	1832-3
AT165288	11	0342-3
AT166149	1	3160-19
AT167553	3	1100-7
AT167553	9	3160-59
AT167553	12	3160-61
AT167553	21	3160-65
AT169849	5	0962-3
AT169939	12	2160-13
AT170005	4	1810-3
AT170991	33	3160-17
AT172629	20	3160-47
AT172629	1	3162-11
AT173193	9	1814-3
AT173313	2	1821-5
AT173313	17	1821-5
AT173313	18	1821-5
AT173313	19	1821-5
AT173314	3	1821-5
AT173315	4	1821-5
AT173321	11	1821-5
AT173321	12	1821-5
AT173321	29	1821-5
AT173321	30	1821-5
AT173321	31	1821-5
AT173321	40	1821-5
AT173354	5	1673-7
AT173355	3	1810-5
AT174697	2	1831-11
AT175750	5	0350-11
AT176801	2	1674-11
AT177950	35	2160-11
AT180119	12	2160-3
AT181313	4	1062-3
AT184015	6	0520-5
AT184016	7	0520-5
AT186563	18	0960-9
AT188759	9	2001-3
AT189390	20	1811-13
AT189390	20	1811-15
AT189390	2	2003-3
AT189487	21	1811-13
AT189487	21	1811-15
AT189487	3	2003-3
AT191285	5	3160-23
AT191285	14	3160-37
AT191285	39	3160-41
AT191285	13	3160-45
AT191487	16	0962-3
AT193500	4	1833-5
AT193500	3	1833-9
AT195301	18	1674-7
AT195302	19	1674-7
AT195441	7	1821-3
AT195442	8	1821-3
AT196427	1	2002-3
AT196760	20	3160-55
AT196943	2	2160-5
AT199388	10	2001-3
AT202726	15	1814-5
AT202786	4	3160-19
AT202789	5	1673-7
AT202827	4	3166-3
AT202934	2	1674-3
AT202934	15	1833-7
AT202955	14	0350-3
AT203130	5	3166-3
AT203137	6	1673-7
AT203182	3	0960-7
AT203247	15	3102-3
AT203457	6	1062-3

NUMERICAL INDEX - CONTINUED

PART NO.	KEY	PAGE
AT203483	16	3140-3
AT203483	9	3140-5
AT203566	29	1674-5
AT203570	10	1740-3
AT203570	24	3140-3
AT203570	10	3140-5
AT206751	13	1740-3
AT206794	1	0242-5
AT206818	31	1674-5
AT206908	11	0540-3
AT206909	12	0540-3
AT206914	13	0540-3
AT206915	14	0540-3
AT207022	2	0242-5
AT207022	9	1100-3
AT207023	5	0210-3
AT207023	5	0210-5
AT207096	2	3160-19
AT207144	1	1812-3
AT207287	2	3140-15
AT207329	2	0325-3
AT207330	11	0325-3
AT207333	5	0325-3
AT207336	8	0325-3
AT207432	4	1746-5
AT207433	6	1746-5
AT207529	28	1062-3
AT207686	2	3140-7
AT207715	21	3140-3
AT207718	5	3140-3
AT207718	4	3140-11
AT207719	28	3140-3
AT207719	12	3140-5
AT207839	10	1100-3
AT207927	13	3165-3
AT207927	13	3165-9
AT207947	46	1062-3
AT207948	45	1062-3
AT208006	13	0510-7
AT208015	2	1100-7
AT208085	11	1062-3
AT208086	18	1062-3
AT208087	22	1062-3
AT208088	7	1062-3
AT208089	25	1062-3
AT208159	7	1910-5
AT208159	10	1910-7
AT208163	23	1062-3
AT208411	6	0210-3
AT208411	6	0210-5
AT208411	13	1100-3
AT208483	5	1821-5
AT208485	7	1821-5
AT208486	8	1821-5
AT208487	9	1821-5
AT208487	20	1821-5
AT208487	21	1821-5
AT208487	22	1821-5
AT208487	23	1821-5
AT208487	24	1821-5
AT208488	15	1821-5
AT208488	36	1821-5
AT208488	37	1821-5
AT208490	10	1821-5
AT208490	25	1821-5
AT208490	26	1821-5
AT208490	27	1821-5
AT208490	28	1821-5
AT208491	11	1821-5
AT208491	32	1821-5
AT208630	6	1674-11
AT208691	10	3160-21
AT208691	10	3160-25
AT208694	4	0960-7
AT208760	14	3160-45
AT208760	16	3160-47
AT208760	28	3162-11
AT208911	21	3160-47
AT208911	1	3162-11
AT208911	4	3162-11
AT209020	9	1821-3
AT209021	10	1821-3
AT209022	15	1821-3
AT209024	17	1821-3
AT209025	19	1821-3
AT209026	21	1821-3
AT209155	5	3101-5
AT209156	14	3101-3
AT209221	1	0342-3
AT209225	23	1821-3
AT209469	13	1821-5
AT209469	33	1821-5
AT209469	34	1821-5
AT209469	35	1821-5
AT209496	14	1100-3
AT209537	45	0930-5
AT209668	14	1833-3
AT209668	13	1833-7
AT209703	2	0342-3
AT209704	3	0342-3
AT209748	2	3160-13
AT209748	8	3160-33
AT209748	13	3160-41
AT209748	33	3160-43
AT209748	26	3160-45
AT209748	46	3160-47
AT209749	16	3160-43
AT209750	2	3160-13
AT209750	35	3160-17
AT209750	8	3160-33
AT209750	28	3160-37
AT209750	13	3160-41
AT209750	33	3160-43
AT209750	26	3160-45
AT209750	46	3160-47
AT209907	1	1100-7
AT209908	11	1814-5
AT209908	9	1814-7
AT209909	10	1814-5
AT209947	1	1814-3
AT209995	1	1822-7
AT210086	5	1833-5
AT210092	18	0930-5
AT210092	45	0930-5
AT210093	19	0930-5
AT210093	45	0930-5
AT210145	2	3162-11
AT210207	48	0930-5
AT210246	9	1673-3
AT210247	90	3162-11
AT210275	7	3104-9
AT210291	29	1062-3
AT210333	11	1673-3
AT210344	13	0325-3
AT210399	21	0930-5
AT210400	11	3160-21
AT210400	11	3160-25
AT210561	15	1833-3
AT210606	3	0242-5
AT210684	39	3160-17
AT210685	37	3160-17
AT210686	44	3160-17
AT210712	14	0510-7
AT210773	1	0350-11
AT210877	34	1062-3
AT211041	22	1672-3
AT211041	19	1672-7
AT211219	3	3160-19
AT211296	3	1811-3
AT211296	8	1811-7
AT211379	18	0510-11
AT211381	15	0510-11
AT21139	1	0400-44
AT211475	10	0325-3
AT219757	4	3160-19
AT219778	7	1833-5
AT219778	5	1833-9
AT219974	8	1910-5
AT220035	50	3160-17
AT220039	30	0350-21
AT220096	19	3160-3
AT220096	20	3160-5
AT220096	20	3160-7
AT220223	19	0962-3
AT220224	20	0962-3
AT220226	15	0962-3
AT220526	4	3160-19
AT220827	11	3160-17
AT220831	32	3160-17
AT220925	18	0510-9
AT220953	17	1833-3
AT220953	14	1833-7
AT221015	25	1821-3
AT221016	26	1821-3
AT221017	28	1821-3
AT221487	5	0520-5
AT221628	4	3166-3
AT221696	7	1671-5
AT221696	11	1910-5
AT222005	21	0350-3
AT222013	33	1746-5
AT222054	12	0342-3
AT222153	2	0962-3
AT222366	5	3166-3
AT222372	59	1062-3
AT222402	1	1816-7
AT222414	11	1064-3
AT222597	7	0530-3
AT223056	6	3160-23
AT223056	14	3160-27
AT223056	38	3160-33
AT223056	15	3160-37
AT223056	40	3160-41
AT223056	17	3160-43
AT223056	47	3160-45
AT223056	37	3160-47
AT223173	15	2160-13
AT223493	5	0560-3
AT223535	59	1062-3
AT223535	18	3160-55
AT223538	3	1100-5

NUMERICAL INDEX - CONTINUED

PART NO.	KEY	PAGE
AT223648	49	0930-5
AT223658	23	2160-11
AT223768	12	1064-3
AT223870	7	2001-3
AT224233	13	1810-5
AT224234	13	1810-5
AT224235	9	1811-13
AT224237	9	1811-15
AT224318	12	3160-21
AT224318	13	3160-25
AT224430	8	1064-3
AT224497	3	1100-5
AT224570	1	0510-15
AT224570	1	2160-5
AT224573	2	3160-53
AT224574	2	3160-53
AT224574	3	3160-53
AT224600	22	3160-55
AT224703	1	3160-57
AT224705	3	3160-53
AT224706	2	0510-15
AT224706	1	3160-53
AT224706	3	3160-53
AT224797	24	2160-11
AT224850	29	3160-17
AT224862	1	0510-15
AT224862	1	2160-5
AT224862	2	3160-53
AT224865	2	0510-15
AT224865	1	3160-53
AT224866	2	0510-15
AT224866	1	3160-53
AT224867	4	3160-53
AT224868	4	3160-53
AT224873	7	2160-5
AT224873	3	3160-57
AT224893	12	2001-3
AT224894	2	1674-13
AT224923	3	1810-5
AT224989	4	1811-3
AT224989	9	1811-7
AT224990	10	1811-7
AT224991	5	1811-3
AT224991	11	1811-7
AT224994	21	1811-9
AT224994	1	1811-11
AT224995	10	1811-11
AT225082	5	3160-53
AT225083	5	3160-53
AT225083	1	3160-57
AT225084	6	3160-53
AT225085	6	3160-53
AT225085	2	3160-57
AT225143	1	3160-17
AT225425	7	3160-29
AT225425	13	3162-7
AT225446	23	3160-55
AT225451	37	1833-5
AT225451	30	1833-9
AT225505	15	0510-11
AT225529	4	3160-57
AT225529	10	3160-59
AT225530	4	3160-57
AT225530	10	3160-59
AT225530	13	3160-61
AT225530	22	3160-65
AT225573	10	1064-3
AT225574	10	2160-9
AT225611	15	0350-5
AT225706	10	1811-13
AT225727	15	1100-3
AT225805	20	0510-13
AT225805	5	0510-15
AT225826	1	3140-15
AT226000	10	1811-9
AT226087	10	2160-13
AT226109	3	0510-15
AT226110	3	0510-15
AT226119	10	3162-7
AT226132	15	3160-41
AT226132	18	3160-43
AT226133	16	3160-41
AT226133	20	3160-43
AT226151	22	1811-9
AT226152	25	1811-9
AT226155	4	1913-5
AT226176	27	1811-9
AT226229	9	1910-5
AT226249	18	1833-3
AT226265	2	3160-57
AT226266	1	3160-57
AT226273	22	1832-3
AT226282	2	2004-3
AT226309	12	1833-5
AT226334	8	1816-5
AT226377	6	1811-3
AT226404	33	0510-13
AT226454	8	3160-29
AT226454	7	3160-35
AT226542	5	3166-5
AT226542	11	3166-9
AT226563	7	1746-3
AT226578	1	1810-7
AT226614	11	2160-13
AT226615	18	3160-29
AT226615	39	3160-33
AT226615	18	3160-35
AT226615	11	3160-37
AT226615	43	3160-41
AT226615	21	3160-43
AT226615	48	3160-45
AT226615	38	3160-47
AT226676	14	1821-5
AT226676	38	1821-5
AT226676	39	1821-5
AT226676	41	1821-5
AT226676	42	1821-5
AT226676	43	1821-5
AT226791	4	1671-5
AT226924	1	1672-9
AT227013	1	1810-7
AT227063	4	1816-9
AT227072	4	1913-3
AT227134	7	1674-11
AT227170	50	1833-9
AT227248	13	0360-3
AT227279	17	0360-3
AT227279	37	2160-11
AT227509	18	0510-11
AT227509	4	0510-15
AT227530	1	3166-5
AT227530	13	3166-9
AT227544	14	1811-7
AT227545	15	1811-7
AT227549	2	1816-3
AT227668	2	1831-3
AT227668	3	1831-7
AT227669	3	1831-3
AT227710	15	0540-3
AT227717	20	3160-55
AT227738	3	1520-3
AT227754	23	1832-3
AT227815	16	0540-3
AT227835	9	0520-5
AT227925	1	3162-3
AT227925	1	3162-5
AT227925	1	3162-7
AT227926	1	3162-5
AT227926	2	3162-7
AT227927	4	3162-3
AT227927	10	3162-5
AT227927	4	3162-7
AT227928	3	3162-3
AT227928	9	3162-5
AT227928	3	3162-7
AT227929	5	3162-7
AT227930	15	3160-33
AT227930	6	3162-3
AT227930	2	3162-5
AT227930	6	3162-7
AT227933	9	3162-3
AT227933	5	3162-5
AT227933	9	3162-7
AT227937	6	0560-3
AT227965	4	1831-7
AT228192	13	3160-21
AT228199	24	3160-55
AT228240	6	1833-13
AT228250	44	3160-41
AT228250	22	3160-43
AT228250	15	3162-3
AT228260	49	3160-45
AT228260	39	3160-47
AT228261	45	3160-41
AT228261	23	3160-43
AT228289	9	1673-7
AT228311	14	1671-3
AT228312	8	1671-3
AT228313	11	1671-3
AT228407	12	1671-3
AT228414	6	1749-3
AT228426	16	1749-3
AT228616	13	2160-13
AT228627	11	0560-3
AT228747	44	2160-11
AT228809	7	1822-3
AT25226	8	0110-3
AT25226	3	0110-7
AT280208	8	1910-3
AT280631	7	1833-13
AT300115	9	1816-9
AT300154	40	3160-33
AT300154	9	3160-35
AT300154	40	3160-37
AT300156	10	3160-35
AT300156	26	3160-37
AT300167	14	1672-7
AT300237	3	3103-3
AT300238	3	3103-3
AT300487	6	0520-3
AT300487	11	0520-5

NUMERICAL INDEX - CONTINUED

PART NO.	KEY	PAGE
AT300489	5	0520-3
AT300489	10	0520-5
AT300524	21	0962-3
AT300921	10	1674-11
AT300921	1	3162-13
AT300936	10	3160-29
AT301026	20	1674-5
AT301380	1	3140-9
AT301390	3	3140-13
AT301421	7	3140-13
AT301498	37	1674-7
AT301520	9	3102-3
AT301520	9	3104-5
AT301520	7	3104-7
AT301539	8	3140-13
AT301543	10	3104-3
AT301543	10	3104-5
AT301544	9	3140-13
AT301576	12	3140-13
AT301711	15	0510-7
AT301818	13	3140-5
AT301913	3	2008-3
AT301914	7	1673-7
AT301914	4	2008-3
AT301930	15	3160-61
AT302059	6	3102-5
AT302077	6	3102-3
AT302078	6	3102-5
AT302080	6	3102-3
AT302144	14	2160-3
AT302146	14	2160-3
AT303320	15	1672-3
AT303493	11	1811-11
AT303619	11	3162-3
AT303619	8	3162-5
AT303619	11	3162-7
AT303799	3	3160-57
AT304026	23	1674-7
AT304633	4	1814-7
AT304736	13	3140-13
AT304880	50	3160-45
AT304880	40	3160-47
AT304881	51	3160-45
AT304881	42	3160-47
AT304899	17	2160-13
AT305126	36	1811-9
AT305126	37	1811-9
AT305126	38	1811-9
AT305130	7	1811-3
AT305130	8	1811-3
AT305130	33	1811-7
AT305130	34	1811-7
AT305320	14	3160-25
AT305324	7	3166-3
AT305389	9	1674-9
AT305405	59	1833-5
AT305405	51	1833-9
AT305603	14	3162-3
AT305603	11	3162-5
AT305658	4	0350-3
AT305687	50	3160-29
AT305692	50	3160-35
AT305931	6	1673-5
AT306133	26	1369-3
AT306219	14	2160-3
AT306603	5	0242-3
AT306690	14	0510-3
AT306690	16	0510-7
AT306690	11	1910-7
AT306828	4	1674-13
AT306829	1	2001-3
AT306830	1	2001-3
AT306831	1	2001-3
AT306913	16	1833-3
AT306930	17	0510-7
AT306931	18	0510-7
AT307045	25	2160-11
AT307067	14	3160-21
AT307090	16	1673-3
AT307315	4	2160-5
AT307485	7	1672-9
AT307486	7	1672-9
AT307538	8	3140-11
AT307539	1	3140-11
AT307612	6	1833-13
AT307636	2	3162-9
AT307637	4	3162-9
AT307638	3	3162-9
AT307640	5	3162-9
AT307641	6	3162-9
AT307774	52	3160-17
AT307818	16	3140-5
AT307898	6	3166-3
AT307928	8	0530-3
AT307950	14	3166-9
AT307996	14	3165-9
AT308025	9	3102-3
AT308025	9	3104-3
AT308032	8	3102-3
AT308065	1	3103-3
AT308066	1	3103-3
AT308067	4	3103-3
AT308067	1	3103-5
AT308199	3	1821-3
AT308284	15	3160-21
AT308284	15	3160-25
AT308285	16	3160-21
AT308285	16	3160-25
AT308286	17	3160-21
AT308286	17	3160-25
AT308287	18	3160-21
AT308287	18	3160-25
AT308419	25	3160-55
AT308426	7	2160-13
AT308477	26	3160-55
AT308487	8	3160-65
AT308488	9	3160-65
AT308533	27	3160-55
AT308795	25	1821-3
AT308796	26	1821-3
AT308797	28	1821-3
AT308841	16	3160-61
AT308842	17	3160-61
AT308994	5	0350-41
AT309049	15	3140-7
AT309079	15	3140-7
AT309494	3	2160-5
AT309550	10	1673-3
AT310060	2	3103-3
AT310335	11	0510-5
AT310412	10B	1816-5
AT310413	9	1816-5
AT310414	10A	1816-5
AT310435	6	1821-3
AT310561	16	2160-13
AT310702	24	1811-7
AT310905	28	2160-11
AT311093	18	3160-61
AT311094	19	3160-61
AT311388	50	3104-3
AT311570	38	2160-11
AT311734	8	3140-11
AT311822	22	1927-7
AT311903	3	1674-9
AT311918	30	1821-3
AT311918	1	1821-5
AT311919	6	1821-3
AT311938	24	1674-7
AT312053	15	0510-3
AT312053	9	1910-7
AT312178	2	1676-3
AT312932	19	0510-9
AT312985	2	3166-7
AT312989	8	3166-7
AT312996	9	3166-7
AT313037	10	3166-7
AT313087	5	3162-13
AT313282	57	1833-5
AT313282	55	1833-9
AT313399	6	1821-5
AT313424	7	3160-27
AT313424	30	3160-33
AT313424	24	3160-43
AT313424	44	3160-47
AT313477	47	1369-3
AT313536	18	1672-3
AT313536	16	1672-7
AT313708	2	2160-5
AT313708	7	2160-5
AT314008	1	3160-9
AT314009	1	3160-11
AT314010	2	3160-11
AT314011	3	3160-11
AT314011	3	3160-13
AT314011	20	3160-33
AT314011	31	3160-37
AT314011	22	3160-41
AT314011	34	3160-43
AT314011	29	3160-45
AT314011	48	3160-47
AT314012	4	3160-11
AT314012	4	3160-13
AT314012	21	3160-33
AT314012	32	3160-37
AT314012	23	3160-41
AT314012	35	3160-43
AT314012	30	3160-45
AT314012	49	3160-47
AT314013	1	3160-11
AT314013	1	3160-13
AT314013	5	3160-19
AT314013	42	3160-33
AT314013	46	3160-41
AT314013	25	3160-43
AT314013	52	3160-45
AT314013	45	3160-47
AT314014	10	3160-11
AT314015	2	3160-9
AT314016	3	3160-9
AT314017	1	3160-9
AT314021	10	3160-13

NUMERICAL INDEX - CONTINUED

PART NO.	KEY	PAGE
AT314021	35	3160-43
AT314022	1	3160-15
AT314023	2	3160-15
AT314025	3	3160-15
AT314026	25	3160-7
AT314046	1	3160-13
AT314046	42	3160-33
AT314046	27	3160-37
AT314046	46	3160-41
AT314046	25	3160-43
AT314046	52	3160-45
AT314046	45	3160-47
AT314048	25	3160-3
AT314057	1	3160-15
AT314121	9	0530-3
AT314125	11	0530-3
AT314266	60	1062-3
AT314267	12	1062-3
AT314290	6	0242-5
AT314583	7	0520-3
AT314583	12	0520-5
AT314600	36	3160-55
AT314647	50	3160-43
AT314734	5	0960-7
AT314764	65	3160-47
AT314817	50	3160-33
AT314989	23	0510-11
AT314989	40	0510-13
AT315001	6	1520-3
AT315049	20	3160-25
AT315050	21	3160-25
AT315072	4	1100-5
AT315111	16	1740-3
AT315175	19	3160-21
AT315254	2	0263-3
AT315290	20	1811-7
AT315331	6	3160-11
AT315446	12	1811-7
AT315458	1	3162-9
AT315459	1	3162-9
AT315459	3	3162-13
AT315715	7	1821-3
AT315761	8	1821-3
AT315833	10	3160-65
AT315834	11	3160-65
AT315846	8	3162-9
AT315847	8	3162-9
AT316085	12	3160-65
AT316244	7	3160-23
AT316244	35	3160-37
AT316244	47	3160-41
AT316245	8	3160-23
AT316245	37	3160-37
AT316245	48	3160-41
AT316246	9	3160-23
AT316246	53	3160-45
AT316247	10	3160-23
AT316247	54	3160-45
AT316250	19	0510-11
AT316250	35	0510-13
AT316311	12	0560-3
AT316315	6	3160-19
AT316328	7	1910-3
AT316329	1	0263-3
AT316333	41	0510-13
AT316421	35	1674-5
AT316466	22	0510-9
AT316483	18	1910-5
AT316487	13	1910-5
AT316489	17	1910-5
AT316490	10	1910-5
AT316492	16	1910-5
AT316494	40	1910-7
AT316532	6	3160-53
AT316566	6	1910-3
AT316650	55	3160-41
AT316651	60	3160-45
AT316652	50	3160-37
AT316716	17	1749-3
AT316717	18	1749-3
AT316718	41	1674-5
AT316733	43	1674-5
AT317014	20	3160-61
AT317047	15	1746-5
AT317062	2	3140-13
AT317063	51	1674-7
AT317096	32	1910-7
AT317129	18	3160-3
AT317129	19	3160-5
AT317129	19	3160-7
AT317146	20	3160-3
AT317147	24	3160-5
AT317148	24	3160-7
AT317174	13	1746-5
AT317251	16	0360-3
AT317353	33	0510-13
AT317367	6	3163-7
AT317468	7	3163-5
AT317472	9	1746-5
AT317474	1	0110-3
AT318123	7	3162-7
AT318742	19	0510-11
AT318742	35	0510-13
AT318789	22	0510-9
AT318912	50	3160-19
AT318915	20	3160-19
AT318916	19	3160-19
AT318917	7	3160-19
AT318925	30	3140-3
AT318925	11	3140-5
AT318941	26	0510-9
AT318974	16	0510-3
AT318987	6	1833-5
AT318987	4	1833-9
AT319056	39	2160-11
AT319105	27	0510-9
AT319144	9	1063-3
AT319145	8	1063-3
AT320168	20	3160-21
AT320168	12	3160-25
AT320193	2	3103-3
AT320309	6	1746-3
AT320571	6	0960-3
AT320593	25	1369-3
AT320619	3	3103-3
AT320620	3	3103-3
AT320673	12	0530-3
AT320674	12	0530-3
AT320691	50	3104-5
AT320724	72	1674-7
AT320922	45	1674-5
AT320974	19	3160-25
AT321007	21	3160-21
AT321070	45	0510-13
AT321264	24	1369-3
AT321388	7	3163-5
AT321505	17	0510-3
AT321942	11	1833-3
AT321942	10	1833-7
AT322202	5	3160-27
AT322202	31	3160-33
AT322202	26	3160-43
AT322203	6	3160-27
AT322203	32	3160-33
AT322203	28	3160-43
AT322206	18	2160-13
AT322224	12	3163-5
AT322227	12	3163-5
AT322230	11	3163-7
AT322416	8	3160-27
AT322416	52	3160-47
AT322442	9	3160-27
AT322442	54	3160-47
AT322717	6	3104-7
AT322719	8	3104-7
AT322719	8	3104-9
AT322723	6	3104-9
AT322957	12	0510-5
AT322982	64	1062-3
AT322982	1	2160-7
AT323120	4	3103-7
AT323306	1	0515-3
AT323307	3	0515-3
AT323318	5	3103-7
AT323319	6	3103-7
AT323337	4	3103-7
AT323621	17	1910-7
AT323622	21	1910-7
AT323632	36	3140-5
AT323692	3	1913-3
AT323720	27	0560-3
AT323756	10	3163-3
AT323757	9	3163-3
AT323817	11	3163-3
AT323920	14	2160-3
AT323961	13	0510-5
AT323961	15	0510-5
AT324137	12	3163-3
AT324222	9	3104-7
AT324238	5	1833-13
AT324266	9	3104-9
AT324290	22	0510-9
AT324291	22	0510-9
AT324484	15	1673-3
AT324641	13	3163-3
AT324681	12	1814-5
AT324715	6	1520-5
AT324849	10	1814-7
AT324881	18	0360-3
AT325146	53	3160-17
AT325146	6	3160-19
AT325194	12	3163-3
AT325201	13	3163-3
AT325611	22	0360-3
AT325612	5	3162-3
AT325612	7	3162-5
AT325643	1	1811-5
AT326184	3	3103-5
AT326190	2	3103-5
AT326203	3	3103-5
AT326370	3	2160-7

NUMERICAL INDEX - CONTINUED

PART NO.	KEY	PAGE
AT326581	29	3160-17
AT326581	54	3160-17
AT326581	6	3160-19
AT326597	16	0510-5
AT326640	2	3103-5
AT326786	17	3104-7
AT326787	16	3104-9
AT326788	1	3102-7
AT326789	1	3102-7
AT326792	4	3103-5
AT326793	4	3103-5
AT326794	4	3103-5
AT326795	4	3103-5
AT326970	65	1062-3
AT327500	1	1822-5
AT327535	5	1671-5
AT327621	7	1816-9
AT327951	14	3163-3
AT328223	54	1674-7
AT329269	28	0510-9
AT329720	28	1833-7
AT329720	1	1833-9
AT329721	6	1833-9
AT329722	1	1833-5
AT329723	8	1833-5
AT329810	40	2160-11
AT329939	1	0960-5
AT329958	8	0520-3
AT329958	13	0520-5
AT330154	12	3163-3
AT330154	13	3163-3
AT330154	25	3163-3
AT330155	12	3163-3
AT330155	13	3163-3
AT330155	25	3163-3
AT330324	1	0520-5
AT330541	1	0960-5
AT330592	29	0510-9
AT330606	30	0510-9
AT330678	31	0510-9
AT330697	50	0930-5
AT330724	11	0960-7
AT330752	10	0960-7
AT330798	32	0510-9
AT331208	44	1062-3
AT331840	2	0960-7
AT332096	19	0510-5
AT332233	3	3166-5
AT332233	13	3166-9
AT332291	7	3160-53
AT332291	19	3160-55
AT332314	19	2160-13
AT332315	20	2160-13
AT332441	1	0960-7
AT332511	24	1832-3
AT332605	33	0510-9
AT332612	18	0510-3
AT332614	20	0510-3
AT332625	1	0930-5
AT332648	21	0510-3
AT332901	19	0510-7
AT333055	34	0510-9
AT333057	35	0510-9
AT333062	36	0510-9
AT333634	23	1369-3
AT333696	22	0510-3
AT333751	16	0520-5
AT333796	20	0510-7
AT333803	21	0510-7
AT333811	5	2160-5
AT333904	20	2160-5
AT333904	11	2160-9
AT334170	37	0510-9
AT334250	22	1910-7
AT334251	23	1910-7
AT334374	22	2160-13
AT334438	38	0510-9
AT334439	39	0510-9
AT334451	10	0350-13
AT334453	24	2160-9
AT334580	50	0510-9
AT334711	70	1674-7
AT334868	24	0360-3
AT334869	25	0360-3
AT335032	24	0510-11
AT335032	42	0510-13
AT335139	51	0930-5
AT335164	25	0510-11
AT335164	43	0510-13
AT335291	37	1910-7
AT335413	52	0930-5
AT335462	60	1369-3
AT336450	12	3104-5
AT336452	12	3104-3
AT336601	65	1674-7
AT336621	5	2007-3
AT336825	6	3160-63
AT336826	7	3160-63
AT336880	8	3160-63
AT336881	8	3160-63
AT336882	9	3160-63
AT336883	9	3160-63
AT336884	17	3160-63
AT336885	17	3160-63
AT337311	23	3160-65
AT340157	35	0560-3
AT340710	9	0560-3
AT35831	20	0510-5
AT41188	15	1671-3
AT44188	14	1811-3
AT45678	14	3166-5
AT45678	15	3166-9
AT49216	20	3162-11
AT49859	12	0242-5
AT53439	11	0520-3
AT53439	17	0520-5
AT53541	7	0210-5
AT53541	13	0242-5
AT59892	2	2006-3
AT62123	10	3160-63
AT83105	12	1811-11
A364R	13	0400-37
A4365R	33	1062-3
A4365R	20	3166-5
A4365R	7	3166-7
A4365R	10	3166-9
A4540R	24	0210-17
A4742R	10	3160-17
CD12569	23	1322-7
CD16284	20	0400-53
DT5366	30	0360-3
D2361R	9	0400-39
E12379	14	0242-5
E12379	16	3165-9
E12379	9	3166-3
E52687	9	3165-5
E52687	14	3165-11
E53801	17	3140-5
E63524	10	0400-61
E69975	24	0510-5
E80242	13	0530-3
F2253R	4	0210-31
F2380R	1	0210-11
F2380R	1	0210-13
F3171R	14	0210-11
F3171R	5	0210-15
F3171R	3	0210-17
F3171R	1	0210-28
F3171R	1	0210-29
GY20126	3	1674-13
H110232	9	1811-3
H110232	21	1811-7
H114865	20	1833-3
H126081	13	1811-11
H126082	14	1811-11
H132922	16	1811-11
H138955	7	1322-5
H143405	11	0960-9
H148166	36	2160-11
H151537	7	3165-5
H151537	13	3165-11
H151890	10	3165-5
H151890	16	3165-11
H152205	3	3165-5
H152205	8	3165-11
H152796	4	3165-5
H152796	7	3165-11
H154514	1	3104-15
H155561	1	3165-11
H155655	8	0960-9
H155770	14	3165-5
H155770	6	3165-11
H155879	7	3165-13
H156058	2	3104-15
H156360	13	1816-5
H156586	3	3104-15
H157897	9	0960-9
H157947	9	0960-9
H158175	17	3165-7
H158192	21	0960-9
H158397	9	3165-7
H159361	5	3165-7
H159362	6	3165-7
H162141	4	0960-9
H163598	18	3165-7
H163979	8	3165-13
H163980	9	3165-13
H164982	7	3104-15
H168220	10	3165-13
H169568	7	1749-3
H169746	15	3165-5
H170139	11	3165-5
H170535	5	3104-15
H170538	19	0960-9
H172014	16	0560-3
H173411	23	0510-7
H174831	20	0560-3
H178765	12	0960-9
H179657	13	0960-9
H180324	16	3165-5
H180324	17	3165-5

NUMERICAL INDEX - CONTINUED

PART NO.	KEY	PAGE
H180324	4	3165-11
H208519	11	3165-13
H208689	3	3165-11
H209168	19	3165-7
H210874	10	3104-15
H210939	14	0960-9
H211156	8	3104-15
H21259	1	1322-3
H216114	11	3165-11
H219217	4	3104-15
H23125	1	0400-3
H34597	6	1831-7
H63262	11	3104-15
H75541	14	3160-61
H77698	17	1671-3
H77698	77	1674-7
H77698	11	1674-11
H77698	21	1833-3
H77698	17	1833-7
H77698	19	3160-29
H77698	19	3160-35
H77698	1	3162-11
H77698	7	3162-11
H77698	17	3165-9
H81330	11	1811-13
H81330	11	1811-15
H81330	4	1831-3
H81330	1	1831-5
H81330	10	1831-9
H85233	8	1671-5
H85233	9	1910-3
H85233	12	1910-5
H86981	8	1833-3
H86981	7	1833-7
H88900	12	3165-13
H89151	14	3104-3
H89151	14	3104-5
H89151	10	3104-7
H89151	10	3104-9
H95874	25	1811-11
JD10315	2	0210-13
JD10316	3	0210-13
JD5749	6	1322-3
JD5822	11	1322-5
JD5822	1	1322-11
JD5902	2	1322-3
JD5906	19	1322-3
JD5929	5	2008-3
JD7759	16	0210-11
JD7759	16	0210-13
JD7759	24	0210-15
JD7759	21	0210-17
JD7759	24	0510-7
JD7759	10	3102-3
JD7759	15	3104-3
JD7759	15	3104-5
JD7759	11	3104-7
JD7759	11	3104-9
JD7759	11	3140-3
JD7759	18	3140-5
JD7759	10	3140-11
JD7759	16	3140-13
JD7759	2	3165-3
JD7763	12	3165-3
JD7763	18	3165-9
JD7781	7	0210-3
JD7788	10	3166-3
JD7797	15	0242-5
JD7797	15	3165-9
JD8206	14	0210-23
JD8206	24	0210-27
JD8240	1	0210-15
JD8248	2	0210-11
JD8255	1	0210-17
JD8259	27	0210-25
JD8264	2	0210-15
JD8272	4	0210-13
JD8946	15	0210-23
JD8946	25	0210-27
JD8954	28	0210-25
JD8970	3	0210-15
JD8974	4	0210-15
JD8989	5	0210-13
JD9018	3	0210-11
JD9055	4	0210-11
JD9078	2	0210-17
JD9118	5	0210-11
J16931	23	0510-3
J16931	27	1910-7
L102023	1	2013-3
L40273	1	0350-13
L57881	22	1833-3
L77943	9	1833-5
L985T	17	1811-7
M113243	4	0515-3
M113243	48	1062-3
M113243	14	1816-5
M114063	22	1811-7
M115279	78	1674-7
M115279	12	1674-11
M118611	31	1322-3
M135542	11	3166-7
M453T	24	1821-3
M45937	16	0242-5
M45937	35	1100-3
M47887	4	2007-3
M68628	18	1910-7
M72389	29	2160-11
M84972	2	1810-5
M84972	15	1816-5
M84972	7	1831-7
M87571	26	0360-3
M88102	12	3166-7
N117290	8	1833-13
N189220	24	0510-3
N189220	25	0510-5
N189220	20	1369-3
N189220	47	2160-11
N189220	20	3160-29
N189220	20	3160-35
N203905	49	1062-3
N218377	3	2007-3
N275830	28	0400-61
PT11778	10	1833-5
P40098	47	1674-5
P46051	27	2160-11
P48347	38	1062-3
P48347	21	3166-5
P48347	13	3166-7
P48347	16	3166-9
RE12363	37	1832-3
RE157329	17	1833-5
RE164448	12	0400-35
RE167207	6	0400-65
RE167207	1	0400-67
RE167207	50	1674-5
RE16879	1	1814-5
RE174764	11	1833-5
RE179976	23	0560-3
RE190139	16	2001-3
RE190140	16	2001-3
RE194040	24	0560-3
RE198074	3	1833-5
RE20342	2	0960-9
RE227953	16	2001-3
RE234193	25	0560-3
RE24468	41	1062-3
RE25102	12	3165-7
RE25146	13	3165-13
RE30162	12	3165-5
RE30162	2	3165-11
RE32361	27	0510-5
RE36133	18	1833-5
RE36133	46	1833-5
RE36133	14	1833-9
RE36133	39	1833-9
RE38310	53	2160-11
RE40049	2	1814-5
RE40049	5	1814-7
RE43497	6	1674-3
RE43497	19	1833-7
RE43637	2	0263-5
RE44574	3	0400-6
RE46534	3	0263-5
RE46684	3	0400-31
RE46685	1	0400-17
RE46685	10	0400-37
RE46685	10	0400-56
RE46686	20	0400-31
RE46686	13	0400-56
RE46686	18	0400-59
RE46687	18	0400-37
RE46742	25	1833-3
RE46742	20	1833-7
RE48838	14	1810-5
RE49486	26	0210-17
RE500168	3	0400-32
RE500250	27	0360-3
RE500398	1	0400-7
RE500608	12	0400-47
RE500612	5	0400-13
RE50114	1	0210-7
RE501150	5	0400-22
RE502173	7	0400-59
RE502174	14	0400-59
RE504210	7	0400-49
RE504233	4	0400-28
RE504543	8	0400-72
RE504562	6	0400-72
RE504562	7	0400-72
RE504580	1	0400-35
RE504836	12	0400-72
RE505264	22	1672-3
RE505264	19	1672-7
RE505501	4	0400-39
RE505515	26	0400-37
RE505921	3	0400-44
RE507537	6	0400-9
RE507538	19	0400-9
RE507539	3	0400-9
RE507540	2	0400-9

NUMERICAL INDEX - CONTINUED

PART NO.	KEY	PAGE
RE507852	6	0400-47
RE507852	7	0400-47
RE507950	8	0400-13
RE507950	16	1369-3
RE508185	16	0400-39
RE508489	7	0400-27
RE508489	8	0400-27
RE508566	4	0400-37
RE508578	1	0400-5
RE508599	6	0400-56
RE508986	1	0400-72
RE509093	27	0400-9
RE51234	1	1673-9
RE515636	35	0400-9
RE516026	12	0400-31
RE516227	8	0400-47
RE516228	1	0400-47
RE516335	36	0400-9
RE516336	8	0400-9
RE516491	4	0400-49
RE51650	5	0400-69
RE516512	4	0400-25
RE516512	2	0400-69
RE516553	5	0400-25
RE516553	6	0400-69
RE517230	1	0400-28
RE517245	15	0400-59
RE517370	16	0400-9
RE517370	22	0400-37
RE517435	17	0400-53
RE517435	18	0400-53
RE517435	19	0400-53
RE518081	12	0400-53
RE518097	5	0400-71
RE518552	7	0400-35
RE519144	3	0400-65
RE519696	4	0400-69
RE520229	4	1831-11
RE520930	33	0400-9
RE521531	20	0400-61
RE521603,	22	0400-43
RE521604	22	0400-59
RE521639	6	0400-53
RE521639	14	0400-53
RE521756	3	0400-50
RE521756	4	0400-50
RE521756	5	0400-50
RE521756	6	0400-50
RE521756	7	0400-50
RE52242	3	0400-72
RE52242	4	0400-72
RE522594	23	0400-9
RE522595	7	0400-9
RE522596	32	0400-9
RE522723	9	0400-65
RE522754	4	0400-75
RE522794	10	0400-65
RE522823	8	0400-65
RE522824	7	0400-65
RE522827	24	0400-59
RE522878	7	0400-25
RE522948	8	0400-75
RE522966	3	0400-69
RE523023	10	0400-49
RE523032	20	0400-49
RE523032	22	0400-49
RE523168	1	0400-37
RE523169	8	0400-37
RE523169	14	0400-37
RE523169	15	0400-37
RE523169	16	0400-37
RE523169	17	0400-37
RE523249	1	0400-9
RE523250	17	0400-31
RE523319	4	0400-61
RE523462	4	0400-59
RE523464	1	0400-59
RE523483	17	0400-75
RE523491	8	0400-61
RE523553	28	0400-75
RE523554	23	0400-75
RE523617	21	0400-75
RE523629	10	0400-59
RE523819	6	0400-61
RE523854	11	0400-65
RE523892	4	0400-35
RE524220	11	0400-59
RE524231	5	0400-61
RE524382	28	0400-9
RE524453	5	0400-47
RE52454	16	1832-3
RE524676	3	0505-3
RE524723	3	0400-25
RE524724	1	0400-69
RE524901	30	0400-61
RE524988	1	0400-61
RE525016	51	1674-5
RE52504	31	0560-3
RE52506	17	1832-3
RE52507	22	1832-3
RE52508	19	1832-3
RE52509	22	1832-3
RE526519	10	0400-53
RE526834	8	0400-25
RE526834	7	0400-69
RE52702	45	2160-11
RE52702	21	2160-13
RE52703	13	0520-3
RE52722	2	0400-65
RE528089	27	0400-61
RE528219	7	0400-61
RE528219	9	0400-61
RE528277	40	0400-61
RE528472	12	0400-75
RE528652	1	0400-16
RE528756	16	0400-61
RE528950	22	0400-43
RE54885	33	0400-61
RE55423	21	1832-3
RE56098	28	0510-5
RE56109	22	0962-3
RE56165	2	3166-5
RE56165	20	3166-9
RE56369	13	0400-27
RE57190	19	0400-31
RE58614	28	1833-3
RE58614	23	1833-7
RE58664	15	0210-11
RE58664	15	0210-13
RE58664	5	0210-15
RE58664	3	0210-17
RE58664	1	0210-28
RE58664	1	0210-29
RE59298	2	0400-56
RE60028	2	0400-59
RE60030	16	0400-59
RE60071	5	0400-59
RE60700	31	3160-55
RE60854	6	0400-25
RE65165	2	0400-44
RE65165	6	0400-44
RE65168	7	0400-44
RE65908	11	0400-47
RE65978	31	0400-61
RE65978	16	0400-75
RE67231	1	0400-56
RE67238	6	0400-4
RE67238	9	0400-56
RE67238	10	0400-72
RE67240	7	0400-4
RE68255	14	0520-3
RE68255	20	0520-5
RE68323	48	1369-3
RE68695	11	0400-49
RE69297	42	1062-3
RE71143	2	0400-13
R10093	23	1833-3
R10093	9	1833-13
R101225	16	0400-27
R104558	1	0350-11
R104592	4	0400-18
R104592	20	0400-41
R104592	11	0400-53
R105415	21	0360-3
R109077	1	0210-31
R109082	1	0210-33
R109083	2	0210-33
R109123	2	0210-31
R109124	3	0210-31
R109127	5	0210-31
R111137	7	0400-39
R11151	15	3166-5
R11151	17	3166-9
R112078	6	0210-31
R112079	3	0210-33
R112210	10	0210-28
R112210	10	0210-29
R113050	25	1832-3
R114082	13	0400-47
R114193	14	0400-27
R114194	15	0400-27
R115138	32	0400-61
R115250	1	0400-14
R115350	26	0510-5
R115742	11	1832-3
R115743	13	1832-3
R115743	19	1832-3
R116031	15	0400-9
R116296	5	0400-4
R116466	2	0400-39
R116516	5	0400-53
R116810	4	0210-33
R117721	13	1833-5
R117721	62	1833-5
R117721	8	1833-9
R117721	31	1833-9
R117845	5	1831-3
R117845	2	1831-5
R119171	45	1833-5
R119171	38	1833-9
R119270	5	0210-33

NUMERICAL INDEX - CONTINUED

PART NO.	KEY	PAGE
R119874	24	0400-43
R120467	2	0400-21
R120631	5	0400-44
R120638	9	0400-50
R120653	3	1814-3
R120653	6	1814-3
R120653	16	1814-5
R120653	3	1814-7
R120653	13	1814-7
R121043	6	0400-39
R121465	9	1833-3
R121465	8	1833-7
R121664	39	1833-5
R121664	63	1833-5
R121664	9	1833-9
R121664	32	1833-9
R121666	40	1833-5
R121666	33	1833-9
R122849	3	0210-19
R123226	6	0400-31
R123226	9	0400-37
R123273	2	0400-28
R123324	7	0400-31
R123417	5	0400-37
R123501	12	0400-56
R123565	15	0400-49
R123575	3	0400-3
R123584	2	0400-27
R123616	3	0400-17
R125223	14	1833-5
R128859	2	1672-9
R129110	15	1833-5
R129110	10	1833-9
R131182	8	0400-39
R131283	12	0400-27
R131425	5	0400-39
R131477	3	0210-20
R131478	4	0210-20
R131769	4	0400-6
R132518	25	0400-43
R132574	9	0210-28
R132574	9	0210-29
R132615	4	0210-19
R132827	11	0210-25
R132828	12	0210-25
R132836	14	0210-25
R133303	22	0400-43
R133303	23	0400-43
R133405	3	0400-28
R133643	19	1672-3
R133643	17	1672-7
R134465	40	0510-9
R134465	21	0510-11
R134465	37	0510-13
R134518	3	0400-27
R134726	7	0210-25
R134920	31	0400-9
R134954	14	0360-3
R135509	6	0400-22
R135510	7	0400-22
R135535	6	0210-15
R135543	7	0210-15
R135543	4	0210-17
R135543	10	0210-31
R135543	9	0210-33
R135543	41	0510-9
R135757	2	0400-54
R135918	8	0400-6
R135918	..	0400-7
R135918	8	0400-44
R136314	26	0210-25
R136475	4	0400-27
R136495	4	0400-4
R136495	42	0510-9
R136508	6	0400-66
R136508	14	1832-3
R184863	29	0560-3
R186228	10	1910-3
R193666	21	0560-3
R194311	22	0560-3
R203687	1	1833-3
R203687	18	1833-7
R206883	5	0505-3
R26227	8	0210-15
R26228	9	0210-15
R26229	10	0210-15
R26286	48	2160-11
R26287	50	1062-3
R26287	30	3160-17
R26287	28	3160-55
R26375	5	0210-28
R26375	5	0210-29
R26375	9	0510-9
R26375	5	0510-11
R26375	9	0510-13
R26375	22	0930-5
R26375	53	0930-5
R26375	5	0960-3
R26375	47	1062-3
R26375	51	1062-3
R26375	1	1063-3
R26375	16	1100-3
R26375	12	1100-5
R26448	11	0210-15
R26448	5	0210-17
R26448	4	0263-3
R26448	6	0510-13
R26448	52	1062-3
R26448	4	1064-3
R26448	5	1100-5
R26448	13	1100-5
R26448	41	1369-3
R26448	12	2160-5
R26448	4	2160-7
R26448	5	2160-9
R26448	30	2160-11
R26448	43	2160-11
R26448	5	3104-3
R26448	5	3104-5
R26448	5	3160-3
R26448	5	3160-5
R26448	5	3160-7
R26448	16	3160-19
R26448	3	3160-29
R26448	6	3160-29
R26448	3	3160-33
R26448	3	3160-35
R26448	4	3160-37
R26448	29	3160-41
R26448	8	3160-43
R26448	5	3160-45
R26448	8	3160-47
R26448	9	3160-55
R26448	5	3160-59
R26448	7	3160-61
R26448	18	3160-65
R26448	21	3162-11
R26448	5	3163-3
R26650	3	0400-39
R26773	14	2160-11
R26906	14	0510-9
R26906	23	0930-5
R26906	18	1369-3
R26906	42	1369-3
R26906	49	2160-11
R26906	45	3160-17
R26906	15	3160-55
R27175	14	0210-11
R27175	5	0210-15
R27175	3	0210-17
R27175	1	0210-28
R27175	1	0210-29
R27175	58	2160-11
R27175	22	3160-3
R27175	22	3160-5
R27175	22	3160-7
R27218	12	0210-15
R27218	6	0210-17
R27218	6	1100-5
R27218	50	2160-11
R27218	23	3160-3
R27218	23	3160-5
R27218	23	3160-7
R27218	11	3160-59
R28782	13	0510-11
R28782	24	0930-5
R28782	7	0960-3
R28782	7	0960-5
R28782	11	2160-3
R28782	2	2160-7
R28782	18	3160-19
R28811	2	0400-7
R29936	5	0350-3
R29936	4	0360-3
R29936	38	0510-13
R29936	25	0930-5
R29936	51	2160-11
R29936	16	3160-3
R29936	17	3160-5
R29936	17	3160-7
R29936	17	3160-55
R29936	4	3165-3
R29936	7	3165-9
R33029	6	0210-33
R33033	7	0210-31
R33138	25	0210-15
R33138	19	0210-17
R33138	6	0210-28
R33138	6	0210-29
R33259	26	1832-3
R35365	7	0210-17
R35366	8	0210-17
R35367	9	0210-17
R36311	17	0242-5
R36311	11	3166-3
R36545	18	1671-3
R36636	52	2160-11
R375R	26	0210-15
R375R	22	0210-17
R375R	2	0210-28
R375R	3	0210-29

NUMERICAL INDEX - CONTINUED

PART NO.	KEY	PAGE
R39112	17	1100-3
R39741	22	0400-41
R41440	11	1833-9
R44097	2	1673-9
R44165	3	1674-3
R44165	16	1833-7
R44302	10	0210-5
R44302	6	0400-35
R44302	12	0520-3
R44302	18	0520-5
R44302	30	0560-3
R44302	19	1671-3
R44302	17	1673-3
R44302	8	1673-5
R44302	5	1674-3
R44302	67	1674-7
R44302	80	1674-7
R44302	4	1814-3
R44302	13	2001-3
R44302	1	3165-3
R44302	12	3166-3
R45197	13	0210-15
R45198	14	0210-15
R45199	15	0210-15
R45200	16	0210-15
R45210	49	1674-5
R47172	20	0210-23
R47172	31	0210-27
R47172	43	0510-9
R48437	7	0210-11
R48685	17	0400-39
R48685	17	0400-41
R48685	9	0400-44
R48767	2	0400-47
R48776	19	0210-15
R48776	11	0210-17
R500271	21	0400-59
R500335	12	0400-47
R500384	24	1672-3
R500384	25	1672-7
R500394	1	0400-11
R501124	14	0400-47
R501252	2	0400-32
R501428	5	0400-56
R501484	2	0400-72
R502079	21	1672-3
R502079	18	1672-7
R502329	1	0400-76
R502341	8	0400-49
R502367	8	0400-53
R502371	7	0400-53
R502511	4	0400-53
R502513	9	0400-72
R502541	14	0400-9
R502725	1	0400-32
R502755	9	0400-47
R503450	1	0400-6
R503596	2	0400-37
R504209	16	0400-49
R504282	1	0400-27
R504577	11	0400-9
R504631	14	0400-49
R504734	3	0400-37
R504754	18	0400-31
R504781	30	0400-9
R504843	6	0400-27
R504882	5	0400-3
R504882	17	0400-49
R505452	25	0400-9
R505479	10	0400-31
R505480	13	0400-31
R505543	9	0400-49
R505609	4	0400-44
R50770	16	1833-5
R50770	12	1833-9
R51031	26	0930-5
R51196	12	0210-17
R51197	13	0210-17
R51198	14	0210-17
R51199	15	0210-17
R515030	5	0400-11
R515033	15	0400-53
R515034	16	0400-53
R515044	21	0400-9
R515408	9	0400-27
R515454	34	0400-9
R515454	37	0400-9
R515494	5	0400-27
R515535	24	0400-9
R515555	6	0400-3
R516125	9	0400-9
R516140	3	0400-49
R516237,	22	0400-43
R516437	1	0400-25
R516453	20	0400-59
R516510	2	0400-57
R516584	1	0400-57
R516648	3	0400-5
R517237	2	0400-5
R517353	3	0400-4
R517471	5	0400-65
R518210	6	0400-71
R518345	29	0400-9
R518543	5	0400-75
R518806	13	0400-53
R518809	18	0400-49
R518858	3	0400-75
R518859	2	0400-75
R518872	9	0400-53
R518880	11	0400-50
R519025	9	0400-31
R519308	6	0400-11
R519398	13	0400-75
R519482	26	0400-75
R519484	41	0400-61
R519486	1	0400-18
R519487	6	0400-75
R519488	3	0400-18
R519489	38	0400-61
R519491	1	0400-15
R519517	8	0400-31
R519518	19	0400-75
R519582	1	0400-53
R519657	27	0400-37
R519737	14	0400-31
R519989	14	0400-75
R520173	2	0400-18
R520632	19	0400-61
R520672	7	0400-75
R520856	22	0400-61
R520867	19	0400-49
R520867	2	0400-53
R520983	4	0400-56
R521060	2	0400-11
R521061	3	0400-11
R521083	4	0400-11
R521158	29	0400-61
R521159	5	0400-9
R521200	39	0400-61
R521390	2	0400-3
R521401	8	0400-3
R521406	3	0400-61
R521407	2	0400-61
R521458	1	0400-49
R521498	4	0400-13
R521530	20	0400-9
R521544	3	0400-53
R521548	2	0400-16
R522106	8	0400-11
R522198	4	0400-3
R522653	1	0400-66
R522686	2	0400-55
R522735	11	0400-61
R522771	1	0400-70
R522776	1	0400-31
R523184	27	0400-37
R52389	7	0210-13
R52389	7	0210-33
R52703	19	0520-5
R53296	2	1913-5
R53317	13	1062-3
R53528	14	2001-3
R54114	10	0400-47
R54123	2	0505-3
R54380	3	0210-28
R54380	4	0210-29
R54380	11	0210-33
R54445	8	1814-5
R54445	14	1814-7
R55233	21	0400-41
R55453	12	0400-9
R56171	9	1832-3
R56308	16	0210-17
R56751	43	1369-3
R59289	4	0210-25
R59439	8	0210-11
R59439	8	0210-13
R59440	9	0210-11
R59440	9	0210-13
R59460	6	0210-25
R61461	10	0210-11
R61461	10	0210-13
R61463	51	3160-17
R61467	2	0400-6
R61871	3	0400-13
R63185	11	0400-31
R63548	21	0400-61
R63667	14	1814-5
R63667	8	1814-7
R65397	22	0400-9
R67811	5	0210-23
R67811	6	0210-27
R68904	26	2160-9
R69281	21	0400-49
R70112	9	0210-25
R70113	10	0210-25
R70115	8	0210-25
R71228	12	0400-37
R72032	13	3165-5
R72032	15	3165-11
R72328	3	0400-21

NUMERICAL INDEX - CONTINUED

PART NO.	KEY	PAGE
R72653	62	1062-3
R72653	6	3166-5
R72653	14	3166-7
R72653	18	3166-9
R72654	39	1062-3
R72655	11	1821-3
R73599	3	0350-11
R74657	18	1100-3
R74869	3	0210-27
R77175	15	0350-3
R77175	13	2160-3
R77175	11	2160-5
R77175	30	3160-55
R78057	35	1832-3
R78059	36	1832-3
R78818	13	3165-7
R79989	11	0210-11
R79989	11	0210-13
R80135	2	0400-4
R80136	1	0400-4
R81195	15	0960-9
R81774	3	0960-9
R82175	12	0210-33
R82718	6	0400-55
R83469	16	0960-9
R85169	14	0325-3
R85192	14	3165-7
R85226	34	0210-25
R85228	14	3165-13
R85556	4	3165-13
R86457	40	1062-3
R86457	7	3166-5
R86457	19	3166-9
R88246	18	0210-23
R88246	31	0210-25
R88246	28	0210-27
R89944	1	0400-55
R91360	13	0400-9
R93173	8	0210-31
R93364	9	0210-31
R93623	4	0210-23
R93623	5	0210-25
R93623	5	0210-27
R93633	6	3104-15
R97061	9	0400-59
R97185	10	0400-39
R97185	8	0400-50
R97332	41	1833-5
R97332	58	1833-5
R97332	7	1833-9
R97332	34	1833-9
R97336	64	1833-5
R97336	13	1833-9
R97998	8	0210-33
R98669	15	3165-13
R99038	23	0210-27
SE501094	12	0400-47
SE501227	8	0400-37
SE501406	5	0400-22
TCU14336	25	1811-7
TCU14336	35	1811-9
TCU14336	28	1811-11
TF1U3252L	4	3101-3
TY21741	7	1671-3
TY22324	22	0510-5
TY22324	46	0510-9
TY22328	23	0510-5
TY22328	3	1831-11
TY22462	10	0510-5
TY22464	9	0360-3
TY22493	9	3160-25
TY22493	17	3160-29
TY22493	17	3160-35
TY22494	29	3160-21
TY22494	29	3160-25
TY22495	32	1746-5
TY22496	30	3160-25
TY22505	1	0400-21
TY24443	5	0400-22
TY6128	7	1671-3
T101480	11	3102-3
T101480	16	3104-5
T101480	12	3104-7
T101480	17	3140-13
T102005	22	3160-21
T102005	22	3160-25
T102135	7	3140-7
T102135	8	3140-9
T102137	8	3140-7
T102137	7	3140-9
T102137	3	3165-3
T102138	18	3140-13
T102138	19	3165-9
T102139	9	3140-9
T102139	3	3140-11
T102139	19	3140-13
T102171	13	3102-3
T102171	22	3104-3
T102171	17	3104-5
T102171	15	3104-7
T102171	15	3104-9
T102172	20	3140-13
T102207	9	3140-7
T102207	6	3140-9
T102207	12	3140-11
T102618	8	1322-7
T102620	8	1322-9
T102934	53	1674-5
T102934	81	1674-7
T102950	9	3140-11
T102958	17	3162-11
T102961	25	3162-11
T102963	27	3162-11
T103238	38	1674-5
T105740	4	1821-3
T105891	14	1910-5
T106595	41	2160-11
T107117	10	1671-3
T107883	1	2160-3
T11234	4	2002-5
T115030	7	2002-5
T115031	8	2002-5
T116416	16	0350-21
T116516	3	0350-5
T116604	17	0350-9
T116604	15	1369-3
T116613	1	0350-5
T116915	5	0350-23
T116918	9	0350-9
T116928	1	0350-23
T119564	2	2002-5
T121416	19	0360-3
T122075	3	0400-56
T122329	19	0510-3
T122803	28	0350-9
T125543	3	3140-7
T125543	15	3140-7
T125543	2	3140-9
T125546	23	1740-3
T128096	54	2160-11
T128437	9	2002-5
T130057	13	3140-3
T130057	19	3140-5
T130058	14	3140-3
T130058	20	3140-5
T130059	15	3140-3
T130059	21	3140-5
T131617	14	3162-11
T131624	19	3162-11
T131980	1	0962-5
T13254	32	0560-3
T133290	24	1740-3
T133290	15	3140-5
T133674	16	1816-5
T134104	20	1671-3
T134874	9	1831-7
T134895	4	1810-5
T135583	23	1811-7
T13624	16	3165-13
T13630	3	0962-3
T13814	23	0400-59
T143169	27	1832-3
T143169	29	1833-3
T144370	12	0350-9
T144486	8	0350-21
T146097	2	1322-5
T146097	2	1322-11
T146098	9	1322-9
T146099	9	1322-7
T146102	1	0400-22
T146104	7	1322-7
T146106	7	1322-9
T146175	4	1322-3
T146178	5	1322-7
T146180	5	1322-9
T146246	32	3140-3
T146246	22	3140-5
T146246	14	3140-11
T146436	5	1322-3
T146443	55	0930-5
T146490	32	3160-55
T146494	6	1322-7
T146495	19	1322-7
T146496	4	1322-7
T146502	6	1322-9
T146503	19	1322-9
T146504	4	1322-9
T146605	7	1322-3
T146606	12	1322-9
T146607	12	1322-7
T146672	2	3101-5
T146792	33	3160-55
T146908	13	1322-7
T146911	13	1322-9
T146933	2	3101-7
T146934	7	3101-3
T146934	3	3101-5
T147188	23	3160-21
T147188	23	3160-25
T147618	8	1814-3
T147891	54	1674-5

NUMERICAL INDEX - CONTINUED

PART NO.	KEY	PAGE
T147891	19	1910-5
T147891	21	1927-7
T148083	1	1322-5
T148083	3	1322-11
T148181	46	2160-11
T148409	25	0510-3
T148409	25	0510-7
T148410	26	0510-3
T151797	5	0110-3
T151797	4	0110-7
T152076	19	1749-3
T153535	3	1810-3
T153680	20	1322-3
T154131	1	0962-3
T154187	27	3160-17
T154342	21	3160-29
T154342	21	3160-35
T156256	7	1831-9
T156471	65	1833-5
T156784	4	0962-7
T156995	1	1330-3
T157029	12	3140-3
T157029	23	3140-5
T157030	17	3140-3
T157030	24	3140-5
T157056	18	0242-5
T157211	14	1062-3
T157212	8	1062-3
T157220	15	1062-3
T157223	26	1062-3
T157234	3	3140-3
T157234	25	3140-5
T157257	20	1062-3
T157258	9	1062-3
T157277	22	3165-3
T157277	20	3165-9
T157315	3	0242-3
T157443	22	3160-29
T157443	22	3160-35
T157457	5	3102-3
T157457	5	3102-5
T157465	4	3102-3
T157465	4	3102-5
T157492	4	3101-5
T157493	1	3101-3
T158047	34	3160-55
T158424	10	1833-13
T158719	25	0350-39
T159028	8	1322-3
T159519	13	0350-31
T159519	17	0350-39
T159950	14	3160-65
T159956	15	3160-65
T160549	11	3160-23
T160549	38	3160-37
T160549	49	3160-41
T160549	55	3160-45
T160762	14	1322-7
T160769	14	1322-9
T161207	2	0350-21
T161208	2	0350-9
T161208	8	0350-19
T162238	26	0510-7
T162238	28	1910-7
T162575	29	0510-5
T162675	55	1674-5
T163334	12	1821-3
T163335	13	1821-3
T163336	14	1821-3
T163962	5	1821-3
T164203	26	0560-3
T165169	42	1833-5
T165169	35	1833-9
T167505	26	1811-9
T167508	17	1811-11
T167514	28	1811-9
T167514	18	1811-11
T167519	12	1811-3
T167519	39	1811-9
T167527	29	1811-9
T167530	19	1811-11
T167546	30	1811-9
T167546	20	1811-11
T167593	12	1811-9
T167593	5	1816-3
T167594	12	1811-9
T167618	21	1811-11
T167630	31	1811-9
T167658	26	1811-7
T167659	2	1810-7
T167659	13	1811-9
T167676	30	1833-3
T167676	24	1833-7
T167683	14	1811-9
T167754	7	1814-9
T167759	4	1831-9
T167764	6	1816-3
T167770	12	1811-13
T167775	82	1674-7
T167837	5	0242-5
T167921	25	3160-21
T167921	25	3160-25
T167924	19	0242-5
T167945	10	1833-3
T167945	9	1833-7
T168119	15	1910-5
T168135	20	1910-5
T168220	11	1833-3
T168220	10	1833-7
T168247	2	0242-3
T168276	4	0962-5
T168383	5	1063-3
T168393	7	1064-3
T169103	19	1100-3
T169104	20	1100-3
T169105	21	1100-3
T169107	22	1100-3
T169108	23	1100-3
T169109	24	1100-3
T169110	25	1100-3
T169111	26	1100-3
T169116	27	1100-3
T169128	4	3102-3
T169284	4	3140-7
T169284	15	3140-7
T169286	5	3140-7
T169286	15	3140-7
T169290	28	1100-3
T169305	2	3140-11
T169329	20	0242-5
T169607	6	0350-21
T169707	28	0350-21
T169711	27	0350-21
T169712	12	0350-21
T169766	11	0350-21
T170053	12	1833-3
T170053	11	1833-7
T170133	19	1833-5
T170133	15	1833-9
T170180	16	1062-3
T170181	17	1062-3
T170196	20	0350-21
T170269	3	3162-11
T171082	2	1831-9
T171111	16	0350-9
T171112	6	0350-9
T171114	2	0350-7
T171126	5	0350-7
T171140	3	0350-27
T171153	18	0350-31
T171153	21	0350-33
T171153	18	0350-35
T171153	14	0350-37
T171153	23	0350-39
T171156	15	0350-31
T171156	18	0350-39
T171178	3	0350-7
T171223	8	1322-5
T171228	4	1322-5
T171228	5	1322-11
T171340	13	0342-3
T171354	3	0350-41
T171459	13	1833-3
T171459	12	1833-7
T17148	4	0962-3
T171686	27	1821-3
T171730	4	0350-5
T171734	4	3140-3
T171734	26	3140-5
T171750	20	1322-7
T171751	20	1322-9
T171756	21	1322-7
T171757	21	1322-9
T171849	1	1816-3
T172094	22	0350-9
T172104	6	0350-33
T172104	8	0350-35
T172104	17	0350-37
T172104	7	0350-39
T172115	16	0350-31
T172115	20	0350-33
T172115	15	0350-35
T172115	12	0350-37
T172115	20	0350-39
T172129	7	0350-33
T172129	9	0350-35
T172129	18	0350-37
T172129	6	0350-39
T172130	8	0350-33
T172130	10	0350-35
T172130	19	0350-37
T172130	5	0350-39
T172247	7	0350-35
T172247	3	0350-37
T172247	8	0350-39
T172251	7	0350-35
T172251	3	0350-37
T172251	8	0350-39
T172274	43	1062-3
T172302	19	0350-31
T172318	18	0350-3

NUMERICAL INDEX - CONTINUED

PART NO.	KEY	PAGE
T172562	16	3160-17
T172652	3	1814-5
T172732	12	0350-3
T172795	8	0350-9
T172814	2	0350-15
T172856	29	1100-3
T172927	5	0515-3
T172927	54	1062-3
T172933	21	1833-5
T172933	17	1833-9
T172934	22	1833-5
T172934	18	1833-9
T172968	36	1100-3
T172985	8	3162-11
T172986	5	3162-11
T172987	9	3162-11
T172988	6	3162-11
T172991	4	1811-13
T172991	4	1811-15
T172992	5	1811-13
T172992	5	1811-15
T173036	5	0350-33
T173036	13	0350-35
T173063	7	0350-9
T173065	7	0350-31
T173066	6	0350-31
T173066	14	0350-33
T173066	3	0350-35
T173066	6	0350-37
T173066	11	0350-39
T173067	5	0350-31
T173067	13	0350-33
T173067	5	0350-35
T173067	5	0350-37
T173067	10	0350-39
T173099	3	0962-7
T173100	2	0962-7
T173100	13	1674-11
T173123	10	0350-19
T173125	14	0350-21
T173126	13	0350-21
T173128	18	0350-21
T173131	1	0350-21
T173138	3	0350-21
T173139	25	0350-21
T173145	1	0350-25
T173146	4	0350-25
T173217	19	0350-9
T173230	30	1100-3
T173324	27	0930-5
T173396	6	0350-13
T173397	4	0350-13
T173398	5	0350-13
T173399	3	0350-13
T173400	2	0350-13
T173511	29	0350-21
T173579	56	0930-5
T173593	31	1100-3
T173636	16	0350-35
T173636	22	0350-37
T173636	21	0350-39
T173637	1	0350-35
T173637	1	0350-37
T173637	1	0350-39
T173638	2	0350-35
T173638	2	0350-37
T173638	2	0350-39
T173639	6	0350-35
T173639	4	0350-37
T173639	9	0350-39
T173644	8	0350-31
T173768	1	1831-9
T173779	6	1822-5
T173779	5	1822-7
T173779	12	1927-7
T173806	21	0350-37
T173807	6	0350-7
T173808	7	0350-7
T173809	8	0350-7
T173811	27	0350-9
T173812	26	0350-9
T173819	20	0350-3
T173819	4	0350-9
T173822	2	0350-17
T173837	19	0350-33
T173839	15	0350-33
T173839	4	0350-35
T173839	7	0350-37
T173839	12	0350-39
T173840	23	0350-31
T173840	3	0350-33
T173841	1	0350-31
T173841	1	0350-33
T173842	2	0350-31
T173842	2	0350-33
T173843	22	0350-33
T173844	4	0350-31
T173844	12	0350-33
T173845	10	0350-33
T173847	6	0350-23
T173847	8	0350-23
T173847	23	0350-33
T173847	15	0350-37
T173848	20	0350-31
T173849	14	0350-31
T173849	4	0350-33
T173849	14	0350-35
T173849	16	0350-37
T173849	19	0350-39
T173851	17	0350-35
T173852	19	0350-35
T173852	11	0350-37
T173853	9	0350-31
T173853	22	0350-35
T173853	8	0350-37
T173853	13	0350-39
T173854	16	0350-39
T173855	4	0350-39
T173856	12	0350-31
T173857	17	0350-31
T173858	13	0350-37
T173859	24	0350-39
T173860	22	0350-39
T173862	17	0350-31
T173863	3	0350-31
T173863	11	0350-33
T173864	3	0350-31
T173864	11	0350-33
T173865	7	0350-23
T173870	9	0350-19
T173873	7	0350-19
T173958	10	0350-31
T173958	17	0350-33
T173958	21	0350-35
T173958	9	0350-37
T173958	14	0350-39
T173960	11	0350-31
T173960	20	0350-35
T173960	10	0350-37
T173960	15	0350-39
T174025	19	3160-17
T174107	1	0350-9
T174109	23	1833-5
T174109	19	1833-9
T174234	5	0350-17
T174237	9	0350-23
T174238	15	0350-9
T174239	8	0350-13
T174271	20	1749-3
T174275	23	2160-13
T174275	12	3160-23
T174275	12	3160-27
T174275	44	3160-33
T174275	39	3160-37
T174275	50	3160-41
T174275	32	3160-43
T174275	56	3160-45
T174275	60	3160-47
T174275	8	3163-5
T174275	7	3163-7
T174298	7	1322-11
T174386	10	0350-5
T174389	6	0350-17
T174392	11	0350-35
T174393	9	0350-19
T174394	9	0350-19
T174396	26	0350-21
T174405	6	0350-27
T174407	9	0350-5
T174407	7	0350-27
T174413	18	0350-33
T174418	16	0350-33
T174427	31	1833-3
T174463	21	0242-5
T174529	5	0350-27
T174530	21	1671-3
T174634	2	0515-3
T174634	10	1062-3
T174735	9	1322-5
T175015	3	1813-3
T175016	4	1813-3
T175017	5	1813-3
T175135	21	1322-3
T175236	21	1062-3
T175292	2	0350-27
T175361	8	1749-3
T175744	9	1322-3
T175862	17	0350-21
T175864	29	0350-9
T176064	77	1740-3
T176064	12	3102-3
T176064	16	3104-3
T176064	18	3104-5
T176064	13	3104-7
T176064	13	3104-9
T176064	6	3140-3
T176064	31	3140-3
T176064	27	3140-5
T176064	10	3140-7
T176064	5	3140-11
T176064	21	3140-13

NUMERICAL INDEX - CONTINUED

PART NO.	KEY	PAGE
T176064	16	3165-3
T176064	21	3165-9
T176108	55	1062-3
T176111	56	1062-3
T176357	13	1927-7
T176526	5	0350-25
T176527	3	0350-25
T176528	2	0350-25
T176796	4	0350-11
T176801	24	0350-33
T176870	9	1822-5
T176870	8	1822-7
T177219	15	0350-21
T177221	9	0350-21
T177255	12	1746-5
T177423	8	0520-5
T177503	7	1822-5
T177503	7	1822-7
T177505	27	1811-7
T177827	19	1811-9
T177909	21	1910-5
T177979	4	0350-19
T177997	19	0350-3
T178063	3	1822-5
T178063	2	1822-7
T178114	18	1811-7
T178115	24	1833-5
T178116	25	1833-5
T178117	26	1833-5
T178117	20	1833-9
T178117	40	1833-9
T178118	27	1833-5
T178118	21	1833-9
T178118	41	1833-9
T178119	28	1833-5
T178119	22	1833-9
T178120	29	1833-5
T178120	23	1833-9
T178123	30	1833-5
T178124	31	1833-5
T178125	32	1833-5
T178126	33	1833-5
T178127	43	1833-5
T178127	36	1833-9
T178130	49	1833-5
T178130	42	1833-9
T178131	50	1833-5
T178131	43	1833-9
T178132	51	1833-5
T178132	44	1833-9
T178133	52	1833-5
T178133	45	1833-9
T178134	53	1833-5
T178134	46	1833-9
T178135	54	1833-5
T178135	47	1833-9
T178136	55	1833-5
T178136	48	1833-9
T178220	20	1811-9
T178221	15	1811-9
T178248	24	1833-9
T178249	25	1833-9
T178250	26	1833-9
T178251	44	1833-5
T178251	27	1833-9
T178251	37	1833-9
T178252	54	1833-9
T178368	7	1927-3
T178368	14	1927-7
T178534	16	1811-9
T178948	2	1673-11
T178971	34	1833-5
T179276	13	0350-5
T179318	23	0350-9
T179468	23	1672-3
T179468	20	1672-7
T179510	3	0350-11
T179531	21	0350-21
T179532	21	0350-21
T179533	21	0350-21
T179594	12	0350-35
T179594	20	0350-37
T179594	3	0350-39
T179609	13	3166-3
T179721	4	0350-21
T179935	9	0350-33
T180074	1	1673-11
T180075	3	1673-11
T180328	4	0350-23
T180329	10	0350-23
T180338	17	2001-3
T180408	14	1811-13
T180408	14	1811-15
T180418	9	1810-5
T180420	18	2001-3
T180480	2	0350-19
T180481	3	0350-19
T180533	10	1811-15
T180533	11	1816-5
T180753	11	0350-23
T180884	14	0350-9
T180884	1	0350-19
T180921	11	1811-3
T180929	56	1833-5
T180929	49	1833-9
T180930	28	1811-7
T180931	11	3140-13
T180944	20	3160-55
T180944	35	3160-55
T180957	3	0350-23
T181050	6	1810-5
T181306	2	0510-15
T181306	1	3160-53
T181306	2	3160-53
T181306	3	3160-53
T181412	2	1814-9
T181413	4	1814-9
T181455	4	0350-17
T181474	3	0350-15
T181520	1	1810-5
T181524	61	1833-5
T181524	53	1833-9
T181535	4	0350-7
T181535	1	0350-27
T181604	69	1674-7
T181615	13	0350-9
T181778	30	0510-5
T181797	7	2007-3
T181873	7	0350-35
T181873	3	0350-37
T181873	8	0350-39
T181874	7	0350-35
T181874	3	0350-37
T181874	8	0350-39
T181875	7	0350-35
T181875	3	0350-37
T181875	8	0350-39
T181876	7	0350-35
T181876	3	0350-37
T181876	8	0350-39
T181881	3	0350-31
T181881	11	0350-33
T181882	3	0350-31
T181882	11	0350-33
T181883	3	0350-31
T181883	11	0350-33
T181884	3	0350-31
T181884	11	0350-33
T181908	1	1810-5
T182191	10	1322-3
T182191	3	3140-15
T182192	1	1913-5
T182196	10	0350-21
T182254	5	0350-21
T182265	78	1740-3
T182265	20	3140-3
T182265	28	3140-5
T182446	79	1740-3
T182516	18	3140-3
T182516	29	3140-5
T182554	27	0510-3
T182612	18	1816-5
T182695	32	1811-9
T182758	9	1910-5
T182795	12	1322-5
T182795	9	1322-11
T182852	32	1833-3
T182858	33	1833-3
T182858	25	1833-7
T182860	17	1811-13
T182860	2	1814-7
T182870	10	1810-5
T182870	12	1810-5
T182870	29	1821-3
T182870	34	1833-3
T182870	19	2001-3
T182871	35	1833-3
T182871	20	2001-3
T182872	9	1831-9
T182874	5	1814-9
T182876	26	1833-7
T182877	27	1833-7
T182888	22	1811-15
T182888	21	2001-3
T182899	17	1811-9
T182899	22	1811-11
T182902	18	1811-9
T182903	1	1811-9
T182906	18	1811-13
T182906	36	1833-3
T182909	1	1814-7
T182909	22	2001-3
T182914	3	1673-9
T182919	6	1814-5
T182919	12	1814-7
T182920	4	1810-7
T182925	15	1811-3
T182927	2	1811-9
T182928	3	1811-9
T182952	13	1811-3
T182963	23	1811-11

NUMERICAL INDEX - CONTINUED

PART NO.	KEY	PAGE
T182967	24	1811-11
T182969	26	1811-11
T182972	27	1811-11
T184135	11	1811-9
T184892	11	1810-5
T184924	5	1831-11
T186776	6	1672-9
T186793	29	1811-7
T18891	18	0400-41
T18891	18	0400-43
T190513	11	1833-13
T195207	1	0350-7
T195210	9	3166-5
T195210	21	3166-9
T195240	5	0350-5
T195241	8	0350-5
T195242	6	0350-5
T195243	7	0350-5
T195270	6	0350-25
T195275	24	0350-21
T195558	26	1322-7
T195559	26	1322-9
T195605	59	1740-3
T195708	9	1671-5
T195857	10	1322-7
T195858	10	1322-9
T195982	12	1749-3
T196237	4	1811-9
T196309	19	1811-7
T196312	56	2160-11
T196464	15	0360-3
T196471	6	1831-3
T196587	28	0360-3
T196621	3	1831-5
T196622	20B	1816-5
T196711	10	1831-7
T196712	11	1831-7
T196733	10	0560-3
T196792	16	0350-5
T197100	30	1910-7
T197144	16	3166-5
T197144	22	3166-9
T197182	4	3162-13
T197186	13	1322-5
T197186	8	1322-11
T197300	16	1322-3
T197323	3	1322-7
T197324	3	1322-9
T197427	28	0510-3
T197440	10	1749-3
T197455	33	1811-9
T197456	34	1811-9
T197461	10	0350-9
T197462	7	0350-17
T197463	8	0350-17
T197467	22	1671-3
T197553	21	0350-31
T197569	11	1746-5
T197575	31	1910-7
T197665	29	0360-3
T197667	10	1671-5
T198109	11	1910-3
T200012	13	1322-3
T200055	11	1322-3
T200056	11	1322-7
T200057	11	1322-9
T200064	18	1322-3
T200064	24	1322-3
T200065	17	1322-7
T200066	17	1322-9
T200158	11	1816-9
T200159	12	1816-9
T200161	8	1816-9
T200267	20A	1816-5
T200280	9	0520-3
T200280	14	0520-5
T200282	15	0520-3
T200363	53	1674-7
T200712	5	1322-5
T200712	6	1322-11
T200729	11	3160-29
T200729	11	3160-35
T200786	15	1322-7
T200791	2	1322-7
T200814	15	1322-9
T200818	2	1322-9
T200888	10	3140-3
T200888	30	3140-5
T201030	4	3140-13
T201041	5	3140-13
T201521	14	2160-3
T201525	14	2160-3
T201538	24	1672-7
T201546	27	0510-7
T201589	29	0510-3
T20168	13	0400-39
T201708	30	1811-7
T201869	14	0530-3
T201880	19	1910-7
T201880	43	1910-7
T201887	57	3160-45
T201887	55	3160-47
T20217	10	1746-5
T202343	4	1814-5
T20280	24	0400-75
T202883	21	1816-5
T202884	3	1322-5
T203047	64	1740-3
T203075	15	1927-7
T203077	16	1927-7
T203128	22	1816-5
T203131	5	3140-9
T203131	6	3140-13
T203290	9	1749-3
T203449	14	3140-13
T203475	15	0325-3
T203614	10	1811-3
T203614	31	1811-7
T203615	32	1811-7
T203671	4	1322-11
T203695	22	1322-3
T203742	6	0350-19
T203767	23	0350-21
T203776	57	2160-11
T203782	17	1322-3
T203966	17	1927-7
T204109	13	1749-3
T204150	3	1833-11
T204315	12	3160-63
T204315	15	3163-3
T204584	21	2160-3
T204635	23	2001-3
T204744	18	1927-7
T205211	23	1322-3
T205369	19	0350-21
T205471	8	1927-3
T205472	15	1811-13
T205718	25	1322-7
T205719	25	1322-9
T205941	7	3162-9
T205944	3	1672-9
T206106	14	1322-5
T206129	4	3140-9
T206130	3	3140-9
T206155	5	1913-7
T206157	6	1913-7
T206158	7	1913-7
T206159	8	1913-7
T206578	22	3140-13
T206624	83	1674-7
T206643	22	0510-7
T206783	9	1913-7
T206857	10	1913-7
T206858	11	1913-7
T206866	12	1913-7
T206873	13	1913-7
T20758	1	0400-54
T207669	3	1831-9
T207741	15	1322-3
T207750	16	1322-7
T207751	16	1322-9
T207759	9	0350-13
T20779	20	3165-7
T207925	12	1816-5
T208086	24	1322-9
T208087	24	1322-7
T208097	26	0510-11
T208097	44	0510-13
T208317	12	1910-3
T208352	24	1910-7
T208364	12	1673-3
T208365	13	1673-3
T208374	28	1322-7
T208375	29	1322-7
T208376	28	1322-9
T208377	29	1322-9
T208695	30	1322-3
T208791	22	0242-5
T208794	30	1322-7
T208795	30	1322-9
T208891	6	1672-9
T209094	13	1811-13
T209601	11	1816-9
T209602	12	1816-9
T210258	15	3166-7
T210399	14	1913-7
T210426	15	1913-7
T210447	12	3140-9
T210447	10	3160-27
T210447	56	3160-47
T210470	12	1369-3
T210479	21A	3160-3
T210479	21A	3160-5
T210479	21A	3160-7
T210488	16	1913-7
T210489	17	1913-7
T210490	18	1913-7
T210511	19	1913-7
T210513	20	1913-7
T210521	21	1913-7
T210522	22	1913-7

NUMERICAL INDEX - CONTINUED

PART NO.	KEY	PAGE
T210568	24	1672-3
T210568	25	1672-7
T210585	23	1913-7
T210796	12	3140-7
T211353	2	0962-7
T211353	16	1674-11
T211390	23	3140-13
T211396	17	3166-7
T211404	18	3166-7
T211405	19	3166-7
T211510	16	0520-3
T211510	21	0520-5
T211616	15	3140-13
T211678	84	1674-7
T211826	24	3140-13
T211997	36	1910-7
T212321	25	1910-7
T212452	4	0110-3
T212453	3	0110-3
T212469	38	0510-5
T212470	31	0510-5
T212471	32	0510-5
T212855	11	0242-5
T212888	12	1910-7
T212898	33	0510-5
T213143	14	3102-3
T213143	7	3102-5
T213146	5	0110-7
T213531	34	0510-5
T213827	44	0510-9
T213828	45	0510-9
T213873	25	1672-3
T213873	26	1672-7
T214207	14	3104-7
T214207	14	3104-9
T214661	11	1369-3
T215155	6	1322-5
T215155	7	1322-11
T215156	31	1322-7
T215157	31	1322-9
T215158	32	1322-3
T215159	32	1322-7
T215160	32	1322-9
T215208	10	1322-5
T215216	33	1322-7
T215217	33	1322-9
T215434	11	3160-27
T215434	45	3160-33
T215434	29	3160-43
T215434	57	3160-47
T215610	7	1520-5
T216182	38	1369-3
T216386	15	1322-5
T216516	20	1910-7
T216516	38	1910-7
T216560	8	1520-5
T216731	9	1673-5
T217012	12	1322-3
T217427	8	1822-3
T217625	2	3102-7
T217789	10	1369-3
T217790	9	1369-3
T217791	8	1369-3
T217792	7	1369-3
T218003	46	0510-9
T218382	35	0510-5
T218394	36	0510-5
T218566	3	1322-3
T219672	17	0520-3
T219672	22	0520-5
T223206	17	0510-5
T223372	10	0520-3
T223372	15	0520-5
T223487	25	3163-3
T223488	16	3104-9
T223616	10	1832-3
T22381	5	1927-3
T22381	19	1927-7
T224069	85	1674-7
T224760	30	0510-3
T224770	28	0510-7
T225291	6	2160-5
T225397	28	1322-3
T225427	29	0510-7
T225859	37	0510-5
T225866	47	0510-9
T225913	4	0350-23
T226561	31	0510-3
T226801	32	1100-3
T226804	33	1100-3
T226957	22	1749-3
T226958	23	1749-3
T227296	1	1322-9
T227297	1	1322-7
T227405	17	3104-3
T227405	20	3104-5
T227552	18	3104-3
T227552	21	3104-5
T23474	12	0400-39
T23914	5	1520-3
T24210	11	0350-3
T25CA	2	3101-3
T25EA	6	3101-3
T26565	4	0210-28
T26565	13	0210-31
T26906	12	0510-13
T27260	32	0510-3
T27260	33	1910-7
T27523	22	0400-75
T27550	39	0510-5
T29342	57	1674-5
T29384	49	1369-3
T3G9609	3	3101-3
T33309	37	1369-3
T38282	3	1062-3
T38485	15	3165-7
T38545	18	0400-61
T39049	13	0962-3
T39155	42	2160-11
T41326	17	3165-13
T42199	16	1671-3
T42977	14	0342-3
T42977	17	0540-3
T46876	86	1674-7
T46876	17	1674-11
T47338	40	0510-5
T54188	35	3140-5
T54188	13	3140-7
T54188	25	3140-13
T55224	16	1821-5
T56112	8	0210-3
T56112	8	0210-5
T56112	23	0242-5
T59933	2	0110-3
T59937	20	1833-5
T59937	16	1833-9
T60752	19	3140-3
T60752	31	3140-5
T60811	21	0510-5
T60811	8	1746-3
T61226	21	3104-3
T61226	22	3104-5
T61226	16	3104-7
T61226	2	3104-9
T63224	22	1322-7
T63225	22	1322-9
T64217	23	1322-9
T64688	5	1369-3
T64784	58	1674-5
T64784	31	1832-3
T65643	10	1673-5
T65643	12	1810-5
T66418	5	1831-7
T66419	33	0510-3
T66419	22	1910-5
T67995	59	1674-5
T67995	26	3160-21
T67995	26	3160-25
T70154	10	1673-7
T72414	75	1740-3
T72414	6	3140-7
T72414	13	3140-9
T74410	60	1674-5
T74412	61	1674-5
T74416	41	0510-5
T74416	62	1674-5
T74416	87	1674-7
T75197	33	0560-3
T75197	8	1673-7
T75197	63	1674-5
T75276	9	0210-5
T75276	34	0560-3
T75276	40	1674-5
T75276	64	1674-5
T76252	65	1674-5
T76252	30	1832-3
T76252	12	1833-13
T76938	8	0350-3
T76938	5	0360-3
T76938	8	2160-3
T76938	59	2160-11
T76938	17	3160-3
T76938	18	3160-5
T76938	18	3160-7
T76938	27	3160-21
T76938	27	3160-25
T76938	13	3160-55
T76938	8	3165-9
T77613	5	0263-3
T77613	1	0350-3
T77613	15	0400-61
T77613	25	0400-61
T77613	12	0510-9
T77613	11	0510-11
T77613	28	0930-5
T77613	9	0960-3
T77613	6	0960-5
T77613	57	1062-3
T77613	2	1063-3
T77613	2	1064-3
T77613	7	1100-3

NUMERICAL INDEX - CONTINUED

PART NO.	KEY	PAGE
T77613	11	1100-5
T77613	4	1369-3
T77613	6	2160-3
T77613	6	2160-9
T77613	32	2160-11
T77613	6	3104-3
T77613	6	3104-5
T77613	6	3160-3
T77613	6	3160-5
T77613	6	3160-7
T77613	14	3160-19
T77613	4	3160-29
T77613	9	3160-29
T77613	4	3160-33
T77613	4	3160-35
T77613	8	3160-35
T77613	5	3160-37
T77613	31	3160-41
T77613	9	3160-43
T77613	6	3160-45
T77613	9	3160-47
T77613	6	3160-59
T77613	8	3160-61
T77613	4	3160-63
T77613	16	3160-65
T77613	6	3163-3
T77814	40	3160-17
T77814	10	3160-55
T77857	10	0510-9
T77857	6	0510-11
T77857	7	0510-13
T77857	10	0510-13
T77857	29	0930-5
T77857	58	0930-5
T77857	14	1063-3
T77857	17	3160-65
T77858	8	0510-11
T77858	15	0510-13
T77858	30	0930-5
T77858	2	0960-3
T77858	3	0960-5
T77858	17	2160-3
T77858	9	2160-11
T77858	2	2160-13
T77858	9	2160-13
T77858	11	3160-3
T77858	11	3160-5
T77858	11	3160-7
T77858	15	3160-19
T77858	28	3160-21
T77858	4	3160-23
T77858	28	3160-25
T77858	4	3160-27
T77858	27	3160-33
T77858	46	3160-33
T77858	7	3160-37
T77858	32	3160-41
T77858	12	3160-43
T77858	8	3160-45
T77858	11	3160-47
T77858	6	3160-55
T77858	9	3163-5
T77858	5	3163-7
T77858	6	3165-3
T77858	10	3165-9
T77932	13	0350-3
T77932	13	0510-13
T77932	1	0960-3
T77932	14	1100-5
T77932	3	1369-3
T77932	12	2160-11
T78612	15	2160-11
T78612	20	3165-3
T78612	12	3165-9
T78707	24	2160-13
T78707	13	3160-23
T78707	13	3160-27
T78707	25	3160-33
T78707	30	3160-37
T78707	52	3160-41
T78707	31	3160-43
T78707	24	3160-45
T78707	59	3160-47
T78707	10	3163-5
T78707	9	3163-7
T78715	2	1369-3
T78784	8	3160-3
T78784	8	3160-5
T78784	8	3160-7
T78974	9	0210-3
T78974	37	1100-3
T78974	66	1674-5
T79471	23	1671-3
T79477	28	0560-3
T81029	48	0510-9
T81029	12	3160-29
T81029	12	3160-35
T81029	13	3160-63
T81029	17	3163-3
T81403	22	2160-11
T825100	3	3101-7
T825105	4	3101-7
T825106	5	3101-7
T82791	23	1816-5
T82791	7	1831-3
T82791	4	1831-5
T82792	24	1816-5
T82792	8	1831-3
T82792	5	1831-5
T82861	4	3166-5
T82861	12	3166-9
T9J2258	5	3101-3
U10289	20	0210-15
U12167	34	1100-3
U12198	20	0960-9
U12331	19	2160-3
U12547	49	0510-9
U12547	9	0510-11
U12547	16	0510-13
U12547	59	0930-5
U12547	4	0960-5
U12547	8	1100-3
U12547	15	1100-5
U12547	1	1369-3
U12547	9	2160-3
U12547	10	2160-11
U12547	3	2160-13
U12547	12	3160-3
U12547	12	3160-5
U12547	12	3160-7
U12547	20	3160-17
U12547	33	3160-17
U12547	17	3160-19
U12547	28	3160-33
U12547	8	3160-37
U12547	13	3160-43
U12547	9	3160-45
U12547	12	3160-47
U12547	7	3160-55
U12547	19	3165-3
U12547	22	3165-9
U13461	12	3104-15
U13639	4	0400-17
U13639	4	0505-3
U13639	18	2160-3
U13639	60	2160-11
U13639	9	3160-3
U13639	9	3160-5
U13639	9	3160-7
U17409	7	0210-28
U17409	7	0210-29
U17409	5	0400-55
U17409	18	0510-5
U40962	22	3160-17
U44384	16	2160-3
U44537	14	1673-3
U46753	16	3160-27
U46753	43	3160-33
U46753	30	3160-43
U46753	43	3160-47
U46753	11	3163-5
U46753	10	3163-7
W29909	9	1822-3
W30317	11	0210-23
W30317	13	0210-25
W30317	12	0210-27
YZ120167	18	0210-15
YZ120167	10	0210-17
YZ120386	3	0210-25
YZ120453	6	0210-13
YZ120470	11	0210-31
YZ120513	20	0210-17
YZ120567	27	0210-15
YZ120590	1	0210-7
YZ120647	16	0210-33
YZ120659	1	0210-7
YZ120660	1	0210-7
YZ120672	1	0210-6
YZ120685	23	0210-17
YZ120686	28	0210-15
YZ120687	17	0210-11
YZ120688	14	0210-13
YZ120703	13	0210-11
YZ120704	13	0210-11
YZ120704	14	0210-11
YZ120763	15	0210-31
YZ120765	29	0210-15
YZ120771	1	0210-6
YZ120812	1	0210-8
YZ120813	1	0210-9
YZ120886	1	0210-23
YZ120886	1	0210-27
YZ120888	2	0210-27
YZ120890	14	0210-27
YZ120894	16	0210-23
YZ120894	26	0210-27
YZ120895	13	0210-23
YZ120895	22	0210-27
YZ120898	16	0210-31
YZ120899	15	0210-27
YZ120900	16	0210-27

NUMERICAL INDEX - CONTINUED

PART NO.	KEY	PAGE
YZ120902	18	0210-25
YZ120902	17	0210-27
YZ120903	18	0210-27
YZ120904	19	0210-27
YZ120906	20	0210-27
YZ120907	21	0210-27
YZ120911	1	0210-19
YZ120929	9	0210-23
YZ120929	10	0210-27
YZ120930	10	0210-23
YZ120930	11	0210-27
YZ120931	8	0210-23
YZ120931	9	0210-27
YZ120935	22	0210-23
YZ120935	32	0210-27
YZ120936	21	0210-23
YZ120936	33	0210-27
YZ120938	7	0210-23
YZ120938	8	0210-27
YZ120939	3	0210-23
YZ120939	4	0210-27
YZ120940	12	0210-23
YZ120940	13	0210-27
YZ120954	2	0210-25
YZ120960	29	0210-25
YZ120961	25	0210-25
YZ120964	16	0210-25
YZ120968	21	0210-25
YZ120970	22	0210-25
YZ120971	23	0210-25
YZ120979	1	0210-20
YZ120982	6	0210-23
YZ120982	7	0210-27
YZ120984	2	0210-23
YZ121015	17	0210-23
YZ121015	27	0210-27
YZ121016	30	0210-25
YZ121022	2	0210-19
YZ121053	2	0210-20
YZ121055	25	0210-17
YZ121062	6	0210-11
YZ121090	20	0210-25
YZ121110	17	0210-25
YZ121118	12	0210-31
YZ121119	10	0210-33
YZ121125	14	0210-33
YZ121129	15	0210-33
YZ121180	11	0210-28
YZ121180	11	0210-29
YZ121185	13	0210-13
YZ121199	19	0210-25
YZ121213	2	0210-18
YZ121220	12	0210-11
YZ121220	12	0210-13
YZ121224	2	0210-29
YZ121225	12	0210-28
YZ121227	35	0210-25
YZ121228	24	0210-25
YZ121230	15	0210-25
YZ121231	36	0210-27
YZ121232	34	0210-27
YZ121233	35	0210-27
YZ121239	1	0210-25
YZ121241	5	0210-19
YZ121242	5	0210-20
YZ121260	36	0210-25
YZ18988	1	0210-3
YZ18989	1	0210-5
YZ18990	1	0210-5
Z59685	19	1833-3
400R	22	3165-7