RUTHZIL TRATOR COMERCIAL DE PEÇAS LTDA 11 97083-6812 ROLANDO CITRANGULO

632

BOBCAT

AGOSTO 2005

632

Parts Manual

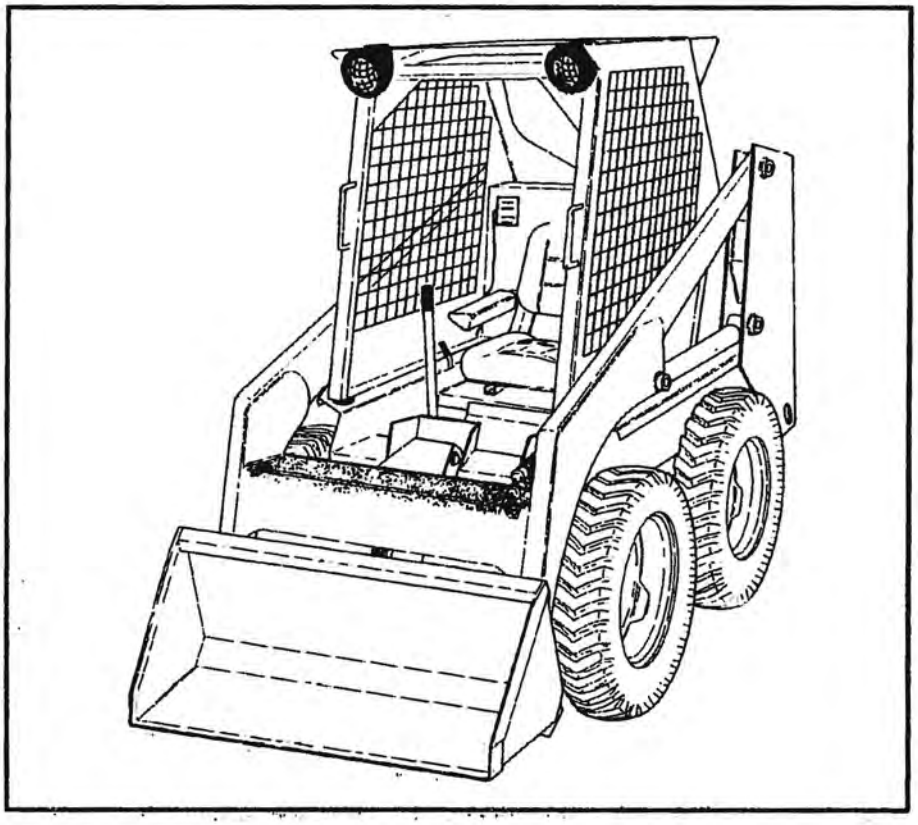

An Ingersoll-Rand business

6556403 (2-99) Revised (8-05)

Printed in U.S.A.

© Bobcat Company 2005

4993-M-14497

GENERAL INFORMATION

When using the machine serial number, use the complete number.

Some Serial Number breaks are not available at time of printing. These are listed as & Below or & Above.

The number shown in the quantity column in this manual is the number of parts needed for the illustration on the page. For some parts an "x" will be shown in the quantity column. This "x" indicates that the quantity to be used is "As Needed".

When references L.H. and R.H. are used in this manual, it is done from the operator's seat in the forward operating position.

Some of the illustrations and information found in this parts manual were supplied to Bobcat by machine component companies.



ABBREVIATIONS & SYMBOLS

SALES = Order from Gwinner Sales Department

NSS = Not Serviced Seperately

NAP = Not Available as Parts

* = Changed or Added Sections, Pages or Part Numbers

Disposition Code Definition (Found in the Remarks Column)

[A] = Use Up

[B] = Use Up on Other Appplication (See PNI)

[C] = File PDR Report With Bobcat Parts Sales

[D] = Part Number Error

NOTE D'INFORMATION

Pour toute référence au numéro de série de l'engin, toujours donner le numéro complet.

Le chiffré apparaissant dans la colonne des quantités de ce manuel représentent le nombre de pièces nécessaires pour l'illustration reprise sur la page. Dans certains cas, on lira un "x" dans la colonne des quantités. Cet "x" indique que la quantité nécessaire est "selon besoin".

Pour toute référence vers la GAUCHE ou la DROITE dans ce manuel, considérer que la personne se trouve assise dans le siège de l'opérateur, en position de fonctionnement en marche avant.

Certaines illustrations et informations reprises dans ce manuel de pièces de rechange ont été fournies à Bobcat/Ingersoll-Rand par des fabricants de composants.

ABREVIATIONS & SYMBOLES

SALES	= Commander au Service Ventes à Bruxelles
NSS	= Pas vendu séparément
NAP	= Non disponible comme pièce de rechange
*	= Chapitre, page ou numéro de pièce modifié ou supplémentaire
BTI	= Bobcat Technical Information Bulletin : voir à la fin de la microfiché du modèle concerné ou la microfiche générale reprenant l' ensemble des "BTI".
was 6535403	= était avant 6535403
adj. (adjustment)	= réglage
Assembly	= ensemble
available W/Ref.	= disponible avec réf.
bulk/sold per foot	= en vrac/vendu par pied
does not include	= ne comprend pas
included with	= compris dans
I.D.	= D.I. (diamètre intérieur)
O.D.	= D.E. (diamètre extérieur)
not in kit	= pas en kit
W/ - WO/	= inclus/ - non inclus/
Qty	= quantité requise
see page/ref.	= voir page/réf.
used with ref/	= utilisé avec réf.
0,05 inch thickness	= 0,05 pouce d'épaisseur (un pouce = 25.4 mm)
weld on	= à souder

ALLGEMEINE INFORMATIONEN

Bei Angabe der Maschinen-Seriennummer stets die komplette Nummer angeben.

Bei der in der Mengenspalte (Anzahl) in diesem Handbuch angegebenen Zahl handelt es sich um die Anzahl von Teilen, die für die Abbildung auf der betreffenden Seite benötigt werden. Bei manchen Teilen in der Mengenspalte ist ein "x" angegeben. Dieses "x" weist darauf hin, dass sich die Anzahl der verwendeten Teile auf den "Bedarf" bezieht.

Bei Verwendung der Seitenangaben links und rechts in diesem Handbuch gelten diese für die Blickrichtung vom Fahrersitz aus, und zwar in Vorwärts-Betriebsrichtung.

Einige der in diesem Ersatzteilhandbuch aufgeführten Abbildungen und Informationen wurden der Bobcat/Ingersoll-Rand von den Herstellern von Maschinenbauteilen zur Verfügung gestellt.

ABKÜRZUNGEN UND SYMBOLE

SALES	= Bestellung bei der Verkaufsabteilung in Brüssel
NSS	= Nicht einzeln erhältlich
NAP	= Nicht als Ersatzteil erhältlich
*	= Geänderte oder hinzugefügte Abschnitte, Seiten oder Teilenummern
BTI	= Bobcat Technical Information Bulletin : Siehe am Ende der Mikrokarte des jeweiligen Modells oder der allgemeinen Mikrokarte der BTI.
was 6535403	= War 6535403
adj.	= Einstellung
Assembly	= Baugruppe
available W/Ref.	= erhältlich mit der Referenz
bulk/sold per foot	= Mengenabnahme / Verkauf pro Fuss
does not include	= beinhaltet nicht
included with	= enthalten in
I.D.	= Innendurchmesser
O.D.	= Aussendurchmesser
not in kit	= nicht in Bausatz
W/ - WO/	= mit/ - ohne/
Qty	= Anzahl
see page/ref.	= Siehe Seite / Referenz
used with ref.	= verwendet mit Referenz
0.05 inch thickness	= Dicke : 0.05 Zoll (ein Zoll = 25.4 mm)
weld on	= anschweissen

INFORMAZIONI GENERALI

Quando si usa il numero di serie della macchina usare il numero completo.

Il numero mostrato nella colonna della quantità di questo manuale corrisponde al numero di componenti necessari per l'illustrazione della pagina. Per alcuni componenti appare "X" nella colonna delle quantità. Questa "X" indica che la quantità da usare è "come necessario".

See in questo manuale si fa riferimento alla parte destra o sinistra, si intende dal sedile dell'operatore nella posizione in avanti di funzionamento.

Alcune delle illustrazioni e informazioni trovate in questo manuale di componenti sono state fornite alla Bobcat/Ingersoll-Rand da società di componenti di macchine.

SIMBOLI E ABBREVIAZIONI

SALES	= Ordinare al servizio vendite di Bruxelles
NSS	= Non vendute separatamente
NAP	= Non disponibile come componente
*	= Sezioni, pagine o numeri di componente cambiati o aggiunti
BTI	= (Bobcat Technical information) Ved. al termine del microfiche del modello relativo oppure microfiche generale
was 6535403	= era 6535403
adj. (adjustment)	= regol. (regolazione)
Assembly	= Complessivo
available W/Ref.	= disponibile con rif.
bulk/sold per foot	= alla rinfusa/venduto al piede
does not include	= non comprende
Included with	= compreso con
I.D.	= d. i.
O.D.	= d. e.
not in kit	= non fa parte del kit
W/ - WO/	= con - senza
Qty	= Qtà
see page/ref	= ved. pagina/rif.
used with ref.	= usato con il rif.
0,05 inch thickness	= spessore 0,05 pollici (un pollice = 25,4 mm)
weld on	= a saldare

INFORMACION GENERAL

Al utilizar el número de serie de la máquina, debe emplearse el número completo.

El número que figura en la columna de "Unidades" en este manual es el número de piezas que se necesitan para la ilustración que consta en la página. En algunas piezas aparece una "x" en la columna de "Unidades". Esta "x" indica que las unidades a utilizar son "según sea necesario".

Cuando se empleen las referencias izq. y dcha., éstas se entienden mirando desde el asiento del conductor, en posición de marcha adelante.

Algunas de las ilustraciones y la información que figuran en este manual de piezas han sido facilitadas a Bobcat/Ingersoll-Rand por empresas de componentes de máquinas.

ABREVIATURAS Y SIMBOLOS

VENTAS	= Pedido al Departamento de Ventas de Bruselas
NSS	= No se vende por separado
NAP	= No disponible como pieza de repuesto
*	= Secciones, páginas o referencias modificadas o añadidas
BTI	= (Bobcat Tecnical Information) Ver al final de la microficha del modelo afectado o en la microficha general "Boletín de Información Técnica Bobcat".
was 6535403	= era anteriormente el 6535403
adj. (adjustment)	= ajuste
assembly	= conjunto
available W/Ref.	= disponible con la ref.
bulk/sold per foot	= a granel/vendido por pies
does not include	= no incluye
included with	= incluido en
I.D.	= diámetro interior
O.D.	= diámetro exterior
not in kit	= no en el kit
W/ - WO/	= con/ - sin
Qty	= Unidades
see page /ref.	= ver página/ref.
used with ref.	= empleado con la ref.
0,05 inch thickness	= 0,05 pulgadas de espesor (1 pulgada = 25,4 mm)
weld on	= debe ser soldado

ALGEMENE INFORMATIE

Als u het serienummer van de machine gebruikt, geef dan het gehele serienummer.

Het cijfer dat voorkomt in de kolom "Aantal", in deze handleiding, is het aantal onderdelen dat nodig is van de illustratie op de pagina. Voor sommige onderdelen staat er een "x" in de kolom "Aantal". Deze "x" betekent dat er een aantal "zoals nodig" vereist is.

Wanneer er in deze handleiding naar "links" en naar "rechts" gerefereerd wordt, moet dit verstaan worden voor een bestuurder die in de bestuurdersstoel zit in de voorwaartse bedrijfsstand.

Sommige van de illustraties en informatie in deze onderdelen-handleiding werden door firma's van machine-componenten geleverd aan Bobcat/Ingersoll-Rand.

AFKORTINGEN EN SYMBOLEN

SALES	= Bestellen bij de Verkoopafdeling te Brussel
NSS	= Niet afzonderlijk te verkrijgen
NAP	= Niet beschikbaar als onderdeel
*	= Gewijzigde of toegevoegde paragrafen, pagina's of onderdeelnummers
BTI	= Bobcat Technical Information Bulletin : Zie einde van de microfiche van het desbetreffende model of einde van de algemene microfiche die het geheel van alle "BTI" herneemt.
was 6535403	= was vroeger 6535403
adj. (adjustment)	= afstelling
Assembly	= geheel
available W/Ref.	= beschikbaar met ref.
bulk/sold per foot	= bulk/aan de meter verkocht
does not include	= bevat niet
includes with	= is bevat in
I.D.	= ϕ inw. (inwendige diameter)
O.D.	= ϕ uitw. (uitwendige diameter)
not in kit	= niet in de kit
W/ - WO/	= met/ - zonder/
Qty	= vereiste aantal
see page/ref.	= zie pagina/ref.
used with ref/	= gebruikt met ref.
0,05 inch thickness	= 0.05 inch dik (een inch = 25.4 mm)
weld on	= te lassen

CONTENTS

MAINTENANCE ITEMS **1-2**
MAINTENANCE ITEMS 1

MAIN FRAME **3-24**
PANELS & SEAT 15
FUEL SYSTEM 17
SEAT 19
OPERATOR CAB 21-24
MAIN FRAME 3
LIFT ARMS & BOB-TACH 5
LIFT ARMS & BOBTACH 7
BOB-TACH 9-14

DRIVE TRAIN **25-30**
DRIVE TRAIN 25
AXLE 27
DISC BRAKE 29

HYDRAULIC SYSTEM **31-54**
HYDRAULIC CIRCUITRY 31
AUXILIARY HYDRAULICS 33-36
LIFT CYLINDER 37-40
TILT CYLINDER 41-50
CONTROL PEDALS 51
HYDRAULIC VALVE 53

HYDROSTATIC SYSTEM **55-82**
HYDROSTATIC CIRCUITRY 55-64
HYDROSTATIC MOTOR 65-74
HYDROSTATIC PUMP 75-78
HAND CONTROLS 79
VANE PUMP 81

ELECTRICAL SYSTEM **83-100**
CAB ELECTRICAL SYSTEM 83-86
ENGINE ELECTRICAL SYSTEM 87
ALTERNATOR 89-94
STARTER 95-100

POWER UNIT **101-136**
ENGINE & ATTACHING PARTS 101-106
ENGINE 107
THROTTLE & CHOKE 109
UNIVERSAL JOINT 111
WATER PUMP 113
CYLINDER BLOCK 115-118
VALVE TRAIN 119
CRANKSHAFT & PISTON 121-124
OIL PUMP 125
IGNITION SYSTEM 127
PIERCE GOVERNOR 129
HOOF GOVERNOR 131
CARBURETOR 133
AIR CLEANER 135

ACCESSORIES & OPTIONS **137-206**
AIR CLEANER VALVE KIT 137
AUXILIARY HYDRAULIC KIT 139
AXLE SEAL KIT 141

CONTENTS (Cont'd)

ACCESSORIES & OPTIONS

BACK-UP ALARM 143
BLOCK HEATER 145
CLOSED ALTERNATOR 147
CAB ENCLOSURE 149-152
DECALS 153-156
FIRE EXTINGUISER 157
FLASHER LIGHTS 159
FUEL SHUT-OFF 161
GRAB HANDLE 163
LIFT ARM STOP 165
OVERFLOW TANK 167
REAR WINDOW 169
RENTAL KIT 171
SEAT BAR KIT 173-180
SINGLE POINT LIFT 181-184
SOUND REDUCTION HARDHAT 185
SPARK ARRESTOR 187
STROBE LIGHT 189
STROBE LIGHT KIT 191
TILT CYLINDER STOP 193
TILT STOP KIT 195
TIRES & RIMS 197
WINDSHIELD WIPER 199
WIRE HARNESS CONNECTOR 201
BULK ITEMS 203-206

NUMERICAL INDEX 208-233

MAINTENANCE ITEMS
(MODEL 632)

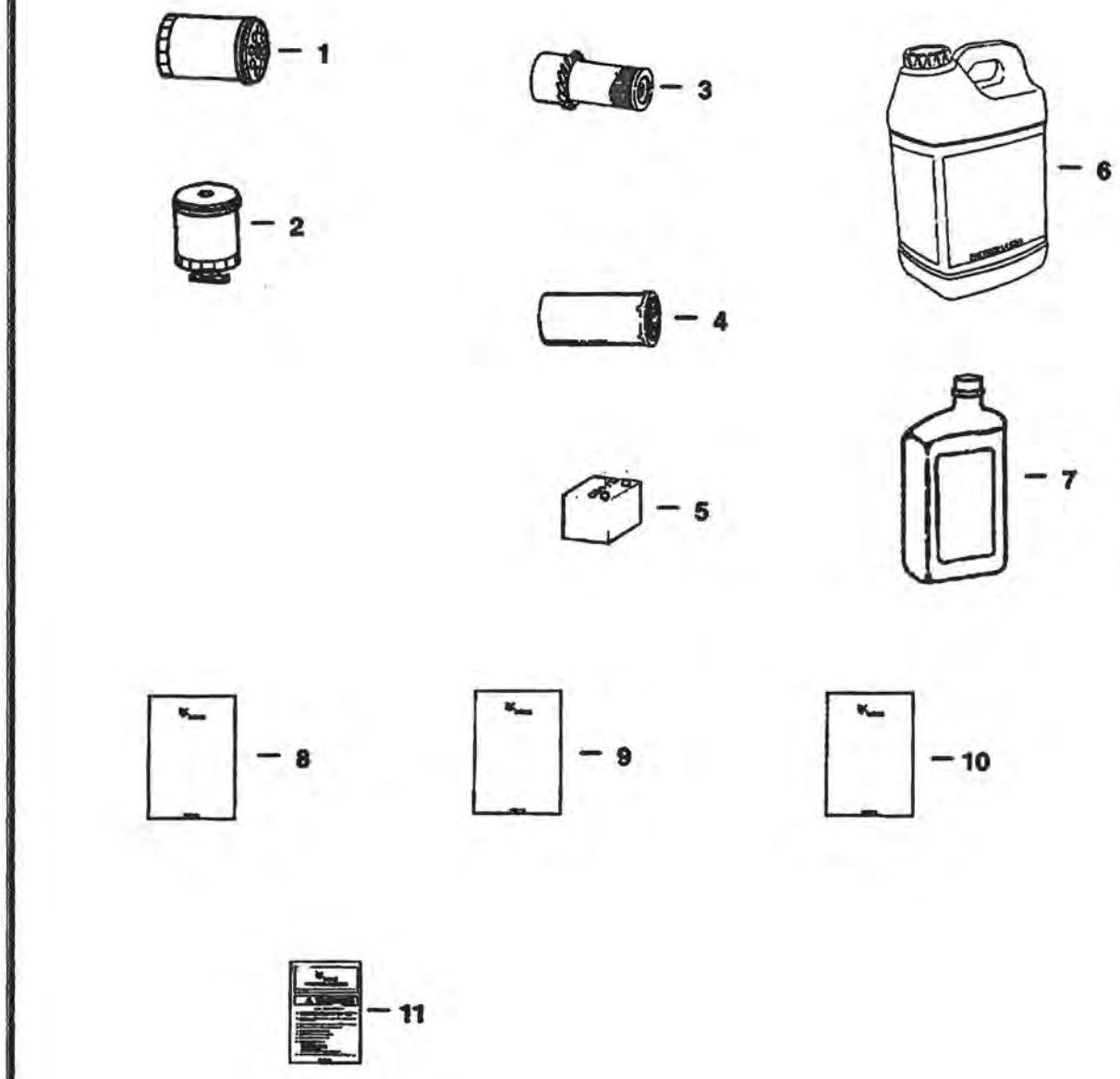

MAINTENANCE ITEMS (Cont'd)
(MODEL 632)

Ref No	Part Number	Description	Remarks	Serial Number	Qty
1	6513601	ELEMENT	See Illustration OIL PUMP/ B2315 Engine Oil		x
2	6512106	ELEMENT	See Illustration FUEL SYSTEM/ B20767 Inline Fuel		x
3	6646494	CARTRIDGE	See Illustration AIR CLEANER/ B17728 Outer Air Cleaner		x
4	6515541	ELEMENT	See Illustration HYDROSTATIC CIRCUITRY/ D1390 See Illustration HYDROSTATIC CIRCUITRY/ D1531 Hydrostatic filter - 10 micron		x
5	6674687	BATTERY	See Illustration ENGINE ELECTRICAL SYSTEM/ E1173		x
6	6903117	HYD FLUID 2.5 GAL. 2	Was 6563328 [A]		x
6	6903118	HYD. FLUID 5GAL	Was 6722344 [A]		x
6	6903119	HYD. FLUID 55GAL	Was 6563330 [A]		x
7	6903109	OIL 30W QT. 12	Was 6657303 [A]		x
7	6903110	OIL 30W GAL. 6	Was 6724559 [A]		x
7	6903111	OIL 30W 2.5 GAL 2	Was 6674206 [A]		x
7	6903107	OIL 10W30 QT. 12	Was 6657301 [A]		x
7	6903108	OIL 10W30 GAL. 6	Was 6724557 [A]		x
7	6903112	OIL 10W30 2.5 GAL 2	Was 6674205 [A]		x
7	6903105	OIL 15W40 QT. 12	Was 6657299 [A]		x
7	6903106	OIL 15W40 GAL. 6	Was 6724558 [A]		x
7	6903113	OIL 15W40 2.5 GAL. 2	Was 6674204 [A]		x
8	6556454	630-S S/M	Service Manual		1
9	6566573	632R O/M	Operation & Maintenance Manual	4993 15319 & Below	1
9	6556157	632CL O/M	Operation & Maintenance	4993 15320 & Above	1
10	6556403	632 P/M	Parts Manual		1
11	6567623	HANDBOOK	See Illustration DECALS/ B20764 Operator		1

MAIN FRAME

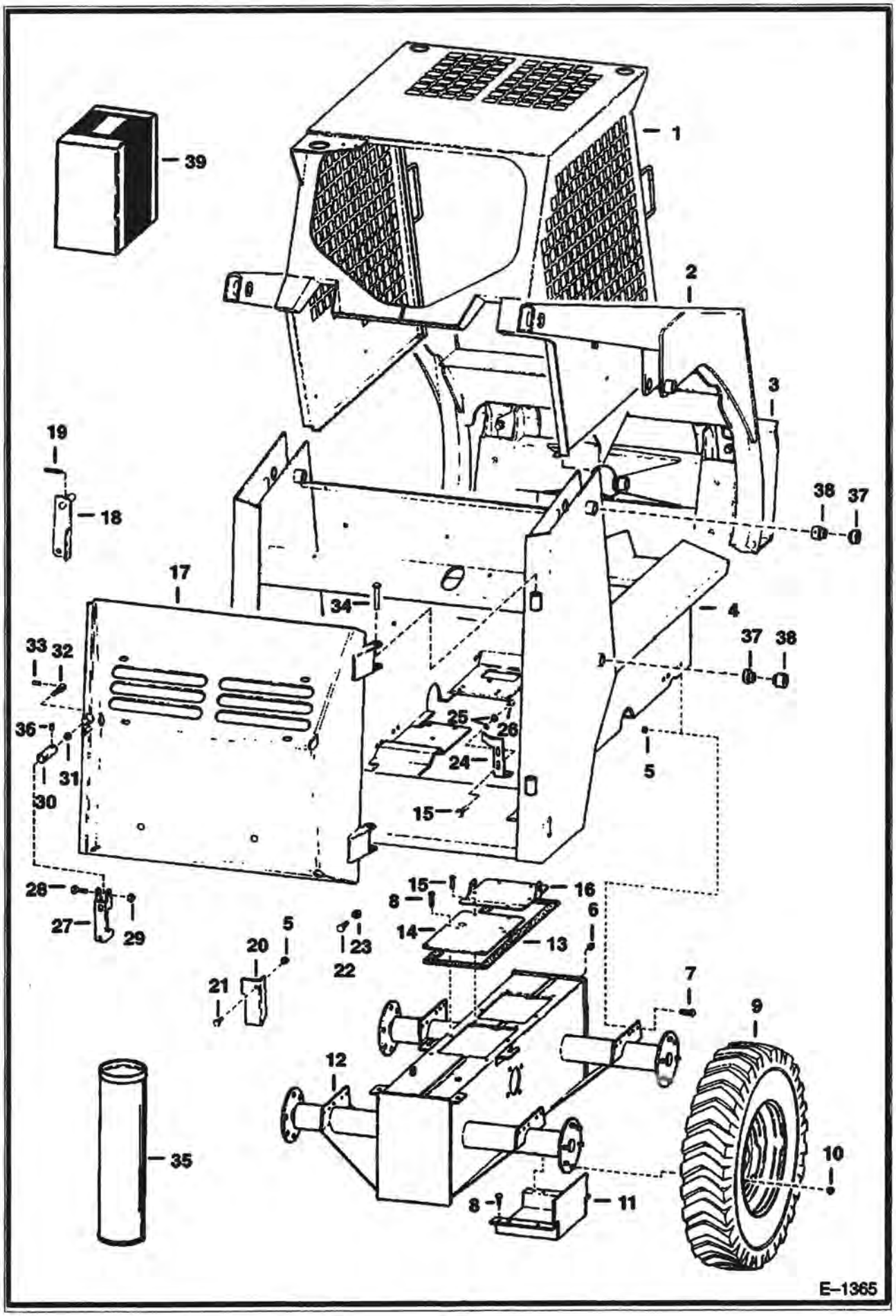
1
2
3
4
5
6
7
8
9
10
11
12
13
14
15
16
17
18
19
20
21
22
23
24
25
26
27
28
29
30
31
32
33
34
35
36
37
38
39
E–1365

MAIN FRAME (Cont'd)

Ref No	Part Number	Description	Remarks	Serial Number	Qty
1		CAB	See Illustration OPERATOR CAB/ C2771		1
2		LIFT ARMS	See Illustration LIFT ARMS & BOB-TACH/ D1380 See Illustration LIFT ARMS & BOBTACH/ B20653		1
3		BOB-TACH	See Illustration BOB-TACH/ B20656 See Illustration BOB-TACH/ PE1527		1
4		MAIN FRAME	See BTI163 NAP	15462 & Below	1
4		MAIN FRAME	NAP - Order Ref. 11 - Was 6565482 [A]	15463 & Above	1
5	83D000008B	NUT			16
6	40K000012B	PLUG			1
7	31C000820B	BOLT			16
8	84G003712B	BOLT			14
9		TIRE & RIM	See Illustration TIRES & RIMS/ B20766		4
10	6557188	NUT	wheel - 1/2"		24
10	6564669	NUT	wheel - 9/16"		24
11	6564918	COVER	Was 6703916 [B]		2
12		CHAINCASE	See BTI161 NAP	15462 & Below	1
12		CHAINCASE	See BTI161 NAP - Order (1) 6563032 & (2) 6560775	15463 & Above	1
13	6703117	GASKET	See BTI189 Was 6553833 [A]		1
14	6557144	PLATE			1
15	84G003716B	BOLT			2
16	6554093	PLATE			1
17		REAR DOOR	See BTI166 See BTI191 NAP	15697 & Below	1
17	6704328	REAR DOOR	hinged - Was 6565073 [A]	15698 & Above	1
18	6553429	HANDLE		15697 & Below	1
19	14J003740B	PIN		15697 & Below	1
20	6558283	DOOR STOP		13224 & Below	1
21	17C000816B	BOLT			1
22	10C000512B	BOLT	Was 6553808 [A]		1
23	85D000005B	NUT			1
24	6558698	DOOR STOP		13225 & Above	1
25	755589B	WASHER			2
26	85D000006B	NUT			2
27	6563681	HANDLE		15698 & Above	1
28	38C000624B	BOLT	Was 6564599 [A]	15698 & Above	1
29	85D000005B	NUT		15698 & Above	1
30		NUT	NAP - 1/2" (12,7mm) - Order Ref. 30 - 33 & 36	15698 & Above	1
30		NUT	NAP - 5/8" (15,88mm) coarse thread - Order Ref. 30-32		1
30	6565628	NUT	5/8" (15,88mm) fine thread		1
31	61D000008B	NUT	1/2" (12,7mm)	15698 & Above	1
31	6563624	NUT	5/8" (15,88mm) coarse thread		1
31	6565627	NUT	5/8" (15,88mm) fine thread		1
32		SCREW	NAP - 1/2" (12,7 mm) - Order Ref. 30-32 & 36	15698 & Above	1
32		SCREW	NAP - 5/8" (15,88 mm) coarse thread - Order Ref. 30-32		1
32	6565629	SCREW	5/8" (15,88mm) fine thread		1
33	6599361	PIN		15698 & Above	1
34	6564340	PIN		15698 & Above	2
35	6632501	SEALANT	transmission cover		x
36	33G000404B	SCREW			1
37	6555987	BUSHING	Weld On		4
38	6555989	BUSHING	Weld On		4
39	6579448	LATCH KIT	Ref. 29 - 33		1

NOTE: Before ordering repair parts, make sure that this is the correct style Lift Arm & Bob–Tach.

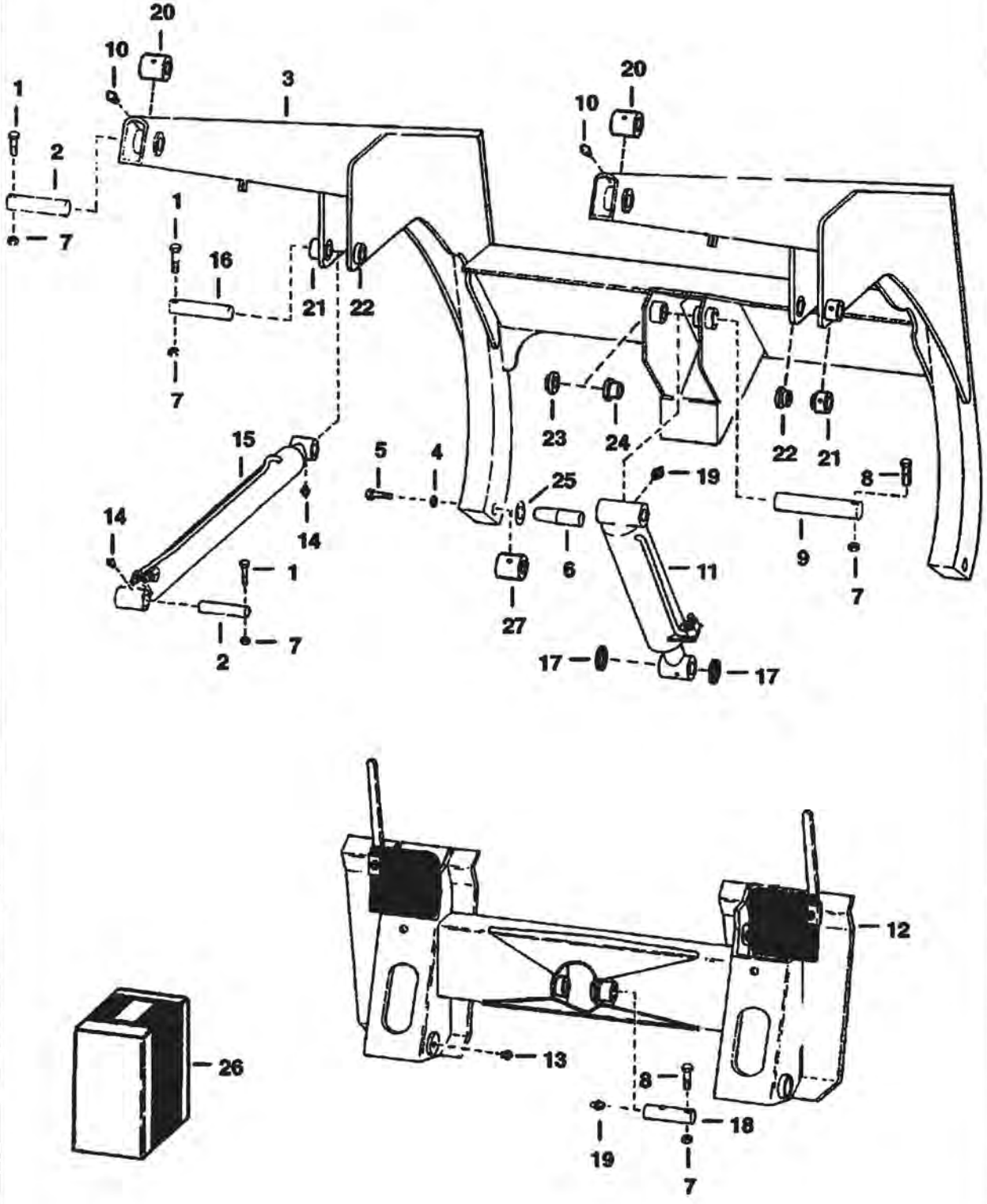

D–1380

LIFT ARMS & BOB-TACH (Cont'd)

Ref No	Part Number	Description	Remarks	Serial Number	Qty
1	17C000640B	BOLT			6
2	6547595	PIN			4
3		LIFT ARMS	See BTI152 See BTI172 See BTI174 NAP - Order (1) 6702894 lift arm, (1) 6539810 cylinder from Bobcat Parts Marketing & (1) 6705172 Bob-tach kit	13999 & Below	1
3	6702894	LIFT ARMS	Was 6565501 [A]	14001 & Above	2
4	6555455	WASHER			2
5	17C001020B	BOLT	1 1/4" long		2
5	17C001064B	BOLT	4" long		2
6		PIN	NAP - Order Ref. 26 - Was 6555449 [A]		2
6	6707521	PIN KIT			2
6	6707042	PIN			2
7	85D000006B	NUT			8
8	17C000632B	BOLT			2
9	6553061	PIN			1
10	10H000035B	GREASE ZERK			1
11		CYLINDER	See Illustration TILT CYLINDER/ C2001A See Illustration TILT CYLINDER/ B20663 See Illustration TILT CYLINDER/ B20664 See Illustration TILT CYLINDER/ B20665 See Illustration TILT CYLINDER/ C2001 See BTI136 See BTI167 TILT		1
12		BOB-TACH	See Illustration BOB-TACH/ B20657 See Illustration BOB-TACH/ B20656 See Illustration BOB-TACH/ PE1527 See BTI178		1
13	743332B	GREASE ZERK			2
14	11H000025B	GREASE ZERK			4
15		CYLINDER	See Illustration LIFT CYLINDER/ B2206 See Illustration LIFT CYLINDER/ B6942 LIFT		2
16	6547593	PIN			2
17	6513605	SEAL		14001 & Above	2
18	6703572	PIN	Was 6560704 [A]		1
19	10H000025B	GREASE ZERK			1
20	6578356	BUSHING	Weld On - Was 6557097 [A]		2
21	6555987	BUSHING	Weld On		2
22	6555989	BUSHING	Weld On		2
23	6558779	BUSHING	Weld On		1
24	6558803	BUSHING	Weld On		1
25	27E000018B	WASHER	See BTI178		x
26	6707521	PIN KIT			2
27	6714874	BUSHING	W/tapered hole		2

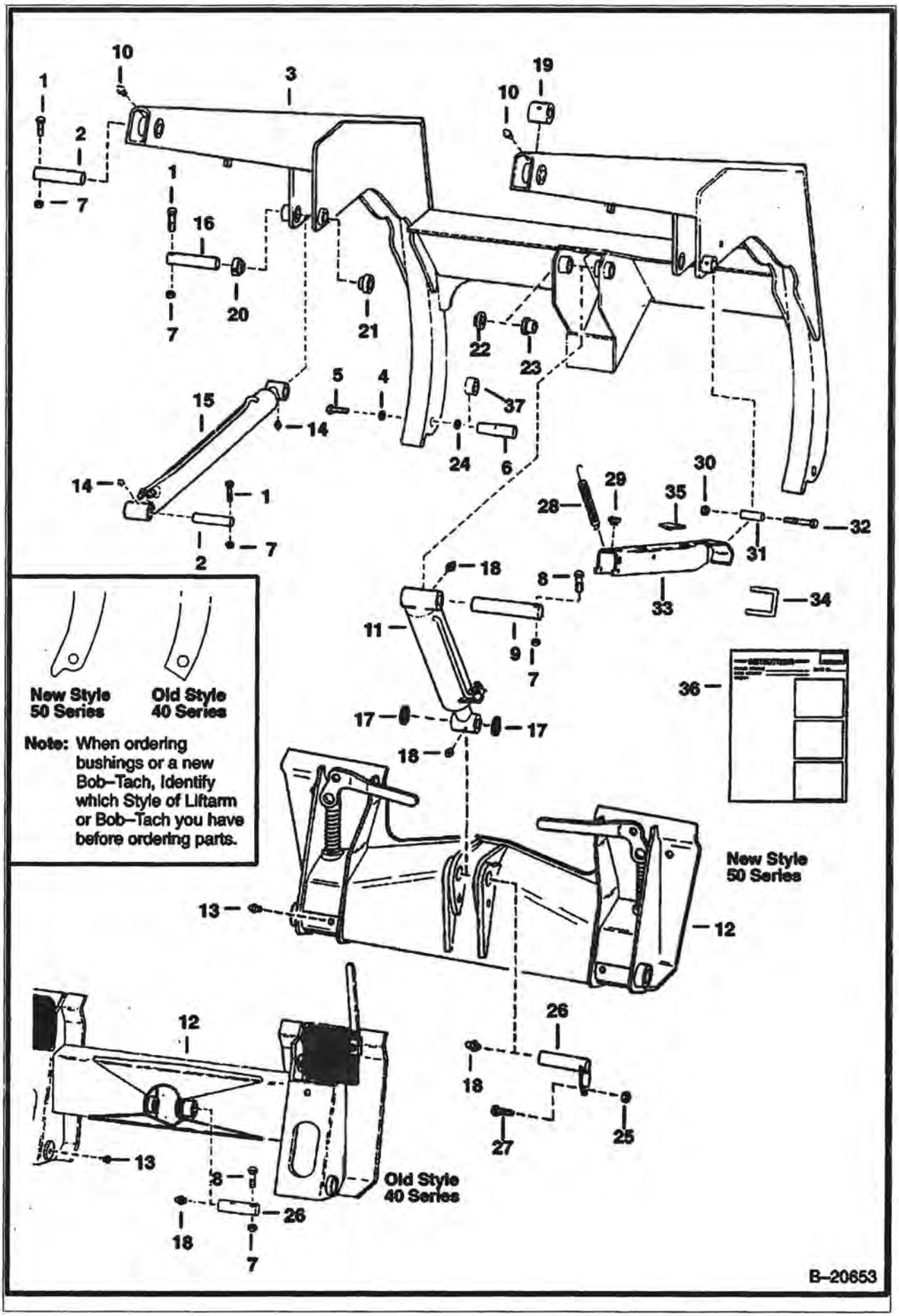
New Style
50 Series
Old Style
40 Series
Note: When ordering bushings or a new Bob–Tach, Identify which Style of Liftarm or Bob–Tach you have before ordering parts.
New Style
50 Series
Old Style
40 Series
B–20653

LIFT ARMS & BOBTACH (Cont'd)

Ref No	Part Number	Description	Remarks	Serial Number	Qty
1	17C000640B	BOLT			6
2	6547595	PIN			4
3	6703953	LIFT ARM			1
4	6555455	WASHER			2
5	17C001020B	BOLT	1 1/4" (31,8mm) Long		2
5	31C001064B	BOLT	4 in. (101,6 mm) Long - Was 17C001064B [B]		2
6		PIN	NAP - order 6707521 Kit-Was 6700301 [A]		2
6	6707521	PIN KIT	W/6732012 Pin, 31C001064B Bolt & Ref. 35		2
6	6732012	PIN	Was 6707042 [A]		2
7	85D000006B	NUT			8
8	17C000632B	BOLT			2
9	6704288	PIN			1
10	10H000035B	GREASE ZERK	.250-28 (6,35mm)		2
10	10H000025B	GREASE ZERK	.125-27 (3,18mm)		2
11		CYLINDER	See Illustration TILT CYLINDER/ C2001A See Illustration TILT CYLINDER/ B20663 See Illustration TILT CYLINDER/ B20664 See Illustration TILT CYLINDER/ B20665 See Illustration TILT CYLINDER/ C2001 TILT		1
12		BOB-TACH	See Illustration BOB-TACH/ PE1527 SALES		1
13	743332B	GREASE ZERK			2
14	11H000015B	GREASE ZERK			4
15		CYLINDER	See Illustration LIFT CYLINDER/ B2206 See Illustration LIFT CYLINDER/ B6942 LIFT		2
16	6547593	PIN			2
17	6654117	SEAL			2
18	10H000025B	GREASE ZERK			2
19	6578356	BUSHING	Weld On		2
20	6555987	BUSHING	Weld On		2
21	6555989	BUSHING	Weld On		2
22	6703363	BUSHING	Weld On - New Style, 50 Series - See Note		1
22	6558779	BUSHING	Weld On - Old Style - See Note		1
23		BUSHING	NAP - Weld On - New Style, 50 Series - See Note - Order 6704287 & 6704288		1
23	6737623	BUSHING	Weld On - New Style, 50 Series - SEE NOTE - Was 6704287 [A]		1
23	6558803	BUSHING	Weld On - Old Style - See Note		1
24	6704436	PAD	New Style, 50 Series - See Note		2
25	85D000006B	NUT	New Style - See Note		9
26	6705223	PIN	New Style, 50 Series - See Note		1
26	6703572	PIN	Old Style, 40 Series - See Note - Was 6560704 [A]		1
27	17C000620B	BOLT	New Style, 50 Series - See Note		1
28	6579072	SPRING	New Style, 50 Series - See Note - Was 6700743 [A]		1
29	6519178	BUMPER	New Style, 50 Series - See Note		1
30	61D000006B	NUT	New Style, 50 Series - See Note		1
31	6700469	SPACER	New Style, 50 Series - See Note		1
32	17C000648B	BOLT	New Style, 50 Series - See Note		1
33	6705089	LIFT ARM STOP	New Style, 50 Series - See Note		1
34	6714810	PIN	retainer - New Style, 50 Series - See Note - Was 6578457 [A]		1
35	6722967	INSTRUCTIONS	INSTRUCTIONS For 6707521 Pin Kit		1
36	6714874	BUSHING	tapered hole- 1.25" (318mm)		2

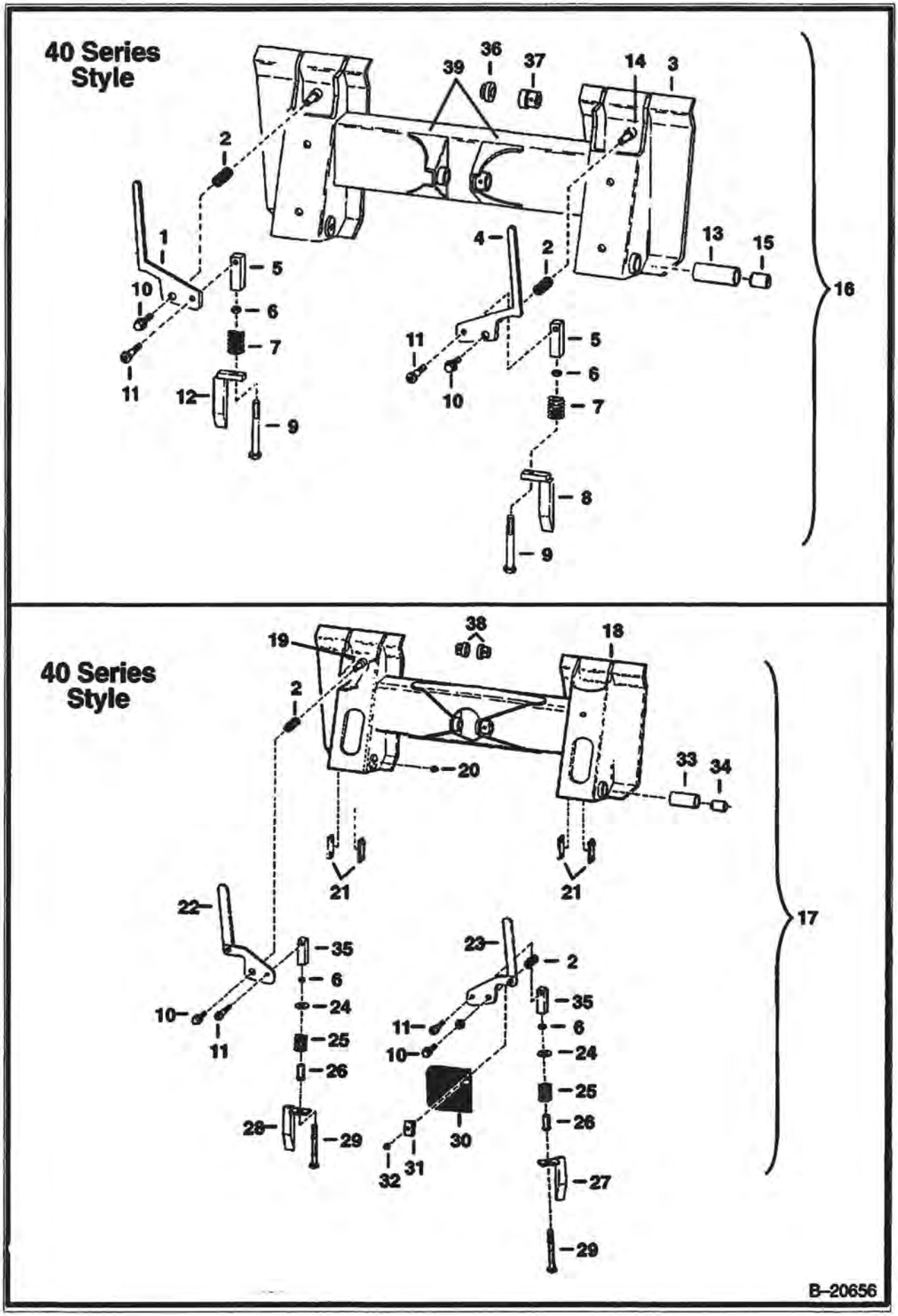
40 Series Style
36
37
39
14
3
2
1
4
2
13
15
16
10
5
6
7
11
12
9
11
10
5
6
7
8
9
40 Series Style
38
19
18
2
20
33
34
21
21
22
23
2
35
6
24
25
26
28
29
11
10
30
31
32
27
29
17
B–20656

BOB-TACH (Cont'd)
(S/N 13999 & Below)

Ref No	Part Number	Description	Remarks	Serial Number	Qty
1	6563106	LEVER	L.H. - Was 6579698 [A]		1
2	6704453	SPRING	Was 6503387 [A]		2
3		FRAME	NAP - Order Ref. 17		1
4	6563107	LEVER	R.H. - Was 6579697 [A]		1
5	6565186	BLOCK			2
6	7D000008B	NUT			2
7	6548407	SPRING			2
8	6548913	WEDGE	R.H.		1
9	17C000896B	BOLT			2
10	35C000608B	BOLT	Was 6557232 [A]		2
11	661846B	BOLT			2
12	6548912	WEDGE	L.H.		1
13	6558424	BUSHING	W/Ref. 15		2
14	6553843	STUD			2
15	6554294	BUSHING			2
16		BOB-TACH	NAP - complete - Order Ref. 17		1
17	6563379	BOB-TACH	COMPLETE - ALSO ORDER 6561383 DECAL		1
18		FRAME	NAP - Order Ref. 17		1
19	6562013	STUD			2
20	743332B	GREASE ZERK			2
21	6562026	INSERT			4
22	6563106	LEVER	L.H.		1
23	6563107	LEVER	R.H.		1
24	1303141B	WASHER			2
25	6562018	SPRING			2
26	6562019	GUIDE			2
27	6565189	WEDGE	R.H.		1
28	6565190	WEDGE	L.H.		1
29	17C000880B	BOLT	1/2" x 5" (12,7mm x 127mm)		2
29	17C000884B	BOLT	1/2" x 5-1/4" (12,7mm x 133,35mm) - Use With 6565186 Block		2
30	6563103	COVER	rubber		2
31	6563108	ANGLE			2
32	85D000006B	NUT			2
33	6565326	BUSHING	W/Ref. 34		2
34	6562067	BUSHING			2
35		BLOCK	NAP - Order 6565186 & 17C000884B Bolt		2
35	6565186	BLOCK	Used Only With 17C000884B Bolt		2
36	6555989	BUSHING	Weld On		1
37	6557095	BUSHING	Weld On		1
38	6562642	BUSHING	Weld On		2
39	6557081	GUSSET	Weld On		2

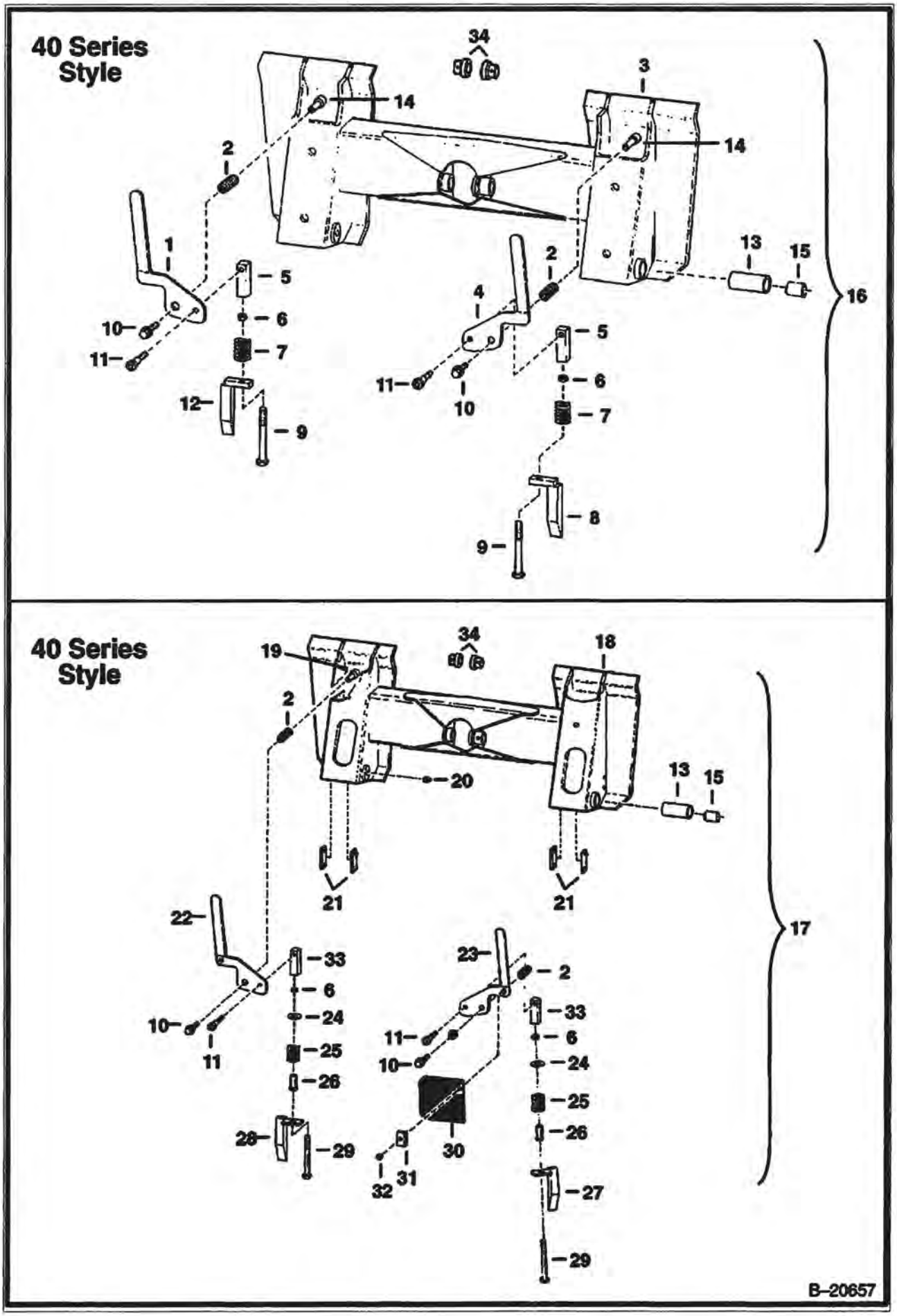
40 Series Style
34
3
14
14
2
1
5
6
7
10
11
12
9
2
4
5
6
7
11
10
8
9
13
15
16
40 Series Style
34
19
18
2
20
13
15
21
21
22
33
6
24
25
26
10
11
28
29
23
2
33
6
24
25
26
11
10
30
31
32
27
29
17
B-20657

BOB-TACH (Cont'd)
(S/N 14001 & Above)

Ref No	Part Number	Description	Remarks	Serial Number	Qty
1	6563106	LEVER	L.H. - Was 6579698 [A]		1
2	6704453	SPRING	Was 6503387 [A]		2
3		FRAME	NAP - Order Ref. 17		1
4	6563107	LEVER	R.H. - Was 6579697 [A]		1
5	6565186	BLOCK			2
6	7D000008B	NUT			2
7	6548407	SPRING			2
8	6548913	WEDGE	R.H.		1
9	17C000896B	BOLT			2
10	35C000608B	BOLT	Was 6557232 [A]		2
11	661846B	BOLT			2
12	6548912	WEDGE	L.H.		1
13	6558424	BUSHING	W/Ref. 15	15450 & Below	2
13	6565326	BUSHING	W/Ref. 15	15451 & Above	2
14	6553843	STUD			2
15	6554294	BUSHING		15450 & Below	2
15	6562067	BUSHING		15451 & Above	2
16		BOB-TACH	NAP - complete - Order Ref. 17		1
17		BOB-TACH	See Illustration BOB-TACH/ PE1527 COMPLETE - ORDER 6705172 BOB-TACH KIT		1
18		FRAME	NAP - Order Ref. 17		1
19	6562013	STUD			2
20	743332B	GREASE ZERK			2
21	6562026	INSERT			4
22	6563106	LEVER	L.H.		1
23	6563107	LEVER	R.H.		1
24	1303141B	WASHER			2
25	6562018	SPRING			2
26	6562019	GUIDE			2
27	6565189	WEDGE	R.H.		1
28	6565190	WEDGE	L.H.		1
29	17C000880B	BOLT	1/2" x 5" (12,7 x 127mm)		2
29	17C000884B	BOLT	1/2" x 5-1/4" (12,7 x 133,35mm) - Use With 6565186 Block		2
30	6563103	COVER	rubber		2
31	6563108	ANGLE			2
32	85D000006B	NUT			2
33		BLOCK	NAP - Order 6565186 & 17C000884B Bolt		2
33	6565186	BLOCK	Used Only With 17C000884B Bolt		2
34	6562642	BUSHING	Weld On		2

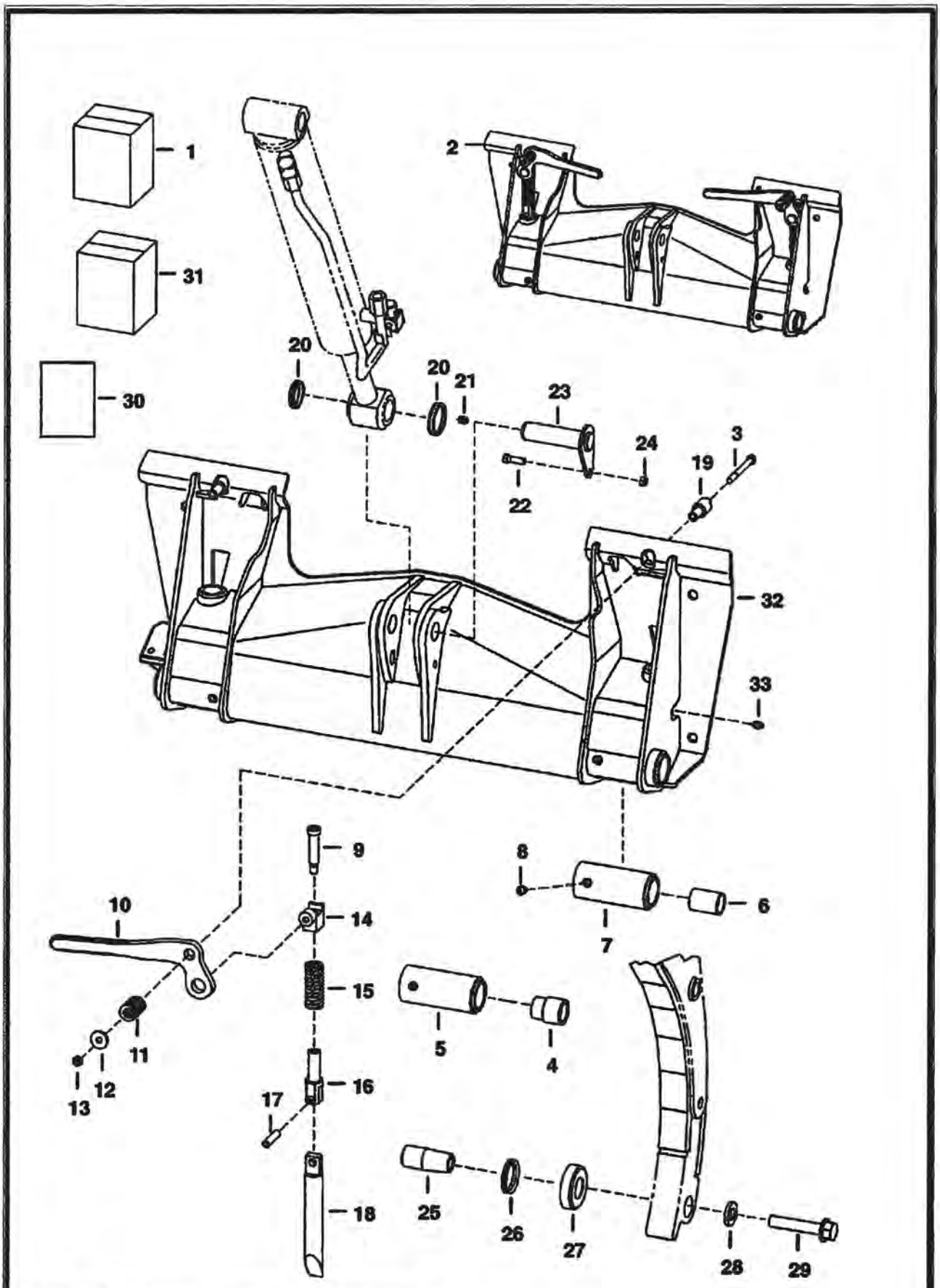

NOTE: Before Ordering repair parts make sure this is the correct style Bob-Tach.

PE–1527

Ref No	Part Number	Description	Remarks	Serial Number	Qty
1	6705172	KIT	Bob-Tach - Ref. 4 & 20 - 28		1
2		BOB-TACH	NAP - W/Ref. 7 (NAP/6577445 bushing) - 2.25 in. (57,15 mm) O.D. weld on bushing - Order 6571744 Bob-tach & (2) Ref. 4 - Also Order 6561383 decal - Was 6705173 [A]		1
2	6571744	BOB-TACH	W/Ref. 5 - 2.50 in. (63,5 mm) O.D. weld on bushings - Not in kit - Also Order (2) Ref. 4 & 6561383 decal -		1
3	17C000644B	BOLT	See Ref. 11 & 12 - 2.75 in. (69,9 mm) long		2
3	17C000660B	BOLT	See Ref. 11 & 12 - 3.75 in. (95,3 mm) long		2
4	6732446	BUSHING	press fit - 1.25 in. (31,8 mm) I.D. - stepped O.D.		2
5	6731979	BUSHING	weld on - 2.50 in. (63,5 mm) O.D. - Also Order Ref. 4		2
6	6589665	BUSHING	press fit - 1.25 in. (31,8 mm) I.D. - straight O.D. - Was 6534387 [A]		2
7		BUSHING	NAP - weld on - 2.25 in. (57,15 mm) O.D. - W/Ref. 6 - Order 6577446 Bushing & Ref. 6 - Was 6577445 [A]		2
7	6577446	BUSHING	weld on - 2.25 in. (57,15 mm) O.D. - Also Order Ref. 6		2
8	743332B	GREASE ZERK			2
9	38C001036B	BOLT	shoulder - Was 6578166 [A]		2
10	6702903	LEVER	L.H.		1
10	6702904	LEVER	R.H.		1
11	6704453	SPRING	Use W/Ref. 3, 17C000644B Bolt - Was 6578252 [A]		2
11	6713040	SPRING	Use W/Ref. 3, 17C000660B Bolt		2
12	6557831	WASHER	Use W/Ref. 3, 17C000644B Bolt		2
12	619021B	WASHER	Use W/Ref. 3, 17C000660B Bolt		2
13	85D000006B	NUT			6
14	6704240	PIVOT ASSY.	Was 6576456 [A]		2
15	6578253	SPRING			2
16	6704248	PIVOT	wedge		2
17	14J005032B	PIN			2
18	6737191	WEDGE	Was 6704242 [A]		2
19	6702958	BUSHING	weld on		2
20	6654117	SEAL			2
21	10H000025B	GREASE ZERK			1
22	17C000620B	BOLT			1
23	6705223	PIN	Was 6700037 [A]		1
24	85D000006B	NUT			1
25		PIN	NAP - Order 6707521 Pin Kit - Was 6700301 [A]		2
25	6707521	PIN KIT	W/6732012 Pin, 17C001064B Bolt & Ref. 30		2
25	6732012	PIN	Was 6707042 [A]		2
26	6651709	SEAL			2
27	6700039	CUP			2
28	6555455	WASHER			2
29	17C001020B	BOLT	1-1/4 in. (31,8 mm)		2
29	17C001064B	BOLT	4 in. (101,6 mm)		2
30	6722967	INSTRUCTIONS	for Ref. 25		1
31	6724775	LEVER KIT	lever - R.H. - Ref. 3 & 9 - 18		1
31	6724776	LEVER KIT	lever - L.H. - Ref. 3 & 9 - 18		1
32		FRAME	NAP		1
33	10H000035B	GREASE ZERK			2

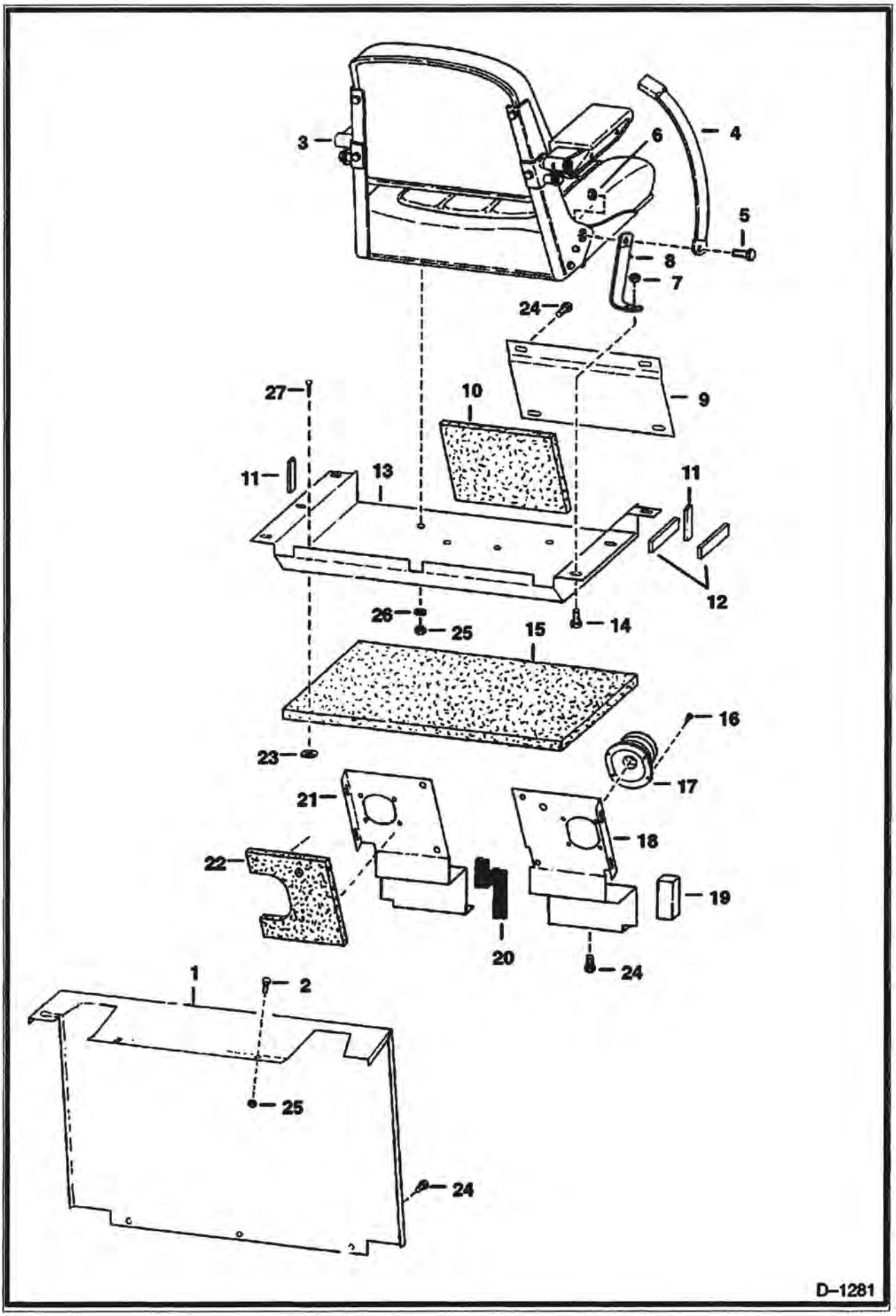
3
6
4
5
8
7
24
9
27
10
11
13
11
12
26
25
14
15
16
23
17
21
18
22
19
20
24
1
2
25
24
D–1281

PANELS & SEAT (Cont'd)

Ref No	Part Number	Description	Remarks	Serial Number	Qty
1	6553796	PANEL			1
2	84G003712B	BOLT			5
3		SEAT	See Illustration SEAT/ B7184		1
4	6563214	SEAT BELT			1
5	17C000716B	BOLT			2
6	61D000007B	NUT			2
7	57D000006B	NUT			2
8	6552184	SEAT BELT			2
9	6557172	PLATE			1
10	6554365	INSULATION			1
11		STRIP	NAP		2
12		STRIP	NAP		2
13	6555648	PLATE	seat		1
14	37C000616B	BOLT	Was 6514537 [A]		10
15	6554364	INSULATION			1
16		FASTENER	NAP		8
17	6532127	BOOT	rubber - Was 6563540 [A]		2
18	6557169	PANEL	R.H.	13999 & Below	1
18	6559576	PANEL	R.H.	14001 - 15462	1
18	6563537	PANEL	R.H.	15463 & Above	1
19		STRIP	NAP		2
20	6553766	BEADING			2
21	6557170	PANEL	L.H.	13999 & Below	1
21	6559577	PANEL	L.H.	14001 - 15462	1
21	6563539	PANEL	L.H.	15463 & Above	1
22	6554366	INSULATION			2
23	6555294	CLIP			10
24	84G003716B	BOLT			4
25	61D000006B	NUT			3
26	4E000006B	WASHER			4
27	6555293	NAIL			10

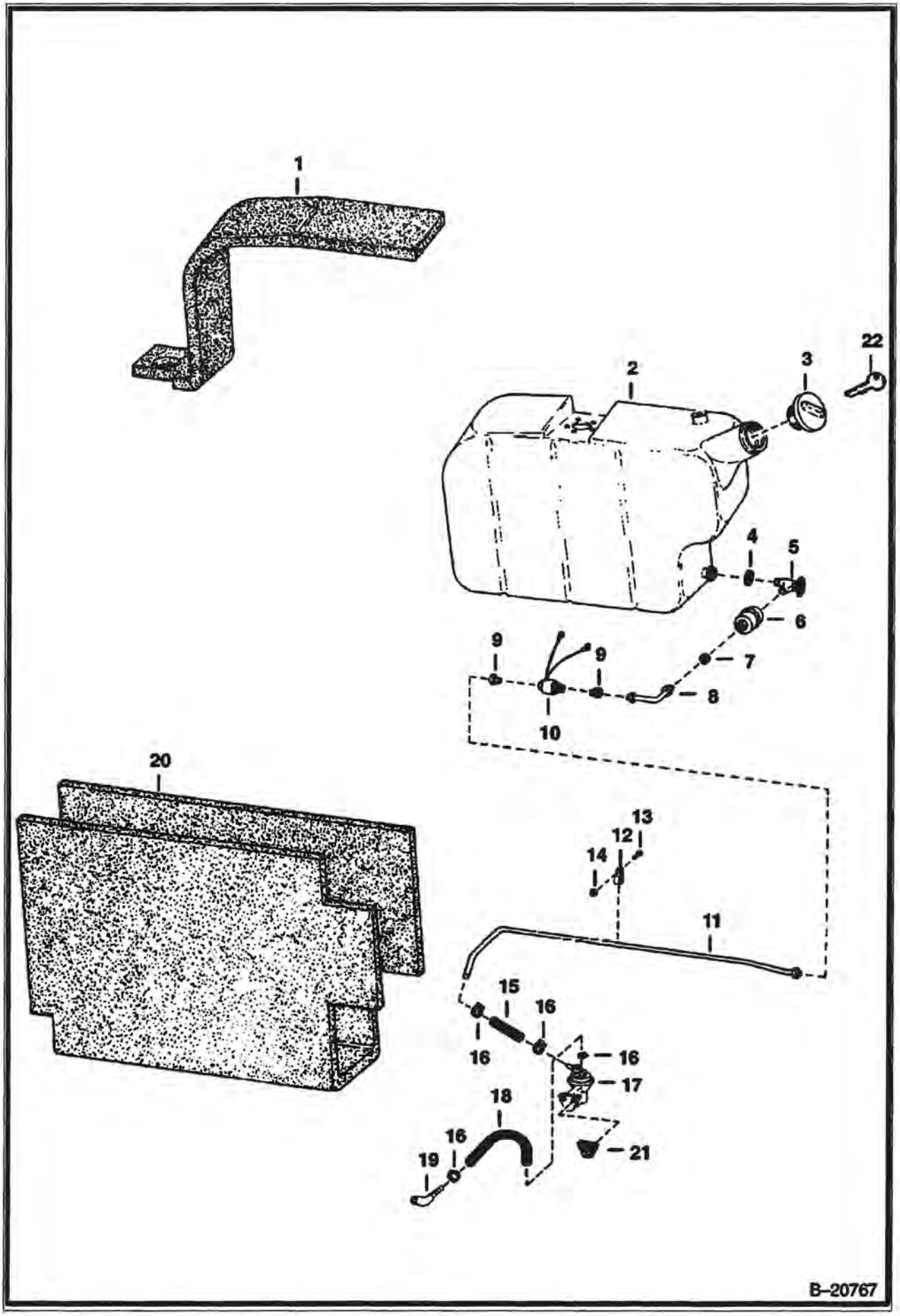
1
2
3
22
4
5
6
7
8
9
9
10
20
13
12
14
11
15
16
16
16
17
18
16
19
21
B–20767

FUEL SYSTEM (Cont'd)

Ref No	Part Number	Description	Remarks	Serial Number	Qty
1	6555909	INSULATION			1
2		TANK	NAP - Order 6560211 - Was 6557743 [A]		1
3	6632468	CAP	Was 6661114 [A]		1
3		CAP	NAP - locking - W/Ref. 22 - Code GC020 - Was 6635877 [A]		1
3	6662770	CAP	locking - W/Ref. 22 - Code PK510		1
4	6514005	CLAMP			1
5	6512138	VALVE			1
6	6512106	ELEMENT			1
7	565073B	GROMMET	Was 6557900 [A]		1
8	6559152	TUBE		14001 & Above	1
9	59F000004B	CONNECTOR		14001 & Above	2
10	6559117	SOLENOID		14001 & Above	1
11	6557246	TUBE		13999 & Below	1
11	6559151	TUBE		14001 & Above	1
12	30H000019B	CLAMP			1
13	17C000512B	BOLT			1
14	85D000005B	NUT			1
15	6559118	HOSE			1
16	6515575	CLAMP			4
17	6512518	FUEL PUMP	Bent Tube		1
18	6557832	HOSE			1
19	6515156	CONNECTOR			1
20	6555908	INSULATION			1
21	6512519	GASKET	spacer		1
21	6660165	GASKET			1
22	6654374	KEY	Code GC020		1
22	6587458	KEY	Code PK510		1

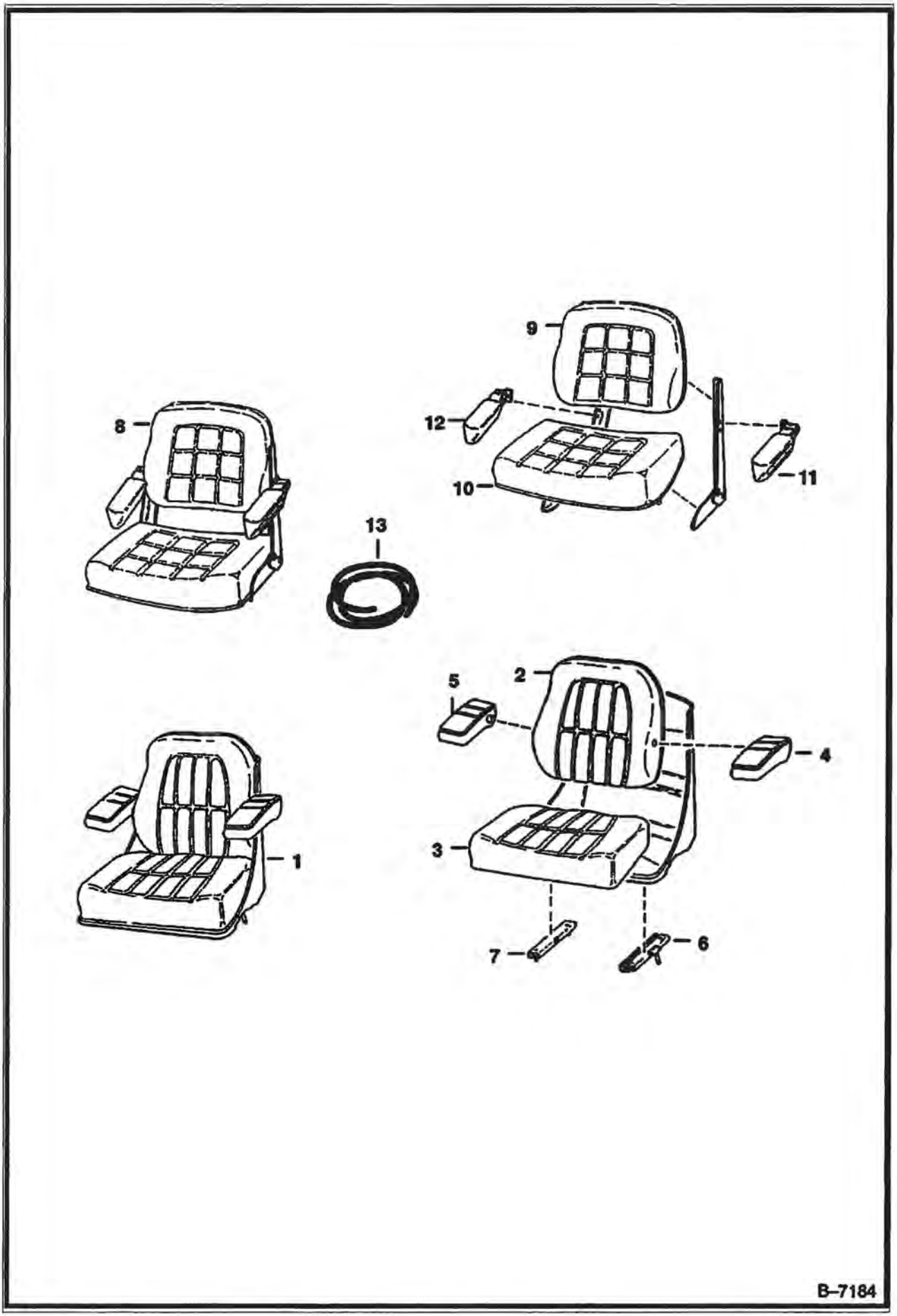
9
12
11
10
8
13
5
2
4
3
1
7
6
B–7184

SEAT (Cont'd)

Ref No	Part Number	Description	Remarks	Serial Number	Qty
1	6563141	SEAT	Clip-In Cushions		1
2	6630464	CUSHION	back		1
3	6630468	CUSHION	seat		1
4	6630466	ARM REST	L.H.		1
5	6630467	ARM REST	R.H.		1
6	6630469	TRACK	W/Latch		1
7	6599780	TRACK	W/O Latch		1
8		SEAT	NAP - Bolt in Cushions - Order 6563141		1
9	6511923	CUSHION	back - bolt on		1
10	6511921	CUSHION	seat - bolt on		1
11	6649502	ARM REST	L.H. - Was 6513573 [A]		1
11		CUSHION	NAP - armrest - Order 6649502 - Was 6513697 [A]		1
12	6649503	ARM REST	R.H. - Was 6513574 [A]		1
12		CUSHION	NAP - arm rest - Order 6649503 - Was 6513698 [A]		1
13	6652935	EDGING	8 ft. for Ref. 2 & 3		1
13	6665656	CLIP			1

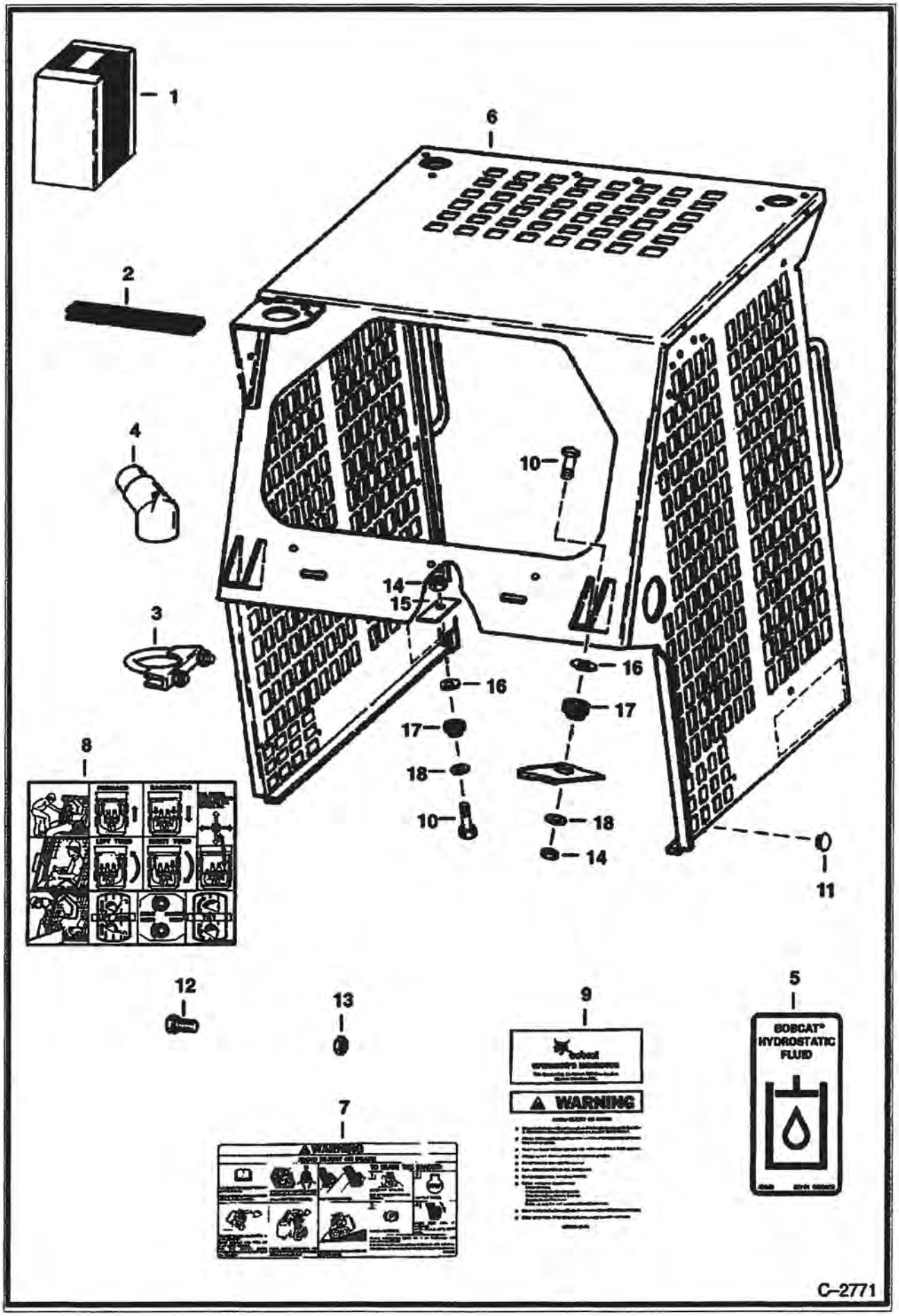
1
6
2
4
10
14
15
3
16
16
17
17
18
10
18
14
11
8
12
13
9
5
7
WARNING
BOBCAT® HYDROSTATIC FLUID
C–2771

Ref No	Part Number	Description	Remarks	Serial Number	Qty
1		KIT	NAP - Ref. 2 - 8 - Order 6569247 & 6563781 - Was 6563029 [A]		1
2	6620417	MOULDING	Was 6512686 [A]		1
3	710706B	CLAMP			1
4	6563039	ELBOW	hydraulic tank		1
5	6565990	DECAL	hydraulic/hydrostatic fluid - Was 6561378 [A]		1
6		CAB	NAP - Order 6569247 Kit		1
7	6702265	DECAL	warning - Was 6575854 [A]		1
8	6569021	DECAL	operation		1
9	6567623	HANDBOOK	handbook - W/6558309 & 6558310		1
9	6558309	WIRE ROPE	33" (838,2mm) long - Bulk Sold Per Foot - Also Order (2) 6558310 Sleeve - Was 6558305 [A]		x
9	6558310	SLEEVE			2
10	17C000836B	BOLT	Was 17C000826B [B]		4
11	6555016	BUMPER			2
12	10C000512B	BOLT	Was 6553808 [A]		1
13	61D000005B	NUT			1
14	59D000008B	NUT	Was 85D000008B [B]		4
15	6553709	WASHER			4
16	6543321	WASHER			4
17	6560633	DAMPENER	shock		4
18	6515817	WASHER			4

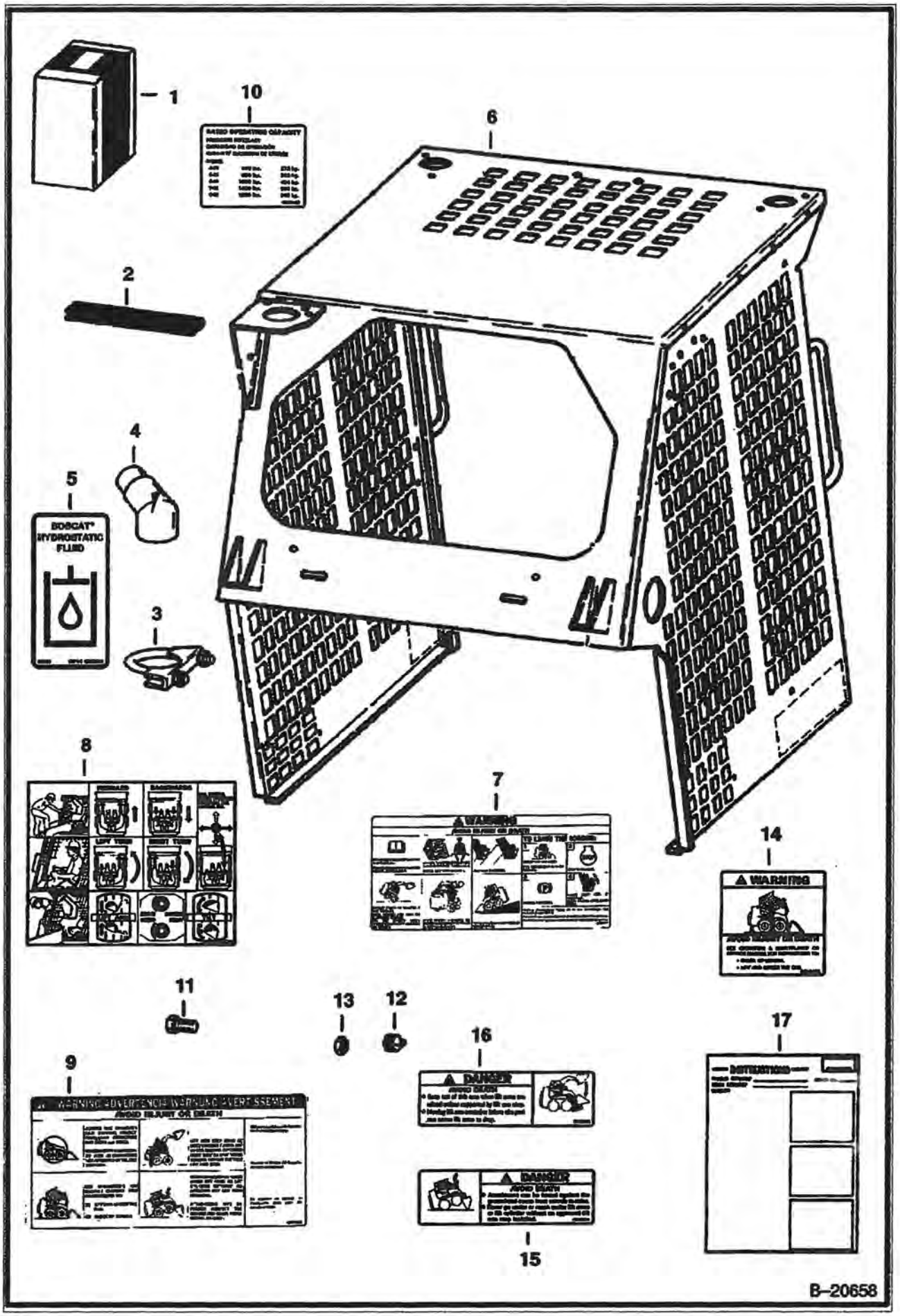
1
10
6
2
4
5
BOBCAT HYDROSTATIC FLUID
3
8
7
14
WARNING
11
13
12
16
17
9
DANGER
15
B–20658

OPERATOR CAB (Cont'd)

Ref No	Part Number	Description	Remarks	Serial Number	Qty
1	6569247	KIT	operator cab - Ref. 2 - 13 - Was 6563029 [A]		1
2	6620417	MOULDING	Was 6512686 [B]		1
3	710706B	CLAMP			1
4	6563039	ELBOW	hydraulic tank		1
5	6565990	DECAL	hydraulic/hydrostatic fluid		1
6		CAB	NAP - Order Ref. 1		1
7	6702265	DECAL	warning - Was 6575854 [A]		1
8	6569021	DECAL	operation		1
9		DECAL	NAP - warning - Order Ref. 7 & 14-15 - Was 6575855 [A]		1
10	6568438	DECAL	load		1
11	17C000410B	BOLT			3
12	30H000054B	CLAMP			3
13	61D000004B	NUT			3
14	6702255	DECAL	warning		1
15	6702302	DECAL	danger		1
16	6702301	DECAL	danger		1
17	6570064	INSTRUCTIONS			1

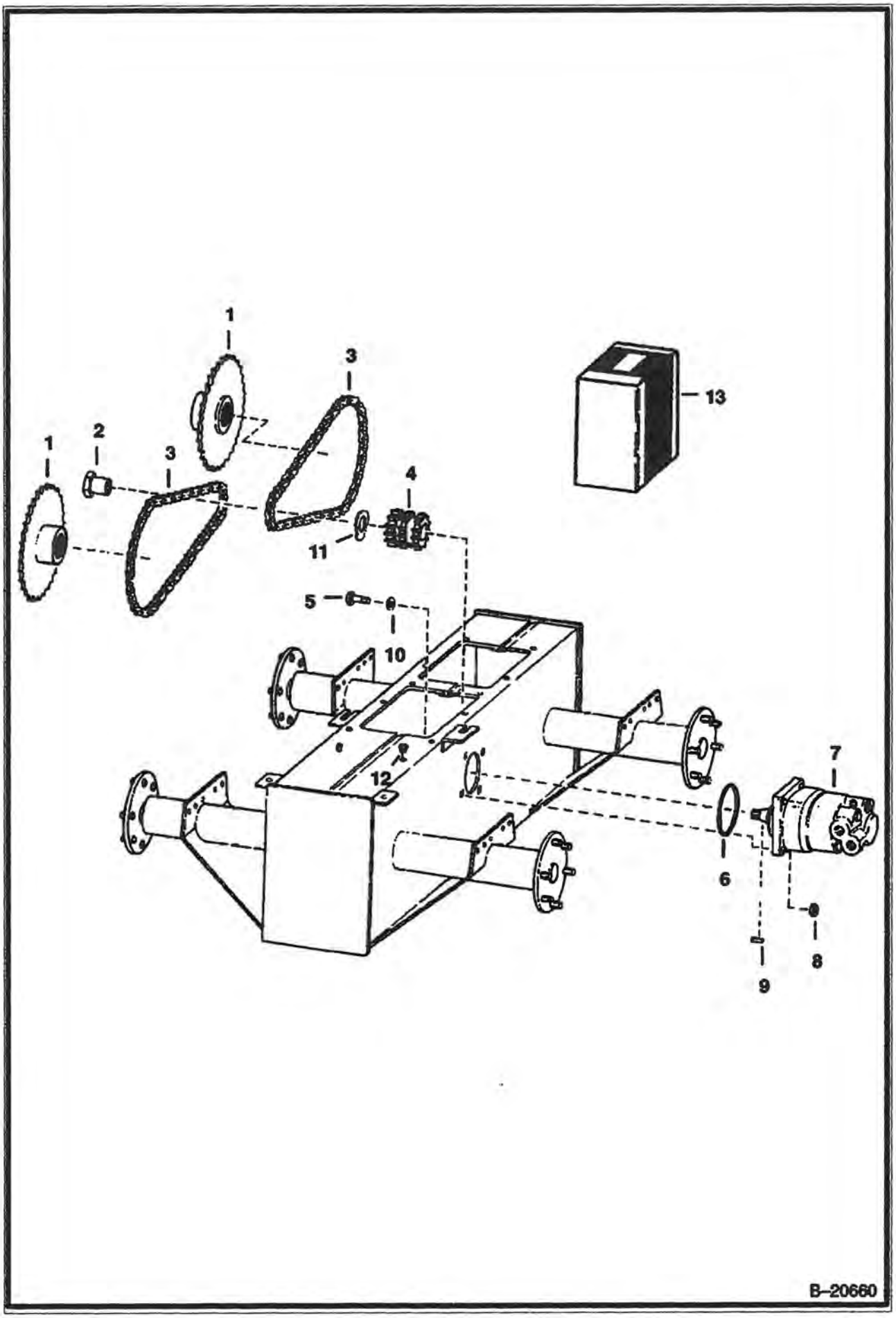
1
3
13
1
2
3
4
11
5
10
12
7
6
8
9
B–20660

Ref No	Part Number	Description	Remarks	Serial Number	Qty
1	6555680	SPROCKET			2
2	6552779	NUT			2
3	6557830	CHAIN	drive		4
3	6515191	LINK			4
4	6552780	SPROCKET			2
5	18C000828B	BOLT			8
6	25K030424B	O-RING			2
7		MOTOR	See Illustration HYDROSTATIC MOTOR/ B20768 See Illustration HYDROSTATIC MOTOR/ B20769 See Illustration HYDROSTATIC MOTOR/ D1650 See Illustration HYDROSTATIC MOTOR/ B20670 See Illustration HYDROSTATIC MOTOR/ C2013 HYDRO.		2
8	86D000008B	NUT			8
9	6630089	KEY			2
10	6557929	WASHER			8
11	6557937	WASHER			2
12	6558506	PLUG	breather		1
13	6568413	KIT	Reinforcing Disc - See Service Letter 20 Jan. 86		2

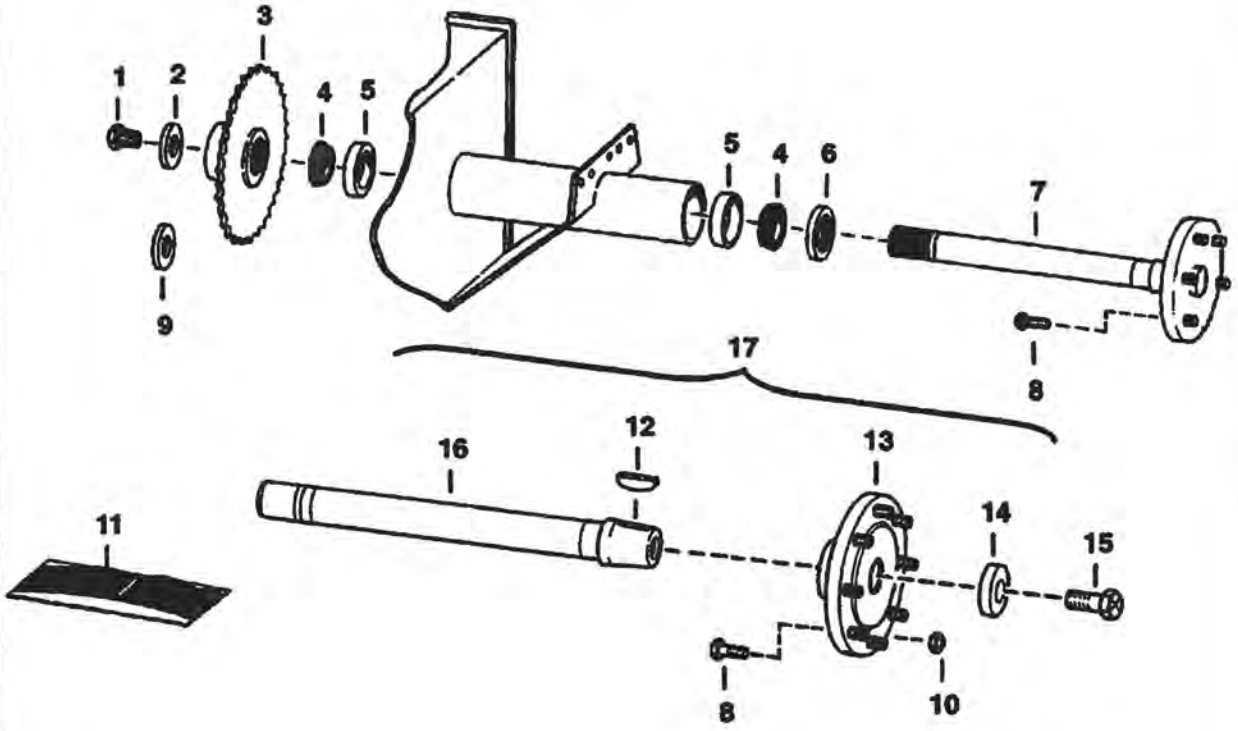

B–20661

Ref No	Part Number	Description	Remarks	Serial Number	Qty
1	18C001224B	BOLT			4
2	6552871	WASHER			4
3	6555680	SPROCKET			4
4	3974866B	BEARING ASSY.	Was 6511331 [A]		8
5		RACE	NSS - Order Ref. 4 - Was 6511330 [A]		8
6	6660126	SEAL	Was 6512114 [A]		4
7		AXLE	NAP - Order Ref. 17 - Was 6568926 [A]		4
8	6557187	BOLT	wheel - 1/2"		24
8	6709170	STUD	wheel - 9/16" - Was 6559502 [A]		24
9	6563606	WASHER	recessed - Use to take up .005 or .010 End Play on Axle		1
10	6557188	NUT	1/2"		6
10	6564669	NUT	9/16"		6
11	6568974	KIT	See Illustration AXLE SEAL KIT/ B4041 AXLE SEAL		1
12	6J001664B	WOODRUFF KEY			4
13	6706038	HUB	W/Ref. 8		4
14	6716843	WASHER	Was 6569461 [A]		4
15	18C001632B	BOLT	2 in. (50,8 mm) Long - For Ref. 16 - W/1.5 in. (38,1 mm) Deep Threads		4
15	18C001636B	BOLT	2.25 in. (57,2 mm) Long - For Ref. 16 - W/1.65 in. (41,9 mm) Deep Threads		4
16	6706039	AXLE ASSY.			4
17	6722927	KIT	W/Ref. 8 & 12 - 16 - Assemble per illustration and torque Ref. 15 to 575-625 ft. lbs.		4

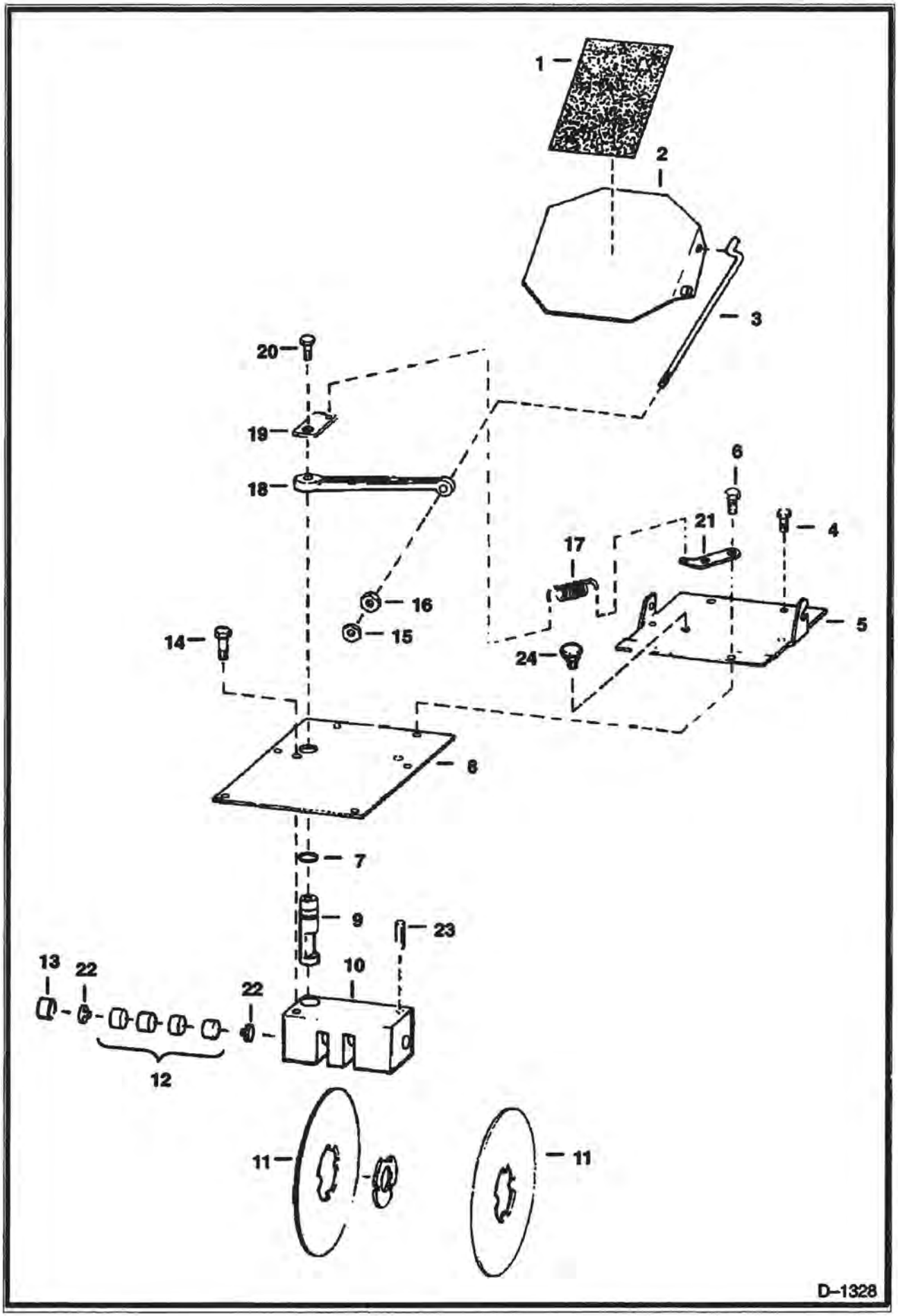
1
2
3
20
19
18
6
21
4
17
16
15
5
14
24
8
7
9
23
13
22
10
22
12
11
11
D–1328

DISC BRAKE (Cont'd)

Ref No	Part Number	Description	Remarks	Serial Number	Qty
1	6553976	SAFETY TREAD			1
2	6563187	PEDAL			1
3	6557145	ROD			1
4	84G003712B	BOLT			8
5	6575654	COVER	Also Order Ref. 24 - Was 6554093 [A]		1
6	84G003716B	BOLT			2
7	25K020028B	O-RING	See BTI141		1
7	25K030100B	O-RING	See BTI141		1
8	6557144	PLATE			1
9	6559216	PIN		15730 & Below	1
9	6562755	PIN		15731 & Above	1
10	6559800	BLOCK	See BTI141	15730 & Below	1
10	6562757	BLOCK		15731 & Above	1
11	6559206	DISC			2
12	6557747	PAD			4
13	6559323	SPACER			1
14	17C000812B	BOLT			2
15	85D000008B	NUT			1
16	6564669	NUT	Was 6519169 [A]		1
17	6584584	SPRING	Was 6505076 [B]		1
18	6563823	LEVER			1
19	6559217	BAR			1
20	17C000816B	BOLT			1
21	6559218	ANGLE			1
22	6562756	WASHER	wear	15731 & Above	2
23	784466B	PIN		15731 & Above	1
24	6632601	BREATHER			1

NOTE: When replacing Orifice that has no spring you must Order Ref. 18, 25, 26 or 25 – 27.

NOTE: If loader has 1 piece tube replaced with 3 piece tubes & tee, Ref. 12, 13 & 19 – 23.

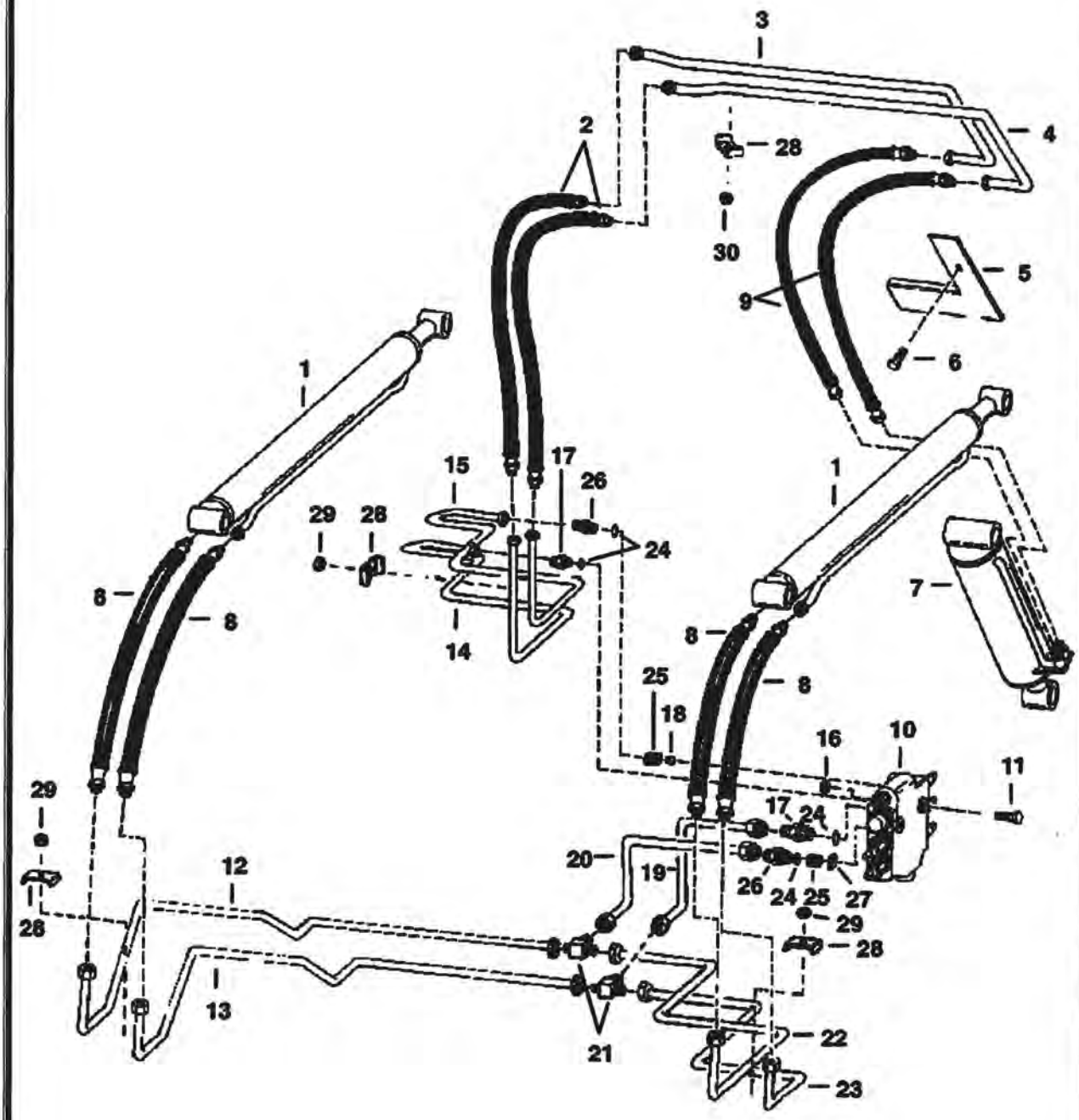

HYDRAULIC CIRCUITRY (Cont'd)

Ref No	Part Number	Description	Remarks	Serial Number	Qty
1		CYLINDER	See Illustration LIFT CYLINDER/ B2206 See Illustration LIFT CYLINDER/ B6942 LIFT		2
2	6541094	HOSE			4
3	6557780	TUBE			1
4	6557781	TUBE			1
5	6553422	COVER			1
6	84G003724B	BOLT			1
7		CYLINDER	See Illustration TILT CYLINDER/ C2001A See Illustration TILT CYLINDER/ B20663 See Illustration TILT CYLINDER/ B20664 See Illustration TILT CYLINDER/ B20665 See Illustration TILT CYLINDER/ C2001 TILT		1
8	6553244	HOSE			4
9	6557426	HOSE			2
10		VALVE	See Illustration HYDRAULIC VALVE/ B20667 HYDRAULIC		1
11	17C000536B	BOLT			2
12	6561886	TUBE	See Note		1
13	6561885	TUBE	See Note		1
14	6557783	TUBE			1
15	6557782	TUBE			1
16	91D000005B	NUT	Was 81D000005B [A]		2
17	731793B	ADAPTER	W/Ref. 24		2
18		ORIFICE	NAP - Order Ref. 18 & 25-27 - See Note		1
18	6560939	ORIFICE	.086 (2,18mm) Dia. - See Note		1
19	6560133	TUBE	See Note		1
20	6560130	TUBE	See Note		1
21	6560136	TEE	See Note		2
22	6561888	TUBE	See Note		1
23	6561887	TUBE	See Note		1
24	79K000008B	O-RING			x
25	6560938	SPRING	See Note		2
26	6560932	ADAPTER	See Note		2
27	6560940	ORIFICE	.125 (3,18mm) Dia. - See Note		1
28	6502203	CLAMP			7
29	85D000006B	NUT			3
30	59D000006B	NUT			4

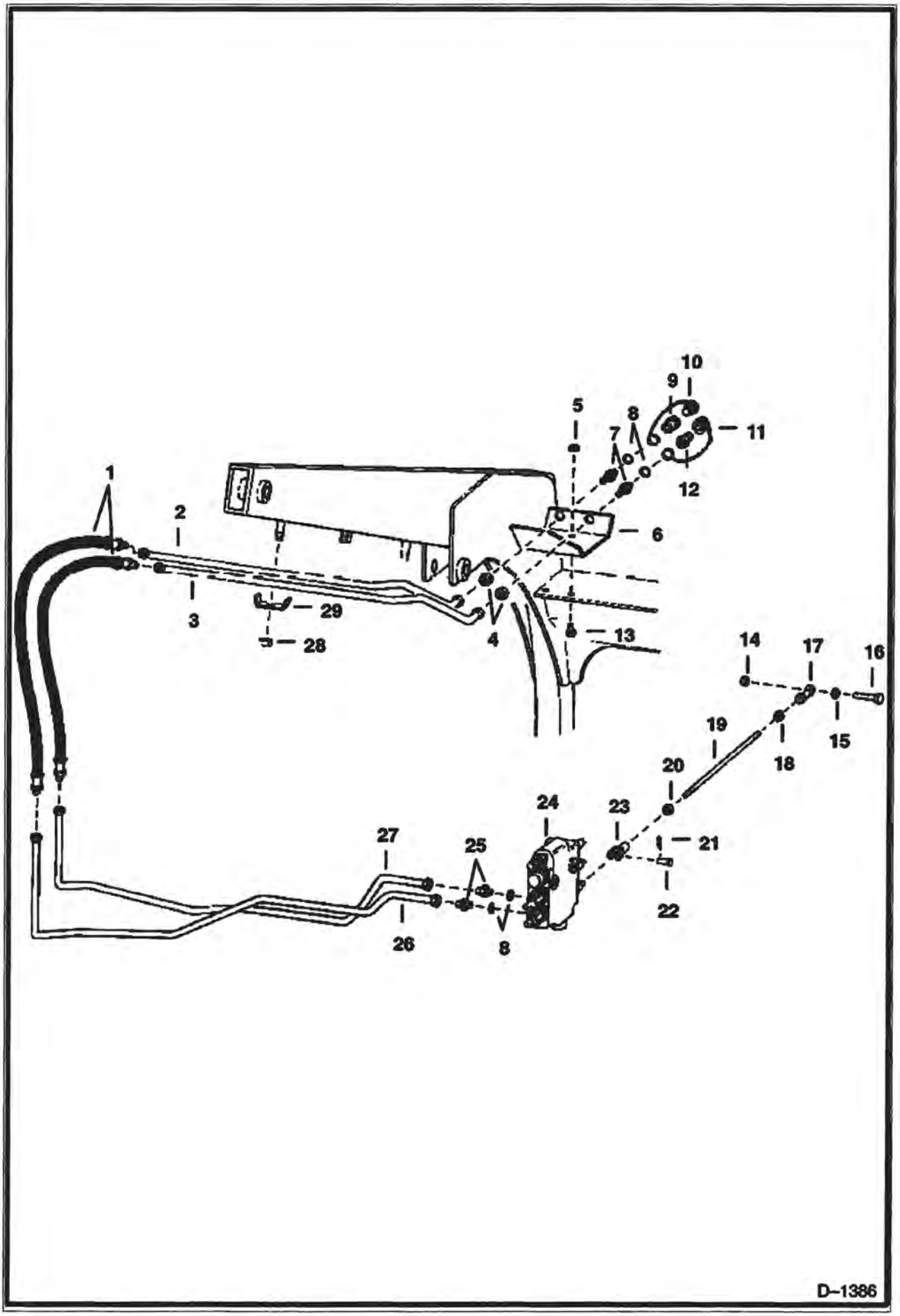
1
2
3
4
5
6
7
8
9
10
11
12
13
14
15
16
17
18
19
20
21
22
23
24
25
26
27
28
29
8
D–1386

AUXILIARY HYDRAULICS (Cont'd)
(S/N 12999 & Below)

Ref No	Part Number	Description	Remarks	Serial Number	Qty
1	6541094	HOSE			2
2	6557428	TUBE			1
3	6557427	TUBE			1
4	86F000007B	NUT			2
5	61D000006B	NUT			2
6	6557430	BRACKET			1
7	6557429	CONNECTOR			2
8	79K000008B	O-RING			2
9	6512159	QUICK COUPLER	See BTI302 Female		1
9	58K000211B	O-RING			1
10	6515167	PLUG			1
11	6515168	CAP			1
12	6513634	QUICK COUPLER	See BTI302 Male		1
13	17C000512B	BOLT			2
14	81D000006B	NUT			1
15	763403B	WASHER			1
16	17C000620B	BOLT			1
17	6512955	SWIVEL			1
18	13D000006B	NUT			1
19	6557090	ROD			1
20	8D000006B	NUT			1
21	6513495	COTTER PIN			1
22	6559014	CLEVIS PIN			1
23	6560526	CLEVIS			1
24	6557603	VALVE	See Illustration HYDRAULIC VALVE/ B20667 HYDRAULIC		1
25	731793B	ADAPTER	W/Ref. 8		2
26	6561106	TUBE			1
27	6561105	TUBE			1
28	6502203	CLAMP			2
29	59D000006B	NUT			2

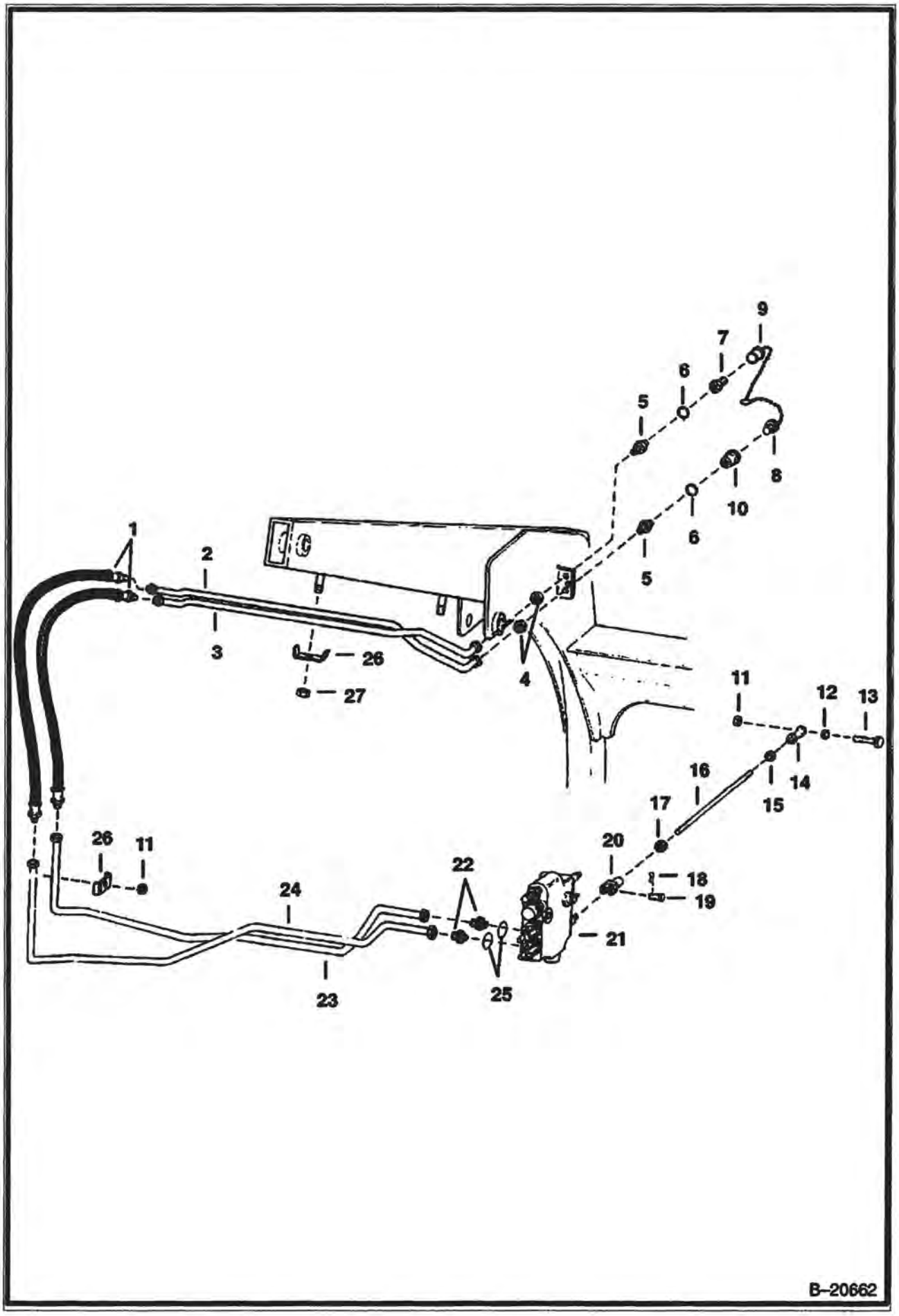
1
2
3
26
27
4
9
7
6
5
8
10
6
5
11
12
13
14
15
16
17
20
18
19
21
22
24
23
25
26
11
B-20662

AUXILIARY HYDRAULICS (Cont'd)
(S/N 13001 & Above)

Ref No	Part Number	Description	Remarks	Serial Number	Qty
1	6541094	HOSE			2
2	6558414	TUBE			1
3	6558415	TUBE			1
4	86F000007B	NUT			2
5	45K000007B	FITTING			2
6	79K000010B	O-RING			2
7	6598757	QUICK COUPLER	Male		1
8	6515167	PLUG			1
9	6515168	CAP			1
10	6598758	QUICK COUPLER	Female		1
10	48K000016B	O-RING			1
10	6665430	BACKUP RING			1
11	85D000006B	NUT			1
12	763403B	WASHER			1
13	17C000620B	BOLT			1
14	6512955	SWIVEL			1
15	13D000006B	NUT			1
16	6557090	ROD			1
17	8D000006B	NUT			1
18	6513495	COTTER PIN			1
19	6559014	CLEVIS PIN			1
20	6560526	CLEVIS			1
21		VALVE	See Illustration HYDRAULIC VALVE/ B20667		1
22	731793B	ADAPTER	W/Ref. 25		2
23	6561106	TUBE			1
24	6561105	TUBE			1
25	79K000008B	O-RING			x
26	6502203	CLAMP			3
27	59D000006B	NUT			2

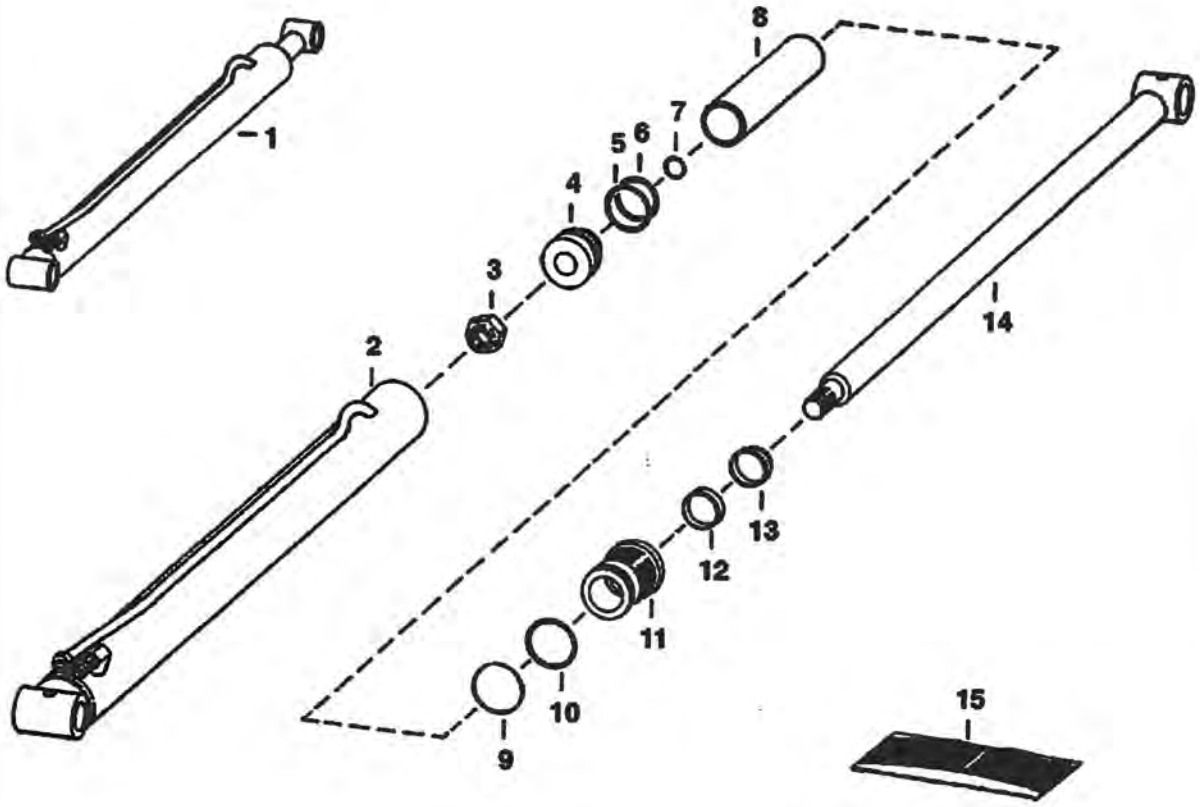

B–2206

LIFT CYLINDER (Cont'd)

Ref No	Part Number	Description	Remarks	Serial Number	Qty
1		CYLINDER	NAP - lift - Order 6586671		2
2		CASE	NAP - cylinder - Order 6592621 & 6529384		1
3	86D000012B	NUT			1
4	6558196	PISTON			1
5	54K030118B	O-RING	Was NSS [A]		1
6	6516231	RING	Was NSS [A]		1
7		O-RING	NSS		1
8	6514501	SPACER	Was NAP [D]		1
9	54K040124B	O-RING	Was NSS [A]		1
10	73K000224B	WASHER	back-up - Was NSS [A]		1
11	6539323	HEAD	Was 6504932 [A]		1
12	6667324	SEAL	rod - Was NSS [A]		1
13	6665208	SEAL	wiper - Was NSS A]		1
14	6592884	ROD			1
15	6803329	SEAL KIT	W/Ref. 5 - 10, 12 & 13 - Was 6589831 [A]		1

LIFT CYLINDER
(W/Replaceable Tube)

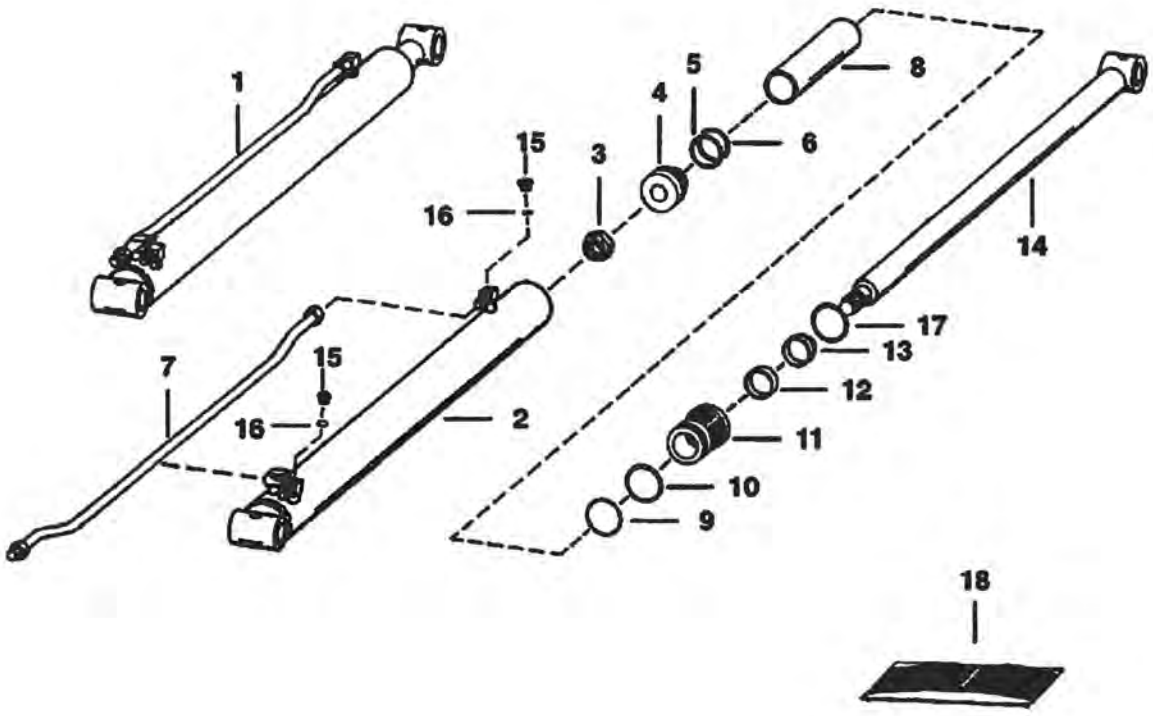

B-6942

LIFT CYLINDER (Cont'd)
(W/Replaceable Tube)

Ref No	Part Number	Description	Remarks	Serial Number	Qty
1	6586671	CYLINDER	Ref. 2 - 17 - Was 6592962 [A]		2
2	6586674	CASE	cylinder - Was 6592621 [A]		1
3	92D000012B	NUT	Was 86D000012B [B]		1
4	6661694	PISTON	Was 6558196 [A]		1
5	6516231	RING			1
6	54K030118B	O-RING	Was NSS [A]		1
7	6529384	TUBE	Was 6592615 [A]		1
8	6514501	SPACER			1
9	54K040124B	O-RING	Was NSS [A]		1
10	73K000224B	WASHER	back-up		1
11	6539323	HEAD	Was 6504932 [A]		1
12	6667324	SEAL	rod - Was 6665184 [A]		1
13	6665208	SEAL	wiper		1
14	6539304	ROD	Was 6592884 [A]		1
15		PLUG	NAP - W/Ref. 16 - flat boss face - Was 47K000005B [A]		2
15	90KV00005B	PLUG	W/Ref. 16 - tapered boss face		2
16	79K000006B	O-RING	flat boss face		2
16	95K000006B	O-RING	tapered boss face		2
17	58K000136B	O-RING			1
18	6803329	SEAL KIT	W/Ref. 3, 5, 6, 9, 10, 12, 13 and 17 - Was 6589831 [A]		1

TILT CYLINDER
(S/N 12999 & Below) (3.00" Bore)

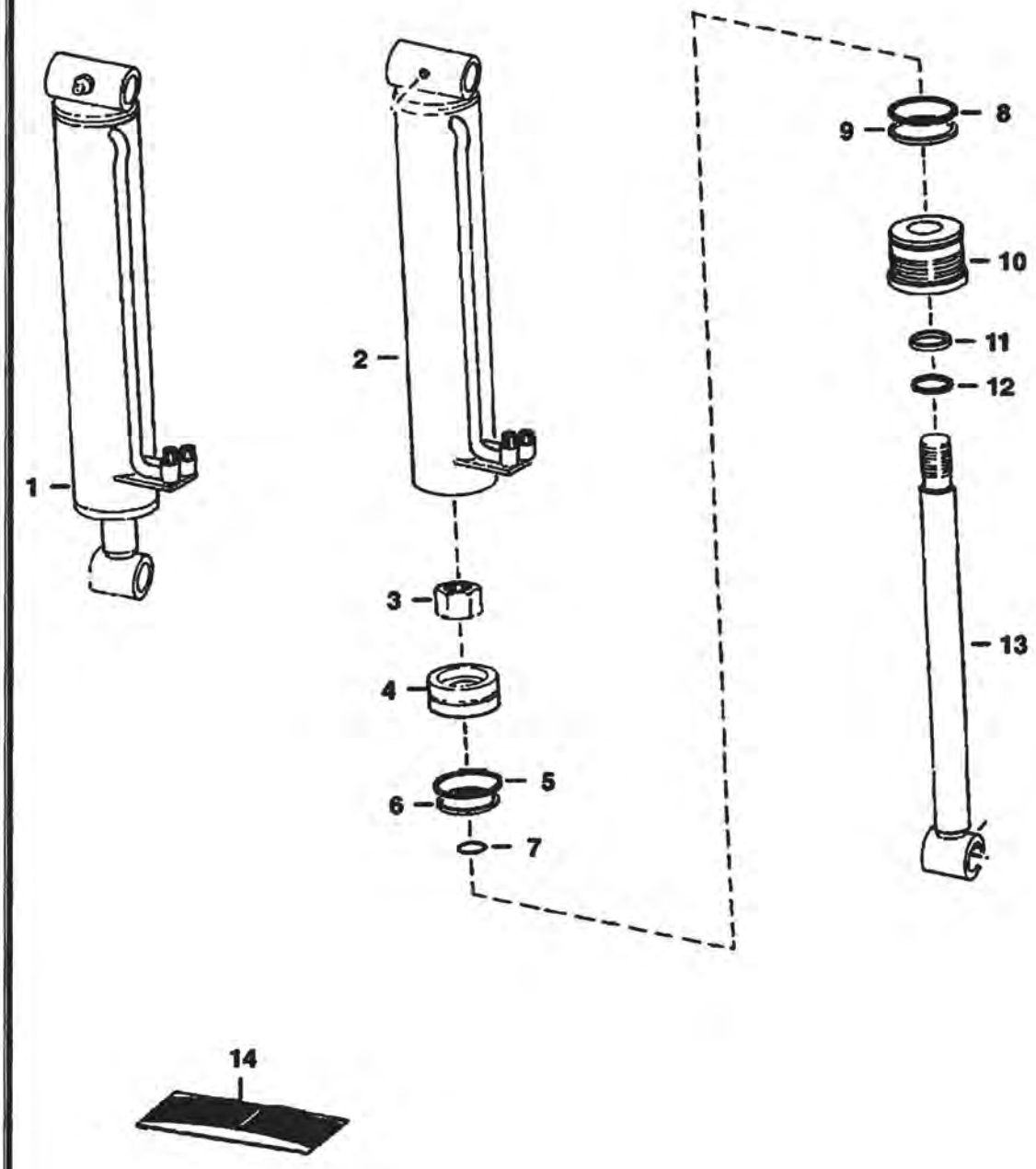

TILT CYLINDER (Cont'd)
(S/N 12999 & Below) (3.00" Bore)

Ref No	Part Number	Description	Remarks	Serial Number	Qty
1	6555992	CYLINDER	See BTI136 tilt		1
2		CASE	NAP		1
3	62D000018B	NUT			1
4	6803870	PISTON	Was 6553912 [A]		1
5	947088B	SEAL			1
6	25K030218B	O-RING			1
7	58K000024B	O-RING			1
8	58K000232B	O-RING			1
9	80K000232B	RING	back-up		1
10	6588912	HEAD	Was 6531649 [A]		1
11	6538141	SEAL	rod		1
12	6665086	SEAL	wiper		1
13	6667184	PLUG	cylinder		1
14	6804605	SEAL KIT	W/Ref. 5 - 9, 11 & 12 - Was 6661308 [A]		1
14		SEAL KIT	NAP - Tool - Order MEL-1010 - Was 6563764 [A]		1

TILT CYLINDER
(S/N 13001 Thru 13999) (3.25" Bore)

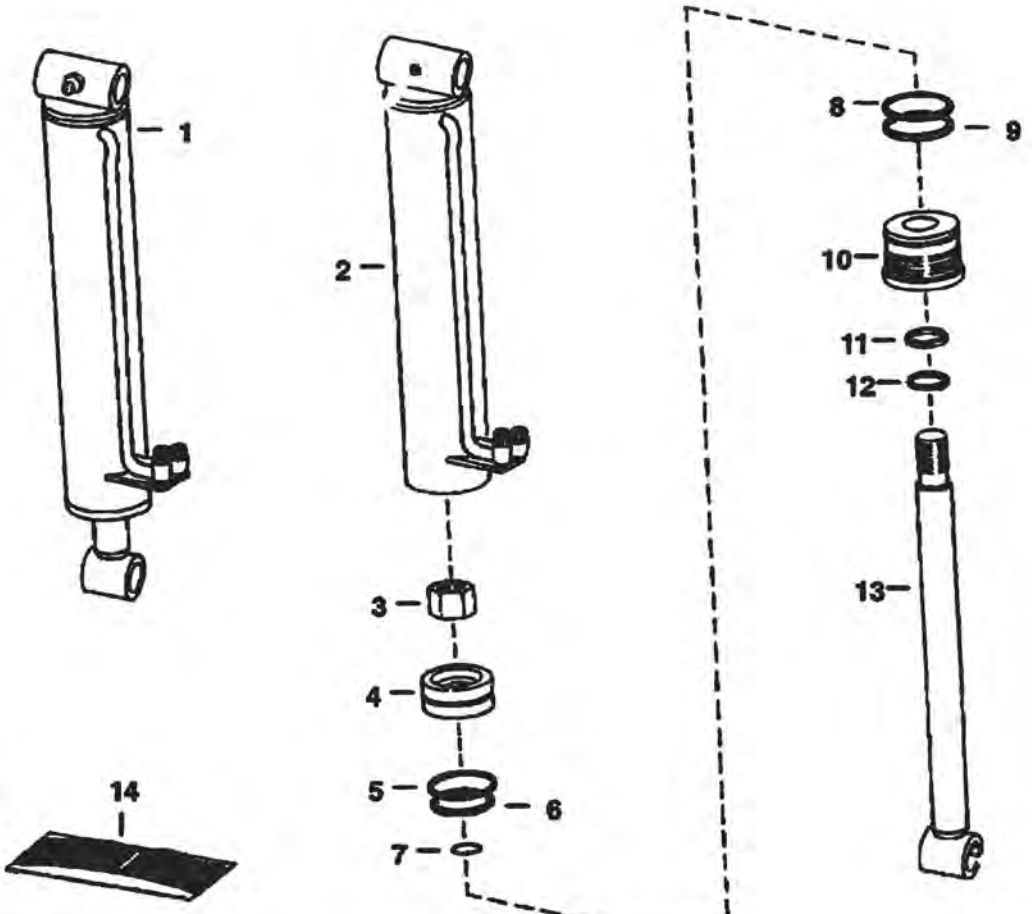

C–2001A

TILT CYLINDER (Cont'd)
(S/N 13001 Thru 13999) (3.25" Bore)

Ref No	Part Number	Description	Remarks	Serial Number	Qty
1	6558782	CYLINDER	See BTI136 tilt		1
2		CASE	NAP		1
3	86D000018B	NUT			1
4	6558778	PISTON			1
5	6513466	SEAL			1
6	25K030226B	O-RING			1
7	58K000024B	O-RING			1
8	58K000234B	O-RING			1
9	80K000234B	RING	back-up		1
10	6558774	HEAD			1
11	6538141	SEAL	rod		1
12	6665086	SEAL	wiper		1
13	6557184	ROD	cylinder		1
14	6804605	SEAL KIT	W/Ref. 5 - 9, 11, 12 - Was 6661308 [A]		1
14		SEAL KIT	NAP - tool - Order MEL-1010 - Was 6562764 [A]		1

TILT CYLINDER
(Cessna - S/N 14001 & Above)

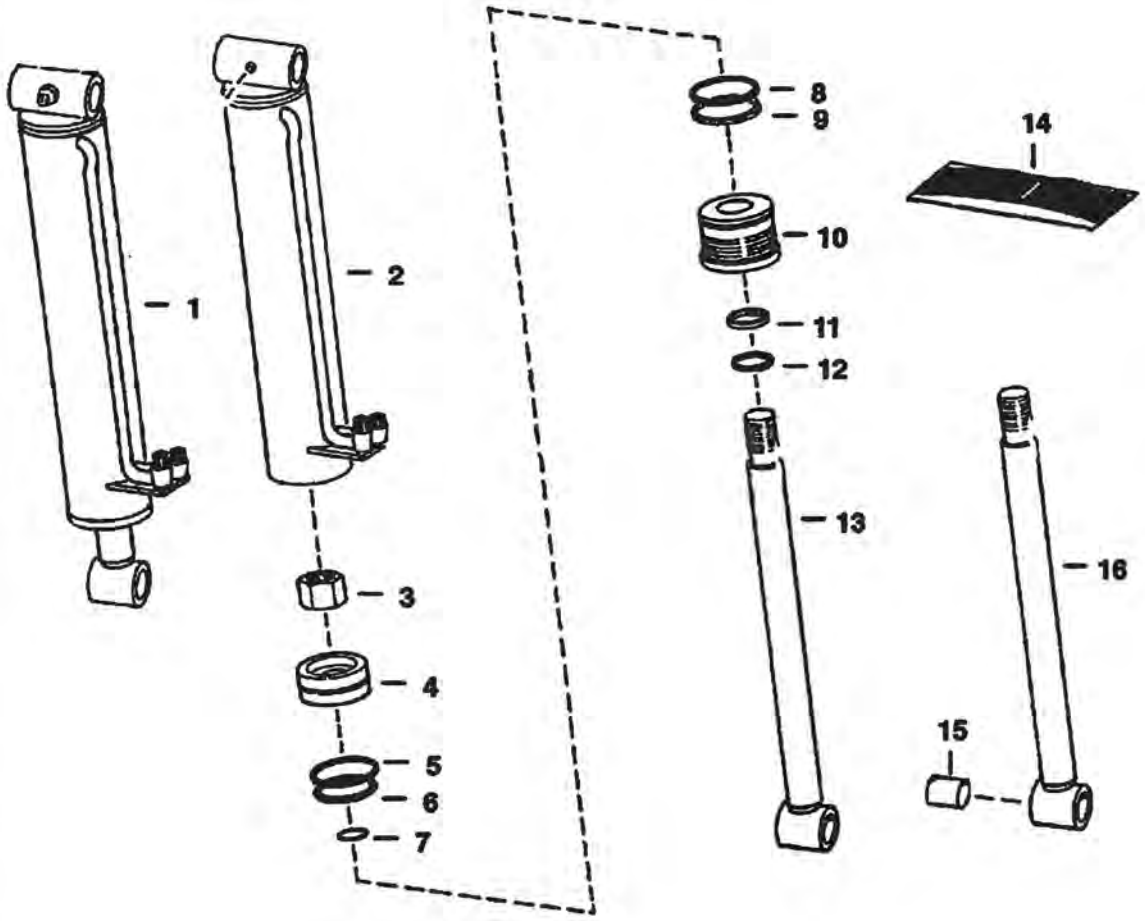

NOTE: Cessna cylinder has hydraulic tube welded on side of cylinder. Bobcat cylinder has replaceable tube.

B–20663

TILT CYLINDER (Cont'd)
(Cessna - S/N 14001 & Above)

Ref No	Part Number	Description	Remarks	Serial Number	Qty
1		CYLINDER	See BTI167 NAP - tilt - Order 6539810		1
2	6592040	CASE			1
3	86D000018B	NUT			1
4	6558778	PISTON			1
5		SEAL	NSS		1
6		O-RING	NSS		1
7		O-RING	NSS		1
8		O-RING	NSS		1
9		WASHER	NSS - back-up		1
10	6558774	HEAD			1
11		SEAL	NSS - rod		1
12		SEAL	NSS - wiper		1
13		ROD	See BTI167 NAP - cylinder - W/O Bushing - Order Ref. 16 - Was 6559586 [A]		1
14	6804605	SEAL KIT	Ref. 5-9, 11 & 12 - Was 6661308 [A]		1
15	6589665	BUSHING	Used W/Ref. 16		1
16	6589783	ROD	W/Bushings		1

TILT CYLINDER
(Bobcat - S/N 14001 & Above)

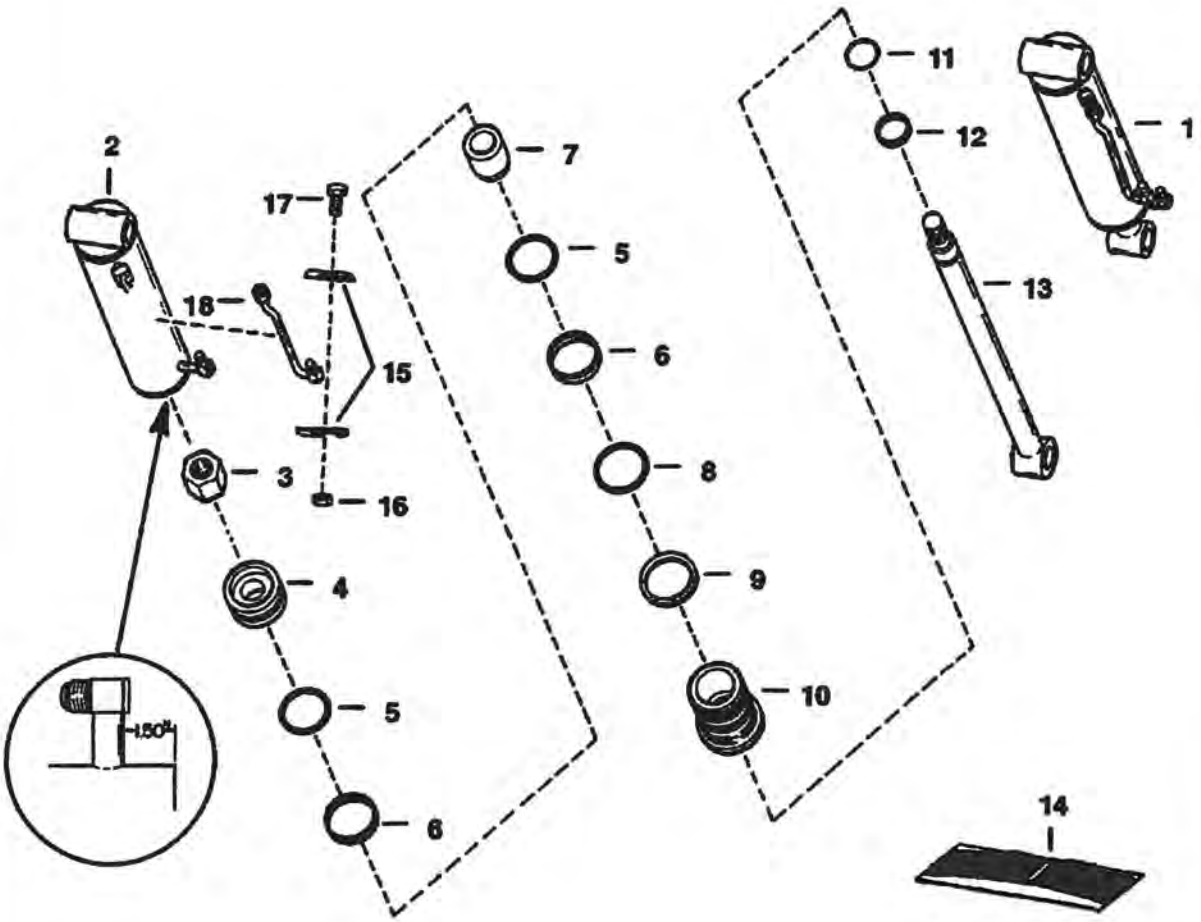

NOTE: Check measurement as shown before ordering repair parts.

B–20664

TILT CYLINDER (Cont'd)
(Bobcat - S/N 14001 & Above)

Ref No	Part Number	Description	Remarks	Serial Number	Qty
1		CYLINDER	NAP - tilt - Order 6539810		1
2	6592041	CASE			1
3	86D000016B	NUT			1
4	6592448	PISTON			1
5		SEAL	NSS		1
6		O-RING	NSS		1
7	6591800	SLEEVE			1
8		O-RING	NSS		1
9		WASHER	NSS - back-up		1
10	6591799	HEAD			1
11		SEAL	NSS - rod		1
12		SEAL	NSS - wiper		1
13	6592800	ROD	cylinder		1
14	6591885	SEAL KIT	W/Ref. 5, 6, 8, 9, 11 & 12		1
15	6591804	CLAMP			2
16	85D000006B	NUT			1
17	17C000616B	BOLT			1
18	6592019	TUBE			1

TILT CYLINDER
(Bobcat - S/N 14001 & Above)

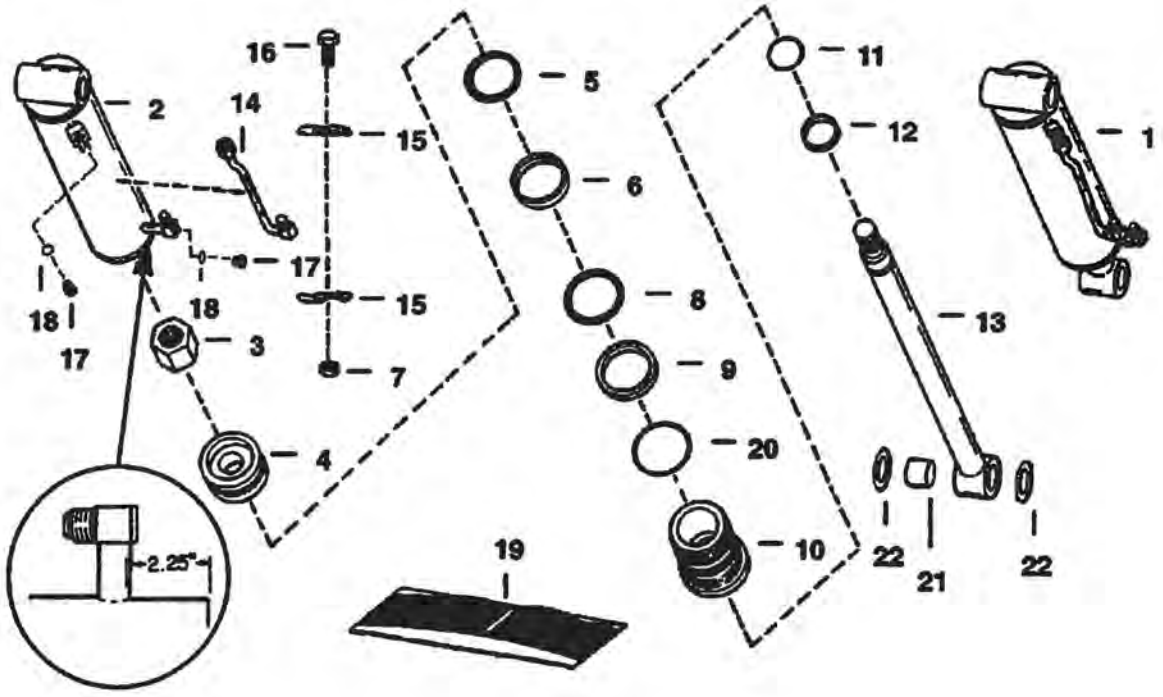

NOTE: Check measurement as shown before ordering repair parts.

TILT CYLINDER (Cont'd)
(Bobcat - S/N 14001 & Above)

Ref No	Part Number	Description	Remarks	Serial Number	Qty
1	6539810	CYLINDER	Was 6593398 [A]		1
2	6588686	CASE	Was 6593404 [A]		1
3	6804592	NUT	Was 6803253 [A]		1
4	6539290	PISTON	Was 6592589 [A]		1
5	6513466	SEAL			2
6	54K030226B	O-RING	Was 25K030226B [A]		2
7	85D000006B	NUT			1
8	54K040300B	O-RING	Was 58K000236B [B]		1
9	80K000234B	RING	back-up		1
10	6529680	HEAD	Was 6592590 [A]		1
11	6667326	SEAL	rod - Was 6538141 [A]		1
12	6665086	SEAL	wiper		1
13	6539815	ROD	Also Order (2) Ref. 19 - Was 6593402 [A]		1
14	6593399	TUBE			1
15	6591804	CLAMP			3
16	17C000616B	BOLT			1
17		PLUG	NAP - W/Ref. 18 - flat boss face - Was 47K000005B [A]		2
17	90KV00005B	PLUG	W/Ref. 18 - tapered boss face		2
18	79K000006B	O-RING	flat boss face		2
18	95K000006B	O-RING	tapered boss face		2
19	6654117	SEAL			2
20	82K000236B	O-RING	Was 58K000236B [A]		1
21	6589665	BUSHING	Was 6534387 [A]		1
22	6804605	SEAL KIT	W/Ref. 5, 6, 8, 9, 11, 12 & 20 - Was 6661308 [A]		1

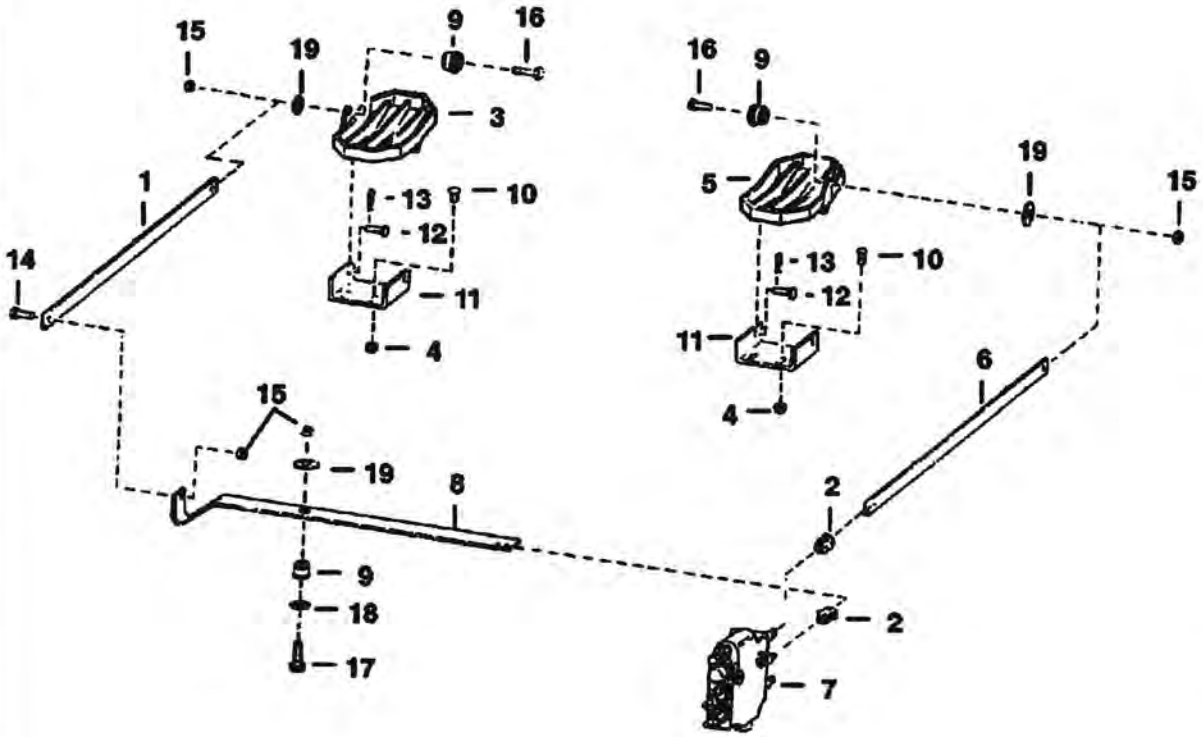
15
19
9
16
3
1
13
10
12
14
11
4
16
9
5
19
15
13
10
12
11
4
6
15
19
8
2
9
18
17
2
7
B–20666

CONTROL PEDALS (Cont'd)

Ref No	Part Number	Description	Remarks	Serial Number	Qty
1	6558454	BAR			1
2	6515186	CONNECTOR			2
3	6558451	PEDAL			1
4	57D000006B	NUT	flange		4
5	6558453	PEDAL			1
6	6558455	BAR			1
7	6557603	VALVE	See Illustration HYDRAULIC VALVE/ B20667		1
8	6558456	LEVER	Used W/Bushing		1
8	6559138	LEVER	Used W/O Bushing		1
9	6665701	BUSHING	See BTI228 - Was 6630081 [A]		3
10	6704349	BOLT	Was 6514537 [B]		4
11	6558447	BRACKET			2
12	1737762B	PIN			4
13	1306637B	PIN	cotter		4
14	17C000616B	BOLT			1
15	85D000006B	NUT			1
16	17C000622B	BOLT			2
17	1304938B	BOLT			1
18	25E000017B	WASHER			1
19	6563914	WASHER			3

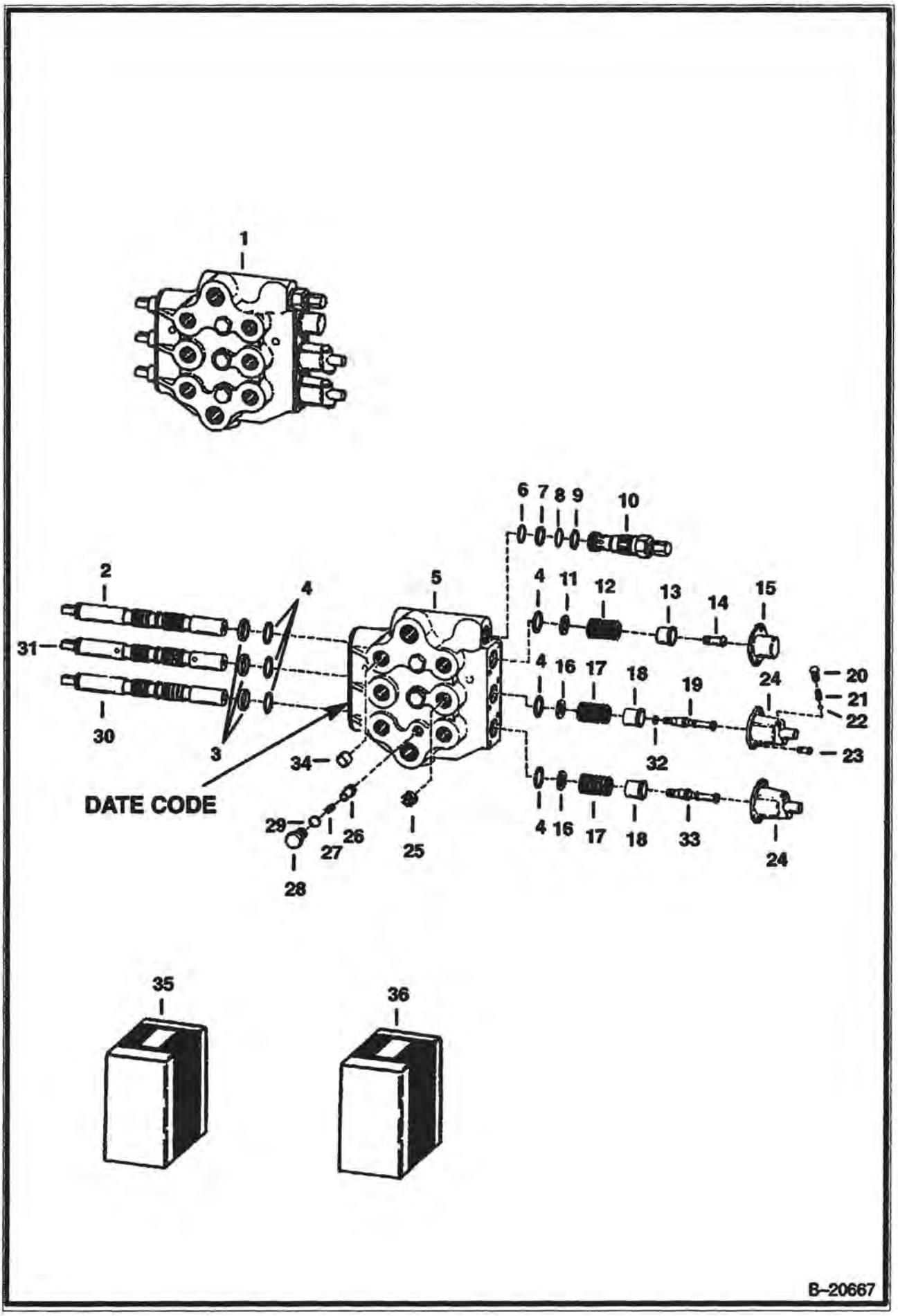
1
2
3
4
5
6
7
8
9
10
11
12
13
14
15
16
17
18
19
20
21
22
23
24
25
26
27
28
29
30
31
32
33
34
35
36
DATE CODE
B-20667

HYDRAULIC VALVE (Cont'd)

Ref No	Part Number	Description	Remarks	Serial Number	Qty
1	6557603	VALVE	W/O Ref. 10		1
2		SPOOL	NAP		1
3		SEAL	NSS - rod wiper		3
4		O-RING	NSS		6
5		BODY	NAP - valve		1
6		O-RING	NSS		1
7		WASHER	NSS - back-up		1
8		O-RING	NSS		1
9		WASHER,	NSS - back-up		1
10	6557602	RELIEF VALVE			1
11		WASHER	NSS		1
12		SPRING	NSS		1
13		SPACER	NSS		1
14		SCREW	NSS		1
15		CAP	NSS - end		1
16		WASHER	NSS		2
17		SPRING	NSS		2
18		SPACER	NSS		2
19		SPOOL	NSS - detent		2
20	6513446	PLUG	detent		4
21	6513445	SPRING	detent		4
22	6513443	BALL	detent		4
23	41G001210B	SCREW	Was 41G001208B [B]		6
24		CAP	NSS - end - See Ref. 35		2
25		ORIFICE	See Illustration HYDRAULIC CIRCUITRY/ D1382 NAP		1
25	6560940	ORIFICE	See Illustration HYDRAULIC CIRCUITRY/ D1382 .125 (3,18MM) DIA.		1
26		POPPET	NAP - Below Data Code 079 - Was 6513711 [A]		3
26	6599473	POPPET	Above Data Code 079		3
27		SPRING	NAP - Below Data Code 079 - Order 6599472 - Was 6513710 [A]		3
27	6599472	SPRING	Above Data Code 079		3
28	6514733	PLUG			3
29		O-RING	NSS		3
30		SPOOL	NAP		1
31		SPOOL	NAP		1
32		O-RING	NSS		1
33		SPOOL	NSS - detent		1
34		ORIFICE	See Illustration HYDRAULIC CIRCUITRY/ D1382 NAP		1
34	6560939	ORIFICE	See Illustration HYDRAULIC CIRCUITRY/ D1382 .086 (2,18MM) DIA. -		1
35	6560312	KIT	detent cap - Ref. 20 - 22 & 24		1
35	6512792	KIT	tilt - Ref. 11 - 15		1
35	6512793	KIT	lift - Ref. 16 - 22, 24 & 32		1
35	6512794	KIT	auxiliary - Ref. 16 - 18, 20 - 22, 24 & 34		1
36	6512795	SEAL KIT	Ref. 3, 4, 6 - 9, 29 & 32		1

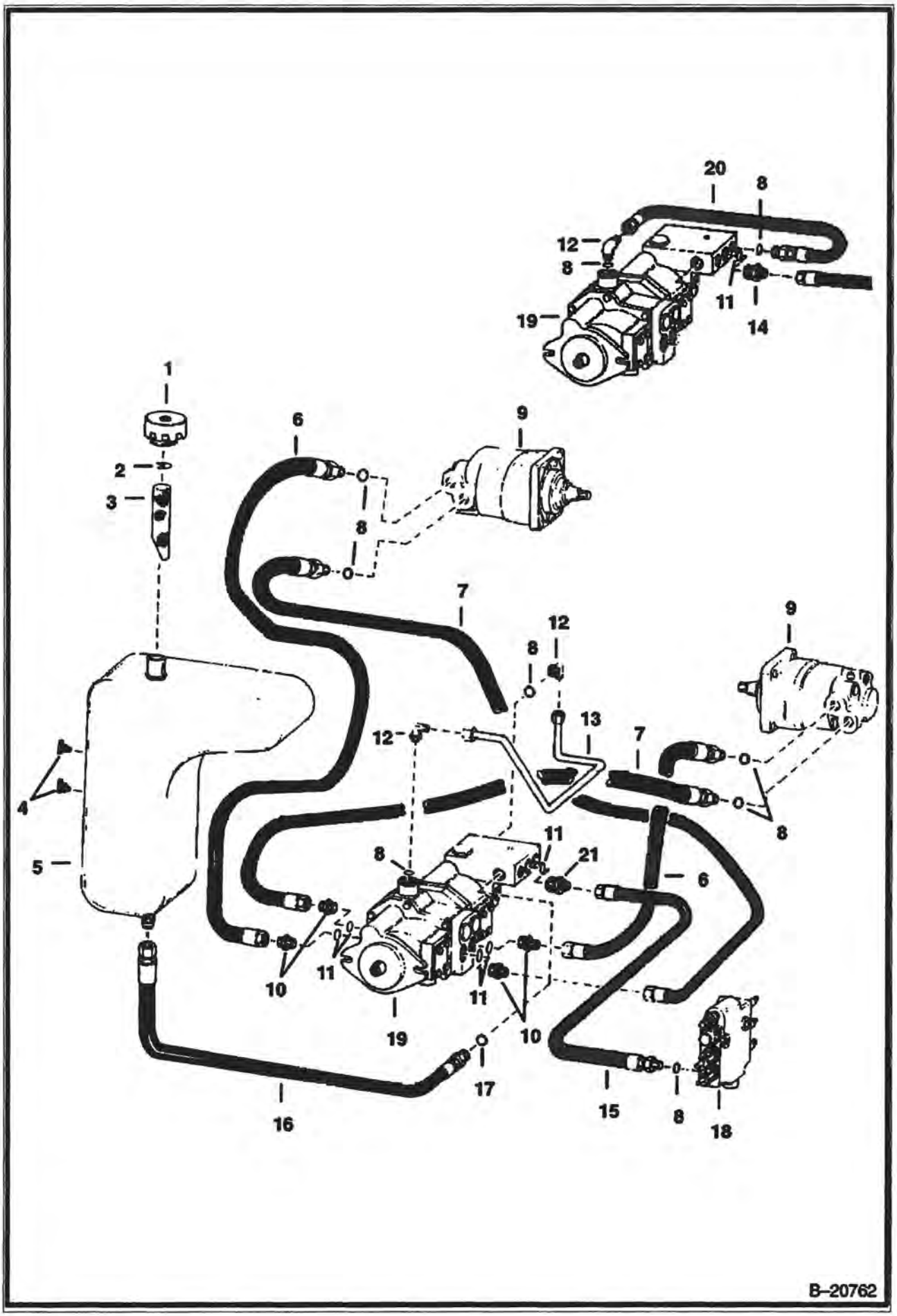
20
8
12
8
11
14
19
1
6
9
2
3
8
7
12
8
9
13
12
7
4
8
11
21
8
5
6
10
11
11
19
10
17
16
15
8
18
B-20762

HYDROSTATIC CIRCUITRY (Cont'd)

Ref No	Part Number	Description	Remarks	Serial Number	Qty
1		CAP	NAP - breather - Pack of 12 - Was 1779011B [A]		1
1	6577785	CAP	breather - Qty. of 1 - Was 6560209 [A]		1
2	713133B	SNAP RING	snap ring		1
3	6558604	SCREEN			1
4	72F000001B	DRAIN COCK			2
5	6555794	RESERVOIR			1
6	6557461	HOSE			2
7	6557462	HOSE			2
8	79K000010B	O-RING			x
9		MOTOR	See Illustration HYDROSTATIC MOTOR/ B20768 See Illustration HYDROSTATIC MOTOR/ B20769 See Illustration HYDROSTATIC MOTOR/ B20670 See Illustration HYDROSTATIC MOTOR/ D1650 See Illustration HYDROSTATIC MOTOR/ C2013 HYDRO.		1
10	15KB01216B	ADAPTER	W/Ref. 11 - Was 712555 [A]		4
11	79K000016B	O-RING			x
12	17K000007B	ELBOW	W/Ref. 8		2
13	6559015	TUBE		13001 & Above	1
14	562912B	ADAPTER		12999 & Below	1
15	6560653	HOSE			1
16	6557490	HOSE			1
17	79K000012B	O-RING			x
18	6557603	VALVE	See Illustration HYDRAULIC VALVE/ B20667		1
19		PUMP	See Illustration HYDROSTATIC PUMP/ B20763 See BTI154 HYDRO.		1
20	6557464	HOSE		12999 & Below	1
21	1303485B	CONNECTOR	W/Ref. 11	13001 & Above	1

HYDROSTATIC CIRCUITRY
(S/N 15319 & Below)

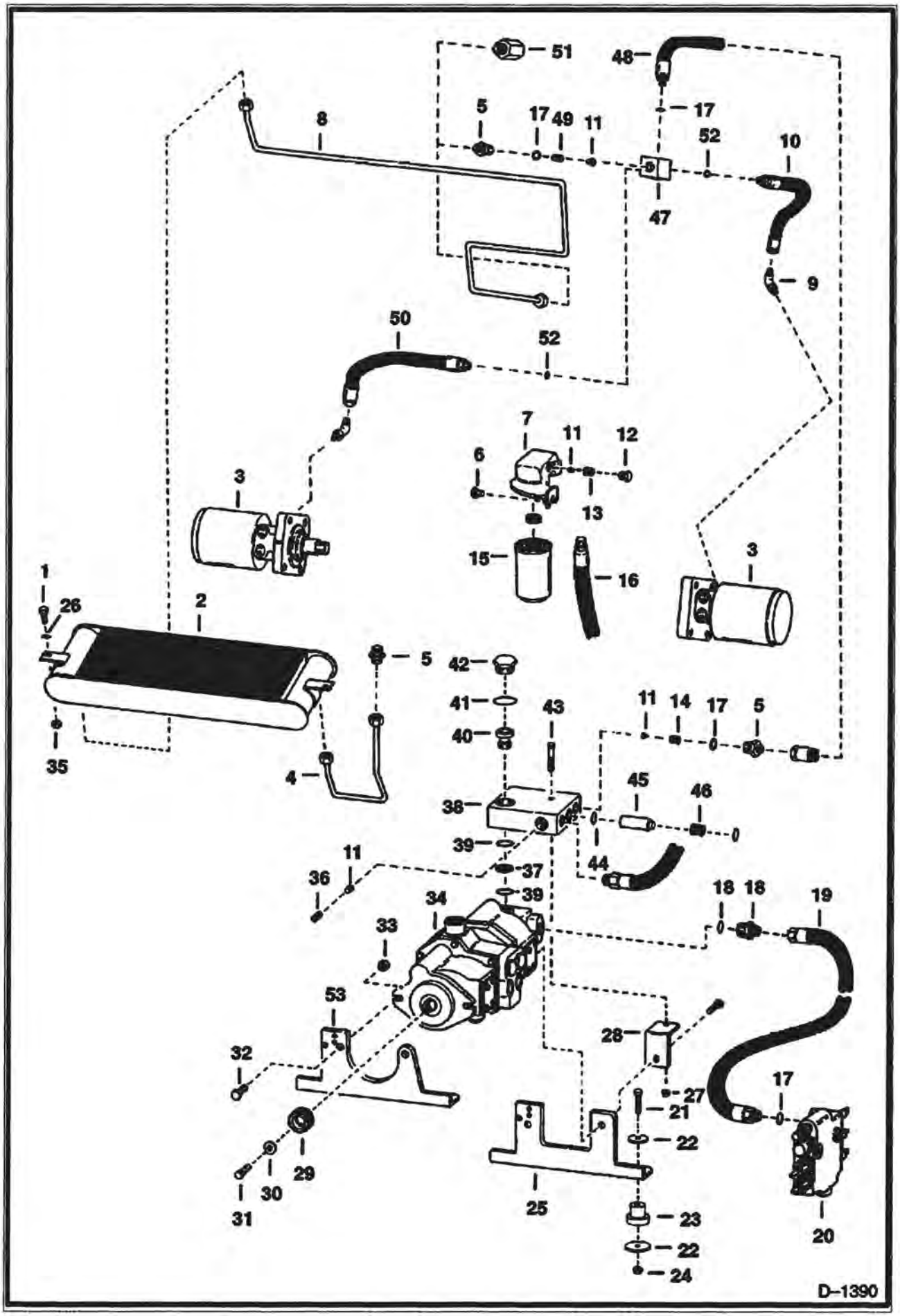

HYDROSTATIC CIRCUITRY (Cont'd)
(S/N 15319 & Below)

Ref No	Part Number	Description	Remarks	Serial Number	Qty
1	84G003716B	BOLT			2
2	6560954	OIL COOLER			1
3		MOTOR	See Illustration HYDROSTATIC MOTOR/ B20768 See Illustration HYDROSTATIC MOTOR/ B20769 See Illustration HYDROSTATIC MOTOR/ B20670 See Illustration HYDROSTATIC MOTOR/ D1650 See Illustration HYDROSTATIC MOTOR/ C2013 HYDRO.		2
4	6557467	TUBE			1
5	15K000007B	CONNECTOR	W/Ref. 17		2
6	84G003712B	BOLT			1
7	6563339	FILTER HEAD	See BTI185 filter		1
8	6557468	TUBE		12999 & Below	1
8	6559003	TUBE		13001-15319	1
9	17K000005B	ELBOW	W/Ref. 52		2
10	6560936	HOSE	W/Ref. 52	13001-15319	1
11	6515078	POPPET			1
12	6561811	PLUG	W/Ref. 17		1
13	6553897	SPRING			1
14	6559896	SPRING		13001-15319	1
15	6515541	ELEMENT	hydraulic filter		1
16	6560213	HOSE			1
17	79K000010B	O-RING			x
18	15K000006B	ADAPTER	W/O-Ring		1
18	79K000008B	O-RING			x
19	6557465	HOSE			1
20	6557603	VALVE	See Illustration HYDRAULIC VALVE/ B20667 HYDRAULIC		1
21	17C000820B	BOLT			4
22	784145B	WASHER			4
23	6560633	DAMPENER	rubber		1
24	81D000008B	NUT			4
25	6569553	BRACKET	mounting		1
26	774220	NUT			2
27	61D000006B	NUT			1
28	6557724	BRACKET			1
29	6540655	ADAPTER			1
30		WASHER	See Illustration UNIVERSAL JOINT/ B20789		1
31		BOLT	See Illustration UNIVERSAL JOINT/ B20789		1
32	17C000824B	BOLT			2
33	6512896	NUT			2
34		PUMP	See Illustration HYDROSTATIC PUMP/ B20763 See BTI154 HYDROSTATIC		1
35	6512894	NUT			2
36	6557479	SPRING		12999 & Below	1
36	6560082	SPRING		13001-15319	1
37	6557802	WASHER			1
38	6557481	BLOCK	See BTI177	12999 & Below	1
38	6558359	BLOCK		13001-15319	1
39	79K000016B	O-RING			1
40	6560137	RETAINER			1
41	79K000024B	O-RING			1
42	6553899	PLUG			1
43	17C000640B	BOLT			1
44		GASKET	NSS		1
45	6557991	FILTER	W/Ref. 44	12999 & Below	1
45	6558357	FILTER	See BTI186	13001-15319	1
46	617904B	SPRING			1

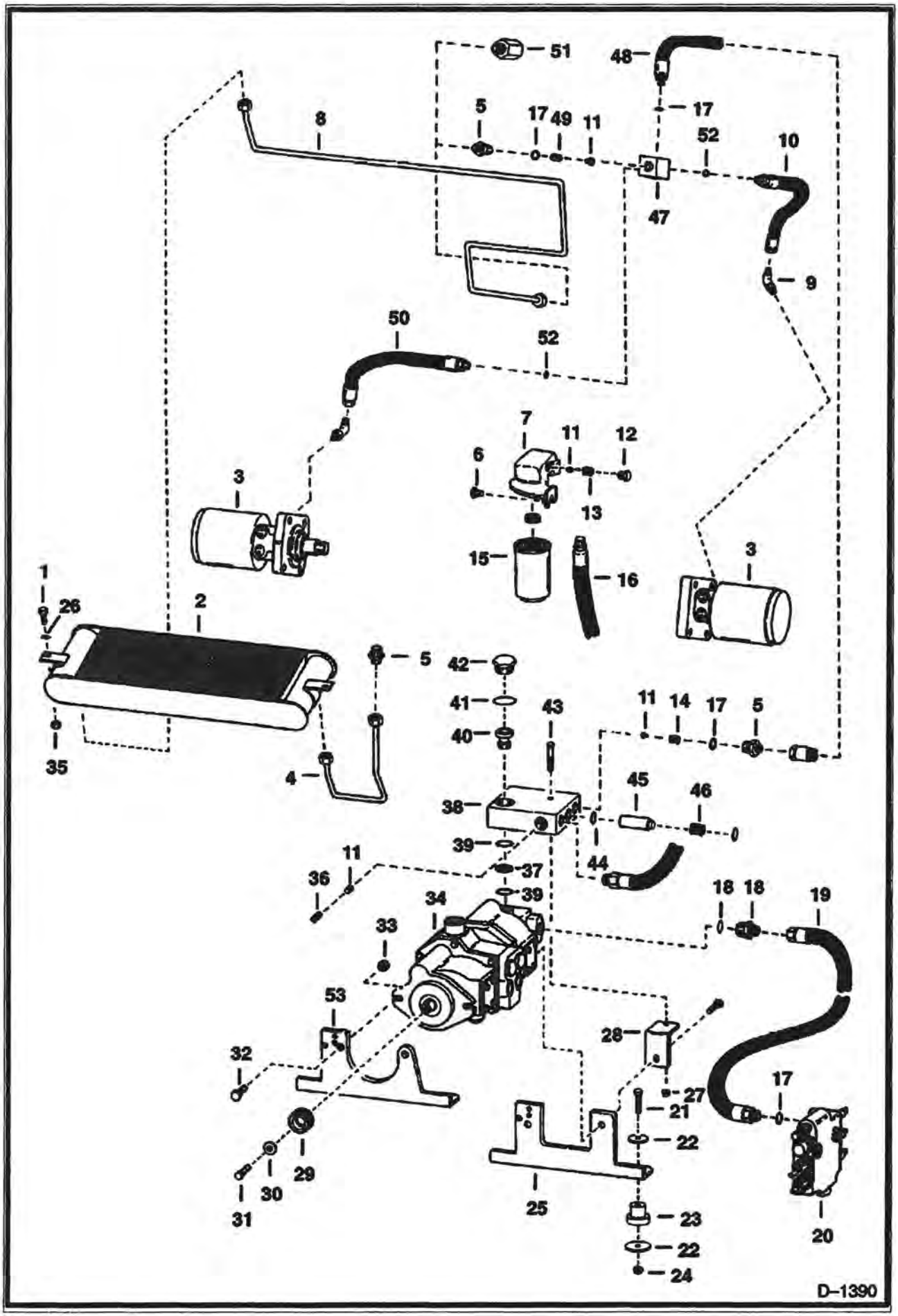
51
48
5
17
49
11
17
52
10
8
47
9
50
52
7
11
12
6
3
13
15
16
3
1
26
2
5
42
41
40
43
11
14
17
5
35
4
45
46
38
39
44
11
36
37
39
34
18
18
19
33
53
28
32
27
17
21
22
29
30
31
25
23
22
24
20
D-1390

HYDROSTATIC CIRCUITRY (Cont'd)
(S/N 15319 & Below)

Ref No	Part Number	Description	Remarks	Serial Number	Qty
47	6558769	BLOCK		13001-15319	1
48	6558857	HOSE		13001-15319	1
49	6558618	SPRING		12999 & Below	2
49	6559895	SPRING		13001-15319	2
50	6560935	HOSE	W/Ref. 52	13001-15319	1
51	6559340	ADAPTER		12999 & Below	1
52	79K000006B	O-RING			x
53	6557463	MOUNT			1

HYDROSTATIC CIRCUITRY
(S/N 15320 & Above)

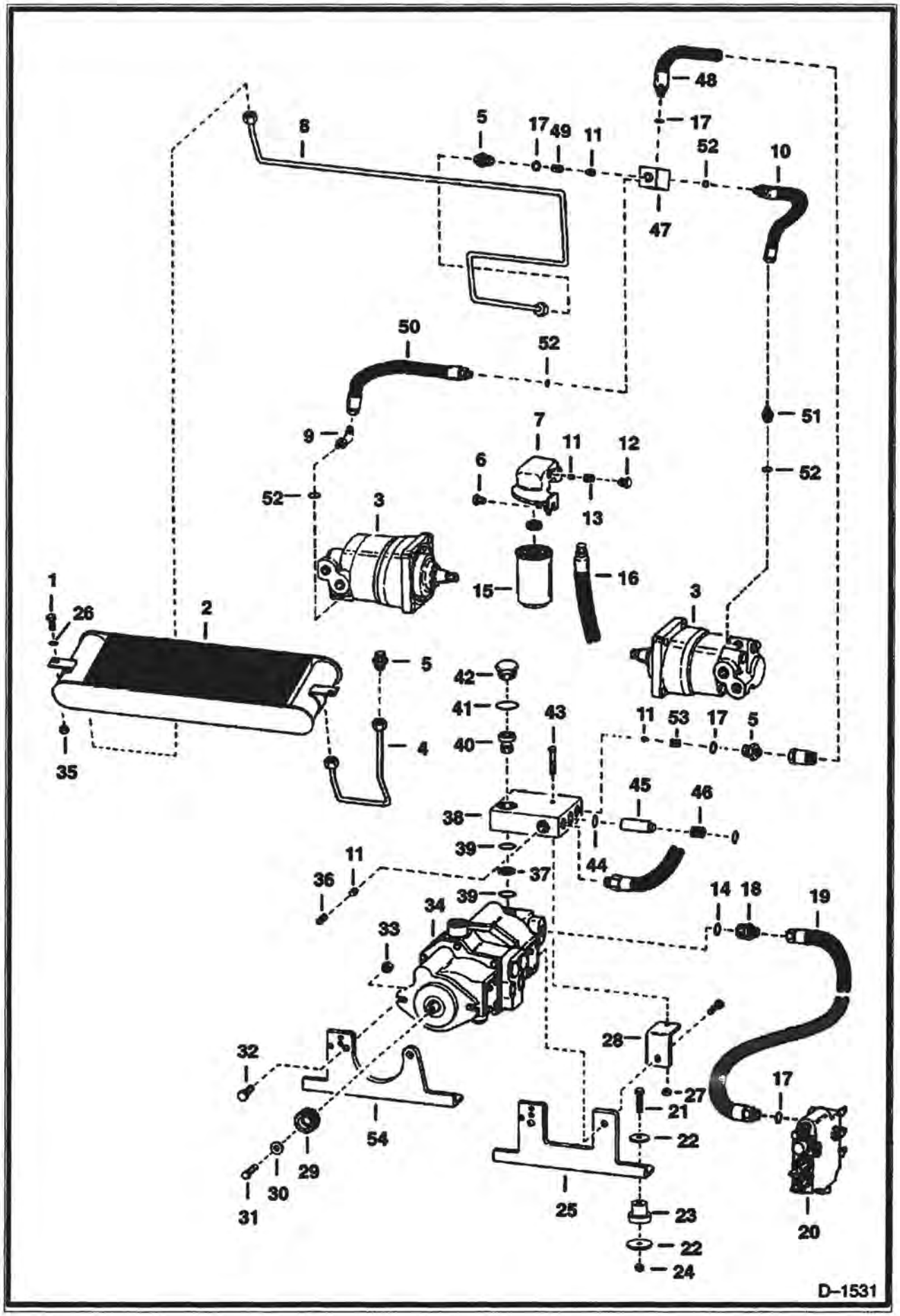

HYDROSTATIC CIRCUITRY (Cont'd)
(S/N 15320 & Above)

Ref No	Part Number	Description	Remarks	Serial Number	Qty
1	84G003716B	BOLT			2
2	6560954	OIL COOLER			1
3		MOTOR	See Illustration HYDROSTATIC MOTOR/ B20768 See Illustration HYDROSTATIC MOTOR/ B20769 See Illustration HYDROSTATIC MOTOR/ B20670 See Illustration HYDROSTATIC MOTOR/ D1650 See Illustration HYDROSTATIC MOTOR/ C2013 HYDRO.		2
4	6557467	TUBE			1
5	15K000007B	CONNECTOR	W/Ref. 17		2
6	84G003712B	BOLT			1
7	6563339	FILTER HEAD	See BTI185 filter		1
8	6559003	TUBE			1
9	18K000005B	ELBOW	W/Ref. 52		2
10	6560936	HOSE	W/Ref. 52		1
11	6515078	POPPET			1
12	6561811	PLUG	W/Ref. 17		1
13	6553897	SPRING			1
14	79K000008B	O-RING			1
15	6515541	ELEMENT	hydraulic filter		1
16	6560213	HOSE			1
17	79K000010B	O-RING			x
18	15K000006B	ADAPTER	W/Ref. 14		1
19	6557465	HOSE			1
20	6557603	VALVE	See Illustration HYDRAULIC VALVE/ B20667 HYDRAULIC		1
21	17C000820B	BOLT			4
22	784145B	WASHER			4
23	6560633	DAMPENER	rubber		1
24	81D000008B	NUT			4
25	6569553	BRACKET	mounting		1
26	774220	NUT			2
27	61D000006B	NUT			1
28	6557724	BRACKET			1
29	6540655	ADAPTER			1
30		WASHER	See Illustration UNIVERSAL JOINT/ B20789		1
31		BOLT	See Illustration UNIVERSAL JOINT/ B20789		1
32	17C000824B	BOLT			2
33	6512896	NUT			2
34		PUMP	See Illustration HYDROSTATIC PUMP/ B20763 See BTI154 HYDROSTATIC		1
35	6512894	NUT			2
36	6560082	SPRING			1
37	6557802	WASHER			1
38	6558359	BLOCK			1
39	79K000016B	O-RING			1
40	6560137	RETAINER			1
41	79K000024B	O-RING			1
42	6553899	PLUG			1
43	17C000640B	BOLT			1
44		GASKET	NSS		1
45	6558357	FILTER	See BTI186 W/Ref. 44		1
46	617904B	SPRING			1
47	6558769	BLOCK			1
48	6558857	HOSE			1
49	6559895	SPRING			2
50	6560935	HOSE	W/O-Ring		1
51	15K000005B	ADAPTER	W/Ref. 52		1

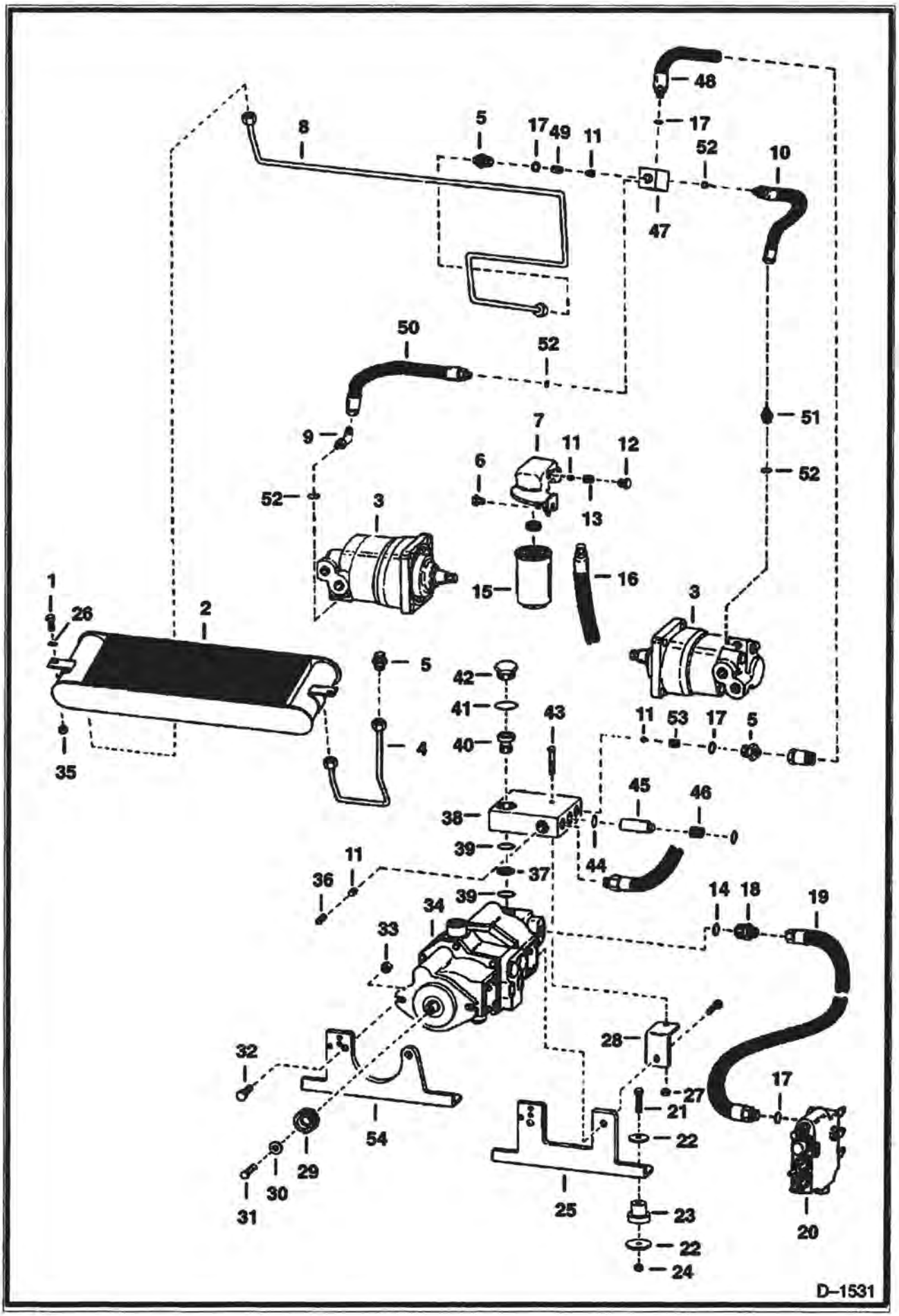
48
17
8
5
17
49
11
52
10
47
50
52
51
9
7
11
12
6
52
13
3
15
16
3
1
26
2
5
42
41
43
11
53
17
5
40
4
35
45
46
38
39
44
11
37
36
39
14
18
19
34
33
28
32
27
17
21
22
54
29
30
31
25
23
22
24
20
D–1531

HYDROSTATIC CIRCUITRY (Cont'd)
(S/N 15320 & Above)

Ref No	Part Number	Description	Remarks	Serial Number	Qty
52	79K000006B	O-RING			x
53	6559896	SPRING			1
54	6557463	MOUNT			1

HYDROSTATIC MOTOR
(Ross MAE 24012, MAE 24021, MAE 24024)

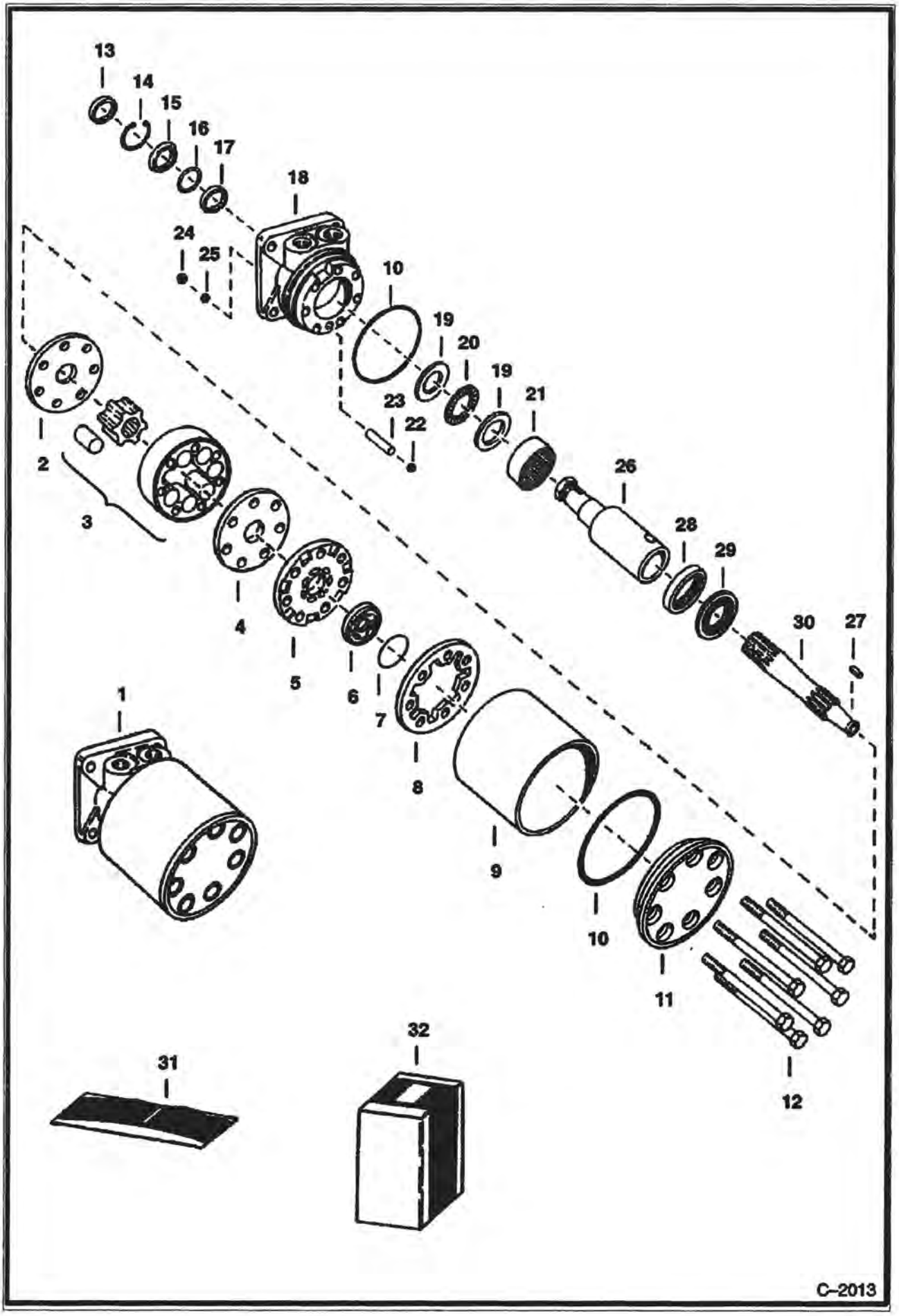

HYDROSTATIC MOTOR (Cont'd)
(Ross MAE 24012, MAE 24021, MAE 24024)

Ref No	Part Number	Description	Remarks	Serial Number	Qty
1		MOTOR	See BTI137 See BTI149 See BTI155 See BTI287 NAP - hydrostatic		2
2	6512296	PLATE			1
3		ROTOR	NAP -Was 6512297 [A]		1
4	6512298	PLATE	manifold		1
5	6512299	MANIFOLD			1
6		COMMUTATOR	NSS - assy.		4
7		RING	NSS - bonded		1
8		COMMUTATOR	NAP - assy. - W/Ref. 6 - Was 6512300 [A]		1
9		SLEEVE	NAP - Was 6512306 [A]		1
10		SEAL	NSS		2
11	6512302	COVER			1
12		BOLT	NAP - Was 994202 [A]		7
13		SEAL	NSS		1
14		RING	NSS - retaining		1
15		SPACER	NSS		1
16		WASHER	NSS - back-up		1
17		SEAL	NSS		1
18		HOUSING	See BTI287 NAP		1
19		WASHER	NAP - thrust - Was 6512338 [A]		2
20		BEARING	NAP - thrust - Was 6512293 [A]		1
21		BEARING	NAP - needle - See Ref. 1 - Was 6512292 [A]		1
22	853750B	BALL			1
23		PIN	NAP		1
24		BALL	NAP		1
25		BALL	NAP		1
26		SHAFT	See BTI287 NAP - coupling		1
27	6514053	KEY	square		1
27	6J001008B	KEY	woodruff		1
28	730143B	BEARING	needle		1
29		BEARING	NAP - thrust - Was 6512295 [A]		1
30		LINK	NAP - drive - Was 6512294 [A]		1
31	6513423	SEAL KIT	W/Ref. 7, 10 & 13 - 17		1
32		KIT	See BTI155 See BTI287 NAP - motor & spool - Was 6561521 [A]		1

HYDROSTATIC MOTOR
(Ross MAE 24027)

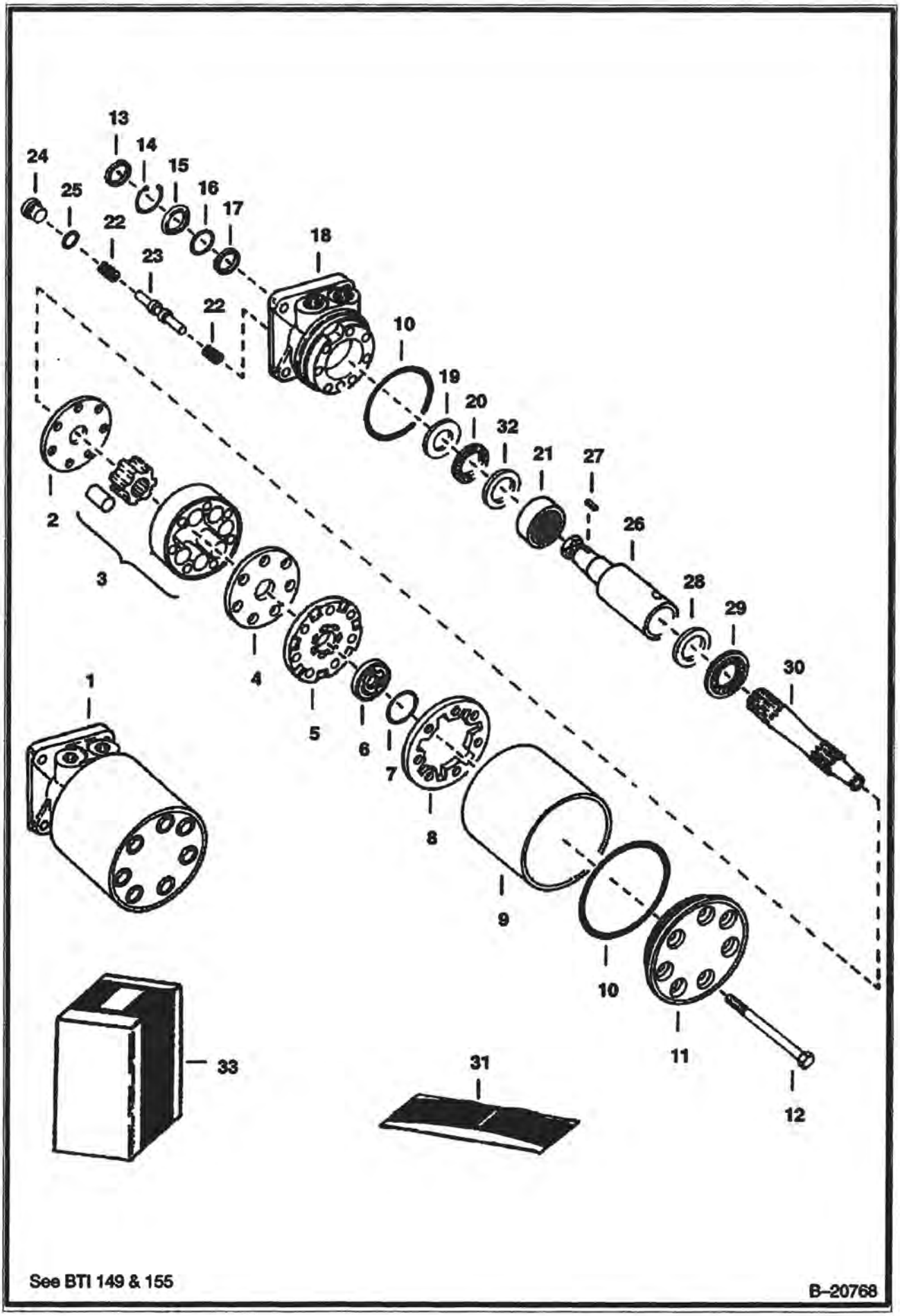

HYDROSTATIC MOTOR (Cont'd)
(Ross MAE 24027)

Ref No	Part Number	Description	Remarks	Serial Number	Qty
1		MOTOR	See BTI137 See BTI149 See BTI155 See BTI287 NAP - hydrostatic		2
2	6512296	PLATE			1
3		ROTOR	NAP - Was 6512297 [A]		1
4	6512298	PLATE	manifold		1
5	6512299	MANIFOLD			1
6		COMMUTATOR	NSS - assy.		1
7		RING	NSS - bonded		1
8		COMMUTATOR	NAP - assy. - W/Ref. 6 - Was 6512300 [A]		1
9		SLEEVE	NAP - Was 6512306 [A]		1
10		SEAL	NSS		2
11	6512302	COVER			1
12		BOLT	NAP - Was 994202 [A]		7
13		SEAL	NSS		1
14		RING	NSS - retaining		1
15		SPACER	NSS		1
16		WASHER	NSS - back-up		1
17		SEAL	NSS		1
18		HOUSING	See BTI287 NAP		1
19		WASHER	NAP - thrust - Was 6512338 [A]		1
20		BEARING	NAP - thrust - Was 6512293 [A]		1
21		BEARING	NAP - needle - Was 6512292 [A]		1
22		SPRING	NAP - Was 6513544 [A]		2
23	6513543	VALVE			1
24	47K000003B	PLUG	W/O-Ring		1
25		O-RING	NSS		1
26		SHAFT	See BTI287 NAP		1
27	6514053	KEY	square		1
27	6J001008B	KEY	woodruff		1
28	730143B	BEARING	needle		1
29		BEARING	NAP - thrust - Was 6512295 [A]		1
30		LINK	NAP - drive - Was 6512294 [A]		1
31	6513423	SEAL KIT	W/Ref. 7, 10 & 13 - 17		1
32	6513497	WASHER	thrust		1
33		KIT	See BTI155 See BTI287 NAP - motor & spool - Was 6561521 [A]		1

HYDROSTATIC MOTOR
(Ross MAE 24032 & MAE 24033)

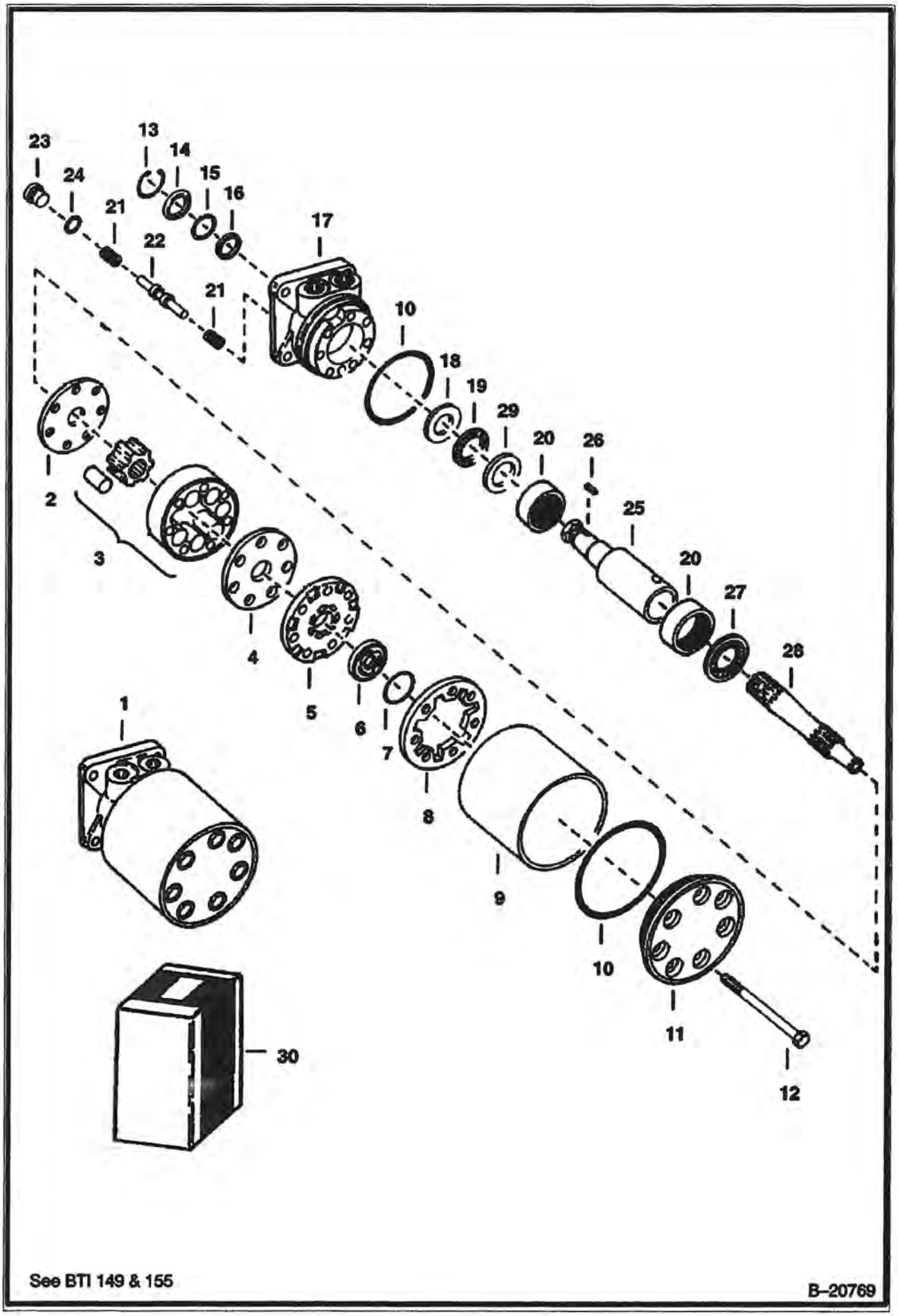

HYDROSTATIC MOTOR (Cont'd)
(Ross MAE 24032 & MAE 24033)

Ref No	Part Number	Description	Remarks	Serial Number	Qty
1		MOTOR	See BTI149 See BTI155 See BTI287 NAP - hydrostatic (24032)		2
1		MOTOR	See BTI287 NAP - 24033 - Was 6562006 [A]		2
2	6512296	PLATE			1
3		ROTOR	NAP - Was 6512297 [A]		1
4	6512298	PLATE	manifold		1
5	6512299	MANIFOLD			1
6		COMMUTATOR	NSS - assy.		1
7		RING	NSS - bonded		1
8		COMMUTATOR	NAP - assy. - W/Ref. 6 - Was 6512300 [A]		1
9		SLEEVE	NAP - Was 6512306 [A]		1
10		SEAL	NSS		2
11	6512302	COVER			1
12		BOLT	NAP - Was 994202 [A]		7
13		RING	NSS - retaining		1
14		WASHER	NSS - back-up		1
15		WASHER	NSS - back-up		1
16		SEAL	NSS		1
17		HOUSING	See BTI287 NAP - Was 6598050 [A]		1
18	6514066	WASHER	thrust		2
19	6514052	BEARING	thrust		1
20		BEARING	NAP - needle - Was 6514065 [A]		2
21		SPRING	NAP - Was 6513544 [A]		2
22	6513543	VALVE	Closed Center		1
22		SPOOL	NAP - Open Center - Was 6514738 [A]		1
23	47K000003B	PLUG			1
24	6514064	O-RING			1
25		SHAFT	See BTI287 NAP - For 24032		1
25		SHAFT	NAP - For 24033 Only - Was 6598049 [A]		1
26	6514053	KEY	square		1
26	6J001008B	KEY	woodruff		1
27	6514056	BEARING	thrust		1
28		LINK	NAP - drive - Was 6512294 [A]		1
29	6598048	WASHER	thrust		1
30	6514896	SEAL KIT	Ref. 7, 10 & 13-16		1
30		HOUSING KIT	See BTI287 NAP - Ref. 7, 10 & 14-27 - Was 6562047 [A]		1
30		KIT	See BTI287 NAP - Was 6561521 [A]		1

HYDROSTATIC MOTOR
(Char-Lynn)
(Motor Model 109-1052-004 & -005)

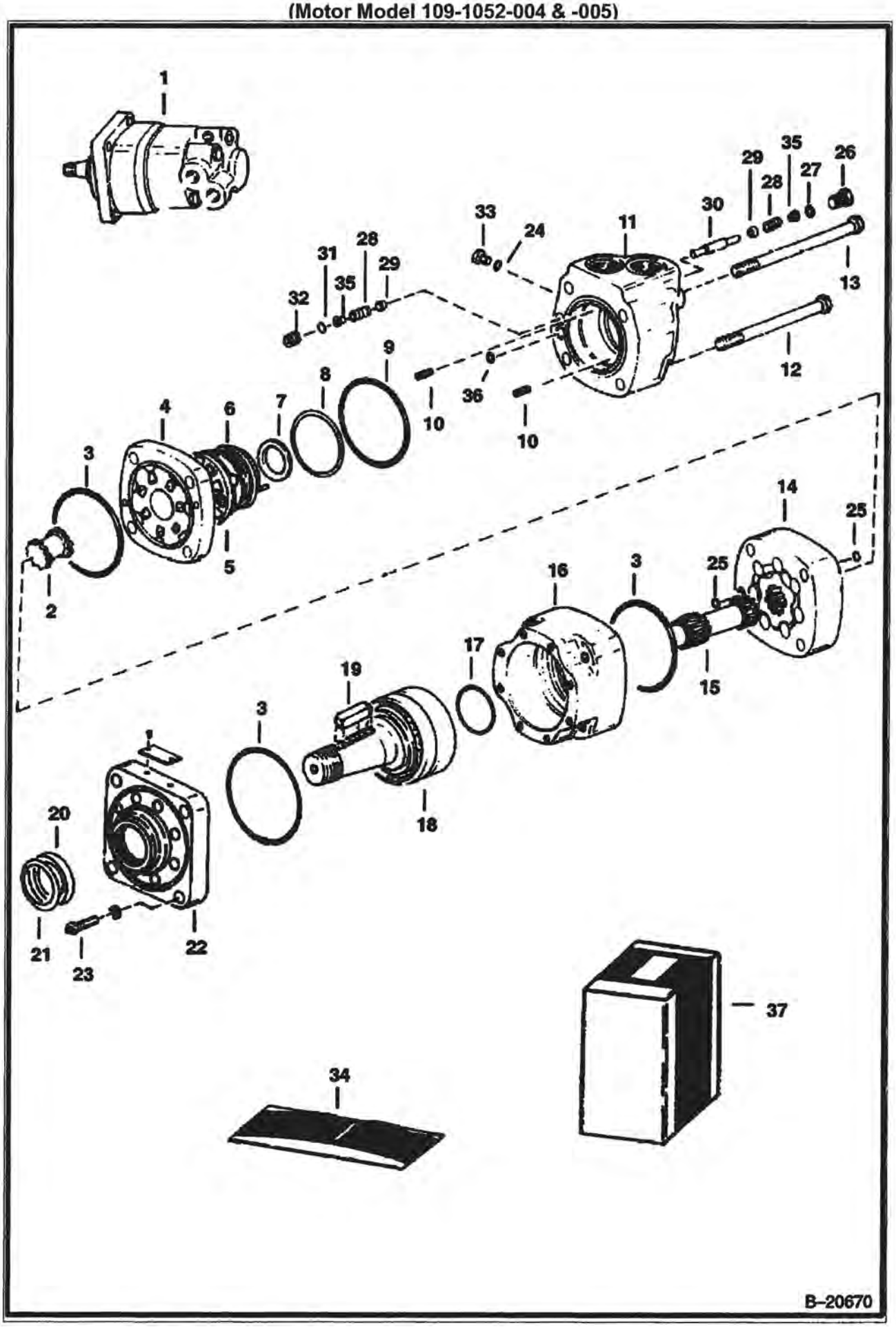

HYDROSTATIC MOTOR (Cont'd)
(Char-Lynn)
(Motor Model 109-1052-004 & -005)

Ref No	Part Number	Description	Remarks	Serial Number	Qty
1		MOTOR	See BTI193 NAP - Order 6599718	15320 & Above	1
1		MOTOR	See Illustration HYDROSTATIC MOTOR/ D1650 NAP - REMANUFACTURED - ORDER 6630245		1
2	6513506	DRIVE			1
3		SEAL	NSS		3
4	6513505	PLATE	valve		1
5	6513507	VALVE			1
6	6630042	PLATE	balancing		1
7		SEAL	NSS - inner		1
8		SEAL	NSS - outer		1
9		SEAL	NSS		1
10	6190121	SPRING			2
11	6599605	HOUSING	valve		1
12	18C000788B	BOLT	hex		3
13	18C000792B	BOLT	hex		1
14	6513504	GEROLER			1
15		SHAFT	NAP - Order Ref. 37 - Was 6630390 [A]		1
16	6513501	HOUSING	bearing		1
17		SEAL	NSS		1
18		DRIVE SHAFT	NSS - Order Ref. 37 - Was 6598374 [A]		1
19	6630089	KEY			1
20		QUAD RING	NSS		1
21		WASHER	NSS		1
22		COVER	NSS - front - Order Ref. 37 - Was 6513502 [A]		1
23	94G000516B	BOLT			8
24	79K000003B	O-RING			1
25		O-RING	NSS		x
26	47K000005B	PLUG	W/Ref. 27		1
27	79K000006B	O-RING			1
28	6513533	SPRING			2
29	6513532	POPPET			2
30	6513510	PISTON			1
31	58K000012B	O-RING			1
32	6513534	PLUG			1
33	47K000002B	PLUG	W/Ref. 24		1
34	6598463	SEAL KIT	W/Ref. 3, 7 - 9, 17, 20, 21, 24, 25, 27, 31 & 36		1
35	6561218	SHUTTLE			2
36		O-RING	NSS		1
37	6648759	REPAIR KIT	To Convert Model 109-1052-004 and Model109-1052-005 to Model 109-1052-006 - Ref. 15, 18, 22 & 35		1

HYDROSTATIC MOTOR
(Model 109-1052-006)

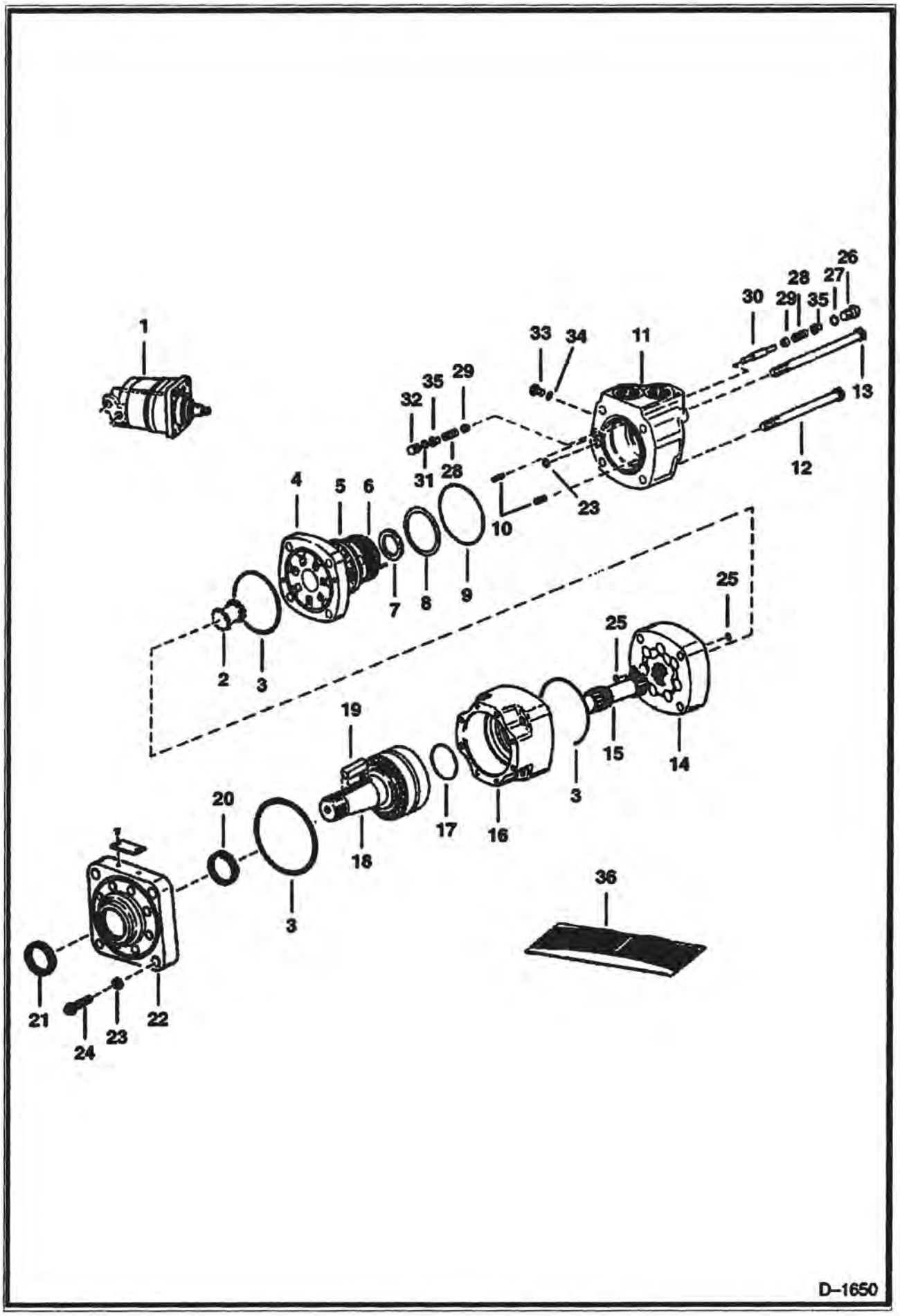

HYDROSTATIC MOTOR (Cont'd)
(Model 109-1052-006)

Ref No	Part Number	Description	Remarks	Serial Number	Qty
1	6599718	MOTOR	new		1
1	6630245REM	MOTOR R	remanufactured - Was 6630245 [A]		1
2	6513506	DRIVE			1
3		SEAL	NSS		3
4	6513505	PLATE	valve		1
5	6513507	VALVE			1
6	6630042	PLATE	balancing		1
7		SEAL	NSS - inner		1
8		SEAL	NSS - outer		1
9		SEAL	NSS		1
10	6190121	SPRING			2
11	6599605	HOUSING	valve		1
12	18C000788B	BOLT			3
13	18C000792B	BOLT			1
14	6513504	GEROLER			1
15	6630373	SHAFT			1
16	6513501	HOUSING	bearing		1
17		SEAL	NSS		1
18	6630088	DRIVE SHAFT			1
19	6630089	KEY			1
20		SEAL	NSS - shaft		1
21		SEAL	NSS - dust		1
22	6630087	COVER	front		1
23		O-RING	NSS		1
24	94G000516B	BOLT			8
25		O-RING	NSS		x
26	47K000005B	PLUG	W/Ref. 27		1
27	79K000006B	O-RING			1
28	6513533	SPRING			2
29	6513532	POPPET			2
30	6513510	PISTON			1
31	58K000012B	O-RING			1
32	6513534	PLUG			1
33	47K000002B	PLUG	W/Ref. 24		1
34	79K000003B	O-RING			1
35	6561218	SHUTTLE			2
36	6632040	SEAL KIT	W/Ref. 3, 7 - 9, 17, 20, 21, 23, 25, 27, 31 & 34		1

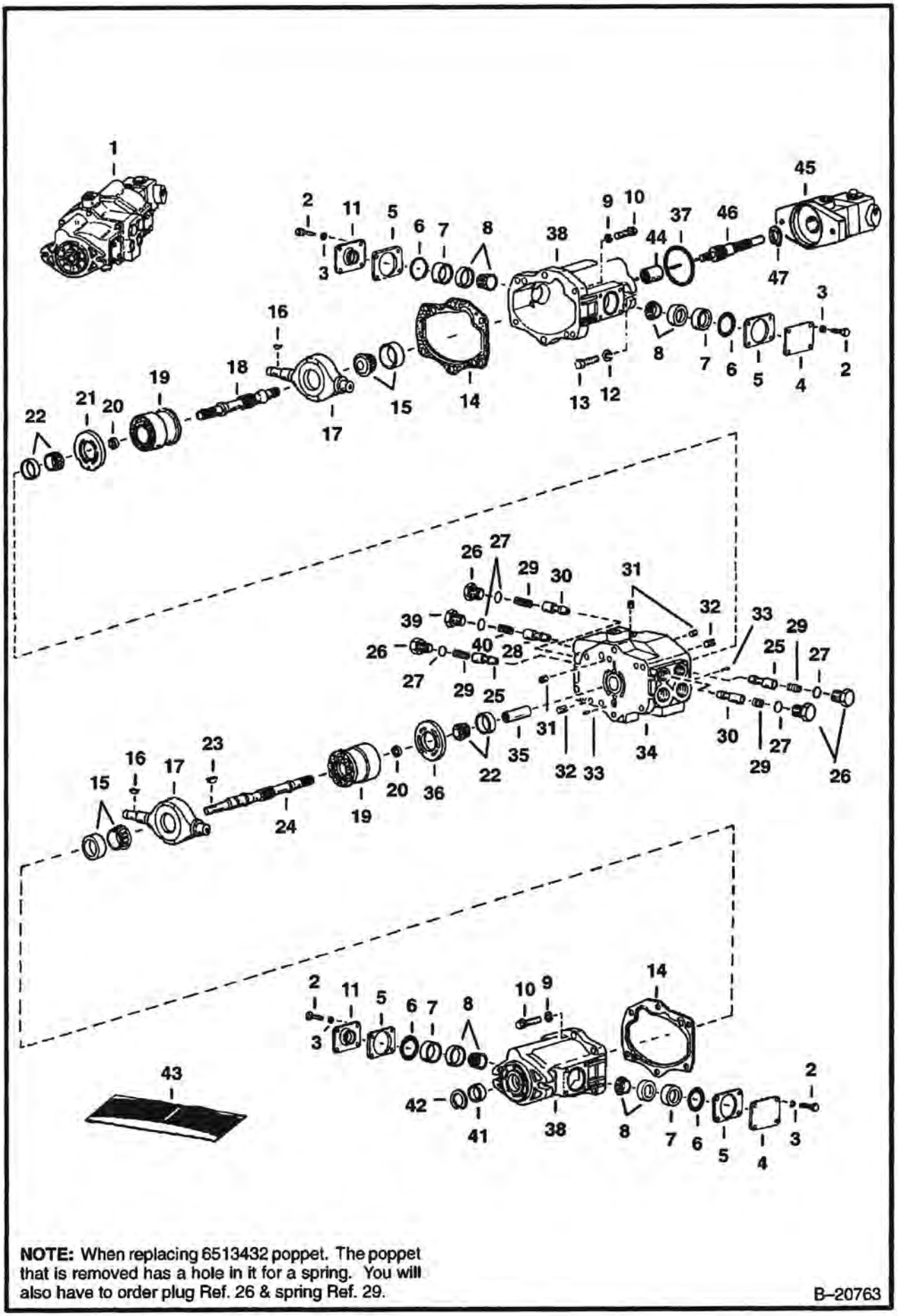

NOTE: When replacing 6513432 poppet. The poppet that is removed has a hole in it for a spring. You will also have to order plug Ref. 26 & spring Ref. 29.

B–20763

Ref No	Part Number	Description	Remarks	Serial Number	Qty
1		PUMP	See BTI154 hydrostatic	12999 & Below	1
1		PUMP	See BTI154 NAP	13001 & Above	1
1		PUMP	See BTI154 remanufactured		1
2	6513631	BOLT			16
3	4E000004B	WASHER			16
4	6512939	COVER			2
5	6512940	SHIM KIT			1
6		O-RING	NSS		4
7	6512938	SPACER			4
8	232539B	BEARING			4
9	4E000006B	WASHER			12
10	93G000624B	SCREW			12
11	6513094	COVER & SEAL			2
12	616791B	WASHER			2
13	17C000820B	BOLT			2
14	6512941	GASKET			2
15	6513091	BEARING			2
16	5J000806B	KEY			2
17	6512929	YOKE			2
18	6512932	SHAFT			1
19	6512930	ROTATING GROUP			2
20	6512948	KIT	spacer		2
20	6674240	SPACER	.137 in.		1
20	6674241	SPACER	.139 in.		1
20	6674242	SPACER	.142 in.		1
20	6674243	SPACER	.145 in.		1
20	6674244	SPACER	.148 in.		1
20	6674245	SPACER	.151 in.		1
20	6674246	SPACER	.154 in.		1
20	6674247	SPACER	.157 in.		1
20	6674248	SPACER	.160 in.		1
20	6674249	SPACER	.163 in.		1
20	6674250	SPACER	.166 in.		1
20	6674251	SPACER	.169 in.		1
21	6598478	WEAR PLATE			1
22	6513093	BEARING			2
23	6519654	KEY			1
24	6512942	SHAFT			1
25	6512947	RELIEF VALVE	High Pressure		2
26	6513434	PLUG			4
27	79K000012B	O-RING			4
28	6512945	POPPET	replenishing Valve		1
29	6513433	SPRING			4
30	6513432	POPPET	Charge Pressure - See Note		2
31	16F000004B	PLUG			3
32	6513089	PIN			4
33	6513092	PIN			2
34	6512931	BODY	valve		1
35	6512933	COUPLER			1
36	6598477	WEAR PLATE			1
37	6512949	O-RING			1
38	6598433	HOUSING	Also Order Ref. 5 & 20		2
39	6513434	PLUG		12999 & Below	1
39	6598902	PLUG		13001 & Above	1

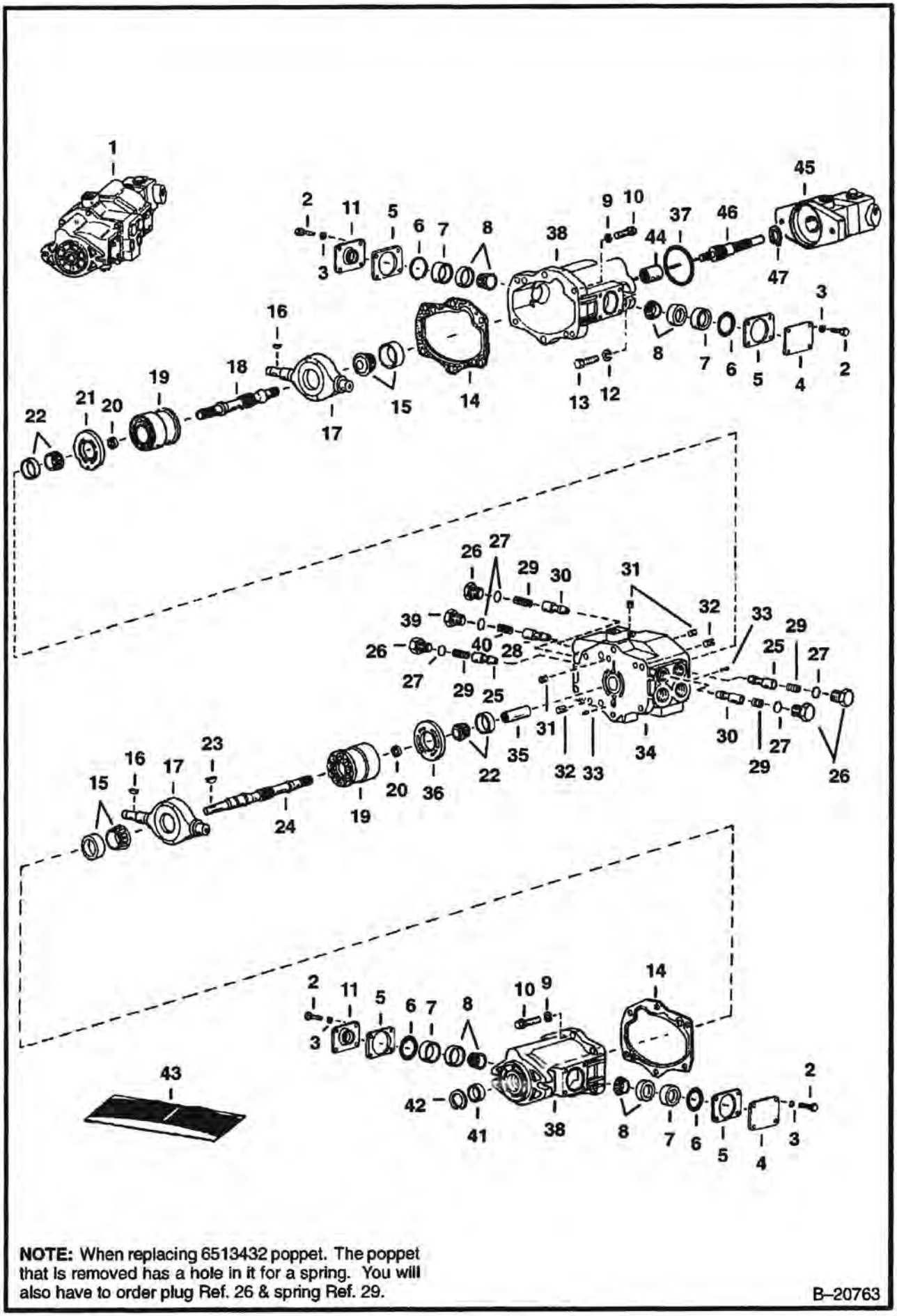

NOTE: When replacing 6513432 poppet. The poppet that is removed has a hole in it for a spring. You will also have to order plug Ref. 26 & spring Ref. 29.

B–20763

Ref No	Part Number	Description	Remarks	Serial Number	Qty
40	6513429	SPRING		12999 & Below	1
40	6512946	SPRING		13001 & Above	1
41	6513090	SEAL			1
42	507695B	SNAP RING			1
43	6512943	SEAL KIT	Ref. 6, 14, 27, 37 & 41		1
44	6512935	COUPLER			1
45	6512950	PUMP	See Illustration VANE PUMP/ C2225 VANE		1
46	6512934	SHAFT			1
47	711054B	SNAP RING			1

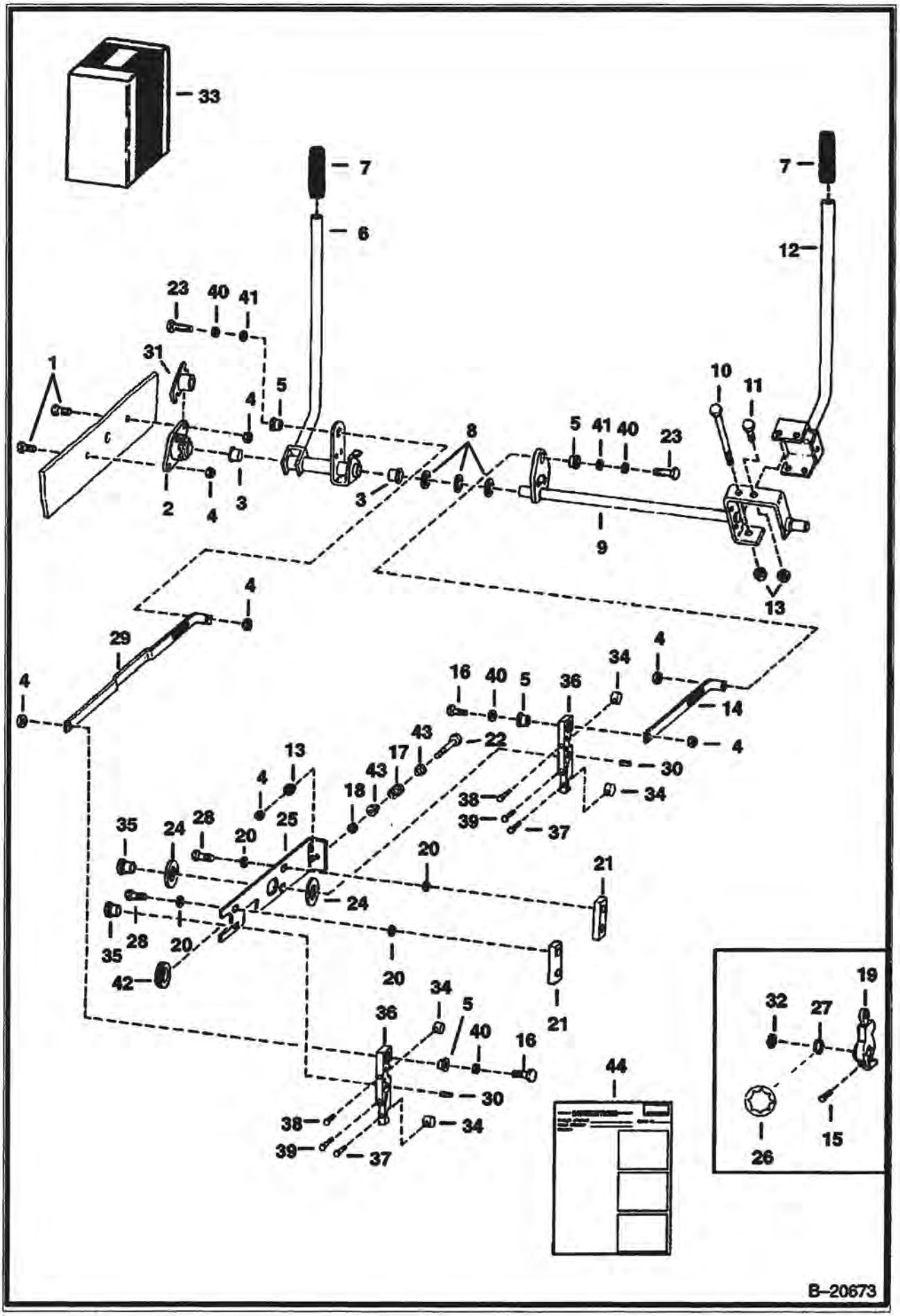
33
7
6
7
12
23
40
41
31
1
5
4
10
11
8
5
41
40
23
2
4
3
3
9
13
4
29
4
4
16
40
5
36
34
14
4
43
22
17
13
30
4
43
18
38
34
39
37
35
24
28
20
25
20
21
24
35
28
20
42
20
21
34
5
36
40
16
19
32
27
44
30
38
34
39
37
26
15
B–20673

Ref No	Part Number	Description	Remarks	Serial Number	Qty
1	17C000612B	BOLT			4
2	6558736	FLANGE			2
3	6512027	BUSHING			2
4	85D000006B	NUT			x
5	6665701	BUSHING	Was 6630081 [A]		4
6	6558460	HANDLE	steering - L.H.		1
7	6513963	GRIP			2
8	25E000029B	WASHER			x
9	6564705	SHAFT	Was 6558461 [A]		1
10	6553081	BOLT			1
11	17C000620B	BOLT			1
12	6558615	HANDLE	R.H.		1
13	61D000006B	NUT			6
14	6558431	BAR			1
15	17C000522B	BOLT			2
16	17C000628B	BOLT			4
17		SPRING	NAP - .44" (11,18mm) I.D. - Order 6572026 & (2) 6571991 - Was 6505082 [A]		1
17	6572026	SPRING	.75" (19,05mm) I.D.		1
18	6579990	WASHER	Was 6558429 [A]		1
19		LEVER	NAP - Order Ref. 33		2
20	6557831	WASHER			9
21	6562281	BAR			2
22	17C000692B	BOLT			1
23	17C000626B	BOLT			2
24	6558680	WASHER			2
25	6562767	BRACKET			1
26		RETAINER	NAP - Tinnerman - Order Ref. 33 - Was 6513388 [A]	14821 & Below	2
27	6560894	WASHER	Used W/Ref. 19	14822 & Above	2
28	8C000616B	BOLT			4
29	6558430	BAR			1
30	5J000806B	KEY			2
31	6552536	PIVOT			2
32	659764B	SNAP RING		14822 & Above	2
33	6564056	LEVER KIT	Ref. 5 & 34-40		2
34	6562062	CAM			4
35	6562063	HUB			2
36	6565751	LEVER			2
37	17C000614B	BOLT			2
38	17C000624B	BOLT			2
39	17C000628B	BOLT			2
40	6563914	WASHER			4
41	6563965	WASHER			2
42	6558436	GUIDE			1
43	6571991	GUIDE	Use only with 6572026 spring		2
44	6556828	INSTRUCTIONS			1

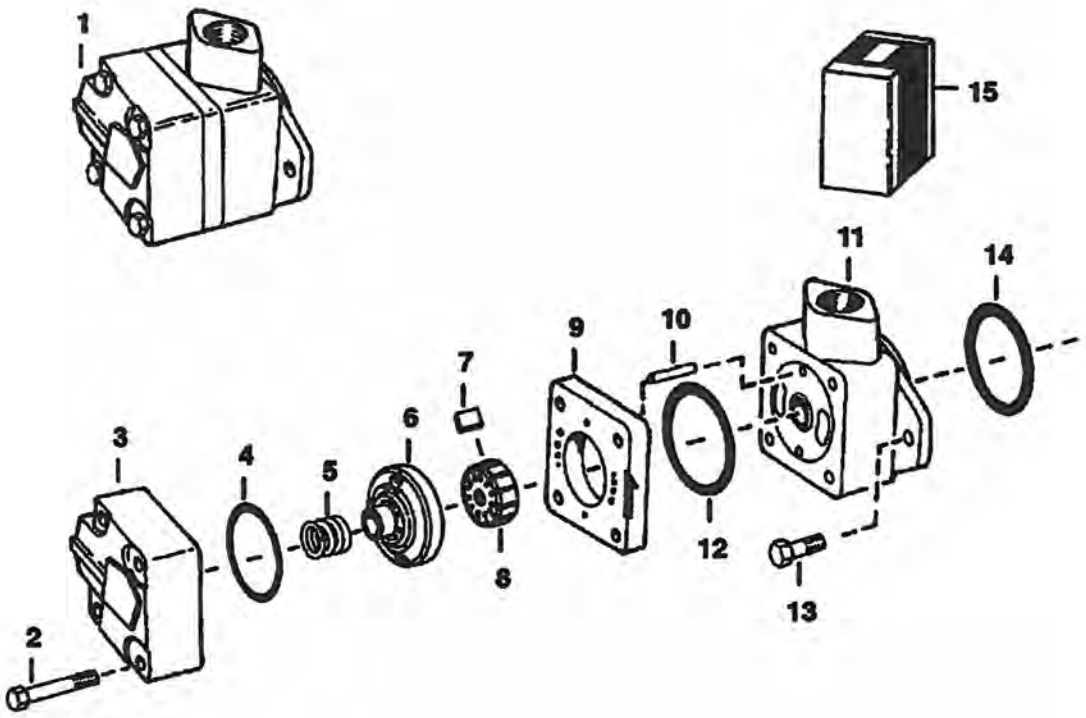
1
15
11
14
10
9
7
6
3
4
5
12
8
13
2
C–2225

VANE PUMP (Cont'd)

Ref No	Part Number	Description	Remarks	Serial Number	Qty
1	6648982	PUMP	vane - Ref. 2 - 13 - Was 6512950 [A]		1
2	17C000648B	BOLT			4
3		COVER	NAP		1
4	25K030214B	O-RING			1
5		SPRING	NAP		1
6		PLATE	NAP - pressure - Was 6649261 [A]		1
7		VANE	NSS		12
8		ROTOR	NSS - vane		1
9		RING	NSS		1
10		PIN	NSS		2
11		BODY	NAP - pump		1
12	25K030216B	O-RING			1
13	17C000616B	BOLT			2
14	6512949	O-RING			1
15	6649262	KIT	Ref. 7 - 9 - Was 4149184B [A]		1

CAB ELECTRICAL SYSTEM
(S/N 11730 & Below)

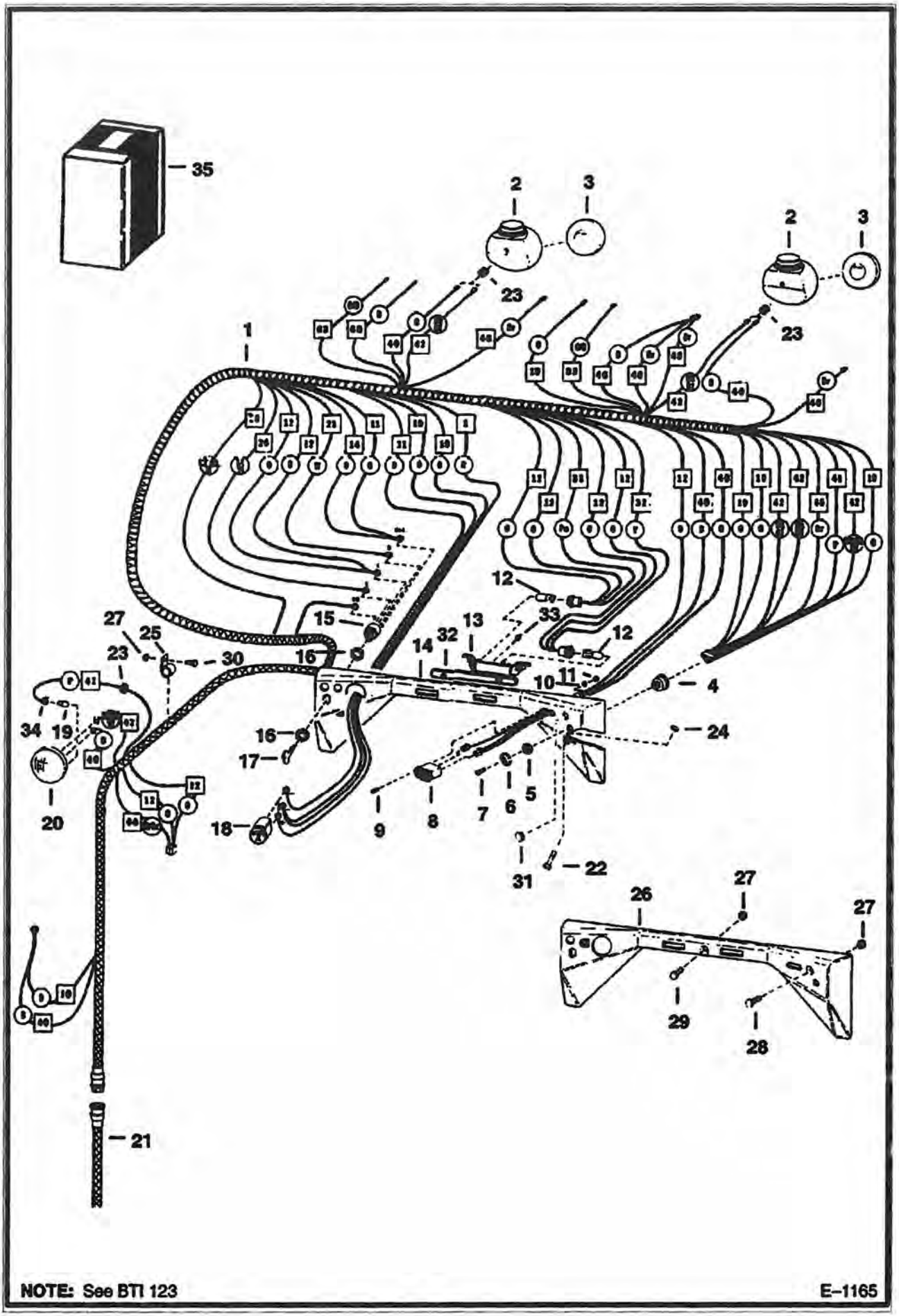

NOTE: See BTI 123

E-1165

CAB ELECTRICAL SYSTEM (Cont'd)
(S/N 11730 & Below)

Ref No	Part Number	Description	Remarks	Serial Number	Qty
1	6557492	HARNESS	See BTI123 cab		1
2	6558142	HOUSING	light		3
3	6557486	LAMP	front		2
4	6512808	SWITCH	W/Ref. 5-7		1
5		NUT	NSS		1
6	6599781	KNOB			1
7		SCREW	NSS		1
8	6664886	HOURMETER	Was 6631657 [A]		1
9	85G000608B	SCREW			2
10	12E000006B	WASHER			2
11	12D000006B	NUT			2
12	6513468	BULB			2
13	6558242	BRACKET			1
14	6558243	PANEL	instrument		1
15		SWITCH	See BTI289 ignition - W/Ref. 16 - Order 6724282 Switch Kit - Was 6519592 [A]		1
15	6724282	SWITCH KIT	W/Ref. 17		1
15	6665606	SWITCH			1
16	6598721	NUT	For NAP/6519592 Switch		2
16	6674202	NUT	For 6665006 Switch		1
17	6512809	KEY	For NAP/6519592 Switch		1
17	6709527	KEY	For 6665606 Switch - Was 6666202 [A]		1
18	6512807	GAUGE	amp		1
19	960855B	BULB	#1003 - Use Only W/#4409 Lamp		1
19	898731B	BULB	#1156 - Use Only W/#4409x		1
20		REAR LIGHT	NAP - #4409 - Order 6563740 & 898731B		1
20	6563740	LAMP	#4409x		1
21		HARNESS	See Illustration ENGINE ELECTRICAL SYSTEM/ E1173 ENGINE WIRING		1
22	17C000572B	BOLT			2
23	6557493	GROMMET			3
24	57D000005B	NUT	Was 6511320 [A]		2
25	30H000041B	CLAMP			4
26		PANEL	NAP - instrument - Order Ref. 13, 14, 22 & 24		1
27	91D000005B	NUT	Was 81D000005B [A]		2
28	17C000560B	BOLT			2
29	17C000532B	BOLT			1
30	10C000512B	BOLT	Was 6553808 [A]		1
31	1300057B	PLUG			2
32	6560699	LENS			1
33	6514742	RIVET			1
34	6557504	SOCKET			1
35	6563326	KIT	See Illustration WIRE HARNESS CONNECTOR/ A2765 CONNECTOR		1

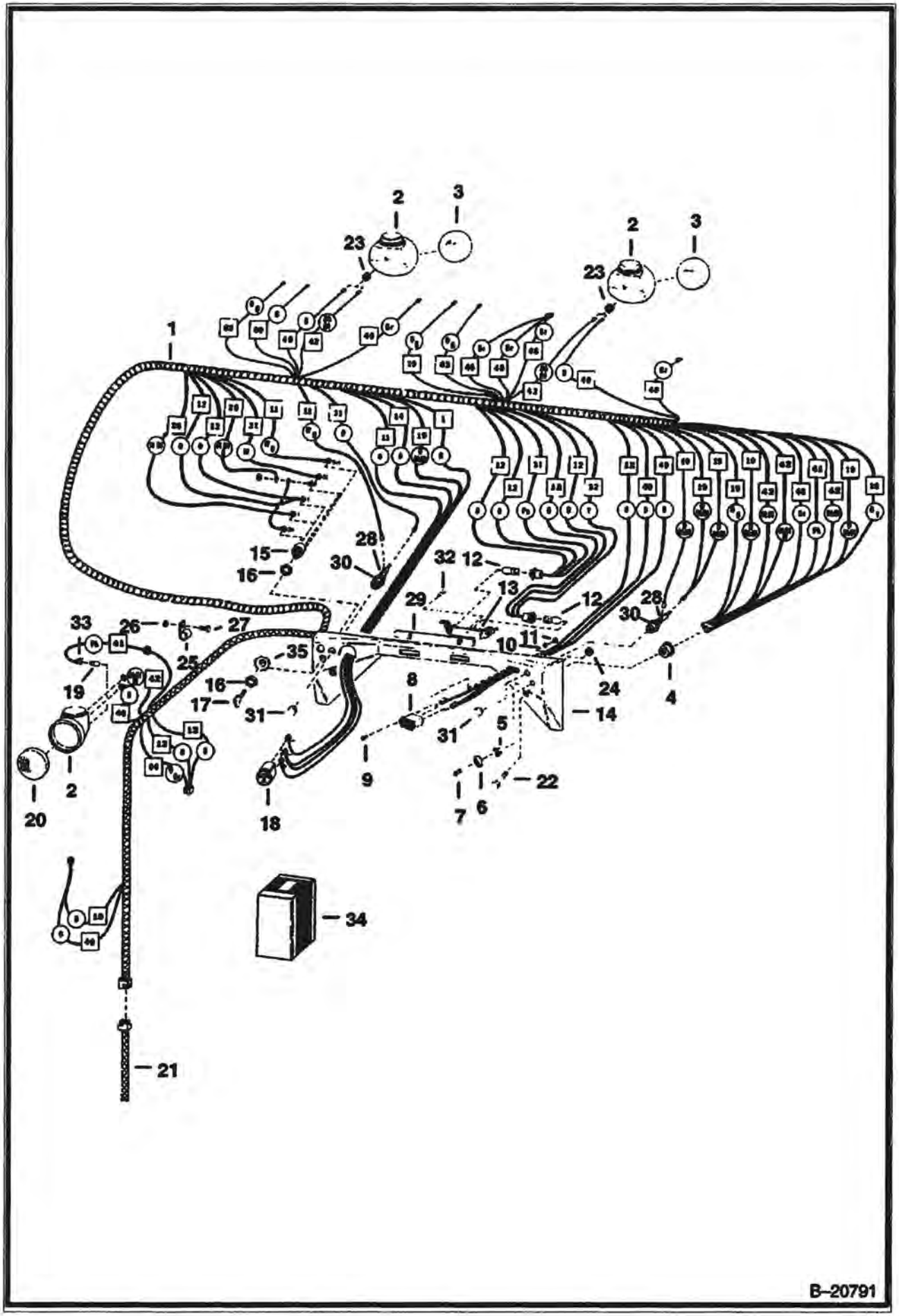
1
2
3
4
5
6
7
8
9
10
11
12
13
14
15
16
17
18
19
20
21
22
23
24
25
26
27
28
29
30
31
32
33
34
35
B–20791

CAB ELECTRICAL SYSTEM (Cont'd)
(S/N 11731 & Above)

Ref No	Part Number	Description	Remarks	Serial Number	Qty
1	6558859	HARNESS	cab	11731-14824	1
1	6561500	HARNESS		14825 & Above	1
2	6558142	HOUSING	light		3
3	6557486	LAMP			2
4	6512808	SWITCH	W/Ref. 5-7		1
5		NUT	NSS		1
6	6599781	KNOB			1
7		SCREW	NSS		1
8	6664886	HOURMETER	Was 6631657 [A]		1
9	85G000608B	SCREW			2
10	12E000006B	WASHER			2
11	12D000006B	NUT			2
12	6513468	BULB			2
13	6558242	BRACKET			1
14	6558243	PANEL	instrument		1
15		SWITCH	See BTI289 NAP - ignition - W/Ref. 16 - Order Ref. 34 - Was 6519592 [A]		1
15	6665606	SWITCH			1
16	6598721	NUT	For NAP/6519592 Switch		2
16	6674202	NUT	For 6665606 Switch		1
17	6512809	KEY	For NAP/6519592 Switch		1
17	6709527	KEY	For 6665606 Switch - Was 6666202 [A]		1
18	6512807	GAUGE	amp.	11731-14824	1
18	6560354	VOLTMETER		14825 & Above	1
19	960855B	BULB	#1003 - Use Only W/#4409 Lamp		1
19	898731B	BULB	#1156 - Use Only W/#4409x Lamp		1
20		LAMP	NAP - #4409 - Order 6563740 & 898731B		1
20	6563740	LAMP	#4409x		1
21		HARNESS	See Illustration ENGINE ELECTRICAL SYSTEM/ E1173 ENGINE WIRING		1
22	17C000572B	BOLT			2
23	6557493	GROMMET			3
24	57D000005B	NUT	Was 6511320 [A]		2
25	30H000041B	CLAMP			4
26	61D000005B	NUT			1
27	10C000512B	BOLT	Was 6553808 [A]		1
28	6513469	HOLDER	See BTI123 fuse		2
28	1319451B	FUSE			x
29	6560699	LENS			1
30	6514643	GASKET			2
31	6514642	CAP			2
32	6514742	RIVET			1
33	6557504	SOCKET			1
34	6724282	SWITCH KIT	W/Ref. 15 & 17		1
35	6709172	PLATE			1

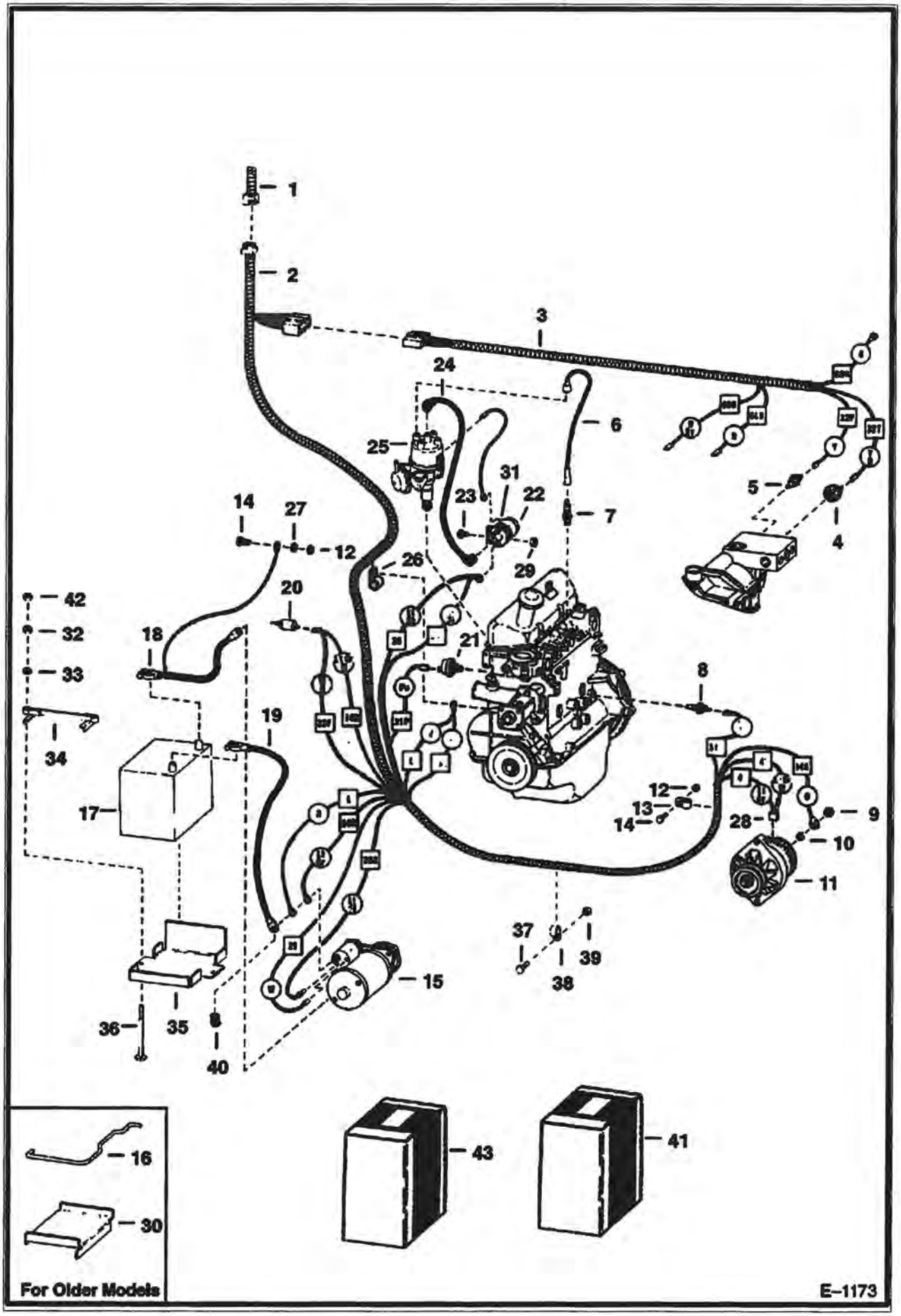
1
2
3
24
6
25
31
23
22
7
5
4
14
27
12
26
29
20
42
32
33
18
21
8
34
19
17
12
13
14
28
9
10
11
37
39
38
15
36
35
40
16
30
For Older Models
43
41
E–1173

Ref No	Part Number	Description	Remarks	Serial Number	Qty
1		HARNESS	See Illustration CAB ELECTRICAL SYSTEM/ E1165 See Illustration CAB ELECTRICAL SYSTEM/ B20791 CAB		1
2	6558864	HARNESS	engine	14824 & Below	1
2	6561654	HARNESS		14825 & Above	1
3	6557447	HARNESS			1
4	6557449	SWITCH	hydrostatic pressure		1
5	6598384	SWITCH	hydrostatic temperature		1
6		WIRES	NSS - spark plug - Order Ref. 41		4
7	6512536	SPARK PLUG			4
8	6630821	SWITCH	See BTI146 engine temp.		1
9	12D000012B	NUT		13999 & Below	1
9	4DM00006B	NUT		14001 & Above	1
10	12E000012B	WASHER			1
11		ALTERNATOR	See Illustration ALTERNATOR/ B20783 See Illustration ALTERNATOR/ B20782 See Illustration ALTERNATOR/ B20784		1
12	61D000005B	NUT			2
13	30H000022B	CLIP			1
14	17C000512B	BOLT			2
15		STARTER	See Illustration STARTER/ B20785 See Illustration STARTER/ C2145 See Illustration STARTER/ B20786		1
16	6553338	BRACKET			1
17	6674687	BATTERY	Was 6669318 [A]		1
17	6630154	CAP	gang - Danger		1
17	6630155	CAP	gang - Poison		1
17		CAP	NAP - tilt-tite - Was 6514898 [A]		6
18	6557451	CABLE	ground		1
19	6557450	CABLE	positive		1
20	6555915	SOLENOID	carburetor		1
21	6631010	SWITCH	engine pressure		1
21	19F000001B	ADAPTER			1
22	881097B	COIL			1
23	10C000512B	BOLT	Was 6553808 [A]		1
24		COIL WIRE	NSS - Order Ref. 41		1
25		DISTRIBUTOR	See Illustration IGNITION SYSTEM/ B20794		1
26	30H000046B	CLAMP			1
27	6E000005B	WASHER			1
28	3675725B	DIODE			1
29	6512894	NUT			1
30	6557794	BATTERY			1
31		BRACKET	NAP - Was 6512914 [A]		1
32	17D000002B	NUT			2
33	25E000015B	WASHER			2
34	6563462	CLAMP			1
35	6558826	MOUNT			1
36	6569623	BOLT			1
37	17C000614B	BOLT			1
38	30H000024B	CLAMP			1
39	61D000006B	NUT			1
40	6560172	COVER			1
41	6513958	WIRE SET	Ref. 6 & 24		1
42	46D000005B	NUT			1
43	6563326	KIT	See Illustration WIRE HARNESS CONNECTOR/ A2765 See BTI182 CONNECTOR		1

ALTERNATOR
(Delco 1102920 - Open)

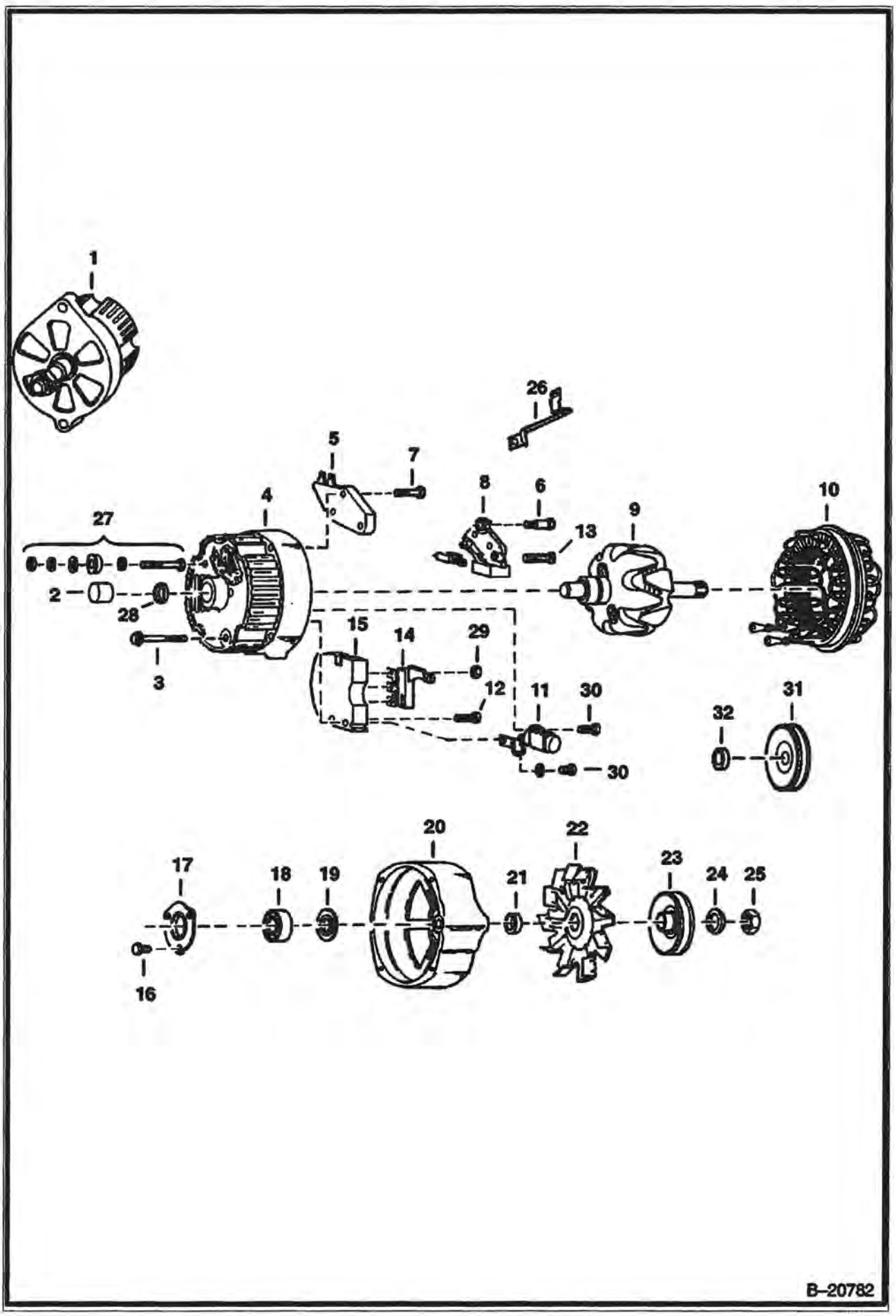

ALTERNATOR (Cont'd)
(Delco 1102920 - Open)

Ref No	Part Number	Description	Remarks	Serial Number	Qty
1		ALTERNATOR	NAP - Order 908221B , 29CM00825B & 4DM00006B		1
2	999306B	BEARING			1
3	897467B	BOLT			4
4	999393B	FRAME	W/Ref. 2		1
5	994381B	REGULATOR	voltage		1
6	6511957	BOLT			2
7	999396B	BOLT			2
8	999394B	HOLDER	assy.		1
9	999305B	ROTOR			1
10	2343911B	STATOR	Was 999392B [A]		1
11	999308B	CAPACITOR			1
12	994373	BOLT			1
13	999397B	BOLT			2
14	994383B	DIODE			1
15	995185B	RECTIFIER			1
16	45G001008B	BOLT			3
17	897456B	RETAINER	bearing		1
18	991599B	BEARING			1
19		SLINGER	NAP		1
20		HOUSING	NAP		1
21	897459B	COLLAR			1
22	329884B	FAN	alternator		1
23		PULLEY	NAP - Order Ref. 31 & 32		1
24	794584B	WASHER			1
25		NUT	NAP - Was 859369 [A]		1
26	999395B	TERMINAL	relay		1
27	994372	TERMINAL PKG.	terminal		1
28	991198B	SEAL			1
29	12D000008B	NUT			1
30	994378B	BOLT			2
31	906104B	PULLEY			1
32	906111B	COLLAR			1

ALTERNATOR
(Delco 1103133 - Open)

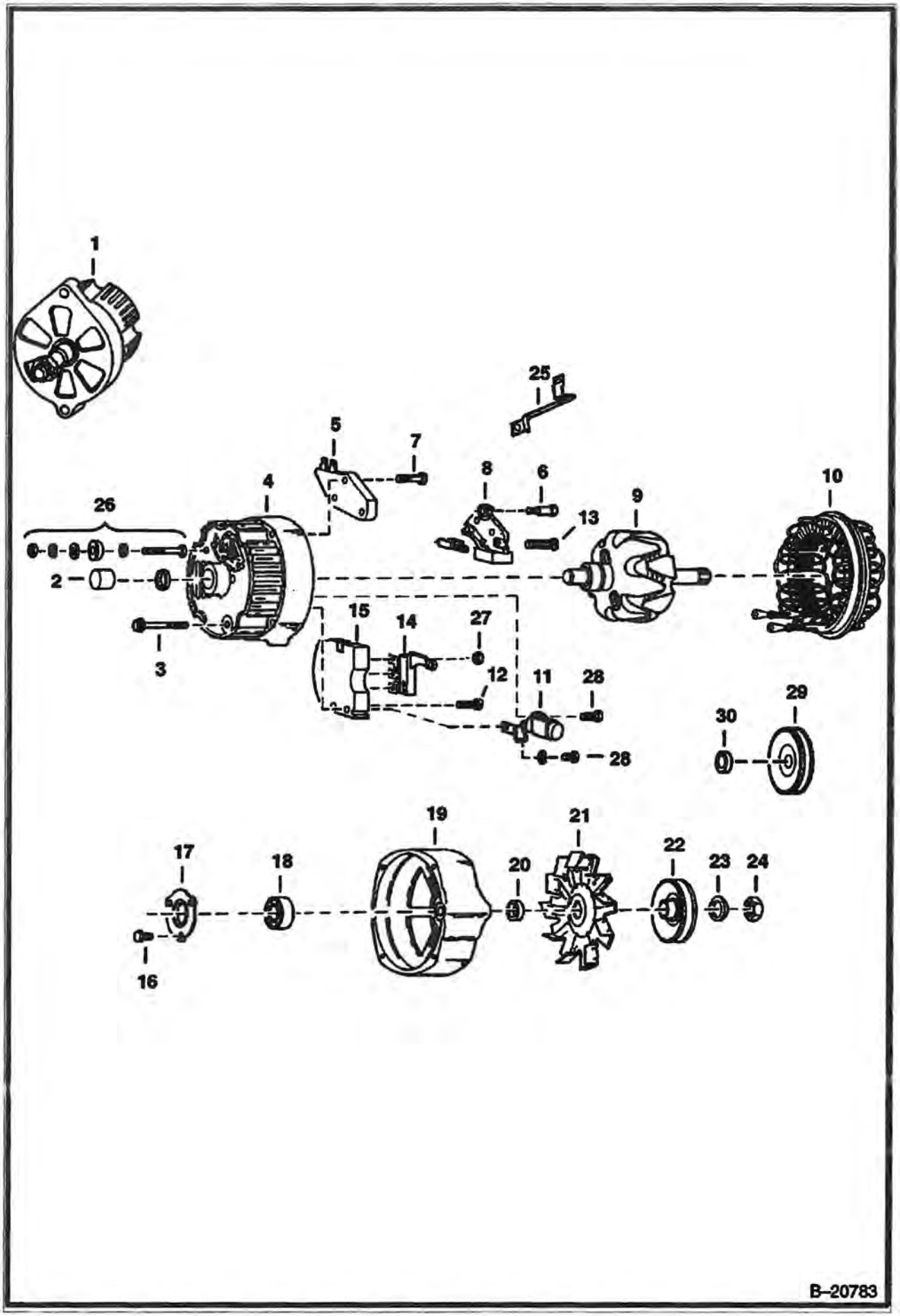

ALTERNATOR (Cont'd)
(Delco 1103133 - Open)

Ref No	Part Number	Description	Remarks	Serial Number	Qty
1		ALTERNATOR	NAP - Order 908221B		1
2	905351B	BEARING			1
3	897467B	BOLT			4
4	905956B	FRAME	W/Ref. 2		1
5	994381B	REGULATOR	voltage		1
6	6511957	BOLT			2
7	999396B	BOLT			2
8	999394B	HOLDER	assy.		1
9	999305B	ROTOR			1
10	2343911B	STATOR	Was 999392B [A]		1
11	999308B	CAPACITOR			1
12	994373	BOLT			1
13	999397B	BOLT			1
14	994383B	DIODE			1
15	995185B	RECTIFIER			1
16	45G001008B	BOLT			3
17	897456B	RETAINER	bearing		1
18	905350B	BEARING			1
19		HOUSING	NAP		1
20	909831B	COLLAR	Was 905958B [A]		1
21	329884B	FAN			1
22		PULLEY	NAP - Order Ref. 29 & 30		1
23	794584B	WASHER			1
24		NUT	NAP - Was 859369 [A]		1
25	999395B	TERMINAL	relay		1
26	905952B	TERMINAL PKG.			1
27	12D000008B	NUT			1
28	994378B	BOLT			2
29	906104B	PULLEY			1
30	906111B	COLLAR			1

ALTERNATOR
(Delco 1105070 or 1105422 - Open)

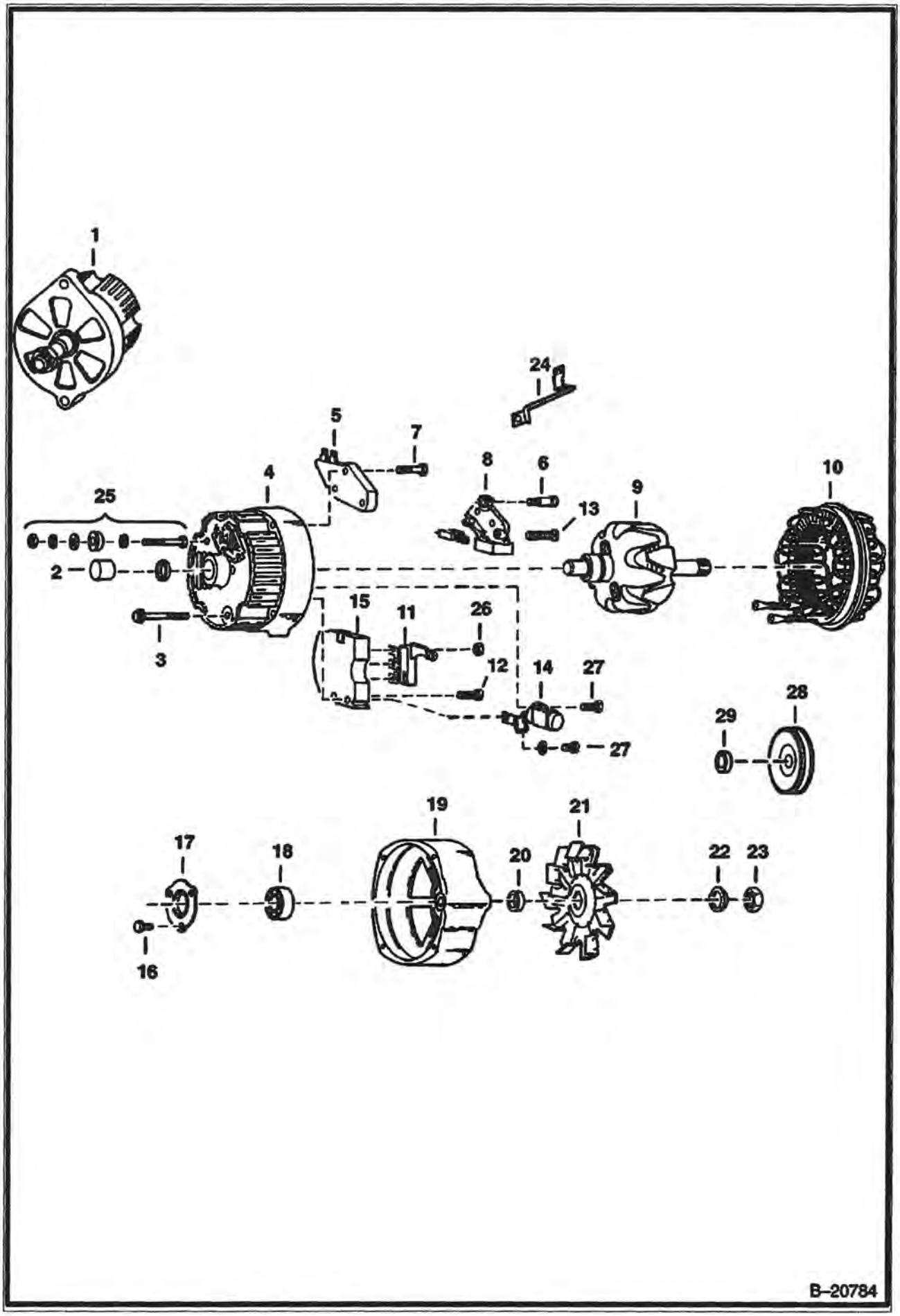

ALTERNATOR (Cont'd)
(Delco 1105070 or 1105422 - Open)

Ref No	Part Number	Description	Remarks	Serial Number	Qty
1		ALTERNATOR	NAP - Less Pulley & Fan - Order 908221REM - Was 908221 [A]		1
2	905351B	BEARING			1
3	897467B	BOLT			4
4	905956B	FRAME	W/Ref. 2		1
5	994381B	REGULATOR	voltage		1
6	6511957	BOLT			2
7	999396B	BOLT			2
8	999394B	HOLDER	assy.		1
9	6599771	ROTOR			1
10	907953B	STATOR			1
11	999308B	CAPACITOR			1
12	6599768	BOLT			1
13	999397B	BOLT			1
14	994383B	DIODE			1
15	6599767	RECTIFIER			1
16	45G001008B	BOLT			3
17	850315B	RETAINER	bearing		1
18	905350B	BEARING			1
19	905957B	HOUSING			1
20	909831B	COLLAR	Was 905958B [A]		1
21	329884B	FAN			1
22	794584B	WASHER			1
23		NUT	NAP - Was 859369 [A]		1
24	999395B	TERMINAL	relay		1
25	905952B	TERMINAL PKG.			1
26	12D000008B	NUT			1
27	994378B	BOLT			2
28	906104B	PULLEY			1
29	906111B	COLLAR			1

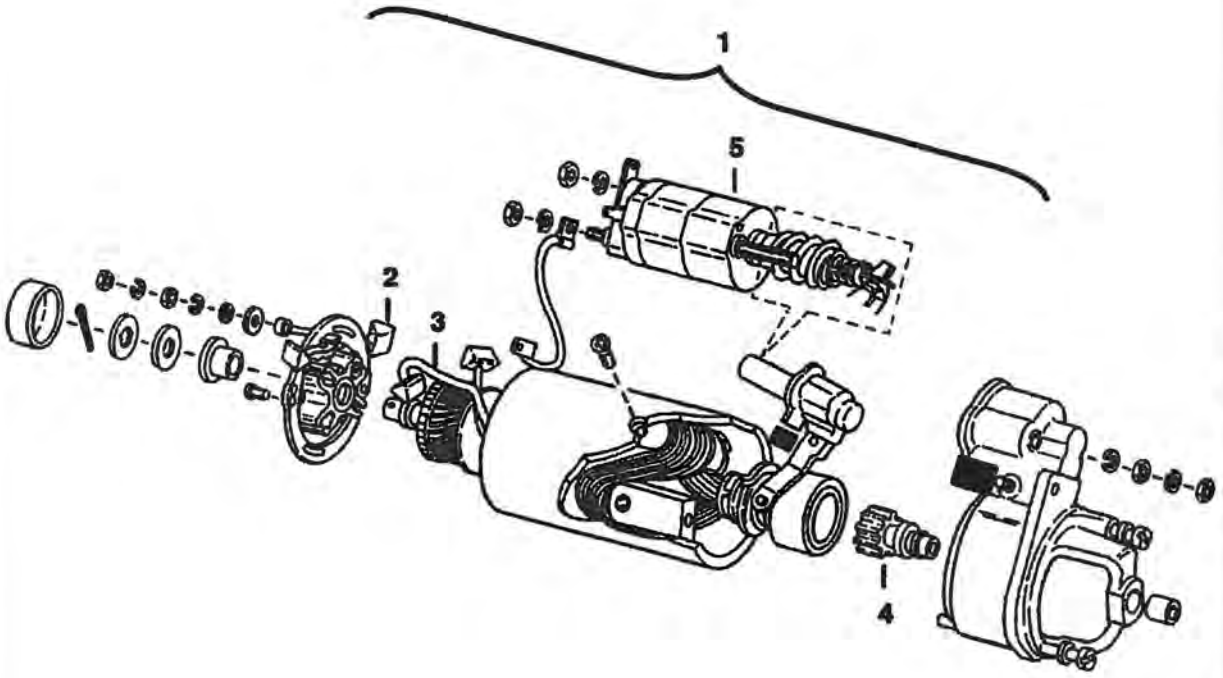

C–2145

STARTER (Cont'd)
(Lucas)

Ref No	Part Number	Description	Remarks	Serial Number	Qty
1		STARTER	NAP - Order 6514006		1
2	6512800	BRUSH KIT			1
3		ARMATURE	NAP - Was 6512799 [A]		1
4	6512801	DRIVE ASSY.			1
5	6513465	SOLENOID			1

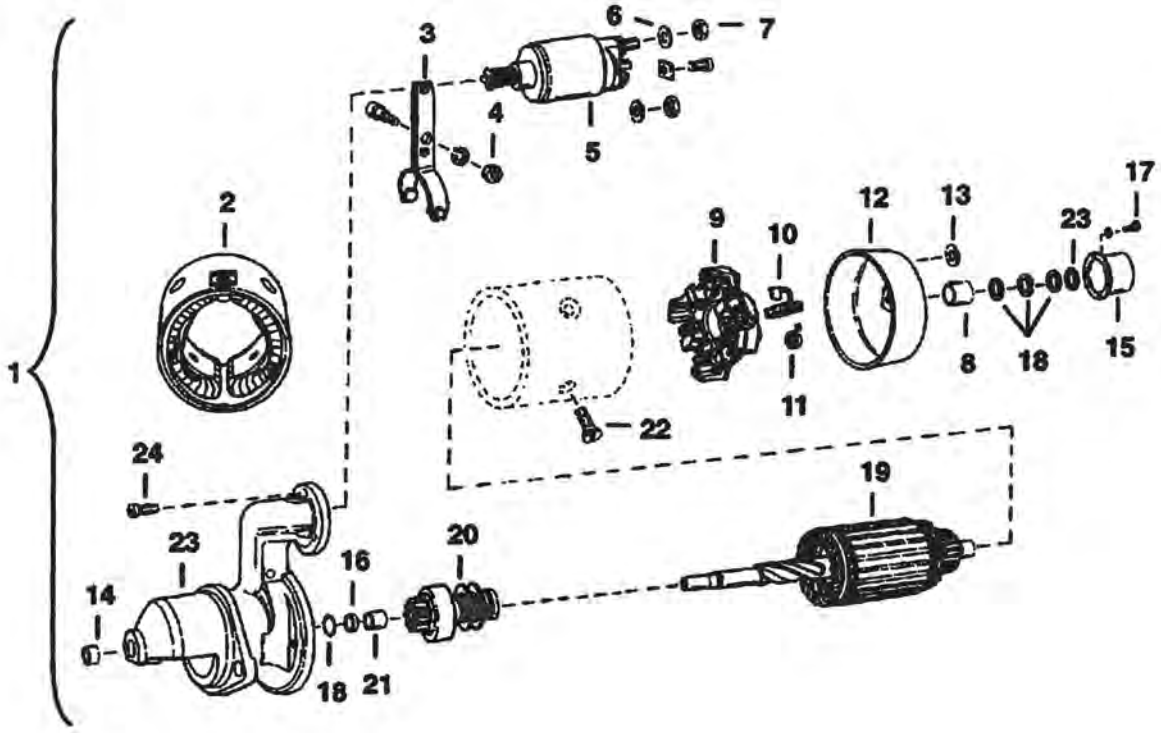

B–20785

STARTER (Cont'd)
(Bosch 0-001-211-206)

Ref No	Part Number	Description	Remarks	Serial Number	Qty
1		STARTER	NAP - Order 6514006		1
2	6513289	COIL			1
3	6513298	LEVER			1
4	32DM00060B	NUT			1
5	6513296	SOLENOID			1
6	4E000005B	WASHER			1
7	6517902	NUT			1
8	4148008B	BUSHING			1
9	6513300	PLATE	brush		1
10	6513301	BRUSHES	See General Service Bulletin G-006		2
11	4148015	SPRING			4
12	6513299	COVER	W/Ref. 8		1
13	6513303	WASHER			2
14	6513291	BUSHING			1
15	6513302	COVER			1
16	9EM00040B	WASHER			2
17	6517905	SCREW			2
18	6598071	KIT	armature hardware		1
19	6513292	ARMATURE			1
20	6513293	DRIVE			1
21	6513294	BUSHING			1
22	6513297	SCREW			4
23	6513290	HOUSING			1
24	6664479	SCREW			3

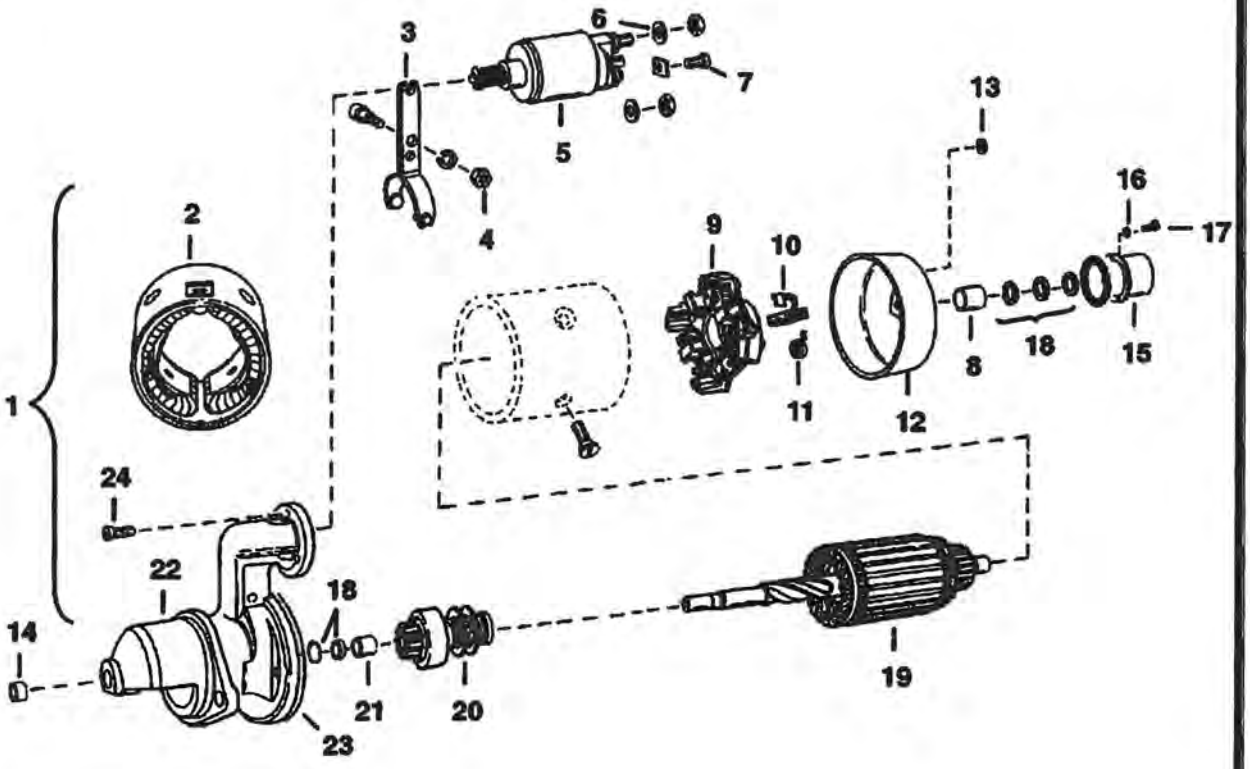

B–20786

STARTER (Cont'd)
(Bosch 0-001-211-228)

Ref No	Part Number	Description	Remarks	Serial Number	Qty
1		STARTER	NAP - Ref. 2 - 24 - Was 6514006 [A]		1
1	6665502	STARTER REMAN			1
2	6513289	COIL			1
3	6513298	LEVER			1
4	1DM00006B	NUT			1
5	6513296	SOLENOID			1
6	4E000005B	WASHER			1
7	6517902	NUT			1
8	4148008B	BUSHING			1
9	6598070	PLATE	brush		1
10	6513301	BRUSHES	See General Service Bulletin G-006		2
11	6514885	SPRING			4
12	6513299	COVER	W/Ref. 8		1
13	6513303	WASHER			2
14	6513291	BUSHING			1
15	6513302	COVER			1
16	6514878	RING			1
17	6517905	SCREW			2
18	6598071	KIT	armature hardware		1
19	6598069	ARMATURE			1
20	6514877	DRIVE			1
21	6513294	BUSHING			1
22	6513290	HOUSING			1
23	6514891	SEAL			1
24	6664478	SCREW			3

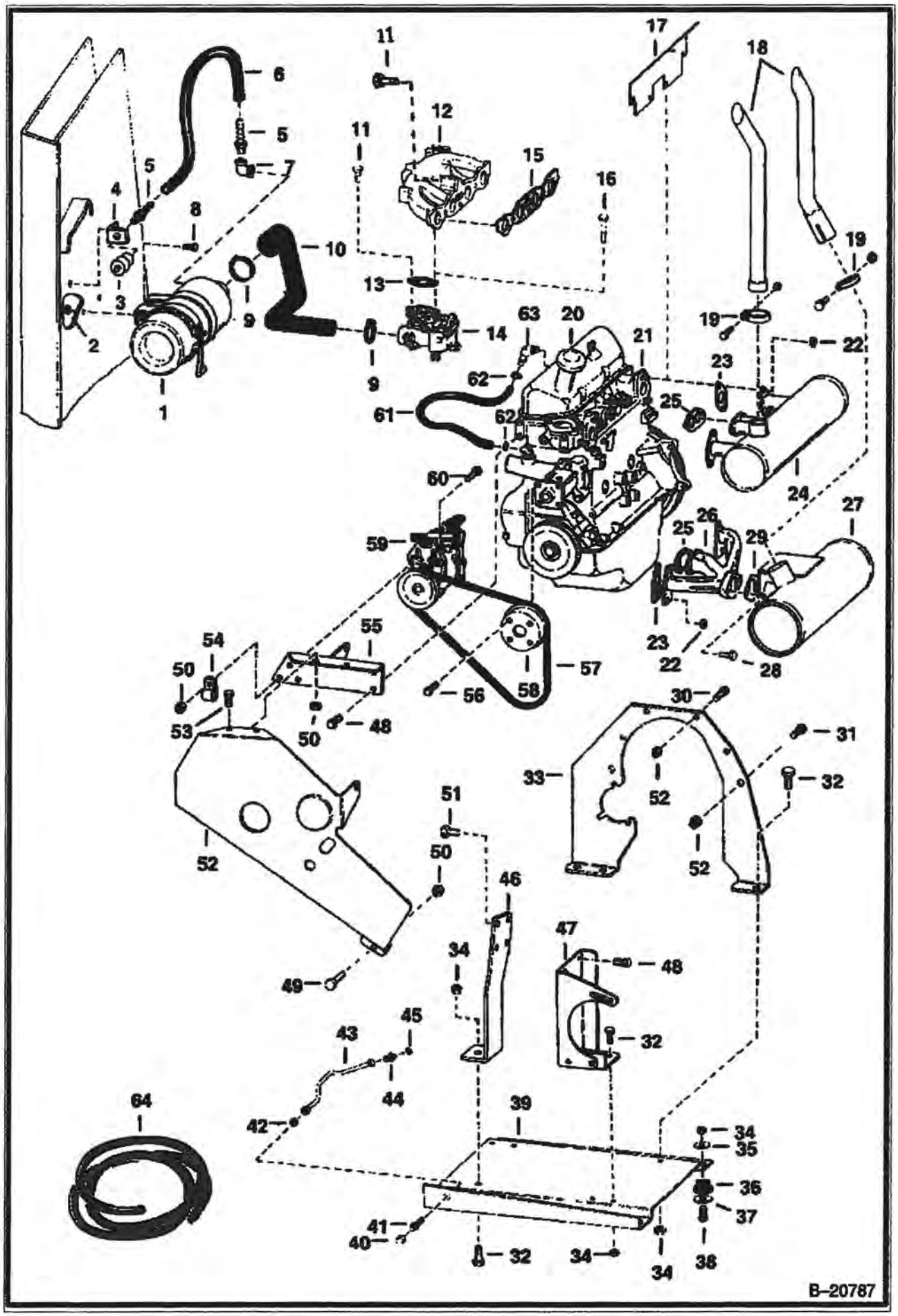
B–20787

Ref No	Part Number	Description	Remarks	Serial Number	Qty
1		AIR CLEANER	See Illustration AIR CLEANER/ B17728		1
2	6512894	NUT	flange		4
3	1735188B	INDICATOR	See BTI134		1
4	6559798	BRACKET	See BTI134		1
5	6505813	CONNECTOR	See BTI134		2
6		HOSE	See BTI134 NAP - 24" (609,6 mm) long - Order Ref. 64 - Was 6559797 [A]		1
7	24F000001B	BRACKET	See BTI134		1
8	17C000512B	BOLT	See BTI134		4
9	42H000032B	CLAMP			1
10	6557457	HOSE			1
11	17C000514B	BOLT			2
12		MANIFOLD	NAP - Was 6513491 [A]		1
13	6562991	GASKET			1
14		CARBURETOR	See Illustration CARBURETOR/ B4002 BTI 180		1
15		GASKET	NAP - Was 6512507 [A]		1
16	17C000564B	BOLT			1
17	6558367	SHIELD			1
18	6557322	PIPE		13999 & Below	1
18	6559319	PIPE		14001 & Above	1
19	6677363	CLAMP	Was 657904 [A]		1
20		ENGINE	See Illustration ENGINE/ B20788 See BTI146 FORD		1
21	6598274	STUD			6
22	86D000005B	NUT	Was 85D000005B [B]		6
23	6512509	GASKET			2
24		MUFFLER	NAP - Order Ref. 18 & 26-29 - Was 6555913 [A]	13999 & Below	1
25		GASKET	NAP - Was 6512508 [A]		1
26	6559799	MANIFOLD		14001 & Above	1
27	6559320	MUFFLER		14001 & Above	1
28	6563005	BOLT		14001 & Above	2
29	6559603	GASKET		14001 & Above	1
30	84G003716B	BOLT	Was 6554436 [A]		2
31	17C000624B	BOLT			4
32	17C000820B	BOLT			6
33	6557162	MOUNT	motor		1
34	61D000008B	NUT			10
35	6515817	WASHER			4
36	6560633	DAMPENER	shock		4
37	6557929	WASHER			4
38	17C000836B	BOLT			4
39		PLATE	NAP - Order 6562989 & 6553204		1
39	6562989	PLATE			1
40	36K000006B	CAP			1
41	86F000006B	NUT			1
42	45K000006B	ADAPTER			1
43		TUBE	NAP - Order 6553204		1
43	6553204	HOSE			1
44	6553537	FITTING			1
45	895504B	SEAL			1
46	6554701	BRACKET			1
47	6557156	BRACKET			1
48	17C000612B	BOLT			2
49	84G003712B	BOLT	Was 6554437 [A]		4
50	57D000006B	NUT			10
51	6555533	BOLT			4

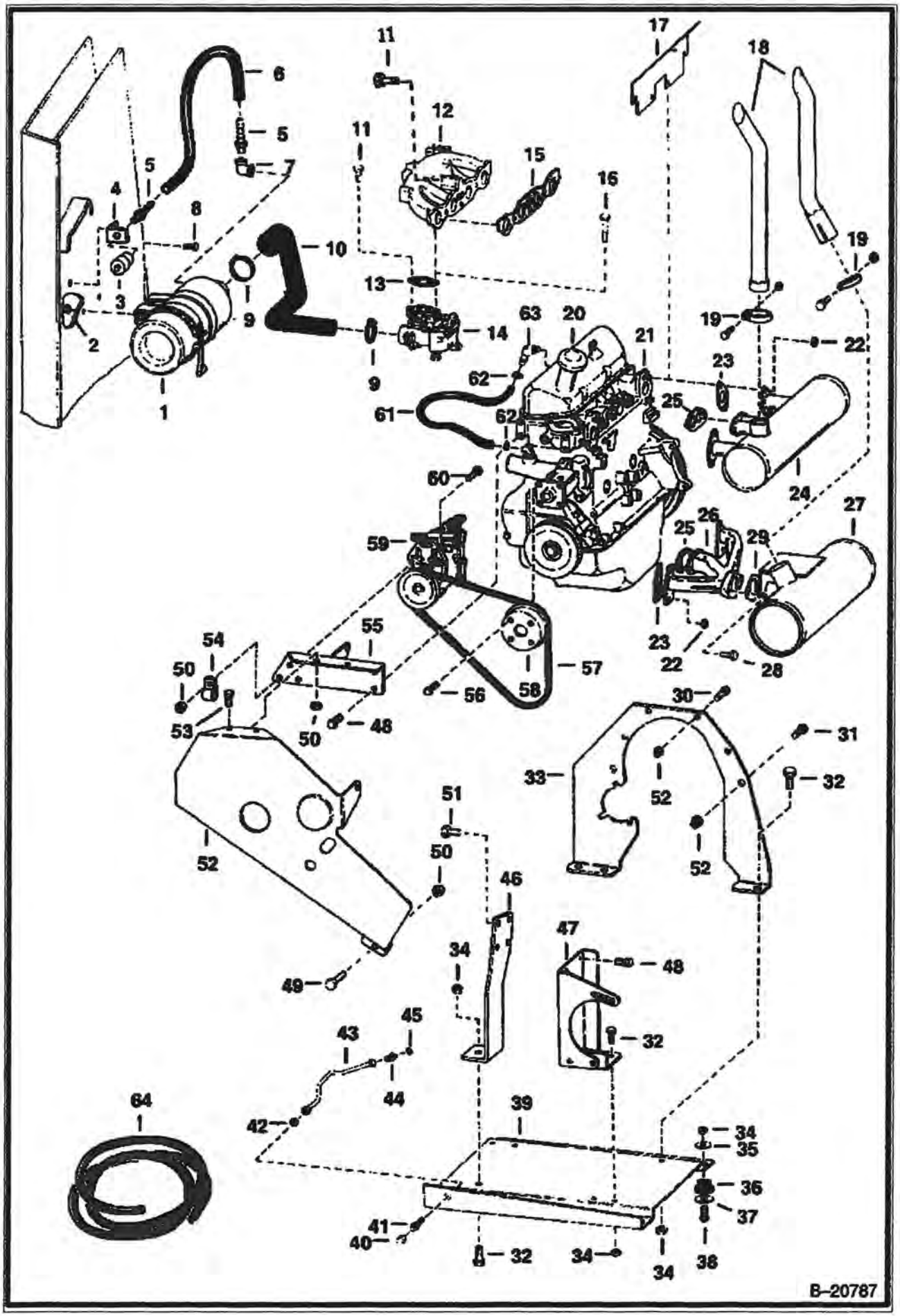
B–20787

Ref No	Part Number	Description	Remarks	Serial Number	Qty
52	6557159	COVER			1
53	84G003712B	BOLT			2
54	6516695	CLIP			1
55	6554841	BRACKET			1
56	4CM00810B	BOLT			4
57	6554888	BELT			1
58	6512498	PULLEY	See Illustration WATER PUMP/ B2361		1
59		GOVERNOR	See Illustration PIERCE GOVERNOR/ D1448 See Illustration HOOF GOVERNOR/ D1491		1
60	6554745	BOLT			3
61	6555529	HOSE			1
62	42H000012B	CLAMP			2
63	666841B	ELBOW			1
64	6557720	HOSE	bulk - Sold Per Foot		x

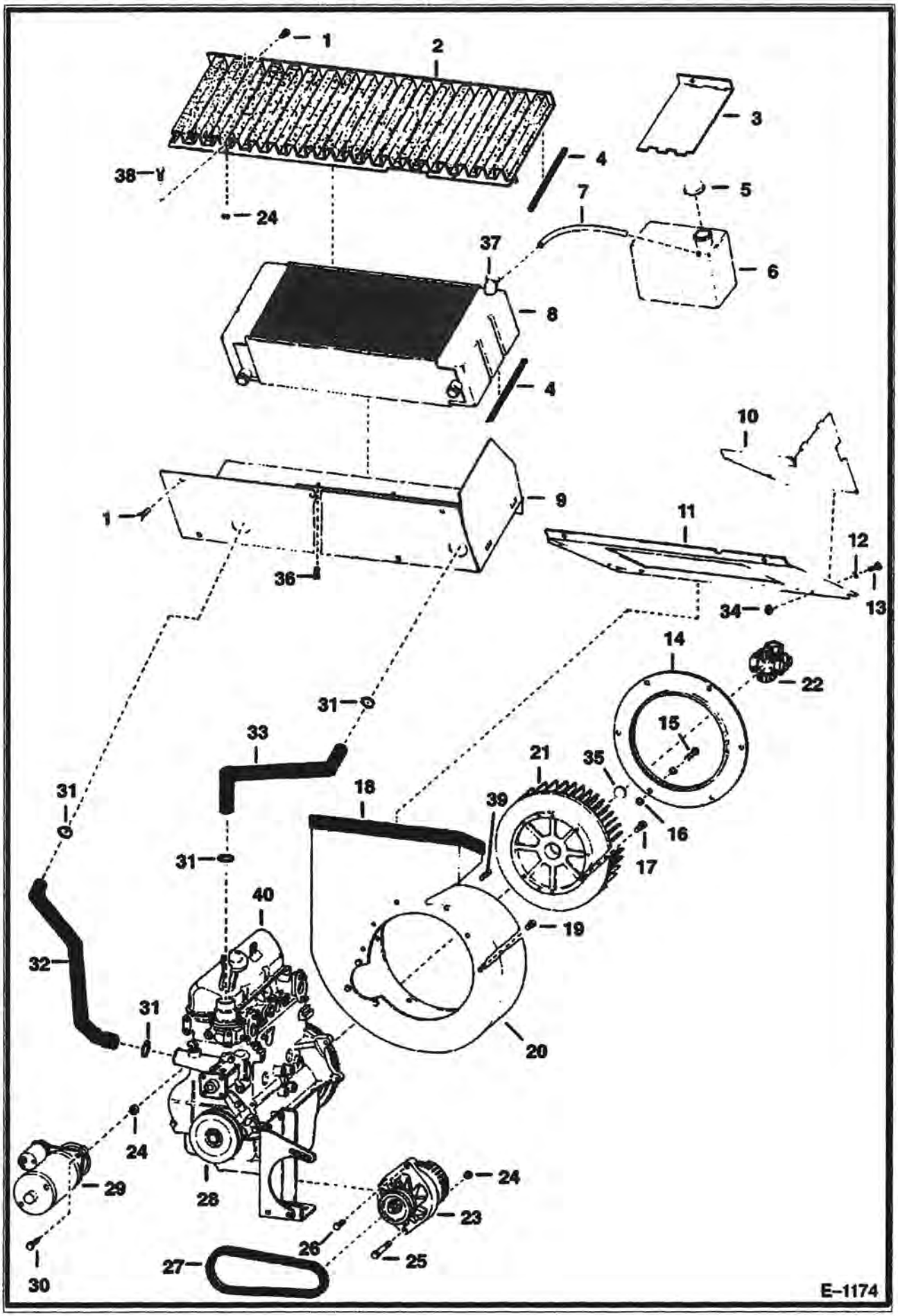
1
2
3
4
38
24
7
5
37
6
8
4
10
1
9
11
12
36
34
13
14
22
31
15
33
21
35
31
18
39
16
17
40
19
32
31
20
24
29
28
24
23
26
25
27
30
E-1174

Ref No	Part Number	Description	Remarks	Serial Number	Qty
1	84G003712B	BOLT			5
2	6557243	GRILL			1
3	6557744	COVER			2
4	6557422	MOULDING			2
5	6702797	CAP	Was 6558658 [A]		1
6	6555891	TANK			1
7	6557751	HOSE			1
8	6555933	RADIATOR			1
9	6557741	MOUNT	radiator		1
10	6557242	COVER			1
11	6557027	SHIELD			1
12	774220	NUT	spring		5
13	10C000512B	BOLT	carriage - Was 6553808 [A]		7
14	6557237	INLET			1
15	6557283	BOLT			6
16	6512960	CLIP			6
17	17C000522B	BOLT			6
18	6512785	MOULDING			1
19	17C000624B	BOLT			4
20		SHROUD	NAP - fan - Was 6557238 [A]		1
21	6557142	FAN			1
22		U-JOINT	See Illustration UNIVERSAL JOINT/ B20789		1
23		ALTERNATOR	See Illustration ALTERNATOR/ B20783 See Illustration ALTERNATOR/ B20782 See Illustration ALTERNATOR/ B20784		1
24	57D000006B	NUT			1
25	17C000644B	BOLT			1
26	35C000516B	BOLT	Was 6554744 [A]	13999 & Below	1
26	29CM00825B	SCREW		14001 & Above	1
27	6557143	BELT	alternator		1
28	6558802	PULLEY			1
29		STARTER	See Illustration STARTER/ B20785 See Illustration STARTER/ C2145 See Illustration STARTER/ B20786		1
30	17C000620B	BOLT			3
31	42H000032B	CLAMP	Was 42H000024B [B]		4
32	6555984	HOSE	radiator		1
33	6555983	HOSE	radiator		1
34	6512894	NUT			7
35	6558410	PLUG			1
36	6555533	BOLT			6
37	6666606	RADIATOR CAP	Was 6630156 [A]		1
38	84G003716B	BOLT			2
39	6512920	DOWEL			3
40		ENGINE	See Illustration ENGINE/ B20788		1

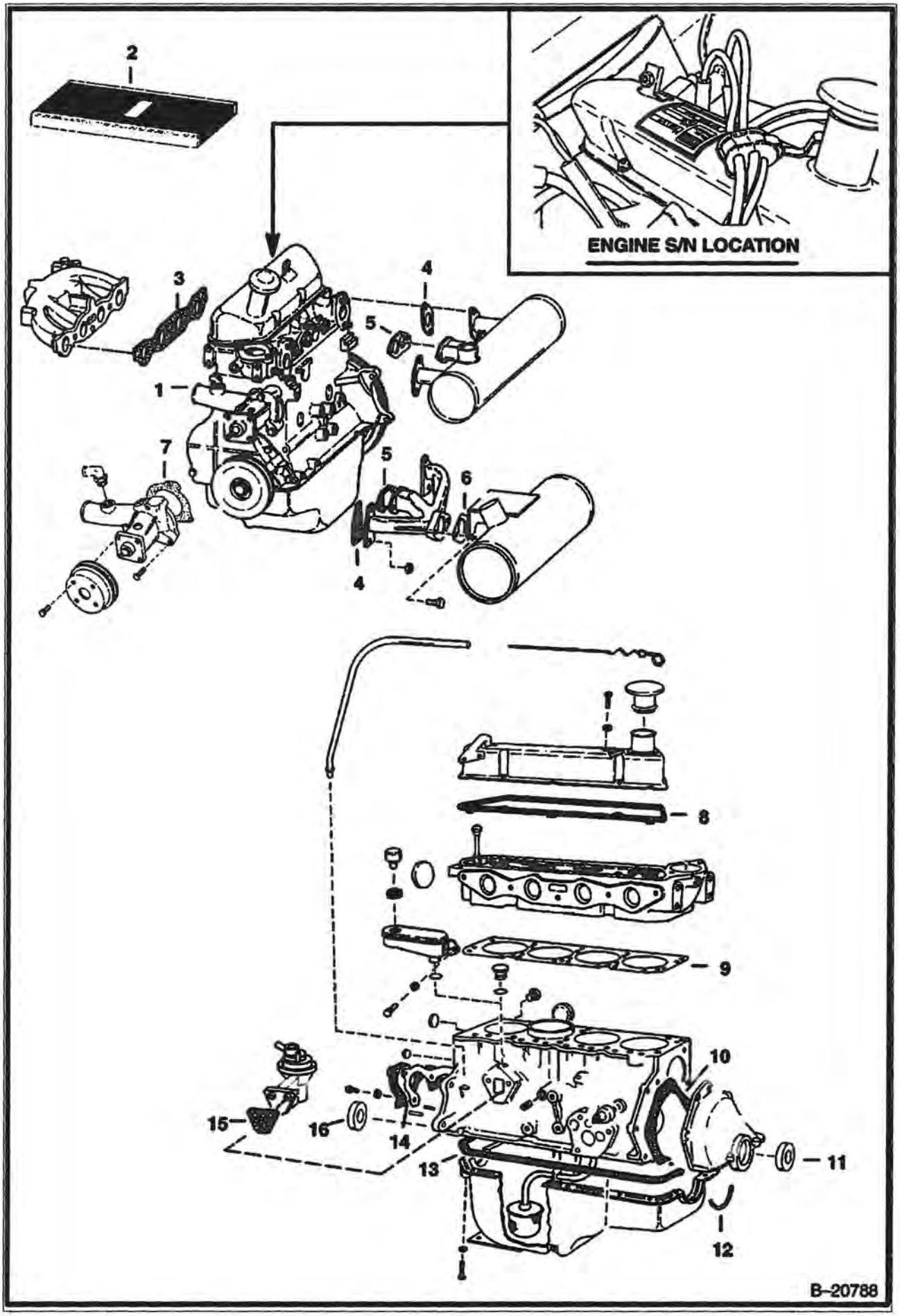
ENGINE S/N LOCATION
1
2
3
4
5
6
7
8
9
10
11
12
13
14
15
16
B–20788

ENGINE (Cont'd)
(Ford)

Ref No	Part Number	Description	Remarks	Serial Number	Qty
1		ENGINE	See BTI146 NAP - fuel pump, oilfilter & water pump - Does not include starter, alternator, flywheel air cleaner, crankshaft pulley, governor & carburetor - Order 6565295 REM - Was 6565295 [A]		1
1	6565295REM	ENGINE	Remanufactured - fuel pump, oilfilter & water pump - Does not include manifold, starter, alternator, flywheel air cleaner, crankshaft pulley, governor & carburetor		1
1		SHORT BLOCK	NAP - Includes crankshaft, pistons, rings, connecting rods, rod bearings, main bearings, camshaft, valve lifters, timing gears & timing chain - Was 6512397 [A]		1
2	6567250	GASKET KIT	Overhaul		1
2		GASKET KIT	NAP - Valve Grind - Was 6564162 [A]		1
3		GASKET	See Illustration ENGINE & ATTACHING PARTS/ B20787 NAP - WAS 6512507 [A]		1
4	6512509	GASKET	See Illustration ENGINE & ATTACHING PARTS/ B20787		2
5		GASKET	See Illustration ENGINE & ATTACHING PARTS/ B20787 NAP - WAS 6512508 [A]		1
6	6559603	GASKET	See Illustration ENGINE & ATTACHING PARTS/ B20787		1
7	6512497	GASKET	See Illustration WATER PUMP/ B2361		1
8	6512477	GASKET	See Illustration CYLINDER BLOCK/ B20800 ROCKER ARM COVER		1
9	6512401	GASKET	See Illustration CYLINDER BLOCK/ B20800 CYLINDER HEAD		1
10	6512399	GASKET	See Illustration CYLINDER BLOCK/ B20800 FRONT COVER		1
11	6648209	SEAL	See Illustration CYLINDER BLOCK/ B20800 FRONT COVER - WAS 6512489 [A]		1
12		SEAL	See Illustration CYLINDER BLOCK/ B20800 NSS		1
13	6669570	GASKET SET	See Illustration CYLINDER BLOCK/ B20800 OIL PAN - W/Ref. 12 - WAS 6512495 [A]		1
14		GASKET	See Illustration CYLINDER BLOCK/ B20800 NAP - REAR OIL SEAL - WAS 6512451 [A]		1
15	6512519	GASKET	See Illustration FUEL SYSTEM/ B20767 SPACER		1
15	6660165	GASKET	See Illustration FUEL SYSTEM/ B20767		1
16	6512490	SEAL	Rear		1

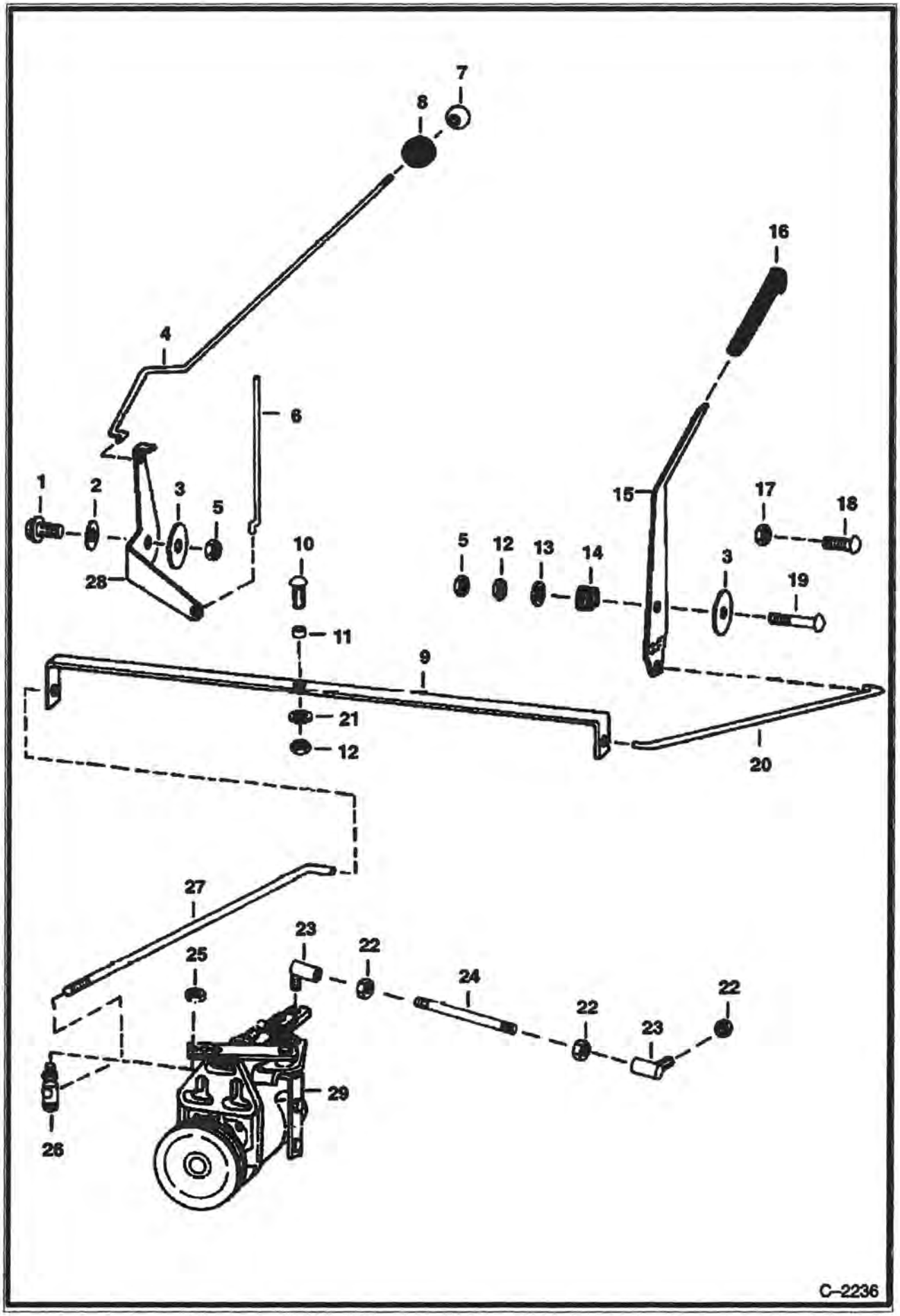
7
8
4
6
16
1
2
3
5
28
10
15
17
18
5
12
13
14
3
19
11
9
21
12
20
27
23
22
25
24
22
23
22
29
26
C–2236

THROTTLE & CHOKE (Cont'd)

Ref No	Part Number	Description	Remarks	Serial Number	Qty
1	84G003716B	BOLT			1
2	755589B	WASHER			1
3	6562127	WASHER			2
4	6557193	ROD			1
5	81D000006B	NUT			2
6	6557192	ROD			1
7	6519552	KNOB			1
8	6519484	GROMMET			1
9	6557196	LEVER			1
10	3327196B	BOLT			1
11	6544654	BUSHING			1
12	85D000006B	NUT			2
13	6505623	WASHER		15450 & Below	1
13	27E000006B	WASHER		15451 & Above	1
14	6503387	SPRING		15450 & Below	1
14	6562126	SPRING		15451 & Above	1
15	6563940	LEVER			1
16	6553557	GRIP			1
17	57D000006B	NUT			2
18	37C000616B	BOLT	Was 6514537 [A]		2
19	7C000632B	BOLT		15450 & Below	1
19	7C000640B	BOLT		15451 & Above	1
20	6562490	ROD			1
21	872229	WASHER			1
22	14D000010B	NUT			4
23	6515194	BALL JOINT	ball		2
24	6554836	ROD			1
25	61D000004B	NUT			1
26	6557291	BALL JOINT			1
27	6562995	ROD			1
28	6557195	LEVER			1

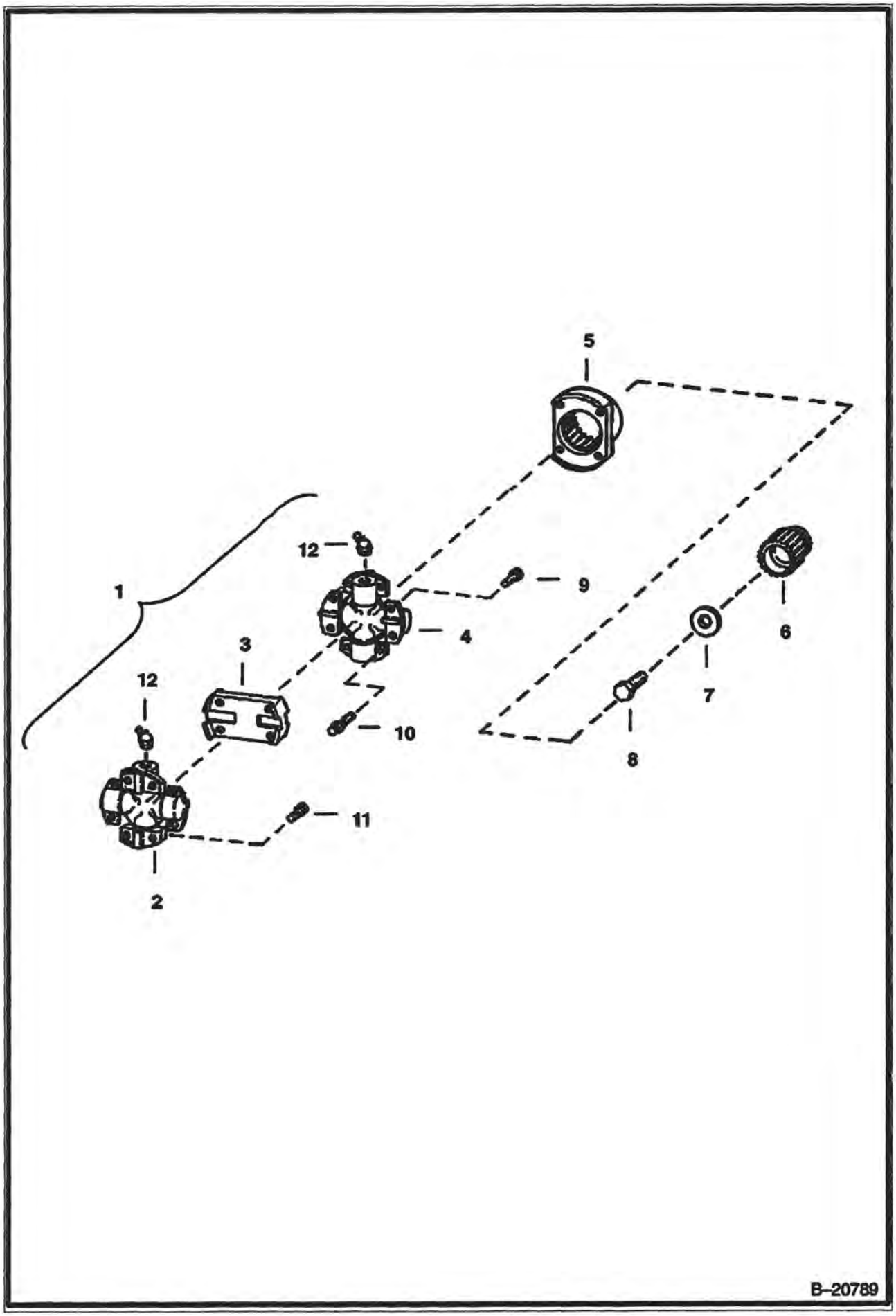
5
12
9
1
4
6
3
12
7
10
8
11
2
B–20789

UNIVERSAL JOINT (Cont'd)

Ref No	Part Number	Description	Remarks	Serial Number	Qty
1	6598347	U-JOINT	Ref. 2-4, 9 & 12		1
2	6598303	SPIDER	rear		1
3	5202123B	COUPLING			1
4	6598304	SPIDER	front		1
5	6557893	SLIP YOKE			1
6	6540655	ADAPTER			1
7		WASHER	NAP - Order 616783B		1
7	616783B	WASHER			1
8		BOLT	NAP - allen head - Order 18C000616B		1
8	18C000616B	BOLT	hex		1
9	94G000524B	SCREW			4
10	94G000512B	BOLT			4
11	94G000516B	BOLT			4
12	11H000025B	GREASE ZERK			2

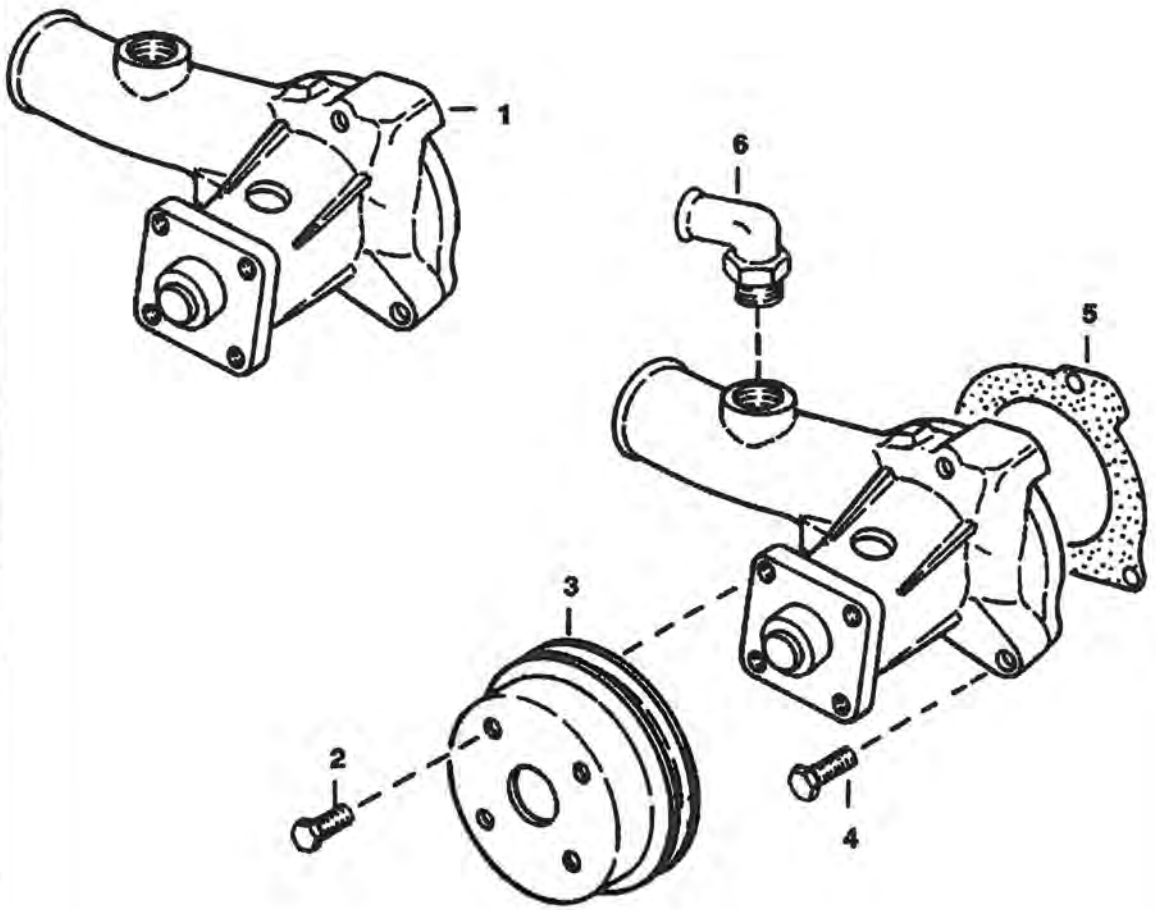
1
6
5
3
2
4
B–2361

WATER PUMP (Cont'd)

Ref No	Part Number	Description	Remarks	Serial Number	Qty
1	6640686	WATER PUMP	W/Ref. 5 - Was 6512496 [A]		1
2	4CM00810B	BOLT			4
3	6512498	PULLEY			1
4	17C000424B	BOLT			1
4	17C000428B	BOLT	Was 17C000430B [B]		1
4	17C000528B	BOLT			1
5	6670270	GASKET	Was 6512497 [A]		1
6	666841B	ELBOW			1

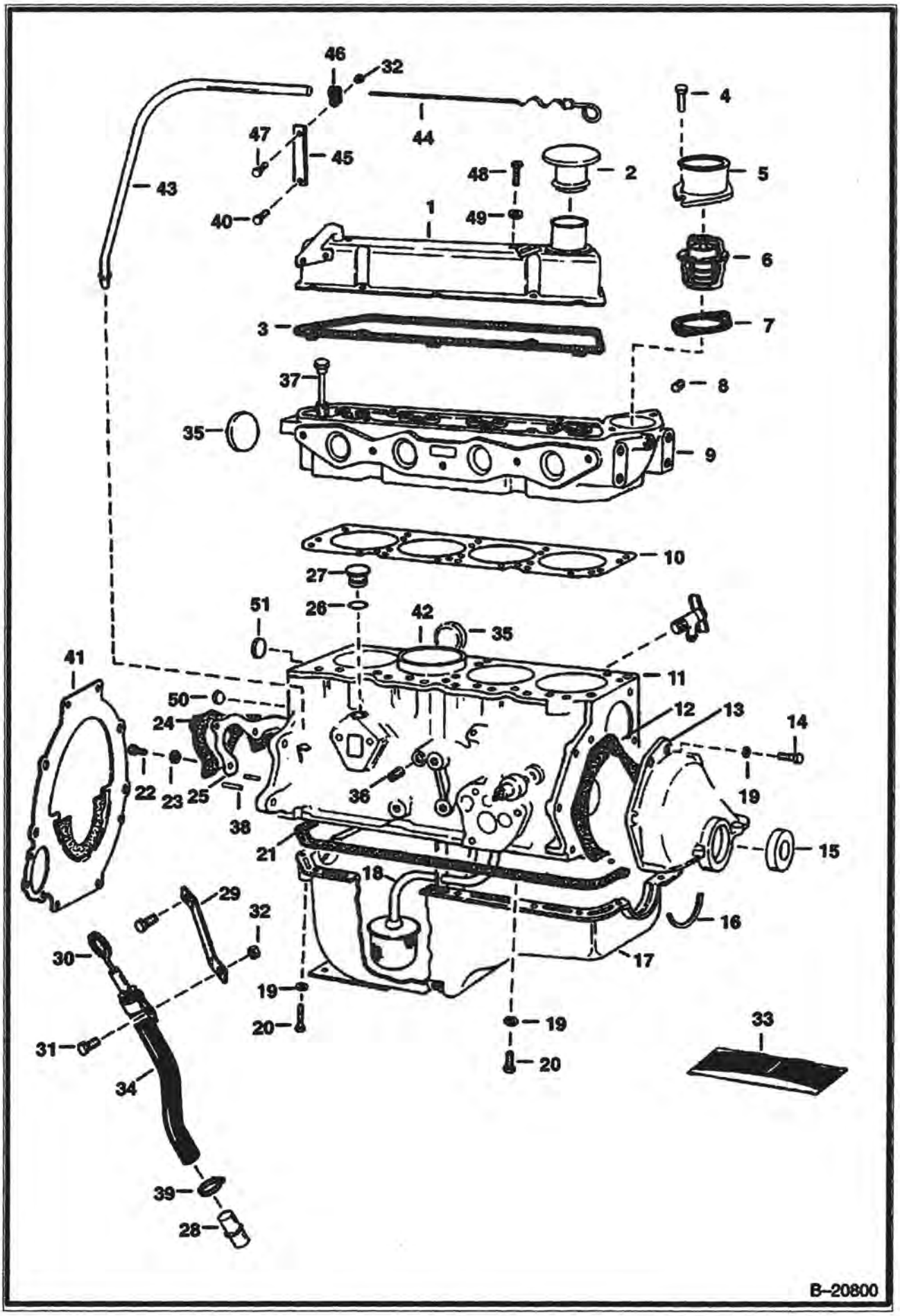
46
32
44
47
45
43
40
48
2
4
5
1
49
6
3
7
37
8
35
9
10
27
26
51
42
35
41
11
50
12
13
14
24
22
23
25
38
36
19
21
15
18
29
32
16
30
17
19
20
19
20
33
31
34
39
28
B–20800

Ref No	Part Number	Description	Remarks	Serial Number	Qty
1		COVER	NAP - rocker arm - Was 6512476 [A]		1
2	6512494	CAP	oil filler		1
3	6512477	GASKET	rocker arm cover		1
4	35C000516B	BOLT	Was 6554744 [A]		2
5	6598095	OUTLET			1
6	6512504	THERMOSTAT			1
7	6512505	GASKET			1
8	40K000002B	PLUG			1
9		HEAD	NAP - cyl. - W/Guides & Soft Plugs Only - Was 6512400 [A]		1
9		HEAD	NAP - For use with Stellite Valves - Order 6630426 Head & 8 of 6512474 Seal		1
9		HEAD	NAP - W/Guides & Soft Plugs Only - For use with Stellite Valves & Seals with Springs - Was 6630426 [A]		1
10	6512401	GASKET	cylinder head		1
11		SHORT BLOCK	See Illustration ENGINE/ B20788		1
12	6512399	GASKET	front cover		1
13	6512398	COVER	front		1
14	17C000412B	BOLT			4
15	6648209	SEAL	front cover - Was 6512489 [B]		1
16		SEAL	NSS		1
17		OIL PAN	NAP - Was 6512488 [A]		1
18		TUBE	NAP - oil pickup - Was 6512482 [A]		1
19	4E000004B	WASHER			18
20	17C000408B	BOLT			18
21	6669570	GASKET SET	oil pan - W/Ref. 16 - Was NAP [A]		1
22	17C000514B	BOLT			2
23	4E000005B	WASHER			2
24		RETAINER	NAP - Was 6512450 [A]		2
25		GASKET	NAP - rear oil seal - Was 6512451 [A]		1
26	25K020026B	O-RING			1
27	6554834	PLUG			1
28		TUBE	oil level - Order Ref. 40 - 47		1
29	6555112	BRACKET			1
30		INDICATOR	oil level - Order Ref. 40 - 47		1
31	17C000508B	BOLT			1
32	61D000005B	NUT			2
33	6567250	GASKET KIT	overhaul		1
33		GASKET KIT	NAP - Valve Grind - Was 6564162 [A]		1
34		HOSE	extension - Order Ref. 32, 40, 43-47		1
35		PLUG	NAP - Was 6512915 [A]		2
36	16F000002B	PLUG	Was 6512916 [A]		1
37		BOLT	NAP - head - Pkg. of 8 - Was 6512918 [A]		1
37		BOLT	NAP - head - Pkg. of 2 - Was 6512919 [A]		1
38	6512921	DOWEL	Cyl. Block to Flywheel Housing		2
39	42H000006B	HOSE CLAMP			1
40	31C000512B	BOLT			1
41		PLATE	NAP - Was 6512521 [A]		1
42	6669569	LINER	Std. - Was 6657209 [A]		4
42		LINER	NAP - .020 Oversizes O.D. & Std. I.D. - Was 6598907 [A]		x
43	6564911	TUBE	dipstick		1
44	6564910	DIPSTICK			1
45	6564912	BRACKET			1
46	30H000022B	CLIP			1
47	17C000510B	BOLT			1

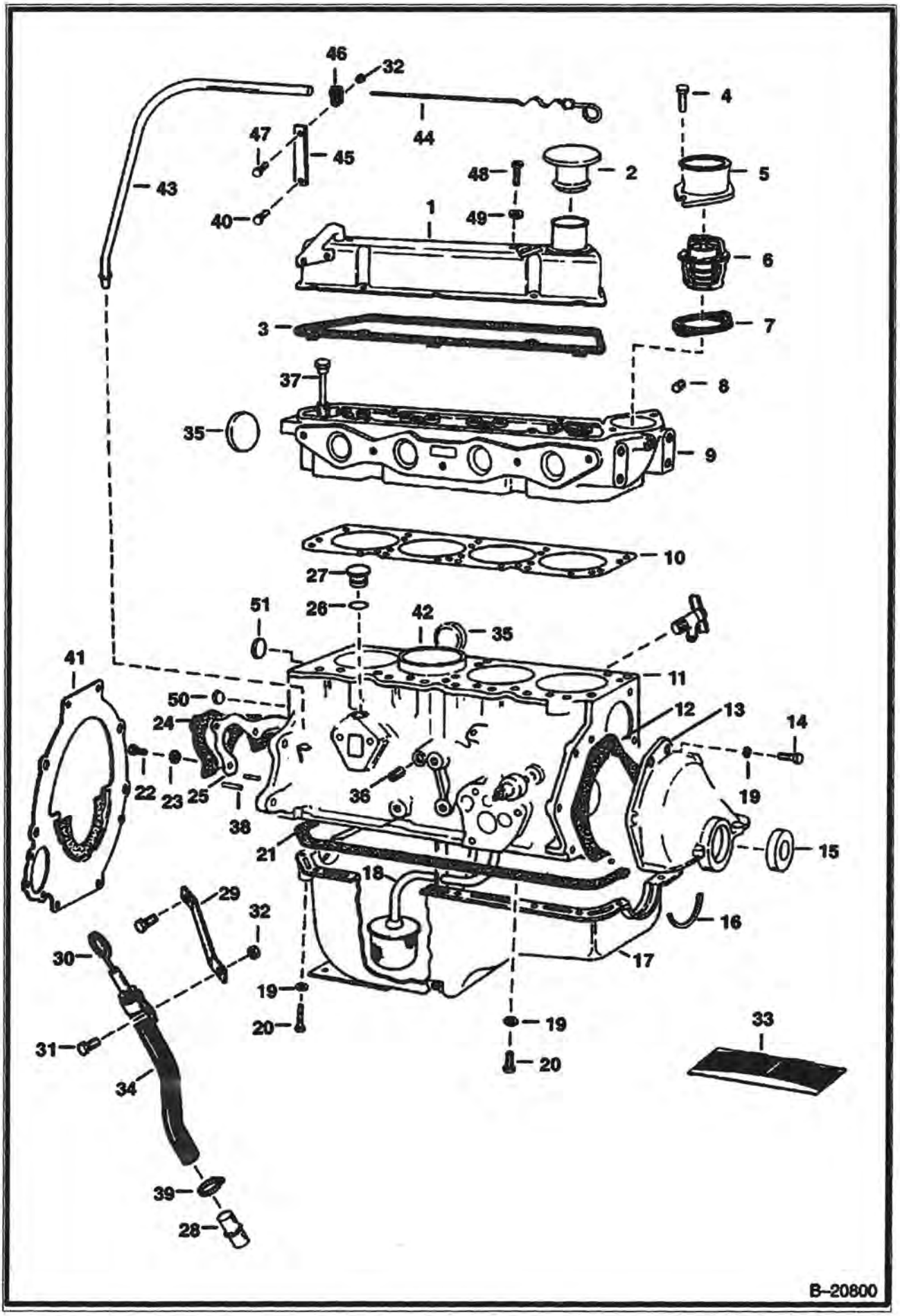
46
32
44
47
45
43
40
48
2
4
5
1
49
6
3
7
37
8
35
9
10
27
26
51
42
35
41
11
50
12
13
14
24
22
23
25
36
19
38
21
15
18
29
32
16
30
17
19
20
19
33
31
34
20
39
28
B-20800

Ref No	Part Number	Description	Remarks	Serial Number	Qty
48	89G000410B	BOLT			4
49	25E000013B	WASHER			4
50		PLUG	NAP - Was 6648189 [A]		1
51	6598806	PLUG	camshaft		1

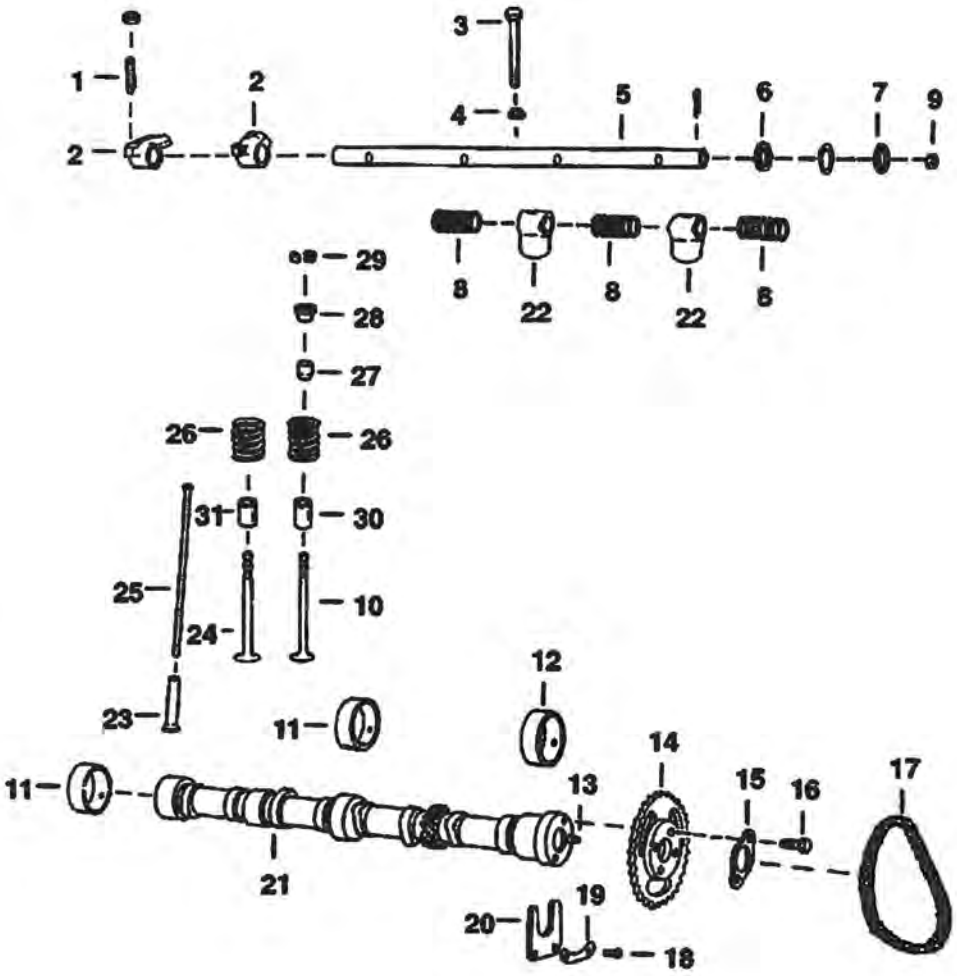
1
2
2
3
4
5
6
7
9
8
22
8
22
8
29
28
27
26
26
31
30
25
24
10
23
11
12
11
13
14
15
16
17
21
20
19
18

B–20792

VALVE TRAIN (Cont'd)

Ref No	Part Number	Description	Remarks	Serial Number	Qty
1	6512605	SCREW	rocker arm adjusting		8
2		ROCKER ARM	NAP - R.H. - Was 6512471 [A]		4
2	6512472	ROCKER ARM	L.H.		4
3	17C000636B	BOLT	Was 17C000634B [B]		4
4		SEAT	NAP - Was 6512469 [A]		4
5	6512470	SHAFT			1
6		WASHER	NAP - Was 6512606 [A]		4
7	6512529	WASHER			2
8		SPRING	NAP - Was 6512478 [A]		3
9		PLUG	NSS - W/Ref. 5 - Was 6512917 [A]		1
10		VALVE	NAP - intake - Three Groove - Order 6513684 & 6513683 - Was 6512459 [A]		4
10	6513684	VALVE	intake - Three Groove - Use Key 6512468 - Was 6630429 [A]		4
10		VALVE	NAP - intake, +.015 (0,38mm) stem - Three Groove - Was 6513146 [A]		4
11	6512431	BEARING	camshaft - Center & Rear - Std. I.D. & O.D.		2
11		BEARING	NAP - camshaft - Center & Rear - Std. I.D.-.020 (0,51mm) O.D. - Was 6512433 [A]		2
12	6512430	BEARING	camshaft - Front - Std. I.D. & O.D.		1
12		BEARING	NAP - camshaft - Front Std. I.D. - .020 (0,51mm) O.D. - Was 6512434 [A]		1
13		DOWEL	NAP - Was 6512530 [A]		1
14		SPROCKET	NAP - camshaft - Was 6512428 [A]		1
15	6512429	RETAINER			1
16	17C000510B	BOLT			2
17	6512436	CHAIN	timing		1
18	17C000410B	BOLT			2
19		RETAINER	NAP - Was 6672534 [A]		1
20	6512437	PLATE			1
21	6512427	CAMSHAFT			1
22		BRACKET	NAP - support - Was 6630436 [A]		4
23	6669568	TAPPET	Std. - Was 6665230 [A]		1
23	6512455	TAPPET	.004 (0,1mm) Oversize		1
24		VALVE	NAP - exhaust - Three Groove - Was 6599695 [A]		4
24	6630427	VALVE	See BTI194 exhaust - For Stellite Head - One Groove		4
24		VALVE	NAP - exhaust, +.015 (0,38 mm) stem - Three Groove - Was 6513144 [A]		4
25		PUSH ROD	NAP - Was 6512473 [A]		8
26		SPRING	NAP - valve - Was 6598077 [A]		4
26		SPRING	NAP - exhaust - For Stellite Head - Was 6598076 [A]		4
27	6599544	SEAL	Without Spring		8
27	6512474	SEAL	With Spring		8
28		RETAINER	NAP - spring - Was 6512467 [A]		1
28		ROTATOR	NAP - exhaust - For Stellite Head - Optional Head - Was 6598078 [A]		4
29	6512468	KEY	Three Groove		1
29	6513683	KEY	For Stellite Head - Optional Head - One Groove		1
30	6648800	VALVE GUIDE	intake - Plain - Was 6512462 [A]		x
31	6648800	VALVE GUIDE	exhaust - Plain - Was 6512464 [A]		x
31		VALVE GUIDE	NAP - exhaust - Shouldered - Was 6512465 [A]		x

NOTE: New main bearing maybe narrower than the bearing in your engine, but still can be used.

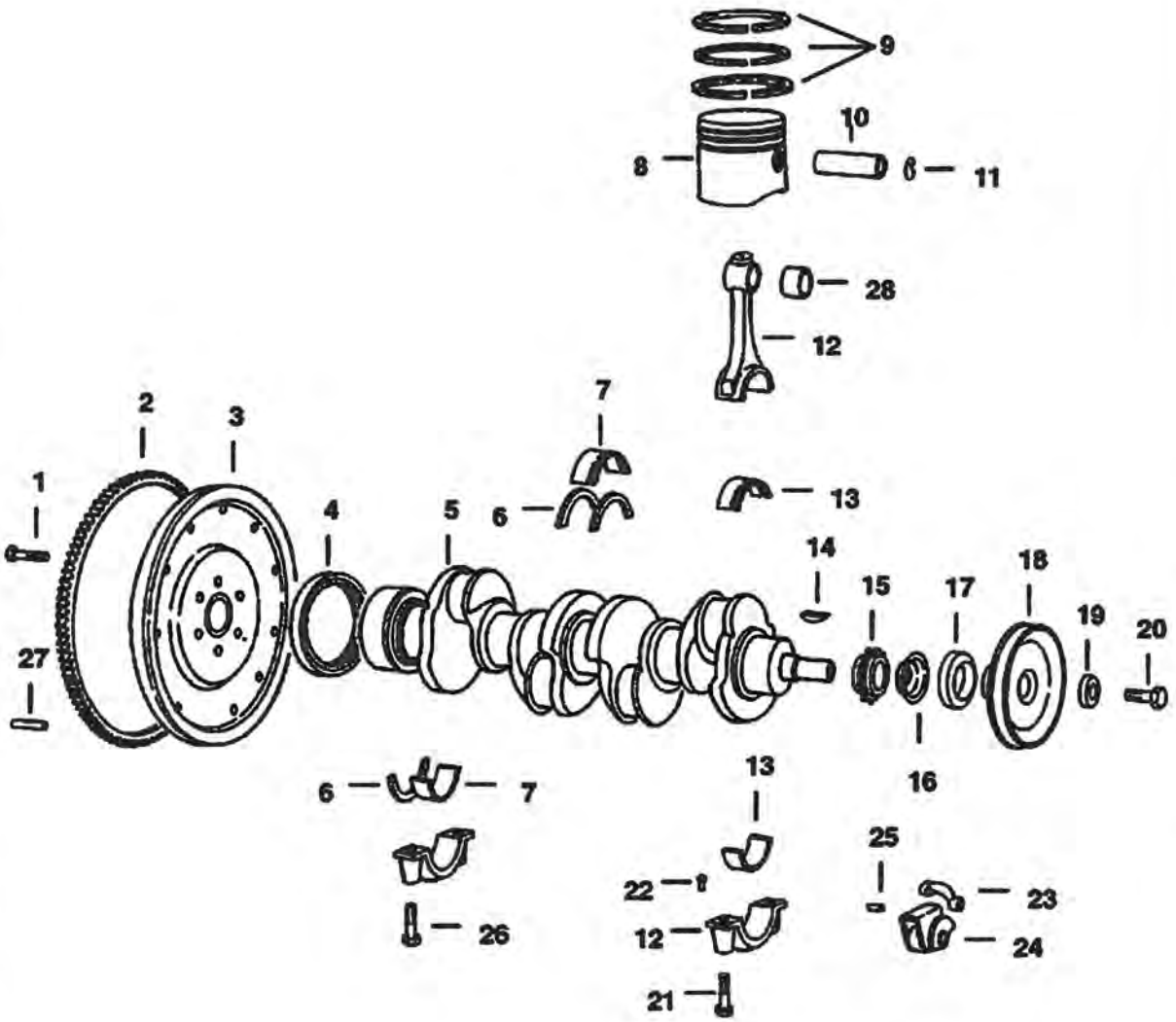

B–20793

Ref No	Part Number	Description	Remarks	Serial Number	Qty
1		BOLT	NAP - Was 6512607 [A]		6
2	6512453	RING GEAR			1
3		FLYWHEEL	NAP - W/Ref. 2 - Was 6512452 [A]		1
4	6512490	SEAL	rear		1
5		CRANKSHAFT	NAP - Was 6512441 [A]		1
6	6512608	WASHER	thrust - Std. - two halves		1
6	6512609	WASHER	thrust - .0025 (0,06mm)		1
6	6512610	WASHER	thrust - .005 (0,13mm)		1
6		WASHER	NAP - thrust - .0075 (0,19mm) - Was 6512611 [A]		1
6		WASHER	NAP - thrust - .010 (0,25mm) - two halves - Was 6512612 [A]		1
7	6674881	BEARING SET	main - Std. - SEE NOTE - One Complete Set - Was 6512445 [A]		5
7	6674882	BEARING SET	main (-.010 (0,25mm)) - One Complete Set - Was 6669567 [A]		5
7	6674883	BEARING SET	main (- .020 (0,51mm)) - One Complete Set - Was 6512448 [A]		5
7	6674884	BEARING SET	main (-.030 (0,76mm)) - One Complete Set - Was 6669272 [A]		1
7		BEARING	NAP - main (+.015 (0,38mm)) OD, Std. ID - one bearing - Was 6512600 [A]		5
7		BEARING	NAP - main (+.015 (0,38mm)) OD, (-.010 (0,25mm)) ID - one bearing - Was 6512597 [A]		5
7		BEARING	NAP - main (+.015 (0,38mm)) OD (-.020 (0,51mm)) ID - Was 6512598 [A]		5
7		BEARING	NAP - main (+.015 (0,38mm)) OD, (-.030 (0,76mm)) ID		5
8		PISTON ASSY.	NAP - W/Pins & Rings - Std. - Was 6512403 [A]		4
8	6658848	PISTON	(.020 (0,51mm)) - W/ Rings		4
8	6665229	PISTON ASSY.	W/Pin & Rings (+.030 (0,76mm)) - Was 6512405 [A]		4
8	6656408	PISTON	W/ Rings - (.040 (1,02mm))		4
9	6512409	RINGS	Std.		1
9	6658849	RINGS	Complete Set - (.020 (0,51mm))		1
9	6512411	RINGS	(+.030 (0,76mm))		1
9	6656407	RINGS	Complete Set - (.040 (1,02mm))		1
10		PISTON PIN	NAP - Std. - Was 6512406 [A]		4
11		RETAINER	NAP - Was 6512408 [A]		8
12	6667022	ROD	connecting - W/Ref. 28 - Was 6512412 [A]		4
13	6666615	BEARING	rod - Std. - Complete Set - Was 6666614 [D]		1
13		BEARING	NAP - rod (-.002 (0,05mm)) - One Bearing - Was 6512677 [A]		4
13	6666350	BEARING	rod (-.010 (0,25mm)) - Complete Set - Was 6512678 [A]		1
13	6674885	BEARING	rod (-.020 (0,51mm)) - Was 6669571 [A]		4
13	6666614	BEARING	rod (-.030 (0,76mm)) - Complete Set - Was 6666615 [D]		1
13		BEARING	NAP - rod (-.040 (1,02mm)) - Was 6632632 [A]		4
14	6512641	KEY			1
15		SPROCKET	NAP - Was 6512442 [A]		1
16		SLINGER	NAP - oil		1
17	6648169	SEAL	Was 6648209 [A]		1
18	6558802	PULLEY			1
19		WASHER	NAP - Was 622284B [A]		1
20	18C000724B	BOLT			1
21		BOLT	NAP - Rod - Was 6512604 [A]		8
22	1JM04010B	DOWEL			8
23	6512439	ARM			1

NOTE: New main bearing maybe narrower than the bearing in your engine, but still can be used.

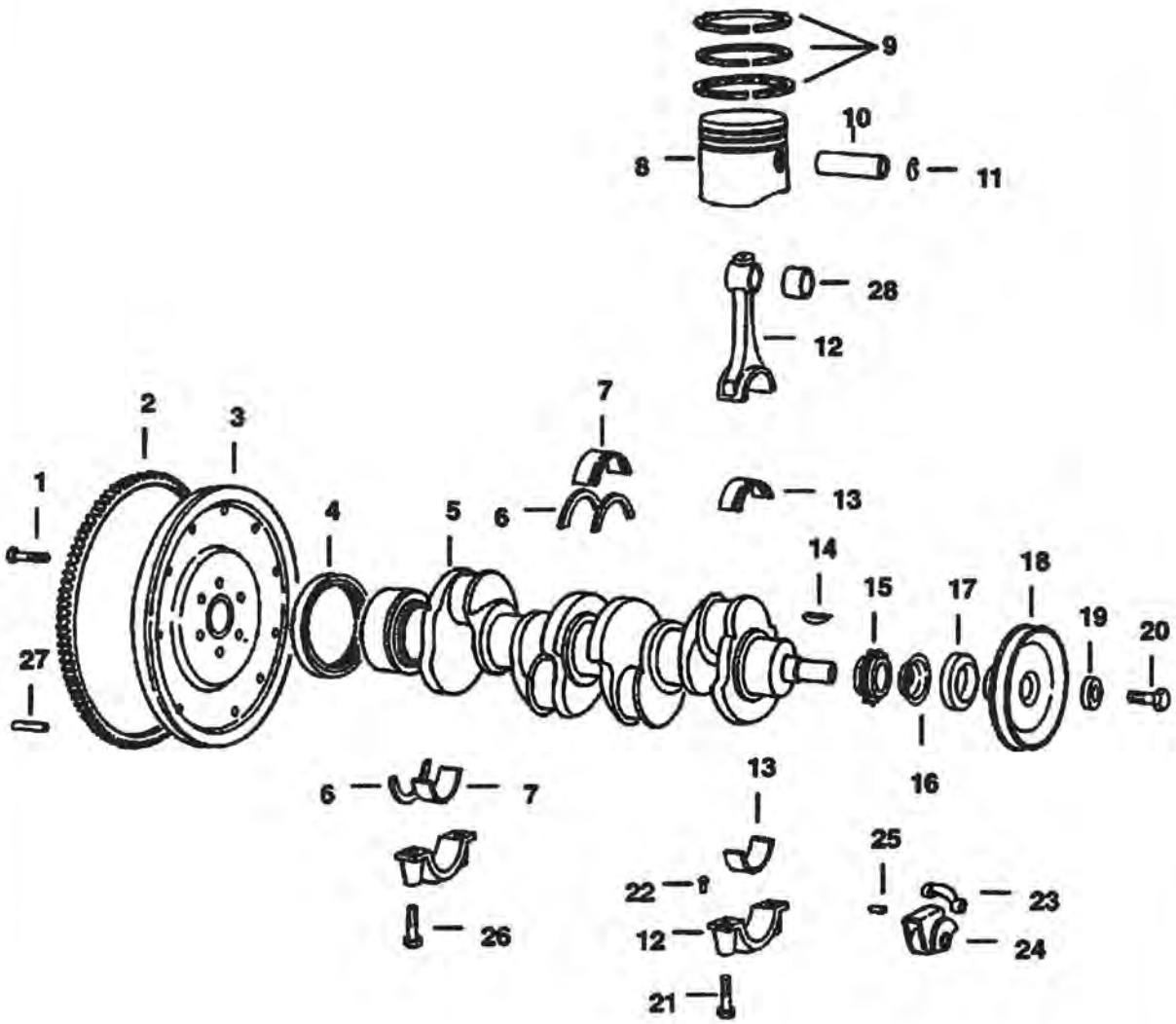

B–20793

Ref No	Part Number	Description	Remarks	Serial Number	Qty
24	6512438	TENSIONER	timing chain		1
25	6661790	PIN	Was 6512440 [A]		1
26	17C000746B	BOLT	Main		10
27	6512920	DOWEL			3
28	6598356	BUSHING	one bushing		4

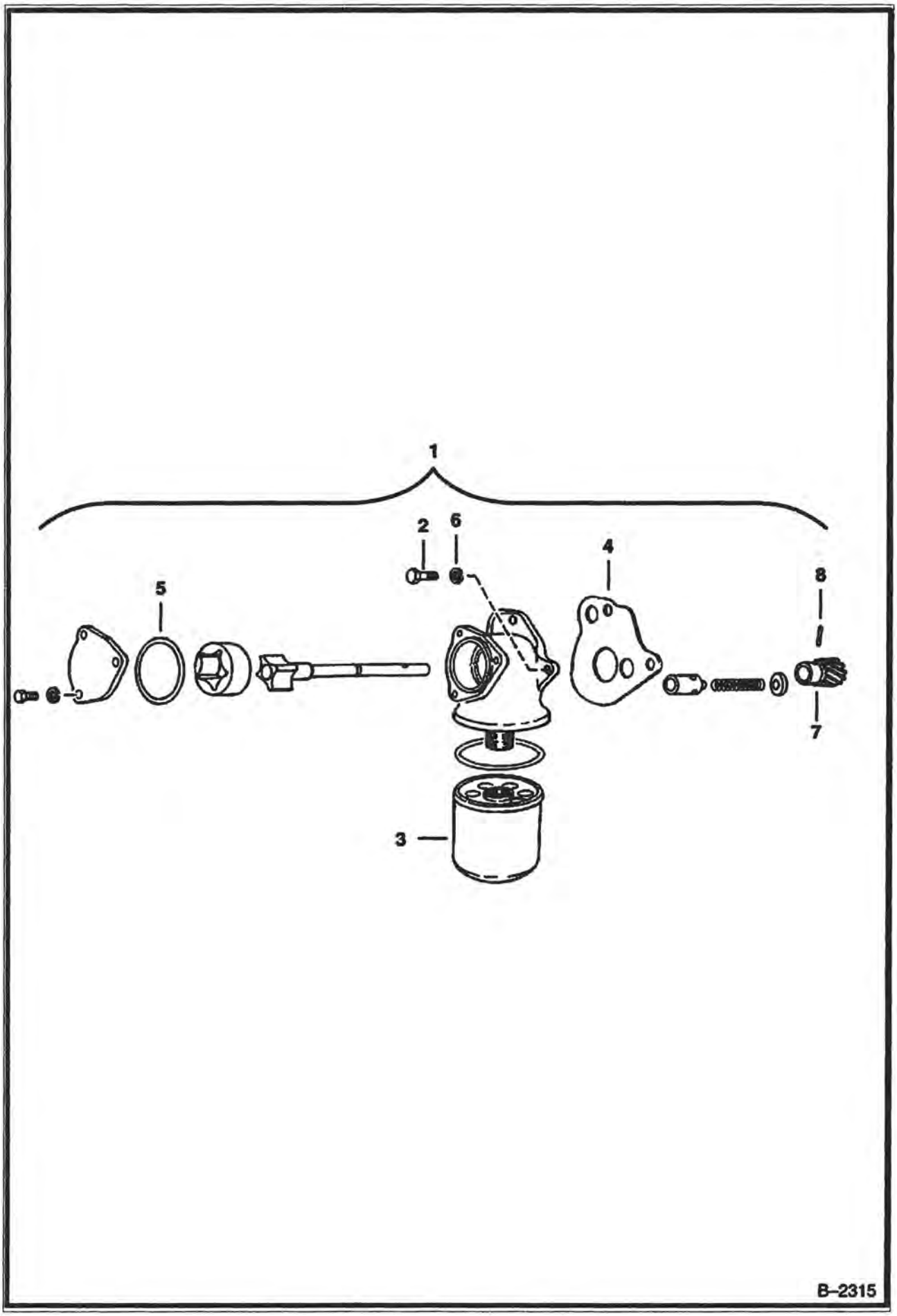
1
2
6
4
8
5
7
3
B–2315

Ref No	Part Number	Description	Remarks	Serial Number	Qty
1		OIL PUMP	NAP - Less Ref. 2-4 - Was 6512479 [A]		1
2	17C000516B	BOLT			3
3	6513601	ELEMENT	oil filter		1
4	6512485	GASKET			1
5	6630080	O-RING			1

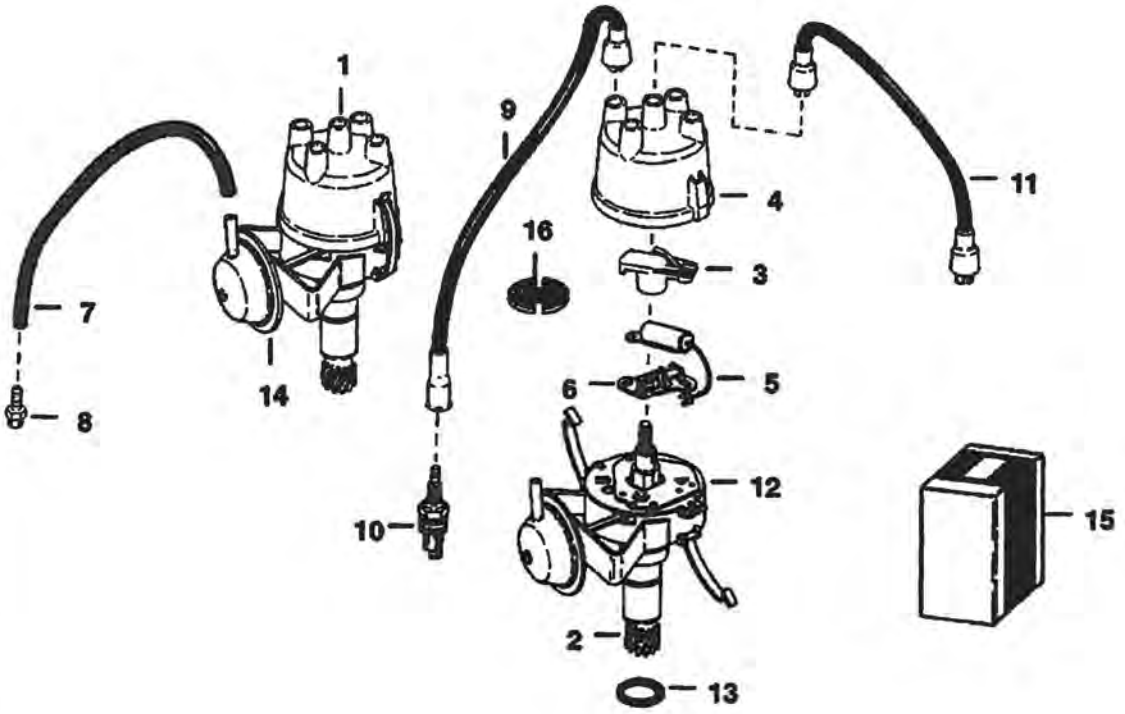

B–20794

Ref No	Part Number	Description	Remarks	Serial Number	Qty
1		DISTRIBUTOR	NAP - Black Cap - Order 6630396		1
1		DISTRIBUTOR	NAP - Black Cap - Reman. - Order 6630396 - Was 6659914 [A]		1
1	6630396	DISTRIBUTOR	Brown Cap		1
2		SHAFT ASSY.	NAP		1
3	6512525	ROTOR	Black Cap		1
3	6630393	ROTOR	Brown Cap		1
4	6512523	CAP	Black Cap - O.D. 3.68		1
4	6630392	CAP	Brown Cap - O.D. 2.869		1
5	6512526	CONDENSER	Black Cap		1
5	6630394	CONDENSER	Brown Cap		1
6	6512524	POINTS	Black Cap		1
6	6630524	POINTS	Brown Cap		1
7	6557891	HOSE	Was 6557891 [A]		1
8	6598353	ELBOW			1
9		WIRE	NSS - spark plug - Order 6513958 Kit		4
10	6512536	SPARK PLUG			4
11		WIRE	NSS - coil - Order 6513958 Kit		1
12		PLATE	NSS - breaker - Black Cap - Was 6599164 [A]		1
13		SEAL	NAP - Was 6631964 [A]		1
14	6632034	DIAPHRAGM	Brown Cap Only		1
15	6558835	IGNITION KIT	Black Cap - Ref. 3, 5, 6 & 10		1
15	6569500	IGNITION KIT	Brown Cap - Ref. 3, 5, 6 & 10		1
15	6513958	WIRE SET	Ref. 9 & 11		1
16		GROMMET	NAP - spark plug wire - Was 6632562 [A]		1

PIERCE GOVERNOR
(S/N 14380 & Below)

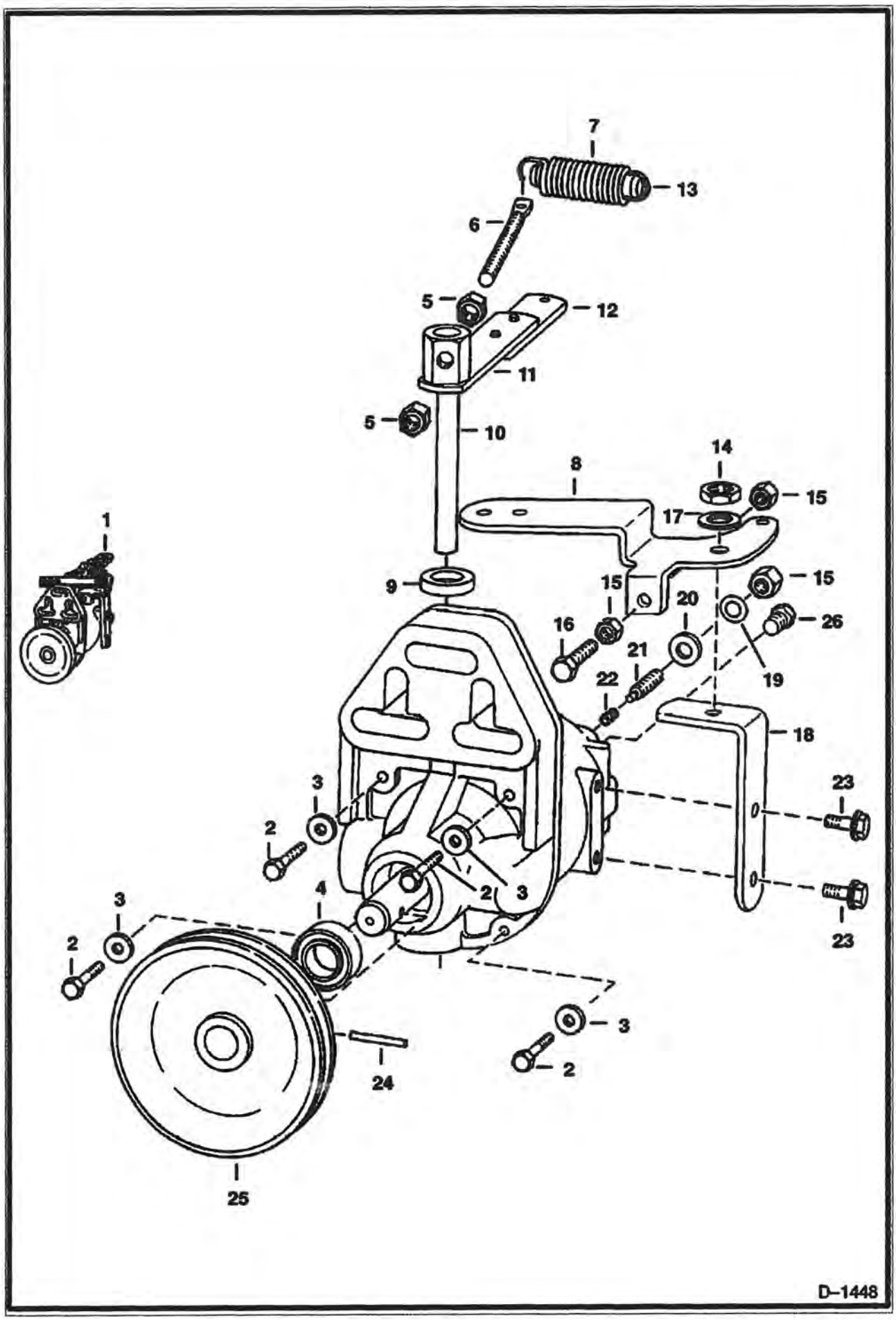

PIERCE GOVERNOR (Cont'd)
(S/N 14380 & Below)

Ref No	Part Number	Description	Remarks	Serial Number	Qty
1		GOVERNOR	NAP - Use 6599757 Hoof Governor		1
2	6513579	BOLT			4
3	25E000010B	WASHER			4
4	5207516B	OIL SEAL			1
5	62D000005B	NUT			2
6	899102B	BOLT			1
7	6513583	SPRING			1
8	6513581	LEVER			1
9	6513578	SEAL			1
10		SHAFT	NSS		1
11		LEVER	NAP - Was 6513585 [A]		1
12		LEVER	NAP - Was 6513584 [A]		1
13	6513582	PIN			1
14	86D000007B	NUT			1
15	8D000004B	NUT			x
16	18C000414B	BOLT			1
17	25E000019B	WASHER			2
18		BRACKET	NAP - Was 6513580 [A]		1
19	25E000013B	WASHER			1
20	6513587	WASHER			1
21	872362B	SCREW			1
22	888052B	SPRING			1
23	17C000408B	BOLT			2
24	654618B	ROLL PIN			1
25	6513586	PULLEY			1
26	40K000002B	PLUG			1

HOOF GOVERNOR
(S/N 14381 & Above)

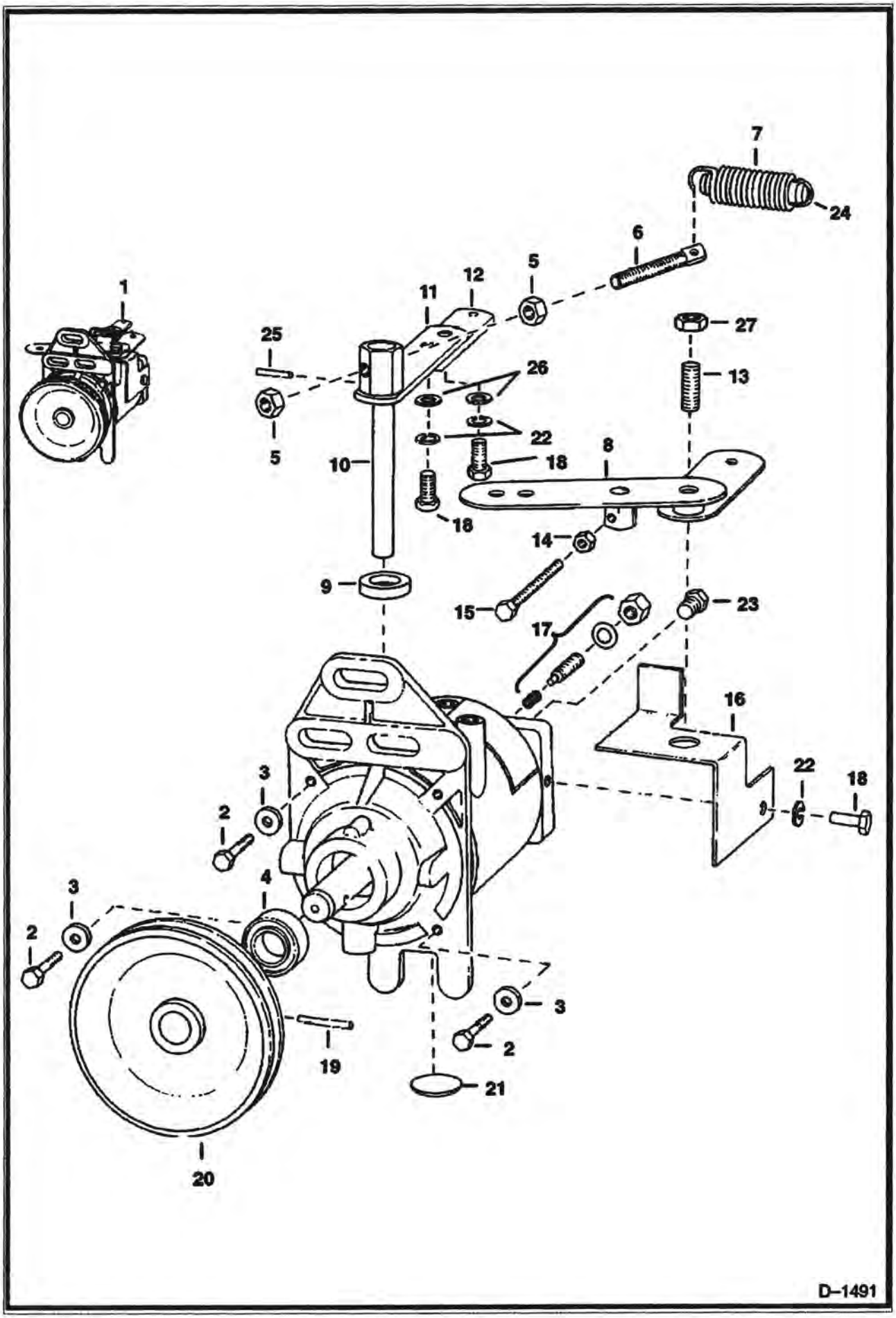

HOOF GOVERNOR (Cont'd)
(S/N 14381 & Above)

Ref No	Part Number	Description	Remarks	Serial Number	Qty
1	6599757	GOVERNOR	Hoof		1
2	45G001212B	BOLT			4
3	6513934	WASHER			4
4	6513952	SEAL			1
5	62D000005B	NUT			2
6	6513953	EYEBOLT			1
7	6513938	SPRING			1
8	6513939	LEVER			1
9	897700B	SEAL			1
10	6630890	ROD			1
11	6513935	LEVER			1
12	6513936	LEVER			1
13	6652878	STUD			1
14	8D000004B	NUT			1
15	6513956	SCREW			1
16	6513940	BRACKET			1
17	958509B	BUMPER ASSY.			1
18	17C000408B	BOLT			1
19	685218B	PIN			1
20	6513933	PULLEY			1
21	12F000013B	PLUG	welch		1
22	4E000004B	WASHER			1
23	40K000002B	PLUG			1
24	6513954	PIN			1
25	14J001210B	ROLL PIN	Was 664131 [A]		1
26	6513937	WASHER			1
27	6652879	NUT			1

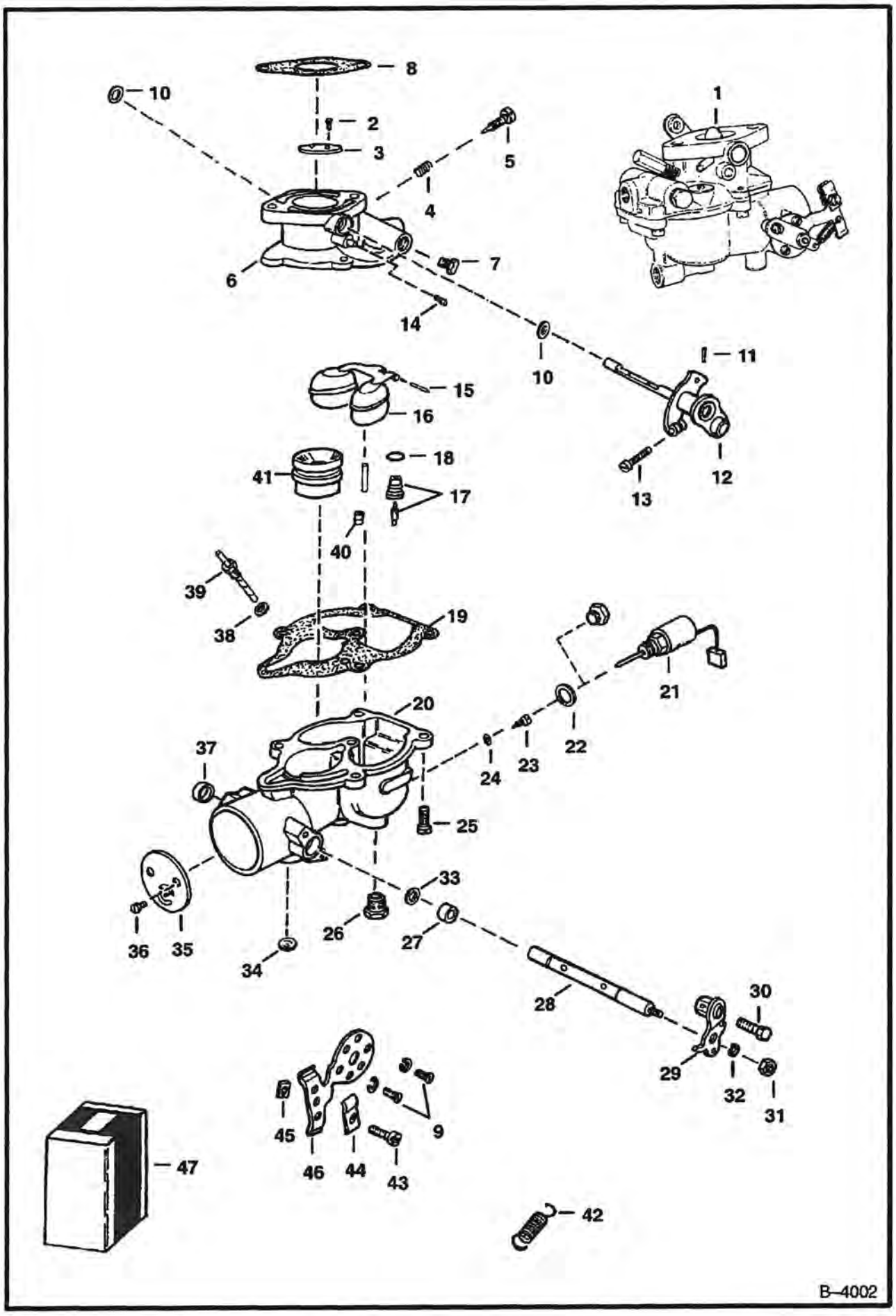
1
2
3
4
5
6
7
8
9
10
11
12
13
14
15
16
17
18
19
20
21
22
23
24
25
26
27
28
29
30
31
32
33
34
35
36
37
38
39
40
41
42
43
44
45
46
47
B–4002

CARBURETOR (Cont'd)

Ref No	Part Number	Description	Remarks	Serial Number	Qty
1		CARBURETOR	See BTI180 NAP - Zenith-13805		1
1	6598372	CARBURETOR	Zenith-0-13805-A (Less Solenoid)		1
2		SCREW	NSS		2
3		PLATE	NSS - throttle		1
4	866397B	SPRING			1
5	6598375	NEEDLE	idle		1
6	6598376	BODY	throttle		1
7	3004023	PLUG			1
8	6562991	GASKET			1
9	871564B	BOLT			2
10		RETAINER	NSS		2
11		PIN	NSS		1
12	6598377	SHAFT	throttle		1
13	46G000810B	BOLT			1
14	6631052	JET	idle		1
15	850001B	AXLE	float		1
16	850009B	FLOAT			1
17		NEEDLE	NSS - W/Seat - Was 6598378 [A]		1
18		GASKET	NSS - washer		1
19		GASKET	NSS		1
20		FUEL BOWL	NSS - Was 6598746 [A]		1
21	6555915	SOLENOID			1
22		GASKET	NSS - washer		1
23	6598380	JET	main		1
24		GASKET	NSS - washer		1
25	47G001010B	SCREW			4
26		PLUG	NSS		1
27		RETAINER	NSS		1
28	6516595	SHAFT			1
29	852287B	LEVER			1
30		SCREW	NSS		1
31	14D000008B	NUT			1
32	17E000010B	WASHER			1
33		SEAL	NSS		1
34		PLUG	NSS		1
35	6598381	PLATE			1
36	85G000504B	SCREW			1
37		PLUG	NSS		1
38		GASKET	NSS		1
39	884428B	JET	discharge		1
40	6598382	VENT	well		1
41	6598383	VENTURI			1
42	853577B	SPRING			1
43		SCREW	NSS		1
44		CLIP	NSS		1
45		NUT	NSS		1
46	871563B	BRACKET ASSY.	W/Ref. 43-45		1
47	6512543	KIT	carburetor repair - Ref. 5, 8, 10, 17-19, 22, 24, 27, 33, 37 & 38		1

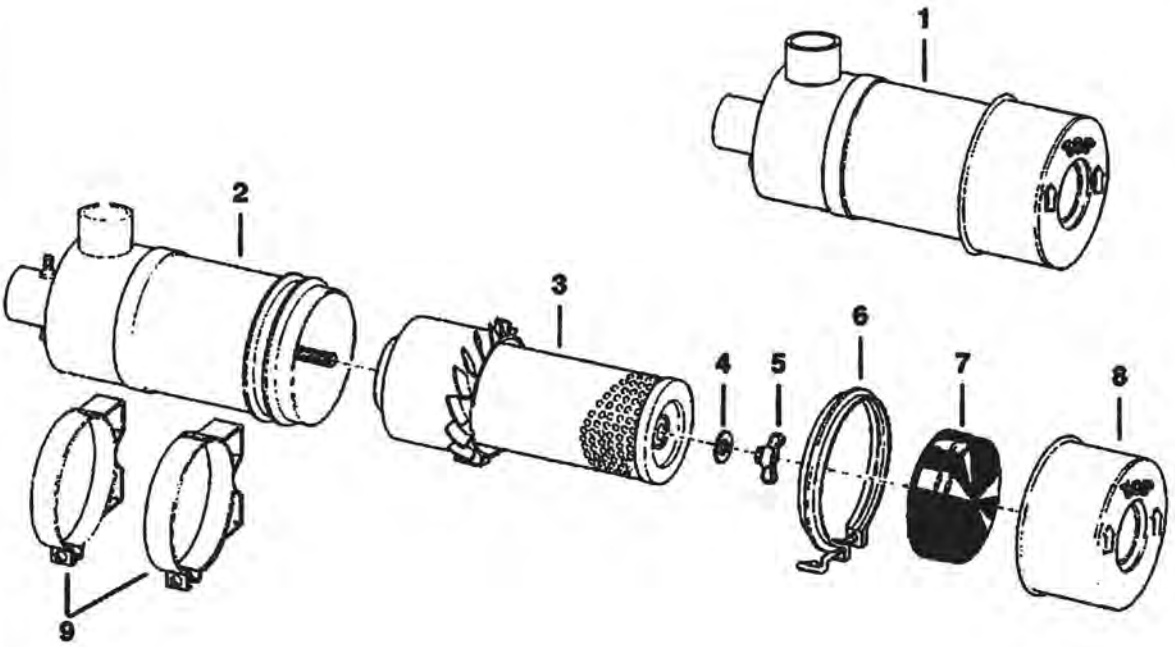

B–17728

Ref No	Part Number	Description	Remarks	Serial Number	Qty
1	6555271	AIR CLEANER	Ref. 2 - 8	13999 & Below	1
1		AIR CLEANER	See BTI134 NAP - Was 6554912 [A]	14001 & Above	1
2		TANK	NAP		1
3	6646494	CARTRIDGE	Was 889098B [A]		1
4	886527B	WASHER			1
5	3291290B	WING NUT			1
6	889097B	CLAMP			1
7	892101B	BAFFLE			1
8	892102B	CAP			1
9	335902B	BAND			2

AIR CLEANER VALVE KIT

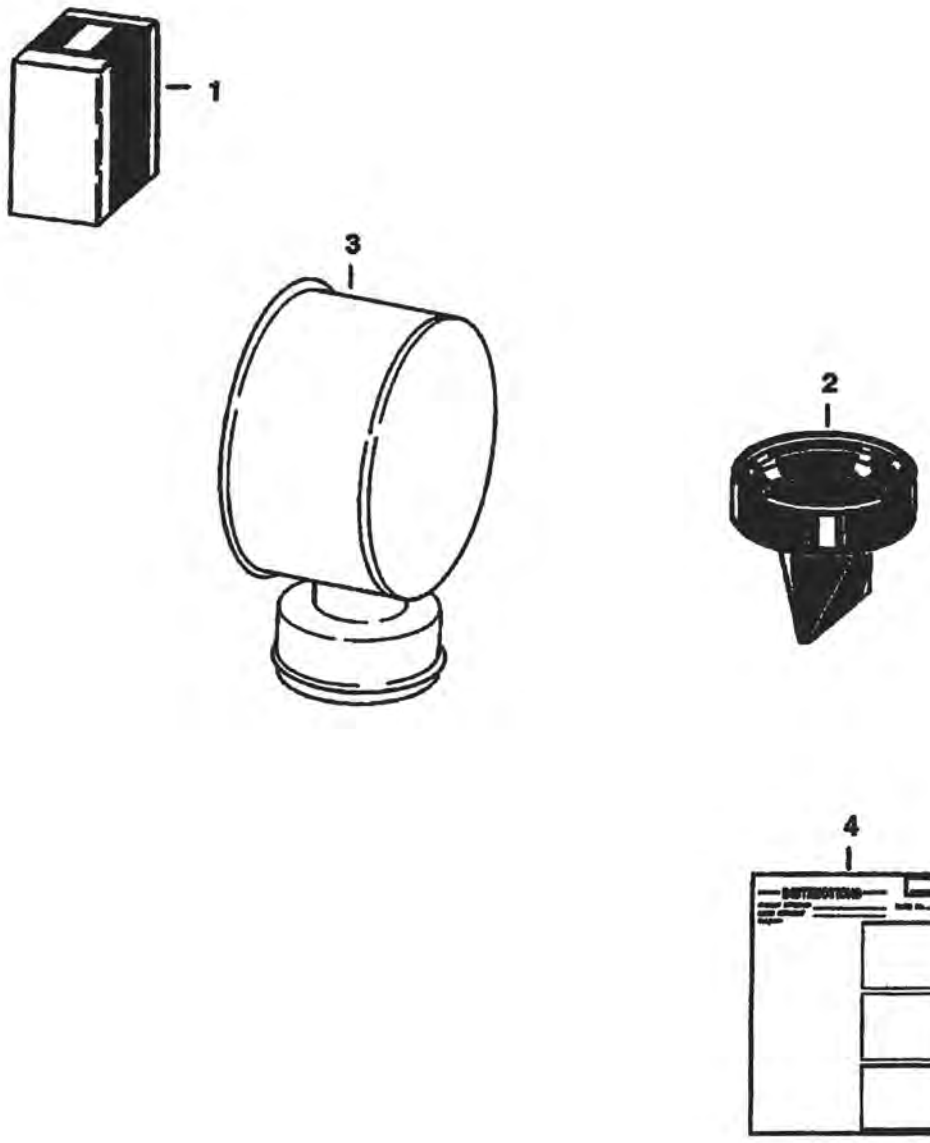

B–3094R

AIR CLEANER VALVE KIT (Cont'd)

Ref No	Part Number	Description	Remarks	Serial Number	Qty
1	6560193	KIT	Ref. 2 & 3		1
2	946860B	VALVE			1
3	3493788B	CAP			1
4	6556436	INSTRUCTIONS			1

AUXILIARY HYDRAULIC KIT
(For Mounting 908B Backhoe on S/N 12999 & Below)

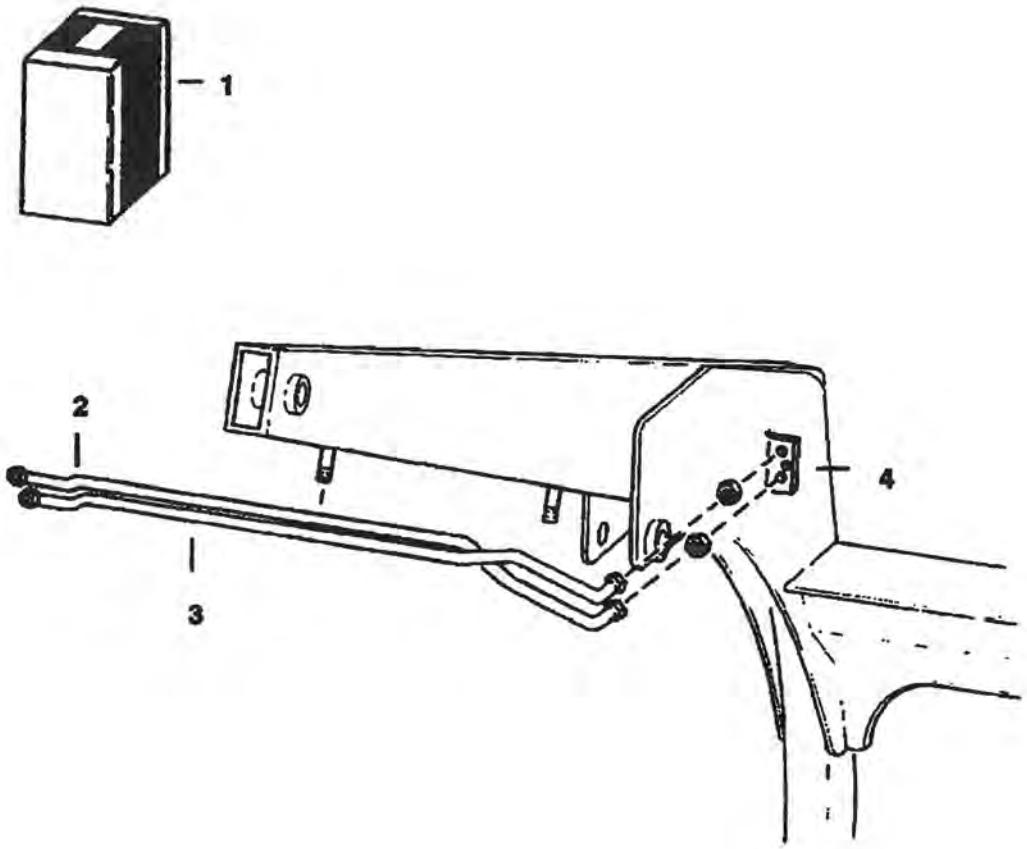

B–20795

AUXILIARY HYDRAULIC KIT (Cont'd)
(For Mounting 908B Backhoe on S/N 12999 & Below)

Ref No	Part Number	Description	Remarks	Serial Number	Qty
1	6562934	KIT	Ref. 2 - 4		1
2	6558415	TUBE			1
3	6558414	TUBE			1
4	6558422	PLATE			1

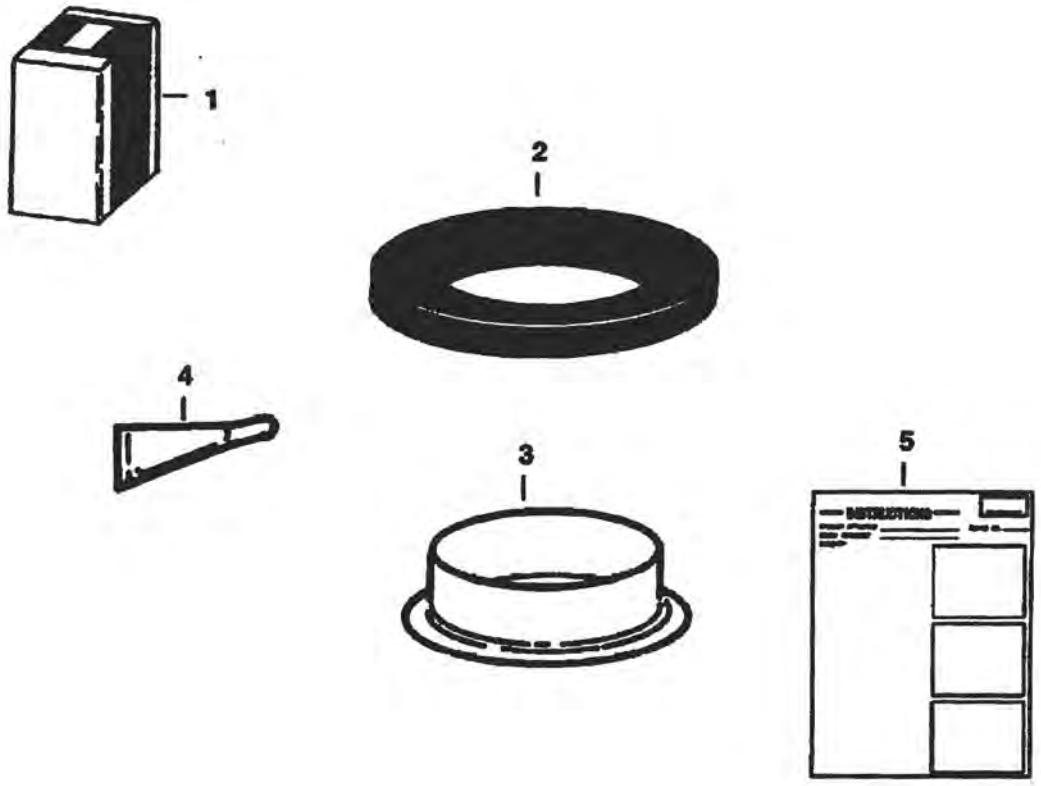

B–4041

AXLE SEAL KIT (Cont'd)

Ref No	Part Number	Description	Remarks	Serial Number	Qty
1	6568974	KIT	Ref. 2 - 5		1
2	6512114	SEAL	Was 6660126 [B]		1
3	6631420	SLEEVE			1
4	6598485	SEALANT			1
5	6570006	INSTRUCTIONS			1

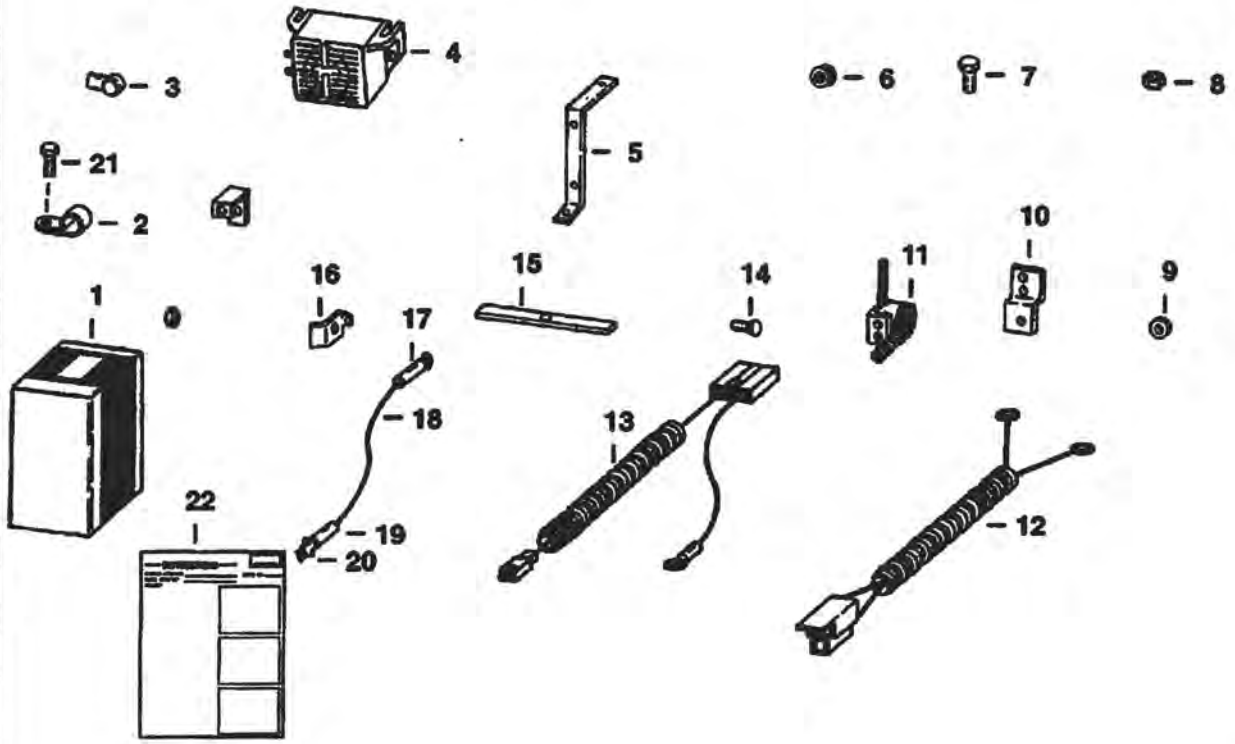

C–2849

BACK-UP ALARM (Cont'd)

Ref No	Part Number	Description	Remarks	Serial Number	Qty
1	6579094	KIT	Ref. 2 - 22 - Was 6565508 [A]		1
2	30H000031B	CLAMP			3
3	616334B	BOOT			2
4	6599931	ALARM			1
4	6668879	DECAL			1
5	6565275	BRACKET			1
6	6557493	GROMMET			1
7	17C000512B	BOLT			7
8	85D000005B	NUT			9
9	6E000005B	WASHER			1
10	6557824	MOUNT			1
11	6579011	SWITCH	Was 6557640 [A]		1
12	6565500	HARNESS			1
13	6565499	WIRE			1
14	10C000512B	BOLT	Was 6553808 [A]		2
15	6557684	BAR			1
16	6557683	STOP			2
17	30R000103B	TERMINAL			2
18	631094B	WIRE	Sold Per Foot		x
19	614142B	SLEEVE			4
20	6515131	TERMINAL			2
21	84G003712B	BOLT			3
22	6566580	INSTRUCTIONS			1

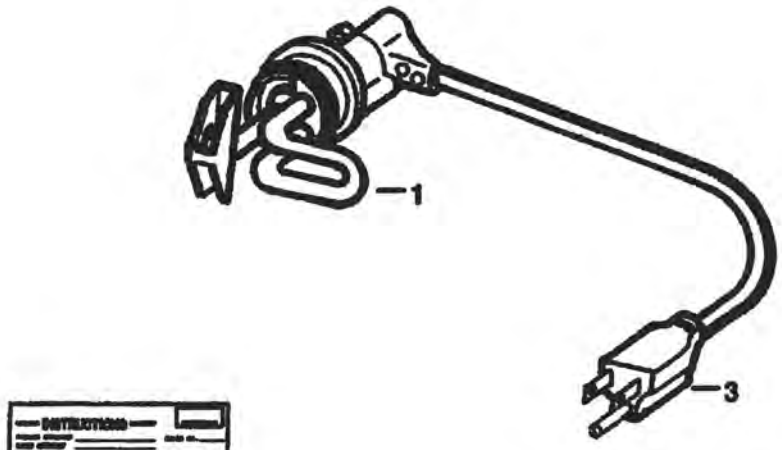



B–12299

Ref No	Part Number	Description	Remarks	Serial Number	Qty
1	6720747	BLOCK HEATER	Installed on left side of engine - Was 6647897 [A]		1
2	6720038	INSTRUCTIONS			1
3	6668881	CORD			1

CLOSED ALTERNATOR
(Delco)

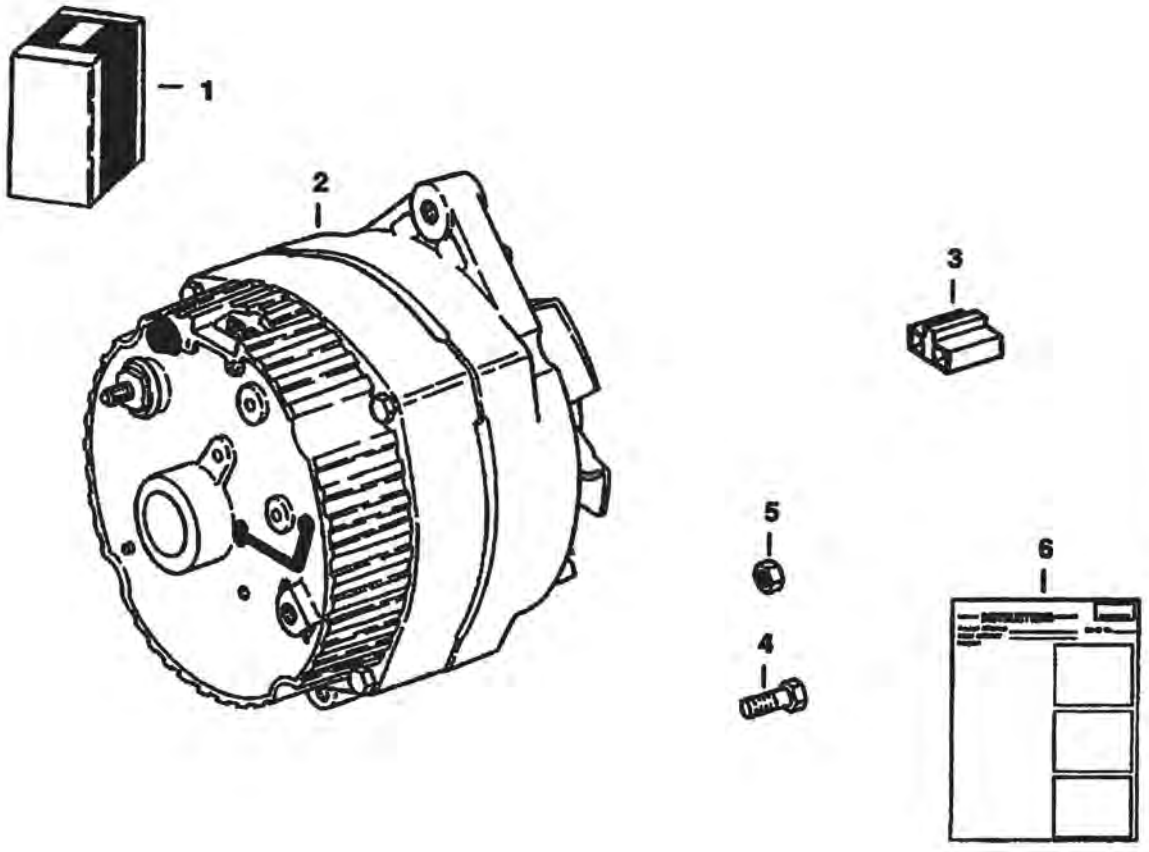

B–3075

CLOSED ALTERNATOR (Cont'd)
(Delco)

Ref No	Part Number	Description	Remarks	Serial Number	Qty
1		KIT	NAP - Not Available as Kit - Order Ref. 2 - 6 - Was 6559894 [A]		1
2		ALTERNATOR	NAP - Order 6599740REM - Was 6599740 [A]		1
3	6510596	CONNECTOR			1
4	29CM00825B	SCREW			1
5	4DM00006B	NUT			1
6	6556415	INSTRUCTIONS			1

CAB ENCLOSURE

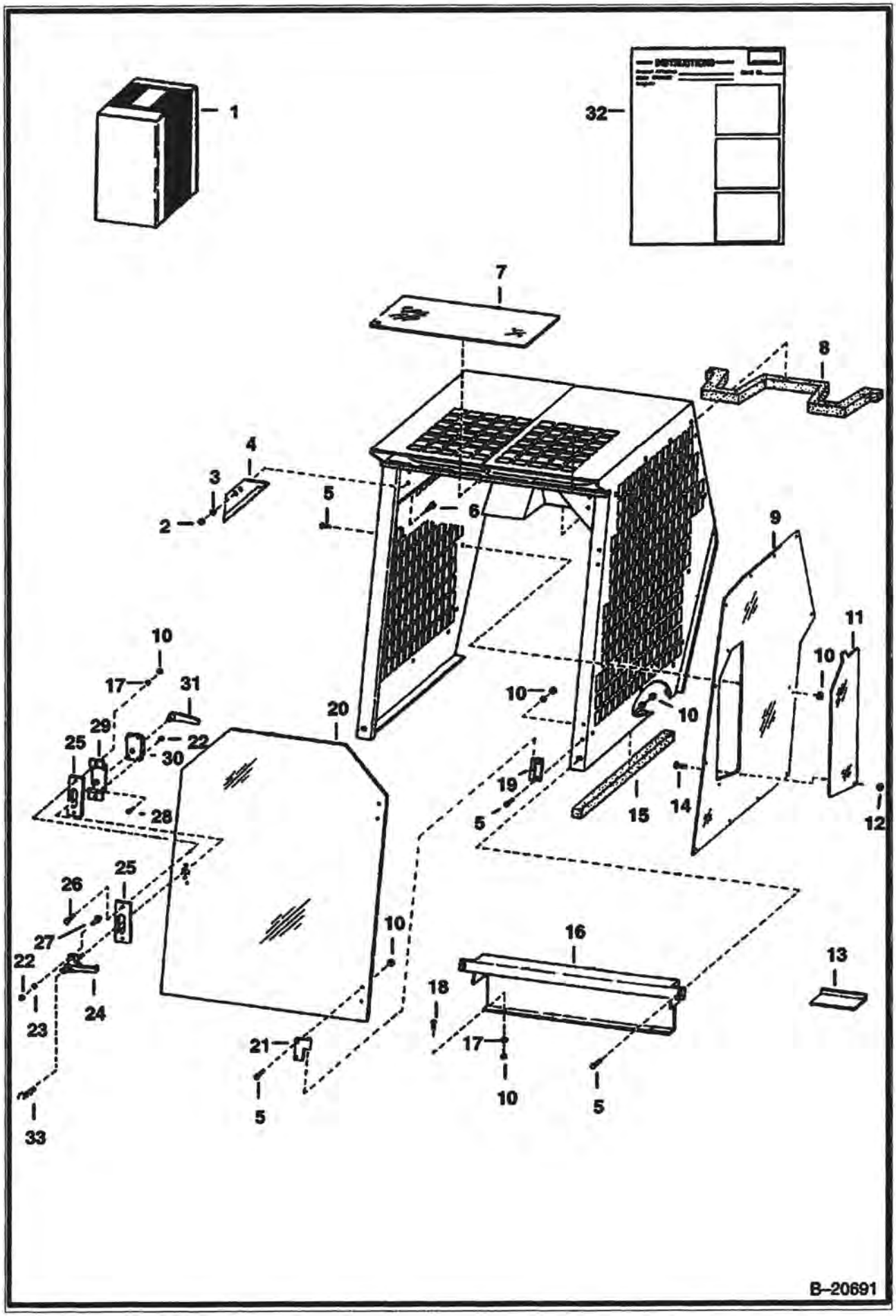

Ref No	Part Number	Description	Remarks	Serial Number	Qty
1	6555917	KIT	cab enclosure - Ref. 2 - 32		1
2	61D000006B	NUT			2
3	25E000018B	WASHER			2
4	6555434	CHANNEL			2
5	10C000512B	BOLT	Was 6553808 [A]		32
6	17C000612B	BOLT			2
7		TOP WINDOW	NAP - Was 6555109 [A]		1
8		STRIP	NAP - foam		1
9	6565755	WINDOW	side - Was 6563390 [A]		2
10	85D000005B	NUT			36
11	6555108	DOOR			2
12	6555869	CLAMP			8
13	6555686	PLATE			2
14	14G001008B	BOLT			8
15		STRIP	NAP - foam		2
16	6555060	PANEL			1
17	25E000015B	WASHER			2
18	17C000512B	BOLT			2
19	6555055	HINGE			2
20	6555062	DOOR			1
21	6555057	HINGE			2
22	12D000010B	NUT			4
23	25E000010B	WASHER			2
24	1550695	HANDLE	outside (W/Key)		1
25	6555054	PLATE			x
26	17C000516B	BOLT			2
27	75G001016B	BOLT			2
28	45G001008B	BOLT			2
29	6555059	BRACKET			1
30	6598475	DOOR LATCH	door		1
31	6515600	HANDLE			1
32	6556078	INSTRUCTIONS			1
33	6665409	KEY			1

CAB ENCLOSURE
(Vinyl)

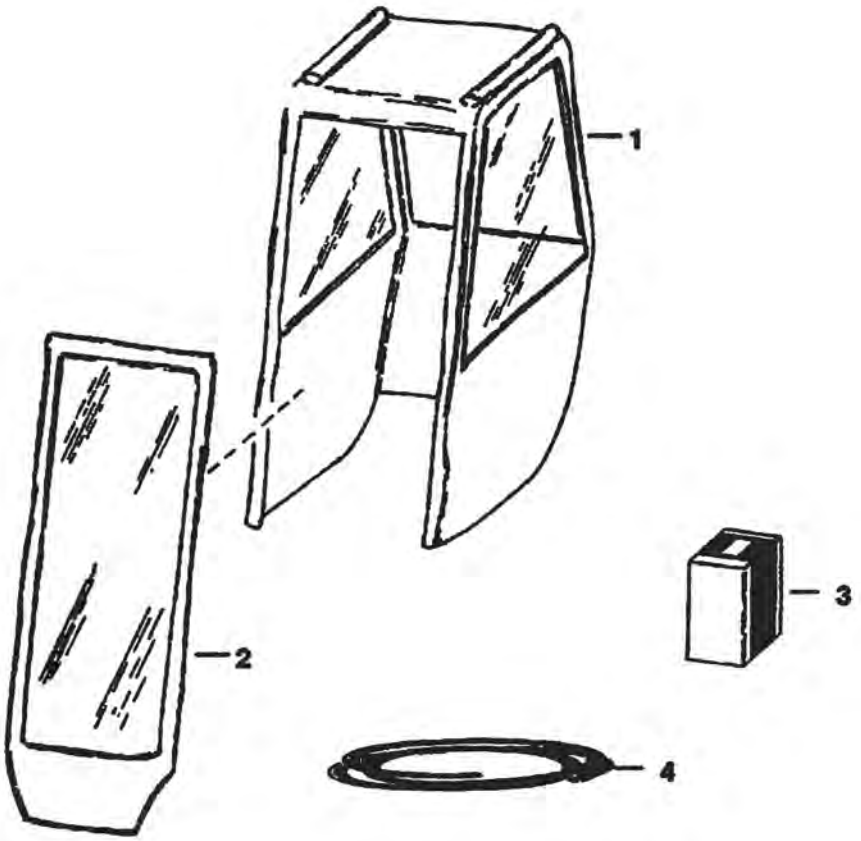

B–1413

CAB ENCLOSURE (Cont'd)
(Vinyl)

Ref No	Part Number	Description	Remarks	Serial Number	Qty
1	6565270	VINYL CAB	fastens to cab W/velcro - W/Ref. 2		1
1	6660340	VINYL CAB	fits over cab - W/Ref. 2		1
2	6599721	DOOR	vinyl		1
3	6662839	HINGE KIT			1
4	6722597	VELCRO	27 feet (8,2 m)		1

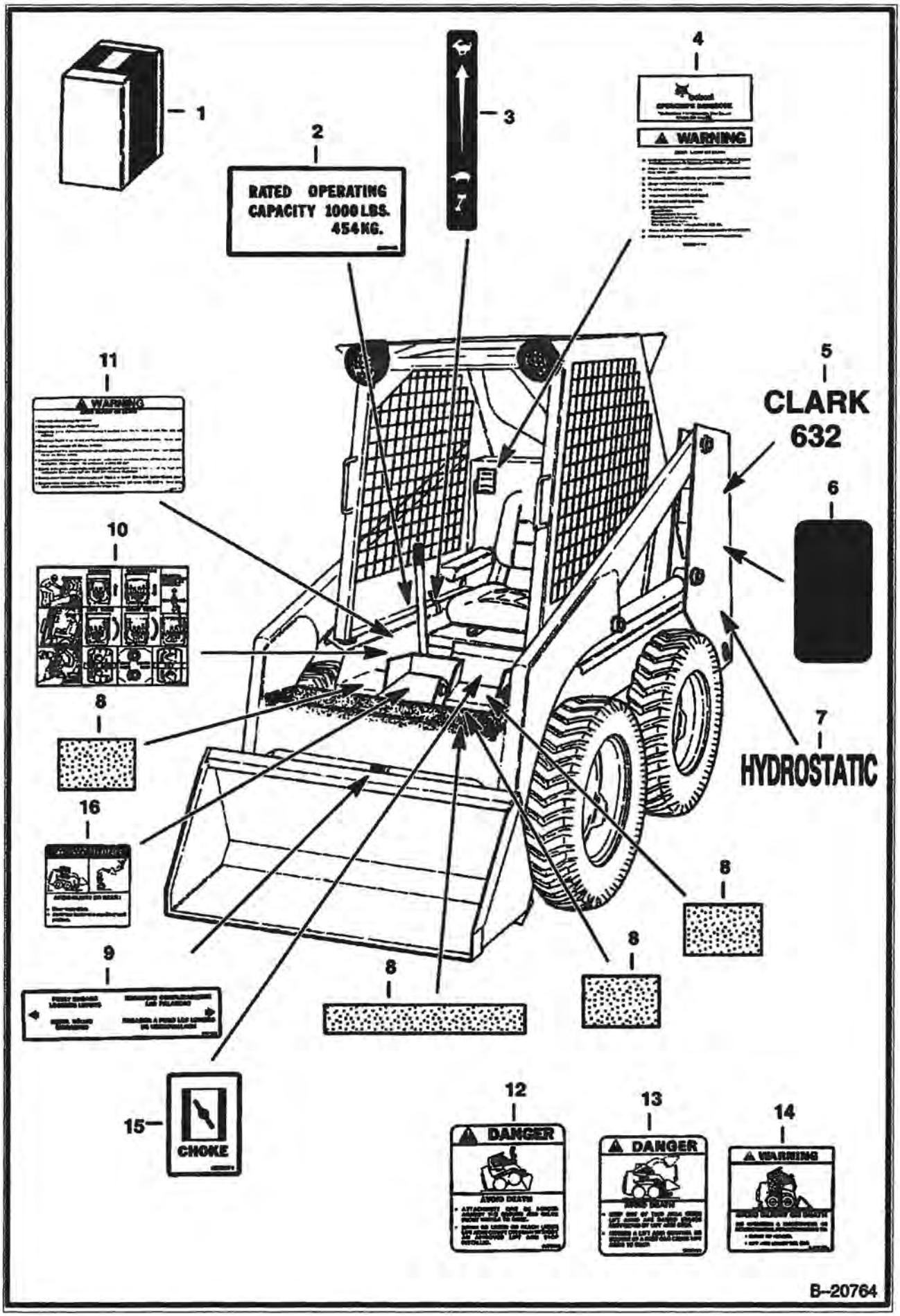
1
2
RATED OPERATING CAPACITY 1000 LBS. 454 KG.
3
4
WARNING
5
CLARK
632
6
7
HYDROSTATIC
8
8
8
8
9
10
11
WARNING
12
DANGER
13
DANGER
14
WARNING
15
CHOKE
16
B-20764

Ref No	Part Number	Description	Remarks	Serial Number	Qty
1	6567917	KIT	decal - W/Ref. 2-16 & Ref. 2-14 on Ill. B20765		1
2	6557410	DECAL	capacity		1
3	6735140	DECAL	throttle - Was 6557565 [A]		1
4	6567623	HANDBOOK	handbook		1
4	6558309	WIRE ROPE	Also Order (2) 6558310 - 33" (838,2mm) long - Bulk - Sold Per Foot - Was 6558305 [A]		1
4	6558310	SLEEVE	wire rope		2
4		LOOP	NAP - scotchmate - Was 6630380 [A]		1
4		HOOK	NAP - scotchmate - Was 6630381 [A]		1
5	6557417	DECAL			2
6	6557415	DECAL			2
7	6557418	DECAL			2
8	6553976	SAFETY TREAD	5" x 8" (127mm x 203,2mm)		1
8	6577949	SAFETY TREAD	6.8" x 8.75" (172,72mm x 222,25mm) Was 6553977 [A]		2
8	6553978	SAFETY TREAD	35" x 8 " (889mm x 203,2mm)		1
8	6554100	TREAD	6" x 6" (152,4mm x 152,4mm)		1
9	6561383	DECAL			1
10	6569021	DECAL	operating		1
11	6579511	DECAL	warning - Was 6565980 [A]		1
12	6579509	DECAL	danger		1
13	6579639	DECAL	danger - Was 6575694 [A]		1
14	6702265	DECAL	safety - Was 6575854 [A]		1
15	6553971	DECAL	choke		1
16	6710358	DECAL	warning		1

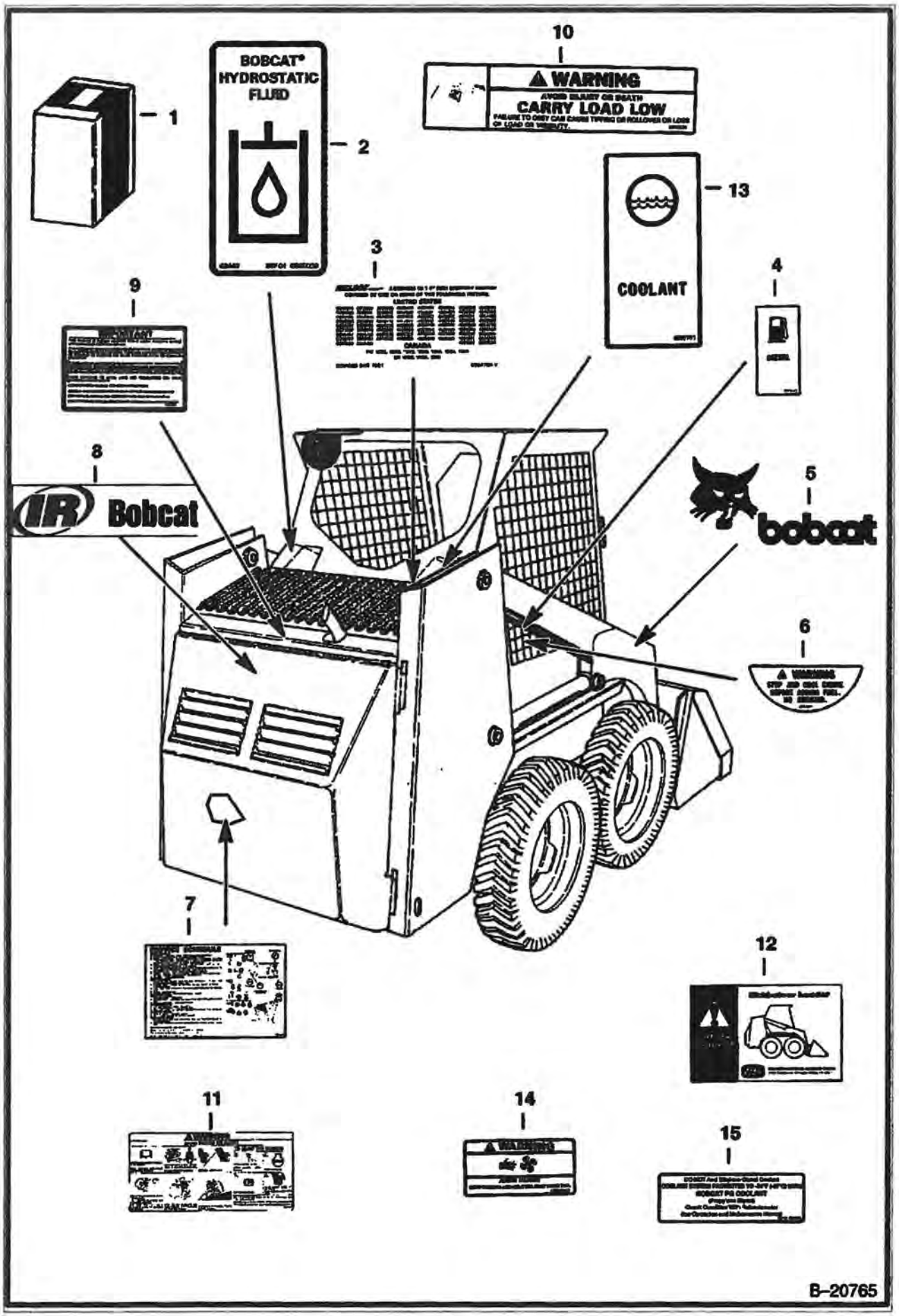
1
BOBCAT®
HYDROSTATIC
FLUID
2
10
WARNING
CARRY LOAD LOW
13
COOLANT
3
4
9
8
Bobcat
5
bobcat
6
7
12
11
14
15
B–20765

DECALS (Cont'd)

Ref No	Part Number	Description	Remarks	Serial Number	Qty
1	6567917	KIT	decal - W/Ref. 2-14 & Ref. 2 - 15 on Ill. B20764		1
2	6565990	DECAL	hydraulic/hydrostatic fluid		1
3	6557224	DECAL	patent		1
4	6561384	DECAL	gasoline		1
5	6557412	DECAL			1
5	6557413	DECAL			1
6	6557227	DECAL	fuel		2
7	6561387	DECAL	service		1
8	6727307	DECAL	Was 6711327 [A]		1
9	6560573	DECAL	spark arrestor		1
10	6579528	DECAL	Was 6565254 [A]		1
11	6702255	DECAL	warning		1
12	6556500	SAFETY MANUAL	safety		1
13	6557701	DECAL	coolant		1
14	6576048	DECAL	fan - Was 6557930 [A]		1
15	6708929	DECAL	propylene glycol anti-freeze		1

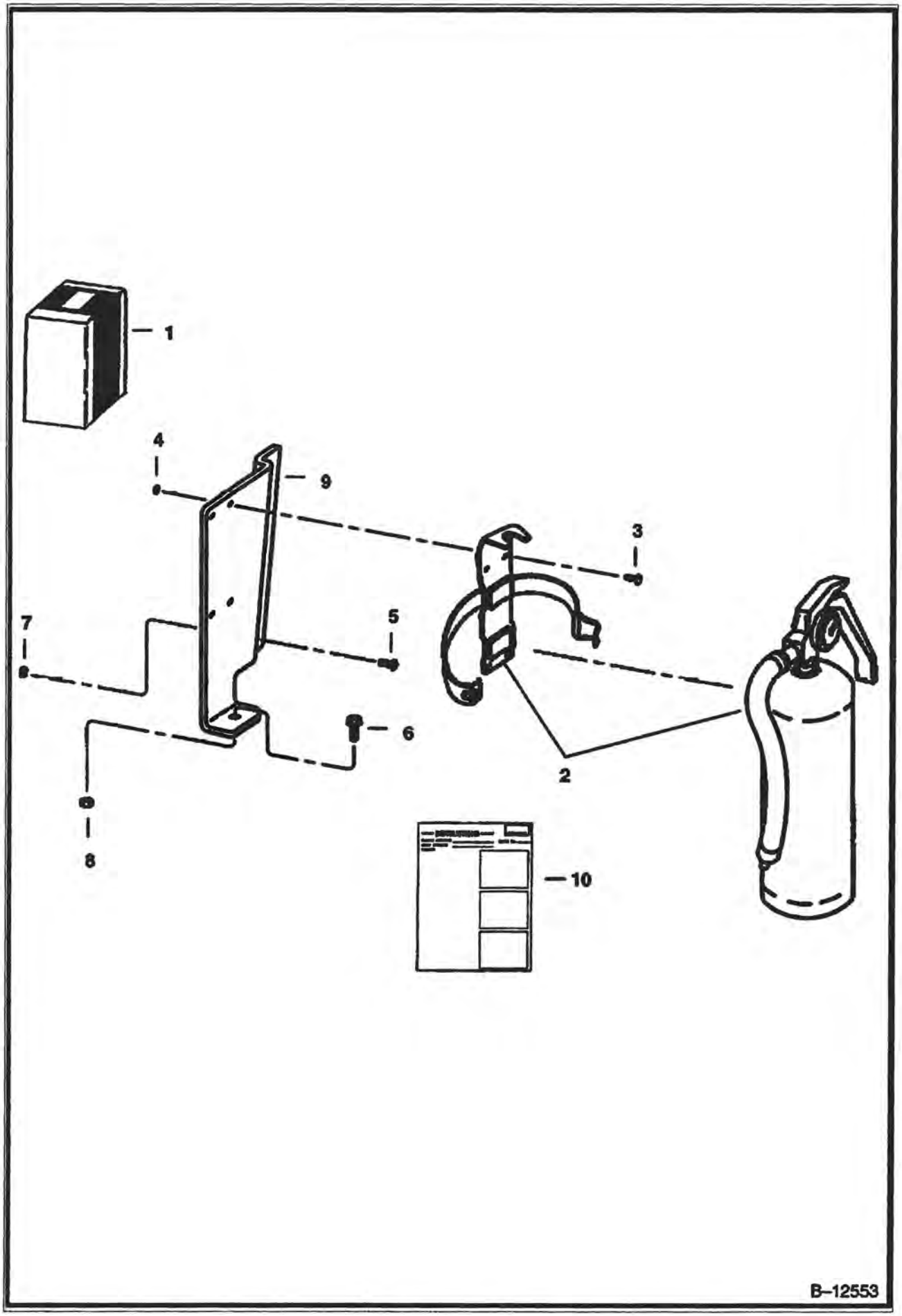
1
4
9
3
7
5
6
2
8
10
B–12553

FIRE EXTINGUISER (Cont'd)

Ref No	Part Number	Description	Remarks	Serial Number	Qty
1	6569112	KIT	fire extinguisher - Ref. 2-10		1
2	1908806B	EXTINGUISHER	fire		1
3	85G001008B	BOLT			4
4	12D000010B	NUT			4
5	25G000410B	BOLT			2
6	35C000516B	BOLT			1
7	83D000004B	NUT			2
8	83D000005B	NUT			1
9	6569095	MOUNT			1
10	6570040	INSTRUCTIONS			1

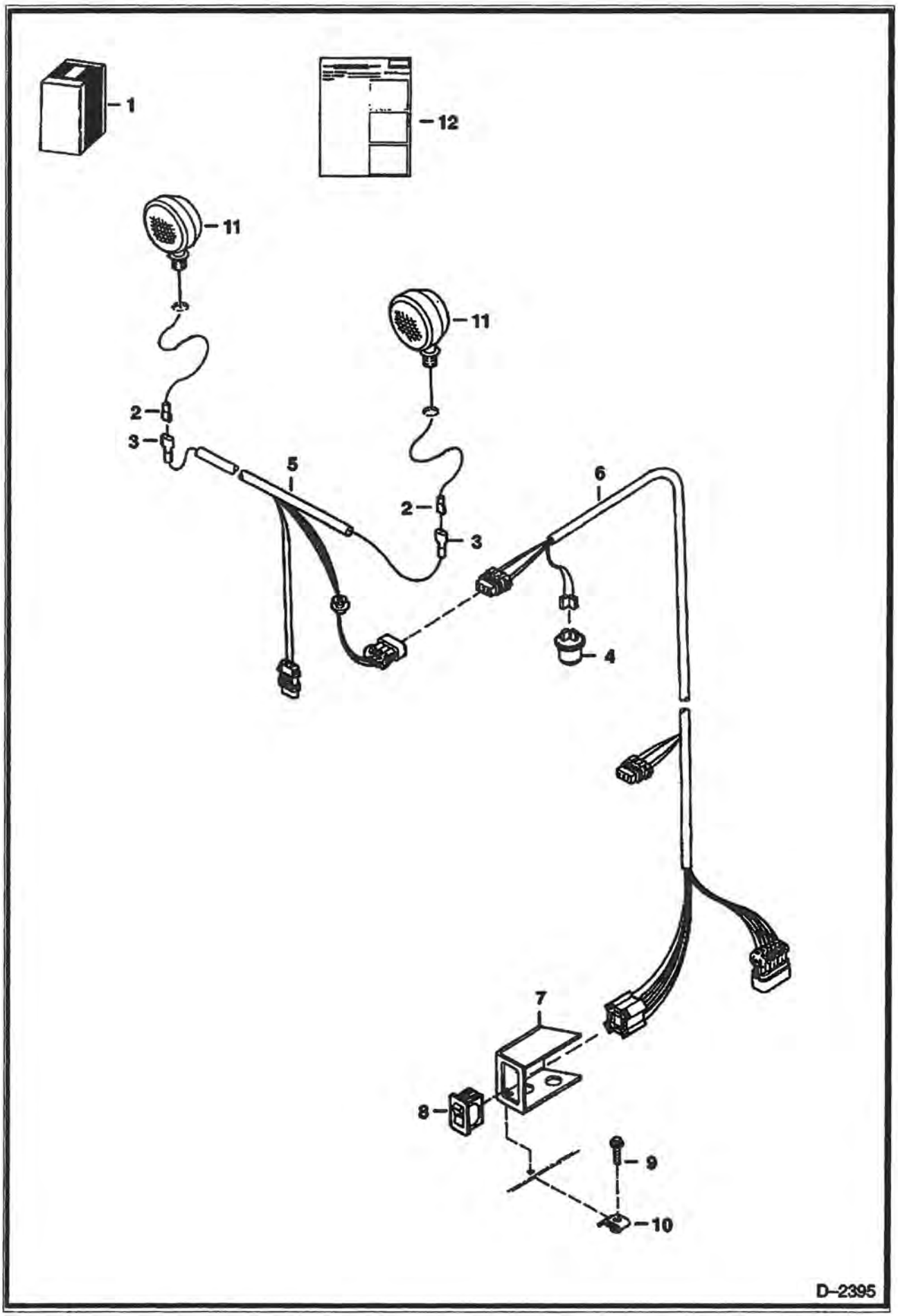
1
12
11
11
2
3
5
2
3
6
4
7
8
9
10
D-2395

Ref No	Part Number	Description	Remarks	Serial Number	Qty
1	6558076	KIT	flasher - Ref. 2-4, 11 & 12		1
2	614142B	SLEEVE			2
3	6515131	TERMINAL			2
4	6557904	FLASHER			1
5	6714213	HARNESS			1
6	6712288	HARNESS			1
7	6711708	MOUNT			1
8	6668815	SWITCH			1
9	31C000420B	BOLT			1
10	6660988	RETAINER			2
11	6517516	LIGHT			2
12	6556222	INSTRUCTIONS			1

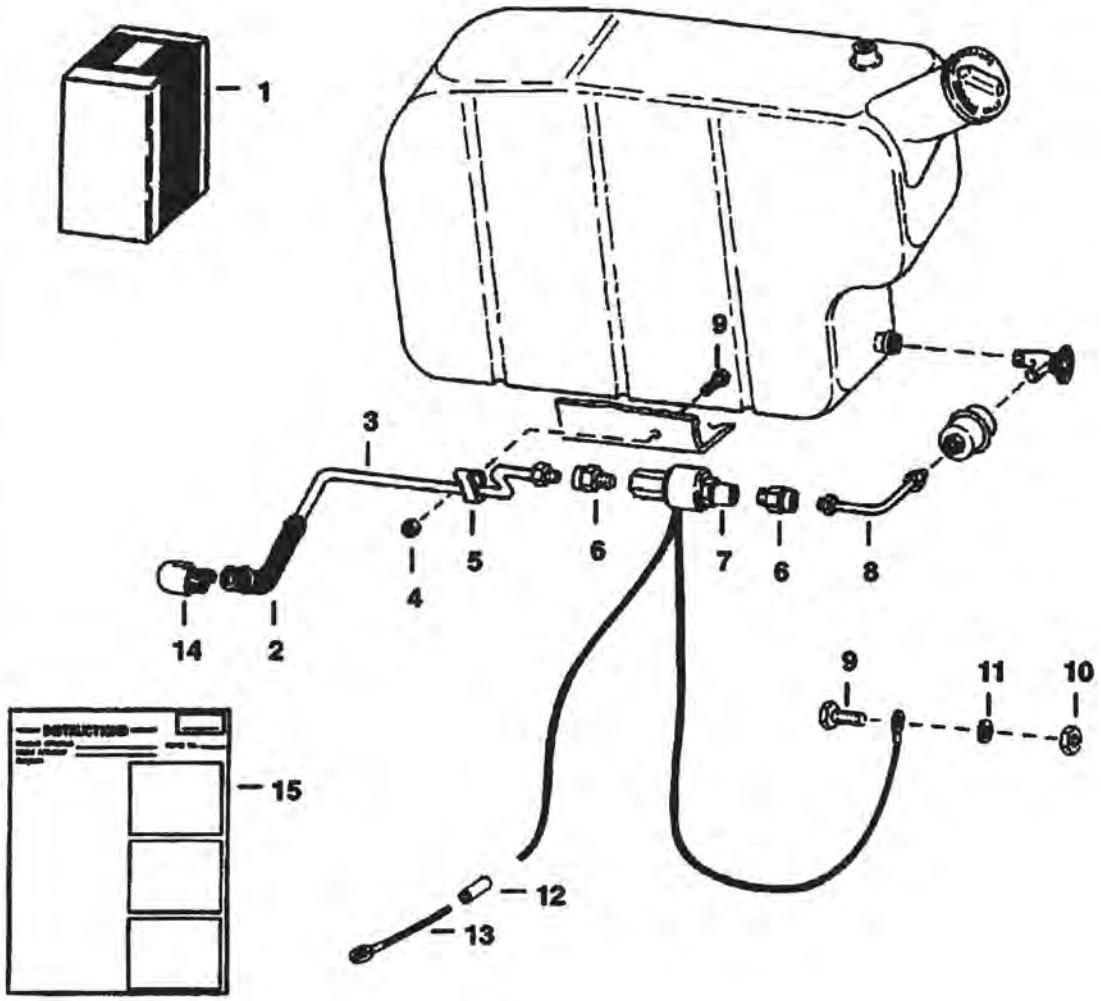
1
9
3
4
5
6
7
6
8
14
2
9
11
10
15
12
13
C–2360

FUEL SHUT-OFF (Cont'd)

Ref No	Part Number	Description	Remarks	Serial Number	Qty
1	6559893	KIT	fuel shut-off - Ref. 2 - 13		1
2	6559118	HOSE			1
3	6559151	TUBE			1
4	85D000005B	NUT			1
5	30H000019B	CLAMP			1
6	59F000004B	CONNECTOR			2
7	6559117	SOLENOID			1
8	6559152	TUBE			1
9	17C000512B	BOLT			2
10	61D000005B	NUT			1
11	6E000005B	WASHER			1
12	614142B	SLEEVE			1
13	30R000104B	TERMINAL			1

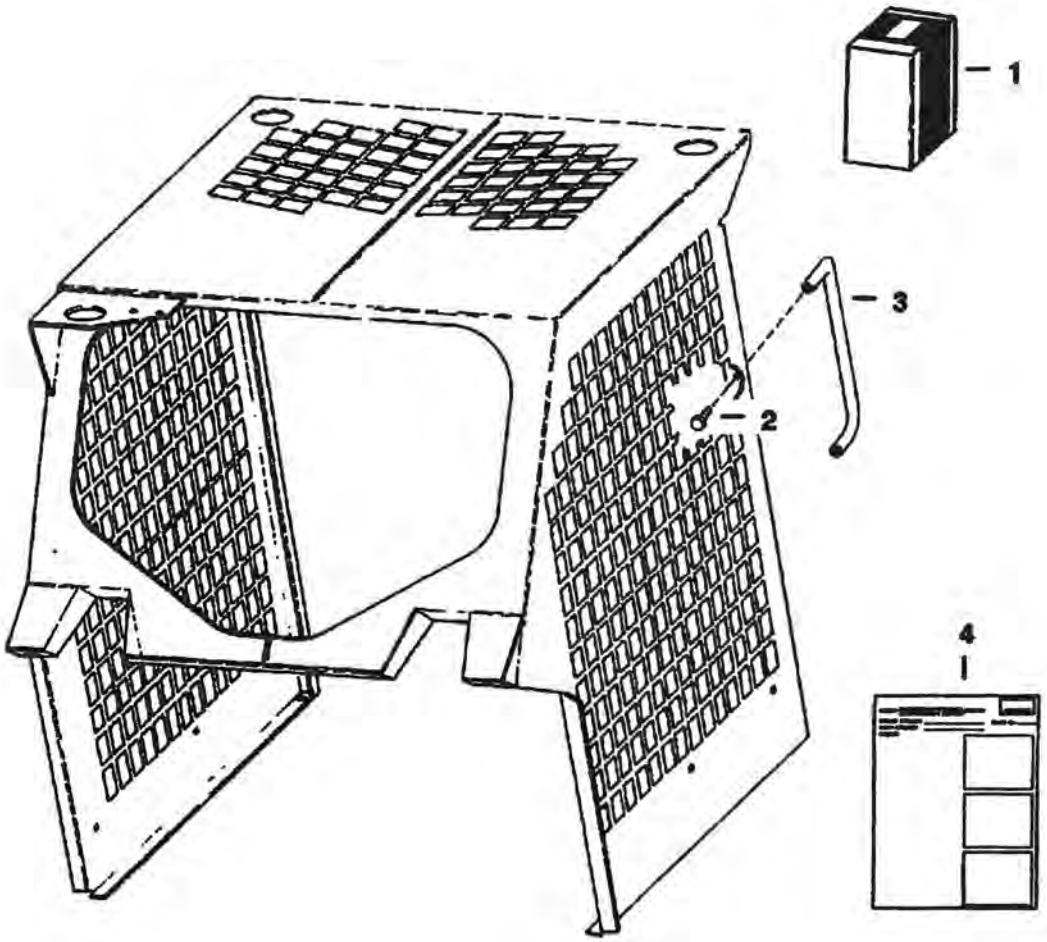

D–1511

GRAB HANDLE (Cont'd)

Ref No	Part Number	Description	Remarks	Serial Number	Qty
1	6561371	KIT	Ref. 2 - 4		1
2	17C000512B	BOLT			4
3	6558504	HANDLE			2
4	6556688	INSTRUCTIONS			1

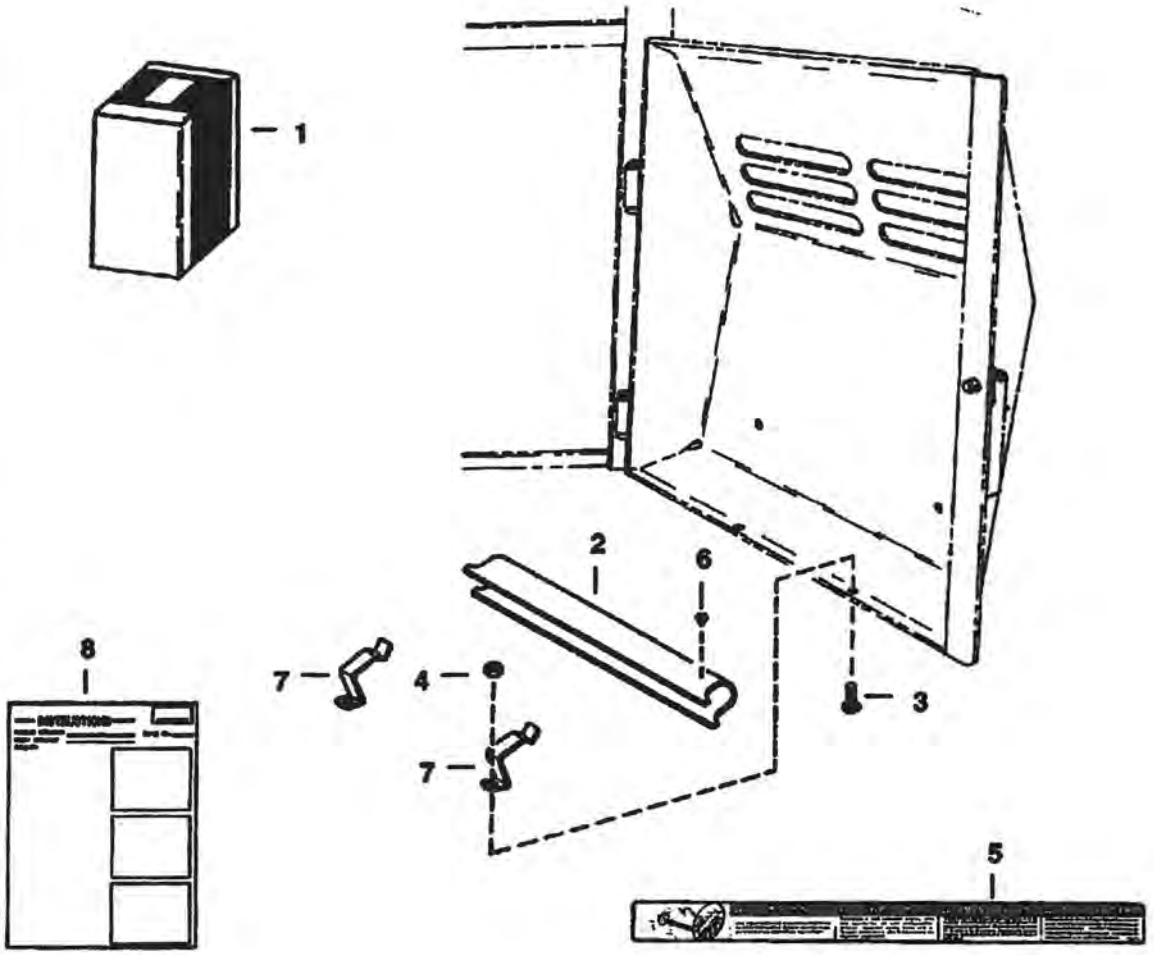

B–20774

LIFT ARM STOP (Cont'd)

Ref No	Part Number	Description	Remarks	Serial Number	Qty
1	6563501	KIT	Ref. 2 - 5, 7 & 8 - Was NAP [D]		1
2	6563449	STOP	W/Ref. 5		1
3	17C000616B	BOLT			2
4	85D000006B	NUT			2
5	6563423	DECAL			1
6	6555016	BUMPER	Not used on new stop		3
7	6563603	BRACKET			2
8	6566056	INSTRUCTIONS			1

OVERFLOW TANK

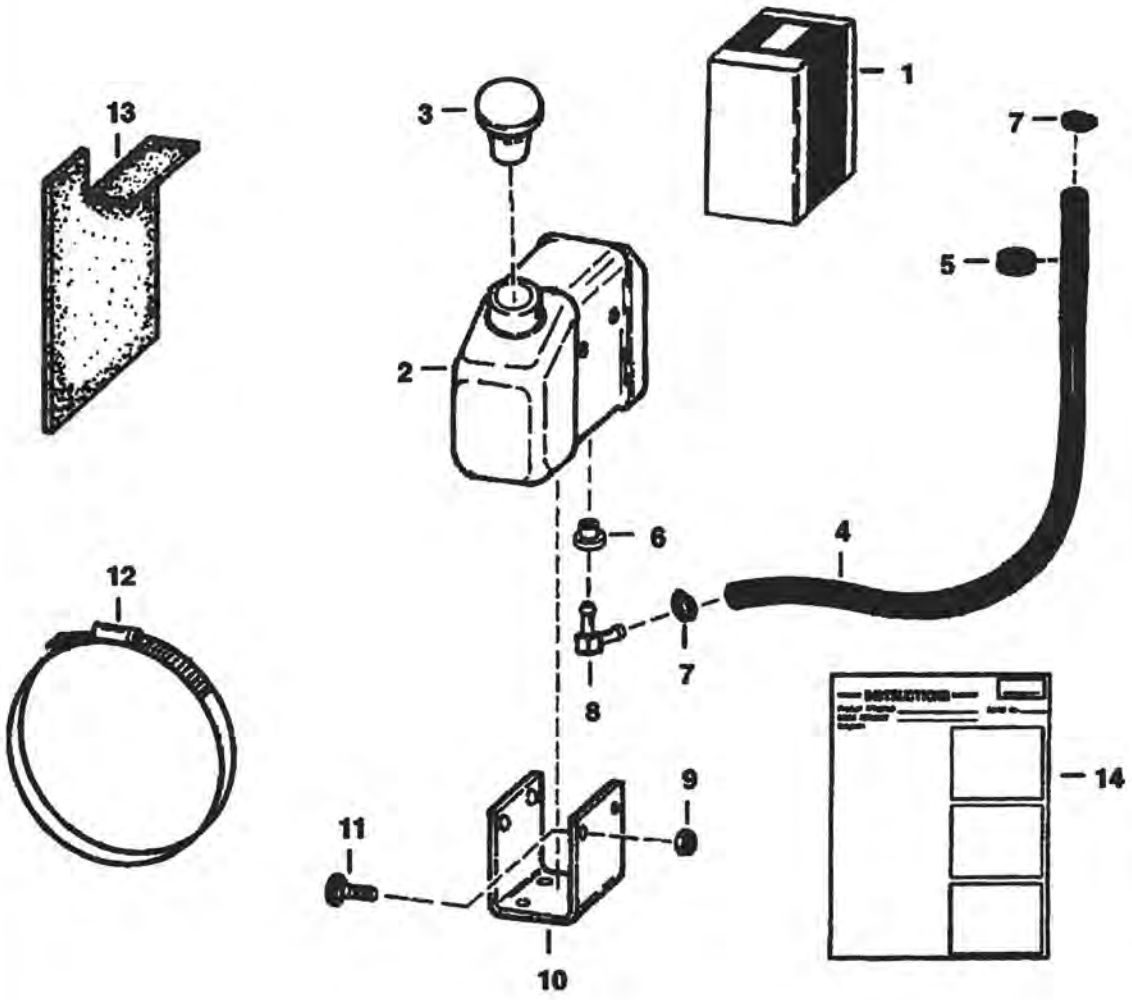

OVERFLOW TANK (Cont'd)

Ref No	Part Number	Description	Remarks	Serial Number	Qty
1	6563781	KIT	Ref. 2 - 14		1
2		TANK	NAP - Without Barbed Fitting - Order 6576660 - Was 6562509 [A]		1
2	6576660	TANK	With Barbed Fitting Molded In		1
3	6702797	CAP	Was 6558658 [A]		1
4	6563655	HOSE			1
5	1021036B	GROMMET			1
6	6553411	BUSHING	Not Used With 6576660 Tank		1
7	6515575	CLAMP			2
8	6598795	ELBOW	Not Used With 6576660 Tank		1
9	57D000005B	NUT			2
10	6562599	MOUNT			1
11	10C000512B	BOLT	Was 6553808 [A]		2
12	6598723	CLAMP			1
13			NAP - Was 6563656 [A]		1
14	6566204	INSTRUCTIONS			1

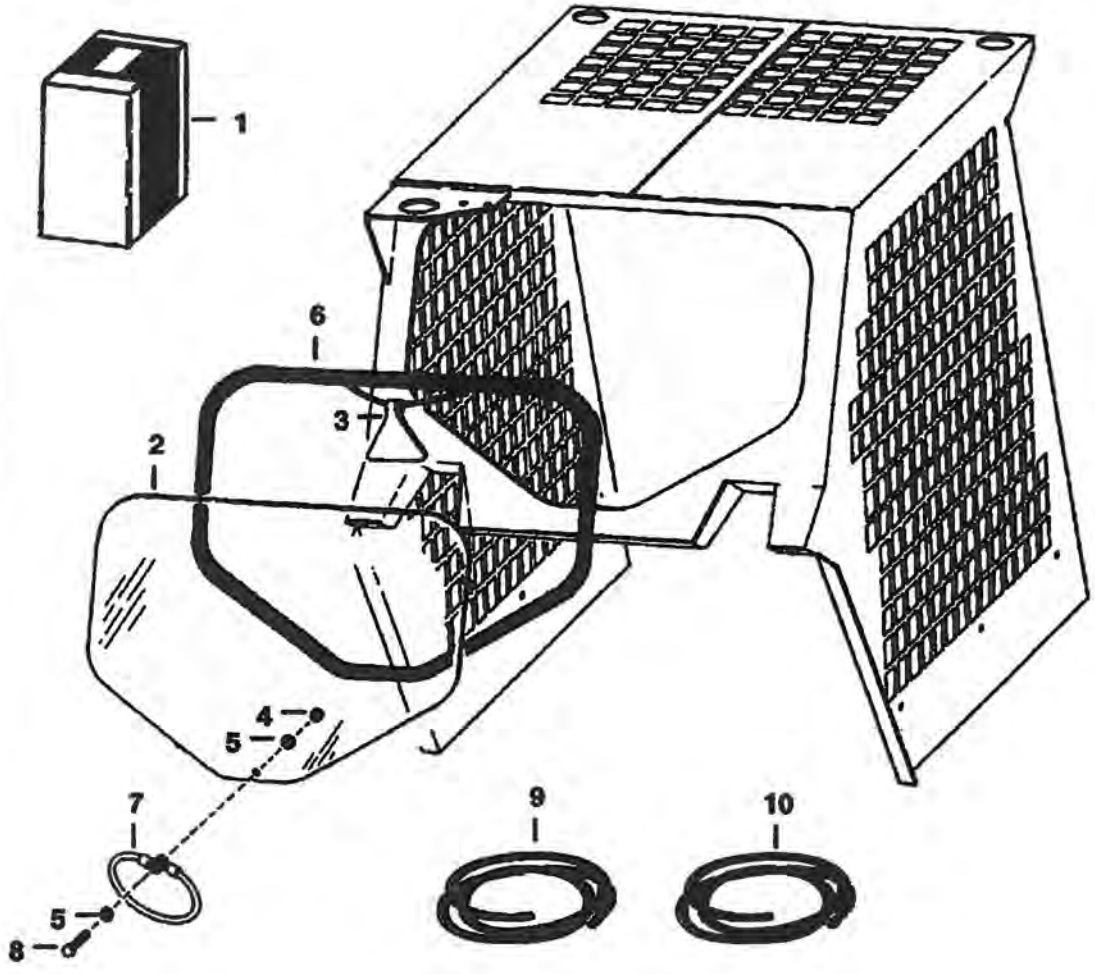

D–1279

REAR WINDOW (Cont'd)

Ref No	Part Number	Description	Remarks	Serial Number	Qty
1		KIT	NAP - rear window - Order Ref. 2 - 8		1
2	6553577	WINDOW			1
3	6731478	EXIT TAG	exit - Was 6559515 [A]		1
4	61D000005B	NUT			1
5	25E000015B	WASHER			2
6		EXTRUSION	NAP - 7' (2133,6 mm) long - Order Ref. 9 - Was 6658352 [D]		x
6		CORD	NAP - 7' (2133,6 mm) long - Order Ref. 10 - Was 6554149 [D]		x
7	6555331	WIRE ROPE			1
8	17C000516B	BOLT			1
9	6658352	MOULDING	bulk - sold per foot		x
10	6554149	CORD	bulk - sold per foot		x

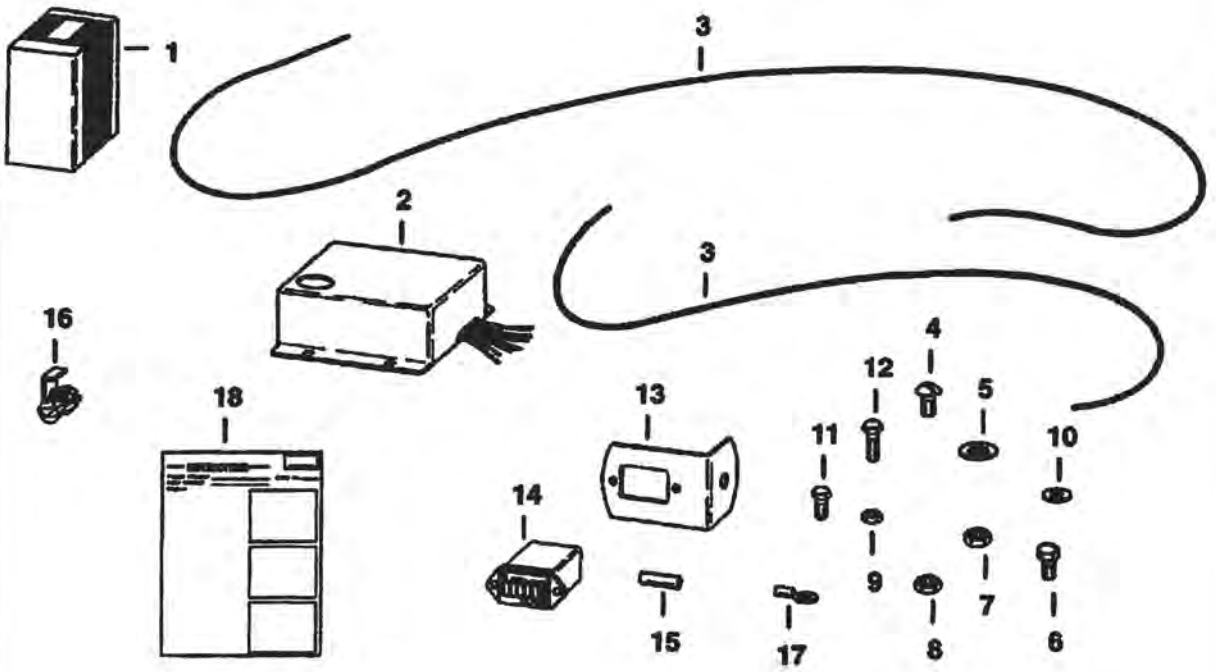
1
3
2
3
16
18
13
4
12
5
11
10
14
9
7
15
17
8
6
C–2282

RENTAL KIT (Cont'd)

Ref No	Part Number	Description	Remarks	Serial Number	Qty
1	6562298	KIT	Ref. 2 - 18		1
2	6513274	MODULE			1
3	774708B	WIRE	3 ft.		1
3		WIRE	NAP - 1 ft. - Was 774706 [A]		1
4	85G000608B	SCREW			2
5	25E000017B	WASHER			1
6	17C000614B	BOLT			1
7	12D000006B	NUT			2
8	61D000004B	NUT			6
9	61D000006B	NUT			1
10	6E000004B	WASHER			1
11	17C000408B	BOLT			4
12	17C000412B	BOLT			2
13	6552906	BRACKET			1
14	6664886	HOURMETER	Was 6631657 [A]		1
15	637641	SLEEVE			1
16	6513275	CONNECTOR			6
17	30R000104B	TERMINAL			1
17	30R000107B	TERMINAL			1
18	6556831	INSTRUCTIONS			1

SEAT BAR KIT

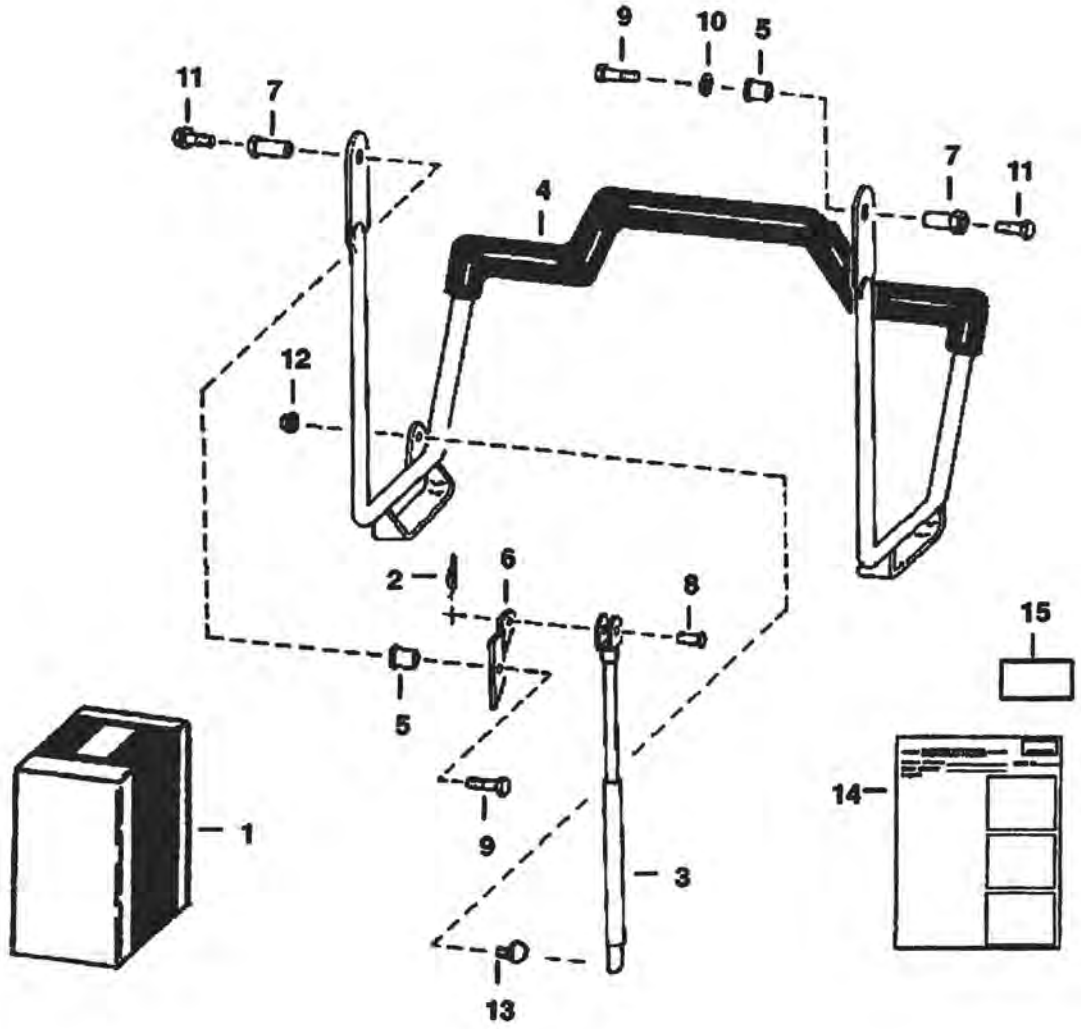

SEAT BAR KIT (Cont'd)

Ref No	Part Number	Description	Remarks	Serial Number	Qty
1		KIT	NAP - seat bar - W/Ref. 2-14 - Order 6713853 - Was 6706796 [A]		1
2	6631418	PIN			1
3	6664207	GAS SPRING			1
4	6706358	SEAT BAR	For Use W/Gas Spring		1
5	6706387	BUSHING			2
6	6706388	BRACKET			1
7	6706389	BUSHING			2
8	4F005062B	PIN			1
9	17C000612B	BOLT			2
10	25E000021B	WASHER			1
11	35C000608B	BOLT			2
12	83D000005B	NUT			1
13	6649244	STUD			1
14	6722836	INSTRUCTIONS			1
15	6577754	DECAL			1

SEAT BAR KIT

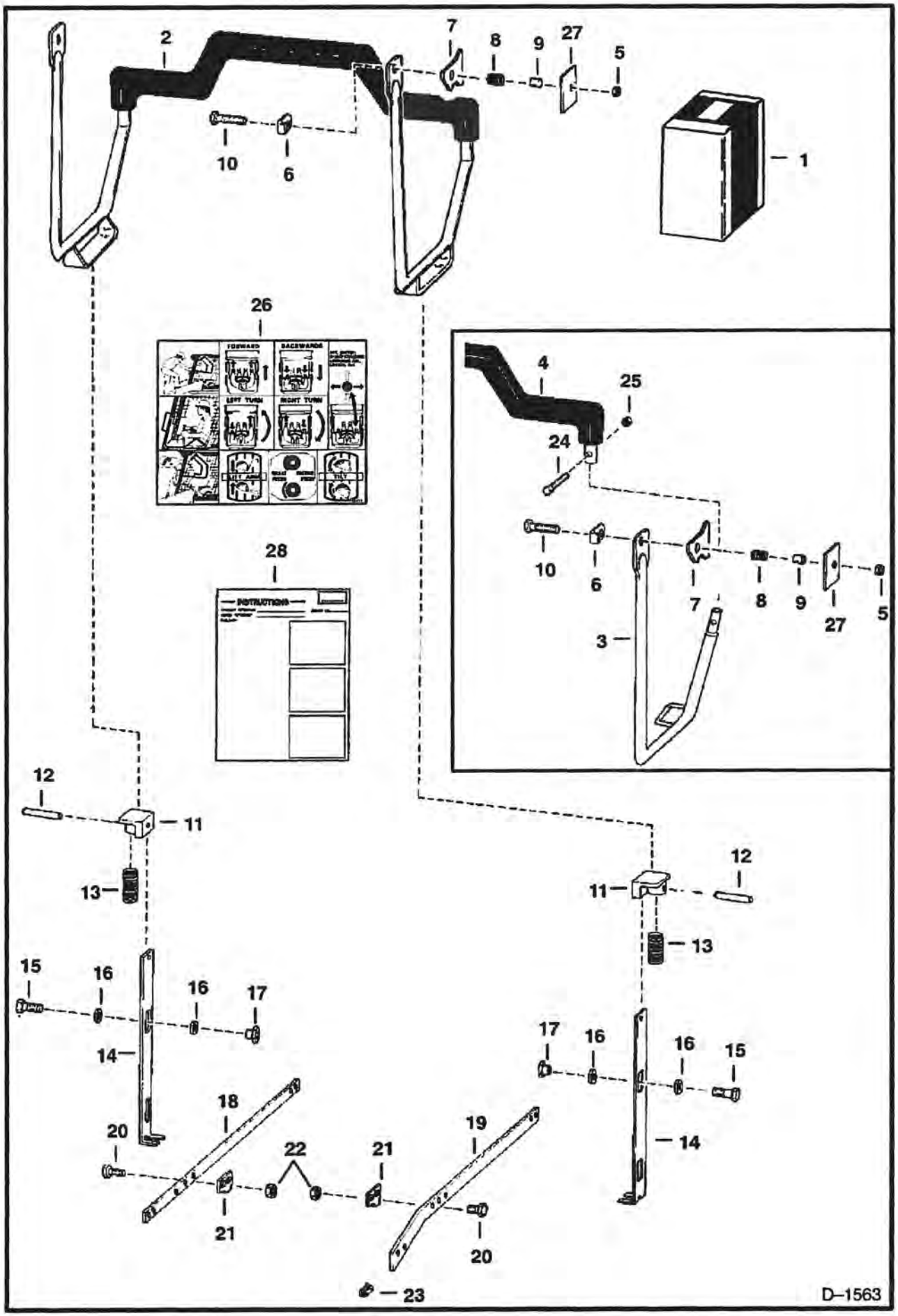
2
7
8
9
27
5
10
6
1
26
FORWARD
BACKWARD
LEFT TURN
RIGHT TURN
4
25
24
10
6
7
8
9
27
5
3
28
INSTRUCTIONS
12
11
13
15
16
16
17
14
18
20
22
21
21
19
20
23
12
11
13
17
16
16
15
14
D–1563

SEAT BAR KIT (Cont'd)

Ref No	Part Number	Description	Remarks	Serial Number	Qty
1	6563500	KIT	Ref. 2 - 28		1
2	6706324	SEAT BAR	1 Piece W/Arms - Was 6564588 [A]		1
3		ARM	NAP - R.H. - Order Ref. 2 - Was 6563295 [A]		1
3		ARM	NAP - L.H. - Order Ref. 2 - Was 6563296 [A]		1
4		BAR	NAP - Order Ref. 2 - Was 6563095 [A]		1
5	85D000006B	NUT			3
6	6563557	WASHER	angle		2
7	6563313	RETAINER			2
8	6503387	SPRING			2
9		BUSHING	NAP - Order 6564507 & 6564506		2
9	6564507	BUSHING			2
10	17C000632B	BOLT			2
11	6563148	BLOCK			2
12	14J002512B	ROLL PIN			2
13	6702430	SPRING	Was 6563149 [A]		2
14	6563150	LOCK			2
15	17C000512B	BOLT			5
16	6700170	WASHER	Was 6563152 [A]		8
17	6559479	NUT			4
18	6563147	BAR			1
19	6563569	BAR			1
20	17C000614B	BOLT			4
21	6563151	LINK			2
22	83D000006B	NUT			4
23	6558077	LINK			1
24	17C000420B	BOLT			2
25	85D000004B	NUT			2
26	6569021	DECAL	Was 6561381 [A]		1
27	6564506	WASHER			2
28	6566083	INSTRUCTIONS			1

SEAT BAR KIT
(Compression Spring)

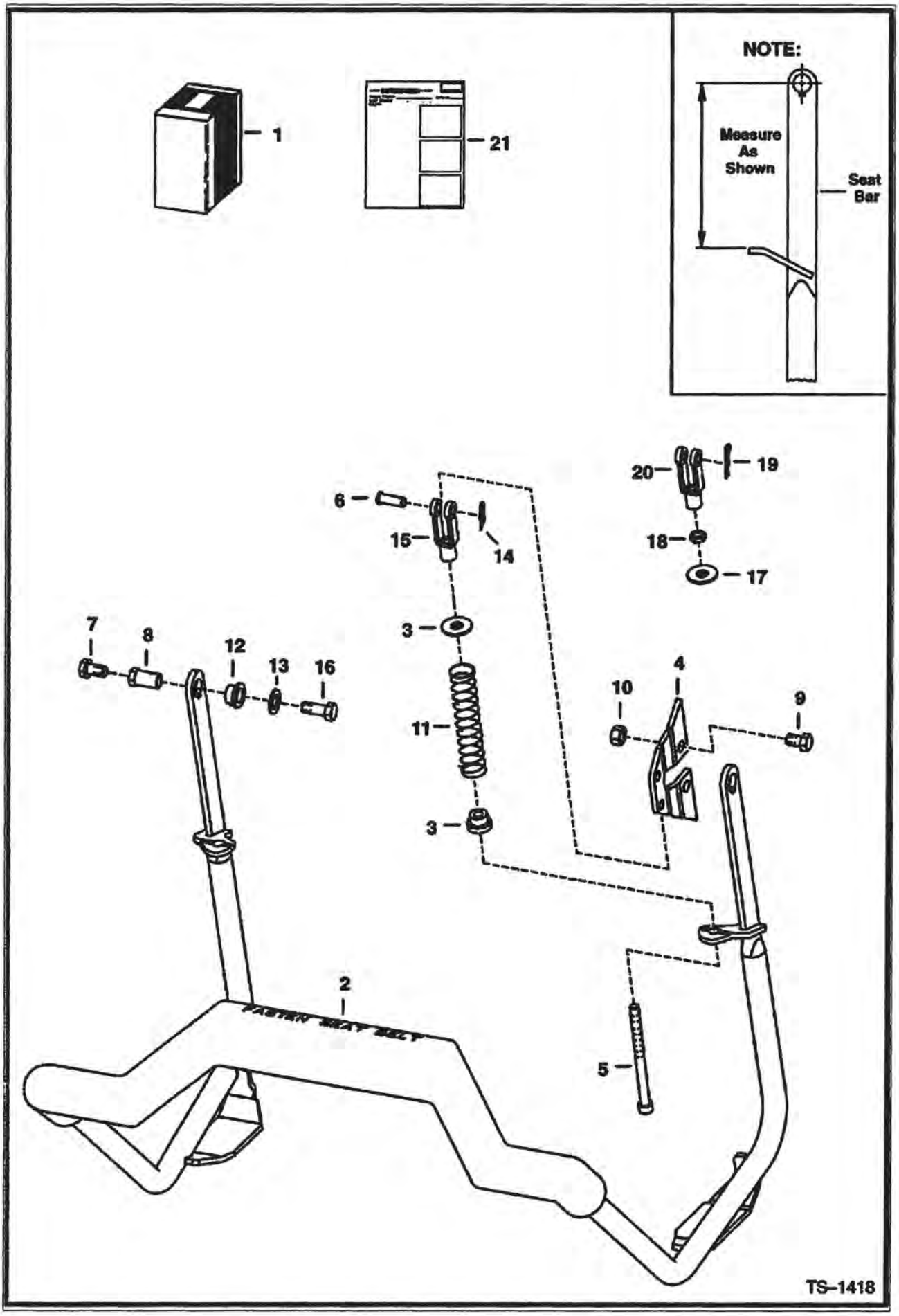

SEAT BAR KIT (Cont'd)
(Compression Spring)

Ref No	Part Number	Description	Remarks	Serial Number	Qty
1	6713853	KIT	Ref. 2 - 18 & 21		1
2		SEAT BAR	NAP - Order 6716777 Seat Bar & (2) ea. of Ref. 3, 5, 14 & 15 - 6.88" (174,8mnm) center of top hole to weld on tab - SEE NOTE - Was 6710661 [A]		1
2	6716777	SEAT BAR	6.13" (155,7mm) center of top hole to weld on tab - SEE NOTE - Was 6713609 [A]		1
3	6710659	BUSHING	Used W/NAP 6710661 Seat Bar		2
3	6710659	BUSHING	Used W/6716777 Seat Bar		4
4	6710660	MOUNT			2
5	6713887	BOLT			2
6	4F006106B	PIN	clevis		2
7	35C000608B	BOLT			2
8	6706962	BUSHING			1
9	17C000712B	BOLT			2
10	95D000007B	NUT	Was 91D000007B [A]		2
11	6701535	SPRING			2
12	6680441	BUSHING	Was 6664882 [A]		2
13	25E000017B	WASHER			2
14	6631418	PIN	Used W/6716777 Seat Bar		2
15	6713589	CLEVIS	2.09 in (53,1 mm) Long - Used W/6716777 Seat Bar		2
16	17C000612B	BOLT			2
17	6571991	GUIDE	Used W/NAP 6710661 Seat Bar		2
18	8D000006B	NUT	jam - Used W/NAP 6710661 Seat Bar		2
19	1306637B	PIN	cotter - Used W/NAP 6710661 Seat Bar - Not in Kit		2
20	2J006208B	CLEVIS	2.85in (72,4 mm) long - Used W/NAP 6710661 Seat Bar - Not In Kit		2
21	6900096	INSTRUCTIONS			1

SEAT BAR KIT
(Forward Position - Compression Spring)

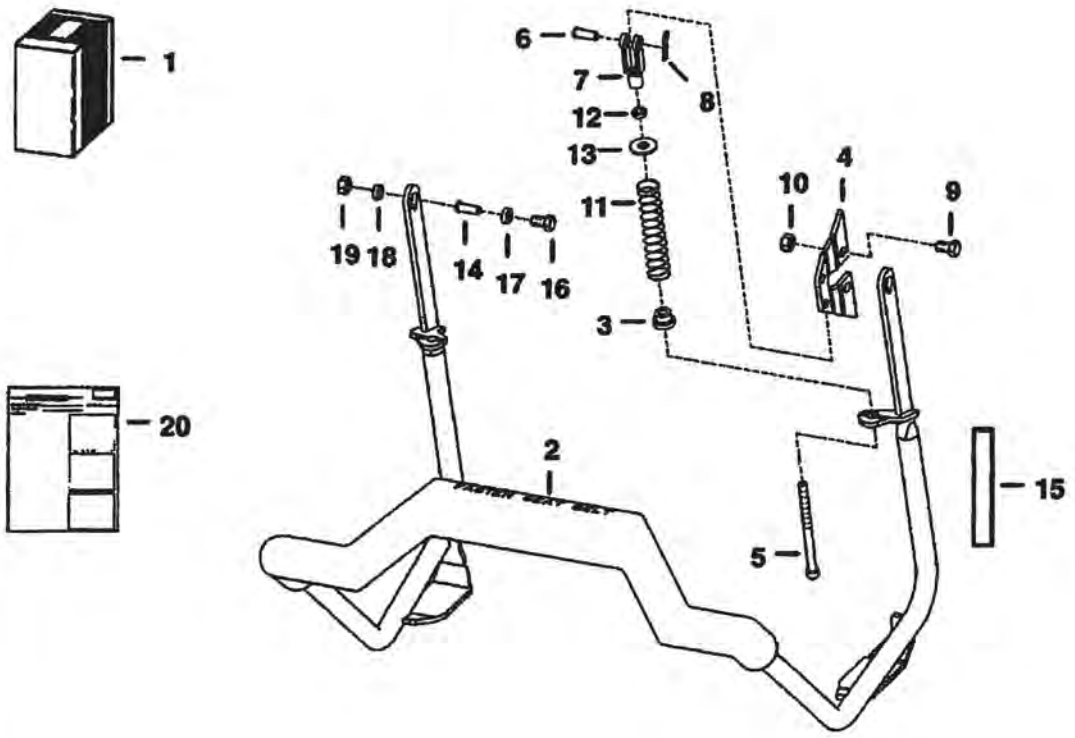

B–17259

SEAT BAR KIT (Cont'd)
(Forward Position - Compression Spring)

Ref No	Part Number	Description	Remarks	Serial Number	Qty
1	6714285	KIT	Ref. 2 - 16 & 20		1
2	6716779	SEAT BAR	W/Ref. 15 - Was 6714282 [A]		1
3	6710659	BUSHING			2
4	6710660	MOUNT			2
5	6713887	BOLT			2
6	4F006106B	PIN	clevis		2
7	6713589	CLEVIS			2
8	6631418	PIN			2
9	17C000712B	BOLT			2
10	91D000007B	NUT			2
11	6701535	SPRING			2
12	8D000006B	NUT	jam		2
13	6571991	GUIDE			2
14	6680441	BUSHING	Was 6664882 [A]		2
15	6714629	DECAL			1
16	17C000612B	BOLT			2
17	25E000017B	WASHER			2
18	6706962	BUSHING			1
19	35C000608B	BOLT			2
20	6900096	INSTRUCTIONS			1

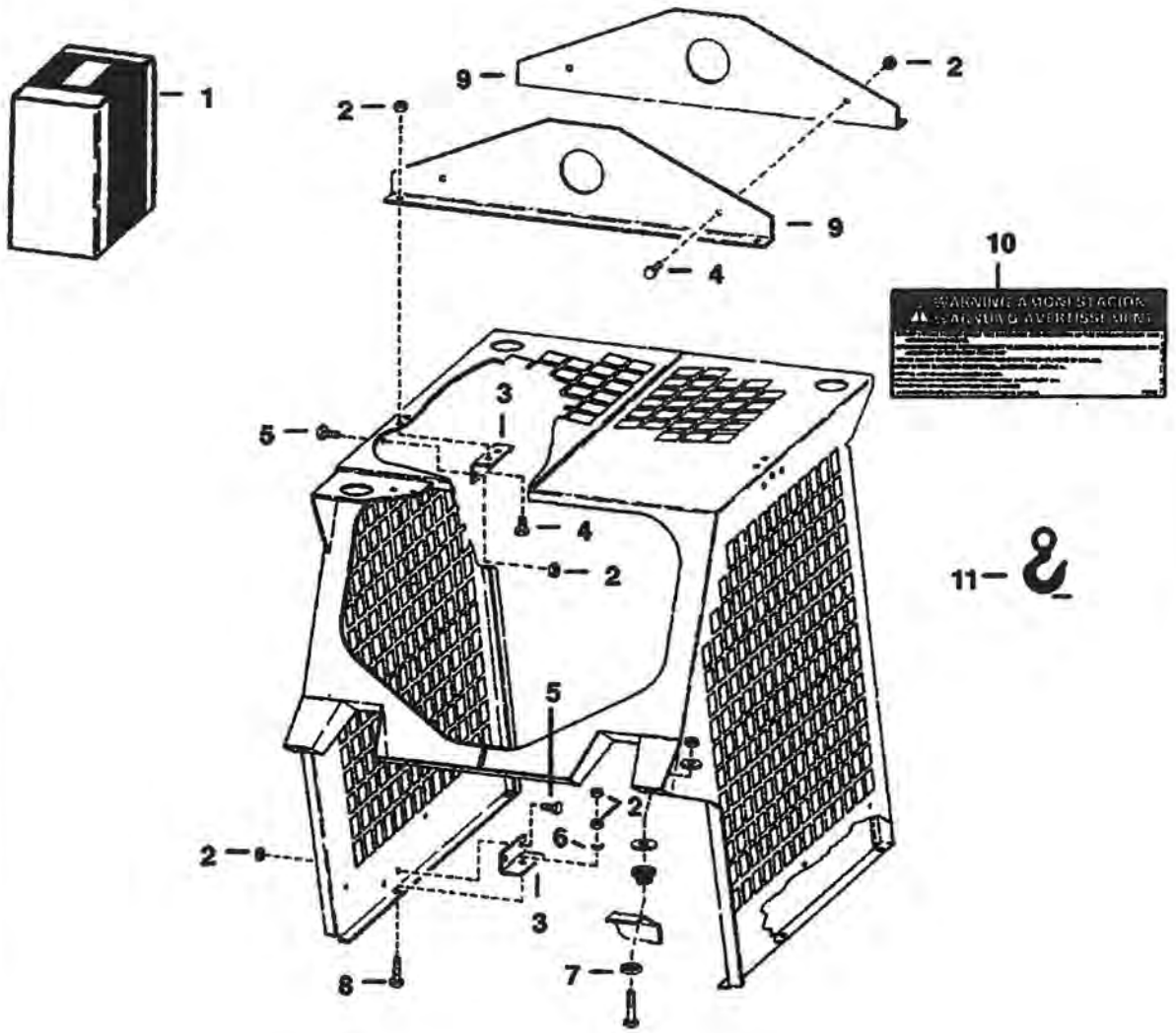

B–20796

Ref No	Part Number	Description	Remarks	Serial Number	Qty
1		KIT	NAP - Ref. 2 - 10 - Order 6568041		1
2	61D000008B	NUT			20
3	6560174	ANGLE			4
4	17C000820B	BOLT			6
5	17C000816B	BOLT			10
6	773085B	WASHER			2
7	6560900	RETAINER			4
8	17C000836B	BOLT			2
9	6560175	ANGLE			2
10	6565932	DECAL	safety		2
11	6533898	DECAL	Hook		1

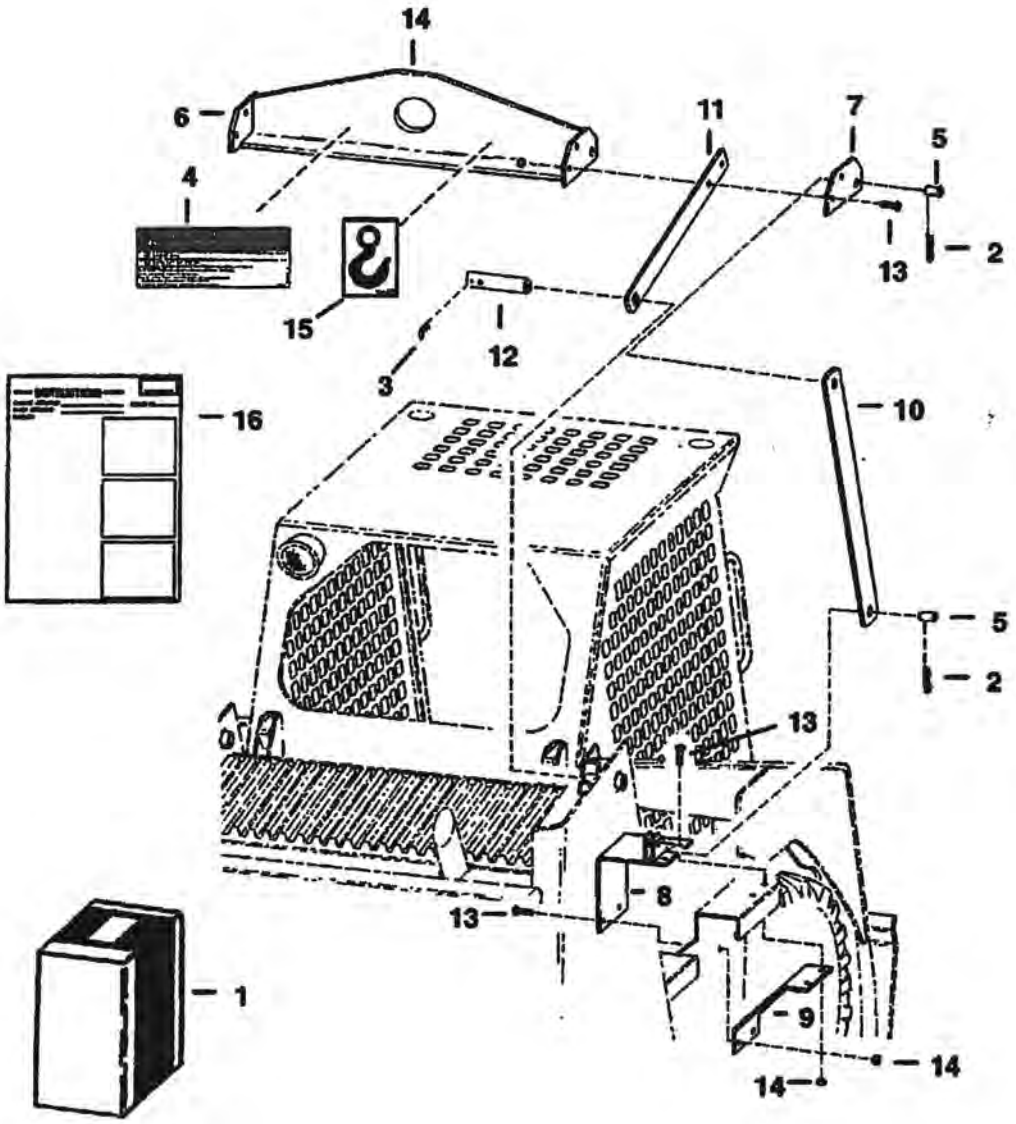
14
6
11
7
5
4
13
2
15
12
3
16
10
5
2
13
8
13
1
9
14
14
B–20696

Ref No	Part Number	Description	Remarks	Serial Number	Qty
1	6568041	KIT	Ref. 2 - 16		1
2	1320075	COTTER PIN			4
3	6005562	PIN			2
4	6565932	DECAL			2
5	6567838	PIN			4
6	6568182	ANGLE			1
7	6568184	MOUNT			2
8	6568188	MOUNT			1
8	6568189	MOUNT			1
9	6568190	BRACE			2
10	6568191	ARM			2
11	6568192	ARM			2
12	6568193	PIN			2
13	17C000824B	BOLT			12
14	85D000008B	NUT			12
15	6533898	DECAL	Hook		1
16	6566946	INSTRUCTIONS			1

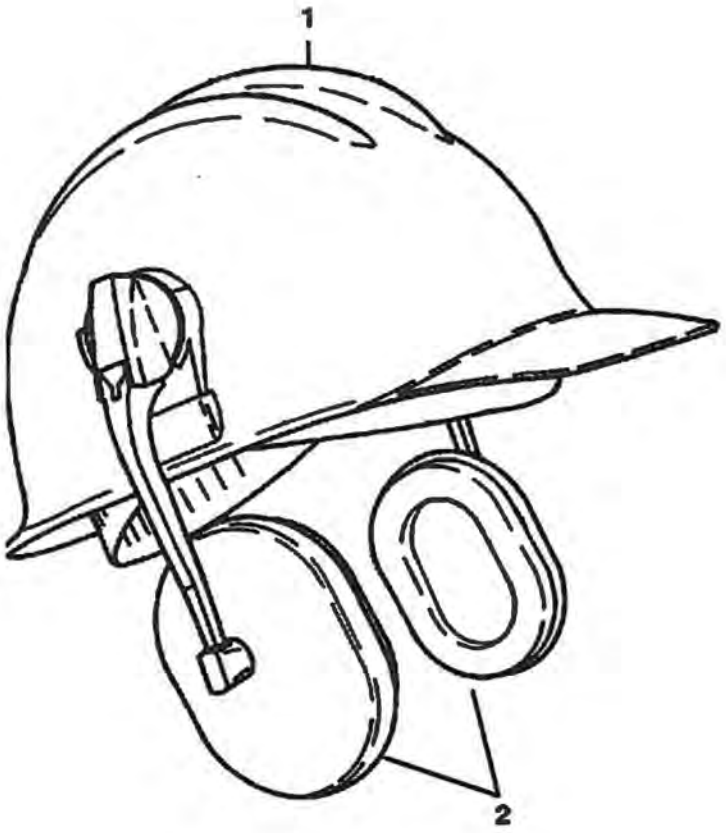

B–3111

SOUND REDUCTION HARDHAT (Cont'd)

Ref No	Part Number	Description	Remarks	Serial Number	Qty
1	6559552	HARDHAT			1
2	6559775	EARMUFFS			1

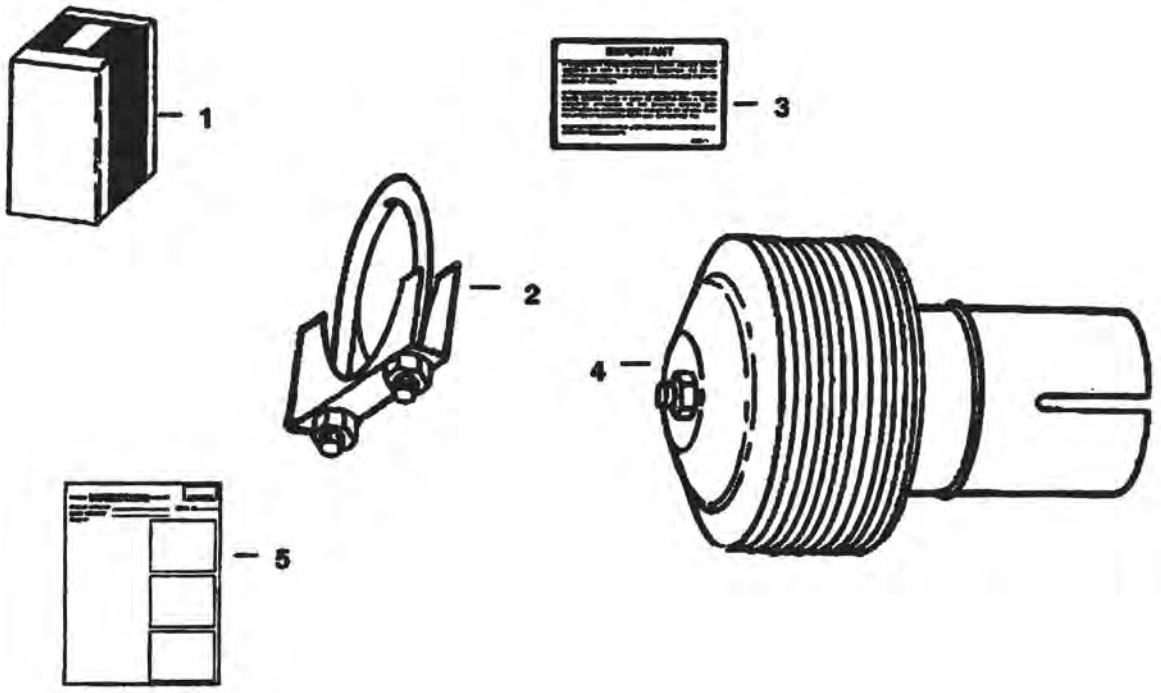
1
2
3
4
5
A–2628

SPARK ARRESTOR (Cont'd)

Ref No	Part Number	Description	Remarks	Serial Number	Qty
1	6560836	KIT	spark arrestor - Ref. 2 - 5		1
2	710705B	CLAMP			1
3	6560572	DECAL			1
4	6560370	ARRESTOR	spark		1
5	6556541	INSTRUCTIONS			1

STROBE LIGHT
(Amber - 2414 ALW)

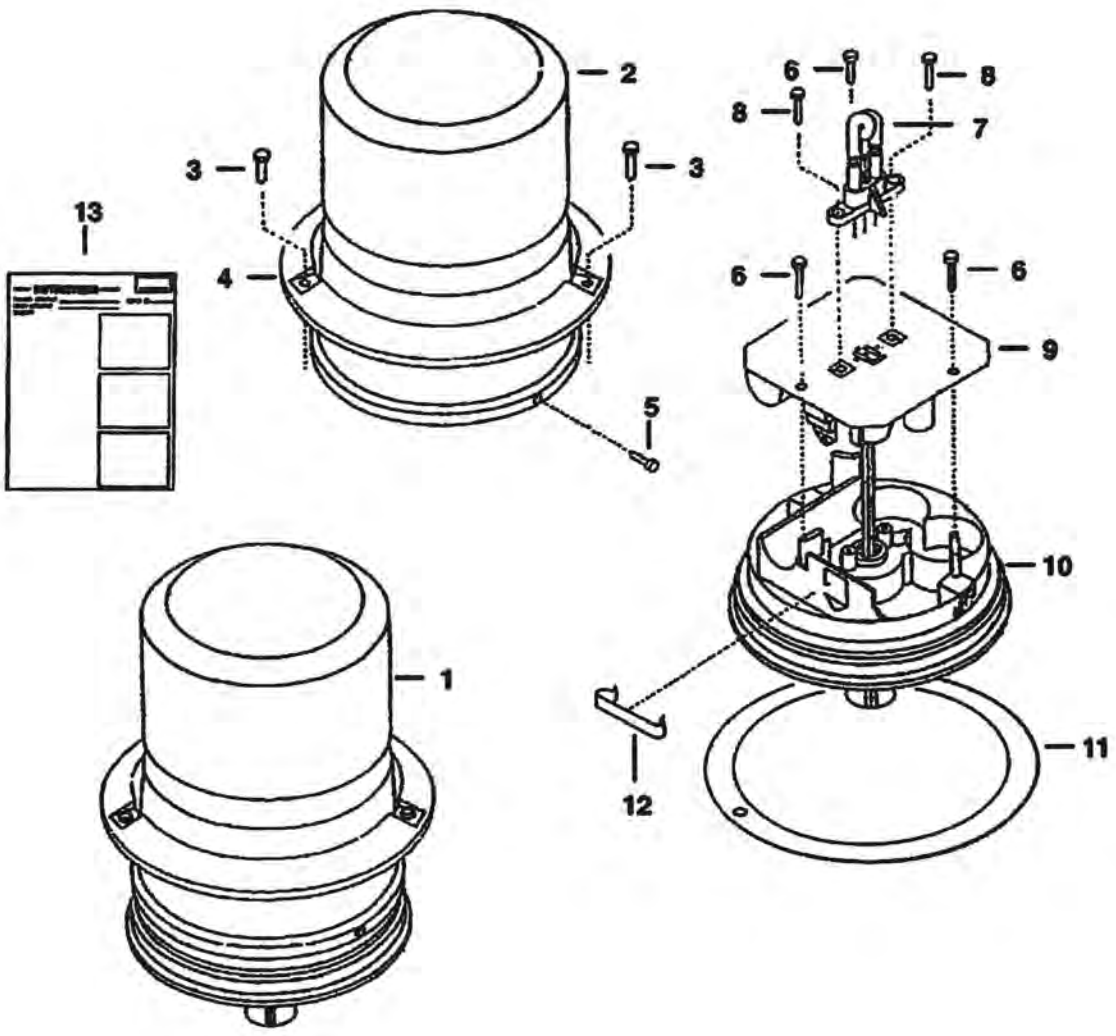

STROBE LIGHT (Cont'd)
(Amber - 2414 ALW)

Ref No	Part Number	Description	Remarks	Serial Number	Qty
1		KIT	NAP - strobe light - Ref. 2 - 13 - Order 6587526 - Was 6659815 [A]		1
2		LENS	NSS - amber - Was 6659971 [A]		1
2		LENS	NSS - blue - Not In Kit - Was 6660247 [A]		1
3		SCREW	NSS		3
4		COLLAR	NSS - mounting - Was 6659974 [A]		1
5		SCREW	NSS		1
6		SCREW	NSS		3
7	6659972	FLASH TUBE	Was NSS [D]		1
8		SCREW	NSS		2
9		POWER SUPPLY	NSS		1
10		BASE	NSS		1
11		GASKET	NSS - Was 6659973 [A]		1
12		RETAINER	NSS		1
13	6720856	INSTRUCTIONS			1

STROBE LIGHT KIT
(Amber - 3414ALW)

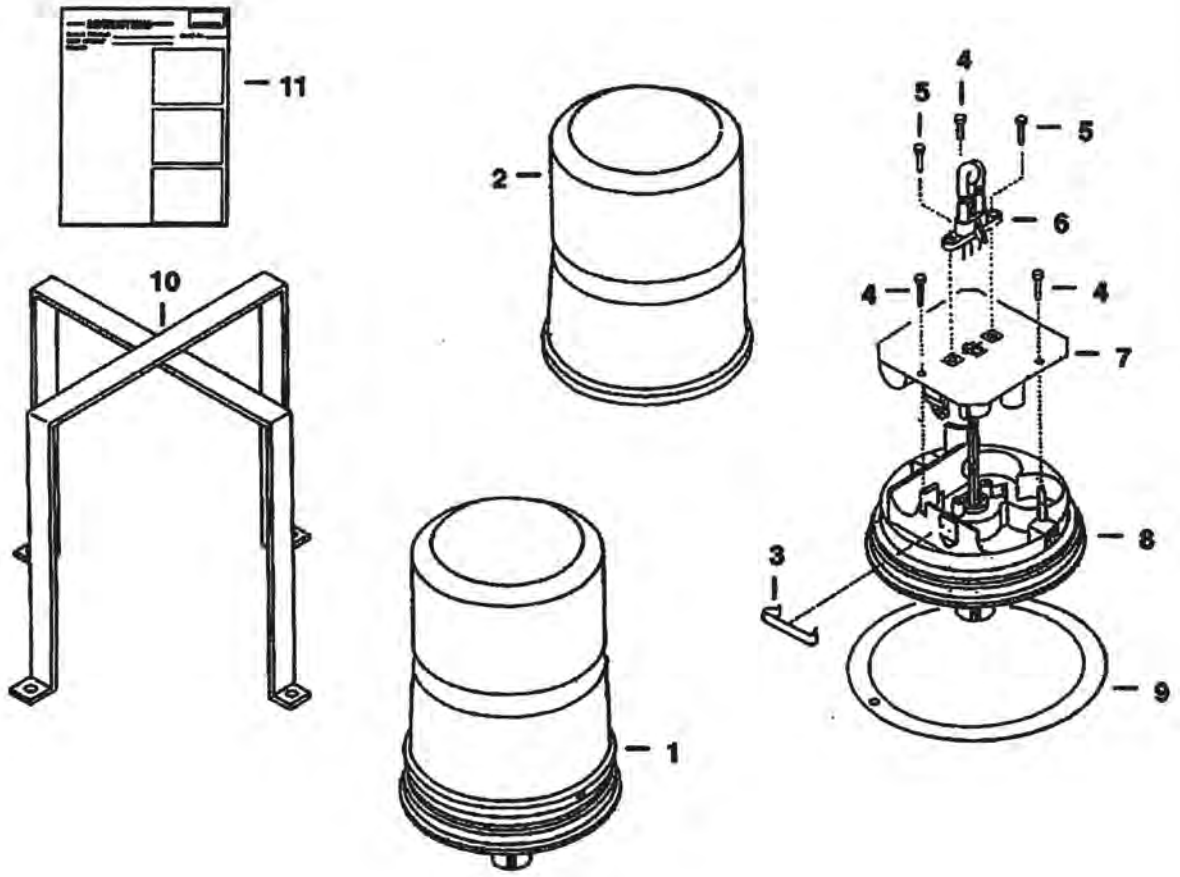

B–14104

STROBE LIGHT KIT (Cont'd)
(Amber - 3414ALW)

Ref No	Part Number	Description	Remarks	Serial Number	Qty
1	6587526	KIT	strobe light - Ref. 2 - 10		1
2	6665021	LENS	amber		1
2	6665025	LENS	blue - Not in Kit		1
3		RETAINER	NSS		1
4		SCREW	NSS		3
5		SCREW	NSS		1
6	6665022	FLASH TUBE			1
7		POWER SUPPLY	NSS		1
8		BASE	NSS		1
9	6665023	GASKET			1
10	6720856	INSTRUCTIONS			1
11	6665024	BRANCH GUARD			1

TILT CYLINDER STOP

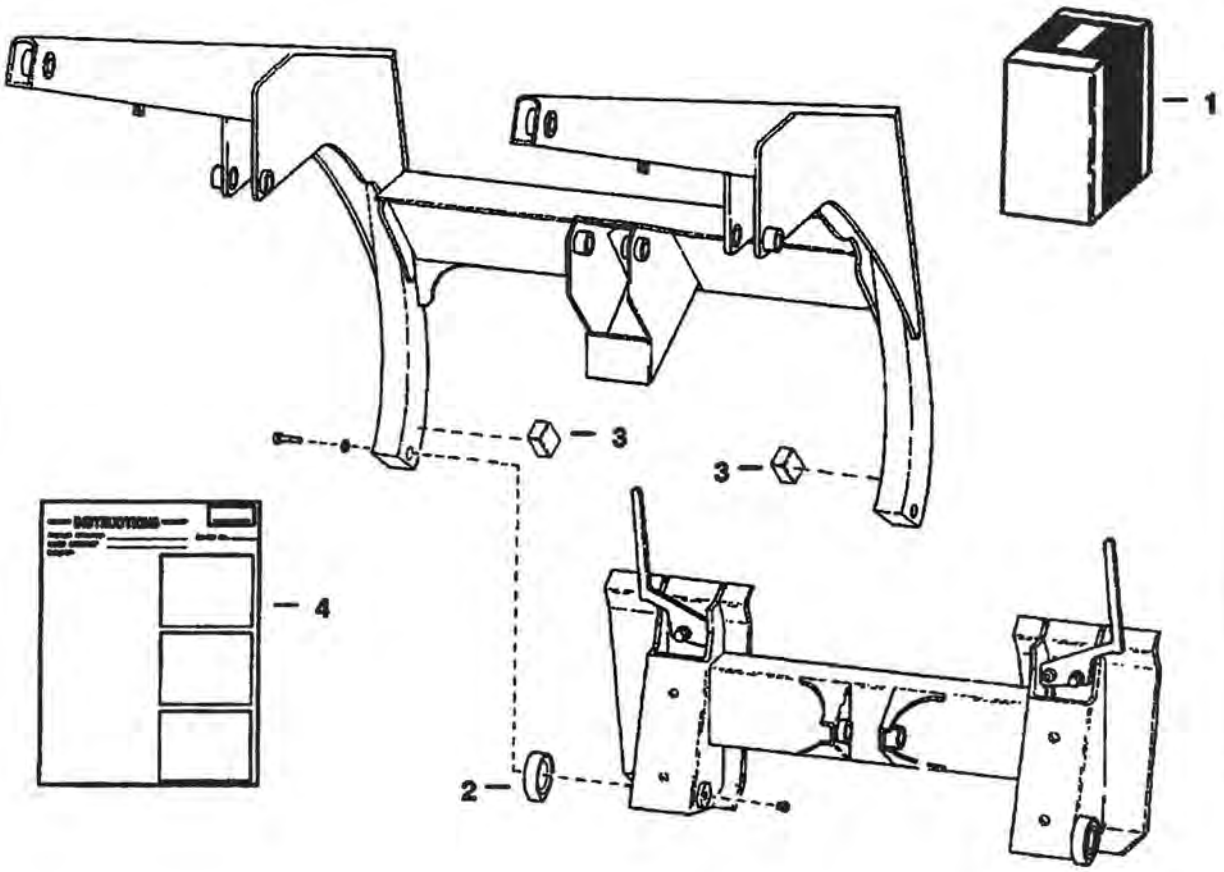

TILT CYLINDER STOP (Cont'd)

Ref No	Part Number	Description	Remarks	Serial Number	Qty
1	6560898	KIT	W/Ref. 2-4		1
2	6560895	STOP			2
3	6560896	STOP			2
4	6556613	INSTRUCTIONS			1

TILT STOP KIT

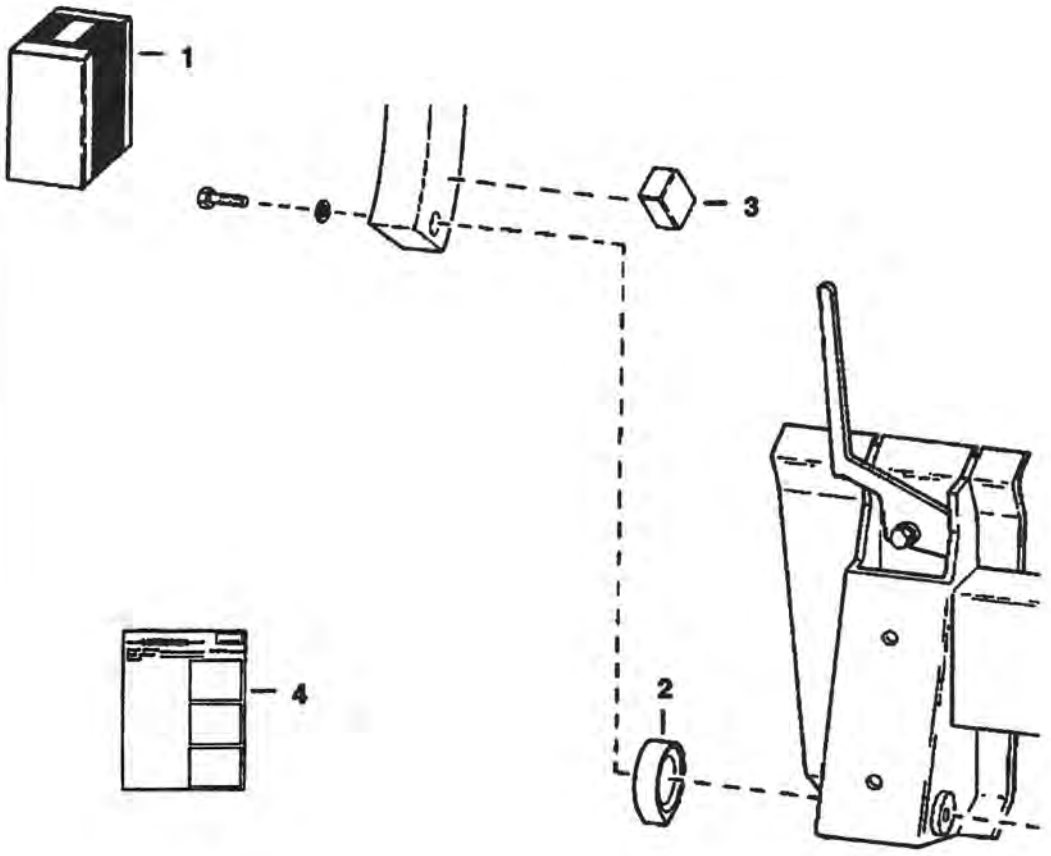

TILT STOP KIT (Cont'd)

Ref No	Part Number	Description	Remarks	Serial Number	Qty
1	6705179	KIT	tilt stop		1
2	6705169	STOP	tilt		2
3	6705170	STOP	tilt		2
4	6722308	INSTRUCTIONS			1

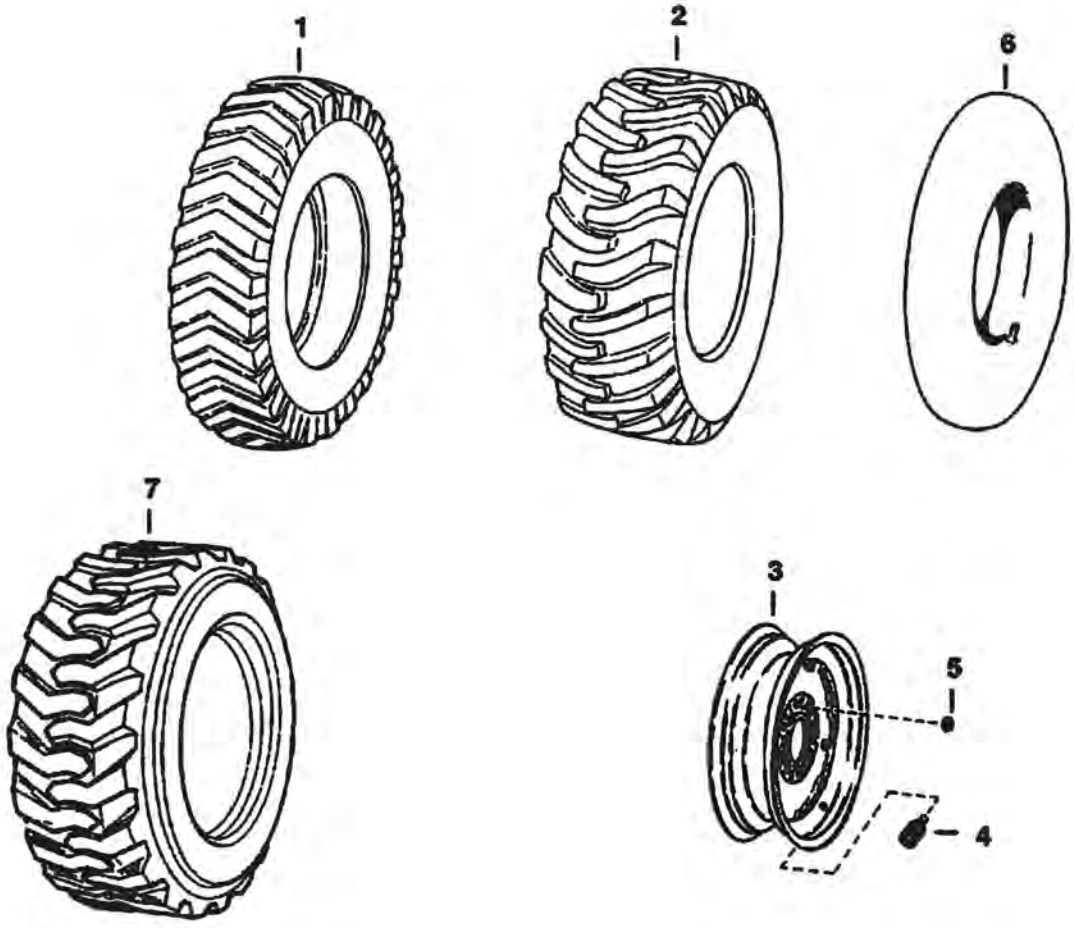

NOTE: For Wheel Rim Identification See BTI 197.

B–20766

Ref No	Part Number	Description	Remarks	Serial Number	Qty
1	6665724	TIRE	nylon, 6 ply rating (7.00 x 15 bar lug) Was 6659474 [A]		4
1	6665724	TIRE	nylon, 6 ply (7.00 x 15) Dico		4
2		TIRE	NAP - nylon, 6 ply rating (16.5 x 10 flo track lug) - Was 6550826 [A]		4
3	6515792	RIM	See BTI197 Used W/Ref. 1		4
3	6565237	RIM	See BTI197 Used W/Ref. 2		4
4	1614765B	STEM	tubeless tire		4
5	6557188	NUT	wheel - 1/2"		24
5	6564669	NUT	wheel - 9/16"		24
6	6515045	TUBE	Used W/Ref. 1		4
6	6516033	TUBE	Used W/Ref. 2		4
7	6704180	TIRE	10 x 16.5 Bar Lug Flotation - Dico		4

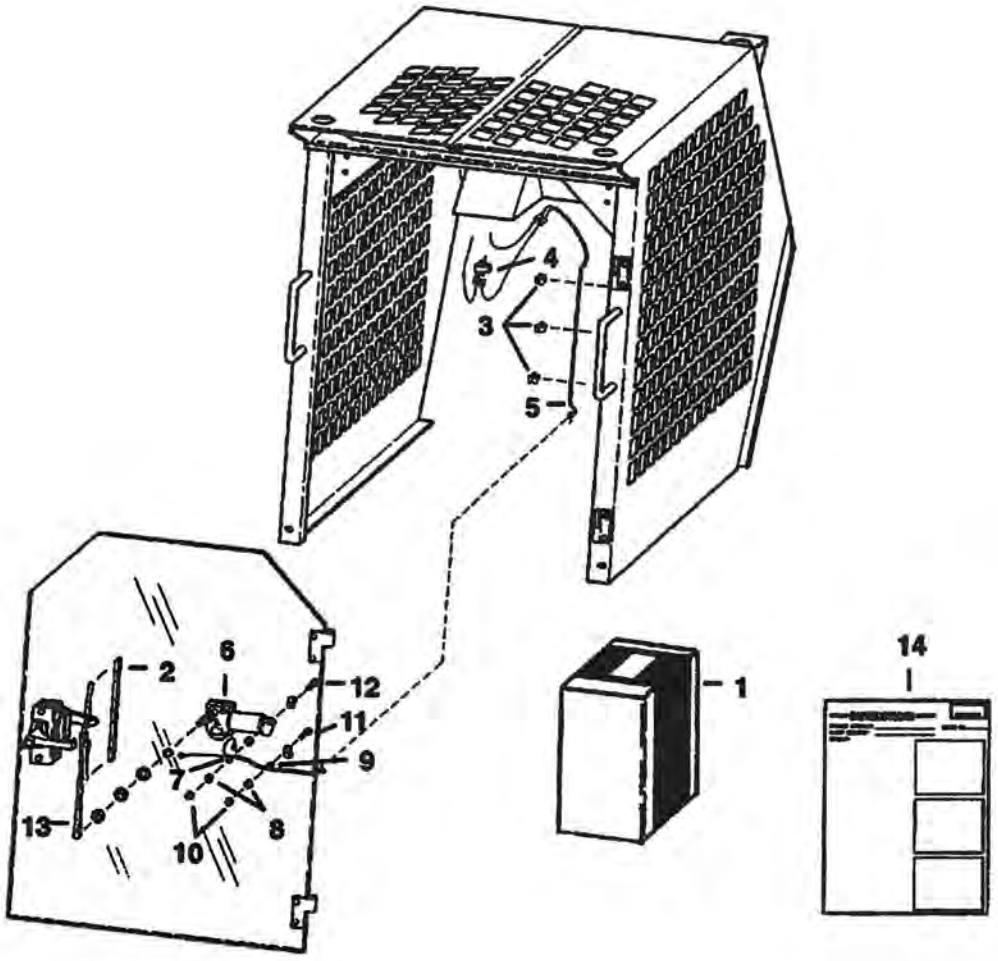

E–1293

Ref No	Part Number	Description	Remarks	Serial Number	Qty
1	6562123	KIT	wiper - Ref. 2 - 14		1
2	1550697B	BLADE	wiper		1
3	6514850	CLIP			3
4	6515521	SWITCH	toggle		1
5	6561592	HARNESS			1
6	6561971	MOTOR			1
7	12E000010B	WASHER			1
8	25E000010B	WASHER			3
9	30H000014B	CLAMP			2
10	51D000010B	NUT			2
11	86G001012B	SCREW			1
12	86G001016B	SCREW			1
13	852454B	ARM			1
14	6556703	INSTRUCTIONS			1

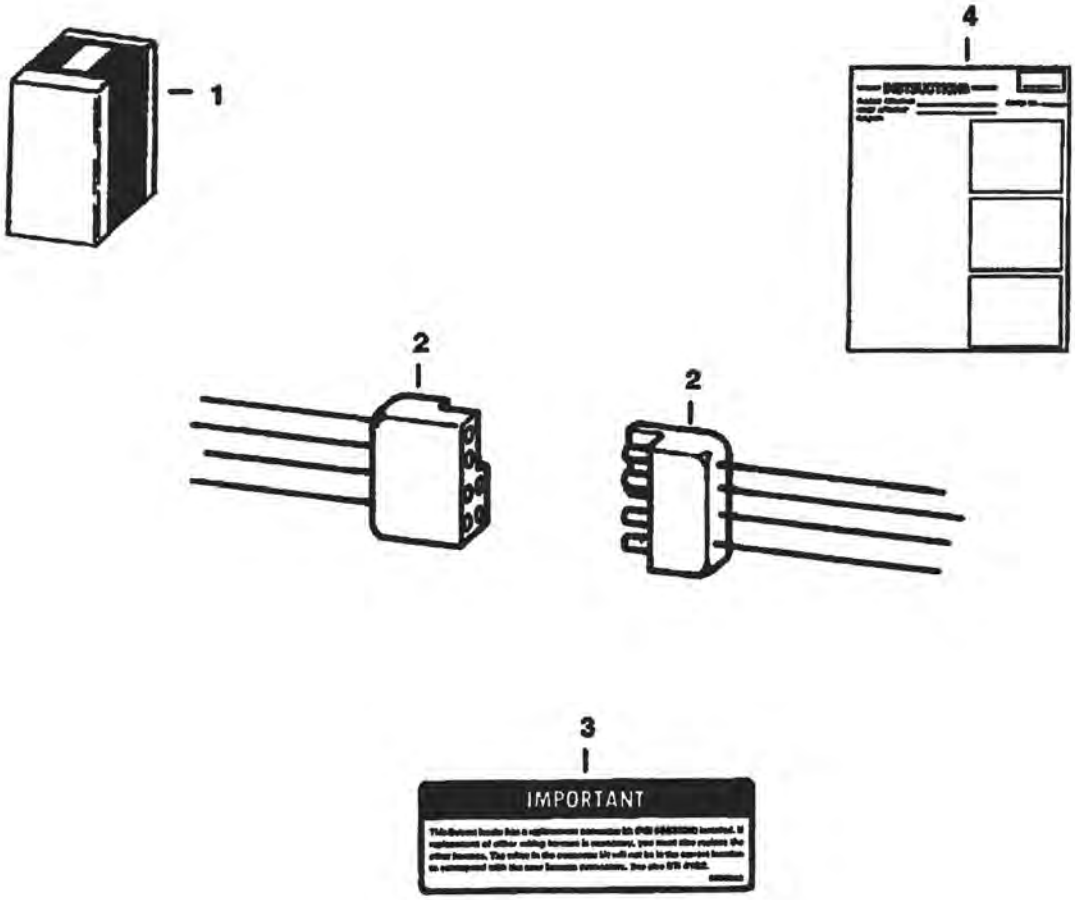

A–2765

WIRE HARNESS CONNECTOR (Cont'd)

Ref No	Part Number	Description	Remarks	Serial Number	Qty
1	6563326	KIT	See BTI182 connector - W/Ref. 2-4		1
2	6563325	CONNECTOR			2
3	6566242	DECAL			1
4	6566072	INSTRUCTIONS			1

BULK ITEMS
(See Note)

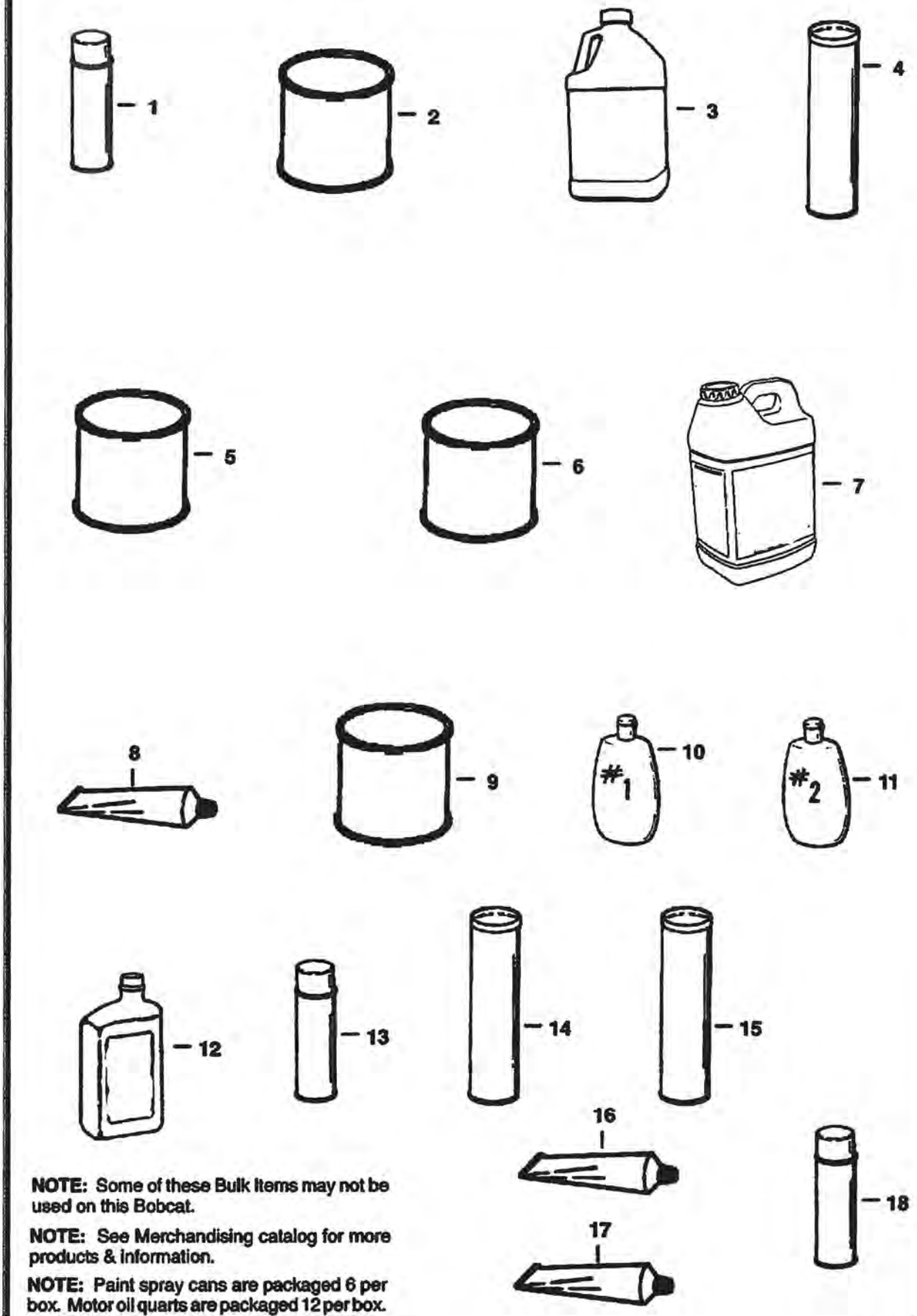

NOTE: Some of these Bulk Items may not be used on this Bobcat.

NOTE: See Merchandising catalog for more products & information.

NOTE: Paint spray cans are packaged 6 per box. Motor oil quarts are packaged 12 per box. Motor oil 1 gal. jugs are packaged 4 per box.

B–20652

BULK ITEMS (Cont'd)
(See Note)

Ref No	Part Number	Description	Remarks	Serial Number	Qty
1	6902228	PAINT	orange - Spray Can - See Note - Was 6722783 [A]		x
1	6902229	PAINT	charcoal - Spray Can - See Note - Was 6722786 [A]		x
1	6902230	PAINT	white - Spray Can - See Note - Was 6722789 [A]		x
1	6902231	PAINT	red - spray can - See Note - Was 6722790 [A]		x
2		PAINT	NAP - Orange - Gallon - ALso Order Ref. 5 - Was 6722781 [A]		x
2	6902233	PAINT	orange - Qt. - Was 6722782 [A]		x
2		PAINT	NAP - Charcoal - Gallon - Also Order Ref. 5 - Was 6722784 [A]		x
2	6902234	PAINT	charcoal - Qt. - Was 6722785 [A]		x
2		PAINT	NAP - White - Gallon - Also Order Ref. 5 - Was 6722787 [A]		x
2	6902235	PAINT	white - Qt. - Was 6722788 [A]		x
3	6724094	ANTI-FREEEZE	gallon - PG - premixed		x
3	6724354	ANTI-FREEZE	gallon - PG - concentrate		x
4	6633583	SEALANT	chaincase covers		x
5		REDUCER	NAP - Gallon - Was 6653517 [A]		x
6		PRIMER	NAP - Gallon - Was 6653518 [A]		x
6	6902232	PRIMER	spray can - Was 6657743 [A]		x
7	6903117	HYD FLUID 2.5 GAL. 2	Was 6563328 [A]		x
7	6903118	HYD. FLUID 5GAL	Was 6722344 [A]		x
7		BLACK GOLD	NAP - 30 Gallon Drum		x
7	6903119	HYD. FLUID 55GAL	Was 6563330 [A]		x
8	6599360	SEALANT	electrical - 3 oz. tube		x
9	6903121	GEAR LUBE 12	Was 6634393 [A]		x
10	6630188	POLISH	window - #1 (8 oz.)		x
10		POLISH	NAP - Window-1 (64 oz.) - Order 6630188 - Was 6630190 [A]		x
11	6630189	POLISH	window - #2 (8 oz.) - scratch remover		x
11		POLISH	NAP - Window-2 (64 oz.) - Scratch Remover - Order 6630189 - Was 6630191 [A]		x
12	6903109	OIL 30W QT. 12	Was 6657303 [A]		x
12	6903107	OIL 10W30 QT. 12	Was 6657301 [A]		x
12	6903105	OIL 15W40 QT. 12	Was 6657299 [A]		x
12	6903108	OIL 10W30 GAL. 6	Was 6724557 [A]		x
12	6903106	OIL 15W40 GAL. 6	Was 6724558 [A]		x
12	6903110	OIL 30W GAL. 6	Was 6724559 [A]		x
12	6903113	OIL 15W40 2.5 GAL. 2	Was 6674204 [A]		x
12	6903112	OIL 10W30 2.5 GAL 2	Was 6674205 [A]		x
12	6903111	OIL 30W 2.5 GAL 2	Was 6674206 [A]		x
13	6652818	ADHESIVE	insulation - spray can		x
14	6903122	GREASE 10	Was 6658266 [A]		x
15	6599719	GREASE	14.5 oz. cartridge - For fan idler bearing		x
16	6650407	ADHESIVE	1 oz. tube		x
17	6650388	SEALANT	flange		x
18	6736644	PAINT	Orange - 5 oz. Spray Can		x

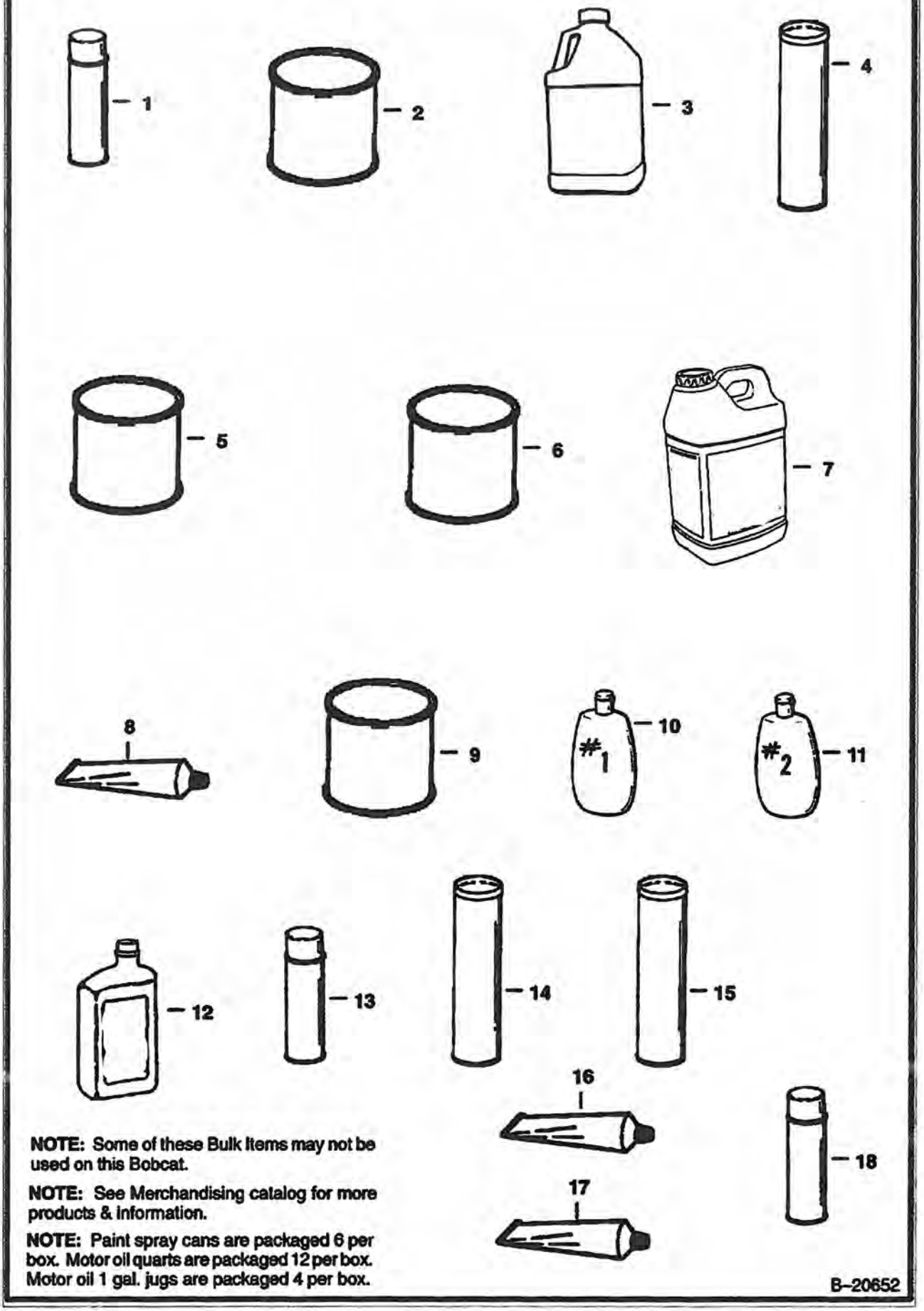

NOTE: Some of these Bulk Items may not be used on this Bobcat.

NOTE: See Merchandising catalog for more products & information.

NOTE: Paint spray cans are packaged 6 per box. Motor oil quarts are packaged 12 per box. Motor oil 1 gal. jugs are packaged 4 per box.

B-20652

BULK ITEMS (Cont'd)
(See Note)

Ref No	Part Number	Description	Remarks	Serial Number	Qty
18	6736641	PAINT	Charcoal - 5 oz. Spray Can		x
18	6736642	PAINT	White - 5 oz. Spray Can		x
18	6736645	PAINT	Red - 5 oz. Spray Can		x

NUMERICAL INDEX

Part No.	Description	Was	Code	Page
1021036B	GROMMET			168
10C000512B	BOLT	6553808	A	4, 22, 84, 86, 88, 106, 144, 150, 168
10H000025B	GREASE ZERK			6, 8, 14
10H000035B	GREASE ZERK			6, 8, 14
11H000015B	GREASE ZERK			8
11H000025B	GREASE ZERK			6, 112
12D000006B	NUT			84, 86, 172
12D000008B	NUT			90, 92, 94
12D000010B	NUT			150, 158
12D000012B	NUT			88
12E000006B	WASHER			84, 86
12E000010B	WASHER			200
12E000012B	WASHER			88
12F000013B	PLUG			132
1300057B	PLUG			84
1303141B	WASHER			10, 12
1303485B	CONNECTOR			56
1304938B	BOLT			52
1306637B	PIN			52, 178
1319451B	FUSE			86
1320075	COTTER PIN			184
13D000006B	NUT			34, 36
14D000008B	NUT			134
14D000010B	NUT			110
14G001008B	BOLT			150
14J001210B	ROLL PIN	664131	A	132
14J002512B	ROLL PIN			176
14J003740B	PIN			4
14J005032B	PIN			14
1550695	HANDLE			150
1550697B	BLADE			200
15K000005B	ADAPTER			62
15K000006B	ADAPTER			58, 62
15K000007B	CONNECTOR			58, 62
15KB01216B	ADAPTER	712555	A	56
1614765B	STEM			198
16F000002B	PLUG	6512916	A	116
16F000004B	PLUG			76
1735188B	INDICATOR			102
1737762B	PIN			52
17C000408B	BOLT			116, 130, 132, 172
17C000410B	BOLT			24, 120
17C000412B	BOLT			116, 172
17C000420B	BOLT			176
17C000424B	BOLT			114
17C000428B	BOLT	17C000430B	B	114
17C000508B	BOLT			116
17C000510B	BOLT			116, 120
17C000512B	BOLT			18, 34, 88, 102, 144, 150, 162, 164, 176
17C000514B	BOLT			102, 116
17C000516B	BOLT			126, 150, 170
17C000522B	BOLT			80, 106
17C000528B	BOLT			114
17C000532B	BOLT			84

Code for disposition of old part number

A -- Use up

B -- Use on other application (See PNI)

C -- File PDR Report with Bobcat Parts Sales

D -- Part Number Error

Part No.	Description	Was	Code	Page
17C000536B	BOLT			32
17C000560B	BOLT			84
17C000564B	BOLT			10
17C000572B	BOLT			84, 8
17C000612B	BOLT			79, 80, 102, 150, 174, 178, 180
17C000614B	BOLT			80, 88, 172, 176
17C000616B	BOLT			48, 50, 52, 82, 166
17C000620B	BOLT			8, 14, 34, 36, 80, 106
17C000622B	BOLT			52
17C000624B	BOLT			80, 102, 106
17C000626B	BOLT			80
17C000628B	BOLT			80
17C000632B	BOLT			6, 8, 176
17C000636B	BOLT	17C000634B	B	120
17C000640B	BOLT			5, 6, 7, 8, 58, 62
17C000644B	BOLT			14, 106
17C000648B	BOLT			8, 82
17C000660B	BOLT			14
17C000692B	BOLT			80
17C000712B	BOLT			178, 180
17C000716B	BOLT			16
17C000746B	BOLT			124
17C000812B	BOLT			30
17C000816B	BOLT			4, 30, 182
17C000820B	BOLT			58, 62, 76, 102, 182
17C000824B	BOLT			58, 62, 184
17C000836B	BOLT	17C000826B	B	22, 102, 182
17C000836B	BOLT			22, 102, 182
17C000880B	BOLT			10, 12
17C000884B	BOLT			10, 12
17C000896B	BOLT			10, 12
17C001020B	BOLT			6, 8, 14
17C001064B	BOLT			6, 14
17D000002B	NUT			88
17E000010B	WASHER			134
17K000005B	ELBOW			58
17K000007B	ELBOW			56
18C000414B	BOLT			130
18C000616B	BOLT			112
18C000724B	BOLT			122
18C000788B	BOLT			72, 74
18C000792B	BOLT			72, 74
18C000828B	BOLT			26
18C001224B	BOLT			27, 28
18C001632B	BOLT			28
18C001636B	BOLT			28
18K000005B	ELBOW			62
1908806B	EXTINGUISHER			158
19F000001B	ADAPTER			88
1DM00006B	NUT			100
1JM04010B	DOWEL			122
232539B	BEARING			76
2343911B	STATOR	999392B	A	90, 92
24F000001B	BRACKET			102

Code for disposition of old part number
A -- Use up
B -- Use on other application (See PNI)
C -- File PDR Report with Bobcat Parts Sales
D -- Part Number Error

Part No.	Description	Was	Code	Page
25E000010B	WASHER			130, 150, 200
25E000013B	WASHER			118, 130
25E000015B	WASHER			88, 150, 170
25E000017B	WASHER			52, 172, 178, 180
25E000018B	WASHER			150
25E000019B	WASHER			130
25E000021B	WASHER			174
25E000029B	WASHER			80
25G000410B	BOLT			158
25K020026B	O-RING			116
25K020028B	O-RING			30
25K030100B	O-RING			30
25K030214B	O-RING			82
25K030216B	O-RING			82
25K030218B	O-RING			42
25K030226B	O-RING			44
25K030424B	O-RING			26
27E000006B	WASHER			110
27E000018B	WASHER			6
29CM00825B	SCREW			106, 148
2J006208B	CLEVIS			178
3004023	PLUG			134
30H000014B	CLAMP			200
30H000019B	CLAMP			18, 162
30H000022B	CLIP			88, 116
30H000024B	CLAMP			88
30H000031B	CLAMP			144
30H000041B	CLAMP			84, 86
30H000046B	CLAMP			88
30H000054B	CLAMP			24
30R000103B	TERMINAL			144
30R000104B	TERMINAL			162, 172
30R000107B	TERMINAL			172
31C000420B	BOLT			160
31C000512B	BOLT			116
31C000820B	BOLT			4
31C001064B	BOLT	17C001064B	B	8
3291290B	WING NUT			136
329884B	FAN			90, 92, 94
32DM00060B	NUT			98
3327196B	BOLT			110
335902B	BAND			136
33G000404B	SCREW			4
3493788B	CAP			138
35C000516B	BOLT	6554744	A	106, 116, 158
35C000516B	BOLT			106, 116, 158
35C000608B	BOLT	6557232	A	10, 12, 174, 178, 180
35C000608B	BOLT			10, 12, 174, 178, 180
3675725B	DIODE			88
36K000006B	CAP			102
37C000616B	BOLT	6514537	A	16, 110
38C000624B	BOLT	6564599	A	4
38C001036B	BOLT	6578166	A	14
3974866B	BEARING ASSY.	6511331	A	28

Code for disposition of old part number
A -- Use up
B -- Use on other application (See PNI)
C -- File PDR Report with Bobcat Parts Sales
D -- Part Number Error

Part No.	Description	Was	Code	Page
40K000002B	PLUG			116, 130, 132
40K000012B	PLUG			4
4148008B	BUSHING			98, 100
4148015	SPRING			98
41G001210B	SCREW	41G001208B	B	54
42H000006B	HOSE CLAMP			116
42H000012B	CLAMP			104
42H000032B	CLAMP	42H000024B	B	102, 106
42H000032B	CLAMP			102, 106
45G001008B	BOLT			90, 92, 94, 150
45G001212B	BOLT			132
45K000006B	ADAPTER			102
45K000007B	FITTING			36
46D000005B	NUT			88
46G000810B	BOLT			134
47G001010B	SCREW			134
47K000002B	PLUG			72, 74
47K000003B	PLUG			68, 70
47K000005B	PLUG			72, 74
48K000016B	O-RING			36
4CM00810B	BOLT			104, 114
4DM00006B	NUT			88, 148
4E000004B	WASHER			76, 116, 132
4E000005B	WASHER			98, 100, 116
4E000006B	WASHER			16, 76
4F005062B	PIN			174
4F006106B	PIN			178, 180
507695B	SNAP RING			78
51D000010B	NUT			200
5202123B	COUPLING			112
5207516B	OIL SEAL			130
54K030118B	O-RING	NSS	A	38, 40
54K030226B	O-RING	25K030226B	A	50
54K040124B	O-RING	NSS	A	38, 40
54K040300B	O-RING	58K000236B	B	50
562912B	ADAPTER			56
565073B	GROMMET	6557900	A	18
57D000005B	NUT	6511320	A	84, 86, 168
57D000005B	NUT			84, 86, 168
57D000006B	NUT			16, 52, 102, 106, 110
58K000012B	O-RING			72, 74
58K000024B	O-RING			42, 44
58K000136B	O-RING			40
58K000211B	O-RING			34
58K000232B	O-RING			42
58K000234B	O-RING			44
59D000006B	NUT			32, 34, 36
59D000008B	NUT	85D000008B	B	22
59F000004B	CONNECTOR			18, 162
5J000806B	KEY			76, 80
6005562	PIN			184
614142B	SLEEVE			144, 160, 162
616334B	BOOT			144
616783B	WASHER			112

Code for disposition of old part number

A -- Use up
B -- Use on other application (See PNI)
C -- File PDR Report with Bobcat Parts Sales
D -- Part Number Error

Part No.	Description	Was	Code	Page
616791B	WASHER			76
617904B	SPRING			58, 62
6190121	SPRING			72, 74
619021B	WASHER			14
61D000004B	NUT			24, 110, 172
61D000005B	NUT			22, 86, 88, 116, 162, 170
61D000006B	NUT			8, 16, 34, 58, 62, 80, 88, 150, 172
61D000007B	NUT			16
61D000008B	NUT			4, 102, 182
62D000005B	NUT			130, 132
62D000018B	NUT			42
631094B	WIRE			144
637641	SLEEVE			172
6502203	CLAMP			32, 34, 36
6503387	SPRING			110, 176
6505623	WASHER			110
6505813	CONNECTOR			102
6510596	CONNECTOR			148
6511921	CUSHION			20
6511923	CUSHION			20
6511957	BOLT			90, 92, 94
6512027	BUSHING			80
6512106	ELEMENT			2, 18
6512114	SEAL	6660126	B	142
6512138	VALVE			18
6512159	QUICK COUPLER			34
6512296	PLATE			66, 68, 70
6512298	PLATE			66, 68, 70
6512299	MANIFOLD			66, 68, 70
6512302	COVER			66, 68, 70
6512398	COVER			116
6512399	GASKET			108, 116
6512401	GASKET			108, 116
6512409	RINGS			122
6512411	RINGS			122
6512427	CAMSHAFT			120
6512429	RETAINER			120
6512430	BEARING			120
6512431	BEARING			120
6512436	CHAIN			120
6512437	PLATE			120
6512438	TENSIONER			122, 123, 124
6512439	ARM			122
6512453	RING GEAR			122
6512455	TAPPET			120
6512468	KEY			120
6512470	SHAFT			120
6512472	ROCKER ARM			120
6512474	SEAL			120
6512477	GASKET			108, 116
6512485	GASKET			126
6512490	SEAL			108, 122
6512494	CAP			116
6512497	GASKET			108

Code for disposition of old part number
A -- Use up
B -- Use on other application (See PNI)
C -- File PDR Report with Bobcat Parts Sales
D -- Part Number Error

Part No.	Description	Was	Code	Page
6512498	PULLEY			104, 114
6512504	THERMOSTAT			116
6512505	GASKET			11[illegible]
6512509	GASKET			102, 10[illegible]
6512518	FUEL PUMP			18
6512519	GASKET			18, 108
6512523	CAP			128
6512524	POINTS			128
6512525	ROTOR			128
6512526	CONDENSER			128
6512529	WASHER			120
6512536	SPARK PLUG			88, 128
6512543	KIT			134
6512605	SCREW			119, 120
6512608	WASHER			122
6512609	WASHER			122
6512610	WASHER			122
6512641	KEY			122
6512785	MOULDING			106
6512792	KIT			54
6512793	KIT			54
6512794	KIT			54
6512795	SEAL KIT			54
6512800	BRUSH KIT			96
6512801	DRIVE ASSY.			96
6512807	GAUGE			84, 86
6512808	SWITCH			84, 86
6512809	KEY			84, 86
6512894	NUT			58, 62, 88, 102, 106
6512896	NUT			58, 62
6512920	DOWEL			106, 124
6512921	DOWEL			116
6512929	YOKE			76
6512930	ROTATING GROUP			76
6512931	BODY			76
6512932	SHAFT			76
6512933	COUPLER			76
6512934	SHAFT			78
6512935	COUPLER			78
6512938	SPACER			76
6512939	COVER			76
6512940	SHIM KIT			76
6512941	GASKET			76
6512942	SHAFT			76
6512943	SEAL KIT			78
6512945	POPPET			76
6512946	SPRING			78
6512947	RELIEF VALVE			76
6512948	KIT			76
6512949	O-RING			76, 82
6512950	PUMP			78
6512955	SWIVEL			34, 36
6512960	CLIP			106
6513089	PIN			76

Code for disposition of old part number
A -- Use up
B -- Use on other application (See PNI)
C -- File PDR Report with Bobcat Parts Sales
D -- Part Number Error

Part No.	Description	Was	Code	Page
6513090	SEAL			78
6513091	BEARING			76
6513092	PIN			76
6513093	BEARING			76
6513094	COVER & SEAL			76
6513274	MODULE			172
6513275	CONNECTOR			172
6513289	COIL			98, 100
6513290	HOUSING			98, 100
6513291	BUSHING			98, 100
6513292	ARMATURE			98
6513293	DRIVE			98
6513294	BUSHING			98, 100
6513296	SOLENOID			98, 100
6513297	SCREW			98
6513298	LEVER			98, 100
6513299	COVER			98, 100
6513300	PLATE			98
6513301	BRUSHES			98, 100
6513302	COVER			98, 100
6513303	WASHER			98, 100
6513423	SEAL KIT			66, 68
6513429	SPRING			77, 78
6513432	POPPET			76
6513433	SPRING			76
6513434	PLUG			76
6513443	BALL			54
6513445	SPRING			54
6513446	PLUG			54
6513465	SOLENOID			96
6513466	SEAL			44, 50
6513468	BULB			84, 86
6513469	HOLDER			86
6513495	COTTER PIN			34, 36
6513497	WASHER			68
6513501	HOUSING			72, 74
6513504	GEROLER			72, 74
6513505	PLATE			72, 74
6513506	DRIVE			72, 74
6513507	VALVE			72, 74
6513510	PISTON			72, 74
6513532	POPPET			72, 74
6513533	SPRING			72, 74
6513534	PLUG			72, 74
6513543	VALVE			68, 70
6513578	SEAL			130
6513579	BOLT			130
6513581	LEVER			130
6513582	PIN			130
6513583	SPRING			130
6513586	PULLEY			130
6513587	WASHER			130
6513601	ELEMENT			1, 2, 126
6513605	SEAL			6

Code for disposition of old part number

A -- Use up
B -- Use on other application (See PNI)
C -- File PDR Report with Bobcat Parts Sales
D -- Part Number Error

Part No.	Description	Was	Code	Page
6513631	BOLT			76
6513634	QUICK COUPLER			34
6513683	KEY			120
6513684	VALVE	6630429	A	120
6513933	PULLEY			132
6513934	WASHER			132
6513935	LEVER			132
6513936	LEVER			132
6513937	WASHER			132
6513938	SPRING			132
6513939	LEVER			132
6513940	BRACKET			132
6513952	SEAL			132
6513953	EYEBOLT			132
6513954	PIN			132
6513956	SCREW			132
6513958	WIRE SET			88, 128
6513963	GRIP			80
6514005	CLAMP			18
6514052	BEARING			70
6514053	KEY			66, 68, 70
6514056	BEARING			70
6514064	O-RING			70
6514066	WASHER			70
6514501	SPACER	NAP	D	38, 40
6514501	SPACER			38, 40
6514642	CAP			86
6514643	GASKET			86
6514733	PLUG			54
6514742	RIVET			84, 86
6514850	CLIP			200
6514877	DRIVE			100
6514878	RING			100
6514885	SPRING			100
6514891	SEAL			100
6514896	SEAL KIT			70
6515045	TUBE			198
6515078	POPPET			58, 62
6515131	TERMINAL			144, 160
6515156	CONNECTOR			18
6515167	PLUG			34, 36
6515168	CAP			34, 36
6515186	CONNECTOR			52
6515191	LINK			26
6515194	BALL JOINT			110
6515521	SWITCH			200
6515541	ELEMENT			2, 58, 62
6515575	CLAMP			18, 168
6515600	HANDLE			150
6515792	RIM			198
6515817	WASHER			22, 102
6516033	TUBE			198
6516231	RING	NSS	A	38, 40
6516231	RING			38, 40

Code for disposition of old part number

A -- Use up
B -- Use on other application (See PNI)
C -- File PDR Report with Bobcat Parts Sales
D -- Part Number Error

Part No.	Description	Was	Code	Page
6516595	SHAFT			134
6516695	CLIP			104
6517516	LIGHT			160
6517902	NUT			98, 100
6517905	SCREW			98, 100
6519178	BUMPER			8
6519484	GROMMET			110
6519552	KNOB			110
6519654	KEY			76
6529384	TUBE	6592615	A	40
6529680	HEAD	6592590	A	50
6532127	BOOT	6563540	A	16
6533898	DECAL			182, 184
6538141	SEAL			42, 44
6539290	PISTON	6592589	A	50
6539304	ROD	6592884	A	40
6539323	HEAD	6504932	A	38, 40
6539810	CYLINDER	6593398	A	49, 50
6539815	ROD	6593402	A	50
6540655	ADAPTER			58, 62, 112
6541094	HOSE			32, 33, 34, 35, 36
6543321	WASHER			22
6544654	BUSHING			110
654618B	ROLL PIN			130
6547593	PIN			6, 8
6547595	PIN			6, 8
6548407	SPRING			10, 12
6548912	WEDGE			10, 12
6548913	WEDGE			10, 12
6552184	SEAT BELT			16
6552536	PIVOT			80
6552779	NUT			26
6552780	SPROCKET			26
6552871	WASHER			28
6552906	BRACKET			172
6553061	PIN			6
6553081	BOLT			80
6553204	HOSE			102
6553244	HOSE			32
6553338	BRACKET			88
6553411	BUSHING			168
6553422	COVER			32
6553429	HANDLE			4
6553537	FITTING			102
6553557	GRIP			110
6553577	WINDOW			170
6553709	WASHER			22
6553766	BEADING			16
6553796	PANEL			15, 16
6553843	STUD			10, 12
6553897	SPRING			58, 62
6553899	PLUG			58, 62
6553971	DECAL			154
6553976	SAFETY TREAD			29, 30, 154

Code for disposition of old part number
A -- Use up
B -- Use on other application (See PNI)
C -- File PDR Report with Bobcat Parts Sales
D -- Part Number Error

Part No.	Description	Was	Code	Page
6553978	SAFETY TREAD			154
6554093	PLATE			4
6554100	TREAD			15
6554149	CORD			17
6554294	BUSHING			10, 12
6554364	INSULATION			16
6554365	INSULATION			16
6554366	INSULATION			16
6554701	BRACKET			102
6554745	BOLT			104
6554834	PLUG			116
6554836	ROD			110
6554841	BRACKET			104
6554888	BELT			104
6555016	BUMPER			22, 166
6555054	PLATE			150
6555055	HINGE			150
6555057	HINGE			150
6555059	BRACKET			150
6555060	PANEL			150
6555062	DOOR			150
6555108	DOOR			150
6555112	BRACKET			116
6555271	AIR CLEANER			135, 136
6555293	NAIL			16
6555294	CLIP			16
6555331	WIRE ROPE			170
6555434	CHANNEL			150
6555455	WASHER			6, 8, 14
6555529	HOSE			104
6555533	BOLT			102, 106
6555648	PLATE			16
6555680	SPROCKET			25, 26, 28
6555686	PLATE			150
6555794	RESERVOIR			56
6555869	CLAMP			150
6555891	TANK			106
6555908	INSULATION			18
6555909	INSULATION			17, 18
6555915	SOLENOID			88, 134
6555917	KIT			149, 150
6555933	RADIATOR			106
6555983	HOSE			106
6555984	HOSE			106
6555987	BUSHING			4, 6, 8
6555989	BUSHING			4, 6, 8, 10
6555992	CYLINDER			41, 42
6556078	INSTRUCTIONS			150
6556157	632CL O/M			2
6556222	INSTRUCTIONS			160
6556403	632 P/M			2
6556415	INSTRUCTIONS			148
6556436	INSTRUCTIONS			138
6556454	630-S S/M			2

Code for disposition of old part number
A -- Use up
B -- Use on other application (See PNI)
C -- File PDR Report with Bobcat Parts Sales
D -- Part Number Error

Part No.	Description	Was	Code	Page
6556500	SAFETY MANUAL			156
6556541	INSTRUCTIONS			188
6556613	INSTRUCTIONS			194
6556688	INSTRUCTIONS			164
6556703	INSTRUCTIONS			200
6556828	INSTRUCTIONS			80
6556831	INSTRUCTIONS			172
6557027	SHIELD			106
6557081	GUSSET			10
6557090	ROD			34, 36
6557095	BUSHING			10
6557142	FAN			106
6557143	BELT			106
6557144	PLATE			4, 30
6557145	ROD			30
6557156	BRACKET			102
6557159	COVER			103, 104
6557162	MOUNT			102
6557169	PANEL			16
6557170	PANEL			16
6557172	PLATE			16
6557184	ROD			44
6557187	BOLT			28
6557188	NUT			4, 28, 198
6557192	ROD			110
6557193	ROD			110
6557195	LEVER			110
6557196	LEVER			110
6557224	DECAL			156
6557227	DECAL			156
6557237	INLET			106
6557242	COVER			106
6557243	GRILL			106
6557246	TUBE			18
6557283	BOLT			106
6557291	BALL JOINT			110
6557322	PIPE			102
6557410	DECAL			154
6557412	DECAL			156
6557413	DECAL			156
6557415	DECAL			154
6557417	DECAL			154
6557418	DECAL			154
6557422	MOULDING			106
6557426	HOSE			32
6557427	TUBE			34
6557428	TUBE			34
6557429	CONNECTOR			34
6557430	BRACKET			34
6557447	HARNESS			88
6557449	SWITCH			88
6557450	CABLE			88
6557451	CABLE			88
6557457	HOSE			102

Code for disposition of old part number

A -- Use up
B -- Use on other application (See PNI)
C -- File PDR Report with Bobcat Parts Sales
D -- Part Number Error

Part No.	Description	Was	Code	Page
6557461	HOSE			56
6557462	HOSE			56
6557463	MOUNT			60, 64
6557464	HOSE			5
6557465	HOSE			58, 62
6557467	TUBE			58, 62
6557468	TUBE			58
6557479	SPRING			58
6557481	BLOCK			58
6557486	LAMP			84, 86
6557490	HOSE			56
6557492	HARNESS			83, 84
6557493	GROMMET			84, 86, 144
6557504	SOCKET			84, 86
6557602	RELIEF VALVE			54
6557603	VALVE			34, 52, 53, 54, 56, 58, 62
6557683	STOP			144
6557684	BAR			144
6557701	DECAL			156
6557720	HOSE			104
6557724	BRACKET			58, 62
6557741	MOUNT			106
6557744	COVER			106
6557747	PAD			30
6557751	HOSE			106
6557780	TUBE			32
6557781	TUBE			32
6557782	TUBE			32
6557783	TUBE			32
6557794	BATTERY			88
6557802	WASHER			58, 62
6557824	MOUNT			144
6557830	CHAIN			26
6557831	WASHER			14, 80
6557832	HOSE			18
6557891	HOSE	6557891	A	128
6557893	SLIP YOKE			112
6557904	FLASHER			160
6557929	WASHER			26, 102
6557937	WASHER			26
6557991	FILTER			58
6558076	KIT			159, 160
6558077	LINK			176
6558142	HOUSING			84, 86
6558196	PISTON			38
6558242	BRACKET			84, 86
6558243	PANEL			84, 86
6558283	DOOR STOP			4
6558309	WIRE ROPE	6558305	A	22, 154
6558310	SLEEVE			22, 154
6558357	FILTER			58, 62
6558359	BLOCK			58, 62
6558367	SHIELD			102
6558410	PLUG			106

Code for disposition of old part number

A -- Use up
B -- Use on other application (See PNI)
C -- File PDR Report with Bobcat Parts Sales
D -- Part Number Error

Part No.	Description	Was	Code	Page
6558414	TUBE			36, 140
6558415	TUBE			36, 140
6558422	PLATE			140
6558424	BUSHING			10, 12
6558430	BAR			80
6558431	BAR			80
6558436	GUIDE			80
6558447	BRACKET			52
6558451	PEDAL			52
6558453	PEDAL			52
6558454	BAR			51, 52
6558455	BAR			52
6558456	LEVER			52
6558460	HANDLE			80
6558504	HANDLE			164
6558506	PLUG			26
6558604	SCREEN			56
6558615	HANDLE			80
6558618	SPRING			60
6558680	WASHER			80
6558698	DOOR STOP			4
6558736	FLANGE			80
6558769	BLOCK			58, 59, 60, 62
6558774	HEAD			44, 46
6558778	PISTON			44, 46
6558779	BUSHING			6, 8
6558782	CYLINDER			43, 44
6558802	PULLEY			106, 122
6558803	BUSHING			6, 8
6558826	MOUNT			88
6558835	IGNITION KIT			128
6558857	HOSE			60, 62
6558859	HARNESS			85, 86
6558864	HARNESS			88
6559003	TUBE			58, 62
6559014	CLEVIS PIN			34, 36
6559015	TUBE			56
6559117	SOLENOID			18, 162
6559118	HOSE			18, 162
6559138	LEVER			52
6559151	TUBE			18, 162
6559152	TUBE			18, 162
6559206	DISC			30
6559216	PIN			30
6559217	BAR			30
6559218	ANGLE			30
6559319	PIPE			102
6559320	MUFFLER			102
6559323	SPACER			30
6559340	ADAPTER			60
6559479	NUT			176
6559552	HARDHAT			185, 186
6559576	PANEL			16
6559577	PANEL			16

Code for disposition of old part number

A -- Use up
B -- Use on other application (See PNI)
C -- File PDR Report with Bobcat Parts Sales
D -- Part Number Error

Part No.	Description	Was	Code	Page
6559603	GASKET			102, 108
6559775	EARMUFFS			186
6559798	BRACKET			10
6559799	MANIFOLD			10
6559800	BLOCK			30
6559893	KIT			161, 162
6559895	SPRING			60, 62
6559896	SPRING			58, 64
6560082	SPRING			58, 62
6560130	TUBE			32
6560133	TUBE			32
6560136	TEE			32
6560137	RETAINER			58, 62
6560172	COVER			88
6560174	ANGLE			182
6560175	ANGLE			182
6560193	KIT			137, 138
6560213	HOSE			58, 62
6560312	KIT			54
6560354	VOLTMETER			86
6560370	ARRESTOR			188
6560526	CLEVIS			34, 36
6560572	DECAL			188
6560573	DECAL			156
6560633	DAMPENER			22, 58, 62, 102
6560653	HOSE			56
6560699	LENS			84, 86
6560836	KIT			187, 188
6560894	WASHER			80
6560895	STOP			194
6560896	STOP			194
6560898	KIT			193, 194
6560900	RETAINER			182
6560932	ADAPTER			32
6560935	HOSE			60, 62
6560936	HOSE			58, 62
6560938	SPRING			32
6560939	ORIFICE			32, 54
6560940	ORIFICE			32, 54
6560954	OIL COOLER			58, 62
6561105	TUBE			34, 36
6561106	TUBE			34, 36
6561218	SHUTTLE			72, 74
6561371	KIT			163, 164
6561383	DECAL			154
6561384	DECAL			156
6561387	DECAL			156
6561500	HARNESS			86
6561592	HARNESS			200
6561654	HARNESS			88
6561811	PLUG			58, 62
6561885	TUBE			32
6561886	TUBE			32
6561887	TUBE			32

Code for disposition of old part number
A -- Use up
B -- Use on other application (See PNI)
C -- File PDR Report with Bobcat Parts Sales
D -- Part Number Error

Part No.	Description	Was	Code	Page
6561888	TUBE			32
6561971	MOTOR			200
6562013	STUD			10, 12
6562018	SPRING			10, 12
6562019	GUIDE			10, 12
6562026	INSERT			10, 12
6562062	CAM			80
6562063	HUB			80
6562067	BUSHING			10, 12
6562123	KIT			199, 200
6562126	SPRING			110
6562127	WASHER			110
6562281	BAR			80
6562298	KIT			171, 172
6562490	ROD			110
6562599	MOUNT			168
6562642	BUSHING			10, 12
6562755	PIN			30
6562756	WASHER			30
6562757	BLOCK			30
6562767	BRACKET			80
6562934	KIT			139, 140
6562989	PLATE			102
6562991	GASKET			102, 134
6562995	ROD			110
6563005	BOLT			102
6563039	ELBOW			22, 24
6563103	COVER			10, 12
6563106	LEVER	6579698	A	9, 10, 11, 12
6563106	LEVER			9, 10, 11, 12
6563107	LEVER	6579697	A	10, 12
6563107	LEVER			10, 12
6563108	ANGLE			10, 12
6563141	SEAT			19, 20
6563147	BAR			176
6563148	BLOCK			176
6563150	LOCK			176
6563151	LINK			176
6563187	PEDAL			30
6563214	SEAT BELT			16
6563313	RETAINER			176
6563325	CONNECTOR			202
6563326	KIT			84, 88, 201, 202
6563339	FILTER HEAD			58, 62
6563379	BOB-TACH			10
6563423	DECAL			166
6563449	STOP			166
6563462	CLAMP			88
6563500	KIT			175, 176
6563501	KIT	NAP	D	165, 166
6563537	PANEL			16
6563539	PANEL			16
6563557	WASHER			176
6563569	BAR			176

Code for disposition of old part number

A -- Use up
B -- Use on other application (See PNI)
C -- File PDR Report with Bobcat Parts Sales
D -- Part Number Error

Part No.	Description	Was	Code	Page
6563603	BRACKET			166
6563606	WASHER			28
6563624	NUT			[illegible]
6563655	HOSE			16[illegible]
6563681	HANDLE			4
6563740	LAMP			84, 86
6563781	KIT			167, 168
6563823	LEVER			30
6563914	WASHER			52, 80
6563940	LEVER			110
6563965	WASHER			80
6564056	LEVER KIT			80
6564340	PIN			4
6564506	WASHER			176
6564507	BUSHING			176
6564669	NUT	6519169	A	4, 28, 30, 198
6564669	NUT			4, 28, 30, 198
6564705	SHAFT	6558461	A	80
6564910	DIPSTICK			116
6564911	TUBE			116
6564912	BRACKET			116
6564918	COVER	6703916	B	4
6565186	BLOCK			10, 12
6565189	WEDGE			10, 12
6565190	WEDGE			10, 12
6565237	RIM			198
6565270	VINYL CAB			151, 152
6565275	BRACKET			144
6565295REM	ENGINE			108
6565326	BUSHING			10, 12
6565499	WIRE			144
6565500	HARNESS			144
6565627	NUT			4
6565628	NUT			4
6565629	SCREW			4
6565751	LEVER			80
6565755	WINDOW	6563390	A	150
6565932	DECAL			182, 184
6565990	DECAL	6561378	A	22, 24, 156
6565990	DECAL			22, 24, 156
6566056	INSTRUCTIONS			166
6566072	INSTRUCTIONS			202
6566083	INSTRUCTIONS			176
6566204	INSTRUCTIONS			168
6566242	DECAL			202
6566573	632R O/M			2
6566580	INSTRUCTIONS			144
6566946	INSTRUCTIONS			184
6567250	GASKET KIT			108, 116
6567623	HANDBOOK			2, 22, 154
6567838	PIN			184
6567917	KIT			153, 154, 155, 156
6568041	KIT			183, 184
6568182	ANGLE			184

Code for disposition of old part number
A -- Use up
B -- Use on other application (See PNI)
C -- File PDR Report with Bobcat Parts Sales
D -- Part Number Error

Part No.	Description	Was	Code	Page
6568184	MOUNT			184
6568188	MOUNT			184
6568189	MOUNT			184
6568190	BRACE			184
6568191	ARM			184
6568192	ARM			184
6568193	PIN			184
6568413	KIT			26
6568438	DECAL			24
6568974	KIT			28, 141, 142
6569021	DECAL	6561381	A	22, 24, 154, 176
6569021	DECAL			22, 24, 154, 176
6569095	MOUNT			158
6569112	KIT			157, 158
6569247	KIT	6563029	A	23, 24
6569500	IGNITION KIT			128
6569553	BRACKET			58, 62
6569623	BOLT			88
6570006	INSTRUCTIONS			142
6570040	INSTRUCTIONS			158
6570064	INSTRUCTIONS			24
6571744	BOB-TACH			14
6571991	GUIDE			80, 178, 180
6572026	SPRING			80
6575654	COVER	6554093	A	30
6576048	DECAL	6557930	A	156
6576660	TANK			168
6577446	BUSHING			14
6577754	DECAL			174
6577785	CAP	6560209	A	56
6577949	SAFETY TREAD	6553977	A	154
6578253	SPRING			14
6578356	BUSHING	6557097	A	6, 8
6578356	BUSHING			6, 8
6579011	SWITCH	6557640	A	144
6579072	SPRING	6700743	A	8
6579094	KIT	6565508	A	143, 144
6579448	LATCH KIT			4
6579509	DECAL			154
6579511	DECAL	6565980	A	154
6579528	DECAL	6565254	A	156
6579639	DECAL	6575694	A	154
6579990	WASHER	6558429	A	80
6584584	SPRING	6505076	B	30
6586671	CYLINDER	6592962	A	39, 40
6586674	CASE	6592621	A	40
6587458	KEY			18
6587526	KIT			191, 192
6588686	CASE	6593404	A	50
6588912	HEAD	6531649	A	42
6589665	BUSHING	6534387	A	14, 46, 50
6589665	BUSHING			14, 46, 50
6589783	ROD			46
6591799	HEAD			48

Code for disposition of old part number
A -- Use up
B -- Use on other application (See PNI)
C -- File PDR Report with Bobcat Parts Sales
D -- Part Number Error

Part No.	Description	Was	Code	Page
6591800	SLEEVE			48
6591804	CLAMP			48, 50
6591885	SEAL KIT			4[illegible]
6592019	TUBE			4[illegible]
6592040	CASE			46
6592041	CASE			48
6592448	PISTON			48
6592800	ROD			48
6592884	ROD			38
6593399	TUBE			50
659764B	SNAP RING			80
6598048	WASHER			70
6598069	ARMATURE			100
6598070	PLATE			100
6598071	KIT			98, 100
6598095	OUTLET			116
6598274	STUD			102
6598303	SPIDER			112
6598304	SPIDER			112
6598347	U-JOINT			111, 112
6598353	ELBOW			128
6598356	BUSHING			124
6598372	CARBURETOR			134
6598375	NEEDLE			134
6598376	BODY			134
6598377	SHAFT			134
6598380	JET			134
6598381	PLATE			134
6598382	VENT			134
6598383	VENTURI			134
6598384	SWITCH			88
6598433	HOUSING			76
6598463	SEAL KIT			72
6598475	DOOR LATCH			150
6598477	WEAR PLATE			76
6598478	WEAR PLATE			76
6598485	SEALANT			142
6598721	NUT			84, 86
6598723	CLAMP			168
6598757	QUICK COUPLER			36
6598758	QUICK COUPLER			36
6598795	ELBOW			168
6598806	PLUG			118
6598902	PLUG			76
6599360	SEALANT			204
6599361	PIN			4
6599472	SPRING			54
6599473	POPPET			54
6599544	SEAL			120
6599605	HOUSING			72, 74
6599718	MOTOR			73, 74
6599719	GREASE			204
6599721	DOOR			152
6599757	GOVERNOR			131, 132

Code for disposition of old part number

A -- Use up
B -- Use on other application (See PNI)
C -- File PDR Report with Bobcat Parts Sales
D -- Part Number Error

Part No.	Description	Was	Code	Page
6599767	RECTIFIER			94
6599768	BOLT			94
6599771	ROTOR			94
6599780	TRACK			20
6599781	KNOB			84, 86
6599931	ALARM			144
661846B	BOLT			10, 12
6620417	MOULDING	6512686	A	22, 24
6620417	MOULDING	6512686	B	22, 24
6630042	PLATE			72, 74
6630080	O-RING			126
6630087	COVER			74
6630088	DRIVE SHAFT			74
6630089	KEY			26, 72, 74
6630154	CAP			88
6630155	CAP			88
6630188	POLISH			204
6630189	POLISH			204
6630245REM	MOTOR R	6630245	A	74
6630373	SHAFT			74
6630392	CAP			128
6630393	ROTOR			128
6630394	CONDENSER			128
6630396	DISTRIBUTOR			128
6630427	VALVE			120
6630464	CUSHION			20
6630466	ARM REST			20
6630467	ARM REST			20
6630468	CUSHION			20
6630469	TRACK			20
6630524	POINTS			128
6630821	SWITCH			88
6630890	ROD			132
6631010	SWITCH			88
6631052	JET			134
6631418	PIN			174, 178, 180
6631420	SLEEVE			142
6632034	DIAPHRAGM			128
6632040	SEAL KIT			74
6632468	CAP	6661114	A	18
6632501	SEALANT			4
6632601	BREATHER			30
6633583	SEALANT			204
6640686	WATER PUMP	6512496	A	113, 114
6646494	CARTRIDGE	889098B	A	2, 136
6646494	CARTRIDGE			2, 136
6648169	SEAL	6648209	A	122
6648209	SEAL	6512489	A	108, 116
6648209	SEAL	6512489	B	108, 116
6648759	REPAIR KIT			72
6648800	VALVE GUIDE	6512462	A	120
6648800	VALVE GUIDE	6512464	A	120
6648982	PUMP	6512950	A	81, 82
6649244	STUD			174

Code for disposition of old part number

A -- Use up
B -- Use on other application (See PNI)
C -- File PDR Report with Bobcat Parts Sales
D -- Part Number Error

Part No.	Description	Was	Code	Page
6649262	KIT	4149184B	A	82
6649502	ARM REST	6513573	A	20
6649503	ARM REST	6513574	A	2[illegible]
6650388	SEALANT			20[illegible]
6650407	ADHESIVE			204
6651709	SEAL			14
6652818	ADHESIVE			204
6652878	STUD			132
6652879	NUT			132
6652935	EDGING			20
6654117	SEAL			8, 14, 50
6654374	KEY			18
6656407	RINGS			122
6656408	PISTON			122
6658352	MOULDING			170
6658848	PISTON			122
6658849	RINGS			122
6659972	FLASH TUBE	NSS	D	190
6660126	SEAL	6512114	A	28
6660165	GASKET			18, 108
6660340	VINYL CAB			152
6660988	RETAINER			160
6661694	PISTON	6558196	A	40
6661790	PIN	6512440	A	124
6662770	CAP			18
6662839	HINGE KIT			152
6664207	GAS SPRING			174
6664478	SCREW			100
6664479	SCREW			98
6664886	HOURMETER	6631657	A	84, 86, 172
6665021	LENS			192
6665022	FLASH TUBE			192
6665023	GASKET			192
6665024	BRANCH GUARD			192
6665025	LENS			192
6665086	SEAL			42, 44, 50
6665208	SEAL	NSS	A	38, 40
6665208	SEAL			38, 40
6665229	PISTON ASSY.	6512405	A	122
6665409	KEY			150
6665430	BACKUP RING			36
6665502	STARTER REMAN			100
6665606	SWITCH			84, 86
6665656	CLIP			20
6665701	BUSHING	6630081	A	52, 80
6665724	TIRE	6659474	A	197, 198
6665724	TIRE			197, 198
6666350	BEARING	6512678	A	122
6666606	RADIATOR CAP	6630156	A	106
6666614	BEARING	6666615	D	122
6666615	BEARING	6666614	D	122
6667022	ROD	6512412	A	122
6667184	PLUG			42
6667324	SEAL	6665184	A	38, 40

Code for disposition of old part number

A -- Use up
B -- Use on other application (See PNI)
C -- File PDR Report with Bobcat Parts Sales
D -- Part Number Error

Part No.	Description	Was	Code	Page
6667324	SEAL	NSS	A	38, 40
6667326	SEAL	6538141	A	50
666841B	ELBOW			104, 114
6668815	SWITCH			160
6668879	DECAL			144
6668881	CORD			146
6669568	TAPPET	6665230	A	120
6669569	LINER	6657209	A	116
6669570	GASKET SET	6512495	A	108, 116
6669570	GASKET SET	NAP	A	108, 116
6670270	GASKET	6512497	A	114
6674202	NUT			84, 86
6674240	SPACER			76
6674241	SPACER			76
6674242	SPACER			76
6674243	SPACER			76
6674244	SPACER			76
6674245	SPACER			76
6674246	SPACER			76
6674247	SPACER			76
6674248	SPACER			76
6674249	SPACER			76
6674250	SPACER			76
6674251	SPACER			76
6674687	BATTERY	6669318	A	2, 88
6674687	BATTERY			2, 88
6674881	BEARING SET	6512445	A	122
6674882	BEARING SET	6669567	A	122
6674883	BEARING SET	6512448	A	122
6674884	BEARING SET	6669272	A	122
6674885	BEARING	6669571	A	122
6677363	CLAMP	657904	A	102
6680441	BUSHING	6664882	A	178, 180
6700039	CUP			14
6700170	WASHER	6563152	A	176
6700469	SPACER			8
6701535	SPRING			178, 180
6702255	DECAL			24, 156
6702265	DECAL	6575854	A	22, 24, 154
6702301	DECAL			24
6702302	DECAL			24
6702430	SPRING	6563149	A	176
6702797	CAP	6558658	A	106, 168
6702894	LIFT ARMS	6565501	A	6
6702903	LEVER			14
6702904	LEVER			14
6702958	BUSHING			14
6703117	GASKET	6553833	A	4
6703363	BUSHING			8
6703572	PIN	6560704	A	6, 8
6703953	LIFT ARM			8
6704180	TIRE			198
6704240	PIVOT ASSY.	6576456	A	14
6704248	PIVOT			14

Code for disposition of old part number
A -- Use up
B -- Use on other application (See PNI)
C -- File PDR Report with Bobcat Parts Sales
D -- Part Number Error

Part No.	Description	Was	Code	Page
6704288	PIN			8
6704328	REAR DOOR	6565073	A	4
6704349	BOLT	6514537	B	5
6704436	PAD			
6704453	SPRING	6503387	A	10, 12, 14
6704453	SPRING	6578252	A	10, 12, 14
6705089	LIFT ARM STOP			8
6705169	STOP			196
6705170	STOP			196
6705172	KIT			13, 14
6705179	KIT			195, 196
6705223	PIN	6700037	A	8, 14
6705223	PIN			8, 14
6706038	HUB			28
6706039	AXLE ASSY.			28
6706324	SEAT BAR	6564588	A	176
6706358	SEAT BAR			174
6706387	BUSHING			174
6706388	BRACKET			174
6706389	BUSHING			174
6706962	BUSHING			178, 180
6707042	PIN			6
6707521	PIN KIT			6, 8, 14
6708929	DECAL			156
6709170	STUD	6559502	A	28
6709172	PLATE			86
6709527	KEY	6666202	A	84, 86
6710358	DECAL			154
6710659	BUSHING			178, 180
6710660	MOUNT			178, 180
6711708	MOUNT			160
6712288	HARNESS			160
6713040	SPRING			14
6713589	CLEVIS			178, 180
6713853	KIT			177, 178
6713887	BOLT			178, 180
6714213	HARNESS			160
6714285	KIT			179, 180
6714629	DECAL			180
6714810	PIN	6578457	A	8
6714874	BUSHING			6, 8
6716777	SEAT BAR	6713609	A	178
6716779	SEAT BAR	6714282	A	180
6716843	WASHER	6569461	A	28
6720038	INSTRUCTIONS			146
6720747	BLOCK HEATER	6647897	A	145, 146
6720856	INSTRUCTIONS			190, 192
6722308	INSTRUCTIONS			196
6722597	VELCRO			152
6722836	INSTRUCTIONS			174
6722927	KIT			28
6722967	INSTRUCTIONS			8, 14
6724094	ANTI-FREEEZE			204
6724282	SWITCH KIT			84, 86

Code for disposition of old part number
A -- Use up
B -- Use on other application (See PNI)
C -- File PDR Report with Bobcat Parts Sales
D -- Part Number Error

Part No.	Description	Was	Code	Page
6724354	ANTI-FREEZE			204
6724775	LEVER KIT			14
6724776	LEVER KIT			14
6727307	DECAL	6711327	A	156
6731478	EXIT TAG	6559515	A	170
6731979	BUSHING			14
6732012	PIN	6707042	A	8, 14
6732446	BUSHING			14
6735140	DECAL	6557565	A	154
6736641	PAINT			204, 205, 206
6736642	PAINT			206
6736644	PAINT			204
6736645	PAINT			206
6737191	WEDGE	6704242	A	14
6737623	BUSHING	6704287	A	8
6803329	SEAL KIT	6589831	A	38, 40
6803870	PISTON	6553912	A	42
6804592	NUT	6803253	A	50
6804605	SEAL KIT	6661308	A	42, 44, 46, 50
685218B	PIN			132
6900096	INSTRUCTIONS			178, 180
6902228	PAINT	6722783	A	203, 204
6902229	PAINT	6722786	A	204
6902230	PAINT	6722789	A	204
6902231	PAINT	6722790	A	204
6902232	PRIMER	6657743	A	204
6902233	PAINT	6722782	A	204
6902234	PAINT	6722785	A	204
6902235	PAINT	6722788	A	204
6903105	OIL 15W40 QT. 12	6657299	A	2, 204
6903106	OIL 15W40 GAL. 6	6724558	A	2, 204
6903107	OIL 10W30 QT. 12	6657301	A	2, 204
6903108	OIL 10W30 GAL. 6	6724557	A	2, 204
6903109	OIL 30W QT. 12	6657303	A	2, 204
6903110	OIL 30W GAL. 6	6724559	A	2, 204
6903111	OIL 30W 2.5 GAL 2	6674206	A	2, 204
6903112	OIL 10W30 2.5 GAL 2	6674205	A	2, 204
6903113	OIL 15W40 2.5 GAL. 2	6674204	A	2, 204
6903117	HYD FLUID 2.5 GAL. 2	6563328	A	2, 204
6903118	HYD. FLUID 5GAL	6722344	A	2, 204
6903119	HYD. FLUID 55GAL	6563330	A	2, 204
6903121	GEAR LUBE 12	6634393	A	204
6903122	GREASE 10	6658266	A	204
6E000004B	WASHER			172
6E000005B	WASHER			88, 144, 162
6J001008B	KEY			66, 68, 70
6J001664B	WOODRUFF KEY			28
710705B	CLAMP			188
710706B	CLAMP			22, 24
711054B	SNAP RING			78
713133B	SNAP RING			56
72F000001B	DRAIN COCK			56

Code for disposition of old part number
A -- Use up
B -- Use on other application (See PNI)
C -- File PDR Report with Bobcat Parts Sales
D -- Part Number Error

Part No.	Description	Was	Code	Page
730143B	BEARING			66, 68
731793B	ADAPTER			32, 34, 36
73K000224B	WASHER	NSS	A	38, 4
73K000224B	WASHER			38, 4
743332B	GREASE ZERK			6, 8, 10, 12, 14
755589B	WASHER			4, 110
75G001016B	BOLT			150
763403B	WASHER			34, 36
773085B	WASHER			182
774220	NUT			58, 62, 106
774708B	WIRE			172
784145B	WASHER			58, 62
784466B	PIN			30
794584B	WASHER			90, 92, 94
79K000003B	O-RING			72, 74
79K000006B	O-RING			40, 50, 60, 62, 63, 64, 72, 74
79K000008B	O-RING			32, 34, 36, 58, 62
79K000010B	O-RING			36, 56, 58, 62
79K000012B	O-RING			56, 76
79K000016B	O-RING			56, 58, 62
79K000024B	O-RING			58, 62
7C000632B	BOLT			110
7C000640B	BOLT			110
7D000008B	NUT			10, 12
80K000232B	RING			42
80K000234B	RING			44, 50
81D000006B	NUT			34, 110
81D000008B	NUT			58, 62
82K000236B	O-RING	58K000236B	A	50
83D000004B	NUT			158
83D000005B	NUT			158, 174
83D000006B	NUT			176
83D000008B	NUT			4
84G003712B	BOLT	6554437	A	4, 16, 30, 58, 62, 102, 104, 105, 106, 144
84G003712B	BOLT			4, 16, 30, 58, 62, 102, 104, 105, 106, 144
84G003716B	BOLT	6554436	A	4, 16, 30, 57, 58, 61, 62, 102, 106, 109, 110
84G003716B	BOLT			4, 16, 30, 57, 58, 61, 62, 102, 106, 109, 110
84G003724B	BOLT			32
850001B	AXLE			134
850009B	FLOAT			134
850315B	RETAINER			94
852287B	LEVER			134
852454B	ARM			200
853577B	SPRING			134
853750B	BALL			66
85D000004B	NUT			176
85D000005B	NUT			4, 18, 144, 150, 162
85D000006B	NUT			4, 6, 8, 10, 12, 14, 32, 36, 48, 50, 52, 80, 110, 166, 176
85D000008B	NUT			30, 184
85G000504B	SCREW			134
85G000608B	SCREW			84, 86, 172
85G001008B	BOLT			158
866397B	SPRING			134
86D000005B	NUT	85D000005B	B	102

Code for disposition of old part number

A -- Use up
B -- Use on other application (See PNI)
C -- File PDR Report with Bobcat Parts Sales
D -- Part Number Error

Part No.	Description	Was	Code	Page
86D000007B	NUT			130
86D000008B	NUT			26
86D000012B	NUT			38
86D000016B	NUT			48
86D000018B	NUT			44, 46
86F000006B	NUT			102
86F000007B	NUT			34, 36
86G001012B	SCREW			200
86G001016B	SCREW			200
871563B	BRACKET ASSY.			134
871564B	BOLT			134
872229	WASHER			110
872362B	SCREW			130
881097B	COIL			88
884428B	JET			134
886527B	WASHER			136
888052B	SPRING			130
889097B	CLAMP			136
892101B	BAFFLE			136
892102B	CAP			136
895504B	SEAL			102
897456B	RETAINER			90, 92
897459B	COLLAR			90
897467B	BOLT			90, 92, 94
897700B	SEAL			132
898731B	BULB			84, 86
899102B	BOLT			130
89G000410B	BOLT			116, 117, 118
8C000616B	BOLT			80
8D000004B	NUT			130, 132
8D000006B	NUT			34, 36, 178, 180
905350B	BEARING			92, 94
905351B	BEARING			92, 94
905952B	TERMINAL PKG.			92, 94
905956B	FRAME			92, 94
905957B	HOUSING			94
906104B	PULLEY			90, 92, 94
906111B	COLLAR			90, 92, 94
907953B	STATOR			94
909831B	COLLAR	905958B	A	92, 94
90KV00005B	PLUG			40, 50
91D000005B	NUT	81D000005B	A	32, 84
91D000007B	NUT			180
92D000012B	NUT	86D000012B	B	40
93G000624B	SCREW			76
946860B	VALVE			138
947088B	SEAL			42
94G000512B	BOLT			112
94G000516B	BOLT			72, 74, 112
94G000524B	SCREW			112
958509B	BUMPER ASSY.			132
95D000007B	NUT	91D000007B	A	178
95K000006B	O-RING			40, 50
960855B	BULB			84, 86

Code for disposition of old part number

A -- Use up
B -- Use on other application (See PNI)
C -- File PDR Report with Bobcat Parts Sales
D -- Part Number Error

Part No.	Description	Was	Code	Page
991198B	SEAL			90
991599B	BEARING			90
994372	TERMINAL PKG.			9[illegible]
994373	BOLT			90, 9[illegible]
994378B	BOLT			90, 92, 94
994381B	REGULATOR			90, 92, 94
994383B	DIODE			90, 92, 94
995185B	RECTIFIER			90, 92
999305B	ROTOR			90, 92
999306B	BEARING			90
999308B	CAPACITOR			90, 92, 94
999393B	FRAME			90
999394B	HOLDER			90, 92, 94
999395B	TERMINAL			90, 92, 94
999396B	BOLT			90, 92, 94
999397B	BOLT			90, 92, 94
9EM00040B	WASHER			98

Code for disposition of old part number
A -- Use up
B -- Use on other application (See PNI)
C -- File PDR Report with Bobcat Parts Sales
D -- Part Number Error