INTRODUCTION AND CUSTOMER INFORMATION

TP49702 -UN-23APR98

ABRIL 1998

RUTHZIL TRATOR COMERCIAL DE PEÇAS LTDA 11 97083-6812 ROLANDO

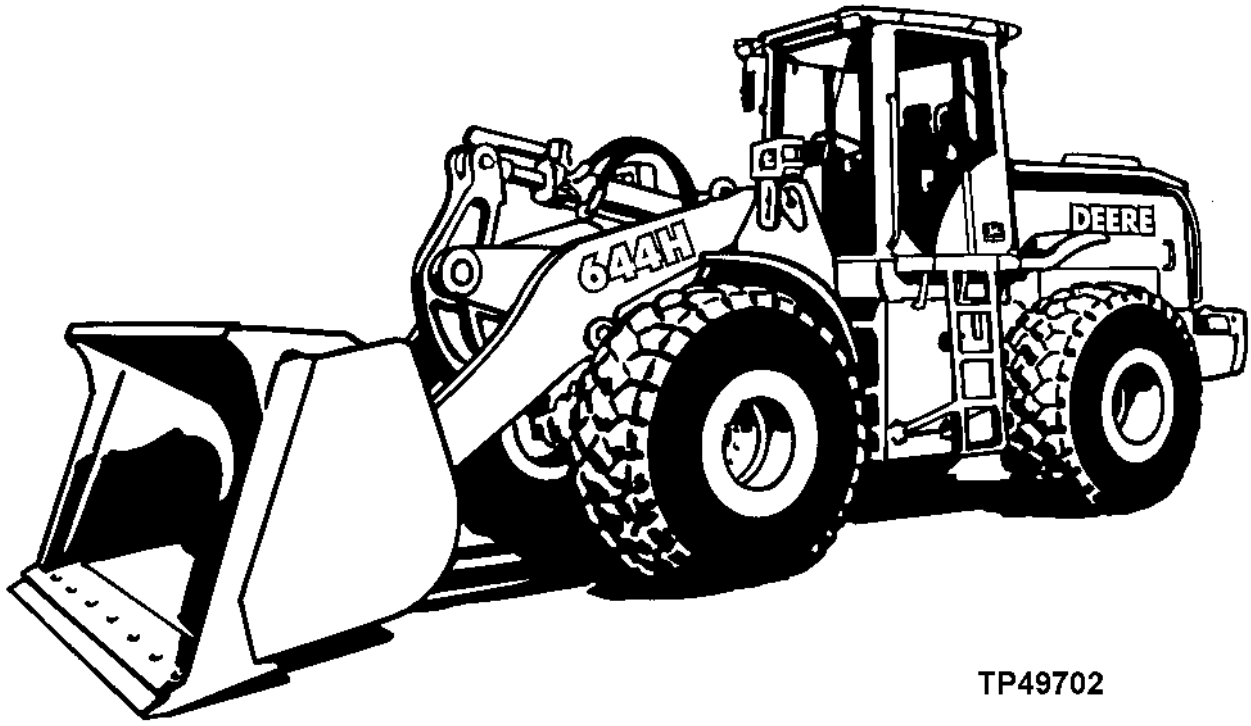

LEFT SIDE VIEW OF JOHN DEERE 644H LOADERS
(MANUFACTURED 1998-)

TO THE CUSTOMER

THE PART NUMBERS IN THIS PARTS CATALOG WERE CORRECT AT THE TIME YOUR CATALOG WAS PUBLISHED. IT IS OUR POLICY TO CONSTANTLY IMPROVE OUR MACHINES, AND, THEREFORE, PART NUMBERS MAY CHANGE. WHEN ORDERING PARTS, VERIFY PART NUMBERS THROUGH YOUR DEALER.

(SPECIFICATIONS AND DESIGN SUBJECT TO CHANGE WITHOUT NOTICE)

SERIAL NUMBER LOCATION

EACH 644H LOADER MAY HAVE SIX SERIAL NUMBER PLATES: ONE FOR THE PRODUCT IDENTIFICATION NUMBER, ONE FOR THE TRANSMISSION, ONE FOR THE HYDRAULIC PUMP, ONE FOR THE ENGINE SERIAL NUMBER PLATE AND ONE FOR THE CAB 0R CANOPY.

THE PRODUCT IDENTIFICATION NUMBER PLATE IS LOCATED ON THE LEFT SIDE OF THE ENGINE FRAME NEAR THE HYDRAULIC OIL RESERVOIR.

THE TRANSMISSION SERIAL NUMBER PLATE IS LOCATED ON THE LOWER RIGHT-HAND SIDE OF THE TRANSMISSION CASE.

THE HYDRAULIC PUMP SERIAL NUMBER PLATE IS LOCATED ON THE HYDRAULIC PUMP.

THE ENGINE SERIAL NUMBER PLATE IS LOCATED ON THE LEFT SIDE OF THE ENGINE NEAR THE ENGINE OIL FILTER.

THE CAB SERIAL NUMBER IS LOCATED INSIDE THE CAB.

THE CANOPY SERIAL NUMBER PLATE IS LOCATED ON THE CANOPY FLOOR.

THE AXLE SERIAL NUMBER PLATE IS LOCATED ON THE INPUT SIDE OF THE DIFFERENTIAL CASE.

LEFT SIDE AND RIGHT SIDE, FRONT AND REAR OF THE LOADER ARE VIEWED BY FACING IN THE DIRECTION OF LOADER FORWARD TRAVEL.

WHENEVER SERIAL NUMBERS ARE REQUIRED ON WARRANTY CLAIMS OR CORRESPONDENCE PERTAINING TO THIS PRODUCT, IT IS EXTREMELY IMPORTANT THAT ALL CHARACTERS BE FURNISHED. THIS POINT CANNOT BE OVEREMPHASIZED.

PRODUCT IDENTIFICATION NUMBER

TP49707 -UN-23APR98

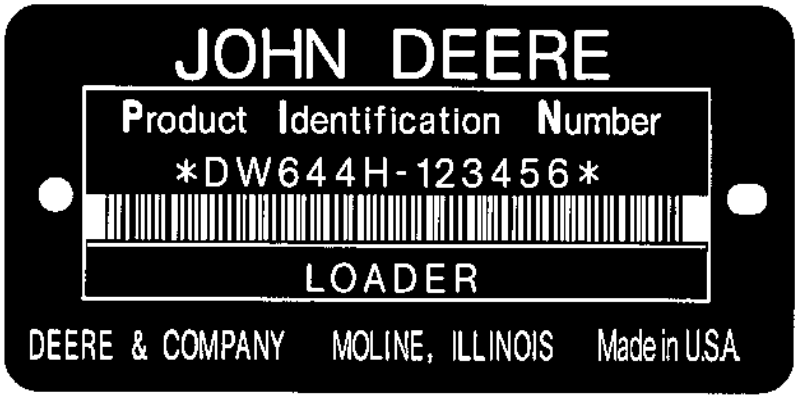

TP49707

1. DESIGNATES LOADER MANUFACTURER	DW - JOHN DEERE DAVENPORT WORKS
2. DESIGNATES LOADER MODEL	644H
3. DESIGNATES LOADER CONFIGURATION	B WITH TWO SPOOL VALVE WITH BUCKET D WITH THREE SPOOL VALVE WITH BUCKET
4. DESIGNATES LOADER SERIAL NUMBER	123456
5. DESIGNATES UNIT TYPE	LOADER

SHORT BLOCK SERIAL NUMBER IDENTIFICATION

RGP4574 -UN-02OCT95

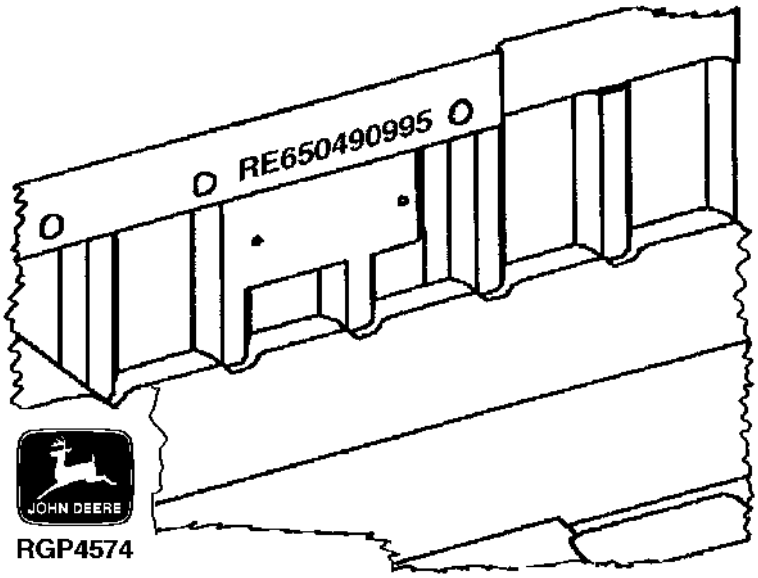

SERIAL NUMBER STAMPED INTO CASTING OF BLOCK NEAR PREVIOUS SERIAL NUMBER PLATE.

EXAMPLE: RE650490995

1. DESIGNATES SERVICE PART NUMBER	RE65049
2. DESIGNATES MONTH ASSEMBLED	09
3. DESIGNATES YEAR ASSEMBLED	95

TWO LINE BAR CODED ENGINE SERIAL NUMBER PLATE

(LOCATED ON STARTER SIDE OF ENGINE)

RGP3513 -UN-01JAN94

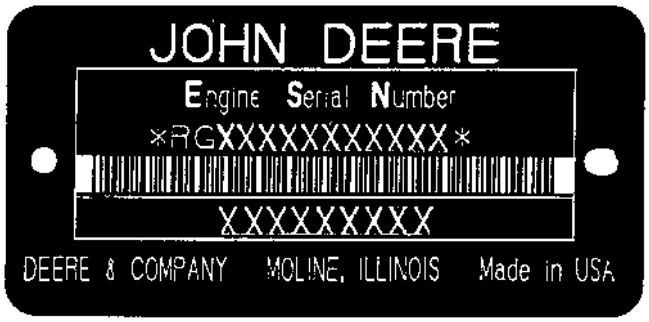

RGP3513

FIRST LINE	DEFINES
RG - WATERLOO ENGINE WORKS	DESIGNATES ENGINE MANUFACTURER
6	DESIGNATES NUMBER OF CYLINDERS
081 (8.1 LITERS)	DESIGNATES LITER DISPLACEMENT
H - AIR-TO-AIR	DESIGNATES TYPE OF AIR INTAKE SYSTEM
XXXXXX	DESIGNATES ENGINE SERIAL NUMBER

SECOND LINE	APPLICATION
6081HDW05	644H
6081HDW06	644MH

MEMORANDA

SERIAL NUMBER LISTING INFORMATION

SERIAL NUMBER INFORMATION IS LISTED TO SHOW ON WHICH MACHINES EACH PART CAN BE USED; FOR EXAMPLE:

-	THE PART CAN BE USED ON ALL MACHINES.
000000-	THE PART CAN BE USED ON ALL MACHINES BEGINNING WITH THE SERIAL NUMBER LISTED.
-000000	THE PART CAN BE USED ON ALL MACHINES UP TO AND INCLUDING THE SERIAL NUMBER LISTED.
000000-000000	THE PART CAN BE USED ON ALL MACHINES BETWEEN AND INCLUDING THE SERIAL NUMBERS LISTED.

WHEN XXXXXX'S ARE LISTED IN PLACE OF A SERIAL NUMBER, A SERIAL NUMBER CHANGE WAS MADE BUT THE EXACT SERIAL NUMBER WAS NOT AVAILABLE WHEN THE CATALOG WAS PRODUCED.

DIRECTION ARROW

ARROWS ARE USED WITH ILLUSTRATIONS TO INDICATE THE FRONT OF THE UNIT. "RIGHT-HAND" AND "LEFT-HAND" SIDES ARE DETERMINED BY FACING IN THE DIRECTION OF MACHINE FORWARD TRAVEL.

EXCEPTION: FOR ALL BACKHOE PARTS, "RIGHT-HAND" AND "LEFT-HAND" SIDES, "FRONT" AND "REAR" ARE DETERMINED WHEN SEATED FOR BACKHOE OPERATION.

BOX-ENCLOSED ILLUSTRATIONS

A KEY NUMBER, SHOWN IN THE PARTS LIST, IS ASSIGNED TO A BOX ENCLOSING ALL PARTS SOLD AS A SERVICE ASSEMBLY.

COMPLETE GOODS LISTINGS

COMPLETE GOODS ARE LISTED IN BOLD FACE TYPE. ORDER SEPARATELY. DO NOT INCLUDE ON REPLACEMENT PARTS ORDER.

SI UNITS OF MEASURE

METRIC DIMENSIONS ARE GIVEN, WHERE APPLICABLE, THROUGHOUT THIS PARTS CATALOG.

CHANGE INDICATOR LINE

(MICROFICHE CATALOGS ONLY)

CHANGES AFFECTING THE ORDERING OF PARTS ARE IDENTIFIED BY VERTICAL LINES MARKED IN THE LEFT-HAND MARGIN OF REVISED PARTS LISTING IMAGES. A LINE IS ALSO AT THE LEFT-HAND EDGE OF THE SAME PART NUMBER IN THE NUMERICAL INDEX TO SHOW THE LOCATION OF REVISED INFORMATION.

MEMORANDA

ALPHABETICAL INDEX

GRID		PAGE
	A	
3E9	A/C BLOWER MOTOR SER. NO. XXXXXX)	1830 - 2
3E11	A/C BLOWER MOTOR SER. NO. XXXXXX)	1830 - 3A
3E13	A/C BLOWER MOTOR SER. NO. XXXXXX)	1830 - 3C
3E19	A/C COMPRESSOR	1830 - 4
3E21	A/C COMPRESSOR	1830 - 6
3E19	A/C COMPRESSOR BRACKET	1830 - 4
3E19	A/C COMPRESSOR DRIVE BELT	1830 - 4
3E23	A/C COMPRESSOR HARDWARE KIT	1830 - 8
3E19	A/C COMPRESSOR HOSES	1830 - 4
3E21	A/C COMPRESSOR MANIFOLD	1830 - 6
3E21	A/C COMPRESSOR REPAIR KIT	1830 - 6
3F1	A/C CONDENSOR	1830 - 10
3F1	A/C CONDENSOR HOSES	1830 - 10
3E9	A/C FILTER ELEMENT SER. NO. XXXXXX)	1830 - 2
3E11	A/C FILTER ELEMENT SER. NO. XXXXXX)	1830 - 3A
3E13	A/C FILTER ELEMENT SER. NO.XXXXXX-)	1830 - 3C
3E9	A/C HIGH PRESSURE SWITCH SER. NO. XXXXXX)	1830 - 2
3E11	A/C HIGH PRESSURE SWITCH SER. NO. XXXXXX)	1830 - 3A
3E15	A/C HIGH PRESSURE SWITCH SER. NO.XXXXXX-)	1830 - 3E
3F1	A/C RECEIVER DRYER	1830 - 10
3E22	A/C SHAFT SEAL KIT	1830 - 7
2B13	ACCUMULATOR, BRAKE (SERIAL NO. -574111)	1060 - 6
2B15	ACCUMULATOR, BRAKE (SERIAL NO. 574112-)	1060 - 8
4F15	ACCUMULATOR, RIDE CONTROL	3160 - 75
4F11	ACCUMULATOR,RIDE CONTROL	3160 - 72
4E21	ACTUATOR, RETURN-TO-DIG	3160 - 64
4E23	ACTUATOR, RETURN-TO-DIG (SERIAL NO. XXXXXX-)	3160 - 65A
1I1	ADAPTER, OIL COOLER	0419 - 2
1I2	ADAPTER, OIL COOLER BYPASS	0419 - 3
2C16	ADHESIVE, SILICONE RUBBER	1330 - 1
2C17	ADHESIVE, SILICONE RUBBER	1330 - 2
3D14	ADJUSTER, LUMBAR	1821 - 3A
1J7	AIR CLEANER	0520 - 2
1J7	AIR CLEANER FILTER	0520 - 2
1J7	AIR CLEANER HOSE	0520 - 2
1J7	AIR CLEANER RESTRICTION SENSOR	0520 - 2
3E19	AIR CONDITIONER FIELD KIT	1830 - 4
2C16	AIR CONDITIONER O-RING REPAIR KIT	1330 - 1
3E15	AIR CONDITIONING ASSEMBLY SER. NO.XXXXXX-)	1830 - 3E
3E9	AIR CONDITIONING MODULE SER. NO. XXXXXX)	1830 - 2
3E11	AIR CONDITIONING MODULE SER. NO. XXXXXX)	1830 - 3A
3E13	AIR CONDITIONING MODULE SER. NO.XXXXXX-)	1830 - 3C
1J7	AIR FILTER RESTRICTION INDICATOR SENSOR	0520 - 2
1I14	AIR INTAKE MANIFOLD	0505 - 2
1J11	AIR PRECLEANER	0520 - 6
1J9	AIR PRECLEANER KIT	0520 - 4
2H9	ALARM, MONITOR	1676 - 2
3G21	ALARM,BACK-UP (SERIAL NO. -578419)	2004 - 4
3G23	ALARM,BACK-UP (SERIAL NO. 578420-)	2004 - 6
2D19	ALTERNATOR (55 AMP)	1672 - 2
2D23	ALTERNATOR (80 AMP)	1672 - 6
2D19	ALTERNATOR CAPACITOR (55 AMP)	1672 - 2
2D19	ALTERNATOR DRIVE BELT (55 AMP)	1672 - 2
2D23	ALTERNATOR DRIVE BELT (80 AMP)	1672 - 6
2D19	ALTERNATOR MOUNTING BRACKETS (55 AMP)	1672 - 2
2D23	ALTERNATOR MOUNTING BRACKETS (80 AMP)	1672 - 6
2D21	ALTERNATOR REAR COVER (55 AMP)	1672 - 4
2E1	ALTERNATOR REAR COVER (80 AMP)	1672 - 8
3G8	ANTENNA, RADIO	2001 - 2
3G10	ANTENNA, RADIO (SER.NO.572399-578901)	2001 - 4
3G12	ANTENNA, RADIO (SER.NO.578902-)	2001 - 6
3D12	ARM REST	1821 - 2
3C17	ARM, WIPER	1810 - 23C
3C13	ARM, WIPER SER.NO. -580190	1810 - 22
3C15	ARM, WIPER SER.NO.580191-	1810 - 23A
1G12	ARMS, ROCKER	0402 - 4
3C9	ASH TRAY	1810 - 18
3E15	ASSEMBLY AIR CONDITIONING SER. NO.XXXXXX-)	1830 - 3E
1I5	ASSEMBLY, CLUTCH (STARTER) (24V)	0422 - 2
1E11	ASSEMBLY,CLUTCH (FORWARD CLUTCH)	0350 - 20
1E13	ASSEMBLY,CLUTCH (REVERSE CLUTCH)	0350 - 22
4D3	AUXILIARY CONTROLLER DETENT KIT	3160 - 28
4B5	AUXILIARY CUTTING EDGE,BUCKET	3102 - 1
4G2	AUXILIARY DRIVE HOUSING	4151 - 2
4G2	AUXILIARY DRIVE OIL LINE	4151 - 2
4E1	AUXILIARY HYDRAULICS, FOURTH FUNCTION	3160 - 48
4D5	AUXILIARY JOY STICK CONTROLLER	3160 - 30
4D5	AUXILIARY JOY STICK CONTROLLER REPAIR KIT	3160 - 30
4D3	AUXILIARY SINGLE LEVER CONTROLLER	3160 - 28
4D3	AUXILIARY SINGLE LEVER CONTROLLER REPAIR KIT	3160 - 28
4C5	AUXILIARY VALVE SECTION	3160 - 10
4C7	AUXILIARY VALVE SECTION	3160 - 11A
4B5	AUXILIARY WEAR PLATES	3102 - 1
1C18	AXLE BREATHER KIT	0260 - 7
1D1	AXLE BREATHERS, HOSES AND FITTINGS	0260 - 14
1D5	AXLE COOLER, HOSES AND FITTINGS	0260 - 18
1D3	AXLE COOLERS, COVER, HOSES AND FITTINGS	0260 - 16
1C19	AXLE DISCONNECT LINE	0260 - 8
1C5	AXLE HOUSING	0250 - 2
1C7	AXLE HOUSING	0250 - 4
1C11	AXLE INPUT DISCONNECT	0250 - 8
1C23	AXLE OIL RECIRCULATION PUMP AND MOTOR (SERIAL NO. -578893)	0260 - 12
1D9	AXLE OIL RECIRCULATION PUMP AND MOTOR (SERIAL NO. 578894-)	0260 - 22
1C21	AXLE RECIRCULATION HOSES AND FITTINGS (SERIAL NO. -578893)	0260 - 10

ALPHABETICAL INDEX - CONTINUED

GRID		PAGE
1D7	AXLE RECIRCULATION HOSES AND FITTINGS (SERIAL NO. 578894-)	0260 - 20
1C5	AXLE SHAFT	0250 - 2
1C7	AXLE SHAFT	0250 - 4
1C3	AXLE STOP (9 DEGREE)	0240 - 2
1B8	AXLE, FRONT	0201 - 1
1B8	AXLE, REAR	0201 - 1

B

3G21	BACK-UP ALARM (SERIAL NO. -578419)	2004 - 4
3G23	BACK-UP ALARM (SERIAL NO. 578420-)	2004 - 6
3D12	BACKREST CUSHION	1821 - 2
4D17	BARREL, BOOM CYLINDER (SER. NO. -XX)	3160 - 42
4D19	BARREL, BOOM CYLINDER (SER. NO.XX-)	3160 - 43A
1I3	BASE, FUEL FILTER	0420 - 2
1H4	BASE, OIL FILTER	0407 - 8
1I3	BASE, PRE-FUEL FILTER	0420 - 2
2D17	BATTERY (1000 CCA) (1400 CCA)	1671 - 2
2D16	BATTERY (750 CCA)	1671 - 1
2D17	BATTERY CABLE (1000 CCA) (1400 CCA)	1671 - 2
2D16	BATTERY CABLE (750 CCA)	1671 - 1
2D17	BATTERY CLAMP (1000 CCA) (1400 CCA)	1671 - 2
2D16	BATTERY CLAMP (750 CCA)	1671 - 1
3F16	BATTERY COVERS	1913 - 4
2D18	BATTERY DISCONNECT CABLE	1671 - 3
2D18	BATTERY DISCONNECT SWITCH	1671 - 3
1G8	BEARING KIT, UNDERSIZED MAIN BEARING CRANKSHAFT	0401 - 4
2B18	BEARING, DRIVELINE/PARKING BRAKE	1115 - 2
1G7	BEARING, THRUST	0401 - 3
4B10	BEARING,LOADER FRAME	3140 - 2
1G7	BEARINGS, MAIN	0401 - 3
2D19	BELT TENSIONER (55 AMP)	1672 - 2
2D23	BELT TENSIONER (80 AMP)	1672 - 6
3D10	BELT, SEAT (THREE INCHES (76MM) WIDE)	1821 - 1
3D11	BELT, SEAT, REPLACEMENT (THREE INCHES (76MM) WIDE)	1821 - 1A
3E19	BELT,A/C COMPRESSOR DRIVE	1830 - 4
2D19	BELT,ALTERNATOR DRIVE (55 AMP)	1672 - 2
2D23	BELT,ALTERNATOR DRIVE (80 AMP)	1672 - 6
1B10	BEVEL DRIVE GEAR	0210 - 2
3C17	BLADE, WIPER	1810 - 23C
3C13	BLADE, WIPER SER.NO. -580190	1810 - 22
3C15	BLADE, WIPER SER.NO.580191-	1810 - 23A
1I18	BLADE,FAN	0510 - 2
1G18	BLOCK, SHORT	0404 - 4
2F23	BLOWER AND A/C WIRING HARNESS	1674 - 34
3E9	BLOWER MOTOR, A/C SER. NO. XXXXXX)	1830 - 2
3E11	BLOWER MOTOR, A/C SER. NO. XXXXXX)	1830 - 3A
3E13	BLOWER MOTOR, A/C SER. NO.XXXXXX-)	1830 - 3C
3E9	BLOWER, HEATER SER. NO. XXXXXX)	1830 - 2
3E11	BLOWER, HEATER SER. NO. XXXXXX)	1830 - 3A
3E13	BLOWER, HEATER SER. NO.XXXXXX-)	1830 - 3C
3E15	BLOWER, HEATER SER. NO.XXXXXX-)	1830 - 3E
3E9	BLOWER, PRESSURIZER SER. NO. XXXXXX)	1830 - 2
3E11	BLOWER, PRESSURIZER SER. NO. XXXXXX)	1830 - 3A
3E13	BLOWER, PRESSURIZER SER. NO.XXXXXX-)	1830 - 3C
1H6	BOLTS, CYLINDER HEAD	0409 - 2
4D17	BOOM CYLINDER (SER. NO. -XX)	3160 - 42
4D19	BOOM CYLINDER (SER. NO.XX-)	3160 - 43A
4D21	BOOM CYLINDER FITTINGS	3160 - 44
4D21	BOOM CYLINDER HYDRAULIC FITTINGS	3160 - 44
4B10	BOOM CYLINDER PIN	3140 - 2
4D21	BOOM CYLINDER PINS	3160 - 44
4D17	BOOM CYLINDER REPAIR KIT (SER. NO. -XX)	3160 - 42
4D19	BOOM CYLINDER REPAIR KIT (SER. NO.XX-)	3160 - 43A
4C5	BOOM SECTION VALVE	3160 - 10
4B14	BOOM, LOADER	3140 - 6
4B16	BOOM, LOADER	3140 - 8
4B14	BOOM, LOADER, HIGH LIFT	3140 - 6
2H19	BOTTOM FUEL TANK GUARD	1746 - 4
2H15	BOTTOM GUARD, FRONT (SERIAL NO. -XXXXXX)	1746 - 2
2H17	BOTTOM GUARD, FRONT (SERIAL NO. XXXXXX-)	1746 - 3A
2H15	BOTTOM GUARD, TRANSMISSION (SERIAL NO. -XXXXXX)	1746 - 2
2H17	BOTTOM GUARD, TRANSMISSION (SERIAL NO. XXXXXX-)	1746 - 3A
3E19	BRACKET.A/C COMPRESSOR	1830 - 4
2B3	BRACKET, BRAKE PEDAL	1060 - 2
2B5	BRACKET, BRAKE PEDAL	1060 - 3A
2B7	BRACKET, BRAKE PEDAL	1060 - 3C
2B9	BRACKET, BRAKE PEDAL	1060 - 3E
3G17	BRACKET, FIRE EXTINGUISHER	2003 - 2
3G18	BRACKET, FIRE EXTINGUISHER, REPLACEMENT	2003 - 3A
2B22	BRACKET, LICENSE PLATE	1314 - 1
1J13	BRACKET, MUFFLER	0530 - 2
1K6	BRACKET, STEERING VALVE	0960 - 4
3D12	BRACKETS, SEAT	1821 - 2
3C19	BRACKETS, WIPER MOUNTING	1810 - 24
2B13	BRAKE ACCUMULATOR (SERIAL NO. -574111)	1060 - 6
2B15	BRAKE ACCUMULATOR (SERIAL NO. 574112-)	1060 - 8
2B3	BRAKE PEDAL	1060 - 2
2B5	BRAKE PEDAL	1060 - 3A
2B7	BRAKE PEDAL	1060 - 3C
2B9	BRAKE PEDAL	1060 - 3E
2B3	BRAKE PEDAL BRACKET	1060 - 2
2B5	BRAKE PEDAL BRACKET	1060 - 3A

ALPHABETICAL INDEX - CONTINUED

GRID		PAGE
2B7	BRAKE PEDAL BRACKET	1060 - 3C
2B9	BRAKE PEDAL BRACKET	1060 - 3E
2B2	BRAKE PLATES	1011 - 1
2B3	BRAKE VALVE	1060 - 2
2B5	BRAKE VALVE	1060 - 3A
2B7	BRAKE VALVE	1060 - 3C
2B9	BRAKE VALVE	1060 - 3E
2B3	BRAKE VALVE FITTINGS	1060 - 2
2B5	BRAKE VALVE FITTINGS	1060 - 3A
2B7	BRAKE VALVE FITTINGS	1060 - 3C
2B9	BRAKE VALVE FITTINGS	1060 - 3E
2B11	BRAKE VALVE HYDRAULIC HOSES	1060 - 4
2B3	BRAKE VALVE SWITCH	1060 - 2
2B5	BRAKE VALVE SWITCH	1060 - 3A
2B7	BRAKE VALVE SWITCH	1060 - 3C
2B9	BRAKE VALVE SWITCH	1060 - 3E
2B18	BRAKE, PARKING	1115 - 2
2B2	BRAKES	1011 - 1
2G15	BREAKER, CIRCUIT	1674 - 44
4E15	BREATHER, REMOTE HYDRAULIC RESERVOIR	3160 - 59C
1D1	BREATHERS, AXLES	0260 - 14
4B5	BUCKET AUXILIARY EDGE	3102 - 1
4B6	BUCKET CUTTING EDGE	3102 - 2
4D15	BUCKET CYLINDER	3160 - 40
4D21	BUCKET CYLINDER FITTINGS	3160 - 44
4D21	BUCKET CYLINDER HYDRAULIC FITTINGS	3160 - 44
4D23	BUCKET CYLINDER HYDRAULICS TO LOADER CONTROL VALVE	3160 - 46
2D8	BUCKET CYLINDER LUBE LINES	1370 - 2
4B10	BUCKET CYLINDER PIN	3140 - 2
4D21	BUCKET CYLINDER PINS	3160 - 44
4D15	BUCKET CYLINDER REPAIR KIT	3160 - 40
4B8	BUCKET TEETH, LOADER	3102 - 4
4C5	BUCKET VALVE SECTION	3160 - 10
4B6	BUCKETS, LOADER	3102 - 2
2E6	BULB, STOP LAMP (SER.NO.-578419)	1673 - 4
2E6	BULB, TAIL LAMP (SER.NO.-578419)	1673 - 4
1G10	BUSHING, CAMSHAFT	0402 - 2
1G16	BUSHING, CAMSHAFT	0404 - 2
1I2	BYPASS TUBES, OIL COOLER	0419 - 3
1H4	BYPASS VALVE, OIL FILTER	0407 - 8

C

3B12	CAB	1810 - 8
3B14	CAB	1810 - 9A
3B18	CAB DOOR HANDLE,R.H.	1810 - 10
3B12	CAB DOOR HOLD OPEN LATCH	1810 - 8
3B14	CAB DOOR HOLD OPEN LATCH	1810 - 9A
3B18	CAB DOOR LATCH,R.H.	1810 - 10
3B18	CAB DOOR,R.H.	1810 - 10
3C8	CAB FLOOR MAT	1810 - 17
2F2	CAB GROUND (-) STRAP	1674 - 17
3B12	CAB HEADLINER	1810 - 8
3B14	CAB HEADLINER	1810 - 9A
3C23	CAB HYDRAULIC HOSE GROMMET	1810 - 28
3B6	CAB MOUNTS (FRONT AND REAR)	1810 - 2
3C5	CAB PEDESTAL	1810 - 15A
3B24	CAB REAR SIDE WINDOWS (SERIAL NO. -574038)	1810 - 13C
3C1	CAB REAR SIDE WINDOWS (SERIAL NO. 574039-)	1810 - 13E
3B12	CAB ROOF	1810 - 8
3B14	CAB ROOF	1810 - 9A
3B8	CAB SHIELDS	1810 - 4
3B12	CAB WINDOWS	1810 - 8
3B14	CAB WINDOWS	1810 - 9A
2F17	CAB WORK LIGHT WIRING HARNESS (SERIAL NO. -XXXXXX)	1674 - 30
2F19	CAB WORK LIGHT WIRING HARNESS (SERIAL NO. XXXXXX-)	1674 - 31A
2D17	CABLE, BATTERY (1000 CCA) (1400 CCA)	1671 - 2
2D16	CABLE, BATTERY (750 CCA)	1671 - 1
2D18	CABLE, BATTERY DISCONNECT	1671 - 3
3E17	CABLE, CONTROL, HEATER TEMPERATURE SER. NO.XXXXXX-)	1830 - 3G
1G10	CAMSHAFT	0402 - 2
1G10	CAMSHAFT BUSHING	0402 - 2
1G16	CAMSHAFT BUSHING	0404 - 2
1G10	CAMSHAFT FOLLOWER	0402 - 2
1G12	CAMSHAFT FOLLOWER	0402 - 4
1G10	CAMSHAFT GEAR	0402 - 2
2E19	CAN TERMINATOR HARNESS	1674 - 9
3C8	CANOPY FLOOR MAT	1810 - 17
3C5	CANOPY PEDESTAL	1810 - 15A
3B12	CANOPY ROPS	1810 - 8
3B14	CANOPY ROPS	1810 - 9A
3D5	CANOPY VANDAL COVER	1810 - 34
3D7	CANOPY VANDAL COVER MONITOR	1810 - 35A
1J17	CAP, FUEL TANK	0560 - 2
1J19	CAP, FUEL TANK	0560 - 3A
1J1	CAP, RADIATOR	0510 - 6
1J3	CAP, RADIATOR	0510 - 8
3B10	CAP, WINDOW WASHER TANK	1810 - 6
2D19	CAPACATIOR,ALTERNATOR (55 AMP)	1672 - 2
1G16	CAPS, MAIN BEARING	0404 - 2
1C9	CARRIER, PLANET PINION	0250 - 6
1B12	CASE, DIFFERENTIAL	0210 - 4
1B13	CASE, DIFFERENTIAL	0210 - 5
1B14	CASE, DIFFERENTIAL	0210 - 6
1B15	CASE, DIFFERENTIAL	0210 - 7
1B16	CASE, DIFFERENTIAL	0210 - 8
1B17	CASE, DIFFERENTIAL	0210 - 9
1B18	CASE, DIFFERENTIAL	0210 - 10
1B19	CASE, DIFFERENTIAL	0210 - 11
2E12	CHASSIS COMPUTER UNIT	1674 - 2
1I3	CHECK VALVE (FUEL FILTER)	0420 - 2
2G15	CIRCUIT BREAKERS	1674 - 44
2D17	CLAMP, BATTERY (1000 CCA) (1400 CCA)	1671 - 2
2D16	CLAMP, BATTERY (750 CCA)	1671 - 1
1J7	CLEANER,AIR	0520 - 2
3E7	CLOSE MOUNTED STEPS	1822 - 6
1E11	CLUTCH ASSEMBLY (FORWARD CLUTCH)	0350 - 20
1E1	CLUTCH ASSEMBLY (K1)	0350 - 12
1E3	CLUTCH ASSEMBLY (K2)	0350 - 14
1E5	CLUTCH ASSEMBLY (K3)	0350 - 16
1E13	CLUTCH ASSEMBLY (REVERSE CLUTCH)	0350 - 22
1E7	CLUTCH ASSEMBLY K-4 (SERIAL NO. -XXXXXX)	0350 - 18

ALPHABETICAL INDEX - CONTINUED

GRID		PAGE
1E9	CLUTCH ASSEMBLY K-4 (SERIAL NO. XXXXXX-)	0350 - 19A
1I5	CLUTCH ASSEMBLY (STARTER) (24)	0422 - 2
3C10	COAT HOOK	1810 - 19
1I16	COLD WEATHER STARTIG AID	0505 - 4
1I16	COLD WEATHER STARTING AID SWITCH	0505 - 4
1K6	COLUMN, LOWER STEERING	0960 - 4
1K4	COLUMN, STEERING	0960 - 2
2H1	COMPARTMENT, LOAD CENTER	1674 - 54
3E19	COMPRESSOR, A/C	1830 - 4
3E24	COMPRESSOR, MANIFOLD AND DUST COVER (R134A REFRIGERANT)	1830 - 9
3E21	COMPRESSOR,A/C	1830 - 6
2E12	COMPUTER UNIT, CHASSIS	1674 - 2
3F1	CONDENSER,A/C	1830 - 10
2D2	CONDITIONER,COOLANT	1369 - 8
1G15	CONNECTING RODS	0403 - 2
1H9	CONNECTORS, FUEL INJECTION PUMP HOUSING	0413 - 1
2G21	CONNECTORS, WEATHERPACK	1674 - 50
2G23	CONNECTORS,SUPPLEMENTAL	1674 - 52
3C21	CONSOLE, RIGHT SIDE	1810 - 26
3F5	CONSULE, MONITOR (CAB)	1830 - 13A
3F3	CONSULE, MONITOR (WITH CAB)	1830 - 12
3F7	CONSULE, MONITOR (WITH CANOPY)	1830 - 14
4D3	CONTOLLER, AUXILIARY SINGLE LEVER	3160 - 28
3E17	CONTROL CABLE, HEATER TEMPERATURE SER. NO.XXXXXX-)	1830 - 3G
3E17	CONTROL KNOB, HEATER TEMPERATURE SER. NO.XXXXXX-)	1830 - 3G
3D14	CONTROL KNOB, SEAT	1821 - 3A
1H12	CONTROL UNIT, ELECTRONIC (ESN -127422)	0413 - 4
1H14	CONTROL UNIT, ELECTRONIC(127423-)	0413 - 5A
2E13	CONTROL UNIT, TRANSMISSION	1674 - 3
1E21	CONTROL VALVE TRANSMISSION (SER.NO. -000587)	0350 - 30
1E23	CONTROL VALVE TRANSMISSION (SER.NO. 000588-)	0350 - 31A
1E19	CONTROL VALVE MANIFOLD,GEAR SHIFT	0350 - 28
4B22	CONTROL VALVE, LOADER (2-SPOOL)	3160 - 2
4B24	CONTROL VALVE, LOADER (3-SPOOL)	3160 - 4
4C1	CONTROL VALVE, LOADER (4-SPOOL)	3160 - 6
4E7	CONTROL VALVES,STEERING AND LOADER HYDRAULIC PUMP	3160 - 54
3G8	CONTROL,RADIO REMOTE	2001 - 2
3G10	CONTROL,RADIO REMOTE (S.N.572399-578901)	2001 - 4
3G12	CONTROL,RADIO REMOTE (S.N.578902-)	2001 - 6
4D7	CONTROLLER, DUAL SINGLE LEVER	3160 - 32
1H12	CONTROLLER, ENGINE (ESN -127422)	0413 - 4
4C17	CONTROLLER, SINGLE LEVER	3160 - 18
4C23	CONTROLLER, SINGLE-LEVER WITH AUXILIARY FUNCTION	3160 - 24
4B20	CONTROLLER, TWO LEVER	3160 - Q0022
4C21	CONTROLLER, TWO LEVER	3160 - 22
4D1	CONTROLLER, TWO LEVER MOUNTING, WITH AND W/O AUX. THIRD AND FOURTH FUNCTION	3160 - 26
4D5	CONTROLLER,AUXILIARY JOY STICK	3160 - 30
4C15	CONTROLLER,SINGLE LEVER	3160 - 16
4B18	CONTROLLER,TWO LEVER	3160 - Q0020
4C19	CONTROLLER,TWO LEVER	3160 - 20
2E20	CONVERTER AND POWER PLUG (24 VOLT TO 12 VOLT)	1674 - 10
2E20	CONVERTER HARNESS 924 VOLT KTO 12 VOLT)	1674 - 10
1F1	CONVERTER RELIEF VALVE	0350 - 32
1D21	CONVERTER, TORQUE	0350 - 6
2D2	COOLANT CONDITIONER	1369 - 8
1I13	COOLANT HEATER, ENGINE	0505 - 1
1D5	COOLER, AXLE	0260 - 18
1I1	COOLER, ENGINE OIL	0419 - 2
1D3	COOLERS, AXLE	0260 - 16
2D5	COOLING FLUID, ENGINE	1369 - 11
2C25	COOLSCAN PLUS TEST KIT, FLUID ANALYSIS PRODUCTS	1369 - 6
3E9	CORE, EVAPORATOR SER. NO. XXXXXX)	1830 - 2
3E11	CORE, EVAPORATOR SER. NO. XXXXXX)	1830 - 3A
3E15	CORE, EVAPORATOR SER. NO.XXXXXX-)	1830 - 3E
3E9	CORE, HEATER SER. NO. XXXXXX)	1830 - 2
3E11	CORE, HEATER SER. NO. XXXXXX)	1830 - 3A
3E15	CORE, HEATER SER. NO.XXXXXX-)	1830 - 3E
2H22	COUNTERWEIGHT, MAIN	1749 - 2
2H24	COUNTERWEIGHT, SECOND	1749 - 4
2D4	COVER KIT WITH DUST CAP	1369 - 10
1D3	COVER, AXLE COOLER	0260 - 16
3D1	COVER, FRESH AIR HOUSING	1810 - 30
2G14	COVER, FUSE BLOCK (CANOPY)	1674 - 43
3F18	COVER, GRILLE HOUSING (SERIAL NO. -578419)	1921 - 2
3F20	COVER, GRILLE HOUSING (SERIAL NO. 578420-)	1921 - 3A
1G13	COVER, INJECTION PUMP ACCESS	0402 - 6
1I1	COVER, OIL COOLER	0419 - 2
2D21	COVER, REAR, ALTERNATOR (55 AMP)	1672 - 4
1G11	COVER, ROCKER ARM	0402 - 3
1K8	COVER, STEERING COLUMN	0960 - 6
1G13	COVER, TIMING GEAR	0402 - 6
1F4	COVER, TRANSMISSION	0350 - 35
1G11	COVER, VALVE	0402 - 3
3D5	COVER, VANDAL, CANOPY	1810 - 34
3D7	COVER, VANDAL, MONITOR, CANOPY	1810 - 35A
1F7	COVER,DRIVE DAMPER	0350 - 38
1D24	COVER,GEARBOX HOUSING	0350 - 10
3D10	COVER,SEAT BELT	1821 - 1
1D19	COVER,TORQUE CONVERTER HOUSING	0350 - 4
3F16	COVERS, BATTERY	1913 - 4
1G5	CRANKSHAFT	0401 - 1
1I7	CRANKSHAFT DAMPERS	0429 - 1
1G13	CRANKSHAFT FRONT OIL SEAL	0402 - 6
1G6	CRANKSHAFT KIT, UNDERSIZE (CONNECTING ROD JOURNAL)	0401 - 2
1I7	CRANKSHAFT PULLEY AND DAMPERS)	0429 - 1
3D12	CUSHION, BACKREST	1821 - 2
3D12	CUSHION, SEAT	1821 - 2
2H13	CUSHIONS, STEERING, ENGINE FRAME	1740 - 4
4B6	CUTTING EDGE,BUCKET	3102 - 2
4B6	CUTTING EDGE,LOADER EDGE	3102 - 2
1G16	CYLINDER BLOCK FITTINGS	0404 - 2
1H6	CYLINDER HEAD	0409 - 2
1H6	CYLINDER HEAD BOLTS	0409 - 2
1H6	CYLINDER HEAD GASKET	0409 - 2
1I9	CYLINDER HEAD GASKET KIT	0452 - 2
1G15	CYLINDER LINERS	0403 - 2
2H21	CYLINDER-FITTING ROCK GUARD	1746 - 6
4D17	CYLINDER, BOOM (SER. NO. -XX)	3160 - 42

ALPHABETICAL INDEX - CONTINUED

GRID		PAGE
4D19	CYLINDER, BOOM (SER. NO.XX-)	3160 - 43A
1K14	CYLINDER, STEERING	0960 - 10
4D15	CYLINDER,BUCKET	3160 - 40

D

1G5	DAMPER KEY	0401 - 1
1F7	DAMPER,DRIVE	0350 - 38
1I7	DAMPERS, CRANKSHAFT	0429 - 1
2B23	DECALS AND LABELS	1320 - 2
2C1	DECALS AND LABELS (644H-MH)	1320 - 4
2C9	DECALS AND LABELS (FUSEBLOCK) (FRENCH)	1320 - 12
2C11	DECALS AND LABELS FUSEBLOCK (SPANISH)	1320 - 14
2E11	DEFROST SWITCH, FRONT WINDOW	1674 - 1
2E11	DEFROST SWITCH, REAR WINDOW	1674 - 1
4D3	DETENT KIT, AUXILIARY CONTROLLER	3160 - 28
2G24	DEUTSCH TERMINALS	1674 - 53
2D1	DIESELSCAN TEST KIT, FLUID ANALYSIS PRODUCTS	1369 - 7
1B12	DIFFERENTIAL CASE	0210 - 4
1B13	DIFFERENTIAL CASE	0210 - 5
1B14	DIFFERENTIAL CASE	0210 - 6
1B15	DIFFERENTIAL CASE	0210 - 7
1B16	DIFFERENTIAL CASE	0210 - 8
1B17	DIFFERENTIAL CASE	0210 - 9
1B18	DIFFERENTIAL CASE	0210 - 10
1B19	DIFFERENTIAL CASE	0210 - 11
1C13	DIFFERENTIAL LOCK LINE, FRONT	0260 - 2
1C15	DIFFERENTIAL LOCK LINES, FRONT AND REAR	0260 - 4
1C17	DIFFERENTIAL LOCK SWITCH	0260 - 6
1C1	DIFFERENTIAL SUPPORT LUBRICATION LINES	0210 - 18
1C1	DIFFERENTIAL SUPPORTS	0210 - 18
1B22	DIFFERENTIAL, LIMITED SLIP	0210 - 14
1B20	DIFFERENTIAL, STANDARD	0210 - 12
1B24	DIFFERENTIAL, 4 PINION HYD ACTUATED	0210 - 16
1G23	DIPSTICK, ENGINE OIL	0407 - 1
1F9	DIPSTICK, TRANSMISSION OIL	0350 - 40
1C11	DISCONNECT, AXLE INPUT	0250 - 8
2B2	DISKS, BRAKE	1011 - 1
2H8	DISPLAY UNIT, MONITOR	1676 - 1
2E9	DOME LIGHT	1673 - 5
3B16	DOMELIGHT (SERIAL NO. 578902-)	1810 - 9C
2E21	DOMELIGHT SWITCH, DOOR ACTIVATED	1674 - 11
2E21	DOOR ACTIVATED DOMELIGHT SWITCH	1674 - 11
3B18	DOOR LATCH,R.H.CAB	1810 - 10
2E9	DOOR LIGHT SWITCH	1673 - 5
3B20	DOOR, CAB, LEFT SIDE (SERIAL NO. -XXXXXX)	1810 - 12
3B22	DOOR, CAB, LEFT SIDE (SERIAL NO. XXXXXX-)	1810 - 13A
3F13	DOOR,ENGINE SIDE SHIELD	1910 - 2
2D6	DRAIN KIT, ENVIRONMENTAL	1369 - 12
1G24	DRAIN VALVE (OIL PAN)	0407 - 2
3D9	DRIP RAIL	1810 - 36
1F7	DRIVE DAMPER	0350 - 38
1F7	DRIVE DAMPER COVER	0350 - 38
1G5	DRIVE GEAR, OIL PUMP	0401 - 1
2E4	DRIVE HI-BEAM LAMP	1673 - 2
1D13	DRIVE SHAFTS, TRANSMISSION TO DIFFERENTIALS(W/WITHOUT DISCONNECT	0325 - 2
1D13	DRIVE SHAFTS, TRANSMISSION TO ENGINE (WITH/WITHOUT DISCONNECT)	0325 - 2
2B18	DRIVELINE BEARING/PARKING BRAKE	1115 - 2
3G20	DUAL HORN	2004 - 2
4D7	DUAL SINGLE-LEVER CONTROLLER	3160 - 32
2D4	DUST CAP WITH COVER KIT	1369 - 10

E

1H12	E.C.U. (ESN -127422)	0413 - 4
1H14	E.C.U.(127423-)	0413 - 5A
1H12	ECU (ESN -127422)	0413 - 4
1H14	ECU(127423-)	0413 - 5A
1H12	ELECTRONIC CONTROL UNIT (ESN -127422)	0413 - 4
1H14	ELECTRONIC CONTROL UNIT(127423-)	0413 - 5A
1H12	ELECTRONIC FUEL INJECTION PUMP (ESN -127422)	0413 - 4
1H14	ELECTRONIC FUEL INJECTION PUMP (127423-)	0413 - 5A
3E9	ELEMENT, A/C FILTER SER. NO. XXXXXX)	1830 - 2
3E11	ELEMENT, A/C FILTER SER. NO. XXXXXX)	1830 - 3A
3E13	ELEMENT, A/C FILTER SER. NO.XXXXXX-)	1830 - 3C
2C13	EMBLEM, SLOW MOVING VEHICLE	1320 - 16
2C13	EMBLEM, SMV	1320 - 16
1I14	ENGINE AIR HEATER	0505 - 2
1I14	ENGINE AIR HEATER FUSE HOLDER	0505 - 2
1I14	ENGINE AIR HEATER RELAY	0505 - 2
1I14	ENGINE AIR HEATER WIRE HARNESS	0505 - 2
3E3	ENGINE COMPARTMENT STEP (SERIAL NO. -XXXXXX)	1822 - 4
3E5	ENGINE COMPARTMENT STEP (SERIAL NO. XXXXXX-)	1822 - 5A
1H12	ENGINE CONTROLLER (ESN -127422)	0413 - 4
1I13	ENGINE COOLANT HEATER	0505 - 1
2E24	ENGINE COOLANT TEMPERATURE SENDER	1674 - 14
2D5	ENGINE COOLING FLUID	1369 - 11
1I22	ENGINE FAN DRIVE MOTOR HYDRAULIC HOSES	0510 - 5A
1I22	ENGINE FAN DRIVE PUMP HYDRAULIC HOSES	0510 - 5A
2H11	ENGINE FRAME	1740 - 2
2H11	ENGINE FRAME LOCK BAR	1740 - 2
2H11	ENGINE FRAME PIN	1740 - 2
2H13	ENGINE FRAME STEERING CUSHIONS	1740 - 4
2G5	ENGINE FRAME WIRING HARNESS	1674 - 38
2G7	ENGINE FRAME WIRING HARNESS	1674 - 39A
2F2	ENGINE GROUND STRAP (-)	1674 - 17
1J15	ENGINE MOUNTING SUPPORTS	0540 - 2
1I1	ENGINE OIL COOLER	0419 - 2
1G23	ENGINE OIL DIPSTICK	0407 - 1
1G23	ENGINE OIL DIPSTICK TUBE	0407 - 1
1H4	ENGINE OIL FILTER	0407 - 8
2F3	ENGINE OIL PRESSURE SENSOR	1674 - 18
1H1	ENGINE OIL PUMP	0407 - 4
1H3	ENGINE OIL PUMP INTAKE	0407 - 6
2C20	ENGINE OIL,TORQ GARD	1369 - 1
1G21	ENGINE OVERHAUL KIT	0404 - 8
1I9	ENGINE REBUILD GASKET KIT	0452 - 2
1G20	ENGINE SERVICE PARTS KEY	0404 - 7
3F13	ENGINE SIDE SHIELD DOOR	1910 - 2
3F13	ENGINE SIDE SHIELD LATCH	1910 - 2
3F13	ENGINE SIDE SHIELD LOCK	1910 - 2
3F13	ENGINE SIDE SHIELD PLATE	1910 - 2
3F13	ENGINE SIDE SHIELDS	1910 - 2
1J5	ENGINE SPEED CONTROL LINKAGE	0515 - 2

ALPHABETICAL INDEX - CONTINUED

GRID		PAGE
1J5	ENGINE SPEED CONTROL PEDAL	0515 - 2
1J5	ENGINE SPEED CONTROL SENSOR	0515 - 2
1G14	ENGINE SPEED SENSOR	0402 - 7
1J15	ENGINE SUPPORT ISOLATOR	0540 - 2
2F15	ENGINE WIRING HARNESS	1674 - 28
2D6	ENVIRONMENTAL DRAIN KIT	1369 - 12
3E9	EVAPORATOR CORE SER. NO. XXXXXX)	1830 - 2
3E11	EVAPORATOR CORE SER. NO. XXXXXX)	1830 - 3A
3E15	EVAPORATOR CORE SER. NO.XXXXXX-)	1830 - 3E
1H8	EXHAUST MANIFOLD	0410 - 1
1H8	EXHAUST MANIFOLD GASKETS	0410 - 1
1J13	EXHAUST PIPE	0530 - 2
1J13	EXHAUST PIPE, CHROME (MATERIAL HANDLER)	0530 - 2
1H6	EXHAUST VALVE SHIELD	0409 - 2
1H6	EXHAUST VALVES	0409 - 2
1F13	EXTERNAL OIL LINES,TRANSMISSION	0360 - 2
1F15	EXTERNAL OIL LINES,TRANSMISSION	0360 - 3A
3G17	EXTINGUISHER, FIRE	2003 - 2

F

1I18	FAN BLADE	0510 - 2
1I18	FAN BLADE HUB	0510 - 2
1I18	FAN BLADE HUB SUPPORT	0510 - 2
1I20	FAN DRIVE HYDRAULIC PUMP	0510 - 4
1I20	FAN DRIVE MOTOR	0510 - 4
1J1	FAN SHROUD	0510 - 6
1J3	FAN SHROUD	0510 - 8
3F22	FENDER SUPPORT	1927 - 2
3G1	FENDERS, FRONT	1927 - 4
3G3	FENDERS, MUD	1927 - 6
3G5	FENDERS, MUD	1927 - 8
3F24	FENDERS, REAR	1927 - 3A
3F22	FENDERS,REAR	1927 - 2
4D7	FIELD KIT, DUAL JOYSTICK, FOURTH FUNCTION	3160 - 32
4D1	FIELD KIT, FOUR LEVER, FOURTH FUNCTION	3160 - 26
4C9	FIFTH FUNCTION VALVE SECTION	3160 - 11C
1J17	FILLER NECK,FUEL TANK	0560 - 2
1J19	FILLER NECK,FUEL TANK	0560 - 3A
1F9	FILLER TUBE,TRANSMISSION OIL	0350 - 40
1H4	FILTER, ENGINE OIL	0407 - 8
3E9	FILTER, FRESH AIR SER. NO. XXXXXX)	1830 - 2
3E11	FILTER, FRESH AIR SER. NO. XXXXXX)	1830 - 3A
3E13	FILTER, FRESH AIR SER. NO.XXXXXX-)	1830 - 3C
1I3	FILTER, FUEL	0420 - 2
4E11	FILTER, HYDRAULIC OIL SERIAL NO. -XXXXXX)	3160 - 58
4E13	FILTER, HYDRAULIC OIL SERIAL NO.XXXXXX-)	3160 - 59A
1F19	FILTER, OIL, TRANSMISSION	0360 - 6
1F21	FILTER, OIL, TRANSMISSION	0360 - 7A
1I3	FILTER, PRE-FUEL	0420 - 2
1J7	FILTER,AIR CLEANER	0520 - 2
1C9	FINAL DRIVE SHAFT	0250 - 6
3G17	FIRE EXTINGUISHER	2003 - 2
3G17	FIRE EXTINGUISHER BRACKET	2003 - 2
3G18	FIRE EXTINGUISHER, REPLACEMENT	2003 - 3A
1G16	FITTINGS, CYLINDER BLOCK	0404 - 2
4E19	FITTINGS, HYDRAULIC OIL PRESSURE REGULATOR VALVE	3160 - 62
4D21	FITTINGS, HYDRAULIC, BOOM CYLINDER	3160 - 44
4D21	FITTINGS, HYDRAULIC, BUCKET CYLINDER	3160 - 44
1K18	FITTINGS, STEERING CYLINDER	0960 - 14
1K10	FITTINGS, STEERING VALVE	0960 - 8
1D17	FITTINGS, TRANSMISSION	0350 - 2
4D21	FITTINGS,BOOM CYLINDER	3160 - 44
4D21	FITTINGS,BUCKET CYLINDER	3160 - 44
3G3	FLAPS, MUD	1927 - 6
3G5	FLAPS, MUD	1927 - 8
2G15	FLASHER	1674 - 44
2D3	FLAT FACE O-RING SEAL KIT	1369 - 9
3C8	FLOOR MAT,CAB	1810 - 17
3C8	FLOOR MAT,CANOPY	1810 - 17
3D3	FLOOR SWEEPING RETAINER	1810 - 32
2C25	FLUID ANALYSIS PRODUCTS (COOLSCAN PLUS TEST KIT)	1369 - 6
2D1	FLUID ANALYSIS PRODUCTS (DIESELSCAN TEST KIT)	1369 - 7
2C23	FLUID ANALYSIS PRODUCTS (OILSCAN PLUS TEST KIT)	1369 - 4
2D5	FLUID, ENGINE COOLING	1369 - 11
1I16	FLUID,STARTING AID	0505 - 4
1I8	FLYWHEEL	0433 - 1
1I8	FLYWHEEL RING GEAR	0433 - 1
1G10	FOLLOWER, CAMSHAFT	0402 - 2
1G12	FOLLOWER, CAMSHAFT	0402 - 4
4E1	FOURTH FUNCTION AUXILIARY HYDRAULICS	3160 - 48
2H11	FRAME, ENGINE	1740 - 2
4B10	FRAME, LOADER	3140 - 2
3E9	FREEZE CONTROL SWITCH SER. NO. XXXXXX)	1830 - 2
3E11	FREEZE CONTROL SWITCH SER. NO. XXXXXX)	1830 - 3A
3E15	FREEZE CONTROL SWITCH SER. NO.XXXXXX-)	1830 - 3E
3E9	FRESH AIR FILTER SER. NO. XXXXXX)	1830 - 2
3E11	FRESH AIR FILTER SER. NO. XXXXXX)	1830 - 3A
3E13	FRESH AIR FILTER SER. NO.XXXXXX-)	1830 - 3C
3D1	FRESH AIR HOUSING COVER	1810 - 30
3B10	FRONT AND REAR WINDOW WASHER	1810 - 6
3C13	FRONT AND REAR WINDSHIELD WIPER MOTOR SER.NO. -580190	1810 - 22
3C15	FRONT AND REAR WINDSHIELD WIPER MOTOR SER.NO.580191-	1810 - 23A
2E10	FRONT AND REAR WORK LAMP	1673 - 6
1B8	FRONT AXLE	0201 - 1
4B10	FRONT AXLE MOUNTING	3140 - 2
2H15	FRONT BOTTOM GUARD (SERIAL NO. -XXXXXX)	1746 - 2
2H17	FRONT BOTTOM GUARD (SERIAL NO. XXXXXX-)	1746 - 3A
2G11	FRONT CONSOLE WIRING HARNESS	1674 - 40
1C13	FRONT DIFFERENTIAL LOCK LINE	0260 - 2
1C15	FRONT DIFFERENTIAL LOCK LINE	0260 - 4
3G1	FRONT FENDER SUPPORT	1927 - 4
3G1	FRONT FENDERS	1927 - 4
2E4	FRONT LIGHT GUARD	1673 - 2
1G13	FRONT OIL SEAL	0402 - 6
2B25	FRONT SUNSCREEN	1320 - 3A
2E3	FRONT TURN LIGHT	1673 - 1
1H25	FRONT WATER MANIFOLD	0418 - 2
2E11	FRONT WINDOW DEFROST SWITCH	1674 - 1

ALPHABETICAL INDEX - CONTINUED

GRID		PAGE
1J21	FUEL FILL STRAINER	0560 - 4
1I3	FUEL FILTER	0420 - 2
1I3	FUEL FILTER LINES	0420 - 2
1I3	FUEL FILTER/WATER SEPARATOR	0420 - 2
1J17	FUEL HOSES	0560 - 2
1J19	FUEL HOSES	0560 - 3A
1H10	FUEL INJ LINES (1601) (AF,TF)	0413 - 2
1H16	FUEL INJECTION NOZZLE	0413 - 6
1H12	FUEL INJECTION PUMP (ESN -127422)	0413 - 4
1H9	FUEL INJECTION PUMP HOUSING CONNECTORS	0413 - 1
1H14	FUEL INJECTION PUMP(127423-)	0413 - 5A
1H12	FUEL LEAK-OFF LINES (ESN -127422)	0413 - 4
1H10	FUEL LEAK-OFF LINES (1601) (AF,TF)	0413 - 2
1H14	FUEL LEAK-OFF LINES(127423-)	0413 - 5A
2G9	FUEL SENDER, JUMPER HARNESS	1674 - 39C
1H12	FUEL SHUT-OFF SOLENOID (ESN -127422)	0413 - 4
1J17	FUEL TANK	0560 - 2
1J19	FUEL TANK	0560 - 3A
1J17	FUEL TANK CAP	0560 - 2
1J19	FUEL TANK CAP	0560 - 3A
1J17	FUEL TANK FILLER HOSE	0560 - 2
1J19	FUEL TANK FILLER HOSE	0560 - 3A
1J17	FUEL TANK FILLER NECK	0560 - 2
1J19	FUEL TANK FILLER NECK	0560 - 3A
2H19	FUEL TANK GUARD, BOTTOM	1746 - 4
1J17	FUEL TANK SENDER	0560 - 2
1J19	FUEL TANK SENDER	0560 - 3A
1H18	FUEL TRANSFER PUMP (ROBERT BOSCH)	0413 - 8
2G14	FUSE BLOCK COVER (CANOPY)	1674 - 43
1I14	FUSE HOLDER, ENGINE AIR HEATER	0505 - 2
2C7	FUSEBLOCK LABEL	1320 - 10
2C7	FUSEBLOCK LABELS AND DECALS	1320 - 10
2G15	FUSES	1674 - 44

G

1I9	GASKET KIT, CYLINDER HEAD	0452 - 2
1I9	GASKET KIT, ENGINE REBUILD	0452 - 2
1I9	GASKET KIT, SHORT BLOCK	0452 - 2
1H6	GASKET, CYLINDER HEAD	0409 - 2
1H19	GASKET, INTAKE MANIFOLD (ESN -199999)	0414 - 1
1H20	GASKET, INTAKE MANIFOLD (ESN 200000-)	0414 - 2
1H4	GASKET, OIL FILTER HOUSING	0407 - 8
1G24	GASKET, OIL PAN	0407 - 2
1H1	GASKET, OIL PUMP	0407 - 4
1H3	GASKET, OIL PUMP INTAKE	0407 - 6
1G9	GASKET, REAR OIL SEAL	0401 - 5
1G11	GASKET, ROCKER ARM COVER	0402 - 3
1G13	GASKET, TIMING GEAR COVER	0402 - 6
1F4	GASKET, TRANSMISSION	0350 - 35
1H21	GASKET, TURBOCHARGER	0416 - 2
1H25	GASKET, WATER MANIFOLD	0418 - 2
1H23	GASKET, WATER PUMP	0417 - 2
1H8	GASKETS, EXHAUST MANIFOLD	0410 - 1
1G10	GEAR, CAMSHAFT	0402 - 2
1H12	GEAR, INJECTION PUMP (ESN -127422)	0413 - 4
1H14	GEAR, INJECTION PUMP(127423-)	0413 - 5A
1D22	GEAR, INPUT	0350 - 8
1G5	GEAR, OIL PUMP DRIVE	0401 - 1
1H1	GEAR, OIL PUMP DRIVE	0407 - 4
1B10	GEAR,BEVEL DRIVE	0210 - 2
1I8	GEAR,FLYWHEEL RING	0433 - 1
1D24	GEARBOX HOUSING	0350 - 10
1D24	GEARBOX HOUSING COVER	0350 - 10
2D10	GREASE GUN HOLDER	1370 - 4
3F18	GRILLE (SERIAL NO. -578419)	1921 - 2
3F20	GRILLE (SERIAL NO. 578420-)	1921 - 3A
3F18	GRILLE HOUSING (SERIAL NO. -578419)	1921 - 2
3F20	GRILLE HOUSING (SERIAL NO. 578420-)	1921 - 3A
2D17	GROUND STRAP (1000 CCA) (1400 CCA)	1671 - 2
2D16	GROUND STRAP (750 CCA)	1671 - 1
2H19	GUARD, BOTTOM FUEL TANK	1746 - 4
2E4	GUARD, FRONT LIGHT	1673 - 2
2H21	GUARD, ROCK, CYLINDER-FITTING	1746 - 6
4B6	GUARD,LOADER BUCKET	3102 - 2

H

2E20	HARNESS, CONVERTER (24 VOLT TO 12 VOLT)	1674 - 10
2E17	HARNESS, INJECTION FUEL TEMPERATURE	1674 - 7
2G9	HARNESS, JUMPER, FUEL SENDER	1674 - 39C
2G10	HARNESS, JUMPER, HYDRAULIC FILTER RESTRICTION SWITCH	1674 - 39D
2E15	HARNESS, LICENSE PLATE LIGHT	1674 - 5
2E22	HARNESS, LOAD CENTER (LPM HARNESS)	1674 - 12
2E16	HARNESS, PIN DISCONNET	1674 - 6
2E18	HARNESS, RETURN TO DIG	1674 - 8
2F11	HARNESS, RIDE CONTROL WIRING	1674 - 24
2G13	HARNESS, ROTARY POTENTIOMETER JUMPER	1674 - 42
2E14	HARNESS, SECONDARY STEERING SWITCH	1674 - 4
2F5	HARNESS, SUMP TANK (SER. NO. -XXXXXX)	1674 - 20
2H5	HARNESS, TRANSMISSION SPEED SENSOR	1674 - 58
2F7	HARNESS, TRANSMISSION WIRING (SERIAL NO. -XXXXXX)	1674 - 22
2F9	HARNESS, TRANSMISSION WIRING (SERIAL NO.XXXXXX-)	1674 - 23A
1H14	HARNESS, WIRING(127423-)	0413 - 5A
2F23	HARNESS, WIRING, BLOWER AND A/C	1674 - 34
2F15	HARNESS, WIRING, ENGINE	1674 - 28
2G5	HARNESS, WIRING, ENGINE FRAME	1674 - 38
2G7	HARNESS, WIRING, ENGINE FRAME	1674 - 39A
2G11	HARNESS, WIRING, FRONT CONSOLE	1674 - 40
2F13	HARNESS, WIRING, LOADER FRAME	1674 - 26
2G1	HARNESS, WIRING, REAR FRAME (SERIAL NO. -578419)	1674 - 36
2G3	HARNESS, WIRING, REAR FRAME (SERIAL NO. 578420-)	1674 - 37A
2F17	HARNESS, WIRING, WORK LIGHT, CAB (SERIAL NO. -XXXXXX)	1674 - 30
2F19	HARNESS, WIRING, WORK LIGHT, CAB (SERIAL NO. XXXXXX-)	1674 - 31A
2E19	HARNESS,CAN TERMINATOR	1674 - 9
2H3	HARNESS,LOAD CENTER WIRING	1674 - 56
1H6	HEAD BOLT KIT	0409 - 2
1H6	HEAD, CYLINDER	0409 - 2
1I3	HEADER, PRE-FUEL FILTER	0420 - 2
3B16	HEADLINER AND DOMELIGHT (SERIAL NO. 578902-)	1810 - 9C
3B12	HEADLINER, CAB	1810 - 8
3B14	HEADLINER, CAB	1810 - 9A
3B12	HEADLINER, CANOPY	1810 - 8

ALPHABETICAL INDEX - CONTINUED

GRID		PAGE
3D12	HEADREST	1821 - 2
3E9	HEATER BLOWER SER. NO. XXXXXXX)	1830 - 2
3E11	HEATER BLOWER SER. NO. XXXXXXX)	1830 - 3A
3E13	HEATER BLOWER SER. NO.XXXXXX-)	1830 - 3C
3E15	HEATER BLOWER SER. NO.XXXXXX-)	1830 - 3E
3E9	HEATER CORE SER. NO. -XXXXXX)	1830 - 2
3E11	HEATER CORE SER. NO. -XXXXXX)	1830 - 3A
3E15	HEATER CORE SER. NO.XXXXXX-)	1830 - 3E
3F9	HEATER HOSES	1830 - 16
3E9	HEATER HOUSING SER. NO. XXXXXX)	1830 - 2
3E11	HEATER HOUSING SER. NO. XXXXXX)	1830 - 3A
3E15	HEATER HOUSING SER. NO.XXXXXX-)	1830 - 3E
3F9	HEATER SHUT-OFF VALVE	1830 - 16
3E17	HEATER TEMPERATURE CONTROL CABLE SER. NO.XXXXXX-)	1830 - 3G
3E17	HEATER TEMPERATURE CONTROL KNOB SER. NO.XXXXXX-)	1830 - 3G
1I14	HEATER, ENGINE AIR	0505 - 2
1I13	HEATER, ENGINE COOLANT	0505 - 1
1B2	HEAVY DUTY WHEEL RIM	0110 - 2
2F4	HIGH BEAM SWITCH	1674 - 19
4B14	HIGH LIFT LOADER BOOM	3140 - 6
4B16	HIGH LIFT LOADER LINK	3140 - 8
2C15	HIGH-LIFT LABEL	1320 - 18
4F24	HOLDER, HYDRAULIC HOSE	3160 - 82
3C7	HOLDER, MAGAZINE	1810 - 16
2D10	HOLDER,GREASE GUN	1370 - 4
3F12	HOOD	1910 - 1
3C10	HOOK, COAT	1810 - 19
2C18	HOOKS, LIFT	1330 - 4
3G20	HORN, DUAL	2004 - 2
4F24	HOSE HOLDER, HYDRAULIC	3160 - 82
1J17	HOSE, FUEL TANK FILLER	0560 - 2
1J19	HOSE, FUEL TANK FILLER	0560 - 3A
1J1	HOSE, RADIATOR	0510 - 6
1J3	HOSE, RADIATOR	0510 - 8
1G11	HOSE, VENT	0402 - 3
1J7	HOSE,AIR CLEANER	0520 - 2
1K16	HOSE,STEERING CYLINDER HYDRAULIC	0960 - 12
3F1	HOSES, A/C CONDENSOR	1830 - 10
1J17	HOSES, FUEL	0560 - 2
1J19	HOSES, FUEL	0560 - 3A
3F9	HOSES, HEATER	1830 - 16
1K18	HOSES, LUBRICATION, STEERING CYLINDER	0960 - 14
3E19	HOSES,A/C COMPRESSOR	1830 - 4
3B10	HOSES,WINDOW WASHER	1810 - 6
3B10	HOSES,WINDOW WASHER TANK	1810 - 6
1H9	HOUSING CONNECTORS, FUEL INJECTION PUMP	0413 - 1
1C5	HOUSING, AXLE	0250 - 2
1C7	HOUSING, AXLE	0250 - 4
1D24	HOUSING, GEARBOX	0350 - 10
3F18	HOUSING, GRILLE (SERIAL NO. -578419)	1921 - 2
3F20	HOUSING, GRILLE (SERIAL NO. 578420-)	1921 - 3A
3E9	HOUSING, HEATER SER. NO. XXXXXX)	1830 - 2
3E11	HOUSING, HEATER SER. NO. XXXXXX)	1830 - 3A
3E15	HOUSING, HEATER SER. NO.XXXXXX-)	1830 - 3E
1H4	HOUSING, OIL FILTER	0407 - 8
1G9	HOUSING, REAR OIL SEAL	0401 - 5
1H25	HOUSING, THERMOSTAT, FRONT	0418 - 2
4G2	HOUSING,AUXILIARY DRIVE	4151 - 2
1D19	HOUSING,TORQUE CONVERTER	0350 - 4
1I18	HUB,FAN BLADE	0510 - 2
1B24	HYD ACTUATED 4 PINION DIFFERENTIAL	0210 - 16
2G10	HYDRAULIC FILTER RESTRICTION SWITCH JUMPER HARNESS	1674 - 39D
4F24	HYDRAULIC HOSE HOLDER	3160 - 82
1I22	HYDRAULIC HOSES, ENGINE FAN DRIVE MOTOR	0510 - 5A
1I22	HYDRAULIC HOSES, ENGINE FAN DRIVE PUMP	0510 - 5A
4F11	HYDRAULIC HOSES, RIDE CONTROL	3160 - 72
2B11	HYDRAULIC HOSES,BRAKE VALVE	1060 - 4
4F9	HYDRAULIC HOSES,PIN DISCONNECT	3160 - 70
4F3	HYDRAULIC HOSES,PIN DISCONNECT (SERIAL NO. -571404)	3160 - 68
4F5	HYDRAULIC HOSES,PIN DISCONNECT (SERIAL NO. 571405-)	3160 - 69A
4D9	HYDRAULIC LINES, ONE AND TWO LEVER CONTROLLER	3160 - 34
4F22	HYDRAULIC LINES, PARK BRAKE SOLENOID VALVE	3160 - 80
4D11	HYDRAULIC LINES, SINGLE LEVER WITH AUXILIARY CONTROLLER	3160 - 36
4D13	HYDRAULIC LINES, TWO LEVER WITH AUXLILIARY CONTROLLER	3160 - 38
1J1	HYDRAULIC OIL COOLER	0510 - 6
1J3	HYDRAULIC OIL COOLER	0510 - 8
4E11	HYDRAULIC OIL FILTER SERIAL NO. -XXXXXX)	3160 - 58
4E13	HYDRAULIC OIL FILTER SERIAL NO.XXXXXX-)	3160 - 59A
4E11	HYDRAULIC OIL FILTER RESTRICTION INDICATOR SWITCH (SER.NO. -XXXXXX)	3160 - 58
4E13	HYDRAULIC OIL FILTER RESTRICTION INDICATOR SWITCH (SER.NO.XXXXXX-)	3160 - 59A
4E19	HYDRAULIC OIL PRESSURE REGULATOR VALVE FITTINGS	3160 - 62
4E17	HYDRAULIC OIL PRESSURE REGULATOR VALVE	3160 - 60
4E17	HYDRAULIC OIL PRESSURE REGULATOR VALVE SOLENOID VALVE	3160 - 60
4E11	HYDRAULIC OIL RESERVOIR SERIAL NO. -XXXXXX)	3160 - 58
4E13	HYDRAULIC OIL RESERVOIR SERIAL NO.XXXXXX-)	3160 - 59A
2G16	HYDRAULIC OUTLET PRESSURE SWITCH (MATERIAL HANDLER)	1674 - 45
1I20	HYDRAULIC PUMP, FAN DRIVE	0510 - 4
4E3	HYDRAULIC PUMP,LOADER	3160 - 50
4E3	HYDRAULIC PUMP,STEERING	3160 - 50
4E11	HYDRAULIC RETURN FILTER RESTRICTION SWITCH (SER.NO. -XXXXXX)	3160 - 58
4E13	HYDRAULIC RETURN FILTER RESTRICTION SWITCH (SER.NO.XXXXXX-)	3160 - 59A
4E16	HYDRAULIC TEMPERATURE SENDER	3160 - 59D
4E11	HYDRAULIC TEMPERATURE SENDER SERIAL NO. -XXXXXX)	3160 - 58
4E13	HYDRAULIC TEMPERATURE SENDER SERIAL NO.XXXXXX-)	3160 - 59A
4D23	HYDRAULICS, BUCKET CYLINDER TO LOADER CONTROL VALVE	3160 - 46

ALPHABETICAL INDEX - CONTINUED

GRID		PAGE
	I	
2E25	IGNITION SWITCH	1674 - 15
2E25	IGNITION SWITCH KEY	1674 - 15
4F16	INDICATOR, LOADER BOOM RETURN	3160 - 76
2E17	INJECTION FUEL TEMPERATURE HARNESS	1674 - 7
1G13	INJECTION PUMP ACCESS COVER	0402 - 6
1H12	INJECTION PUMP GEAR (ESN -127422)	0413 - 4
1H14	INJECTION PUMP GEAR(127423-)	0413 - 5A
1H12	INJECTION PUMP LUBE LINE (ESN -127422)	0413 - 4
1H14	INJECTION PUMP LUBE LINE(127423-)	0413 - 5A
1H12	INJECTION PUMP, ELECTRONIC FUEL (ESN -127422)	0413 - 4
1H14	INJECTION PUMP, ELECTRONIC FUEL (127423-)	0413 - 5A
4C3	INLET SECTION VALVE WITH RELIEF VALVE	3160 - 8
1D22	INPUT GEAR	0350 - 8
1D22	INPUT SHAFT	0350 - 8
1B9	INPUT YOKE	0210 - 1
1H6	INSERTS, VALVE SEAT	0409 - 2
3G14	INSIDE REAR VIEW MIRROR	2002 - 1
1H19	INTAKE MANIFOLD (ESN -199999)	0414 - 1
1H20	INTAKE MANIFOLD (ESN 200000-)	0414 - 2
1H19	INTAKE MANIFOLD GASKET (ESN -199999)	0414 - 1
1H20	INTAKE MANIFOLD GASKET (ESN 200000-)	0414 - 2
1H6	INTAKE VALVES	0409 - 2
1H3	INTAKE, ENGINE OIL PUMP	0407 - 6
1J15	ISOLATOR,ENGINE SUPPORT	0540 - 2
	J	
1G16	JETS, PISTON COOLING	0404 - 2
2G9	JUMPER HARNESS, FUEL SENDER	1674 - 39C
2G10	JUMPER HARNESS, HYDRAULIC FILTER RESTRICTION SWITCH	1674 - 39D
2G13	JUMPER HARNESS, ROTARY POTENTIOMETER	1674 - 42
	K	
1G20	KEY ENGINE SERVICE PARTS	0404 - 7
1G5	KEY, DAMPER	0401 - 1
2E25	KEY,IGNITION SWITCH	1674 - 15
4F1	KICKOUT,LOADER BOOM	3160 - 66
2C16	KIT, AIR CONDITIONER O-RING REPAIR	1330 - 1
1G21	KIT, ENGINE OVERHAUL	0404 - 8
2D6	KIT, ENVIRONMENTAL DRAIN	1369 - 12
4E1	KIT, FITTING, QUICK-DISCONNECT	3160 - 48
2D3	KIT, FLAT FACE O-RING SEAL	1369 - 9
4D7	KIT, FOURTH FUNCTION, DUAL JOYSTICK, FIELD	3160 - 32
4D1	KIT, FOURTH FUNCTION, FOUR LEVER, FIELD	3160 - 26
1H6	KIT, HEAD BOLT	0409 - 2
2C17	KIT, LOCTITE SERVICE	1330 - 2
2C21	KIT, O-RING	1369 - 2
1G15	KIT, PISTON/LINER	0403 - 2
2H7	KIT, PROGRAMMING	1674 - 60
4C11	KIT, RELIEF VALVE	3160 - 12
3D22	KIT, SEAT MOUNTING PARTS (MECHANICAL SUSPENSION)	1821 - 8
1K12	KIT, STEERING VALVE SEAL	0960 - 9A
1H23	KIT, WATER PUMP SEAL	0417 - 2
2G17	KIT, WIRE LEAD	1674 - 46
2G19	KIT, WIRE LEAD	1674 - 48
3E23	KIT,A/C COMPRESSOR HARDWARE	1830 - 8
3E21	KIT,A/C COMPRESSOR REPAIR	1830 - 6
3E22	KIT,A/C SHAFT SEAL	1830 - 7
4D5	KIT,AUXILIARY JOY STICK REPAIR	3160 - 30
4D3	KIT,AUXILIARY SINGLE LEVER CONTROLLER REPAIR	3160 - 28
1C18	KIT,AXLE BREATHER	0260 - 7
4D17	KIT,BOOM CYLINDER REPAIR (SER. NO. -XX)	3160 - 42
4D19	KIT,BOOM CYLINDER REPAIR (SER. NO.XX-)	3160 - 43A
4D15	KIT,BUCKET CYLINDER REPAIR	3160 - 40
1C18	KIT,PARK BRAKE BREATHER	0260 - 7
3D24	KIT,SEAT SUSPENSION (AIR SUSPENSION)	1821 - 10
4C15	KIT,SINGLE LEVER CONTROLLER	3160 - 16
4C17	KIT,SINGLE LEVER CONTROLLER REPAIR	3160 - 18
1K14	KIT,STEERING CYLINDER REPAIR	0960 - 10
4D1	KIT,TWO LEVER CONTROLLER	3160 - 26
4B18	KIT,TWO LEVER CONTROLLER REPAIR	3160 - Q0020
4B20	KIT,TWO LEVER CONTROLLER REPAIR	3160 - Q0022
4C19	KIT,TWO LEVER CONTROLLER REPAIR	3160 - 20
4C21	KIT,TWO LEVER CONTROLLER REPAIR	3160 - 22
3D18	KITM SEAT KNOB (MECHANICAL SUSPENSION)	1821 - 4
3D22	KITS, SEAT SPRING (MECHANICAL SUSPENSION)	1821 - 8
3D18	KITS, SEAT SUSPENSION (MECHANICAL SUSPENSION)	1821 - 4
3D22	KITS, SEAT SUSPENSION (MECHANICAL SUSPENSION)	1821 - 8
3E17	KNOB, CONTROL, HEATER TEMPERATURE SER. NO.XXXXXX-)	1830 - 3G
3D14	KNOB, CONTROL, SEAT	1821 - 3A
	L	
2C7	LABEL, FUSEBLOCK	1320 - 10
2C15	LABEL, HIGH-LIFT	1320 - 18
2B25	LABEL, LEAPING DEERE	1320 - 3A
2B23	LABELS AND DECALS	1320 - 2
2C1	LABELS AND DECALS (644H-MH)	1320 - 4
2C9	LABELS AND DECALS (FUSEBLOCK) (FRENCH)	1320 - 12
2C11	LABELS AND DECALS, FUSEBLOCK (SPANISH)	1320 - 14
2C3	LABELS AND TRADEMARKS (FRENCH)	1320 - 6
2C5	LABELS AND TRADEMARKS (SPANISH)	1320 - 8
2E4	LAMP, HI-BEAM, DRIVE	1673 - 2
2E7	LAMP, STOP (SER.NO.578420-)	1673 - 4A
2E6	LAMP, TAIL (SER.NO.-578419)	1673 - 4
2E7	LAMP, TAIL (SER.NO.578420-)	1673 - 4A
2E6	LAMP, TURN (SER.NO.-578419)	1673 - 4
2E7	LAMP, TURN (SER.NO.578420-)	1673 - 4A
3F13	LATCH, ENGINE SIDE SHIELD	1910 - 2
3B12	LATCH,CAB DOOR HOLD-OPEN	1810 - 8
3B14	LATCH,CAB DOOR HOLD-OPEN	1810 - 9A
2B25	LEAPING DEERE LABEL	1320 - 3A

ALPHABETICAL INDEX - CONTINUED

GRID		PAGE
3B20	LEFT SIDE CAB DOOR (SERIAL NO. -XXXXXX)	1810 - 12
3B22	LEFT SIDE CAB DOOR (SERIAL NO. XXXXXX-)	1810 - 13A
3D16	LEVER,SEAT SLIDE CONTROL	1821 - 3C
1K4	LEVER,STEERING COLUMN TILT	0960 - 2
2B22	LICENSE PLATE BRACKET	1314 - 1
2B22	LICENSE PLATE LIGHT	1314 - 1
2E15	LICENSE PLATE LIGHT HARNESS	1674 - 5
2C18	LIFT HOOKS	1330 - 4
2E9	LIGHT, DOME	1673 - 5
2E3	LIGHT, FRONT TURN	1673 - 1
2E3	LIGHT, MARKER	1673 - 1
2E6	LIGHT, STOP (SER.NO.-578419)	1673 - 4
2E7	LIGHT, STOP (SER.NO.578420-)	1673 - 4A
2E6	LIGHT, TAIL (SER.NO.-578419)	1673 - 4
2E7	LIGHT, TURN (SER.NO.578420-)	1673 - 4A
2B22	LIGHT,LICENSE PLATE	1314 - 1
1B22	LIMITED SLIP DIFFERENTIAL	0210 - 14
1C19	LINE, AXLE DISCONNECT	0260 - 8
1C13	LINE, DIFFERENTIAL LOCK, FRONT	0260 - 2
1H12	LINE, INJECTION PUMP LUBE (ESN -127422)	0413 - 4
1H14	LINE, INJECTION PUMP LUBE(127423-)	0413 - 5A
1G15	LINER O-RINGS	0403 - 2
1G15	LINER SHIM	0403 - 2
1G15	LINERS, CYLINDER	0403 - 2
1C15	LINES, DIFFERENTIAL LOCK, FRONT AND REAR	0260 - 4
1H12	LINES, FUEL LEAK-OFF (ESN -127422)	0413 - 4
1H14	LINES, FUEL LEAK-OFF(127423-)	0413 - 5A
4E9	LINES, MAIN HYDRAULIC	3160 - 56
1I3	LINES, PRE-FUEL	0420 - 2
1H21	LINES, TURBOCHARGER OIL	0416 - 2
4B16	LINK, LOADER, HIGH LIFT	3140 - 8
1K4	LINKAGE, STEERING COLUMN	0960 - 2
1J5	LINKAGE,ENGINE SPEED CONTROL	0515 - 2
2H1	LOAD CENTER COMPARTMENT	1674 - 54
2G13	LOAD CENTER HARNESS TO POTENTIOMETER JUMPER	1674 - 42
2E22	LOAD CENTER RIGHT PANEL (LPM HARNESS)	1674 - 12
2H3	LOAD CENTER WIRING WIRE HARNESS	1674 - 56
4B14	LOADER BOOM	3140 - 6
4B16	LOADER BOOM	3140 - 8
4F1	LOADER BOOM KICKOUT	3160 - 66
4F1	LOADER BOOM KICKOUT SENSOR	3160 - 66
4F16	LOADER BOOM RETURN INDICATOR	3160 - 76
4B6	LOADER BUCKET CUTTING EDGE	3102 - 2
4B6	LOADER BUCKET GUARD	3102 - 2
4B6	LOADER BUCKET PINS	3102 - 2
4B8	LOADER BUCKET SHANKS	3102 - 4
4B8	LOADER BUCKET TEETH	3102 - 4
4B6	LOADER BUCKETS	3102 - 2
4B22	LOADER CONTROL VALVE (2-SPOOL)	3160 - 2
4B24	LOADER CONTROL VALVE (3-SPOOL)	3160 - 4
4C1	LOADER CONTROL VALVE (4-SPOOL)	3160 - 6
4D23	LOADER CONTROL VALVE TO BUCKET CYLINDER HYDRAULICS	3160 - 46
4B10	LOADER FRAME	3140 - 2
4B10	LOADER FRAME BEARING	3140 - 2
4B12	LOADER FRAME LOCK	3140 - 4
4B10	LOADER FRAME PIN	3140 - 2
2F13	LOADER FRAME WIRING HARNESS	1674 - 26
4E3	LOADER HYRAULIC PUMP	3160 - 50
4B14	LOADER LINKAGE PIN	3140 - 6
2H11	LOCK BAR,ENGINE FRAME	1740 - 2
4B12	LOCK, LOADER FRAME	3140 - 4
3F13	LOCK,ENGINE SIDE SHIELD	1910 - 2
2C17	LOCTITE SERVICE KIT	1330 - 2
1K6	LOWER STEERING COLUMN	0960 - 4
2G16	LPM TRANSDUCER (MATERIAL HANDLER)	1674 - 45
2D8	LUBE LINES,BUCKET CYLINDER	1370 - 2
1C1	LUBRICATION LINES, DIFFERENTIAL SUPPORTS	0210 - 18
3D14	LUMBAR ADJUSTER AND CONTROL KNOB	1821 - 3A

M

3C7	MAGAZINE HOLDER	1810 - 16
1G14	MAGNETIC PICK-UP	0402 - 7
1G16	MAIN BEARING CAPS	0404 - 2
1G7	MAIN BEARINGS	0401 - 3
2H22	MAIN COUNTERWEIGHT	1749 - 2
4E9	MAIN HYDRAULIC LINES	3160 - 56
1E19	MANIFOLD, CONTROL VALVE GEAR SHIFT	0350 - 28
1H8	MANIFOLD, EXHAUST	0410 - 1
1H19	MANIFOLD, INTAKE (ESN -199999)	0414 - 1
1H20	MANIFOLD, INTAKE (ESN 200000-)	0414 - 2
1H25	MANIFOLD, WATER, FRONT	0418 - 2
3E21	MANIFOLD,A/C COMPRESSOR	1830 - 6
1I14	MANIFOLD,AIR INTAKE	0505 - 2
2E3	MARKER LIGHT	1673 - 1
1G11	MEDALLION (ENGINE)	0402 - 3
3G15	MIRROR, OUTSIDE	2002 - 2
3G14	MIRROR, REAR VIEW, INSIDE	2002 - 1
3E9	MODULE, AIR CONDITIONING SER. NO. XXXXXX)	1830 - 2
3E11	MODULE, AIR CONDITIONING SER. NO. XXXXXX)	1830 - 3A
3E13	MODULE, AIR CONDITIONING SER. NO.XXXXXX-)	1830 - 3C
2H9	MONITOR ALARM	1676 - 2
3F5	MONITOR CONSULE (CAB)	1830 - 13A
3F3	MONITOR CONSULE (WITH CAB)	1830 - 12
3F7	MONITOR CONSULE (WITH CANOPY)	1830 - 14
2H8	MONITOR DISPLAY UNIT	1676 - 1
3D7	MONITOR, VANDAL COVER, CANOPY	1810 - 35A
3E9	MOTOR BLOWER, A/C SER. NO. XXXXXX)	1830 - 2
3E11	MOTOR BLOWER, A/C SER. NO. XXXXXX)	1830 - 3A
3E13	MOTOR BLOWER, A/C SER. NO.XXXXXX-)	1830 - 3C
3B12	MOTOR, WINDSHIELD WIPER	1810 - 8
3B14	MOTOR, WINDSHIELD WIPER	1810 - 9A
3C13	MOTOR, WIPER SER.NO. -580190	1810 - 22
3C15	MOTOR, WIPER SER.NO.580191-	1810 - 23A
1I20	MOTOR,FAN DRIVE	0510 - 4
2D19	MOUNTING BRACKETS, ALTERNATOR (55 AMP)	1672 - 2
2D23	MOUNTING BRACKETS, ALTERNATOR (80 AMP)	1672 - 6
3D22	MOUNTING PARTS KIT, SEAT (MECHANICAL SUSPENSION)	1821 - 8
1J15	MOUNTING SUPPORTS, ENGINE	0540 - 2

ALPHABETICAL INDEX - CONTINUED

GRID		PAGE
1D15	MOUNTING SUPPORTS, TRANSMISSION	0342 - 2
4B10	MOUNTING, FRONT AXLE	3140 - 2
3B6	MOUNTS, CAB (FRONT AND REAR)	1810 - 2
3G3	MUD FENDERS	1927 - 6
3G5	MUD FENDERS	1927 - 8
3G3	MUD FLAPS	1927 - 6
3G5	MUD FLAPS	1927 - 8
1J13	MUFFLER	0530 - 2
1J13	MUFFLER BRACKET	0530 - 2

N

1H16	NOZZLE, FUEL INJECTION	0413 - 6
1H10	NOZZLES, FUEL INJECTION (1601) (AF,TF)	0413 - 2

O

2C21	O-RING KIT	1369 - 2
2C16	O-RING REPAIR KIT, AIR CONDITIONER	1330 - 1
1H23	O-RING, WATER PUMP	0417 - 2
1G15	O-RINGS, LINER	0403 - 2
1I1	OIL COOLER ADAPTER	0419 - 2
1I2	OIL COOLER BYPASS ADAPTER	0419 - 3
1I2	OIL COOLER BYPASS TUBES	0419 - 3
1I1	OIL COOLER COVER	0419 - 2
1I1	OIL COOLER TUBES	0419 - 2
1I1	OIL COOLER, ENGINE	0419 - 2
1J1	OIL COOLER,HYDRAULIC	0510 - 6
1J3	OIL COOLER,HYDRAULIC	0510 - 8
1J1	OIL COOLER,TRANSMISSION	0510 - 6
1J3	OIL COOLER,TRANSMISSION	0510 - 8
1H4	OIL FILTER BASE	0407 - 8
1H4	OIL FILTER BYPASS VALVE	0407 - 8
1H4	OIL FILTER HOUSING	0407 - 8
1H4	OIL FILTER HOUSING GASKET	0407 - 8
1H4	OIL FILTER, ENGINE	0407 - 8
1F19	OIL FILTER, TRANSMISSION	0360 - 6
1F21	OIL FILTER, TRANSMISSION	0360 - 7A
4G2	OIL LINE,AUXILIARY DRIVE	4151 - 2
1H21	OIL LINES, TURBOCHARGER	0416 - 2
1G24	OIL PAN	0407 - 2
1G24	OIL PAN GASKET	0407 - 2
1H4	OIL PRESSURE REGULATING VALVE	0407 - 8
1I1	OIL PRESSURE REGULATING VALVE	0419 - 2
2F3	OIL PRESSURE SENSOR, ENGINE	1674 - 18
1G5	OIL PUMP DRIVE GEAR	0401 - 1
1H1	OIL PUMP DRIVE GEAR	0407 - 4
1H1	OIL PUMP GASKET	0407 - 4
1H3	OIL PUMP INTAKE	0407 - 6
1H3	OIL PUMP INTAKE GASKET	0407 - 6
1H1	OIL PUMP, ENGINE	0407 - 4
1G13	OIL SEAL, CRANKSHAFT FRONT	0402 - 6
1G9	OIL SEAL, REAR	0401 - 5
2C23	OILSCAN PLUS TEST KIT, FLUID ANALYSIS	1369 - 4
4D9	ONE AND TWO LEVER CONTROLLER HYDRAULIC LINES	3160 - 34
3E1	OPERATOR ACCESS PLATFORM	1822 - 2
3E1	OPERATOR ACCESS PLATFORM STEPS	1822 - 2
3C3	OPERATOR STATION FRONT PEDESTAL	1810 - 14
3C5	OPERATOR STATION FRONT PEDESTAL	1810 - 15A
1H10	OPTION CODE 1601 INJECTION LINES AND NOZZLES (AF,TF)	0413 - 2
1C1	OSCILLATING DIFFERENTIAL SUPPORT	0210 - 18
4C13	OUTLET SECTION	3160 - 14
1E15	OUTPUT SHAFT,TRANSMISSION	0350 - 24
3G15	OUTSIDE MIRROR	2002 - 2
1G21	OVERHAUL KIT, ENGINE	0404 - 8

P

1G24	PAN, OIL	0407 - 2
1C18	PARK BRAKE BREATHER KIT	0260 - 7
4F18	PARK BRAKE SOLENOID VALVE	3160 - 78
4F20	PARK BRAKE SOLENOID VALVE	3160 - 79A
4F22	PARK BRAKE SOLENOID VALVE HYDRAULIC LINES	3160 - 80
4F18	PARK BRAKE VALVE SOLENOID SWITCH	3160 - 78
2B18	PARKING BRAKE/DRIVELINE BEARING	1115 - 2
1G20	PARTS, KEY ENGINE SERVICE	0404 - 7
2B3	PEDAL, BRAKE	1060 - 2
2B5	PEDAL, BRAKE	1060 - 3A
2B7	PEDAL, BRAKE	1060 - 3C
2B9	PEDAL, BRAKE	1060 - 3E
1J5	PEDAL,ENGINE SPEED CONTROL	0515 - 2
3C5	PEDESTAL, CAB	1810 - 15A
3C5	PEDESTAL, CANOPY	1810 - 15A
3C3	PEDESTAL, OPERATOR STATION FRONT	1810 - 14
3C5	PEDESTAL, OPERATOR STATION FRONT	1810 - 15A
1G14	PICK-UP, MAGNETIC	0402 - 7
2E16	PIN DISCONNECT HARNESS	1674 - 6
4F9	PIN DISCONNECT HYDRAULIC HOSES	3160 - 70
4F7	PIN DISCONNECT VALVE	3160 - 69C
4F3	PIN DISCONNECT VALVE (SERIAL NO. -571404)	3160 - 68
4F5	PIN DISCONNECT VALVE (SERIAL NO. 571405-)	3160 - 69A
4F3	PIN DISCONNECT VALVE HYDRAULIC HOSES (SERIAL NO. -571404)	3160 - 68
4F5	PIN DISCONNECT VALVE HYDRAULIC HOSES (SERIAL NO. 571405-)	3160 - 69A
4B14	PIN, LOADER LINKAGE	3140 - 6
4B10	PIN,BOOM CYLINDER	3140 - 2
4B10	PIN,BUCKET CYLINDER	3140 - 2
2H11	PIN,ENGINE FRAME	1740 - 2
4B10	PIN,LOADER FRAME	3140 - 2
4B10	PIN,STEERING CYLINDER	3140 - 2
4D21	PINS, BOOM CYLINDER	3160 - 44
4D21	PINS, BUCKET CYLINDER	3160 - 44
4B6	PINS, LOADER BUCKET	3102 - 2
1J13	PIPE, EXHAUST	0530 - 2
1G16	PISTON COOLING JETS	0404 - 2
1G15	PISTON RINGS	0403 - 2
1G15	PISTON/LINER KIT	0403 - 2
2B2	PISTON, BRAKE	1011 - 1
1G15	PISTON, ENGINE	0403 - 2
1C9	PLANET PINION CARRIER	0250 - 6
3F13	PLATE, ENGINE SIDE SHIELD	1910 - 2
2B2	PLATES, BRAKE	1011 - 1
3E1	PLATFORM, OPERATOR ACCESS	1822 - 2
1C21	PLUMBING, AXLE COOLING (SERIAL NO. -578893)	0260 - 10
1D7	PLUMBING, AXLE COOLING (SERIAL NO. 578894-)	0260 - 20
2E20	POWER PLUG AND CONVERTER (24 VOLT TO 12 VOLT)	1674 - 10
1E17	POWER TAKE-OFF SHAFT	0350 - 26
1I3	PRE-FUEL FILTER	0420 - 2
1I3	PRE-FUEL FILTER BASE	0420 - 2
1J11	PRECLEANER, AIR,	0520 - 6
1J9	PRECLEANER, AIR, KIT	0520 - 4

ALPHABETICAL INDEX - CONTINUED

GRID		PAGE
2F3	PRESSURE SENSOR, ENGINE OIL	1674 - 18
2G16	PRESSURE SWITCH, HYDRAULIC OUTLET (MATERIAL HANDLER)	1674 - 45
3E9	PRESSURIZER BLOWER SER. NO. XXXXXX)	1830 - 2
3E11	PRESSURIZER BLOWER SER. NO. XXXXXX)	1830 - 3A
3E13	PRESSURIZER BLOWER SER. NO.XXXXXX-)	1830 - 3C
2H7	PROGRAMMING KIT	1674 - 60
1I7	PULLEY, CRANKSHAFT AND DAMPERS)	0429 - 1
1C23	PUMP AND MOTOR RECIRCULATION, AXLE OIL (SERIAL NO. -578893)	0260 - 12
1D9	PUMP AND MOTOR RECIRCULATION, AXLE OIL (SERIAL NO. 578894-)	0260 - 22
1H12	PUMP, FUEL INJECTION (ESN -127422)	0413 - 4
1H14	PUMP, FUEL INJECTION(127423-)	0413 - 5A
1H18	PUMP, FUEL TRANSFER (ROBERT BOSCH)	0413 - 8
1H1	PUMP, OIL ENGINE	0407 - 4
1F3	PUMP, TRANSMISSION	0350 - 34
1H23	PUMP, WATER	0417 - 2
3B10	PUMP, WINDOW WASHER	1810 - 6
1K2	PUMP,SECONDARY STEERING	0930 - 2
1G12	PUSH RODS	0402 - 4

Q

4E1	QUICK-DISCONNECT FITTING KIT	3160 - 48

R

3B18	R.H. CAB DOOR WINDOWPANE	1810 - 10
3B18	R.H.CAB DOOR	1810 - 10
3B18	R.H.CAB DOOR HANDLE	1810 - 10
1J1	RADIATOR	0510 - 6
1J3	RADIATOR	0510 - 8
1J1	RADIATOR CAP	0510 - 6
1J3	RADIATOR CAP	0510 - 8
1J1	RADIATOR COOLANT LEVEL SENSOR	0510 - 6
1J3	RADIATOR COOLANT LEVEL SENSOR	0510 - 8
1J1	RADIATOR HOSE	0510 - 6
1J3	RADIATOR HOSE	0510 - 8
1J1	RADIATOR OVERFLOW TANK	0510 - 6
1J3	RADIATOR OVERFLOW TANK	0510 - 8
3G8	RADIO	2001 - 2
3G10	RADIO (SER.NO.572399-578901)	2001 - 4
3G12	RADIO (SER.NO.578902-)	2001 - 6
3G8	RADIO ANTENNA	2001 - 2
3G10	RADIO ANTENNA (S.N.572399-578901)	2001 - 4
3G12	RADIO ANTENNA (S.N.578902-)	2001 - 6
3G8	RADIO REMOTE CONTROL	2001 - 2
3G10	RADIO REMOTE CONTROL (S.N.572399-578901)	2001 - 4
3G12	RADIO REMOTE CONTROL (S.N.578902-)	2001 - 6
3G8	RADIO SPEAKER	2001 - 2
3G10	RADIO SPEAKER (SERIAL NO. 572399-578901)	2001 - 4
3G12	RADIO SPEAKER (SERIAL NO. 578902-)	2001 - 6
3D9	RAIL, DRIP	1810 - 36
1B8	REAR AXLE	0201 - 1
2D21	REAR COVER, ALTERNATOR (55 AMP)	1672 - 4
2E1	REAR COVER, ALTERNATOR (80 AMP)	1672 - 8
1C15	REAR DIFFERENTIAL LOCK LINE	0260 - 4
3F22	REAR FENDERS	1927 - 2
3F24	REAR FENDERS	1927 - 3A
2G1	REAR FRAME WIRING HARNESS (SERIAL NO. -578419)	1674 - 36
2G3	REAR FRAME WIRING HARNESS (SERIAL NO. 578420-)	1674 - 37A
1G9	REAR OIL SEAL	0401 - 5
1G9	REAR OIL SEAL GASKET	0401 - 5
1G9	REAR OIL SEAL HOUSING	0401 - 5
2B25	REAR SUNSCREEN	1320 - 3A
2E11	REAR WINDOW DEFROST SWITCH	1674 - 1
3B12	REAR WINDOW RETAINERS	1810 - 8
3B14	REAR WINDOW RETAINERS	1810 - 9A
3F1	RECEIVER DRIER,A/C	1830 - 10
1C23	RECIRCULATION PUMP AND MOTOR, AXLE OIL (SERIAL NO. -578893)	0260 - 12
1D9	RECIRCULATION PUMP AND MOTOR, AXLE OIL (SERIAL NO. 578894-)	0260 - 22
2D19	REGULATOR,VOLTAGE (55 AMP)	1672 - 2
1I14	RELAY, ENGINE AIR HEATER	0505 - 2
2G15	RELAY, TURN SIGNAL FLASHER	1674 - 44
2F1	RELAY,STARTER	1674 - 16
2G15	RELAYS	1674 - 44
4C3	RELIEF VALVE FOR INLET SECTION VALVE	3160 - 8
4C11	RELIEF VALVE SEAL KIT	3160 - 12
4E15	REMOTE HYDRAULIC RESERVOIR BREATHER	3160 - 59C
4E5	REPAIR KITS, STEERING AND LOADER HYDRAULIC PUMP	3160 - 52
3G18	REPLACEMENT FIRE EXTINGUISHER AND BRACKET	2003 - 3A
3D11	REPLACEMENT SEAT BELT (THREE INCHES (76MM) WIDE)	1821 - 1A
4E11	RESERVOIR, HYDRAULIC OIL SERIAL NO. -XXXXXX)	3160 - 58
4E13	RESERVOIR, HYDRAULIC OIL SERIAL NO.XXXXXX-)	3160 - 59A
3C11	REST, WRIST	1810 - 20
4E11	RESTRICTION SWITCH, HYDRAULIC RETURN FILTER (SERIAL NO. -XXXXXX)	3160 - 58
4E13	RESTRICTION SWITCH, HYDRAULIC RETURN FILTER (SERIAL NO.XXXXXX-)	3160 - 59A
3D3	RETAINER, FLOOR SWEEPING	1810 - 32
3B12	RETAINERS, REAR WINDOW	1810 - 8
3B14	RETAINERS, REAR WINDOW	1810 - 9A
4E11	RETURN HOSE, RESERVOIR SERIAL NO. -XXXXXX)	3160 - 58
4E13	RETURN HOSE, RESERVOIR SERIAL NO.XXXXXX-)	3160 - 59A
2E18	RETURN TO DIG HARNESS	1674 - 8
4F16	RETURN-TO-CARRY	3160 - 76
4E21	RETURN-TO-DIG ACTUATOR	3160 - 64
4E23	RETURN-TO-DIG ACTUATOR (SERIAL NO. XXXXXX-)	3160 - 65A
4E21	RETURN-TO-DIG SENSOR	3160 - 64
4E23	RETURN-TO-DIG SENSOR (SERIAL NO. XXXXXX-)	3160 - 65A
4F11	RIDE CONTROL ACCUMULATOR	3160 - 72
4F15	RIDE CONTROL ACCUMULATOR	3160 - 75
4F15	RIDE CONTROL ACCUMULATOR SEAL KIT	3160 - 75
4F11	RIDE CONTROL HYDRAULIC HOSES	3160 - 72
4F13	RIDE CONTROL SOLENOID VALVE (SERIAL NO. -XXXXXX)	3160 - 74
4F14	RIDE CONTROL SOLENOID VALVE (SERIAL NO. XXXXXX-)	3160 - 74A
4F11	RIDE CONTROL VALVE	3160 - 72
4F13	RIDE CONTROL VALVE (SERIAL NO. -XXXXXX)	3160 - 74

ALPHABETICAL INDEX - CONTINUED

GRID		PAGE
4F14	RIDE CONTROL VALVE (SERIAL NO. XXXXXX-)	3160 - 74A
2F11	RIDE CONTROL WIRING HARNESS	1674 - 24
3C21	RIGHT SIDE CONSOLE	1810 - 26
1B2	RIM, WHEEL	0110 - 2
1H23	RING, WATER PUMP RETAINING	0417 - 2
1G15	RINGS, PISTON	0403 - 2
2H21	ROCK GUARD, CYLINDER-FITTING	1746 - 6
1G11	ROCKER ARM COVER	0402 - 3
1G11	ROCKER ARM COVER GASKET	0402 - 3
1G12	ROCKER ARM SHAFT	0402 - 4
1G12	ROCKER ARMS	0402 - 4
2E11	ROCKER SWITCHES AND PLUG ASSEMBLY	1674 - 1
4D17	ROD, BOOM CYLINDER (SER. NO. -XX)	3160 - 42
4D19	ROD, BOOM CYLINDER (SER. NO.XX-)	3160 - 43A
1G15	RODS, CONNECTING	0403 - 2
1G12	RODS, PUSH	0402 - 4
3B12	ROOF, CAB	1810 - 8
3B14	ROOF, CAB	1810 - 9A
3B12	ROPS, CANOPY	1810 - 8
3B14	ROPS, CANOPY	1810 - 9A

S

4F15	SEAL KIT,RIDE CONTROL ACCUMULATOR	3160 - 75
1G13	SEAL, FRONT OIL	0402 - 6
1G9	SEAL, REAR OIL	0401 - 5
1H23	SEAL, TUBE	0417 - 2
1H23	SEAL, WATER PUMP OIL	0417 - 2
3D10	SEAT BELT (THREE INCHES (76MM) WIDE)	1821 - 1
3D10	SEAT BELT COVER	1821 - 1
3D11	SEAT BELT, REPLACEMENT (THREE INCHES (76MM WIDE)	1821 - 1A
3D12	SEAT BRACKETS	1821 - 2
3D12	SEAT CUSHION	1821 - 2
3D18	SEAT KNOB KIT (MECHANICAL SUSPENSION)	1821 - 4
3D22	SEAT MOUNTING PARTS KIT (MECHANICAL SUSPENSION)	1821 - 8
3D16	SEAT SLIDE ASSEMBLY	1821 - 3C
3D16	SEAT SLIDE CONTROL LEVER	1821 - 3C
3D16	SEAT SLIDE LATCH KIT	1821 - 3C
3D22	SEAT SPRING KITS (MECHANICAL SUSPENSION)	1821 - 8
3D12	SEAT SUSPENSION	1821 - 2
3D24	SEAT SUSPENSION (AIR SUSPENSION)	1821 - 10
3D24	SEAT SUSPENSION KIT (AIR SUSPENSION)	1821 - 10
3D24	SEAT, SUSPENSION (AIR SUSPENSION)	1821 - 10
3D18	SEAT, SUSPENSION KITS (MECHANICAL SUSPENSION)	1821 - 4
3D20	SEAT, SUSPENSION KITS (MECHANICAL SUSPENSION)	1821 - 6
3D22	SEAT, SUSPENSION KITS (MECHANICAL SUSPENSION)	1821 - 8
2H24	SECOND COUNTERWEIGHT	1749 - 4
1K2	SECONDARY STEERING	0930 - 2
1K2	SECONDARY STEERING PUMP	0930 - 2
1K2	SECONDARY STEERING SWITCH	0930 - 2
2E14	SECONDARY STEERING SWITCH HARNESS	1674 - 4
1K2	SECONDARY STEERING WIRE HARNESS	0930 - 2
2F21	SECONDARY STEERING WIRING HARNESS	1674 - 32
4C7	SECTION, AUXILIARY	3160 - 11A
4C5	SECTION, VALVE, BOOM	3160 - 10
4C9	SECTION, VALVE, FIFTH FUNCTION	3160 - 11C
4C3	SECTION, VALVE, INLET, WITH RELIEF VALVE	3160 - 8
2F4	SELECTOR SHIFT SWITCH	1674 - 19
2F4	SELECTOR, SWITCH	1674 - 19
2E24	SENDER, ENGINE COOLANT TEMPERATURE	1674 - 14
2F3	SENDER, ENGINE OIL PRESSURE SENSOR	1674 - 18
1J17	SENDER, FUEL TANK	0560 - 2
1J19	SENDER, FUEL TANK	0560 - 3A
4E16	SENDER, TEMPERATURE, HYDRAULIC	3160 - 59D
4E11	SENDER, TEMPERATURE, HYDRAULIC SERIAL NO. -XXXXXX)	3160 - 58
4E13	SENDER, TEMPERATURE, HYDRAULIC SERIAL NO.XXXXXX-)	3160 - 59A
1J7	SENSOR, AIR FILTER RESTRICTION INDICATOR	0520 - 2
2F3	SENSOR, ENGINE OIL PRESSURE	1674 - 18
1G14	SENSOR, ENGINE SPEED	0402 - 7
1H25	SENSOR, ENGINE TEMPERATURE	0418 - 2
4F1	SENSOR, LOADER BOOM KICKOUT	3160 - 66
4E21	SENSOR, RETURN-TO-DIG	3160 - 64
4E23	SENSOR, RETURN-TO-DIG (SERIAL NO. XXXXXX-)	3160 - 65A
1H12	SENSOR, TEMPERATURE (ESN -127422)	0413 - 4
1H14	SENSOR, TEMPERATURE(127423-)	0413 - 5A
1F5	SENSOR, TRANSMISSION SPEED	0350 - 36
1E21	SENSOR, TRANSMISSION TEMPERATURE	0350 - 30
1E23	SENSOR, TRANSMISSION TEMPERATURE	0350 - 31A
1J5	SENSOR,ENGINE SPEED CONTROL	0515 - 2
1J1	SENSOR,RADIATOR COOLANT LEVEL	0510 - 6
1J3	SENSOR,RADIATOR COOLANT LEVEL	0510 - 8
1I3	SEPARATOR, WATER	0420 - 2
1B10	SHAFT AND SPIRAL BEVEL GEAR, FRONT	0210 - 2
1B11	SHAFT AND SPIRAL BEVEL GEAR, FRONT	0210 - 3
1C9	SHAFT, FINAL DRIVE	0250 - 6
1D22	SHAFT, INPUT	0350 - 8
1G12	SHAFT, ROCKER ARM	0402 - 4
1E17	SHAFT,POWER TAKE-OFF	0350 - 26
1D19	SHAFT,TORQUE CONVERTER	0350 - 4
1E15	SHAFT,TRANSMISSION OUTPUT	0350 - 24
4B8	SHANKS,LOADER BUCKET	3102 - 4
1H6	SHIELD, EXHAUST VALVE	0409 - 2
3B8	SHIELDS, CAB	1810 - 4
3F15	SHIELDS, TRANSMISSION	1913 - 3
2F4	SHIFT SELECTOR SWITCH	1674 - 19
1G15	SHIM, LINER	0403 - 2
1G18	SHORT BLOCK	0404 - 4
1I9	SHORT BLOCK GASKET KIT	0452 - 2
1J1	SHROUD,FAN	0510 - 6
1J3	SHROUD,FAN	0510 - 8
1H12	SHUT-OFF HOUSING SOLENOID (ESN -127422)	0413 - 4
3F13	SIDE SHIELDS, ENGINE	1910 - 2
2C16	SILICONE RUBBER ADHESIVE	1330 - 1
2C17	SILICONE RUBBER ADHESIVE	1330 - 2
4C15	SINGLE LEVER CONTROLLER	3160 - 16
4C17	SINGLE LEVER CONTROLLER	3160 - 18
4C15	SINGLE LEVER CONTROLLER REPAIR KIT	3160 - 16
4C17	SINGLE LEVER CONTROLLER REPAIR KIT	3160 - 18
4D11	SINGLE LEVER WITH AUXILIARY CONTROLLER HYDRAULIC LINES	3160 - 36
4C23	SINGLE-LEVER CONTROLLER WITH AUXILIARY FUNCTION	3160 - 24
3D16	SLIDE LATCH KIT, SEAT	1821 - 3C
3D16	SLIDE PUCK KIT,SEAT	1821 - 3C
3D16	SLIDE,SEAT ASSEMBLY	1821 - 3C
2C13	SLOW MOVING VEHICLE EMBLEM	1320 - 16
2C13	SMV EMBLEM	1320 - 16

ALPHABETICAL INDEX - CONTINUED

GRID		PAGE
4F18	SOLENOID VALVE, PARK BRAKE	3160 - 78
4F20	SOLENOID VALVE, PARK BRAKE	3160 - 79A
4F13	SOLENOID VALVE, RIDE CONTROL (SERIAL NO. -XXXXXX)	3160 - 74
4F14	SOLENOID VALVE, RIDE CONTROL (SERIAL NO. XXXXXX-)	3160 - 74A
4E17	SOLENOID VALVE,HYDRAULIC OIL PRESSURE REGULATOR VALVE	3160 - 60
1H12	SOLENOID, FUEL SHUT-OFF (ESN -127422)	0413 - 4
1H12	SOLENOID, SHUT-OFF HOUSING (ESN -127422)	0413 - 4
1B4	SPACER, WHEEL	0110 - 4
3G8	SPEAKER, RADIO	2001 - 2
3G10	SPEAKER, RADIO (SER.NO.572399-578901)	2001 - 4
3G12	SPEAKER, RADIO (SER.NO.578902-)	2001 - 6
2H5	SPEED SENSOR, TRANSMISSION, HARNESS	1674 - 58
1B10	SPIRAL BEVEL GEAR AND SHAFT, FRONT	0210 - 2
1B11	SPIRAL BEVEL GEAR AND SHAFT, FRONT	0210 - 3
3D22	SPRING KITS, SEAT (MECHANICAL SUSPENSION)	1821 - 8
3D18	SPRING SEAT SUSPENSION KIT (MECHANICAL SUSPENSION)	1821 - 4
1B20	STANDARD DIFFERENTIAL	0210 - 12
1I16	STARING AID FLUID	0505 - 4
1I16	STARING AID,COLD WEATHER	0505 - 4
1I5	STARTER (24V)	0422 - 2
1I5	STARTER SWITCH (24V)	0422 - 2
2F1	STARTER,RELAY	1674 - 16
4E7	STEERING AND LOADER HYDRAULIC PUMP CONTROL VALVES	3160 - 54
4E5	STEERING AND LOADER HYDRAULIC PUMP REPAIR KITS	3160 - 52
1K4	STEERING COLUMN	0960 - 2
1K8	STEERING COLUMN COVER	0960 - 6
1K4	STEERING COLUMN LINKAGE	0960 - 2
1K4	STEERING COLUMN TILT LEVER	0960 - 2
1K6	STEERING COLUMN, LOWER	0960 - 4
1K14	STEERING CYLINDER	0960 - 10
1K18	STEERING CYLINDER FITTINGS	0960 - 14
1K16	STEERING CYLINDER HYDRAULIC HOSE	0960 - 12
1K18	STEERING CYLINDER LUBRICATION HOSES	0960 - 14
4B10	STEERING CYLINDER PIN	3140 - 2
1K14	STEERING CYLINDER REPAIR KIT	0960 - 10
4E3	STEERING HYDRAULIC PUMP	3160 - 50
1K10	STEERING VALVE	0960 - 8
1K6	STEERING VALVE BRACKET	0960 - 4
1K10	STEERING VALVE FITTINGS	0960 - 8
1K12	STEERING VALVE SEAL KIT	0960 - 9A
1K4	STEERING WHEEL	0960 - 2
2F21	STEERING WIRING HARNESS, SECONDARY	1674 - 32
1K2	STEERING, SECONDARY	0930 - 2
3E3	STEP, ENGINE COMPARTMENT (SERIAL NO. -XXXXXX)	1822 - 4
3E5	STEP, ENGINE COMPARTMENT (SERIAL NO. XXXXXX-)	1822 - 5A
3E7	STEPS,CLOSE MOUNTED	1822 - 6
3E1	STEPS,OPERATOR ACCESS PLATFORM	1822 - 2
2E6	STOP LAMP (SER.NO.-578419)	1673 - 4
2E7	STOP LAMP (SER.NO.578420-)	1673 - 4A
2E6	STOP LAMP BULB (SER.NO.-578419)	1673 - 4
2E7	STOP LIGHT (SER.NO.578420-)	1673 - 4A
1C3	STOP, AXLE (9 DEGREE)	0240 - 2
1J21	STRAINER, FUEL FILL	0560 - 4
2F2	STRAP, CAB GROUND (-)	1674 - 17
2D17	STRAP, GROUND (1000 CCA) (1400 CCA)	1671 - 2
2D16	STRAP, GROUND (750 CCA)	1671 - 1
2F2	STRAP,ENGINE GROUND (-)	1674 - 17
2F5	SUMP TANK HARNESS (SER. NO. -XXXXXX)	1674 - 20
3G16	SUN VISOR	2002 - 3
2B25	SUNSCREEN, FRONT & REAR	1320 - 3A
2G23	SUPPLEMENTAL CONNECTORS	1674 - 52
2G23	SUPPLEMENTARY TERMINALS	1674 - 52
1I18	SUPPORT,FAN BLADE HUB	0510 - 2
3F22	SUPPORT,FENDER	1927 - 2
3G1	SUPPORT,FRONT FENDER	1927 - 4
1C1	SUPPORTS, DIFFERERNTIAL	0210 - 18
1D15	SUPPORTS, MOUNTING, TRANSMISSION	0342 - 2
3D24	SUSPENSION SEAT (AIR SUSPENSION)	1821 - 10
3D20	SUSPENSION SEAT KITS (MECHANICAL SUPENSION)	1821 - 6
3D18	SUSPENSION SEAT KITS (MECHANICAL SUSPENSION)	1821 - 4
3D22	SUSPENSION SEAT KITS (MECHANICAL SUSPENSION)	1821 - 8
3D18	SUSPENSION SEAT SPRING KIT (MECHANICAL SUSPENSION)	1821 - 4
3D12	SUSPENSION, SEAT	1821 - 2
3E9	SWITCH, A/C HIGH PRESSURE SER. NO. XXXXXX)	1830 - 2
3E11	SWITCH, A/C HIGH PRESSURE SER. NO. XXXXXX)	1830 - 3A
3E15	SWITCH, A/C HIGH PRESSURE SER. NO.XXXXXX-)	1830 - 3E
2E11	SWITCH, AIR CONDITIONING SHUTOFF	1674 - 1
2E11	SWITCH, AUTOMATIC TRANSMISSION	1674 - 1
2B3	SWITCH, BRAKE VALVE	1060 - 2
2B5	SWITCH, BRAKE VALVE	1060 - 3A
2B7	SWITCH, BRAKE VALVE	1060 - 3C
2B9	SWITCH, BRAKE VALVE	1060 - 3E
2E11	SWITCH, CAB WORK LIGHT	1674 - 1
2E11	SWITCH, CLUTCH CUT-OFF	1674 - 1
1C17	SWITCH, DIFFERENTIAL LOCK	0260 - 6
2E21	SWITCH, DOMELIGHT, DOOR ACTIVATED	1674 - 11
2E9	SWITCH, DOOR LIGHT	1673 - 5
2E11	SWITCH, DRIVE LIGHT	1674 - 1
2E11	SWITCH, FOUR-WAY FLASHER	1674 - 1
3E9	SWITCH, FREEZE CONTROL SER. NO. XXXXXX)	1830 - 2
3E11	SWITCH, FREEZE CONTROL SER. NO. XXXXXX)	1830 - 3A
3E15	SWITCH, FREEZE CONTROL SER. NO.XXXXXX-)	1830 - 3E
2E11	SWITCH, FRONT WINDOW DEFROST	1674 - 1
2F4	SWITCH, HIGH BEAM	1674 - 19
2E11	SWITCH, HYDRAULIC PILOT ENABLE/BOOM DOWN	1674 - 1
2E11	SWITCH, PARK BRAKE RELEASE	1674 - 1
2E11	SWITCH, PIN DISCONNECT	1674 - 1
2G16	SWITCH, PRESSURE, HYDRAULIC OUTLET (MATERIAL HANDLER)	1674 - 45
2E11	SWITCH, REAR WINDOW DEFROST	1674 - 1
4E11	SWITCH, RESTRICTION, HYDRAULIC RETURN FILTER (SERIAL NO. -XXXXXX)	3160 - 58
4E13	SWITCH, RESTRICTION, HYDRAULIC RETURN FILTER (SERIAL NO.XXXXXXX-)	3160 - 59A
2E11	SWITCH, RETURN TO CARRY	1674 - 1
2E11	SWITCH, RIDE CONTROL	1674 - 1
2E11	SWITCH, ROTARY BEACON	1674 - 1

ALPHABETICAL INDEX - CONTINUED

GRID		PAGE
2F4	SWITCH, SELECTOR SHIFT	1674 - 19
2E11	SWITCH, START AID	1674 - 1
1I5	SWITCH, STARTER (24V)	0422 - 2
3E9	SWITCH, THERMOSTAT, A/C SER. NO. XXXXXX)	1830 - 2
3E11	SWITCH, THERMOSTAT, A/C SER. NO. XXXXXX)	1830 - 3A
3E15	SWITCH, THERMOSTAT, A/C SER. NO.XXXXXX-)	1830 - 3E
2F4	SWITCH, TURN SIGNAL	1674 - 19
2D18	SWITCH,BATTERY DISCONNECT	1671 - 3
1I16	SWITCH,COLD WEATHER STARTING AID	0505 - 4
4E11	SWITCH,HYDRAULIC OIL FILTER RESTRICTION INDICATOR (SER.NO.-XXXXXX)	3160 - 58
4E13	SWITCH,HYDRAULIC OIL FILTER RESTRICTION INDICATOR (SER.NO.XXXXXX-)	3160 - 59A
2E25	SWITCH,IGNITION	1674 - 15
4F18	SWITCH,PARK BRAKE VALVE SOLENOID	3160 - 78
1K2	SWITCH,SECONDARY STEERING	0930 - 2
1F19	SWITCH,TRANSMISSION OIL FILTER	0360 - 6
1F21	SWITCH,TRANSMISSION OIL FILTER RESTRICTION INDICATOR	0360 - 7A

T

2E6	TAIL LAMP (SER.NO.-578419)	1673 - 4
2E6	TAIL LAMP BULB (SER.NO.-578419)	1673 - 4
1J17	TANK, FUEL	0560 - 2
1J19	TANK, FUEL	0560 - 3A
3B10	TANK, WINDOW WASHER	1810 - 6
1J1	TANK,RADIATOR OVERFLOW	0510 - 6
1J3	TANK,RADIATOR OVERFLOW	0510 - 8
4B8	TEETH, LOADER BUCKET	3102 - 4
3E9	TEMPERATURE CONTROL SER. NO. XXXXXX)	1830 - 2
3E11	TEMPERATURE CONTROL SER. NO. XXXXXX)	1830 - 3A
4E16	TEMPERATURE SENDER, HYDRAULIC	3160 - 59D
4E11	TEMPERATURE SENDER, HYDRAULIC SERIAL NO. -XXXXXX)	3160 - 58
4E13	TEMPERATURE SENDER, HYDRAULIC SERIAL NO.XXXXXX-)	3160 - 59A
1H12	TEMPERATURE SENSOR (ESN -127422)	0413 - 4
1H14	TEMPERATURE SENSOR(127423-)	0413 - 5A
1H25	TEMPERATURE SENSOR, ENGINE	0418 - 2
1E21	TEMPERATURE SENSOR, TRANSMISSION	0350 - 30
1E23	TEMPERATURE SENSOR, TRANSMISSION	0350 - 31A
2D19	TENSIONER,BELT (55 AMP)	1672 - 2
2D23	TENSIONER,BELT (80 AMP)	1672 - 6
2G24	TERMINALS, DEUTSCH	1674 - 53
2G23	TERMINALS, SUPPLEMENTARY	1674 - 52
2G21	TERMINALS, WEATHERPACK	1674 - 50
2C25	TEST KIT, FLUID ANALYSIS PRODUCTS (COOLSCAN)	1369 - 6
2D1	TEST KIT, FLUID ANALYSIS PRODUCTS (DIESELSCAN)	1369 - 7
2C23	TEST KIT, FLUID ANALYSIS PRODUCTS (OILSCAN)	1369 - 4
1F17	THERMAL BY-PASS VALVE,TRANSMISSION	0360 - 4
1F13	THERMAL VALVE,TRANSMISSION OIL LINE	0360 - 2
1F15	THERMAL VALVE,TRANSMISSION OIL LINE	0360 - 3A
1H25	THERMOSTAT HOUSING, FRONT	0418 - 2
3E9	THERMOSTAT, A/C SWITCH SER. NO. XXXXXX)	1830 - 2
3E11	THERMOSTAT, A/C SWITCH SER. NO. XXXXXX)	1830 - 3A
3E15	THERMOSTAT, A/C SWITCH SER. NO.XXXXXX-)	1830 - 3E
1F17	THERMOSTAT,TRANSMISSION BY-PASS VALVE	0360 - 4
1G7	THRUST BEARING	0401 - 3
1G7	THRUST WASHER	0401 - 3
1G13	TIMING GEAR COVER	0402 - 6
1G13	TIMING GEAR COVER GASKET	0402 - 6
2C20	TORQ-GARD ENGINE OIL	1369 - 1
1D21	TORQUE CONVERTER	0350 - 6
1D19	TORQUE CONVERTER DRIVE SHAFT	0350 - 4
1D19	TORQUE CONVERTER HOUSING	0350 - 4
1D19	TORQUE CONVERTER HOUSING COVER	0350 - 4
2C3	TRADEMARKS AND LABELS (FRENCH)	1320 - 6
2C5	TRADEMARKS AND LABELS (SPANISH)	1320 - 8
2C7	TRADEMARKS AND LABELS ,FUSEBLOCK	1320 - 10
2G16	TRANSDUCER, LPM (MATERIAL HANDLER)	1674 - 45
1H18	TRANSFER PUMP, FUEL (ROBERT BOSCH)	0413 - 8
1D17	TRANSMISSION	0350 - 2
2H15	TRANSMISSION BOTTOM GUARD (SERIAL NO. -XXXXXX)	1746 - 2
2H17	TRANSMISSION BOTTOM GUARD (SERIAL NO. XXXXXX-)	1746 - 3A
1F17	TRANSMISSION BY-PASS VALVE THERMOSTAT	0360 - 4
1E23	TRANSMISSION CONTROL VALVE (SER. NO. 000588-)	0350 - 31A
1E21	TRANSMISSION CONTROL VALVE (SER. NO.-000587)	0350 - 30
1F4	TRANSMISSION COVER	0350 - 35
1F13	TRANSMISSION EXTERNAL OIL LINES	0360 - 2
1F15	TRANSMISSION EXTERNAL OIL LINES	0360 - 3A
1D17	TRANSMISSION FITTINGS	0350 - 2
1F4	TRANSMISSION GASKET	0350 - 35
1F11	TRANSMISSION INTERNAL OIL LINES	0350 - 42
1D15	TRANSMISSION MOUNTING SUPPORTS	0342 - 2
1J1	TRANSMISSION OIL COOLER	0510 - 6
1J3	TRANSMISSION OIL COOLER	0510 - 8
1F9	TRANSMISSION OIL DIPSTICK	0350 - 40
1F9	TRANSMISSION OIL FILLER TUBE	0350 - 40
1F21	TRANSMISSION OIL FILTER S	0360 - 7A
1F19	TRANSMISSION OIL FILTER AND HOSES	0360 - 6
1F21	TRANSMISSION OIL FILTER RESTRICTION INDICATOR SWITCH	0360 - 7A
1F19	TRANSMISSION OIL FILTER SWITCH	0360 - 6
1F13	TRANSMISSION OIL LINE THERMAL VALVE	0360 - 2
1F15	TRANSMISSION OIL LINE THERMAL VALVE	0360 - 3A
1F11	TRANSMISSION OIL LINES,INTERNAL	0350 - 42
1F3	TRANSMISSION PUMP	0350 - 34
3F15	TRANSMISSION SHIELDS	1913 - 3
1F5	TRANSMISSION SPEED SENSOR	0350 - 36
2H5	TRANSMISSION SPEED SENSOR HARNESS	1674 - 58
1E21	TRANSMISSION TEMPERATURE SENSOR	0350 - 30
1E23	TRANSMISSION TEMPERATURE SENSOR	0350 - 31A
2F7	TRANSMISSION WIRING HARNESS (SERIAL NO. -XXXXXX)	1674 - 22
2F9	TRANSMISSION WIRING HARNESS (SERIAL NO.XXXXXX-)	1674 - 23A
1D13	TRANSMISSION-TO-DIFFERENTIALS AND ENGINE DRIVE-SHAFTS (WITH/WITHOUT DISCONNECT)	0325 - 2
2E13	TRANSMISSISON CONTROL UNIT	1674 - 3
3C9	TRAY, ASH	1810 - 18

ALPHABETICAL INDEX - CONTINUED

GRID		PAGE
1H23	TUBE SEAL	0417 - 2
1G23	TUBE, ENGINE OIL DIPSTICK	0407 - 1
1I1	TUBES, OIL COOLER	0419 - 2
1I2	TUBES, OIL COOLER BYPASS	0419 - 3
1H21	TURBOCHARGER	0416 - 2
1H21	TURBOCHARGER GASKET	0416 - 2
1H21	TURBOCHARGER OIL LINES	0416 - 2
2E6	TURN LAMP (SER.NO.-578419)	1673 - 4
2E7	TURN LAMP (SER.NO.578420-)	1673 - 4A
2E7	TURN LIGHT (SER.NO.578420-)	1673 - 4A
2E3	TURN LIGHT, FRONT	1673 - 1
2G15	TURN SIGNAL FLASHER RELAY	1674 - 44
2F4	TURN SIGNAL SWITCH	1674 - 19
4B18	TWO LEVER CONTROLLER	3160 - Q0020
4B20	TWO LEVER CONTROLLER	3160 - Q0022
4C19	TWO LEVER CONTROLLER	3160 - 20
4C21	TWO LEVER CONTROLLER	3160 - 22
4D1	TWO LEVER CONTROLLER MOUNTING WITH AND W/O AUX. THIRD AND FOURTH FUNCTION	3160 - 26
4B18	TWO LEVER CONTROLLER REPAIR KIT	3160 - Q0020
4B20	TWO LEVER CONTROLLER REPAIR KIT	3160 - Q0022
4C19	TWO LEVER CONTROLLER REPAIR KIT	3160 - 20
4C21	TWO LEVER CONTROLLER REPAIR KIT	3160 - 22
4D1	TWO LEVER CONTROLLER REPAIR KIT	3160 - 26
4D13	TWO LEVER WITH AUXILIARY CONTROLLER HYDRAULIC LINES	3160 - 38

U

1G6	UNDERSIZE CRANKSHAFT KIT (CONNECTING ROD JOURNAL)	0401 - 2
1G8	UNDERSIZE MAIN BEARING CRANKSHAFT AND BEARING KIT	0401 - 4

V

1G11	VALVE COVER	0402 - 3
1H6	VALVE SEAT INSERTS	0409 - 2
4C5	VALVE SECTION,AUXILIARY	3160 - 10
4C5	VALVE SECTION,BUCKET	3160 - 10
1B2	VALVE STEM,WHEEL RIM	0110 - 2
4C7	VALVE, AUXILIARY	3160 - 11A
4C5	VALVE, BOOM SECTION	3160 - 10
2B3	VALVE, BRAKE	1060 - 2
2B5	VALVE, BRAKE	1060 - 3A
2B7	VALVE, BRAKE	1060 - 3C
2B9	VALVE, BRAKE	1060 - 3E
1I3	VALVE, CHECK (FUEL FILTER)	0420 - 2
1G24	VALVE, DRAIN (OIL PAN)	0407 - 2
4C9	VALVE, FIFTH FUNCTION SECTION	3160 - 11C
4E17	VALVE, HYDRAULIC OIL PRESSURE REGULATOR	3160 - 60
4C3	VALVE, INLET SECTION WITH RELIEF VALVE	3160 - 8
4B22	VALVE, LOADER CONTROL (2-SPOOL)	3160 - 2
4B24	VALVE, LOADER CONTROL (3-SPOOL)	3160 - 4
4C1	VALVE, LOADER CONTROL (4-SPOOL)	3160 - 6
1H4	VALVE, OIL FILTER BYPASS	0407 - 8
1H4	VALVE, OIL PRESSURE REGULATING	0407 - 8
1I1	VALVE, OIL PRESSURE REGULATING	0419 - 2
4F3	VALVE, PIN DISCONNECT (SERIAL NO. -571404)	3160 - 68
4F5	VALVE, PIN DISCONNECT (SERIAL NO. 571405-)	3160 - 69A
4F13	VALVE, RIDE CONTROL (SERIAL NO. -XXXXXX)	3160 - 74
4F14	VALVE, RIDE CONTROL (SERIAL NO. XXXXXX-)	3160 - 74A
4F18	VALVE, SOLENOID, PARK BRAKE	3160 - 78
4F20	VALVE, SOLENOID, PARK BRAKE	3160 - 79A
1K10	VALVE, STEERING	0960 - 8
1K6	VALVE, STEERING, BRACKET	0960 - 4
1K12	VALVE, STEERING, KIT	0960 - 9A
1F17	VALVE, TRANSMISSION THERMAL BY-PASS	0360 - 4
1F1	VALVE,CONVERTER RELIEF	0350 - 32
3F9	VALVE,HEATER SHUT-OFF	1830 - 16
4F7	VALVE,PIN DISCONNECT	3160 - 69C
4F11	VALVE,RIDE CONTROL	3160 - 72
1H6	VALVES, EXHAUST	0409 - 2
1H6	VALVES, INTAKE	0409 - 2
3D7	VANDAL COVER MONITOR, CANOPY	1810 - 35A
3D5	VANDAL COVER, CANOPY	1810 - 34
1G11	VENT HOSE	0402 - 3
3G16	VISOR, SUN	2002 - 3
2D19	VOLTAGE REGULATOR (55 AMP)	1672 - 2

W

1G7	WASHER, THRUST	0401 - 3
1H25	WATER MANIFOLD GASKET	0418 - 2
1H25	WATER MANIFOLD, FRONT	0418 - 2
1H23	WATER PUMP	0417 - 2
1H23	WATER PUMP GASKET	0417 - 2
1H23	WATER PUMP O-RING	0417 - 2
1H23	WATER PUMP OIL SEAL	0417 - 2
1H23	WATER PUMP RETAINING RING	0417 - 2
1H23	WATER PUMP SEAL KIT	0417 - 2
1I3	WATER SEPARATOR	0420 - 2
1H25	WATER TEMPERATURE SENSOR, ENGINE	0418 - 2
4B5	WEAR PLATES, AUXILIARY	3102 - 1
2G21	WEATHERPACK CONNECTORS	1674 - 50
2G21	WEATHERPACK TERMINALS	1674 - 50
1B2	WHEEL RIM	0110 - 2
1B2	WHEEL RIM VALVE STEM	0110 - 2
1B2	WHEEL RIM, HEAVY DUTY	0110 - 2
1B4	WHEEL SPACER	0110 - 4
1K4	WHEEL, STEERING	0960 - 2
3B10	WINDOW WASHER PUMP	1810 - 6
3B10	WINDOW WASHER TANK	1810 - 6
3B10	WINDOW WASHER TANK CAP	1810 - 6
3B10	WINDOW WASHER, FRONT AND REAR	1810 - 6
3B18	WINDOWPANE,R.H. CAB DOOR	1810 - 10
3B12	WINDOWS, CAB	1810 - 8
3B14	WINDOWS, CAB	1810 - 9A
3B24	WINDOWS, CAB REAR SIDE (SERIAL NO. -574038)	1810 - 13C
3C1	WINDOWS, CAB REAR SIDE (SERIAL NO. 574039-)	1810 - 13E
3B12	WINDSHIELD WIPER MOTOR	1810 - 8
3B14	WINDSHIELD WIPER MOTOR	1810 - 9A
3C17	WIPER ARM	1810 - 23C
3C13	WIPER ARM SER.NO. -580190	1810 - 22
3C15	WIPER ARM SER.NO.580191-	1810 - 23A
3C17	WIPER BLADE	1810 - 23C
3C13	WIPER BLADE SER.NO. -580190	1810 - 22

ALPHABETICAL INDEX - CONTINUED

GRID		PAGE
3C15	WIPER BLADE SER.NO.580191-	1810 - 23A
3C13	WIPER MOTOR SER.NO. -580190	1810 - 22
3C15	WIPER MOTOR SER.NO.580191-	1810 - 23A
3C19	WIPER MOUNTING BRACKETS	1810 - 24
1I14	WIRE HARNESS, ENGINE AIR HEATER	0505 - 2
1K2	WIRE HARNESS,SECONDARY STEERING	0930 - 2
2G17	WIRE LEAD KIT	1674 - 46
2G19	WIRE LEAD KIT	1674 - 48
1H14	WIRING HARNESS(127423-)	0413 - 5A
2F23	WIRING HARNESS, BLOWER AND A/C	1674 - 34
2F15	WIRING HARNESS, ENGINE	1674 - 28
2G5	WIRING HARNESS, ENGINE FRAME	1674 - 38
2G7	WIRING HARNESS, ENGINE FRAME	1674 - 39A
2G11	WIRING HARNESS, FRONT CONSOLE	1674 - 40
2F13	WIRING HARNESS, LOADER FRAME	1674 - 26
2G1	WIRING HARNESS, REAR FRAME (SERIAL NO. -578419)	1674 - 36
2G3	WIRING HARNESS, REAR FRAME (SERIAL NO. 578420-)	1674 - 37A
2F21	WIRING HARNESS, SECONDARY STEERING	1674 - 32
2F7	WIRING HARNESS, TRANSMISSION (SERIAL NO. -XXXXXX)	1674 - 22
2F9	WIRING HARNESS, TRANSMISSION (SERIAL NO.XXXXXX-)	1674 - 23A
2F17	WIRING HARNESS, WORK LIGHT, CAB (SERIAL NO. -XXXXXX)	1674 - 30
2F19	WIRING HARNESS, WORK LIGHT, CAB (SERIAL NO. XXXXXX-)	1674 - 31A
2E10	WORK LAMP, FRONT AND REAR	1673 - 6
3C11	WRIST REST	1810 - 20

Y

1B9	YOKE, INPUT	0210 - 1

WHEEL RIM ASSEMBLY

T151264 -UN-14FEB02

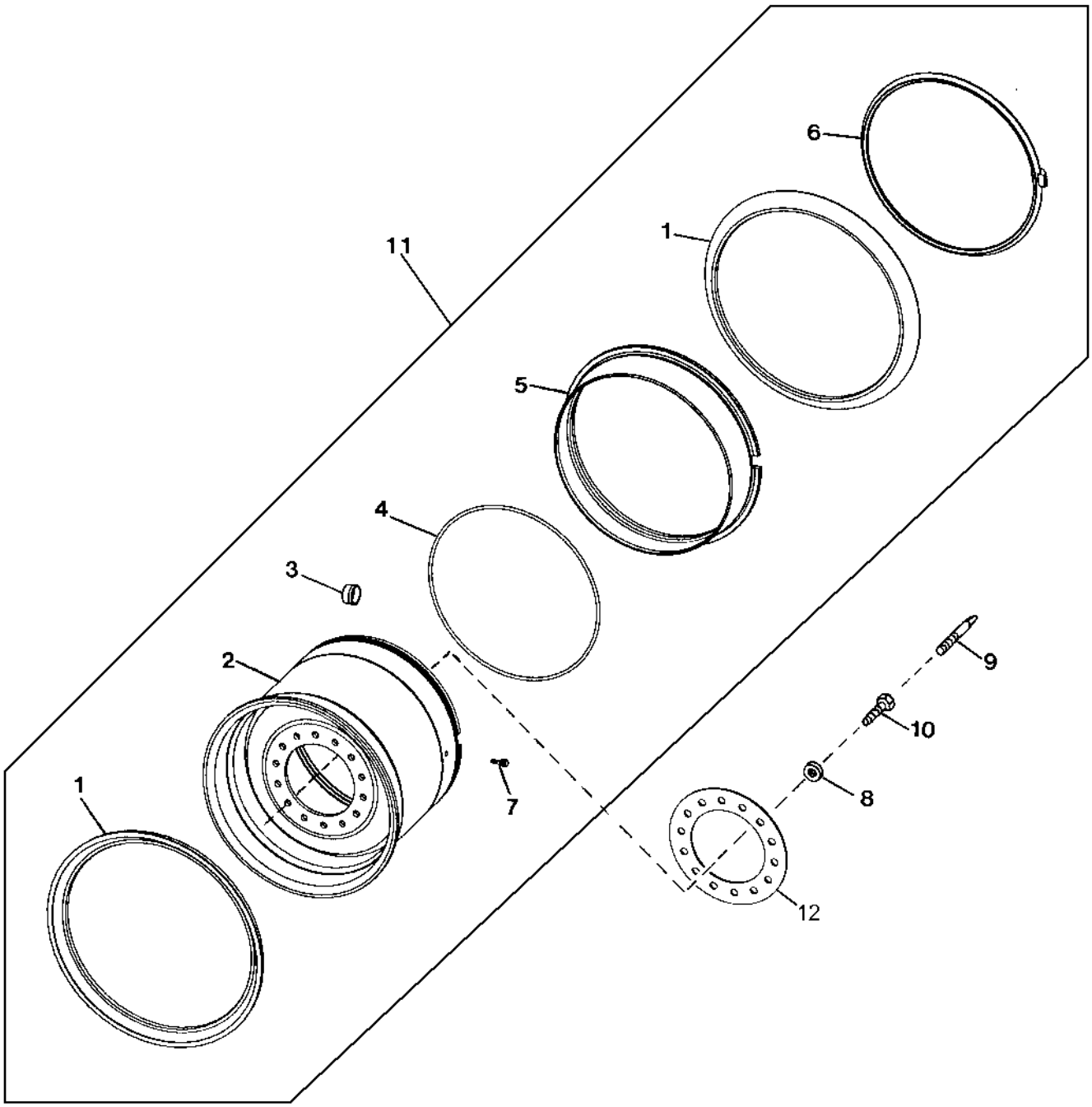

T151264

WHEEL RIM ASSEMBLY

KEY	PART NO.	PART NAME	QTY	SERIAL NO.	REMARKS
1	T174997	RING	2		(USE WITH 25"X17"X2.0 MP RIM)
	R29477	WHEEL RING	2		(USE WITH 25"X19.5"X2.5 MP RIM)
2	AT219855	RIM	1		(25"X17"X2.0 MP RIM)
	AT208156	RIM	1		(25"X19.5"X2.5 MP RIM)
	.....	RIM	1		(USE WITH 25"X19.5"X2.5 RIM)(HEAVY DUTY)
3	15H710	FITTING	1		
4	R29480	O-RING	1		
5	U43961	WHEEL RING	1		(USE WITH 25"X17"X2.0 MP RIM AND 25"X19" X2.5" MP RIM)
6	R29479	WHEEL RING	1		
7	AT25226	TIRE VALVE STEM	1		(USE WITH 25"X17"X2.0 MP RIM)
	AT67275	TIRE VALVE STEM	1		(USE WITH 25"X19.5"X2.5 MP RIM)
8	T151797	WASHER	56		20.630 X 47.630 X 6.350 MM
9	T169824	STUD	3		
10	19M7597	CAP SCREW	56		M20 X 50
11	AT225170	RIM	1		(2.5"X19.5"X2.5 RIM) (HEAVY DUTY)
	.....	RIM	1		(25"X17"X2.0 MP RIM)(ORDER COMPONENTS)
12	T181909	RING	1		CLAMP

WHEEL SPACER

TP60706 -UN-06APR99

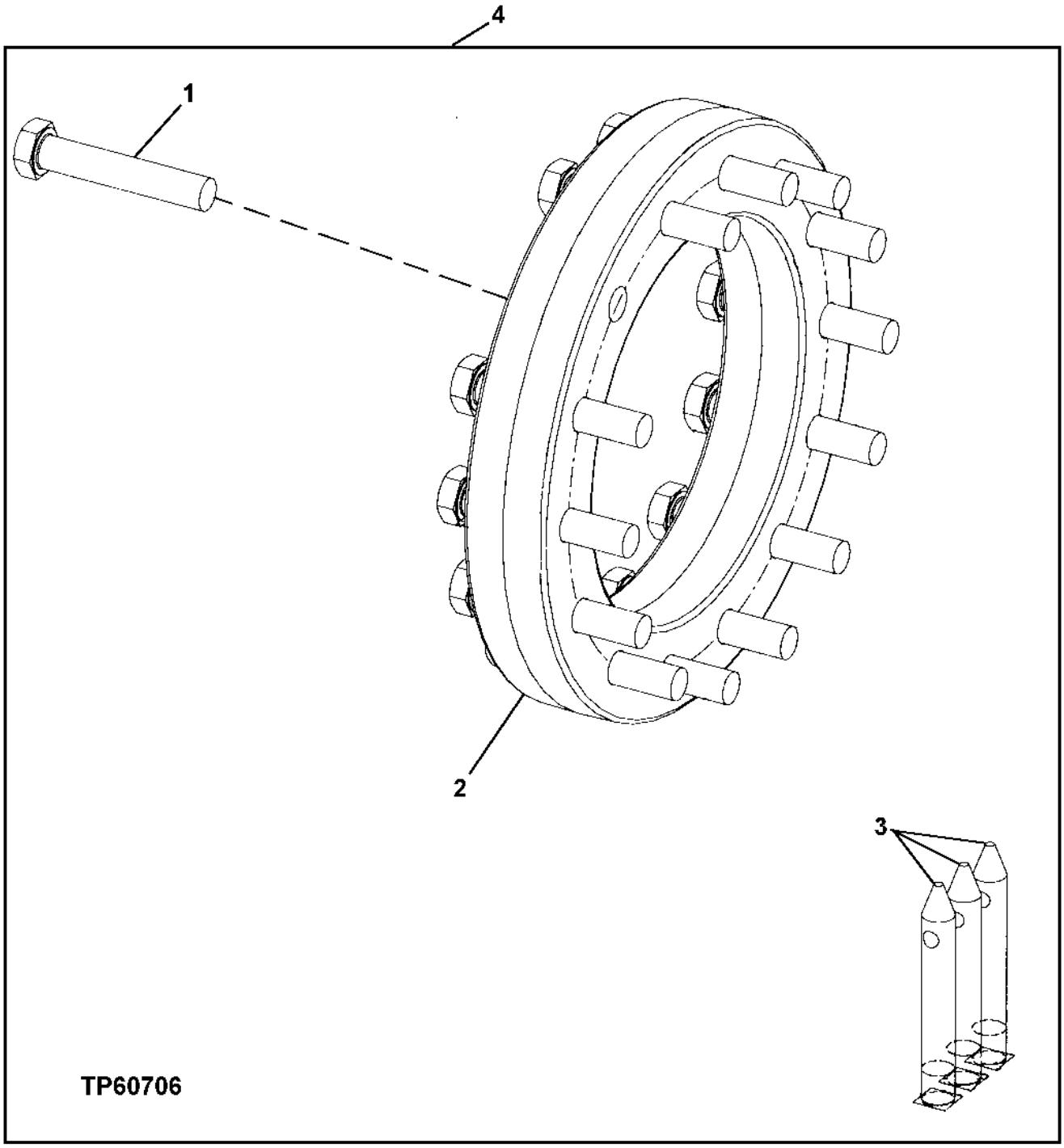

WHEEL SPACER

KEY	PART NO.	PART NAME	QTY	SERIAL NO.	REMARKS
1	19M7969	CAP SCREW	56		M20 X 110
2	T66862	SPACER	4		
3	T176455	STUD	3		
4	**AT220872**	**SPACER**	**1**		**WHEEL**

MEMORANDA

AXLES

RE029885 -UN-14AUG98

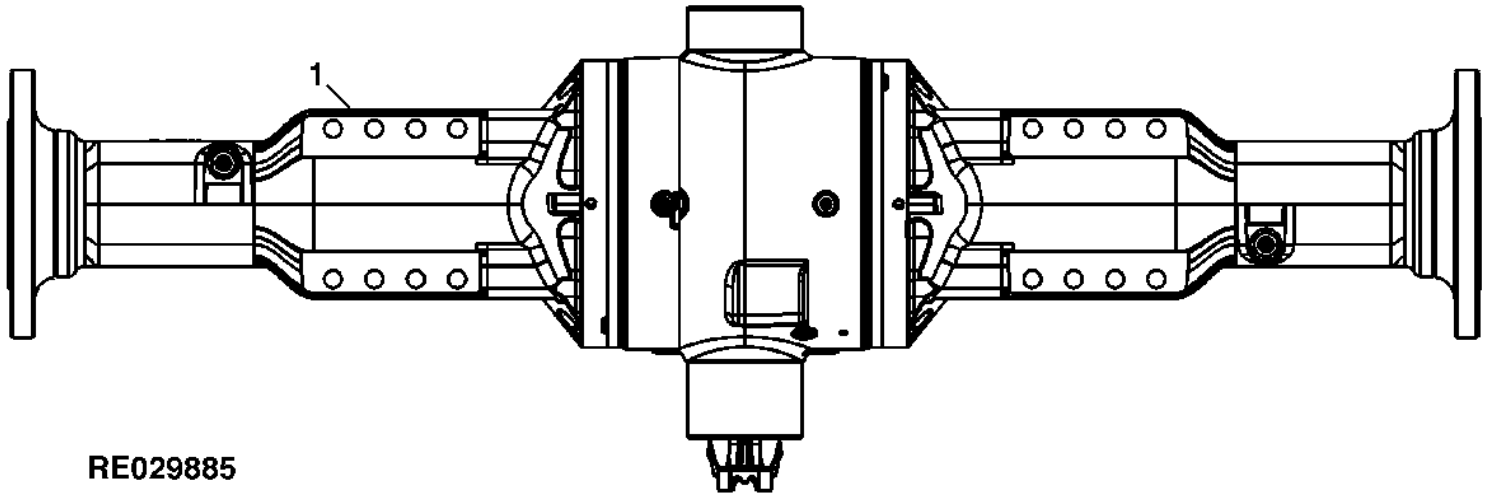

KEY	PART NO.	PART NAME	QTY	SERIAL NO.	REMARKS
1	RE160302	AXLE, WITH DIFFERENTIAL	1		FRONT, ROAG2514R, DIFF-LOCK, NON-OSC
	RE160305	AXLE, WITH DIFFERENTIAL	1		REAR, ROAG2514R, DIFF LOCK, OSC
	RE160303	AXLE, WITH DIFFERENTIAL	1		FRONT, ROAG2514R, LMTD SLIP DIFF, NON-OSC
	RE160306	AXLE, WITH DIFFERENTIAL	1		REAR, ROAG2514R, LMTD SLIP DIFF, OSC
	RE160301	AXLE, WITH DIFFERENTIAL	1		FRONT, ROAG2514R, STD DIFF, NON-OSC
	RE160304	AXLE, WITH DIFFERENTIAL	1		REAR, ROAG2514R, STD DIFF, OSC

MEMORANDA

FRONT AND REAR INPUT YOKE
RE030270 -UN-14DEC98

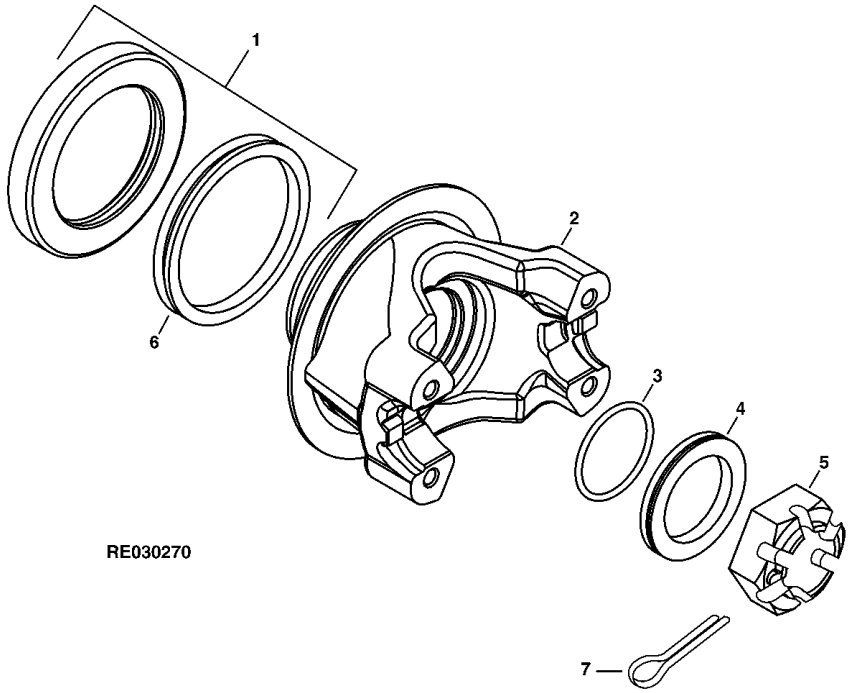

KEY	PART NO.	PART NAME	QTY	AXLE SERIAL NO.	644H	REMARKS
1	RE45315	SEAL KIT	1			
2	RE69868	UNIVERSAL JOINT YOKE	1			(MARKED R133686)
3	A4540R	O-RING	1			
4	R48734	WASHER	1			
5	R48776	NUT	1			(SUB FOR R151933)
6	R100500	SEAL	1			
7	11M7032	COTTER PIN	1			

REAR SPIRAL BEVEL INPUT PINION AND RING GEAR SET
RE027760 -UN-03APR97

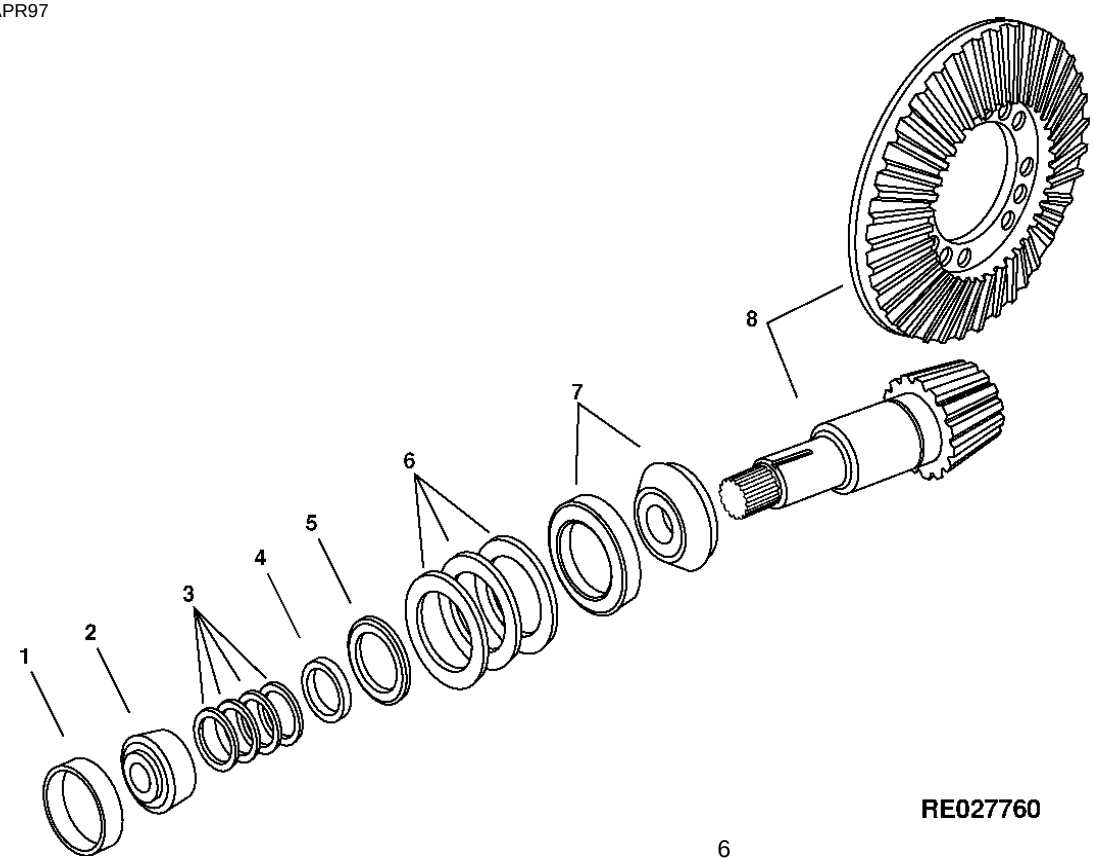

KEY	PART NO.	PART NAME	QTY	AXLE SERIAL NO.	644H	REMARKS
1	JD8255	BEARING CUP	1			
2	JD9078	BEARING CONE	1			
3	R51196	SHIM	2			0.178MM(0.007")
	R51197	SHIM	2			0.254MM(0.010")
	R51198	SHIM	2			0.305MM(0.012")
	R51199	SHIM	2			0.381MM(0.015")
4	R56308	WASHER	1			
5	R134215	SLEEVE	1			
6	R152892	SHIM	2			0.076MM(0.003")
	R152893	SHIM	2			0.127MM(0.005")
	R152894	SHIM	2			0.254MM(0.010")
7	RE49486	TAPERED ROLLER BEARING	1			
8	RE68172	BEVEL GEAR DRIVE	1			R.H. ASSEMBLY, (MARKED R133087 AND R133088)

FRONT SPIRAL BEVEL INPUT PINION AND RING GEAR SET
RE027760 -UN-03APR97

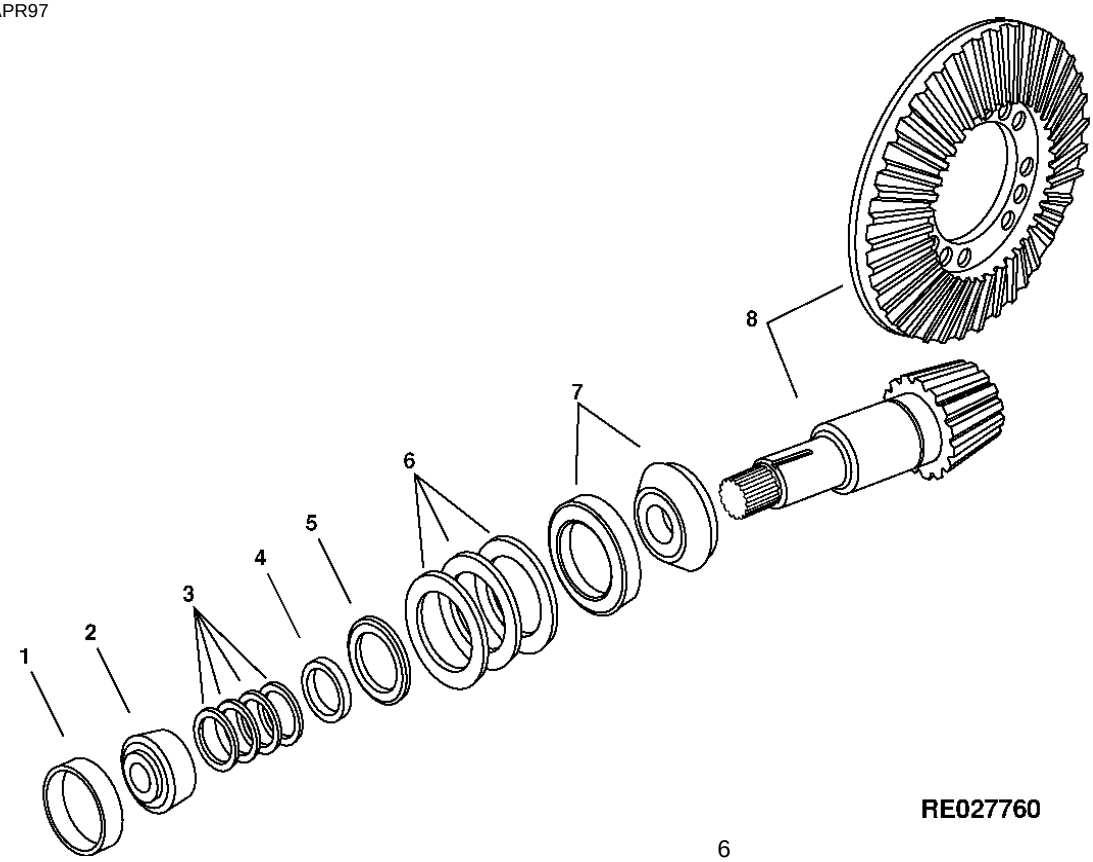

KEY	PART NO.	PART NAME	QTY	AXLE SERIAL NO.	644H	REMARKS
1	JD8255	BEARING CUP	1			
2	JD9078	BEARING CONE	1			
3	R51196	SHIM	2			0.178MM(0.007")
	R51197	SHIM	2			0.254MM(0.010")
	R51198	SHIM	2			0.305MM(0.012")
	R51199	SHIM	2			0.381MM(0.015")
4	R56308	WASHER	1			
5	R134215	SLEEVE	1			
6	R152892	SHIM	2			0.076MM(0.003")
	R152893	SHIM	2			0.127MM(0.005")
	R152894	SHIM	2			0.254MM(0.010")
7	RE49486	TAPERED ROLLER BEARING	1			
8	RE68175	BEVEL GEAR DRIVE	1			L.H. ASSEMBLY, (MARKED R133093 AND R133094)

DIFF LOCK DIFFERENTIAL CASE, OSCILLATING, REAR
T144967 -UN-24AUG01

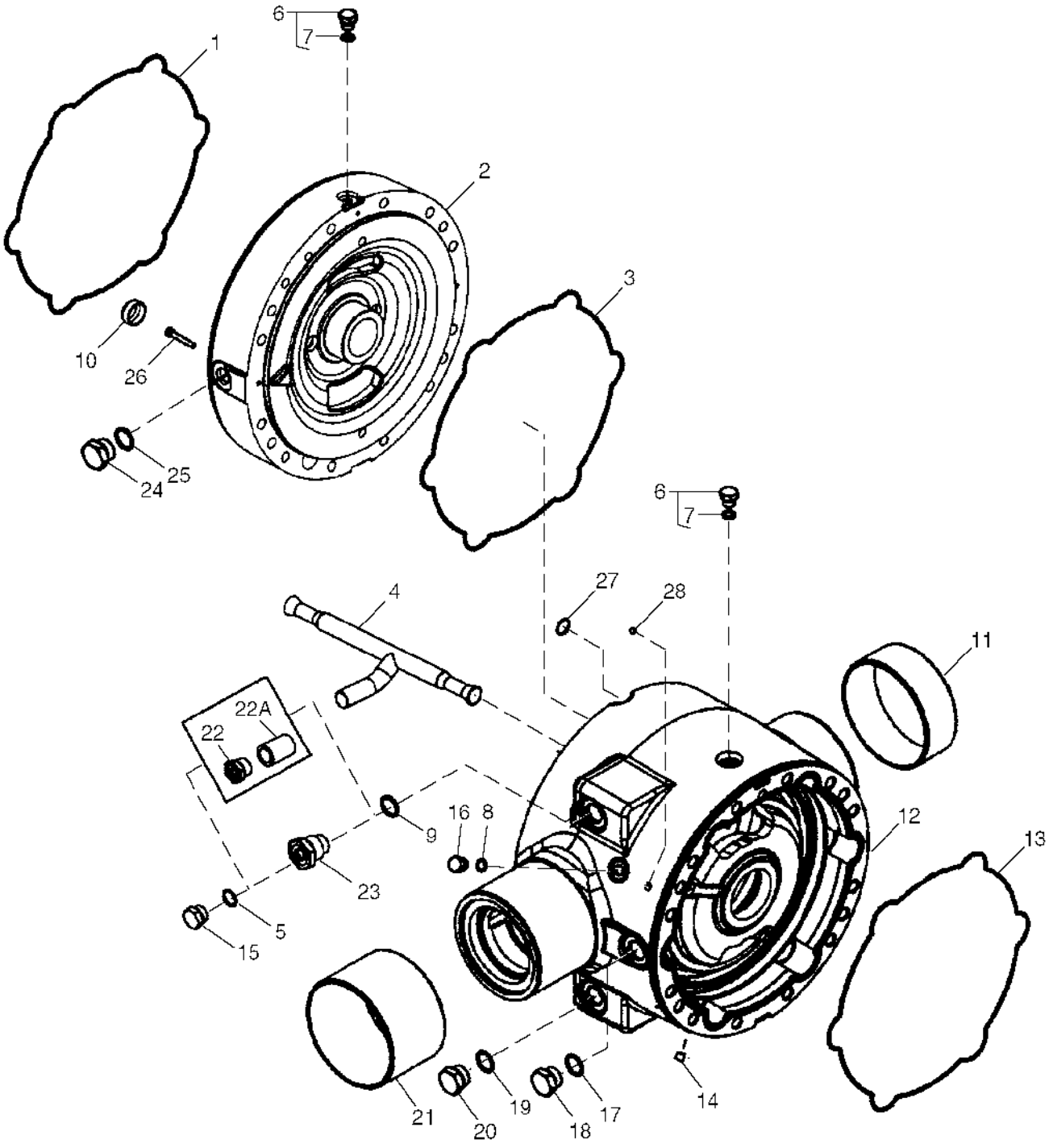

T144967

DIFF LOCK DIFFERENTIAL CASE, OSCILLATING, REAR - CONTINUED

KEY	PART NO.	PART NAME	QTY	AXLE SERIAL NO.	644H	REMARKS
1	R133369	O-RING	1			
2	R133371	COVER	1			
3	R133369	O-RING	1			
4	R159758	TEE FITTING	1			
5	F3171R	O-RING	1			
6	RE46684	PLUG	2			
7	51M7041	O-RING	2			
8	F3171R	O-RING	1			
9	F3171R	O-RING	1			
10	R160155	PLUG	6			
11	R132113	SLEEVE	1			
12	RE164762	CASE	1			(MARKED R161397) (INCLUDES R132113, R160832, (2) R42849 AND 400)
13	R133369	O-RING	1			
14	15H558	PIPE PLUG	1			
15	R27094	DRAIN PLUG	1			
16	R116801	PIPE PLUG	1			
17	F3171R	O-RING	1			
18	R116801	PIPE PLUG	1			
19	F3171R	O-RING	1			
20	R116801	PIPE PLUG	1			
21	R160832	SLEEVE	1			(SUB FOR R134454)
22	R160154	ADAPTER	1			(SUB R160699)
22A	R159759	SLEEVE	1			(SUB R160699)
23	R160699	ADAPTER	1			
24	R116801	PIPE PLUG	1			
25	F3171R	O-RING	1			
26	19M8513	SCREW	2			
27	T44604	O-RING	1			
28	R42849	BALL	1			

400R (2) STEEL BALL
NOT ALL HARDWARE USED IN EVERY APPLICATION

DIFF LOCK DIFFERENTIAL CASE, NON-OSCILLATING, FRONT
T144968 -UN-24AUG01

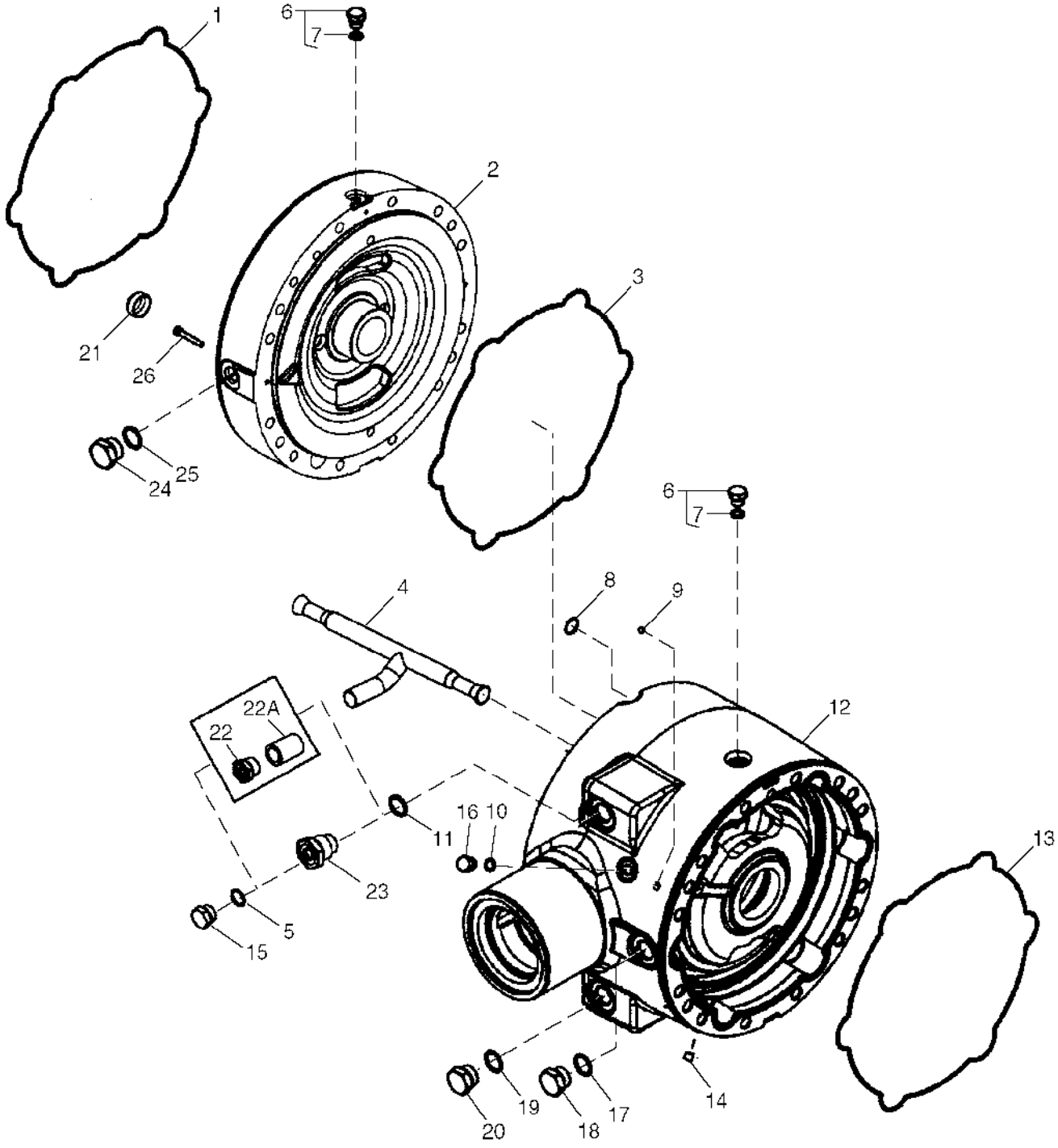

T144968

DIFF LOCK DIFFERENTIAL CASE, NON-OSCILLATING, FRONT - CONTINUED

KEY	PART NO.	PART NAME	QTY	AXLE SERIAL NO.	REMARKS
1	R133369	O-RING	1		
2	R133371	COVER	1		
3	R133369	O-RING	1		
4	R159758	TEE FITTING	1		
5	F3171R	O-RING	1		
6	RE46684	PLUG	2		
7	51M7041	O-RING	2		
8	T44604	O-RING	1		
9	R42849	BALL	1		
10	F3171R	O-RING	1		
11	F3171R	O-RING	1		
12	RE164763	CASE	1		(MARKED R161398) (INCLUDES (2) R42849 AND 400)
13	R133369	O-RING	1		
14	15H558	PIPE PLUG	1		
15	R27094	DRAIN PLUG	1		
16	R116801	PIPE PLUG	1		
17	F3171R	O-RING	1		
18	R116801	PIPE PLUG	1		
19	F3171R	O-RING	1		
20	R116801	PIPE PLUG	1		
21	R160155	PLUG	6		
22	R160154	ADAPTER	1		(SUB R160699)
22A	R159759	SLEEVE	1		(SUB R160699)
23	R160699	ADAPTER	1		
24	R116801	PIPE PLUG	1		
25	F3171R	O-RING	1		
26	19M8513	SCREW	2		

400R (2) STEEL BALL
NOT ALL HARDWARE USED IN EVERY APPLICATION

STANDARD DIFFERENTIAL CASE, OSCILLATING, REAR
T144969 -UN-24AUG01

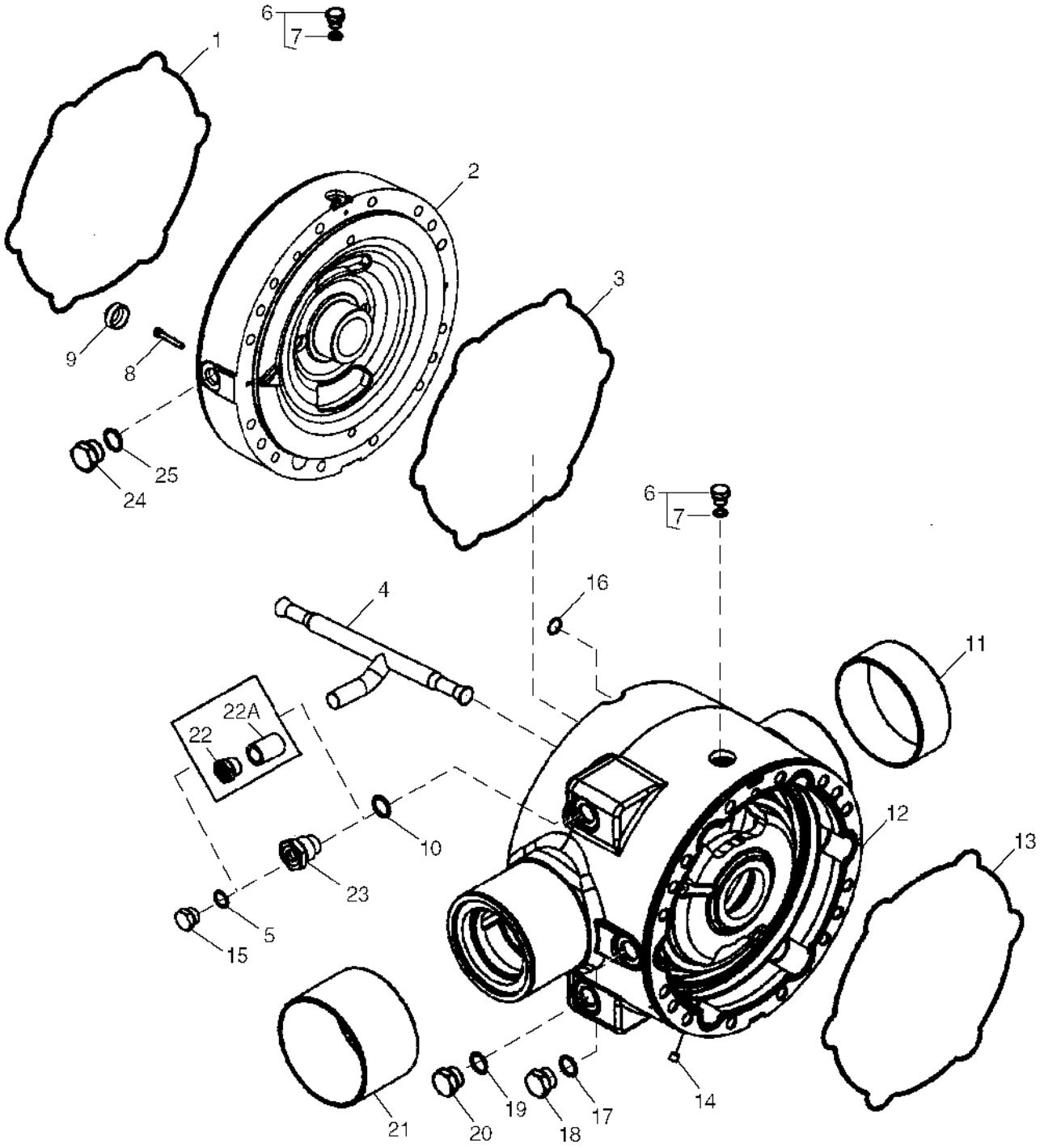

T144969

STANDARD DIFFERENTIAL CASE, OSCILLATING, REAR - CONTINUED

KEY	PART NO.	PART NAME	QTY	AXLE SERIAL NO.	644H	REMARKS
1	R133369	O-RING	1			
2	R133371	COVER	1			
3	R133369	O-RING	1			
4	R159758	TEE FITTING	1			
5	F3171R	O-RING	1			
6	RE46684	PLUG	2			
7	51M7041	O-RING	2			
8	19M8513	SCREW	2			
9	R160155	PLUG	6			
10	F3171R	O-RING	1			
11	R132113	SLEEVE	1			
12	RE164764	CASE	1			(MARKED R161399) (INCLUDES R132113 AND R160832)
13	R133369	O-RING	1			
14	15H558	PIPE PLUG	1			
15	R27094	DRAIN PLUG	1			
16	T44604	O-RING	1			
17	F3171R	O-RING	1			
18	R116801	PIPE PLUG	1			
19	F3171R	O-RING	1			
20	R116801	PIPE PLUG	1			
22	R160154	ADAPTER	1			(SUB R160699)
22A	R159759	SLEEVE	1			(SUB R160699)
23	R160699	ADAPTER	1			
24	R116801	PIPE PLUG	1			
25	F3171R	O-RING	1			

400R (2) STEEL BALL
NOT ALL HARDWARE USED IN EVERY APPLICATION

STANDARD DIFFERENTIAL CASE, NON-OSCILLATING, FRONT
T144970 -UN-24AUG01

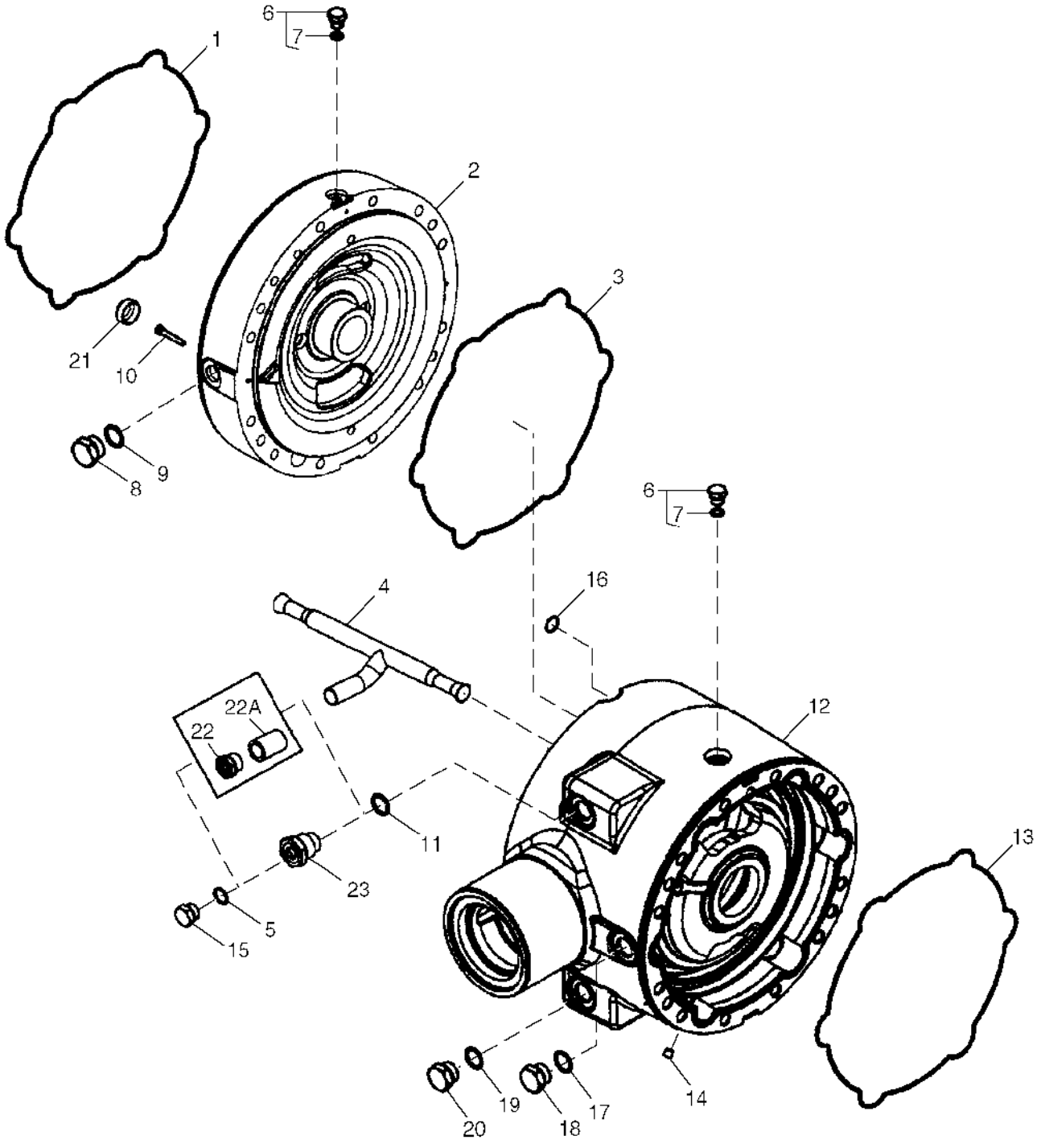

T144970

STANDARD DIFFERENTIAL CASE, NON-OSCILLATING, FRONT - CONTINUED

KEY	PART NO.	PART NAME	QTY	AXLE SERIAL NO.	REMARKS
1	R133369	O-RING	1		
2	R133371	COVER	1		
3	R133369	O-RING	1		
4	R159758	TEE FITTING	1		
5	F3171R	O-RING	1		
6	RE46684	PLUG	2		
7	51M7041	O-RING	2		
8	R116801	PIPE PLUG	1		
9	F3171R	O-RING	1		
10	19M8513	SCREW	2		
11	F3171R	O-RING	1		
12	R161400	CASE	1		(SUB FOR R153497 OR R157887)
13	R133369	O-RING	1		
14	15H558	PIPE PLUG	1		
15	R27094	DRAIN PLUG	1		
16	T44604	O-RING	1		
17	F3171R	O-RING	1		
18	R116801	PIPE PLUG	1		
19	F3171R	O-RING	1		
20	R116801	PIPE PLUG	1		
21	R160155	PLUG	6		
22	R160154	ADAPTER	1		(SUB R160699)
22A	R159759	SLEEVE	1		(SUB R160699)
23	R160699	ADAPTER	1		

400R (2) STEEL BALL
NOT ALL HARDWARE USED IN EVERY APPLICATION

STANDARD DIFFERENTIAL, FRONT AND REAR
RE028203 -UN-14JUL97

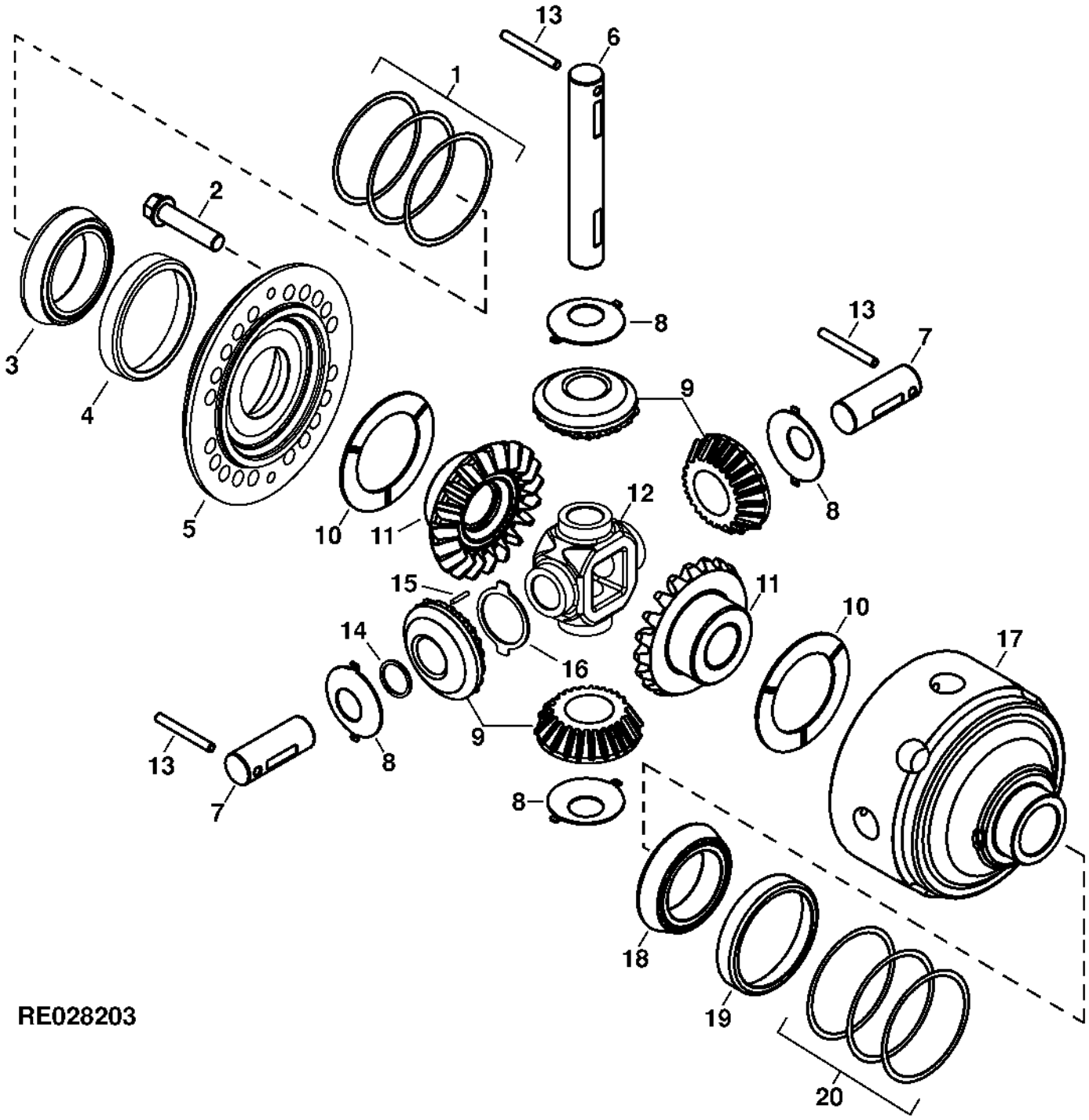

STANDARD DIFFERENTIAL, FRONT AND REAR-CONTINUED

KEY	PART NO.	PART NAME	QTY	AXLE SERIAL NO.	REMARKS
1	R134717	SHIM	AR		
	R134718	SHIM	AR		
	R134719	SHIM	AR		
2	R134183	CAP SCREW	20		
3	JD10127	BEARING CONE	1		
4	JD8254	BEARING CUP	1		
5	R134860	COVER	1		
6	R132827	PINION SHAFT	1		
7	R132828	PINION SHAFT	2		
8	R59460	THRUST WASHER	4		
9	R134726	PINION	4		
10	R133719	THRUST WASHER	2		
11	R134861	BEVEL GEAR	1		
12	R132836	HUB	1		
13	R135984	PIN	3		
14	R70112	THRUST WASHER	4		
15	R70115	NEEDLE ROLLER	104		
16	R70113	THRUST WASHER	4		
17	R134859	HOUSING	1		
18	JD8167	BEARING CONE	1		
19	JD8214	BEARING CUP	1		
20	R135532	SHIM	AR		
	R135533	SHIM	AR		
	R135534	SHIM	AR		

LIMITED SLIP DIFFERENTIAL, FRONT AND REAR
RE030571 -UN-11JUN99

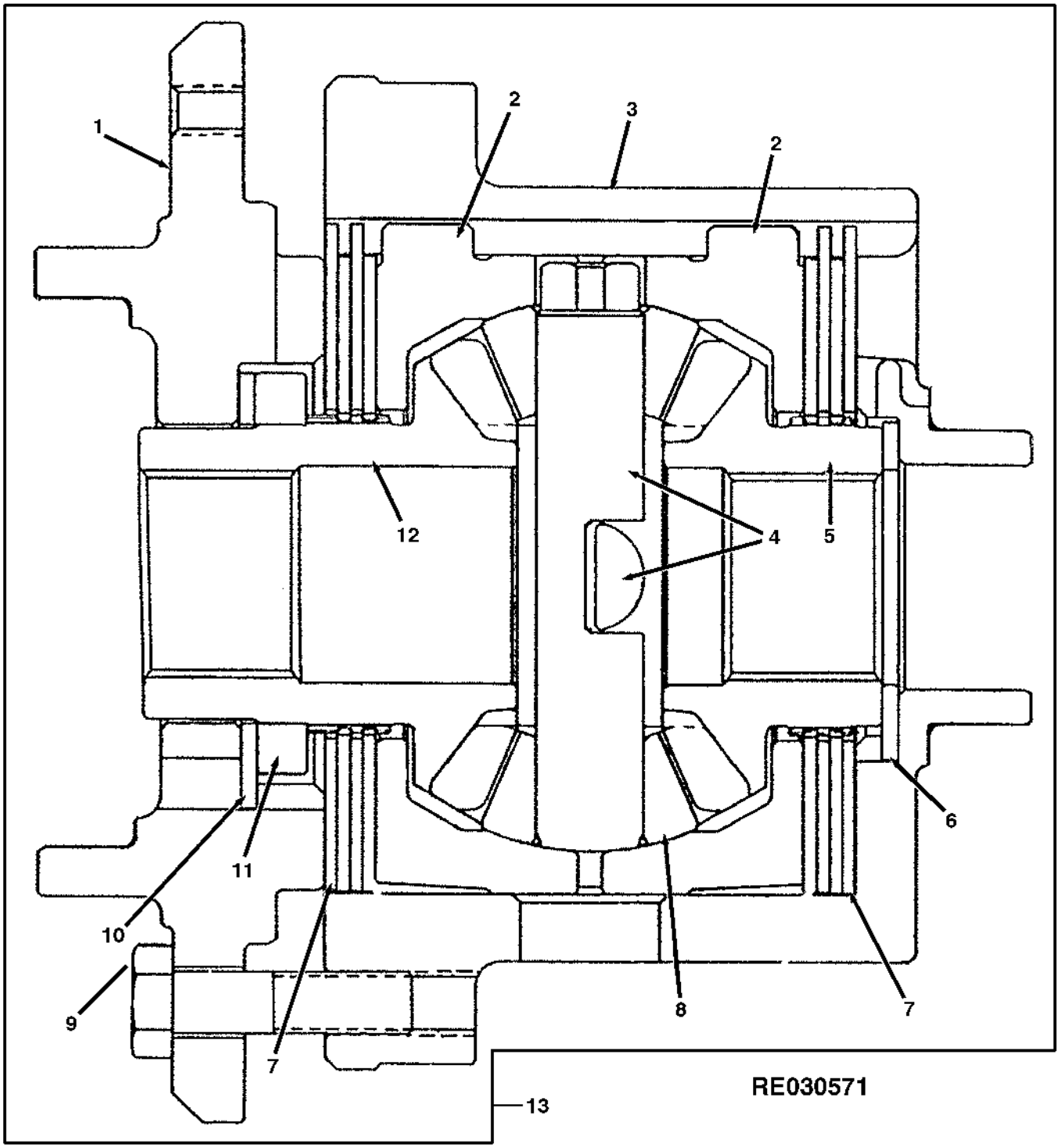

LIMITED SLIP DIFFERENTIAL, FRONT AND REAR - CONTINUED

KEY	PART NO.	PART NAME	QTY	AXLE SERIAL NO.	644H	REMARKS
1	R152913	COVER	1			
2	R152916	HOUSING	2			
3	R152911	HOUSING	1			
4	R152925	SHAFT	2			
5	R152922	BEVEL GEAR	1			
6	R152926	THRUST WASHER	1			
7	RE152929	DISK	1			THIN
	RE152930	DISK	1			THICK
8	R152924	PINION	4			
9	R134183	CAP SCREW	20			
10	R152928	THRUST WASHER	1			
11	R152927	SPACER	1			
12	R152923	BEVEL GEAR	1			
13	RE69806	DIFFERENTIAL	1			
..	JD10127	BEARING CONE	1			
..	JD8254	BEARING CUP	1			
..	JD8167	BEARING CONE	1			
..	JD8214	BEARING CUP	1			
..	R134717	SHIM	AR			
..	R134718	SHIM	AR			
..	R134719	SHIM	AR			
..	R135532	SHIM	AR			
..	R135533	SHIM	AR			
..	R135534	SHIM	AR			

4 PINION HYD ACTUATED DIFFERENTIAL, FRONT AND REAR
RE028124 -UN-14JUL97

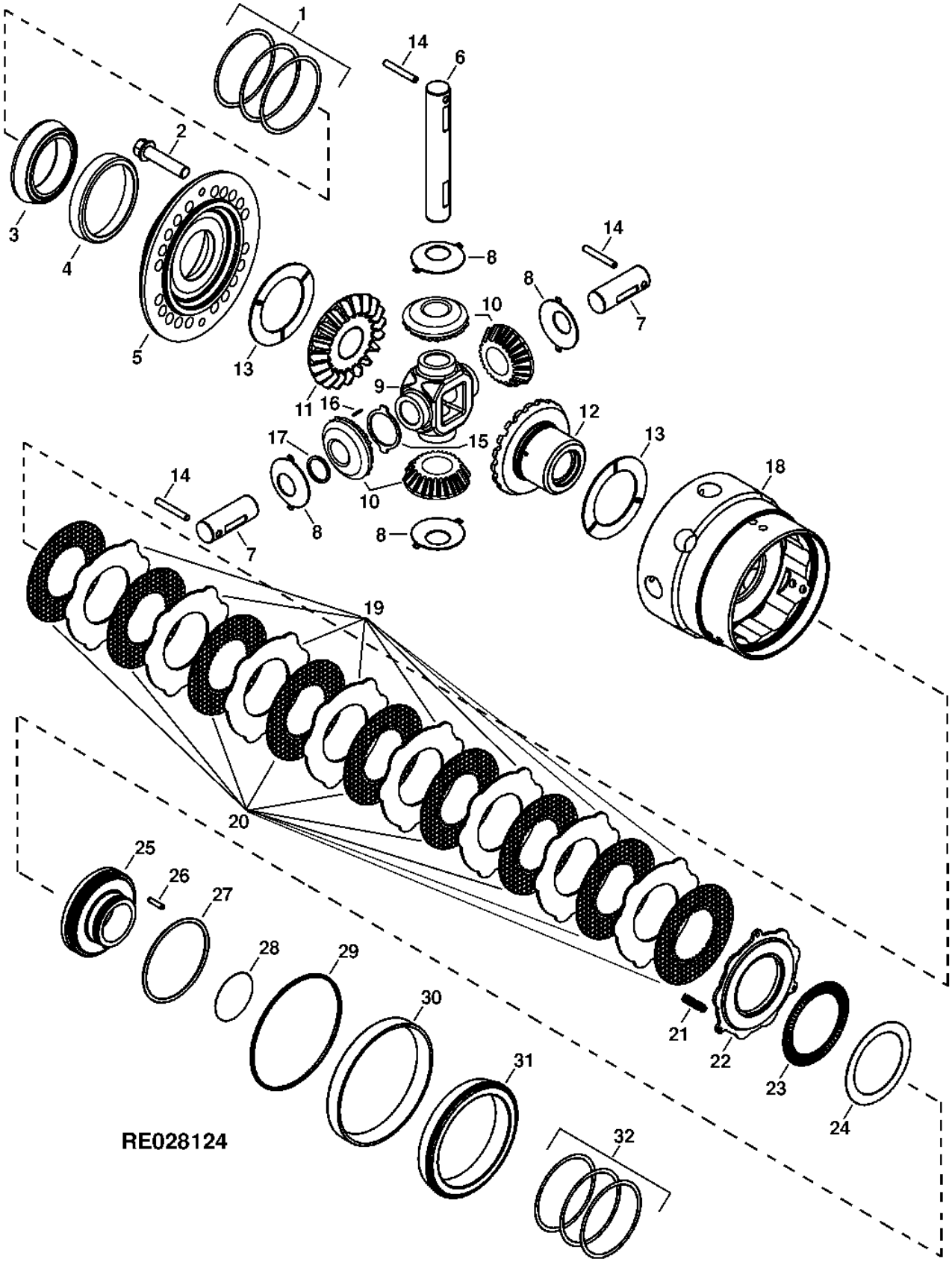

4 PINION HYD ACTUATED DIFFERENTIAL, FRONT AND REAR - CONTINUED

KEY	PART NO.	PART NAME	QTY	AXLE SERIAL NO.	REMARKS
1	R134717	SHIM	AR		
	R134718	SHIM	AR		
	R134719	SHIM	AR		
2	R134183	CAP SCREW	20		
3	JD10127	BEARING CONE	1		
4	JD8254	BEARING CUP	1		
5	R133803	COVER	1		
6	R132827	PINION SHAFT	1		
7	R132828	PINION SHAFT	2		
8	R59460	THRUST WASHER	4		
9	R132836	HUB	1		
10	R134726	PINION	4		
11	R133858	BEVEL GEAR	1		
12	R133859	BEVEL GEAR	1		
13	R133719	THRUST WASHER	2		
14	R57254	PIN	3		
15	R70113	THRUST WASHER	4		
16	R70115	NEEDLE ROLLER	104		
17	R70112	THRUST WASHER	4		
18	R133798	HOUSING	1		
19	R134016	CLUTCH PLATE	8		
20	RE69025	DISK	9		
21	R120236	SPRING	3		
22	R134017	CLUTCH PLATE	1		
23	RE68730	ROLLER BEARING	1		
24	R133725	THRUST WASHER	1		
25	RE166221	PISTON	1		(SUB FOR R133740)
26	R109082	NEEDLE ROLLER	1		
27	R134270	SEAL	1		
28	R134269	SEAL	1		
29	R133328	SPACER	1		
30	JD9148	BEARING CUP	1		
31	JD9093	BEARING CONE	1		
32	R134720	SHIM	AR		0.076MM(0.003")
	R134721	SHIM	AR		0.127MM(0.005")
	R134722	SHIM	AR		0.254MM(0.010")

DIFFERENTIAL SUPPORTS AND LUBRICATION LINES

TP60236 -UN-03APR98

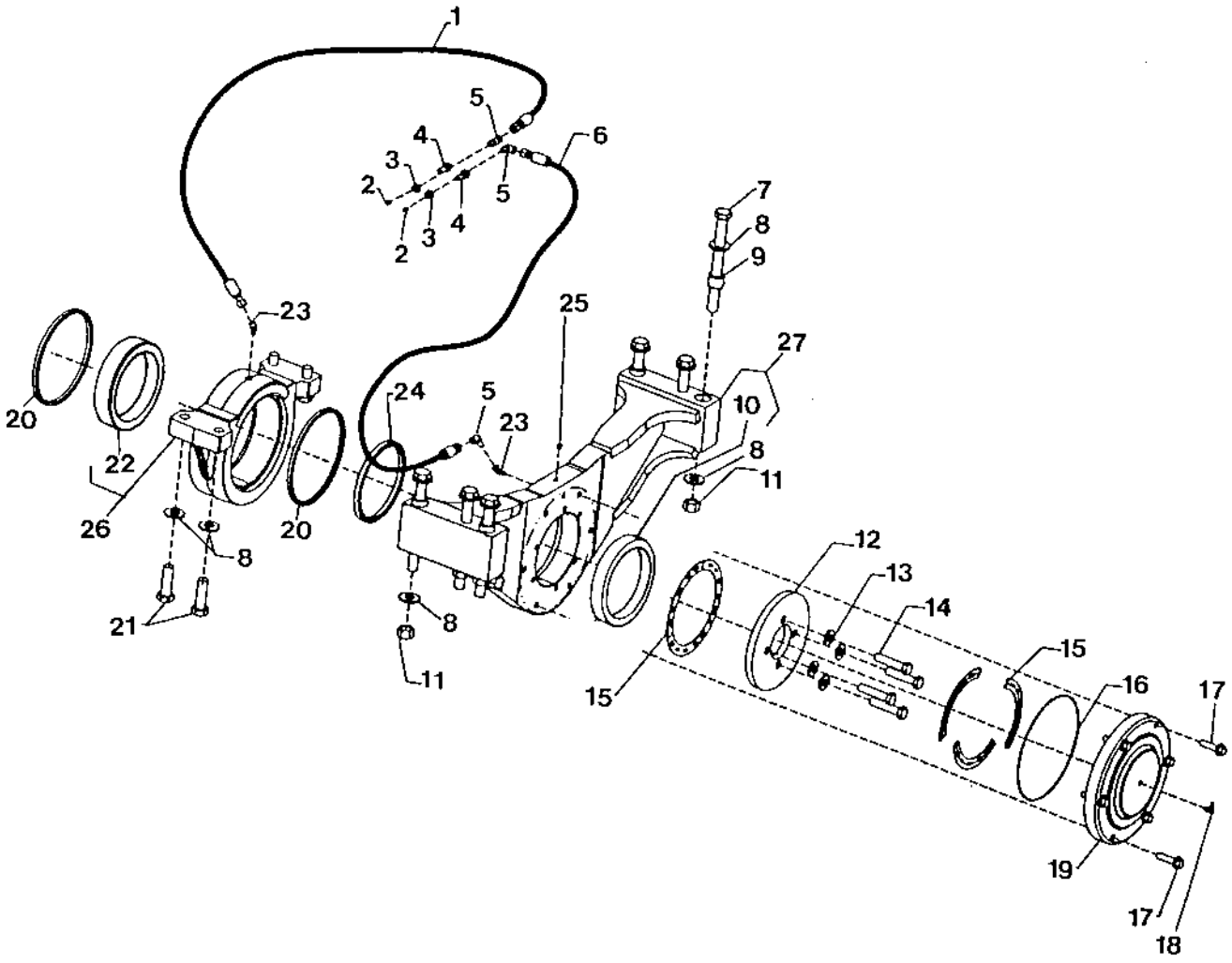

TP60236

DIFFERENTIAL SUPPORTS AND LUBRICATION LINES

KEY	PART NO.	PART NAME	QTY	SERIAL NO.	REMARKS
1	AT207022	HYDRAULIC HOSE	1		
2	JD7842	LUBRICATION FITTING	2		
3	E12379	NUT	2		
4	R36311	FITTING	2		
5	T56112	ELBOW FITTING	3		
6	AT53541	HYDRAULIC HOSE	1		
7	19M7778	CAP SCREW	6		M20 X 220
8	24M7242	WASHER	16		21.400 X 42 X 5 MM
9	T174463	BUSHING	4		
10	T167837	BUSHING	1		
11	14M7277	NUT	6		M20
12	T157055	DISK	1		
13	24M7241	WASHER	4		17 X 34 X 4 MM
14	19M7719	CAP SCREW	4		M16 X 70
15	T167924	THRUST BEARING	6		
16	T169329	O-RING	1		
17	19M7813	SCREW	6		M12 X 45
18	JD7781	LUBRICATION FITTING	1		
19	T157056	COVER	1		
20	AT210022	SEAL	2		
21	19M8638	CAP SCREW	4		M20 X 65
22	T171553	BUSHING	1		
23	M45937	ELBOW FITTING	2		
24	AT206794	SEAL	1		
25	15H558	PIPE PLUG	1		1/8"
26	AT210838	REAR AXLE SUPPORT	1		
27	AT211367	REAR AXLE SUPPORT	1		

AXLE STOP
(9 DEGREE)

TP62689 -UN-28OCT99

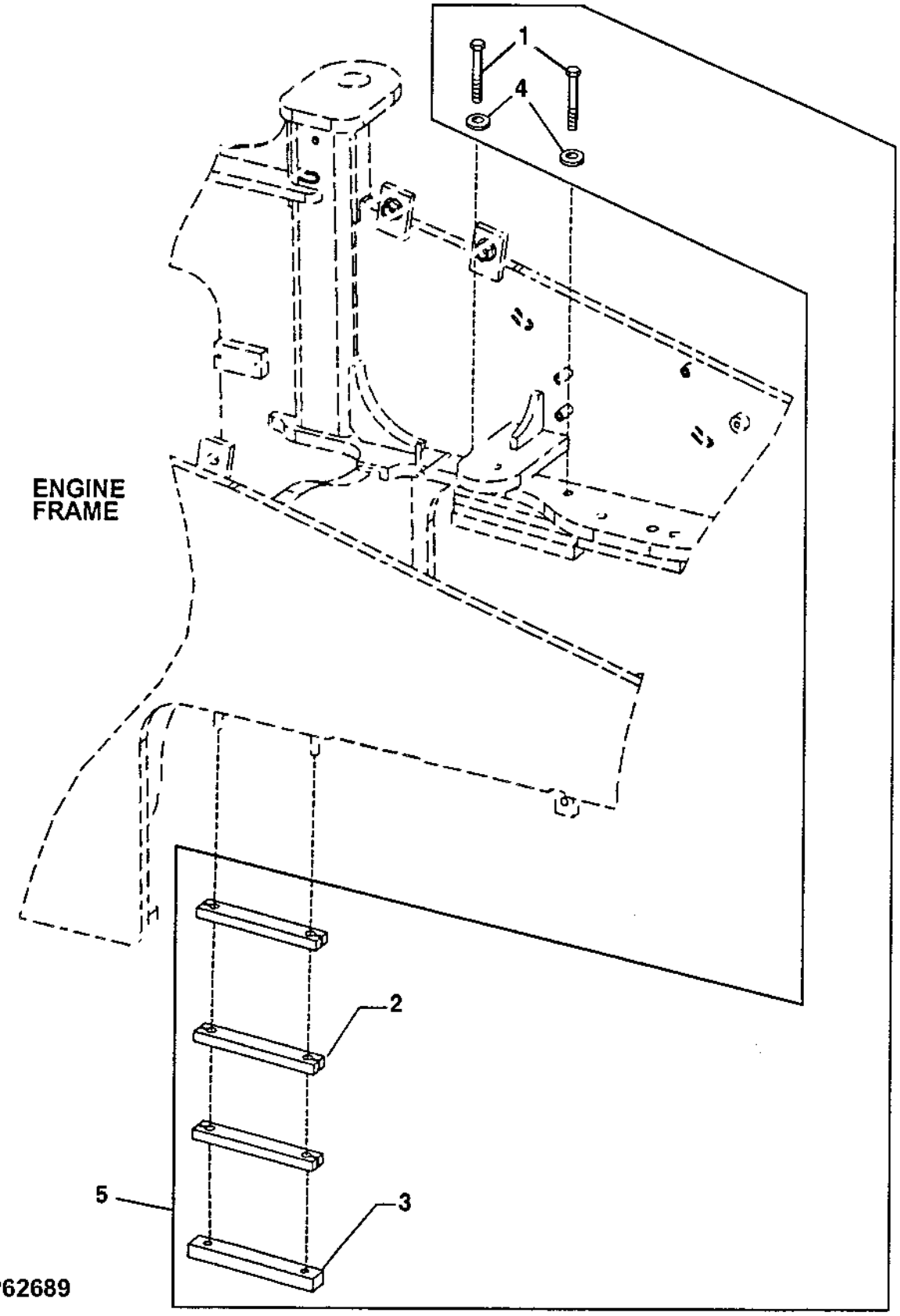

AXLE STOP
(9 DEGREE)

KEY	PART NO.	PART NAME	QTY	SERIAL NO.	REMARKS
1	19M7884	CAP SCREW	4		M16 X 110
2	T168247	STRAP	6		
3	T157315	STRAP	2		TAPPED BLOCK
4	24M7241	WASHER	4		17 X 34 X 4 MM
5	**AT209185**	**STOP**	**1**		**WHOLEGOODS**

MEMORANDA

MEMORANDA

AXLE HOUSING AND SHAFT (FRONT)
RXP022818 -UN-21AUG98

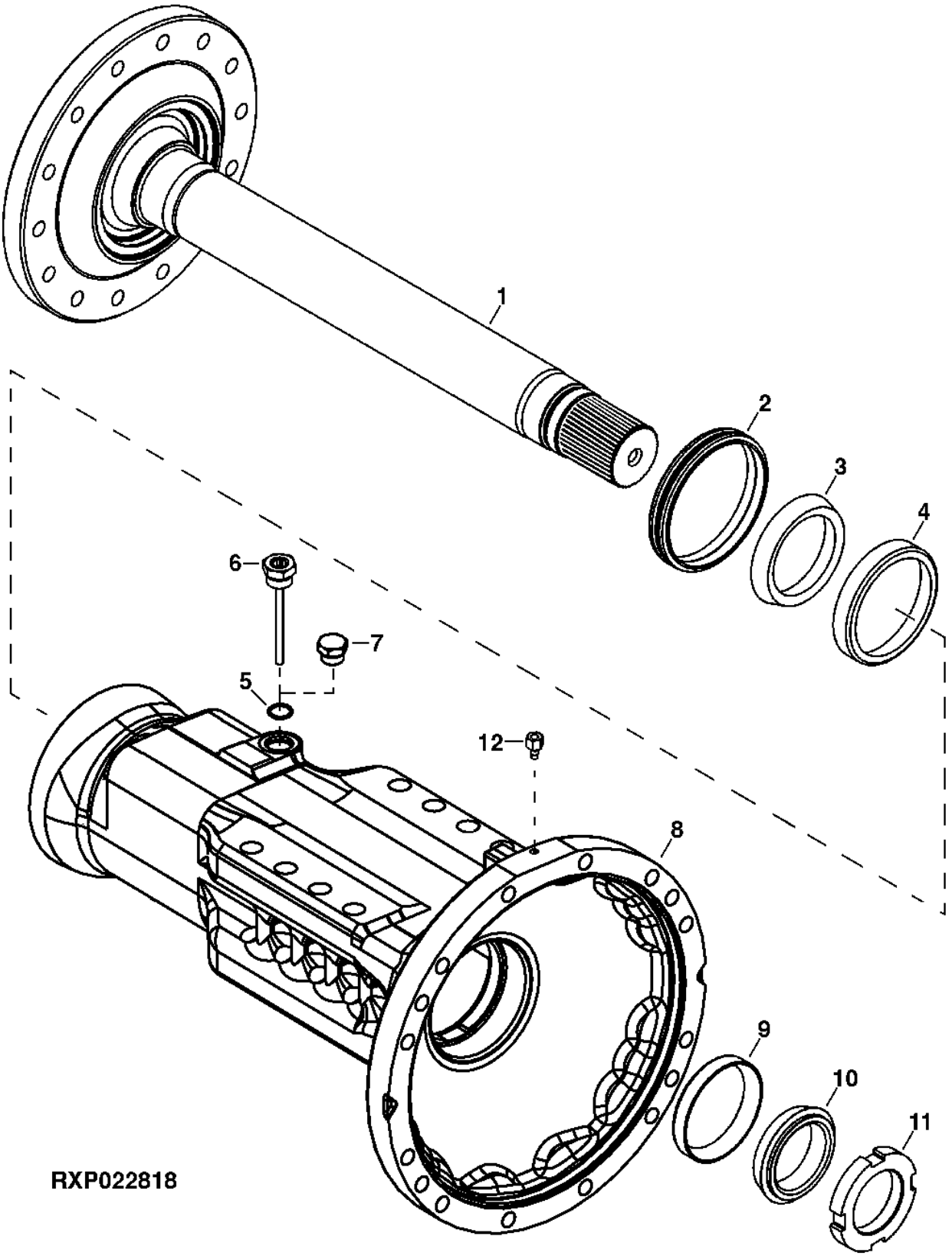

AXLE HOUSING AND SHAFT (FRONT) -CONTINUED

KEY	PART NO.	PART NAME	QTY	AXLE SERIAL NO.	REMARKS
1	R151392	SPINDLE	1		
2	R134239	SEAL	1		
3	JD10315	BEARING CONE	1		
4	JD10316	BEARING CUP	1		
5	F3171R	O-RING	1		
6	RE160141	DIPSTICK	1		(SUB FOR RE68300 OR RE154952)
7	R116801	PIPE PLUG	1		
8	R133165	HOUSING	1		
9	JD8272	BEARING CUP	1		
10	JD8989	BEARING CONE	1		
11	R134172	NUT	1		
12	R131795	PRESSURE RELIEF FITTING	1		

AXLE HOUSING AND SHAFT (REAR)
RXP022819 -UN-21AUG98

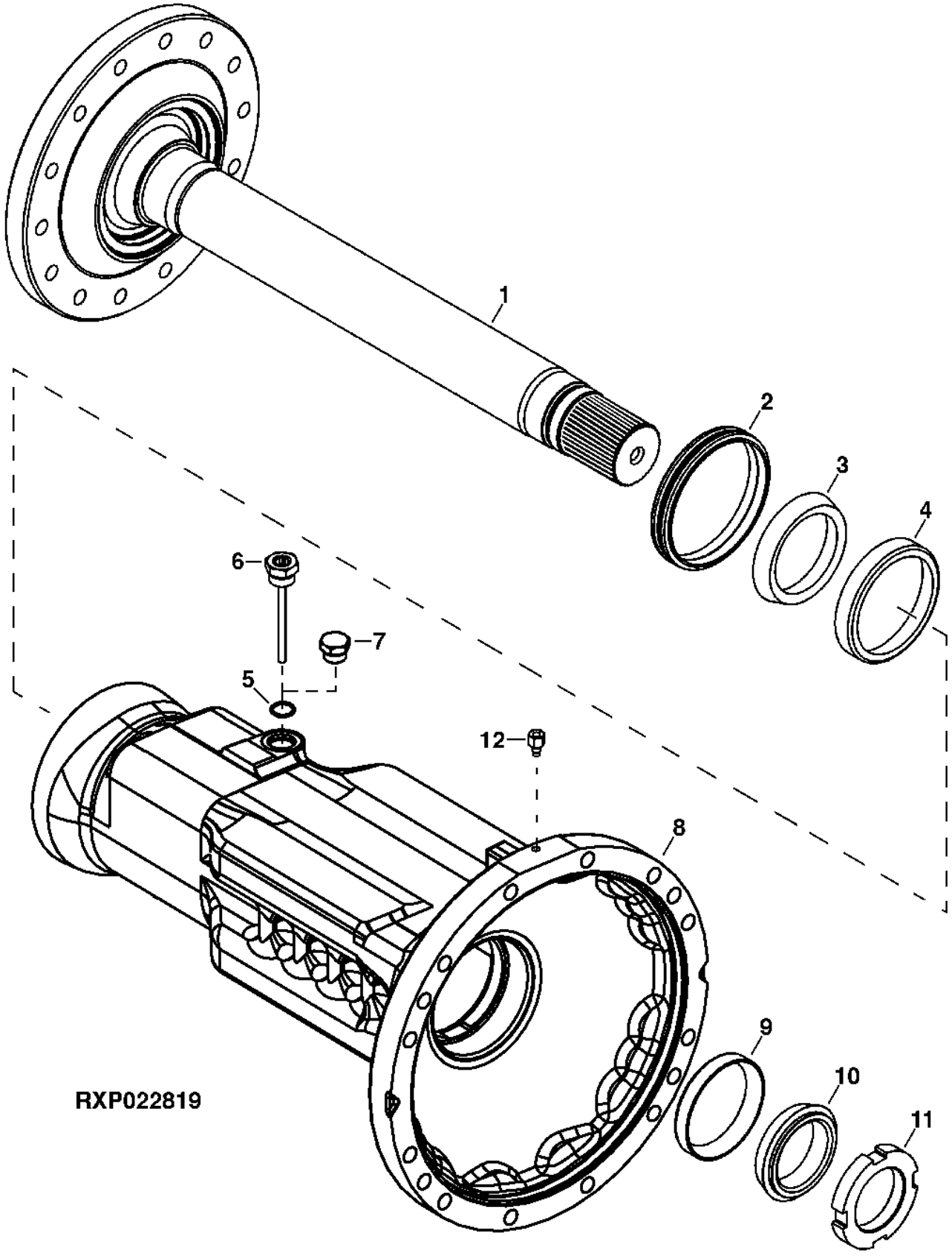

AXLE HOUSING AND SHAFT (REAR) - CONTINUED

KEY	PART NO.	PART NAME	QTY	AXLE SERIAL NO.	REMARKS
1	R151392	SPINDLE	1		
2	R134239	SEAL	1		
3	JD10315	BEARING CONE	1		
4	JD10316	BEARING CUP	1		
5	F3171R	O-RING	1		
6	RE160141	DIPSTICK	1		(SUB FOR RE68300)
7	R116801	PIPE PLUG	1		
8	R134236	HOUSING	1		
9	JD8272	BEARING CUP	1		
10	JD8989	BEARING CONE	1		
11	R134172	NUT	1		
12	R131795	PRESSURE RELIEF FITTING	1		

FRONT AND REAR FINAL DRIVE
RE029364 -UN-30MAR98

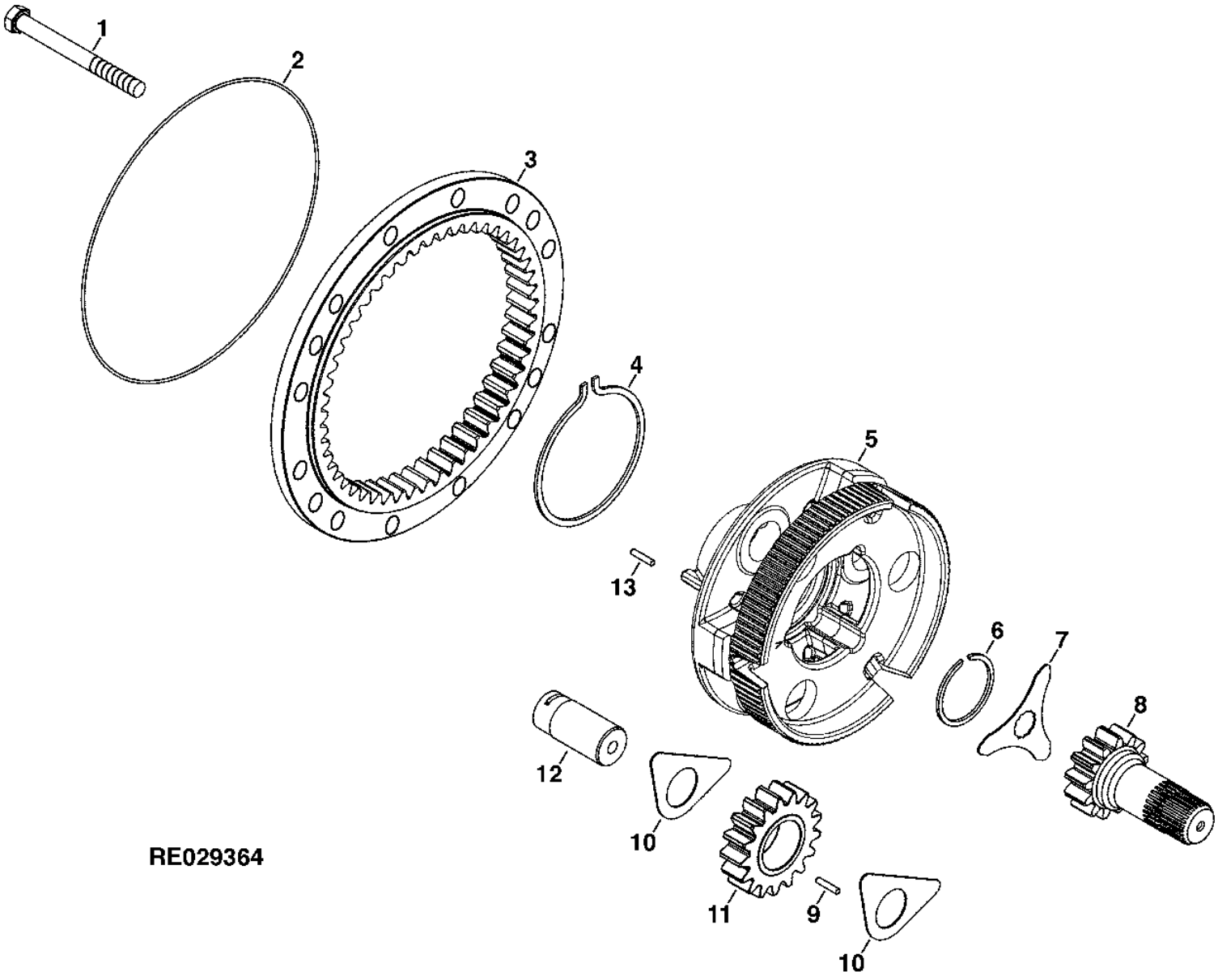

FRONT AND REAR FINAL DRIVE - CONTINUED

KEY	PART NO.	PART NAME	QTY	AXLE SERIAL NO.	REMARKS
1	19M8486	CAP SCREW	16		M16 X 180, COVER SIDE
	19M8485	CAP SCREW	16		M16 X 90, OPPOSITE SIDE
2	R135953	O-RING	1		
3	R133379	GEAR	1		
4	R133373	SNAP RING	1		
5	R151626	PLANET PINION CARRIER	1		
6	R133377	SNAP RING	1		
7	R26012	LOCK PLATE	1		
8	R133378	PINION SHAFT	1		
9	R63575	NEEDLE ROLLER	72		
10	R133368	THRUST WASHER	6		
11	R133367	PLANET PINION	3		
12	R133370	PINION SHAFT	3		
13	34H348	SPRING PIN	1		

DISCONNECT, AXLE INPUT
RE030271 -UN-14DEC98

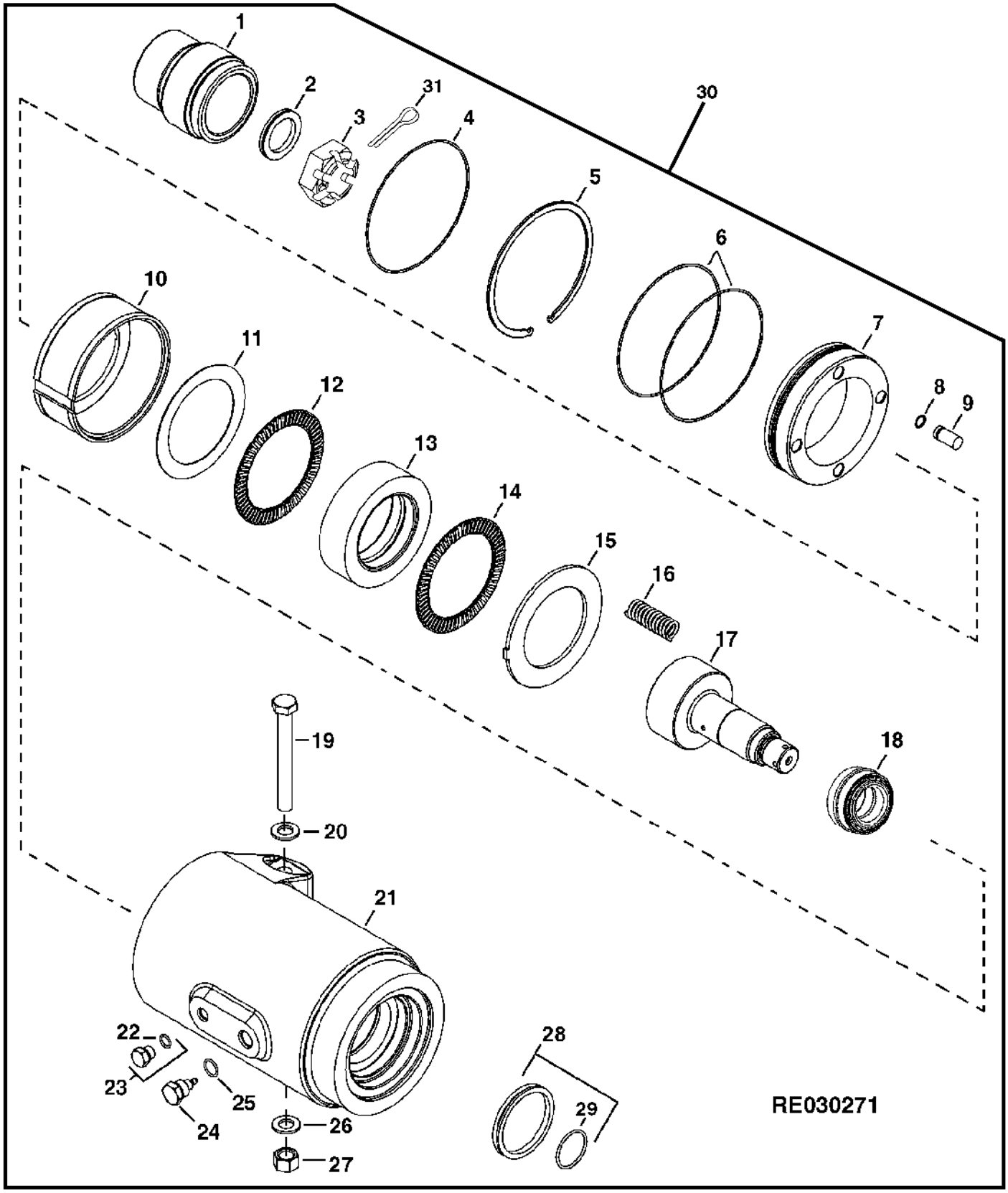

DISCONNECT, AXLE INPUT - CONTINUED

KEY	PART NO.	PART NAME	QTY	AXLE SERIAL NO.	REMARKS
1	R135344	YOKE	1		
2	R48734	WASHER	1		
3	R151933	NUT	1		
4	T80622	O-RING	1		(SUB FOR R136078)
5	R136077	RING	1		
6	R136078	O-RING	2		
7	R135345	SLEEVE	1		
8	R135118	SEAL	4		
9	R135805	PIN	4		
10	R135346	PISTON	1		
11	R133725	THRUST WASHER	1		
12	RE68730	ROLLER BEARING	1		
13	R135348	SHIFT COLLAR	1		
14	RE68730	ROLLER BEARING	1		
15	R135347	PLATE	1		
16	R38185	SPRING	4		
17	R135343	UNIVERSAL DRIVESHAFT	1		
18	F58602	BEARING	1		
19	19M8019	CAP SCREW	1		M16 X 160
20	R135543	WASHER	1		
21	R135342	HOUSING	1		
22	51M7041	O-RING	1		
23	RE46684	PLUG	1		
24	R36943	FITTING	1		
25	R26375	O-RING	1		
26	R135543	WASHER	1		
27	14M7276	NUT	1		
28	RE45315	SEAL KIT	1		
29	R100500	SEAL	1		
30	RE68117	AXLE	1		FI
31	11M7032	COTTER PIN	1		

DIFFERENTIAL LOCK LINE (FRONT)

TP48656 -UN-21FEB97

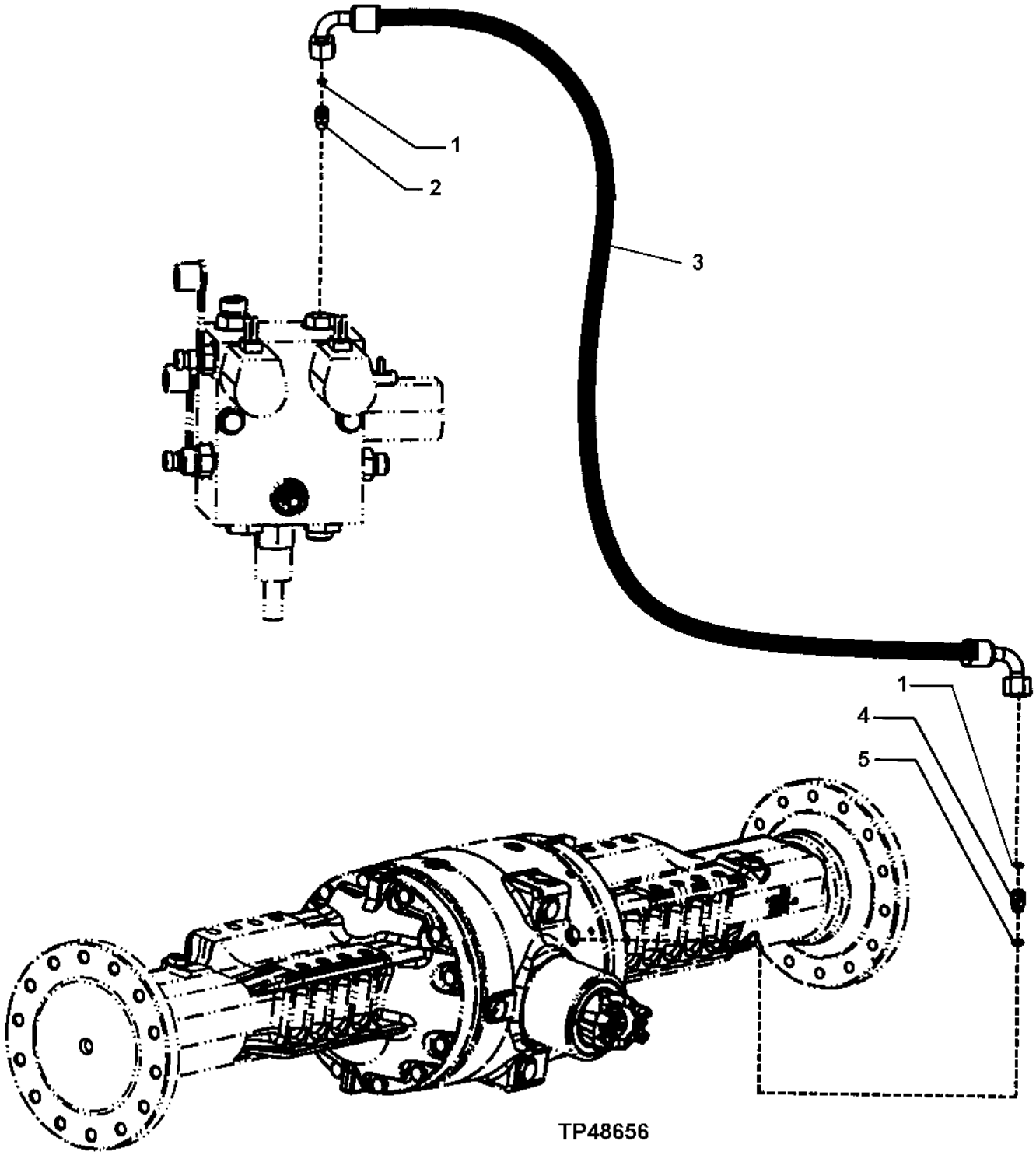

DIFFERENTIAL LOCK LINE (FRONT)

KEY	PART NO.	PART NAME	QTY	SERIAL NO.	REMARKS
1	T77613	O-RING	2		
2	38H1160	ADAPTER	1		
3	AT208696	HYDRAULIC HOSE - FABRICATE	1		
4	38H5002	ADAPTER	1		
5	51M7041	O-RING	1		

DIFFERENTIAL LOCK LINES (FRONT AND REAR)

TP55546 -UN-12JUN97

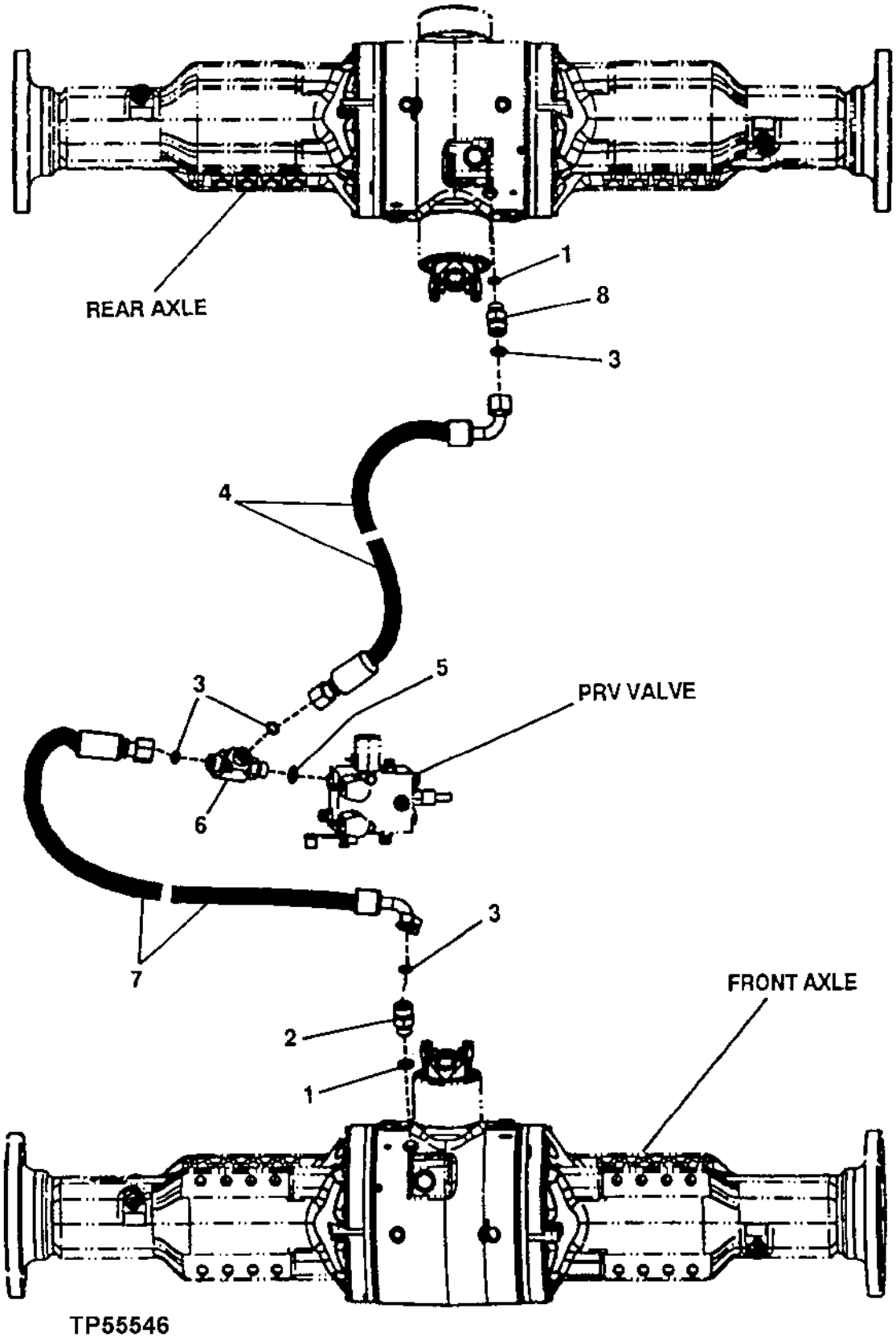

DIFFERENTIAL LOCK LINES
(FRONT AND REAR)

KEY	PART NO.	PART NAME	QTY	SERIAL NO.	REMARKS
1	51M7041	O-RING	2		
2	38H5002	ADAPTER	1		
3	T77613	O-RING	4		
4	AT166149	HYDRAULIC HOSE - FABRICATE	1		
5	R26448	O-RING	1		
6	38H1023	TEE FITTING	1		
7	AT208696	HYDRAULIC HOSE - FABRICATE	1		
8	38H5016	ELBOW FITTING	1		

DIFFERENTIAL LOCK SWITCH

TP48545 -UN-07NOV96

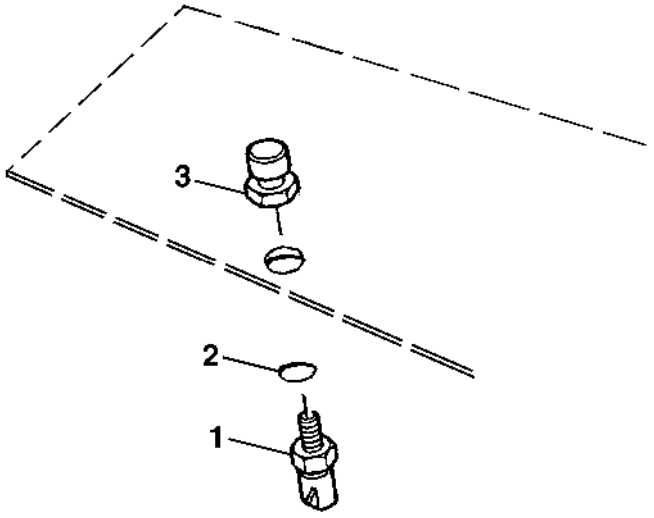

TP48545

KEY	PART NO.	PART NAME	QTY	SERIAL NO.	REMARKS
1	RE46534	SWITCH	1		
2	51M7042	O-RING	1		13.300 X 2.200 MM
3	RE43637	PUSH BUTTON	1		

AXLE AND PARKING BRAKE BREATHER EXTENSION KIT

TP55822 -UN-26JAN98

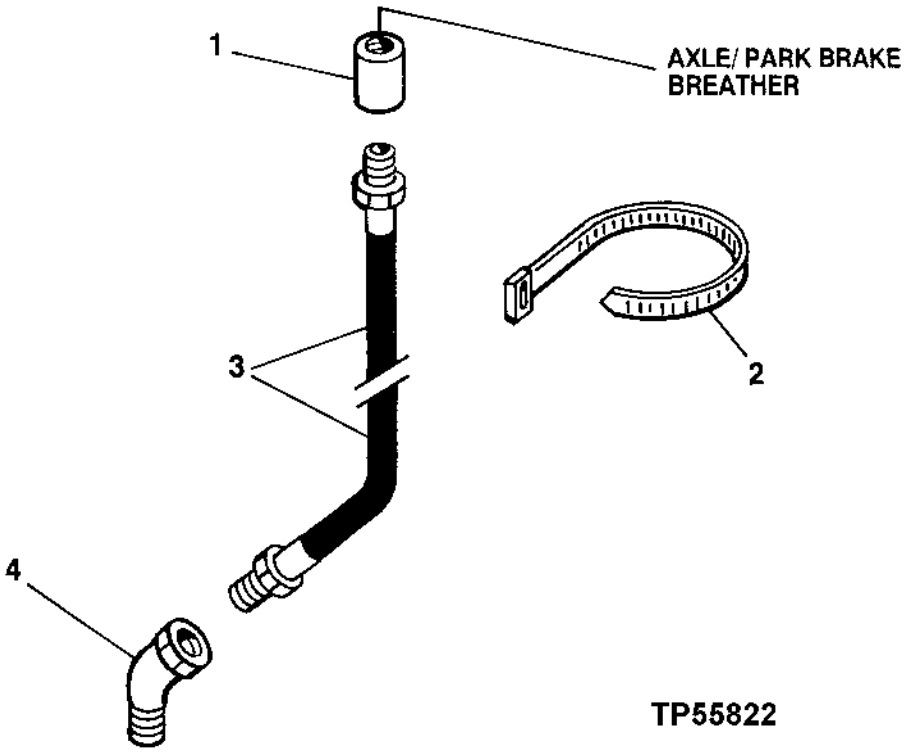

KEY	PART NO.	PART NAME	QTY	SERIAL NO.	REMARKS
1	15H84	COUPLING	3		3.175 MM
2	H77698	TIE BAND	9		
3	AT207022	HYDRAULIC HOSE	3		(SUB FOR AT207023)
4	M45937	ELBOW FITTING	3		

AXLE DISCONNECT LINE

TP60708 -UN-01APR99

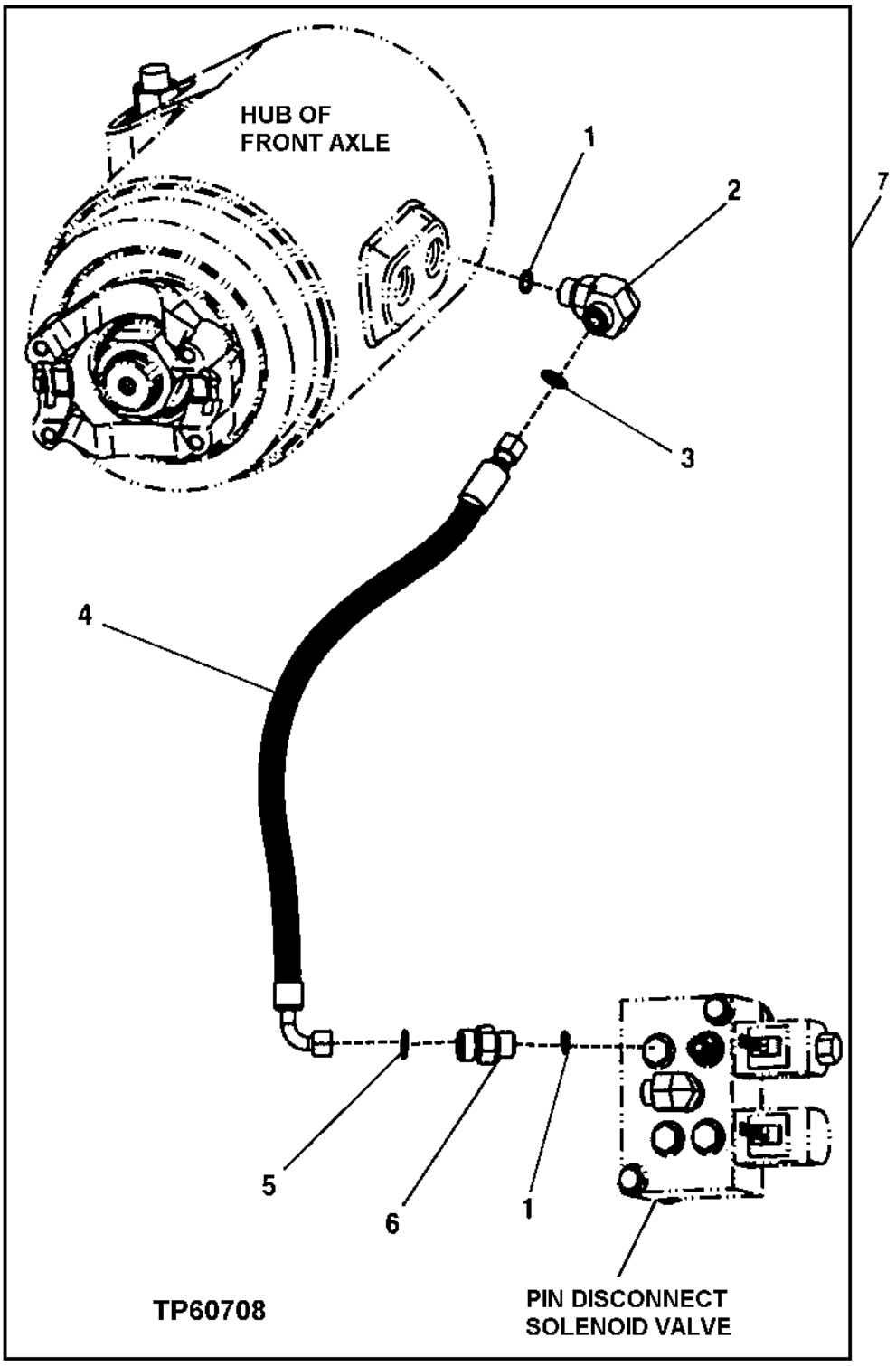

AXLE DISCONNECT LINE

KEY	PART NO.	PART NAME	QTY	SERIAL NO.	REMARKS
1	T77613	O-RING	2		
2	38H5016	ELBOW FITTING	1		
3	R26448	O-RING	1		
4	AT167553	HYDRAULIC HOSE - FABRICATE	1		
5	51M7041	O-RING	1		
6	38H1160	ADAPTER	1		
7	**AT220028**	**AXLE**	**1**		**ASSEMBBLY**

AXLE RECIRCULATION HOSES AND FITTINGS
(SERIAL NO. -578893)

TP62673 -UN-08OCT99

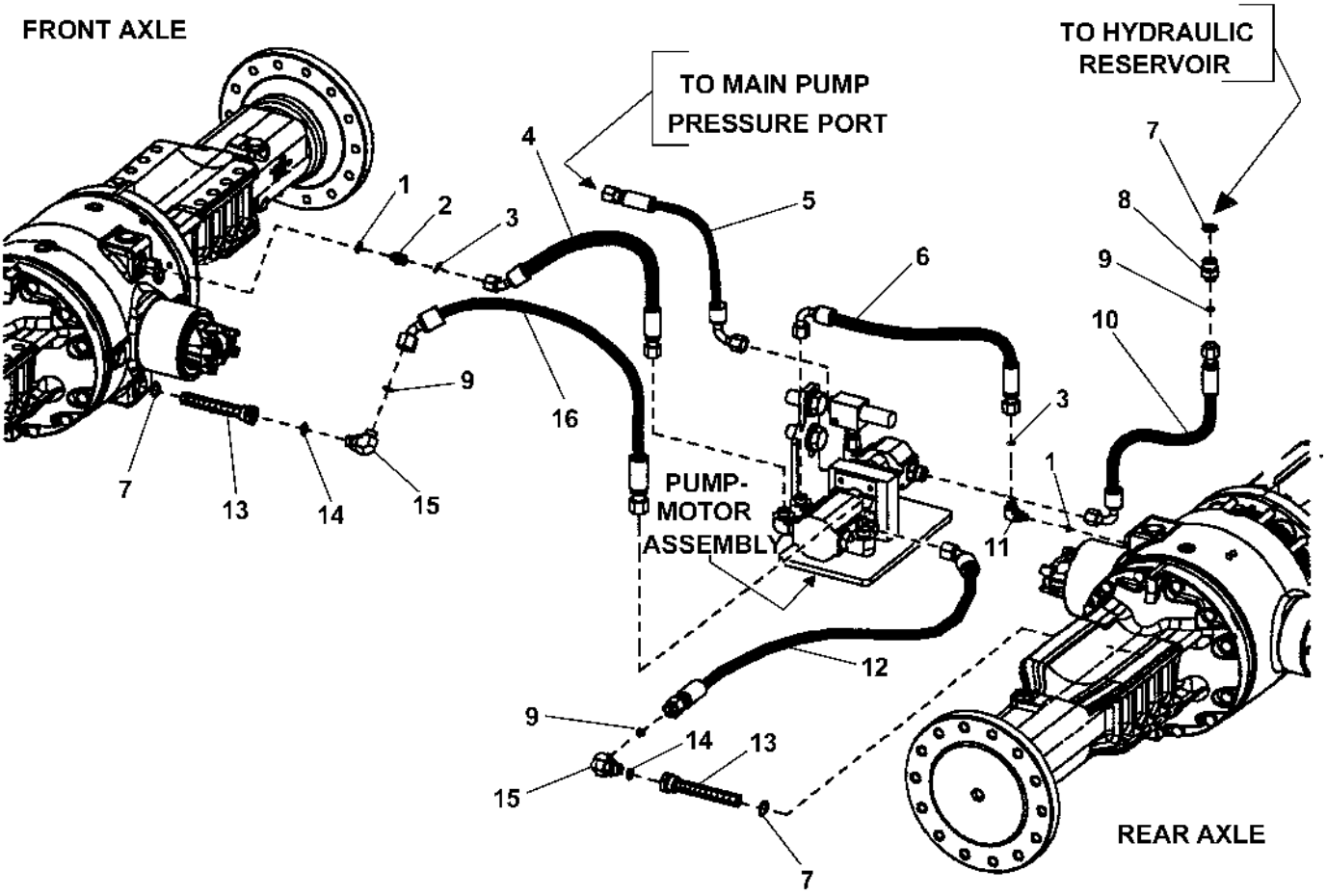

AXLE RECIRCULATION HOSES AND FITTINGS
(SERIAL NO. -578893)

KEY	PART NO.	PART NAME	QTY	SERIAL NO.	REMARKS
1	R26286	O-RING	2		
2	38H1170	ADAPTER	1		
3	T77613	O-RING	2		
4	AT220730	HYDRAULIC HOSE - FABRICATE	1		11/16" X 2 950 MM (116-1/4") X 11/16"
5	AT166149	HYDRAULIC HOSE - FABRICATE	1		11/16" X 975 MM (38-1/2") X 11/16"
6	AT220744	HYDRAULIC HOSE - FABRICATE	1		11/16" X 970 MM (38-1/4") X 11/16"
7	U12547	O-RING	3		
8	38H1175	ADAPTER	1		
9	T77857	O-RING	3		
10	AT220732	HYDRAULIC HOSE - FABRICATE	1		13/16" X 1 400 MM (55") X 13/16"
11	38H1430	ELBOW FITTING	1		
12	AT220734	HYDRAULIC HOSE - FABRICATE	1		13/16" X 735 MM (29") X 13/16"
13	AT220925	OIL FILTER	2		
14	R26375	O-RING	2		
15	38H1005	ELBOW FITTING	2		
16	AT220735	HYDRAULIC HOSE - FABRICATE	1		13/16" X 3 302 MM (130") X 13/16"

AXLE OIL RECIRCULATION PUMP AND MOTOR
(SERIAL NO. -578893)

TP70472 -UN-12SEP00

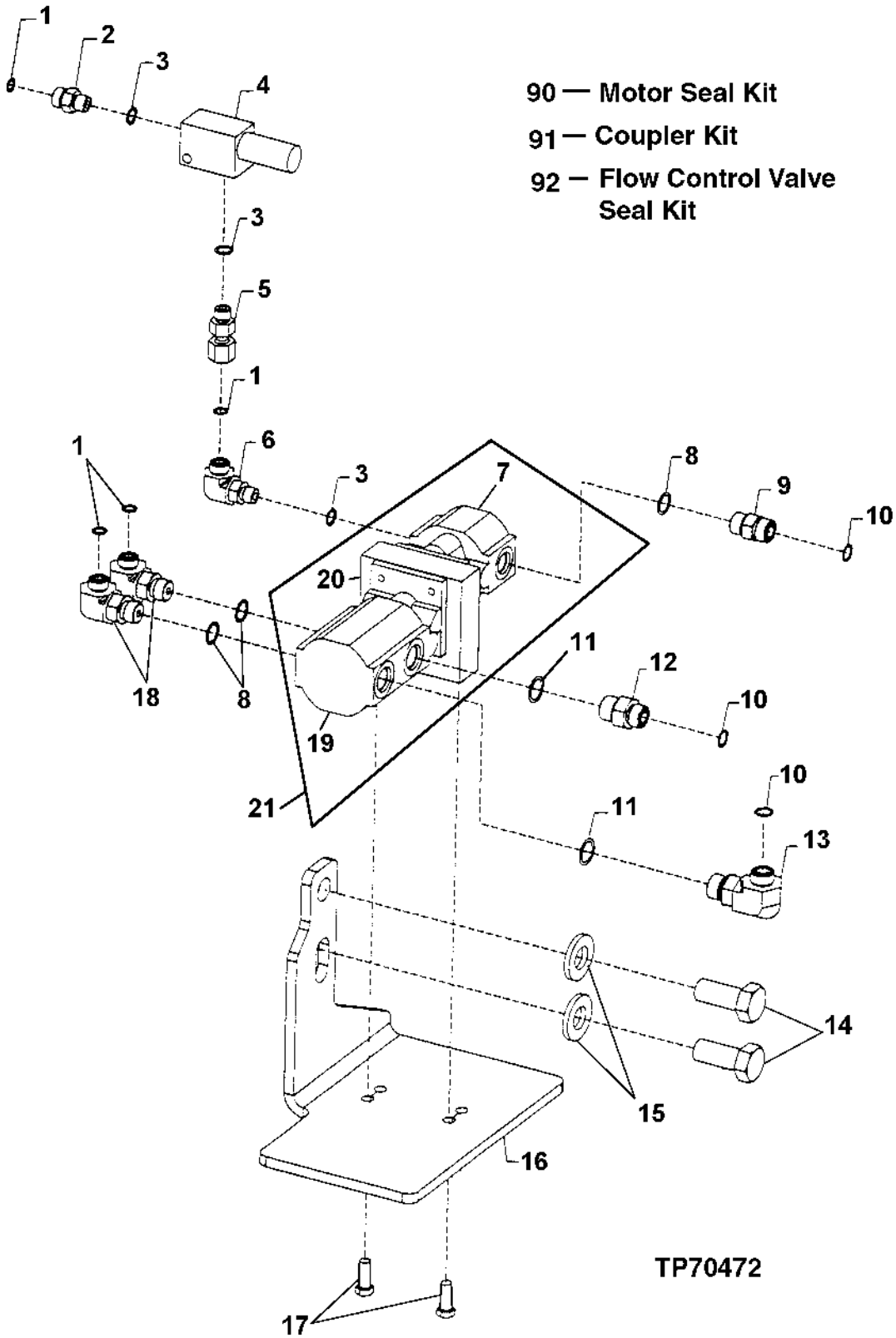

AXLE RECIRCULATION PUMP AND MOTOR
(SERIAL NO. -578893)

KEY	PART NO.	PART NAME	QTY	SERIAL NO.	REMARKS
1	T77613	O-RING	6		
2	38H1160	ADAPTER	1		
3	R26448	O-RING	5		
4	AT220684	CONTROL VALVE	1		
5	38H1067	ADAPTER	1		
6	38H1004	ELBOW FITTING	1		
7	AT220682	HYDRAULIC MOTOR	1		
8	R26375	O-RING	5		
9	38H1161	ADAPTER	1		
10	T77857	O-RING	5		
11	R26906	O-RING	2		
12	38H1174	ADAPTER	1		
13	38H1012	ELBOW FITTING	1		
14	19M7950	CAP SCREW	2		M20 X 45
15	24M7242	WASHER	2		21.400 X 42 X 5 MM
16	T176115	BRACKET	1		
17	19H2676	CAP SCREW	2		3/8" X 1"
18	38H1010	ELBOW FITTING	2		
19	AT220681	HYDRAULIC PUMP	1		
20	AT220790	PLATE	1		
21	AT220607	PUMP	1		
90	AT220685	SEAL KIT	1		MOTOR
91	AT220683	HYDR.QUICK COUPLER PLUG	1		
92	AH148472	SEAL KIT	1		FLOW CONTROL VALVE

AXLE BREATHERS, HOSES AND FITTINGS

TP60509 -UN-25SEP98

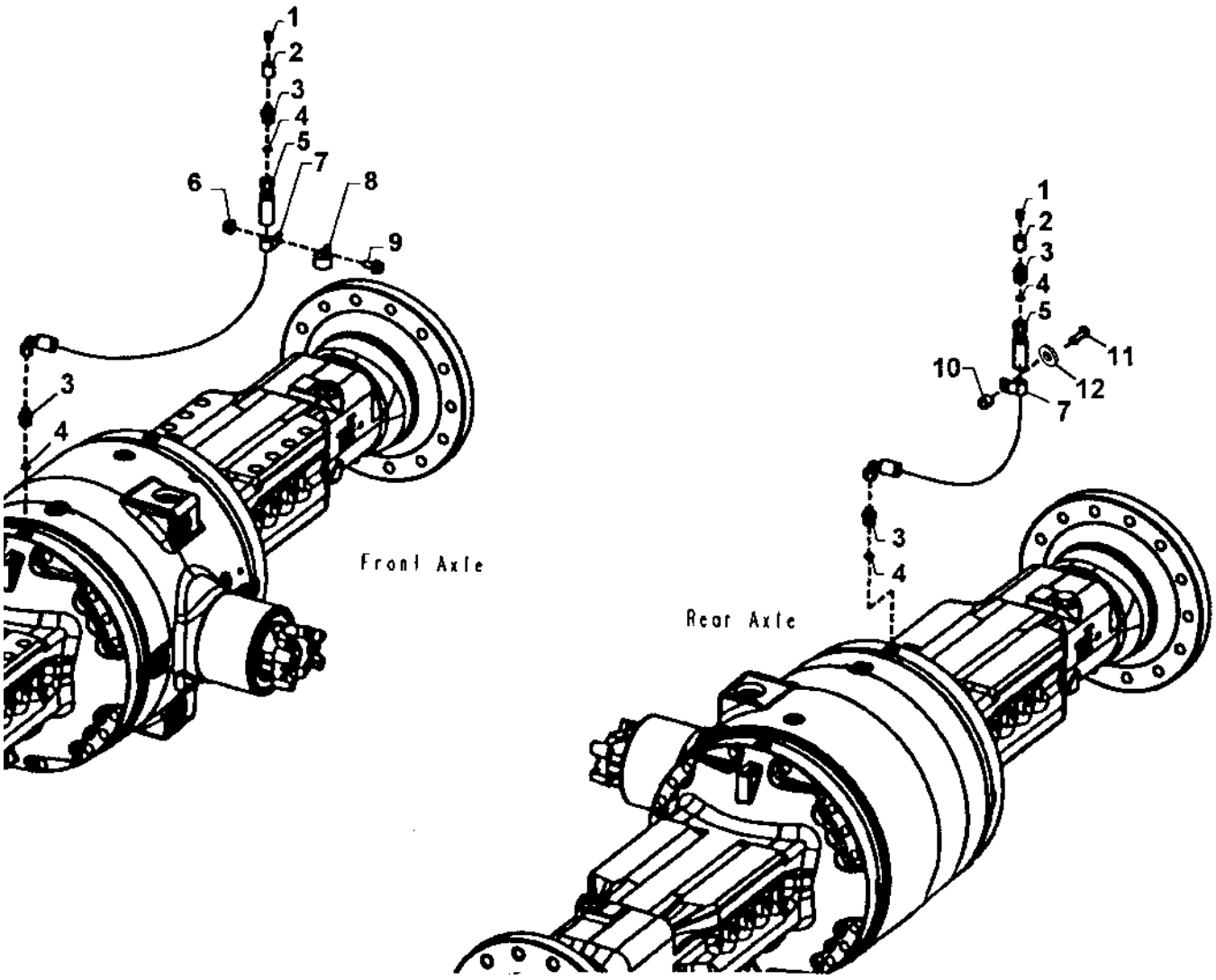

TP60509

AXLE BREATHERS, HOSES AND FITTINGS

KEY	PART NO.	PART NAME	QTY	SERIAL NO.	REMARKS
1	AT208411	RELIEF VALVE	2		
2	15H84	COUPLING	2		1/8"
3	H127578	ADAPTER	4		
4	T77613	O-RING	4		
5	AT147847	HYDRAULIC HOSE - FABRICATE	2		
6	14M7296	FLANGE NUT	1		M10
7	R46414	CLAMP	2		
8	T102934	CLAMP	1		
9	19M7784	SCREW	1		M10 X 20
10	28H3381	SPACER	1		0.493" X 0.675" X 5/8"
11	19H3772	CAP SCREW	1		3/8" X 1-3/4"
12	24M7239	WASHER	1		10.700 X 21 X 2.500 MM

AXLE COOLERS, COVER, HOSES AND FITTINGS

TP60515 -UN-13OCT98

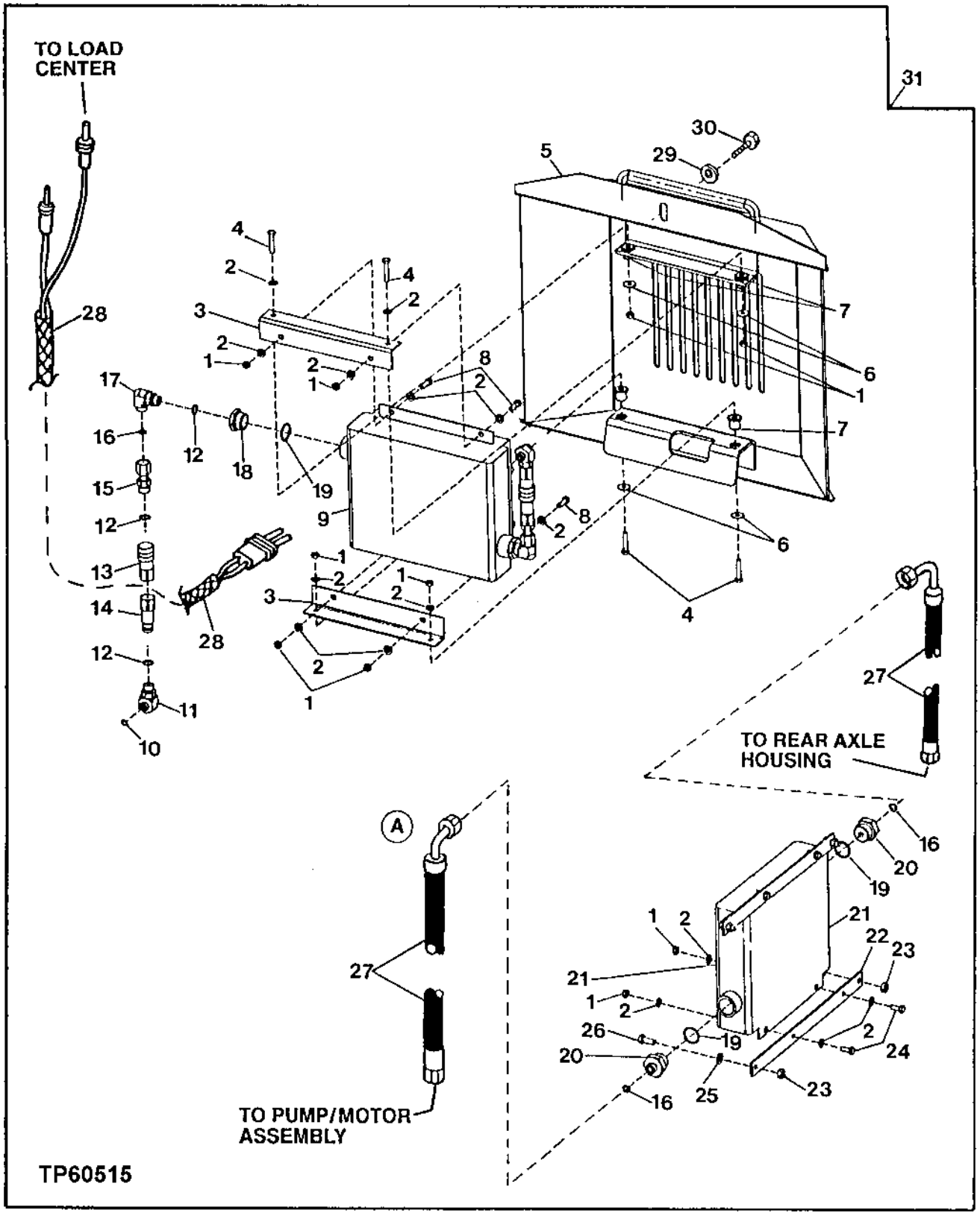

AXLE COOLERS, COVER, HOSES AND FITTINGS

KEY	PART NO.	PART NAME	QTY	SERIAL NO.	REMARKS
1	14M7273	NUT	12		M8
2	24M7238	WASHER	20		8.700 X 17 X 2 MM
3	T175512	ANGLE	2		
4	19M7922	CAP SCREW	4		M8 X 40
5	AT220242	COVER	1		
6	24M7298	WASHER	4		8.400 X 25 X 2 MM
7	AT116162	RUBBER MOUNT	4		
8	19M7407	CAP SCREW	4		M8 X 25
9	AT211578	OIL COOLER	1		(INCLUDES FAN AT220848)
	AT220848	FAN	1		(NOT ILLUSTRATED)
10	T77613	O-RING	2		
11	38H1010	ELBOW FITTING	2		
12	R26375	O-RING	6		
13	AT181185	HYD. QUICK-CONNECT COUPLER	2		
14	AT181186	HYD. QUICK-CONNECT COUPLER	2		
15	38H1068	ADAPTER	2		
16	T77857	O-RING	4		
17	38H1005	ELBOW FITTING	2		
18	T132838	FITTING PLUG	2		
19	R29936	O-RING	4		
20	38H1176	ADAPTER	2		
21	AT220029	OIL COOLER	1		
22	T175290	STRAP	2		
23	14M7274	NUT	4		M10
24	19M7881	SCREW	4		M8 X 20
25	24M7239	WASHER	4		10.700 X 21 X 2.500 MM
26	19M7402	CAP SCREW	4		M10 X 25
27	AT220857	HYDRAULIC HOSE - FABRICATE	2		
28	AT220736	WIRING HARNESS	1		
29	24M7180	WASHER	1		13 X 37 X 3 MM
30	19M7814	SCREW	1		M12 X 50
31	**AT221684**	**OIL COOLER**	**1**		**(SUB FOR AT219853)**

AXLE COOLER, HOSES AND FITTINGS

TP62675 -UN-05JAN00

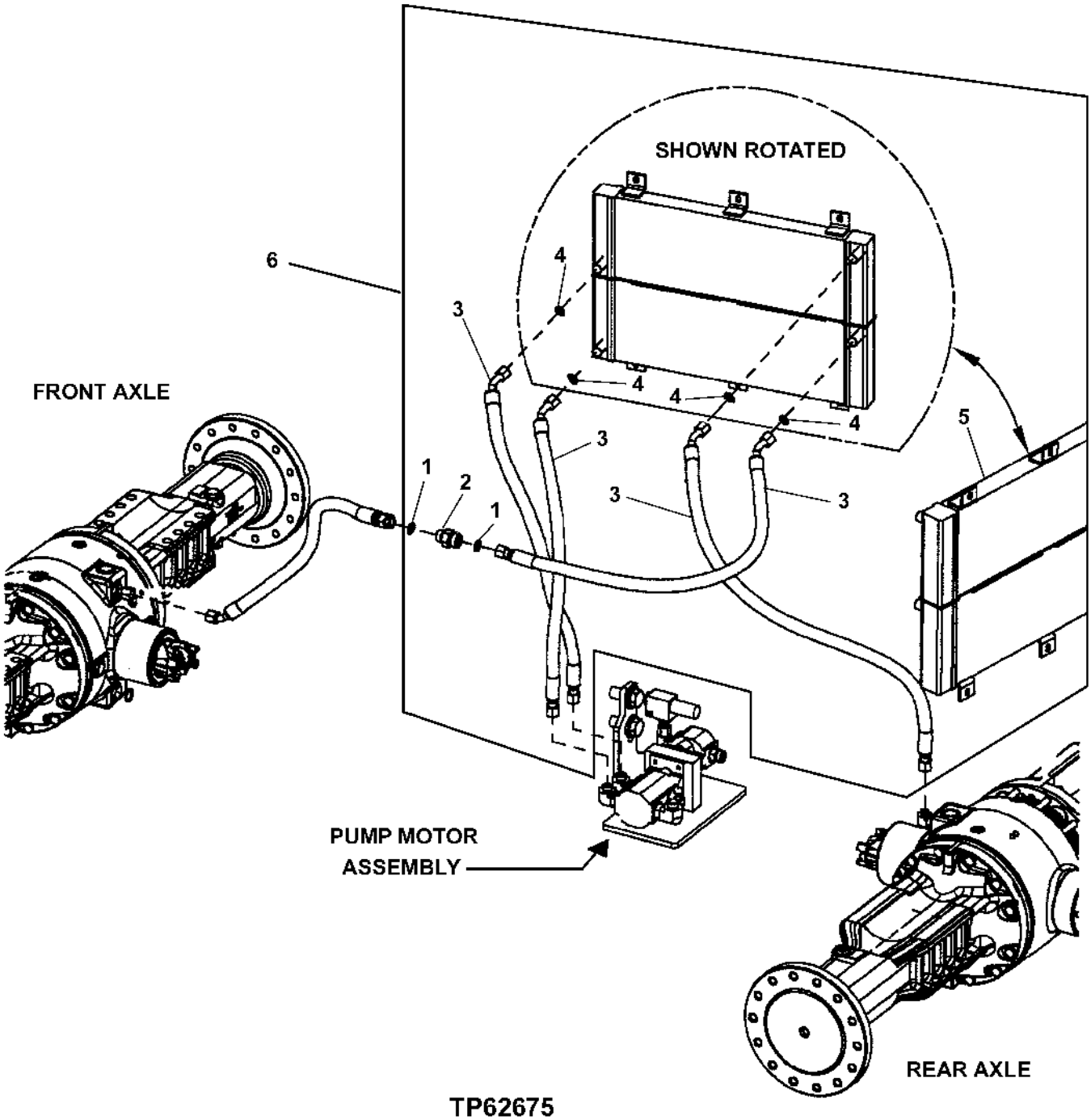

TP62675

AXLE COOLER, HOSES AND FITTINGS

KEY	PART NO.	PART NAME	QTY	SERIAL NO.	REMARKS
1	T77613	O-RING	2		
2	38H1278	UNION FITTING	1		
3	AT222396	HYDRAULIC HOSE - FABRICATE	4		11/16" X 2 591 MM (102") X 13/16"
4	T77857	O-RING	4		
5	AT221685	OIL COOLER	1		
	AT221756	BRACKET	2		(COOLER MOUNTING)
	H146457	NUT	2		(COOLER TO RADIATOR FLANGE)
	19M7866	SCREW	6		M8 X 20, (STRAP TO COOLER)
	19M7785	SCREW	2		M10 X 25, (COOLER ASSEMBLY TO RADIATOR FLANGE)
	24M7178	WASHER	2		10.500 X 30 X 2.500 MM, (COOLER ASSEMBLY TO RADIATOR FLANGE)
	19M7784	SCREW	2		M10 X 20, (COOLER ASSEMBLY TO SIDE PLATE)
	14M7296	FLANGE NUT	2		M10, (COOLER ASSEMBLY TO SIDE PLATE)
6	**AT221684**	**KIT**	**1**		

AXLE RECIRCULATION HOSES AND FITTINGS
(SERIAL NO. 578894-)

T136479 -UN-27DEC00

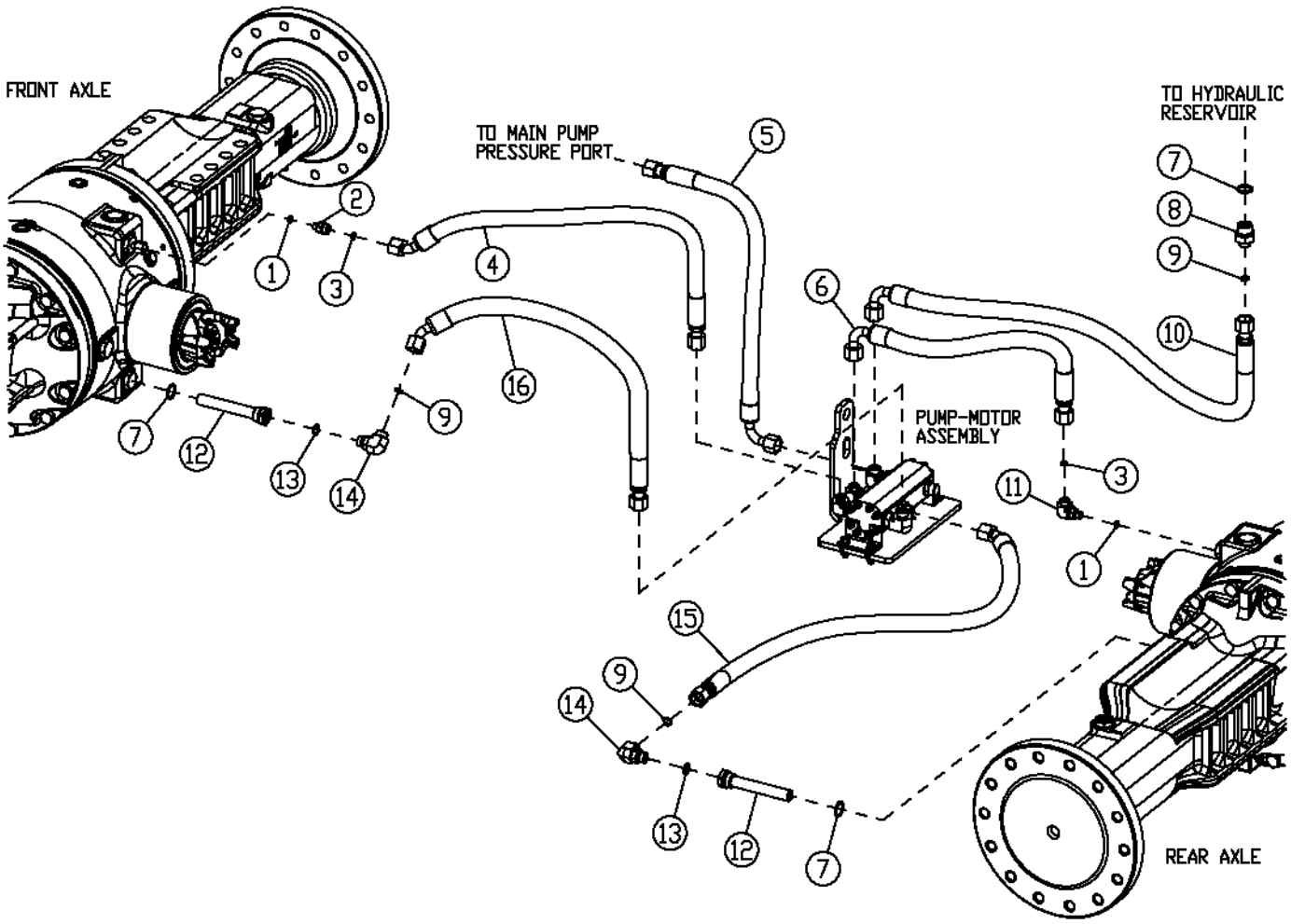

T136479

AXLE RECIRCULATION HOSES AND FITTINGS
(SERIAL NO. 578894-)

KEY	PART NO.	PART NAME	QTY	SERIAL NO.	REMARKS
1	R26286	O-RING	2		
2	38H1170	ADAPTER	1		
3	T77613	O-RING	2		
4	AT220730	HYDRAULIC HOSE - FABRICATE	1		11/16" X 2 950 MM (116-1/4") X 11/16"
5	AT166149	HYDRAULIC HOSE - FABRICATE	1		11/16" X 975 MM (38-1/2") X 11/16"
6	AT220744	HYDRAULIC HOSE - FABRICATE	1		11/16" X 970 MM (38-1/4") X 11/16"
7	U12547	O-RING	3		
8	38H1175	ADAPTER	1		
9	T77857	O-RING	3		
10	AT220732	HYDRAULIC HOSE - FABRICATE	1		13/16" X 1 400 MM (55") X 13/16"
11	38H1430	ELBOW FITTING	1		
12	AT220925	OIL FILTER	2		
13	R26375	O-RING	2		
14	38H1005	ELBOW FITTING	2		
15	AT220734	HYDRAULIC HOSE - FABRICATE	1		13/16" X 735 MM (29") X 13/16"
16	AT220735	HYDRAULIC HOSE - FABRICATE	1		13/16" X 3 302 MM (130") X 13/16"

AXLE OIL RECIRCULATION PUMP AND MOTOR
(SERIAL NO. 578894-)

T136474 -UN-15DEC00

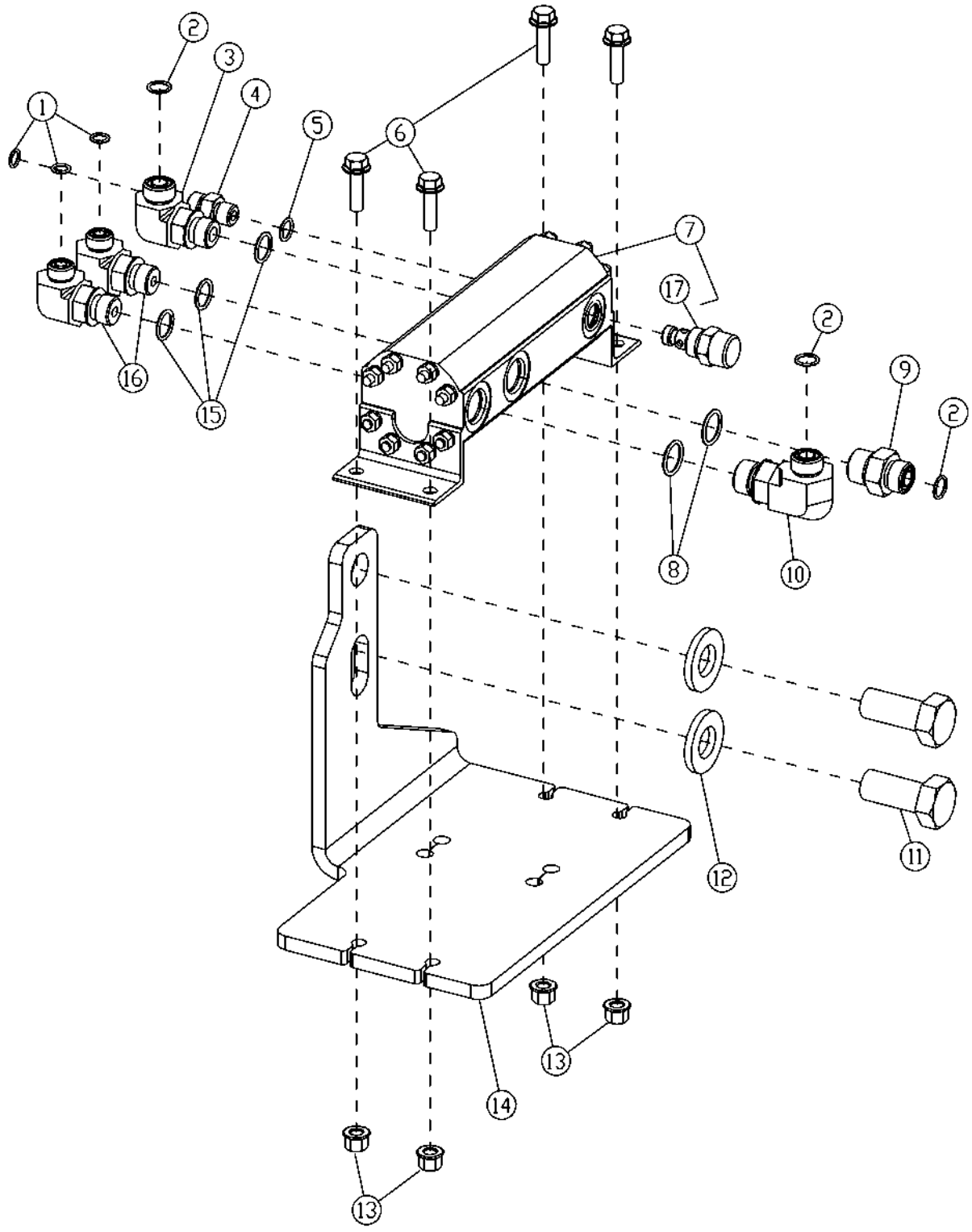

THIS PARTS LISTING IS CONTINUED

AXLE OIL RECIRCULATION PUMP AND MOTOR
(SERIAL NO. 578894-)

KEY	PART NO.	PART NAME	QTY	SERIAL NO.	REMARKS
1	T77613	O-RING	3		
2	T77857	O-RING	3		
3	38H1005	ELBOW FITTING	1		
4	38H1160	ADAPTER	1		
5	R26448	O-RING	1		
6	19M7868	SCREW	4		M8 X 30
7	AT220832	PUMP	1		
8	R26906	O-RING	2		
9	38H1174	ADAPTER	1		
10	38H1012	ELBOW FITTING	1		
11	19M7950	CAP SCREW	2		M20 X 45
12	24M7242	WASHER	2		21.400 X 42 X 5 MM
13	14M7396	LOCK NUT	4		M8
14	T176115	BRACKET	1		
15	R26375	O-RING	4		
16	38H1010	ELBOW FITTING	2		
17	AT223728	CONTROL VALVE	1		FLOW
	AT223805	SEAL KIT	1		

TRANSMISSION-TO-DIFFERENTIALS AND ENGINE DRIVE-SHAFTS
(WITH AND WITHOUT DISCONNECT)

TP60368 -UN-28APR98

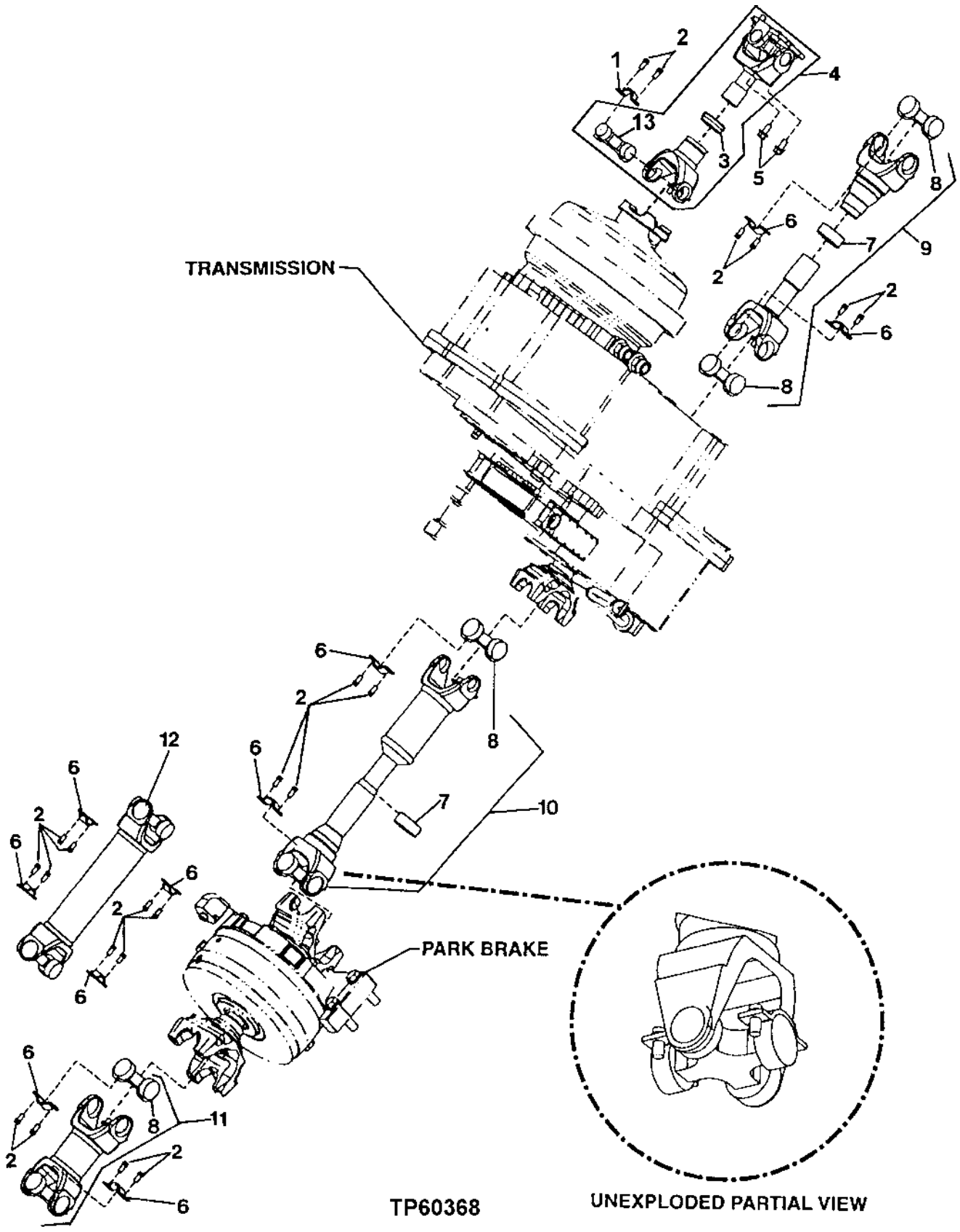

TRANSMISSION-TO-DIFFERENTIALS AND ENGINE DRIVE-SHAFTS
(WITH AND WITHOUT DISCONNECT)

KEY	PART NO.	PART NAME	QTY	SERIAL NO.	REMARKS
1	R85168	CLAMP	2		(SUB FOR R85169)
2	T179522	CAP SCREW	28		(SUB FOR R85169)
3	AT210344	CAP	1		
4	AT211475	DRIVE SHAFT	1		(ENGINE/TRANSMISSION SHAFT (MATERIAL HANDLER)
	AT211475	DRIVE SHAFT	1	-573979	(ENGINE/TRANSMISSION SHAFT)
	AT220954	DRIVE SHAFT	1	573980-	(ENGINE/TRANSMISSION SHAFT
5	19M7788	SCREW	4		M12 X 25
6	T171597	STRAP	12		
7	AT211207	CAP	1		
8	AT207417	UNIVERSAL JOINT CROSS	8		(UNIVERSAL JOINT)
	AT225137	UNIVERSAL JOINT	8		GREASABLE U-JOINT
9	AT207418	DRIVE SHAFT	1		(REAR SHAFT)
10	AT207414	DRIVE SHAFT	1		(SUB AT225254) (ARTICULATION SHAFT) (USE IF AVAILABLE)
	AT225254	DRIVE SHAFT	1		(ARTICULATION SHAFT) (SUB FOR AT224986)
11	AT220205	DRIVE SHAFT	1		(FRONT DRIVE SHAFT) (WITH DISCONNECT)
12	AT220204	DRIVE SHAFT	1		(FRONT DRIVE SHAFT) (WITHOUT DISCONNECT) (INCLUDES AT207417)
13	AT207330	UNIVERSAL JOINT	2		

TRANSMISSION MOUNTING SUPPORTS

TP60234 -UN-11MAR98

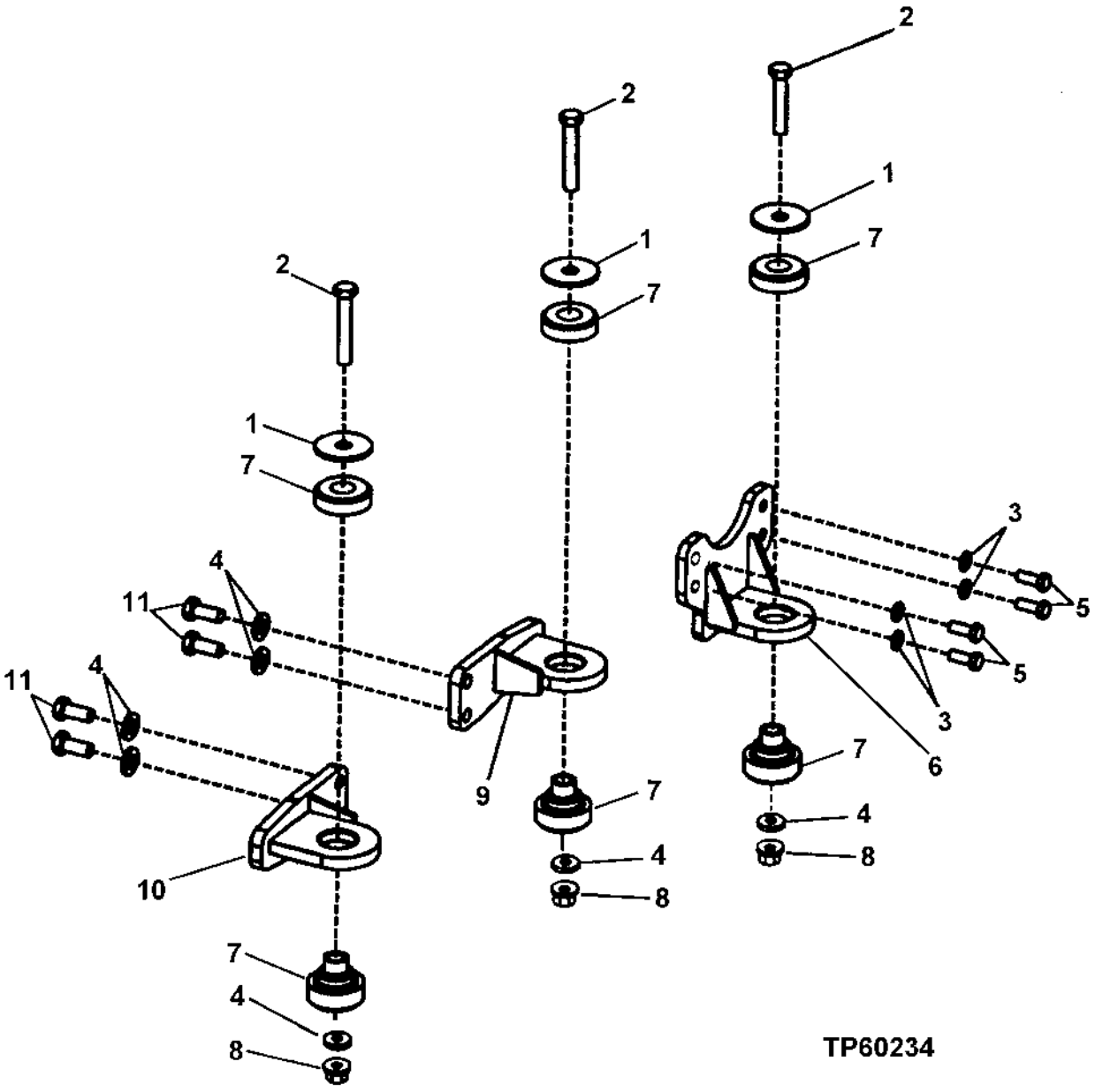

TRANSMISSION MOUNTING SUPPORTS

KEY	PART NO.	PART NAME	QTY	SERIAL NO.	REMARKS
1	T42977	WASHER	3		
2	19M7968	CAP SCREW	3		M20 X 130
3	24M7241	WASHER	4		17 X 34 X 4 MM
4	24M7242	WASHER	7		21.400 X 42 X 5 MM
5	19M7488	CAP SCREW	4		M16 X 40
6	AT209221	SUPPORT	1		
7	AT165288	ISOLATOR	3		
8	14M7277	NUT	3		M20
9	AT209704	SUPPORT	1		
10	AT209703	SUPPORT	1		
11	19M7487	CAP SCREW	2		M20 X 50

TRANSMISSION

TP62620 -UN-30AUG99

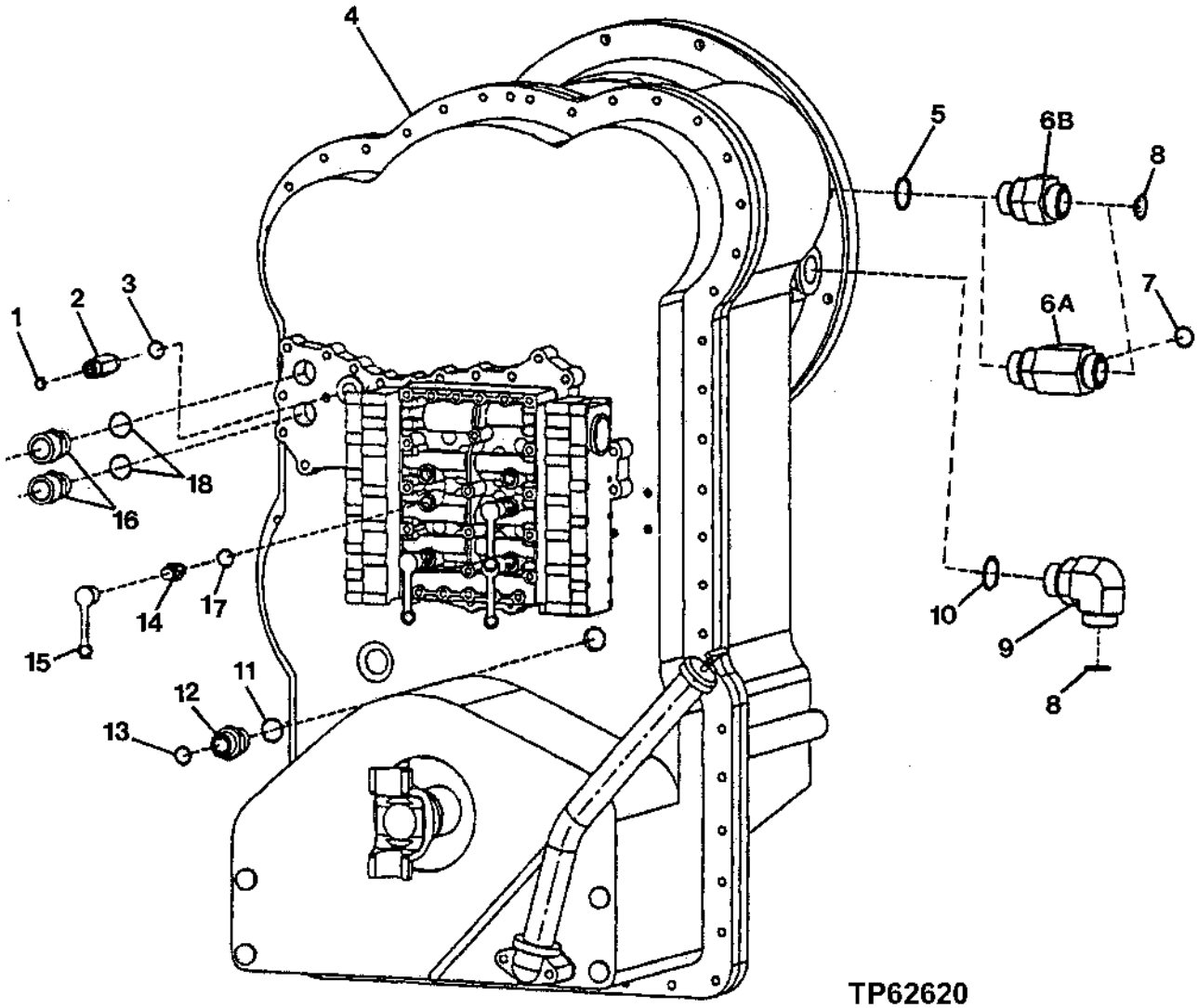

TP62620

TRANSMISSION

KEY	PART NO.	PART NAME	QTY	SERIAL NO.	REMARKS
1	T77613	O-RING	1		
2	38H5178	FITTING	1		
3	51M7042	O-RING	1		
4	AT209717	TRANSMISSION	1	-573382	(REMANUFACTURED)
	AT222004	TRANSMISSION	1	573383-	(REMANUFACTURED)
5	R29936	O-RING	1		
6A	38H1410	TEE FITTING	1	-573382	
6B	38H1164	ADAPTER	1	573383-	
7	T77858	O-RING	1		
8	T76938	O-RING	2		
9	38H1037	ELBOW FITTING	1		
10	51M7048	O-RING	1		
11	T24210	O-RING	1		
12	T172732	ADAPTER	1		
13	T77932	O-RING	1		
14	AT202955	FITTING	4		
15	R77175	COVER	4		
16	T168064	ADAPTER	2	-573382	
17	51M7039	O-RING	4		
18	T24210	O-RING	2	-573382	
	T172318	O-RING	2	573383-	

CONVERTER HOUSING COVERS AND INPUT DRIVE

T144101 -UN-16JUL01

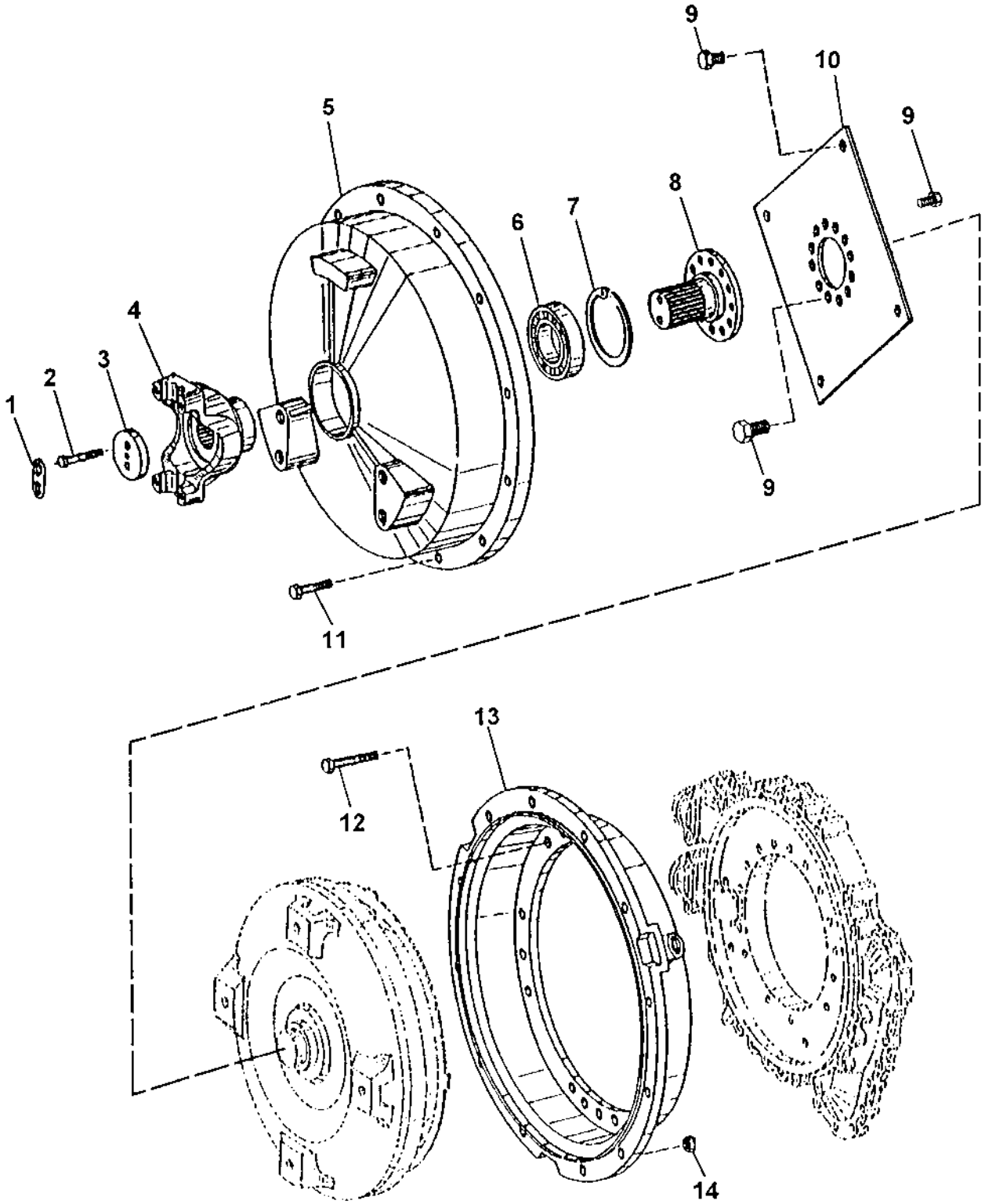

T144101

CONVERTER HOUSING COVERS AMD INPUT DRIVE

KEY	PART NO.	PART NAME	QTY	SERIAL NO.	REMARKS
1	T116613	WASHER	1		
2	19M8397	CAP SCREW	2		M8 X 50
3	T116516	WASHER	1		
4	T171730	YOKE	1		
5	T168343	COVER	1		
6	T171202	BALL BEARING	1		
7	40M7060	SNAP RING	1		
8	T172801	UNIVERSAL DRIVESHAFT	1		
9	T174407	CAP SCREW	16		
10	T174386	DIAPHRAGM	1		
11	T174407	CAP SCREW	12		
12	19M7742	CAP SCREW	18		M10 X 65
13	T179276	HOUSING	1		(SUB FOR T168373)
14	14M7274	NUT	12		M10

TORQUE CONVERTER

TP55556 -UN-14JUL97

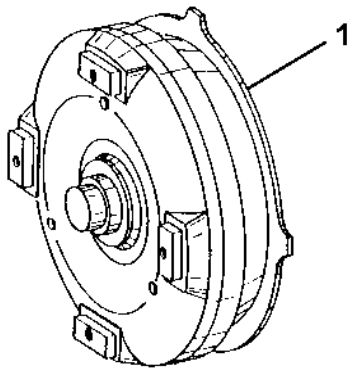

TP55556

KEY	PART NO.	PART NAME	QTY	SERIAL NO.	REMARKS
1	.....	TORQUE CONVERTER	1		(AT220330 , AT221199 AND AT225655 NO LONGER AVAILABLE) (SUB AT225612)
	AT225612	TORQUE CONVERTER	1		(REMANUFACTURED)

MEMORANDA

INPUT SHAFT, GEAR AND BEARINGS

TP48608 -UN-16JAN97

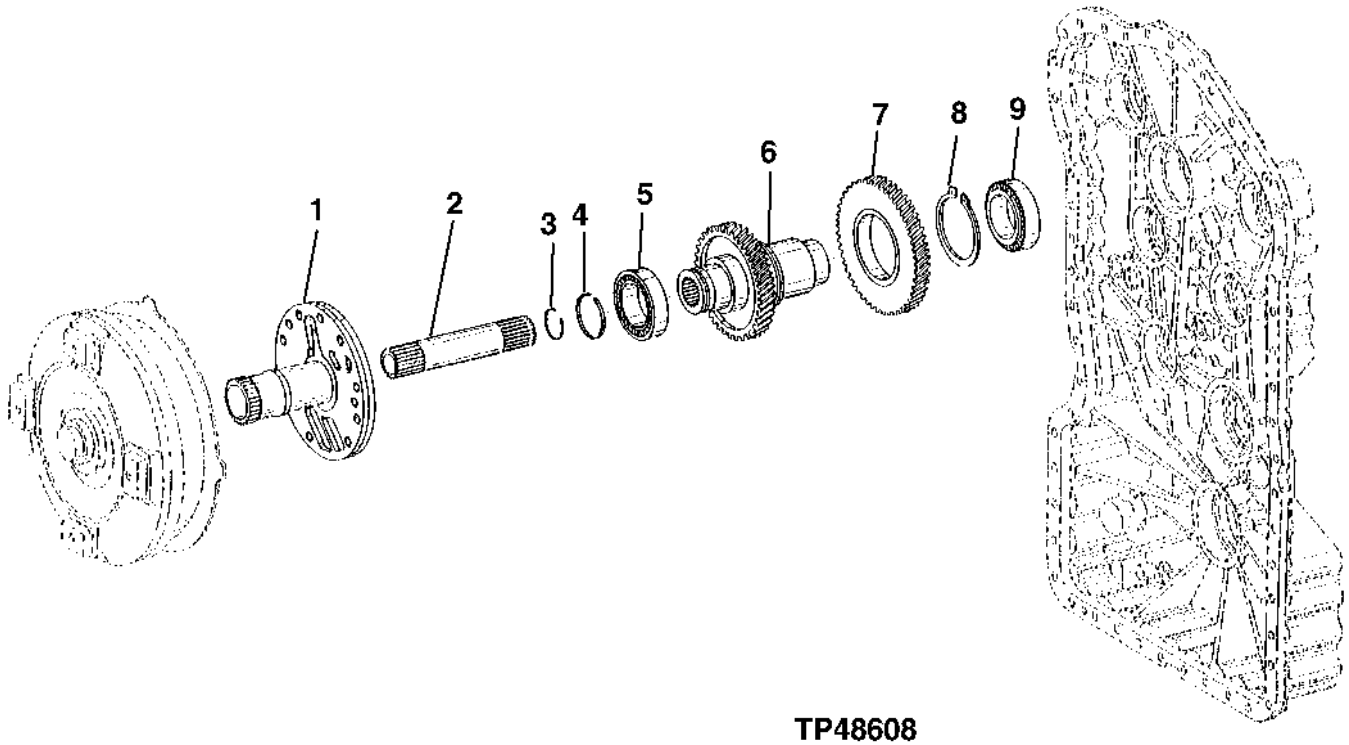

TP48608

INPUT SHAFT, GEAR AMD BEARINGS

KEY	PART NO.	PART NAME	QTY	SERIAL NO.	REMARKS
1	T175624	UNIVERSAL DRIVESHAFT	1		
2	T171114	UNIVERSAL DRIVESHAFT	1		
3	T171178	SNAP RING	1		
4	T181535	PISTON RING	2		(SUB FOR T171179)
5	T171126	ROLLER BEARING	1		
6	T173807	UNIVERSAL DRIVESHAFT	1		
7	T173808	GEAR	1		
8	T173809	SNAP RING	1		
9	T171126	ROLLER BEARING	1		IMPORTANT-HIGH TOLERANCE BEARING REQUIRED IN THIS LOCATION. USE ONLY JOHN DEERE PARTS SOURCED BEARINGS.

GEARBOX HOUSING AND COVERS

TP62773 -UN-03MAR00

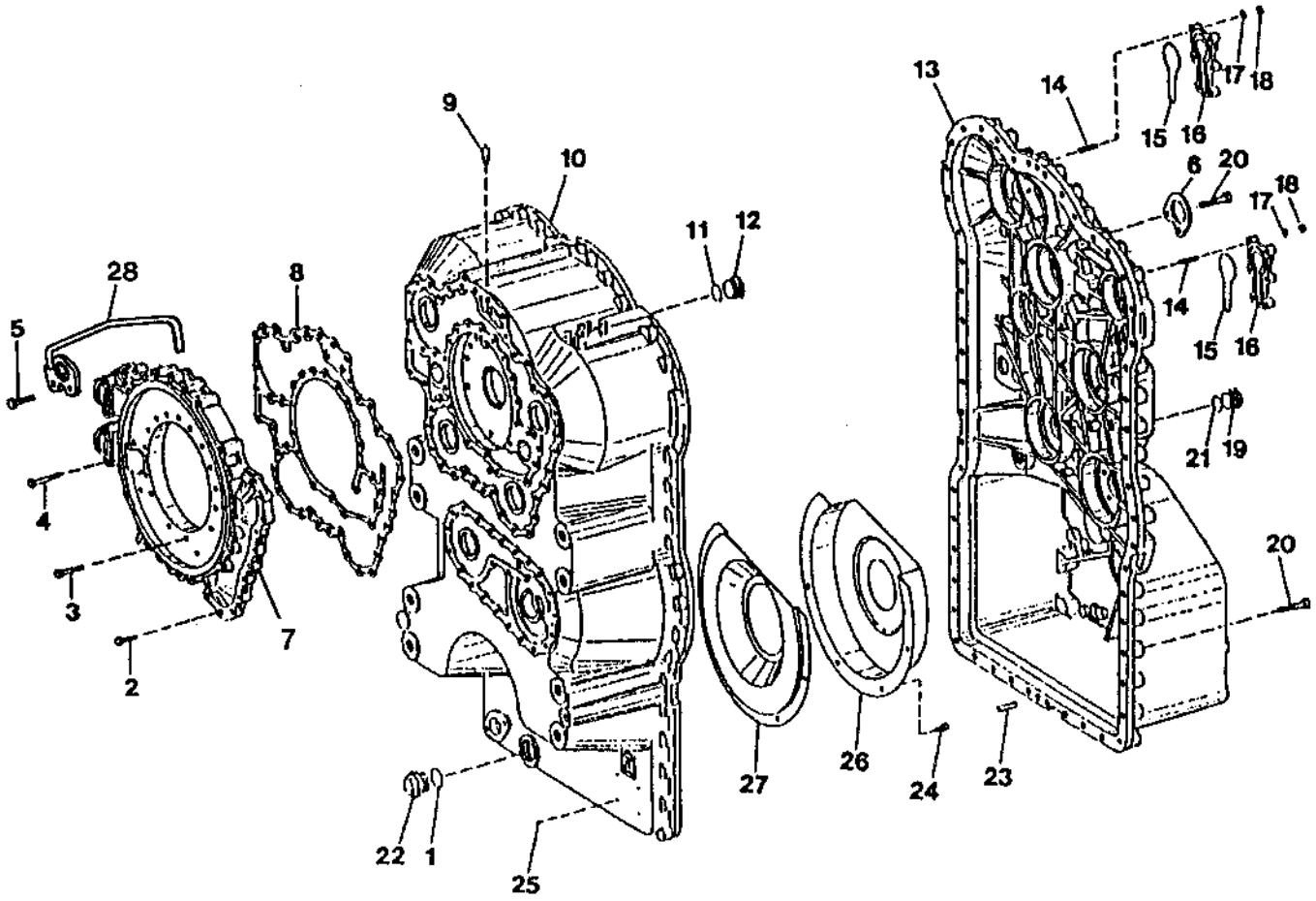

TP62773

GEARBOX HOUSING

KEY	PART NO.	PART NAME	QTY	SERIAL NO.	REMARKS
1	T174107	O-RING	1		
2	T161208	CAP SCREW	15		(SUB FOR T173071)
3	19M2972	CAP SCREW	21		M8 X 45
4	T173819	CAP SCREW	4		
5	19M8637	CAP SCREW	2		M10 X 40
6	T171112	PLATE	1		
7	T173063	COVER	1		
8	T172795	GASKET	1		
9	T116918	BREATHER	1		
10	T174367	TRANSMISSION CASE	1		HOUSING (USE IF AVAILABLE) (SUB T180479)
	T180479	TRANSMISSION CASE	1		HOUSING
11	T174107	O-RING	1		(USE WITH T173216 AND T174367 HOUSING)
12	T173216	PLUG	1		(USE WITH T174367 HOUSING)
13	T179958	HOUSING	1		(SUB T181615) (USE IF AVAILABLE)
	T181615	HOUSING	1		(ALSO ORDER T170720)
	T179959	CAP	1		(NOT ILLUSTRATED) (USE WITH T179958)
	T170720	CAP	1		(NOT ILLUSTRATED) (USE WITH T179958)
14	T171961	STUD	12		(USE IF AVAILABLE) (SUB T180884)
	T180884	STUD	12		
15	T174238	O-RING	2		
16	T171111	COVER	2		
17	24M7095	WASHER	12		(NO LONGER REQUIRED)
18	14M7298	FLANGE NUT	12		M8
19	T173217	PLUG	1		
20	19M7658	CAP SCREW	53		M10 X 50
21	T174236	O-RING	7		
22	T172094	CAP SCREW	1		
23	T179318	PIN	2		(SUB FOR T173810)
24	19M7964	CAP SCREW	5		M8 X 12
25	25M7021	GROOVE PIN	4		3 X 5 MM
26	T173812	SHROUD	1		
27	T173811	SHROUD	1		
28	AT222054	GUIDE	1		

CLUTCH ASSEMBLY
(K1)

TP55756 -UN-23DEC97

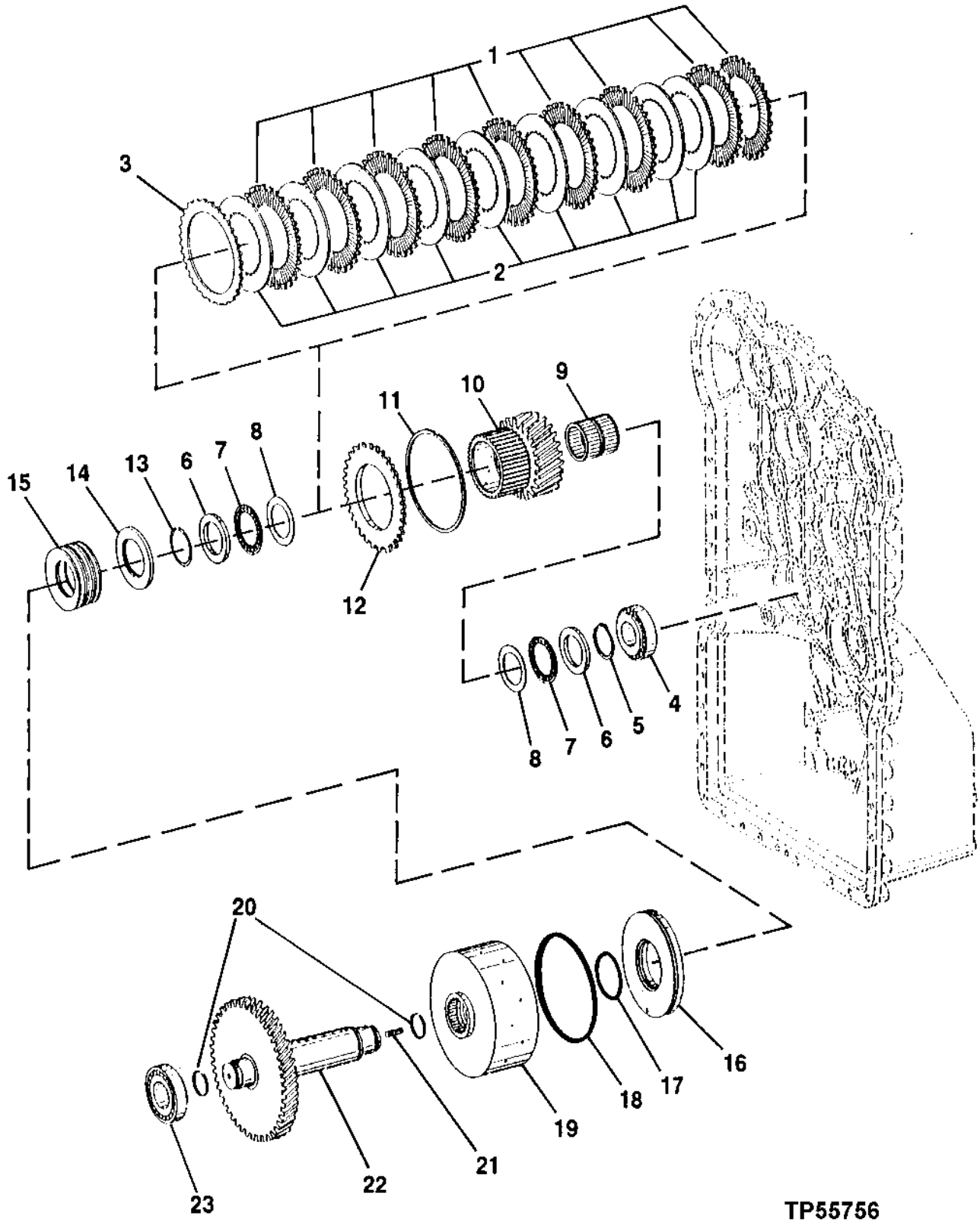

CLUTCH ASSEMBLY
(K1)

KEY	PART NO.	PART NAME	QTY	SERIAL NO.	REMARKS
1	T173841	CLUTCH DISK	9		
2	T173842	CLUTCH DISK	9		
3	T173840	CLUTCH DISK	1		
4	T173849	ROLLER BEARING	1		IMPORTANT-HIGH TOLERANCE BEARING REQUIRED IN THIS LOCATION. USE ONLY JOHN DEERE PARTS SOURCED BEARINGS.
5	T173036	SNAP RING	1		
6	T172104	DISK	2		
7	T172129	THRUST BEARING	2		
8	T172130	THRUST WASHER	2		
9	T179935	NEEDLE BEARING	1		(SUB FOR T179501)
10	T173845	IDLER	AR		
11	T173863	SNAP RING	AR		3.60 MM (.142")
	T173864	SNAP RING	AR		4.20 MM (.165")
	T181881	SNAP RING	AR		2.4 MM (.095")
	T181882	SNAP RING	AR		2.7 MM (.106")
	T181883	SNAP RING	AR		3.0 MM (.118")
	T181884	SNAP RING	AR		3.3 MM (.123")
12	T173844	SOLID SHIM	1		
13	T173067	SNAP RING	1		
14	T173066	SNAP RING	2		
15	T173839	SPRING	7		
16	T174254	PISTON	1		(SUB FOR T174418)
17	T173958	O-RING	1		
18	T174413	O-RING	1		
19	T173837	HOUSING	1		
20	T172115	PISTON RING	2		
21	T171153	STUD	1		
22	T173843	SHAFT	1		
23	T173847	ROLLER BEARING	1		IMPORTANT-HIGH TOLERANCE BEARING REQUIRED IN THIS LOCATION. DO NOT SUBSTITUTE STANDARD BEARING.

CLUTCH ASSEMBLY
(K2)

TP55758 -UN-23DEC97

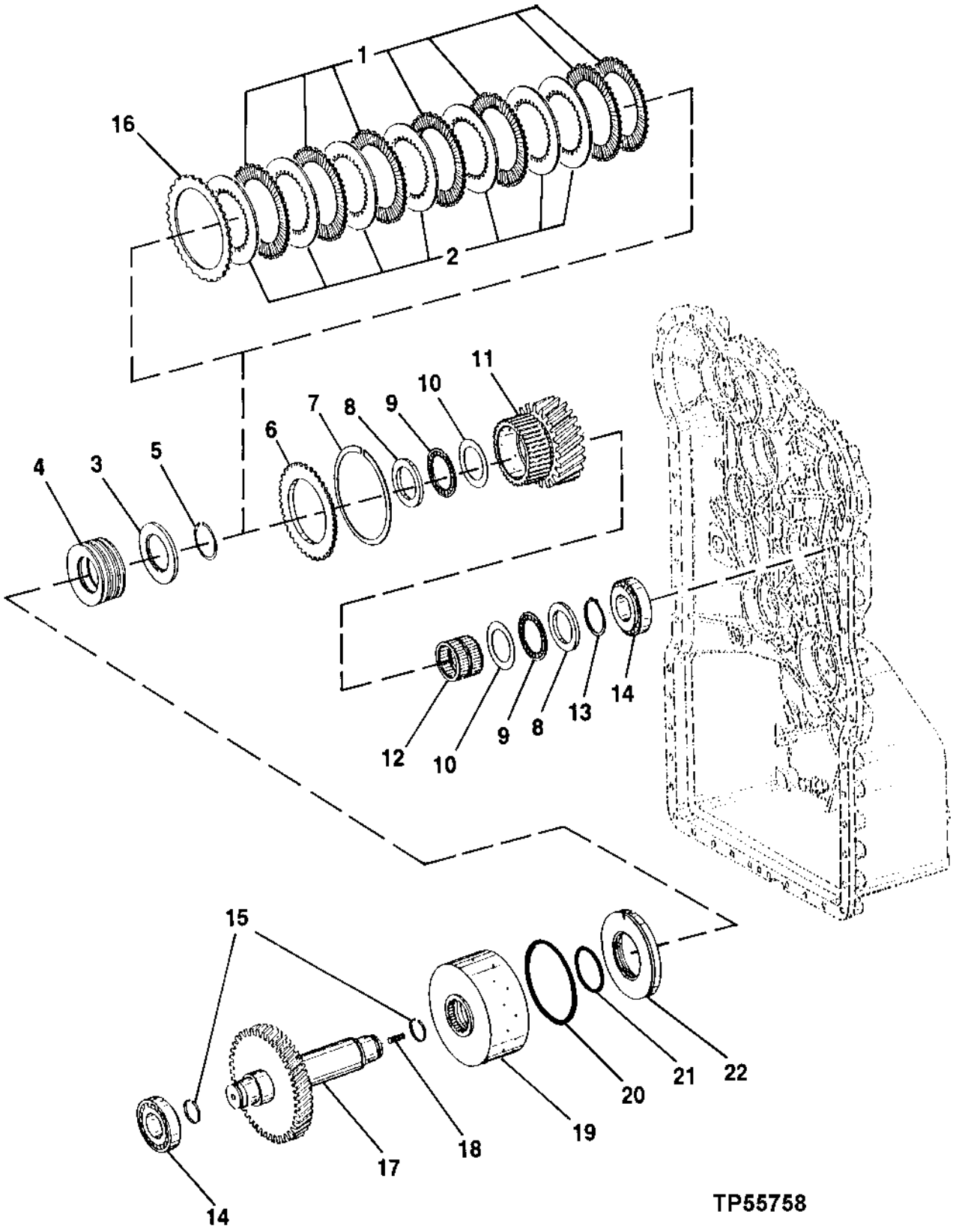

CLUTCH ASSEMBLY
(K2)

KEY	PART NO.	PART NAME	QTY	SERIAL NO.	REMARKS
1	T173637	DISK, WITH OUTER SPLINE	7		
2	T173638	DISK, WITH INNER SPLINE	7		
3	T173066	SNAP RING	2		
4	T173839	SPRING	7		
5	T173067	SNAP RING	1		
6	T173639	SOLID SHIM	1		
7	T172247	SNAP RING	AR		3.60 MM (.141")
	T172251	SNAP RING	AR		4.20 MM (.165")
	T181873	SNAP RING	AR		2.4 MM (.095")
	T181874	SNAP RING	AR		2.7 MM (.106")
	T181875	SNAP RING	AR		3.0 MM (.118")
	T181876	SNAP RING	AR		3.3 MM (.123")
8	T172104	DISK	2		
9	T172129	THRUST BEARING	2		
10	T172130	THRUST WASHER	2		
11	T174392	IDLER	1		
12	T179594	NEEDLE BEARING	1		(SUB FOR T172131)
13	T173036	SNAP RING	1		
14	T173849	ROLLER BEARING	2		IMPORTANT-HIGH TOLERANCE BEARING REQUIRED IN THIS LOCATION. USE ONLY JOHN DEERE PARTS SOURCED BEARINGS.
15	T172115	PISTON RING	2		
16	T173636	DISK, WITH OUTER SPLINE	1		
17	T173851	SHAFT	1		
18	T171153	STUD	1		
19	T173852	HOUSING	2		
20	T173960	O-RING	1		
21	T173958	O-RING	1		
22	T173853	PISTON	1		(SUB FOR T174417)

CLUTCH ASSEMBLY
(K3)

TP55759 -UN-11DEC97

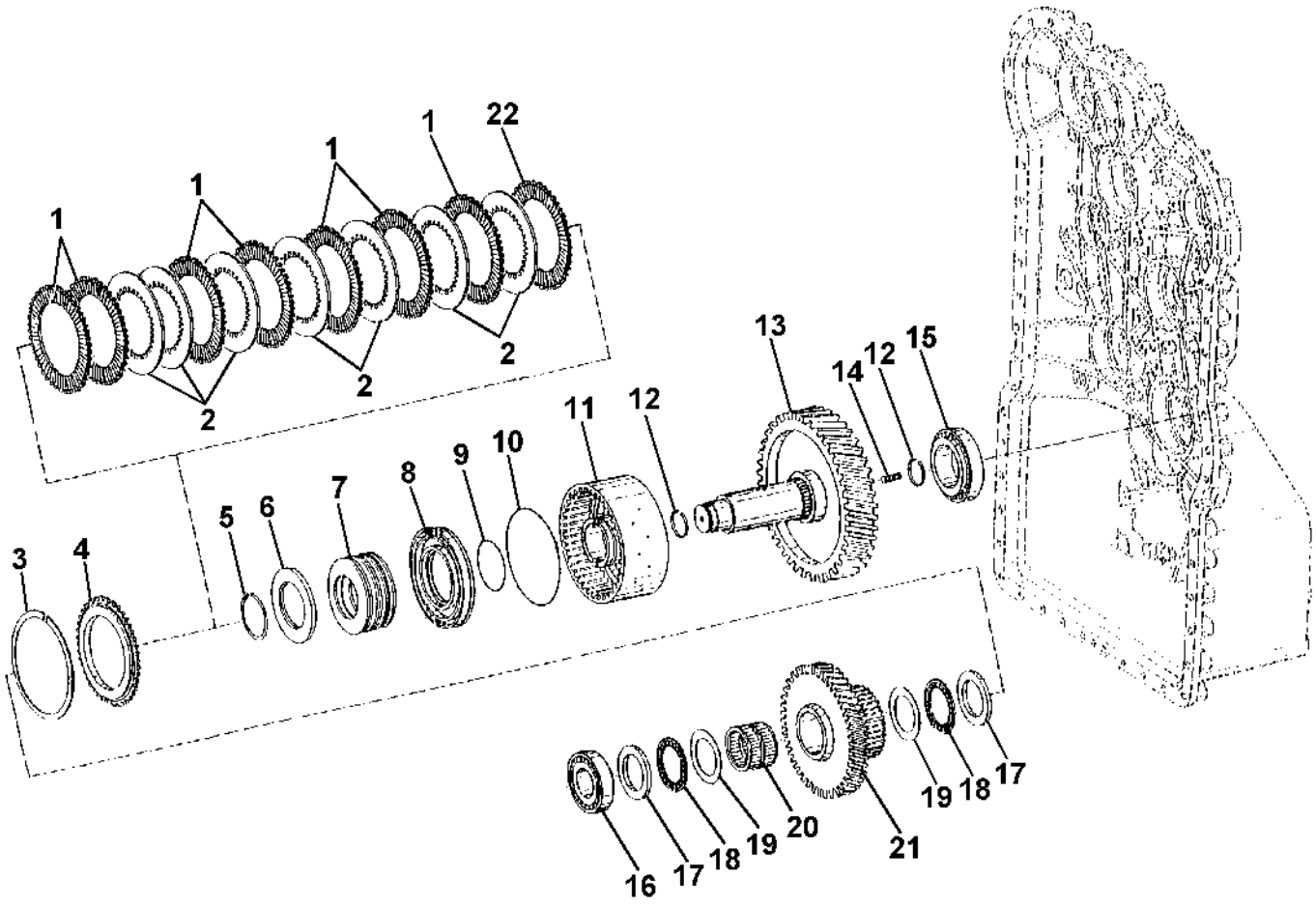

TP55759

CLUTCH ASSEMBLY
(K3)

KEY	PART NO.	PART NAME	QTY	SERIAL NO.	REMARKS
1	T173637	DISK, WITH OUTER SPLINE	7		
2	T173638	DISK, WITH INNER SPLINE	7		
3	T172247	SNAP RING	AR		3.60 MM (.141")
	T172251	SNAP RING	AR		4.20 MM (.165")
	T181873	SNAP RING	AR		2.4 MM(.095")
	T181874	SNAP RING	AR		2.7 MM (.106")
	T181875	SNAP RING	AR		3.0 MM (.118")
	T181876	SNAP RING	AR		3.3 MM (.123")
4	T173639	SOLID SHIM	1		
5	T173067	SNAP RING	1		
6	T173066	SNAP RING	2		
7	T173839	SPRING	7		
8	T173853	PISTON	1		(SUB FOR T174417)
9	T173958	O-RING	1		
10	T173960	O-RING	1		
11	T173852	HOUSING	1		
12	T172115	PISTON RING	2		
13	T173858	SHAFT	1		
14	T171153	STUD	1		
15	T173847	ROLLER BEARING	1		IMPORTANT-HIGH TOLERANCE BEARING REQUIRED IN IS LOCATION. USE ONLY JOHN DEERE PARTS SOURCED BEARINGS.
16	T173849	ROLLER BEARING	2		
17	T172104	DISK	2		
18	T172129	THRUST BEARING	2		
19	T172130	THRUST WASHER	2		
20	T179594	NEEDLE BEARING	1		(SUB FOR T172131)
21	T173806	IDLER	1		
22	T173636	DISK, WITH OUTER SPLINE	1		

CLUTCH ASSEMBLY
(K4)
(TRANSMISSION SERIAL NO. -000229)

TP55760 -UN-23DEC97

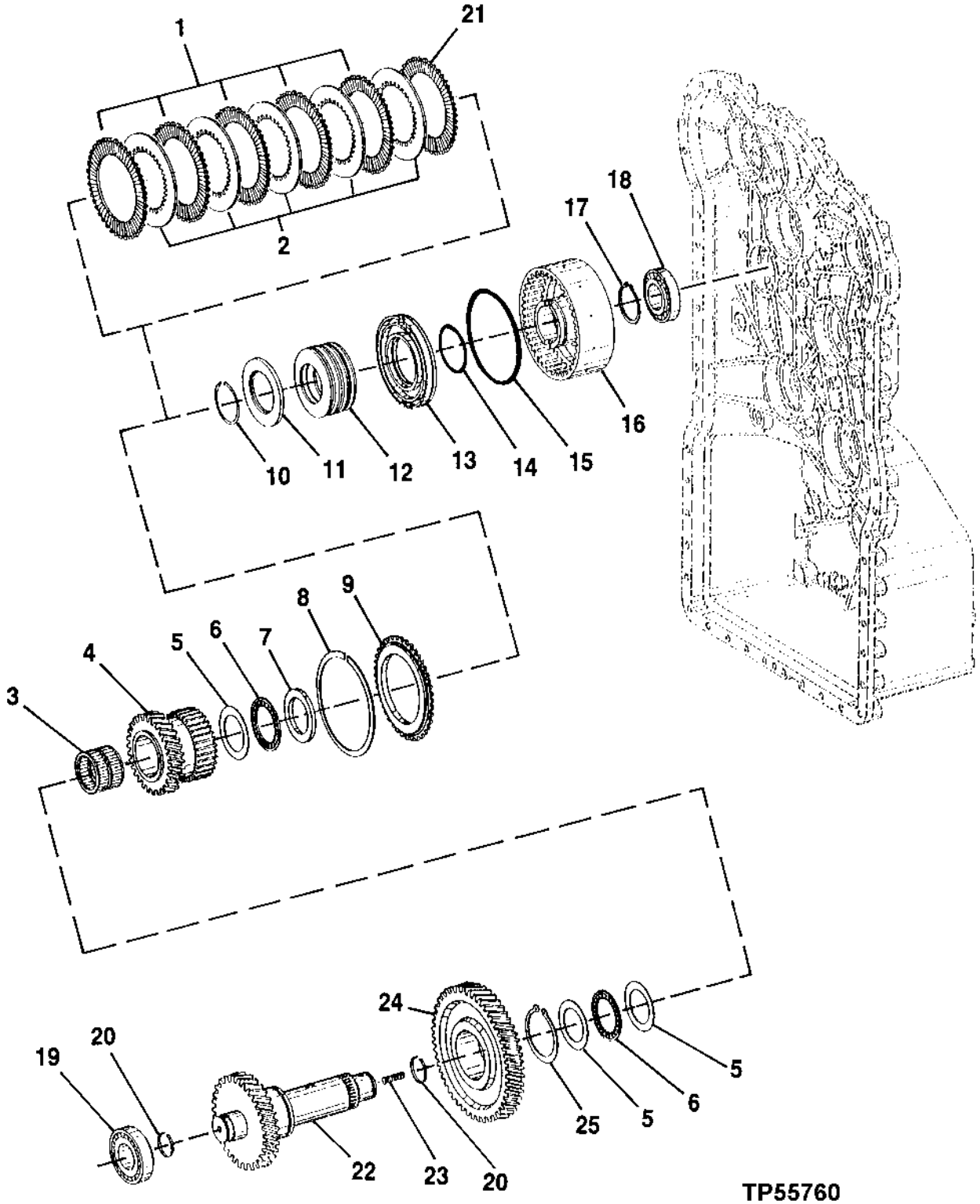

CLUTCH ASSEMBLY
(K4)
(TRANSMISSION SERIAL NO. -000229)

KEY	PART NO.	PART NAME	QTY	SERIAL NO.	REMARKS
1	T173637	DISK, WITH OUTER SPLINE	5		
2	T173638	DISK, WITH INNER SPLINE	5		
3	T179594	NEEDLE BEARING	1		(SUB FOR T172131)
4	T173855	IDLER	1		
5	T172130	THRUST WASHER	3		
6	T172129	THRUST BEARING	2		
7	T172104	DISK	1		
8	T172247	SNAP RING	AR		
	T172251	SNAP RING	AR		
	T181873	SNAP RING	AR		2.4 MM (.095")
	T181874	SNAP RING	AR		2.7 MM (.106")
	T181875	SNAP RING	AR		3.0 MM (.118")
	T181876	SNAP RING	AR		3.3 MM (.123")
9	T173639	SOLID SHIM	1		
10	T173067	SNAP RING	1		
11	T173066	SNAP RING	1		
12	T173839	SPRING	7		
13	T173853	PISTON	1		(SUB FOR T174417)
14	T173958	O-RING	1		
15	T173960	O-RING	1		
16	T175629	HOUSING	1		
17	T159519	SNAP RING	1		
18	T171156	ROLLER BEARING	1		IMPORTANT-HIGH TOLERANCE BEARING REQUIRED IN THIS LOCATION. USE ONLY JOHN DEERE PARTS SOURCED BEARINGS.
19	T173849	ROLLER BEARING	1		IMPORTANT-HIGH TOLERANCE BEARING REQUIRED IN THIS LOCATION. USE ONLY JOHN DEERE PARTS SOURCED BEARINGS.
20	T172115	PISTON RING	2		
21	T173636	DISK, WITH OUTER SPLINE	1		
22	T173860	SHAFT	1		
23	T171153	STUD	1		
24	T173859	GEAR	1		
25	T158719	SNAP RING	1		

CLUTCH ASSEMBLY
(K4)
(TRANSMISSION SERIAL NO. 000230-)

TP60545 -UN-06NOV98

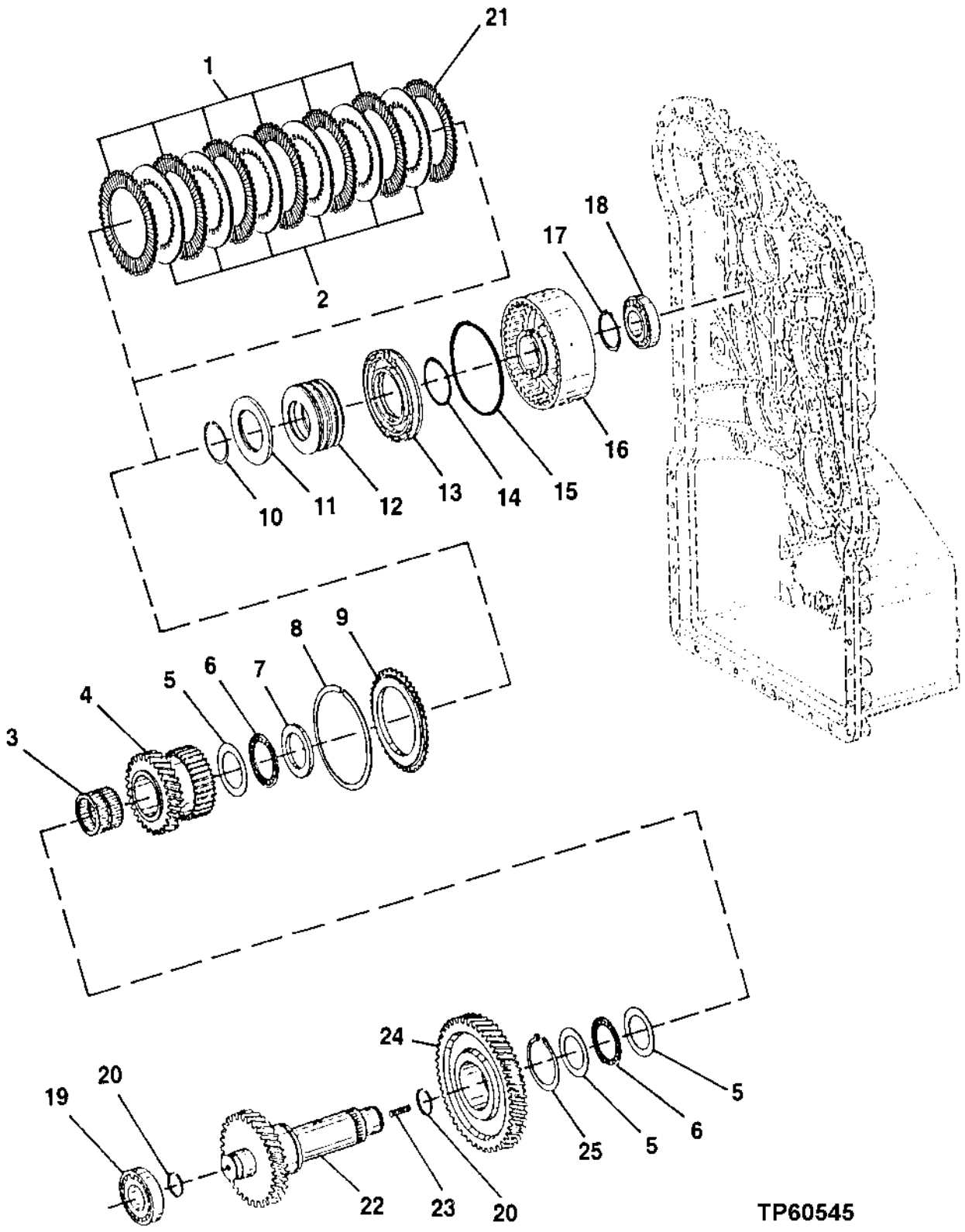

CLUTCH ASSEMBLY
(K4)
(TRANSMISSION SERIAL NO. 000230-)

KEY	PART NO.	PART NAME	QTY	SERIAL NO.	REMARKS
1	T173637	DISK, WITH OUTER SPLINE	6		
2	T173638	DISK, WITH INNER SPLINE	6		
3	T179594	NEEDLE BEARING	1		(SUB FOR T172131)
4	T173855	IDLER	1		
5	T172130	THRUST WASHER	3		
6	T172129	THRUST BEARING	2		
7	T172104	DISK	1		
8	T172247	SNAP RING	AR		
	T172251	SNAP RING	AR		
9	T173639	SOLID SHIM	1		
10	T173067	SNAP RING	1		
11	T173066	SNAP RING	1		
12	T173839	SPRING	7		
13	T173853	PISTON	1		
14	T173958	O-RING	1		
15	T173960	O-RING	1		
16	T175629	HOUSING	1		
17	T159519	SNAP RING	1		
18	T171156	ROLLER BEARING	1		IMPORTANT-HIGH TOLERANCE BEARING REQUIRED IN THIS LOCATION. USE ONLY JOHN DEERE PARTS SOURCED BEARINGS.
19	T173849	ROLLER BEARING	1		IMPORTANT-HIGH TOLERANCE BEARING REQUIRED IN THIS LOCATION. USE ONLY JOHN DEERE PARTS SOURCED BEARINGS.
20	T172115	PISTON RING	2		
21	T173636	DISK, WITH OUTER SPLINE	1		
22	T173860	SHAFT	1		
23	T171153	STUD	1		
24	T173859	GEAR	1		
25	T158719	SNAP RING	1		

CLUTCH ASSEMBLY
(FORWARD CLUTCH)

TP55761 -UN-23DEC97

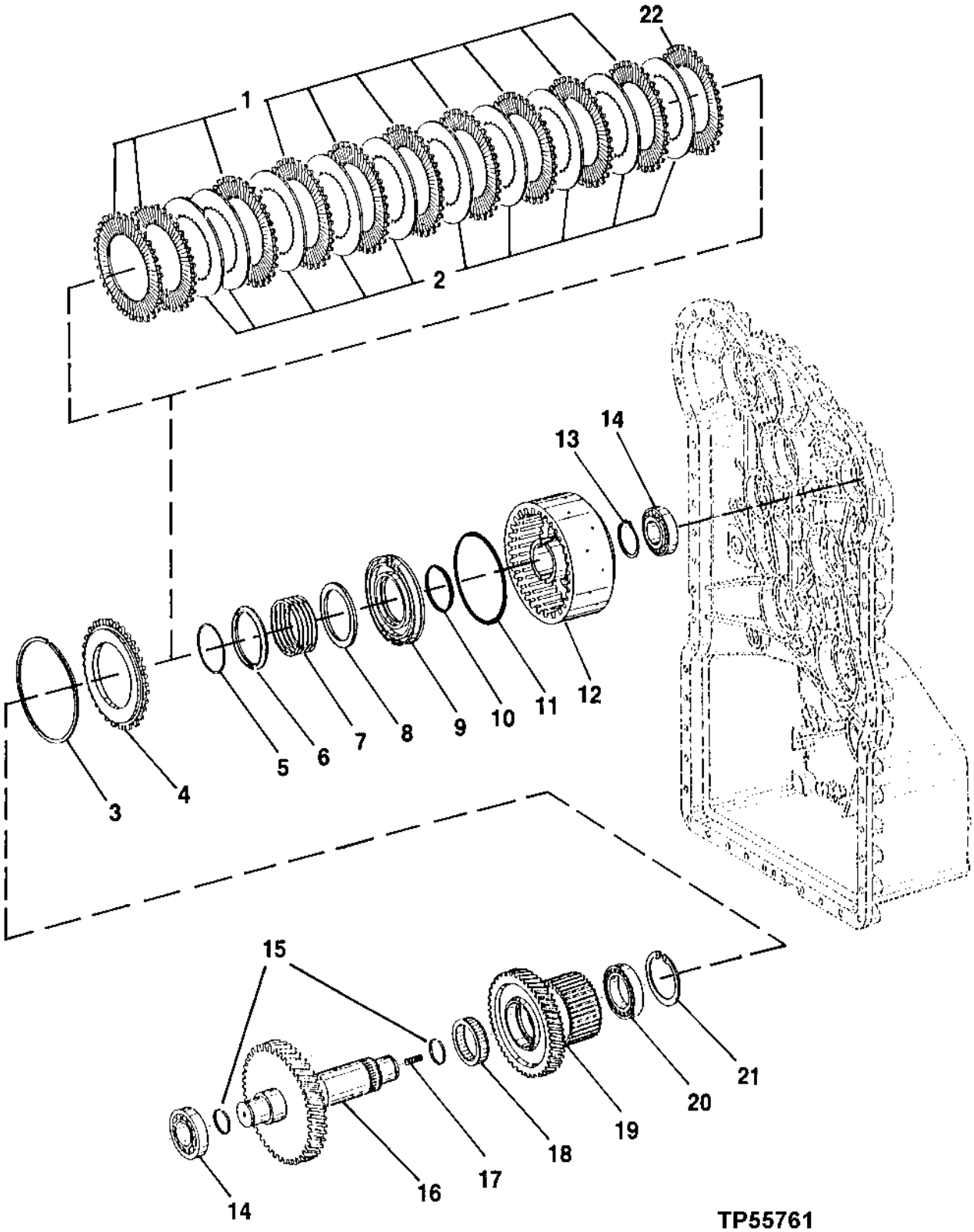

CLUTCH ASSEMBLY
(FORWARD CLUTCH)

KEY	PART NO.	PART NAME	QTY	SERIAL NO.	REMARKS
1	T173841	CLUTCH DISK	10		
2	T173842	CLUTCH DISK	10		
3	T173863	SNAP RING	AR		
	T173864	SNAP RING	AR		
	T181881	SNAP RING	AR		2.4 MM (.095")
	T181882	SNAP RING	AR		2.7 MM (.106")
	T181883	SNAP RING	AR		3.0 MM (.118")
	T181884	SNAP RING	AR		3.3 MM (.123")
4	T173844	SOLID SHIM	1		
5	T173067	SNAP RING	1		
6	T173066	SNAP RING	1		
7	T173065	COMPRESSION SPRING	1		COMPRESSION
8	T173644	RING	1		
9	T173853	PISTON	1		(SUB FOR T174417)
10	T173958	O-RING	1		
11	T173960	O-RING	1		
12	T173856	HOUSING	1		
13	T159519	SNAP RING	2		
14	T171156	ROLLER BEARING	2		IMPORTANT-HIGH TOLERANCE BEARING REQUIRED IN THIS LOCATION. USE ONLY JOHN DEERE PARTS SOURCED BEARINGS.
15	T172115	PISTON RING	2		
16	T173862	SHAFT	1		
17	T171153	STUD	1		
18	T172302	NEEDLE BEARING	1		
19	T173848	IDLER	2		
20	T171218	BALL BEARING	1		
21	40M7060	SNAP RING	1		
22	T173840	CLUTCH DISK	1		

CLUTCH ASSEMBLY
(REVERSE CLUTCH)

TP55762 -UN-23DEC97

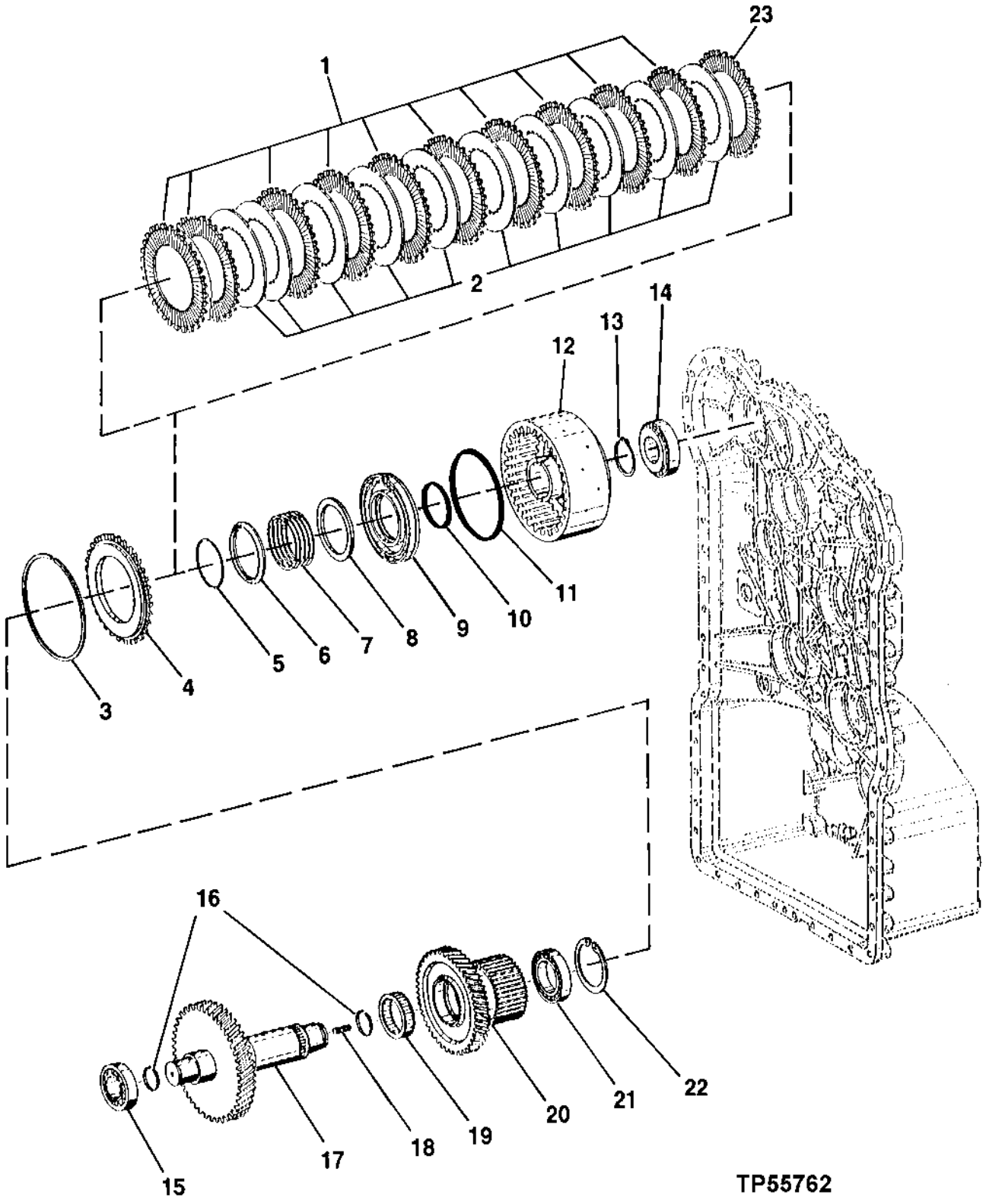

CLUTCH ASSEMBLY
(REVERSE CLUTCH)

KEY	PART NO.	PART NAME	QTY	SERIAL NO.	REMARKS
1	T173841	CLUTCH DISK	10		
2	T173842	CLUTCH DISK	10		
3	T173863	SNAP RING	AR		3.60 MM (.141")
	T173864	SNAP RING	AR		4.20 MM (.165")
	T181881	SNAP RING	AR		2.4 MM (.095")
	T181882	SNAP RING	AR		2.7 MM (.106")
	T181883	SNAP RING	AR		3.0 MM (.118")
	T181884	SNAP RING	AR		3.3 MM (.123")
4	T173844	SOLID SHIM	1		
5	T173067	SNAP RING	1		
6	T173066	SNAP RING	1		
7	T173065	COMPRESSION SPRING	1		
8	T173644	RING	1		
9	T173853	PISTON	1		(SUB FOR T174417)
10	T173958	O-RING	1		
11	T173960	O-RING	1		
12	T173856	HOUSING	1		
13	T159519	SNAP RING	1		
14	T173849	ROLLER BEARING	1		IMPORTANT-HIGH TOLERANCE BEARING REQUIRED IN THIS LOCATION. USE ONLY JOHN DEERE PARTS SOURCED BEARING.
15	T171156	ROLLER BEARING	2		IMPORTANT-HIGH TOLERANCE BEARING REQUIRED IN THIS LOCATION. USE ONLY JOHN DEERE PARTS SOURCED BEARING.
16	T172115	PISTON RING	1		
17	T173857	SHAFT	1		
18	T171153	STUD	1		
19	T172302	NEEDLE BEARING	2		
20	T173848	IDLER	1		
21	T171218	BALL BEARING	1		
22	40M7060	SNAP RING	1		
23	T173840	CLUTCH DISK	1		

OUTPUT SHAFT

TP62877 -UN-23AUG00

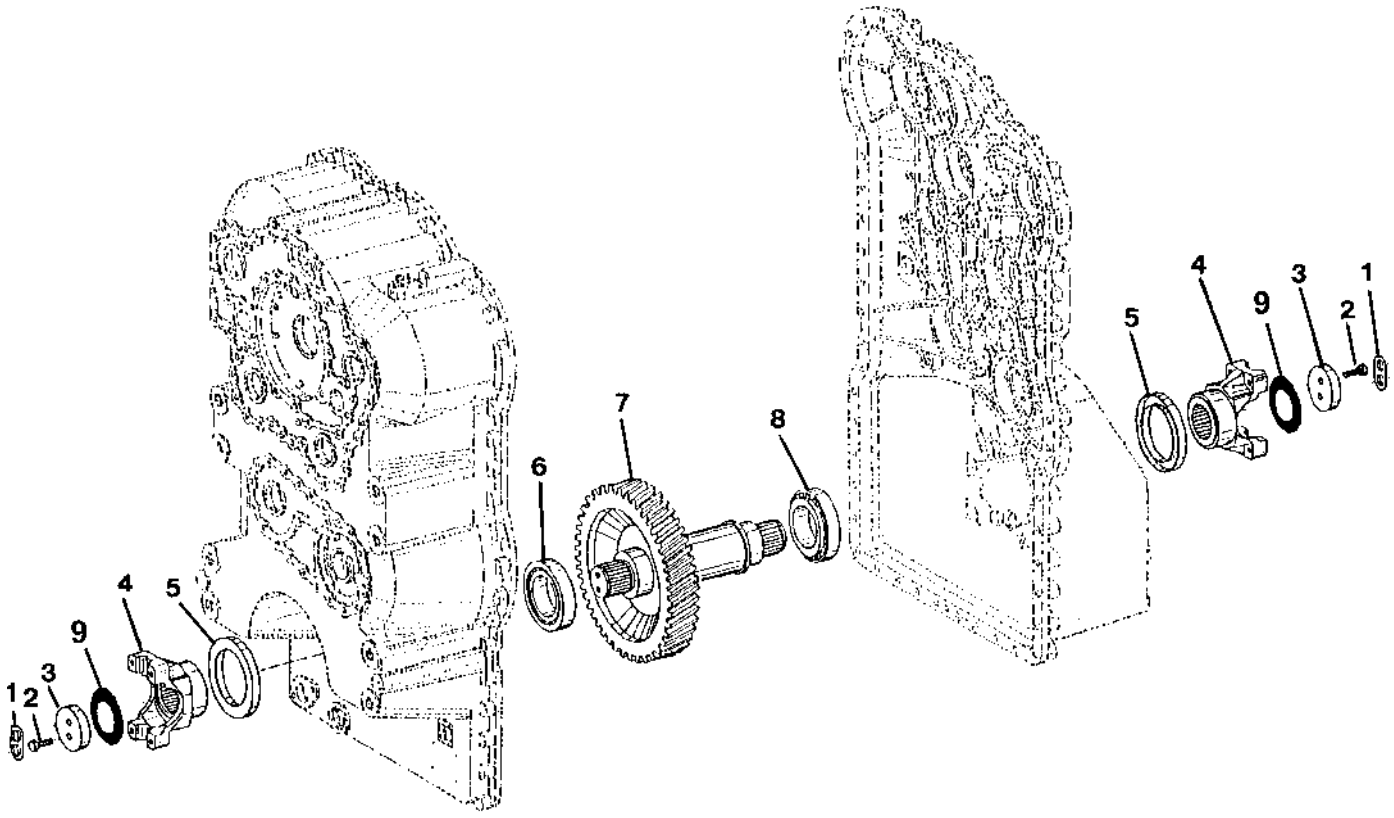

TP62877

OUTPUT SHAFT

KEY	PART NO.	PART NAME	QTY	SERIAL NO.	REMARKS
1	T116928	WASHER	2		
2	19M7168	CAP SCREW	4		M10 X 30
3	T116940	WASHER	2	-XXXXXX	
	T180957	WASHER	2	XXXXXX-	
4	T178856	YOKE	2		(USE IF AVAILABLE) (SUB T180607)
	T180607	YOKE	2		
5	T116915	SEAL	2		
6	T173847	ROLLER BEARING	1		
7	T173865	SHAFT	1		
8	T173847	ROLLER BEARING	1		
9	R78975	O-RING	2		

POWER TAKE-OFF

TP60302 -UN-08APR98

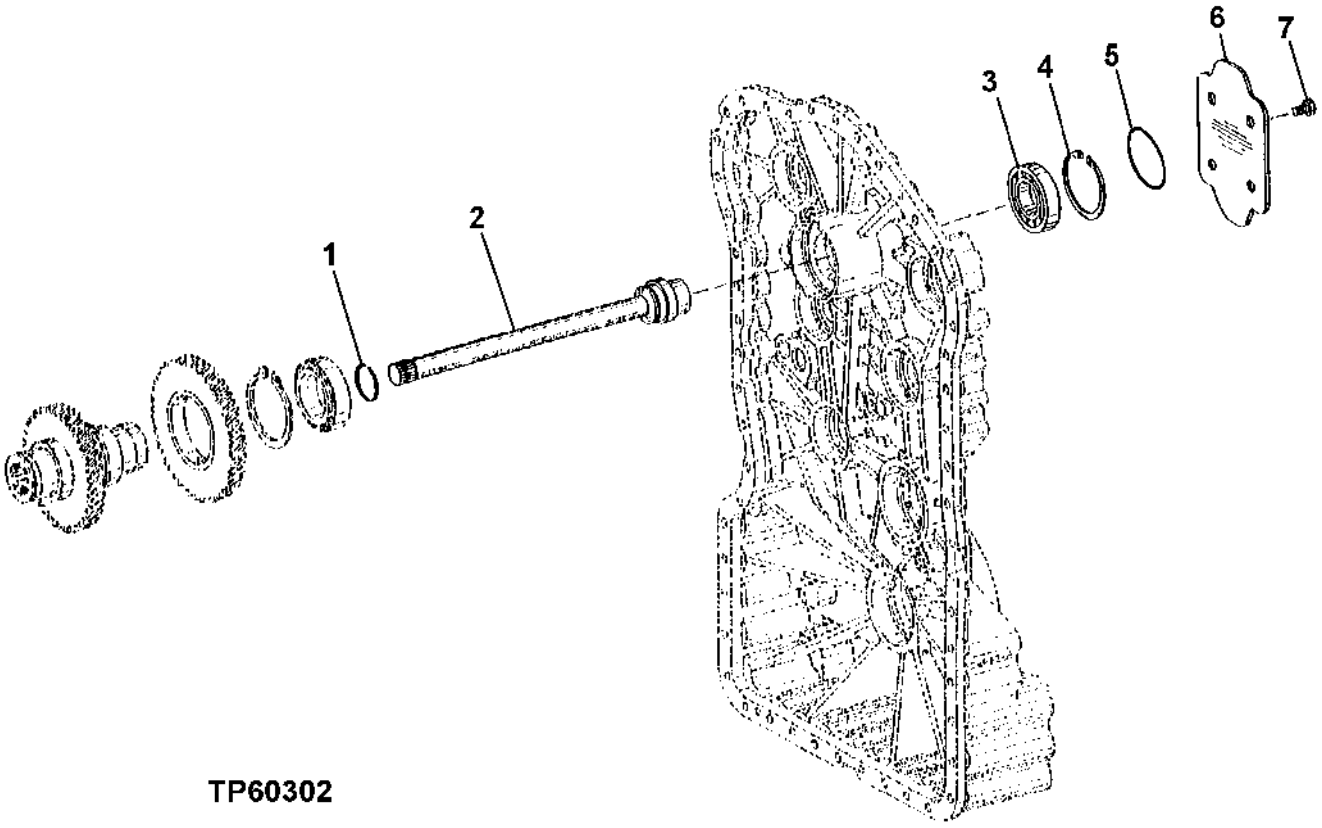

TP60302

POWER TAKE-OFF

KEY	PART NO.	PART NAME	QTY	SERIAL NO.	REMARKS
1	T171179	PISTON RING	1		
2	T175292	SHAFT	1		
3	T171140	BALL BEARING	1		
4	40M1872	SNAP RING	1		
5	T174529	O-RING	1		(SUB FOR T175294)
6	T174405	PLATE	1		
7	T174407	CAP SCREW	4		

GEARSHIFT SYSTEM
(CONTROL VALVE MANIFOLD AND GASKETS)

TP60304 -UN-08APR98

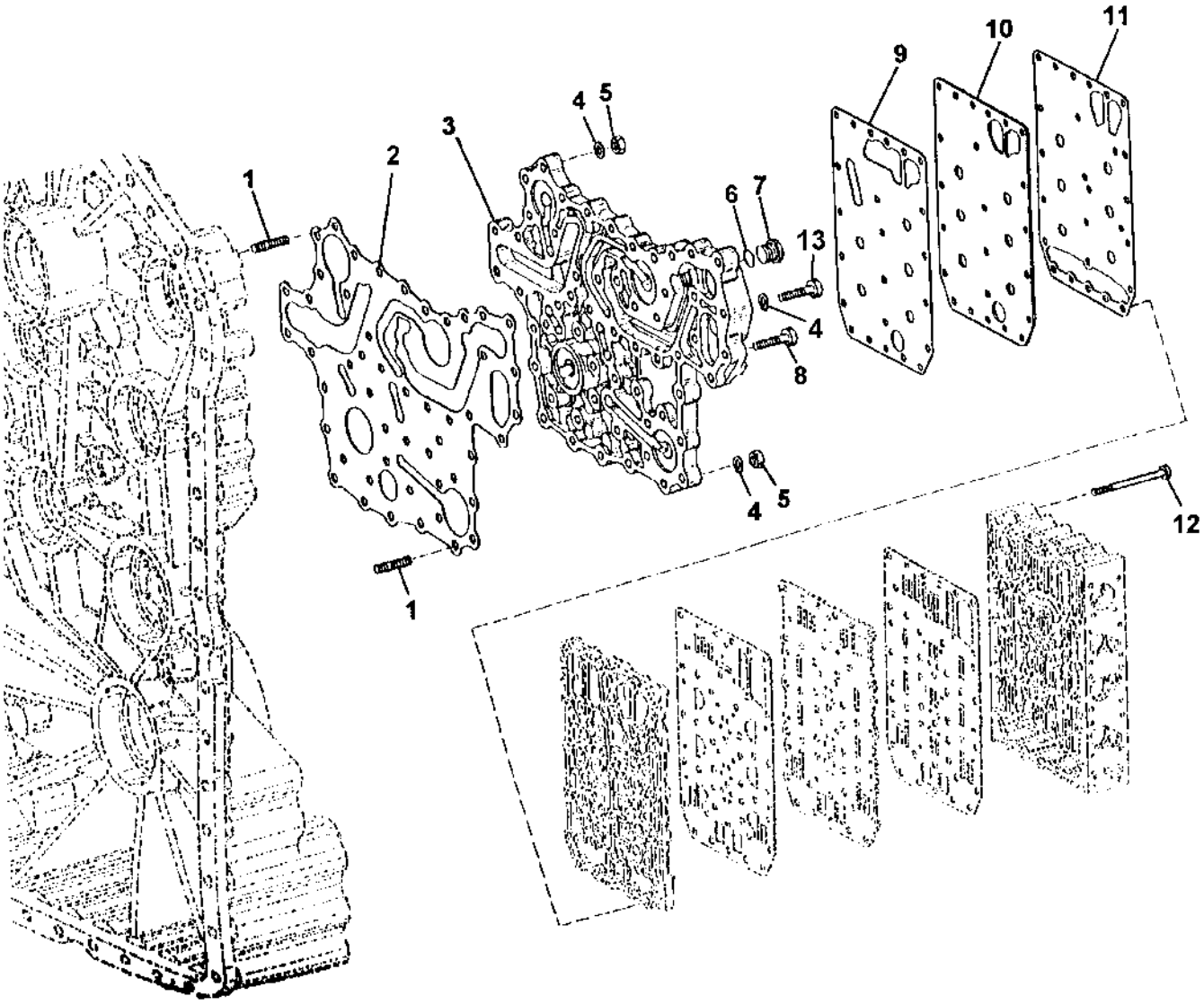

GEARSHIFT SYSTEM
(CONTROL VALVE MANIFOLD AND GASKETS)

KEY	PART NO.	PART NAME	QTY	TRANSMISSION SERIAL NO.	REMARKS
1	T171961	STUD	14		(USE IF AVAILABLE) (SUB T180884)
	T180884	STUD	14		
2	T173868	GASKET	1	-001232	
	T177977	GASKET	1	001233-002641	
	T180480	GASKET	1	002642-	
3	T173869	MANIFOLD	1	-001232	
	T179497	MANIFOLD	1	001233-002641	
	T180481	MANIFOLD	1	002642-	
4	24M7095	WASHER	16		8.400 X 15 X 1.600 MM, (NO LONGER REQUIRED)
5	14M7298	FLANGE NUT	14		M8
6	T74552	O-RING	1		
7	T122803	FITTING PLUG	1		
8	T161208	CAP SCREW	36		
9	T173870	GASKET	1		
10	T174393	GASKET	1		
11	T174394	GASKET	1		
12	T173123	CAP SCREW	23		
13	T173819	CAP SCREW	2		

GEARSHIFT SYSTEM
(CONTROL VALVE)
(TRANSMISSION SERIAL NO. -000587)

TP62805 -UN-11MAY00

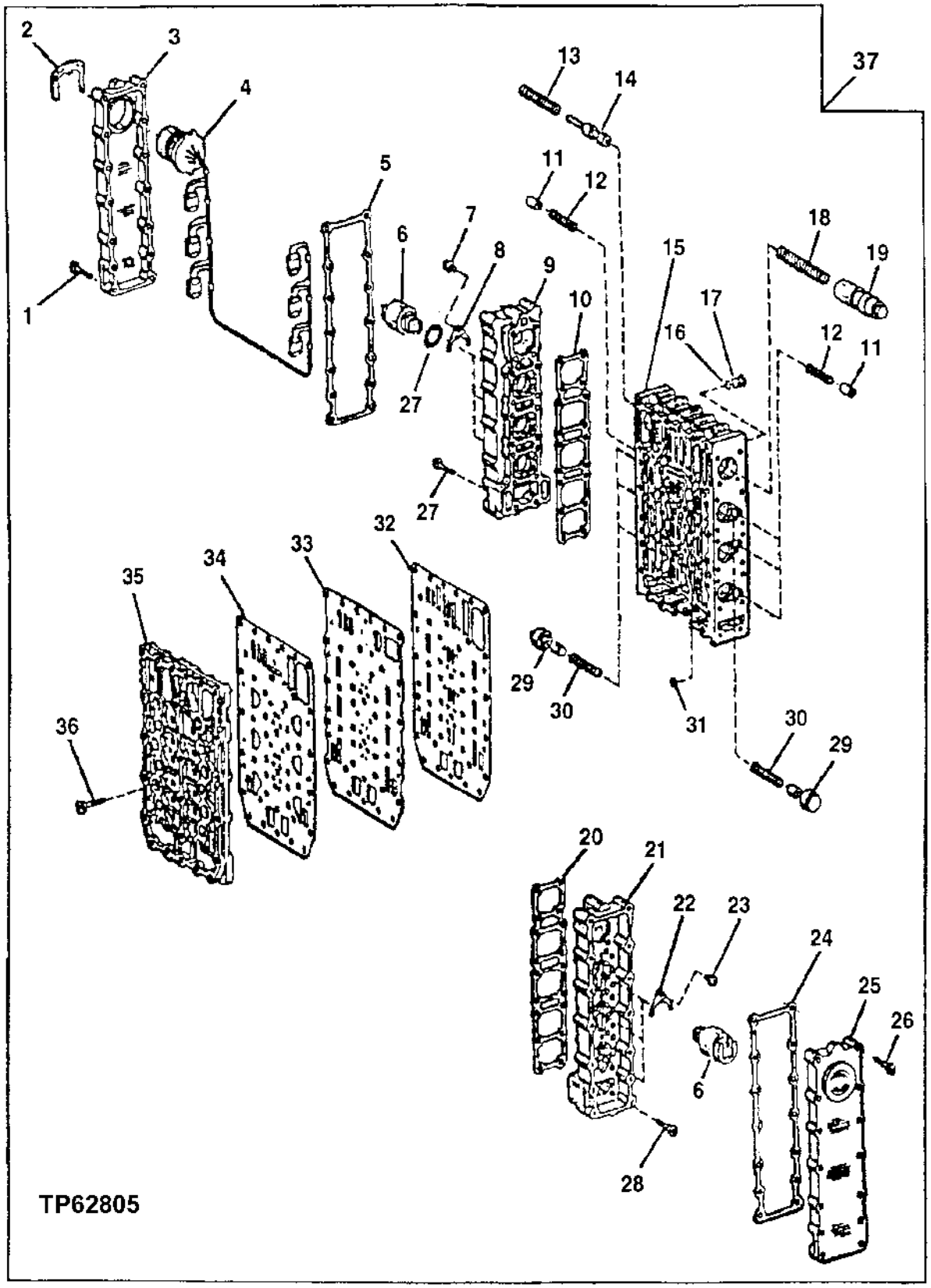

GEARSHIFT SYSTEM
(CONTROL VALVE)
(TRANSMISSION SERIAL NO. -000587)

KEY	PART NO.	PART NAME	QTY	SERIAL NO.	REMARKS
1	T173131	CAP SCREW	14		
2	T161207	CLAMP	1		
3	T173139	COVER	1		
4	T170715	WIRING HARNESS	1		(INCLUDES TRANSMISSION TEMPERATURE SENSOR)
5	T173137	GASKET	1		
6	T169607	SOLENOID VALVE	6		
7	19M7600	SCREW	3		M5 X 12, (SUB FOR T159602)
8	T144486	PLATE	3		
9	T173134	HOUSING	1		
10	T173129	GASKET	1		
11	T169766	PISTON	6		
12	T169712	COMPRESSION SPRING	6		
13	T173126	COMPRESSION SPRING	1		
14	T173125	PISTON	1		
15	T173124	VALVE	1		
16	T173646	O-RING	8		
17	R53869	DRAIN PLUG	8		
18	T173128	COMPRESSION SPRING	1		
19	T179593	PISTON	1		(SUB FOR T173127)
20	T173129	GASKET	1		
21	T173134	HOUSING	1		(SUB FOR T173130)
22	T144486	PLATE	3		
23	19M7600	SCREW	3		M5 X 12, (SUB FOR T159602)
24	T173137	GASKET	1		
25	T173138	COVER	1		
26	T173131	CAP SCREW	14		
27	T173131	CAP SCREW	18		
28	T173131	CAP SCREW	18		
29	T173511	PISTON	6		
30	T169711	COMPRESSION SPRING	6		
31	T169707	ORIFICE	6		
32	T173140	GASKET	1		
33	T173141	PLATE	1		
34	T173142	GASKET	1		
35	T173143	PLATE	1		
36	T173144	CAP SCREW	18		
37	AT210004	CONTROL VALVE	1		(USE IF AVAIL) (SUB AT220039) (ALSO ORDER AT211065 MOUNTING KIT) (INCLUDES T179557, T179556, T179553, T179554, T179555, R53869, T170498, T116416, T173123, T122083, T174090 AND T174091)

GEARSHIFT SYSTEM
(CONTROL VALVE)
(TRANSMISSION SERIAL NO. 000588-)

TP60647 -UN-23FEB99

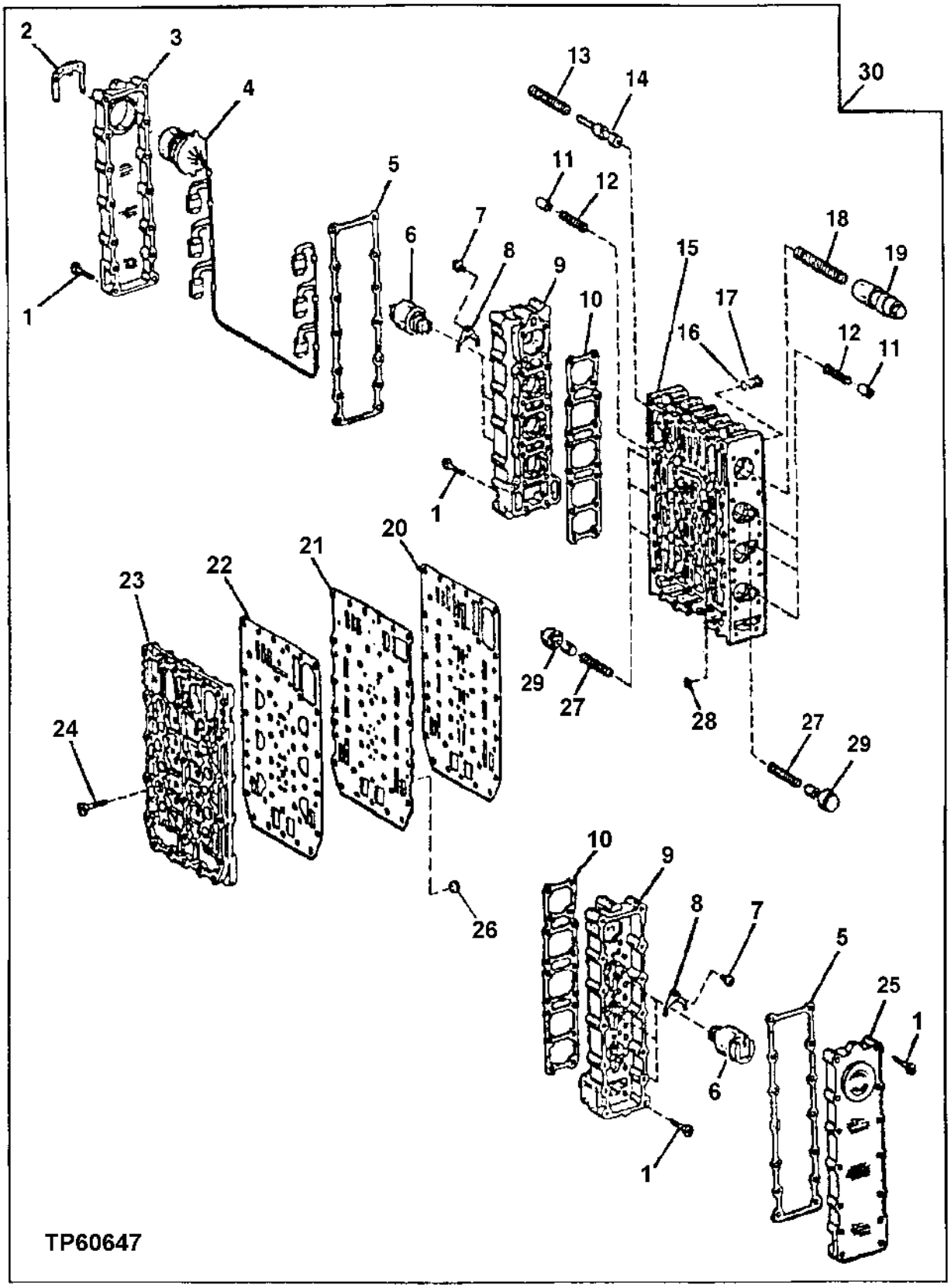

GEARSHIFT SYSTEM
(CONTROL VALVE)
(TRANSMISSION SERIAL NO. 000588-)

KEY	PART NO.	PART NAME	QTY	SERIAL NO.	REMARKS
1	T173131	CAP SCREW	64		
2	T161207	CLAMP	1		
3	T173139	COVER	1		
4	T170715	WIRING HARNESS	1		(INCLUDES TRANSMISSION TEMPERATURE SENSOR) (USE IF AVAILABLE) (SUB T179721)
	T179721	WIRING HARNESS	1		
5	T173137	GASKET	2		
6	T174929	SOLENOID VALVE	6		(USE IF AVAILABLE) (SUB T169607)
	T169607	SOLENOID VALVE	6		
7	19M7600	SCREW	6		M5 X 12, (SUB FOR T159602)
8	T144486	PLATE	6		
9	T177221	HOUSING	2		
10	T177220	GASKET	2		
11	T169766	PISTON	6		
12	T169712	COMPRESSION SPRING	6		
13	T173126	COMPRESSION SPRING	1		
14	T173125	PISTON	1		
15	T174408	VALVE	1	-000878	
	T177219	VALVE	1	000879-	
16	T116416	O-RING	8		(SUB FOR T173646)
17	T175862	PLUG	8		(SUB FOR T175299)
18	T173128	COMPRESSION SPRING	1		
19	T179593	PISTON	1		(SUB FOR T173127)
20	T173140	GASKET	1	-000878	
	T174395	GASKET	1	000879-001866	
	T179531	GASKET	1	001867-	
21	T173141	PLATE	1	-000878	
	T174243	PLATE	1	000879-001866	
	T179532	PLATE	1	001867-	(ALSO ORDER T179531, T179533 AND T179534)
22	T173142	GASKET	1	-000878	
	T174244	GASKET	1	000879-001866	
	T179533	GASKET	1	001867-	
23	T173143	PLATE	1	-000878	
	T174387	PLATE	1	000879-001866	
	T179534	PLATE	1	001867-	(ALSO ORDER: T179531, T179532 AND T179533)
24	T173144	CAP SCREW	18		
25	T173138	COVER	1		
26	T174396	SCREEN	6		
27	T169711	COMPRESSION SPRING	6		
28	T169707	ORIFICE	6		
29	T173511	PISTON	6		
30	AT220039	CONTROL VALVE	1		

CONVERTER RELIEF AND MINIMUM PRESSURE VALVES

TP55688 -UN-24JAN00

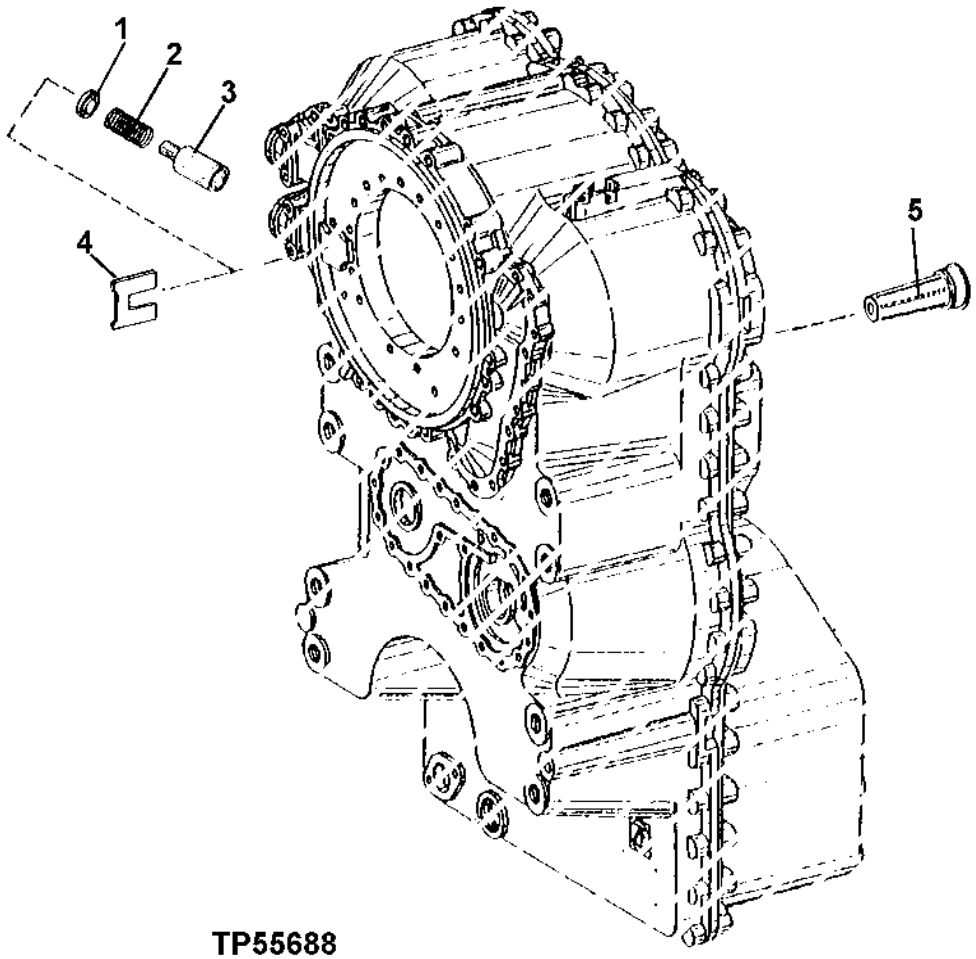

TP55688

CONVERTER RELIEF AND MINIMUM PRESSURE VALVES

KEY	PART NO.	PART NAME	QTY	SERIAL NO.	REMARKS
1	T173145	PLATE	1		
2	T176528	COMPRESSION SPRING	1		(SUB FOR T172792)
3	T176527	PISTON	1		(SUB FOR T172830)
4	T173146	WASHER	1		
5	T176526	VALVE	1		(SUB FOR T173877)

TRANSMISSION PUMP

TP55490 -UN-15APR97

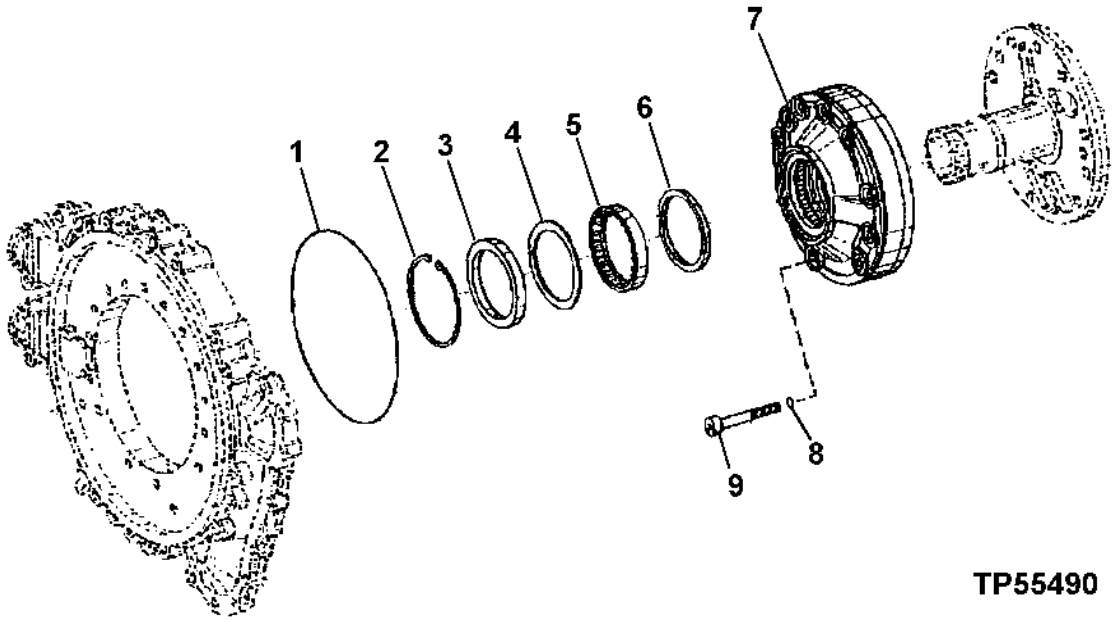

KEY	PART NO.	PART NAME	QTY	SERIAL NO.	REMARKS
1	T174240	O-RING	1		
2	T173400	SNAP RING	1		
3	T173399	SEAL	1		
4	T173397	SOLID SHIM	1		
5	T173398	BEARING	1		
6	T173396	RING	1		
7	T173878	PUMP	1		
8	T174239	O-RING	10		
9	19M7329	CAP SCREW	10		M10 X 75

TRANSMISSION COVER AND GASKET

TP55579 -UN-14JUL97

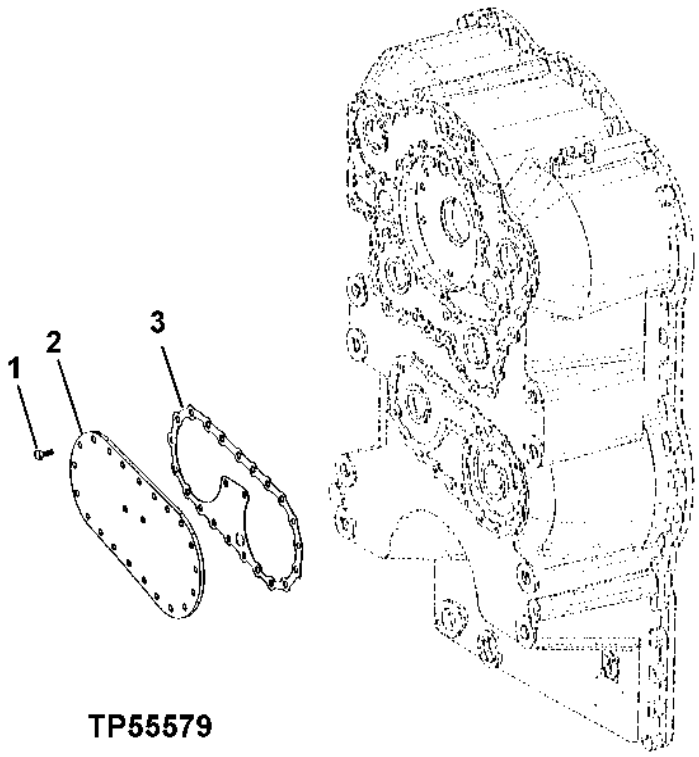

KEY	PART NO.	PART NAME	QTY	SERIAL NO.	REMARKS
1	19M7284	CAP SCREW	23		M8 X 18
2	T172814	COVER	1		
3	T172813	GASKET	1		(USE IF AVAILABLE) (SUB T181474)
	T181474	GASKET	1		

TRANSMISSION SPEED SENSOR

TP62706 -UN-23NOV99

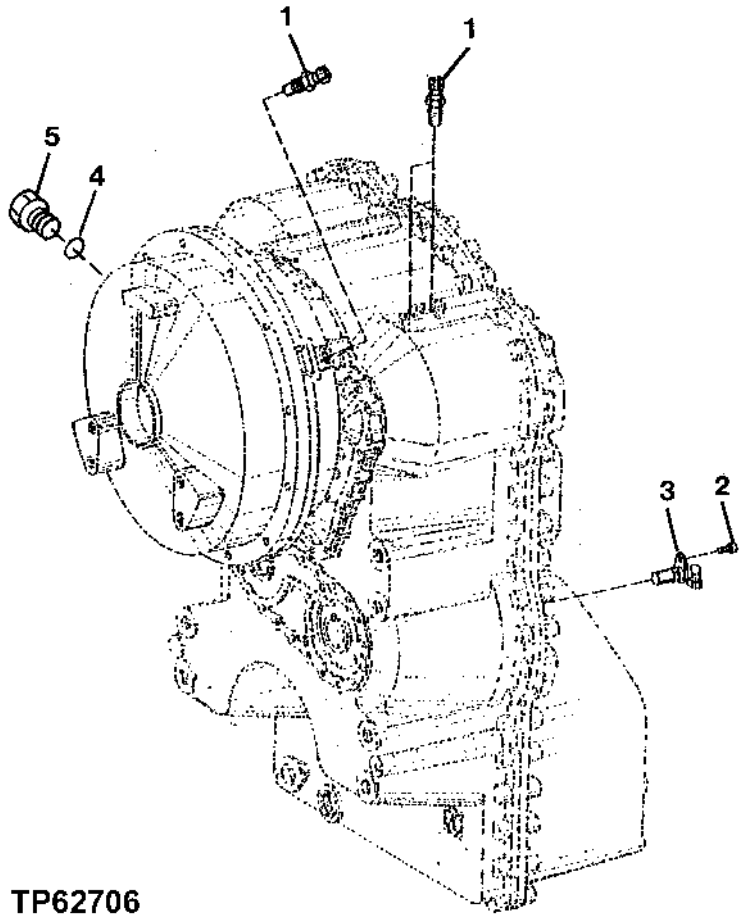

TP62706

TRANSMISSION SPEED SENSOR

KEY	PART NO.	PART NAME	QTY	SERIAL NO.	REMARKS
1	AT210773	SENSOR	3		
	R104558	O-RING	3		(NOT ILLUSTRATED)
2	19M7162	CAP SCREW	1		M8 X 16
3	T170719	SENSOR	1		(USE IF AVAILABLE) (SUB T179510)
	T179510	GROUND SPEED SENSOR	1		
4	T176796	O-RING	1		
5	AT175750	PLUG	1		

DRIVE DAMPER AND COVER

TP62688 -UN-26OCT99

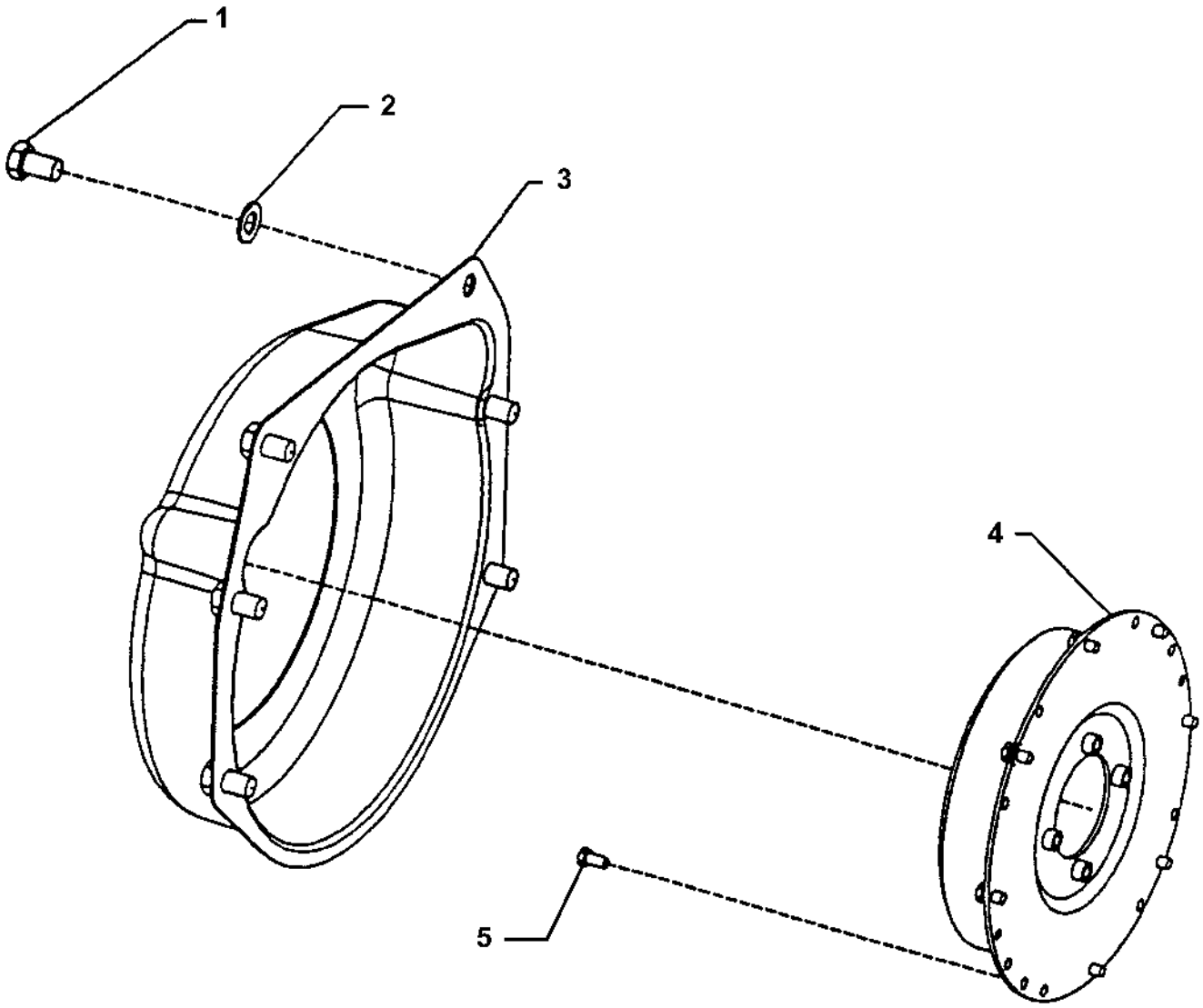

TP62688

DRIVE DAMPER AND COVER

KEY	PART NO.	PART NAME	QTY	SERIAL NO.	REMARKS
1	19H1871	CAP SCREW	6		3/4" X 1-1/4"
2	24M7051	WASHER	6		21 X 37 X 3 MM
3	T134141	COVER	1		
4	AT211477	TORSIONAL DAMPENER	1		
5	19M7835	SCREW	8		M10 X 35

TRANSMISSION OIL FILLER TUBE AND DIPSTICK

TP55581 -UN-14JUL97

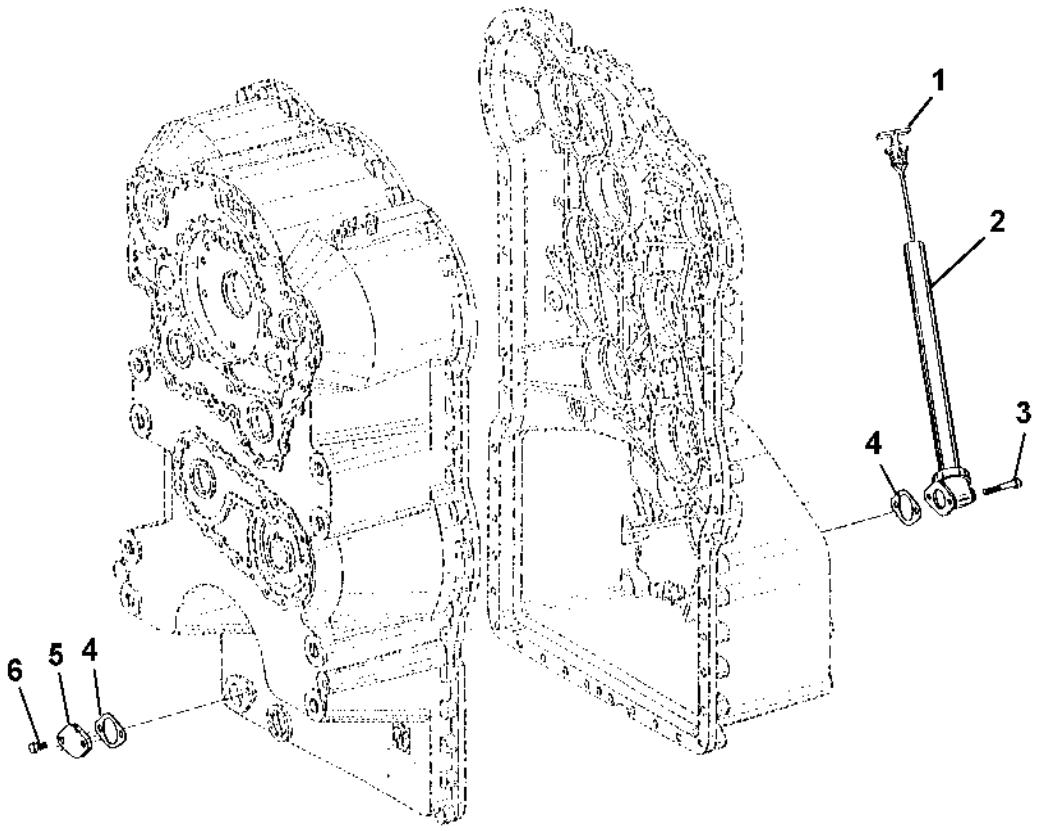

TP55581

TRANSMISSION OIL FILLER TUBE AND DIPSTICK

KEY	PART NO.	PART NAME	QTY	SERIAL NO.	REMARKS
1	AT223410	DIPSTICK	1		(SUB FOR AT210569, THIS APPLICATION)
2	AT210568	DIPSTICK TUBE	1		
3	19M8397	CAP SCREW	2		M8 X 50
4	T116604	GASKET	2		
5	T144370	PLATE	1		
6	19M7284	CAP SCREW	2		M8 X 18

TRANSMISSION INTERNAL OIL LINES

TP68412 -UN-13SEP99

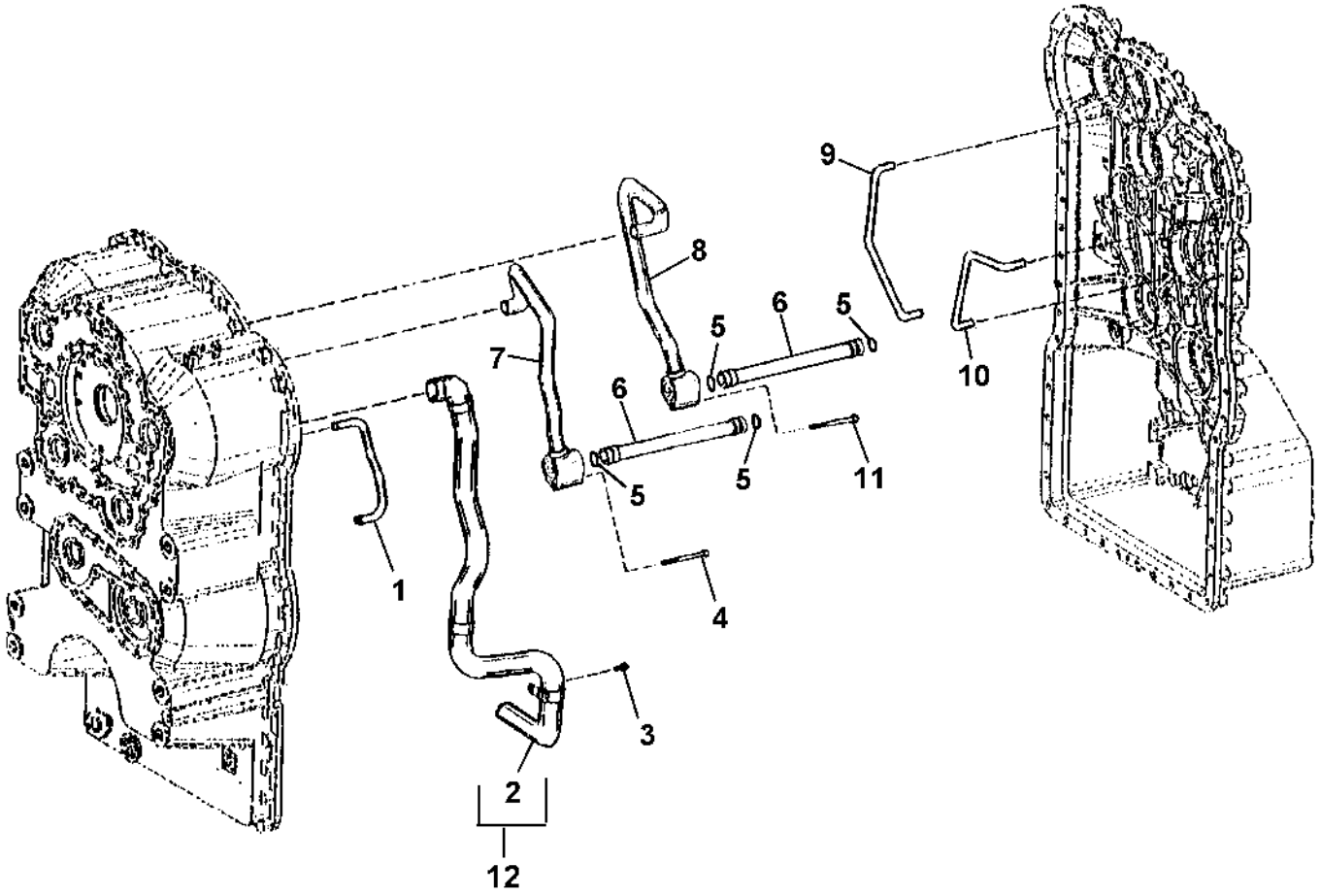

TP68412

TRANSMISSION INTERNAL OIL LINES

KEY	PART NO.	PART NAME	QTY	SERIAL NO.	REMARKS
1	T173823	PIPE	1	-002495	(USE WITH T174367)
2	T173822	STRUCTURAL TUBING	1		
3	19M7297	CAP SCREW	1		M8 X 12
4	T174390	CAP SCREW	1		(USE IF AVAILABLE) (SUB T181455)
	T181455	CAP SCREW	1		
5	T174234	O-RING	4		
6	T174389	PIPE	2		
7	T174388	PIPE	1		
8	T174423	PIPE	1		
9	T173816	PIPE	1		(USE WITH T174368)
10	T173824	PIPE	1		(USE WITH T174368)
11	T174390	CAP SCREW	1		(USE IF AVAILABLE) (SUB T181455)
	T181455	CAP SCREW	1		
12	.....	KIT	1		AT210521 NO LONGER AVAILABLE,ORDER COMPONENTS

TRANSMISSION OIL LINES
(SERIAL NO. -578517)

TP62799 -UN-28APR00

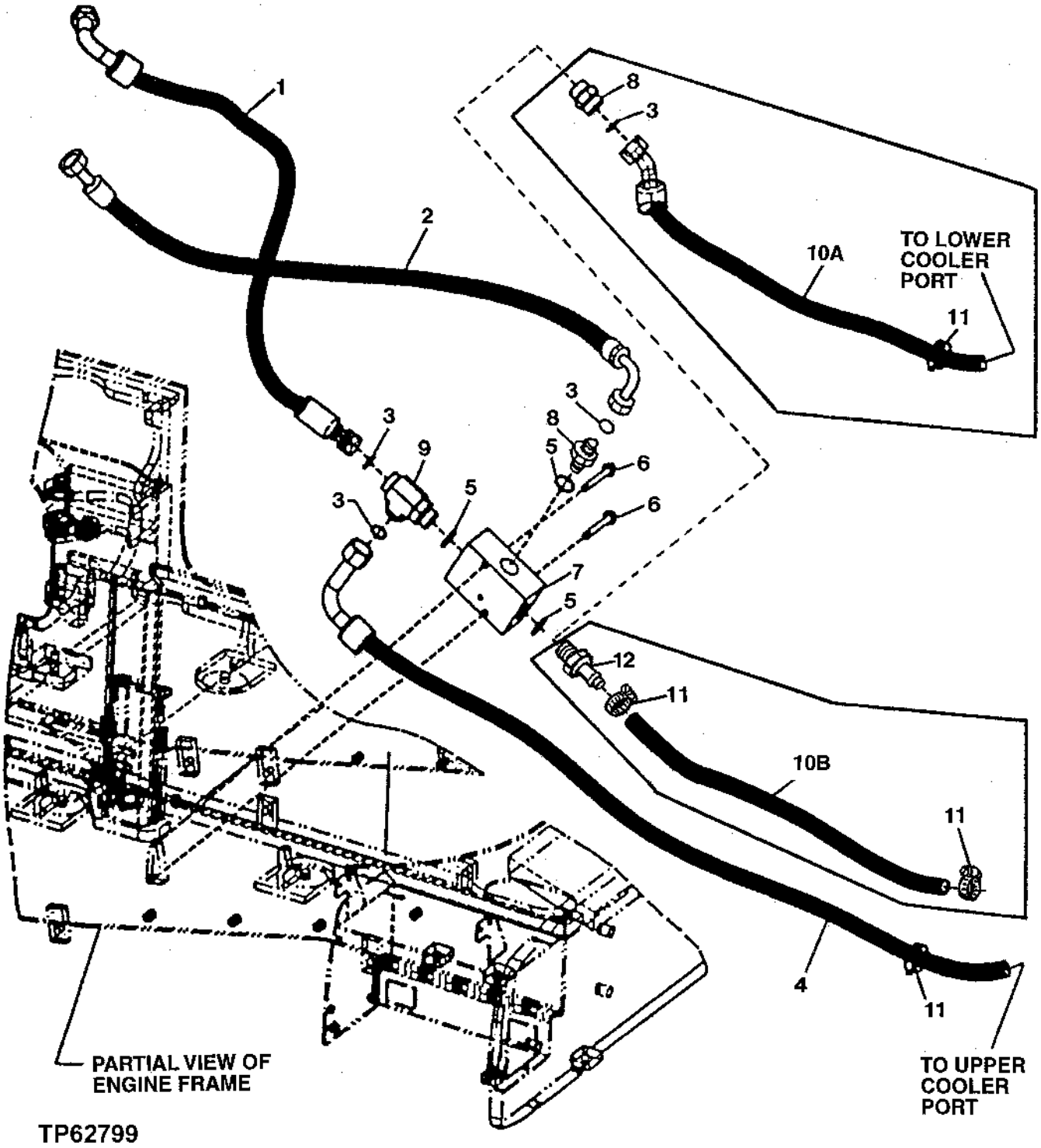

TRANSMISSION OIL LINES
(SERIAL NO. -578517)

KEY	PART NO.	PART NAME	QTY	SERIAL NO.	REMARKS
1	AT207987	HYDRAULIC HOSE - FABRICATE	1		
2	AT220093	HYDRAULIC HOSE - FABRICATE	1		
3	T76938	O-RING	4	-575953	
	T76938	O-RING	3	575954-	
4	AT220555	HYDRAULIC HOSE - FABRICATE	1		(SUB FOR AT208010)
5	R29936	O-RING	3		
6	19M7810	SCREW	2		M10 X 80
7	AT175707	VALVE	1		(SUB FOR AT129526)
8	38H1164	ADAPTER	2	-575953	
	38H1164	ADAPTER	1	575954-	
9	38H1027	TEE FITTING	1		
10A	AT208009	HYDRAULIC HOSE - FABRICATE	1	-575953	(SUB FOR AT203208)
10B	T179523	HYDRAULIC HOSE - FABRICATE	1	575954-	
11	AR21839	CLAMP	2	-575953	
	AR21839	CLAMP	3	575954-	
12	T29747	HOSE FITTING	1	575954-	

TRANSMISSION OIL LINES
(SERIAL NO.578518-)

T137586 -UN-31JAN01

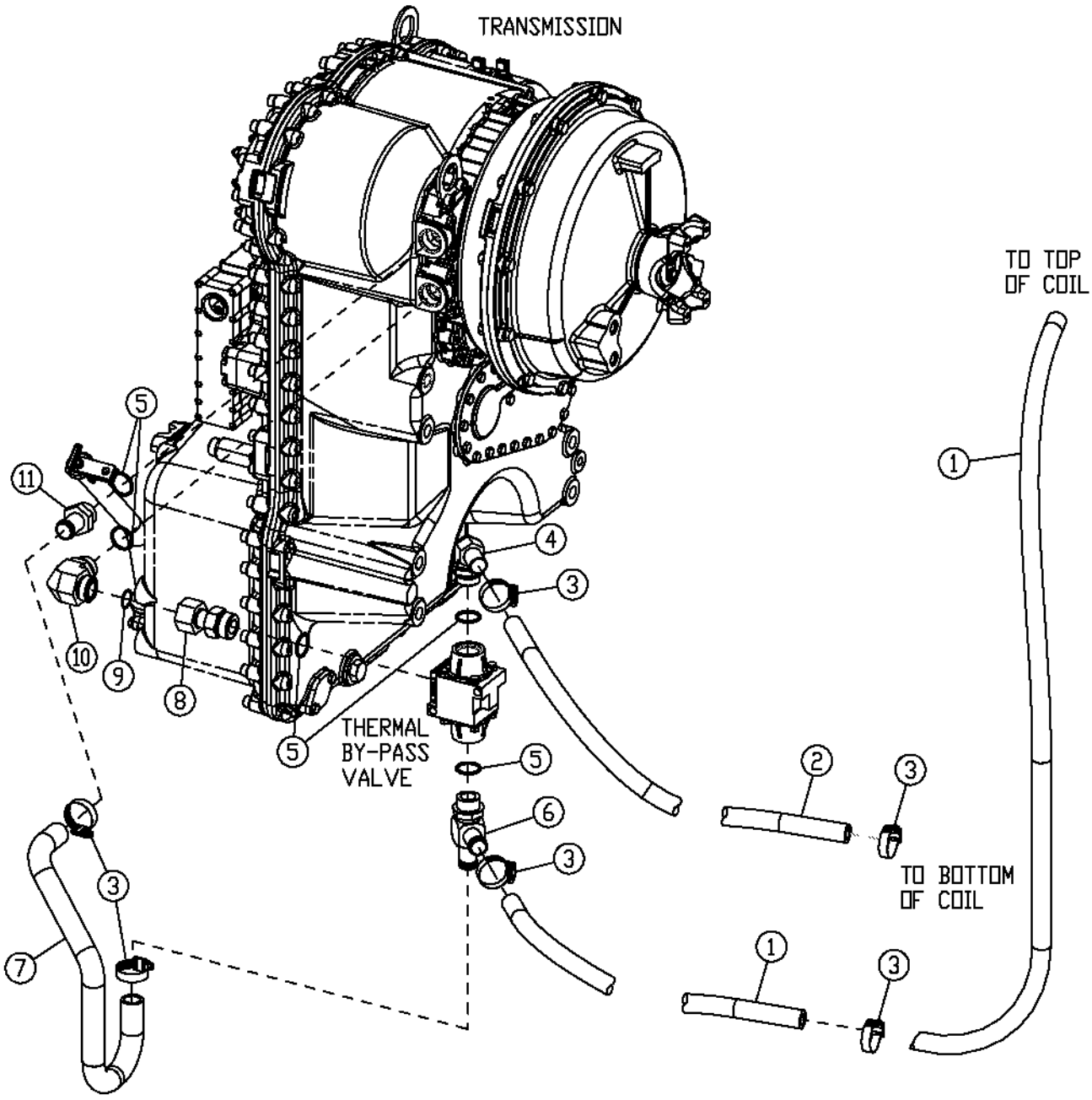

T137586

TRANSMISSION OIL LINES
(SERIAL NO.578518-)

KEY	PART NO.	PART NAME	QTY	SERIAL NO.	REMARKS
1	T180645	BULK HOSE	1		
2	T180646	HYDRAULIC HOSE - FABRICATE	1		
3	AR21839	CLAMP	6		
4	AH75162	FITTING	1		
5	R29936	O-RING	5		
6	AT223584	FITTING	1		
7	T180529	HOSE	1		
8	38H1071	ADAPTER	1		
9	T76938	O-RING	1		
10	38H1037	ELBOW FITTING	1		
11	T29747	HOSE FITTING	1		

TRANSMISSION THERMAL BY-PASS VALVE

TP48432 -UN-16AUG96

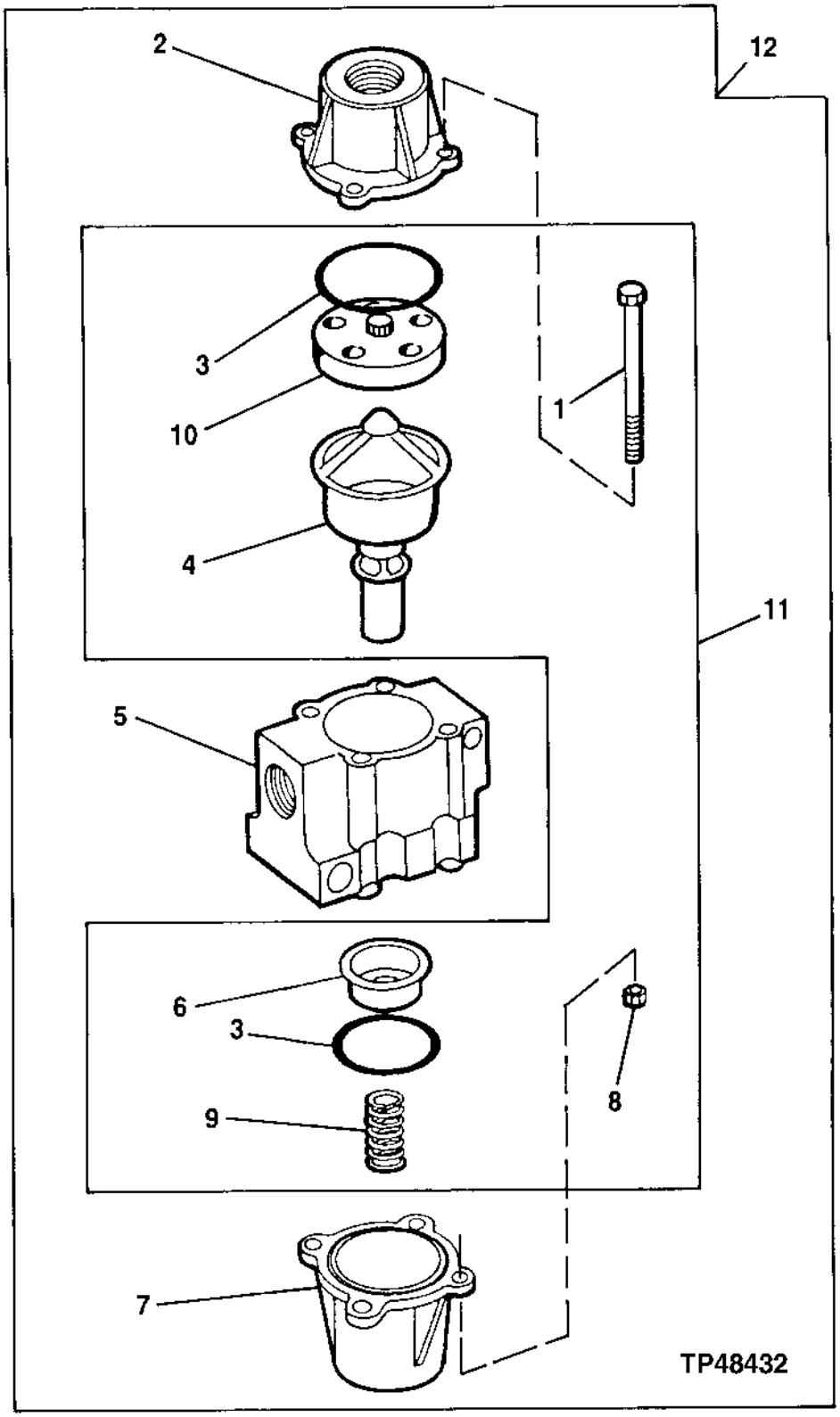

TRANSMISSION THERMAL BY-PASS VALVE

KEY	PART NO.	PART NAME	QTY	SERIAL NO.	REMARKS
1	19H2336	CAP SCREW	4		1/4" X 3-1/2"
2	.....	VALVE COVER	1		(SUB AT175707)
3	T102419	O-RING	2		
4	.....	THERMOSTAT	1		
5	.....	HOUSING	1		(SUB AT175707)
6	.....	SEAL	1		
7	.....	COVER	1		(SUB AT175707)
8	M40333	LOCK NUT	4		
9	.....	SPRING	1		
10	.....	CAP	1		(SUB AT175707)
11	AT175831	KIT	1		
12	AT225189	VALVE	1		(SUB FOR AT175707)

TRANSMISSION OIL FILTER AND HOSES
(SERIAL NO. -572706)
(TRANSMISSION SERIAL NO. -001232)

TP49701 -UN-23APR98

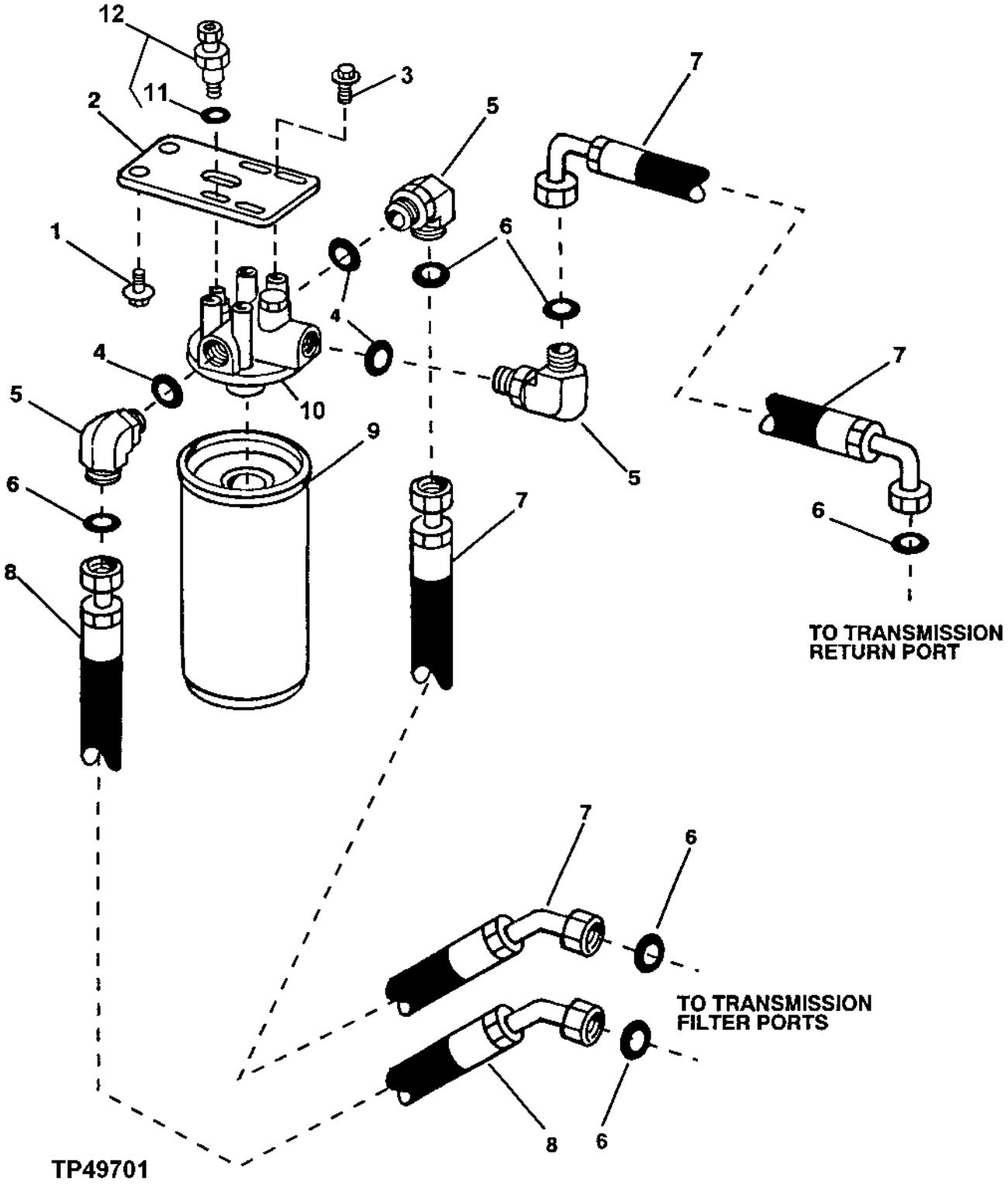

TRANSMISSION OIL FILTER AND HOSES
(SERIAL NO. -572706)
(TRANSMISSION SERIAL NO. -001232)

KEY	PART NO.	PART NAME	QTY	SERIAL NO.	REMARKS
1	19M7788	SCREW	2		M12 X 25
2	T173245	BRACKET	1		
3	19M7785	SCREW	4		M10 X 25
4	U12547	O-RING	3		
5	38H1007	ELBOW FITTING	3		
6	T77858	O-RING	3		
7	AT210280	HYDRAULIC HOSE - FABRICATE	2		
8	AT210281	HYDRAULIC HOSE - FABRICATE	1		
9	AT184206	FILTER ELEMENT	1		(SUB FOR AT147496) (TRANSMISSION FILTER ONLY)
10	AT144995	FILTER HEAD	1		
11	R26375	O-RING	1		
12	AT129419	SWITCH	1		FILTER RESTRICTION INDICATOR

TRANSMISSION OIL FILTER
(SERIAL NO. 572707-)
(TRANSMISSION SERIAL NO. 001233-)

TP62621 -UN-30AUG99

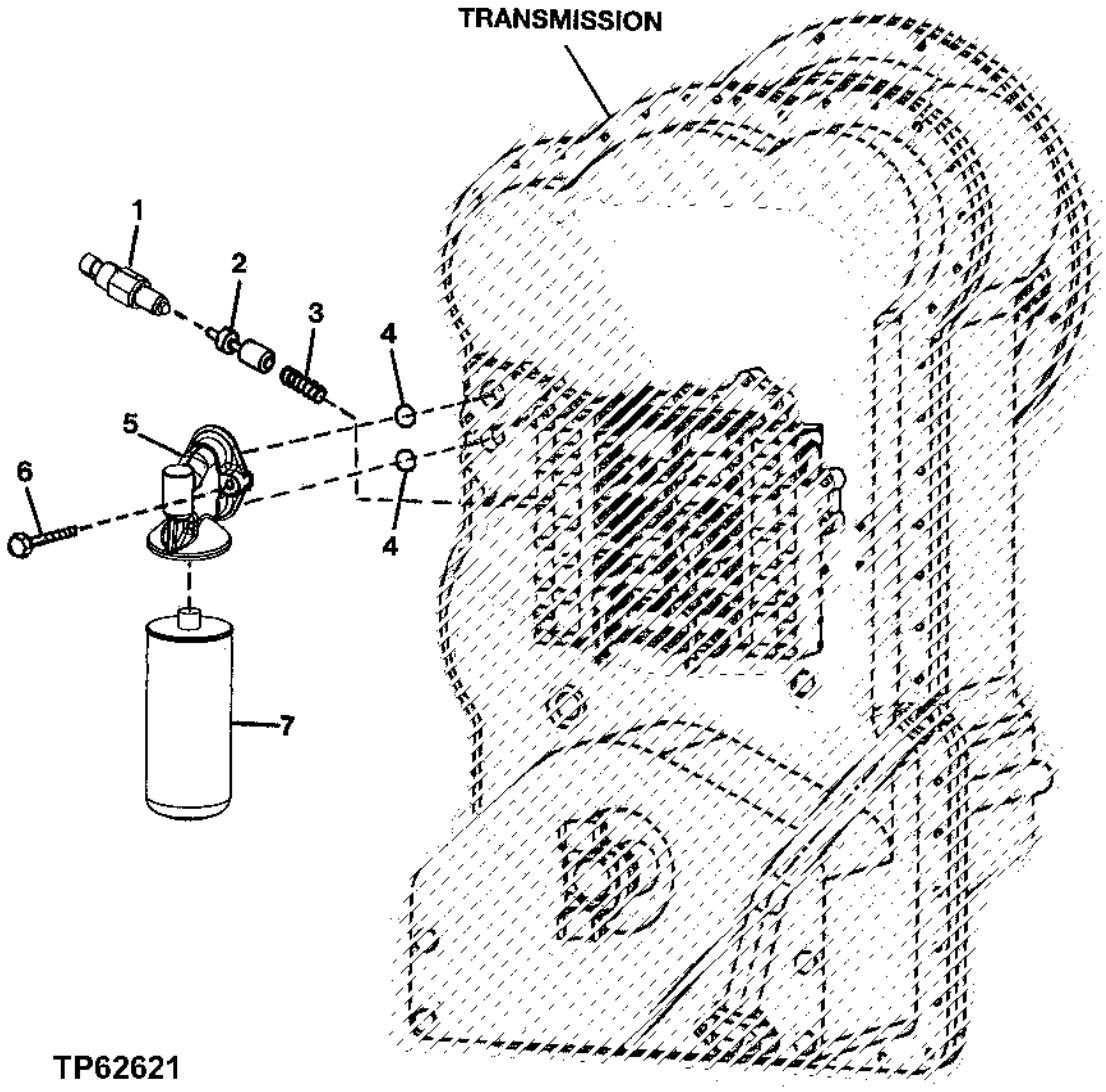

TP62621

TRANSMISSION OIL FILTER
(SERIAL NO. 572707-)
(TRANSMISSION SERIAL NO. 001233-)

KEY	PART NO.	PART NAME	QTY	SERIAL NO.	REMARKS
1	AT221989	TOUCH SWITCH	1		(OIL FILTER RESTRICTION INDICATOR)
2	T177978	VALVE SPOOL	1		
3	T177979	SPRING	1		
4	T172318	O-RING	2		
5	T177997	FILTER HEAD	1		
6	T173819	CAP SCREW	2		
7	AT222005	FILTER ELEMENT	1		

MEMORANDA

CRANKSHAFT

RGP7406 -UN-26FEB01

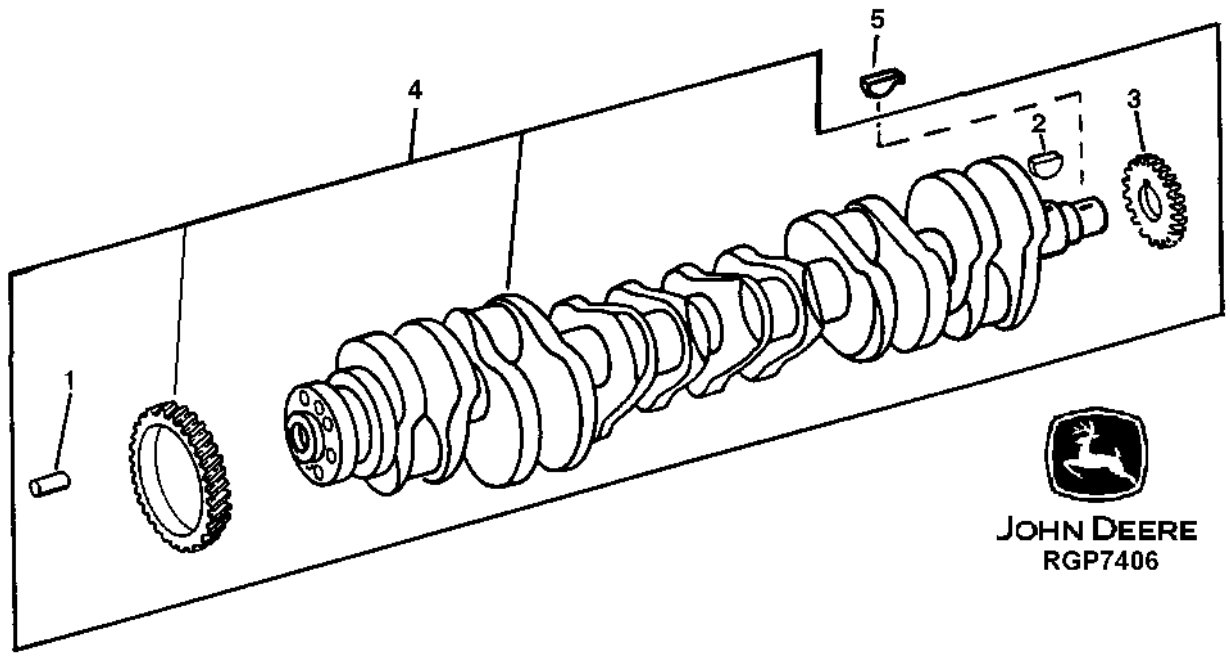

KEY	PART NO.	PART NAME	QTY	ENGINE SERIAL NO.	REMARKS
1	R41934	DOWEL PIN	1		
2	R120752	KEY	1		
3	R104587	GEAR	1		
4	RE55522	CRANKSHAFT	1		(MARKED R120030)
5	R116311	KEY	1		

UNDERSIZE CONNECTING ROD JOURNAL CRANKSHAFT AND BEARING KIT

RGP4816 -UN-21OCT96

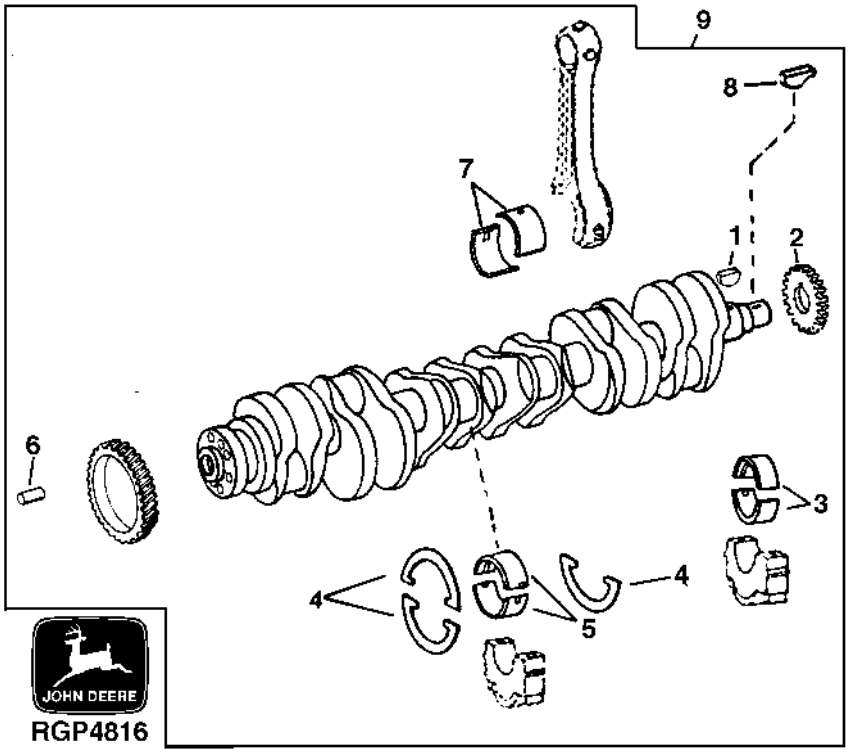

KEY	PART NO.	PART NAME	QTY	ENGINE SERIAL NO.	REMARKS
1	R120752	KEY	1		
2	R104587	GEAR	1		
3	RE57170	BEARING	6		STD
4	RE61253	THRUST WASHER	1		STD (PKG R116084 AND, R116085)
5	RE57175	THRUST BEARING	1		STD (PKG R116085)
6	R41934	DOWEL PIN	1		
7	RE57167	BEARING	6		.292 MM (.011") US (PKG (2) R121338)
8	R116311	KEY	1		
9	RE61267	CRANKSHAFT	1		.292 MM (.011") US, (MARKED RE58780 OR R122653)

MAIN AND MAIN THRUST BEARINGS

RGP1272 -UN-01JAN94

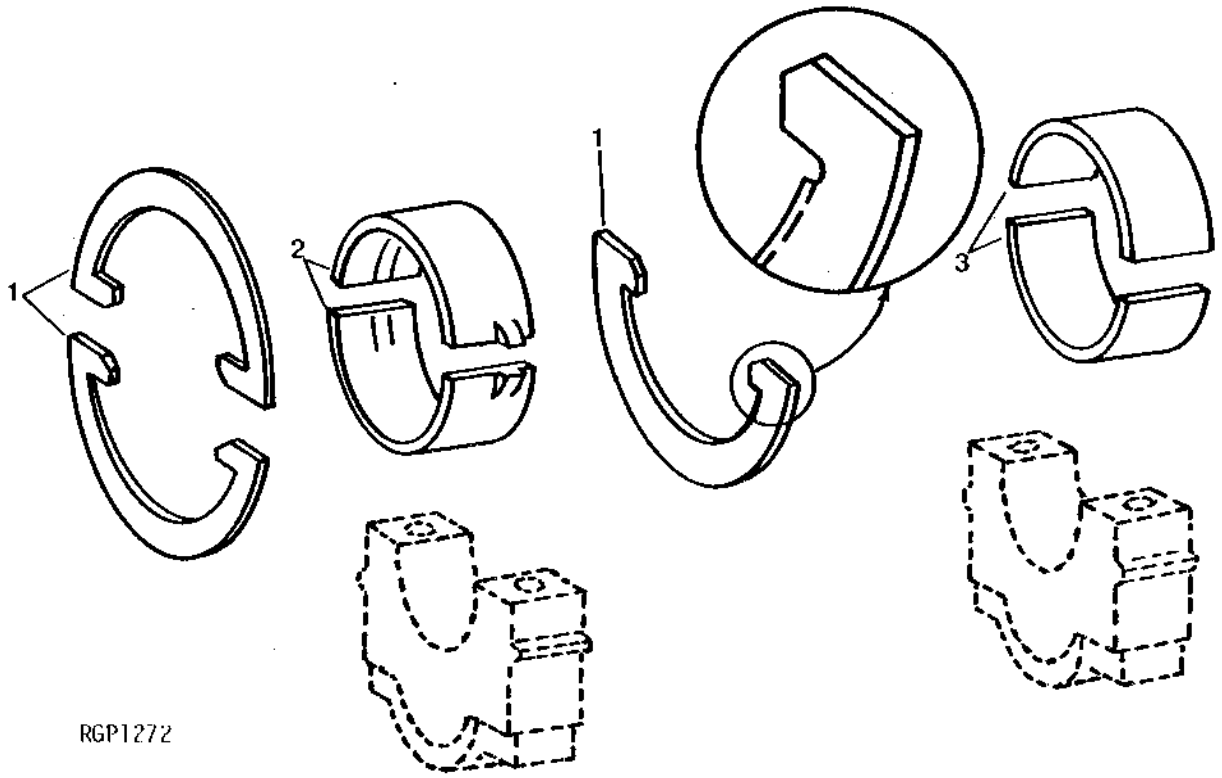

KEY	PART NO.	PART NAME	QTY	ENGINE SERIAL NO.	REMARKS
1	RE61253	THRUST WASHER	1		STD (PKG (3) R124381)
	RE61851	THRUST WASHER	1		0.18 MM (.007") (PKG (3) R124842)
2	RE504198	THRUST BEARING	1		(SUB FOR RE57175) STD (PKG R116084 AND R116085 OR R502127 AND R502128)
	RE504199	THRUST BEARING	1		(SUB FOR RE57177) 0.292 MM(.011") (PKG R121350 AND R121354 OR R502315 AND R502319)
	RE504200	THRUST BEARING	1		(SUB FOR RE57178) 0.552 MM (.022") (PKG R121351 AND R121355 OR R502316 AND R502320)
3	RE504195	BEARING	AR		(SUB FOR RE57170) STD (PKG R116082 AND R116083 OR R502125 AND R502126)
	RE504196	BEARING	AR		(SUB FOR RE57172) 0.292 MM (.011") (PKG R121342 AND R121346 OR R502317 AND R502321)
	RE57173	BEARING	AR		0.552 MM (.022") (PKG R121343 AND R121347)

UNDERSIZE MAIN BEARING CRANKSHAFT AND BEARING KIT

RGP4816 -UN-21OCT96

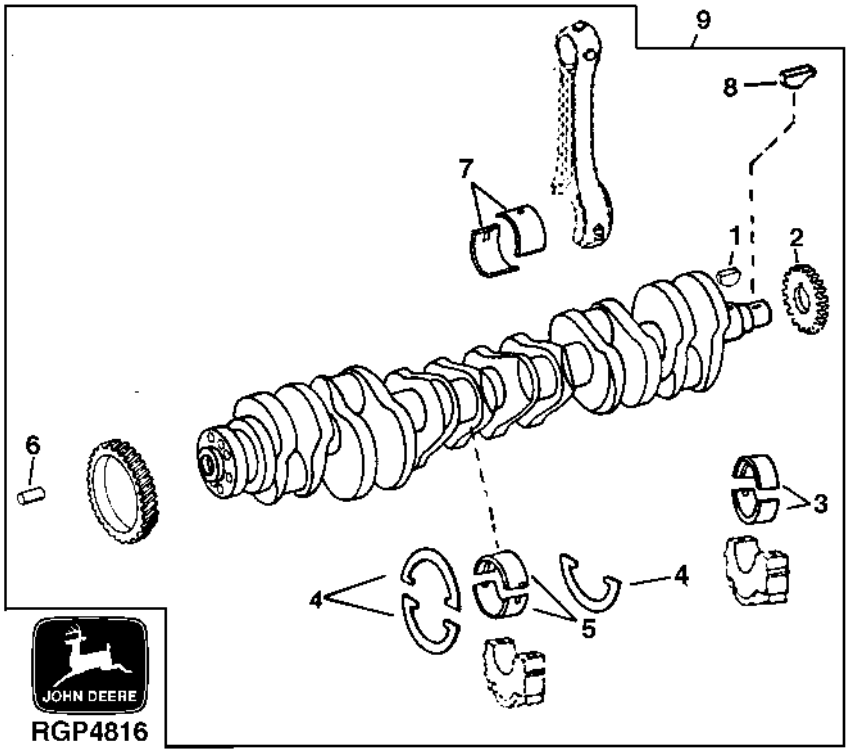

KEY	PART NO.	PART NAME	QTY	ENGINE SERIAL NO.	REMARKS
1	R120752	KEY	1		1/8" X 0.625"
2	R104587	GEAR	1		
3	RE57172	BEARING	6		.292 MM (.011") US (PKG R121342 AND, R121346)
4	RE61851	THRUST WASHER	1		0.18MM (.007") OS FLANGE (PKG (3) R124842)
5	RE57177	THRUST BEARING	1		.292 MM (.011") US (PKG R121350 AND, R121354)
6	R41934	DOWEL PIN	1		
7	R116081	BEARING	12		STD PKG (2)
8	R116311	KEY	1		
9	RE61268	CRANKSHAFT	1		(MARKED R122654 OR RE58781)

CRANKSHAFT OIL SEAL AND HOUSING

RGP2382 -UN-01JAN94

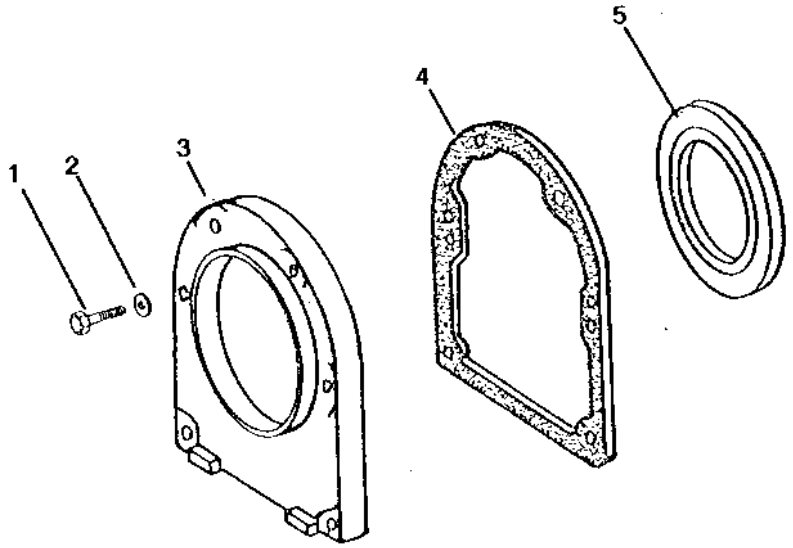

RGP2382

KEY	PART NO.	PART NAME	QTY	ENGINE SERIAL NO.	REMARKS
1	19H2117	CAP SCREW	6		7.925 X 28.575 MM (5/16" X 1-1/8")
2	T27860	WASHER	6		0.344" X 0.689" X 0.066"
3	R125027	HOUSING	1		
4	R26058	GASKET	1		
5	RE504363	SEAL	1		(SUB FOR RE22764)

CAMSHAFT AND GEAR

RGP3752 -UN-01JAN94

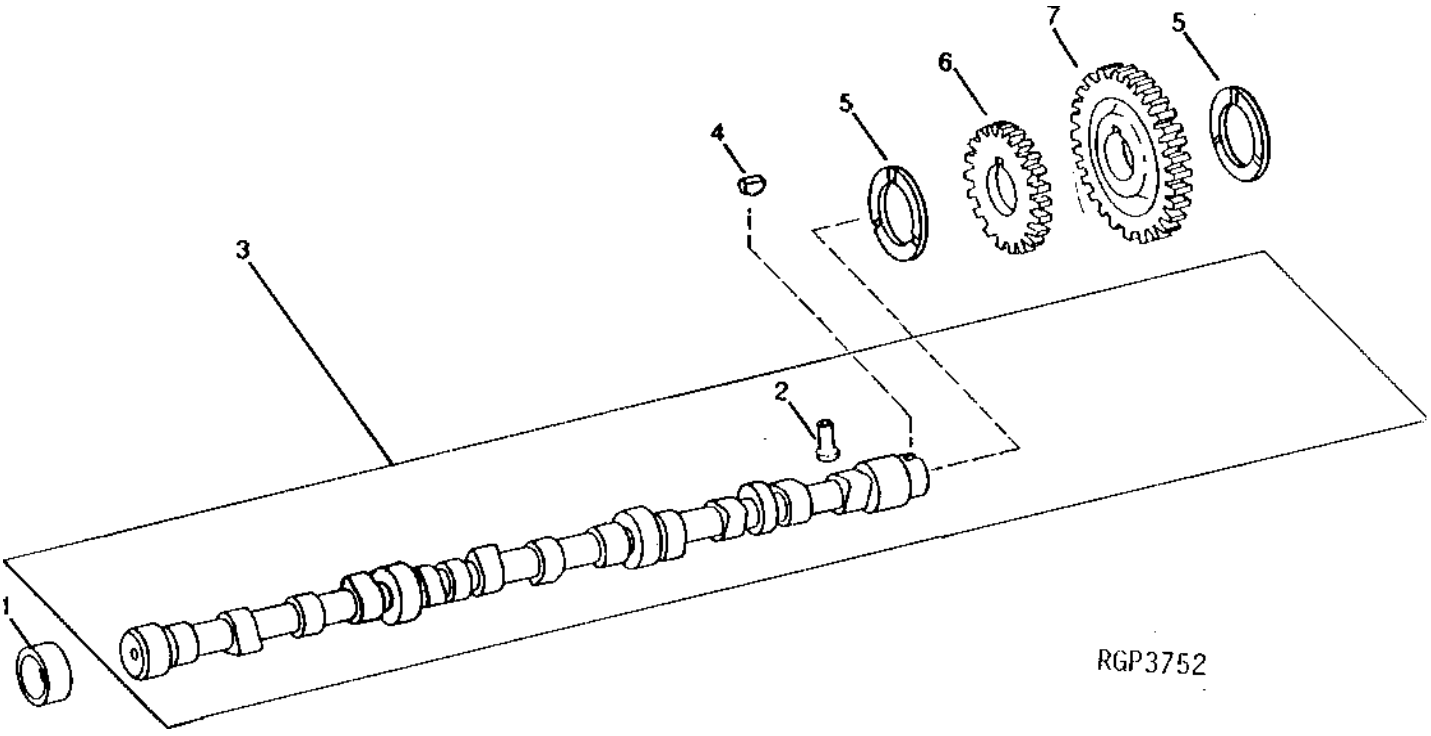

KEY	PART NO.	PART NAME	QTY	ENGINE SERIAL NO.	REMARKS
1	R87561	BUSHING	4		
2	R110126	CAM FOLLOWER	12		
3	RE57054	CAMSHAFT	1		(MARKED R120872)
4	26H91	SHAFT KEY	1		3/16" X 1-1/4"
5	R104656	THRUST WASHER	2		
6	R104589	GEAR	1		
7	R112053	GEAR	1		

ENGINE ROCKER ARM COVER

RGP4885 -UN-13MAY97

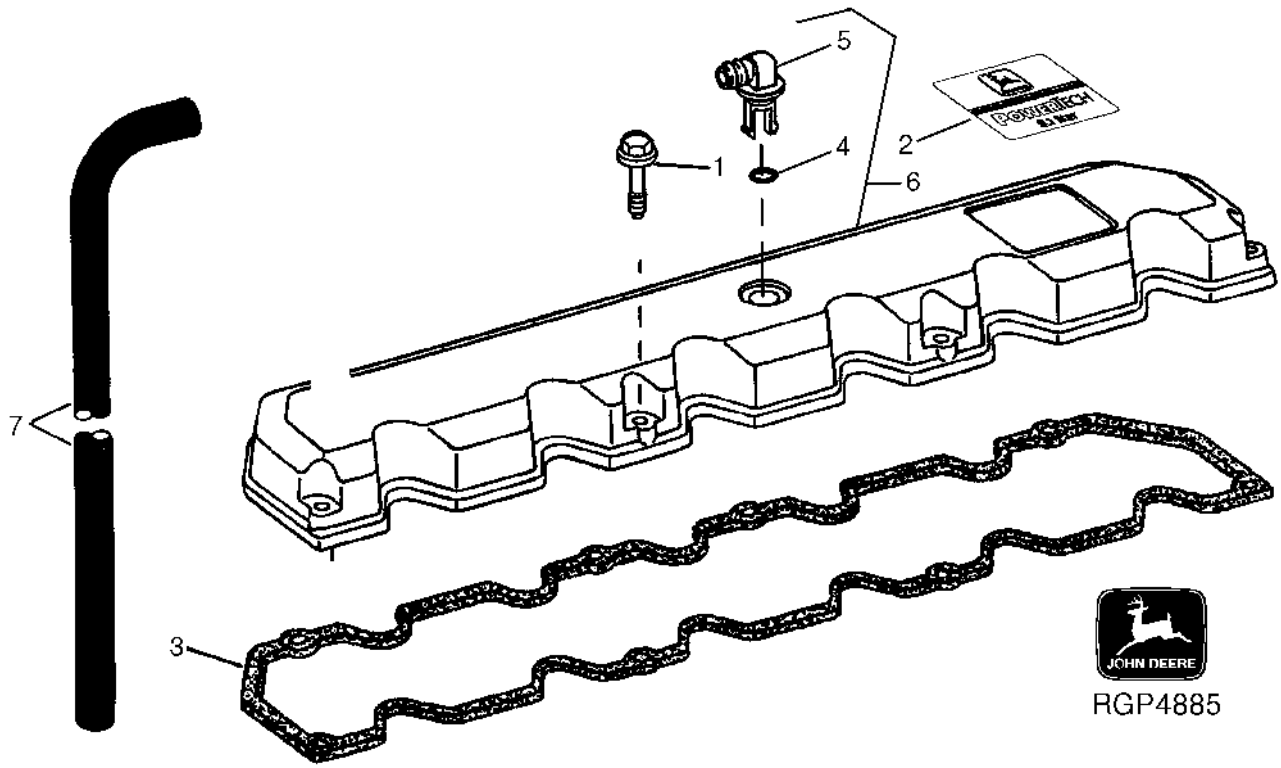

KEY	PART NO.	PART NAME	QTY	ENGINE SERIAL NO.	REMARKS
1	AR100124	SCREW, WITH WASHER	8	-074637	
	RE57632	SCREW, WITH WASHER	8	074638-	
2	R116932	MEDALLION	1		
3	R49866	GASKET	1	-074637	
	RE54368	GASKET	1	074638-	
4	R72328	O-RING	1		
5	R120467	ELBOW FITTING	1		
6	RE37448	COVER	1	-074637	
	RE70023	COVER	1	074638-	
7	TY22450	BULK HOSE	1		
..	AR21839	CLAMP	1		

ROCKER ARMS, SHAFT AND PUSH RODS

RGP2824 -UN-01JAN94

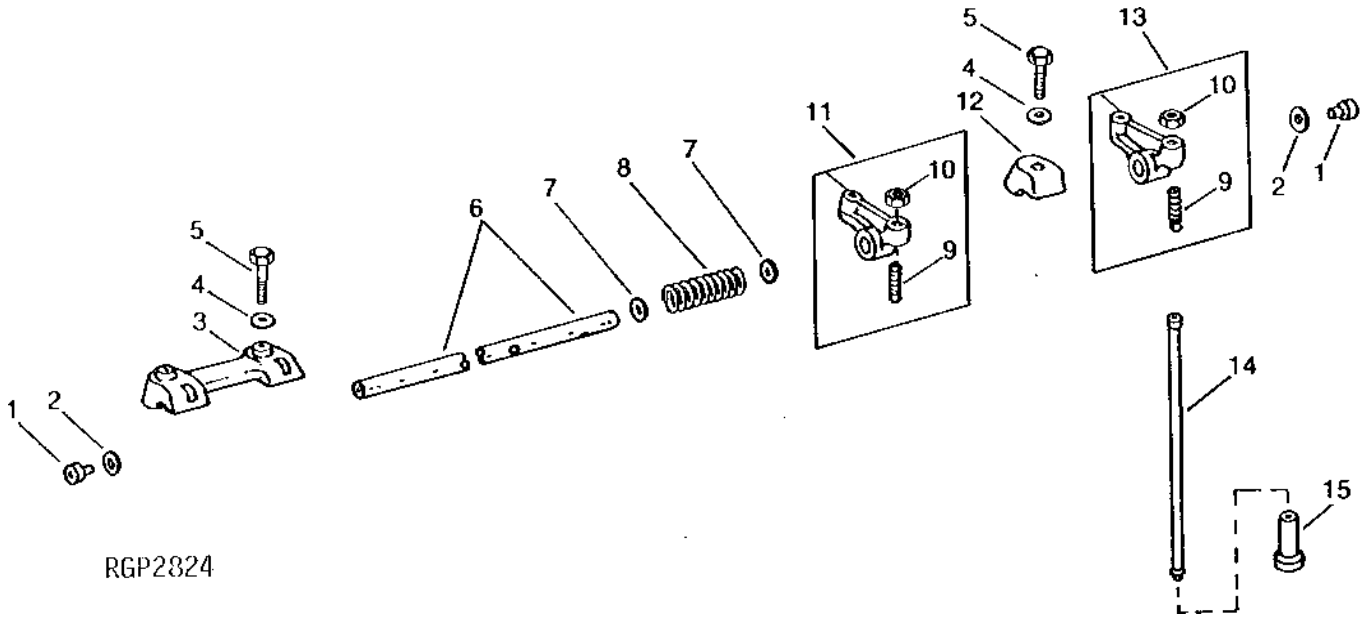

KEY	PART NO.	PART NAME	QTY	ENGINE SERIAL NO.	REMARKS
1	R54565	PLUG	2		
2	R26081	WASHER	2		
3	R136083	CLAMP	2		
4	R26559	WASHER	6		
5	19H1740	CAP SCREW	6		7/16" X 1-3/4"
6	R70826	ROCKER ARM SHAFT	1		
7	R71208	WASHER	10		
8	R26079	SPRING	5		
9	R27443	SET SCREW	12		
10	14H1080	NUT	12		3/8"
11	RE24045	ROCKER ARM	6		(A) (1E, 2I, 3E, 4I, 5E, 6I) (RH)
12	R26748	CLAMP	2		
13	RE24046	ROCKER ARM	6		(A) (1I, 2E, 3I, 4E, 5I, 6E) (LH)
14	R85027	PUSH ROD	12		
15	R110126	CAM FOLLOWER	12		

(A) - E (EXHAUST VALVE) - I (INTAKE VALVE)

MEMORANDA

TIMING GEAR COVER AND FRONT OIL SEAL

RGP4447 -UN-28FEB95

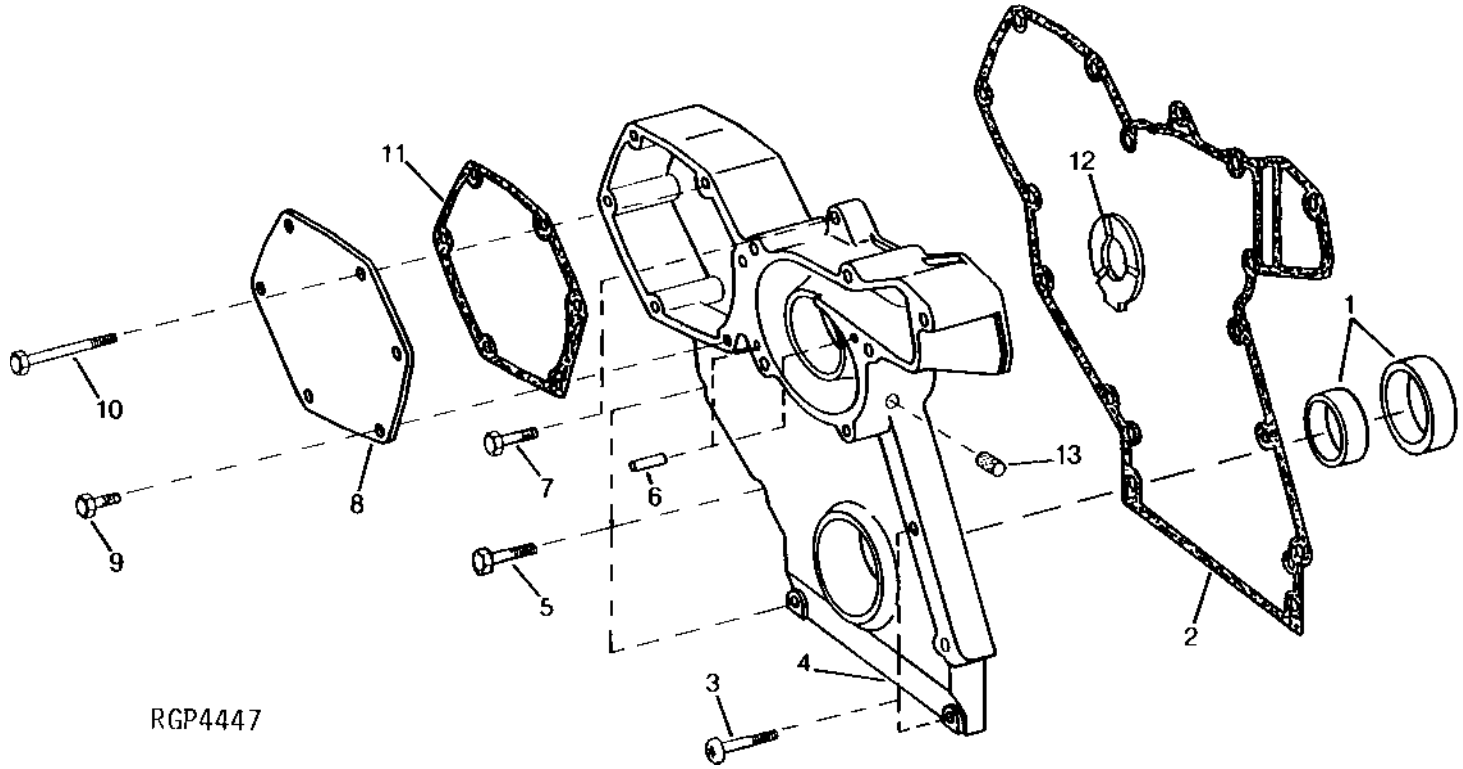

KEY	PART NO.	PART NAME	QTY	ENGINE SERIAL NO.	REMARKS
1	AR49025	SEAL	1		
2	R119384	GASKET	1		
3	R115129	CAP SCREW	3		
4	R502083	COVER	1		(SUB FOR R500456)
5	R104859	CAP SCREW	3		
6	R11086	DOWEL PIN	2		
7	19H3693	CAP SCREW	1		3/8" X 1-1/4"
8	R50393	COVER	1		(WITHOUT AUXILIARY DRIVE)
9	R112268	CAP SCREW	1		(WITHOUT AUXILIARY DRIVE)
10	R104861	CAP SCREW	5		(WITHOUT AUXILIARY DRIVE)
11	R50390	GASKET	1		(WITHOUT AUXILIARY DRIVE)
12	R104656	THRUST WASHER	1		
13	R98527	FILTER	1		
..	R72853	CLAMP	1		

MAGNETIC PICK-UP

RGP4360 -UN-01JAN94

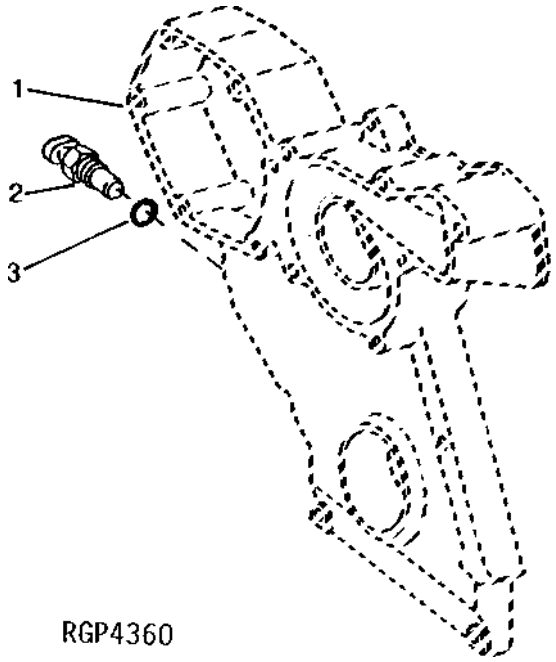

KEY	PART NO.	PART NAME	QTY	ENGINE SERIAL NO.	REMARKS
1	.....	COVER	1		
2	RE71121	SENSOR	1		
3	51M7044	O-RING	1		17.300 X 2.200 MM

PISTON, RINGS, LINERS AND CONNECTING RODS

RGP5202 -UN-14JUN99

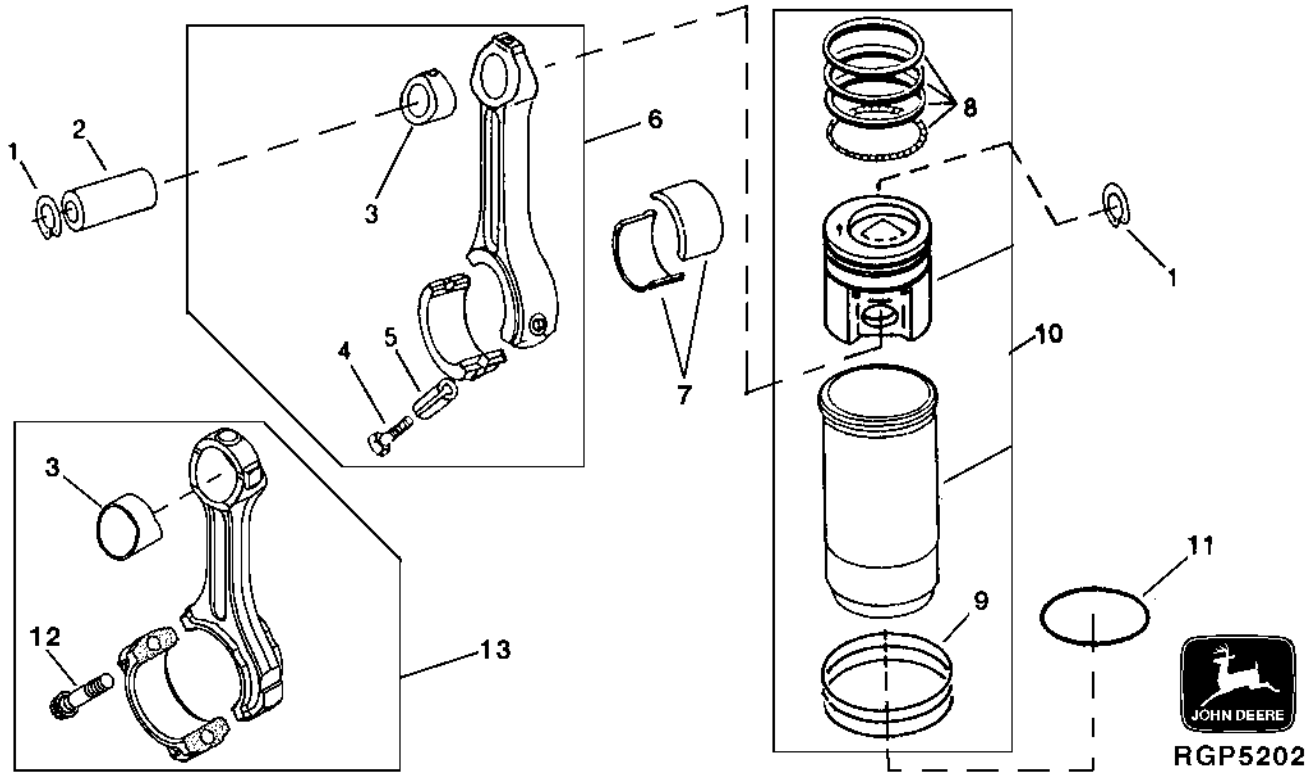

KEY	PART NO.	PART NAME	QTY	ENGINE SERIAL NO.	REMARKS
1	E1343FN	SNAP RING	12		
2	R57771	PISTON PIN	6		
3	R74008	BUSHING	6		
4	R66452	CAP SCREW	12	-086535	
5	R53292	SLEEVE	12	-086535	
6	RE53154	CONNECTING ROD	6	-086535	(MARKED R116340)
7	R116081	BEARING	12		STD PKG (2)
	RE57167	BEARING	AR		0.292MM (.011") (UNDERSIZE) (PKG (2) R121338)
8	RE57188	PISTON RING	6		
9	AR98850	O-RING KIT	6		
10	RE64509	KIT	6		(MARKED RE53000 OR RE64170)
11	R93948	SHIM	2		0.05MM (.002") (MAX.)
12	R501035	CAP SCREW	12	086536-	(USE WITH RE501513)
13	RE501513	CONNECTING ROD	6	086536-	(MARKED R501034)

MEMORANDA

CYLINDER BLOCK FITTINGS AND MAIN BEARING CAPS

RGP4339 -UN-01JAN94

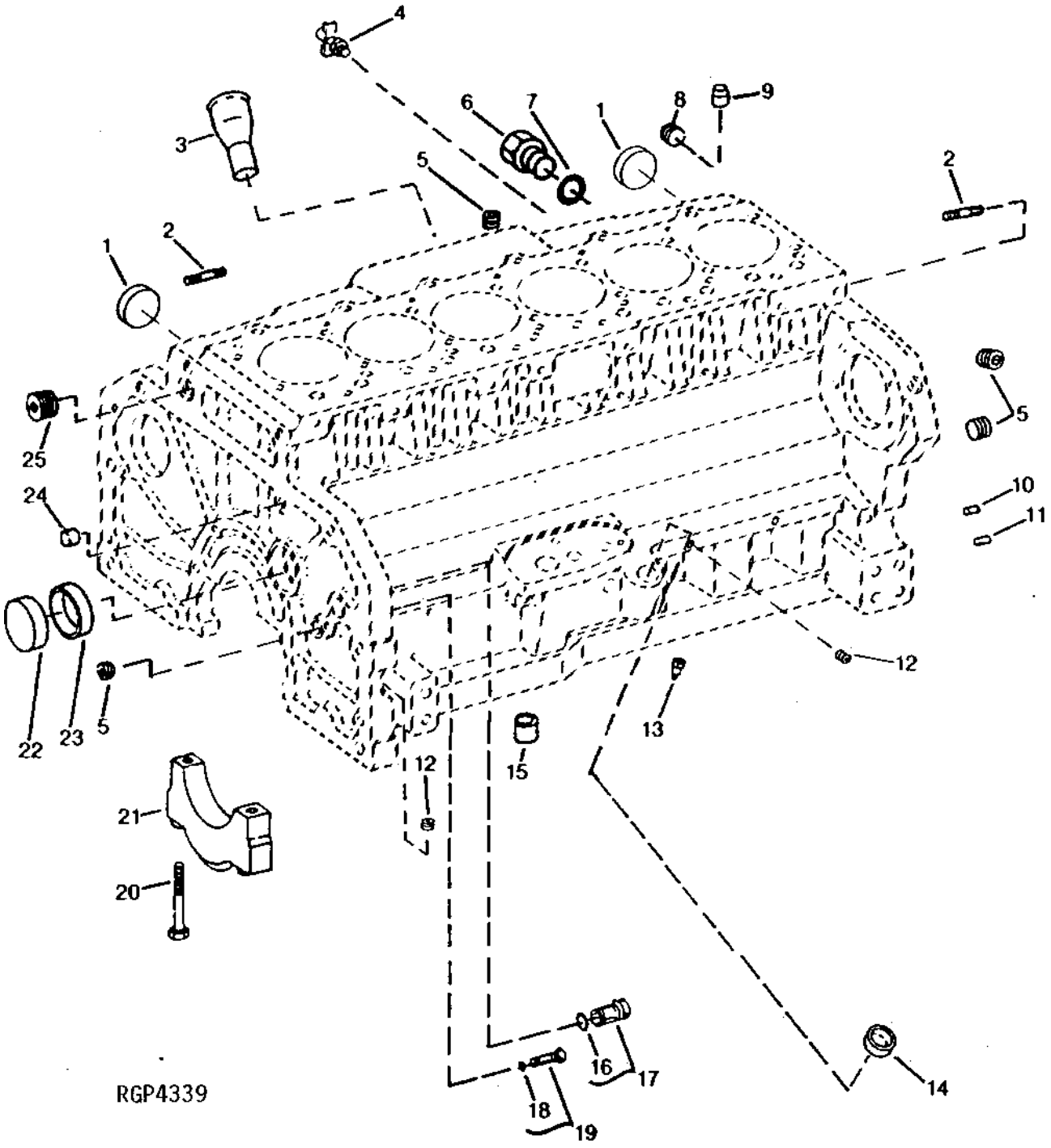

CYLINDER BLOCK FITTINGS AND MAIN BEARING CAPS - CONTINUED

KEY	PART NO.	PART NAME	QTY	ENGINE SERIAL NO.	REMARKS
1	R43409	CAP	2		
2	R114130	STUD	5		
3	R120801	DIPSTICK TUBE	1		141.5 MM (5.57")
4	AT13740	DRAIN VALVE	1		
5	R36599	CAP	1		
	15H624	PIPE PLUG	2		1/2"
6	R39741	DRAIN PLUG	1		
7	U13639	O-RING	1		
8	15H690	PIPE PLUG	1		3/4"
9	R42340	BUSHING	2		
10	R1612R	DOWEL PIN	2		
11	F1743R	DOWEL PIN	2		
12	R104592	PIPE PLUG	6		
13	R43621	ORIFICE	6		
14	T35390	CAP	1		(OIL FILLER HOLE - NOT USED)
15	R500642	BUSHING	2		
16	R27149	O-RING	1		
17	R121929	PLUG	1		(SUB FOR AR61533)
18	A4365R	O-RING	1		
19	AR61589	PLUG	1		
20	R122364	BOLT	14		
21	R120953	BEARING CAP	6		(MAIN)
	R120954	BEARING CAP	1		(THRUST)
22	R82007	CAP	1		
23	R87561	BUSHING	4		
24	R61288	DOWEL PIN	1		
25	15H562	PIPE PLUG	1		1"
..	15H686	PIPE PLUG	1		1", (CYLINDER BLOCK REAR COOLANT OPENING)
..	.....	CYLINDER BLOCK	NA		(NOT AVAILABLE)
..	R501255	PLUG	1		(AUXILARY DRIVE IDLER HOLE)
..	B2762R	O-RING	1		(AUXILARY DRIVE IDLER HOLE)

ENGINE SHORT BLOCK W/HEADBOLTS

RGP4577 -UN-02NOV95

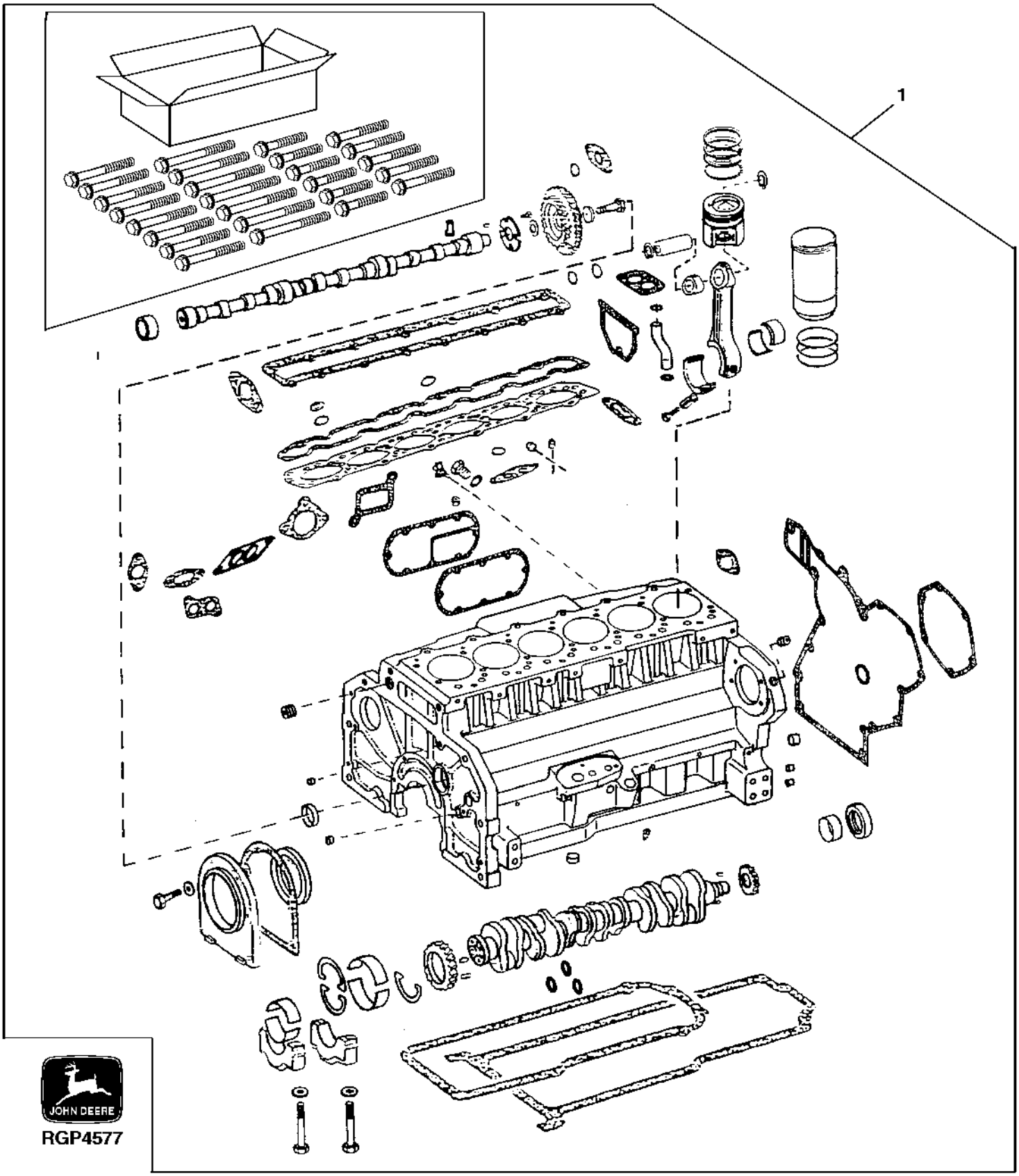

ENGINE SHORT BLOCK W/HEADBOLTS - CONTINUED

KEY	PART NO.	PART NAME	QTY	ENGINE SERIAL NO.	REMARKS
1	RE504460	SHORT BLOCK ASSEMBLY	1		(ALSO ORDER R120801) (SUB FOR RE64508) (MARKED R115471) (HIGH COMPRESSION) (PISTON MARKED RE70688 (WITH AUXILARY DRIVE W/O OIL HOLE)

MEMORANDA

KEY ENGINE SERVICE PARTS
(6081HDW05 SHOWN)

RGP5033 -UN-20APR98

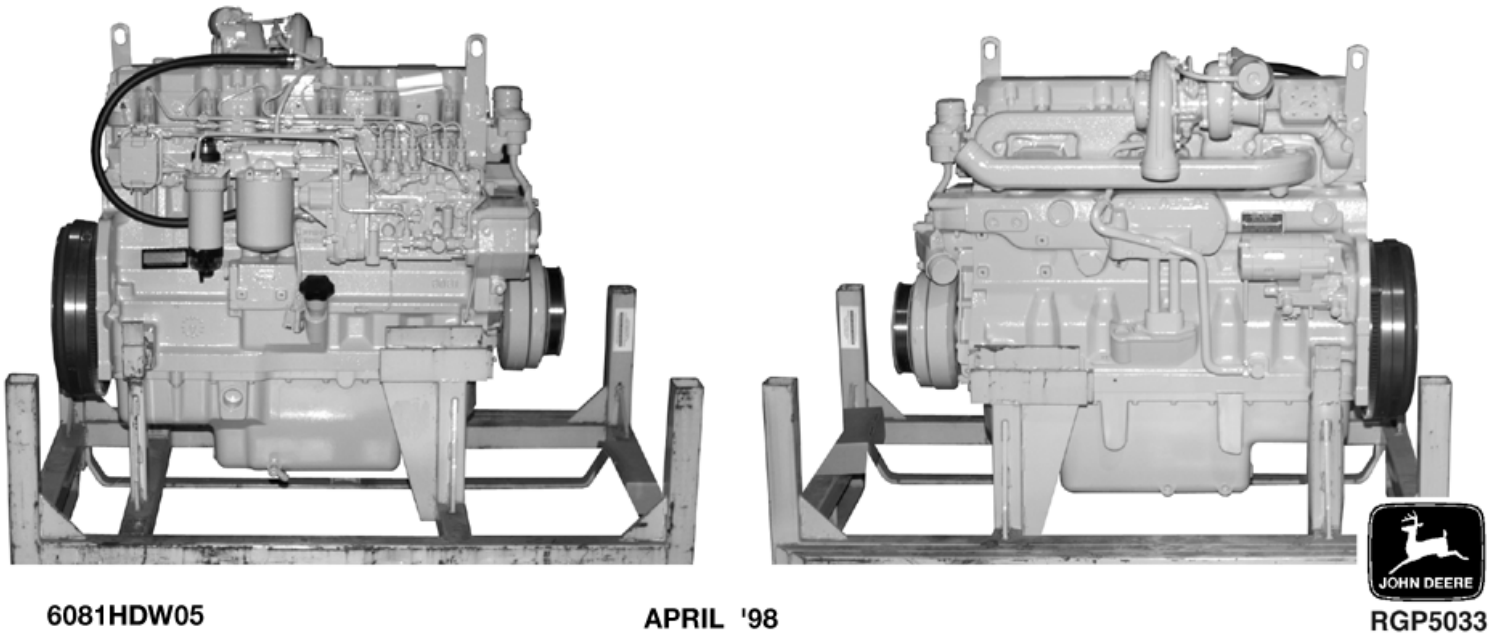

6081HDW05 APRIL '98 RGP5033

KEY	PART NO.	PART NAME	QTY	ENGINE SERIAL NO.	REMARKS
..	R119384	GASKET	1		(T.G.C.)
..	RE60622	OIL PUMP	1		
..	RE55475	ENGINE CYLINDER HEAD GASKET	1		(HEAD)
..	RE57394	OIL FILTER	1		
..	RE64509	KIT	1		CYLINDER LINER, PISTON W/RINGS
..	RE504363	SEAL	1		(SUB FOR RE22764) (REAR)
..	AR49025	SEAL	1		(FRONT)
..	RE67677	ENGINE OVERHAUL KIT	1		(OVERHAUL KIT)
..	RE69844	KIT	1		(WATER PUMP SEAL)
..	AR48675	THERMOSTAT	1		(USE WITH R100671)
..	RE57152	INJECTION NOZZLE	6		(NIPPONDENSO)

ENGINE OVERHAUL KIT

RGP4274 -UN-01JAN94

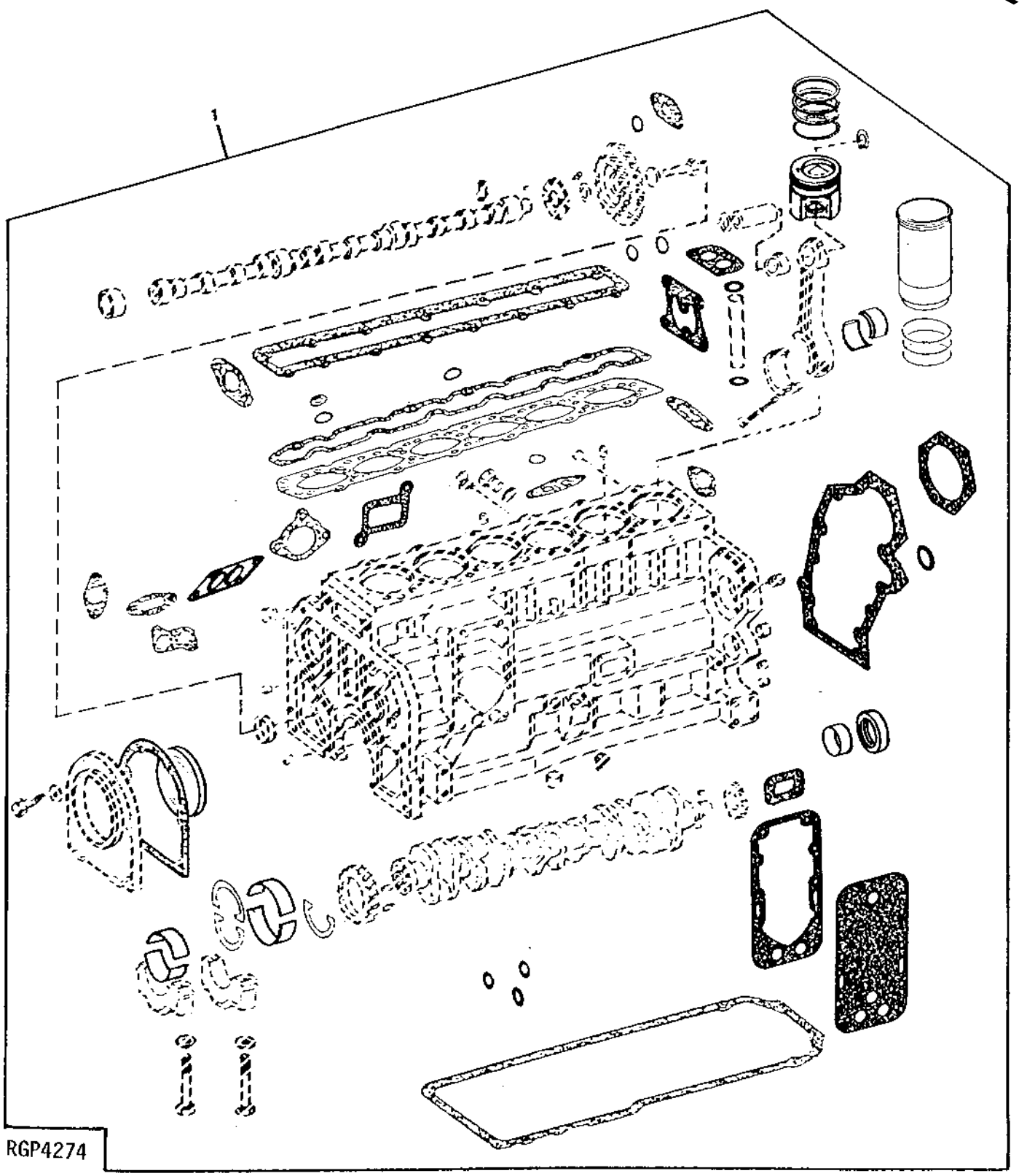

ENGINE OVERHAUL KIT - CONTINUED

KEY	PART NO.	PART NAME	QTY	ENGINE SERIAL NO.	REMARKS
1	RE504201	ENGINE OVERHAUL KIT	1		(SUB FOR RE67677) (ALSO ORDER R501035 IF USED WITH R501034 OR R66452 IF USED WITH R116340)

MEMORANDA

ENGINE OIL DIPSTICK AND TUBE

RGP4446 -UN-03MAR95

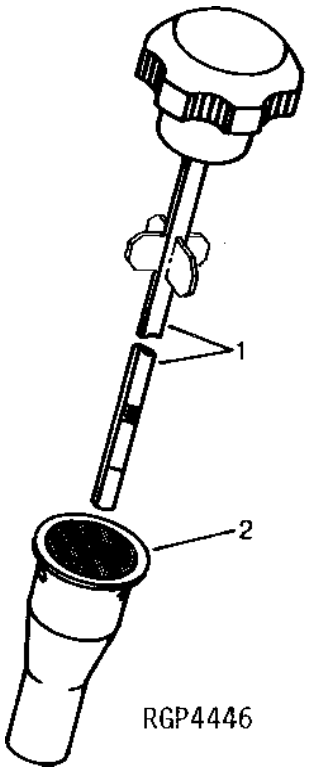

KEY	PART NO.	PART NAME	QTY	ENGINE SERIAL NO.	REMARKS
1	RE500216	DIPSTICK	1		
2	R120801	DIPSTICK TUBE	1		141.5 MM (5.57")

OIL PAN

RGP5011 -UN-15APR98

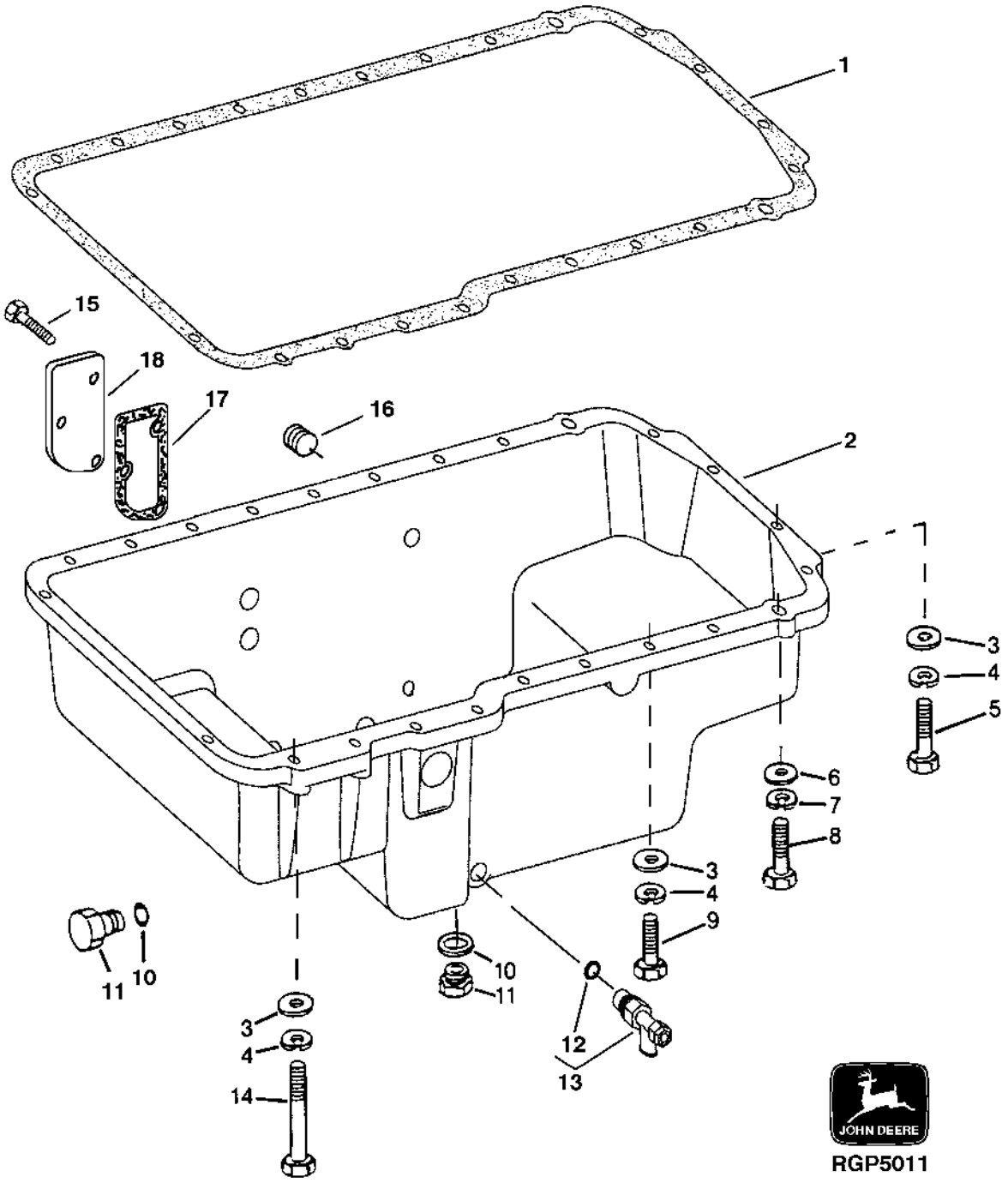

OIL PAN - CONTINUED

KEY	PART NO.	PART NAME	QTY	ENGINE SERIAL NO.	REMARKS
1	RE504822	GASKET	1		(SUB FOR R49376 OR R49377)
2	R127394	PAN	1		(MARKED R125195)
3	24H1305	WASHER	22		13/32" X 13/16" X 0.065"
4	19H3485	CAP SCREW	4		3/8" X 2"
5	24H1756	WASHER	2		1/2" X 1" X 0.060"
6	19H2473	CAP SCREW	2		1/2" X 1-3/4"
7	19H3267	CAP SCREW	18		3/8" X 1-5/8"
8	F3171R	O-RING	2		23.470 X 2.946 MM (0.924" X 0.116")
9	R70534	PIPE PLUG	2		
10	R26906	O-RING	1		
11	15H690	PIPE PLUG	2		3/4"
12	19H1731	CAP SCREW	3		3/8" X 1"
13	AT152180	DRAIN VALVE	1		
14	RE63439	GASKET	1		
15	R127873	COVER	1		

ENGINE OIL PUMP

RGP4450 -UN-03MAR95

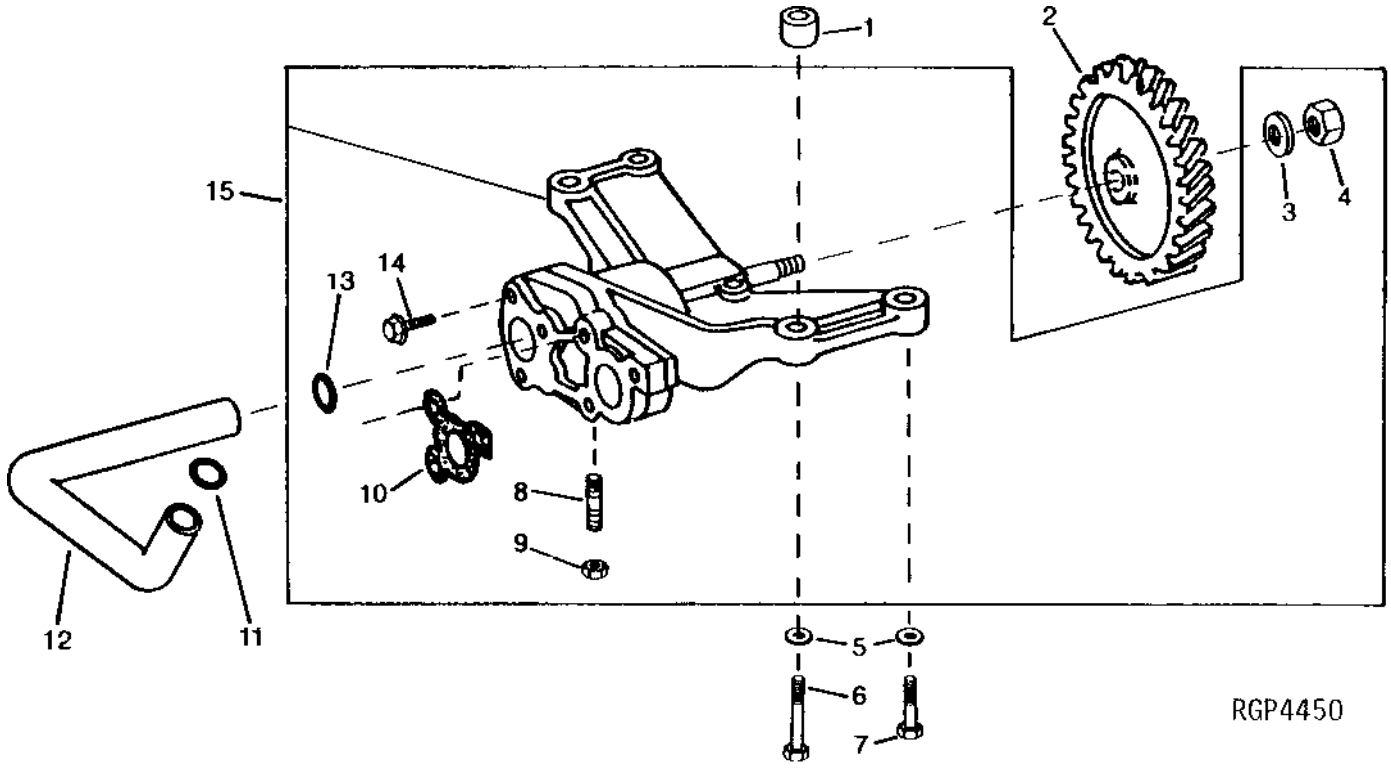

ENGINE OIL PUMP - CONTINUED

KEY	PART NO.	PART NAME	QTY	ENGINE SERIAL NO.	REMARKS
1	R500642	BUSHING	2		
2	R62938	GEAR	1		
3	T21242	WASHER	1		
4	14H826	NUT	1		1/2"
5	R57696	WASHER	4		
6	19H2549	CAP SCREW	2		3/8" X 1-7/8"
7	19H3219	CAP SCREW	2		3/8" X 1-3/8"
8	22H1040	SET SCREW	1		5/16" X 1-1/4"
9	14H785	NUT	1		5/16"
10	R100569	GASKET	1		
11	R71732	O-RING	1		
12	R116718	OIL TUBE	1		
13	R71732	O-RING	1		
14	R104628	CAP SCREW	2		
	R104628	CAP SCREW	3		(INTAKE COVER TO HOUSING)
15	RE507076	OIL PUMP	1		(MARKED R124328 OR R504028) (SUB FOR RE60622)

ENGINE OIL PUMP INTAKE

RGP3629 -UN-01JAN94

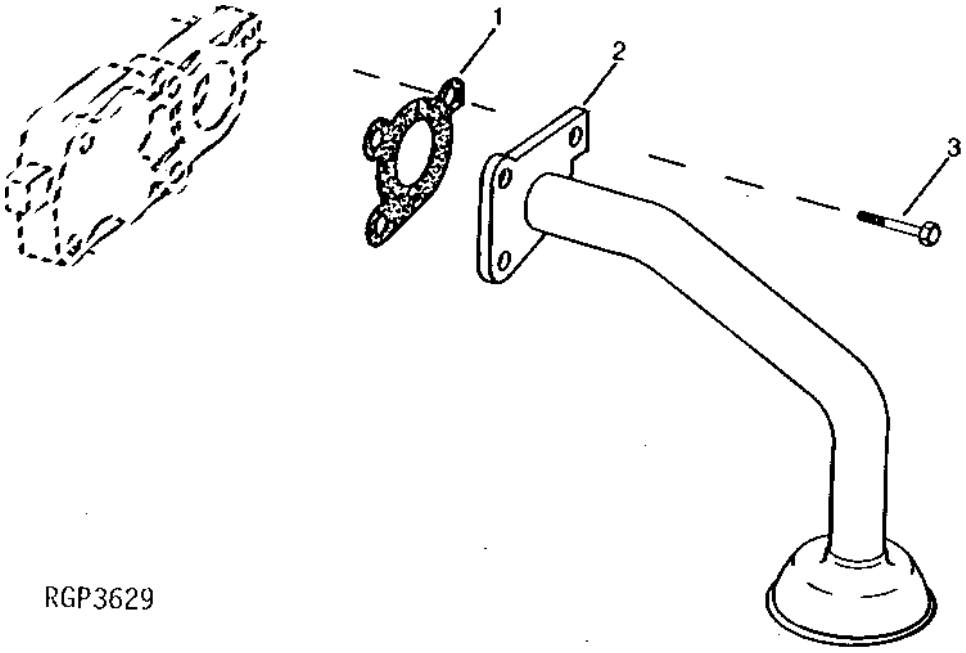

KEY	PART NO.	PART NAME	QTY	ENGINE SERIAL NO.	REMARKS
1	R100569	GASKET	1		
2	RE62144	OIL PUMP INTAKE	1		
3	R104628	CAP SCREW	3		

MEMORANDA

ENGINE OIL FILTER AND HOUSING

RGP4845 -UN-18DEC96

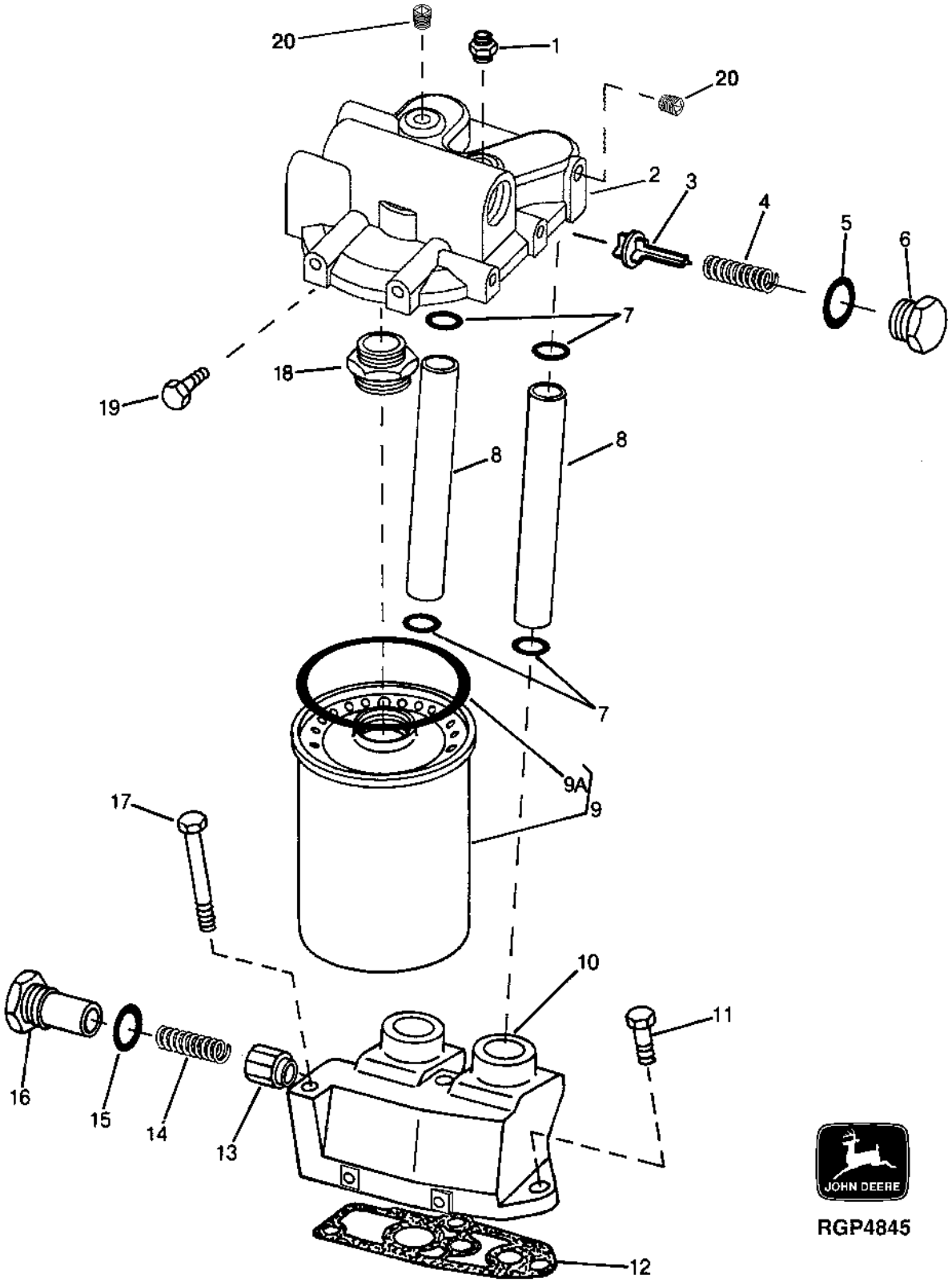

ENGINE OIL FILTER AND HOUSING - CONTINUED

KEY	PART NO.	PART NAME	QTY	ENGINE SERIAL NO.	REMARKS
1	RE57561	CONNECTOR	1		
2	R128694	BASE	1		
3	R500055	VALVE	1		
4	R98064	SPRING	1		
5	U17409	O-RING	1		
6	R117073	FITTING PLUG	1		
7	R47153	O-RING	4		
8	R86063	TUBE	2		
9	RE57394	OIL FILTER	1		(MARKED RE57394)
9A	R43660	PACKING	1		
10	R129820	HOUSING	1		
11	19H3239	CAP SCREW	1		3/8" X 1-1/4"
12	R119847	GASKET	1		
13	R124186	RELIEF VALVE	1		
14	R500330	SPRING	1		
15	U17409	O-RING	1		
16	R129821	FITTING PLUG	1		(USE WITH R129820)
17	19H3445	CAP SCREW	2		3/8" X 3-3/4"
18	R104621	ADAPTER	1		
19	19H3104	CAP SCREW	2		7/16" X 1-1/4"
20	RE71255	PIPE PLUG	2		

CYLINDER HEAD AND VALVES

RGP4443 -UN-28FEB95

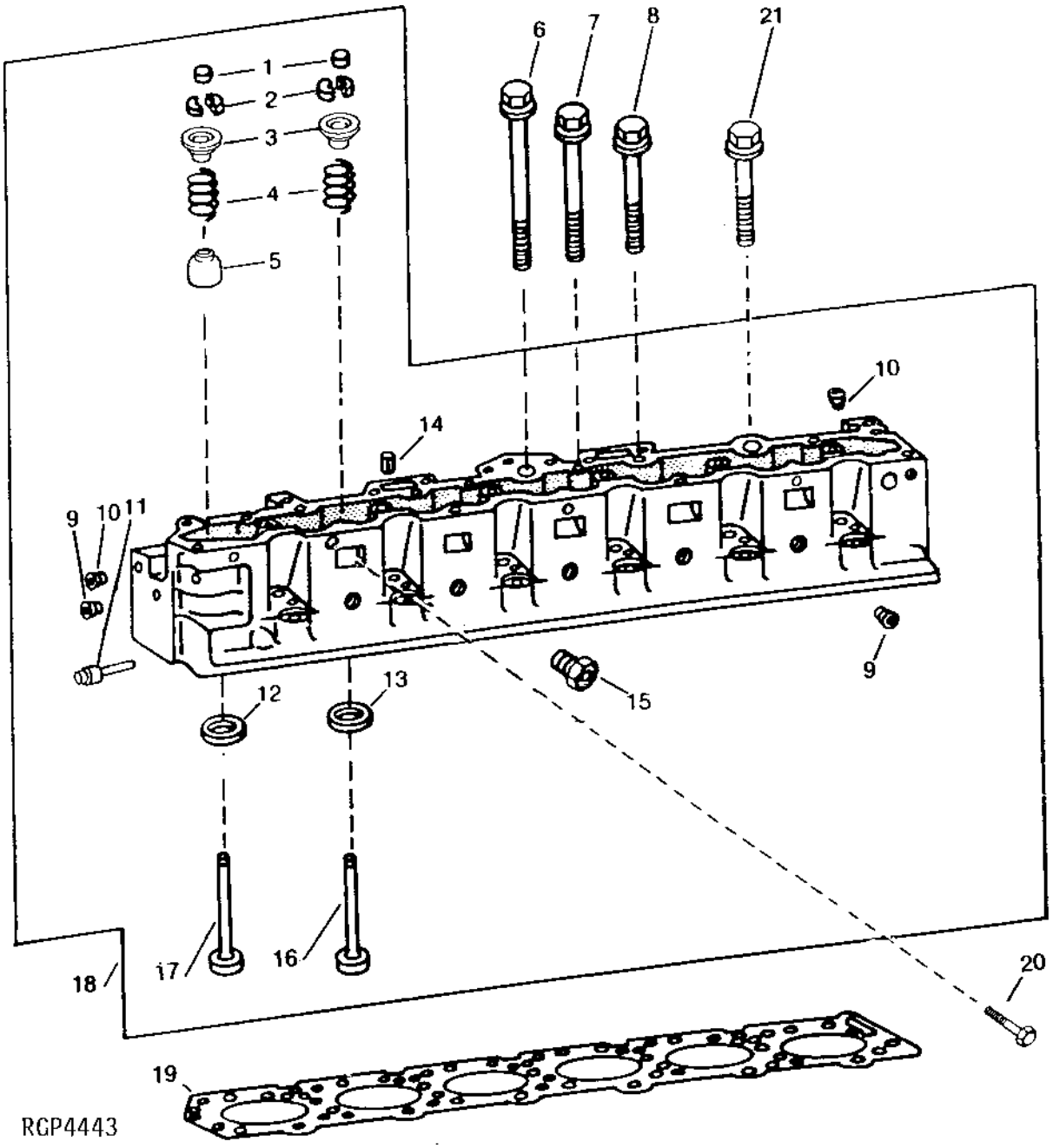

CYLINDER HEAD AND VALVES - CONTINUED

KEY	PART NO.	PART NAME	QTY	ENGINE SERIAL NO.	REMARKS
1	T20129	CAP	12		
2	T20077	RETAINER	24		
3	R136320	CAP	12		
4	R91822	SPRING	12		
5	R102882	SHIELD	6		(EXHAUST VALVES ONLY)
6	R121491	CAP SCREW	7		203 MM (8.0") (MARKED "SPECIAL")
7	R121490	CAP SCREW	8		175 MM (6.9") (MARKED "SPECIAL")
8	R121320	CAP SCREW	6		134 MM (5.3") (MARKED "SPECIAL")
9	15H690	PIPE PLUG	10		3/4"
10	15H624	PIPE PLUG	3		1/2", (SUB RE57836)
11	AT107509	PLUG	1		
12	R119132	VALVE SEAT INSERT	6		EXHAUST
	R93349	VALVE SEAT INSERT	6		0.25MM (.010") OS
13	R121193	VALVE SEAT INSERT	6		INTAKE
	R93350	VALVE SEAT INSERT	6		0.25MM (.010") OS
14	34H387	SPRING PIN	1		3/16" X 3/4"
15	RE501737	PIPE PLUG	1		(SUB FOR R76491)
16	R84618	INTAKE VALVE	6		STD
	R93308	INTAKE VALVE	AR		0.08MM (.003") OS
	R93312	INTAKE VALVE	AR		0.38MM (.015") OS
	R93314	INTAKE VALVE	AR		0.76MM (.030") OS
17	R84619	EXHAUST VALVE	6		STD
	R93311	EXHAUST VALVE	AR		0.08MM (.003") OS
	R93313	EXHAUST VALVE	AR		0.38MM (.015") OS
	R93315	EXHAUST VALVE	AR		0.76MM (.030") OS
18	RE57750	CYLINDER HEAD	1		(MARKED R122492)
19	RE55475	ENGINE CYLINDER HEAD GASKET	1		
20	19H2367	CAP SCREW	1		5/8" X 3/4"
21	R121489	CAP SCREW	5		149 MM (5.9") (MARKED "SPECIAL")
..	RG24026	KIT	1		(CONTAINS (26) "SPECIAL" HEAD BOLTS)

MEMORANDA

EXHAUST MANIFOLDS

RGP4065 -UN-01JAN94

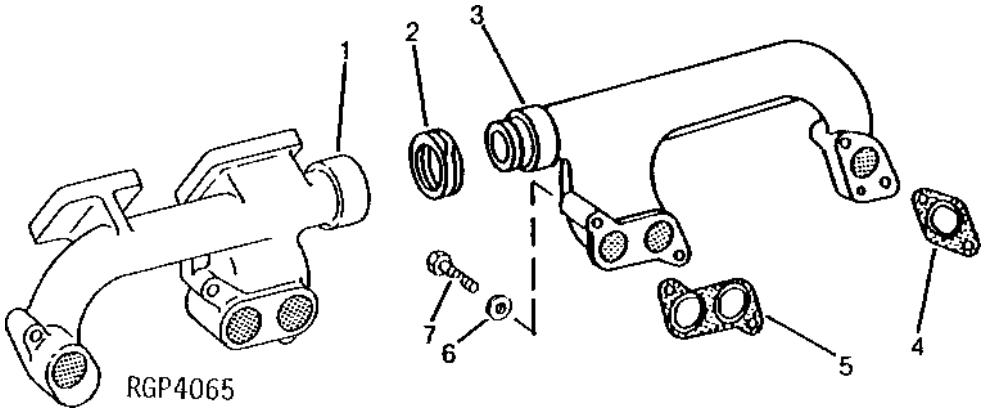

KEY	PART NO.	PART NAME	QTY	ENGINE SERIAL NO.	REMARKS
1	R127425	EXHAUST MANIFOLD	1		(REAR)
2	R122595	RING	2		
3	R127426	EXHAUST MANIFOLD	1		(FRONT)
4	R83021	GASKET	2		
5	R83020	GASKET	2		
6	R63845	WASHER	8		
7	19H3031	CAP SCREW	4		3/8" X 2-1/2", (UPPER)
	19H3267	CAP SCREW	4		3/8" X 1-5/8", (LOWER)

MEMORANDA

FUEL INJECTION PUMP HOUSING CONNECTORS

RGP3634 -UN-01JAN94

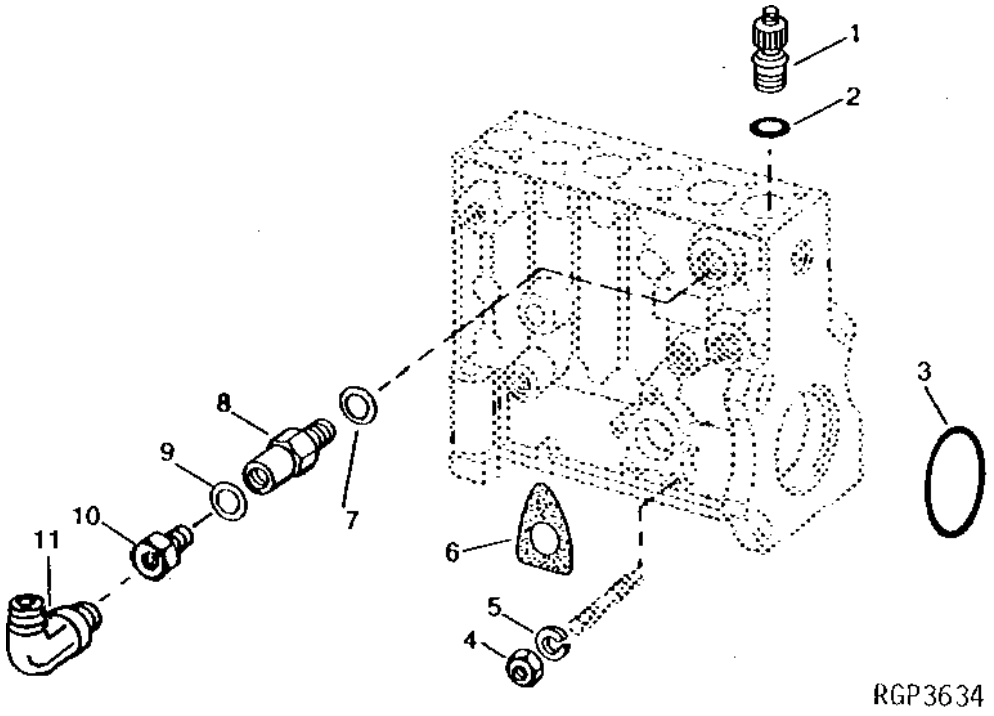

KEY	PART NO.	PART NAME	QTY	ENGINE SERIAL NO.	REMARKS
1	.....	HOLDER	NA		
2	T24210	O-RING	6		
3	R76358	O-RING	1		
4	T31556	NUT	3		
5	T24229	LOCK WASHER	3		
6	R67879	GASKET	1		
7	R53901	WASHER	1		
8	RE36151	CONTROL VALVE	1		(SUB FOR AR77114)
9	R53901	WASHER	1		
10	R63016	ADAPTER	1		
11	R67364	ELBOW FITTING	1		

FUEL INJECTION NOZZLES AND LINES

RGP7358 -UN-13FEB01

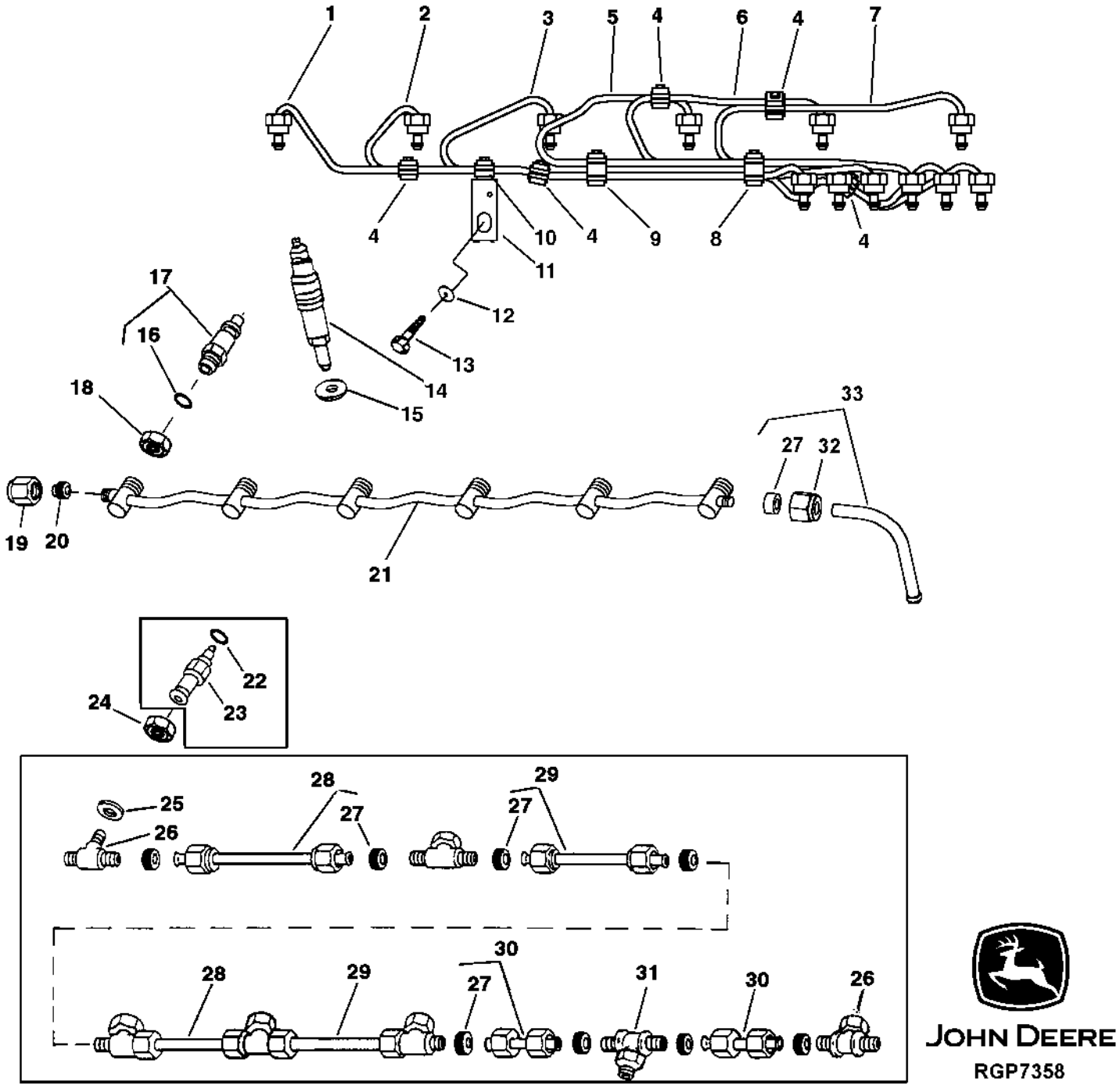

FUEL INJECTION NOZZLES AND LINES - CONTINUED

KEY	PART NO.	PART NAME	QTY	ENGINE SERIAL NO.	REMARKS
1	RE47431	FUEL LINE	1		NO. 6
2	RE47430	FUEL LINE	1		NO. 5
3	RE47429	FUEL LINE	1		NO. 4
4	R120185	BOLT	4		
	R58186	CLAMP	8		
	R120181	STRAP	4		
	R120182	STRAP	4		
5	RE47428	FUEL LINE	1		NO. 3
6	RE47427	FUEL LINE	1	-080424	
	RE502930	FUEL LINE	1	080425-	NO. 2
7	RE47426	FUEL LINE	1	-080424	
	RE502929	FUEL LINE	1	080425-	NO. 1
8	R120186	BOLT	2		
	R71212	CLAMP	1		
	R120183	STRAP	1		
	R120184	STRAP	1		
	R59297	HALF CLAMP	2		
9	R71212	CLAMP	1		
	R59297	HALF CLAMP	2		
	R120184	STRAP	1		
	R120183	STRAP	1		
	R120186	BOLT	1		
10	R120185	BOLT	2		
	R59297	HALF CLAMP	2		
	R120183	STRAP	1		
11	RE55662	ABSORBER	1		
12	24H1884	WASHER	1		13/32" X 13/16" X 0.120" 13/32" X 13/16" X 0.120"
13	19M7166	CAP SCREW	1		M10 X 20 M10 X 20
14	RE57152	INJECTION NOZZLE	6		(1 ORANGE DOT) (ROBERT BOSCH)
	SE500182	INJECTION NOZZLE	6		(REMANUFACTURED)
15	R84472	WASHER	6		7.360 X 18.160 X 2 MM (0.290" X 0.715" X 0.079")
16	R504057	O-RING	6	087550-	(SUB FOR T44604, THIS APPLICATION)
17	RE501970	CONNECTOR	6	087550-	
18	R79604	TUBE NUT	6	087550-	
19	R51937	TUBE NUT	1		
20	AR85519	PLUG	1		
21	RE500803	FUEL LINE	1	087550-	
22	R77551	O-RING	6	-087549	
23	R87082	FITTING	6	-087549	
24	R79604	TUBE NUT	6	-087549	
25	R79605	WASHER	6	-087549	
26	R79606	TEE FITTING	6	-087549	
27	R51936	WASHER	11	-087549	
28	RE15807	FUEL LINE	2	-087549	(INCLUDES (2) R51936 AND (2) R51937)
29	RE15808	FUEL LINE	2	-087549	(INCLUDES (2) R51936 AND (2) R51937)
30	RE36421	FUEL LINE	2	-087549	
31	R97061	TEE FITTING	1	-087549	
32	R123593	TUBE NUT	1		
33	AR104650	FUEL LINE	1		

FUEL INJECTION PUMP,FUEL LINE AND ENGINE CONTROLLER (ESN -127422)

RGP5016 -UN-15APR98

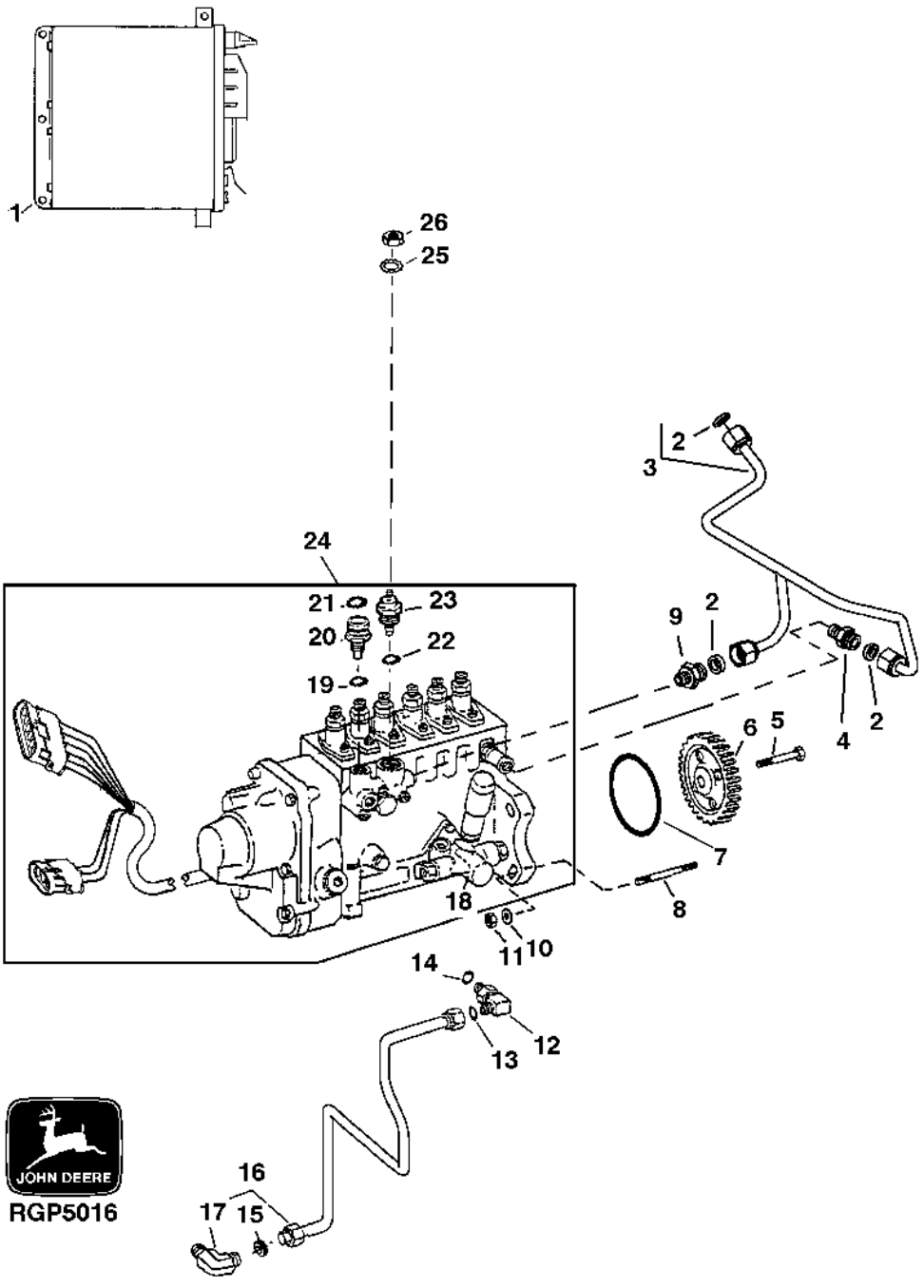

FUEL INJECTION PUMP, LUBE LINE AND ENGINE CONTROLLER (ESN -127422) -CONTINUED

KEY	PART NO.	PART NAME	QTY	ENGINE SERIAL NO.	REMARKS
1	RE502067	ENGINE CONTROLLER	1		(MARKED RE66617) (SUB RE503309) (USE WITH RE62645)
	RE509773	ENGINE CONTROLLER	1	-090002	(MARKED RE502406 OR RE506424) (USE WITH RE502698) (SUB FOR RE503309 OR RE508430)
	RE506199	ENGINE CONTROLLER	1	090003-	(MARKED RE502406) (USE WITH RE503347) (SUB FOR RE503403)
2	R51936	WASHER	3		
3	RE66000	FUEL LINE	1	-087549	
	RE501262	FUEL LINE	1	087550-090544	(SUB RE504635)
	RE504635	FUEL LINE	1	090545-127422	(SUB FOR RE501262)
4	RE502650	FITTING	1		(SUB FOR R63604)
5	R121195	CAP SCREW	4		(SUB FOR R112975)
6	R121164	GEAR	1		
7	R76358	O-RING	1		
8	R114130	STUD	4		
9	RE67934	CONNECTOR	1	-127411	
10	24M7239	WASHER	4		10.700 X 21 X 2.500 MM, (SUB FOR M72490)
11	14H1090	NUT	4		3/8"
12	AR88903	ELBOW FITTING	1		
13	R67264	PACKING	1		
14	R79060	O-RING	1		
15	R67264	PACKING	1		
16	RE60577	OIL LINE	1		
17	T18012	ELBOW FITTING	1		
18	RE46252	FUEL PUMP	1		
19	R53899	WASHER	1		
20	RE28217	FUEL TEMPERATURE SENSOR	1		(SUB RE506424, 57M7278, 51M4238 AND (2) 57M7829)
	RE506424	FUEL TEMPERATURE SENSOR	1		
21	R98500	O-RING	1		
22	R99047	O-RING	1		
23	R89014	SOLENOID	1		(SHUT-OFF HOUSING)
24	RE502698	FUEL INJECTION PUMP	1	-090002	(A) (ROBERT BOSCH) (PES6P120A720RS3354) (SUB FOR RE62645)
	RE503347	FUEL INJECTION PUMP	1	090003-127422	(A) (ROBERT BOSCH) (USE WITH RE506199 OR RE503403) (SUB RE507687, (3) R504303, R504304, (3) 12M7006 AND (3) 14M7272)
25	12H296	WASHER	1	-127422	5.486 MM (0.216")
26	14M7297	NUT	1	-127422	M5
..	RE506251	TEE FITTING	1		

(A) "SEE YOUR AUTHORIZED PUMP REPAIR STATION FOR PARTS NOT LISTED"

FUEL INJECTION PUMP,FUEL LINE AND ENGINE CONTROLLER (ESN 127423-)

RGP7453 -UN-21MAR01

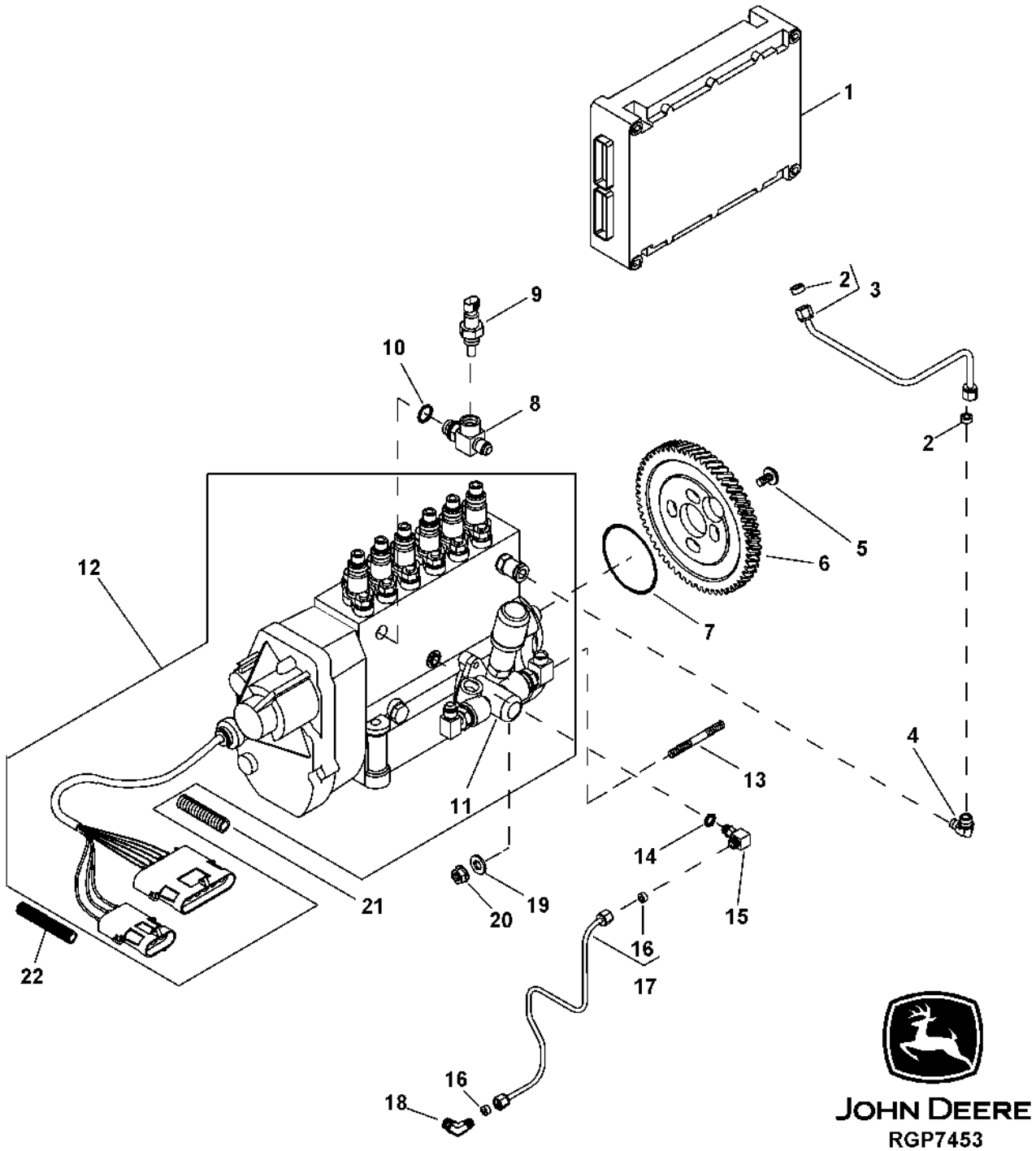

FUEL INJECTION PUMP, LUBE LINE AND ENGINE CONTROLLER (ESN 127423-)- CONTINUE

KEY	PART NO.	PART NAME	QTY	ENGINE SERIAL NO.	REMARKS
1	RE507734	ENGINE CONTROLLER	1		(MARKED RE502406)
	RE501491	COVER	1		
2	R51936	WASHER	2		
3	RE504748	FUEL LINE	1		
4	RE502650	FITTING	1		
	R79060	O-RING	1		
5	R121195	CAP SCREW	4		
6	R121164	GEAR	1		
7	R76358	O-RING	1		
8	RE506251	TEE FITTING	1		
9	RE506424	FUEL TEMPERATURE SENSOR	1		
10	51M4238	SEALING RING	1		
11	RE46252	FUEL PUMP	1		
12	RE507687	FUEL INJECTION PUMP	1		(A) (ROBERT BOSCH)
13	R114130	STUD	4		
14	R79060	O-RING	1		
15	AR88903	ELBOW FITTING	1		
16	R67264	PACKING	2		
17	RE60577	OIL LINE	1		
18	T18012	ELBOW FITTING	1		
19	24M7239	WASHER	4		10.700 X 21 X 2.500 MM, (SUB FOR M72490)
20	14H1090	NUT	4		3/8"
21	R504032	SHIELD	1		
22	R504033	SHIELD	1		

(A)"SEE YOUR AUTHORIZED PUMP REPAIR STATION FOR PARTS NOT LISTED"

FUEL INJECTION NOZZLE (ROBERT BOSCH)

RGP7450 -UN-19MAR01

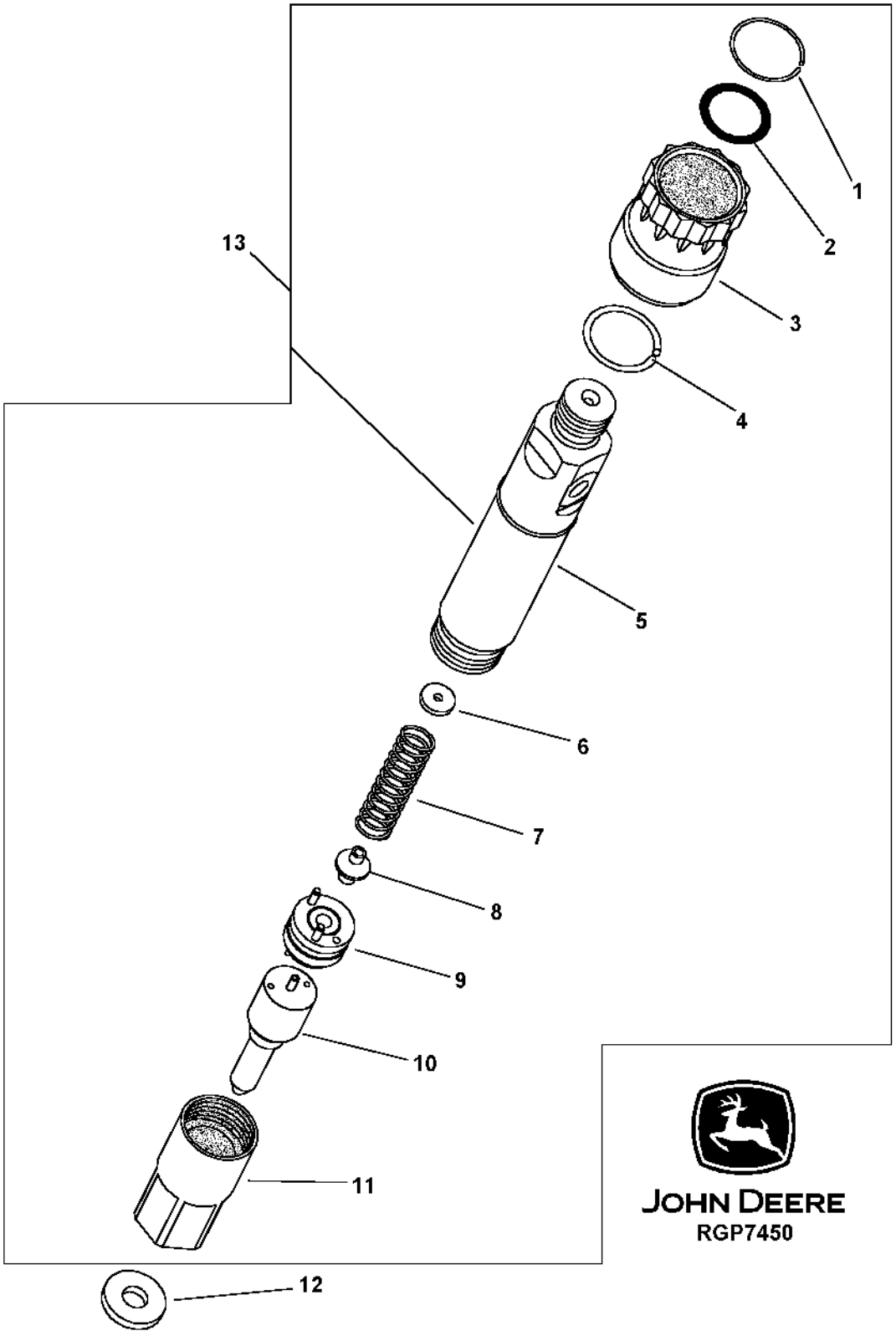

FUEL INJECTION NOZZLE (ROBERT BOSCH) - CONTINUED

KEY	PART NO.	PART NAME	QTY	ENGINE SERIAL NO.	REMARKS
1	R60277	SNAP RING	1		
2	R51603	O-RING	1		
3	R60279	NUT	1		
4	R60278	SNAP RING	1		
5	.....	NOZZLE HOLDER	1		(SUB RE57152)
6	R83720	WASHER	AR		1.02 MM (.0402")
	R83721	WASHER	AR		1.08 MM (.0425")
	R83722	WASHER	AR		1.12 MM (.0441")
	R83723	WASHER	AR		1.18 MM (.0465")
	R83724	WASHER	AR		1.22 MM (.0480")
	R83725	WASHER	AR		1.28 MM (.0504")
	R83726	WASHER	AR		1.30 MM (.0512")
	R83727	WASHER	AR		1.38 MM (.0543")
	R83728	WASHER	AR		1.42 MM (.0559")
	R83729	WASHER	AR		1.48 MM (.0583")
	R83730	WASHER	AR		1.50 MM (.0591")
	R83731	WASHER	AR		1.58 MM (.0622")
	R83732	WASHER	AR		1.60 MM (.0630")
	R83733	WASHER	AR		1.68 MM (.0661")
	R83734	WASHER	AR		1.70 MM (.0669")
	R83735	WASHER	AR		1.78 MM (.0701")
	R83736	WASHER	AR		1.82 MM (.0717")
	R83737	WASHER	AR		1.88 MM (.0740")
	R83738	WASHER	AR		1.90 MM (.0748")
	R83739	WASHER	AR		1.98 MM (.0780")
7	R108699	SPRING	1		
8	R108700	SEAT	1		
9	R108701	PLATE	1		
10	RE57153	NOZZLE	1		(7 X 0.22)
11	R127181	NUT	1		
12	R84472	WASHER	1		
13	RE57152	INJECTION NOZZLE	6		(ROBERT BOSCH) (2 ORANGE DOTS)
	SE500182	INJECTION NOZZLE	6		(REMANUFACTURED)

FUEL TRANSFER PUMP (ROBERT BOSCH)

RGP3934 -UN-01JAN94

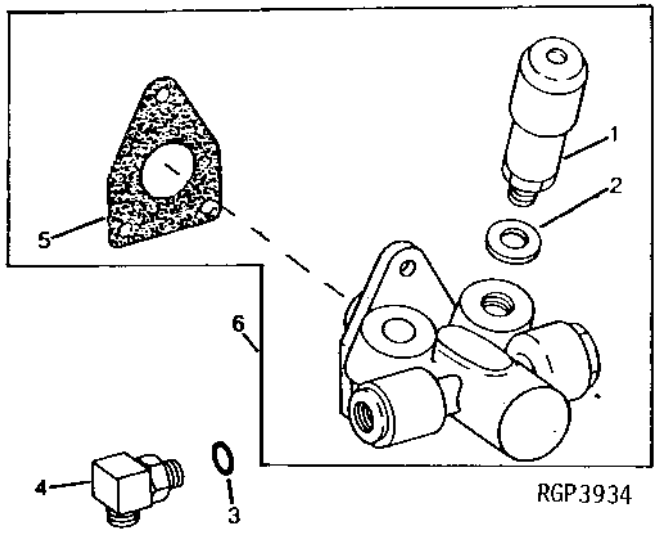

KEY	PART NO.	PART NAME	QTY	ENGINE SERIAL NO.	REMARKS
1	RE65265	HAND PRIMER	1		
2	R54025	WASHER	1		
3	R26448	O-RING	2		
4	RE10258	ELBOW FITTING	2		(TO RE65787)
	RE34128	ELBOW FITTING	2		(TO RE63313)
5	R67879	GASKET	1		
6	RE46252	FUEL PUMP	1		

INTAKE MANIFOLD (ESN -199999)

RGP4720 -UN-02AUG96

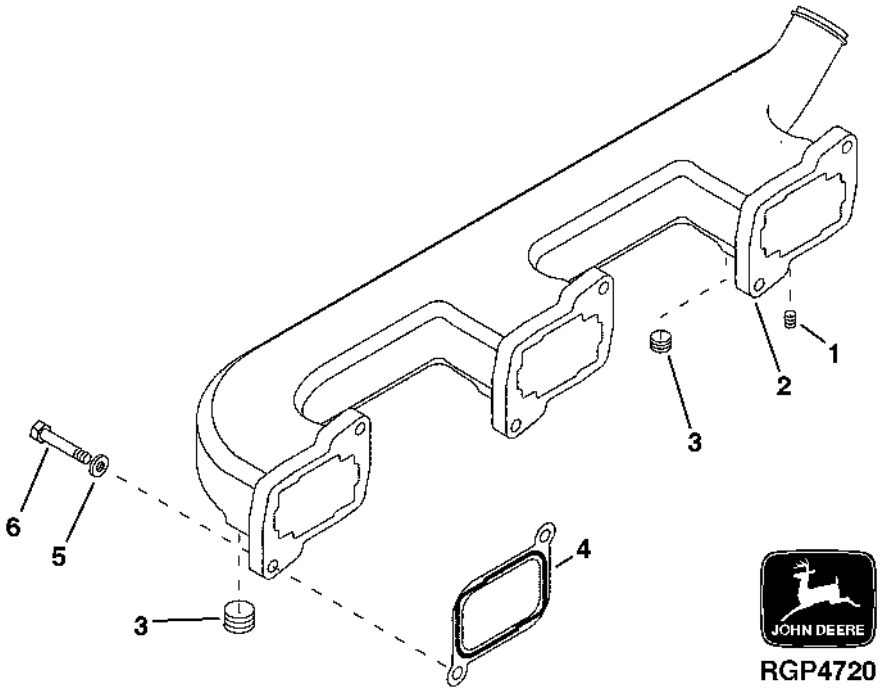

KEY	PART NO.	PART NAME	QTY	ENGINE SERIAL NO.	REMARKS
1	RE71255	PIPE PLUG	1		1/8"
2	R132290	INTAKE MANIFOLD	1		(SUB R503926 AND RE46684)
3	15H666	PIPE PLUG	1		3/8", (FRONT)
	15H690	PIPE PLUG	1		3/4", (REAR)
4	R130573	GASKET	3		
5	24H1682	WASHER	6		13/32" X 7/8" X 0.120"
6	19H1651	CAP SCREW	6		3/8" X 1-1/2"

INTAKE MANIFOLD (ESN 200000-)

RGP7359 -UN-13FEB01

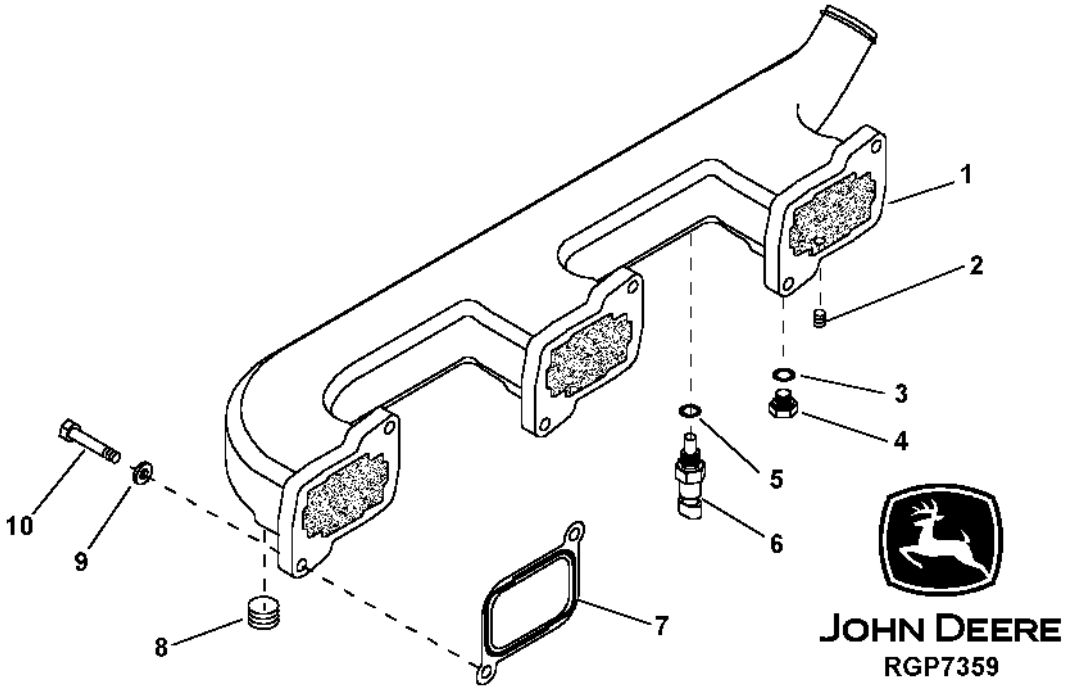

KEY	PART NO.	PART NAME	QTY	ENGINE SERIAL NO.	REMARKS
1	R503926	INTAKE MANIFOLD	1		
2	RE71255	PIPE PLUG	1		1/8"
3	51M7041	O-RING	1		11.300 X 2.200 MM
4	RE46684	PLUG	1		(INCLUDES 51M7041)
5	51M7041	O-RING	1		11.300 X 2.200 MM
6	RE48419	SENSOR	1		(INCLUDES 51M7041)
7	R130573	GASKET	3		
8	15H690	PIPE PLUG	1		3/4"
9	24H1682	WASHER	6		13/32" X 7/8" X 0.120"
10	19H1651	CAP SCREW	6		3/8" X 1-1/2"

MEMORANDA

TURBOCHARGER AND OIL LINES

RGP5015 -UN-15APR98

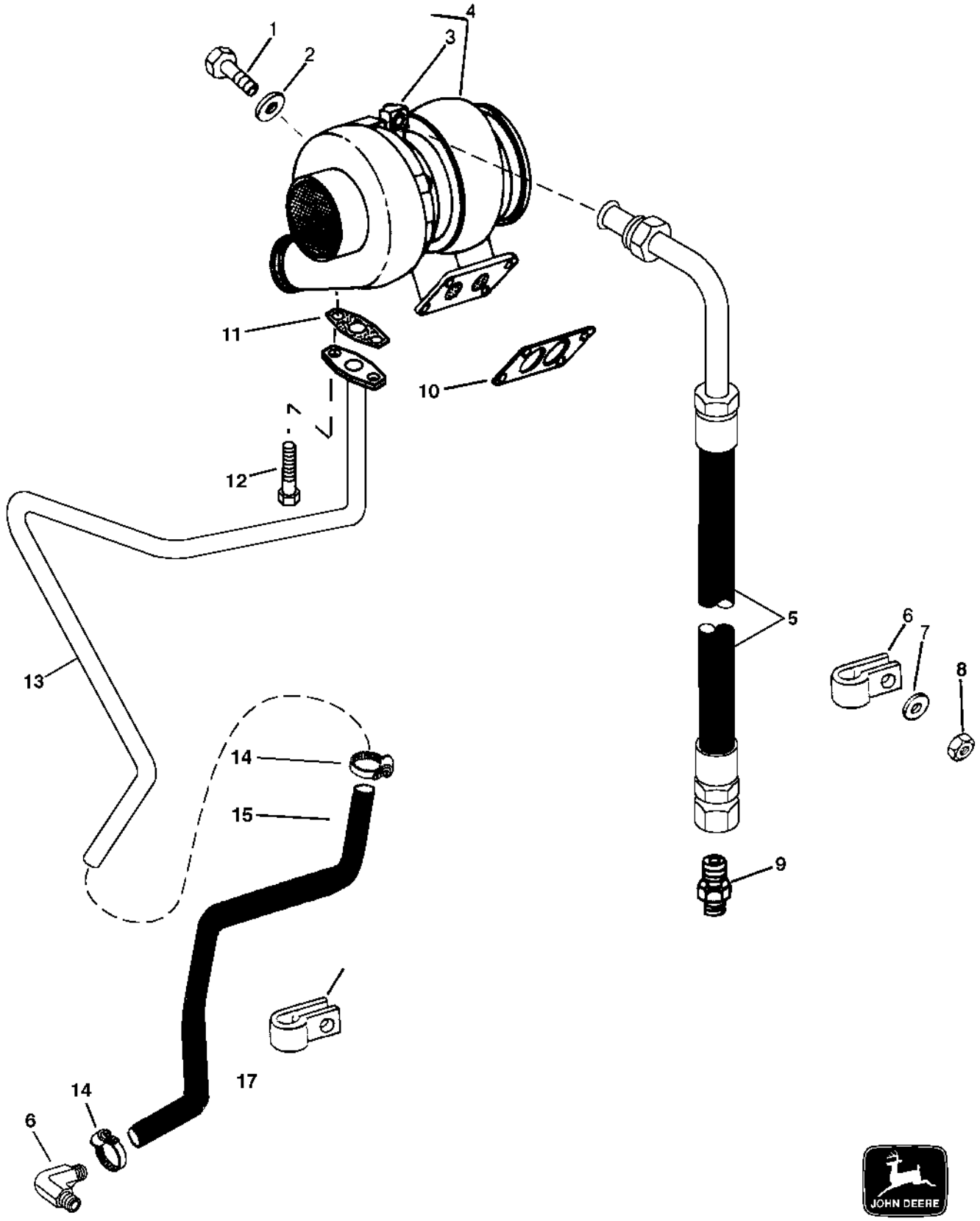

TURBOCHARGER AND OIL LINES - CONTINUED

KEY	PART NO.	PART NAME	QTY	ENGINE SERIAL NO.	REMARKS
1	R54500	SCREW	4		9.525 X 25.400 MM (3/8" X 1")
2	24H1305	WASHER	4		13/32" X 13/16" X 0.065"
3	T11180	ELBOW FITTING	1		
4	RE501051	TURBOCHARGER	1		(MARKED RE71192) (REMANUFACTURED) (SCHWITZER)
5	RE20230	OIL LINE	1		
6	T13814	CLAMP	1		
7	24H753	WASHER	1		9/32" X 5/8" X 0.049"
8	14H786	NUT	1		1/4"
9	RE57561	CONNECTOR	1		
10	R123572	GASKET	1		(SUB FOR R89879, THIS APPLICATION)
11	R105346	GASKET	1		
12	R122618	SCREW	2		
13	RE69328	OIL LINE	1		
14	TY22467	CLAMP	2		
15	R500723	HOSE	1		
16	R126812	ELBOW FITTING	1		
17	T72853	STRAP	1		

WATER PUMP

RGP7459 -UN-27MAR01

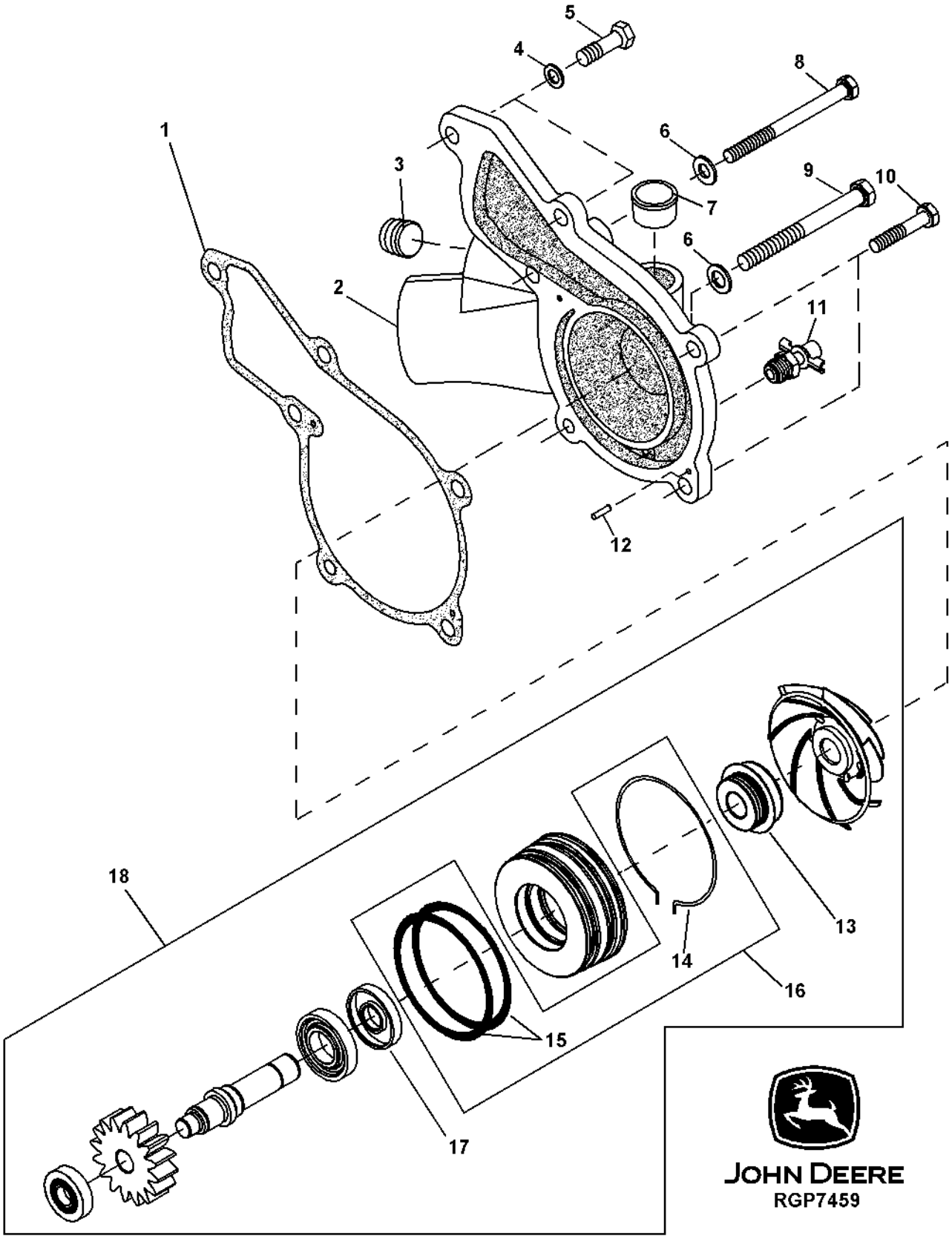

WATER PUMP - CONTINUED

KEY	PART NO.	PART NAME	QTY	ENGINE SERIAL NO.	REMARKS
1	R119383	GASKET	1		
2	R119382	COVER	1		(LEFT HAND)
3	15H624	PIPE PLUG	1		
4	24H1136	WASHER	1		
5	19H1854	CAP SCREW	1		3/8" X 3-3/4"
6	24H1305	WASHER	3		
7	RE57190	SEAL	1		
8	19H2345	CAP SCREW	1		3/8" X 1/2"
9	19H2343	CAP SCREW	1		5/16" X 5-1/2"
10	19H3411	CAP SCREW	2		3/8" X 1-1/8"
11	AT13740	DRAIN VALVE	1		
12	R11086	DOWEL PIN	2		
13	RE69844	SEAL KIT	1	-135212	(USE WITH R119795)
	RE68318	SEAL KIT	1	135213-	(USE WITH R503501)
14	R121316	RING	1		(RETAINING)
	R26976	O-RING	1		(USE WITH R503501)
15	R122430	O-RING	2	-135212	(USE WITH R119795)
	R504778	O-RING	1	135213-	(USE WITH R503501) (BLUE)
	R504791	O-RING	1	135213-	(USE WITH R503501) (PINK)
16	RE502154	KIT	1		(WATER PUMP SEAL)
17	RE39134	SEAL	1		(OIL)
18	RE57154	WATER PUMP	1	-135212	(MARKED R119795) (SUB RE509598)
	RE509598	WATER PUMP	1	135213-	(MARKED R503501)

WATER MANIFOLD AND THERMOSTAT

RGP7356 -UN-13FEB01

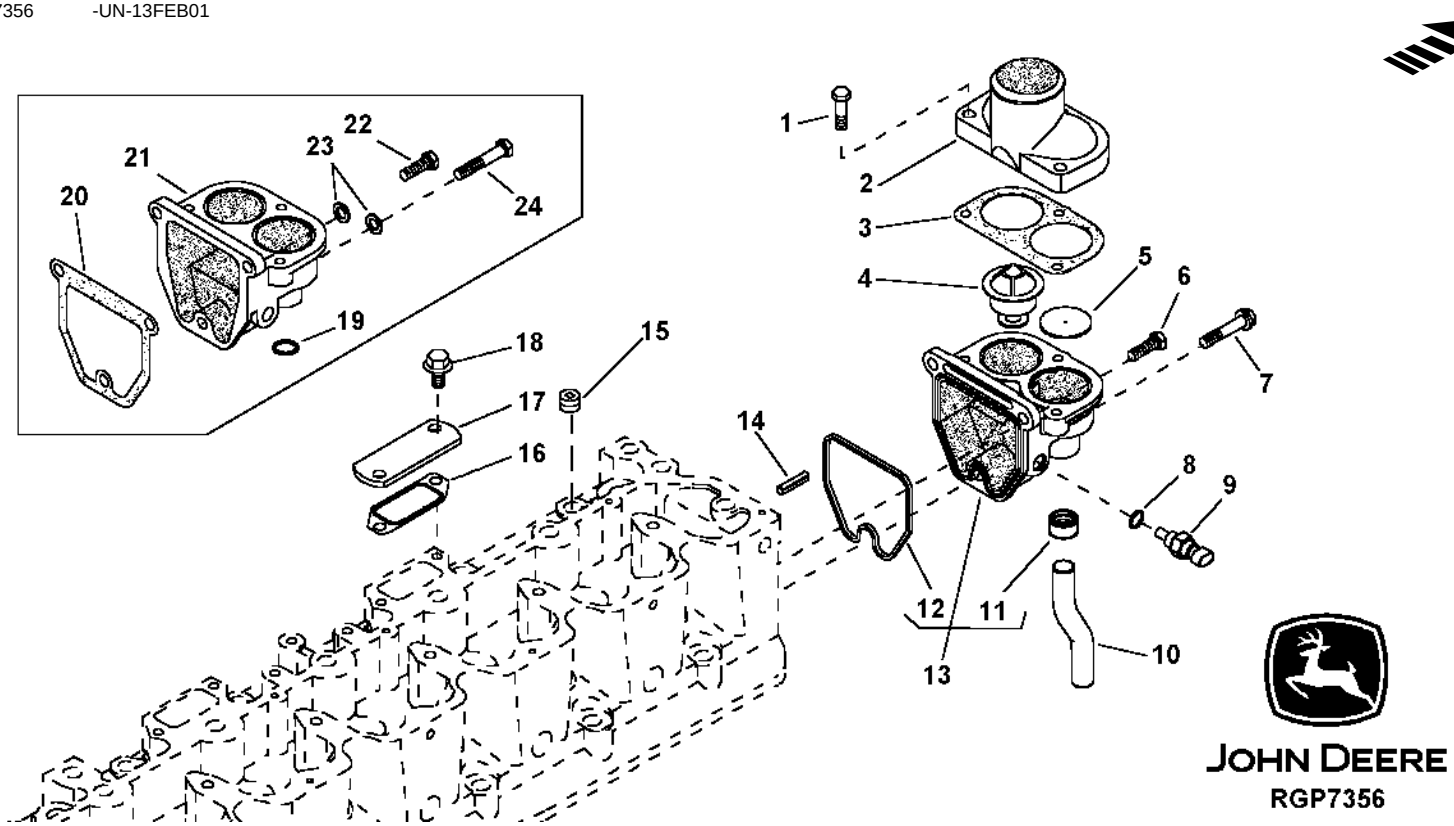

KEY	PART NO.	PART NAME	QTY	ENGINE SERIAL NO.	REMARKS
1	19H3239	CAP SCREW	3		3/8" X 1-1/4"
2	R86007	COVER	1		
3	R124607	GASKET	1		
4	AR48675	THERMOSTAT	1		82°C (180°F)
5	R100671	PLUG	1		
6	19H3773	CAP SCREW	1	124462-	3/8" X 2"
7	19H3483	CAP SCREW	2	124462-	3/8" X 1-1/8"
8	R77673	O-RING	1		
9	RE48419	SENSOR	1		(SUB FOR RE151433)
10	R120022	TUBE	1		
11	RE57190	SEAL	1	124462-	
12	R136063	SEAL	1	124462-	
13	RE502573	HOUSING	1	124462-	
14	34H329	SPRING PIN	1		
15	15H691	PIPE BUSHING	1		1/8"
16	R88397	GASKET	2		
17	R86061	STRAP	2		
18	T53268	BOLT	4		3/8" X 0.870"
19	R72328	O-RING	1	-124461	
20	R124211	GASKET	1	-124461	
21	RE502573	HOUSING	1	-124461	(SUB FOR R122195)
22	19H3483	CAP SCREW	2	-124461	3/8" X 1-1/8"
23	24M7096	WASHER	3	-124461	10.500 X 18 X 1.600 MM
24	19H1819	CAP SCREW	1	-124461	3/8" X 2-1/8"

MEMORANDA

ENGINE OIL COOLER

RGP5010 -UN-15APR98

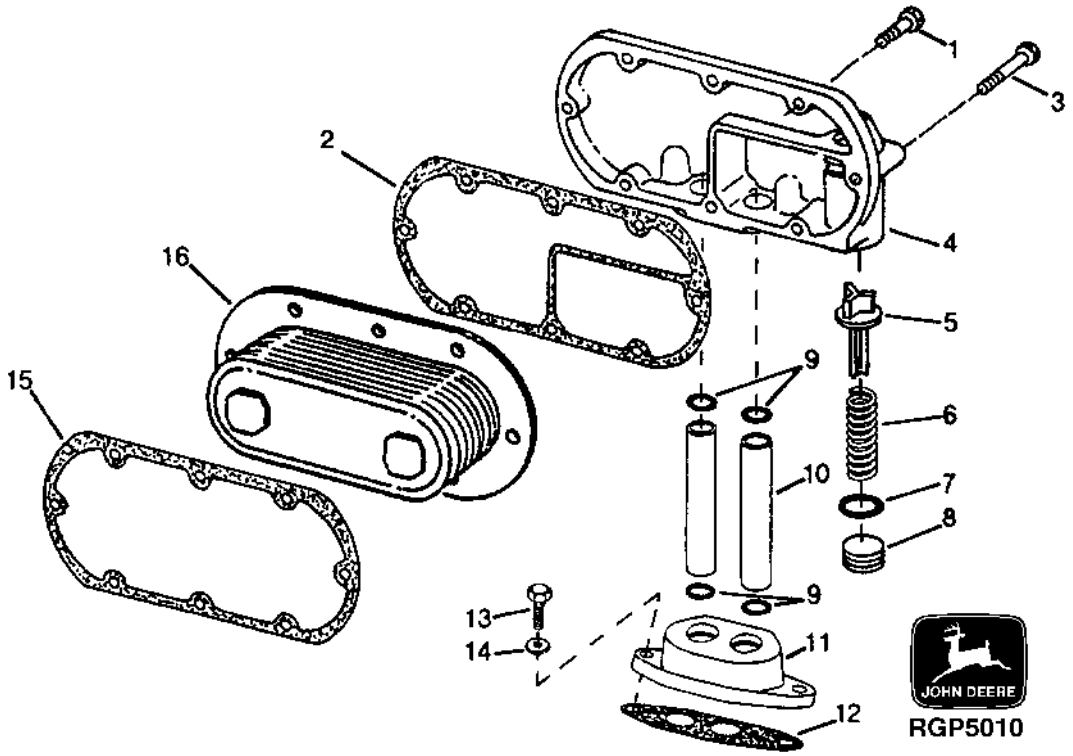

KEY	PART NO.	PART NAME	QTY	ENGINE SERIAL NO.	REMARKS
1	19H3768	CAP SCREW	5		5/16" X 1-3/8"
2	R132396	GASKET	1		
3	19H3769	CAP SCREW	3		5/16" X 2-1/2"
4	R134602	COVER	1		
5	R500055	VALVE	1		
6	R98064	SPRING	1		
7	U17409	O-RING	1		
8	R121163	FITTING PLUG	1		
9	R47153	O-RING	4		
10	R51053	OIL TUBE	2		
11	R127297	ADAPTER	1		
12	R50424	GASKET	2		
13	19H3483	CAP SCREW	2		3/8" X 1-1/8"
14	24M7096	WASHER	2		10.500 X 18 X 1.600 MM
15	AR58952	GASKET	1		
16	AR55394	OIL COOLER	1		

ENGINE OIL COOLER BYPASS TUBES AND ADAPTER

RGP5009 -UN-15APR98

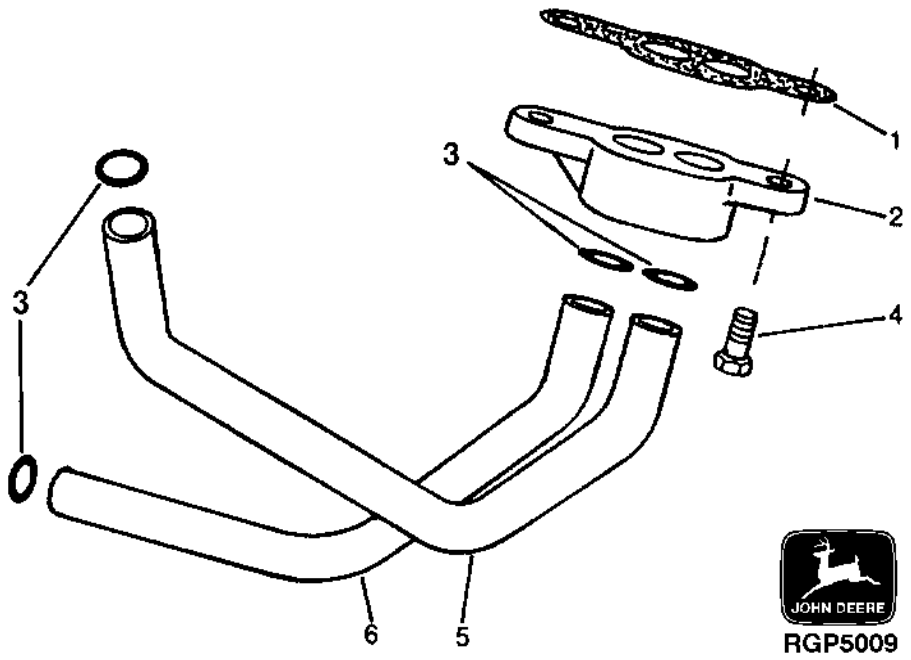

KEY	PART NO.	PART NAME	QTY	ENGINE SERIAL NO.	REMARKS
1	R109625	GASKET	1		
2	R116233	ADAPTER	1		
3	R71732	O-RING	4		31.344 X 3.531 MM
4	R40236	CAP SCREW	2		
5	R126337	OIL TUBE	1		
6	R116718	OIL TUBE	1		

FUEL FILTER AND FUEL FILTER FUEL LINES

T152565 -UN-12MAR02

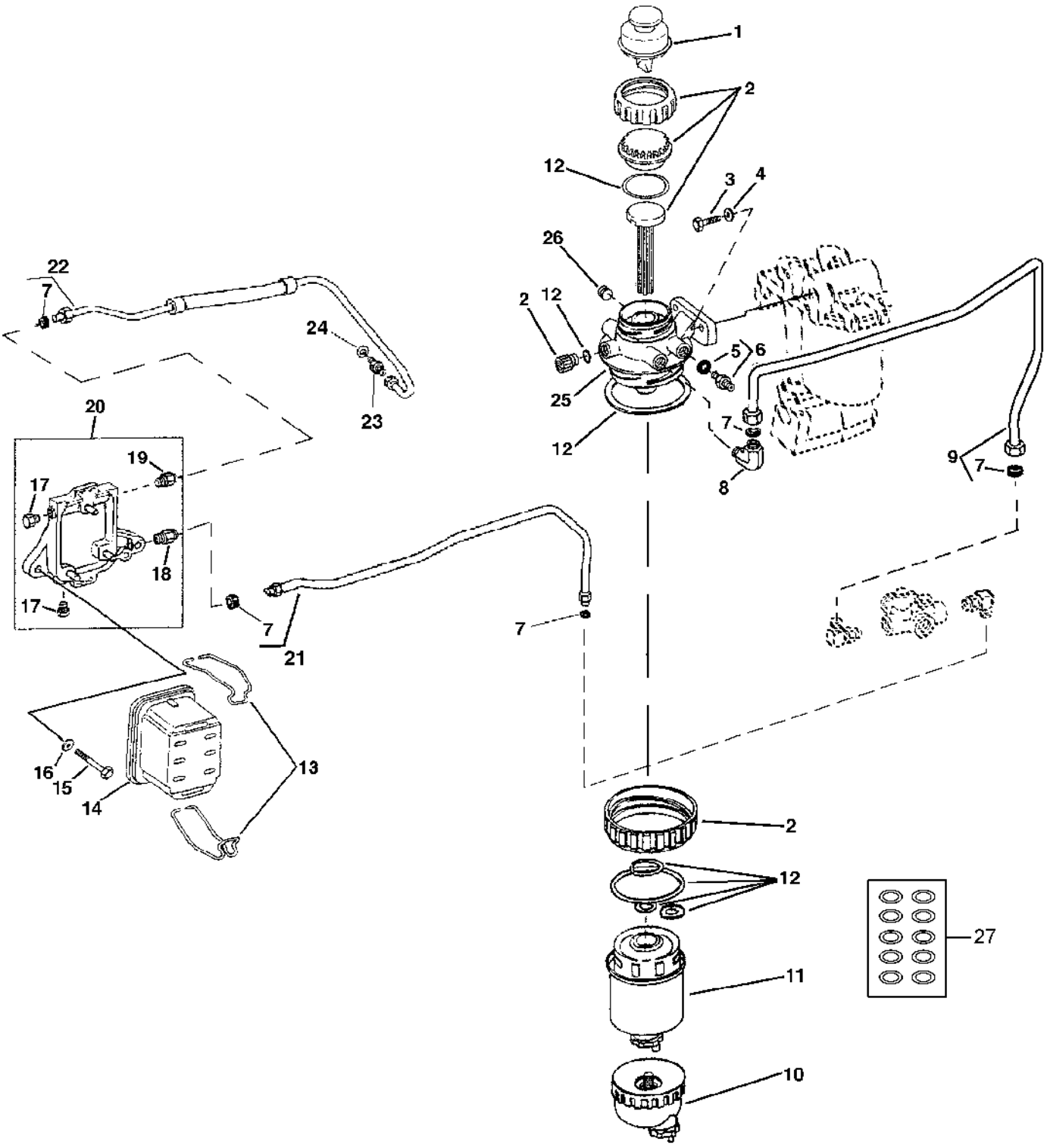

T152565

FUEL FILTER AND FUEL LINES

KEY	PART NO.	PART NAME	QTY	ENGINE SERIAL NO.	REMARKS
1	RE50467	HAND PRIMER	1		
2	RE51649	SEAL KIT	1		(MECHANICAL COMPONENTS) (INCLUDES R113563)
3	19H3483	CAP SCREW	2		3/8" X 1-1/8"
4	24M7096	WASHER	2		10.500 X 18 X 1.600 MM
5	R26286	O-RING	1		
6	AM31805	FITTING	1		
7	R67092	SEAL	5		
8	R134957	ELBOW FITTING	1		
9	RE63313	FUEL LINE	1		
10	RE51650	SEDIMENT BOWL	1		
11	RE65431	FILTER ELEMENT	1		
12	RE516553	KIT	1		(FUEL FILTER PACKINGS) (SUB FOR RE50752) (INCLUDES R113562 AND R113565)
13	R89927	CLAMP	2		
14	AR86745	FILTER ELEMENT	1		
15	19H3104	CAP SCREW	2		7/16" X 1-1/4"
16	24H1325	WASHER	2		15/32" X 59/64" X 0.065"
17	R119223	PLUG	2		
18	RE54244	CHECK VALVE	1		
19	RE54245	FITTING	1		
20	RE61693	BASE	1		
21	RE65787	FUEL LINE	1		
22	RE504139	FUEL LINE	1		(SUB FOR RE500280) (INCLUDES (2) R49672)
23	.....	FITTING	NA		
24	51M4236	SEALING RING	1		(SUB FOR R93008)
25	RE63183	FILTER HEAD	1		
26	R82719	FITTING PLUG	2		
27	RE516513	KIT	1		(WITH HAND PRIMER) (CONTAINS 10 O-RINGS)
	RE516512	KIT	1		(WITHOUT HAND PRIMER) (CONTAINS 10 O-RINGS)

STARTING MOTOR (24V)
(NIPPONDENSO NO. 228000-7410)

RGP5018 -UN-15APR98

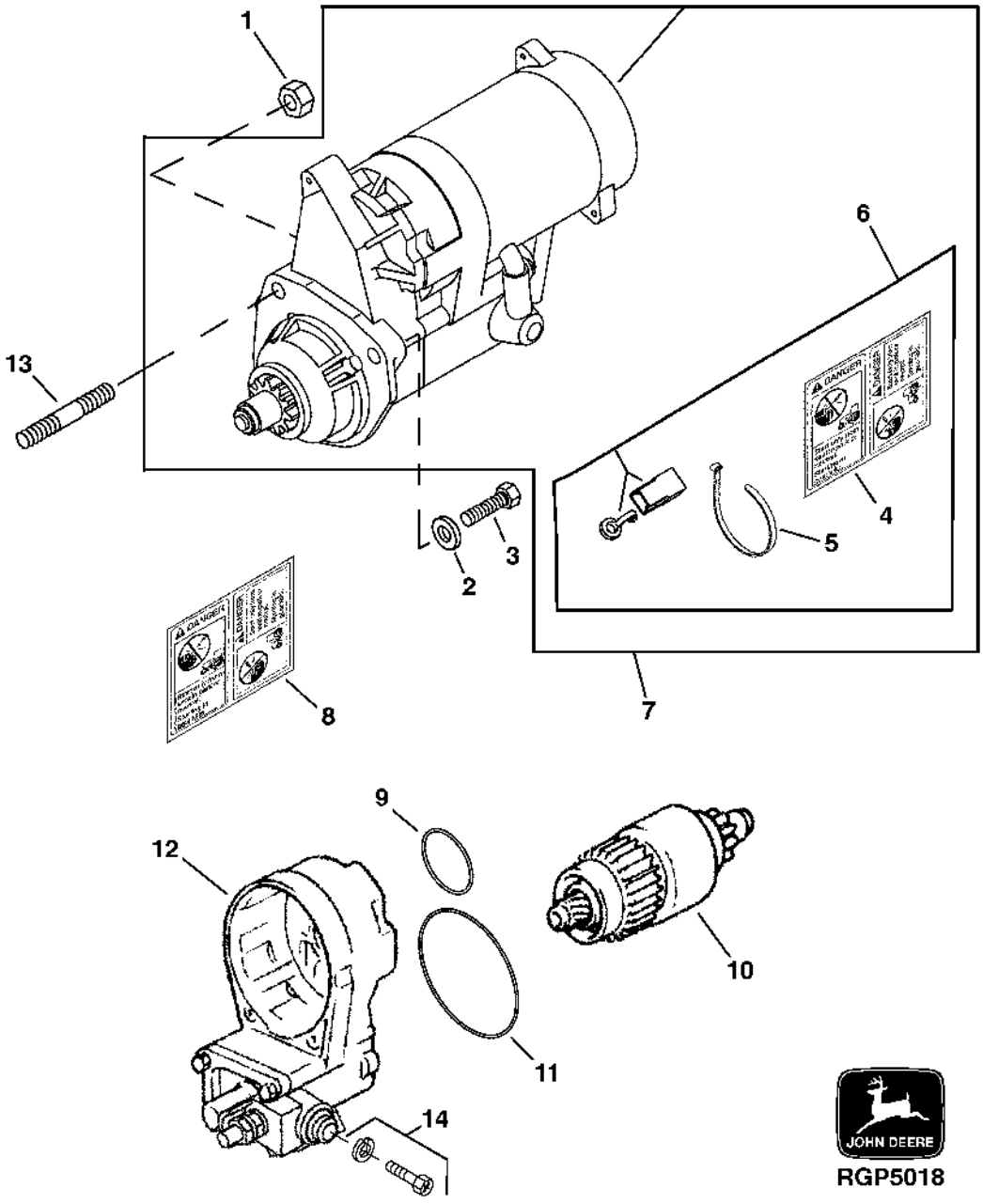

STARTING MOTOR (24V) - CONTINUED
(NIPPONDENSO NO. 228000-7410)

KEY	PART NO.	PART NAME	QTY	ENGINE SERIAL NO.	REMARKS
1	E55662	FLANGE NUT	1		
2	24H1303	WASHER	2		13/32" X 11/16" X 0.065"
3	19H3219	CAP SCREW	2		3/8" X 1-3/8"
4	T146102	LABEL	1		(ENGLISH)
5	R44302	TIE BAND	1		
6	RE70756	KIT	1		
7	RE501150	STARTER MOTOR KIT	1		(MARKED RE501060 OR RE69705)
8	T146517	SAFETY SIGN	1		(SPANISH)
	T146104	SAFETY SIGN	1		(FRENCH)
	T146515	SAFETY SIGN	1		(GERMAN)
	T146516	SAFETY SIGN	1		(ITALIAN)
	T146517	SAFETY SIGN	1		(ENGLISH-FRENCH)
9	R135510	O-RING	1		
10	RE70682	CLUTCH	1		
11	R135509	SEAL	1		
12	RE70678	SWITCH	1		
13	R114130	STUD	1		
14	RE71256	SCREW, WITH WASHER	1		

MEMORANDA

CRANKSHAFT DAMPERS AND PULLEY

RGP5012 -UN-15APR98

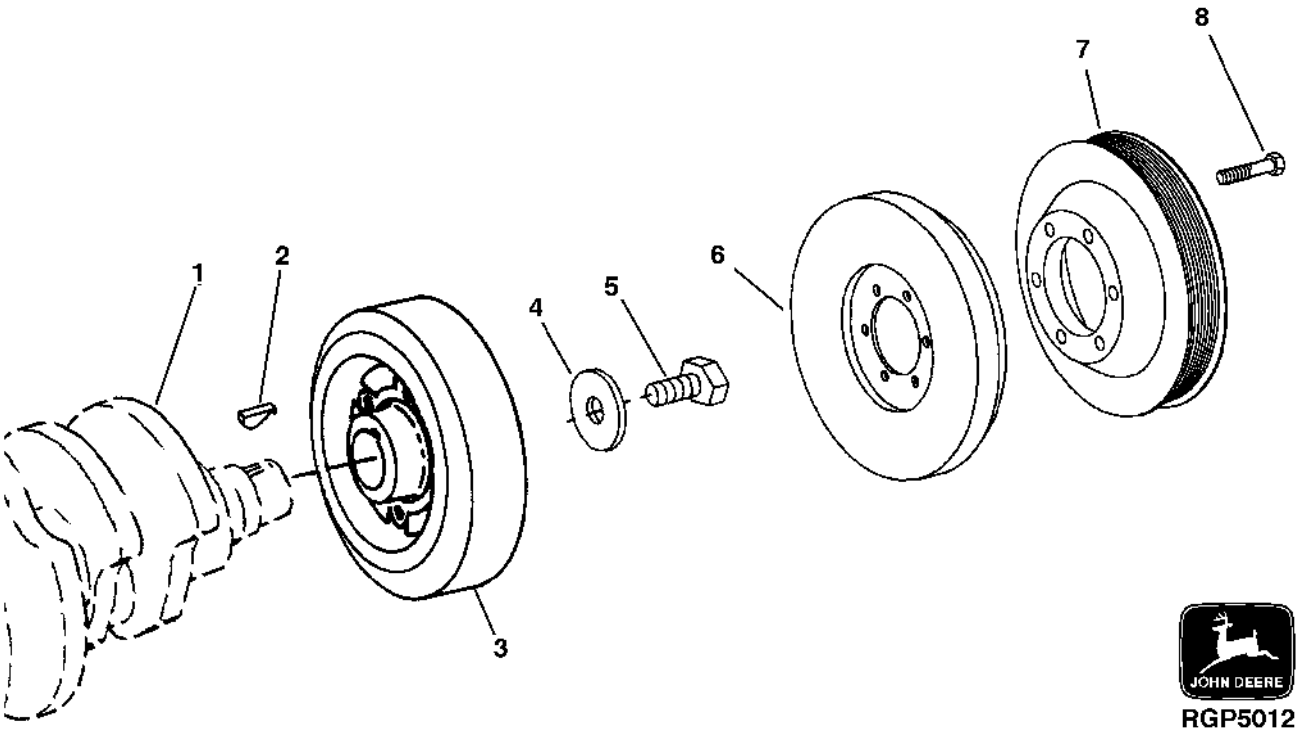

KEY	PART NO.	PART NAME	QTY	ENGINE SERIAL NO.	REMARKS
1	RE55522	CRANKSHAFT	1		
2	R116311	KEY	1		
3	RE500917	TORSIONAL DAMPENER	1		
4	R26333	WASHER	1		
5	R79846	CAP SCREW	1		
6	R501114	SPACER	1		
	RE57604	TORSIONAL DAMPENER	1		(MATERIAL HANDLER)
7	R135175	PULLEY	1		
8	19H2633	CAP SCREW	6		9.525 X 38.100 MM

MEMORANDA

FLYWHEEL

RGP2155 -UN-01JAN94

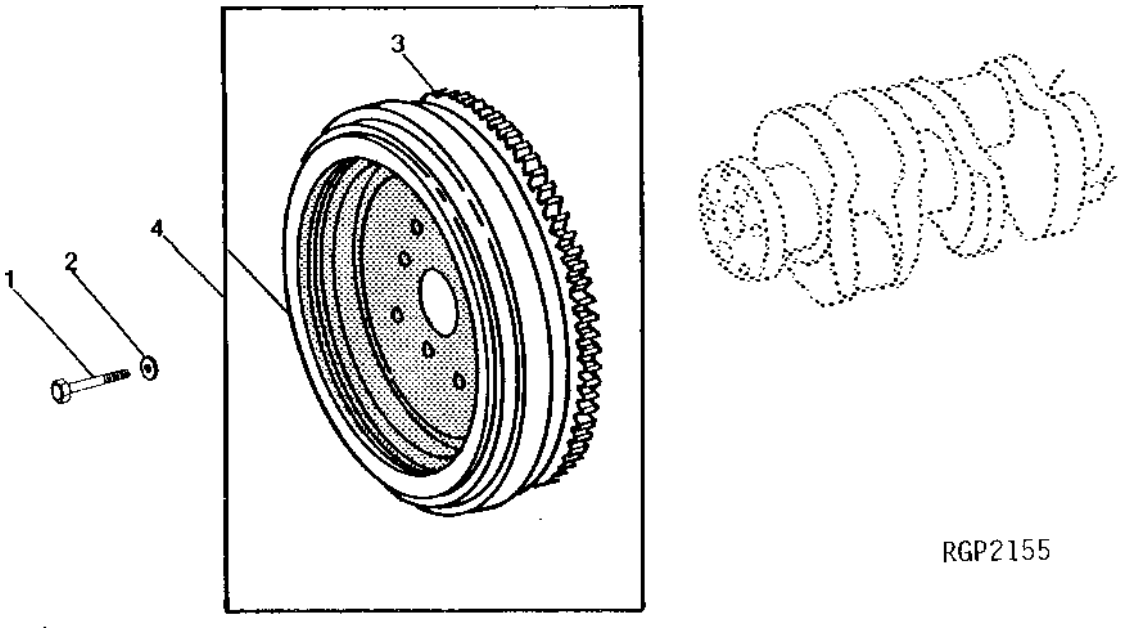

KEY	PART NO.	PART NAME	QTY	ENGINE SERIAL NO.	REMARKS
1	R121199	CAP SCREW	6	-094481	12.700 X 50.800 MM (1/2" X 2")
	R52634	CAP SCREW	6	094482-	12.700 X 35.052 MM (1/2" X 1.380")
	R121199	CAP SCREW	6		12.700 X 50.800 MM (1/2" X 2")
2	T23891	WASHER	6		13.487 X 20.625 X 1.524 MM (17/32" X 13/16" X 0.060")
3	R28811	RING GEAR	1		
4	RE56779	FLYWHEEL	1	-094481	(MARKED R121026)
	RE44632	FLYWHEEL	1	094482-	(MARKED R107339)
	RE56779	FLYWHEEL	1		(MARKED R121026)

ENGINE GASKET KITS

RGP4358 -UN-31JUL00

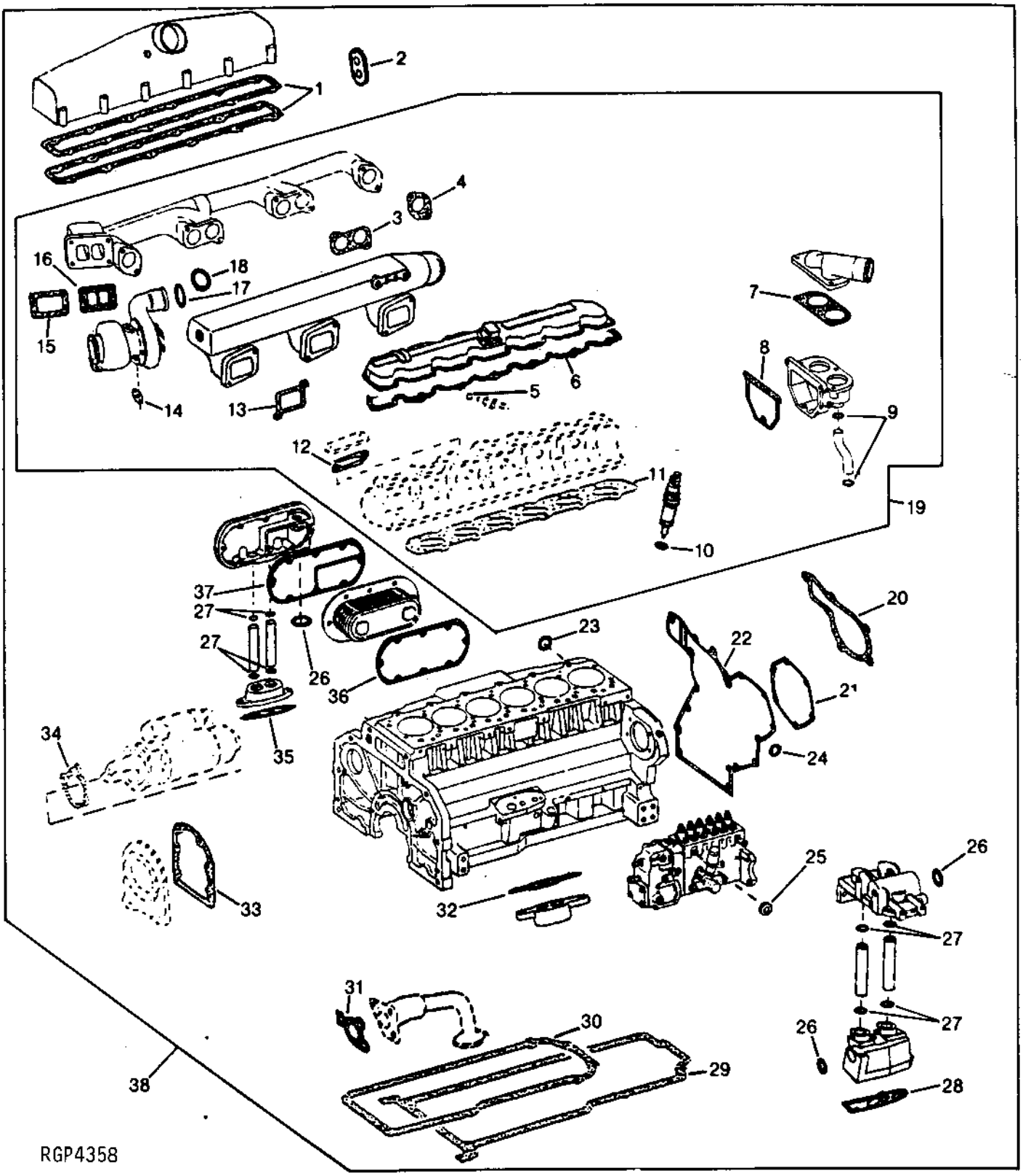

ENGINE GASKET KITS - CONTINUED

KEY	PART NO.	PART NAME	QTY	ENGINE SERIAL NO.	REMARKS
1	R88993	GASKET	1		
2	R100911	SEAL	1		
3	RE62776	GASKET	2		
4	RE62777	GASKET	2		
5	R77551	O-RING	6		
6	R49866	GASKET	1		
7	R124607	GASKET	1		
8	R124211	GASKET	1		
9	R72328	O-RING	1		
10	R84472	WASHER	6		
11	RE55475	ENGINE CYLINDER HEAD GASKET	1		
12	R88397	GASKET	2		
13	R120646	GASKET	3		
	R130573	GASKET	3		
14	R105346	GASKET	1		
15	R92097	GASKET	NA		
16	R123572	GASKET	1		(SUB FOR R89879, THIS APPLICATION)
17	R86743	O-RING	1		
18	R50405	O-RING	1		
19	RE506222	GASKET KIT	1		(SUB FOR RE57186) CYLINDER HEAD
20	R119383	GASKET	1		
21	R50390	GASKET	1		
22	R119384	GASKET	1		
23	U13639	O-RING	1		
24	R54856	O-RING	1		
25	R53899	WASHER	1		(USE WITH R83489)
	R53901	WASHER	1		(USE WITH R83490)
26	U17409	O-RING	3		
27	R47153	O-RING	8		
28	R119847	GASKET	1		
29	R49377	GASKET	1		
30	.....	GASKET	NA		
31	R100569	GASKET	1		
32	R109625	GASKET	1		
33	R26058	GASKET	1		
34	R53108	GASKET	1		
35	R50424	GASKET	1		
36	AR58952	GASKET	1		
37	R132396	GASKET	1		
38	RE506220	GASKET KIT	1		ENGINE REBUILD, (SUB FOR RE57187)

MEMORANDA

ENGINE COOLANT HEATER

RGP7321 -UN-30JAN01

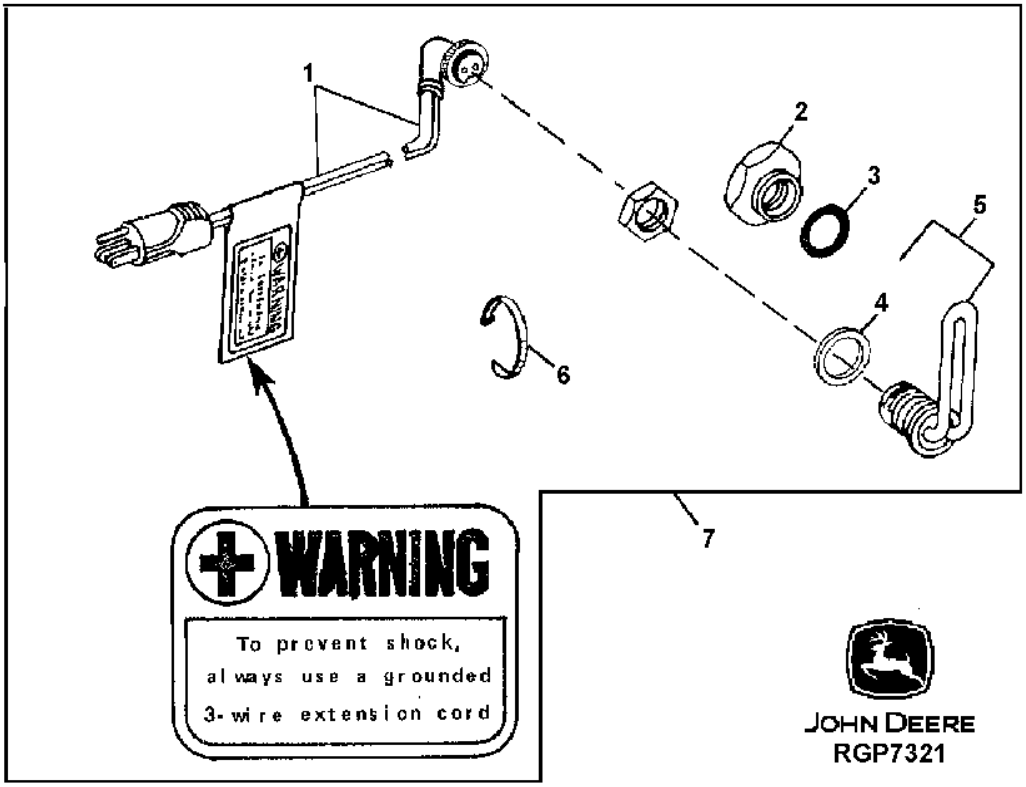

KEY	PART NO.	PART NAME	QTY	ENGINE SERIAL NO.	REMARKS
1	AR50411	WIRING LEAD	1		
2	R54123	ADAPTER	1		
3	U13639	O-RING	1		
4	R47693	GASKET	1		
5	RE504122	COOLANT HEATER	1		(SUB FOR AR62399) (110V)
6	R44302	TIE BAND	1		
7	AR62492	COOLANT HEATER	1		(110V)

ENGINE AIR HEATER

TP60614 -UN-12FEB99

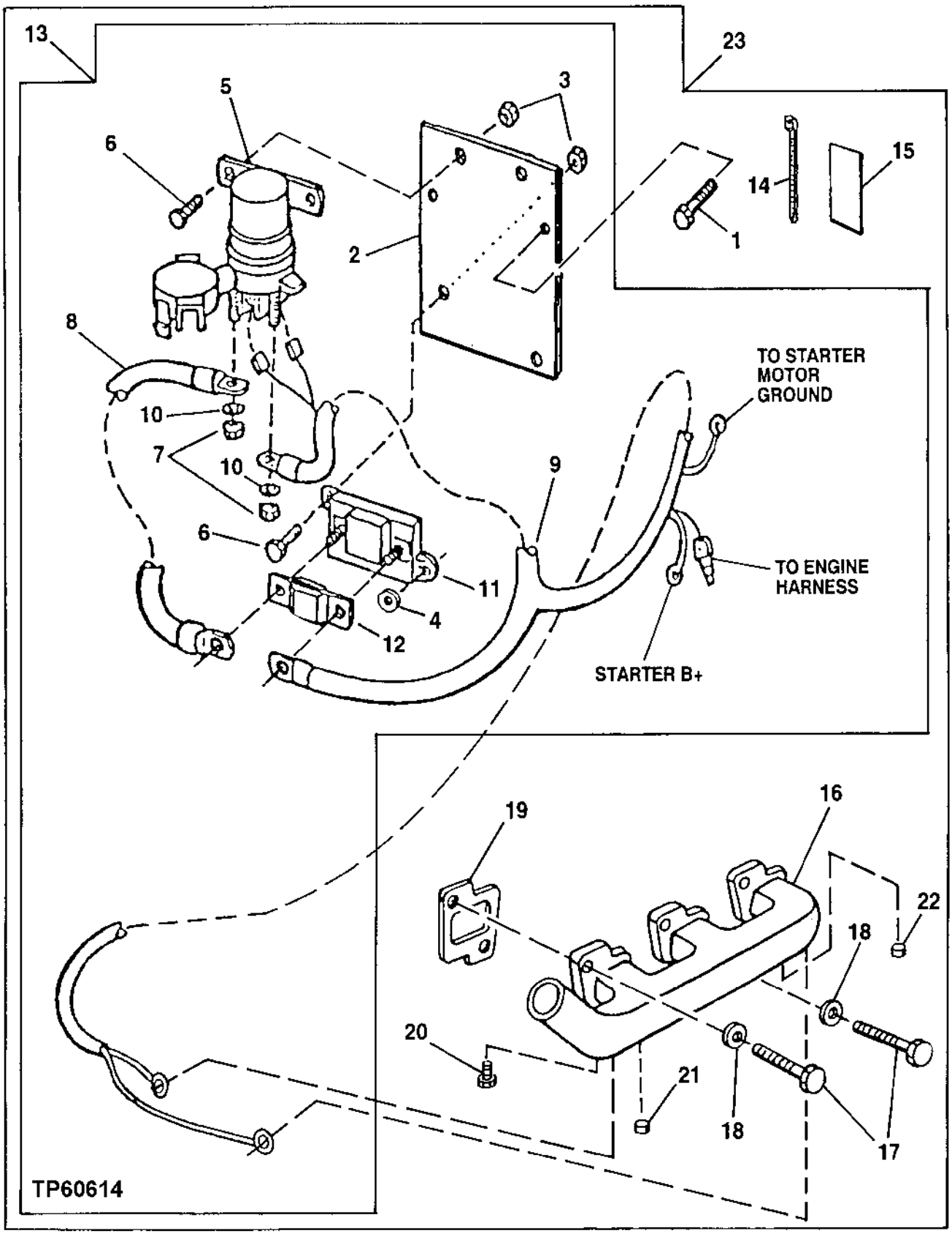

ENGINE AIR HEATER

KEY	PART NO.	PART NAME	QTY	SERIAL NO.	REMARKS
1	19M7865	SCREW	2		M8 X 16
2	.....	PLATE	1		(T157427 NO LONGER AVAILABLE)
3	14M7297	NUT	4		M5
4	12M7064	THRUST WASHER	2		
5	AT145341	RELAY	1		
6	21M7022	SCREW	4		M5 X 20
7	14M7272	NUT	2		M6
8	AT207082	CABLE	1		
9	AT211495	WIRING HARNESS	1		
10	12H297	LOCK WASHER	2		1/4"
11	AT206818	FUSE HOLDER	1		
12	AT203566	FUSE	1		
13	AT211494	STAND-OFF	1		AIR HEATER ASSEMBLY
14	R44302	TIE BAND	2		
15	T174430	DECAL	1		(ON RIGHT FRONT ROPS POST)
16	RE508101	INTAKE MANIFOLD	1		(MARKED R504611) (SUB FOR RE67537) (ALSO ORDER RE46684 AND R77673)
17	19H2633	CAP SCREW	6		3/8" X 1-1/2"
18	24H1682	WASHER	6		13/32" X 7/8" X 0.120"
19	R130573	GASKET	3		
20	15H623	PIPE PLUG	1		3/8"
	15H666	PIPE PLUG	1		3/8", (USE WITH AT210378)
21	15H558	PIPE PLUG	1		1/8"
22	15H690	PIPE PLUG	6		3/4"
23	**AT210378**	**HEATER**	**1**		

COLD WEATHER STARTING AID

T134930 -UN-31OCT00

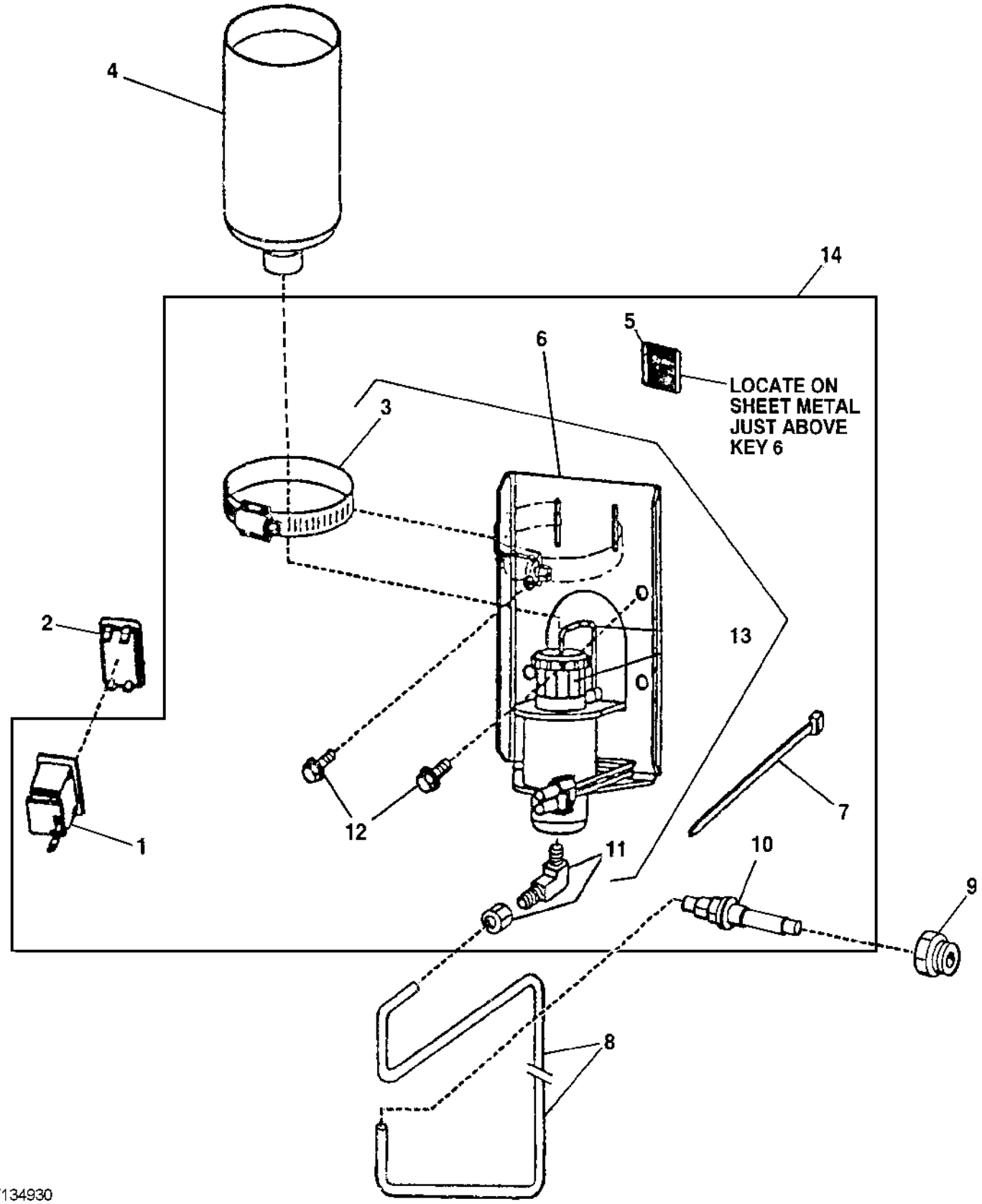

STARTING AID, ETHER

KEY	PART NO.	PART NAME	QTY	SERIAL NO.	REMARKS
1	AT202842	ROCKER SWITCH	1		STARTING AID
2	M115279	PLUG	1		WITHOUT STARTING AID SWITCH
3	AR21999	HOSE CLAMP	1		
4	AT171162	STARTING FLUID	1		STARTING AID FLUID
5	T42170	LABEL	1		
6	AT170759	SOLENOID	1		
7	R44302	TIE BAND	1		
8	.....	HOSE	AR		(MAKE FROM T78593 BULK MATERIAL, CUT TO LENGTH)
9	T164133	ADAPTER	1	-XXXXXX	(SUB FOR R47160)
10	AT183222	NOZZLE	1		(SUB FOR R28583)
11	AT181582	ELBOW FITTING	1		
12	19M7865	SCREW	2		M8 X 16
13	AT171539	CAP (HAT)	1		
14	AT223771	STARTING AID	1		(SUB FOR AT211497)

FAN BLADE,FAN HUB AND SUPPORT

TP55840 -UN-31JAN98

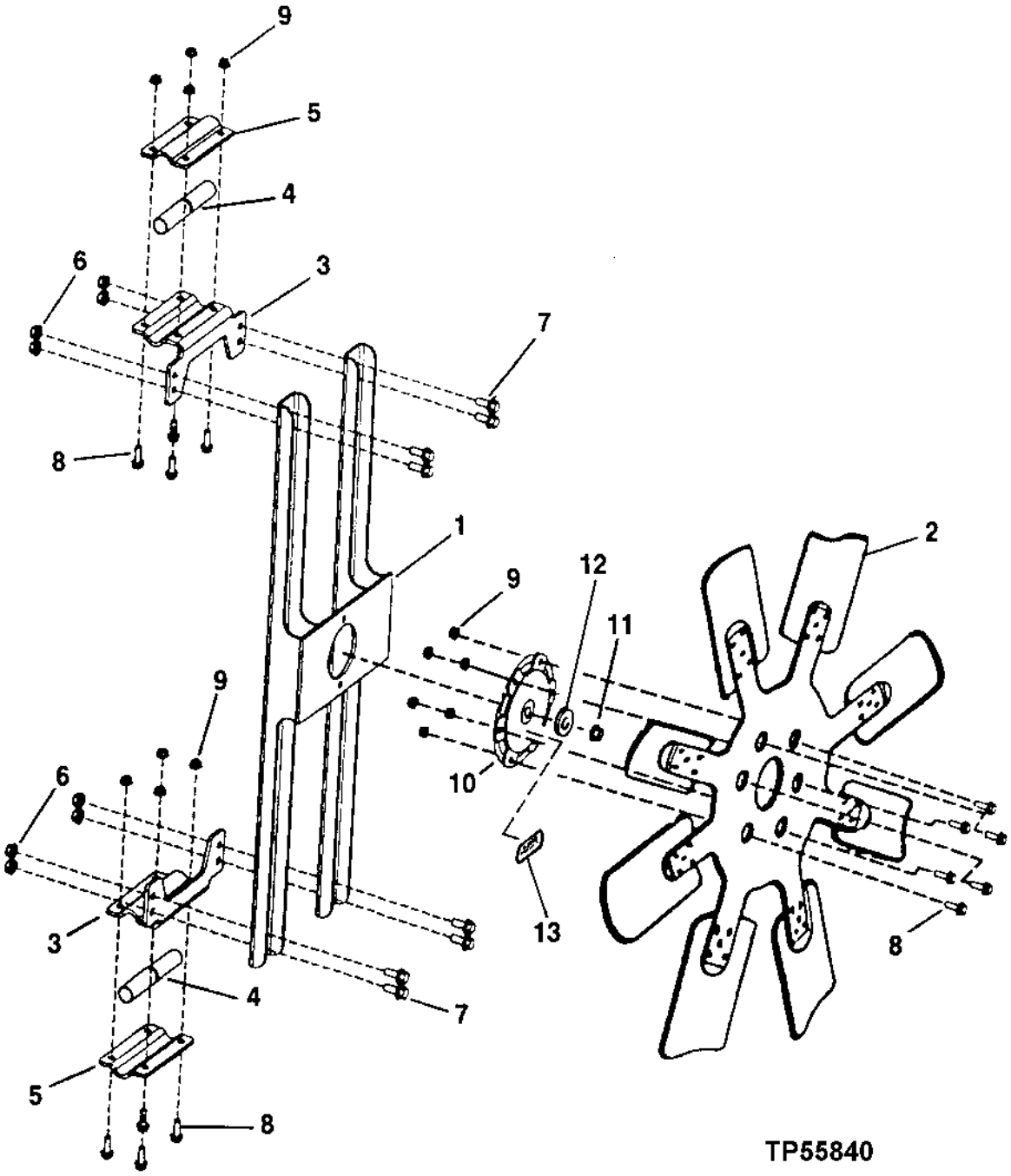

FAN BLADE,FAN HUB AND SUPPORT

KEY	PART NO.	PART NAME	QTY	SERIAL NO.	REMARKS
1	AT208334	SUPPORT	1		
	AT211419	SUPPORT	1		(HIGH AMBIENT PUMP AND MOTOR)
2	AT208006	FAN	1		
3	T174629	BRACKET	2		
4	T170104	BUSHING	4		
5	T170088	STRAP	2		
6	14M7296	FLANGE NUT	8		M10
7	19M7785	SCREW	8		M10 X 25
8	19M7867	SCREW	14		M8 X 25
9	14M7396	LOCK NUT	14		M8
10	AT210712	HUB	1		
11	14M7540	NUT	1		M14
12	L110471	WASHER	1		
	24M7427	WASHER	1		15 X 24 X 2.500 MM, (HIGH AMBIENT PUMP AND MOTOR)
13	T175135	DECAL	1		

FAN DRIVE HYDRAULIC PUMP AND MOTOR

TP62786 -UN-29MAR00

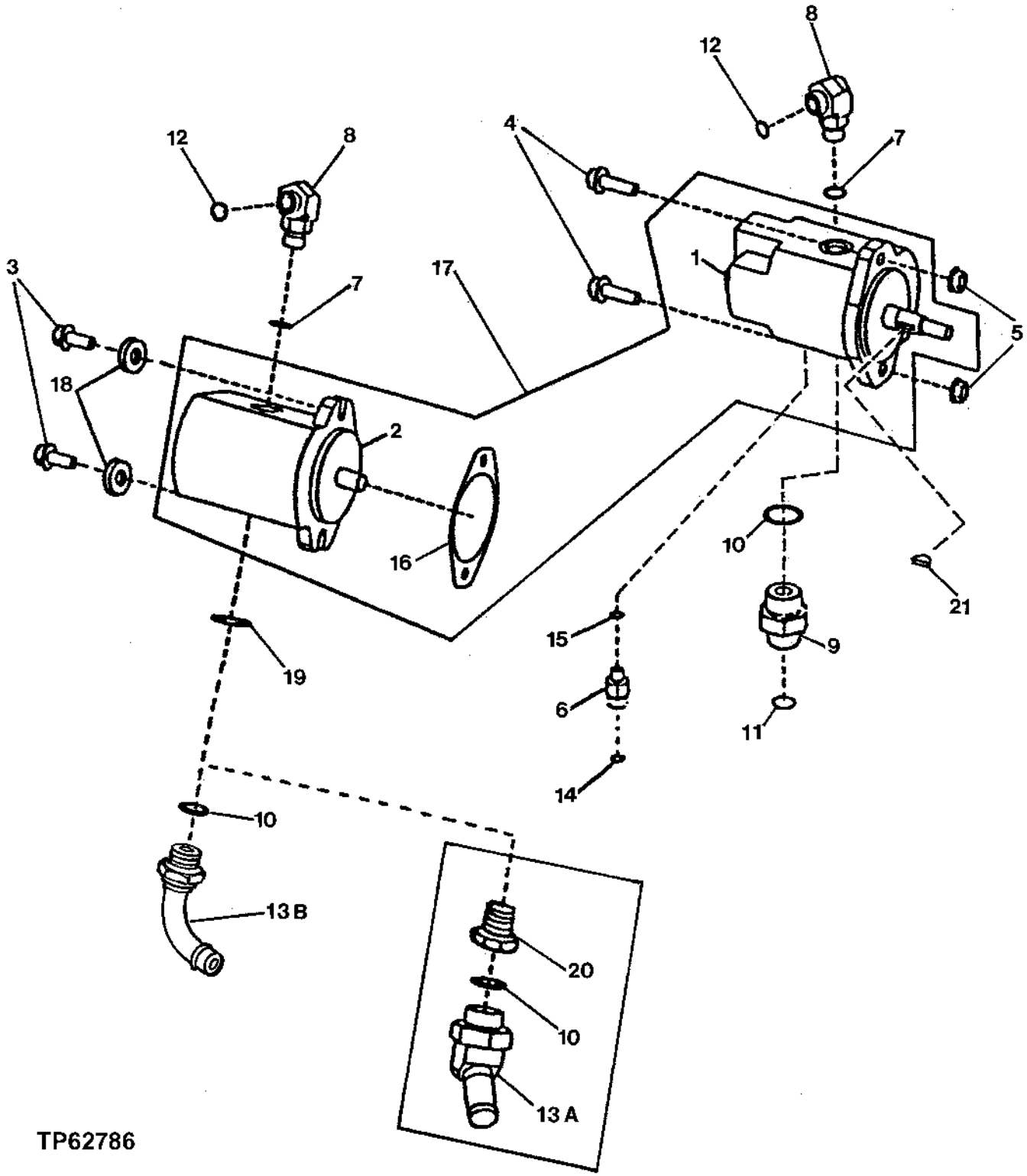

FAN DRIVE HYDRAULIC PUMP AND MOTOR

KEY	PART NO.	PART NAME	QTY	SERIAL NO.	REMARKS
1	AT219775	HYDRAULIC MOTOR	1		(STANDARD) (SUB FOR AT211030)
	AT219776	HYDRAULIC MOTOR	1		(K1) (HIGH AMBIENT) (SUB FOR AT211032)
	AT211381	SEAL KIT	1		(K1)(MOTOR) (STANDARD AND HIGH AMBIENT) (NOT ILLUSTRATED)
	AT211380	RELIEF VALVE	1		(STANDARD) (NOT ILLUSTRATED)
	AT211382	RELIEF VALVE	1		(K1)(HIGH AMBIENT) (NOT ILLUSTRATED)
	AT211379	SEAL KIT	1		(K1)(RELIEF VALVE) (STANDARD AND AND HIGH AMBIENT)(NOT ILLUSTRATED)
2	AT224379	PUMP	1		(STANDARD) (SUB FOR AT211029)
	AT211031	PUMP	1		(K1)(HIGH AMBIENT)
	AT224424	SEAL KIT	1		(K1)(PUMP) (STANDARD) (NOT ILLUSTRATED) (SUB FOR AT211378 THIS APPLICATION)
	AT220512	SEAL KIT	1		(K1) (PUMP) (HIGH AMBIENT) (NOT ILLUSTRATED)
	AT210137	PUMP	1		(DOMESTIC)
3	19M3239	CAP SCREW	2		
4	19M7835	SCREW	2		M10 X 35
	19M7790	SCREW	2		M12 X 35, (HIGH AMBIENT)
5	14M7299	FLANGE NUT	2		M12, (HIGH AMBIENT)
	14M7296	FLANGE NUT	2		M10
6	38H1309	ADAPTER	1		
7	R26375	O-RING	2		
	R26906	O-RING	2		(HIGH AMBIENT)
8	38H1005	ELBOW FITTING	2		(STANDARD)
	38H1012	ELBOW FITTING	2		(HIGH AMBIENT)
9	38H1194	ADAPTER	1		
10	R29936	O-RING	2		
11	T77858	O-RING	1		
12	T77857	O-RING	2		
13A	AT209592	ELBOW FITTING	1	-575579	
13B	AH96708	ELBOW FITTING	1	575580-	
14	T77613	O-RING	1		
15	R28782	O-RING	1		
16	R96935	GASKET	1		(K1)HIGH AMBIENT PUMP AND MOTOR)
17	**AT219856**	**KIT**	**1**		**FAN DRIVE PUMP AND MOTOR**
18	24M7239	WASHER	2		10.700 X 21 X 2.500 MM
19	T78612	O-RING	1	-575579	
20	T179513	FITTING	1		(SUB FOR N205035)
21	26H77	SHAFT KEY	1		3/16" X 3/4"

ENGINE FAN DRIVE PUMP AND MOTOR HYDRAULIC HOSES

TP60521 -UN-02DEC98

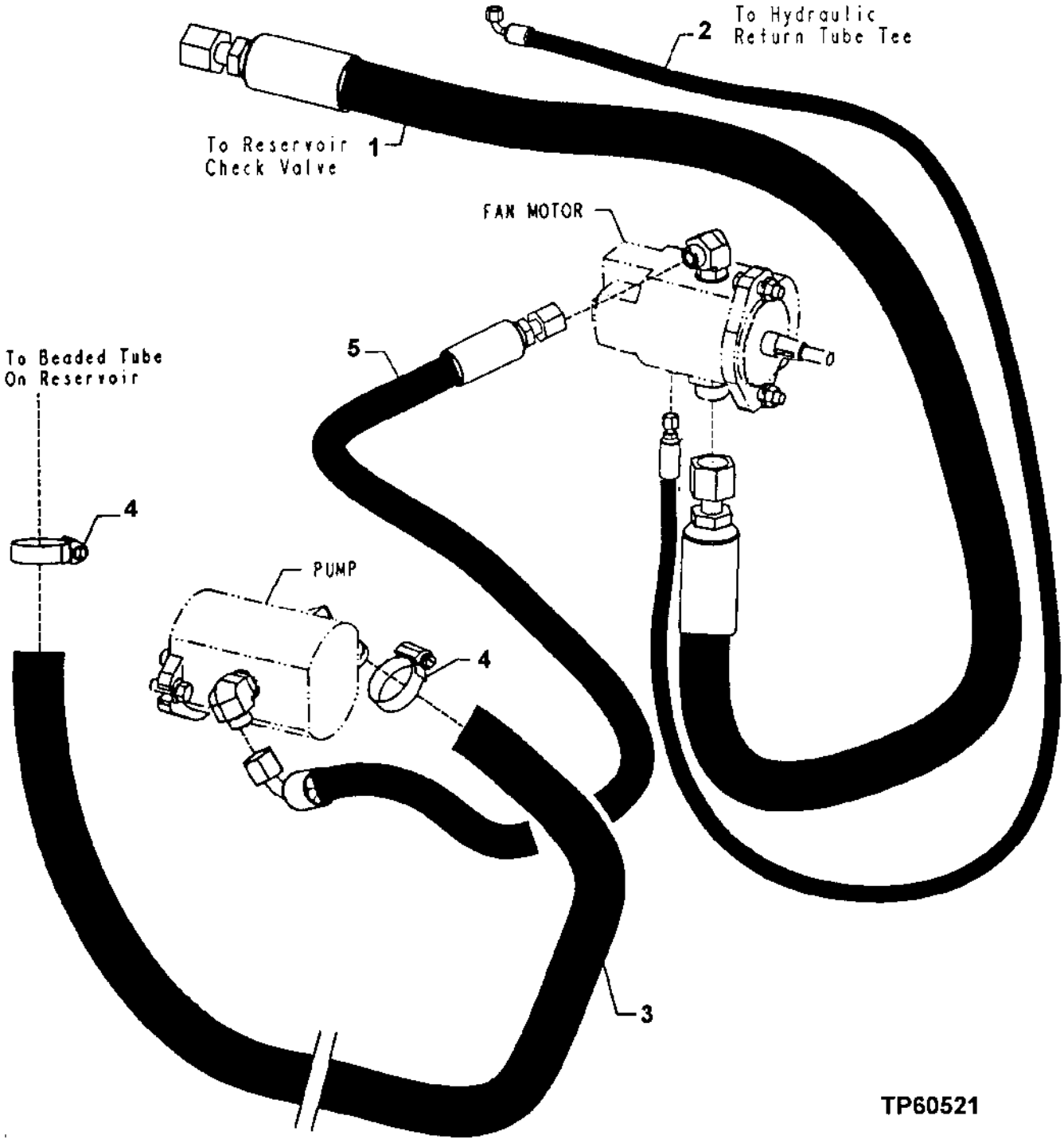

ENGINE FAN DRIVE PUMP AND MOTOR HYDRAULIC HOSES

KEY	PART NO.	PART NAME	QTY	SERIAL NO.	REMARKS
1	AT211050	HYDRAULIC HOSE - FABRICATE	1		
2	AT207034	HYDRAULIC HOSE - FABRICATE	1		
3	T174659	HYDRAULIC HOSE - FABRICATE	1		
4	AR21839	CLAMP	2		(SUB FOR AT145650)
5	AT128889	HYDRAULIC HOSE - FABRICATE	1		

RADIATOR, RADIATOR HOSES, OIL COOLER AND FAN SHROUD

TP62679 -UN-15OCT99

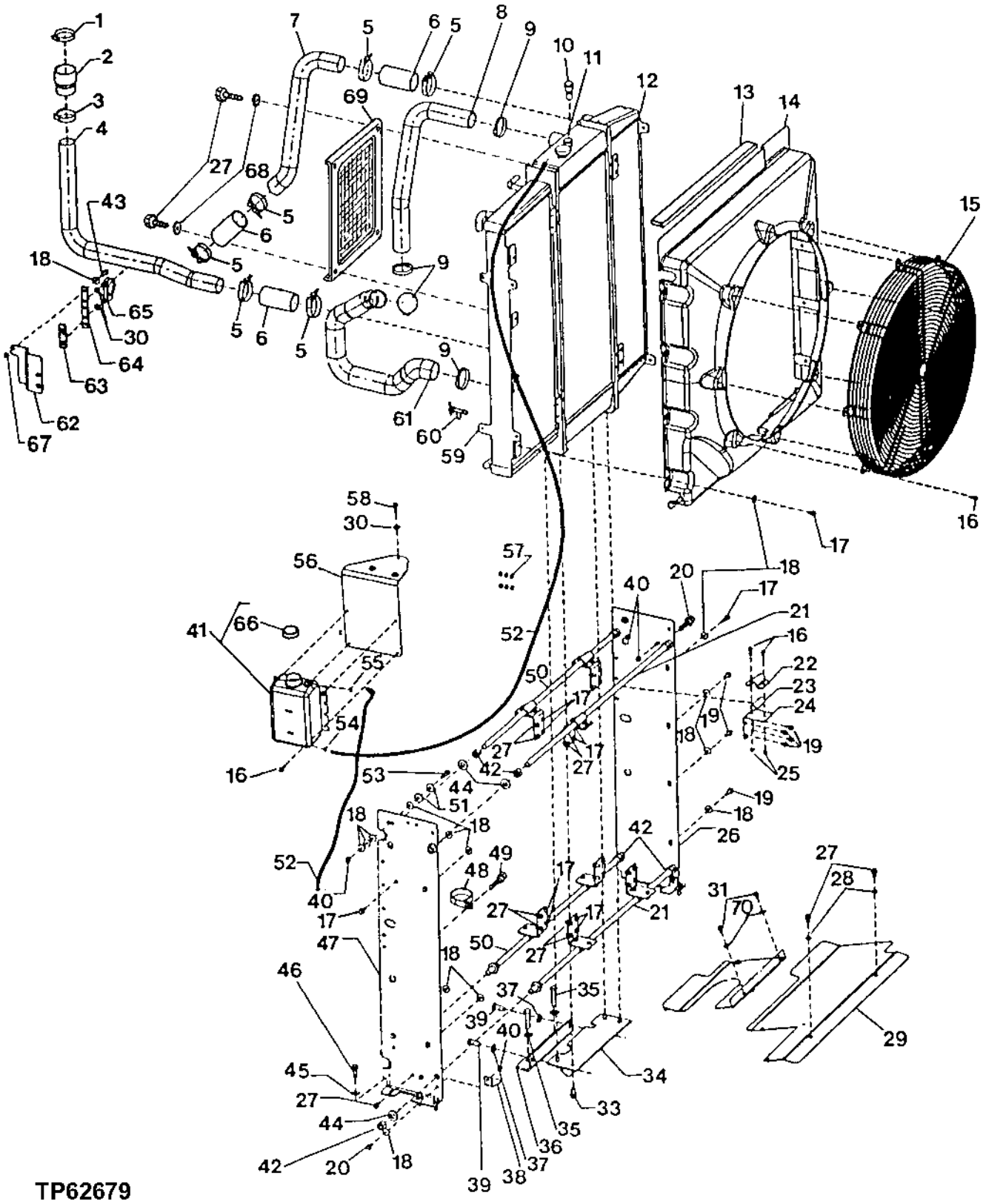

RADIATOR, RADIATOR HOSES, OIL COOLER AND FAN SHROUD

KEY	PART NO.	PART NAME	QTY	SERIAL NO.	REMARKS
1	AT37476	HOSE CLAMP	1		BEFORE S.N. 576719 ALSO ORDER RE506300 THERMOSTAT, (SUB FOR AT221858)
2	T174226	HOSE	1		
3	AT221359	CLAMP	1		(SUB FOR AT39141)
4	T173302	STRUCTURAL TUBING	1		
5	AT37693	HOSE CLAMP	6		
6	T168123	RADIATOR HOSE	3		
7	T173301	STRUCTURAL TUBING	1		
8	T173316	RADIATOR HOSE	1		
9	AR21999	HOSE CLAMP	4		
10	AT169418	SENSOR	1	-574742	COOLANT LEVEL
	15H620	PIPE PLUG	1	574743-XXXXXX	1", (ALSO ORDER RE12363 AND (2) R78064) (USE WITH AT209101 OR AT209675 RADIATOR)
11	AT209101	RADIATOR	1	-XXXXXX	(STANDARD)
	AT224106	RADIATOR	1	XXXXXX-	BEFORE S.N. 576719 ALSO ORDER RE506300 THERMOSTAT, (SUB FOR AT223883) (STANDARD)
	AT209675	RADIATOR	1	-XXXXXX	(TRASH PACKAGE)
	AT224107	RADIATOR	1	XXXXXX-	BEFORE S.N. 576719 ALSO ORDER RE506300 THERMOSTAT (TRASH PACKAGE) (SUB FOR AT223884)
	AT173610	FILLER CAP	1		(RADIATOR)
12	AT210183	AIR COOLER	1		
13	.....	STRIP	AR		(MAKE FROM T119593 OR T63019, CUT TO 120.") (TWO PIECES EACH SIDE OF RADIATOR AND ONE TOP AND BOTTOM FLANGES OF SHROUD)
14	AT208451	SHROUD	1		
15	AT210575	GUARD	1		
16	19M7867	SCREW	28		M8 X 25
17	19M7786	SCREW	12		M10 X 30
18	24M7296	WASHER	28		10.500 X 30 X 2.500 MM
19	19M7783	SCREW	24		M10 X 16
20	19M7785	SCREW	6		M10 X 25
21	T170085	ROD	2		
22	T170103	STRAP	8		
23	T170104	BUSHING	8		
24	T170102	PLATE	8		
25	14M7396	LOCK NUT	16		M8
26	AT208437	SUPPORT	1		
27	19M7784	SCREW	16		M10 X 20
28	24M7028	WASHER	2		10.500 X 20 X 2 MM
29	AT219734	GUARD	1		
30	24M7036	WASHER	3		9 X 16 X 1.600 MM
31	19M7865	SCREW	3		M8 X 16
32	AT219735	GUARD	1		
33	19M7788	SCREW	4		M12 X 25
34	AT211284	BRACKET	1		
35	19M7417	CAP SCREW	2		M16 X 65

THIS PARTS LISTING IS CONTINUED

RADIATOR, RADIATOR HOSES, OIL COOLER AND FAN SHROUD

TP62679 -UN-15OCT99

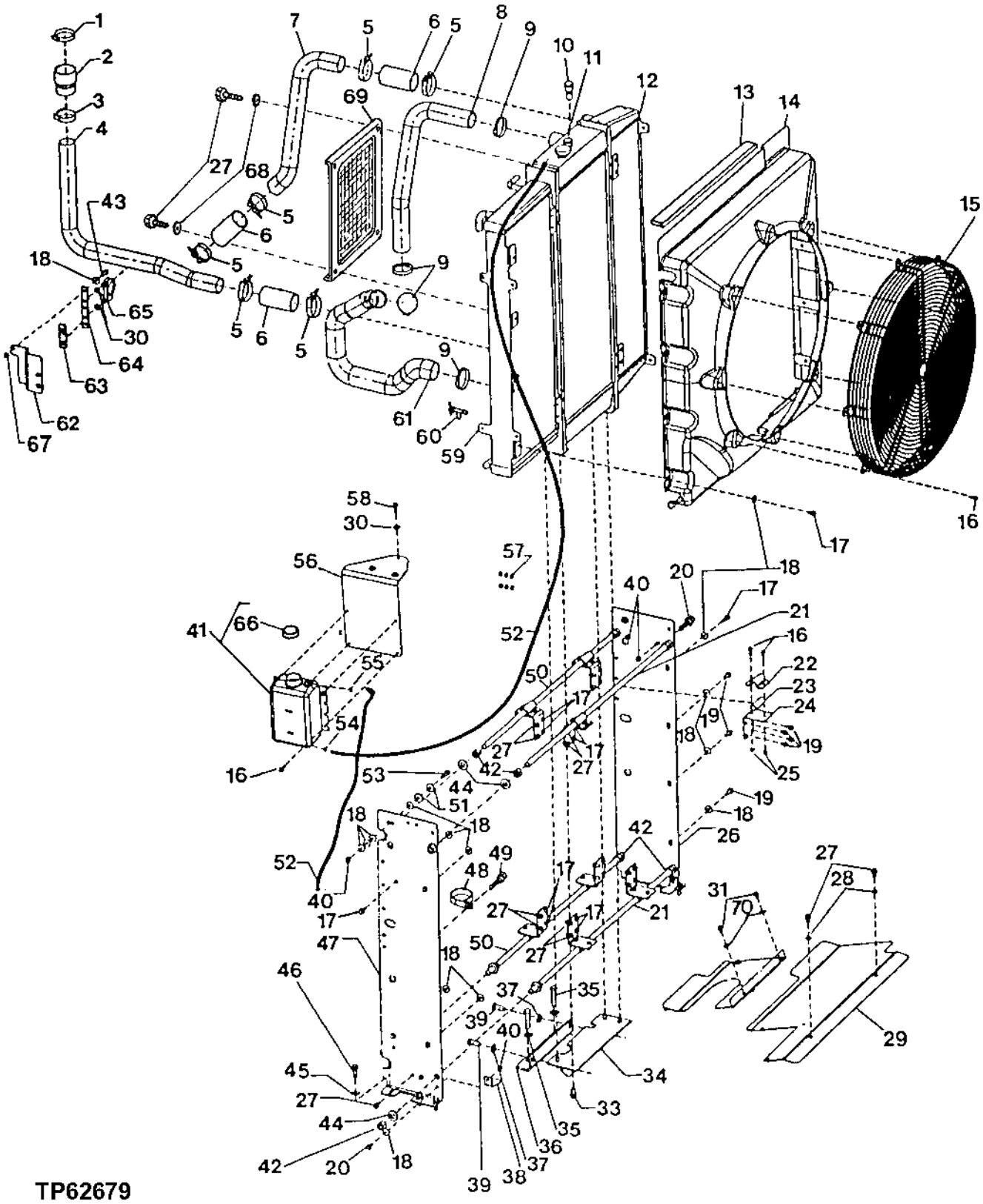

RADIATOR, RADIATOR HOSES, OIL COOLER AND FAN SHROUD

KEY	PART NO.	PART NAME	QTY	SERIAL NO.	REMARKS
36	T174534	ANGLE	1		
37	24M7241	WASHER	4		17 X 34 X 4 MM
38	T173322	BRACKET	2		
39	19M7488	CAP SCREW	2		M16 X 40
40	14M7296	FLANGE NUT	8		M10
41	AT166459	TANK	1		
42	14M7277	NUT	12		M20
43	19M7835	SCREW	1		M10 X 35
44	24M7242	WASHER	8		21.400 X 42 X 5 MM
45	24M7180	WASHER	6		13 X 37 X 3 MM
46	19M7790	SCREW	6		M12 X 35
47	AT208438	SUPPORT	1		
48	T162575	CLAMP	1		
49	19H3771	CAP SCREW	1		3/8" X 1"
50	T170625	ROD	2		
51	24M7226	WASHER	4		13 X 35 X 5 MM
52	.....	HOSE	2		(MAKE FROM T79478 BULK MATERIAL, CUT TO LENGTH)
53	19M7806	SCREW	2		M10 X 50
54	T13254	CLAMP	1		
55	PT9412	HOSE CLAMP	1		
56	AT222815	BRACKET	1		(OVERFLOW BOTTLE) (SUB FOR AT208532)
57	T173168	CLIP	6		
58	19M7868	SCREW	3		M8 X 30
59	AT210641	OIL COOLER	1		
60	AT35831	VALVE	1		(SUB FOR AT210284)
61	T173277	RADIATOR HOSE	1		
62	T173365	BRACKET	1		
63	T175103	PLATE	1		
64	T175034	SUPPORT	1		
65	AA46694	CLAMP	1		
66	AT106413	CAP	1		
67	14M7400	LOCK NUT	1		M10
68	24M7239	WASHER	4		10.700 X 21 X 2.500 MM
69	T175206	SCREEN	1		
70	24M7298	WASHER	3		8.400 X 25 X 2 MM

ENGINE SPEED CONTROL AND SENSORS

T139907 -UN-15MAR01

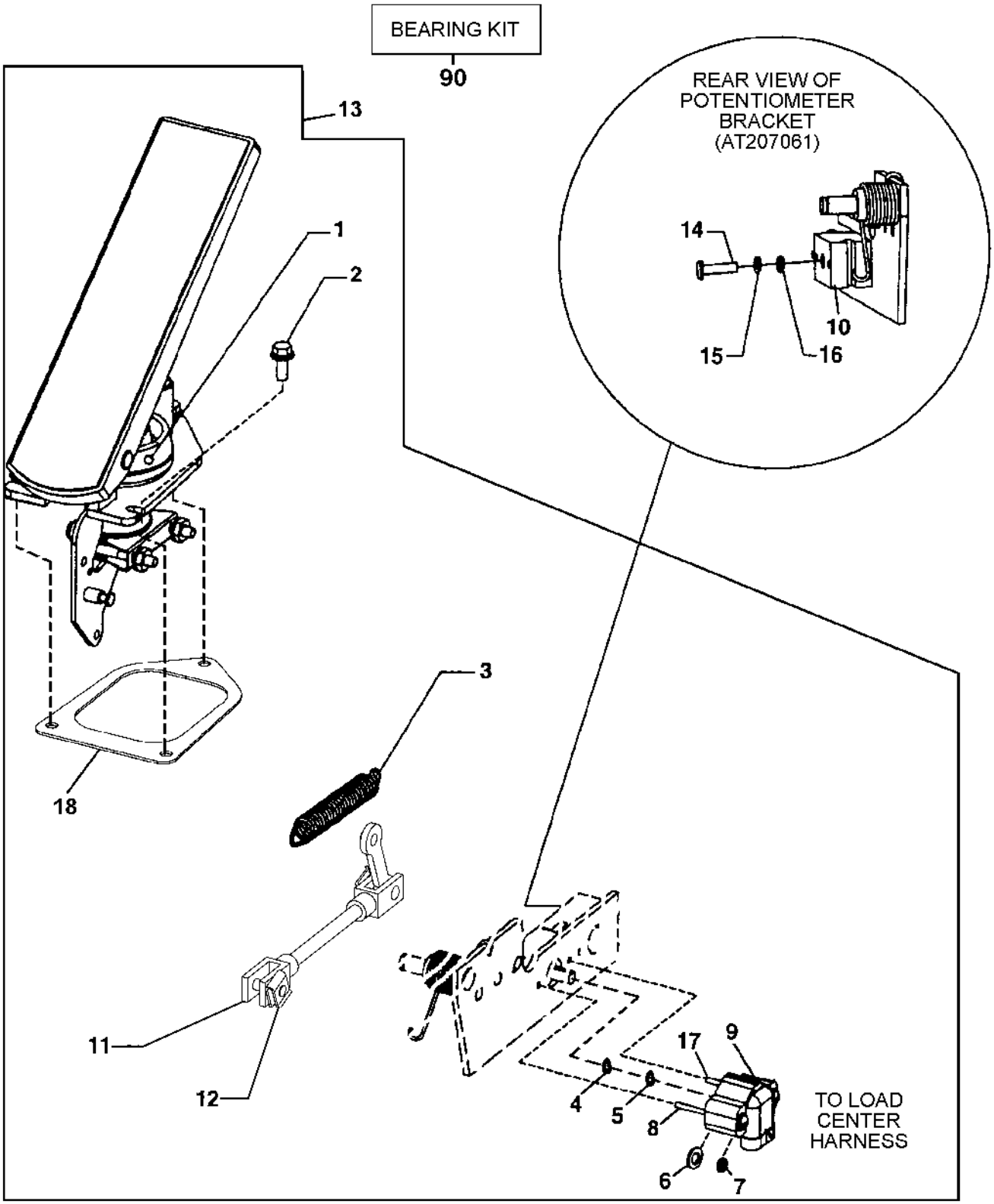

T139907

ENGINE SPEED CONTROL AND SENSORS

KEY	PART NO.	PART NAME	QTY	SERIAL NO.	REMARKS
1	T174634	BOOT	1		(SUB FOR T170938)
2	M113243	SCREW	3		
3	AT224427	KIT	1	-578969	THROTTLE SERVICE (INCLUDES SPRING T181078 AND MOUNTING PARTS)
	T181078	EXTENSION SPRING	1	578970-	
4	L64884	O-RING	2		
5	T45298	O-RING	4		
6	24M7087	WASHER	4		
7	12H246	LOCK WASHER	4		
8	19H3390	SCREW	1		
9	RE30295	SENSOR	1		
10	AT209724	SHAFT	1		BLOCK ASSEMBLY
11	AT211466	LINKAGE	1		
12	T170939	CLIP	6		
13	AT211416	CONTROL	1		
14	21H1391	SCREW	2		
15	12M7084	LOCK WASHER	2		
16	B1085R	WASHER	2		
17	21H1390	SCREW	3		4.826 X 44.450 MM
18	T172927	GASKET	1		
90	AT156748	BEARING KIT	1		INCLUDES ALL PARTS (BEARINGS,CLIPS TORSION SPRING AND PUSH ROD ASSEMBLY)(PEDAL ONLY)

AIR CLEANER, AIR CLEANER FILTERS AND AIR CLEANER HOSE

TP60343 -UN-23APR98

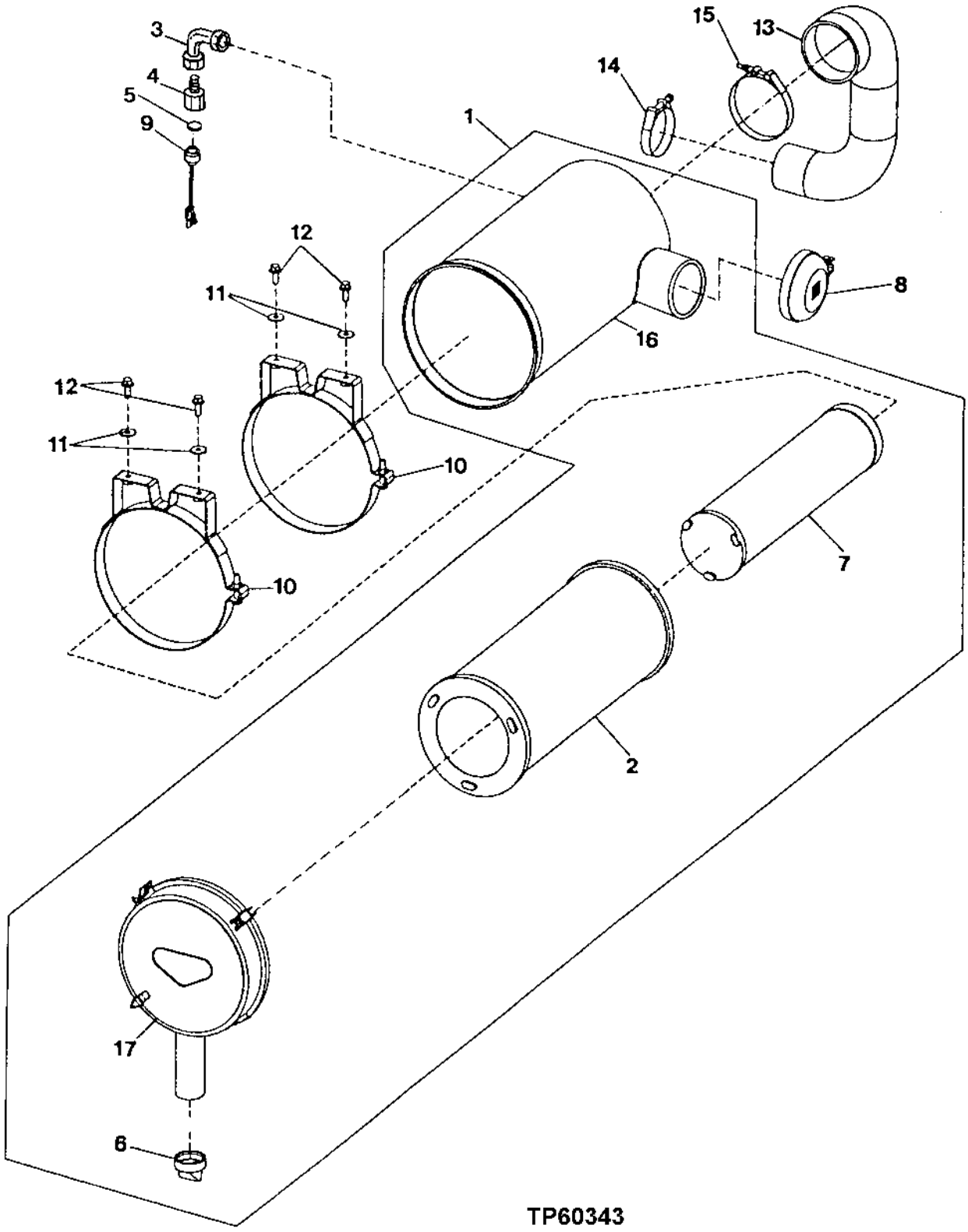

AIR CLEANER, AIR CLEANER FILTERS AND AIR CLEANER HOSE

KEY	PART NO.	PART NAME	QTY	SERIAL NO.	REMARKS
1	AT202910	AIR CLEANER	1		
2	AT203050	FILTER ELEMENT	1		
3	15H95	ELBOW FITTING	1		90 DEGREE
4	T82907	ADAPTER	1		
5	R26286	O-RING	1		
6	R48568	VALVE	1		
7	AT203051	FILTER ELEMENT	1		
8	AT206940	SCREEN	1		
9	RE12176	AIR FILTER RSTR SENSOR	1		
10	AT210532	CLAMP	2		
11	24M7296	WASHER	4		10.500 X 30 X 2.500 MM
12	19M7785	SCREW	4		M10 X 25
13	AT210518	RADIATOR HOSE	1		
14	AT56657	HOSE CLAMP	1		
15	AT53440	CLAMP	1		
16	.....	HOUSING	1		(SUB AT202910)
17	AT202908	COVER	1		

AIR PRECLEANER KIT

TP60528 -UN-27OCT98

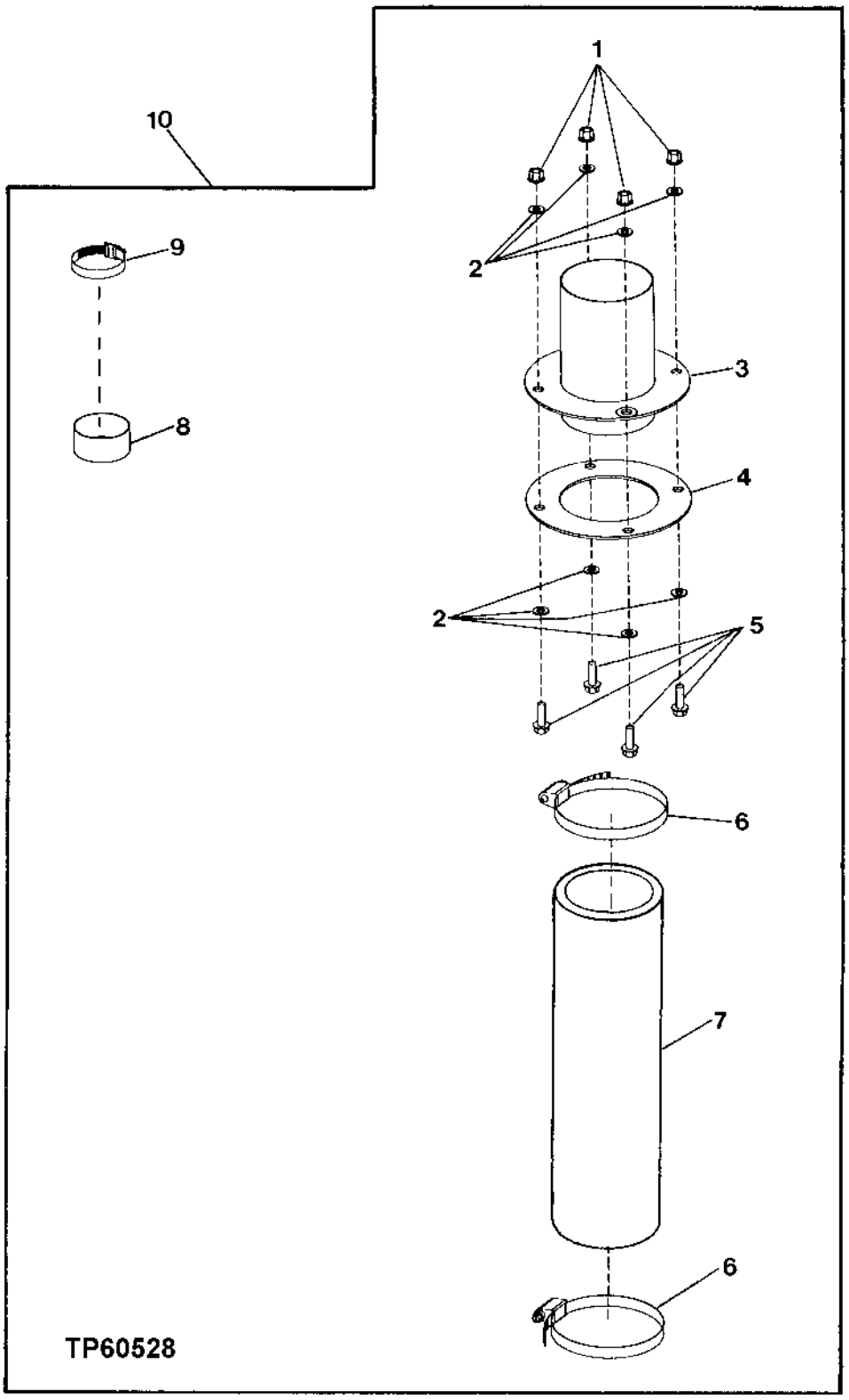

AIR PRECLEANER KIT

KEY	PART NO.	PART NAME	QTY	SERIAL NO.	REMARKS
1	14M7396	LOCK NUT	4		M8
2	24M7238	WASHER	8		8.700 X 17 X 2 MM
3	AT222761	CONNECTOR	1		(SUB FOR AT220359)
4	T178979	PLATE	1		(SUB FOR T176299)
5	19M7867	SCREW	4		M8 X 25
6	T45639	CLAMP	2		
7	T176370	HOSE	1		
8	T176553	PLUG	1		
9	AR40418	HOSE CLAMP	1		
10	**AT220800**	**KIT**	**1**		

AIR PRECLEANER

TP60692 -UN-19MAR99

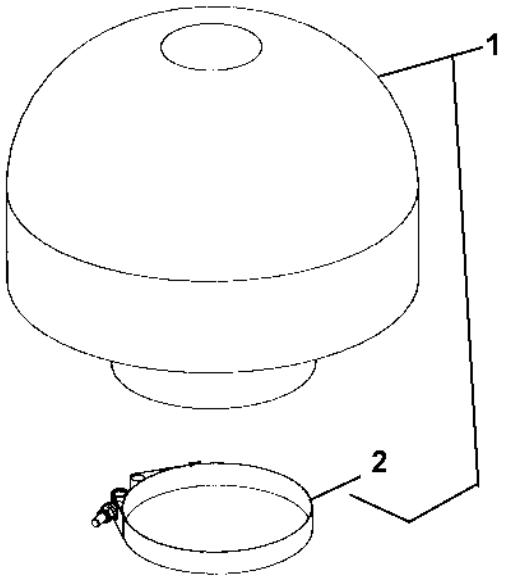

TP60692

AIR PRECLEANER

KEY	PART NO.	PART NAME	QTY	SERIAL NO.	REMARKS
1	AT184015	AIR CLEANER	1		(PRE) ROTARY EJECTOR
2	AT53440	CLAMP	1		

MUFFLER AND EXHAUST PIPE

TP60346 -UN-15APR98

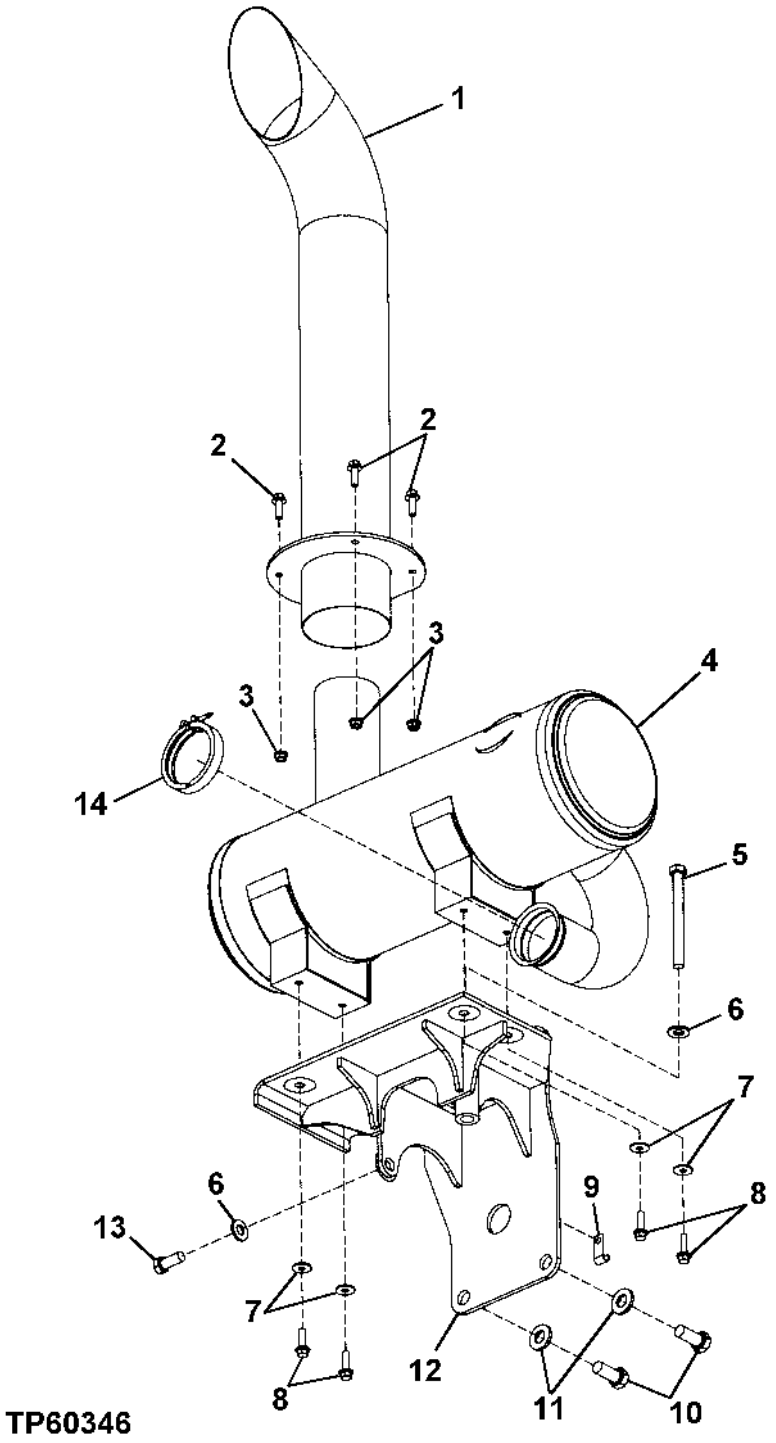

MUFFLER AND EXHAUST PIPE

KEY	PART NO.	PART NAME	QTY	SERIAL NO.	REMARKS
1	AT209141	EXHAUST PIPE	1		
	AT220440	EXHAUST PIPE	1		
2	19M7786	SCREW	4		M10 X 30
3	14M7296	FLANGE NUT	4		M10
4	AT220199	MUFFLER	1		
5	19H3416	CAP SCREW	1		5/8" X 6-1/2"
6	24M7241	WASHER	2		17 X 34 X 4 MM
7	24M7296	WASHER	8		10.500 X 30 X 2.500 MM
8	19M7785	SCREW	4		M10 X 25
9	AH89557	CLIP	2		
10	19H2717	CAP SCREW	2		3/4" X 1-3/4"
11	24M7242	WASHER	2		21.400 X 42 X 5 MM
12	AT221120	BRACKET	1		(SUB FOR AT220178)
13	19H2710	CAP SCREW	1		5/8" X 1-3/4"
14	RE166242	CLAMP	1		(SUB FOR RE40048)

ENGINE MOUNTING SUPPORTS

TP60345 -UN-15APR98

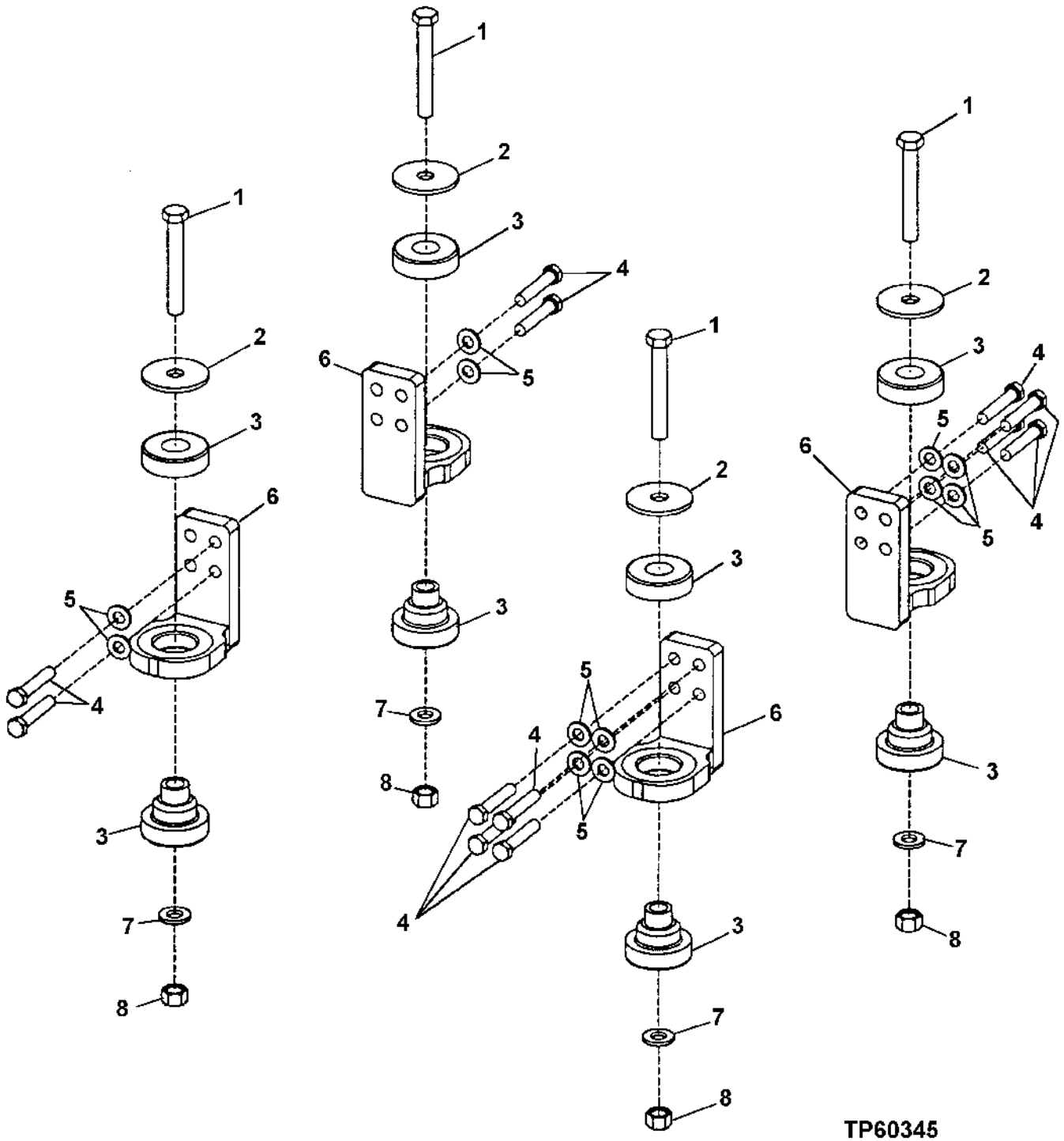

ENGINE MOUNTING SUPPORTS

KEY	PART NO.	PART NAME	QTY	SERIAL NO.	REMARKS
1	19M7907	SCREW	4		M20 X 140
2	T42977	WASHER	4		
3	AT107738	ISOLATOR	4		(TWO PIECES FOR EACH ISOLATOR)
4	19H2641	CAP SCREW	12		5/8" X 3-1/4"
5	24M7241	WASHER	12		0.669" X 1.339" X 0.157"
6	AT209660	SUPPORT	4		
7	24M7242	WASHER	4		
8	14M7277	NUT	4		M20

FUEL TANK AND FUEL TANK HOSES
(SERIAL NO. -XXXXXX)

TP60457 -UN-11AUG98

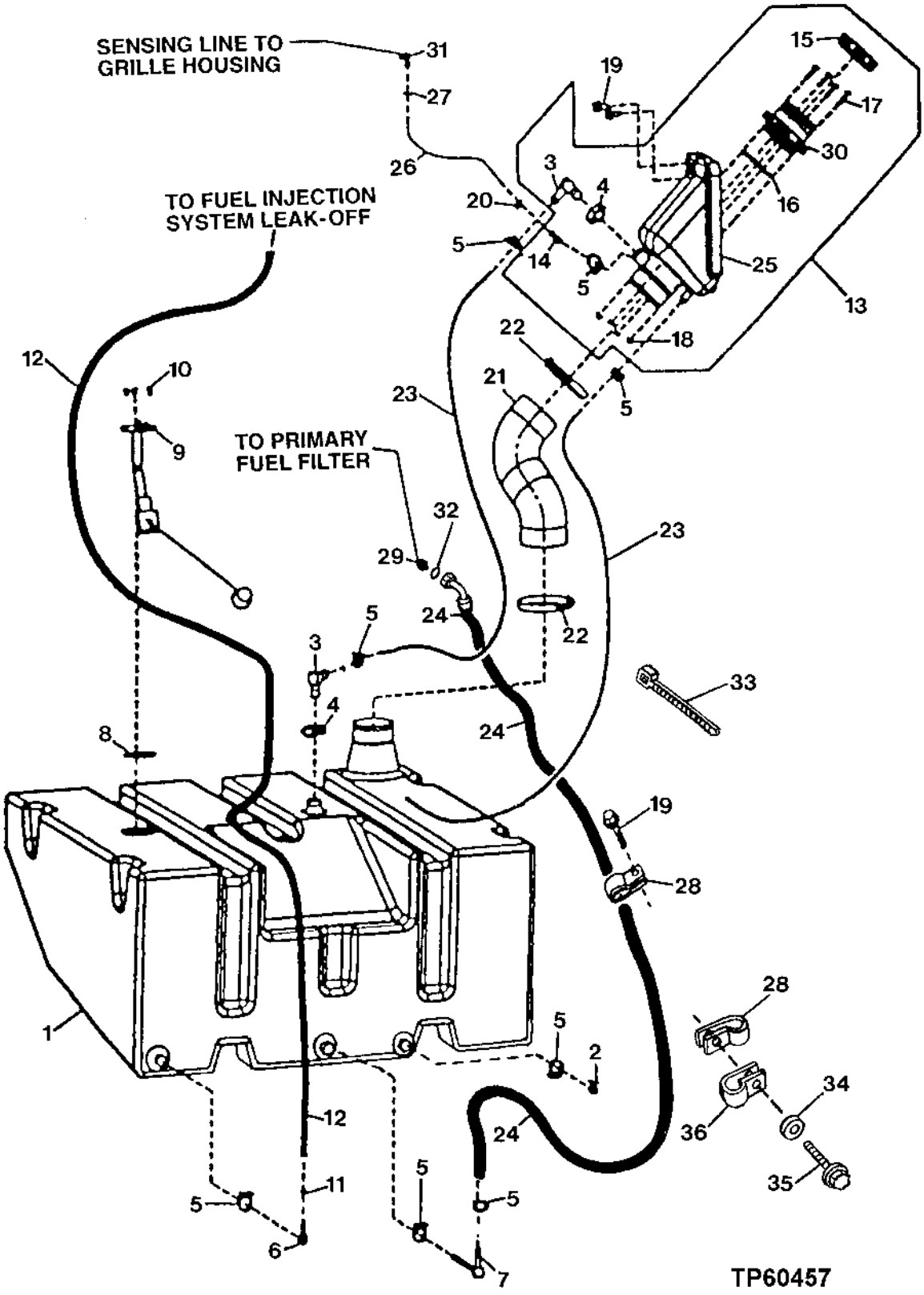

FUEL TANK AND FUEL TANK HOSES
(SERIAL NO. -XXXXXX)

KEY	PART NO.	PART NAME	QTY	SERIAL NO.	REMARKS
1	T171069	FUEL TANK	1		
2	AT156632	DRAIN VALVE	1		
3	T167934	ELBOW FITTING	2		
4	AR21839	CLAMP	2		
5	AR21837	CLAMP	7		
6	T28077	ELBOW FITTING	1		
7	T168996	ELBOW FITTING	1		
8	T155195	GASKET	1		
9	.....	FUEL SENDER	1	-572382	(USE WITH -XXXXX ENGINE FRAME WIRING HARNESS) (AT208716 NO LONGER AVAILABLE) (SUB AT221124) (ALSO ORDER R78060, R78059, RE12363, T155195, AT221699 AND (5) 21H1300)
	AT226224	FUEL SENDER	1	572383-	(SUB FOR AT221124) (USE WITH XXXXX- ENGINE FRAME WIRING HARNESS) (IF USED WITH -XXXXX ENGINE FRAME WIRING HARNESS ALSO ORDER AT221699 JUMPER WIRING HARNESS, R78060 CONTACT SOCKET, R78059 CABLE SEAL, RE12363 CONNECTOR, (5) 21H1300 SCREW AND T155195 GASKET)
10	21H1301	SCREW	5		0.190" X 1/2"
11	AR21836	CLAMP	2		
12	.....	HOSE	1		(MAKE FROM T79478,BULK MATERIAL CUT TO LENGHT)
13	AT208158	FILLER NECK	1		
14	E48497	HOSE FITTING	1		
15	AMT1274	FILLER CAP	1		
16	U42702	O-RING	1		
17	03M7342	BOLT	4		M6 X 30
18	14M7303	FLANGE NUT	4		M6
19	19M7784	SCREW	3		M10 X 20
20	PT9412	HOSE CLAMP	1		
21	T170434	HOSE	1		
22	AR21842	CLAMP	2		
23	.....	HOSE	2		(MAKE FROM T60811 BULK MATERIAL, CUT TO LENGHT)
24	AT211188	HYDRAULIC HOSE - FABRICATE	1		
25	.....	FILLER NECK	1		(SUB AT208158)
26	.....	HOSE	1		(MAKE FROM T79477 BULK MATERIAL, CUT TO LENGHT)
27	PT9412	HOSE CLAMP	1		
28	R46414	CLAMP	2		(SUB FOR T74416, THIS APPLICATION)
29	38H1170	ADAPTER	1		
30	.....	FILLER NECK	1		FUEL FILL (SUB AT208158)
31	R156318	ELBOW FITTING	1		(USE 14M7152 TO MOUNT)
	14M7152	NUT	1		MOUNT R156318 (NOT ILLUSTRATED)
32	T77613	O-RING	1		
33	R44302	TIE BAND	2		
34	.....	WASHER	1		(24M7239 NO LONGER REQUIRED)
35	19M7784	SCREW	1		M10 X 20
36	H75541	CLAMP	1		

FUEL TANK AND FUEL TANK HOSES
(SERIAL NO. XXXXXX-)

TP62626 -UN-13SEP99

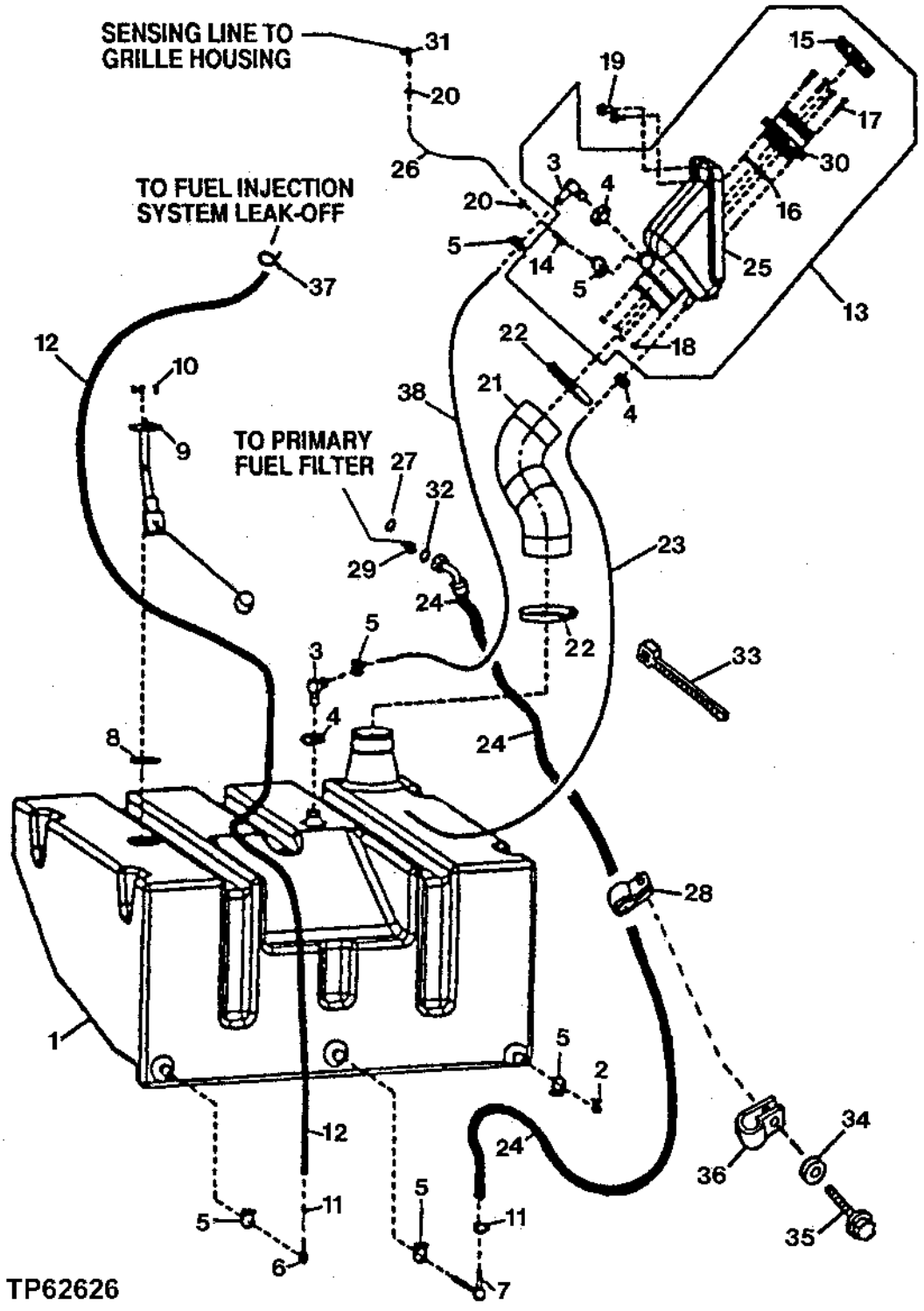

FUEL TANK AND FUEL TANK HOSES
(SERIAL NO. XXXXXX-)

KEY	PART NO.	PART NAME	QTY	SERIAL NO.	REMARKS
1	T171069	FUEL TANK	1		
2	AT156632	DRAIN VALVE	1		
3	T167934	ELBOW FITTING	2		
4	AR21839	CLAMP	3		
5	AR21837	CLAMP	6		
6	T28077	ELBOW FITTING	1		
7	T168996	ELBOW FITTING	1		
8	T155195	GASKET	1		
9	.....	FUEL SENDER	1	-572382	(USE WITH -XXXXX ENGINE FRAME WIRING HARNESS) (AT208716 NO LONGER AVAILABLE) (SUB AT221124) (ALSO ORDER R78060, R78059, RE12363, T155195, AT221699 AND (5) 21H1300)
	AT226224	FUEL SENDER	1	572383-	(SUB FOR AT221124) (USE WITH XXXXX- ENGINE FRAME WIRING HARNESS) (IF USED WITH -XXXXX ENGINE FRAME WIRING HARNESS ALSO ORDER AT221699 JUMPER WIRING HARNESS, R78060 CONTACT SOCKET, R78059 CABLE SEAL, RE12363 CONNECTOR, (5) 21H1300 SCREW AND T155195 GASKET)
10	21H1301	SCREW	5		0.190" X 1/2"
11	AR21836	CLAMP	2		
12	.....	HOSE	1		(MAKE FROM T79477,BULK MATERIAL CUT TO LENGHT)
13	AT221930	HOUSING	1		
14	E48497	HOSE FITTING	1		
15	AMT1274	FILLER CAP	1		
16	U42702	O-RING	1		
17	03M7342	BOLT	4		M6 X 30
18	14M7303	FLANGE NUT	4		M6
19	19M7784	SCREW	2		M10 X 20
20	PT9412	HOSE CLAMP	2		
21	T170434	HOSE	1		
22	AR21842	CLAMP	2		
23	T177631	HOSE	1		
24	AT211188	HYDRAULIC HOSE - FABRICATE	1		
25	.....	FILLER NECK	1		(SUB AT208158)
26	.....	HOSE	1		(MAKE FROM T79478 BULK MATERIAL, CUT TO LENGHT)
27	R26286	O-RING	1		
28	R46414	CLAMP	1		(SUB FOR T74416, THIS APPLICATION)
29	38H1170	ADAPTER	1		
30	.....	FILLER NECK	1		FUEL FILL (SUB AT208158)
31	R156318	ELBOW FITTING	1		(USE 14M7152 TO MOUNT)
	14M7152	NUT	1		MOUNT R156318 (NOT ILLUSTRATED)
32	T77613	O-RING	1		
33	R44302	TIE BAND	2		
34	.....	WASHER	1		(24M7239 NO LONGER AVAILABLE)
35	19M7784	SCREW	1		M10 X 20
36	H75541	CLAMP	1		
37	T13254	CLAMP	1		
38	.....	HOSE	AR		(MAKE FROM T60811 BULK MATERIAL, CUT TO LENGTH)

FUEL FILL STRAINER

TP48624 -UN-21FEB97

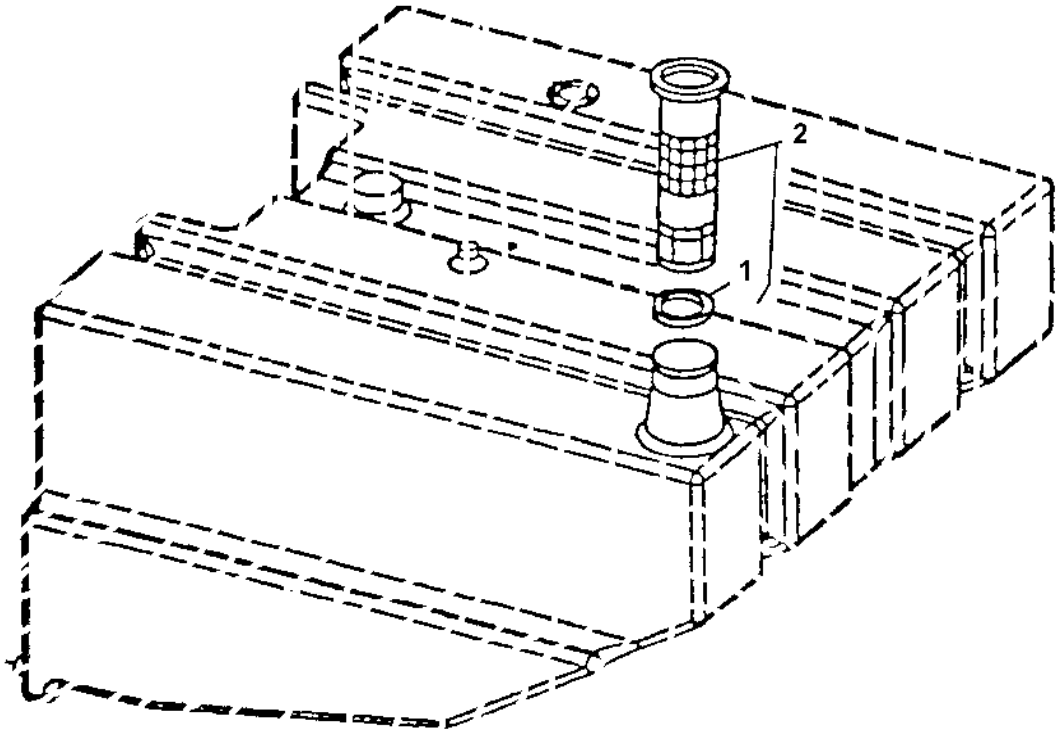

TP48624

FUEL FILL STRAINER

KEY	PART NO.	PART NAME	QTY	SERIAL NO.	REMARKS
1	H147415	O-RING	1		
2	AH162914	STRAINER	1		(SUB FOR AH135155)

SECONDARY STEERING

TP62778 -UN-22MAY00

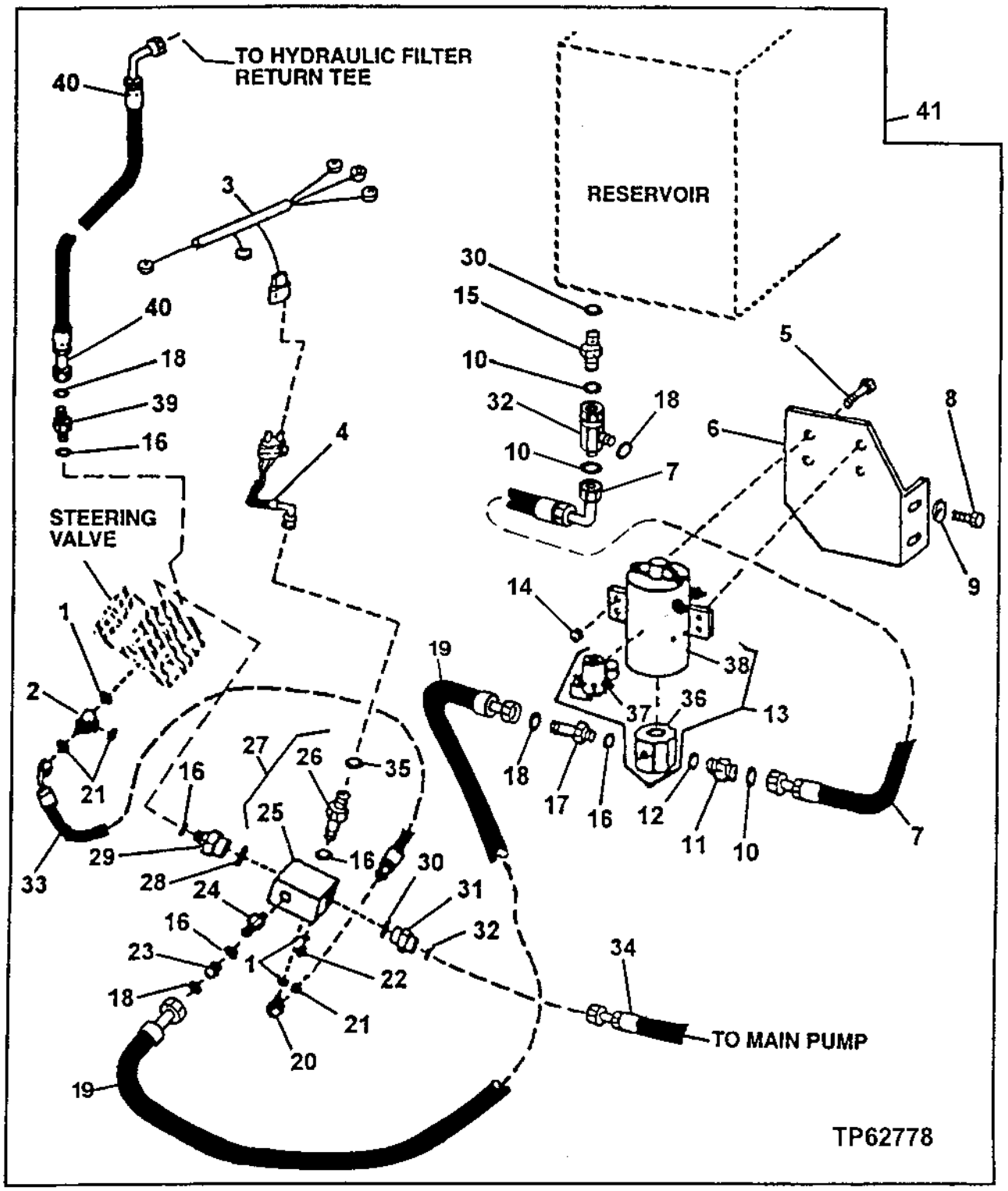

SECONDARY STEERING

KEY	PART NO.	PART NAME	QTY	SERIAL NO.	REMARKS
1	R28782	O-RING	3		
2	38H1434	TEE FITTING	1		
3	AT210155	WIRING HARNESS	1		
4	AT203492	WIRING HARNESS	1		
5	19M7785	SCREW	4		M10 X 25
6	T173579	BRACKET	1		
7	AT211417	HYDRAULIC HOSE - FABRICATE	1		
8	19M7950	CAP SCREW	2		M20 X 45
9	24M7242	WASHER	2		21.400 X 42 X 5 MM
10	T77858	O-RING	4		
11	38H1193	ADAPTER	1		
12	R26906	O-RING	1		
13	AT209537	PUMP	1		
14	14M7296	FLANGE NUT	4		M10
15	38H1163	ADAPTER	1		(RIGHT FRONT PORT UNDER HYDRAULIC RESERVOIR)
16	R26375	O-RING	5		
17	38H1046	ELBOW FITTING	1		
18	T77857	O-RING	4		
19	AT175781	HYDRAULIC HOSE - FABRICATE	1		
20	38H1435	ELBOW FITTING	1		
21	T77613	O-RING	3		
22	AT223648	FITTING	1		(ASSEMBLY INCLUDES: R28782 O-RING)
23	AT141527	CHECK VALVE	1		
24	AT116373	CHECK VALVE	1		
25	T173324	JUNCTION BLOCK	1		
26	AT210399	TOUCH SWITCH	1		
27	AT210207	SWITCH	1		(ALSO INCLUDES AT116373 CHECK VALVE AND CAUTION LABEL)
28	R29936	O-RING	1		
29	AT116114	ADAPTER	1		
30	U12547	O-RING	3		
31	38H1163	ADAPTER	1		
32	38H1532	TEE FITTING	1		
33	AT208725	HYDRAULIC HOSE - FABRICATE	1		
34	AT191282	HYDRAULIC HOSE - FABRICATE	1		(SUB FOR AT168984)
35	R26448	O-RING	1		
36	AT210092	PUMP	1		
37	AT210093	SOLENOID	1		
38	AT210094	HYDRAULIC MOTOR	1		
39	38H1161	ADAPTER	1		
40	AT211418	HYDRAULIC HOSE - FABRICATE	1		
41	**AT207858**	**MOUNTING PARTS**	**1**		

STEERING WHEEL,STEERING COLUMN AND LINKAGE

TP68401 -UN-10SEP99

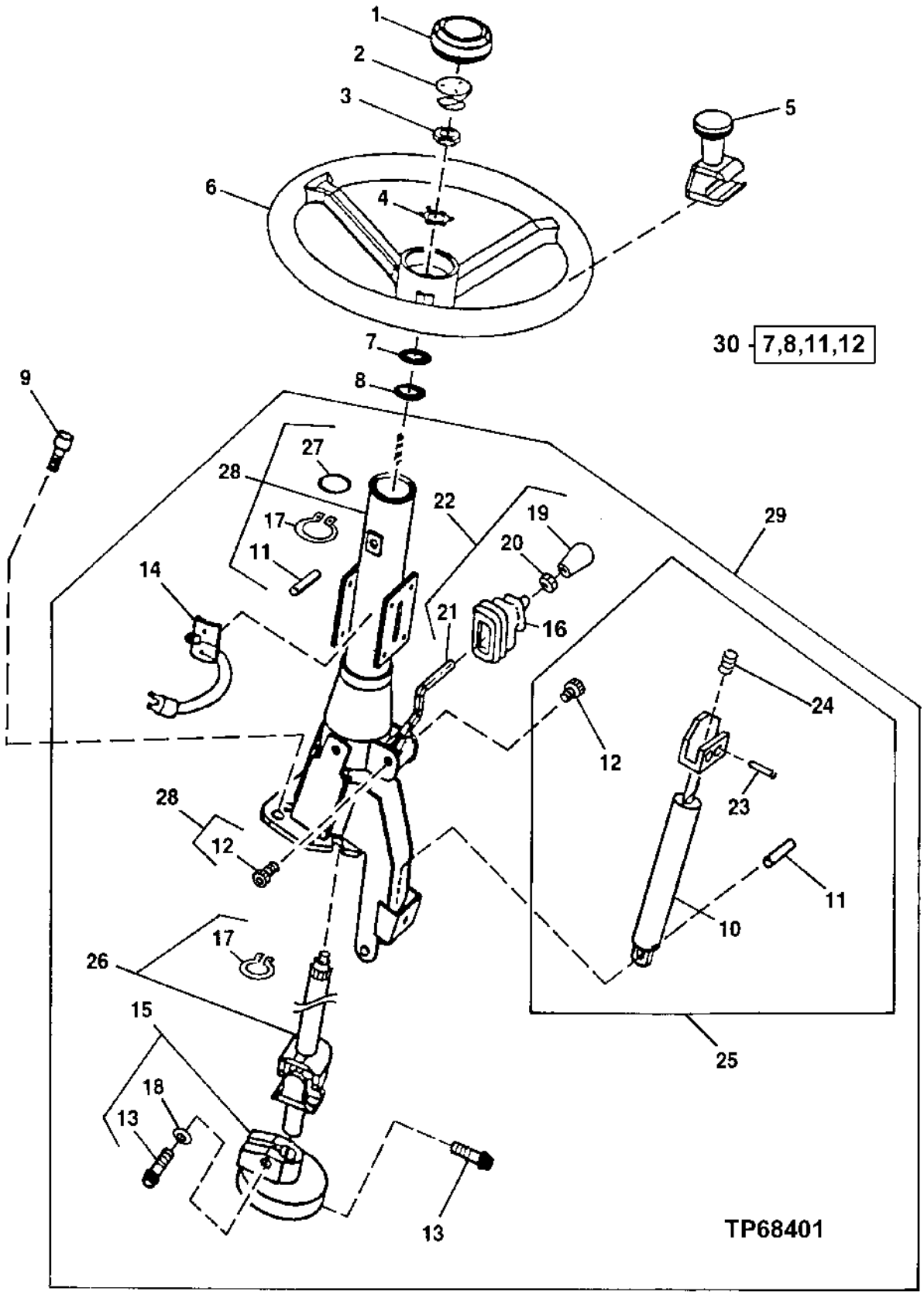

STEERING WHEEL,STEERING COLUMN AND LINKAGE

KEY	PART NO.	PART NAME	QTY	SERIAL NO.	REMARKS
1	T154131	COVER	1		
2	AT207682	SPRING ASSEMBLY	1		(USE IF AVAILABLE) (SUB AT222153)
	AT222153	SWITCH	1		(HORN)
3	T13630	NUT	1		
4	T17148	LOCK WASHER	2		
5	AT169849	KNOB	1		
6	AT139694	STEERING WHEEL	1		
7	.....	SNAP RING	1		
8	.....	SEAL	1		
9	19M8328	SCREW	4		
10	.....	SPRING	1		(SUB AT160662)
11	.....	DOWEL PIN	1		
12	.....	SCREW	2		
13	T39049	BOLT	2		
14	AT162719	BRUSH SET	1		
15	AT220226	ISOLATOR	1		
16	T145701	COVER	4		
17	.....	SNAP RING	1		(SUB AT220225 OR AT220227)
18	.....	LOCK WASHER	1		(SUB AT220226)
19	AT220223	KIT	1		KNOB
20	.....	NUT	1		(SUB AT220224)
21	.....	LEVER	1		(SUB AT220224)
22	AT220224	KIT	1		TILT LEVER
23	.....	PIN	2		(SUB AT160662)
24	.....	SPRING	1		(SUB AT160662)
25	AT160662	KIT	1		GAS SPRING
26	AT220225	KIT	1		SHAFT
27	.....	O-RING	1		(SUB AT220227)
28	AT220227	KIT	1		HOUSING
29	AT202610	STEERING COLUMN	1		
30	RE56109	KIT	1		STEERING COLUMN REPAIR

LOWER STEERING COLUMN

TP47601 -UN-05SEP96

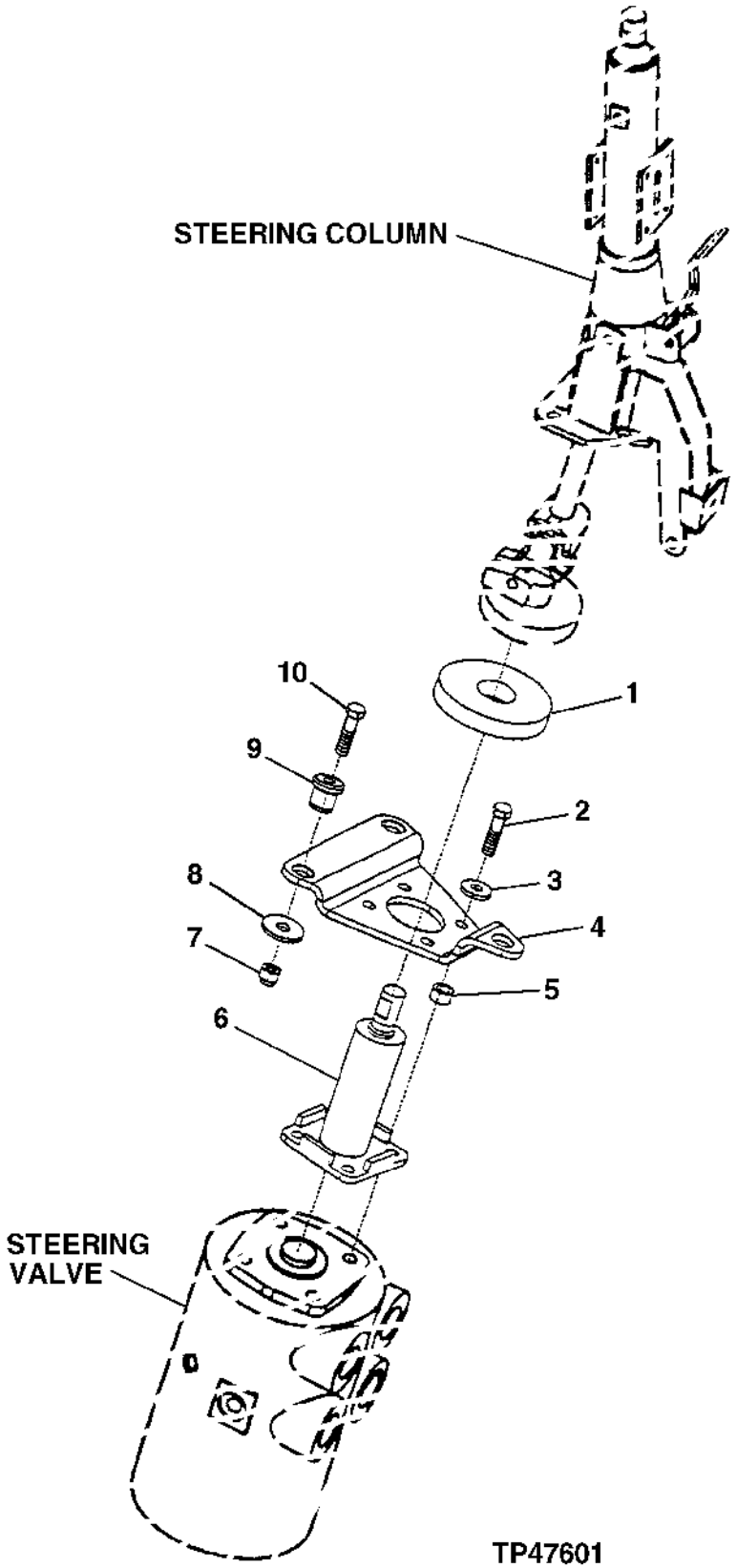

LOWER STEERING COLUMN

KEY	PART NO.	PART NAME	QTY	SERIAL NO.	REMARKS
1	T131980	ISOLATOR	1		(SUB FOR T182852)
2	19H2633	CAP SCREW	4		
3	24H1308	WASHER	4		13/32" X 1" X 0.134"
4	T168276	BRACKET	1		TO CAB FLOOR
5	28H860	WASHER	4		0.423" X 0.675" X 3/8"
6	AT156896	STEERING COLUMN	1		LOWER
7	14M7400	LOCK NUT	3		M10
8	24M7296	WASHER	3		10.500 X 30 X 2.500 MM
9	AT116162	RUBBER MOUNT	3		
10	19H2633	CAP SCREW	3		

STEERING COLUMN COVERS

TP60362 -UN-27APR98

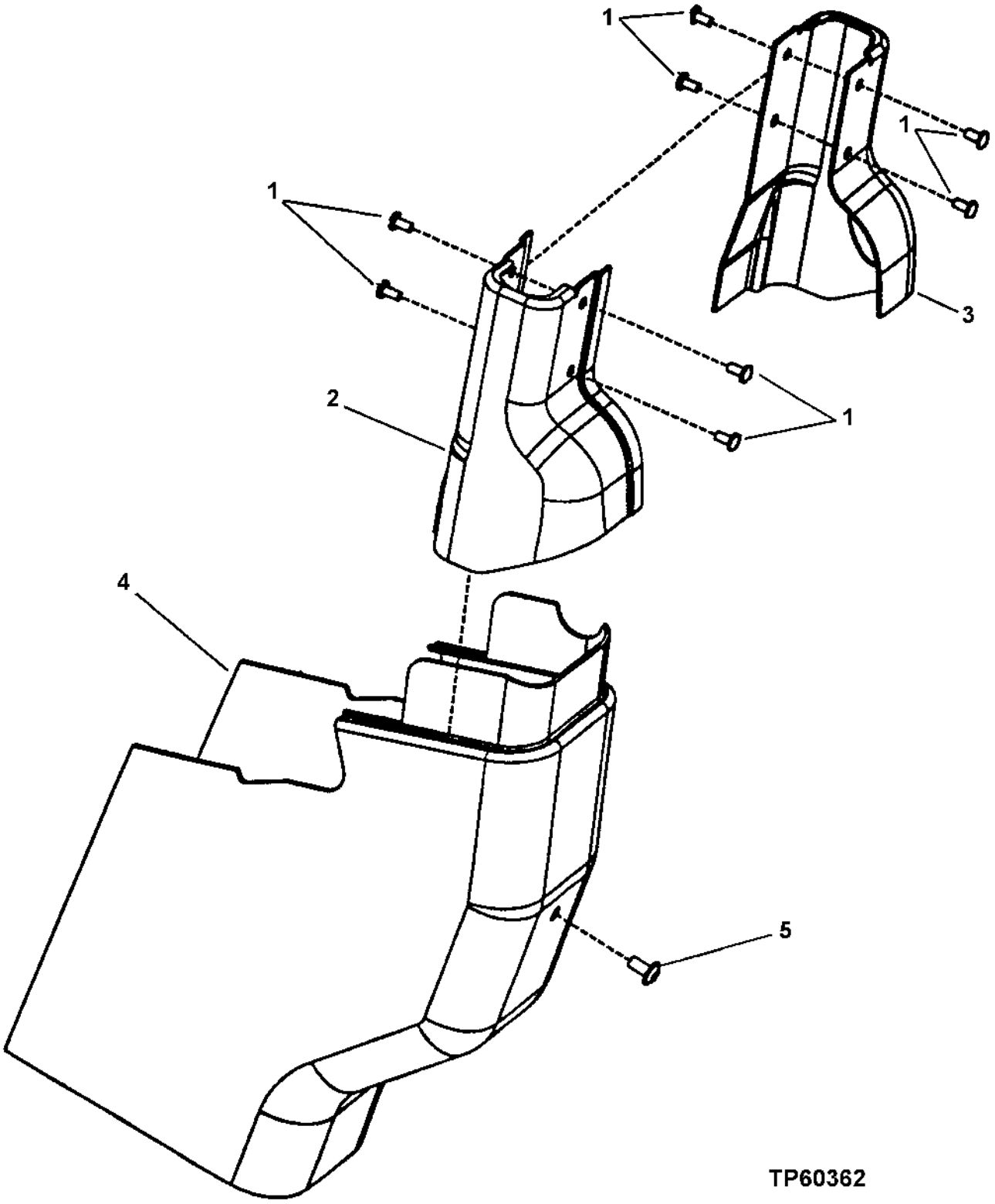

STEERING COLUMN COVERS

KEY	PART NO.	PART NAME	QTY	SERIAL NO.	REMARKS
1	21M7305	SCREW	8		M6 X 12
2	T173100	COVER	1		
3	T173099	COVER	1		
4	T156784	COVER	1		
5	19M8675	SCREW	1		M8 X 16

STEERING VALVE AND FITTINGS

TP60360 -UN-25APR98

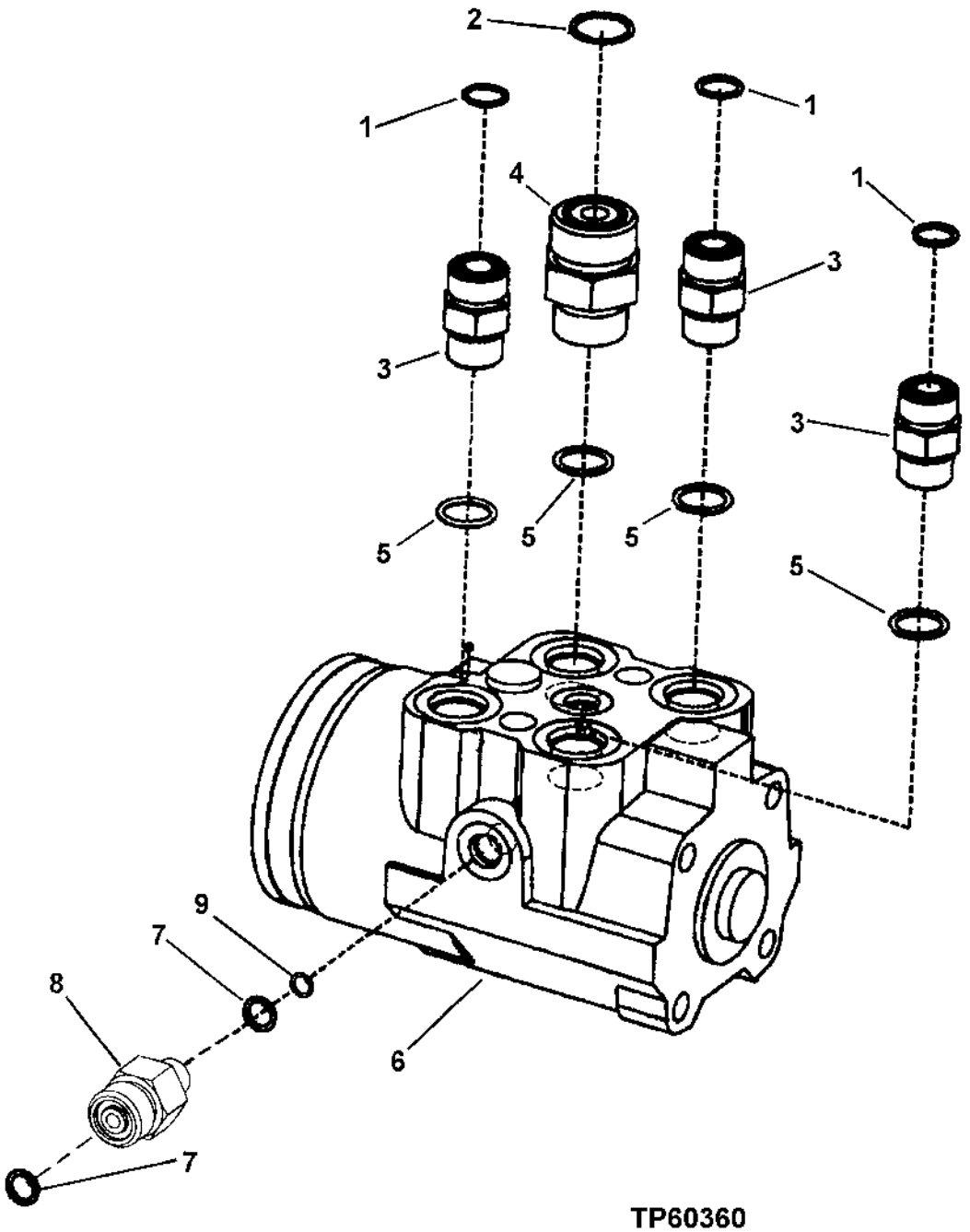

TP60360

STEERING VALVE AND FITTINGS

KEY	PART NO.	PART NAME	QTY	SERIAL NO.	REMARKS
1	T77932	O-RING	3		
2	T77858	O-RING	1		
3	38H1317	FITTING	3		
4	38H1178	ADAPTER	1		
5	R26375	O-RING	4		(USE IF AVAILABLE)
6	AT220455	CONTROL VALVE	1		(USE IF AVAILABLE) (SUB AT223390)
	AT223390	VALVE	1		
7	R28782	O-RING	2		
8	38H1309	ADAPTER	1		
9	T77613	O-RING	1		

STEERING VALVE SEAL KIT

TP62824 -UN-20JUN00

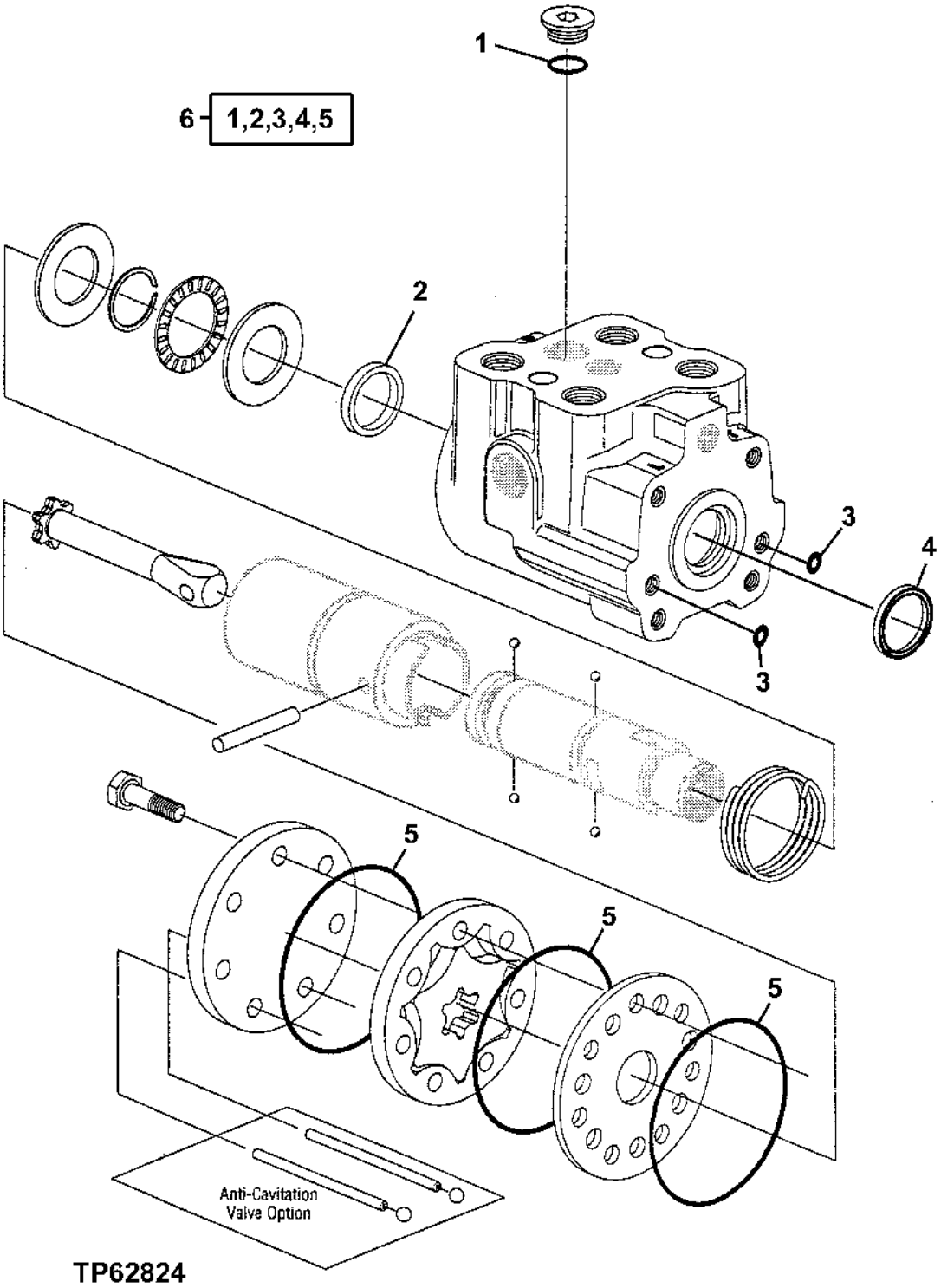

STEERING VALVE SEAL KIT

KEY	PART NO.	PART NAME	QTY	SERIAL NO.	REMARKS
1	R26375	O-RING	1		
2	T180289	SEAL	1		
3	R10093	O-RING	2		
4	C15104	SEAL	1		
5	T180290	O-RING	3		
6	AT223439	SEAL KIT	1		

STEERING CYLINDER

TP68402 -UN-13SEP99

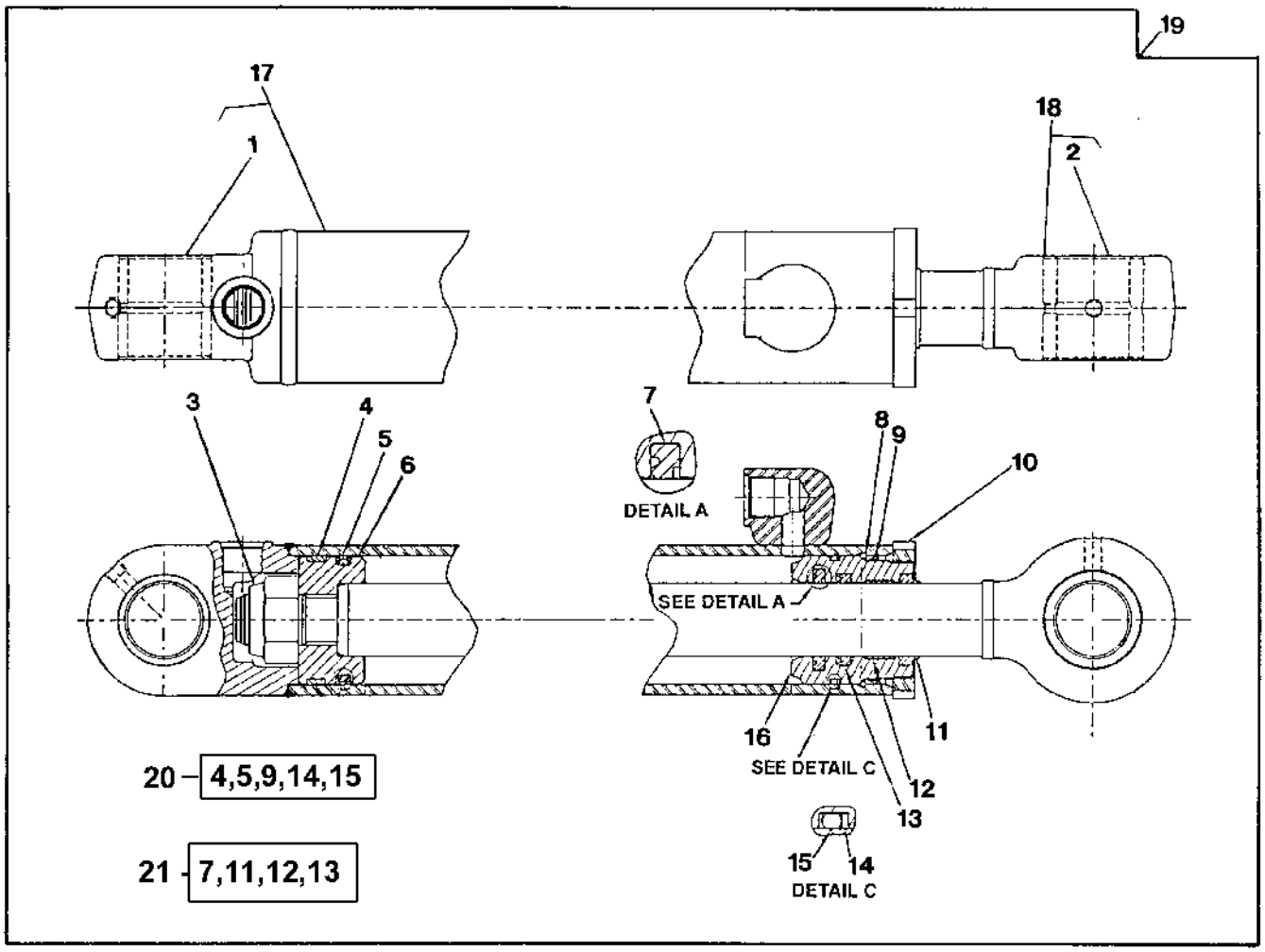

TP68402

STEERING CYLINDER

KEY	PART NO.	PART NAME	QTY	SERIAL NO.	REMARKS
1	R89940	BUSHING	1		
2	R89940	BUSHING	1		
3	R81866	NUT	1		
4	R81777	WEAR RING	1		
5	RE20345	SEAL	1		
6	R86084	PISTON	1		
7	AH146560	SEAL	1		
8	R81789	RING	1		
9	R91729	RING	AR		
10	R81795	NUT	1		
11	AH146556	SEAL	1		
12	H152793	BACK-UP RING	1		
13	H152202	SEAL	1		
14	R81864	BACK-UP RING	1		
15	T12582	O-RING	1		
16	H157510	HYDR. CYLINDER ROD GUIDE	1		(SUB FOR H152347)
17	AH150703	HYDRAULIC CYLINDER BARREL	1		
18	AH151585	ROD	1		
19	AH150468	HYDRAULIC CYLINDER	1		
20	AH149842	HYDRAULIC CYLINDER KIT	1		(BORE REPAIR KIT)
21	AH149813	HYDRAULIC CYLINDER KIT	1		(ROD REPAIR KIT)

STEERING CYLINDER HYDRAULIC HOSES

TP55587 -UN-09SEP97

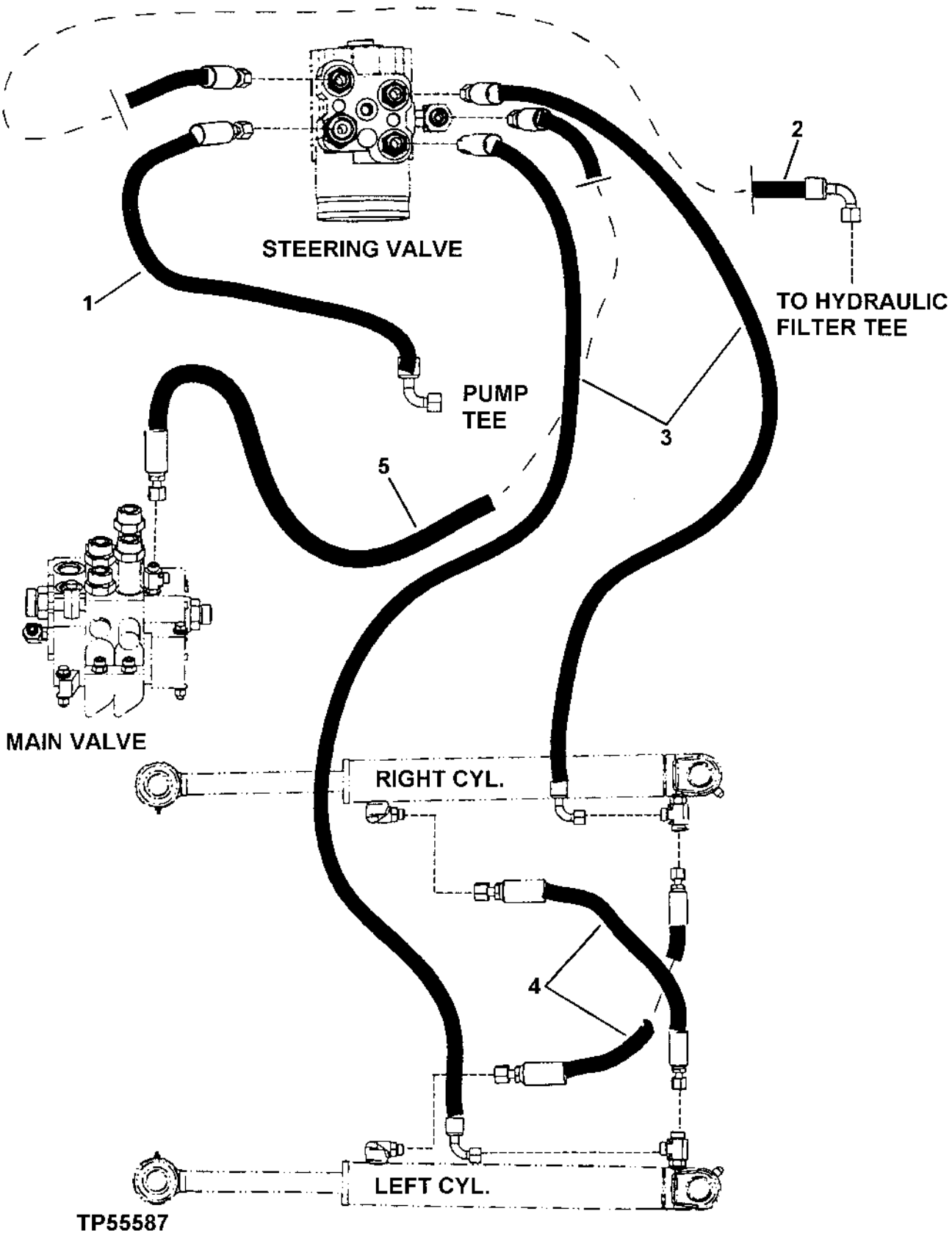

STEERING CYLINDER HYDRAULIC HOSES

KEY	PART NO.	PART NAME	QTY	SERIAL NO.	REMARKS
1	AT205530	HYDRAULIC HOSE - FABRICATE	1		
2	AT208695	HYDRAULIC HOSE - FABRICATE	1		
3	AT203182	HYDRAULIC HOSE - FABRICATE	2		
4	AT208694	HYDRAULIC HOSE - FABRICATE	2		
5	AT169282	HYDRAULIC HOSE - FABRICATE	1		

STEERING CYLINDER FITTINGS AND LUBRICATION HOSES

TP60361 -UN-25APR98

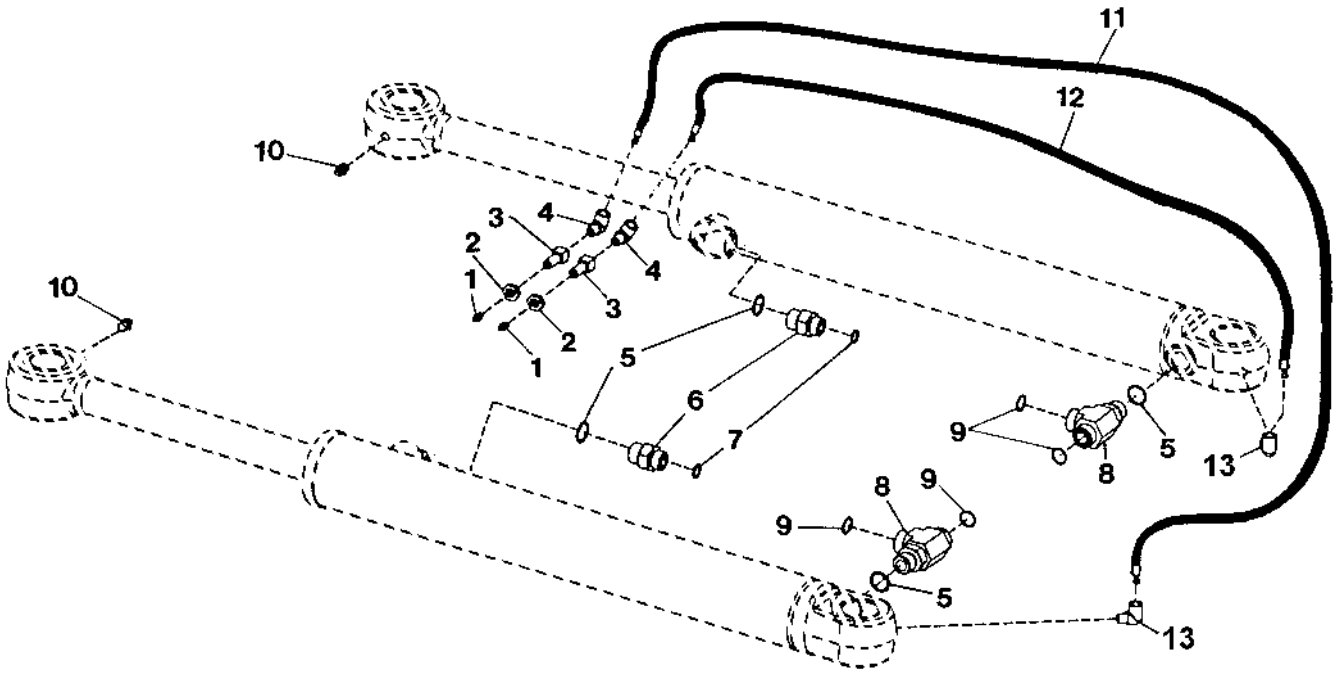

TP60361

STEERING CYLINDER FITTINGS AND LUBRICATION HOSES

KEY	PART NO.	PART NAME	QTY	SERIAL NO.	REMARKS
1	JD7842	LUBRICATION FITTING	2		
2	E12379	NUT	2		
3	R36311	FITTING	2		
4	T56112	ELBOW FITTING	2		
5	R26906	O-RING	4		
6	38H1174	ADAPTER	2		
7	T77857	O-RING	2		
8	38H1025	TEE FITTING	2		
9	T77932	O-RING	4		
10	JD7759	LUBRICATION FITTING	2		
11	AT207022	HYDRAULIC HOSE	1		(SUB FOR AT53932)
12	AT53541	HYDRAULIC HOSE	1		
13	M45937	ELBOW FITTING	2		(45 DEGREE)

MEMORANDA

FRONT AND REAR BRAKES
RXP021925 -UN-04FEB97

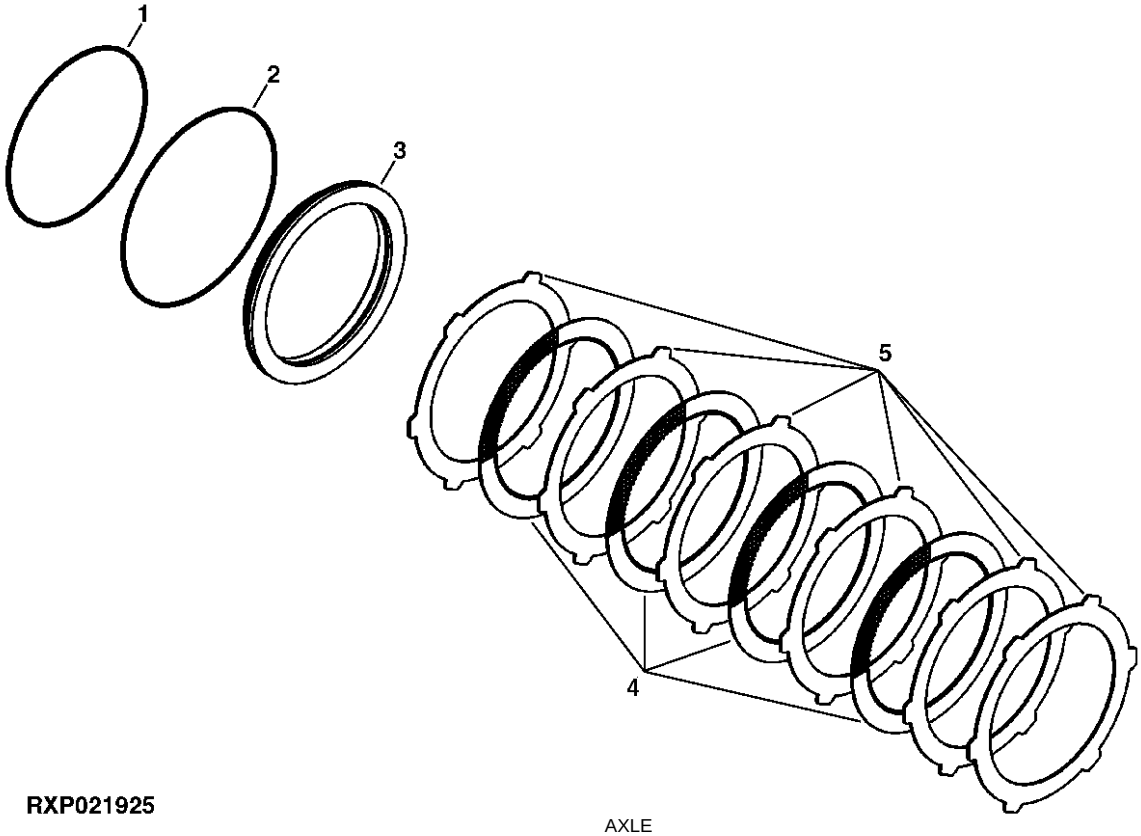

RXP021925

KEY	PART NO.	PART NAME	QTY	AXLE SERIAL NO.	REMARKS
1	R156898	SEAL	1		I.D.
2	R156897	SEAL	1		O.D.
3	R152936	PISTON	1		
4	RE159199	BRAKE DISK	4		(SUB FOR RE68338)
5	R161863	WEAR PLATE	6		(SUB FOR R133268)

BRAKE VALVE, PEDALS AND LINKAGE
(SERIAL NO. -XXXXXX)

TP55875 -UN-02MAR98

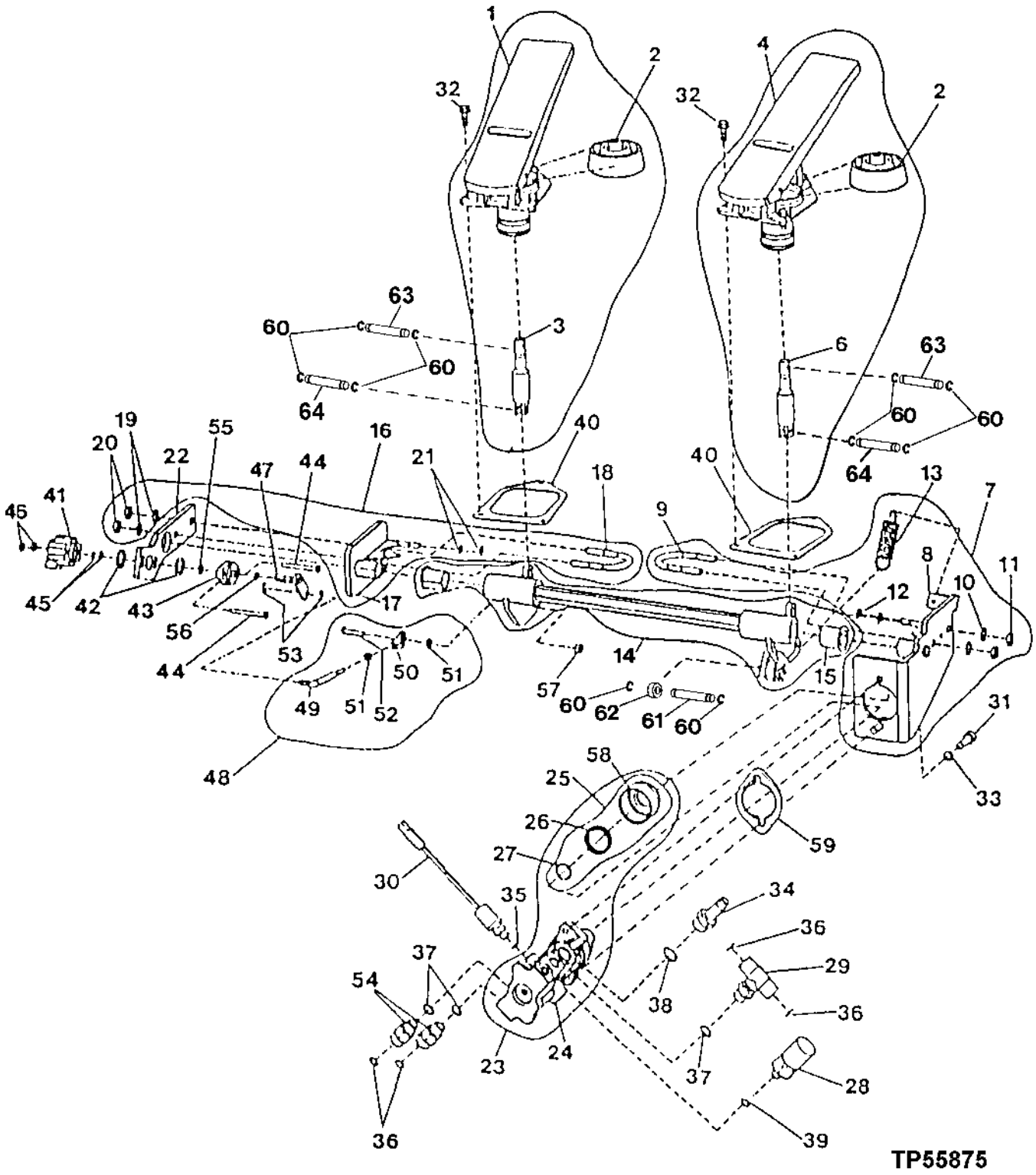

BRAKE VALVE, PEDALS AND LINKAGE
(SERIAL NO. -XXXXXX)

KEY	PART NO.	PART NAME	QTY	SERIAL NO.	REMARKS
1	AT208087	PEDAL	1		(LEFT)
2	T174634	BOOT	1		(SUB FOR T157222)
3	AT208163	PUSH ROD	1		
4	AT203457	PEDAL	1		(RIGHT)
5	T174634	BOOT	1		(SUB FOR T157222)
6	AT208088	PUSH ROD	1		
7	AT208086	KIT	1		BRACKET
8	AT208166	SUPPORT	1		
9	T157220	CLAMP	1		
10	T170181	LOCK WASHER	2		
11	R53317	LOCK NUT	2		
12	T170180	SNAP RING	2		
13	T176108	SPRING	1		(THIS SPRING AND T176111 SUB FOR T174333) (NO LONGER CONTAINED IN RIGHT PEDAL BRACKET KIT)
	T176111	SPRING	1		(THIS SPRING AND T176108 SUB FOR T174333) (NO LONGER CONTAINED IN RIGHT PEDAL BRACKET KIT)
14	AT208089	ROCKER ARM	1		
15	T157223	BEARING	2		
16	AT208085	KIT	1		BRACKET
17	AT208167	SUPPORT	1		
18	T157220	CLAMP	1		
19	T170181	LOCK WASHER	2		
20	R53317	LOCK NUT	2		
21	T170180	SNAP RING	2		
22	T172274	SUPPORT	1		(K)
23	AT210229	VALVE	1		
24	.....	HOUSING	1		(SUB AT210229)
25	AT207948	SEAL KIT	1		
26	AT207947	SEAL	1		
27	R26375	O-RING	1		
28	AT206721	SWITCH	1		ACCUMULATOR, CHARGE
	AT222371	SWITCH	1		ACCUMULATOR, CHARGE (HARSH ENVIORNMENT, SEALED CONNECTORS) (NOT ILLUSTRATED)
29	AT207529	FITTING	1		SHUTTLE, CHECK
30	AT223535	SWITCH	1		PRESSURE, (SUB FOR AT152113)
	AT222372	SWITCH	1		PRESSURE (HARSH ENVIRONMENT, SEALED CONNECTORS) (NOT ILLUSTRATED)
31	19M7657	SCREW	2		M8 X 25
32	M113243	SCREW	6		
33	24M7313	WASHER	2		8.100 X 12 X 1.200 MM
34	T38282	HOSE FITTING	1		BEADED
35	R26287	O-RING	1		
..	AT210291	KIT	1	-561731	(CLUTCH CUTOFF) INCLUDES ALL (K) PARTS (ALSO ORDER ONE RE12364, THREE R78058 THREE R78059 AND ONE AT210876)

BRAKE VALVE, PEDALS AND LINKAGE
(SERIAL NO. -XXXXXX)

TP55875 -UN-02MAR98

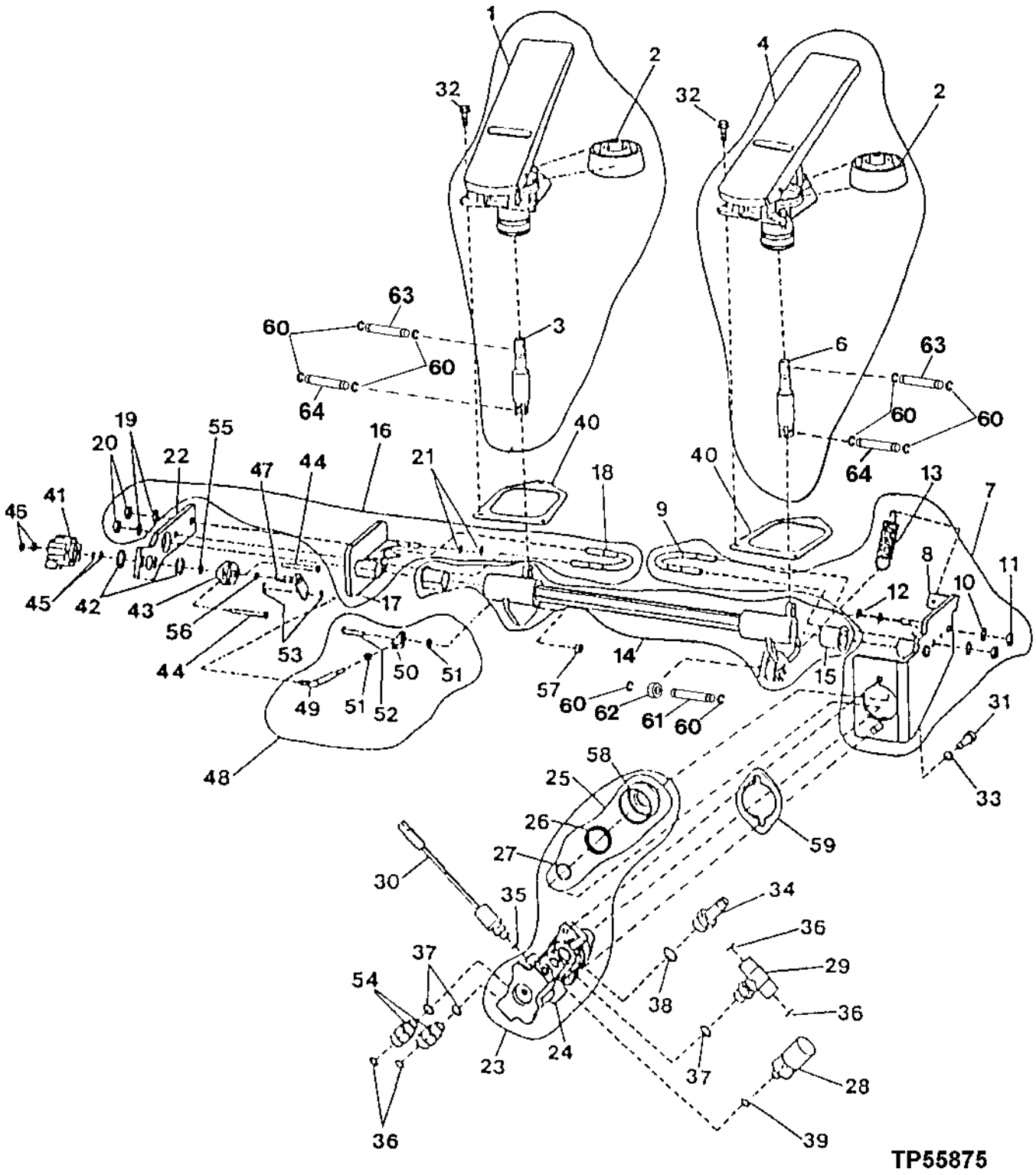

BRAKE VALVE, PEDALS AND LINKAGE
(SERIAL NO. -XXXXXX)

KEY	PART NO.	PART NAME	QTY	SERIAL NO.	REMARKS
36	T77613	O-RING	4		
37	R26448	O-RING	3		
38	R26375	O-RING	1		
39	R28782	O-RING	1		
40	T172927	GASKET	2		FLOOR, SEAL
41	AT207073	TRANSDUCER	1	-562283	PRESSURE
	RE35704	SENSOR	1	562284-	(K) POSITION, ROTARY
42	P48347	O-RING	2		(K)
43	R86457	SUPPORT	1		(K) POSITION SENSORY SHAFT
44	21H1390	SCREW	2		(K) 0.190" X 1-3/4"
45	12M7060	WASHER	2		(K) 5.300 MM
46	14H631	NUT	2		(K) 0.190"
47	RE24468	SHAFT	1		(K) SPEED CONTROL SENSOR WITH ARM
48	AT210877	LINKAGE	1		(K)
49	.....	LINKAGE	1		(K) (SUB AT210877)
50	AH108055	TIE ROD END	1		(K)
51	N203905	LOCK NUT	2		(K)
52	21H985	SCREW	1		(K) 0.190" X 1"
53	R72654	SNAP RING	2		(K)
54	AT181313	CHECK VALVE	2		(K)
55	R72653	SNAP RING	1		(K)
56	A4365R	O-RING	1		(K)
57	N203905	LOCK NUT	1		(K)
58	.....	COVER	1		(SUB AT207948 KIT)
59	.....	SHIM	1		
60	T157212	CLIP	10		
61	T157257	PIN	1		
62	T175236	ROLLER	1		19 MM DIAMETER
	T157213	ROLLER	1		22 MM DIAMETER
63	T157258	PIN	2		
64	T157211	PIN	2		
..	AT210291	KIT	1	-561731	(CLUTCH CUTOFF) INCLUDES ALL (K) PARTS (ALSO ORDER ONE RE12364, THREE R78058 THREE R78059 AND ONE AT210876)

BRAKE VALVE, PEDALS AND LINKAGE
(SERIAL NO. XXXXXX-)

T136037 -UN-07DEC00

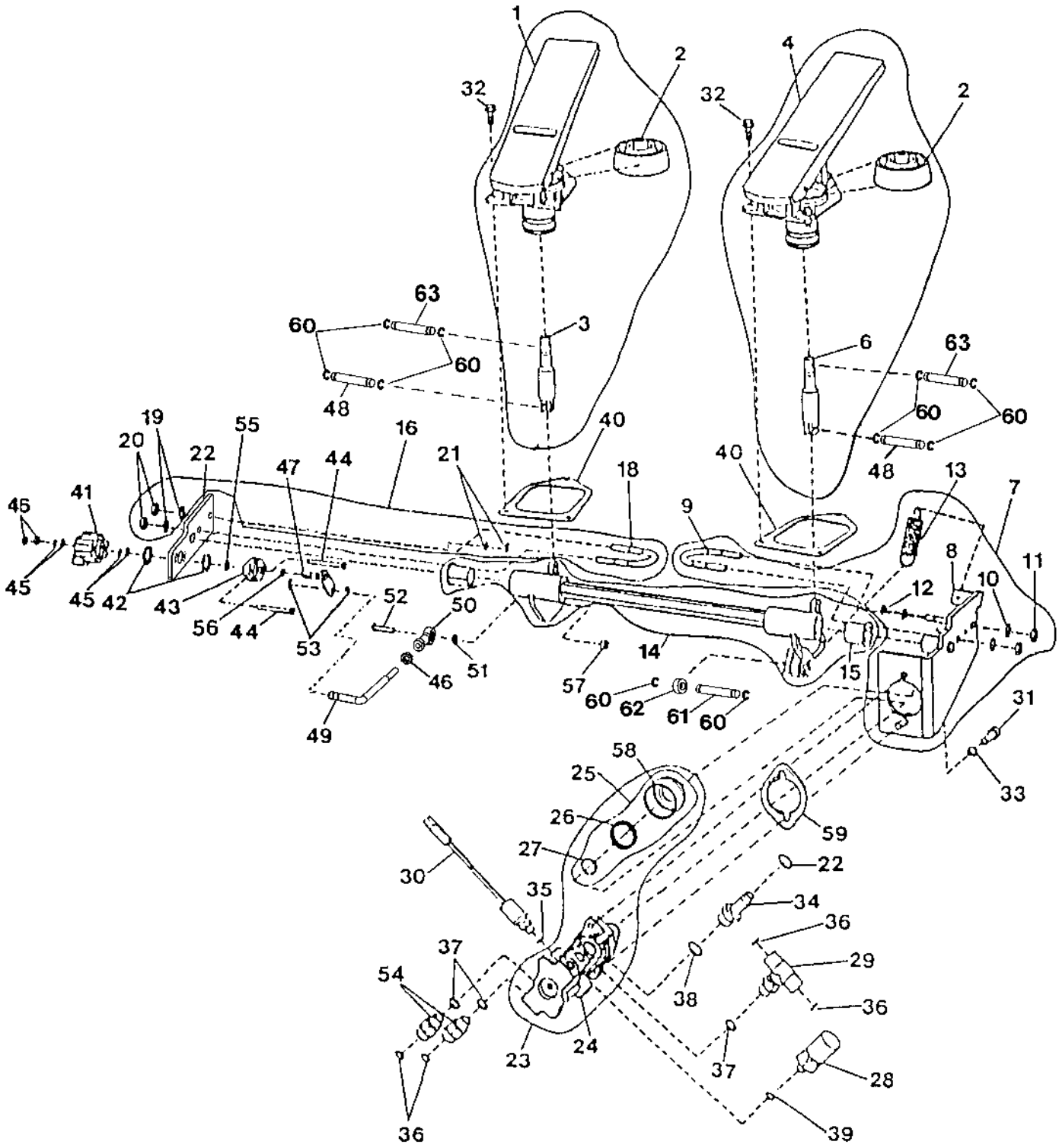

T136037

BRAKE VALVE, PEDALS AND LINKAGE
(SERIAL NO. XXXXXX-)

KEY	PART NO.	PART NAME	QTY	SERIAL NO.	REMARKS
1	AT208087	PEDAL	1		(LEFT)
2	T174634	BOOT	1		(SUB FOR T157222)
3	AT208163	PUSH ROD	1		
4	AT203457	PEDAL	1		(RIGHT)
5	T174634	BOOT	1		(SUB FOR T157222)
6	AT208088	PUSH ROD	1		
7	AT208086	KIT	1		BRACKET
8	AT208166	SUPPORT	1		
9	T157220	CLAMP	1		
10	T170181	LOCK WASHER	2		
11	R53317	LOCK NUT	2		
12	T170180	SNAP RING	2		
13	T176108	SPRING	1		(THIS SPRING AND T176111 SUB FOR T174333) (NO LONGER CONTAINED IN RIGHT PEDAL BRACKET KIT)
	T176111	SPRING	1		(THIS SPRING AND T176108 SUB FOR T174333) (NO LONGER CONTAINED IN RIGHT PEDAL BRACKET KIT)
14	AT208089	ROCKER ARM	1		
15	T157223	BEARING	2		
16	AT222972	KIT	1		BRACKET
17	AT222842	PLATE	1		
18	T157220	CLAMP	1		
19	T170181	LOCK WASHER	2		
20	R53317	LOCK NUT	2		
21	T170180	SNAP RING	2		
22	T77857	O-RING	1		(K)
23	AT210229	VALVE	1		
24	.....	HOUSING	1		(SUB AT210229)
25	AT207948	SEAL KIT	1		
26	AT207947	SEAL	1		
27	R26375	O-RING	1		
28	AT206721	SWITCH	1		ACCUMULATOR, CHARGE
	AT222371	SWITCH	1		ACCUMULATOR, CHARGE (HARSH ENVIORNMENT, SEALED CONNECTORS) (NOT ILLUSTRATED)
29	AT207529	FITTING	1		SHUTTLE, CHECK
30	AT223535	SWITCH	1		PRESSURE, (SUB FOR AT152113)
	AT222372	SWITCH	1		PRESSURE (HARSH ENVIRONMENT, SEALED CONNECTORS) (NOT ILLUSTRATED)
31	19M7657	SCREW	2		M8 X 25
32	M113243	SCREW	6		
33	24M7313	WASHER	2		8.100 X 12 X 1.200 MM
34	38H1161	ADAPTER	1		
35	R26287	O-RING	1		

BRAKE VALVE, PEDALS AND LINKAGE
(SERIAL NO. XXXXXX-)

T136037 -UN-07DEC00

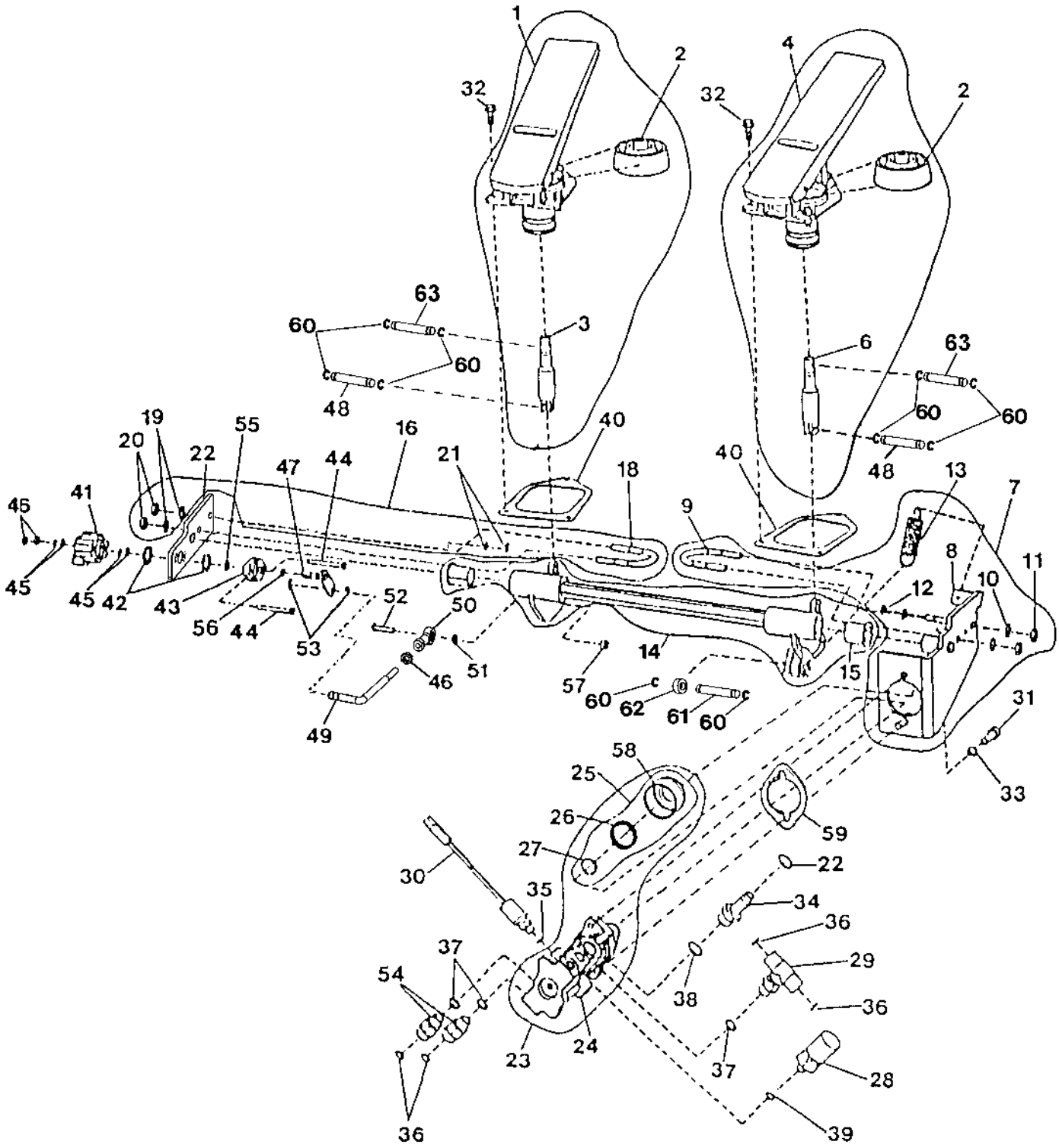

T136037

BRAKE VALVE, PEDALS AND LINKAGE
(SERIAL NO. XXXXXX-)

KEY	PART NO.	PART NAME	QTY	SERIAL NO.	REMARKS
36	T77613	O-RING	4		
37	R26448	O-RING	3		
38	R26375	O-RING	1		
39	R28782	O-RING	1		
40	T172927	GASKET	2		FLOOR, SEAL
41	AT207073	TRANSDUCER	1	-562283	PRESSURE
	RE35704	SENSOR	1	562284-	(K) POSITION, ROTARY
42	P48347	O-RING	2		(K)
43	R86457	SUPPORT	1		(K) POSITION SENSORY SHAFT
44	21H1390	SCREW	2		(K) 0.190" X 1-3/4"
45	12M7060	WASHER	4		(K) 5.300 MM
46	14H631	NUT	3		(K) 0.190"
47	RE24468	SHAFT	1		(K) SPEED CONTROL SENSOR WITH ARM
48	T157211	PIN	2		(K)
49	T178779	LINKAGE	1		(K) (SUB AT210877)
50	AT222853	TIE ROD END	1		(K)
51	N203905	LOCK NUT	2		(K)
52	21H985	SCREW	1		(K) 0.190" X 1"
53	R72654	SNAP RING	2		(K)
54	AT181313	CHECK VALVE	2		(K)
55	R72653	SNAP RING	1		(K)
56	A4365R	O-RING	1		(K)
57	N203905	LOCK NUT	1		(K)
58	.....	COVER	1		(SUB AT207948 KIT)
59	.....	SHIM	1		
60	T157212	CLIP	10		
61	T157257	PIN	1		
62	T175236	ROLLER	1		19 MM DIAMETER
	T157213	ROLLER	1		22 MM DIAMETER
63	T157258	PIN	2		
..	AT210291	KIT	1	-562283	INCLUDES ALL (K) PARTS

BRAKE VALVE HYDRAULIC HOSES

TP60460 -UN-12AUG98

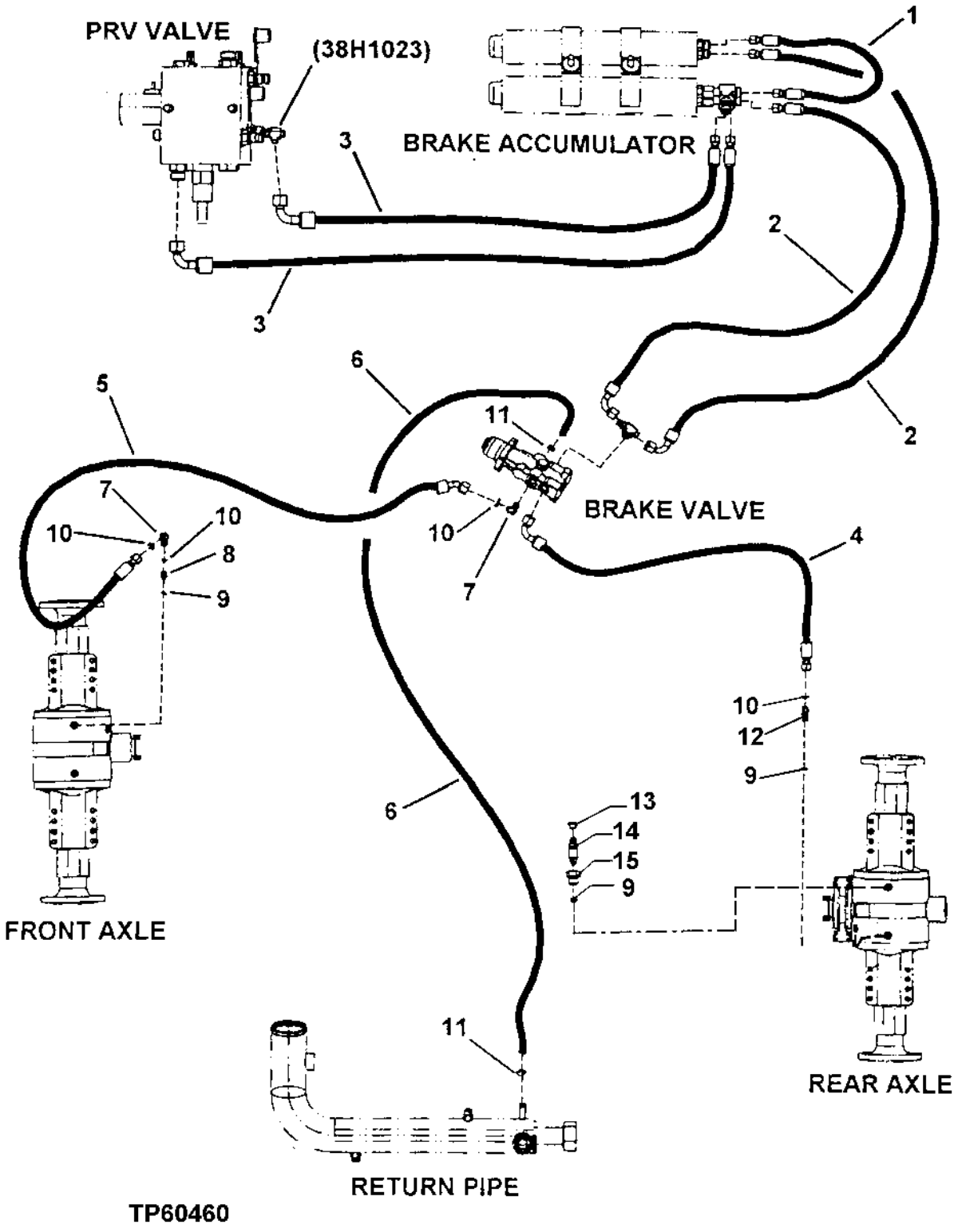

BRAKE VALVE HYDRAULIC HOSES

KEY	PART NO.	PART NAME	QTY	SERIAL NO.	REMARKS
1	AT166148	HYDRAULIC HOSE - FABRICATE	1		
2	AT222201	HYDRAULIC HOSE - FABRICATE	2	-574111	(SUB FOR AT166149)
	AT222414	HYDRAULIC HOSE - FABRICATE	2	574112-	
3	AT222163	HYDRAULIC HOSE - FABRICATE	2	-574111	(SUB FOR AT207035)
	AT222413	HYDRAULIC HOSE - FABRICATE	1	574112-	
4	AT79576	HYDRAULIC HOSE - FABRICATE	1		
5	AT207096	HYDRAULIC HOSE - FABRICATE	1		
6	.....	HOSE	AR		(MAKE FROM T168383 BULK MATERIAL, CUT TO LENGTH)
7	38H1094	ELBOW FITTING	2		
8	38H5002	ADAPTER	1		
9	51M7041	O-RING	3		
10	T77613	O-RING	4		
11	AR21836	CLAMP	2		
12	38H5016	ELBOW FITTING	1		
13	.....	PLUG	1		(R100122 NO LONGER REQUIRED)
14	.....	BLEED VALVE	1		(R21612 NO LONGER REQUIRED)
15	.....	BUSHING	1		(T175880 NO LONGER REQUIRED)

BRAKE ACCUMULATOR
(SERIAL NO. -574111)

TP60348 -UN-16APR98

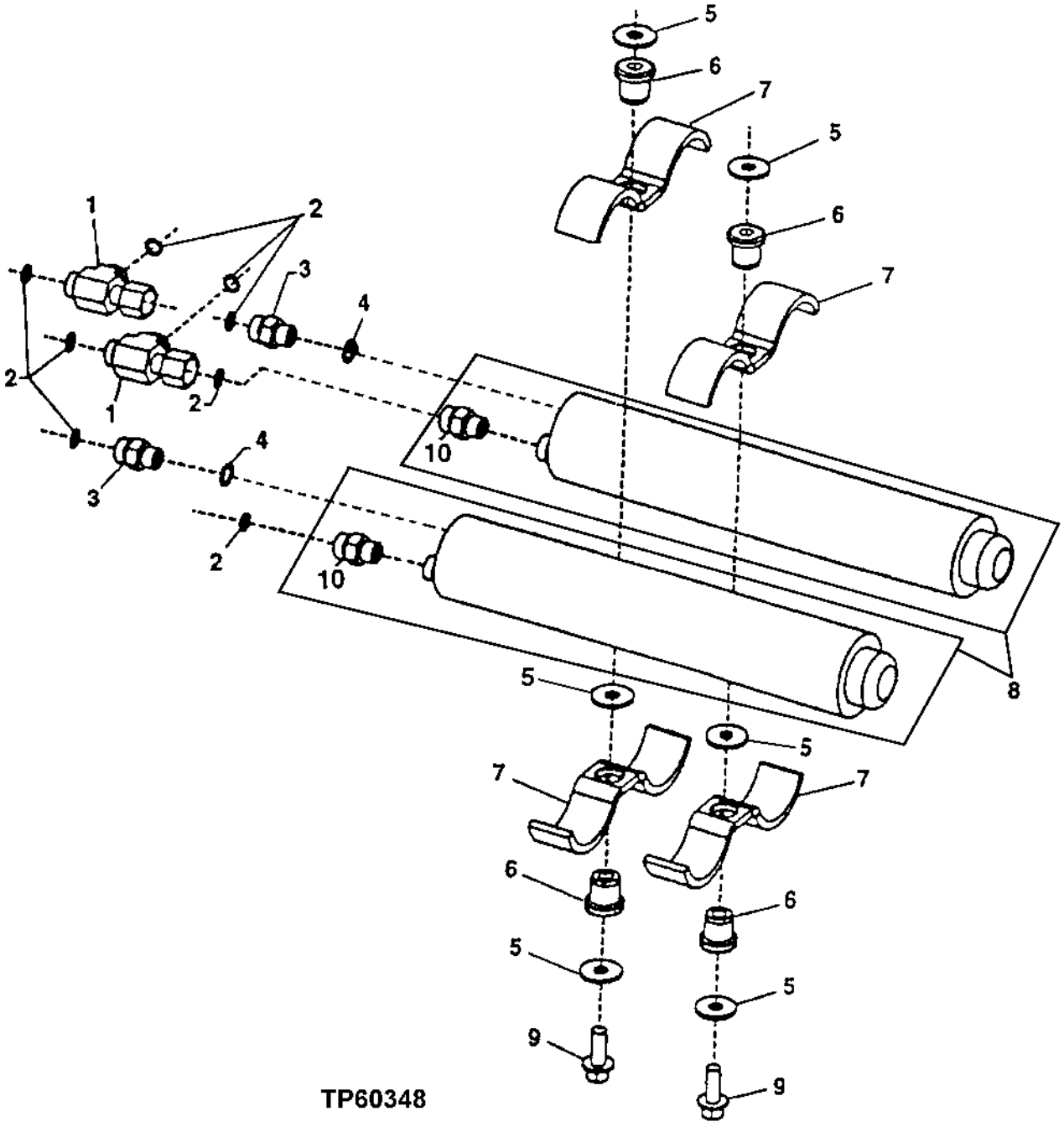

BRAKE ACCUMULATOR
(SERIAL NO. -574111)

KEY	PART NO.	PART NAME	QTY	SERIAL NO.	REMARKS
1	38H1030	TEE FITTING	2		
2	T77613	O-RING	8		
3	38H1160	ADAPTER	2		
4	R26448	O-RING	2		
5	24M7296	WASHER	8		10.500 X 30 X 2.500 MM
6	AT116162	RUBBER MOUNT	4		
7	T168393	CLAMP	4		
8	AT224430	ACCUMULATOR	2		(SUB FOR AT202889 OR AT223476)
9	19M7807	SCREW	2		M10 X 60
10	R104795	ADAPTER	2		

BRAKE ACCUMULATOR
(SERIAL NO. 574112-)

T147407 -UN-25OCT01

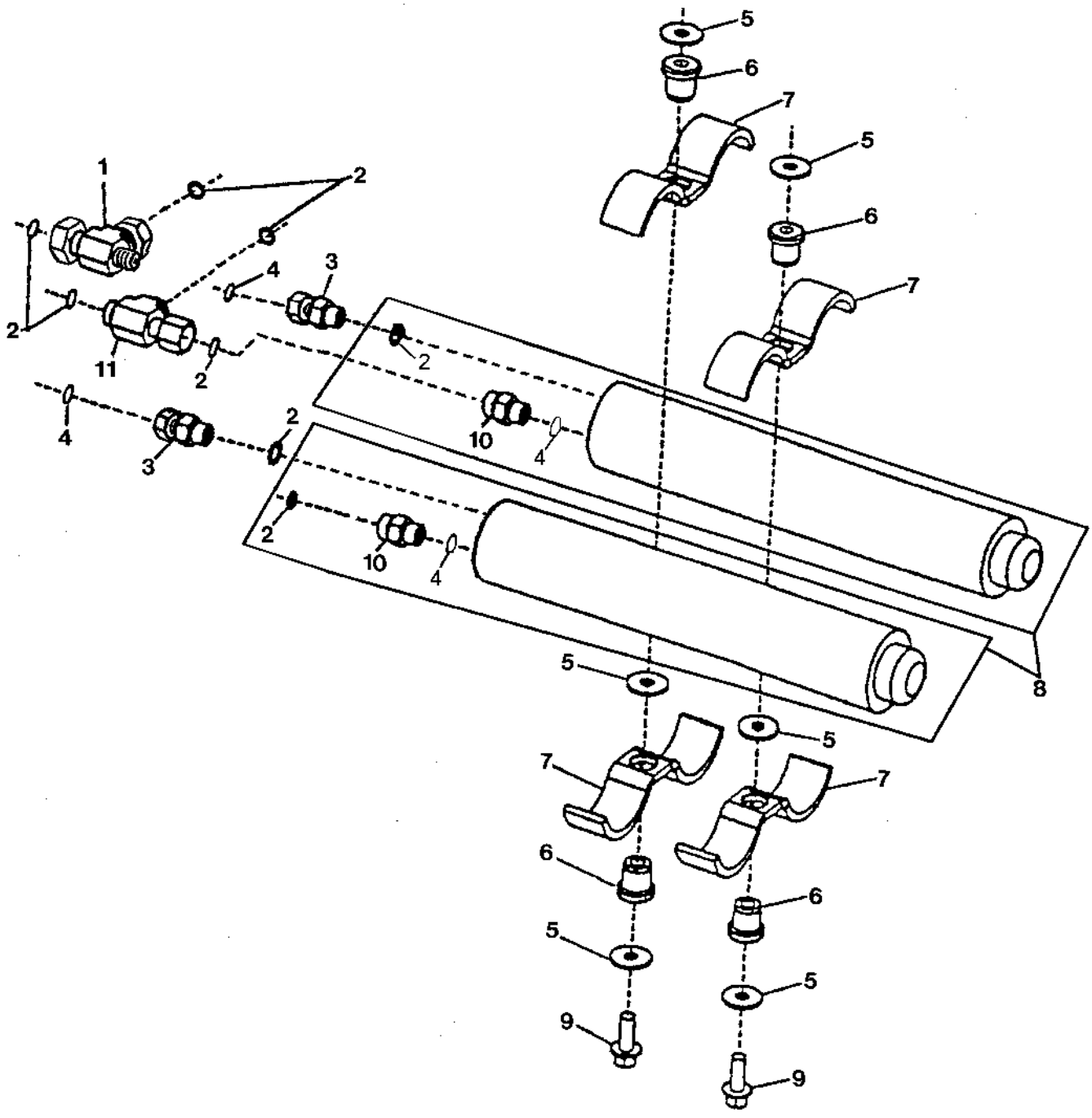

T147407

BRAKE ACCUMULATOR
(SERIAL NO. 574112-)

KEY	PART NO.	PART NAME	QTY	SERIAL NO.	REMARKS
1	AT219792	TEE FITTING	1		
2	T77613	O-RING	8		
3	38H1067	ADAPTER	1		
4	R26448	O-RING	4		
5	24M7296	WASHER	8		10.500 X 30 X 2.500 MM
6	AT116162	RUBBER MOUNT	4		
7	T168393	CLAMP	4		
8	AT224430	ACCUMULATOR	2		(SUB FOR AT223476)
9	19M7807	SCREW	2		M10 X 60
10	AT225573	CHECK VALVE	2		(SUB FOR (2) R104795)
11	38H1030	TEE FITTING	1		

DRIVELINE BEARING/PARKING BRAKE

T140204 -UN-21MAR01

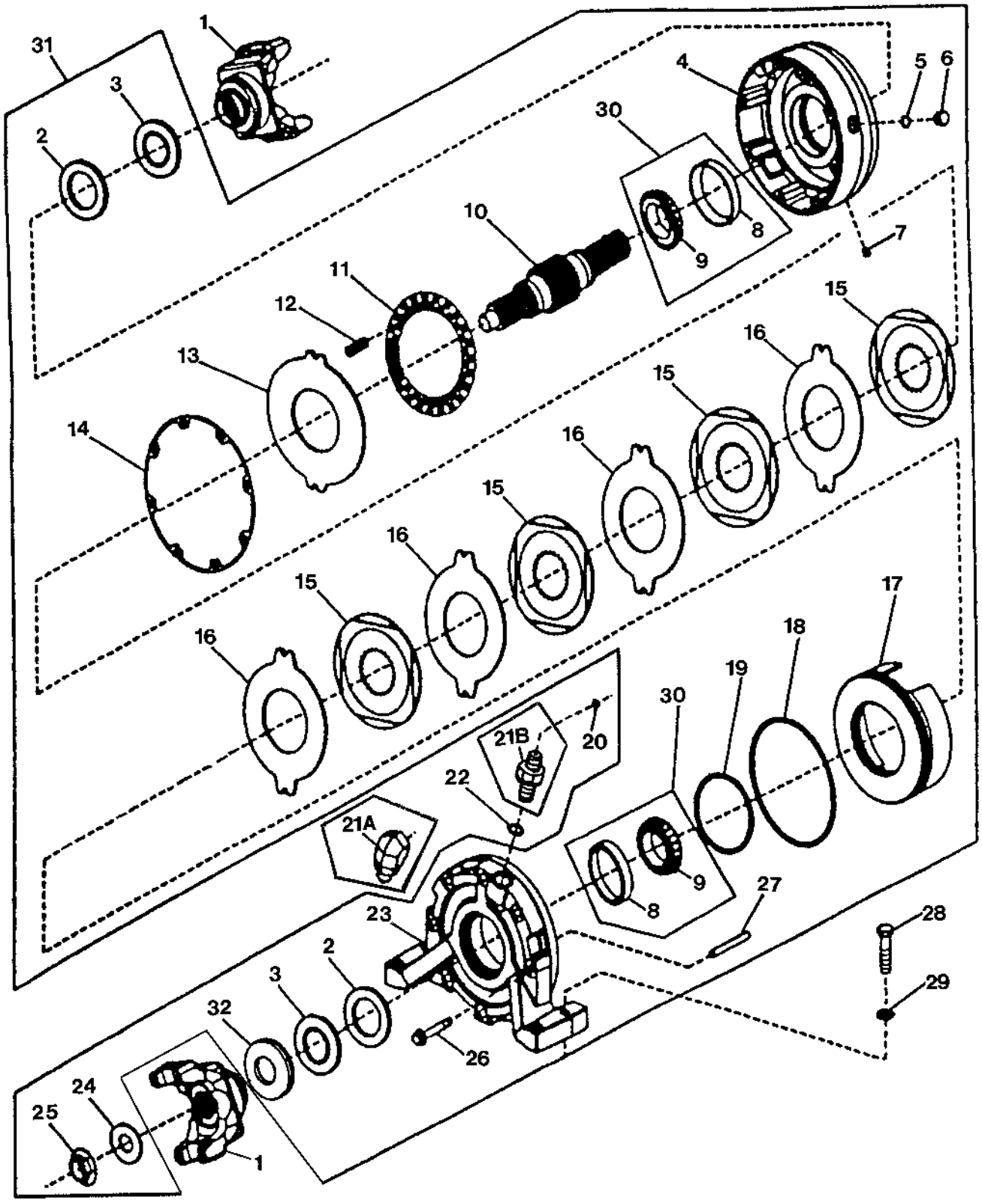

T140204

DRIVELINE BEARING/PARKING BRAKE

KEY	PART NO.	PART NAME	QTY	SERIAL NO.	REMARKS
1	T175448	YOKE	1		
2	AT225728	SEAL	2		(SUB FOR AT206798 AND AT206797)
3	.....	SEAL	2		(AT206797 NO LONGER AVAILABLE)
4	.....	HOUSING	1		(SUB AT208101)
5	R26375	O-RING	2		
6	R39112	FITTING	2		
7	AT208411	RELIEF VALVE	1		
8	.....	BEARING CUP	1		(SUB AT209495)
9	.....	BEARING CONE	1		(SUB AT209495)
10	T170604	UNIVERSAL DRIVESHAFT	1		(SUB AT208101)
11	T167840	RETAINER	1		
12	T167841	COMPRESSION SPRING	46		
13	T167980	DISK, WITH OUTER SPLINE	1		
14	T167842	GASKET	1		
15	T167981	DISK, WITH INNER SPLINE	4		
16	T167982	DISK, WITH OUTER SPLINE	4		
17	T170607	PISTON	1		(SUB AT208101)
18	T167843	O-RING	1		
19	T167845	O-RING	1		
20	T77613	O-RING	1		
21A	38H1413	ELBOW FITTING	1	-573530	
21B	38H1338	ADAPTER	1	573531-	
22	U12547	O-RING	1		
23	.....	PLATE	1		(SUB AT208101)
24	T170582	WASHER	1		
25	T167848	FLANGE NUT	1		
26	19M7817	SCREW	8		M12 X 70
27	T167943	DOWEL PIN	2		
28	19M7719	CAP SCREW	4		M16 X 70
29	24M7338	WASHER	4		17 X 30 X 3 MM
30	AT209495	BEARING	2		
31	AT208101	BRAKE	1		
32	T173407	SPACER	1		

MEMORANDA

LICENSE PLATE BRACKET AND LIGHT

TP48344 -UN-22AUG96

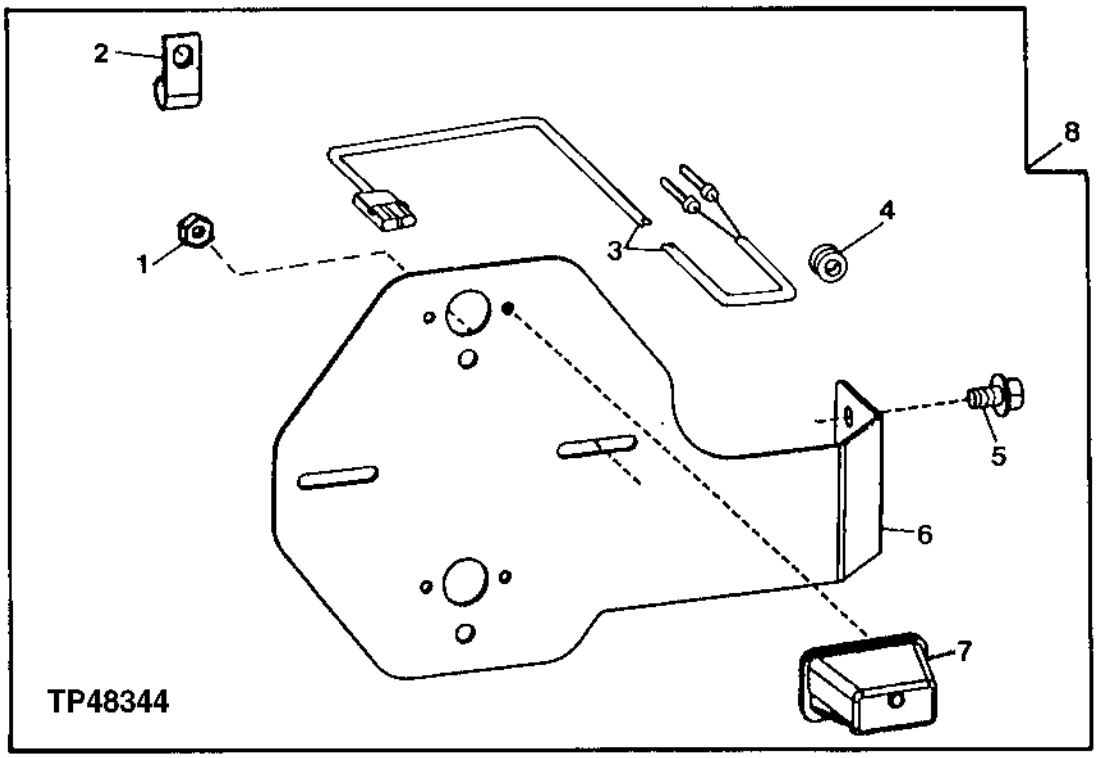

KEY	PART NO.	PART NAME	QTY	SERIAL NO.	REMARKS
1	14H605	NUT	2		0.164"
2	T75197	CLAMP	1		
3	AT203137	WIRING HARNESS	1		
4	R27583	GROMMET	1		
5	19M7783	SCREW	2		M10 X 16
6	T156693	BRACKET	1		
7	AT202789	LAMP	1		
	AT173354	BULB	1		(NOT ILLUSTRATED)
8	**AT206660**	**BRACKET**	**1**		

DECALS AND LABELS
(644H LOADER)

TP62612 -UN-07SEP99

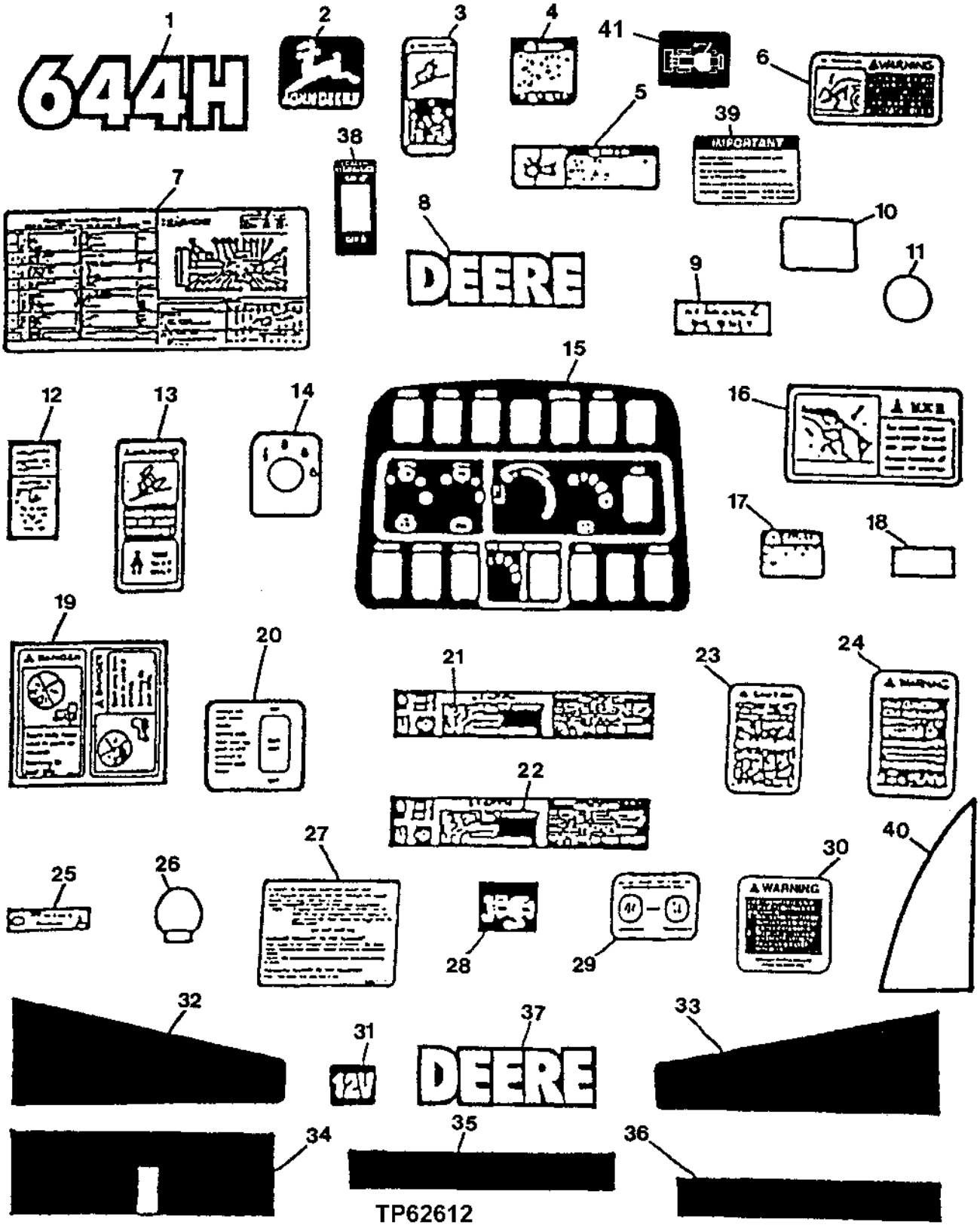

DECALS AND LABELS
(644H LOADER)

KEY	PART NO.	PART NAME	QTY	SERIAL NO.	REMARKS
1	T173568	LABEL	1	-581888	MODEL DESIGNATION
	T182411	LABEL	1	581889-	MODEL DESIGNATION
2	.....	LABEL	1		LEAPING DEER (WINDOW) (CAB) (T160822 NO LONGER REQUIRED)
	.....	LABEL	1		LEAPING DEER (CANOPY) (JD5621 NO LONGER REQUIRED)
3	T159028	LABEL	1		WARNING (PARK BRAKE)
4	T180944	LABEL	1		WARNING (RIDE CONTROL ACCUMULATOR) (SUB FOR T146431)
5	T146436	SAFETY SIGN	1		WARNING (ARTICULATION)
6	T173098	DECAL	1	-581888	WARNING (BOOM LOCK)
	T182191	DECAL	1	581889-	BOOM LOCK
7	T176347	LABEL	1		PERIODIC MAINTENANCE, (SUB FOR T175909)
8	T171632	LABEL	1	-581888	DEERE (COUNTERWEIGHT)
9	T101942	LABEL	1		HYDRAULIC OIL
10	JD5902	REFLECTOR	1		RED
11	T172928	LABEL	1		YELLOW
12	T174648	LABEL	1		ROPS
13	T146097	LABEL	1		WARNING (SEAT BELT)
14	T157172	LABEL	1		KEY START
15	T169953	LABEL	1	-581888	SWITCHES, CAB (RIGHT CONSOLE)
	T179364	LABEL	1	-581888	SWITCHES, CANOPY (RIGHT CONSOLE) (SUB FOR T172958)
	T181851	DECAL	1	581889-	SWITCHES, CAB (RIGHT CONSOLE)
	T179725	LABEL	1	581889-	SWITCHES,CANOPY WITH LPM(RIGHT CONSOLE)
16	T146175	SAFETY SIGN	1		WARNING (LIFT ARM)
17	T146438	SAFETY SIGN	1		CAUTION (BATTERY)
18	H21259	MAT	1		ANTI-SKID
19	.....	LABEL	1		BYPASS START (T146195 NO LONGER AVAILABLE)
20	T171228	LABEL	1		PARK BRAKE
21	T175739	DECAL	1		JOYSTICK / CAUTION / ENGINE START AND STOP, (SUB FOR T171430)
22	T175738	SAFETY SIGN	1		STACKABLE / CAUTION / ENGINE START AND STOP, (SUB FOR T169855)
23	T146443	SAFETY SIGN	1		CAUTION (SECONDARY STEERING)
24	T146792	SAFETY SIGN	1		WARNING (HIGH PRESSURE OIL)
25	T148083	LABEL	1		OPERATORS MANUAL
26	T149895	LABEL	1		BUMPER
27	T146605	LABEL	1		AIR CLEANER
28	T171223	LABEL	1		DOOR RELEASE
29	T175744	LABEL	1		ISO 9001, (SUB FOR T155224)
30	T174298	LABEL	1		WARNING (BRAKE ACCUMULATOR)
31	T168160	LABEL	1		(CONVERTER (24 VOLT TO 12 VOLT)
32	T173197	LABEL	1	-581888	STRIPE, LEFT (GRILLE HOUSING)
33	T173198	LABEL	1	-581888	STRIPE, RIGHT (GRILLE HOUSING)
34	T173195	LABEL	1	-581888	STRIPE, LEFT (RESERVOIR)
35	T173196	LABEL	1	-581888	STRIPE, RIGHT (RESERVOIR)
36	T173571	LABEL	1	-581888	STRIPE (SIDE SHIELD)
37	T173199	LABEL	1	-581888	(DEERE)
	T182409	LABEL	1	581889-	(DEERE)
38	T171587	DECAL	1		BOOM LOCK
39	T172234	DECAL	1		PARK BRAKE OVERFILL
40	T167610	LABEL	1		DOOR (NO LONGER REQUIRED)
41	T174735	LABEL	1		(DOOR/WINDOW RELEASE, RIGHT SIDE)

DECALS AND LABELS

T152665 -UN-14MAR02

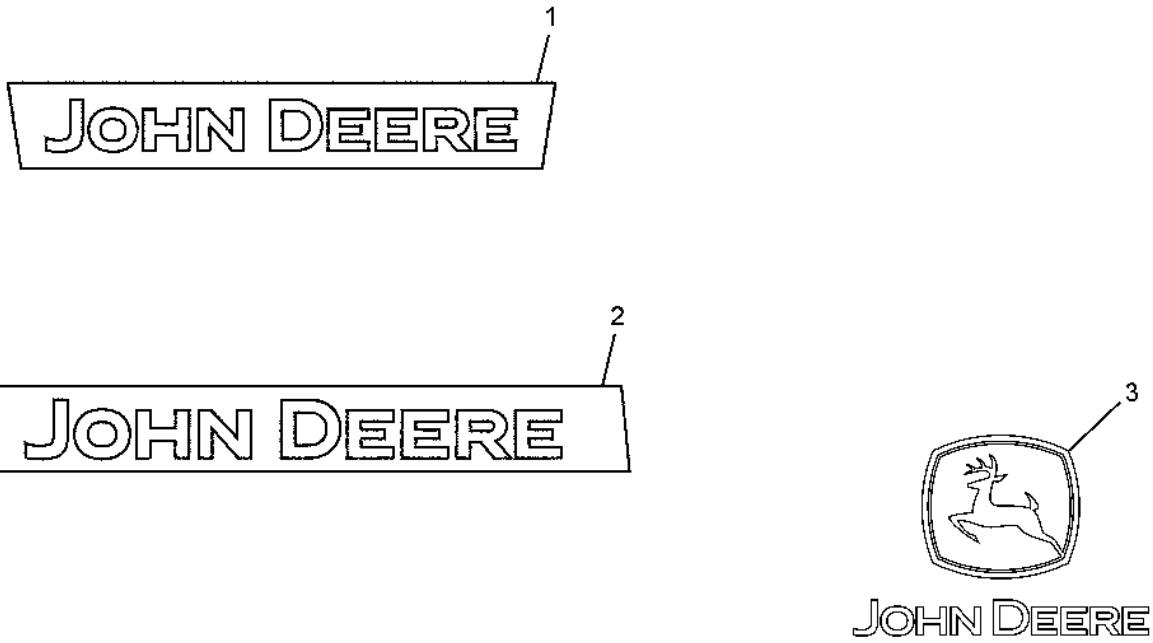

T152665

KEY	PART NO.	PART NAME	QTY	SERIAL NO.	REMARKS
1	T182183	LABEL	1		FRONT
2	T182184	LABEL	1		REAR
3	JD5750	LABEL	1		LEAPING DEERE

MEMORANDA

MODEL DECALS AND LABELS
(644H LOADER MATERIAL HANDLER)

TP49724 -UN-30APR98

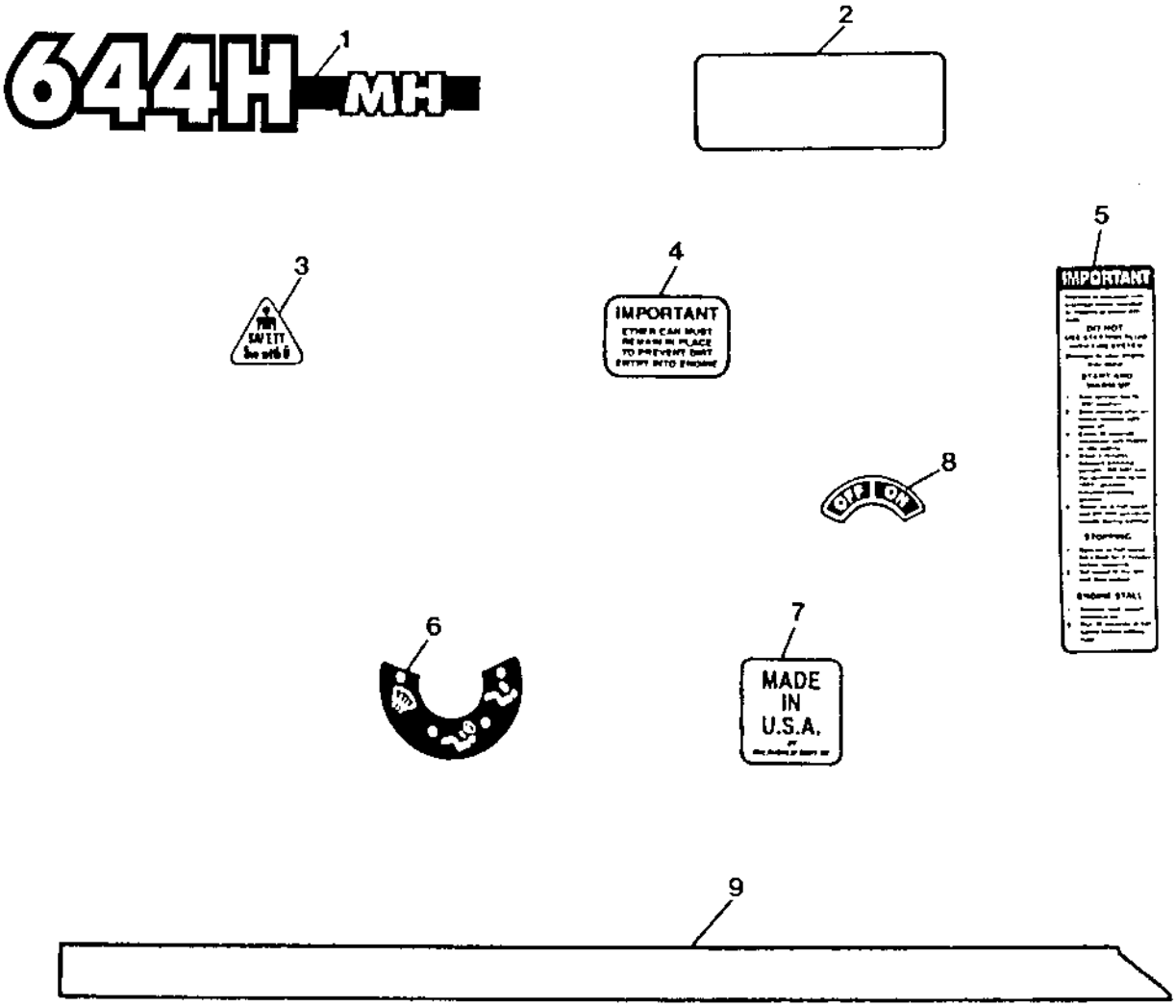

TP49724

MODEL LABELS AND DECALS
(644H LOADER MATERIAL HANDLER)

KEY	PART NO.	PART NAME	QTY	SERIAL NO.	REMARKS
1	T174543	LABEL	1		MODEL DESIGNATION-MATERIAL HANDLER
2	T103395	MAT	1		ANTI-SKID
3	H138955	LABEL	1		SAFTEY
4	T42170	LABEL	1		STARTING AID
5	T174430	DECAL	1		ENGINE AIR HEATER
6	T171688	LABEL	1		HEATER/DEFROSTER SWITCH
7	T167636	DECAL	1		MADE IN U.S.A.
8	T42199	LABEL	1		BATTERY DISCONNECT
9	T167663	DECAL	1		CAB DOOR POST R.H.
	T167662	DECAL	1		CAB DOOR POST L.H.

TRADEMARKS AND LABELS
(FRENCH)

TP60356 -UN-21APR98

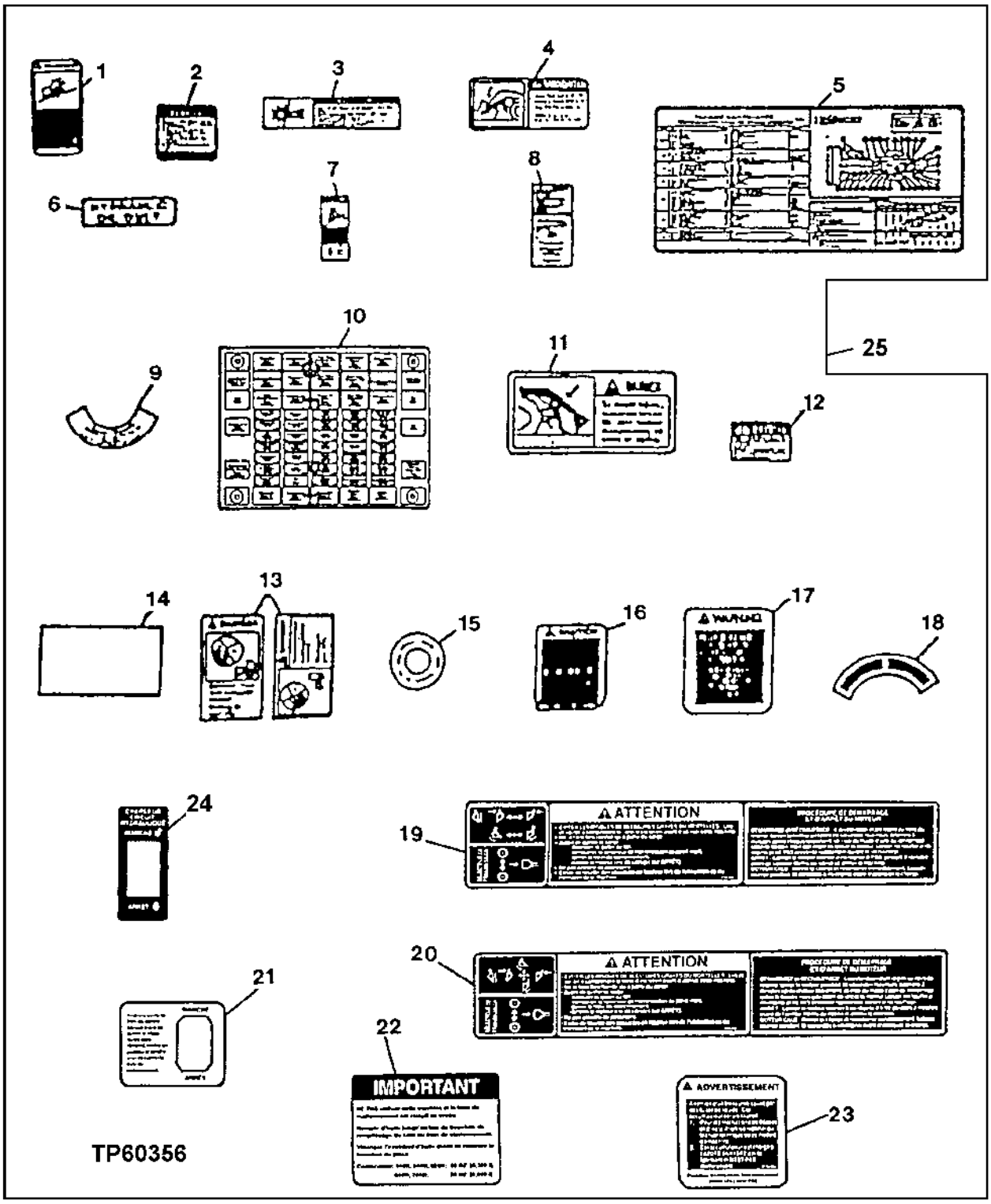

TRADEMARKS AND LABELS
(FRENCH)

KEY	PART NO.	PART NAME	QTY	SERIAL NO.	REMARKS
1	T160762	LABEL	1		WARNING (PARK BRAKE)
2	T146500	SAFETY SIGN	2		RIDE CONTROL ACCUMULATOR
3	T146496	SAFETY SIGN	2		WARNING
4	T173171	LABEL	1		WARNING (BOOM LOCK)
5	T176348	LABEL	1		PERIODIC MAINTENANCE, (SUB FOR T175910)
6	T102618	LABEL	1		HYDRAULIC OIL
7	T146099	SAFETY SIGN	1		CAUTION (SEAT BELT)
8	T171742	LABEL	1		ROPS
9	CD12569	DECAL	1		OIL FILTER ELEMENT
10	T177785	LABEL	1		FUSEBLOCK
11	T146178	SAFETY SIGN	1		DANGER
12	T146495	SAFETY SIGN	1		CAUTION
13	T146104	SAFETY SIGN	1		BYPASS START
14	T146607	LABEL	1		AIR CLEANER UNLOADER VALVE
15	T171756	LABEL	1		RADIATOR CAP
16	T146494	SAFETY SIGN	1		CAUTION, SECONDARY STEERING
17	T146908	SAFETY SIGN	1		WARNING, RIDE CONTROL
18	T63224	LABEL	1		BATTERY DISCONNECT
19	T176274	LABEL	1		CAUTION, START AND STOP (SUB FOR T171748)
20	T176275	LABEL	1		CAUTION, START AND STOP (SUB FOR T171758
21	T171750	LABEL	1		PARK BRAKE
22	T173077	LABEL	1		OVERFILL
23	T174300	LABEL	2		ACCUMULATOR
24	T173585	LABEL	1		(PILOT ENABLE)
25	AT210705	DECAL KIT	1		FRENCH LANGUAGE KIT, (IMPORTANT: MUST ALSO ORDER TRANSLATED OPERATOR'S MANUAL THROUGH YOUR AUTHORIZED DEALER)

TRADEMARKS AND LABELS
(SPANISH)

TP60357 -UN-21APR98

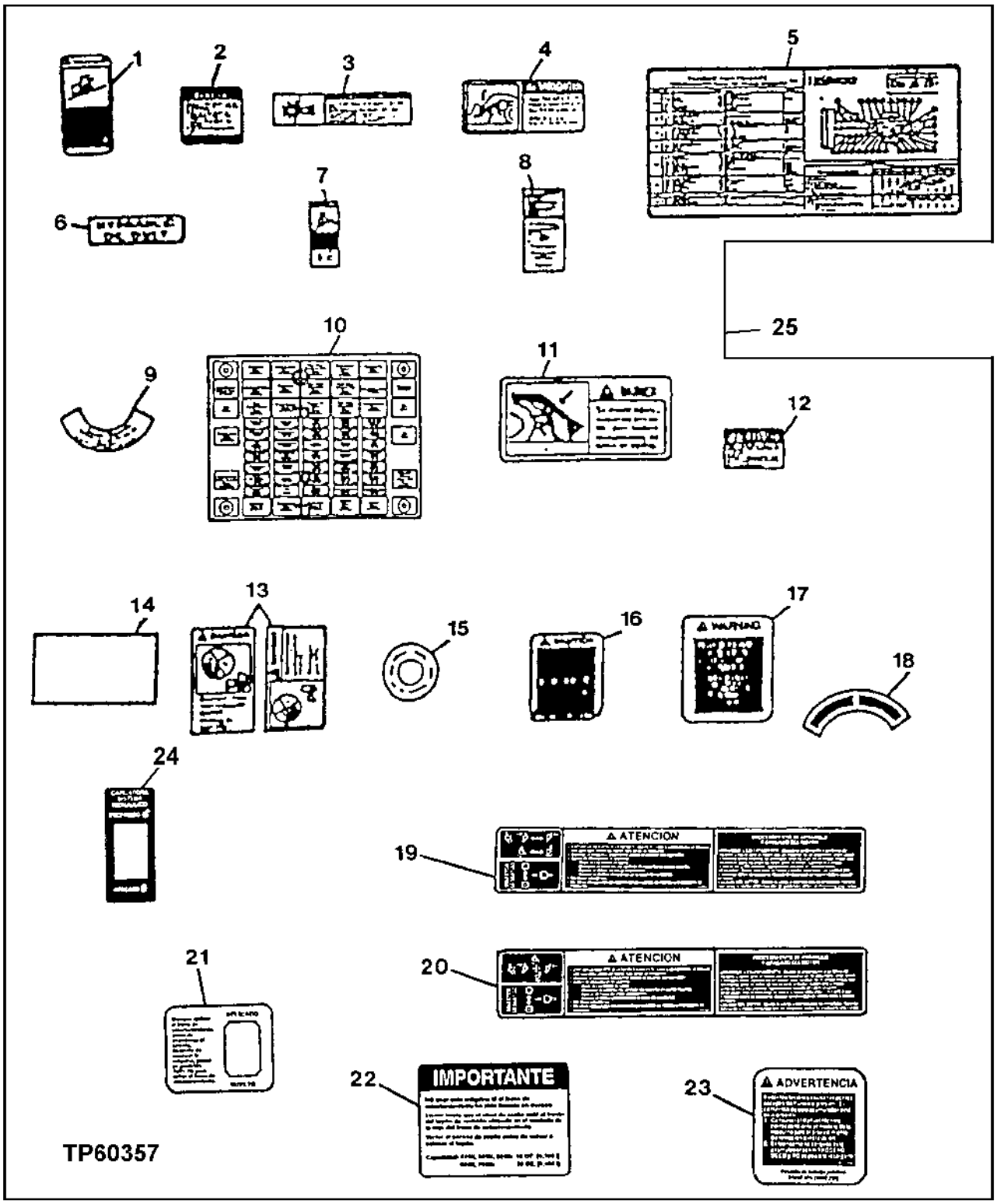

TRADEMARKS AND LABELS
(SPANISH)

KEY	PART NO.	PART NAME	QTY	SERIAL NO.	REMARKS
1	T160769	SAFETY SIGN	1		WARNING (PARK BRAKE)
2	T146507	SAFETY SIGN	2		RIDE CONTROL ACCUMULATOR
3	T146504	SAFETY SIGN	2		WARNING
4	T173172	LABEL	1		WARNING (BOOM LOCK)
5	T176349	LABEL	1		PERIODIC MAINTENANCE, (SUB FOR T175911)
6	T102620	LABEL	1		HYDRAULIC OIL
7	T146098	SAFETY SIGN	1		CAUTION (SEAT BELT)
8	T171743	LABEL	1		ROPS
9	T64217	DECAL	1		OIL FILTER ELEMENT
10	T177783	LABEL	1		FUSEBLOCK
11	T146180	SAFETY SIGN	1		DANGER
12	T146503	SAFETY SIGN	1		CAUTION
13	T146106	SAFETY SIGN	1		BYPASS START
14	T146606	LABEL	1		AIR CLEANER UNLOADER VALVE
15	T171757	LABEL	1		RADIATOR CAP
16	T146502	SAFETY SIGN	1		CAUTION, SECONDARY STEERING
17	T146911	LABEL	1		WARNING, RIDE CONTROL
18	T63225	LABEL	1		BATTERY DISCONNECT
19	T176276	LABEL	1		CAUTION, START AND STOP (SUB FOR T171749)
20	T176277	LABEL	1		CAUTION, START AND STOP (SUB FOR T171759)
21	T171751	LABEL	1		PARK BRAKE
22	T173078	LABEL	1		OVERFILL
23	T174299	LABEL	2		ACCUMULATOR
24	T173586	LABEL	1		(PILOT ENABLE)
25	AT210709	DECAL KIT	1		SPANISH, (IMPORTANT: MUST ALSO ORDER TRANSLATED OPERATOR'S MANUAL THROUGH YOUR AUTHORIZED DEALER)

TRADEMARKS AND LABELS
(FUSEBLOCK)

TP55534 -UN-27MAY97

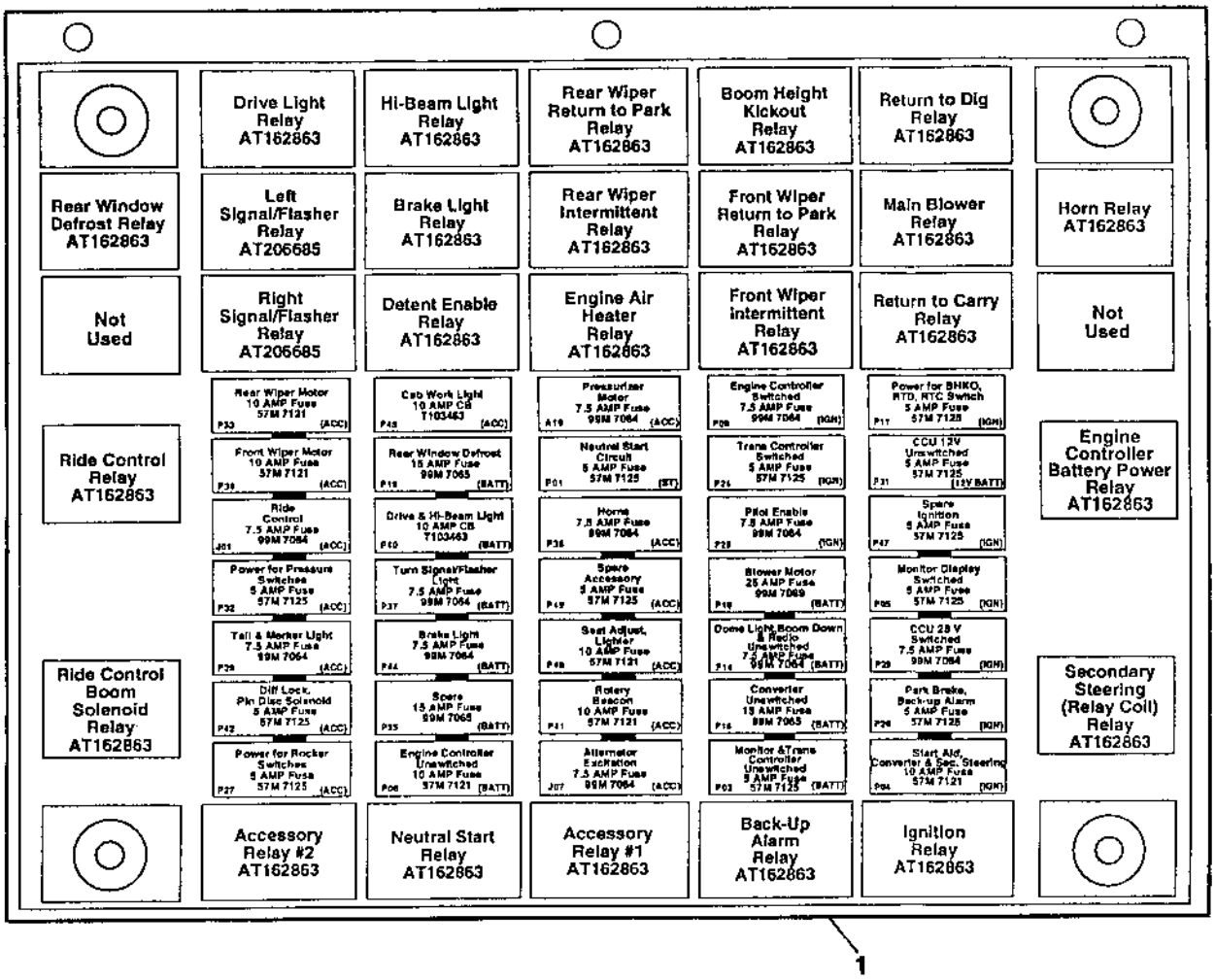

TP55534

TRADEMARKS AND LABELS
(FUSEBLOCK)

KEY	PART NO.	PART NAME	QTY	SERIAL NO.	REMARKS
1	T173487	LABEL	1	FUSEBLOCK	

**DECALS AND LABELS (FUSEBLOCK)
(FRENCH))**

TP60210 -UN-02MAR98

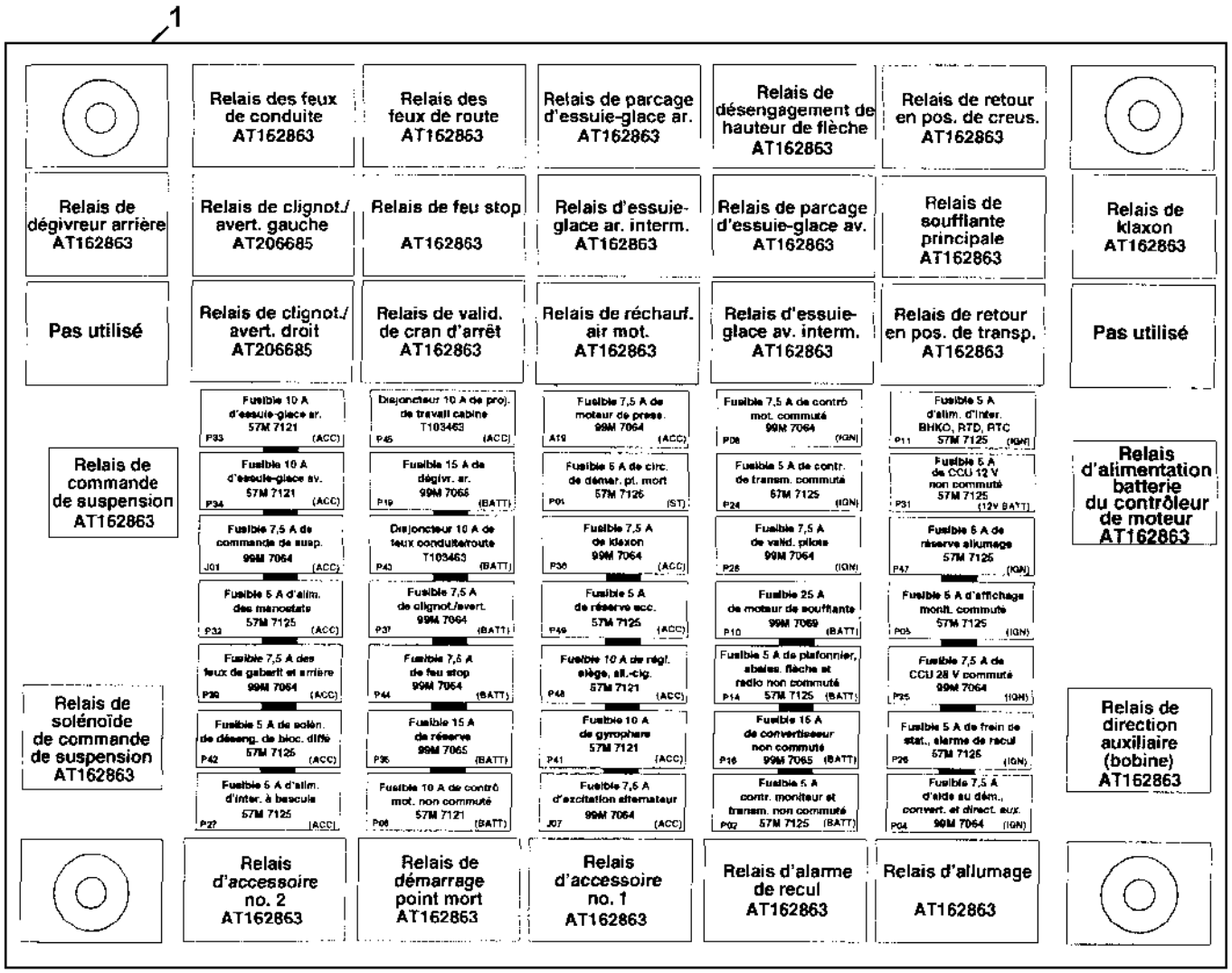

TP60210

DECALS AND LABELS (FUSEBLOCK)
(FRENCH)

KEY	PART NO.	PART NAME	QTY	SERIAL NO.	REMARKS
1	T177785	LABEL	1		

FUSE BLOCK LABELS
(SPANISH)

TP55906 -UN-02MAR98

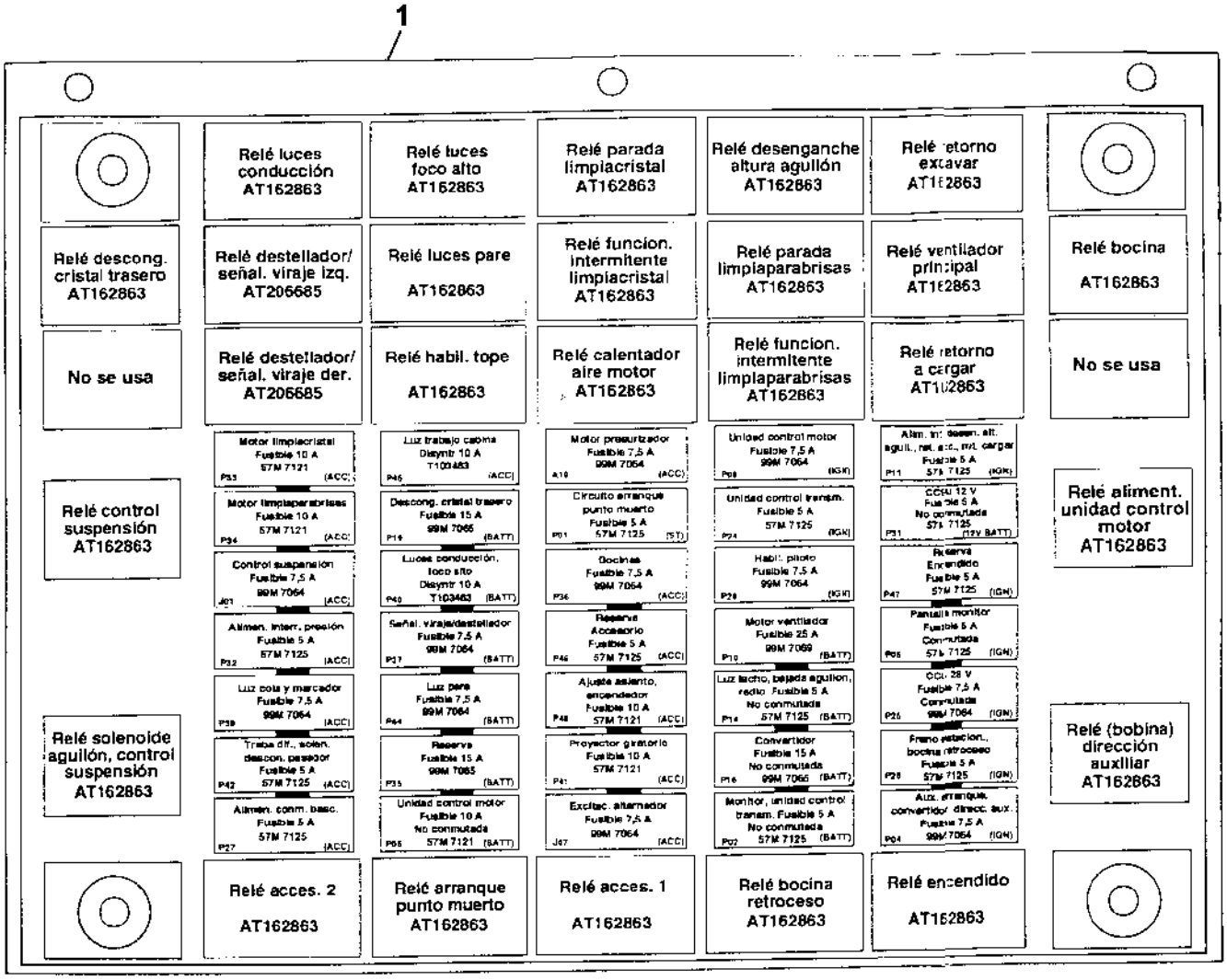

TP55906

FUSE BLOCK LABELS
(SPANISH)

KEY	PART NO.	PART NAME	QTY	SERIAL NO.	REMARKS
1	T177783	LABEL	1		

SLOW MOVING VEHICLE EMBLEM

TP60358 -UN-22APR98

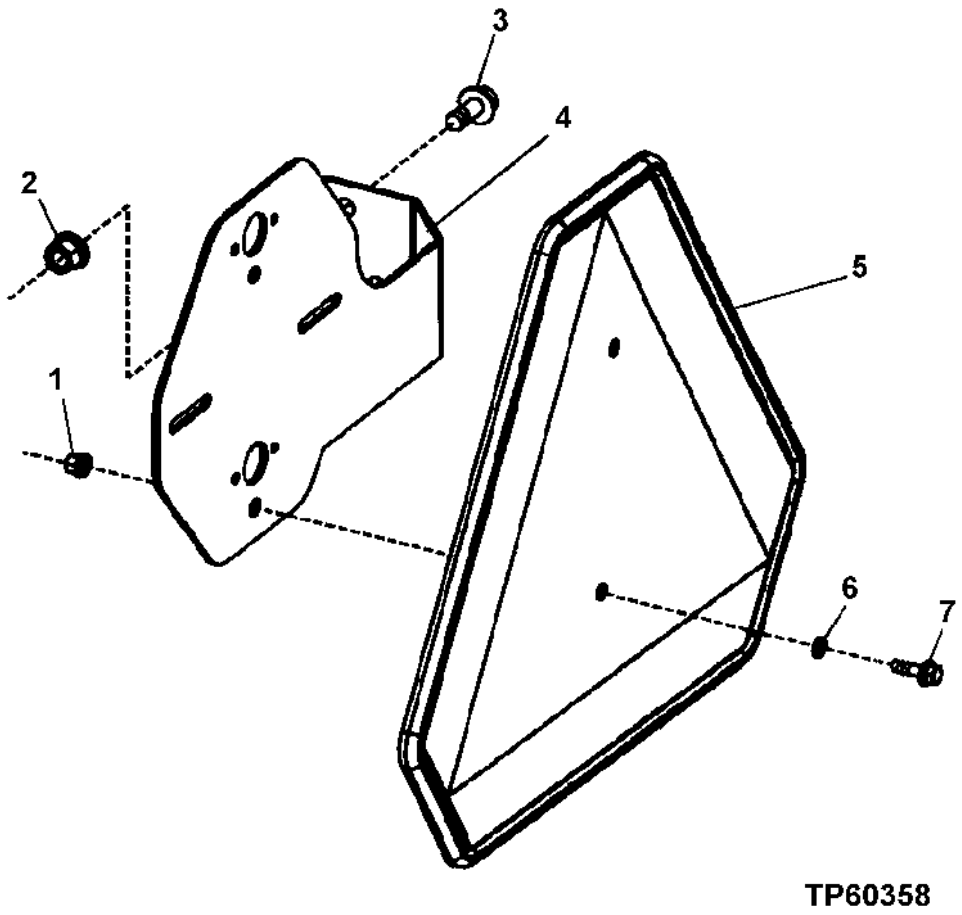

SLOW MOVING VEHICLE EMBLEM

KEY	PART NO.	PART NAME	QTY	SERIAL NO.	REMARKS
1	14M7397	LOCK NUT	2		M6
2	14M7400	LOCK NUT	2		M10
3	19M7785	SCREW	2		M10 X 25
4	T156693	BRACKET	1		
5	JD5929	SMV EMBLEM	1		
6	24M7088	WASHER	2		6.600 X 12 X 1.600 MM
7	19M7862	SCREW	2		M6 X 20

HIGH-LIFT LABEL

T141466 -UN-23APR01

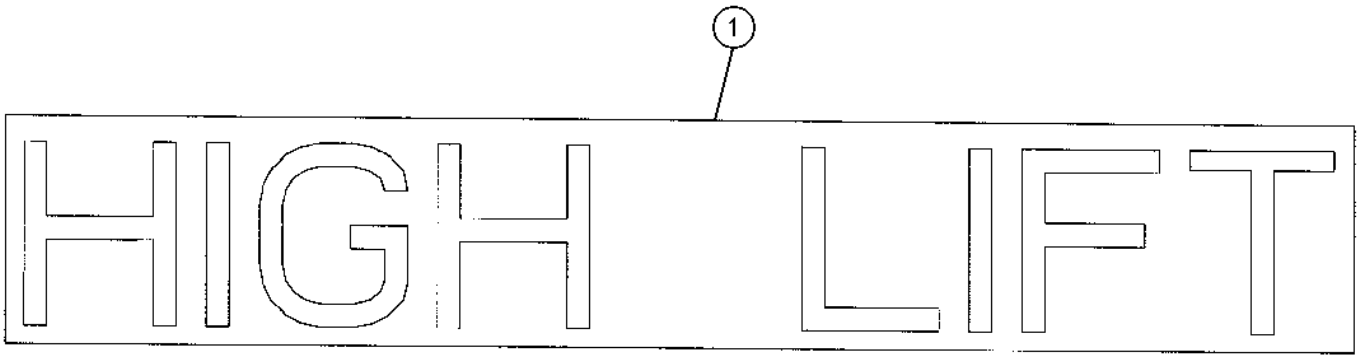

T141466

KEY	PART NO.	PART NAME	QTY	SERIAL NO.	REMARKS
1	T179464	DECAL	1		

AIR CONDITIONER O-RING REPAIR KIT
(PARTS LISTED BELOW ARE NOT ILLUSTRATED)

KEY	PART NO.	PART NAME	QTY	SERIAL NO.	REMARKS
1	32240	O-RING	5		21.895 X 2.616 MM (0.862" X 0.103")
	B15646	O-RING	10		26.695 X 1.778 MM (1.051" X 0.070")
	P50883	RING	10		17.170 X 1.778 MM (0.676" X 0.070")
	P51212	O-RING	10		10.820 X 1.778 MM (0.426" X 0.070")
	R10093	O-RING	15		7.645 X 1.778 MM (0.301" X 0.070")
	R33259	O-RING	10		13.995 X 1.778 MM (0.551" X 0.070")
	R34812	O-RING	10		3.683 X 1.778 MM (0.145" X 0.070")
	R47235	O-RING	10		20.218 X 3.531 MM (0.796" X 0.139")
	.....	KIT	1		AT66632 NO LONGER AVAILABLE SUB TY15939

REPLACEMENT AIR CONDITIONER O-RING REPAIR KIT
(PART LISTED BELOW IS NOT ILLUSTRATED)

KEY	PART NO.	PART NAME	QTY	SERIAL NO.	REMARKS
1	A3917R	O-RING	20		9.246 X 1.778 MM (0.364" X 0.070")
	A4365R	O-RING	20		6.071 X 1.778 MM (0.239" X 0.070")
	R10093	O-RING	30		7.645 X 1.778 MM (0.301" X 0.070")
	R27166	O-RING	20		15.596 X 1.778 MM (0.614" X 0.070")
	R28776	O-RING	10		12.421 X 1.778 MM (0.489" X 0.070")
	R33259	O-RING	20		13.995 X 1.778 MM (0.551" X 0.070")
	R394R	O-RING	20		12.370 X 2.616 MM (0.487" X 0.103")
	R74210	O-RING	20		20.218 X 3.531 MM (0.796" X 0.139")
	R113050	O-RING	20		10.820 X 1.778 MM (0.426" X 0.070")
	T143166	O-RING	20		26.695 X 1.778 MM (1.051" X 0.070")
	T143167	O-RING	20		3.683 X 1.778 MM (0.145" X 0.070")
	T143169	O-RING	20		17.170 X 1.778 MM (0.676" X 0.070")
	T57247	O-RING	10		21.895 X 2.616 MM (0.862" X 0.103")
	TY15939	O-RING KIT	1		

LOCTITE SERVICE KIT
(PARTS LISTED BELOW ARE NOT ILLUSTRATED)

KEY	PART NO.	PART NAME	QTY	SERIAL NO.	REMARKS
1	TY16285	PRIMER	1		(SUB FOR TY6305) CLEANER
	T43512	SEALANT	1		HYDRAULIC SEALANT AND THREAD LOCTITE
	T43513	SEALANT	1		STUD
	T43514	GASKET	1		PLASTIC
	TY15969	ADHESIVE	1		(SUB FOR T43515)
	AT42386	KIT	1		(INCLUDES ALL PARTS ABOVE)

SILICONE RUBBER ADHESIVE
(PART LISTED BELOW IS NOT ILLUSTRATED)

KEY	PART NO.	PART NAME	QTY	SERIAL NO.	REMARKS
..	TY15130	SEALANT	1		

MEMORANDA

LIFT HOOKS

TP48560 -UN-15NOV96

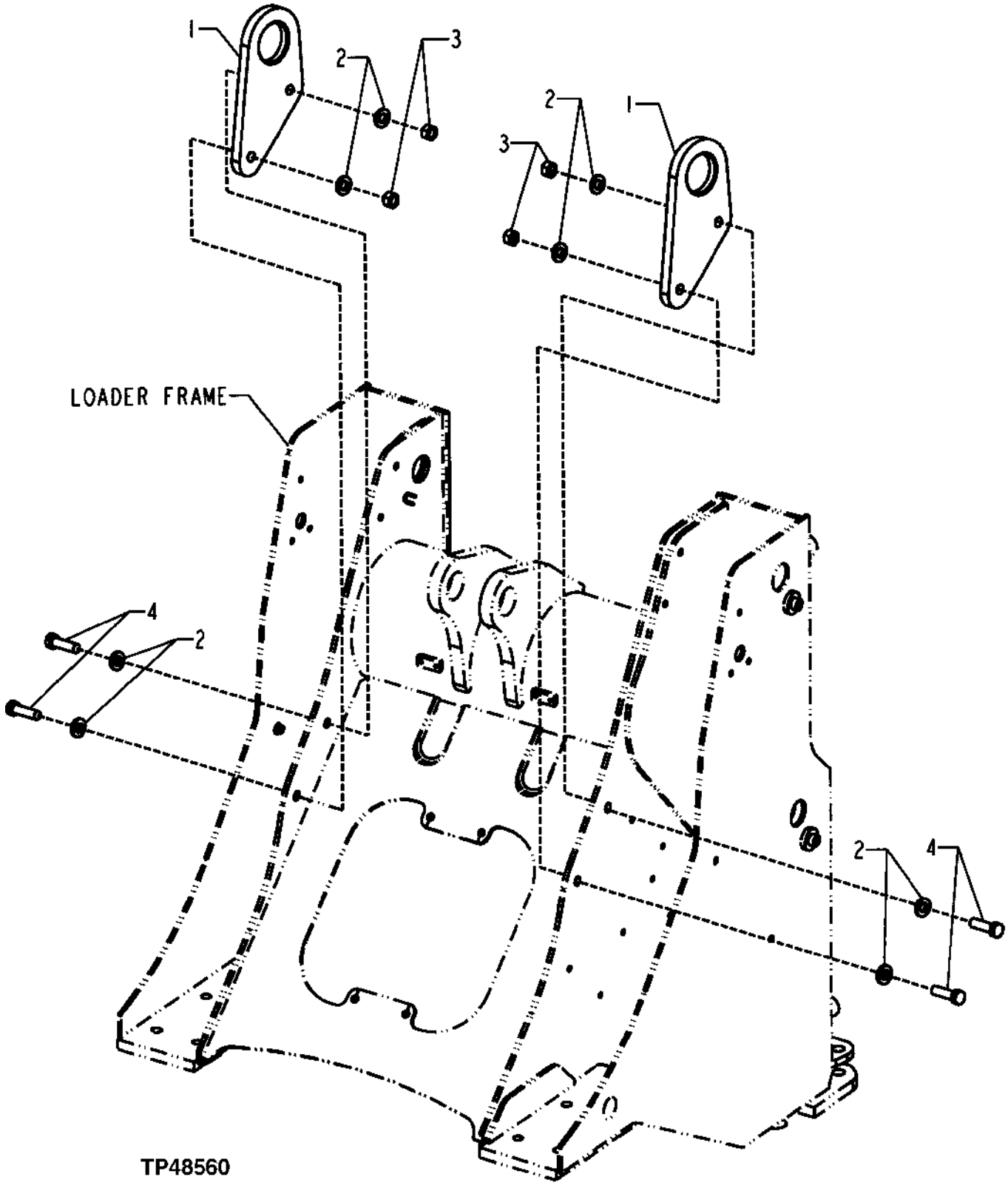

LIFT HOOKS

KEY	PART NO.	PART NAME	QTY	SERIAL NO.	REMARKS
1	T156995	PLATE	2		
2	24M7242	WASHER	8		21.400 X 42 X 5 MM
3	14M7277	NUT	4		M20
4	19M8639	CAP SCREW	4		M20 X 70

MEMORANDA

TORQ-GARD SUPREME AND PLUS-50 ENGINE OIL

RGP3291 -UN-01JAN94

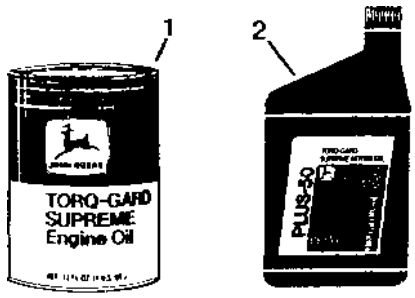

RGP3291

TORQ-GARD SUPREME

KEY	PART NO.	PART NAME	QTY	ENGINE SERIAL NO.	REMARKS
1	TY22064	TORQ-GARD SUPREME	1		(SAE 5W/30), 0.9L (1 QUART)
	TY22065	TORQ-GARD SUPREME	1		(SAE 5W/30), 19L (5 GALLON)
	TY22066	TORQ-GARD SUPREME	1		(SAE 5W/30), 208L (55 GALLON)
	TY6364	OIL	1		(SAE 10W/30), 0.9 L (1 QUART) (BREAKIN)
	TY6389	OIL	1		(SAE 15W/40, 0.9 L (1 QUART)
	TY6390	OIL	1		(SAE 15W/40), 19 L (5 GALLON)
	TY22010	TORQ-GARD SUPREME PLUS-50	1		(SAE 15W/40), 114 L (30 GALLON)
	TY6391	OIL	1		(SAE 15W/40), 208 L (55 GALLON)
	TY22067	TORQ-GARD SUPREME	1		(SAE 10W), .9L (1 GALLON)
	TY22068	TORQ-GARD SUPREME	1		(SAE 10W), 19L (5 GALLON)
	TY22069	TORQ-GARD SUPREME	1		(SAE 10W), 208L (55 GALLON)
	TY22070	TORQ-GARD SUPREME	1		(SAE 30W), 0.9L (1 GALLON)
	TY22073	TORQ-GARD SUPREME	1		(SAE 30W), 19L (5 GALLON)
	TY6280	OIL	1		(SAE 30W), 114 L (30 GALLON)
	TY22074	TORQ-GARD SUPREME	1		(SAE 30W), 208L (55 GALLON)

TORQ-GARD PLUS-50

KEY	PART NO.	PART NAME	QTY	ENGINE SERIAL NO.	REMARKS
2	TY6389	OIL	1		(SAE 15W/40), 0.9 L (1 QUART)
	TY22008	TORQ-GARD SUPREME PLUS-50	1		(SAE 15W/40), 3.8 L (1 GALLON)
	TY6390	OIL	1		(SAE 15W/40), 19 L (5 GALLON)
	TY22010	TORQ-GARD SUPREME PLUS-50	1		(SAE 15W/40), 113.6 L (30 GALLON)
	TY6391	OIL	1		(SAE 15W/40), 208 L (55 GALLON)
	TY6392	OIL	1		(SAE 30W), 0.9 L (1 QUART)
	TY22007	OIL	1		(SAE 30W), 3.8 L (1 GALLON)
	TY6393	OIL	1		(SAE 30W), 19 L (5 GALLON)
	TY22011	OIL	1		(SAE 30W), 113.6 L (30 GALLON)
	TY6394	OIL	1		(SAE 30W), 208 L (55 GALLON)
..	TY22041	ENGINE BREAK-IN OIL	1		(SAE 10W/30), 3.8 L (1 GALLON) (FACTORY SPEC BREAKIN)
..	TY22042	ENGINE BREAK-IN OIL	1		(SAE 10W/30), 208 L (55 GALLON) (FACTORY SPEC. BREAKIN)

O-RING KIT

TP70402 -UN-13JUL00

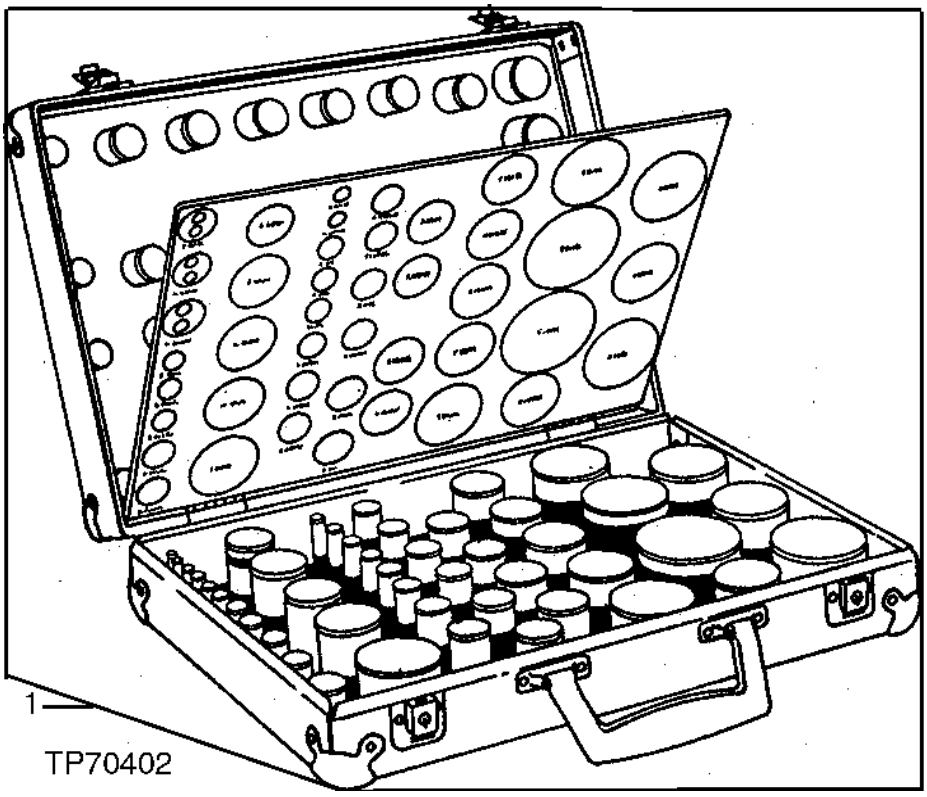

O-RING KIT-CONTINUED

KEY	PART NO.	PART NAME	QTY	SERIAL NO.	REMARKS
1	A3606R	O-RING	1		
	A3917R	O-RING	1		
	A4365R	O-RING	1		
	A4730R	O-RING	1		
	B2762R	O-RING	1		
	B3690R	O-RING	1		
	F1056R	O-RING	1		
	F1870R	O-RING	1		
	U12547	O-RING	1		
	F3353R	O-RING	1		
	H35244	RING	1		
	T78313	O-RING	1		
	M4237T	O-RING	1		
	N131838	O-RING	1		
	P46051	O-RING	1		
	P48403	O-RING	1		
	P50631	O-RING	1		
	R375R	O-RING	1		
	R394R	O-RING	1		
	R459R	O-RING	1		
	R460R	O-RING	1		
	R495R	O-RING	1		
	R10093	O-RING	1		
	R26286	O-RING	1		
	R26287	O-RING	1		
	R26375	O-RING	1		
	R26448	O-RING	1		

FLUID ANALYSIS PRODUCTS (OILSCAN PLUS TEST KIT)

T135474 -UN-15NOV00



T135474

FLUID ANALYSIS PRODUCTS (OILSCAN PLUS TEST KIT)

KEY	PART NO.	PART NAME	QTY	SERIAL NO.	REMARKS
1	AT178840	KIT	1		STANDARD ENGINE, SELF EXTRACTION (12 PER PACKAGE)(INCLUDES SPECTROCHEMICAL ANALYSIS, VISCOSITY, ° WATER, FUEL DILUTION, GLYCOL, FUEL SOOT) (SUB FOR AT178843)
	AT180333	KIT	1		STANDARD ENGINE, 4 OZ BOTTLE (10 PER PACKAGE) (SAME AS AT178840) (SUB FOR AT180335)
	AT178842	KIT	1		COMPREHENSIVE ENGINE W/TBN (EXTENDED DRAIN) (12 PER PACKAGE)(SAME AS AT178840 PLUS TBN)
	AT180334	KIT	1		COMPREHENSIVE ENGINE W/TBN (EXTENDED DRAIN) 4 OZ BOTTLE (10 PRT PACKAGE) (SAME AS AT178842)
	AT178844	KIT	1		COMPREHENSIVE HYDRAULIC & HYDROSTATIC SYSTEMS, 4 OZ BOTTLE (10 PER PACKAGE) (REQUIRES USE OF A SAMPLING VALVE FOR ACCURATE RESULTS)
	ISPKIT3	PUMP	1		OIL EXTRACTION (1 PER PACKAGE)(CAN BE USED WITH AT180333, AT180334, AND AT180335 KITS TO EXTRACT OIL SAMPLE)
	DSO345	TUBE	1		500'ROLL (USED WITH IPSKIT3 PUMP TO EXTRACT SAMPLE)
	DSO346	TUBE	1		100' ROLL (USED WITH IPSKIT3 PUMP TO EXTRACT SAMPLE)

FLUID ANALYSIS PRODUCTS (COOLSCAN PLUS TEST KIT)

T135475 -UN-15NOV00

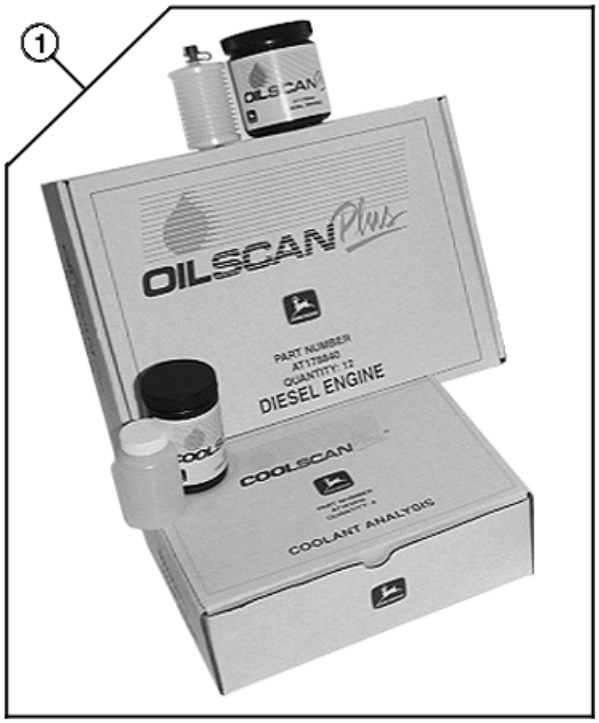

T135475

KEY	PART NO.	PART NAME	QTY	SERIAL NO.	REMARKS
1	AT183016	KIT	1		COOLANT ANALYSIS (6 PER PACKAGE)(TESTS FREEZE POINT, ° ANTIFREEZE, PH, RESERVE ALKALINITY, NITRITE, MOLYBDATE, SILICATE, VISUAL ASSESSMENT & CORROSION METALS (IRON, COPPER, ALUMINUM & LEAD))

FLUID ANALYSIS PRODUCTS (DIESELSCAN TEST KIT)

T135476 -UN-15NOV00



T135476

KEY	PART NO.	PART NAME	QTY	SERIAL NO.	REMARKS
1	AT180344	KIT	1		DIESEL ANALYSIS (6 PER PACKAGE)(USED TO VERIFY TYPE, SUITABILITY FOR COLD TEMPERATURE OPERATIONS, CLEANLINESS, WATER CONTENT AND IF FUEL IS WITHIN ASTM SPECIFICATIONS. CHECKS API GRAVITY, VISCOSITY AT 40C, SULFUR, CETANE INDEX, DISTILLATION, CLOUD POINT, POUR POINT AND COLD FILTER PLUGGING POINT.

COOLANT CONDITIONER AND ENGINE PART LUBRICANTS

RGP4314 -UN-01JAN94

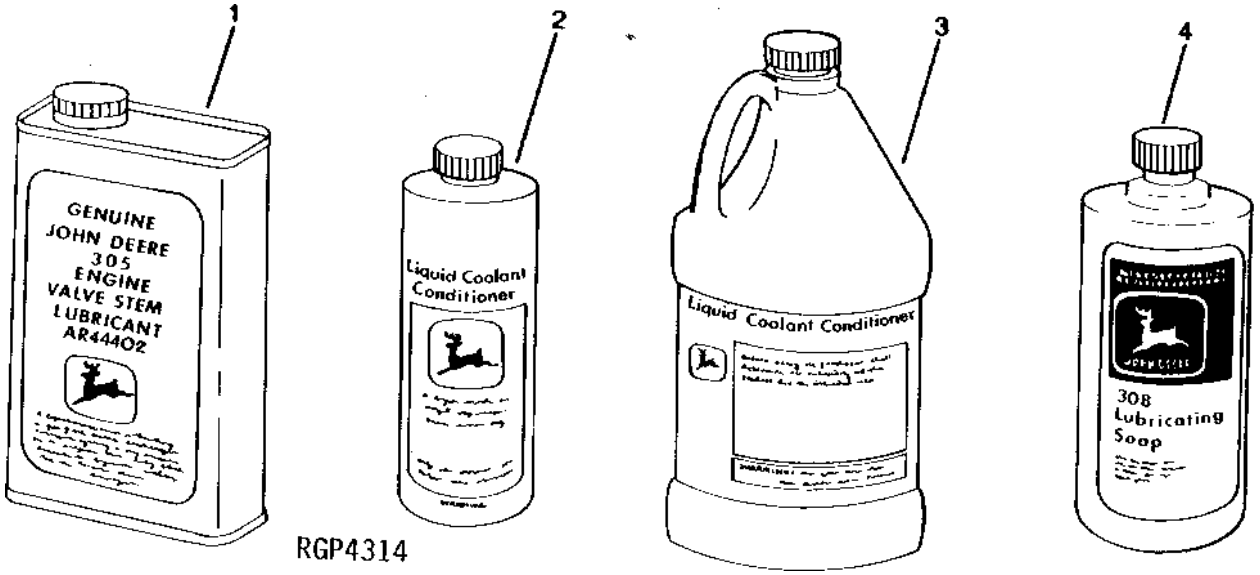

VALVE STEM LUBRICANT

KEY	PART NO.	PART NAME	QTY	SERIAL NO.	REMARKS
1	AR44402	OIL	1		0.9 L (1 QT.)

COOLANT CONDITIONER

KEY	PART NO.	PART NAME	QTY	SERIAL NO.	REMARKS
2	TY16004	ENGINE COOLANT CONDITIONER	1		0.472 L (16 OZ.) (PHOSPHATE - FREE)
3	TY16005	ENGINE COOLANT CONDITIONER	1		1.9 L (1/2 GAL.) (PHOSPHATE - FREE)

OTHER LUBRICANTS

KEY	PART NO.	PART NAME	QTY	ENGINE SERIAL NO.	REMARKS
4	AR54749	LUBRICANT	1		0.9 L (1 QT.)
	AT66865	LUBRICANT	1		(ELECTRICAL CONNECTIONS) (NOT SHOWN)

KITS
(NOT ILLUSTRATED)

KEY	PART NO.	PART NAME	QTY	ENGINE SERIAL NO.	REMARKS
..	AR41785	KIT	1		CONTAINS 0.9 L (1 QT.) (OFF-SEASON STORAGE)
..	AR21969	KIT	1		(DUST CAP/COVER KIT)
..	DS0251	KIT	1		(COOLANT SCAN TEST)
..	IPSKIT1	KIT	1		(OIL SCAN TEST)
..	DS0557	VALVE	1		(SAMPLING SYSTEM)
..	TY16423	LEVEL GAUGE	1		(COOLANT EYE - FILL/FLUSHING)

FLAT FACE O-RING SEAL KIT
(NOT ILLUSTRATED)

KEY	PART NO.	PART NAME	QTY	SERIAL NO.	REMARKS
1	T77814	O-RING	1		(SIZE -4) KIT O-RING QUANTITY 10
2	T77613	O-RING	1		(SIZE -6) KIT O-RING QUANTITY 12
3	T77857	O-RING	1		(SIZE -8) KIT O-RING QUANTITY 12
4	T77932	O-RING	1		(SIZE -10) KIT O-RING QUANTITY 12
5	T77858	O-RING	1		(SIZE -12) KIT O-RING QUANTITY 12
6	T76938	O-RING	1		(SIZE -16) KIT O-RING QUANTITY 12
7	T78612	O-RING	1		(SIZE -20) KIT O-RING QUANTITY 5
8	T78784	O-RING	1		(SIZE -24) KIT O-RING QUANTITY 5
9	AT85197	O-RING KIT	1		INCLUDES ALL O-RINGS LISTED 1-8

DUST CAP WITH COVER KIT
(NOT ILLUSTRATED)

KEY	PART NO.	PART NAME	QTY	ENGINE SERIAL NO.	REMARKS
..	AR21969	KIT	1		

ENGINE COOLING FLUID

TP6956 -UN-01JAN94



KEY	PART NO.	PART NAME	QTY	SERIAL NO.	REMARKS
1	DD14134	FLUID	1		(A) 5L, (1.3 GAL.)
	DD14345	FLUID	1		(A) 20L, (5.3 GAL.)
	DD14136	FLUID	1		(A) 60L, (15.9 GAL.)
	DD14346	FLUID	1		(A) 210L, (52.5 GAL.)

(A) EITHER PART ACCEPTABLE. CHECK LOCAL AVAILABILITY.

ENVIRONMENTAL DRAIN KIT

TP60323 -UN-08APR98

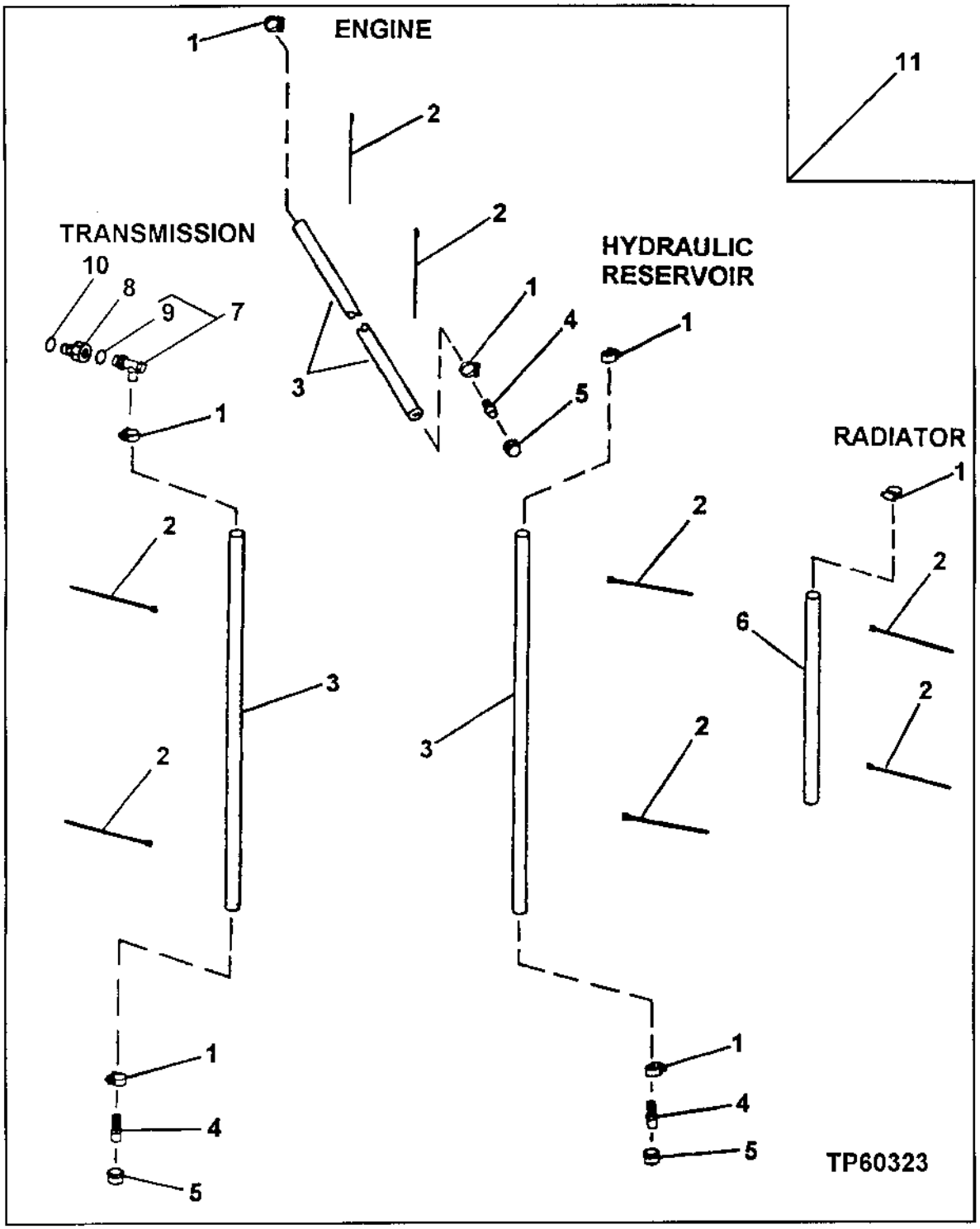

ENVIRONMENTAL DRAIN KIT

KEY	PART NO.	PART NAME	QTY	SERIAL NO.	REMARKS
1	AR21837	CLAMP	7		
2	R44302	TIE BAND	8		
3	.....	HOSE	AR		(MAKE FROM T60811 BULK MATERIAL, CUT TO LENGTH)
4	H23196	FITTING	3		
5	15H3	FITTING	3		
6	.....	HOSE	1		(MAKE FROM T60811 BULK MATERIAL, CUT TO LENGTH)
7	AT211196	DRAIN VALVE	1		
8	51M7045	O-RING	1		19.300 X 2.200 MM
9	T174228	FITTING	1		
10	T174107	O-RING	1		
11	**AT210493**	**KIT**	**1**		

MEMORANDA

MEMORANDA

BUCKET CYLINDER LUBRICATION HOSE AND FITTINGS

TP55445 -UN-08APR97

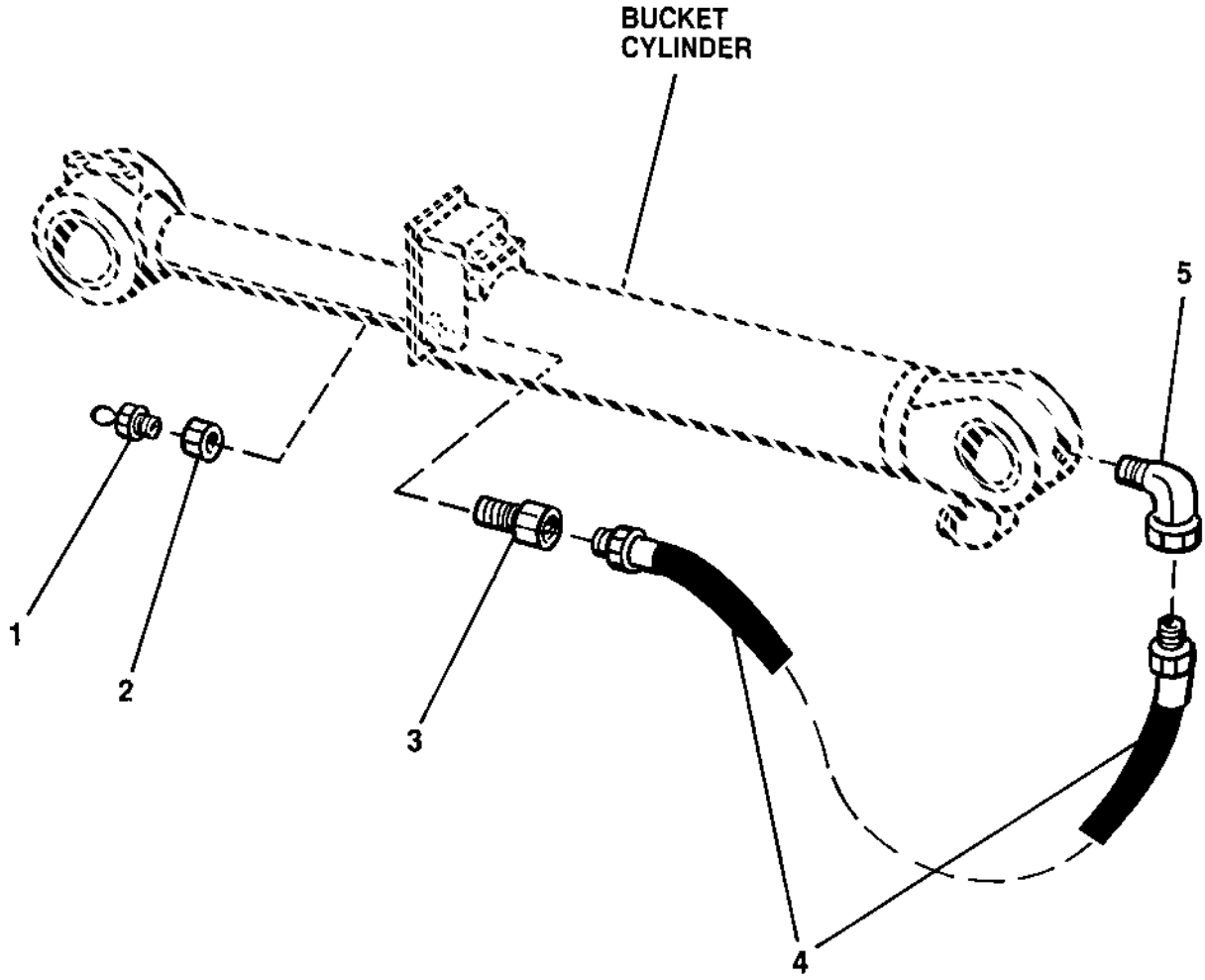

TP55445

BUCKET CYLINDER LUBRICATION HOSE AND FITTINGS

KEY	PART NO.	PART NAME	QTY	SERIAL NO.	REMARKS
1	JD7788	LUBRICATION FITTING	1		
2	E12379	NUT	1		
3	R36311	FITTING	1		
4	AT103107	HYDRAULIC HOSE	1		
5	T56112	ELBOW FITTING	1		

GREASE GUN HOLDER

TP62751 -UN-01FEB00

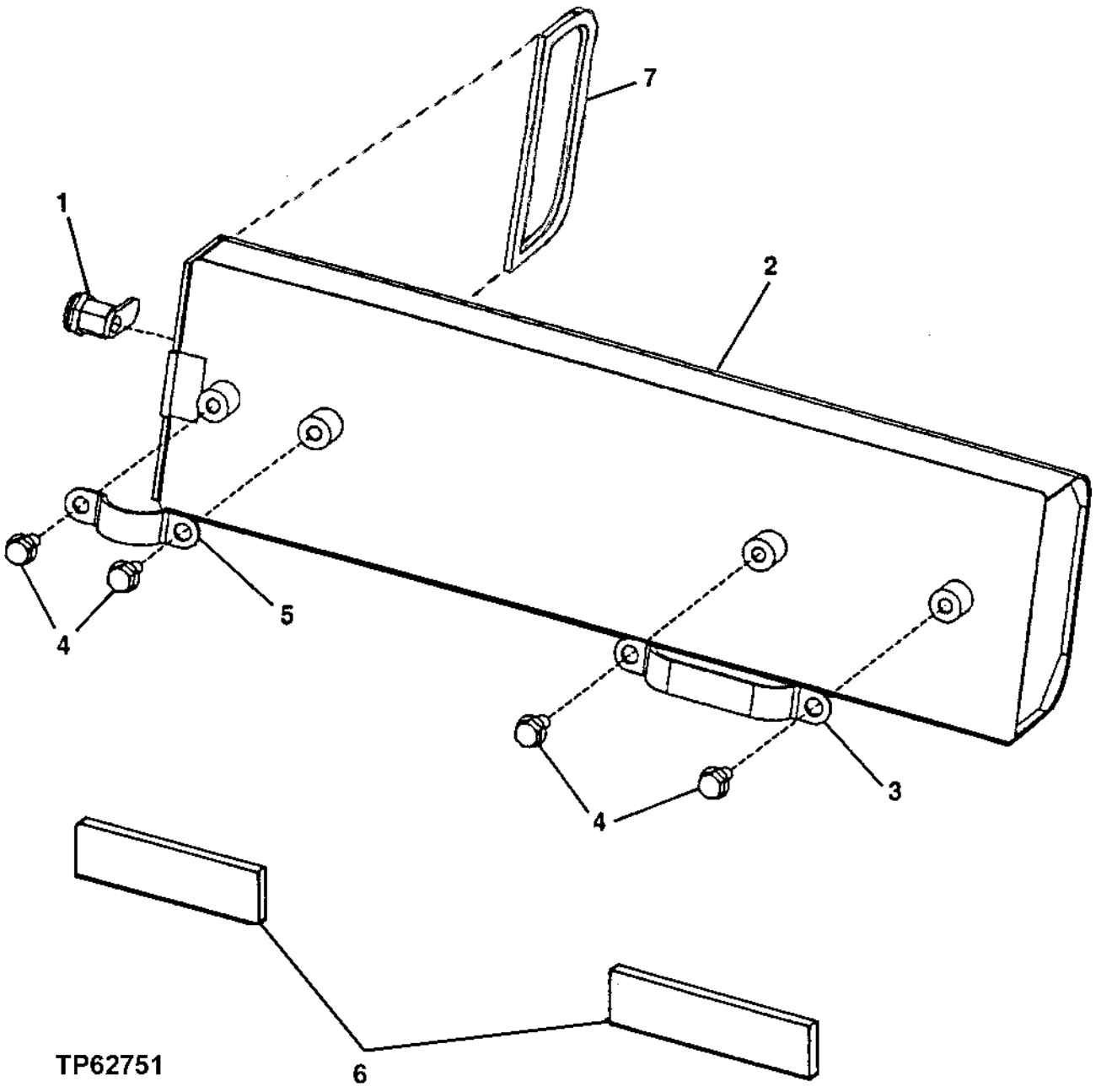

GREASE GUN HOLDER

KEY	PART NO.	PART NAME	QTY	SERIAL NO.	REMARKS
1	AT53801	LOCK	1		
2	AT210204	CASE	1		
3	T173055	STRAP	1		
4	19M7865	SCREW	4		M8 X 16
5	T173054	STRAP	1		
6	M66382	PAD	2		(HOLDER-TO-LADDER ISOLATORS)
7	.....	SEAL	AR		WEATHER (MAKE FROM T66354 BULK MATERIAL, CUT TO LENGTH)

MEMORANDA

BATTERIES,BATTERY CABLES AND BATTERY CLAMPS
(750 CCA)

TP60446 -UN-10AUG98

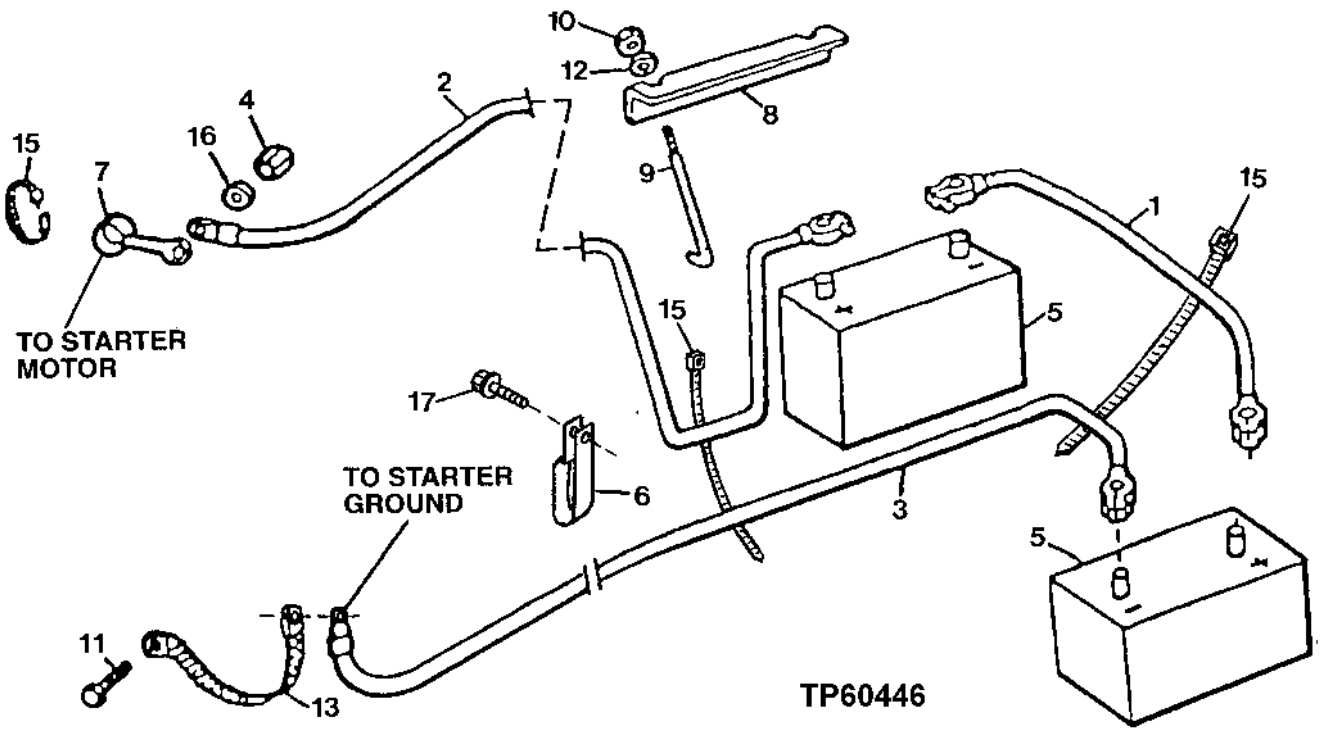

KEY	PART NO.	PART NAME	QTY	SERIAL NO.	REMARKS
1	AT202813	CABLE	1		(ALSO ORDER (2) TY15733)
2	AT202812	CABLE	1		
3	AT202814	CABLE	1		
4	T174530	TERMINAL	1		
5	TY21766	DRY CHARGED BATTERY	2		(ALSO ORDER TY15733)
6	AH77869	CLIP	1		
7	T134104	COVER	1		
8	T158577	ANGLE	2		
9	T79471	HOOK BOLT	4		
10	14M7396	LOCK NUT	4		M8
11	19M7784	SCREW	1		M10 X 20
12	24M7298	WASHER	4		8.400 X 25 X 2 MM
13	R36545	GROUND CABLE	1		(SUB FOR AT38449)
14	14H1040	NUT	1		1/2", (STARTER STUD)
15	H77698	TIE BAND	3		
16	24M7240	WASHER	1		13 X 25 X 3 MM
17	19H3771	CAP SCREW	1		

BATTERIES,BATTERY CABLES AND BATTERY CLAMPS
(1000 CCA) (1400 CCA)

TP62746 -UN-24JAN00

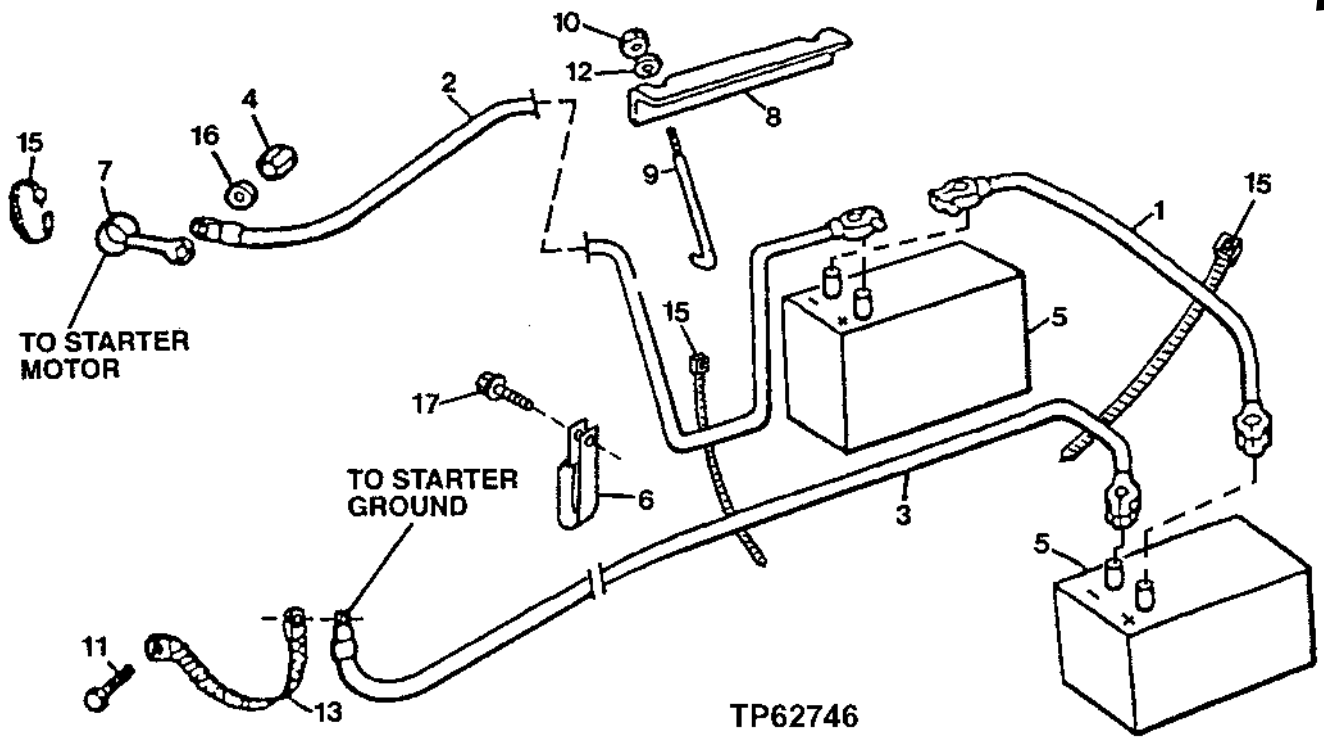

KEY	PART NO.	PART NAME	QTY	SERIAL NO.	REMARKS
1	AT209375	CABLE	1		(ALSO ORDER (2) TY15733)
2	AT209421	CABLE	1		
3	AT209376	CABLE	1		
4	T174530	TERMINAL	1		
5	TY21709	DRY CHARGED BATTERY	2		(1000 CCA) (USE IF AVAILABLE) (SUB TY23020) (ALSO ORDER TY15733)
	TY23020	DRY CHARGED BATTERY	2		(1400 CCA) (ALSO ORDER TY15733)
6	AH77869	CLIP	1		
7	T134104	COVER	1		
8	T173559	ANGLE	2		
9	T79471	HOOK BOLT	4		
10	14M7396	LOCK NUT	4		M8
11	19M7784	SCREW	3		M10 X 20
12	24M7298	WASHER	4		8.400 X 25 X 2 MM
13	R36545	GROUND CABLE	1		(SUB FOR AT38449)
14	14H1040	NUT	1		1/2", (STARTER STUD)
15	H77698	TIE BAND	3		
16	24M7240	WASHER	1		13 X 25 X 3 MM
17	19H3771	CAP SCREW	1		3/8" X 1"

BATTERY DISCONNECT SWITCH AND CABLE

TP48653 -UN-03MAR97

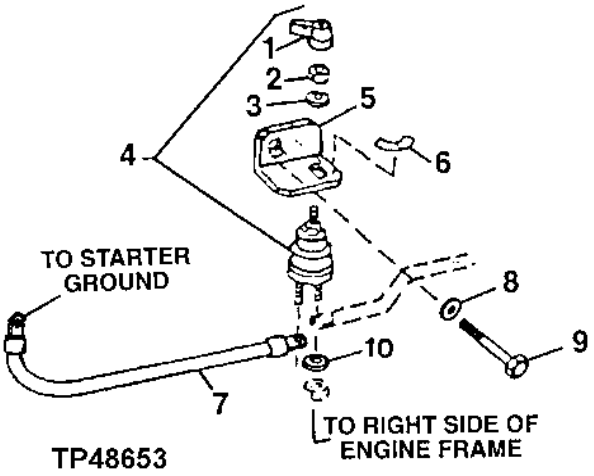

KEY	PART NO.	PART NAME	QTY	SERIAL NO.	REMARKS
1	.....	HANDLE	1		
2	.....	NUT	1		
3	.....	WASHER	1		
4	AT41188	SWITCH	1		
5	T151139	BRACKET	1		
6	T42199	LABEL	1		
7	AT202815	CABLE	1		
8	24M7226	WASHER	1		13 X 35 X 5 MM
9	19M7788	SCREW	1		M12 X 25
10	24M7239	WASHER	2		10.700 X 21 X 2.500 MM

ALTERNATOR, MOUNTING BRACKETS, BELT AND BELT TENSIONER
(55 AMP)

TP62804 -UN-10MAY00

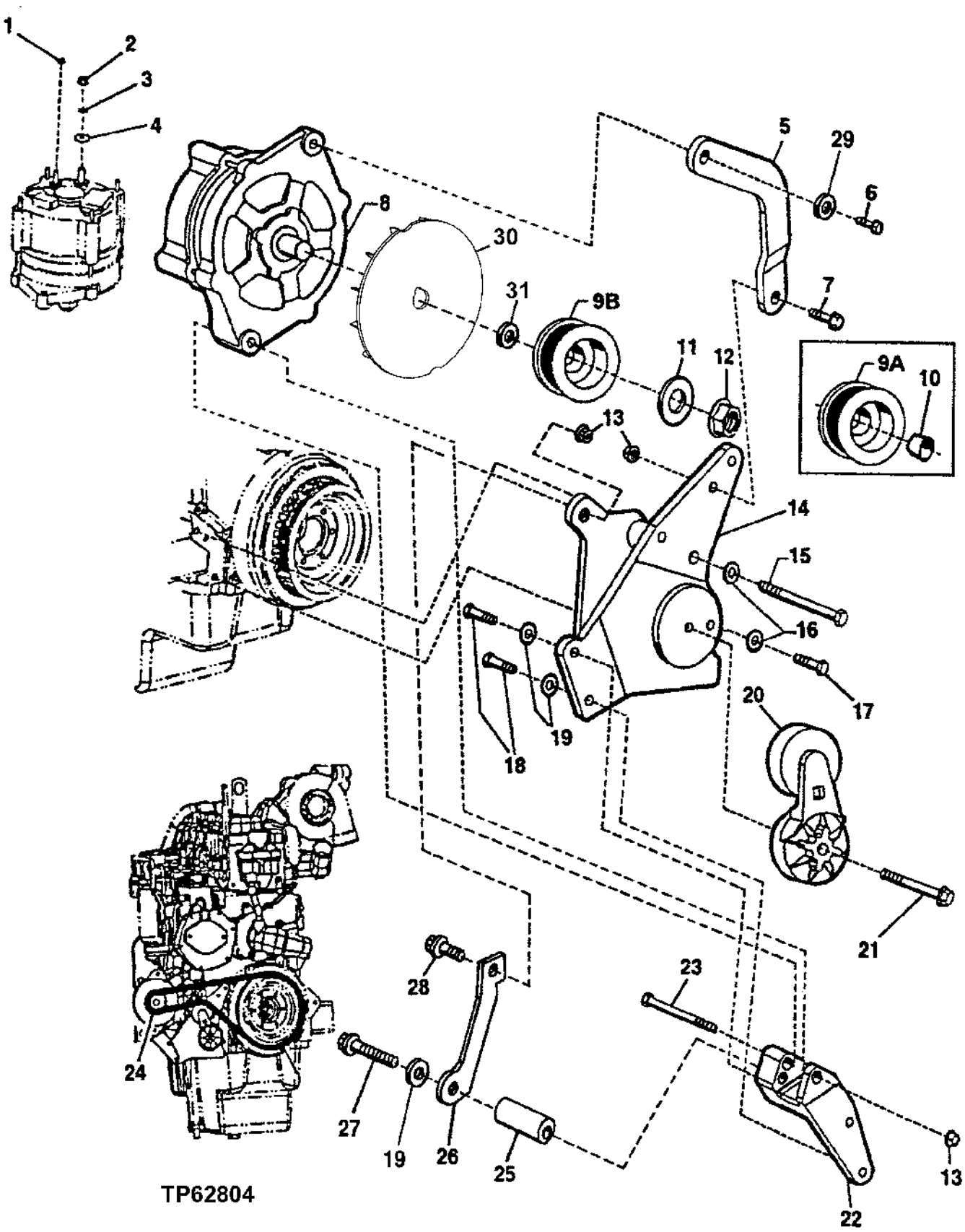

ALTERNATOR, MOUNTING BRACKETS, BELT AND BELT TENSIONER
(55 AMP)

KEY	PART NO.	PART NAME	QTY	SERIAL NO.	REMARKS
1	14M7375	FLANGE NUT	1		M5
2	14M7298	FLANGE NUT	1		M8
3	12M7032	LOCK WASHER	1		
4	24M7207	WASHER	2		8.400 X 24 X 2 MM
5	R128962	STRAP	1		
6	19M7868	SCREW	1		M8 X 30
7	19M7835	SCREW	1		M10 X 35
8	AT207608	ALTERNATOR	1		(NEW) (CONVENIENCE ASSEMBLY) (55 AMP) (INCLUDES AT163156 REGULATOR, H144095 CAPACITOR, 14M7158 NUT AND 24M7240 WASHER) (USE IF AVAILABLE) (SUB AT221116)
	AT221116	ALTERNATOR	1		(NEW) (CONVENIENCE ASSEMBLY)
	TY6798	ALTERNATOR	1		(REMANUFACTURED) (55 AMP)
	AT163156	REGULATOR	1		(NOT ILLUSTRATED)
	H144095	CAPACITOR	1		(NOT ILLUSTRATED)
9A	R94350	PULLEY	1	-XXXXXX	
9B	R501486	PULLEY	1	XXXXXX-	
10	R94351	BUSHING	1	-XXXXXX	
11	24M7240	WASHER	1		13 X 25 X 3 MM, (INCLUDED WITH ALTERNATOR)
12	14M7158	NUT	1		M16, (INCLUDED WITH ALTERNATOR)
13	14M7296	FLANGE NUT	3		M10
14	AT220259	SUPPORT	1		(SUB FOR AT210677)
15	19H3136	CAP SCREW	1		1/2" X 5-3/4"
16	24M7240	WASHER	2		13 X 25 X 3 MM
17	19H2993	CAP SCREW	1		1/2" X 1-1/2"
18	19H3239	CAP SCREW	2		3/8" X 1-1/4"
19	24M7239	WASHER	3		10.700 X 21 X 2.500 MM
20	RE70535	TIGHTENER	1		
21	19M7810	SCREW	1		M10 X 80
22	R500607	STRAP	1		
23	19M8166	CAP SCREW	1		M10 X 110
24	T173121	SYNCHRONOUS BELT	1		(1220 MM LONG) (WITHOUT AIR CONDITIONING) (USE IF AVAILABLE) (SUB T178418)
	T178418	SYNCHRONOUS BELT	1		(1220 MM LONG) (WITHOUT AIR CONDITIONING)
	T173122	SYNCHRONOUS BELT	1		(1920 MM LONG) (WITH AIR CONDITIONING) (USE IF AVAILABLE) (SUB T178419)
	T178419	SYNCHRONOUS BELT	1		(1920 MM LONG) (WITH AIR CONDITIONING)
25	T175670	SPACER	1		
26	T175671	ADJUSTING STRAP	1		
27	19H3031	CAP SCREW	1		3/8" X 2-1/2"
28	19M7786	SCREW	1		M10 X 30
29	24H1621	WASHER	1		11/32" X 1" X 0.220"
30	T158584	FAN	1	XXXXXX-	
31	R39129	THRUST WASHER	1	XXXXXX-	

ALTERNATOR REAR COVER
(55 AMP)

TP60229 -UN-19MAR98

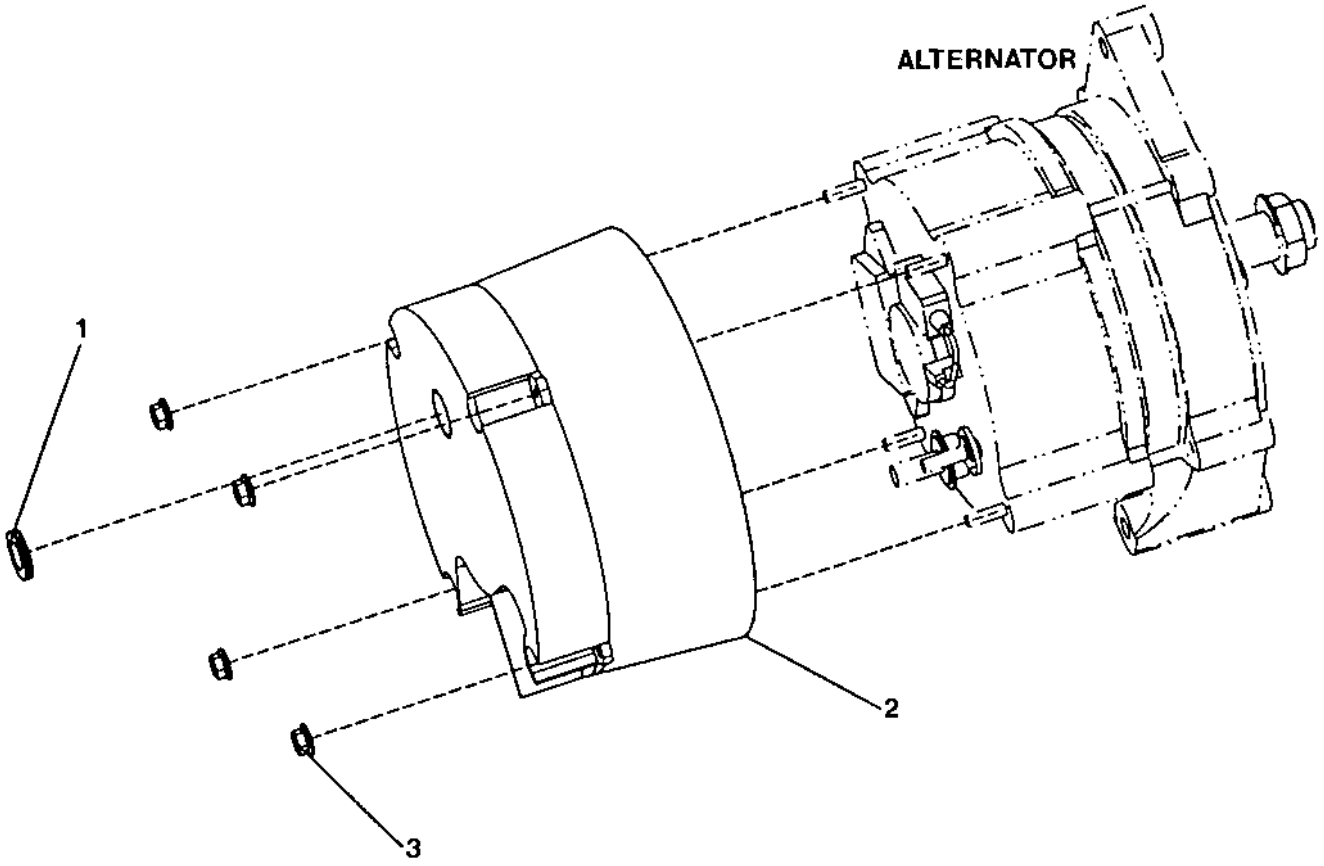

TP60229

ALTERNATOR REAR COVER
(55 AMP)

KEY	PART NO.	PART NAME	QTY	SERIAL NO.	REMARKS
1	R27180	GROMMET	1		
2	AT207952	SCREEN	1		
3	14M7375	FLANGE NUT	4		M5

ALTERNATOR, MOUNTING BRACKETS, BELT AND BELT TENSIONER
(80 AMP)

TP62521 -UN-14APR99

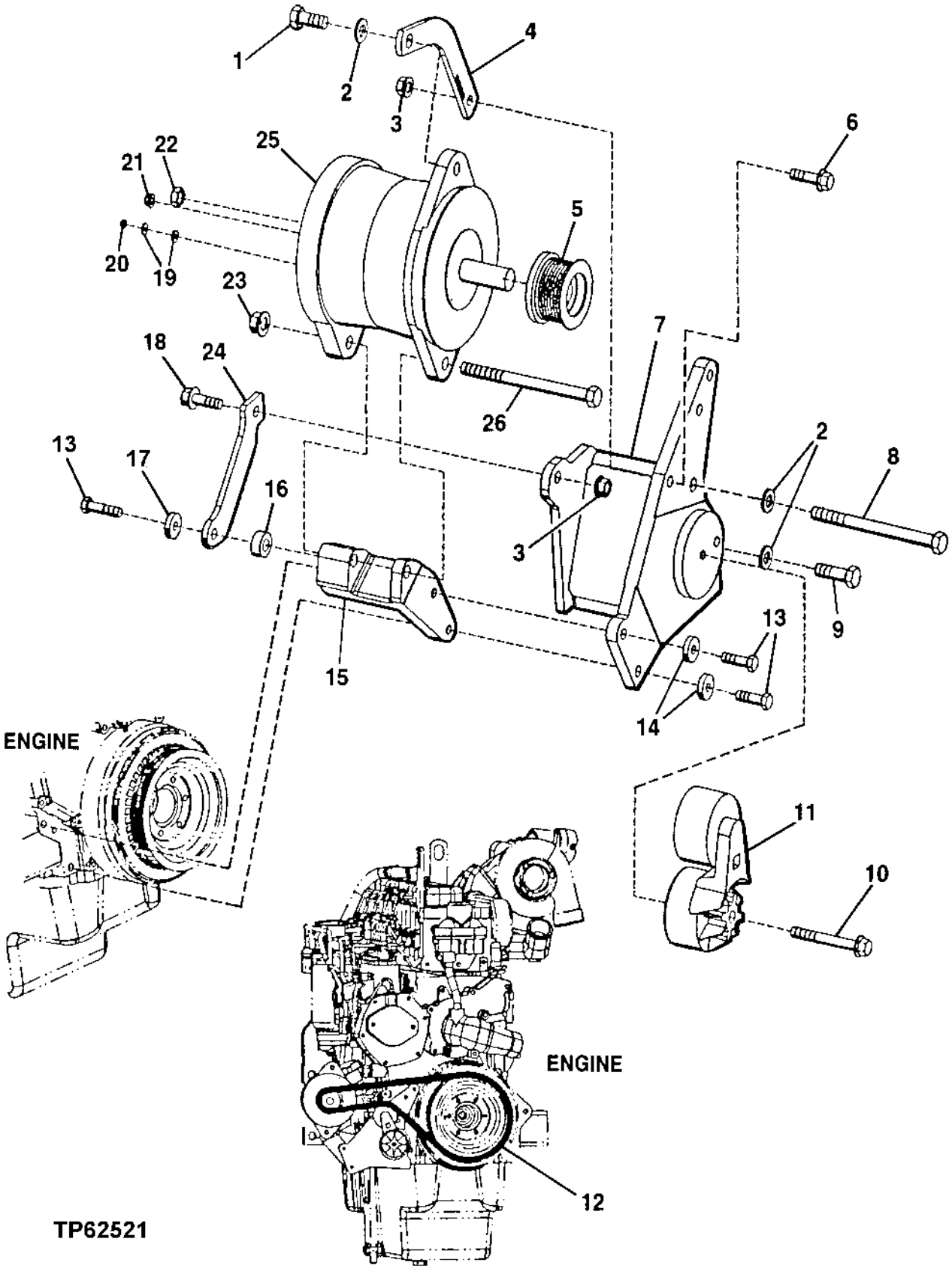

ALTERNATOR, MOUNTING BRACKETS, BELT AND BELT TENSIONER (80 AMP)

KEY	PART NO.	PART NAME	QTY	SERIAL NO.	REMARKS
1	19H3385	CAP SCREW	1		(K) 1/2" X 1-1/8"
2	24M7240	WASHER	3		(K) 13 X 25 X 3 MM
3	14M7296	FLANGE NUT	2		M10
4	R128961	STRAP	1		(K)
5	R128859	PULLEY	1		(USE IF AVAILABLE) (SUB T181325)
	T181325	PULLEY	1		
6	19M7835	SCREW	1		M10 X 35
7	AT220259	SUPPORT	1		
8	19H3136	CAP SCREW	1		1/2" X 5-3/4"
9	19H2993	CAP SCREW	1		1/2" X 1-1/2"
10	19M7810	SCREW	1		M10 X 80
11	RE70535	TIGHTENER	1		
12	T173121	SYNCHRONOUS BELT	1		(K) (1220 MM LONG) (WITHOUT AIR CONDITIONING) (USE IF AVAILABLE) (SUB T178418)
	T178418	SYNCHRONOUS BELT	1		(1220 MM LONG) (WITHOUT AIR CONDITIONING)
	T173122	SYNCHRONOUS BELT	1		(1920 MM LONG) (WITH AIR CONDITIONING) (USE IF AVAILABLE) (SUB T178419)
	T178419	SYNCHRONOUS BELT	1		(1920 MM LONG) (WITH AIR CONDITIONING)
13	19H3239	CAP SCREW	3		3/8" X 1-1/4"
14	24M7239	WASHER	2		10.700 X 21 X 2.500 MM
15	R500607	STRAP	1		
16	T175669	SPACER	1		
17	24M7239	WASHER	1		10.700 X 21 X 2.500 MM
18	19M7786	SCREW	1		M10 X 30
19	14M7299	FLANGE NUT	1		M12
20	14M7100	NUT	1		M4, (K)
21	14M7303	FLANGE NUT	1		M6, (K)
22	14H849	NUT	1		(K) 7/16"
	12H325	LOCK WASHER	1		(NOT ILLUSTRATED)
23	14M7299	FLANGE NUT	1		(K) M12
24	T175671	ADJUSTING STRAP	1		
25	AT208541	ALTERNATOR	1		(K) (NEW) (CONVENIENCE ASSEMBLY) (80AMP)
	TY6794	ALTERNATOR	1		(REMANUFACTURED) (80AMP)
26	19M7307	CAP SCREW	1		M12 X 150
27	**AT207346**	**ALTERNATOR**	**1**		**INCLUDES ALL (K) PARTS (WHOLEGOODS)**

ALTERNATOR REAR COVER
(80 AMP)

TP60231 -UN-11MAR98

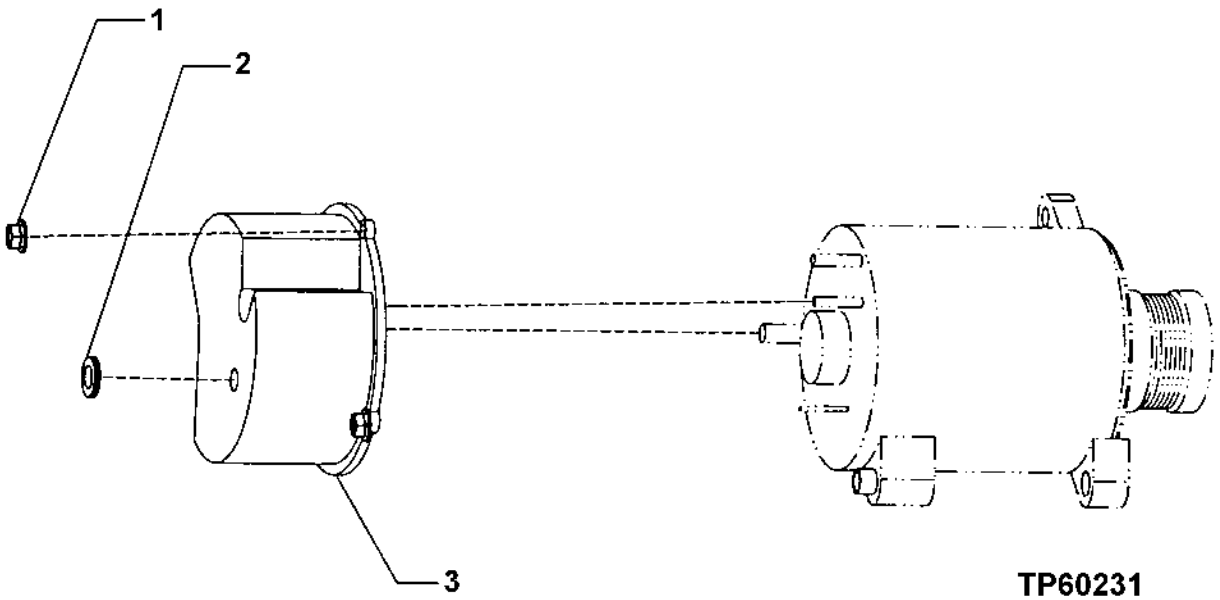

ALTERNATOR REAR COVER
(80 AMP)

KEY	PART NO.	PART NAME	QTY	SERIAL NO.	REMARKS
1	14M7375	FLANGE NUT	4		M5
2	R27180	GROMMET	1		
3	AT160704	SCREEN	1		

MEMORANDA

FRONT TURN AND MARKER LIGHT

TP48309 -UN-01APR96

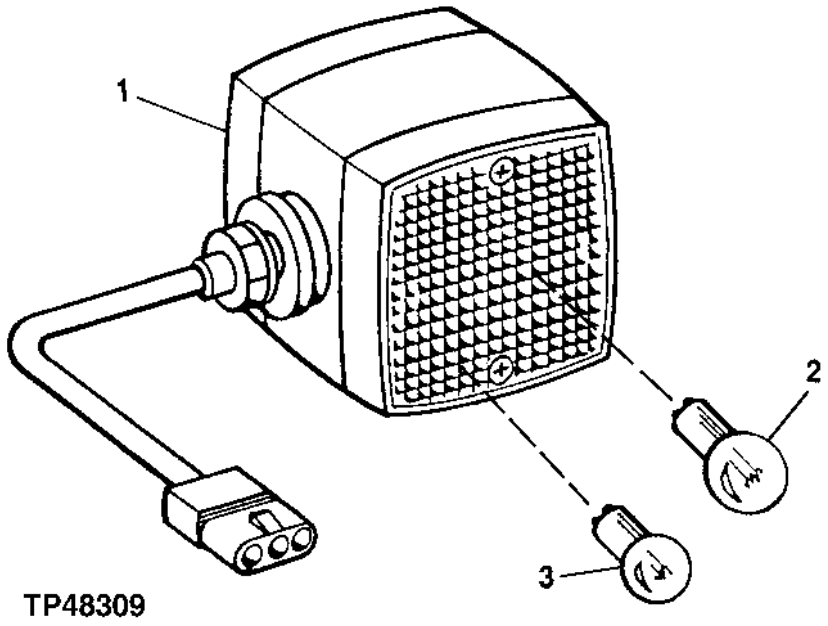

KEY	PART NO.	PART NAME	QTY	SERIAL NO.	REMARKS
1	AT206878	LAMP	1		
	T176372	LENS	2		
2	AT210333	BULB	1		TURN
3	57M7122	BULB	1		MARKER

DRIVE HI-BEAM LAMP AND GUARD

TP55460 -UN-14APR97

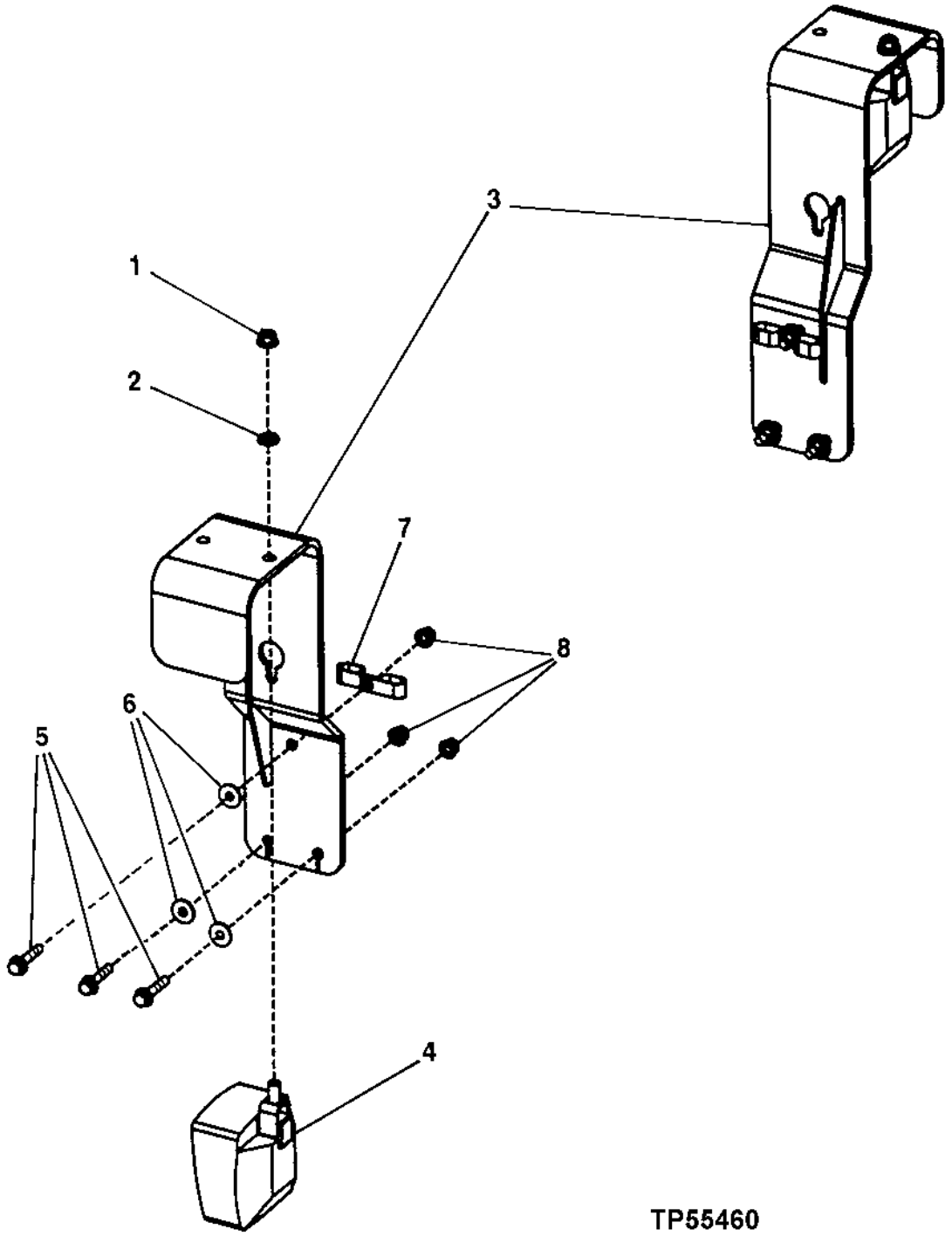

DRIVE HI-BEAM LAMP AND GUARD

KEY	PART NO.	PART NAME	QTY	SERIAL NO.	REMARKS
1	14M7299	FLANGE NUT	2		M12
2	24M7240	WASHER	2		13 X 25 X 3 MM
3	AT210246	SUPPORT	2		
4	AT209902	SIDE LIGHT	2		
	AT135758	BULB	2		(NOT ILLUSTRATED)
5	19M7806	SCREW	6		M10 X 50
6	24M7296	WASHER	6		10.500 X 30 X 2.500 MM
7	AH97280	CLIP	4		
8	14M7400	LOCK NUT	6		

STOP, TURN AND TAIL LIGHT
(SERIAL NO. -578419)

TP62541 -UN-27APR99

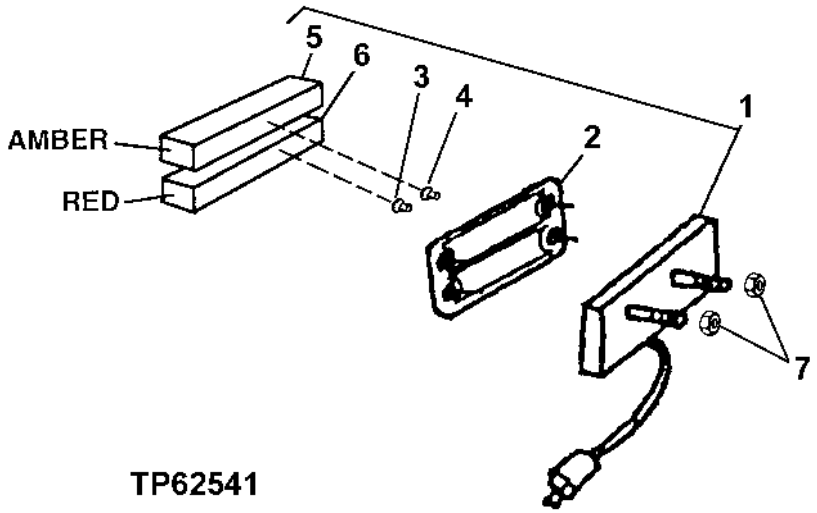

KEY	PART NO.	PART NAME	QTY	SERIAL NO.	REMARKS
1	AT202792	STOP LIGHT	1		
2	T150355	GASKET	1		
3	57M7181	BULB	1		BRAKE AND TAIL LIGHT
4	AT210333	BULB	1		TURN SIGNAL
5	T145897	LENS	1		AMBER
6	T145896	LENS	1		RED
7	14M7375	FLANGE NUT	2		M5

STOP, TURN AND TAIL LIGHT
(SERIAL NO. 578420-)

T137967 -UN-12FEB01

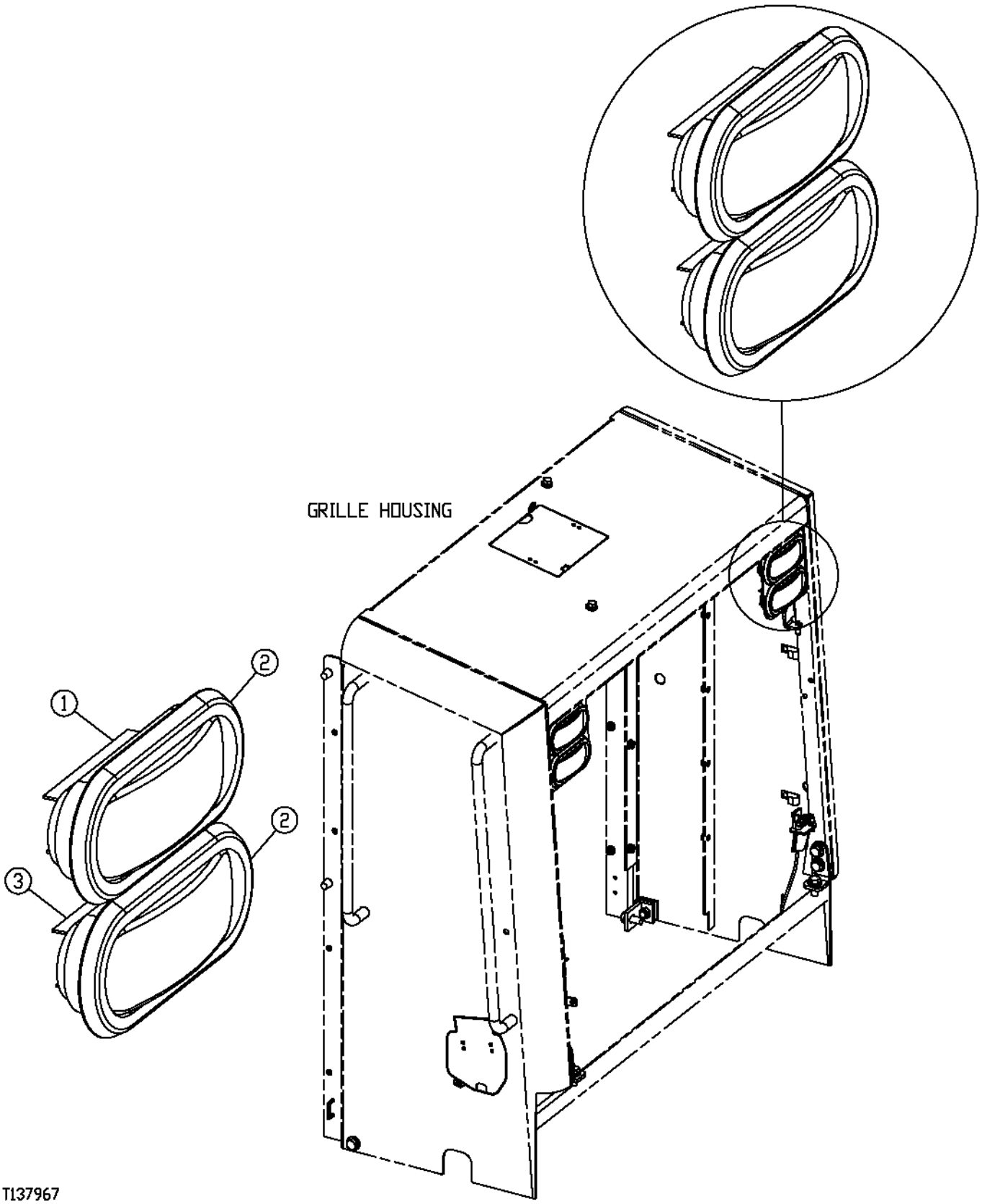

STOP, TURN AND TAIL LIGHT
(SERIAL NO. 578420-)

KEY	PART NO.	PART NAME	QTY	SERIAL NO.	REMARKS
1	T178947	TURN SIGNAL LAMP	2		STANDARD
	T180074	TURN SIGNAL LAMP	2		HEAVY-DUTY
2	T178948	RETAINER	4		
3	T178946	TAIL LAMP	2		STANDARD, STOP
	T180075	TAIL LAMP	2		HEAVY-DUTY, STOP
4	AT223807	WIRING HARNESS	1		LED JUMPER (USE WITH HEAVY DUTY) (NOT ILLUSTRATED)

DOME LIGHT AND DOOR LIGHT SWITCH

TP48466 -UN-14SEP96

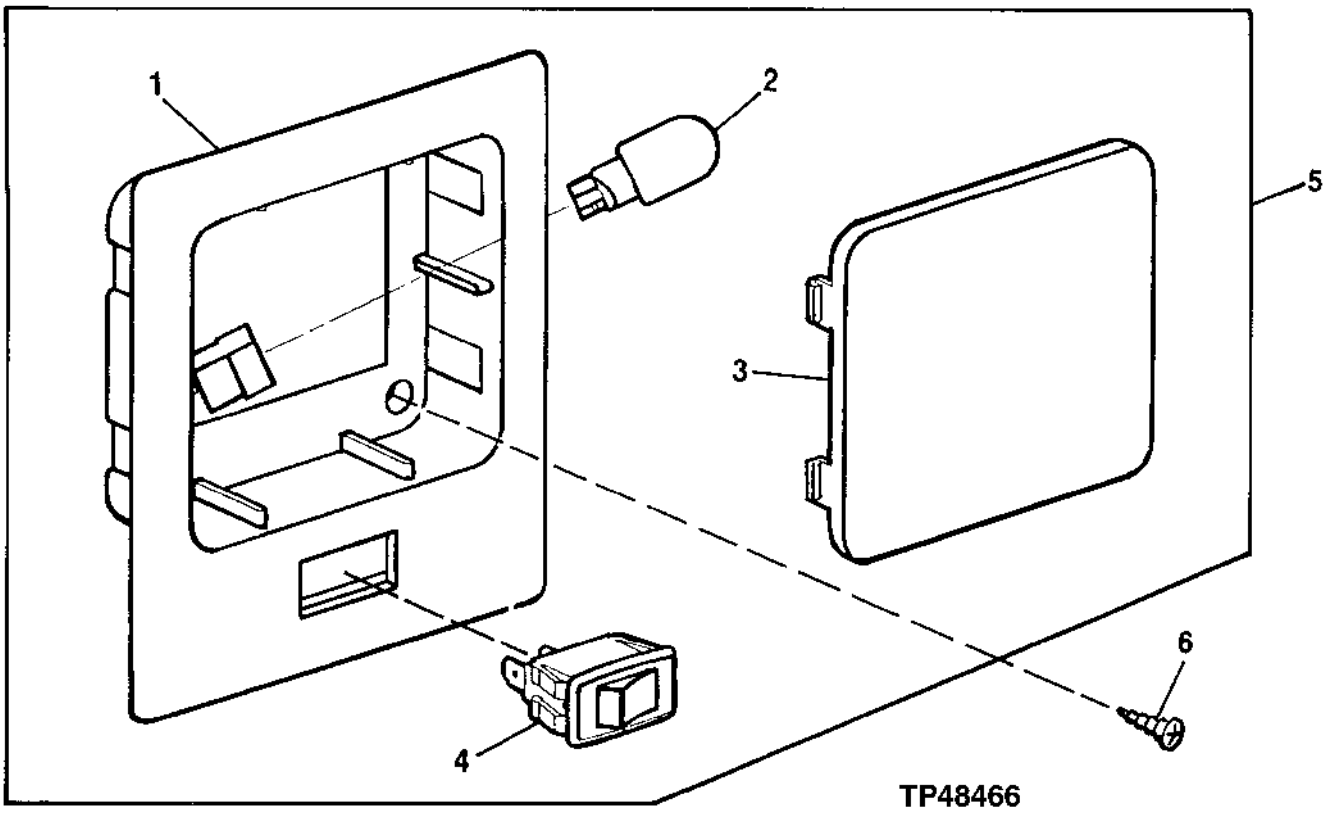

KEY	PART NO.	PART NAME	QTY	SERIAL NO.	REMARKS
1	.....	HOUSING	1		(SUB AT207721)
2	AT173355	BULB	1		
3	.....	LENS	1		(SUB AT207721)
4	RE48838	ROCKER SWITCH	1		
5	AT207721	LAMP	1	-581888	(SUB FOR AT211053)
	AT224923	LAMP	1	581889-	
6	T182875	SCREW	2		

FRONT AND REAR WORK LAMP

TP62820 -UN-08JUN00

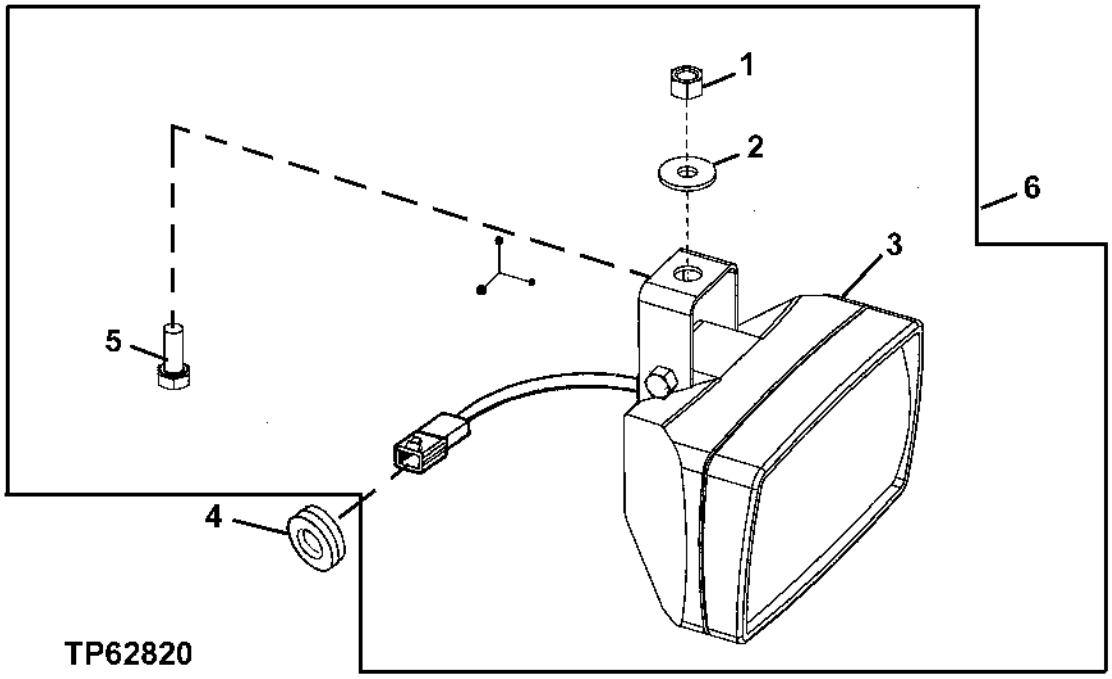

KEY	PART NO.	PART NAME	QTY	SERIAL NO.	REMARKS
1	14M7166	LOCK NUT	1		M8
2	24M7207	WASHER	1		8.400 X 24 X 2 MM
3	.....	LAMP	1		(SUB AT208435)
	AT135758	BULB	1		(NOT ILLUSTRATED)
4	H81678	GROMMET	1		
5	19M7139	CAP SCREW	1		M8 X 20
6	AT208435	LAMP	1		

ROCKER SWITCHES AND PLUG ASSEMBLY

TP55870 -UN-20FEB98

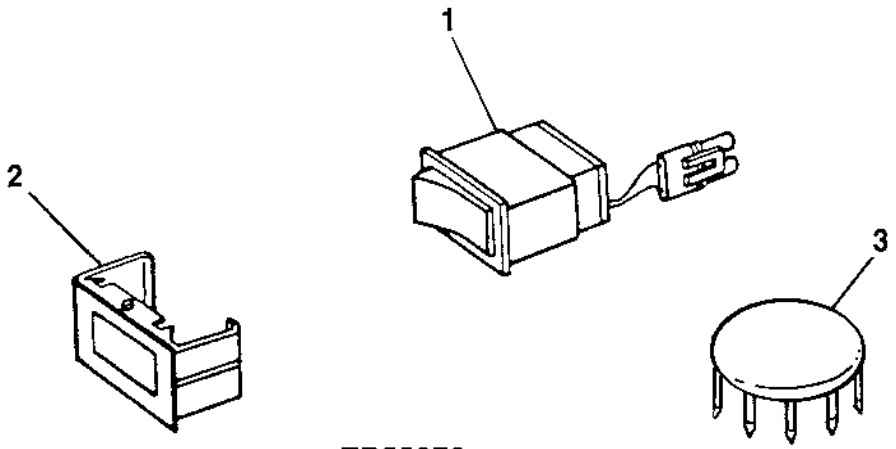

TP55870

KEY	PART NO.	PART NAME	QTY	SERIAL NO.	REMARKS
1	AT203500	ROCKER SWITCH	1		CAB WORK LIGHT
	AT202786	SWITCH	1		FOUR-WAY FLASHER
	RE55478	AC COMPRESSOR SWITCH	1		AIR CONDITIONING SHUTOFF
	AT202787	SWITCH	1		DRIVE LIGHT
	AT208630	SWITCH	1		PARK BRAKE RELEASE
	AT202842	ROCKER SWITCH	1		START AID
	AT202795	SWITCH	1		BOOM DOWN/PILOT ENABLE
	AT202796	SWITCH	1		CLUTCH CUTOFF
	AT202797	ROCKER SWITCH	1		AUTOMATIC TRANSMISSION
	AT210224	SWITCH	1		RETURN TO CARRY (SUB FOR AT210224)
	AT202788	SWITCH	1		ROTARY BEACON
	AT202805	ROCKER SWITCH	1		PIN DISCONNECT
	AT220517	ROCKER SWITCH	1		RIDE CONTROL WITH LIGHT, (SUB FOR AT202798)
	AT202800	SWITCH	1		
	AT202958	SWITCH	1		AXLE DISCONNECT
	AT207709	SWITCH	1		REAR WINDOW DEFROST
	AT209123	SWITCH	1		FRONT WINDOW DEFROST
2	M115279	PLUG	1		BEZEL AND PLUG ASSEMBLY
3	T152230	PLUG	4		(USED TO PLUG UP HOLES IN CAB ROOF WITHOUT WORKLIGHTS)
	T161380	PLUG	1		(USED TO PLUG ROTARY LPM SWITCH HOLE IN RIGHT PANEL)
	T182880	PLUG	1		(USED TO PLUG 12V POWER PLUG HOLE IN RIGHT-PANEL WALL)

CHASSIS COMPUTER UNIT

TP35394 -UN-11SEP96

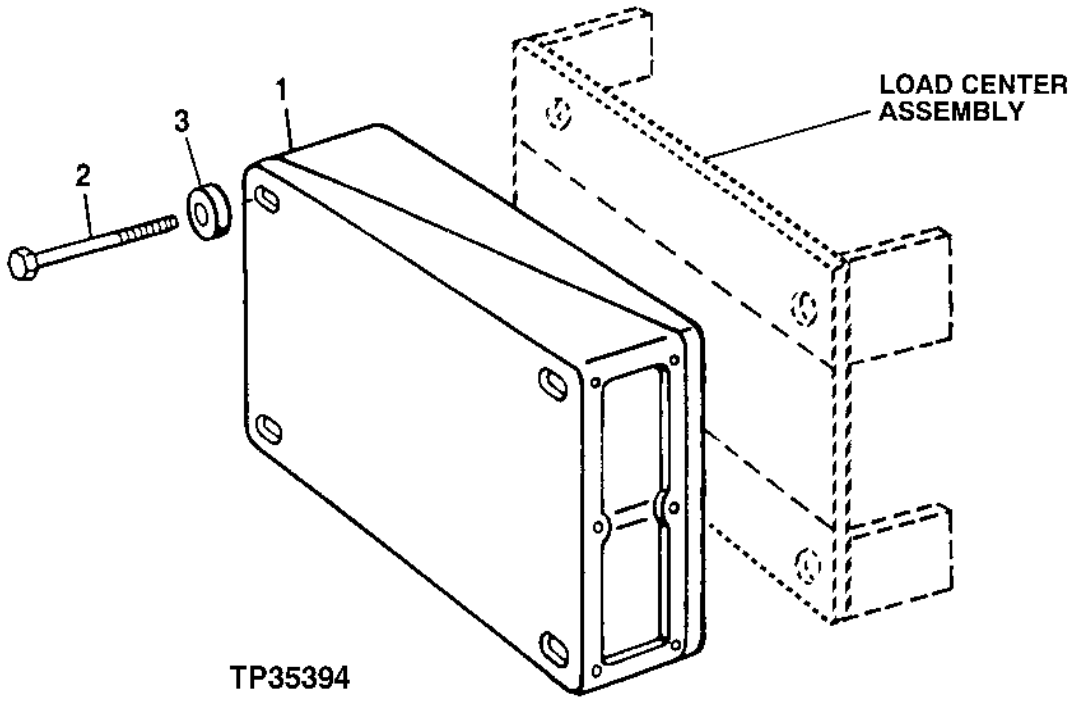

KEY	PART NO.	PART NAME	QTY	SERIAL NO.	REMARKS
1	AT224098	VEHICLE CONTROLLER	1		(WITHOUT TRACTION CONTROL)
2	19M8786	SCREW	4		M6 X 70
3	24M7088	WASHER	4		6.600 X 12 X 1.600 MM

TRANSMISSION CONTROL UNIT

TP35396 -UN-07AUG96

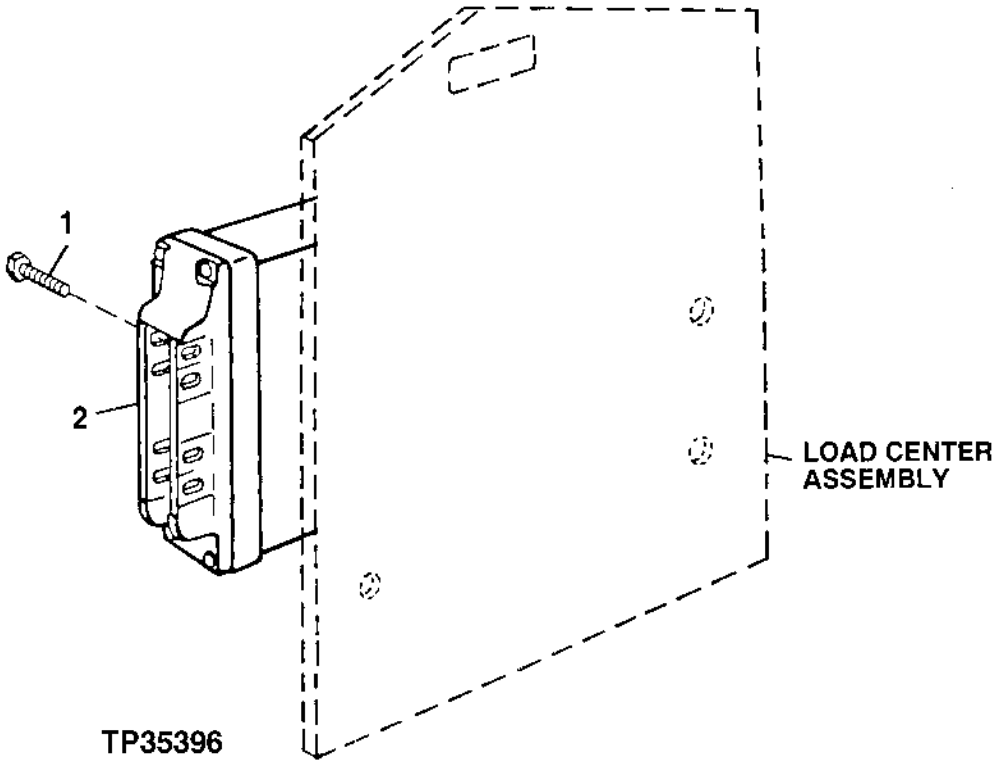

KEY	PART NO.	PART NAME	QTY	SERIAL NO.	REMARKS
1	21M7250	SCREW	2		M4 X 12
2	AT219930	TRANSMISSION CONTROLLER	1	-573381	
	AT221716	TRANSMISSION CONTROLLER	1	573382-XXXXXX	
	AT223804	TRANSMISSION CONTROLLER	1	XXXXXX-	

SECONDARY STEERING SWITCH HARNESS

TP48333 -UN-10MAY96

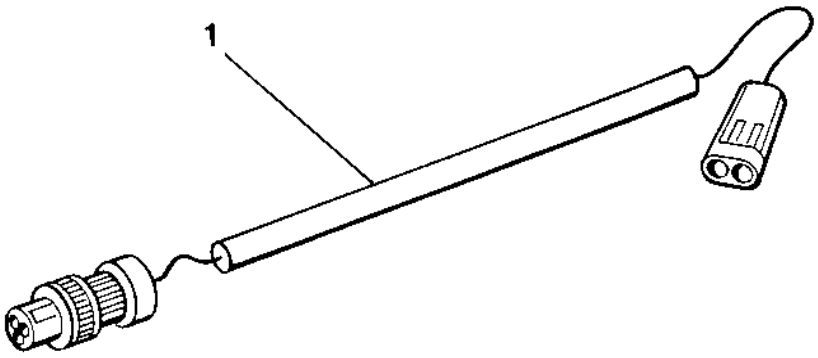

KEY	PART NO.	PART NAME	QTY	SERIAL NO.	REMARKS
1	AT203492	WIRING HARNESS	1		

LICENSE PLATE LIGHT HARNESS

TP48334 -UN-10MAY96

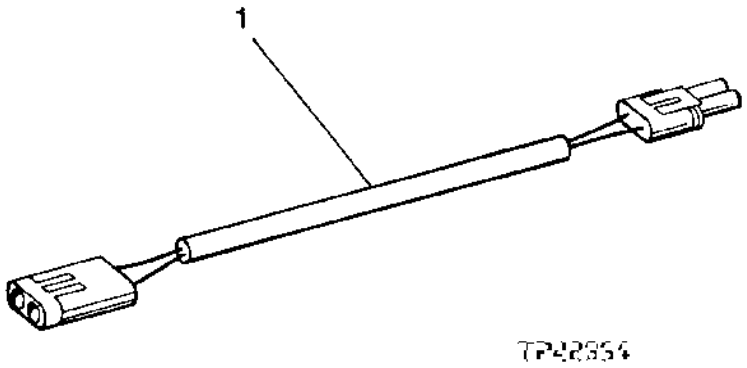

KEY	PART NO.	PART NAME	QTY	SERIAL NO.	REMARKS
1	AT203137	WIRING HARNESS	1		

PIN DISCONNECT HARNESS

TP48336 -UN-10MAY96

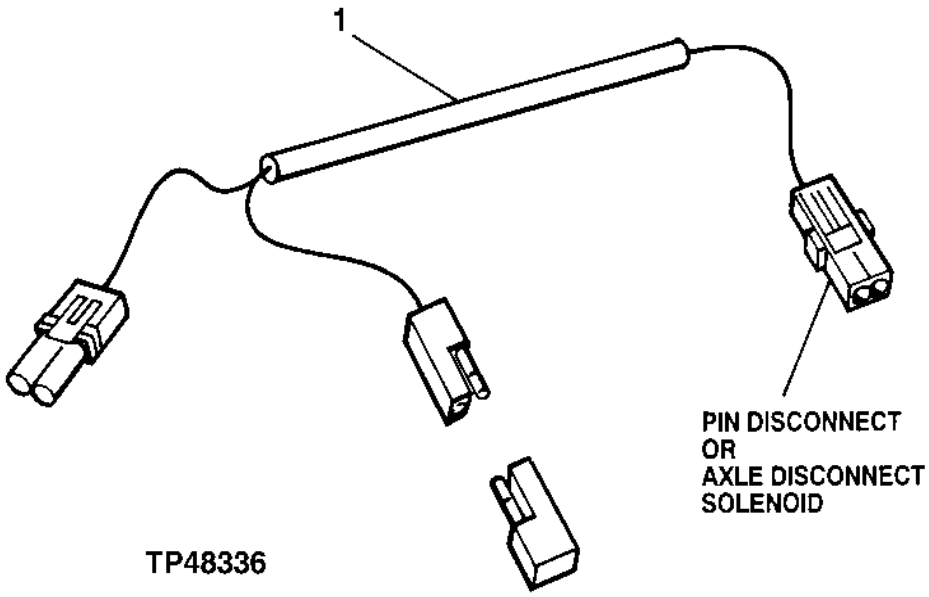

KEY	PART NO.	PART NAME	QTY	SERIAL NO.	REMARKS
1	AT202824	WIRING HARNESS	1		(INCLUDES AR94101 ONE AMP DIODE)

INJECTION FUEL TEMPERATURE HARNESS

TP62651 -UN-04OCT99

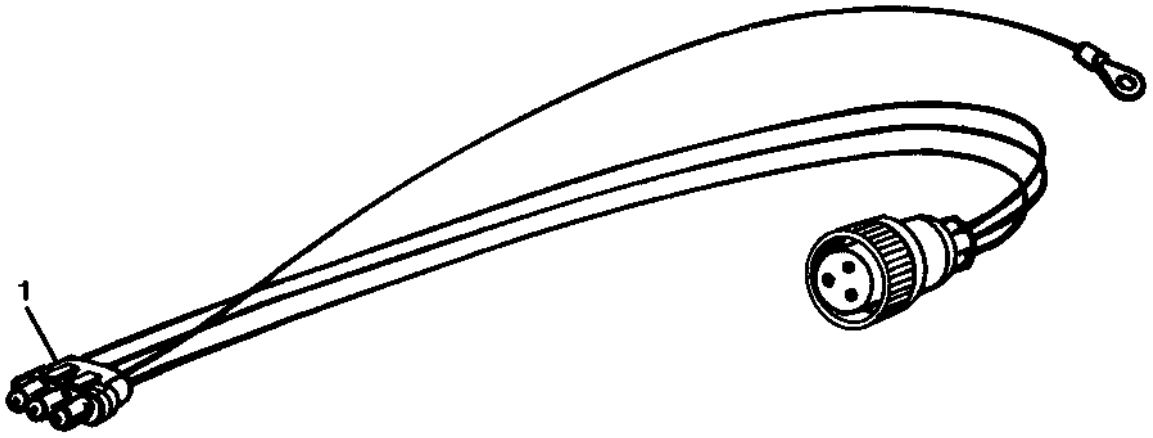

TP62651

KEY	PART NO.	PART NAME	QTY	SERIAL NO.	REMARKS
1	AT180830	WIRING HARNESS	1	-579034	(USE WITH AT208756 OR AT223974 ENGINE WIRING HARNESS) (WHEN USING WITH AT223974, ALSO ORDER (1) R78054 CONNECTOR, (3) R78058 TERMINALS AND (3) R78059 SEALS)

RETURN TO DIG HARNESS

TP55511 -UN-01MAY97

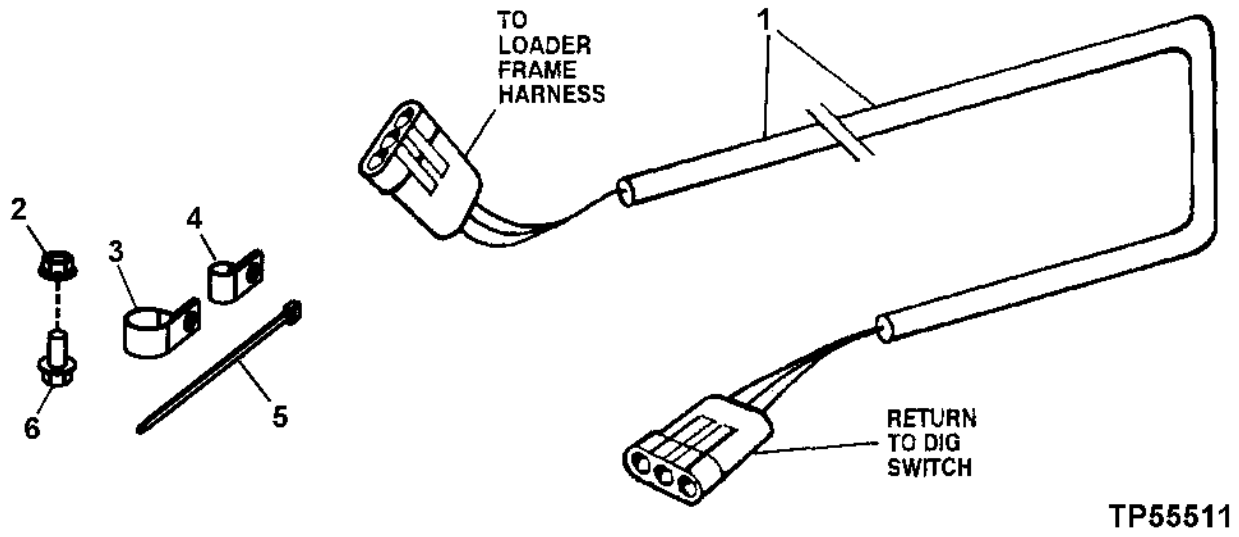

KEY	PART NO.	PART NAME	QTY	SERIAL NO.	REMARKS
1	AT202827	WIRING HARNESS	1		
2	14M7296	FLANGE NUT	2		M10
3	T75197	CLAMP	2		
4	T102934	CLAMP	2		
5	R44302	TIE BAND	2		
6	19M7788	SCREW	2		M12 X 25

CAN TERMINATOR

TP48320 -UN-09APR96

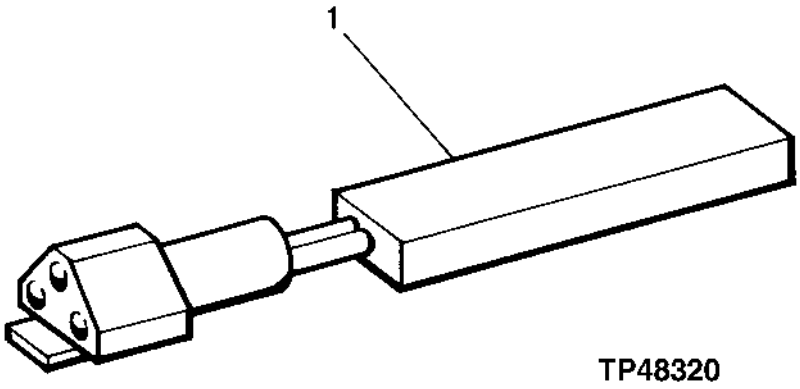

KEY	PART NO.	PART NAME	QTY	SERIAL NO.	REMARKS
1	AT202778	WIRING HARNESS	1		

CONVERTER, HARNESS, AND POWER PLUG
(24 VOLT TO 12 VOLT)

TP62794 -UN-06APR00

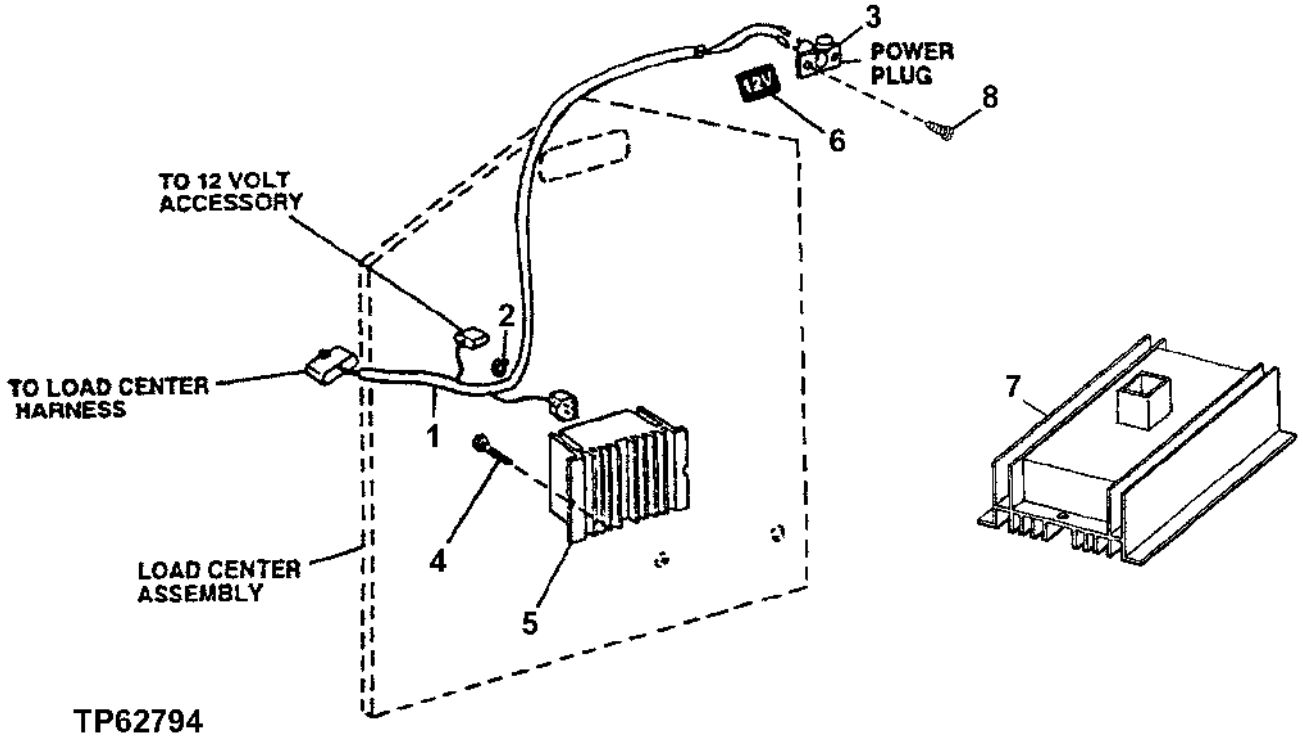

KEY	PART NO.	PART NAME	QTY	SERIAL NO.	REMARKS
1	AT202935	WIRING HARNESS	1		
2	R44302	TIE BAND	1		
3	AT202831	ELECTRICAL PLUG	1		POWER PLUG
4	21M7250	SCREW	4		M4 X 12
5	AT164676	CONVERTER	1	-578901	FIVE AMP
	AT223785	CONVERTER	1	578902-	FIVE AMP
6	T168160	LABEL	1		TWELVE VOLT
7	AT206684	CONVERTER	1	-578901	12/24 VOLT (10/20 AMP)
	AT223813	CONVERTER	1	578902-	TEN AMP
8	37M7030	SCREW	2		

DOOR-ACTIVATED DOMELIGHT SWITCH

TP62906 -UN-25SEP00

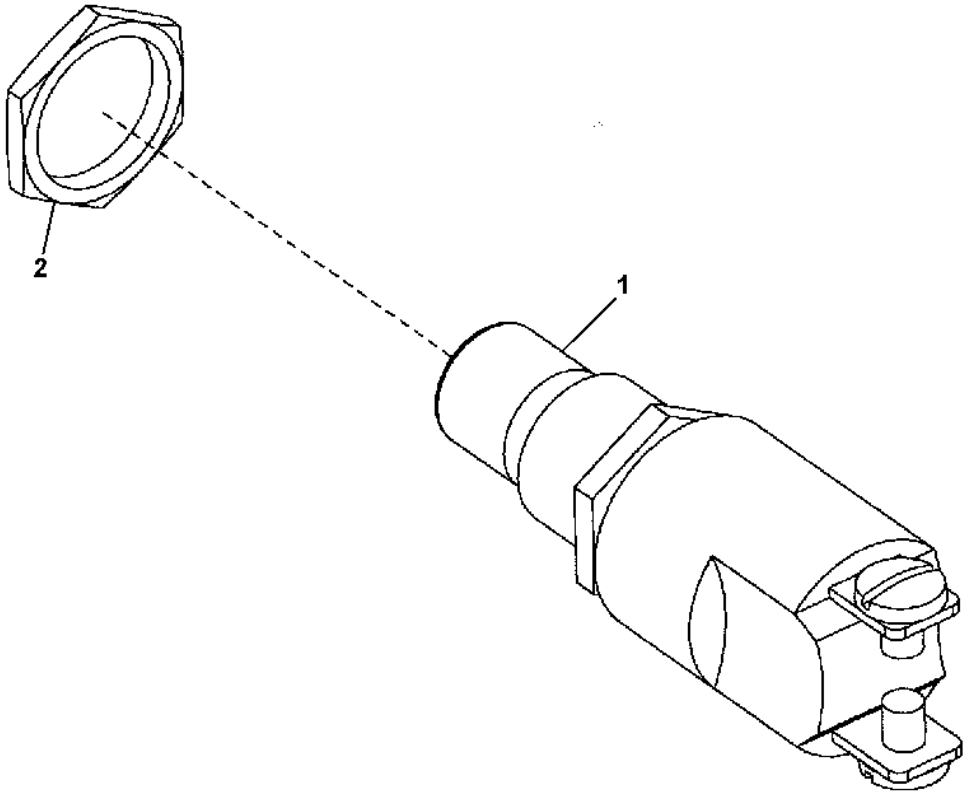

TP62906

KEY	PART NO.	PART NAME	QTY	SERIAL NO.	REMARKS
1	RE51234	DOOR LIGHT SWITCH	1		(CAB ONLY)
	T182914	CAP	1		(DOME SWITCH) (NOT ILLUSTRATED)
2	R44097	NUT	1		

LOAD CENTER HARNESS AND RIGHT PANEL
(LPM HARNESS)

TP60274 -UN-15APR98

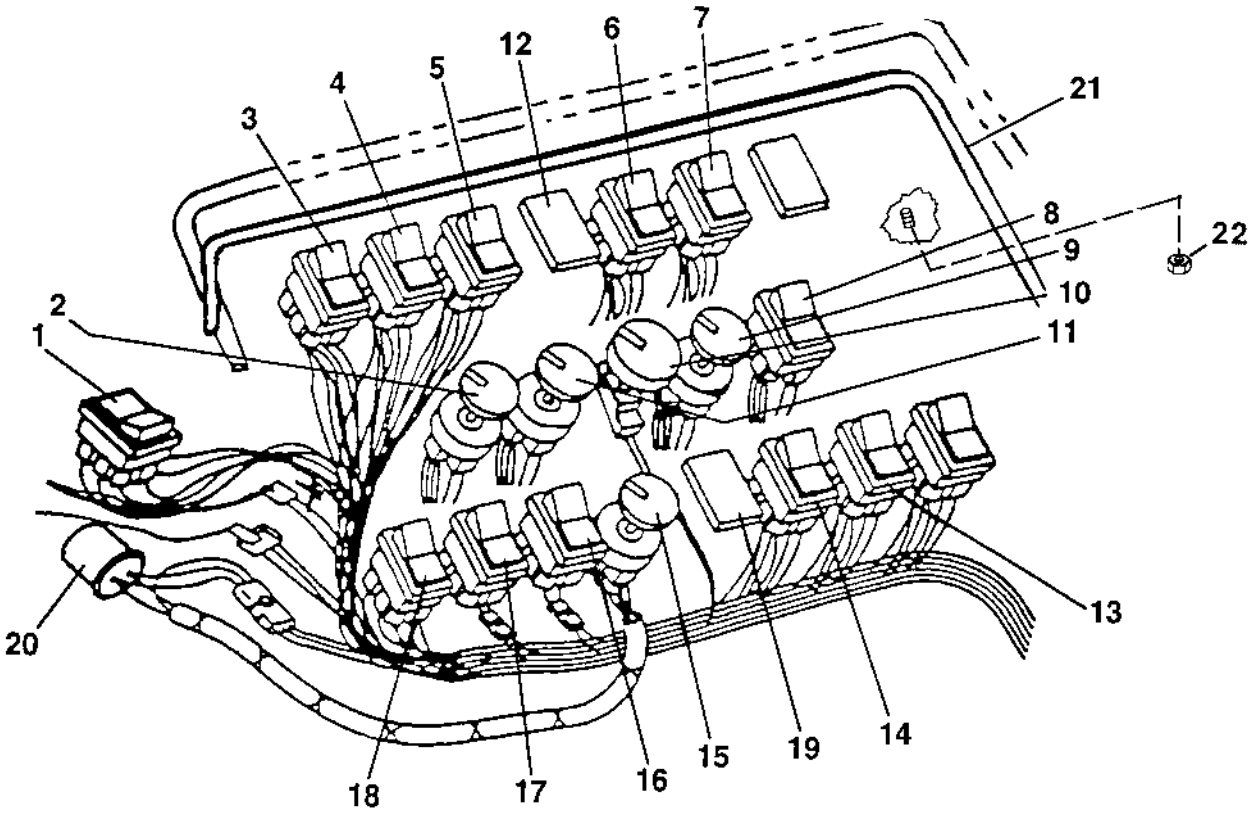

TP60274

LOAD CENTER HARNESS AND RIGHT PANEL
(LPM HARNESS)

KEY	PART NO.	PART NAME	QTY	SERIAL NO.	REMARKS
1	AT202795	SWITCH	1		PILOT ENABLE/BOOM DOWN
2	RE46634	SWITCH	1		FRONT WIPER
	AL76568	KNOB	1		(NOT ILLUSTRATED)
	E46066	NUT	2		(SUB FOR R44165) (NOT ILLUSTRATED)
3	AT202787	SWITCH	1		DRIVE AND TAIL MARKER
4	AT203500	ROCKER SWITCH	1		CAB WORK LIGHT
5	AT202786	SWITCH	1		FOUR-WAY FLASHER
6	AT202796	SWITCH	1		CLUTCH CUTOFF
7	AT202797	ROCKER SWITCH	1		AUTOMATIC TRANSMISSION
8	RE55478	AC COMPRESSOR SWITCH	1		AIR CONDITIONER, ON/OFF SWITCH
9	RE43497	AC/HEAT TEMPERATURE SWITCH	1		BLOWER SWITCH
	AL76568	KNOB	1		(NOT ILLUSTRATED)
	E46066	NUT	2		(SUB FOR R44165) (NOT ILLUSTRATED)
10	RE46742	CONTROL	1		TEMPERATURE CONTROL (NOT PART OF LOAD CENTER HARNESS)
	R111632	KNOB	1		(NOT ILLUSTRATED)
11	RE46634	SWITCH	1		REAR WIPER
	AL76568	KNOB	1		(NOT ILLUSTRATED)
	E46066	NUT	2		(SUB FOR R44165) (NOT ILLUSTRATED)
12	M115279	PLUG	1		
13	.....	SWITCH	1		(AT202810 NO LONGER AVAILABLE)
14	AT220517	ROCKER SWITCH	1		RIDE CONTROL WITH SWITCH, (SUB FOR AT202798)
15	RE43497	AC/HEAT TEMPERATURE SWITCH	1		LPM MODE SWITCH
	AL76568	KNOB	1		(NOT ILLUSTRATED)
	E46066	NUT	2		(SUB FOR R44165) (NOT ILLUSTRATED)
16	AT202805	ROCKER SWITCH	1		PIN DISCONNECT
17	AT202788	SWITCH	1		ROTARY BEACON
18	AT210224	SWITCH	1		(SUB FOR AT210224) RETURN TO CARRY
19	AT202800	SWITCH	1		LPM OFF/ON SWITCH
	AT202958	SWITCH	1		AXLE DISCONNECT
20	AT206912	WIRING HARNESS	1		LPM HARNESS
21	AT207497	PLATE	1		RIGHT PANEL PLATE
22	14M7303	FLANGE NUT	4		M6

ENGINE COOLANT TEMPERATURE SENDER

TP55455 -UN-08APR97

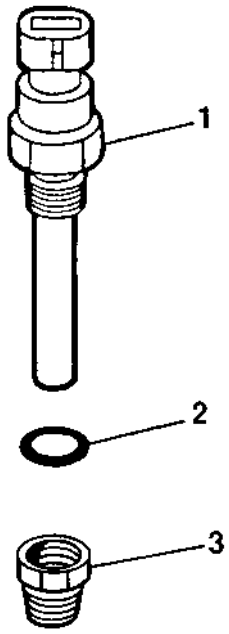

TP55455

KEY	PART NO.	PART NAME	QTY	ENGINE SERIAL NO.	REMARKS
1	RE151433	COOLANT TEMPERATURE SENSOR	1		
2	R26286	O-RING	1		
3	R71210	ADAPTER	1		

IGNITION SWITCH KEY

TP35393 -UN-12SEP96

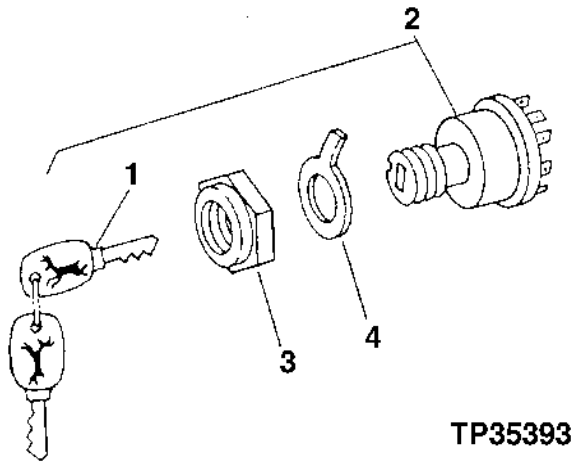

KEY	PART NO.	PART NAME	QTY	SERIAL NO.	REMARKS
1	AT145929	KEY	2		
2	AT195301	SWITCH	1		(SUB FOR AT145931)
3	R44342	NUT	1		
4	R52725	CONNECTOR	1		

STARTER RELAY

TP35401 -UN-17AUG96

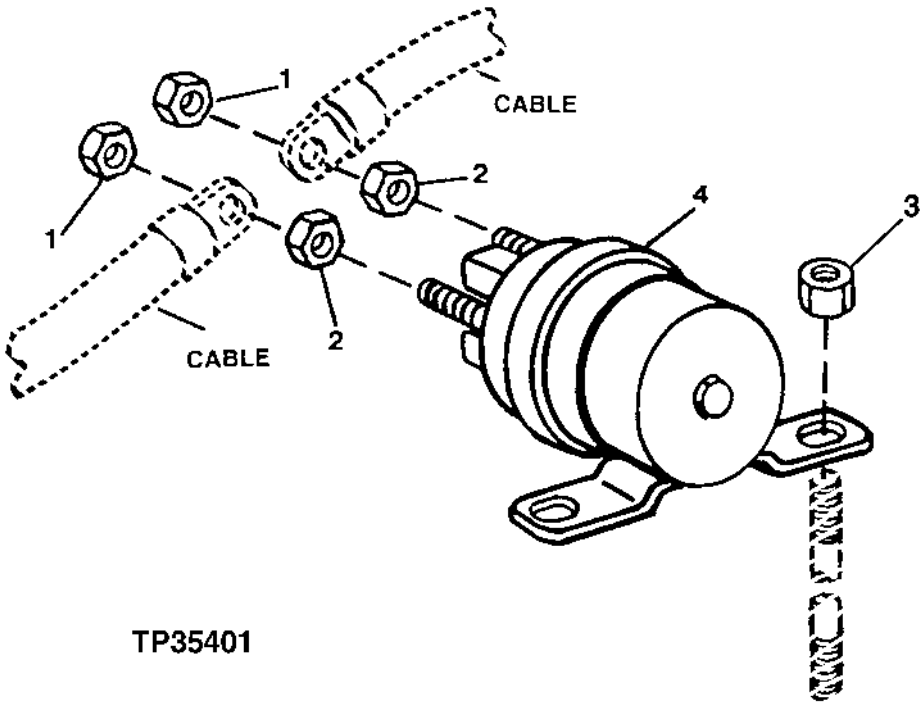

KEY	PART NO.	PART NAME	QTY	ENGINE SERIAL NO.	REMARKS
1	14M7272	NUT	2		M6
2	12H297	LOCK WASHER	2		1/4"
3	14M7303	FLANGE NUT	2		M6
4	AT145341	RELAY	1		

GROUND STRAP
(CAB)

TP33723 -UN-01JAN94

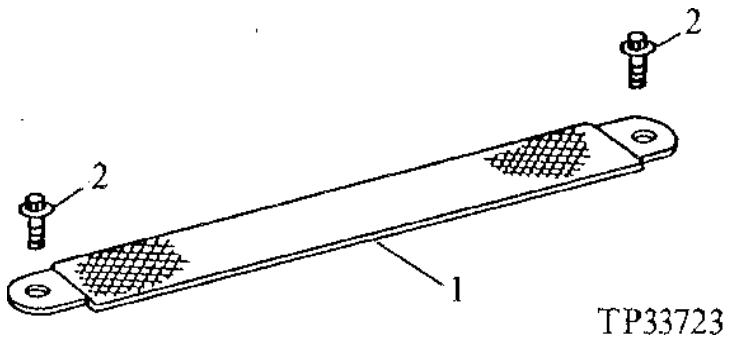

KEY	PART NO.	PART NAME	QTY	SERIAL NO.	REMARKS
1	AP22660	GROUND CABLE	1		(ENGINE)
2	19M7784	SCREW	2		M10 X 20

ENGINE OIL PRESSURE SENSOR

TP62596 -UN-21JUL99

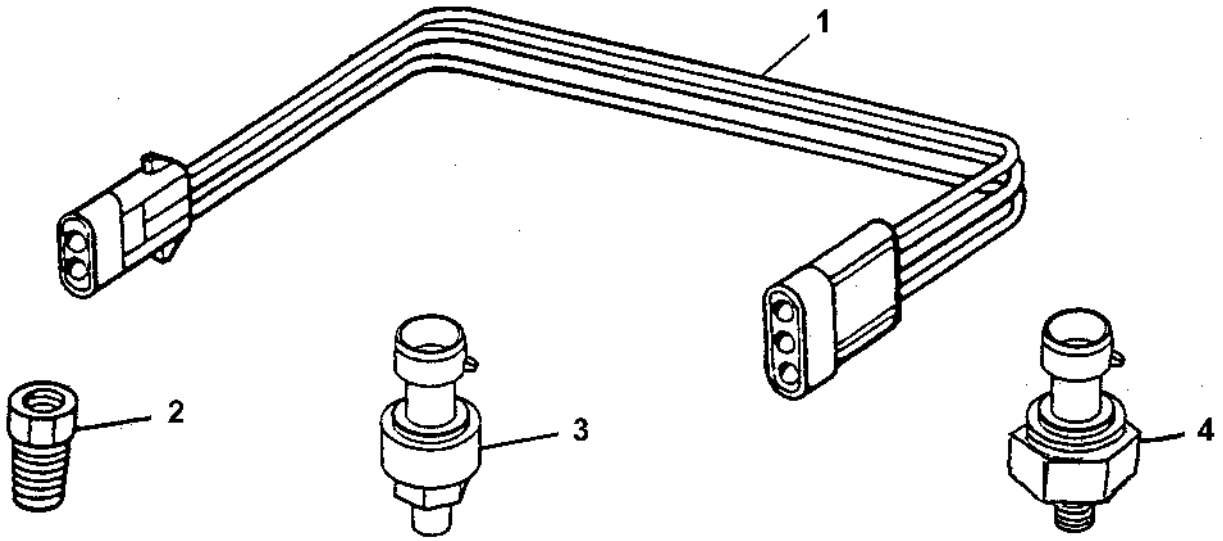

KEY	PART NO.	PART NAME	QTY	SERIAL NO.	REMARKS
1	AT207707	WIRING HARNESS	1		(ENGINE OIL PRESSURE) (LOW END MONITOR)
2	P40098	ADAPTER	1		
3	RE63289	SWITCH	1		(ENGINE OIL PRESSURE)(LOW END MONITOR) (SUB FOR RE52866)
	AT210435	TRANSDUCER	1	-XXXXXX	(ENGINE OIL PRESSURE) (USE WITH DELUXE MONITOR)
4	AT222377	TRANSDUCER	1	XXXXXX-	(ENGINE OIL PRESSURE) (USE WITH DELUXE MONITOR)

SHIFT SELECTOR, HIGH BEAM AND TURN SIGNAL SWITCH

TP35404 -UN-10SEP96

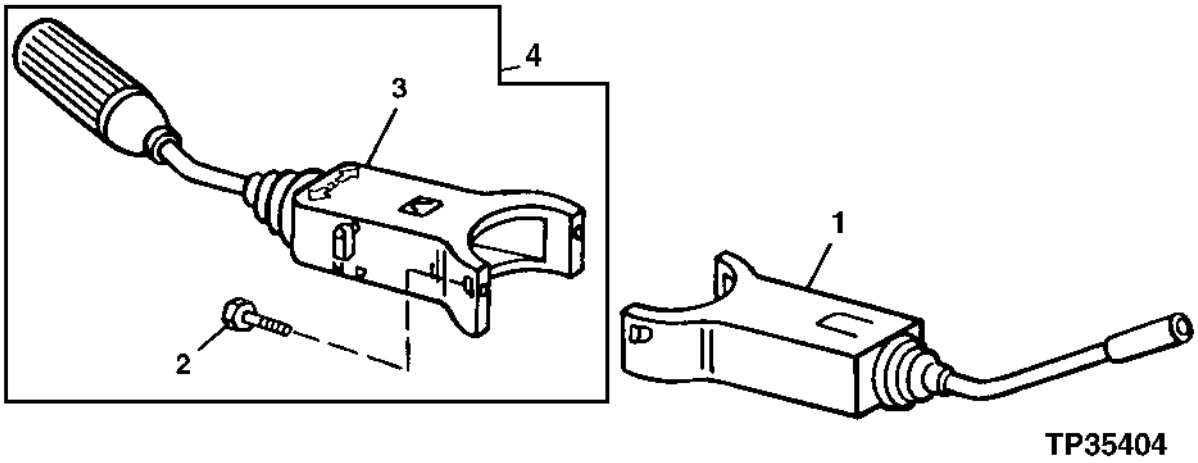

KEY	PART NO.	PART NAME	QTY	SERIAL NO.	REMARKS
1	AT202785	SWITCH	1		HIGH BEAM AND TURN SIGNAL (USE IF AVAILABLE) (SUB AT210334)
	AT210334	SWITCH	1		
2	19M8146	SCREW	2		
3	.....	SWITCH	1		SHIFT SELECTOR (INCLUDES T143445 GRIP) (AT179079 NO LONGER AVAILABLE)
4	AT176801	SWITCH	1		SHIFT SELECTOR ASSEMBLY

SUMP TANK HARNESS
(SERIAL NO. -XXXXXX)

TP60294 -UN-02APR98

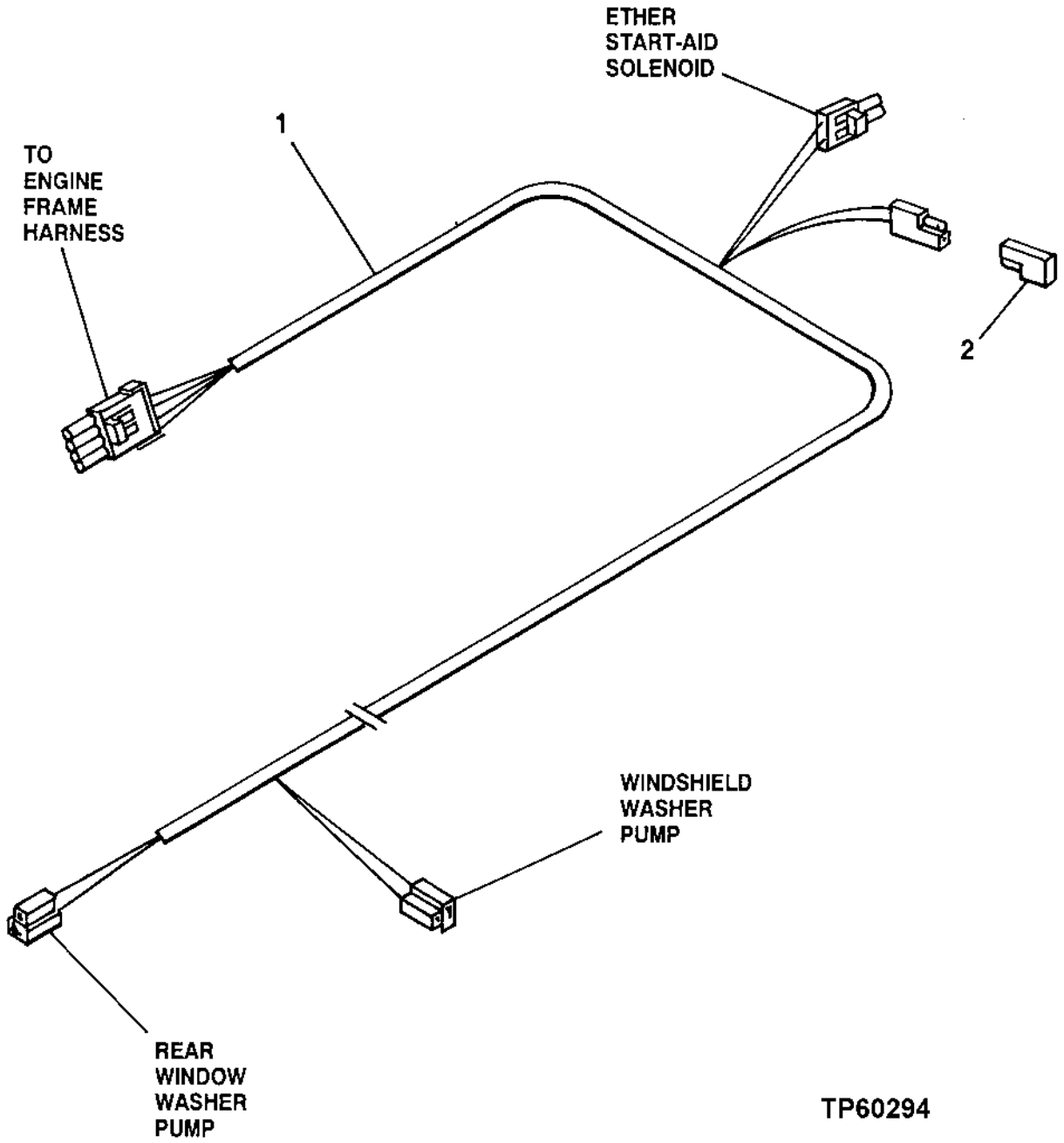

SUMP TANK HARNESS
(SERIAL NO. -XXXXXX)

KEY	PART NO.	PART NAME	QTY	SERIAL NO.	REMARKS
1	AT206722	WIRING HARNESS	1		
2	AR94101	DIODE	1		ETHER START-AID SOLENOID

TRANSMISSION WIRING HARNESS
(SERIAL NO. -XXXXXX)

TP48570 -UN-03MAR97

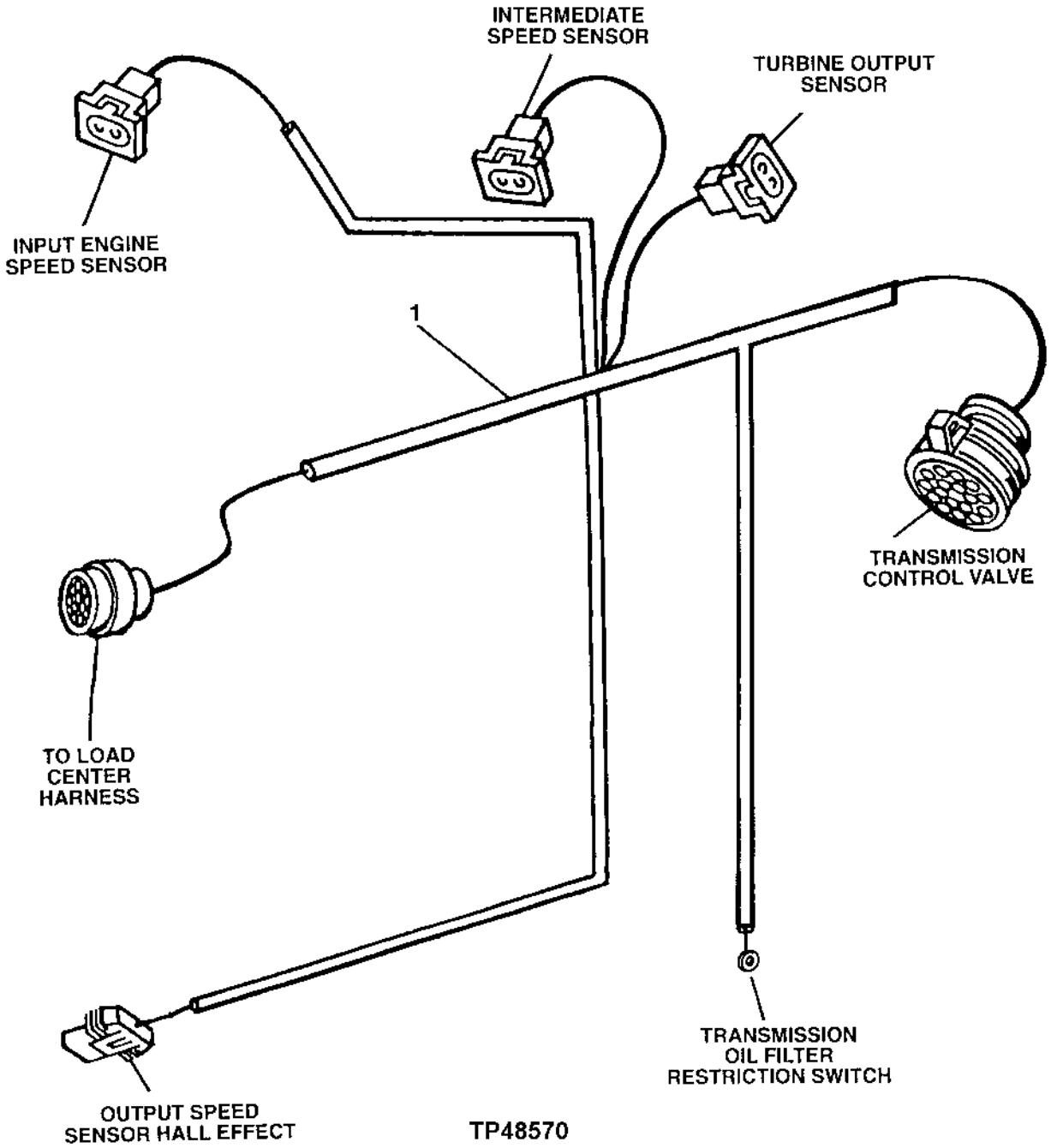

TRANSMISSION WIRING HARNESS
(SERIAL NO. -XXXXXX)

KEY	PART NO.	PART NAME	QTY	SERIAL NO.	REMARKS
1	AT210177	WIRING HARNESS	1		

TRANSMISSION WIRING HARNESS
(SERIAL NO. XXXXXX-)

TP62552 -UN-25MAY99

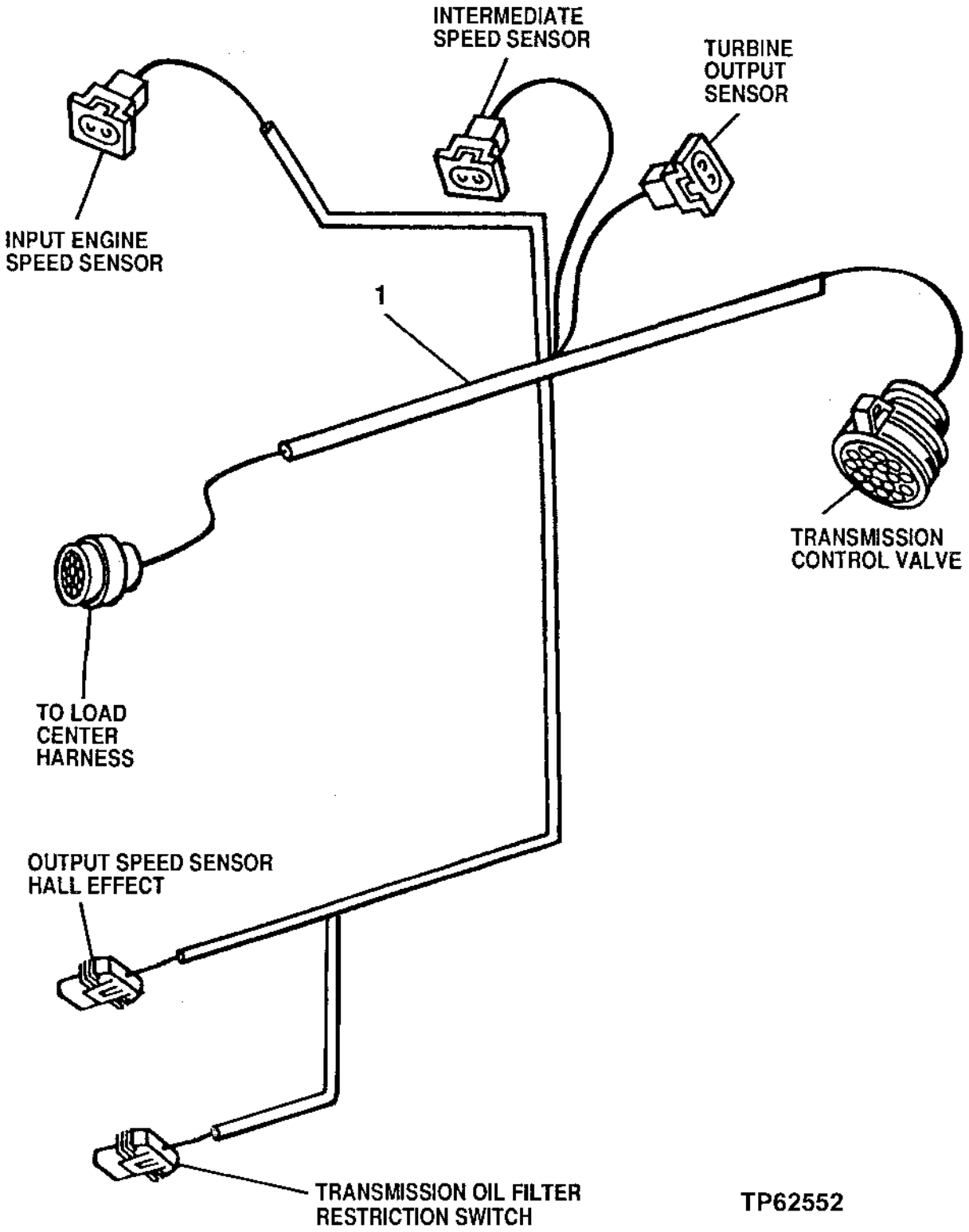

TRANSMISSION WIRING HARNESS
(SERIAL NO.XXXXXX-)

KEY	PART NO.	PART NAME	QTY	SERIAL NO.	REMARKS
1	AT209463	WIRING HARNESS	1		

RIDE CONTROL WIRING HARNESS

TP48335 -UN-10MAY96

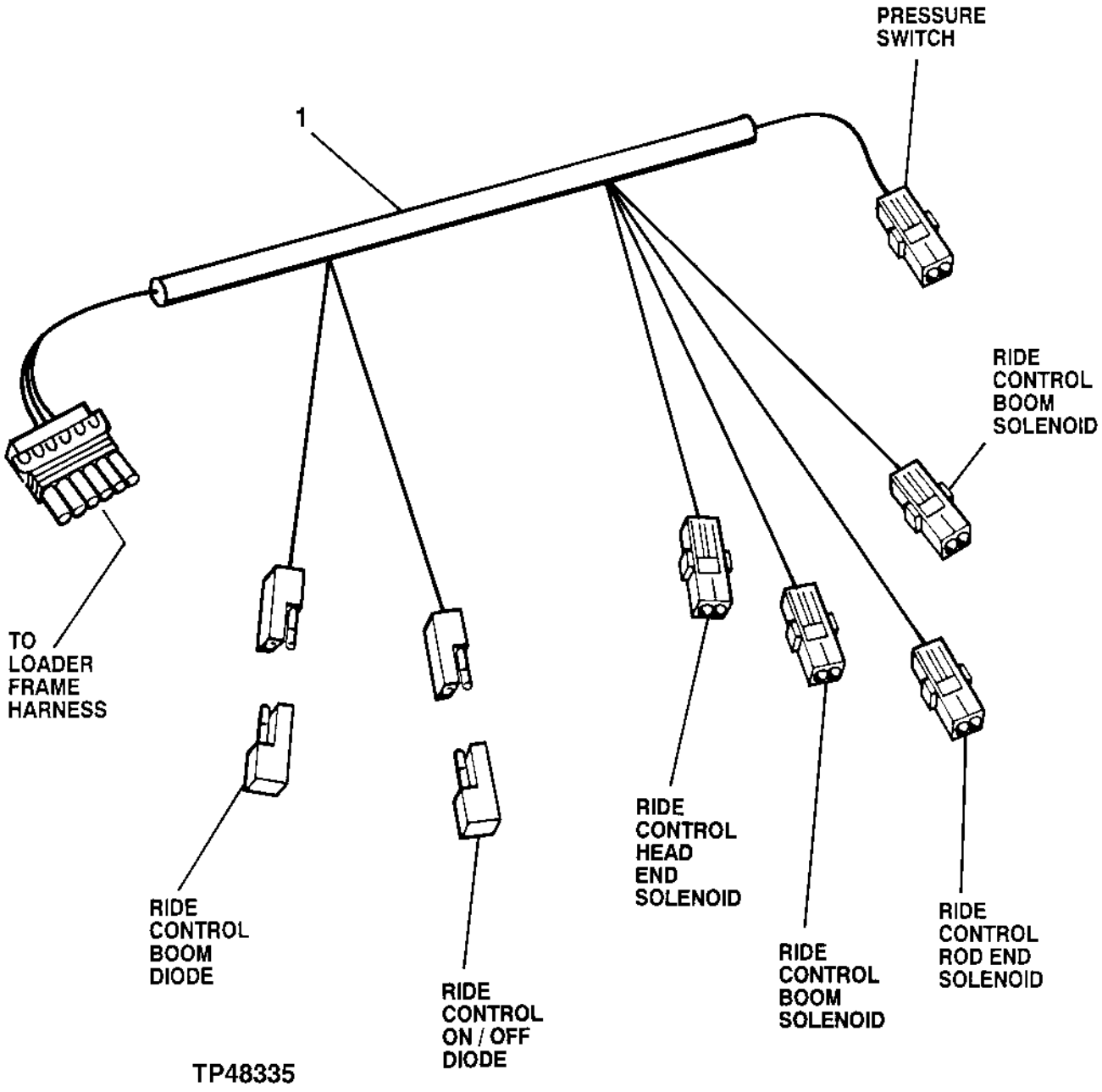

RIDE CONTROL WIRING HARNESS

KEY	PART NO.	PART NAME	QTY	SERIAL NO.	REMARKS
1	AT222138	WIRING HARNESS	1		(INCLUDES AR94101 ONE AMP DIODE) (SUB FOR AT202823)

LOADER FRAME WIRING HARNESS

TP62635 -UN-13SEP99

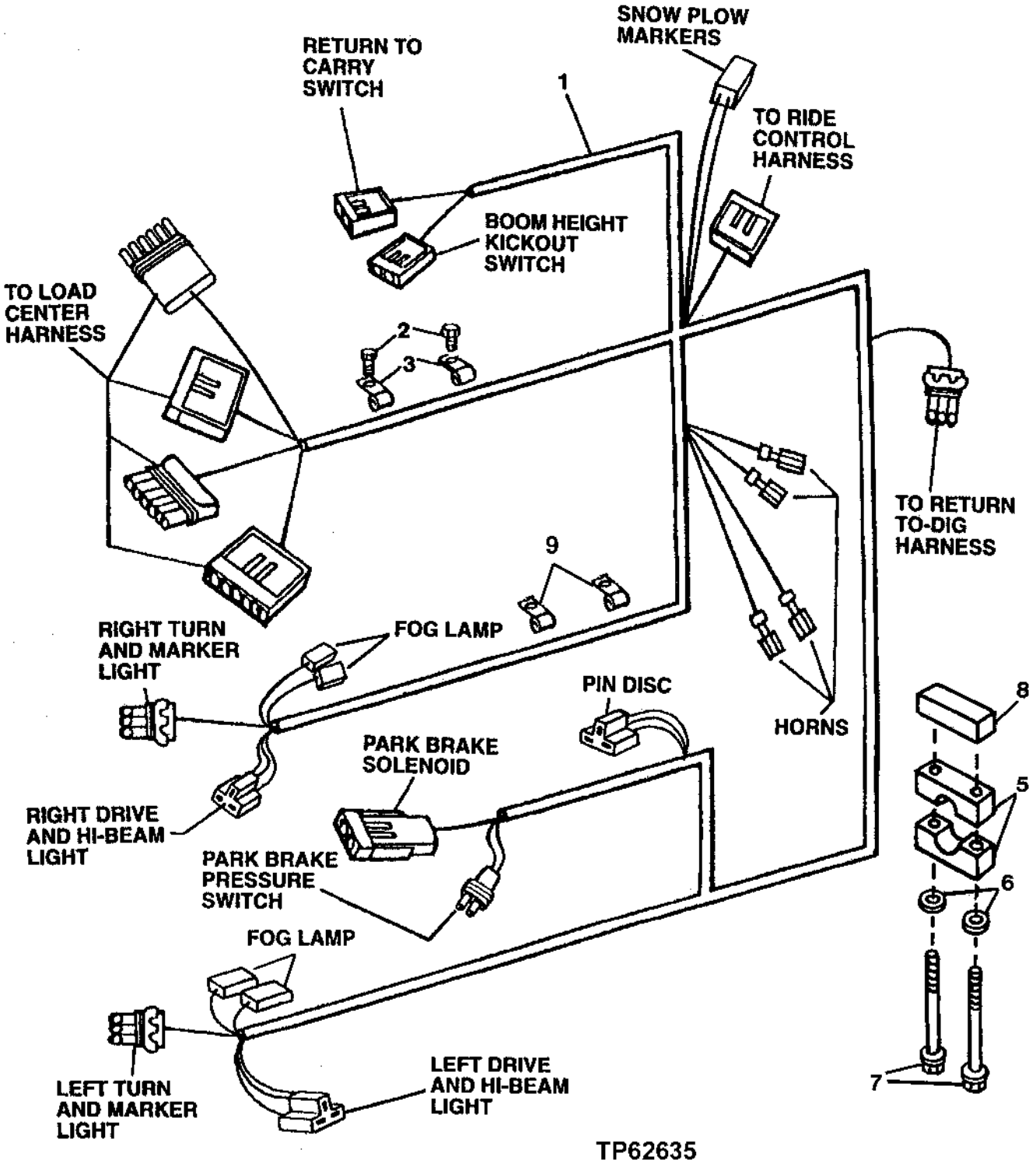

LOADER FRAME WIRING HARNESS

KEY	PART NO.	PART NAME	QTY	SERIAL NO.	REMARKS
1	.....	WIRING HARNESS	1	-572567	(AT208746 NO LONGER AVAILABLE) (SUB AT222030) (ALSO ORDER(2) T133290, (2) T72414, (2) N191985, (2)19M7784, (15) R44302, (4) T67995, (4) T29342 AND (2)19M7810)
	AT222030	WIRING HARNESS	1	572568-XXXXXX	
	AT224876	WIRING HARNESS	1	XXXXXX-	
2	19M7784	SCREW	2		M10 X 20
3	T120536	CLAMP	2		
4	T76252	CLAMP	4		
5	T67995	CLAMP	4	572568-	
6	T29342	WASHER	4	572568-	
7	19M7810	SCREW	4	572568-	M10 X 80
8	T133290	STRAP	2	572568-	
9	N191985	CLIP	2	572568-	

ENGINE WIRING HARNESS

TP60371 -UN-19MAY98

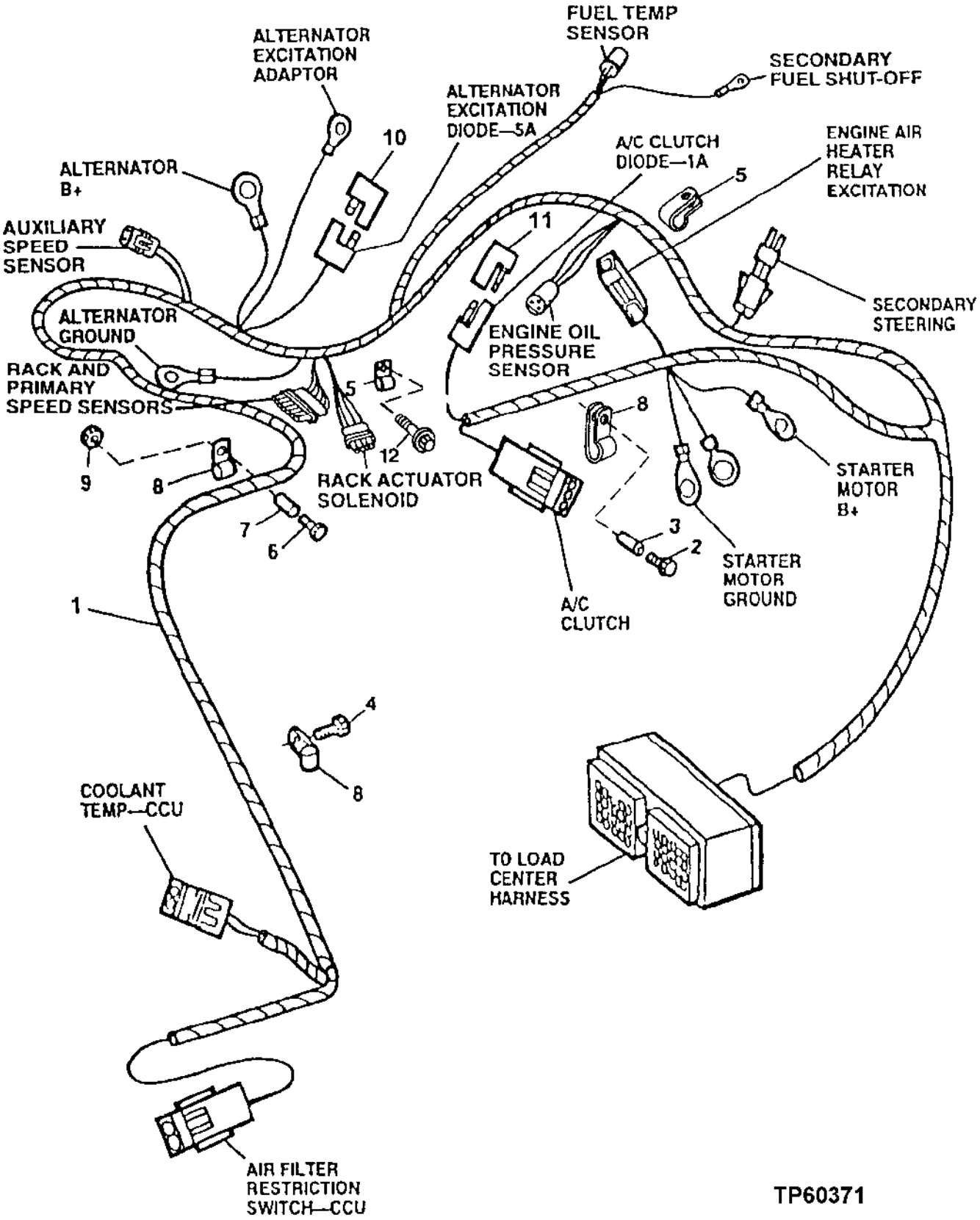

ENGINE WIRING HARNESS

KEY	PART NO.	PART NAME	QTY	SERIAL NO.	REMARKS
1	AT208756	ENGINE POWER WRG HARNESS	1	-579034	(INCLUDES AR94101 ONE AMP DIODE AND AT103399 FIVE AMP DIODE)
	AT223974	ENGINE POWER WRG HARNESS	1	579035-	(INCLUDES AR94101 ONE AMP DIODE AND AT103399 FIVE AMP DIODE)
2	19M7807	SCREW	1		M10 X 60
3	T101975	BUSHING	1		
4	19M7866	SCREW	1		M8 X 20
5	T74416	CLAMP	2		
6	19M7970	SCREW	1		
7	28H3399	SPACER	1		
8	T75276	CLAMP	3		
9	14M7296	FLANGE NUT	2		
10	AT103399	DIODE	1		(5 AMP)
11	AR94101	DIODE	1		(1 AMP) (A/C CLUTCH)
12	19H3695	CAP SCREW	1		5/16" X 5/8"

CAB WORK LIGHT WIRING HARNESS
(SERIAL NO. -578901)

TP62904 -UN-25SEP00

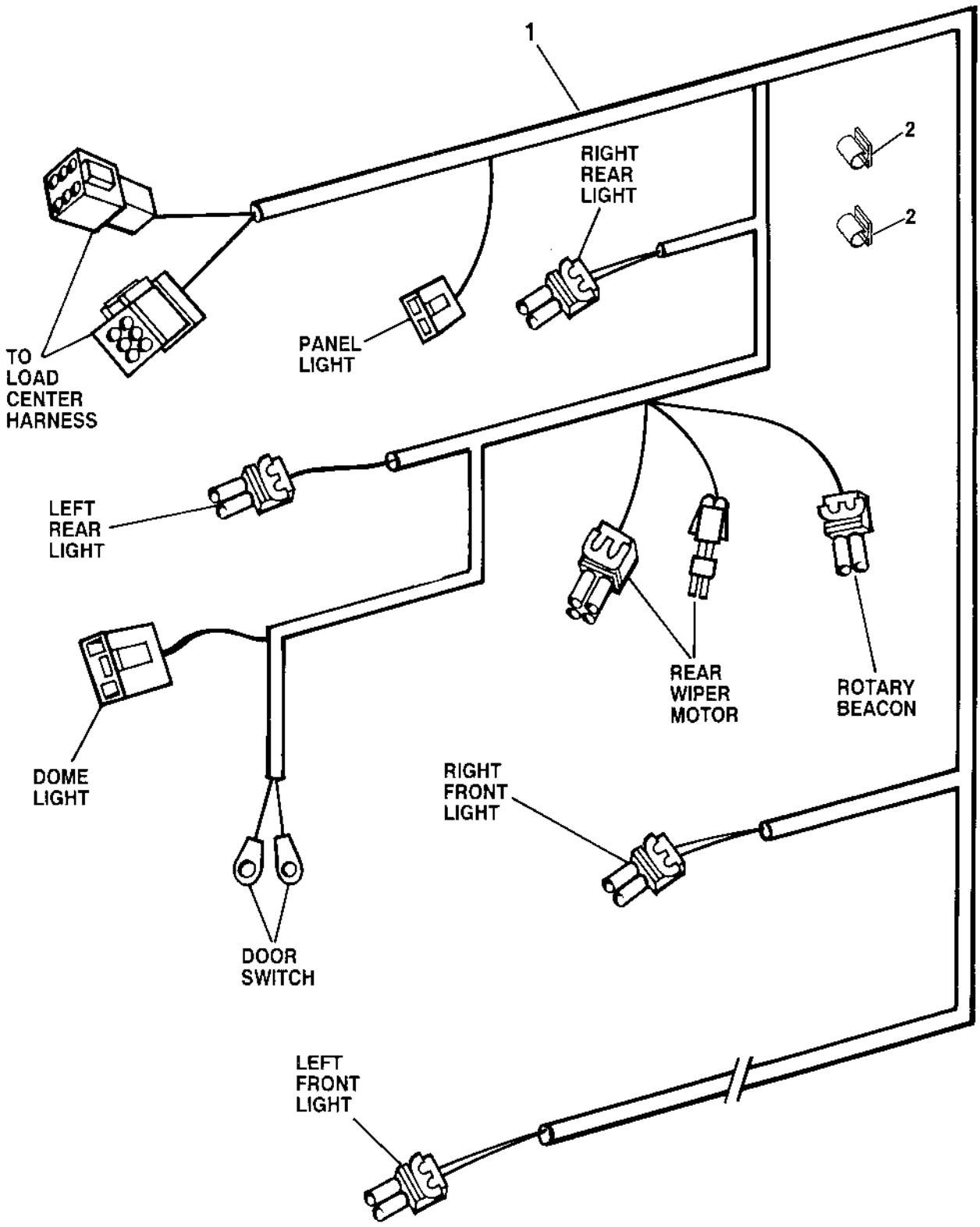

TP62904

CAB WORK LIGHT WIRING, HARNESS
(SERIAL NO. -578901)

KEY	PART NO.	PART NAME	QTY	SERIAL NO.	REMARKS
1	AT202822	WIRING HARNESS	1		
2	T182909	CLIP	2		

CAB WORK LIGHT WIRING HARNESS
(SERIAL NO. 578902-)

T143534 -UN-02JUL01

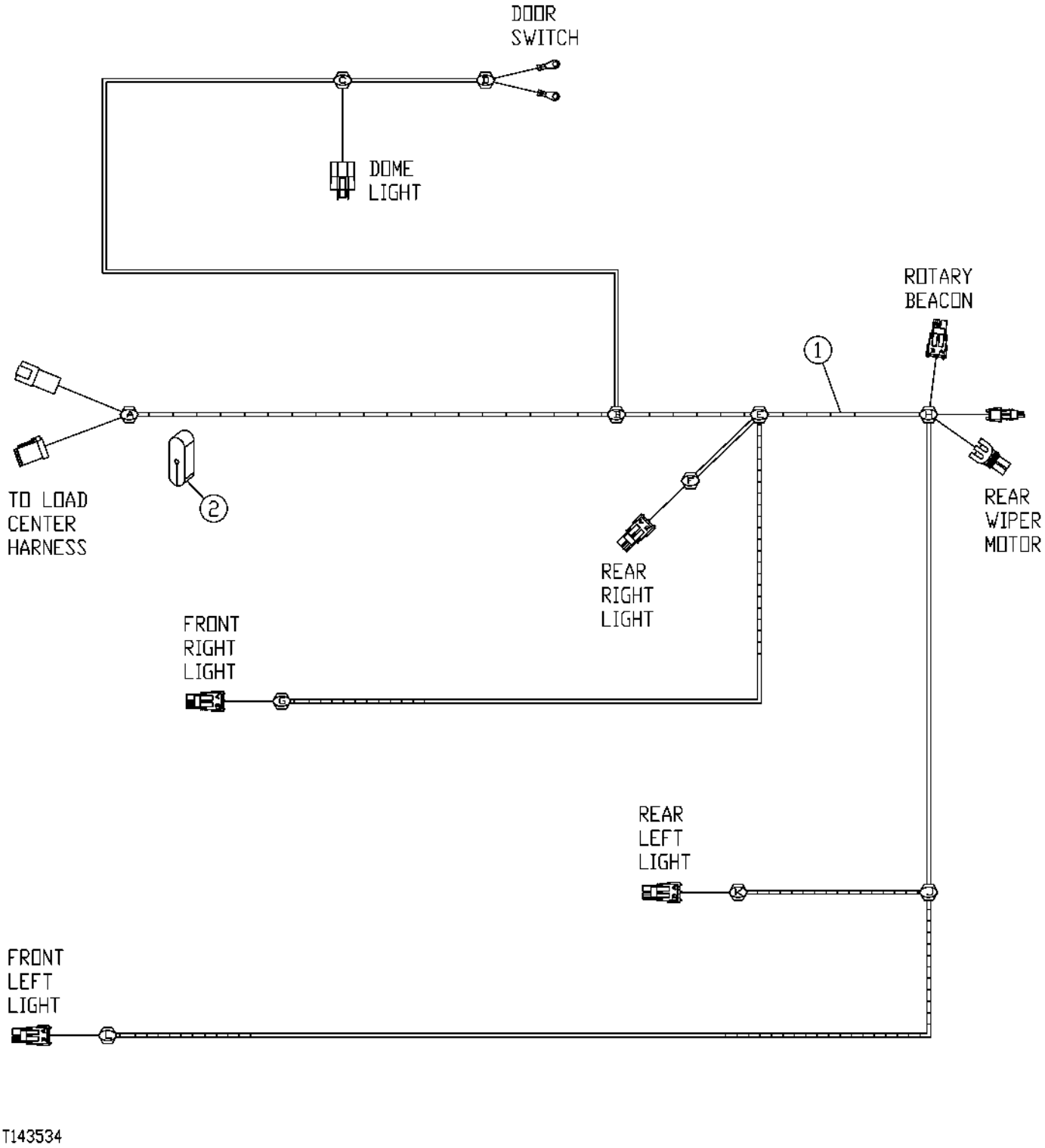

CAB WORK LIGHT WIRING, HARNESS
(SERIAL NO. 578902-)

KEY	PART NO.	PART NAME	QTY	SERIAL NO.	REMARKS
1	AT223869	WIRING HARNESS	1		
2	T182862	PLUG	1		

SECONDARY STEERING WIRING HARNESS

TP33937 -UN-01JAN94

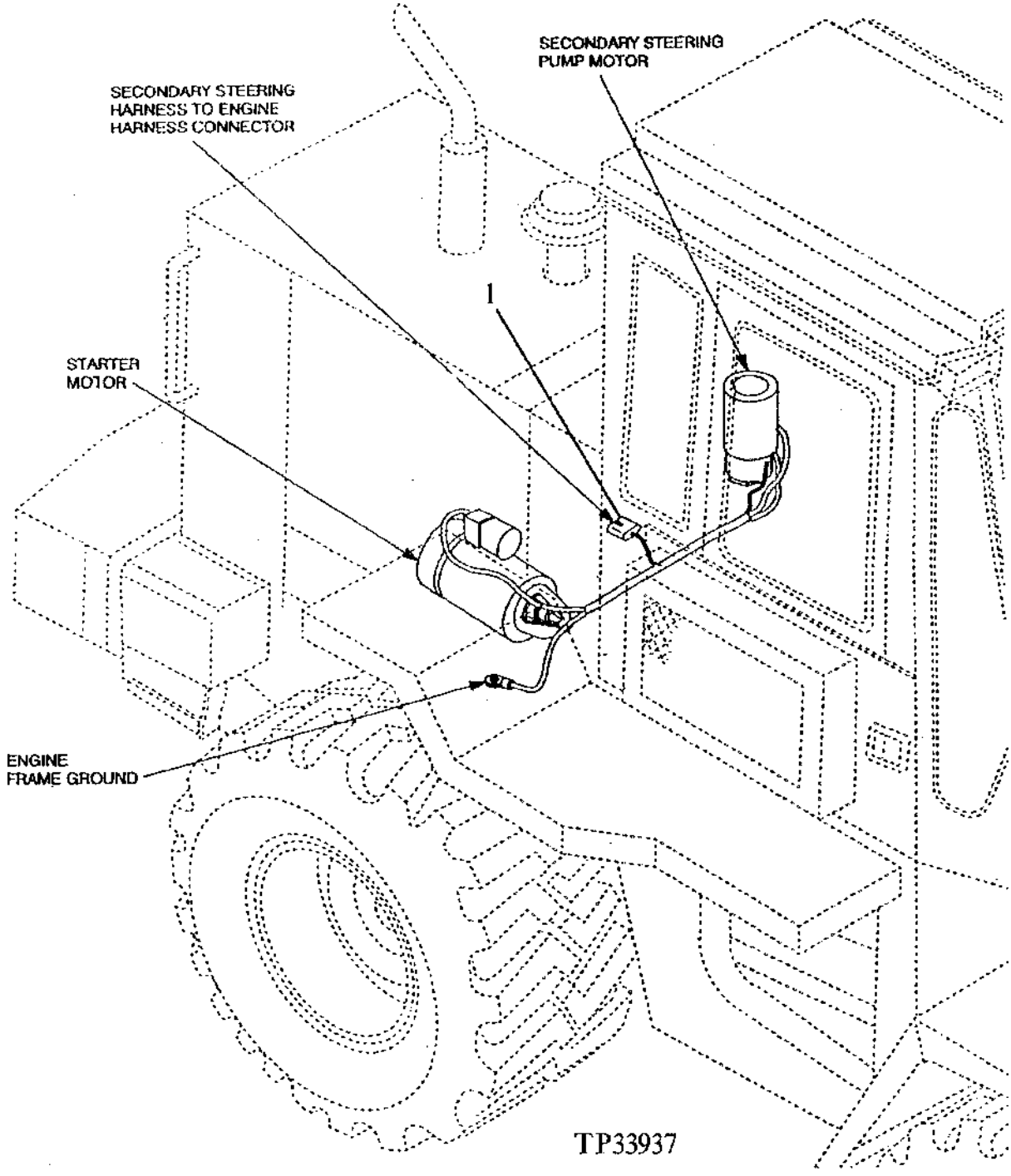

SECONDARY STEERING WIRING HARNESS

KEY	PART NO.	PART NAME	QTY	SERIAL NO.	REMARKS
1	AT210155	WIRING HARNESS	1		
	R44302	TIE BAND	2		

BLOWER AND AIR CONDITIONING WIRING HARNESS

TP48474 -UN-26SEP96

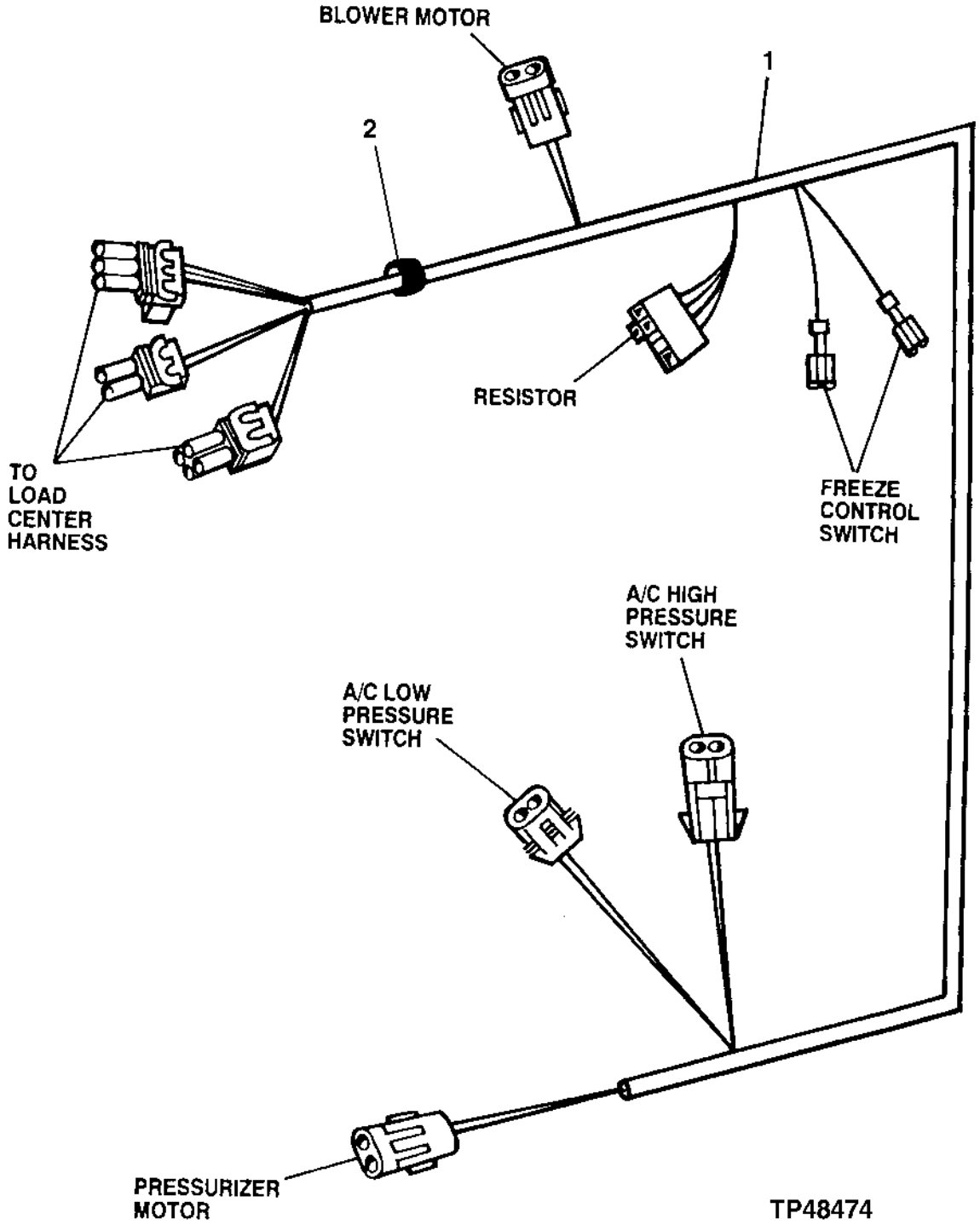

BLOWER AND AIR CONDITIONING WIRING HARNESS

KEY	PART NO.	PART NAME	QTY	SERIAL NO.	REMARKS
1	AT202934	WIRING HARNESS	1		
2	N119177	GROMMET	2		

REAR FRAME WIRING HARNESS
(SERIAL NO. -578419)

TP48574 -UN-02DEC96

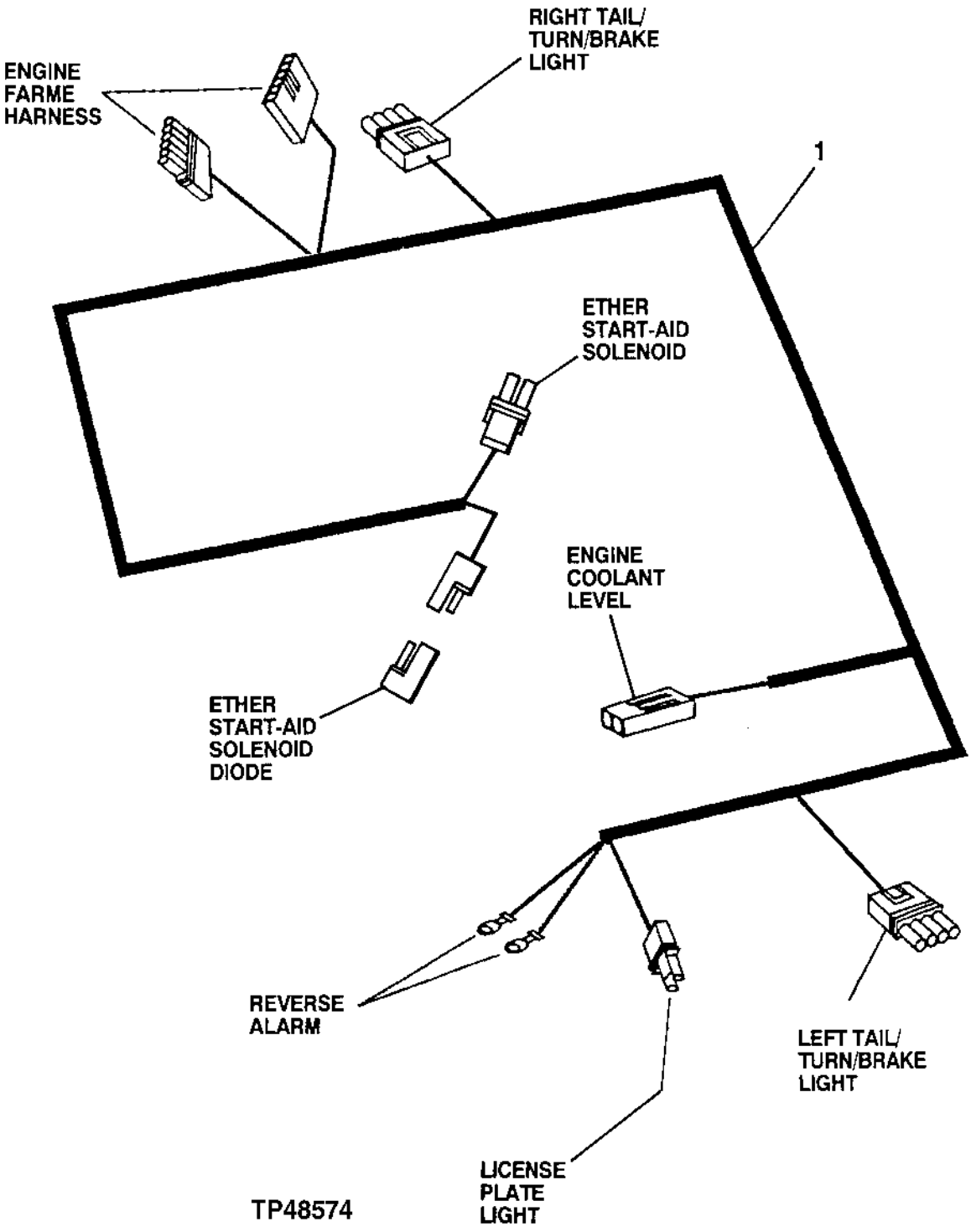

REAR FRAME WIRING HARNESS
(SERIAL NO. -578419)

KEY	PART NO.	PART NAME	QTY	SERIAL NO.	REMARKS
1	AT208750	WIRING HARNESS	1		

REAR FRAME WIRING HARNESS
(SERIAL NO. 578420-)

T137985 -UN-14FEB01

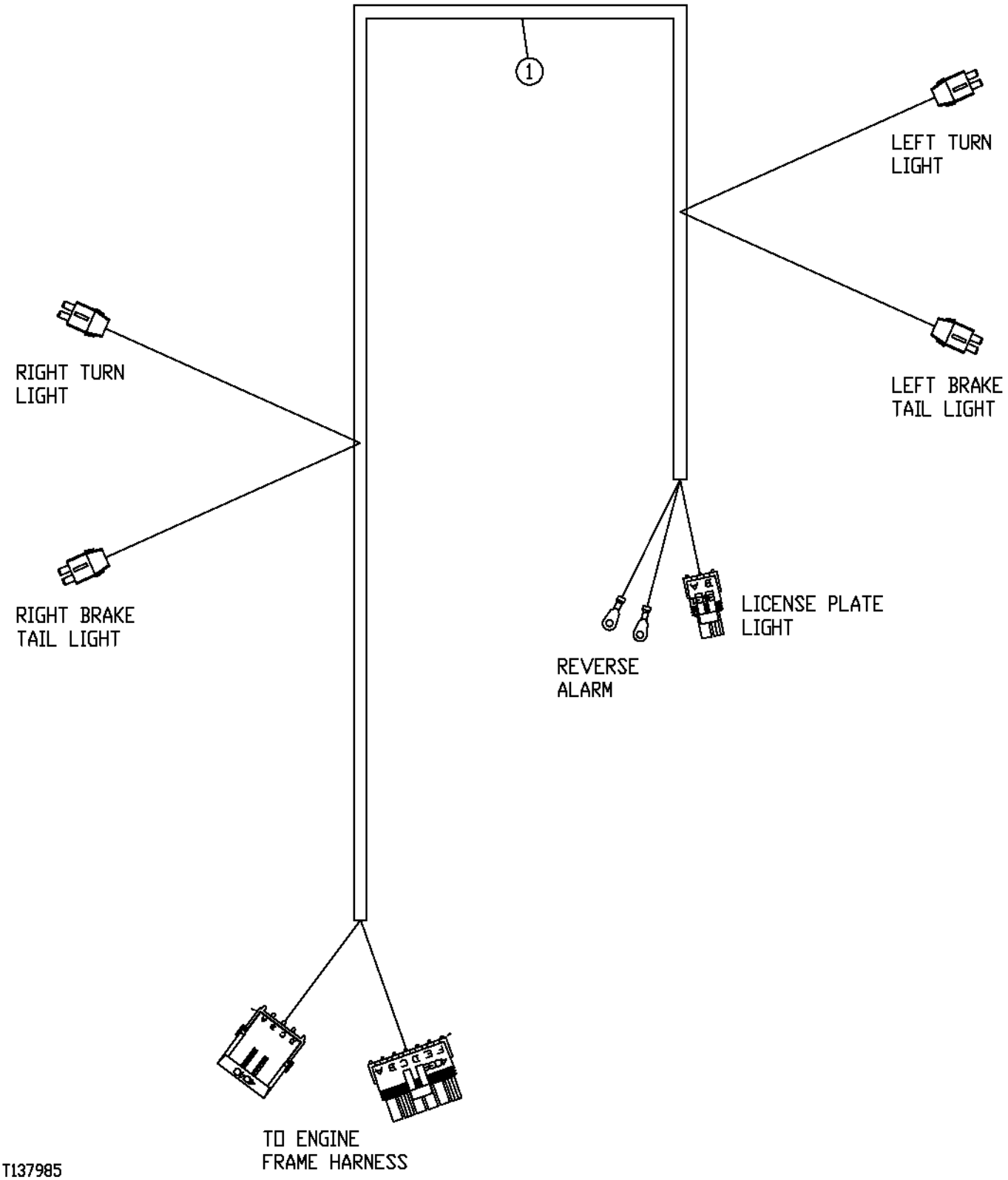

REAR FRAME WIRING HARNESS
(SERIAL NO. 578420-)

KEY	PART NO.	PART NAME	QTY	SERIAL NO.	REMARKS
1	AT223975	WIRING HARNESS	1		

ENGINE FRAME WIRING HARNESS
(SERIAL NO. -XXXXXX)

TP60276 -UN-03APR98

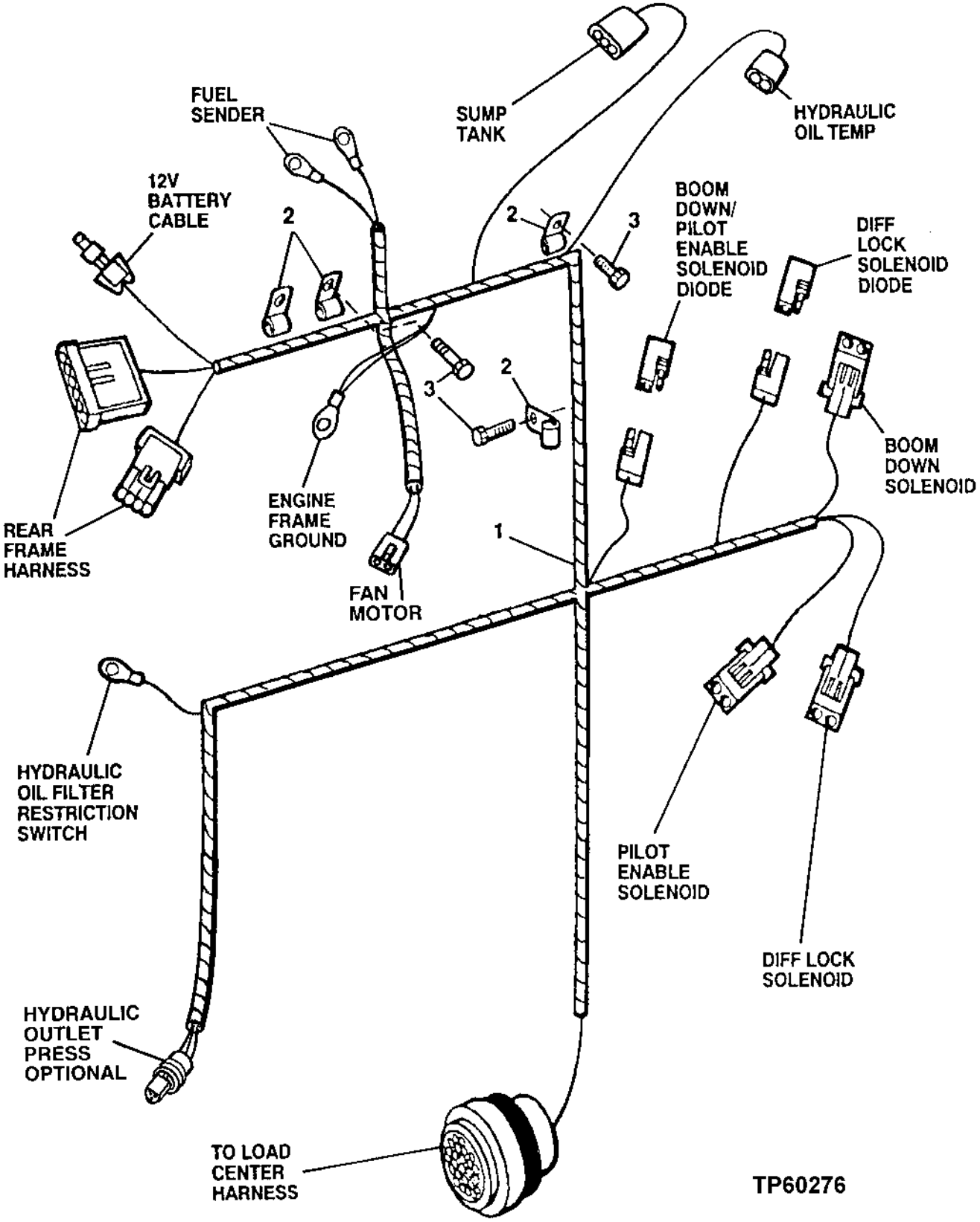

ENGINE FRAME WIRING HARNESS
(SERIAL NO. -XXXXXX)

KEY	PART NO.	PART NAME	QTY	SERIAL NO.	REMARKS
1	AT208749	WIRING HARNESS	1		(INCLUDES AR94101 ONE AMP DIODE)
2	T75197	CLAMP	4		
3	19M7784	SCREW	3		M10 X 20

ENGINE FRAME WIRING HARNESS
(SERIAL NO. XXXXX -)

TP62836 -UN-08AUG00

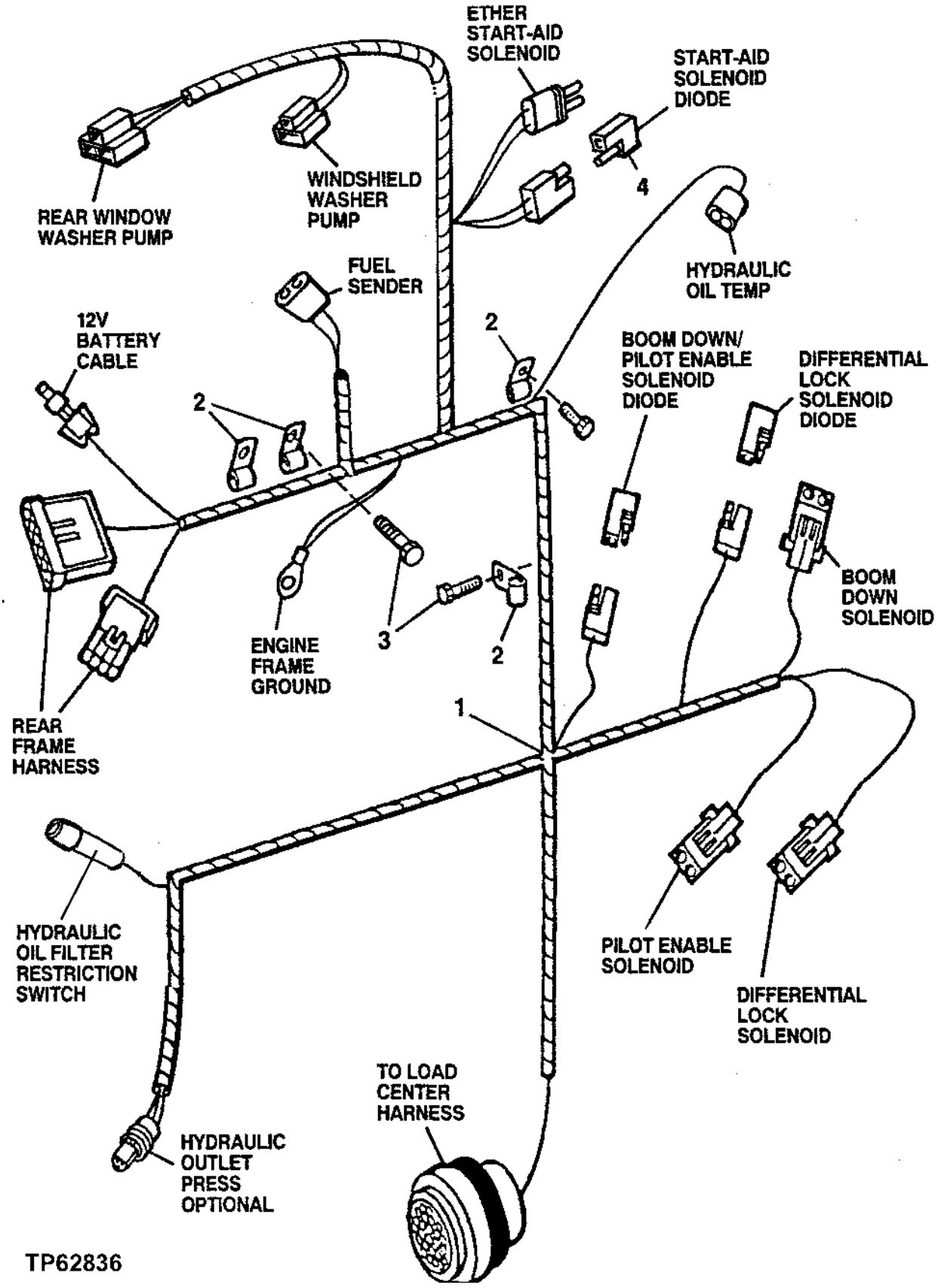

ENGINE FRAME WIRING HARNESS
(SERIAL NO. XXXXXX-)

KEY	PART NO.	PART NAME	QTY	SERIAL NO.	REMARKS
1	AT223759	WIRING HARNESS	1		(USE AT113759 JUMPER HARNESS WITH AT129419 FILTER RESTRICTION SWITCH) (SUB FOR AT221562)
2	T75197	CLAMP	4		
3	19M7784	SCREW	3		M10 X 20
4	AR94101	DIODE	3		

FUEL SENDER JUMPER HARNESS
(SERIAL NO. -XXXXXX)

TP60657 -UN-11MAR99

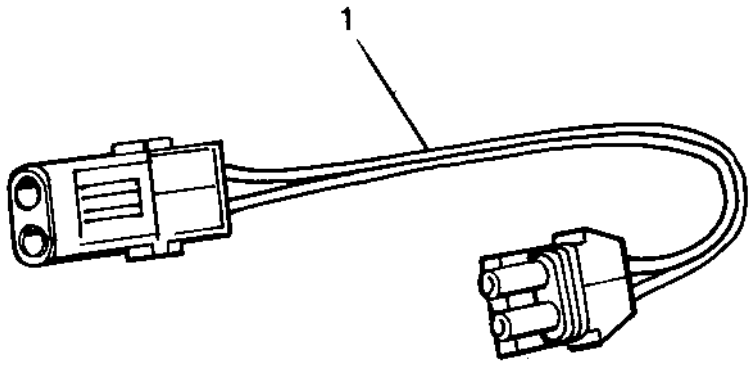

TP60657

KEY	PART NO.	PART NAME	QTY	SERIAL NO.	REMARKS
1	AT221699	WIRING HARNESS	1		

HYDRAULIC FILTER RESTRICTION SWITCH JUMPER HARNESS

TP62847 -UN-28JUL00

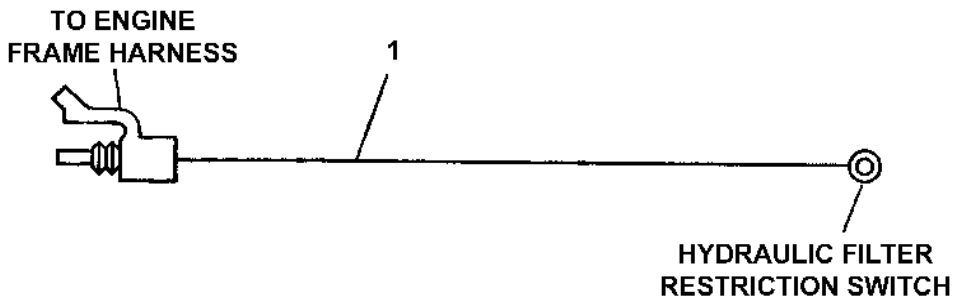

TP62847

KEY	PART NO.	PART NAME	QTY	SERIAL NO.	REMARKS
1	AT113759	WIRING HARNESS	1		(USE WITH AT129419 HYDRAULIC FILTER RESTRICTION SWITCH)

FRONT CONSOLE WIRING HARNESS

TP55864 -UN-17FEB98

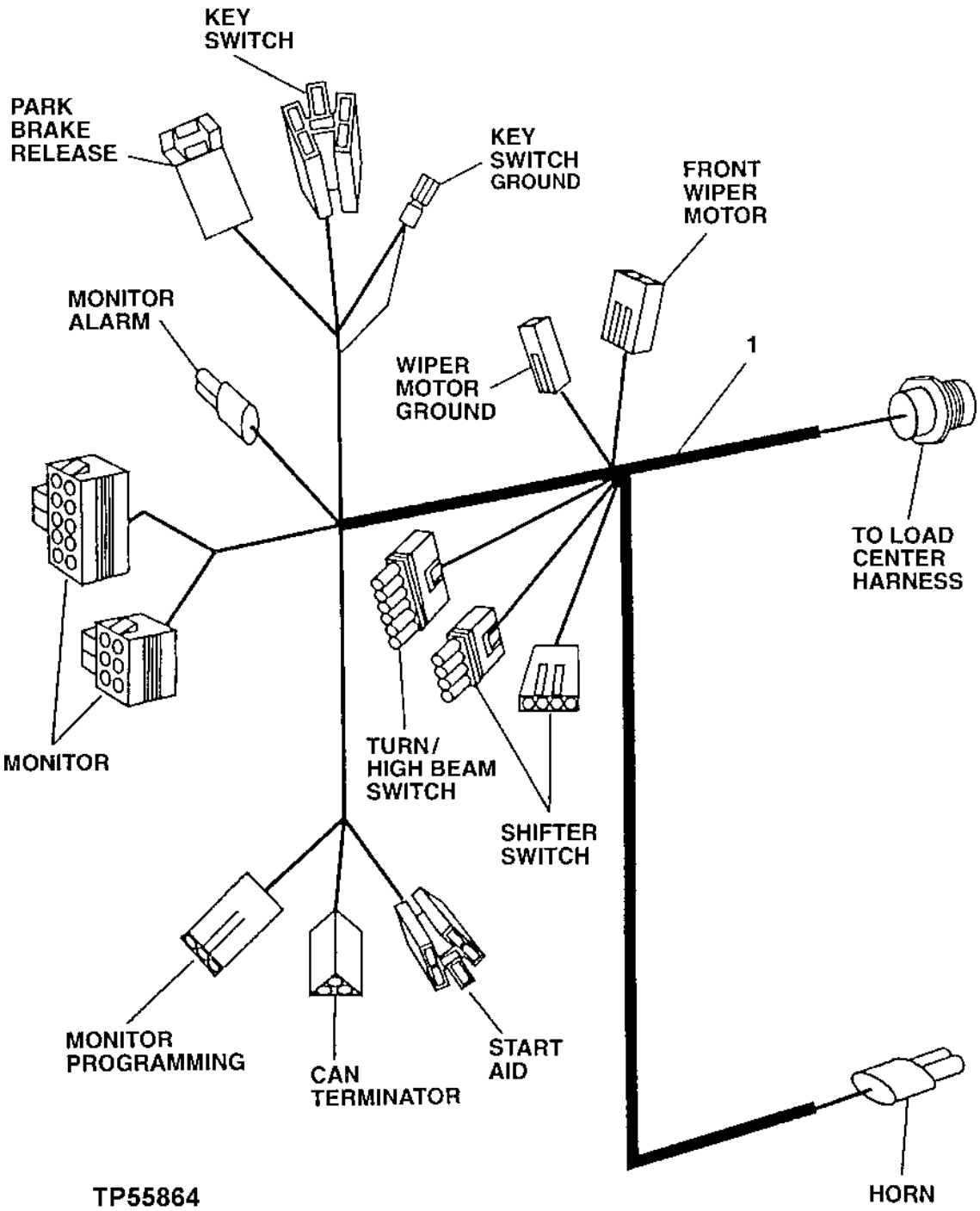

FRONT CONSOLE WIRING HARNESS

KEY	PART NO.	PART NAME	QTY	SERIAL NO.	REMARKS
1	AT203128	WIRING HARNESS	1		(ALSO INCLUDES AT202778 CAN TERMINATOR HARNESS)
2	T46876	GROMMET	1		

LOAD CENTER HARNESS TO POTENTIOMETER JUMPER

TP60209 -UN-02MAR98

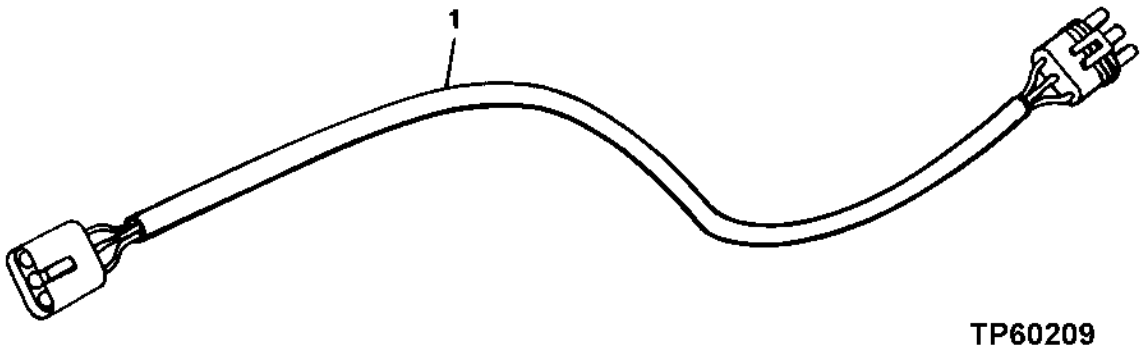

KEY	PART NO.	PART NAME	QTY	ENGINE SERIAL NO.	REMARKS
1	AT210876	WIRING HARNESS	1		ROTARY POTENTIOMETER JUMPER

FUSE BLOCK COVER
(CANOPY)

T140800 -UN-30MAR01

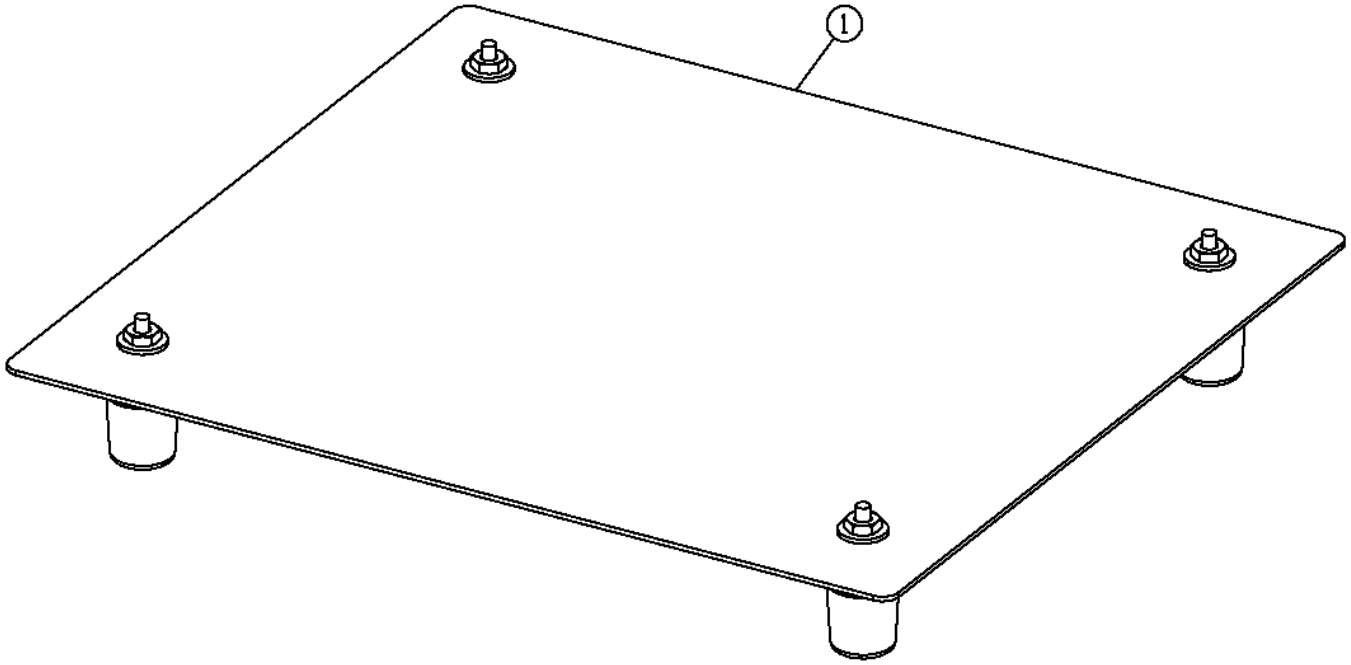

T140800

KEY	PART NO.	PART NAME	QTY	SERIAL NO.	REMARKS
1	AT224283	COVER	1		

FUSES, RELAYS AND CIRCUIT BREAKERS

TP48427 -UN-17AUG96

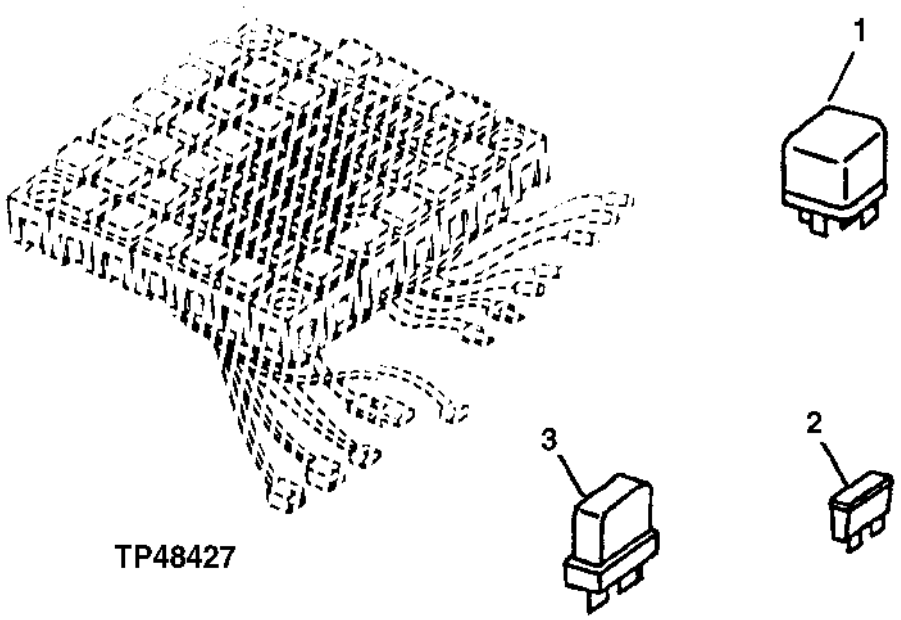

KEY	PART NO.	PART NAME	QTY	SERIAL NO.	REMARKS
1	AT162863	RELAY	24		
	AT206685	RELAY	2		TURN SIGNAL FLASHER
2	57M7125	FUSE	13		5 AMP
	99M7064	FUSE	11		7.5 AMP
	57M7121	FUSE	5		10 AMP
	99M7065	FUSE	3		15 AMP
	57M7120	FUSE	1		20 AMP
	99M7069	FUSE	1		25 AMP
3	T103463	CIRCUIT BREAKER	2		10 AMP CB

LPM TRANSDUCER
(MATERIAL HANDLER)

TP60432 -UN-30JUN98

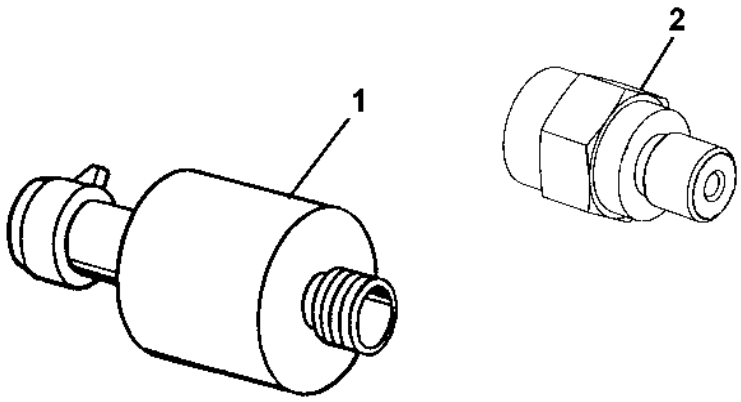

TP60432

KEY	PART NO.	PART NAME	QTY	SERIAL NO.	REMARKS
1	AT211362	TRANSDUCER	1		
2	T176338	ADAPTER	1		

WIRE LEAD KIT

RWP3870 -UN-01JAN94

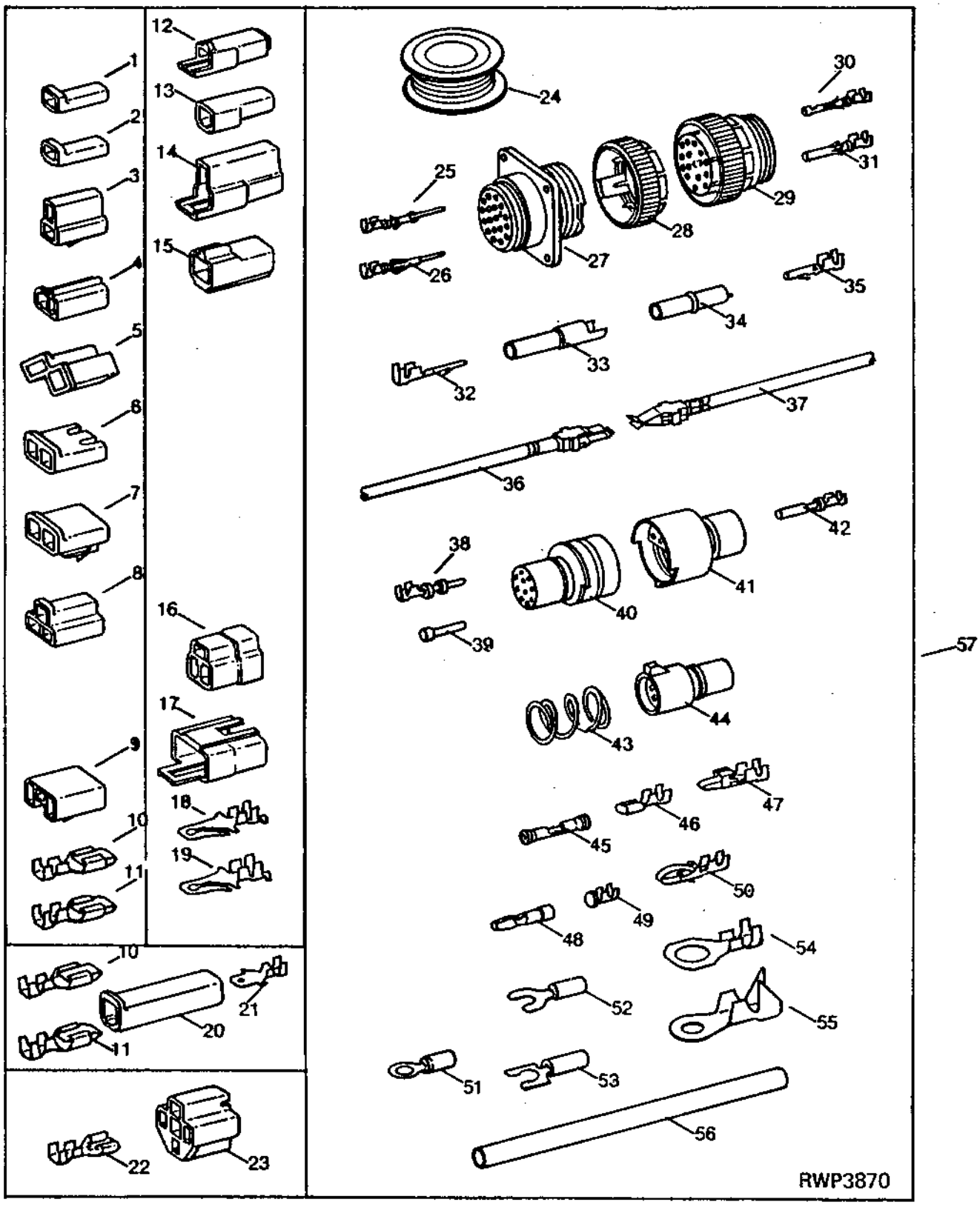

WIRE LEAD KIT

KEY	PART NO.	PART NAME	QTY	TRACTOR SERIAL NO.	REMARKS
1	T28583	RECEPTACLE CONNECTOR BODY	1		(B)
2	M43835	FLAT CONNECTOR	1		(B)
3	R77476	CONNECTOR	1		(A)
4	R77477	RECEPTACLE CONNECTOR BODY	1		(A)
5	R77479	CONNECTOR	1		(A)
6	R77480	RECEPTACLE CONNECTOR BODY	1		(A)
7	R77481	CONNECTOR	1		(A)
8	R77482	CONNECTOR	1		
9	H104855	RECEPTACLE CONNECTOR BODY	1		
10	U46662	TERMINAL	1		(E) (F)
11	N115096	TERMINAL	1		(G) (PKG. OF 15)
12	T28585	TAB CONNECTOR BODY	1		(B)
13	R77475	CONNECTOR	1		(B)
14	T28586	CONNECTOR	1		(A)
15	R77478	CONNECTOR	1		(A)
16	R77483	CONNECTOR	1		
17	R48887	TAB CONNECTOR BODY	1		
18	T34067	TERMINAL	1		(E) (F)
19	R77484	TERMINAL	1		(G) (PKG. OF 15)
20	U46370	CONNECTOR	1		(B)
21	R77485	TAB	1		(C) (F)
22	R77486	TERMINAL	1		(E) (F)
23	R77487	CONNECTOR	1		(B)
24	R66321	WIRING LEAD	1		15M (50 FT.) 10 GA.
	R66320	WIRING LEAD	1		30.5M (100 FT.) 12 GA.
	R77501	WIRE	1		30.5M (100 FT.) 14 GA.
	R77500	WIRE	1		30.5M (100 FT.) 16 GA.
	R77499	WIRE	1		30.5M (100 FT.) 18 GA.
	R77498	WIRE	1		30.5M (100 FT.) 20 GA.
25	R77462	PIN CONTACT	1		(PKG. OF 40) (20-22 OR 24 GA. WIRE)
26	R77464	PIN CONTACT	1		(H) (PKG. OF 50)
27	R77456	RECEPTACLE	1		(37 WAY)
28	R77458	CONNECTOR	1		(A) (SIZE 23)
	R77459	CONNECTOR	1		(A) (SIZE 17)
	R77460	CONNECTOR	1		(A) (SIZE 13)
	R77461	CONNECTOR	1		(A) (SIZE 11)
29	R77457	ELECTRICAL PLUG	1		(37 WAY)
30	R77463	SOCKET CONTACT	1		(PKG. OF 40) (20-22 OR 24 GA. WIRE)
31	R77465	SOCKET CONTACT	1		(H) (PKG. OF 50)
32	R77468	TERMINAL	1		(PKG. OF 5)
33	R77466	CONNECTOR	1		(A)
34	R77467	CONNECTOR	1		(A)

(A) PKG. OF 2
(B) PKG. OF 3
(C) PKG. OF 10
(D) PKG. OF 20
(E) PKG. OF 25
(F) 14 OR 16 GA. WIRE
(G) 10 OR 12 GA. WIRE
(H) 14-16 OR 18 GA. WIRE

WIRE LEAD KIT

RWP3870 -UN-01JAN94

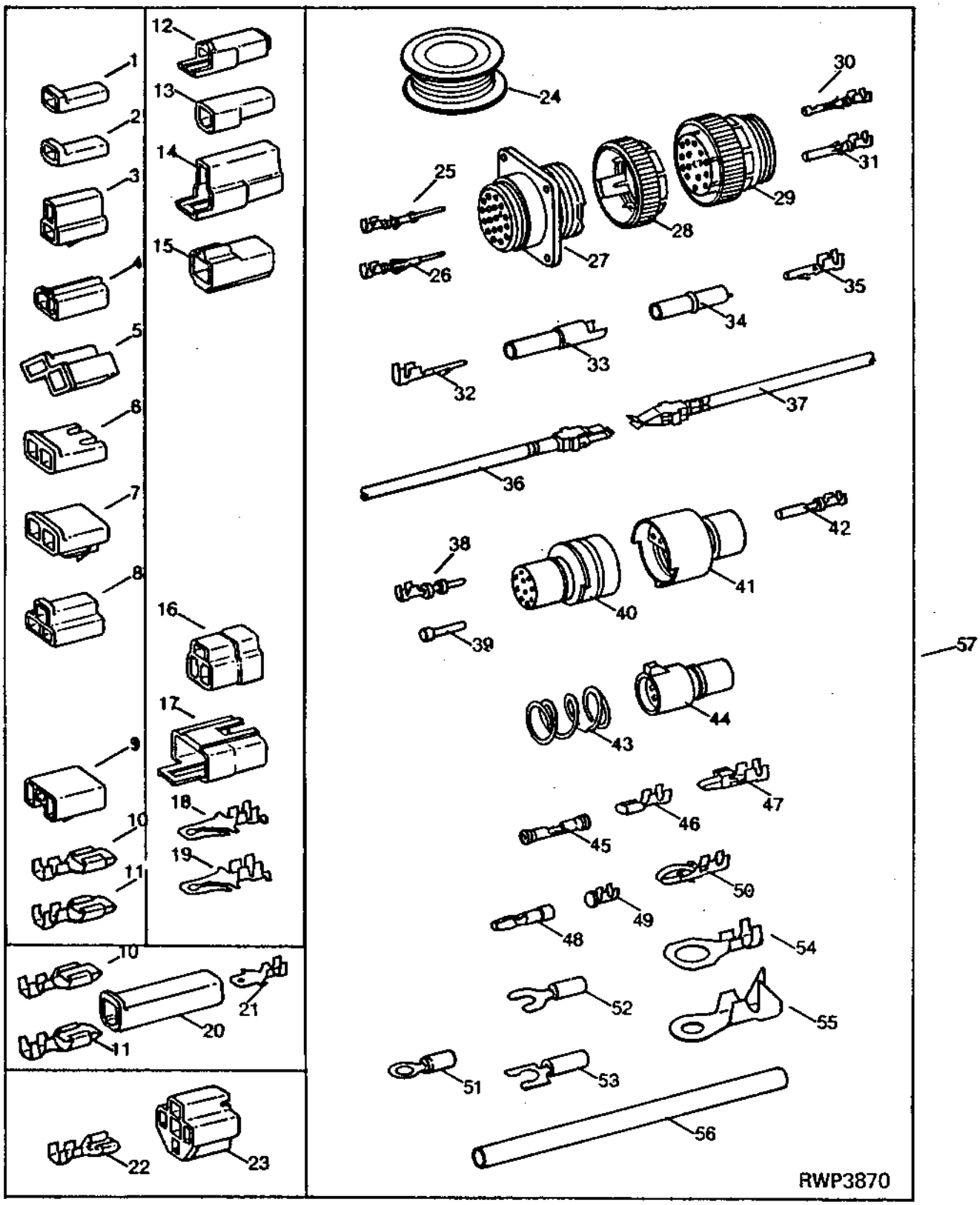

WIRE LEAD KIT

KEY	PART NO.	PART NAME	QTY	TRACTOR SERIAL NO.	REMARKS
35	R77469	TERMINAL	1		(PKG. OF 5)
36	RE11156	TERMINAL	1		(B) (MALE)
37	RE11157	TERMINAL	1		(B) (FEMALE)
38	R70222	PIN CONTACT	1		(D) (H)
39	R70221	ELECTRICAL PLUG	1		(E)
40	R70219	PLUG	1		(A) (10 WAY)
	R70217	PLUG	1		(A) (7 WAY)
	R70215	PLUG	1		(A) (4 WAY)
	R70213	PIN CONTACT CONNECTOR BODY	1		(A) (3 WAY)
	R70211	CONNECTOR	1		(A) (2 WAY)
41	R70218	RECEPTACLE	1		(A) (10 WAY)
	R70216	RECEPTACLE	1		(A) (7 WAY)
	R70214	RECEPTACLE	1		(A) (4 WAY)
	R70212	RECEPTACLE	1		(A) (3 WAY)
	R70210	RECEPTACLE	1		(A) (2 WAY)
42	AR91793	SOCKET CONTACT	1		(D)
43	R30378	SPRING	1		(C)
44	R77474	CONNECTOR	1		(A) (6 WAY)
45	R77470	TERMINAL	1		SPLICE (PKG. OF 15) (16-18-20 OR 22 GA. WIRE)
	R77471	TERMINAL	1		(C) (G) SPLICE
	R77472	TERMINAL	1		(A) SPLICE (8 GA. WIRE)
	R77473	TERMINAL	1		(A) SPLICE (6 GA. WIRE)
46	R65607	TERMINAL	1		(C) (18 OR 20 GA. WIRE)
47	U46664	TERMINAL	1		(C) (F)
48	R32026	TERMINAL	1		(D) (F)
49	R65602	SOCKET CONTACT	1		(C) (16 OR 18 GA. WIRE)
50	R70220	TERMINAL	1		(C) (18 OR 20 GA. WIRE)
51	R77489	TERMINAL	1		(D) (14-16-18 OR 20 GA. WIRE) (NO. 10 EYELET)
	R77493	TERMINAL	1		(D) (G) (NO. 10 EYELET)
	R77488	TERMINAL	1		(D) (14-16-18 OR 20 GA. WIRE) (3/8" EYELET)
	R77490	TERMINAL	1		(D) (G) (1/2" EYELET)
52	R77496	TERMINAL	1		(D) (F) (NO. 8 SPADE)
	R77495	TERMINAL	1		(D) (18 GA. WIRE) (NO. 10 SPADE)
53	R77497	TERMINAL	1		(D) (F) (NO. 6 SPADE)
54	R77491	TERMINAL	1		(D) (G) (3/8" EYELET)
	R77492	TERMINAL	1		(D) (G) (1/4" EYELET)
55	R77494	TERMINAL	1		(D) (6 OR 8 GA. WIRE) (1/4" EYELET)
56	R77502	TUBE	1		(PKG. OF 8) 3/8" (HEAT SHRINK)
	R77503	TUBE	1		(PKG. OF 8) 3/16" (HEAT SHRINK)
57	PM797NA	KIT	1		(SUB FOR RE11154)

(A) PKG. OF 2
(B) PKG. OF 3
(C) PKG. OF 10
(D) PKG. OF 20
(E) PKG. OF 25
(F) 14 OR 16 GA. WIRE
(G) 10 OR 12 GA. WIRE
(H) 14-16 OR 18 GA. WIRE

WEATHERPACK TERMINALS AND CONNECTORS

TP17921 -UN-01JAN94

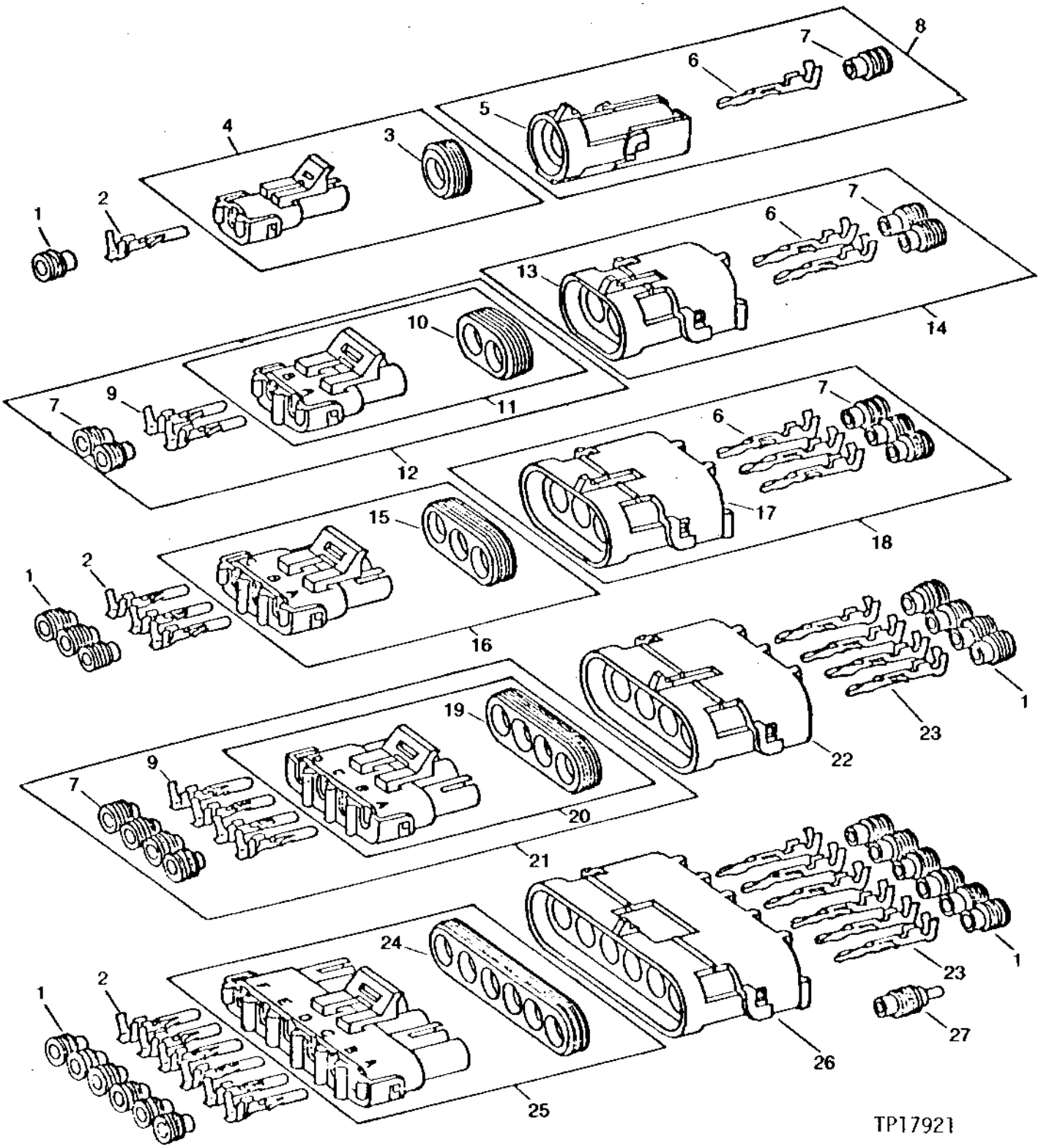

WEATHERPACK TERMINALS AND CONNECTORS

KEY	PART NO.	PART NAME	QTY	SERIAL NO.	REMARKS
1	R78063	TERMINAL NIPPLE	1		(PKG. OF 40) (16 GA. WIRE) (GRAY)
	R78059	ELECTRICAL PLUG	1		(PKG. OF 40) (18 OR 20 GA. WIRE) (GREEN)
	R78062	TERMINAL NIPPLE	1		(PKG. OF 40) (14 GA. WIRE) (BLUE)
2	R78057	SOCKET CONTACT	1		(PKG. OF 40) (18 OR 20 GA. WIRE) (NO. 19)
	R78060	SOCKET CONTACT	1		(PKG. OF 40) (14 OR 16 GA. WIRE) (NO. 15)
3	R78047	SEAL	1		(PKG. OF 5)
4	RE12362	CONNECTOR	1		(PKG. OF 3)
5	R78052	PIN CONTACT CONNECTOR BODY	1		(PKG. OF 3)
6	R78061	PIN CONTACT	1		(PKG. OF 40) (14 OR 16 GA. WIRE) (NO. 15)
7	R78063	TERMINAL NIPPLE	1		(PKG. OF 40) (16 GA. WIRE) (GRAY)
8	RE12334	CONNECTOR	1		
9	R78060	SOCKET CONTACT	1		(PKG. OF 40) (14 OR 16 GA. WIRE) (NO. 15)
10	R78048	TERMINAL NIPPLE	1		(PKG. OF 5)
11	RE12363	CONNECTOR	1		(PKG. OF 3)
12	RE12331	CONNECTOR	1		
13	R78053	PIN CONTACT CONNECTOR BODY	1		(PKG. OF 3)
14	RE12330	CONNECTOR	1		
15	R78049	SEAL	1		(PKG. OF 5)
16	RE12364	SOCKET CONT.CONNECTOR BODY	1		(PKG. OF 3)
17	R78054	PIN CONTACT CONNECTOR BODY	1		(PKG. OF 3)
18	RE12332	CONNECTOR	1		
19	R78050	SEAL	1		(PKG. OF 5)
20	RE12365	CONNECTOR	1		(PKG. OF 2)
21	RE12333	CONNECTOR	1		
22	R78055	PIN CONTACT CONNECTOR BODY	1		(PKG. OF 2)
23	R78061	PIN CONTACT	1		(PKG. OF 40) (14 OR 16 GA. WIRE) (NO. 15)
	R78058	PIN CONTACT	1		(PKG. OF 40) (18 OR 20 GA. WIRE) (NO. 19)
24	R78051	SEAL	1		(PKG. OF 5)
25	RE12366	CONNECTOR	1		(PKG. OF 2)
26	R78056	PIN CONTACT CONNECTOR BODY	1		(PKG. OF 2)
27	R78064	ELECTRICAL PLUG	1		(PKG. OF 40)

SUPPLEMENTARY TERMINALS, CONNECTORS AND REPAIR CONDUIT

TP24539 -UN-01JAN94

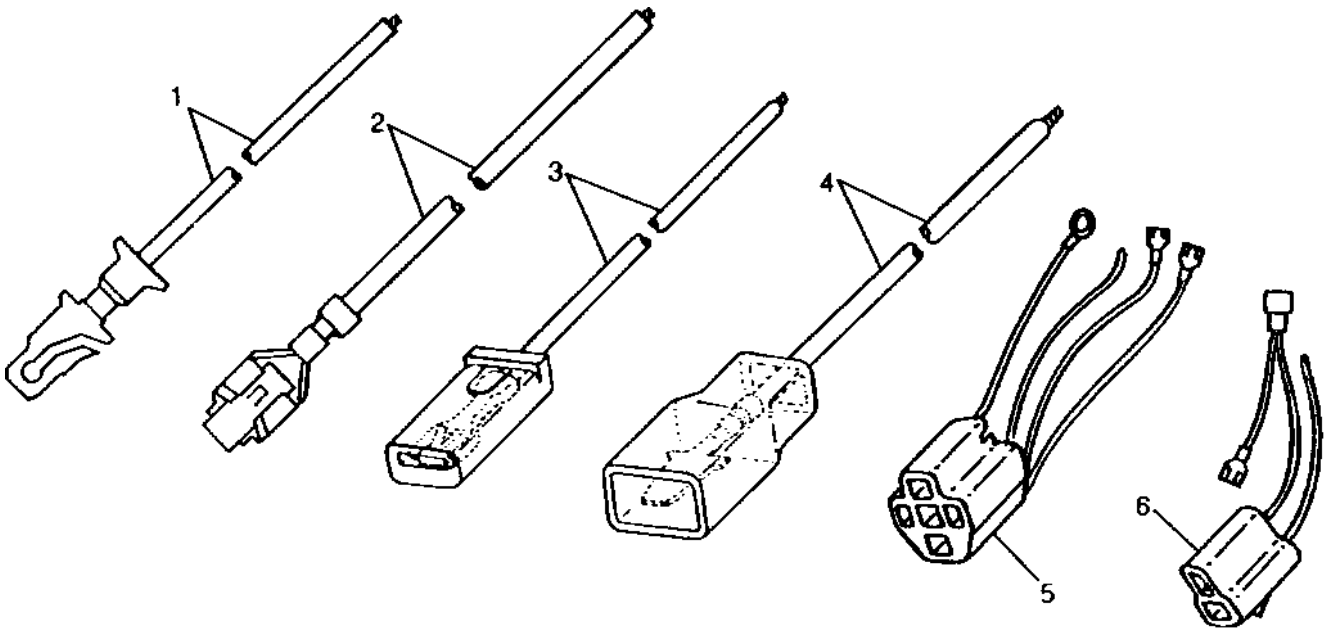

TP24539

KEY	PART NO.	PART NAME	QTY	SERIAL NO.	REMARKS
1	AR65005	TERMINAL	1		
2	AR65006	TERMINAL	1		
3	R32024	WIRING LEAD	1		
4	R32025	WIRING LEAD	1		
5	RE21730	TERMINAL	1		(ILLUSTRATED)
	RE21731	TERMINAL	1		
6	RE21732	TERMINAL	1		
	R93219	CONDUIT	1		0.3 X 3048 MM (1/4" X 120")
	R93220	CONDUIT	1		10.4 X 2048 MM (13/32" X 120")
	R93221	CONDUIT	1		15.9 X 3048 MM (5/8" X 120")
	R93222	CONDUIT	1		25.4 X 3048 MM (1" X 120")

DEUTSCH TERMINALS

TP24540 -UN-01JAN94

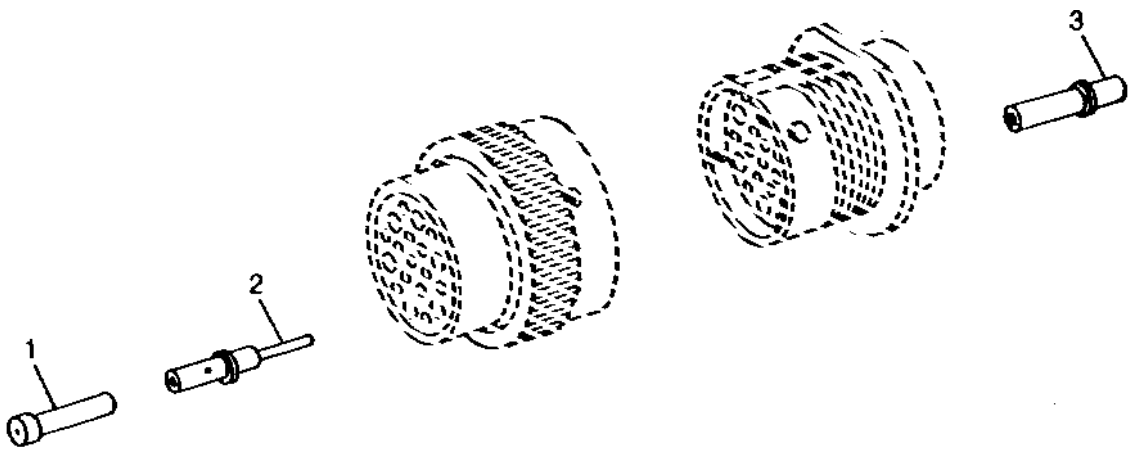

TP24540

KEY	PART NO.	PART NAME	QTY	SERIAL NO.	REMARKS
1	R78069	ELECTRICAL PLUG	1		(PKG OF 40)
2	R78066	PIN CONTACT	1		(PKG OF 40) (16 OR 18 GA WIRE)
3	R78065	SOCKET CONTACT	1		(PKG OF 40) (16 OR 18 GA WIRE)

LOAD CENTER COMPARTMENT

T142028 -UN-10MAY01

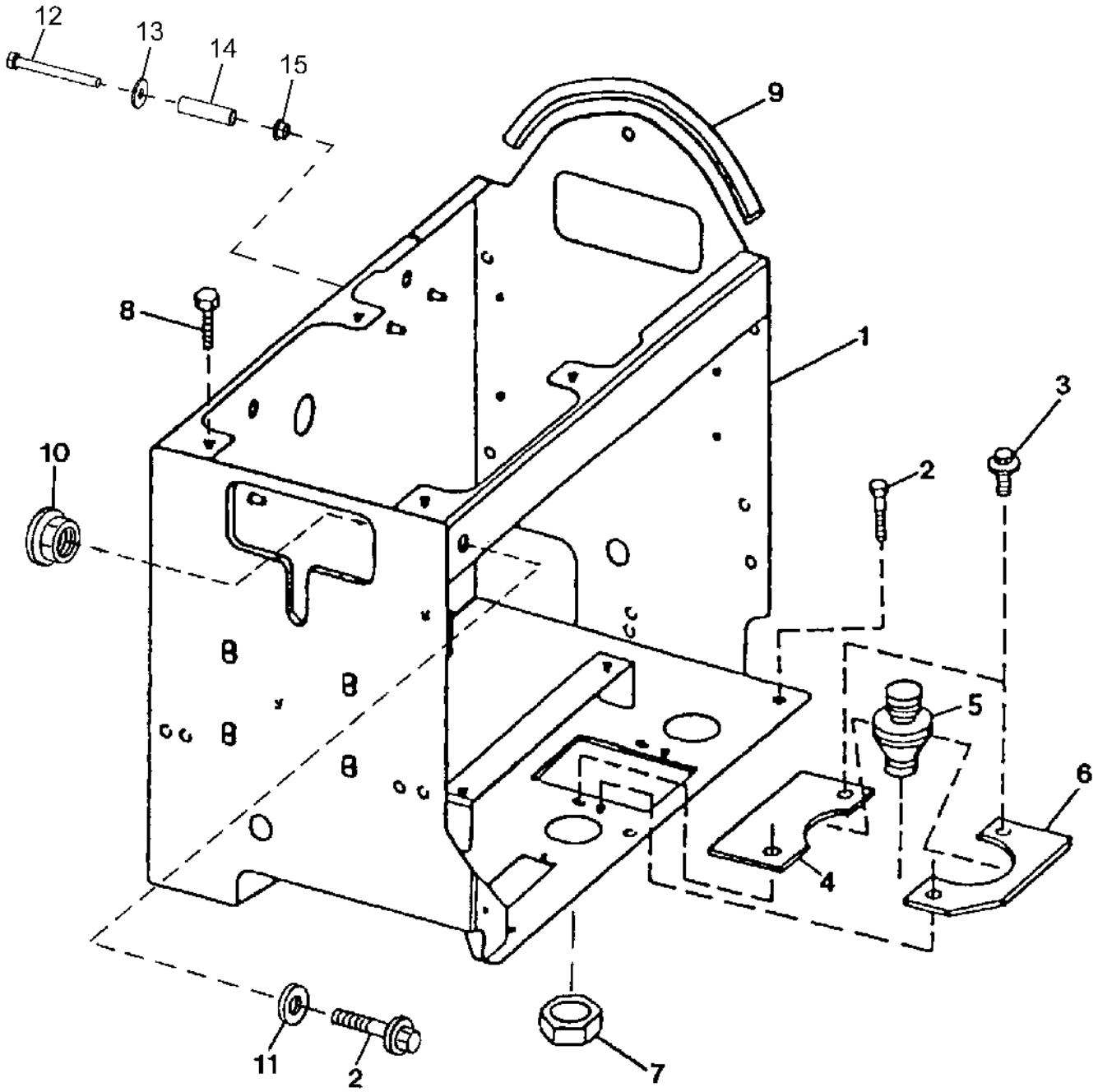

T142028

LOAD CENTER COMPARTMENT

KEY	PART NO.	PART NAME	QTY	SERIAL NO.	REMARKS
1	AT210024	CONTROL	1	-581888	
	AT224232	HOUSING	1	581889-	GRAY
2	19M7866	SCREW	3		M8 X 20
3	19M7774	SCREW	4		M6 X 12
4	T173632	PLATE	1	-581888	
	T181605	PLATE	1	581889-	GRAY
5	T143596	GROMMET	1		
6	T173631	PLATE	1	-581888	
	T181604	PLATE	1	581889-	GRAY
7	E73240	NUT	3		
8	21M7265	SCREW	4		M5 X 12
9	.....	ISOLATOR	AR		(MAKE FROM T61798 BULK MATERIAL, CUT TO LENGTH)
10	14M7298	FLANGE NUT	1		M8
11	24M7238	WASHER	1		8.700 X 17 X 2 MM
12	19M8504	CAP SCREW	1		M8 X 80
13	24M7298	WASHER	1		8.400 X 25 X 2 MM
14	T167775	PIPE	1		
15	14M7298	FLANGE NUT	1		M8

**LOAD CENTER WIRING HARNESS
(BELOW CAB)**

TP48470 -UN-05OCT96

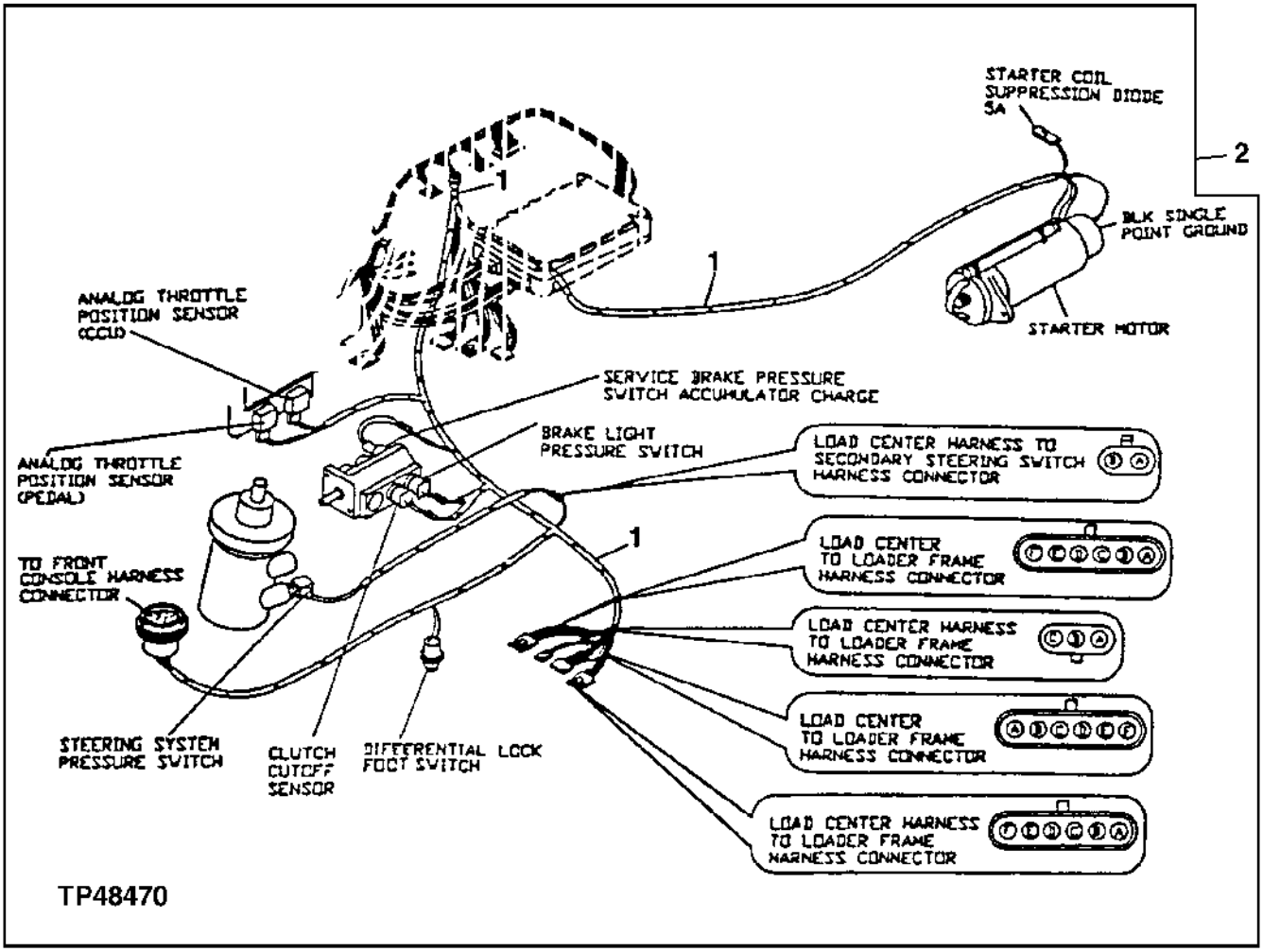

LOAD CENTER WIRING HARNESS (BELOW CAB)

KEY	PART NO.	PART NAME	QTY	SERIAL NO.	REMARKS
1	AT208759	WIRING HARNESS	1	-XXXXXX	(INCLUDES AR94101 ONE AMP DIODE AND AT103399 FIVE AMP DIODE)
	AT223512	WIRING HARNESS	1	XXXXXX-	
	T173648	GROMMET	1	XXXXXX-	(NOT ILLUSTRATED)
2	.....	CAB WIRING HARNESS	1		(INCLUDES TRANSMISSION CONTROLLER, START RELAY AND LOAD CENTER COMPARTMENT) (SUB FOR AT208758)

TRANSMISSION SPEED SENDOR HARNESS

TP62649 -UN-22SEP99

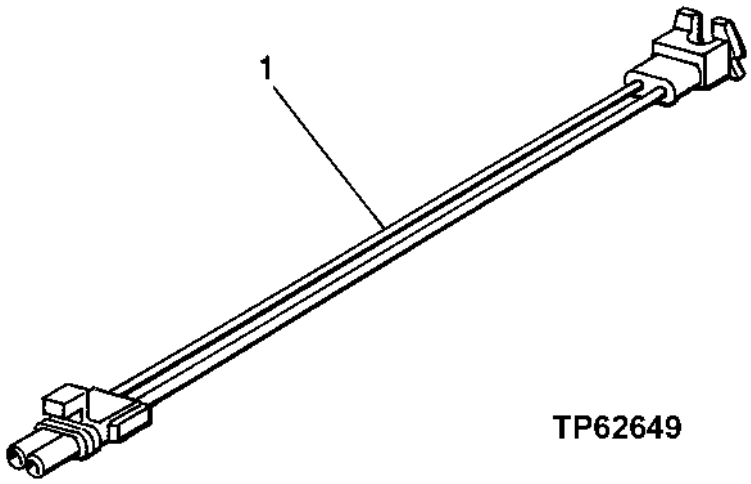

TRANSMISSION SPEED SENSOR HARNESS

KEY	PART NO.	PART NAME	QTY	SERIAL NO.	REMARKS
1	AT222296	WIRING HARNESS	1		(USE WITH AT210177 TRANSMISSION HARNESS)

PROGRAMMING KIT

TP62692 -UN-12NOV99

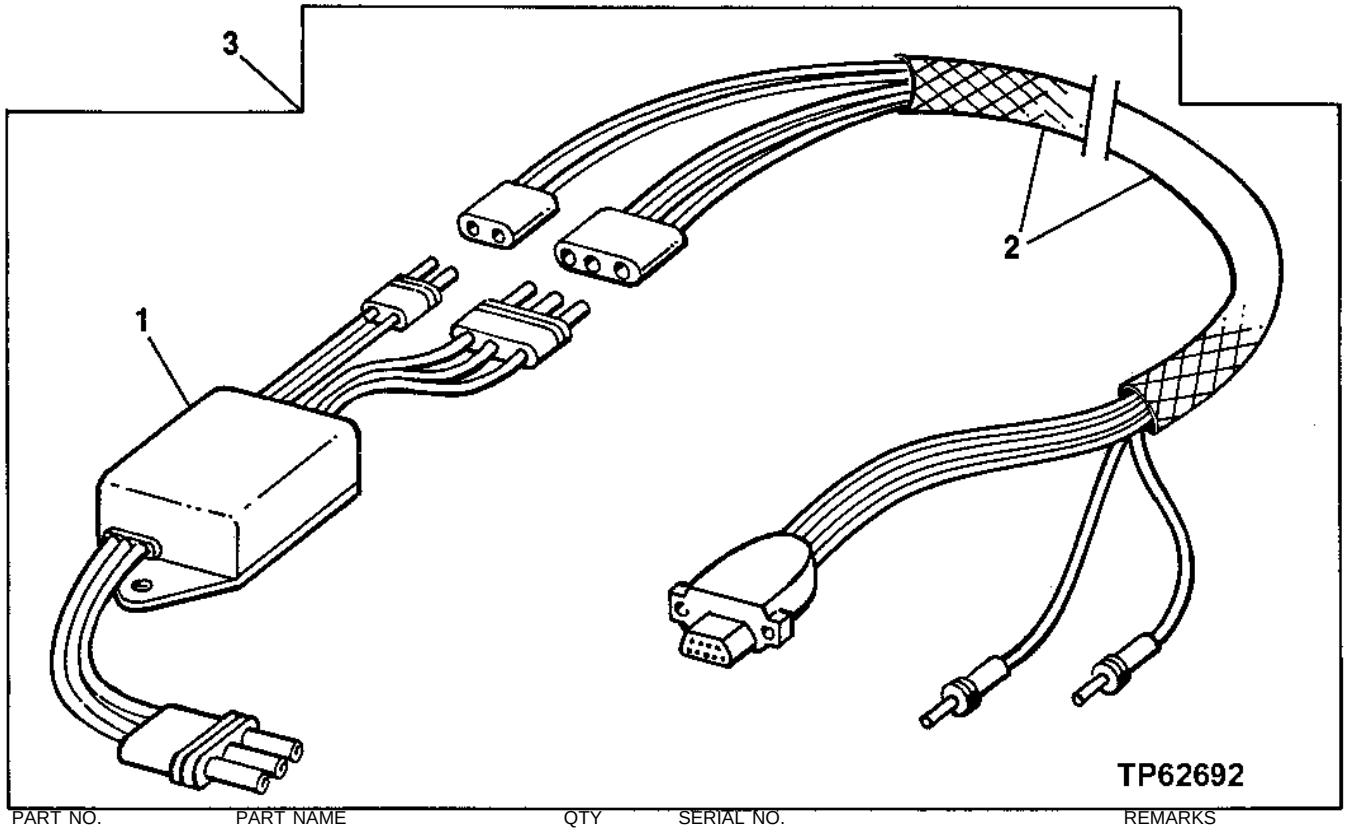

KEY	PART NO.	PART NAME	QTY	SERIAL NO.	REMARKS
1	AT210794	CIRCUIT BOX	1		
2	.....	WIRING HARNESS	1		(SUB AT222678)
3	**AT222678**	**KIT**	**1**		

MONITOR DIPLAY UNIT

TP55890 -UN-19FEB98

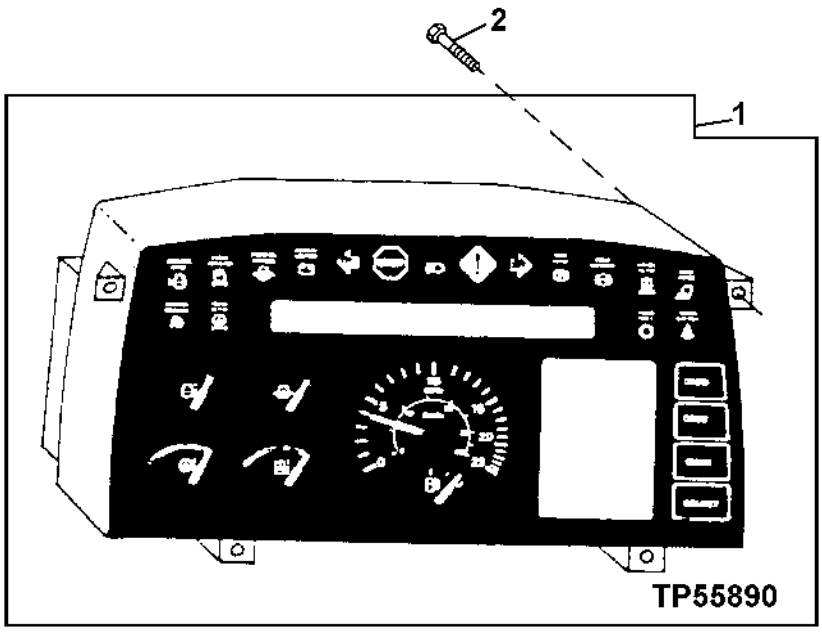

KEY	PART NO.	PART NAME	QTY	SERIAL NO.	REMARKS
1	AT170314	VEHICLE MONITOR	1		(DELUXE) (USE IF AVAILABLE) (SUB AT224095) (ALSO ORDER AT222377 SENSOR, R78054 AND (3) R78064)
	AT224095	MONITOR	1		(DELUXE)
	AT175424	BULB	29		(NOT ILLUSTRATED)
2	21M7265	SCREW	4		M5 X 12, (MONITOR TO FRONT DASH)

MONITOR ALARM

TP33938 -UN-01JAN94

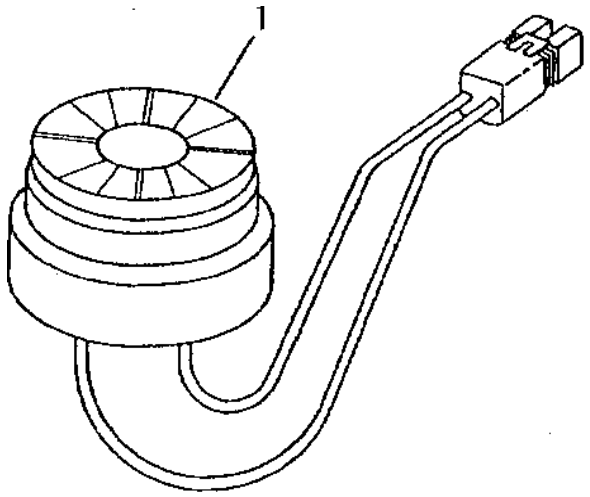

TP33938

KEY	PART NO.	PART NAME	QTY	SERIAL NO.	REMARKS
1	AT160480	ALARM SYSTEM	1		

MEMORANDA

ENGINE FRAME

T150842 -UN-05FEB02

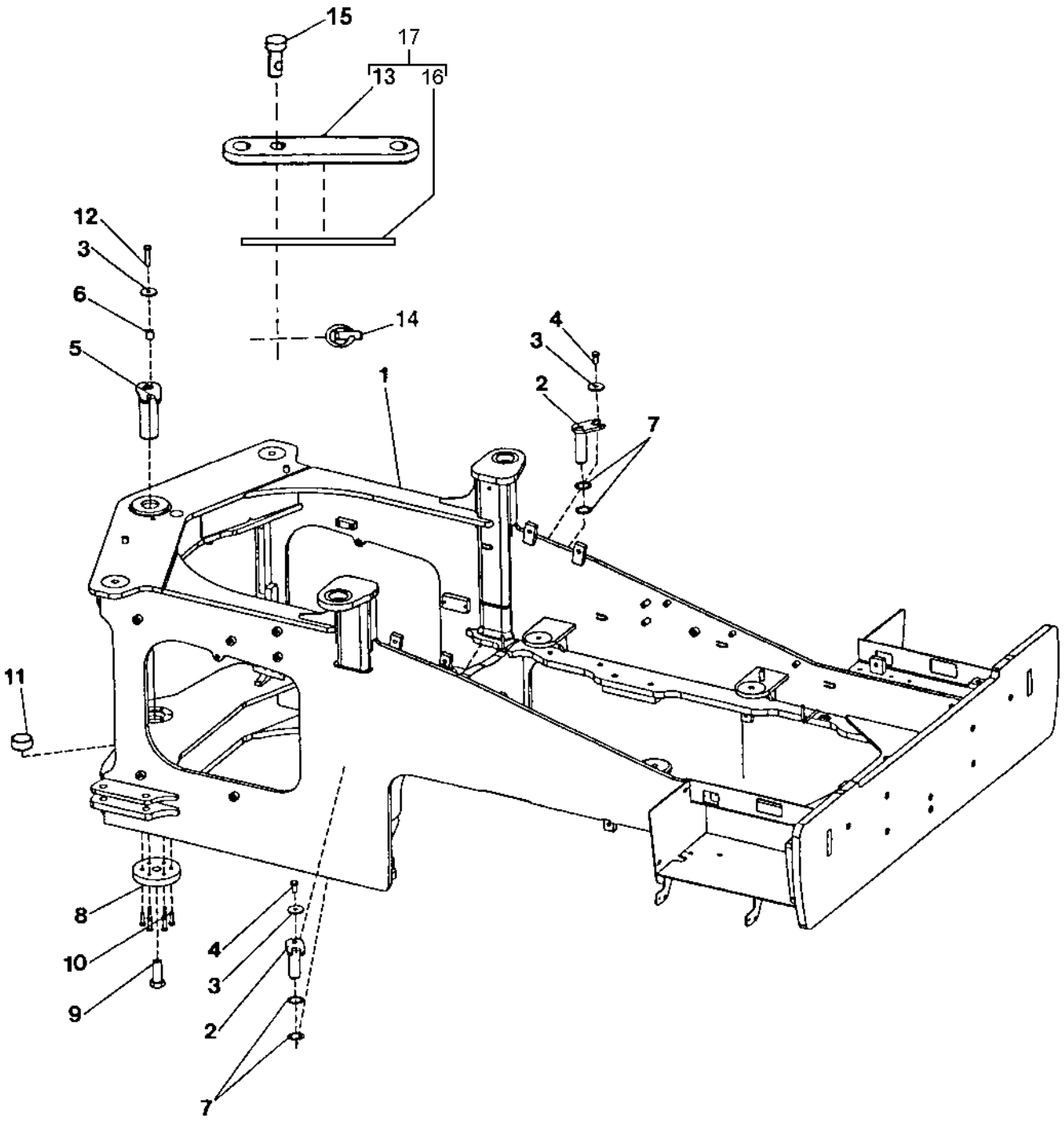

T150842

ENGINE FRAME

KEY	PART NO.	PART NAME	QTY	SERIAL NO.	REMARKS
1	AT208653	FRAME	1		(CONVENIENCE ASSEMBLY)
2	AT157299	PIN FASTENER	2		
3	T146246	WASHER	3		
4	19M8029	CAP SCREW	2		
5	AT206751	PIN	1		
6	28H3452	BUSHING	1		
7	24H1576	WASHER	3		1-13/16" X 2-15/16" X 0.075"
	24H1577	WASHER	4		1-25/32" X 2-7/8" X 0.036"
8	T167860	COVER	1		
9	19M8353	CAP SCREW	1		
10	19M7493	CAP SCREW	6		M12 X 40
11	T156994	BUSHING	1		
12	19M8295	CAP SCREW	1		M16 X 55
13	T156258	BAR	1		
14	AA21292	QUICK LOCK PIN	2		
15	R125450	PIN	2		
16	T182192	DECAL	2		
17	AT226156	BAR	1		

ENGINE FRAME STEERING CUSHIONS

TP48566 -UN-16NOV96

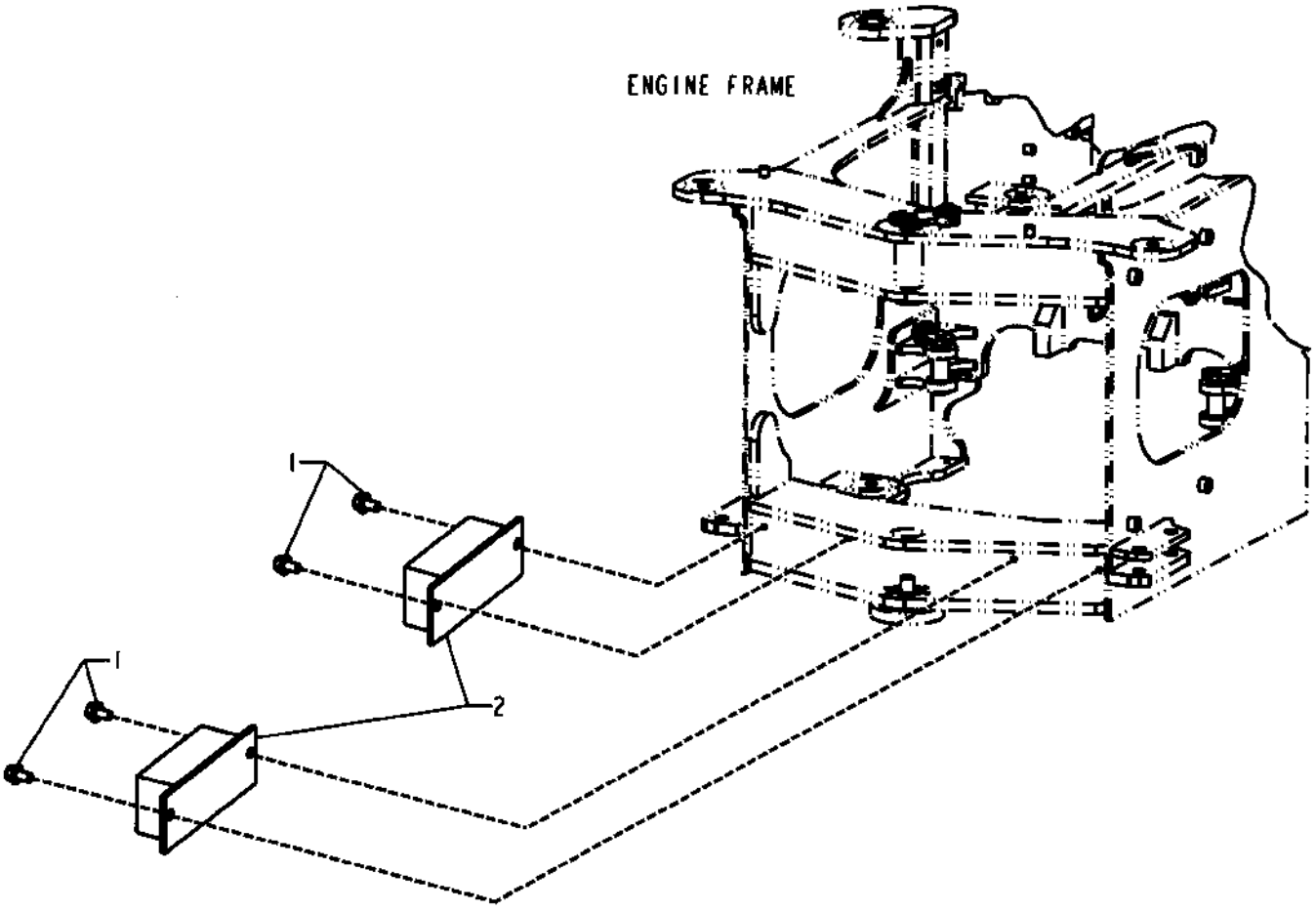

TP48566

ENGINE FRAME STEERING CUSHIONS

KEY	PART NO.	PART NAME	QTY	SERIAL NO.	REMARKS
1	19M7788	SCREW	4		M12 X 25
2	AT143577	BUMPER	2		

TRANSMISSION BOTTOM GUARD AND FRONT BOTTOM GUARD
(SERIAL NO. -XXXXXX)

TP60385 -UN-19MAY98

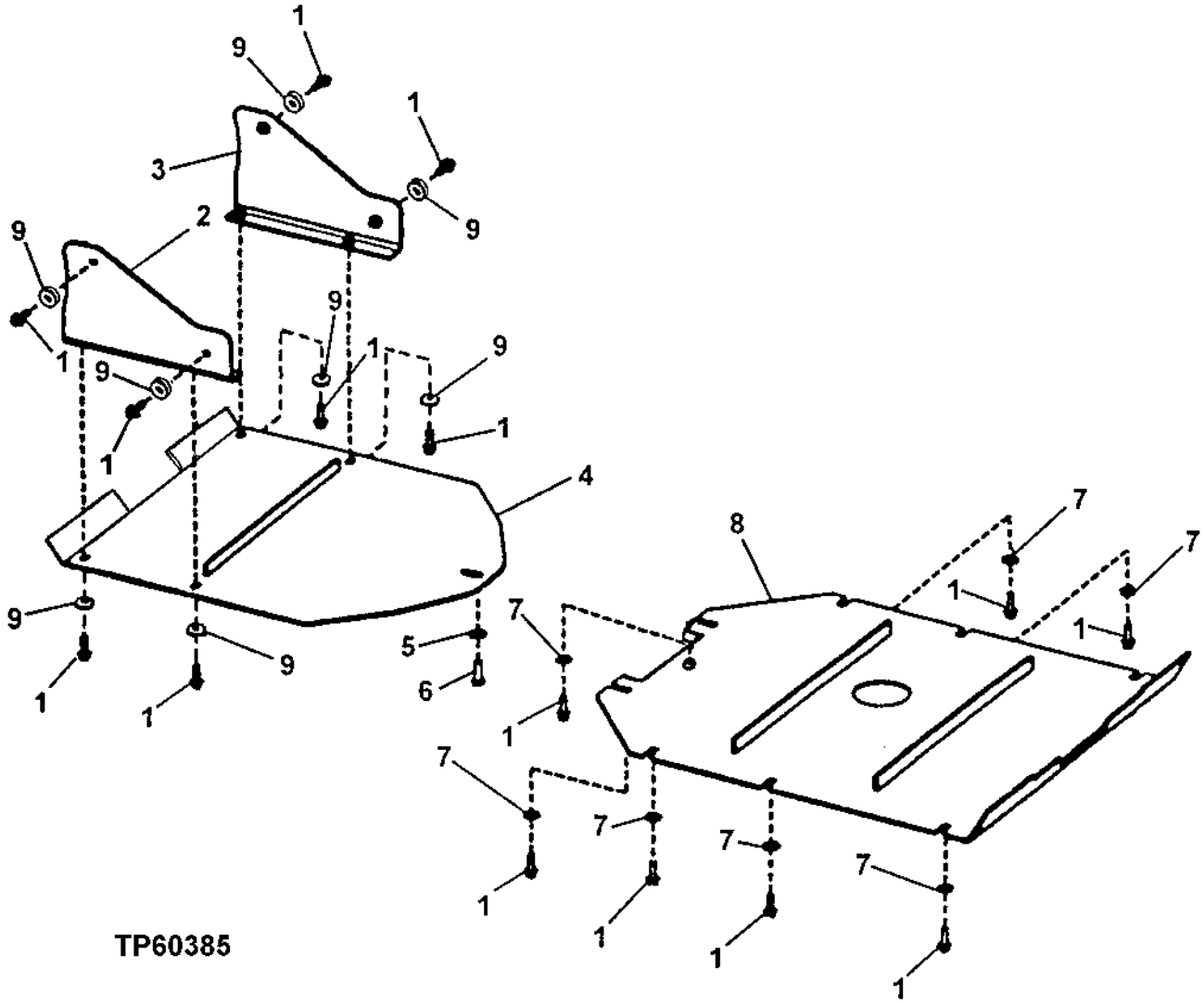

TRANSMISSION BOTTOM GUARD AND FRONT BOTTOM GUARD
(SERIAL NO. -XXXXXX)

KEY	PART NO.	PART NAME	QTY	SERIAL NO.	REMARKS
1	19M7791	SCREW	16		M12 X 40
2	AT207432	SUPPORT	1		
3	AT207433	SUPPORT	1		
4	AT209083	GUARD	1		
5	T20217	WASHER	1		
6	19M7791	SCREW	1		M12 X 40
7	T20217	WASHER	8		
8	AT209079	GUARD	1		
9	24M7226	WASHER	8		13 X 35 X 5 MM

TRANSMISSION BOTTOM GUARD AND FRONT BOTTOM GUARD
(SERIAL NO. XXXXXX-)

TP60661 -UN-03MAR99

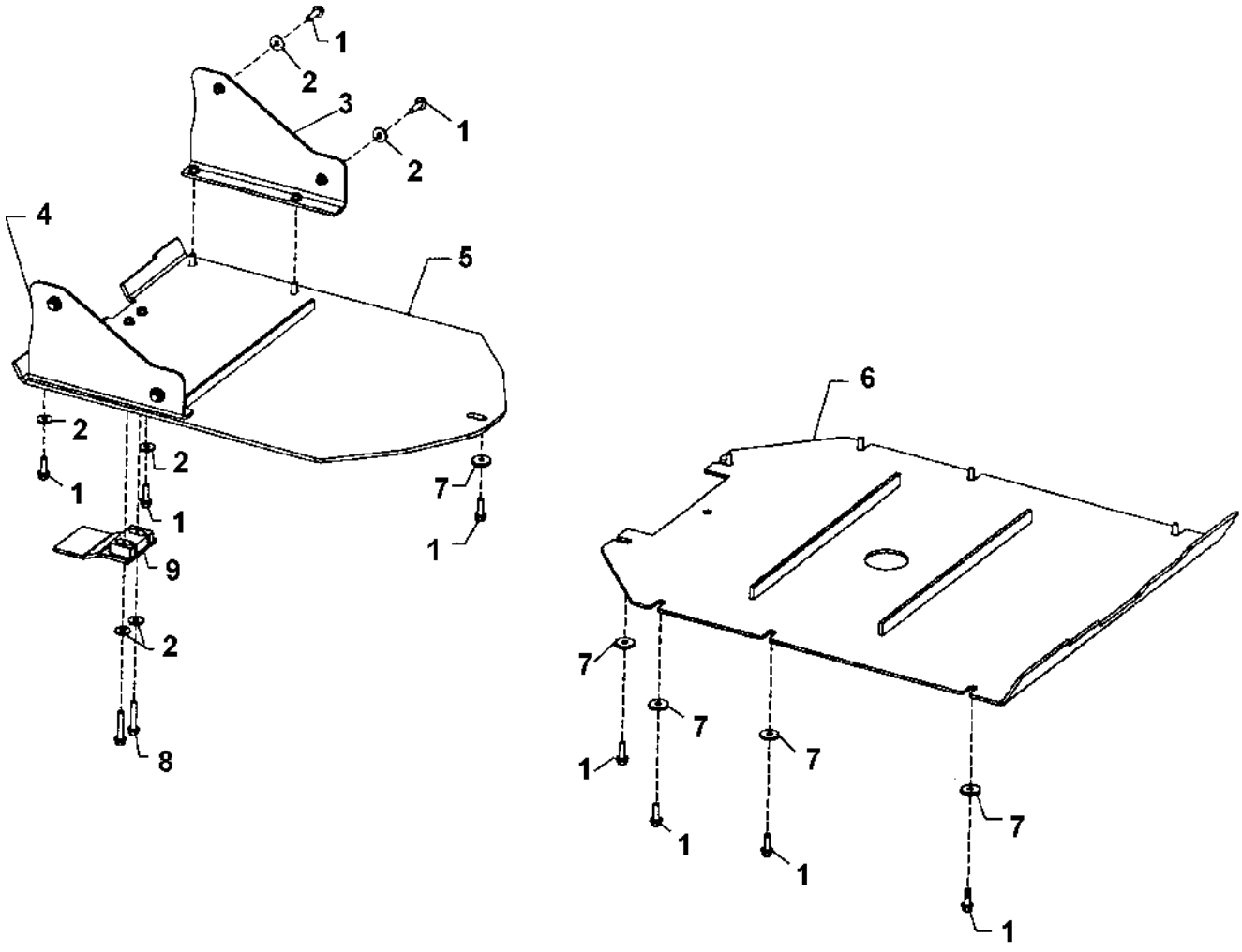

TP60661

TRANSMISSION BOTTOM GUARD AND FRONT BOTTOM GUARD
(SERIAL NO. XXXXXX-)

KEY	PART NO.	PART NAME	QTY	SERIAL NO.	REMARKS
1	19M7791	SCREW	17		M12 X 40
2	24M7226	WASHER	10		13 X 35 X 5 MM
3	AT207433	SUPPORT	1		
4	AT207432	SUPPORT	1		
5	AT209083	GUARD	1		FRONT (LOADER FRAME)
6	AT209079	GUARD	1		TRANSMISSION (ENGINE FRAME)
7	T20217	WASHER	9		
8	19M7817	SCREW	2		M12 X 70
9	AT221332	GUARD	1		(EXTENSION)

BOTTOM FUEL TANK GUARD

TP60490 -UN-08SEP98

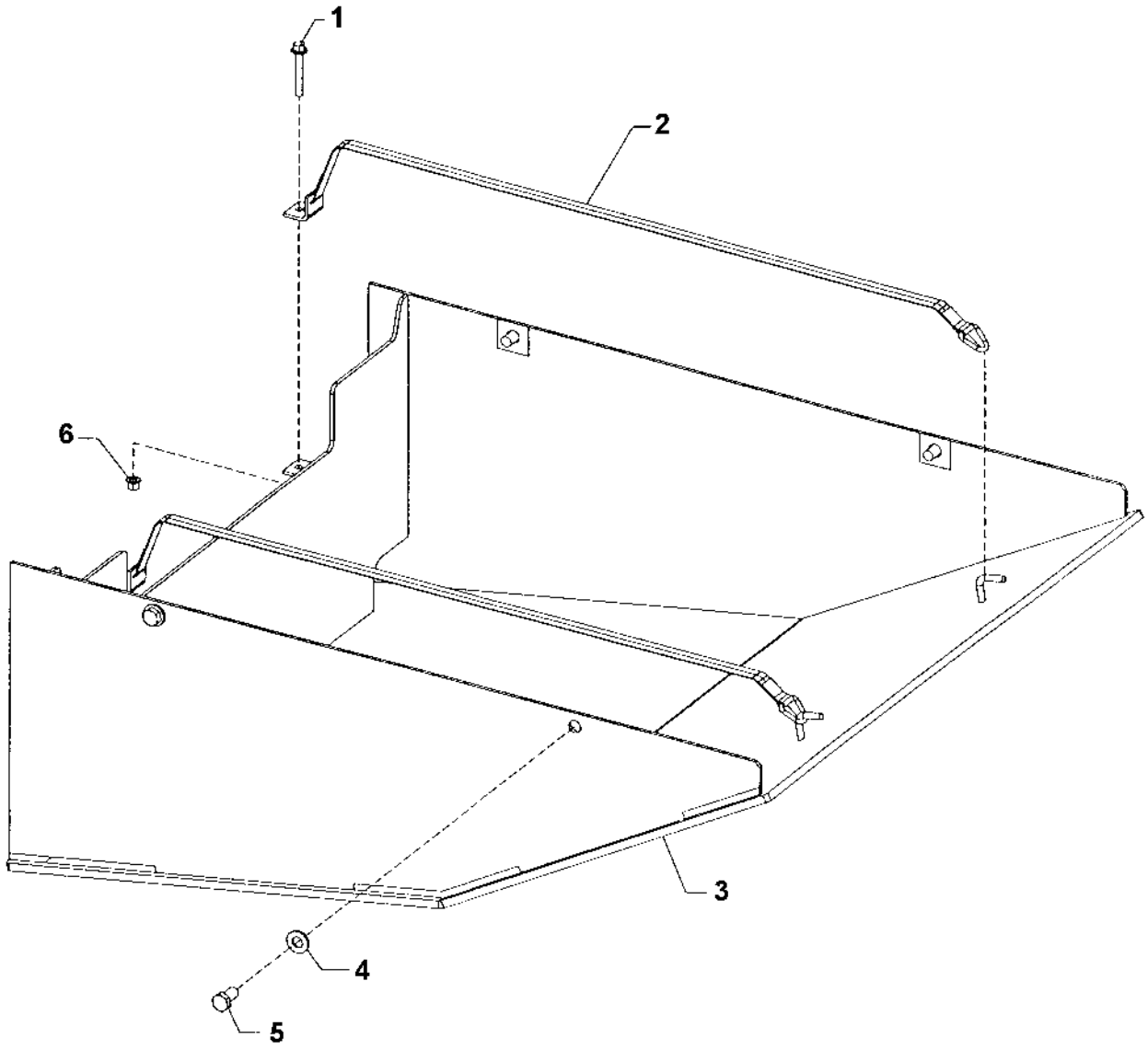

TP60490

BOTTOM FUEL TANK GUARD

KEY	PART NO.	PART NAME	QTY	SERIAL NO.	REMARKS
1	19M8114	SCREW	2		
2	AT222992	STRAP	2		(SUB FOR AT208712)
3	AT208711	GUARD	1		
4	24M7241	WASHER	4		17 X 34 X 4 MM
5	19M8029	CAP SCREW	4		M16 X 30
6	14M7400	LOCK NUT	2		

CYLINDER-FITTING ROCK GUARDS
(SERIAL NO. 573855-)

TP62703 -UN-19NOV99

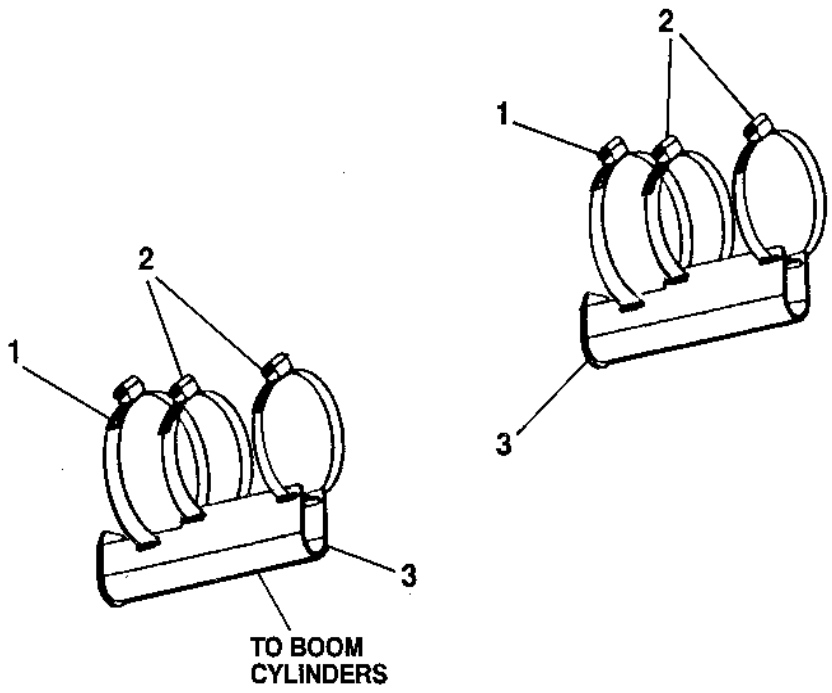

TP62703

KEY	PART NO.	PART NAME	QTY	SERIAL NO.	REMARKS
1	AH130230	HOSE CLAMP	2		
2	TY22494	HOSE CLAMP	4		
3	AT222093	COVER	1		

MEMORANDA

MAIN COUNTERWEIGHT

TP48561 -UN-16NOV96

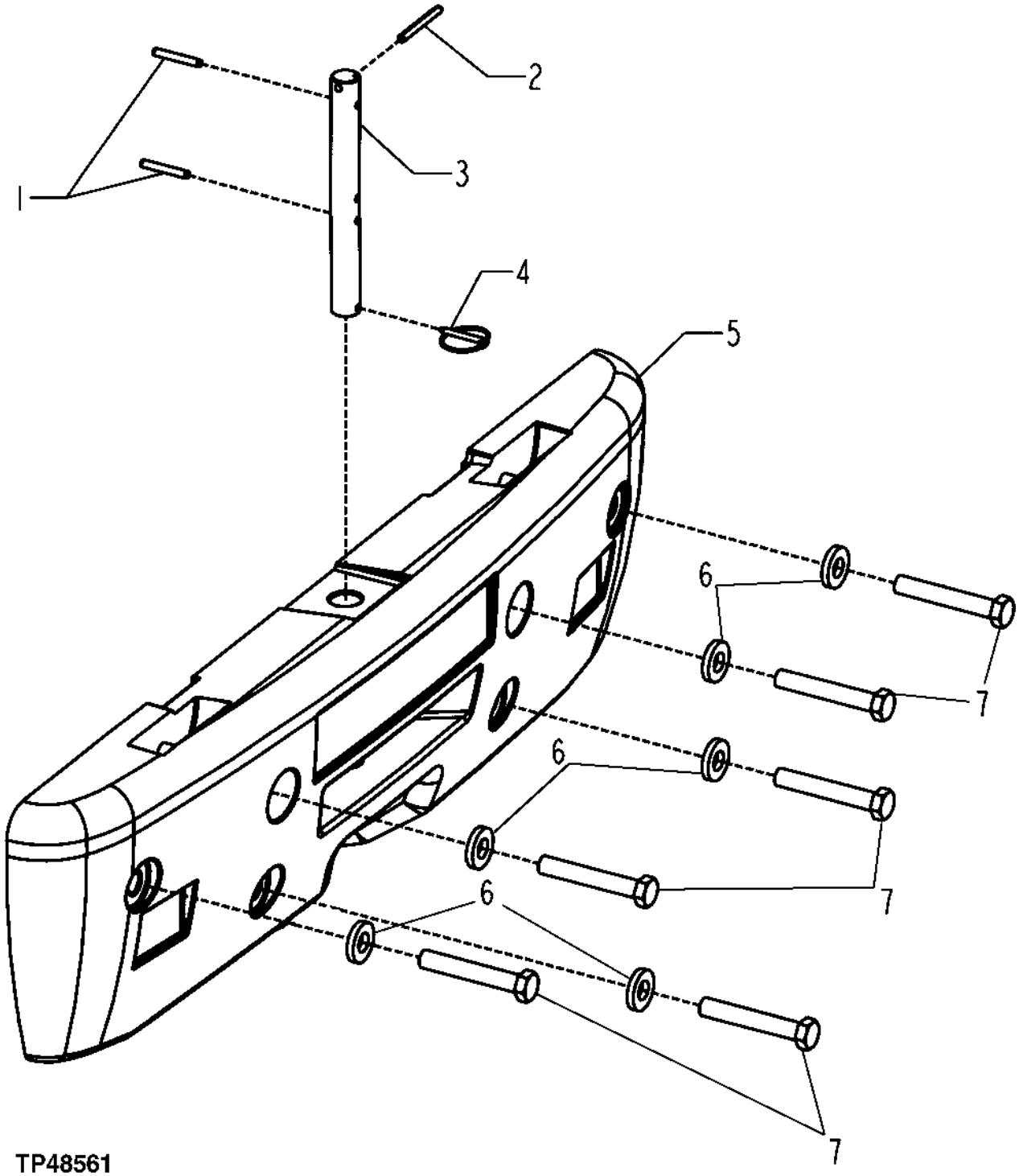

MAIN COUNTERWEIGHT

KEY	PART NO.	PART NAME	QTY	SERIAL NO.	REMARKS
1	34H356	SPRING PIN	2		3/8" X 2-1/4"
2	34H363	SPRING PIN	1		3/8" X 4"
3	T170945	PIN	1		
4	AR83396	QUICK LOCK PIN	1		
5	T171239	COUNTERWEIGHT	1		
6	T152076	WASHER	6		
7	19M7781	CAP SCREW	6		M24 X 150

SECOND COUNTERWEIGHT

TP60355 -UN-21APR98

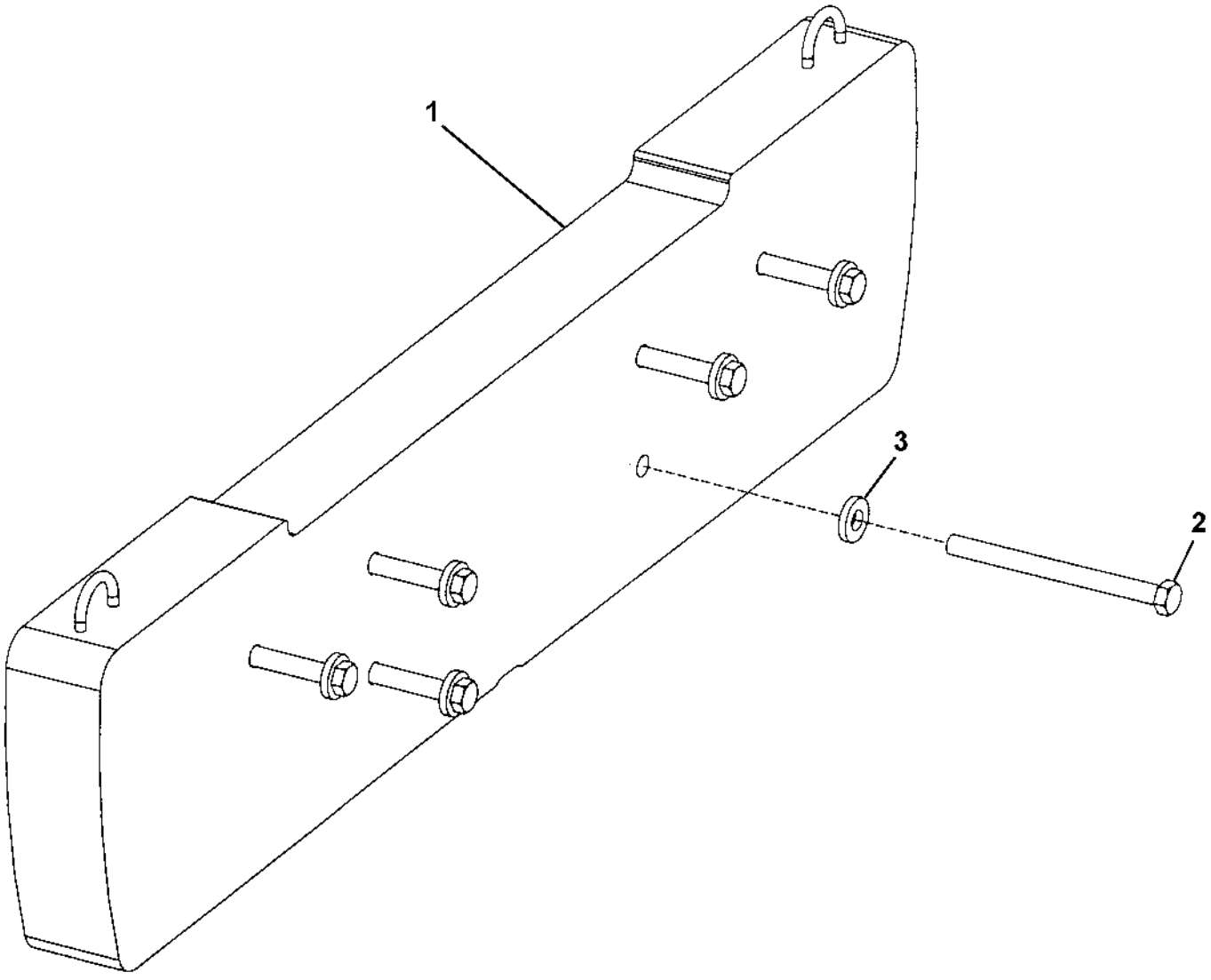

TP60355

SECOND COUNTERWEIGHT

KEY	PART NO.	PART NAME	QTY	SERIAL NO.	REMARKS
1	.....	COUNTERWEIGHT	1		(SUB AT210718)
2	19M8791	SCREW	6		M24 X 280
3	T152076	WASHER	6		
4	**AT210718**	**COUNTERWEIGHT**	**1**		

CAB MOUNTS
(FRONT AND REAR)

TP60508 -UN-22SEP98

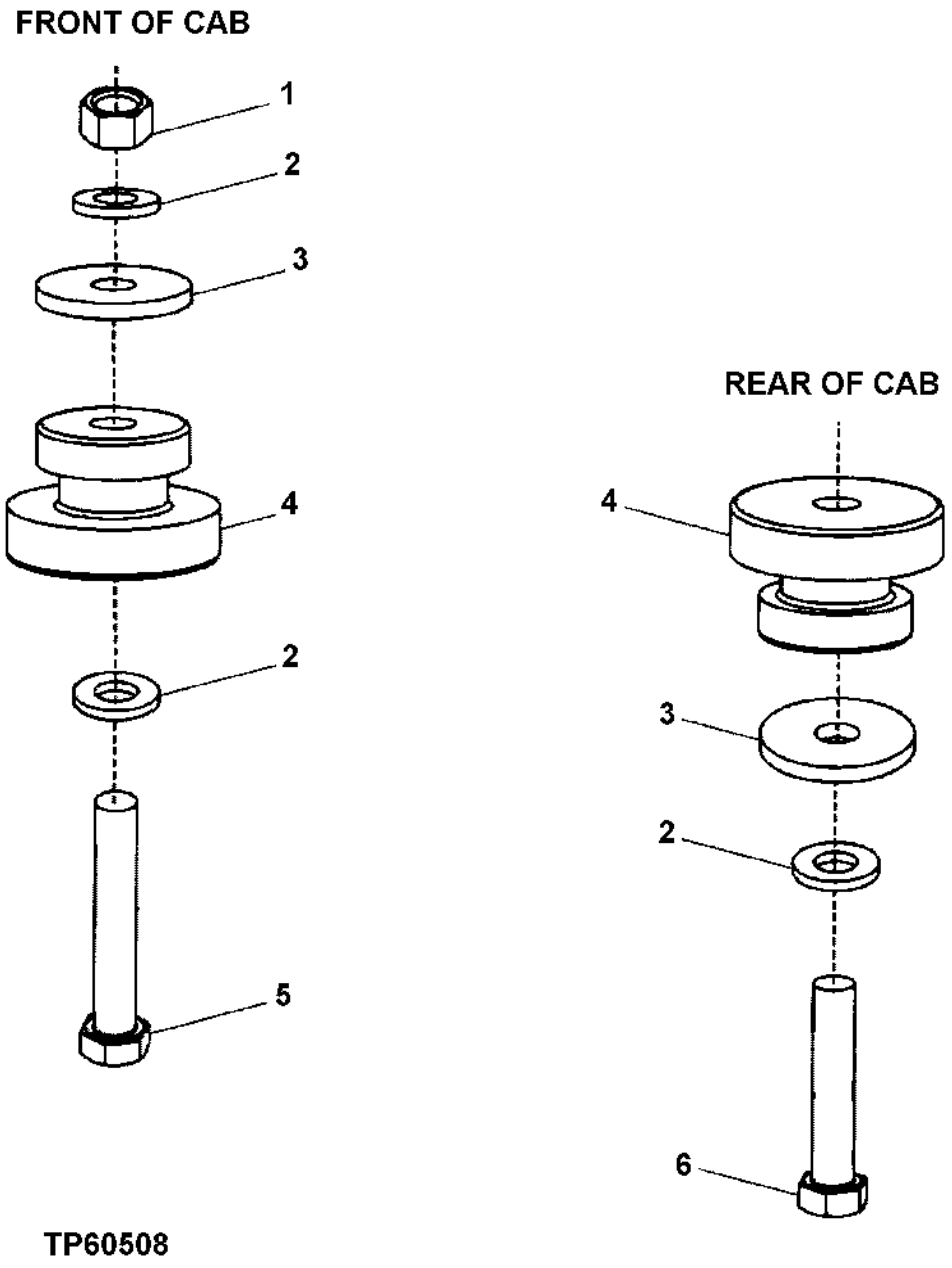

CAB MOUNTS
(FRONT AND REAR)

KEY	PART NO.	PART NAME	QTY	SERIAL NO.	REMARKS
1	14M7278	NUT	2		M24
2	24M7243	WASHER	6		25.400 X 50 X 6 MM
3	T153535	WASHER	4		
4	AT170005	RUBBER MOUNT	4		
5	19M7781	CAP SCREW	2		M24 X 150
6	19M7903	CAP SCREW	2		M24 X 120

CAB SHIELDS

TP60364 -UN-30APR98

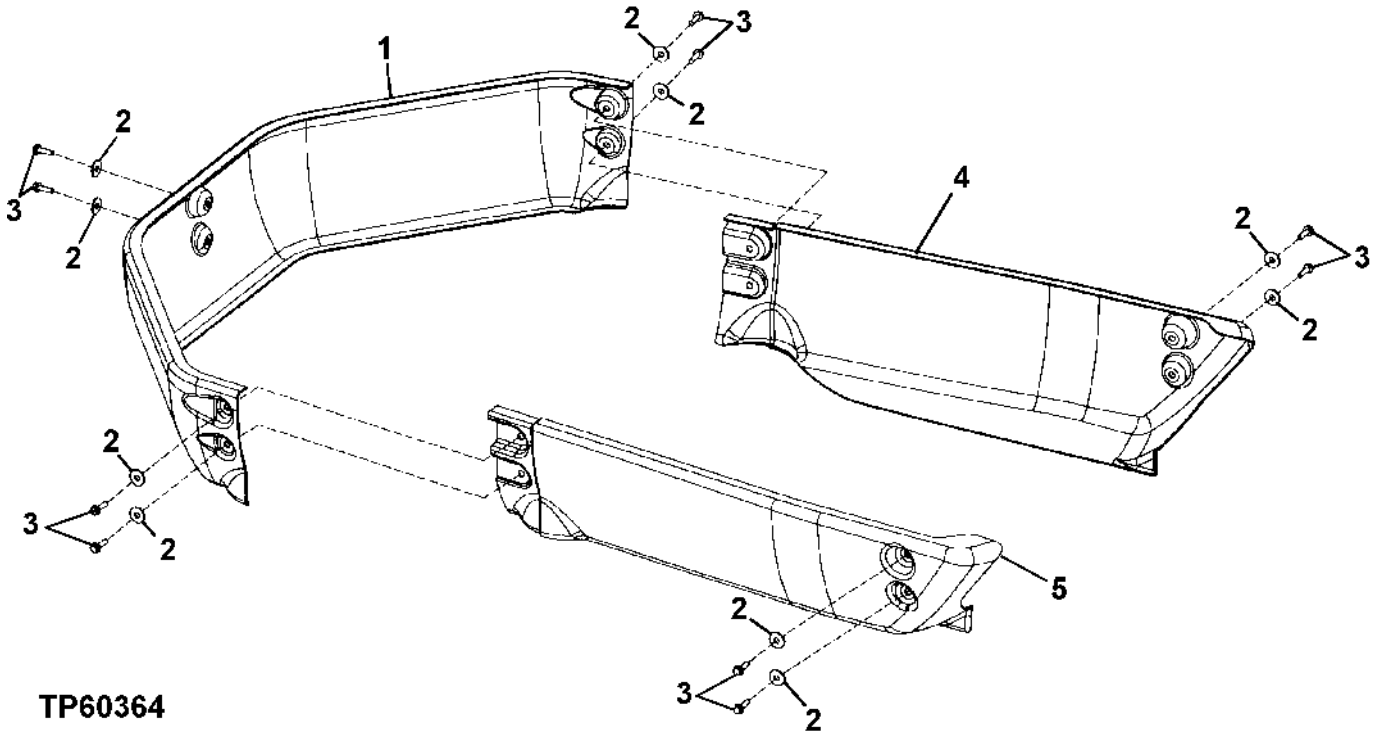

CAB SHIELDS

KEY	PART NO.	PART NAME	QTY	SERIAL NO.	REMARKS
1	T168340	SHIELD	1		
2	24M7296	WASHER	10		10.500 X 30 X 2.500 MM
3	19M7868	SCREW	10		M8 X 30
4	T175534	SHIELD	1		(RIGHT HAND)
5	T175533	SHIELD	1		(LEFT HAND)

FRONT AND REAR WINDOW WASHER AND HOSES

TP60279 -UN-23MAR98

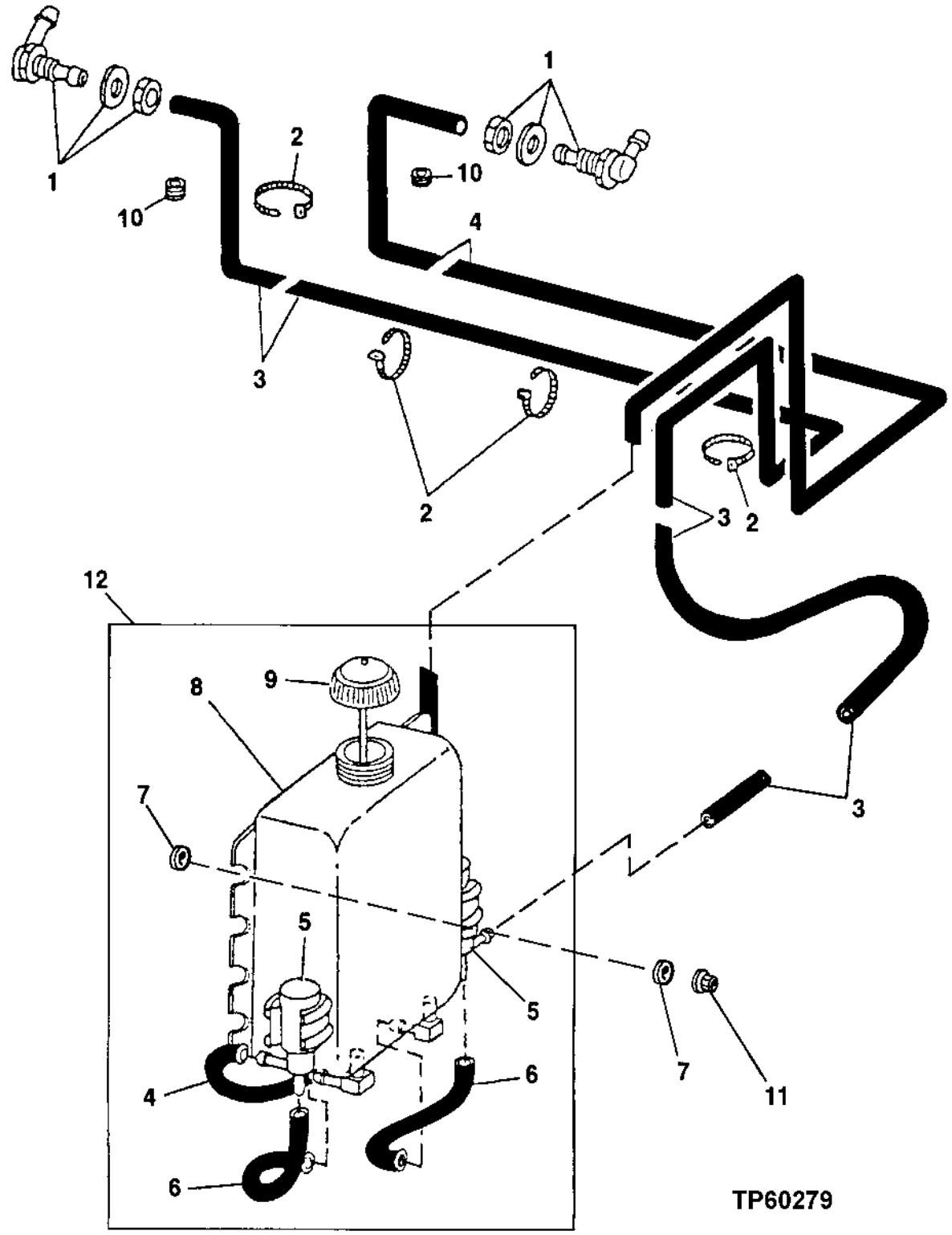

FRONT AND REAR WINDOW WASHER AND HOSES

KEY	PART NO.	PART NAME	QTY	SERIAL NO.	REMARKS
1	AT116970	ELBOW FITTING	2		
2	R44302	TIE BAND	AR		
3	.....	HOSE	AR		(MAKE FROM R120653 BULK MATERIAL, CUT TO LENGTH) (SUB FOR R54445 AND R104595)
4	.....	HOSE	AR		(MAKE FROM R120653 BULK MATERIAL, CUT TO LENGTH) (SUB FOR R54445 AND R104595)
5	AT106365	PUMP	2		
6	.....	HOSE	AR		(MAKE FROM R120653 BULK MATERIAL, CUT TO LENGTH) (SUB FOR R54445 AND R104595)
7	24M7139	WASHER	AR		6.400 X 18 X 1.600 MM, TO BOSSES ON ACCESS DOOR
8	T147618	TANK	1		
9	AT173193	CAP	1		
10	T70154	GROMMET	2		(BOTH CAB AND ROPS)
11	14M7303	FLANGE NUT	4		M6
12	AT209947	TANK	1		(WINDSHIELD WASHER)

CAB WITH DOOR AND WINDOWS

T139679 -UN-12MAR01

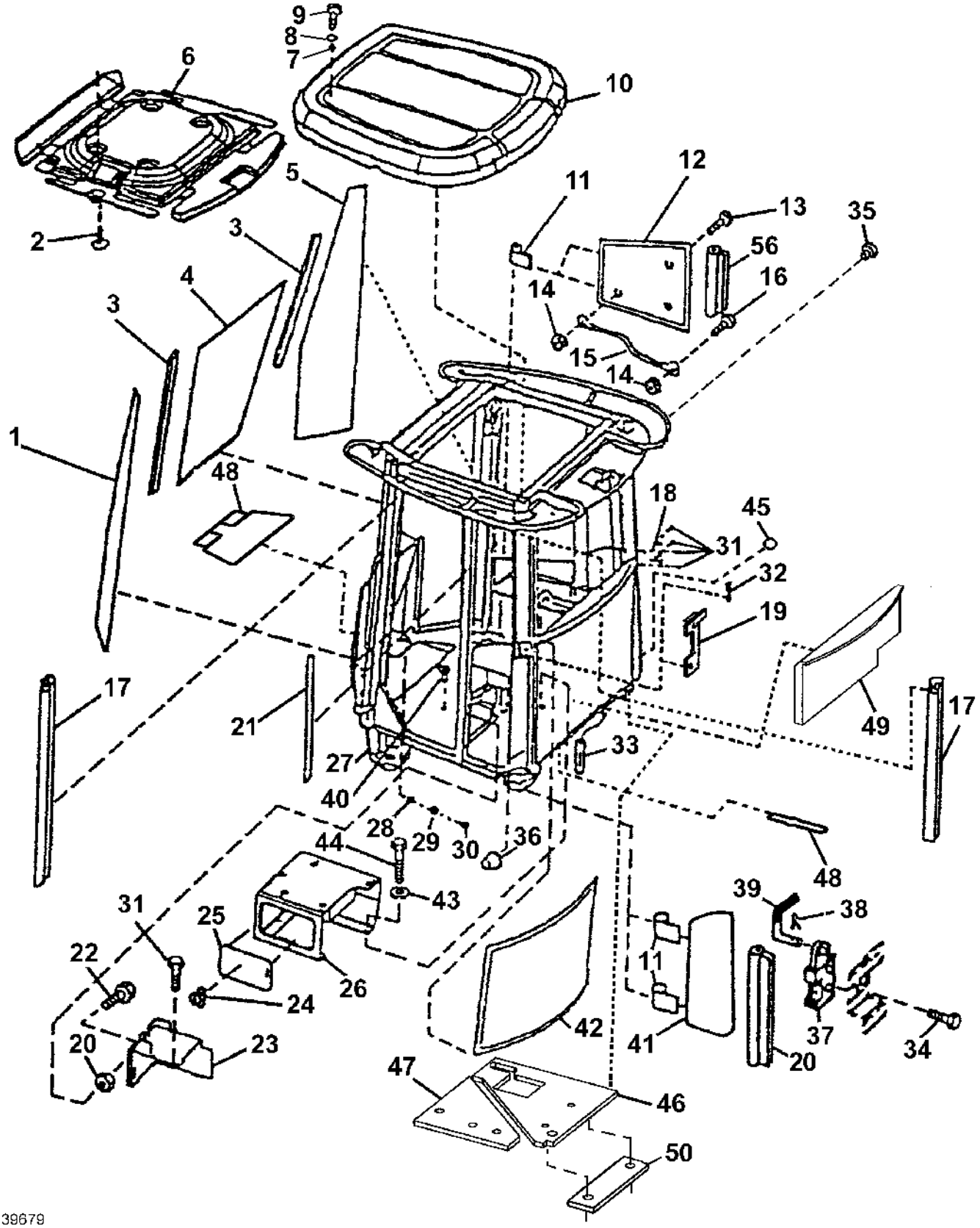

T139679

CAB WITH DOOR AND WINDOWS

KEY	PART NO.	PART NAME	QTY	SERIAL NO.	REMARKS
1	T182927	WINDOWPANE	1		
2	T182973	CLIP	4		(SUB FOR H147887)
3	T182903	SEAL	AR		
4	T182926	WINDSHIELD	1		USE IF AVAILABLE, (SUB T182258)
	T182258	WINDSHIELD	1		(ALSO ORDER T182183)
5	T182928	WINDOWPANE	1		
6	T167551	HEADLINER	1	-578901	CAB
	T167661	HEADLINER	1	-581888	CANOPY
	T180754	HEADLINER	1	578902-581888	(WITHOUT RADIO)
	T179502	HEADLINER	1	578902-581888	(WITH RADIO)
	T180921	HEADLINER	1	581889-	GRAY(CANOPY)
	T181520	HEADLINER	1	581889-	GRAY(WITH RADIO)
	T181908	HEADLINER	1	581889-	GRAY(WITHOUT RADIO)
7	T167659	WASHER	4		RUBBER
8	24H1368	WASHER	4		21/32" X 1-5/16" X 0.090"
9	T182920	CAP SCREW	4		
10	T167533	ROOF	1		
	T182856	ROOF	1		PAINTABLE, FOR CUSTOM APPLICATIONS
11	AT206472	HINGE	6		BOTH LOAD-CENTER DOORS AND FRESH AIR FILTER DOOR (SUB FOR T167540)
12	AT206438	DOOR	1	-581888	FRONT LOAD-CENTER
	AT224991	DOOR	1	581889-	GRAY(FRONT LOAD-CENTER)
13	19M7640	CAP SCREW	4		M5 X 12
14	14M7375	FLANGE NUT	2		M5
15	AH124857	WIRING LEAD	1		
16	21M7265	SCREW	1		M5 X 12
17	.....	SEAL	AR		CAB DOOR, RIGHT SIDE WINDOW AND BOTH REAR SIDE WINDOWS (MAKE FROM T58341 BULK MATERIAL, CUT TO LENGTH)
	T180533	SEALING TRIM	AR		(CANOPY UNITS, AROUND WINDOW OPENINGS)
18	T167507	COVER	2	-581888	HOLD-OPEN LATCH
	T181603	COVER	1	581889-	GRAY(HOLD-OPEN LATCH)(LEFT HAND)
	T182389	COVER	1	581889-	GRAY(HOLD-OPEN LATCH)(RIGHT HAND)

THIS PARTS LISTING IS CONTINUED

CAB WITH DOOR AND WINDOWS

T139679 -UN-12MAR01

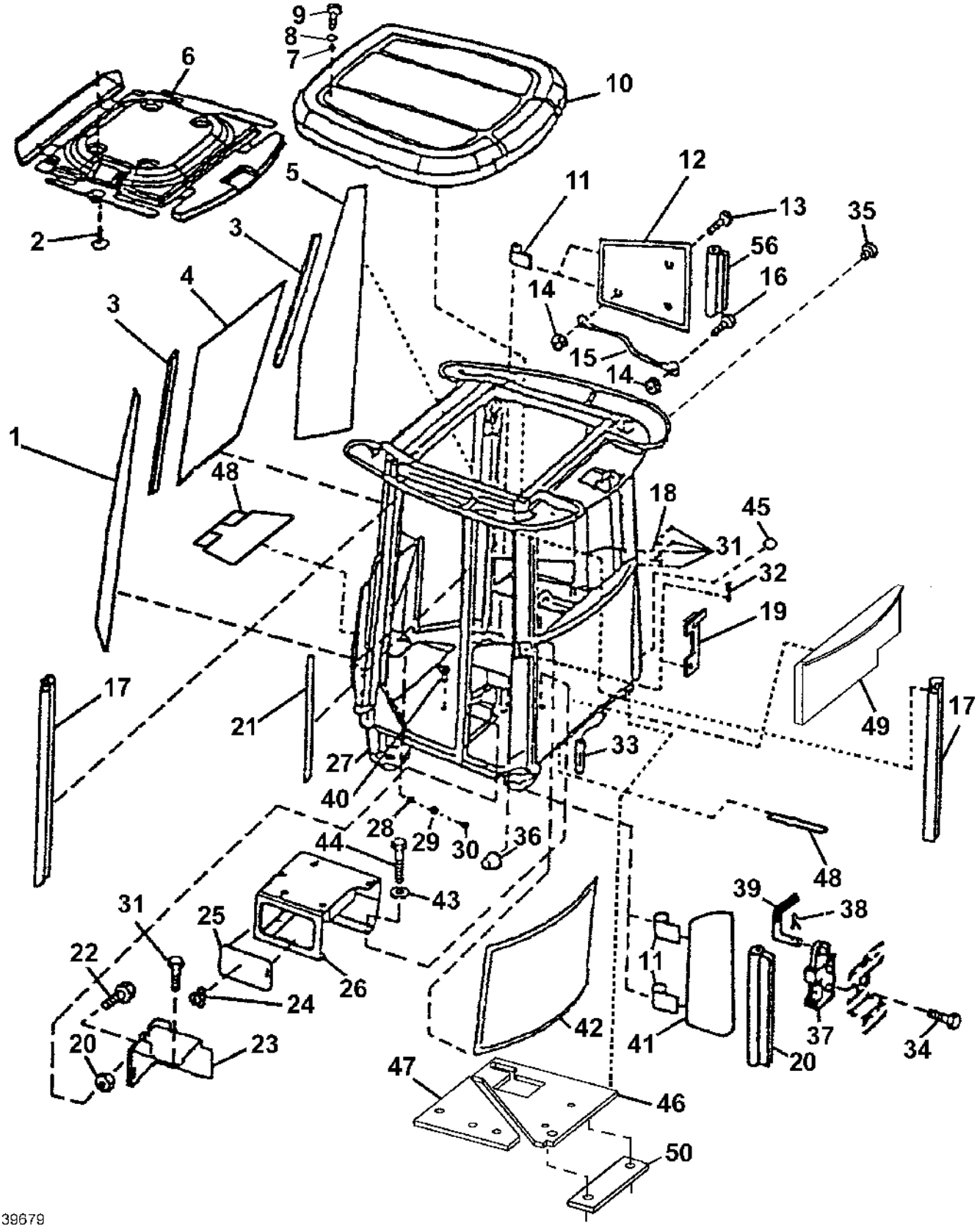

T139679

CAB WITH DOOR AND WINDOWS

KEY	PART NO.	PART NAME	QTY	SERIAL NO.	REMARKS
19	T177505	BRACKET	1		(USE WITH T167504)
20	T179365	SEAL	1		(ANY LOWER, REAR CORNER AND FORWARD LOAD CENTER ACCESS DOOR)
21	T167662	DECAL	1		LEFT SIDE
	T167663	DECAL	1		RIGHT SIDE
22	T167593	SCREW	2		
23	AT206464	COVER	1	-581888	HVAC
	AT224238	COVER	1	581889-	GRAY(HVAC)
24	AT151931	LATCH	1		
25	AT206414	DOOR	1		
26	AT206413	FLOOR	1	-581888	(CAB)
	AT217414	FLOOR	1	-581888	(CANOPY)
	AT224237	FLOOR	1	581889-	GRAY(CANOPY)
	AT224235	FLOOR	1	581889-	GRAY(CAB)
27	AT206421	CAB FRAME	1		(ALSO ORDER HEADLINER AT223158 (WITH RADIO) AND SERIAL NUMBER 578902- RADIO ASSEMBLY OR HEADLINER AT223935 (WITHOUT RADIO)) (ALSO ORDER SERIAL NUMBER 574039- CAB, REAR, SIDE WINDOW PARTS)
	AT217403	CAB FRAME	1	-581888	ROPS (NOT ILLUSTRATED) CANOPY
	AT225000	CAB FRAME	1	581889-	GRAY(CANOPY)(NOT ILLUSTRATED)
28	14H813	NUT	2		7/16"
29	T135583	GUARD	1		
30	AR91896	STRIKER	2		
31	19M7774	SCREW	8		M6 X 12
32	T167504	LATCH	2		CAB DOOR HOLD-OPEN
	T182808	COVER	2		HOLD OPEN (NOT ILLUSTRATED)
	19M7797	SCREW	4		M6 X 40
	14M7397	LOCK NUT	4		M6
33	T167512	LATCH	1		CAB DOOR HOLD-OPEN ACTUATOR WITH CABLE
	T178112	PIN FASTENER	1		(CABLE TO LATCH)
	T178113	CLIP	1		(CABLE TO LATCH)
	T178114	SPACER	1		(CABLE TO LATCH)
	37H112	SCREW	2		0.190" X 1/2"
34	19H1948	CAP SCREW	2		1/4" X 3/4"
35	T66355	PLUG	1		
36	AT211296	BUMPER	1		
37	T167658	LATCH	1		FRESH AIR FILTER DOOR, LEFT REAR CORNER
38	11M7081	COTTER PIN	1		COTTER
39	T167764	ROD	1		
40	T182867	PLUG	1		
	T180408	PLUG	1		(WITHOUT DIFF LOCK)
41	AT206436	DOOR	1	-581888	REAR LOAD-CENTER, RIGHT REAR CORNER
	AT206437	DOOR	1	-581888	FRESH -AIR FILTER, LEFT REAR CORNER
	AT224989	DOOR	1	581889-	GRAY(REAR LOAD-CENTER)
	AT224990	DOOR	1	581889-	GRAY(LH ACCESS)
42	T167519	WINDOW	1		REAR
	T182952	RETAINER	3		(NOT ILLUSTRATED)
	T182925	RETAINER	3		(NOT ILLUSTRATED)
	AT44188	RIVET	9		(NOT ILLUSTRATED)
43	24M7298	WASHER	4		8.400 X 25 X 2 MM
44	19M7866	SCREW	4		M8 X 20
45	T182958	DECAL	1		
	T182958	DECAL	2		(USE WITH CANOPY)
46	T167770	FOAM PAD	1		(USE WITH CAB)
47	T167771	FOAM PAD	1		(USE WITH CAB)
48	.....	SEAL	AR		(MAKE FROM H81330 BULK MATERIAL, CUT TO LENGTH)
49	AT225707	FOAM PAD	1	-581888	(FOAM) (SUB FOR T167769)
	AT225706	FOAM PAD	1	581889-	GRAY
50	T182906	PLATE	1		(USE WITH CAB)

HEADLINER AND DOMELIGHT
(SERIAL NO. 578902-)

T145917 -UN-25SEP01

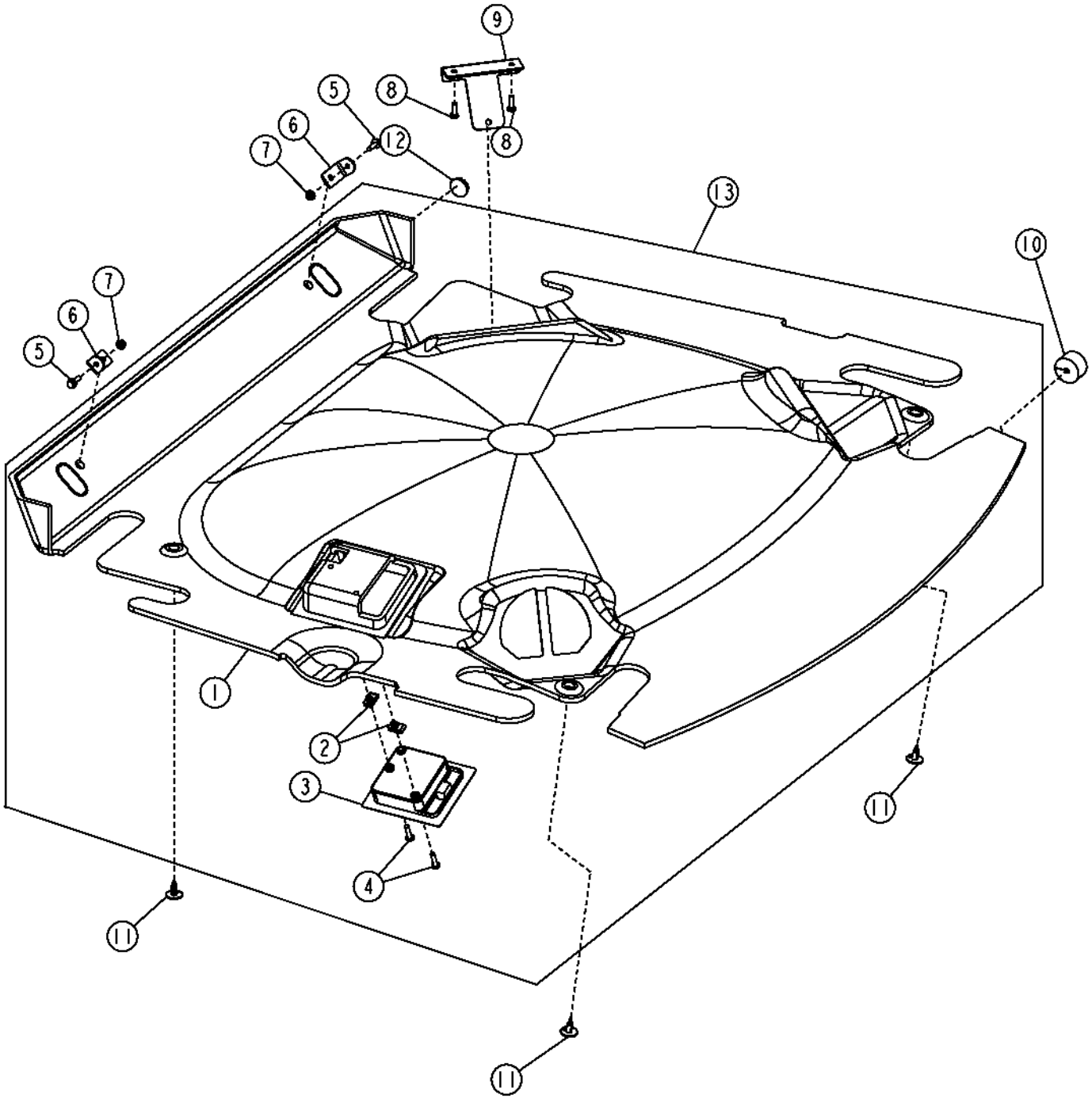

T145917

HEADLINER AND DOMELIGHT
(SERIAL NO. 578902-)

KEY	PART NO.	PART NAME	QTY	SERIAL NO.	REMARKS
1	T180754	HEADLINER	1		WITHOUT RADIO
	T179502	HEADLINER	1		WITH RADIO
2	M84972	NUT	2		
3	AT207721	LAMP	1		
4	T134895	SELF-LOCKING SCREW	2		
5	19M7862	SCREW	2		
6	T181050	ANGLE	2		
7	14M7303	FLANGE NUT	2		
8	19H1948	CAP SCREW	2		
9	T180418	STRAP	1		(WITHOUT RADIO)
10	T182861	PLUG	1		(WITHOUT RADIO)
11	T184892	RETAINER	4		
12	T152230	PLUG	1		
13	AT223158	HEADLINER	1	-581888	WITH RADIO
	AT223935	HEADLINER	1	-581888	WITHOUT RADIO
	AT224233	HEADLINER	1	581889-	GRAY(WITH RADIO)
	AT224234	HEADLINER	1	581889-	GRAY(WITHOUT RADIO)

RIGHT HAND CAB DOOR,DOOR LATCH AND WINDOWPANE

T139538 -UN-21MAR01

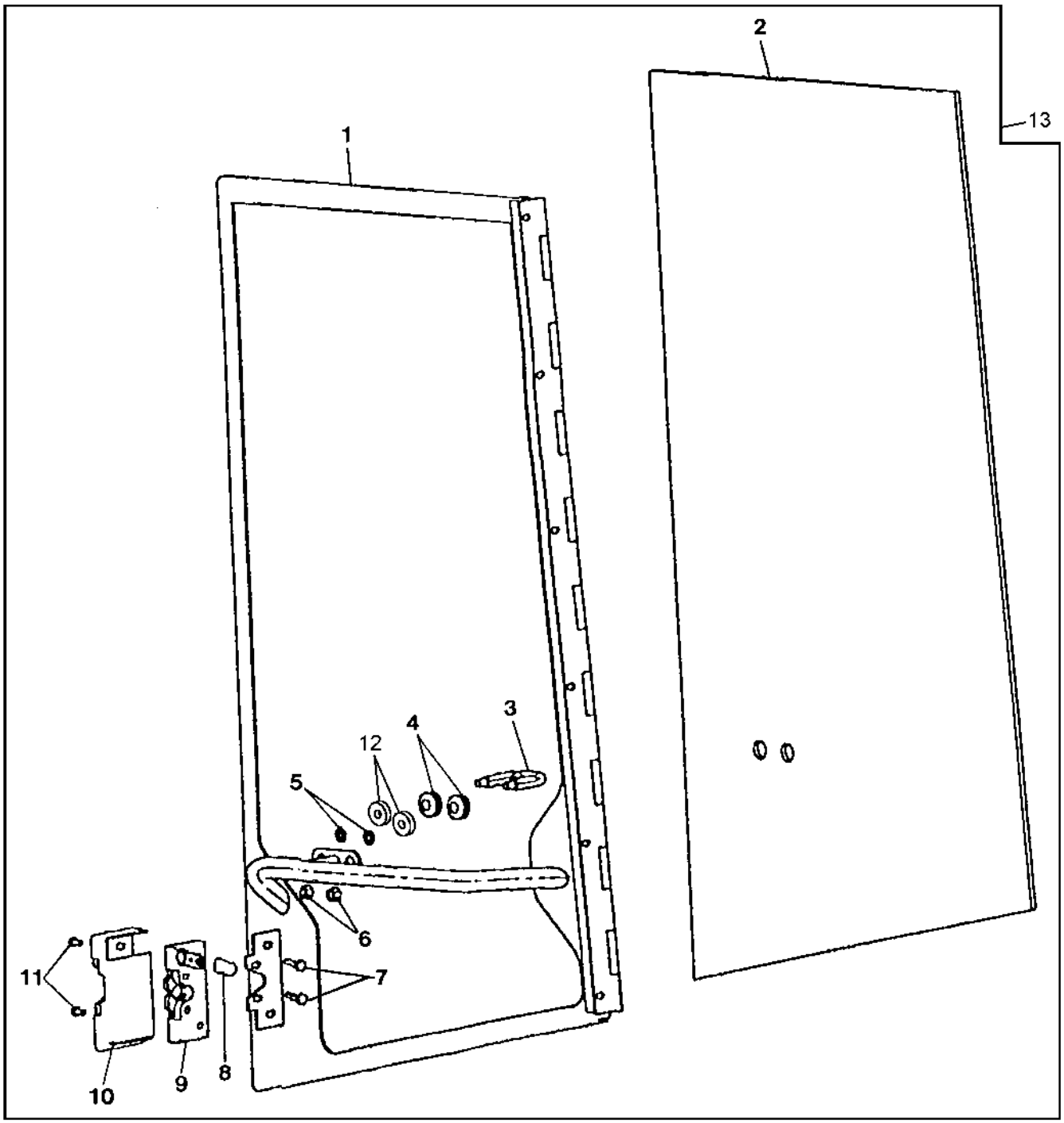

T139538

RIGHT HAND CAB DOOR,DOOR LATCH AND WINDOWPANE

KEY	PART NO.	PART NAME	QTY	SERIAL NO.	REMARKS
1	AT206433	DOOR	1	-581888	(INCLUDES T167505 HINGE)
	T167505	HINGE	1		(NOT ILLUSTRATED)
	AT224993	DOOR	1	581889-	GRAY(DOOR)
2	T167527	DOOR	1		
3	T167546	STRIKER	1		
4	T167514	GROMMET	2		
5	14M7424	NUT	2		
6	14M7424	FLANGE NUT	2		M8
7	19H1948	CAP SCREW	2		1/4" X 3/4"
8	T167630	GRIP	1		
9	AT83105	LATCH	1		
10	T167633	COVER	1		
11	T167593	SCREW	2		
12	T182899	WASHER	2		
13	AT206441	WINDOW	1	-581888	CAB DOOR ASSEMBLY WITH LATCH AND WINDOWPANE
	AT224992	WINDOW	1	581889-	GRAY(RH ASSEMBLY WITH GLASS)

LEFT SIDE CAB DOOR
(SERIAL NO. -572541)

TP62597 -UN-15JUL99

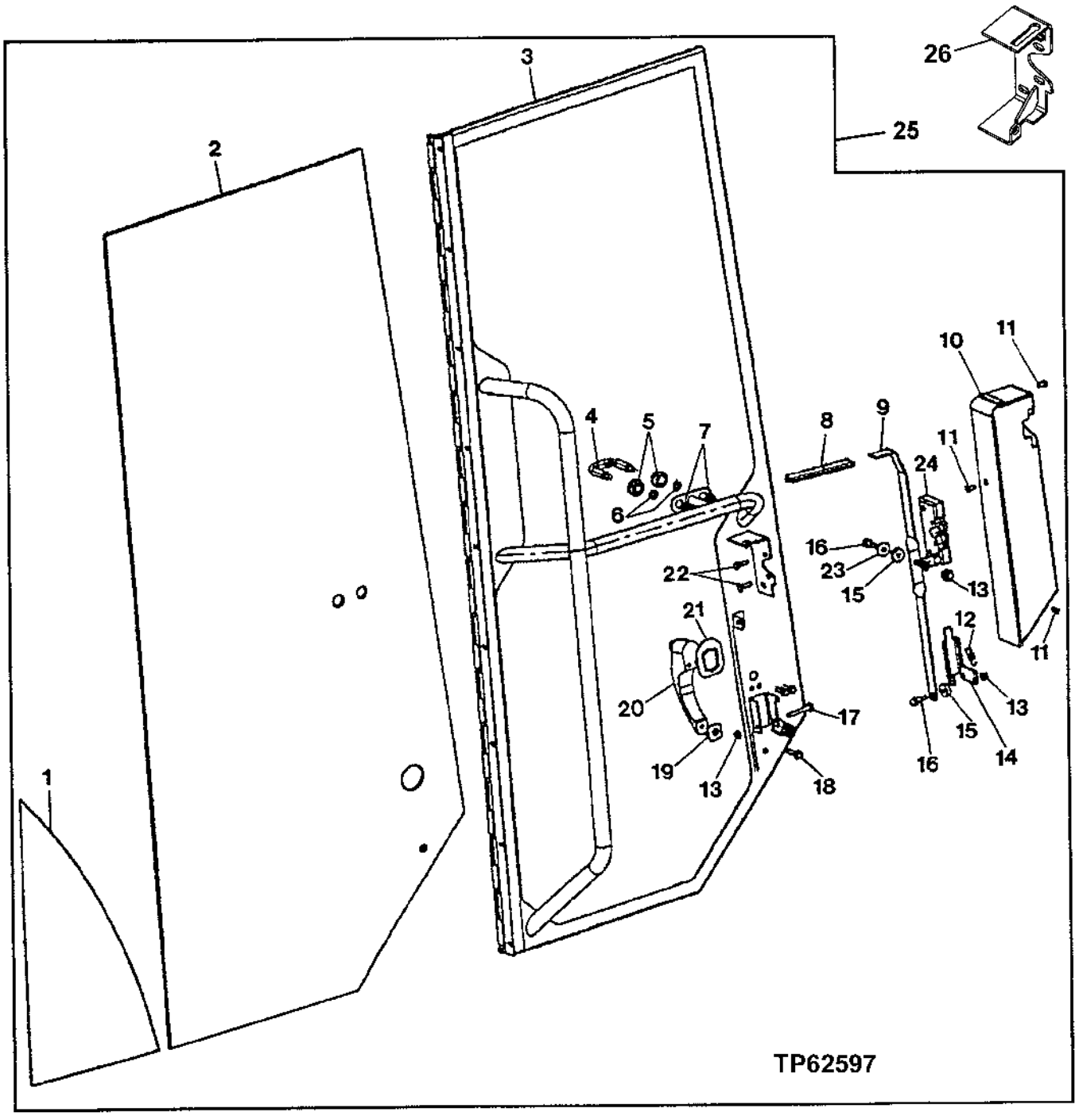

LEFT SIDE CAB DOOR
(SERIAL NO. -572541)

KEY	PART NO.	PART NAME	QTY	SERIAL NO.	REMARKS
1	T167610	LABEL	1		(NO LONGER REQUIRED)
2	T167508	WINDOWPANE	1		
3	AT206432	DOOR	1		
4	T167546	STRIKER	1		
5	T167514	GROMMET	2		
6	24M7362	WASHER	2		8.400 X 16 X 1.600 MM
7	14M7424	FLANGE NUT	2		M8
8	T167609	GRIP	1		
9	T167647	LEVER	1		
10	T167631	COVER	1		
11	T167593	SCREW	9		(DOOR HINGE TO CAB)
	T167593	SCREW	3		(T167631 LATCH COVER TO DOOR)
12	T167530	SPRING	1		
13	14M7303	FLANGE NUT	3		M6
14	T167618	ARM	1		
15	T182899	WASHER	2		
16	H131424	BOLT	2		
17	19M7834	SCREW	1		M6 X 45
18	19M7863	SCREW	3		M6 X 25
19	H126082	BEZEL	1		
20	AH121227	HANDLE	1		
21	H126081	BEZEL	1		
22	19H1948	CAP SCREW	2		1/4" X 3/4"
23	24M7298	WASHER	1		
24	AT83105	LATCH	1		
25	AT206440	DOOR	1		LEFT HAND
26	AT222327	BRACKET	1		DOOR LATCH CONVERSION (ALSO ORDER: H132922, H95874, (4) T182963, T182966, T182967, T182969, T182972 AND 24M7251)

LEFT SIDE CAB DOOR
(SERIAL NO. 572542-)

T139539 -UN-20MAR01

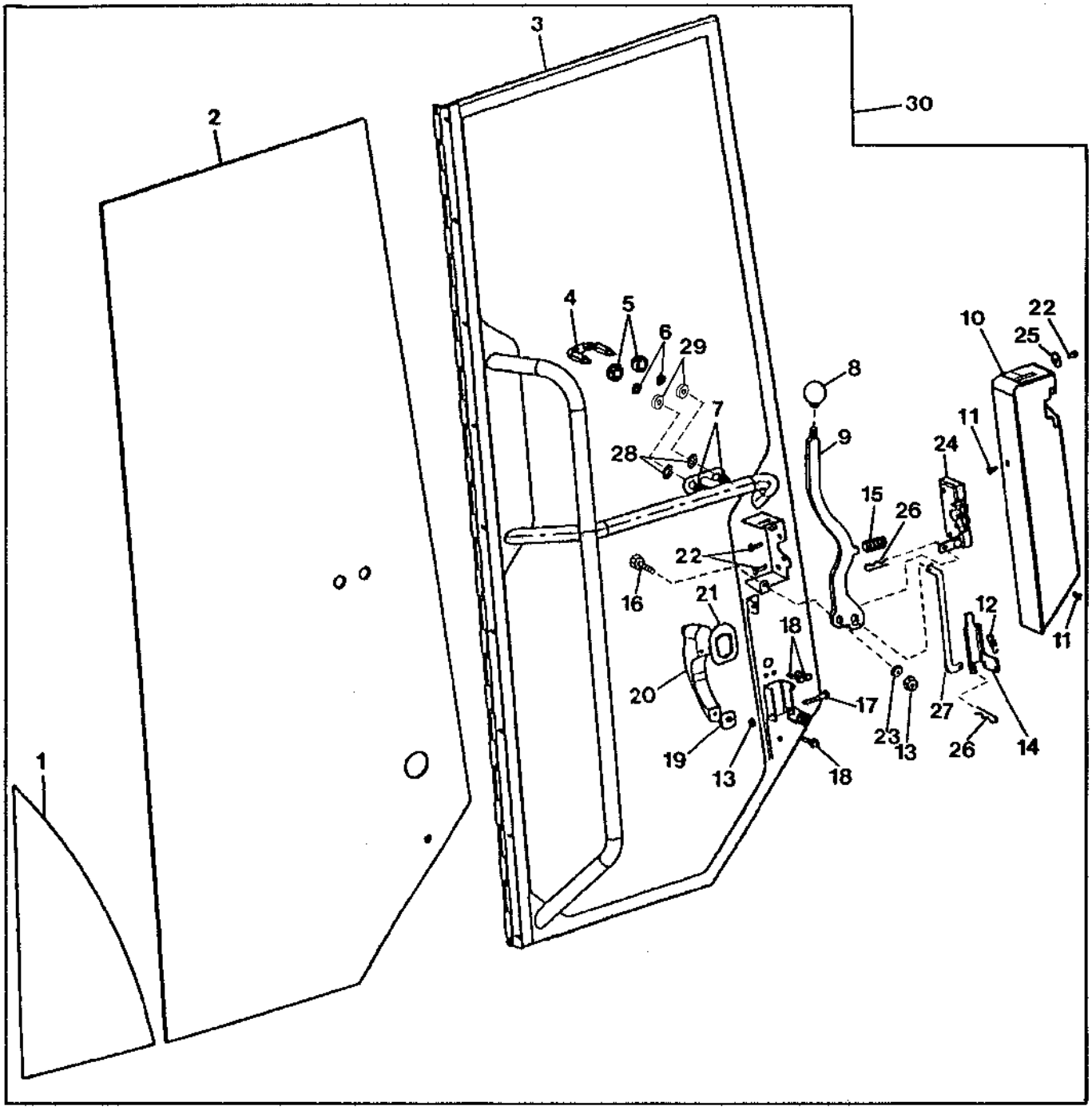

T139539

LEFT SIDE CAB DOOR
(SERIAL NO. 572542-)

KEY	PART NO.	PART NAME	QTY	SERIAL NO.	REMARKS
1	T167610	LABEL	1		(NO LONGER REQUIRED)
2	T167508	WINDOWPANE	1		
3	AT222151	DOOR	1	-581888	
	AT224995	DOOR	1	581889-	GRAY
4	T167546	STRIKER	1		
5	T167514	GROMMET	2		
6	24M7362	WASHER	2		8.400 X 16 X 1.600 MM
7	14M7424	FLANGE NUT	2		M8
8	T182969	KNOB	1		
9	T182966	CONTROL LEVER	1		
10	T182972	COVER	1		
11	T167593	SCREW	9		(DOOR HINGE TO CAB)
	T167593	SCREW	2		(T182972 LATCH COVER TO DOOR)
12	T167530	SPRING	1		
13	14M7303	FLANGE NUT	3		M6
14	T167618	ARM	1		
15	H95874	SPRING	1		
16	H131424	BOLT	1		
17	19M7834	SCREW	1		M6 X 45
18	19M7863	SCREW	3		M6 X 25
19	H126082	BEZEL	1		
20	AH121227	HANDLE	1		
21	H126081	BEZEL	1		
22	T182963	SCREW	4		
23	24M7298	WASHER	1		
24	AT83105	LATCH	1		
25	24M7251	WASHER	1		6.400 X 18 X 1.600 MM
26	H132922	COTTER PIN	2		
27	T182967	ROD	1		
28	T181047	NUT	2		
29	T182899	WASHER	2		
30	AT222152	DOOR	1	-581888	LEFT HAND
	AT224994	DOOR	1	581889-	GRAY(LH ASSEMBLY WITH GLASS)

CAB REAR SIDE WINDOWS
(SERIAL NO. -574038)

TP62765 -UN-18FEB00

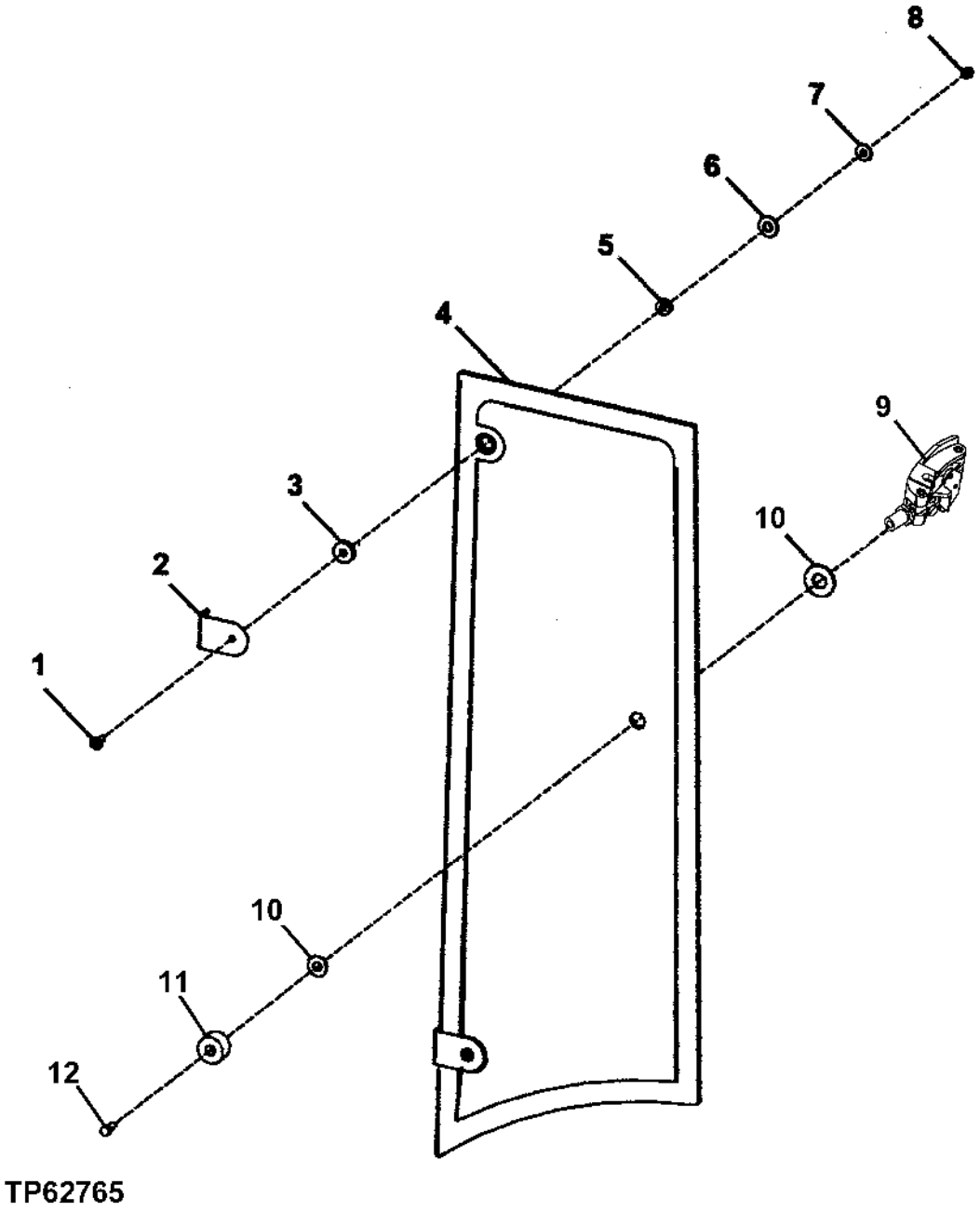

CAB REAR SIDE WINDOWS.
(SERIAL NO. -574038)

KEY	PART NO.	PART NAME	QTY	SERIAL NO.	REMARKS
1	19M8649	SCREW	2		M6 X 20
2	T167594	HINGE	2		
3	T55167	GROMMET	2		
4	T167509	WINDOWPANE	1		LEFT (USE IF AVAILABLE) (SUB T178221 AND AT222198)
	T167516	WINDOWPANE	1		RIGHT (NOT ILLUSTRATED) (USE IF AVAILABLE) (SUB T178220 AND AT222198)
5	T167534	BUSHING	2		
6	T167683	WASHER	2		
7	24M7261	WASHER	2		6.600 X 12 X 1.600 MM
8	14M7376	LOCK NUT	2		M6
9	AT217458	LATCH	2		
	37M7082	SCREW	3		M3 X 10, (LATCH TO CAB FRAME) (NOT ILLUSTRATED)
10	T167621	BUSHING	2		
11	T101090	BUMPER	1		
12	19M8146	SCREW	1		M5 X 16

CAB REAR SIDE WINDOWS
(SERIAL NO. 574039-)

TP62749 -UN-28JAN00

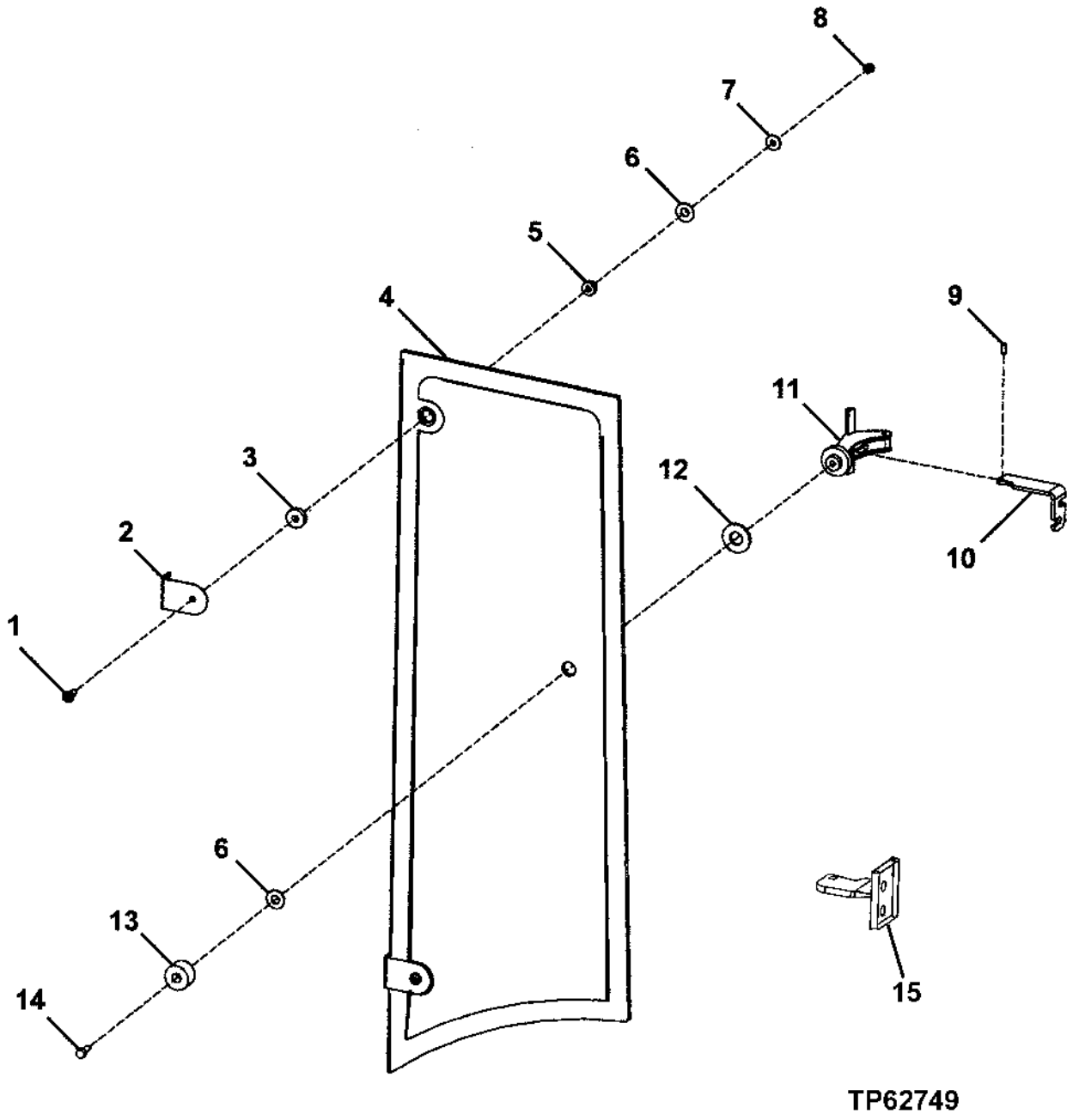

CAB REAR SIDE WINDOWS.
(SERIAL NO. 574039-)

KEY	PART NO.	PART NAME	QTY	SERIAL NO.	REMARKS
1	19M8648	SCREW	2		M6 X 16
2	T167594	HINGE	2		
3	T182899	WASHER	2		
4	T178221	WINDOWPANE	1		LEFT
	T178220	WINDOWPANE	1		RIGHT (NOT ILLUSTRATED)
5	T182902	BUSHING	2		
6	T167683	WASHER	3		
7	24M7251	WASHER	2		6.400 X 18 X 1.600 MM
8	14M7376	LOCK NUT	2		M6
9	34H275	SPRING PIN	1		3/16" X 1/2"
10	T178534	BRACKET	1		LEFT
	T177827	BRACKET	1		RIGHT (NOT ILLUSTRATED)
11	AT222197	LATCH	1		
	19M7768	SCREW	2		M6 X 16, (LATCH TO CAB FRAME) (NOT ILLUSTRATED)
12	T167659	WASHER	1		
13	T101090	BUMPER	1		
14	19M7768	SCREW	1		M6 X 16
15	AT222198	BRACKET	1		(USED TO ADAPT THE WINDOW PARTS ON THIS PAGE TO CABS ON MACHINES WITH SERIAL NO. PREVIOUS TO THE ONE ON THIS PAGE)

OPERATOR STATION FRONT PEDESTAL
(SERIAL NO. -XXXXXX)

TP48595 -UN-11DEC96

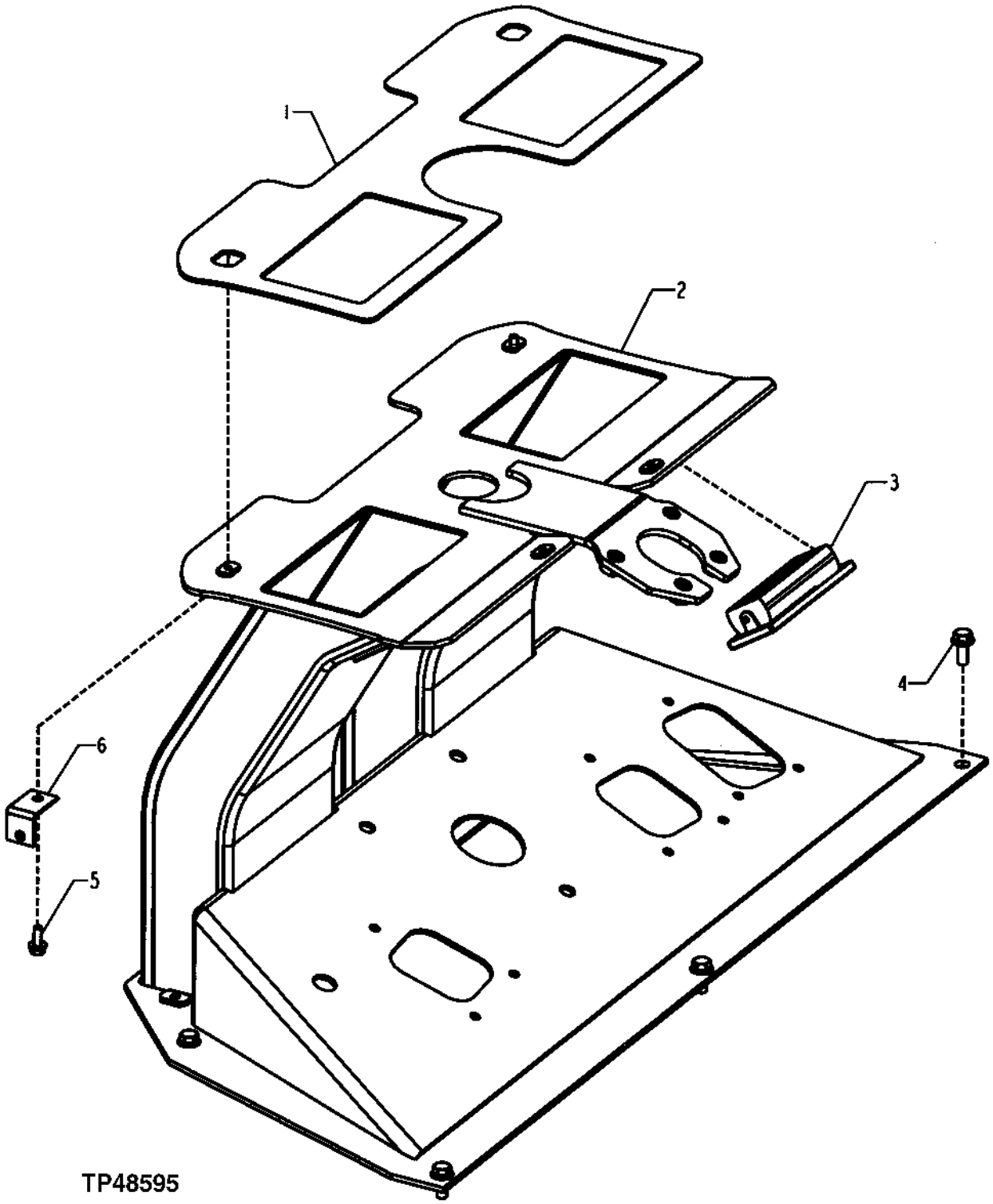

OPERATOR STATION FRONT PEDESTAL
(SERIAL NO. -XXXXXX)

KEY	PART NO.	PART NAME	QTY	SERIAL NO.	REMARKS
1	T171157	ISOLATOR	1		
2	AT209877	PEDESTAL	1		
3	AT211527	LOUVER	2		(SUB FOR AT202857)
4	19M7866	SCREW	6		M8 X 20
5	19M7775	SCREW	2		M6 X 16
6	AT207597	BRACKET	2		

OPERATOR STATION FRONT PEDESTAL
(SERIAL NO.XXXXXX-)

T149325 -UN-02JAN02

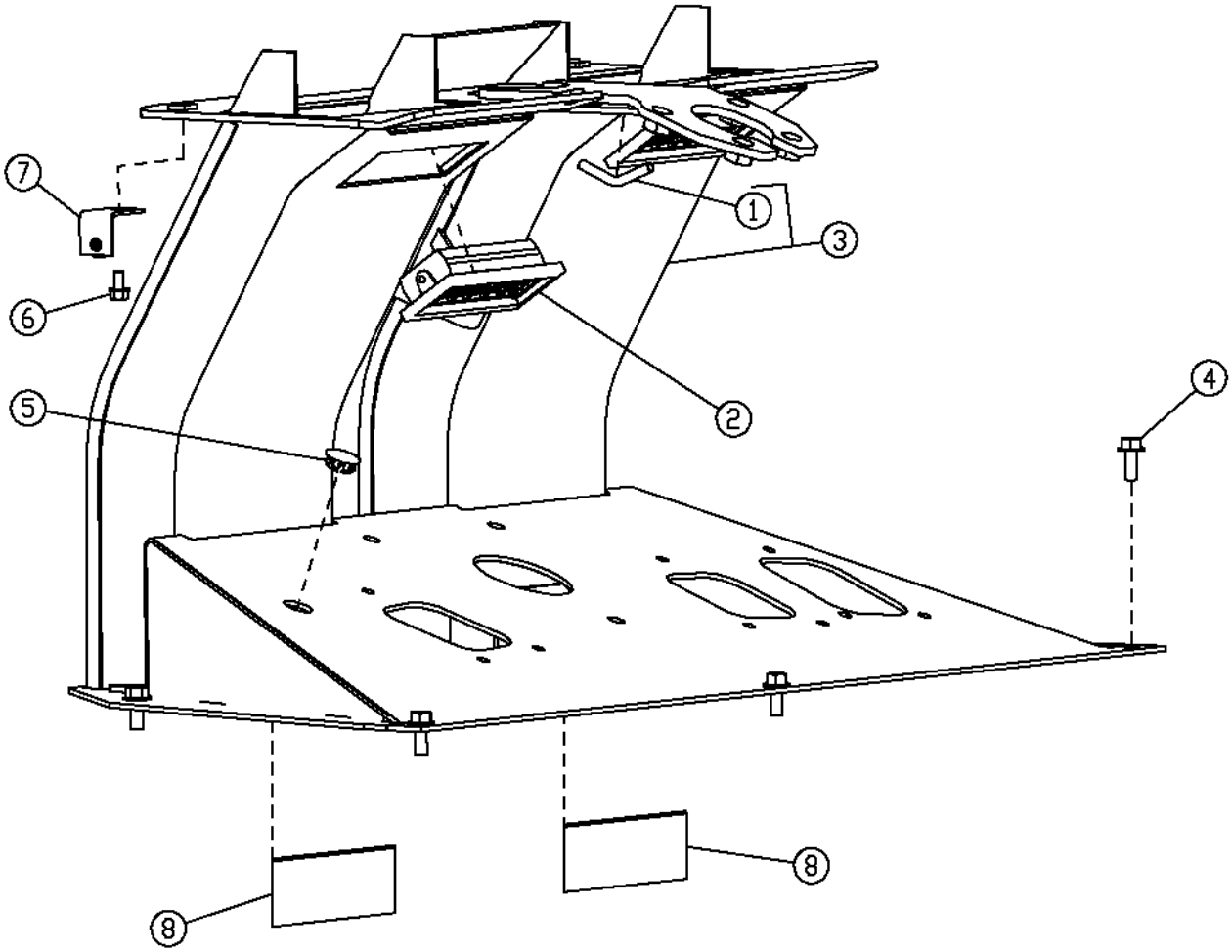

T149325

OPERATOR STATION FRONT PEDESTAL
(SERIAL NO. -XXXXXX)

KEY	PART NO.	PART NAME	QTY	SERIAL NO.	REMARKS
1	E72335	LINK CHAIN	1		
2	AT224239	LOUVER	2		
3	AT223443	PEDESTAL	1		(SUB FOR AT202857)
4	19M7866	SCREW	6		M8 X 20
5	H34597	PLUG	1		
6	19M7774	SCREW	2		
7	AT207597	BRACKET	2		
8	.....	ISOLATOR	2		(MAKE FROM T66418BULK MATERIAL CUT TO LENGTH)

MAGAZINE HOLDER

TP55854 -UN-05FEB98

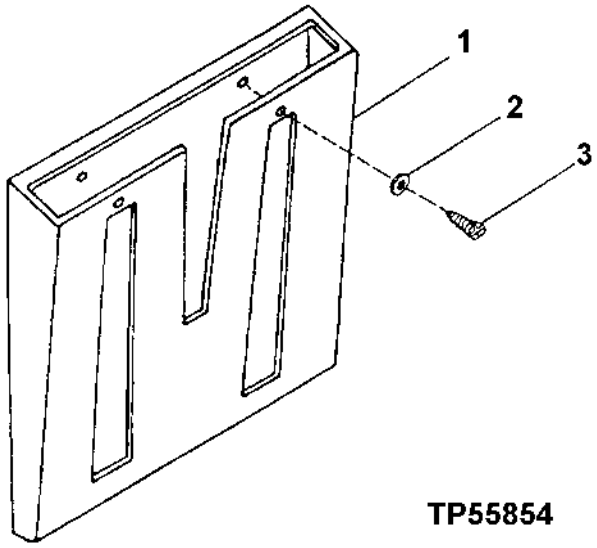

KEY	PART NO.	PART NAME	QTY	SERIAL NO.	REMARKS
1	T142873	HOLDER	1	-581888	
	T180924	HOLDER	1	581889-	GRAY
2	24M7054	WASHER	2		6.400 X 12 X 1.600 MM
3	37H112	SCREW	2		0.190" X 1/2"

CAB AND CANOPY FLOOR MAT

TP53738 -UN-28AUG96

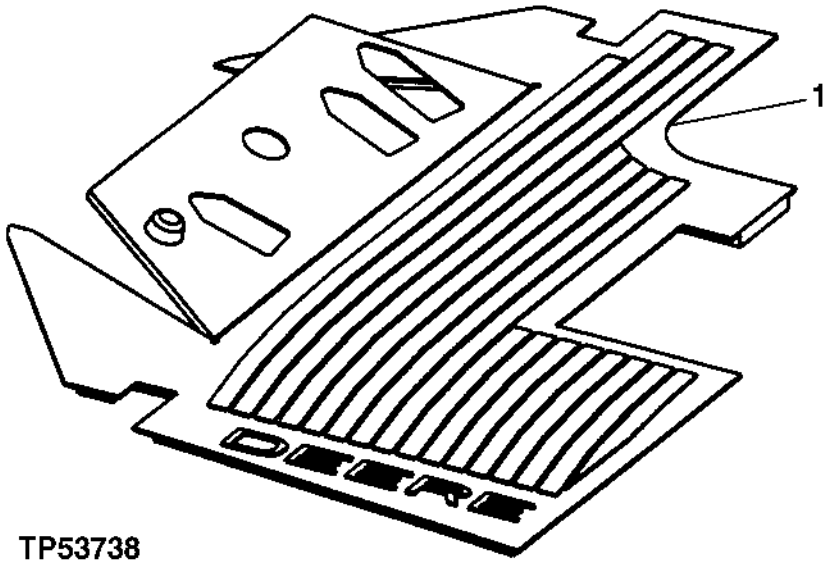

KEY	PART NO.	PART NAME	QTY	SERIAL NO.	REMARKS
1	AT202732	MAT	1		FLOOR MAT - CAB AND CANOPY

ASH TRAY

TP33786 -UN-01JAN94

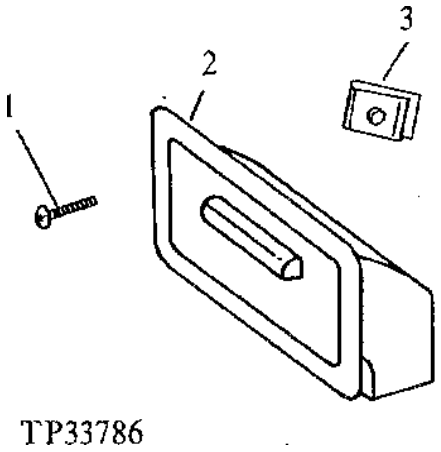

KEY	PART NO.	PART NAME	QTY	SERIAL NO.	REMARKS
1	21H1470	SCREW	2		0.164" X 3/4"
2	AT59892	ASHTRAY	1		
3	R53528	NUT	2		

COAT HOOK

TP60658 -UN-08MAR99

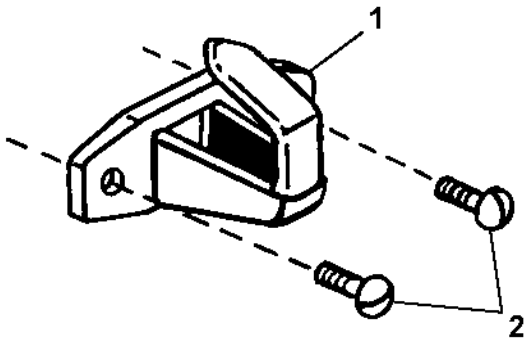

TP60658

KEY	PART NO.	PART NAME	QTY	SERIAL NO.	REMARKS
1	L102023	HOOK	2		
2	21M7305	SCREW	4		M6 X 12

WRIST REST

TP34968 -UN-01JAN94

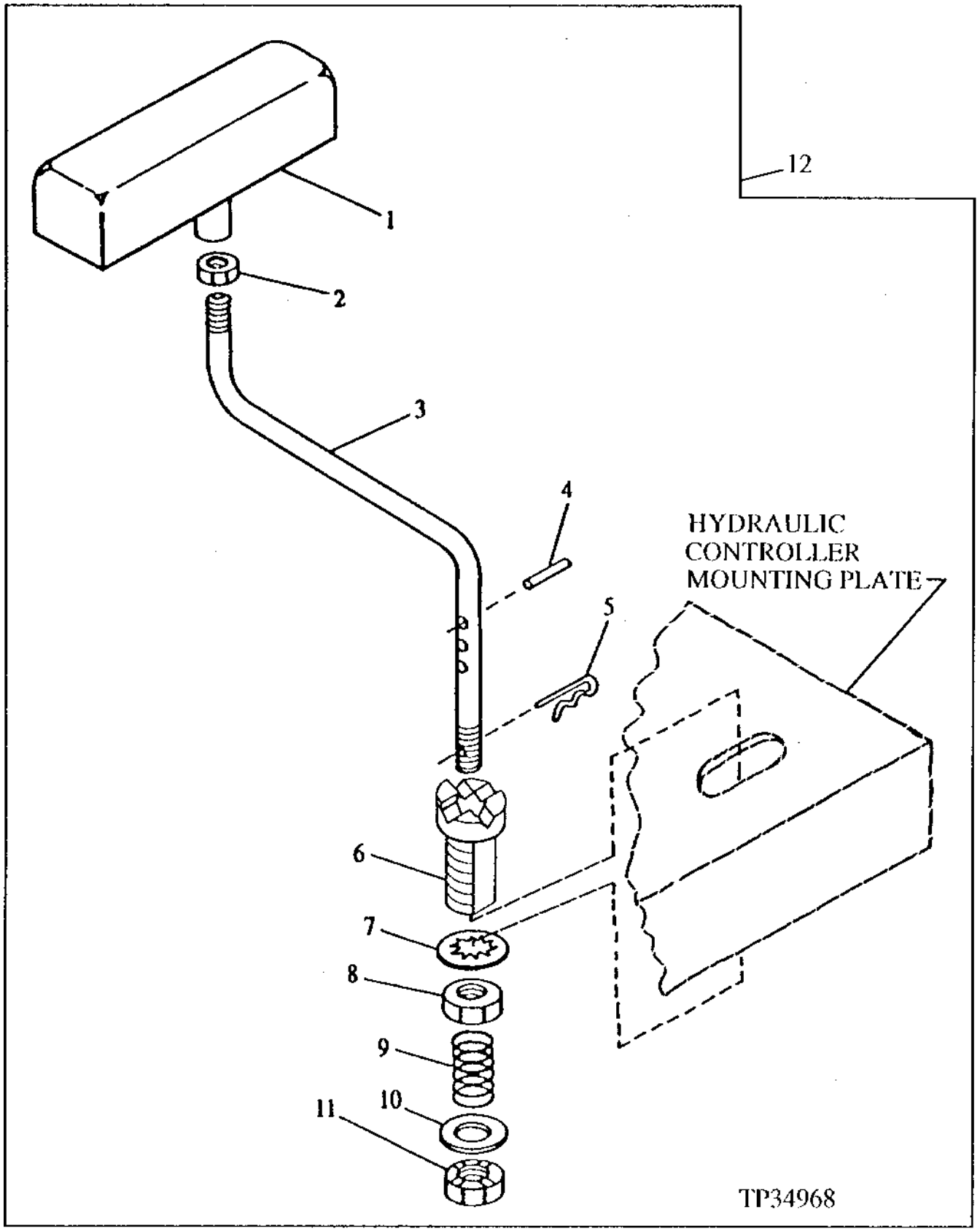

WRIST REST

KEY	PART NO.	PART NAME	QTY	SERIAL NO.	REMARKS
1	AT162171	PLATE	1		
2	R27296	NUT	1		
3	T174081	ROD	1		
4	34H282	SPRING PIN	1		3/16" X 1"
5	11H206	COTTER PIN	1		3/32" X 3/4"
6	T174080	SUPPORT	1		
7	12H328	LOCK WASHER	1		22.225 MM (7/8")
8	14H810	NUT	1		7/8"
9	T148177	SPRING	1		
10	24M7180	WASHER	1		13 X 37 X 3 MM (0.512" X 1.457" X 0.118")
11	14H522	NUT	1		1/2"
12	.....	ARMREST	1		WRIST REST ASSEMBLY (AT206780 NO LONGER AVAILABLE, ORDER COMPONENT PARTS)

FRONT AND REAR WINDSHIELD WIPER MOTOR
(SERIAL NO. -580190)

TP68403 -UN-13SEP99

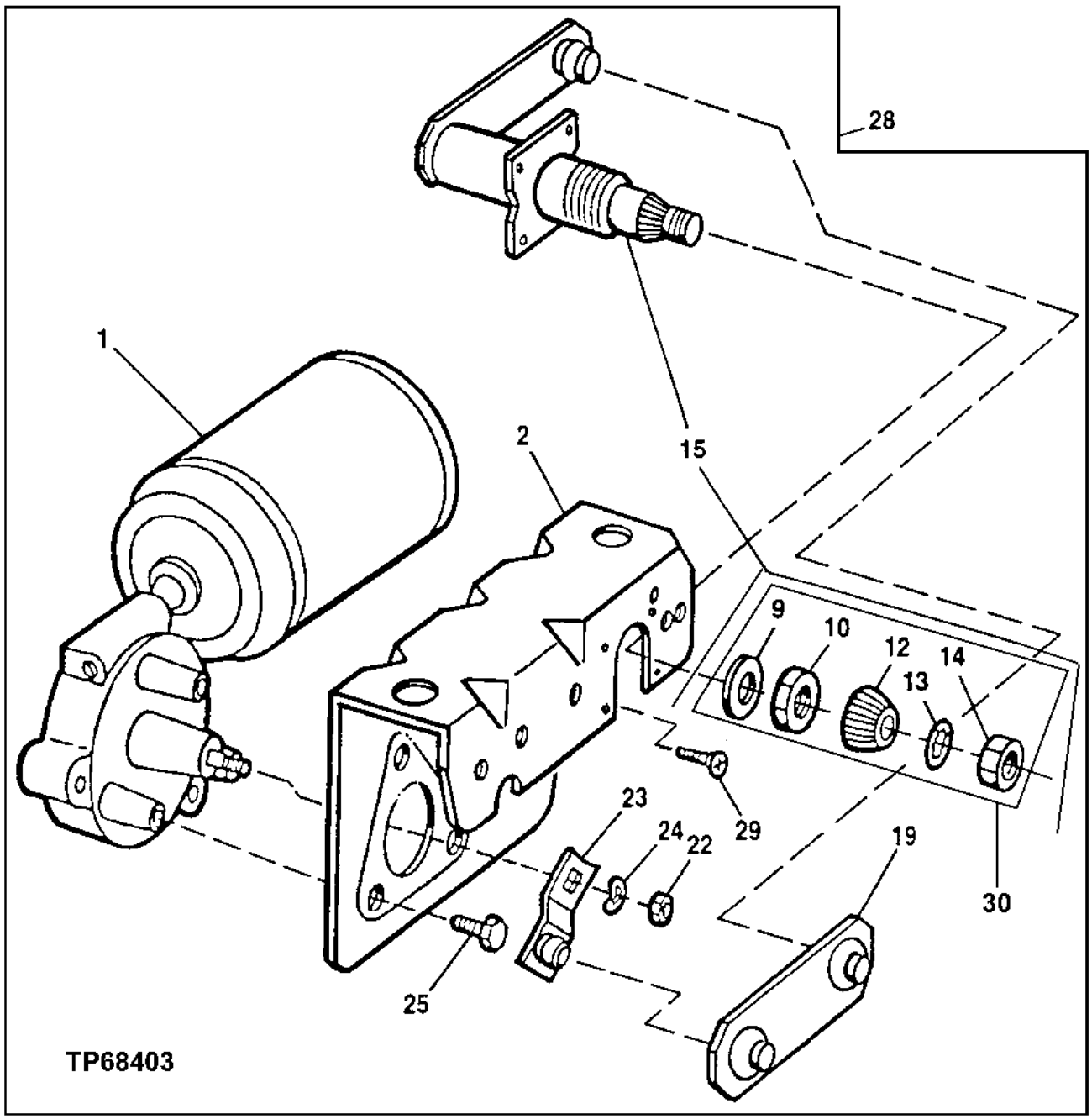

FRONT AND REAR WINDSHIELD WIPER MOTOR
(SERIAL NO. -580190)

KEY	PART NO.	PART NAME	QTY	SERIAL NO.	REMARKS
1	AT209908	MOTOR	2		(24 VOLT, FRONT AND REAR)
2	RE16879	BRACKET	2		(FRONT AND REAR)
9	R63667	WASHER	2		
10	AT138180	NUT	2		(FRONT AND REAR)
12	AT138179	CAP	2		(FRONT AND REAR)
13	.....	WASHER	2		(FRONT AND REAR) (SUB T172660 OR T172653)
14	.....	NUT	2		(FRONT AND REAR) (SUB T172660 OR T172653)
15	T172660	PIVOT	1		(REAR)
	T172653	PIVOT	1		(FRONT)
19	AT177963	LINK	1		(REAR)
	T172652	LINK	1		(FRONT)
22	14M7273	NUT	2		M8, (FRONT AND REAR)
23	AT177956	CRANK	1		(REAR)
	T172651	CRANK	1		(FRONT)
24	T160352	WASHER	2		(FRONT AND REAR)
25	AT177957	SCREW, WITH WASHER	6		(FRONT AND REAR)
28	AT202726	WINDSHIELD WIPER	1		(FRONT-INCLUDES BLIND PIVOT KIT T172654, WET WIPER ARM AT209909 AND WIPER BLADE AT138215)
	AT202784	MOTOR	1		(REAR-INCLUDES WET WIPER ARM AT209910, WIPER BLADE AT209912 AND COMPACT DRIVE ASSEMBLY AT209904)
	AT209904	DRIVE	1		REAR COMPACT DRIVE ASSEMBLY (INCLUDES RE40049) KIT
29	21M7282	SCREW	4		M5 X 8, (REAR)
30	RE40049	KIT	1		HARDWARE

FRONT AND REAR WINDSHIELD WIPER MOTOR
(SERIAL NO. 580191-)

T141950 -UN-04MAY01

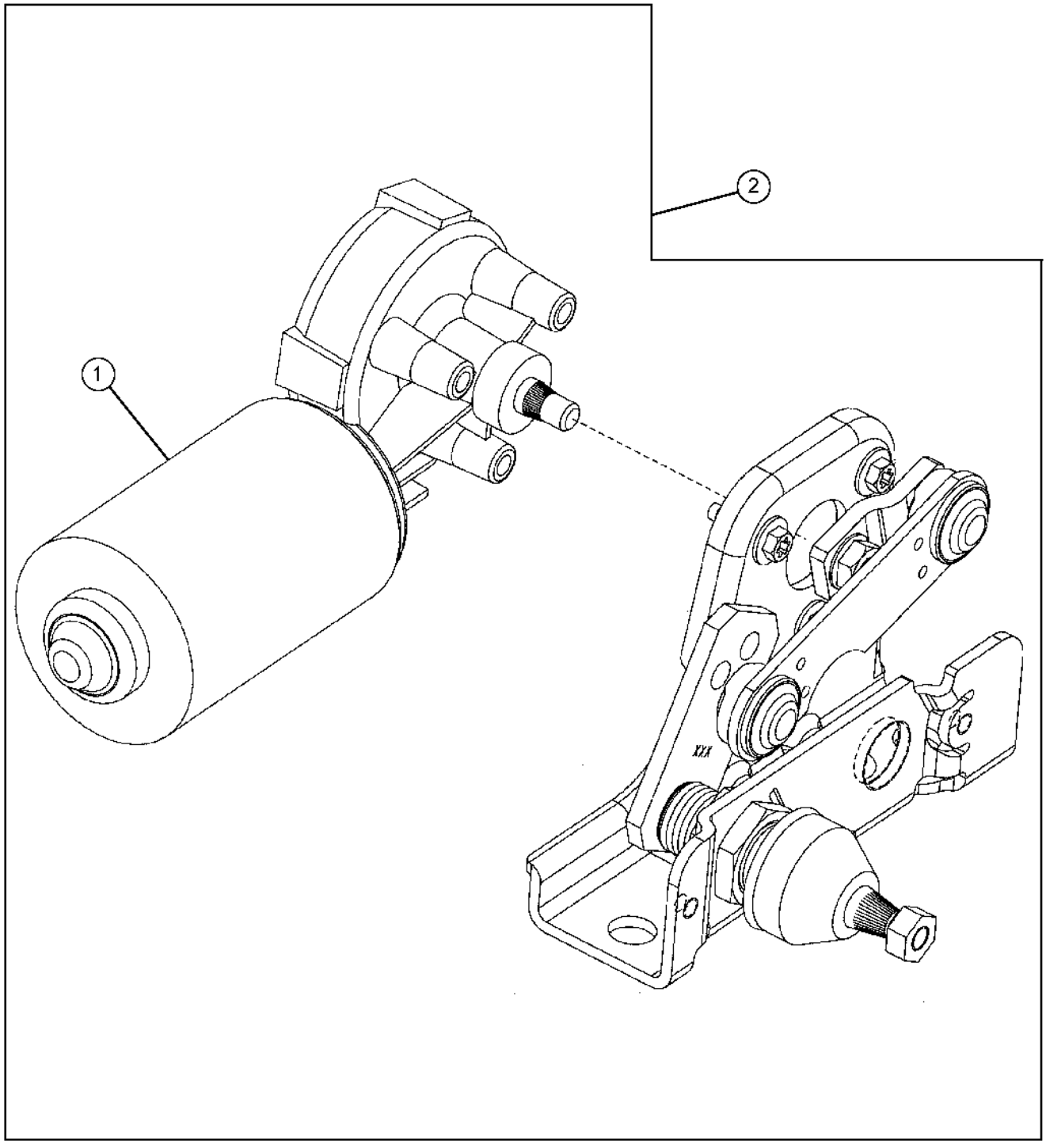

T141950

FRONT AND REAR WINDSHIELD WIPER MOTOR
(SERIAL NO. 580191-)

KEY	PART NO.	PART NAME	QTY	SERIAL NO.	REMARKS
1	AT209908	WIPER MOTOR	1		
2	AT224217	WIPER MOTOR	1		

WIPER ARMS AND BLADES

T139350 -UN-09MAR01

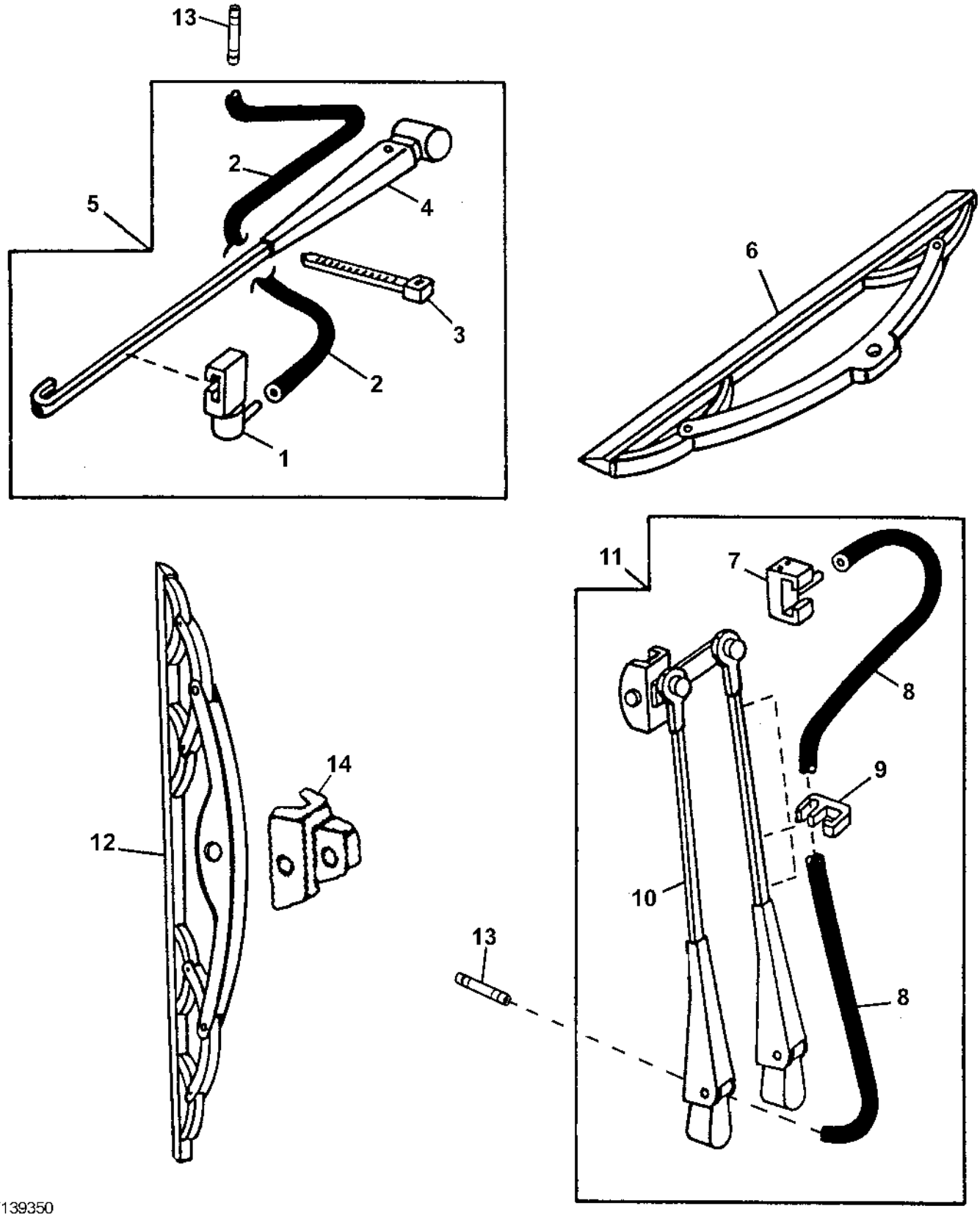

T139350

WIPER ARMS AND BLADES

KEY	PART NO.	PART NAME	QTY	SERIAL NO.	REMARKS
1	AT106384	NOZZLE	1		
2	.....	HOSE	AR		(MAKE FROM R120653 BULK MATERIAL, CUT TO LENGTH) (SUB FOR R54445 AND R104595)
3	.....	TIE BAND	2		
4	.....	ARM	1		(SUB AT209910)
5	AT209910	WIPER ARM	1		(REAR)
6	AT209912	WIPER BLADE	1		
7	AT137920	WINDSHIELD WASHER	1		
8	.....	HOSE	AR		(MAKE FROM R120653 BULK MATERIAL, CUT TO LENGTH) (SUB FOR R54445 AND R104595)
9	AT137921	CLIP	1		
10	.....	ARM	1		(SUB AT209909)
11	AT209909	WIPER ARM	1		(FRONT)
12	TY24971	WIPER BLADE	1		(ALSO ORDER TY25006 AND TY16313 WIPER BLADE KIT) (SUB FOR TY16308)
13	T182919	FITTING	2		
14	TY25006	BRACKET	1		(SUB FOR TY16312)

WIPER MOUNTING BRACKETS

T148081 -UN-14NOV01

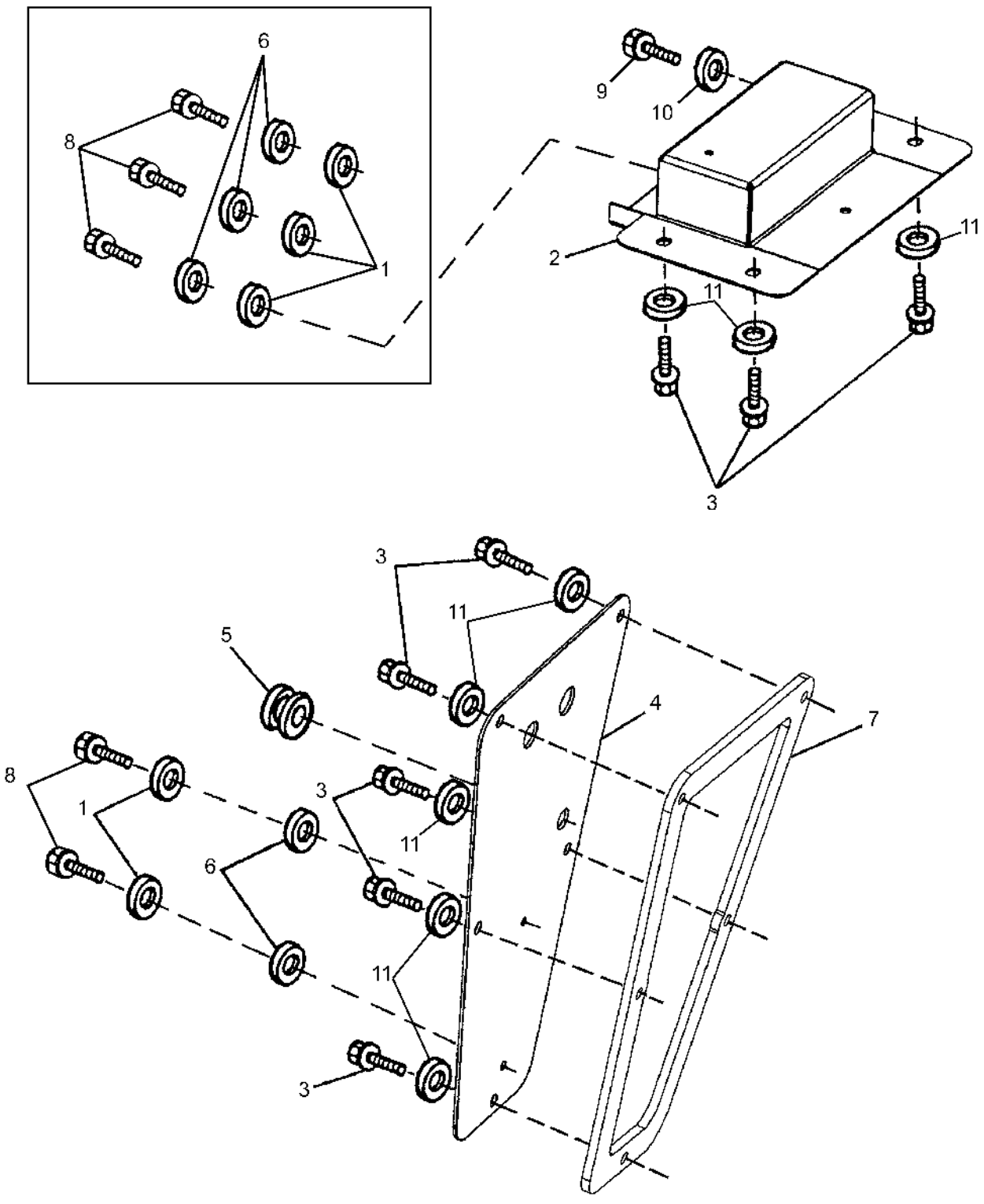

T148081

WIPER MOUNTING BRACKETS

KEY	PART NO.	PART NAME	QTY	SERIAL NO.	REMARKS
1	24M7100	WASHER	5	-580190	6.600 X 22 X 2 MM
	24M7100	WASHER	2	580191-	6.600 X 22 X 2 MM
2	T167638	TRAY	1		BRACKET, REAR WIPER MOUNTING
	T181412	TRAY	1		(EXPORT)
3	19M7866	SCREW	9	-XXXXXX	M8 X 20
	19M7865	SCREW	9	XXXXXX-	
4	T167753	PLATE	1		
	T181413	PLATE	1		(EXPORT)
5	T182874	GROMMET	1		
6	H110232	WASHER	5	-580190	(SUB FOR T60920)
	H110232	WASHER	2	580191-	(SUB FOR T60920)
7	T167754	SEAL	1		
8	19H3138	CAP SCREW	5	-580190	1/4" X 5/8"
	19H3138	CAP SCREW	2	580191-	
9	19M7923	CAP SCREW	1	580191-XXXXXX	M6 X 12
	19M7774	SCREW	1	XXXXXX-	
10	24M7139	WASHER	1	580191-	6.400 X 18 X 1.600 MM
11	24M7238	WASHER	9	XXXXXX-	

RIGHT SIDE CONSOLE

TP55881 -UN-24FEB98

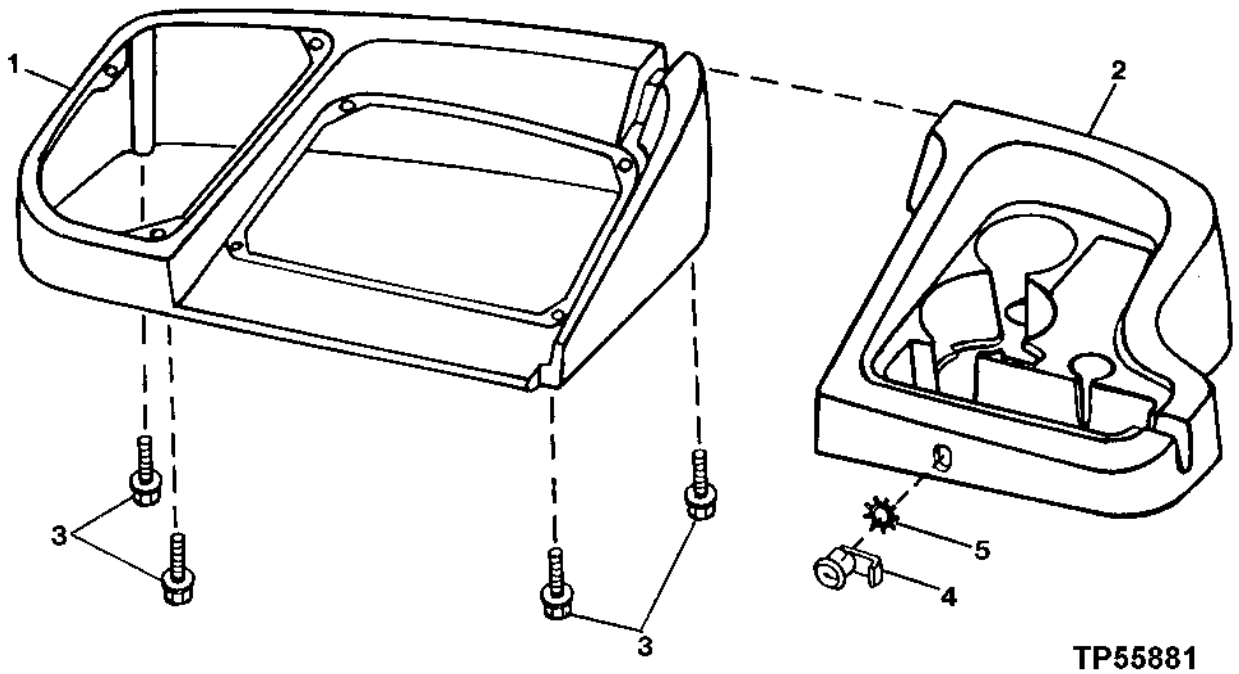

TP55881

RIGHT SIDE CONSOLE

KEY	PART NO.	PART NAME	QTY	SERIAL NO.	REMARKS
1	T171854	CONSOLE	1	-581888	
	T180922	CONSOLE	1	581889-	GRAY
2	T171855	CONSOLE	1	-581888	
	T180923	CONSOLE	1	581889-	GRAY
3	19M7774	SCREW	4		M6 X 12
4	AT221162	LOCK	1	-571580	(SUB FOR AT151812)
5	12H327	LOCK WASHER	1		3/4"

CAB HYDRAULIC HOSE GROMMET

TP60507 -UN-06OCT98

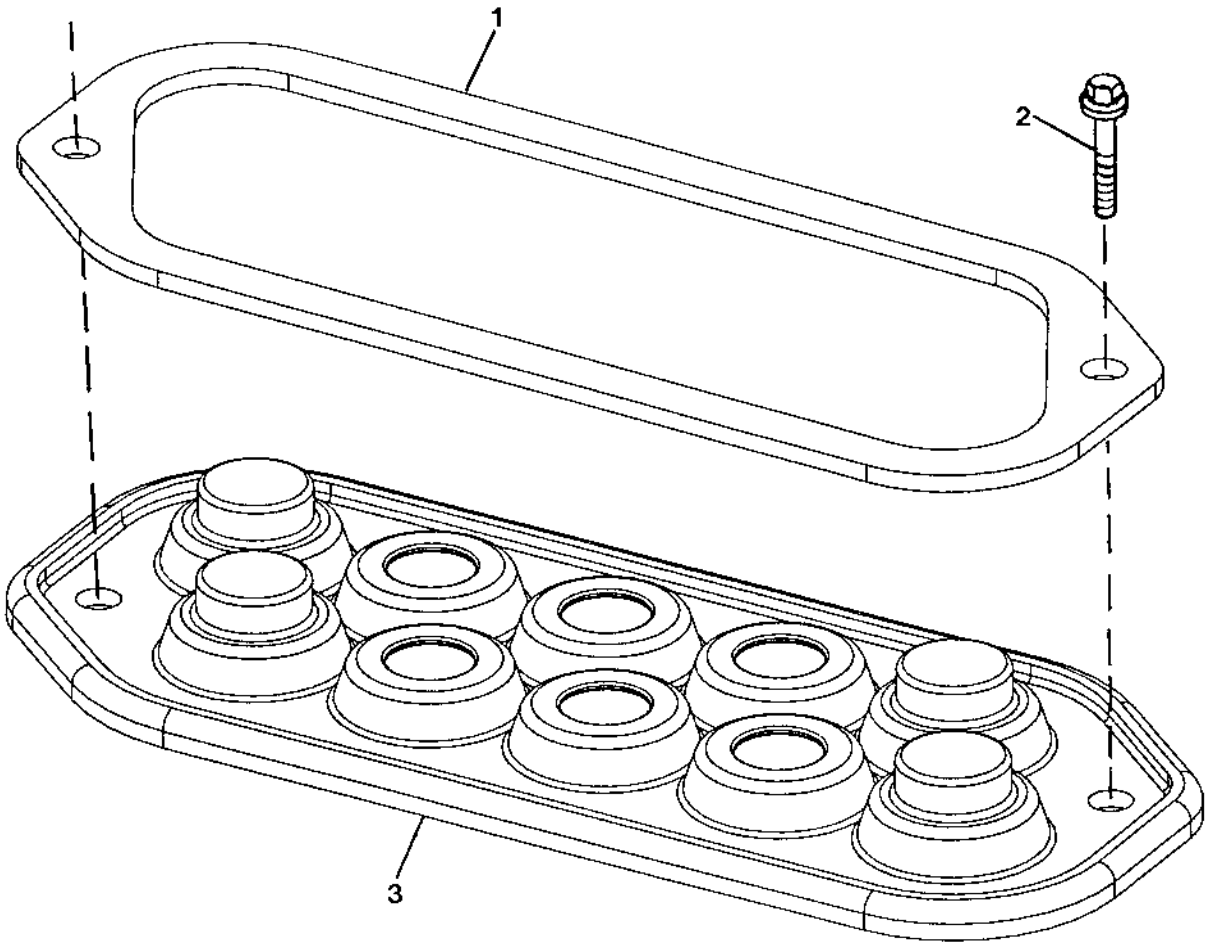

TP60507

CAB HYDRAULIC HOSE GROMMET

KEY	PART NO.	PART NAME	QTY	SERIAL NO.	REMARKS
1	T172991	PLATE	1		
2	19M7866	SCREW	2		M8 X 20
3	T172992	GROMMET	1		

FRESH AIR HOUSING COVER

TP60556 -UN-01DEC98

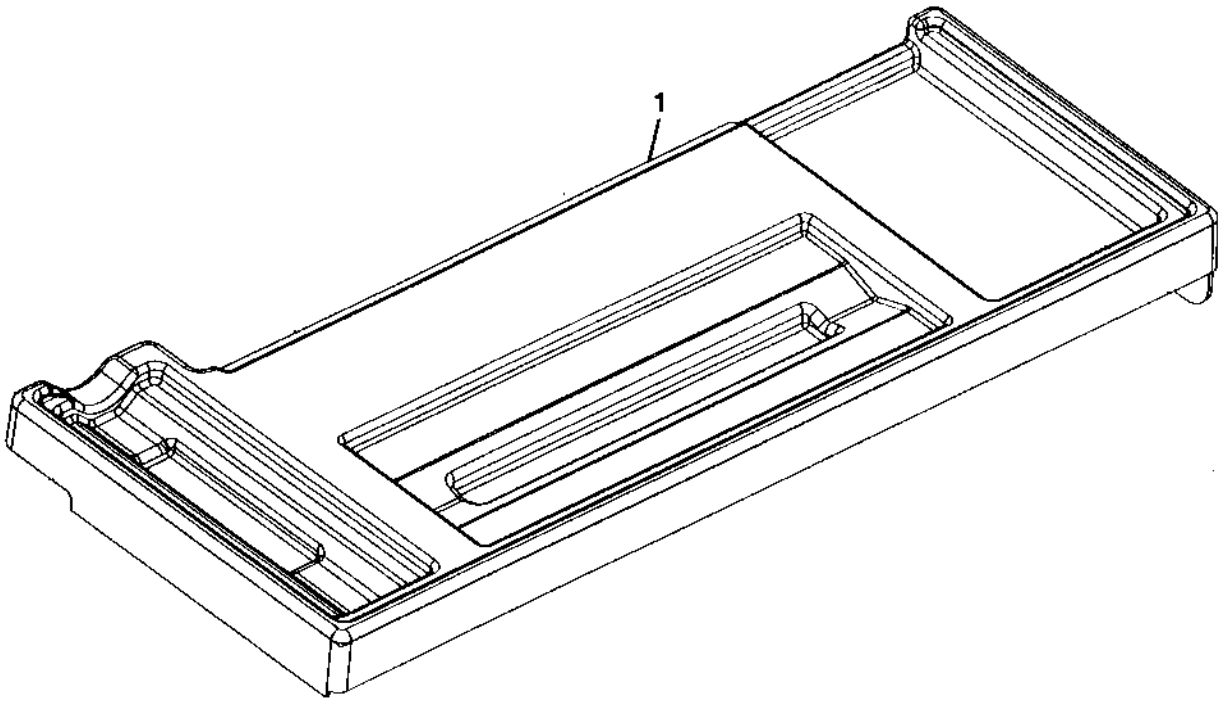

TP60556

FRESH AIR HOUSING COVER

KEY	PART NO.	PART NAME	QTY	SERIAL NO.	REMARKS
1	AT222402	COVER	1		(SUB FOR AT211486)

FLOOR SWEEPING RETAINER

TP62520 -UN-15APR99

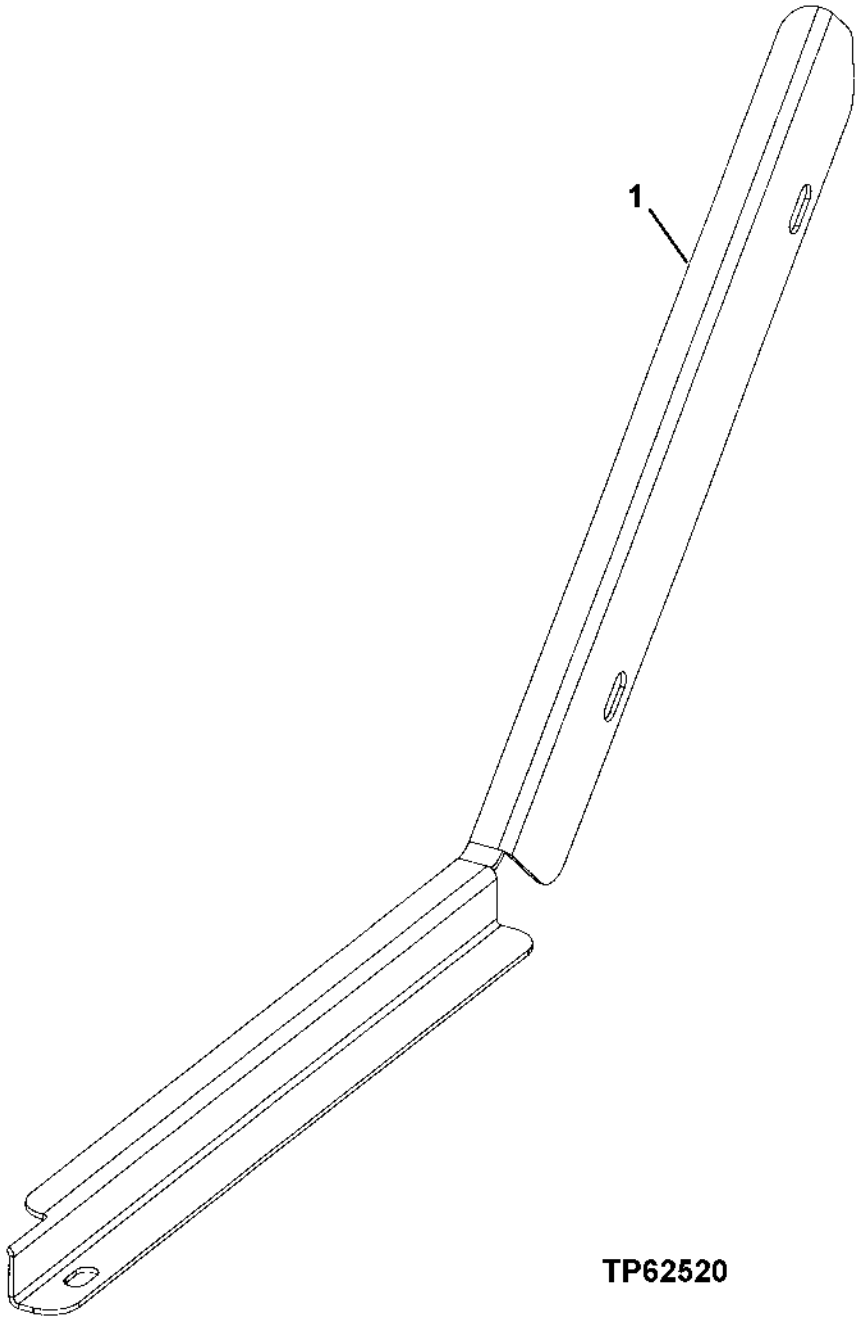

FLOOR SWEEPING RETAINER

KEY	PART NO.	PART NAME	QTY	SERIAL NO.	REMARKS
1	T182970	RETAINER	1	-581888	(SUB FOR T167758)
	T180930	RETAINER	1	581889-	GRAY

**VANDAL COVER
(CANOPY)**

T151252 -UN-12FEB02

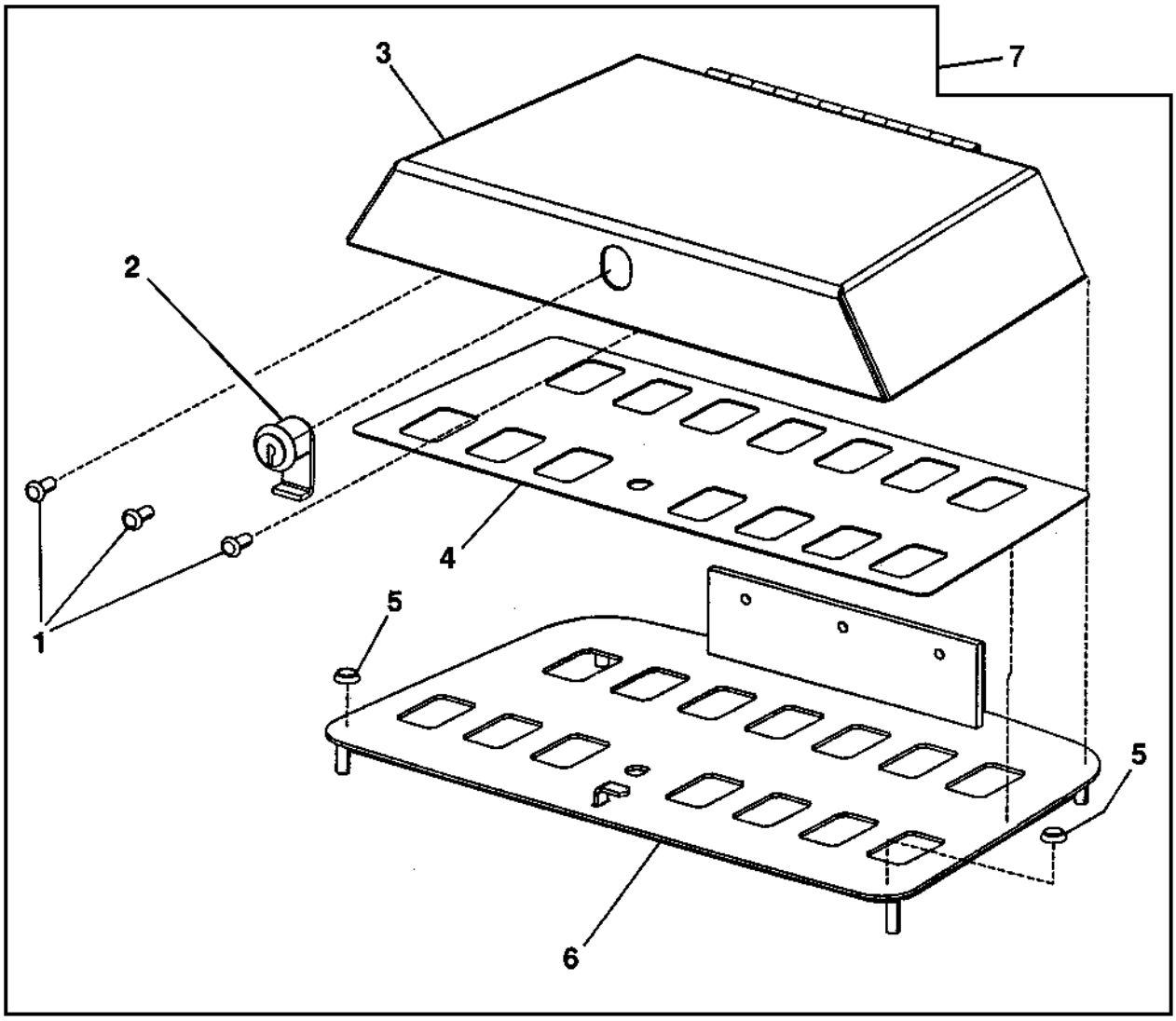

T151252

VANDAL COVER
(CANOPY)

KEY	PART NO.	PART NAME	QTY	SERIAL NO.	REMARKS
1	T167593	SCREW	3		
2	AT221162	LOCK	1		
3	AT217473	COVER	1		
	T182848	HINGE	1		
	T182891	COVER	1		
4	T179364	LABEL	1	-581888	(SUB FOR T172958)
	T179725	LABEL	1	581889-	
5	R96753	SPACER	2		
6	AT217439	PLATE	1		
7	AT217476	COVER	1		

VANDAL COVER MONITOR (CANOPY)

TP62808 -UN-25MAY00

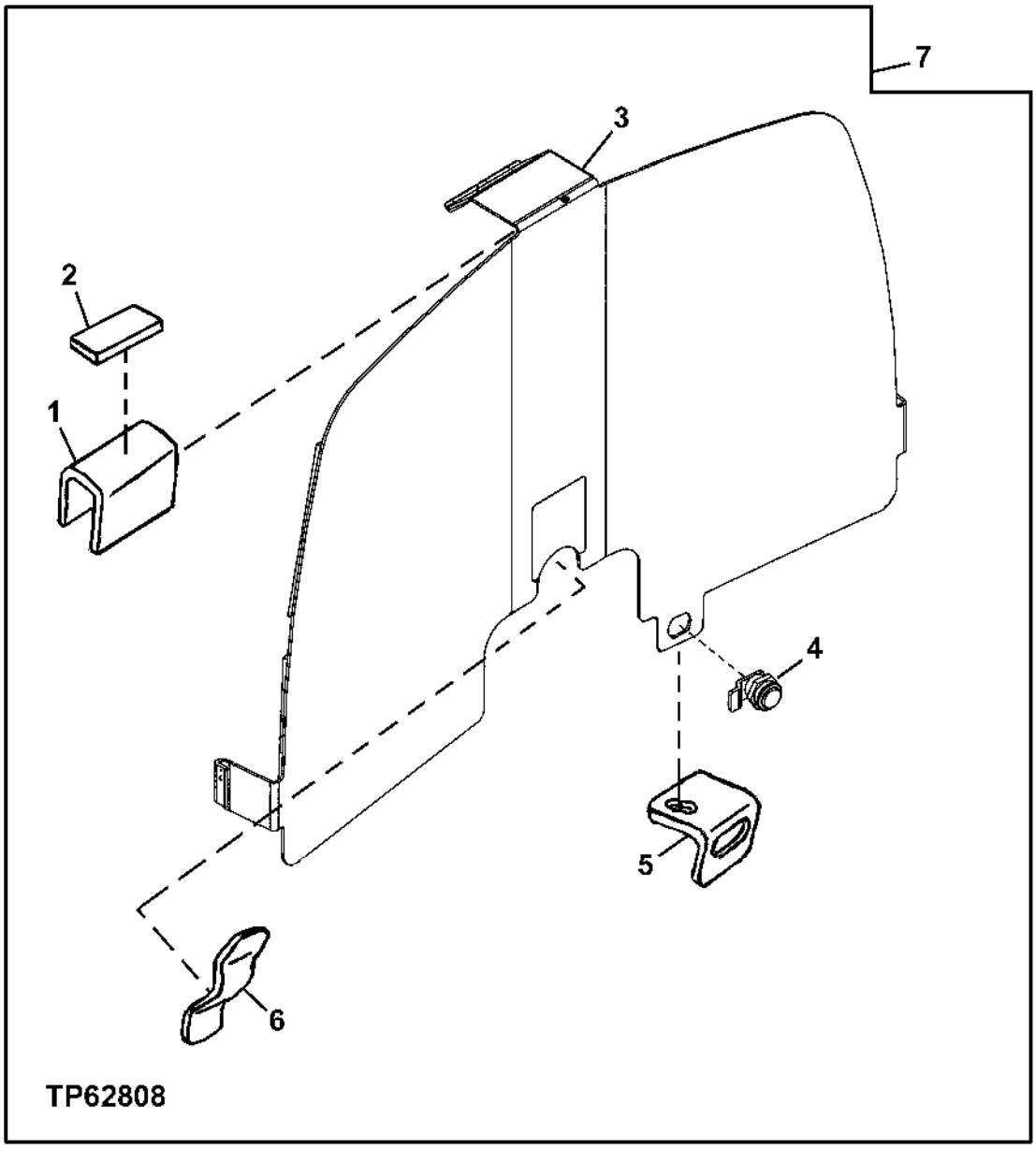

VANDAL COVER MONITOR (CANOPY)

KEY	PART NO.	PART NAME	QTY	SERIAL NO.	REMARKS
1	.....	BRACKET	1		SUPPORT, (SUB AT223572)
2	.....	ANCHOR	1		VELCRO, LOOP, (SUB AT223572)
3	.....	COVER	1		DASH, (SUB AT223572)
4	AT38176	LOCK	1		CYLINDER
5	.....	ANGLE	1		LOCK, (SUB AT223572)
6	.....	STRAP	1		RETAINER, (SUB AT223572)
7	AT223572	VALVE COVER	1		MONITOR

DRIP RAIL

TP62704 -UN-23NOV99

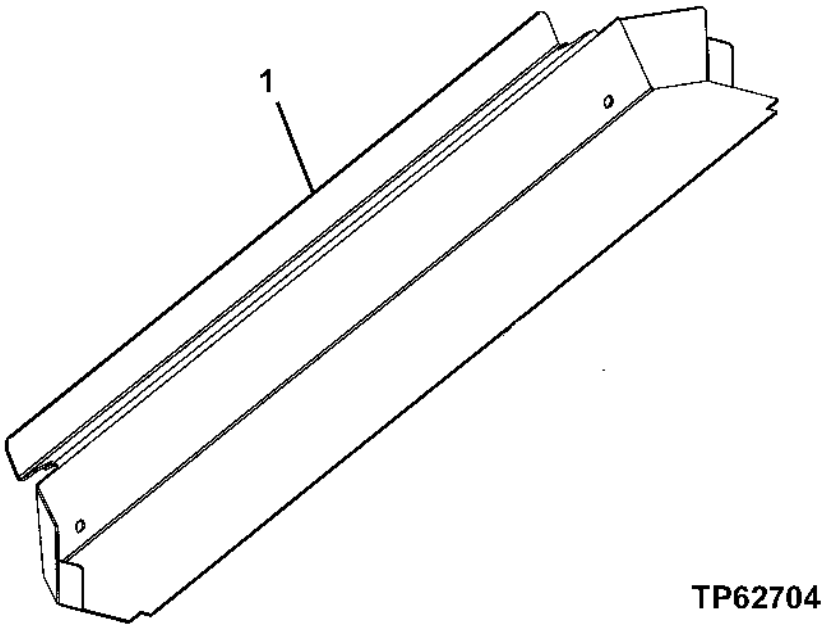

KEY	PART NO.	PART NAME	QTY	SERIAL NO.	REMARKS
1	AT217436	RAIL	1	-581888	DRIP
	AT224933	RAIL	1	581889-	DRIP(GRAY)

SEAT BELT
76MM (3 IN.) WIDE

TP55745 -UN-26NOV97

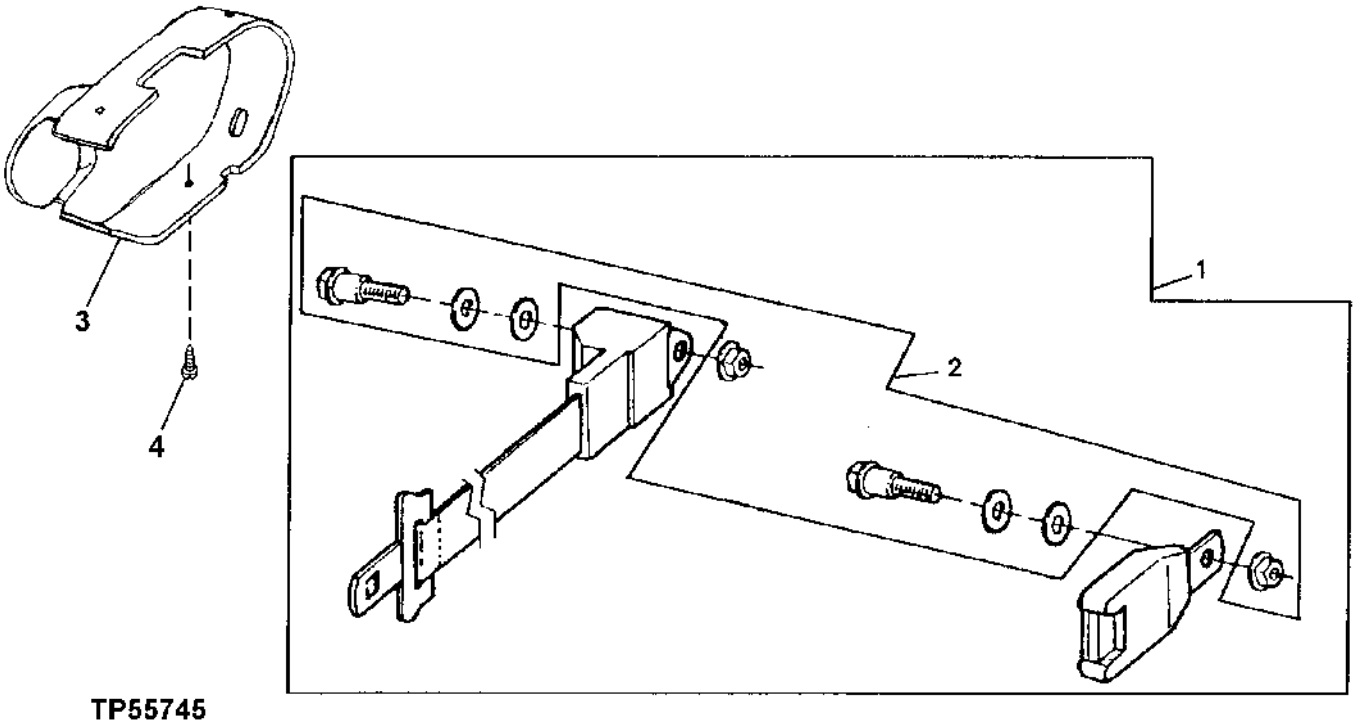

TP55745

KEY	PART NO.	PART NAME	QTY	SERIAL NO.	REMARKS
1	AT172778	SEAT BELT	1		ALSO ORDER AT172779 HARDWARE KIT)
2	AT172779	KIT	1		(HARDWARE)
3	T163633	COVER	1		(LEFT SIDE)
	T160895	COVER	1		(LEFT SIDE) (SNAP-ON, DOESN'T USE FASTENERS)
4	21H1427	SCREW	4		0.190" X 1/2", (USE WITH T163633)

REPLACEMENT SEAT BELT
76MM (3 IN.) WIDE

TP62743 -UN-19JAN00

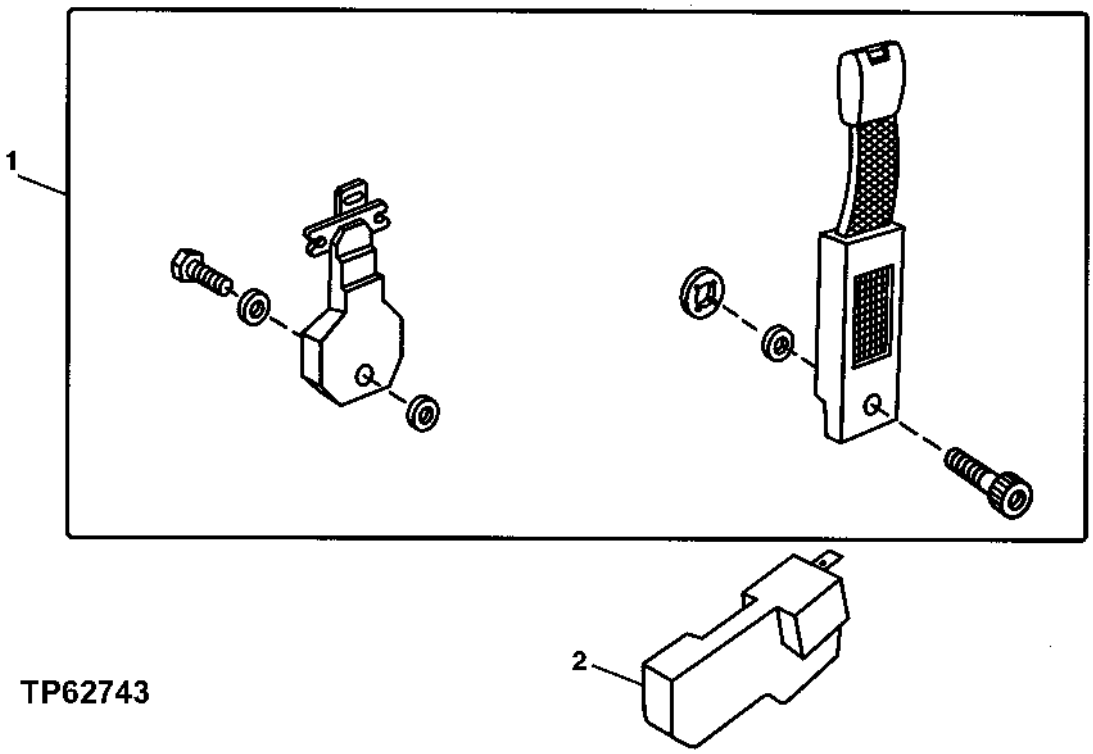

KEY	PART NO.	PART NAME	QTY	SERIAL NO.	REMARKS
1	AT178065	SEAT BELT	1		
2	T163962	COVER	1		

MEMORANDA

SEAT AND SEAT SUSPENSION

TP60316 -UN-03APR98

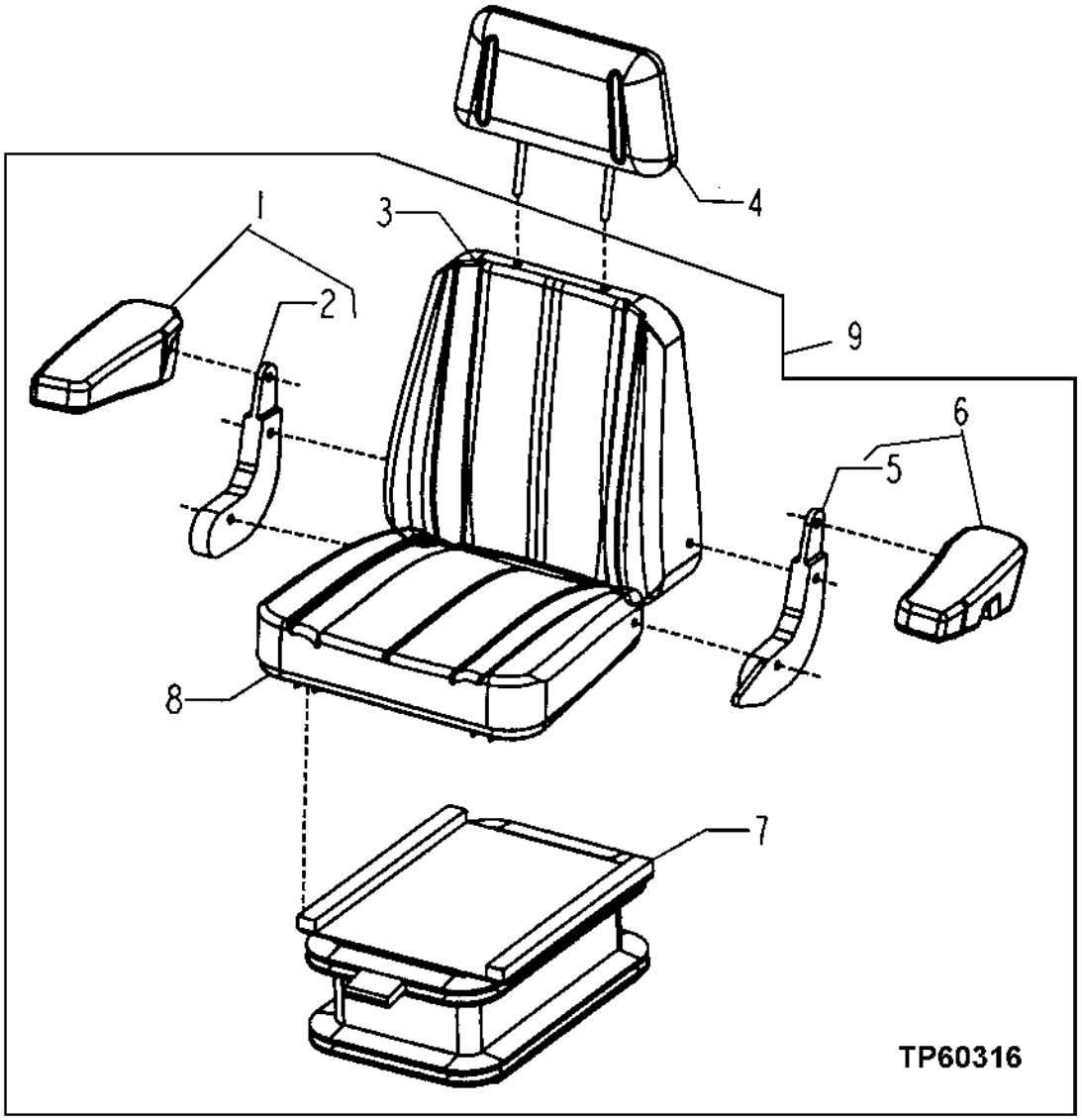

SEAT AND SEAT SUSPENSION

KEY	PART NO.	PART NAME	QTY	SERIAL NO.	REMARKS
1	AT209016	ARMREST KIT	1	-581888	RT. ARM REST (WITH MECHANICAL OR AIR SUSPENSION) (REFERENCE KEY 6 FOR KIT INFORMATION)
	AT195441	ARMREST KIT	1	581889-	GRAY
2	.....	BRACKET	1		RT. BRACKET (WITH AIR SUSPENSION) (SUB AT209016)
	AT160273	BRACKET	1		RT. BRACKET (WITH MECHANICAL SUSPENSION)
3	AT209015	PAD	1		BACKREST CUSHION (CLOTH W/AIR OR MECHANICAL SUSPENSION)
	AT209028	PAD	1		BACKREST CUSHION (VINYL WITH MECHANICAL SUSPENSION)
4	AT209385	CUSHION	1		HEADREST (CLOTH W/AIR OR MECHANICAL, SUSPENSION)
	AT209386	CUSHION	1		HEADREST (VINYL WITH MECHANICAL SUSPENSION)
5	.....	BRACKET	1		LT. BRACKET (WITH AIR SUSPENSION) (SUB AT209017)
	AT160278	BRACKET	1		LT. BRACKET (WITH MECHANICAL SUSPENSION)
	AT209225	KIT	1		(RECLINER) (NOT ILLUSTRATED)
	AT209025	KIT	1		(KNOB AND SCREW) (RECLINER) (NOT ILLUSTRATED)
6	AT209017	ARMREST KIT	1	-581888	LT. ARM REST (WITH MECHANICAL OR AIR SUSPENSION)
	AT221618	KIT	1		(NOT ILLUSTRATED) (USE WITH EITHER RIGHT OR LEFT ARM REST) (KIT INCLUDES FOUR PARTS LISTED BELOW)
	T177589	WASHER	1		(NOT ILLUSTRATED)
	T177590	NUT	1		(NOT ILLUSTRATED)
	T177591	BOLT	1		(NOT ILLUSTRATED)
	T177592	WASHER	1		(NOT ILLUSTRATED)
	AT195442	ARMREST KIT	1	581889-	GRAY
7	AT208531	SEAT SUSPENSION	1		AIR SUSPENSION (CLOTH W/AIR SUSPENSION)
	AT209031	SEAT SUSPENSION	1		MECHANICAL SUSPENSION (CLOTH W/MECHANICAL SUSPENSION)
8	AT209014	PAD	1		SEAT CUSHION (CLOTH W/AIR OR MECHANICAL SUSPENSION)
	AT209027	SEAT	1		SEAT CUSHION (VINYL WITH MECHANICAL SUSPENSION)
9	AT209029	SEAT	1		SEAT ASSEMBLY WITHOUT HEADREST (CLOTH W/AIR SUSPENSION) (USE IF AVAILABLE) (SUB AT222887)
	AT222887	SEAT	1	-581888	SEAT ASSEMBLY WITHOUT HEADREST (CLOTH W/AIR SUSPENSION)
	AT209030	SEAT	1		SEAT ASSEMBLY WITHOUT HEADREST (CLOTH W/MECHANICAL SUSPENSION) (USE IF AVAILABLE) (SUB AT222888)
	AT222888	SEAT	1	-581888	SEAT ASSEMBLY WITHOUT HEADREST (CLOTH WITH MECHANICAL SUSPENSION)
	AT209032	SEAT SUSPENSION	1		SEAT ASSEMBLY WITHOUT HEADREST (VINYL WITH MECHANICAL SUSPENSION) (USE IF AVAILABLE) (SUB AT222889)
	AT222889	SEAT	1	-581888	SEAT ASSEMBLY WITH OUT HEADREST (VINL WITH MECHANICAL SUSPENSION)
	AT224248	SEAT	1	581889-	GRAY(CLOTH WITH AIR SUSPENSION)
	AT224247	SEAT	1	581889-	GRAY(CLOTH WITH MECHANICAL SUSPENSION)
	AT224249	SEAT	1	581889-	GRAY(VINYL DELUXE)

LUMBAR ADJUSTER AND CONTROL KNOB

TP60417 -UN-17JUN98

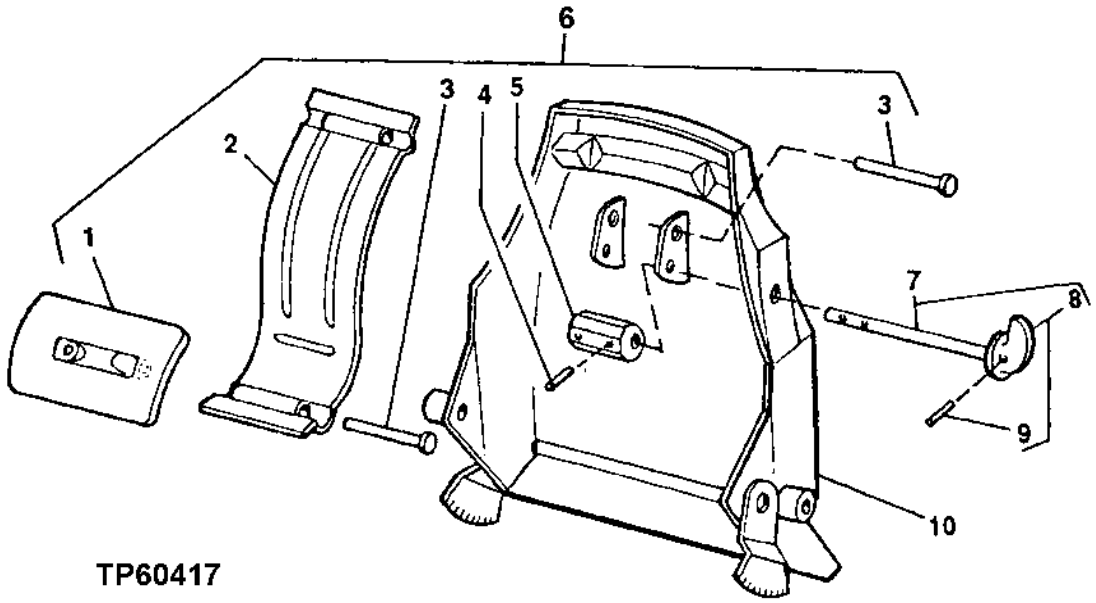

TP60417

LUMBAR ADJUSTER AND CONTROL KNOB

KEY	PART NO.	PART NAME	QTY	SERIAL NO.	REMARKS
1	.....	ISOLATOR	1		
2	.....	SUPPORT	1		
3	.....	NAIL	2		
4	34H387	SPRING PIN	1		3/16" X 3/4"
5	.....	CAM	1		
6	AT209026	KIT	1		(LUMBAR)
7	.....	KNOB	1		AND SHAFT
8	AT209024	KIT	1		(LUMBAR KNOB)
9	34H262	SPRING PIN	1		5/32" X 3/4"
10	.....	SEAT BACK	1		

SEAT SLIDE AND CONTROL LEVER

TP54391 -UN-19APR99

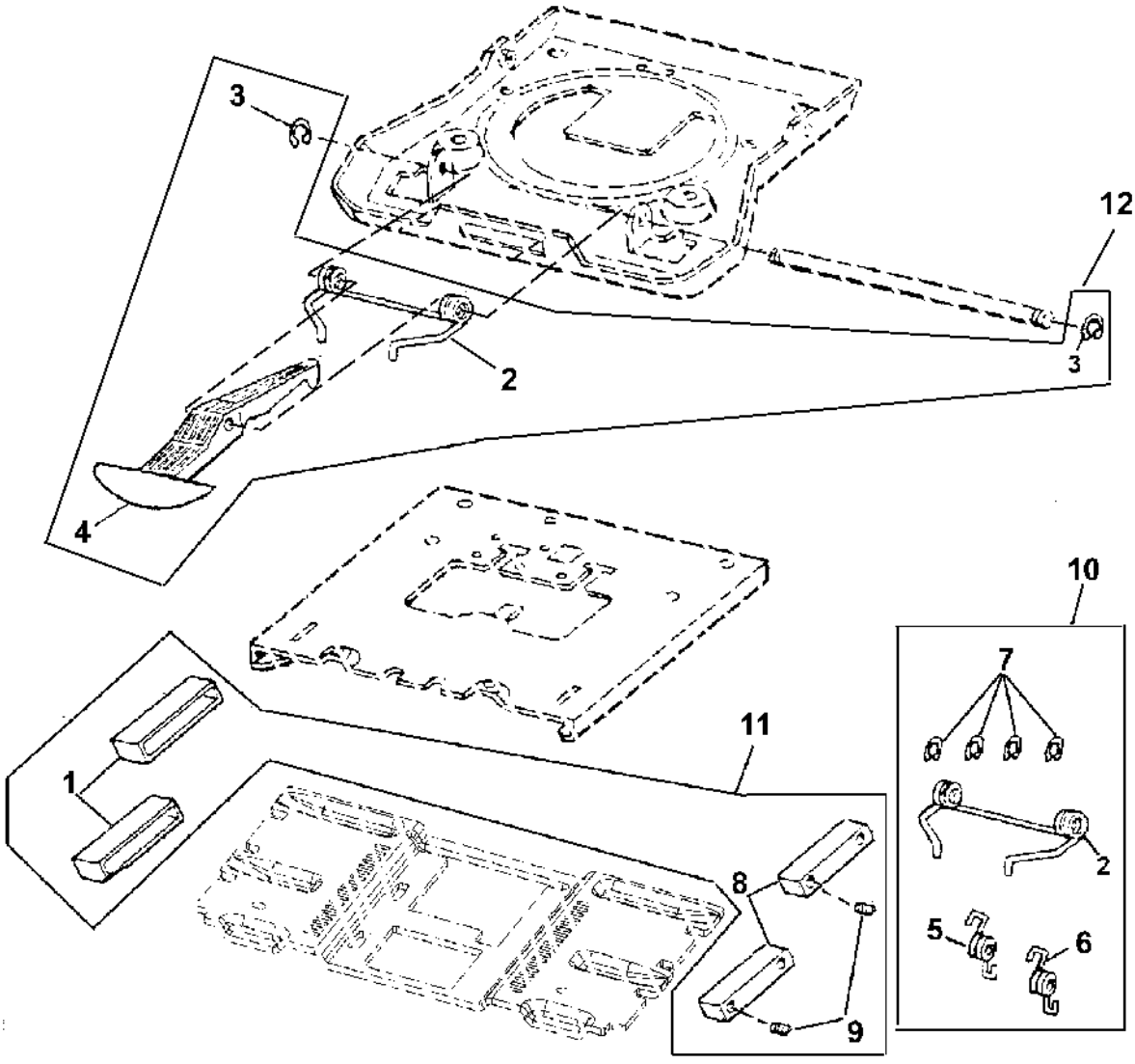

TP54391

SEAT SLIDE AND CONTROL LEVER

KEY	PART NO.	PART NAME	QTY	SERIAL NO.	REMARKS
1	.....	SLIDE SET	2		
2	T163336	TORSION SPRING	2		(DOUBLE TORSION)
3	R72655	SNAP RING	2		
4	.....	CONTROL LEVER	1		(ORDER AT209022) (FORE-AFT)
5	T163334	SPRING	1		SLIDE LATCH (RIGHT)
6	T163335	SPRING	1		SLIDE LATCH (LEFT)
7	R72655	SNAP RING	4		
8	.....	SLIDE SET	2		
9	.....	SET SCREW	4		SOCKET
10	AT209021	KIT	1		(SLIDE LATCH SPRING)
11	AT209020	KIT	1		(SLIDE PUCK)
12	AT209022	KIT	1		(SLIDE CONTROL)

SEAT SUSPENSION KITS
(MECHANICAL SUSPENSION)

TP47398 -UN-07APR95

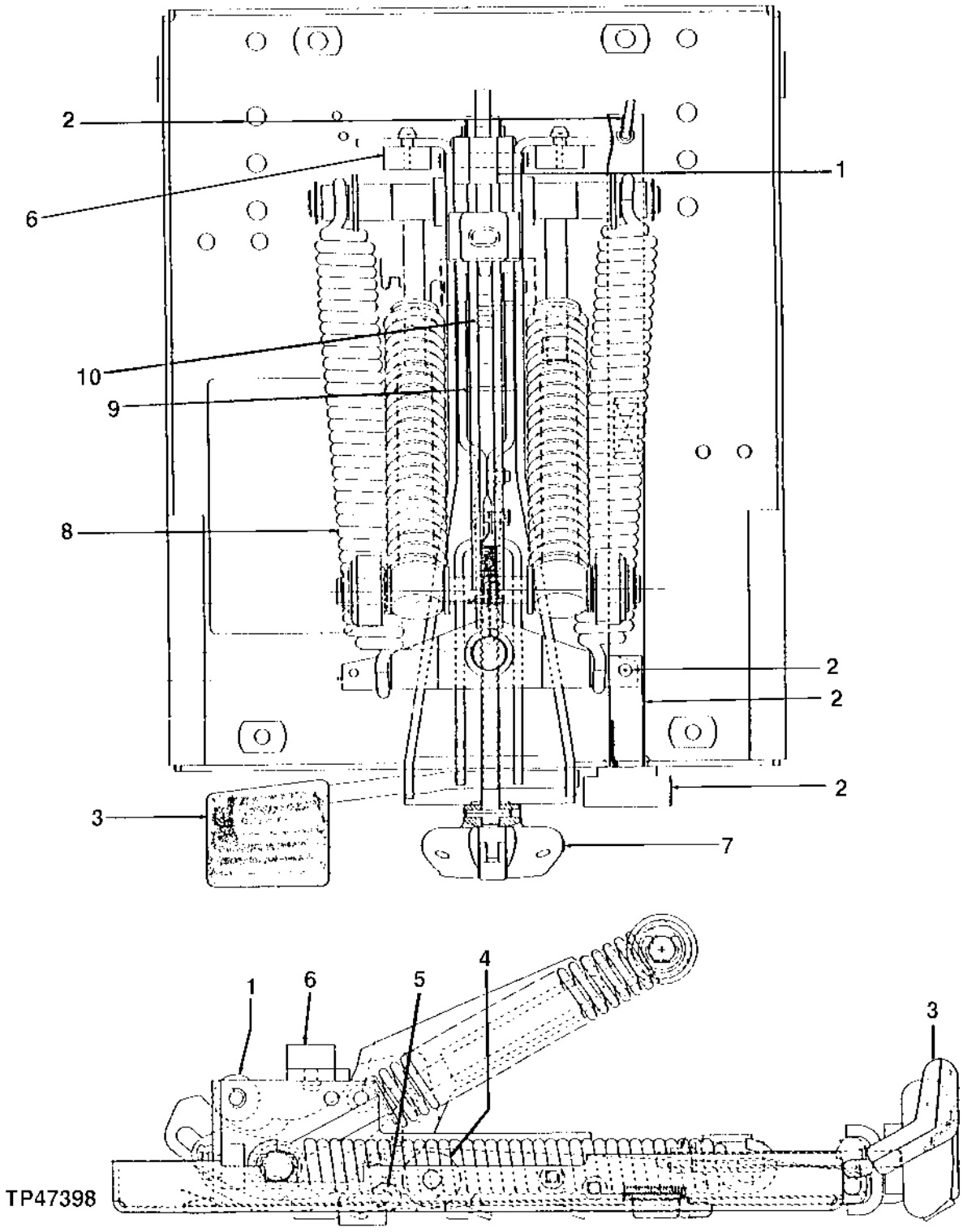

SEAT SUSPENSION KITS
(MECHANICAL SUSPENSION)

KEY	PART NO.	PART NAME	QTY	SERIAL NO.	REMARKS
1	AT173328	CAM	1		(KIT)
2	AT173325	WEIGHT	1		(KIT)
3	AT173323	KNOB	1		(KIT)
4	AT173326	CAM	1		(KIT)
5	AT173327	ACTUATOR	1		(KIT)
6	AT173324	BUMPER	1		(KIT)
7	AT173316	KNOB	1		(KIT)
8	AT173319	SPRING	1		((2)BUSHINGS & (2)SPRINGS) (KIT)
9	AT173328	CAM	1		(KIT)
10	AT173327	ACTUATOR	1		(KIT)

SEAT SUSPENSION KITS
(MECHANICAL SUSPENSION)

TP47399 -UN-07APR95

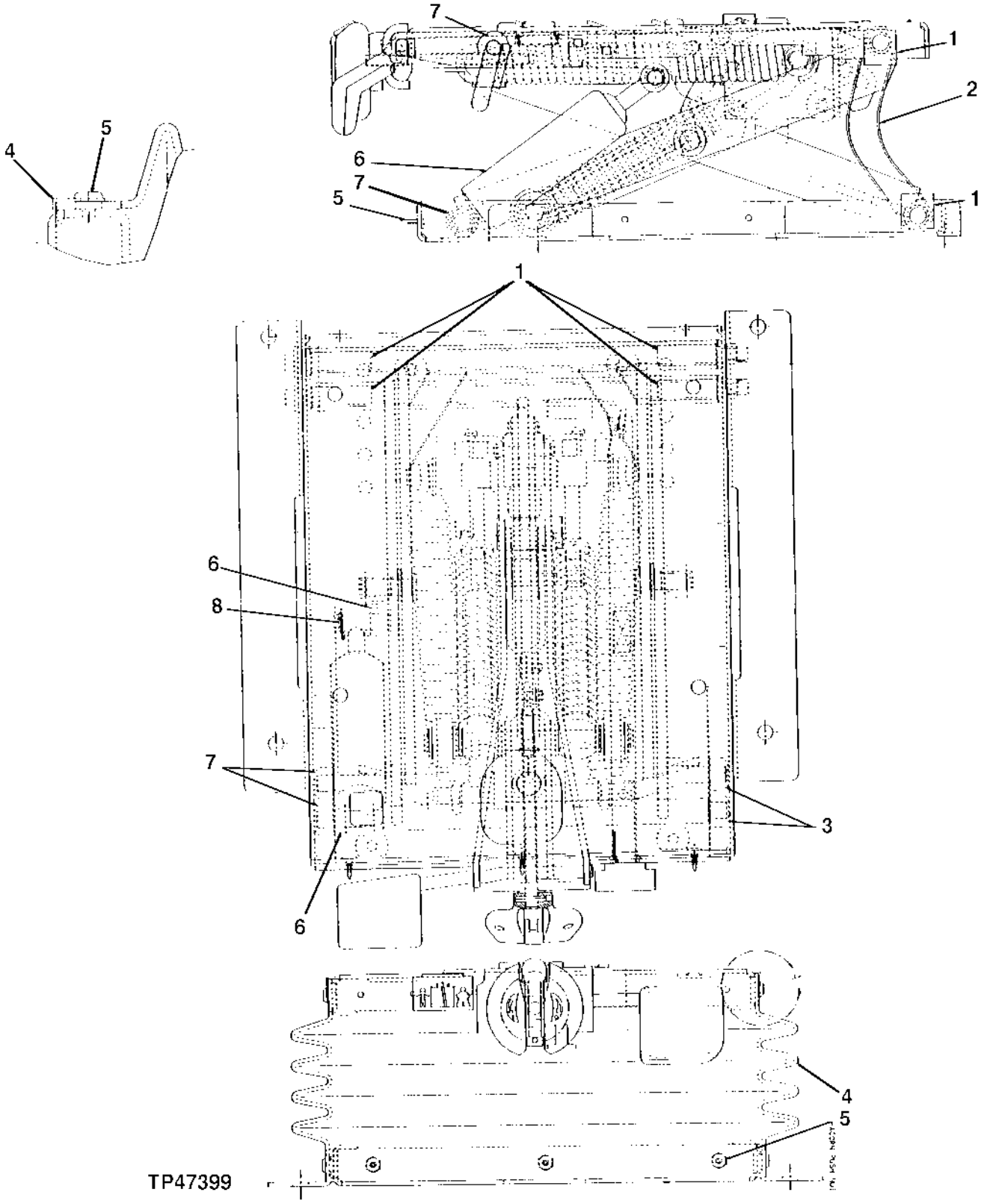

SEAT SUSPENSION KITS
(MECHANICAL SUSPENSION)

KEY	PART NO.	PART NAME	QTY	SERIAL NO.	REMARKS
1	AT173313	UNIVERSAL DRIVESHAFT	1	(KIT)	
2	AT173315	KIT	1	(KIT)	
3	AT173314	ROLLER	1	(KIT)	
4	AT173317	BOOT	1	(KIT)	
5	AT173321	CLIP	1	(KIT)	
6	AT173322	MOUNTING PARTS	1	(KIT)	
7	AT173314	ROLLER	1	(KIT)	
8	AT173320	MOUNTING PARTS	1	(KIT)	

SEAT SUSPENSION KITS
(MECHANICAL SUSPENSION)

TP47400 -UN-07APR95

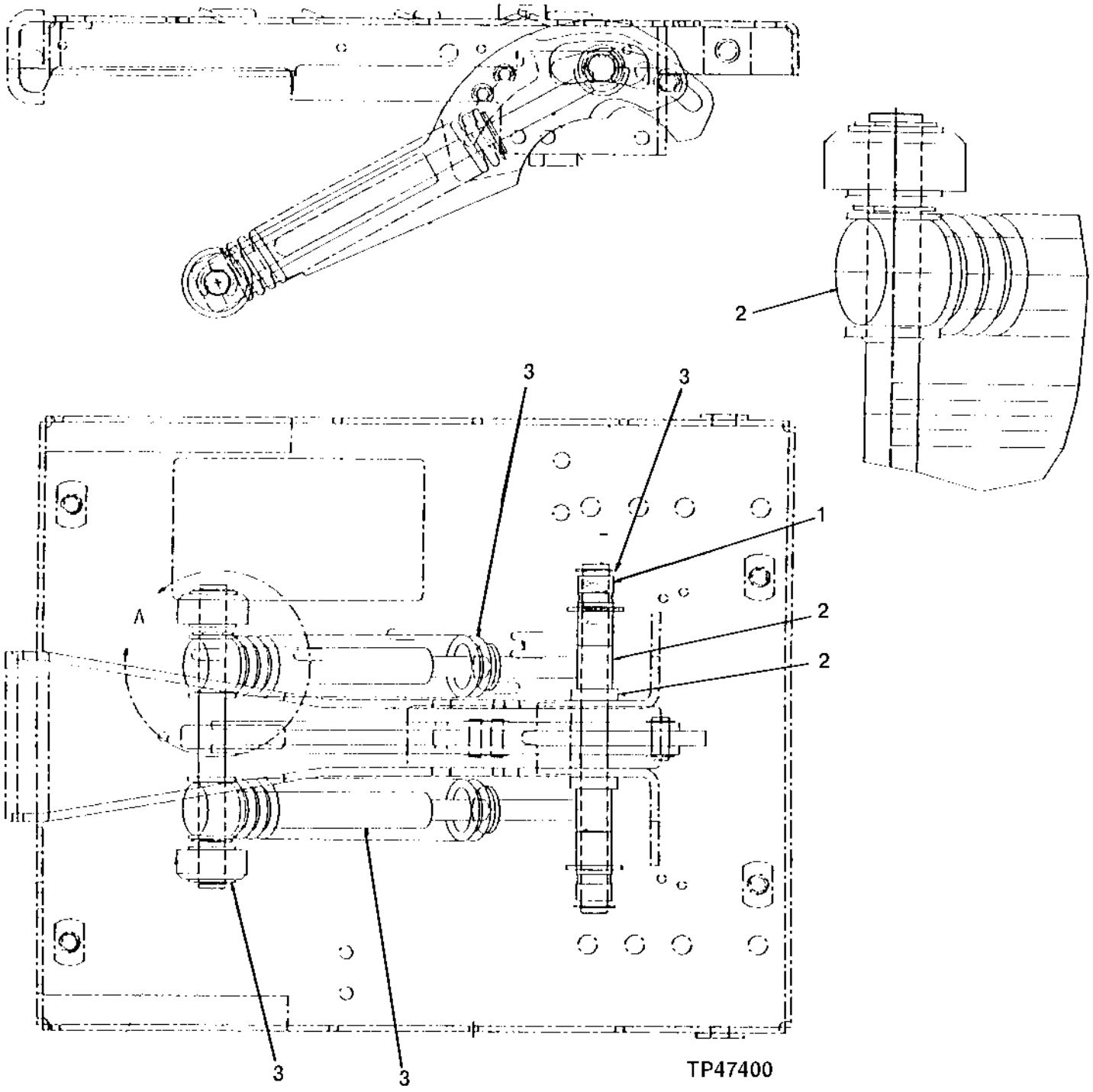

SEAT SUSPENSION KITS
(MECHANICAL SUSPENSION)

KEY	PART NO.	PART NAME	QTY	SERIAL NO.	REMARKS
1	AT173319	SPRING	1		((2)BUSHINGS & (2)SPRINGS) (KIT) (REQUIRES AT226123 INSTALLATION TOOL)
2	AT173318	SPRING	1		((2)BUSHINGS, (2)SPRINGS, (2)WEIGHT ADJUST CASTINGS & (2)SPACERS) (KIT) (REQUIRES AT226123 INSTALLATION TOOL)
3	AT173320	MOUNTING PARTS	1		(KIT)
	AT173318	SPRING	1		(KIT)
4	AT226123	SPECIAL SERVICE TOOL	1		SPRING COMPRESSION, (NOT ILLUSTRATED)

SEAT SUSPENSION
(AIR SUSPENSION)

T139677 -UN-12MAR01

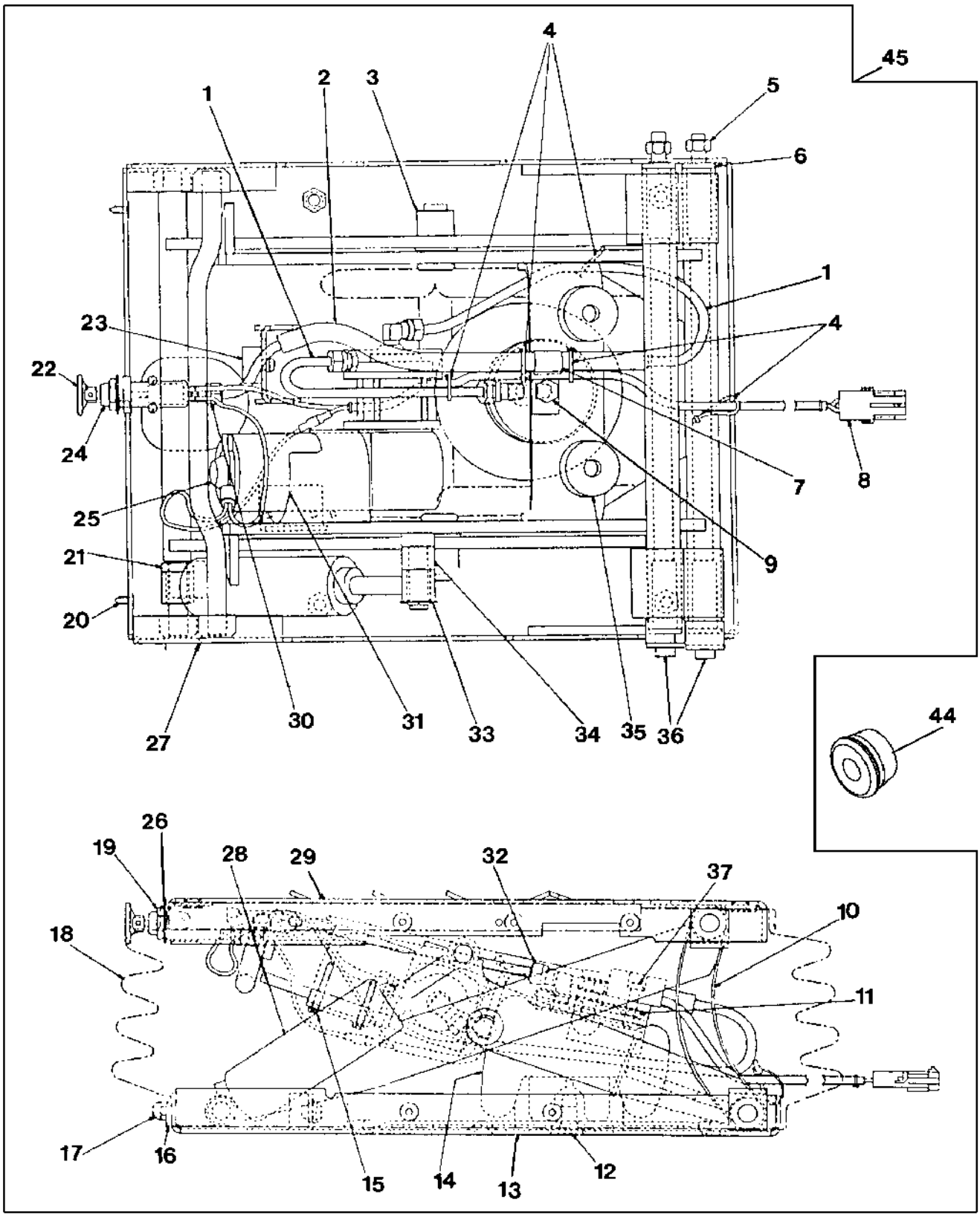

T139677

SEAT SUSPENSION
(AIR SUSPENSION)

KEY	PART NO.	PART NAME	QTY	SERIAL NO.	REMARKS
1	.....	LINE	3		(SUB AT208493)
2	.....	TUBE	1		(SUB AT208493 AIRLINE FITTING KIT)
3	AT208485	ARM	1		
4	.....	TIE BAND	5		(SUB AT208493)
5	.....	LOCK NUT	2		(SUB AT173313)
6	.....	TUBE	4		(SUB AT173313)
7	.....	CLIP	1		(SUB AT208493)
8	AT208488	WIRING HARNESS	1		
9	19H2038	CAP SCREW	1		3/8" X 1/2"
10	AT173315	KIT	1		
11	.....	LOCK NUT	1		(SUB AT209469)
12	N61345	SCREW	1		
13	AT208483	HOUSING	1		
14	AT208486	SPRING	1		
15	37H142	SCREW	2		0.164" X 1"
16	.....	CLIP	23		(SUB AT173321)
17	.....	PUSH NUT	3		(SUB AT173321)
18	AT208491	KIT	1		
19	.....	NUT	1		(SUB AT208490)
20	.....	CLIP	3		(SUB AT173321)
21	.....	BEARING	1		(SUB AT208487)
22	.....	KNOB	1		(SUB AT208490)
23	.....	BUMPER	1		(SUB AT208483)
24	.....	CONTROL VALVE	1		(SUB AT208490)
25	AT208492	COMPRESSOR	1		
26	.....	LOCK WASHER	1		(SUB AT208490)
27	AT173314	ROLLER	1		
28	.....	ABSORBER	1		(SUB AT208487)
29	AT208484	HOUSING	1		
30	.....	CONNECTOR	2		(SUB AT208493)
31	.....	BRACKET	1		(SUB AT208531)
32	.....	ELBOW FITTING	2		(SUB AT208493)
33	.....	BOLT	1		(SUB AT208487)
34	.....	BEARING	1		(SUB AT208487)
35	.....	BUMPER	1		(SUB AT209469)
36	.....	BEARING	2		SHAFT, WELDMENT (SUB AT173313)
37	.....	SCREW	1		(SUB AT209469)
38	AT173313	KIT	1		SUSPENSION SHAFT SERVICE (INCLUDES KEYS: 5, 6 AND 36) (NOT ILLUSTRATED)
39	AT173321	KIT	1		BOOT CLIP (INCLUDES KEYS: 16,17 AND 20) (NOT ILLUSTRATED)
40	AT208487	KIT	1		SUSPENSION SHOCK SERVICE (INCLUDES KEYS: 21, 28, 33 AND 34) (NOT ILLUSTRATED)
41	AT208490	VALVE	1		CONTROL, AIR (INCLUDES KEYS: 19, 22, 24 AND 26) (NOT ILLUSTRATED)
42	AT208493	KIT	1		AIRLINE/FITTINGS SERVICE (INCLUDES KEKYS: 1, 4, 7, 30 AND 32) (NOT ILLUSTRATED)
43	AT209469	KIT	1		BUMPER SERVICE (INCLUDES KEYS: 11, 35 AND 37) (NOT ILLUSTRATED)
44	N119177	GROMMET	1		
45	AT208531	SEAT SUSPENSION	1		AIR

OPERATOR ACCESS PLATFORM AND STEPS

T151385 -UN-15FEB02

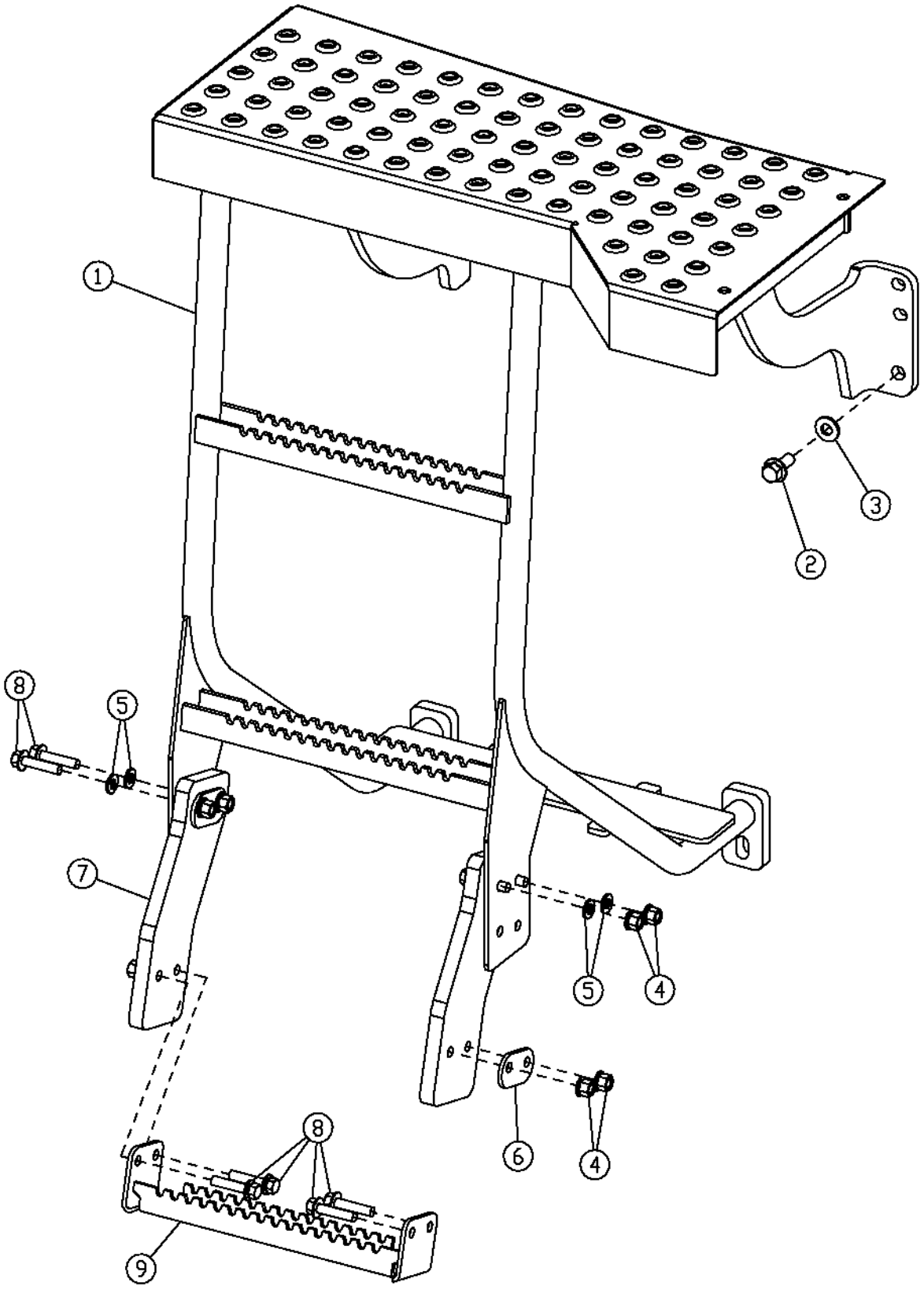

ACCESS PLATFORM AND STEPS

KEY	PART NO.	PART NAME	QTY	SERIAL NO.	REMARKS
1	AT223990	PLATFORM	1		(SUB FOR AT211377)
2	19M7789	SCREW	5		M12 X 30
3	T178063	WASHER	5		
4	14M7400	LOCK NUT	8		
5	24M7239	WASHER	4		
6	T173779	STRAP	4		
7	T177503	STRAP	2		
8	19M7805	SCREW	8		
9	T176870	STEP	1		(SUB FOR AT157991)

ENGINE COMPARTMENT STEP
(SERIAL NO. -572314)

TP60270 -UN-18MAR98

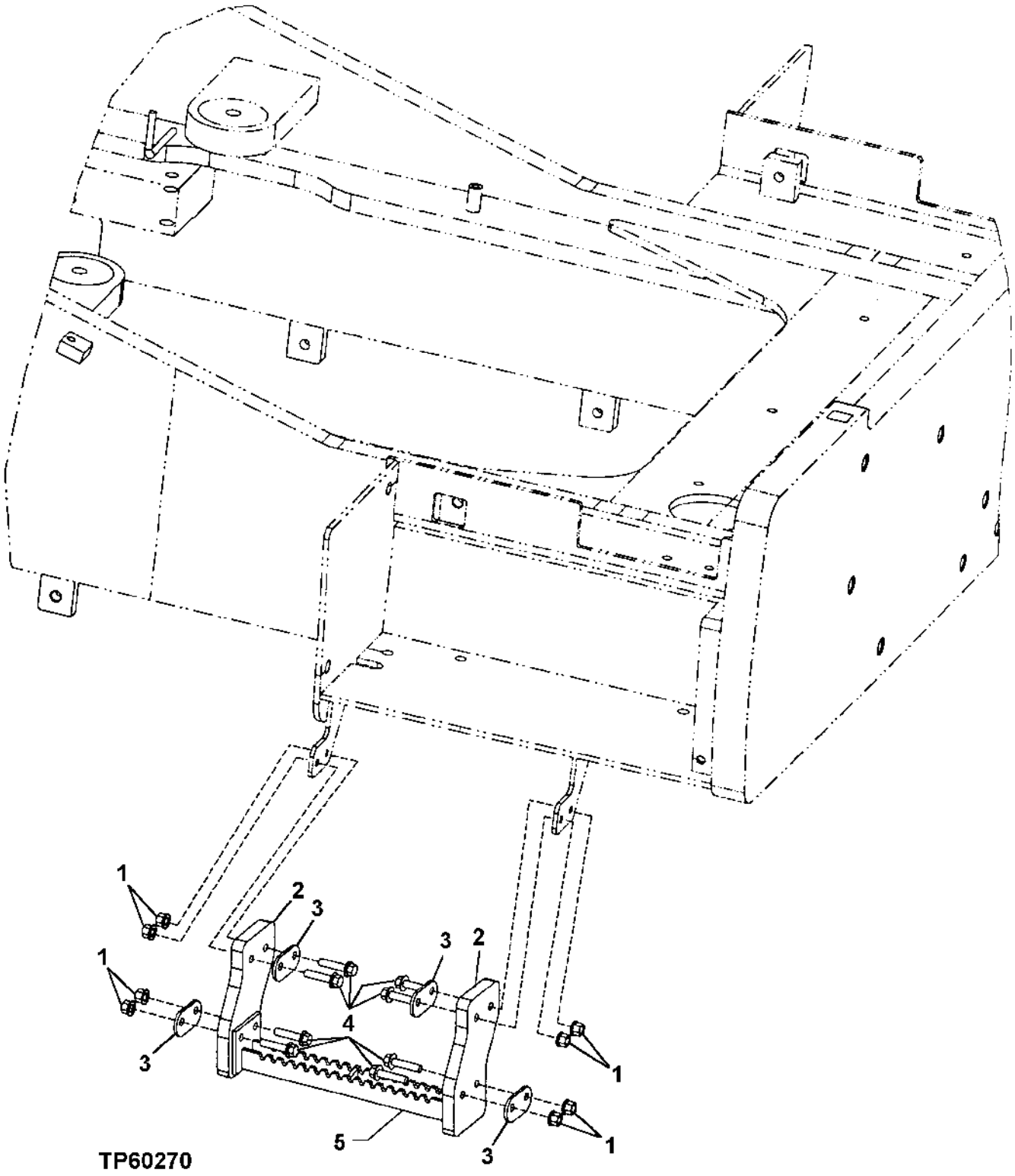

ENGINE COMPARTMENT STEP
(SERIAL NO. -572314)

KEY	PART NO.	PART NAME	QTY	SERIAL NO.	REMARKS
1	14M7400	LOCK NUT	8		M10
2	T177502	STRAP	2		(SUB FOR T173778)
3	T173779	STRAP	4		
4	19M7805	SCREW	8		M10 X 45
5	T176870	STEP	1		(SUB FOR AT157991)

ENGINE COMPARTMENT STEP
(SERIAL NO. 572315-)

TP62575 -UN-23JUN99

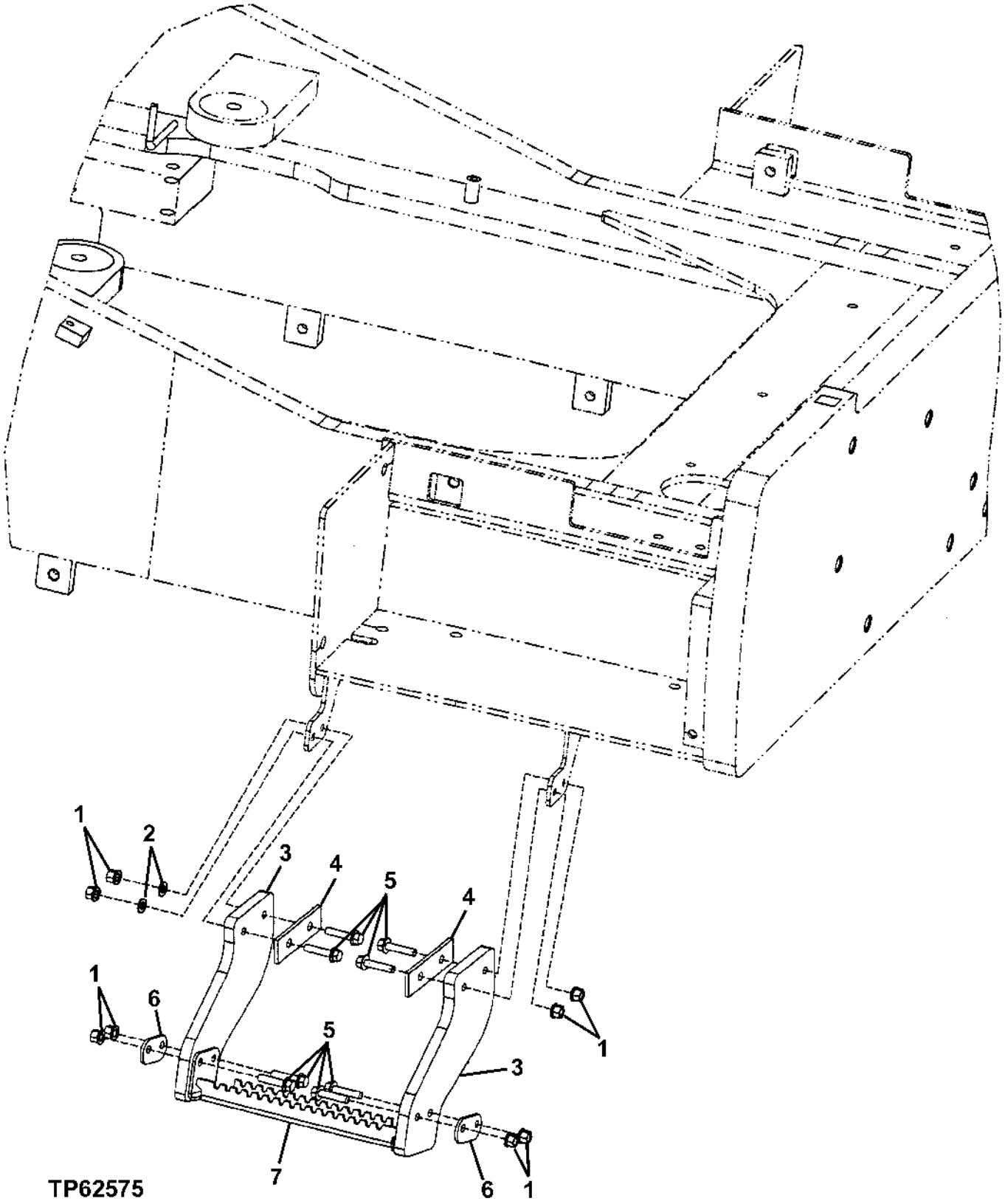

ENGINE COMPARTMENT STEP
(SERIAL NO. 572315-)

KEY	PART NO.	PART NAME	QTY	SERIAL NO.	REMARKS
1	14M7400	LOCK NUT	8		M10
2	24M7239	WASHER	2		10.700 X 21 X 2.500 MM, (NO LONGER REQUIRED)
3	T177756	STRAP	2		(RUBBER)
4	T177753	STRAP	2		
5	19M7805	SCREW	8		M10 X 45
6	T173779	STRAP	2		
7	T176870	STEP	1		

CLOSE MOUNTED STEPS

TP62532 -UN-04MAY99

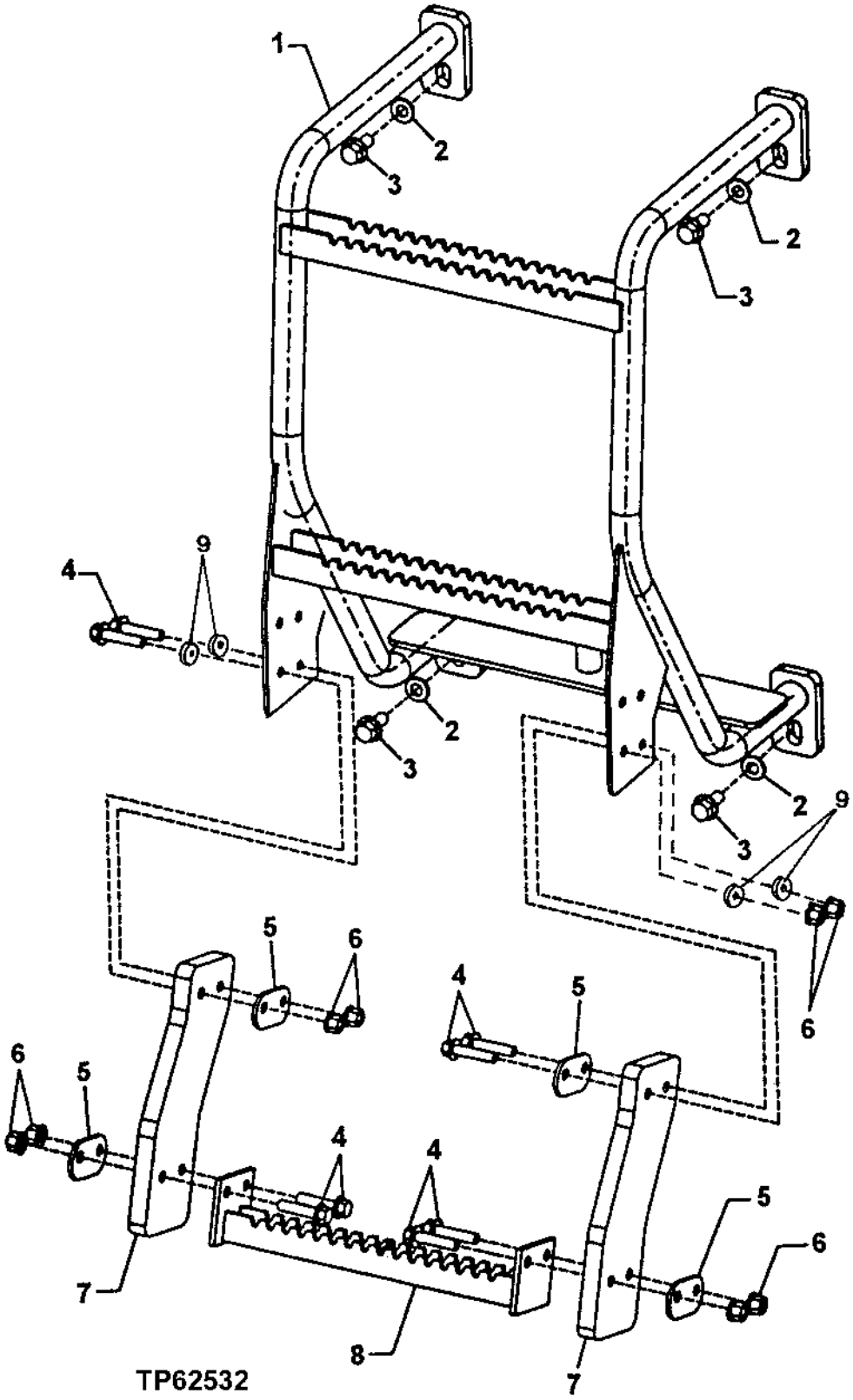

CLOSE MOUNTED STEPS

KEY	PART NO.	PART NAME	QTY	SERIAL NO.	REMARKS
1	AT209995	STEP	1		
2	T178063	WASHER	4		
3	19M7789	SCREW	4		M12 X 30
4	19M7805	SCREW	8		M10 X 45
5	T173779	STRAP	4		
6	14M7400	LOCK NUT	8		M10
7	T177503	STRAP	2		(SUB FOR T177503)
8	T176870	STEP	1		(SUB FOR AT157991)
9	24M7239	WASHER	4		10.700 X 21 X 2.500 MM

AIR CONDITIONING MODULE WITH HEATER AND EVAPORATOR CORES
(SERIAL NO. -575206)

TP62758 -UN-23FEB00

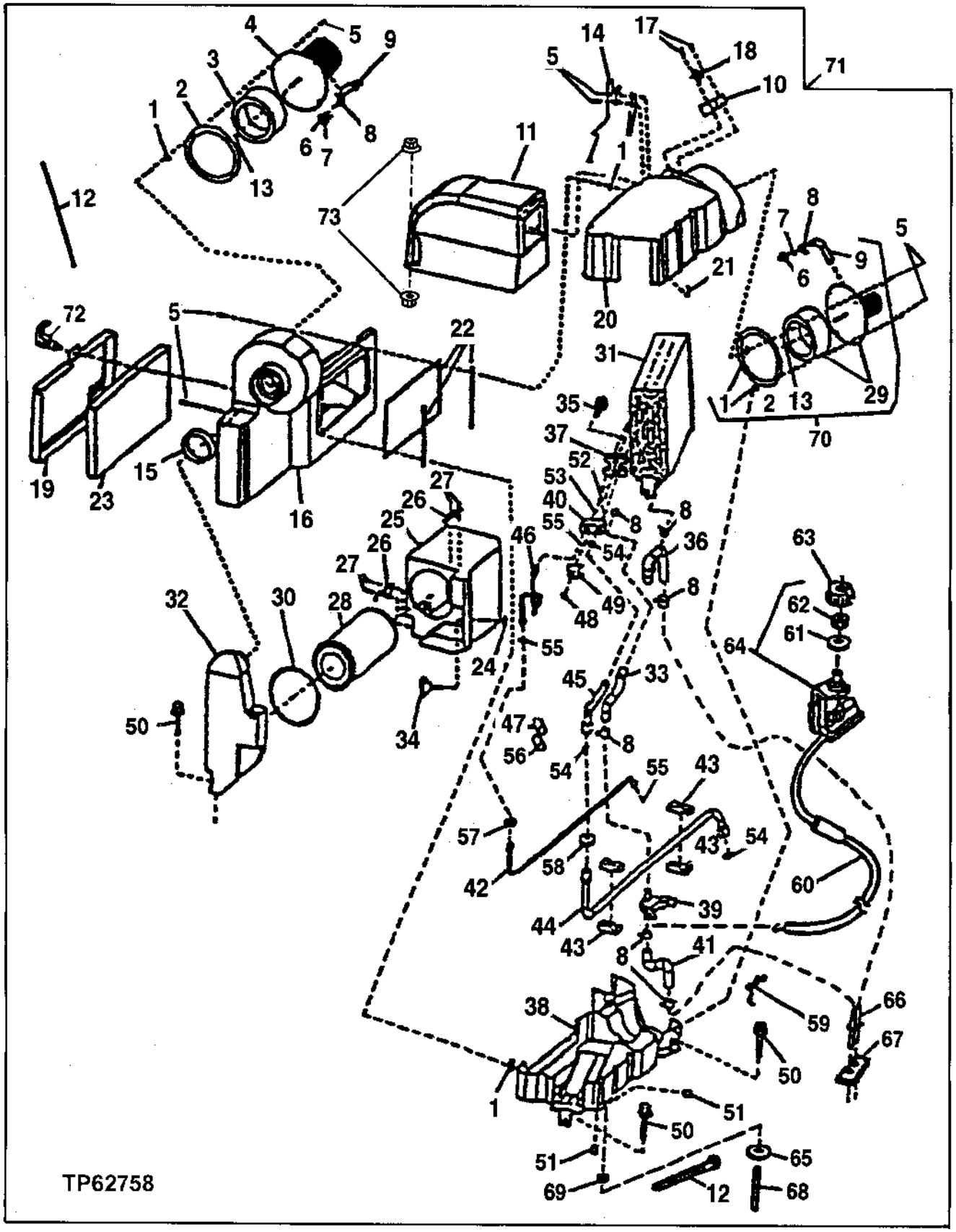

AIR CONDITIONING MODULE WITH HEATER AND EVAPORATOR CORES
(SERIAL NO. -575206)

KEY	PART NO.	PART NAME	QTY	SERIAL NO.	REMARKS
1	M84972	NUT	14		
2	R121664	SEAL	2		
3	R121666	IMPELLER	1		(AIR PLENUM) (CAB PRESSURIZER)
4	AT208399	BLOWER MOTOR	1		(CAB PRESSURIZER)
5	19M7077	CAP SCREW	14		
6	RE36133	TUBE	2		
7	H111706	SCREW	2		
8	R117721	CLAMP	8		
9	R97336	TUBE	2		
10	AT210516	BRACKET	1		
11	AT209668	AIR DUCT	1		
12	H77698	TIE BAND	4		
13	R97332	CLIP	2		
14	AH144020	SWITCH	1		(A/C, THERMOSTAT, FREEZE CONTROL)
15	R119171	SEAL	1		
16	T156965	AIR PLENUM	1		
17	37M7073	SCREW	2		
18	AT210515	RESISTOR	1		
19	AT206467	COVER	1		
20	T156962	HOUSING	1		
21	R129110	SCREW	12		
22	T59937	ISOLATOR	3		(MAKE FROM T59937 BULK MATERIAL)
23	T156471	AIR FILTER	1		
24	R115857	NUT	1		
25	T171459	HOUSING	1		
26	R121465	LATCH	2		
27	H86981	RIVET	4		
28	T168220	AIR FILTER	1		
29	.....	MOTOR	1		(BLOWER) (A/C AND HEATER) (SUB AT224929)
30	T170053	SEAL	1		
31	RE57574	EVAPORATOR	1	-XXXXXX	
	T156452	HEATER	1		(HEATER ONLY) (WITHOUT AIR CONDITIONING)
	AT225899	EVAPORATOR	1	XXXXXX-	

AIR CONDITIONING MODULE WITH HEATER AND EVAPORATOR CORES
(SERIAL NO. -575206)

TP62758 -UN-23FEB00

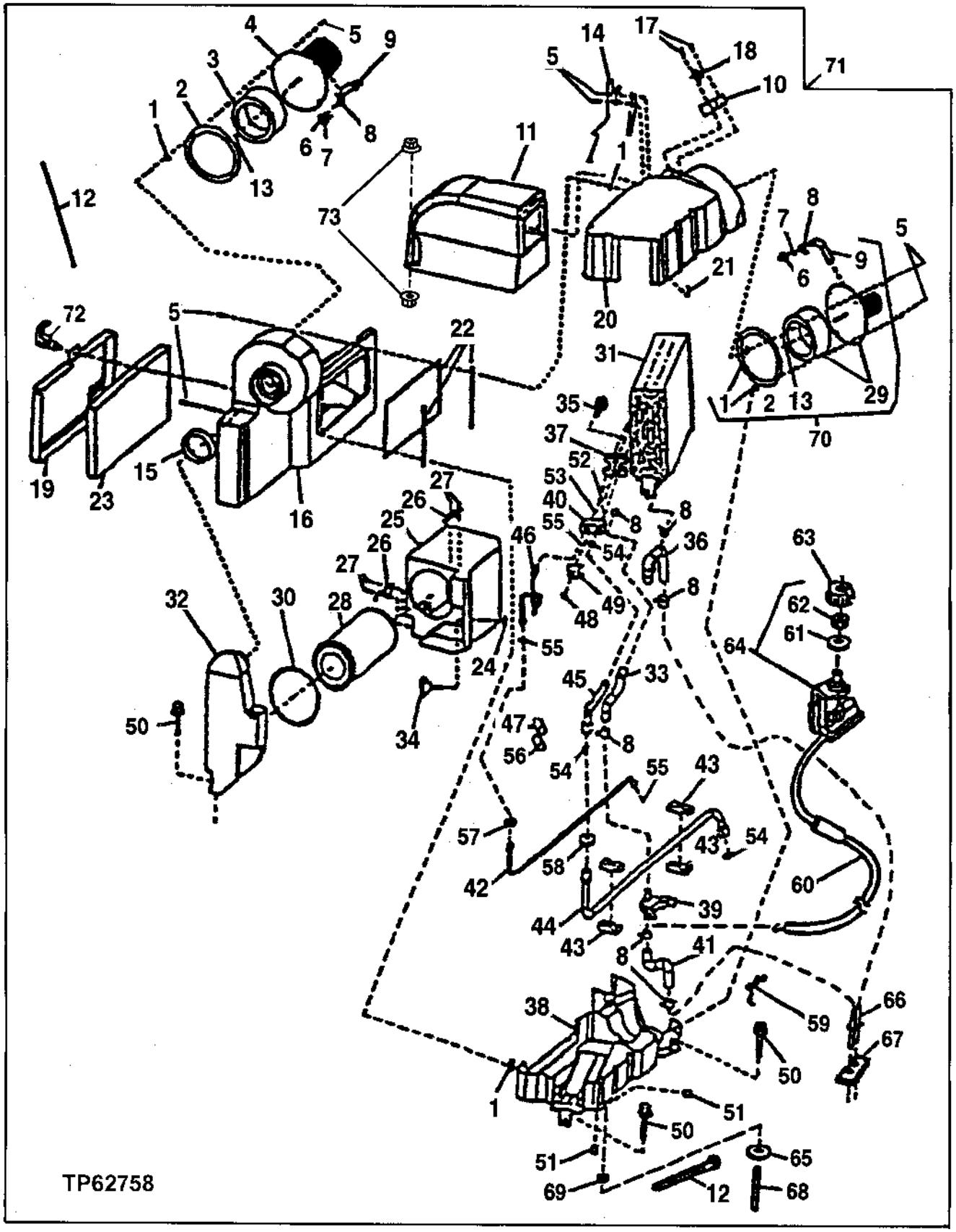

AIR CONDITIONING MODULE WITH HEATER AND EVAPORATOR CORES
(SERIAL NO. -575206)

KEY	PART NO.	PART NAME	QTY	SERIAL NO.	REMARKS
32	T167945	AIR DUCT	1		
33	T170133	HOSE	1		
34	AT220953	KNOB	1		(SUB FOR AT211592)
35	PT11778	BOLT	2		(SUB FOR M67176)
36	T172933	HOSE	1		INLET
37	L77943	PLATE	1		
38	T156963	HOUSING	1		
39	AT193500	VALVE	1		(SUB FOR RE47070)
	AT193500	VALVE	1		
40	RE57575	VALVE	1	-XXXXXX	
	RE174764	VALVE	1	XXXXXX-	
41	T172934	HOSE	1		OUTLET
42	AT210562	STRUCTURAL TUBING	1		INLET
43	H114865	CLAMP	4		
44	AT210561	STRUCTURAL TUBING	1		SUCTION
45	AT210086	STRUCTURAL TUBING	1		INLET
46	AT210085	STRUCTURAL TUBING	1		INLET
47	RE60888	HIGH PRESSURE SWITCH	1		
48	19M8553	SCREW	1		M6 X 16
49	R125223	PLATE	1		
50	19M7866	SCREW	4		M8 X 20
51	R50770	PLUG	2		
52	R33259	O-RING	1		
53	R113050	O-RING	1		
54	T143169	O-RING	3		
55	R10093	O-RING	3		
56	RE155938	LOW PRESSURE SWITCH	1		(SUB FOR RE60887)
57	T178971	GROMMET	1		
58	R45210	GROMMET	1		
59	L57881	CLIP	1		
60	RE58614	CABLE	1		
61	12H325	LOCK WASHER	1		7/16"
62	14H934	NUT	1		7/16"
63	R111632	KNOB	1		
64	RE46742	CONTROL	1		(TEMPERATURE/HEATER)
65	T182852	SEAL	1		
66	AT219778	BUSHING	1		
67	T182858	GASKET	1		
68	.....	HOSE	AR		(MAKE FROM B14604 BULK MATERIAL, CUT TO LENGTH)
69	T174427	CLAMP	1		
70	AT224929	BLOWER FAN	1		(A/C AND HEATER) (SUB FOR AT221777)
71	.....	MODULE	1		HVAC (AT221361 NO LONGER AVAILABLE)
72	AT222150	LATCH	1		
73	14M7298	FLANGE NUT	4		M8

AIR CONDITIONING MODULE WITH HEATER AND EVAPORATOR CORES
(SERIAL NO. 575207-)

TP62821 -UN-20JUN00

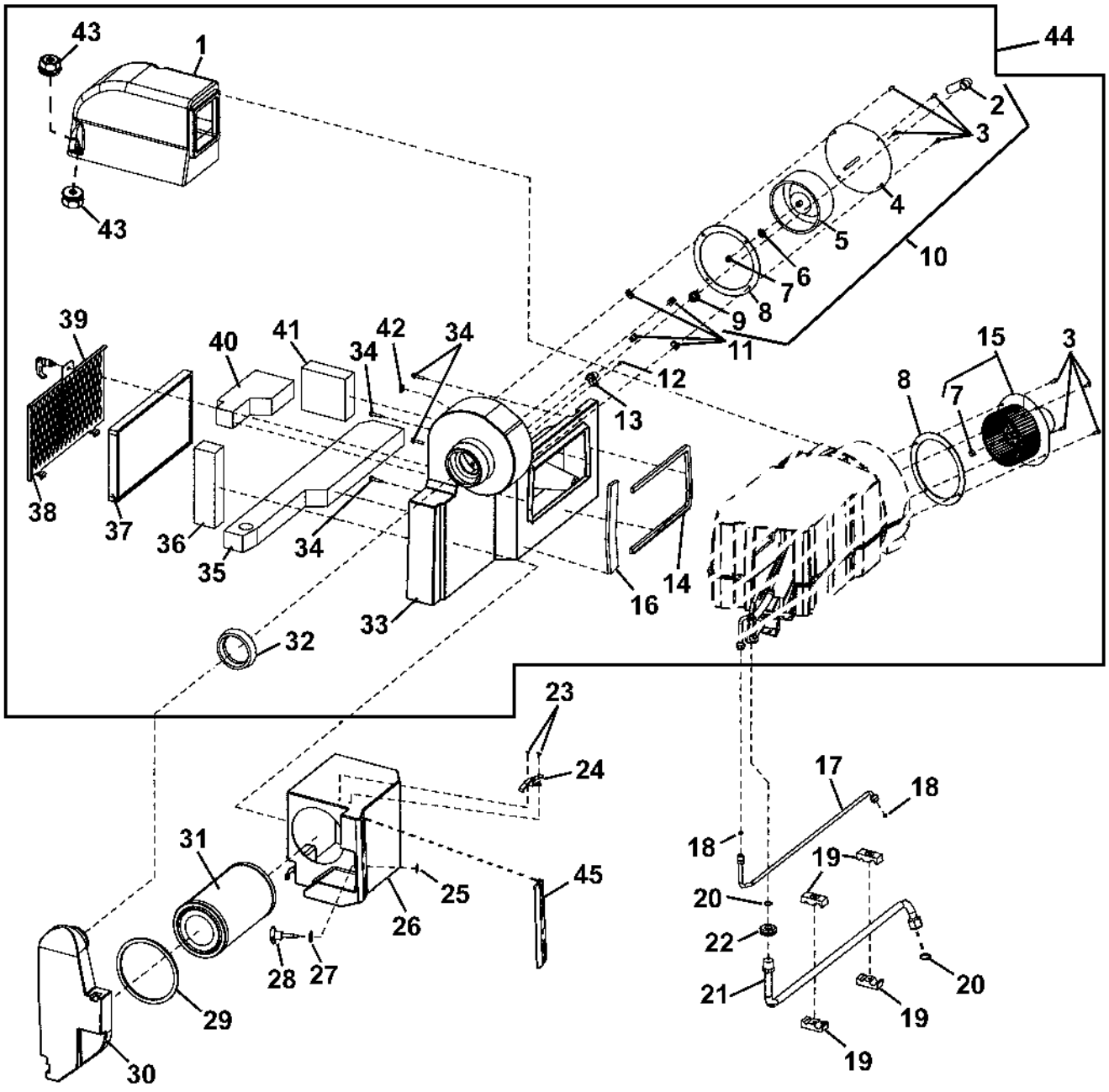

TP62821

AIR CONDITIONING MODULE WITH HEATER AND EVAPORATOR CORES
(SERIAL NO. 575207-)

KEY	PART NO.	PART NAME	QTY	SERIAL NO.	REMARKS
1	AT209668	AIR DUCT	1		
2	R97336	TUBE	1		
3	T178251	CAP SCREW	8		
4	AT208399	BLOWER MOTOR	1		
5	R121666	IMPELLER	1		
6	T178127	PUSH NUT	1		
7	R97332	CLIP	2		
8	R121664	SEAL	2		
9	R117721	CLAMP	1		
10	AT222141	BLOWER	1		
11	T178117	CLEVIS	4		
12	T178118	CAP SCREW	1		
13	RE36133	TUBE	1		AIR OUTLET
14	T178135	ISOLATOR	1		
15	AT224929	KIT	1		(SUB FOR AT221777) BLOWER ASSEMBLY
16	T178136	ISOLATOR	1		
17	AT210562	STRUCTURAL TUBING	1		
18	R10093	O-RING	2		
19	H114865	CLAMP	4		
20	T143169	O-RING	2		
21	AT210561	STRUCTURAL TUBING	1		
22	R45210	GROMMET	1		
23	H86981	RIVET	4		
24	R121465	LATCH	2		
25	.....	PUSH NUT	1		(T178391 NO LONGER REQUIRED)
26	T171459	AIR DUCT	1		FILTER
27	24M7296	WASHER	1		10.500 X 30 X 2.500 MM
28	AT220953	KNOB	1		
29	T170053	SEAL	1		
30	T167945	AIR DUCT	1		
31	T168220	AIR FILTER	1		
32	R119171	SEAL	1		DUCT, BLOWER
33	T156965	AIR PLENUM	1	-581888	
	T180929	AIR PLENUM	1	581889-	BLACK
34	T178130	BOLT	4		
35	T178131	ISOLATOR	1		PLENUM, BOTTOM
36	T178133	ISOLATOR	1		PLENUM, RIGHT
37	T156471	AIR FILTER	1		PANEL
38	AT221580	COVER	1		
39	AT222150	LATCH	1	-581888	
40	T178132	ISOLATOR	1		PLENUM, TOP
41	T178134	FOAM PAD	1		PLENUM, LEFT
42	24H1122	WASHER	1		3/8" X 7/8" X 0.083"
43	14M7298	FLANGE NUT	4		M8
44	AT223531	MODULE	1		HVAC
	AT221452	HEATER	1		(HEATER ONLY)
45	T167676	SEAL	1		

AIR CONDITIONING ASSEMBLY WITH EVAPORATOR AND HEATER CORES
(SERIAL NO. 575207-)

T135443 -UN-13NOV00

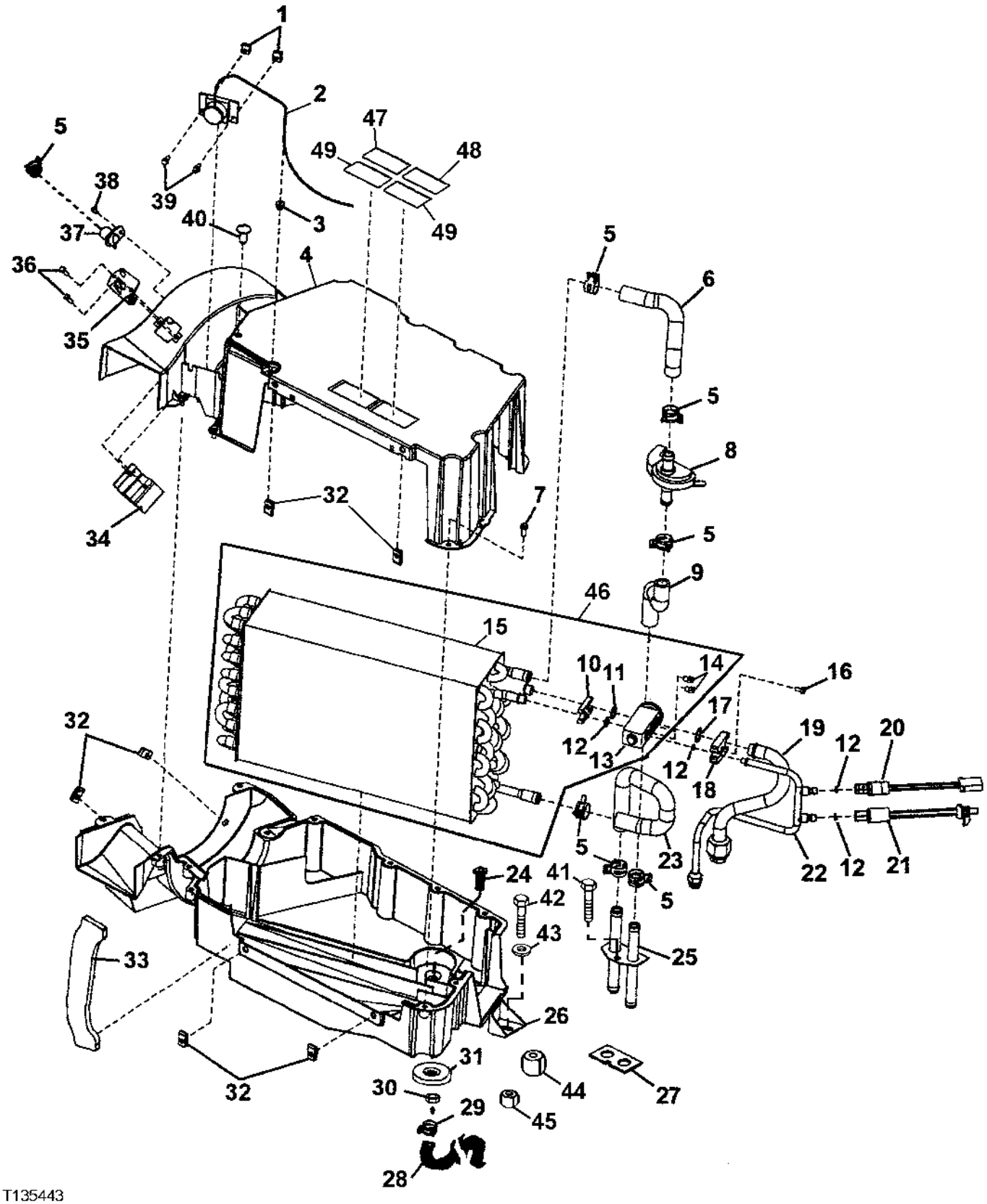

T135443

AIR CONDITIONING ASSEMBLY WITH EVAPORATOR AND HEATER CORES
(SERIAL NO. 575207-)

KEY	PART NO.	PART NAME	QTY	SERIAL NO.	REMARKS
1	T178115	CLEVIS	2		
2	AH144020	THERMOSTAT	1		
3	R41440	GROMMET	1		
4	T174109	HOUSING	1		
5	R117721	CLAMP	6		
6	T170133	HOSE	1		
7	R129110	SCREW	12		
8	AT193500	VALVE	1		(SUB FOR RE47070)
	AT193500	VALVE	1		
9	T172934	HOSE	1		
10	L77943	PLATE	1		
11	R33259	O-RING	1		
12	T178123	O-RING	4		
13	RE57575	VALVE	1	-XXXXXX	
	RE174764	VALVE	1	XXXXXX-	
14	PT11778	BOLT	2		(SUB FOR M67176)
15	AT222210	HEATER	1		(HEATER)
16	T178124	SCREW	1		
17	T143169	O-RING	1		
18	R125223	PLATE	1		
19	AT210086	STRUCTURAL TUBING	1		
20	RE155938	LOW PRESSURE SWITCH	1		(SUB FOR RE60887)
21	RE60888	HIGH PRESSURE SWITCH	1		
22	AT210085	STRUCTURAL TUBING	1		
23	T172933	HOSE	1		
24	.....	TUBE	1		DRAIN
25	AT219778	HOSE	1		
26	.....	HOUSING	1		MODULE, HVAC, (SUB AT223531(HVAC) OR AT221452(HEATER ONLY))
27	T182858	GASKET	1		
28	.....	HOSE	1		(MAKE FROM B14604 BULK MATERIAL, CUT TO LENGTH)
29	T174427	CLAMP	1		
30	14H934	NUT	1		7/16"
31	T182852	SEAL	1		
32	T178117	CLEVIS	6		
33	T171570	SEAL	1		
34	AT210516	BRACKET	1		
35	AT210515	RESISTOR	1		
36	T178119	CAP SCREW	2		
37	RE36133	TUBE	1		
38	T178118	CAP SCREW	1		
39	T178116	CAP SCREW	2		
40	T178120	RIVET	1		
41	19M7866	SCREW	1		M8 X 20
42	19M7862	SCREW	4		M6 X 20
43	T182931	WASHER	4		
44	T182870	GROMMET	1		
45	T182871	PLUG	1		
46	RE57574	EVAPORATOR	1	-XXXXXX	(HVAC)
	AT225899	EVAPORATOR	1	XXXXXX-	
47	T178248	DECAL	1		
48	T178249	DECAL	1		
49	T178250	DECAL	2		

HEATER TEMPERATURE CONTROL CABLE AND KNOB
(SERIAL NO. 575207-)

TP62828 -UN-21JUN00

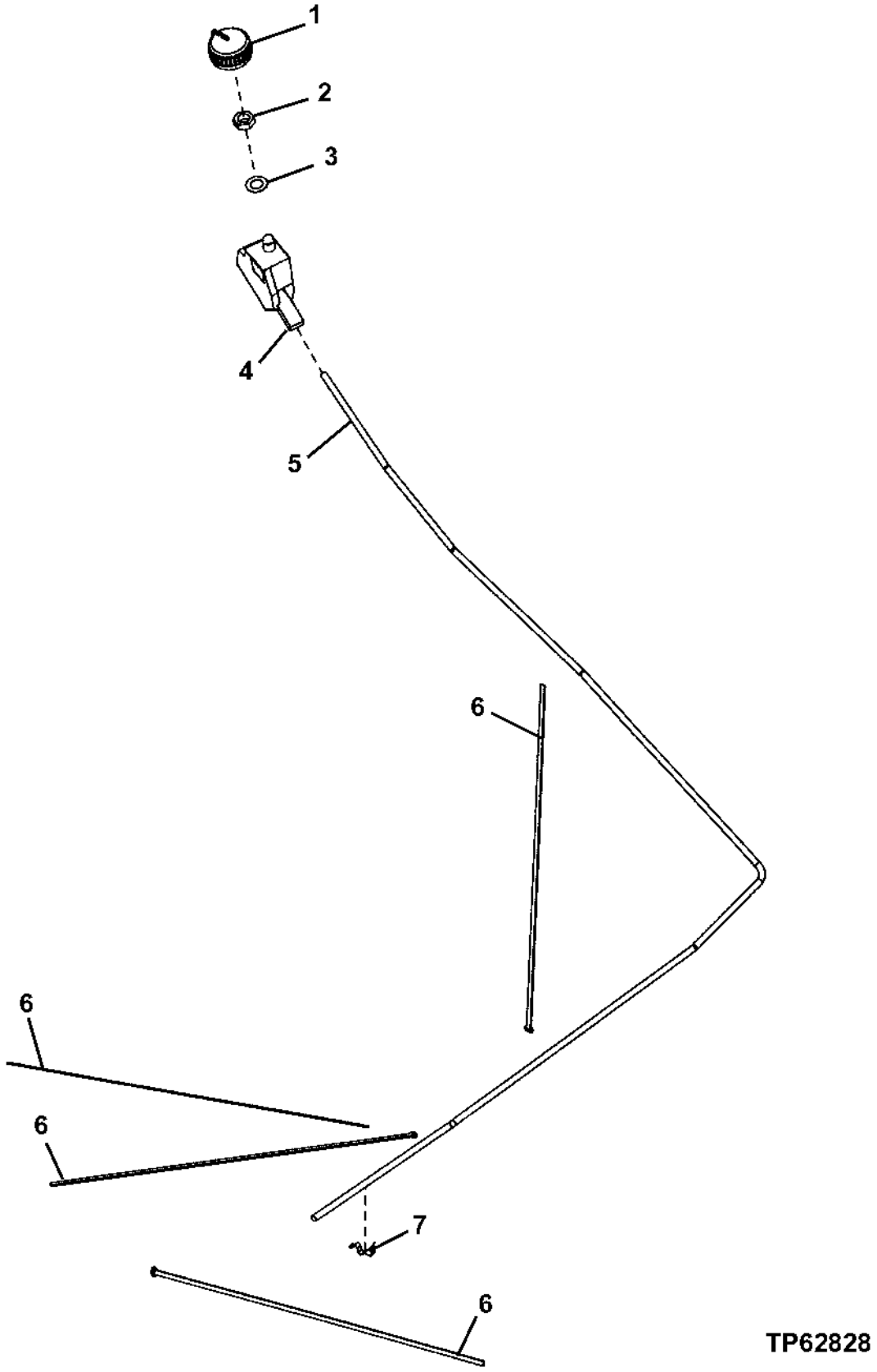

HEATER TEMPERATURE CONTROL CABLE AND KNOB
(SERIAL NO. 575207-)

KEY	PART NO.	PART NAME	QTY	SERIAL NO.	REMARKS
1	R111632	KNOB	1		
2	14H934	NUT	1		7/16"
3	12H325	LOCK WASHER	1		7/16"
4	RE46742	CONTROL	1		TEMPERATURE
5	RE58614	CABLE	1		
6	H77698	TIE BAND	4		
7	L57881	CLIP	1		CABLE HOUSING TO TEMPERATURE CONTROL VALVE

AIR CONDITIONING COMPRESSOR, BRACKET,HOSES AND DRIVE BELT

TP60565 -UN-23NOV98

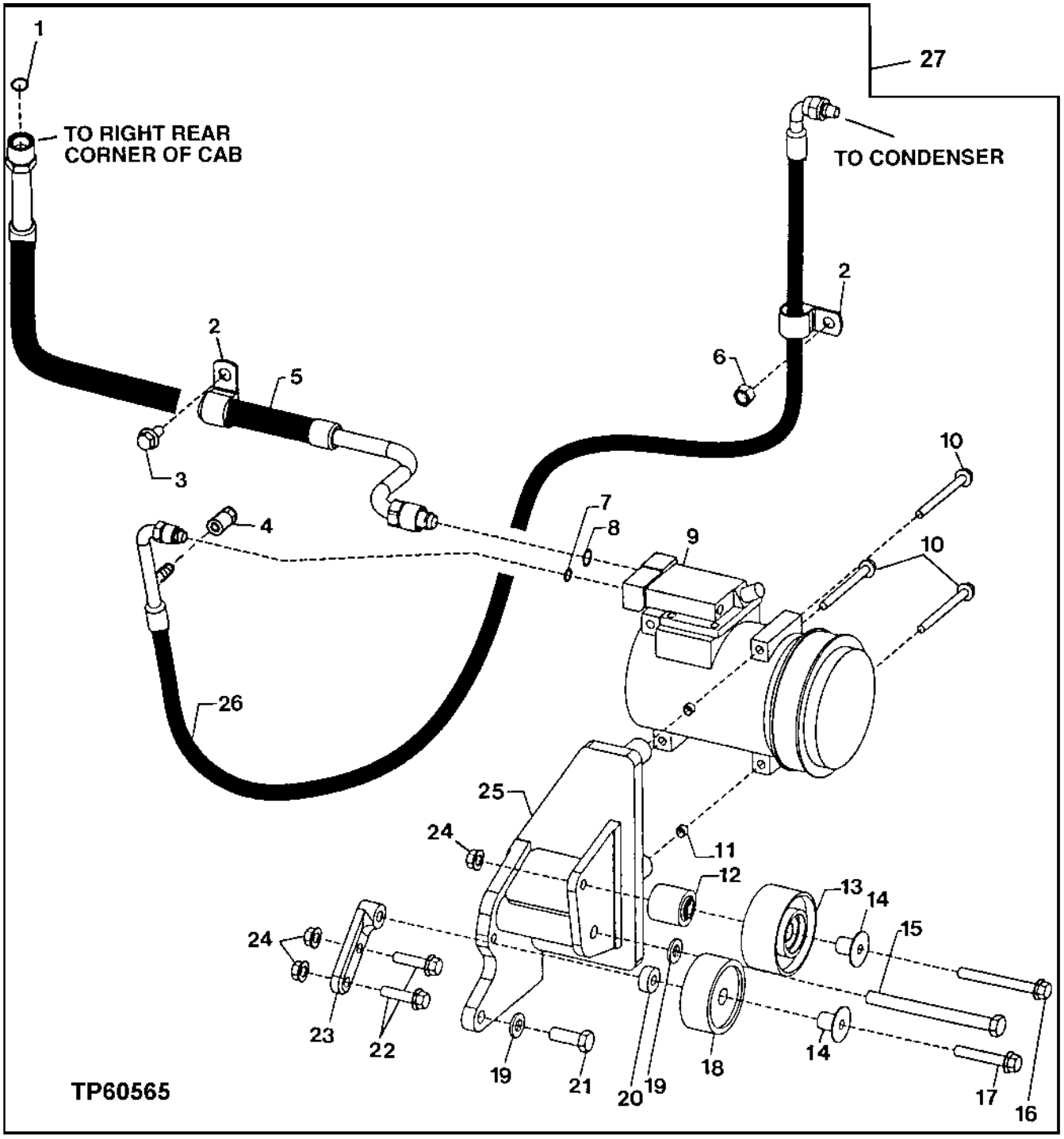

AIR CONDITIONER COMPRESSOR, BRACKET,HOSES AND DRIVE BELT

KEY	PART NO.	PART NAME	QTY	SERIAL NO.	REMARKS
1	T143169	O-RING	1		
2	R46667	CLAMP	2		
3	19M7783	SCREW	1		M10 X 16
4	T160938	CAP	1		
5	AT211480	SUCTION HOSE	1		
6	14M7167	LOCK NUT	1		M10
7	R113050	O-RING	1		
8	R33259	O-RING	1		
9	AT168543	COMPRESSOR	1		
10	19M7913	SCREW	3		M8 X 90
11	34M7189	SPRING PIN	2		
12	R123523	SPACER	1		
13	RE505265	PULLEY	1		(SUB FOR RE155577)
14	R502079	SLEEVE	2		(SUB FOR R107749)
15	19H3136	CAP SCREW	1		1/2" X 5-3/4"
16	19M7811	SCREW	1		M10 X 90
17	19M7807	SCREW	1		M10 X 60
18	AT211041	PULLEY	1		
19	24M7240	WASHER	2		13 X 25 X 3 MM
20	R128892	SPACER	1		
21	19H2993	CAP SCREW	1		1/2" X 1-1/2"
22	19M7805	SCREW	2		M10 X 45
23	R127808	SUPPORT	1		
24	14M7296	FLANGE NUT	3		M10
25	AT220236	SUPPORT	1		
26	AT220544	REFRIGERANT HOSE	1		
27	**AT211509**	**KIT**	**1**		**(INCLUDES: RECEIVER-DRYER, CONDENSER, EVAPORATOR, THERMOSTAT, PULLEYS, HIGH AND LOW PRESSURE SWITCHES AND MISCELLANEOUS PARTS)**

A/C COMPRESSOR, COMPRESSOR MANIFOLD AND REPAIR KITS

TP34763 -UN-01JAN94

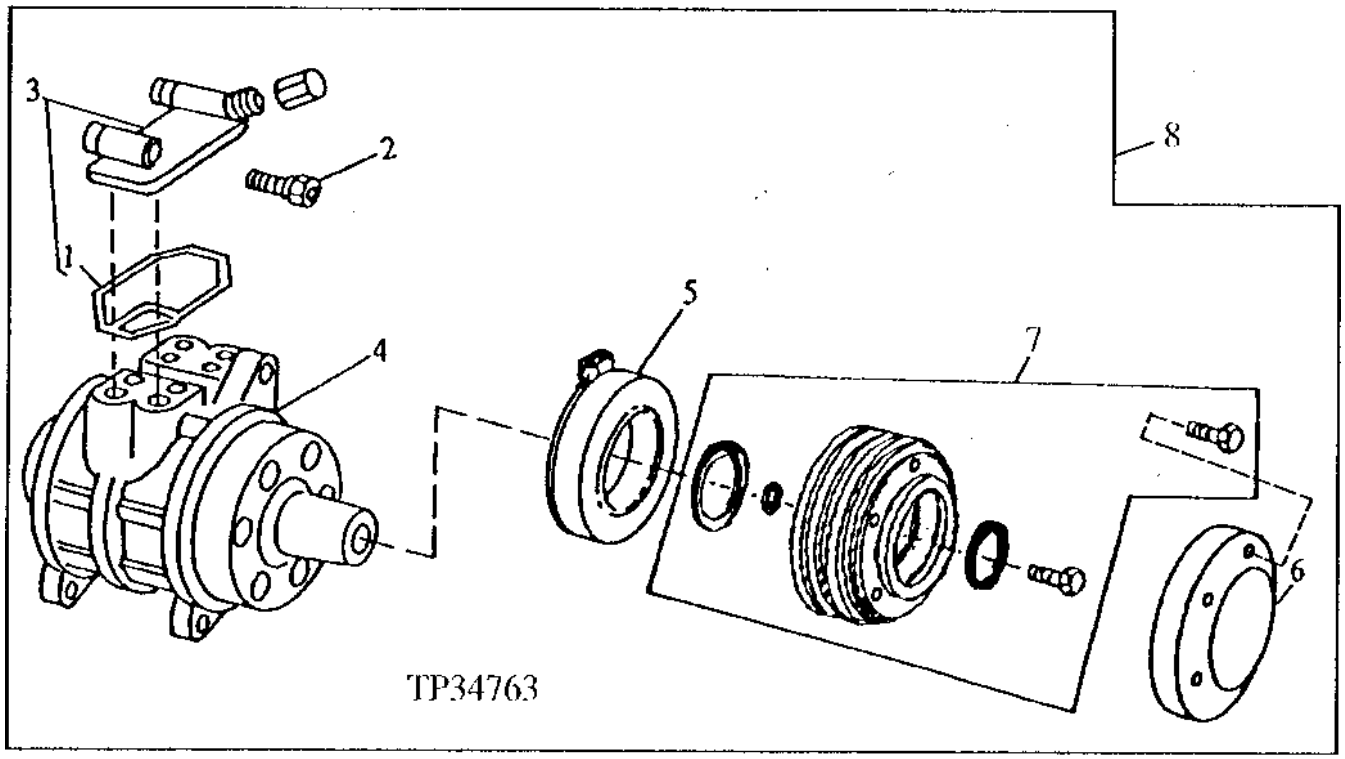

KEY	PART NO.	PART NAME	QTY	SERIAL NO.	REMARKS
1	R115742	SEAL	1		
2	RE52506	VALVE	1		
3	RE55423	MANIFOLD	1		
4	RE52454	COMPRESSOR	1		(HOUSING)
5	AT163872	KIT	1		
6	R115743	COVER	1		
7	RE52508	KIT	1		COMPRESSOR CLUTCH AND PULLEY
8	AT168543	COMPRESSOR	1		

A/C COMPRESSOR SHAFT SEAL REPAIR KIT

TP34246 -UN-01JAN94

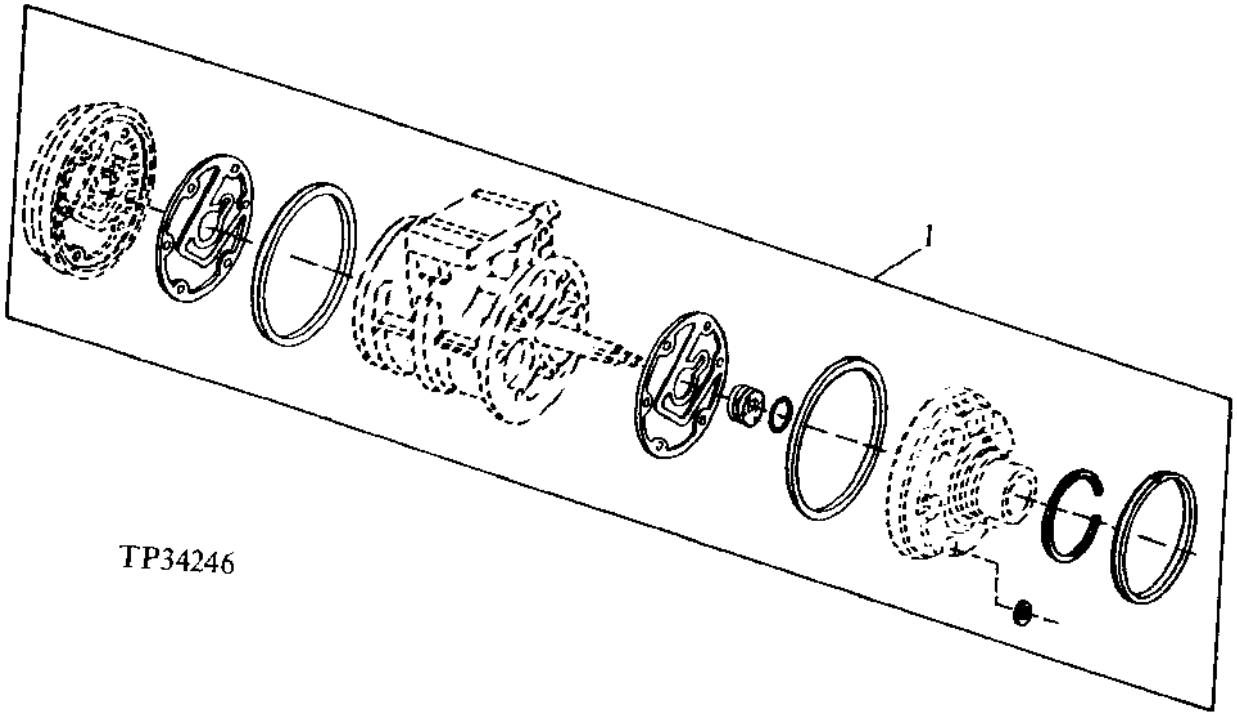

KEY	PART NO.	PART NAME	QTY	SERIAL NO.	REMARKS
1	RE52509	SEAL KIT	1		

A/C COMPRESSOR HARDWARE KIT

TP34247 -UN-01JAN94

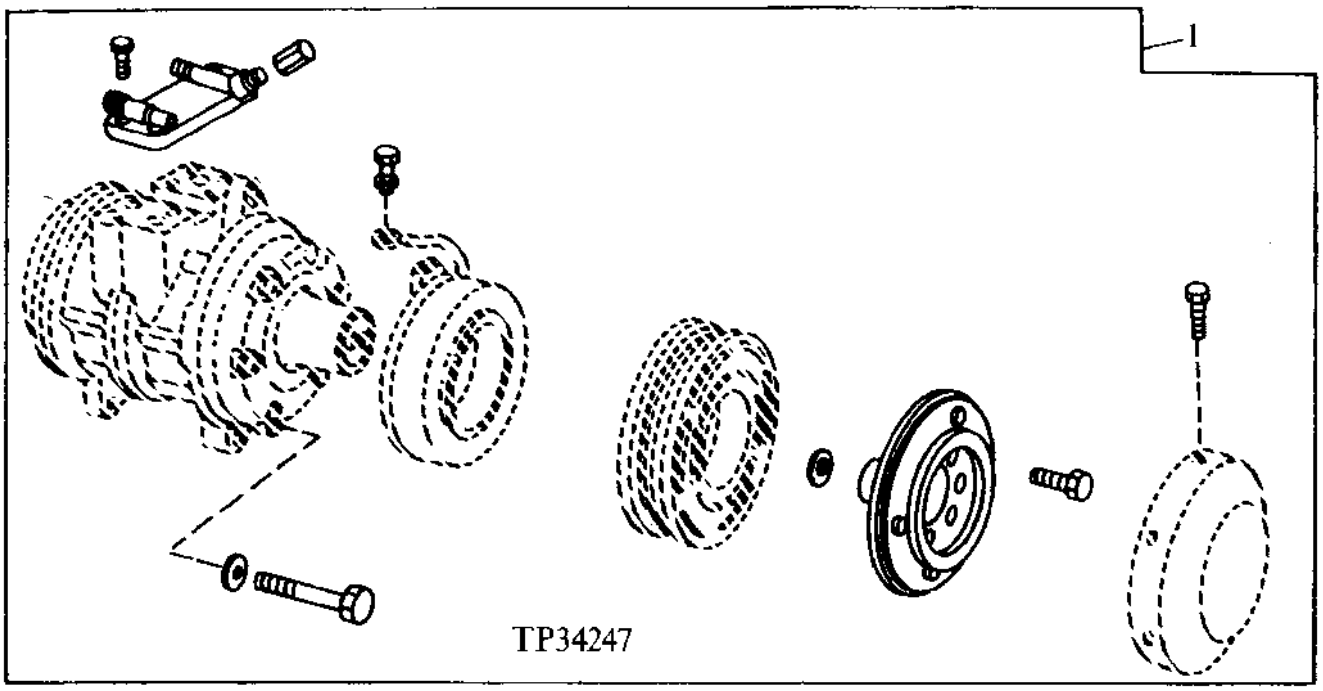

KEY	PART NO.	PART NAME	QTY	SERIAL NO.	REMARKS
1	RE52507	KIT	1		

HEATING AND AIR CONDITIONING OUTLET DUCTS

TP62831 -UN-29JUN00

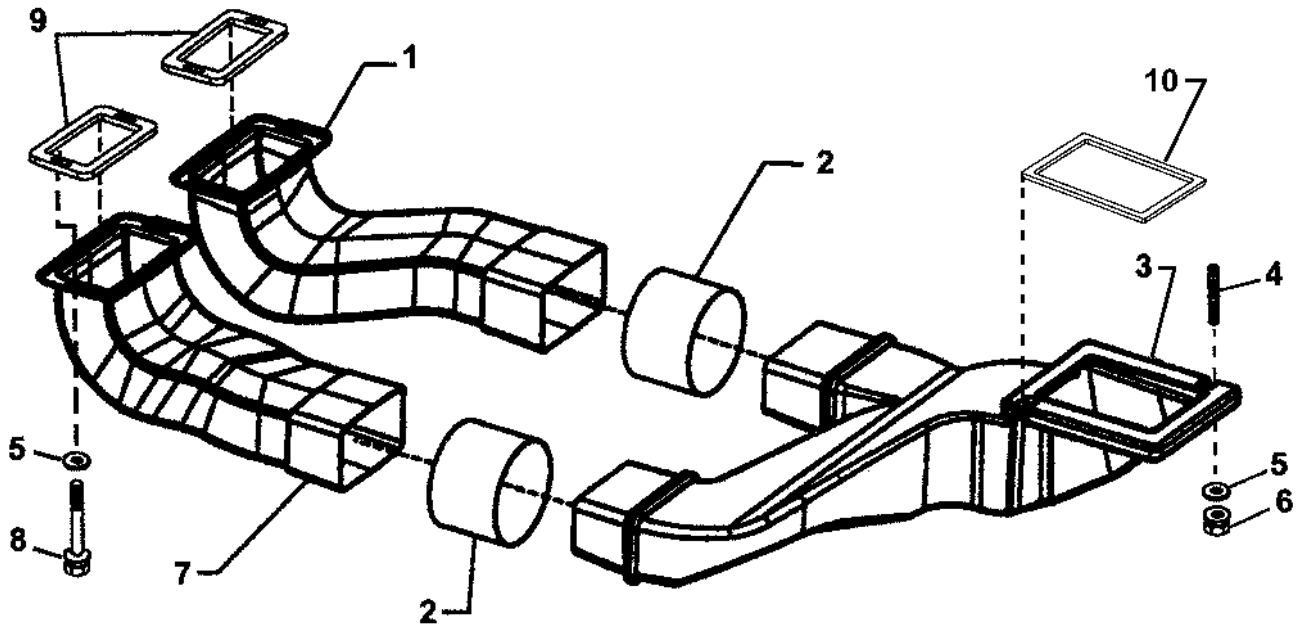

TP62831

KEY	PART NO.	PART NAME	QTY	SERIAL NO.	REMARKS
1	T173768	AIR DUCT	1		(SUB FOR T156732) (RIGHT SIDE)
2	T171082	SEAL	2		
3	T175855	AIR DUCT	1		
4	T167759	ROD	2		
5	24M7298	WASHER	6		8.400 X 25 X 2 MM
6	14M7298	FLANGE NUT	2		M8
7	T156256	AIR DUCT	1		(LEFT SIDE)
8	19M7800	SCREW	4		M8 X 50
9	T182872	SEAL	2		
10	T167679	SEAL	1		

AIR CONDITIONER CONDENSER,RECEIVER-DRIER AND HOSES

TP60544 -UN-06NOV98

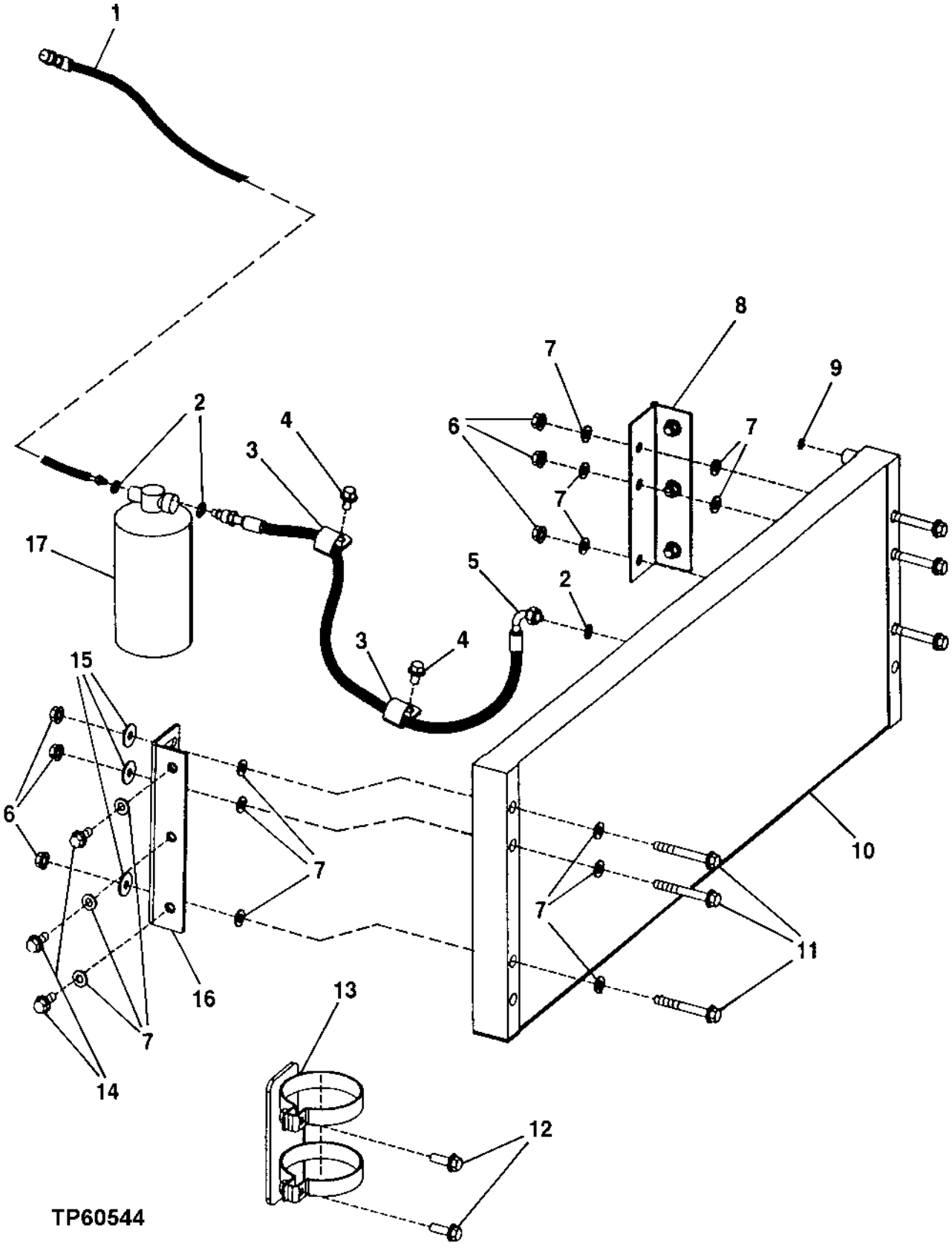

A/C CONDENSOR,RECEIVER-DRIER AND HOSES

KEY	PART NO.	PART NAME	QTY	SERIAL NO.	REMARKS
1	AT211478	HOSE	1		
2	R10093	O-RING	3		
3	R46667	CLAMP	2		
4	19M7783	SCREW	2		M10 X 16
5	AT210781	REFRIGERANT HOSE	1		
6	14M7296	FLANGE NUT	6		M10
7	24M7239	WASHER	21		10.700 X 21 X 2.500 MM
8	AT210031	HINGE	1		
9	R113050	O-RING	1		
10	AT208410	VAPOR CONDENSER	1		
11	19M7810	SCREW	6		M10 X 80
12	19M7786	SCREW	2		M10 X 30
13	AT207103	BRACKET	1		
14	19M7785	SCREW	8		M10 X 25
15	24M7296	WASHER	3		10.500 X 30 X 2.500 MM
16	AT210468	BRACKET	1		
17	AT162848	RECEIVER-DRYER	1		

MONITOR CONSULE
(WITH CAB)

T136634 -UN-19DEC00

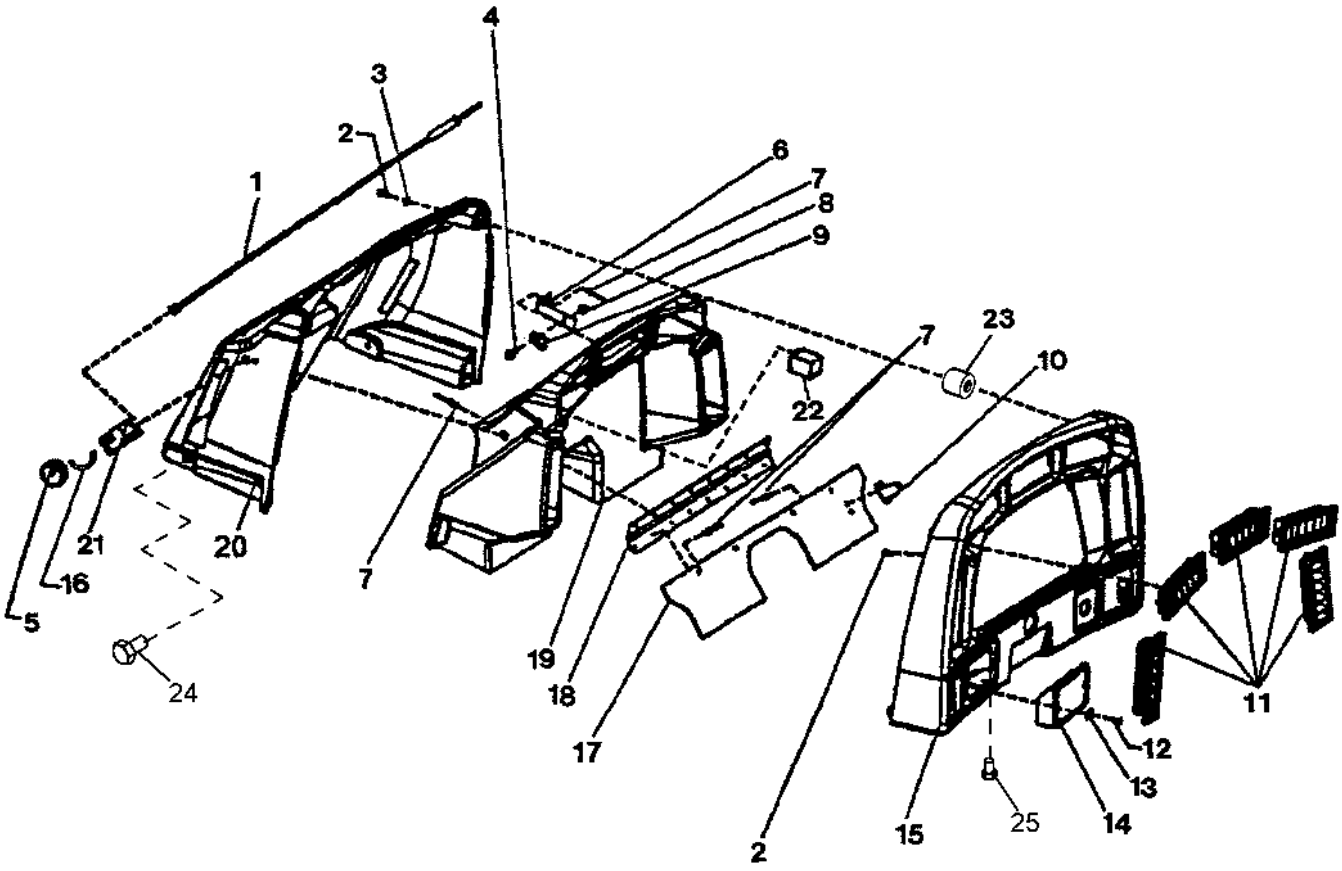

T136634

MONITOR CONSULE
(WITH CAB)

KEY	PART NO.	PART NAME	QTY	SERIAL NO.	REMARKS
1	AT171023	PUSH PULL CABLE	1		
2	21M7265	SCREW	4		M5 X 12
3	24M7054	WASHER	4		6.400 X 12 X 1.600 MM
4	19M7775	SCREW	1		M6 X 16
5	R111632	KNOB	1		
6	T170445	ANGLE	1		
7	H89098	RIVET	12		
8	14M7397	LOCK NUT	1		M6
9	R31654	CLAMP	1		
10	T170446	BRACKET	1		
11	AT211527	LOUVER	5		
12	21H1470	SCREW	2		0.164" X 3/4"
13	R53528	NUT	2		
14	AT59892	ASHTRAY	1		
15	T168546	COWL	1		
16	T171688	LABEL	1		
17	T172582	DOOR	1		
18	T68131	HINGE	1		
19	T171815	AIR PLENUM	1		NLA
20	T172460	HOUSING	1		
21	AT223687	CONTROL	1		(SUB FOR AT209239)
22	T182971	PAD	1		FOAM
23	T182861	PLUG	2		
24	19M7774	SCREW	2		M6 X 12, (CAB AND CANOPY)
25	19M7775	SCREW	2		M6 X 16, (CAB AND CANOPY)

MONITOR CONSULE
(CAB)
(SERIAL NO.XXXXXX-)

T151632 -UN-19FEB02

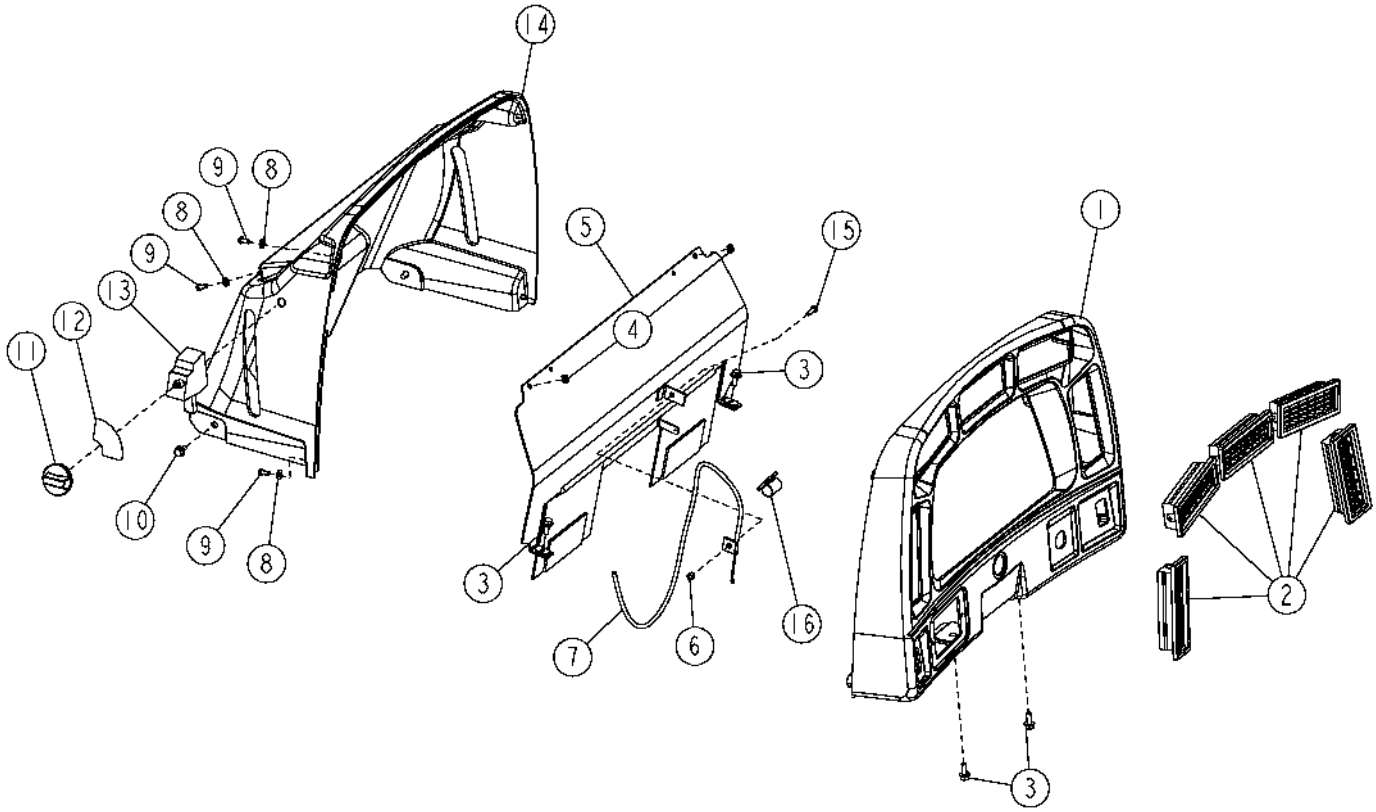

T151632

MONITOR CONSULE
(CAB)
(SERIAL NO.XXXXXX-)

KEY	PART NO.	PART NAME	QTY	SERIAL NO.	REMARKS
1	T168546	COWL	1	-581888	
	T180926	COWL	1	581889-	GRAY
2	AT211527	LOUVER	5		
3	19M7775	SCREW	4		M6 X 16
4	14M7442	NUT	2		M5
5	AT223073	PARTITION	1		
6	14M7397	LOCK NUT	1	-XXXXXX	
	14M7360	LOCK NUT	1	XXXXXX-	
7	AT223688	CABLE	1		
8	24M7054	WASHER	6		
9	21M7265	SCREW	6		
10	19M7774	SCREW	2		
11	AT223689	KNOB	1		(SUB FOR AT202857)
12	T171688	LABEL	1	-XXXXXX	
	T182189	LABEL	1	XXXXXX-	
13	AT223687	CONTROL	1		
14	T179956	HOUSING	1	-581888	
	T180925	HOUSING	1	581889-	GRAY
15	19M7775	SCREW	1	-XXXXXX	
	19M7372	CAP SCREW	1	XXXXXX-	
16	T182909	CLIP	1		

MONITOR CONSULE
(WITH CANOPY)

TP55710 -UN-28OCT97

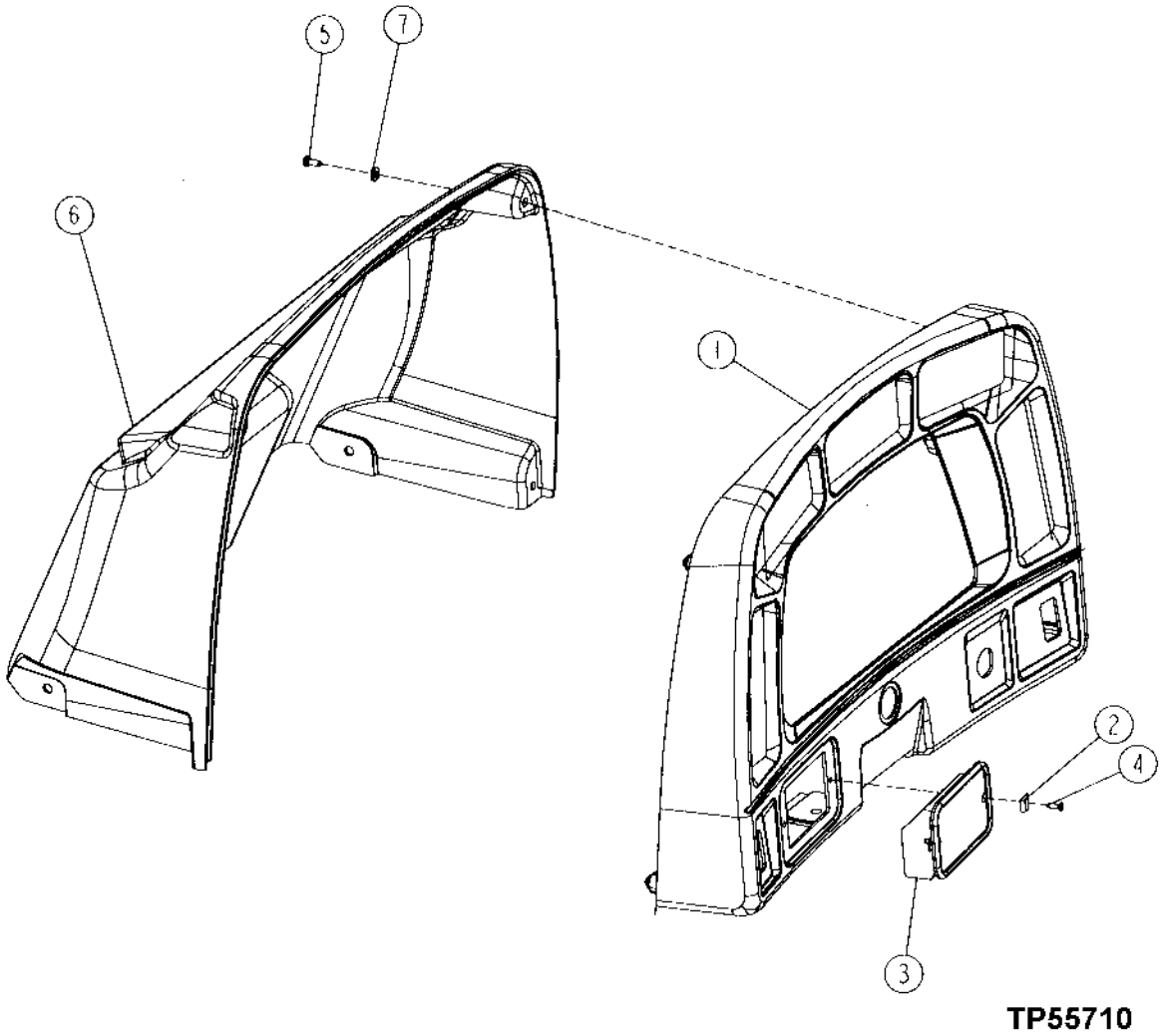

TP55710

MONITOR CONSULE
(WITH CANOPY)

KEY	PART NO.	PART NAME	QTY	SERIAL NO.	REMARKS
1	T171779	COWL	1	-581888	
	T180928	COWL	1	581889-	GRAY
2	R53528	NUT	2		
3	AT59892	ASHTRAY	1		
4	21H1470	SCREW	2		0.164" X 3/4"
5	21M7265	SCREW	4		M5 X 12
6	T172743	HOUSING	1	-581888	
	T180927	HOUSING	1	581889-	GRAY
7	24M7054	WASHER	4		6.400 X 12 X 1.600 MM

HEATER HOSES AND FITTINGS

TP62676 -UN-19OCT99

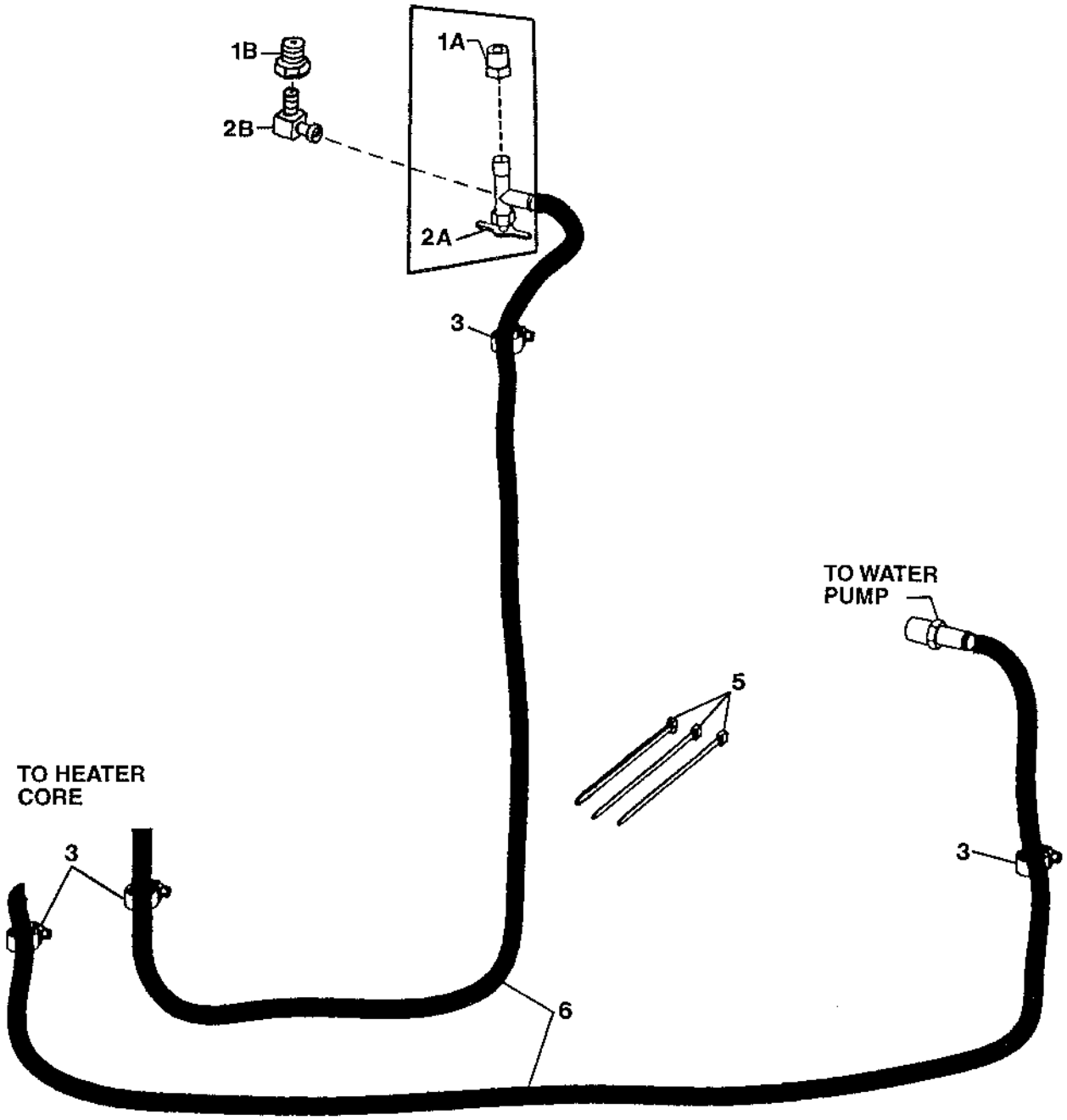

TP62676

HEATER HOSES AND FITTINGS

KEY	PART NO.	PART NAME	QTY	SERIAL NO.	REMARKS
1A	15H619	PIPE BUSHING	1	-572924	
1B	T177861	FITTING	1	572925-	
2A	AT35831	VALVE	1	-572924	
2B	R117310	ELBOW FITTING	1	572925-	
3	T184924	HOSE CLAMP	4		(SUB FOR (4) AR21837)
4	R41985	FITTING	1		
5	R44302	TIE BAND	2		
6	.....	HOSE	2		(MAKE FROM T60811 BULK MATERIAL, CUT TO LENGTH)

MEMORANDA

HOOD

TP55681 -UN-06OCT97

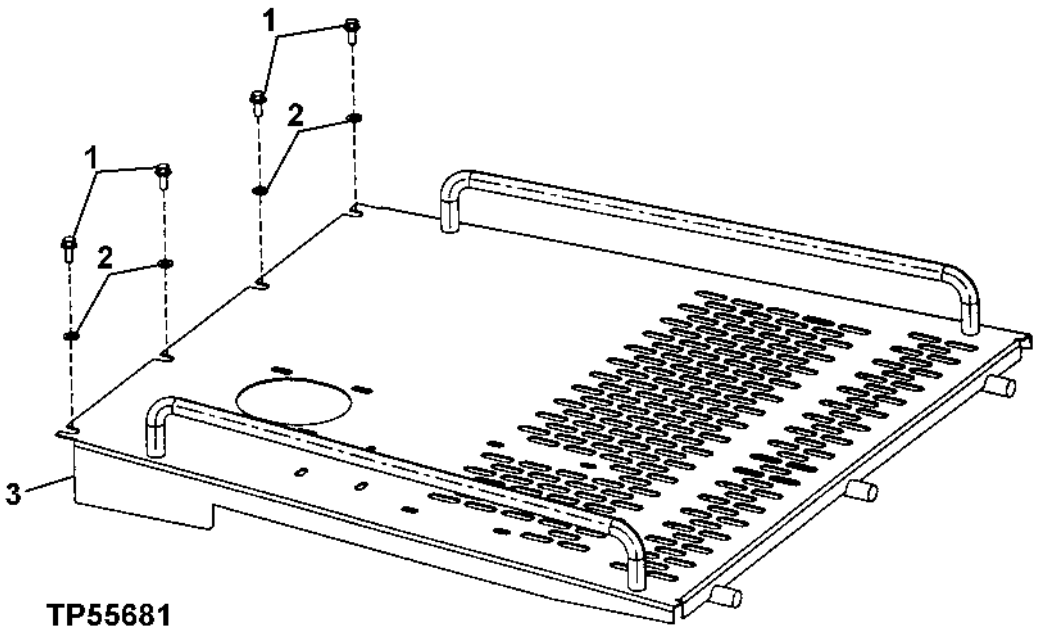

KEY	PART NO.	PART NAME	QTY	SERIAL NO.	REMARKS
1	19M7785	SCREW	4		M10 X 25
2	24M7239	WASHER	4		10.700 X 21 X 2.500 MM
3	AT209048	HOOD	1		

ENGINE SIDE SHIELDS

TP62580 -UN-30AUG99

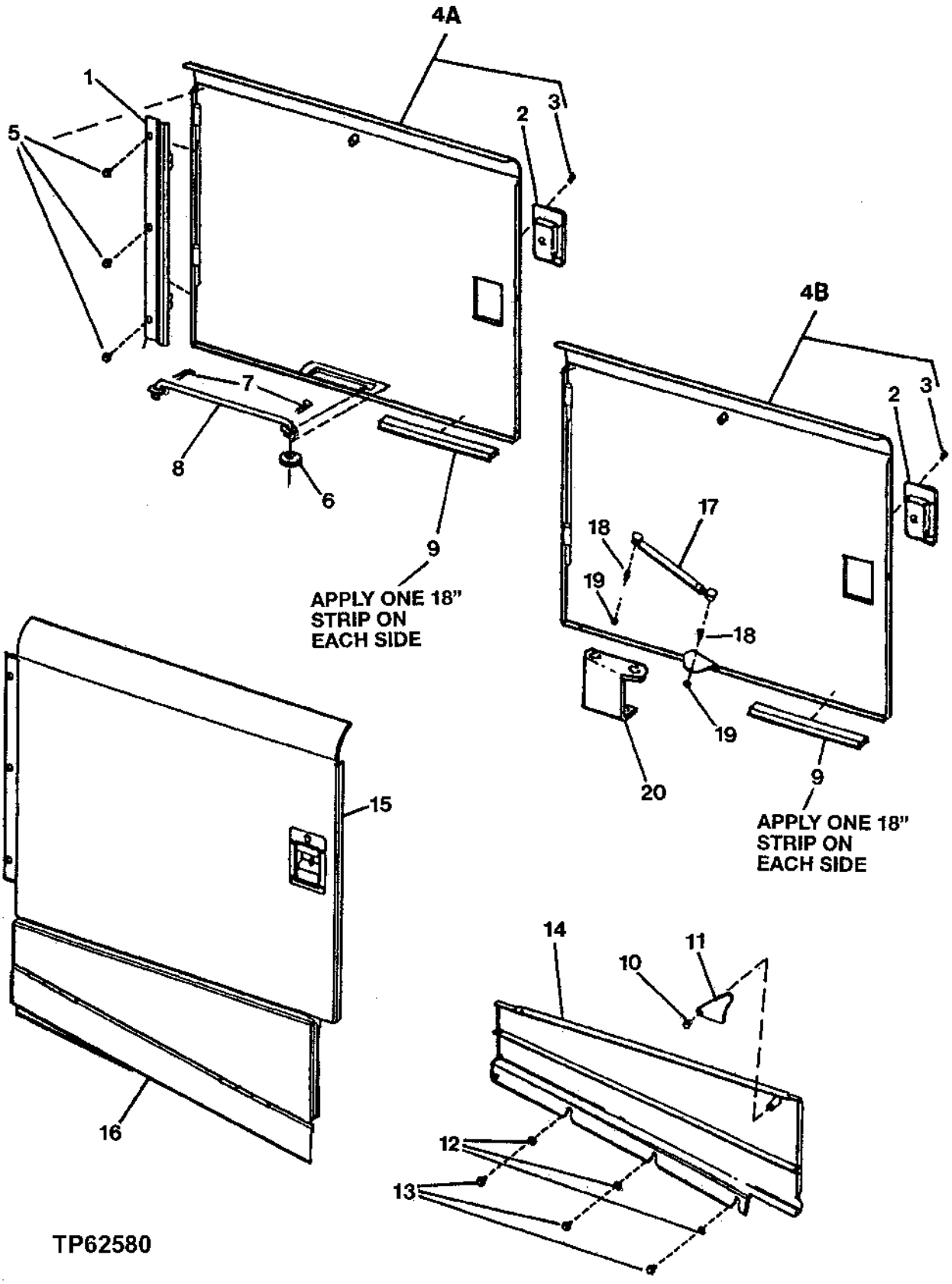

ENGINE SIDE SHIELDS

KEY	PART NO.	PART NAME	QTY	SERIAL NO.	REMARKS
1	AT208159	HINGE	2		
2	AT221696	LATCH	1		(SUB FOR AT115875)
3	H85233	RIVET	4		
4A	.....	SHIELD	1	-572556	(R.H.) (AT209052 NO LONGER AVAILABLE) (SUB AT221967) (ALSO ORDER T177989, AT222529, T177909 (2) AND 14M7298 (2))
4B	AT221967	DOOR	1	572557-	(R.H.)
5	19M7783	SCREW	6		M10 X 16
6	T170057	WASHER	4		
7	J16931	PIN	4		
8	AT206690	ROD	2		
9	.....	ISOLATOR	AR		(MAKE FROM T167650 BULK MATERIAL, CUT TO LENGTH)
10	T105891	CAP SCREW	2		M10 X 20
11	T168119	PLATE	2		
12	24M7296	WASHER	6		10.500 X 30 X 2.500 MM
13	19M7784	SCREW	6		M10 X 20
14	AT220495	DOOR	1		(R.H.) (SUB FOR AT209266)
15	.....	SHIELD	1	-572550	(L.H.)(INCLUDES AT221696 LATCH AND (4)H85233 RIVET) (AT211128 NO LONGER AVAILABLE) (SUB AT221754) (ALSO ORDER T177950, AT222529, T177909 (2) AND 14M7298 (2))
	AT221754	SHIELD	1	572557-	(L.H.) (NOT ILLUSTRATED)
16	AT220494	DOOR	1		(L.H.) (SUB FOR AT209051)
17	AT222529	CYLINDER	2	572557-	(SUB FOR AT146294)
18	T177909	BALL STUD	4	572557-	
19	14M7298	FLANGE NUT	4	572557-	M8
20	T177989	BRACKET	1	572557-	(R.H.)
	T177950	PLATE	1	572557-	(L.H.) (NOT ILLUSTRATED)

MEMORANDA

TRANSMISSION SHIELDS

TP55810 -UN-12JAN98

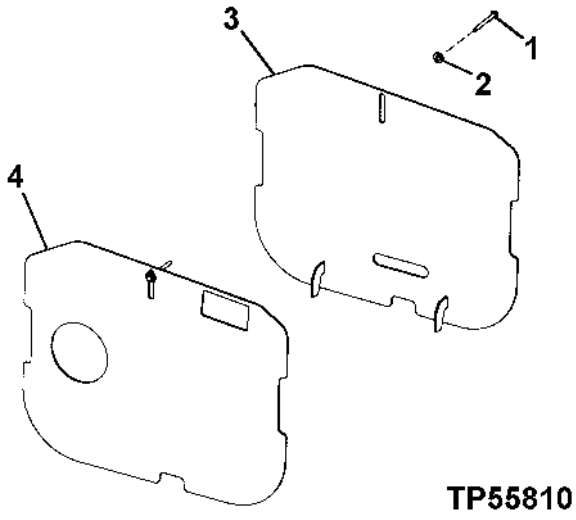

KEY	PART NO.	PART NAME	QTY	SERIAL NO.	REMARKS
1	19M7814	SCREW	2		M12 X 50
2	24M7180	WASHER	2		13 X 37 X 3 MM
3	AT220017	COVER	1		
4	AT219770	COVER	1		

BATTERY COVERS

TP60648 -UN-23FEB99

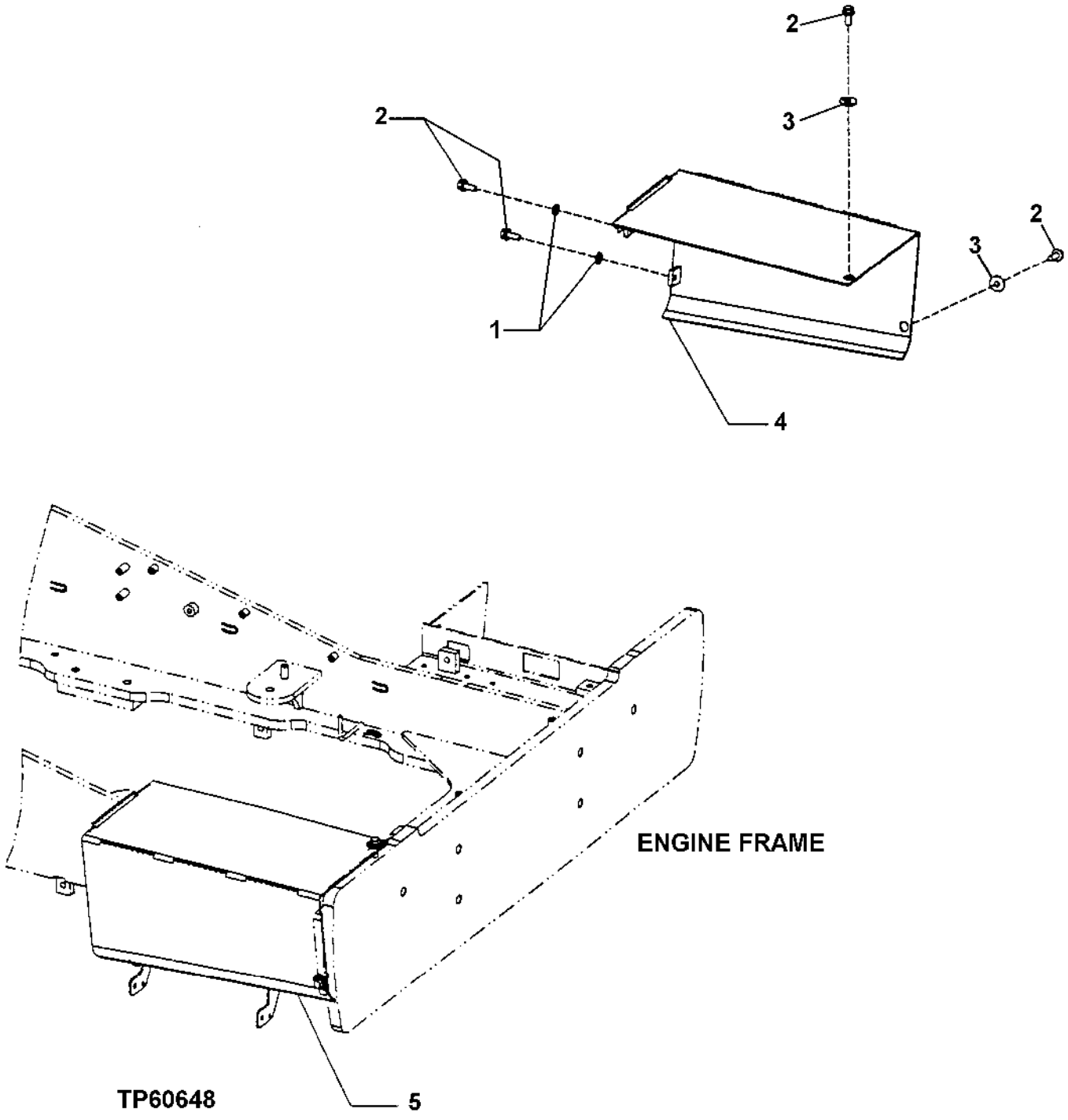

BATTERY COVERS

KEY	PART NO.	PART NAME	QTY	SERIAL NO.	REMARKS
1	24M7240	WASHER	4		13 X 25 X 3 MM
2	19M7789	SCREW	8		M12 X 30
3	24M7180	WASHER	4		13 X 37 X 3 MM
4	AT209439	COVER	1		(USE IF AVAILABLE) (SUB AT221658)
	AT221658	COVER	1		
5	AT209438	COVER	1		(USE IF AVAILABLE) (SUB AT221657)
	AT221657	COVER	1		

GRILLE AND GRILLE HOUSING
(SERIAL NO. -578419)

T137380 -UN-01FEB01

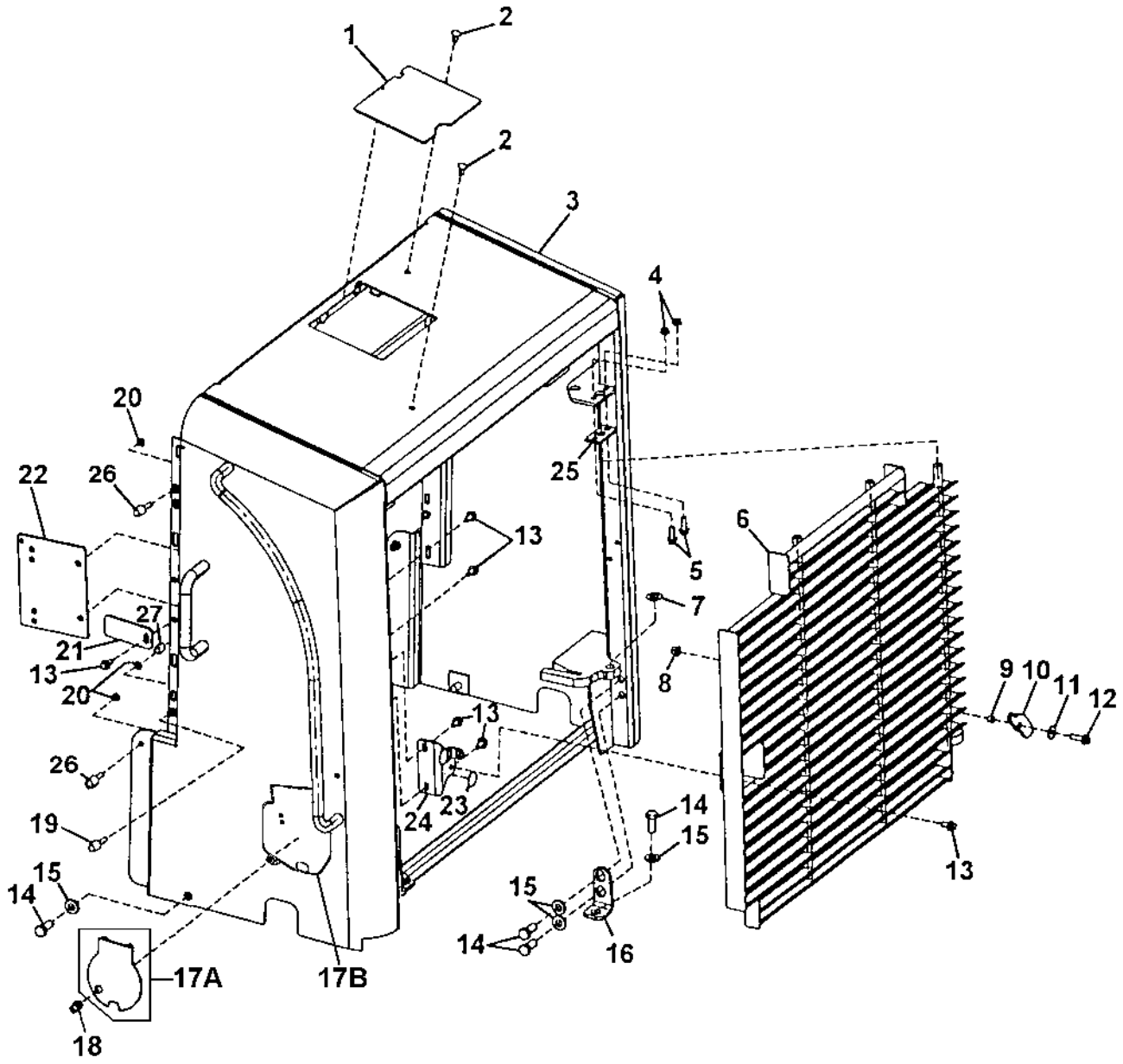

T137380

GRILLE AND GRILLE HOUSING
(SERIAL NO. -578419)

KEY	PART NO.	PART NAME	QTY	SERIAL NO.	REMARKS
1	AT202924	COVER	1	-XXXXXX	
	AT220994	COVER	1	XXXXXX-	
2	T174271	PLUG	2		
3	AT222957	GRILLE	1		(USE IF AVAILABLE) (ALSO ORDER AT220993 AND, AT220994) (SUB FOR AT219932)
4	14M7296	FLANGE NUT	2		M10
5	19M7786	SCREW	2		M10 X 30
6	AT208191	DOOR	1		
7	24H1387	WASHER	1		
8	14M7400	LOCK NUT	1		M10
9	Z32264	SPACER	1		
10	T156428	STRAP	1		
11	24M7296	WASHER	1		10.500 X 30 X 2.500 MM
12	19M7835	SCREW	1		M10 X 35
13	19M7784	SCREW	7		M10 X 20
14	19M8035	CAP SCREW	8		M16 X 35
15	T175481	WASHER	8		
16	T170442	BRACKET	1		(RIGHT SIDE)
	T172056	BRACKET	1		(LEFT SIDE) (NOT ILLUSTRATED)
17A	AT202925	COVER	1	-XXXXXX	
17B	AT220993	DOOR	1	XXXXXX-	
18	AT38176	LOCK	1	-XXXXXX	
	12H327	LOCK WASHER	1	-XXXXXX	3/4", (NOT ILLUSTRATED)
19	AT219974	BUMPER	2		
20	14M7152	NUT	6		M10
21	T168135	STRAP	2		
22	AT209506	BRACKET	1		
23	T149895	LABEL	2		
24	AT220241	SUPPORT	1		
25	T156379	PLATE	1		
26	AT221273	BUMPER	4		
27	T101955	BUMPER	2		

GRILLE AND GRILLE HOUSING
(SERIAL NO. 578420-)

T148417 -UN-27NOV01

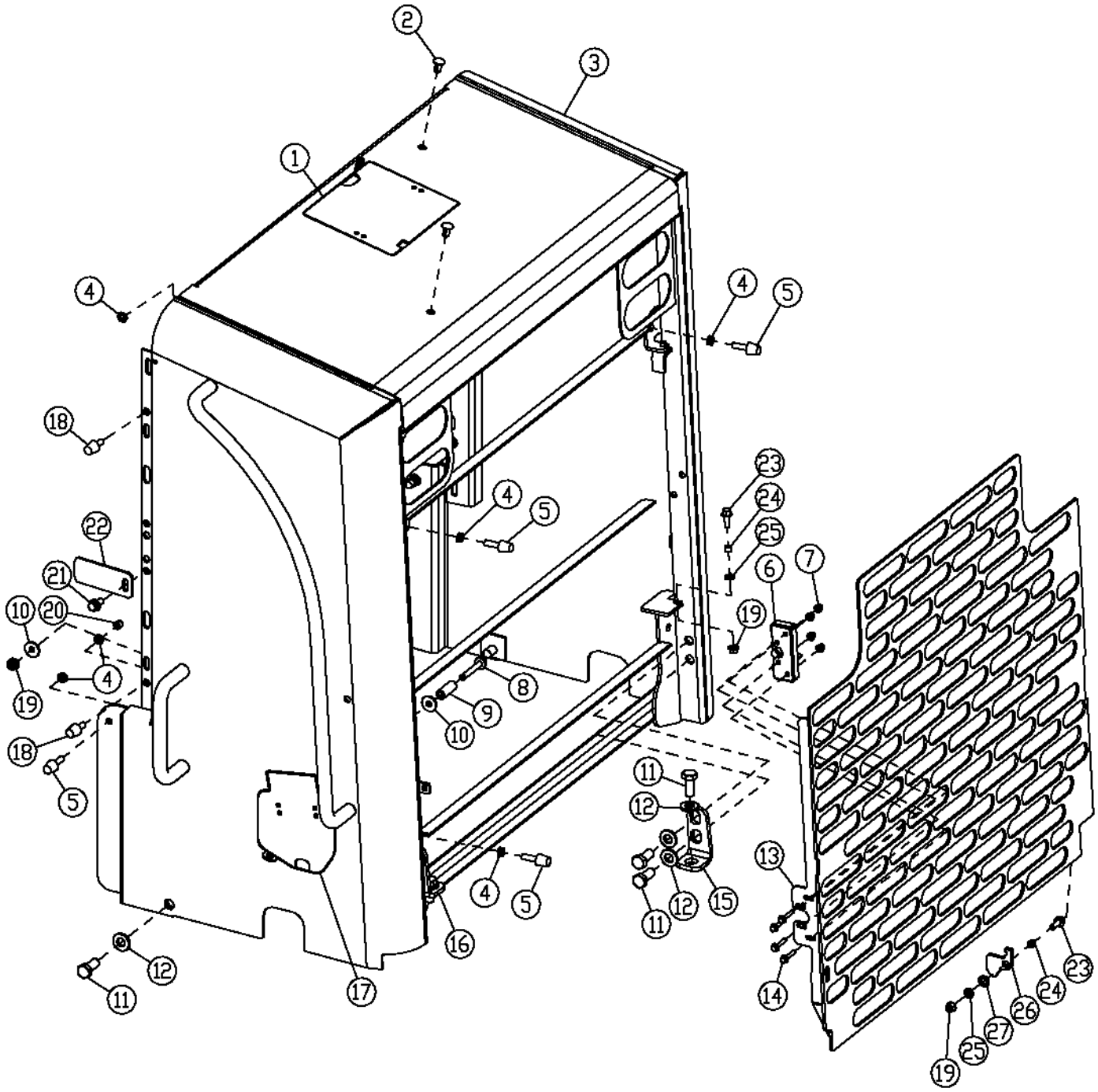

T148417

GRILLE AND GRILLE HOUSING
(SERIAL NO. 578420-)

KEY	PART NO.	PART NAME	QTY	SERIAL NO.	REMARKS
1	AT220994	COVER	1		
2	T174271	PLUG	2		
3	AT223987	GRILLE	1		(SUB FOR AT223577)
4	14M7152	NUT	10		M10
5	AT219974	BUMPER	5		
6	AT220015	LATCH	1		
7	14M7397	LOCK NUT	4		M6
8	19M7808	SCREW	1		M10 X 65
9	T101975	BUSHING	1		
10	24M7296	WASHER	2		10.500 X 30 X 2.500 MM
11	19M8035	CAP SCREW	8		M16 X 35
12	24M7241	WASHER	8		17 X 34 X 4 MM
13	AT223988	DOOR	1		(SUB FOR AT223589)
14	19M7833	SCREW	4		M6 X 35
15	T170442	BRACKET	1		(RIGHT)
16	T172056	BRACKET	1		(LEFT)
17	AT222814	DOOR	1		
18	AT221273	BUMPER	4		
19	14M7296	FLANGE NUT	3		M10
20	T101955	BUMPER	2		
21	19M7784	SCREW	2		M10 X 20
22	T168135	STRAP	2		
23	19M7786	SCREW	2		
24	Z32264	SPACER	2		
25	24M7239	WASHER	2		
26	T180661	STRAP	1		
27	24M7228	WASHER	1		

REAR FENDERS AND FENDER SUPPORTS
(SERIAL NO. -XXXXXX)

TP62644 -UN-19OCT99

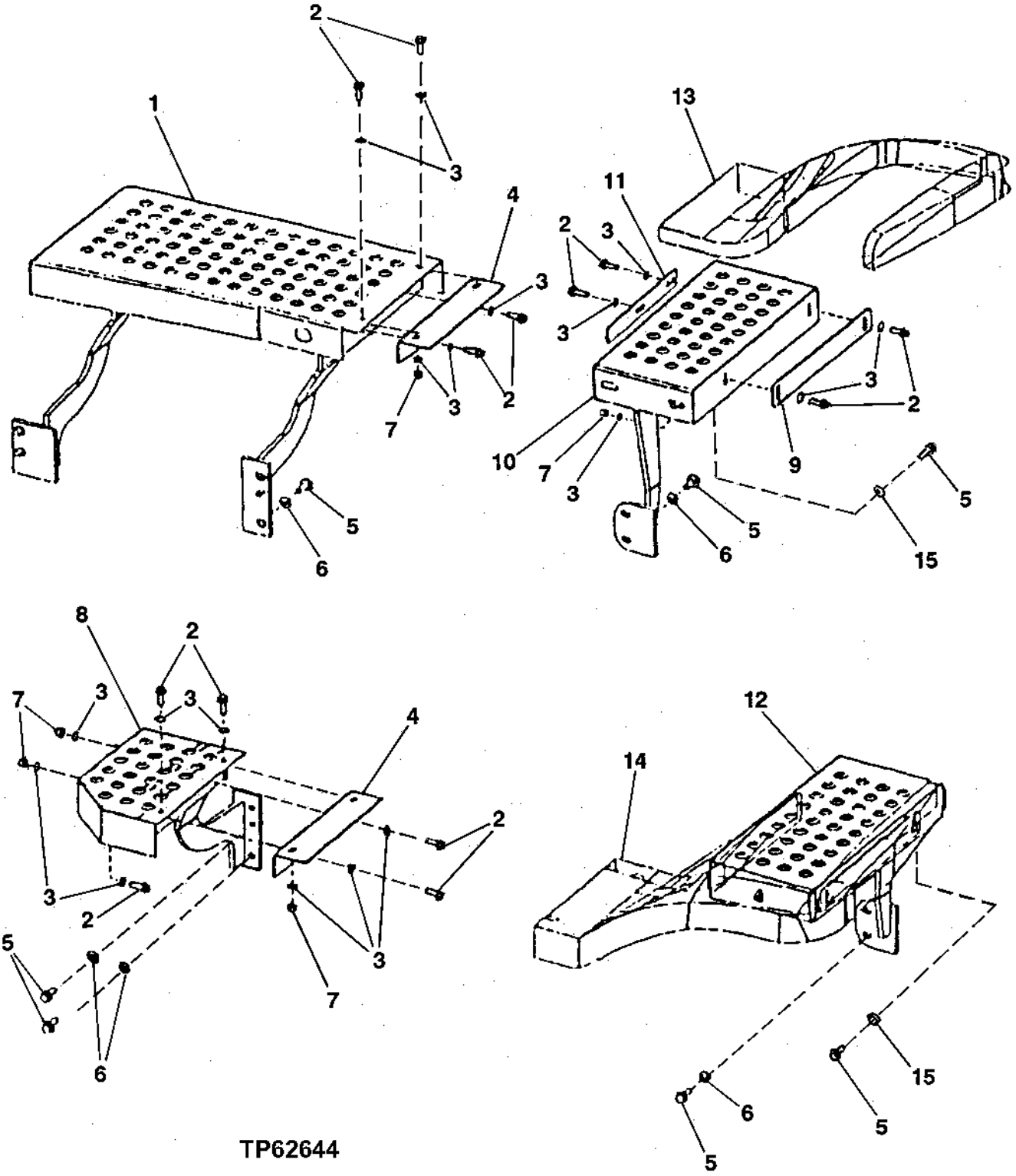

THIS PARTS LISTING IS CONTINUED

REAR FENDERS AND FENDER SUPPORTS
(SERIAL NO. -XXXXXX)

KEY	PART NO.	PART NAME	QTY	SERIAL NO.	REMARKS
1	AT219728	KIT	1		(SUB FOR AT210331) (INCLUDES AT222323 RIGHT PLATFORM AND T125546 THREADED BOSS)
	AT222323	PLATFORM	1		RIGHT
	AT222323	PLATFORM	1		
	T125546	BUSHING	1		(NOT ILLUSTRATED)
2	19M7835	SCREW	18		M10 X 35
3	24M7296	WASHER	36		10.500 X 30 X 2.500 MM
4	T173273	SUPPORT	2		
5	19M7789	SCREW	10		M12 X 30
6	24M7240	WASHER	8		
7	14M7400	LOCK NUT	18		M10
8	AT210330	PLATFORM	1		
9	T172334	SUPPORT	2		
10	AT211526	PLATFORM	1		
11	T172336	STRAP	2		
12	AT211524	PLATFORM	1		
13	T173239	FENDER	1		(RIGHT)
	T173458	FENDER	1		(RIGHT) (CUSTOM)
14	T173238	FENDER	1		(LEFT)
	T173457	FENDER	1		(LEFT) (CUSTOM)
15	T178063	WASHER	2		

REAR FENDERS AND FENDER SUPPORTS
(SERIAL NO.XXXXXX-)

T137588 -UN-02FEB01

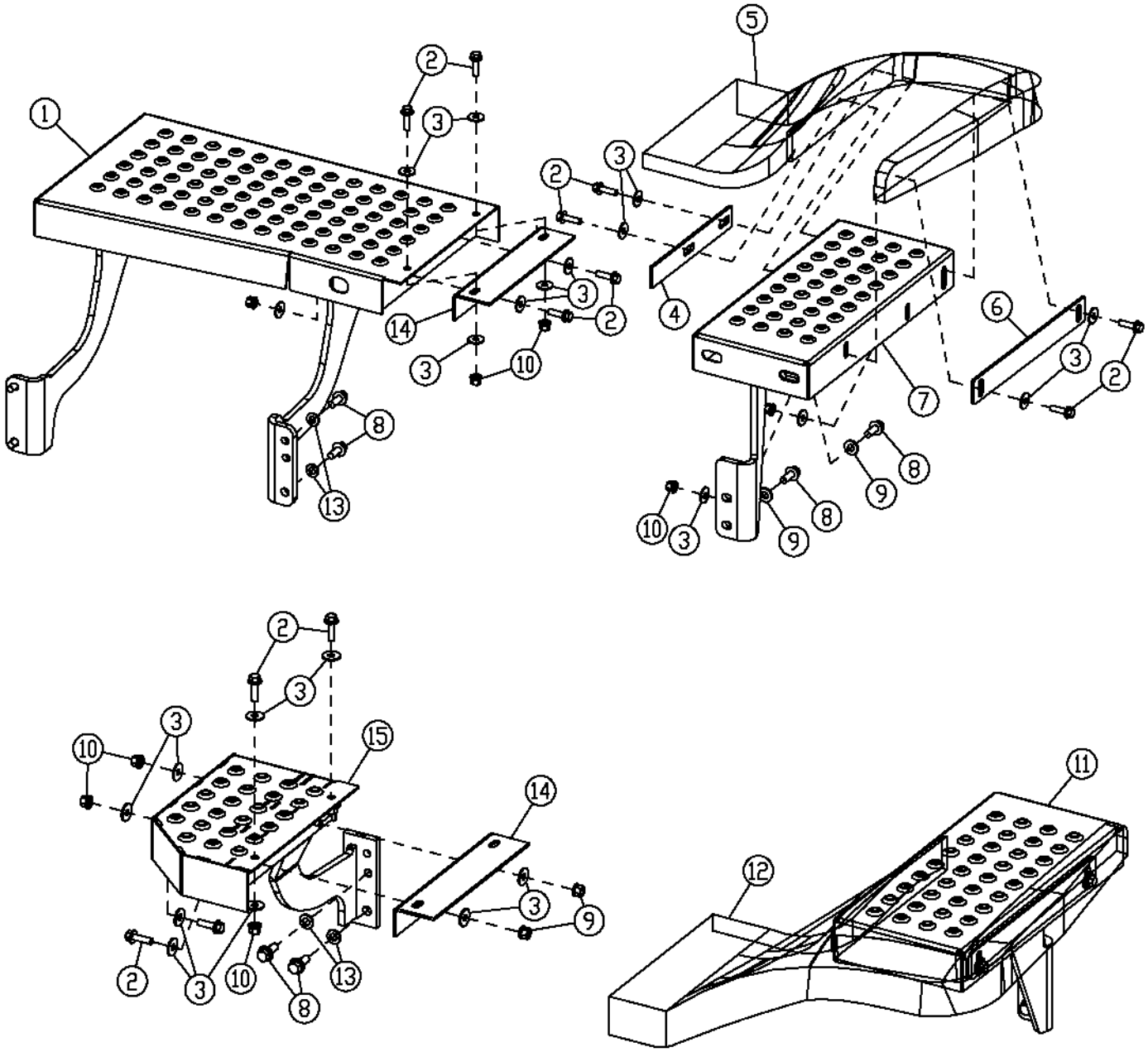

T137588

REAR FENDERS AND FENDER SUPPORTS
(SERIAL NO.XXXXXX-)

KEY	PART NO.	PART NAME	QTY	SERIAL NO.	REMARKS
1	AT222323	PLATFORM	1		RIGHT
2	19M7835	SCREW	18		
3	24M7296	WASHER	36		
4	T172336	STRAP	2		
5	T173239	FENDER	1		RIGHT
	T173458	FENDER	1		CUSTOM
6	T172334	SUPPORT	2		
7	AT223341	PLATFORM	1		RIGHT
8	19M7789	SCREW	10		
9	T178063	WASHER	4		
10	14M7400	LOCK NUT	18		
11	AT223340	PLATFORM	1		LEFT
12	T173238	FENDER	1		LEFT
	T173457	FENDER	1		CUSTOM
13	24M7240	WASHER	6		
14	T173273	SUPPORT	2		
15	AT210330	PLATFORM	1		LEFT

FRONT FENDERS AND FENDER SUPPORTS

T137690 -UN-01FEB01

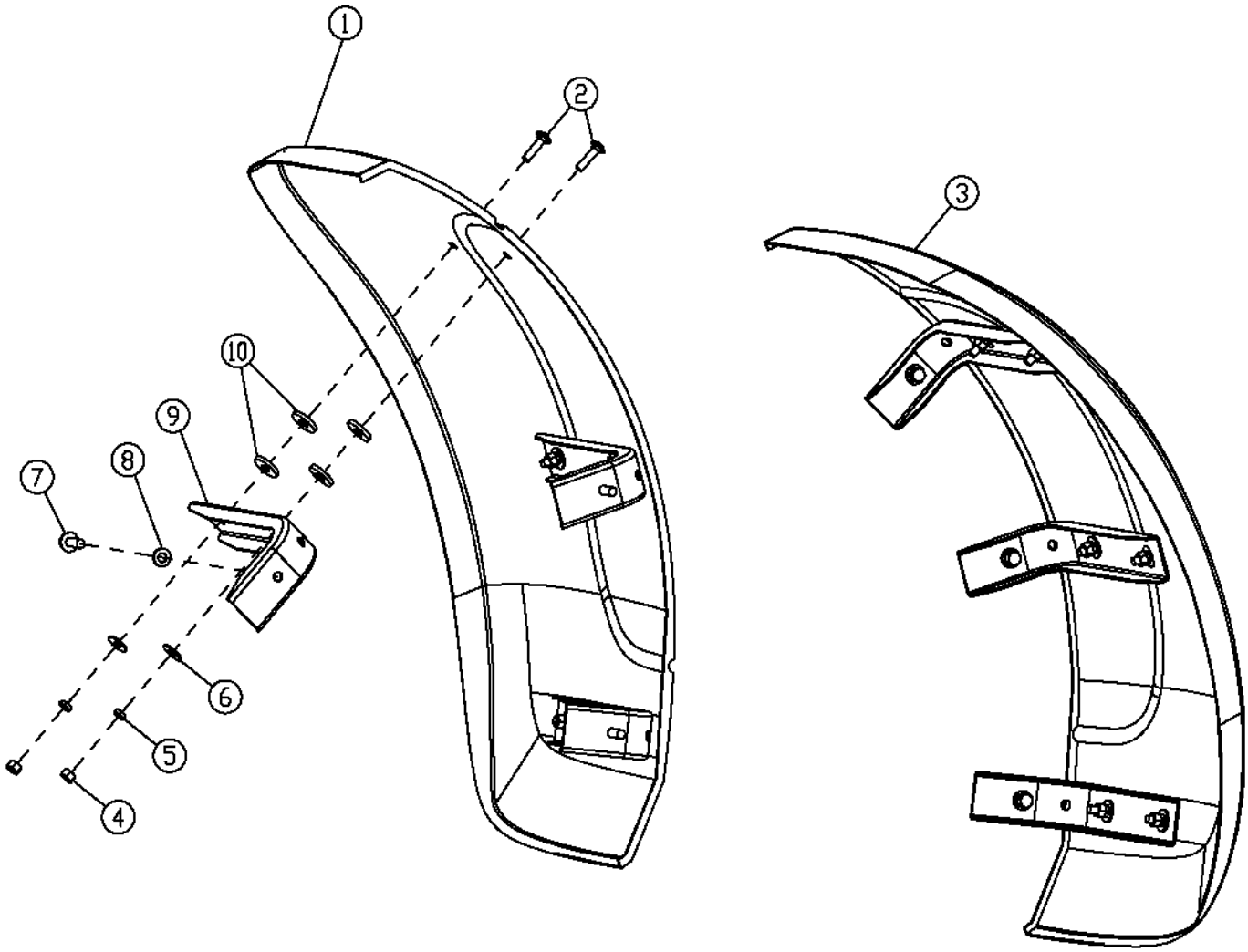

T137690

FRONT FENDERS AND FENDER SUPPORTS

KEY	PART NO.	PART NAME	QTY	SERIAL NO.	REMARKS
1	T170595	FENDER	1		(RIGHT)
	T173162	FENDER	1		(CUSTOM)
2	03M7194	BOLT	12		M10 X 40
3	T169118	FENDER	1		(LEFT)
	T173161	FENDER	1		(CUSTOM)
4	14M7167	LOCK NUT	12		M10
5	14M7152	NUT	12		M10
6	24M7296	WASHER	12		10.500 X 30 X 2.500 MM
7	19M7790	SCREW	6		M12 X 35
8	24M7240	WASHER	6		13 X 25 X 3 MM
9	T178368	SUPPORT	6		
10	T22381	WASHER	24		

MUD FLAPS AND MUD FENDERS

T136313 -UN-15DEC00

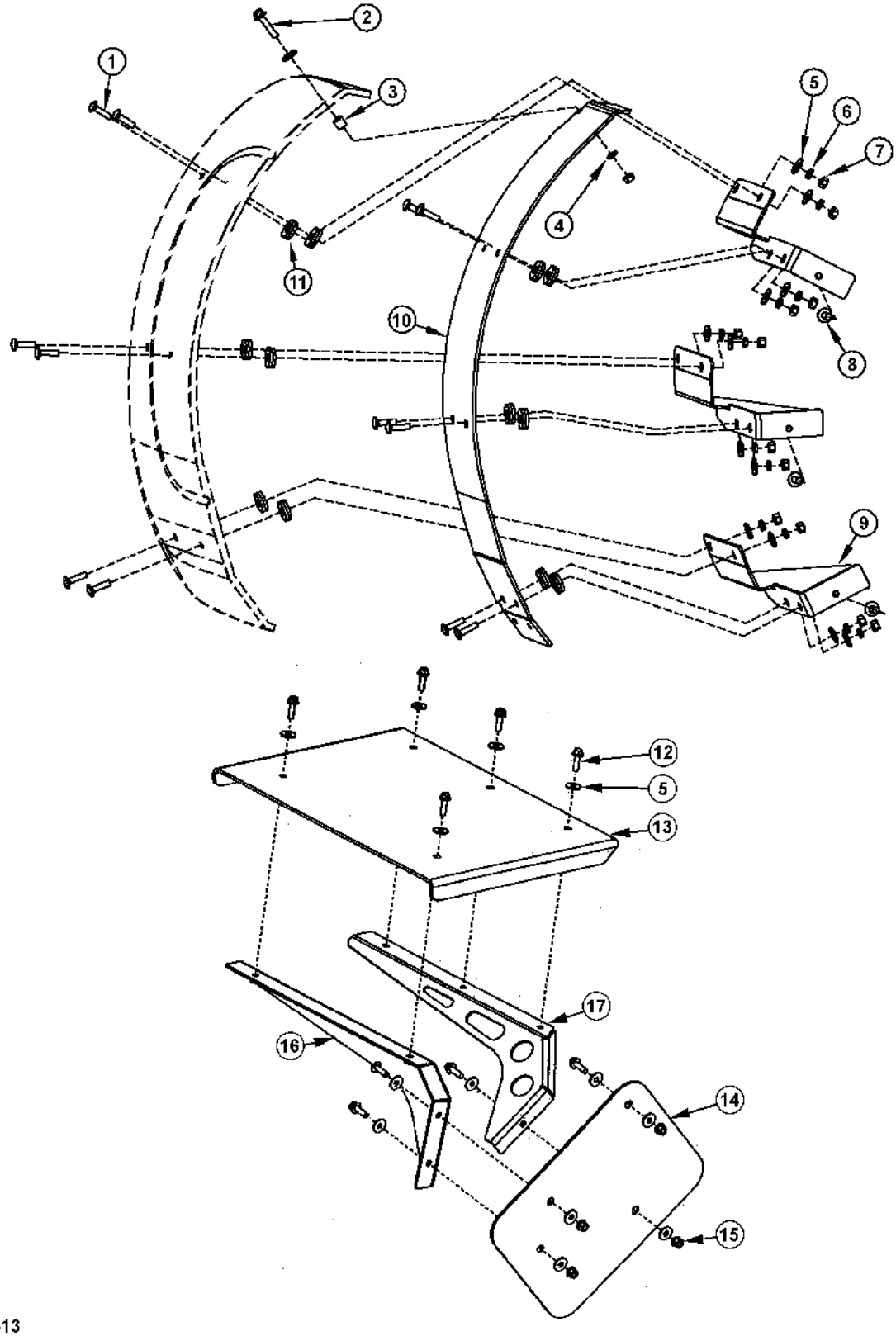

MUD FLAPS AND MUD FENDERS

KEY	PART NO.	PART NAME	QTY	SERIAL NO.	REMARKS
1	03M7194	BOLT	24		M10 X 40
2	19M7806	SCREW	2		M10 X 50
3	H148464	SPACER	2		
4	24M7239	WASHER	2		10.700 X 21 X 2.500 MM
5	24M7296	WASHER	52		10.500 X 30 X 2.500 MM
6	14M7152	NUT	24		M10
7	14M7167	LOCK NUT	26		M10
8	19M7789	SCREW	6		M12 X 30
9	AT220737	SUPPORT	3		(LEFT)
	AT221701	SUPPORT	3		(RIGHT)
10	T176279	FENDER	1		(EXTENSION) (LEFT)
	T176282	FENDER	1		(EXTENSION) (RIGHT)
11	T22381	WASHER	48		
12	19M7835	SCREW	16		
13	T176113	FENDER	2		
14	T176192	PLATE	2		
15	14M7400	LOCK NUT	8		M10
16	AT223323	SUPPORT	1		(LEFT)
	AT223331	SUPPORT	1		(RIGHT)
17	AT223324	SUPPORT	1		(LEFT)
	AT223332	SUPPORT	1		(RIGHT)
18	**AT220687**	**KIT**	**1**		**INCLUDES MUD FLAPS (SEE FOLLOWING TWO PAGES)**

MUD FLAPS AND MUD FENDERS

T136314 -UN-08DEC00

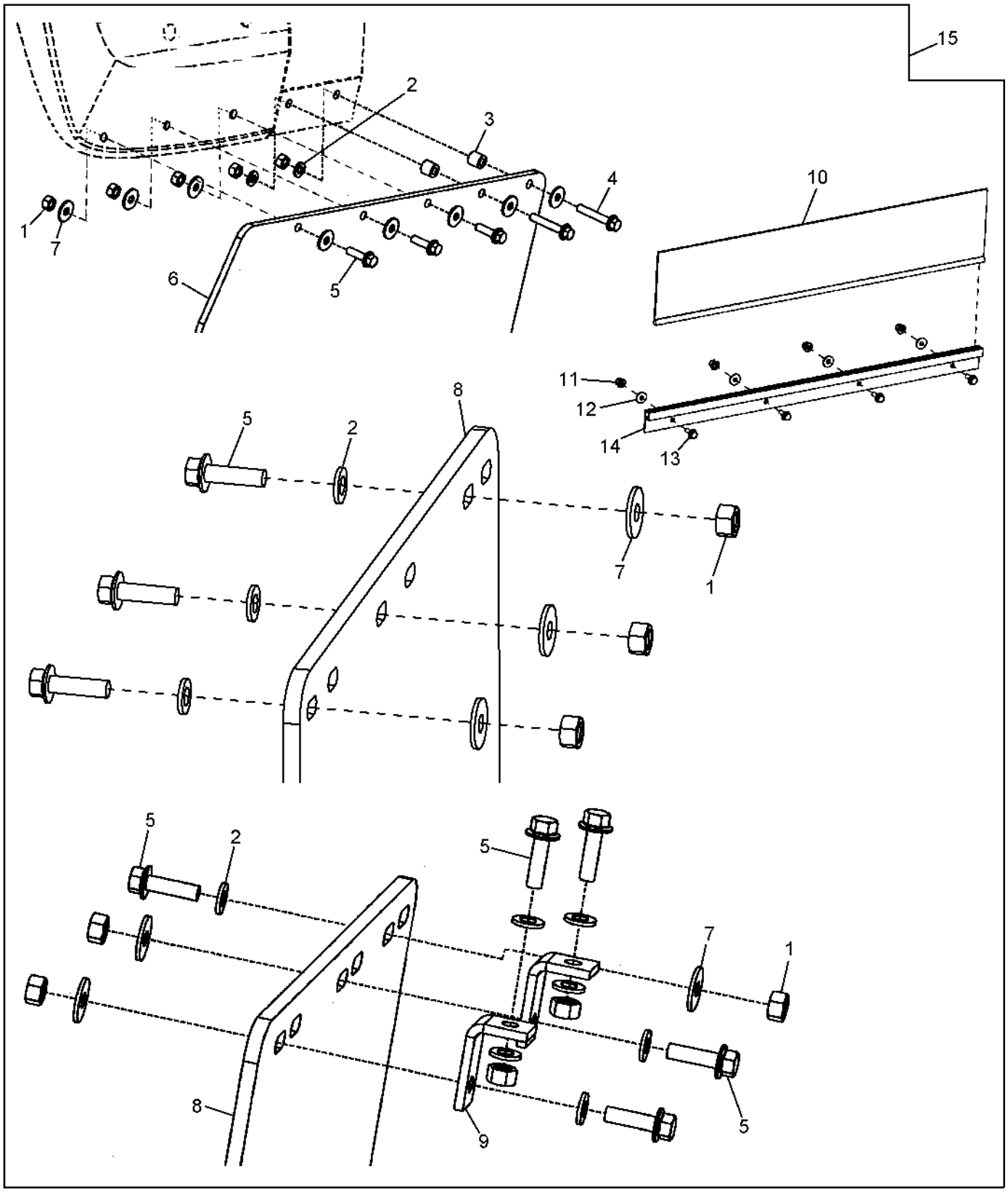

T136314

MUD FLAPS AND MUD FENDERS

KEY	PART NO.	PART NAME	QTY	SERIAL NO.	REMARKS
1	14M7167	LOCK NUT	18		M10
2	24M7239	WASHER	14		10.700 X 21 X 2.500 MM
3	H148464	SPACER	4		
4	19M7807	SCREW	4		
5	19M7835	SCREW	16		M10 X 35
6	T176341	SPLASH GUARDS	2		
7	24M7296	WASHER	22		10.500 X 30 X 2.500 MM
8	T176342	SPLASH GUARDS	2		
9	T176357	BRACKET	2		
10	T178275	LIMB RISER	2		
11	14M7397	LOCK NUT	8		M6
12	24M7139	WASHER	8		6.400 X 18 X 1.600 MM
13	19M7775	SCREW	8		M6 X 16
14	T178276	BRACKET	2		
15	**AT220687**	**KIT**	**1**		**INCLUDES MUD FENDERS (SEE PREVIOUS TWO PAGES)**

RADIO, RADIO SPEAKERS AND ANTENNA
(SERIAL NO. -572398)

TP60281 -UN-24MAR98

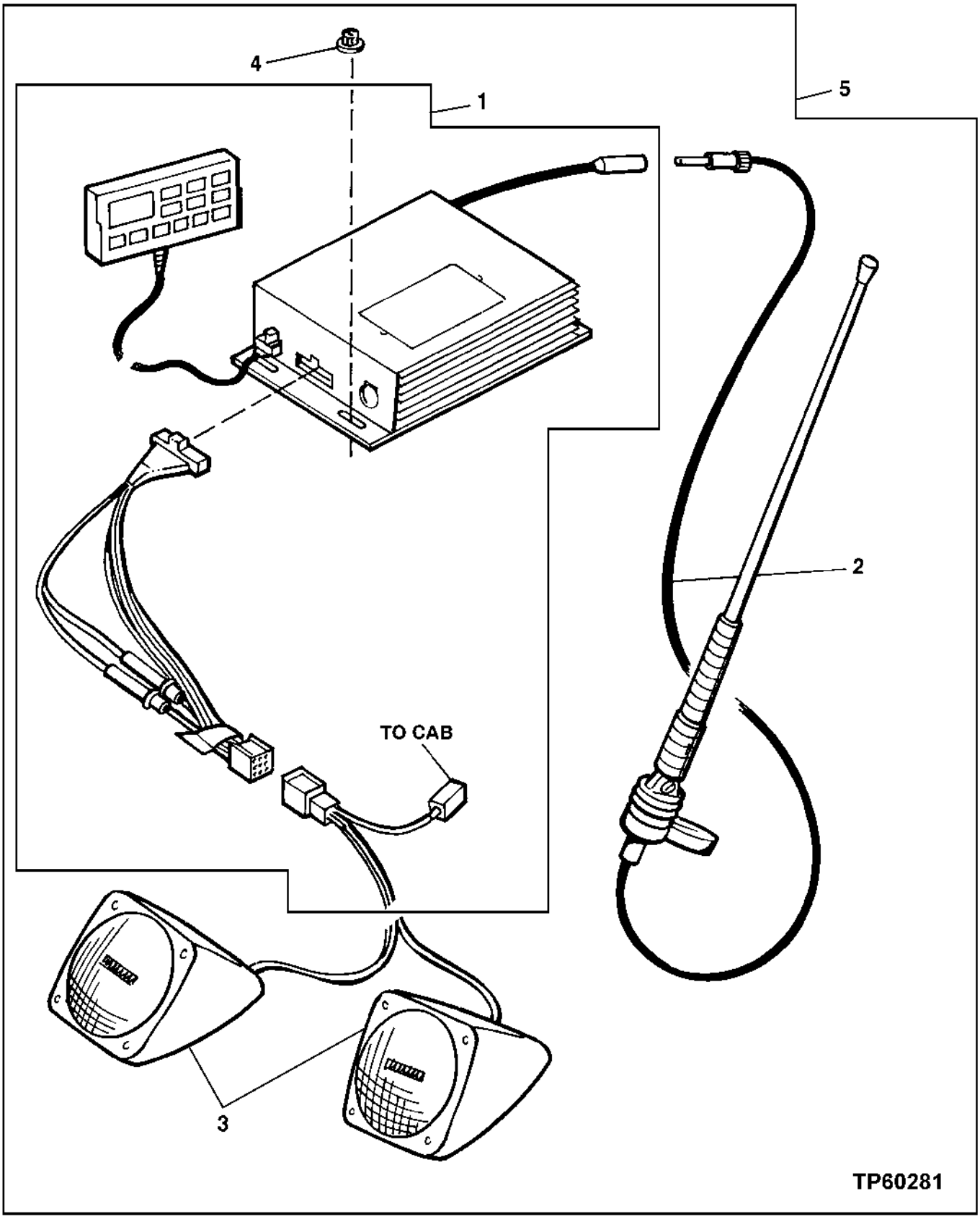

RADIO, RADIO SPEAKERS AND ANTENNA
(SERIAL NO. -572398)

KEY	PART NO.	PART NAME	QTY	SERIAL NO.	REMARKS
1	.....	RADIO	1		WITH REMOTE CONTROL (USE AT208481 IF AVAILABLE) (SUB AT222111)
2	AT208495	ANTENNA	1		
3	AT208494	SPEAKER	2		
4	14M7375	FLANGE NUT	3		M5
5	.....	RADIO	1		(AT210395 NO LONGER AVAILABLE) (SUB AT222293)

RADIO, RADIO SPEAKERS AND ANTENNA
(SERIAL NO. 572399-578901)

TP62867 -UN-14AUG00

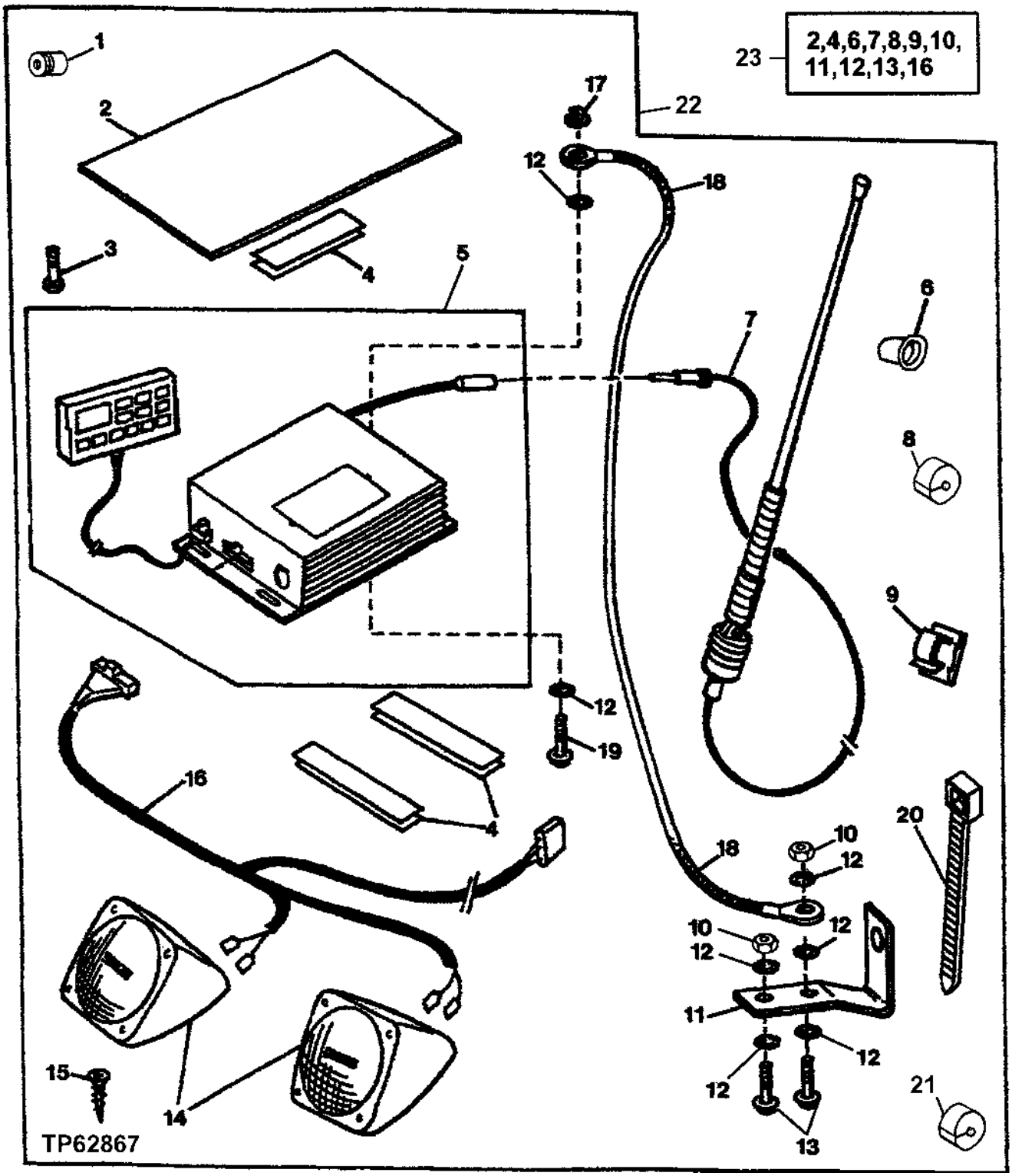

RADIO, RADIO SPEAKERS AND ANTENNA
(SERIAL NO. 572399-578901)

KEY	PART NO.	PART NAME	QTY	SERIAL NO.	REMARKS
1	N119177	GROMMET	1		
2	T178098	COVER	1		
3	37M7030	SCREW	2		(KEYPAD TO HEADLINER)
4	T117030	TAPE	2		(RECLOSABLE) (USE IF AVAILABLE) (SUB T180494)
	T180494	TAPE	1		
5	AT222111	RADIO	1		
6	T180408	PLUG	1		(OLD ANTENNA HOLE)
7	AR104516	ANTENNA	1		
8	T182861	PLUG	1		(SEAL RADIO WIRING HOLE)
9	T182909	CLIP	8		(RADIO WIRING TO INSIDE CAB)
10	14M7273	NUT	2		M8
11	T177397	BRACKET	1		(ANTENNA MOUNTING)
12	12M7032	LOCK WASHER	6		8.400 MM
13	19M7881	SCREW	2		M8 X 20
14	AT208494	SPEAKER	2		
15	T182954	SCREW	6		(SPEAKERS TO CAB ROOF)
16	AT221992	WIRING HARNESS	1		(NEW INSTALLATION)
	AT222025	WIRING HARNESS	1		(RELOCATION OF EARLY RADIO INSTALLATION) (NOT ILLUSTRATED)
17	14M7303	FLANGE NUT	1		M6
18	T179742	STRAP	1		
19	19M7774	SCREW	1		M6 X 12
20	R44302	TIE BAND	2		
21	T182870	GROMMET	1		
22	**AT222293**	**RADIO**	**1**		**(ASSEMBLY)**
23	AT222295	KIT	1		ASSEMBLY, RELOCATE EARLY RADIO INSTALLATION

RADIO, RADIO SPEAKERS AND ANTENNA
(SERIAL NO. 578902-)

T143481 -UN-28JUN01

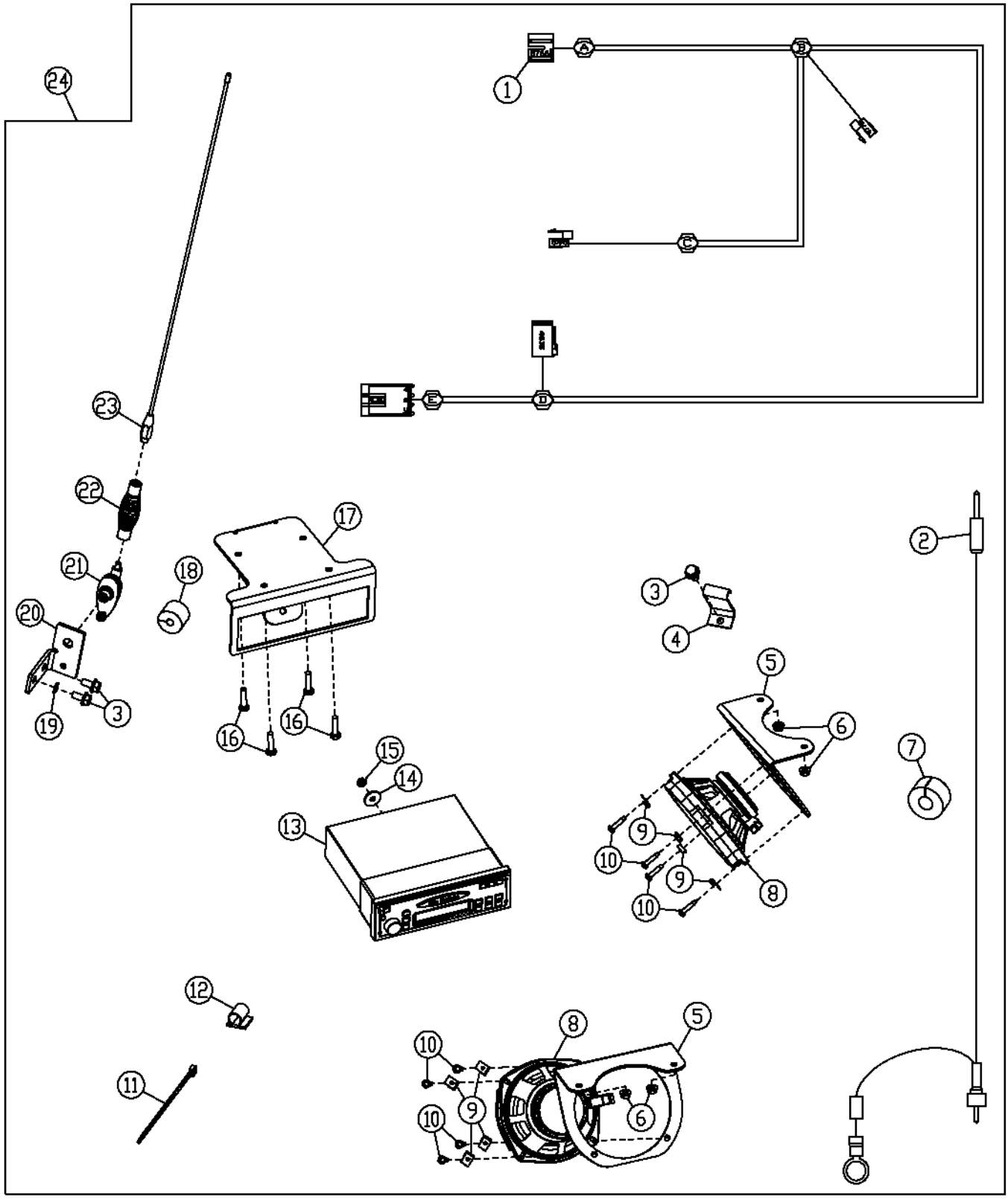

T143481

RADIO, RADIO SPEAKERS AND ANTENNA
(SERIAL NO. 578902-)

KEY	PART NO.	PART NAME	QTY	SERIAL NO.	REMARKS
1	AT223870	RADIO SPEAKER WRG HARNESS	1		
2	AT223897	CABLE	1		
3	19M7865	SCREW	3		M8 X 16
4	T180573	BRACKET	1		
5	T180338	BRACKET	2		
6	14M7303	FLANGE NUT	4		M6
7	T182870	GROMMET	1		
8	AT188759	SPEAKER	2		
9	R53528	NUT	8		
10	37M7070	SCREW	8		
11	R44302	TIE BAND	1		
12	T182909	CLIP	3		
13	AT192956	RADIO	1		
	AT192957	RADIO	1		WITH CASETTE
	AT192958	RADIO	1		WITH COMPACT DISC
14	24M7100	WASHER	1		6.600 X 22 X 2 MM
15	14M7375	FLANGE NUT	1		
16	19H1948	CAP SCREW	4		6.350 X 19.050 MM
17	T180420	BRACKET	1		
18	T182871	PLUG	1		
19	12M7032	LOCK WASHER	1		8.400 MM
20	T180487	BRACKET	1		
21	RE168454	BASE	1		ANTENNA
22	RE61651	SPRING	1		
23	AR104516	ANTENNA	1		
24	AT224225	KIT	1		(INCLUDES AT223785 CONVERTER)
	AT224226	KIT	1		WITH CASETTE (INCLUDES AT223785 CONVERTER)
	AT224227	KIT	1		WITH COMPACT DISC (INCLUDES AT223785 CONVERTER)

MEMORANDA

INSIDE REAR VIEW MIRROR

TP62771 -UN-23FEB00

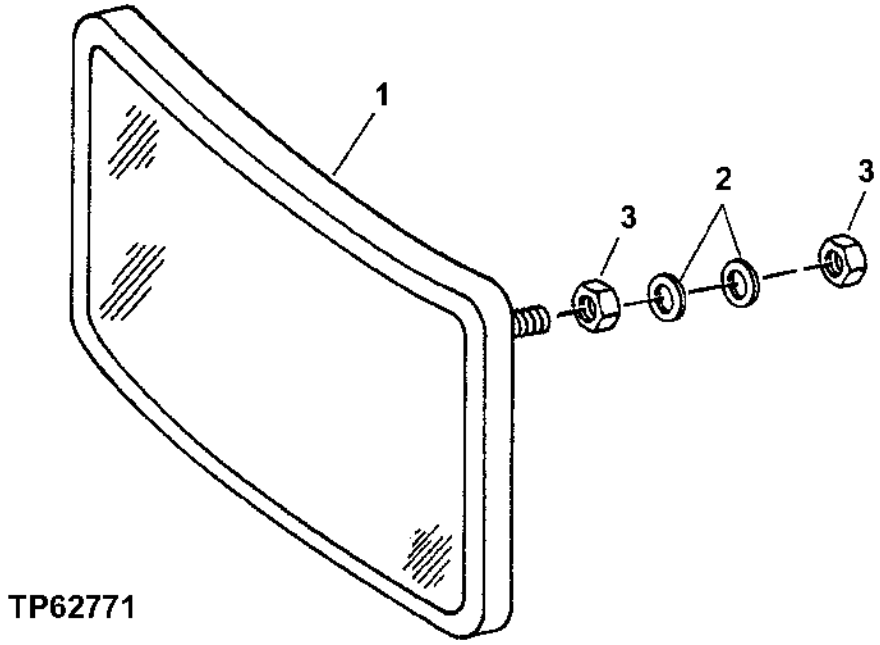

KEY	PART NO.	PART NAME	QTY	SERIAL NO.	REMARKS
1	AT222333	REAR VIEW MIRROR	1		(SUB FOR AT186760)
2	24M7036	WASHER	2		9 X 16 X 1.600 MM
3	14M7273	NUT	2		M8

OUTSIDE MIRROR FOR CAB OR CANOPY

TP62878 -UN-23AUG00

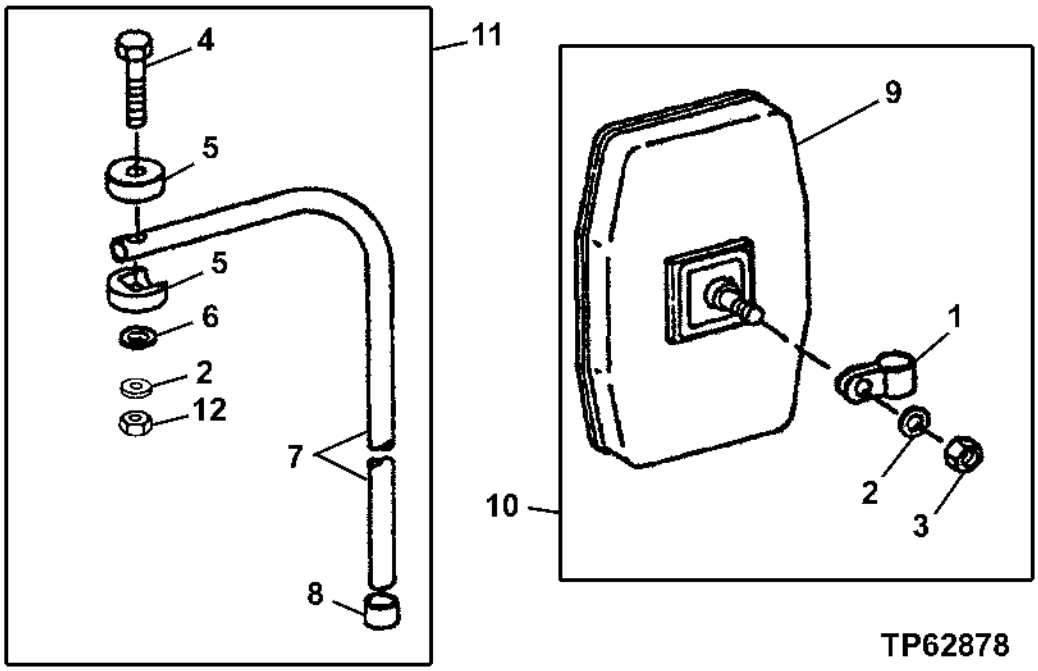

KEY	PART NO.	PART NAME	QTY	SERIAL NO.	REMARKS
1	T119564	CLAMP	1		
2	24M7239	WASHER	2		10.700 X 21 X 2.500 MM
3	T11234	LOCK NUT	1		
4	19H2791	CAP SCREW	1		3/8" X 1-3/4"
5	T115030	HALF CLAMP	2		
6	H110232	WASHER	1		(SUB FOR T60920)
7	T115031	RIB	1		
8	T128437	CAP	1		
9	AT157226	REAR VIEW MIRROR	1		
10	AT103919	REAR VIEW MIRROR	1		
11	AT149608	RIB	1		
12	U13184	LOCK NUT	1		3/8"

SUN VISOR

T141042 -UN-09APR01

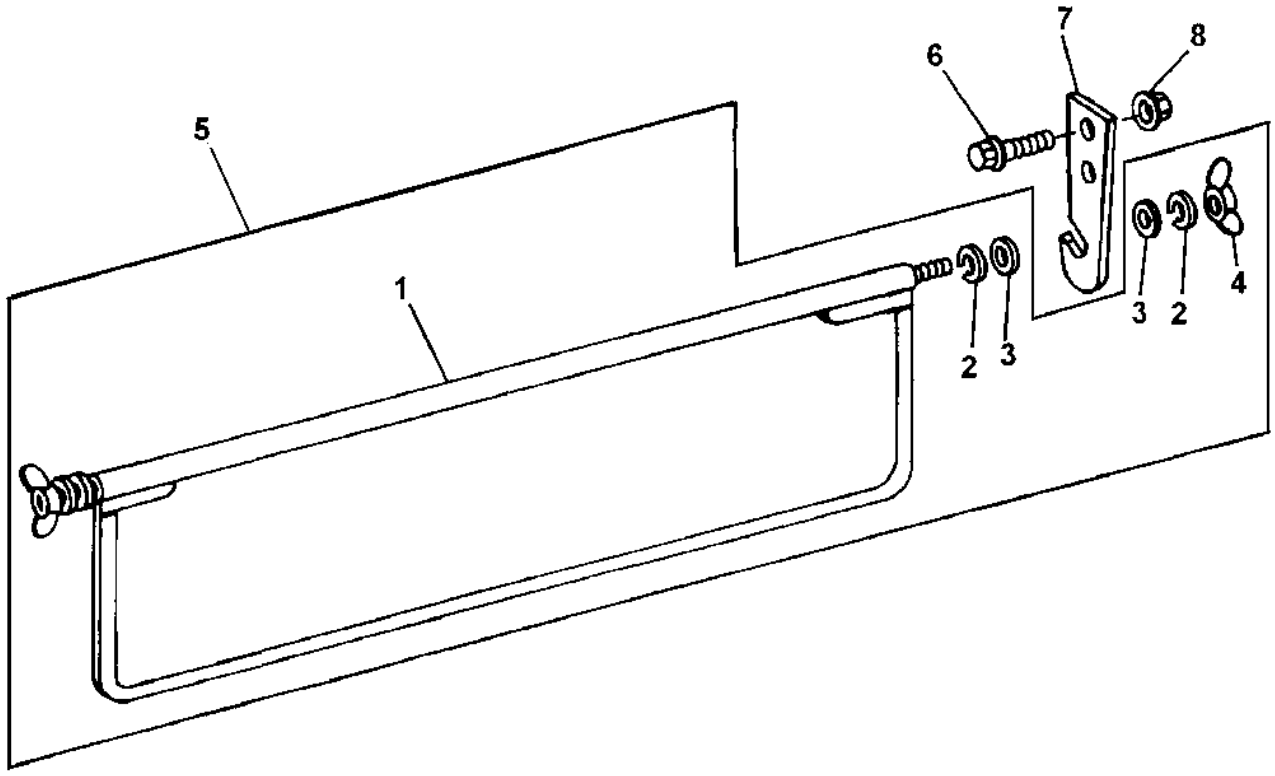

KEY	PART NO. T141042	PART NAME	QTY	SERIAL NO.	REMARKS
1	.....	SUN VISOR	1		(SUB AT217448)
2	24H1285	WASHER	4		17/64" X 7/16" X 0.065"
3	N218377	WASHER	4		
4	M47887	WING NUT	2		
5	AT217448	SUN VISOR	1		
6	19M7862	SCREW	2		M6 X 20
7	T167757	BRACKET	2	-581888	
	T181797	BRACKET	2	581889-	GRAY
8	14M7303	FLANGE NUT	2		M6

MEMORANDA

MEMORANDA

FIRE EXTINGUISHER AND BRACKET

TP32376 -UN-01JAN94

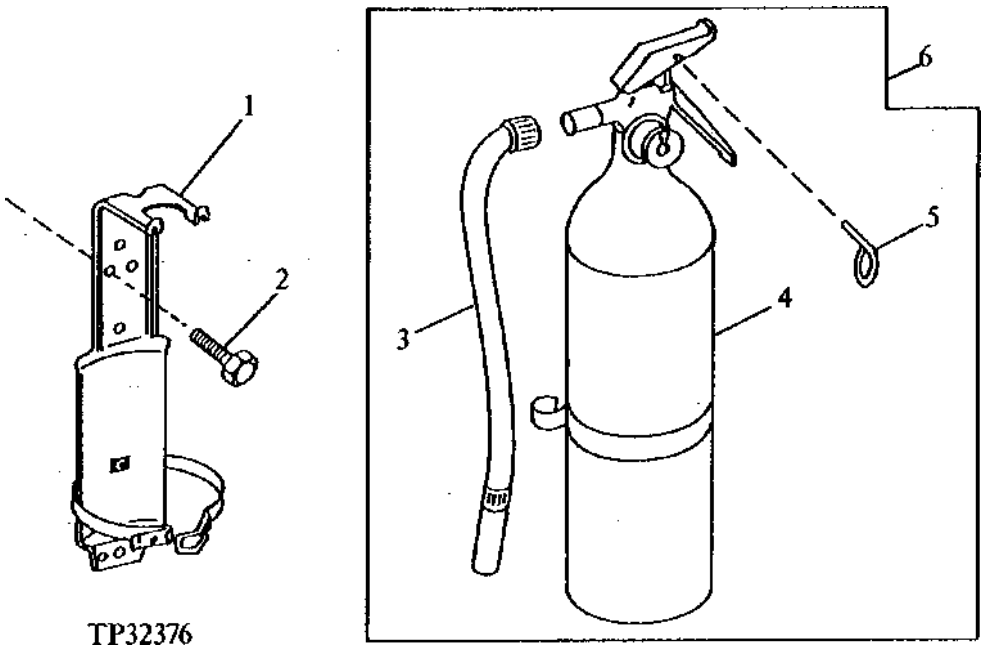

KEY	PART NO.	PART NAME	QTY	SERIAL NO.	REMARKS
1	AT75387	BRACKET	1		
2	19M7774	SCREW	2		M6 X 12
3	.....	HOSE	1		(SUB AT189487)
4	.....	FIRE EXTINGUISHER	1		(SUB AT189487)
5	R77698	PIN	1		
6	AT189487	FIRE EXTINGUISHER	1		(SUB FOR AT168165)

MEMORANDA

REPLACEMENT FIRE EXTINGUISHER AND BRACKET

T148970 -UN-13DEC01

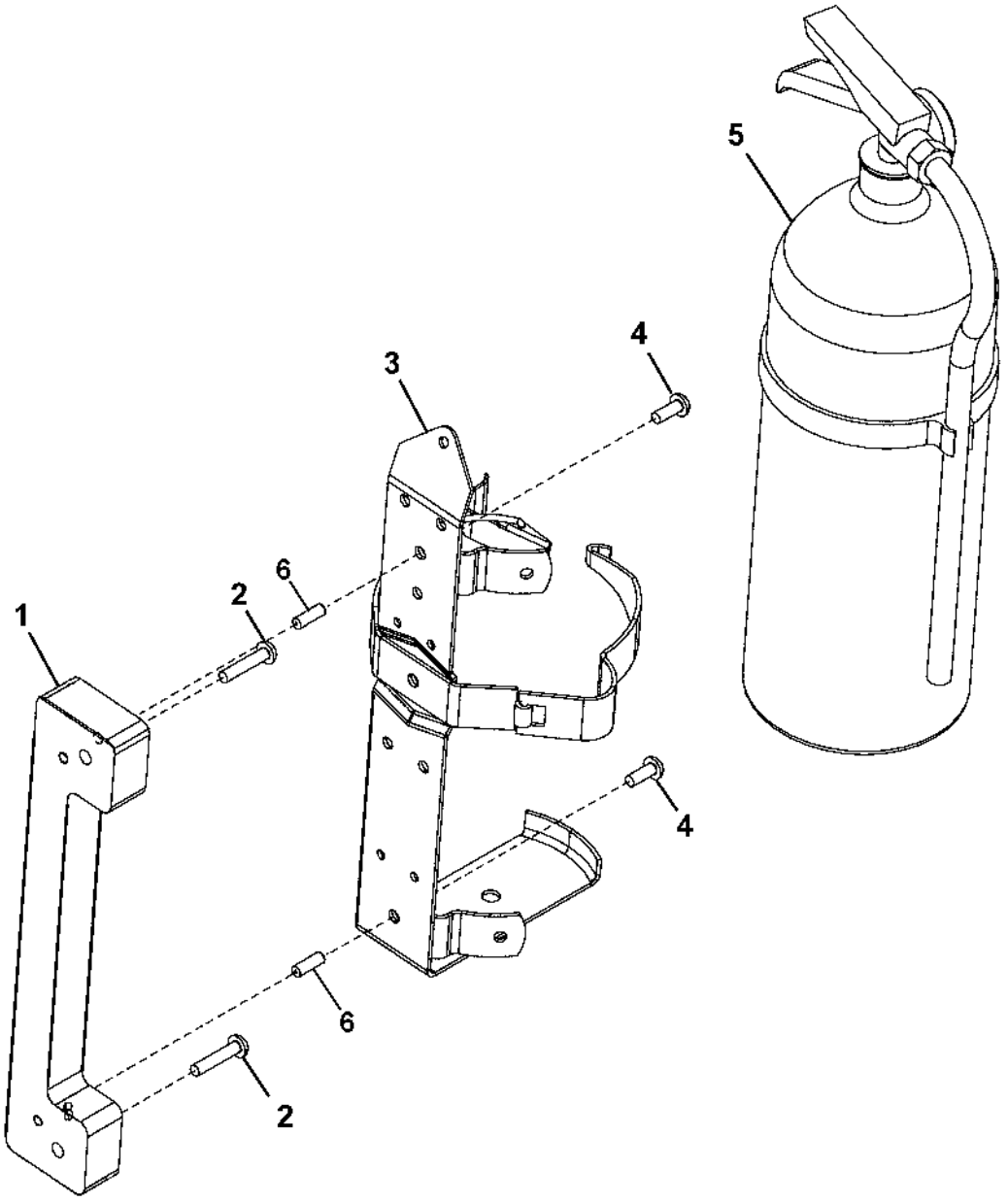

T148970

REPLACEMENT FIRE EXTINGUISHER AND BRACKET

KEY	PART NO.	PART NAME	QTY	SERIAL NO.	REMARKS
1	T180273	BRACKET	1	-XXXXXX	
2	21M7248	SCREW	2	-XXXXXX	M6 X 30
3	AT189390	BRACKET	1		
4	21M7246	SCREW	2	-XXXXXX	M6 X 16
	21M7247	SCREW	2	XXXXXX-	
5	AT189487	FIRE EXTINGUISHER	1		
6	28H3423	BUSHING	1	XXXXXX-	

HORN

TP60280 -UN-23MAR98

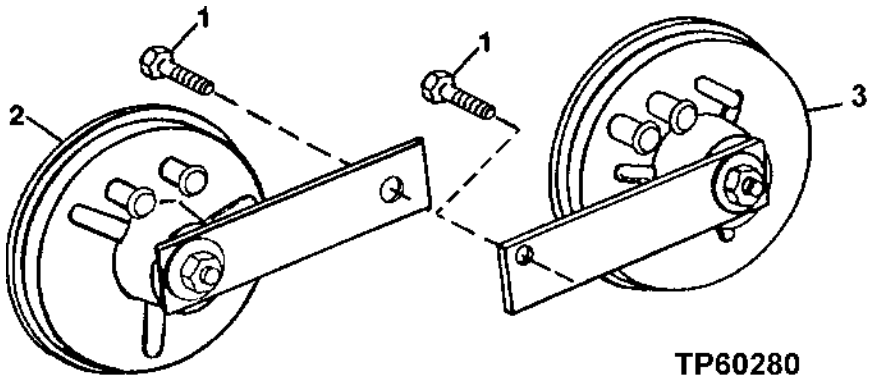

KEY	PART NO.	PART NAME	QTY	SERIAL NO.	REMARKS
1	19M7864	SCREW	2		M8 X 12
2	AT202779	HORN	1		HIGH NOTE
3	AT64237	HORN	1		LOW NOTE (SINGLE HORN INSTALLATION)

MEMORANDA

BACK-UP ALARM
(SERIAL NO. -578419)

TP60366 -UN-28APR98

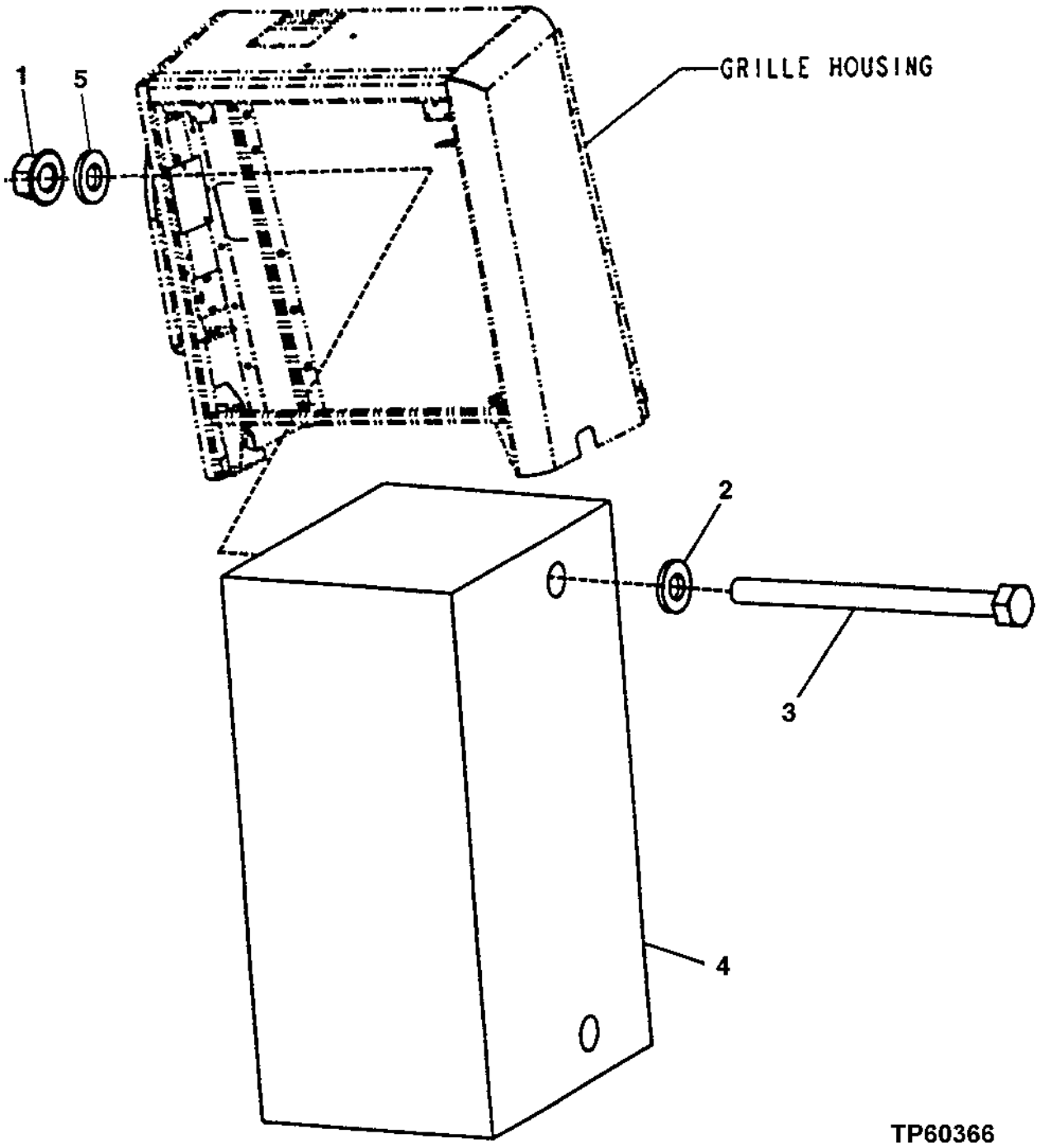

BACK-UP ALARM
(SERIAL NO. -578419)

KEY	PART NO.	PART NAME	QTY	SERIAL NO.	REMARKS
1	14M7298	FLANGE NUT	2		M8
2	24M7238	WASHER	2		8.700 X 17 X 2 MM
3	19M7296	CAP SCREW	2		M8 X 100
4	AT78534	TRAVEL WARNING ALARM	1		
5	24M7298	WASHER	2		8.400 X 25 X 2 MM

BACK-UP ALARM
(SERIAL NO. 578420-)

T134335 -UN-10OCT00

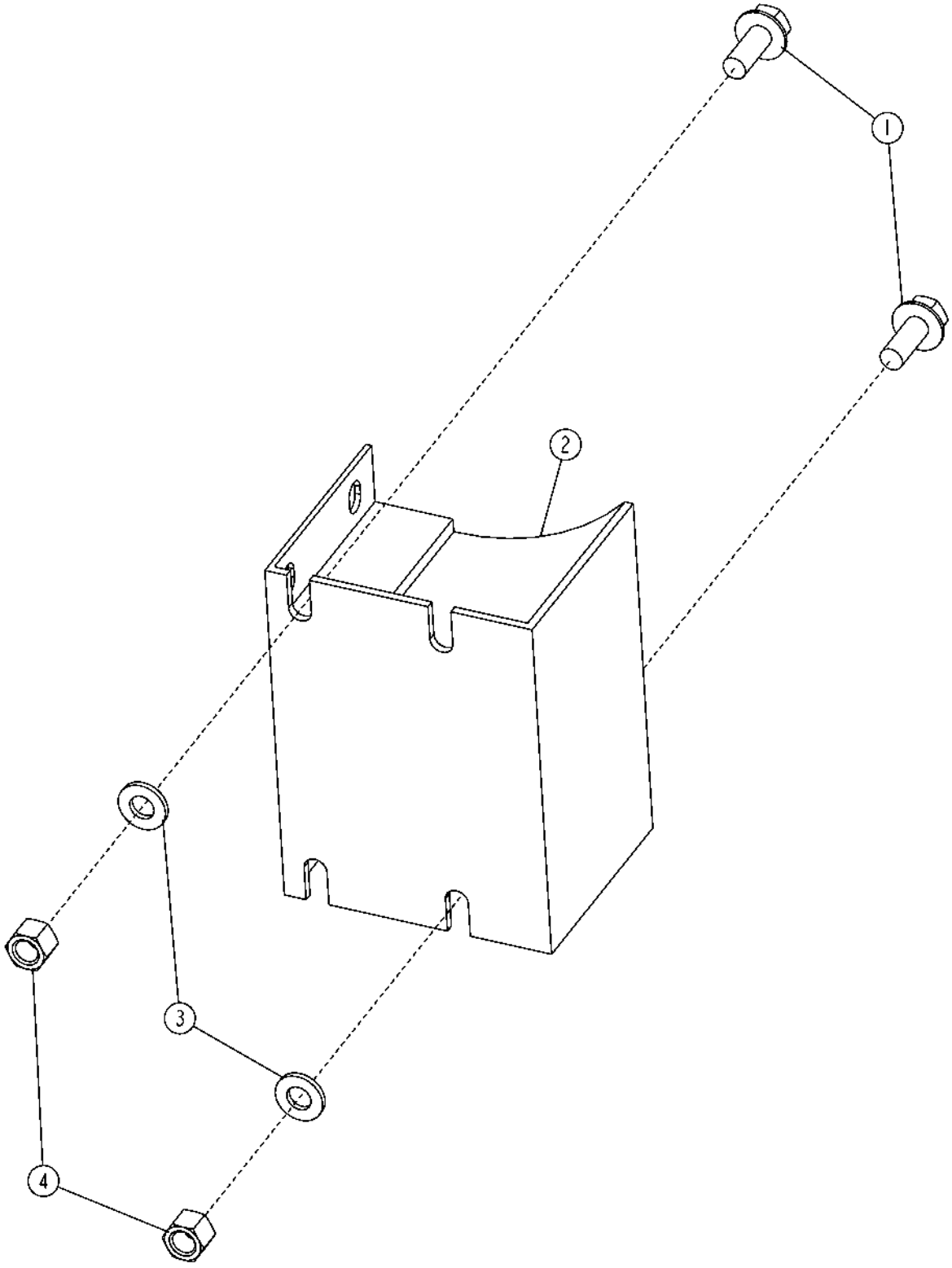

BACK-UP ALARM
(SERIAL NO. 578420-)

KEY	PART NO.	PART NAME	QTY	SERIAL NO.	REMARKS
1	19M7867	SCREW	2		M8 X 25
2	AT120461	TRAVEL WARNING ALARM	1		
3	24M7238	WASHER	2		8.700 X 17 X 2 MM
4	14M7396	LOCK NUT	2		M8

MEMORANDA

BUCKET AUXILIARY CUTTING EDGE

TP55659 -UN-15SEP97

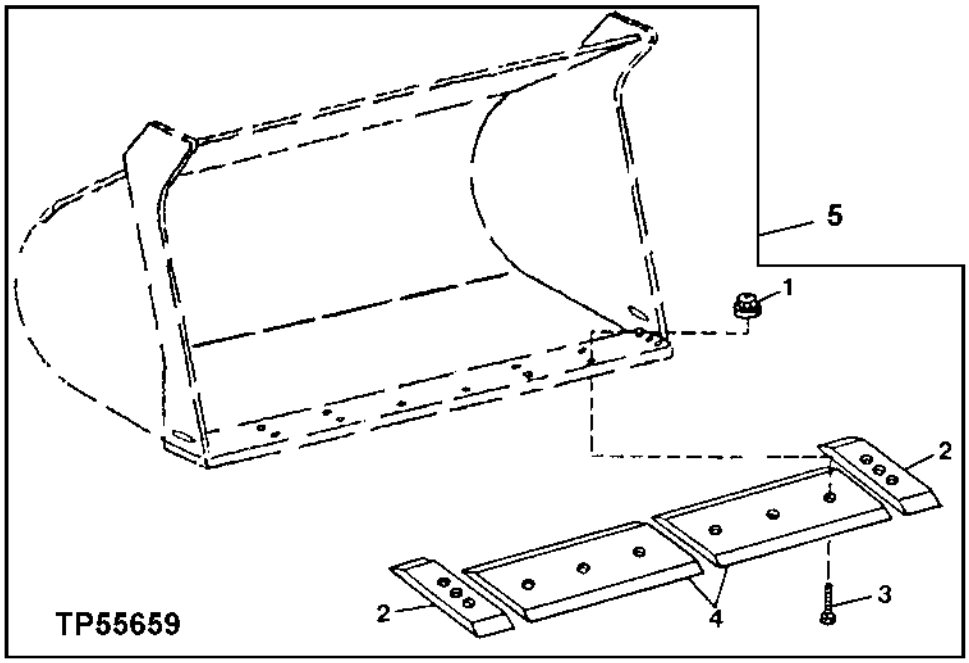

KEY	PART NO.	PART NAME	QTY	SERIAL NO.	REMARKS
1	14H1048	NUT	12		1"
2	T167829	CUTTING EDGE	2		
3	T146933	BOLT	12		
4	T167828	CUTTING EDGE	2		(2.7 M3 AND 3.3 M3 BUCKET)
	T171386	CUTTING EDGE	2		(3.4 M3 BUCKET)
5	**AT209676**	**CUTTING EDGE**	**1**		**(2.7 M3 AND 3.3 M3 BUCKET)**
	AT209679	**CUTTING EDGE**	**1**		**(3.4 M3 BUCKET)**

LOADER BUCKETS, BUCKET PINS AND CUTTING EDGE

TP60478 -UN-01SEP98

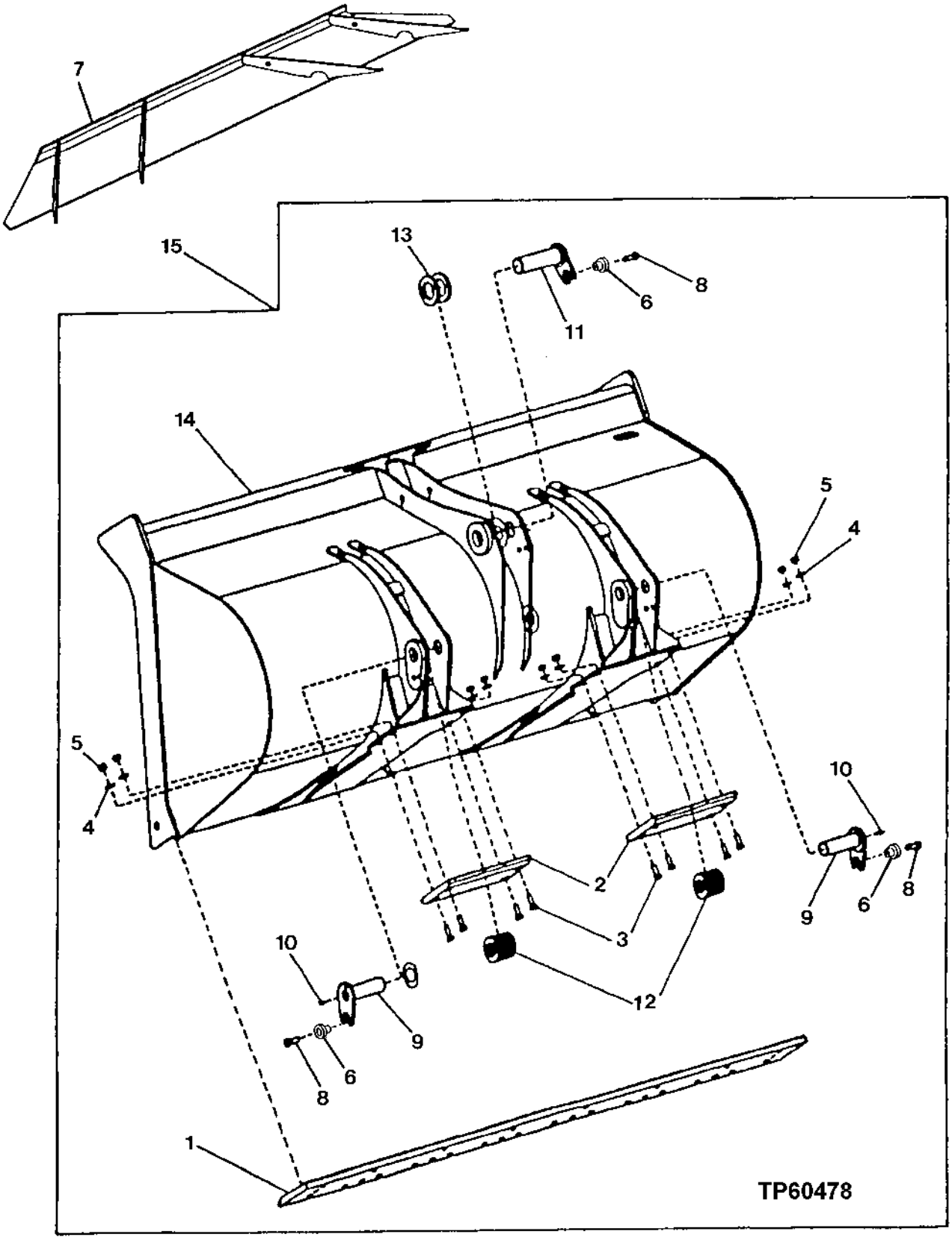

LOADER BUCKETS,BUCKET PINS AND CUTTING EDGE

KEY	PART NO.	PART NAME	QTY	SERIAL NO.	REMARKS
1	T167802	CUTTING EDGE	1		(2.7 M3 AND 3.3 M3)
	T171165	CUTTING EDGE	1		(3.4 M3)
2	T157457	SHOE	2		
3	10H1040	BOLT	8		5/8" X 2"
4	24M7241	WASHER	8		17 X 34 X 4 MM
5	14H1039	NUT	8		5/8"
6	T176064	BUSHING	3		
7	**AT203247**	**GUARD**	**1**		
8	19M7489	CAP SCREW	3		M16 X 45
9	AT208975	PIN	2		
10	JD7759	LUBRICATION FITTING	2		
11	AT219746	PIN	1		
12	T102171	WASHER	AR		
13	T101480	WASHER	AR		
14	.....	LOADER BUCKET	1		(SUB AT209683, AT219714 AND AT219716)
15	**AT209683**	**LOADER BUCKET**	**1**		**(2.7 M3 BUCKET)**
	AT219714	**LOADER BUCKET**	**1**		**(3.3 M3 BUCKET)**
	AT219716	**LOADER BUCKET**	**1**		**(3.4 M3 BUCKET)**

LOADER BUCKET TEETH AND SHANKS

TP60337 -UN-13APR98

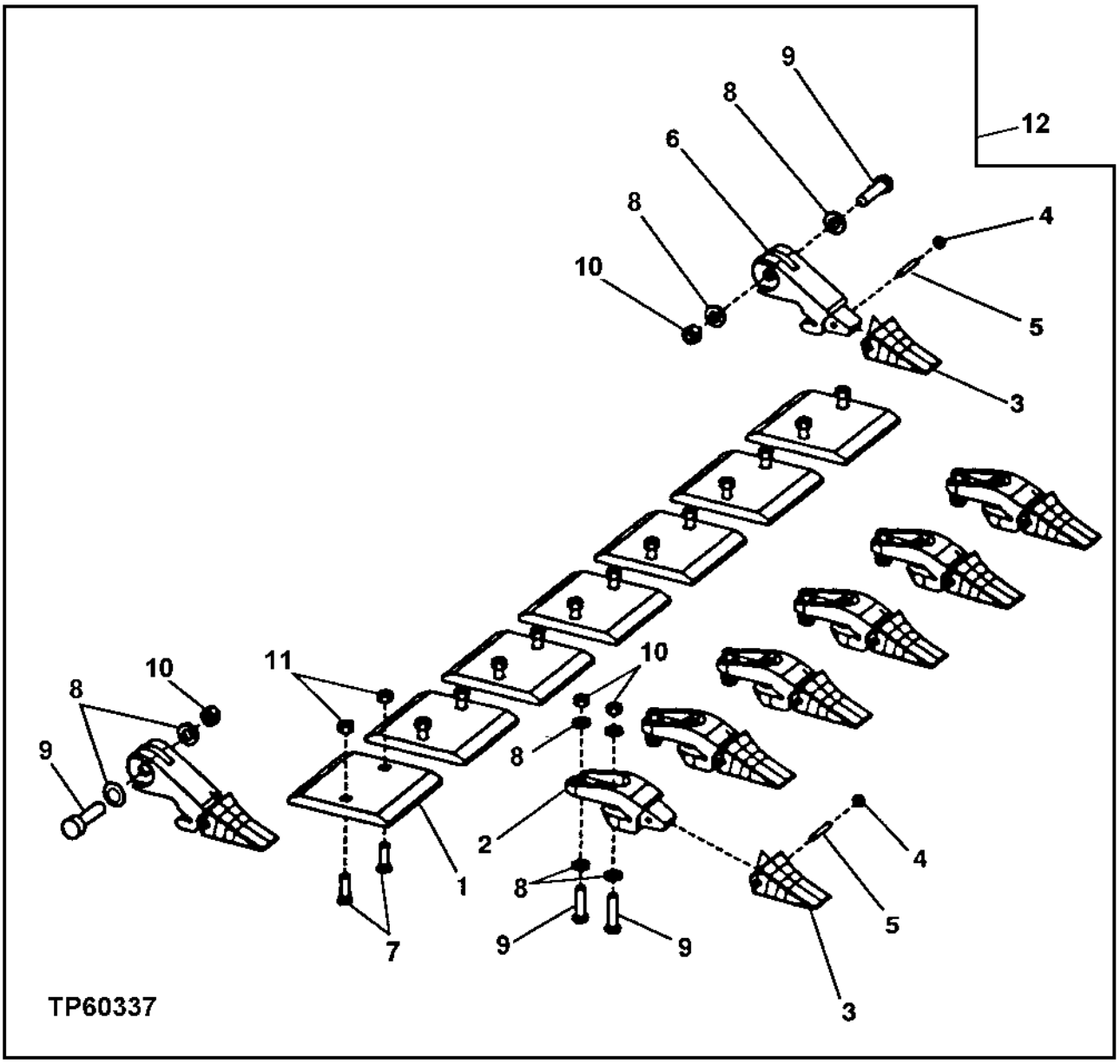

LOADER BUCKET TEETH AND SHANKS

KEY	PART NO.	PART NAME	QTY	SERIAL NO.	REMARKS
1	T167850	CUTTING EDGE	7		
2	T30CA	BUCKET TOOTH ADAPTER	6		
3	TF1U3302L	TOOTH	8		
4	T3G9609	WASHER	8		
5	T9J2308	PIN FASTENER	8		
6	T30EA	BUCKET TOOTH ADAPTER	2		
7	T146933	BOLT	14		
8	24M7243	WASHER	28		25.400 X 50 X 6 MM
9	19M8288	CAP SCREW	14		M24 X 90
10	14M7278	NUT	14		M24
11	14H1048	NUT	14		25.400 MM
12	**AT209677**	**TOOTH**	**1**		**(AND SEGMENTS)**

LOADER FRAME,LOADER FRAME COVER AND PINS

TP60689 -UN-24MAR99

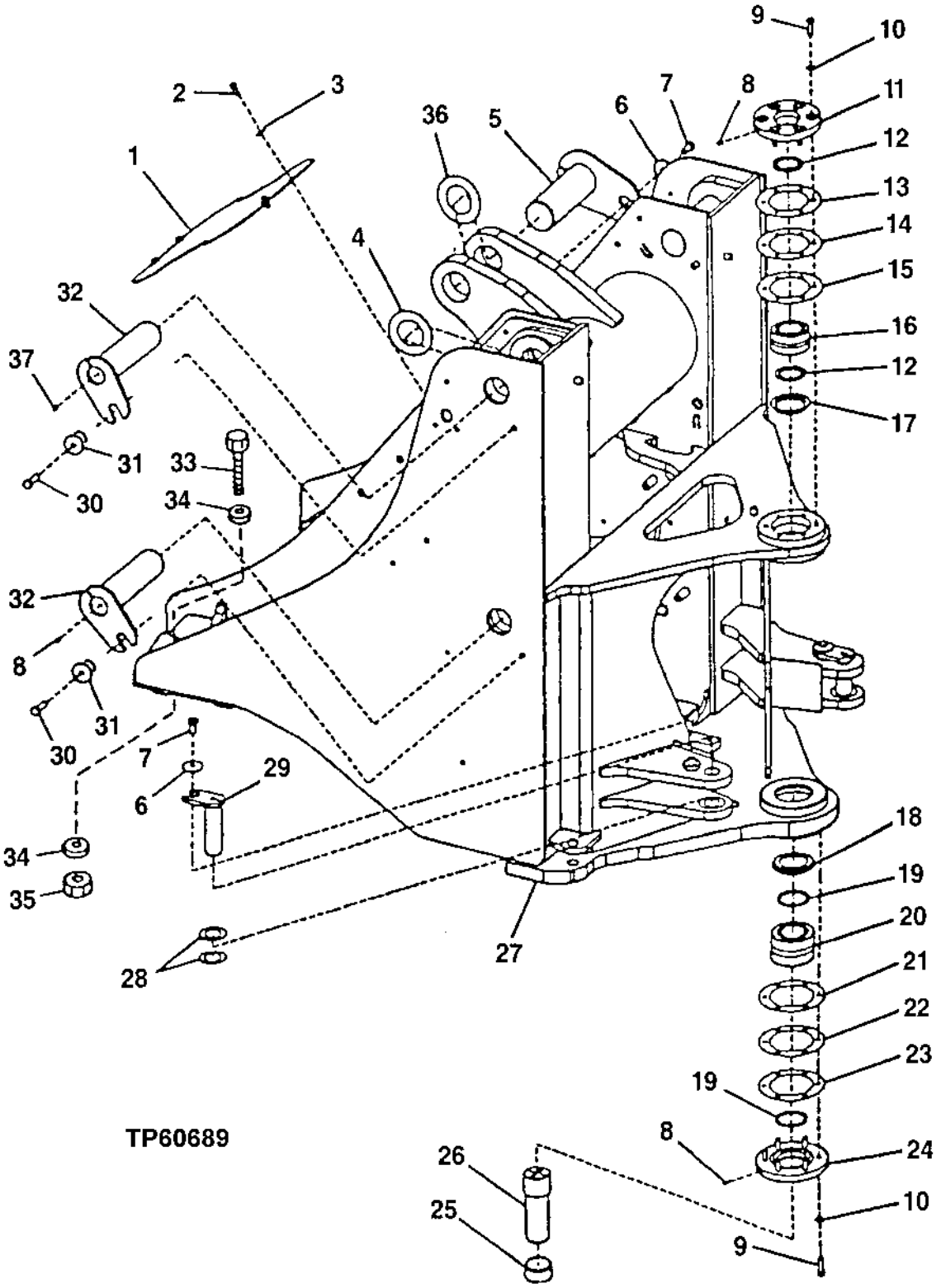

LOADER FRAME,LOADER FRAME COVER AND PINS

KEY	PART NO.	PART NAME	QTY	SERIAL NO.	REMARKS
1	T157234	COVER	1		
2	19M7786	SCREW	4		M10 X 30
3	24M7296	WASHER	4		10.500 X 30 X 2.500 MM
4	T101480	WASHER	AR		(SUB FOR T171734)
5	AT219746	PIN	1		
6	T146246	WASHER	3		
7	19M8029	CAP SCREW	3		M16 X 30
8	JD7759	LUBRICATION FITTING	4		
9	19M7493	CAP SCREW	12		M12 X 40
10	24M7240	WASHER	12		13 X 25 X 3 MM
11	T156992	COVER	1		
12	T157029	SEAL	2		
13	T130057	SHIM	AR		0.508MM(0.020")
14	T130058	SHIM	AR		0.254MM(0.010")
15	T130059	SHIM	AR		0.127MM(0.005")
16	AT203483	BEARING	1		
17	T157030	SPACER	1		
18	T157027	SPACER	1		
19	T60752	SEAL	2		
20	AT208123	BEARING	1		
21	T140379	SHIM	AR		
22	T140380	SHIM	AR		
23	T140381	SHIM	AR		
24	T157028	COVER	1		
25	T156994	BUSHING	1		
26	T157026	PIN	1		
27	AT208585	FRAME	1		(CONVENIENCE ASSEMBLY)
28	24H1576	WASHER	6		1-13/16" X 2-15/16" X 0.075"
	24H1577	WASHER	2		1-25/32" X 2-7/8" X 0.036"
29	AT157299	PIN FASTENER	2		
30	19M7489	CAP SCREW	4		M16 X 45
31	T176064	BUSHING	4		
32	AT207717	PIN	4		
33	19M7779	CAP SCREW	12		M20 X 240
34	24M7242	WASHER	12		21.400 X 42 X 5 MM
35	14M7277	NUT	12		M20
36	T101480	WASHER	AR		
37	JD7759	LUBRICATION FITTING	2		

LOADER FRAME LOCK

TP62511 -UN-05APR99

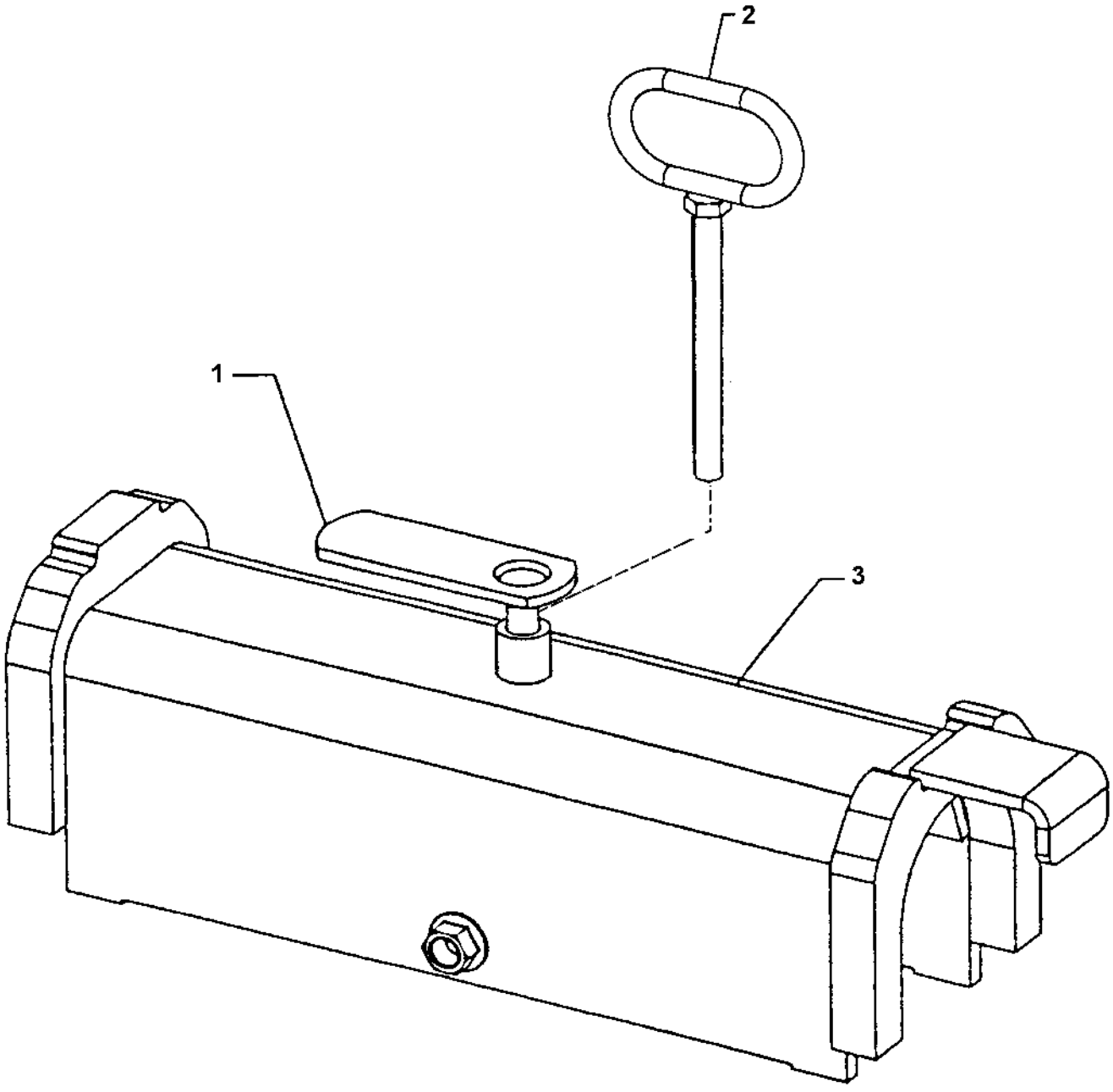

TP62511

LOADER FRAME LOCK

KEY	PART NO.	PART NAME	QTY	SERIAL NO.	REMARKS
1	AT220006	HANDLE	1	-571504	
2	AT207287	HANDLE	1	571505--	
3	AT225825	LOCK	1		BOOM (USE AT209199 UNTIL EXHAUSTED) (SUB FOR AT209199)

LOADER BOOM AND LINKAGE PIN

TP60365 -UN-27APR98

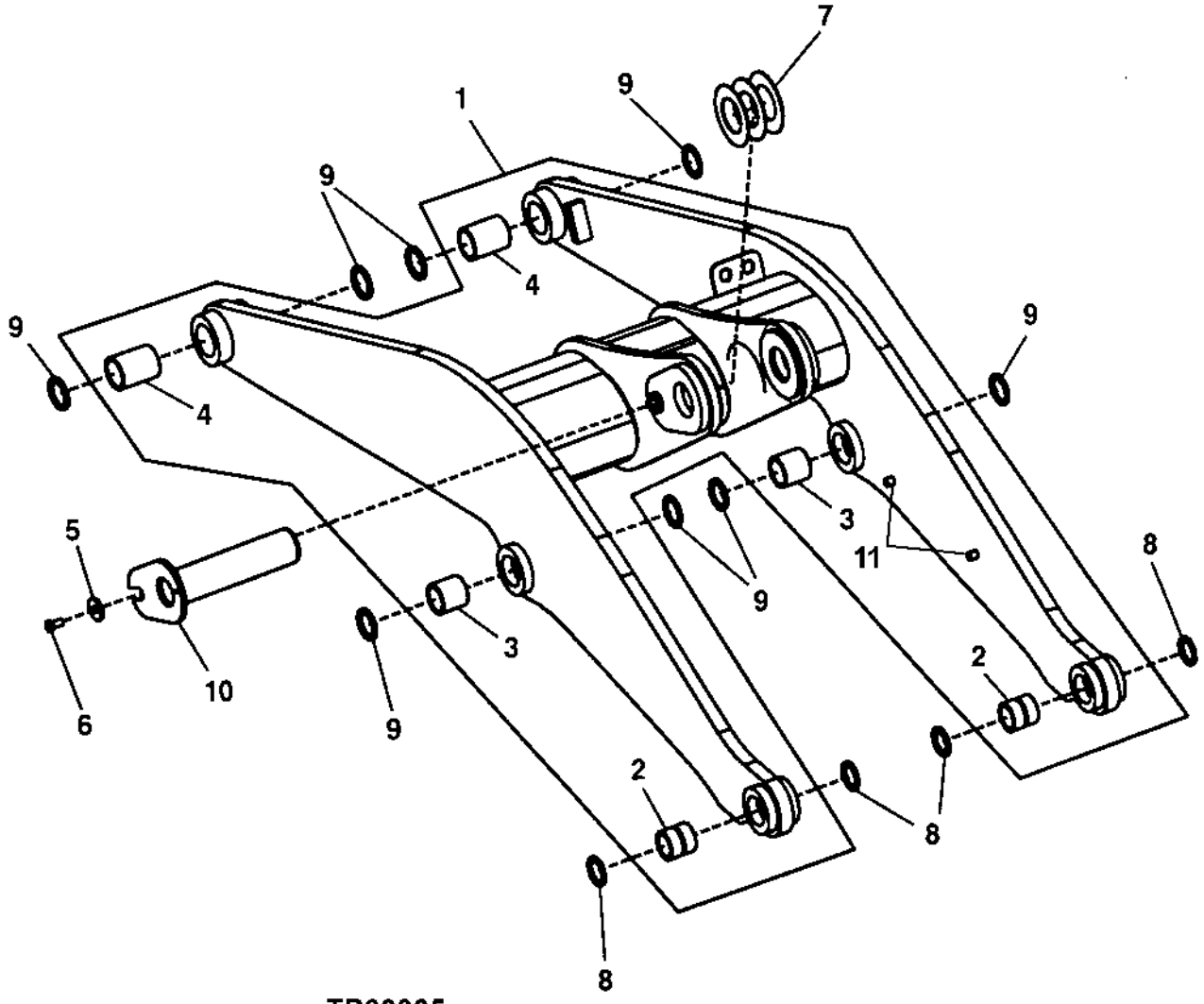

LOADER BOOM AND LINKAGE PIN

KEY	PART NO.	PART NAME	QTY	SERIAL NO.	REMARKS
1	AT208620	LOADER BOOM	1		
	AT222490	LOADER BOOM	1		(HIGH LIFT) (NOT ILLUSTRATED)
2	T125535	BUSHING	2		
3	T156059	BUSHING	2		
4	T169284	BUSHING	2		
5	T146246	WASHER	1		
6	19M8029	CAP SCREW	1		M16 X 30
7	T102172	WASHER	4		
8	T102136	SEAL	4		
9	T102137	SEAL	8		
10	AT208622	PIN	1		(LOADER LINKAGE)
11	T72414	BUSHING	6		

LOADER LINKAGE

TP60479 -UN-25AUG98

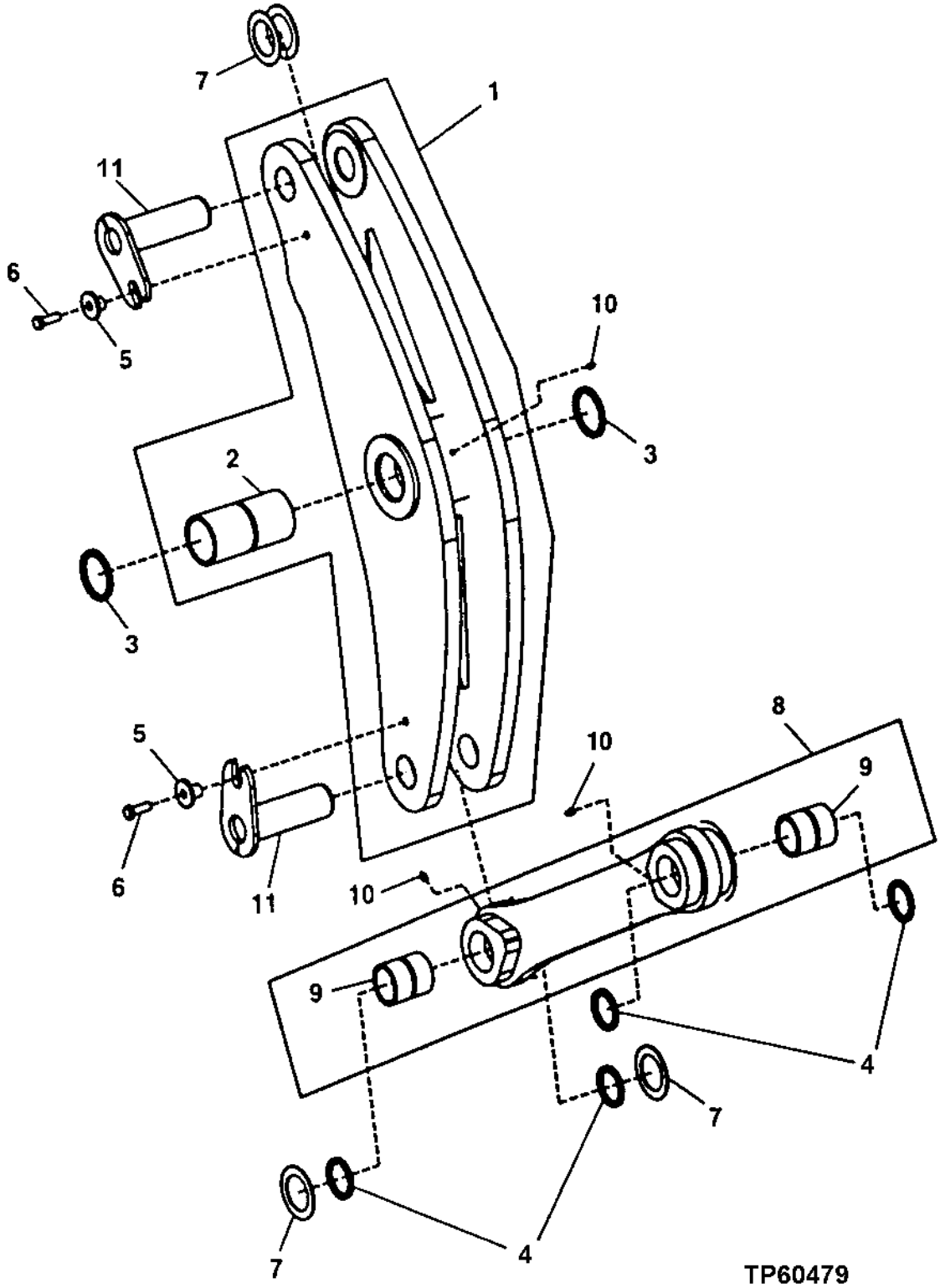

LOADER LINKAGE

KEY	PART NO.	PART NAME	QTY	SERIAL NO.	REMARKS
1	AT209082	BELLCRANK	1		
2	T177086	BUSHING	2		(SUB FOR T171353)
3	T102140	SEAL	2		
4	T102138	SEAL	4		
5	T176064	BUSHING	2		
6	19M7489	CAP SCREW	2		M16 X 45
7	T101480	WASHER	AR		3.602" X 6.299" X 0.118"
8	AT209081	LINK	1		
	AT222520	LINK	1		(HIGH LIFT) (NOT ILLUSTRATED)
9	R85556	BUSHING	2		
10	JD7759	LUBRICATION FITTING	3		
11	AT219746	PIN	2		

TWO LEVER CONTROLLER

TP70474 -UN-12SEP00

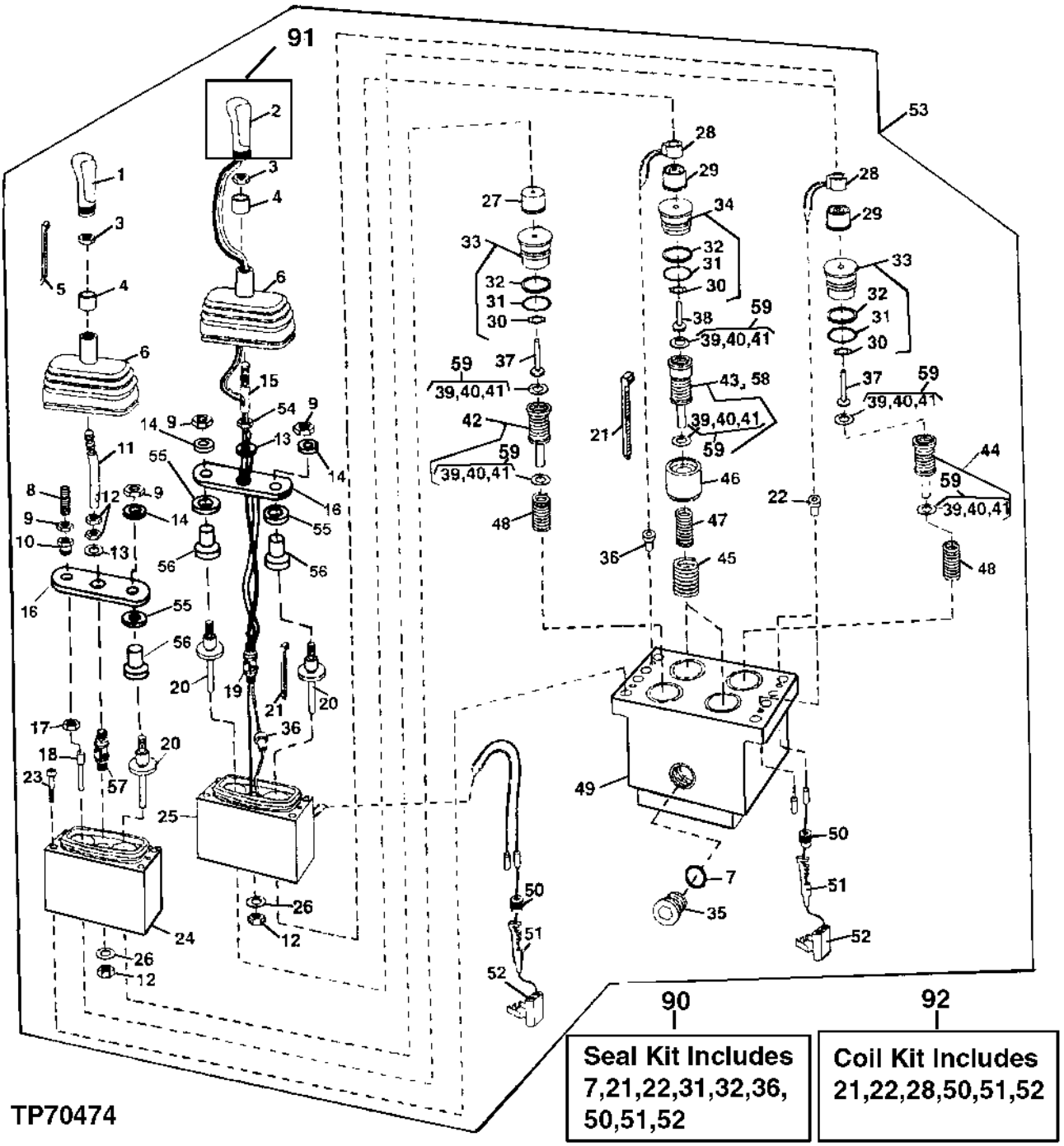

TWO LEVER CONTROLLER

KEY	PART NO.	PART NAME	QTY	SERIAL NO.	REMARKS
1	AT172629	GRIP	1		
2	.....	GRIP	1		(K2)
3	T170269	NUT	2		
4	AT208911	RETAINER	2		
5	H77698	TIE BAND	2		
6	T170295	BOOT	2		(ALSO ORDER AT208911)
7	R26375	O-RING	1		(K1)
8	T172523	SET SCREW	1		
9	T170275	NUT	4		
10	T170273	PLUG	1		
11	T173208	LEVER	1		
12	T173219	NUT	4		
13	T173205	WASHER	2		
14	T173206	WASHER	3		
15	T173209	LEVER	1		
16	T173210	PLATE	2		
17	T170272	NUT	1		
18	T170274	BAR	1		
19	AT210263	UNIVERSAL JOINT	1		
20	AT210250	BALL JOINT SOCKET	3		
21	T170262	STRAP	4		(K1) (K3)
22	T170382	GROMMET	1		(K1) (K3)
23	T170367	CAP SCREW	8		
24	.....	HOUSING	1		
25	.....	HOUSING	1		

TWO LEVER CONTROLLER

TP70474 -UN-12SEP00

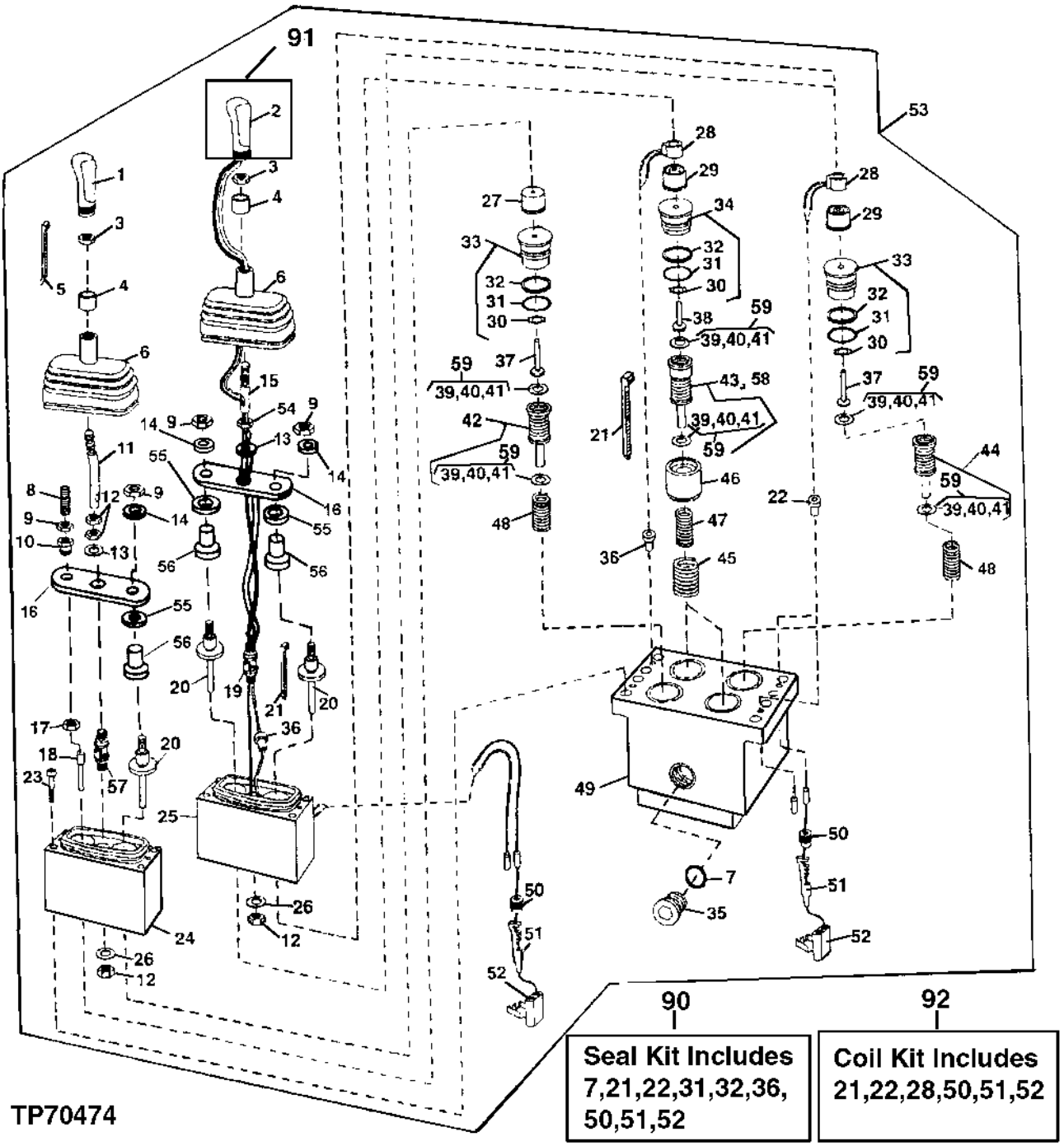

TWO LEVER CONTROLLER

KEY	PART NO.	PART NAME	QTY	SERIAL NO.	REMARKS
26	T172609	WASHER	2		
27	T170278	STRUCTURAL TUBING	1		
28	.....	ELECTRICAL COIL	3		(K3)
29	T170284	RETAINER	3		
30	T131617	RING	4		
31	T170306	SEAL	4		(K1)
32	T170307	BACK-UP RING	4		(K1)
33	AT208178	RETAINER	2		(BOOM RAISE AND BUCKET DUMP)
	AT208178	RETAINER	1		(BOOM RAISE) (USE WITH TOOL CARRIER AND LOG LOADER)
34	AT208179	RETAINER	2		(BUCKET ROLL BACK AND BOOM LOWER)
	AT208179	RETAINER	3		(BUCKET ROLLBACK, BUCKET DUMP AND BOOM LOWER) (USE WITH TOOL CARRIER AND LOG LOADER)
35	AT49216	FITTING	1		
36	T170266	GROMMET	3		(K1)
37	T170285	PLUNGER	3		
	T170285	PLUNGER	1		(BOOM RAISE) (USE WITH TOOL CARRIER AND LOG LOADER)
38	T170286	PLUNGER	1		
	T170286	PLUNGER	3		(BUCKET ROLLBACK, BUCKET DUMP AND BOOM LOWER) (USE WITH TOOL CARRIER AND LOG LOADER)
39	T103094	SHIM	AR		0.4 MM (.015")
40	T103093	SHIM	AR		0.2 MM (.007")
41	T103092	SHIM	AR		0.1 MM (.004")
42	AT208182	SPOOL	1		(BUCKET DUMP)
43	AT208183	SPOOL	1		(BOOM LOWER)
	AT208183	SPOOL	3		(BUCKET ROLLBACK, BUCKET DUMP AND BOOM LOWER) (USE WITH TOOL CARRIER AND LOG LOADER)
44	AT208181	SPOOL	1		(BOOM RAISE)
	AT208181	SPOOL	1		(BOOM RAISE) (USE WITH TOOL CARRIER AND LOG L LOADER)
45	T170288	SPRING	2		
	T170288	SPRING	3		(BUCKET ROLLBACK, BUCKET DUMP AND BOOM LOWER) (USE WITH TOOL CARRIER AND LOG LOADER)
46	AT208180	KIT	2		
	AT208180	KIT	3		(BUCKET ROLLBACK, BUCKET DUMP AND BOOM LOWER) (USE WITH TOOL CARRIER AND LOG LOADER)
47	T170289	SPRING	2		
	T170289	SPRING	3		(BUCKET ROLLBACK, BUCKET DUMP AND BOOM LOWER) (USE WITH TOOL CARRIER AND LOG LOADER)
48	T170287	SPRING	2		
	T170287	SPRING	1		(BOOM RAISE) (USE WITH TOOL CARRIER AND LOG LOADER)
49	.....	HOUSING	1		(SUB AT210210)
50	R78059	ELECTRICAL PLUG	8		(K1) (K3)
51	R78058	PIN CONTACT	8		(K1) (K3)
52	R78053	PIN CONTACT CONNECTOR BODY	4		(K1) (K3)
53	AT210210	VALVE	1		
54	T173220	NUT	1		
55	T173207	WASHER	3		(SLIDDER TOP)
56	T173179	SLEEVE	3		
57	AT210262	UNIVERSAL JOINT	2		
58	AT209789	SPOOL	1		(BUCKET ROLLBACK)
59	AT210376	KIT	AR		
90	AT209780	SEAL KIT	1		INCLUDES ALL (K1) PARTS (SEAL)
91	AT209784	GRIP	1		INCLUDES ALL (K2) PARTS (GRIP WITH KICKDOWN SWITCH)
92	AT209788	KIT	1		INCLUDES ALL (K3) PARTS (COIL)

LOADER CONTROL VALVE
(TWO-SPOOL)

TP62729 -UN-13JAN00

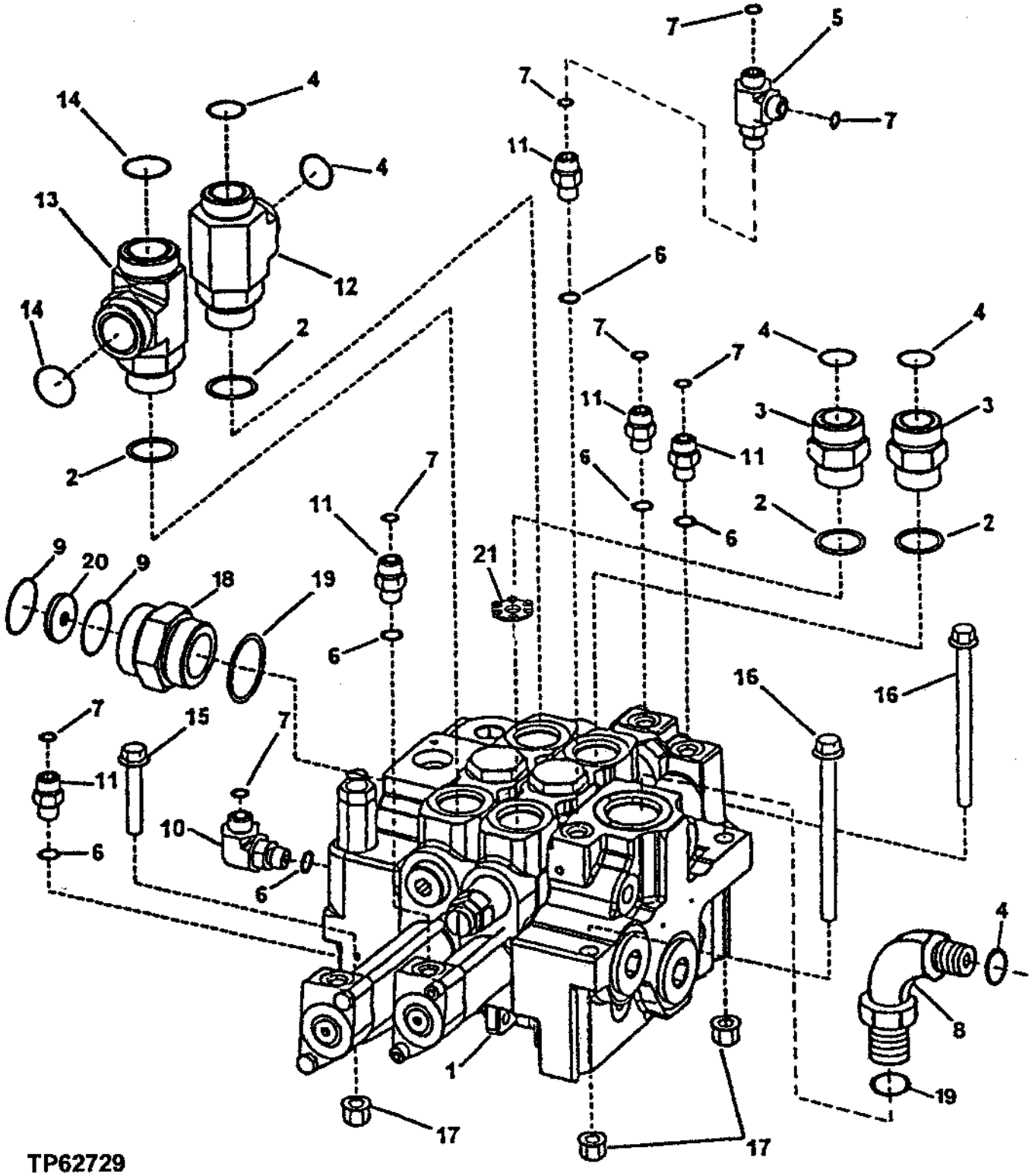

LOADER CONTROL VALVE
(TWO-SPOOL)

KEY	PART NO.	PART NAME	QTY	SERIAL NO.	REMARKS
1	AT225792	CONTROL VALVE	1		(SUB FOR AT208042 OR AT224771)
2	R29936	O-RING	4		
3	38H1164	ADAPTER	2		
4	T76938	O-RING	5		
5	38H1030	TEE FITTING	1		
6	R26448	O-RING	6		
7	T77613	O-RING	8		
8	38H1325	ELBOW FITTING	1		
9	T78784	O-RING	2		
10	38H1004	ELBOW FITTING	1		
11	38H1160	ADAPTER	3		(BUCKET SECTION) (INLET SECTION)
	AT220096	CHECK VALVE	2		(BOOM SECTION) (DO NOT USE WITH T169955 ORIFICE)
12	38H1027	TEE FITTING	1		
13	AT210274	TEE FITTING	1	-574111	
	38H1573	TEE FITTING	1	574112-	
14	T78612	O-RING	2		
15	19M8528	SCREW	1		M10 X 55
16	19M7898	SCREW	2		M10 X 130
17	14M7400	LOCK NUT	3		M10
18	38H1197	ADAPTER	1		
19	U13639	O-RING	2		
20	T177442	PLATE	1		ORIFICE (DO NOT USE WITH MATERIAL HANDLER)
21	T178487	HYDRAULIC RESTRICTOR	1	573220-	

LOADER CONTROL VALVE
(THREE-SPOOL)

TP62730 -UN-13JAN00

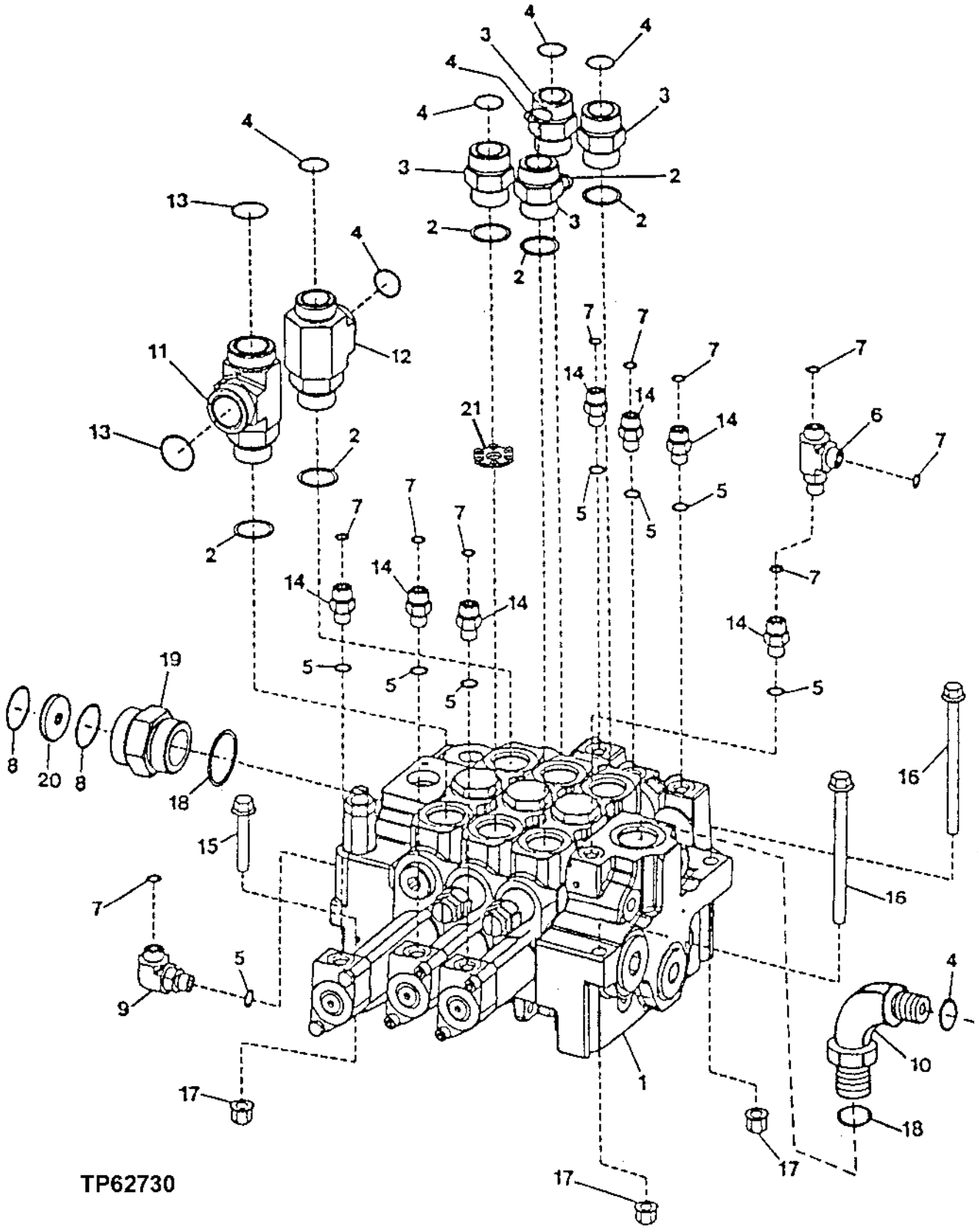

THIS PARTS LISTING IS CONTINUED

LOADER CONTROL VALVE
(THREE-SPOOL)

KEY	PART NO.	PART NAME	QTY	SERIAL NO.	REMARKS
1	AT224772	CONTROL VALVE	1		(SUB FOR AT208041)
2	R29936	O-RING	6		
3	38H1164	ADAPTER	4		
4	T76938	O-RING	7		
5	R26448	O-RING	8		
6	38H1030	TEE FITTING	1		
7	T77613	O-RING	10		
8	T78784	O-RING	2		
9	38H1004	ELBOW FITTING	1		
10	38H1325	ELBOW FITTING	1		
11	AT210274	TEE FITTING	1	-574111	
	38H1573	TEE FITTING	1	574112-	
12	38H1027	TEE FITTING	1		
13	T78612	O-RING	2		
14	38H1160	ADAPTER	5		(BUCKET AND AUXILIARY SECTION)(INLET SEC)
	AT220096	CHECK VALVE	2		(BOOM SECTION) (DO NOT USE WITH T169955 ORIFICE)
15	19M8528	SCREW	1		M10 X 55
16	19M7898	SCREW	2		M10 X 130
17	14M7400	LOCK NUT	3		M10
18	U13639	O-RING	2		
19	38H1197	ADAPTER	1		
20	T177442	PLATE	1		ORIFICE (DO NOT USE WITH MATERIAL HANDLER)
21	T178487	HYDRAULIC RESTRICTOR	1	573220-	

LOADER CONTROL VALVE
(FOUR-SPOOL)

TP62731 -UN-13JAN00

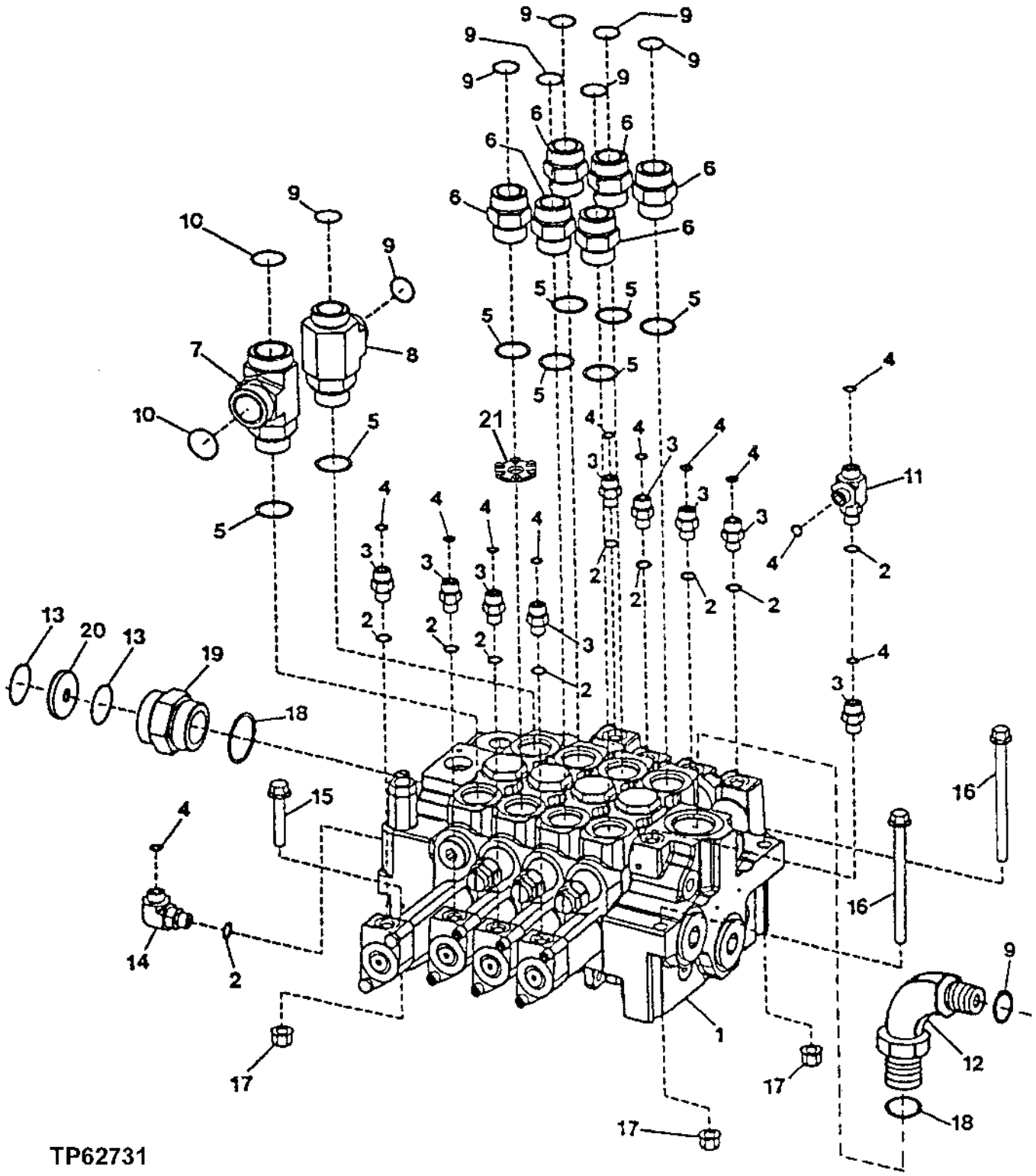

THIS PARTS LISTING IS CONTINUED

LOADER CONTROL VALVE
(FOUR-SPOOL)

KEY	PART NO.	PART NAME	QTY	SERIAL NO.	REMARKS
1	AT225794	CONTROL VALVE	1		(SUB FOR AT209987 OR AT224773)
2	R26448	O-RING	10		
3	38H1160	ADAPTER	7		(BUCKET AND AUXILIARY SECTION)(INLET SEC)
	AT220096	CHECK VALVE	2		(BOOM SECTION) (DO NOT USE WITH T169955 ORIFICE)
4	T77613	O-RING	12		
5	R29936	O-RING	8		
6	38H1164	ADAPTER	6		
7	AT210274	TEE FITTING	1	-574111	
	38H1573	TEE FITTING	1	574112-	
8	38H1027	TEE FITTING	1		
9	T76938	O-RING	9		
10	T78612	O-RING	2		
11	38H1030	TEE FITTING	1		
12	38H1325	ELBOW FITTING	1		
13	T78784	O-RING	2		
14	38H1004	ELBOW FITTING	1		
15	19M8528	SCREW	1		M10 X 55
16	19M7898	SCREW	2		M10 X 130
17	14M7400	LOCK NUT	3		M10
18	U13639	O-RING	2		
19	38H1197	ADAPTER	1		
20	T177442	PLATE	1		ORIFICE (DO NOT USE WITH MATERIAL HANDLER)
21	T178487	HYDRAULIC RESTRICTOR	1	573220-	

INLET SECTION VALVE WITH RELIEF VALVE

TP60332 -UN-20APR98

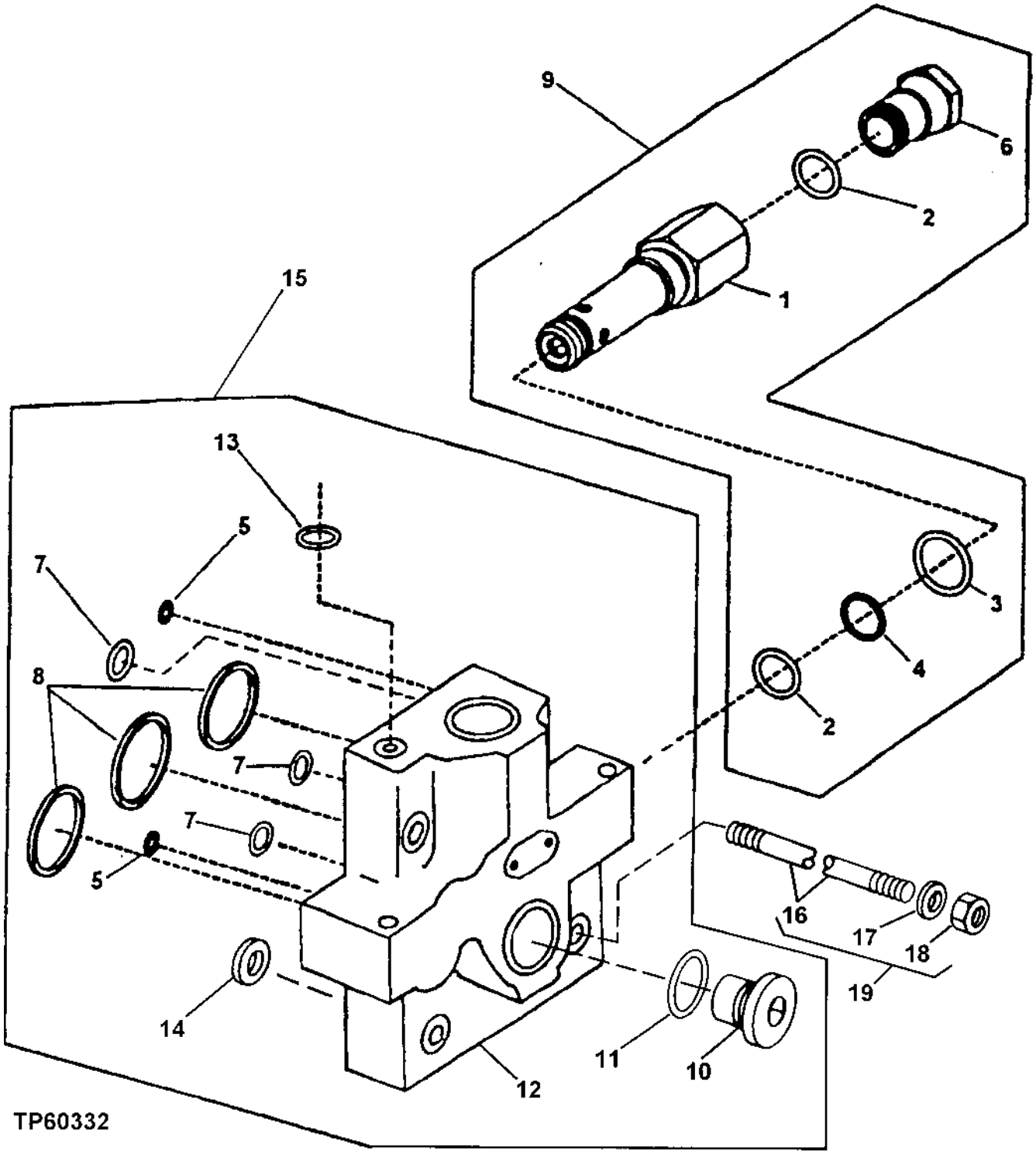

INLET VALVE SECTION WITH RELIEF VALVE

KEY	PART NO.	PART NAME	QTY	SERIAL NO.	REMARKS
1	.....	VALVE	1		(SUB AT209811)
2	T170029	O-RING	2		(K1)
3	U12547	O-RING	1		(K1)
4	.....	BACK-UP RING	1		(K1)
5	.....	O-RING	2		(K2) (SUB AT210694)
6	.....	SCREW	1		ADJUSTING (SUB AT209811)
7	.....	O-RING	3		(K2) (SUB AT210694)
8	.....	O-RING	3		(K2) (SUB AT210694)
9	AT209811	PRESSURE RELIEF FITTING	1		VALVE
10	.....	PLUG	1		(SUB AT210694)
11	R29936	O-RING	1		(K2)
12	.....	HOUSING	1		(SUB AT210694)
13	R26448	O-RING	1		(K2)
14	.....	SHIM	1		(K2) (ONE SHIM ON EACH TIE-BOLT)
15	AT210694	MANIFOLD	1		INLET SECTION
16	.....	STUD	1		(SUB AT210950, AT210951 OR AT210683)
17	.....	WASHER	2		(SUB AT210950, AT210951 OR AT210683)
18	.....	NUT	2		(SUB AT210950, AT210951 OR AT210683)
19	AT210950	STUD	4		(TWO SPOOL VALVE)
	AT210951	STUD	4		(THREE-SPOOL VALVE)
	AT210683	STUD	4		(FOUR-SPOOL VALVE)
	AT219895	STUD	4		(FIVE-SPOOL VALVE)

(K1) KIT AT169157-MAIN RELIEF VALVE SEAL KIT

(K2) KIT AT210695-INLET SECTION SEAL KIT

BOOM, BUCKET AND AUXILIARY VALVE SECTIONS

TP62700 -UN-07JAN00

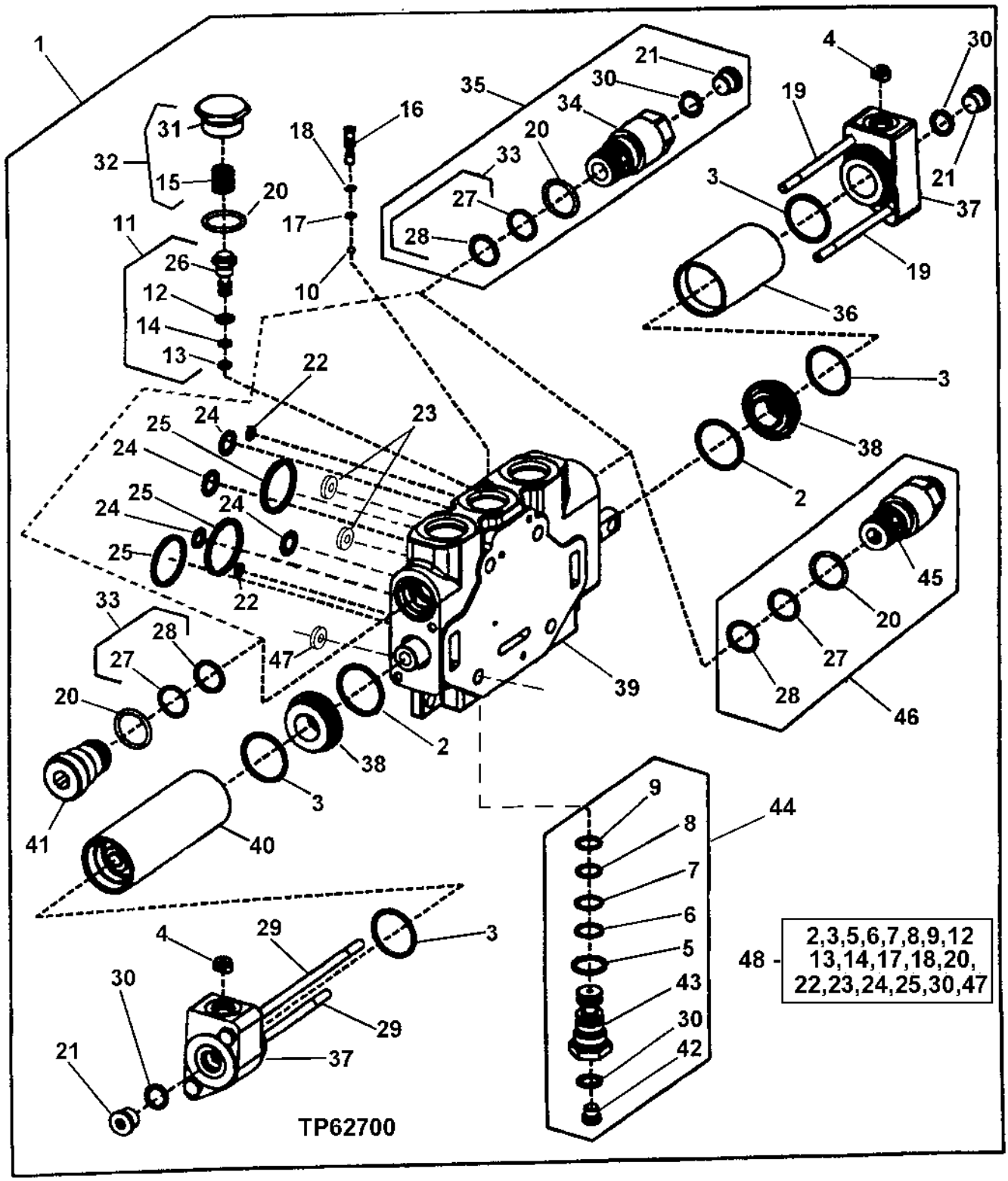

BOOM, BUCKET AND AUXILIARY VALVE SECTIONS

KEY	PART NO.	PART NAME	QTY	SERIAL NO.	REMARKS
1	AT224770	SPOOL VALVE	1		(BOOM) (SUB FOR AT210692)
	AT210701	SPOOL VALVE	1		(BUCKET)
	AT210684	SPOOL VALVE	1	-569074	(AUXILIARY)
2	.....	O-RING	2		
3	.....	O-RING	4		
4	T169955	ORIFICE	2		(BUCKET AND AUXILIARY SECTION) (DO NOT USE IN BOOM SECTION WHEN USING AT220096 CHECK VALVES IN PLACE OF 38H1160 IN PILOT PORTS)
5	.....	O-RING	1		
6	.....	BACK-UP RING	1		
7	.....	O-RING	1		
8	.....	O-RING	1		
9	.....	BACK-UP RING	1		
10	A4742R	BALL	1		
11	AT220827	COMPENSATOR	1		(BOOM AND AUXILIARY)
	AT220829	COMPENSATOR	1		(BUCKET)
12	.....	O-RING	1		
13	.....	O-RING	1		
14	.....	BACK-UP RING	1		
15	.....	SPRING	1		
16	T172562	CHECK VALVE	1		
17	.....	O-RING	1		
18	.....	BACK-UP RING	1		
19	T174025	CAP SCREW	2		(BOOM)
	T174025	CAP SCREW	4		(BUCKET AND AUXILIARY)
20	U12547	O-RING	2		
21	.....	PLUG	3		(BOOM)
	.....	PLUG	2		(BUCKET AND AUXILIARY)
22	.....	O-RING	2		(AUXILIARY AND BUCKET)
	.....	O-RING	1		(BOOM)
23	.....	O-RING	1		
24	.....	O-RING	3		(AUXILIARY AND BUCKET)
	.....	O-RING	4		(BOOM)
25	.....	O-RING	2		
26	.....	COMPENSATOR	1		
27	T154187	BACK-UP RING	2		
28	AT124574	O-RING	2		
29	19H3782	CAP SCREW	2		5/16" X 6-1/4", (BOOM SECTION)
30	.....	O-RING	4		(BOOM)
	.....	O-RING	3		(BUCKET AND AUXILIARY)
31	.....	PLUG	1		
32	AT220831	KIT	1		
33	AT170991	KIT	2		(BOOM SECTION)
34	.....	VALVE	1		(BOOM SECTION)
35	AT209750	RELIEF VALVE	2		(AUXILIARY AND BUCKET)
36	.....	STRUCTURAL TUBING	1		(BOOM)
	.....	BUSHING	2		(AUXILIARY AND BUCKET)
37	.....	CAP	2		
38	.....	STRUCTURAL TUBING	2		
39	.....	HOUSING	1		(SUB AT210692, AT210684 AND AT210701)
40	.....	STRUCTURAL TUBING	1		(BOOM)
41	.....	PLUG	1		(BOOM)
42	.....	PLUG	1		(SUB AT209758 OR AT210685)
43	.....	SPOOL	1		(SUB AT209758 FOR BUCKETT OR AT210686 FOR AUXILIARY AND BOOM)
44	AT209758	CHECK VALVE	1		(BUCKET)
	AT210686	CHECK VALVE	1		(AUXILIARY AND BOOM)
45	.....	VALVE	1		(BUCKET SECTION) (SUB AT209750)
46	AT221506	VALVE	2		(BBM) (SUB FOR AT209762)
47	.....	SHIM	4		(ONE SHIM ON EACH TIE-BOLT)
48	AT210685	SEAL KIT	1		(FOR BUCKET, BOOM AND AUXILIARY)

AUXILIARY SECTION
(SERIAL NO. 569075-)

TP62701 -UN-07JAN00

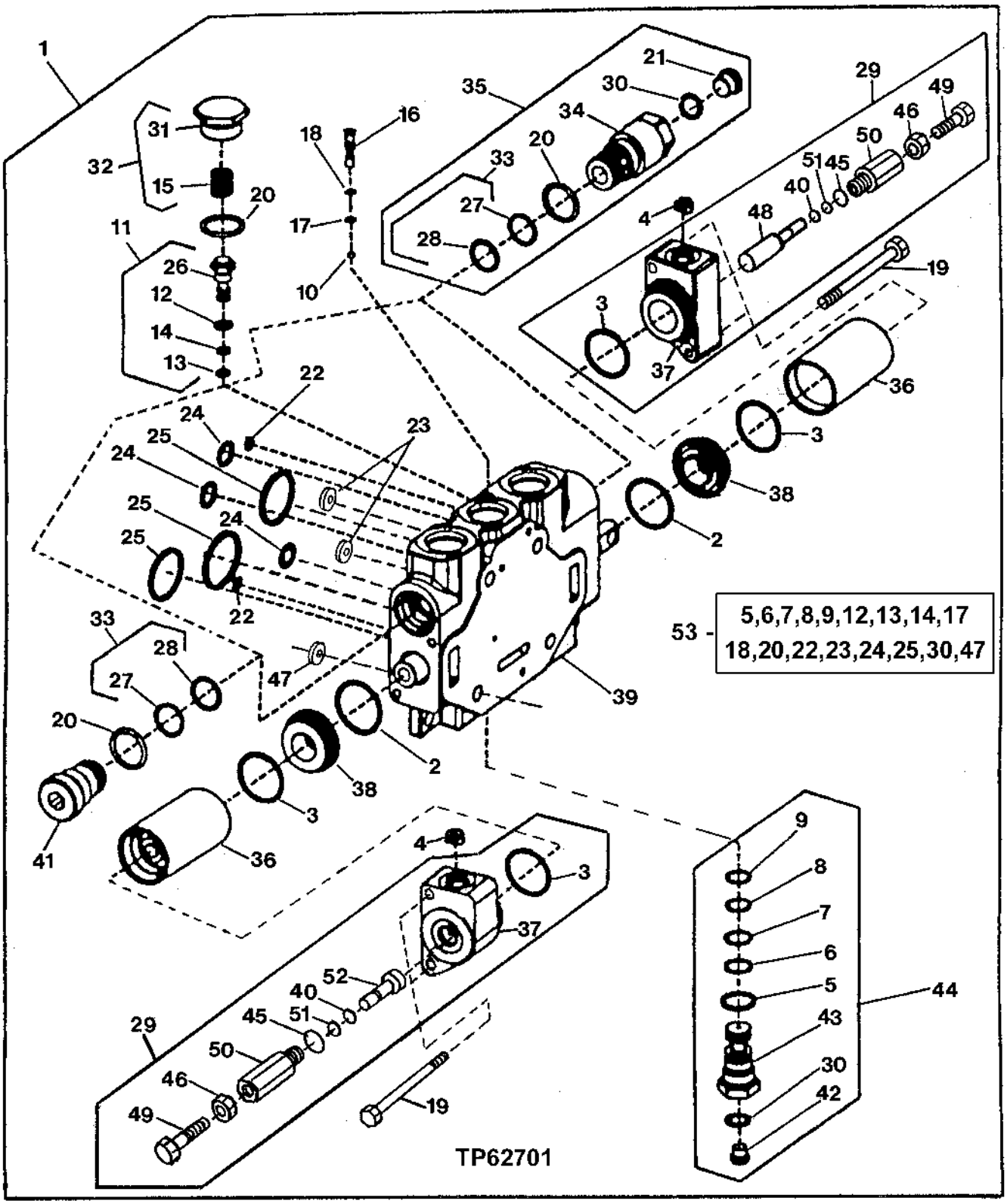

AUXILIARY SECTION
(SERIAL NO. 569075-)

KEY	PART NO.	PART NAME	QTY	SERIAL NO.	REMARKS
1	AT220174	SPOOL VALVE	1		
2	M4125T	O-RING	2		
3	H84318	O-RING	4		
4	T169955	ORIFICE	2		
5	.....	O-RING	1		
6	.....	BACK-UP RING	1		
7	.....	O-RING	1		
8	.....	O-RING	1		
9	.....	BACK-UP RING	1		
10	A4742R	BALL	1		
11	AT220827	COMPENSATOR	1		
12	.....	O-RING	1		
13	.....	O-RING	1		
14	.....	BACK-UP RING	1		
15	.....	SPRING	1		
16	T172562	CHECK VALVE	1		
17	.....	O-RING	1		
18	.....	BACK-UP RING	1		
19	T174025	CAP SCREW	4		
20	U12547	O-RING	2		
21	.....	PLUG	2		
22	.....	O-RING	2		
23	.....	O-RING	1		
24	.....	O-RING	3		
25	.....	O-RING	2		
26	.....	COMPENSATOR	1		
27	.....	BACK-UP RING	2		(SUB AT209750)
28	AT124574	O-RING	2		
29	AT220036	KIT	1		
30	.....	O-RING	2		
31	.....	PLUG	1		
32	AT220831	KIT	1		
33	AT170991	KIT	2		
34	.....	VALVE	1		
35	AT209750	RELIEF VALVE	2		
36	.....	STRUCTURAL TUBING	2		
	.....	BUSHING	2		
37	.....	CAP	2		
38	.....	STRUCTURAL TUBING	2		
39	.....	HOUSING	1		(SUB AT220174)
40	T77814	O-RING	2		
41	.....	PLUG	1		
42	.....	PLUG	1		(SUB AT210686)
43	.....	SPOOL	1		(SUB AT210686)
44	AT210686	CHECK VALVE	1		
45	R26906	O-RING	2		
46	14H856	NUT	2		1/2", (SUB FOR AT209762)
47	.....	SHIM	4		(ONE SHIM ON EACH TIE-BOLT)
48	.....	PLUNGER	1		(SUB AT220035)
49	22H1022	SET SCREW	2		
50	.....	RELIEF VALVE	2		(SUB AT220036)
51	R61463	BACK-UP RING	2		
52	.....	PLUNGER	1		(SUB AT220036)
53	AT210685	SEAL KIT	1		SECTION SEAL KIT

FIFTH FUNCTION VALVE SECTION

TP62890 -UN-26SEP00

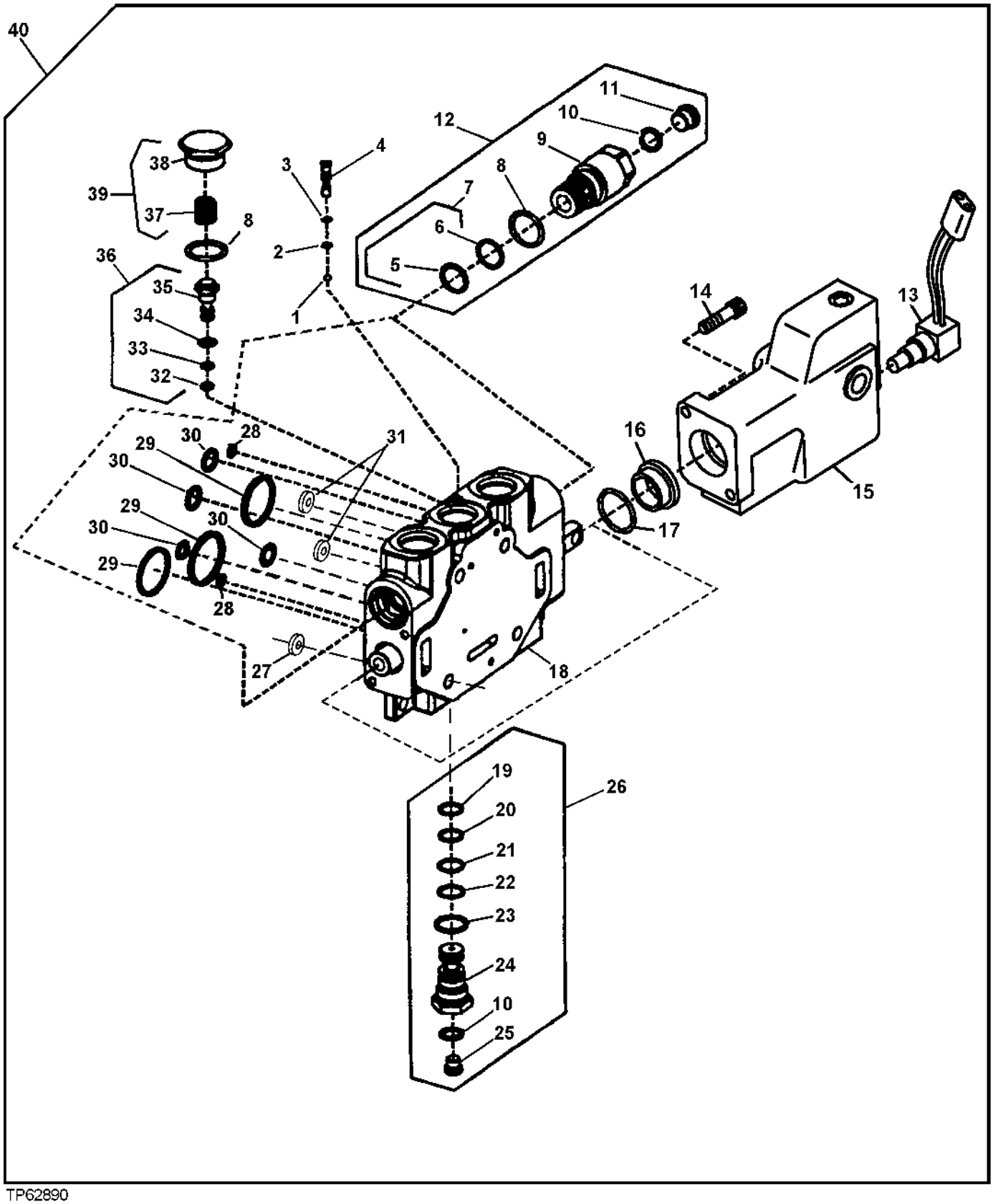

TP62890

FIFTH FUNCTION VALVE SECTION

KEY	PART NO.	PART NAME	QTY	SERIAL NO.	REMARKS
1	A4742R	BALL	1		
2	.....	O-RING	1		
3	.....	BACK-UP RING	1		
4	T172562	CHECK VALVE	1		
5	AT124574	O-RING	2		
6	T154187	BACK-UP RING	2		
7	AT170991	KIT	2		
8	U12547	O-RING	2		
9	.....	VALVE	1		
10	.....	O-RING	4		
11	.....	PLUG	3		
12	AT209750	RELIEF VALVE	2		
13	AT224852	SOLENOID VALVE	2		
14	T174025	CAP SCREW	4		
15	.....	CAP	2		
16	.....	RETAINER	2		
17	.....	O-RING	2		
18	.....	HOUSING	1		
19	.....	BACK-UP RING	1		
20	.....	O-RING	1		
21	.....	O-RING	1		
22	.....	BACK-UP RING	1		
23	.....	O-RING	1		
24	.....	SPOOL	1		
25	.....	PLUG	1		
26	AT210686	CHECK VALVE	1		
27	.....	SHIM	4		
28	U40962	O-RING	2		
29	T103465	SEAL	2		
30	AT216573	O-RING	3		
31	.....	O-RING	1		
32	.....	O-RING	1		
33	.....	BACK-UP RING	1		
34	.....	O-RING	1		
35	.....	COMPENSATOR	1		
36	AT220827	COMPENSATOR	1		
37	.....	SPRING	1		
38	.....	PLUG	1		
39	AT220831	KIT	1		
40	AT222852	VALVE	1		

RELIEF VALVE SEAL KIT

TP68409 -UN-13SEP99

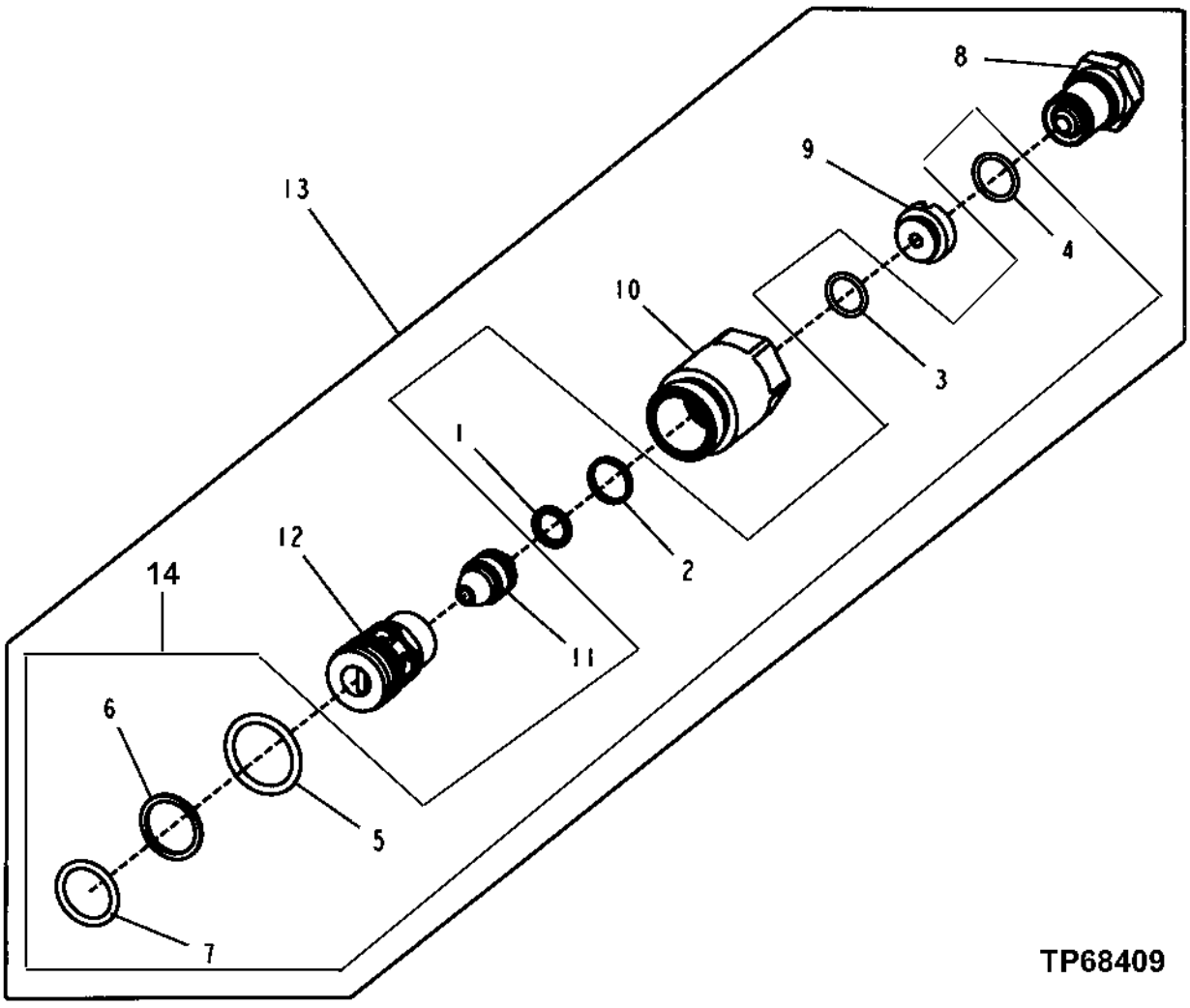

RELIEF VALVE SEAL KIT

KEY	PART NO.	PART NAME	QTY	SERIAL NO.	REMARKS
1	.....	SEAL	1		
2	.....	SEAL	1		
3	.....	O-RING	1		
4	.....	O-RING	1		
5	.....	O-RING	1		
6	.....	BACK-UP RING	1		
7	.....	O-RING	1		
8	.....	ADJUSTER	1		(SUB AT209750)
9	.....	DISK	1		(SUB AT209750)
10	.....	HOUSING	1		(SUB AT209750)
11	.....	PISTON	1		(SUB AT209750)
12	.....	SPOOL	1		(SUB AT209750)
13	AT209750	RELIEF VALVE	1		
14	AT209748	SEAL KIT	1		RELIEF VALVE

OUTLET SECTION

TP68410 -UN-13SEP99

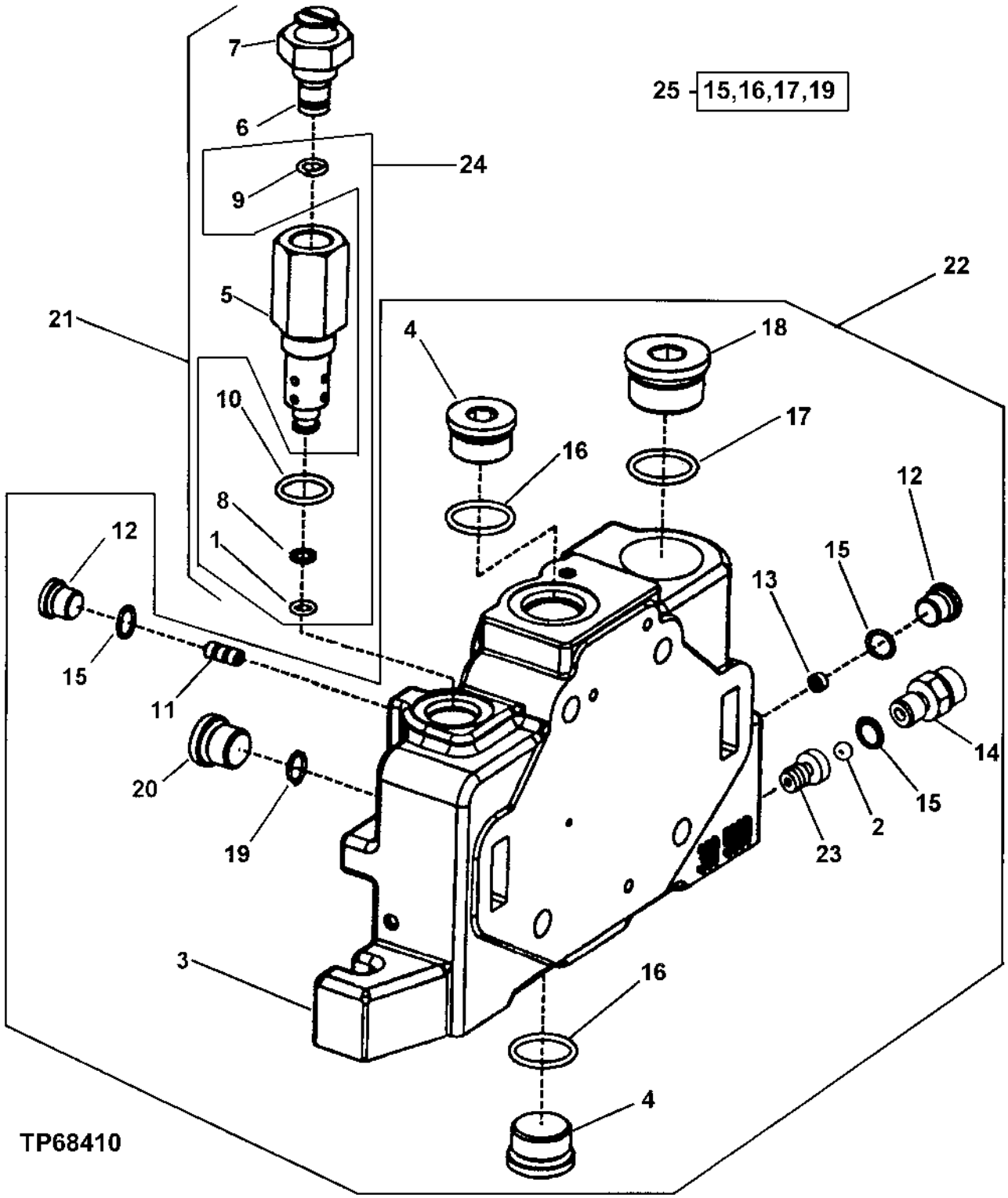

OUTLET SECTION

KEY	PART NO.	PART NAME	QTY	SERIAL NO.	REMARKS
1	.....	O-RING	1		(SUB AT209812)
2	JD38714	BALL	1		
3	.....	HOUSING	1		(SUB AT210696)
4	.....	PLUG	2		(SUB AT210696)
5	.....	VALVE	1		(SUB AT209812)
6	.....	SCREW	1		(SUB AT209812)
7	.....	NUT	1		(SUB AT209812)
8	.....	O-RING	1		(SUB AT209812)
9	.....	O-RING	1		(SUB AT209812)
10	.....	O-RING	1		(SUB AT209812)
11	.....	PLUG	3		(SUB AT210696)
12	.....	PLUG	2		(SUB AT210696)
13	.....	PLUG	1		(SUB AT210696)
14	T172712	FITTING	1		
15	.....	O-RING	3		(SUB AT210696)
16	R29936	O-RING	2		
17	.....	O-RING	1		(SUB AT210696)
18	.....	PLUG	1		(SUB AT210696)
19	R26448	O-RING	2		
20	.....	PLUG	2		(SUB AT210696)
21	AT209812	RELIEF VALVE	1		
22	AT210696	VALVE	1		
23	T172579	CHECK VALVE	1		
24	AT179935	SEAL KIT	1		LOAD SENSE RELIEF VALVE SEAL KIT
25	AT179934	SEAL KIT	1		OUTLET SECTION SEAL KIT

SINGLE LEVER CONTROLLER

TP70475 -UN-12SEP00

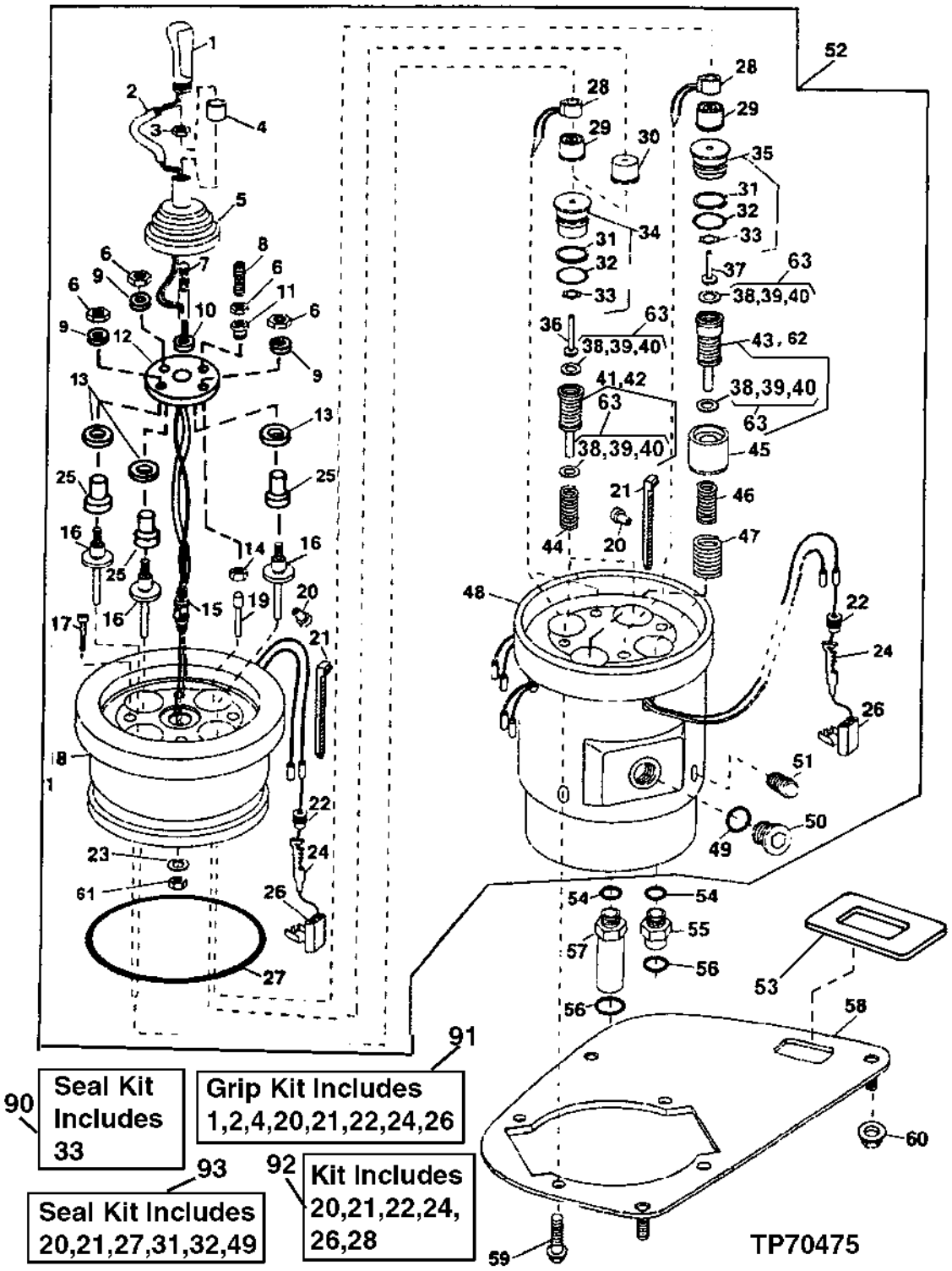

SINGLE LEVER CONTROLLER

KEY	PART NO.	PART NAME	QTY	SERIAL NO.	REMARKS
1	AT208188	GRIP	1		
2	.....	SLEEVE	1		(K1)
3	T170269	NUT	1		
4	AT208911	RETAINER	1		(K1)
5	T170293	BOOT	1		(ALSO ORDER AT208911)
6	T170275	NUT	4		
7	T173178	LEVER	1		
8	T172523	SET SCREW	1		
9	T173181	WASHER	3		
10	T173205	WASHER	1		
11	T170273	PLUG	1		
12	T173180	PLATE	1		
13	T173182	WASHER	3		
14	T170272	NUT	1		
15	AT210249	POST	1		
16	AT210250	BALL JOINT SOCKET	3		
17	T170263	CAP SCREW	4		
18	.....	HOUSING	1		(SUB AT210209)
19	T170274	BAR	1		
20	T170266	GROMMET	4		(K1) (K2) (K3)
21	H77698	TIE BAND	4		(K1) (K2) (K3)
22	R78059	ELECTRICAL PLUG	8		(K1) (K2)
23	T172522	WASHER	1		
24	R78058	PIN CONTACT	8		(K1) (K2)
25	T173179	NUT	1		
90	AT104041	SEAL KIT	1		(INCLUDES ALL (K) PARTS) (ALSO ORDER AT115876 TUBE OF GREASE)
91	AT209784	GRIP	1		(INCLUDES ALL (K1) PARTS) (GRIP WITH KICK DOWN PLATE)
92	AT209788	KIT	1		(INCLUDES ALL (K3) PARTS) (COIL)
93	AT209779	SEAL KIT	1		(INCLUDES ALL (K4) PARTS) (SINGLE LEVER SEAL KIT)

SINGLE LEVER CONTROLLER

TP70475 -UN-12SEP00

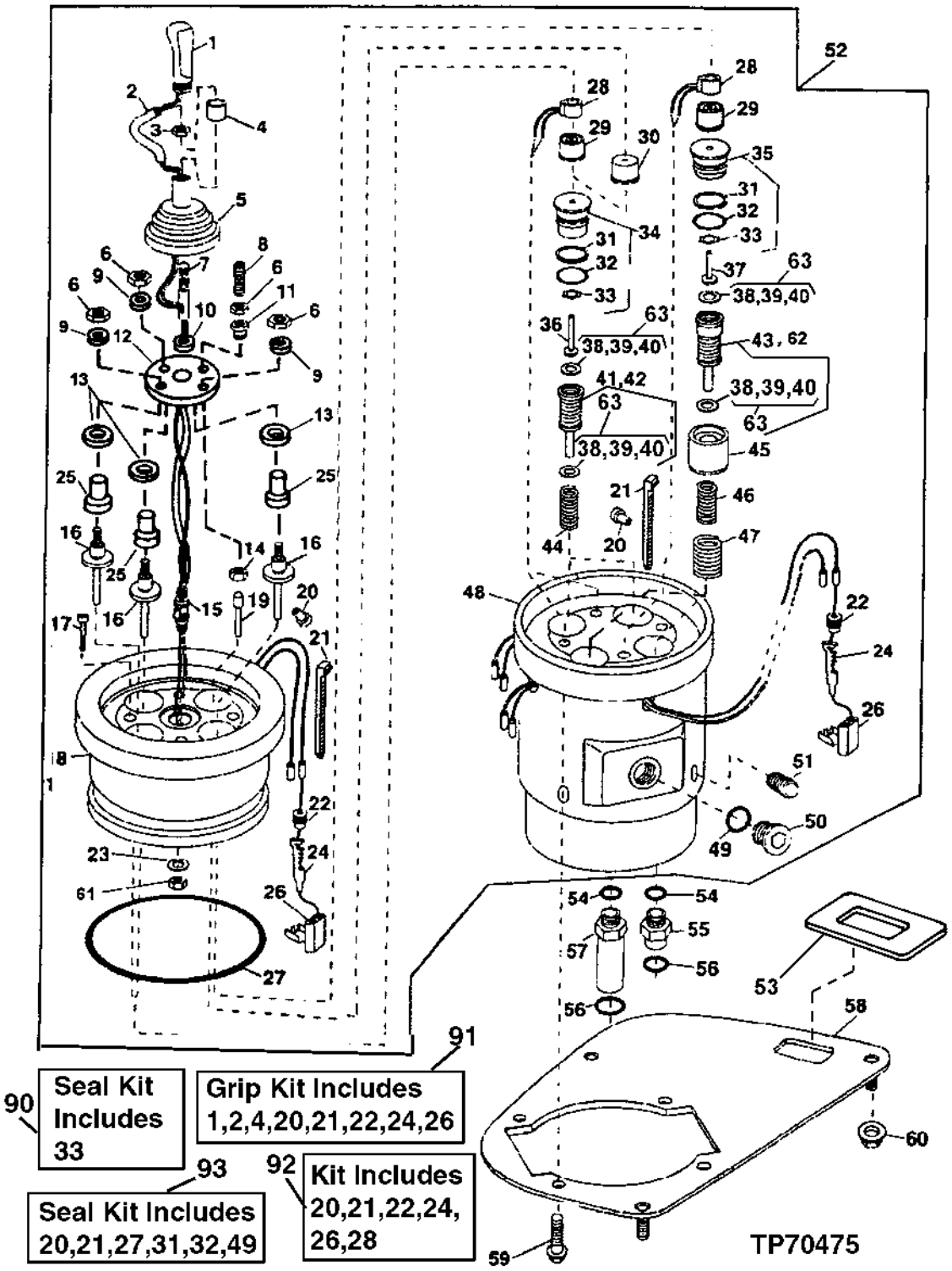

SINGLE LEVER CONTROLLER

KEY	PART NO.	PART NAME	QTY	SERIAL NO.	REMARKS
26	R78053	PIN CONTACT CONNECTOR BODY	4		(K1) (K2)
27	.....	O-RING	1		(SUB AT210209) (K3)
28	T170283	ELECTRICAL COIL	3		(K2)
29	T170284	RETAINER	3		
30	T170278	STRUCTURAL TUBING	1		(BUCKET DUMP)
31	T170307	BACK-UP RING	1		(K3)
32	T170306	SEAL	1		(K3)
33	T131617	RING	2		(K)
34	AT208178	RETAINER	2		(BUCKET DUMP AND BOOM RAISE)
	AT208178	RETAINER	1		(BOOM RAISE) (USE WITH TOOL CARRIER AND LOG LOADER)
35	AT208179	RETAINER	2		(BOOM LOWER AND BUCKET ROLL-BACK)
	AT208179	RETAINER	3		(BOOM LOWER) (BUCKET DUMP) AND (BUCKET ROLL -BACK) (USE WITH TOOL CARRIER AND LOG LOADER)
36	T170285	PLUNGER	2		
	T170285	PLUNGER	1		(BOOM RAISE) (USE WITH TOOL CARRIER AND LOG LOADER)
37	T170286	PLUNGER	2		
	T170286	PLUNGER	3		(BOOM LOWER) (BUCKET DUMP) AND (BUCKET ROLL-BACK) (USE WITH TOOL CARRIER AND LOG LOADER)
38	T103092	SHIM	AR		0.1 MM (.004")
39	T103093	SHIM	AR		0.2 MM (.007")
40	T103094	SHIM	AR		0.4 MM (.015")
41	AT208182	SPOOL	1		(BUCKET DUMP)
42	AT208181	SPOOL	1		(BOOM RAISE)
	AT208181	SPOOL	1		(BOOM RAISE) (USE WITH TOOL CARRIER AND LOG LOADER)
43	AT208183	SPOOL	1		(BOOM LOWER)
	AT208183	SPOOL	3		(BOOM LOWER) (BUCKET DUMP) AND (BUCKET ROLL-BACK) (USE WITH TOOL CARRIER AND LOG LOADER)
44	T170288	SPRING	2		
	T170288	SPRING	1		(USE WITH TOOL CARRIER AND LOG LOADER)
45	AT208180	KIT	2		
46	T170289	SPRING	2		
	T170289	SPRING	3		(USE WITH TOOL CARRIER AND LOG LOADER)
47	T170287	SPRING	2		
	T170287	SPRING	3		(USE WITH TOOL CARRIER AND LOG LOADER)
48	.....	HOUSING	1		(SUB AT210209)
49	R26375	O-RING	2		(K3)
50	.....	PLUG	2		(SUB AT210209)
51	.....	PLUG	2		(SUB AT210209)
52	AT210209	VALVE	1		
53	T171587	DECAL	1		
54	R26448	O-RING	6		
55	38H1160	ADAPTER	5		
56	T77613	O-RING	6		
57	38H1212	ADAPTER	1		
58	AT203087	PLATE	1	-581888	
	AT224241	PLATE	1	581889-	GRAY
59	21M7285	SCREW	4		
60	14M7397	LOCK NUT	3		
61	14H849	NUT	1		7/16"
62	AT209789	SPOOL	1		(BUCKET ROLL-BACK(USE WITH TOOL CARRIER AND LOG LOADER)
63	AT210376	KIT	AR		
90	AT104041	SEAL KIT	1		INCLUDES ALL (K) PARTS (ALSO ORDER AT115876 TUBE OF GREASE)
91	AT209784	GRIP	1		INCLUDES ALL (K1) PARTS (GRIP WITH KICKDOWN PLATE)
92	AT209788	KIT	1		INCLUDES ALL (K3) PARTS (COIL)
93	AT209779	SEAL KIT	1		INCLUDES ALL(K4) PARTS(SINGLE LEVER SEAL KIT)

TWO LEVER CONTROLLER

TP70474 -UN-12SEP00

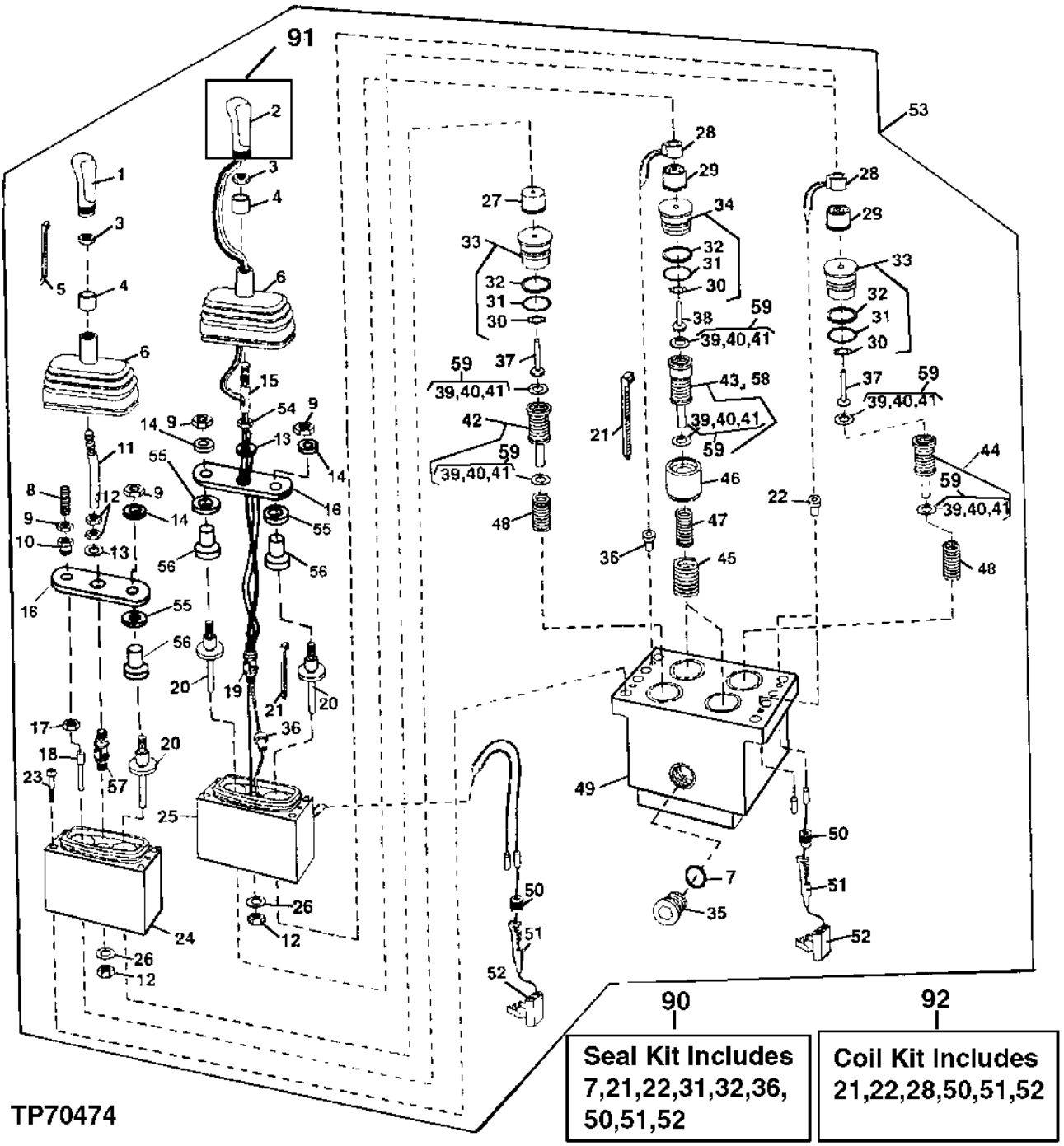

TWO LEVER CONTROLLER

KEY	PART NO.	PART NAME	QTY	SERIAL NO.	REMARKS
1	AT172629	GRIP	1		
2	.....	GRIP	1		
3	T170269	NUT	2		
4	AT208911	RETAINER	2		
5	H77698	TIE BAND	2		
6	T170295	BOOT	2		(ALSO ORDER AT208911)
7	R26375	O-RING	1		
8	T172523	SET SCREW	1		
9	T170275	NUT	4		
10	T170273	PLUG	1		
11	T173208	LEVER	1		
12	T173219	NUT	4		
13	T173205	WASHER	2		
14	T173206	WASHER	3		
15	T173209	LEVER	1		
16	T173210	PLATE	2		
17	T170272	NUT	1		
18	T170274	BAR	1		
19	AT210262	UNIVERSAL JOINT	1		
20	AT210250	BALL	3		
21	T170262	STRAP	4		
22	T170382	GROMMET	1		
23	T170367	CAP SCREW	8		
24	.....	HOUSING	1		
25	.....	HOUSING	1		

TWO LEVER CONTROLLER

TP70474 -UN-12SEP00

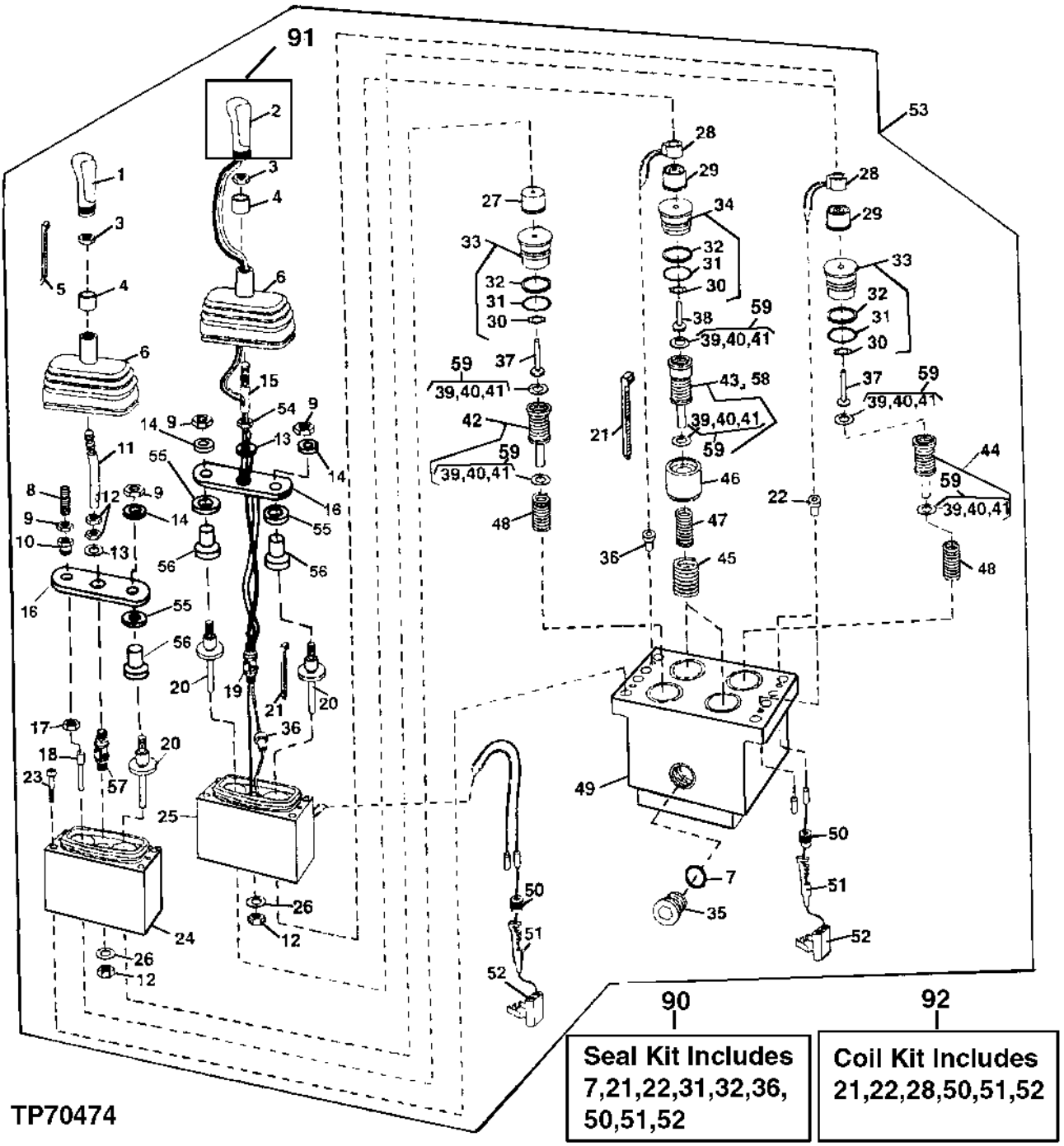

TWO LEVER CONTROLLER

KEY	PART NO.	PART NAME	QTY	SERIAL NO.	REMARKS
26	T172609	WASHER	2		
27	T170278	STRUCTURAL TUBING	1		
28	.....	ELECTRICAL COIL	3		(SUB AT209788 COIL KIT)
29	T170284	RETAINER	3		
30	T131617	RING	4		
31	T170306	SEAL	4		
32	T170307	BACK-UP RING	4		
33	AT208178	RETAINER	2		(BOOM RAISE AND BUCKET DUMP)
	AT208178	RETAINER	1		(BOOM RAISE) (USE WITH TOOL CARRIER AND LOG LOADER)
34	AT208179	RETAINER	2		(BUCKET ROLL BACK AND BOOM LOWER)
	AT208179	RETAINER	3		(BUCKET ROLLBACK, BUCKET DUMP AND BOOM LOWER) (USE WITH TOOL CARRIER AND LOG LOADER)
35	AT49216	FITTING	1		
36	T170266	GROMMET	3		
37	T170285	PLUNGER	3		
	T170285	PLUNGER	1		(BOOM RAISE) (USE WITH TOOL CARRIER AND LOG LOADER)
38	T170286	PLUNGER	1		
	T170286	PLUNGER	3		(BUCKET ROLLBACK, BUCKET DUMP AND BOOM LOWER) (USE WITH TOOL CARRIER AND LOG LOADER)
39	T103094	SHIM	AR		0.4 MM (.015")
40	T103093	SHIM	AR		0.2 MM (.007")
41	T103092	SHIM	AR		0.1 MM (.004")
42	AT208182	SPOOL	1		(BUCKET DUMP)
43	AT208183	SPOOL	1		(BOOM LOWER)
	AT208183	SPOOL	3		(BUCKET ROLLBACK, BUCKET DUMP AND BOOM LOWER) (USE WITH TOOL CARRIER AND LOG LOADER)
44	AT208181	SPOOL	1		(BOOM RAISE)
	AT208181	SPOOL	1		(BOOM RAISE) (USE WITH TOOL CARRIER AND LOG L LOADER)
45	T170288	SPRING	2		
	T170288	SPRING	3		(BUCKET ROLLBACK, BUCKET DUMP AND BOOM LOWER) (USE WITH TOOL CARRIER AND LOG LOADER)
46	AT208180	KIT	2		
	AT208180	KIT	3		(BUCKET ROLLBACK, BUCKET DUMP AND BOOM LOWER) (USE WITH TOOL CARRIER AND LOG LOADER)
47	T170289	SPRING	2		
	T170289	SPRING	3		(BUCKET ROLLBACK, BUCKET DUMP AND BOOM LOWER) (USE WITH TOOL CARRIER AND LOG LOADER)
48	T170287	SPRING	2		
	T170287	SPRING	1		(BOOM RAISE) (USE WITH TOOL CARRIER AND LOG LOADER)
49	.....	HOUSING	1		(SUB AT210210)
50	R78059	ELECTRICAL PLUG	8		
51	R78058	PIN CONTACT	8		
52	R78053	PIN CONTACT CONNECTOR BODY	4		
53	AT210210	VALVE	1		
54	T173220	NUT	1		
55	T173207	WASHER	3		(SLIDDER TOP)
56	T173179	SLEEVE	3		
57	AT210263	UNIVERSAL JOINT	2		
58	AT209789	SPOOL	1		(BUCKET ROLLBACK)
59	AT210376	KIT	AR		
90	AT209780	SEAL KIT	1		
91	AT209784	GRIP	1		(GRIP WITH KICKDOWN SWITCH)
92	AT209788	KIT	1		(COIL)

SINGLE LEVER CONTROLLER WITH AUXILIARY FUNCTION

TP55661 -UN-25SEP97

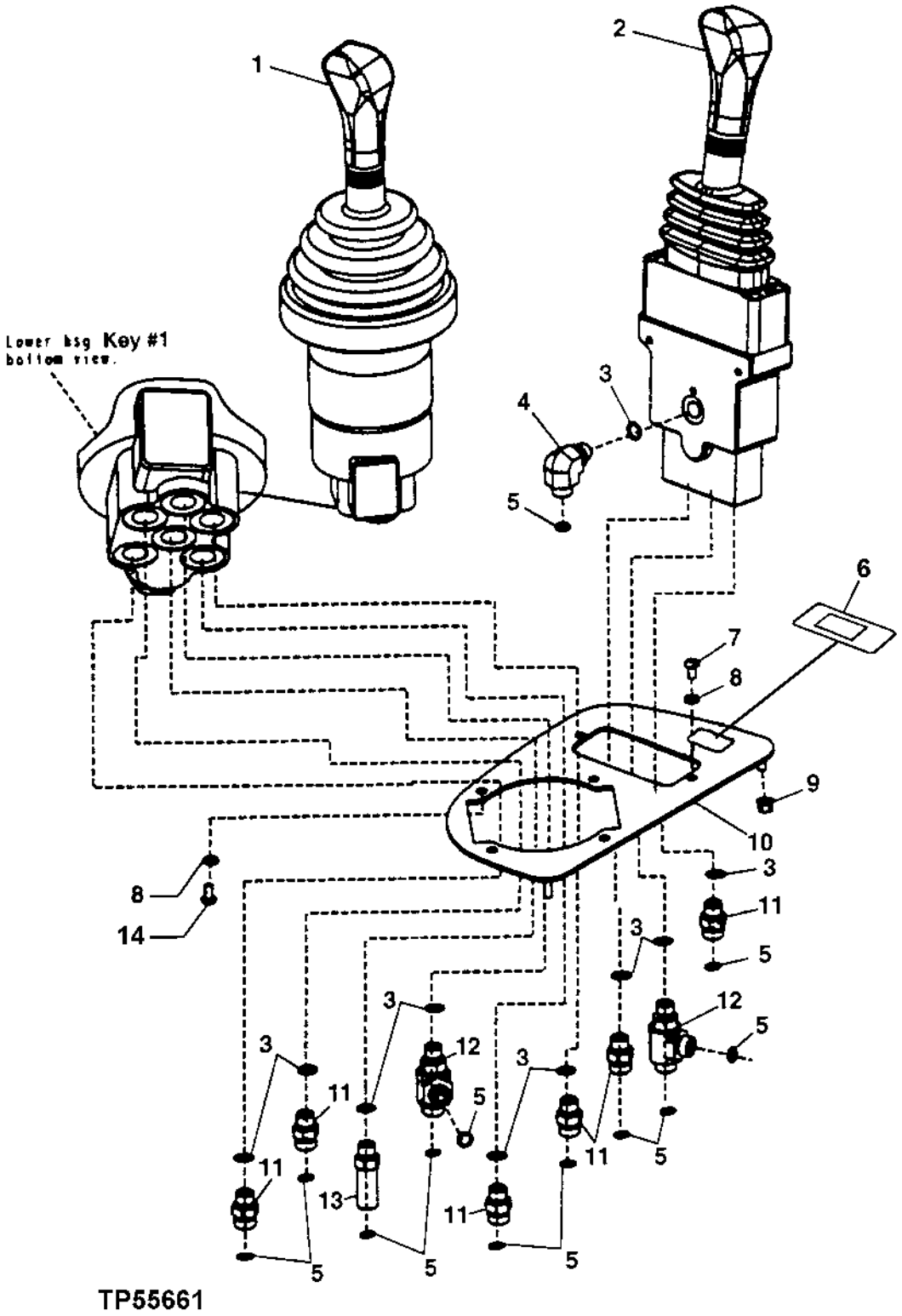

SINGLE LEVER CONTROLLER WITH AUXILIARY FUNCTION

KEY	PART NO.	PART NAME	QTY	SERIAL NO.	REMARKS
1	AT210209	VALVE	1		
2	AT210213	VALVE	1		
3	R26448	O-RING	10		
4	38H1004	ELBOW FITTING	1		
5	T77613	O-RING	10		
6	T171587	DECAL	1		
7	21M7267	SCREW	2		M6 X 20
8	24M7054	WASHER	6		6.400 X 12 X 1.600 MM
9	14M7397	LOCK NUT	3		M6
10	AT203591	PLATE	1	-581888	
	AT224242	PLATE	1	581889-	GRAY
11	38H1160	ADAPTER	6		
12	38H1023	TEE FITTING	2		
13	38H1212	ADAPTER	1		
14	21M7285	SCREW	4		M6 X 12

AT210512 (1) 3RD FUNCTION
3RD FUNC. JSTK+AUX FLD. (INCLUDES ALL PARTS
NEEDED FOR ADDING 3RD FUNC. TO TOOL CARRIER).

TWO LEVER CONTROLLER MOUNTING WITH AND WITHOUT AUXILIARY THIRD AND FOURTH FUNCTION

TP70476 -UN-12SEP00

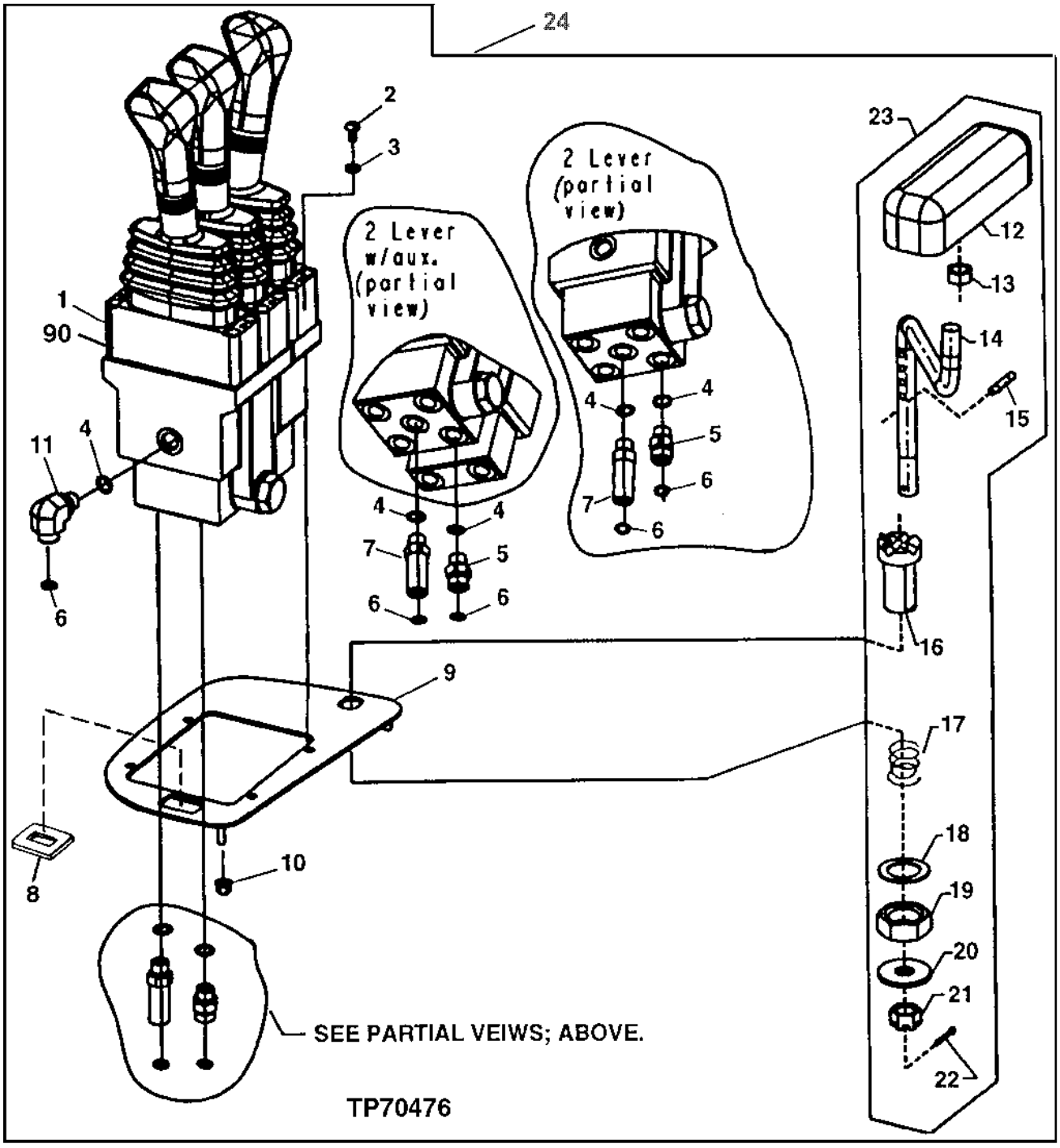

TWO LEVER CONTROLLER MOUNTING WITH AND WITHOUT AUXILIARY THIRD AND FOURTH FUNCTION

KEY	PART NO.	PART NAME	QTY	SERIAL NO.	REMARKS
1	AT210211	VALVE	1		(WITH AUXILIARY)
	AT210210	VALVE	1		(WITHOUT AUXILIARY)
	AT210212	ELECTRONIC CONTROL UNIT	1		(WITH TWO AUXILIARY SECTIONS)
2	21M7285	SCREW	6		M6 X 12, (WITH AUXILIARY)
	21M7285	SCREW	4		M6 X 12, (WITHOUT AUXILIARY)
3	24M7054	WASHER	6		6.400 X 12 X 1.600 MM, (WITH AUXILIARY)
	24M7054	WASHER	4		6.400 X 12 X 1.600 MM, (WITHOUT AUXILIARY)
4	R26448	O-RING	8		(WITH AUXILIARY)
	R26448	O-RING	6		(WITHOUT AUXILIARY)
5	38H1160	ADAPTER	6		(WITH AUXILIARY)
	38H1160	ADAPTER	4		(WITHOUT AUXILIARY)
6	T77613	O-RING	8		(WITH AUXILIARY)
	T77613	O-RING	6		(WITHOUT AUXILIARY)
7	38H1212	ADAPTER	1		
8	T171587	DECAL	1		
9	AT203088	PLATE	1	-581888	(WITH ONE AUXILIARY SECTION)
	AT203086	PLATE	1	-581888	(WITHOUT AUXILIARY)
	AT207968	PLATE	1	-581888	(WITH TWO AUXILIARY SECTIONS)
	AT224243	PLATE	1	581889-	GRAY(WITH ONE AUXILIARY SECTION)
	AT224244	PLATE	1	581889-	GRAY(WITHOUT AUXILIARY)
	AT224245	PLATE	1	581889-	GRAY(WITH TWO AUXILIARY SECTIONS)
10	14M7397	LOCK NUT	3		
11	38H1004	ELBOW FITTING	1		
12	AT162171	PLATE	1		
13	R27296	NUT	1		
14	T171500	ROD	1		
15	34H282	SPRING PIN	1		3/16" X 1"
16	T171502	SUPPORT	1		
17	T148177	SPRING	1		
18	12H328	LOCK WASHER	1		7/8"
19	14H810	NUT	1		7/8"
20	24M7180	WASHER	1		13 X 37 X 3 MM
21	14H926	NUT	1		12.700 MM
22	11M7081	COTTER PIN	1		2.500 X 20 MM
23	.....	ARMREST	1		WRIST REST ASSEMBLY (AT206780 NO LONGER AVAILABLE, ORDER COMPONENT PARTS)
24	**AT225403**	**KIT**	**1**		**(SUB FOR AT210503) FOUR LEVER, FOURTH FUNCTION (ALSO INCLUDES HYDRAULIC HOSES, OIL LINES AND MISCELLANEOUS PARTS)**
90	AT209781	SEAL KIT	1		INCLUDES ALL PARTS (NECESSARY TO REPAIR AT210211)
	AT209782	SEAL KIT	1		INCLUDES ALL PARTS NECESSARY TO REPAIR AT210212

AUXILIARY SINGLE LEVER CONTROLLER

TP70477 -UN-12SEP00

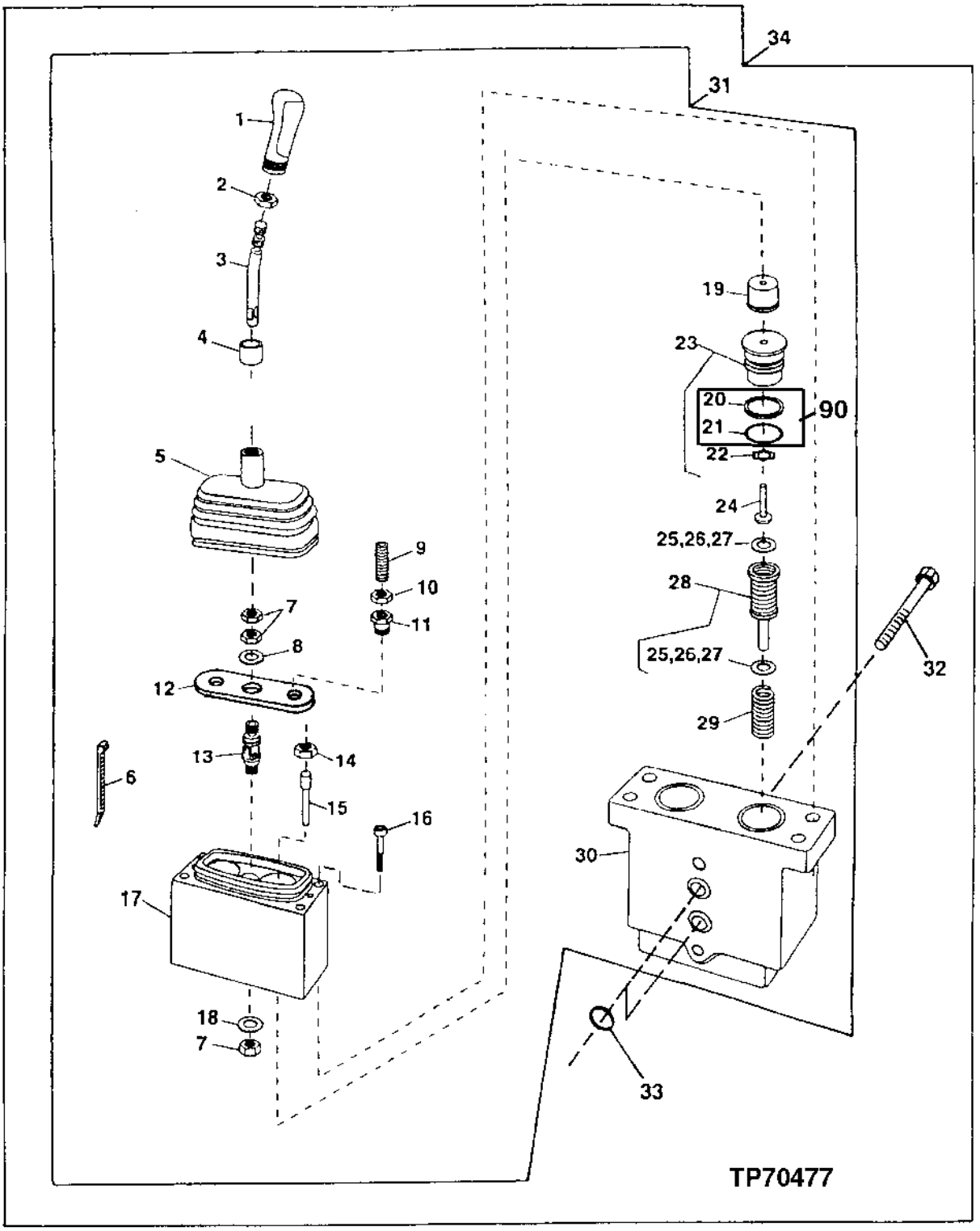

AUXILIARY SINGLE LEVER CONTROLLER

KEY	PART NO.	PART NAME	QTY	SERIAL NO.	REMARKS
1	AT172629	GRIP	1		
2	T170269	NUT	1		
3	T173229	LEVER	1		(USE WITH AT210213) (ILLUSTRATED) (USE WITH AT210214) (NOT ILLUSTRATED)
	T173226	LEVER	1		(USE WITH AT210215) (NOT ILLUSTRATED)
4	AT208911	RETAINER	1		
5	T170295	BOOT	1		(ALSO ORDER AT208911)
6	H77698	TIE BAND	1		
7	T173219	NUT	3		
8	T173205	WASHER	1		
9	T172523	SET SCREW	2		
10	T170275	NUT	2		
11	T170273	PLUG	2		
12	T173210	PLATE	1		
13	AT210263	UNIVERSAL JOINT	1		
14	T170272	NUT	2		
15	T170274	BAR	2		
16	T170367	CAP SCREW	4		
17	.....	HOUSING	1		(SUB AT210213, AT210214 OR AT210215)
18	T172609	WASHER	1		
19	T170278	STRUCTURAL TUBING	2		
20	T170307	BACK-UP RING	1		(K1)
21	T170306	SEAL	1		(K1)
22	T131617	RING	1		
23	AT208178	RETAINER	2		
24	T170285	PLUNGER	2		
25	T103092	SHIM	AR		0.1 MM (.004")
26	T103093	SHIM	AR		O.2 MM (.007")
27	T103094	SHIM	AR		0.4 MM (.015")
28	AT208182	SPOOL	2		
29	T170288	SPRING	2		
30	.....	HOUSING	1		(SUB AT210213, AT210214 OR AT210215)
31	AT210213	VALVE	1		(USE WITH SINGLE LEVER CONTROLLER)
	AT210214	VALVE	1		(USE WITH TWO-LEVER CONTROLLER)
	AT210215	VALVE	1		(USE WITH TWO-LEVER CONTROLLER) FUNCTION AUXILIARY SECTION) (NOT ILLUSTRATED)
32	T170381	CAP SCREW	2		(USE WITH AT210214)
	T171072	CAP SCREW	2		(USE WITH AT210215 FOURTH-FUNCTION AUXILIARY SECTION)
33	T13119	O-RING	2		(USE WITH THIRD-FUNCTION ONLY)
	T13119	O-RING	4		(USE WITH FOURTH-FUNCTION ONLY)
34	**AT225388**	**KIT**	**1**		**(SUB FOR AT208872) THIRD FUNCTION TWO LEVER (ALSO INCLUDES HYDRAULIC HOSES, LOADER CONTROL VALVE SECTION AND MOUNTING PARTS)**
	AT225395	**KIT**	**1**		**(SUB FOR AT208873) THIRD FUNCTION SINGLE LEVER (ALSO INCLUDES HYDRAULIC HOSES, LOADER CONTROL VALVE SECTION AND MOUNTING PARTS)**
	AT219909	KIT	1		AUXILIARY CONTROLLER DETENT (NOT ILLUSTRATED)ONE KIT FOR EACH LEVER DIR.
90	AT210247	SEAL KIT	1		INCLUDES ALL (K1) PARTS
	AT209783	SEAL KIT	1		INCLUDES ALL (K1) PARTS (SEAL)

AUXILIARY JOY STICK CONTROLLER

TP70478 -UN-12SEP00

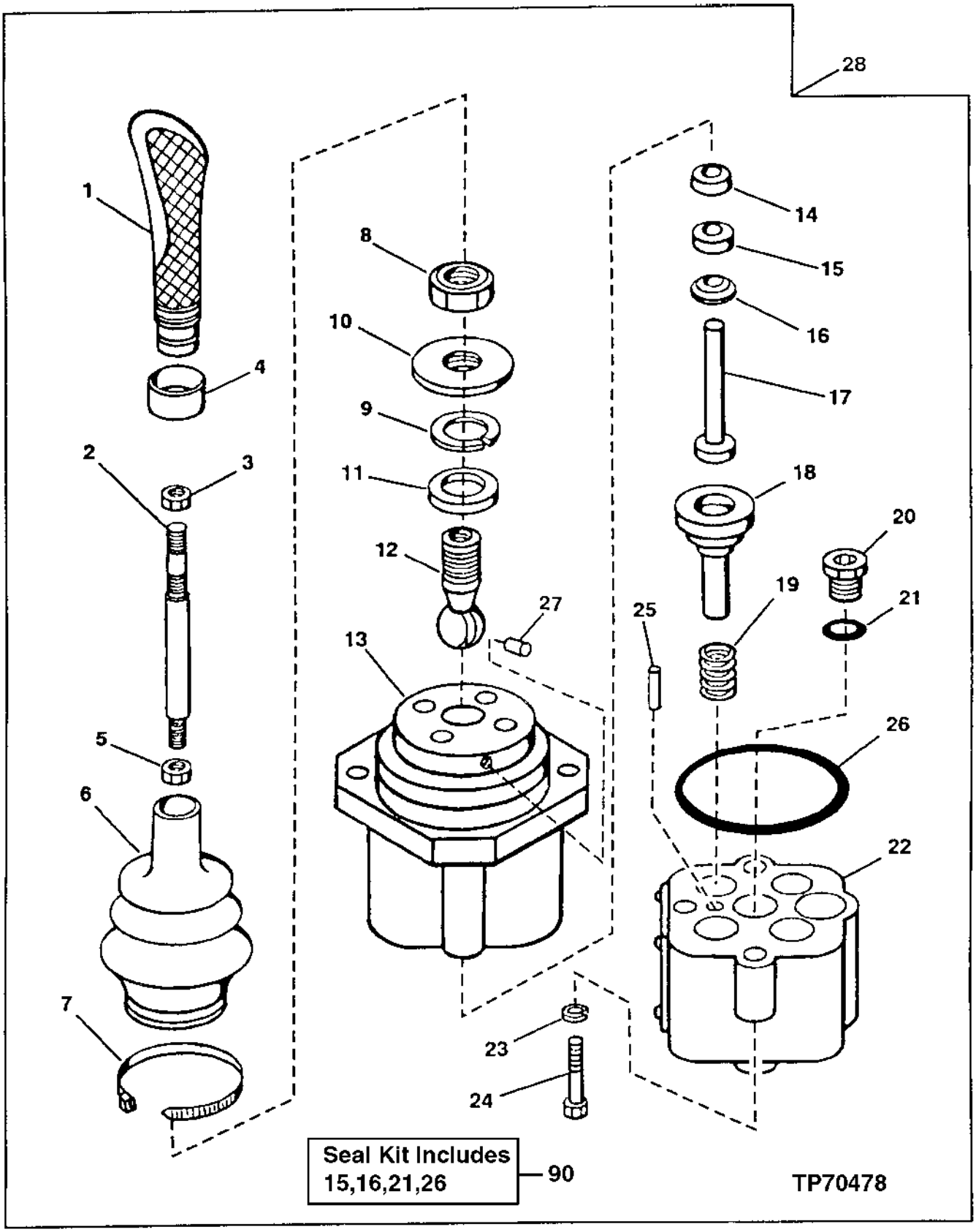

AUXILIARY JOY STICK CONTROLLER
(PILOT CONTROLLER SERIAL NO. 562210-)

KEY	PART NO.	PART NAME	QTY	SERIAL NO.	REMARKS
1	AT172629	GRIP	1		(ALSO ORDER H77698 AND AT208911)
2	AT210145	LEVER	1		
3	T170269	NUT	1		
4	AT208911	RETAINER	1		
5	T172986	NUT	1		
6	T172988	BOOT	1		
7	H77698	TIE BAND	1		
8	T172985	NUT	1		
9	T172987	SNAP RING	1		
10	AT119017	PLATE	1		
11	AT119378	RETAINER	1		
12	AT119018	BALL	1		
13	.....	HOUSING	1		UPPER (SUB AT208760)
14	.....	SEAL	1		
15	.....	RETAINER	1		(K1)
16	.....	RING	1		(K1)
17	T102958	PLUNGER	4		
18	.....	SPOOL	4		(SUB AT208760)
19	T131624	SPRING	4		
20	AT49216	FITTING	1		
21	.....	O-RING	1		(K1)
22	.....	HOUSING	1		LOWER
23	12M7006	LOCK WASHER	4		6 MM
24	19M7966	SCREW	4		M6 X 25
25	T102961	DOWEL PIN	1		
26	.....	SEAL	1		(K1)
27	T102963	PIN FASTENER	1		ANTI-ROTATION
28	AT208760	ELECTRONIC CONTROL UNIT	2		
90	AT210247	SEAL KIT	1		INCLUDES ALL (K) PARTS (SEAL)

DUAL SINGLE-LEVER CONTROLLER

TP62527 -UN-16APR99

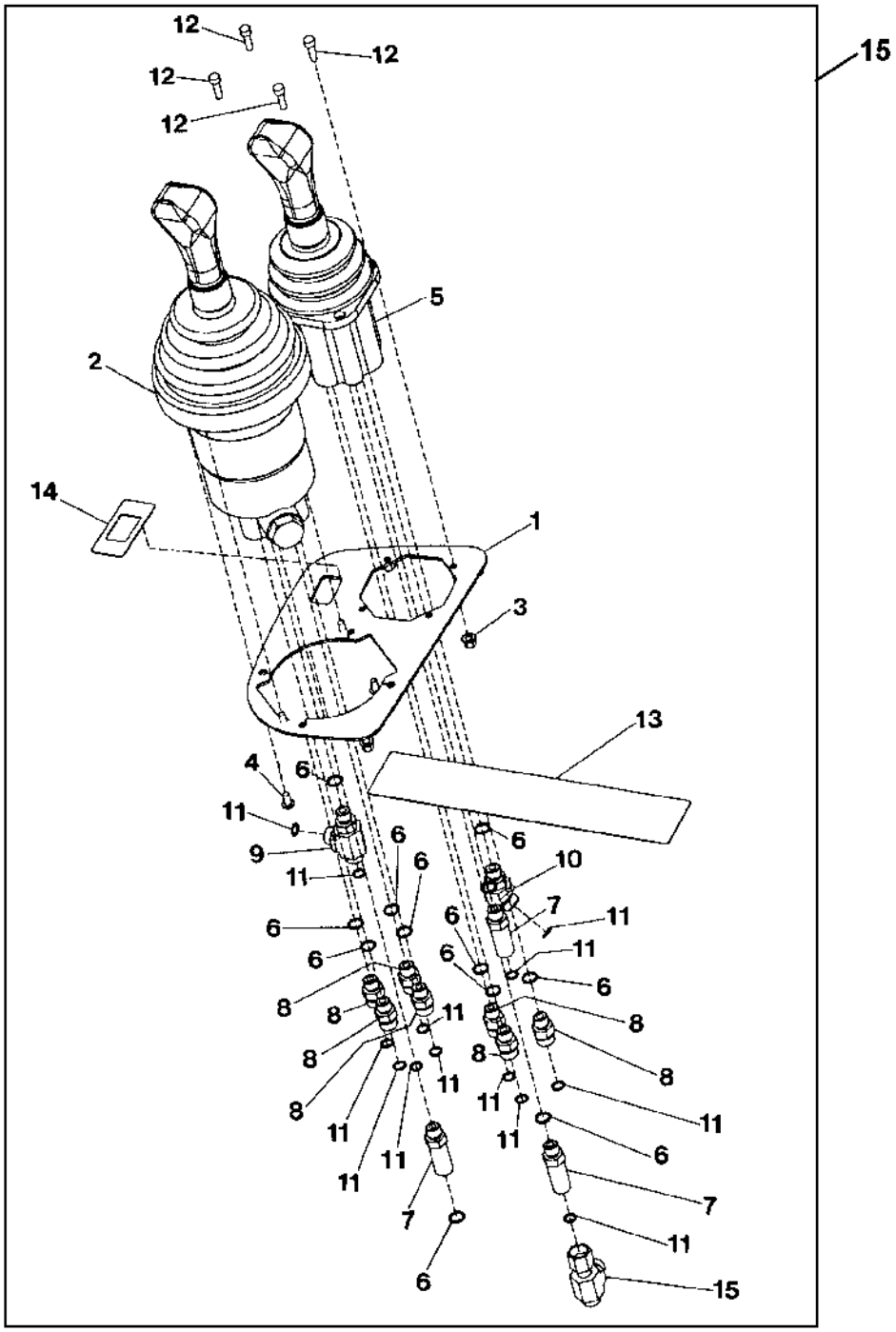

DUAL SINGLE-LEVER CONTROLLER

KEY	PART NO.	PART NAME	QTY	SERIAL NO.	REMARKS
1	AT207967	PLATE	1	-581888	
	AT224246	PLATE	1	581889-	GRAY
2	AT210209	VALVE	1		
3	14M7397	LOCK NUT	7		M6
4	21M7285	SCREW	4		M6 X 12
5	AT208760	VALVE	1		
6	R26448	O-RING	12		
7	38H1160	ADAPTER	10		
8	38H1023	TEE FITTING	1		
9	38H1212	ADAPTER	1		
10	T77613	O-RING	15		
11	38H1030	TEE FITTING	1		
12	19M8553	SCREW	4		
13	T175739	DECAL	1		(SUB FOR T171430)
14	T171587	DECAL	1		
15	**AT225406**	**KIT**	**1**		**(SUB FOR AT210504) FOURTH FUNCTION, DUAL JOYSTICK (INCLUDES HYDRAULIC HOSES, OIL LINES, AND MISCELLANEOUS PARTS)**

ONE AND TWO LEVER CONTROLLER HYDRAULIC LINES

TP62577 -UN-25JUN99

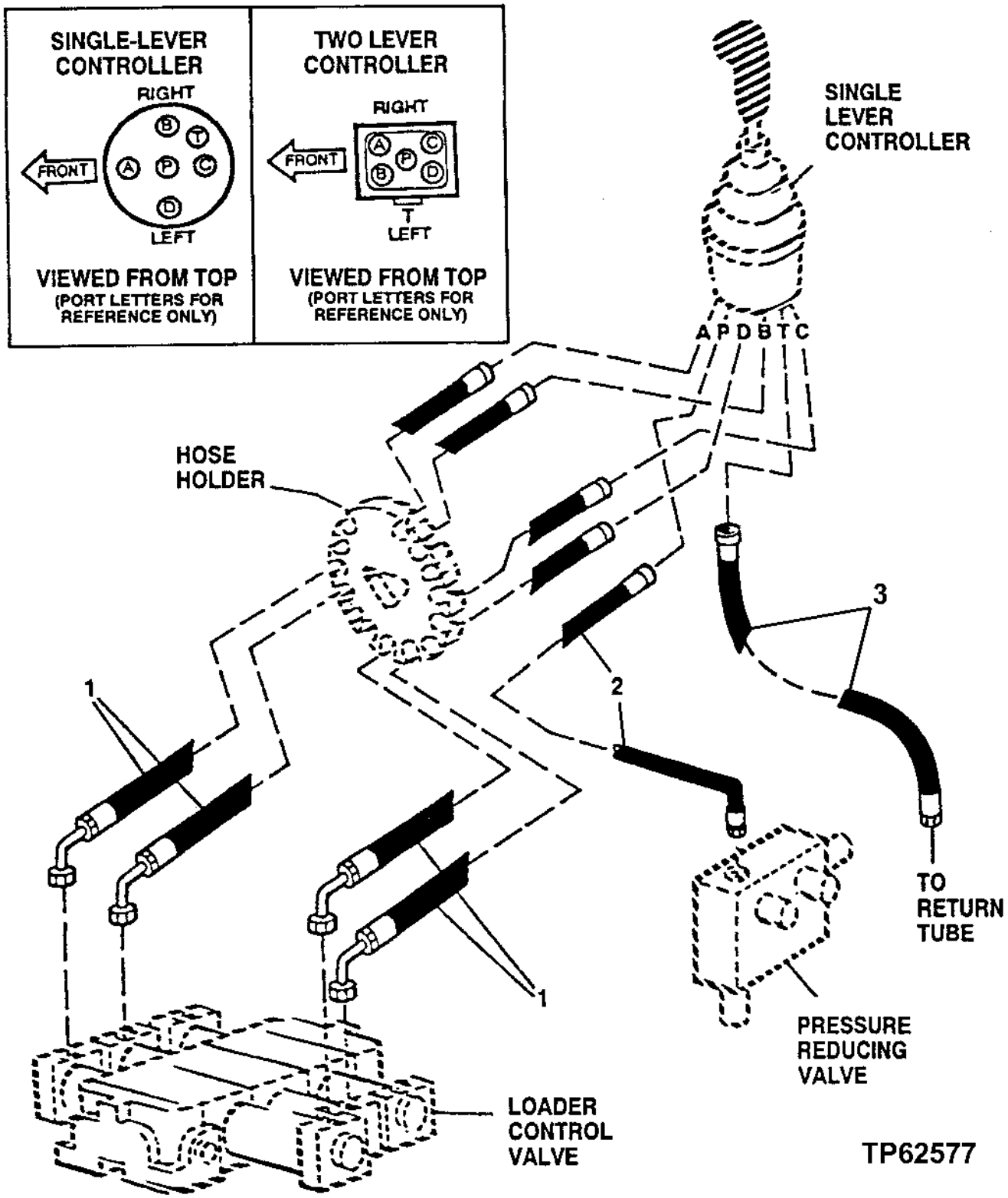

ONE AND TWO LEVER CONTROLLER HYDRAULIC LINES

KEY	PART NO.	PART NAME	QTY	SERIAL NO.	REMARKS
1	AT207096	HYDRAULIC HOSE - FABRICATE	4		
2	AT219985	HYDRAULIC HOSE - FABRICATE	1	-573223	(SUB FOR AT207097)
	AT222385	HYDRAULIC HOSE - FABRICATE	1	573224-	
3	AT219985	HYDRAULIC HOSE - FABRICATE	1	-573223	
	AT164515	HYDRAULIC HOSE - FABRICATE	1	573224-574602	
	AT219985	HYDRAULIC HOSE - FABRICATE	1	574603-	

SINGLE LEVER WITH AUXILIARY CONTROLLER HYDRAULIC LINES

TP62578 -UN-28JUN99

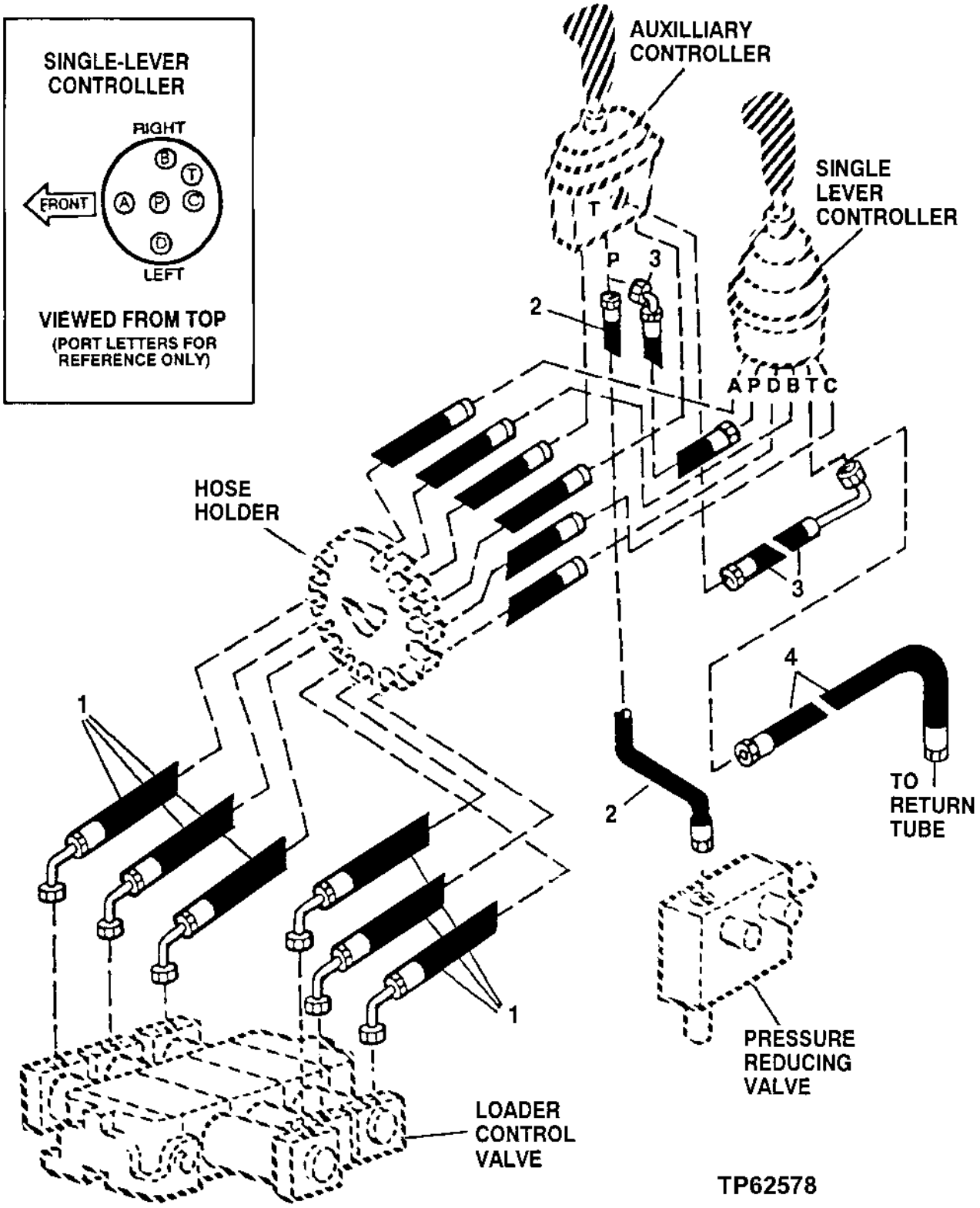

SINGLE LEVER WITH AUXILIARY CONTROLLER HYDRAULIC LINES

KEY	PART NO.	PART NAME	QTY	SERIAL NO.	REMARKS
1	AT207096	HYDRAULIC HOSE - FABRICATE	6		
2	AT219985	HYDRAULIC HOSE - FABRICATE	1	-573223	(SUB FOR AT207097)
	AT222385	HYDRAULIC HOSE - FABRICATE	1	573224-	
3	AT133590	HYDRAULIC HOSE - FABRICATE	2		
4	AT219985	HYDRAULIC HOSE - FABRICATE	1	-573223	
	AT164515	HYDRAULIC HOSE - FABRICATE	1	573224-574602	
	AT219985	HYDRAULIC HOSE - FABRICATE	1	574603-	

TWO LEVER WITH AUXILIARY CONTROLLER HYDRAULIC LINES

TP62579 -UN-28JUN99

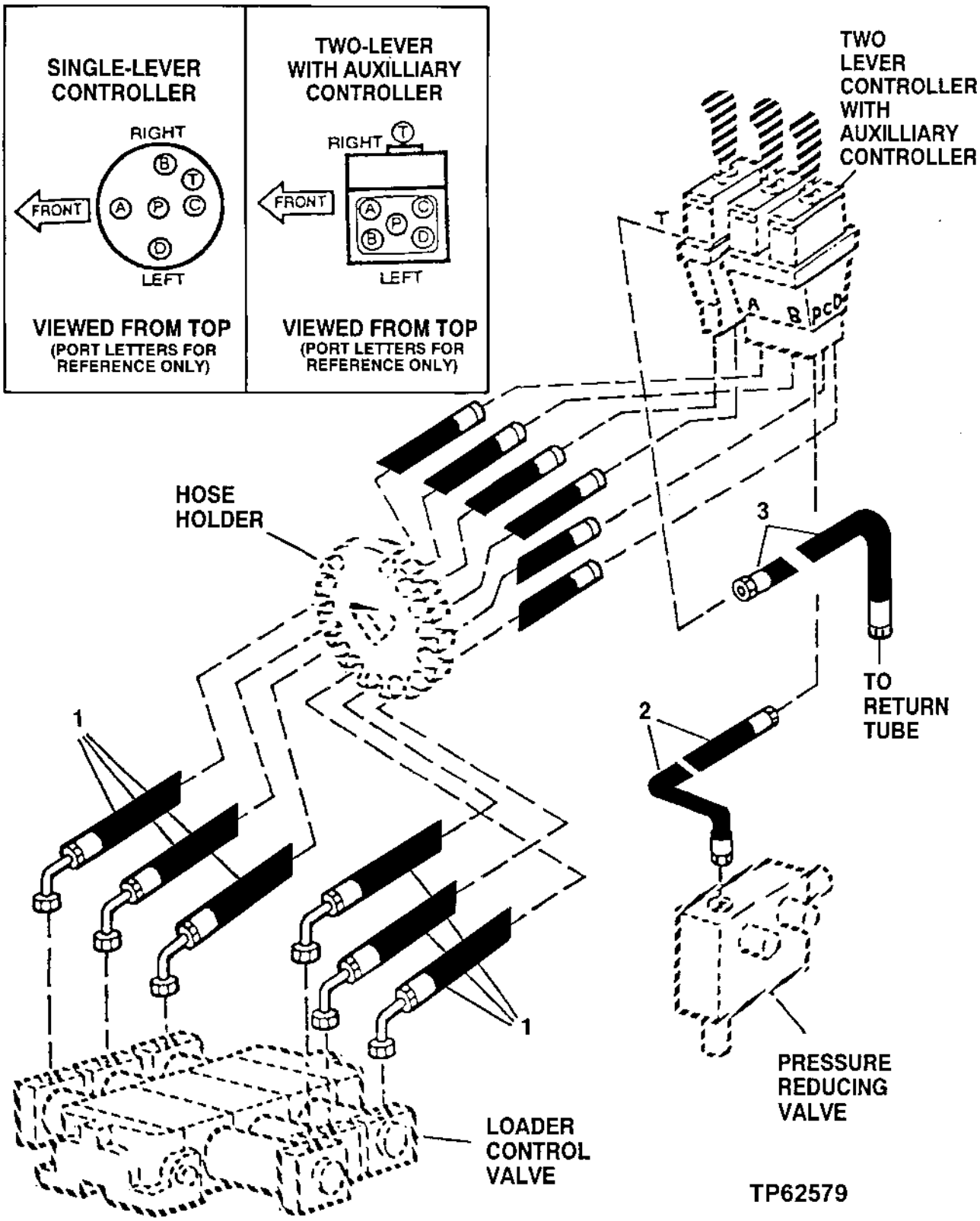

TWO LEVER WITH AUXILIARY CONTROLLER HYDRAULIC LINES

KEY	PART NO.	PART NAME	QTY	SERIAL NO.	REMARKS
1	AT207096	HYDRAULIC HOSE - FABRICATE	6		(WITH ONE AUXILIARY CONTROLLER SECTION)
	AT207096	HYDRAULIC HOSE - FABRICATE	8		(WITH TWO AUXILIARY CONTROLLER SECTIONS)
2	AT219985	HYDRAULIC HOSE - FABRICATE	1	-573223	(SUB FOR AT207097)
	AT222385	HYDRAULIC HOSE - FABRICATE	1	573224-	
3	AT219985	HYDRAULIC HOSE - FABRICATE	1	-573223	
	AT164515	HYDRAULIC HOSE - FABRICATE	1	573224-574602	
	AT219985	HYDRAULIC HOSE - FABRICATE	1	574603-	

BUCKET CYLINDER

TP68417 -UN-13SEP99

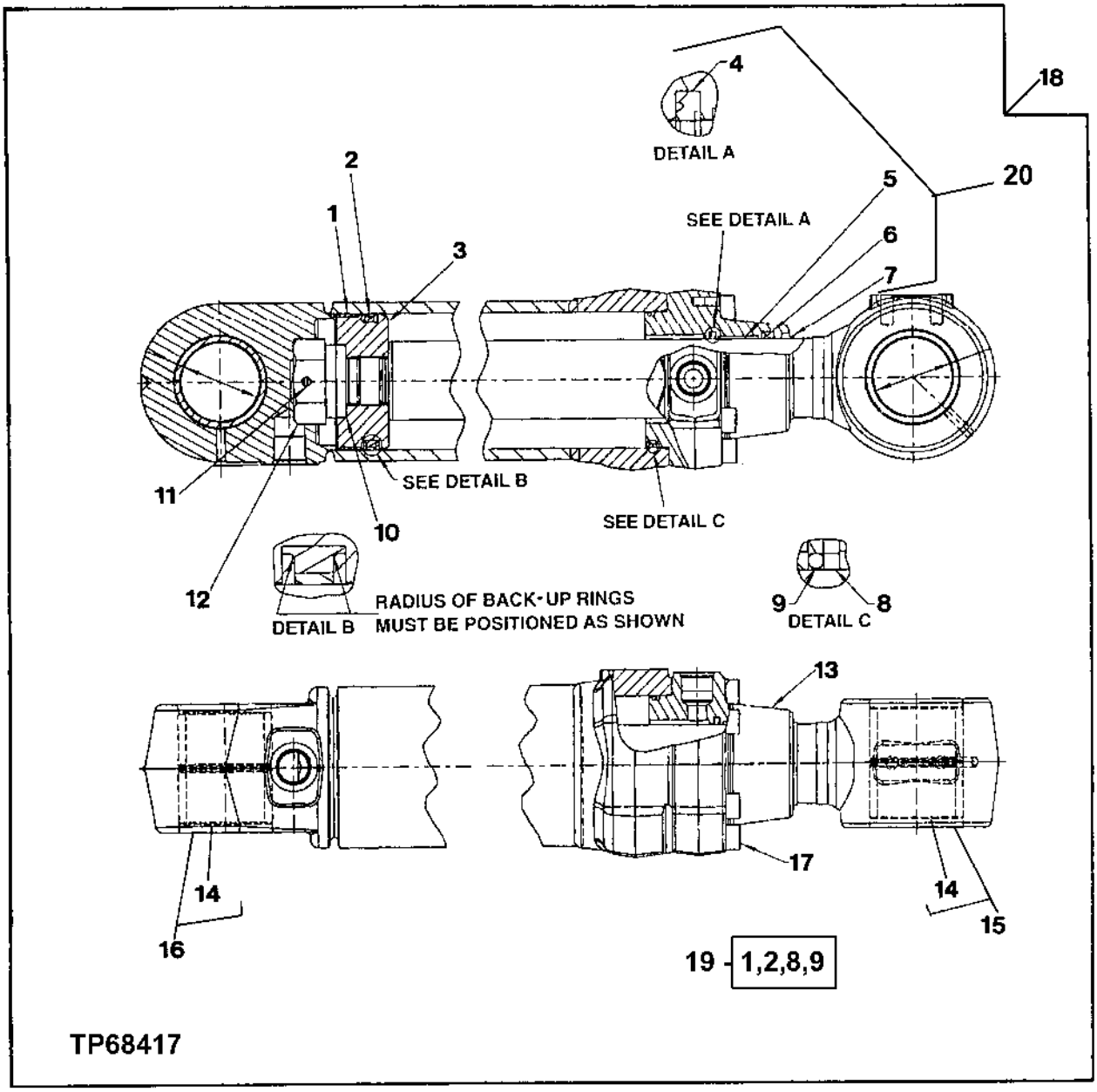

BUCKET CYLINDER

KEY	PART NO.	PART NAME	QTY	SERIAL NO.	REMARKS
1	R85228	WEAR RING	1		
2	RE25146	SEAL	1		
3	H168220	PISTON	1		
4	AH157292	SEAL	1		
5	H163980	BUSHING	1		
6	H163979	SEAL	1		
7	AH157291	SEAL	1		
8	R98669	BACK-UP RING	1		
9	H88900	O-RING	1		
10	AT153937	SHIM	1		
11	22M7009	SET SCREW	1		M12 X 12
	T13624	BALL	1		
12	H155879	NUT	1		
13	H173655	HYDR. CYLINDER ROD GUIDE	1		(SUB FOR H163730)
14	R85556	BUSHING	2		
15	AH161349	ROD	1		(SUB FOR AH159191)
16	AH161347	HYDRAULIC CYLINDER BARREL	1		(SUB FOR AH159190)
17	19M8985	SCREW	8		M20 X 80
18	AH159069	HYDRAULIC CYLINDER	1		
19	AH137210	HYDRAULIC CYLINDER KIT	1		BORE REPAIR
20	AH159192	KIT	1		ROD REPAIR

BOOM CYLINDER
(SERIAL NO. -570486)

TP70479 -UN-12SEP00

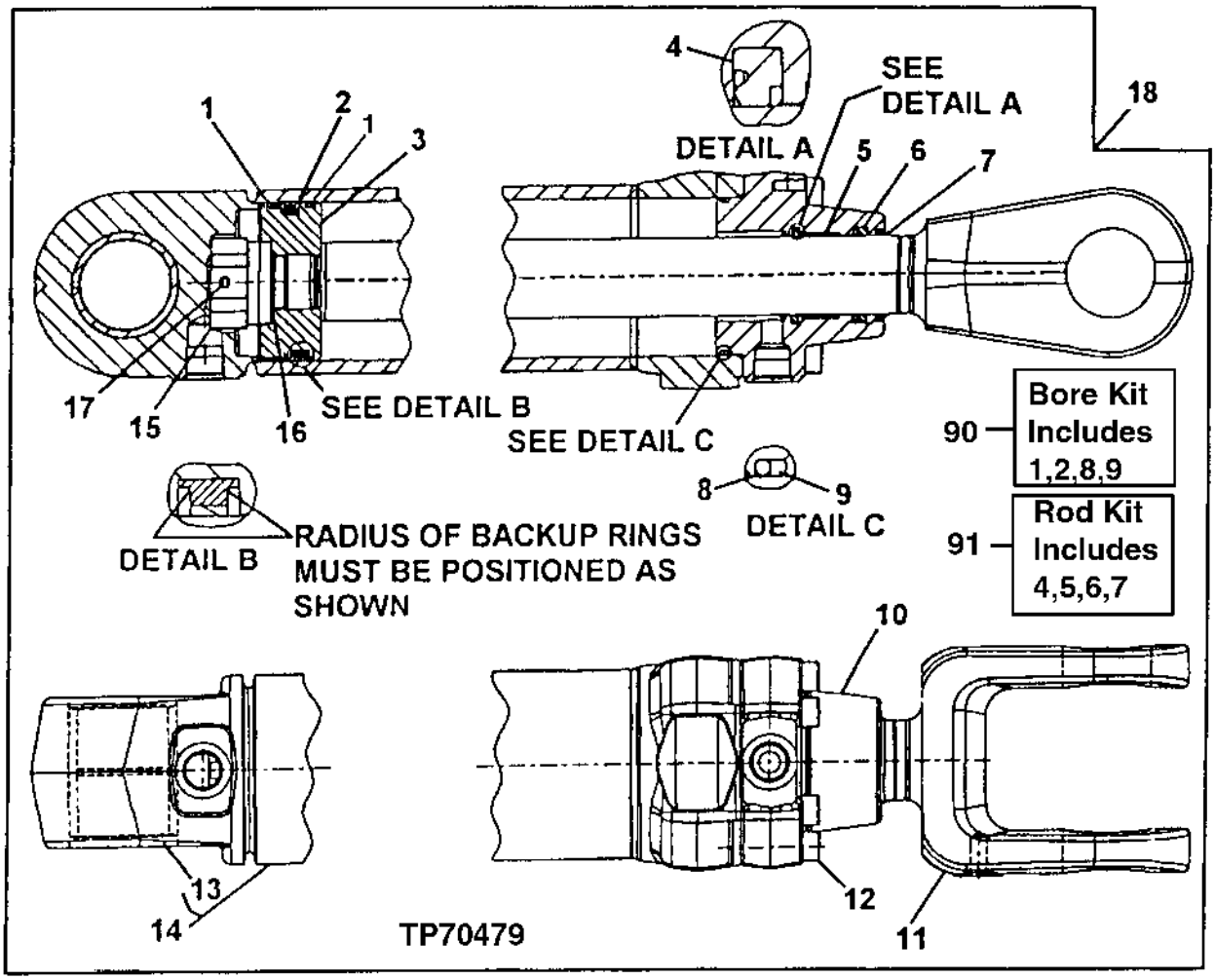

BOOM CYLINDER
(SERIAL NO. -570486)

KEY	PART NO.	PART NAME	QTY	SERIAL NO.	REMARKS
1	H170140	WEAR RING	2		(BK)
2	RE25102	SEAL	1		(BK)
3	H169747	PISTON	1		
4	AH150932	SEAL	1		(RK)
5	H158437	WEAR RING	1		(RK)
6	H158436	SEAL	1		(RK)
7	AH150933	SEAL	1		(RK)
8	T38485	O-RING	1		(BK)
9	R78818	BACK-UP RING	1		(BK)
10	H165481	HYDR. CYLINDER ROD GUIDE	1		
11	AH159196	ROD	1		
12	19M8913	SCREW	8		M18 X 80
13	H158397	BUSHING	1		
14	AH159195	HYDRAULIC CYLINDER BARREL	1		
15	H158175	NUT	1		
16	TH110253	SHIM	1		
17	22M7139	SET SCREW	1		M10 X 10
	400R	BALL	1		
18	AH159194	HYDRAULIC CYLINDER	1		
90	AH163673	KIT	1		INCLUDES ALL (BK) PARTS (BORE)
91	AH156466	HYDRAULIC CYLINDER KIT	1		INCLUDES ALL (RK) PARTS(ROD)

BOOM CYLINDER
(SERIAL NO. 570487-)

TP70479 -UN-12SEP00

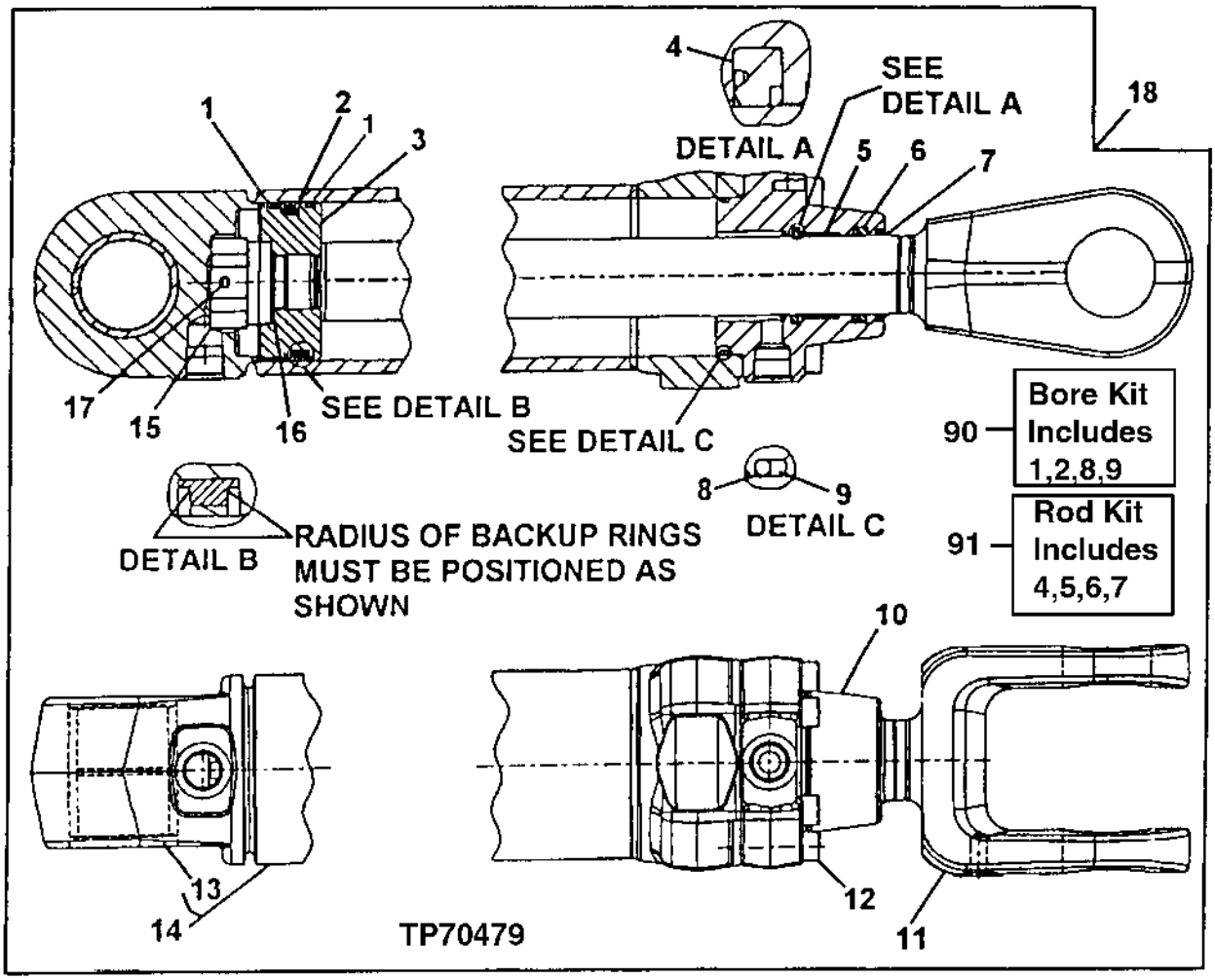

BOOM CYLINDER
(SERIAL NO.570487-)

KEY	PART NO.	PART NAME	QTY	SERIAL NO.	REMARKS
1	H170140	WEAR RING	2		(BK)
2	RE25102	SEAL	1		(BK)
3	H169747	PISTON	1		
4	AH150932	SEAL	1		(RK)
5	H158437	WEAR RING	1		(RK)
6	H158436	SEAL	1		(RK)
7	AH150933	SEAL	1		(RK)
8	T38485	O-RING	1		(BK)
9	R78818	BACK-UP RING	1		(BK)
10	H165481	HYDR. CYLINDER ROD GUIDE	1		
11	AH159196	ROD	1		
12	19M8913	SCREW	8		M18 X 80
13	H158397	BUSHING	1		
14	AH159195	HYDRAULIC CYLINDER BARREL	1		
15	H158175	NUT	1		
16	TH110253	SHIM	1		
17	22M7139	SET SCREW	1		M10 X 10
	400R	BALL	1		
18	AH163632	HYDRAULIC CYLINDER	1		
90	AH163673	KIT	1		INCLUDES ALL (BK) PARTS (BORE)
91	AH156466	HYDRAULIC CYLINDER KIT	1		INCLUDES ALL (RK) PARTS (ROD)

BUCKET AND BOOM CYLINDER PINS AND FITTINGS

TP60690 -UN-24MAR99

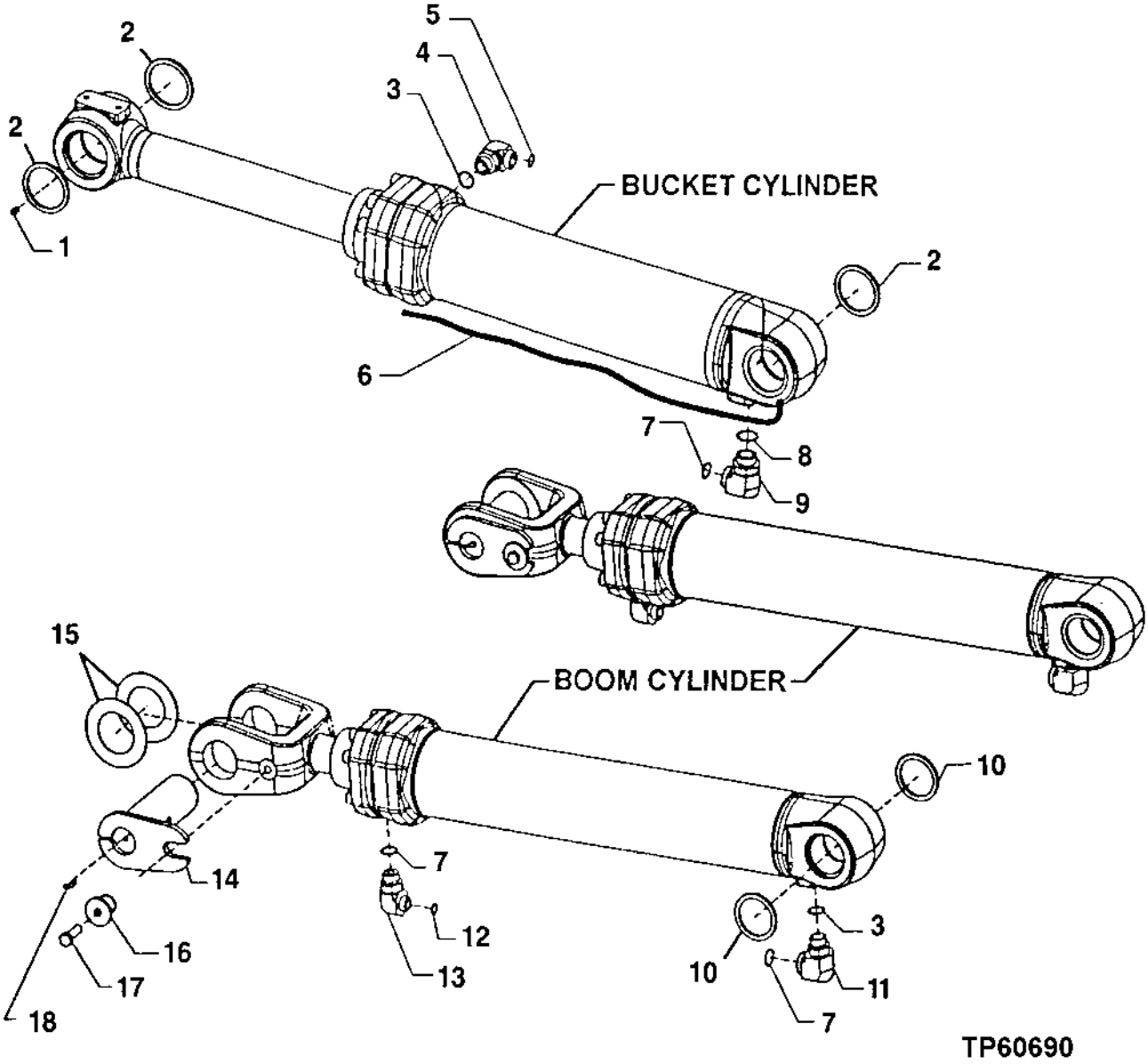

BUCKET AND BOOM CYLINDER PINS AND FITTINGS

KEY	PART NO.	PART NAME	QTY	SERIAL NO.	REMARKS
1	JD7759	LUBRICATION FITTING	1		
2	T102138	SEAL	4		
3	R29936	O-RING	5		
4	38H1037	ELBOW FITTING	1		
5	T76938	O-RING	1		
6	AT103107	HYDRAULIC HOSE	1		
7	T78612	O-RING	3		
8	U13639	O-RING	1		
9	38H1008	ELBOW FITTING	1		
10	T102137	SEAL	4		
11	38H1053	ELBOW FITTING	2		
12	T77858	O-RING	2		
13	38H1052	ELBOW FITTING	2		
14	AT206731	PIN	2		
15	T171734	WASHER	4		
16	T176064	BUSHING	2		
17	19M7489	CAP SCREW	2		M16 X 45
18	JD7763	LUBRICATION FITTING	2		
19	T171734	WASHER	4		

CONTROL VALVE TO BOOM AND BUCKET CYLINDER AND THIRD FUNCTION HYDRAULICS

TP62515 -UN-19APR99

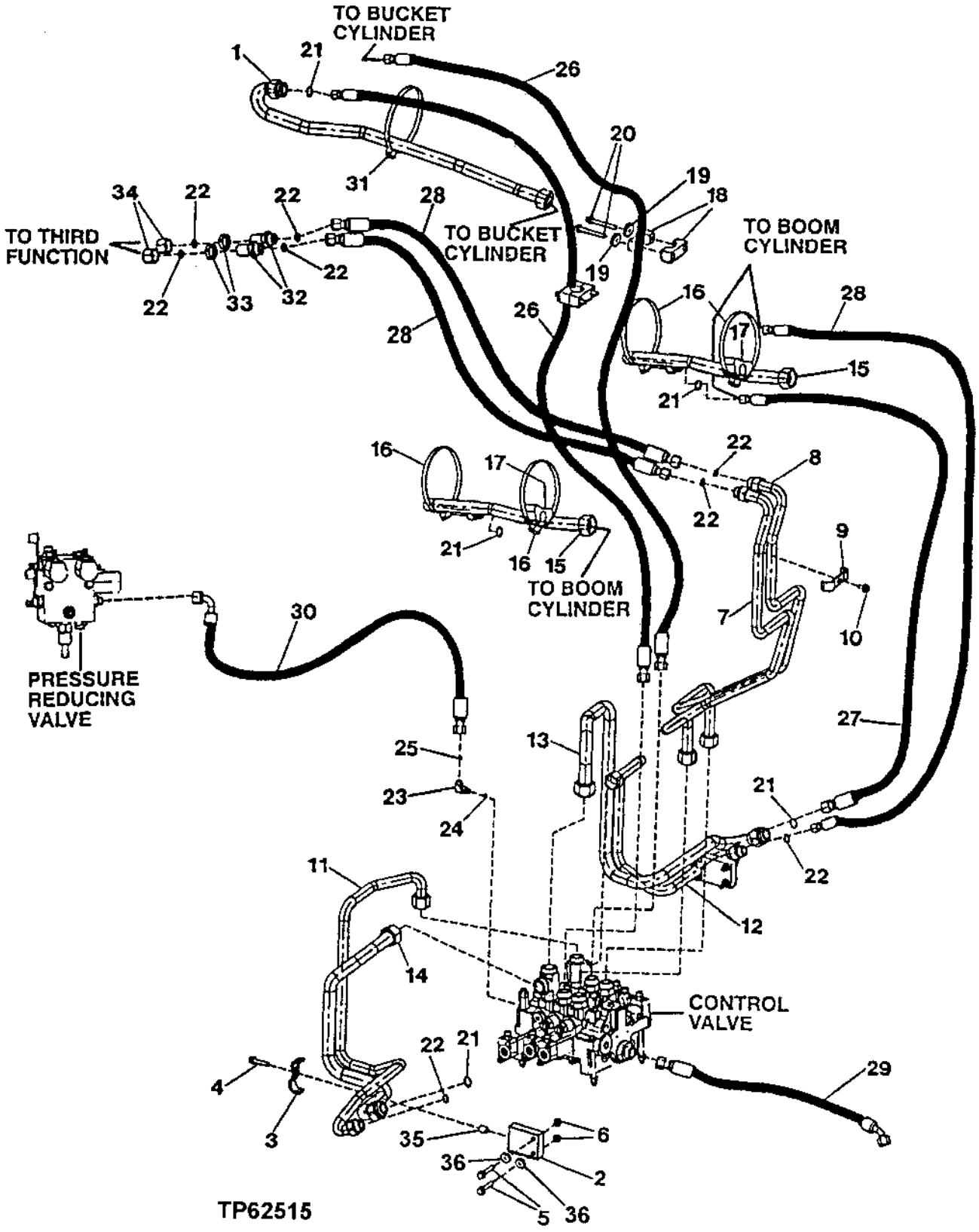

CONTROL VALVE TO BOOM AND BUCKET CYLINDER AND THIRD FUNCTION HYDRAULICS

KEY	PART NO.	PART NAME	QTY	SERIAL NO.	REMARKS
1	AT209285	OIL LINE	1		
2	T170524	BAR	2	-XXXXXX	
	AT224318	BRACKET	2	XXXXXX-	
3	T170365	CLAMP	2		
4	19M7805	SCREW	2		M10 X 45
5	19M8528	SCREW	4	-XXXXXX	M10 X 55
	19M7835	SCREW	4	XXXXXX-	
6	14M7296	FLANGE NUT	4		M10
7	AT220957	OIL LINE	1		(THREE-SPOOL) (SUB FOR AT219993)
8	AT220958	OIL LINE	1		(THREE-SPOOL) (SUB FOR AT219994)
9	T167979	CLAMP	1		(THREE-SPOOL)
10	19M7783	SCREW	1		M10 X 16, (THREE-SPOOL)
11	AT210216	OIL LINE	1		
12	AT210217	OIL LINE	1		(WITHOUT RIDE CONTROL)
13	AT210218	OIL LINE	1		(WITHOUT RIDE CONTROL)
14	AT210219	OIL LINE	1		
15	AT210400	OIL LINE	2		
16	TY22495	HOSE CLAMP	4		(SUB FOR TY22494)
17	T102005	GUIDE	2		
18	T67995	CLAMP	4		
19	24M7296	WASHER	4		
20	19M7810	SCREW	4		M10 X 80
21	T76938	O-RING	5		
22	T77858	O-RING	2		(TWO-SPOOL)
	T77858	O-RING	8		(THREE-SPOOL)
23	38H1003	ELBOW FITTING	1	-574111	
24	R28782	O-RING	1	-574111	
25	T77814	O-RING	1	-574111	
26	AT210075	HYDRAULIC HOSE - FABRICATE	2		
27	AT208691	HYDRAULIC HOSE - FABRICATE	2		
28	AT207923	HYDRAULIC HOSE - FABRICATE	4		(SUB FOR AT169881)
29	AT210077	HYDRAULIC HOSE - FABRICATE	1		(TWO-SPOOL)
	AT210078	HYDRAULIC HOSE - FABRICATE	1		(THREE-SPOOL)
30	AT203061	HYDRAULIC HOSE - FABRICATE	1	-574111	
31	AH130230	HOSE CLAMP	1		(THREE-SPOOL)
32	38H1276	ADAPTER	2		(THREE-SPOOL)
	T174275	LOCK WASHER	2		(BETWEEN KEY 32 ADAPTER AND KEY 33 NUT)
33	T78707	NUT	2		(THREE-SPOOL)
34	38H1418	FITTING PLUG	2		(THREE-SPOOL)
35	28H3383	BUSHING	2		
36	T148712	WASHER	4		

FOURTH FUNCTION AUXILIARY HYDRAULICS

T136684 -UN-03JAN01

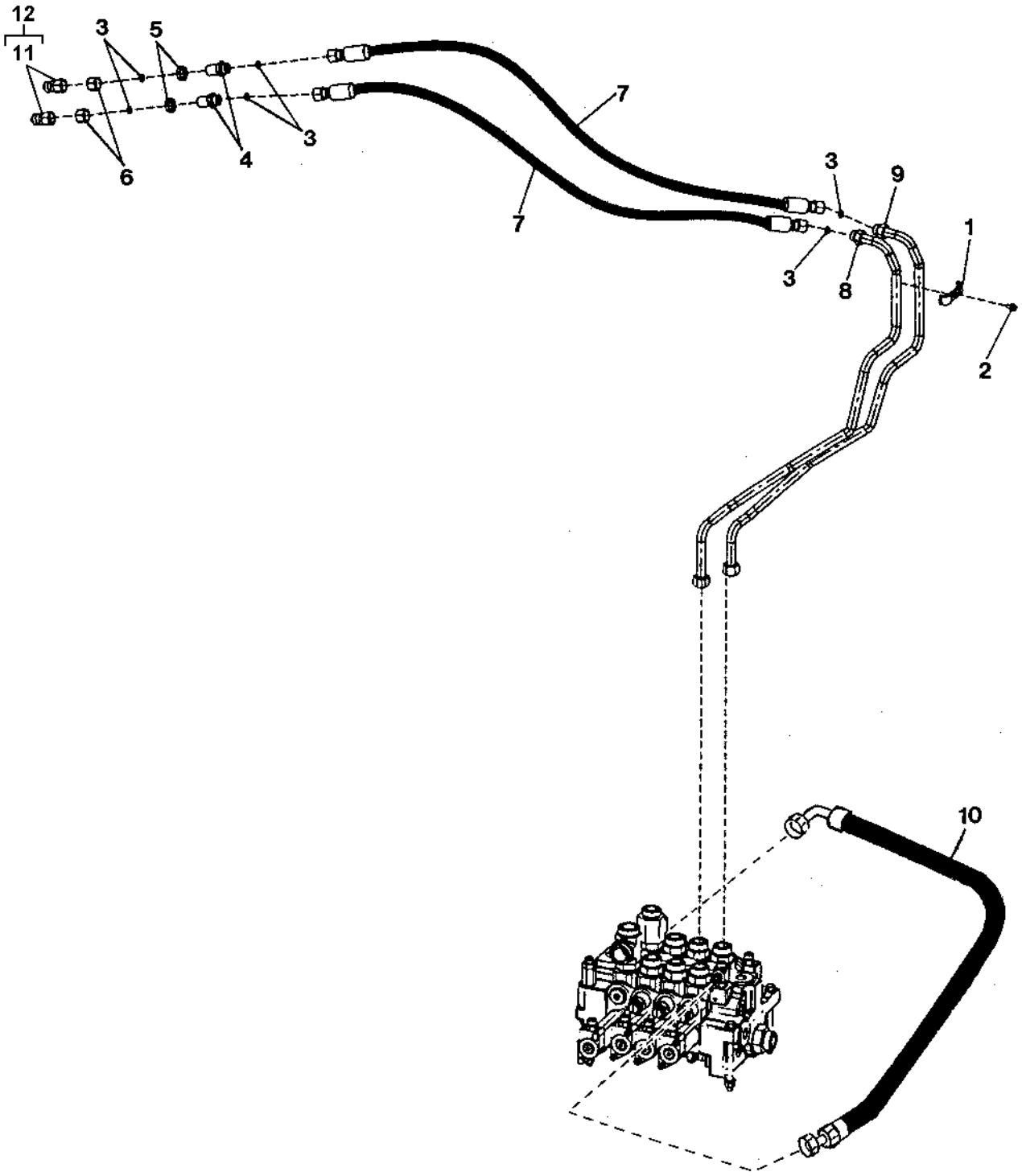

T136684

FOURTH FUNCTION AUXILIARY HYDRAULICS

KEY	PART NO.	PART NAME	QTY	SERIAL NO.	REMARKS
1	T167979	CLAMP	2		
2	19M7783	SCREW	2		M10 X 16
3	T77858	O-RING	12		
4	38H1276	ADAPTER	4		
	T174275	LOCK WASHER	2		(BETWEEN KEY 4 ADAPTER AND KEY 5 NUT)
5	T78707	NUT	4		
6	38H1418	FITTING PLUG	4		
7	AT169881	HYDRAULIC HOSE - FABRICATE	4		1-3/16" X 1 549 MM (61") X 1-3/16", (USE IF AVAILABLE) (SUB AT191283)
	AT191283	HYDRAULIC HOSE - FABRICATE	4		
8	AT220959	OIL LINE	1		(SUB FOR AT219995)
9	AT220960	OIL LINE	1		(SUB FOR AT219996)
10	AT169886	HYDRAULIC HOSE - FABRICATE	1		11/16" X 775 MM (30-1/2") X 11/16", (SUB FOR AT167553)
11	T180870	ADAPTER	2		(USE WITH QUICK-DISCONNECT)
12	.....	FIELD INSTALLATION KIT	1		AT224361 NO LONGER AVAILABLE) (ORDER COMPONENTS, (2) T180870) (USE WITH QUICK-DISCONNECT)

HYDRAULIC PUMP
(STEERING AND LOADER)

TP60645 -UN-23FEB99

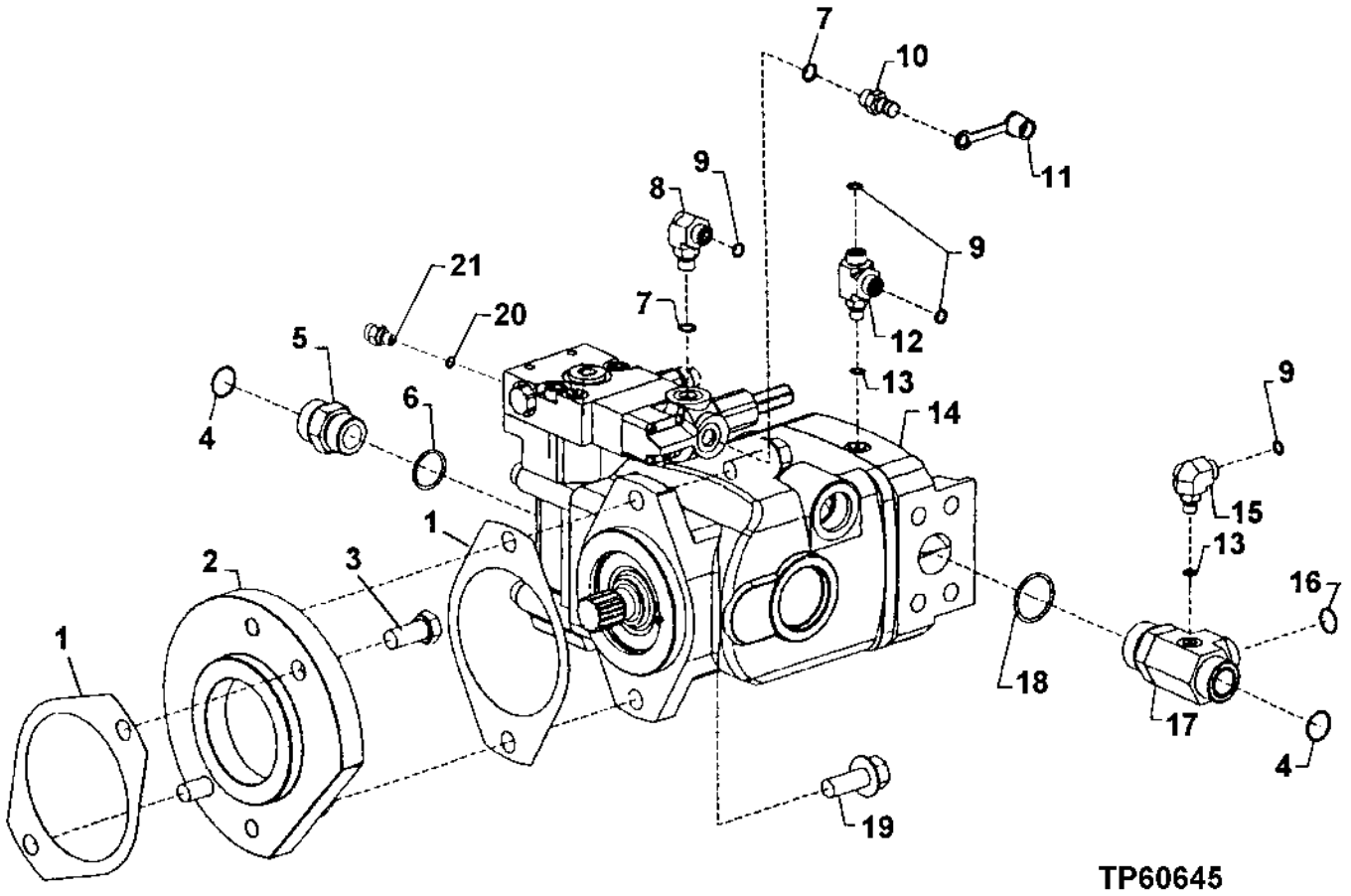

HYDRAULIC PUMP
(STEERING AND LOADER)

KEY	PART NO.	PART NAME	QTY	SERIAL NO.	REMARKS
1	T132071	GASKET	2		
2	T171389	SPACER	1		
3	19M8035	CAP SCREW	2		M16 X 35
4	T78612	O-RING	1		
5	38H1164	ADAPTER	1		
6	R29936	O-RING	1		
7	R26448	O-RING	2		
8	38H1004	ELBOW FITTING	1		
9	T77613	O-RING	4		
10	AH125760	HYD. QUICK-CONNECT COUPLER	1		
11	R77175	COVER	1		
12	38H1434	TEE FITTING	1		
13	R28782	O-RING	2		
14	AT223264	HYDRAULIC PUMP	1		
	AT223265	HYDRAULIC PUMP	1		(MATERIAL HANDLER) (SUB FOR AT210903)
15	38H1435	ELBOW FITTING	1		
16	T77858	O-RING	1		
17	AT220692	TEE FITTING	1		
18	U13639	O-RING	1		
19	19M7793	SCREW	2		M16 X 40
20	R26287	O-RING	1		
21	T176338	ADAPTER	1		

STEERING AND LOADER HYDRAULIC PUMP REPAIR KITS

TP70480 -UN-12SEP00

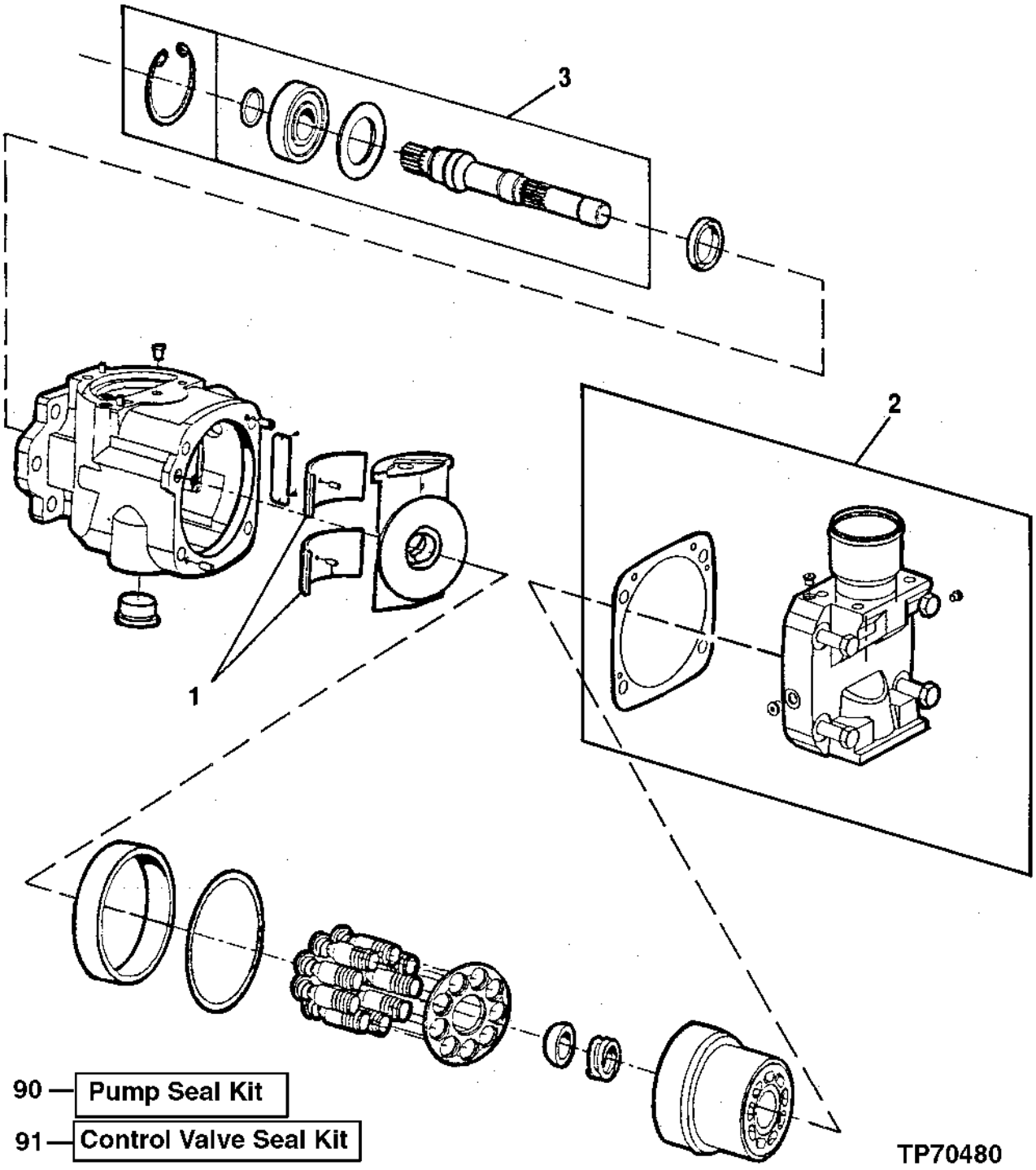

STEERING AND LOADER HYDRAULIC PUMP REPAIR KITS

KEY	PART NO.	PART NAME	QTY	SERIAL NO.	REMARKS
1	AT180692	BEARING	1		SWASH BLOCK BEARING KIT (LOADER PUMP) (SUB FOR AT208634)
2	AT208635	PLATE	1		VALVE PLATE WITH TUBE (LOADER PUMP)
3	AT211038	BEARING KIT	1		SHAFT AND BEARING KIT (LOADER PUMP)
90	AT208633	SEAL KIT	1		PUMP SEAL KIT (ALSO INCLUDES GASKET AND O-RING BETWEEN PUMP CONTROL ASSY).
91	AT208638	SEAL KIT	1		CONTROL VALVE SEAL KIT (INCLUDES GASKET AND 0-RING BETWEEN PUMP AND CONTROL ASSY).

STEERING AND LOADER HYDRAULIC PUMP CONTROL VALVES

T141838 -UN-01MAY01

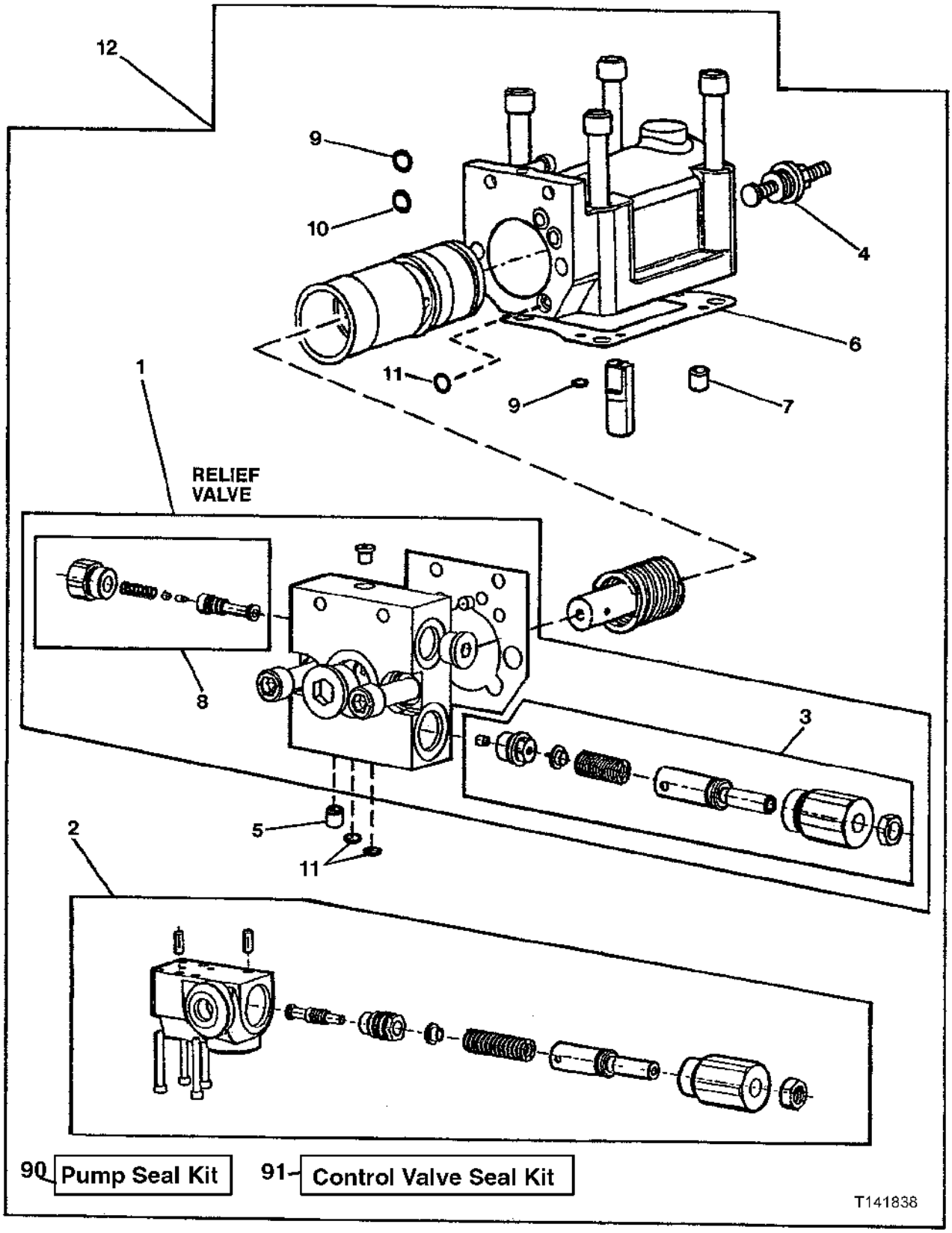

STEERING AND LOADER HYDRAULIC PUMP CONTROL VALVES

KEY	PART NO.	PART NAME	QTY	SERIAL NO.	REMARKS
1	AT211040	CAP	1		(PUMP CONTROL END CAP) (INCLUDES ALL SEALS, GASKETS AND O-RINGS NEEDED FOR INSTALLATION)
	T118681	O-RING	1		(NOT ILLUSTRATED) (CENTER OF PUMP CONTROL END CAP)
2	AT209878	VALVE	1		LOAD SENSING VALVE ASSEMBLY) (INCLUDES ALL SEALS, GASKETS, AND O-RINGS NEEDED FOR INSTALLLATION)
3	AT209879	VALVE	1		LOAD SENSING PLUS VALVE ASSEMBLY (INCLUDES ALL SEALS, GASKETS AND O-RINGS NEEDED FOR INSTALLATION)
4	AT209881	STOP	1		STROKE LIMITER
5	T166400	ORIFICE	1		
6	T178707	GASKET	1		
7	T178706	ORIFICE	1		
8	AT186257	KIT	1		4-WAY SPOOL
9	T166274	O-RING	2		
10	T40308	O-RING	1		
11	T166275	O-RING	3		
12	AT211039	KIT	1		PUMP CONTROL
90	AT208633	SEAL KIT	1		PUMP SEAL KIT (ALSO INCLUDES GASKET AND O-RING BETWEEN PUMP AND CONTROL ASSY).
91	AT208638	SEAL KIT	1		CONTROL VALVE SEAL KIT (INCLUDES GASKET AND O-RING BETWEEN PUMP AND CONTROL ASSY).

MAIN HYDRAULIC LINES

TP60651 -UN-23MAR99

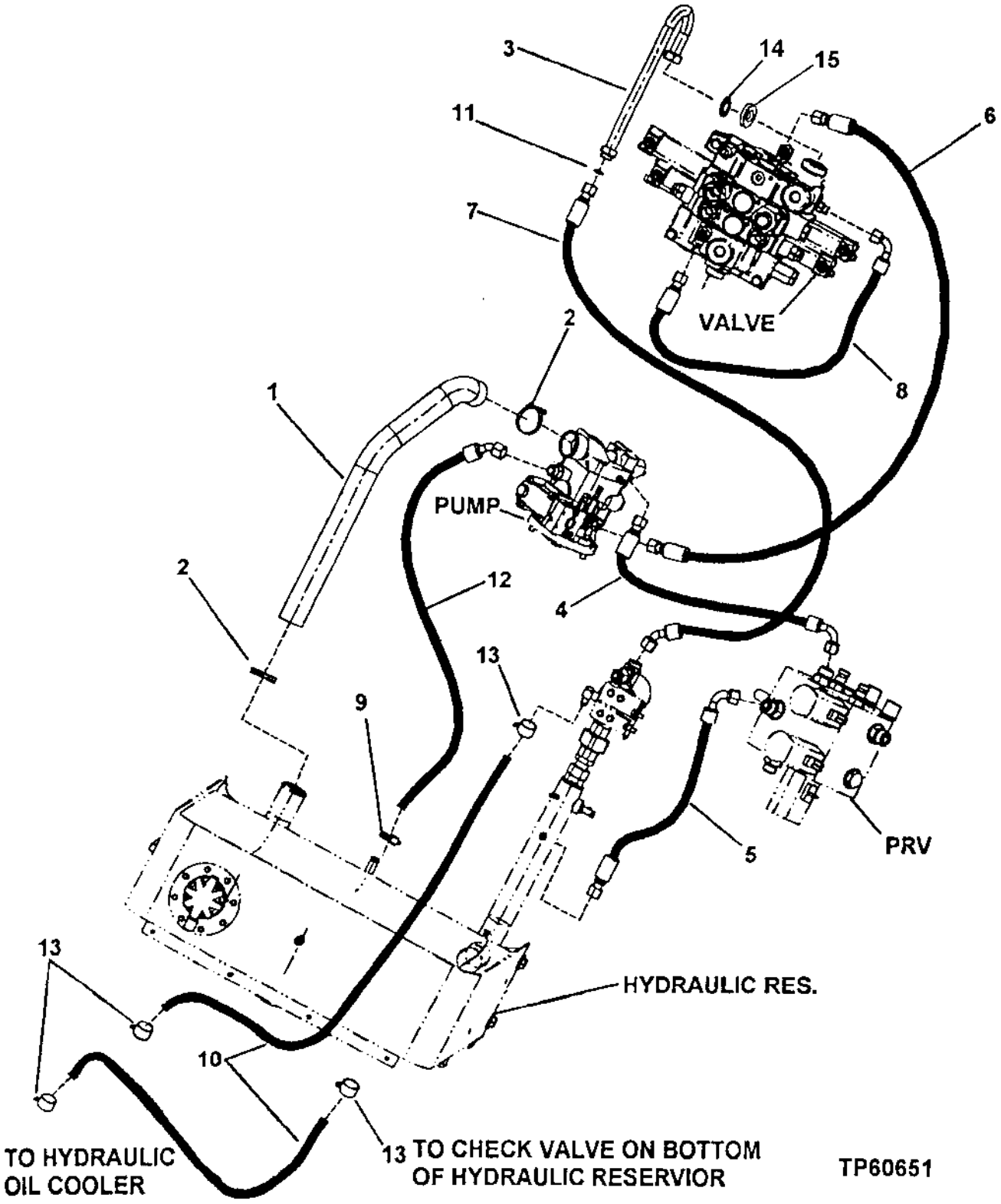

MAIN HYDRAULIC LINES

KEY	PART NO.	PART NAME	QTY	SERIAL NO.	REMARKS
1	AT209112	SUCTION HOSE	1		
2	AT37476	HOSE CLAMP	2		
3	AT209432	OIL LINE	1		
4	AT166149	HYDRAULIC HOSE - FABRICATE	1		
5	AT81931	HYDRAULIC HOSE - FABRICATE	1	-570770	(SUB FOR AT207875)
	AT116449	HYDRAULIC HOSE - FABRICATE	1	570771-	
6	AT169939	HYDRAULIC HOSE - FABRICATE	1		
7	AT210076	HYDRAULIC HOSE - FABRICATE	1		
8	AT167553	HYDRAULIC HOSE - FABRICATE	1		
9	AR21839	CLAMP	1		
10	.....	HYDRAULIC HOSE	2		(MAKE FROM T148181 BULK MATERIAL, CUT TO LENGTH)
11	T78612	O-RING	1		
12	AT223173	HYDRAULIC HOSE - FABRICATE	1		(SUB FOR AT203208, THIS APPLICATION)
13	TY22467	CLAMP	4		(SUB FOR AT79195)
14	T78784	O-RING	1		(NOT FOR USE ON MATERIAL HANDLER)
15	T177442	PLATE	1		(NOT FOR USE ON MATERIAL HANDLER)

HYDRAULIC OIL RESERVOIR, FILTER AND RETURN HOSE
(SERIAL NO. -XXXXXX)

TP62628 -UN-27AUG99

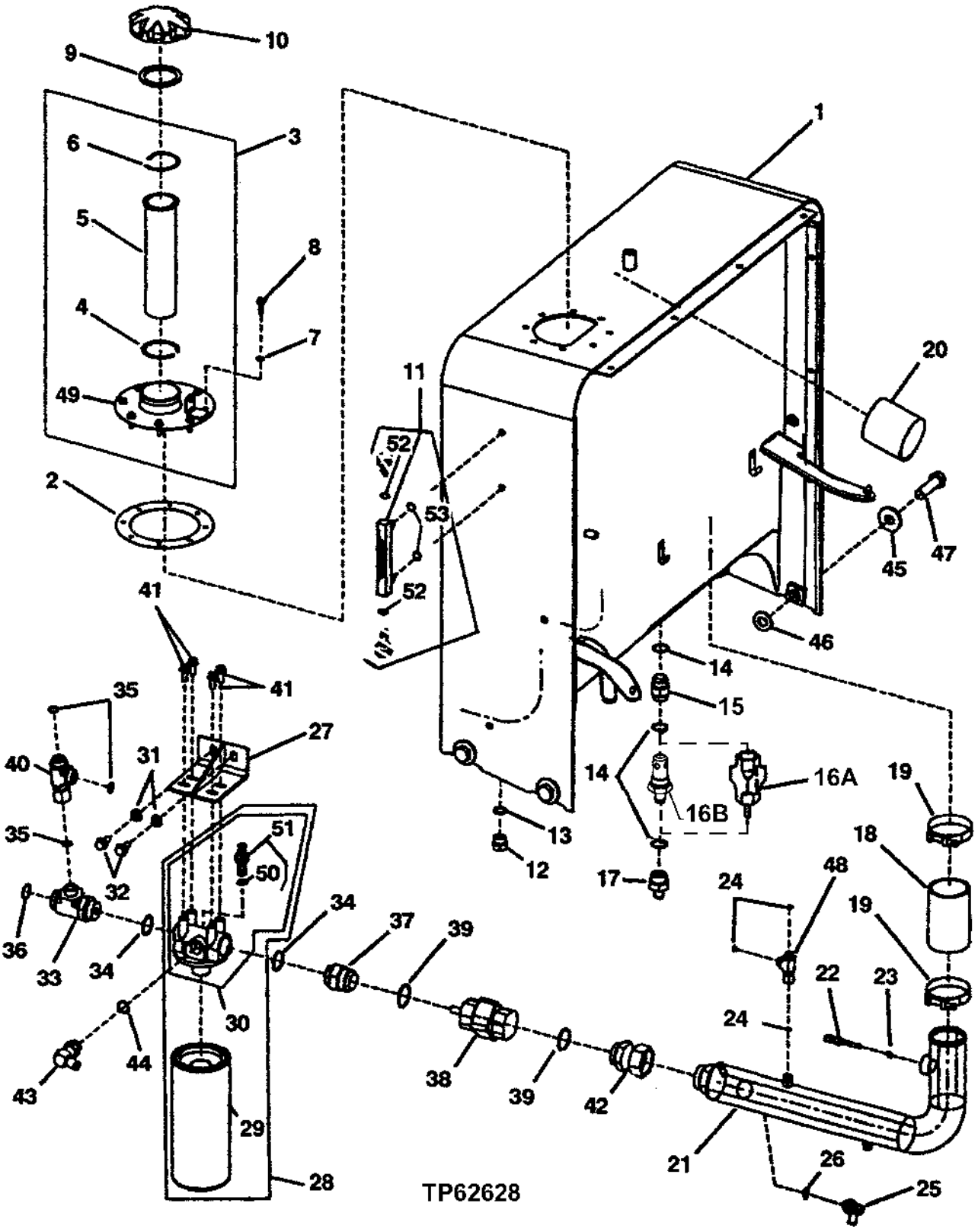

HYDRAULIC OIL RESERVOIR, FILTER AND RETURN HOSE
(SERIAL NO. -XXXXXX)

KEY	PART NO.	PART NAME	QTY	SERIAL NO.	REMARKS
1	AT221988	HYDRAULIC RESERVOIR	1		(SUB FOR AT207900) (ALSO ORDER T177989 R.H. BRACKET AND T177950 L.H. BRACKET)
2	T106595	GASKET	1	-XXXXXX	
	T179363	GASKET	1	XXXXXX-	
3	AT203547	STRAINER	1	-XXXXXX	
	AT223275	HOUSING	1	XXXXXX-	
4	M596T	SNAP RING	1	-XXXXXX	
5	AT161638	STRAINER	1		
6	T39155	SNAP RING	1		
7	24H1136	WASHER	8		11/32" X 11/16" X 0.065"
8	T81403	SCREW	8		
9	T103461	GASKET	1		
10	T121028	FILLER CAP	1		
11	AT157532	STRUCTURAL TUBING	1		(SIGHT)
12	.....	DRAIN PLUG	1		(R27175 NO LONGER REQUIRED)
13	.....	O-RING	1		(U12547 NO LONGER REQUIRED)
14	R29936	O-RING	3		
15	T26767	FITTING	1		
16A	AT203034	CHECK VALVE	1	-573399	
16B	AT221897	CHECK VALVE	1	573400-	
17	R71787	FITTING	1		
18	T157202	HOSE	1		
19	AT37476	HOSE CLAMP	2		
20	AM39653	OIL FILTER	1		
21	AT210597	PIPE	1		
22	RE151433	SENDER	1		(SUB FOR RE48073) TEMPERATURE, HYDRAULIC
23	R26286	O-RING	1		
24	T77613	O-RING	3		
25	AT152180	DRAIN VALVE	1		
26	R26906	O-RING	1		
27	AT208930	BRACKET	1		
28	AT209203	FILTER HEAD	1		
29	AT209204	FILTER	1		
30	AT144994	FILTER HEAD	1		
31	24M7240	WASHER	2		13 X 25 X 3 MM
32	19M7788	SCREW	2		M12 X 25
33	38H1397	TEE FITTING	1		
34	U13639	O-RING	2		
35	T77858	O-RING	3		
36	T78612	O-RING	1		
37	T35268	ADAPTER	1		(SUB FOR T48170)
38	AT202944	RELIEF VALVE	1		
39	R26773	O-RING	2		
40	38H1033	TEE FITTING	1		
41	19M7785	SCREW	4		M10 X 25
42	AT79546	ADAPTER	1		
43	AR46217	ELBOW FITTING	1		
44	U12547	O-RING	1		
45	T128096	WASHER	4		
46	24M7242	WASHER	4		21.400 X 42 X 5 MM
47	19M8639	CAP SCREW	4		M20 X 70
48	38H1030	TEE FITTING	1		
49	.....	FLANGE	1		(SUB AT203547)
50	R26375	O-RING	1		
51	AT129419	SWITCH	1		FILTER RESTRICTION INDICATOR
52	R63548	O-RING	2		
53	R73599	O-RING	2		

HYDRAULIC OIL RESERVOIR, FILTER AND RETURN HOSE
(SERIAL NO. XXXXXX-)

TP62832 -UN-09AUG00

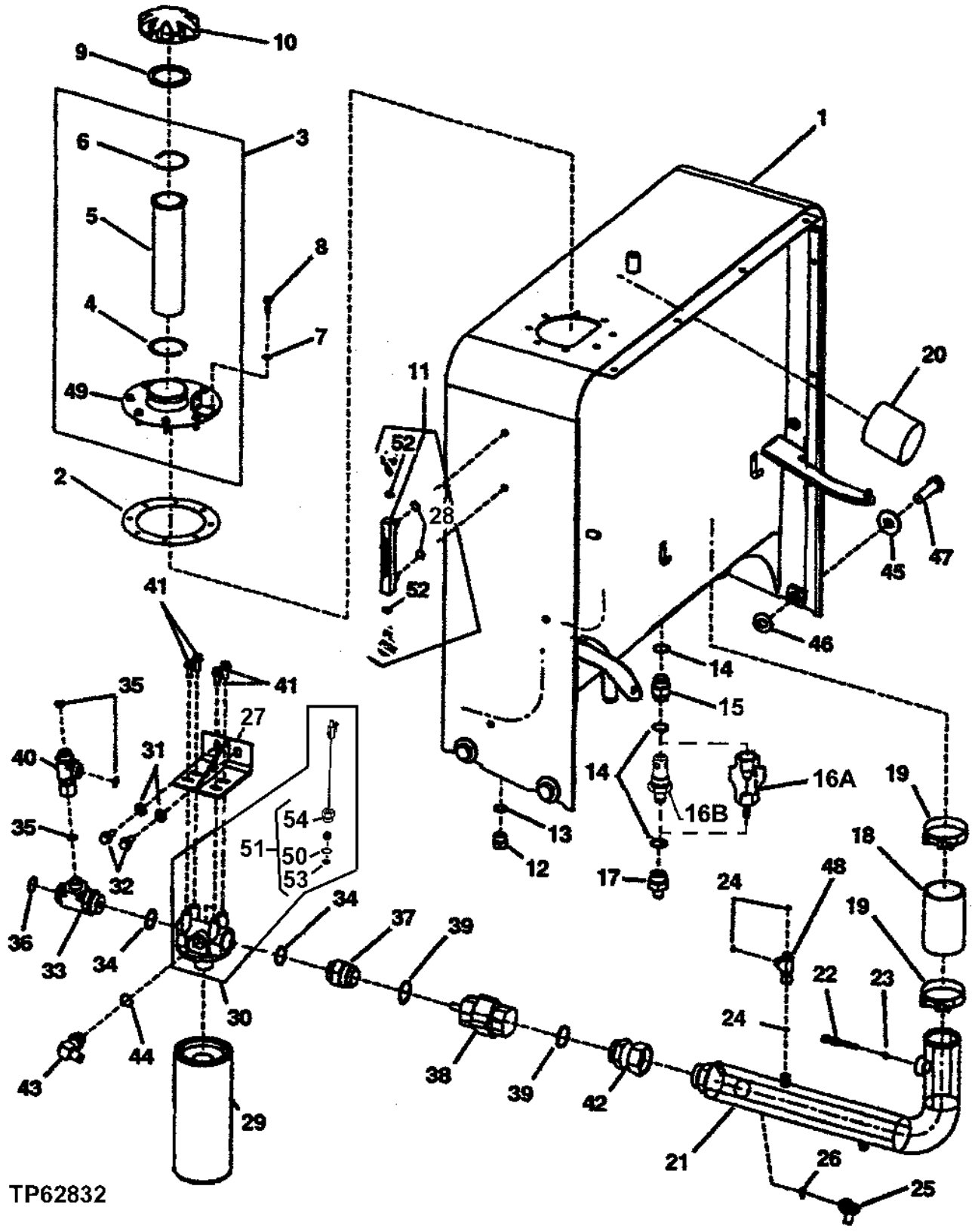

HYDRAULIC OIL RESERVOIR, FILTER AND RETURN HOSE
(SERIAL NO. XXXXXX-)

KEY	PART NO.	PART NAME	QTY	SERIAL NO.	REMARKS
1	AT221988	HYDRAULIC RESERVOIR	1		(SUB FOR AT207900) (ALSO ORDER T177989 R.H. BRACKET AND T177950 L.H. BRACKET)
2	T106595	GASKET	1	-XXXXXX	
	T179363	GASKET	1	XXXXXX-	
3	AT203547	STRAINER	1	-XXXXXX	
	AT223275	HOUSING	1	XXXXXX-	
4	M596T	SNAP RING	1	-XXXXXX	
5	AT161638	STRAINER	1		
6	T39155	SNAP RING	1		
7	24H1136	WASHER	8		11/32" X 11/16" X 0.065"
8	T81403	SCREW	8		
9	T103461	GASKET	1		
10	T121028	FILLER CAP	1		
11	AT157532	STRUCTURAL TUBING	1		(SIGHT)
12	.....	DRAIN PLUG	1		(R27175 NO LONGER REQUIRED)
13	.....	O-RING	1		(U12547 NO LONGER REQUIRED)
14	R29936	O-RING	3		
15	T26767	FITTING	1		
16A	AT203034	CHECK VALVE	1	-573399	
16B	AT221897	CHECK VALVE	1	573400-	
17	R71787	FITTING	1		
18	T157202	HOSE	1		
19	AT37476	HOSE CLAMP	2		
20	AM39653	OIL FILTER	1		
21	AT210597	PIPE	1		
22	RE151433	SENDER	1		(SUB FOR RE48073) TEMPERATURE, HYDRAULIC
23	R26286	O-RING	1		
24	T77613	O-RING	3		
25	AT152180	DRAIN VALVE	1		
26	R26906	O-RING	1		
27	AT208930	BRACKET	1		
28	R73599	O-RING	2		
29	AT209204	FILTER	1		
30	AT223686	FILTER HEAD	1		
31	24M7240	WASHER	2		13 X 25 X 3 MM
32	19M7788	SCREW	2		M12 X 25
33	38H1397	TEE FITTING	1		
34	U13639	O-RING	2		
35	T77858	O-RING	3		
36	T78612	O-RING	1		
37	T35268	ADAPTER	1		(SUB FOR T48170)
38	AT202944	RELIEF VALVE	1		
39	R26773	O-RING	2		
40	38H1033	TEE FITTING	1		
41	19M7785	SCREW	4		M10 X 25
42	AT79546	ADAPTER	1		
43	AR46217	ELBOW FITTING	1		
44	U12547	O-RING	1		
45	T128096	WASHER	4		
46	24M7242	WASHER	4		21.400 X 42 X 5 MM
47	19M8639	CAP SCREW	4		M20 X 70
48	38H1030	TEE FITTING	1		
49	.....	FLANGE	1		(SUB AT203547)
50	R26375	O-RING	1		
51	AT223672	SWITCH	1		FILTER RESTRICTION INDICATOR
52	R63548	O-RING	2		
53	T186154	O-RING	1		
54	AT191790	SWITCH	1		

REMOTE HYDRAULIC RESERVOIR BREATHER

TP62691 -UN-12NOV99

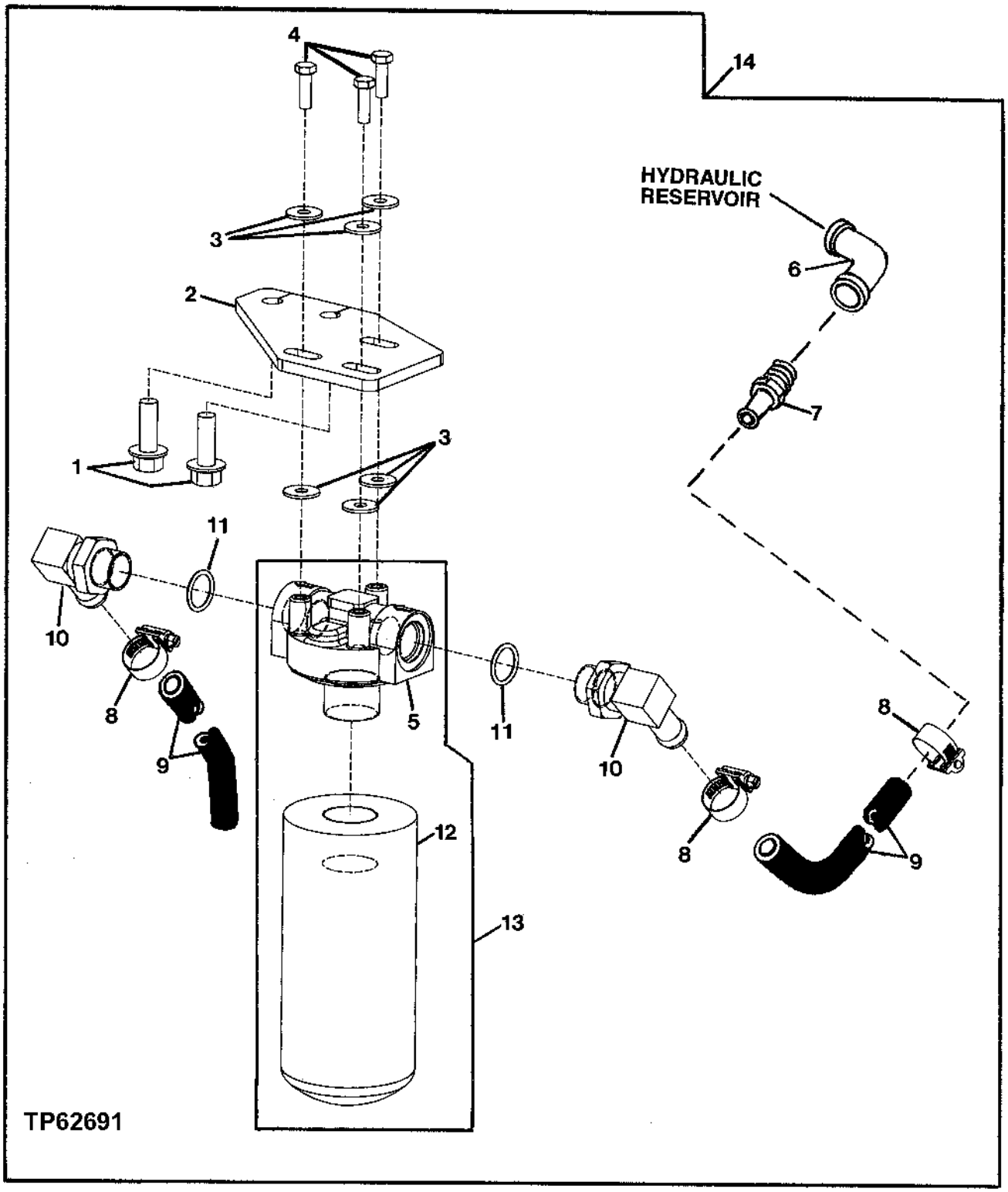

REMOTE HYDRAULIC RESERVOIR BREATHER

KEY	PART NO.	PART NAME	QTY	SERIAL NO.	REMARKS
1	19M7790	SCREW	2	-572706	M12 X 35
	19M7788	SCREW	2	572707-	
2	T177772	BRACKET	1		
3	24M7298	WASHER	6		8.400 X 25 X 2 MM
4	19H1905	CAP SCREW	3		5/16" X 1"
5	AT135906	FILTER HEAD	1		
6	15H577	ELBOW FITTING	1		1/2"
7	R39503	FITTING	1		
8	AR21837	CLAMP	3		
9	.....	HOSE	2		(MAKE FROM T148181 BULK MATERIAL, CUT TO LENGTH)
10	AH61472	HOSE FITTING	2		
11	U12547	O-RING	2		
12	AT120444	OIL FILTER	1		
13	AT135907	FILTER	1		
14	**AT222027**	**KIT**	**1**		

HYDRAULIC OIL PRESSURE REGULATOR VALVE

TP62896 -UN-08SEP00

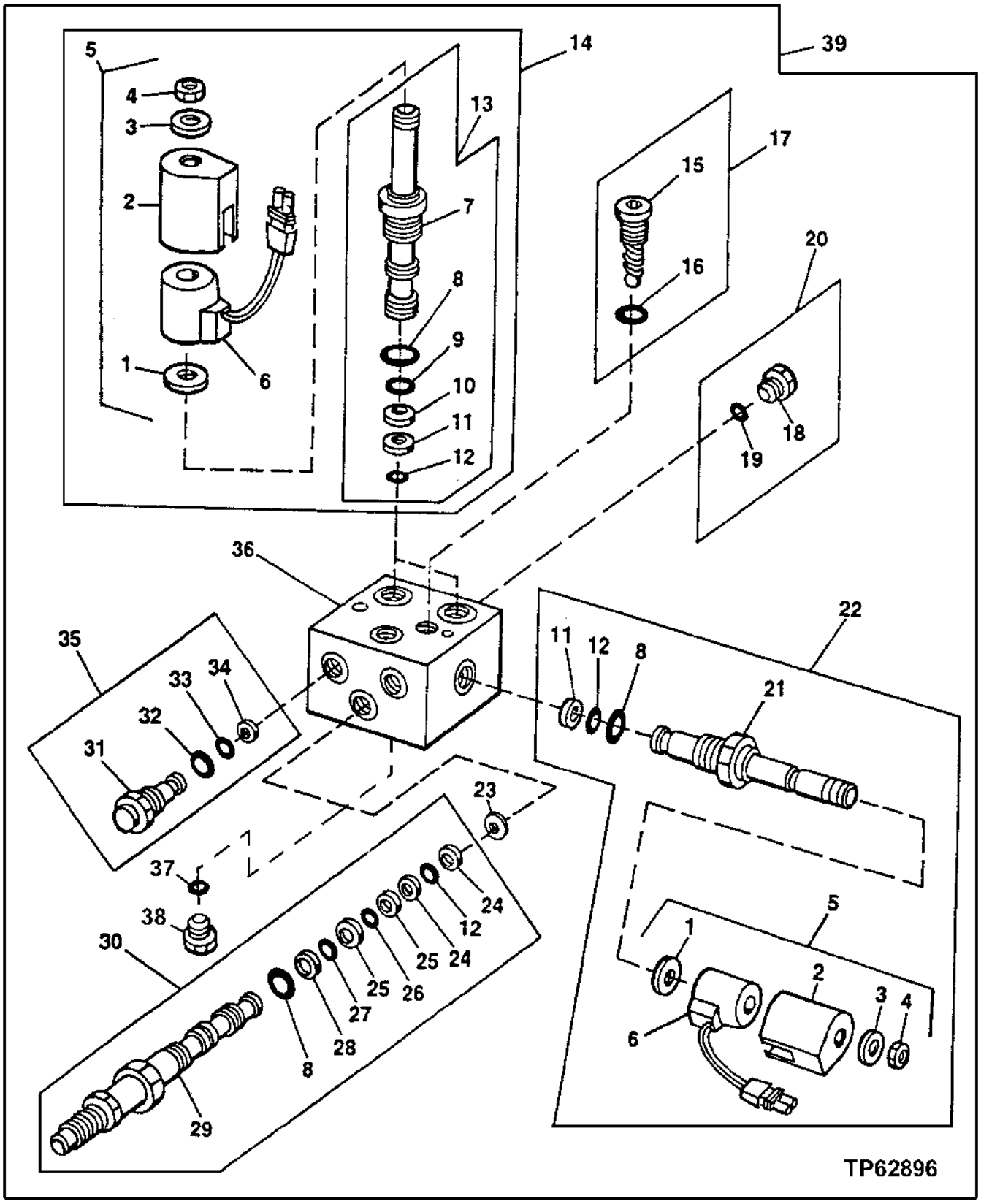

HYDRAULIC OIL PRESSURE REGULATOR VALVE

KEY	PART NO.	PART NAME	QTY	SERIAL NO.	REMARKS
1	T130847	PLATE	3		
2	.....	COVER	3		(SUB AT139434)
3	.....	WASHER	3		(SUB AT139434)
4	.....	NUT	3		(SUB AT139434)
5	AT139434	KIT	3		
6	AT139433	ELECTRICAL COIL	3		
7	.....	SPOOL	2		(SUB AT139432)
8	R47151	O-RING	4		
9	R33259	O-RING	2		
10	T81247	BACK-UP RING	2		
11	R42926	BACK-UP RING	3		
12	R28776	O-RING	4		
13	AT139432	VALVE	2		
14	AT139431	SOLENOID VALVE	2		
15	.....	PLUG	1		(SUB AT159938)
16	R28782	O-RING	1		
17	AT159938	KIT	1		
18	.....	PLUG	1		(SUB AT49216)
19	R26448	O-RING	1		
20	AT49216	FITTING	1		(SUB AT208424)
21	.....	SPOOL	1		(SUB AT208424)
22	AT208424	SOLENOID VALVE	1		
23	T170615	ORIFICE	1		
24	A36431	BACK-UP RING	2		
25	A36432	BACK-UP RING	2		
26	R33259	O-RING	1		
27	R27166	O-RING	1		
28	T35985	BACK-UP RING	1		
29	.....	SPOOL	1		(SUB AT208426)
30	AT208426	VALVE	1		
31	.....	CHECK VALVE	2		(SUB AT208425)
32	R47150	O-RING	2		
33	A3917R	O-RING	2		
34	T106208	BACK-UP RING	2		
35	AT208425	CHECK VALVE	2		
36	.....	HOUSING	1		(SUB AT203487)
37	R30903	O-RING	2		
38	AT184869	PLUG	2		
39	AT203487	CONTROL VALVE	1		

HYDRAULIC OIL PRESSURE REGULATOR VALVE FITTINGS

TP62736 -UN-19JAN00

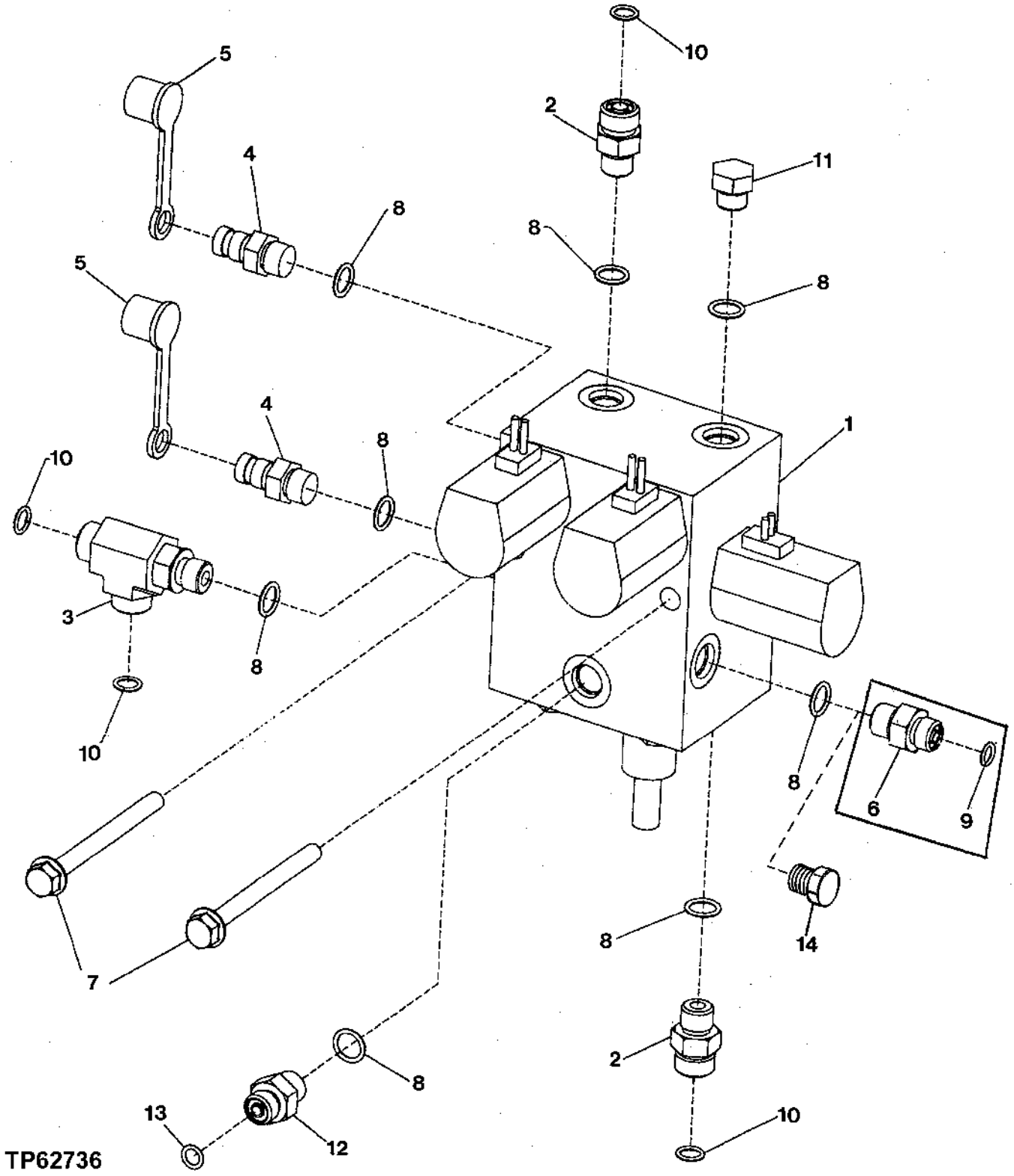

HYDRAULIC OIL PRESSURE REGULATOR VALVE FITTINGS

KEY	PART NO.	PART NAME	QTY	SERIAL NO.	REMARKS
1	AT203487	CONTROL VALVE	1		(PRESSURE REDUCING VALVE)
2	38H1160	ADAPTER	2		
3	38H1023	TEE FITTING	1		
4	AH125760	HYD. QUICK-CONNECT COUPLER	2		
5	R77175	COVER	2		
6	38H1168	ADAPTER	1	-574111	
7	19M7913	SCREW	2		M8 X 90
8	R26448	O-RING	8		
9	T77814	O-RING	1	-574111	
10	T77613	O-RING	4		
11	R27218	FITTING PLUG	1		
12	38H1168	ADAPTER	1		
13	T77814	O-RING	1		
14	R27218	FITTING PLUG	1	574112-	

RETURN-TO-DIG ACTUATOR AND SENSOR
(NOT FOR USE WITH TOOL CARRIER AND LOG LOADER)
(SERIAL NO. -574612)

TP55671 -UN-30SEP97

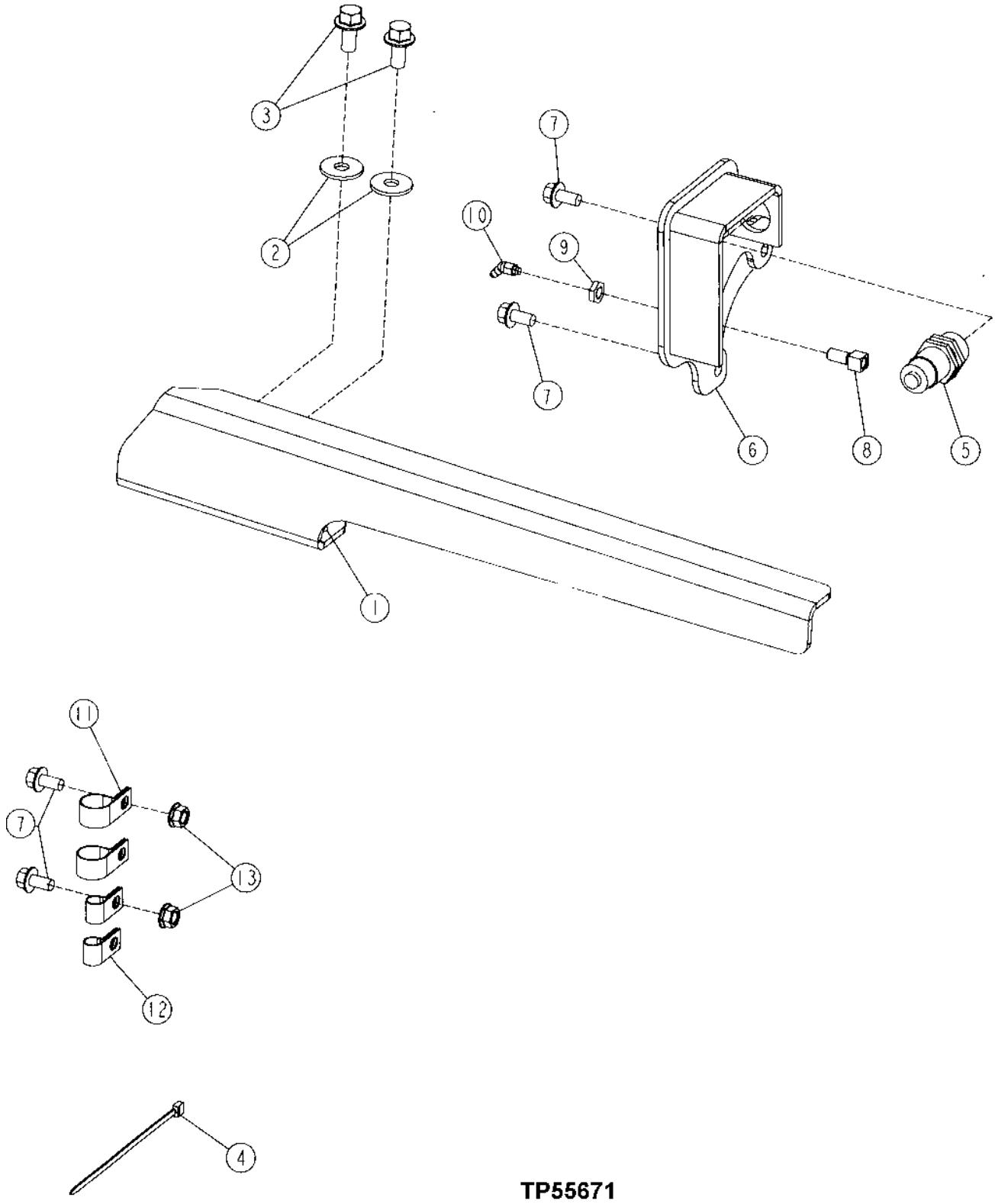

TP55671

RETURN-TO-DIG ACTUATOR AND SENSOR
(NOT FOR USE WITH TOOL CARRIER AND LOG LOADER)
(SERIAL NO. -574612)

KEY	PART NO.	PART NAME	QTY	SERIAL NO.	REMARKS
1	T175117	ANGLE	1		
2	24M7180	WASHER	2		13 X 37 X 3 MM
3	19M7789	SCREW	2		M12 X 30
4	R44302	TIE BAND	2		
5	AT203130	SENSOR	1		
6	AT219797	BRACKET	1		
7	19M7784	SCREW	4		M10 X 20
8	R36311	FITTING	1		
9	E12379	NUT	1		
10	JD7788	LUBRICATION FITTING	1		
11	T26955	CLAMP	2		
12	T75197	CLAMP	2		
13	14M7296	FLANGE NUT	2		M10

RETURN-TO-DIG ACTUATOR AND SENSOR
(NOT FOR USE WITH TOOL CARRIER AND LOG LOADER)
(SERIAL NO. 574613-)

TP62723 -UN-07JAN00

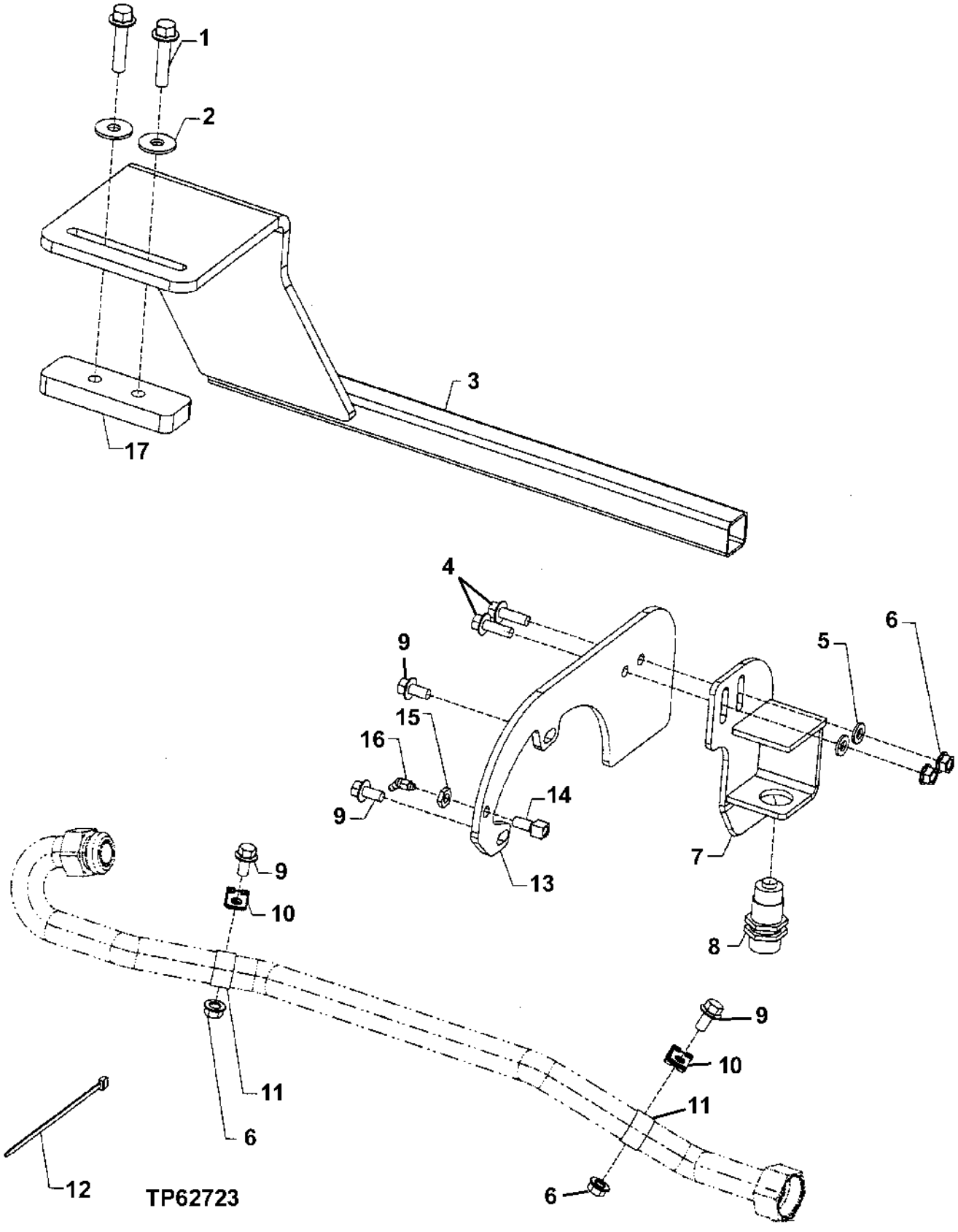

RETURN-TO-DIG ACTUATOR AND SENSOR
(NOT FOR USE WITH TOOL CARRIER AND LOG LOADER)
(SERIAL NO. 574613-)

KEY	PART NO.	PART NAME	QTY	SERIAL NO.	REMARKS
1	19M7814	SCREW	2		M12 X 50
2	24M7180	WASHER	2		13 X 37 X 3 MM
3	AT221356	ACTUATOR	1		
4	19M7786	SCREW	2		M10 X 30
5	24M7239	WASHER	2		10.700 X 21 X 2.500 MM
6	14M7296	FLANGE NUT	4	-XXXXXX	M10
	14M7296	FLANGE NUT	2	XXXXXX-	
7	AT221350	BRACKET	1		
8	AT203130	SENSOR	1		
9	19M7784	SCREW	4	-XXXXXX	M10 X 20
	19M7784	SCREW	2	XXXXXX-	
10	T75276	CLAMP	2	-XXXXXX	
11	T26955	CLAMP	2	-XXXXXX	
12	R44302	TIE BAND	2	-XXXXXX	
	R44302	TIE BAND	4	XXXXXX-	
13	T177573	PLATE	1		
14	R36311	FITTING	1		
15	E12379	NUT	1		
16	JD7788	LUBRICATION FITTING	1		
17	T179609	SPACER	1		

LOADER BOOM KICK OUT AND SENSOR

TP62892 -UN-30AUG00

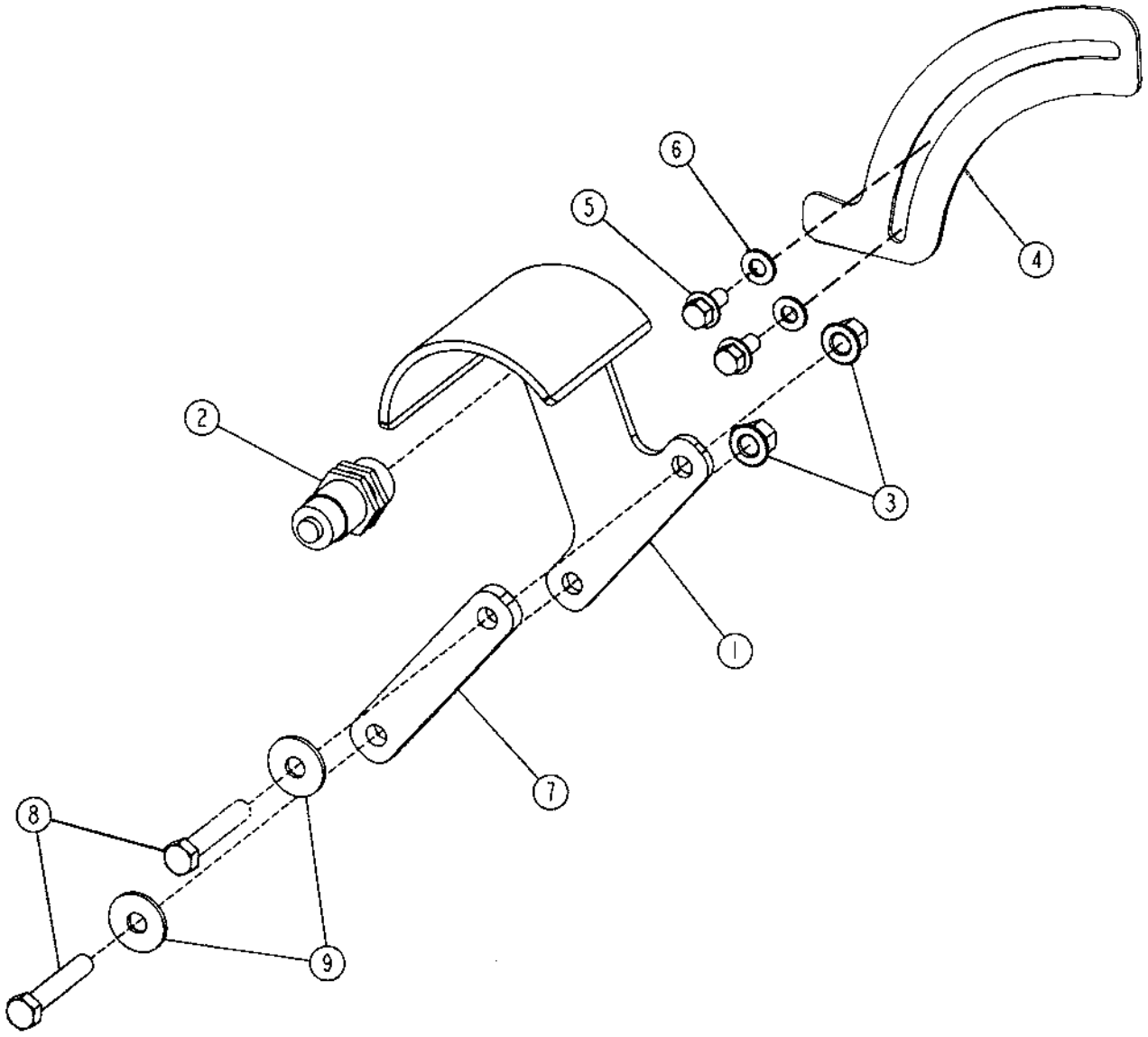

TP62892

LOADER BOOM KICK OUT AND SENSOR

KEY	PART NO.	PART NAME	QTY	SERIAL NO.	REMARKS
1	AT207205	BRACKET	1		
2	AT203130	SENSOR	1		LOADER BOOM KICKOUT
3	14M7401	LOCK NUT	2		M12
4	T180444	PLATE	1		(SUB FOR T170135)
5	19M7784	SCREW	2		M10 X 20
6	.....	WASHER	2		(24M7239 NO LONGER REQUIRED)
7	T171309	SPACER	1		
8	19M7753	CAP SCREW	2		M12 X 70
9	24M7180	WASHER	2		13 X 37 X 3 MM

PIN DISCONNECT VALVE AND HYDRAULIC HOSES
(SERIAL NO. -571404)

TP60336 -UN-20APR98

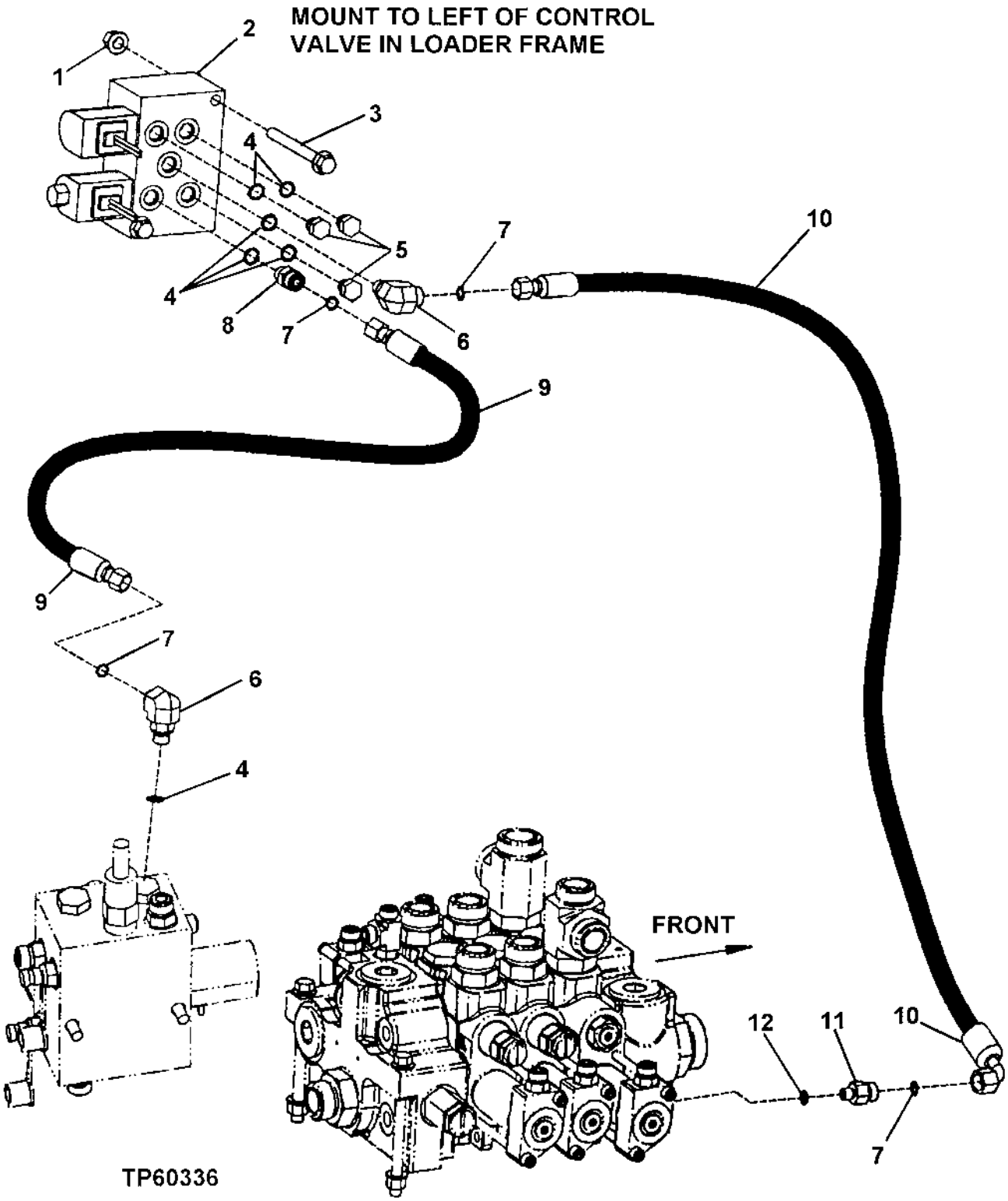

PIN DISCONNECT VALVE HYDRAULIC HOSES
(SERIAL NO. -571404)

KEY	PART NO.	PART NAME	QTY	SERIAL NO.	REMARKS
1	14M7400	LOCK NUT	2		M10
2	.....	VALVE	1		(AT207644 NO LONGER AVAILABLE) (SUB AT220192)
3	19M7812	SCREW	2		M10 X 100
4	R26448	O-RING	6		
5	R27218	FITTING PLUG	3		
6	38H1004	ELBOW FITTING	2		
7	T77613	O-RING	4		
8	38H1160	ADAPTER	1		
9	AT169939	HYDRAULIC HOSE - FABRICATE	1		
10	AT167553	HYDRAULIC HOSE - FABRICATE	1		
11	38H1309	ADAPTER	1		
12	R28782	O-RING	1		

PIN DISCONNECT VALVE AND HYDRAULIC HOSES
(SERIAL NO. 571405-)

TP62548 -UN-12MAY99

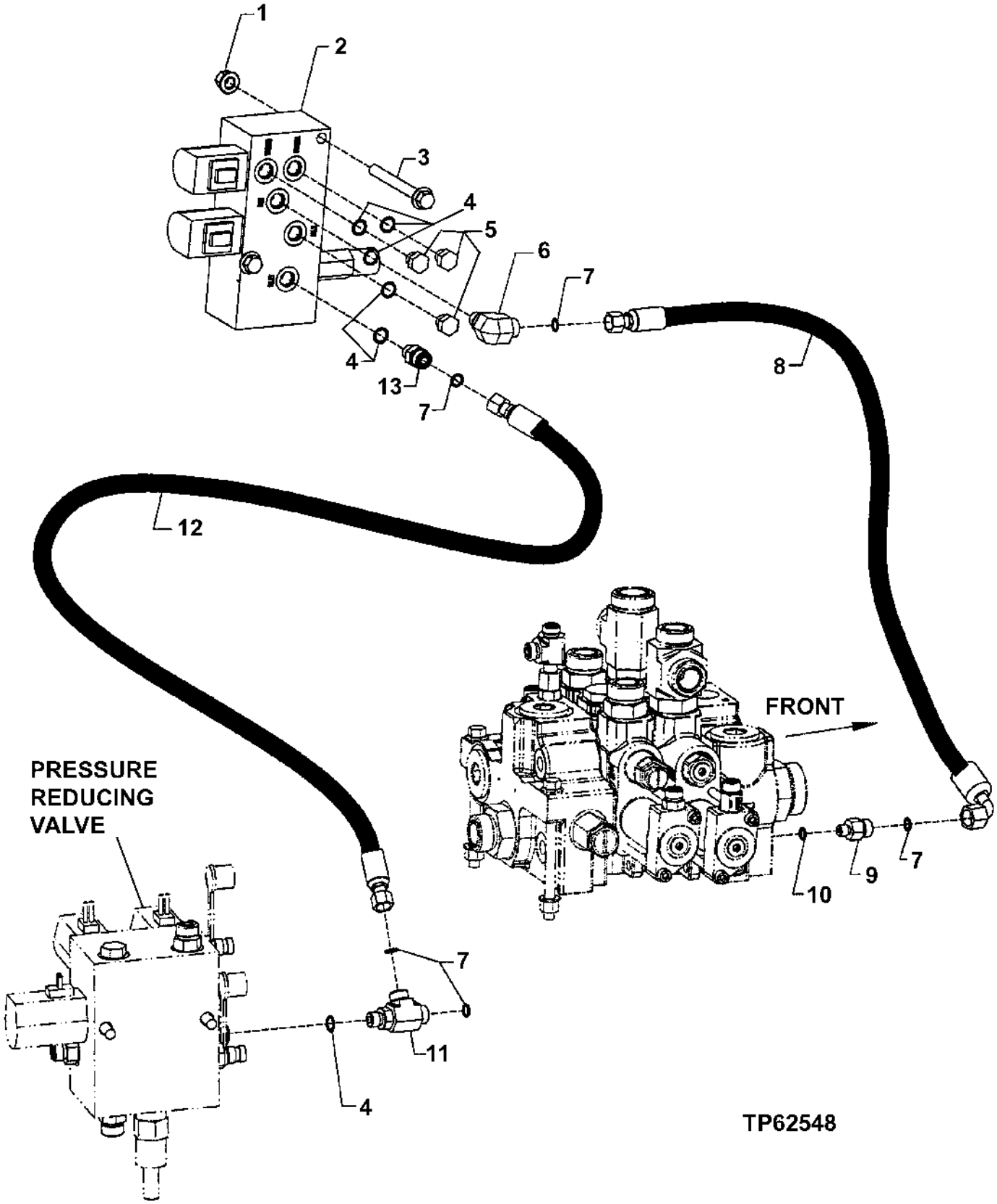

PIN DISCONNECT VALVE HYDRAULIC HOSES
(SERIAL NO. 571405-)

KEY	PART NO.	PART NAME	QTY	SERIAL NO.	REMARKS
1	14M7400	LOCK NUT	2		M10
2	AT220192	VALVE	1		
3	19M7812	SCREW	2		M10 X 100
4	R26448	O-RING	6		
5	R27218	FITTING PLUG	3		
6	38H1004	ELBOW FITTING	1		
7	T77613	O-RING	5		
8	AT167553	HYDRAULIC HOSE - FABRICATE	1		11/16" X 630 MM (24-3/4") X 11/16"
9	38H1309	ADAPTER	1		
10	R28782	O-RING	1		
11	38H1023	TEE FITTING	1		
12	AT169939	HYDRAULIC HOSE - FABRICATE	1		11/16" X 2 210 MM (87") X 11/16"
13	38H1160	ADAPTER	1		

PIN DISCONNECT VALVE

TP62602 -UN-09AUG99

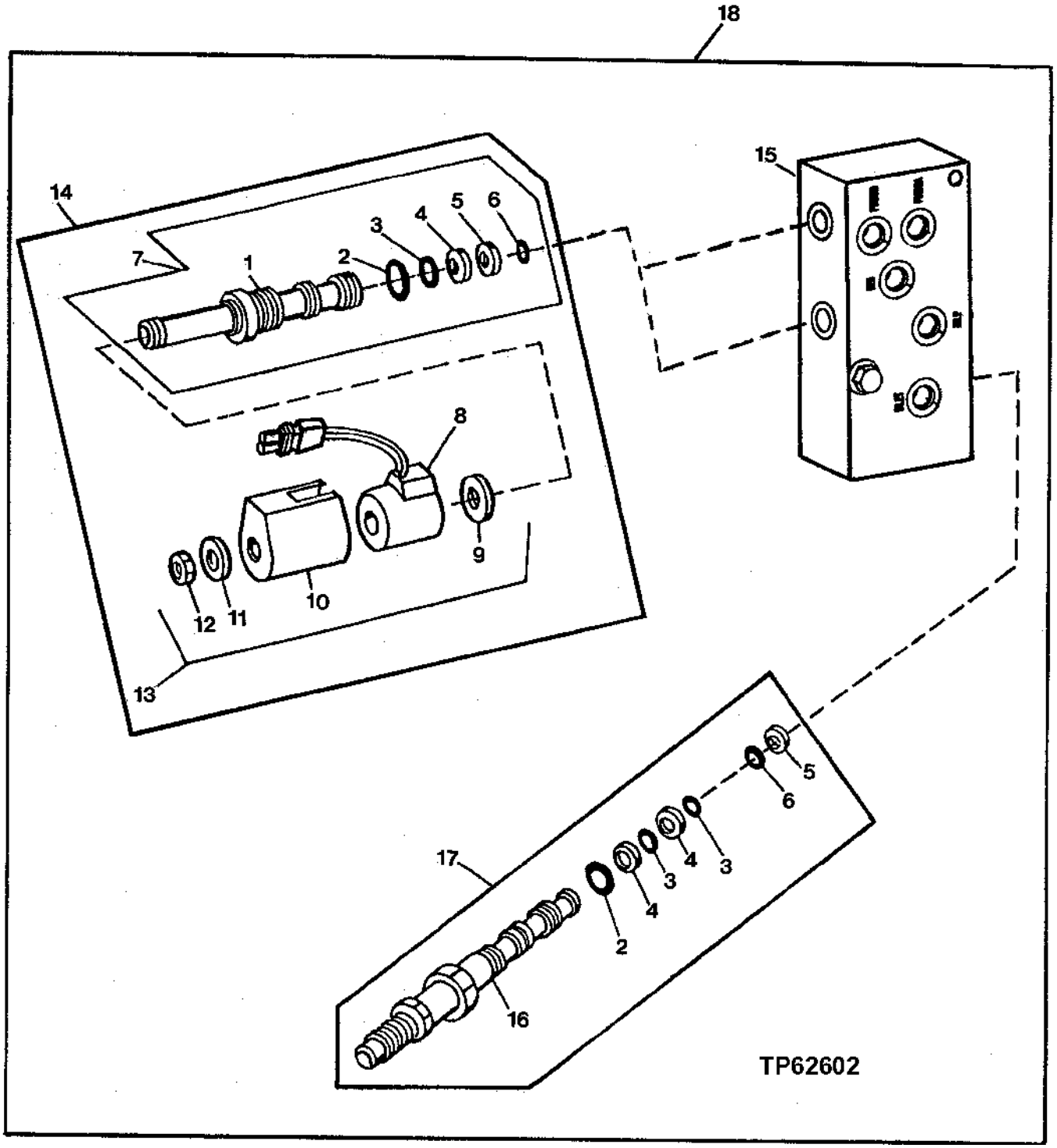

PIN DISCONNECT VALVE

KEY	PART NO.	PART NAME	QTY	SERIAL NO.	REMARKS
1	.....	SPOOL	2		(SUB AT139432)
2	R47151	O-RING	3		
3	R33259	O-RING	4		
4	T81247	BACK-UP RING	4		
5	R42926	BACK-UP RING	3		
6	R28776	O-RING	3		
7	AT139432	VALVE	2		
8	AT139433	ELECTRICAL COIL	2		
9	T130847	PLATE	2		
10	.....	COVER	2		(SUB AT139434)
11	.....	WASHER	2		(SUB AT139434)
12	.....	NUT	2		(SUB AT139434)
13	AT139434	KIT	2		
14	AT139431	SOLENOID VALVE	2		
15	.....	HOUSING	1		(SUB AT220192)
16	.....	SPOOL	1		(SUB AT220788)
17	AT220788	RELIEF VALVE	1		
18	AT220192	VALVE	1		

PIN DISCONNECT HYDRAULIC LINES

TP60319 -UN-08APR98

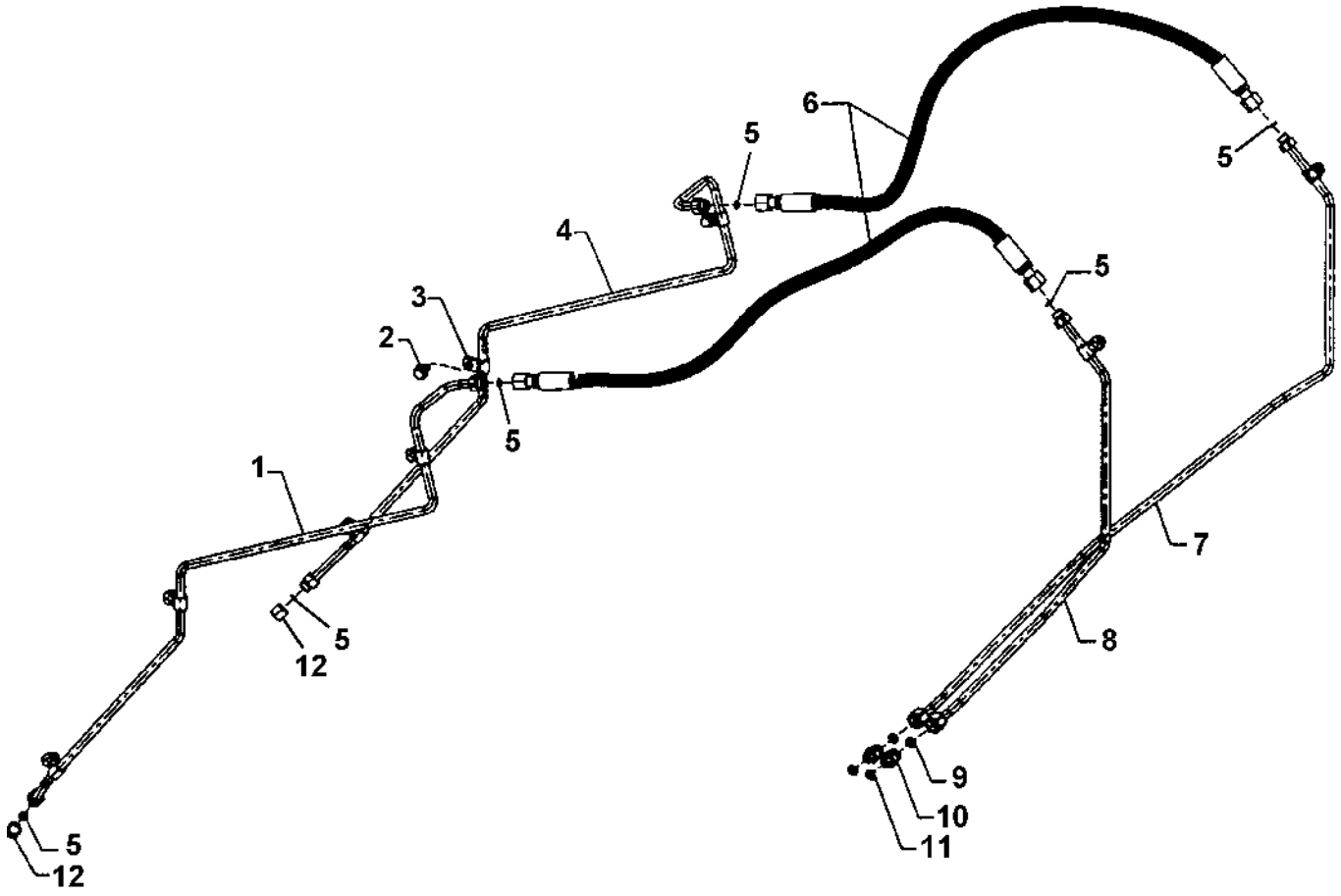

TP60319

PIN DISCONNECT HYDRAULIC LINES

KEY	PART NO.	PART NAME	QTY	SERIAL NO.	REMARKS
1	AT211452	OIL LINE	1		
2	19M7783	SCREW	8		M10 X 16
3	H75541	CLAMP	8		
4	AT211453	OIL LINE	1		
5	T77613	O-RING	6		
6	AT219985	HYDRAULIC HOSE - FABRICATE	2		(SUB FOR AT164852)
7	AT211451	OIL LINE	1		
8	AT211450	OIL LINE	1		
9	T77857	O-RING	2		
10	38H1173	ADAPTER	2		
11	R26448	O-RING	2		
12	38H1415	FITTING PLUG	2		

RIDE CONTROL VALVE,ACCUMULATOR AND HYDRAULIC HOSES

TP62687 -UN-24JAN00

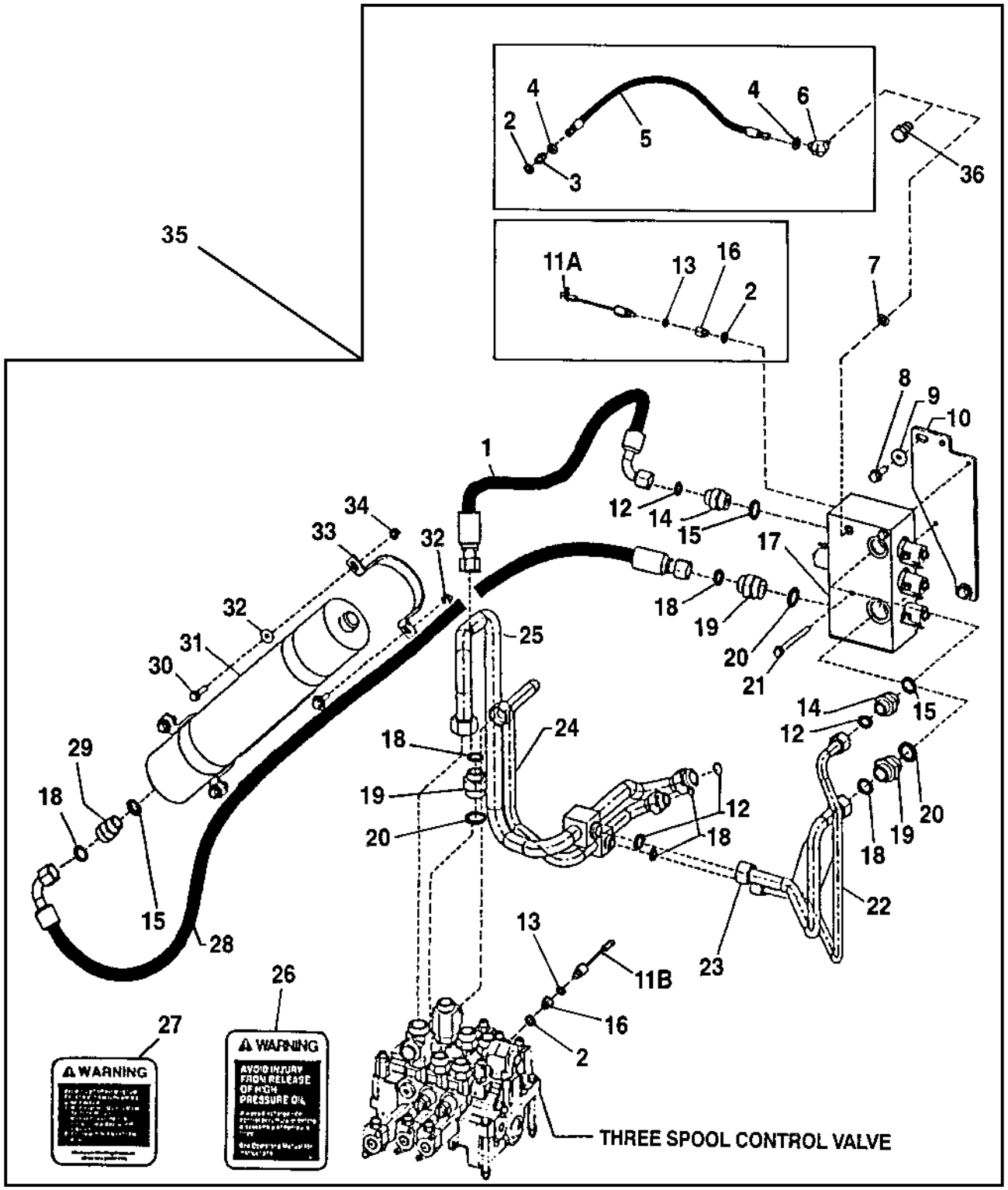

TP62687

RIDE CONTROL VALVE,ACCUMULATOR AND HYDRAULIC HOSES

KEY	PART NO.	PART NAME	QTY	SERIAL NO.	REMARKS
1	AT210898	HYDRAULIC HOSE - FABRICATE	1		
2	R26448	O-RING	2	-572380	
	R26448	O-RING	1	572381-	
3	38H1160	ADAPTER	1	-572380	
4	T77613	O-RING	2	-572380	
5	AT167553	HYDRAULIC HOSE - FABRICATE	1	-572380	
6	38H1435	ELBOW FITTING	1	-572380	
7	R28782	O-RING	1		
8	19M7790	SCREW	2		M12 X 35
9	24M7226	WASHER	2		13 X 35 X 5 MM
10	T181972	PLATE	1		(SUB FOR T174599)
11A	AT223537	SWITCH	1	-572380	(SUB FOR AT162096)
11B	AT162096	SWITCH	1	572381-	(RELOCATED)
12	T77858	O-RING	5		
13	R26287	O-RING	1		
14	38H1194	ADAPTER	2		
15	R29936	O-RING	3		
16	T158047	ADAPTER	1		(SUB FOR T167861)
17	AT208704	VALVE	1		
18	T76938	O-RING	6		
19	38H1180	ADAPTER	3		
20	U13639	O-RING	3		
21	19M7944	SCREW	2		M10 X 120
22	AT211472	OIL LINE	1		(USE IF AVAILABLE) (SUB AT223008)
	AT223008	HOSE	1		
23	AT211471	OIL LINE	1		(USE IF AVAILABLE) (SUB AT223056)
	AT223056	HOSE	1		
24	AT210267	OIL LINE	1		
25	AT210268	OIL LINE	1		
26	T146792	SAFETY SIGN	1		
27	T180944	LABEL	1		(SUB FOR T146431)
28	AT210078	HYDRAULIC HOSE - FABRICATE	1		
29	38H1164	ADAPTER	1		
30	19M7804	SCREW	4		M10 X 40, (FACTORY)
	19M7786	SCREW	4		M10 X 30, (FIELD)
31	AT158971	HYDRAULIC ACCUMULATOR	1		
	AT161527	SEAL KIT	1		(NOT ILLUSTRATED)
	AT161528	VALVE	1		(NOT ILLUSTRATED)
	T146481	CAP	1		(NOT ILLUSTRATED)
32	24M7296	WASHER	4		10.500 X 30 X 2.500 MM
33	T146490	CLAMP	2		
34	14M7400	LOCK NUT	4		M10
35	**AT208924**	**KIT**	**1**		
36	AT223648	FITTING	1	572381-	(ASSEMBLY INCLUDES: R28782 O-RING)

RIDE CONTROL VALVE
(SERIAL NO. -XXXXXX)

TP48431 -UN-22AUG96

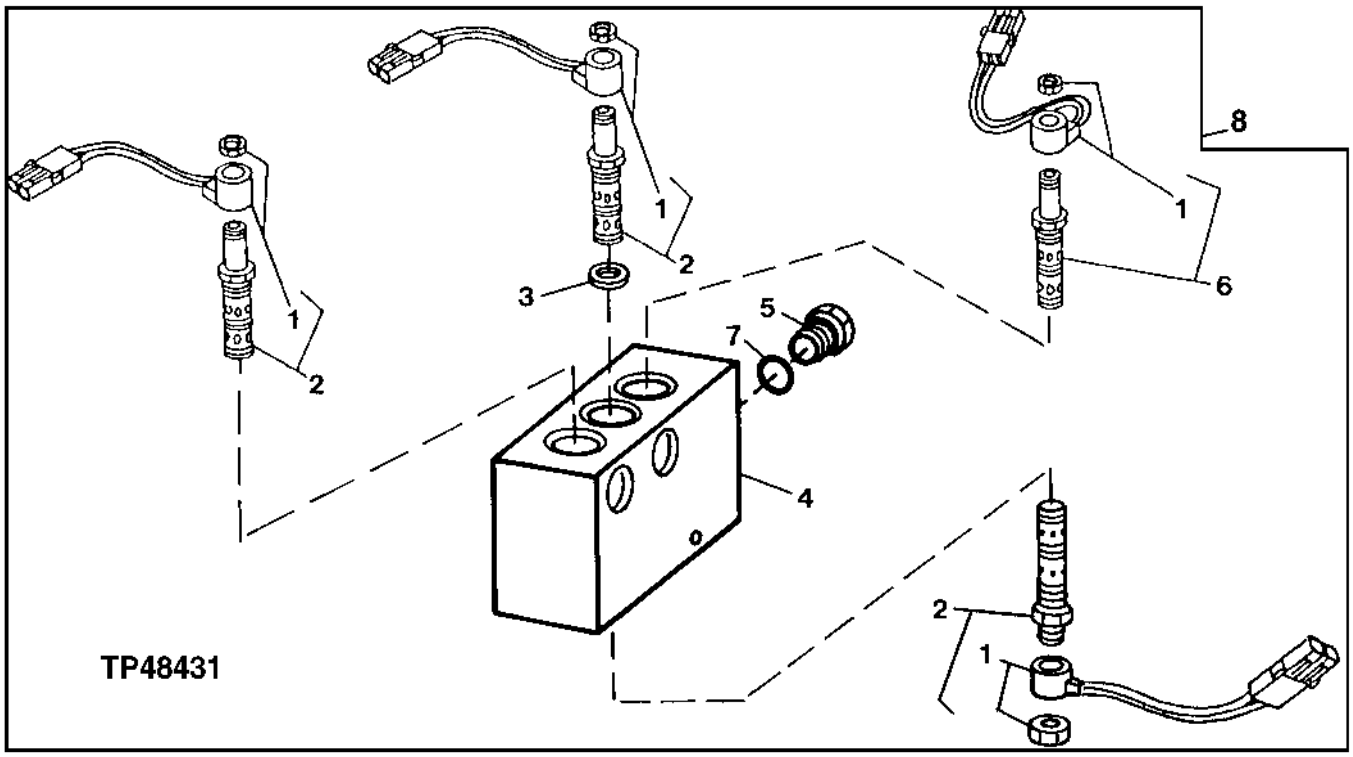

KEY	PART NO.	PART NAME	QTY	SERIAL NO.	REMARKS
1	AT208598	ELECTRICAL COIL	3		
2	AT208592	SOLENOID VALVE	3		CARTRIDGE
	AT147166	SEAL KIT	1		(NOT ILLUSTRATED)
3	T148884	ORIFICE	1		(SUB FOR AT208594)
4	.....	HOUSING	1		(SUB AT208704)
5	AT208603	CHECK VALVE	1		
	AT208596	SEAL KIT	1		(NOT ILLUSTRATED)
6	AT208601	SOLENOID VALVE	1		
	AT208596	SEAL KIT	1		(NOT ILLUSTRATED)
7	R26375	O-RING	1		
8	AT208704	VALVE	1		
	R39112	FITTING	2		(NOT ILLUSTRATED)
	AT222369	SOLENOID	1		(HARSH ENVIORNMENT, SEALED CONNECTORS) (NOT ILLUSTRATED)

RIDE CONTROL VALVE
(SERIAL NO. XXXXXX-)

TP62898 -UN-26SEP00

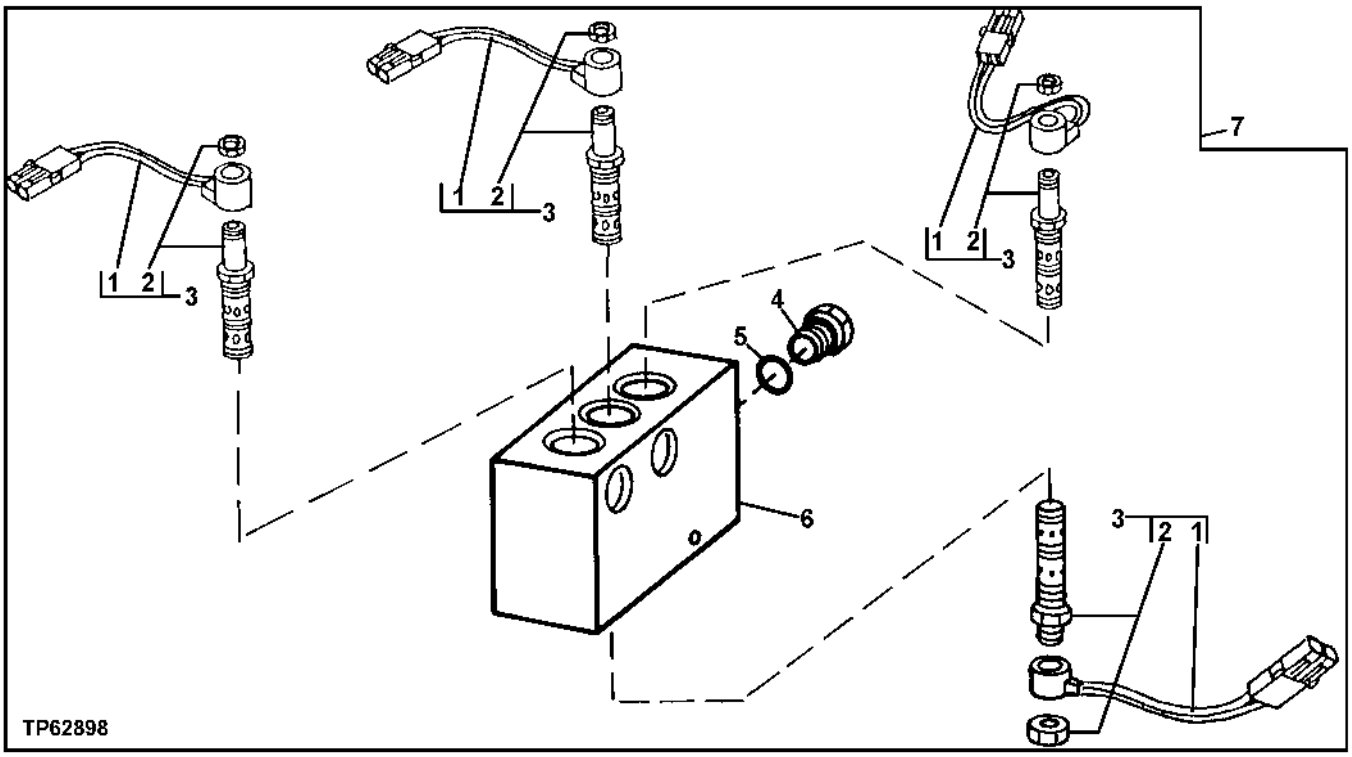

KEY	PART NO.	PART NAME	QTY	SERIAL NO.	REMARKS
1	AT208598	ELECTRICAL COIL	4		(SUB FOR AT223875)
2	.....	VALVE	4		(AT223874 NO LONGER AVAILABLE)
3	AT208601	SOLENOID VALVE	4		(SUB FOR AT223876)
	AT208596	SEAL KIT	1		(NOT ILLUSTRATED)
4	AT208603	CHECK VALVE	1		
	AT208596	SEAL KIT	1		(NOT ILLUSTRATED)
5	R26375	O-RING	1		
6	.....	HOUSING	1		(SUB AT223520)
7	AT223520	VALVE	1		
	R39112	FITTING	2		(NOT ILLUSTRATED)
	AT222369	SOLENOID	1		(HARSH ENVIORNMENT, SEALED CONNECTORS) (NOT ILLUSTRATED)

MEMORANDA

RIDE CONTROL ACCUMULATOR

TP34057 -UN-01JAN94

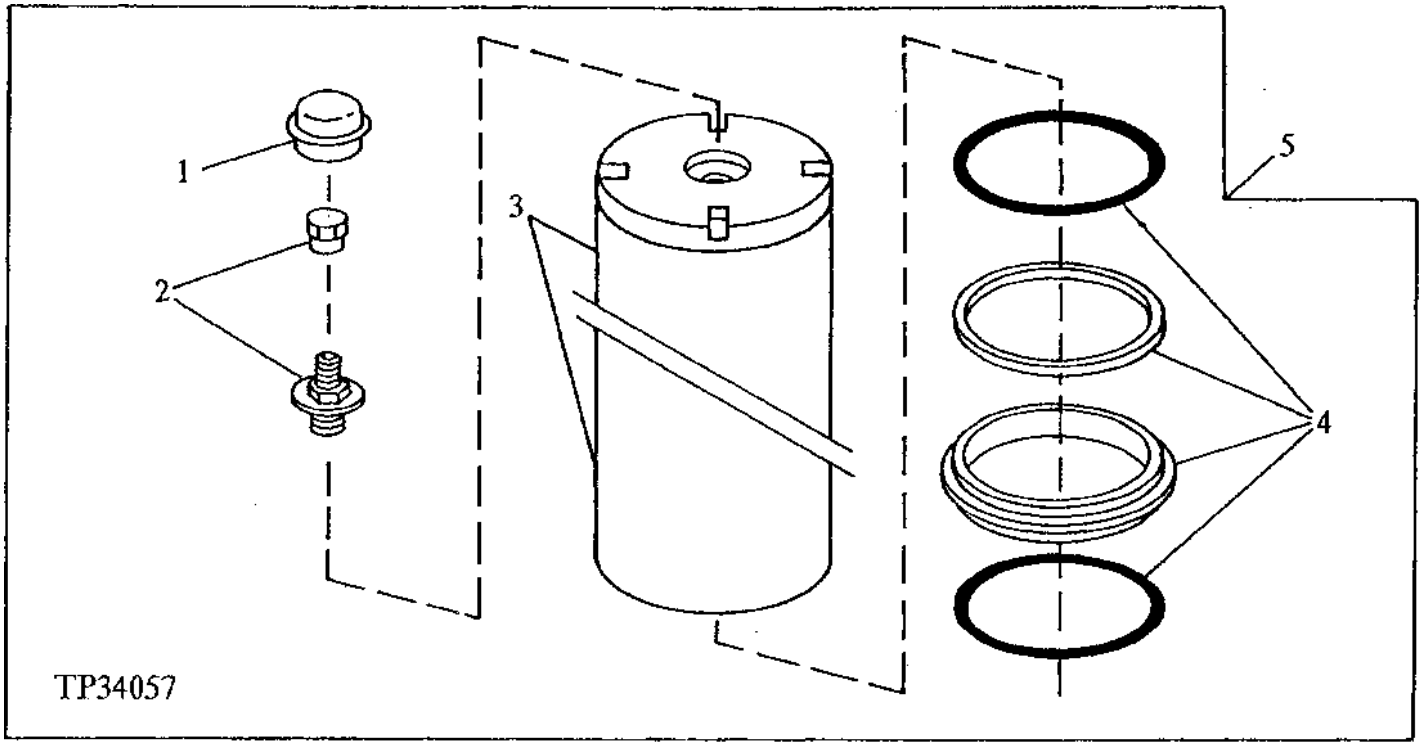

KEY	PART NO.	PART NAME	QTY	SERIAL NO.	REMARKS
1	T146481	CAP	1		
2	AT161528	VALVE	1		
3	.....	HOUSING	1		(SUB AT158971)
4	AT161527	SEAL KIT	1		
5	AT158971	HYDRAULIC ACCUMULATOR	1		

RETURN-TO-CARRY

TP60574 -UN-16DEC98

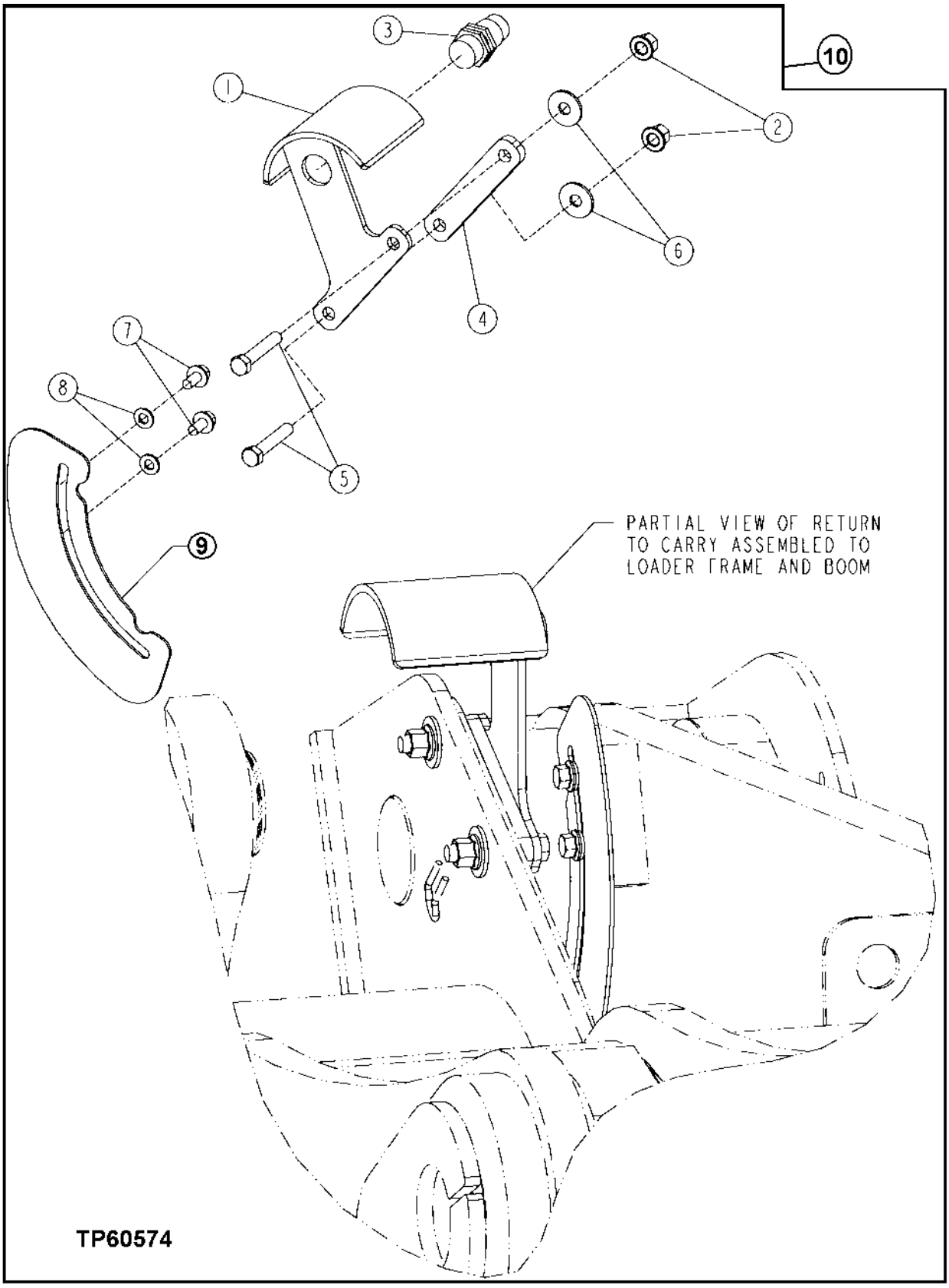

RETURN-T0-CARRY

KEY	PART NO.	PART NAME	QTY	SERIAL NO.	REMARKS
1	AT207199	BRACKET	1		
2	14M7401	LOCK NUT	2		M12
3	AT203130	SENSOR	1		
4	T171309	SPACER	1		
5	19M7753	CAP SCREW	2		M12 X 70
6	24M7180	WASHER	2		13 X 37 X 3 MM
7	19M7784	SCREW	2		M10 X 20
8	.....	WASHER	2		(24M7239 NO LONGER REQUIRED)
9	T174497	ACTUATOR	1		
10	**AT209132**	**KIT**	**1**		**(INCLUDES RELAY AND SWITCH)**

PARK BRAKE SOLENOID VALVE
(SER.NO. -XXXXXX)

TP62656 -UN-27SEP99

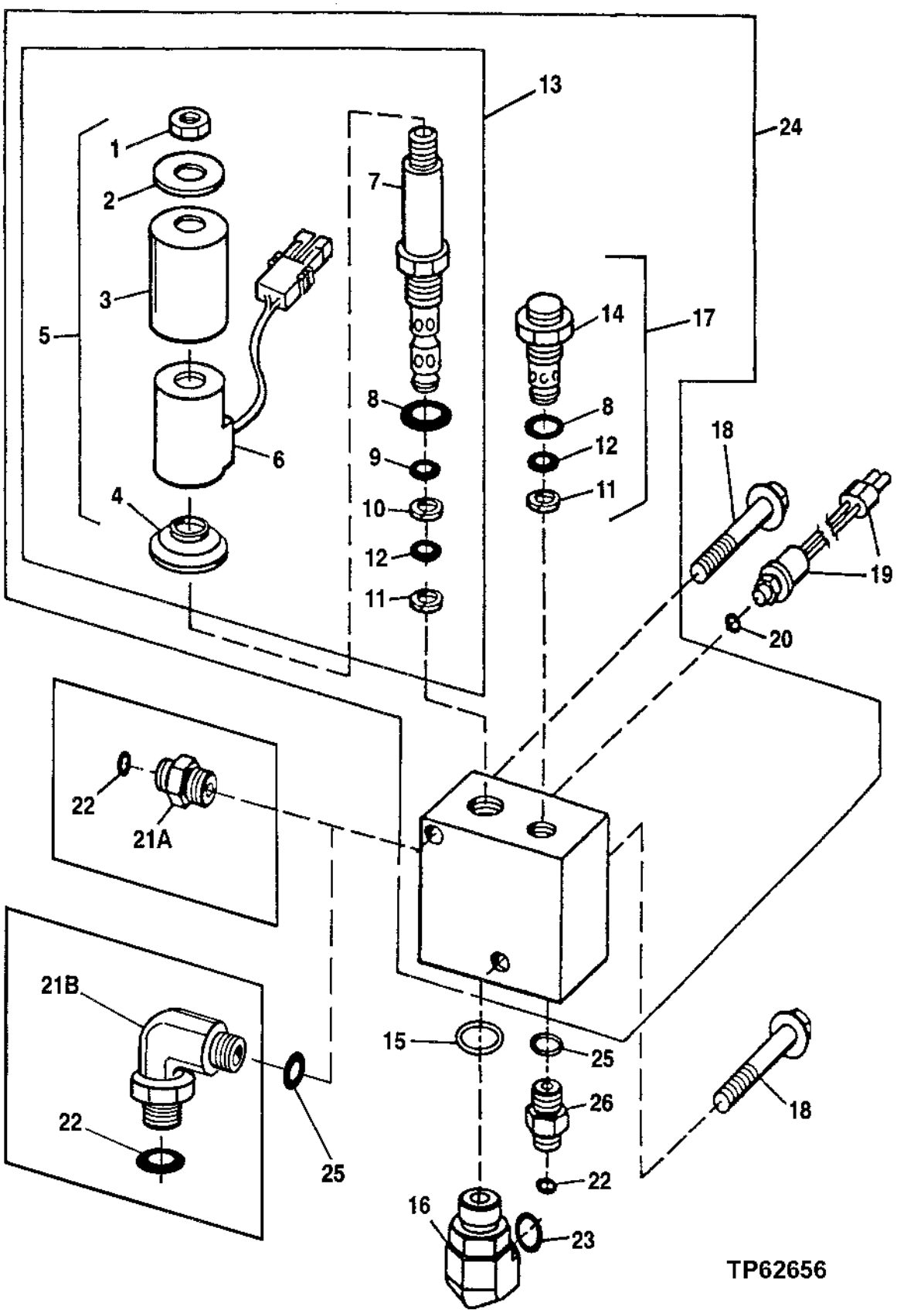

PARK BRAKE SOLENOID VALVE
(SER. NO. -XXXXXX)

KEY	PART NO.	PART NAME	QTY	SERIAL NO.	REMARKS
1	.....	NUT	1		
2	.....	WASHER	1		(SUB AT139434)
3	.....	COVER	1		(SUB AT139434)
4	T130847	PLATE	1		
5	AT139434	KIT	1		
6	AT139433	ELECTRICAL COIL	1		
7	.....	SPOOL	1		(SUB AT209468)
8	R26906	O-RING	2		
9	R33259	O-RING	1		
10	T81247	BACK-UP RING	1		
11	R42926	BACK-UP RING	2		
12	R28776	O-RING	2		
13	AT209468	SOLENOID VALVE	1		
14	.....	VALVE	1		
15	U12547	O-RING	1		
16	38H1404	ELBOW FITTING	1		
17	AT168227	VALVE	1		
18	19M7819	SCREW	2		M12 X 90
19	AT223538	SWITCH	1		(SUB FOR AT206883)
20	R26287	O-RING	1		
21A	38H1171	ADAPTER	1	-573530	
21B	38H1010	ELBOW FITTING	1	573531-	90 DEGREE
22	T77613	O-RING	2		
23	T77858	O-RING	1		
24	AT206811	SOLENOID	1		
25	R26375	O-RING	2		
26	38H1171	ADAPTER	1		

PARK BRAKE SOLENOID VALVE
(SER. NO.XXXXXX-)

T147496 -UN-29OCT01

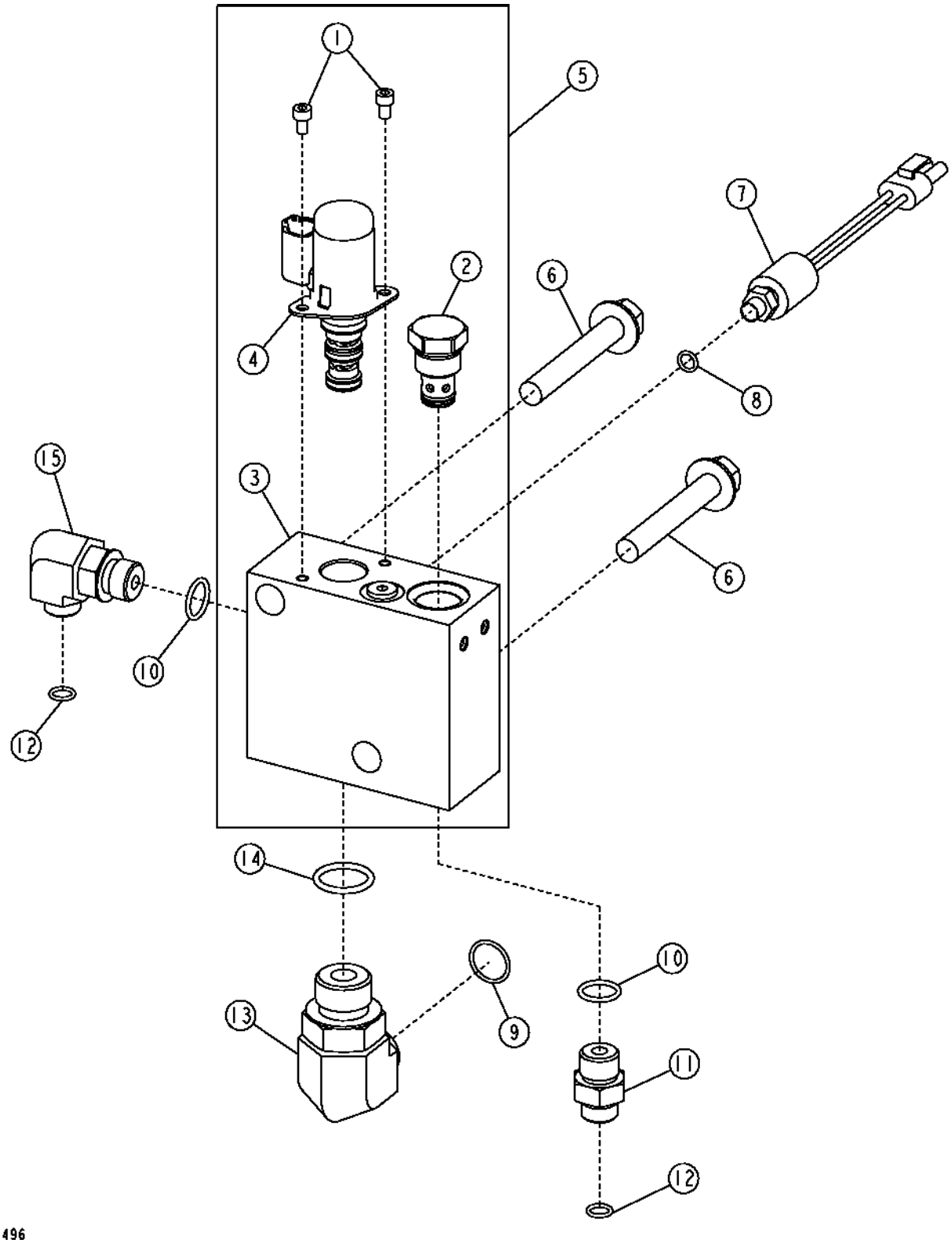

PARK BRAKE SOLENOID VALVE
(SER. NO.XXXXXX-)

KEY	PART NO.	PART NAME	QTY	SERIAL NO.	REMARKS
1	19M9150	SCREW	2		
2	AT224863	CHECK VALVE	1		
	AT224864	SEAL KIT	1		(NOT ILLUSTRATED)
3	.....	HOUSING	1		(SUB AT224497)
4	AT224576	SOLENOID VALVE	1		
	AT224873	SEAL KIT	1		(NOT ILLUSTRATED)
5	AT224497	VALVE	1		
6	19M7818	SCREW	2		
7	AT223538	SWITCH	1		
8	R26287	O-RING	1		
9	T77858	O-RING	1		
10	R26375	O-RING	2		
11	38H1171	ADAPTER	1		
12	T77613	O-RING	2		
13	38H1404	ELBOW FITTING	1		
14	U12547	O-RING	1		
15	38H1010	ELBOW FITTING	1		

PARK BRAKE SOLENOID VALVE HYDRAULIC LINES

TP60324 -UN-08APR98

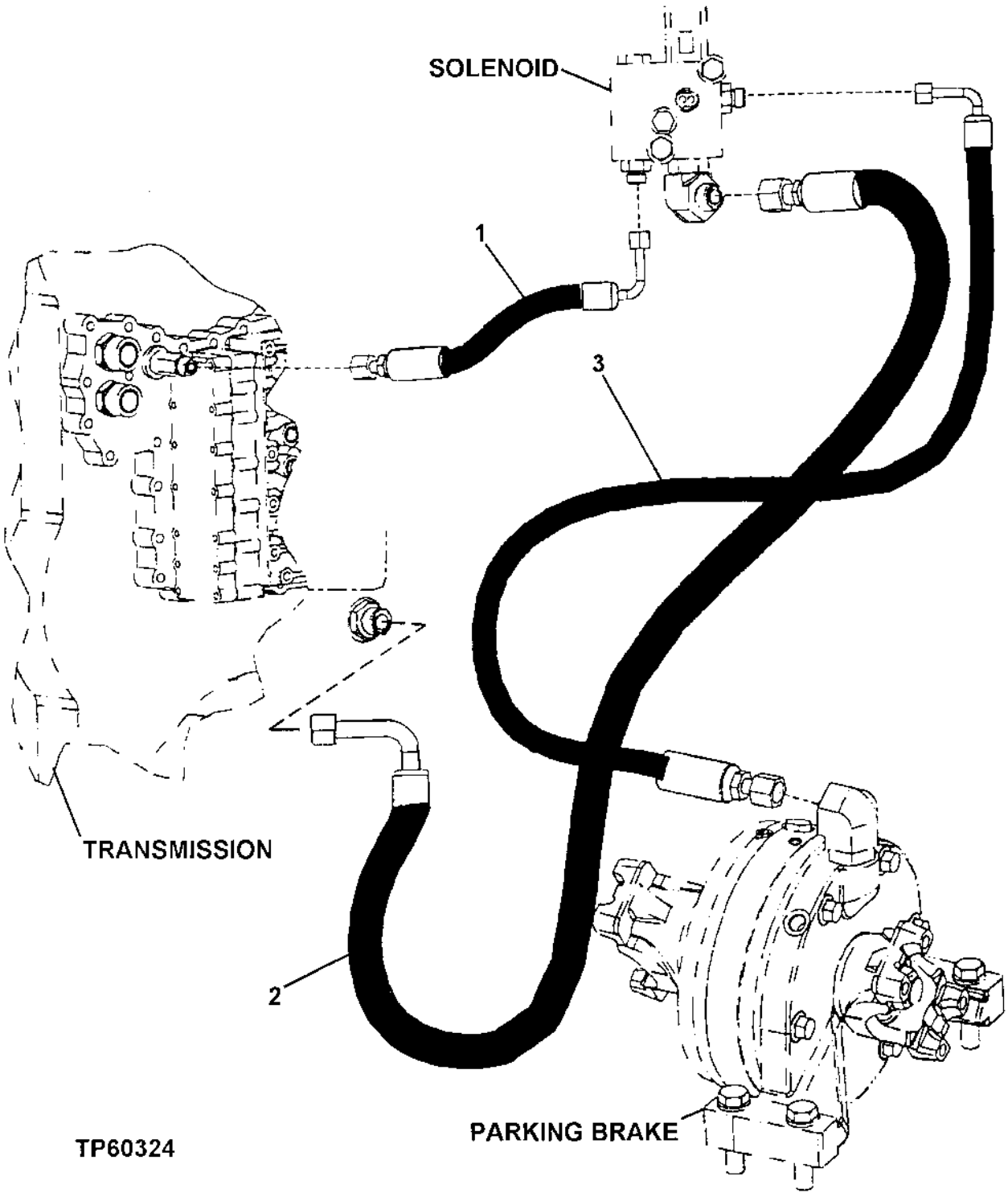

PARK BRAKE SOLENOID VALVE HYDRAULIC LINES

KEY	PART NO.	PART NAME	QTY	SERIAL NO.	REMARKS
1	AT209907	HYDRAULIC HOSE - FABRICATE	1		
2	AT209003	HYDRAULIC HOSE - FABRICATE	1		
3	AT167553	HYDRAULIC HOSE - FABRICATE	1		

HYDRAULIC HOSE HOLDER

TP55430 -UN-15MAR97

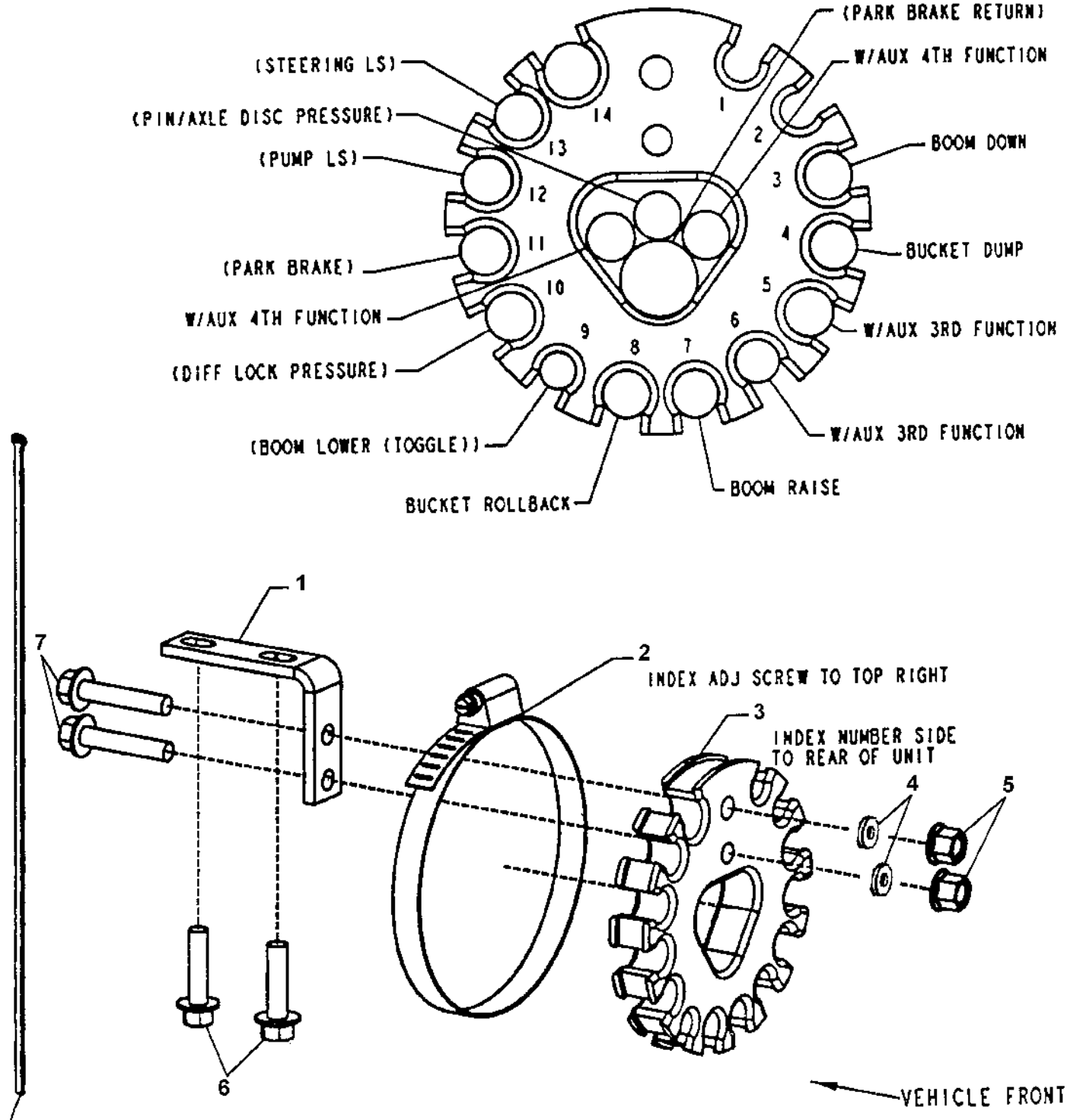

10 X H77698
BAND PILOT HOSES RT BANK 6" FROM REAR OF CONTROL VALVE
BAND PILOT HOSES LEFT BANK 6" FROM REAR OF CONTROL VALVE
BAND ALL PILOT HOSES AT HOSE RING IN LDR FRM
EDGE BAND ALL PILOT HOSES 1" BEHIND HOLDER IN ENG FRM
BAND PILOT HOSES JUST BENEATH CAB
BAND PILOT HOSES INSIDE CONTROL PANEL

TP55430

HYDRAULIC HOSE HOLDER

KEY	PART NO.	PART NAME	QTY	SERIAL NO.	REMARKS
1	T157443	BRACKET	1		
2	AR89602	CLAMP	1		
3	T154342	RETAINER	1		
4	24M7239	WASHER	4		10.700 X 21 X 2.500 MM
5	14M7400	LOCK NUT	2		
6	19M8162	CAP SCREW	2		M10 X 40
7	19M7806	SCREW	2		

AUXILIARY DRIVE HOUSING AND OIL LINE

RGP5013 -UN-15APR98

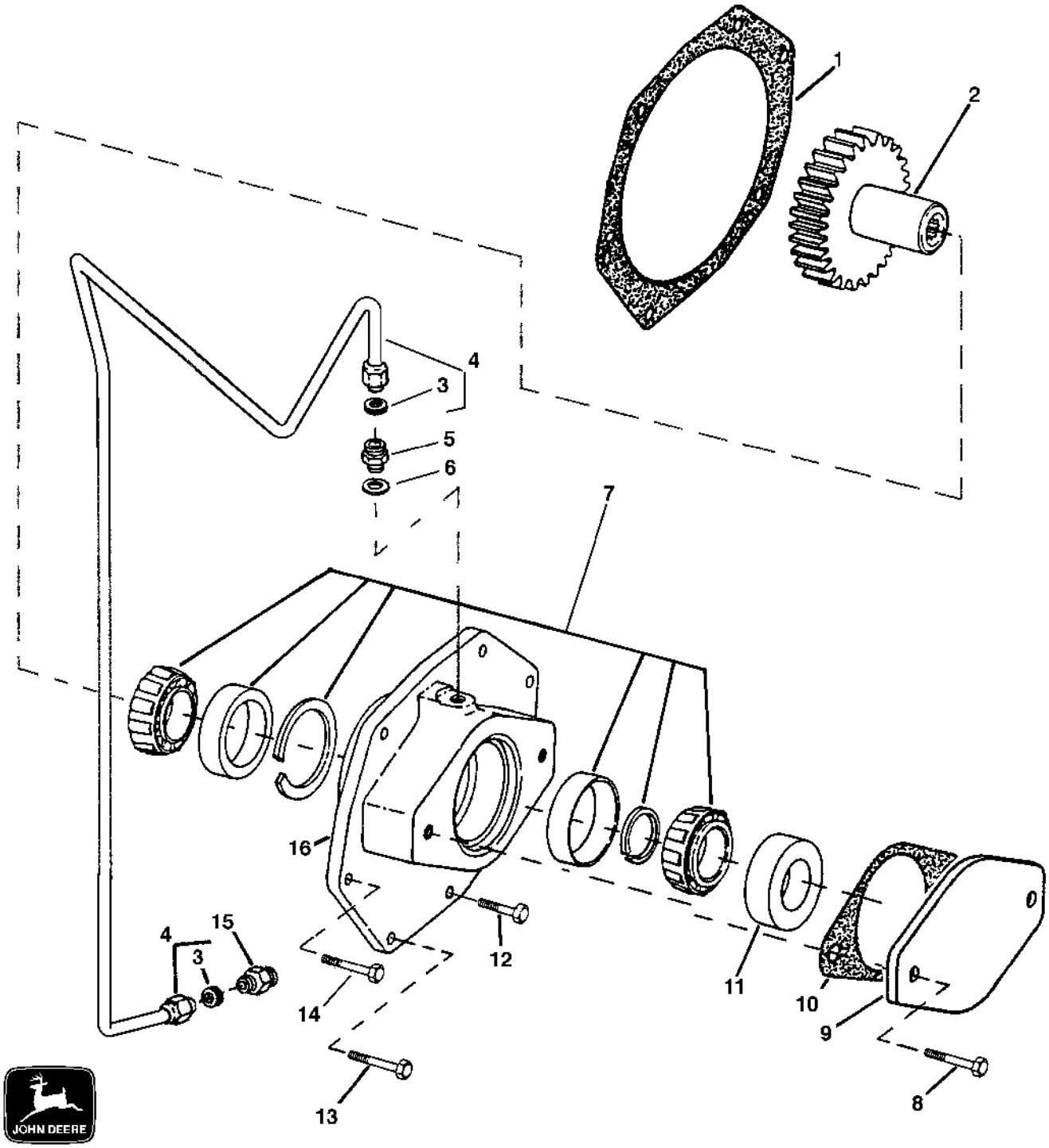

RGP5013

AUXILIARY DRIVE HOUSING AND ADAPTER

KEY	PART NO.	PART NAME	QTY	ENGINE SERIAL NO.	REMARKS
1	T80123	O-RING	1		
2	R112200	GEAR	1		
3	R51936	WASHER	2		
4	RE501787	OIL LINE	1		
5	R119653	FITTING	1		
6	R48693	WASHER	1		
7	RE22514	ROLLER BEARING	1		
8	19H2284	CAP SCREW	1		3/8" X 7/8"
9	R85145	COVER	1		
10	R96935	GASKET	1		
11	R112203	BUSHING	1		
12	19H1905	CAP SCREW	1		5/16" X 1"
13	19H1897	CAP SCREW	1		5/16" X 3-3/4", (HOUSING TO BLOCK)
	19H1907	CAP SCREW	3		5/16" X 2-3/4", (HOUSING TO BLOCK)
14	19H2729	CAP SCREW	1		5/16" X 4-1/4"
15	R63604	FITTING	1		
16	R122722	HOUSING	1		

MEMORANDA

NUMERICAL INDEX

PART NO.	GRID	KEY	PAGE
AA21292	2H12	14	1740 - 3
AA46694	1J4	65	0510 - 9
AH108055	2B6	50	1060 - 3B
AH121227	3B21	20	1810 - 13
AH121227	3B23	20	1810 - 13B
AH124857	3B13	15	1810 - 9
AH125760	4E4	10	3160 - 51
AH125760	4E20	4	3160 - 63
AH130230	2H21	1	1746 - 6
AH130230	4D24	31	3160 - 47
AH135155	1J22	2	0560 - 5
AH137210	4D16	19	3160 - 41
AH144020	3E10	14	1830 - 3
AH144020	3E16	2	1830 - 3F
AH146556	1K15	11	0960 - 11
AH146560	1K15	7	0960 - 11
AH148472	1C24	92	0260 - 13
AH149813	1K15	21	0960 - 11
AH149842	1K15	20	0960 - 11
AH150468	1K15	19	0960 - 11
AH150703	1K15	17	0960 - 11
AH150932	4D18	4	3160 - 43
AH150932	4D20	4	3160 - 43B
AH150933	4D18	7	3160 - 43
AH150933	4D20	7	3160 - 43B
AH151585	1K15	18	0960 - 11
AH156466	4D18	91	3160 - 43
AH156466	4D20	91	3160 - 43B
AH157291	4D16	7	3160 - 41
AH157292	4D16	4	3160 - 41
AH159069	4D16	18	3160 - 41
AH159190	4D16	16	3160 - 41
AH159191	4D16	15	3160 - 41
AH159192	4D16	20	3160 - 41
AH159194	4D18	18	3160 - 43
AH159195	4D18	14	3160 - 43
AH159195	4D20	14	3160 - 43B
AH159196	4D18	11	3160 - 43
AH159196	4D20	11	3160 - 43B
AH161347	4D16	16	3160 - 41
AH161349	4D16	15	3160 - 41
AH162914	1J22	2	0560 - 5
AH163632	4D20	18	3160 - 43B
AH163673	4D18	90	3160 - 43
AH163673	4D20	90	3160 - 43B
AH61472	4E16	10	3160 - 59D
AH75162	1F16	4	0360 - 3B
AH77869	2D16	6	1671 - 1
AH77869	2D17	6	1671 - 2
AH89557	1J14	9	0530 - 3
AH96708	1I21	13B	0510 - 5
AH97280	2E5	7	1673 - 3
AL76568	2E23	2	1674 - 13
AL76568	2E23	9	1674 - 13
AL76568	2E23	11	1674 - 13
AL76568	2E23	15	1674 - 13
AMT1274	1J18	15	0560 - 3
AMT1274	1J20	15	0560 - 3B
AM31805	1I4	6	0420 - 3
AM39653	4E12	20	3160 - 59
AM39653	4E14	20	3160 - 59B
AP22660	2F2	1	1674 - 17
AR100124	1G11	1	0402 - 3
AR104516	3G11	7	2001 - 5
AR104516	3G13	23	2001 - 7
AR104650	1H11	33	0413 - 3
AR21836	1J18	11	0560 - 3
AR21836	1J20	11	0560 - 3B
AR21836	2B12	11	1060 - 5
AR21837	1J18	5	0560 - 3
AR21837	1J20	5	0560 - 3B
AR21837	2D7	1	1369 - 13
AR21837	3F10	3	1830 - 17
AR21837	4E16	8	3160 - 59D
AR21839	1F14	11	0360 - 3
AR21839	1F16	3	0360 - 3B
AR21839	1G11	..	0402 - 3
AR21839	1I23	4	0510 - 5B
AR21839	1J18	4	0560 - 3
AR21839	1J20	4	0560 - 3B
AR21839	4E10	9	3160 - 57
AR21842	1J18	22	0560 - 3
AR21842	1J20	22	0560 - 3B
AR21969	2D2	..	1369 - 8
AR21969	2D4	..	1369 - 10
AR21999	1I17	3	0505 - 5
AR21999	1J2	9	0510 - 7
AR40418	1J10	9	0520 - 5
AR41785	2D2	..	1369 - 8
AR44402	2D2	1	1369 - 8
AR46217	4E12	43	3160 - 59
AR46217	4E14	43	3160 - 59B
AR48675	1G20	..	0404 - 7
AR48675	1H25	4	0418 - 2
AR49025	1G13	1	0402 - 6
AR49025	1G20	..	0404 - 7
AR50411	1I13	1	0505 - 1
AR54749	2D2	4	1369 - 8
AR55394	1I1	16	0419 - 2
AR58952	1I1	15	0419 - 2
AR58952	1I10	36	0452 - 3
AR61533	1G17	17	0404 - 3
AR61589	1G17	19	0404 - 3
AR62399	1I13	5	0505 - 1
AR62492	1I13	7	0505 - 1
AR65005	2G23	1	1674 - 52
AR65006	2G23	2	1674 - 52
AR77114	1H9	8	0413 - 1
AR83396	2H23	4	1749 - 3
AR85519	1H11	20	0413 - 3
AR86745	1I4	14	0420 - 3
AR88903	1H13	12	0413 - 5
AR88903	1H15	15	0413 - 5B
AR89602	4F25	2	3160 - 83
AR91793	2G20	42	1674 - 49
AR91896	3B15	30	1810 - 9B
AR94101	2E16	1	1674 - 6
AR94101	2F6	2	1674 - 21
AR94101	2F12	1	1674 - 25
AR94101	2F16	1	1674 - 29
AR94101	2F16	11	1674 - 29
AR94101	2G6	1	1674 - 39
AR94101	2G8	4	1674 - 39B
AR94101	2H4	1	1674 - 57
AR98850	1G15	9	0403 - 2
AT103107	2D9	4	1370 - 3
AT103107	4D22	6	3160 - 45
AT103399	2F16	1	1674 - 29
AT103399	2F16	10	1674 - 29
AT103399	2H4	1	1674 - 57
AT103919	3G15	10	2002 - 2
AT104041	4C16	90	3160 - 17
AT104041	4C18	90	3160 - 19
AT106365	3B11	5	1810 - 7
AT106384	3C18	1	1810 - 23D
AT106413	1J4	66	0510 - 9
AT107509	1H7	11	0409 - 3
AT107738	1J16	3	0540 - 3
AT113759	2G8	1	1674 - 39B
AT113759	2G10	1	1674 - 39D
AT115875	3F14	2	1910 - 3
AT115876	4C16	90	3160 - 17
AT116114	1K3	29	0930 - 3
AT116162	1D4	7	0260 - 17
AT116162	1K7	9	0960 - 5
AT116162	2B14	6	1060 - 7
AT116162	2B16	6	1060 - 9
AT116373	1K3	24	0930 - 3
AT116373	1K3	27	0930 - 3
AT116449	4E10	5	3160 - 57
AT116970	3B11	1	1810 - 7
AT119017	4D6	10	3160 - 31
AT119018	4D6	12	3160 - 31
AT119378	4D6	11	3160 - 31
AT120444	4E16	12	3160 - 59D
AT120461	3G24	2	2004 - 7
AT124574	4C6	28	3160 - 11
AT124574	4C8	28	3160 - 11B
AT124574	4C10	5	3160 - 11D
AT128889	1I23	5	0510 - 5B
AT129419	1F20	12	0360 - 7
AT129419	2G8	1	1674 - 39B
AT129419	2G10	1	1674 - 39D
AT129419	4E12	51	3160 - 59
AT129526	1F14	7	0360 - 3
AT133590	4D12	3	3160 - 37
AT135758	2E5	4	1673 - 3
AT135758	2E10	3	1673 - 6
AT135906	4E16	5	3160 - 59D
AT135907	4E16	13	3160 - 59D
AT13740	1G17	4	0404 - 3
AT13740	1H24	11	0417 - 3
AT137920	3C18	7	1810 - 23D
AT137921	3C18	9	1810 - 23D
AT138179	3C14	12	1810 - 23
AT138180	3C14	10	1810 - 23
AT138215	3C14	28	1810 - 23
AT139431	4E18	14	3160 - 61
AT139431	4F8	14	3160 - 69D
AT139432	4E18	7	3160 - 61
AT139432	4E18	13	3160 - 61
AT139432	4F8	1	3160 - 69D
AT139432	4F8	7	3160 - 69D
AT139433	4E18	6	3160 - 61
AT139433	4F8	8	3160 - 69D
AT139433	4F19	6	3160 - 79
AT139434	4E18	2	3160 - 61
AT139434	4E18	3	3160 - 61
AT139434	4E18	4	3160 - 61
AT139434	4E18	5	3160 - 61
AT139434	4F8	10	3160 - 69D
AT139434	4F8	11	3160 - 69D
AT139434	4F8	12	3160 - 69D
AT139434	4F8	13	3160 - 69D
AT139434	4F19	2	3160 - 79
AT139434	4F19	3	3160 - 79
AT139434	4F19	5	3160 - 79
AT139694	1K5	6	0960 - 3
AT141527	1K3	23	0930 - 3
AT143577	2H14	2	1740 - 5
AT144994	4E12	30	3160 - 59

NUMERICAL INDEX - CONTINUED

PART NO.	GRID	KEY	PAGE
AT144995	1F20	10	0360 - 7
AT145341	1I15	5	0505 - 3
AT145341	2F1	4	1674 - 16
AT145650	1I23	4	0510 - 5B
AT145929	2E25	1	1674 - 15
AT145931	2E25	2	1674 - 15
AT146294	3F14	17	1910 - 3
AT147166	4F13	2	3160 - 74
AT147496	1F20	9	0360 - 7
AT147847	1D2	5	0260 - 15
AT149608	3G15	11	2002 - 2
AT151812	3C22	4	1810 - 27
AT151931	3B15	24	1810 - 9B
AT152113	2B4	30	1060 - 3
AT152113	2B8	30	1060 - 3D
AT152180	1G25	13	0407 - 3
AT152180	4E12	25	3160 - 59
AT152180	4E14	25	3160 - 59B
AT153937	4D16	10	3160 - 41
AT156632	1J18	2	0560 - 3
AT156632	1J20	2	0560 - 3B
AT156748	1J6	90	0515 - 3
AT156896	1K7	6	0960 - 5
AT157226	3G15	9	2002 - 2
AT157299	2H12	2	1740 - 3
AT157299	4B11	29	3140 - 3
AT157532	4E12	11	3160 - 59
AT157532	4E14	11	3160 - 59B
AT157991	3E2	9	1822 - 3
AT157991	3E4	5	1822 - 5
AT157991	3E8	8	1822 - 7
AT158971	4F12	31	3160 - 73
AT158971	4F15	3	3160 - 75
AT158971	4F15	5	3160 - 75
AT159938	4E18	15	3160 - 61
AT159938	4E18	17	3160 - 61
AT160273	3D13	2	1821 - 3
AT160278	3D13	5	1821 - 3
AT160480	2H9	1	1676 - 2
AT160662	1K5	10	0960 - 3
AT160662	1K5	23	0960 - 3
AT160662	1K5	24	0960 - 3
AT160662	1K5	25	0960 - 3
AT160704	2E2	3	1672 - 9
AT161527	4F12	31	3160 - 73
AT161527	4F15	4	3160 - 75
AT161528	4F12	31	3160 - 73
AT161528	4F15	2	3160 - 75
AT161638	4E12	5	3160 - 59
AT161638	4E14	5	3160 - 59B
AT162096	4F12	11A	3160 - 73
AT162096	4F12	11B	3160 - 73
AT162171	3C12	1	1810 - 21
AT162171	4D2	12	3160 - 27
AT162719	1K5	14	0960 - 3
AT162848	3F2	17	1830 - 11
AT162863	2G15	1	1674 - 44
AT163156	2D20	8	1672 - 3
AT163872	3E21	5	1830 - 6
AT164515	4D10	3	3160 - 35
AT164515	4D12	4	3160 - 37
AT164515	4D14	3	3160 - 39
AT164676	2E20	5	1674 - 10
AT164852	4F10	6	3160 - 71
AT165288	1D16	7	0342 - 3
AT166148	2B12	1	1060 - 5
AT166149	1C16	4	0260 - 5
AT166149	1C22	5	0260 - 11
AT166149	1D8	5	0260 - 21
AT166149	2B12	2	1060 - 5
AT166149	4E10	4	3160 - 57
AT166459	1J4	41	0510 - 9
AT167553	1C20	4	0260 - 9
AT167553	4E2	10	3160 - 49
AT167553	4E10	8	3160 - 57
AT167553	4F4	10	3160 - 69
AT167553	4F6	8	3160 - 69B
AT167553	4F12	5	3160 - 73
AT167553	4F23	3	3160 - 81
AT168165	3G17	6	2003 - 2
AT168227	4F19	17	3160 - 79
AT168543	3E20	9	1830 - 5
AT168543	3E21	8	1830 - 6
AT168984	1K3	34	0930 - 3
AT169157-MAI	4C4	..	3160 - 9
AT169282	1K17	5	0960 - 13
AT169418	1J2	10	0510 - 7
AT169849	1K5	5	0960 - 3
AT169881	4D24	28	3160 - 47
AT169881	4E2	7	3160 - 49
AT169886	4E2	10	3160 - 49
AT169939	4E10	6	3160 - 57
AT169939	4F4	9	3160 - 69
AT169939	4F6	12	3160 - 69B
AT170005	3B7	4	1810 - 3
AT170314	2H8	1	1676 - 1
AT170759	1I17	6	0505 - 5
AT170991	4C6	33	3160 - 11
AT170991	4C8	33	3160 - 11B
AT170991	4C10	7	3160 - 11D
AT171023	3F4	1	1830 - 13
AT171162	1I17	4	0505 - 5
AT171539	1I17	13	0505 - 5
AT172629	4B19	1	3160 - Q0021
AT172629	4C20	1	3160 - 21
AT172629	4D4	1	3160 - 29
AT172629	4D6	1	3160 - 31
AT172778	3D10	1	1821 - 1
AT172779	3D10	1	1821 - 1
AT172779	3D10	2	1821 - 1
AT173193	3B11	9	1810 - 7
AT173313	3D21	1	1821 - 7
AT173313	3D25	5	1821 - 11
AT173313	3D25	6	1821 - 11
AT173313	3D25	36	1821 - 11
AT173313	3D25	38	1821 - 11
AT173314	3D21	3	1821 - 7
AT173314	3D21	7	1821 - 7
AT173314	3D25	27	1821 - 11
AT173315	3D21	2	1821 - 7
AT173315	3D25	10	1821 - 11
AT173316	3D19	7	1821 - 5
AT173317	3D21	4	1821 - 7
AT173318	3D23	2	1821 - 9
AT173318	3D23	3	1821 - 9
AT173319	3D19	8	1821 - 5
AT173319	3D23	1	1821 - 9
AT173320	3D21	8	1821 - 7
AT173320	3D23	3	1821 - 9
AT173321	3D21	5	1821 - 7
AT173321	3D25	16	1821 - 11
AT173321	3D25	17	1821 - 11
AT173321	3D25	20	1821 - 11
AT173321	3D25	39	1821 - 11
AT173322	3D21	6	1821 - 7
AT173323	3D19	3	1821 - 5
AT173324	3D19	6	1821 - 5
AT173325	3D19	2	1821 - 5
AT173326	3D19	4	1821 - 5
AT173327	3D19	5	1821 - 5
AT173327	3D19	10	1821 - 5
AT173328	3D19	1	1821 - 5
AT173328	3D19	9	1821 - 5
AT173354	2B22	7	1314 - 1
AT173355	2E9	2	1673 - 5
AT173610	1J2	11	0510 - 7
AT175424	2H8	1	1676 - 1
AT175707	1F14	7	0360 - 3
AT175707	1F18	2	0360 - 5
AT175707	1F18	5	0360 - 5
AT175707	1F18	7	0360 - 5
AT175707	1F18	10	0360 - 5
AT175707	1F18	12	0360 - 5
AT175750	1F6	5	0350 - 37
AT175781	1K3	19	0930 - 3
AT175831	1F18	11	0360 - 5
AT176801	2F4	4	1674 - 19
AT177956	3C14	23	1810 - 23
AT177957	3C14	25	1810 - 23
AT177963	3C14	19	1810 - 23
AT178065	3D11	1	1821 - 1A
AT178840	2C24	1	1369 - 5
AT178842	2C24	1	1369 - 5
AT178843	2C24	1	1369 - 5
AT178844	2C24	1	1369 - 5
AT179079	2F4	3	1674 - 19
AT179934	4C14	25	3160 - 15
AT179935	4C14	24	3160 - 15
AT180333	2C24	1	1369 - 5
AT180334	2C24	1	1369 - 5
AT180335	2C24	1	1369 - 5
AT180344	2D1	1	1369 - 7
AT180692	4E6	1	3160 - 53
AT180830	2E17	1	1674 - 7
AT181185	1D4	13	0260 - 17
AT181186	1D4	14	0260 - 17
AT181313	2B6	54	1060 - 3B
AT181313	2B10	54	1060 - 3F
AT181582	1I17	11	0505 - 5
AT183016	2C25	1	1369 - 6
AT183222	1I17	10	0505 - 5
AT184015	1J12	1	0520 - 7
AT184206	1F20	9	0360 - 7
AT184869	4E18	38	3160 - 61
AT186257	4E8	8	3160 - 55
AT186760	3G14	1	2002 - 1
AT188759	3G13	8	2001 - 7
AT189390	3G19	3	2003 - 3B
AT189487	3G17	3	2003 - 2
AT189487	3G17	4	2003 - 2
AT189487	3G17	6	2003 - 2
AT189487	3G19	5	2003 - 3B
AT191282	1K3	34	0930 - 3
AT191283	4E2	7	3160 - 49
AT191790	4E14	54	3160 - 59B
AT192956	3G13	13	2001 - 7
AT192957	3G13	13	2001 - 7
AT192958	3G13	13	2001 - 7
AT193500	3E12	39	1830 - 3B
AT193500	3E16	8	1830 - 3F
AT195301	2E25	2	1674 - 15

NUMERICAL INDEX - CONTINUED

PART NO.	GRID	KEY	PAGE
AT195441	3D13	1	1821 - 3
AT195442	3D13	6	1821 - 3
AT202610	1K5	29	0960 - 3
AT202726	3C14	28	1810 - 23
AT202732	3C8	1	1810 - 17
AT202778	2E19	1	1674 - 9
AT202778	2G12	1	1674 - 41
AT202779	3G20	2	2004 - 2
AT202784	3C14	28	1810 - 23
AT202785	2F4	1	1674 - 19
AT202786	2E11	1	1674 - 1
AT202786	2E23	5	1674 - 13
AT202787	2E11	1	1674 - 1
AT202787	2E23	3	1674 - 13
AT202788	2E11	1	1674 - 1
AT202788	2E23	17	1674 - 13
AT202789	2B22	7	1314 - 1
AT202792	2E6	1	1673 - 4
AT202795	2E11	1	1674 - 1
AT202795	2E23	1	1674 - 13
AT202796	2E11	1	1674 - 1
AT202796	2E23	6	1674 - 13
AT202797	2E11	1	1674 - 1
AT202797	2E23	7	1674 - 13
AT202798	2E11	1	1674 - 1
AT202798	2E23	14	1674 - 13
AT202800	2E11	1	1674 - 1
AT202800	2E23	19	1674 - 13
AT202805	2E11	1	1674 - 1
AT202805	2E23	16	1674 - 13
AT202810	2E23	13	1674 - 13
AT202812	2D16	2	1671 - 1
AT202813	2D16	1	1671 - 1
AT202814	2D16	3	1671 - 1
AT202815	2D18	7	1671 - 3
AT202822	2F18	1	1674 - 31
AT202823	2F12	1	1674 - 25
AT202824	2E16	1	1674 - 6
AT202827	2E18	1	1674 - 8
AT202831	2E20	3	1674 - 10
AT202842	1I17	1	0505 - 5
AT202842	2E11	1	1674 - 1
AT202857	3C4	3	1810 - 15
AT202857	3C6	3	1810 - 15B
AT202857	3F6	11	1830 - 13B
AT202889	2B14	8	1060 - 7
AT202908	1J8	17	0520 - 3
AT202910	1J8	1	0520 - 3
AT202910	1J8	16	0520 - 3
AT202924	3F19	1	1921 - 3
AT202925	3F19	17A	1921 - 3
AT202934	2F24	1	1674 - 35
AT202935	2E20	1	1674 - 10
AT202944	4E12	38	3160 - 59
AT202944	4E14	38	3160 - 59B
AT202955	1D18	14	0350 - 3
AT202958	2E11	1	1674 - 1
AT202958	2E23	19	1674 - 13
AT203034	4E12	16A	3160 - 59
AT203034	4E14	16A	3160 - 59B
AT203050	1J8	2	0520 - 3
AT203051	1J8	7	0520 - 3
AT203061	4D24	30	3160 - 47
AT203086	4D2	9	3160 - 27
AT203087	4C18	58	3160 - 19
AT203088	4D2	9	3160 - 27
AT203128	2G12	1	1674 - 41
AT203130	4E22	5	3160 - 65
AT203130	4E24	8	3160 - 65B
AT203130	4F2	2	3160 - 67
AT203130	4F17	3	3160 - 77
AT203137	2B22	3	1314 - 1
AT203137	2E15	1	1674 - 5
AT203182	1K17	3	0960 - 13
AT203208	1F14	10A	0360 - 3
AT203208	4E10	12	3160 - 57
AT203247	4B7	7	3102 - 3
AT203457	2B4	4	1060 - 3
AT203457	2B8	4	1060 - 3D
AT203483	4B11	16	3140 - 3
AT203487	4E18	36	3160 - 61
AT203487	4E18	39	3160 - 61
AT203487	4E20	1	3160 - 63
AT203492	1K3	4	0930 - 3
AT203492	2E14	1	1674 - 4
AT203500	2E11	1	1674 - 1
AT203500	2E23	4	1674 - 13
AT203547	4E12	3	3160 - 59
AT203547	4E12	49	3160 - 59
AT203547	4E14	3	3160 - 59B
AT203547	4E14	49	3160 - 59B
AT203566	1I15	12	0505 - 3
AT203591	4C24	10	3160 - 25
AT205530	1K17	1	0960 - 13
AT206413	3B15	26	1810 - 9B
AT206414	3B15	25	1810 - 9B
AT206421	3B15	27	1810 - 9B
AT206432	3B21	3	1810 - 13
AT206433	3B19	1	1810 - 11
AT206436	3B15	41	1810 - 9B
AT206437	3B15	41	1810 - 9B
AT206438	3B13	12	1810 - 9
AT206440	3B21	25	1810 - 13
AT206441	3B19	13	1810 - 11
AT206464	3B15	23	1810 - 9B
AT206467	3E10	19	1830 - 3
AT206472	3B13	11	1810 - 9
AT206660	2B22	8	1314 - 1
AT206684	2E20	7	1674 - 10
AT206685	2G15	1	1674 - 44
AT206690	3F14	8	1910 - 3
AT206721	2B4	28	1060 - 3
AT206721	2B8	28	1060 - 3D
AT206722	2F6	1	1674 - 21
AT206731	4D22	14	3160 - 45
AT206751	2H12	5	1740 - 3
AT206780	3C12	12	1810 - 21
AT206780	4D2	23	3160 - 27
AT206794	1C2	24	0210 - 19
AT206797	2B19	2	1115 - 3
AT206798	2B19	2	1115 - 3
AT206811	4F19	24	3160 - 79
AT206818	1I15	11	0505 - 3
AT206878	2E3	1	1673 - 1
AT206883	4F19	19	3160 - 79
AT206912	2E23	20	1674 - 13
AT206940	1J8	8	0520 - 3
AT207022	1C2	1	0210 - 19
AT207022	1C18	3	0260 - 7
AT207022	1K19	11	0960 - 15
AT207023	1C18	3	0260 - 7
AT207034	1I23	2	0510 - 5B
AT207035	2B12	3	1060 - 5
AT207073	2B6	41	1060 - 3B
AT207073	2B10	41	1060 - 3F
AT207082	1I15	8	0505 - 3
AT207096	2B12	5	1060 - 5
AT207096	4D10	1	3160 - 35
AT207096	4D12	1	3160 - 37
AT207096	4D14	1	3160 - 39
AT207097	4D10	2	3160 - 35
AT207097	4D12	2	3160 - 37
AT207097	4D14	2	3160 - 39
AT207103	3F2	13	1830 - 11
AT207199	4F17	1	3160 - 77
AT207205	4F2	1	3160 - 67
AT207287	4B13	2	3140 - 5
AT207330	1D14	13	0325 - 3
AT207346	2D24	27	1672 - 7
AT207414	1D14	10	0325 - 3
AT207417	1D14	8	0325 - 3
AT207417	1D14	12	0325 - 3
AT207418	1D14	9	0325 - 3
AT207432	2H16	2	1746 - 3
AT207432	2H18	4	1746 - 3B
AT207433	2H16	3	1746 - 3
AT207433	2H18	3	1746 - 3B
AT207497	2E23	21	1674 - 13
AT207529	2B4	29	1060 - 3
AT207529	2B8	29	1060 - 3D
AT207597	3C4	6	1810 - 15
AT207597	3C6	7	1810 - 15B
AT207608	2D20	8	1672 - 3
AT207644	4F4	2	3160 - 69
AT207682	1K5	2	0960 - 3
AT207707	2F3	1	1674 - 18
AT207709	2E11	1	1674 - 1
AT207717	4B11	32	3140 - 3
AT207721	2E9	1	1673 - 5
AT207721	2E9	3	1673 - 5
AT207721	2E9	5	1673 - 5
AT207721	3B17	3	1810 - 9D
AT207858	1K3	41	0930 - 3
AT207875	4E10	5	3160 - 57
AT207900	4E12	1	3160 - 59
AT207900	4E14	1	3160 - 59B
AT207923	4D24	28	3160 - 47
AT207947	2B4	26	1060 - 3
AT207947	2B8	26	1060 - 3D
AT207948	2B4	25	1060 - 3
AT207948	2B6	58	1060 - 3B
AT207948	2B8	25	1060 - 3D
AT207948	2B10	58	1060 - 3F
AT207952	2D22	2	1672 - 5
AT207967	4D8	1	3160 - 33
AT207968	4D2	9	3160 - 27
AT207987	1F14	1	0360 - 3
AT208006	1I19	2	0510 - 3
AT208009	1F14	10A	0360 - 3
AT208010	1F14	4	0360 - 3
AT208041	4B25	1	3160 - 5
AT208042	4B23	1	3160 - 3
AT208085	2B4	16	1060 - 3
AT208086	2B4	7	1060 - 3
AT208086	2B8	7	1060 - 3D
AT208087	2B4	1	1060 - 3
AT208087	2B8	1	1060 - 3D
AT208088	2B4	6	1060 - 3
AT208088	2B8	6	1060 - 3D
AT208089	2B4	14	1060 - 3
AT208089	2B8	14	1060 - 3D

NUMERICAL INDEX - CONTINUED

PART NO.	GRID	KEY	PAGE
AT208101	2B19	4	1115 - 3
AT208101	2B19	10	1115 - 3
AT208101	2B19	17	1115 - 3
AT208101	2B19	23	1115 - 3
AT208101	2B19	31	1115 - 3
AT208123	4B11	20	3140 - 3
AT208156	1B3	2	0110 - 3
AT208158	1J18	13	0560 - 3
AT208158	1J18	25	0560 - 3
AT208158	1J18	30	0560 - 3
AT208158	1J20	25	0560 - 3B
AT208158	1J20	30	0560 - 3B
AT208159	3F14	1	1910 - 3
AT208163	2B4	3	1060 - 3
AT208163	2B8	3	1060 - 3D
AT208166	2B4	8	1060 - 3
AT208166	2B8	8	1060 - 3D
AT208167	2B4	17	1060 - 3
AT208178	4B21	33	3160 - Q0023
AT208178	4C18	34	3160 - 19
AT208178	4C22	33	3160 - 23
AT208178	4D4	23	3160 - 29
AT208179	4B21	34	3160 - Q0023
AT208179	4C18	35	3160 - 19
AT208179	4C22	34	3160 - 23
AT208180	4B21	46	3160 - Q0023
AT208180	4C18	45	3160 - 19
AT208180	4C22	46	3160 - 23
AT208181	4B21	44	3160 - Q0023
AT208181	4C18	42	3160 - 19
AT208181	4C22	44	3160 - 23
AT208182	4B21	42	3160 - Q0023
AT208182	4C18	41	3160 - 19
AT208182	4C22	42	3160 - 23
AT208182	4D4	28	3160 - 29
AT208183	4B21	43	3160 - Q0023
AT208183	4C18	43	3160 - 19
AT208183	4C22	43	3160 - 23
AT208188	4C16	1	3160 - 17
AT208191	3F19	6	1921 - 3
AT208334	1I19	1	0510 - 3
AT208399	3E10	4	1830 - 3
AT208399	3E14	4	1830 - 3D
AT208410	3F2	10	1830 - 11
AT208411	1D2	1	0260 - 15
AT208411	2B19	7	1115 - 3
AT208424	4E18	20	3160 - 61
AT208424	4E18	21	3160 - 61
AT208424	4E18	22	3160 - 61
AT208425	4E18	31	3160 - 61
AT208425	4E18	35	3160 - 61
AT208426	4E18	29	3160 - 61
AT208426	4E18	30	3160 - 61
AT208435	2E10	3	1673 - 6
AT208435	2E10	6	1673 - 6
AT208437	1J2	26	0510 - 7
AT208438	1J4	47	0510 - 9
AT208451	1J2	14	0510 - 7
AT208481	3G9	1	2001 - 3
AT208483	3D25	13	1821 - 11
AT208483	3D25	23	1821 - 11
AT208484	3D25	29	1821 - 11
AT208485	3D25	3	1821 - 11
AT208486	3D25	14	1821 - 11
AT208487	3D25	21	1821 - 11
AT208487	3D25	28	1821 - 11
AT208487	3D25	33	1821 - 11
AT208487	3D25	34	1821 - 11
AT208487	3D25	40	1821 - 11
AT208488	3D25	8	1821 - 11
AT208490	3D25	19	1821 - 11
AT208490	3D25	22	1821 - 11
AT208490	3D25	24	1821 - 11
AT208490	3D25	26	1821 - 11
AT208490	3D25	41	1821 - 11
AT208491	3D25	18	1821 - 11
AT208492	3D25	25	1821 - 11
AT208493	3D25	1	1821 - 11
AT208493	3D25	2	1821 - 11
AT208493	3D25	4	1821 - 11
AT208493	3D25	7	1821 - 11
AT208493	3D25	30	1821 - 11
AT208493	3D25	32	1821 - 11
AT208493	3D25	42	1821 - 11
AT208494	3G9	3	2001 - 3
AT208494	3G11	14	2001 - 5
AT208495	3G9	2	2001 - 3
AT208531	3D13	7	1821 - 3
AT208531	3D25	31	1821 - 11
AT208531	3D25	45	1821 - 11
AT208532	1J4	56	0510 - 9
AT208541	2D24	25	1672 - 7
AT208585	4B11	27	3140 - 3
AT208592	4F13	2	3160 - 74
AT208594	4F13	3	3160 - 74
AT208596	4F13	5	3160 - 74
AT208596	4F13	6	3160 - 74
AT208596	4F14	3	3160 - 74A
AT208596	4F14	4	3160 - 74A
AT208598	4F13	1	3160 - 74
AT208598	4F14	1	3160 - 74A
AT208601	4F13	6	3160 - 74
AT208601	4F14	3	3160 - 74A
AT208603	4F13	5	3160 - 74
AT208603	4F14	4	3160 - 74A
AT208620	4B15	1	3140 - 7
AT208622	4B15	10	3140 - 7
AT208630	2E11	1	1674 - 1
AT208633	4E6	90	3160 - 53
AT208633	4E8	90	3160 - 55
AT208634	4E6	1	3160 - 53
AT208635	4E6	2	3160 - 53
AT208638	4E6	91	3160 - 53
AT208638	4E8	91	3160 - 55
AT208653	2H12	1	1740 - 3
AT208691	4D24	27	3160 - 47
AT208694	1K17	4	0960 - 13
AT208695	1K17	2	0960 - 13
AT208696	1C14	3	0260 - 3
AT208696	1C16	7	0260 - 5
AT208704	4F12	17	3160 - 73
AT208704	4F13	4	3160 - 74
AT208704	4F13	8	3160 - 74
AT208711	2H20	3	1746 - 5
AT208712	2H20	2	1746 - 5
AT208716	1J18	9	0560 - 3
AT208716	1J20	9	0560 - 3B
AT208725	1K3	33	0930 - 3
AT208746	2F14	1	1674 - 27
AT208749	2G6	1	1674 - 39
AT208750	2G2	1	1674 - 37
AT208756	2E17	1	1674 - 7
AT208756	2F16	1	1674 - 29
AT208758	2H4	2	1674 - 57
AT208759	2H4	1	1674 - 57
AT208760	4D6	13	3160 - 31
AT208760	4D6	18	3160 - 31
AT208760	4D6	28	3160 - 31
AT208760	4D8	5	3160 - 33
AT208872	4D4	34	3160 - 29
AT208873	4D4	34	3160 - 29
AT208911	4B19	4	3160 - Q0021
AT208911	4B19	6	3160 - Q0021
AT208911	4C16	4	3160 - 17
AT208911	4C16	5	3160 - 17
AT208911	4C20	4	3160 - 21
AT208911	4C20	6	3160 - 21
AT208911	4D4	4	3160 - 29
AT208911	4D4	5	3160 - 29
AT208911	4D6	1	3160 - 31
AT208911	4D6	4	3160 - 31
AT208924	4F12	35	3160 - 73
AT208930	4E12	27	3160 - 59
AT208930	4E14	27	3160 - 59B
AT208975	4B7	9	3102 - 3
AT209003	4F23	2	3160 - 81
AT209014	3D13	8	1821 - 3
AT209015	3D13	3	1821 - 3
AT209016	3D13	1	1821 - 3
AT209016	3D13	2	1821 - 3
AT209017	3D13	5	1821 - 3
AT209017	3D13	6	1821 - 3
AT209020	3D17	11	1821 - 3D
AT209021	3D17	10	1821 - 3D
AT209022	3D17	4	1821 - 3D
AT209022	3D17	12	1821 - 3D
AT209024	3D15	8	1821 - 3B
AT209025	3D13	5	1821 - 3
AT209026	3D15	6	1821 - 3B
AT209027	3D13	8	1821 - 3
AT209028	3D13	3	1821 - 3
AT209029	3D13	9	1821 - 3
AT209030	3D13	9	1821 - 3
AT209031	3D13	7	1821 - 3
AT209032	3D13	9	1821 - 3
AT209048	3F12	3	1910 - 1
AT209051	3F14	16	1910 - 3
AT209052	3F14	4A	1910 - 3
AT209079	2H16	8	1746 - 3
AT209079	2H18	6	1746 - 3B
AT209081	4B17	8	3140 - 9
AT209082	4B17	1	3140 - 9
AT209083	2H16	4	1746 - 3
AT209083	2H18	5	1746 - 3B
AT209101	1J2	10	0510 - 7
AT209101	1J2	11	0510 - 7
AT209112	4E10	1	3160 - 57
AT209123	2E11	1	1674 - 1
AT209132	4F17	10	3160 - 77
AT209141	1J14	1	0530 - 3
AT209185	1C4	5	0240 - 3
AT209199	4B13	3	3140 - 5
AT209203	4E12	28	3160 - 59
AT209204	4E12	29	3160 - 59
AT209204	4E14	29	3160 - 59B
AT209221	1D16	6	0342 - 3
AT209225	3D13	5	1821 - 3
AT209239	3F4	21	1830 - 13
AT209266	3F14	14	1910 - 3
AT209285	4D24	1	3160 - 47
AT209375	2D17	1	1671 - 2

NUMERICAL INDEX - CONTINUED

PART NO.	GRID	KEY	PAGE
AT209376	2D17	3	1671 - 2
AT209385	3D13	4	1821 - 3
AT209386	3D13	4	1821 - 3
AT209421	2D17	2	1671 - 2
AT209432	4E10	3	3160 - 57
AT209438	3F17	5	1913 - 5
AT209439	3F17	4	1913 - 5
AT209463	2F10	1	1674 - 23B
AT209468	4F19	7	3160 - 79
AT209468	4F19	13	3160 - 79
AT209469	3D25	11	1821 - 11
AT209469	3D25	35	1821 - 11
AT209469	3D25	37	1821 - 11
AT209469	3D25	43	1821 - 11
AT209495	2B19	8	1115 - 3
AT209495	2B19	9	1115 - 3
AT209495	2B19	30	1115 - 3
AT209506	3F19	22	1921 - 3
AT209537	1K3	13	0930 - 3
AT209592	1I21	13A	0510 - 5
AT209660	1J16	6	0540 - 3
AT209668	3E10	11	1830 - 3
AT209668	3E14	1	1830 - 3D
AT209675	1J2	10	0510 - 7
AT209675	1J2	11	0510 - 7
AT209676	4B5	5	3102 - 1
AT209677	4B9	12	3102 - 5
AT209679	4B5	5	3102 - 1
AT209683	4B7	14	3102 - 3
AT209683	4B7	15	3102 - 3
AT209703	1D16	10	0342 - 3
AT209704	1D16	9	0342 - 3
AT209717	1D18	4	0350 - 3
AT209724	1J6	10	0515 - 3
AT209748	4C12	14	3160 - 13
AT209750	4C6	35	3160 - 11
AT209750	4C6	45	3160 - 11
AT209750	4C8	27	3160 - 11B
AT209750	4C8	35	3160 - 11B
AT209750	4C10	12	3160 - 11D
AT209750	4C12	8	3160 - 13
AT209750	4C12	9	3160 - 13
AT209750	4C12	10	3160 - 13
AT209750	4C12	11	3160 - 13
AT209750	4C12	12	3160 - 13
AT209750	4C12	13	3160 - 13
AT209758	4C6	42	3160 - 11
AT209758	4C6	43	3160 - 11
AT209758	4C6	44	3160 - 11
AT209762	4C6	46	3160 - 11
AT209762	4C8	46	3160 - 11B
AT209779	4C16	93	3160 - 17
AT209779	4C18	93	3160 - 19
AT209780	4B21	90	3160 - Q0023
AT209780	4C22	90	3160 - 23
AT209781	4D2	90	3160 - 27
AT209782	4D2	90	3160 - 27
AT209783	4D4	90	3160 - 29
AT209784	4B21	91	3160 - Q0023
AT209784	4C16	91	3160 - 17
AT209784	4C18	91	3160 - 19
AT209784	4C22	91	3160 - 23
AT209788	4B21	92	3160 - Q0023
AT209788	4C16	92	3160 - 17
AT209788	4C18	92	3160 - 19
AT209788	4C22	28	3160 - 23
AT209788	4C22	92	3160 - 23
AT209789	4B21	58	3160 - Q0023
AT209789	4C18	62	3160 - 19
AT209789	4C22	58	3160 - 23
AT209811	4C4	1	3160 - 9
AT209811	4C4	6	3160 - 9
AT209811	4C4	9	3160 - 9
AT209812	4C14	1	3160 - 15
AT209812	4C14	5	3160 - 15
AT209812	4C14	6	3160 - 15
AT209812	4C14	7	3160 - 15
AT209812	4C14	8	3160 - 15
AT209812	4C14	9	3160 - 15
AT209812	4C14	10	3160 - 15
AT209812	4C14	21	3160 - 15
AT209877	3C4	2	1810 - 15
AT209878	4E8	2	3160 - 55
AT209879	4E8	3	3160 - 55
AT209881	4E8	4	3160 - 55
AT209902	2E5	4	1673 - 3
AT209904	3C14	28	1810 - 23
AT209907	4F23	1	3160 - 81
AT209908	3C14	1	1810 - 23
AT209908	3C16	1	1810 - 23B
AT209909	3C18	10	1810 - 23D
AT209909	3C18	11	1810 - 23D
AT209910	3C14	28	1810 - 23
AT209910	3C18	4	1810 - 23D
AT209910	3C18	5	1810 - 23D
AT209912	3C14	28	1810 - 23
AT209912	3C18	6	1810 - 23D
AT209947	3B11	12	1810 - 7
AT209987	4C2	1	3160 - 7
AT209995	3E8	1	1822 - 7
AT210004	1E22	37	0350 - 31
AT210022	1C2	20	0210 - 19
AT210024	2H2	1	1674 - 55
AT210031	3F2	8	1830 - 11
AT210075	4D24	26	3160 - 47
AT210076	4E10	7	3160 - 57
AT210077	4D24	29	3160 - 47
AT210078	4D24	29	3160 - 47
AT210078	4F12	28	3160 - 73
AT210085	3E12	46	1830 - 3B
AT210085	3E16	22	1830 - 3F
AT210086	3E12	45	1830 - 3B
AT210086	3E16	19	1830 - 3F
AT210092	1K3	36	0930 - 3
AT210093	1K3	37	0930 - 3
AT210094	1K3	38	0930 - 3
AT210137	1I21	2	0510 - 5
AT210145	4D6	2	3160 - 31
AT210155	1K3	3	0930 - 3
AT210155	2F22	1	1674 - 33
AT210177	2F8	1	1674 - 23
AT210177	2H6	1	1674 - 59
AT210183	1J2	12	0510 - 7
AT210204	2D11	2	1370 - 5
AT210207	1K3	27	0930 - 3
AT210209	4C16	18	3160 - 17
AT210209	4C18	27	3160 - 19
AT210209	4C18	48	3160 - 19
AT210209	4C18	50	3160 - 19
AT210209	4C18	51	3160 - 19
AT210209	4C18	52	3160 - 19
AT210209	4C24	1	3160 - 25
AT210209	4D8	2	3160 - 33
AT210210	4B21	49	3160 - Q0023
AT210210	4B21	53	3160 - Q0023
AT210210	4C22	49	3160 - 23
AT210210	4C22	53	3160 - 23
AT210210	4D2	1	3160 - 27
AT210211	4D2	1	3160 - 27
AT210212	4D2	1	3160 - 27
AT210213	4C24	2	3160 - 25
AT210213	4D4	3	3160 - 29
AT210213	4D4	17	3160 - 29
AT210213	4D4	30	3160 - 29
AT210213	4D4	31	3160 - 29
AT210214	4D4	3	3160 - 29
AT210214	4D4	17	3160 - 29
AT210214	4D4	30	3160 - 29
AT210214	4D4	31	3160 - 29
AT210214	4D4	32	3160 - 29
AT210215	4D4	3	3160 - 29
AT210215	4D4	17	3160 - 29
AT210215	4D4	30	3160 - 29
AT210215	4D4	31	3160 - 29
AT210215	4D4	32	3160 - 29
AT210216	4D24	11	3160 - 47
AT210217	4D24	12	3160 - 47
AT210218	4D24	13	3160 - 47
AT210219	4D24	14	3160 - 47
AT210224	2E11	1	1674 - 1
AT210224	2E23	18	1674 - 13
AT210229	2B4	23	1060 - 3
AT210229	2B4	24	1060 - 3
AT210229	2B8	23	1060 - 3D
AT210229	2B8	24	1060 - 3D
AT210246	2E5	3	1673 - 3
AT210247	4D4	90	3160 - 29
AT210247	4D6	90	3160 - 31
AT210249	4C16	15	3160 - 17
AT210250	4B19	20	3160 - Q0021
AT210250	4C16	16	3160 - 17
AT210250	4C20	20	3160 - 21
AT210262	4B21	57	3160 - Q0023
AT210262	4C20	19	3160 - 21
AT210263	4B19	19	3160 - Q0021
AT210263	4C22	57	3160 - 23
AT210263	4D4	13	3160 - 29
AT210267	4F12	24	3160 - 73
AT210268	4F12	25	3160 - 73
AT210274	4B23	13	3160 - 3
AT210274	4B25	11	3160 - 5
AT210274	4C2	7	3160 - 7
AT210280	1F20	7	0360 - 7
AT210281	1F20	8	0360 - 7
AT210284	1J4	60	0510 - 9
AT210291	2B4	..	1060 - 3
AT210291	2B6	..	1060 - 3B
AT210291	2B10	..	1060 - 3F
AT210330	3F23	8	1927 - 3
AT210330	3F25	15	1927 - 3B
AT210331	3F23	1	1927 - 3
AT210333	2E3	2	1673 - 1
AT210333	2E6	4	1673 - 4
AT210334	2F4	1	1674 - 19
AT210344	1D14	3	0325 - 3
AT210376	4B21	59	3160 - Q0023
AT210376	4C18	63	3160 - 19
AT210376	4C22	59	3160 - 23
AT210378	1I15	20	0505 - 3
AT210378	1I15	23	0505 - 3
AT210395	3G9	5	2001 - 3

NUMERICAL INDEX - CONTINUED

PART NO.	GRID	KEY	PAGE
AT210399	1K3	26	0930 - 3
AT210400	4D24	15	3160 - 47
AT210435	2F3	3	1674 - 18
AT210468	3F2	16	1830 - 11
AT210493	2D7	11	1369 - 13
AT210503	4D2	24	3160 - 27
AT210504	4D8	15	3160 - 33
AT210515	3E10	18	1830 - 3
AT210515	3E16	35	1830 - 3F
AT210516	3E10	10	1830 - 3
AT210516	3E16	34	1830 - 3F
AT210518	1J8	13	0520 - 3
AT210532	1J8	10	0520 - 3
AT210561	3E12	44	1830 - 3B
AT210561	3E14	21	1830 - 3D
AT210562	3E12	42	1830 - 3B
AT210562	3E14	17	1830 - 3D
AT210568	1F10	2	0350 - 41
AT210569	1F10	1	0350 - 41
AT210575	1J2	15	0510 - 7
AT210597	4E12	21	3160 - 59
AT210597	4E14	21	3160 - 59B
AT210641	1J4	59	0510 - 9
AT210677	2D20	14	1672 - 3
AT210683	4C4	16	3160 - 9
AT210683	4C4	17	3160 - 9
AT210683	4C4	18	3160 - 9
AT210683	4C4	19	3160 - 9
AT210684	4C6	1	3160 - 11
AT210684	4C6	39	3160 - 11
AT210685	4C6	48	3160 - 11
AT210685	4C8	53	3160 - 11B
AT210686	4C6	43	3160 - 11
AT210686	4C6	44	3160 - 11
AT210686	4C8	42	3160 - 11B
AT210686	4C8	43	3160 - 11B
AT210686	4C8	44	3160 - 11B
AT210686	4C10	26	3160 - 11D
AT210692	4C6	1	3160 - 11
AT210692	4C6	39	3160 - 11
AT210694	4C4	5	3160 - 9
AT210694	4C4	7	3160 - 9
AT210694	4C4	8	3160 - 9
AT210694	4C4	10	3160 - 9
AT210694	4C4	12	3160 - 9
AT210694	4C4	15	3160 - 9
AT210695-INL	4C4	..	3160 - 9
AT210696	4C14	3	3160 - 15
AT210696	4C14	4	3160 - 15
AT210696	4C14	11	3160 - 15
AT210696	4C14	12	3160 - 15
AT210696	4C14	13	3160 - 15
AT210696	4C14	15	3160 - 15
AT210696	4C14	17	3160 - 15
AT210696	4C14	18	3160 - 15
AT210696	4C14	20	3160 - 15
AT210696	4C14	22	3160 - 15
AT210701	4C6	1	3160 - 11
AT210701	4C6	39	3160 - 11
AT210705	2C4	25	1320 - 7
AT210709	2C6	25	1320 - 9
AT210712	1I19	10	0510 - 3
AT210718	2H25	1	1749 - 5
AT210718	2H25	4	1749 - 5
AT210773	1F6	1	0350 - 37
AT210781	3F2	5	1830 - 11
AT210794	2H7	1	1674 - 60
AT210838	1C2	26	0210 - 19
AT210876	2B4	..	1060 - 3
AT210876	2B6	..	1060 - 3B
AT210876	2G13	1	1674 - 42
AT210877	2B6	48	1060 - 3B
AT210877	2B6	49	1060 - 3B
AT210877	2B10	49	1060 - 3F
AT210898	4F12	1	3160 - 73
AT210903	4E4	14	3160 - 51
AT210950	4C4	16	3160 - 9
AT210950	4C4	17	3160 - 9
AT210950	4C4	18	3160 - 9
AT210950	4C4	19	3160 - 9
AT210951	4C4	16	3160 - 9
AT210951	4C4	17	3160 - 9
AT210951	4C4	18	3160 - 9
AT210951	4C4	19	3160 - 9
AT211029	1I21	2	0510 - 5
AT211030	1I21	1	0510 - 5
AT211031	1I21	2	0510 - 5
AT211032	1I21	1	0510 - 5
AT211038	4E6	3	3160 - 53
AT211039	4E8	12	3160 - 55
AT211040	4E8	1	3160 - 55
AT211041	3E20	18	1830 - 5
AT211050	1I23	1	0510 - 5B
AT211053	2E9	5	1673 - 5
AT211065	1E22	37	0350 - 31
AT211128	3F14	15	1910 - 3
AT211188	1J18	24	0560 - 3
AT211188	1J20	24	0560 - 3B
AT211196	2D7	7	1369 - 13
AT211207	1D14	7	0325 - 3
AT211284	1J2	34	0510 - 7
AT211296	3B15	36	1810 - 9B
AT211362	2G16	1	1674 - 45
AT211367	1C2	27	0210 - 19
AT211377	3E2	1	1822 - 3
AT211378	1I21	2	0510 - 5
AT211379	1I21	1	0510 - 5
AT211380	1I21	1	0510 - 5
AT211381	1I21	1	0510 - 5
AT211382	1I21	1	0510 - 5
AT211416	1J6	13	0515 - 3
AT211417	1K3	7	0930 - 3
AT211418	1K3	40	0930 - 3
AT211419	1I19	1	0510 - 3
AT211450	4F10	8	3160 - 71
AT211451	4F10	7	3160 - 71
AT211452	4F10	1	3160 - 71
AT211453	4F10	4	3160 - 71
AT211466	1J6	11	0515 - 3
AT211471	4F12	23	3160 - 73
AT211472	4F12	22	3160 - 73
AT211475	1D14	4	0325 - 3
AT211477	1F8	4	0350 - 39
AT211478	3F2	1	1830 - 11
AT211480	3E20	5	1830 - 5
AT211486	3D2	1	1810 - 31
AT211494	1I15	13	0505 - 3
AT211495	1I15	9	0505 - 3
AT211497	1I17	14	0505 - 5
AT211509	3E20	27	1830 - 5
AT211524	3F23	12	1927 - 3
AT211526	3F23	10	1927 - 3
AT211527	3C4	3	1810 - 15
AT211527	3F4	11	1830 - 13
AT211527	3F6	2	1830 - 13B
AT211578	1D4	9	0260 - 17
AT211592	3E12	34	1830 - 3B
AT216573	4C10	30	3160 - 11D
AT217403	3B15	27	1810 - 9B
AT217414	3B15	26	1810 - 9B
AT217436	3D9	1	1810 - 36
AT217439	3D6	6	1810 - 35
AT217448	3G16	1	2002 - 3
AT217448	3G16	5	2002 - 3
AT217458	3B25	9	1810 - 13D
AT217473	3D6	3	1810 - 35
AT217476	3D6	7	1810 - 35
AT219714	4B7	14	3102 - 3
AT219714	4B7	15	3102 - 3
AT219716	4B7	14	3102 - 3
AT219716	4B7	15	3102 - 3
AT219728	3F23	1	1927 - 3
AT219734	1J2	29	0510 - 7
AT219735	1J2	32	0510 - 7
AT219746	4B7	11	3102 - 3
AT219746	4B11	5	3140 - 3
AT219746	4B17	11	3140 - 9
AT219770	3F15	4	1913 - 3
AT219775	1I21	1	0510 - 5
AT219776	1I21	1	0510 - 5
AT219778	3E12	66	1830 - 3B
AT219778	3E16	25	1830 - 3F
AT219792	2B16	1	1060 - 9
AT219797	4E22	6	3160 - 65
AT219853	1D4	31	0260 - 17
AT219855	1B3	2	0110 - 3
AT219856	1I21	17	0510 - 5
AT219895	4C4	19	3160 - 9
AT219909	4D4	34	3160 - 29
AT219930	2E13	2	1674 - 3
AT219932	3F19	3	1921 - 3
AT219974	3F19	19	1921 - 3
AT219974	3F21	5	1921 - 3B
AT219985	4D10	2	3160 - 35
AT219985	4D10	3	3160 - 35
AT219985	4D12	2	3160 - 37
AT219985	4D12	4	3160 - 37
AT219985	4D14	2	3160 - 39
AT219985	4D14	3	3160 - 39
AT219985	4F10	6	3160 - 71
AT219993	4D24	7	3160 - 47
AT219994	4D24	8	3160 - 47
AT219995	4E2	8	3160 - 49
AT219996	4E2	9	3160 - 49
AT220006	4B13	1	3140 - 5
AT220015	3F21	6	1921 - 3B
AT220017	3F15	3	1913 - 3
AT220028	1C20	7	0260 - 9
AT220029	1D4	21	0260 - 17
AT220035	4C8	48	3160 - 11B
AT220036	4C8	29	3160 - 11B
AT220036	4C8	50	3160 - 11B
AT220036	4C8	52	3160 - 11B
AT220039	1E22	37	0350 - 31
AT220039	1E24	30	0350 - 31B
AT220093	1F14	2	0360 - 3
AT220096	4B23	11	3160 - 3
AT220096	4B25	14	3160 - 5
AT220096	4C2	3	3160 - 7
AT220096	4C6	4	3160 - 11
AT220174	4C8	1	3160 - 11B

NUMERICAL INDEX - CONTINUED

PART NO.	GRID	KEY	PAGE
AT220174	4C8	39	3160 - 11B
AT220178	1J14	12	0530 - 3
AT220192	4F4	2	3160 - 69
AT220192	4F6	2	3160 - 69B
AT220192	4F8	15	3160 - 69D
AT220192	4F8	18	3160 - 69D
AT220199	1J14	4	0530 - 3
AT220204	1D14	12	0325 - 3
AT220205	1D14	11	0325 - 3
AT220223	1K5	19	0960 - 3
AT220224	1K5	20	0960 - 3
AT220224	1K5	21	0960 - 3
AT220224	1K5	22	0960 - 3
AT220225	1K5	17	0960 - 3
AT220225	1K5	26	0960 - 3
AT220226	1K5	15	0960 - 3
AT220226	1K5	18	0960 - 3
AT220227	1K5	17	0960 - 3
AT220227	1K5	27	0960 - 3
AT220227	1K5	28	0960 - 3
AT220236	3E20	25	1830 - 5
AT220241	3F19	24	1921 - 3
AT220242	1D4	5	0260 - 17
AT220259	2D20	14	1672 - 3
AT220259	2D24	7	1672 - 7
AT220330	1D21	1	0350 - 6
AT220359	1J10	3	0520 - 5
AT220440	1J14	1	0530 - 3
AT220455	1K11	6	0960 - 9
AT220494	3F14	16	1910 - 3
AT220495	3F14	14	1910 - 3
AT220512	1I21	2	0510 - 5
AT220517	2E11	1	1674 - 1
AT220517	2E23	14	1674 - 13
AT220544	3E20	26	1830 - 5
AT220555	1F14	4	0360 - 3
AT220607	1C24	21	0260 - 13
AT220681	1C24	19	0260 - 13
AT220682	1C24	7	0260 - 13
AT220683	1C24	91	0260 - 13
AT220684	1C24	4	0260 - 13
AT220685	1C24	90	0260 - 13
AT220687	3G4	18	1927 - 7
AT220687	3G6	15	1927 - 9
AT220692	4E4	17	3160 - 51
AT220730	1C22	4	0260 - 11
AT220730	1D8	4	0260 - 21
AT220732	1C22	10	0260 - 11
AT220732	1D8	10	0260 - 21
AT220734	1C22	12	0260 - 11
AT220734	1D8	15	0260 - 21
AT220735	1C22	16	0260 - 11
AT220735	1D8	16	0260 - 21
AT220736	1D4	28	0260 - 17
AT220737	3G4	9	1927 - 7
AT220744	1C22	6	0260 - 11
AT220744	1D8	6	0260 - 21
AT220788	4F8	16	3160 - 69D
AT220788	4F8	17	3160 - 69D
AT220790	1C24	20	0260 - 13
AT220800	1J10	10	0520 - 5
AT220827	4C6	11	3160 - 11
AT220827	4C8	11	3160 - 11B
AT220827	4C10	36	3160 - 11D
AT220829	4C6	11	3160 - 11
AT220831	4C6	32	3160 - 11
AT220831	4C8	32	3160 - 11B
AT220831	4C10	39	3160 - 11D
AT220832	1D10	7	0260 - 23
AT220848	1D4	9	0260 - 17
AT220857	1D4	27	0260 - 17
AT220872	1B5	4	0110 - 5
AT220925	1C22	13	0260 - 11
AT220925	1D8	12	0260 - 21
AT220953	3E12	34	1830 - 3B
AT220953	3E14	28	1830 - 3D
AT220954	1D14	4	0325 - 3
AT220957	4D24	7	3160 - 47
AT220958	4D24	8	3160 - 47
AT220959	4E2	8	3160 - 49
AT220960	4E2	9	3160 - 49
AT220993	3F19	17B	1921 - 3
AT220993 AND	3F19	3	1921 - 3
AT220994	3F19	1	1921 - 3
AT220994	3F19	3	1921 - 3
AT220994	3F21	1	1921 - 3B
AT221116	2D20	8	1672 - 3
AT221120	1J14	12	0530 - 3
AT221124	1J18	9	0560 - 3
AT221124	1J20	9	0560 - 3B
AT221162	3C22	4	1810 - 27
AT221162	3D6	2	1810 - 35
AT221199	1D21	1	0350 - 6
AT221273	3F19	26	1921 - 3
AT221273	3F21	18	1921 - 3B
AT221332	2H18	9	1746 - 3B
AT221350	4E24	7	3160 - 65B
AT221356	4E24	3	3160 - 65B
AT221359	1J2	3	0510 - 7
AT221361	3E12	71	1830 - 3B
AT221452	3E14	44	1830 - 3D
AT221506	4C6	46	3160 - 11
AT221562	2G8	1	1674 - 39B
AT221580	3E14	38	1830 - 3D
AT221618	3D13	6	1821 - 3
AT221657	3F17	5	1913 - 5
AT221658	3F17	4	1913 - 5
AT221684	1D4	31	0260 - 17
AT221684	1D6	6	0260 - 19
AT221685	1D6	5	0260 - 19
AT221696	3F14	2	1910 - 3
AT221696	3F14	15	1910 - 3
AT221699	1J18	9	0560 - 3
AT221699	1J20	9	0560 - 3B
AT221699	2G9	1	1674 - 39C
AT221701	3G4	9	1927 - 7
AT221716	2E13	2	1674 - 3
AT221754	3F14	15	1910 - 3
AT221756	1D6	5	0260 - 19
AT221777	3E12	70	1830 - 3B
AT221777	3E14	15	1830 - 3D
AT221858	1J2	1	0510 - 7
AT221897	4E12	16B	3160 - 59
AT221897	4E14	16B	3160 - 59B
AT221930	1J20	13	0560 - 3B
AT221967	3F14	4A	1910 - 3
AT221967	3F14	4B	1910 - 3
AT221988	4E12	1	3160 - 59
AT221988	4E14	1	3160 - 59B
AT221989	1F22	1	0360 - 7B
AT221992	3G11	16	2001 - 5
AT222004	1D18	4	0350 - 3
AT222005	1F22	7	0360 - 7B
AT222025	3G11	16	2001 - 5
AT222027	4E16	14	3160 - 59D
AT222030	2F14	1	1674 - 27
AT222054	1D25	28	0350 - 11
AT222093	2H21	3	1746 - 6
AT222111	3G9	1	2001 - 3
AT222111	3G11	5	2001 - 5
AT222138	2F12	1	1674 - 25
AT222141	3E14	10	1830 - 3D
AT222150	3E12	72	1830 - 3B
AT222150	3E14	39	1830 - 3D
AT222151	3B23	3	1810 - 13B
AT222152	3B23	30	1810 - 13B
AT222153	1K5	2	0960 - 3
AT222163	2B12	3	1060 - 5
AT222197	3C2	11	1810 - 13F
AT222198	3B25	4	1810 - 13D
AT222198	3C2	15	1810 - 13F
AT222201	2B12	2	1060 - 5
AT222210	3E16	15	1830 - 3F
AT222293	3G9	5	2001 - 3
AT222293	3G11	22	2001 - 5
AT222295	3G11	23	2001 - 5
AT222296	2H6	1	1674 - 59
AT222323	3F23	1	1927 - 3
AT222323	3F25	1	1927 - 3B
AT222327	3B21	26	1810 - 13
AT222333	3G14	1	2002 - 1
AT222369	4F13	8	3160 - 74
AT222369	4F14	7	3160 - 74A
AT222371	2B4	28	1060 - 3
AT222371	2B8	28	1060 - 3D
AT222372	2B4	30	1060 - 3
AT222372	2B8	30	1060 - 3D
AT222377	2F3	4	1674 - 18
AT222377	2H8	1	1676 - 1
AT222385	4D10	2	3160 - 35
AT222385	4D12	2	3160 - 37
AT222385	4D14	2	3160 - 39
AT222396	1D6	3	0260 - 19
AT222402	3D2	1	1810 - 31
AT222413	2B12	3	1060 - 5
AT222414	2B12	2	1060 - 5
AT222490	4B15	1	3140 - 7
AT222520	4B17	8	3140 - 9
AT222529	3F14	4A	1910 - 3
AT222529	3F14	15	1910 - 3
AT222529	3F14	17	1910 - 3
AT222678	2H7	2	1674 - 60
AT222678	2H7	3	1674 - 60
AT222761	1J10	3	0520 - 5
AT222814	3F21	17	1921 - 3B
AT222815	1J4	56	0510 - 9
AT222842	2B8	17	1060 - 3D
AT222852	4C10	40	3160 - 11D
AT222853	2B10	50	1060 - 3F
AT222887	3D13	9	1821 - 3
AT222888	3D13	9	1821 - 3
AT222889	3D13	9	1821 - 3
AT222957	3F19	3	1921 - 3
AT222972	2B8	16	1060 - 3D
AT222992	2H20	2	1746 - 5
AT223008	4F12	22	3160 - 73
AT223056	4F12	23	3160 - 73
AT223073	3F6	5	1830 - 13B
AT223158	3B15	27	1810 - 9B
AT223158	3B17	13	1810 - 9D
AT223173	4E10	12	3160 - 57

NUMERICAL INDEX - CONTINUED

PART NO.	GRID	KEY	PAGE
AT223264	4E4	14	3160 - 51
AT223265	4E4	14	3160 - 51
AT223275	4E12	3	3160 - 59
AT223275	4E14	3	3160 - 59B
AT223323	3G4	16	1927 - 7
AT223324	3G4	17	1927 - 7
AT223331	3G4	16	1927 - 7
AT223332	3G4	17	1927 - 7
AT223340	3F25	11	1927 - 3B
AT223341	3F25	7	1927 - 3B
AT223390	1K11	6	0960 - 9
AT223410	1F10	1	0350 - 41
AT223439	1K13	6	0960 - 9B
AT223443	3C6	3	1810 - 15B
AT223476	2B14	8	1060 - 7
AT223476	2B16	8	1060 - 9
AT223512	2H4	1	1674 - 57
AT223520	4F14	6	3160 - 74A
AT223520	4F14	7	3160 - 74A
AT223531	3E14	44	1830 - 3D
AT223535	2B4	30	1060 - 3
AT223535	2B8	30	1060 - 3D
AT223537	4F12	11A	3160 - 73
AT223538	4F19	19	3160 - 79
AT223538	4F21	7	3160 - 79B
AT223572	3D8	1	1810 - 35B
AT223572	3D8	2	1810 - 35B
AT223572	3D8	3	1810 - 35B
AT223572	3D8	5	1810 - 35B
AT223572	3D8	6	1810 - 35B
AT223572	3D8	7	1810 - 35B
AT223577	3F21	3	1921 - 3B
AT223584	1F16	6	0360 - 3B
AT223589	3F21	13	1921 - 3B
AT223648	1K3	22	0930 - 3
AT223648	4F12	36	3160 - 73
AT223672	4E14	51	3160 - 59B
AT223686	4E14	30	3160 - 59B
AT223687	3F4	21	1830 - 13
AT223687	3F6	13	1830 - 13B
AT223688	3F6	7	1830 - 13B
AT223689	3F6	11	1830 - 13B
AT223728	1D10	17	0260 - 23
AT223759	2G8	1	1674 - 39B
AT223771	1I17	14	0505 - 5
AT223785	2E20	5	1674 - 10
AT223785	3G13	24	2001 - 7
AT223804	2E13	2	1674 - 3
AT223805	1D10	17	0260 - 23
AT223807	2E8	4	1673 - 4B
AT223813	2E20	7	1674 - 10
AT223869	2F20	1	1674 - 31B
AT223870	3G13	1	2001 - 7
AT223874	4F14	2	3160 - 74A
AT223875	4F14	1	3160 - 74A
AT223876	4F14	3	3160 - 74A
AT223883	1J2	11	0510 - 7
AT223884	1J2	11	0510 - 7
AT223897	3G13	2	2001 - 7
AT223935	3B15	27	1810 - 9B
AT223935	3B17	13	1810 - 9D
AT223974	2E17	1	1674 - 7
AT223974	2F16	1	1674 - 29
AT223975	2G4	1	1674 - 37B
AT223987	3F21	3	1921 - 3B
AT223988	3F21	13	1921 - 3B
AT223990	3E2	1	1822 - 3
AT224095	2H8	1	1676 - 1
AT224098	2E12	1	1674 - 2
AT224106	1J2	11	0510 - 7
AT224107	1J2	11	0510 - 7
AT224217	3C16	2	1810 - 23B
AT224225	3G13	24	2001 - 7
AT224226	3G13	24	2001 - 7
AT224227	3G13	24	2001 - 7
AT224232	2H2	1	1674 - 55
AT224233	3B17	13	1810 - 9D
AT224234	3B17	13	1810 - 9D
AT224235	3B15	26	1810 - 9B
AT224237	3B15	26	1810 - 9B
AT224238	3B15	23	1810 - 9B
AT224239	3C6	2	1810 - 15B
AT224241	4C18	58	3160 - 19
AT224242	4C24	10	3160 - 25
AT224243	4D2	9	3160 - 27
AT224244	4D2	9	3160 - 27
AT224245	4D2	9	3160 - 27
AT224246	4D8	1	3160 - 33
AT224247	3D13	9	1821 - 3
AT224248	3D13	9	1821 - 3
AT224249	3D13	9	1821 - 3
AT224283	2G14	1	1674 - 43
AT224318	4D24	2	3160 - 47
AT224361	4E2	12	3160 - 49
AT224379	1I21	2	0510 - 5
AT224424	1I21	2	0510 - 5
AT224427	1J6	3	0515 - 3
AT224430	2B14	8	1060 - 7
AT224430	2B16	8	1060 - 9
AT224497	4F21	3	3160 - 79B
AT224497	4F21	5	3160 - 79B
AT224576	4F21	4	3160 - 79B
AT224770	4C6	1	3160 - 11
AT224771	4B23	1	3160 - 3
AT224772	4B25	1	3160 - 5
AT224773	4C2	1	3160 - 7
AT224852	4C10	13	3160 - 11D
AT224863	4F21	2	3160 - 79B
AT224864	4F21	2	3160 - 79B
AT224873	4F21	4	3160 - 79B
AT224876	2F14	1	1674 - 27
AT224923	2E9	5	1673 - 5
AT224929	3E10	29	1830 - 3
AT224929	3E12	70	1830 - 3B
AT224929	3E14	15	1830 - 3D
AT224933	3D9	1	1810 - 36
AT224986	1D14	10	0325 - 3
AT224989	3B15	41	1810 - 9B
AT224990	3B15	41	1810 - 9B
AT224991	3B13	12	1810 - 9
AT224992	3B19	13	1810 - 11
AT224993	3B19	1	1810 - 11
AT224994	3B23	30	1810 - 13B
AT224995	3B23	3	1810 - 13B
AT225000	3B15	27	1810 - 9B
AT225137	1D14	8	0325 - 3
AT225170	1B3	11	0110 - 3
AT225189	1F18	12	0360 - 5
AT225254	1D14	10	0325 - 3
AT225388	4D4	34	3160 - 29
AT225395	4D4	34	3160 - 29
AT225403	4D2	24	3160 - 27
AT225406	4D8	15	3160 - 33
AT225573	2B16	10	1060 - 9
AT225612	1D21	1	0350 - 6
AT225655	1D21	1	0350 - 6
AT225706	3B15	49	1810 - 9B
AT225707	3B15	49	1810 - 9B
AT225728	2B19	2	1115 - 3
AT225792	4B23	1	3160 - 3
AT225794	4C2	1	3160 - 7
AT225825	4B13	3	3140 - 5
AT225899	3E10	31	1830 - 3
AT225899	3E16	46	1830 - 3F
AT226123	3D23	4	1821 - 9
AT226156	2H12	17	1740 - 3
AT226224	1J18	9	0560 - 3
AT226224	1J20	9	0560 - 3B
AT25226	1B3	7	0110 - 3
AT35831	1J4	60	0510 - 9
AT35831	3F10	2A	1830 - 17
AT37476	1J2	1	0510 - 7
AT37476	4E10	2	3160 - 57
AT37476	4E12	19	3160 - 59
AT37476	4E14	19	3160 - 59B
AT37693	1J2	5	0510 - 7
AT38176	3D8	4	1810 - 35B
AT38176	3F19	18	1921 - 3
AT38449	2D16	13	1671 - 1
AT38449	2D17	13	1671 - 2
AT39141	1J2	3	0510 - 7
AT41188	2D18	4	1671 - 3
AT42386	2C17	1	1330 - 2
AT44188	3B15	42	1810 - 9B
AT49216	4B21	35	3160 - Q0023
AT49216	4C22	35	3160 - 23
AT49216	4D6	20	3160 - 31
AT49216	4E18	18	3160 - 61
AT49216	4E18	20	3160 - 61
AT53440	1J8	15	0520 - 3
AT53440	1J12	2	0520 - 7
AT53541	1C2	6	0210 - 19
AT53541	1K19	12	0960 - 15
AT53801	2D11	1	1370 - 5
AT53932	1K19	11	0960 - 15
AT56657	1J8	14	0520 - 3
AT59892	3C9	2	1810 - 18
AT59892	3F4	14	1830 - 13
AT59892	3F8	3	1830 - 15
AT64237	3G20	3	2004 - 2
AT66632	2C16	1	1330 - 1
AT66865	2D2	4	1369 - 8
AT67275	1B3	7	0110 - 3
AT75387	3G17	1	2003 - 2
AT78534	3G22	4	2004 - 5
AT79195	4E10	13	3160 - 57
AT79546	4E12	42	3160 - 59
AT79546	4E14	42	3160 - 59B
AT79576	2B12	4	1060 - 5
AT81931	4E10	5	3160 - 57
AT83105	3B19	9	1810 - 11
AT83105	3B21	24	1810 - 13
AT83105	3B23	24	1810 - 13B
AT85197	2D3	9	1369 - 9
A3606R	2C22	1	1369 - 3
A36431	4E18	24	3160 - 61
A36432	4E18	25	3160 - 61
A3917R	2C16	1	1330 - 1
A3917R	2C22	1	1369 - 3
A3917R	4E18	33	3160 - 61
A4365R	1G17	18	0404 - 3

NUMERICAL INDEX - CONTINUED

PART NO.	GRID	KEY	PAGE
A4365R	2B6	56	1060 - 3B
A4365R	2B10	56	1060 - 3F
A4365R	2C16	1	1330 - 1
A4365R	2C22	1	1369 - 3
A4540R	1B9	3	0210 - 1
A4730R	2C22	1	1369 - 3
A4742R	4C6	10	3160 - 11
A4742R	4C8	10	3160 - 11B
A4742R	4C10	1	3160 - 11D
B1085R	1J6	16	0515 - 3
B14604	3E12	68	1830 - 3B
B14604	3E16	28	1830 - 3F
B15646	2C16	1	1330 - 1
B2762R	1G17	..	0404 - 3
B2762R	2C22	1	1369 - 3
B3690R	2C22	1	1369 - 3
CD12569	2C4	9	1320 - 7
C15104	1K13	4	0960 - 9B
DD14134	2D5	1	1369 - 11
DD14136	2D5	1	1369 - 11
DD14345	2D5	1	1369 - 11
DD14346	2D5	1	1369 - 11
DSO345	2C24	1	1369 - 5
DSO346	2C24	1	1369 - 5
DS0251	2D2	..	1369 - 8
DS0557	2D2	..	1369 - 8
E12379	1C2	3	0210 - 19
E12379	1K19	2	0960 - 15
E12379	2D9	2	1370 - 3
E12379	4E22	9	3160 - 65
E12379	4E24	15	3160 - 65B
E1343FN	1G15	1	0403 - 2
E46066	2E23	2	1674 - 13
E46066	2E23	9	1674 - 13
E46066	2E23	11	1674 - 13
E46066	2E23	15	1674 - 13
E48497	1J18	14	0560 - 3
E48497	1J20	14	0560 - 3B
E55662	1I6	1	0422 - 3
E72335	3C6	1	1810 - 15B
E73240	2H2	7	1674 - 55
F1056R	2C22	1	1369 - 3
F1743R	1G17	11	0404 - 3
F1870R	2C22	1	1369 - 3
F3171R	1B13	5	0210 - 5
F3171R	1B13	8	0210 - 5
F3171R	1B13	9	0210 - 5
F3171R	1B13	17	0210 - 5
F3171R	1B13	19	0210 - 5
F3171R	1B13	25	0210 - 5
F3171R	1B15	5	0210 - 7
F3171R	1B15	10	0210 - 7
F3171R	1B15	11	0210 - 7
F3171R	1B15	17	0210 - 7
F3171R	1B15	19	0210 - 7
F3171R	1B15	25	0210 - 7
F3171R	1B17	5	0210 - 9
F3171R	1B17	10	0210 - 9
F3171R	1B17	17	0210 - 9
F3171R	1B17	19	0210 - 9
F3171R	1B17	25	0210 - 9
F3171R	1B19	5	0210 - 11
F3171R	1B19	9	0210 - 11
F3171R	1B19	11	0210 - 11
F3171R	1B19	17	0210 - 11
F3171R	1B19	19	0210 - 11
F3171R	1C6	5	0250 - 3
F3171R	1C8	5	0250 - 5
F3171R	1G25	8	0407 - 3
F3353R	2C22	1	1369 - 3
F58602	1C12	18	0250 - 9
H104855	2G18	9	1674 - 47
H110232	3C20	6	1810 - 25
H110232	3G15	6	2002 - 2
H111706	3E10	7	1830 - 3
H114865	3E12	43	1830 - 3B
H114865	3E14	19	1830 - 3D
H126081	3B21	21	1810 - 13
H126081	3B23	21	1810 - 13B
H126082	3B21	19	1810 - 13
H126082	3B23	19	1810 - 13B
H127578	1D2	3	0260 - 15
H131424	3B21	16	1810 - 13
H131424	3B23	16	1810 - 13B
H132922	3B21	26	1810 - 13
H132922	3B23	26	1810 - 13B
H138955	2C2	3	1320 - 5
H144095	2D20	8	1672 - 3
H146457	1D6	5	0260 - 19
H147415	1J22	1	0560 - 5
H147887	3B13	2	1810 - 9
H148464	3G4	3	1927 - 7
H148464	3G6	3	1927 - 9
H152202	1K15	13	0960 - 11
H152347	1K15	16	0960 - 11
H152793	1K15	12	0960 - 11
H155879	4D16	12	3160 - 41
H157510	1K15	16	0960 - 11
H158175	4D18	15	3160 - 43
H158175	4D20	15	3160 - 43B
H158397	4D18	13	3160 - 43
H158397	4D20	13	3160 - 43B
H158436	4D18	6	3160 - 43
H158436	4D20	6	3160 - 43B
H158437	4D18	5	3160 - 43
H158437	4D20	5	3160 - 43B
H163730	4D16	13	3160 - 41
H163979	4D16	6	3160 - 41
H163980	4D16	5	3160 - 41
H165481	4D18	10	3160 - 43
H165481	4D20	10	3160 - 43B
H168220	4D16	3	3160 - 41
H169747	4D18	3	3160 - 43
H169747	4D20	3	3160 - 43B
H170140	4D18	1	3160 - 43
H170140	4D20	1	3160 - 43B
H173655	4D16	13	3160 - 41
H21259	2B24	18	1320 - 3
H23196	2D7	4	1369 - 13
H34597	3C6	5	1810 - 15B
H35244	2C22	1	1369 - 3
H75541	1J18	36	0560 - 3
H75541	1J20	36	0560 - 3B
H75541	4F10	3	3160 - 71
H77698	1C18	2	0260 - 7
H77698	2D16	15	1671 - 1
H77698	2D17	15	1671 - 2
H77698	3E10	12	1830 - 3
H77698	3E18	6	1830 - 3H
H77698	4B19	5	3160 - Q0021
H77698	4C16	21	3160 - 17
H77698	4C20	5	3160 - 21
H77698	4D4	6	3160 - 29
H77698	4D6	1	3160 - 31
H77698	4D6	7	3160 - 31
H81330	3B15	48	1810 - 9B
H81678	2E10	4	1673 - 6
H84318	4C8	3	3160 - 11B
H85233	3F14	3	1910 - 3
H86981	3E10	27	1830 - 3
H86981	3E14	23	1830 - 3D
H88900	4D16	9	3160 - 41
H89098	3F4	7	1830 - 13
H95874	3B21	26	1810 - 13
H95874	3B23	15	1810 - 13B
IPSKIT1	2D2	..	1369 - 8
IPSKIT3	2C24	1	1369 - 5
ISPKIT3	2C24	1	1369 - 5
JD10127	1B21	3	0210 - 13
JD10127	1B23	..	0210 - 15
JD10127	1B25	3	0210 - 17
JD10315	1C6	3	0250 - 3
JD10315	1C8	3	0250 - 5
JD10316	1C6	4	0250 - 3
JD10316	1C8	4	0250 - 5
JD38714	4C14	2	3160 - 15
JD5750	2B25	3	1320 - 3A
JD5902	2B24	10	1320 - 3
JD5929	2C14	5	1320 - 17
JD7759	1K19	10	0960 - 15
JD7759	4B7	10	3102 - 3
JD7759	4B11	8	3140 - 3
JD7759	4B11	37	3140 - 3
JD7759	4B17	10	3140 - 9
JD7759	4D22	1	3160 - 45
JD7763	4D22	18	3160 - 45
JD7781	1C2	18	0210 - 19
JD7788	2D9	1	1370 - 3
JD7788	4E22	10	3160 - 65
JD7788	4E24	16	3160 - 65B
JD7842	1C2	2	0210 - 19
JD7842	1K19	1	0960 - 15
JD8167	1B21	18	0210 - 13
JD8167	1B23	..	0210 - 15
JD8214	1B21	19	0210 - 13
JD8214	1B23	..	0210 - 15
JD8254	1B21	4	0210 - 13
JD8254	1B23	..	0210 - 15
JD8254	1B25	4	0210 - 17
JD8255	1B10	1	0210 - 2
JD8255	1B11	1	0210 - 3
JD8272	1C6	9	0250 - 3
JD8272	1C8	9	0250 - 5
JD8989	1C6	10	0250 - 3
JD8989	1C8	10	0250 - 5
JD9078	1B10	2	0210 - 2
JD9078	1B11	2	0210 - 3
JD9093	1B25	31	0210 - 17
JD9148	1B25	30	0210 - 17
J16931	3F14	7	1910 - 3
L102023	3C10	1	1810 - 19
L110471	1I19	12	0510 - 3
L57881	3E12	59	1830 - 3B
L57881	3E18	7	1830 - 3H
L64884	1J6	4	0515 - 3
L77943	3E12	37	1830 - 3B
L77943	3E16	10	1830 - 3F
M113243	1J6	2	0515 - 3
M113243	2B4	32	1060 - 3
M113243	2B8	32	1060 - 3D
M115279	1I17	2	0505 - 5

NUMERICAL INDEX - CONTINUED

PART NO.	GRID	KEY	PAGE
M115279	2E11	2	1674 - 1
M115279	2E23	12	1674 - 13
M40333	1F18	8	0360 - 5
M4125T	4C8	2	3160 - 11B
M4237T	2C22	1	1369 - 3
M43835	2G18	2	1674 - 47
M45937	1C2	23	0210 - 19
M45937	1C18	4	0260 - 7
M45937	1K19	13	0960 - 15
M47887	3G16	4	2002 - 3
M596T	4E12	4	3160 - 59
M596T	4E14	4	3160 - 59B
M66382	2D11	6	1370 - 5
M67176	3E12	35	1830 - 3B
M67176	3E16	14	1830 - 3F
M72490	1H13	10	0413 - 5
M72490	1H15	19	0413 - 5B
M84972	3B17	2	1810 - 9D
M84972	3E10	1	1830 - 3
N115096	2G18	11	1674 - 47
N119177	2F24	2	1674 - 35
N119177	3D25	44	1821 - 11
N119177	3G11	1	2001 - 5
N131838	2C22	1	1369 - 3
N191985	2F14	1	1674 - 27
N191985	2F14	9	1674 - 27
N203905	2B6	51	1060 - 3B
N203905	2B6	57	1060 - 3B
N203905	2B10	51	1060 - 3F
N203905	2B10	57	1060 - 3F
N205035	1I21	20	0510 - 5
N218377	3G16	3	2002 - 3
N61345	3D25	12	1821 - 11
PM797NA	2G20	57	1674 - 49
PT11778	3E12	35	1830 - 3B
PT11778	3E16	14	1830 - 3F
PT9412	1J4	55	0510 - 9
PT9412	1J18	20	0560 - 3
PT9412	1J18	27	0560 - 3
PT9412	1J20	20	0560 - 3B
P40098	2F3	2	1674 - 18
P46051	2C22	1	1369 - 3
P48347	2B6	42	1060 - 3B
P48347	2B10	42	1060 - 3F
P48403	2C22	1	1369 - 3
P50631	2C22	1	1369 - 3
P50883	2C16	1	1330 - 1
P51212	2C16	1	1330 - 1
RE10258	1H18	4	0413 - 8
RE11154	2G20	57	1674 - 49
RE11156	2G20	36	1674 - 49
RE11157	2G20	37	1674 - 49
RE12176	1J8	9	0520 - 3
RE12330	2G22	14	1674 - 51
RE12331	2G22	12	1674 - 51
RE12332	2G22	18	1674 - 51
RE12333	2G22	21	1674 - 51
RE12334	2G22	8	1674 - 51
RE12362	2G22	4	1674 - 51
RE12363	1J2	10	0510 - 7
RE12363	1J18	9	0560 - 3
RE12363	1J20	9	0560 - 3B
RE12363	2G22	11	1674 - 51
RE12364	2B4	..	1060 - 3
RE12364	2B6	..	1060 - 3B
RE12364	2G22	16	1674 - 51
RE12365	2G22	20	1674 - 51
RE12366	2G22	25	1674 - 51
RE151433	1H25	9	0418 - 2
RE151433	2E24	1	1674 - 14
RE151433	4E12	22	3160 - 59
RE151433	4E14	22	3160 - 59B
RE152929	1B23	7	0210 - 15
RE152930	1B23	7	0210 - 15
RE154952	1C6	6	0250 - 3
RE155577	3E20	13	1830 - 5
RE155938	3E12	56	1830 - 3B
RE155938	3E16	20	1830 - 3F
RE15807	1H11	28	0413 - 3
RE15808	1H11	29	0413 - 3
RE159199	2B2	4	1011 - 1
RE160141	1C6	6	0250 - 3
RE160141	1C8	6	0250 - 5
RE160301	1B8	1	0201 - 1
RE160302	1B8	1	0201 - 1
RE160303	1B8	1	0201 - 1
RE160304	1B8	1	0201 - 1
RE160305	1B8	1	0201 - 1
RE160306	1B8	1	0201 - 1
RE164762	1B13	12	0210 - 5
RE164763	1B15	12	0210 - 7
RE164764	1B17	12	0210 - 9
RE166221	1B25	25	0210 - 17
RE166242	1J14	14	0530 - 3
RE168454	3G13	21	2001 - 7
RE16879	3C14	2	1810 - 23
RE174764	3E12	40	1830 - 3B
RE174764	3E16	13	1830 - 3F
RE20230	1H22	5	0416 - 3
RE20345	1K15	5	0960 - 11
RE21730	2G23	5	1674 - 52
RE21731	2G23	5	1674 - 52
RE21732	2G23	6	1674 - 52
RE22514	4G3	7	4151 - 3
RE22764	1G9	5	0401 - 5
RE22764	1G20	..	0404 - 7
RE24045	1G12	11	0402 - 4
RE24046	1G12	13	0402 - 4
RE24468	2B6	47	1060 - 3B
RE24468	2B10	47	1060 - 3F
RE25102	4D18	2	3160 - 43
RE25102	4D20	2	3160 - 43B
RE25146	4D16	2	3160 - 41
RE28217	1H13	20	0413 - 5
RE30295	1J6	9	0515 - 3
RE34128	1H18	4	0413 - 8
RE35704	2B6	41	1060 - 3B
RE35704	2B10	41	1060 - 3F
RE36133	3E10	6	1830 - 3
RE36133	3E14	13	1830 - 3D
RE36133	3E16	37	1830 - 3F
RE36151	1H9	8	0413 - 1
RE36421	1H11	30	0413 - 3
RE37448	1G11	6	0402 - 3
RE39134	1H24	17	0417 - 3
RE40048	1J14	14	0530 - 3
RE40049	3C14	30	1810 - 23
RE43497	2E23	9	1674 - 13
RE43497	2E23	15	1674 - 13
RE43637	1C17	3	0260 - 6
RE44632	1I8	4	0433 - 1
RE45315	1B9	1	0210 - 1
RE45315	1C12	28	0250 - 9
RE46252	1H13	18	0413 - 5
RE46252	1H15	11	0413 - 5B
RE46252	1H18	6	0413 - 8
RE46534	1C17	1	0260 - 6
RE46634	2E23	2	1674 - 13
RE46634	2E23	11	1674 - 13
RE46684	1B13	6	0210 - 5
RE46684	1B15	6	0210 - 7
RE46684	1B17	6	0210 - 9
RE46684	1B19	6	0210 - 11
RE46684	1C12	23	0250 - 9
RE46684	1H19	2	0414 - 1
RE46684	1H20	4	0414 - 2
RE46684	1I15	16	0505 - 3
RE46742	2E23	10	1674 - 13
RE46742	3E12	64	1830 - 3B
RE46742	3E18	4	1830 - 3H
RE47070	3E12	39	1830 - 3B
RE47070	3E16	8	1830 - 3F
RE47426	1H11	7	0413 - 3
RE47427	1H11	6	0413 - 3
RE47428	1H11	5	0413 - 3
RE47429	1H11	3	0413 - 3
RE47430	1H11	2	0413 - 3
RE47431	1H11	1	0413 - 3
RE48073	4E12	22	3160 - 59
RE48073	4E14	22	3160 - 59B
RE48419	1H20	6	0414 - 2
RE48419	1H25	9	0418 - 2
RE48838	2E9	4	1673 - 5
RE49486	1B10	7	0210 - 2
RE49486	1B11	7	0210 - 3
RE500216	1G23	1	0407 - 1
RE500280	1I4	22	0420 - 3
RE500803	1H11	21	0413 - 3
RE500917	1I7	3	0429 - 1
RE501051	1H22	4	0416 - 3
RE501060	1I6	7	0422 - 3
RE501150	1I6	7	0422 - 3
RE501262	1H13	3	0413 - 5
RE501491	1H15	1	0413 - 5B
RE501513	1G15	12	0403 - 2
RE501513	1G15	13	0403 - 2
RE501737	1H7	15	0409 - 3
RE501787	4G3	4	4151 - 3
RE501970	1H11	17	0413 - 3
RE502067	1H13	1	0413 - 5
RE502154	1H24	16	0417 - 3
RE502406	1H13	1	0413 - 5
RE502406	1H15	1	0413 - 5B
RE502573	1H25	13	0418 - 2
RE502573	1H25	21	0418 - 2
RE502650	1H13	4	0413 - 5
RE502650	1H15	4	0413 - 5B
RE502698	1H13	1	0413 - 5
RE502698	1H13	24	0413 - 5
RE502929	1H11	7	0413 - 3
RE502930	1H11	6	0413 - 3
RE503309	1H13	1	0413 - 5
RE503347	1H13	1	0413 - 5
RE503347	1H13	24	0413 - 5
RE503403	1H13	1	0413 - 5
RE503403	1H13	24	0413 - 5
RE504122	1I13	5	0505 - 1
RE504139	1I4	22	0420 - 3
RE504195	1G7	3	0401 - 3
RE504196	1G7	3	0401 - 3
RE504198	1G7	2	0401 - 3

NUMERICAL INDEX - CONTINUED

PART NO.	GRID	KEY	PAGE
RE504199	1G7	2	0401 - 3
RE504200	1G7	2	0401 - 3
RE504201	1G22	1	0404 - 9
RE504363	1G9	5	0401 - 5
RE504363	1G20	..	0404 - 7
RE504460	1G19	1	0404 - 5
RE504635	1H13	3	0413 - 5
RE50467	1I4	1	0420 - 3
RE504748	1H15	3	0413 - 5B
RE504822	1G25	1	0407 - 3
RE505265	3E20	13	1830 - 5
RE506199	1H13	1	0413 - 5
RE506199	1H13	24	0413 - 5
RE506220	1I10	38	0452 - 3
RE506222	1I10	19	0452 - 3
RE506251	1H13	..	0413 - 5
RE506251	1H15	8	0413 - 5B
RE506424	1H13	1	0413 - 5
RE506424	1H13	20	0413 - 5
RE506424	1H15	9	0413 - 5B
RE507076	1H2	15	0407 - 5
RE50752	1I4	12	0420 - 3
RE507687	1H13	24	0413 - 5
RE507687	1H15	12	0413 - 5B
RE507734	1H15	1	0413 - 5B
RE508101	1I15	16	0505 - 3
RE508430	1H13	1	0413 - 5
RE509598	1H24	18	0417 - 3
RE509773	1H13	1	0413 - 5
RE51234	2E21	1	1674 - 11
RE51649	1I4	2	0420 - 3
RE51650	1I4	10	0420 - 3
RE516512	1I4	27	0420 - 3
RE516513	1I4	27	0420 - 3
RE516553	1I4	12	0420 - 3
RE52454	3E21	4	1830 - 6
RE52506	3E21	2	1830 - 6
RE52507	3E23	1	1830 - 8
RE52508	3E21	7	1830 - 6
RE52509	3E22	1	1830 - 7
RE52866	2F3	3	1674 - 18
RE53000	1G15	10	0403 - 2
RE53154	1G15	6	0403 - 2
RE54244	1I4	18	0420 - 3
RE54245	1I4	19	0420 - 3
RE54368	1G11	3	0402 - 3
RE55423	3E21	3	1830 - 6
RE55475	1G20	..	0404 - 7
RE55475	1H7	19	0409 - 3
RE55475	1I10	11	0452 - 3
RE55478	2E11	1	1674 - 1
RE55478	2E23	8	1674 - 13
RE55522	1G5	4	0401 - 1
RE55522	1I7	1	0429 - 1
RE55662	1H11	11	0413 - 3
RE56109	1K5	30	0960 - 3
RE56779	1I8	4	0433 - 1
RE57054	1G10	3	0402 - 2
RE57152	1G20	..	0404 - 7
RE57152	1H11	14	0413 - 3
RE57152	1H17	5	0413 - 7
RE57152	1H17	13	0413 - 7
RE57153	1H17	10	0413 - 7
RE57154	1H24	18	0417 - 3
RE57167	1G6	7	0401 - 2
RE57167	1G15	7	0403 - 2
RE57170	1G6	3	0401 - 2
RE57170	1G7	3	0401 - 3
RE57172	1G7	3	0401 - 3
RE57172	1G8	3	0401 - 4
RE57173	1G7	3	0401 - 3
RE57175	1G6	5	0401 - 2
RE57175	1G7	2	0401 - 3
RE57177	1G7	2	0401 - 3
RE57177	1G8	5	0401 - 4
RE57178	1G7	2	0401 - 3
RE57186	1I10	19	0452 - 3
RE57187	1I10	38	0452 - 3
RE57188	1G15	8	0403 - 2
RE57190	1H24	7	0417 - 3
RE57190	1H25	11	0418 - 2
RE57394	1G20	..	0404 - 7
RE57394	1H5	9	0407 - 9
RE57561	1H5	1	0407 - 9
RE57561	1H22	9	0416 - 3
RE57574	3E10	31	1830 - 3
RE57574	3E16	46	1830 - 3F
RE57575	3E12	40	1830 - 3B
RE57575	3E16	13	1830 - 3F
RE57604	1I7	6	0429 - 1
RE57632	1G11	1	0402 - 3
RE57750	1H7	18	0409 - 3
RE57836	1H7	10	0409 - 3
RE58614	3E12	60	1830 - 3B
RE58614	3E18	5	1830 - 3H
RE58780	1G6	9	0401 - 2
RE58781	1G8	9	0401 - 4
RE60577	1H13	16	0413 - 5
RE60577	1H15	17	0413 - 5B
RE60622	1G20	..	0404 - 7
RE60622	1H2	15	0407 - 5
RE60887	3E12	56	1830 - 3B
RE60887	3E16	20	1830 - 3F
RE60888	3E12	47	1830 - 3B
RE60888	3E16	21	1830 - 3F
RE61253	1G6	4	0401 - 2
RE61253	1G7	1	0401 - 3
RE61267	1G6	9	0401 - 2
RE61268	1G8	9	0401 - 4
RE61651	3G13	22	2001 - 7
RE61693	1I4	20	0420 - 3
RE61851	1G7	1	0401 - 3
RE61851	1G8	4	0401 - 4
RE62144	1H3	2	0407 - 6
RE62645	1H13	1	0413 - 5
RE62645	1H13	24	0413 - 5
RE62776	1I10	3	0452 - 3
RE62777	1I10	4	0452 - 3
RE63183	1I4	25	0420 - 3
RE63289	2F3	3	1674 - 18
RE63313	1I4	9	0420 - 3
RE63439	1G25	14	0407 - 3
RE64170	1G15	10	0403 - 2
RE64508	1G19	1	0404 - 5
RE64509	1G15	10	0403 - 2
RE64509	1G20	..	0404 - 7
RE65265	1H18	1	0413 - 8
RE65431	1I4	11	0420 - 3
RE65787	1I4	21	0420 - 3
RE66000	1H13	3	0413 - 5
RE66617	1H13	1	0413 - 5
RE67537	1I15	16	0505 - 3
RE67677	1G20	..	0404 - 7
RE67677	1G22	1	0404 - 9
RE67934	1H13	9	0413 - 5
RE68117	1C12	30	0250 - 9
RE68172	1B10	8	0210 - 2
RE68175	1B11	8	0210 - 3
RE68300	1C6	6	0250 - 3
RE68300	1C8	6	0250 - 5
RE68318	1H24	13	0417 - 3
RE68338	2B2	4	1011 - 1
RE68730	1B25	23	0210 - 17
RE68730	1C12	12	0250 - 9
RE68730	1C12	14	0250 - 9
RE69025	1B25	20	0210 - 17
RE69328	1H22	13	0416 - 3
RE69705	1I6	7	0422 - 3
RE69806	1B23	13	0210 - 15
RE69844	1G20	..	0404 - 7
RE69844	1H24	13	0417 - 3
RE69868	1B9	2	0210 - 1
RE70023	1G11	6	0402 - 3
RE70535	2D20	20	1672 - 3
RE70535	2D24	11	1672 - 7
RE70678	1I6	12	0422 - 3
RE70682	1I6	10	0422 - 3
RE70688	1G19	1	0404 - 5
RE70756	1I6	6	0422 - 3
RE71121	1G14	2	0402 - 7
RE71192	1H22	4	0416 - 3
RE71255	1H5	20	0407 - 9
RE71255	1H19	1	0414 - 1
RE71255	1H20	2	0414 - 2
RE71256	1I6	14	0422 - 3
RG24026	1H7	..	0409 - 3
R100122	2B12	13	1060 - 5
R100500	1B9	6	0210 - 1
R100500	1C12	29	0250 - 9
R100569	1H2	10	0407 - 5
R100569	1H3	1	0407 - 6
R100569	1I10	31	0452 - 3
R100671	1G20	..	0404 - 7
R100671	1H25	5	0418 - 2
R100911	1I10	2	0452 - 3
R10093	1K13	3	0960 - 9B
R10093	2C16	1	1330 - 1
R10093	2C16	1	1330 - 1
R10093	2C22	1	1369 - 3
R10093	3E12	55	1830 - 3B
R10093	3E14	18	1830 - 3D
R10093	3F2	2	1830 - 11
R102882	1H7	5	0409 - 3
R104558	1F6	1	0350 - 37
R104587	1G5	3	0401 - 1
R104587	1G6	2	0401 - 2
R104587	1G8	2	0401 - 4
R104589	1G10	6	0402 - 2
R104592	1G17	12	0404 - 3
R104595	3B11	3	1810 - 7
R104595	3B11	4	1810 - 7
R104595	3B11	6	1810 - 7
R104595	3C18	2	1810 - 23D
R104595	3C18	8	1810 - 23D
R104621	1H5	18	0407 - 9
R104628	1H2	14	0407 - 5
R104628	1H3	3	0407 - 6
R104656	1G10	5	0402 - 2
R104656	1G13	12	0402 - 6
R104795	2B14	10	1060 - 7
R104795	2B16	10	1060 - 9

NUMERICAL INDEX - CONTINUED

PART NO.	GRID	KEY	PAGE
R104859	1G13	5	0402 - 6
R104861	1G13	10	0402 - 6
R105346	1H22	11	0416 - 3
R105346	1I10	14	0452 - 3
R107339	1I8	4	0433 - 1
R107749	3E20	14	1830 - 5
R108699	1H17	7	0413 - 7
R108700	1H17	8	0413 - 7
R108701	1H17	9	0413 - 7
R109082	1B25	26	0210 - 17
R109625	1I2	1	0419 - 3
R109625	1I10	32	0452 - 3
R110126	1G10	2	0402 - 2
R110126	1G12	15	0402 - 4
R11086	1G13	6	0402 - 6
R11086	1H24	12	0417 - 3
R111632	2E23	10	1674 - 13
R111632	3E12	63	1830 - 3B
R111632	3E18	1	1830 - 3H
R111632	3F4	5	1830 - 13
R112053	1G10	7	0402 - 2
R112200	4G3	2	4151 - 3
R112203	4G3	11	4151 - 3
R112268	1G13	9	0402 - 6
R112975	1H13	5	0413 - 5
R113050	2C16	1	1330 - 1
R113050	3E12	53	1830 - 3B
R113050	3E20	7	1830 - 5
R113050	3F2	9	1830 - 11
R113562	1I4	12	0420 - 3
R113563	1I4	2	0420 - 3
R113565	1I4	12	0420 - 3
R114130	1G17	2	0404 - 3
R114130	1H13	8	0413 - 5
R114130	1H15	13	0413 - 5B
R114130	1I6	13	0422 - 3
R115129	1G13	3	0402 - 6
R115471	1G19	1	0404 - 5
R115742	3E21	1	1830 - 6
R115743	3E21	6	1830 - 6
R115857	3E10	24	1830 - 3
R116081	1G8	7	0401 - 4
R116081	1G15	7	0403 - 2
R116082	1G7	3	0401 - 3
R116083	1G7	3	0401 - 3
R116084	1G6	4	0401 - 2
R116084	1G7	2	0401 - 3
R116085	1G6	4	0401 - 2
R116085	1G6	5	0401 - 2
R116085	1G7	2	0401 - 3
R116233	1I2	2	0419 - 3
R116311	1G5	5	0401 - 1
R116311	1G6	8	0401 - 2
R116311	1G8	8	0401 - 4
R116311	1I7	2	0429 - 1
R116340	1G15	6	0403 - 2
R116718	1H2	12	0407 - 5
R116718	1I2	6	0419 - 3
R116801	1B13	16	0210 - 5
R116801	1B13	18	0210 - 5
R116801	1B13	20	0210 - 5
R116801	1B13	24	0210 - 5
R116801	1B15	16	0210 - 7
R116801	1B15	18	0210 - 7
R116801	1B15	20	0210 - 7
R116801	1B15	24	0210 - 7
R116801	1B17	18	0210 - 9
R116801	1B17	20	0210 - 9
R116801	1B17	24	0210 - 9
R116801	1B19	8	0210 - 11
R116801	1B19	18	0210 - 11
R116801	1B19	20	0210 - 11
R116801	1C6	7	0250 - 3
R116801	1C8	7	0250 - 5
R116932	1G11	2	0402 - 3
R117073	1H5	6	0407 - 9
R117310	3F10	2B	1830 - 17
R117721	3E10	8	1830 - 3
R117721	3E14	9	1830 - 3D
R117721	3E16	5	1830 - 3F
R119132	1H7	12	0409 - 3
R119171	3E10	15	1830 - 3
R119171	3E14	32	1830 - 3D
R119223	1I4	17	0420 - 3
R119382	1H24	2	0417 - 3
R119383	1H24	1	0417 - 3
R119383	1I10	20	0452 - 3
R119384	1G13	2	0402 - 6
R119384	1G20	..	0404 - 7
R119384	1I10	22	0452 - 3
R119653	4G3	5	4151 - 3
R119795	1H24	13	0417 - 3
R119795	1H24	15	0417 - 3
R119795	1H24	18	0417 - 3
R119847	1H5	12	0407 - 9
R119847	1I10	28	0452 - 3
R120022	1H25	10	0418 - 2
R120030	1G5	4	0401 - 1
R120181	1H11	4	0413 - 3
R120182	1H11	4	0413 - 3
R120183	1H11	8	0413 - 3
R120183	1H11	9	0413 - 3
R120183	1H11	10	0413 - 3
R120184	1H11	8	0413 - 3
R120184	1H11	9	0413 - 3
R120185	1H11	4	0413 - 3
R120185	1H11	10	0413 - 3
R120186	1H11	8	0413 - 3
R120186	1H11	9	0413 - 3
R120236	1B25	21	0210 - 17
R120467	1G11	5	0402 - 3
R120646	1I10	13	0452 - 3
R120653	3B11	3	1810 - 7
R120653	3B11	4	1810 - 7
R120653	3B11	6	1810 - 7
R120653	3C18	2	1810 - 23D
R120653	3C18	8	1810 - 23D
R120752	1G5	2	0401 - 1
R120752	1G6	1	0401 - 2
R120752	1G8	1	0401 - 4
R120801	1G17	3	0404 - 3
R120801	1G19	1	0404 - 5
R120801	1G23	2	0407 - 1
R120872	1G10	3	0402 - 2
R120953	1G17	21	0404 - 3
R120954	1G17	21	0404 - 3
R121026	1I8	4	0433 - 1
R121163	1I1	8	0419 - 2
R121164	1H13	6	0413 - 5
R121164	1H15	6	0413 - 5B
R121193	1H7	13	0409 - 3
R121195	1H13	5	0413 - 5
R121195	1H15	5	0413 - 5B
R121199	1I8	1	0433 - 1
R121316	1H24	14	0417 - 3
R121320	1H7	8	0409 - 3
R121338	1G6	7	0401 - 2
R121338	1G15	7	0403 - 2
R121342	1G7	3	0401 - 3
R121342	1G8	3	0401 - 4
R121343	1G7	3	0401 - 3
R121346	1G8	3	0401 - 4
R121350	1G7	2	0401 - 3
R121350	1G8	5	0401 - 4
R121351	1G7	2	0401 - 3
R121354	1G8	5	0401 - 4
R121465	3E10	26	1830 - 3
R121465	3E14	24	1830 - 3D
R121489	1H7	21	0409 - 3
R121490	1H7	7	0409 - 3
R121491	1H7	6	0409 - 3
R121664	3E10	2	1830 - 3
R121664	3E14	8	1830 - 3D
R121666	3E10	3	1830 - 3
R121666	3E14	5	1830 - 3D
R121929	1G17	17	0404 - 3
R122195	1H25	21	0418 - 2
R122364	1G17	20	0404 - 3
R122430	1H24	15	0417 - 3
R122492	1H7	18	0409 - 3
R122595	1H8	2	0410 - 1
R122618	1H22	12	0416 - 3
R122653	1G6	9	0401 - 2
R122654	1G8	9	0401 - 4
R122722	4G3	16	4151 - 3
R123523	3E20	12	1830 - 5
R123572	1H22	10	0416 - 3
R123572	1I10	16	0452 - 3
R123593	1H11	32	0413 - 3
R124186	1H5	13	0407 - 9
R124211	1H25	20	0418 - 2
R124211	1I10	8	0452 - 3
R124328	1H2	15	0407 - 5
R124381	1G7	1	0401 - 3
R124607	1H25	3	0418 - 2
R124607	1I10	7	0452 - 3
R124842	1G7	1	0401 - 3
R124842	1G8	4	0401 - 4
R125027	1G9	3	0401 - 5
R125195	1G25	2	0407 - 3
R125223	3E12	49	1830 - 3B
R125223	3E16	18	1830 - 3F
R125450	2H12	15	1740 - 3
R126337	1I2	5	0419 - 3
R126812	1H22	16	0416 - 3
R127181	1H17	11	0413 - 7
R127297	1I1	11	0419 - 2
R127394	1G25	2	0407 - 3
R127425	1H8	1	0410 - 1
R127426	1H8	3	0410 - 1
R127808	3E20	23	1830 - 5
R127873	1G25	15	0407 - 3
R128694	1H5	2	0407 - 9
R128859	2D24	5	1672 - 7
R128892	3E20	20	1830 - 5
R128961	2D24	4	1672 - 7
R128962	2D20	5	1672 - 3
R129110	3E10	21	1830 - 3
R129110	3E16	7	1830 - 3F
R129820	1H5	10	0407 - 9
R129820	1H5	16	0407 - 9

NUMERICAL INDEX - CONTINUED

PART NO.	GRID	KEY	PAGE
R129821	1H5	16	0407 - 9
R130573	1H19	4	0414 - 1
R130573	1H20	7	0414 - 2
R130573	1I10	13	0452 - 3
R130573	1I15	19	0505 - 3
R131795	1C6	12	0250 - 3
R131795	1C8	12	0250 - 5
R132113	1B13	11	0210 - 5
R132113	1B13	12	0210 - 5
R132113	1B17	11	0210 - 9
R132113	1B17	12	0210 - 9
R132290	1H19	2	0414 - 1
R132396	1I1	2	0419 - 2
R132396	1I10	37	0452 - 3
R132827	1B21	6	0210 - 13
R132827	1B25	6	0210 - 17
R132828	1B21	7	0210 - 13
R132828	1B25	7	0210 - 17
R132836	1B21	12	0210 - 13
R132836	1B25	9	0210 - 17
R133087	1B10	8	0210 - 2
R133088	1B10	8	0210 - 2
R133093	1B11	8	0210 - 3
R133094	1B11	8	0210 - 3
R133165	1C6	8	0250 - 3
R133268	2B2	5	1011 - 1
R133328	1B25	29	0210 - 17
R133367	1C10	11	0250 - 7
R133368	1C10	10	0250 - 7
R133369	1B13	1	0210 - 5
R133369	1B13	3	0210 - 5
R133369	1B13	13	0210 - 5
R133369	1B15	1	0210 - 7
R133369	1B15	3	0210 - 7
R133369	1B15	13	0210 - 7
R133369	1B17	1	0210 - 9
R133369	1B17	3	0210 - 9
R133369	1B17	13	0210 - 9
R133369	1B19	1	0210 - 11
R133369	1B19	3	0210 - 11
R133369	1B19	13	0210 - 11
R133370	1C10	12	0250 - 7
R133371	1B13	2	0210 - 5
R133371	1B15	2	0210 - 7
R133371	1B17	2	0210 - 9
R133371	1B19	2	0210 - 11
R133373	1C10	4	0250 - 7
R133377	1C10	6	0250 - 7
R133378	1C10	8	0250 - 7
R133379	1C10	3	0250 - 7
R133686	1B9	2	0210 - 1
R133719	1B21	10	0210 - 13
R133719	1B25	13	0210 - 17
R133725	1B25	24	0210 - 17
R133725	1C12	11	0250 - 9
R133740	1B25	25	0210 - 17
R133798	1B25	18	0210 - 17
R133803	1B25	5	0210 - 17
R133858	1B25	11	0210 - 17
R133859	1B25	12	0210 - 17
R134016	1B25	19	0210 - 17
R134017	1B25	22	0210 - 17
R134172	1C6	11	0250 - 3
R134172	1C8	11	0250 - 5
R134183	1B21	2	0210 - 13
R134183	1B23	9	0210 - 15
R134183	1B25	2	0210 - 17
R134215	1B10	5	0210 - 2
R134215	1B11	5	0210 - 3
R134236	1C8	8	0250 - 5
R134239	1C6	2	0250 - 3
R134239	1C8	2	0250 - 5
R134269	1B25	28	0210 - 17
R134270	1B25	27	0210 - 17
R134454	1B13	21	0210 - 5
R134602	1I1	4	0419 - 2
R134717	1B21	1	0210 - 13
R134717	1B23	..	0210 - 15
R134717	1B25	1	0210 - 17
R134718	1B21	1	0210 - 13
R134718	1B23	..	0210 - 15
R134718	1B25	1	0210 - 17
R134719	1B21	1	0210 - 13
R134719	1B23	..	0210 - 15
R134719	1B25	1	0210 - 17
R134720	1B25	32	0210 - 17
R134721	1B25	32	0210 - 17
R134722	1B25	32	0210 - 17
R134726	1B21	9	0210 - 13
R134726	1B25	10	0210 - 17
R134859	1B21	17	0210 - 13
R134860	1B21	5	0210 - 13
R134861	1B21	11	0210 - 13
R134957	1I4	8	0420 - 3
R135118	1C12	8	0250 - 9
R135175	1I7	7	0429 - 1
R135342	1C12	21	0250 - 9
R135343	1C12	17	0250 - 9
R135344	1C12	1	0250 - 9
R135345	1C12	7	0250 - 9
R135346	1C12	10	0250 - 9
R135347	1C12	15	0250 - 9
R135348	1C12	13	0250 - 9
R135509	1I6	11	0422 - 3
R135510	1I6	9	0422 - 3
R135532	1B21	20	0210 - 13
R135532	1B23	..	0210 - 15
R135533	1B21	20	0210 - 13
R135533	1B23	..	0210 - 15
R135534	1B21	20	0210 - 13
R135534	1B23	..	0210 - 15
R135543	1C12	20	0250 - 9
R135543	1C12	26	0250 - 9
R135805	1C12	9	0250 - 9
R135953	1C10	2	0250 - 7
R135984	1B21	13	0210 - 13
R136063	1H25	12	0418 - 2
R136077	1C12	5	0250 - 9
R136078	1C12	4	0250 - 9
R136078	1C12	6	0250 - 9
R136083	1G12	3	0402 - 4
R136320	1H7	3	0409 - 3
R151392	1C6	1	0250 - 3
R151392	1C8	1	0250 - 5
R151626	1C10	5	0250 - 7
R151933	1B9	5	0210 - 1
R151933	1C12	3	0250 - 9
R152892	1B10	6	0210 - 2
R152892	1B11	6	0210 - 3
R152893	1B10	6	0210 - 2
R152893	1B11	6	0210 - 3
R152894	1B10	6	0210 - 2
R152894	1B11	6	0210 - 3
R152911	1B23	3	0210 - 15
R152913	1B23	1	0210 - 15
R152916	1B23	2	0210 - 15
R152922	1B23	5	0210 - 15
R152923	1B23	12	0210 - 15
R152924	1B23	8	0210 - 15
R152925	1B23	4	0210 - 15
R152926	1B23	6	0210 - 15
R152927	1B23	11	0210 - 15
R152928	1B23	10	0210 - 15
R152936	2B2	3	1011 - 1
R153497	1B19	12	0210 - 11
R156318	1J18	31	0560 - 3
R156318	1J20	31	0560 - 3B
R156897	2B2	2	1011 - 1
R156898	2B2	1	1011 - 1
R157887	1B19	12	0210 - 11
R159758	1B13	4	0210 - 5
R159758	1B15	4	0210 - 7
R159758	1B17	4	0210 - 9
R159758	1B19	4	0210 - 11
R159759	1B13	22A	0210 - 5
R159759	1B15	22A	0210 - 7
R159759	1B17	22A	0210 - 9
R159759	1B19	22A	0210 - 11
R160154	1B13	22	0210 - 5
R160154	1B15	22	0210 - 7
R160154	1B17	22	0210 - 9
R160154	1B19	22	0210 - 11
R160155	1B13	10	0210 - 5
R160155	1B15	21	0210 - 7
R160155	1B17	9	0210 - 9
R160155	1B19	21	0210 - 11
R160699	1B13	22	0210 - 5
R160699	1B13	22A	0210 - 5
R160699	1B13	23	0210 - 5
R160699	1B15	22	0210 - 7
R160699	1B15	22A	0210 - 7
R160699	1B15	23	0210 - 7
R160699	1B17	22	0210 - 9
R160699	1B17	22A	0210 - 9
R160699	1B17	23	0210 - 9
R160699	1B19	22	0210 - 11
R160699	1B19	22A	0210 - 11
R160699	1B19	23	0210 - 11
R160832	1B13	12	0210 - 5
R160832	1B13	21	0210 - 5
R160832	1B17	12	0210 - 9
R1612R	1G17	10	0404 - 3
R161397	1B13	12	0210 - 5
R161398	1B15	12	0210 - 7
R161399	1B17	12	0210 - 9
R161400	1B19	12	0210 - 11
R161863	2B2	5	1011 - 1
R21612	2B12	14	1060 - 5
R26012	1C10	7	0250 - 7
R26058	1G9	4	0401 - 5
R26058	1I10	33	0452 - 3
R26079	1G12	8	0402 - 4
R26081	1G12	2	0402 - 4
R26286	1C22	1	0260 - 11
R26286	1D8	1	0260 - 21
R26286	1I4	5	0420 - 3
R26286	1J8	5	0520 - 3
R26286	1J20	27	0560 - 3B
R26286	2C22	1	1369 - 3
R26286	2E24	2	1674 - 14
R26286	4E12	23	3160 - 59

NUMERICAL INDEX - CONTINUED

PART NO.	GRID	KEY	PAGE
R26286	4E14	23	3160 - 59B
R26287	2B4	35	1060 - 3
R26287	2B8	35	1060 - 3D
R26287	2C22	1	1369 - 3
R26287	4E4	20	3160 - 51
R26287	4F12	13	3160 - 73
R26287	4F19	20	3160 - 79
R26287	4F21	8	3160 - 79B
R26333	1I7	4	0429 - 1
R26375	1C12	25	0250 - 9
R26375	1C22	14	0260 - 11
R26375	1C24	8	0260 - 13
R26375	1D4	12	0260 - 17
R26375	1D8	13	0260 - 21
R26375	1D10	15	0260 - 23
R26375	1F20	11	0360 - 7
R26375	1I21	7	0510 - 5
R26375	1K3	16	0930 - 3
R26375	1K11	5	0960 - 9
R26375	1K13	1	0960 - 9B
R26375	2B4	27	1060 - 3
R26375	2B6	38	1060 - 3B
R26375	2B8	27	1060 - 3D
R26375	2B10	38	1060 - 3F
R26375	2B19	5	1115 - 3
R26375	2C22	1	1369 - 3
R26375	4B19	7	3160 - Q0021
R26375	4C18	49	3160 - 19
R26375	4C20	7	3160 - 21
R26375	4E12	50	3160 - 59
R26375	4E14	50	3160 - 59B
R26375	4F13	7	3160 - 74
R26375	4F14	5	3160 - 74A
R26375	4F19	25	3160 - 79
R26375	4F21	10	3160 - 79B
R26448	1C16	5	0260 - 5
R26448	1C20	3	0260 - 9
R26448	1C24	3	0260 - 13
R26448	1D10	5	0260 - 23
R26448	1H18	3	0413 - 8
R26448	1K3	35	0930 - 3
R26448	2B6	37	1060 - 3B
R26448	2B10	37	1060 - 3F
R26448	2B14	4	1060 - 7
R26448	2B16	4	1060 - 9
R26448	2C22	1	1369 - 3
R26448	4B23	6	3160 - 3
R26448	4B25	5	3160 - 5
R26448	4C2	2	3160 - 7
R26448	4C4	13	3160 - 9
R26448	4C14	19	3160 - 15
R26448	4C18	54	3160 - 19
R26448	4C24	3	3160 - 25
R26448	4D2	4	3160 - 27
R26448	4D8	6	3160 - 33
R26448	4E4	7	3160 - 51
R26448	4E18	19	3160 - 61
R26448	4E20	8	3160 - 63
R26448	4F4	4	3160 - 69
R26448	4F6	4	3160 - 69B
R26448	4F10	11	3160 - 71
R26448	4F12	2	3160 - 73
R26559	1G12	4	0402 - 4
R26748	1G12	12	0402 - 4
R26773	4E12	39	3160 - 59
R26773	4E14	39	3160 - 59B
R26906	1C24	11	0260 - 13
R26906	1D10	8	0260 - 23
R26906	1G25	10	0407 - 3
R26906	1I21	7	0510 - 5
R26906	1K3	12	0930 - 3
R26906	1K19	5	0960 - 15
R26906	4C8	45	3160 - 11B
R26906	4E12	26	3160 - 59
R26906	4E14	26	3160 - 59B
R26906	4F19	8	3160 - 79
R26976	1H24	14	0417 - 3
R27094	1B13	15	0210 - 5
R27094	1B15	15	0210 - 7
R27094	1B17	15	0210 - 9
R27094	1B19	15	0210 - 11
R27149	1G17	16	0404 - 3
R27166	2C16	1	1330 - 1
R27166	4E18	27	3160 - 61
R27175	4E12	12	3160 - 59
R27175	4E14	12	3160 - 59B
R27180	2D22	1	1672 - 5
R27180	2E2	2	1672 - 9
R27218	4E20	11	3160 - 63
R27218	4E20	14	3160 - 63
R27218	4F4	5	3160 - 69
R27218	4F6	5	3160 - 69B
R27296	3C12	2	1810 - 21
R27296	4D2	13	3160 - 27
R27443	1G12	9	0402 - 4
R27583	2B22	4	1314 - 1
R28583	1I17	10	0505 - 5
R28776	2C16	1	1330 - 1
R28776	4E18	12	3160 - 61
R28776	4F8	6	3160 - 69D
R28776	4F19	12	3160 - 79
R28782	1I21	15	0510 - 5
R28782	1K3	1	0930 - 3
R28782	1K3	22	0930 - 3
R28782	1K11	7	0960 - 9
R28782	2B6	39	1060 - 3B
R28782	2B10	39	1060 - 3F
R28782	4D24	24	3160 - 47
R28782	4E4	13	3160 - 51
R28782	4E18	16	3160 - 61
R28782	4F4	12	3160 - 69
R28782	4F6	10	3160 - 69B
R28782	4F12	7	3160 - 73
R28782	4F12	36	3160 - 73
R28811	1I8	3	0433 - 1
R29477	1B3	1	0110 - 3
R29479	1B3	6	0110 - 3
R29480	1B3	4	0110 - 3
R29936	1D4	19	0260 - 17
R29936	1D18	5	0350 - 3
R29936	1F14	5	0360 - 3
R29936	1F16	5	0360 - 3B
R29936	1I21	10	0510 - 5
R29936	1K3	28	0930 - 3
R29936	4B23	2	3160 - 3
R29936	4B25	2	3160 - 5
R29936	4C2	5	3160 - 7
R29936	4C4	11	3160 - 9
R29936	4C14	16	3160 - 15
R29936	4D22	3	3160 - 45
R29936	4E4	6	3160 - 51
R29936	4E12	14	3160 - 59
R29936	4E14	14	3160 - 59B
R29936	4F12	15	3160 - 73
R30378	2G20	43	1674 - 49
R30903	4E18	37	3160 - 61
R31654	3F4	9	1830 - 13
R32024	2G23	3	1674 - 52
R32025	2G23	4	1674 - 52
R32026	2G20	48	1674 - 49
R33259	2C16	1	1330 - 1
R33259	2C16	1	1330 - 1
R33259	3E12	52	1830 - 3B
R33259	3E16	11	1830 - 3F
R33259	3E20	8	1830 - 5
R33259	4E18	9	3160 - 61
R33259	4E18	26	3160 - 61
R33259	4F8	3	3160 - 69D
R33259	4F19	9	3160 - 79
R34812	2C16	1	1330 - 1
R36311	1C2	4	0210 - 19
R36311	1K19	3	0960 - 15
R36311	2D9	3	1370 - 3
R36311	4E22	8	3160 - 65
R36311	4E24	14	3160 - 65B
R36545	2D16	13	1671 - 1
R36545	2D17	13	1671 - 2
R36599	1G17	5	0404 - 3
R36943	1C12	24	0250 - 9
R375R	2C22	1	1369 - 3
R38185	1C12	16	0250 - 9
R39112	2B19	6	1115 - 3
R39112	4F13	8	3160 - 74
R39112	4F14	7	3160 - 74A
R39129	2D20	31	1672 - 3
R394R	2C16	1	1330 - 1
R394R	2C22	1	1369 - 3
R39503	4E16	7	3160 - 59D
R39741	1G17	6	0404 - 3
R40236	1I2	4	0419 - 3
R41440	3E16	3	1830 - 3F
R41934	1G5	1	0401 - 1
R41934	1G6	6	0401 - 2
R41934	1G8	6	0401 - 4
R41985	3F10	4	1830 - 17
R42340	1G17	9	0404 - 3
R42849	1B13	12	0210 - 5
R42849	1B13	28	0210 - 5
R42849	1B15	9	0210 - 7
R42849	1B15	12	0210 - 7
R42926	4E18	11	3160 - 61
R42926	4F8	5	3160 - 69D
R42926	4F19	11	3160 - 79
R43409	1G17	1	0404 - 3
R43621	1G17	13	0404 - 3
R43660	1H5	9A	0407 - 9
R44097	2E21	2	1674 - 11
R44165	2E23	2	1674 - 13
R44165	2E23	9	1674 - 13
R44165	2E23	11	1674 - 13
R44165	2E23	15	1674 - 13
R44302	1I6	5	0422 - 3
R44302	1I13	6	0505 - 1
R44302	1I15	14	0505 - 3
R44302	1I17	7	0505 - 5
R44302	1J18	33	0560 - 3
R44302	1J20	33	0560 - 3B
R44302	2D7	2	1369 - 13
R44302	2E18	5	1674 - 8
R44302	2E20	2	1674 - 10
R44302	2F14	1	1674 - 27

NUMERICAL INDEX - CONTINUED

PART NO.	GRID	KEY	PAGE
R44302	2F22	1	1674 - 33
R44302	3B11	2	1810 - 7
R44302	3F10	5	1830 - 17
R44302	3G11	20	2001 - 5
R44302	3G13	11	2001 - 7
R44302	4E22	4	3160 - 65
R44302	4E24	12	3160 - 65B
R44342	2E25	3	1674 - 15
R45210	3E12	58	1830 - 3B
R45210	3E14	22	1830 - 3D
R459R	2C22	1	1369 - 3
R460R	2C22	1	1369 - 3
R46414	1D2	7	0260 - 15
R46414	1J18	28	0560 - 3
R46414	1J20	28	0560 - 3B
R46667	3E20	2	1830 - 5
R46667	3F2	3	1830 - 11
R47150	4E18	32	3160 - 61
R47151	4E18	8	3160 - 61
R47151	4F8	2	3160 - 69D
R47153	1H5	7	0407 - 9
R47153	1I1	9	0419 - 2
R47153	1I10	27	0452 - 3
R47160	1I17	9	0505 - 5
R47235	2C16	1	1330 - 1
R47693	1I13	4	0505 - 1
R48568	1J8	6	0520 - 3
R48693	4G3	6	4151 - 3
R48734	1B9	4	0210 - 1
R48734	1C12	2	0250 - 9
R48776	1B9	5	0210 - 1
R48887	2G18	17	1674 - 47
R49376	1G25	1	0407 - 3
R49377	1G25	1	0407 - 3
R49377	1I10	29	0452 - 3
R495R	2C22	1	1369 - 3
R49672	1I4	22	0420 - 3
R49866	1G11	3	0402 - 3
R49866	1I10	6	0452 - 3
R500055	1H5	3	0407 - 9
R500055	1I1	5	0419 - 2
R500330	1H5	14	0407 - 9
R500456	1G13	4	0402 - 6
R500607	2D20	22	1672 - 3
R500607	2D24	15	1672 - 7
R500642	1G17	15	0404 - 3
R500642	1H2	1	0407 - 5
R500723	1H22	15	0416 - 3
R501034	1G15	13	0403 - 2
R501035	1G15	12	0403 - 2
R501035	1G22	1	0404 - 9
R501114	1I7	6	0429 - 1
R501255	1G17	..	0404 - 3
R501486	2D20	9B	1672 - 3
R502079	3E20	14	1830 - 5
R502083	1G13	4	0402 - 6
R503501	1H24	13	0417 - 3
R503501	1H24	14	0417 - 3
R503501	1H24	15	0417 - 3
R503501	1H24	18	0417 - 3
R50390	1G13	11	0402 - 6
R50390	1I10	21	0452 - 3
R503926	1H19	2	0414 - 1
R503926	1H20	1	0414 - 2
R50393	1G13	8	0402 - 6
R504028	1H2	15	0407 - 5
R504032	1H15	21	0413 - 5B
R504033	1H15	22	0413 - 5B
R50405	1I10	18	0452 - 3
R504057	1H11	16	0413 - 3
R50424	1I1	12	0419 - 2
R50424	1I10	35	0452 - 3
R504303	1H13	24	0413 - 5
R504304	1H13	24	0413 - 5
R504611	1I15	16	0505 - 3
R504778	1H24	15	0417 - 3
R504791	1H24	15	0417 - 3
R50770	3E12	51	1830 - 3B
R51053	1I1	10	0419 - 2
R51196	1B10	3	0210 - 2
R51196	1B11	3	0210 - 3
R51197	1B10	3	0210 - 2
R51197	1B11	3	0210 - 3
R51198	1B10	3	0210 - 2
R51198	1B11	3	0210 - 3
R51199	1B10	3	0210 - 2
R51199	1B11	3	0210 - 3
R51603	1H17	2	0413 - 7
R51936	1H11	27	0413 - 3
R51936	1H11	28	0413 - 3
R51936	1H11	29	0413 - 3
R51936	1H13	2	0413 - 5
R51936	1H15	2	0413 - 5B
R51936	4G3	3	4151 - 3
R51937	1H11	19	0413 - 3
R51937	1H11	28	0413 - 3
R51937	1H11	29	0413 - 3
R52634	1I8	1	0433 - 1
R52725	2E25	4	1674 - 15
R53108	1I10	34	0452 - 3
R53292	1G15	5	0403 - 2
R53317	2B4	11	1060 - 3
R53317	2B4	20	1060 - 3
R53317	2B8	11	1060 - 3D
R53317	2B8	20	1060 - 3D
R53528	3C9	3	1810 - 18
R53528	3F4	13	1830 - 13
R53528	3F8	2	1830 - 15
R53528	3G13	9	2001 - 7
R53869	1E22	17	0350 - 31
R53869	1E22	37	0350 - 31
R53899	1H13	19	0413 - 5
R53899	1I10	25	0452 - 3
R53901	1H9	7	0413 - 1
R53901	1H9	9	0413 - 1
R53901	1I10	25	0452 - 3
R54025	1H18	2	0413 - 8
R54123	1I13	2	0505 - 1
R54445	3B11	3	1810 - 7
R54445	3B11	4	1810 - 7
R54445	3B11	6	1810 - 7
R54445	3C18	2	1810 - 23D
R54445	3C18	8	1810 - 23D
R54500	1H22	1	0416 - 3
R54565	1G12	1	0402 - 4
R54856	1I10	24	0452 - 3
R56308	1B10	4	0210 - 2
R56308	1B11	4	0210 - 3
R57254	1B25	14	0210 - 17
R57696	1H2	5	0407 - 5
R57771	1G15	2	0403 - 2
R58186	1H11	4	0413 - 3
R59297	1H11	8	0413 - 3
R59297	1H11	9	0413 - 3
R59297	1H11	10	0413 - 3
R59460	1B21	8	0210 - 13
R59460	1B25	8	0210 - 17
R60277	1H17	1	0413 - 7
R60278	1H17	4	0413 - 7
R60279	1H17	3	0413 - 7
R61288	1G17	24	0404 - 3
R61463	4C8	51	3160 - 11B
R62938	1H2	2	0407 - 5
R63016	1H9	10	0413 - 1
R63548	4E12	52	3160 - 59
R63548	4E14	52	3160 - 59B
R63575	1C10	9	0250 - 7
R63604	1H13	4	0413 - 5
R63604	4G3	15	4151 - 3
R63667	3C14	9	1810 - 23
R63845	1H8	6	0410 - 1
R65602	2G20	49	1674 - 49
R65607	2G20	46	1674 - 49
R66320	2G18	24	1674 - 47
R66321	2G18	24	1674 - 47
R66452	1G15	4	0403 - 2
R66452	1G22	1	0404 - 9
R67092	1I4	7	0420 - 3
R67264	1H13	13	0413 - 5
R67264	1H13	15	0413 - 5
R67264	1H15	16	0413 - 5B
R67364	1H9	11	0413 - 1
R67879	1H9	6	0413 - 1
R67879	1H18	5	0413 - 8
R70112	1B21	14	0210 - 13
R70112	1B25	17	0210 - 17
R70113	1B21	16	0210 - 13
R70113	1B25	15	0210 - 17
R70115	1B21	15	0210 - 13
R70115	1B25	16	0210 - 17
R70210	2G20	41	1674 - 49
R70211	2G20	40	1674 - 49
R70212	2G20	41	1674 - 49
R70213	2G20	40	1674 - 49
R70214	2G20	41	1674 - 49
R70215	2G20	40	1674 - 49
R70216	2G20	41	1674 - 49
R70217	2G20	40	1674 - 49
R70218	2G20	41	1674 - 49
R70219	2G20	40	1674 - 49
R70220	2G20	50	1674 - 49
R70221	2G20	39	1674 - 49
R70222	2G20	38	1674 - 49
R70534	1G25	9	0407 - 3
R70826	1G12	6	0402 - 4
R71208	1G12	7	0402 - 4
R71210	2E24	3	1674 - 14
R71212	1H11	8	0413 - 3
R71212	1H11	9	0413 - 3
R71732	1H2	11	0407 - 5
R71732	1H2	13	0407 - 5
R71732	1I2	3	0419 - 3
R71787	4E12	17	3160 - 59
R71787	4E14	17	3160 - 59B
R72328	1G11	4	0402 - 3
R72328	1H25	19	0418 - 2
R72328	1I10	9	0452 - 3
R72653	2B6	55	1060 - 3B
R72653	2B10	55	1060 - 3F
R72654	2B6	53	1060 - 3B
R72654	2B10	53	1060 - 3F

NUMERICAL INDEX - CONTINUED

PART NO.	GRID	KEY	PAGE
R72655	3D17	3	1821 - 3D
R72655	3D17	7	1821 - 3D
R72853	1G13	..	0402 - 6
R73599	4E12	53	3160 - 59
R73599	4E14	28	3160 - 59B
R74008	1G15	3	0403 - 2
R74210	2C16	1	1330 - 1
R76358	1H9	3	0413 - 1
R76358	1H13	7	0413 - 5
R76358	1H15	7	0413 - 5B
R76491	1H7	15	0409 - 3
R77175	1D18	15	0350 - 3
R77175	4E4	11	3160 - 51
R77175	4E20	5	3160 - 63
R77456	2G18	27	1674 - 47
R77457	2G18	29	1674 - 47
R77458	2G18	28	1674 - 47
R77459	2G18	28	1674 - 47
R77460	2G18	28	1674 - 47
R77461	2G18	28	1674 - 47
R77462	2G18	25	1674 - 47
R77463	2G18	30	1674 - 47
R77464	2G18	26	1674 - 47
R77465	2G18	31	1674 - 47
R77466	2G18	33	1674 - 47
R77467	2G18	34	1674 - 47
R77468	2G18	32	1674 - 47
R77469	2G20	35	1674 - 49
R77470	2G20	45	1674 - 49
R77471	2G20	45	1674 - 49
R77472	2G20	45	1674 - 49
R77473	2G20	45	1674 - 49
R77474	2G20	44	1674 - 49
R77475	2G18	13	1674 - 47
R77476	2G18	3	1674 - 47
R77477	2G18	4	1674 - 47
R77478	2G18	15	1674 - 47
R77479	2G18	5	1674 - 47
R77480	2G18	6	1674 - 47
R77481	2G18	7	1674 - 47
R77482	2G18	8	1674 - 47
R77483	2G18	16	1674 - 47
R77484	2G18	19	1674 - 47
R77485	2G18	21	1674 - 47
R77486	2G18	22	1674 - 47
R77487	2G18	23	1674 - 47
R77488	2G20	51	1674 - 49
R77489	2G20	51	1674 - 49
R77490	2G20	51	1674 - 49
R77491	2G20	54	1674 - 49
R77492	2G20	54	1674 - 49
R77493	2G20	51	1674 - 49
R77494	2G20	55	1674 - 49
R77495	2G20	52	1674 - 49
R77496	2G20	52	1674 - 49
R77497	2G20	53	1674 - 49
R77498	2G18	24	1674 - 47
R77499	2G18	24	1674 - 47
R77500	2G18	24	1674 - 47
R77501	2G18	24	1674 - 47
R77502	2G20	56	1674 - 49
R77503	2G20	56	1674 - 49
R77551	1H11	22	0413 - 3
R77551	1I10	5	0452 - 3
R77673	1H25	8	0418 - 2
R77673	1I15	16	0505 - 3
R77698	3G17	5	2003 - 2
R78047	2G22	3	1674 - 51
R78048	2G22	10	1674 - 51
R78049	2G22	15	1674 - 51
R78050	2G22	19	1674 - 51
R78051	2G22	24	1674 - 51
R78052	2G22	5	1674 - 51
R78053	2G22	13	1674 - 51
R78053	4B21	52	3160 - Q0023
R78053	4C18	26	3160 - 19
R78053	4C22	52	3160 - 23
R78054	2E17	1	1674 - 7
R78054	2G22	17	1674 - 51
R78054	2H8	1	1676 - 1
R78055	2G22	22	1674 - 51
R78056	2G22	26	1674 - 51
R78057	2G22	2	1674 - 51
R78058	2B4	..	1060 - 3
R78058	2B6	..	1060 - 3B
R78058	2E17	1	1674 - 7
R78058	2G22	23	1674 - 51
R78058	4B21	51	3160 - Q0023
R78058	4C16	24	3160 - 17
R78058	4C22	51	3160 - 23
R78059	1J18	9	0560 - 3
R78059	1J20	9	0560 - 3B
R78059	2B4	..	1060 - 3
R78059	2B6	..	1060 - 3B
R78059	2E17	1	1674 - 7
R78059	2G22	1	1674 - 51
R78059	4B21	50	3160 - Q0023
R78059	4C16	22	3160 - 17
R78059	4C22	50	3160 - 23
R78060	1J18	9	0560 - 3
R78060	1J20	9	0560 - 3B
R78060	2G22	2	1674 - 51
R78060	2G22	9	1674 - 51
R78061	2G22	6	1674 - 51
R78061	2G22	23	1674 - 51
R78062	2G22	1	1674 - 51
R78063	2G22	1	1674 - 51
R78063	2G22	7	1674 - 51
R78064	1J2	10	0510 - 7
R78064	2G22	27	1674 - 51
R78064	2H8	1	1676 - 1
R78065	2G24	3	1674 - 53
R78066	2G24	2	1674 - 53
R78069	2G24	1	1674 - 53
R78818	4D18	9	3160 - 43
R78818	4D20	9	3160 - 43B
R78975	1E16	9	0350 - 25
R79060	1H13	14	0413 - 5
R79060	1H15	4	0413 - 5B
R79060	1H15	14	0413 - 5B
R79604	1H11	18	0413 - 3
R79604	1H11	24	0413 - 3
R79605	1H11	25	0413 - 3
R79606	1H11	26	0413 - 3
R79846	1I7	5	0429 - 1
R81777	1K15	4	0960 - 11
R81789	1K15	8	0960 - 11
R81795	1K15	10	0960 - 11
R81864	1K15	14	0960 - 11
R81866	1K15	3	0960 - 11
R82007	1G17	22	0404 - 3
R82719	1I4	26	0420 - 3
R83020	1H8	5	0410 - 1
R83021	1H8	4	0410 - 1
R83489	1I10	25	0452 - 3
R83490	1I10	25	0452 - 3
R83720	1H17	6	0413 - 7
R83721	1H17	6	0413 - 7
R83722	1H17	6	0413 - 7
R83723	1H17	6	0413 - 7
R83724	1H17	6	0413 - 7
R83725	1H17	6	0413 - 7
R83726	1H17	6	0413 - 7
R83727	1H17	6	0413 - 7
R83728	1H17	6	0413 - 7
R83729	1H17	6	0413 - 7
R83730	1H17	6	0413 - 7
R83731	1H17	6	0413 - 7
R83732	1H17	6	0413 - 7
R83733	1H17	6	0413 - 7
R83734	1H17	6	0413 - 7
R83735	1H17	6	0413 - 7
R83736	1H17	6	0413 - 7
R83737	1H17	6	0413 - 7
R83738	1H17	6	0413 - 7
R83739	1H17	6	0413 - 7
R84472	1H11	15	0413 - 3
R84472	1H17	12	0413 - 7
R84472	1I10	10	0452 - 3
R84618	1H7	16	0409 - 3
R84619	1H7	17	0409 - 3
R85027	1G12	14	0402 - 4
R85145	4G3	9	4151 - 3
R85168	1D14	1	0325 - 3
R85169	1D14	1	0325 - 3
R85169	1D14	2	0325 - 3
R85228	4D16	1	3160 - 41
R85556	4B17	9	3140 - 9
R85556	4D16	14	3160 - 41
R86007	1H25	2	0418 - 2
R86061	1H25	17	0418 - 2
R86063	1H5	8	0407 - 9
R86084	1K15	6	0960 - 11
R86457	2B6	43	1060 - 3B
R86457	2B10	43	1060 - 3F
R86743	1I10	17	0452 - 3
R87082	1H11	23	0413 - 3
R87561	1G10	1	0402 - 2
R87561	1G17	23	0404 - 3
R88397	1H25	16	0418 - 2
R88397	1I10	12	0452 - 3
R88993	1I10	1	0452 - 3
R89014	1H13	23	0413 - 5
R89879	1H22	10	0416 - 3
R89879	1I10	16	0452 - 3
R89927	1I4	13	0420 - 3
R89940	1K15	1	0960 - 11
R89940	1K15	2	0960 - 11
R91729	1K15	9	0960 - 11
R91822	1H7	4	0409 - 3
R92097	1I10	15	0452 - 3
R93008	1I4	24	0420 - 3
R93219	2G23	6	1674 - 52
R93220	2G23	6	1674 - 52
R93221	2G23	6	1674 - 52
R93222	2G23	6	1674 - 52
R93308	1H7	16	0409 - 3
R93311	1H7	17	0409 - 3
R93312	1H7	16	0409 - 3
R93313	1H7	17	0409 - 3
R93314	1H7	16	0409 - 3

NUMERICAL INDEX - CONTINUED

PART NO.	GRID	KEY	PAGE
R93315	1H7	17	0409 - 3
R93349	1H7	12	0409 - 3
R93350	1H7	13	0409 - 3
R93948	1G15	11	0403 - 2
R94350	2D20	9A	1672 - 3
R94351	2D20	10	1672 - 3
R96753	3D6	5	1810 - 35
R96935	1I21	16	0510 - 5
R96935	4G3	10	4151 - 3
R97061	1H11	31	0413 - 3
R97332	3E10	13	1830 - 3
R97332	3E14	7	1830 - 3D
R97336	3E10	9	1830 - 3
R97336	3E14	2	1830 - 3D
R98064	1H5	4	0407 - 9
R98064	1I1	6	0419 - 2
R98500	1H13	21	0413 - 5
R98527	1G13	13	0402 - 6
R98669	4D16	8	3160 - 41
R99047	1H13	22	0413 - 5
SE500182	1H11	14	0413 - 3
SE500182	1H17	13	0413 - 7
TF1U3302L	4B9	3	3102 - 5
TH110253	4D18	16	3160 - 43
TH110253	4D20	16	3160 - 43B
TY15130	2C17	..	1330 - 2
TY15733	2D16	1	1671 - 1
TY15733	2D16	5	1671 - 1
TY15733	2D17	1	1671 - 2
TY15733	2D17	5	1671 - 2
TY15939	2C16	1	1330 - 1
TY15969	2C17	1	1330 - 2
TY16004	2D2	2	1369 - 8
TY16005	2D2	3	1369 - 8
TY16285	2C17	1	1330 - 2
TY16308	3C18	12	1810 - 23D
TY16312	3C18	14	1810 - 23D
TY16313	3C18	12	1810 - 23D
TY16423	2D2	..	1369 - 8
TY21709	2D17	5	1671 - 2
TY21766	2D16	5	1671 - 1
TY22007	2C20	2	1369 - 1
TY22008	2C20	2	1369 - 1
TY22010	2C20	1	1369 - 1
TY22010	2C20	2	1369 - 1
TY22011	2C20	2	1369 - 1
TY22041	2C20	..	1369 - 1
TY22042	2C20	..	1369 - 1
TY22064	2C20	1	1369 - 1
TY22065	2C20	1	1369 - 1
TY22066	2C20	1	1369 - 1
TY22067	2C20	1	1369 - 1
TY22068	2C20	1	1369 - 1
TY22069	2C20	1	1369 - 1
TY22070	2C20	1	1369 - 1
TY22073	2C20	1	1369 - 1
TY22074	2C20	1	1369 - 1
TY22450	1G11	7	0402 - 3
TY22467	1H22	14	0416 - 3
TY22467	4E10	13	3160 - 57
TY22494	2H21	2	1746 - 6
TY22494	4D24	16	3160 - 47
TY22495	4D24	16	3160 - 47
TY23020	2D17	5	1671 - 2
TY24971	3C18	12	1810 - 23D
TY25006	3C18	14	1810 - 23D
TY6280	2C20	1	1369 - 1
TY6305	2C17	1	1330 - 2
TY6364	2C20	1	1369 - 1
TY6389	2C20	1	1369 - 1
TY6389	2C20	2	1369 - 1
TY6390	2C20	1	1369 - 1
TY6390	2C20	2	1369 - 1
TY6391	2C20	1	1369 - 1
TY6391	2C20	2	1369 - 1
TY6392	2C20	2	1369 - 1
TY6393	2C20	2	1369 - 1
TY6394	2C20	2	1369 - 1
TY6794	2D24	25	1672 - 7
TY6798	2D20	8	1672 - 3
T101090	3B25	11	1810 - 13D
T101090	3C2	13	1810 - 13F
T101480	4B7	13	3102 - 3
T101480	4B11	4	3140 - 3
T101480	4B11	36	3140 - 3
T101480	4B17	7	3140 - 9
T101942	2B24	9	1320 - 3
T101955	3F19	27	1921 - 3
T101955	3F21	20	1921 - 3B
T101975	2F16	3	1674 - 29
T101975	3F21	9	1921 - 3B
T102005	4D24	17	3160 - 47
T102136	4B15	8	3140 - 7
T102137	4B15	9	3140 - 7
T102137	4D22	10	3160 - 45
T102138	4B17	4	3140 - 9
T102138	4D22	2	3160 - 45
T102140	4B17	3	3140 - 9
T102171	4B7	12	3102 - 3
T102172	4B15	7	3140 - 7
T102419	1F18	3	0360 - 5
T102618	2C4	6	1320 - 7
T102620	2C6	6	1320 - 9
T102934	1D2	8	0260 - 15
T102934	2E18	4	1674 - 8
T102958	4D6	17	3160 - 31
T102961	4D6	25	3160 - 31
T102963	4D6	27	3160 - 31
T103092	4B21	41	3160 - Q0023
T103092	4C18	38	3160 - 19
T103092	4C22	41	3160 - 23
T103092	4D4	25	3160 - 29
T103093	4B21	40	3160 - Q0023
T103093	4C18	39	3160 - 19
T103093	4C22	40	3160 - 23
T103093	4D4	26	3160 - 29
T103094	4B21	39	3160 - Q0023
T103094	4C18	40	3160 - 19
T103094	4C22	39	3160 - 23
T103094	4D4	27	3160 - 29
T103395	2C2	2	1320 - 5
T103461	4E12	9	3160 - 59
T103461	4E14	9	3160 - 59B
T103463	2G15	3	1674 - 44
T103465	4C10	29	3160 - 11D
T105891	3F14	10	1910 - 3
T106208	4E18	34	3160 - 61
T106595	4E12	2	3160 - 59
T106595	4E14	2	3160 - 59B
T11180	1H22	3	0416 - 3
T11234	3G15	3	2002 - 2
T115030	3G15	5	2002 - 2
T115031	3G15	7	2002 - 2
T116416	1E22	37	0350 - 31
T116416	1E24	16	0350 - 31B
T116516	1D20	3	0350 - 5
T116604	1F10	4	0350 - 41
T116613	1D20	1	0350 - 5
T116915	1E16	5	0350 - 25
T116918	1D25	9	0350 - 11
T116928	1E16	1	0350 - 25
T116940	1E16	3	0350 - 25
T117030	3G11	4	2001 - 5
T118681	4E8	1	3160 - 55
T119564	3G15	1	2002 - 2
T119593	1J2	13	0510 - 7
T120536	2F14	3	1674 - 27
T121028	4E12	10	3160 - 59
T121028	4E14	10	3160 - 59B
T122083	1E22	37	0350 - 31
T122803	1E20	7	0350 - 29
T125535	4B15	2	3140 - 7
T125546	3F23	1	1927 - 3
T12582	1K15	15	0960 - 11
T128096	4E12	45	3160 - 59
T128096	4E14	45	3160 - 59B
T128437	3G15	8	2002 - 2
T130057	4B11	13	3140 - 3
T130058	4B11	14	3140 - 3
T130059	4B11	15	3140 - 3
T130847	4E18	1	3160 - 61
T130847	4F8	9	3160 - 69D
T130847	4F19	4	3160 - 79
T13119	4D4	33	3160 - 29
T131617	4B21	30	3160 - Q0023
T131617	4C18	33	3160 - 19
T131617	4C22	30	3160 - 23
T131617	4D4	22	3160 - 29
T131624	4D6	19	3160 - 31
T131980	1K7	1	0960 - 5
T132071	4E4	1	3160 - 51
T13254	1J4	54	0510 - 9
T13254	1J20	37	0560 - 3B
T132838	1D4	18	0260 - 17
T133290	2F14	1	1674 - 27
T133290	2F14	8	1674 - 27
T134104	2D16	7	1671 - 1
T134104	2D17	7	1671 - 2
T134141	1F8	3	0350 - 39
T134895	3B17	4	1810 - 9D
T135583	3B15	29	1810 - 9B
T13624	4D16	11	3160 - 41
T13630	1K5	3	0960 - 3
T13814	1H22	6	0416 - 3
T140379	4B11	21	3140 - 3
T140380	4B11	22	3140 - 3
T140381	4B11	23	3140 - 3
T142873	3C7	1	1810 - 16
T143166	2C16	1	1330 - 1
T143167	2C16	1	1330 - 1
T143169	2C16	1	1330 - 1
T143169	3E12	54	1830 - 3B
T143169	3E14	20	1830 - 3D
T143169	3E16	17	1830 - 3F
T143169	3E20	1	1830 - 5
T143445	2F4	3	1674 - 19
T143596	2H2	5	1674 - 55
T144370	1F10	5	0350 - 41
T144486	1E22	8	0350 - 31
T144486	1E22	22	0350 - 31
T144486	1E24	8	0350 - 31B

NUMERICAL INDEX - CONTINUED

PART NO.	GRID	KEY	PAGE
T145701	1K5	16	0960 - 3
T145896	2E6	6	1673 - 4
T145897	2E6	5	1673 - 4
T146097	2B24	13	1320 - 3
T146098	2C6	7	1320 - 9
T146099	2C4	7	1320 - 7
T146102	1I6	4	0422 - 3
T146104	1I6	8	0422 - 3
T146104	2C4	13	1320 - 7
T146106	2C6	13	1320 - 9
T146175	2B24	16	1320 - 3
T146178	2C4	11	1320 - 7
T146180	2C6	11	1320 - 9
T146195	2B24	19	1320 - 3
T146246	2H12	3	1740 - 3
T146246	4B11	6	3140 - 3
T146246	4B15	5	3140 - 7
T146431	2B24	4	1320 - 3
T146431	4F12	27	3160 - 73
T146436	2B24	5	1320 - 3
T146438	2B24	17	1320 - 3
T146443	2B24	23	1320 - 3
T146481	4F12	31	3160 - 73
T146481	4F15	1	3160 - 75
T146490	4F12	33	3160 - 73
T146494	2C4	16	1320 - 7
T146495	2C4	12	1320 - 7
T146496	2C4	3	1320 - 7
T146500	2C4	2	1320 - 7
T146502	2C6	16	1320 - 9
T146503	2C6	12	1320 - 9
T146504	2C6	3	1320 - 9
T146507	2C6	2	1320 - 9
T146515	1I6	8	0422 - 3
T146516	1I6	8	0422 - 3
T146517	1I6	8	0422 - 3
T146605	2B24	27	1320 - 3
T146606	2C6	14	1320 - 9
T146607	2C4	14	1320 - 7
T146792	2B24	24	1320 - 3
T146792	4F12	26	3160 - 73
T146908	2C4	17	1320 - 7
T146911	2C6	17	1320 - 9
T146933	4B5	3	3102 - 1
T146933	4B9	7	3102 - 5
T147618	3B11	8	1810 - 7
T148083	2B24	25	1320 - 3
T148177	3C12	9	1810 - 21
T148177	4D2	17	3160 - 27
T148181	4E10	10	3160 - 57
T148181	4E16	9	3160 - 59D
T148712	4D24	36	3160 - 47
T148884	4F13	3	3160 - 74
T149895	2B24	26	1320 - 3
T149895	3F19	23	1921 - 3
T150355	2E6	2	1673 - 4
T151139	2D18	5	1671 - 3
T151797	1B3	8	0110 - 3
T152076	2H23	6	1749 - 3
T152076	2H25	3	1749 - 5
T152230	2E11	3	1674 - 1
T152230	3B17	12	1810 - 9D
T153535	3B7	3	1810 - 3
T154131	1K5	1	0960 - 3
T154187	4C6	27	3160 - 11
T154187	4C10	6	3160 - 11D
T154342	4F25	3	3160 - 83
T155195	1J18	8	0560 - 3
T155195	1J18	9	0560 - 3
T155195	1J20	8	0560 - 3B
T155195	1J20	9	0560 - 3B
T155224	2B24	29	1320 - 3
T156059	4B15	3	3140 - 7
T156256	3E24	7	1830 - 9
T156258	2H12	13	1740 - 3
T156379	3F19	25	1921 - 3
T156428	3F19	10	1921 - 3
T156452	3E10	31	1830 - 3
T156471	3E10	23	1830 - 3
T156471	3E14	37	1830 - 3D
T156693	2B22	6	1314 - 1
T156693	2C14	4	1320 - 17
T156732	3E24	1	1830 - 9
T156784	1K9	4	0960 - 7
T156962	3E10	20	1830 - 3
T156963	3E12	38	1830 - 3B
T156965	3E10	16	1830 - 3
T156965	3E14	33	1830 - 3D
T156992	4B11	11	3140 - 3
T156994	2H12	11	1740 - 3
T156994	4B11	25	3140 - 3
T156995	2C19	1	1330 - 5
T157026	4B11	26	3140 - 3
T157027	4B11	18	3140 - 3
T157028	4B11	24	3140 - 3
T157029	4B11	12	3140 - 3
T157030	4B11	17	3140 - 3
T157055	1C2	12	0210 - 19
T157056	1C2	19	0210 - 19
T157172	2B24	14	1320 - 3
T157202	4E12	18	3160 - 59
T157202	4E14	18	3160 - 59B
T157211	2B6	64	1060 - 3B
T157211	2B10	48	1060 - 3F
T157212	2B6	60	1060 - 3B
T157212	2B10	60	1060 - 3F
T157213	2B6	62	1060 - 3B
T157213	2B10	62	1060 - 3F
T157220	2B4	9	1060 - 3
T157220	2B4	18	1060 - 3
T157220	2B8	9	1060 - 3D
T157220	2B8	18	1060 - 3D
T157222	2B4	2	1060 - 3
T157222	2B4	5	1060 - 3
T157222	2B8	2	1060 - 3D
T157222	2B8	5	1060 - 3D
T157223	2B4	15	1060 - 3
T157223	2B8	15	1060 - 3D
T157234	4B11	1	3140 - 3
T157257	2B6	61	1060 - 3B
T157257	2B10	61	1060 - 3F
T157258	2B6	63	1060 - 3B
T157258	2B10	63	1060 - 3F
T157315	1C4	3	0240 - 3
T157427	1I15	2	0505 - 3
T157443	4F25	1	3160 - 83
T157457	4B7	2	3102 - 3
T158047	4F12	16	3160 - 73
T158577	2D16	8	1671 - 1
T158584	2D20	30	1672 - 3
T158719	1E8	25	0350 - 19
T158719	1E10	25	0350 - 19B
T159028	2B24	3	1320 - 3
T159519	1E8	17	0350 - 19
T159519	1E10	17	0350 - 19B
T159519	1E12	13	0350 - 21
T159519	1E14	13	0350 - 23
T159602	1E22	7	0350 - 31
T159602	1E22	23	0350 - 31
T159602	1E24	7	0350 - 31B
T160352	3C14	24	1810 - 23
T160762	2C4	1	1320 - 7
T160769	2C6	1	1320 - 9
T160822	2B24	2	1320 - 3
T160895	3D10	3	1821 - 1
T160938	3E20	4	1830 - 5
T161207	1E22	2	0350 - 31
T161207	1E24	2	0350 - 31B
T161208	1D25	2	0350 - 11
T161208	1E20	8	0350 - 29
T161380	2E11	3	1674 - 1
T162575	1J4	48	0510 - 9
T163334	3D17	5	1821 - 3D
T163335	3D17	6	1821 - 3D
T163336	3D17	2	1821 - 3D
T163633	3D10	3	1821 - 1
T163633	3D10	4	1821 - 1
T163962	3D11	2	1821 - 1A
T164133	1I17	9	0505 - 5
T166274	4E8	9	3160 - 55
T166275	4E8	11	3160 - 55
T166400	4E8	5	3160 - 55
T167504	3B15	19	1810 - 9B
T167504	3B15	32	1810 - 9B
T167505	3B19	1	1810 - 11
T167507	3B13	18	1810 - 9
T167508	3B21	2	1810 - 13
T167508	3B23	2	1810 - 13B
T167509	3B25	4	1810 - 13D
T167512	3B15	33	1810 - 9B
T167514	3B19	4	1810 - 11
T167514	3B21	5	1810 - 13
T167514	3B23	5	1810 - 13B
T167516	3B25	4	1810 - 13D
T167519	3B15	42	1810 - 9B
T167527	3B19	2	1810 - 11
T167530	3B21	12	1810 - 13
T167530	3B23	12	1810 - 13B
T167533	3B13	10	1810 - 9
T167534	3B25	5	1810 - 13D
T167540	3B13	11	1810 - 9
T167546	3B19	3	1810 - 11
T167546	3B21	4	1810 - 13
T167546	3B23	4	1810 - 13B
T167551	3B13	6	1810 - 9
T167593	3B15	22	1810 - 9B
T167593	3B19	11	1810 - 11
T167593	3B21	11	1810 - 13
T167593	3B23	11	1810 - 13B
T167593	3D6	1	1810 - 35
T167594	3B25	2	1810 - 13D
T167594	3C2	2	1810 - 13F
T167609	3B21	8	1810 - 13
T167610	2B24	40	1320 - 3
T167610	3B21	1	1810 - 13
T167610	3B23	1	1810 - 13B
T167618	3B21	14	1810 - 13
T167618	3B23	14	1810 - 13B
T167621	3B25	10	1810 - 13D
T167630	3B19	8	1810 - 11
T167631	3B21	10	1810 - 13

NUMERICAL INDEX - CONTINUED

PART NO.	GRID	KEY	PAGE
T167633	3B19	10	1810 - 11
T167636	2C2	7	1320 - 5
T167638	3C20	2	1810 - 25
T167647	3B21	9	1810 - 13
T167650	3F14	9	1910 - 3
T167658	3B15	37	1810 - 9B
T167659	3B13	7	1810 - 9
T167659	3C2	12	1810 - 13F
T167661	3B13	6	1810 - 9
T167662	2C2	9	1320 - 5
T167662	3B15	21	1810 - 9B
T167663	2C2	9	1320 - 5
T167663	3B15	21	1810 - 9B
T167676	3E14	45	1830 - 3D
T167679	3E24	10	1830 - 9
T167683	3B25	6	1810 - 13D
T167683	3C2	6	1810 - 13F
T167753	3C20	4	1810 - 25
T167754	3C20	7	1810 - 25
T167757	3G16	7	2002 - 3
T167758	3D4	1	1810 - 33
T167759	3E24	4	1830 - 9
T167764	3B15	39	1810 - 9B
T167769	3B15	49	1810 - 9B
T167770	3B15	46	1810 - 9B
T167771	3B15	47	1810 - 9B
T167775	2H2	14	1674 - 55
T167802	4B7	1	3102 - 3
T167828	4B5	4	3102 - 1
T167829	4B5	2	3102 - 1
T167837	1C2	10	0210 - 19
T167840	2B19	11	1115 - 3
T167841	2B19	12	1115 - 3
T167842	2B19	14	1115 - 3
T167843	2B19	18	1115 - 3
T167845	2B19	19	1115 - 3
T167848	2B19	25	1115 - 3
T167850	4B9	1	3102 - 5
T167860	2H12	8	1740 - 3
T167861	4F12	16	3160 - 73
T167924	1C2	15	0210 - 19
T167934	1J18	3	0560 - 3
T167934	1J20	3	0560 - 3B
T167943	2B19	27	1115 - 3
T167945	3E12	32	1830 - 3B
T167945	3E14	30	1830 - 3D
T167979	4D24	9	3160 - 47
T167979	4E2	1	3160 - 49
T167980	2B19	13	1115 - 3
T167981	2B19	15	1115 - 3
T167982	2B19	16	1115 - 3
T168064	1D18	16	0350 - 3
T168119	3F14	11	1910 - 3
T168123	1J2	6	0510 - 7
T168135	3F19	21	1921 - 3
T168135	3F21	22	1921 - 3B
T168160	2B24	31	1320 - 3
T168160	2E20	6	1674 - 10
T168220	3E10	28	1830 - 3
T168220	3E14	31	1830 - 3D
T168247	1C4	2	0240 - 3
T168276	1K7	4	0960 - 5
T168340	3B9	1	1810 - 5
T168343	1D20	5	0350 - 5
T168373	1D20	13	0350 - 5
T168383	2B12	6	1060 - 5
T168393	2B14	7	1060 - 7
T168393	2B16	7	1060 - 9
T168546	3F4	15	1830 - 13
T168546	3F6	1	1830 - 13B
T168996	1J18	7	0560 - 3
T168996	1J20	7	0560 - 3B
T169118	3G2	3	1927 - 5
T169284	4B15	4	3140 - 7
T169329	1C2	16	0210 - 19
T169607	1E22	6	0350 - 31
T169607	1E24	6	0350 - 31B
T169707	1E22	31	0350 - 31
T169707	1E24	28	0350 - 31B
T169711	1E22	30	0350 - 31
T169711	1E24	27	0350 - 31B
T169712	1E22	12	0350 - 31
T169712	1E24	12	0350 - 31B
T169766	1E22	11	0350 - 31
T169766	1E24	11	0350 - 31B
T169824	1B3	9	0110 - 3
T169855	2B24	22	1320 - 3
T169953	2B24	15	1320 - 3
T169955	4B23	11	3160 - 3
T169955	4B25	14	3160 - 5
T169955	4C2	3	3160 - 7
T169955	4C6	4	3160 - 11
T169955	4C8	4	3160 - 11B
T170029	4C4	2	3160 - 9
T170053	3E10	30	1830 - 3
T170053	3E14	29	1830 - 3D
T170057	3F14	6	1910 - 3
T170085	1J2	21	0510 - 7
T170088	1I19	5	0510 - 3
T170102	1J2	24	0510 - 7
T170103	1J2	22	0510 - 7
T170104	1I19	4	0510 - 3
T170104	1J2	23	0510 - 7
T170133	3E12	33	1830 - 3B
T170133	3E16	6	1830 - 3F
T170135	4F2	4	3160 - 67
T170180	2B4	12	1060 - 3
T170180	2B4	21	1060 - 3
T170180	2B8	12	1060 - 3D
T170180	2B8	21	1060 - 3D
T170181	2B4	10	1060 - 3
T170181	2B4	19	1060 - 3
T170181	2B8	10	1060 - 3D
T170181	2B8	19	1060 - 3D
T170262	4B19	21	3160 - Q0021
T170262	4C20	21	3160 - 21
T170263	4C16	17	3160 - 17
T170266	4B21	36	3160 - Q0023
T170266	4C16	20	3160 - 17
T170266	4C22	36	3160 - 23
T170269	4B19	3	3160 - Q0021
T170269	4C16	3	3160 - 17
T170269	4C20	3	3160 - 21
T170269	4D4	2	3160 - 29
T170269	4D6	3	3160 - 31
T170272	4B19	17	3160 - Q0021
T170272	4C16	14	3160 - 17
T170272	4C20	17	3160 - 21
T170272	4D4	14	3160 - 29
T170273	4B19	10	3160 - Q0021
T170273	4C16	11	3160 - 17
T170273	4C20	10	3160 - 21
T170273	4D4	11	3160 - 29
T170274	4B19	18	3160 - Q0021
T170274	4C16	19	3160 - 17
T170274	4C20	18	3160 - 21
T170274	4D4	15	3160 - 29
T170275	4B19	9	3160 - Q0021
T170275	4C16	6	3160 - 17
T170275	4C20	9	3160 - 21
T170275	4D4	10	3160 - 29
T170278	4B21	27	3160 - Q0023
T170278	4C18	30	3160 - 19
T170278	4C22	27	3160 - 23
T170278	4D4	19	3160 - 29
T170283	4C18	28	3160 - 19
T170284	4B21	29	3160 - Q0023
T170284	4C18	29	3160 - 19
T170284	4C22	29	3160 - 23
T170285	4B21	37	3160 - Q0023
T170285	4C18	36	3160 - 19
T170285	4C22	37	3160 - 23
T170285	4D4	24	3160 - 29
T170286	4B21	38	3160 - Q0023
T170286	4C18	37	3160 - 19
T170286	4C22	38	3160 - 23
T170287	4B21	48	3160 - Q0023
T170287	4C18	47	3160 - 19
T170287	4C22	48	3160 - 23
T170288	4B21	45	3160 - Q0023
T170288	4C18	44	3160 - 19
T170288	4C22	45	3160 - 23
T170288	4D4	29	3160 - 29
T170289	4B21	47	3160 - Q0023
T170289	4C18	46	3160 - 19
T170289	4C22	47	3160 - 23
T170293	4C16	5	3160 - 17
T170295	4B19	6	3160 - Q0021
T170295	4C20	6	3160 - 21
T170295	4D4	5	3160 - 29
T170306	4B21	31	3160 - Q0023
T170306	4C18	32	3160 - 19
T170306	4C22	31	3160 - 23
T170306	4D4	21	3160 - 29
T170307	4B21	32	3160 - Q0023
T170307	4C18	31	3160 - 19
T170307	4C22	32	3160 - 23
T170307	4D4	20	3160 - 29
T170365	4D24	3	3160 - 47
T170367	4B19	23	3160 - Q0021
T170367	4C20	23	3160 - 21
T170367	4D4	16	3160 - 29
T170381	4D4	32	3160 - 29
T170382	4B19	22	3160 - Q0021
T170382	4C20	22	3160 - 21
T170434	1J18	21	0560 - 3
T170434	1J20	21	0560 - 3B
T170442	3F19	16	1921 - 3
T170442	3F21	15	1921 - 3B
T170445	3F4	6	1830 - 13
T170446	3F4	10	1830 - 13
T170498	1E22	37	0350 - 31
T170524	4D24	2	3160 - 47
T170582	2B19	24	1115 - 3
T170595	3G2	1	1927 - 5
T170604	2B19	10	1115 - 3
T170607	2B19	17	1115 - 3
T170615	4E18	23	3160 - 61
T170625	1J4	50	0510 - 9
T170715	1E22	4	0350 - 31
T170715	1E24	4	0350 - 31B

NUMERICAL INDEX - CONTINUED

PART NO.	GRID	KEY	PAGE
T170719	1F6	3	0350 - 37
T170720	1D25	13	0350 - 11
T170938	1J6	1	0515 - 3
T170939	1J6	12	0515 - 3
T170945	2H23	3	1749 - 3
T171069	1J18	1	0560 - 3
T171069	1J20	1	0560 - 3B
T171072	4D4	32	3160 - 29
T171082	3E24	2	1830 - 9
T171111	1D25	16	0350 - 11
T171112	1D25	6	0350 - 11
T171114	1D23	2	0350 - 9
T171126	1D23	5	0350 - 9
T171126	1D23	9	0350 - 9
T171140	1E18	3	0350 - 27
T171153	1E2	21	0350 - 13
T171153	1E4	18	0350 - 15
T171153	1E6	14	0350 - 17
T171153	1E8	23	0350 - 19
T171153	1E10	23	0350 - 19B
T171153	1E12	17	0350 - 21
T171153	1E14	18	0350 - 23
T171156	1E8	18	0350 - 19
T171156	1E10	18	0350 - 19B
T171156	1E12	14	0350 - 21
T171156	1E14	15	0350 - 23
T171157	3C4	1	1810 - 15
T171165	4B7	1	3102 - 3
T171178	1D23	3	0350 - 9
T171179	1D23	4	0350 - 9
T171179	1E18	1	0350 - 27
T171202	1D20	6	0350 - 5
T171218	1E12	20	0350 - 21
T171218	1E14	21	0350 - 23
T171223	2B24	28	1320 - 3
T171228	2B24	20	1320 - 3
T171239	2H23	5	1749 - 3
T171309	4F2	7	3160 - 67
T171309	4F17	4	3160 - 77
T171353	4B17	2	3140 - 9
T171386	4B5	4	3102 - 1
T171389	4E4	2	3160 - 51
T171430	2B24	21	1320 - 3
T171430	4D8	13	3160 - 33
T171459	3E10	25	1830 - 3
T171459	3E14	26	1830 - 3D
T17148	1K5	4	0960 - 3
T171500	4D2	14	3160 - 27
T171502	4D2	16	3160 - 27
T171553	1C2	22	0210 - 19
T171570	3E16	33	1830 - 3F
T171587	2B24	38	1320 - 3
T171587	4C18	53	3160 - 19
T171587	4C24	6	3160 - 25
T171587	4D2	8	3160 - 27
T171587	4D8	14	3160 - 33
T171597	1D14	6	0325 - 3
T171632	2B24	8	1320 - 3
T171688	2C2	6	1320 - 5
T171688	3F4	16	1830 - 13
T171688	3F6	12	1830 - 13B
T171730	1D20	4	0350 - 5
T171734	4B11	4	3140 - 3
T171734	4D22	15	3160 - 45
T171734	4D22	19	3160 - 45
T171742	2C4	8	1320 - 7
T171743	2C6	8	1320 - 9
T171748	2C4	19	1320 - 7
T171749	2C6	19	1320 - 9
T171750	2C4	21	1320 - 7
T171751	2C6	21	1320 - 9
T171756	2C4	15	1320 - 7
T171757	2C6	15	1320 - 9
T171758	2C4	20	1320 - 7
T171759	2C6	20	1320 - 9
T171779	3F8	1	1830 - 15
T171815	3F4	19	1830 - 13
T171854	3C22	1	1810 - 27
T171855	3C22	2	1810 - 27
T171961	1D25	14	0350 - 11
T171961	1E20	1	0350 - 29
T172056	3F19	16	1921 - 3
T172056	3F21	16	1921 - 3B
T172094	1D25	22	0350 - 11
T172104	1E2	6	0350 - 13
T172104	1E4	8	0350 - 15
T172104	1E6	17	0350 - 17
T172104	1E8	7	0350 - 19
T172104	1E10	7	0350 - 19B
T172115	1E2	20	0350 - 13
T172115	1E4	15	0350 - 15
T172115	1E6	12	0350 - 17
T172115	1E8	20	0350 - 19
T172115	1E10	20	0350 - 19B
T172115	1E12	15	0350 - 21
T172115	1E14	16	0350 - 23
T172129	1E2	7	0350 - 13
T172129	1E4	9	0350 - 15
T172129	1E6	18	0350 - 17
T172129	1E8	6	0350 - 19
T172129	1E10	6	0350 - 19B
T172130	1E2	8	0350 - 13
T172130	1E4	10	0350 - 15
T172130	1E6	19	0350 - 17
T172130	1E8	5	0350 - 19
T172130	1E10	5	0350 - 19B
T172131	1E4	12	0350 - 15
T172131	1E6	20	0350 - 17
T172131	1E8	3	0350 - 19
T172131	1E10	3	0350 - 19B
T172234	2B24	39	1320 - 3
T172247	1E4	7	0350 - 15
T172247	1E6	3	0350 - 17
T172247	1E8	8	0350 - 19
T172247	1E10	8	0350 - 19B
T172251	1E4	7	0350 - 15
T172251	1E6	3	0350 - 17
T172251	1E8	8	0350 - 19
T172251	1E10	8	0350 - 19B
T172274	2B4	22	1060 - 3
T172302	1E12	18	0350 - 21
T172302	1E14	19	0350 - 23
T172318	1D18	18	0350 - 3
T172318	1F22	4	0360 - 7B
T172334	3F23	9	1927 - 3
T172334	3F25	6	1927 - 3B
T172336	3F23	11	1927 - 3
T172336	3F25	4	1927 - 3B
T172460	3F4	20	1830 - 13
T172522	4C16	23	3160 - 17
T172523	4B19	8	3160 - Q0021
T172523	4C16	8	3160 - 17
T172523	4C20	8	3160 - 21
T172523	4D4	9	3160 - 29
T172562	4C6	16	3160 - 11
T172562	4C8	16	3160 - 11B
T172562	4C10	4	3160 - 11D
T172579	4C14	23	3160 - 15
T172582	3F4	17	1830 - 13
T172609	4B21	26	3160 - Q0023
T172609	4C22	26	3160 - 23
T172609	4D4	18	3160 - 29
T172651	3C14	23	1810 - 23
T172652	3C14	19	1810 - 23
T172653	3C14	13	1810 - 23
T172653	3C14	14	1810 - 23
T172653	3C14	15	1810 - 23
T172654	3C14	28	1810 - 23
T172660	3C14	13	1810 - 23
T172660	3C14	14	1810 - 23
T172660	3C14	15	1810 - 23
T172712	4C14	14	3160 - 15
T172732	1D18	12	0350 - 3
T172743	3F8	6	1830 - 15
T172792	1F2	2	0350 - 33
T172795	1D25	8	0350 - 11
T172801	1D20	8	0350 - 5
T172813	1F4	3	0350 - 35
T172814	1F4	2	0350 - 35
T172830	1F2	3	0350 - 33
T172927	1J6	18	0515 - 3
T172927	2B6	40	1060 - 3B
T172927	2B10	40	1060 - 3F
T172928	2B24	11	1320 - 3
T172933	3E12	36	1830 - 3B
T172933	3E16	23	1830 - 3F
T172934	3E12	41	1830 - 3B
T172934	3E16	9	1830 - 3F
T172958	2B24	15	1320 - 3
T172958	3D6	4	1810 - 35
T172985	4D6	8	3160 - 31
T172986	4D6	5	3160 - 31
T172987	4D6	9	3160 - 31
T172988	4D6	6	3160 - 31
T172991	3C24	1	1810 - 29
T172992	3C24	3	1810 - 29
T173036	1E2	5	0350 - 13
T173036	1E4	13	0350 - 15
T173054	2D11	5	1370 - 5
T173055	2D11	3	1370 - 5
T173063	1D25	7	0350 - 11
T173065	1E12	7	0350 - 21
T173065	1E14	7	0350 - 23
T173066	1E2	14	0350 - 13
T173066	1E4	3	0350 - 15
T173066	1E6	6	0350 - 17
T173066	1E8	11	0350 - 19
T173066	1E10	11	0350 - 19B
T173066	1E12	6	0350 - 21
T173066	1E14	6	0350 - 23
T173067	1E2	13	0350 - 13
T173067	1E4	5	0350 - 15
T173067	1E6	5	0350 - 17
T173067	1E8	10	0350 - 19
T173067	1E10	10	0350 - 19B
T173067	1E12	5	0350 - 21
T173067	1E14	5	0350 - 23
T173071	1D25	2	0350 - 11
T173077	2C4	22	1320 - 7
T173078	2C6	22	1320 - 9
T173098	2B24	6	1320 - 3

NUMERICAL INDEX - CONTINUED

PART NO.	GRID	KEY	PAGE
T173099	1K9	3	0960 - 7
T173100	1K9	2	0960 - 7
T173121	2D20	24	1672 - 3
T173121	2D24	12	1672 - 7
T173122	2D20	24	1672 - 3
T173122	2D24	12	1672 - 7
T173123	1E20	12	0350 - 29
T173123	1E22	37	0350 - 31
T173124	1E22	15	0350 - 31
T173125	1E22	14	0350 - 31
T173125	1E24	14	0350 - 31B
T173126	1E22	13	0350 - 31
T173126	1E24	13	0350 - 31B
T173127	1E22	19	0350 - 31
T173127	1E24	19	0350 - 31B
T173128	1E22	18	0350 - 31
T173128	1E24	18	0350 - 31B
T173129	1E22	10	0350 - 31
T173129	1E22	20	0350 - 31
T173130	1E22	21	0350 - 31
T173131	1E22	1	0350 - 31
T173131	1E22	26	0350 - 31
T173131	1E22	27	0350 - 31
T173131	1E22	28	0350 - 31
T173131	1E24	1	0350 - 31B
T173134	1E22	9	0350 - 31
T173134	1E22	21	0350 - 31
T173137	1E22	5	0350 - 31
T173137	1E22	24	0350 - 31
T173137	1E24	5	0350 - 31B
T173138	1E22	25	0350 - 31
T173138	1E24	25	0350 - 31B
T173139	1E22	3	0350 - 31
T173139	1E24	3	0350 - 31B
T173140	1E22	32	0350 - 31
T173140	1E24	20	0350 - 31B
T173141	1E22	33	0350 - 31
T173141	1E24	21	0350 - 31B
T173142	1E22	34	0350 - 31
T173142	1E24	22	0350 - 31B
T173143	1E22	35	0350 - 31
T173143	1E24	23	0350 - 31B
T173144	1E22	36	0350 - 31
T173144	1E24	24	0350 - 31B
T173145	1F2	1	0350 - 33
T173146	1F2	4	0350 - 33
T173161	3G2	3	1927 - 5
T173162	3G2	1	1927 - 5
T173168	1J4	57	0510 - 9
T173171	2C4	4	1320 - 7
T173172	2C6	4	1320 - 9
T173178	4C16	7	3160 - 17
T173179	4B21	56	3160 - Q0023
T173179	4C16	25	3160 - 17
T173179	4C22	56	3160 - 23
T173180	4C16	12	3160 - 17
T173181	4C16	9	3160 - 17
T173182	4C16	13	3160 - 17
T173195	2B24	34	1320 - 3
T173196	2B24	35	1320 - 3
T173197	2B24	32	1320 - 3
T173198	2B24	33	1320 - 3
T173199	2B24	37	1320 - 3
T173205	4B19	13	3160 - Q0021
T173205	4C16	10	3160 - 17
T173205	4C20	13	3160 - 21
T173205	4D4	8	3160 - 29
T173206	4B19	14	3160 - Q0021
T173206	4C20	14	3160 - 21
T173207	4B21	55	3160 - Q0023
T173207	4C22	55	3160 - 23
T173208	4B19	11	3160 - Q0021
T173208	4C20	11	3160 - 21
T173209	4B19	15	3160 - Q0021
T173209	4C20	15	3160 - 21
T173210	4B19	16	3160 - Q0021
T173210	4C20	16	3160 - 21
T173210	4D4	12	3160 - 29
T173216	1D25	11	0350 - 11
T173216	1D25	12	0350 - 11
T173217	1D25	19	0350 - 11
T173219	4B19	12	3160 - Q0021
T173219	4C20	12	3160 - 21
T173219	4D4	7	3160 - 29
T173220	4B21	54	3160 - Q0023
T173220	4C22	54	3160 - 23
T173226	4D4	3	3160 - 29
T173229	4D4	3	3160 - 29
T173238	3F23	14	1927 - 3
T173238	3F25	12	1927 - 3B
T173239	3F23	13	1927 - 3
T173239	3F25	5	1927 - 3B
T173245	1F20	2	0360 - 7
T173273	3F23	4	1927 - 3
T173273	3F25	14	1927 - 3B
T173277	1J4	61	0510 - 9
T173301	1J2	7	0510 - 7
T173302	1J2	4	0510 - 7
T173316	1J2	8	0510 - 7
T173322	1J4	38	0510 - 9
T173324	1K3	25	0930 - 3
T173365	1J4	62	0510 - 9
T173396	1F3	6	0350 - 34
T173397	1F3	4	0350 - 34
T173398	1F3	5	0350 - 34
T173399	1F3	3	0350 - 34
T173400	1F3	2	0350 - 34
T173407	2B19	32	1115 - 3
T173457	3F23	14	1927 - 3
T173457	3F25	12	1927 - 3B
T173458	3F23	13	1927 - 3
T173458	3F25	5	1927 - 3B
T173487	2C8	1	1320 - 11
T173511	1E22	29	0350 - 31
T173511	1E24	29	0350 - 31B
T173559	2D17	8	1671 - 2
T173568	2B24	1	1320 - 3
T173571	2B24	36	1320 - 3
T173579	1K3	6	0930 - 3
T173585	2C4	24	1320 - 7
T173586	2C6	24	1320 - 9
T173631	2H2	6	1674 - 55
T173632	2H2	4	1674 - 55
T173636	1E4	16	0350 - 15
T173636	1E6	22	0350 - 17
T173636	1E8	21	0350 - 19
T173636	1E10	21	0350 - 19B
T173637	1E4	1	0350 - 15
T173637	1E6	1	0350 - 17
T173637	1E8	1	0350 - 19
T173637	1E10	1	0350 - 19B
T173638	1E4	2	0350 - 15
T173638	1E6	2	0350 - 17
T173638	1E8	2	0350 - 19
T173638	1E10	2	0350 - 19B
T173639	1E4	6	0350 - 15
T173639	1E6	4	0350 - 17
T173639	1E8	9	0350 - 19
T173639	1E10	9	0350 - 19B
T173644	1E12	8	0350 - 21
T173644	1E14	8	0350 - 23
T173646	1E22	16	0350 - 31
T173646	1E24	16	0350 - 31B
T173648	2H4	1	1674 - 57
T173768	3E24	1	1830 - 9
T173778	3E4	2	1822 - 5
T173779	3E2	6	1822 - 3
T173779	3E4	3	1822 - 5
T173779	3E6	6	1822 - 5B
T173779	3E8	5	1822 - 7
T173806	1E6	21	0350 - 17
T173807	1D23	6	0350 - 9
T173808	1D23	7	0350 - 9
T173809	1D23	8	0350 - 9
T173810	1D25	23	0350 - 11
T173811	1D25	27	0350 - 11
T173812	1D25	26	0350 - 11
T173816	1F12	9	0350 - 43
T173819	1D25	4	0350 - 11
T173819	1E20	13	0350 - 29
T173819	1F22	6	0360 - 7B
T173822	1F12	2	0350 - 43
T173823	1F12	1	0350 - 43
T173824	1F12	10	0350 - 43
T173837	1E2	19	0350 - 13
T173839	1E2	15	0350 - 13
T173839	1E4	4	0350 - 15
T173839	1E6	7	0350 - 17
T173839	1E8	12	0350 - 19
T173839	1E10	12	0350 - 19B
T173840	1E2	3	0350 - 13
T173840	1E12	22	0350 - 21
T173840	1E14	23	0350 - 23
T173841	1E2	1	0350 - 13
T173841	1E12	1	0350 - 21
T173841	1E14	1	0350 - 23
T173842	1E2	2	0350 - 13
T173842	1E12	2	0350 - 21
T173842	1E14	2	0350 - 23
T173843	1E2	22	0350 - 13
T173844	1E2	12	0350 - 13
T173844	1E12	4	0350 - 21
T173844	1E14	4	0350 - 23
T173845	1E2	10	0350 - 13
T173847	1E2	23	0350 - 13
T173847	1E6	15	0350 - 17
T173847	1E16	6	0350 - 25
T173847	1E16	8	0350 - 25
T173848	1E12	19	0350 - 21
T173848	1E14	20	0350 - 23
T173849	1E2	4	0350 - 13
T173849	1E4	14	0350 - 15
T173849	1E6	16	0350 - 17
T173849	1E8	19	0350 - 19
T173849	1E10	19	0350 - 19B
T173849	1E14	14	0350 - 23
T173851	1E4	17	0350 - 15
T173852	1E4	19	0350 - 15
T173852	1E6	11	0350 - 17
T173853	1E4	22	0350 - 15
T173853	1E6	8	0350 - 17

NUMERICAL INDEX - CONTINUED

PART NO.	GRID	KEY	PAGE
T173853	1E8	13	0350 - 19
T173853	1E10	13	0350 - 19B
T173853	1E12	9	0350 - 21
T173853	1E14	9	0350 - 23
T173855	1E8	4	0350 - 19
T173855	1E10	4	0350 - 19B
T173856	1E12	12	0350 - 21
T173856	1E14	12	0350 - 23
T173857	1E14	17	0350 - 23
T173858	1E6	13	0350 - 17
T173859	1E8	24	0350 - 19
T173859	1E10	24	0350 - 19B
T173860	1E8	22	0350 - 19
T173860	1E10	22	0350 - 19B
T173862	1E12	16	0350 - 21
T173863	1E2	11	0350 - 13
T173863	1E12	3	0350 - 21
T173863	1E14	3	0350 - 23
T173864	1E2	11	0350 - 13
T173864	1E12	3	0350 - 21
T173864	1E14	3	0350 - 23
T173865	1E16	7	0350 - 25
T173868	1E20	2	0350 - 29
T173869	1E20	3	0350 - 29
T173870	1E20	9	0350 - 29
T173877	1F2	5	0350 - 33
T173878	1F3	7	0350 - 34
T173958	1E2	17	0350 - 13
T173958	1E4	21	0350 - 15
T173958	1E6	9	0350 - 17
T173958	1E8	14	0350 - 19
T173958	1E10	14	0350 - 19B
T173958	1E12	10	0350 - 21
T173958	1E14	10	0350 - 23
T173960	1E4	20	0350 - 15
T173960	1E6	10	0350 - 17
T173960	1E8	15	0350 - 19
T173960	1E10	15	0350 - 19B
T173960	1E12	11	0350 - 21
T173960	1E14	11	0350 - 23
T174025	4C6	19	3160 - 11
T174025	4C8	19	3160 - 11B
T174025	4C10	14	3160 - 11D
T174080	3C12	6	1810 - 21
T174081	3C12	3	1810 - 21
T174090	1E22	37	0350 - 31
T174091	1E22	37	0350 - 31
T174107	1D25	1	0350 - 11
T174107	1D25	11	0350 - 11
T174107	2D7	10	1369 - 13
T174109	3E16	4	1830 - 3F
T174226	1J2	2	0510 - 7
T174228	2D7	9	1369 - 13
T174234	1F12	5	0350 - 43
T174236	1D25	21	0350 - 11
T174238	1D25	15	0350 - 11
T174239	1F3	8	0350 - 34
T174240	1F3	1	0350 - 34
T174243	1E24	21	0350 - 31B
T174244	1E24	22	0350 - 31B
T174254	1E2	16	0350 - 13
T174271	3F19	2	1921 - 3
T174271	3F21	2	1921 - 3B
T174275	4D24	32	3160 - 47
T174275	4E2	4	3160 - 49
T174298	2B24	30	1320 - 3
T174299	2C6	23	1320 - 9
T174300	2C4	23	1320 - 7
T174367	1D25	10	0350 - 11
T174367	1D25	12	0350 - 11
T174367	1F12	1	0350 - 43
T174368	1F12	9	0350 - 43
T174368	1F12	10	0350 - 43
T174386	1D20	10	0350 - 5
T174387	1E24	23	0350 - 31B
T174388	1F12	7	0350 - 43
T174389	1F12	6	0350 - 43
T174390	1F12	4	0350 - 43
T174390	1F12	11	0350 - 43
T174392	1E4	11	0350 - 15
T174393	1E20	10	0350 - 29
T174394	1E20	11	0350 - 29
T174395	1E24	20	0350 - 31B
T174396	1E24	26	0350 - 31B
T174405	1E18	6	0350 - 27
T174407	1D20	9	0350 - 5
T174407	1D20	11	0350 - 5
T174407	1E18	7	0350 - 27
T174408	1E24	15	0350 - 31B
T174413	1E2	18	0350 - 13
T174417	1E4	22	0350 - 15
T174417	1E6	8	0350 - 17
T174417	1E8	13	0350 - 19
T174417	1E12	9	0350 - 21
T174417	1E14	9	0350 - 23
T174418	1E2	16	0350 - 13
T174423	1F12	8	0350 - 43
T174427	3E12	69	1830 - 3B
T174427	3E16	29	1830 - 3F
T174430	1I15	15	0505 - 3
T174430	2C2	5	1320 - 5
T174463	1C2	9	0210 - 19
T174497	4F17	9	3160 - 77
T174529	1E18	5	0350 - 27
T174530	2D16	4	1671 - 1
T174530	2D17	4	1671 - 2
T174534	1J4	36	0510 - 9
T174543	2C2	1	1320 - 5
T174599	4F12	10	3160 - 73
T174629	1I19	3	0510 - 3
T174634	1J6	1	0515 - 3
T174634	2B4	2	1060 - 3
T174634	2B4	5	1060 - 3
T174634	2B8	2	1060 - 3D
T174634	2B8	5	1060 - 3D
T174648	2B24	12	1320 - 3
T174659	1I23	3	0510 - 5B
T174735	2B24	41	1320 - 3
T174929	1E24	6	0350 - 31B
T174997	1B3	1	0110 - 3
T175034	1J4	64	0510 - 9
T175103	1J4	63	0510 - 9
T175117	4E22	1	3160 - 65
T175135	1I19	13	0510 - 3
T175206	1J4	69	0510 - 9
T175236	2B6	62	1060 - 3B
T175236	2B10	62	1060 - 3F
T175290	1D4	22	0260 - 17
T175292	1E18	2	0350 - 27
T175294	1E18	5	0350 - 27
T175299	1E24	17	0350 - 31B
T175448	2B19	1	1115 - 3
T175481	3F19	15	1921 - 3
T175512	1D4	3	0260 - 17
T175533	3B9	5	1810 - 5
T175534	3B9	4	1810 - 5
T175624	1D23	1	0350 - 9
T175629	1E8	16	0350 - 19
T175629	1E10	16	0350 - 19B
T175669	2D24	16	1672 - 7
T175670	2D20	25	1672 - 3
T175671	2D20	26	1672 - 3
T175671	2D24	24	1672 - 7
T175738	2B24	22	1320 - 3
T175739	2B24	21	1320 - 3
T175739	4D8	13	3160 - 33
T175744	2B24	29	1320 - 3
T175855	3E24	3	1830 - 9
T175862	1E24	17	0350 - 31B
T175880	2B12	15	1060 - 5
T175909	2B24	7	1320 - 3
T175910	2C4	5	1320 - 7
T175911	2C6	5	1320 - 9
T176064	4B7	6	3102 - 3
T176064	4B11	31	3140 - 3
T176064	4B17	5	3140 - 9
T176064	4D22	16	3160 - 45
T176108	2B4	13	1060 - 3
T176108	2B8	13	1060 - 3D
T176111	2B4	13	1060 - 3
T176111	2B8	13	1060 - 3D
T176113	3G4	13	1927 - 7
T176115	1C24	16	0260 - 13
T176115	1D10	14	0260 - 23
T176192	3G4	14	1927 - 7
T176274	2C4	19	1320 - 7
T176275	2C4	20	1320 - 7
T176276	2C6	19	1320 - 9
T176277	2C6	20	1320 - 9
T176279	3G4	10	1927 - 7
T176282	3G4	10	1927 - 7
T176299	1J10	4	0520 - 5
T176338	2G16	2	1674 - 45
T176338	4E4	21	3160 - 51
T176341	3G6	6	1927 - 9
T176342	3G6	8	1927 - 9
T176347	2B24	7	1320 - 3
T176348	2C4	5	1320 - 7
T176349	2C6	5	1320 - 9
T176357	3G6	9	1927 - 9
T176370	1J10	7	0520 - 5
T176372	2E3	1	1673 - 1
T176455	1B5	3	0110 - 5
T176526	1F2	5	0350 - 33
T176527	1F2	3	0350 - 33
T176528	1F2	2	0350 - 33
T176553	1J10	8	0520 - 5
T176796	1F6	4	0350 - 37
T176870	3E2	9	1822 - 3
T176870	3E4	5	1822 - 5
T176870	3E6	7	1822 - 5B
T176870	3E8	8	1822 - 7
T177086	4B17	2	3140 - 9
T177219	1E24	15	0350 - 31B
T177220	1E24	10	0350 - 31B
T177221	1E24	9	0350 - 31B
T177397	3G11	11	2001 - 5
T177442	4B23	20	3160 - 3
T177442	4B25	20	3160 - 5
T177442	4C2	20	3160 - 7
T177442	4E10	15	3160 - 57

NUMERICAL INDEX - CONTINUED

PART NO.	GRID	KEY	PAGE
T177502	3E4	2	1822 - 5
T177503	3E2	7	1822 - 3
T177503	3E8	7	1822 - 7
T177505	3B15	19	1810 - 9B
T177573	4E24	13	3160 - 65B
T177589	3D13	6	1821 - 3
T177590	3D13	6	1821 - 3
T177591	3D13	6	1821 - 3
T177592	3D13	6	1821 - 3
T177631	1J20	23	0560 - 3B
T177753	3E6	4	1822 - 5B
T177756	3E6	3	1822 - 5B
T177772	4E16	2	3160 - 59D
T177783	2C6	10	1320 - 9
T177783	2C12	1	1320 - 15
T177785	2C4	10	1320 - 7
T177785	2C10	1	1320 - 13
T177827	3C2	10	1810 - 13F
T177861	3F10	1B	1830 - 17
T177909	3F14	4A	1910 - 3
T177909	3F14	15	1910 - 3
T177909	3F14	18	1910 - 3
T177950	3F14	15	1910 - 3
T177950	3F14	20	1910 - 3
T177950	4E12	1	3160 - 59
T177950	4E14	1	3160 - 59B
T177977	1E20	2	0350 - 29
T177978	1F22	2	0360 - 7B
T177979	1F22	3	0360 - 7B
T177989	3F14	4A	1910 - 3
T177989	3F14	20	1910 - 3
T177989	4E12	1	3160 - 59
T177989	4E14	1	3160 - 59B
T177997	1F22	5	0360 - 7B
T178063	3E2	3	1822 - 3
T178063	3E8	2	1822 - 7
T178063	3F23	15	1927 - 3
T178063	3F25	9	1927 - 3B
T178098	3G11	2	2001 - 5
T178112	3B15	33	1810 - 9B
T178113	3B15	33	1810 - 9B
T178114	3B15	33	1810 - 9B
T178115	3E16	1	1830 - 3F
T178116	3E16	39	1830 - 3F
T178117	3E14	11	1830 - 3D
T178117	3E16	32	1830 - 3F
T178118	3E14	12	1830 - 3D
T178118	3E16	38	1830 - 3F
T178119	3E16	36	1830 - 3F
T178120	3E16	40	1830 - 3F
T178123	3E16	12	1830 - 3F
T178124	3E16	16	1830 - 3F
T178127	3E14	6	1830 - 3D
T178130	3E14	34	1830 - 3D
T178131	3E14	35	1830 - 3D
T178132	3E14	40	1830 - 3D
T178133	3E14	36	1830 - 3D
T178134	3E14	41	1830 - 3D
T178135	3E14	14	1830 - 3D
T178136	3E14	16	1830 - 3D
T178220	3B25	4	1810 - 13D
T178220	3C2	4	1810 - 13F
T178221	3B25	4	1810 - 13D
T178221	3C2	4	1810 - 13F
T178248	3E16	47	1830 - 3F
T178249	3E16	48	1830 - 3F
T178250	3E16	49	1830 - 3F
T178251	3E14	3	1830 - 3D
T178275	3G6	10	1927 - 9
T178276	3G6	14	1927 - 9
T178368	3G2	9	1927 - 5
T178391	3E14	25	1830 - 3D
T178418	2D20	24	1672 - 3
T178418	2D24	12	1672 - 7
T178419	2D20	24	1672 - 3
T178419	2D24	12	1672 - 7
T178487	4B23	21	3160 - 3
T178487	4B25	21	3160 - 5
T178487	4C2	21	3160 - 7
T178534	3C2	10	1810 - 13F
T178706	4E8	7	3160 - 55
T178707	4E8	6	3160 - 55
T178779	2B10	49	1060 - 3F
T178856	1E16	4	0350 - 25
T178946	2E8	3	1673 - 4B
T178947	2E8	1	1673 - 4B
T178948	2E8	2	1673 - 4B
T178971	3E12	57	1830 - 3B
T178979	1J10	4	0520 - 5
T179276	1D20	13	0350 - 5
T179318	1D25	23	0350 - 11
T179363	4E12	2	3160 - 59
T179363	4E14	2	3160 - 59B
T179364	2B24	15	1320 - 3
T179364	3D6	4	1810 - 35
T179365	3B15	20	1810 - 9B
T179464	2C15	1	1320 - 18
T179497	1E20	3	0350 - 29
T179501	1E2	9	0350 - 13
T179502	3B13	6	1810 - 9
T179502	3B17	1	1810 - 9D
T179510	1F6	3	0350 - 37
T179513	1I21	20	0510 - 5
T179522	1D14	2	0325 - 3
T179523	1F14	10B	0360 - 3
T179531	1E24	20	0350 - 31B
T179531	1E24	21	0350 - 31B
T179531	1E24	23	0350 - 31B
T179532	1E24	21	0350 - 31B
T179532	1E24	23	0350 - 31B
T179533	1E24	21	0350 - 31B
T179533	1E24	22	0350 - 31B
T179533	1E24	23	0350 - 31B
T179534	1E24	21	0350 - 31B
T179534	1E24	23	0350 - 31B
T179553	1E22	37	0350 - 31
T179554	1E22	37	0350 - 31
T179555	1E22	37	0350 - 31
T179556	1E22	37	0350 - 31
T179557	1E22	37	0350 - 31
T179593	1E22	19	0350 - 31
T179593	1E24	19	0350 - 31B
T179594	1E4	12	0350 - 15
T179594	1E6	20	0350 - 17
T179594	1E8	3	0350 - 19
T179594	1E10	3	0350 - 19B
T179609	4E24	17	3160 - 65B
T179721	1E24	4	0350 - 31B
T179725	2B24	15	1320 - 3
T179725	3D6	4	1810 - 35
T179742	3G11	18	2001 - 5
T179935	1E2	9	0350 - 13
T179956	3F6	14	1830 - 13B
T179958	1D25	13	0350 - 11
T179959	1D25	13	0350 - 11
T180074	2E8	1	1673 - 4B
T180075	2E8	3	1673 - 4B
T18012	1H13	17	0413 - 5
T18012	1H15	18	0413 - 5B
T180273	3G19	1	2003 - 3B
T180289	1K13	2	0960 - 9B
T180290	1K13	5	0960 - 9B
T180338	3G13	5	2001 - 7
T180408	3B15	40	1810 - 9B
T180408	3G11	6	2001 - 5
T180418	3B17	9	1810 - 9D
T180420	3G13	17	2001 - 7
T180444	4F2	4	3160 - 67
T180479	1D25	10	0350 - 11
T180480	1E20	2	0350 - 29
T180481	1E20	3	0350 - 29
T180487	3G13	20	2001 - 7
T180494	3G11	4	2001 - 5
T180529	1F16	7	0360 - 3B
T180533	3B13	17	1810 - 9
T180573	3G13	4	2001 - 7
T180607	1E16	4	0350 - 25
T180645	1F16	1	0360 - 3B
T180646	1F16	2	0360 - 3B
T180661	3F21	26	1921 - 3B
T180754	3B13	6	1810 - 9
T180754	3B17	1	1810 - 9D
T180870	4E2	11	3160 - 49
T180870	4E2	12	3160 - 49
T180884	1D25	14	0350 - 11
T180884	1E20	1	0350 - 29
T180921	3B13	6	1810 - 9
T180922	3C22	1	1810 - 27
T180923	3C22	2	1810 - 27
T180924	3C7	1	1810 - 16
T180925	3F6	14	1830 - 13B
T180926	3F6	1	1830 - 13B
T180927	3F8	6	1830 - 15
T180928	3F8	1	1830 - 15
T180929	3E14	33	1830 - 3D
T180930	3D4	1	1810 - 33
T180944	2B24	4	1320 - 3
T180944	4F12	27	3160 - 73
T180957	1E16	3	0350 - 25
T181047	3B23	28	1810 - 13B
T181050	3B17	6	1810 - 9D
T181078	1J6	3	0515 - 3
T181325	2D24	5	1672 - 7
T181412	3C20	2	1810 - 25
T181413	3C20	4	1810 - 25
T181455	1F12	4	0350 - 43
T181455	1F12	11	0350 - 43
T181474	1F4	3	0350 - 35
T181520	3B13	6	1810 - 9
T181535	1D23	4	0350 - 9
T181603	3B13	18	1810 - 9
T181604	2H2	6	1674 - 55
T181605	2H2	4	1674 - 55
T181615	1D25	13	0350 - 11
T181797	3G16	7	2002 - 3
T181851	2B24	15	1320 - 3
T181873	1E4	7	0350 - 15
T181873	1E6	3	0350 - 17
T181873	1E8	8	0350 - 19
T181874	1E4	7	0350 - 15
T181874	1E6	3	0350 - 17

NUMERICAL INDEX - CONTINUED

PART NO.	GRID	KEY	PAGE
T181874	1E8	8	0350 - 19
T181875	1E4	7	0350 - 15
T181875	1E6	3	0350 - 17
T181875	1E8	8	0350 - 19
T181876	1E4	7	0350 - 15
T181876	1E6	3	0350 - 17
T181876	1E8	8	0350 - 19
T181881	1E2	11	0350 - 13
T181881	1E12	3	0350 - 21
T181881	1E14	3	0350 - 23
T181882	1E2	11	0350 - 13
T181882	1E12	3	0350 - 21
T181882	1E14	3	0350 - 23
T181883	1E2	11	0350 - 13
T181883	1E12	3	0350 - 21
T181883	1E14	3	0350 - 23
T181884	1E2	11	0350 - 13
T181884	1E12	3	0350 - 21
T181884	1E14	3	0350 - 23
T181908	3B13	6	1810 - 9
T181909	1B3	12	0110 - 3
T181972	4F12	10	3160 - 73
T182183	2B25	1	1320 - 3A
T182183	3B13	4	1810 - 9
T182184	2B25	2	1320 - 3A
T182189	3F6	12	1830 - 13B
T182191	2B24	6	1320 - 3
T182192	2H12	16	1740 - 3
T182258	3B13	4	1810 - 9
T182389	3B13	18	1810 - 9
T182409	2B24	37	1320 - 3
T182411	2B24	1	1320 - 3
T182808	3B15	32	1810 - 9B
T182848	3D6	3	1810 - 35
T182852	1K7	1	0960 - 5
T182852	3E12	65	1830 - 3B
T182852	3E16	31	1830 - 3F
T182856	3B13	10	1810 - 9
T182858	3E12	67	1830 - 3B
T182858	3E16	27	1830 - 3F
T182861	3B17	10	1810 - 9D
T182861	3F4	23	1830 - 13
T182861	3G11	8	2001 - 5
T182862	2F20	2	1674 - 31B
T182867	3B15	40	1810 - 9B
T182870	3E16	44	1830 - 3F
T182870	3G11	21	2001 - 5
T182870	3G13	7	2001 - 7
T182871	3E16	45	1830 - 3F
T182871	3G13	18	2001 - 7
T182872	3E24	9	1830 - 9
T182874	3C20	5	1810 - 25
T182875	2E9	6	1673 - 5
T182880	2E11	3	1674 - 1
T182891	3D6	3	1810 - 35
T182899	3B19	12	1810 - 11
T182899	3B21	15	1810 - 13
T182899	3B23	29	1810 - 13B
T182899	3C2	3	1810 - 13F
T182902	3C2	5	1810 - 13F
T182903	3B13	3	1810 - 9
T182906	3B15	50	1810 - 9B
T182909	2F18	2	1674 - 31
T182909	3F6	16	1830 - 13B
T182909	3G11	9	2001 - 5
T182909	3G13	12	2001 - 7
T182914	2E21	1	1674 - 11
T182919	3C18	13	1810 - 23D
T182920	3B13	9	1810 - 9
T182925	3B15	42	1810 - 9B
T182926	3B13	4	1810 - 9
T182927	3B13	1	1810 - 9
T182928	3B13	5	1810 - 9
T182931	3E16	43	1830 - 3F
T182952	3B15	42	1810 - 9B
T182954	3G11	15	2001 - 5
T182958	3B15	45	1810 - 9B
T182963	3B21	26	1810 - 13
T182963	3B23	22	1810 - 13B
T182966	3B21	26	1810 - 13
T182966	3B23	9	1810 - 13B
T182967	3B21	26	1810 - 13
T182967	3B23	27	1810 - 13B
T182969	3B21	26	1810 - 13
T182969	3B23	8	1810 - 13B
T182970	3D4	1	1810 - 33
T182971	3F4	22	1830 - 13
T182972	3B21	26	1810 - 13
T182972	3B23	10	1810 - 13B
T182972	3B23	11	1810 - 13B
T182973	3B13	2	1810 - 9
T184892	3B17	11	1810 - 9D
T184924	3F10	3	1830 - 17
T186154	4E14	53	3160 - 59B
T20077	1H7	2	0409 - 3
T20129	1H7	1	0409 - 3
T20217	2H16	5	1746 - 3
T20217	2H16	7	1746 - 3
T20217	2H18	7	1746 - 3B
T21242	1H2	3	0407 - 5
T22381	3G2	10	1927 - 5
T22381	3G4	11	1927 - 7
T23891	1I8	2	0433 - 1
T24210	1D18	11	0350 - 3
T24210	1D18	18	0350 - 3
T24210	1H9	2	0413 - 1
T24229	1H9	5	0413 - 1
T26767	4E12	15	3160 - 59
T26767	4E14	15	3160 - 59B
T26955	4E22	11	3160 - 65
T26955	4E24	11	3160 - 65B
T27860	1G9	2	0401 - 5
T28077	1J18	6	0560 - 3
T28077	1J20	6	0560 - 3B
T28583	2G18	1	1674 - 47
T28585	2G18	12	1674 - 47
T28586	2G18	14	1674 - 47
T29342	2F14	1	1674 - 27
T29342	2F14	6	1674 - 27
T29747	1F14	12	0360 - 3
T29747	1F16	11	0360 - 3B
T3G9609	4B9	4	3102 - 5
T30CA	4B9	2	3102 - 5
T30EA	4B9	6	3102 - 5
T31556	1H9	4	0413 - 1
T34067	2G18	18	1674 - 47
T35268	4E12	37	3160 - 59
T35268	4E14	37	3160 - 59B
T35390	1G17	14	0404 - 3
T35985	4E18	28	3160 - 61
T38282	2B4	34	1060 - 3
T38485	4D18	8	3160 - 43
T38485	4D20	8	3160 - 43B
T39049	1K5	13	0960 - 3
T39155	4E12	6	3160 - 59
T39155	4E14	6	3160 - 59B
T40308	4E8	10	3160 - 55
T42170	1I17	5	0505 - 5
T42170	2C2	4	1320 - 5
T42199	2C2	8	1320 - 5
T42199	2D18	6	1671 - 3
T42977	1D16	1	0342 - 3
T42977	1J16	2	0540 - 3
T43512	2C17	1	1330 - 2
T43513	2C17	1	1330 - 2
T43514	2C17	1	1330 - 2
T43515	2C17	1	1330 - 2
T44604	1B13	27	0210 - 5
T44604	1B15	8	0210 - 7
T44604	1B17	16	0210 - 9
T44604	1B19	16	0210 - 11
T44604	1H11	16	0413 - 3
T45298	1J6	5	0515 - 3
T45639	1J10	6	0520 - 5
T46876	2G12	2	1674 - 41
T48170	4E12	37	3160 - 59
T48170	4E14	37	3160 - 59B
T53268	1H25	18	0418 - 2
T55167	3B25	3	1810 - 13D
T56112	1C2	5	0210 - 19
T56112	1K19	4	0960 - 15
T56112	2D9	5	1370 - 3
T57247	2C16	1	1330 - 1
T58341	3B13	17	1810 - 9
T59937	3E10	22	1830 - 3
T60752	4B11	19	3140 - 3
T60811	1J20	38	0560 - 3B
T60811	2D7	3	1369 - 13
T60811	2D7	6	1369 - 13
T60811	3F10	6	1830 - 17
T60920	3C20	6	1810 - 25
T60920	3G15	6	2002 - 2
T61798	2H2	9	1674 - 55
T63224	2C4	18	1320 - 7
T63225	2C6	18	1320 - 9
T64217	2C6	9	1320 - 9
T66354	2D11	7	1370 - 5
T66355	3B15	35	1810 - 9B
T66862	1B5	2	0110 - 5
T67995	2F14	1	1674 - 27
T67995	2F14	5	1674 - 27
T67995	4D24	18	3160 - 47
T68131	3F4	18	1830 - 13
T70154	3B11	10	1810 - 7
T72414	2F14	1	1674 - 27
T72414	4B15	11	3140 - 7
T72853	1H22	17	0416 - 3
T74416	1J18	28	0560 - 3
T74416	1J20	28	0560 - 3B
T74416	2F16	5	1674 - 29
T74552	1E20	6	0350 - 29
T75197	2B22	2	1314 - 1
T75197	2E18	3	1674 - 8
T75197	2G6	2	1674 - 39
T75197	2G8	2	1674 - 39B
T75197	4E22	12	3160 - 65
T75276	2F16	8	1674 - 29
T75276	4E24	10	3160 - 65B
T76252	2F14	4	1674 - 27
T76938	1D18	8	0350 - 3
T76938	1F14	3	0360 - 3

NUMERICAL INDEX - CONTINUED

PART NO.	GRID	KEY	PAGE
T76938	1F16	9	0360 - 3B
T76938	2D3	6	1369 - 9
T76938	4B23	4	3160 - 3
T76938	4B25	4	3160 - 5
T76938	4C2	9	3160 - 7
T76938	4D22	5	3160 - 45
T76938	4D24	21	3160 - 47
T76938	4F12	18	3160 - 73
T77613	1C14	1	0260 - 3
T77613	1C16	3	0260 - 5
T77613	1C20	1	0260 - 9
T77613	1C22	3	0260 - 11
T77613	1C24	1	0260 - 13
T77613	1D2	4	0260 - 15
T77613	1D4	10	0260 - 17
T77613	1D6	1	0260 - 19
T77613	1D8	3	0260 - 21
T77613	1D10	1	0260 - 23
T77613	1D18	1	0350 - 3
T77613	1I21	14	0510 - 5
T77613	1J18	32	0560 - 3
T77613	1J20	32	0560 - 3B
T77613	1K3	21	0930 - 3
T77613	1K11	9	0960 - 9
T77613	2B6	36	1060 - 3B
T77613	2B10	36	1060 - 3F
T77613	2B12	10	1060 - 5
T77613	2B14	2	1060 - 7
T77613	2B16	2	1060 - 9
T77613	2B19	20	1115 - 3
T77613	2D3	2	1369 - 9
T77613	4B23	7	3160 - 3
T77613	4B25	7	3160 - 5
T77613	4C2	4	3160 - 7
T77613	4C18	56	3160 - 19
T77613	4C24	5	3160 - 25
T77613	4D2	6	3160 - 27
T77613	4D8	10	3160 - 33
T77613	4E4	9	3160 - 51
T77613	4E12	24	3160 - 59
T77613	4E14	24	3160 - 59B
T77613	4E20	10	3160 - 63
T77613	4F4	7	3160 - 69
T77613	4F6	7	3160 - 69B
T77613	4F10	5	3160 - 71
T77613	4F12	4	3160 - 73
T77613	4F19	22	3160 - 79
T77613	4F21	12	3160 - 79B
T77814	2D3	1	1369 - 9
T77814	4C8	40	3160 - 11B
T77814	4D24	25	3160 - 47
T77814	4E20	9	3160 - 63
T77814	4E20	13	3160 - 63
T77857	1C22	9	0260 - 11
T77857	1C24	10	0260 - 13
T77857	1D4	16	0260 - 17
T77857	1D6	4	0260 - 19
T77857	1D8	9	0260 - 21
T77857	1D10	2	0260 - 23
T77857	1I21	12	0510 - 5
T77857	1K3	18	0930 - 3
T77857	1K19	7	0960 - 15
T77857	2B8	22	1060 - 3D
T77857	2D3	3	1369 - 9
T77857	4F10	9	3160 - 71
T77858	1D18	7	0350 - 3
T77858	1F20	6	0360 - 7
T77858	1I21	11	0510 - 5
T77858	1K3	10	0930 - 3
T77858	1K11	2	0960 - 9
T77858	2D3	5	1369 - 9
T77858	4D22	12	3160 - 45
T77858	4D24	22	3160 - 47
T77858	4E2	3	3160 - 49
T77858	4E4	16	3160 - 51
T77858	4E12	35	3160 - 59
T77858	4E14	35	3160 - 59B
T77858	4F12	12	3160 - 73
T77858	4F19	23	3160 - 79
T77858	4F21	9	3160 - 79B
T77932	1D18	13	0350 - 3
T77932	1K11	1	0960 - 9
T77932	1K19	9	0960 - 15
T77932	2D3	4	1369 - 9
T78313	2C22	1	1369 - 3
T78593	1I17	8	0505 - 5
T78612	1I21	19	0510 - 5
T78612	2D3	7	1369 - 9
T78612	4B23	14	3160 - 3
T78612	4B25	13	3160 - 5
T78612	4C2	10	3160 - 7
T78612	4D22	7	3160 - 45
T78612	4E4	4	3160 - 51
T78612	4E10	11	3160 - 57
T78612	4E12	36	3160 - 59
T78612	4E14	36	3160 - 59B
T78707	4D24	33	3160 - 47
T78707	4E2	5	3160 - 49
T78784	2D3	8	1369 - 9
T78784	4B23	9	3160 - 3
T78784	4B25	8	3160 - 5
T78784	4C2	13	3160 - 7
T78784	4E10	14	3160 - 57
T79471	2D16	9	1671 - 1
T79471	2D17	9	1671 - 2
T79478	1J4	52	0510 - 9
T80123	4G3	1	4151 - 3
T80622	1C12	4	0250 - 9
T81247	4E18	10	3160 - 61
T81247	4F8	4	3160 - 69D
T81247	4F19	10	3160 - 79
T81403	4E12	8	3160 - 59
T81403	4E14	8	3160 - 59B
T82907	1J8	4	0520 - 3
T9J2308	4B9	5	3102 - 5
U12547	1C22	7	0260 - 11
U12547	1D8	7	0260 - 21
U12547	1F20	4	0360 - 7
U12547	1K3	30	0930 - 3
U12547	2B19	22	1115 - 3
U12547	2C22	1	1369 - 3
U12547	4C4	3	3160 - 9
U12547	4C6	20	3160 - 11
U12547	4C8	20	3160 - 11B
U12547	4C10	8	3160 - 11D
U12547	4E12	13	3160 - 59
U12547	4E12	44	3160 - 59
U12547	4E14	13	3160 - 59B
U12547	4E14	44	3160 - 59B
U12547	4E16	11	3160 - 59D
U12547	4F19	15	3160 - 79
U12547	4F21	14	3160 - 79B
U13184	3G15	12	2002 - 2
U13639	1G17	7	0404 - 3
U13639	1I10	23	0452 - 3
U13639	1I13	3	0505 - 1
U13639	4B23	19	3160 - 3
U13639	4B25	18	3160 - 5
U13639	4C2	18	3160 - 7
U13639	4D22	8	3160 - 45
U13639	4E4	18	3160 - 51
U13639	4E12	34	3160 - 59
U13639	4E14	34	3160 - 59B
U13639	4F12	20	3160 - 73
U17409	1H5	5	0407 - 9
U17409	1H5	15	0407 - 9
U17409	1I1	7	0419 - 2
U17409	1I10	26	0452 - 3
U40962	4C10	28	3160 - 11D
U42702	1J18	16	0560 - 3
U42702	1J20	16	0560 - 3B
U43961	1B3	5	0110 - 3
U46370	2G18	20	1674 - 47
U46662	2G18	10	1674 - 47
U46664	2G20	47	1674 - 49
Z32264	3F19	9	1921 - 3
Z32264	3F21	24	1921 - 3B
32240	2C16	1	1330 - 1
400	1B13	12	0210 - 5
400	1B15	12	0210 - 7
400R	4D18	17	3160 - 43
400R	4D20	17	3160 - 43B