RUTHZIL TRATOR COMERCIAL DE PEÇAS LTDA 11 97083-6812 ROLANDO CITRANGULO

JUNHO 2012

644K 4WD Loader

(PIN: 1DW644KZ_ _E634315—)

JOHN DEERE

OPERATOR'S MANUAL

644K 4WD Loader (PIN: 1DW644KZ_ _E634315—)

OMT260553 ISSUE H3 (ENGLISH)

CALIFORNIA

Proposition 65 Warning

Diesel engine exhaust and some of its constituents are known to the State of California to cause cancer, birth defects, and other reproductive harm.

If this product contains a gasoline engine:

⚠ WARNING

The engine exhaust from this product contains chemicals known to the State of California to cause cancer, birth defects or other reproductive harm.

The State of California requires the above two warnings.

Additional Proposition 65 Warnings can be found in this manual.

Worldwide Construction And Forestry Division

LITHO IN U.S.A.

Introduction

Foreword

READ THIS MANUAL carefully to learn how to operate and service your machine correctly. Failure to do so could result in personal injury or equipment damage. This manual and safety signs on your machine may also be available in other languages. (See your John Deere dealer to order.)

THIS MANUAL SHOULD BE CONSIDERED a permanent part of your machine and should remain with the machine when you sell it.

MEASUREMENTS in this manual are given in both metric and customary U.S. unit equivalents. Use only correct replacement parts and fasteners. Metric and inch fasteners may require a specific metric or inch wrench.

RIGHT-HAND AND LEFT-HAND sides are determined by facing in the direction of forward travel.

WRITE PRODUCT IDENTIFICATION NUMBERS (P.I.N.) in the Machine Numbers section. Accurately record all the numbers to help in tracing the machine should it be stolen. Your dealer also needs these numbers when you order parts. File the identification numbers in a secure place off the machine.

WARRANTY is provided as part of John Deere's support program for customers who operate and maintain their equipment as described in this manual. The warranty is explained on the warranty certificate or statement which you should have received from your dealer.

This warranty provides you the assurance that John Deere will back its products where defects appear within the warranty period. In some circumstances, John Deere also provides field improvements, often without charge to the customer, even if the product is out of warranty. Should the equipment be abused, or modified to change its performance beyond the original factory specifications, the warranty will become void and field improvements may be denied. Setting fuel delivery above specifications or otherwise overpowering machines will result in such action.

THE TIRE MANUFACTURER'S warranty supplied with your machine may not apply outside the U.S.

If you are not the original owner of this machine, it is in your interest to contact your local John Deere dealer to inform them of this unit's serial number. This will help John Deere notify you of any issues or product improvements.

DX,IFC7 -19-03APR09-1/1

Manual Identification—READ THIS FIRST!

IMPORTANT: Use only supporting manuals designated for your specific machine. If incorrect manual is chosen, improper service may occur. Verify product identification number (PIN) and engine model number when choosing the correct manual.

Choosing the Correct Supporting Manuals

John Deere four wheel drive (4WD) loaders are available in different machine configurations based on the various markets into which they are sold. Different supporting manuals exist for different machine configurations.

When necessary, product serial numbers and engine model numbers are listed on the front covers of 4WD loader manuals. These numbers are used to identify the correct supporting manual for your machine.

Product Serial Number Identification

The product identification number (PIN) plate (1) is located on left side of machine frame under the cab door. Each machine has a 13-character PIN (2) or 17-character PIN (3) shown on this plate. The last 6 characters of the PIN represent the machine's product serial number.

1— PIN Plate
2— 13-Character PIN
3— 17-Character PIN



TX1082004A —UN—15APR13

PIN Plate Location

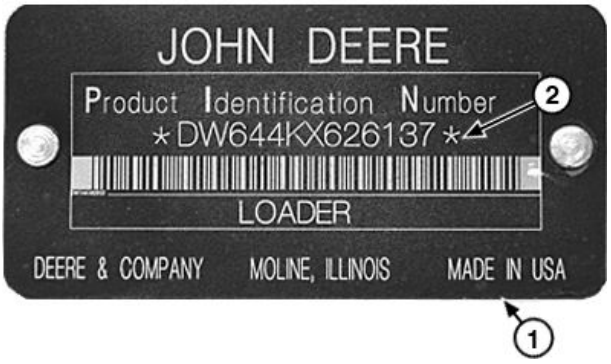

TX1081996A —UN—17SEP10

PIN Plate (13-character)

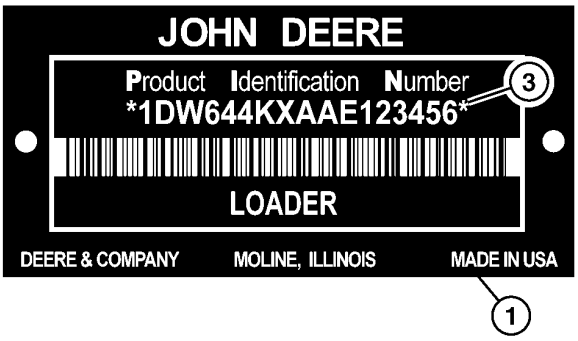

TX1082023 —UN—21SEP10

PIN Plate (17-character)

Continued on next page

Engine Model Number Identification

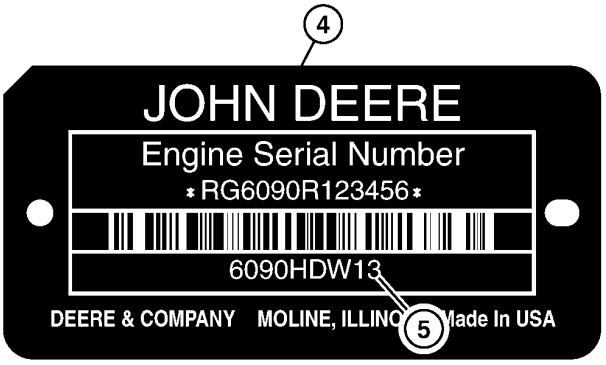

Engine Serial Number Plate

The engine serial number plate (4) is located on the right side of the engine for engine model 6090HDW13. It is located on the left side of engine for engine models 6068HDW80 and 6068HDW83. Each engine has a 9-character engine model number (5) shown on this plate.

Engine Emissions Level Identification

The 9-character engine model number corresponds to a specific engine emissions level.

Engine Model Number	Engine Emissions Level
6090HDW13	Interim Tier 4/Stage III B
6068HDW80	Tier 3/Stage III A
6068HDW83	Stage II

For machines equipped with a 17-character PIN, where the 11th character is “E”, “D”, or “C”, this character also corresponds to a specific engine emissions level.

NOTE: Later machines with a 17-character PIN identify engine emissions level (“E”, “D”, or “C”) with the 11th character. Earlier machines with a 17-character PIN do not identify engine emissions level with the 11th character.

17-Character PIN (11th character)	Engine Emissions Level
xxxxxxxxxx**E**xxxxxx	Interim Tier 4/Stage III B
xxxxxxxxxx**D**xxxxxx	Tier 3/Stage III A
xxxxxxxxxx**C**xxxxxx	Stage II

4— Engine Serial Number Plate

5— 9-Character Engine Model Number

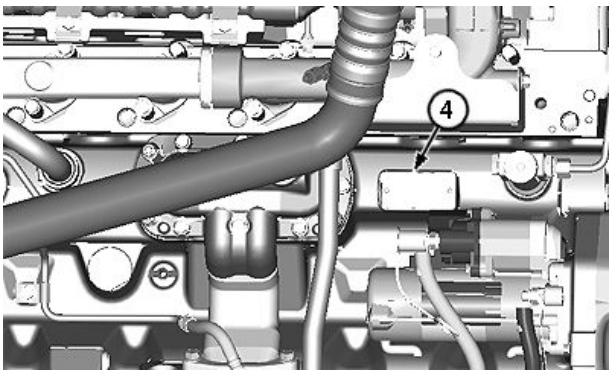

TX1082024 —UN—21SEP10

TX1082090A —UN—08NOV10

Engine Serial Number Plate Location—6090HDW13

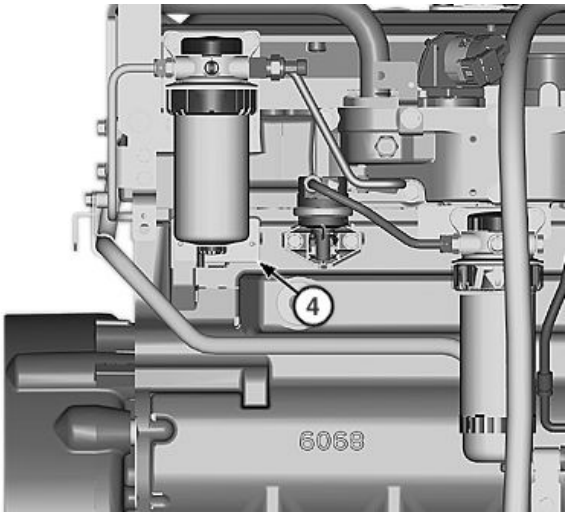

TX1081900A —UN—15APR13

Engine Serial Number Plate Location—6068HDW80

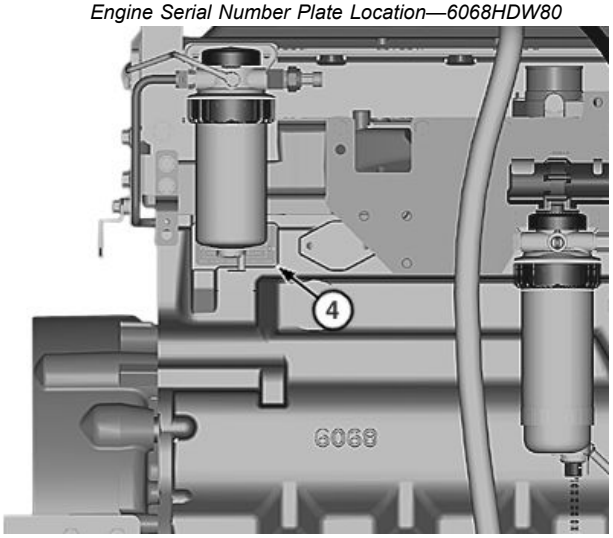

TX1081901A —UN—15APR13

Engine Serial Number Plate Location—6068HDW83

OUT4001,000069C -19-06JUN12-2/2

IMPORTANT

Warranty will not apply to engine and drivetrain failures resulting from unauthorized adjustments to this engine.

Unauthorized adjustments are in violation of the emissions regulations applicable to this engine and may result in substantial fines and penalties.

VD76477,000104D -19-27JUN12-1/1

EPA Non-road Emissions Control Warranty Statement—Compression Ignition

DXLOGOV1 —UN—28APR09

JOHN DEERE

U.S. AND CANADA EMISSION CONTROL WARRANTY STATEMENT
YOUR WARRANTY RIGHTS AND OBLIGATIONS

To determine if the John Deere engine qualifies for the additional warranties set forth below, look for the "Emissions Control Information" label located on the engine. If the engine is operated in the United States or Canada and the Emissions Control information label states: "This engine complies with US EPA regulations for nonroad and stationary diesel engines", or "This engine conforms to US EPA nonroad compression-ignition regulations", refer to the "U.S. and Canada Emission Control Warranty Statement." If the engine is operated in California, and the label states: "This engine complies with US EPA and CARB regulations for nonroad diesel engines", or "This engine conforms to US EPA and California nonroad compression-ignition emission regulations", also refer to the "California Emission Control Warranty Statement."

Warranties stated on this certificate refer only to emissions-related parts and components of your engine. The complete engine warranty, less emissions-related parts and components, is provided separately. If you have any questions about your warranty rights and responsibilities, you should contact John Deere at 1-319-292-5400.

JOHN DEERE'S WARRANTY RESPONSIBILITY

John Deere warrants to the ultimate purchaser and each subsequent purchaser that this off-road diesel engine including all parts of its emission-control system was designed, built and equipped so as to conform at the time of the sale with Section 213 of the Clean Air Act and is free from defects in materials and workmanship which would cause the engine to fail to conform with applicable US EPA regulations for a period of five years from the date the engine is placed into service or 3,000 hours of operation, whichever first occurs.

Where a warrantable condition exists, John Deere will repair or replace, as it elects, any part or component with a defect in materials or workmanship that would increase the engine's emissions of any regulated pollutant within the stated warranty period at no cost to you, including expenses related to diagnosing and repairing or replacing emission-related parts. Warranty coverage is subject to the limitations and exclusions set forth herein. Emission- related components include engine parts developed to control emissions related to the following:

Air-Induction System
Fuel System
Ignition System
Exhaust Gas Recirculation Systems
Aftertreatment Devices
Crankcase Ventilation Valves
Sensors
Engine Electronic Control Units

EMISSION WARRANTY EXCLUSIONS

John Deere may deny warranty claims for malfunctions or failures caused by:

- Non-performance of maintenance requirements listed in the Operator's Manual
- The use of the engine/equipment in a manner for which it was not designed
- Abuse, neglect, improper maintenance or unapproved modifications or alterations
- Accidents for which it does not have responsibility or by acts of God

The off-road diesel engine is designed to operate on diesel fuel as specified in the Fuels, Lubricants and Coolants section in the Operators Manual. Use of any other fuel can harm the emissions control system of the engine/equipment and is not approved for use.

To the extent permitted by law John Deere is not liable for damage to other engine components caused by a failure of an emission-related part, unless otherwise covered by standard warranty.

THIS WARRANTY IS EXPRESSLY IN LIEU OF ANY OTHER WARRANTIES, EXPRESS OR IMPLIED, INCLUDING ANY WARRANTY OF MERCHANTABILITY OR FITNESS FOR A PARTICULAR PURPOSE. REMEDIES UNDER THIS WARRANTY ARE LIMITED TO THE PROVISIONS OF MATERIAL AND SERVICES AS SPECIFIED HEREIN. WHERE PERMITTED BY LAW, NEITHER JOHN DEERE NOR ANY AUTHORIZED JOHN DEERE ENGINE DISTRIBUTOR, DEALER, OR REPAIR FACILITY OR ANY COMPANY AFFILIATED WITH JOHN DEERE WILL BE LIABLE FOR INCIDENTAL OR CONSEQUENTIAL DAMAGES.

Emission_CI_EPA (18Dec09)

Continued on next page

DX,EMISSIONS,EPA -19-12DEC12-1/2

JOHN DEERE

U.S. AND CANADA EMISSION CONTROL WARRANTY STATEMENT
YOUR WARRANTY RIGHTS AND OBLIGATIONS

To determine if the John Deere engine qualifies for the additional warranties set forth below, look for the "Emissions Control Information" label located on the engine. If the engine is operated in the United States or Canada and the Emissions Control information label states: "This engine complies with US EPA regulations for nonroad and stationary diesel engines", or "This engine conforms to US EPA nonroad compression-ignition regulations", refer to the "U.S. and Canada Emission Control Warranty Statement." If the engine is operated in California, and the label states: "This engine complies with US EPA and CARB regulations for nonroad diesel engines", or "This engine conforms to US EPA and California nonroad compression-ignition emission regulations", also refer to the "California Emission Control Warranty Statement."

Warranties stated on this certificate refer only to emissions-related parts and components of your engine. The complete engine warranty, less emissions-related parts and components, is provided separately. If you have any questions about your warranty rights and responsibilities, you should contact John Deere at 1-319-292-5400.

JOHN DEERE'S WARRANTY RESPONSIBILITY

John Deere warrants to the ultimate purchaser and each subsequent purchaser that this off-road diesel engine including all parts of its emission-control system was designed, built and equipped so as to conform at the time of the sale with Section 213 of the Clean Air Act and is free from defects in materials and workmanship which would cause the engine to fail to conform with applicable US EPA regulations for a period of five years from the date the engine is placed into service or 3,000 hours of operation, whichever first occurs.

Where a warrantable condition exists, John Deere will repair or replace, as it elects, any part or component with a defect in materials or workmanship that would increase the engine's emissions of any regulated pollutant within the stated warranty period at no cost to you, including expenses related to diagnosing and repairing or replacing emission-related parts. Warranty coverage is subject to the limitations and exclusions set forth herein. Emission- related components include engine parts developed to control emissions related to the following:

Air-Induction System
Fuel System
Ignition System
Exhaust Gas Recirculation Systems
Aftertreatment Devices
Crankcase Ventilation Valves
Sensors
Engine Electronic Control Units

EMISSION WARRANTY EXCLUSIONS

John Deere may deny warranty claims for malfunctions or failures caused by:

- Non-performance of maintenance requirements listed in the Operator's Manual
- The use of the engine/equipment in a manner for which it was not designed
- Abuse, neglect, improper maintenance or unapproved modifications or alterations
- Accidents for which it does not have responsibility or by acts of God

The off-road diesel engine is designed to operate on diesel fuel as specified in the Fuels, Lubricants and Coolants section in the Operators Manual. Use of any other fuel can harm the emissions control system of the engine/equipment and is not approved for use.

To the extent permitted by law John Deere is not liable for damage to other engine components caused by a failure of an emission-related part, unless otherwise covered by standard warranty.

THIS WARRANTY IS EXPRESSLY IN LIEU OF ANY OTHER WARRANTIES, EXPRESS OR IMPLIED, INCLUDING ANY WARRANTY OF MERCHANTABILITY OR FITNESS FOR A PARTICULAR PURPOSE. REMEDIES UNDER THIS WARRANTY ARE LIMITED TO THE PROVISIONS OF MATERIAL AND SERVICES AS SPECIFIED HEREIN. WHERE PERMITTED BY LAW, NEITHER JOHN DEERE NOR ANY AUTHORIZED JOHN DEERE ENGINE DISTRIBUTOR, DEALER, OR REPAIR FACILITY OR ANY COMPANY AFFILIATED WITH JOHN DEERE WILL BE LIABLE FOR INCIDENTAL OR CONSEQUENTIAL DAMAGES.

Emission_CI_EPA (18Dec09)

TS1721 —UN—15JUL13

DX,EMISSIONS,EPA -19-12DEC12-2/2

CARB Non-road Emissions Control Warranty Statement—Compression Ignition

DXLOGOV1 —UN—28APR09

JOHN DEERE

CALIFORNIA EMISSIONS CONTROL WARRANTY STATEMENT
YOUR WARRANTY RIGHTS AND OBLIGATIONS

To determine if the John Deere engine qualifies for the additional warranties set forth below, look for the “Emission Control Information” label located on the engine. If the engine is operated in the United States or Canada and the engine label states: “This engine complies with US EPA regulations for nonroad and stationary diesel engines”, or “This engine complies with US EPA regulations for stationary emergency diesel engines”, refer to the “U.S. and Canada Emission Control Warranty Statement.” If the engine is operated in California, and the engine label states: “This engine complies with US EPA and CARB regulations for nonroad diesel engines” also refer to the “California Emissions Control Warranty Statement.”

Warranties stated on this certificate refer only to emissions-related parts and components of your engine. The complete engine warranty, less emission-related parts and components, is provided separately. If you have any questions about your warranty rights and responsibilities, you should contact John Deere at 1-319-292-5400.

CALIFORNIA EMISSIONS CONTROL WARRANTY STATEMENT:

The California Air Resources Board (CARB) is pleased to explain the emission-control system warranty on 2013 through 2015 off-road diesel engines. In California, new off-road engines must be designed, built and equipped to meet the State’s stringent anti-smog standards. John Deere must warrant the emission control system on your engine for the periods of time listed below provided there has been no abuse, neglect or improper maintenance of your engine.

Your emission control system may include parts such as the fuel injection system and the air induction system. Also included may be hoses, belts, connectors and other emission-related assemblies.

John Deere warrants to the ultimate purchaser and each subsequent purchaser that this off-road diesel engine was designed, built, and equipped so as to conform at the time of sale with all applicable regulations adopted by CARB and is free from defects in materials and workmanship which would cause the failure of a warranted part to be identical in all material respects to the part as described in John Deere's application for certification for a period of five years from the date the engine is delivered to an ultimate purchaser or 3,000 hours of operation, whichever occurs first for all engines rated at 19 kW and greater. In the absence of a device to measure hours of use, the engine shall be warranted for a period of five years.

EMISSIONS WARRANTY EXCLUSIONS:

John Deere may deny warranty claims for failures caused by the use of an add-on or modified part which has not been exempted by the CARB. A modified part is an aftermarket part intended to replace an original emission-related part which is not functionally identical in all respects and which in any way affects emissions. An add-on part is any aftermarket part which is not a modified part or a replacement part.

In no event will John Deere, any authorized engine distributor, dealer, or repair facility, or any company affiliated with John Deere be liable for incidental or consequential damage.

Continued on next page

JOHN DEERE'S WARRANTY RESPONSIBILITY:

Where a warrantable condition exists, John Deere will repair or replace, as it elects, your off-road diesel engine at no cost to you, including diagnosis, parts or labor. Warranty coverage is subject to the limitations and exclusions set forth herein. The off-road diesel engine is warranted for a period of five years from the date the engine is delivered to an ultimate purchaser or 3,000 hours of operation, whichever occurs first. The following are emissions-related parts:

Air Induction System

- Intake manifold
- Turbocharger
- Charge air cooler

Fuel Metering system

- Fuel injection system

Exhaust Gas Recirculation

- EGR valve

Catalyst or Thermal Reactor Systems

- Catalytic converter
- Exhaust manifold

Emission control labels

Particulate Controls

- Any device used to capture particulate emissions
- Any device used in the regeneration of the capturing system
- Enclosures and manifolding
- Smoke Puff Limiters

Positive Crankcase Ventilation (PCV) System

- PCV valve
- Oil filler cap

Advanced Oxides of Nitrogen (NOx) Controls

- NOx absorbers and catalysts

SCR systems and urea containers/dispensing systems

Miscellaneous Items used in Above Systems

- Electronic control units, sensors, actuators, wiring harnesses, hoses, connectors, clamps, fittings, gasket, mounting hardware

Any warranted emissions-related part scheduled for replacement as required maintenance is warranted by John Deere for the period of time prior to the first scheduled replacement point for the part. Any warranted emissions-related part not scheduled for replacement as required maintenance or scheduled only for regular inspection is warranted by John Deere for the stated warranty period.

OWNER'S WARRANTY RESPONSIBILITIES:

As the off-road diesel engine owner you are responsible for the performance of the required maintenance listed in your Operator's Manual. John Deere recommends that the owner retain all receipts covering maintenance on the off-road diesel engine, but John Deere cannot deny warranty solely for the lack of receipts or for the owner's failure to ensure the performance of all scheduled maintenance. However, as the off-road diesel engine owner, you should be aware that John Deere may deny you warranty coverage if your off-road diesel engine or a part has failed due to abuse, neglect, improper maintenance or unapproved modifications.

The off-road diesel engine is designed to operate on diesel fuel as specified in the Fuels, Lubricants and Coolants section in the Operators Manual. Use of any other fuel may result in the engine no longer operating in compliance with applicable emissions requirements.

The owner is responsible for initiating the warranty process, and should present the machine to the nearest authorized John Deere dealer as soon as a problem is suspected. The warranty repairs should be completed by the authorized John Deere dealer as quickly as possible.

Emissions regulations require the customer to bring the unit to an authorized servicing dealer when warranty service is required. As a result, John Deere is NOT liable for travel or mileage on emissions warranty service calls.

Emission_CI_CARB (19Sep12)

Continued on next page

JOHN DEERE

CALIFORNIA EMISSIONS CONTROL WARRANTY STATEMENT
YOUR WARRANTY RIGHTS AND OBLIGATIONS

To determine if the John Deere engine qualifies for the additional warranties set forth below, look for the "Emission Control Information" label located on the engine. If the engine is operated in the United States or Canada and the engine label states: "This engine complies with US EPA regulations for nonroad and stationary diesel engines", or "This engine complies with US EPA regulations for stationary emergency diesel engines", refer to the "U.S. and Canada Emission Control Warranty Statement." If the engine is operated in California, and the engine label states: "This engine complies with US EPA and CARB regulations for nonroad diesel engines" also refer to the "California Emissions Control Warranty Statement."

Warranties stated on this certificate refer only to emissions-related parts and components of your engine. The complete engine warranty, less emission-related parts and components, is provided separately. If you have any questions about your warranty rights and responsibilities, you should contact John Deere at 1-319-292-5400.

CALIFORNIA EMISSIONS CONTROL WARRANTY STATEMENT:

The California Air Resources Board (CARB) is pleased to explain the emission-control system warranty on 2013 through 2015 off-road diesel engines. In California, new off-road engines must be designed, built and equipped to meet the State's stringent anti-smog standards. John Deere must warrant the emission control system on your engine for the periods of time listed below provided there has been no abuse, neglect or improper maintenance of your engine.

Your emission control system may include parts such as the fuel injection system and the air induction system. Also included may be hoses, belts, connectors and other emission-related assemblies.

John Deere warrants to the ultimate purchaser and each subsequent purchaser that this off-road diesel engine was designed, built, and equipped so as to conform at the time of sale with all applicable regulations adopted by CARB and is free from defects in materials and workmanship which would cause the failure of a warranted part to be identical in all material respects to the part as described in John Deere's application for certification for a period of five years from the date the engine is delivered to an ultimate purchaser or 3,000 hours of operation, whichever occurs first for all engines rated at 19 kW and greater. In the absence of a device to measure hours of use, the engine shall be warranted for a period of five years.

EMISSIONS WARRANTY EXCLUSIONS:

John Deere may deny warranty claims for failures caused by the use of an add-on or modified part which has not been exempted by the CARB. A modified part is an aftermarket part intended to replace an original emission-related part which is not functionally identical in all respects and which in any way affects emissions. An add-on part is any aftermarket part which is not a modified part or a replacement part.

In no event will John Deere, any authorized engine distributor, dealer, or repair facility, or any company affiliated with John Deere be liable for incidental or consequential damage.

TS1722 —UN—17DEC12

Continued on next page

DX,EMISSIONS,CARB -19-12DEC12-3/4

JOHN DEERE'S WARRANTY RESPONSIBILITY:

Where a warrantable condition exists, John Deere will repair or replace, as it elects, your off-road diesel engine at no cost to you, including diagnosis, parts or labor. Warranty coverage is subject to the limitations and exclusions set forth herein. The off-road diesel engine is warranted for a period of five years from the date the engine is delivered to an ultimate purchaser or 3,000 hours of operation, whichever occurs first. The following are emissions-related parts:

Air Induction System

- Intake manifold
- Turbocharger
- Charge air cooler

Fuel Metering system

- Fuel injection system

Exhaust Gas Recirculation

- EGR valve

Catalyst or Thermal Reactor Systems

- Catalytic converter
- Exhaust manifold

Emission control labels

Particulate Controls

- Any device used to capture particulate emissions
- Any device used in the regeneration of the capturing system
- Enclosures and manifolding
- Smoke Puff Limiters

Positive Crankcase Ventilation (PCV) System

- PCV valve
- Oil filler cap

Advanced Oxides of Nitrogen (NOx) Controls

- NOx absorbers and catalysts

SCR systems and urea containers/dispensing systems

Miscellaneous Items used in Above Systems

- Electronic control units, sensors, actuators, wiring harnesses, hoses, connectors, clamps, fittings, gasket, mounting hardware

Any warranted emissions-related part scheduled for replacement as required maintenance is warranted by John Deere for the period of time prior to the first scheduled replacement point for the part. Any warranted emissions-related part not scheduled for replacement as required maintenance or scheduled only for regular inspection is warranted by John Deere for the stated warranty period.

OWNER'S WARRANTY RESPONSIBILITIES:

As the off-road diesel engine owner you are responsible for the performance of the required maintenance listed in your Operator's Manual. John Deere recommends that the owner retain all receipts covering maintenance on the off-road diesel engine, but John Deere cannot deny warranty solely for the lack of receipts or for the owner's failure to ensure the performance of all scheduled maintenance. However, as the off-road diesel engine owner, you should be aware that John Deere may deny you warranty coverage if your off-road diesel engine or a part has failed due to abuse, neglect, improper maintenance or unapproved modifications.

The off-road diesel engine is designed to operate on diesel fuel as specified in the Fuels, Lubricants and Coolants section in the Operators Manual. Use of any other fuel may result in the engine no longer operating in compliance with applicable emissions requirements.

The owner is responsible for initiating the warranty process, and should present the machine to the nearest authorized John Deere dealer as soon as a problem is suspected. The warranty repairs should be completed by the authorized John Deere dealer as quickly as possible.

Emissions regulations require the customer to bring the unit to an authorized servicing dealer when warranty service is required. As a result, John Deere is NOT liable for travel or mileage on emissions warranty service calls.

Emission_CI_CARB (19Sep12)

TS1723 —UN—15JUL13

DX,EMISSIONS,CARB -19-12DEC12-4/4

FCC Notifications to User

FCC Notification

These devices comply with Part 15 of the FCC Rules. Operation is subject to the following two conditions: (1) These devices may not cause harmful interference, and (2) these devices must accept any interference received, including interference that may cause undesired operation.

These devices must be operated as supplied by John Deere Ag Management Solutions. Any changes or modifications made to these devices without the express written approval of John Deere Ag Management Solutions may void the user's authority to operate these devices.

Modular Telematics Gateway and Satellite Module

This equipment has been tested and found to comply with the limits for Class B digital devices, pursuant to part 15 of the FCC Rules. These limits are designed to provide reasonable protection against harmful interference in a residential installation. This equipment generates, uses, and can radiate radio frequency energy, and if not installed and used in accordance with the instructions, may cause harmful interference to radio communications. However, no guarantee shall be made that interference will not occur in a particular installation. If this equipment does cause harmful interference to radio or television reception, which can be determined by turning the equipment off and on, the user is encouraged to try to correct the interference by one or more of the following measures:

- Reorient or relocate the receiving antenna.
- Increase the separation between the equipment and receiver.
- Connect the equipment into an outlet on a circuit different from that to which the receiver is connected.
- Consult the dealer or an experienced radio/TV technician for help.

MM16284,000196F -19-26JUL12-1/1

Service ADVISOR™ Remote (SAR)—SOFTWARE TERMS AND CONDITIONS

IMPORTANT -- READ CAREFULLY: THIS SOFTWARE LICENSE AGREEMENT IS A LEGAL CONTRACT BETWEEN YOU AND THE LICENSOR ("LICENSOR") IDENTIFIED BELOW AND GOVERNS YOUR USE OF THE SOFTWARE DELIVERED TO YOUR MACHINE (THE “MACHINE”).

BY INDICATING YOUR ACCEPTANCE ON A DISPLAY ON THE MACHINE, BY INSTALLING SOFTWARE TO THE MACHINE, OR USING SOFTWARE ON THE MACHINE, YOU ARE ACCEPTING AND AGREEING TO THE TERMS OF THIS LICENSE AGREEMENT WITH RESPECT TO THE SOFTWARE (THE "Software") THAT IS DELIVERED TO YOUR MACHINE. YOU AGREE THAT THIS SOFTWARE LICENSE AGREEMENT, INCLUDING THE WARRANTY DISCLAIMERS, LIMITATIONS OF LIABILITY AND TERMINATION PROVISIONS BELOW, IS BINDING UPON YOU, AND UPON ANY COMPANY ON WHOSE BEHALF YOU USE THE SOFTWARE AS WELL AS THE EMPLOYEES OF ANY SUCH COMPANY (COLLECTIVELY REFERRED TO AS "YOU" IN THIS SOFTWARE LICENSE AGREEMENT). IF YOU DO NOT AGREE TO THE TERMS OF THIS AGREEMENT, OR IF YOU ARE NOT AUTHORIZED TO ACCEPT THESE TERMS ON BEHALF OF YOUR COMPANY OR ITS EMPLOYEES, PLEASE CLICK THE [Decline] ICON ON THE DISPLAY ON THE MACHINE TO DECLINE THESE TERMS AND CONDITIONS. THIS LICENSE AGREEMENT REPRESENTS THE ENTIRE AGREEMENT CONCERNING THE SOFTWARE BETWEEN YOU AND THE LICENSOR.

1. Delivery of Software. Software may be delivered to your Machine by Licensor wirelessly or via an agent of Licensor, such as a dealer. If it is delivered wirelessly, you may be responsible for any data transmission fees incurred due to such delivery.

2. License. Licensor hereby grants to you, and you accept, a nonexclusive license to use the Software in machine-readable, object code form, only as authorized in this License Agreement and the applicable provisions of the Operators' Manuals, which you agree to review carefully prior to using the Software. The Software may be used only on the Machine to which it was initially delivered. You agree that you will not assign, sublicense, transfer, pledge, lease, rent, or share your rights under this License Agreement, except that you may permanently transfer all of your rights under this License Agreement in connection with the sale of the Machine on which the Software covered by this Agreement is installed.

3. Licensor's Rights. You acknowledge and agree that the Software is proprietary to Licensor and is protected under copyright law. You further acknowledge and agree that all right, title, and interests in and to the Software, including associated intellectual property rights, are and shall remain with Licensor. This License Agreement does not convey to you any title or interest in or to the Software, but only a limited right of use revocable in accordance with the terms of this License Agreement. You agree that you will not: (a) reverse assemble, reverse compile, modify, or otherwise translate the Software, or attempt to defeat the copyright protection and application enabling mechanisms therein; (b) copy or reproduce the Software; or, (b) remove or obliterate any copyright, trademark or other proprietary rights notices from the Software. You also agree not to permit any third party acting under your control to do any of the foregoing.

4. License Fees. The license fees paid by you, if any, are paid in consideration of the licenses granted under this License Agreement.

5. Limited Warranty. Licensor warrants, for your benefit alone and not for the benefit of any other party, that during the "**Warranty Period**" defined below, the Software will operate substantially in accordance with the applicable functional specifications ("**Specifications**") set forth in the Operators' Manuals. If, prior to expiration of the Warranty Period, the Software fails to perform substantially in accordance with the Specifications, you may return the Machine to the place of purchase for repair or replacement of the non-performing Software. The Warranty Period is ninety (90) days from the date of installation of the Software or the duration of the warranty period of the component of the Machine on which the Software is installed, whichever is longer. The Software Warranty Period does not affect the warranty period of the Machine itself or any component thereof.

6. DISCLAIMER OF WARRANTIES. YOU HEREBY AGREE THAT THE LIMITED WARRANTY PROVIDED ABOVE (THE "**LIMITED WARRANTY**") CONSTITUTES YOUR SOLE AND EXCLUSIVE REMEDY FOR ANY PROBLEM WHATSOEVER WITH THE SOFTWARE. EXCEPT AS PROVIDED IN THE LIMITED WARRANTY, THE SOFTWARE IS LICENSED “AS IS,” AND LICENSOR, ITS AFFILIATES AND THIRD PARTY SUPPLIERS EXPRESSLY DISCLAIM AND YOU EXPRESSLY WAIVE, RELEASE AND RENOUNCE ALL WARRANTIES ARISING BY LAW OR OTHERWISE WITH RESPECT TO THE SOFTWARE, INCLUDING, BUT NOT LIMITED TO: ANY IMPLIED WARRANTY OF MERCHANTABILITY OR FITNESS FOR A PARTICULAR PURPOSE; ANY IMPLIED WARRANTY ARISING FROM COURSE OF PERFORMANCE, COURSE OF DEALING OR TRADE USAGE; ANY WARRANTY OF TITLE OR NON-INFRINGEMENT; AND, ANY OTHER WARRANTY ARISING UNDER ANY THEORY OF LAW, INCLUDING TORT, NEGLIGENCE, STRICT LIABILITY, CONTRACT OR OTHER LEGAL OR EQUITABLE THEORY. NO REPRESENTATION OR OTHER AFFIRMATION OF FACT INCLUDING, BUT NOT LIMITED TO, STATEMENTS REGARDING SUITABILITY FOR USE, SHALL BE DEEMED TO BE A WARRANTY BY LICENSOR OR ANY OF ITS AFFILIATES OR THIRD PARTY SUPPLIERS. LICENSOR DOES NOT WARRANT THAT THE SOFTWARE IS ERROR-FREE OR WILL OPERATE WITHOUT INTERRUPTION.

Continued on next page

7. LIMITATION OF LIABILITY. EXCEPT AS SET FORTH IN THE LIMITED WARRANTY, UNDER NO CIRCUMSTANCES SHALL LICENSOR, ITS AFFILIATES OR ITS THIRD PARTY SUPPLIERS BE LIABLE TO YOU OR TO ANY THIRD PARTIES FOR DIRECT, INDIRECT, INCIDENTAL OR CONSEQUENTIAL DAMAGES OF ANY KIND, INCLUDING ANY LOSS OR DAMAGE CAUSED BY THE SOFTWARE; ANY PARTIAL OR TOTAL FAILURE OF THE SOFTWARE; PERFORMANCE, NONPERFORMANCE OR DELAYS IN CONNECTION WITH ANY INSTALLATION, MAINTENANCE, WARRANTY OR REPAIRS OF THE SOFTWARE, DAMAGES FOR CROP LOSS, DAMAGE TO LAND, LOST PROFITS, LOSS OF BUSINESS OR LOSS OF GOODWILL, LOSS OF USE OF EQUIPMENT OR SERVICES OR DAMAGES TO BUSINESS OR REPUTATION ARISING FROM THE PERFORMANCE OR NON-PERFORMANCE OF ANY ASPECT OF THIS AGREEMENT, WHETHER IN CONTRACT, TORT OR OTHERWISE, AND WHETHER OR NOT LICENSOR, ITS AFFILIATES OR ITS THIRD PARTY SUPPLIERS HAVE BEEN ADVISED OF THE POSSIBILITY OF SUCH DAMAGES. IN NO EVENT SHALL LICENSOR'S CUMULATIVE LIABILITY TO YOU OR TO ANY OTHER PARTY FOR ANY LOSSES OR DAMAGES RESULTING FROM ANY CLAIMS, LAWSUITS, DEMANDS, OR ACTIONS ARISING FROM OR RELATING TO USE OF THE SOFTWARE EXCEED YOUR TOTAL PAYMENT FOR THE MACHINE AND FOR THE LICENSE OF THE SOFTWARE.

8. Termination of License. Licensor may terminate the license granted under this Agreement upon written notice of termination provided to you if you violate any material term of this Agreement pertaining to your use of the Software or Licensor's rights, including, without limitation, the provisions of Sections 2 and 3 above.

9. Compliance with Law. You agree that you will use the Software in accordance with United States law and the laws of the country in which you are located, as applicable, including foreign trade control laws and regulations. The Software may be subject to export and other foreign trade controls restricting re-sales and/or transfers to other countries and parties. By accepting the terms of this Agreement, you acknowledge that you understand that the Software may be so controlled, including, but not limited to, by the Export Administration Regulations and/or the foreign trade control regulations of the Treasury Department of the United States. Any other provision of this Agreement to the contrary notwithstanding, you agree that the Software will not be resold, re-exported or otherwise transferred. The Software remains subject to applicable U.S. laws.

10. Indemnification. You agree to defend, indemnify and hold Licensor, its affiliates and third party supplier, and their, officers, directors, employees, agents and representatives (each an "**Indemnified Party**"), harmless from and against all claims, demands proceedings, injuries, liabilities, losses, or costs and expenses (including reasonable legal fees) brought by any third party against any such persons arising from or in connection with your use of the Software, regardless of whether such losses are caused, wholly or partially, by any negligence, breach of contract or other fault of an Indemnified Party.

11. Costs of Litigation. If any claim or action is brought by either party to this License Agreement against the other party regarding the subject matter hereof, the prevailing party shall be entitled to recover, in addition to any other relief granted, reasonable attorney fees and expenses of litigation.

12. Severability and Waiver. Should any term of this Agreement be declared void or unenforceable by any court of competent jurisdiction, such declaration shall have no effect on the remaining terms hereof. The failure of either party to enforce any rights granted hereunder or to take action against the other party in the event of any breach hereunder shall not be deemed a waiver by that party as to subsequent enforcement of rights of subsequent actions in the event of future breaches.

13. Language Clause. If you are a resident of Canada at the time you accept this Agreement, then the parties hereby acknowledge that they have required this Agreement, and all other documents relating hereto, be drawn up in the English language only. Les parties reconnaissent avoir demandé que le présent contrat ainsi que toute autre entente ou avis requis ou permis à être conclu ou donné en vertu des stipulations du présent contrat, soient rédigés en langue anglaise seulement. If you are a resident of any country other than the United States, Canada, Great Britain, Australia or New Zealand then you agree as follows: there may be a translated version of this Agreement. If there is an inconsistency or contradiction between the translated version and the English version of this Agreement, the English version of this Agreement shall control.

14. Assignment by Licensor. Licensor may assign this Agreement without your prior consent to any company or entity affiliated with Licensor, or by an assignment associated with a corporate restructuring, merger or acquisition.

15. Governing Law and Forum. This Agreement will be governed by and construed in accordance with the substantive laws identified in the table in Section 18, below The respective courts of the venue identified in the table in Section 18, below, for the location of the Machine shall have non-exclusive jurisdiction over all disputes relating to this Agreement. This Agreement will not be governed by the conflict of law rules of any jurisdiction or the United Nations Convention on Contracts for the International Sale of Goods, the application of which is expressly excluded.

16. Specific Exceptions.

Continued on next page

16.1 Limited Warranty for Users Residing in European Economic Area Countries or Switzerland. If you obtained the Software in any European Economic Area country or Switzerland, and you usually reside in such country, then Section 6 does not apply, instead, Licensor warrants that the Software provides the functionalities set forth in the Operators Manuals (the "**agreed upon functionalities**") for the Warranty Period. As used in this Section, "Warranty Period" means one (1) year. Non-substantial variation from the agreed upon functionalities shall not be considered and does not establish any warranty rights. THIS LIMITED WARRANTY DOES NOT APPLY TO SOFTWARE PROVIDED TO YOU FREE OF CHARGE, FOR EXAMPLE, UPDATES, OR SOFTWARE THAT HAS BEEN ALTERED BY YOU, TO THE EXTENT SUCH ALTERATIONS CAUSED A DEFECT. To make a warranty claim, during the Warranty Period you must return, at our expense, the Software and proof of purchase to the location where you obtained it. If the functionalities of the Software vary substantially from the agreed upon functionalities, Licensor is entitled -- by way of re-performance and at its own discretion -- to repair or replace the Software. If this fails, you are entitled to a reduction of the purchase price (reduction) or to cancel the purchase agreement (rescission). For further warranty information, please contact Licensor at the address listed in Section 18.

16.2 Limitation of Liability for Users Residing in European Economic Area Countries or Switzerland.

(a) If you obtained the Software in any European Economic Area country or Switzerland, and you usually reside in such country, then Sections 7 and 10 do not apply, Instead, Licensor's statutory liability for damages shall be limited as follows: (a) Licensor shall be liable only up to the amount of damages as typically foreseeable at the time of entering into this Agreement in respect of damages caused by a slightly negligent breach of a material contractual obligation and (b) Licensor shall not be liable for damages caused by a slightly negligent breach of a non-material contractual obligation.

(b) The aforesaid limitation of liability shall not apply to any mandatory statutory liability, in particular, to liability under the German Product Liability Act, liability for assuming a specific guarantee or liability for culpably caused personal injuries.

(c) You are required to take all reasonable measures to avoid and reduce damages, in particular to make back-up copies of the Software and your computer data subject to the provisions of this Agreement.

17. Representations of Licensee. BY ACCEPTING THIS AGREEMENT, YOU: (A) ACKNOWLEDGE THAT YOU HAVE READ AND UNDERSTAND THIS AGREEMENT; (B) REPRESENT THAT YOU HAVE THE AUTHORITY TO ENTER INTO THIS AGREEMENT; (C) AGREE THAT THIS AGREEMENT IS ENFORCEABLE AGAINST YOU AND ANY LEGAL ENTITY THAT OBTAINED THE SOFTWARE AND ON WHOSE BEHALF IT IS USED; AND, (D) AGREE TO PERFORM THE OBLIGATIONS OF THIS AGREEMENT.

18. Identification of Licensor and Notices. The Licensor is the entity identified in the table below. All notices to Licensor shall be sent by certified or registered mail to the corresponding address for the Licensor given below. In each case a copy of the notice shall also be sent to John Deere Intelligent Solutions Group, ATTN: Legal, 4140 114th Street Urbandale, IA 50322 U.S.A. All notices to Licensor shall be effective upon receipt. All notices required to be given to you shall, in Licensor's sole discretion, either be sent via certified or registered mail to the address given to Licensor in connection with your purchase of the Machine. Either method of notification used by Licensor shall be effective upon dispatch. You agree to notify Licensor of any change in your address in the manner set forth above.

Place of Purchase	Address	Governing Law	Venue
United States of America	John Deere Shared Services, Inc. One John Deere Place Moline, IL 61265 U.S.A.	State of Illinois, USA	Rock Island County, Illinois, USA
Argentina	Industrias John Deere Argentina, S.A. Casilla de Correo 80 Rosario (Santa Fe), 2000, Argentina	Province of Santa Fe, Argentina	Province of Santa Fe, Argentina
Australia or New Zealand	John Deere Limited (Australia) P.O. Box 2022 Crestmead, Queensland, Australia 4132	State of Queensland, Australia	State of Queensland, Australia
Canada	John Deere Limited 295 Hunter Road P.O. Box 1000 Grimsby, ON L9K 1M3	Province of Ontario, Canada	Province of Ontario, Canada
Chile	John Deere Water, S.A. Cerro Santa Lucia 9990 Quilicura, Santiago, Chile	Province of Santiago, Chile	Province of Santiago, Chile
Mexico	Industrias John Deere, S.A. de C.V. Boulevard Diaz Ordaz #500 Garza Garcia Nuevo Leon 66210, Mexico	State of Nuevo Leon, Mexico	State of Nuevo Leon, Mexico

Continued on next page

Europe	ETIC Strassburgerallee 5 67657 Kaiserslautern, Germany	Federal Republic of Germany	Kaiserslautern, Germany
Other	The John Deere entity identified for the location of your Machine on www.JDLink.com.	The John Deere entity identified for the location of your Machine on www.JDLink.com.	The John Deere entity identified for the location of your Machine on www.JDLink.com.

OUT4001,00006C5 -19-08NOV10-4/4

Technical Information Feedback Form

We need your help to continually improve our technical publications. Please copy this page and FAX or mail your comments, ideas and improvements.

SEND TO: John Deere Dubuque Works
18600 South John Deere Road
Attn: Publications, Dept. 324
Dubuque, IA 52004-0538
USA

FAX NUMBER: 1-563-589-5800 (USA)

Publication Number:_____

Page Number:_____

Ideas, Comments:_____

Name: _____

Phone: _____

Email Address: _____

THANK YOU!

TX,TM,FAX -19-03JUL01-1/1

Contents

Page

Safety—Safety and Operator Conveniences
Safety and Operator Convenience Features 1-1-1

Safety—General Precautions
Recognize Safety Information 1-2-1
Follow Safety Instructions.....1-2-1
Operate Only If Qualified 1-2-1
Wear Protective Equipment.....1-2-2
Avoid Unauthorized Machine Modifications.....1-2-2
Inspect Machine 1-2-2
Stay Clear of Moving Parts.....1-2-2
Avoid High-Pressure Fluids 1-2-3
Avoid High-Pressure Oils 1-2-3
Work In Ventilated Area.....1-2-4
Prevent Fires 1-2-4
Clean Debris from Machine 1-2-5
Prevent Battery Explosions 1-2-5
Handle Chemical Products Safely 1-2-5
Dispose of Waste Properly 1-2-6
Exhaust Filter Ash Handling and Disposal 1-2-6
Prepare for Emergencies.....1-2-6
Add Cab Guarding for Special Uses.....1-2-6

Safety—Operating Precautions
Use Steps and Handholds Correctly 1-3-1
Start Only From Operator's Seat 1-3-1
Use and Maintain Seat Belt 1-3-1
Prevent Unintended Machine Movement 1-3-2
Avoid Work Site Hazards.....1-3-2
Use Special Care When Operating Loader 1-3-3
Keep Riders Off Machine 1-3-3
Avoid Backover Accidents 1-3-3
Avoid Machine Tip Over 1-3-4
Operating on Slopes.....1-3-4
Operating or Traveling On Public Roads 1-3-5
Inspect and Maintain ROPS 1-3-5
Add and Operate Attachments Safely 1-3-5

Safety—Maintenance Precautions
Park and Prepare for Service Safely 1-4-1
Clean Exhaust Filter Safely 1-4-2
Service Cooling System Safely 1-4-3
Service Tires Safely.....1-4-3
Remove Paint Before Welding or Heating.....1-4-4
Make Welding Repairs Safely 1-4-4
Drive Metal Pins Safely 1-4-4

Page

Safety—Safety Signs
Safety Signs 1-5-1

Operation—Operator's Station
Levers—Two Function Hydraulic Control 2-1-1
Levers—Three Function Hydraulic Control 2-1-2
Levers—Four Function Hydraulic Control 2-1-4
Levers—Joystick Steering Control 2-1-4
Pedals.....2-1-5
Sealed Switch Module (SSM).....2-1-6
Switch Module Functions.....2-1-7
Advanced Display Unit (ADU) 2-1-10
Display Unit Functions.....2-1-11
Display Unit—Normal Display 2-1-16
Display Unit—Main Menu 2-1-17
Display Unit—Main Menu—Codes 2-1-18
Display Unit—Main Menu—Codes—Active Codes 2-1-18
Display Unit—Main Menu—Codes—Stored Codes.....2-1-19
Display Unit—Main Menu—Settings 2-1-20
Display Unit—Main Menu—Settings—Reverse Fan Cycle 2-1-21
Display Unit—Main Menu—Settings—Courtesy Lights 2-1-21
Display Unit—Main Menu—Settings—Quick Shift.....2-1-22
Display Unit—Main Menu—Settings—Job Timer 2-1-22
Display Unit—Main Menu—Settings—Stopwatch 2-1-23
Display Unit—Main Menu—Settings—Ride Control—If Equipped 2-1-23
Display Unit—Main Menu—Settings—Counters 2-1-23
Display Unit—Main Menu—Settings—Camera Mode 2-1-24
Display Unit—Main Menu—Settings—Operator Configuration 2-1-24
Display Unit—Main Menu—Diagnostics.....2-1-25
Display Unit—Main Menu—Diagnostics—Machine ID 2-1-26
Display Unit—Main Menu—Diagnostics—Battery Monitor.....2-1-26

Continued on next page

Original Instructions. All information, illustrations and specifications in this manual are based on the latest information available at the time of publication. The right is reserved to make changes at any time without notice.

COPYRIGHT © 2013
DEERE & COMPANY
Moline, Illinois
All rights reserved.
A John Deere ILLUSTRUCTION ® Manual
Previous Editions
Copyright © 2010, 2011

Page

Display Unit—Main Menu—Diagnostics—Engine Sensors....2-1-27
Display Unit—Main Menu—Diagnostics—Transmission/Axle....2-1-27
Display Unit—Main Menu—Diagnostics—Hydraulic Sensors....2-1-28
Display Unit—Main Menu—Diagnostics—Machine Sensors....2-1-28
Display Unit—Main Menu—Diagnostics—FNR Selector....2-1-29
Display Unit—Main Menu—Diagnostics—Cab Switches....2-1-29
Display Unit—Main Menu—Diagnostics—Switch Module....2-1-29
Display Unit—Main Menu—Diagnostics—Joystick Steering—If Equipped....2-1-30
Display Unit—Main Menu—Diagnostics—Tire Pressure—If Equipped....2-1-31
Display Unit—Main Menu—Diagnostics—Object Detect—If Equipped....2-1-32
Display Unit—Main Menu—Diagnostics—Auto Diff Lock—If Equipped....2-1-32
Display Unit—Main Menu—Diagnostics—Payload Scale—If Equipped....2-1-33
Display Unit—Main Menu—Diagnostics—JDLink™ System Info....2-1-33
Display Unit—Main Menu—Diagnostics—Park Brake Test....2-1-34
Display Unit—Main Menu—Payload Scale—If Equipped....2-1-35
Display Unit—Main Menu—Payload Scale—Long Total....2-1-35
Display Unit—Main Menu—Payload Scale—Display Units....2-1-36
Display Unit—Main Menu—Payload Scale—Auto Add....2-1-36
Display Unit—Main Menu—Payload Scale—Diagnostics....2-1-36
Display Unit—Main Menu—Payload Scale—Setup....2-1-36
Display Unit—Main Menu—Security....2-1-37
Display Unit—Main Menu—Security—Security....2-1-38
Display Unit—Main Menu—Security—Change Owner PIN....2-1-38
Display Unit—Main Menu—Security—Manage Operator PINs....2-1-39
Display Unit—Main Menu—Security—Manage Transport PIN....2-1-40
Display Unit—Main Menu—Security—Delayed Operator Logout....2-1-41
Display Unit—Main Menu—Exhaust Filter....2-1-42
Display Unit—Main Menu—Exhaust Filter—Auto Cleaning....2-1-43
Display Unit—Main Menu—Exhaust Filter—Parked Cleaning....2-1-44

Page

Display Unit—Main Menu—Software Delivery....2-1-45
Display Unit—Main Menu—Software Delivery—Software Update....2-1-46
Horn Button....2-1-47
Turn Signals....2-1-47
Neutral Lock....2-1-48
Joystick Steering Armrest Adjustment— if Equipped....2-1-48
Air Conditioner and Heater Operation....2-1-49
Counter Switch....2-1-50
Opening and Securing Side Door....2-1-51
Opening Side Window/Secondary Exit....2-1-52
Opening Rear Side Window....2-1-52
Seat Adjustment....2-1-53
Fire Extinguisher Mounting Location....2-1-54

Operation—Operating the Machine

Before Starting Work....2-2-1
Inspect Machine Daily Before Starting....2-2-1
Check Instruments Before Starting....2-2-1
Security System....2-2-2
Battery Disconnect Switch....2-2-2
Engine Break-In Period....2-2-3
Starting the Engine....2-2-4
Engine Block Heater—If Equipped....2-2-6
Starting Fluid (Cold Weather Starting Aid)—If Equipped....2-2-6
Warmup....2-2-7
Cold Weather Warmup....2-2-7
Park Brake Switch....2-2-8
Shifting the Transmission....2-2-9
Automatic Idle and Automatic Shutdown....2-2-11
Joystick Bucket and Boom Control....2-2-12
Two Lever Bucket and Boom Control....2-2-13
Auxiliary Control....2-2-14
Joystick Steering Control—If Equipped....2-2-15
Ride Control—If Equipped....2-2-17
Secondary Steering—If Equipped....2-2-19
Differential Lock Operation....2-2-19
Exhaust Filter....2-2-20
Service ADVISOR™ Remote (SAR) Software Delivery Process....2-2-22
Rear Camera and Radar Object Detection (ROD) System—If Equipped....2-2-23
Counter Switch Operation....2-2-25
Embedded Payload Scale—If Equipped....2-2-26
Boom Height Kickout Adjustment....2-2-30
Return-to-Carry Kickout Adjustment....2-2-30
Return-to-Dig Adjustment for Z-Bar Linkage....2-2-31
Return-to-Dig Adjustment for Powerllel™ Linkage—If Equipped....2-2-33
Operating Loader Coupler—If Equipped....2-2-34
Using the Loader Bucket....2-2-35
Backdragging....2-2-36
Fork Attachment....2-2-37
Parking the Machine....2-2-39

Continued on next page

Page

Loading Machine on a Trailer 2-2-40
Towing Procedure....2-2-42
Lifting the Machine 2-2-44

Maintenance—Machine
Diesel Fuel....3-1-1
Diesel Fuel Specifications 3-1-1
Lubricity of Diesel Fuel 3-1-2
Handling and Storing Diesel Fuel....3-1-2
Biodiesel Fuel....3-1-3
Testing Diesel Fuel 3-1-4
Minimizing the Effect of Cold Weather on Diesel Engines 3-1-5
Alternative and Synthetic Lubricants 3-1-6
Mixing of Lubricants....3-1-6
Lubricant Storage 3-1-6
John Deere Break-In Plus™ Engine Oil 3-1-7
Diesel Engine Oil—Interim Tier 4 and Stage III B Engines 3-1-8
Engine Oil and Filter Service Intervals—Interim Tier 4 and Stage III B Engines....3-1-9
Transmission, Park Brake, and Axle Oil 3-1-9
Hydraulic System Oil 3-1-10
Grease....3-1-10
Heavy Duty Diesel Engine Coolant 3-1-11
Drain Intervals for Diesel Engine Coolant....3-1-11
John Deere COOL-GARD™ II Coolant Extender....3-1-12
Supplemental Coolant Additives....3-1-12
Operating in Warm Temperature Climates 3-1-13
Additional Information About Diesel Engine Coolants and John Deere COOL-GARD™ II Coolant Extender 3-1-14
Testing Diesel Engine Coolant....3-1-15
Disposing of Coolant 3-1-15

Maintenance—Periodic Maintenance
Service Machine at Specified Intervals....3-2-1
Check Hour Meter Regularly 3-2-1
Prepare Machine for Maintenance 3-2-2
Frame Locking Bar 3-2-3
Boom Lock....3-2-4
Pin Removal—If Equipped With Powerllel™ Linkage 3-2-5
Engine Service Doors and Side Shields....3-2-6
Cooling System Doors....3-2-7
Fuel Tank....3-2-8
Fluid Analysis Program Test Kits and 3-Way Coolant Test Kit....3-2-8
Service Intervals....3-2-9
Required Parts....3-2-11

Maintenance—As Required
Service Exhaust Filter....3-3-1
Inspect Tires and Check Pressure 3-3-2
Tire Pressures 3-3-3

Page

Check Wheel Bolt Torque....3-3-5
Inspect Engine Air Cleaner Elements....3-3-6
Replace Fast Fill Fuel Breather Filter—If Equipped 3-3-7
Inspect Air Conditioner Compressor and Alternator Belt 3-3-7
Check Engine Coolant....3-3-8
Clean Cooler Cores....3-3-9
Check Rear Camera and Radar Object Detection (ROD) System—If Equipped....3-3-10
Check Windshield Washer Fluid Level 3-3-11
Drain Water From Primary Fuel Filter....3-3-11
Check and Clean or Replace Cab Fresh Air Filter....3-3-12
Check and Clean or Replace Cab Recirculating Air Filter 3-3-13

Maintenance—Every 10 Hours or Daily
Clean Air Cleaner Dust Unloader Valve 3-4-1
Check Coolant Level in Surge Tank 3-4-1
Check Engine Oil Level 3-4-2
Check Hydraulic System Oil Level 3-4-2
Check Transmission Oil Level 3-4-3
Inspect Outer Pin Seals....3-4-4

Maintenance—Every 100 Hours
Lubricate Loader Linkage and Cylinder Pivots—Z-Bar Linkage 3-5-1
Lubricate Loader Linkage and Cylinder Pivots—Powerllel™ Linkage 3-5-2

Maintenance—Initial Service - 250 Hours
Drain and Refill Front and Rear Axle Oil 3-6-1
Replace Axle Oil Filters—If Equipped 3-6-2

Maintenance—Every 250 Hours
Take Engine Oil Sample 3-7-1

Maintenance—Every 500 Hours
Lubricate Driveline Upper and Lower Sliding Joints and Lower U-Joints 3-8-1
Check Front and Rear Axle Oil Level 3-8-2
Lubricate Front and Rear Axle Shaft Seals 3-8-3
Check Battery Water Level and Terminals 3-8-4
Check Air Intake Hoses and Charge Air Cooler Tube Couplings 3-8-6
Replace Fast Fill Fuel Breather Filter—If Equipped 3-8-6
Take Fluid Samples 3-8-7
Drain and Refill Engine Oil and Replace Filter ..3-8-7
Replace In-Line Fuel Strainer....3-8-8
Replace Primary Fuel Filter 3-8-9
Replace Final Fuel Filter....3-8-10
Replace Hydraulic Reservoir Breather Filter ...3-8-10
Check Park Brake Oil Level....3-8-11

Continued on next page

Page

Lubricate Front and Rear Shaft Seals on Park Brake 3-8-11
Check Ride Control Accumulator—If Equipped 3-8-12

Maintenance—Every 1000 Hours
Clean Hydraulic Fan Drive Case Drain In-Line Screen 3-9-1
Replace Air Cleaner Dust Unloader Valve 3-9-3
Replace Engine Air Cleaner Elements 3-9-3
Check Coolant 3-9-4
Replace Fuel Tank Breather Filter 3-9-4
Replace Axle Oil Filters—If Equipped 3-9-4
Lubricate Frame Hinge Pivots 3-9-5
Drain and Refill Park Brake Oil 3-9-5

Maintenance—Every 2000 Hours
Replace Outer Pin Seals 3-10-1
Drain and Refill Transmission Oil and Replace Filter 3-10-1
Drain and Refill Front and Rear Axle Oil 3-10-3
Clean Front and Rear Axle Oil Recirculation Screens—If Equipped 3-10-4
Adjust Engine Valve Lash (Clearance) 3-10-4
Rerun Transmission Clutch Calibration 3-10-4

Maintenance—Every 4000 Hours
Clean Hydraulic Pump Case Drain In-Line Screen 3-11-1
Replace Hydraulic System Return Filter 3-11-3
Drain, Flush, and Refill Hydraulic System Oil 3-11-4
Clean Hydraulic System Fill Strainer 3-11-5

Maintenance—Every 5000 Hours
Check Driveline Damper For Cracks 3-12-1

Maintenance—Every 6000 Hours
Drain Cooling System 3-13-1
Refill Cooling System 3-13-2

Miscellaneous—Machine
Tire Removal With Tire Pressure Monitor (TPM) System—If Equipped 4-1-1
Check Air Inlet Cover 4-1-1
Bleed Fuel System 4-1-2
Do Not Service Control Valves, Cylinders, Pumps, or Motors 4-1-2
Precautions for Alternator and Regulator 4-1-2
Handling, Checking, and Servicing Batteries Carefully 4-1-3
Using Booster Batteries—24-Volt System 4-1-4
Using Battery Charger 4-1-5
Replacement Batteries 4-1-5
Remove and Install Batteries 4-1-6
12-Volt Auxiliary Power Outlet—If Equipped 4-1-7
JDLink™ Machine Monitoring System (MMS)—If Equipped 4-1-7

Page

Replacing Fuses 4-1-8
Remove and Install Halogen Bulbs 4-1-10
Fluid Sampling Test Ports—If Equipped 4-1-10
Air Conditioning System Service 4-1-12
External Service Brake Inspection 4-1-13
Bleeding Brakes 4-1-14
Service Recommendations For Snap-To-Connect (STC®) Fittings 4-1-15
Welding On Machine 4-1-16
Welding Near Electronic Control Units 4-1-16
Keep Electronic Control Unit Connectors Clean 4-1-16
Keep ROPS Installed Properly 4-1-17
Hardware Torque Specifications 4-1-17
Metric Bolt and Screw Torque Values 4-1-18
Unified Inch Bolt and Screw Torque Values 4-1-19

Miscellaneous—Operational Checkout
Operational Checkout 4-2-1

Miscellaneous—Troubleshooting
Troubleshooting Procedure 4-3-1
Engine 4-3-2
Transmission 4-3-5
Differential and Axle 4-3-8
Service Brake 4-3-9
Driveline 4-3-10
Park Brake 4-3-10
Hydraulic System 4-3-11
Steering 4-3-13
Air Conditioning System 4-3-14
Heater System 4-3-16
Software Update 4-3-16

Miscellaneous—Storage
Prepare Machine for Storage 4-4-1
Monthly Storage Procedure 4-4-2

Miscellaneous—Machine Numbers
Record Product Identification Number (PIN) 4-5-1
Record Engine Serial Number 4-5-1
Record Transmission Serial Number 4-5-1
Record Hydraulic Pump Serial Number 4-5-2
Record Front and Rear Axle Housing Serial Numbers 4-5-2
Keep Proof of Ownership 4-5-2
Keep Machines Secure 4-5-3

Miscellaneous—Specifications
Engine Specifications 4-6-1
Drain and Refill Capacities 4-6-1
Standard Z-Bar Specifications 4-6-2
High Lift Z-Bar Specifications 4-6-4
Powerllel™ Specifications 4-6-6
Travel Speeds 4-6-7

Safety and Operator Convenience Features

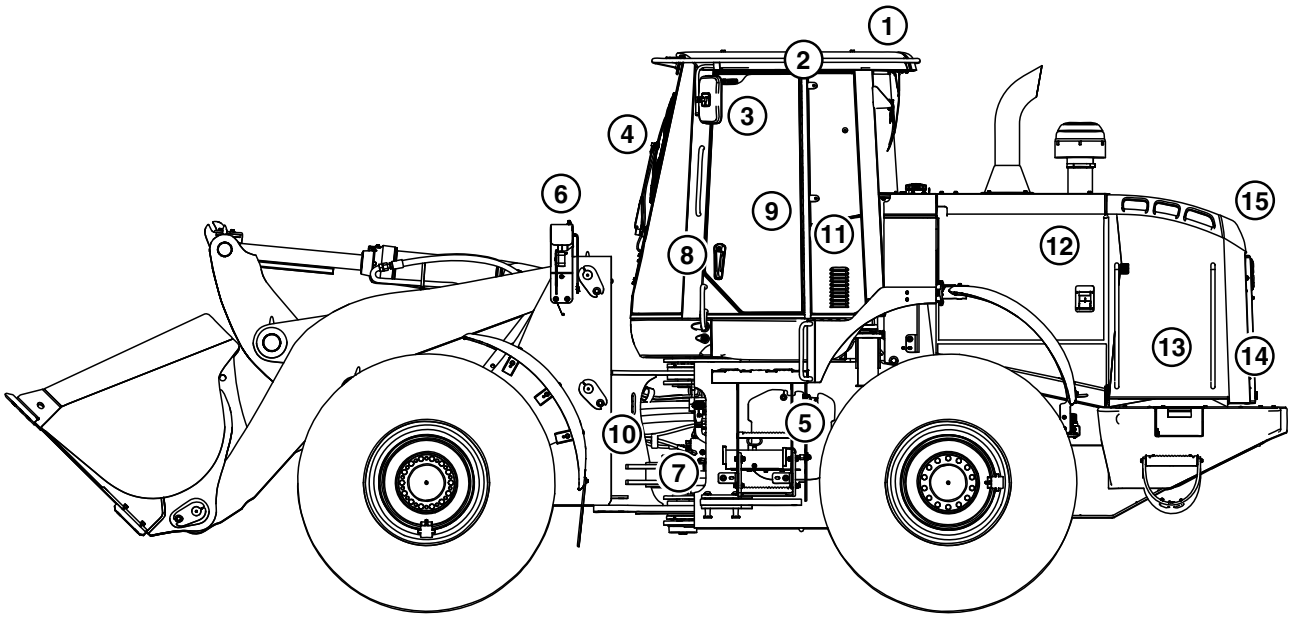

TX1083193 —UN—18OCT10

TX1083193

Please remember, the operator is the key to preventing accidents.

1. **ROPS, FOPS, and OPS.** Structures designed to help protect the operator are certified to ISO and OSHA. Enclosures also deflect sun and rain.
2. **Pressurized Cab with Heater and Defroster.** Positive pressure ventilation system circulates both outside and inside air through filters for a clean working environment. Built in defroster vents direct air flow for effective window defogging/deicing.
3. **Mirrors.** Large exterior mirrors on both sides and an inside mirror offers operator a broad view of area behind machine.
4. **Large Windshield Wiper with Washer.** Extra long wiper cleans large windshield area.
5. **Loader Boom Service Lock.** Loader includes a mechanical lock for securing boom in the raised position before work is started on or around the machine.
6. **Halogen Lights and Turn Signals.** High intensity halogen drive/work lights and high-visibility turn signals are standard equipment.
7. **Articulation Locking Bar.** A self-storing mechanical lock is provided for transport or service.
8. **Handholds.** Large, conveniently placed handholds make it easy to enter or exit the operator's station or service area.
9. **Horn.** Standard horn is useful when driving or signaling coworkers.
10. **Independent Parking Brake.** Electronically controlled and engages whenever the engine is stopped.
11. **Seat Belt Retractors.** Seat belt retractors help keep belts clean and convenient to use.
12. **Bypass Start Protection.** Shielding over the starter terminals helps prevent dangerous bypass starting.
13. **Engine Fan Guard.** A secondary fan guard inside the cooling compartment helps prevent contact with the rotating fan blades.
14. **Backup Alarm.** Alerts bystanders when reverse travel direction is selected by operator.
15. **Stop and Signal Lights.** Highly visible stop lights and turn signal lights are standard equipment.

OUT4001,00006A6 -19-18OCT10-1/1

Safety—General Precautions

Recognize Safety Information

This is the safety alert symbol. When you see this symbol on your machine or in this manual, be alert for the potential of personal injury.

Follow the precautions and safe operating practices highlighted by this symbol.

A signal word — DANGER, WARNING, or CAUTION — is used with the safety alert symbol. DANGER identifies the most serious hazards.

On your machine, DANGER signs are red in color, WARNING signs are orange, and CAUTION signs are yellow. DANGER and WARNING signs are located near specific hazards. General precautions are on CAUTION labels.



T133555 —UN—15APR13

T133588 —19—28AUG00

TX,RECOGNIZE -19-28JUN10-1/1

Follow Safety Instructions

Carefully read all safety messages in this manual and on your machine safety signs. Keep safety signs in good condition. Replace missing or damaged safety signs. Use this operator's manual for correct safety sign placement. Be sure that new equipment components and repair parts include the current safety signs. Replacement safety signs are available from your John Deere dealer.

There can be additional safety information contained on parts and components sourced from suppliers that is not reproduced in this operator's manual.

Learn how to operate the machine and how to use controls properly. Do not let anyone operate without instruction.

Keep your machine in proper working condition. Unauthorized modifications to the machine could impair the function or safety and affect machine life.

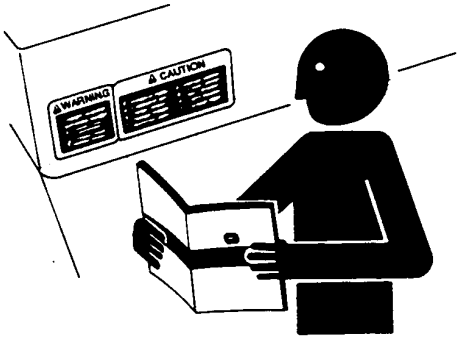

TS201 —UN—15APR13

If you do not understand any part of this manual and need assistance, contact your John Deere dealer.

TX,FOLLOW -19-20JAN11-1/1

Operate Only If Qualified

Do not operate this machine unless the operator's manual has been read carefully, and you have been qualified by supervised training and instruction.

Operator should be familiar with the job site and surroundings before operating. Try all controls and machine functions with the machine in an open area before starting to work.

Know and observe all safety rules that may apply to every work situation and work site.

TX,QUALIFIED -19-18JAN11-1/1

Wear Protective Equipment

Guard against injury from flying pieces of metal or debris; wear goggles or safety glasses.

Wear close fitting clothing and safety equipment appropriate to the job.

Operating equipment safely requires the full attention of the operator. Do not wear radio or music headphones while operating machine.

Prolonged exposure to loud noise can cause impairment or loss of hearing. Wear suitable hearing protection such as earmuffs or earplugs to protect against objectionable or uncomfortable loud noises. Radio or music headphones are not suitable to use for hearing protection.

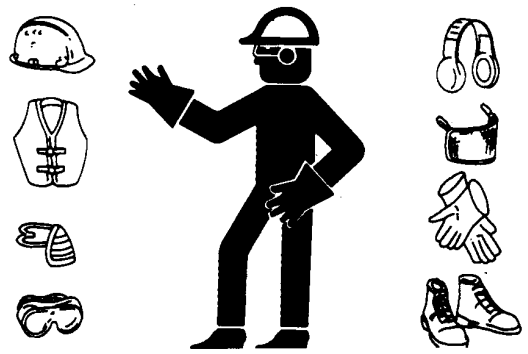

TS206 —UN—15APR13

TX,WEAR,PE -19-22SEP10-1/1

Avoid Unauthorized Machine Modifications

John Deere recommends using only genuine John Deere replacement parts to ensure machine performance. Never substitute genuine John Deere parts with alternate parts not intended for the application as these can create hazardous situations or hazardous performance. Non-John Deere Parts, or any damage or failures resulting from their use are not covered by any John Deere warranty.

Modifications of this machine, or addition of unapproved products or attachments, may affect machine stability or reliability, and may create a hazard for the operator or others near the machine. The installer of any modification which may affect the electronic controls of this machine is responsible for establishing that the modification does not adversely affect the machine or its performance.

Always contact an authorized John Deere dealer before making machine modifications that change the intended use, weight or balance of the machine, or that alter machine controls, performance or reliability.

AM40430,00000A9 -19-14JAN08-1/1

Inspect Machine

Inspect machine carefully each day by walking around it before starting.

Keep all guards and shields in good condition and properly installed. Fix damage and replace worn or broken parts immediately. Pay special attention to hydraulic hoses and electrical wiring.



T6607AQ —UN—15APR13

TX,INSPECT -19-08SEP10-1/1

Stay Clear of Moving Parts

Entanglements in moving parts can cause serious injury.

Stop engine before examining, adjusting, or maintaining any part of machine with moving parts.

Keep guards and shields in place. Replace any guard or shield that has been removed for access as soon as service or repair is complete.

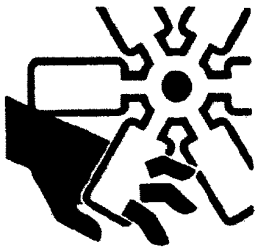

T133592 —UN—15APR13

TX,MOVING,PARTS -19-20JAN11-1/1

Avoid High-Pressure Fluids

Inspect hydraulic hoses periodically – at least once per year – for leakage, kinking, cuts, cracks, abrasion, blisters, corrosion, exposed wire braid or any other signs of wear or damage.

Replace worn or damaged hose assemblies immediately with John Deere approved replacement parts.

Escaping fluid under pressure can penetrate the skin causing serious injury.

Avoid the hazard by relieving pressure before disconnecting hydraulic or other lines. Tighten all connections before applying pressure.

Search for leaks with a piece of cardboard. Protect hands and body from high-pressure fluids.

If an accident occurs, see a doctor immediately. Any fluid injected into the skin must be surgically removed within a few hours or gangrene may result. Doctors unfamiliar with this type of injury should reference a knowledgeable medical source. Such information is available in English from Deere & Company Medical Department in Moline, Illinois, U.S.A., by calling 1-800-822-8262 or +1 309-748-5636.

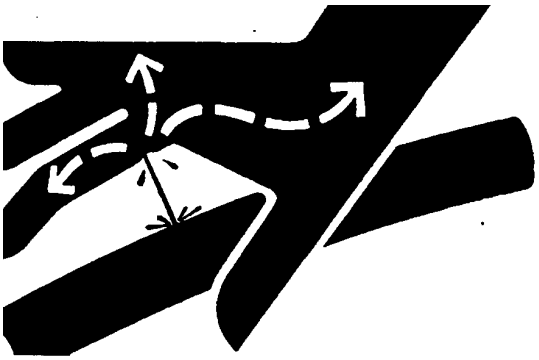

X9811 —UN—23AUG88

DX,FLUID -19-12OCT11-1/1

Avoid High-Pressure Oils

This machine uses a high-pressure hydraulic system. Escaping oil under pressure can penetrate the skin causing serious injury.

Never search for leaks with your hands. Protect hands. Use a piece of cardboard to find location of escaping oil. Stop engine and relieve pressure before disconnecting lines or working on hydraulic system.

If hydraulic oil penetrates your skin, see a doctor immediately. Injected oil must be removed surgically within hours or gangrene could result. Contact a knowledgeable medical source or the Deere & Company Medical Department in Moline, Illinois, U.S.A.

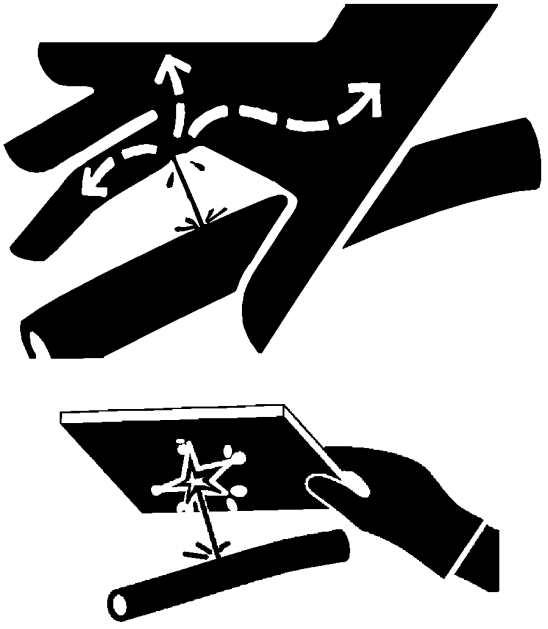

T133509 —UN—15APR13

T133840 —UN—20SEP00

TX,HPOILS -19-20JAN11-1/1

Work In Ventilated Area

Engine exhaust fumes can cause sickness or death. If it is necessary to run an engine in an enclosed area, remove the exhaust fumes from the area with an exhaust pipe extension.

If you do not have an exhaust pipe extension, open the doors and get outside air into the area.

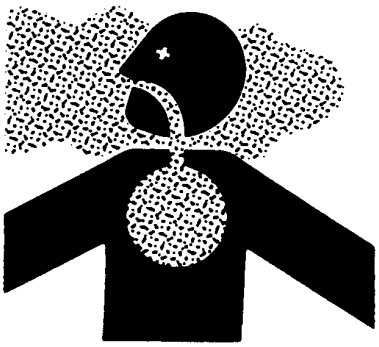

TS220 —UN—15APR13

DX,AIR -19-17FEB99-1/1

Prevent Fires

Handle Fuel Safely: Store flammable fluids away from fire hazards. Never refuel machine while smoking or when near sparks or flame.

Clean Machine Regularly: Keep trash, debris, grease and oil from accumulating in engine compartment, around fuel lines, hydraulic lines, exhaust components, and electrical wiring. Never store oily rags or flammable materials inside a machine compartment.

Maintain Hoses and Wiring: Replace hydraulic hoses immediately if they begin to leak, and clean up any oil spills. Examine electrical wiring and connectors frequently for damage.

Keep A Fire Extinguisher Available: Always keep a multipurpose fire extinguisher on or near the machine. Know how to use extinguisher properly.



T133552 —UN—15APR13

T133553 —UN—07SEP00

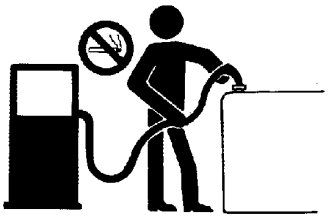

T133554 —UN—07SEP00



TX,PREVENT,FIRE -19-20JAN11-1/1

Clean Debris from Machine

Keep engine compartment, radiator, batteries, hydraulic lines, exhaust components, fuel tank, and operator's station clean and free of debris.

Clean any oil spills or fuel spills on machine surfaces.

Temperature in engine compartment could go up immediately after engine is stopped. BE ON GUARD FOR FIRES DURING THIS PERIOD.

Open access door(s) to cool the engine faster, and clean engine compartment.

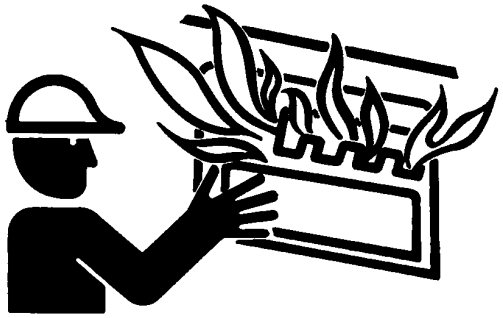

T6669AG —UN—15APR13

TX,DEBRIS -19-20JAN11-1/1

Prevent Battery Explosions

Keep sparks, lighted matches, and open flame away from the top of battery. Battery gas can explode.

Never check battery charge by placing a metal object across the posts. Use a volt-meter or hydrometer.

Do not charge a frozen battery; it may explode. Warm battery to 16°C (60°F).



TS204 —UN—15APR13

DX,SPARKS -19-03MAR93-1/1

Handle Chemical Products Safely

Direct exposure to hazardous chemicals can cause serious injury. Potentially hazardous chemicals used with John Deere equipment include such items as lubricants, coolants, paints, and adhesives.

A Material Safety Data Sheet (MSDS) provides specific details on chemical products: physical and health hazards, safety procedures, and emergency response techniques.

Check the MSDS before you start any job using a hazardous chemical. That way you will know exactly what the risks are and how to do the job safely. Then follow procedures and recommended equipment.

(See your John Deere dealer for MSDS's on chemical products used with John Deere equipment.)

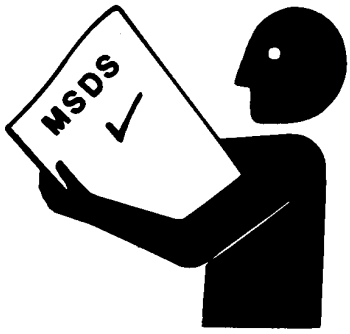

TS1132 —UN—15APR13

DX,MSDS,NA -19-03MAR93-1/1

Dispose of Waste Properly

Improperly disposing of waste can threaten the environment and ecology. Potentially harmful waste used with John Deere equipment include such items as oil, fuel, coolant, brake fluid, filters, and batteries.

Use leakproof containers when draining fluids. Do not use food or beverage containers that may mislead someone into drinking from them.

Do not pour waste onto the ground, down a drain, or into any water source.

Air conditioning refrigerants escaping into the air can damage the Earth's atmosphere. Government regulations may require a certified air conditioning service center to recover and recycle used air conditioning refrigerants.

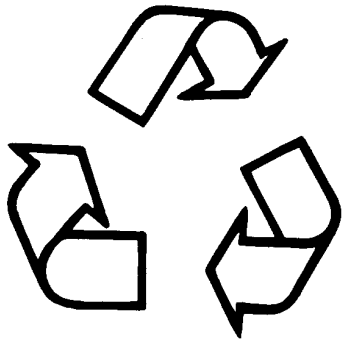

TS1133 —UN—15APR13

Inquire on the proper way to recycle or dispose of waste from your local environmental or recycling center, or from your John Deere dealer.

DX,DRAIN -19-03MAR93-1/1

Exhaust Filter Ash Handling and Disposal

CAUTION: Under federal, state, and local laws or regulations, exhaust filter ash can be classified as a hazardous waste. Hazardous waste must be disposed of in accordance with all applicable federal, state, and local laws or regulations governing hazardous waste disposal. Only a qualified service provider should remove ash from the exhaust filter. Personal protective equipment and clothing, maintained in a sanitary and reliable condition, should be used when handling and cleaning exhaust filter. See your authorized dealer for exhaust filter ash handling and disposal.

TX,ASH,DISP -19-20JAN11-1/1

Prepare for Emergencies

Be prepared if a fire starts.

Keep a first aid kit and fire extinguisher handy.

Keep emergency numbers for doctors, ambulance service, hospital, and fire department near your telephone.

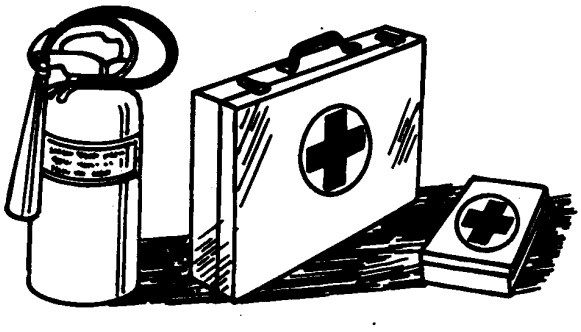

TS291 —UN—15APR13

DX,FIRE2 -19-03MAR93-1/1

Add Cab Guarding for Special Uses

Special work situations or machine attachments could create an environment with falling or flying objects. Working near an overhead bank, demolition work, using a hydraulic hammer or winch, working in a forestry application or wooded area, or working in a waste management application, for example, could require added guarding to protect the operator.

Additional level II FOPS (falling object protective structure), forestry protection packages, and special screens or guarding should be installed when falling or flying objects could enter or damage the machine. A rear screen should always be used with a winch to protect against a snapping cable. Before operating in any special work environments, follow the operator protection recommendations of the manufacturer of any specialized attachment or equipment. Contact your authorized John Deere dealer for information on protective guarding.

TX,CABGUARD -19-12FEB13-1/1

Use Steps and Handholds Correctly

Prevent falls by facing the machine when you get on and off. Maintain 3-point contact with steps and handrails. Never use machine controls as handholds.

Use extra care when mud, snow, or moisture present slippery conditions. Keep steps clean and free of grease or oil. Never jump when exiting machine. Never mount or dismount a moving machine.

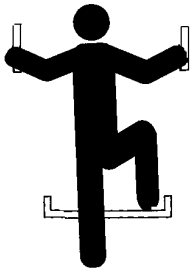

T133468 —UN—15APR13

TX,STEPS -19-09FEB11-1/1

Start Only From Operator's Seat

Avoid unexpected machine movement. Start engine only while sitting in operator's seat. Ensure that all controls and working tools are in proper position for a parked machine.

Never attempt to start engine from the ground. Do not attempt to start engine by shorting across the starter solenoid terminals.



T133715 —UN—15APR13

TX,SOFOS -19-20JAN11-1/1

Use and Maintain Seat Belt

Use seat belt when operating machine. Remember to fasten seat belt when loading and unloading from trucks and during other uses.

Examine seat belt frequently. Be sure that webbing is not cut or torn. Replace seat belt immediately if any part is damaged or does not function properly.

The complete seat belt assembly should be replaced every three years, regardless of appearance.



T133716 —19—17APR13

TX,SEAT,BELT -19-20JAN11-1/1

Prevent Unintended Machine Movement

Lower all equipment to the ground during work interruptions. Place transmission control in neutral, press park brake switch (1) to engage park brake, press pilot enable/boom down switch (2) to disable the hydraulics, and stop engine before allowing anyone to approach the machine.

Follow these same precautions before standing up, leaving the operator's seat, or exiting the machine.

1— Park Brake Switch

2— Pilot Enable/Boom Down Switch



TX1041772A —UN—02MAY08

DP99999,00000A3 -19-28JUN12-1/1

Avoid Work Site Hazards

Avoid contact with gas lines, buried cables and water lines. Call utility line location services to identify all underground utilities before starting work.

Prepare work site properly. Avoid operating near structures or objects that could fall onto the machine. Clear away debris that could move unexpectedly if run over.

Avoid boom or attachment contact with overhead obstacles or overhead electrical lines. Never move machine closer than 3 m (10 ft) plus twice the line insulator length to overhead wires.

Keep bystanders clear at all times. Keep bystanders away from raised booms, attachments, and unsupported loads. Avoid swinging or raising booms, attachments, or loads over or near personnel. Use barricades or a signal person to keep vehicles and pedestrians away. Use a signal person if moving machine in congested areas or where visibility is restricted. Always keep signal person in view. Coordinate hand signals before starting machine.

Operate only on solid footing with strength sufficient to support machine. Be especially alert working near embankments or excavations.

Avoid working under over-hanging embankments or stockpiles that could collapse under or on machine.

Reduce machine speed when operating with tool on or near ground when obstacles may be hidden (e.g., during snow removal or clearing mud, dirt, etc.). At high speeds hitting obstacles (rocks, uneven concrete or manholes) can cause a sudden stop. Always wear your seat belt.

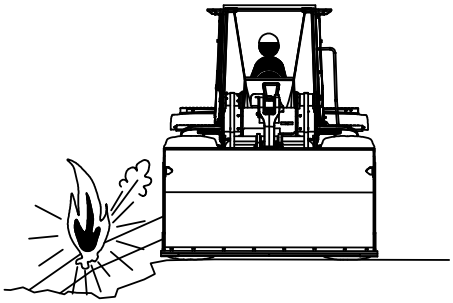

T141894 —UN—15APR13

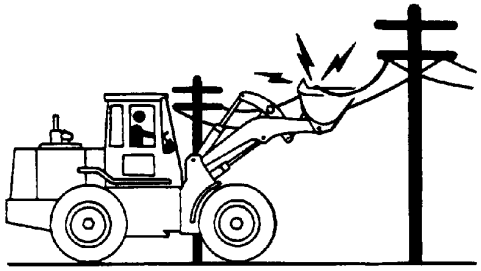

T141670 —UN—24APR01

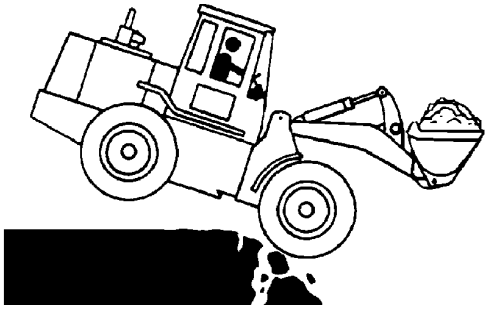

T141672 —UN—04MAY01

DP99999,0000113 -19-19AUG10-1/1

Use Special Care When Operating Loader

Never use the loader to lift people. Do not allow anyone to ride in the bucket or use the bucket as a work platform.

Operate carefully with raised loads. Raising the load reduces machine stability, especially on side slopes or an unstable surface. Drive and turn slowly with a raised load.

Ensure that objects in the bucket are secure. Do not attempt to lift or carry objects that are too big or too long to fit inside the bucket unless secured with an adequate chain or other device. Keep bystanders away from raised loads.

Be careful when lifting objects. Never attempt to lift objects too heavy for your machine. Assure machine stability and hydraulic capability with a test lift before attempting other maneuvers. Use an adequate chain or sling and proper rigging techniques to attach and stabilize loads. Never lift an object above or near another person.

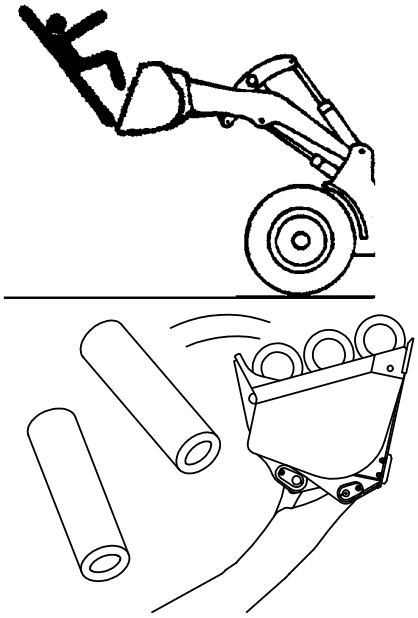

T141957 —UN—15APR13

T141902 —UN—07MAY01

TX03768,0000B70 -19-14MAY01-1/1

Keep Riders Off Machine

Only allow operator on machine.

Riders are subject to injury. They may fall from machine, be caught between machine parts, or be struck by foreign objects.

Riders may obstruct operator's view or impair his ability to operate machine safely.

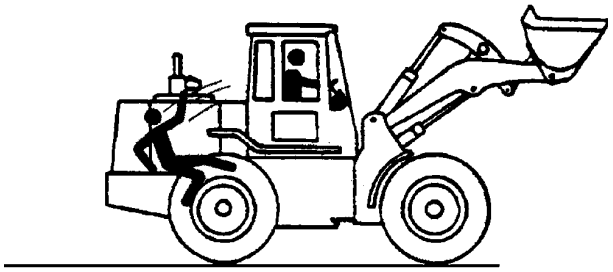

T141671 —UN—15APR13

TX03679,000179B -19-20APR01-1/1

Avoid Backover Accidents

Before moving machine, be sure that all persons are clear of machine path. Turn around and look directly for best visibility. Use mirrors to assist in checking all around machine. Keep windows and mirrors clean, adjusted, and in good repair.

Be certain reverse warning alarm is working properly.

Use a signal person when backing if view is obstructed or when in close quarters. Keep signal person in view at all times. Use prearranged hand signals to communicate.

Do not rely on the rear camera and radar object detection systems to determine if personnel are behind the machine. The system has limitations due to maintenance practices, environmental conditions, and operating range.



PC10857XW —UN—15APR13

TX,AVOID,BACKOVER -19-25OCT10-1/1

Avoid Machine Tip Over

Use seat belt at all times.

Do not jump if the machine tips. You will be unlikely to jump clear and the machine may crush you.

Load and unload from trucks or trailers carefully. Be sure truck is wide enough and on a firm level surface. Use loading ramps and attach them properly to truck bed.

Be careful on slopes. Avoid sharp turns. Balance loads so weight is evenly distributed and load is stable. Carry tools and loads close to the ground to aid visibility and lower center of gravity. Use extra care on soft, rocky or frozen ground.

Know the capacity of the machine. Do not overload. Be careful with heavy loads. Using oversize buckets or lifting heavy objects reduces machine stability.

Ensure solid footing. Use extra care in soft ground conditions that may not uniformly support the wheels, especially when raising the boom. Do not operate close to banks or open excavations that may cave in and cause machine to tip or fall.

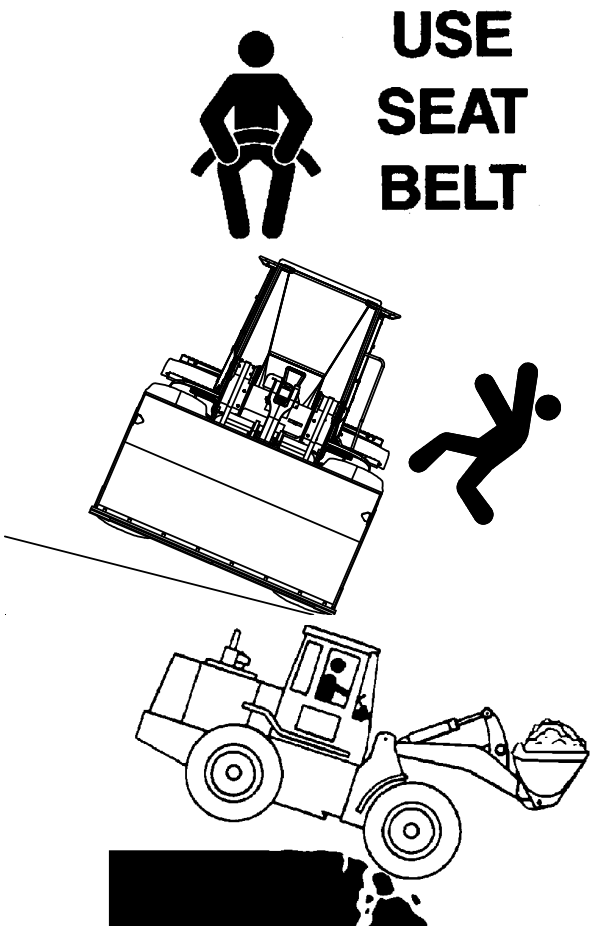

T133716 —19—17APR13

T141676 —UN—04MAY01

T141672 —UN—04MAY01

TX03679,000179D -19-02MAY01-1/1

Operating on Slopes

Avoid side slope travel whenever possible. Drive up steep slope in forward and down in reverse.

Select low gear speed before starting down slope. The grade of the slope will be limited by ground condition and load being handled.

Use service brakes to control speed. Sudden brake application with a loaded bucket on downhill side could cause machine to tip forward.

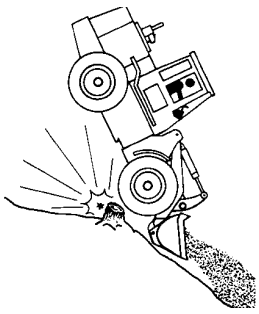

T141681 —UN—15APR13

TX03679,000179E -19-14MAY01-1/1

Operating or Traveling On Public Roads

Machines that work near vehicle traffic or travel slower than normal highway speeds must have proper lighting and markings to assure they are visible to other drivers.

Install additional lights, beacon lights, slow moving vehicle (SMV) emblems, or other devices and use as required to make the machine visible and identify it as a work machine. Check state and local regulations to assure compliance. Keep these devices clean and in working condition.

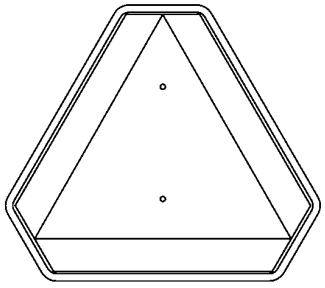

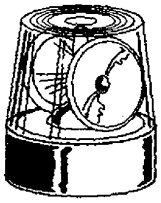

T141891 —UN—15APR13

TX,ROADS -19-20JAN11-1/1

Inspect and Maintain ROPS

A damaged rollover protective structure (ROPS) should be replaced, not reused.

The protection offered by ROPS could be impaired if ROPS is subjected to structural damage, is involved in an overturn incident, or is in any way altered by welding, bending, drilling, or cutting.

If ROPS was loosened or removed for any reason, inspect it carefully before operating the machine again.

To maintain the ROPS:

- Replace missing hardware using correct grade hardware.
- Check hardware torque.
- Check isolation mounts for damage, looseness, or wear; replace them if necessary.
- Check ROPS for cracks or physical damage.

TX,ROPS -19-20JAN11-1/1

Add and Operate Attachments Safely

Always verify compatibility of attachments by contacting your authorized dealer. Adding unapproved attachments could affect machine stability or reliability and could create a hazard for others near the machine.

Ensure that a qualified person is involved in attachment installation. Add guards to machine if operator protection is required or recommended. Verify that all connections are secure and attachment responds properly to controls.

Carefully read attachment manual and follow all instructions and warnings. In an area free of bystanders and obstructions, carefully operate attachment to learn its characteristics and range of motion.

TX,ATTACH -19-20JAN11-1/1

Park and Prepare for Service Safely

Warn others of service work. Always park and prepare your machine for service or repair properly.

- Park machine on a level surface and lower equipment to the ground.
- Engage park brake.
- Stop engine.
- Install frame locking bar.
- Attach a DO NOT OPERATE tag in an obvious place in the operator's station.

Securely support machine or attachment before working under it.

- Do not support machine with boom, bucket, or other hydraulically actuated equipment.
- Do not support machine with cinder blocks or wooden pieces that can crumble or crush.
- Do not support machine with a single jack or other devices that could slip out of place.

Understand service procedures before beginning repairs. Keep service area clean and dry. Use two people whenever the engine must be running for service work.

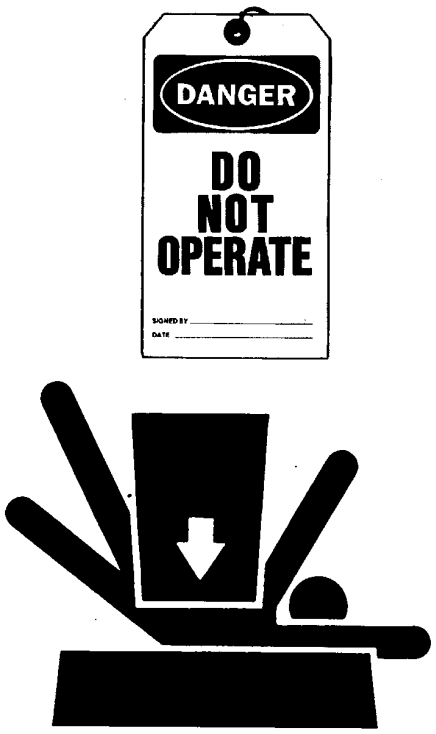

T133332 —19—17APR13

TS229 —UN—23AUG88

TX,PARK,4WD -19-28JUN10-1/1

Clean Exhaust Filter Safely

During exhaust filter cleaning operations, the engine may run at elevated idle and hot temperatures for an extended period of time. Exhaust gases and exhaust filter components reach temperatures hot enough to burn people, or ignite or melt common materials.

Keep machine away from people, animals, or structures which may be susceptible to harm or damage from hot exhaust gases or components. Avoid potential fire or explosion hazards from flammable materials and vapors near the exhaust. Keep exhaust outlet away from people and anything that can melt, burn, or explode.

Closely monitor machine and surrounding area for smoldering debris during and after exhaust filter cleaning.

Adding fuel while an engine is running can create a fire or explosion hazard. Always stop engine before refueling machine and clean up any spilled fuel.

Always make sure that engine is stopped while hauling machine on a truck or trailer.

Contact with exhaust components while still hot can result in serious personal injury.

Avoid contact with these components until cooled to safe temperatures.

If service procedure requires engine to be running:

- Only engage power-driven parts required by service procedure
- Ensure that other people are clear of operator station and machine

Keep hands, feet, and clothing away from power-driven parts.

Always disable movement (neutral), set the parking brake or mechanism and disconnect power to attachments or tools before leaving the operator's station.

Shut off engine and remove key (if equipped) before leaving the machine unattended.



TS227 —UN—15APR13

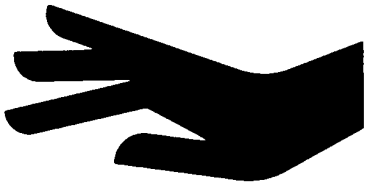



TS271 —UN—23AUG88

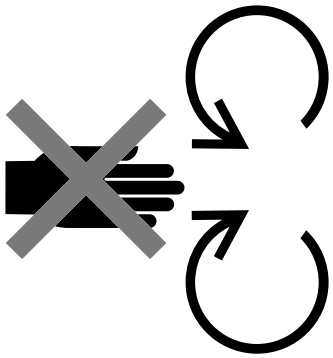

TS1693 —UN—09DEC09

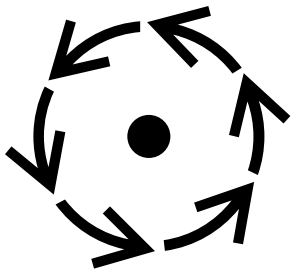



TS1695 —UN—07DEC09

DX,EXHAUST,FILTER -19-12JAN11-1/1

Service Cooling System Safely

Explosive release of fluids from pressurized cooling system can cause serious burns.

Do not service radiator through the radiator cap. Only fill through the surge tank filler cap. Shut off engine. Only remove surge tank filler cap when cool enough to touch with bare hands. Slowly loosen cap to relieve pressure before removing completely.



TS281 —UN—15APR13

TX,SURGE -19-19JAN11-1/1

Service Tires Safely

Explosive separation of a tire and rim parts can cause serious injury or death.

Do not attempt to mount a tire unless you have the proper equipment and experience to perform the job.

Always maintain the correct tire pressure. Do not inflate the tires above the recommended pressure. Never weld or heat a wheel and tire assembly. The heat can cause an increase in air pressure resulting in a tire explosion. Welding can structurally weaken or deform the wheel.

When inflating tires, use a clip-on chuck and extension hose long enough to allow you to stand to one side and NOT in front of or over the tire assembly. Use a safety cage if available.

Check wheels for low pressure, cuts, bubbles, damaged rims or missing lug bolts and nuts.

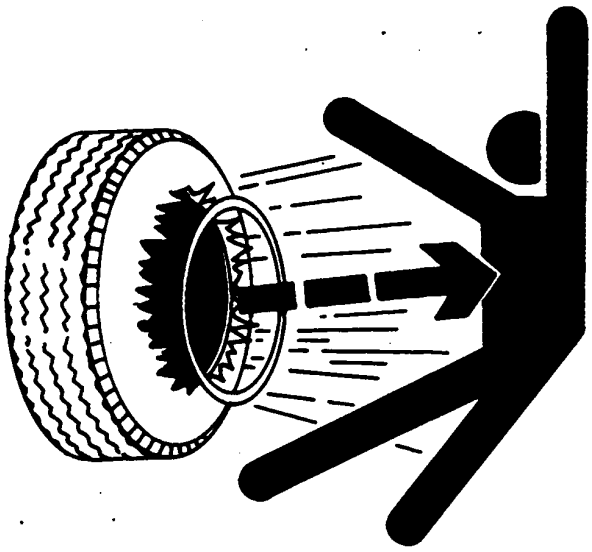

TS211 —UN—15APR13

DX,RIM -19-24AUG90-1/1

Remove Paint Before Welding or Heating

Avoid potentially toxic fumes and dust.

Hazardous fumes can be generated when paint is heated by welding, soldering, or using a torch.

Remove paint before heating:

- Remove paint a minimum of 100 mm (4 in.) from area to be affected by heating. If paint cannot be removed, wear an approved respirator before heating or welding.
- If you sand or grind paint, avoid breathing the dust. Wear an approved respirator.
- If you use solvent or paint stripper, remove stripper with soap and water before welding. Remove solvent or paint stripper containers and other flammable material from area. Allow fumes to disperse at least 15 minutes before welding or heating.

Do not use a chlorinated solvent in areas where welding will take place.

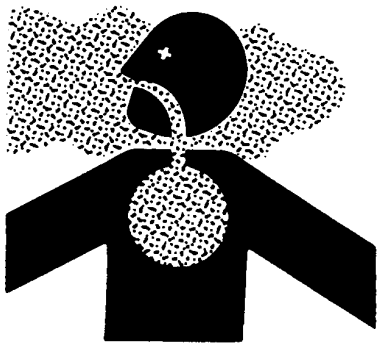

TS220 —UN—15APR13

Do all work in an area that is well ventilated to carry toxic fumes and dust away.

Dispose of paint and solvent properly.

DX,PAINT -19-24JUL02-1/1

Make Welding Repairs Safely

IMPORTANT: Disable electrical power before welding. Turn off main battery switch and disconnect positive and negative battery cables.

Do not weld or apply heat on any part of a reservoir or tank that has contained oil or fuel. Heat from welding and cutting can cause oil, fuel, or cleaning solution to create gases which are explosive, flammable, or toxic.

Avoid welding or heating near pressurized fluid lines. Flammable spray may result and cause severe burns if pressurized lines fail as a result of heating. Do not let heat go beyond work area to nearby pressurized lines.

Remove paint properly. Do not inhale paint dust or fumes. Use a qualified welding technician for structural repairs.



T133547 —UN—15APR13

Make sure there is good ventilation. Wear eye protection and protective equipment when welding.

MB60223,0000212 -19-31MAY12-1/1

Drive Metal Pins Safely

Always wear protective goggles or safety glasses and other protective equipment before striking hardened parts. Hammering hardened metal parts such as pins and bucket teeth could dislodge chips at high velocity.

Use a soft hammer or a brass bar between hammer and object to prevent chipping.

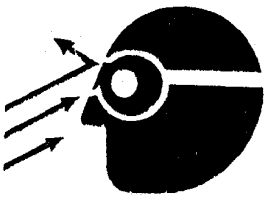

T133738 —UN—15APR13

TX,PINS -19-20JAN11-1/1

Safety Signs

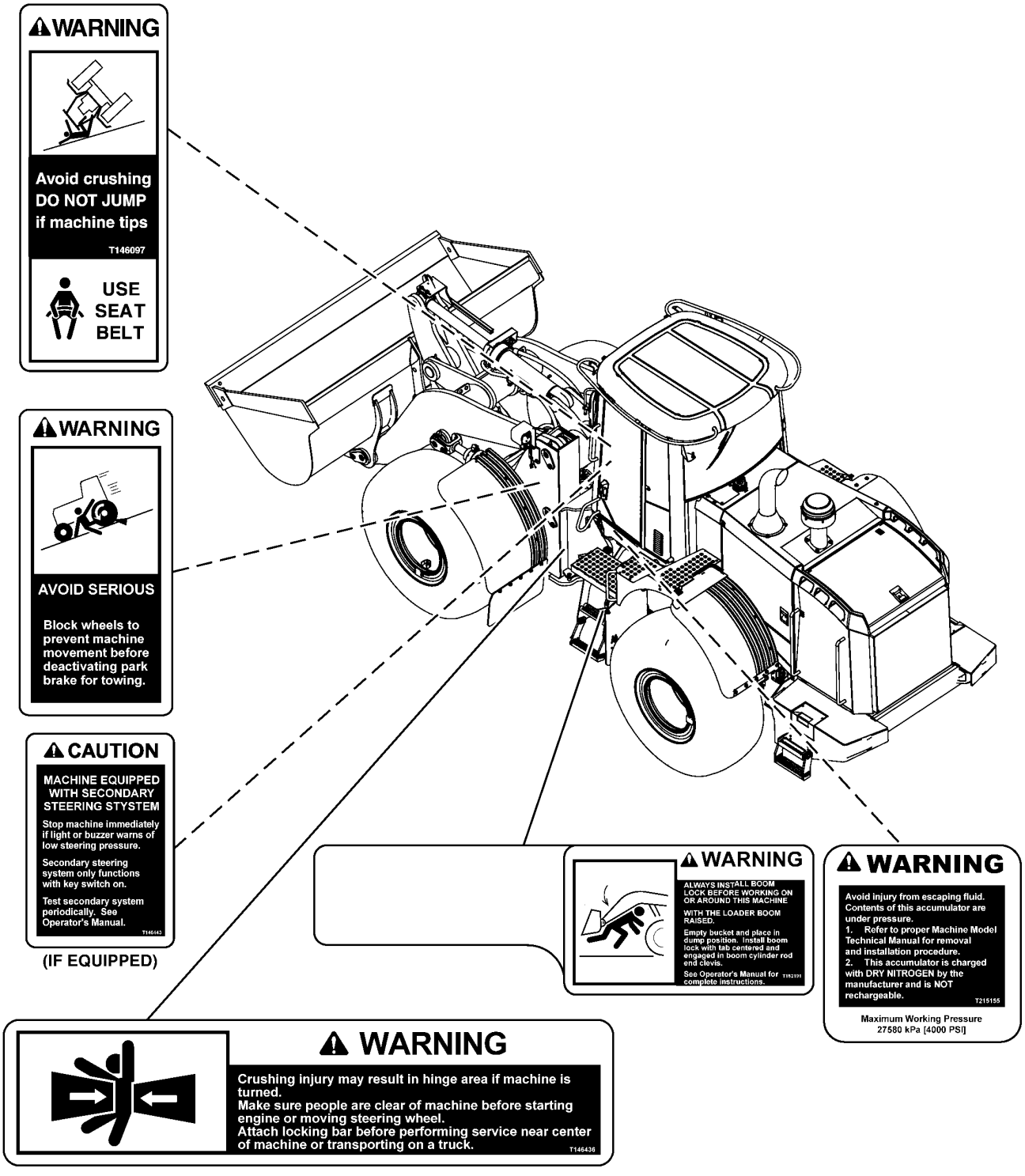

TX1083194

Left Side Shown

TX1083194 —19—12NOV10

Continued on next page

OUT4001,00006CB -19-09NOV10-1/2

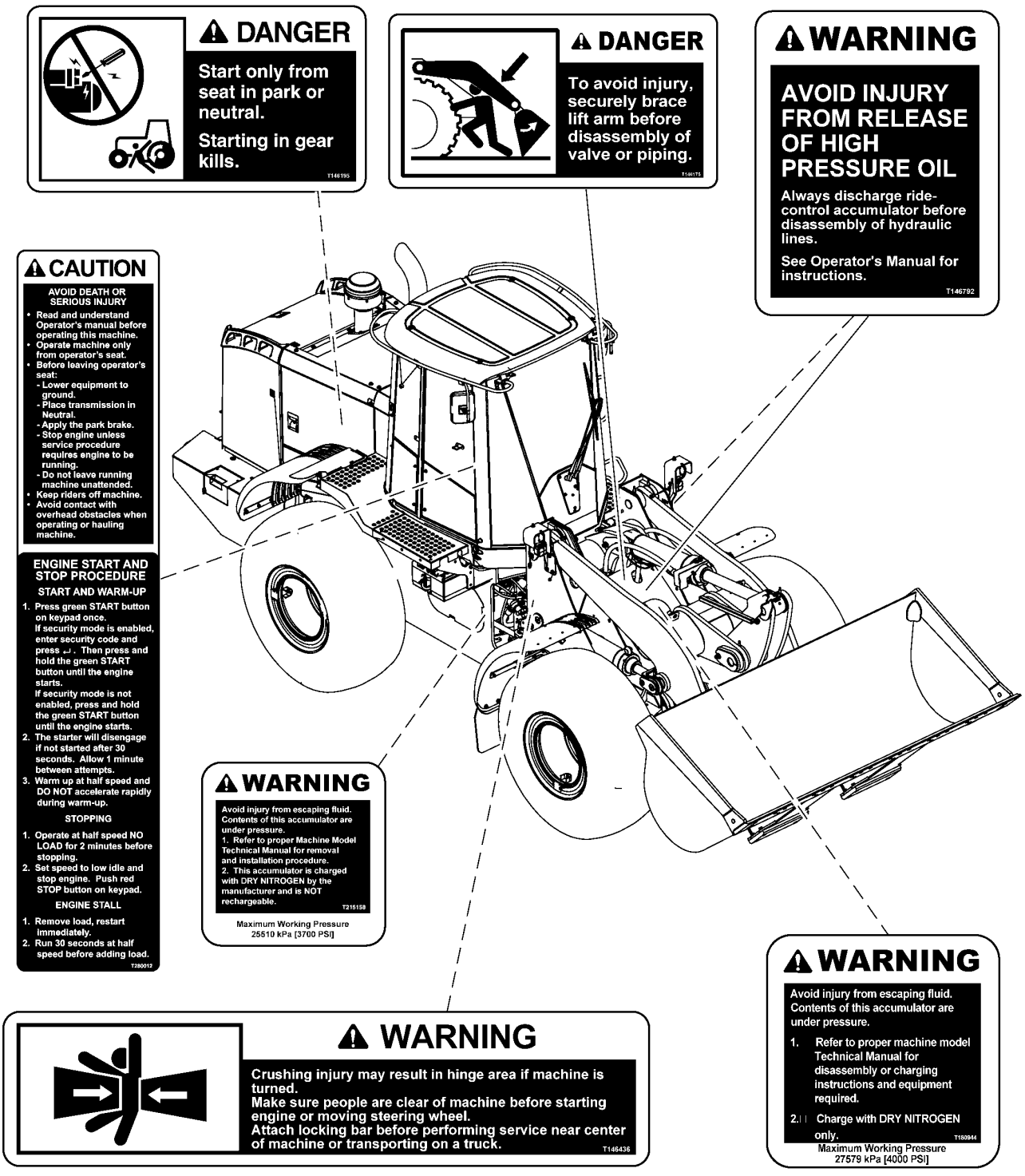

TX1083195

Right Side Shown

OUT4001,00006CB -19-09NOV10-2/2

Levers—Two Function Hydraulic Control

NOTE: There are several control lever configurations available on John Deere four wheel drive loaders. Please verify the configuration of your machine before reviewing operating instructions.

Joystick Bucket and Boom Control with Gearshift, Quick Shift Switch, and FNR Switch

1— Joystick Bucket and Boom Control
2— Increase Gear Button
3— Quick Shift Switch
4— Forward, Neutral, or Reverse (FNR) Switch
5— Decrease Gear Button

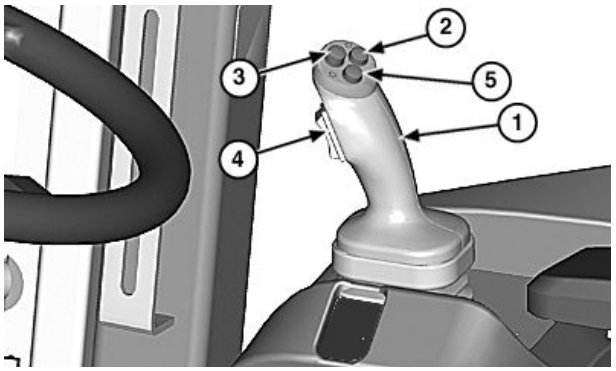

TX1063319A —UN—18NOV09

Joystick Bucket and Boom Control with Gearshift, Quick Shift Switch, and FNR Switch

JH91824,00006A4 -19-20JUL11-1/2

Two Lever Bucket and Boom Control with Quick Shift Switch and Steering Column FNR Lever

3— Quick Shift Switch
5— Steering Column Forward, Neutral, or Reverse (FNR) Lever
6— Bucket Control Lever
7— Boom Control Lever

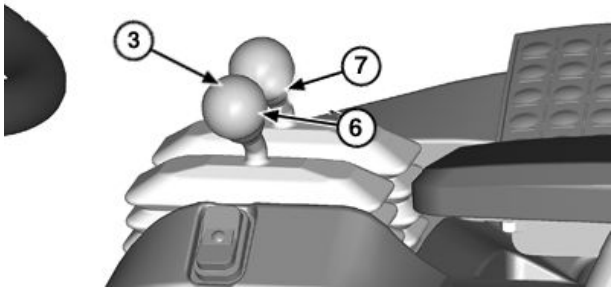

TX1063322A —UN—21OCT09

Two Lever Bucket and Boom Control with Quick Shift Switch

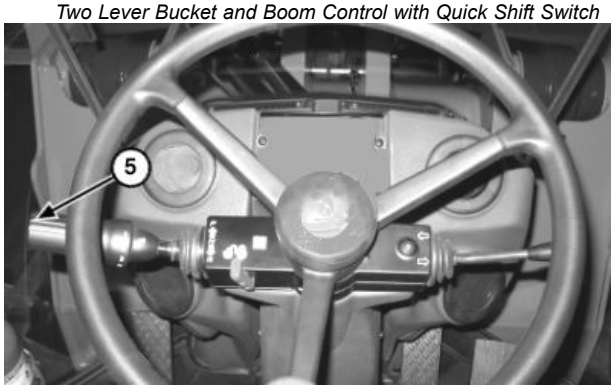

TX1063321A —UN—25AUG09

Steering Column FNR Lever

JH91824,00006A4 -19-20JUL11-2/2

Levers—Three Function Hydraulic Control

NOTE: There are several control lever configurations available on John Deere four wheel drive loaders. Please verify the configuration of your machine before reviewing operating instructions.

Joystick Bucket and Boom Control with Gearshift, Quick Shift Switch, FNR Switch, and Third Function Auxiliary Control Lever

1— Joystick Bucket and Boom Control
2— Increase Gear Button
3— Quick Shift Switch
4— Forward, Neutral, or Reverse (FNR) Switch
5— Decrease Gear Button
6— Third Function Auxiliary Control Lever

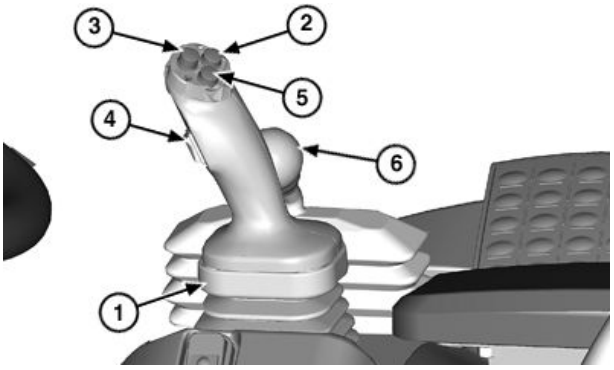

TX1063323A —UN—18NOV09

Joystick Bucket and Boom Control with Gearshift, Quick Shift Switch, FNR Switch, and Third Function Auxiliary Control Lever

JH91824,00006B9 -19-30NOV10-1/3

Joystick Bucket and Boom Control with Gearshift and Quick Shift Switch, Steering Column FNR Lever, and Third Function Auxiliary Control Lever

1— Joystick Bucket and Boom Control
2— Increase Gear Button
3— Quick Shift Switch
5— Decrease Gear Button
6— Third Function Auxiliary Control Lever
7— Steering Column Forward, Neutral, or Reverse (FNR) Lever

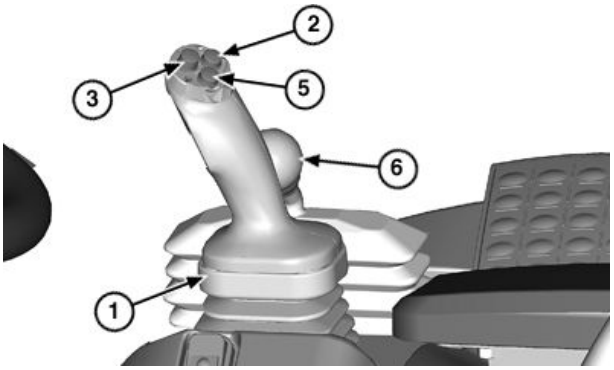

TX1065160A —UN—18NOV09

Joystick Bucket and Boom Control with Gearshift, Quick Shift Switch, and Third Function Auxiliary Control Lever

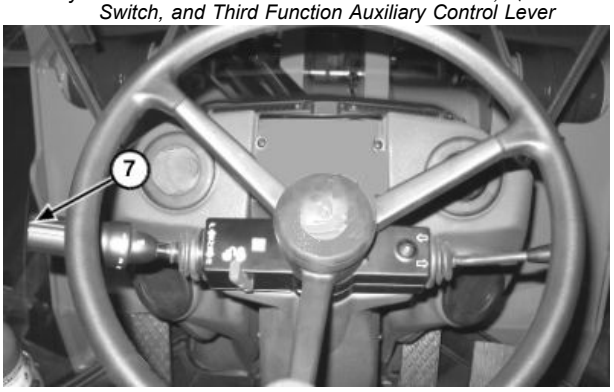

TX1067913A —UN—18NOV09

Steering Column FNR Lever

Continued on next page

JH91824,00006B9 -19-30NOV10-2/3

Two Lever Bucket and Boom Control with Quick Shift Switch, Steering Column FNR Lever, and Third Function Auxiliary Control Lever

1— Bucket Control Lever
2— Boom Control Lever
3— Quick Shift Switch
4— Third Function Auxiliary Control Lever
5— Steering Column Forward, Neutral, or Reverse (FNR) Lever

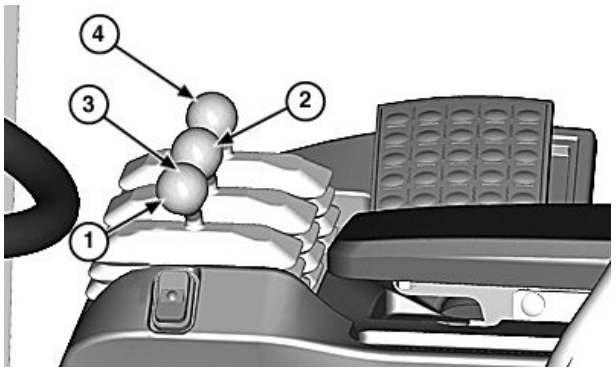

TX1063325A —UN—24AUG09

Two Lever Bucket and Boom Control with Quick Shift Switch and Third Function Auxiliary Control Lever

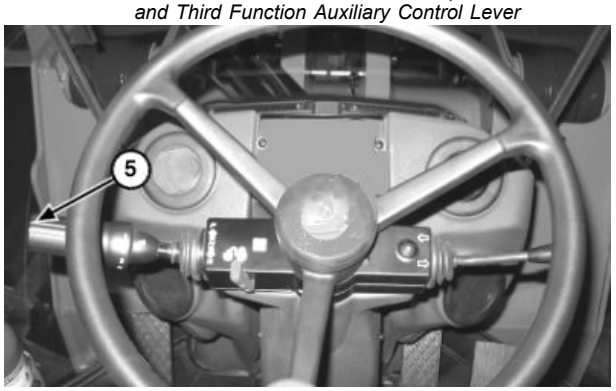

TX1063321A —UN—25AUG09

Steering Column FNR Lever

JH91824,00006B9 -19-30NOV10-3/3

Levers—Four Function Hydraulic Control

NOTE: There are several control lever configurations available on John Deere four wheel drive loaders. Please verify the configuration of your machine before reviewing operating instructions.

Two Lever Bucket and Boom Control with Quick Shift Switch, Steering Column FNR Lever, and Third and Fourth Function Auxiliary Control Levers

1— Bucket Control Lever
2— Boom Control Lever
3— Quick Shift Switch
5— Third Function Auxiliary Control Lever
6— Fourth Function Auxiliary Control Lever
7— Steering Column Forward, Neutral, or Reverse (FNR) Lever

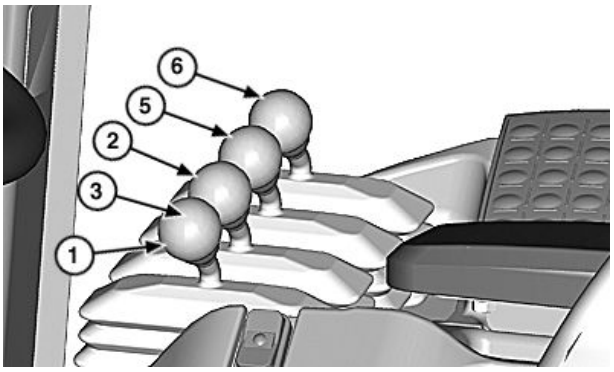

TX1067333A —UN—05NOV09

Two Lever Bucket and Boom Control with Quick Shift Switch and Third and Fourth Function Auxiliary Control Levers

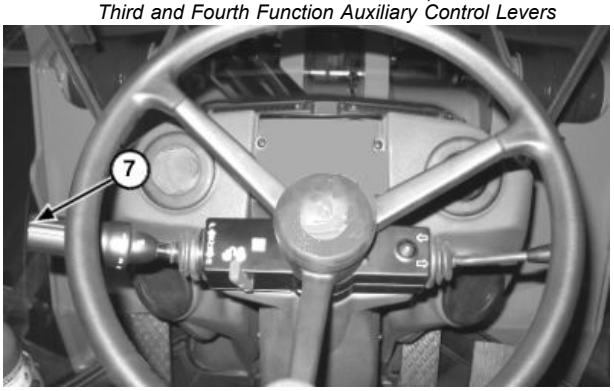

TX1065546A —UN—05OCT09

Steering Column FNR Lever

JH91824,00006BA -19-30NOV10-1/1

Levers—Joystick Steering Control

NOTE: There are several control lever configurations available on John Deere four wheel drive loaders. Please verify the configuration of your machine before reviewing operating instructions.

Joystick Steering Control with Gearshift, Horn, FNR Switch, and Steering Column FNR Lever

3— Forward, Neutral, or Reverse (FNR) Switch
4— Decrease Gear Button
5— Increase Gear Button
6— Horn Button
7— Steering Column Forward, Neutral, or Reverse (FNR) Lever

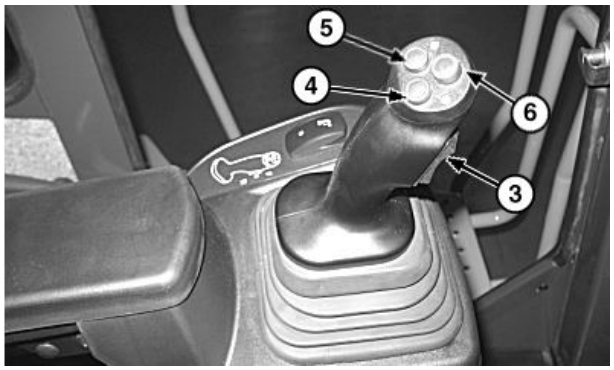

TX1066632A —UN—21OCT09

Joystick Steering Control with Gearshift, Horn, and FNR Switch



TX1065546A —UN—05OCT09

Steering Column FNR Lever

JH91824,00006BB -19-26OCT11-1/1

Pedals

Accelerator Pedal (1): Depress to increase speed of machine.

NOTE: Brake pedals also serve as clutch cut-off pedals (2 and 4) when clutch cut-off switch is in ON position.

Brake Pedals: Depress right brake pedal (2) or left brake pedal (4) to stop machine.

Steering Column Release Pedal (3): Depress pedal to release steering column and adjust column to desired tilt. Release pedal to lock column in position.

NOTE: Use differential lock only when conditions require traction. Avoid using differential lock when steering.

Differential Lock Switch (5): Depress switch to lock front axle differential and rear axle differential, if equipped. Release switch to unlock differentials.

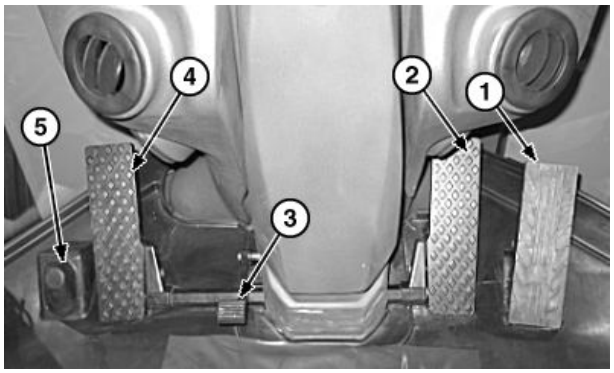

TX1039887A —UN—04APR08

Pedals

1— Accelerator Pedal
2— Right Brake/Clutch Cut-Off Pedal
3— Steering Column Release Pedal
4— Left Brake/Clutch Cut-Off Pedal
5— Differential Lock Switch

OUT4001,00005CA -19-15OCT11-1/1

Sealed Switch Module (SSM)



TX1039287A —UN—16JUL08

1— Engine Start Switch
2— Engine Stop Switch
3— Beacon Light Switch—If Equipped
4— Hazard Light Switch
5— Pilot Enable/Boom Down Switch
6— Park Brake Switch
7— Return-to-Dig (RTD) Switch
8— Automatic Transmission Switch
9— Ride Control Switch—If Equipped
10— Clutch Cut-Off Switch
11— Boom Height Kickout Switch
12— Return-to-Carry (RTC) Switch
13— Automatic Differential Lock Switch—If Equipped
14— Spin Control Switch—If Equipped
15— Pin Disconnect Switch—If Equipped
16— Air Conditioner Switch
17— Heated Outside Mirrors Switch—If Equipped
18— Front Washer Switch
19— Front Wiper Switch
20— Drive and Marker Light Switch
21— Lockup Torque Converter Switch—If Equipped
22— Rear Axle Disconnect Switch—If Equipped
23— Rear Washer Switch
24— Rear Wiper Switch
25— Cab Work Light Switch

OUT4001,000095A -19-28OCT11-1/1

Switch Module Functions

Most switches on the sealed switch module (SSM) are equipped with light emitting diodes (LEDs) to indicate current switch setting. Press switch momentarily to advance to next setting. For switches with more than one LED, press and hold switch for 2—3 seconds to return to OFF from any setting.

1—Engine Start Switch: This switch has three settings:

- Press and release switch (left LED is illuminated) to energize ignition and apply power to control units and display unit.
- After display unit has initialized, press and hold switch to start engine. Both LEDs are illuminated when engine is cranking. Only left LED is illuminated when engine is running.
- When engine stop switch is pressed, engine stops and both LEDs are off.

2—Engine Stop Switch: Press switch to shut off engine.

If vehicle speed is greater than 0.5 km/h (0.3 mph), engine stops and ignition power remains on until vehicle speed is less than 0.5 km/h (0.3 mph). To turn off ignition power while vehicle is still moving, press and hold switch or press and release switch twice.

3—Beacon Light Switch—If Equipped: Press switch (LED is illuminated) to turn on beacon light. Press switch again to turn light off (LED is off).

4—Hazard Light Switch: Press switch (LED is illuminated) to turn on 4-way flashers. Press switch again to turn flashers off (LED is off).

5—Pilot Enable/Boom Down Switch: Press switch (LED is illuminated) to unlock pilot controllers for normal operation. Press switch again to lock pilot controllers and disable hydraulic control levers (LED is off).

Press and hold switch while moving boom control lever forward to lower boom with engine off and ignition on.

6—Park Brake Switch: Press switch (LED and indicator on display unit are illuminated) to engage park brake. Press switch again to release park brake (LED and indicator on display unit go off).

7—Return-to-Dig (RTD) Switch: This switch has two operational settings if machine is equipped with Z-bar linkage or three operational settings if machine is equipped with Powerllel™ linkage:

NOTE: For Powerllel™ linkage equipped machines, the RTD switch offers the capability to select and calibrate two different loader positions depending if the switch is set to the 1st position (left LED illuminated, right LED off) or the 2nd position (right LED illuminated, left LED off).

- For Z-bar linkage—Press and release switch (left LED is illuminated, right LED off) to activate RTD.
  For Powerllel linkage—Press and release switch (left LED is illuminated, right LED off) to activate RTD for 1st position function.
- For Powerllel linkage—Press and release switch again (right LED is illuminated, left LED off) to activate RTD for 2nd position function.
- For Z-bar linkage—Press and release switch twice or press and hold switch to deactivate RTD (left LED is off).
  For Powerllel linkage—Press and release switch again to deactivate RTD (both LEDs are off).

8—Automatic Transmission Switch: This switch has three settings:

- Press and release switch (left LED is illuminated) to engage transmission in AUTO 1-D mode. Transmission will start in 2nd gear when initially shifted from neutral. After initial shift from neutral, transmission will shift to 1st gear if a high load is encountered. Transmission will upshift or downshift as ground speed dictates, but will only upshift to highest gear selected.
- Press and release switch again (both LEDs are illuminated) to engage transmission in AUTO 2-D mode. Transmission will start in 2nd gear and will shift to highest gear selected as ground speed increases, or will downshift to 2nd gear as ground speed decreases. Transmission will never shift to 1st gear. In this setting, 1st gear can only be obtained by actuating the transmission quick shift switch.
- Press and release switch again to engage transmission in MANUAL mode (both LEDs are off). Transmission operates in gear selected by operator.

9—Ride Control Switch—If Equipped: This switch has three settings:

- Press and release switch (left LED is illuminated) to turn ride control to ON mode (full time mode).
- Press and release switch again (both LEDs are illuminated) to set ride control to AUTO mode. Ride control functions same as in ON mode except that it is only active when ground speed is greater than setpoint. Default setpoint is approximately 5.6 km/h (3.5 mph).
- Press and release switch again to disable ride control (both LEDs are off).

10—Clutch Cut-Off Switch: This switch has four settings:

CAUTION: Prevent possible injury from unexpected machine movement. When stopping on inclines, press switch until all LEDs on switch are OFF to disable clutch cut-off before releasing brake pedal. This feature prevents the machine from rolling downhill during transmission re-engagement cycle.

Continued on next page

NOTE: Park brake also disengages transmission clutches. Release park brake before operating.

Clutch cut-off feature does not work in 3rd gear or higher.

- Press and release switch (one LED is illuminated) to turn on Level Slope setting. Clutch releases with low brake pedal pressure.
- Press and release switch again (two LEDs are illuminated) to turn on Small Slope setting. Clutch releases with medium brake pedal pressure.
- Press and release switch again (three LEDs are illuminated) to turn on Steep Slope setting. Clutch releases with high brake pressure.
- Press and release switch again to disable clutch cut-off (all LEDs are off).

Clutch cut-off feature disengages transmission and thus directs more engine power to hydraulic system. This provides increased breakout force, useful in situations such as truck loading.

11—Boom Height Kickout Switch: This switch has two settings:

- Press and release switch (LED is illuminated) to activate boom height kickout. Pull boom control lever to full rear detent position. Lever returns to neutral position when boom reaches a preset height from ground.
- While LED is illuminated, kickout height can be reset as follows. Move boom to desired kickout height, then press and hold switch to reset kickout height. LED flashes and audible alarm sounds to indicate position has been set.
- Press and release switch to deactivate boom height kickout (LED is off).

12—Return-to-Carry (RTC) Switch: Switch has two settings:

- Press and release switch (LED is illuminated) to activate RTC. Push boom control lever to full forward detent position. Boom lowers to a preset height and lever returns to neutral position.
- While LED is illuminated, RTC height can be reset as follows. Move boom to desired height, then press and hold switch to reset RTC height. LED flashes and audible alarm sounds to indicate position has been set.
- Press and release switch to deactivate RTC (LED is off).

13—Automatic Differential Lock Switch—If Equipped: The automatic differential lock system locks the axles so that the left and right wheels turn together when wheel slip is detected.

NOTE: Differential lock is activated any time the differential lock foot switch is pressed, regardless of whether automatic differential lock system is enabled or not.

Press switch (LED is illuminated) to enable the automatic differential lock system. Press switch again to disable the system (LED is off).

14—Spin Control Switch: Spin control operates in 1st gear forward to reduce rim pull by reducing engine rpm when loading the bucket.

Switch has four settings to select desired amount of control. Minimum engine rpm decrease occurs with one LED illuminated. Maximum engine rpm decrease occurs with four LEDs illuminated. Press switch momentarily to advance to desired setting.

15—Pin Disconnect Switch—If Equipped: This switch has two settings:

- Press switch to retract cylinders for removal of attachments. LED illuminates, pin disconnect indicator on display unit illuminates, and audible alarm sounds every 10 seconds.
- Press switch again to extend cylinders for attachment (LED is off).

16—Air Conditioner Switch:

NOTE: Engine must be running and blower fan speed switch must be on to operate air conditioner.

Press switch to turn on air conditioner (LED is illuminated). Press switch again to turn off air conditioner (LED is off).

17—Heated Outside Mirrors—If Equipped: Press switch (LED is illuminated) to energize outside rear view mirror heaters. Press switch again to turn off heaters (LED is off).

Heaters automatically shut off after 15 minutes or when ignition power is turned off. When ignition power is turned back on, switch must be pressed again to energize heaters.

18—Front Washer Switch: Press and hold switch to spray washer fluid on front window and activate low speed front wiper operation. Wiper blade swipes three times and turns off.

19—Front Wiper Switch: Switch has four settings:

- Press and release switch (one LED is illuminated) for intermittent front wiper operation.
- Press and release switch again (two LEDs are illuminated) for low speed front wiper operation.
- Press and release switch again (three LEDs are illuminated) for high speed front wiper operation.
- Press and release switch again to turn off front wipers (all LEDs are off).

20—Drive and Marker Light Switch: This switch has three settings:

- Press and release switch (LED is illuminated) to turn on marker lights.
- Press and release switch again (two LEDs are illuminated) to turn on drive lights and marker lights.
- Press and release switch again to turn off drive lights and marker lights (all LEDs are off).

Continued on next page

NOTE: When marker or drive lights are turned on, the intensity of the backlighting on SSM will dim.

When a communication fault occurs between SSM and vehicle control unit (VCU) or a stuck button condition occurs, marker lights, drive lights, and backlighting turn on.

21—Lockup Torque Converter—If Equipped: Press switch (LED is illuminated) to enable the lockup torque converter feature on machines equipped with the optional 5-speed transmission. Press switch again to disable feature (LED is off).

The lockup torque converter, when engaged, provides better fuel economy during material transport and more torque and speed when climbing steep inclines. The feature is physically controlled by the transmission control unit.

22—Rear Axle Disconnect Switch—If Equipped: Feature not available on this model.

23—Rear Washer Switch: Press and hold switch to spray washer fluid on rear window and activate low speed rear wiper operation. Wiper blade swipes five times and turns off.

24—Rear Wiper Switch: This switch has four settings:

- Press and release switch (one LED is illuminated) for intermittent rear wiper operation.
- Press and release switch again (two LEDs are illuminated) for low speed rear wiper operation.
- Press and release switch again (three LEDs are illuminated) for high speed rear wiper operation.
- Press and release switch again to turn off rear wipers (all LEDs are off).

Powerllel is a trademark of Deere & Company

25—Cab Work Light Switch: This switch has three or four settings, depending on whether or not rear machine work light option is enabled.

If rear machine work light option is **not** enabled:

- Press and release switch (one LED is illuminated) to turn on front work lights and marker and tail lights.
- Press and release switch again (two LEDs are illuminated) to turn on four front cab work lights, two rear cab work lights, and marker and tail lights.
- Press and release switch again to turn all lights off (all LEDs are off).

If rear machine work light option is enabled:

- Press and release switch (one LED is illuminated) to turn on front work lights and marker and tail lights.
- Press and release switch again (two LEDs are illuminated) to turn on four front cab work lights, two rear machine work lights, and marker and tail lights.
- Press and release switch again (three LEDs are illuminated) to turn on four front cab work lights, two rear cab work lights, two rear machine work lights along with marker and tail lights.
- Press and release switch again to turn all lights off (all LEDs are off).

NOTE: For courtesy light option to activate, engine must be running and marker lights turned on when light duration selection is made in the monitor. When the engine is turned off, the courtesy lighting shall activate and expire at the selected time. To set a duration time, see Display Unit—Main Menu—Settings—Courtesy Lights in this section.

OUT4001,00006A4 -19-28OCT11-3/3

Advanced Display Unit (ADU)

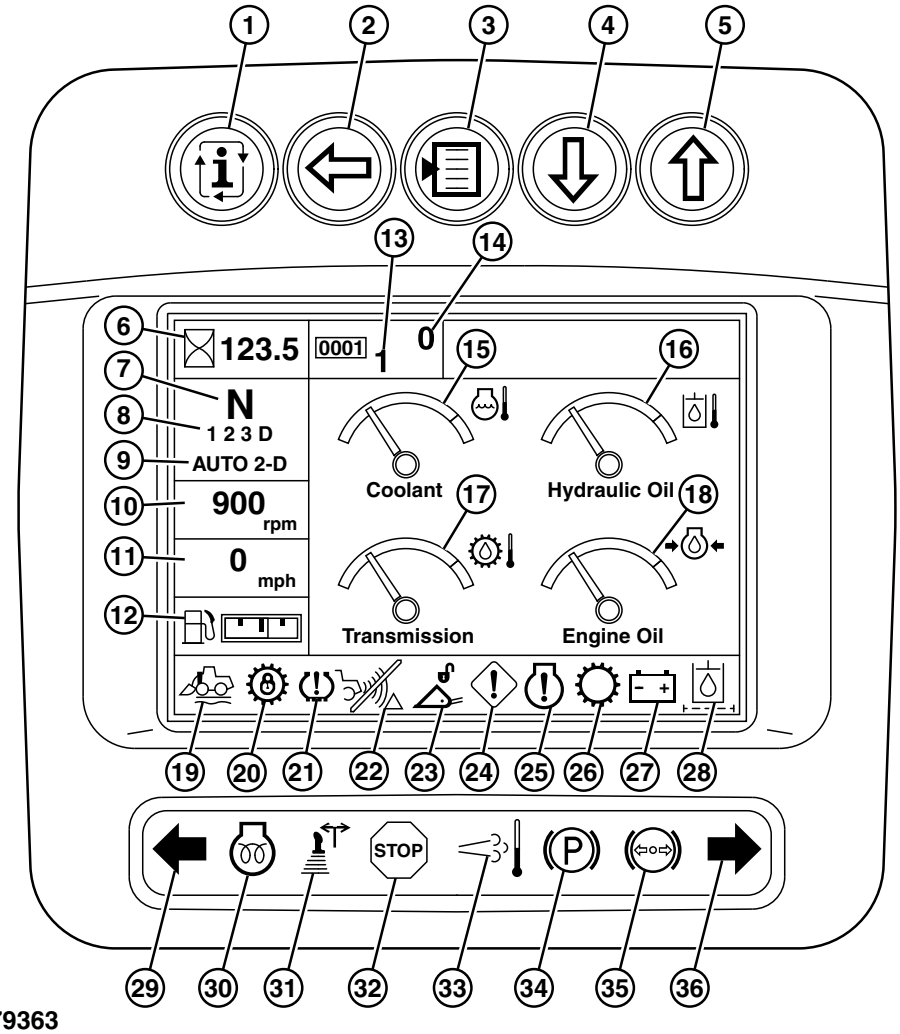

TX1079363

TX1079363 —UN—30JUN10

Advanced Display Unit

1— INFO Button
2— BACK Button
3— SELECT Button
4— DOWN Button
5— UP Button
6a— Hour Meter
6b— Odometer
6c— Average Fuel Consumption
6d— Exhaust Filter Restriction Level Indicator
7— Travel Direction
8— Requested Gear
9— Transmission Mode
10— Tachometer
11— Speedometer
12— Fuel Level Gauge
13— Material Counter
14— Truck Counter
15— Engine Coolant Temperature Gauge
16— Hydraulic Oil Temperature Gauge
17— Transmission Oil Temperature Gauge
18— Engine Oil Pressure Gauge
19— Ride Control Indicator—If Equipped
20— Lockup Torque Converter Indicator—If Equipped
21— Tire Pressure Monitor (TPM) System Indicator—If Equipped
22— Radar Object Detection (ROD) System Indicator—If Equipped
23— Pin Disconnect Indicator—If Equipped
24— Caution Indicator
25— Check Engine Indicator
26a— Transmission Fault Indicator
26b— Axle Over Temperature Indicator
26c— Low Coolant Level Indicator
27a— Low Battery Voltage Indicator
27b— Exhaust Filter Auto Cleaning Disabled Indicator
28— Filter Restriction Indicator
29— Left Turn Indicator
30— Engine Heater Indicator—If Equipped
31— Joystick Steering Indicator—If Equipped
32— STOP Indicator
33— Exhaust Filter Cleaning Indicator
34— Park Brake Indicator
35— Brake Pressure Indicator
36— Right Turn Indicator

OUT4001,000095B -19-05OCT11-1/1

Display Unit Functions

1—INFO Button: Press INFO button to return to normal display from menu display mode. On machines equipped with radar object detection system or embedded payload scale weighing system, or both, press button to select desired system display.

2—BACK Button: Press BACK button to move to the previous menu displayed.

3—SELECT Button: Press SELECT button to move from normal display to main menu display. In menu mode, press button to activate menu function currently highlighted. Press button to make selections on individual submenu displays such as, resetting job timer, starting and stopping stopwatch, and storing settings.

4—DOWN Button: Press DOWN button to move to the next selection within a menu or mode.

If equipped with embedded payload scale (EPS) weighing system:

- Press button while normal display is active to switch EPS between active and standby mode.
- Press button while active weight screen is displayed to switch to LONG TOTAL display.

5—UP Button: Press UP button to move to the previous selection within a menu or mode. At the normal display, press this button to toggle between hour meter, odometer, fuel consumption, and exhaust filter restriction level readings. When fuel consumption is shown, press and hold the UP button to reset value.

NOTE: Hour meter, odometer, fuel consumption, and exhaust filter restriction level readings share the same space on the display. Press UP button on display unit to toggle between these items.

Either English or metric units can be selected using MAIN MENU—SETTINGS menu on display unit.

6a—Hour Meter: Shows accumulated hours that engine has been running. Display defaults to show hour meter when ignition is first energized.

6b—Odometer: Shows odometer reading in miles or kilometers.

6c—Average Fuel Consumption: Shows fuel consumption in gallons or liters per hour as an average over the past hour.

6d—Exhaust Filter Restriction Level Indicator: Shows soot level restriction in the exhaust filter. The indicator will start to turn gray as the filter begins to restrict and will continue to fill the whole indicator depending on the soot level restriction. There are two sections on the exhaust filter restriction level indicator:

- The first section of the indicator is for **MODERATE** soot level restriction.
- The second section of the indicator is for **HIGH** soot level restriction. If indicator is 100% and auto cleaning is enabled, a pop-up will appear on the monitor stating further action is needed to clean the filter.
  If auto cleaning is disabled, the exhaust filter auto cleaning disabled indicator is illuminated and a pop-up will appear on the monitor stating auto cleaning needs to be enabled. For more information, see Display Unit—Main Menu—Exhaust Filter—Auto Cleaning in this section.
  - If exhaust filter reaches **VERY HIGH** soot level restriction, indicator will remain at 100%, but will turn yellow. Caution indicator will also be illuminated. A pop-up will appear on the monitor stating that engine power is limited and to begin a parked filter cleaning. For more information, see Display Unit—Main Menu—Exhaust Filter—Parked Cleaning in this section.
  - If exhaust filter reaches **SERVICE** soot level restriction, indicator will remain at 100%, but will turn red. STOP indicator will be flashing and an alarm will sound. A pop-up will appear on the monitor stating that engine power is limited and to contact service representative for service filter cleaning.

TX1085052 —UN—23NOV10

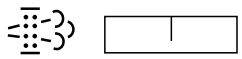

Exhaust Filter Restriction Level Indicator

7—Travel Direction: Shows whether transmission is engaged in forward (F), neutral (N), or reverse (R). When in forward or reverse, display also shows actual gear currently engaged.

8—Requested Gear: Shows the gear requested by the gear up and gear down buttons on the joystick control lever or by rotating the steering column forward, neutral, or reverse (FNR) lever.

9—Transmission Mode: Shows whether the transmission is in the AUTO 1-D mode, AUTO 2-D mode, or MANUAL mode. Select desired mode using automatic transmission switch on sealed switch module (SSM). If a transmission control unit malfunction occurs or communication is lost, "- - -" is displayed.

10—Tachometer: Shows engine speed in revolutions per minute (rpm). If a transmission control unit malfunction occurs or communication is lost, "- - -" is displayed.

11—Speedometer: Shows travel speed in miles per hour (mph) or kilometers per hour (km/h). If a vehicle control unit (VCU) malfunction occurs or communication is lost, "- - -" is displayed.

Continued on next page

12—Fuel Level Gauge: Shows approximate level of fuel remaining in tank. When fuel tank is less than 1/8 full, gauge turns red. Always fill tank at end of day to prevent condensation in fuel tank.

13—Material Counter: Shows which counter is currently selected. Up to five counters are available.

14—Truck Counter: Shows the number of trucks that have been loaded and added to current material counter selection. Truck counter is incremented by one each time ADD TRUCK button on counter switch is momentarily pressed. Counter is reset to zero when button is pressed and held for at least 1 second.

NOTE: For the following four gauges:

If electronic communication is lost or a sensor error is active, pointer on gauge deflects to far left side of scale. Indicator does not illuminate.

15—Engine Coolant Temperature Gauge: Engine coolant temperature gauge indicator flashes when pointer is in red zone—above 228°F (109°C). If temperature gets above 233°F (112°C), indicator flashes, STOP indicator flashes, and audible alarm sounds. Stop machine, shut off engine, and allow system to cool to less than 225°F (107°C). Investigate cause and take corrective action. Temperature readings can be obtained from the display unit. See Display Unit—Main Menu—Diagnostics—Engine Sensors in this section.

16—Hydraulic Oil Temperature Gauge: Hydraulic oil temperature gauge indicator and caution indicator illuminate when pointer is in red zone—above 220°F (104°C). Stop work and cycle loader functions without load to lower oil temperature to less than 212°F (100°C). If pointer remains in red zone, stop machine and see your authorized dealer. Temperature readings can be obtained from the display unit. See Display Unit—Main Menu—Diagnostics—Hydraulic Sensors in this section.

17—Transmission Oil Temperature Gauge: Transmission oil temperature gauge indicator flashes, STOP indicator flashes, and audible alarm sounds when pointer is in red zone—temperature is above 230°F (110°C). Stop machine, shut off engine, and allow transmission to cool to less than 225°F (107°C). Investigate cause and take corrective action. Temperature readings can be obtained from the display unit. See Display Unit—Main Menu—Diagnostics—Transmission/Axle in this section.

18—Engine Oil Pressure Gauge:

IMPORTANT: Prevent possible engine damage. If engine oil pressure warning indicator flashes, stop machine and SHUT OFF ENGINE IMMEDIATELY.

NOTE: Operating machine on steep slopes (off level) can cause indicator to illuminate.

Engine oil pressure gauge indicator flashes, STOP indicator flashes, and audible alarm sounds when pointer is in red zone—below 9 psi (62 kPa). Stop machine and SHUT OFF ENGINE IMMEDIATELY (alarm will only sound if engine is ON). Pressure readings can be obtained from the display unit. See Display Unit—Main Menu—Diagnostics—Engine Sensors in this section.

19—Ride Control Indicator—If Equipped: Green indicator illuminates when ride control function is active. When ride control is in ON mode, indicator is on. In AUTO mode, indicator illuminates only when ground speed is greater than setpoint.

20—Lockup Torque Converter Indicator—If Equipped: On machines equipped with 5-speed transmission, green indicator illuminates when torque converter lockup occurs. Indicator goes off when lockup is disengaged.

21—Tire Pressure Monitor (TPM) System Indicator—If Equipped: Amber indicator illuminates along with caution indicator when there is an under inflated tire, an over inflated tire, an over heated tire, or a low sensor battery voltage in any tire. If indicator is flashing along with caution indicator, a more severe tire problem exists. Stop machine and investigate cause as soon as possible. Check tire conditions on the monitor in the diagnostic menu. See Display Unit—Main Menu—Diagnostics—Tire Pressure (If Equipped) in this section.

Continued on next page

22—Radar Object Detection (ROD) System Indicator—If Equipped: When system is set to ON, green indicator will be illuminated. Alarm sounds when an object is detected at the rear of the machine.

When system is set to ON, but communication has been lost with the sensor, yellow indicator will be illuminated with a slash through it. The caution indicator will also be illuminated.

When system is set to OFF, green indicator will be illuminated with a slash through it.

23—Pin Disconnect Indicator—If Equipped: Amber indicator illuminates and alarm sounds every 10 seconds when pin disconnect switch is pressed to retract cylinders for removal or installation of attachments.

24—Caution Indicator: Amber indicator illuminates when a problem is developing. It is not necessary to stop the engine immediately, but the cause must be investigated as soon as possible.

25—Check Engine Indicator: There are 3 levels of severity to the check engine indicator:

- Low Severity—Amber indicator illuminates.
  Investigate fault and take corrective action.
- Moderate Severity—Amber indicator illuminates along with caution indicator.
  Investigate fault and take corrective action as soon as possible.
- High Severity—Amber indicator illuminates, STOP indicator flashes, alarm sounds, and engine derates full power.
  Stop machine, investigate fault and take corrective action immediately.

TX1076402 —UN—23APR10



ROD System Enabled

TX1076403 —UN—23APR10



ROD System Disabled

For possible faults, view diagnostic trouble codes (DTCs) that are displayed on ADU. See Display Unit—Main Menu—Codes—Active Codes in this section. See your authorized dealer for further assistance.

Continued on next page

ML82895,0000669 -19-21DEC11-3/5

NOTE: Transmission Fault Indicator, Axle Over Temperature Indicator, and Low Coolant Level Indicator share the same space on the display.

26a—Transmission Fault Indicator: Amber indicator illuminates and caution indicator illuminates and stays on when transmission clutch slippage is detected or when transmission control unit (TCU) sets transmission in limp home mode. In limp home mode, transmission will not shift up higher than 2nd gear. View diagnostic trouble codes (DTCs) that are displayed in ADU. See Display Unit—Main Menu—Codes—Active Codes in this section. See your authorized dealer for further assistance.

26b—Axle Over Temperature Indicator: Amber indicator illuminates and caution indicator illuminates when either the front or rear axle temperature is greater than 120°C (248°F).

26c—Low Coolant Level Indicator: Operator is given two indications if the coolant level drops below recommended operating levels.

Amber indicator illuminates only during startup as a reminder to add coolant.

Red indicator illuminates, STOP indicator flashes, alarm sounds, and engine derates to 50% of full power when coolant is too low for machine operation. Stop machine, shut off engine, and allow system to cool. See Check Coolant Level in Surge Tank. (Section 3-4.)

NOTE: Low Battery Voltage Indicator and Exhaust Filter Auto Cleaning Disabled Indicator share the same space on the display.

27a—Low Battery Voltage Indicator: Red indicator illuminates and caution indicator illuminates when battery voltage is less than 24 volts with engine running or less than 18 volts when engine is not running. Check battery charge on the monitor in the diagnostic menu. See Display Unit—Main Menu—Diagnostics—Battery Monitor in this section.

TX1076374 —UN—23APR10

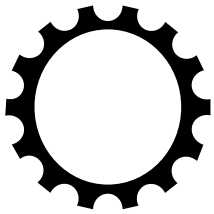

Transmission Fault Indicator

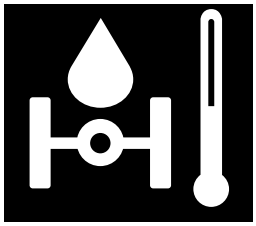

TX1076375 —UN—28APR10

Axle Over Temperature Indicator

TX1076376 —UN—23APR10

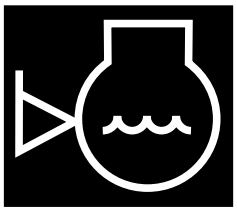

Low Coolant Level Indicator

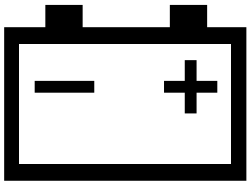

Low Battery Voltage Indicator

TX1077059 —UN—28APR10

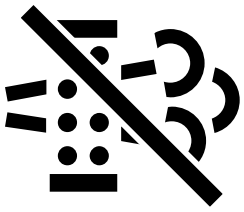

TX1077058 —UN—28APR10

Exhaust Filter Auto Cleaning Disabled Indicator

27b—Exhaust Filter Auto Cleaning Disabled Indicator: Green indicator illuminates when exhaust filter auto cleaning has been disabled by the operator. For more information, see Display Unit—Main Menu—Exhaust Filter—Auto Cleaning in this section.

Continued on next page

28—Filter Restriction Indicator:

IMPORTANT: Prevent possible damage to machine. Change filters as soon as possible when a problem occurs.

NOTE: A flickering indicator is an early warning that it is time to change filter.

Any of the following filter restrictions cause the respective amber indicator to illuminate in this space. Caution indicator will also illuminate. If more than one filter restriction occurs at the same time, the indicators will alternate at 1-second intervals.

- Engine Air Filter Restriction
- Transmission Oil Filter Restriction
- Axle Filter Restriction
- Hydraulic Oil Filter Restriction

NOTE: Cold oil can cause hydraulic oil filter restriction indicator to illuminate until oil is warm.

- Fuel Filter Restriction

NOTE: Fuel filter restriction indicator can illuminate during cold start-ups or when machine is under heavy loads.

Fuel filter restriction indicator and caution indicator illuminate when fuel pressure falls to a preset low value. If pressure drops to a preset severe low value, engine derates to 50% of full power. Replace both primary and final fuel filters.

29—Left Turn Indicator: Green indicator illuminates when left turn signal switch or 4-way flashers switch is engaged.

30—Engine Heater Indicator—If Equipped: This feature is available.

31—Joystick Steering Indicator—If Equipped: Green indicator illuminates when joystick steering is activated.

32—STOP Indicator:

CAUTION: Prevent possible injury or machine damage. If STOP indicator flashes and alarm sounds, stop machine immediately and investigate cause.

Red indicator illuminates when a problem has developed. Stop machine immediately and determine cause of problem.

33—Exhaust Filter Cleaning Indicator: White indicator illuminates when elevated idle is active or exhaust filter cleaning is in process.

If auto cleaning is being performed, machine can be operated as normal and indicator will disappear when exhaust filter auto cleaning is complete and exhaust temperatures return to normal.

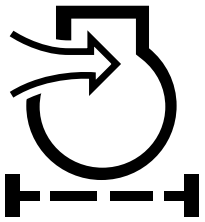

TX1076378 —UN—28APR10

Engine Air Filter Restriction Indicator

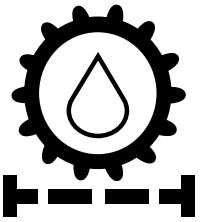

TX1076380 —UN—28APR10

Transmission Oil Filter Restriction Indicator

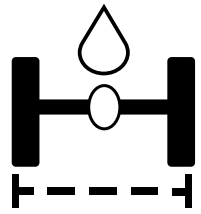

TX1076382 —UN—28APR10

Axle Filter Restriction Indicator

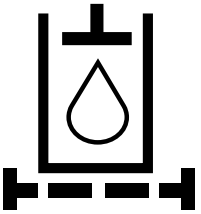

TX1076379 —UN—29APR10

Hydraulic Oil Filter Restriction Indicator

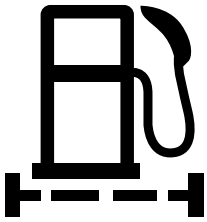

TX1076381 —UN—28APR10

Fuel Filter Restriction Indicator

If parked cleaning is being performed, machine CANNOT be operated until the process is complete. Indicator will disappear when exhaust filter parked cleaning is complete and exhaust temperatures return to normal.

34—Park Brake Indicator: Red indicator illuminates when park brake is engaged.

If transmission is shifted out of neutral with engine running and park brake engaged, the STOP indicator flashes, park brake indicator flashes, and alarm sounds until park brake is disengaged or transmission is shifted back to neutral.

35—Brake Pressure Indicator:

CAUTION: Prevent possible injury or machine damage from runaway machine due to brake malfunction. If brake pressure indicator illuminates while operating, stop machine immediately.

Red indicator flashes, STOP indicator flashes, and alarm sounds when brake oil pressure is low or brake accumulator has lost its charge. Stop machine immediately and engage park brake or shut off engine.

36—Right Turn Indicator: Green indicator illuminates when right turn signal switch or 4-way flashers switch is engaged.

ML82895,0000669 -19-21DEC11-5/5

Display Unit—Normal Display

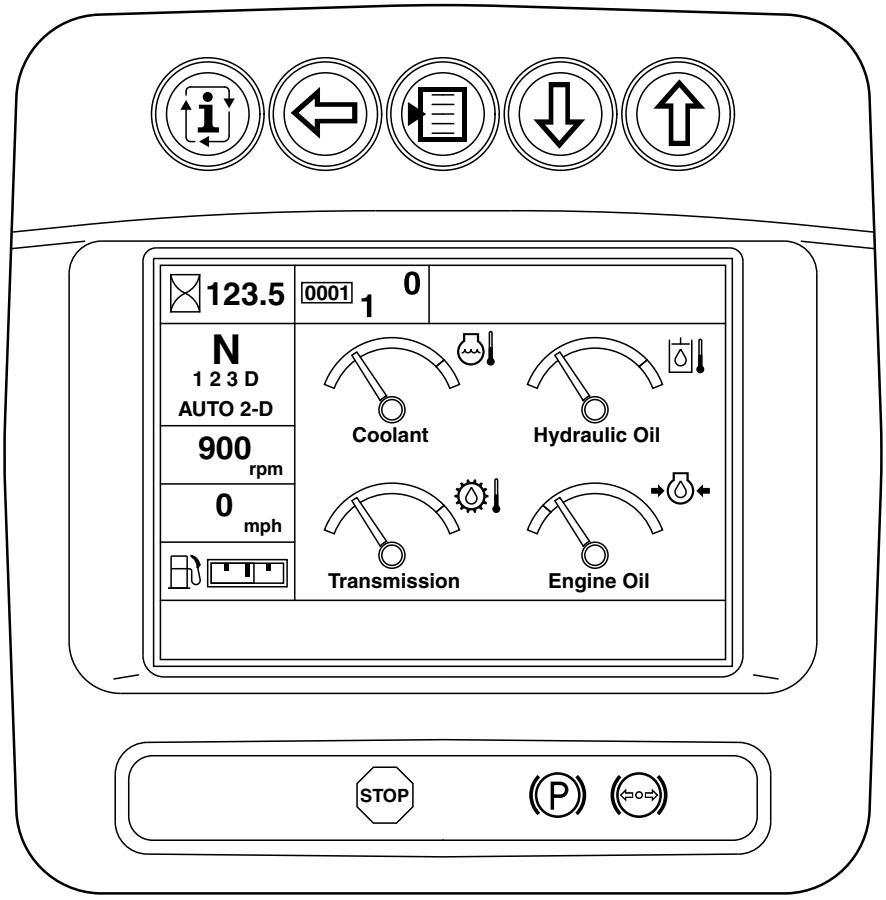

TX1046105 —UN—02FEB10

TX1046105

Display Unit Normal Display

When the engine start switch is pressed the first time, ignition switch power is turned on and applied to the control units and the display unit. The display unit performs a display check sequence as follows:

1. Alarm sounds for approximately 3 seconds.
2. John Deere screen is displayed momentarily.
3. Eight indicators at the bottom of display unit light momentarily.
4. Backlighting on buttons at top of display unit comes on.
5. If security system has been enabled by owner, operator logon screen appears on display unit. Operator must enter valid personal identification number (PIN).
6. If radar object detection (ROD) system is enabled, display screen shows camera image for 2 seconds. If ROD system is not enabled, display screen will be black for 2 seconds.
7. Display screen populates with normal display items. Gauge pointers position to current input values.

After the display check is complete:

- Park brake indicator and STOP indicator remain on.
- STOP indicator flashes.
- Engine oil pressure gauge pointer indicates zero.
- Engine oil pressure gauge and warning indicator are highlighted in red and flash until engine is started.

OUT4001,000058D -19-26MAY10-1/1

Display Unit—Main Menu

The **MAIN MENU** displays seven submenus which can be selected to view diagnostic information or change various operating characteristics of the machine or the display unit.

NOTE: Translations shown on display may be abbreviated.

The MAIN MENU is accessed by pressing the SELECT button (3).

The submenus under MAIN MENU that appear on display (6) include:

1. **CODES—**allows service personnel or operator to view active or stored diagnostic trouble codes.
2. **SETTINGS—**allows the operator to change various operating characteristics of the machine.
3. **DIAGNOSTICS—**provides a limited set of tools, and is intended for use by service personnel and machine operators for diagnostic and troubleshooting functions.
4. **PAYLOAD SCALE—**if equipped, provides operator with information on weight of material being loaded and a means to change certain operating parameters and diagnose operation of the payload weighing system.
5. **SECURITY—**provides means for machine owner to assign personal identification numbers (PINs) to authorized operators to prevent theft or unauthorized use of the machine. When security system is on, operator must enter valid PIN when prompted or machine will not start.
6. **EXHAUST FILTER—**allows operator to enable or disable auto cleaning and start a parked cleaning, if needed.
7. **SOFTWARE DELIVERY—**allows operator the capability to accept, reject, or download Service ADVISOR™ Remote updates.

At MAIN MENU, press DOWN button (4) to move to desired submenu.

Service ADVISOR is a trademark of Deere & Company

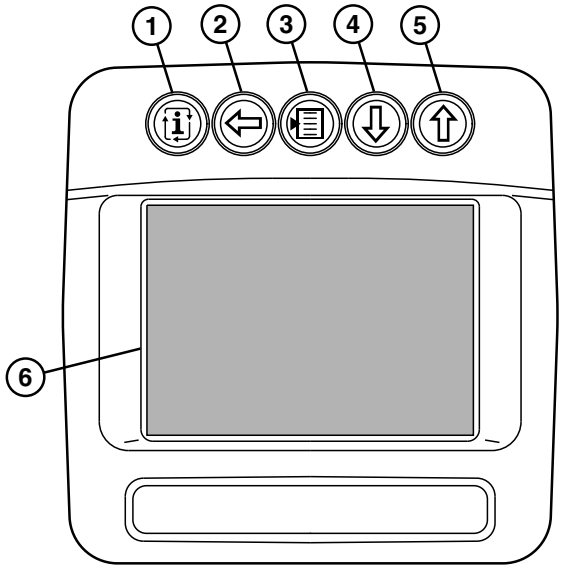

TX1051892 —UN—25NOV08

Display Unit

1— INFO Button
2— BACK Button
3— SELECT Button
4— DOWN Button
5— UP Button
6— Display

Press SELECT button to activate chosen submenu.

Press BACK button (2) to return to previous menu.

Press INFO button (1) to return to runtime screen.

OUT4001,000058E -19-04NOV10-1/1

Display Unit—Main Menu—Codes

The **CODES** menu provides the capability to select and display active or stored diagnostic trouble codes (DTCs) and information about each DTC.

The submenus under MAIN MENU that appear on display (6) include:

1. **CODES**
2. **SETTINGS**
3. **DIAGNOSTICS**
4. **PAYLOAD SCALE**
5. **SECURITY**
6. **EXHAUST FILTER**
7. **SOFTWARE DELIVERY**

At MAIN MENU with CODES highlighted, press SELECT button (3) to display the CODES menu.

CODES menu items on display include:

1. **ACTIVE CODES**
2. **STORED CODES**

Press DOWN button (4) to move to desired menu item.

Press SELECT button to activate chosen menu item.

Press BACK button (2) to return to previous menu.

Press INFO button (1) to return to runtime screen.

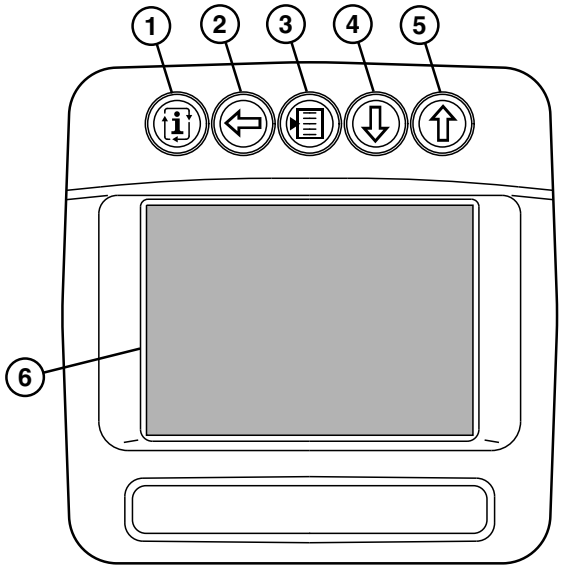

TX1051892 —UN—25NOV08

Display Unit

1— INFO Button
2— BACK Button
3— SELECT Button
4— DOWN Button
5— UP Button
6— Display

OUT4001,0000590 -19-04NOV10-1/1

Display Unit—Main Menu—Codes—Active Codes

The **ACTIVE CODES** menu provides the capability to display in sequence up to 20 of the latest diagnostic trouble codes (DTCs) that are currently active on the machine. As each diagnostic trouble code is resolved or fixed, the code is removed from the active code list.

At CODES menu, press UP button or DOWN button to highlight ACTIVE CODES.

Press SELECT button to display first active code.

The following is displayed for each active code:

NOTE: Circuit information varies based upon diagnostic trouble code.

- SPN (Suspect Parameter Number)
- FMI (Failure Mode Indicator)
- Text description of the DTC with associated icon
- Source controller of fault:
  - ECU (Engine Control Unit)
  - ADU (Advanced Display Unit)
  - VCU (Vehicle Control Unit)
  - TCU (Transmission Control Unit)
  - SSM (Sealed Switch Module)
  - JSC (Joystick Controller)
  - JSV (Joystick Valve)
  - RDR (Ground Speed Radar)
  - ROD (Radar Object Detection)
  - TPM (Tire Pressure Monitor)
  - JDL (JDLink™)
- Description of what is possibly wrong
- Total number of occurrences
- Hour meter reading at first occurrence
- Hour meter reading at last occurrence
- Current hour meter reading

Press DOWN button to display next active code.

Press UP button to display previous active code.

Press BACK button to return to previous menu.

JDLink is a trademark of Deere & Company

OUT4001,000058F -19-04NOV10-1/1

Display Unit—Main Menu—Codes—Stored Codes

The **STORED CODES** menu provides the capability to display in sequence up to 20 of the latest diagnostic trouble codes (DTCs) that have occurred on the machine. Each diagnostic trouble code is saved in the order it occurred. If 20 codes exist and another DTC occurs, the oldest DTC is removed from the list.

At CODES menu, press UP button or DOWN button to highlight STORED CODES.

Press SELECT button to display first stored code.

The following is displayed for each stored code:

NOTE: Information on the circuit varies based upon diagnostic trouble code.

- SPN (Suspect Parameter Number)
- FMI (Failure Mode Indicator)
- Text description of the DTC with associated icon
- Source controller of fault:
  - ECU (Engine Control Unit)
  - ADU (Advanced Display Unit)
  - VCU (Vehicle Control Unit)
  - TCU (Transmission Control Unit)
  - SSM (Sealed Switch Module)
  - JSC (Joystick Controller)
  - JSV (Joystick Valve)
  - RDR (Ground Speed Radar)
  - ROD (Radar Object Detection)
  - TPM (Tire Pressure Monitor)
  - JDL (JDLink™)
- Description of what is possibly wrong
- Total number of occurrences
- Hour meter reading at first occurrence
- Hour meter reading at last occurrence
- Current hour meter reading

Press DOWN button to display next stored code.

Press UP button to display previous stored code.

Press BACK button to return to previous menu.

JDLink is a trademark of Deere & Company

OUT4001,0000591 -19-04NOV10-1/1

Display Unit—Main Menu—Settings

The **SETTINGS** menu allows the operator to make changes to various operating conditions of the machine. Normally, the last setting is stored when the engine is shut off and is retrieved when the engine is restarted. However, ride control setting changes are only in effect until the engine stop switch is pressed, unless the operator stores a new set point.

The submenus under MAIN MENU that appear on display (6) include:

1. **CODES**
2. **SETTINGS**
3. **DIAGNOSTICS**
4. **PAYLOAD SCALE**
5. **SECURITY**
6. **EXHAUST FILTER**
7. **SOFTWARE DELIVERY**

Press DOWN button (4) at MAIN MENU to highlight SETTINGS.

Press SELECT button (3) to display SETTINGS menu page 1.

Page 1 SETTINGS menu items on display include:

1. **REVERSE FAN**
2. **REV FAN CYCLE**
3. **COURTESY LIGHTS**
4. **QUICK SHIFT**
5. **JOB TIMER**
6. **STOPWATCH**
7. **RIDE CONTROL**

Press DOWN button to highlight MORE, then press SELECT button to display SETTINGS menu page 2.

Page 2 SETTINGS menu items on display include:

1. **COUNTERS**
2. **DISPLAY UNITS**
3. **LANGUAGE**
4. **CAMERA MODE**
5. **OBJECT DETECT**
6. **OPERATOR CONFIGURATION**

Press DOWN button to move to desired menu item.

Press SELECT button to activate chosen menu item.

Press BACK button (2) to return to previous menu.

Press INFO button (1) to return to runtime screen.

The following menus listed under the SETTINGS menu can either be turned on or off by pressing the SELECT button or units and languages can be changed by pressing the SELECT button, when the desired menu is highlighted. Those menus are:

- **REVERSE FAN**
- **DISPLAY UNITS**
- **LANGUAGE**
- **OBJECT DETECT**

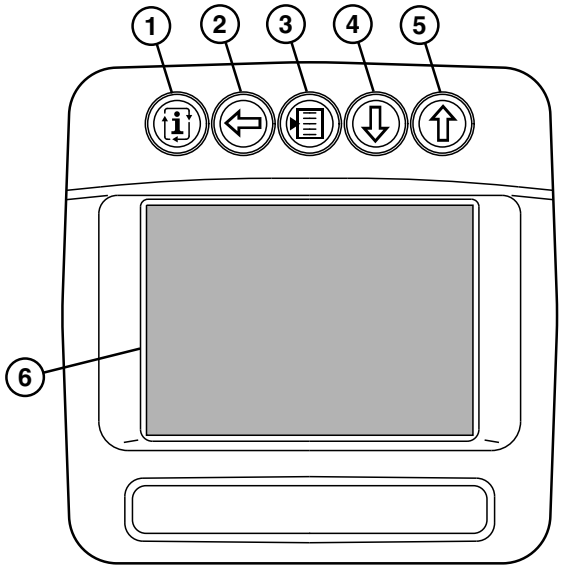

TX1051892 —UN—25NOV08

Display Unit

1— INFO Button
2— BACK Button
3— SELECT Button
4— DOWN Button
5— UP Button
6— Display

REVERSE FAN—The reversing fan function controls the direction of rotation of the radiator cooling fan. The controller software activates this function at preset intervals to reverse the fan for 15 seconds to blow debris from the radiator. The function can be manually activated by the operator when necessary, but must not be activated within 1 minute of the last reverse cycle (automatic or manual). If the feature is not installed, then "- - -" shall be displayed.

NOTE: During fan reversal, the air conditioner will not function.

Press DOWN button at SETTINGS menu to highlight REVERSE FAN, then press SELECT button to activate the reverse fan cycle. The status displayed on the screen changes from OFF to ON. At cycle completion, the status automatically reverts to OFF.

Press BACK button to return to the previous menu.

DISPLAY UNITS—Allows operator to choose the desired measurement units (English or metric).

Press DOWN button at SETTINGS menu page 1 to highlight MORE, then press SELECT button to display SETTINGS menu page 2. Press DOWN button at SETTINGS menu page 2 to highlight DISPLAY UNITS, then press SELECT button until desired measurement unit is shown.

Press BACK button to store chosen measurement unit and return to the previous menu.

Continued on next page

OUT4001,0000592 -19-16SEP11-1/2

LANGUAGE—Allows operator to choose the desired language that is used on the display (English, French, Spanish, or Russian).

Press DOWN button at SETTINGS menu page 1 to highlight MORE, then press SELECT button to display SETTINGS menu page 2. Press DOWN button at SETTINGS menu page 2 to highlight LANGUAGE, then press DOWN button until desired language is highlighted. Press SELECT to set chosen language.

NOTE: Screen will turn black while retrieving language information.

Press BACK button to return to the previous menu.

OBJECT DETECT—On machines equipped with the radar object detection (ROD) system , the operator can choose whether the system is ON or OFF. In the ON mode, the system alarm sounds when an object appears in the detection zone.

Press DOWN button at SETTINGS menu page 1 to highlight MORE, then press SELECT button to display SETTINGS menu page 2. Press DOWN button at SETTINGS menu page 2 to highlight OBJECT DETECT, then press SELECT button until desired detection mode is shown.

Press BACK button to store chosen setting and return to previous menu.

OUT4001,0000592 -19-16SEP11-2/2

Display Unit—Main Menu—Settings—Reverse Fan Cycle

The **REV FAN CYCLE** menu allows the operator to change the interval at which the system automatically engages the radiator cooling fan in the reverse direction to blow debris from the radiator. The interval ranges from 20—40 minutes and is adjustable in 5-minute increments. Initial default selection is 30 minutes. If the feature is not installed, then "- - -" shall be displayed.

NOTE: During fan reversal, the air conditioner will not function.

At SETTINGS menu, press UP button or DOWN button to highlight REV FAN CYCLE.

Press SELECT button to display REV FAN CYCLE menu.

Press UP button to increase time between reverse fan cycles. Press DOWN button to decrease time between reverse fan cycles.

Press SELECT button to store chosen setting.

Press BACK button to return to previous menu.

OUT4001,0000593 -19-02NOV10-1/1

Display Unit—Main Menu—Settings—Courtesy Lights

The **COURTESY LIGHTS** menu allows the operator to determine the amount of time that the machine's work lights remain ON after the vehicle shuts down. Light durations to select from are: OFF, 30, 45, 60, and 90 seconds. Initial default selection is 1 minute. Engine must be running and marker lights turned on when light duration selection is made. When the engine is turned off, the courtesy lights shall activate and expire at the selected time.

At SETTINGS menu, press UP button or DOWN button to highlight COURTESY LIGHTS.

Press SELECT button to display COURTESY LIGHTS menu.

Press UP button to increase light duration time. Press DOWN button to decrease light duration time.

Press SELECT button to store chosen setting.

Press BACK button to return to previous menu.

OUT4001,0000595 -19-18JUN10-1/1

Display Unit—Main Menu—Settings—Quick Shift

The **QUICK SHIFT** menu allows the operator to choose between DOWN/UP and DOWN ONLY shift mode when the transmission is in either manual or automatic operation. Initial default selection is DOWN ONLY shift mode.

The quick shift switch is located at the top of the joystick controller on single lever hydraulic control systems and on the bucket control lever on two lever control systems. See Lever configuration stories at the beginning of this section and Shifting the Transmission in Section 2-2.

DOWN/UP: When this mode is selected, the transmission downshifts one gear when the quick shift switch is pressed once. It is not possible to downshift more than one gear. When the quick shift switch is pressed again, the transmission electronically shifts up one gear.

DOWN ONLY—Transmission in Manual Mode: When this mode is selected, each time the quick shift switch is pressed, the transmission shifts down one gear (regardless of selected gear). Once a downshift is made by pressing the quick shift switch, the transmission will not shift up again unless a direction change is made using forward, neutral, or reverse (FNR) lever or FNR switch or a gear change request is made by rotating FNR lever or pressing increase gear button.

DOWN ONLY—Transmission in Automatic Mode: If the operator presses the quick shift switch when the transmission is in the automatic mode, the transmission shifts down one gear below the actual gear shown in the display window. This change is made regardless of requested gear.

The DOWN ONLY function works basically the same in automatic mode as in manual mode, except the transmission automatically shifts up or down from the highest gear downshifted to.

If the operator presses the quick shift switch while an upshift is taking place, the transmission control unit causes the transmission to shift down to the previous gear.

If the operator presses the quick shift switch while a downshift is taking place, the transmission control unit ignores the request for the downshift.

The transmission automatically shifts up or down from the actual gear shown in the display window until the FNR switch or lever is moved to neutral. When FNR switch or lever is moved to neutral, DOWN ONLY quick shift mode is canceled and transmission goes back to fully automatic mode.

At SETTINGS menu, press UP button or DOWN button to highlight QUICK SHIFT.

Press SELECT button to display QUICK SHIFT menu.

DOWN/UP mode is on when a checkmark is displayed next to DOWN/UP.

To turn on DOWN ONLY mode and disable DOWN/UP mode, press DOWN button on the display to highlight DOWN ONLY, then press SELECT button.

Press BACK button to return to previous menu.

OUT4001,0000596 -19-17MAY10-1/1

Display Unit—Main Menu—Settings—Job Timer

The job timer is a resettable hour meter that can be used to time tasks to the nearest tenth of an hour. The maximum time displayed is 999.9 hours. The job timer stops and the value is set to zero when it exceeds 999.9 hours. Once started, the job timer runs even when **JOB TIMER** menu is hidden. If engine stop switch is pressed, the job timer value is stored.

At SETTINGS menu, press UP button or DOWN button to highlight JOB TIMER.

Press SELECT button to display JOB TIMER menu.

If timer is off, press SELECT button to start the timer. If timer is on, press SELECT button to stop the timer.

Press DOWN button to reset timer to zero.

Press BACK button to return to previous menu.

OUT4001,0000597 -19-19APR10-1/1

Display Unit—Main Menu—Settings—Stopwatch

The stopwatch is a resettable meter that is used to time various tasks to the nearest tenth of a second. The maximum time displayed is 99 hours, 99 minutes, and 99.9 seconds. The stopwatch stops and the value is set to zero when it exceeds 99 hours, 99 minutes, and 99.9 seconds. Once started, the stopwatch runs even when **STOPWATCH** menu is hidden. If engine stop switch is pressed, the stopwatch turns off and resets to zero.

At SETTINGS menu, press UP button or DOWN button to highlight STOPWATCH.

Press SELECT button to display STOPWATCH menu.

If stopwatch is off, press SELECT button to start the stopwatch. If stopwatch is on, press SELECT button to stop the stopwatch.

Press DOWN button to reset stopwatch to zero.

Press BACK button to return to previous menu.

OUT4001,0000598 -19-19APR10-1/1

Display Unit—Main Menu—Settings—Ride Control—If Equipped

The **RIDE CONTROL** menu allows the operator to adjust the speed at which ride control becomes active in ON mode or AUTO mode, if the option is enabled. If the feature is not installed, then "- - -" shall be displayed.

The range of adjustment is from 1.5 kph to 24.0 kph (1.0 mph to 15.0 mph) in increments of 0.5 units.

At SETTINGS menu, press UP button or DOWN button to highlight RIDE CONTROL.

Press SELECT button to display RIDE CONTROL menu.

Press UP button to increase the speed setpoint by 0.5. If the value displayed is 3.5 kph (3.0 mph), pressing the UP button will take the value to 4.0 kph (3.5 mph). If the value displayed is 24.0 kph (15.0 mph), pressing the UP button will take the value back to1.5 kph (1.0 mph).

Press DOWN button to decrease the speed setpoint by 0.5. If the value displayed is 3.5 kph (3.0 mph), pressing the DOWN button will take the value to 3.0 kph (2.5 mph). If the value displayed is 1.5 kph (1.0 mph), pressing the DOWN button will take the value to 24.0 kph (15.0 mph).

NOTE: Changing the speed setpoint without storing the value with the SELECT button affects the setting only until the engine is shut off. The previously stored value is used when the ignition is turned on again.

Press SELECT button to store new speed setpoint.

Press BACK button to return to previous menu.

OUT4001,000095D -19-06OCT11-1/1

Display Unit—Main Menu—Settings—Counters

The **COUNTERS** menu provides the operator with a means to select multiple counters for use when loading more than one product. Up to five counters can be selected.

On machines equipped with the payload scale system, a running total of the weight added for each counter selection is maintained.

At SETTINGS menu, press UP button or DOWN button to highlight MORE, then press SELECT button to display SETTINGS menu page 2.

Press UP button or DOWN button to highlight COUNTERS.

Press SELECT button to display COUNTERS menu.

Press UP button to increase the number of counters selected.

Press DOWN button to decrease the number of counters selected.

Press SELECT button to store the desired number of counters.

Press BACK button to return to previous menu.

OUT4001,000059A -19-30APR10-1/1

Display Unit—Main Menu—Settings—Camera Mode

On machines equipped with the radar object detection (ROD) system, the **CAMERA MODE** menu allows the operator to choose from the following four camera operating modes:

- **MANUAL—**Camera is off. Operator can turn on camera by pressing INFO button on display unit.
- **REVERSE—**Monitor display changes to the camera view when the transmission is engaged in reverse gear. (This mode is the default selection for machines equipped with "Camera Only" option.)
- **OBJECT—**Monitor display changes to the camera view when an object is detected by the ROD system. (This mode is removed if "Camera Only" option is enabled.)
- **IN REVERSE WITH OBJECT—**Monitor display changes to the camera view when transmission is engaged in reverse gear or when an object is detected by the ROD system. This mode is the default selection for machines equipped with the ROD system. (This mode is removed if "Camera Only" option is enabled.)

At SETTINGS menu, press UP button or DOWN button to highlight MORE, then press SELECT button to display SETTINGS menu page 2.

Press UP button or DOWN button to highlight CAMERA MODE.

Press SELECT button to display CAMERA MODE menu. Current mode is on when a checkmark is displayed next to it.

Press UP button or DOWN button to highlight desired camera operating mode.

Press SELECT button to activate chosen mode.

Press BACK button to return to previous menu.

OUT4001,0000594 -19-14JUN10-1/1

Display Unit—Main Menu—Settings—Operator Configuration

The **OPERATOR CONFIGURATION** menu shows the configuration that is currently active and provides the capability for multiple users of the machine to store their personal settings, if security is enabled. If security is not enabled, the operator can store settings that are different than the factory installed settings.

It also lets operator choose between activating the factory installed settings, their own personal settings (if security is enabled) or settings that were stored by an operator of the machine (if security was not enabled). For information on the machine's security system, see Display Unit—Main Menu—Security in this section.

At SETTINGS menu, press UP button or DOWN button to highlight MORE, then press SELECT button to display SETTINGS menu page 2.

Press UP button or DOWN button to highlight OPERATOR CONFIGURATION.

Press SELECT button to display OPERATOR CONFIGURATION menu.

OPERATOR CONFIGURATION menu items on display include:

CURRENTLY ACTIVE: FACTORY—FACTORY will display for factory installed settings. PIN(1,2,3,4,5,6,7,8,9, or 10) will display for current operator's personal identification number (PIN) settings that were stored, if security is enabled on machine. PIN 0 will display if settings have been stored by the last operator when security was NOT enabled on machine.

1. **STORE TO USER SETTINGS—**If selected, a pop-up will appear stating STORED and all configuration settings for the user operating the machine will be stored to their PIN, if security is enabled. If security is not enabled and this is selected, the configuration settings for the user operating the machine will be stored to PIN 0. Settings will not be stored until machine is shut down.
2. **RETRIEVE USER SETTINGS—**If selected, a pop-up will appear first stating the conditions that the machine has to be in for this setting to activate:
   PARK BRAKE MUST BE APPLIED
   THROTTLE MUST BE AT IDLE
   Once conditions are met, the settings saved to the current operator's PIN will be activated on machine, if security is enabled. If security is not enabled, the settings saved to PIN0 will be activated.
3. **RESTORE TO FACTORY SETTINGS—**If selected, the factory installed configuration settings will be activated.

Press UP button or DOWN button to highlight desired settings mode.

Press SELECT button to activate chosen mode.

Press BACK button to return to previous menu.

OUT4001,00006C3 -19-05JAN12-1/1

Display Unit—Main Menu—Diagnostics

The **DIAGNOSTICS** menu provides a limited set of tools and is intended for use by service personnel and machine operators for diagnostic and troubleshooting functions.

The submenus under MAIN MENU that appear on display (6) include:

1. **CODES**
2. **SETTINGS**
3. **DIAGNOSTICS**
4. **PAYLOAD SCALE**
5. **SECURITY**
6. **EXHAUST FILTER**
7. **SOFTWARE DELIVERY**

Press DOWN button (4) at MAIN MENU to highlight DIAGNOSTICS.

Press SELECT button (3) to display DIAGNOSTICS menu page 1.

Page 1 DIAGNOSTICS menu items on display include:

1. **MACHINE ID**
2. **BATTERY MONITOR**
3. **ENGINE SENSORS**
4. **TRANSMISSION/AXLE**
5. **HYDRAULIC SENSORS**
6. **MACHINE SENSORS**
7. **FNR SELECTOR**

Press DOWN button to highlight MORE, then press SELECT button to display DIAGNOSTICS menu page 2.

Page 2 DIAGNOSTICS menu items on display include:

1. **CAB SWITCHES**
2. **SWITCH MODULE**
3. **JOYSTICK STEERING**
4. **TIRE PRESSURE**
5. **OBJECT DETECT**
6. **AUTO DIFF LOCK**
7. **PAYLOAD SCALE**

Press DOWN button to highlight MORE, then press SELECT button to display DIAGNOSTICS menu page 3.

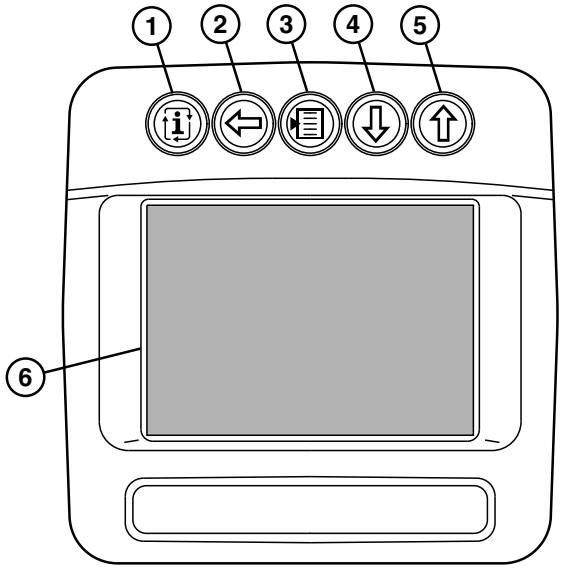

TX1051892 —UN—25NOV08

Display Unit

1— INFO Button
2— BACK Button
3— SELECT Button
4— DOWN Button
5— UP Button
6— Display

Page 3 DIAGNOSTICS menu items on display include:

1. **JDLINK SYSTEM INFO**
2. **PARK BRAKE TEST**

Press DOWN button to move to desired menu item.

Press SELECT button to activate chosen menu item.

Press BACK button (2) to return to previous menu.

Press INFO button (1) to return to runtime screen.

OUT4001,000059B -19-04NOV10-1/1

Display Unit—Main Menu—Diagnostics—Machine ID

The **MACHINE ID** menu provides the means to view the part number and serial number for control units, and the part number and version of software installed.

At DIAGNOSTICS menu, press UP button or DOWN button to highlight MACHINE ID.

Press SELECT button to display page 1 of the MACHINE ID menu.

MACHINE ID menu items on display include:

1. **SSM SEALED SWITCH MODULE—**Displays SSM part number, serial number, software part number, and software version.
2. **VCU VEHICLE CONTROLLER UNIT—**Displays VCU part number, serial number, software part number, and software version.
3. **ADU ADVANCED DISPLAY UNIT—**Displays ADU part number, serial number, software part number, and software version.
4. **TCU TRANSMISSION CONTROLLER—**Displays TCU software identification.
5. **JSV JOYSTICK STEERING VALVE—**Displays JSV part number, software part number, and software version. This display is available only on machines equipped with joystick steering option. For machines without joystick steering, a pop-up menu will appear stating that the option is not enabled or installed.
6. **RDR GROUND SPEED RADAR—**Displays RDR part number, serial number, software part number, and software version. This display is available only on machines equipped with automatic differential lock option. For machines without automatic differential lock, a pop-up menu will appear stating that the option is not enabled or installed.

MORE...

MACHINE VIN—Displays vehicle identification number.

Press DOWN button to highlight MORE.

Press SELECT button to view page 2 of the MACHINE ID menu.

MACHINE ID menu items on page 2 display include:

1. **JDL JDLINK—**Displays JDL part number, serial number, software part number, and software version.
2. **TPM TIRE PRESSURE MONITOR—**Displays TPM model number, software part number, and software version.

MACHINE VIN—Displays vehicle identification number.

Press DOWN button to highlight the desired menu selection.

Press SELECT button to obtain information about the item selected.

Press BACK button to return to previous menu.

OUT4001,000059C -19-05DEC11-1/1

Display Unit—Main Menu—Diagnostics—Battery Monitor

The **BATTERY MONITOR** menu displays the current voltage values of the left (inboard) and right (outboard) batteries.

At DIAGNOSTICS menu, press UP button or DOWN button to highlight BATTERY MONITOR.

Press SELECT button to view the current voltage values of the left and right batteries.

Press BACK button to return to previous menu.

NOTE: If 12 V center tap wire is not connected to the right battery, left battery displays system voltage and right battery displays 0.0.

OUT4001,000059D -19-21APR10-1/1

Display Unit—Main Menu—Diagnostics—Engine Sensors

The **ENGINE SENSORS** menu allows the technician to monitor all available engine sensors that provide input to the engine control unit (ECU).

At DIAGNOSTICS menu, press UP button or DOWN button to highlight ENGINE SENSORS.

Press SELECT button to display ENGINE SENSORS menu.

ENGINE SENSORS menu items on display include:

1. **TEMPERATURE—**Displays coolant, manifold air, fuel, and charge air cooler temperatures in °C or °F, depending on whether metric or English units have been selected on MAIN MENU—SETTINGS—DISPLAY UNITS menu.
2. **PRESSURES—**Displays oil, fuel, manifold air pressures, and crank case pressure in kPa or psi, depending on whether metric or English units have been selected on MAIN MENU—SETTINGS—DISPLAY UNITS menu.
3. **OTHER SENSORS—**Displays throttle sensor (voltage is displayed as a percentage), crank requested (displays ON or OFF if the vehicle control unit (VCU) is requesting the ECU to start the engine), starter status (displays CRANK, OFF, or INHIBITED depending on whether the VCU request to start the engine was received by the ECU), and security (displays LOCKED or UNLOCKED status of the security system).

Press DOWN button to highlight the desired menu selection.

Press SELECT button to obtain information about the item selected.

Press BACK button to return to previous menu.

OUT4001,000059E -19-14SEP11-1/1

Display Unit—Main Menu—Diagnostics—Transmission/Axle

The **TRANSMISSION/AXLE** menu displays data from all transmission sensors that provide input to the transmission control unit (TCU).

At DIAGNOSTICS menu, press UP button or DOWN button to highlight TRANSMISSION/AXLE.

Press SELECT button to display TRANSMISSION/AXLE menu.

NOTE: Values are displayed in either English or metric units, depending on whether metric or English units have been selected on MAIN MENU—SETTINGS—DISPLAY UNITS menu.

TRANSMISSION/AXLE menu items on display include:

- **TRANS OIL TEMP—**Displays transmission oil temperature in °C or °F.
- **TORQUE OUTPUT SPEED—**Displays torque converter output speed in rpm.
- **INTERNAL CLUTCH SPD—**Displays internal clutch speed in rpm.
- **OUTPUT SHAFT SPD—**Displays output shaft speed in rpm.
- **CLUTCH CUTOFF—**Displays clutch cut-off in volts.
- **1- TRANS/AXLE SWITCHES—**When selected, displays the open or closed status of the quick shift, park brake, transmission oil filter restriction, and axle oil filter restriction switches.
- **2- AXLE TEMPERATURES—**When selected, displays the front axle temperature in °C or °F. If equipped, it will also display the rear axle temperature in °C or °F.

Press DOWN button to highlight either 1- TRANS/AXLE SWITCHES or 2- AXLE TEMPERATURES.

Press SELECT button to obtain information about the item selected.

Press BACK button to return to previous menu.

OUT4001,0000715 -19-05OCT11-1/1

Display Unit—Main Menu—Diagnostics—Hydraulic Sensors

The **HYDRAULIC SENSORS** menu allows the technician to monitor hydraulic system sensors that provide input to the vehicle control unit (VCU).

At DIAGNOSTICS menu, press UP button or DOWN button to highlight HYDRAULIC SENSORS.

Press SELECT button to display HYDRAULIC SENSORS menu.

NOTE: Values are displayed in either English or metric units, depending on whether metric or English units have been selected on MAIN MENU—SETTINGS—DISPLAY UNITS menu.

HYDRAULIC SENSORS menu items on display include:

- **HYD OIL TEMP—**Displays hydraulic oil temperature in °C or °F.
- **HYD OIL FILTER REST—**Displays whether hydraulic oil filter restriction switch is open or closed. Switch is open when filter is restricted.
- **SYSTEM PRESSURE—**Displays hydraulic system pressure in kPa or psi.
- **LOAD SENSE PRESSURE—**Displays hydraulic load sense pressure in kPa or psi.
- **BRAKE PRESSURE—**Displays brake accumulator pressure in kPa or psi.
- **STEERING PRESSURE SW—**If secondary steering is enabled, displays status of steering pressure switch. If steering system pressure is lost, switch opens to signal the VCU to energize secondary steering pump motor.

Press BACK button to return to previous menu.

OUT4001,00005A0 -19-18JUN10-1/1

Display Unit—Main Menu—Diagnostics—Machine Sensors

The **MACHINE SENSORS** menu displays data from various machine sensors that provide input to the vehicle control unit (VCU).

At DIAGNOSTICS menu, press UP button or DOWN button to highlight MACHINE SENSORS.

Press SELECT button to display MACHINE SENSORS menu.

MACHINE SENSORS menu items on display include:

- **FUEL LEVEL—**Displays fuel level as a percentage of fuel remaining in tank and in millivolts.
- **BOOM POSITION—**Displays boom position (height) as a percentage and in millivolts.
- **BUCKET POS PROX—**Displays bucket position switch status as open or closed. This switch is not used on machines equipped with Powerllel™ linkage.
- **FAN SPEED - COMMANDED—**Displays fan controlled speed as a percentage.
- **FAN SPEED - ACTUAL—**Displays actual fan speed in rpm.
- **FAN CONTROLLED BY—**Displays one of the following possibilities:
  - Hydraulic Oil Temperature
  - Axle Oil Temperature
  - Transmission Oil Temperature
  - Coolant Temperature
  - Charged Air Cooler Temperature
  - Intake Manifold Air Temperature
  - Ambient Air Temperature
  - Air Conditioner
  - Reversing Fan
- **1- SWITCHES—**When selected, displays the open or closed status of the engine light and horn switches.

Press BACK button to return to previous menu.

Powerllel is a trademark of Deere & Company

OUT4001,00006A3 -19-07OCT11-1/1

Display Unit—Main Menu—Diagnostics—FNR Selector

The **FNR SELECTOR** menu displays the status of the transmission control switches as shown. The second FNR information is only shown on machines equipped with two FNR controls, such as steering column mounted and pilot joystick mounted.

At DIAGNOSTICS menu, press UP button or DOWN button to highlight FNR SELECTOR.

Press SELECT button to display FNR SELECTOR menu.

FNR SELECTOR menu items on display include:

- **FNR TYPE—**Displays controller type.
- **ACTUAL FNR—**Displays F, N, or R.
- **REQUESTED FNR—**Displays F, N, or R.
- **MAIN FNR—**Displays F, N, or R.
- **SECOND FNR—**Displays F, N, or R, if machine is equipped with two FNR controls such as steering column mounted and pilot joystick mounted. If not, then "- - -" shall be displayed.
- **JOYSTICK GEAR SELECT—**Displays OPEN, UP, or DOWN.

Press BACK button to return to previous menu.

OUT4001,00005A2 -19-14MAY10-1/1

Display Unit—Main Menu—Diagnostics—Cab Switches

The **CAB SWITCHES** menu displays the current status of all machine switches hardwired to the vehicle control unit (VCU).

At DIAGNOSTICS menu, press UP button or DOWN button to highlight MORE, then press SELECT button to display DIAGNOSTICS menu page 2.

Press UP button or DOWN button to highlight CAB SWITCHES.

Press SELECT button to display CAB SWITCHES menu.

CAB SWITCHES menu items on display include:

- **BLOWER SWITCH—**Displays blower switch status.
- **QUICK SHIFT—**Displays quick shift switch status.
- **FRONT WIPER PARK SW—**Displays front wiper park switch status.
- **REAR WIPER PARK SW—**Displays rear wiper park switch status.
- **LEFT TURN SIGNAL—**Displays left turn signal switch status.
- **RIGHT TURN SIGNAL—**Displays right turn signal switch status.
- **DIFF LOCK SW—**Displays differential lock switch status.
- **1- COUNTER SWITCH—**When selected, displays picture of counter switch. Pressing the Add Bucket, Counter Select, or Add Truck button on the counter switch will indicate each switch status on the picture.

Press DOWN button to highlight 1- COUNTER SWITCH.

Press SELECT button to view the 1- COUNTER SWITCH screen.

Press BACK button to return to previous menu.

OUT4001,00005A3 -19-18JUN10-1/1

Display Unit—Main Menu—Diagnostics—Switch Module

The **SWITCH MODULE** menu allows the operator or technician to perform continuity checks on the switches in the sealed switch module (SSM). Pressing each switch will illuminate all LEDs present on the switch and will correspond with the picture displayed on the monitor.

NOTE: Access to the SSM diagnostic screen can only be done with the engine OFF and the ignition power ON.

At DIAGNOSTICS menu, press UP button or DOWN button to highlight MORE, then press SELECT button to display DIAGNOSTICS menu page 2.

Press UP button or DOWN button to highlight SWITCH MODULE.

Press SELECT button to display SSM diagnostic screen.

Press a switch on the SSM. The corresponding icon on the diagnostic screen changes to green to indicate switch continuity.

Press BACK button to return to previous menu.

OUT4001,00005A4 -19-23APR10-1/1

Display Unit—Main Menu—Diagnostics—Joystick Steering—If Equipped

The **JOYSTICK STEERING** menu allows the operator or technician to diagnose malfunctions in the joystick steering system. This menu will only be available if joystick steering option is enabled.

At DIAGNOSTICS menu, press UP button or DOWN button to highlight MORE, then press SELECT button to display DIAGNOSTICS menu page 2.

Press UP button or DOWN button to highlight JOYSTICK STEERING.

Press SELECT button to display JOYSTICK STEERING menu.

JOYSTICK STEERING menu items on display include:

- **JS ARMREST—**Displays up or down status of joystick steering armrest.
- **JS ACTIVATE SWITCH—**Displays open or closed status of joystick steering activate switch.
- **LEVER POSITION—**Displays current direction of joystick steering lever as either L, N, or R (left, neutral, or right), and percent of travel the lever has moved in the determined direction.
- **VALVE REQUEST—**Displays requested direction of the steering valve as either L, N, or R, and percent of request.
- **LEFT PORT FLOW—**Displays left joystick steering valve port flow percentage.
- **RIGHT PORT FLOW—**Displays right joystick steering valve port flow percentage.
- **1- JS CONFIG—**When selected, displays the scale, slope, and ramp times of the left and right joystick steering valves.

Press DOWN button to highlight 1- JS CONFIG.

Press SELECT button to view the 1- JS CONFIG screen.

Press BACK button to return to previous menu.

OUT4001,00005A5 -19-22APR10-1/1

Display Unit—Main Menu—Diagnostics—Tire Pressure—If Equipped

The vehicle control unit (VCU) determines if the machine has a tire pressure monitor (TPM) system installed. The **TIRE PRESSURE** menu lets the operator view needed tire information.

At DIAGNOSTICS menu, press UP button or DOWN button to highlight MORE, then press SELECT button to display DIAGNOSTICS menu page 2.

Press UP button or DOWN button to display TIRE PRESSURE menu.

TIRE PRESSURE menu items on display include:

1. **TIRE PRESSURE VALUES—**Displays the current measured tire pressure (1), the current measured tire temperature (2), and the sensor battery status (3) for each tire (4) on the machine. To adjust preset pressure and temperature ranges, see your authorized dealer.
   Color coding and explanation for tire status:
   - Black — tire is good
   - Red — fault/warning condition (this will appear to warn the operator that the pressure or temperature is out of preset range or if the sensor battery is going bad)
   - White— status is unknown

   Color coding and explanation for battery icon status:
   - Green with check mark displayed — battery is good
   - Red with an X displayed — battery is bad, but may last for 8 months to 1 year before replacement is necessary
   - White with a question mark displayed— status is unknown

   If an invalid or no response is received from the TPM system for the desired tire, the displayed tire will be white. The pressure and temperature status next to the tire will be "- - -", and the battery icon will display a question mark. This unknown condition may be present during power up. If the unknown condition persists, see your authorized dealer.
2. **ALARM TEMP VALUES—**Displays the set alarm pressure value and the actual alarm pressure value of each tire. The stored alarm value is the pressure which the operator wishes the tire alarm to trigger. The actual alarm values are compensated values from the set value due to temperature. The actual alarm value is the pressure the alarm will trigger. The set values and the actual values are shown under each of these headings:
   - FR (front right tire)
   - FL (front left tire)
   - BR (back right tire)
   - BL (back left tire)

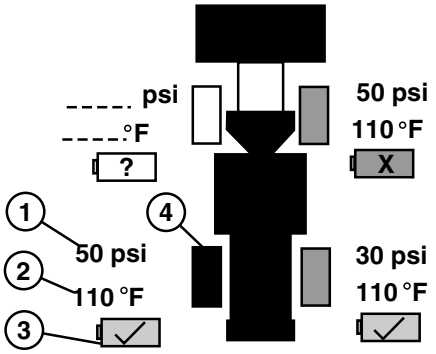

TX1060757 —UN—23JUN09

Tire Pressure Monitor Screen

1— Tire Pressure
2— Tire Temperature
3— Sensor Battery Status
4— Tire (4 used)

Press DOWN button to highlight the desired menu selection.

Press SELECT button to obtain information about the item selected.

Press BACK button to return to previous menu.

OUT4001,00005A6 -19-05OCT11-1/1

Display Unit—Main Menu—Diagnostics—Object Detect—If Equipped

The **OBJECT DETECT** menu allows operator to view sensor range. It will only be available if radar object detection (ROD) system option is enabled.

At DIAGNOSTICS menu, press UP button or DOWN button to highlight MORE, then press SELECT button to display DIAGNOSTICS menu page 2.

Press UP button or DOWN button to highlight OBJECT DETECT.

Press SELECT button to display OBJECT DETECT information screen.

This screen displays whether object detect is ON or OFF. It also will show one of the following detection zones:

- ZONE 0 — NO TARGET DETECTED
- ZONE 1 — TARGET WITHIN 0—20% OF SENSOR RANGE
- ZONE 2 — TARGET WITHIN 21—40% OF SENSOR RANGE
- ZONE 3 — TARGET WITHIN 41—60% OF SENSOR RANGE
- ZONE 4 — TARGET WITHIN 61—80% OF SENSOR RANGE
- ZONE 5 — TARGET WITHIN 81—100% OF SENSOR RANGE

Press BACK button to return to previous menu.

OUT4001,00005A7 -19-05OCT11-1/1

Display Unit—Main Menu—Diagnostics—Auto Diff Lock—If Equipped

Automatic differential lock is an optional feature on this machine which is intended to reduce wheel slippage, improve traction, and reduce tire rutting in most applications without operator input. This option uses a dual beam radar unit which is physically located beneath the transmission. The radar measures actual machine ground speed and direction and communicates this information to the vehicle control unit (VCU).

Automatic differential lock can only occur when ground speed is less than 12 km/h (7.5 mph). When ground speed is less than 12 km/h (7.5 mph) in forward or reverse, and wheel slip is detected, differential lock will automatically engage. The differential lock will disengage when any of the following occur:

- Ground speed increases by 2 km/h (1.2 mph)
- Transmission output shaft speed drops to zero
- Direction of machine travel changes

Whenever the machine reaches a steady ground speed of 9—14 km/h (5.5—8.7 mph) an automatic calibration of the system is performed. Automatic calibration compares the difference between calculated machine speed and radar ground speed and adjusts accordingly. This calibration compensates for the effects of tire wear, inflation pressure, axle load, and so on.

Due to the nature of the radar, reduced system performance may result when operating over a highly reflective surface such as standing water. If operating in such conditions, and the differential lock actuates when not intended, disable automatic differential lock function using switch on sealed switch module (SSM).

Manual activation of the differential lock can occur at any time by pressing the foot switch on the floor of the cab.

The **AUTO DIFF LOCK** menu allows the operator to view information from the dual beam radar unit. This menu will only be available if automatic differential lock option is enabled.

At DIAGNOSTICS menu, press UP button or DOWN button to highlight MORE, then press SELECT button to display DIAGNOSTICS menu page 2.

Press UP button or DOWN button to highlight AUTO DIFF LOCK.

Press SELECT button to display AUTO DIFF LOCK menu.

AUTO DIFF LOCK menu items on display include:

- **BEAM REQUEST—**Displays ON or OFF status of the radar beam request from the VCU.
- **DIFF LOCK SOL—**Displays ON or OFF status of auto differential lock switch.

  NOTE: Values are displayed in either English or metric units, depending on whether metric or English units have been selected on MAIN MENU—SETTINGS—DISPLAY UNITS menu.

- **VEHICLE SPEED—**Displays the calculated ground speed measured by the front and rear beams in mph or kph.
- **GROUND SPEED—**Displays the actual ground speed measured by the front and rear beams in mph or kph.
- **FRONT HORN SPD—**Displays front horn speed in mph or kph.
- **REAR HORN SPD—**Displays rear horn speed in mph or kph.
- **BEAM STATUS—**Displays current beam status. It will show one of the following:
  - BEAMS ARE ON
  - BEAMS ARE OFF
  - MISSING FRONT BEAM
  - MISSING REAR BEAM

Press BACK button to return to previous menu.

OUT4001,00005A8 -19-05OCT11-1/1

Display Unit—Main Menu—Diagnostics—Payload Scale—If Equipped

The **PAYLOAD SCALE** menu allows the operator or technician to monitor various system operating parameters that are inputs to the Embedded Payload Scale (EPS) system. This menu will only be available if EPS option is enabled.

At DIAGNOSTICS menu, press UP button or DOWN button to highlight MORE, then press SELECT button to display DIAGNOSTICS menu page 2.

Press UP button or DOWN button to highlight PAYLOAD SCALE.

Press SELECT button to display PAYLOAD SCALE menu.

PAYLOAD SCALE menu items on display include:

NOTE: Values are displayed in either English or metric units, depending on whether metric or English units have been selected on MAIN MENU—SETTINGS—DISPLAY UNITS menu.

- **LIFT PRESS—**Displays lift cylinder hydraulic lift pressure.
- **RETURN PRESS—**Displays lift cylinder hydraulic return pressure.
- **BOOM POSITION—**Displays position of the boom.
- **HYD OIL TEMP—**Displays hydraulic oil temperature in °C or °F.
- **ENGINE SPEED—**Displays engine speed in rpm.

Press BACK button to return to previous menu.

OUT4001,00005A9 -19-05OCT11-1/1

Display Unit—Main Menu—Diagnostics—JDLink™ System Info

The **JDLINK SYSTEM INFO** menu allows the operator or technician to view the JDLink™ system values.

At DIAGNOSTICS menu, press UP button or DOWN button to highlight MORE, then press SELECT button to display DIAGNOSTICS menu page 2.

At DIAGNOSTICS menu page 2, press UP button or DOWN button to highlight MORE, then press SELECT button to display DIAGNOSTICS menu page 3.

Press UP button or DOWN button to highlight JDLINK SYSTEM INFO.

Press SELECT button to display JDLINK SYSTEM INFO menu.

JDLINK SYSTEM INFO menu items on display include:

- **CELLULAR STRENGTH—**Displays cellular strength by percentage.
- **CARRIER—**Displays cellular provider.
- **REGISTRATION—**Displays registration status of the JDLink system as either REGISTERED, UNREGISTERED, PENDING or UNKNOWN.
- **LATITUDE—**Displays latitude reading of GPS position.
- **LONGITUDE—**Displays longitude reading of GPS position.
- **GPS ANTENNA—**Displays GPS antenna status as either OK, SHORT, OPEN, or UNKNOWN.
- **CELLULAR ANTENNA—**Displays cellular antenna version as either US or EU.

Press BACK button to return to previous menu.

JDLink is a trademark of Deere & Company

OUT4001,00006B8 -19-05DEC11-1/1

Display Unit—Main Menu—Diagnostics—Park Brake Test

The **PARK BRAKE TEST** menu allows the operator or technician to test the machine's park brake.

At DIAGNOSTICS menu, press UP button or DOWN button to highlight MORE, then press SELECT button to display DIAGNOSTICS menu page 2.

At DIAGNOSTICS menu page 2, press UP button or DOWN button to highlight MORE, then press SELECT button to display DIAGNOSTICS menu page 3.

Press UP button or DOWN button to highlight PARK BRAKE TEST.

Press SELECT button to display PARK BRAKE TEST menu.

PARK BRAKE TEST menu will display the following warning and conditions that must be met before starting the test:

WARNING!

MACHINE MAY MOVE DURING TEST
- **PARK BRAKE APPLIED**
- **FNR IN NEUTRAL**
- **TRANS IN MANUAL/GEAR X** ("X"= "D" for machines equipped with lockup torque converter and "3" for non-lockup.)
- **SERVICE BRAKES NOT APPLIED**
  "SELECT" TO START

"BACK" TO EXIT

If SELECT is pressed and any of the conditions are NOT met, pop-ups will appear on the monitor directing what must be done before continuing.

If all conditions are met and SELECT is pressed, the following screen will appear stating instructions to perform the test:

- **RAISE IMPLEMENT OFF GROUND**
- **PLACE MACHINE INTO FORWARD**
- **GRADUALLY APPLY MAX THROTTLE**
- **HOLD MAX THROTTLE FOR 3 SEC**

WHEN COMPLETE
"BACK" TO EXIT

When throttle is above 2%, the next screen will display:

- **HOLD MAX THROTTLE FOR 3 SEC**
- **IF MACHINE MOVES CONTACT JOHN DEERE DEALERSHIP**

RPM: XXXX
GEAR X

If machine does not move, park brake test is complete and acceptable to continue operation.

Press BACK button to return to previous menu.

OUT4001,00006B9 -19-03NOV10-1/1

Display Unit—Main Menu—Payload Scale—If Equipped

Machines equipped with the Embedded Payload Scale (EPS) system provide the operator with the capability to check the **PAYLOAD SCALE** menu to display weight of each bucket lifted and to accumulate the total weight of material loaded onto a truck. The system also accumulates the total weight lifted (long total) since the last time the total was cleared.

The PAYLOAD SCALE menu also provides access to diagnostic and setup menus and data displays primarily for use by service personnel.

The submenus under MAIN MENU that appear on display (6) include:

1. **CODES**
2. **SETTINGS**
3. **DIAGNOSTICS**
4. **PAYLOAD SCALE**
5. **SECURITY**
6. **EXHAUST FILTER**
7. **SOFTWARE DELIVERY**

Press DOWN button (4) at MAIN MENU to highlight PAYLOAD SCALE.

Press SELECT button (3) to display PAYLOAD SCALE menu.

PAYLOAD SCALE menu items on display include:

1. **LONG TOTAL**
2. **DISPLAY UNITS**
3. **AUTO ADD**
4. **DIAGNOSTICS**
5. **SETUP**

Press DOWN button to move to desired menu item.

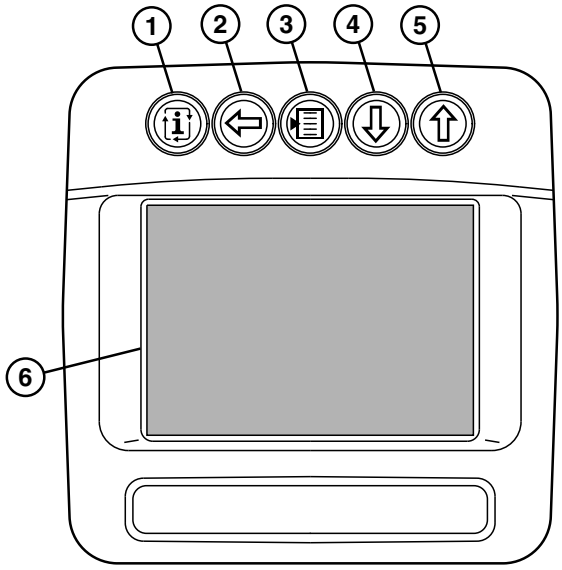

TX1051892 —UN—25NOV08

Display Unit

1— INFO Button
2— BACK Button
3— SELECT Button
4— DOWN Button
5— UP Button
6— Display

Press SELECT button to activate chosen menu item.

Press BACK button (2) to return to previous menu.

Press INFO button (1) to return to runtime screen at any time.

OUT4001,00005AA -19-05OCT11-1/1

Display Unit—Main Menu—Payload Scale—Long Total

The **LONG TOTAL** menu displays the total weight of material that has been lifted since the last time the long total was reset.

At PAYLOAD SCALE menu, press UP button or DOWN button to highlight LONG TOTAL.

Press SELECT button to display LONG TOTAL screen.

The value displayed on the screen updates as more buckets of material are lifted and dumped.

With EXIT highlighted, press SELECT button to close the screen with no changes.

If desired, press DOWN button to highlight CLEAR and press SELECT button to reset the total.

Press BACK button to return to previous menu.

OUT4001,00005AB -19-26APR10-1/1

Display Unit—Main Menu—Payload Scale—Display Units

The **DISPLAY UNITS** menu allows the operator to select desired measurement unit for the values displayed. Selections include KG, POUNDS, TONS, and TONNES.

At PAYLOAD SCALE menu, press UP button or DOWN button to highlight DISPLAY UNITS.

Press SELECT button to view DISPLAY UNITS screen. Current measurement unit is on when a checkmark is displayed next to it.

To change, press UP button or DOWN button to highlight the desired measurement unit.

Press SELECT button to activate chosen measurement unit.

Press BACK button to return to previous menu.

OUT4001,00005AC -19-26APR10-1/1

Display Unit—Main Menu—Payload Scale—Auto Add

The **AUTO ADD** menu allows the operator to add the bucket load weight to the truck total weight automatically each time a load is lifted past the trigger point and control the amount of time the current load information is shown on the display unit.

At PAYLOAD SCALE menu, press UP button or DOWN button to highlight AUTO ADD.

Press SELECT button to display AUTO ADD menu.

AUTO ADD menu items on display include:

- **AUTO ADD—**Displays ON or OFF status of the auto add function. Press SELECT button to change to opposite setting.
- **AUTO ADD TIME—**Displays auto add time. The auto add time can be adjusted from 3—12 seconds but cannot be greater than the manual add time set at activation.

Press UP button or DOWN button to highlight AUTO ADD TIME.

Press SELECT button to view AUTO ADD TIME screen.

Press UP button to increase time or DOWN button to decrease time.

Press BACK button to return to previous menu.

OUT4001,00005AD -19-26APR10-1/1

Display Unit—Main Menu—Payload Scale—Diagnostics

The **DIAGNOSTICS** menu provides access to limited diagnostic information screens for use by the operator and various setup and diagnostic information screens for use by service personnel.

At PAYLOAD SCALE menu, press UP button or DOWN button to highlight DIAGNOSTICS.

Press SELECT button to display DIAGNOSTICS menu.

DIAGNOSTICS menu items on display include:

- **1- MACHINE READINGS—**Displays lift cylinder hydraulic lift pressure, hydraulic return pressure, boom height position, hydraulic oil temperature, and engine speed.
- **2- SPECIAL WEIGH—**Displays the last four values for weight lifted and the average weight, the last three speed values and the average speed, and it shows the last four values for boom lift, return and mixed.
- **3- DISPLAY CALIBRATION—**For use by service personnel. The values on the previous two screens can be analyzed to determine possible causes of inaccurate weight readings.

Press DOWN button to highlight the desired menu selection.

Press SELECT button to obtain information about the item selected.

Press BACK button to return to the previous menu.

OUT4001,00005AE -19-24MAY10-1/1

Display Unit—Main Menu—Payload Scale—Setup

The **SETUP** menu is for use by service personnel.

OUT4001,00005AF -19-26APR10-1/1

Display Unit—Main Menu—Security

The **SECURITY** menu provides the machine owner a feature that is designed to impede theft or unauthorized use of the machine by preventing the engine from starting until the operator correctly enters a valid security code. The system provides for one master owner personal identification number (PIN) and up to ten operator PINs.

PINs can be from 1—8 numeric characters in length. Leading zeros are recognized. For example, 1, 01, and 001 are each valid and unique PINs.

When security is enabled, the following occurs:

- When engine start switch is pressed, operator is prompted to enter a PIN on the sealed switch module (SSM). Valid PIN must be entered or engine will not start.
- When engine stop switch is pressed and engine shuts down, system automatically locks the vehicle controllers. Operator can restart engine within preset logout delay time. After delay time expires, PIN must be entered to start engine.

The machine owner can perform any of the following security system functions:

- Enable or disable security system.
- Change owner PIN.
- Manage and assign operator PINs.
- Manage and assign transport PIN.
- Change operator logout delay time.

The submenus under MAIN MENU that appear on display (6) include:

1. **CODES**
2. **SETTINGS**
3. **DIAGNOSTICS**
4. **PAYLOAD SCALE**
5. **SECURITY**
6. **EXHAUST FILTER**
7. **SOFTWARE DELIVERY**

Press DOWN button (4) at MAIN MENU to highlight SECURITY.

Press SELECT button (3) to activate the OWNER PIN screen.

Enter PIN using one of the following methods:

- Enter PIN on numeric keypad (7) on SSM, then press enter key (8) on SSM to activate SECURITY menu.
  OR
- Enter PIN using buttons on display unit:
  a. Press UP button (5) or DOWN button to start process of entering PIN.
  b. Press UP button to increment number shown. If pressed when "9" is shown, display will wrap around to "0".
  c. Press DOWN button to decrement number shown. If pressed when "0" is shown, display will wrap around to "9".
  d. Press SELECT button to store current digit.

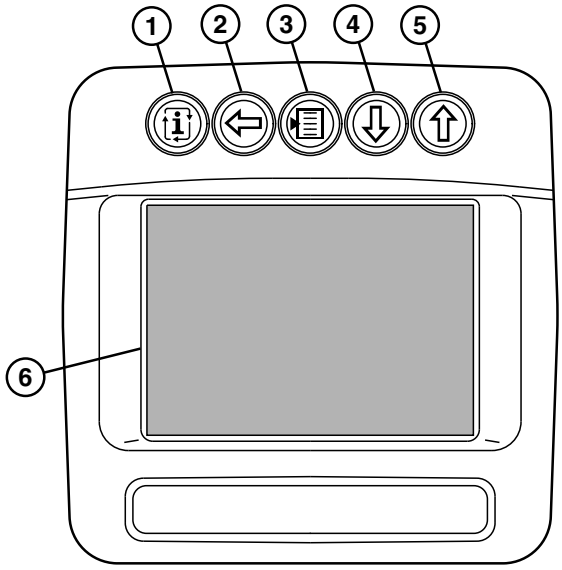

TX1051892 —UN—25NOV08

Display Unit

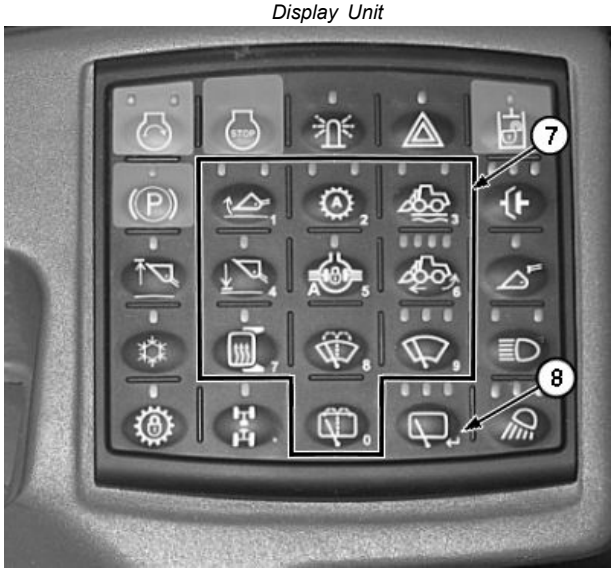

TX10770614 —UN—29APR10

Sealed Switch Module (SSM)

1— INFO Button
2— BACK Button
3— SELECT Button
4— DOWN Button
5— UP Button
6— Display
7— Numeric Keypad
8— Enter Key

e. Continue entering remaining digits of PIN.
f. When PIN is correctly displayed, press BACK button (2) to enter PIN and activate SECURITY menu.

SECURITY menu items on display include:

1. **SECURITY**
2. **CHANGE OWNER PIN**
3. **MANAGE OWNER PINS**
4. **MANAGE TRANSPORT PIN**

Continued on next page

5. **DELAYED OPERATOR LOGOUT**

Press DOWN button to move to desired menu item.

Press SELECT button to activate chosen menu item.

Press BACK button to return to previous menu.

Press INFO button (1) to return to runtime screen at any time.

OUT4001,00005B0 -19-04NOV10-2/2

Display Unit—Main Menu—Security—Security

The **SECURITY** menu allows machine owner to enable or disable the security system.

Press DOWN button at MAIN MENU to highlight SECURITY.

Press SELECT button and OWNER PIN screen appears.

Enter owner personal identification number (PIN) on numeric keypad on sealed switch module (SSM), then press enter key on SSM to activate SECURITY menu.

SECURITY menu appears.

With SECURITY highlighted, press SELECT button to turn security system ON or OFF.

Press BACK button to return to previous menu. If security system OFF mode was selected, display returns to MAIN MENU.

If security system ON mode was selected, warning screen appears. Press SELECT button to allow security system to be enabled or press BACK button to return to previous menu.

OUT4001,00005B1 -19-26APR10-1/1

Display Unit—Main Menu—Security—Change Owner PIN

The **CHANGE OWNER PIN** menu allows machine owner to change their personal identification number (PIN) at any time.

PINs can be from 1—8 numeric characters in length. Leading zeros are recognized. For example, 1, 01, and 001 are each valid and unique PINs.

Press DOWN button at MAIN MENU to highlight SECURITY.

Press SELECT button and OWNER PIN screen appears.

Enter owner PIN on numeric keypad on sealed switch module (SSM), then press enter key on SSM to activate SECURITY menu.

SECURITY menu appears.

Press DOWN button to highlight CHANGE OWNER PIN, then press SELECT button.

Current OWNER PIN menu appears.

Enter current owner PIN again using numeric keypad on SSM, then press enter key on SSM.

NEW OWNER PIN screen appears.

Enter new owner PIN using numeric keypad on SSM, then press enter key on SSM.

CONFIRM OWNER PIN screen appears.

Enter new owner PIN again using numeric keypad on SSM, then press enter key on SSM to confirm change or BACK button to exit without changing.

Press BACK button to return to previous menu.

OUT4001,00005B2 -19-18MAY10-1/1

Display Unit—Main Menu—Security—Manage Operator PINs

The **MANAGE OPERATOR PINS** menu allows the machine owner to enter up to ten unique personal identification numbers (PINs) for operators. PINs can be added or deleted only by the owner.

PINs can be from 1—8 numeric characters in length. Leading zeros are recognized. For example, 1, 01, and 001 are each valid and unique PINs.

Press DOWN button at MAIN MENU to highlight SECURITY.

Press SELECT button and OWNER PIN screen appears.

Enter owner PIN on numeric keypad on sealed switch module (SSM), then press enter key on SSM to activate SECURITY menu.

SECURITY menu appears.

Press DOWN button to highlight MANAGE OPERATOR PINS, then press SELECT button.

OPERATOR PINS screen appears showing PINs for operators 1—5. PINs for operators 6—10 can be accessed by pressing DOWN button to highlight PINS 6—10, then pressing SELECT button.

Machine owner can clear operator PINs as follows:

Press DOWN button to highlight desired operator PIN, then press SELECT button.

OPERATOR PIN UPDATE screen appears.

Press DOWN button to highlight CLEAR PIN, then press SELECT button.

CLEAR PIN screen appears.

Press SELECT button to clear PIN or press BACK button to return without clearing.

Machine owner can enter new operator PINs as follows:

Press DOWN button to highlight next available unassigned operator PIN, then press SELECT button.

OPERATOR PIN UPDATE screen appears.

Press DOWN button to highlight ENTER PIN, then press SELECT button.

ENTER NEW PIN screen appears.

Enter new PIN using numeric keypad on SSM, then press enter key on SSM or press BACK button to exit without change.

Press BACK button to return to previous menu.

OUT4001,00005B3 -19-26APR10-1/1

Display Unit—Main Menu—Security—Manage Transport PIN

The **MANAGE TRANSPORT PIN** menu allows the machine owner to assign and manage a temporary transport personal identification number (PIN) for use by maintenance personnel during service or while transporting machine.

When a transport PIN is assigned, owner also specifies a length of time from 1—8 hours that the PIN is valid. This time is actual machine operating hours which counts down only when machine is running.

The machine can be started any number of times using the transport PIN. Once the transport PIN time expires, the machine will continue to run until the engine stop switch is pressed. Thereafter, the engine will not restart unless a valid owner or operator PIN is entered.

If an owner or operator PIN is entered before transport PIN time expires, the time is reset to zero.

A valid transport PIN can be from 1—8 numeric characters in length. Leading zeros are acceptable and recognized.

Press DOWN button at MAIN MENU to highlight SECURITY.

Press SELECT button and OWNER PIN screen appears.

Enter current owner PIN on numeric keypad on sealed switch module (SSM), then press enter key on SSM to activate SECURITY menu.

SECURITY menu appears.

Press DOWN button to highlight MANAGE TRANSPORT PIN, then press SELECT button.

TRANSPORT PIN menu appears.

TRANSPORT PIN menu items on display include:

- **1- CLEAR TRANSPORT PIN**
- **2- CHANGE TRANSPORT PIN**
- **3- CHANGE TRANSPORT PIN TIME**

To clear transport PIN:

Press DOWN button to highlight CLEAR TRANSPORT PIN.

Press SELECT button to clear PIN.

PIN is cleared and verification message pops up on screen.

Press BACK button to return to previous menu.

To change or enter new transport PIN:

Press DOWN button to highlight CHANGE TRANSPORT PIN.

Press SELECT button.

CHANGE TRANSPORT PIN screen appears.

Enter new transport PIN using numeric keypad on SSM, then press enter key on SSM or press BACK button to exit without change.

Press BACK button to return to previous menu.

To set or change transport PIN time:

Press DOWN button to highlight CHANGE TRANSPORT PIN TIME.

Press SELECT button.

CHANGE TRANSPORT PIN TIME screen appears.

Press UP button to increase valid time or DOWN button to decrease time.

Press SELECT button to store desired PIN time.

Press BACK button to return to previous menu.

OUT4001,00005B4 -19-26APR10-1/1

Display Unit—Main Menu—Security—Delayed Operator Logout

The **DELAYED OPERATOR LOGOUT** menu allows the machine owner to set the time interval allowed for logout after the machine is shut off. Once the logout time expires, the operator must enter a PIN to restart the machine. This feature simplifies the procedure and reduces the restart time when operator must periodically shut down machine for short wait times. The delayed operator logout time can only be reset by owner with the following selections:

- **OFF**
- **5 MINUTES**
- **60 MINUTES**

Press DOWN button at MAIN MENU to highlight SECURITY.

Press SELECT button and OWNER PIN screen appears.

Enter current owner PIN on numeric keypad on sealed switch module (SSM), then press enter key on SSM to activate SECURITY menu.

SECURITY menu appears.

Press DOWN button to highlight DELAYED OPERATOR LOGOUT, then press SELECT button.

Press DOWN button to highlight desired delay time. Selection is active when a checkmark is displayed next to it.

Press SELECT button to store new time.

Press BACK button to return to previous menu.

OUT4001,00005B5 -19-26APR10-1/1

Display Unit—Main Menu—Exhaust Filter

There are 5 soot levels to describe the amount of restriction in the exhaust filter. These levels determine the type of cleaning that is required:

- LOW
- MODERATE
- HIGH
- VERY HIGH
- SERVICE

Auto cleaning is able to activate (if not disabled by the operator) when the exhaust filter restriction is anywhere between MODERATE and HIGH soot levels. Auto cleaning is no longer available if exhaust filter restriction reaches VERY HIGH or SERVICE soot levels.

Parked cleaning can only be initiated when the exhaust filter restriction reaches HIGH or VERY HIGH soot levels.

If exhaust filter restriction reaches SERVICE soot level, contact your authorized dealer.

For more information on the exhaust filter, see Exhaust Filter. (Section 2-2.)

The **EXHAUST FILTER** menu allows the operator to enable or disable auto filter cleaning. It also allows the operator to initiate a parked filter cleaning.

The submenus under MAIN MENU that appear on display (6) include:

1. **CODES**
2. **SETTINGS**
3. **DIAGNOSTICS**
4. **PAYLOAD SCALE**
5. **SECURITY**
6. **EXHAUST FILTER**
7. **SOFTWARE DELIVERY**

Press DOWN button (4) at MAIN MENU to highlight EXHAUST FILTER.

Press SELECT button (3) to display EXHAUST FILTER menu.

EXHAUST FILTER menu items on display include:

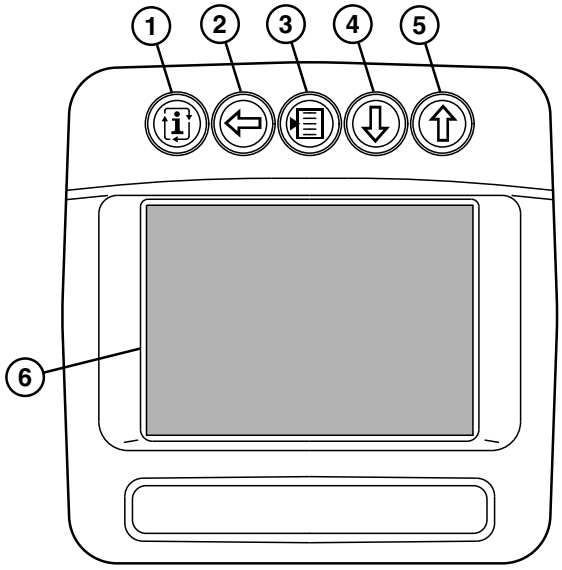

TX1051892 —UN—25NOV08

Display Unit

1— INFO Button
2— BACK Button
3— SELECT Button
4— DOWN Button
5— UP Button
6— Display

FILTER SOOT LEVEL—Displays LOW, MODERATE, HIGH, VERY HIGH, or SERVICE to describe the soot level of restriction in the exhaust filter.

1. **AUTO CLEANING**
2. **PARKED CLEANING**

Press DOWN button to move to desired menu item.

Press SELECT button to activate chosen menu item.

Press BACK button (2) to return to previous menu.

Press INFO button (1) to return to runtime screen at any time.

OUT4001,00005B6 -19-08SEP11-1/1

Display Unit—Main Menu—Exhaust Filter—Auto Cleaning

CAUTION: Servicing machine during exhaust filter auto cleaning can result in serious personal injury. Avoid exposure and skin contact with hot gases and components.

During exhaust filter auto cleaning, the engine may run at elevated idle and hot temperatures for an extended period of time. Exhaust gases and exhaust filter components may reach temperatures hot enough to burn people and ignite or melt common materials.

NOTE: Disabling exhaust filter auto cleaning is not preferred. Whenever possible, auto cleaning should be enabled to keep soot buildup to a minimum and to increase overall machine uptime.

Auto cleaning is set from the factory to be enabled. If operating in conditions where it may be unsafe for elevated exhaust temperatures, auto cleaning can be disabled.

The **AUTO CLEANING** menu allows the operator to enable or disable the auto cleaning function for the exhaust filter.

At EXHAUST FILTER menu, press UP button or DOWN button to highlight AUTO CLEANING.

Press SELECT button to display AUTO CLEANING menu.

AUTO CLEANING menu items on display include:

- **ENABLED**
- **DISABLED**
  DURING CLEANING
  ELEVATED EXHAUST TEMPERATURE MAY EXIST
  ELEVATED ENGINE IDLE SPEED MAY BE ACTIVE

Press UP button or DOWN button to highlight desired function.

Press SELECT button to activate chosen function. Current function is active when a checkmark is displayed next to it.

Press BACK button to return to previous menu.

If auto cleaning is enabled, and operator chooses to disable, a pop-up will appear on the monitor for 3 seconds stating AUTO CLEANING DISABLED. The exhaust filter auto cleaning disabled indicator will also illuminate on the advanced display unit (ADU) and stay illuminated until operator enables auto cleaning again.

If filter restriction reaches the HIGH soot level while auto cleaning is disabled, a pop-up will appear on the monitor stating:

- EXHAUST FILTER RESTRICTED
  PRESS 'SELECT' TO ENABLE AUTO FILTER CLEANING

Pop-up remains on monitor until any button is pressed. If SELECT button is not pressed, pop-up will display again after 15 minutes.

If auto cleaning is disabled, and operator chooses to enable, a pop-up will appear on the monitor for 3 seconds stating AUTO CLEANING ENABLED.

If filter restriction reaches the HIGH soot level with auto cleaning enabled, a pop-up will appear on the monitor stating:

- EXHAUST FILTER RESTRICTED
  INCREASE ENGINE SPEED ABOVE 1200 RPM OR PRESS 'SELECT' FOR PARKED FILTER CLEANING

Pop-up remains on monitor until engine speed is increased to 1200 rpm or any button is pressed. If engine speed is not increased to 1200 rpm or parked filter cleaning is not initiated, pop-up will display again after 15 minutes.

OUT4001,00005B7 -19-09SEP11-1/1

Display Unit—Main Menu—Exhaust Filter—Parked Cleaning

CAUTION: Servicing machine during exhaust filter parked cleaning can result in serious personal injury. Avoid exposure and skin contact with hot gases and components.

During exhaust filter parked cleaning, the engine may run at elevated idle and hot temperatures for an extended period of time. Exhaust gases and exhaust filter components may reach temperatures hot enough to burn people and ignite or melt common materials.

Avoid death or serious injury from machine movement. Do not leave running machine unattended during exhaust filter cleaning.

IMPORTANT: Avoid machine damage. Always park machine in a safe location and check for adequate fuel level before beginning exhaust filter parked cleaning.

Parked cleaning is performed when the operator chooses to have the machine actively clean the exhaust filter while it is in a predetermined safe state. This safe state includes three conditions:

- park brake applied
- FNR in neutral
- engine running at idle

An exhaust filter parked cleaning can only be initiated if the filter restriction is at HIGH or VERY HIGH soot levels.

Parked cleaning occurs in two stages. The first stage is to prepare the exhaust filter by automatically raising exhaust filter temperature to 300°C (572°F). Once the exhaust filter temperature reaches 275—300°C (527—572°F), the cleaning process may begin. The second stage is when the cleaning process begins and can result in exhaust filter temperatures exceeding 550°C (1022°F). The cleaning process will continue until one of the following conditions exist:

- exhaust filter restriction level is back to LOW
- 45 minutes has elapsed causing a timeout
- operator cancels the parked cleaning procedure by releasing park brake, moving FNR out of neutral, or increasing engine speed
- parked cleaning is aborted due to a fault
- engine runs out of fuel due to not following ADU suggestions
- engine is shut off by operator (not recommended)

If operator tries to initiate a parked cleaning when the filter restriction is at LOW or MODERATE soot levels, the vehicle control unit (VCU) will not activate a parked cleaning and a pop-up will appear on the monitor stating EXHAUST FILTER CLEANING NOT REQUIRED. This will be displayed for 3 seconds accompanied by an alarm and then return to EXHAUST FILTER menu.

If operator tries to initiate a parked cleaning when the filter restriction is at the SERVICE soot level, the VCU will not activate a parked cleaning and a pop-up will appear on the monitor stating SERVICE FILTER CLEANING REQUIRED. This will be displayed for 3 seconds accompanied by an alarm and then return to EXHAUST FILTER menu. Contact your authorized dealer for exhaust filter cleaning at this soot level.

The **PARKED CLEANING** menu allows the operator to initiate a parked cleaning.

At EXHAUST FILTER menu, press UP button or DOWN button to highlight PARKED CLEANING.

Press SELECT button to display PARKED CLEANING menu.

PARKED CLEANING menu will first display:

- DO YOU WISH TO SHUTDOWN AFTER CLEANING?
- NO
- YES
  IF YES
  MACHINE WILL SHUTDOWN AFTER CLEANING IS COMPLETE

Once a choice is made, monitor will display the next screen with warnings and checklist to ensure machine is in a safe state for parked cleaning to take place. If any of the safe state conditions are not met, another screen will appear on the monitor telling the operator what condition is not met and will remain on until operator satisfies condition.

- HIGH EXHAUST TEMPERATURE WILL EXIST
- ELEVATED ENGINE IDLE SPEED WILL EXIST
- HYDRAULICS WILL BE DISABLED DURING CLEANING

  - PARK BRAKE APPLIED
  - FNR IN NEUTRAL
  - ENGINE SPEED AT IDLE

Press SELECT button to start.

Press BACK button to exit.

If SELECT button is pressed to start parked cleaning, but fuel level is low, a screen is displayed to warn the operator of this and give the operator the choice to continue cleaning by pressing the SELECT button or cancel cleaning by pressing BACK button.

NOTE: Once parked cleaning is started, operator can go back and forth between the runtime screen and the menu screen by pressing the INFO button. All other monitor buttons will be inactive during the parked cleaning process until it is completed.

If SELECT button is pressed, the first stage of the parked cleaning process will be displayed to show preparation status:

Continued on next page

- RELEASE PARK BRAKE, MOVE FNR, OR INCREASE ENGINE SPEED TO CANCEL
  PREPARING TO CLEAN EXHAUST FILTER
  (bar is displayed and filled in as status progresses)
  ESTIMATED TOTAL PERCENT COMPLETE XX%
  MACHINE WILL SHUTDOWN AFTER CLEANING
  (only displays if auto shutdown is selected)

Once the first stage is complete, stage two of the parked cleaning process will be displayed to show cleaning progress:

- RELEASE PARK BRAKE, MOVE FNR, OR INCREASE ENGINE SPEED TO CANCEL
  EXHAUST FILTER CLEANING IN PROGRESS
  (bar is displayed and filled in as status progresses)
  ESTIMATED TOTAL PERCENT COMPLETE XX%
  MACHINE WILL SHUTDOWN AFTER CLEANING
  (only displays if auto shutdown is selected)

When cleaning is complete and auto shutdown is enabled, a full screen pop-up is displayed stating COMPLETE until the machine shuts down or the operator presses SELECT to cancel the auto shutdown.

When cleaning is complete and auto shutdown is disabled, a full screen pop-up is displayed stating COMPLETE until operator presses SELECT button to confirm. Once SELECT button is pressed, monitor returns to runtime screen.

OUT4001,00005B8 -19-11JAN11-2/2

Display Unit—Main Menu—Software Delivery

The **SOFTWARE DELIVERY** menu is set by the dealer to enable Service ADVISOR™ Remote (SAR) software to be downloaded and installed on machine through the JDLink™ cellular connection. (For JDLink connection information, see Display Unit—Main Menu—Diagnostics—JDLink™ System Info in this section.) A series of screens will appear on the display monitor to walk the operator through the download and installation process. It will be necessary to interact with your John Deere dealer or technician for needed information.

The submenus under MAIN MENU that appear on display (6) include:

1. **CODES**
2. **SETTINGS**
3. **DIAGNOSTICS**
4. **PAYLOAD SCALE**
5. **SECURITY**
6. **EXHAUST FILTER**
7. **SOFTWARE DELIVERY**

Press DOWN button (4) at MAIN MENU to highlight SOFTWARE DELIVERY.

Press SELECT button (3) to display SOFTWARE DELIVERY menu.

NOTE: If software delivery has NOT been enabled by the dealer, a pop-up will appear on the monitor stating:

SOFTWARE DELIVERY HAS NOT BEEN ENABLED

SEE DEALER TO ENABLE

SOFTWARE DELIVERY menu item on display is:

1. **SOFTWARE UPDATE**

Service ADVISOR is a trademark of Deere & Company
JDLink is a trademark of Deere & Company

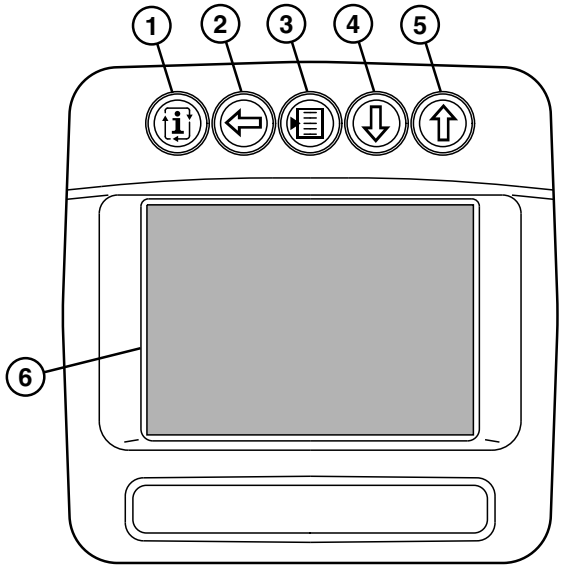

TX1051892 —UN—25NOV08

Display Unit

1— INFO Button
2— BACK Button
3— SELECT Button
4— DOWN Button
5— UP Button
6— Display

Press SELECT button to activate menu item.

Press BACK button (2) to return to previous menu.

Press INFO button (1) to return to runtime screen at any time.

OUT4001,00006BE -19-03NOV10-1/1

Display Unit—Main Menu—Software Delivery—Software Update

The **SOFTWARE UPDATE** menu is for receiving Service ADVISOR™ Remote (SAR) software downloads and installations to the machine. Downloads can take place with the engine running and machine operating. However, installation of the software can only process if the engine is not running and park brake applied. If conditions exist that will not allow the download or installation to happen, screens will appear on the monitor advising what needs to be done in order to continue. For more information, contact your authorized John Deere dealer.

At SOFTWARE DELIVERY menu, press SELECT button to display SOFTWARE UPDATE menu.

NOTE: To avoid delays, it will be helpful at this point to make sure engine is not running, park brake is applied, and the SOFTWARE TERMS AND CONDITIONS have been read before continuing. (Find SOFTWARE TERMS AND CONDITIONS at the beginning of this manual.)

Press SELECT again and the SOFTWARE UPDATE menu will display a series of screens depending on the status of the update and the status of the machine.

If update is already downloaded, the monitor will display the following screen:

DOWNLOAD COMPLETE

READY TO INSTALL

After 3 seconds, the monitor will then display a SOFTWARE LICENSE AGREEMENT screen stating:

PRESS SELECT TO ACCEPT THE TERMS AND CONDITIONS DEFINED IN THE OPERATOR'S MANUAL AND TO BEGIN LOADING THE NEW SOFTWARE UPDATE

Once SELECT is pressed, installation will take place if all conditions are acceptable. A warning screen will appear for 5 seconds stating:

WARNING

DO NOT PRESS STOP BUTTON ONCE SOFTWARE UPDATE HAS STARTED

The following screen will then appear:

SOFTWARE INSTALLATION MAY TAKE 10 MINUTES

SCREEN MAY BE BLANK

When completed, the monitor will display:

SOFTWARE INSTALLATION COMPLETED SUCCESSFULLY

PLEASE CYCLE POWER

— — — — — — — — — — — — — — — — — — — —

Service ADVISOR is a trademark of Deere & Company

The machine is set at the factory to auto approve software downloads, but if the dealer or technician has changed this setting to notify operator before downloading, the following screen will appear:

NEW SOFTWARE AVAILABLE FOR DOWNLOAD

1. APPROVE DOWNLOAD
2. REJECT DOWNLOAD

Press UP or DOWN button to highlight desired function.

Press SELECT button to activate chosen function.

Press BACK button to return to previous menu.

If APPROVE DOWNLOAD is selected, a pop-up will appear on the monitor for 5 seconds stating:

SOFTWARE DOWNLOADING

NORMAL MACHINE OPERATION MAY CONTINUE

(Monitor will go back to the runtime screen after the pop-up disappears and normal machine operation may continue while the software is being downloaded.)

If REJECT DOWNLOAD is selected, a pop-up will appear on the monitor for 5 seconds stating:

SOFTWARE DOWNLOAD REJECTED

(Monitor will go back to the runtime screen after the pop-up disappears and normal machine operation may continue.)

NOTE: To get rejected software downloaded at some other time, dealer interaction will be necessary.

To change the setting back to auto approve software downloads, contact your authorized John Deere dealer.

— — — — — — — — — — — — — — — — — — — —

If software download was sent when machine power was off, upon cycle start up and initial display check, an alarm will beep and runtime screen will have a pop-up displayed stating:

SOFTWARE DOWNLOAD IS AVAILABLE

"SELECT" TO DOWNLOAD

"BACK" TO ASK LATER

If software is ready to install upon cycle start up and initial display check, an alarm will beep and runtime screen will have a pop-up displayed stating:

SOFTWARE READY TO INSTALL

"SELECT" TO GO TO SOFTWARE UPDATE MENU

"BACK" TO ASK LATER

OUT4001,00006BF -19-12NOV10-1/1

Horn Button

1— Horn Button

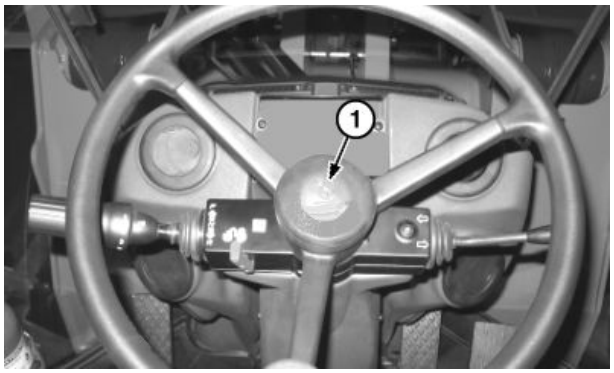

TX1039888A —UN—04APR08



TX1062356A —UN—13AUG09

Horn Button on Joystick Steering Control (if equipped)

DP99999,000000E -19-21OCT09-1/1

Turn Signals

Push turn signal lever (1) forward to signal a left turn. Pull turn signal lever rearward to signal a right turn.

1— Turn Signal Lever

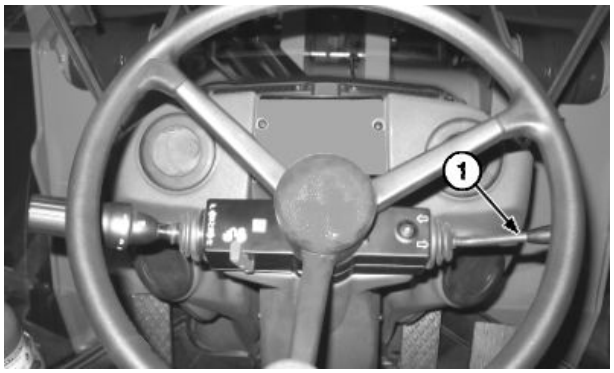

TX1039889A —UN—04APR08

DP99999,000000F -19-08APR08-1/1

Neutral Lock

CAUTION: Prevent possible injury from unexpected machine movement. Always move forward, neutral, or reverse (FNR) lever to N (neutral), and engage neutral lock before starting or dismounting.

Move neutral lock lever (1) to the locked position to engage neutral lock. Move lever to the unlocked position to disengage neutral lock.

1— Neutral Lock Lever



TX1041550A —UN—29APR08

DP99999,0000088 -19-23JUL08-1/1

Joystick Steering Armrest Adjustment— if Equipped

IMPORTANT: If armrest is loose when tilting downward, see your authorized dealer.

Release hold-up lever (1) and lower armrest to operating position.

NOTE: Arm pad height adjustment knob does not tighten the arm rest.

To raise or lower joystick armrest, loosen arm pad height adjustment knob (2) and tighten when desired height is reached.

Loosen arm pad position adjustment knob (3) to move armrest forward or backward and tighten when desired position is reached.

Loosen arm pad tilt adjustment lever (4) to tilt arm pad. Tighten lever when desired angle is reached.

1— Hold-Up Lever
2— Arm Pad Height Adjustment Knob
3— Arm Pad Position Adjustment Knob
4— Arm Pad Tilt Adjustment Lever



TX1047806A —UN—25AUG08

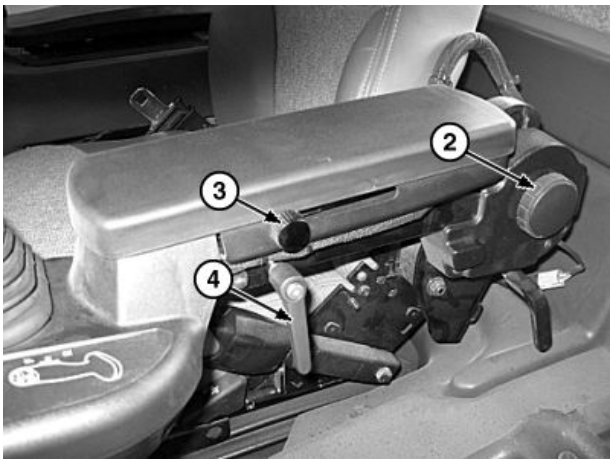

TX1047807A —UN—27AUG08

DP99999,000005C -19-20MAR12-1/1

Air Conditioner and Heater Operation

IMPORTANT: Before starting air conditioner first time in the season, check filters and condenser. Clean them if necessary. Check refrigerant level.

NOTE: Engine must be running and blower speed switch must be on for air conditioning to function.

To Operate Air Conditioner:

Press and release air conditioner switch (1) until LED is illuminated to turn ON air conditioner.

Turn temperature control knob (2) to adjust air temperature. Turn knob clockwise toward red zone for warmer air (best for defrosting) and counterclockwise toward blue zone for cooler air.

Turn blower speed knob (3) clockwise to increase blower speed. Blower has four speed settings plus an OFF position.

NOTE: Use air conditioner with temperature setting in midrange to dehumidify air and remove moisture from cab windows without overcooling.

To Operate Heater:

Make sure air conditioner switch (1) is OFF. LED on air conditioner switch should not be illuminated.

Turn temperature control knob (2) to the heat position (red zone).

Turn blower speed knob (3) to desired blower speed.

If equipped with heated seat option, press seat heater switch (4) to warm operator's seat.

1— Air Conditioner Switch
2— Temperature Control Knob
3— Blower Speed Knob
4— Seat Heater Switch



Air Conditioner Switch

TX1039891A —UN—04APR08

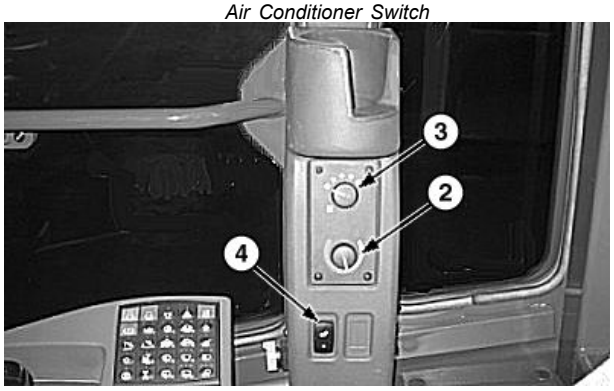

Temperature Controls

TX1039892A —UN—04APR08

OUT4001,00005C5 -19-15OCT11-1/1

Counter Switch

The counter switch (1) is located on the right side of the operator's seat near the boom and bucket control levers. The switch consists of three individual buttons.

The SELECT COUNTER button allows the operator to select from up to five different counters which can correspond to five different aggregates. For more information, see Counter Switch Operation. (Section 2-2.)

The ADD BUCKET button and the ADD TRUCK button are used on machines equipped with the Embedded Payload Scale (EPS) system. For more information, see Embedded Payload Scale—If Equipped. (Section 2-2.)

1— Counter Switch



TX1045645A —UN—15JUL08

Counter Switch

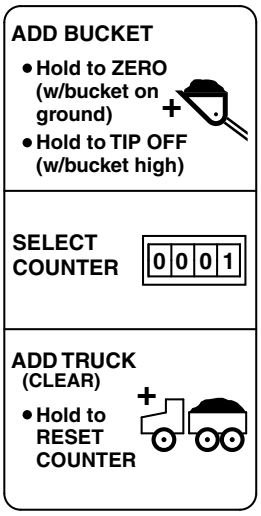

TX1044805 —19—10JUL08

Counter Switch Label

OUT4001,000069F -19-15OCT11-1/1

Opening and Securing Side Door

To open left side cab door from outside, press button on door handle (1) and pull door open.

To secure door in open position, open door until clam latch (3) fastens onto striker (4) on side of cab. Door must be secure against rubber bumper (2). Adjust bumper as required to maintain proper tension.

To release door from secured position from inside or outside cab, pull on release rod (5) located to the left of the operator's seat. Door will latch when closed.

To open left side cab door from inside cab, push forward on latch release lever (6).

1— Door Handle
2— Bumper
3— Clam Latch
4— Striker
5— Release Rod
6— Latch Release Lever

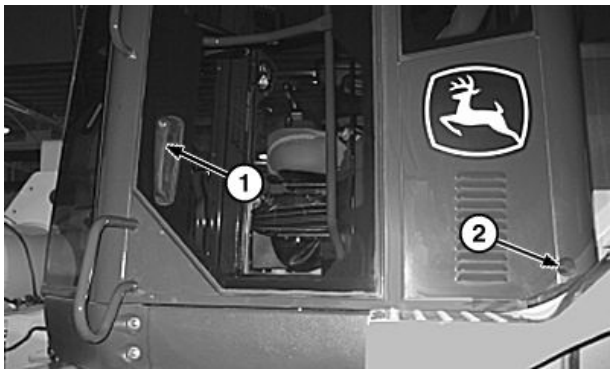

TX1039894A —UN—04APR08

Cab Entrance Door

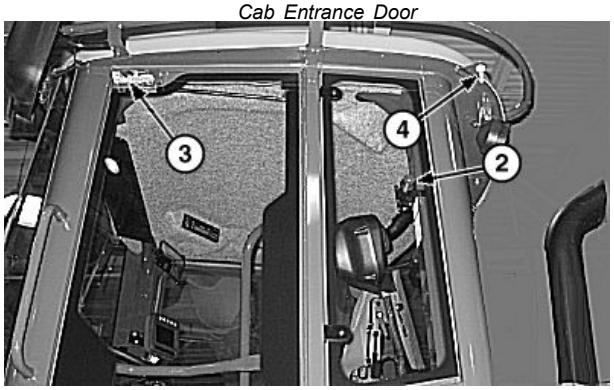

TX1039895A —UN—04APR08

Securing Door In Open Position

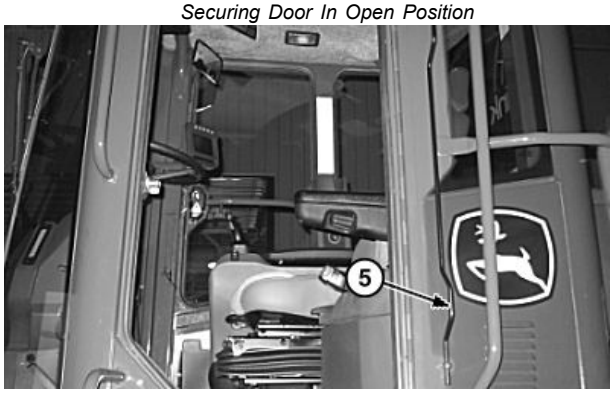

TX1039897A —UN—04APR08

Release Rod

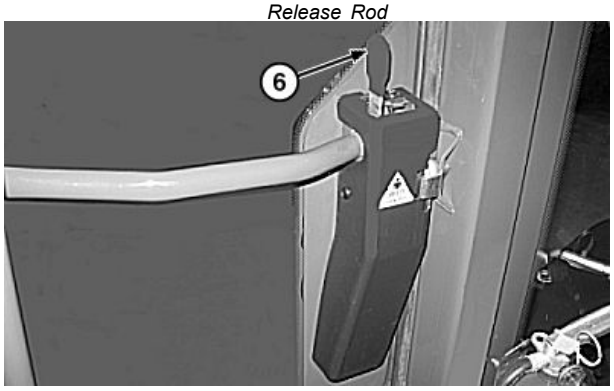

TX1039900A —UN—04APR08

Latch Release Lever

DP99999,0000014 -19-17OCT11-1/1

Opening Side Window/Secondary Exit

NOTE: The cab right side window can be used as a secondary exit.

Push inside latch release lever (1) to open side window.

Push window out and around. Engage outer latch striker into latch in rear cab corner post to hold window open.

To close window, push down on outside latch release lever (2). Swing window around and engage inside latch.

1— Inside Latch Release Lever
2— Outside Latch Release Lever

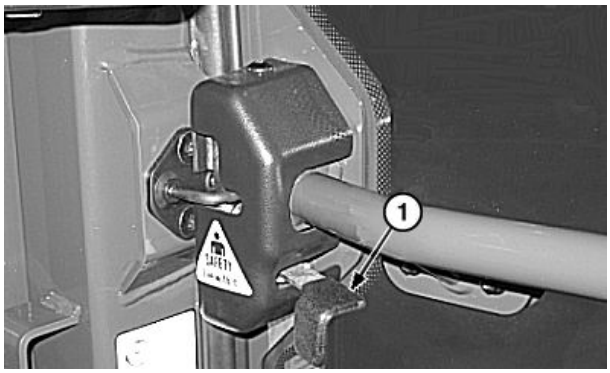

TX1039904A —UN—04APR08

Secondary Exit Latch

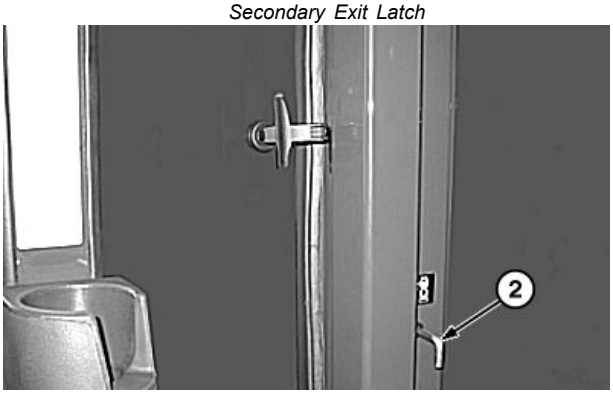

TX1040102A —UN—08APR08

Outside Latch Release Lever

DP99999,0000015 -19-15OCT11-1/1

Opening Rear Side Window

Pull on latch handle (1) to release window lock. Push window outward to open.

1— Latch Handle



TX1039905A —UN—08APR08

Rear Side Window

DP99999,0000017 -19-15OCT11-1/1

Seat Adjustment

CAUTION: Operator can lose control of machine and be injured if seat is loose. Be sure seat is properly locked in position before operating the machine.

Lift fore-aft adjustment lever (1) to move seat forward and rearward. Release handle at desired position.

To adjust ride firmness, adjust position of ride firmness adjustment lever (2).

While sitting in seat, lift backrest tilt adjustment lever (3) and allow cushion to angle forward or lean backward into desired position and release lever.

While sitting in seat, rotate armrest adjustment knob (4) to tilt armrest to desired position.

To raise or lower seat height, press engine start switch to energize ignition and push the appropriate side of seat height adjustment switch (5).

Deluxe model seats include seat heaters. To energize heater (if equipped), press seat heater switch (6).

1— Fore-Aft Adjustment Lever
2— Ride Firmness Adjustment Lever
3— Backrest Tilt Adjustment Lever
4— Armrest Adjustment Knob
5— Seat Height Adjustment Switch
6— Seat Heater Switch

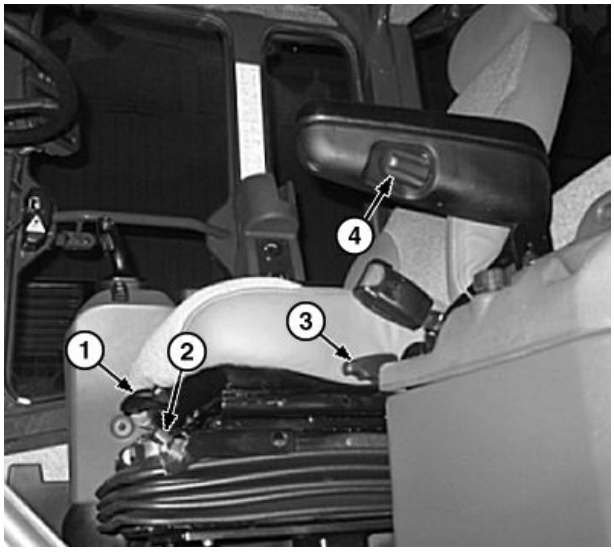

TX1039906A —UN—07APR08

Operator's Seat

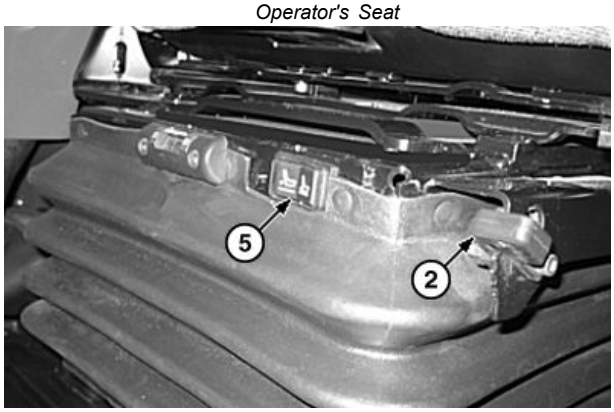

TX1039907A —UN—07APR08

Seat Adjustments

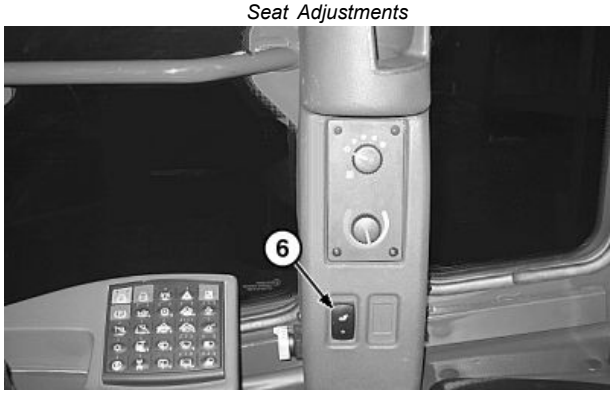

TX1039908A —UN—07APR08

Seat Heater Control

DP99999,0000016 -19-15OCT11-1/1

Fire Extinguisher Mounting Location

MOUNTING LOCATION:

The designated fire extinguisher mounting location (1) is inside the cab by the entrance door.

USE:

NOTE: **All fire extinguishers do not operate the same. Read operating instructions on canister.**

The portable fire extinguisher is used to aid in the extinguishing of small fires. Refer to individual manufacturers' instructions and proper fire fighting procedures before the need to use the fire extinguisher arises. See Prevent Fires. (Section 1-2.)

MAINTENANCE:

IMPORTANT: Avoid possible machine damage. Check gauge (if equipped) on fire extinguisher. If fire extinguisher is not fully charged, recharge or replace it according to the manufacturer's instructions.



TX1041664A —UN—01MAY08

Fire Extinguisher Mounting Location

1— Fire Extinguisher Mounting Location

Inspect and maintain the fire extinguisher following the manufacturer's recommendations and all local, regional and national regulations.

OUT4001,00005EC -19-30NOV10-1/1

Before Starting Work

Review the operating precautions. See Safety—Operating Precautions. (Section 1-3.)

Use seat belt when operating machine. Remember to fasten seat belt even during brief periods of use.

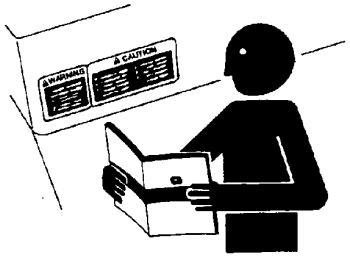

T133556 —UN—24AUG00

Reading Operator's Manual

OUT4001,00005EB -19-29JUL13-1/1

Inspect Machine Daily Before Starting

Safety and Protective Devices Checks

Walk around machine to clear all persons from machine area before starting machine.

Clear all steps and walking surfaces.

Check gauge (if equipped) on fire extinguisher. If fire extinguisher is not fully charged, recharge or replace it according to the manufacturer's instructions.

Check condition of guards, shields, roll-over protective structure (ROPS), covers, and seat belt.

Check for correct park brake operation.

Overall Machine Checks

Check fuel level and fill with proper fuel, if necessary.

Check for worn or frayed electrical wires and loose or corroded connections.

Check for bent, broken, loose, or missing parts.

Check for oil leaks, missing or loose clamps, kinked hoses, and lines or hoses that rub against each other or other parts.

OUT4001,00005DD -19-07FEB12-1/1

Check Instruments Before Starting

Press and release engine start switch (1). The alarm sounds briefly, John Deere screen is displayed momentarily, and then all lights on display unit come on. If security system has been enabled by owner, operator logon screen appears on display unit. Operator must enter valid personal identification number (PIN). If radar object detection (ROD) system is enabled, display screen shows camera image for 2 seconds. If ROD system is not enabled, display screen will be black for 2 seconds. Then display screen populates with normal display items and gauge pointers position to current input values.

After the display check, the STOP indicator and park brake indicator remain illuminated. The STOP indicator flashes. The engine oil pressure gauge and warning indicator are highlighted in red and flash until engine is started.

1— Engine Start Switch



TX1039909A —UN—08APR08

Engine Start Switch

OUT4001,00005F1 -19-18OCT11-1/1

Security System

The security system is designed to impede theft or unauthorized use of the machine. The system prevents the machine from starting until the operator correctly enters a valid security code when prompted during the startup sequence.

IMPORTANT: The default owner PIN set at factory is 1111. To maintain security, machine owner must change default PIN to another value. Owner must assign operator PINs as required and not provide owner PIN to anyone else.

The system provides for one master owner personal identification number (PIN) and up to ten operator PINs. Each PIN consists of up to eight numeric characters. Leading zeros are acceptable. For example, 001, 01, and 1 are each unique PINs.

The machine owner can perform any of the following security system functions:

- **Enable or disable security system.** See Display Unit—Main Menu—Security—Security. (Section 2-1.)
- **Change owner PIN.** See Display Unit—Main Menu—Security—Change Owner PIN. (Section 2-1.)
- **Manage and assign operator PINs.** See Display Unit—Main Menu—Security—Manage Operator PINs. (Section 2-1.)
- **Manage and assign transport PIN.** Transport PIN is for use by maintenance personnel and automatically expires after a preset time of 1—8 hours. See Display Unit—Main Menu—Security—Manage Transport PIN. (Section 2-1.)
- **Change operator logout delay time.** Logout delay time is a specified period of time after machine shutdown during which operator may restart machine without entering PIN. Time is either 0, 5, or 60 minutes. See Display Unit—Main Menu—Security—Delayed Operator Logout. (Section 2-1.)

DP99999,0000112 -19-17JUL08-1/1

Battery Disconnect Switch

Turn battery disconnect switch (1) clockwise to turn ON machine electrical system.

Turn switch counterclockwise to turn OFF machine electrical system.

1— Battery Disconnect Switch

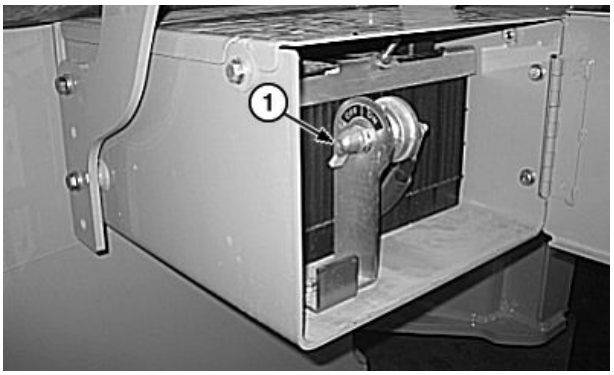

TX1041670A —UN—01MAY08

Battery Disconnect Switch

OUT4001,00005F3 -19-18OCT11-1/1

Engine Break-In Period

IMPORTANT: To avoid engine damage it is critical to observe the engine break-in period. Extra care during the first 500 hours of operation will result in more satisfactory long-term engine performance and life. DO NOT exceed 500 hours of operation with John Deere Break-In Plus™ engine oil.

This machine is factory filled with John Deere Break-In Plus engine oil.

1. Operate the machine at heavy or normal loads with minimal idling during the break-in period. During the first 20 hours, avoid prolonged periods of engine idling or sustained maximum load operation. If engine will idle longer than 5 minutes, stop engine.

IMPORTANT: DO NOT add make-up oil until the oil level is BELOW the ADD mark on the dipstick. John Deere Break-In Plus oil should be used to make up any oil consumed during the break-in period. See John Deere Break-In Plus Engine Oil. (Section 3-1.)

If John Deere Break-In Plus Engine Oil is not available, use a 10W-30 diesel engine oil meeting one of the following during the initial 250 hours of operation:

- **API Service Category CJ-4**
- **ACEA Oil Sequence E9**
- **ACEA Oil Sequence E6**

2. Check engine oil level more frequently during the engine break-in period.
3. Change oil and oil filter after first 500 hours of operation (maximum). Fill crankcase with the normal seasonal viscosity grade oil. See Diesel Engine Oil—Interim Tier 4 and Stage III B Engines. (Section 3-1.)
4. Watch coolant temperature gauge closely. If coolant temperature rises above specified limits on the gauge, reduce load on engine. Unless temperature drops quickly, stop the engine and determine the cause before resuming operation. See Troubleshooting. (Section 4-3.)
5. Watch oil pressure gauge for pressure within specification.
6. Check belt for proper alignment and seating in pulley grooves.

Break-In Plus is a trademark of Deere & Company

OUT4001,00005FE -19-10DEC10-1/1

Starting the Engine

CAUTION: Avoid possible injury or death from a runaway machine.

DO NOT start engine by shorting across starter terminals. If normal circuitry is bypassed, machine will start in gear.

NEVER start engine while standing on ground. Start engine only from operator's seat, with forward, neutral, or reverse (FNR) lever or switch in neutral (N). Engage park brake.

Use of seat belt with roll-over protective structure (ROPS) is recommended under all operating conditions.

1. Turn battery disconnect switch to ON.
2. Sit in operator's seat and fasten seat belt.

NOTE: If engine is started with FNR lever or switch in F (forward) or R (reverse), transmission will not shift into F or R until FNR lever or switch is first moved to N (neutral).

3. Move FNR lever (1) or switch (2) to N (neutral).

NOTE: Starting engine is a two-step process. First step applies power to control units and display unit. Second step applies power to starter motor.

4. Press and release engine start switch (3). Wait for display unit to initialize.

1— FNR Lever
2— FNR Switch
3— Engine Start Switch
4— Engine Stop Switch



Start Engine Safely

TS177 —UN—11JAN89

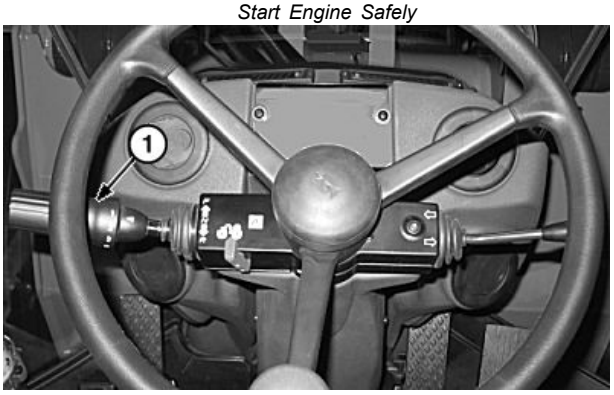

FNR Lever

TX1039911A —UN—07APR08



FNR Switch

TX1039912A —UN—07APR08

Continued on next page

OUT4001,00005F2 -19-12JAN12-1/2

5. If security system has been enabled by owner, operator logon screen appears on display unit. Operator must enter valid personal identification number (PIN) in order to start machine.

   Enter PIN using one of the following methods:

   - Enter PIN on numeric keypad (5) on sealed switch module (SSM). Press enter key (6) on SSM to unlock engine control unit and allow operator to start machine.
   - Enter PIN using buttons on display unit as follows:
     a. Press UP or DOWN button to start process of entering PIN.
     b. Press UP button to increment number shown. If pressed when “9” is shown, display will wrap around to “0”.
     c. Press DOWN button to decrement number shown. If pressed when “0” is shown, display will wrap around to “9”.
     d. Press SELECT button to store current digit.
     e. Continue entering remaining digits of PIN.
     f. When PIN is correctly displayed, press BACK button to enter PIN and unlock engine control unit to allow operator to start machine.

6. Push horn button (1) to sound horn to alert bystanders that machine is being started. Observe display unit to see that park brake indicator is illuminated.

IMPORTANT: After a false start, DO NOT press engine start switch until engine stops or starter damage may occur.

If engine fails to start after two or three tries, press engine stop switch. Wait 2 minutes, then try again.

Engine cannot be started by towing or pushing. Permanent damage to transmission will result.

7. Press and hold engine start switch. Release switch when engine starts.

   Starter will disengage if engine does not start within 30 seconds. A WAIT TO START pop-up message appears on the display unit. Release engine start switch and wait 60 seconds before trying again.

8. If engine fails to start after two or three tries, press engine stop switch (4). Wait 2 minutes before trying again.

IMPORTANT: If STOP indicator does not go off within 10 seconds after starting engine, STOP THE ENGINE. Find and correct the cause.

If engine stops when operating under load, remove load. Restart engine immediately. Run 30 seconds at 1/2 speed before adding load.



TX1046008A —UN—24JUL08

SSM Numeric Keypad

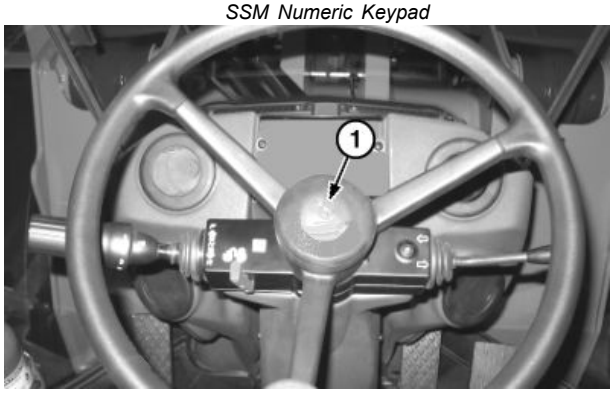

TX1039888A —UN—04APR08

Horn Button



TX1062356A —UN—13AUG09

Horn Button (joystick steering control—if equipped)

1— Horn Button
5— Numeric Keyboard
6— Enter Key

9. Operate machine at less than normal loads and at half speed until engine warms up.

OUT4001,00005F2 -19-12JAN12-2/2

Engine Block Heater—If Equipped

CAUTION: Prevent possible injury from electrical shock. Use grounded cord and inspect for damage before connecting to power source.

IMPORTANT: Prevent property damage as a result of possible fire from an overheated electrical cord. Use a heavy-duty, grounded cord to connect heater to electrical power.

Supply voltage for engine block heater is 110V. Ensure correct supply voltage is used.

Connect engine block heater (1) to electrical power 10 hours before starting engine.

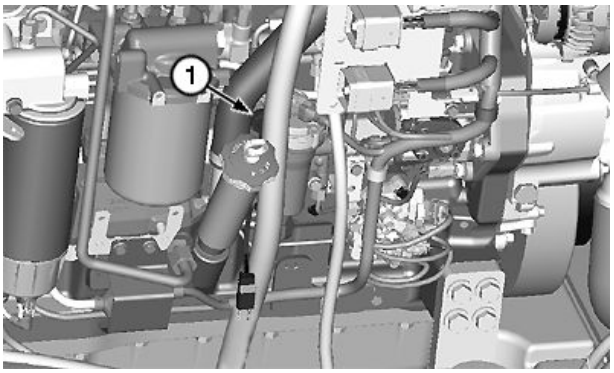

TX1083414A —UN—20OCT10

1— Engine Block Heater

OUT4001,00006A8 -19-20OCT10-1/1

Starting Fluid (Cold Weather Starting Aid)—If Equipped

USING STARTING FLUID

CAUTION: Starting fluid is highly flammable and container is pressurized. To prevent possible injury from exploding container, keep container away from heat, sparks, and open flame. DO NOT puncture or incinerate container. Remove container from machine in seasons when fuel temperature is greater than 4°C (40°F).



TS281 —UN—15APR13

Machines equipped with the cold weather start aid system automatically inject the proper amount of ether starting fluid into the engine when the engine start switch is pressed and the fuel temperature is less than 4°C (40°F). The amount of fluid injected is based on the actual fuel temperature.

REPLACING START AID CONTAINER

1. On left side of machine, open engine service door.
2. Loosen hose clamp (1) and turn start aid container (2) counterclockwise to remove.
3. Remove safety cap from new container, turn container clockwise in mounting base, and tighten clamp to install.

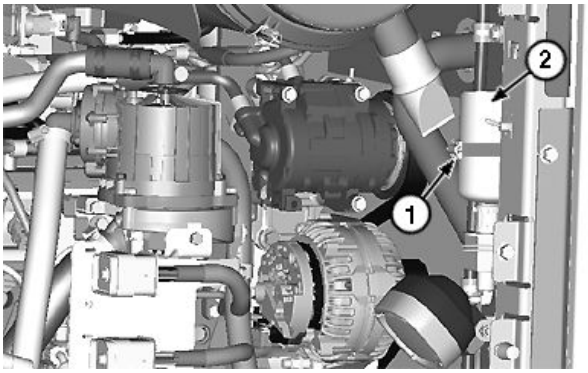

TX1083417A —UN—20OCT10

1— Hose Clamp **2— Start Aid Container**

OPERATING MACHINE WITHOUT START AID CONTAINER INSTALLED

IMPORTANT: Protect machine from possible damage. Install plug in starting fluid valve when container is removed.

Remove start aid container and install plug in fitting on valve.

OUT4001,00006AA -19-21SEP11-1/1

Warmup

Operate machine at less-than-normal loads and speeds for 3—5 minutes or until temperatures and pressures reach normal operating range.

DP99999,00002B7 -19-20JAN10-1/1

Cold Weather Warmup

IMPORTANT: If hydraulic oil and transmission oil are cold, functions move slowly. Do not attempt normal machine operations until hydraulic and transmission functions move at close-to-normal cycle times.

NOTE: For temperatures below -20°C (-4°F), it may take up to 2 minutes for white exhaust smoke to clear.

1. Start engine. Run engine at minimum speed for 5 minutes.
2. Cycle boom with bucket stalled in rollback position until bucket functions move at normal speed.
3. Check transmission oil level with engine at slow idle.

   Prepare machine to shift transmission as follows:

   - Machine—stopped
   - Engine—slightly above slow idle
   - Bucket—off the ground and empty
   - Brakes—apply right or left brake pedal with clutch cut-off disengaged
   - Parking brake—released
   - Cycle transmission 10 times by shifting: Neutral—F1—R1—F1—R1—F1—Neutral. Each cycle should be approximately 5 seconds.
4. Shift from F1—R1 without braking until transmission operates normally.

OUT4001,00005CB -19-05OCT11-1/1

Park Brake Switch

CAUTION: Prevent possible injury or death from machine runaway. Be sure that service brakes are operational before disengaging park brake.

NOTE: Transmission clutches are disengaged when park brake is applied.

To engage park brake, press park brake switch (1) (LED illuminated). When park brake is engaged, park brake indicator (2) on display unit appears in red.

To release park brake, press park brake switch (indicator on display unit and LED go off).

NOTE: If park brake is engaged when engine is running and FNR switch or lever is moved to F (forward) or R (reverse), park brake indicator flashes, STOP indicator flashes, and alarm sounds. Display unit reads N until park brake is released.

Park brake is automatically applied when engine is stopped.

Park brake comes on if transmission pressure drops below 1034 kPa (10.3 bar) (150 psi), if hydraulic pressure is lost, or if electrical power is lost.

1— Park Brake Switch **2— Park Brake Indicator**



TX1039915A —UN—07APR08

Park Brake Switch

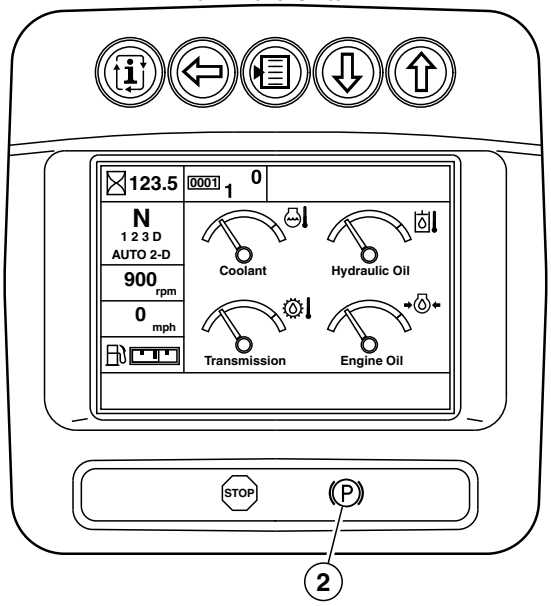

TX1046108 —UN—02FEB10

Park Brake Indicator

OUT4001,000063C -19-18OCT11-1/1

Shifting the Transmission

Press park brake switch (1) to release park brake. If not on a flat surface, press brake pedal to hold machine.

Select desired direction of travel by moving forward, neutral, or reverse (FNR) lever (2) or switch (3) to F (forward) or R (reverse).

Maximum machine travel speed is limited by the gear selected. Select a gear suitable to operating and road conditions. See Travel Speeds. (Section 4-6.) Machines are equipped with either four or five forward gears and three reverse gears. Selecting 4th or 5th gear reverse provides same travel speed as 3rd gear reverse.

On machines equipped with steering column FNR lever, change travel speed range of machine by rotating lever to desired gear. On machines equipped with joystick controllers, change travel speed range by pressing increase gear button (4) or decrease gear button (5).

The transmission can be operated in manual mode, or in one of two automatic modes:

- In AUTO 1-D mode, machine will start in 2nd gear when initially shifted from neutral. After initial shift from neutral, transmission will shift to 1st gear if a high load is encountered. Transmission will upshift or downshift as ground speed dictates, but will only upshift to highest gear selected.
- In AUTO 2-D mode, machine will start in 2nd gear and will shift to highest gear selected as ground speed increases, or will downshift to 2nd gear as ground speed decreases. Transmission will never shift to 1st gear. In this setting, 1st gear can only be obtained by actuating the transmission quick shift switch.

To select AUTO 1-D mode, press and release automatic transmission switch (6) until left LED on switch is illuminated.

To select AUTO 2-D mode, press switch until both LEDs are illuminated.

To select MANUAL mode, press switch until both LEDs are off.



TX1039913A —UN—07APR08

Joystick Bucket and Boom Control Shown

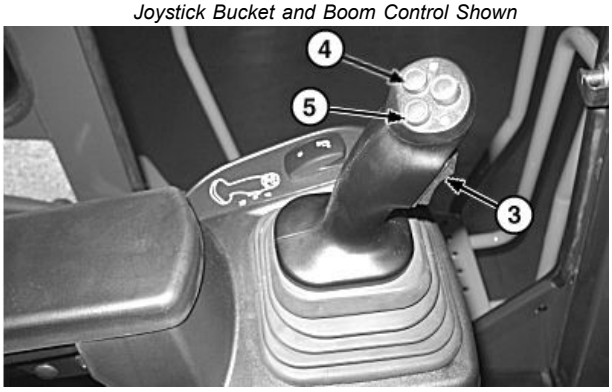

TX1079002A —UN—18JUN10

Joystick Steering Control Shown

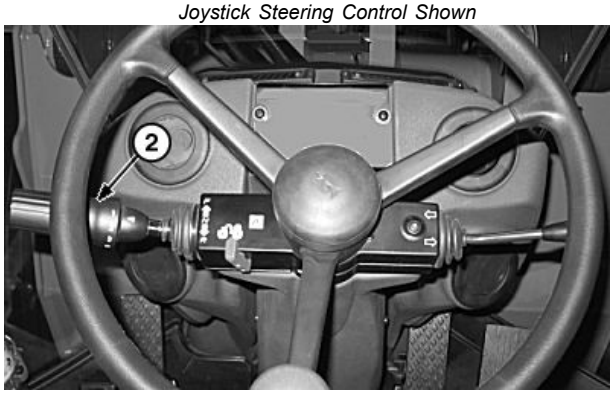

TX1039914A —UN—07APR08

Steering Column FNR Lever

1— Park Brake Switch
2— FNR Lever
3— FNR Switch
4— Increase Gear Button
5— Decrease Gear Button
6— Automatic Transmission Switch

Continued on next page

NOTE: Machine can be programmed for down/up or down only quick shift mode using the SETTINGS menu on the display unit.

Quick Shift Down/Up Mode

Press quick shift switch (1) to downshift from selected gear to next lower gear. Press switch again to return to previous gear.

Quick Shift Down Only Mode

This mode allows the transmission to downshift one gear each time switch is pressed. Once a downshift is made by pressing the quick shift switch, the transmission will not shift up again unless a direction change is made using FNR lever (2) or FNR switch (3) or a gear change request is made by rotating FNR lever or pressing increase gear button (4).

1— Quick Shift Switch
2— FNR Lever
3— FNR Switch
4— Increase Gear Button



TX1039921A —UN—08APR08

Two Lever Bucket and Boom Control Shown

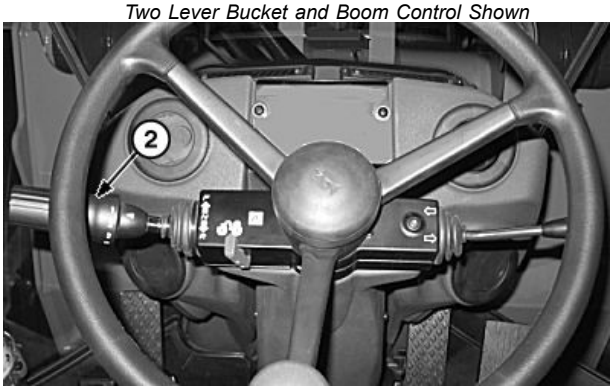

TX1039914A —UN—07APR08

Steering Column FNR Lever



TX1039920A —UN—08APR08

Joystick Bucket and Boom Control Shown

OUT4001,0000634 -19-26OCT11-2/2

Automatic Idle and Automatic Shutdown

Automatic idle feature reduces the engine idle speed after the engine has operated at normal idle speed for a preset period of time. Idle speed is reduced from 900 rpm to 650 rpm.

Once the idle speed is lowered, the vehicle control unit (VCU) disables the clutch calibration mode, reversing fan function (if equipped), and hydraulics to assure that the engine does not stall if the operator activates a hydraulic function at the reduced rpm.

Automatic idle can be enabled or disabled and set to activate after 1, 2, 3, 4, 5, 10, 15, 20, 25, or 30 minute increments from the service mode in the SETTINGS menu on the display unit. See your authorized dealer to activate automatic idle feature.

Automatic idle can be used as a stand alone feature but automatic shutdown can only be enabled when automatic idle feature is enabled.

Automatic shutdown feature turns off ignition power and shuts down the engine after the engine has been operating at a reduced automatic idle speed for a preset period of time.

Automatic shutdown can be enabled or disabled and set to activate after 1, 2, 3, 4, 5, 10, 15, 20, 25, or 30 minute increments from the service mode in the SETTINGS menu on the display unit. See your authorized dealer to activate automatic shutdown feature.

With automatic idle enabled, the VCU and the engine control unit (ECU) monitor various operating parameters. When all parameters meet prerequisites, the automatic idle timer is started. If engine rpm changes during timer countdown, the timer is reset. When timer reaches zero, engine rpm is automatically reduced.

With automatic shutdown also enabled, the automatic shutdown timer is started when engine rpm is reduced by the automatic idle feature. When timer reaches 30 seconds remaining, an audible alarm beeps once and a pop-up display shows a countdown timer indicating that the machine is about to power down. Momentarily increase idle or activate a bucket function to deactivate automatic shutdown feature and return machine to standard operating idle.

Prerequisites that must be met for features to operate are:

- Transmission is in neutral
- Throttle is at idle
- Vehicle speed is less than 0.5 km/h (0.31 mph)
- Engine coolant temperature is greater than a minimum value and less than a maximum value
- Hydraulic oil temperature is less than a maximum value
- Transmission oil temperature is less than a maximum value
- Electrical system voltage is within specification
- Clutch calibration is not active
- Machine cannot be doing a regeneration or be in the service state

If any of these parameters vary from preset values, or CAN communication is lost with the ECU or transmission control unit (TCU), the machine will return to standard operating idle.

KR46761,00009C1 -19-02AUG13-1/1

Joystick Bucket and Boom Control

NOTE: There are several control lever configurations available on John Deere four wheel drive loaders. Please verify the configuration of your machine before reviewing operating instructions.

NOTE: To lower boom with engine stopped, pilot enable/boom down switch (9) must be pressed and held down while moving control lever forward.

Move control lever forward to boom lower position (1) to lower boom.

Move control lever rearward to boom raise position (3) to raise boom.

Move control lever right to bucket dump position (5) or to fast bucket dump position (6) to dump bucket.

Move control lever left to bucket rollback position (7) to roll back bucket backward.

Boom and bucket functions can be operated simultaneously by moving lever between positions. For example, to raise boom and roll back bucket, move lever between positions (3) and (7).

Return-to-Carry (RTC)—Set RTC switch (10) to ON (LED illuminated). Push control lever fully forward to detented boom float position (2). The boom stops at a preset height and lever returns to neutral position automatically.

NOTE: RTC mode overrides boom float mode. Push RTC switch to OFF setting to allow boom float to operate. Boom float does not work when boom height is less than preset distance from ground.

Boom Float—This function allows oil to flow in and out both ends of cylinders so the bucket can follow the contour of the ground. Set RTC switch to OFF. Push control lever fully forward to detented boom float position (2) to activate boom float function. Manually release lever from this position when desired.

Return-to-Dig (RTD)—Set RTD switch (11) to ON (left LED illuminated). Move control lever fully left to detented RTD position (8). Bucket returns to preset dig position.

Boom Height Kickout—Set boom height kickout switch (12) to ON (LED illuminated). Pull control lever fully rearward to detented boom height kickout position (4). Lever remains in this position until boom reaches a preset height, then returns to neutral automatically.

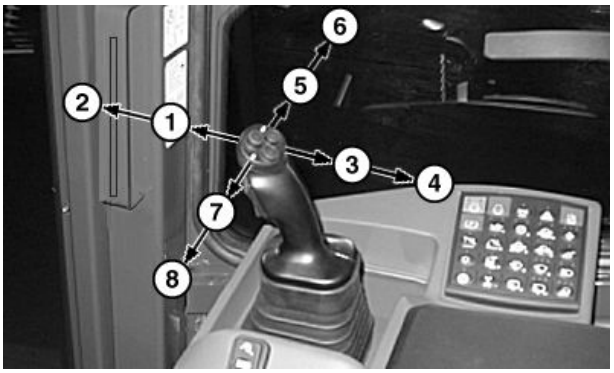

TX1039916A —UN—07APR08

Single Lever Hydraulic Control



TX1039917A —UN—08APR08

Hydraulic Switches

1— Boom Lower Position
2— Boom Float Position
3— Boom Raise Position
4— Boom Height Kickout Position
5— Bucket Dump Position
6— Fast Bucket Dump Position
7— Bucket Rollback Position
8— RTD Position
9— Pilot Enable/Boom Down Switch
10— RTC Switch
11— RTD Switch
12— Boom Height Kickout Switch

OUT4001,0000635 -19-18OCT11-1/1

Two Lever Bucket and Boom Control

NOTE: There are several control lever configurations available on John Deere four wheel drive loaders. Please verify the configuration of your machine before reviewing operating instructions.

NOTE: Pilot enable/boom down switch (9) must be pressed and held down while moving control lever forward to lower boom with engine stopped.

Move right-hand control lever forward to boom lower position (1) to lower boom.

Move right-hand control lever rearward to boom raise position (3) to raise boom.

Move left-hand control lever forward to bucket dump position (5) or fast bucket dump position (6) to dump bucket.

Move left-hand control lever rearward to bucket rollback position (7) to roll back bucket backward.

Return-to-Carry (RTC)—Set RTC switch (10) to ON (LED illuminated).

Push boom control lever fully forward to detented boom float position (2). The boom stops at a preset height and lever returns to neutral position automatically.

NOTE: RTC mode overrides boom float. Push RTC switch to OFF setting to allow boom float to operate. Boom float does not work once boom height is lower than preset distance from ground.

Boom Float—This function allows oil to flow in and out both ends of cylinders so bucket can follow contour of the ground. Set RTC switch to OFF. Push right-hand control lever fully forward to detented boom float position (2) to activate boom float. Manually release lever from this position when desired.

Return-to-Dig (RTD)—Set RTD switch (11) to ON (left LED illuminated).

Pull left-hand control lever fully rearward to detented RTD position (8). Bucket returns to preset dig position.

Boom Height Kickout—Set boom height kickout switch (12) to ON (LED illuminated).

Pull right-hand control lever fully rearward to detented boom height kickout position (4). Lever remains in this position until boom reaches a preset height, then returns to neutral automatically.

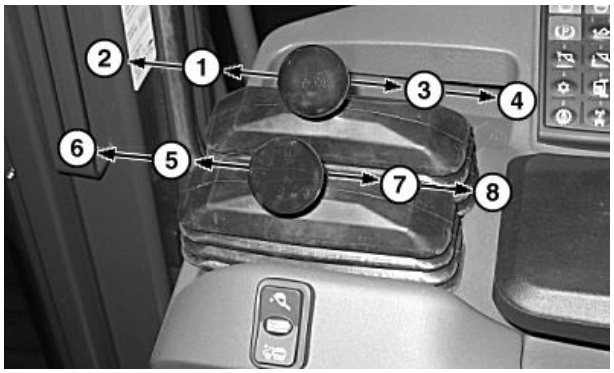

TX1039919A —UN—08APR08

Boom and Bucket Control Levers



TX1039917A —UN—08APR08

Hydraulic Switches

1— Boom Lower Position
2— Boom Float Position
3— Boom Raise Position
4— Boom Height Kickout Position
5— Bucket Dump Position
6— Fast Bucket Dump Position
7— Bucket Rollback Position
8— RTD Position
9— Pilot Enable/Boom Down Switch
10— RTC Switch
11— RTD Switch
12— Boom Height Kickout Switch

OUT4001,0000636 -19-18OCT11-1/1

Auxiliary Control

NOTE: There are several control lever configurations available on John Deere four wheel drive loaders. Please verify the configuration of your machine before reviewing operating instructions.

Three and Four Function Hydraulic Control

Operate third and fourth function control levers to control the attachment. See your auxiliary hydraulic attachment operator's manual for more information.

1— Third Function Auxiliary Control Lever

2— Fourth Function Auxiliary Control Lever

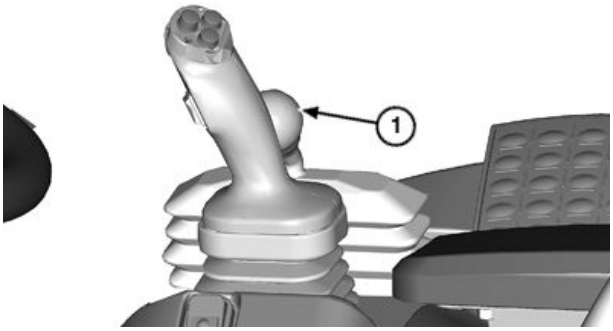

TX1067920A —UN—19NOV09

Third Function Auxiliary Control Lever (shown with joystick bucket and boom control)

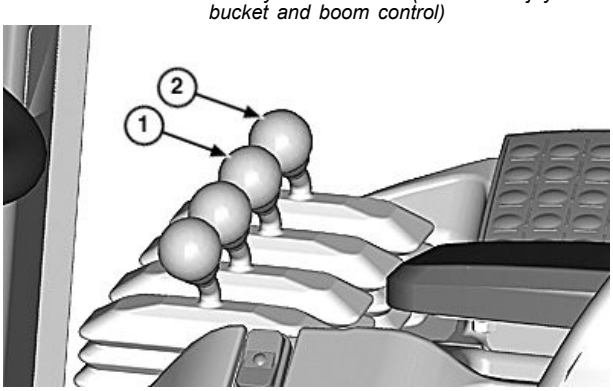

TX1063326A —UN—21OCT09

Third and Fourth Function Auxiliary Control Levers (shown with two lever bucket and boom control)

JH91824,00008A7 -19-17NOV10-1/1

Joystick Steering Control—If Equipped

Joystick steering is an option that allows the operator to select direction, gear, sound the horn, and steer the machine from a single lever to the left of the operator's seat. The armrest has an activation switch that is used to activate and deactivate joystick steering when armrest is in the lowered position.

NOTE: Joystick steering sensitivity changes with speed. Become familiar with steering at all speeds before operating in confined areas.

Activate Joystick Steering

Certain conditions must be met before joystick steering will activate. Pop-up messages will appear on the display unit to assist in the activation if one of the required conditions is not met.

NOTE: Joystick steering cannot be engaged while machine is moving or the engine is OFF.

1. Stop machine and move steering column forward, neutral, or reverse (FNR) lever to neutral (N).
2. Release hold-up lever (1) and tilt armrest down to lowered position. Make sure that joystick forward, neutral, and reverse (FNR) switch (4) is in neutral (N).

NOTE: If hydraulic oil temperature is less than 10°C, pop-up message appears on display unit.

3. Ensure that hydraulic oil is warm. Cycle boom and bucket controls to warm oil if necessary.
4. Activate joystick steering by pressing joystick steering activation switch (2) to ON position. Joystick steering indicator (3) on display unit illuminates when joystick steering is activated.

NOTE: Alarm sounds, joystick steering indicator blinks, and joystick steering is inactive until park brake is released.

5. Press park brake switch on sealed switch module (SSM) to release park brake (LED on switch and park brake indicator on display unit go OFF).

1— Hold-Up Lever
2— Joystick Steering Activation Switch
3— Joystick Steering Indicator
4— Forward, Neutral, and Reverse (FNR) Switch



TX1045664A —UN—15JUL08

Hold-Up Lever

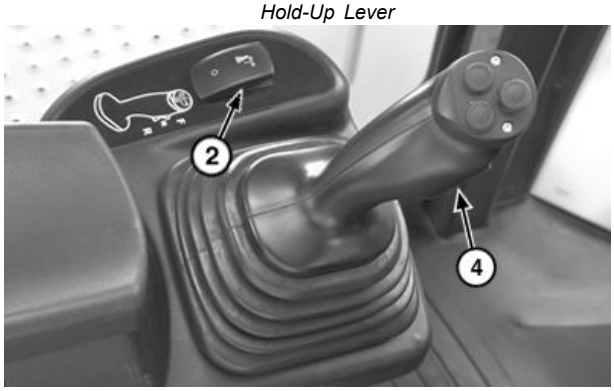

TX1067939A —UN—19NOV09

Joystick Steering Activation

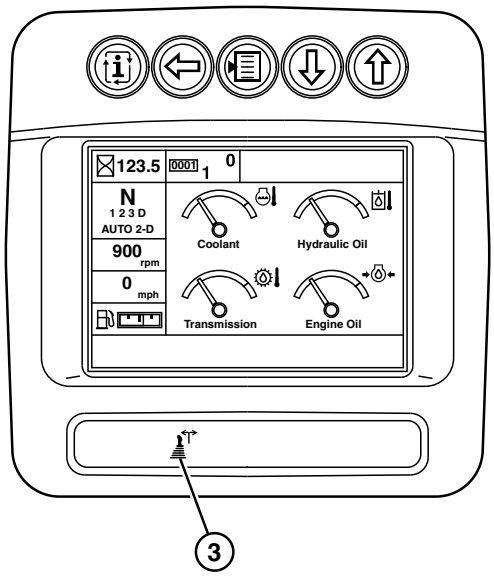

TX1046162 —19—28JUL08

Joystick Steering Indicator

Continued on next page

OUT4001,0000637 -19-12JAN12-1/2

Operate Joystick Steering

NOTE: If steering column FNR lever is moved out of NEUTRAL while machine is moving and joystick steering is active, joystick steering FNR switch and gear up and gear down buttons are deactivated. Machine can still be steered using joystick steering lever. Once ground speed reaches zero, joystick steering system fully deactivates and defaults to steering column FNR lever and steering wheel.

Machines equipped with joystick steering can be steered with the conventional steering wheel or the joystick steering control. The steering wheel always has priority; if steering with the steering wheel and joystick steering control simultaneously, the machine will turn in the direction of the steering wheel.

Joystick steering is speed sensitive. The faster the machine is traveling, the less aggressive the steering. The slower the machine is traveling, the more aggressive the steering.

Tilt joystick steering control to the left to steer left (5).

Tilt joystick steering control to the right to steer right (6).

Deactivate Joystick Steering

Deactivate joystick steering by either of the following methods:

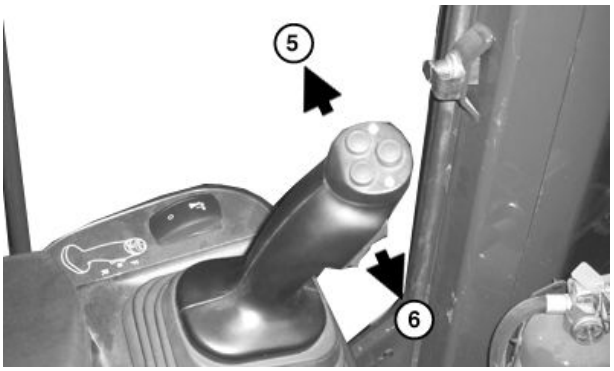

TX1068012A —UN—20NOV09

Joystick Steering Control

5— Steer Left **6— Steer Right**

- Press joystick steering activation switch to OFF position OR
- Move left armrest to raised position

When joystick steering is deactivated, indicator on display unit goes off.

OUT4001,0000637 -19-12JAN12-2/2

Ride Control—If Equipped

The range of adjustment is from 1.5 kph to 24.0 kph (1.0 mph to 15.0 mph) in increments of 0.5 units.

Ride control improves machine ride and reduces tire flexing when traveling over rough terrain or at speeds above a preset value. Ride control also reduces material spillage from the bucket by cushioning boom movement.

Ride control can be set to the ON (full time) mode, AUTO mode, or OFF using ride control switch (1). When ride control is active, indicator (2) on display unit is illuminated.

The default speed setpoint for ride control actuation is 5.6 km/h (3.5 mph). Setpoint can be adjusted from 1.5 kph to 24.0 kph (1.0 mph to 15.0 mph) in increments of 0.5 units. See Display Unit—Main Menu—Settings—Ride Control (If Equipped). (Section 2-1.)

ON Mode

NOTE: In the ON mode, ride control is always active. This mode is best suited for attachment and non-bucket loading applications.

Once engine is running, press and release ride control switch (left LED illuminated). Ride control remains in ON mode until engine is shut off.

If engine is shut off with ride control switch in ON mode, ride control is automatically deactivated. If engine is restarted with switch in ON mode, ride control will not activate until ground speed is greater than stored setpoint. To restore normal ON mode (full time) operation, press and hold ride control switch to turn OFF (both LEDs off), then press switch to activate ON mode again.

AUTO Mode

NOTE: The AUTO mode is best suited for bucket loading applications since it temporarily disengages ride control to stop boom movement for improved bucket loading while crowding the pile.

To activate AUTO mode, press ride control switch twice (both LEDs are illuminated). Ride control is active whenever engine is running and ground speed is greater than stored setpoint. Shutting off engine does not turn off AUTO ride control.

OFF Mode

Press and hold ride control switch (both LEDs are off).

Operating Ride Control

⚠ CAUTION: Prevent possible injury from unexpected boom movement. Clear all bystanders from area around boom and bucket. Boom may move up when ride control switch is turned ON.

1. Make sure that area around bucket is clear.
2. Start engine.



TX1039922A —UN—08APR08

Sealed Switch Module (SSM)

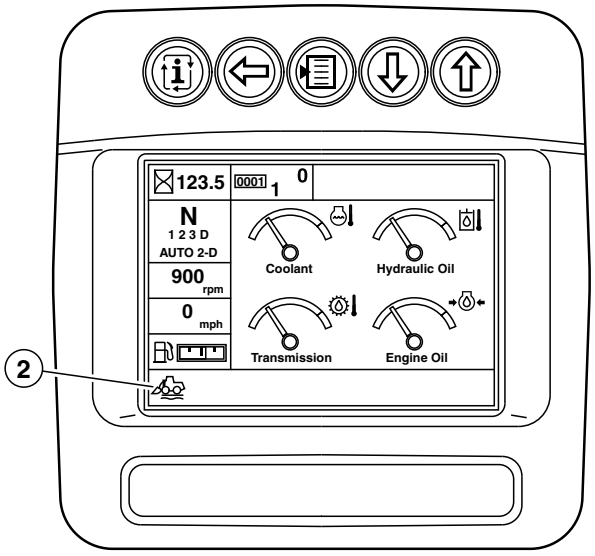

TX1046109 —UN—02FEB10

Ride Control Indicator

1— Ride Control Switch **2— Ride Control Indicator**

Observe ride control switch:

- If ride control switch LEDs are off, ride control is OFF.
- If left LED is illuminated, ride control was automatically turned OFF when engine was shut off. Ride control will not activate until ground speed is greater than stored setpoint. To restore normal ON mode (full time) operation, cycle ride control switch to OFF, then back to ON mode again.

Continued on next page

OUT4001,000095E -19-01NOV11-1/3

- If both LEDs are illuminated, ride control is in AUTO mode. Ride control automatically reactivates as soon as a ground speed greater than the setpoint value is reached and operates until switch is turned OFF.

3. Press ride control switch as required to select desired operating mode.

OUT4001,000095E -19-01NOV11-2/3

Discharging Ride Control Accumulator

1. Lower boom and bucket to ground and stop engine.
2. Press and release engine start switch (1); DO NOT START engine.
3. Press return-to-carry (RTC) switch (2) to OFF setting (LED off).

CAUTION: Prevent possible injury from unexpected boom movement. Make sure area around boom and bucket is clear. Boom could move up when ride control switch is turned ON.

4. Make sure that area around bucket is clear.

NOTE: When ride control switch is in AUTO mode setting (two LEDs illuminated), ride control accumulator hydraulic pressure cannot be discharged. When ride control switch is in ON mode setting, left LED is illuminated.

5. Cycle ride control switch (3) to OFF mode setting (LEDs are off) then to ON mode (left LED illuminated).
6. Press and hold pilot enable/boom down switch (4) while holding the boom control lever in the float position (fully forward) for 5 seconds.
7. While still holding pilot enable/boom down switch, cycle each hydraulic control lever to relieve pressure.
8. Press engine stop switch (5).



TX1039923A —UN—08APR08

Sealed Switch Module (SSM)

1— Engine Start Switch
2— Return-to-Carry (RTC) Switch
3— Ride Control Switch
4— Pilot Enable/Boom Down Switch
5— Engine Stop Switch

OUT4001,000095E -19-01NOV11-3/3

Secondary Steering—If Equipped

IMPORTANT: Prevent possible damage to secondary steering system. Stop machine as soon as possible after steering pressure warning message appears and audible alarm come on while operating. THE SECONDARY STEERING SYSTEM IS NOT INTENDED FOR CONTINUOUS USE.

NOTE: For optimum secondary steering performance, ensure electrical system and batteries are properly maintained.

STOP indicator (1) flashes, and an audible alarm sounds when secondary steering system is activated. A pop-up message also appears on the display unit. This message indicates low hydraulic pressure resulting from mechanical malfunction, such as loss of engine power. An electrically driven pump actuates to provide temporary emergency steering.

NOTE: Secondary steering is activated if the engine stalls with engine start switch on. The secondary steering motor stops when engine stop switch is pressed.

The secondary steering system functions only when engine start switch is on.

1— STOP Indicator

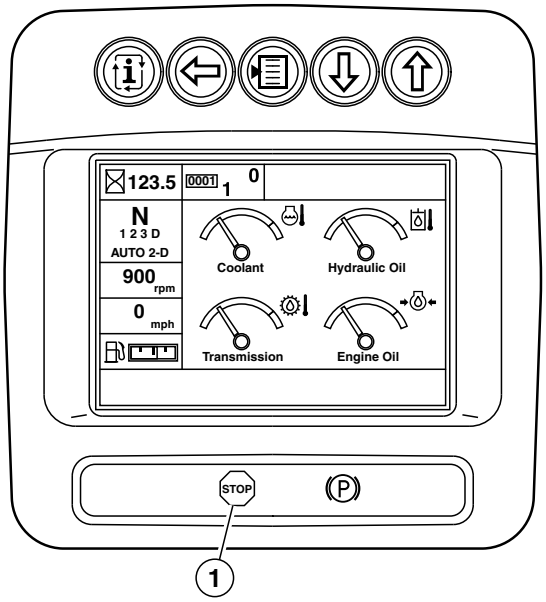

TX1046112 —UN—02FEB10

STOP Indicator

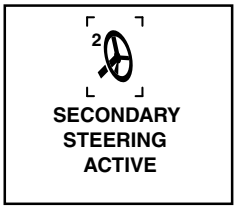

TX1044650 —19—09JUL08

Secondary Steering Pop-Up Message

OUT4001,00005F6 -19-26JUL10-1/1

Differential Lock Operation

NOTE: Use differential lock only when conditions require traction. Avoid using differential lock when steering.

Depress differential lock switch (1) to lock front differential and rear differential, if equipped.

Release switch to unlock differentials.

1— Differential Lock Switch

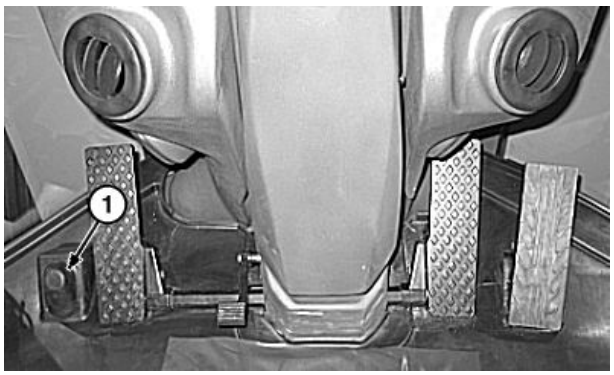

TX1039924A —UN—08APR08

Differential Lock Switch

DP99999,0000021 -19-18OCT11-1/1

Exhaust Filter

The exhaust filter is a critical component in the engine's emissions control system, which is required to meet governmental emissions regulations. The exhaust filter captures soot and ash to prevent its release into the atmosphere. The soot and ash must be eliminated from the exhaust filter to keep it functioning properly. The process of eliminating collected soot is called exhaust filter cleaning. There are 3 types of exhaust filter cleaning available to the operator:

- **NATURAL/PASSIVE**
- **AUTO**
- **PARKED**

There are 5 soot levels to describe the amount of restriction in the exhaust filter. These levels determine the type of cleaning that is required:

- LOW
- MODERATE
- HIGH
- VERY HIGH
- SERVICE

To observe the current restriction status of the exhaust filter, an exhaust filter restriction level indicator is located in the upper left corner of the advanced display unit (ADU) for viewing at any time. The exhaust filter restriction level indicator shares the same space on the ADU with other indicators. Use the UP button on the ADU to toggle between readings. For more information, see Display Unit Functions. (Section 2-1.) The current restriction status can also be viewed by navigating to the exhaust filter menu on the ADU where filter soot level is displayed. For more information, see Display Unit—Main Menu—Exhaust Filter. (Section 2-1.)

Auto cleaning is able to activate (if not disabled by the operator) when the exhaust filter restriction is anywhere between MODERATE and HIGH soot levels. Auto cleaning is no longer available if exhaust filter restriction reaches VERY HIGH or SERVICE soot levels.

Parked cleaning can only be initiated when the exhaust filter restriction reaches HIGH or VERY HIGH soot levels.

If exhaust filter restriction reaches SERVICE soot level, contact your authorized dealer.

In addition to the cleaning procedures, the exhaust filter also requires maintenance to remove accumulated ash, which is a noncombustible result of additives used in crankcase lubrication oils and the fuel. Ash removal CANNOT be performed by the operator. For more information on exhaust filter ash removal, see Service Exhaust Filter. (Section 3-3.)

NOTE: Shut off engine whenever possible. Unnecessary idling can cause exhaust filter soot to accumulate. For the best possible exhaust filter operation, which requires the least amount of operator interaction, idling should be kept to a minimum.

Natural/Passive Cleaning

During normal machine operation, the exhaust heat will naturally clean the soot build up in the exhaust filter.

Auto Cleaning

CAUTION: Servicing machine during exhaust filter auto cleaning can result in serious personal injury. Avoid exposure and skin contact with hot gases and components.

During exhaust filter auto cleaning, the engine may run at elevated idle and hot temperatures for an extended period of time. Exhaust gases and exhaust filter components may reach temperatures hot enough to burn people and ignite or melt common materials.

Auto cleaning is set from the factory in the ADU menu to be enabled. Different settings can be chosen for the default state after a power cycle. These settings are:

☐ DEFAULT TO CURRENT SELECTION
☐ DEFAULT TO ENABLED
☐ DEFAULT TO DISABLED

See your authorized dealer if a different default setting is preferred.

With auto cleaning enabled, exhaust filter cleaning is automatically performed as needed, with no interaction from the operator. An exhaust filter cleaning indicator will illuminate on the ADU when the system is actively performing an exhaust filter auto cleaning. Machine can be operated as normal. When the exhaust filter auto cleaning process has completed its cycle, the cleaning indicator will automatically turn off.

If filter restriction reaches the HIGH soot level with auto cleaning enabled, a pop-up will appear on the monitor stating two options. First option is to increase engine speed above 1200 rpm to assist auto cleaning. The second option is to initiate a parked filter cleaning. If a filter cleaning does not occur and the filter restriction continues to grow to VERY HIGH soot level, then a parked filter cleaning MUST be performed.

NOTE: Disabling exhaust filter auto cleaning is not preferred. Whenever possible, auto cleaning should be enabled to keep soot buildup to a minimum and to increase overall machine uptime.

Continued on next page

If operating in conditions where it may be unsafe for elevated exhaust temperatures, auto cleaning can be disabled using the ADU menu. If auto cleaning is disabled by the operator, a green exhaust filter auto cleaning disabled indicator will appear on the ADU and remains on until auto cleaning is enabled again. If filter restriction reaches the HIGH soot level with auto cleaning disabled, a pop-up will appear on the monitor stating that auto cleaning needs to be enabled. For more information, see Display Unit—Main Menu—Exhaust Filter—Auto Cleaning. (Section 2-1.)

Parked Cleaning

CAUTION: Servicing machine during exhaust filter parked cleaning can result in serious personal injury. Avoid exposure and skin contact with hot gases and components.

During exhaust filter parked cleaning, the engine may run at elevated idle and hot temperatures for an extended period of time. Exhaust gases and exhaust filter components may reach temperatures hot enough to burn people and ignite or melt common materials.

Avoid death or serious injury from machine movement. Do not leave running machine unattended during exhaust filter cleaning.

IMPORTANT: Avoid machine damage. Always park machine in a safe location and check for adequate fuel level before beginning exhaust filter parked cleaning.

Parked cleaning is prompted by the ADU and initiated by the operator. This process allows the system to clean the exhaust filter. It is most commonly initiated after extended operation with exhaust filter auto cleaning disabled or frequent engine shut downs have occurred while the auto cleaning process was active.

During the cleaning process, the engine speed will be controlled automatically and the machine must remain parked to complete the procedure. Complete cleaning time takes less than 45 minutes, but will vary on several criteria including fuel type, oil type, duty cycle, and the number of previously aborted exhaust filter cleaning requests.

Parked cleaning needs to be activated through the ADU menu. The first parked cleaning menu offers a choice to either automatically shut down the machine after parked cleaning is complete or to not shutdown. For more information, see Display Unit—Main Menu—Exhaust Filter—Parked Cleaning. (Section 2-1.) Parked cleaning can only be initiated if the filter restriction is at HIGH or VERY HIGH soot levels. Machine needs to be in a predetermined safe state. This safe state includes three conditions:

- park brake applied
- FNR in neutral
- engine running at idle

Parked cleaning occurs in two stages. The first stage is to prepare the exhaust filter by automatically raising exhaust filter temperature to 300°C (572°F). Preparation status is displayed on the monitor. Once the exhaust filter temperature reaches 275—300°C (527—572°F), the cleaning process may begin. The second stage is when the cleaning process begins and may result in exhaust filter temperatures exceeding 550°C (1022°F). Progress status is displayed on the monitor. The cleaning process will continue until one of the following conditions exist:

- until there is no soot restriction in the exhaust filter
- 45 minutes has elapsed causing a timeout
- operator cancels the parked cleaning procedure by releasing park brake, moving FNR out of neutral, or increasing engine speed
- parked cleaning is aborted due to a fault
- engine runs out of fuel
- engine is shut off by operator (not recommended)

The exhaust filter cleaning indicator will be illuminated on the ADU during a parked cleaning. When parked cleaning procedure is complete, engine will automatically return to slow idle and exhaust filter cleaning indicator will turn off. Machine is ready to return to operation.

IMPORTANT: Avoid engine damage. If machine will NOT be returning to operation immediately after a parked cleaning procedure, allow the engine and exhaust filter time to return to normal operating temperatures BEFORE stopping engine.

Operator can choose to have the machine automatically shutdown when parked cleaning procedure is complete by selecting the auto shutdown feature from the ADU parked cleaning menu. If auto shutdown was not chosen and operator decides not to return to operation after a parked cleaning procedure, allow the engine and exhaust filter time to return to normal operating temperatures BEFORE stopping engine.

Avoid disabling the auto cleaning process unless absolutely necessary. Repeated disabling of the auto cleaning process or ignoring prompts to perform a parked cleaning procedure, will cause engine power limitations and can eventually lead to dealer required service cleaning.

Ash Removal

The exhaust filter cleaning procedures listed previously, clean the soot from the machine's exhaust filter. The exhaust filter also traps ash deposits over time which are not removed during an exhaust filter cleaning. When the exhaust filter has run several thousand hours, these ash deposits can restrict engine performance and must be removed. For more information on ash removal, see Service Exhaust Filter. (Section 3-3.)

OUT4001,00005B9 -19-22OCT12-2/2

Service ADVISOR™ Remote (SAR) Software Delivery Process

Theory of Operation

Service ADVISOR™ is a diagnostic tool used by John Deere dealers to perform diagnostics as well as updates to machine settings and software. Dealers can access diagnostic trouble codes and diagnostic addresses, create readings and recordings, and program controllers. This technology consists of both software and hardware. Technicians attend a minimum of 8 hours of training to become certified in utilizing this tool.

Service ADVISOR Remote (SAR) is a function of Service ADVISOR. It allows the dealer technician to connect to a SAR-enabled machine via the JDLink™ network to remotely access diagnostic trouble code information and record diagnostic data, as well as program controllers.

Similar to software (payload) updates in the computer industry, SAR enables John Deere to remotely deliver updated software via the JDLink hardware on board. Remote programming gives John Deere the ability to update software to enhance the performance of the machine. This capability can be used to reprogram most machine controllers. The user actively participates with the dealer in this process by both downloading the software update and installing the software update.

NOTE: Some vehicle controllers may not be compatible for SAR reprogramming.

Service ADVISOR is a trademark of Deere & Company
JDLink is a trademark of Deere & Company

For more information about Service ADVISOR Remote, consult your local John Deere dealer.

Vehicle Reprogramming

NOTE: Factory setting is set to always accept software downloads. To change this setting, consult your John Deere dealer to either be prompted for software updates or deny all software updates.

Normal machine operation can continue during the software download process.

Customer will be notified by John Deere or a John Deere dealer of pending software updates with appropriate installation instructions via letter or phone.

Customer will determine the appropriate time and place to install the new software on the machine via the machine monitor. For more information, see Display Unit—Main Menu—Software Delivery—Software Update. (Section 2-1.)

Once the customer initiates delivery and installation of the software, SAR will start and manage the installation of the new payload to the appropriate machine controllers.

NOTE: Software download speed capability depends on JDLink cellular coverage.

OUT4001,00006C4 -19-09NOV10-1/1

Rear Camera and Radar Object Detection (ROD) System—If Equipped

CAUTION: This system is designed to supplement other safety practices and is not intended to be the sole method of collision avoidance. Always be alert and aware of the surroundings when operating this machine to avoid possible injury or death to operator or others.

Rear Camera—Rear camera has four selectable modes:

- **MANUAL—**Camera is off. Operator can turn on camera by pressing INFO button (1) on display unit.
- **REVERSE—**Display screen (2) changes to the camera view when the transmission is engaged in reverse gear. (This mode is the default selection for machines equipped with “Camera Only” option.)
- **OBJECT—**Display screen changes to the camera view when an object is detected by the ROD system. (This mode is removed if “Camera Only” option is enabled.)
- **IN REVERSE WITH OBJECT—**Display screen changes to the camera view when transmission is engaged in reverse gear and an object is detected by the ROD system. Camera stays on until machine direction of travel changes. This mode is the default selection for machines equipped with the ROD system. (This mode is removed if “Camera Only” option is enabled.)

When camera activates by any of the four methods, display screen changes to rear camera view. Display returns to previous screen when INFO button is pressed again when in MANUAL mode, transmission is moved out of reverse when in REVERSE mode, or once ROD system no longer detects an object when in OBJECT mode.

Mode is selected by accessing the camera mode menu on the display unit. See Display Unit—Main Menu—Settings—Camera Mode. (Section 2-1.)

ROD System—ROD system is a solid-state, pulsed radar object detection system designed to alert vehicle operators to the presence of objects at the rear of the machine. When activated, the system detects both moving and stationary objects within the approximate detection zone and alerts the operator with an audible signal and by changing the display to rear camera view.

The operator can turn the system ON or OFF using the settings menu on the display unit. See Display Unit—Main Menu—Settings—Object Detect. (Section 2-1.)

Object Detection Capability— The ROD system can detect most objects within the detection zone. However, there are factors such as object size, shape, relative location, and composition that could cause an object to go undetected by the system.

The ROD system operates by transmitting a pulse of low power electromagnetic energy. Any energy that strikes an object reflects a certain amount of this energy back to the sensor. If the returned energy is of sufficient magnitude, it is used to indicate object presence and determine the distance of the object from the machine.

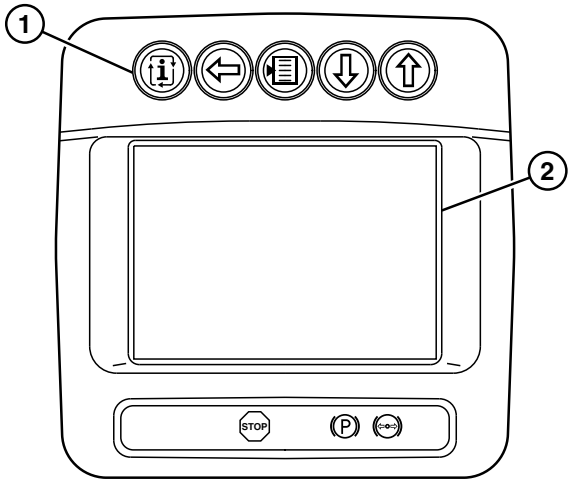

TX1046161 —UN—28JUL08

Camera Display

1— INFO Button **2— Display Screen**

While the system can resolve multiple objects, only the object closest to the vehicle is reported to the display unit since it represents the most significant collision threat.

The amount of energy returned is based on a few factors:

- **Size—**A larger object usually reflects more energy than a smaller object.
- **Composition—**A metal object typically reflects more energy than a non-metallic object. A metallic object at the edge of the maximum detection zone might be detected, whereas a wood object may not.
- **Scattering—**A solid object reflects more energy that a non-solid object such as tree branches, gravel, or bushes.
- **Shape—**Complex shapes cause energy to be returned in a non-uniform way. Small variations or movement can change detection status.
- **Angle—**The flat side of an object perpendicular to the sensor reflects more energy than an object at an angle.

Continued on next page

OUT4001,00005ED -19-20JUL10-1/2

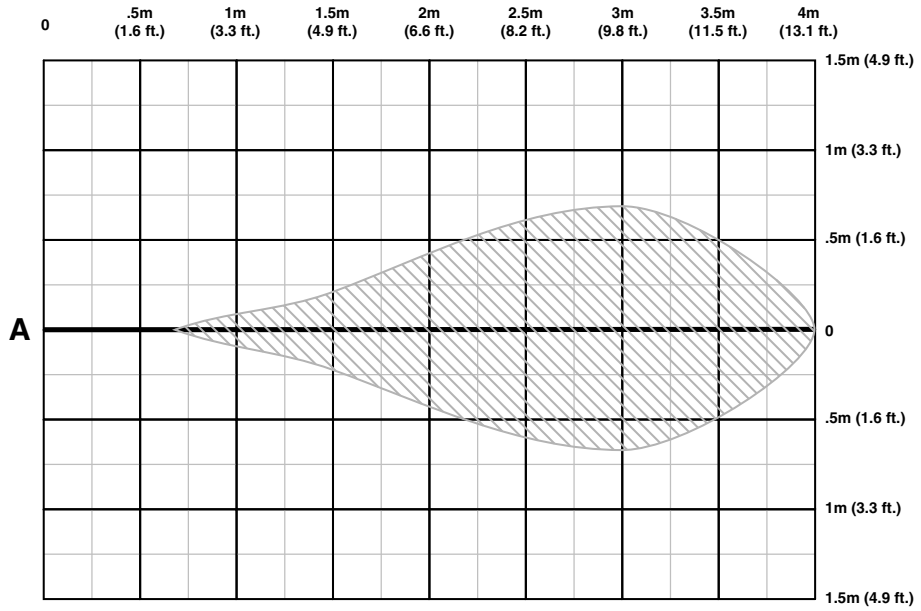

TX1079976

Approximate Detection Zone Width and Rearward Distance

A—Centerline of Machine Rear

OUT4001,00005ED -19-20JUL10-2/2

Counter Switch Operation

This machine includes a counter switch (1), located on the right side of the operator's seat near the boom and bucket control levers. The switch consists of three individual buttons. The ADD BUCKET button and the ADD TRUCK button are used on machines equipped with the Embedded Payload Scale (EPS) system.

The SELECT COUNTER button allows the operator to select from up to five different counters which can correspond to five different aggregates. The operator can choose how many counters are selected. See Display Unit—Main Menu—Settings—Counters. (Section 2-1.)

The counter currently selected is displayed on the display unit in the box to the right of the hour meter. Press and release the ADD TRUCK button to increment the counter by one. Press and hold the ADD TRUCK button to reset the counter.

1— Counter Switch



TX1045645A —UN—15JUL08

Counter Switch

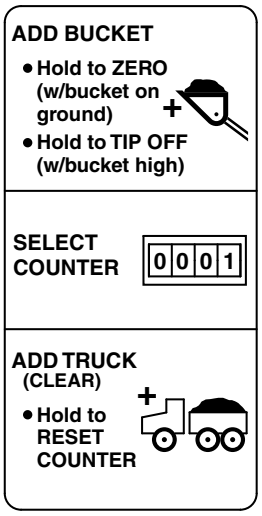

TX1044805 —19—10JUL08

Counter Switch Label

OUT4001,00005F9 -19-18OCT11-1/1

Embedded Payload Scale—If Equipped

Overview

Machines equipped with the embedded payload scale (EPS) system display the selected counter, truck counter, and the total weight of material loaded onto a truck (short total). The system also keeps a running total of the total weight lifted (long total) since the long total was last reset. The long total is typically used to accumulate the weight lifted over a longer period of time such as a shift or when loading a series of trucks for the same job or customer.

The system includes a counter switch (4) which consists of three individual push-buttons and allows the operator to perform the following functions:

- **ADD BUCKET**
  - Press momentarily to add current bucket weight to truck total weight.
  - Press and hold with bucket raised to perform tip off.
  - Press and hold with bucket on ground to perform zero check.
- **SELECT COUNTER**
  - Up to five individual counters are available to correspond to five different aggregrates.
  - Operator may select any of the available counters for each truck loaded.
  - Number of counters available is selected by using COUNTERS menu in the display unit. See Display Unit—Main Menu—Settings—Counters. (Section 2-1.)
- **ADD TRUCK**
  - Press momentarily to clear current total truck weight and increment truck counter.
  - Press and hold to reset truck counter.

When the payload scale is not in use, system can be placed in standby mode. Press DOWN button on display unit while normal display (temperature and pressure gauges) is active to switch between active and standby modes.

Warmup

For best weighing accuracy, hydraulic fluid in lift cylinders must be at normal operating temperature. If the machine has been off for more than 1 hour, or if hydraulic oil temperature drops more than 10°C, the EPS system prompts the operator to perform hydraulic warmup.

Three warmup cycles are required. Each cycle consists of lowering bucket to ground level, then raising it to full height. The warmup screen on the display unit will count down as each cycle is completed.

Check Zero

To avoid inaccurate weight readings due to material buildup in the bucket, it is necessary to periodically check zero on the system. Zeroing must be performed every 15 minutes during the first hour of operation and every 30 minutes thereafter. A pop up display appears as a reminder.

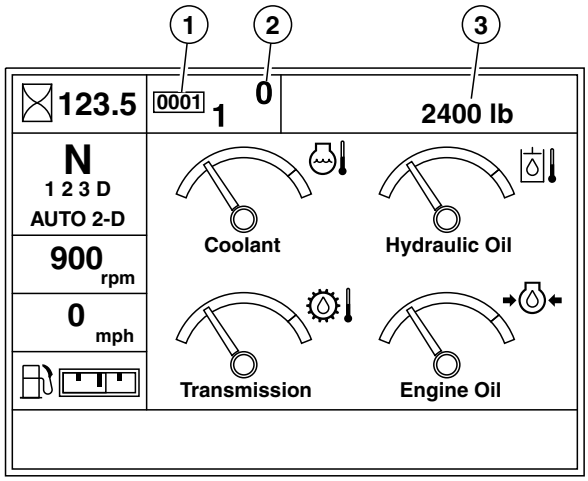

TX1046113 —UN—02FEB10

Normal Display



TX1045312A —UN—08JUL08

Counter Switch Location

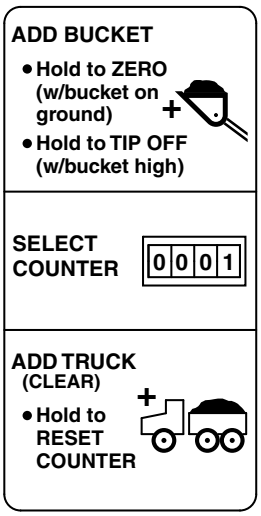

TX1044805 —19—10JUL08

Counter Switch Function Label

1— Selected Counter
2— Truck Counter
3— Total Truck Weight
4— Counter Switch

Continued on next page

To check zero:

- Empty bucket and roll bucket back to stops.
- Lower bucket to ground.
- Press and hold ADD BUCKET button on counter switch for at least 1 second.
- PERFORM ZERO LIFT screen appears on display unit.
- Raise empty bucket to full height.
- ZERO UPDATED screen appears on display unit.

OUT4001,00005FA -19-12JAN12-2/5

Weigh Load

1. Perform warmup and check zero.
2. Set counter to desired value using SELECT COUNTER button on counter switch.
3. Check truck counter on display unit and reset to zero, if desired, by pressing and holding ADD TRUCK button on counter switch for at least 1 second.
4. Reset long total if desired. See Display Unit—Main Menu—Payload Scale—Long Total. (Section 2-1.)
5. Pick up material and roll bucket back to stops.
6. Raise load smoothly past trigger point at normal engine speed. Display unit beeps and active weight screen appears.
7. Active weight screen shows current bucket weight, current truck total weight, and new total truck weight including current bucket.
8. Active weight screen remains on display unit for 8—12 seconds, depending on setting entered when system was activated.
   - In REMOTE ADD mode, press ADD BUCKET button on counter switch while display is on screen to add current load to weight totals.
   - In AUTO ADD mode, weight will be automatically added to totals within a preset time.
   - To keep active weight screen on display, press INFO button on display unit while screen is displayed.
9. Empty bucket onto truck. Continue weighing and loading until truck is full.
10. When truck is nearly full, tip off procedure may be performed if desired to load truck to an exact value. See Tip Off in this section.
11. When truck is fully loaded, momentarily press ADD TRUCK button on counter switch. This increments truck counter on display unit and resets truck total to zero. This function does not reset long total.

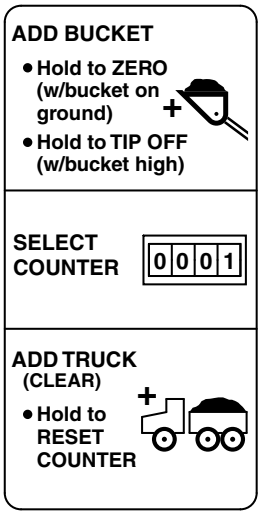

TX1044805 —19—10JUL08

Counter Switch

Add Load

This function adds the lifted weight to the current truck total and to the long total. This function can be set to occur automatically or upon remote switch input.

- To add lifted weight automatically, see Display Unit—Main Menu—Payload Scale—Auto Add. (Section 2-1.)
  Set AUTO ADD mode to ON. Set AUTO ADD TIME to allow enough time for operator to see active weight screen.
- To add lifted weight manually, momentarily press ADD BUCKET button on counter switch while active weight screen is on display unit.
- To view long total, see Display Unit—Main Menu—Payload Scale—Long Total. (Section 2-1.)

Continued on next page

OUT4001,00005FA -19-12JAN12-3/5

Tip Off

This feature allows the operator to load a truck to an exact value by using only part of the last bucket load of material. There are two methods of tip off. The method used is set according to operator preference at the time the system is activated.

- **Truck tip off.** This method is used to tip a measured amount of material from the bucket into the truck. The remainder is dumped. To perform truck tip off:
  a. Lift load in normal way.
  b. When active weight screen appears, press and hold ADD BUCKET button on counter switch.
  c. Lift bucket over truck. Roll bucket forward slightly to begin dumping material into truck.
  d. Observe new truck total on display unit. When desired truck weight is reached, roll bucket back.
  e. Momentarily press ADD BUCKET button on counter switch to update current truck total.
  f. Move machine away from truck and dump remaining material onto pile.
- **Stock pile tip off.** Using this method, material is dumped from the bucket back onto the pile until the bucket contains the amount needed to load the truck to the desired weight. To perform stock pile tip off:
  a. Calculate weight of material needed: Desired truck weight - current total truck weight = weight needed.
  b. Pick up bucket load of material and roll bucket back to stops.
  c. With bucket still positioned over pile, lift load past trigger point.
  d. When active weight screen appears, press and hold ADD BUCKET button on counter switch.

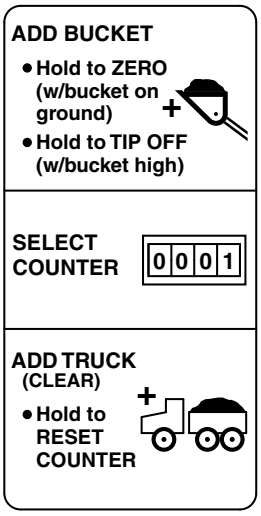

TX1044805 —19—10JUL08

Counter Switch

  e. Roll bucket slightly forward to begin dumping material back onto pile and observe current bucket weight displayed on screen. Current bucket weight displayed updates as amount of material in bucket is reduced.
  f. When current bucket weight reaches weight of material needed, roll bucket back to stop dumping.
  g. Momentarily press ADD BUCKET button on counter switch to add current bucket weight to truck total.
  h. Move to the truck and dump bucket into truck.

Continued on next page

OUT4001,00005FA -19-12JAN12-4/5

Clear Totals

To clear current truck total (short total), momentarily press ADD TRUCK button on counter switch.

To reset truck counter, press and hold ADD TRUCK button on counter switch for at least 1 second.

To clear long total, see Display Unit—Main Menu—Payload Scale—Long Total. (Section 2-1.)

Select CLEAR.

Obtain Accurate Weight Readings

The following factors can affect the accuracy of weight measurement:

- **Lifting Speed.** Weight lifted is calculated as a function of hydraulic boom lift pressure. Hydraulic pressure required to lift a load varies with the lifting speed. More accurate measurements are obtained when lifts are performed at a consistent and steady engine speed.
- **Trigger Point.** The trigger point is the boom position at which the weight measurement calculation occurs. On this machine, the trigger point is located at the point where the bottom of the bucket is approximately even with the top of the front work lights.
  The load must be moving at a steady speed when it reaches the trigger point. The lift must start low enough that there are at least 2 seconds of lift before the trigger point.
- **Bounce.** Pneumatic tires can cause the machine to bounce when driven over rough ground. Bounce and steering will cause variations in hydraulic pressure and affect the accuracy of the weight measurement. The most accurate measurements are obtained while the machine is not moving.
- **Center of Gravity.** The center of gravity of the load affects hydraulic pressure in the lift cylinders and the accuracy of the weight measurement. Always roll the bucket fully back to the stops before lifting the load.
- **Zero Check.** When an empty bucket is raised past the trigger point, the weight measurement should be zero.

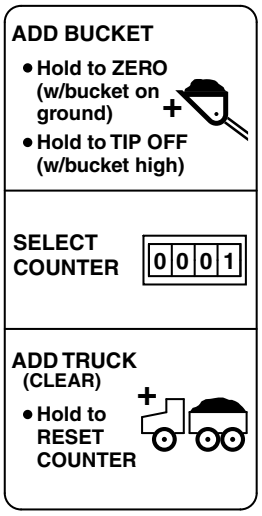

TX1044805 —19—10JUL08

Counter Switch

When material builds up in the bucket, a corresponding zero error occurs. Perform zero check procedure as frequently as necessary.

Error Messages

Any of the following error messages may appear on the active weight display:

- Poor quality lift
- Lift speed too high
- Lift speed changed
- Bouncing load
- Bucket underloaded
- Bucket overloaded
- System not calibrated
- Zero check required
- Lifted weight too heavy to zero
- Lifted weight too light to zero

OUT4001,00005FA -19-12JAN12-5/5

Boom Height Kickout Adjustment

NOTE: The boom height kickout position remains the same until a new position is set.

1. With engine running and pilot enable/boom down switch (1) ON, raise boom to desired kickout height.
2. Press and release boom height kickout switch (2) to turn ON function.
3. Press and hold boom height kickout switch until audible alarm sounds and LED on switch flashes to set new position.

1— Pilot Enable/Boom Down Switch

2— Boom Height Kickout Switch



TX1039925A —UN—08APR08

Boom Height Kickout

DP99999,0000023 -19-18OCT11-1/1

Return-to-Carry Kickout Adjustment

NOTE: The return-to-carry (RTC) position remains the same until a new position is set.

1. With engine running and pilot enable/boom down switch (1) ON, position boom in desired RTC position.
2. Press and release RTC switch (2) to turn ON function.
3. Press and hold RTC switch until audible alarm sounds and LED on switch flashes to set new position.

1— Pilot Enable/Boom Down Switch

2— RTC Switch



TX1039926A —UN—08APR08

Return-to-Carry (RTC) Switch

DP99999,0000024 -19-18OCT11-1/1

Return-to-Dig Adjustment for Z-Bar Linkage

NOTE: The machine hydraulic system must be at operating temperature before making this adjustment. Cycle boom and bucket cylinders through full travel at least four times to ensure hydraulic oil in the cylinders is warm. Do not set return-to-dig (RTD) with a cold hydraulic system.

1. With engine running and pilot enable/boom down switch (1) ON, raise boom to allow clearance for full bucket dump position.
2. Press and release RTD switch (2) to turn ON function (left LED illuminated).
3. With the engine operating between 1500—1700 rpm, move loader control lever to RTD detent position and release. Bucket will roll back and stop at current RTD setting.

1— Pilot Enable/Boom Down Switch

2— RTD Switch



TX1041060A —UN—22APR08

Return-to-Dig (RTD) Switch

Continued on next page

AA95137,0001B4F -19-18OCT11-1/2

4. After control lever returns to neutral, scribe an alignment mark (6) on RTD bar (5) at edge of switch bracket (4).
5. Using hydraulic control lever, move the boom and bucket to the desired RTD position. Stop engine.
6. Remove RTD bar adjustment cap screws (8) one at a time and remove old thread lock and sealer. Apply cure primer and thread lock and sealer (medium strength) to cap screws.
7. Install RTD bar adjustment cap screws, but do not tighten. Adjust RTD bar to align the scribed mark with edge of switch bracket. Tighten cap screws to specification.

Specification

RTD Bar Adjustment Cap Screw—Torque.....121 N·m
89 lb-ft

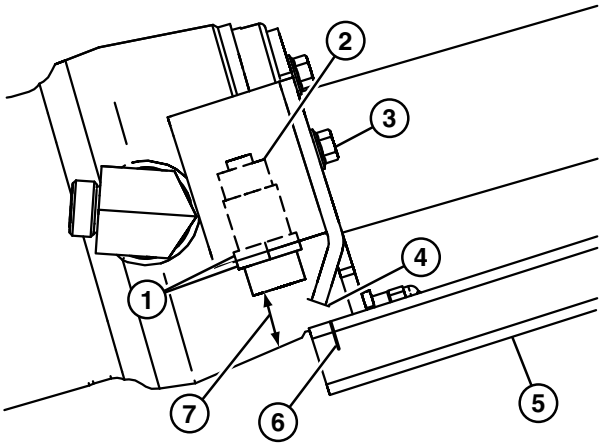

TX1041382 —UN—30APR08

Return-to-Dig (RTD) Alignment

8. Verify RTD switch (2) is perpendicular to RTD bar. If adjustment is necessary, loosen RTD switch bracket cap screws (3) and rotate RTD bracket assembly as needed. Tighten bracket cap screws.
9. Check air gap (7) between RTD switch and RTD bar.

Specification

Air Gap—Distance.....5—8 mm
0.20—0.32 in.

10. If air gap is not within specification, loosen RTD switch nuts (1). Move switch to obtain specified air gap while keeping edge of switch bracket aligned with scribed mark on RTD bar. Tighten nuts to specification.

Specification

RTD Switch Nut—Torque.....75 N·m
55 lb-ft

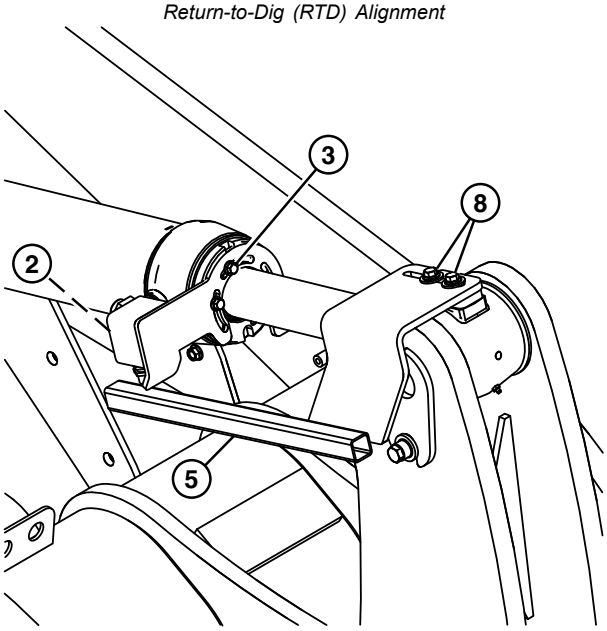

TX1041383 —UN—30APR08

Return-to-Dig (RTD) Bar Adjustment

1— RTD Switch Nut (2 used)
2— RTD Switch
3— RTD Switch Bracket Cap Screw (3 used)
4— Edge of Switch Bracket
5— RTD Bar
6— Alignment Mark
7— Air Gap
8— RTD Bar Adjustment Cap Screw (2 used)

AA95137,0001B4F -19-18OCT11-2/2

Return-to-Dig Adjustment for Powerllel™ Linkage—If Equipped

NOTE: For Powerllel™ linkage equipped machines, the return-to-dig (RTD) switch offers the capability to select and calibrate two different loader positions depending if the switch is set to the 1st position (left LED illuminated, right LED off) or the 2nd position (right LED illuminated, left LED off).

1st Position Procedure:

NOTE: The machine hydraulic system must be at operating temperature before making this adjustment. Cycle boom and bucket cylinders through full travel at least four times to ensure hydraulic oil in the cylinders is warm. Do not set RTD with a cold hydraulic system.

1. With engine running and pilot enable/boom down switch (1) ON, position bucket/forks in the desired tilt position.
2. Press and release RTD switch (2) to turn ON 1st position function (left LED illuminated, right LED off).
3. Press and hold RTD switch until audible alarm sounds (left LED is flashing). Four consecutive pop up messages will appear on the display unit screen to instruct the operator how to complete the adjustment. Every time a new pop up message appears, an audible alarm sounds.

   First pop up message:

RTD CALIBRATION 1/4
- 1) POSITION BUCKET OR FORKS
- 2) LOWER BUCKET/FORKS UNTIL TOUCHING GROUND
- 3) PRESS RTD BUTTON

Second pop up message:

RTD CALIBRATION 2/4
- 4) DO NOT MOVE BUCKET LEVER
- 5) RAISE BOOM TO MAX HEIGHT
- 6) PRESS RTD BUTTON

Third pop up message:

RTD CALIBRATION 3/4
- 7) DO NOT MOVE BUCKET LEVER
- 8) LOWER BUCKET/FORKS UNTIL TOUCHING GROUND
- 9) PRESS RTD BUTTON

Fourth pop up message:

RTD CALIBRATION 4/4
- COMPLETE!

(This screen will disappear after 3 seconds and return to the runtime screen. Left LED will quit flashing.)



TX1041060A —UN—22APR08

SSM

1— Pilot Enable/Boom Down Switch **2— RTD Switch**

To turn OFF return-to-dig when in the 1st position, press RTD switch twice to cycle over 2nd position (both LEDs are off).

2nd Position Procedure:

NOTE: The machine hydraulic system must be at operating temperature before making this adjustment. Cycle boom and bucket cylinders through full travel at least four times to ensure hydraulic oil in the cylinders is warm. Do not set RTD with a cold hydraulic system.

1. With engine running and pilot enable/boom down switch ON, position bucket/forks in the desired tilt position.
2. Press RTD switch twice to turn ON 2nd position function (right LED illuminated, left LED off).
3. Press and hold RTD switch until audible alarm sounds (right LED is flashing). Four consecutive pop up messages will appear on the display unit screen to instruct the operator how to complete the adjustment. Every time a new pop up message appears, an audible alarm sounds.

   First pop up message:

RTD CALIBRATION 1/4
- 1) POSITION BUCKET OR FORKS
- 2) LOWER BUCKET/FORKS UNTIL TOUCHING GROUND
- 3) PRESS RTD BUTTON

Second pop up message:

Continued on next page

RTD CALIBRATION 2/4
- 4) DO NOT MOVE BUCKET LEVER
- 5) RAISE BOOM TO MAX HEIGHT
- 6) PRESS RTD BUTTON

Third pop up message:

RTD CALIBRATION 3/4
- 7) DO NOT MOVE BUCKET LEVER
- 8) LOWER BUCKET/FORKS UNTIL TOUCHING GROUND
- 9) PRESS RTD BUTTON

Fourth pop up message:

RTD CALIBRATION 4/4
- COMPLETE!

(This screen will disappear after 3 seconds and return to the runtime screen. Right LED will quit flashing.)

To turn OFF return-to-dig when in the 2nd position, press RTD switch again (both LEDs are off).

Powerllel is a trademark of Deere & Company

ML82895,000068D -19-13JAN12-2/2

Operating Loader Coupler—If Equipped

CAUTION: Prevent possible injury from unexpected machine motion. The attachment could fall if not properly installed to loader coupler. Operator must be aware of all bystanders at the worksite.

1. Position machine on firm, level ground. Lower boom. Stop machine.
2. Press pin disconnect switch (1) to retract coupler pins. LED illuminates, pin disconnect indicator on the display unit illuminates, and audible alarm sounds every 10 seconds.
3. Operate bucket control to move coupler frame forward.
4. Drive forward. Guide top of coupler frame into attachment mounting hooks.
5. Raise boom. Tilt mounting frame rearward until attachment is against coupler.
6. Press pin disconnect switch again to extend coupler pins. LED, audible alarm, and pin disconnect indicator on the display unit will turn off.

NOTE: If attachment is not properly latched, disconnect and attach again.

7. Raise boom. Visually inspect attachment to verify that loader coupler pin plate is pressed against the loader coupler structure and that the pins are engaged in attachment mounting holes.



TX1067323A —UN—05NOV09

Pin Disconnect Switch

1— Pin Disconnect Switch

JH91824,00006A1 -19-18OCT11-1/1

Using the Loader Bucket

1. Place bucket in the return-to-dig (RTD) position and lower to ground.

NOTE: Bucket and boom can be positioned while machine is on-the-go.

2. Select 1st or 2nd gear depending on ground condition.
3. Move forward into the material.
4. Raise and curl bucket to hold load.

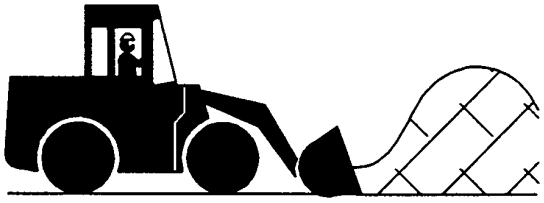

T7747BB —UN—19MAY92

Moving Forward Into Material

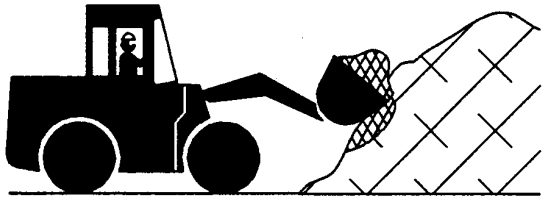

T7747BC —UN—19MAY92

Bucket Raise and Curl

DP99999,000005F -19-18OCT11-1/3

EXCAVATING ON THE LEVEL: Position bucket at a slightly downward angle on ground (use bucket teeth for this type of digging).

IMPORTANT: Prevent possible damage to the bellcrank linkage. DO NOT bulldoze with bucket in dump position. When dozing, keep bucket bottom parallel to the ground.

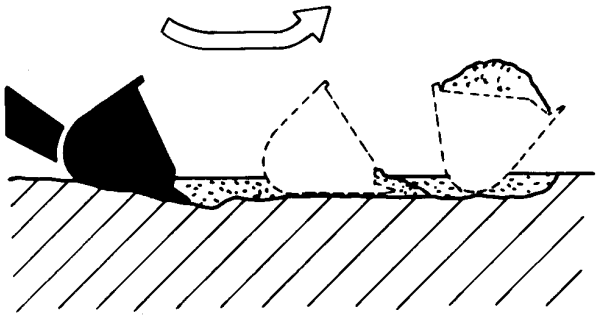

T7208AR —UN—30JAN90

Excavating Method

Continued on next page

DP99999,000005F -19-18OCT11-2/3

DOZING: With bucket parallel to ground, remove as little dirt as possible from the top surface. Let dirt spill from partially dumped bucket to fill in low spots.

SCRAPING: Partially open clam. After bucket has been loaded, tilt it all the way back, while at the same time closing the clam.

USING BOOM IN FLOAT POSITION: Place the boom in float position and bucket in RTD position to prevent gouging the surface, as in cleaning concrete and snow removal. Also use float position to avoid mixing surface material with stockpile material.

DIGGING IN HARD, DENSE, OR TIGHTLY-PACKED MATERIAL: To break material loose, use a gentle up-and-down motion of the bucket.

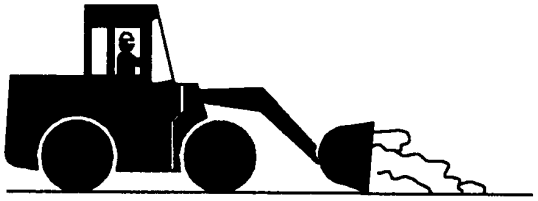

T7747BD —UN—19MAY92

Dozing Operation

DP99999,000005F -19-18OCT11-3/3

Backdragging

Leveling and grading can be done with the boom in the float position by backdragging the loader bucket while traveling in reverse. (Float position allows the bucket to follow contour of the ground.)

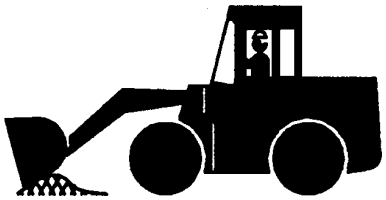

T7747BG —UN—19MAY92

Backdragging Operation

DP99999,00002C5 -19-18OCT11-1/1

Fork Attachment

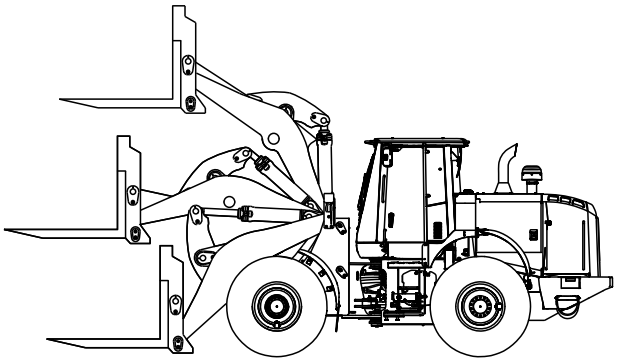

TX1083196 —UN—18OCT10

LOADING

- Center forks and carriage before lifting.
- Inspect load to ensure stability when lifted.
- Never attempt to lift load with one fork.
- Approach load slowly and squarely with fork tips level. Move forks slowly under load with load positioned equally on forks. Continue to drive forward until load is against backrest of forks.

UNLOADING

- Always use a signal person if you cannot see the placement area for the load. Make certain area is clear of all objects.
- Lower load to ground and tilt forks to a level position. Back away carefully to disengage forks.

ELEVATED LOADS

- Slowly raise load with a slight back tilt to cradle load. Never tilt load forward unless load is over landing area and ready to be set down.
- If there is any indication of load instability during the lift such as movement, leaning, or swaying, stop lifting immediately. Lower load and restock.
- As load approaches desired height, slow the lift speed to a minimum. Continue the lift until load is slightly higher than the landing point.
- After load is securely in place, retract forks clear of load and lower forks to traveling height before moving.

DRIVING ON A SLOPE

CAUTION: Prevent possible injury from machine rollover, do not turn on slopes. Do not drive across slopes under any circumstances.

Driving up or down slope WITH load on forks:

- Lower load near to ground.
- Keep mast tilted back to retain load. Slowly drive straight up or back straight down slope.

Driving up or down slope WITHOUT load on forks:

- Lower forks near to ground.
- Keep mast tilted back.
- Slowly drive straight down or back straight up slope.

LIFTING CAPACITY

To maintain stability, only lift loads equal to or less than mast capacity or rated operating capacity of machine, whichever is less. For machine lifting capacities, see Miscellaneous—Specifications. (Section 4-6.)

TRAVELING

- Operate machine controls from operator seat only.
- While driving, carry load low for good visibility and machine stability.
- Downshift with care. A sudden deceleration could shift or topple load.
- A sudden reversal of travel direction could tip load or overturn the machine. Come to a gradual stop before reversing directions.
- Slow travel speed when making turns to avoid an overturn.
- Use low gear for hillside or ramp operation. Never coast downhill with transmission in neutral. The machine could go out of control and tip over.
- Reduce speed when driving over rough terrain, carrying a heavy load, or working in a congested area. Avoid rocks, curbs, and ditches.

OPERATING TIPS

CAUTION: Forks or boom may move suddenly, causing serious injury to you or others. To avoid injury observe the following precautions.

- Never use the fork attachment as a working platform.
- Know locations of bystanders in the working area at all times.
- DO NOT touch, lean on, or reach through the mast, boom or lift mechanism or permit others to do so. Never climb on the mast, boom, or attachments.
- NEVER allow anyone to stand or pass under the raised forks, mast, carriage, boom, or attachments.
- Reduce speed and sound horn at blind intersections, exits, and when approaching pedestrians.

Continued on next page

OUT4001,00006A5 -19-18OCT10-1/2

FORK INSPECTION

The forks are the main load bearing components of the mast. Forks must be maintained and checked periodically to assure safe operation.

Inspect forks daily. If any of the following conditions exist, replace forks before operating machine.

- Check for visibly bent forks and abrasions. If forks are bent more than 3°, replace forks. (Tapered forks are 90° nominal and standard forks are 87° nominal.) If a flat spot is clearly evident from abrasive wear, replace forks.
- Inspect forks for cracks along the inside radius of heel.
- Bent forks are not always detectable by sight. Measure the interior angle of each fork to detect a bent fork.
- Tapered tip forks have an interior angle of 90°. Standard square tip forks have an interior angle of 87°. If angle is bent more than 3°, replace fork.

OUT4001,00006A5 -19-18OCT10-2/2

Parking the Machine

1. Park machine on a level surface.
2. Lower bucket to ground.
3. Move forward, neutral, or reverse (FNR) lever (1) or FNR switch (2) to N (neutral).

CAUTION: Prevent possible injury from unexpected machine movement. Machine can unexpectedly roll or move under power, resulting in death or serious injury. Always turn park brake switch ON and turn engine off to hold machine.

4. Press park brake switch (3). (LED on switch and indicator on display unit are illuminated.)

IMPORTANT: Turbocharger can be damaged if engine is not properly shut down.

5. Run engine at 1/2 speed without load for 2 minutes before stopping to avoid damage to turbocharger. Release accelerator pedal to slow idle.
6. Press engine stop switch (4) to shut off engine.
7. Turn battery disconnect switch (5) OFF.

1— FNR Lever
2— FNR Switch
3— Park Brake Switch
4— Engine Stop Switch
5— Battery Disconnect Switch

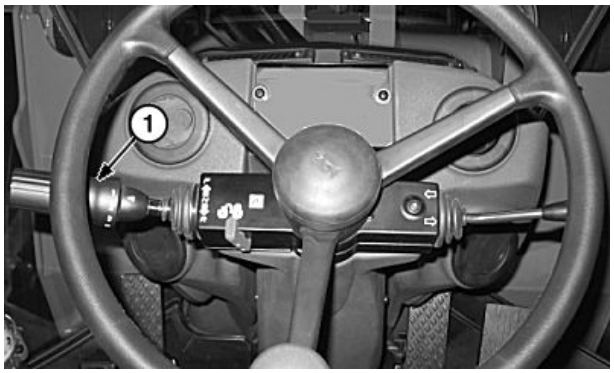

TX1039911A —UN—07APR08

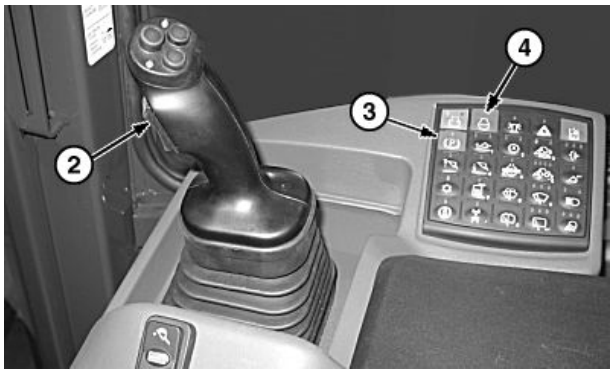

TX1039927A —UN—08APR08

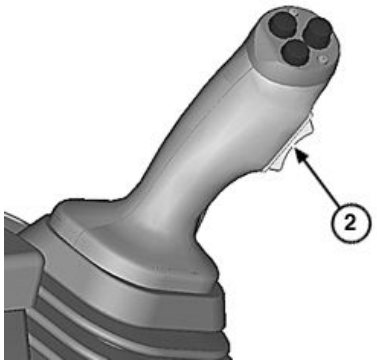

TX1062360A —UN—13AUG09

FNR Switch (joystick steering control—if equipped)

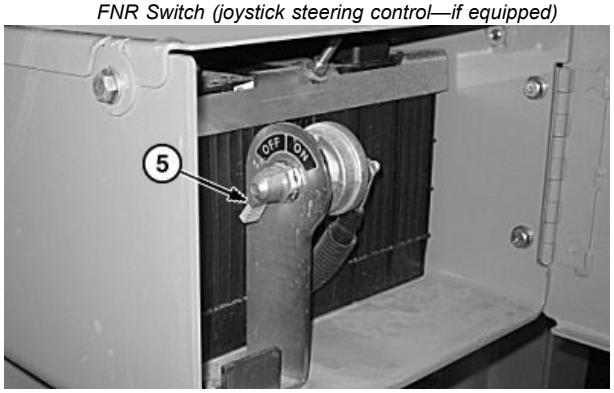

TX1039928A —UN—08APR08

OUT4001,00005FB -19-30NOV10-1/1

Loading Machine on a Trailer

1. Place chocks against trailer wheels.
2. Use ramp or loading dock. Ramps must be strong enough, have a low angle, and correct height.
3. Fasten seat belt before starting engine.

CAUTION: Prevent possible injury from tipover. Position machine centerline over trailer bed centerline. NEVER steer machine while on ramp. If necessary to reposition machine, drive machine off ramp, reposition on ground, then try loading again.

4. Drive machine onto ramp slowly. Centerline of machine should be over centerline of trailer.
5. Lower all equipment onto blocks or trailer bed.
6. Move forward, neutral, or reverse (FNR) lever (1) or FNR switch (2) to N (neutral).

CAUTION: Prevent possible injury from unexpected machine movement. Machine can unexpectedly roll or move under power, resulting in death or serious injury. Always turn off engine or engage park brake.

7. Press park brake switch (3). (LED on switch and indicator on display unit are illuminated.)
8. Install frame locking bar. See Locking Machine Frame. (Section 3-2.)
9. Press engine stop switch (4).
10. Press and release engine start switch (5) once; DO NOT START engine.
11. Press and hold pilot enable/boom down switch (6), then move hydraulic control levers to relieve pressure.
12. Press engine stop switch.
13. Turn battery disconnect switch (7) OFF.

1— FNR Lever
2— FNR Switch
3— Park Brake Switch
4— Engine Stop Switch
5— Engine Start Switch
6— Pilot Enable/Boom Down Switch
7— Battery Disconnect Switch

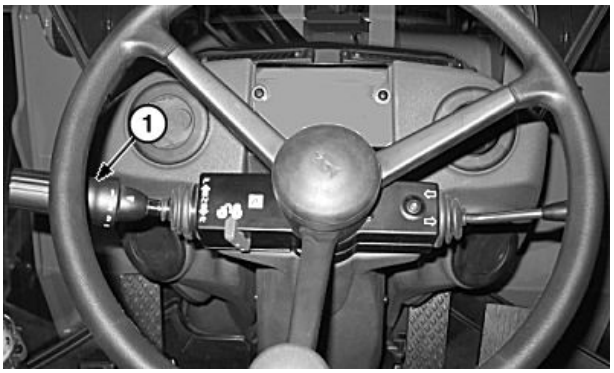

TX1039911A —UN—07APR08

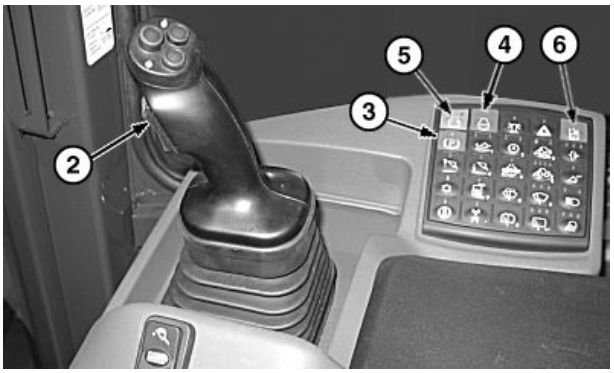

TX1039930A —UN—08APR08

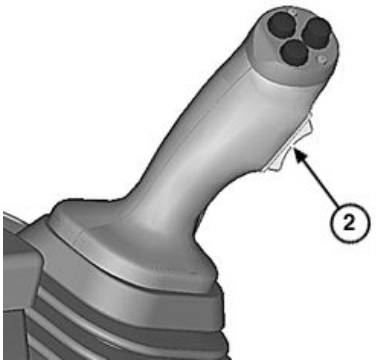

TX1062360A —UN—13AUG09

FNR Switch (joystick steering control—if equipped)

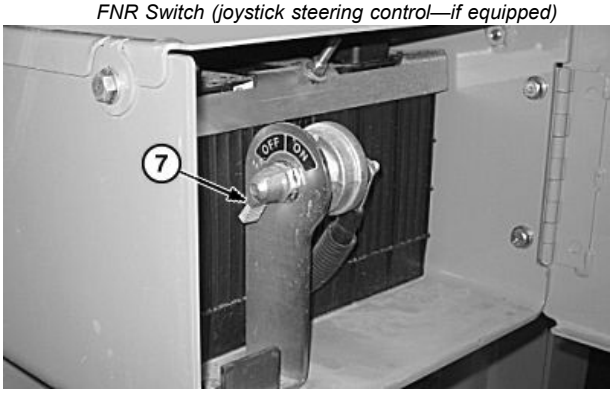

TX1039929A —UN—08APR08

Continued on next page

OUT4001,00006AB -19-17NOV10-1/2

14. Fasten machine to trailer with chains or cables and appropriate load binders at front axle tiedown eyes (8) and rear tiedown eyes (9).

8— Front Axle Tiedown Eye (2 used)

9— Rear Tiedown Eye (2 used)

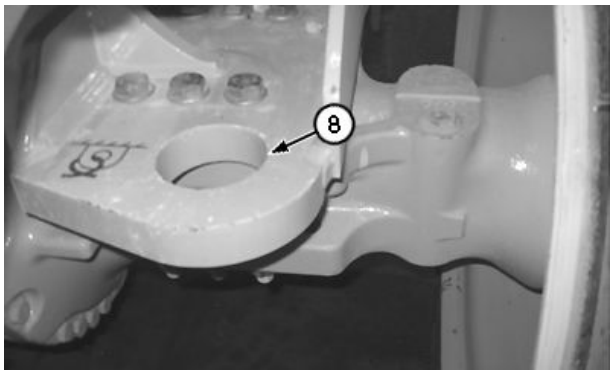

TX1083418A —UN—20OCT10

Front Axle Tiedown Eye (left side shown)

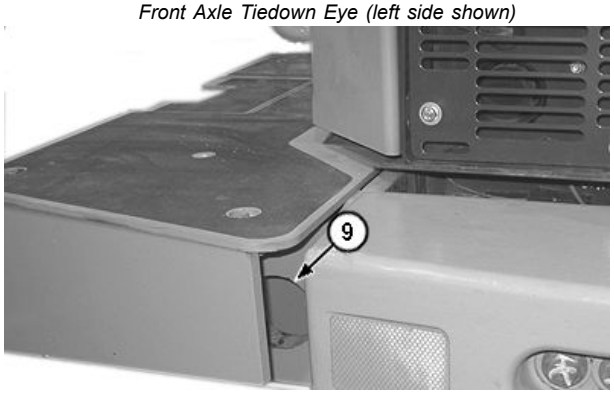

TX1083448A —UN—21OCT10

Rear Tiedown Eye (left side shown)

OUT4001,00006AB -19-17NOV10-2/2

Towing Procedure

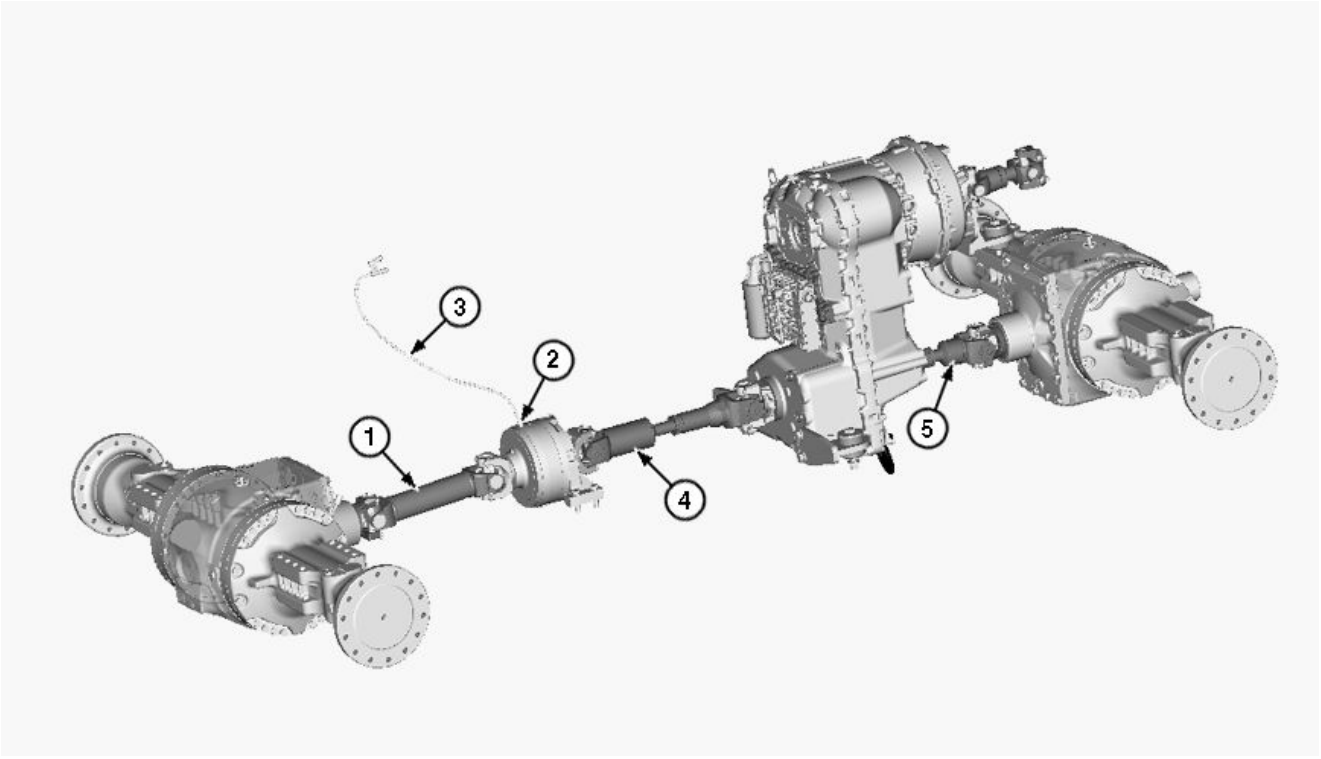

TX1083461A —UN—21OCT10

1— Front Driveshaft
2— Park Brake Fitting
3— Park Brake Hose
4— Telescoping Driveshaft
5— Rear Driveshaft

IMPORTANT: Engine cannot be started by towing.

Tow the machine off-road to the nearest location where repair work can be done. Haul the machine if it must be moved further than 460 m (500 yd).

Never tow machine faster than 3.2 km/hr (2 mph) to avoid transmission damage.

If the engine or the transmission hydraulic system is nonfunctional, the park brake will be ON.

CAUTION: Prevent possible injury from unexpected machine movement. Place blocks at front and rear of tires to prevent machine from rolling.

1. Place blocks at front and rear of tires.
2. Connect the towed and towing machines together.

CAUTION: Prevent possible injury from unexpected machine movement. Install articulation locking bar to prevent weaving as machine is towed.

3. Start engine if possible, and install articulation locking bar.
4. Move forward, neutral, or reverse (FNR) lever or switch to neutral (N) position.
5. If park brake indicator does not illuminate, the park brake is OFF. Go to Step 12.

   If park brake indicator illuminates, the park brake is ON. Go to Step 6.
6. Stop engine.
7. Disconnect park brake hose (3) from park brake fitting (2). Plug hose.
8. Connect hose from hand operated hydraulic pump to park brake fitting.

NOTE: Keep hand operated hydraulic pump filled with oil.

CAUTION: Prevent possible injury from unexpected machine movement. Sit in operator's seat when pumping the hydraulic pump. When towing the machine, maintain at least 1379 kPa (13.8 bar) (200 psi). If pressure is below 1379 (13.8 bar) (200 psi), park brake may engage.

9. Place hydraulic hand pump on left side of operator's station floor.

IMPORTANT: Do not pump pressure up to more than 2068 kPa (20.7 bar) (300 psi) to avoid damage to the park brake.

Continued on next page

10. Pump handle until gauge needle indicates 1379 kPa (13.8 bar) (200 psi) which will be required to disengage park brake.

    To engage the park brake, open the valve in the hand-operated pump to relieve pressure.

CAUTION: Prevent possible injury from unexpected machine movement. Never attempt to remove driveshafts without blocking front and rear tires.

11. Remove driveshafts if a hand operated pump is not available to release the park brake.

    Disconnect driveshafts (1 and 4) at axle and transmission and remove from machine.

NOTE: Limit tow to 460 m (500 yd) maximum.

12. Tow the machine slowly.

CAUTION: Prevent possible injury from unexpected machine movement. Place blocks at front and rear of tires to prevent machine from rolling.

13. Place blocks at front and at rear of tires.

14. Reapply park brake or reinstall driveshafts if they were removed. See your authorized dealer for installation information.

OUT4001,00006AC -19-21OCT10-2/2

Lifting the Machine

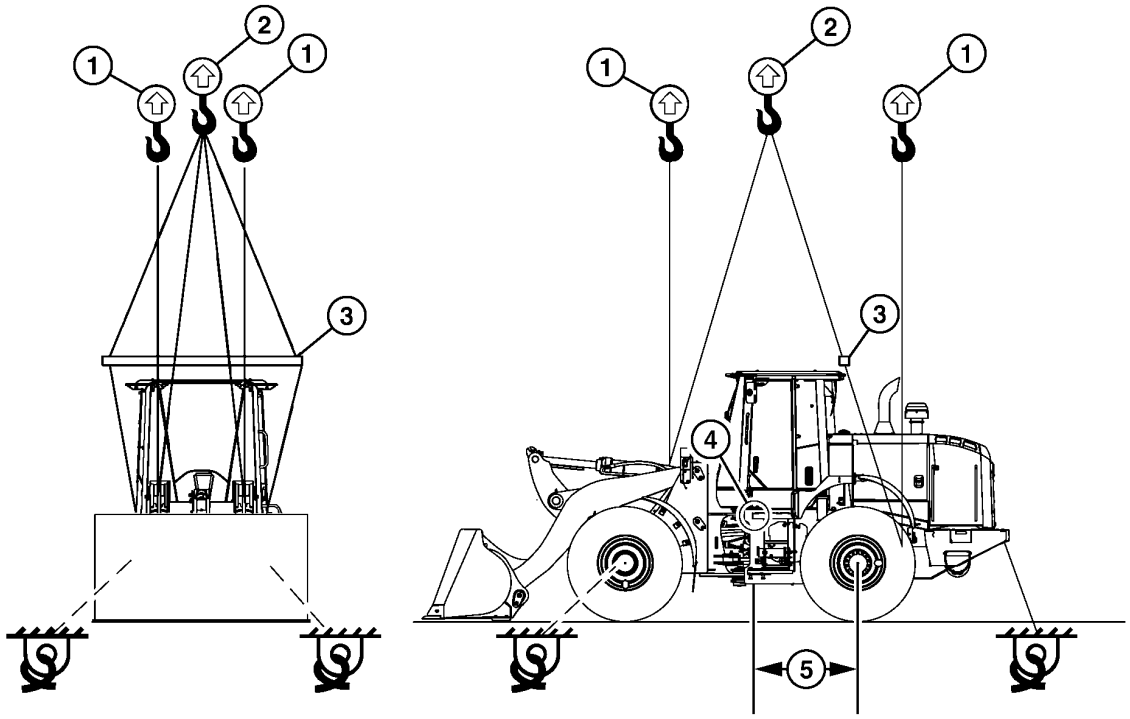

TX1083466 —UN—01NOV10

TX1083466

1— Alternate Lifting Method
2— Alternate Lifting Method
3— Spreader Bar
4— Center of Gravity
5— Center of Gravity Dimension

⚠ CAUTION: Prevent possible injury from unexpected machine movement. Clear all bystanders from lifting area. Select correct lifting cable strength for weight of machine. Test lift by raising machine 0.3 m (1 ft) off the ground.

1. Install machine frame locking bar. See Frame Locking Bar. (Section 3-2.)
2. Position crane for level machine lift.
3. For information on machine specifications, see Miscellaneous—Specifications. (Section 4-6.)

IMPORTANT: Use proper rated cables and slings for lifting.

4. Attach cables to machine, using alternate lifting methods (1 or 2).

Specification	
Center of Gravity Dimension (5)—Length	1484.5 mm (68.4 in.)
Standard Z-Bar Linkage—Maximum Operating Weight	23 300 kg (51 368 lb.)

5. Attach a tether cable to machine to control machine as it is lifted.
6. Test lift by raising machine 0.3 m (1 ft) off the ground.
7. Lift machine and swing to unloading area.

OUT4001,00006AD -19-01NOV10-1/1

Diesel Fuel

Consult your local fuel distributor for properties of the diesel fuel available in your area.

In general, diesel fuels are blended to satisfy the low temperature requirements of the geographical area in which they are marketed.

Diesel fuels specified to EN 590 or ASTM D975 are recommended. Renewable diesel fuel produced by hydrotreating animal fats and vegetable oils is basically identical to petroleum diesel fuel. Renewable diesel that meets EN 590 or ASTM D975 is acceptable for use at all percentage mixture levels.

Required Fuel Properties

In all cases, the fuel shall meet the following properties:

Cetane number of 43 minimum. Cetane number greater than 47 is preferred, especially for temperatures below –20 °C (–4 °F) or elevations above 1500 m (5000 ft.).

Cold Filter Plugging Point (CFPP) should be at least 5 °C (9 °F) below the expected lowest temperature or **Cloud Point** below the expected lowest ambient temperature.

Fuel lubricity should pass a maximum scar diameter of 0.45 mm as measured by ASTM D6079 or ISO 12156-1.

Diesel fuel quality and sulfur content must comply with all existing emissions regulations for the area in which the engine operates. DO NOT use diesel fuel with sulfur content greater than 10 000 mg/kg (10 000 ppm).

Sulfur content for Interim Tier 4, Final Tier 4, Stage III B, and Stage IV Engines

- Use ONLY ultra low sulfur diesel (ULSD) fuel with a maximum of 15 mg/kg (15 ppm) sulfur content.

Sulfur Content for Tier 3 and Stage III A Engines

- Use of diesel fuel with sulfur content less than 1000 mg/kg (1000 ppm) is RECOMMENDED.
- Use of diesel fuel with sulfur content 1000—5000 mg/kg (1000—5000 ppm) REDUCES oil and filter change intervals.
- BEFORE using diesel fuel with sulfur content greater than 5000 mg/kg (5000 ppm), contact your John Deere dealer.

Sulfur Content for Tier 2 and Stage II Engines

- Use of diesel fuel with sulfur content less than 500 mg/kg (500 ppm) is RECOMMENDED.
- Use of diesel fuel with sulfur content 500—5000 mg/kg (500—5000 ppm) REDUCES the oil and filter change interval.
- BEFORE using diesel fuel with sulfur content greater than 5000 mg/kg (5000 ppm), contact your John Deere dealer.

Sulfur Content for Other Engines

- Use of diesel fuel with sulfur content less than 5000 mg/kg (5000 ppm) is RECOMMENDED.
- Use of diesel fuel with sulfur content greater than 5000 mg/kg (5000 ppm) REDUCES the oil and filter change intervals.

IMPORTANT: Do not mix used diesel engine oil or any other type of lubricating oil with diesel fuel.

Improper fuel additive usage may cause damage on fuel injection equipment of diesel engines.

DX,FUEL1 -19-15MAY13-1/1

Diesel Fuel Specifications

The engine in this machine is designed to operate only with ultra low sulfur diesel (ULSD) fuel. Use of fuel other than ULSD will reduce the efficiency and durability of the engine, will harm and permanently damage the engine's advanced emissions control systems, reduce fuel economy, and possibly prevent the engine from running at all. Emission-related warranties are likely to be rendered void by the use of fuel that does not meet these specifications.

OUT4001,000060A -19-10JAN12-1/1

Lubricity of Diesel Fuel

Most diesel fuels manufactured in the United States, Canada, and the European Union have adequate lubricity to ensure proper operation and durability of fuel injection system components. However, diesel fuels manufactured in some areas of the world may lack the necessary lubricity.

IMPORTANT: Make sure the diesel fuel used in your machine demonstrates good lubricity characteristics.

Fuel lubricity should pass a maximum scar diameter of 0.45 mm as measured by ASTM D6079 or ISO 12156-1.

If fuel of low or unknown lubricity is used, add John Deere Fuel-Protect Diesel Fuel Conditioner (or equivalent) at the specified concentration.

Lubricity of Biodiesel Fuel

Fuel lubricity can improve significantly with biodiesel blends up to B20 (20% biodiesel). Further increase in lubricity is limited for biodiesel blends greater than B20.

DX,FUEL5 -19-14APR11-1/1

Handling and Storing Diesel Fuel

CAUTION: Handle fuel carefully. Do not fill the fuel tank when engine is running. DO NOT smoke while you fill the fuel tank or service the fuel system.

Fill the fuel tank at the end of each day's operation to prevent water condensation and freezing during cold weather. Keep all storage tanks as full as practicable to minimize condensation. Ensure that all fuel tank caps and covers are installed properly to prevent moisture from entering. Monitor water content of the fuel regularly.

IMPORTANT: The fuel tank is vented through the filler cap. If a new filler cap is required, always replace it with an original vented cap.

When fuel is stored for an extended period or if there is a slow turnover of fuel, add a fuel conditioner to stabilize the fuel and prevent water condensation. Contact your fuel supplier for recommendations.

JR74534,0000253 -19-08APR10-1/1

Biodiesel Fuel

Biodiesel is a fuel comprised of monoalkyl esters of long chain fatty acids derived from vegetable oils or animal fats. Biodiesel blends are biodiesel mixed with petroleum diesel fuel on a volume basis.

Before using fuel containing biodiesel review the Biodiesel Use Requirements and Recommendations in this Operator's Manual.

Environmental laws / regulations may encourage or prohibit the use of biofuels. Operators should consult with appropriate governmental authorities prior to using biofuels.

US / Canada

While 5% blends are preferred (B5), biodiesel concentrations up to a 20% blend (B20) in petroleum diesel fuel can be used in all John Deere engines. Biodiesel blends up to B20 can be used ONLY if the biodiesel (100% biodiesel or B100) meets ASTM D6751 (US), EN 14214 (EU), or equivalent specification. Expect a 2% reduction in power and a 3% reduction in fuel economy when using B20.

Biodiesel concentrations above B20 may harm the engine's emission control systems and should not be used in the US and Canada. Risks may include, but not be limited to, more frequent exhaust filter parked cleanings, soot accumulation, and increased intervals for ash removal.

Biodiesel users in the U.S. are strongly encouraged to purchase biodiesel blends from a BQ9000 Certified Marketer and sourced from a BQ9000 Accredited Producer (as certified by the National Biodiesel Board). Certified Marketers and Accredited Producers can be found at the following website: http://www.bq9000.org.

Other regions

John Deere engines can operate on biodiesel blends below and above B20 (up to 100% biodiesel). Operate at levels above B20 ONLY if the biodiesel meets the EN 14214 specification (primarily available in Europe). Engines operating on biodiesel blends above B20 may not fully comply with all applicable emissions regulations. Expect up to a 12% reduction in power and an 18% reduction in fuel economy when using 100% biodiesel. John Deere approved fuel conditioners containing detergent/dispersant additives are required.

Biodiesel Use Requirements

The petroleum diesel portion of all biodiesel blends must meet the requirements of ASTM D975 (US) or EN 590 (EU) commercial standard.

When using biodiesel fuel, the fuel filter may require more frequent replacement due to premature plugging. Check engine oil level daily prior to starting engine. A rising oil level may indicate fuel dilution of the engine oil.

John Deere approved fuel conditioners containing detergent/dispersant additives are required when using B20 blends and recommended when using lower biodiesel blends. Biodiesel blends up to B20 must be used within 90 days of the date of biodiesel manufacture. Biodiesel blends above B20 must be used within 45 days from the date of biodiesel manufacture.

Biodiesel Use Recommendations

When using biodiesel blends up to B20 the following must be considered:

- Cold weather flow degradation
- Stability and storage issues (moisture absorption, oxidation, microbial growth)
- Possible filter restriction and plugging (usually a problem when first switching to biodiesel on used engines)

Request a certificate of analysis from your fuel distributor to ensure that the fuel is compliant with the specifications provided in this Operator's Manual.

Consult your John Deere dealer for approved fuel conditioners to improve storage and performance with biodiesel fuels.

The following must also be considered when using biodiesel blends above B20:

- Possible coking and/or blocked injector nozzles, resulting in power loss and engine misfire if John Deere approved fuel conditioners containing detergent/dispersant additives are not used
- Possible crankcase oil dilution, requiring more frequent oil changes
- Possible lacquering and/or seizure of internal components
- Possible formation of sludge and sediments
- Possible thermal oxidation of fuel at elevated temperatures
- Possible compatibility issues with other materials (including copper, lead, zinc, tin, brass, and bronze) used in fuel handling equipment
- Possible reduction in water separator efficiency
- Possible damage to paint if exposed to biodiesel

IMPORTANT: Raw pressed vegetable oils are NOT acceptable for use as fuel in any concentration in John Deere engines. Their use could cause engine failure.

OUT4001,0000671 -19-29MAR11-1/1

Testing Diesel Fuel

A fuel analysis program can help to monitor the quality of diesel fuel. The fuel analysis can provide critical data such as cetane number, fuel type, sulfur content, water content, appearance, suitability for cold weather operations, bacteria, cloud point, acid number, particulate contamination, and whether the fuel meets specification.

Contact your John Deere dealer for more information on diesel fuel analysis.

DX,FUEL6 -19-14APR11-1/1

Minimizing the Effect of Cold Weather on Diesel Engines

John Deere diesel engines are designed to operate effectively in cold weather.

However, for effective starting and cold weather operation, a little extra care is necessary. The following information outlines steps that can minimize the effect that cold weather may have on starting and operation of your engine. See your John Deere dealer for additional information and local availability of cold weather aids.

Use Winter Grade Fuel

When temperatures fall below 0°C (32°F), winter grade fuel (No. 1D in North America) is best suited for cold weather operation. Winter grade fuel has a lower cloud point and a lower pour point.

Cloud point is the temperature at which wax will begin to form in the fuel and this wax causes fuel filters to plug. **Pour point** is the lowest temperature at which movement of the fuel is observed.

NOTE: On an average, winter grade diesel fuel has a lower BTU (heat content) rating. Using winter grade fuel may reduce power and fuel efficiency, but should not cause any other engine performance effects. Check the grade of fuel being used before troubleshooting for low power complaints in cold weather operation.

Air Intake Heater

An air intake heater is an available option for some engines to aid cold weather starting.

Ether

An ether port on the intake is available to aid cold weather starting.

CAUTION: Ether is highly flammable. Do not use ether when starting an engine equipped with glow plugs or an air intake heater.

Coolant Heater

An engine block heater (coolant heater) is an available option to aid cold weather starting.

Seasonal Viscosity Oil and Proper Coolant Concentration

Use seasonal grade viscosity engine oil based on the expected air temperature range between oil changes and a proper concentration of low silicate antifreeze as recommended. (See Diesel Engine Oil and Heavy Duty Diesel Engine Coolant in this section.)

Diesel Fuel Flow Additive

Use John Deere PREMIUM DIESEL FUEL CONDITIONER (winter formula), which contains antigel chemistry, or equivalent fuel conditioner to treat non-winter grade fuel (No. 2D in North America) during the cold weather season. This generally extends operability to about 10°C (18°F) below the fuel cloud point. For operability at even lower temperatures, use winter grade fuel.

IMPORTANT: Treat fuel when outside temperature drops below 0°C (32°F). For best results, use with untreated fuel. Follow all recommended instructions on label.

BioDiesel

When operating with biodiesel blends, wax formation can occur at warmer temperatures. Begin using John Deere PREMIUM BIODIESEL FUEL CONDITIONER (winter formula) at 5°C (41°F) to treat biodiesel fuels during the cold-weather season. Use B5 or lower blends at temperatures below 0°C (32°F). Use only winter grade petroleum diesel fuel at temperatures below -10°C (14°F). In colder weather, engines operating with biodiesel may have more frequent parked cleanings, soot accumulation, and increased intervals for ash removal from the exhaust filter.

Winterfronts

Use of fabric, cardboard, or solid winterfronts is not recommended with any John Deere engine. Their use can result in excessive engine coolant, oil, and charge air temperatures. This can lead to reduced engine life, loss of power and poor fuel economy. Winterfronts may also put abnormal stress on fan and fan drive components potentially causing premature failures. If winterfronts are used, they should never totally close off the grill frontal area. Approximately 25% area in the center of the grill should remain open at all times. At no time should the air blockage device be applied directly to the radiator core.

Radiator Shutters

If equipped with a thermostatically controlled radiator shutter system, this system should be regulated in such a way that the shutters are completely open by the time the coolant reaches 93°C (200°F) to prevent excessive intake manifold temperatures. Manually controlled systems are not recommended. If air-to-air aftercooling is used, the shutters must be completely open by the time the intake manifold air temperature reaches the maximum allowable temperature out of the charge air cooler. For more information, see your John Deere dealer.

OUT4001,0000632 -19-09DEC10-1/1

Alternative and Synthetic Lubricants

Conditions in certain geographical areas may require lubricant recommendations different from those printed in this manual.

Some John Deere brand coolants and lubricants may not be available in your location.

Consult your John Deere dealer to obtain information and recommendations.

Synthetic lubricants may be used if they meet the performance requirements as shown in this manual.

The temperature limits and service intervals shown in this manual apply to both conventional and synthetic lubricants.

Re-refined base stock products may be used if the finished lubricant meets the performance requirements.

DX,ALTER -19-11APR11-1/1

Mixing of Lubricants

In general, avoid mixing different brands or types of oil. Oil manufacturers blend additives in their oils to meet certain specifications and performance requirements.

Mixing different oils can interfere with the proper functioning of these additives and degrade lubricant performance.

Consult your John Deere dealer to obtain specific information and recommendations.

DX,LUBMIX -19-18MAR96-1/1

Lubricant Storage

Your equipment can operate at top efficiency only when clean lubricants are used.

Use clean containers to handle all lubricants.

Store lubricants and containers in an area protected from dust, moisture, and other contamination. Store containers on their side to avoid water and dirt accumulation.

Make certain that all containers are properly marked to identify their contents.

Properly dispose of all old containers and any residual lubricant they may contain.

DX,LUBST -19-11APR11-1/1

John Deere Break-In Plus™ Engine Oil

New engines are filled at the factory with either John Deere Break-In™ or Break-In Plus™ Engine Oil. During the break-in period, add John Deere Break-In or Break-In Plus Engine Oil, respectively, as needed to maintain the specified oil level.

Operate the engine under various conditions, particularly heavy loads with minimal idling, to help seat engine components properly.

Change the oil and filter at 250 hours maximum for Break-In Oil or 500 hours maximum for Break-In Plus Oil during the initial operation of a new or rebuilt engine.

After engine overhaul, fill the engine with either John Deere Break-In or Break-In Plus Engine Oil.

If John Deere Break-In or Break-In Plus Engine Oil is not available, use a 10W-30 diesel engine oil meeting one of the following during the first 250 hours of operation:

- API Service Classification CE
- API Service Classification CD
- API Service Classification CC
- ACEA Oil Sequence E2
- ACEA Oil Sequence E1

Break-In is a trademark of Deere & Company.
Break-In Plus is a trademark of Deere & Company
Plus-50 is a trademark of Deere & Company.

IMPORTANT: Do not use Plus-50™ II, Plus-50, or engine oils meeting any of the following for the initial break-in of a new or rebuilt engine:

API CJ-4	**ACEA E9**
API CI-4 PLUS	**ACEA E7**
API CI-4	**ACEA E6**
API CH-4	**ACEA E5**
API CG-4	**ACEA E4**
API CF-4	**ACEA E3**
API CF-2	
API CF	

These oils will not allow the engine to break in properly.

John Deere Break-In Plus Engine Oil can be used for all John Deere diesel engines at all emission certification levels.

After the break-in period, use John Deere Plus-50 II, John Deere Plus-50, or other diesel engine oil as recommended in this manual.

OUT4001,000067D -19-31MAR11-1/1

Diesel Engine Oil—Interim Tier 4 and Stage III B Engines

Use oil viscosity based on the expected air temperature range during the period between oil changes.

John Deere Plus-50™ II is the recommended engine oil.

Extended service intervals may apply when John Deere Plus-50 II engine oil is used. Refer to the engine oil drain interval table and consult your John Deere dealer for more information.

If John Deere Plus-50 II engine oil is not available, engine oil meeting one or more of the following may be used:

- API Service Category CJ-4
- ACEA Oil Sequence E9
- ACEA Oil Sequence E6

DO NOT use engine oil containing more than 1.0% sulfated ash, 0.12% phosphorus, or 0.4% sulfur.

Multi-viscosity diesel engine oils are preferred.

Diesel fuel quality and fuel sulfur content must comply with all existing emissions regulations for the area in which the engine operates.

IMPORTANT: Use only ultra low sulfur diesel (ULSD) fuel with a maximum sulfur content of 15 mg/kg (15 ppm).

Plus-50 is a trademark of Deere & Company

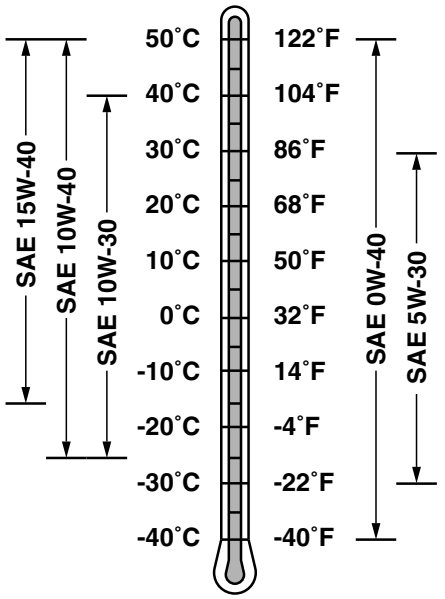

Oil Viscosities for Air Temperature Ranges

VD76477,00004E6 -19-23MAY12-1/1

Engine Oil and Filter Service Intervals—Interim Tier 4 and Stage III B Engines

Recommended oil and filter service intervals are based on a combination of oil pan capacity, type of engine oil and filter used, and sulfur content of the diesel fuel. Actual service intervals also depend on operation and maintenance practices.

Use oil analysis to evaluate the condition of the oil and to aid in selection of the proper oil and filter service interval. Contact your John Deere dealer for more information on engine oil analysis.

Change the oil and oil filter at least once every 12 months even if the hours of operation are fewer than the otherwise recommended service interval.

Diesel fuel sulfur content affects engine oil and filter service intervals. Higher fuel sulfur levels reduce oil and filter service intervals.

Use of diesel fuel with sulfur content less than 15 mg/kg (15 ppm) is REQUIRED.

IMPORTANT: To avoid engine damage:

- **Reduce oil and filter service intervals by 50% when using biodiesel blends greater than B20. Oil analysis may allow longer service intervals.**
- **Use only approved oil types.**

Approved Oil Types:

- John Deere Plus-50™ II.
- "Other Oils" include API CJ-4, ACEA E9, and ACEA E6.

NOTE: The 500 hour extended oil and filter change interval is only allowed if all of the following conditions are met:

- *Use of diesel fuel with sulfur content less than 15 mg/kg (15 ppm).*
- *Use of John Deere Plus-50™ II oil.*
- *Use of an approved John Deere oil filter.*

Engine Oil and Filter Service Intervals	
John Deere Plus-50™ II	500 hours
Other Oils	250 hours

Plus-50 is a trademark of Deere & Company

DX,ENOIL15,IT4,120toMAX -19-14APR11-1/1

Transmission, Park Brake, and Axle Oil

Use oil viscosity based on the expected air temperature range during the period between oil changes.

The following oils are preferred:

- John Deere Hy-Gard™
- John Deere Low Viscosity Hy-Gard

Other oils may be used if they meet one of the following:

- John Deere Standard JDM J20C
- John Deere Standard JDM J20D

Use John Deere Bio-Hy-Gard™ oil when a biodegradable fluid is required.

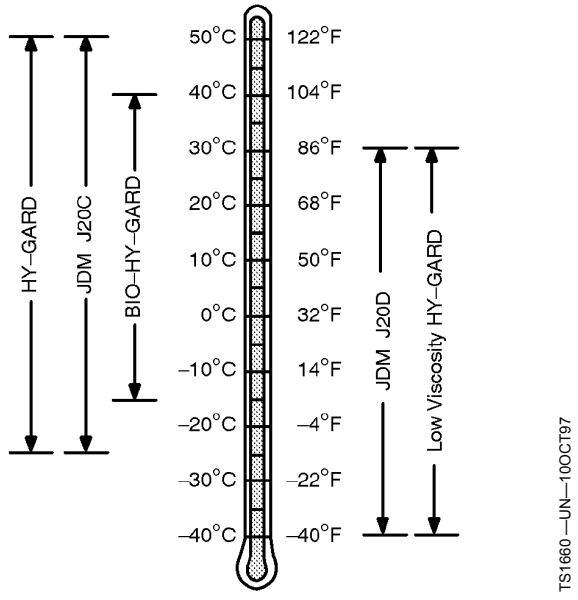

Hy-Gard is a trademark of Deere & Company
Bio-Hy-Gard is a trademark of Deere & Company

DP99999,00002CC -19-01OCT10-1/1

Hydraulic System Oil

The following oil is preferred:

- John Deere Torq-Gard™, 10W-30

The following oil is also recommended:

- John Deere Plus-50™ II, 10W-30

Other oils may be used if they meet one or more of the following:

- API Service Classification CH-4
- API Service Classification CG-4

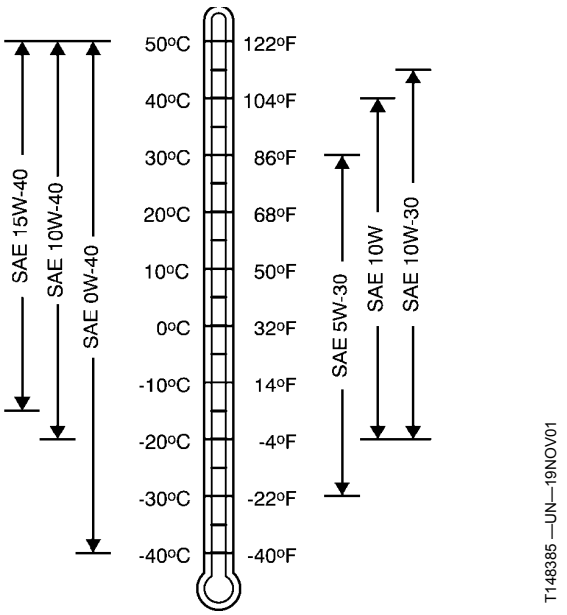

Torq-Gard is a trademark of Deere & Company
Plus-50 is a trademark of Deere & Company

OUT4001,00005E7 -19-13JUL10-1/1

Grease

Use grease based on NLGI consistency numbers and the expected air temperature range during the service interval.

John Deere MOLY HIGH TEMPERATURE EP GREASE or SAE multipurpose EP grease containing 3 to 5% molybdenum disulfide are preferred.

The following greases are also recommended:

- John Deere HIGH TEMPERATURE EP GREASE
- John Deere GREASE-GARD™
- NLGI No.2
- NLGI No.1
- NLGI No.0
- NLGI No.00

Other greases may be used if they meet the following:

- SAE multipurpose EP grease
- NLGI Performance Classification GC-LB
- MIL-PRF-10924

IMPORTANT: Some types of grease thickeners are not compatible with others. Consult your grease supplier before mixing different types of grease.

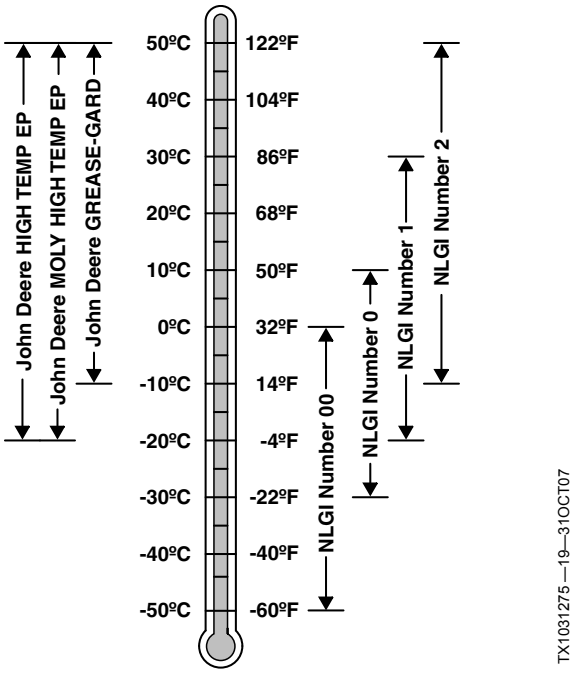

GREASE-GARD is a trademark of Deere & Company

DP99999,00002CE -19-14JUN10-1/1

Heavy Duty Diesel Engine Coolant

The engine cooling system is filled to provide year-round protection against corrosion and cylinder liner pitting, and winter freeze protection to -37°C (-34°F). If protection at lower temperatures is required, consult your John Deere dealer for recommendations.

The following engine coolants are preferred:

- John Deere COOL-GARD™ II Premix
- John Deere COOL-GARD II PG Premix

Use John Deere COOL-GARD II PG Premix when a non-toxic coolant formulation is required.

Additional Recommended Coolants

The following engine coolant is also recommended:

- John Deere COOL-GARD II Concentrate in a 40–60% mixture of concentrate with quality water.

John Deere COOL-GARD II Premix, COOL-GARD II PG Premix, and COOL-GARD II Concentrate coolants do not require use of supplemental coolant additives.

Other Coolants

John Deere COOL-GARD II and COOL-GARD II PG coolants might not be available in the geographical area where service is performed.

If these coolants are unavailable, use a coolant concentrate or prediluted coolant intended for use with heavy duty diesel engines and with a minimum of the following chemical and physical properties:

- Is formulated with a quality nitrite-free additive package.
- Provides cylinder liner cavitation protection according to either the John Deere Cavitation Test Method or a fleet study run at or above 60% load capacity
- Protects the cooling system metals (cast iron, aluminum alloys, and copper alloys such as brass) from corrosion

The additive package must be part of one of the following coolant mixtures:

- ethylene glycol or propylene glycol base prediluted (40—60%) heavy duty coolant
- ethylene glycol or propylene glycol base heavy duty coolant concentrate in a 40—60% mixture of concentrate with quality water

Water Quality

Water quality is important to the performance of the cooling system. Distilled, deionized, or demineralized water is recommended for mixing with ethylene glycol and propylene glycol base engine coolant concentrate.

IMPORTANT: Do not use cooling system sealing additives or antifreeze that contains sealing additives.

Do not mix ethylene glycol and propylene glycol base coolants.

Do not use coolants that contain nitrites.

COOL-GARD is a trademark of Deere & Company

DX,COOL3 -19-14APR11-1/1

Drain Intervals for Diesel Engine Coolant

Drain and flush the cooling system and refill with fresh coolant at the indicated interval, which varies with the coolant used.

John Deere COOL-GARD™ II Premix, COOL-GARD II PG Premix and COOL-GARD II Concentrate are maintenance free coolants for up to six years or 6000 hours of operation, provided that the cooling system is topped off using only John Deere COOL-GARD II Premix or COOL-GARD II PG Premix.

Test the coolant condition annually with Coolant Test Strips designed for use with John Deere COOL-GARD II coolants. If the test strip chart indicates that additive is required, add John Deere COOL-GARD II Coolant Extender as directed.

If John Deere COOL-GARD™ II Premix, COOL-GARD II PG Premix, or COOL-GARD II Concentrate is used, but the coolant is not tested OR additives are not replenished by adding John Deere COOL-GARD II Coolant Extender, the drain interval is four years or 4000 hours of operation. This drain interval only applies to COOL-GARD II coolants that have been maintained within a 40—60% mixture of concentrate with quality water.

If a coolant other than COOL-GARD II, or COOL-GARD II PG is used, reduce the drain interval to two years or 2000 hours of operation.

COOL-GARD is a trademark of Deere & Company

DX,COOL11 -19-14APR11-1/1

John Deere COOL-GARD™ II Coolant Extender

Some coolant additives will gradually deplete during engine operation. For John Deere COOL-GARD™ II Premix, COOL-GARD II PG Premix, and COOL-GARD II Concentrate, replenish coolant additives between drain intervals by adding John Deere COOL-GARD II Coolant Extender.

John Deere COOL-GARD II Coolant Extender should not be added unless indicated by coolant testing.

John Deere COOL-GARD II Coolant Extender is a chemically matched additive system for use with all John Deere COOL-GARD II coolants. John Deere COOL-GARD II Coolant Extender is not intended for use with nitrite-containing coolants.

COOL-GARD is a trademark of Deere & Company

IMPORTANT: Do not add a supplemental coolant additive when the cooling system is drained and refilled with any of the following:

- **John Deere COOL-GARD II**
- **John Deere COOL-GARD II PG**

The use of non-recommended supplemental coolant additives may result in additive drop-out, gelation of the coolant, or corrosion of cooling system components.

Add the recommended concentration of John Deere COOL-GARD II Coolant Extender. DO NOT add more than the recommended amount.

DX,COOL16 -19-20APR11-1/1

Supplemental Coolant Additives

Some coolant additives will gradually deplete during engine operation. For nitrite-containing coolants, replenish coolant additives between drain intervals by adding a supplemental coolant additive as determined necessary by coolant testing.

John Deere Liquid Coolant Conditioner is recommended as a supplemental coolant additive for nitrite-containing coolants.

John Deere Liquid Coolant Conditioner is not designed for use with John Deere COOL-GARD™ II Premix, COOL-GARD II PG Premix, or COOL-GARD II Concentrate.

IMPORTANT: Do not add a supplemental coolant additive when the cooling system is drained and refilled with any of the following:

- **John Deere COOL-GARD II**
- **John Deere COOL-GARD II PG**

COOL-GARD is a trademark of Deere & Company

If other coolants are used, consult the coolant supplier and follow the manufacturer's recommendation for use of supplemental coolant additives.

The use of non-recommended supplemental coolant additives may result in additive drop-out and gelation of the coolant.

Add the manufacturer's recommended concentration of supplemental coolant additive. DO NOT add more than the recommended amount.

DX,COOL4 -19-14APR11-1/1

Operating in Warm Temperature Climates

John Deere engines are designed to operate using glycol base engine coolants.

Always use a recommended glycol base engine coolant, even when operating in geographical areas where freeze protection is not required.

John Deere COOL-GARD™ II Premix is available in a concentration of 50% ethylene glycol. However, there are situations in warm temperature climates where a coolant with lower glycol concentration (approximately 20% ethylene glycol) has been approved. In these cases, the low glycol formulation has been modified to provide the same level of corrosion inhibitor as John Deere COOL-GARD II Premix (50/50).

COOL-GARD is a trademark of Deere & Company

IMPORTANT: Water may be used as coolant *in emergency situations only.*

Foaming, hot surface aluminum and iron corrosion, scaling, and cavitation will occur when water is used as the coolant, even when coolant conditioners are added.

Drain cooling system and refill with recommended glycol base engine coolant as soon as possible.

DX,COOL6 -19-03NOV08-1/1

Additional Information About Diesel Engine Coolants and John Deere COOL-GARD™ II Coolant Extender

Engine coolants are a combination of three chemical components: ethylene glycol (EG) or propylene glycol (PG) antifreeze, inhibiting coolant additives, and quality water.

Coolant Specifications

John Deere COOL-GARD™ II Premix either EG or PG, are fully formulated coolants that contain all three components in their correct concentrations. DO NOT add an initial charge of John Deere COOL-GARD II Coolant Extender to COOL-GARD II Premix. DO NOT add any other supplemental coolant additive or water to COOL-GARD II Premix.

John Deere COOL-GARD II Concentrate contains both ethylene glycol and inhibiting coolant additives. Mix this product with quality water, but DO NOT add an initial charge of John Deere COOL-GARD II Coolant Extender or any other supplemental coolant additive.

Replenish Coolant Additives

Some coolant additives will gradually deplete during engine operation. Periodic replenishment of inhibitors is required, even when John Deere COOL-GARD II Premix or COOL-GARD II Concentrate is used. Follow the recommendations in this manual for the use of John Deere COOL-GARD II Coolant Extender.

Why use John Deere COOL-GARD II Coolant Extender?

Operating without proper coolant additives will result in increased corrosion, cylinder liner erosion and pitting, and other damage to the engine and cooling system. A simple mixture of ethylene glycol or propylene glycol and water will not give adequate protection.

John Deere COOL-GARD II Coolant Extender is a chemically matched additive system designed to fortify the proprietary additives used in John Deere COOL-GARD II Premix and COOL-GARD II Concentrate and to provide optimum protection for up to six years or 6000 hours of operation.

COOL-GARD is a trademark of Deere & Company

Avoid Automotive-type Coolants

Never use automotive-type coolants (such as those meeting ASTM D3306). These coolants do not contain the correct additives to protect heavy-duty diesel engines. Do not treat an automotive engine coolant with supplemental coolant additives because the high concentration of additives can result in additive fallout.

Water Quality

Water quality is important to the performance of the cooling system. Distilled, deionized, or demineralized water is recommended for mixing with ethylene glycol and propylene glycol base engine coolant concentrate.All water used in the cooling system should meet the following minimum specifications for quality:

Chlorides	<40 mg/L
Sulfates	<100 mg/L
Total dissolved solids	<340 mg/L
Total hardness	<170 mg/L
pH	5.5 to 9.0

Freeze Protection

The relative concentrations of glycol and water in the engine coolant determine its freeze protection limit.

Ethylene Glycol	**Freeze Protection Limit**
40%	-24°C (-12°F)
50%	-37°C (-34°F)
60%	-52°C (-62°F)
Propylene Glycol	**Freeze Protection Limit**
40%	-21°C (-6°F)
50%	-33°C (-27°F)
60%	-49°C (-56°F)

DO NOT use a coolant-water mixture greater than 60% ethylene glycol or 60% propylene glycol.

DX,COOL17 -19-20APR11-1/1

Testing Diesel Engine Coolant

Maintaining adequate concentrations of glycol and inhibiting additives in the coolant is critical to protect the engine and cooling system against freezing, corrosion, and cylinder liner erosion and pitting.

Test the coolant solution at intervals of 12 months or less and whenever excessive coolant is lost through leaks or overheating.

Coolant Test Strips

Coolant test strips are available from your John Deere dealer. These test strips provide a simple, effective method to check the freeze point and additive levels of your engine coolant.

When Using John Deere COOL-GARD II

John Deere COOL-GARD II Premix™ , COOL-GARD II PG Premix and COOL-GARD II Concentrate are maintenance free coolants for up to six years or 6000 hours of operation, provided that the cooling system is topped off using only John Deere COOL-GARD II Premix or COOL-GARD II PG premix. Test the coolant condition annually with coolant test strips designed for use with John Deere COOL-GARD II coolants. If the test strip chart indicates that additive is required, add John Deere COOL-GARD II Coolant Extender as directed.

COOL-GARD is a trademark of Deere & Company

Add only the recommended concentration of John Deere COOL-GARD II Coolant Extender. DO NOT add more than the recommended amount.

When Using Nitrite-Containing Coolants

Compare the test strip results to the supplemental coolant additive (SCA) chart to determine the amount of inhibiting additives in your coolant and whether more John Deere Liquid Coolant Conditioner should be added.

Add only the recommended concentration of John Deere Liquid Coolant Conditioner. DO NOT add more than the recommended amount.

Coolant Analysis

For a more thorough evaluation of your coolant, perform a coolant analysis. The coolant analysis can provide critical data such as freezing point, antifreeze level, pH, alkalinity, nitrite content (cavitation control additive), molybdate content (rust inhibitor additive), silicate content, corrosion metals, and visual assessment.

Contact your John Deere dealer for more information on coolant analysis.

DX,COOL9 -19-11APR11-1/1

Disposing of Coolant

Improperly disposing of engine coolant can threaten the environment and ecology.

Use leakproof containers when draining fluids. Do not use food or beverage containers that may mislead someone into drinking from them.

Do not pour waste onto the ground, down a drain, or into any water source.

Inquire on the proper way to recycle or dispose of waste from your local environmental or recycling center, or from your authorized John Deere dealer.

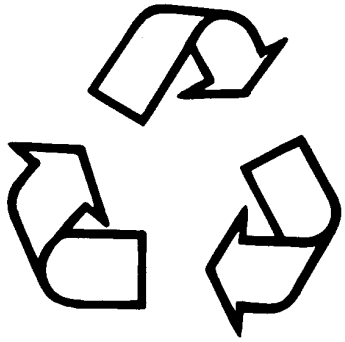

Recycle Waste

TS1133 —UN—15APR13

OUT4001,0000685 -19-09JUL10-1/1

Service Machine at Specified Intervals

IMPORTANT: Avoid machine damage. Perform scheduled maintenance on machine. See Service Intervals in this section and the following Maintenance sections for specific recommended intervals. This is also listed on the periodic maintenance chart located on machine.

Lubricate, clean, inspect machine, and make service checks and adjustments at intervals shown on the periodic maintenance chart (1) and in the following maintenance sections.

Periodic maintenance chart is located on left side engine service door.

Service items at multiples of the original requirement. For example, at 500 hours also service those items listed under 250 hours, 100 hours, 50 hours, and 10 hours or daily.

NeverGrease™ pin joints do not require lubrication. However, machines equipped with the NeverGrease™ pin joint option will have other maintenance points that still require lubrication.

NeverGrease is a trademark of Deere & Company

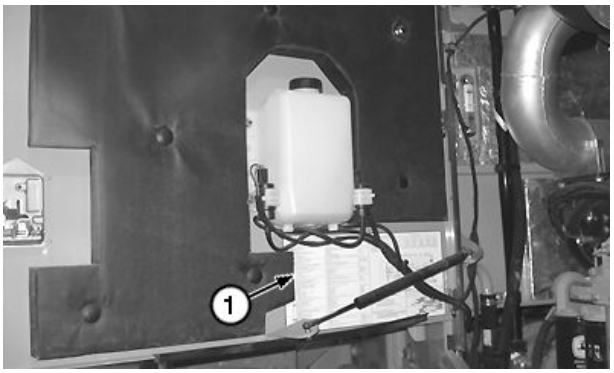

TX1083405A —UN—20OCT10

Periodic Maintenance Chart

1— Periodic Maintenance Chart

OUT4001,00006A9 -19-13JAN12-1/1

Check Hour Meter Regularly

Check hour meter display (1) to determine when machine needs periodic maintenance.

Intervals on the periodic maintenance chart are for operation in normal conditions. If machine is operated in severe conditions, service it at SHORTER INTERVALS.

1— Hour Meter Display

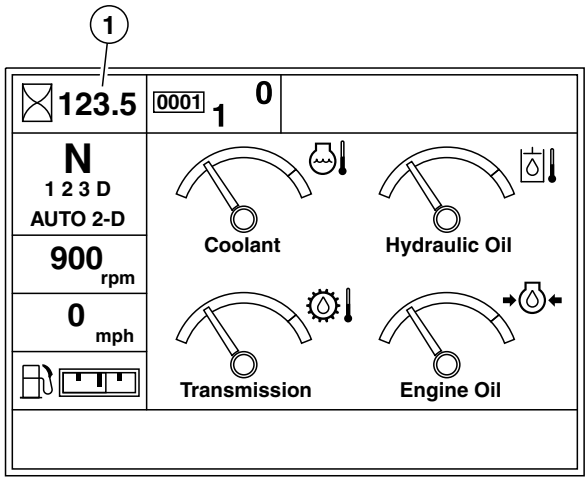

TX1046114 —UN—02FEB10

Display Unit

DP99999,00002D0 -19-22NOV11-1/1

Prepare Machine for Maintenance

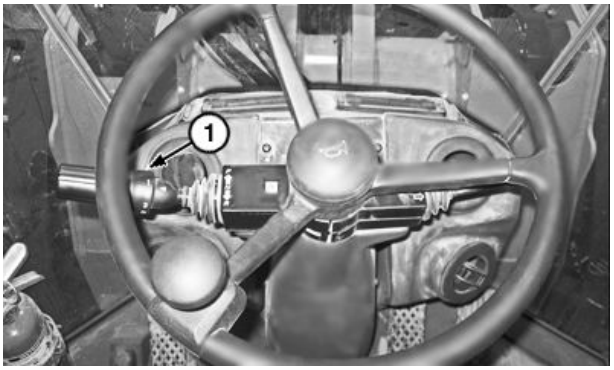

TX1096863A —UN—29AUG11

Steering Column FNR Lever



TX1041104A —UN—23APR08

FNR Switch

Before leaving operator's seat, park machine and discharge hydraulic pressures as described in following steps unless otherwise specified in the maintenance procedure. If maintenance must be performed with engine running, do not leave machine unattended.

1. Move forward, neutral, or reverse (FNR) lever (1) or switch (2) to N (neutral).

⚠ CAUTION: Prevent possible injury from unexpected machine movement. Press park brake switch to apply park brakes to hold machine.

2. Press park brake switch (3). (LED on switch and indicator on display unit illuminate.)
3. If bucket must be off ground for maintenance, install boom lock. See Boom Lock in this section.
4. If work is being performed in frame pivot area, install frame locking bar. See Frame Locking Bar in this section.
5. Lower equipment to ground and press engine stop switch (4).
6. Press and release engine start switch (5); DO NOT START engine.
7. Press return-to-carry (RTC) switch (6) to OFF setting (LED off).

⚠ CAUTION: Prevent possible injury from unexpected boom movement. Clear all bystanders from area around boom and bucket. Boom can move up when ride control switch is turned ON.

8. Make sure area around boom and bucket is clear of bystanders.

NOTE: If ride control switch is in AUTO setting (both LEDs on), ride control accumulator hydraulic pressure cannot be discharged. When ride control switch is in ON setting, left LED on switch is on.

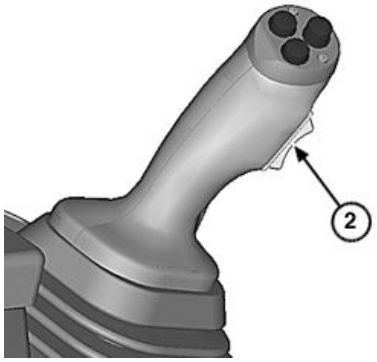

TX1062360A —UN—13AUG09

FNR Switch (joystick steering control—if equipped)



TX1041105A —UN—23APR08

Sealed Switch Module

1— FNR Lever
2— FNR Switch
3— Park Brake Switch
4— Engine Stop Switch
5— Engine Start Switch
6— Return-to-Carry (RTC) Switch
7— Ride Control Switch
8— Pilot Enable/Boom Down Switch

Continued on next page

9. Cycle ride control switch (7) to OFF setting (both LEDs off) then to ON (left LED on).
10. Press and hold pilot enable/boom down switch (8) while holding boom control lever in the float position (fully forward) for 5 seconds.
11. While still holding pilot enable/boom down switch, cycle each hydraulic control lever to relieve pressure.
12. Press engine stop switch.
13. Turn battery disconnect switch OFF.

OUT4001,00005FF -19-02DEC11-2/2

Frame Locking Bar

CAUTION: Prevent possible injury from unexpected machine movement. Connect articulation locking bar to both frames before you work in frame pivot area.

1. Align loader and machine frames.
2. Remove quick lock ring (1) and pull locking pin (2) from hole.
3. Rotate locking bar (3) to align with hole in loader frame.
4. Install locking pin through hole in loader frame and end of locking bar. Install quick lock ring to secure locking bar in place.

1— Quick Lock Ring
2— Locking Pin
3— Locking Bar

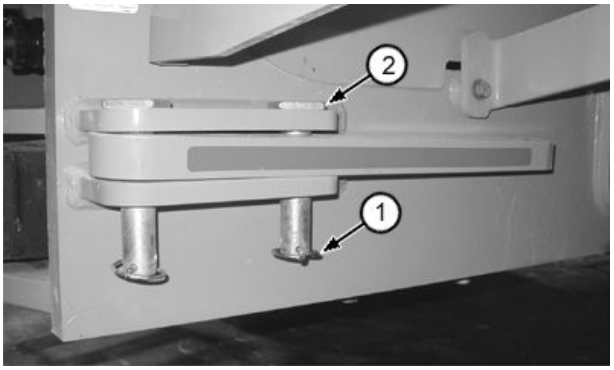

T161062B —UN—29OCT02

Lock Bar—Stored Position

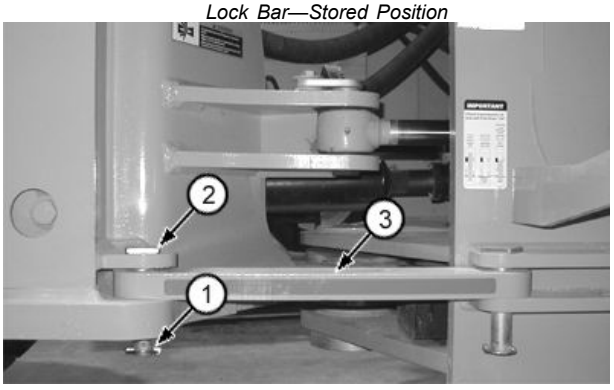

T161061B —UN—29OCT02

Lock Bar—Locked Position

DP99999,00002D2 -19-22NOV11-1/1

Boom Lock

CAUTION: Prevent possible crushing injury from falling boom. Always install boom lock before working on or around this machine with the boom raised.

Empty bucket and place in dump position before installing boom lock.

1. Raise boom. Empty bucket and place in dump position before installing boom lock (1).
2. Remove hand bolt (2) and remove boom lock from left side of machine frame, under the platform.
3. Install boom lock on boom cylinder and install hand bolt in outer face of boom lock. Lower boom onto lock.
4. Tighten hand bolt.
5. Before removing boom lock from cylinder, raise boom slightly to relieve pressure. Return boom lock to storage position on left side of machine frame. Move hand bolt to top of boom lock and tighten.

1— Boom Lock **2— Hand Bolt**

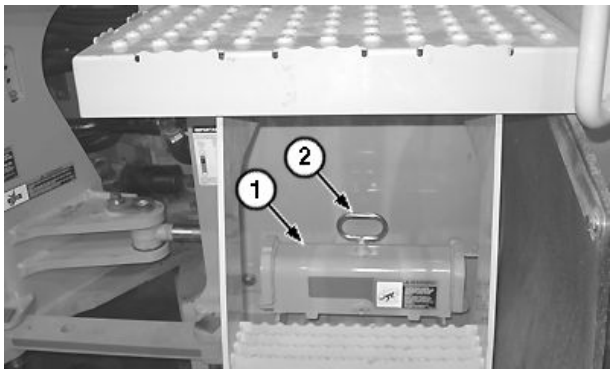

TX1083495A —UN—21OCT10

Boom Lock in Storage Position

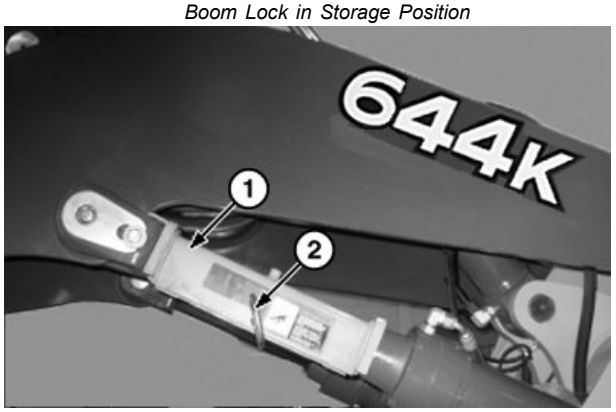

TX1046085A —UN—24JUL08

Boom Lock Installed on Boom Cylinder

OUT4001,00006AE -19-21OCT10-1/1

Pin Removal—If Equipped With Powerllel™ Linkage

CAUTION: Avoid injury from sudden linkage movement. Support powerllel bell crank before removing any pins.

Before removing any pin on the Powerllel™ linkage, the bell crank (1) must be supported with hoist. See your authorized dealer for further details.

1— Bell Crank

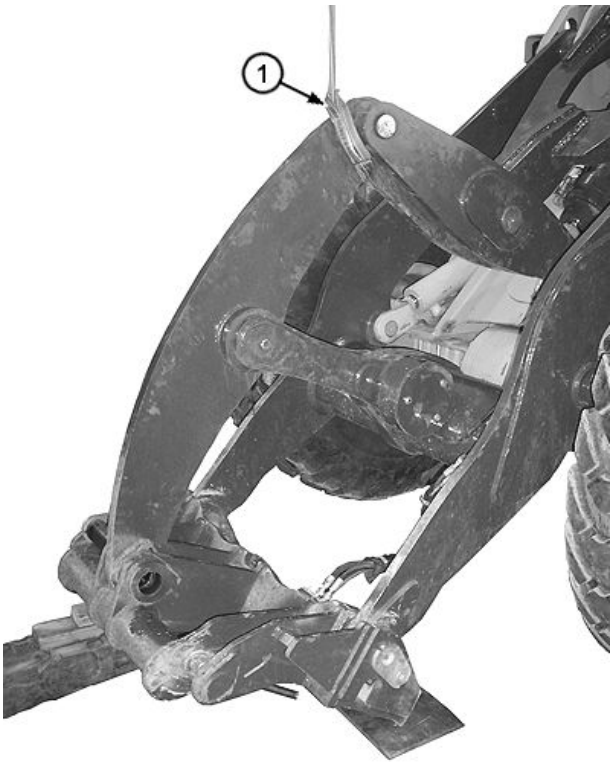

T202191B —UN—28SEP04

Powerllel is a trademark of Deere & Company

DP99999,000011D -19-11OCT10-1/1

Engine Service Doors and Side Shields

CAUTION: Prevent possible injury from engine service door closing. Always keep service door in the open locked position when servicing the engine area.

1. Pull out on engine service door latch (1) and open door outward to full extent. Strut holds door in open position.
2. Rotate side shield latch (2) to the side and fold side shield (3) down.

NOTE: Right side engine service door and side shield open in the same manner.

Engine Compartment Light

The engine compartment light switch (4) is located on the left hand side of machine on the engine service door frame. Move toggle switch up momentarily to turn ON engine compartment light (5). Toggle switch will automatically return to middle position. Move toggle switch down momentarily to turn OFF engine compartment light. To help reduce the engine compartment light from being left on during normal operation, the light will automatically turn off when the engine turns on. The light can be turned on again by toggling the switch up after the engine starts running.

1— Engine Service Door Latch
2— Side Shield Latch
3— Side Shield
4— Engine Compartment Light Switch
5— Engine Compartment Light



TX1041109A —UN—23APR08

Engine Service Door Latch (left side of machine shown)

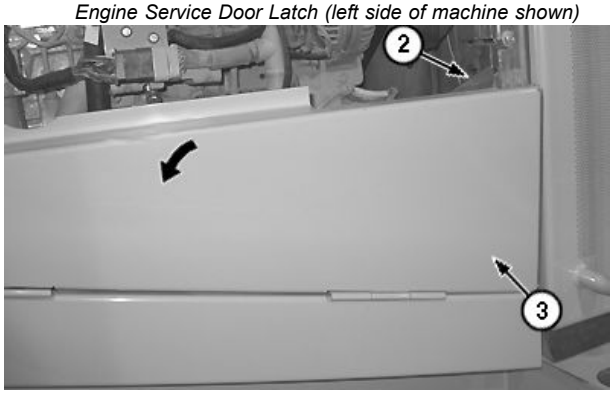

TX1083533A —UN—21OCT10

Side Shield Latch (left side of machine shown)

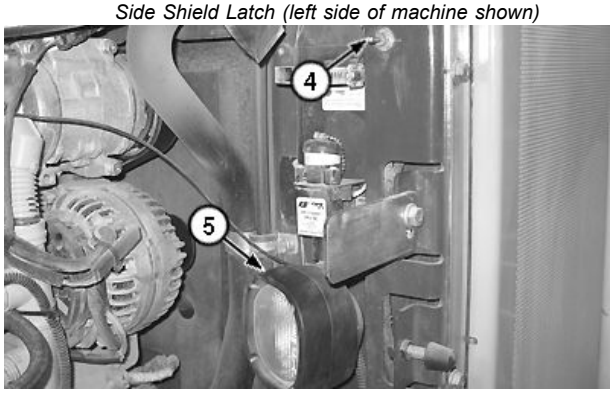

TX1083535A —UN—21OCT10

Engine Compartment Light Switch

OUT4001,00006AF -19-30NOV10-1/1

Cooling System Doors

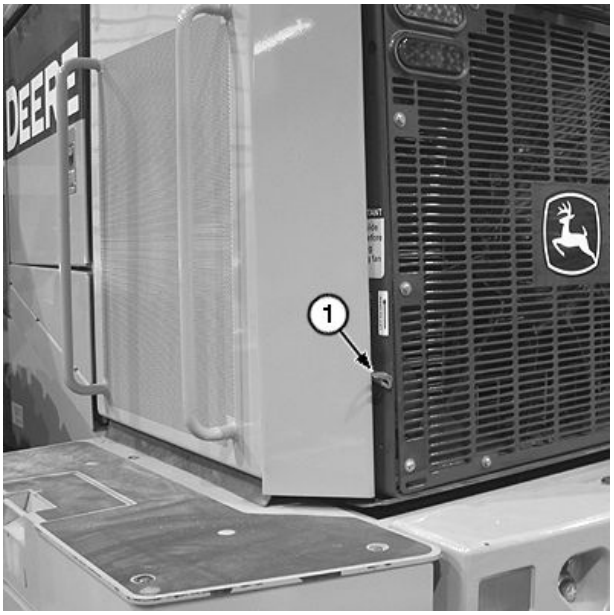

TX1083553A —UN—22OCT10

Left Cooler Door



TX1083554A —UN—22OCT10

Right Cooler Door

IMPORTANT: Prevent damage to cooler doors. Open left and right side cooler doors before opening fan grille.

1. Press down on left door release lever (1) and fully open left cooler door until it locks in open position.
2. Press down on right door release lever (2) and fully open right cooler door until it locks in open position.
3. Press down on fan grille release lever (3) and open fan grille door until it locks in open position.

CAUTION: Top door is heavy. Prevent crushing injuries. Be sure that door is locked in open position before releasing.

4. Pull top door release latch (4) up and raise top cooler door until it locks in open position.

1— Left Door Release Lever
2— Right Door Release Lever
3— Fan Grille Release Lever
4— Top Door Release Latch

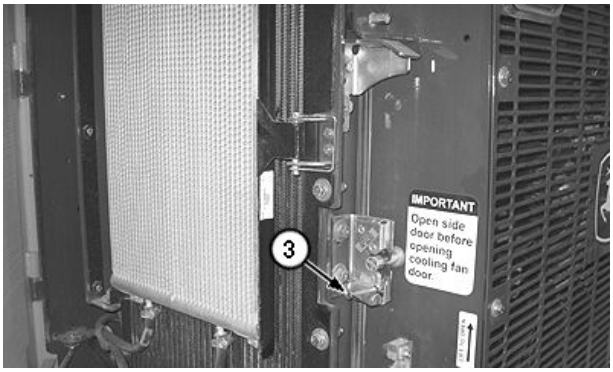

TX1083555A —UN—22OCT10

Fan Grille Door

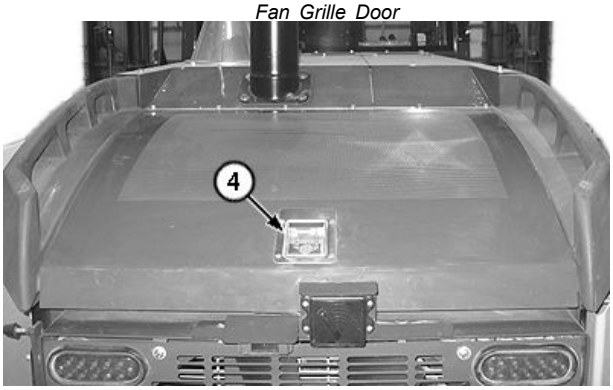

TX1083556A —UN—22OCT10

Top Cooler Door

OUT4001,00006B0 -19-22OCT10-1/1

Fuel Tank

CAUTION: Fuel is flammable and may ignite if spilled on hot engine. To prevent injury, handle fuel carefully. If engine is hot or running, DO NOT fill the fuel tank. DO NOT smoke while filling fuel tank or working on fuel system.

To avoid condensation, fill the fuel tank at the end of each work day. Shut off engine before filling.

Specification

Fuel Tank—Capacity..... 397.0 L
105.0 gal.

OUT4001,00006B1 -19-13JUN12-1/1

Fluid Analysis Program Test Kits and 3-Way Coolant Test Kit

Fluid Analysis Program Test Kits and the 3-Way Coolant Test Kit are John Deere fluid sampling products to help you monitor machine maintenance and system condition. The objective of a fluid sampling program is to ensure machine availability when you need it and to reduce repair costs by identifying potential problems before they become critical.

Engine, hydraulic, power train, and coolant samples should be taken from each system on a periodic basis, usually prior to a filter and/or fluid change interval. Certain systems require more frequent sampling. Consult your authorized John Deere dealer on a maintenance program for your specific application. Your authorized John Deere dealer has the sampling products and expertise to assist you in lowering your overall operating costs through fluid sampling.



Fluid Analysis Kits

TX1003513A —UN—20FEB06

AM40430,00002FE -19-19OCT11-1/1

Service Intervals

Model: 644K (PIN: 1DW644KZ_ _E634315—)	**Hour Meter Reading:**
PIN/Serial Number:	
SERVICE INTERVALS	
Service your machine at intervals shown on this chart. Also, perform service on items at multiples of the original requirement. For example, at 500 hours also service those items listed under 250 hours, 100 hours, 50 hours, and 10 hours or daily.	
FLUID SAMPLING	
Take fluid samples from each system as indicated on this form. The manufacturer of the fluid analysis kits will provide maintenance recommendations based upon the results of the fluid analysis and the operating information you supply. Regular fluid sampling extends the operational life of your machine.	
As Required	
□ Inspect tires and check pressure	□ Clean cooler cores
□ Check wheel bolt torque	□ Check rear camera and radar object detection (ROD) system (if equipped)
□ Inspect engine air cleaner elements	□ Check windshield washer fluid level
□ Replace fast fill fuel breather filter (if equipped)	□ Drain water from primary fuel filter
□ Inspect air conditioner compressor and alternator belt	□ Check and clean or replace cab fresh air filter
□ Add coolant extender as indicated by COOL-GARD™ II test strips	□ Check and clean or replace cab recirculating air filter
□ Service exhaust filter	
Every 10 Hours or Daily	
□ Clean engine air cleaner dust unloader valve	□ Check hydraulic system oil level
□ Check coolant level in surge tank	□ Check transmission oil level
□ Check engine oil level	□ Inspect outer pin seals
Every 100 Hours	
□ Lubricate loader linkage and cylinder pivots (unless NeverGrease™ equipped)	
Initial Service—250 Hours[1]	
□ Drain and refill front and rear axle oil	□ Replace axle oil filters (if equipped)
[1]Perform initial service once after the first 250 hours of operation.	
Every 250 Hours	
□ Take engine oil sample	
Every 500 Hours	
□ Lubricate driveline upper and lower sliding joints and lower U-joints	□ Replace final fuel filter
□ Check front and rear axle oil level	□ Replace hydraulic reservoir breather filter
□ Lubricate front and rear axle shaft seals	□ Check park brake oil level
□ Check battery water level and terminals	□ Lubricate front and rear shaft seals on park brake
□ Check air intake hoses and charge air cooler tube couplings	□ Take transmission oil sample
□ Replace fast fill fuel breather filter (if equipped)	□ Take hydraulic oil sample
□ Drain and refill engine oil and replace filter	□ Take axle oil sample
□ Replace primary fuel filter	□ Take diesel fuel sample
□ Replace in-line fuel strainer	□ Take engine coolant sample
□ Check ride control accumulator (if equipped)	
Every 1000 Hours	
□ Clean hydraulic fan drive case drain in-line screens	□ Replace fuel tank breather filter
□ Replace engine air cleaner dust unloader valve	□ Replace axle oil filters (if equipped)
□ Replace engine air cleaner elements	□ Lubricate frame hinge pivots
□ Check coolant	□ Drain and refill park brake oil

Continued on next page

OUT4001,00006B2 -19-11JUN13-1/2

Every 2000 Hours	
□ Drain and refill front and rear axle oil[2]	□ Drain and refill transmission oil and replace filter[3]
□ Clean front and rear axle oil recirculation screens (if equipped)	□ Rerun transmission clutch calibration
□ Check and adjust engine valve lash (clearance)	□ Replace outer pin seals
[2]The magnetic axle oil drain plug is serving its function when a ball of fine metal particles or machining chips are found on the magnet. If concerned with the amount of debris on the magnet of the drain plug, the magnet could be cleaned and checked again after running a short period of time with fresh oil.	
[3]Reduce service intervals to 1500 hours in severe applications, which run the torque converter at high loads for more than approximately 25% of the time. (Examples include basement digging, land clearing, etc...)	
Every 4000 Hours	
□ Clean hydraulic pump case drain in-line screen	□ Drain, flush, and refill hydraulic system oil
□ Replace hydraulic system return filter	□ Clean hydraulic system fill strainer
Every 5000 Hours	
□ Check driveline dampener for cracks	
Every 6000 Hours	
□ Drain and refill cooling system	

COOL-GARD is a trademark of Deere & Company
NeverGrease is a trademark of Deere & Company

OUT4001,00006B2 -19-11JUN13-2/2

Required Parts

REQUIRED PARTS								
Ensure machine performance and availability; use only genuine John Deere parts. Verify that part numbers are current and that any associated parts such as filter O-rings are also on hand.								
Description	**Part Number**	**Initial Service—250 Hours[1]**	**Every 250 Hours**	**Every 500 Hours**	**Every 1000 Hours**	**Every 2000 Hours**	**Every 4000 Hours**	**Every 6000 Hours**
Axle Oil Filters (if equipped)	AT367635	2			2	2	2	2
Engine Oil Filter	RE521420			1	1	1	1	1
Primary Fuel Filter	RE539465			1	1	1	1	1
Final Fuel Filter	RE533910			1	1	1	1	1
In-Line Fuel Strainer	AT223493			1	1	1	1	1
Fast Fill Fuel Breather Filter (if equipped)	T225008			1	1	1	1	1
Hydraulic Reservoir Breather Filter	AM39653			1	1	1	1	1
Engine Air Cleaner Components								
Primary Filter Element	AT223226				1	1	1	1
Secondary Filter Element	AT175224				1	1	1	1
Dust Unloader Valve	T158495				1	1	1	1
Fuel Tank Breather Filter	H216169				1	1	1	1
Transmission Oil Filter	AT336140					1	1	1
Engine Rocker Arm Cover Gasket	R526607					1	1	1
Hydraulic System Return Filter	AT335977						1	
Diesel Particulate Filter (component of exhaust filter)	RE541834	As Required						
Cab Fresh Air Filter	AT191102	As Required						
Cab Recirculation Filter	AT307501	As Required						
Outer Pin Seals								
NeverGrease™ Linkage								
Boom to Attachment Joint	AT341091	As Required						
Attachment to Bucket Link Joint	AT330664	As Required						
Bucket Link to Bellcrank Joint	AT330664	As Required						
Steering Cylinder Joint	T277591	As Required						
All Other Linkage Configurations								
Boom to Attachment Joint	AT341091	As Required						
Attachment to Bucket Link Joint	AT330664	As Required						
John Deere Plus-50™ II Engine Oil	TY26674[4]			28.0 L (7.4 gal.)	28.0 L (7.4 gal.)	28.0 L (7.4 gal.)	28.0 L (7.4 gal.)	28.0 L (7.4 gal.)
John Deere Hy-Gard™ Oil								
Front Axle	TY6354[4]	22.0 L (5.8 gal.)				22.0 L (5.8 gal.)	22.0 L (5.8 gal.)	22.0 L (5.8 gal.)
Rear Axle	TY6354[4]	22.0 L (5.8 gal.)				22.0 L (5.8 gal.)	22.0 L (5.8 gal.)	22.0 L (5.8 gal.)
Park Brake	TY6354[4]				600 mL (20 oz.)	600 mL (20 oz.)	600 mL (20 oz.)	600 mL (20 oz.)
Transmission	TY6354[4]					23.0 L (6.0 gal.)	23.0 L (6.0 gal.)	23.0 L (6.0 gal.)
John Deere Torq-Gard™ Hydraulic Oil	TY25287[4]						110.0 L (29.1 gal.)	
COOL-GARD™ II Pre-Mix	TY26575							45.5 L (12.0 gal.)
Coolant Extender	TY26603	As Required						
Fluid Analysis Kits:[5]								
Diesel Engine Oil	AT346594		1	1	1	1	1	1
Transmission Oil	AT346594			1	1	1	1	1

Continued on next page

ER93822,000020A -19-27AUG13-1/2

REQUIRED PARTS

Ensure machine performance and availability; use only genuine John Deere parts. Verify that part numbers are current and that any associated parts such as filter O-rings are also on hand.

Description	Part Number	Initial Service—250 Hours[1]	Every 250 Hours	Every 500 Hours	Every 1000 Hours	Every 2000 Hours	Every 4000 Hours	Every 6000 Hours
Axle Oil	AT346594			2	2	2	2	2
Hydraulic Oil	AT346594			1	1	1	1	1
Diesel Fuel	AT180344			1	1	1	1	1
Engine Coolant	TY26873			1	1	1	1	1
COOL-GARD™ II Test Strips	TY26605				1	1	1	1

[1]Perform initial service once after the first 250 hours of operation.
[4]For recommended oil type and oil viscosities based on operating temperatures, see Maintenance—Machine. (Section 3-1.)
[5]Based on fluid analysis results, intervals may need to be adjusted for your operating conditions. Consult your local John Deere dealer.

NeverGrease is a trademark of Deere & Company
Plus-50 is a trademark of Deere & Company.
Hy-Gard is a trademark of Deere & Company
Torq-Gard is a trademark of Deere & Company
COOL-GARD is a trademark of Deere & Company

ER93822,000020A -19-27AUG13-2/2

Service Exhaust Filter

CAUTION: Under federal, state, and/or local laws or regulations, exhaust filter ash may be classified as a hazardous waste. Hazardous waste must be disposed of in accordance with all applicable federal, state and local laws or regulations governing hazardous waste disposal. Only a qualified service provider should remove ash from the exhaust filter. See your authorized dealer for exhaust filter ash handling and disposal.

The exhaust filter (1) is designed to retain residual ash, which is a noncombustible result of additives used in crankcase lubrication oils and the fuel. As ash levels rise, the capacity for soot storage is reduced. Engine performance can be reduced due to increased exhaust system back pressure. The residual ash must be removed from the filter. Ash removal is performed by removing the exhaust filter from machine and having it cleaned by specialized equipment or replacing the exhaust filter.

The advanced display unit (ADU) will indicate when the exhaust filter is restricted and requires ash removal service. It is expected that the service interval for exhaust filter ash removal will be at least 4500 hours, however, actual service should take place when indicated by the ADU. Exhaust filter service may involve removing accumulated ash from the exhaust filter using an approved ash removal method, exchanging the exhaust filter for a comparable exhaust filter in which accumulated ash has been removed, or replacing with a new exhaust filter.

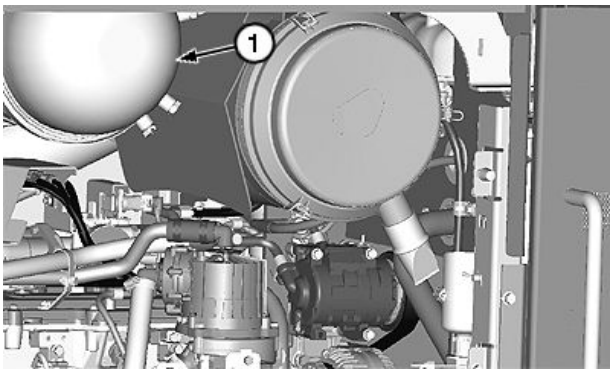

TX1085123A —UN—24NOV10

Exhaust Filter

1— Exhaust Filter

Do **NOT** attempt to remove exhaust filter from machine. **Contact your authorized dealer to remove exhaust filter for ash removal or replacement.**

Failure to follow the approved ash removal methods may violate U.S. federal, state and local hazardous waste laws, along with damage to the exhaust filter resulting in potential denial of the emissions warranty.

OUT4001,000070D -19-12SEP11-1/1

Inspect Tires and Check Pressure

CAUTION: Explosive separation of tire and rim parts can cause serious injury or death.

Always maintain correct tire pressure. DO NOT inflate tires above the recommended pressure.

Inspect tires and wheels daily. DO NOT operate with low pressure, cuts, bubbles, damaged rims, or missing lug bolts.

Carefully inspect any tire and rim assembly that has been run flat or severely underinflated before reinflating the tire. Damage to the rim and tire may have developed. Call your authorized dealer or a qualified repair service to inspect the rim and tire assembly and make necessary repairs.

When inflating tires, use a clip-on chuck and extension hose long enough to allow you to stand to one side and NOT in front of or over the tire assembly. Use a safety cage if available.

NEVER cut or weld on an inflated tire or rim assembly. Heat from welding could cause an increase in pressure and may result in tire explosion.

Do not attempt to mount a tire if you do not have the proper equipment and experience to perform the job. Have it done by your authorized dealer or a qualified repair service.

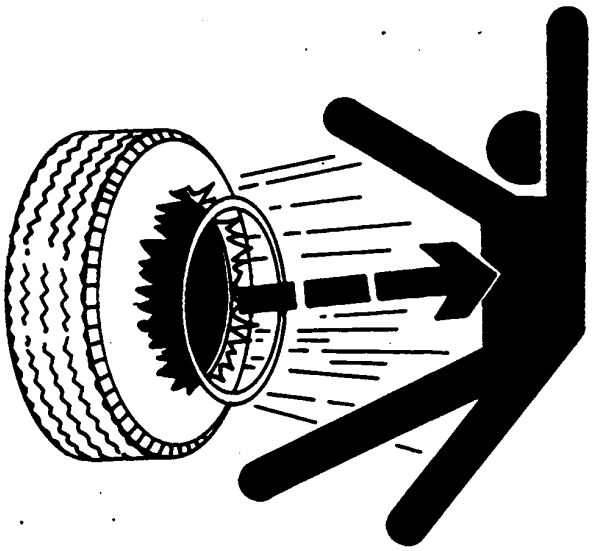

TS211 —UN—15APR13

Service Tires Properly



T87502 —UN—21OCT88

Air Hose Connected

1. Inspect tires for cuts, bubbles, damaged rims, or missing retainer bolts. Pay special attention to any tire and rim assembly that has been run flat or underinflated.
2. Check tire pressure with an accurate gauge having 7.0 kPa (0.07 bar) (1 psi) graduations.
3. Compare measured pressure to recommended pressure for manufacturer's tire size installed on machine. (See Tire Pressures in this section.)
4. If necessary, adjust tire pressure as follows:
   a. Shut off air supply to hose.
   b. Move gauge hand to correct pressure.
   c. Lock air chuck onto tire valve.
   d. Stand to front or rear of tire and turn on air supply.
   e. After tire is at correct pressure, shut off air supply.
   f. Release air chuck from tire valve.

DP99999,000025C -19-04SEP12-1/1

Tire Pressures

IMPORTANT: Avoid tire damage. ALWAYS follow tire manufacturer's recommendations for operating pressure and load range.

NOTE: Tire shipping pressure may not be the same as tire operating pressure. Tire pressures may be changed based on machine configuration and actual working conditions.

It is recommended to keep the rear tire pressure at a minimum of 2/3 the front tire pressure, even if the pressure chart indicates a lower pressure is acceptable.

Wheel loader tire pressure is determined by machine weight and load. Determine front tire pressure from the weight on the front tire when the vehicle is in a load and carry position with a full bucket. Determine rear tire pressure from the weight on the rear tire when the vehicle is in a load and carry position with an empty bucket.

Addition of fluids, water and/or calcium chloride does not affect recommended tire pressures.

To increase side-to-side stability, increase front tire pressures in 14 kPa (2 psi) increments.

Due to the high loads in the pile and in tip conditions for a loader, the front tires are often set higher than the load and carry weight suggests. Consult your tire manufacturer for the most accurate information. However, if the tire pressure is below the maximum listed on the chart, increasing by an additional 69-103 kPa (10-15 psi) is a typical industry practice to account for this increased load.

To adjust fore-aft stability, increase or decrease rear tire pressures in 14 kPa (2 psi) increments.

See tire manufacturer's charts for detailed load, pressure, and distance recommendations.

For quick reference:

- Consult your dealer and the DealerNet 444H—844K tire pressure charts **OR**
- Use the following tables with this guideline:
  - Single front tire loaded vehicle weight is approximately—0.40 X (loaded vehicle weight)
  - Single rear tire empty vehicle weight is approximately—0.28 X (empty vehicle weight)

Bias Tires

Tire Size	Tire Brand	Pressure Chart								
Front Loaded Tire		Load	7983 kg 17 600 lb.	9480 kg 20 900 lb.	10 886 kg 24 000 lb.	12 519 kg 27 600 lb.	13 608 kg 30 000 lb.	14 515 kg 32 000 lb.	15 513 kg 34 200 lb.	16 511 kg 36 400 lb.
23.5-25 L3	All	Pressure	228 kPa 2.28 bar 33 psi	303 kPa 3.03 bar 44 psi	372 kPa 3.72 bar 54 psi	476 kPa 4.76 bar 69 psi	552 kPa 5.52 bar 80 psi	627 kPa 6.27 bar 91 psi	703 kPa 7.03 bar 102 psi	772 kPa 7.72 bar 112 psi
		Maximum Ply	12	16	20	24	28	32	36	40
Rear Empty Tire		Load	5307 kg 11 700 lb.	5806 kg 12 800 lb.	6169 kg 13 600 lb.	6486 kg 14 300 lb.	6895 kg 15 200 lb.	7303 kg 16 100 lb.	7756 kg 17 100 lb.	7983 kg 17 600 lb.
23.5-25 L3	All	Pressure	172 kPa 1.72 bar 25 psi	200 kPa 2.00 bar 29 psi	228 kPa 2.28 bar 33 psi	248 kPa 2.48 bar 36 psi	276 kPa 2.76 bar 40 psi	303 kPa 3.03 bar 44 psi	324 kPa 3.24 bar 47 psi	352 kPa 3.52 bar 51 psi
		Maximum Ply	12		16			20		24
Front Loaded Tire		Load	9979 kg 22 000 lb.	12 156 kg 26 800 lb.	13 200 kg 29 100 lb.	27 624 kg 60 900 lb.	15 513 kg 34 200 lb.	17 010 kg 37 500 lb.	18 507 kg 40 800 lb.	20 593 kg 45 400 lb.
26.5-25 L3, L5	All	Pressure	228 kPa 2.28 bar 33 psi	303 kPa 3.03 bar 44 psi	352 kPa 3.52 bar 51 psi	400 kPa 4.00 bar 58 psi	476 kPa 4.76 bar 69 psi	552 kPa 5.52 bar 80 psi	627 kPa 6.27 bar 91 psi	772 kPa 7.72 bar 112 psi
		Maximum Ply	14		20	24	28	32	36	44
Rear Empty Tire		Load	6713 kg 14 800 lb.	7756 kg 17 100 lb.	8255 kg 18 200 lb.	9253 kg 20 400 lb.	9979 kg 22 000 lb.	10 886 kg 24 000 lb.	12 519 kg 27 600 lb.	13 200 kg 29 100 lb.
26.5-25 L3, L5	All	Pressure	172 kPa 1.72 bar 25 psi	228 kPa 2.28 bar 33 psi	248 kPa 2.48 bar 36 psi	303 kPa 3.03 bar 44 psi	352 kPa 3.52 bar 51 psi	400 kPa 4.00 bar 58 psi	503 kPa 5.03 bar 73 psi	572 kPa 5.72 bar 83 psi
		Maximum Ply	14		20	24	28		38	44
Front Loaded Tire		Load	12 156 kg 26 800 lb.	12 837 kg 28 300 lb.	14 515 kg 32 000 lb.	15 014 kg 33 100 lb.	16 511 kg 36 400 lb.	17 509 kg 38 600 lb.	19 006 kg 41 900 lb.	20 003 kg 44 100 lb.
29.5-25 L3	All	Pressure	228 kPa 2.28 bar 33 psi	248 kPa 2.48 bar 36 psi	303 kPa 3.03 bar 44 psi	324 kPa 3.24 bar 47 psi	372 kPa 3.72 bar 54 psi	427 kPa 4.27 bar 62 psi	476 kPa 4.76 bar 69 psi	524 kPa 5.24 bar 76 psi
		Maximum Ply		16		22		28		34
Rear Empty Tire		Load	7983 kg 17 600 lb.	8754 kg 19 300 lb.	9253 kg 20 400 lb.	9979 kg 22 000 lb.	10 614 kg 23 400 lb.	11 521 kg 25 400 lb.	12 519 kg 27 600 lb.	13 200 kg 29 100 lb.

Continued on next page

Bias Tires										
Tire Size	**Tire Brand**	**Pressure Chart**								
29.5-25 L3	All	Pressure	172 kPa 1.72 bar 25 psi	200 kPa 2.00 bar 29 psi	228 kPa 2.28 bar 33 psi	248 kPa 2.48 bar 36 psi	276 kPa 2.76 bar 40	324 kPa 3.24 bar 47 psi	372 kPa 3.72 bar 54 psi	400 kPa 4.00 bar 58 psi
		Maximum Ply	16			22		28		34

Radial Tires										
Tire Size	**Tire Brand**	**Pressure Chart**								
Front Loaded Tire		Load	5987 kg 13 200 lb.	7121 kg 15 700 lb.	8255 kg 18 200 lb.	9253 kg 20 400 lb.	10 297 kg 22 700 lb.	11 204 kg 24 700 lb.	12 156 kg 26 800 lb.	13 336 kg 29 400 lb.
23.5R25 L3*	Michelin	Pressure	200 kPa 2.00 bar 29 psi	200 kPa 2.00 bar 29 psi	207 kPa 2.07 bar 30 psi	262 kPa 2.62 bar 38 psi	310 kPa 3.10 bar 45 psi	352 kPa 3.52 bar 51 psi	400 kPa 4.00 bar 58 psi	448 kPa 4.48 bar 65 psi
	Other	Pressure	200 kPa 2.00 bar 29 psi	248 kPa 2.48 bar 36 psi	303 kPa 3.03 bar 44 psi	352 kPa 3.52 bar 51 psi	400 kPa 4.00 bar 58 psi	448 kPa 4.48 bar 65 psi	503 kPa 5.03 bar 73 psi	—
Rear Empty Tire		Load	5579 kg 12 300 lb.	5987 kg 13 200 lb.	6486 kg 14 300 lb.	6713 kg 14 800 lb.	7121 kg 15 700 lb.	8097 kg 17 850 lb.	8902 kg 19 625 lb.	10 705 kg 23 600 lb.
23.5R25 L3*	Michelin	Pressure	200 kPa 2.00 bar 29 psi	200 kPa 2.00 bar 29 psi	200 kPa 2.00 bar 29 psi	214 kPa 2.14 bar 31 psi	234 kPa 2.34 bar 34 psi	303 kPa 3.03 bar 44 psi	352 kPa 3.52 bar 51 psi	448 kPa 4.48 bar 65 psi
	Other	Pressure	276 kPa 2.76 bar 40 psi	303 kPa 3.03 bar 44 psi	324 kPa 3.24 bar 47 psi	352 kPa 3.52 bar 51 psi	372 kPa 3.72 bar 54 psi	—	—	—
Front Loaded Tire		Load	8391 kg 18 500 lb.	11 022 kg 24 300 lb.	12 360 kg 27 250 lb.	13 608 kg 30 000 lb.	15 014 kg 33 100 lb.	15 513 kg 34 200 lb.	16 329 kg 36 000 lb.	17 645 kg 38 900 lb.
750/65R25 L3*	Michelin	Pressure	200 kPa 2.00 bar 29 psi	303 kPa 3.03 bar 44 psi	352 kPa 3.52 bar 51 psi	400 kPa 4.00 bar 58 psi	455 kPa 4.55 bar 66 psi	469 kPa 4.69 bar 68 psi	510 kPa 5.10 bar 74 psi	552 kPa 5.52 bar 80 psi
	Goodyear	Pressure	200 kPa 2.00 bar 29 psi	303 kPa 3.03 bar 44 psi	352 kPa 3.52 bar 51 psi	400 kPa 4.00 bar 58 psi	448 kPa 4.48 bar 65 psi	476 kPa 4.76 bar 69 psi	—	—
Rear Empty Tire		Load	5987 kg 13 200 lb.	6486 kg 14 300 lb.	7756 kg 17 100 lb.	8255 kg 18 200 lb.	8754 kg 19 300 lb.	9888 kg 21 800 lb.	11 998 kg 26 450 lb.	14 084 kg 31 050 lb.
750/65R25 L3*	Michelin	Pressure	200 kPa 2.00 bar 29 psi	200 kPa 2.00 bar 29 psi	248 kPa 2.48 bar 36 psi	276 kPa 2.76 bar 40 psi	303 kPa 3.03 bar 44 psi	352 kPa 3.52 bar 51 psi	448 kPa 4.48 bar 65 psi	552 kPa 5.52 bar 80 psi
	Goodyear	Pressure	200 kPa 2.00 bar 29 psi	228 kPa 2.28 bar 33 psi	276 kPa 2.76 bar 40 psi	303 kPa 3.03 bar 44 psi	324 kPa 3.24 bar 47 psi	—	—	—
Front Loaded Tire		Load	6690 kg 14 750 lb.	8255 kg 18 200 lb.	8981 kg 19 800 lb.	10 297 kg 22 700 lb.	11 521 kg 25 400 lb.	12 837 kg 28 300 lb.	13 903 kg 30 650 lb.	15 014 kg 33 100 lb.
26.5R25 L3*	Michelin	Pressure	200 kPa 2.00 bar 29 psi	269 kPa 2.69 bar 39 psi	296 kPa 2.96 bar 43 psi	352 kPa 3.52 bar 51 psi	407 kPa 4.07 bar 59 psi	455 kPa 4.55 bar 66 psi	503 kPa 5.03 bar 73 psi	—
	Other	Pressure	200 kPa 2.00 bar 29 psi	228 kPa 2.28 bar 33 psi	248 kPa 2.48 bar 36 psi	303 kPa 3.03 bar 44 psi	352 kPa 3.52 bar 51 psi	400 kPa 4.00 bar 58 psi	448 kPa 4.48 bar 65 psi	503 kPa 5.03 bar 73 psi
Rear Empty Tire		Load	5398 kg 11 900 lb.	6350 kg 14 000 lb.	7121 kg 15 700 lb.	7983 kg 17 600 lb.	8233 kg 18 150 lb.	8981 kg 19 800 lb.	10 138 kg 22 350 lb.	11 090 kg 24 450 lb.
26.5R25 L3*	Michelin	Pressure	200 kPa 2.00 bar 29 psi	248 kPa 2.48 bar 36 psi	296 kPa 2.96 bar 43 psi	338 kPa 3.38 bar 49 psi	352 kPa 3.52 bar 51 psi	393 kPa 3.93 bar 57 psi	448 kPa 4.48 bar 65 psi	503 kPa 5.03 bar 73 psi
	Other	Pressure	200 kPa 2.00 bar 29 psi	207 kPa 2.07 bar 30 psi	276 kPa 2.76 bar 40 psi	324 kPa 3.24 bar 47 psi	338 kPa 3.38 bar 49 psi	372 kPa 3.72 bar 54 psi	—	—
Front Loaded Tire		Load	11 136 kg 24 550 lb.	12 270 kg 27 050 lb.	15 513 kg 34 200 lb.	16 012 kg 35 300 lb.	17 509 kg 38 600 lb.	18 008 kg 39 700 lb.	20 956 kg 46 200 lb.	22 407 kg 49 400 lb.

Continued on next page

Radial Tires										
Tire Size	**Tire Brand**	**Pressure Chart**								
29.5R25 L3*, L5*	Michelin	Pressure	200 kPa 2.00 bar 29 psi	248 kPa 2.48 bar 36 psi	331 kPa 3.31 bar 48 psi	345 kPa 3.45 bar 50 psi	386 kPa 3.86 bar 56 psi	400 kPa 4.00 bar 58 psi	503 kPa 5.03 bar 73 psi	552 kPa 5.52 bar 80 psi
	Other	Pressure	296 kPa 2.96 bar 43 psi	317 kPa 3.17 bar 46 psi	400 kPa 4.00 bar 58 psi	427 kPa 4.27 bar 62 psi	476 kPa 4.76 bar 69 psi	503 kPa 5.03 bar 73 psi	—	—
Rear Empty Tire		Load	8482 kg 18 700 lb.	8890 kg 19 600 lb.	9253 kg 20 400 lb.	9752 kg 21 500 lb.	10 886 kg 24 000 lb.	13 041 kg 28 750 lb.	15 558 kg 34 300 lb.	17 894 kg 39 450 lb.
29.5R25 L3*, L5*	Michelin	Pressure	200 kPa 2.00 bar 29 psi	200 kPa 2.00 bar 29 psi	221 kPa 2.21 bar 32 psi	248 kPa 2.48 bar 36 psi	283 kPa 2.83 bar 41 psi	352 kPa 3.52 bar 51 psi	455 kPa 4.55 bar 66 psi	552 kPa 5.52 bar 80 psi
	Other	Pressure	276 kPa 2.76 bar 40 psi	290 kPa 2.90 bar 42 psi	303 kPa 3.03 bar 44 psi	324 kPa 3.24 bar 47 psi	372 kPa 3.72 bar 54 psi	—	—	—

Examples:

For the base 644K with 3000 lb./cu. yd. material	
Single front tire, loaded vehicle: 20 580 lb. (9335 kg)	Michelin 23.5R25 L3*
	Pressure: • 39 psi (269 kPa) (2.69 bar) • 54 psi (372 kPa) (3.72 bar) for added stability in the pile
Single rear tire, empty vehicle: 11 260 lb. (5107 kg)	Michelin 23.5R25 L3*
	Pressure: 29 psi (200 kPa) (2.00 bar)

For the maximum weight factory option 644K with 3000 lb./cu. yd. material	
Single front tire, loaded vehicle: 23 645 lb. (10 725 kg)	Michelin 23.5R25 L3*
	Pressure: • 42 psi (290 kPa) (2.90 bar) • 57 psi (393 kPa) (3.93 bar) for added stability in the pile
Single rear tire, empty vehicle: 12 540 lb. (5688 kg)	Michelin 23.5R25 L3*
	Pressure: 29 psi (200 kPa) (2.00 bar)

OUT4001,0000406 -19-22MAY13-3/3

Check Wheel Bolt Torque

NOTE: Tighten bolts after first 10 hours, then again after first 50 hours of loaded operation. After that, tighten as required. Threads should be clean and lightly oiled.

Item	Measurement	Specification
Wheel Bolt	Torque	624 N·m 460 lb.-ft.

OUT4001,000056B -19-12OCT10-1/1

Inspect Engine Air Cleaner Elements

1. On left side of machine, open engine service door.
2. Release latches (1) and remove air inlet cover.
3. Remove primary element (2).
4. Remove secondary element (3).
5. If engine air filter restriction indicator on display unit was illuminated, replace both elements.

IMPORTANT: Damaged or dirty elements can cause engine damage. DO NOT clean elements; replace elements as required.

Install new primary element:

1. **If element shows damage.**
2. **If engine air filter restriction indicator illuminates.**
3. **After 1000 hours service.**

Install new secondary element:

1. **If primary element is replaced.**
2. **If element is visibly dirty.**
3. **After 1000 hours service.**

6. Inspect elements and gasket (4) for damage. Hold a bright light inside primary element and check for holes.
7. Be sure outer screen (5) is not dented. Vibration can quickly wear a hole in filter.
8. Engine air filter restriction indicator will not signal correctly if an element has a break or is not correctly sealed in air cleaner housing. Replace damaged elements.
9. Install secondary element into housing making sure it is centered in canister, then install primary element.
10. Install air cleaner cover and secure latches.
11. Close engine service door.

1— Latch (3 used)
2— Primary Element
3— Secondary Element
4— Gasket
5— Outer Screen

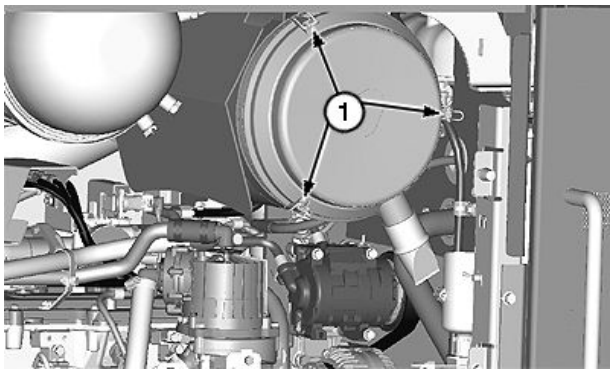

TX1084792A —UN—17NOV10

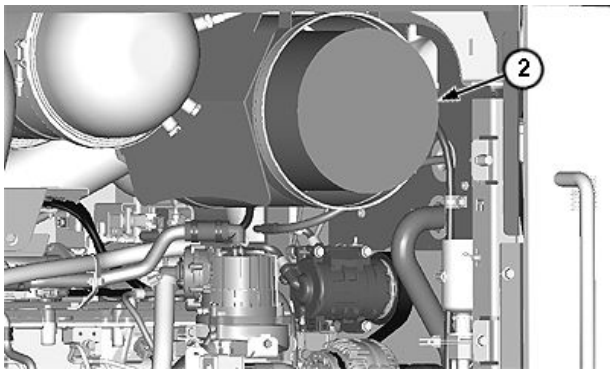

TX1084793A —UN—17NOV10

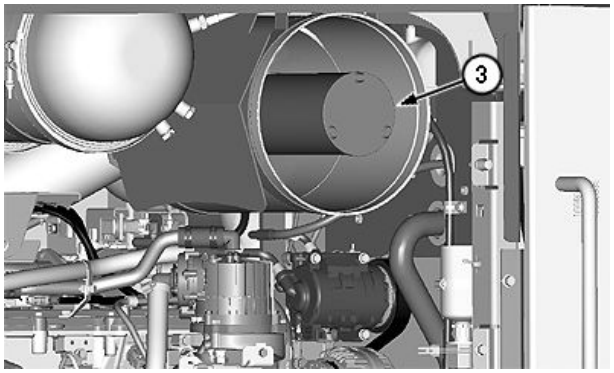

TX1084794A —UN—17NOV10

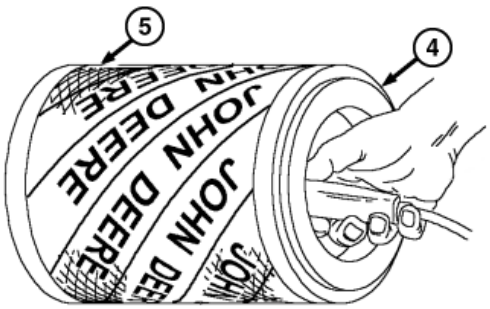

TX1028283 —UN—29JUL08

OUT4001,00006E1 -19-17NOV10-1/1

Replace Fast Fill Fuel Breather Filter—If Equipped

See Replace Fast Fill Fuel Breather Filter—If Equipped. (Section 3-8.)

NOTE: During normal operating conditions, the fast fill fuel breather filter should be changed every 500 hours. If operating in dusty conditions, check filter more often and replace as required.

OUT4001,000060F -19-07JUN10-1/1

Inspect Air Conditioner Compressor and Alternator Belt

1. Open engine service doors.
2. Check belt (1) regularly for wear, frayed edges, or cracks at bottom of grooves.

NOTE: If belt is stretched to the point that belt tensioner is against its stop, belt must be replaced.

3. If necessary, replace belt.
4. Using a square drive tool, hold belt tensioner (2) away from belt while removing old belt and installing new belt.
5. Close engine service doors.

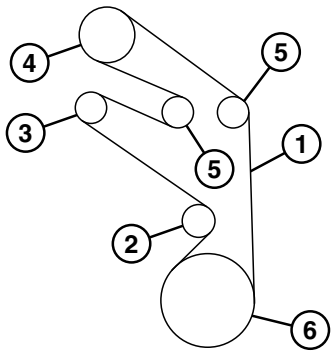

TX1078592 —UN—08JUN10

Belt Routing

1— Belt
2— Belt Tensioner
3— Alternator Pulley
4— Air Conditioner Compressor
5— Idler
6— Crankshaft

OUT4001,00006E2 -19-30NOV10-1/1

Check Engine Coolant

CAUTION: Prevent possible injury from hot spraying fluids. Shut off engine. Remove filler cap only when cool enough to touch with bare hands. Slowly loosen cap to relieve pressure before removing completely.

IMPORTANT: John Deere COOL-GARD™ II Coolant Extender does not protect against freezing. Coolant extender prevents rust, scale, and liner cavitation.

NOTE: Check coolant every 1000 hours or 1 year, or when replacing 1/3 or more of coolant. Add coolant extender as necessary.

1. Open top cooler door and remove surge tank cap (1).
2. Test coolant solution using the following kit:
   - **COOL-GARD II Test Strips**
     Coolant test strips provide an effective method to check freeze point and additive levels of engine coolant. See your authorized dealer for COOL-GARD II test strips and follow instructions on kit.
3. Add John Deere COOL-GARD II Coolant Extender as necessary. Follow instructions on container for amount.

Specification	
Cooling System—Capacity	45.5 L 12.0 gal

COOL-GARD is a trademark of Deere & Company



TS281 —UN—15APR13

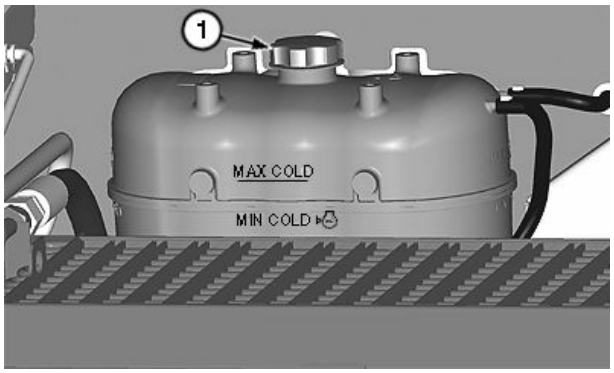

TX1085043A —UN—23NOV10

Surge Tank

1— Surge Tank Cap

4. Install surge tank cap and close top cooler door.

OUT4001,00006E4 -19-14MAR13-1/1

Clean Cooler Cores

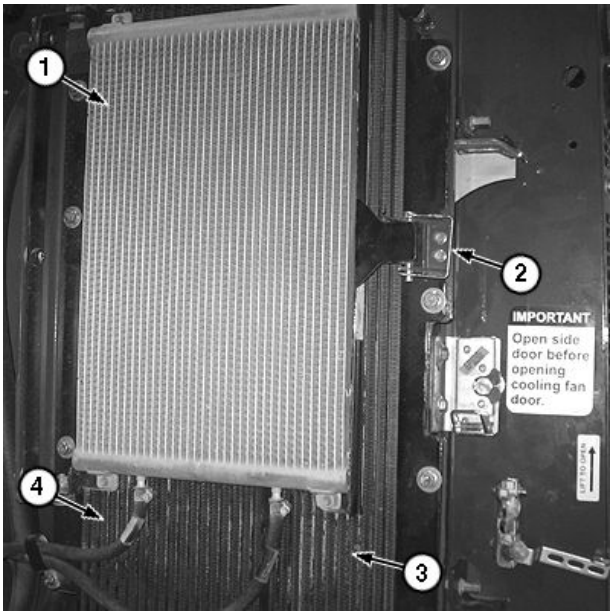

TX1084806A —UN—17NOV10

Left Cooler Compartment

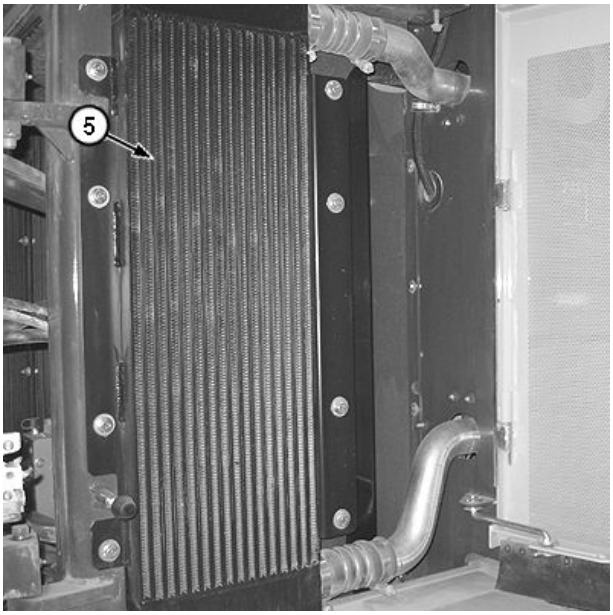

TX1084807A —UN—17NOV10

Right Cooler Compartment

1. Open left and right cooler doors, fan grille door, and top cooler door. See Cooling System Doors. (Section 3-2.)
2. Behind the left cooler door is the fuel cooler (1). Unlatch clip (2) and swing out fuel cooler to access the hydraulic oil cooler (3) and the transmission oil cooler (4).
3. Behind the right cooler door is the charge air cooler (5).
4. Behind the fan grille door is the radiator (6). If machine is equipped with axle oil coolers, they will be attached to the fan grille door. The rear axle oil cooler (7) is on the left and is identified by the red banded hoses. The front axle oil cooler (8) is on the right and is identified by the green banded hoses.
5. Below the top cooler door is the air conditioner condenser (9).
6. If dust or debris is light, clean coolers by blowing air through the fins. Do not exceed pressure of 600 kPa (6 bar) (90 psi). Blow air straight through fins to avoid bending them.
7. If compressed air fails to clean the coolers, use a high pressure washer with soap and water. Do not exceed pressure of 4800 kPa (48 bar) (700 psi). Direct water straight through fins to avoid bending them.
8. Close cooler doors.

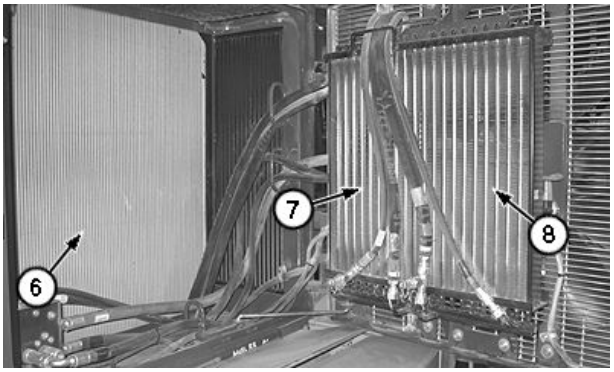

TX1084808A —UN—17NOV10

Fan Grille Compartment

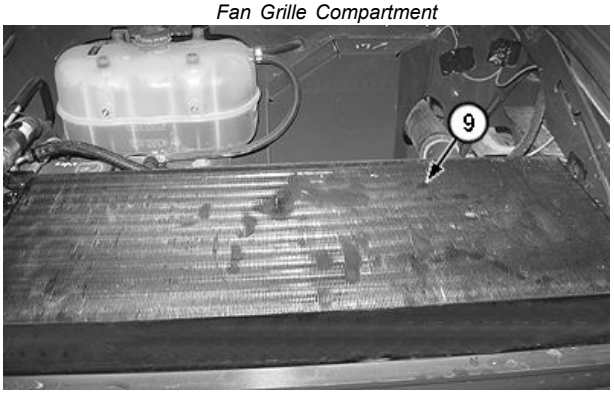

TX1084809A —UN—17NOV10

Top Cooler Compartment

1— Fuel Cooler
2— Clip
3— Hydraulic Oil Cooler
4— Transmission Oil Cooler
5— Charge Air Cooler
6— Radiator
7— Rear Axle Oil Cooler (if equipped)
8— Front Axle Oil Cooler (if equipped)
9— Air Conditioner Condenser

OUT4001,00006E3 -19-30NOV10-1/1

Check Rear Camera and Radar Object Detection (ROD) System—If Equipped

IMPORTANT: Avoid machine damage. While performing operational checks given below, use mirrors or turn head to verify distances, in case system is not working properly.

NOTE: Inspect and check out rear camera and ROD system daily to verify proper operation. Inspect system more frequently due to operating or environmental conditions that could affect performance.

1. Inspect camera lens (1) and ROD system sensor face (2) for any accumulation of dirt, mud, snow, ice, or debris. Clean lens and sensor face as necessary.
2. Perform operational check of camera in each mode as follows:
   a. Set camera to MANUAL mode. See Display Unit—Main Menu—Settings—Camera Mode. (Section 2-1.)

NOTE: On machines equipped with embedded payload scale (EPS) system, if system is active, it is necessary to press INFO button twice to activate camera.

   b. Press INFO button on display unit and verify that image from camera is displayed.
   c. Select OBJECT mode.
   d. Shift transmission in 1st gear reverse (1R) and back up to within 4.0 m (13.1 ft.) of a large object. Verify that image of object appears on display.
   e. Move machine forward at least 5.0 m (16.4 ft.) away from object.
   f. Select REVERSE mode.
   g. Shift transmission into 1st gear reverse (1R). Verify that image from camera is displayed.
   h. Select IN REVERSE WITH OBJECT mode.
   i. Back up machine to within 4.0 m (13.1 ft.) of object. Verify that image of object is displayed.
3. Perform operational check of radar object detection (ROD) system as follows:
   a. Turn ROD system to OFF mode using settings menu on display unit. See Display Unit—Main Menu—Settings. (Section 2-1.) Use the DOWN button to highlight MORE and press SELECT to display page 2 of Settings menu. Use the DOWN button to highlight OBJECT DETECT and press SELECT button to change detection mode.
   b. Verify that green ROD system indicator with a slash through it is illuminated on display unit.

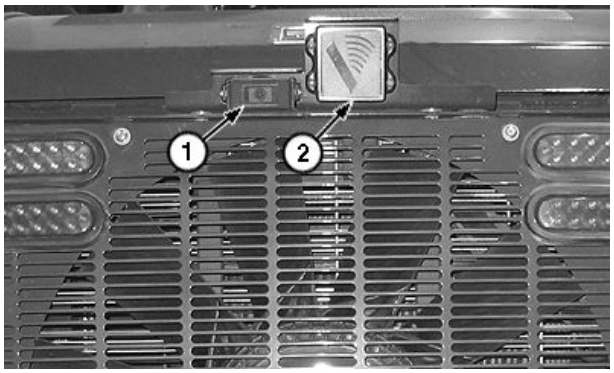

TX1084819A —UN—17NOV10

Rear Camera and ROD System

1— Camera Lens **2— Sensor Face**

   c. Turn ROD system to ON mode. Verify that display indicates that ROD system is ON and green indicator with no slash is illuminated on display unit.
   d. Change display to the object detect diagnostics screen. See Display Unit—Main Menu—Diagnostics—Object Detect (If Equipped). (Section 2-1.)
   e. Place transmission in 1st gear reverse (1R) and back up machine to within 4.0 m (13.1 ft.) of a large object.
   f. Verify that alarm beeps and display indicates that object is detected.
   g. Move machine closer to object. Verify that alarm beeps faster and display changes to indicate that object detected is now in closer detection zone.
4. If checkout of either camera or ROD system shows a performance problem, perform detailed checkout as follows, using an assistant:
   a. Verify that camera lens and sensor face are clean.
   b. Move machine to an area where rear of machine is clear of objects within 8.0 m (26.2 ft.).
   c. Verify that ROD system is ON and camera is in OBJECT mode.
   d. Move forward, neutral, or reverse (FNR) lever or FNR switch to N (neutral). Press park brake switch (LED on switch and indicator on display unit are illuminated).
   e. Have assistant move to left rear corner of machine, in sight of rear view mirror. Have assistant walk toward centerline of machine in a path parallel to rear of machine. Note when image of assistant appears in display and alarm beeps.
   f. Have assistant continue walking toward right side of machine. Note when alarm stops beeping and image of assistant is no longer displayed.

Continued on next page

g. Have assistant walk straight back and away from rear center of machine. Note rear detection limit when alarm stops beeping and image of assistant no longer appears on display.

h. Have assistant walk to left and right to determine outer rear corners of detection zone.

i. Compare results of this check to the approximate detection zone chart shown in Rear Camera and Radar Object Detection (ROD) System (If Equipped). (Section 2-2.)

j. If observed detection zone differs significantly from the approximate detection zone chart, see your authorized dealer.

OUT4001,00006E5 -19-26OCT11-2/2

Check Windshield Washer Fluid Level

1. On left side of machine, open engine service door.

NOTE: During winter season, use all-season windshield washer fluid which will not freeze.

2. Check fluid level in windshield washer fluid bottle (1) and refill as required.
3. Close engine service door.

1— Windshield Washer Fluid Bottle

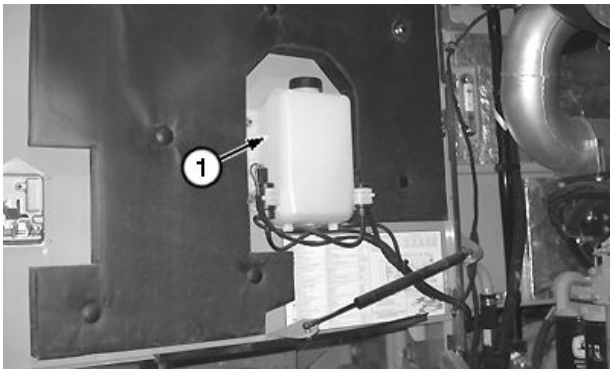

TX1084820A —UN—17NOV10

Windshield Washer Fluid Bottle

OUT4001,00006E6 -19-17NOV10-1/1

Drain Water From Primary Fuel Filter

1. Start engine and run 3—5 minutes at slow idle, if machine has not been previously operating. Stop engine and wait 15 minutes before proceeding.
2. On left side of machine, open engine service door and side shield.
3. Clean area around primary fuel filter (1).
4. Place end of drain hose (2) into a suitable container.
5. Loosen drain valve (3). Drain liquid for several seconds or until water and sediment is removed. Dispose of waste properly.
6. Tighten drain valve.
7. Bleed fuel system. See Bleed Fuel System. (Section 4-1.)

NOTE: Replace both primary and final fuel filters if fuel filter restriction indicator is displayed on monitor. See Replace Primary Fuel Filter and Replace Final Fuel Filter. (Section 3-8.)

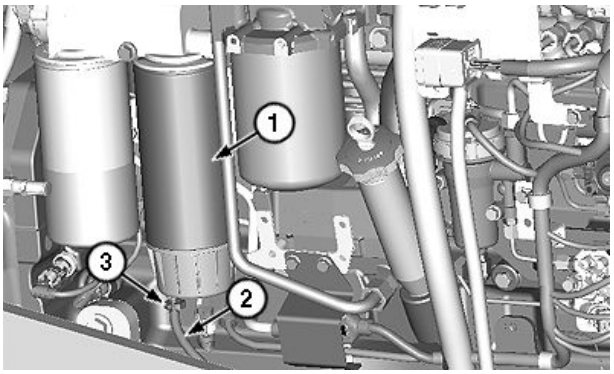

TX1084821A —UN—17NOV10

Primary Fuel Filter

1— Primary Fuel Filter
2— Drain Hose
3— Drain Valve

OUT4001,00006E7 -19-17NOV10-1/1

Check and Clean or Replace Cab Fresh Air Filter

NOTE: If operating in dusty conditions, cab fresh air filter should be checked and cleaned frequently.

1. Unscrew cover retainer (1) and remove cover (2).
2. Squeeze filter retainer (3) and remove from bracket.
3. Remove filter element (4) from housing and inspect. Replace filter if damaged.

CAUTION: Prevent possible injury from flying chips and dirt. Reduce compressed air pressure to less than 210 kPa (2.1 bar) (30 psi) when using for cleaning purposes. Clear area of bystanders, guard against flying chips, and wear personal protection equipment including eye protection.

4. Clean filter in one of these ways:
   - Tap filter on a flat surface with the dirty side down.
   - Use compressed air opposite to the normal air flow.
   - Wash filter in warm, soapy water. Flush filter thoroughly with clean water. Let filter dry before installing.
5. Clean dust from filter housing. Replace fresh air filter as required.
6. Install filter into housing and install filter retainer.
7. Install cover and tighten cover retainer.

1— Cover Retainer
2— Cover
3— Filter Retainer
4— Filter Element



TX1041312A —UN—25APR08

Filter Compartment Cover



TX1041313A —UN—25APR08

Fresh Air Filter

DP99999,000006F -19-02DEC11-1/1

Check and Clean or Replace Cab Recirculating Air Filter

1. Unscrew cover retainer (1) and remove cover (2).
2. Squeeze filter retainer (3) and remove from bracket.
3. Remove filter element (4) and inspect for dirt and damage. Replace filter if damaged.

CAUTION: Prevent possible injury from flying chips and dirt. Reduce compressed air pressure to less than 210 kPa (2.1 bar) (30 psi) when using for cleaning purposes. Clear area of bystanders, guard against flying chips, and wear personal protection equipment including eye protection.

4. Clean filter in one of these ways:
   - Tap filter on a flat surface with the dirty side down.
   - Use compressed air opposite to the normal air flow.
   - Wash filter in warm soapy water. Flush filter thoroughly with clean water. Let filter dry before installing. Replace recirculating filter as required.
5. Install filter in housing and retain with filter retainer.
6. Install cover and tighten cover retainer.

1— Cover Retainer
2— Cover
3— Filter Retainer
4— Filter Element



TX1041312A —UN—25APR08

Filter Compartment Cover



TX1041314A —UN—25APR08

Recirculating Filter

DP99999,0000070 -19-24OCT11-1/1

Clean Air Cleaner Dust Unloader Valve

IMPORTANT: A missing, damaged, or hardened dust unloader valve will make the dust cup precleaner ineffective, causing very short element life. Valve should suck closed above 1/3 engine speed.

NOTE: If operating in high dust conditions, squeeze dust unloader valve every couple of hours of operation to release dust.

1. On left side of machine, open engine service door.
2. Squeeze dust unloader valve (1) to remove dust from the air cleaner.
3. Check condition of dust unloader valve. Replace it, if hardened or damaged.
4. Close engine service door.

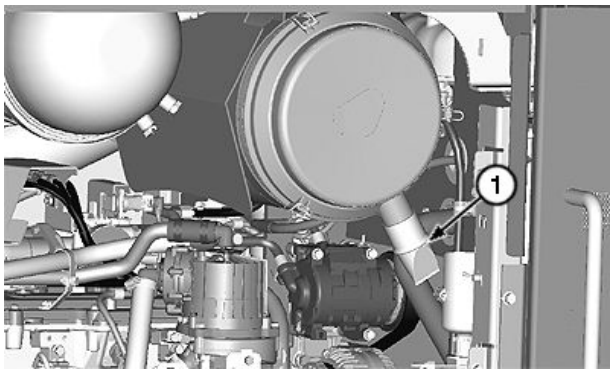

TX1084840A —UN—18NOV10

Dust Unloader Valve

1— Dust Unloader Valve

OUT4001,00006E8 -19-18NOV10-1/1

Check Coolant Level in Surge Tank

CAUTION: Prevent possible injury from hot spraying fluids. Shut off engine. Remove filler cap only when cool enough to touch with bare hands. Slowly loosen cap to relieve pressure before removing completely.

1. Open top cooler door and check coolant level in surge tank (1).
2. With engine cold, coolant level must be between MIN COLD and MAX COLD marks on surge tank.
3. If coolant is below MIN COLD mark, add coolant to surge tank. See Heavy Duty Diesel Engine Coolant. (Section 3-1.)
4. If surge tank is empty, check for leaks in tank, hoses, and radiator. Repair as required, then refill with coolant.

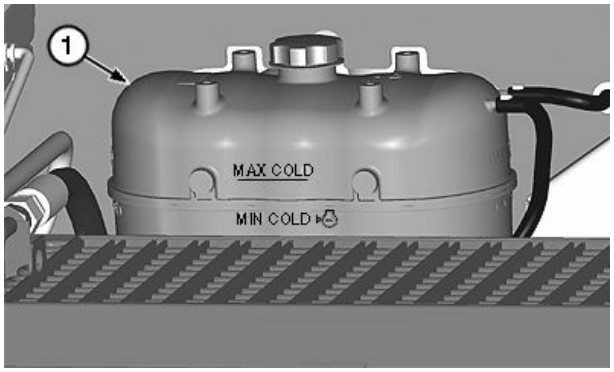

TX1084814A —UN—23NOV10

Surge Tank

1— Coolant Surge Tank

OUT4001,00006E9 -19-14MAR13-1/1

Check Engine Oil Level

IMPORTANT: If oil level is low, the engine can be damaged. DO NOT operate the engine when oil level is below the ADD mark.

The most accurate oil level reading is obtained when the engine is cold, before starting the engine for the day.

1. Park machine on a level surface.
2. Shut off engine and allow oil to drain into oil pan for 10 minutes.
3. On left side of machine, open engine service door and side shield.
4. Remove dipstick (1) and check oil level.

   BEFORE THE ENGINE IS STARTED: Engine is full when oil level is in crosshatched area. It is acceptable to run the engine when oil level is above the ADD mark.

   AFTER THE ENGINE HAS BEEN RUN: Allow oil to drain into oil pan for 10 minutes before checking level. Ten minutes after shutdown, oil level must be above the ADD mark.

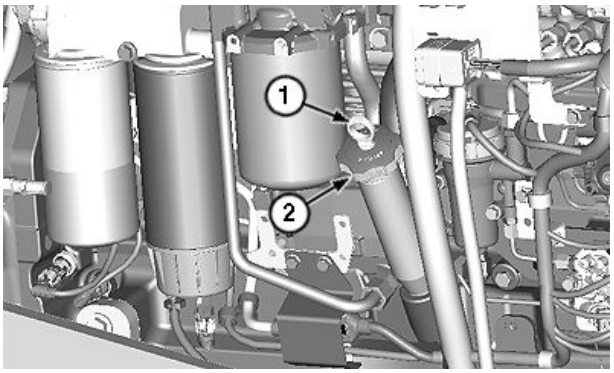

TX1084842A —UN—18NOV10

Engine Oil Dipstick and Fill Tube Cap

1— Dipstick **2— Fill Tube Cap**

5. If oil level is below ADD mark, remove fill tube cap (2) and add oil as necessary. See Diesel Engine Oil—Interim Tier 4 and Stage III B Engines. (Section 3-1.) Install dipstick and fill tube cap.
6. Close engine service door and side shield.

OUT4001,00006EA -19-18NOV10-1/1

Check Hydraulic System Oil Level

IMPORTANT: Prevent possible hydraulic pump damage. DO NOT operate engine without oil in the hydraulic reservoir.

1. Park machine on a level surface.
2. Lower equipment to the ground.
3. On left side of machine, open engine service door.
4. Check hydraulic oil level in sight gauge (1). When oil is cold, oil level must be in FULL range.
5. If necessary, remove fill cap (2) on top of hydraulic reservoir and add oil. See Hydraulic System Oil. (Section 3-1.)
6. If oil is abnormally low, check for leaks and repair as required.
7. Install fill cap and close engine service door.

1— Sight Gauge **2— Fill Cap**

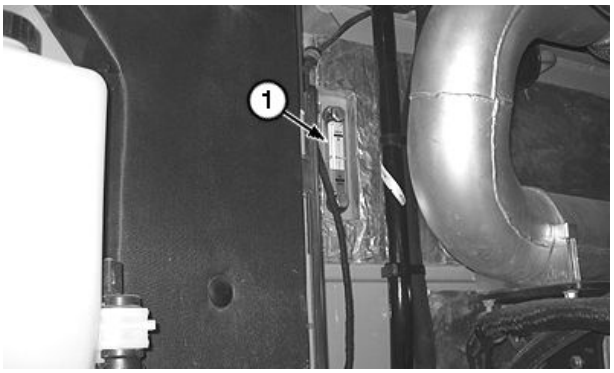

TX1084851A —UN—18NOV10

Hydraulic Oil Sight Gauge

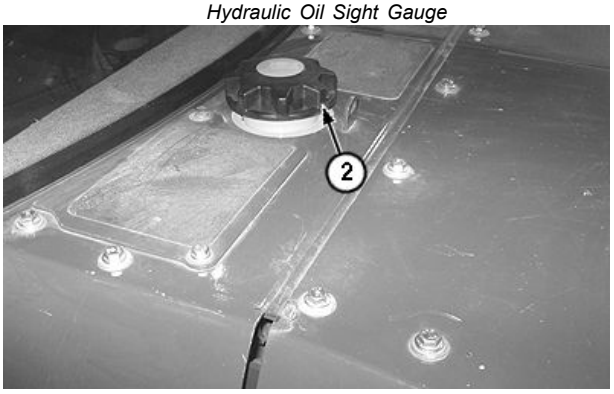

TX1084854A —UN—18NOV10

Hydraulic Reservoir Fill Cap

OUT4001,00006EB -19-18NOV10-1/1

Check Transmission Oil Level

IMPORTANT: Prevent possible transmission damage. DO NOT operate engine when transmission oil level is low.

1. Before starting engine, check transmission oil level on sight gauge (1). If oil level is higher than HOT area on sight gauge, there is sufficient oil to start the engine.
2. If necessary, remove fill cap (2) and add oil. See Transmission, Park Brake, and Axle Oil. (Section 3-1.)
3. Start engine.
4. Press and hold clutch cut-off switch to disable clutch cut-off function (all LEDs off).
5. Press and hold automatic transmission switch to engage transmission in MANUAL mode (both LEDs off).
6. Engage service brakes and release park brake.
7. Move forward, neutral, or reverse (FNR) lever or switch to F (forward) and select gear 3.

   Operate engine at fast idle for 30 seconds. Reduce engine speed to slow idle and place FNR lever or switch in neutral (N), for 15 seconds.

   Repeat this step until transmission oil reaches normal operating temperature, approximately 80°C (175°F).
8. Move FNR lever or switch to N (neutral). Lower all equipment to ground.
9. Press park brake switch (LED on switch and indicator on display unit are illuminated). Release service brakes.
10. Allow 2 minutes for oil level to stabilize.
11. Check oil level with engine at slow idle. Oil level is correct when in HOT area on sight gauge.
12. If necessary, add oil. See Transmission, Park Brake, and Axle Oil. (Section 3-1.)

1— Sight Gauge **2— Fill Cap**

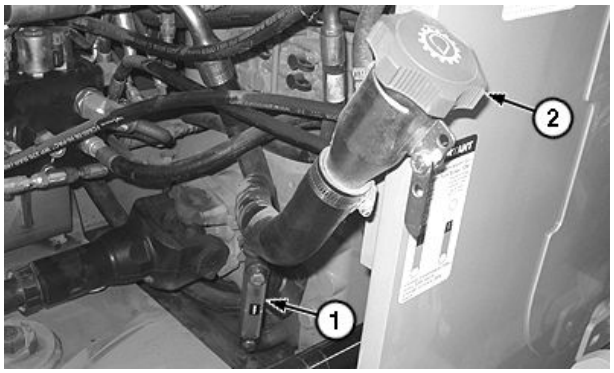

TX1084866A —UN—18NOV10

Transmission Oil Sight Gauge and Fill Cap

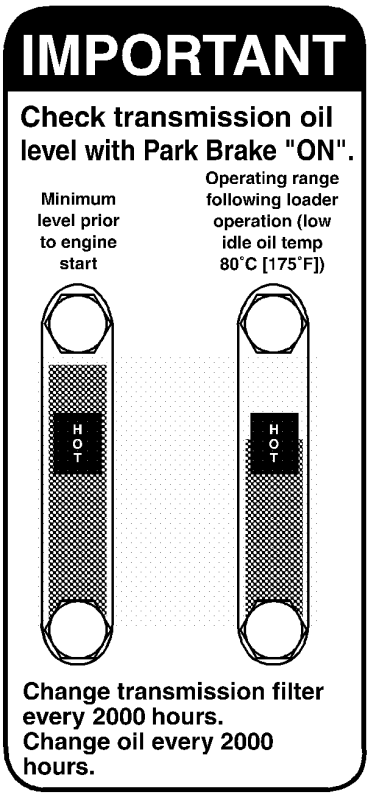

TX1042729A —19—22MAY08

OUT4001,00006EC -19-18NOV10-1/1

Inspect Outer Pin Seals

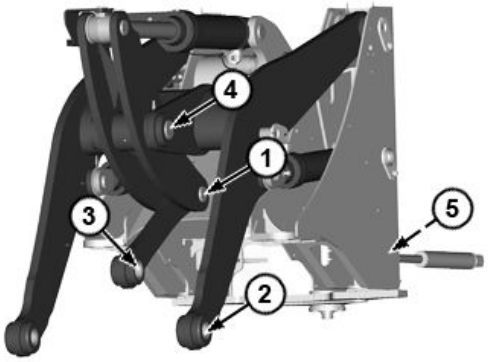

Outer Pin Seal Locations (single bucket link boom shown) (left side shown)

TX1134287A —UN—03APR13

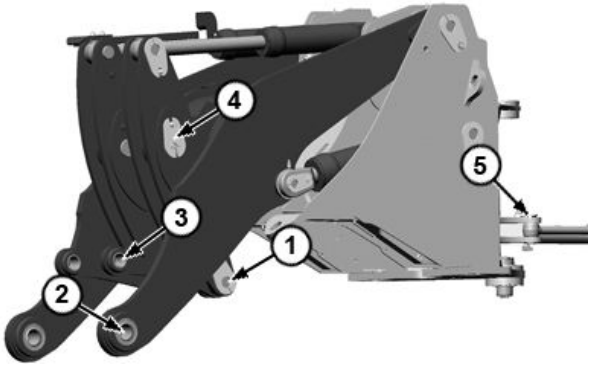

Outer Pin Seal Locations (double bucket link boom shown) (left side shown)

TX1134260A —UN—02APR13

Examine all outer pin seals. Replace all damaged or missing outer pin seals.

All outer pin seals must be replaced at 2000 hour intervals.

NOTE: Linkage configuration determines which locations utilize outer pin seals. Inspect these locations as required. For more information concerning outer pin seal locations, see Required Parts. (Section 3-2.)

Outer pin seal locations may include:

- **Boom to attachment joints**
- **Attachment to bucket link joints**
- **Bucket link to bellcrank joints**
- **Bellcrank to boom joints**
- **Steering cylinder joints:** Steering cylinder joints are located at both front and back of steering cylinder. Steering cylinder joint outer pin seals (5) are located on top portion of steering cylinder joints.

1— Bucket Link to Bellcrank Joint Outer Pin Seal
2— Boom to Attachment Joint Outer Pin Seal
3— Attachment to Bucket Link Joint Outer Pin Seal
4— Bellcrank to Boom Joint Outer Pin Seal
5— Steering Cylinder Joint Outer Pin Seal

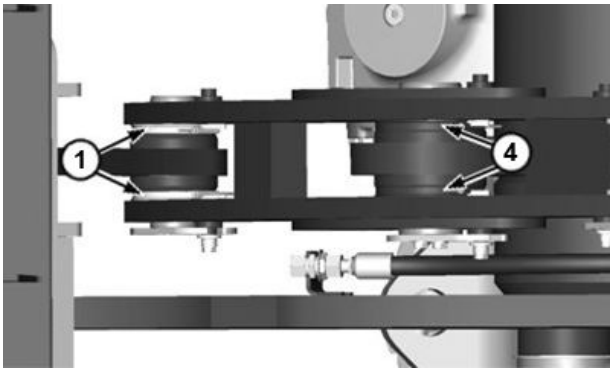

Bellcrank Joints (left side shown)

TX1134253A —UN—02APR13

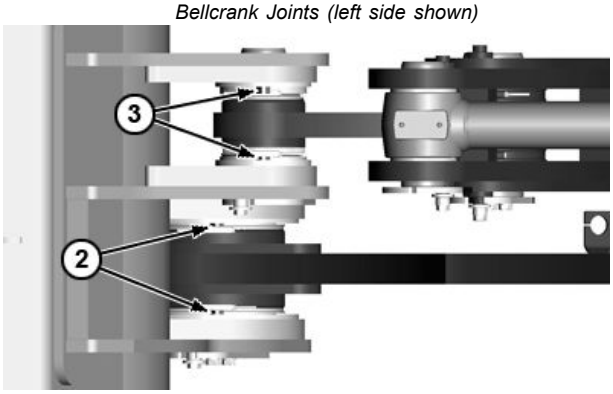

Attachment Joints (left side shown)

TX1134306A —UN—03APR13

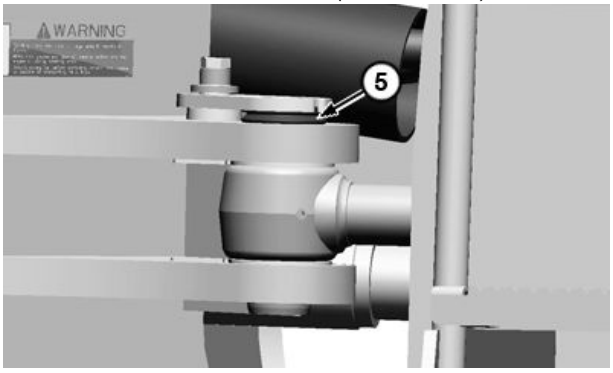

Steering Cylinder Joint Outer Pin Seal (front left shown)

TX1128903A —UN—03JAN13

ER93822,00001E0 -19-12JUN13-1/1

Lubricate Loader Linkage and Cylinder Pivots—Z-Bar Linkage

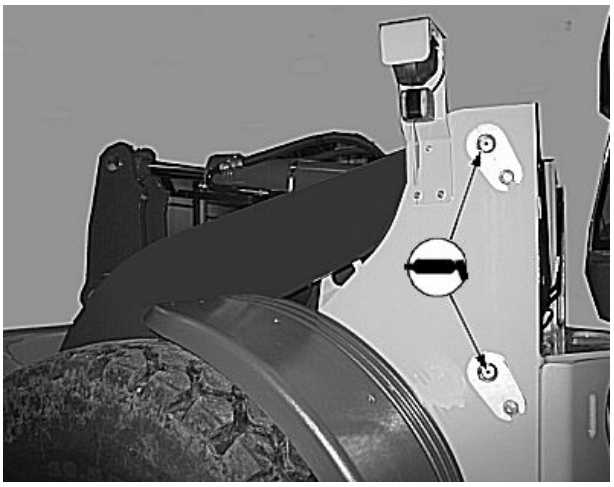

TX1041328A —UN—09MAY08

4 Points, Left Side Shown

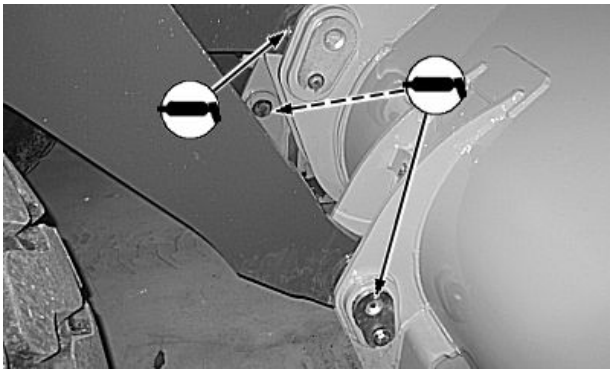

TX1085321A —UN—01DEC10

3 Points

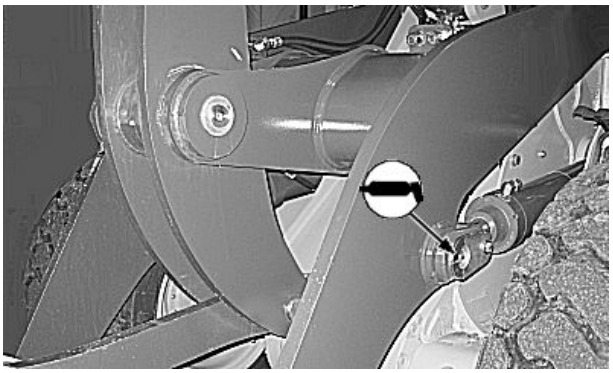

TX1041331A —UN—09MAY08

2 Points, Left Side Shown

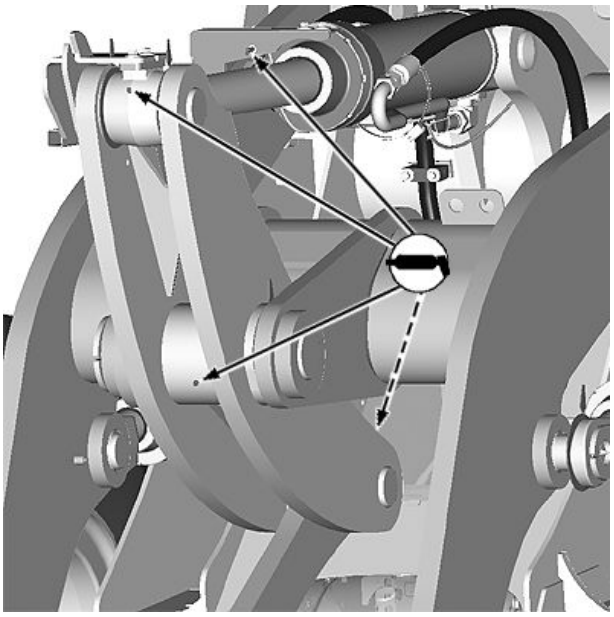

TX1085325A —UN—01DEC10

4 Points

NOTE: This procedure does not apply to machines equipped with NeverGrease™ pivots.

⚠ CAUTION: Prevent possible injury from unexpected machine movement. Install articulation locking bar before lubricating.

NOTE: Lubricate every 10 hours when operating in severe conditions such as deep mud, water, or snow.

Lower bucket flat on ground.

Lubricate 17 points (shown) until grease escapes around seals. See Grease. (Section 3-1.)

NeverGrease is a trademark of Deere & Company

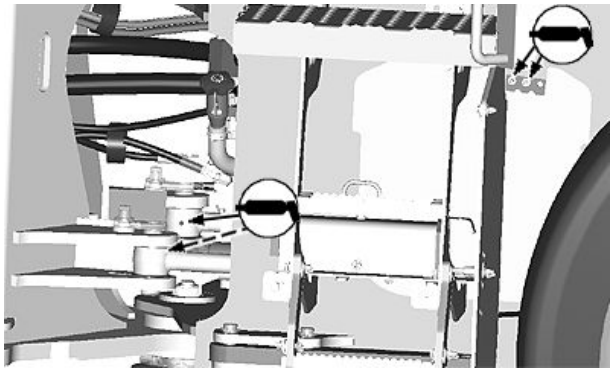

TX1085326A —UN—01DEC10

Steering Cylinders—4 Points

OUT4001,00006EF -19-01DEC10-1/1

Lubricate Loader Linkage and Cylinder Pivots—Powerllel™ Linkage



TX1041332A —UN—01MAY08

7 Points, Right Side Shown

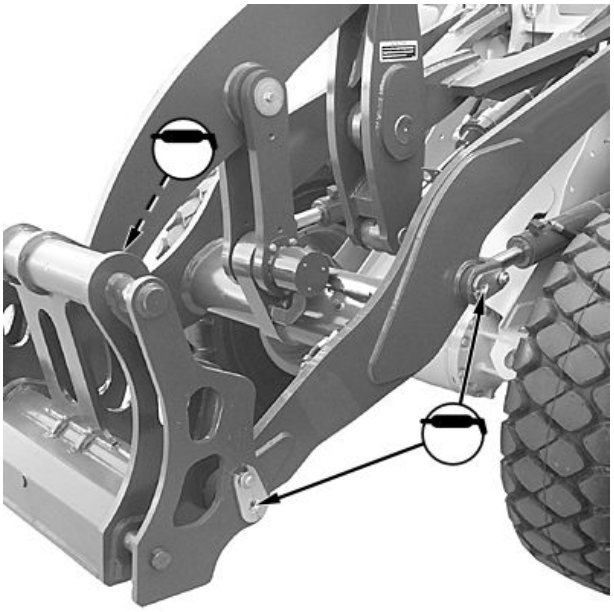

TX1041333A —UN—01MAY08

3 Points, Left Side Shown



TX1041334A —UN—01MAY08

3 Points

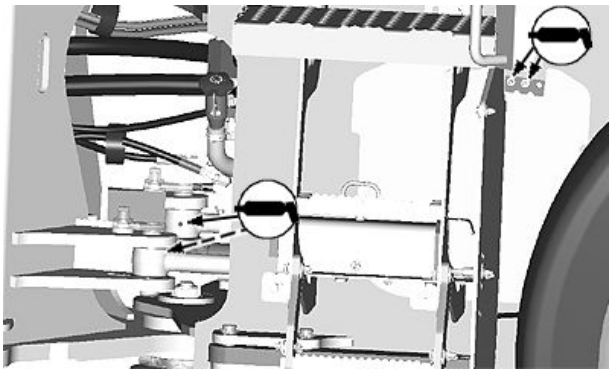

TX1085326A —UN—01DEC10

Steering Cylinders—4 Points

NOTE: This procedure does not apply to machines equipped with NeverGrease™ pivots.

⚠ CAUTION: Prevent possible injury from unexpected machine movement. Install articulation locking bar before lubricating.

NeverGrease is a trademark of Deere & Company

NOTE: Lubricate every 10 hours when operating in severe conditions such as deep mud, water, or snow.

Lower bucket flat on ground.

Lubricate 17 points (shown) until grease escapes around seals. See Grease. (Section 3-1.)

OUT4001,00006F0 -19-01DEC10-1/1

Drain and Refill Front and Rear Axle Oil

NOTE: Perform this service at the first 250 hours of operation and at 2000 hour intervals thereafter.

1. Remove drain plug (1). Allow oil to drain into a container. Dispose of waste oil properly.

NOTE: Axle drain plug is magnetized to attract metal particles. Clean plug when changing axle oil.

2. Clean, install, and tighten drain plug.

NOTE: Dipstick plugs are located on left side of front and rear axle housings.

3. Clean area around dipstick plug (2) and axle housing plug (3) and remove.
4. Slowly fill axle through both right and left side axle housing ports. See Transmission, Park Brake, and Axle Oil. (Section 3-1.)

Specification

Front Axle	
Oil—Capacity	22.0 L
	5.8 gal.
Rear Axle Oil—Capacity	22.0 L
	5.8 gal.

5. Wipe dipstick with clean cloth.

NOTE: Do not thread dipstick plug into port. Place bottom surface of dipstick plug on machined surface of axle housing when checking oil level. Allow 10 minutes for oil level to stabilize throughout sump before checking.

Use dipstick plug to check level at both sides of axle.

6. Check oil level at both right and left side axle housing ports. When full, oil must be in the crosshatched area on dipstick.
7. Continue adding oil as required until oil is at proper level.
8. Install and tighten axle housing plug and dipstick plug back in original location.



TX1041344A —UN—01MAY08

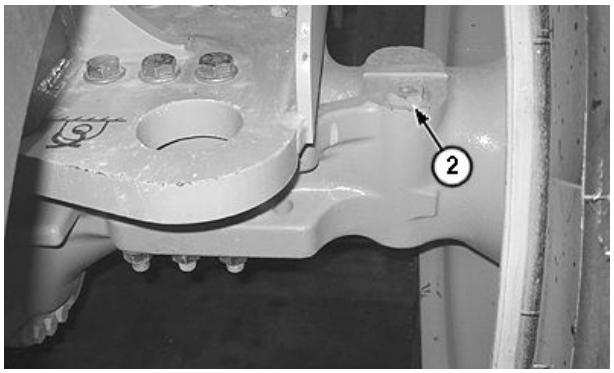

TX10848879A —UN—18NOV10

Left Side of Front Axle Shown

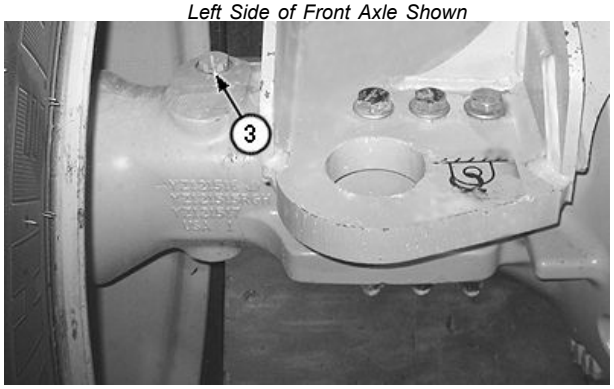

TX10848880A —UN—19NOV10

Right Side of Front Axle Shown

1— Drain Plug
2— Dipstick Plug
3— Axle Housing Plug

OUT4001,00006F1 -19-13JUN12-1/1

Replace Axle Oil Filters—If Equipped

NOTE: Perform this service at the first 250 hours of operation and at 1000 hour intervals thereafter.

1. On left side of machine, remove cover behind the steps.
2. Turn front axle oil filter (1) counterclockwise to remove. (Front axle is identified by the green banded hoses.)
3. Turn rear axle oil filter (2) counterclockwise to remove. (Rear axle is identified by the red banded hoses.)
4. Apply light film of axle oil to gasket on new filters.
5. Install new axle oil filters. Turn filters clockwise by hand until gasket contacts mounting base.
6. Tighten filters an additional 1/2—3/4 turn.
7. Start engine and check for leaks around base of filters. Tighten filters as required to stop any leaks.

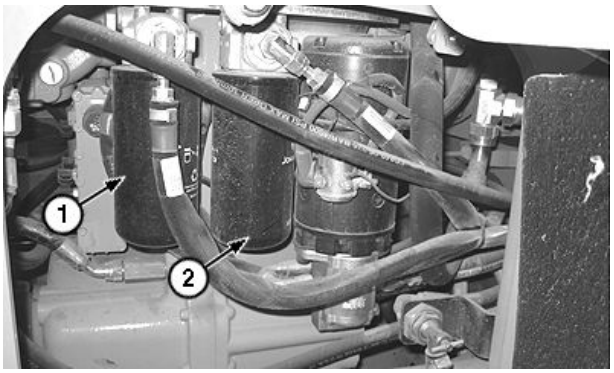

TX1084881A —UN—18NOV10

Front and Rear Axle Oil Filters (if equipped)

1— Front Axle Oil Filter **2— Rear Axle Oil Filter**

8. Install cover.

OUT4001,00006F2 -19-24NOV10-1/1

Maintenance—Every 250 Hours

Take Engine Oil Sample

See your authorized dealer.

OUT4001,000039B -19-14MAR12-1/1

Lubricate Driveline Upper and Lower Sliding Joints and Lower U-Joints

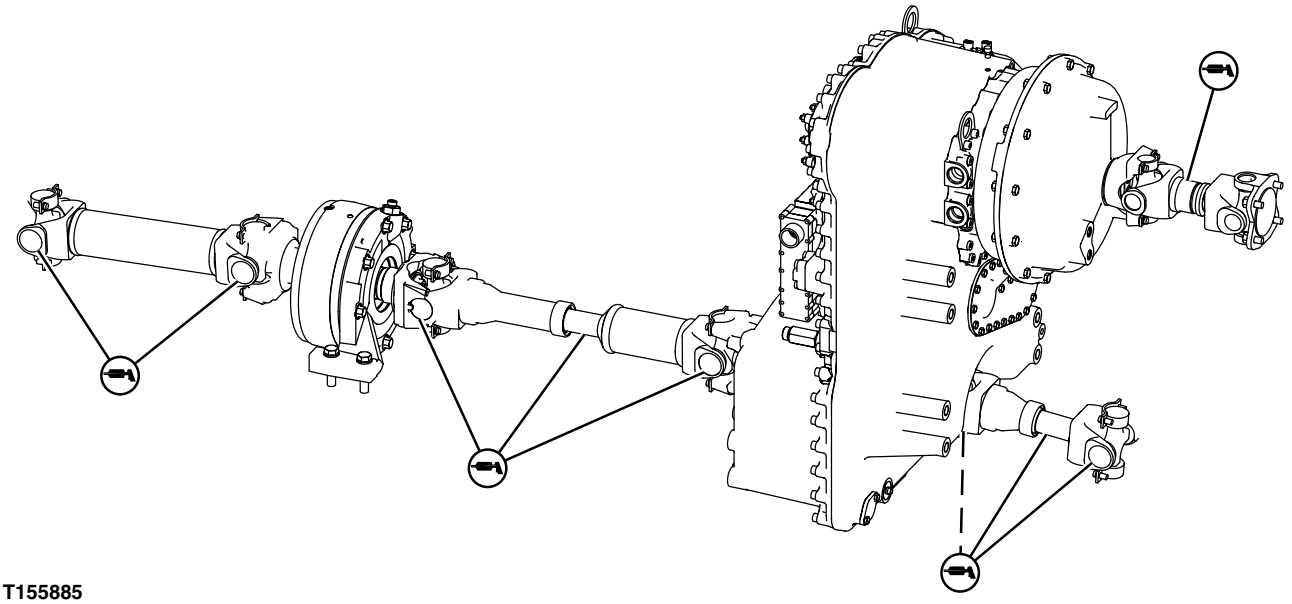

T155885

T155885 —UN—24SEP02

NOTE: Lubricate daily when operating in deep mud, water, or snow.

⚠ CAUTION: Prevent possible injury from unexpected machine movement. Install frame locking bar, lower bucket to ground, and shut off engine before lubricating.

Install frame locking bar (1) with machine in articulated position.

IMPORTANT: Damage to drive shafts and U-joints can occur if not adequately lubricated.

Lubricate sliding joints until grease escapes around vent holes in drive shaft end. See Grease. (Section 3-1.)

Lubricate U-joints until grease escapes around bearing caps.

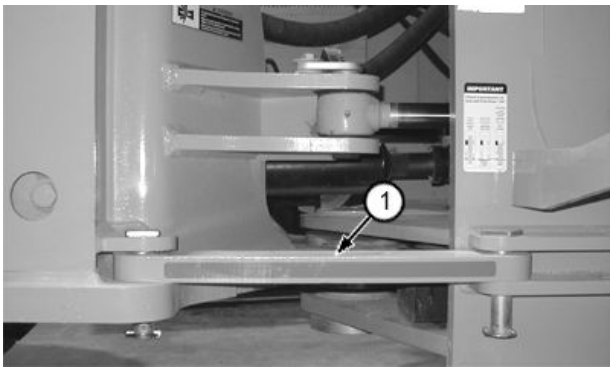

T161066B —UN—29OCT02

1— Frame Locking Bar

OUT4001,00006F3 -19-19NOV10-1/1

Check Front and Rear Axle Oil Level

NOTE: If axle is hot (dipstick plug is too warm to hold with bare hands), oil expands. It is normal for oil to be up to 25 mm (1 in.) above FULL mark when hot. Do not adjust level when oil is hot. If oil level is above FULL mark when cool, drain oil and recheck.

NOTE: Dipstick plugs are located on left side of front and rear axle housings. Use dipstick plug to check level at both sides of each axle.

1. Clean area around dipstick plug (2) and axle housing plug (3) and remove.
2. Wipe dipstick with clean cloth.

NOTE: Do not thread dipstick plug into port. Place bottom surface of dipstick plug on machined surface of axle housing when checking oil level. Allow 10 minutes for oil level to stabilize throughout sump before checking.

3. Check oil level at both right and left side axle housing ports. When full, oil must be in the crosshatched area on dipstick.
4. If necessary, add oil. See Transmission, Park Brake, and Axle Oil. (Section 3-1.)
5. After adding oil, wait 10 minutes for oil level to stabilize before rechecking or adding more oil.
6. Install and tighten axle housing plug and dipstick plug back in original location.

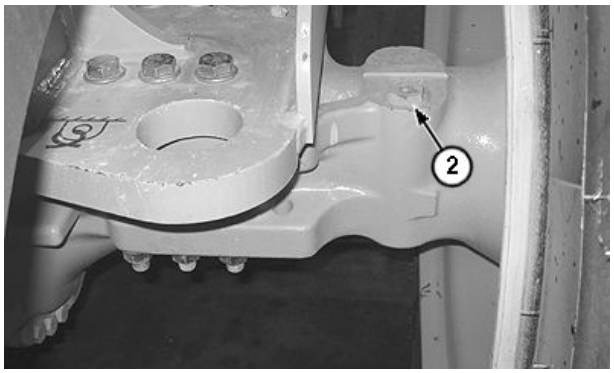

TX1084879A —UN—18NOV10

Left Side of Front Axle Shown

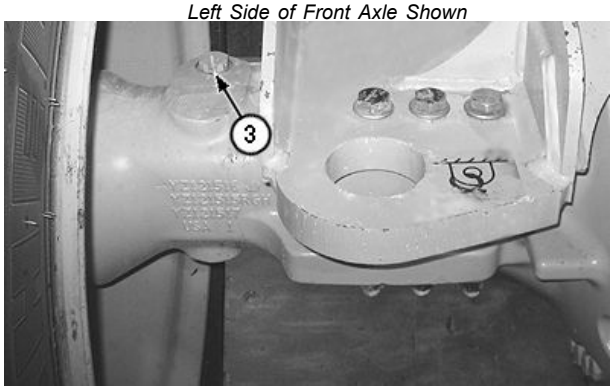

TX1084880A —UN—19NOV10

Right Side of Front Axle Shown

2— Dipstick Plug **3— Axle Housing Plug**

OUT4001,00006F4 -19-30NOV10-1/1

Lubricate Front and Rear Axle Shaft Seals

CAUTION: Prevent possible injury from unexpected machine movement. Park machine on level surface. Turn engine off and lower bucket to ground before lubricating.

NOTE: Grease daily when operating in severe conditions such as deep mud, water, or snow.

The front axle shaft seal grease fitting (1) is located on the left side of the machine. Lubricate grease fitting with five shots of grease. See Grease. (Section 3-1.)

The rear axle shaft seal grease fitting (2) is also located on the left side of the machine. Lubricate grease fitting with five shots of grease. See Grease. (Section 3-1.)

1— Front Axle Shaft Seal Grease Fitting

2— Rear Axle Shaft Seal Grease Fitting

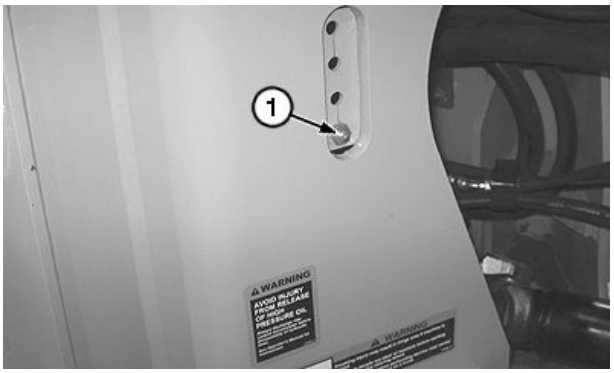

TX1084913A —UN—19NOV10

Front Axle Shaft Seal Grease Fitting

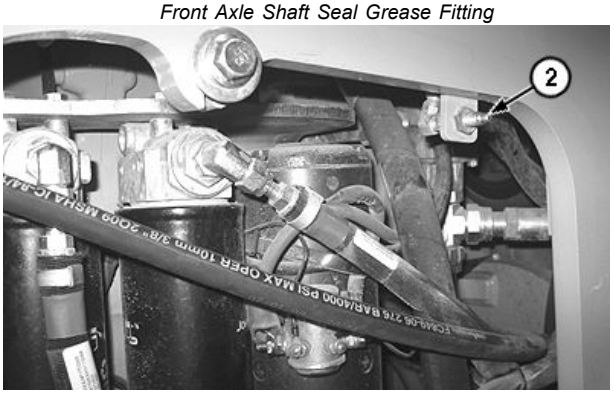

TX1084914A —UN—19NOV10

Rear Axle Shaft Seal Grease Fitting (shown with cover removed)

OUT4001,00006F5 -19-01DEC10-1/1

Check Battery Water Level and Terminals

CAUTION: Battery gas can explode. Keep sparks and flames away from batteries.

NEVER check battery charge by placing a metal object across the posts. Use voltmeter or hydrometer.

ALWAYS remove grounded (-) battery clamp first and replace it last.

Sulfuric acid in battery electrolyte is poisonous. It is strong enough to burn skin, eat holes in clothing, and cause blindness if splashed into eyes.

Avoid the hazard by:

1. **Filling batteries in a well-ventilated area.**
2. **Wearing eye protection and rubber gloves.**
3. **Avoiding breathing fumes when electrolyte is added.**
4. **Avoiding spilling or dripping electrolyte.**
5. **Using proper jump start procedure.**

If you spill acid on yourself:

1. **Flush skin with water.**
2. **Apply baking soda or lime to help neutralize the acid.**
3. **Flush eyes with water for 15—30 minutes. Get medical attention immediately.**

If acid is swallowed:

1. **Do not induce vomiting.**
2. **Drink large amounts of water or milk, but do not exceed 1.9 L (2 quarts).**
3. **Get medical attention immediately.**



TS204 —UN—15APR13

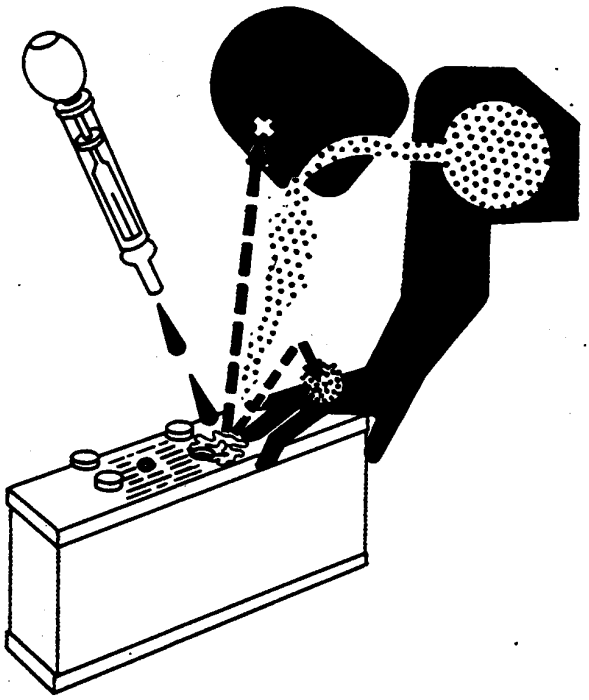

TS203 —UN—23AUG88

Continued on next page

OUT4001,00006FF -19-30NOV10-1/2

1. Pull on latch (1) and open door on battery box.
2. Turn battery disconnect switch (2) to OFF.
3. Remove cap screws (3) and battery box cover.
4. Clean dirt and debris from top of batteries.

CAUTION: Accidental contact between positive battery terminal and ground can cause electrical flash and burns. Prevent possible injury. ALWAYS remove grounded (-) battery clamp first and replace it last.

CAUTION: Battery posts, terminals, and related accessories contain lead and lead compounds, chemicals known to the state of California to cause cancer and reproductive harm. Wash hands after handling.

5. Disconnect grounded negative (-) black cable (4) from battery post on right-hand battery.
6. Disconnect positive (+) red cable (5) from battery post on left-hand battery.
7. Disconnect and remove intermediate battery cable (6) connecting the two batteries in series.
8. Clean battery terminal posts and cable clamps with a stiff brush.
9. Apply lubricating grease around base of terminal posts.

IMPORTANT: If water is added to batteries during freezing weather, batteries must be charged after water is added to prevent batteries from freezing. Charge battery using a battery charger or by running the engine. DO NOT OVERFILL cells.

10. Remove caps and check electrolyte level in each cell. Water level should be within 6 mm (0.25 in.) of bottom of fill tube. Add distilled water as required. DO NOT overfill.
11. Install intermediate battery cable and tighten clamps.
12. Connect positive (+) red cable to positive terminal post on left-hand battery and tighten clamp.
13. Connect negative (-) black cable to negative terminal post on right-hand battery and tighten clamp.
14. Install battery box cover and cap screws.

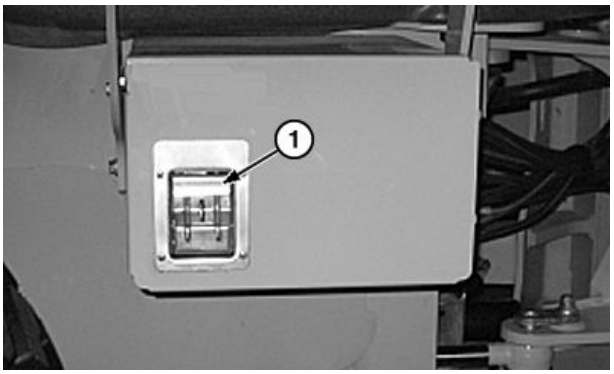

TX1041688A —UN—01MAY08

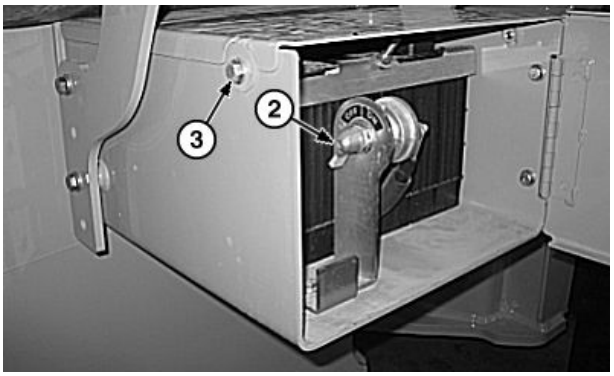

TX1041362A —UN—25APR08

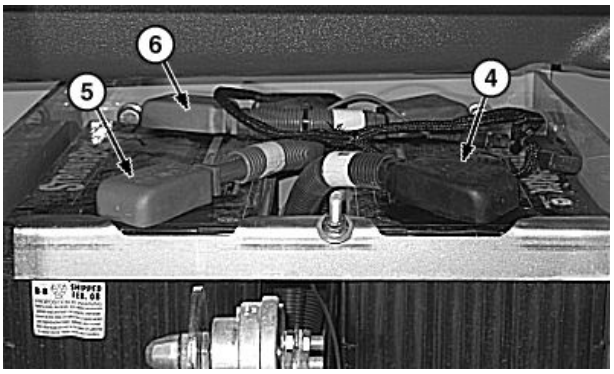

TX1041363A —UN—25APR08

1— Battery Box Latch
2— Battery Disconnect Switch
3— Cap Screw (2 used)
4— Negative Battery Cable
5— Positive Battery Cable
6— Intermediate Battery Cable

15. Turn battery disconnect switch to ON and close door on battery box.

OUT4001,00006FF -19-30NOV10-2/2

Check Air Intake Hoses and Charge Air Cooler Tube Couplings

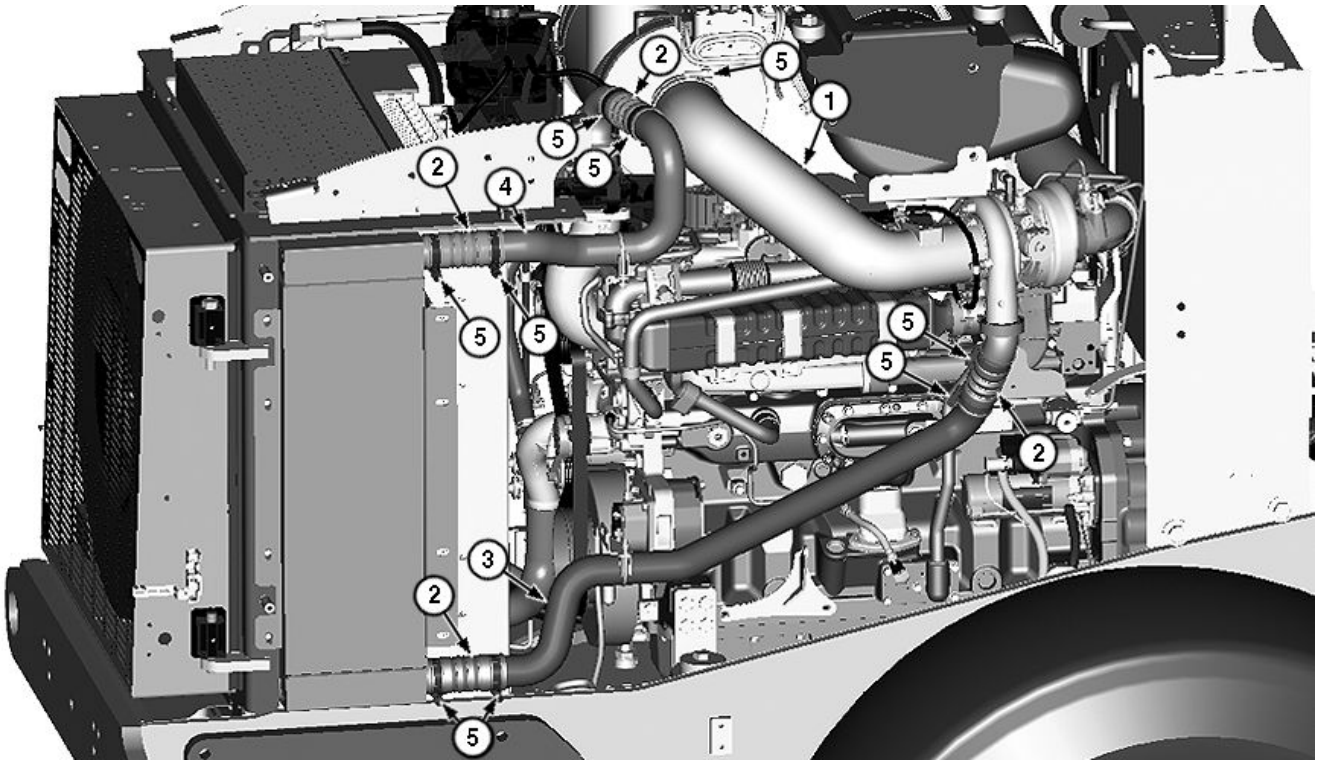

1— Air Intake Hose
2— Hose Coupling (4 used)
3— Compressor Outlet Tube
4— Cooler Outlet Tube
5— Clamp (9 used)

1. Check air intake hose (1) for cracks and replace as required.
2. Check hose couplings (2), compressor outlet tube (3), and cooler outlet tube (4) for cracks or leaks. Replace as required.
3. Tighten all clamps (5).

OUT4001,00006F7 -19-23NOV10-1/1

Replace Fast Fill Fuel Breather Filter—If Equipped

NOTE: During normal operating conditions, the fast fill fuel breather filter should be changed every 500 hours. If operating in dusty conditions, check filter more often and replace as required.

1. On right side of machine, open engine service door.
2. Turn fast fill fuel breather filter (1) counterclockwise to remove.
3. Install new filter and tighten until snug.
4. Close engine service door.

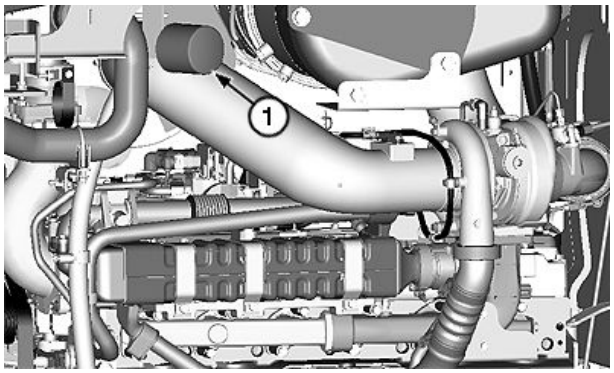

Fast Fill Fuel Breather Filter

1— Fast Fill Fuel Breather Filter

OUT4001,00006F8 -19-19NOV10-1/1

Take Fluid Samples

See your authorized dealer for taking the following fluid samples:

- Transmission Oil
- Hydraulic Oil
- Axle Oil
- Diesel Fuel
- Coolant

OUT4001,000040B -19-07JUL09-1/1

Drain and Refill Engine Oil and Replace Filter

1. Run engine to warm oil. Park machine on a level surface. Lower equipment to ground and stop engine.
2. Place a container under engine oil drain hose (1) that is routed to an opening on front side of fuel tank.
3. On left side of machine, open engine service door and side shield. Open engine oil drain valve (2) and drain oil into container. Dispose of waste oil properly. Close engine oil drain valve.
4. Turn engine oil filter (3) counterclockwise and remove from base. Clean mounting surface on base.
5. Fill new filter with oil and apply thin film of oil to gasket.
6. Install new filter. Turn filter clockwise by hand until gasket touches mounting surface. Tighten filter 3/4 turn more using filter wrench.
7. Remove fill tube cap (4) and fill engine with oil. See Diesel Engine Oil—Interim Tier 4 and Stage III B Engines. (Section 3-1.)

Specification

Engine Oil With Filter—Capacity..... 28.0 L 7.4 gal

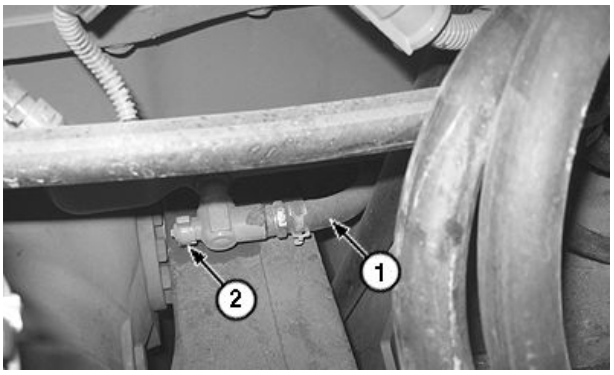

TX1084935A —UN—19NOV10

Engine Oil Drain Hose and Valve

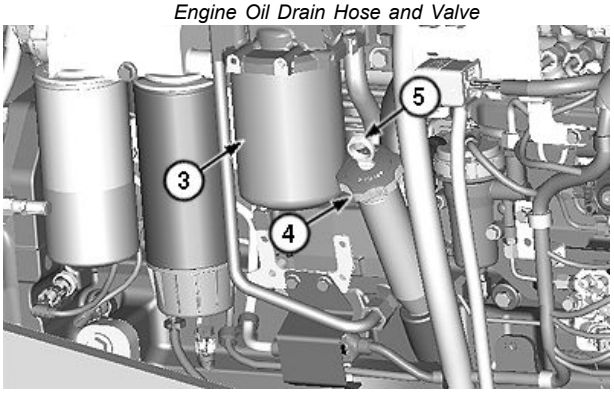

TX1084936A —UN—19NOV10

Engine Oil Filter and Fill Tube Cap With Dipstick

1— Drain Hose
2— Drain Valve
3— Engine Oil Filter
4— Fill Tube Cap
5— Dipstick

8. Install fill tube cap. Start engine and run at slow idle.
9. Check that engine oil pressure light on display unit goes out and audible alarm shuts off. If not, stop engine immediately and find cause.
10. Stop engine, remove dipstick (5) and check oil level. Engine is full when oil level is in the crosshatched area. Install dipstick.
11. Check for any leakage at filter. Tighten filter only enough to stop leakage.
12. Close engine service door and side shield.

OUT4001,00006F9 -19-17OCT11-1/1

Replace In-Line Fuel Strainer

1. Park machine.
2. On left side of machine, open engine service door and side shield.
3. Loosen hose clamps that are retaining fuel hoses to in-line fuel strainer (1) and slide clamps away from strainer.
4. Disconnect hoses from in-line fuel strainer and allow fuel and sediment to drain into a container.

NOTE: Fuel flow direction is marked on strainer housing.

5. Connect hoses to new in-line fuel strainer with arrow on housing pointing toward primary fuel filter.
6. Slide hose clamps toward in-line fuel strainer and tighten to retain hoses.
7. Close engine service door and side shield.
8. Prime fuel system and bleed air. See Bleed Fuel System. (Section 4-1.)

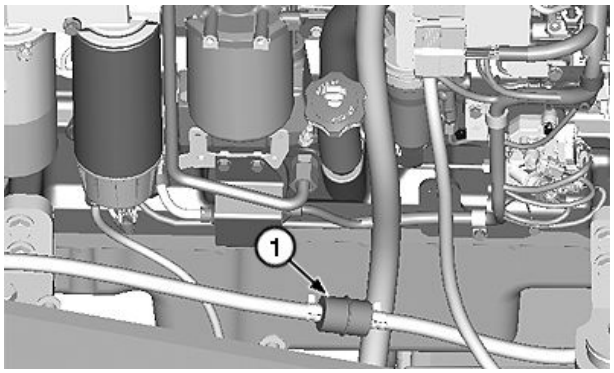

TX1084939A —UN—19NOV10

In-Line Fuel Strainer

1— In-Line Fuel Strainer

OUT4001,00006FA -19-19NOV10-1/1

Replace Primary Fuel Filter

NOTE: Perform this service at 500 hour intervals when operating in normal conditions. When operating in dry, dusty conditions, replace fuel filter as necessary.

1. Start engine and run 3—5 minutes at slow idle, if machine has not been previously operating. Stop engine and wait 15 minutes before proceeding.
2. On left side of machine, open engine service door and side shield.
3. Clean area around primary fuel filter (1).
4. Place end of drain hose (2) into a suitable container.

CAUTION: Fuel in filter may be under pressure. Escaping fuel under pressure can penetrate the skin and cause serious injury. Relieve pressure before removing filter.

5. Loosen drain valve (3) to relieve pressure and drain contaminants from primary fuel filter. Dispose of waste properly.
6. Close drain valve.
7. Disconnect water-in-fuel (WIF) sensor (4) wiring.

NOTE: Additional fuel will remain in the primary fuel filter housing.

8. Rotate primary fuel filter counterclockwise and remove from mounting base. Remove water separator bowl (5) from primary fuel filter. Dispose of used fuel filter properly.
9. Clean filter mounting base.
10. Install water separator bowl to new primary fuel filter.

IMPORTANT: DO NOT prefill fuel filters. Debris in unfiltered fuel will damage fuel system components.

Only lube filter seal with diesel fuel before installing.



TS1343 —UN—18MAR92

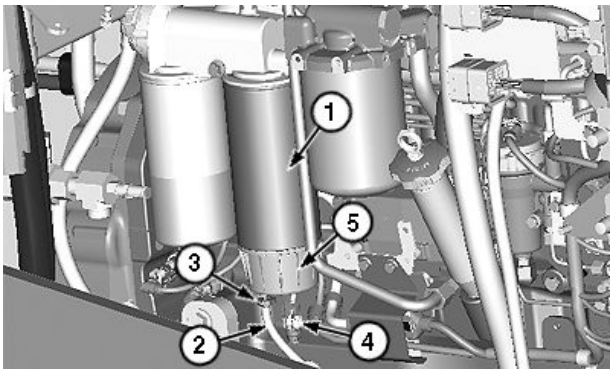

TX1084940A —UN—19NOV10

Primary Fuel Filter

1— Primary Fuel Filter
2— Drain Hose
3— Drain Valve
4— WIF Sensor
5— Water Separator Bowl

11. Install new primary fuel filter onto mounting base. Rotate filter housing clockwise by hand. Tighten 1/2—3/4 turn after seal contacts mounting base.
12. Connect WIF sensor wiring.
13. Close engine service door and side shield.
14. Prime fuel system and bleed air. See Bleed Fuel System. (Section 4-1.)

OUT4001,00006FB -19-19NOV10-1/1

Replace Final Fuel Filter

NOTE: Perform this service at 500 hour intervals when operating in normal conditions. When operating in dry, dusty conditions, replace fuel filter as necessary.

1. On left side of machine, open engine service door and side shield.
2. Clean area around final fuel filter (1).

NOTE: Some fuel will be present in final fuel filter housing.

3. Rotate final fuel filter counterclockwise and remove from mounting base. Dispose of used fuel filter properly.
4. Clean filter mounting base.

IMPORTANT: DO NOT prefill fuel filters. Debris in unfiltered fuel will damage fuel system components.

Only lube filter seal with diesel fuel before installing.

5. Install new final fuel filter onto mounting base. Rotate filter housing clockwise by hand. Tighten one turn after seal contacts mounting base.

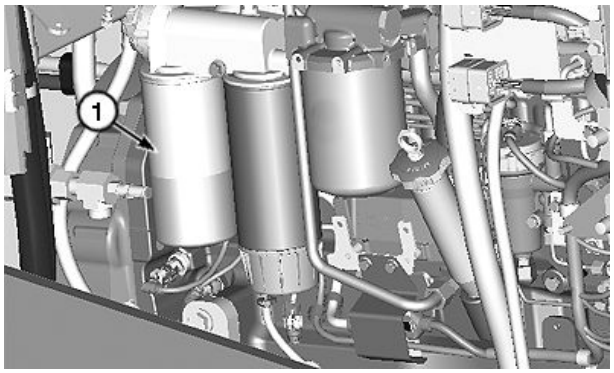

TX1084941A —UN—19NOV10

Final Fuel Filter

1— Final Fuel Filter

6. Close engine service door and side shield.
7. Prime fuel system and bleed air. See Bleed Fuel System. (Section 4-1.)

OUT4001,00006FC -19-30NOV10-1/1

Replace Hydraulic Reservoir Breather Filter

1. On left side of machine, open engine service door.
2. Turn hydraulic reservoir breather filter (1) counterclockwise to remove.
3. Install new filter and tighten until snug.
4. Close engine service door.

1— Hydraulic Reservoir Breather Filter

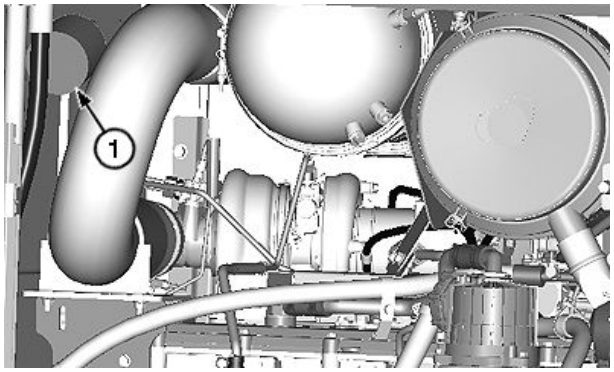

TX1084944A —UN—19NOV10

Hydraulic Reservoir Breather Filter

OUT4001,00006FD -19-19NOV10-1/1

Check Park Brake Oil Level

CAUTION: Prevent possible injury from unexpected machine movement. Always install articulation locking bar.

NOTE: Change park brake oil every 500 hours for applications running in deep water, mud, or snow.

1. Park machine on level surface.
2. Install frame locking bar with machine in articulated position.
3. Remove check/fill plug (1). Check oil level.

IMPORTANT: Oil level must be at bottom of check plug on the side of the park brake. Too much oil can cause overheating. Too little oil can cause bearing failure.

4. Add oil if necessary. See Transmission, Park Brake, and Axle Oil. (Section 3-1.) Allow 2 minutes for oil to settle to bottom of reservoir.

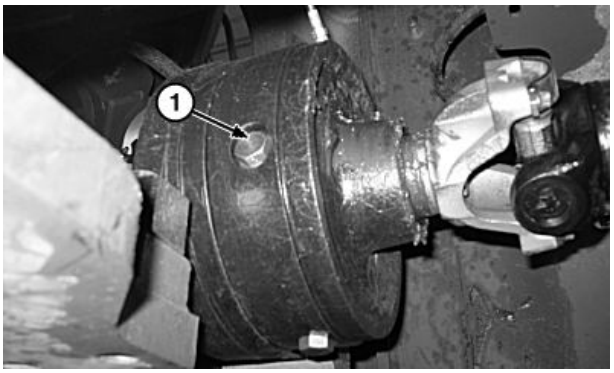

TX1029728A —UN—27SEP07

Park Brake

1— Check/Fill Plug

5. Check oil level and install check/fill plug.

OUT4001,000061E -19-05DEC11-1/1

Lubricate Front and Rear Shaft Seals on Park Brake

CAUTION: Prevent possible injury from unexpected machine movement. Install frame locking bar to prevent movement.

1. Park machine on level surface.
2. Install frame locking bar with machine in articulated position.
3. Lubricate fittings (1) on front and rear shaft until grease escapes around seals. See Grease. (Section 3-1.)

1— Fitting (2 used)

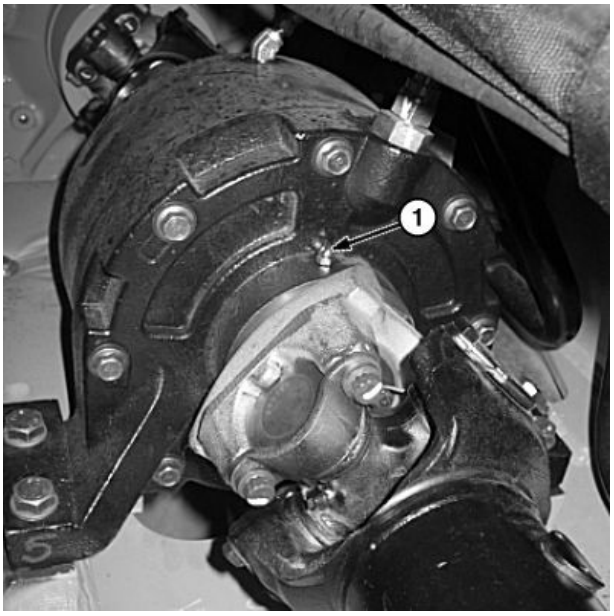

TX1028341A —UN—22AUG07

Two Points, Front Side Shown

OUT4001,00005DF -19-20MAY10-1/1

Check Ride Control Accumulator—If Equipped

CAUTION: Avoid personal injury. Boom will jump upward during this check. Make sure area around the bucket is clear.

1. Start engine and run at fast idle.
2. Press and hold ride control switch (1) to disable ride control (both LEDs are off).
3. Raise boom to maximum height and hold control lever over relief for 2 seconds.
4. Lower boom and bucket to eye level.

NOTE: Ride control indicator (2) on display unit is illuminated when ride control is active.

5. Observe loader boom during this step.

   Press ride control switch once to enable ON mode (left LED illuminated).

   If boom does not jump upward 30 mm (1.2 in.) or more, see your authorized John Deere dealer.

NOTE: The next two steps must be performed with the machine in stationary position.

6. Press ride control switch again to enable AUTO mode (both LEDs illuminated).
7. Raise boom to maximum height and hold control lever over relief for 2 seconds.
8. Lower boom and bucket to eye level.

NOTE: To verify ride control setpoint, see Display Unit—Main Menu—Settings—Ride Control—If Equipped. (Section 2-1.)

9. Observe loader boom during this step.

NOTE: Ride control indicator on display unit illuminates only when ground speed is greater than setpoint.

   Slowly accelerate to ride control setpoint while watching speedometer and bucket.

   If boom does not rise, see your authorized John Deere dealer.



TX1039922A —UN—08APR08

Sealed Switch Module (SSM)

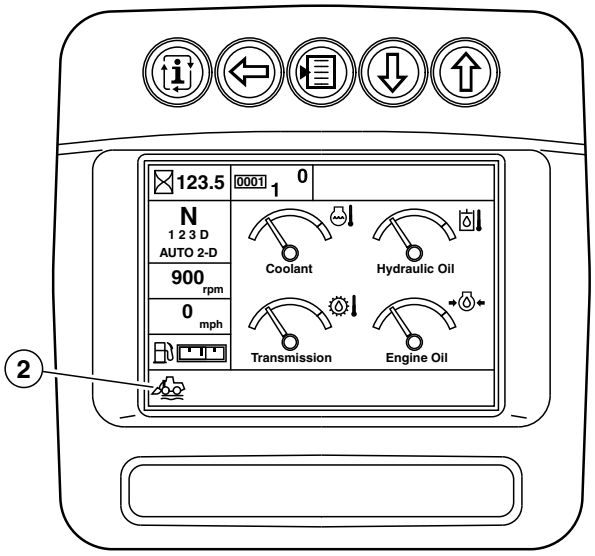

TX1046109 —UN—02FEB10

Ride Control Indicator

1— Ride Control Switch **2— Ride Control Indicator**

OUT4001,000095F -19-09DEC11-1/1

Clean Hydraulic Fan Drive Case Drain In-Line Screen

1. Lower boom and bucket to ground.
2. Turn steering wheel to move loader frame to one side and install frame locking bar.
3. Press engine stop switch (1).
4. Press and release engine start switch (2); DO NOT START engine.
5. Press return-to-carry switch (3) to OFF setting (LED off).

CAUTION: Prevent possible injury from unexpected boom movement. Clear all bystanders from area around boom and bucket. Boom may move when ride control switch is turned ON.

6. Make sure area around boom and bucket is clear.

NOTE: When ride control switch is in AUTO mode (both LEDs on), ride control accumulator hydraulic pressure cannot be discharged.

7. Cycle ride control switch (4) to OFF mode (both LEDs off) then to ON mode (left LED on).
8. Press and hold pilot enable/boom down switch (5) while holding boom control lever in the float position (fully forward) for 5 seconds.
9. While still holding pilot enable/boom down switch, cycle each hydraulic control lever to relieve pressure.
10. Press engine stop switch.
11. Remove hydraulic reservoir fill cap (6).
12. Connect vacuum pump to reservoir fill port. Turn on pump to create vacuum in reservoir to prevent excessive oil from draining when fan drive case drain hoses are disconnected.

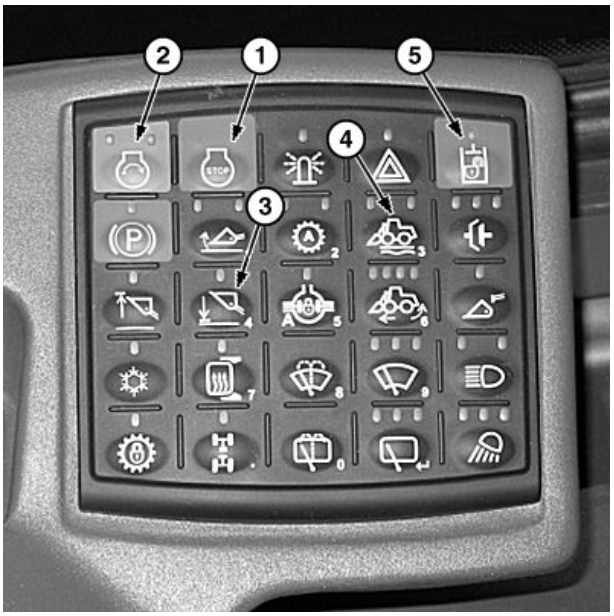

TX1047139A —UN—13AUG08

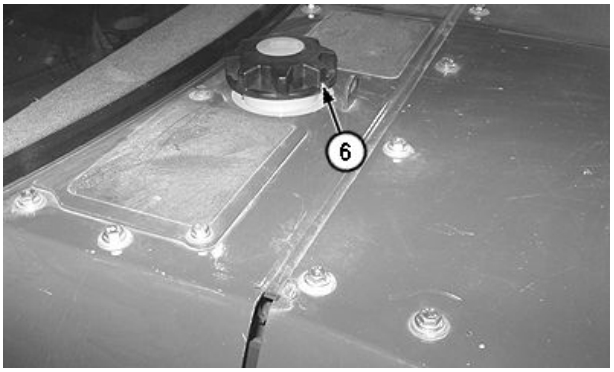

TX1085076A —UN—24NOV10

Hydraulic Reservoir Fill Cap

1— Engine Stop Switch
2— Engine Start Switch
3— Return-to-Carry Switch
4— Ride Control Switch
5— Pilot Enable/Boom Down Switch
6— Fill Cap

Continued on next page

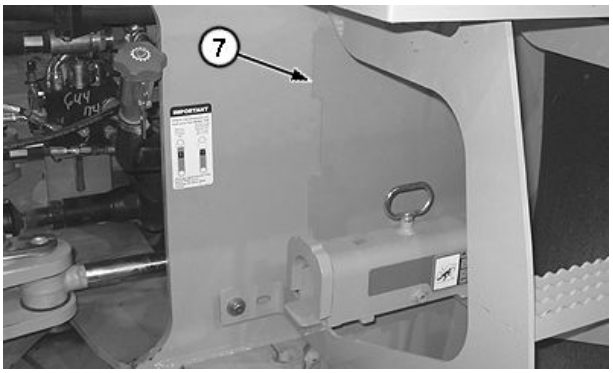

TX1085077A —UN—29NOV10

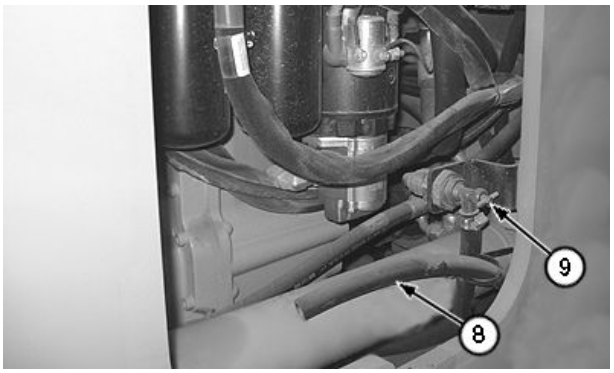

TX1085078A —UN—24NOV10

Hydraulic Oil Drain Valve and Hose

13. If using vacuum pump, skip to step 19. If vacuum pump is not available, proceed to drain fluid into clean container. Keep container covered and retain fluid for reuse.
14. On left side of machine, remove cover (7) behind steps to access hydraulic reservoir drain hose (8) and drain valve (9).
15. Remove tie band and route drain hose into suitable container.

NOTE: Keep oil clean for reuse after completion of this procedure.

16. Open drain valve and allow oil to drain into container. Cover container to keep oil clean for reuse.
17. Tighten drain valve and route drain hose back to original position. Secure with tie band.
18. Install cover behind steps.
19. Disconnect hydraulic fan pump hose (10) and hydraulic fan motor hose (11) from tee fitting (12).
20. Remove tee fitting.
21. Remove in-line screen (13) from hydraulic reservoir port.
22. Thoroughly clean in-line screen and tee fitting in solvent. Blow dry with compressed air.
23. Install in-line screen into hydraulic reservoir port.
24. Install tee fitting.
25. Connect hydraulic fan pump hose and hydraulic fan motor hose to tee fitting.
26. If fluid was drained, refill hydraulic reservoir using oil drained earlier.

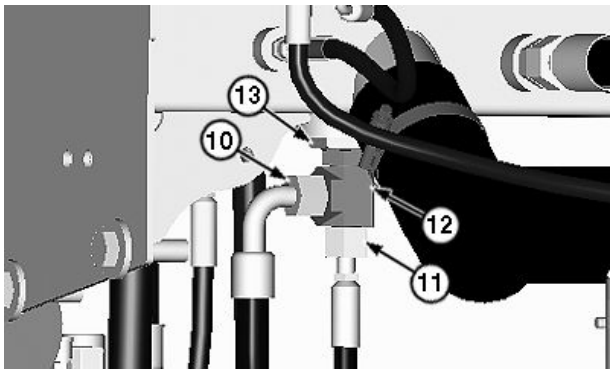

TX1085102A —UN—24NOV10

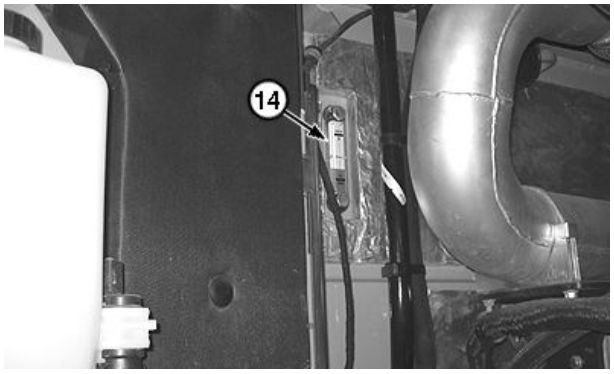

TX1085081A —UN—24NOV10

7— Cover
8— Drain Hose
9— Drain Valve
10— Hydraulic Fan Pump Hose
11— Hydraulic Fan Motor Hose
12— Tee Fitting
13— In-Line Screen
14— Sight Gauge

27. Install fill cap.
28. Check hydraulic oil level in sight gauge (14). Level is correct when oil is in FULL range. Add oil as necessary.

OUT4001,0000701 -19-24NOV10-2/2

Replace Air Cleaner Dust Unloader Valve

NOTE: A missing, damaged, or hardened dust unloader valve will cause the air filter elements to be ineffective.

1. On left side of machine, open engine service door.
2. Twist and pull on dust unloader valve (1) to remove valve from air cleaner cover.
3. Install new dust unloader valve on air cleaner cover.
4. Close engine service door.

1— Dust Unloader Valve

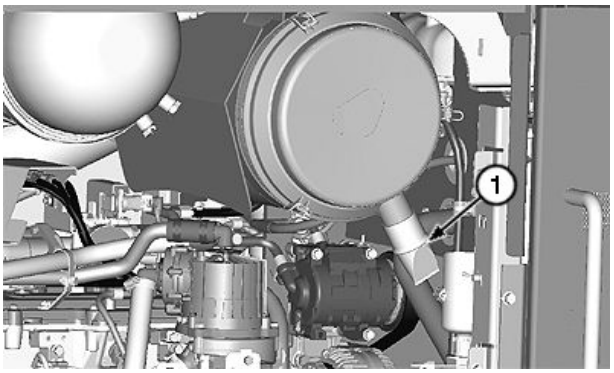

TX1084840A —UN—18NOV10

Dust Unloader Valve

OUT4001,0000702 -19-23NOV10-1/1

Replace Engine Air Cleaner Elements

1. On left side of machine, open engine service door.
2. Release latches (1) and remove air inlet cover.
3. Remove primary element (2).
4. Remove secondary element (3).
5. Clean inside of air cleaner canister.
6. Install new elements into housing, one at a time, making sure secondary element is centered in canister.
7. Install cover and secure latches.
8. Close engine service door.

1— Latch (3 used)
2— Primary Element
3— Secondary Element

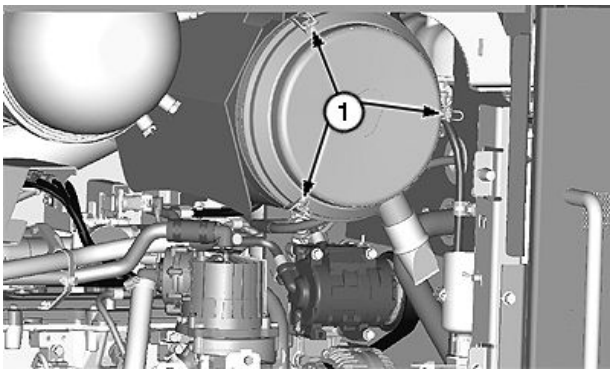

TX1084792A —UN—17NOV10

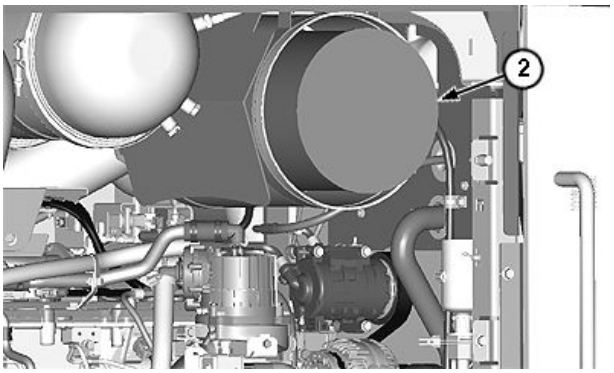

TX1084793A —UN—17NOV10

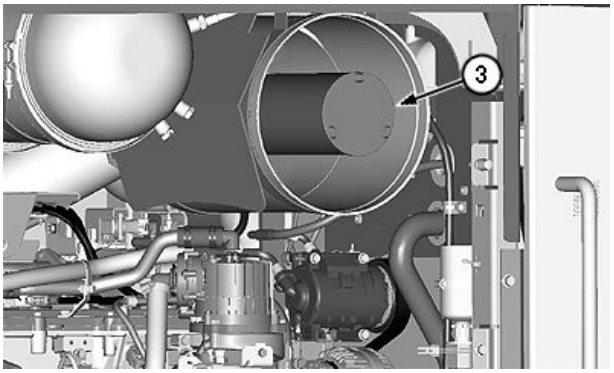

TX1084794A —UN—17NOV10

OUT4001,0000700 -19-23NOV10-1/1

Check Coolant

See Check Coolant. (Section 3-3.)

OUT4001,0000365 -19-12APR11-1/1

Replace Fuel Tank Breather Filter

1. On right side of machine, open engine service door.
2. Twist off fuel tank breather filter (1).
3. Replace with new breather filter.
4. Close engine service door.

1— Fuel Tank Breather Filter

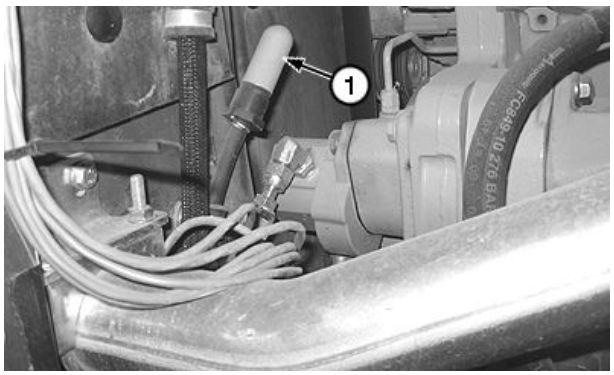

TX1085070A —UN—23NOV10

Fuel Tank Breather Filter

OUT4001,0000704 -19-23NOV10-1/1

Replace Axle Oil Filters—If Equipped

NOTE: Perform this service at the first 250 hours of operation and at 1000 hour intervals thereafter.

1. On left side of machine, remove cover behind the steps.
2. Turn front axle oil filter (1) counterclockwise to remove. (Front axle is identified by the green banded hoses.)
3. Turn rear axle oil filter (2) counterclockwise to remove. (Rear axle is identified by the red banded hoses.)
4. Apply light film of axle oil to gasket on new filters.
5. Install new axle oil filters. Turn filters clockwise by hand until gasket contacts mounting base.
6. Tighten filters an additional 1/2—3/4 turn.
7. Start engine and check for leaks around base of filters. Tighten filters as required to stop any leaks.
8. Install cover.

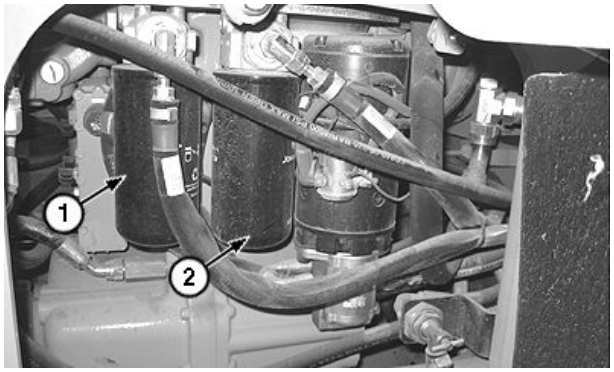

TX1084881A —UN—18NOV10

Front and Rear Axle Oil Filters (if equipped)

1— Front Axle Oil Filter **2— Rear Axle Oil Filter**

OUT4001,0000703 -19-24NOV10-1/1

Lubricate Frame Hinge Pivots

CAUTION: Prevent possible injury from unexpected machine movement. Install frame locking bar before lubricating.

NOTE: Lubricate pivots daily when operating machine in deep water, mud, or snow.

Lubricate each point with a minimum of three shots of grease and until grease escapes from around the seals. See Grease. (Section 3-1.)

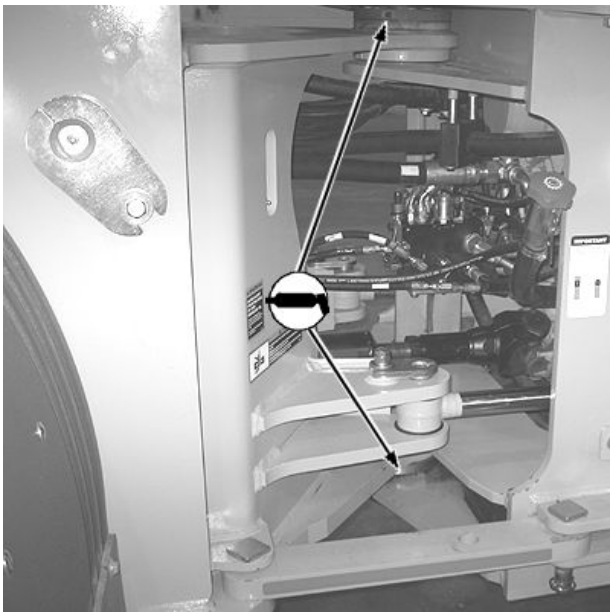

TX10851110A —UN—24NOV10

Frame Hinge Pivots, Two Points

OUT4001,0000705 -19-24NOV10-1/1

Drain and Refill Park Brake Oil

NOTE: Change park brake oil every 500 hours for applications running in deep water, mud, or snow.

CAUTION: Prevent possible injury from unexpected machine movement. Always install frame locking bar.

1. Park machine on level surface.
2. Install frame locking bar with machine in the articulated position.
3. Remove drain plug (1). Allow oil to drain into a container. Dispose of waste oil properly.
4. Install drain plug.
5. Remove fill/check plug (2).
6. Fill park brake with oil. See Transmission, Park Brake, and Axle Oil. (Section 3-1.)

Specification	
Park Brake Oil—Capacity	600 mL (20 oz.)

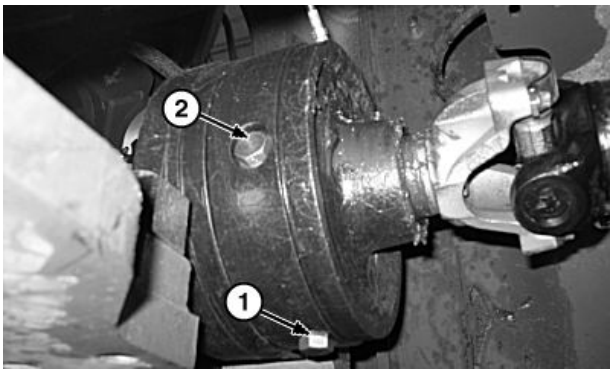

TX1029737A —UN—27SEP07

1— Drain Plug **2— Fill/Check Plug**

IMPORTANT: Oil must be at bottom of check plug on side of park brake. Too much oil can cause overheating; too little can cause bearing failure.

7. Allow oil to settle for approximately 2 minutes after filling. Check oil level and add oil if necessary.
8. Install fill/check plug.

OUT4001,0000706 -19-30NOV10-1/1

Replace Outer Pin Seals

See Inspect Outer Pin Seals. (Section 3-4.)

ER93822,00001E1 -19-10APR13-1/1

Drain and Refill Transmission Oil and Replace Filter

NOTE: Shorten service intervals in severe applications which run the torque converter at high load more than approximately 25% of the time, such as basement digging or land clearing, or if using low viscosity oil.

The following chart shows the appropriate service interval in hours based on application and type of oil used.

	Oil Type and Service Interval (hours)	
Application	-John Deere Hy-Gard™ -Oils meeting JDM J20C	-John Deere Low Viscosity Hy-Gard™ -Oils meeting JDM J20D
Normal	2000	1500
Severe	1500	1000

1. Operate machine under load until transmission oil reaches normal operating temperature.
2. Park machine on a level surface.
3. Lower bucket to ground.
4. Move forward, neutral, or reverse (FNR) lever or FNR switch to N (neutral).
5. Press park brake switch on sealed switch module (SSM) (LED on switch and indicator on display unit are illuminated).

CAUTION: Prevent possible injury from unexpected machine movement. Machine can unexpectedly roll or move under power, resulting in death or serious injury. Install frame locking bar and shut off engine before changing oil.

6. Install frame locking bar.
7. Shut off engine. Let machine sit for approximately 10 minutes.

NOTE: Drain plug is magnetic. If an excessive amount of metal particles appears on plug, see your John Deere dealer.

8. On left side, under the machine, remove tie band and route drain hose (1) through opening into a suitable container.
9. Open drain valve (2) and allow oil to drain into container. Dispose of waste oil properly.
10. Close drain valve. Fold up drain hose and retain with tie band.

Hy-Gard is a trademark of Deere & Company

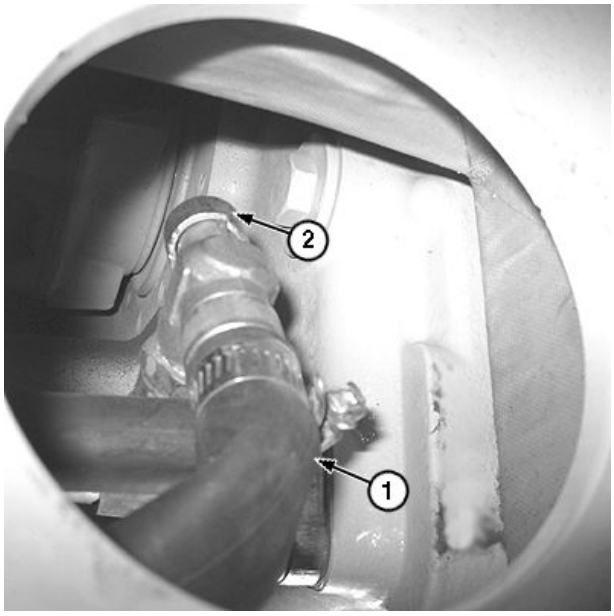

TX1085115A —UN—24NOV10

Transmission Drain Hose and Valve

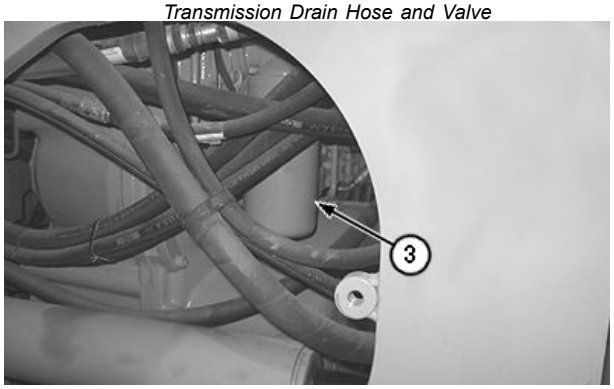

TX1085116A —UN—24NOV10

Transmission Oil Filter

1— Drain Hose
2— Drain Valve
3— Transmission Oil Filter

11. Remove cover plate under right side of machine.
12. Turn transmission oil filter (3) counterclockwise to remove.
13. Clean mounting surface. Apply thin film of oil to gasket of new filter.
14. Install new filter. Turn filter clockwise by hand until gasket touches mounting surface.
15. Tighten 3/4 of a full turn more.

Continued on next page

OUT4001,0000707 -19-17OCT11-1/2

16. Remove transmission fill cap (4) and fill with oil. See Transmission, Park Brake, and Axle Oil. (Section 3-1.)

Specification	
Transmission Case and Filter Oil—Capacity	24.0 L 6.3 gal

17. Start engine and run for 2 minutes.
18. Move FNR lever or switch to N.
19. Check oil level with oil at operating temperature. Oil must be between HOT marks on sight gauge (5). Add oil if necessary.
20. Check for leaks around filter base. Tighten filter as necessary to stop leaks.

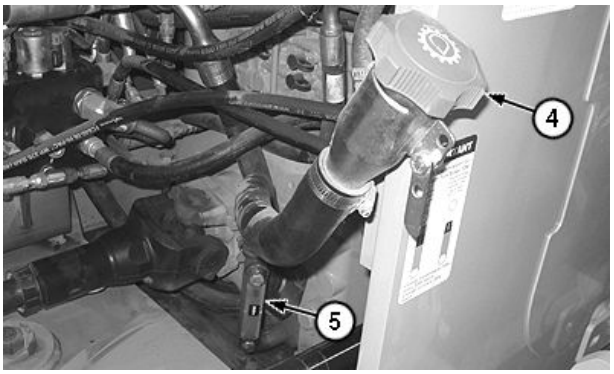

TX1085117A —UN—24NOV10

Transmission Fill Cap and Sight Gauge

4— Fill Cap **5— Sight Gauge**

OUT4001,0000707 -19-17OCT11-2/2

Drain and Refill Front and Rear Axle Oil

NOTE: Perform this service at the first 250 hours of operation and at 2000 hour intervals thereafter.

1. Remove drain plug (1). Allow oil to drain into a container. Dispose of waste oil properly.

NOTE: Clean recirculation screens also after axle oil is drained. See Clean Front and Rear Axle Oil Recirculation Screens in this section.

NOTE: Axle drain plug is magnetized to attract metal particles. Clean plug when changing axle oil.

2. Clean, install, and tighten drain plug.

NOTE: Dipstick plugs are located on left side of front and rear axle housings.

3. Clean area around dipstick plug (2) and axle housing plug (3) and remove.
4. Slowly fill axle through both right and left side axle housing ports. See Transmission, Park Brake, and Axle Oil. (Section 3-1.)

Specification

Front Axle	
Oil—Capacity	22.0 L
	5.8 gal
Rear Axle Oil—Capacity	22.0 L
	5.8 gal

5. Wipe dipstick with clean cloth.

NOTE: Do not thread dipstick plug into port. Place bottom surface of dipstick plug on machined surface of axle housing when checking oil level. Allow 10 minutes for oil level to stabilize throughout sump before checking.

Use dipstick plug to check level at both sides of axle.

6. Check oil level at both right and left side axle housing ports. When full, oil must be in the crosshatched area on dipstick.
7. Continue adding oil as required until oil is at proper level.
8. Install and tighten axle housing plug and dipstick plug back in original location.



TX1041344A —UN—01MAY08

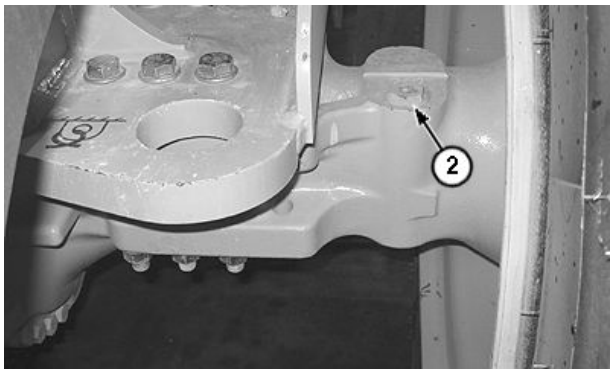

TX10848879A —UN—18NOV10

Left Side of Front Axle Shown

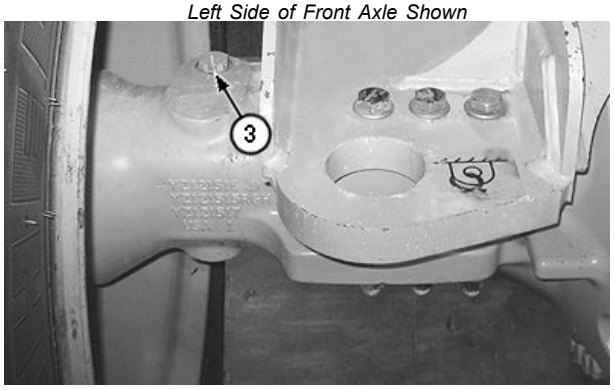

TX10848880A —UN—19NOV10

Right Side of Front Axle Shown

1— Drain Plug
2— Dipstick Plug
3— Axle Housing Plug

OUT4001,0000708 -19-30SEP11-1/1

Clean Front and Rear Axle Oil Recirculation Screens—If Equipped

NOTE: Clean recirculation screens after axle oil is drained.

1. Place container under axle and disconnect hose (1) from screen fitting (2).
2. Remove screen fitting.

NOTE: Fitting and screen are a one piece design. Thoroughly clean and reuse screen.

3. Clean screen with solvent.
4. Install screen fitting.
5. Connect hose to fitting.
6. Fill axle with oil.

1— Hose **2— Screen Fitting**

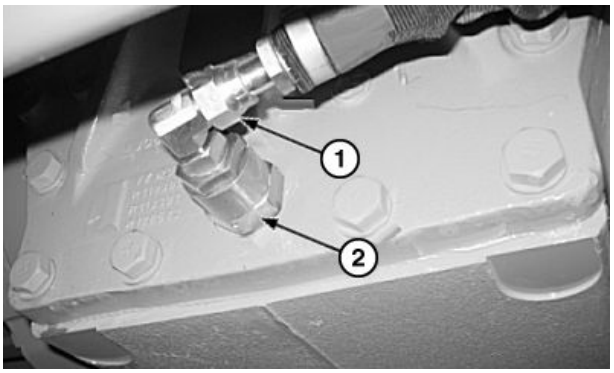

TX1028428A —UN—22AUG07

Oil Recirculation Hose and Fitting

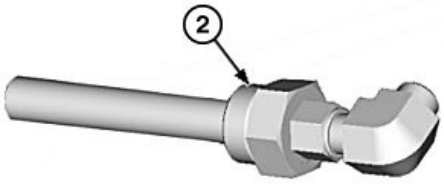

TX1044528A —UN—24JUN08

Screen Fitting

OUT4001,0000709 -19-24NOV10-1/1

Adjust Engine Valve Lash (Clearance)

See your authorized John Deere dealer.

OUT4001,00005D6 -19-19MAY10-1/1

Rerun Transmission Clutch Calibration

See your authorized John Deere dealer.

OUT4001,00005D7 -19-19MAY10-1/1

Clean Hydraulic Pump Case Drain In-Line Screen

1. Lower boom and bucket to ground.
2. Turn steering wheel to move loader frame to one side and install frame locking bar.
3. Press engine stop switch (1).
4. Press and release engine start switch (2); DO NOT START engine.
5. Press return-to-carry (RTC) switch (3) to OFF setting (LED off).

CAUTION: Prevent possible injury from unexpected boom movement. Clear all bystanders from area around boom and bucket. Boom may move when ride control switch is turned ON.

6. Make sure area around boom and bucket is clear.

NOTE: When ride control switch is in AUTO mode (both LEDs on), ride control accumulator hydraulic pressure cannot be discharged.

7. Cycle ride control switch (4) to OFF mode (both LEDs off) then to ON mode (left LED on).
8. Press and hold pilot enable/boom down switch (5) while holding boom control lever in the float position (fully forward) for 5 seconds.
9. While still holding pilot enable/boom down switch, cycle each hydraulic control lever to relieve pressure.
10. Press engine stop switch.
11. Remove hydraulic reservoir fill cap (6).
12. Connect vacuum pump to reservoir fill port. Turn on pump to create vacuum in reservoir to prevent excessive oil from draining when fan motor case drain hoses are disconnected.

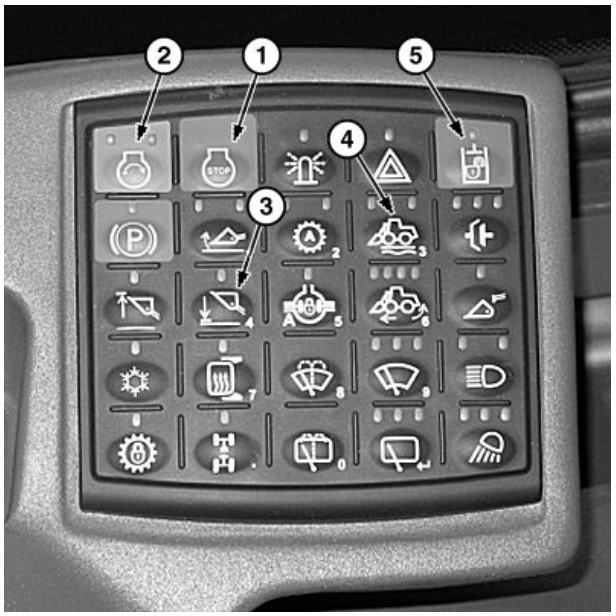

TX1047139A —UN—13AUG08

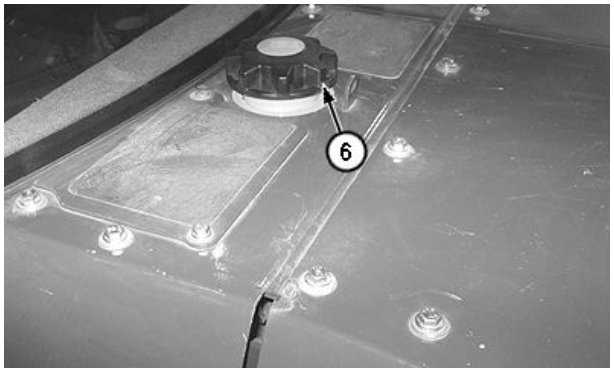

TX1085076A —UN—24NOV10

Hydraulic Reservoir Fill Cap

1— Engine Stop Switch
2— Engine Start Switch
3— Return-to-Carry (RTC) Switch
4— Ride Control Switch
5— Pilot Enable/Boom Down Switch
6— Fill Cap

Continued on next page

OUT4001,000070A -19-01NOV11-1/2

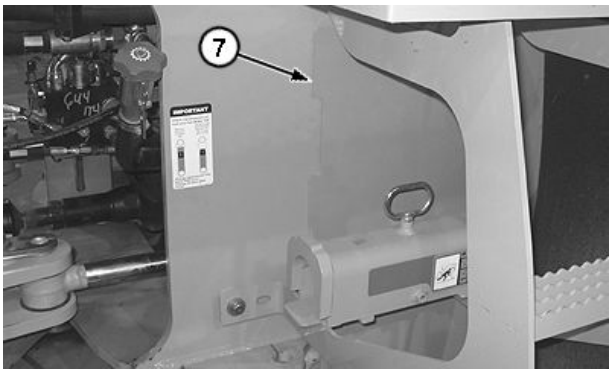

TX1085077A —UN—29NOV10

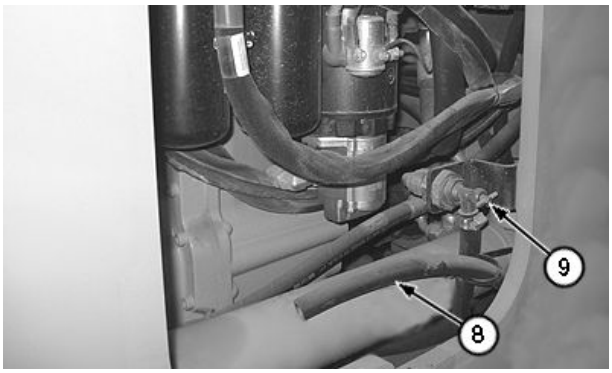

TX1085078A —UN—24NOV10

Hydraulic Oil Drain Valve and Hose

13. If using vacuum pump, skip to step 19. If vacuum pump is not available, proceed to drain fluid into clean container. Keep container covered and retain fluid for reuse.
14. On left side of machine, remove cover (7) behind steps to access hydraulic reservoir drain hose (8) and drain valve (9).
15. Remove tie band and route drain hose into suitable container.

NOTE: Keep oil clean for reuse after completion of this procedure.

16. Open drain valve and allow oil to drain into container. Cover container to keep oil clean for reuse.
17. Tighten drain valve and route drain hose back to original position. Secure with tie band.
18. Install cover behind steps.
19. Disconnect hydraulic fan pump hose (10).
20. Remove in-line screen from port where hose was disconnected.
21. Thoroughly clean in-line screen in solvent. Blow dry with compressed air.
22. Install in-line screen into port on hydraulic reservoir.
23. Connect hydraulic pump hose.

NOTE: If hydraulic reservoir was drained, ensure that hydraulic fan drive case drain in-line screens are removed and cleaned before refilling reservoir.

24. If fluid was drained, refill hydraulic reservoir using oil drained earlier.
25. Install fill cap.

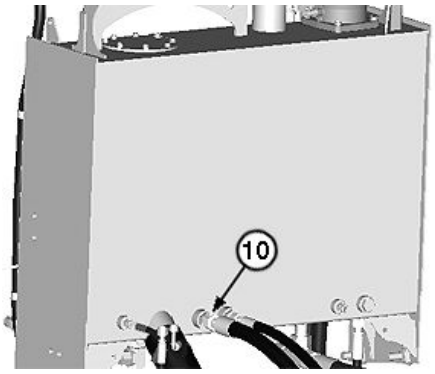

TX1085118A —UN—24NOV10

Hydraulic Hose

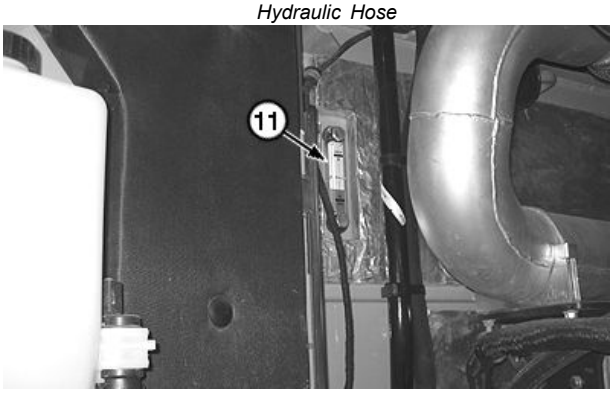

TX1085119A —UN—24NOV10

Hydraulic Sight Gauge

7— Cover
8— Drain Hose
9— Drain Valve
10— Hydraulic Fan Pump Hose
11— Sight Gauge

26. Check oil level in sight gauge (11). Level is correct when oil is in FULL range. Add oil as necessary.

OUT4001,000070A -19-01NOV11-2/2

Replace Hydraulic System Return Filter

1. Remove cap screws (1) and hydraulic filter cover plate (2).
2. Unscrew and remove filter cover (4) from return filter (3).
3. Lift filter element (5) out of filter housing.
4. Install new filter elements in housings.
5. Install filter covers.
6. Install cover plate and cap screws.

1— Cap Screw (2 used)
2— Cover Plate
3— Return Filter
4— Filter Cover
5— Filter Element

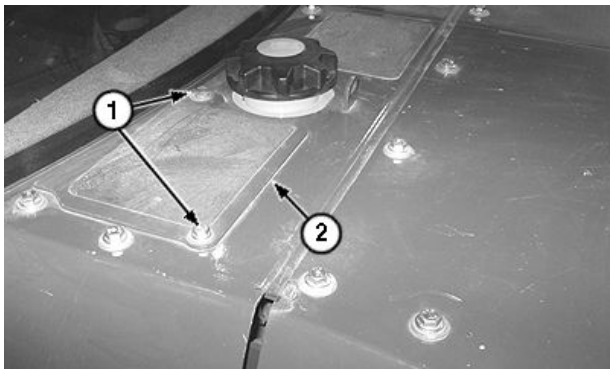

TX1085120A —UN—24NOV10

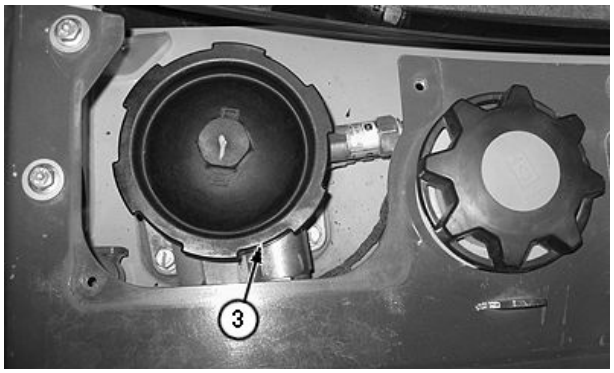

TX1085121A —UN—24NOV10

Hydraulic Return Filter

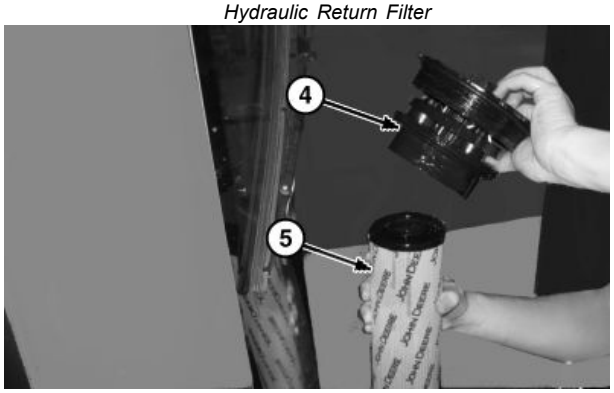

TX1029712A —UN—27SEP07

OUT4001,000070B -19-24NOV10-1/1

Drain, Flush, and Refill Hydraulic System Oil

1. Lower boom and bucket to ground.
2. Press engine stop switch (1).
3. Press and release engine start switch (2); DO NOT START engine.
4. Press return-to-carry (RTC) switch (3) to OFF setting (LED off).

CAUTION: Prevent possible injury from unexpected boom movement. Clear all bystanders from area around boom and bucket. Boom may move when ride control switch is turned ON.

5. Make sure area around boom and bucket is clear.

NOTE: When ride control switch is in AUTO mode (both LEDs on), ride control accumulator hydraulic pressure cannot be discharged.

6. Cycle ride control switch (4) to OFF mode (both LEDs off) then to ON mode (left LED on).
7. Press and hold pilot enable/boom down switch (5) while holding boom control lever in the float position (fully forward) for 5 seconds.
8. While still holding pilot enable/boom down switch, cycle each hydraulic control lever to relieve pressure.
9. Press engine stop switch.
10. Remove hydraulic reservoir fill cap (6).

1— Engine Stop Switch
2— Engine Start Switch
3— Return-to-Carry (RTC) Switch
4— Ride Control Switch
5— Pilot Enable/Boom Down Switch
6— Fill Cap

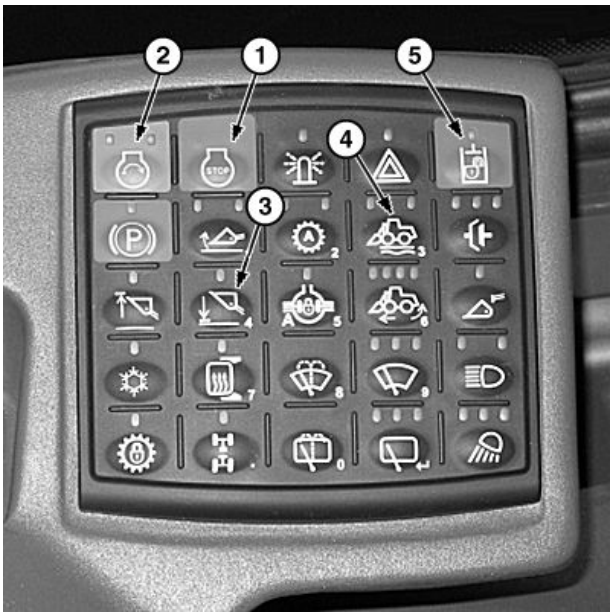

TX1047139A —UN—13AUG08

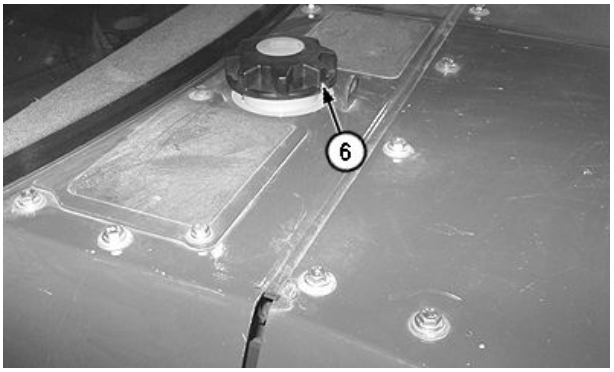

TX1085076A —UN—24NOV10

Hydraulic Reservoir Fill Cap

Continued on next page

OUT4001,000070C -19-01NOV11-1/2

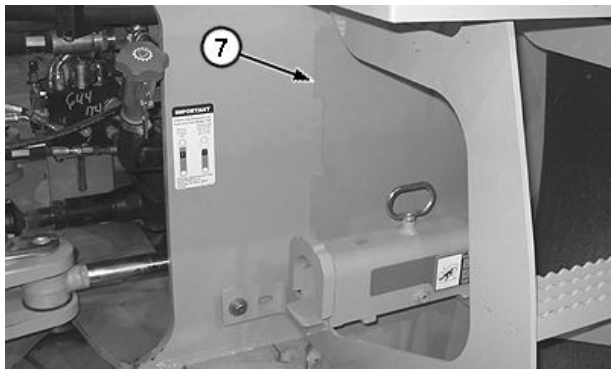

TX1085077A —UN—29NOV10

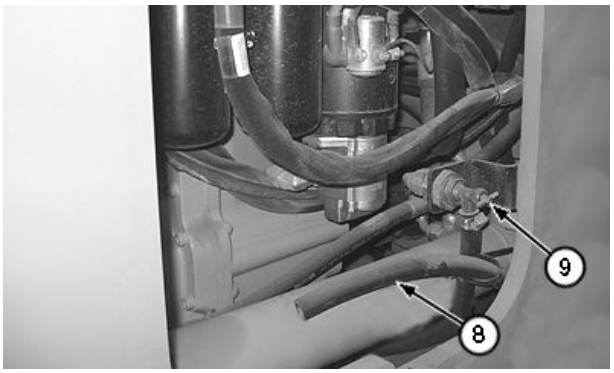

TX1085078A —UN—24NOV10

Hydraulic Oil Drain Valve and Hose

11. On left side of machine, remove cover (7) behind steps to access hydraulic reservoir drain hose (8) and drain valve (9).
12. Remove tie band and route drain hose into suitable container.
13. Open drain valve and allow oil to drain into container. Dispose of waste oil properly.
14. Flush reservoir with diesel fuel.
15. Tighten drain valve and route drain hose back to original position. Secure with tie band.
16. Install cover behind steps.
17. Fill reservoir. See Hydraulic System Oil. (Section 3-1.)

Specification	
Hydraulic Reservoir and Filters—Capacity	110.0 L 29.1 gal

18. Install fill cap.

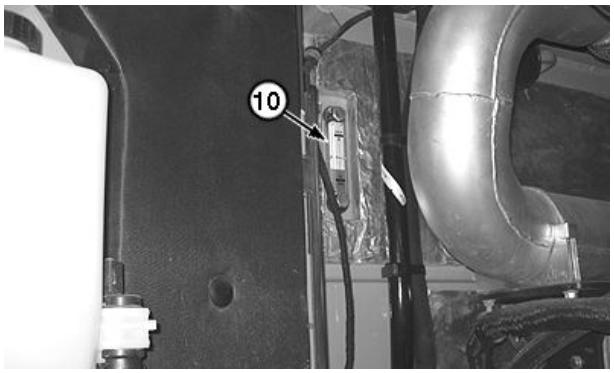

TX1085122A —UN—24NOV10

7— Cover
8— Drain Hose
9— Drain Valve
10— Sight Gauge

19. Check oil level in sight gauge (10). Level is correct when oil is in FULL range. Add oil as necessary.

OUT4001,000070C -19-01NOV11-2/2

Clean Hydraulic System Fill Strainer

1. Remove hydraulic reservoir fill cap (1).
2. Remove snap ring and strainer (2).
3. Clean strainer with solvent.
4. Install strainer and snap ring.
5. Install fill cap.

1— Fill Cap
2— Strainer

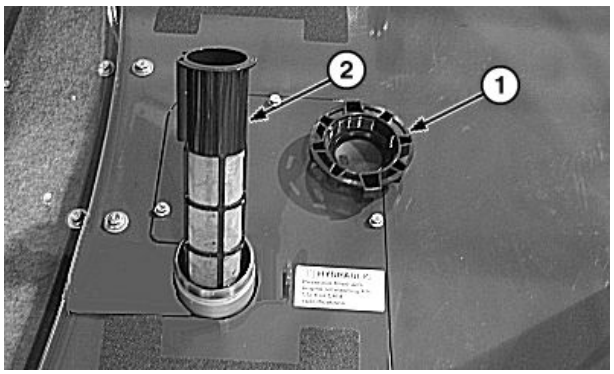

TX1041656A —UN—01MAY08

Hydraulic System Fill Strainer

OUT4001,0000627 -19-30SEP11-1/1

Check Driveline Damper For Cracks

Check driveline damper (1) for cracks. If cracks are found, consult your authorized dealer.

1— Driveline Damper



TX1029760A —UN—04JAN08

Driveline Damper

OUT4001,00005DB -19-11OCT11-1/1

Drain Cooling System



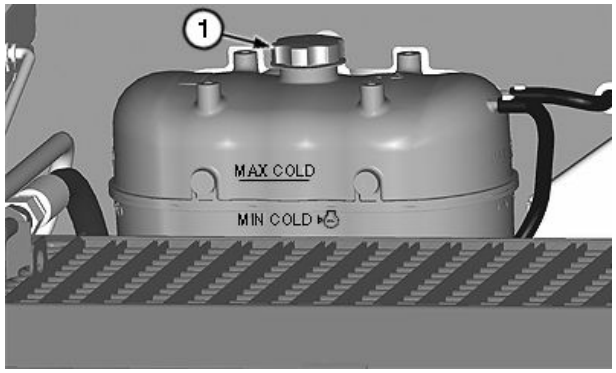

TS281 —UN—15APR13

TX1085043A —UN—23NOV10

Surge Tank

NOTE: If not using John Deere COOL-GARD™ II (even for top-off) or not conducting 1000 hour coolant test strip checks, change interval must be reduced.

Every 6000 hours, drain and flush cooling system and refill with new coolant.

1. Open top cooler door.

⚠ CAUTION: Prevent possible injury from hot spraying fluids. Shut off engine. Remove filler cap only when cool enough to touch with bare hands. Slowly loosen cap to relieve pressure before removing completely.

2. Remove surge tank cap (1).
3. Open right side cooler door.
4. Coolant drain hose (2) and drain valve (3) are located at lower corner of the radiator. Place end of coolant drain hose into a suitable container.
5. Open drain valve and allow system to drain into suitable container. Dispose of used coolant properly.
6. Flush system using a commercial product.
7. Close drain valve.
8. Open left side cooler door. Open left side engine service door and side shield. Check coolant hoses (4) for cracks or leaks. Replace hoses as required. Tighten hose clamps.
9. Clean radiator, oil coolers, and charge air cooler and check for damage, leaks, and loose or broken mountings. See Clean Cooler Cores. (Section 3-3.)

COOL-GARD is a trademark of Deere & Company

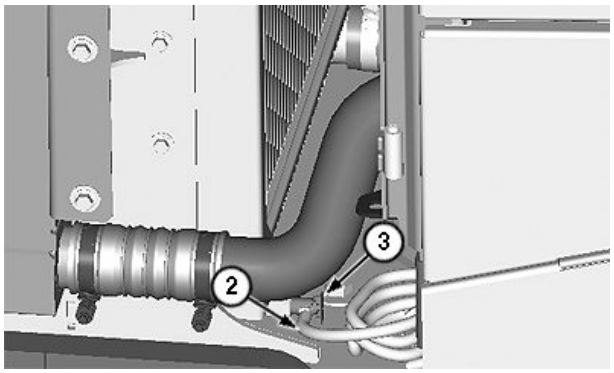

TX1085140A —UN—29NOV10

Coolant Drain Hose and Valve (shown with right side cooler door removed)

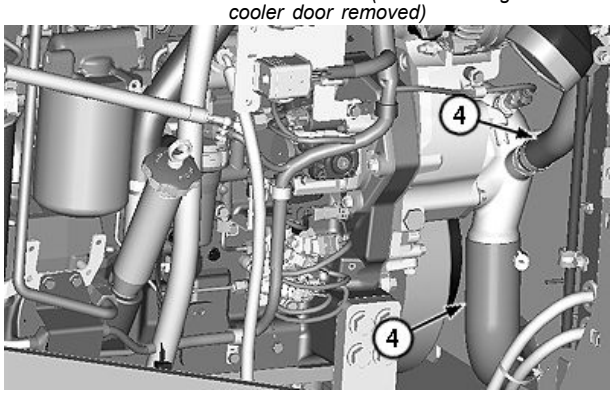

TX1085149A —UN—29NOV10

Coolant Hoses (shown from left side engine compartment)

1— Surge Tank Cap
2— Drain Hose
3— Drain Valve
4— Coolant Hose (2 used)

OUT4001,000070E -19-14MAR13-1/1

Refill Cooling System

CAUTION: Prevent possible injury from hot spraying fluids. Shut off engine. Remove filler cap only when cool enough to touch with bare hands. Slowly loosen cap to relieve pressure before removing completely.

IMPORTANT: Use only permanent type, low silicate, ethylene glycol base antifreeze in coolant solution. Other types of antifreeze may damage cylinder seals.

If not using premixed coolant, use only distilled water when mixing with ethylent glycol concentrate.

NOTE: Premixed coolant provides winter freeze protection to -37°C (-34°F). If protection at lower temperatures is required, consult your John Deere dealer.

1. Fill system with coolant to the MAX COLD mark on surge tank (1). See Heavy Duty Diesel Engine Coolant. (Section 3-1.)

Specification	
Cooling System—Capacity	45.5 L 12.0 gal

2. Install surge tank cap.

NOTE: Coolant level must be repeatedly checked after draining and refilling to ensure that all air is out of system to allow coolant level to stabilize.

Cooling system will not deaerate during normal operation. Several warmup and cool-down cycles will be required to remove trapped air from system.

3. Deaerate cooling system as follows:
   a. Start and run engine until coolant reaches a warm temperature.



TS281—UN—15APR13

Draining the Cooling System

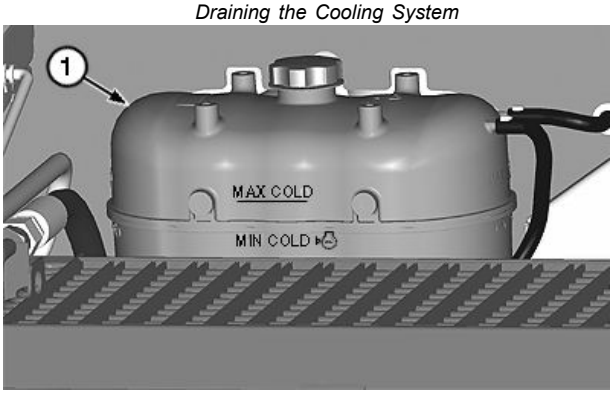

TX1084814A—UN—23NOV10

Surge Tank

1— Surge Tank

   b. Stop engine and allow coolant to cool.
   c. Check coolant level at surge tank. Add coolant as required.
   d. Repeat steps a—c until coolant level in surge tank is repeatedly at the same level.

OUT4001,000070F -19-14MAR13-1/1

Tire Removal With Tire Pressure Monitor (TPM) System—If Equipped

IMPORTANT: Avoid tire pressure sensor (1) damage. Follow instructions for tire removal when equipped with TPM system.

Follow these instructions when replacing tire (2) with TPM system installed or when replacing a bad tire pressure sensor:

1. Partially remove tire from rim allowing enough room to access the tire pressure sensor.

NOTE: Spring clamp (3) and sensor should be located near the valve stem (4).

2. Reach in and loosen hex screw on spring clamp.
3. Remove spring clamp and sensor assembly from rim.
4. Remove tire completely.

Installation of tire with TPM system installed:

1. Install tire partially.

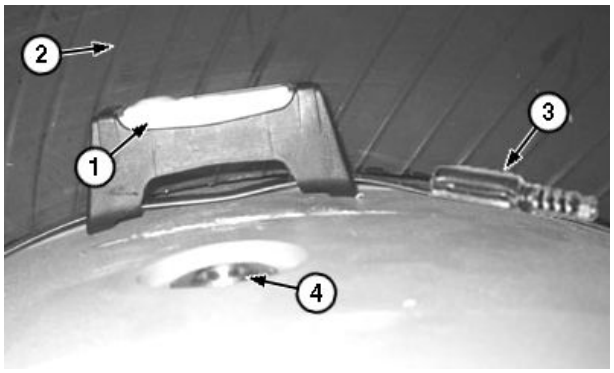

TX1061117A —UN—26JUN09

Tire Pressure Sensor

1— Tire Pressure Sensor
2— Tire
3— Spring Clamp
4— Valve Stem

2. Install spring clip and sensor assembly to rim.
3. Tighten hex screw on spring clamp.
4. Install tire completely.

OUT4001,00003F7 -19-19JUN13-1/1

Check Air Inlet Cover

1. Loosen hose clamp (1).
2. Remove air inlet cover (2).
3. Check cover for dirt and debris and clean as required.
4. Install air inlet cover and tighten hose clamp.

1— Hose Clamp
2— Air Inlet Cover

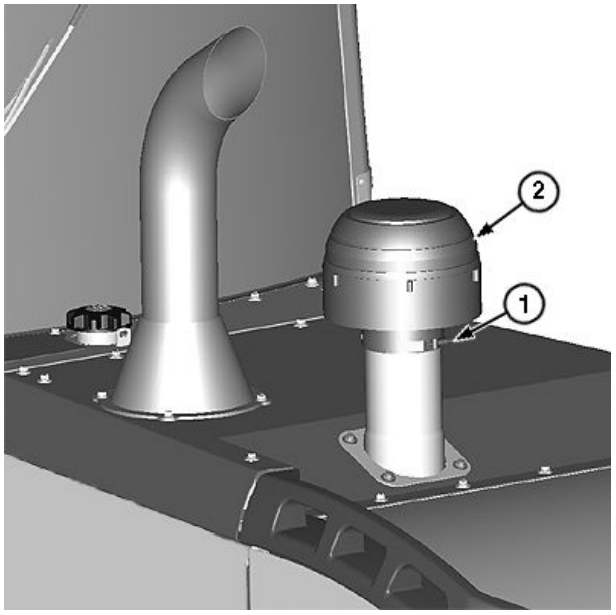

TX1085159A —UN—29NOV10

Air Inlet Cover

OUT4001,0000710 -19-29NOV10-1/1

Bleed Fuel System

IMPORTANT: DO NOT prefill fuel filters. Debris in unfiltered fuel will damage fuel system components.

NOTE: This procedure should be performed after each fuel filter change or when the engine has run out of fuel.

Air can enter fuel system when changing fuel filters or when machine has run out of fuel. Air in the fuel system can prevent the engine from starting or cause rough idle.

This machine is equipped with an electric priming pump. Prime fuel system and bleed air as follows:

1. Press and release engine start switch to energize ignition system and fuel pump. Let pump run for 60 seconds to prime fuel system.
2. After 60 seconds, press engine start switch to start the engine.
3. Run engine for 5 minutes at slow idle.

OUT4001,0000686 -19-12JUL10-1/1

Do Not Service Control Valves, Cylinders, Pumps, or Motors

Special tools and information are needed to service control valves, cylinders, pumps, or motors.

If these parts need service, see your authorized John Deere dealer.

TX,90,DH2537 -19-20JUL12-1/1

Precautions for Alternator and Regulator

When batteries are connected, follow these rules:

1. Disconnect negative (-) battery cable when you work on or near alternator or regulator.
2. DO NOT TRY TO POLARIZE ALTERNATOR OR REGULATOR.
3. Be sure alternator wires are correctly connected BEFORE you connect batteries.
4. Do not ground alternator output terminal.
5. Do not disconnect or connect any alternator or regulator wires while batteries are connected or while alternator is operating.
6. Connect batteries or a booster battery in the correct polarity (positive [+] to positive [+] and negative [-] to negative [-]).
7. Do not disconnect the batteries when engine is running and alternator is charging.
8. Disconnect battery cables before you connect battery charger to the batteries. If machine has more than one battery, each battery must be charged separately.

CED,OUO1021,185 -19-05NOV08-1/1

Handling, Checking, and Servicing Batteries Carefully

CAUTION: Battery gas can explode. Keep sparks and flames away from batteries. Use a flashlight to check battery electrolyte level.

Never check battery charge by placing a metal object across the posts. Use a voltmeter or hydrometer.

Always remove grounded (-) battery clamp first, and replace it last.

Sulfuric acid in battery electrolyte is poisonous. It is strong enough to burn skin, eat holes in clothing, and cause blindness if splashed into eyes.

Avoid the hazard by:

1. **Filling batteries in a well-ventilated area.**
2. **Wearing eye protection and rubber gloves.**
3. **Avoiding breathing fumes when electrolyte is added.**
4. **Avoiding spilling or dripping electrolyte.**
5. **Use proper jump start procedure.**

If you spill acid on yourself:

1. **Flush contacted skin with water.**
2. **Apply baking soda or lime to contacted area to help neutralize the acid.**
3. **Flush eyes with water for 15—30 minutes. Get medical attention immediately.**

If acid is swallowed:

1. **Do not induce vomiting.**
2. **Drink large amounts of water or milk, but do not exceed 1.9 L (2 qts.).**
3. **Get medical attention immediately.**

WARNING: Battery posts, terminals, and related accessories contain lead and lead compounds, chemicals known to the State of California to cause cancer and reproductive harm. **Wash hands after handling.**

If electrolyte spills on the floor, use one of the following mixtures to neutralize the acid: 0.5 kg (1 lb.) baking soda in 4 L (1 gal.) water, or 0.47 L (1 pt.) household ammonia in 4 L (1 gal.) water.

IMPORTANT: Do not overfill the battery cells.

Check the specific gravity of electrolyte in each battery cell.

See your authorized dealer for JT05460 SERVICEGARD™ battery and coolant tester. Follow directions included with the tester.

A fully charged battery will have a corrected specific gravity reading of 1.260. If the reading is below 1.200, charge the battery.

SERVICEGARD is a trademark of Deere & Company



TS204 —UN—15APR13

Exploding Battery Gas

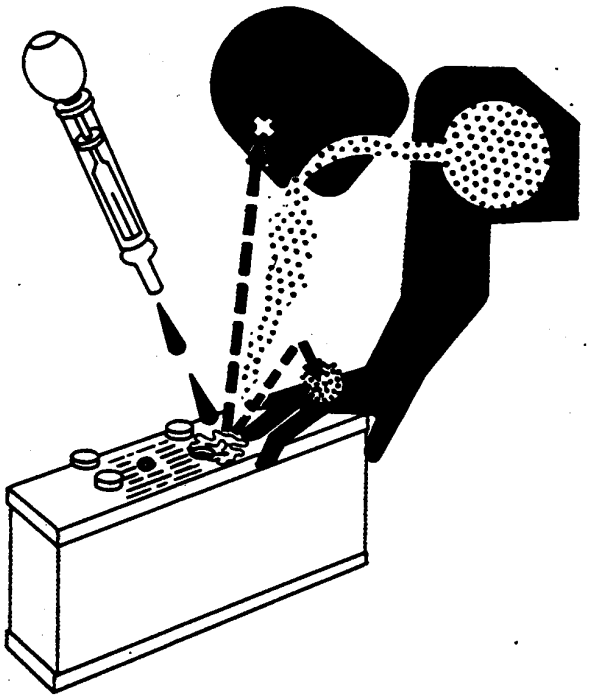

TS203 —UN—23AUG88

Battery Electrolyte



T85402 —UN—10NOV88

Battery and Coolant Tester

TX03679,0001788 -19-05MAR13-1/1

Using Booster Batteries—24-Volt System

Before boost starting, machine must be properly shut down and secured to prevent unexpected machine movement when engine starts.

CAUTION: An explosive gas is produced while batteries are in use or being charged. Keep flames or sparks away from the battery area. Make sure that the batteries are charged in a well ventilated area.

IMPORTANT: The machine electrical system is a 24 V negative (-) ground. Connect two 12 V booster batteries together in series as shown for 24-volts.

1. Connect cable (6) to positive terminal on booster battery (8) and negative terminal on booster battery (2).
2. On right side of machine, open engine service door and side shield. Remove plastic cap on starter lug (4).
3. Connect one end of positive cable (1) to starter lug and other end to positive terminal of booster battery (2).
4. Connect one end of negative cable (3) to negative terminal of booster battery (8). Then connect other end of negative cable to machine frame (7) as far away from machine batteries as possible.
5. Start engine.
6. Immediately after starting engine, disconnect end of negative cable from machine frame first. Then disconnect other end of negative cable from negative terminal of booster batteries.
7. Disconnect positive cable from booster battery (2) and starter lug.
8. Install plastic cap. Close side shield and engine service door.

1— Cable (positive)
2— Booster Battery
3— Cable (negative)
4— Starter Lug
6— Cable (positive and negative)
7— Machine Frame
8— Booster Battery



TS204 —UN—15APR13

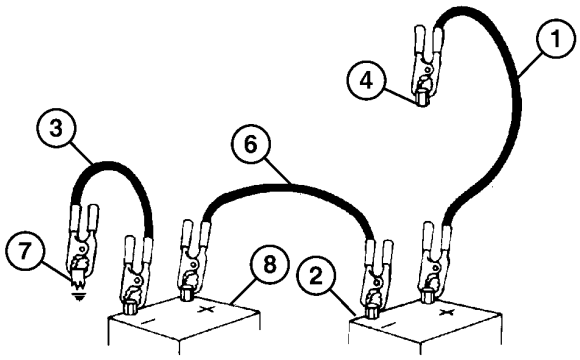

TX1057368 —UN—24MAR09

Booster Batteries To Starter Lug



TX1085163A —UN—29NOV10

Starter Lug

OUT4001,0000711 -19-03NOV11-1/1

Using Battery Charger

CAUTION: Charging a frozen battery may cause it to explode. Prevent possible injury from exploding battery. Warm battery to 16°C (60°F) before charging. Turn off charger before connecting or disconnecting.

IMPORTANT: Disconnect battery ground negative (—) cable or turn battery disconnect switch to OFF before charging batteries in the machine to prevent damage to electrical components.

A battery charger can be used as a booster to start engine.

Ventilate the area where batteries are being charged.

Check electrolyte level in batteries. If low, add distilled water as needed. See Check Battery Water Level and Terminals. (Section 3-8.)

Measure the open circuit voltage of each battery. If voltage is greater than 10.0 volts, charge battery using standard charging procedure. If voltage is less than 10.0 volts, battery is considered to be deeply discharged. Use deep discharge recovery procedure.

IMPORTANT: If constant current charging is the only available option, contact battery manufacturer for the correct procedure.

Standard Charging Procedure. Constant voltage charging is the preferred method for charging lead acid batteries. When using a 12 V charger, charge at a constant voltage of 14.00—14.50 volts using a charger with a minimum current availability of 20 amps for 6 hours. When using a 24 V charger, charge at a constant voltage of 28.0—29.0 volts.

Deep Discharge Recovery Procedure. When using a 12 V charger, recharge battery with charger set at constant voltage of 14.00—14.50 volts with the maximum available current set to 5 amps. When using a 24 V charger, set output to a constant voltage of 28.0—29.0 volts. This is the safest method of recovery but may take 36 hours or more to fully recharge the battery.

NOTE: Initially, the battery may appear as if it is not accepting the charge due to the sulfation barrier that builds up within a deeply discharged battery. After approximately 20 minutes, the current should begin to flow.



TS204 —UN—15APR13

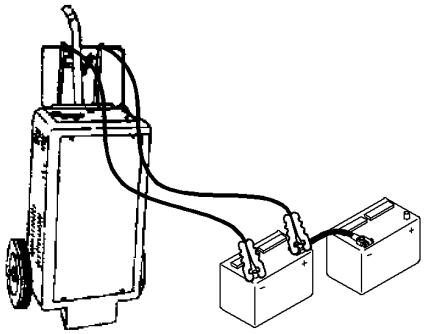

TX1038674 —UN—14MAR08

12 V Battery Charger Connection

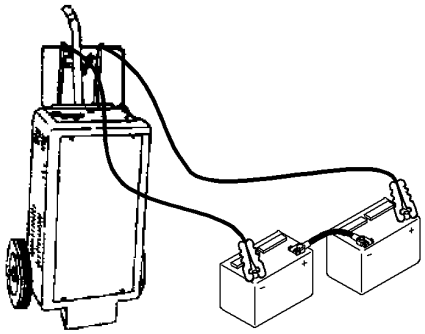

TX1038676 —UN—14MAR08

24 V Battery Charger Connection

Stop or cut back charging rate if battery case feels hot or is venting electrolyte. Battery temperature must not exceed 52°C (125°F).

DP99999,0000314 -19-16JAN12-1/1

Replacement Batteries

Your machine is equipped with a 24 V, negative ground electrical system. It uses two 12 V batteries connected in series. If one of the two batteries fails, both batteries must be replaced. See Remove and Install Batteries in this section. Use only batteries which meet or exceed specifications.

Specification	
Battery—BCI Group	31
Cold Cranking Amps at -18°C (0°F)	950
Reserve Capacity at 25 Amps	190 Minutes

OUT4001,0000712 -19-02DEC10-1/1

Remove and Install Batteries

CAUTION: To prevent injury from battery cover dropping, remove when servicing or replacing batteries. Hinge is in place to aid in removal only. Cover must not be held or propped open during servicing.

NOTE: Loader is equipped with a 24-volt negative (-) ground electrical system which uses two 12-volt batteries connected in series. If one battery fails, both batteries must be replaced.

IMPORTANT: Avoid machine damage. Turn off battery disconnect switch before disconnecting cables.

1. Pull on latch (1) and open battery box door.
2. Turn battery disconnect switch (2) to OFF.
3. Remove cap screws (3) retaining battery box cover. Remove cover.

CAUTION: Prevent possible injury. ALWAYS disconnect grounded (-) battery cable first and connect it last.

4. Disconnect grounded negative (black) battery cable (4) from outboard battery first.
5. Disconnect and remove intermediate battery cable (6).
6. Disconnect positive (red) battery cable (5) from inboard battery.
7. Remove nut and washer (7) and hold-down bracket (8).
8. Lift batteries out of compartment.
9. Check cables and clamps for damage and wear. Replace as required.

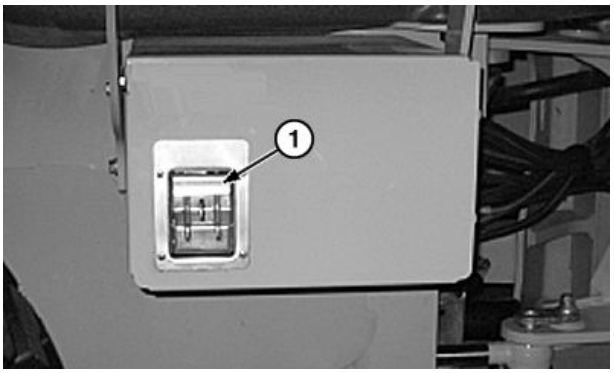

TX1041688A —UN—01MAY08

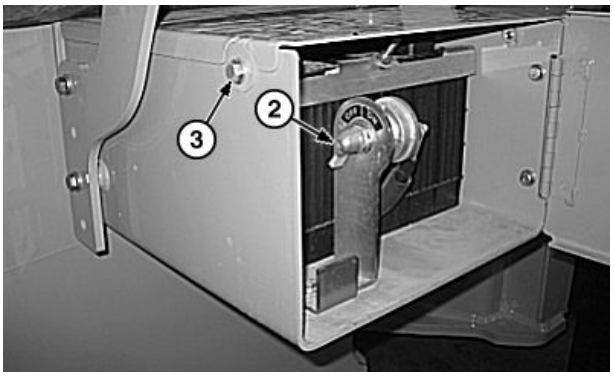

TX1041362A —UN—25APR08

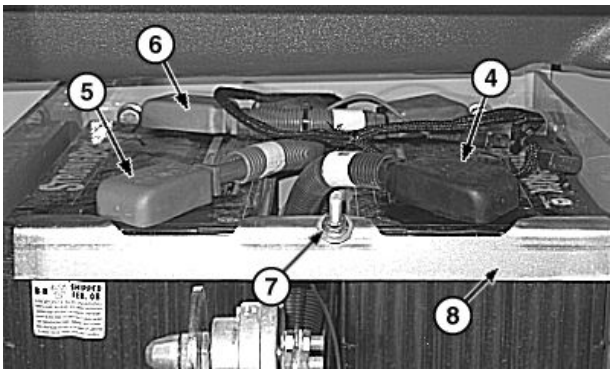

TX1041676A —UN—01MAY08

1— Latch
2— Battery Disconnect Switch
3— Cap Screw (2 used)
4— Negative (-) Battery Cable
5— Positive (+) Battery Cable
6— Intermediate Battery Cable
7— Nut and Washer
8— Hold-Down Bracket

Continued on next page

OUT4001,0000713 -19-30NOV10-1/2

10. Make sure that new batteries are fully charged by checking the specific gravity of electrolyte in each cell.

    A fully charged battery will have a corrected specific gravity reading of 1.260. If reading is below 1.200, charge the battery.

    See your authorized dealer for JT05460 SERVICEGARD™ Battery and Coolant Tester. Follow directions included with tester.

11. Set batteries in compartment. Install hold-down bracket and secure with washer and nut.
12. Install intermediate battery cable and tighten clamps.
13. Connect positive (red) battery cable to positive (+) terminal post on inboard battery and tighten clamp.
14. Connect negative (black) battery cable to negative (-) terminal post on outboard battery and tighten clamp.

SERVICEGARD is a trademark of Deere & Company



T85402 —UN—10NOV88

15. Install battery box cover and cap screws.
16. Turn battery disconnect switch ON and close door.

OUT4001,0000713 -19-30NOV10-2/2

12-Volt Auxiliary Power Outlet—If Equipped

This vehicle may be equipped with a 12-volt auxiliary power outlet or connector that can be used to power personal electronic devices. Use of electronic devices that draw amperage from the vehicle electrical system near, or exceeding, the rated capacity of the 24V/12V converter and auxiliary power outlet may adversely affect vehicle charging system performance. If this occurs, an upgrade to a higher output alternator may be required. Contact your authorized John Deere dealer to determine proper alternator sizing and available alternator upgrade options.

NOTE: The use of common, low-amperage devices such as cellular telephone chargers, music players, or CB radios, will not typically require an upgrade to a higher output alternator.

LB82152,000071F -19-23MAR11-1/1

JDLink™ Machine Monitoring System (MMS)—If Equipped

JDLink™ is an equipment monitoring and information delivery system. JDLink™ automatically collects and manages information about where and how construction and forestry equipment is being used, as well as critical machine health data and service status.

For more information, see your authorized dealer or visit www.deere.com (browse to Construction, Services and Support, JDLink™).

JDLink is a trademark of Deere & Company

VD76477,0001541 -19-20JUL12-1/1

Replacing Fuses

The load center is located in the right rear corner of the cab. Remove load center cover (1) and fuse block cover (2) to access fuse block (3).

Fuses protect all electrical circuits. Amperage rating is marked on each fuse and fuses are color coded to ensure proper replacement. Fuse and circuit identification is provided in the following illustration.

IMPORTANT: Install fuse with correct amperage rating to prevent electrical system damage from overload. DO NOT replace original fuse with higher rated fuse.

If original size fuse continues to blow, have the electrical system checked by your John Deere dealer.

Amperage Rating	Color
1	Black
3	Violet
4	Pink
5	Tan
7.5	Brown
10	Red
15	Light Blue
20	Yellow
25	Natural (white)
30	Light Green

1— Load Center Cover
2— Fuse Block Cover
3— Fuse Block

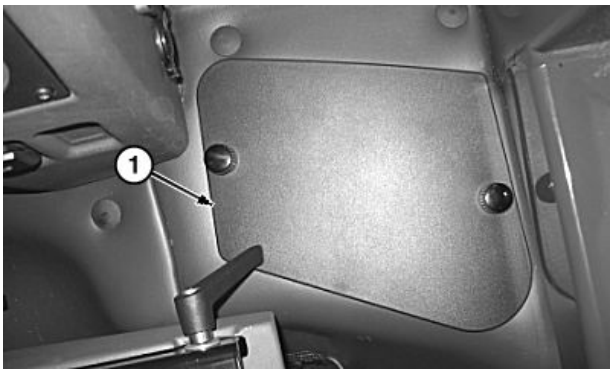

TX1041678A —UN—01MAY08

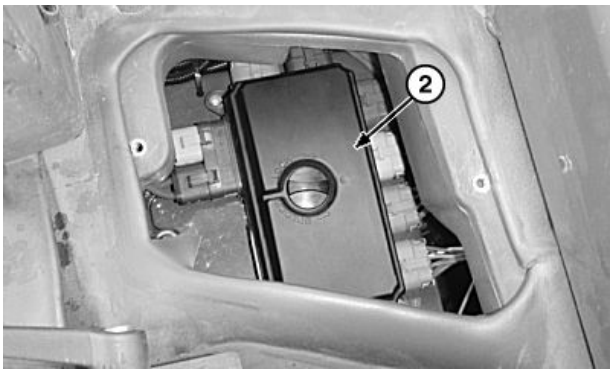

TX1047136A —UN—13AUG08

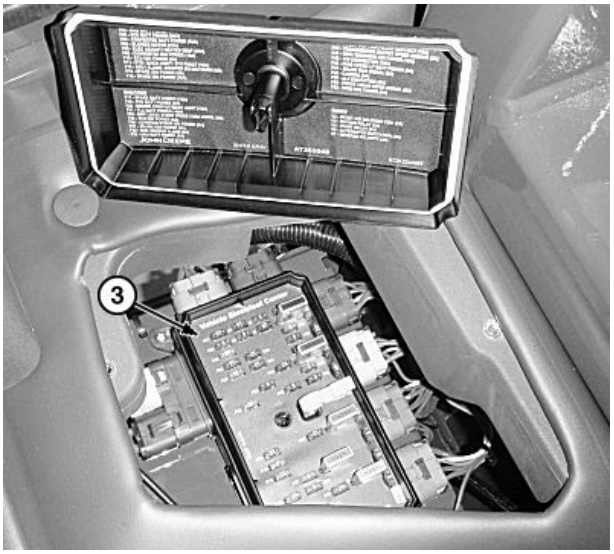

TX1047137A —UN—13AUG08

Continued on next page

OUT4001,00005EF -19-12OCT11-1/2

F01— JDLink™ Battery Power (10A)
F02— Sealed Switch Module (SSM) Battery Power (5A)
F03— Engine Control Unit (ECU) Battery Power (20A)
F04— 24V/12V Converter, Rear Camera, and Radio Battery Power (15A)
F05— Blower Motor (25A)
F08— Air Seat Adjust and Heat (20A)
F09— 24V/12V Converter and Radio Ignition Power (10A)
F10— ECU Ignition Power (5A)
F11— RTD and Quick Shift Switches (10A)
F13— Advanced Display Unit (ADU), Monitor Alarm, Turn Signal, and Counter Switch Ignition Power (5A)
F15— Vehicle Control Unit (VCU) Ignition Power (15A)
F16— Spare Ignition Power (15A)
F17— Spare Battery Power (15A)
F18— Transmission Control Unit (TCU) Battery Power (5A)
F19— Fuel Dosing Pump Battery Power (15A)
F20— VCU Battery Power (25A)
F21— VCU Battery Power (15A)
F23— Differential Lock, Steering Pressure, Park Brake Switch (5A)
F28— TCU Ignition Power (5A)
F29— Joystick Steering Ignition Power—If Equipped (5A)
F30— JDLink™ Battery Power (7.5A)
F31— JDLink™ Ignition Power (5A)
F32— Radar Object Detection (ROD) and Backup Alarm (5A)
F33— ADU Battery Power (5A)
F34— Spare Ignition Power (15A)
F37— Fuel Transfer Pump Battery Power (15A)
F38— Fuel Pump (15A)
F40— Transmission Output Speed Sensor (5A)
F41— Ground Speed Radar (RDR) and Advanced Payload Scale—If Equipped (10A)
F46— 12V Auxiliary Power (10A)
F49— Service ADVISOR™ Engine and Dome Light Battery Power (5A)
F51— Not Used
F52— Rear Camera Power 12 V Power—If Equipped (5A)
F53— Not Used
F55— Front and Rear Wiper Motor Ignition Power (5A)
F56— Tire Pressure Monitoring (TPM) System Ignition Power—If Equipped (5A)
V2— Start Aid Solenoid Suppression Diode—If Equipped (3A)
V3— Ignition Relay Diode (3A)
V4— Start Relay Diode (3A)
V5— Not Used
V7— Reverse Polarity Protection Diode (3A)

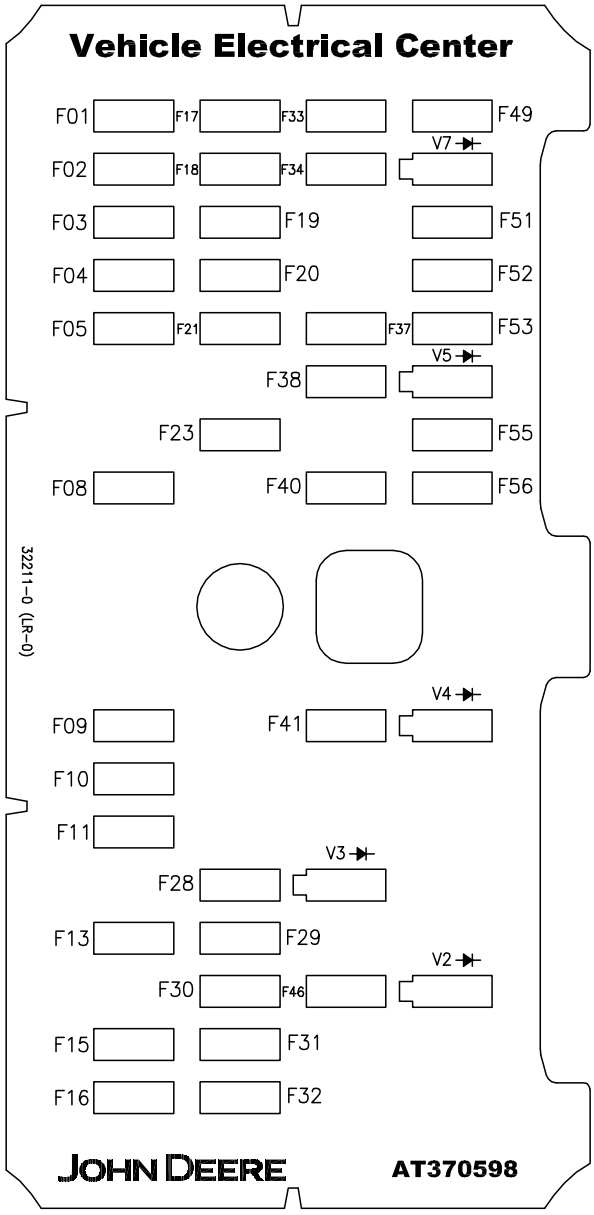

TX1078241

TX1078241 —UN—27MAY10

JDLink is a trademark of Deere & Company
Service ADVISOR is a trademark of Deere & Company

OUT4001,00005EF -19-12OCT11-2/2

Remove and Install Halogen Bulbs

Before disassembling, remember how bezel (G) and lens (F) are installed with respect to mounting stud.

1. Remove four screws (H) to remove bezel and lens.
2. Disconnect wiring lead and release retainer clip to remove halogen bulb (D).
3. To disconnect ground wiring lead, push tab up, then pull connector from terminal.

IMPORTANT: Do not touch the halogen bulb with bare hands. Oil and moisture may cause premature bulb failure. If touched, clean bulb using a soft, oil-free cloth with alcohol.

4. Install new halogen bulb so square notch is aligned with square tab on reflector back.
5. Install retainer clip into locking tabs on reflector back.
6. Connect wiring leads. Check wiring leads are free of clip.

NOTE: To get the correct lighting pattern, lens must be installed into housing so the word TOP is on top. Install wider section of bezel on top also.

7. Install lens (F) in housing (C) making sure wires are not crimped, or keeping lens assembly from seating on gasket.
8. Install bezel so wider section is on top. Sealing flange must be inside housing on all four sides before tightening screws.
9. Tighten screws alternately. Do not overtighten as screws may strip out plastic.

A—Flange Nut
B—Lock Washer
C—Housing
D—Bulb
E—Gasket
F—Lens
G—Bezel
H—Screw (4 used)

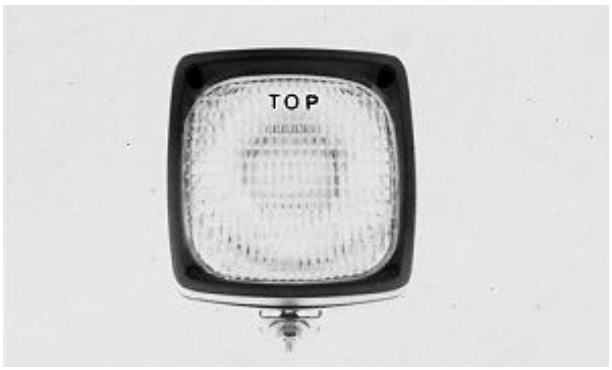

Replace Lights

T5894AG1 —UN—17APR89

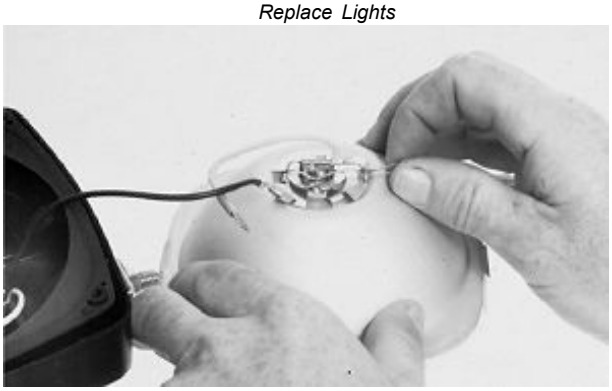

T5894AI1 —UN—20OCT88

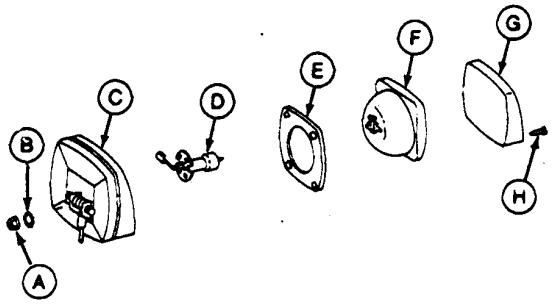

Lens Assembly

T6249AU —UN—19OCT88

OUT4001,000062E -19-16JAN12-1/1

Fluid Sampling Test Ports—If Equipped

Engine Coolant Sampling Test Port

On right side of machine, open engine service door and side shield to access the engine coolant test port (1).

1— Coolant Test Port

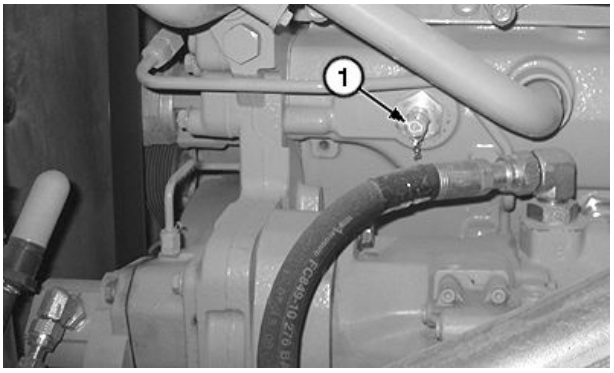

Engine Coolant Sampling Test Port

TX1085201A —UN—29NOV10

Continued on next page

OUT4001,0000714 -19-08MAR11-1/5

Front and Rear Axle Oil Sampling Test Ports—If Equipped

Open left side cooler door first to find release lever for rear fan grille door. Open the fan grille door to access front axle oil test port (2) and the rear axle oil test port (3). Green banded hoses identify the front axle and red banded hoses identify the rear axle.

2— Front Axle Oil Test Port **3— Rear Axle Oil Test Port**

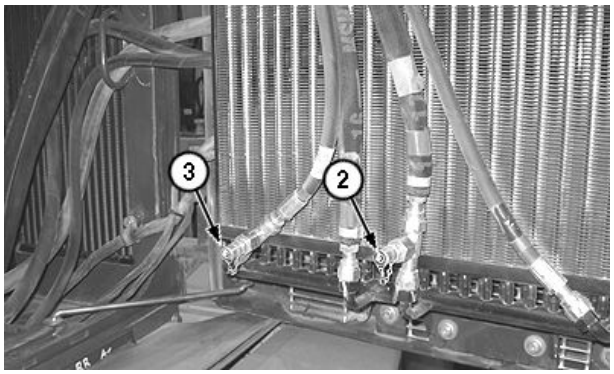

TX1085202A —UN—29NOV10

Front and Rear Axle Oil Sampling Test Ports

OUT4001,0000714 -19-08MAR11-2/5

Engine Oil and Hydraulic Oil Sampling Test Ports

On left side of machine, open engine service door and side shield to access engine oil test port (4) and hydraulic oil test port (5).

4— Engine Oil Test Port **5— Hydraulic Oil Test Port**

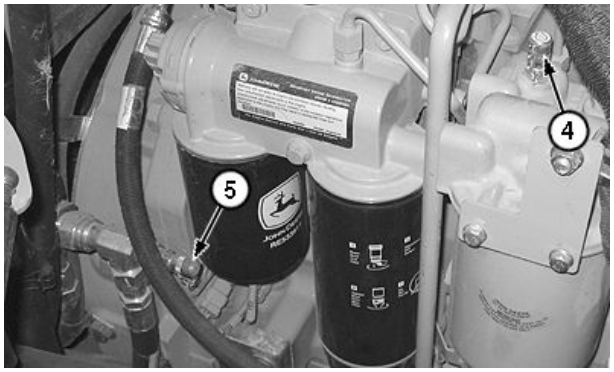

TX1085203A —UN—29NOV10

Engine Oil and Hydraulic Oil Sampling Test Ports

OUT4001,0000714 -19-08MAR11-3/5

Transmission Oil Sampling Test Port

The transmission oil test port (6) is located on the right side of machine, above the hydraulic pump manifold.

6— Transmission Oil Test Port

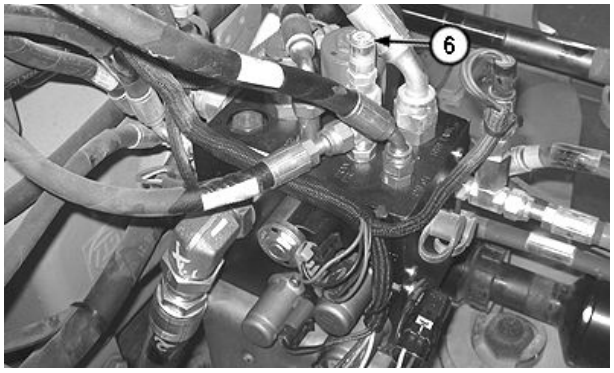

TX1085204A —UN—29NOV10

Transmission Oil Sampling Test Port

Continued on next page

OUT4001,0000714 -19-08MAR11-4/5

Quick Service Connectors—If Equipped

On left side of machine, open engine service door and side shield to access quick service connectors. Test ports (7—10) are located on a plate connected to machine frame.

7— Transmission Oil Sampling Test Port
8— Engine Oil Sampling Test Port
9— Hydraulic Oil Sampling Test Port
10— Engine Coolant Sampling Test Port

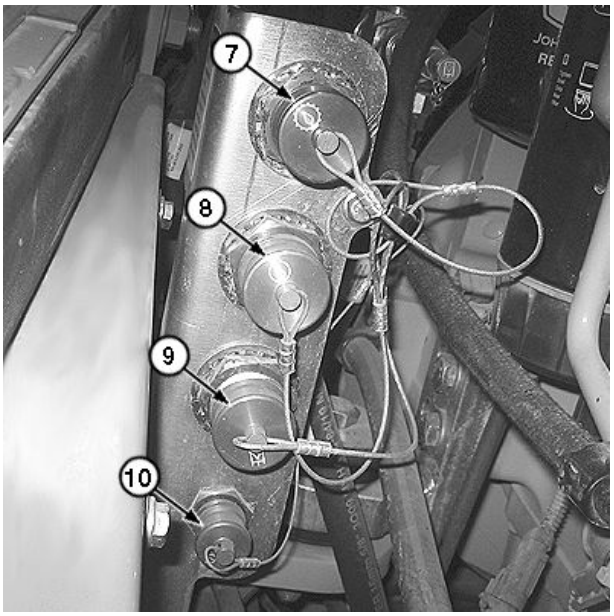

TX1085205A —UN—29NOV10

Quick Service Connectors—If Equipped

OUT4001,0000714 -19-08MAR11-5/5

Air Conditioning System Service

CAUTION: Escaping refrigerant under pressure can penetrate eyes and skin causing serious injury. Do not attempt to repair or service refrigerant system. Special equipment and procedures are required. See your John Deere dealer.

The air conditioning system contains self-resetting thermal overload devices which will open in the event of a compressor overload and shut the system off. If thermal overload devices open, press air conditioner switch OFF and wait a few minutes to allow system to cool down. If the overload device does not reset or opens repeatedly, see your authorized dealer.

If air conditioner runs but does not cool, or cooling is intermittent, check the following:

1. Check compressor clutch engagement.
2. Check evaporator core for clogging.
3. Check air intake filters for clogging.
4. Check blowers for proper operation.
5. Check the condenser core to see that it is not clogged with dirt or trash. Clean with compressed air or water when needed.

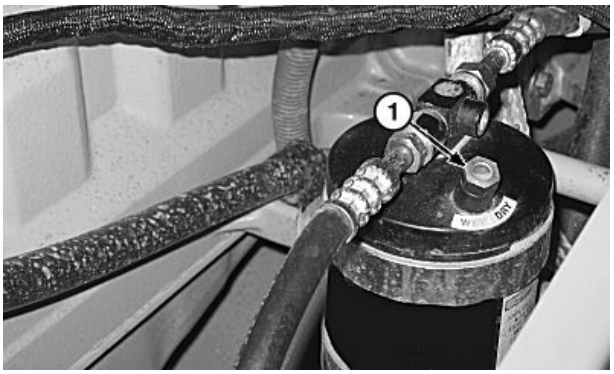

TX1041685A —UN—01MAY08

Receiver-Dryer

1— Sight Glass

6. Run air conditioning system for several minutes.
7. Open right side engine service door and check sight glass (1) on receiver-dryer. Bubbles must not be present in sight glass. If bubbles are present, see your authorized dealer for charging the air conditioning system.

OUT4001,00005C6 -19-06DEC11-1/1

External Service Brake Inspection

Check both front and rear axle during each inspection. Perform this inspection at the first 5000 hours of operation and at 1000 hour intervals thereafter.

NOTE: If service brakes are subjected to severe duty, inspect more frequently.

CAUTION: Prevent possible injury from hot spraying oil. Slowly loosen inspection port plugs to relieve any air pressure.

1. Remove external brake inspection port plugs (1).
2. Inspect the brake linings (2) on brake disk.
3. If oil grooves (3) on linings are no longer visible, brake disks must be replaced. See your authorized John Deere dealer.

1— Inspection Port Plug (2 used per axle)
2— Brake Lining
3— Oil Groove

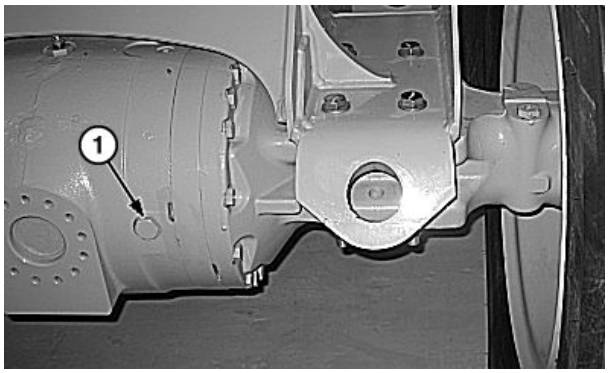

TX1041686A —UN—01MAY08

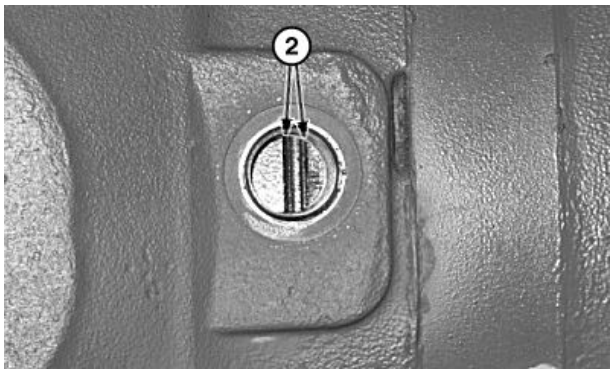

TX1029779A —UN—01OCT07

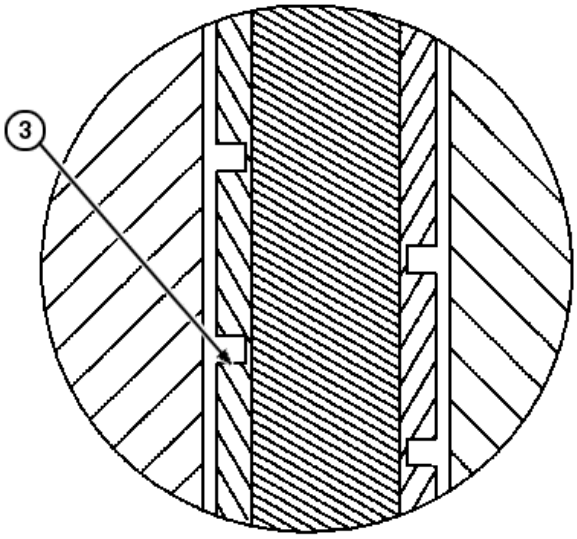

TX1015685A —UN—22NOV06

DP99999,00000A1 -19-19OCT10-1/1

Bleeding Brakes

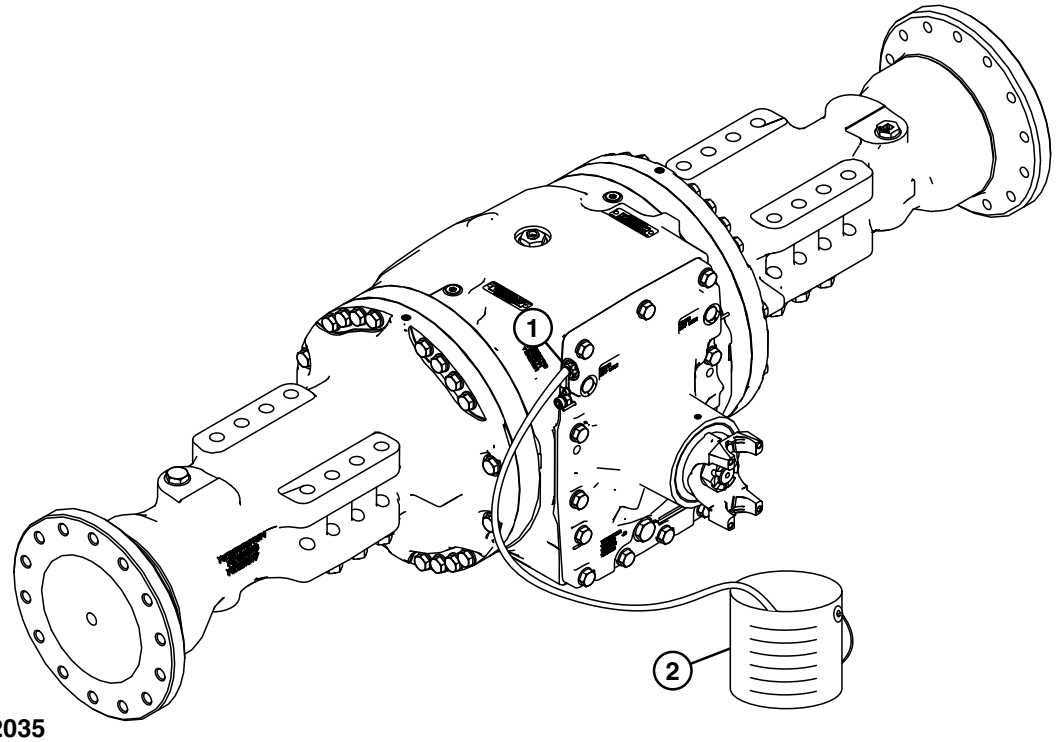

TX1062035

TX1062035 —UN—21JUL09

Front Axle Shown

1— Bleed Screw (2 used, 1 per axle) **2— Container**

CAUTION: Escaping fluid under pressure can penetrate the skin causing serious injury. Avoid the hazard by relieving pressure before disconnecting hydraulic or other lines. Tighten all connections before applying pressure. Search for leaks with a piece of cardboard. Protect hands and body from high pressure fluids.

If an accident occurs, see a doctor immediately. Any fluid injected into the skin must be surgically removed within a few hours or gangrene may result. Doctors unfamiliar with this type of injury should reference a knowledgeable medical source. Such information is available from Deere & Company Medical Department in Moline, Illinois, U.S.A.

CAUTION: Prevent possible injury from unexpected machine movement. Install frame articulation locking bar to both frames before working in frame pivot area.

1. Engage park brake and install frame articulation locking bar. Stop engine.
2. Remove front and rear axle bottom guards to access both brake bleed screws (1).
3. Secure a clear plastic tube on one brake bleed screw with hose clamp and secure other end in a suitable container (2).

CAUTION: To avoid injury from escaping fluid under pressure, DO NOT loosen or tighten brake bleed screw while engine is running.

4. Loosen brake bleed screw. DO NOT loosen more than two turns.
5. Start engine and run at slow idle with park brake engaged.
6. Apply slight pressure to service brake pedal for 15 seconds.
7. Release service brake pedal and stop engine.
8. Tighten brake bleed screw. Wait 15 minutes to allow air to migrate in service brake system.
9. Repeat brake bleed procedure on other axle (steps 3—8).
10. Install bottom guards and remove frame articulation locking bar.
11. Check hydraulic oil level. See Check Hydraulic System Oil Level. (Section 3-4.)

OUT4001,00006A7 -19-20OCT10-1/1

Service Recommendations For Snap-To-Connect (STC®) Fittings

Snap-To-Connect (STC®) fittings are used on this machine. The fittings are designed to allow the hydraulic hose to rotate as needed when the system is not pressurized. This prevents the hydraulic hoses from binding when components are put back to their operating position.

Fittings are easily disconnected using special tool, JDG1385 STC Fitting Release Tool (1) (supplied in machine with Operator's Manual). The special tool has a different size slot cut into each end. The narrow slot is for -06 size fittings. The wide slot is for -08 size fittings. Use appropriate end of special tool on fitting being disconnected. To connect fittings, simply push each half of fitting together.

IMPORTANT: DO NOT pry against release sleeve (3) or damage to fitting may result.

DO NOT force release sleeve beyond normal range of travel, otherwise, release sleeve may fall off when hose is disconnected. If this happens and fitting is connected without the release sleeve installed, fitting will not be able to be disconnected again.

1. Disconnect STC type fittings:
   a. Clean area around fitting, especially around the release sleeve (3).

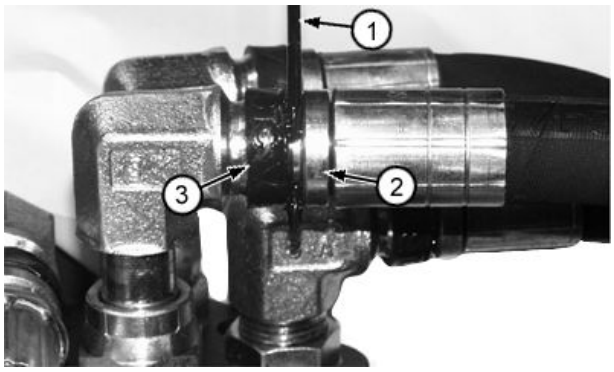

T134792C —UN—24OCT00

STC Fitting and JDG1385 STC Fitting Release Tool

1— JDG1385 STC Fitting Release Tool
2— Shoulder
3— Release Sleeve

   b. While keeping JDG1385 STC Fitting Release Tool (1) perpendicular to the fitting, insert tool between release sleeve (3) and shoulder (2).
   c. Gently push, **DO NOT PRY**, release sleeve away from shoulder to disconnect the fitting.
   d. Pull hose to disconnect.

Snap-To-Connect (STC) is a trademark of Eaton Corp.

OUO1010,0000457 -19-05DEC11-1/2

2. Inspect STC fittings:
   a. Check seal mating surfaces for nicks, scratches, or flat spots.
   b. Check O-ring (4), backup ring (5), and retaining ring (2) for wear or damage.
   c. Make sure O-ring, backup ring, and retaining ring are in position before connecting fitting halves together.
3. Connect STC fittings:
   a. Make sure fitting halves (3 and 6) are clean and free of contaminants.
   b. Make sure release sleeve (1) is on male half (6) of fitting before connecting fitting halves together.
   c. Push fitting halves together until a definite snap and solid stop is felt.
   d. Pull back on hose to make sure fitting halves are locked together.
   e. To prevent hoses from binding, move component into position before pressurizing hydraulic system.

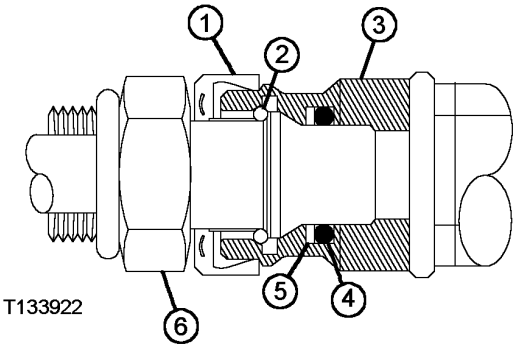

T133922 —UN—21SEP00

STC Fitting Cross Section

1— Release Sleeve
2— Retaining Ring
3— Female Half of STC Fitting
4— O-Ring
5— Backup Ring
6— Male Half of STC Fitting

OUO1010,0000457 -19-05DEC11-2/2

Welding On Machine

IMPORTANT: Disconnect both negative and positive battery cables and microprocessor unit (if applicable).

Have only a qualified welder do this job. Connect welder ground clamp close to each weld area so electrical current does not pass through any bearings.

Remove or protect all parts that can be damaged by heat or weld splatter.

VD76477,00004EE -19-31OCT12-1/1

Welding Near Electronic Control Units

IMPORTANT: Do not jump-start engines with arc welding equipment. Currents and voltages are too high and may cause permanent damage.

1. Disconnect the negative (-) battery cable(s).
2. Disconnect the positive (+) battery cable(s).
3. Connect the positive and negative cables together. Do not attach to vehicle frame.
4. Clear or move any wiring harness sections away from welding area.
5. Connect welder ground close to welding point and away from control units.



TS953 —UN—15MAY90

6. After welding, reverse Steps 1—5.

DX,WW,ECU02 -19-14AUG09-1/1

Keep Electronic Control Unit Connectors Clean

IMPORTANT: Do not open control unit and do not clean with a high-pressure spray. Moisture, dirt, and other contaminants may cause permanent damage.

1. Keep terminals clean and free of foreign debris. Moisture, dirt, and other contaminants may cause the terminals to erode over time and not make a good electrical connection.
2. If a connector is not in use, put on the proper dust cap or an appropriate seal to protect it from foreign debris and moisture.
3. Control units are not repairable.
4. Since control units are the components LEAST likely to fail, isolate failure before replacing by completing a diagnostic procedure. (See your John Deere dealer.)
5. The wiring harness terminals and connectors for electronic control units are repairable.

OUT4001,000063A -19-18JUN10-1/1

Keep ROPS Installed Properly

CAUTION: Make certain all parts are reinstalled correctly if the roll-over protective structure (ROPS) is loosened or removed for any reason. Tighten mounting bolts to proper torque.

The protection offered by ROPS will be impaired if ROPS is subjected to structural damage, is involved in an overturn incident, or is in any way altered. A damaged ROPS should be replaced, not reused.

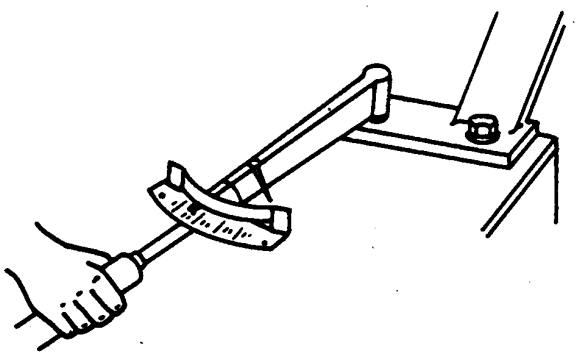

TS176 —UN—23AUG88

ROPS Maintenance

When installation of equipment on a machine necessitates loosening or removing ROPS, mounting bolts must be tightened to 620 N·m (457 lb.-ft).

Specification	
ROPS Mounting Bolts—Torque	620 N·m 457 lb.-ft.

04T,90,MM8 -19-30NOV11-1/1

Hardware Torque Specifications

Check cap screws and nuts to be sure they are tight. If hardware is loose, tighten to torque shown on the following charts unless a special torque is specified.

TX,90,FF1225 -19-15MAR93-1/1

Metric Bolt and Screw Torque Values

TS1670 —UN—01MAY03

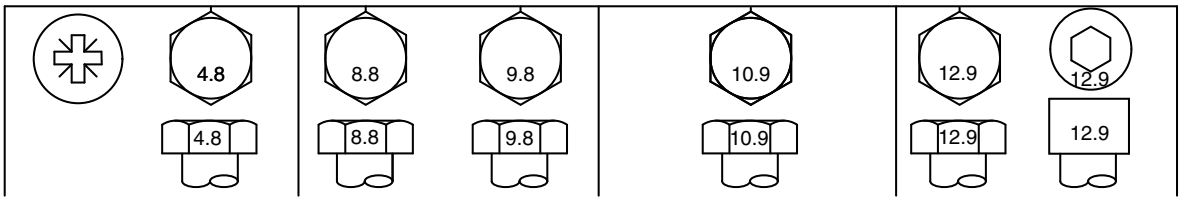

Bolt or Screw Size	Class 4.8				Class 8.8 or 9.8				Class 10.9				Class 12.9			
	Lubricated[a]		Dry[b]		Lubricated[a]		Dry[b]		Lubricated[a]		Dry[b]		Lubricated[a]		Dry[b]	
	N·m	lb.-in.	N·m	lb.-in.	N·m	lb.-in.	N·m	lb.-in.	N·m	lb.-in.	N·m	lb.-in.	N·m	lb.-in.	N·m	lb.-in.
M6	4.7	42	6	53	8.9	79	11.3	100	13	115	16.5	146	15.5	137	19.5	172
									N·m	lb.-ft.	N·m	lb.-ft.	N·m	lb.-ft.	N·m	lb.-ft.
M8	11.5	102	14.5	128	22	194	27.5	243	32	23.5	40	29.5	37	27.5	47	35
			N·m	lb.-ft.	N·m	lb.-ft.	N·m	lb.-ft.								
M10	23	204	29	21	43	32	55	40	63	46	80	59	75	55	95	70
	N·m	lb.-ft.														
M12	40	29.5	50	37	75	55	95	70	110	80	140	105	130	95	165	120
M14	63	46	80	59	120	88	150	110	175	130	220	165	205	150	260	190
M16	100	74	125	92	190	140	240	175	275	200	350	255	320	235	400	300
M18	135	100	170	125	265	195	330	245	375	275	475	350	440	325	560	410
M20	190	140	245	180	375	275	475	350	530	390	675	500	625	460	790	580
M22	265	195	330	245	510	375	650	480	725	535	920	680	850	625	1080	800
M24	330	245	425	315	650	480	820	600	920	680	1150	850	1080	800	1350	1000
M27	490	360	625	460	950	700	1200	885	1350	1000	1700	1250	1580	1160	2000	1475
M30	660	490	850	625	1290	950	1630	1200	1850	1350	2300	1700	2140	1580	2700	2000
M33	900	665	1150	850	1750	1300	2200	1625	2500	1850	3150	2325	2900	2150	3700	2730
M36	1150	850	1450	1075	2250	1650	2850	2100	3200	2350	4050	3000	3750	2770	4750	3500

Torque values listed are for general use only, based on the strength of the bolt or screw. DO NOT use these values if a different torque value or tightening procedure is given for a specific application. For stainless steel fasteners or for nuts on U-bolts, see the tightening instructions for the specific application. Tighten plastic insert or crimped steel type lock nuts by turning the nut to the dry torque shown in the chart, unless different instructions are given for the specific application.

Shear bolts are designed to fail under predetermined loads. Always replace shear bolts with identical property class. Replace fasteners with the same or higher property class. If higher property class fasteners are used, tighten these to the strength of the original. Make sure fastener threads are clean and that you properly start thread engagement. When possible, lubricate plain or zinc plated fasteners other than lock nuts, wheel bolts or wheel nuts, unless different instructions are given for the specific application.

[a] *"Lubricated" means coated with a lubricant such as engine oil, fasteners with phosphate and oil coatings, or M20 and larger fasteners with JDM F13C, F13F or F13J zinc flake coating.*

[b] *"Dry" means plain or zinc plated without any lubrication, or M6 to M18 fasteners with JDM F13B, F13E or F13H zinc flake coating.*

DX,TORQ2 -19-12JAN11-1/1

Unified Inch Bolt and Screw Torque Values

TS1671 —UN—01MAY03

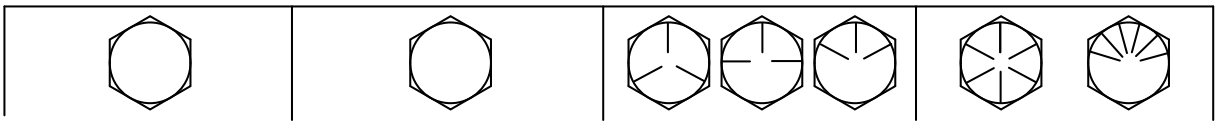

Bolt or Screw Size	SAE Grade 1				SAE Grade 2[a]				SAE Grade 5, 5.1 or 5.2				SAE Grade 8 or 8.2			
	Lubricated[b]		Dry[c]		Lubricated[b]		Dry[c]		Lubricated[b]		Dry[c]		Lubricated[b]		Dry[c]	
	N·m	lb.-in.	N·m	lb.-in.	N·m	lb.-in.	N·m	lb.-in.	N·m	lb.-in.	N·m	lb.-in.	N·m	lb.-in.	N·m	lb.-in.
1/4	3.7	33	4.7	42	6	53	7.5	66	9.5	84	12	106	13.5	120	17	150
													N·m	lb.-ft.	N·m	lb.-ft.
5/16	7.7	68	9.8	86	12	106	15.5	137	19.5	172	25	221	28	20.5	35	26
									N·m	lb.-ft.	N·m	lb.-ft.				
3/8	13.5	120	17.5	155	22	194	27	240	35	26	44	32.5	49	36	63	46
			N·m	lb.-ft.	N·m	lb.-ft.	N·m	lb.-ft.								
7/16	22	194	28	20.5	35	26	44	32.5	56	41	70	52	80	59	100	74
	N·m	lb.-ft.														
1/2	34	25	42	31	53	39	67	49	85	63	110	80	120	88	155	115
9/16	48	35.5	60	45	76	56	95	70	125	92	155	115	175	130	220	165
5/8	67	49	85	63	105	77	135	100	170	125	215	160	240	175	305	225
3/4	120	88	150	110	190	140	240	175	300	220	380	280	425	315	540	400
7/8	190	140	240	175	190	140	240	175	490	360	615	455	690	510	870	640
1	285	210	360	265	285	210	360	265	730	540	920	680	1030	760	1300	960
1-1/8	400	300	510	375	400	300	510	375	910	670	1150	850	1450	1075	1850	1350
1-1/4	570	420	725	535	570	420	725	535	1280	945	1630	1200	2050	1500	2600	1920
1-3/8	750	550	950	700	750	550	950	700	1700	1250	2140	1580	2700	2000	3400	2500
1-1/2	990	730	1250	930	990	730	1250	930	2250	1650	2850	2100	3600	2650	4550	3350

Torque values listed are for general use only, based on the strength of the bolt or screw. DO NOT use these values if a different torque value or tightening procedure is given for a specific application. For plastic insert or crimped steel type lock nuts, for stainless steel fasteners, or for nuts on U-bolts, see the tightening instructions for the specific application. Shear bolts are designed to fail under predetermined loads. Always replace shear bolts with identical grade.

Replace fasteners with the same or higher grade. If higher grade fasteners are used, tighten these to the strength of the original. Make sure fastener threads are clean and that you properly start thread engagement. When possible, lubricate plain or zinc plated fasteners other than lock nuts, wheel bolts or wheel nuts, unless different instructions are given for the specific application.

[a]Grade 2 applies for hex cap screws (not hex bolts) up to 6 in. (152 mm) long. Grade 1 applies for hex cap screws over 6 in. (152 mm) long, and for all other types of bolts and screws of any length.

[b]"Lubricated" means coated with a lubricant such as engine oil, fasteners with phosphate and oil coatings, or 7/8 in. and larger fasteners with JDM F13C, F13F or F13J zinc flake coating.

[c]"Dry" means plain or zinc plated without any lubrication, or 1/4 to 3/4 in. fasteners with JDM F13B, F13E or F13H zinc flake coating.

DX,TORQ1 -19-12JAN11-1/1

Miscellaneous—Operational Checkout

Operational Checkout

Use this procedure to make a quick check of machine operation by doing a walk-around inspection and performing specific checks from the operator seat.

Complete visual checks (oil levels, oil condition, external leaks, loose hardware, linkage, wiring, etc.) before performing checkout.

Most checks will require machine systems to be at normal operating temperatures and a level area with adequate space to operate machine. Some checks may require varied surfaces.

No special tools are necessary to perform the checkout.

If no problem is found, go to next check. If a problem is indicated, an additional check or repair procedure will be suggested.

ER93822,00001E8 -19-30MAY13-1/47

Diagnostic Trouble Code Check

ER93822,00001E8 -19-30MAY13-2/47

Display and Clear Trouble Codes	**Always check for diagnostic trouble codes and correct them before performing operational checkout.** Check for active and stored diagnostic trouble codes (DTCs). Diagnostic trouble codes can be displayed by using one of the following methods: • Advanced Display Unit (ADU) - To access DTCs using ADU, see Display Unit—Main Menu—Codes. (Section 2-1.) • Service ADVISOR™ Diagnostic Application - To access DTCs using Service ADVISOR™ diagnostic application, see your authorized John Deere dealer. *LOOK: Are diagnostic trouble codes present?*	**YES:** Correct all diagnostic trouble codes before proceeding. **NO:** Continue with operational checkout.

Service ADVISOR is a trademark of Deere & Company

ER93822,00001E8 -19-30MAY13-3/47

Operational Checks—Ignition OFF, Engine OFF Checks

ER93822,00001E8 -19-30MAY13-4/47

Horn Check	Push horn button, see Horn Button. (Section 2-1.) *LISTEN: Does horn activate?*	**YES:** Go to next check. **NO:** See your authorized John Deere dealer.

ER93822,00001E8 -19-30MAY13-5/47

Seat Control Checks	*NOTE: For seat adjustment procedures, see Seat Adjustment. (Section 2-1.)* *If machine is equipped with air seat, engine start switch must be ON to raise seat.* Does seat rise and lower easily? Does seat angle change easily? Does lever move easily to unlock seat support? Does seat move forward and rearward easily? Does lever lock seat support in position when released? Does seat back tilt forward and rearward easily? Does lever unlock and lock easily to hold seat back in position?	**YES:** Go to next check. **NO:** Inspect linkage and repair.

ER93822,00001E8 -19-30MAY13-6/47

Operational Checks—Ignition ON, Engine OFF Checks

Continued on next page

ER93822,00001E8 -19-30MAY13-7/47

Advanced Display Unit (ADU) Check

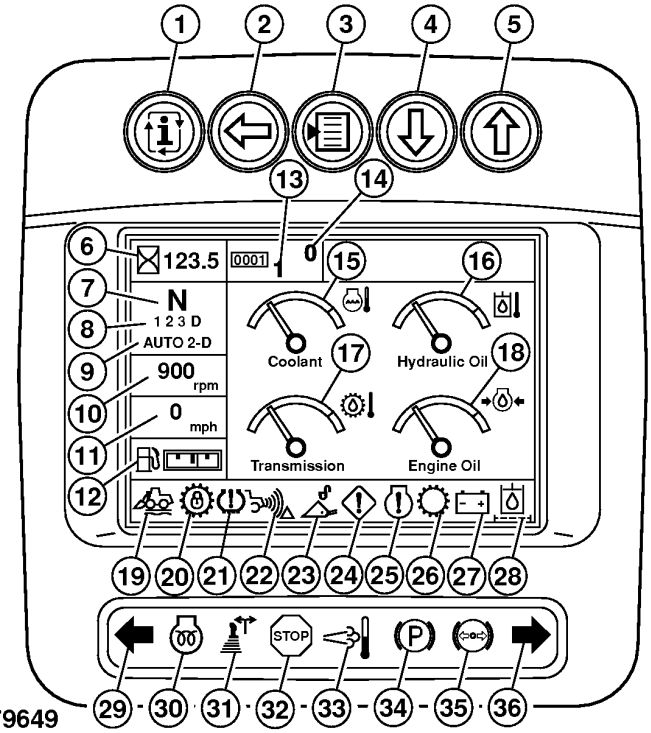

TX1079649 —UN—06JUL10

Advanced Display Unit (ADU)

1— INFO Button
2— BACK Button
3— SELECT Button
4— DOWN Button
5— UP Button
6— Hour Meter, Odometer, Average Fuel Consumption, and Exhaust Filter Restriction Level Indicator
7— Travel Direction
8— Requested Gear
9— Transmission Mode
10— Tachometer
11— Speedometer
12— Fuel Level Gauge
13— Material Counter
14— Truck Counter
15— Engine Coolant Temperature Gauge
16— Hydraulic Oil Temperature Gauge
17— Transmission Oil Temperature Gauge
18— Engine Oil Pressure Gauge
19— Ride Control Indicator (if equipped)
20— Lockup Torque Converter Indicator (if equipped)
21— Tire Pressure Monitoring System Indicator (if equipped)
22— Radar Object Detection System Indicator (if equipped)
23— Pin Disconnect Indicator (if equipped)
24— Caution Indicator
25— Check Engine Indicator
26— Transmission Fault , Axle Over Temperature, and Low Coolant Level Indicator
27— Low Battery Voltage and Exhaust Filter Auto Cleaning Disabled Indicator
28— Filter Restriction Indicator
29— Left Turn Indicator
30— Engine Heater Indicator (if equipped)
31— Joystick Steering Indicator (if equipped)
32— STOP Indicator
33— Exhaust Filter Cleaning Indicator
34— Park Brake Indicator
35— Brake Pressure Indicator
36— Right Turn Indicator

Continued on next page

ER93822,00001E8 -19-30MAY13-8/47

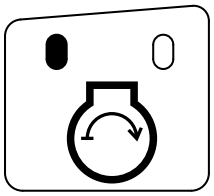

TX1028777 —UN—30AUG07

Engine Start Switch

Push engine start switch once to enable ignition ON mode.	
Observe ADU display, gauges, and warning lights as ADU powers up.	
NOTE: A gauge pointer that deflects to far left side of scale indicates loss of electronic communication or an active sensor malfunction. The associated warning light will not come on if this happens.	
LOOK/LISTEN: Does backlighting come ON and does alarm sound? Do all warning lights on lower row come on? After approximately 3 seconds, do all lights on lower row go off except STOP and park brake indicator lights? Does STOP indicator light flash?	
LOOK: Does display screen populate with normal display items? Do gauges indicate current machine status? Does display show hour meter reading? Does engine oil pressure gauge read (0) with red flashing background?	**YES:** Go to next check.
LOOK: If equipped with rear camera, push INFO button. Does ADU screen display rear camera view?	**NO:** Check ADU, monitor alarm, turn signal, and counter switch ignition power 5-amp fuse (F13). See Replacing Fuses. (Section 4-1.)

Continued on next page

ER93822,00001E8 -19-30MAY13-9/47

Battery Check



LEFT (INBOARD)
12V



RIGHT (OUTBOARD)
12V

TX1073149 —UN—09MAR10

Battery Monitor

Push SELECT button on ADU. MAIN MENU will be displayed.

Push DOWN button until DIAGNOSTICS is highlighted.

Push SELECT button to display DIAGNOSTICS menu.

Push DOWN button until BATTERY MONITOR is highlighted.

Push SELECT button to display battery voltage for both batteries.

LOOK: Does each battery have a minimum of 12 volts when engine is not running?

YES: Go to next check.

NO: Clean and tighten battery terminals. See Check Battery Water Level and Tighten Terminals. (Section 3-8.)

Charge batteries. See Using Battery Charger. (Section 4-1.)

NOTE: If one battery will not hold a charge, replace both batteries.

See your authorized John Deere dealer.

Continued on next page

ER93822,00001E8 -19-30MAY13-10/47

Cab System Checks



TX1074224A —UN—24MAR10

Sealed Switch Module (SSM)

1— Engine Start Switch
2— Engine Stop Switch
3— Beacon Light Switch (if equipped)
4— Hazards Light Switch
5— Pilot Enable/Boom Down Switch
6— Park Brake Switch
7— Return-to-Dig Enable Switch
8— Automatic Transmission Switch
9— Ride Control Switch (if equipped)
10— Clutch Cut-Off Enable Switch
11— Boom Height Kickout Enable Switch
12— Return-to-Carry Enable Switch
13— Auto-Differential Lock Enable Switch (if equipped)
14— Spin Control Enable Switch (if equipped)
15— Pin Disconnect Switch (if equipped)
16— Air Conditioner (On/Off) Switch
17— Heated Side Mirrors Switch (if equipped)
18— Front Washer Switch
19— Front Wiper Switch
20— Drive Lights Switch
21— Torque Converter Lock Up Enable Switch (if equipped)
22— Auto-Axle Disconnect Switch (if equipped)
23— Rear Washer Switch
24— Rear Wiper Switch
25— Work Light Switch

Activate following lights:

- Dome light
- Front and rear work lights
- Front and rear drive, marker, and tail lights
- Turn lights
- Four-way flashers
- Rotary beacon (if equipped)

YES: Go to next step in this check.

Continued on next page

	LOOK: Do all lights operate properly?	**NO:** See your authorized John Deere dealer. If dome light does not operate, check Service ADVISOR™ and dome light battery power 5-amp fuse (F49). If turn lights do not operate, check ADU, monitor alarm, turn signal, and counter switch ignition power 5-amp fuse (F13). See Replacing Fuses. (Section 4-1.)
	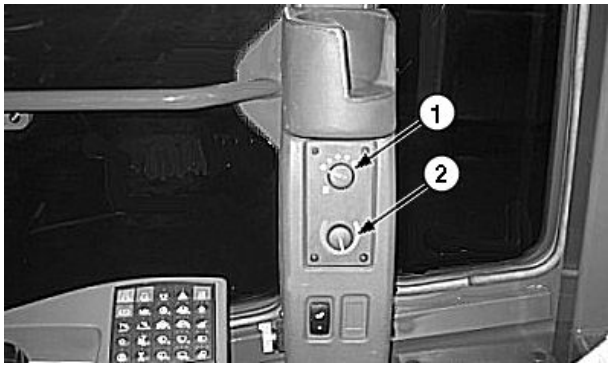 TX1074226A —UN—24MAR10 *Blower Fan and Temperature Controls* **1— Blower Fan Speed Knob** **2— Temperature Control Knob** Check operation of following: • Front and rear windshield wiper and washer. • Air conditioner and heater blower fan. • Precleaner blower fan. *LOOK: Do windshield wipers and washers operate properly?* *LISTEN/FEEL: Does air conditioner and heater blower fan incrementally increase in speed when blower speed switch is moved to all four speed positions?* *LISTEN/FEEL: Does precleaner blower operate when blower speed switch is moved to all four speed positions?*	**YES:** Go to next check. **NO:** See your authorized John Deere dealer. If both blower fans do not operate, check blower motors 25-amp fuse (F05). See Replacing Fuses. (Section 4-1.)

Continued on next page

Transmission Gear Shift Switch and Neutral Lock Latch Checks—Steering Column Mount Only

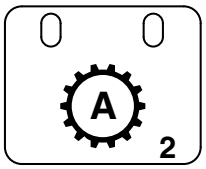

TX1028750 —UN—30AUG07

Automatic Transmission Switch

Push automatic transmission switch to OFF position (LEDs off).

Move steering column FNR/gear select switch to forward (F), neutral (N), and reverse (R) positions.

LOOK: Does steering column FNR/gear select switch move into forward, neutral, and reverse positions?

LOOK: Does steering column FNR/gear select switch stay in detented positions?

LISTEN: Does backup alarm activate when steering column FNR/gear select switch is in reverse position?

Put steering column FNR/gear select switch in neutral position. Put neutral lock in LOCKED position.

Using a light force, try to move steering column FNR/gear select switch into forward and reverse positions.

LOOK: Does neutral lock stay engaged and steering column FNR/gear select switch stay in neutral?

Put neutral lock in UNLOCK position.

Rotate steering column FNR/gear select switch handle to select each gear: 1st, 2nd, 3rd, and D.

LOOK: Does gear number align with pointer in each detented position?

LOOK/FEEL: Does handle remain in detented positions?

YES: Go to next check.

NO: If lever does not move or lock properly, replace lever.

LOOK: Does monitor display indicate neutral position (N) and correct gear (1, 2, 3, and D)?

NO: If gear selection does not change on monitor, see your authorized John Deere dealer.

Continued on next page

ER93822,00001E8 -19-30MAY13-13/47

Transmission Gear Shift Switch Checks—Hydraulic Control Lever Mount Only	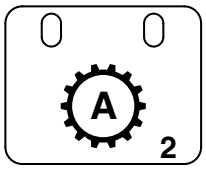 TX1028750 —UN—30AUG07 *Automatic Transmission Switch* Push automatic transmission switch to OFF position (LEDs off). Put gear shift switch in forward (F), neutral (N), and reverse (R) positions. *LISTEN/LOOK: Does switch move into forward, neutral, and reverse positions?* *Does switch stay in detented positions?* *Does backup alarm sound when in reverse?* Push upshift button and downshift button on hydraulic control lever. *LOOK: Does monitor display indicate neutral position (N) and correct gear (1, 2, 3, and D)?*	**YES:** Go to next check. **NO:** If gear shift switch does not move properly or stays in detented position, replace switch. **NO:** If gear selection does not change on monitor, see your authorized John Deere dealer.

ER93822,00001E8 -19-30MAY13-14/47

Neutral Start Check	Put steering column FNR/gear select switch in first gear forward (1F) or first gear reverse (1R) position, then press engine start switch. *LOOK/LISTEN: Does engine start?* *Does display unit indicate a neutral gear selection?* *LISTEN: Does audible alarm beep?* *NOTE: F or R will not appear in gear display until gear shift switch is cycled back to neutral and park brake is released.*	**YES:** Go to next check. **NO:** See your authorized John Deere dealer.

ER93822,00001E8 -19-30MAY13-15/47

Operational Checks—Ignition ON, Engine ON Checks

ER93822,00001E8 -19-30MAY13-16/47

Hydraulic and Transmission Oil Warmup Procedure	**IMPORTANT: For following checks, all systems must be warmed up to operating range to get accurate test results.** See Warmup and Cold Weather Warmup. (Section 2-2.)	**YES:** Go to next check.

Continued on next page

ER93822,00001E8 -19-30MAY13-17/47

Park Brake Check

CAUTION: Prevent possible injury from machine movement. Perform this check in an open area away from other people and machinery.

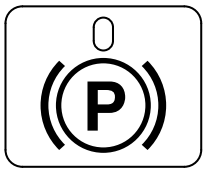

TX1123787 —UN—08OCT12

Park Brake Switch



TX1123574 —UN—08OCT12

Park Brake Indicator

Shift transmission to neutral (N).

Press park brake switch to apply park brake (LED on).

LOOK: Does park brake switch LED come on when park brake is applied?

LOOK: Does park brake indicator on advanced display unit (ADU) come on when park brake is applied?

Fasten seat belt.

Press park brake switch to release park brake (LED off).

LOOK: Does park brake switch LED go off when park brake is released?

LOOK: Does park brake indicator on ADU go off when park brake is released?

LOOK: Does engine rpm displayed on ADU increase?

Check park brake operation using ADU:

- Press SELECT button to display MAIN MENU.
- Press DOWN button until DIAGNOSTICS is highlighted.
- Press SELECT button to display DIAGNOSTICS menu.
- Press DOWN button until MORE is highlighted.
- Press SELECT button to display second screen of DIAGNOSTICS menu.
- Press DOWN button until MORE is highlighted.
- Press SELECT button to display third screen of DIAGNOSTICS menu.
- Press DOWN button until PARK BRAKE TEST is highlighted.
- Press SELECT button to begin park brake test.

Follow on-screen instructions to perform park brake test.

LOOK/FEEL: Did machine remain stationary?

YES: Go to next check.

NO: See your authorized John Deere dealer.

Continued on next page

ER93822,00001E8 -19-30MAY13-18/47

Park Brake Functional Check	**CAUTION: Prevent possible injury from machine movement. Perform this check away from other people and machinery.** Fill bucket with full load of material. Drive machine on to the maximum downhill slope of the worksite, up to a 15% slope (15% grade). Apply service brakes. Shift transmission to neutral (N). Press park brake switch to apply park brake (LED on). Release service brakes. *NOTE: Machine must not move when park brake is applied.* *LOOK/FEEL: Does machine roll forward when park brake is applied?*	**YES:** If machine moves, see your authorized John Deere dealer. **NO:** Go to next check.

ER93822,00001E8 -19-30MAY13-19/47

Service Brake Check	Move each brake pedal to check free travel. *FEEL: Does each brake pedal have approximately 6 mm (0.25 in.) free travel?*	**YES:** Go to next step in this check. **NO:** Inspect for debris under brake pedal. Inspect brake pedal linkage for damage.
	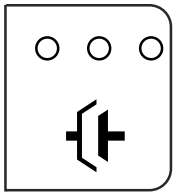 T194311 —UN—11SEP03 *Clutch Cut-Off Enable Switch* Push clutch cut-off enable switch until function is off (LEDs off). Fully apply either brake pedal. Push park brake switch to OFF. Put transmission in second forward. Increase engine speed to fast idle. *LOOK: Does machine remain stationary or move slowly?* Repeat check three times to ensure accurate results.	**YES:** Go to next check. **NO:** See your authorized John Deere dealer.

Continued on next page

ER93822,00001E8 -19-30MAY13-20/47

Service Brake and Brake Accumulator Precharge Check

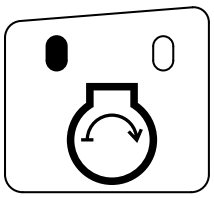

TX1028777 —UN—30AUG07

Engine Start Switch

Stop engine.

Push engine start switch once to enable ignition ON mode.

Observe brake pressure using ADU:

- Push SELECT button on ADU to access MAIN MENU.
- Push DOWN button until DIAGNOSTICS is highlighted.
- Push SELECT button to display DIAGNOSTICS menu.
- Push DOWN button until HYDRAULIC SENSORS is highlighted.
- Push SELECT button to display BRAKE PRESSURE.

Slowly pump brake pedal and count number of applications until brake pressure reading on ADU is zero.

Push engine start switch and hold to start machine.

With engine speed at slow idle, observe ADU until brake pressure reading stabilizes.

Push engine stop switch to turn OFF engine.

Push engine start switch once to enable ignition ON mode.

Slowly pump brake pedal and count number of applications until low brake pressure warning light comes on.

LOOK:



TX1076768 —UN—30APR10

Brake Pressure Light

Are at least 10 brake pedal applications needed before low brake pressure light comes on?

LOOK: Do brake lights come on at appropriate time during pedal application (reasonable pedal travel)?

YES: Go to next check.

NO: If low brake pressure light does not activate before brake pressure reading on ADU is at zero pressure, see your authorized John Deere dealer.

If fewer than 10 brake pedal applications cause low brake pressure light to come on, see your authorized John Deere dealer.

Continued on next page

Clutch Cut-Off Check	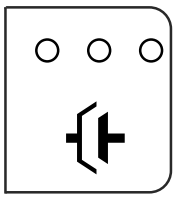 T194311 —UN—11SEP03 *Clutch Cut-Off Enable Switch* Push clutch cut-off enable switch to enable clutch cut-off for driving on any slope (one or more LEDs on). Ensure that transmission is in first or second gear. Apply service brake. Increase engine speed to 1500 rpm. Push clutch cut-off enable switch until clutch cut-off function is off (LEDs off). *LISTEN/LOOK: Does engine rpm drop?* *FEEL: Does machine pull against brakes?*	**YES:** Go to next check. **NO:** See your authorized John Deere dealer.

Continued on next page

ER93822,00001E8 -19-30MAY13-22/47

Torque Converter and Engine Power Check

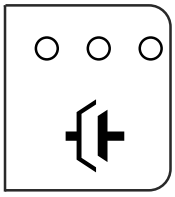

T194311 —UN—11SEP03

Clutch Cut-Off Enable Switch

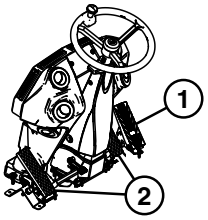

TX1076771 —UN—23APR10

Accelerator and Brake Pedals

1— Accelerator Pedal
2— Brake Pedal (2 used)

CAUTION: Prevent possible injury from machine movement. Perform this check in an open area away from other people and machinery.

Wear seat belt while operating machine.

Fasten seat belt.

Release park brake.

Disable clutch cut-off by pushing clutch cut-off enable switch on sealed switch module (SSM) (LEDs off).

See your authorized John Deere dealer.

Apply service brakes so machine does not move.

Shift transmission to third gear forward.

Push accelerator pedal until it contacts stop bolt. Record engine speed that appears in display window.

LOOK: Is torque converter stall speed within following range?

- No. 1 fuel: 1880—1980 rpm
- No. 2 fuel: 1930—2030 rpm

Put transmission in neutral and run for 15 seconds to cool oil.

YES: Go to next check.

NO: If stall speed is outside range, problem may be engine power, torque converter, or hydraulic system.

See your authorized John Deere dealer.

Continued on next page

ER93822,00001E8 -19-30MAY13-23/47

Differential Lock Check

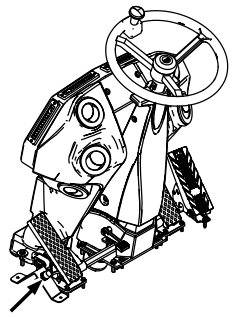

TX1045808 —UN—17JUL08

Differential Lock Foot Switch

Park machine on hard dirt or gravel surface.

Release brakes.

Push differential lock foot switch and steer machine left and right.

Release switch and steer machine left and right.

LOOK: Do front wheels slide with differential lock on?

NOTE: It is normal to get a "clunk" sound when switch is released.

LOOK: Do front wheels rotate in opposite directions with differential lock switch released?

YES: Go to next check.

NO: See your authorized John Deere dealer.

ER93822,00001E8 -19-30MAY13-24/47

Auto-Differential Lock Check (If Equipped)

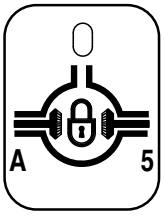

TX1073279 —UN—22MAR10

Auto-Differential Lock Enable Switch

Enable auto-differential lock (ADL) by pushing auto-differential lock enable switch on SSM (LED on).

NOTE: Auto-differential lock diagnostic screen shows status of radar beam request from vehicle control unit (VCU) and whether individual front and rear beams are on or off. Monitor screen also displays calculated ground speed and actual ground speed measured by front and rear beams.

Observe auto-differential lock diagnostic screen on ADU. See Display Unit—Main Menu—Diagnostics—Auto Diff Lock (If Equipped). (Section 2-1.)

Shift transmission to first gear forward.

Position machine on a gravel surface with bucket in pile or against an immovable object.

Lower boom enough to take some load off and lift front axle slightly.

Gradually increase engine speed until front wheels begin to turn.

NOTE: Initially only one front wheel will turn and if ADL is functioning correctly, differential lock will automatically engage causing both front wheels to turn equally.

LOOK: Do both front wheels turn equally?

YES: Go to next check.

NO: See your authorized John Deere dealer.

Continued on next page

ER93822,00001E8 -19-30MAY13-25/47

Automatic Shift Check

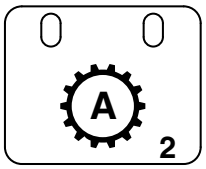

TX1028750 —UN—30AUG07

Automatic Transmission Switch

CAUTION: Prevent possible injury from machine movement. Perform this check in an open area away from other people and machinery.

Wear seat belt while operating machine.

NOTE: In AUTO 1-D mode, transmission will start in second when initially shifted from neutral. After initial shift from neutral, transmission will shift to first if a high load is encountered. Transmission will upshift or downshift as ground speed dictates, but will only upshift to highest gear selected.

In AUTO 2-D mode, transmission will shift to highest gear selected as ground speed increases, or will downshift to second as ground speed decreases. Transmission will never shift to first gear.

Fasten seat belt.

Put transmission in AUTO 1-D mode by pushing automatic transmission switch on sealed switch module (SSM) (one LED on).

Push park brake switch on SSM to release park brake. Make sure park brake indicator on advanced display unit (ADU) is off.

Shift transmission to D using steering column FNR/gear select switch.

Put steering column FNR/gear select switch to forward (F) position.

Drive machine on level ground and slowly accelerate to fast idle speed while observing each upshift.

Reduce engine speed to slow idle and observe each downshift.

LOOK: Does transmission shift through all gears depending on auto mode selected?

NOTE: When in D automatic, transmission starts out in 2nd gear and upshifts to 3rd, 4th, then 5th (if equipped with five speed transmission) as machine accelerates. As machine decelerates, transmission downshifts until 2nd gear is obtained. Transmission will shift at different speeds, depending on machine loads.

YES: Go to next check.

NO: See your authorized John Deere dealer.

Continued on next page

ER93822,00001E8 -19-30MAY13-26/47

Transmission Shift Mode Check

CAUTION: Prevent possible injury from machine movement. Perform this check in an open area away from other people and machinery.

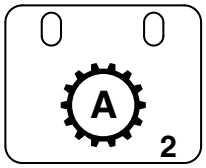

TX1028750 —UN—30AUG07

Automatic Transmission Switch

NOTE: On machines equipped with single lever pilot controls, quick shift switch is raised switch on top of control lever.

On machines equipped with two or three lever pilot controls only, quick shift switch is located on top of boom (left) pilot control lever.

Quick Shift feature operates in all gears.

Down/UP Mode:

1. Push automatic transmission switch on sealed switch module (SSM) to put transmission in manual mode (LEDs off).
2. Push SELECT button on advanced display unit (ADU) to access MAIN MENU. Select SETTINGS, then QUICK SHIFT menu. See Display Unit—Main Menu—Settings—Quick Shift. (Section 2-1.)
3. Push SELECT to set quick shift in DOWN/UP mode.
4. Release park brake and shift to third forward.
5. Drive machine at approximately 1600 rpm and press quick shift switch once.
   LOOK/FEEL: Does transmission shift to and remain in 2nd gear?
6. Push quick shift switch once more.
   LOOK/FEEL: Does transmission shift back to third gear?

NOTE: If quick shift switch is pushed twice, transmission will shift down one gear, then immediately shift back to where it was.

Down Only Mode:

1. Automatic transmission switch in manual mode (LED off).
2. Push SELECT to access MAIN MENU. Select SETTINGS, then QUICK SHIFT menu. See Display Unit—Main Menu—Settings—Quick Shift. (Section 2-1.)
3. Push NEXT to highlight DOWN ONLY, then push SELECT to set quick shift in DOWN ONLY mode.
4. Release park brake and shift to third forward.
5. Drive machine at approximately 1200 rpm and press quick shift switch once.
   LOOK/FEEL: Does transmission shift to and remain in second gear?
6. Push quick shift switch once more.
   LOOK/FEEL: Does transmission shift to and remain in first gear?
7. Push quick shift switch once more.
   LOOK/FEEL: Does transmission stay in first gear?

NOTE: When in DOWN ONLY mode, pushing quick shift switch will not change gears once first gear is reached unless a direction or gear change is made.

YES: Go to next check.

NO: Check return to dig (RTD) and quick shift switches 10-amp fuse (F11). See Replacing Fuses. (Section 4-1.)

NO: See your authorized John Deere dealer.

Continued on next page

ER93822,00001E8 -19-30MAY13-27/47

Transmission Shift Modulation Check

CAUTION: Prevent possible injury from machine movement. Perform this check in an open area away from other people and machinery.

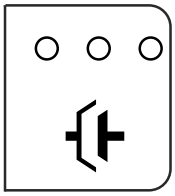

T194311 —UN—11SEP03

Clutch Cut-Off Enable Switch

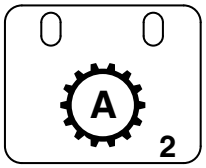

TX1028750 —UN—30AUG07

Automatic Transmission Switch

Push clutch cut-off enable switch to disable clutch cut-off (LEDs off).

Push automatic transmission switch to put transmission in manual mode (LEDs off).

CAUTION: To prevent personal injury fasten seat belt before performing this check. Machine will change directions abruptly!

Shift transmission to first forward.

Increase engine speed to fast idle and allow machine to reach full travel speed in first gear.

Shift from forward to reverse, then reverse to forward several times while allowing machine to reach full speed in forward and reverse before changing directions.

Repeat check in second gear.

LOOK: Does machine slow down and change direction smoothly?

Drive machine in second gear with engine speed at fast idle.

Apply service brakes to slow engine down to 1800 rpm, then while still holding service brakes, shift to first gear.

FEEL: Does transmission shift smooth without jerking?

YES: Go to next check.

NO: See your authorized John Deere dealer.

Continued on next page

ER93822,00001E8 -19-30MAY13-28/47

Pilot Controller Lock Check

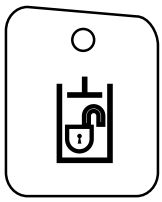

T194312 —UN—11SEP03

Pilot Enable/Boom Down Switch



T103429

T103429 —UN—09SEP96

Pilot Control Lever

Run machine at slow idle.

Push pilot enable/boom down switch to lock pilot controls (LED off).

Hold control lever in boom raise position.

Push pilot enable/boom down switch to unlock pilot controls (LED on).

LOOK: Does boom rise when pilot controls are unlocked?

Push pilot enable/boom down switch to lock pilot controls (LED off) and observe boom.

LOOK: Does boom stop when controls are locked?

Unlock pilot controls and check all hydraulic functions.

- Boom up/down
- Bucket roll/dump
- Auxiliary functions
- Steering (left and right)
- Pin disconnect

LOOK: Do all equipped hydraulic functions operate correctly?

YES: Go to next check.

NO: See your authorized John Deere dealer.

ER93822,00001E8 -19-30MAY13-29/47

Pilot Enable Solenoid and Pilot Accumulator Check

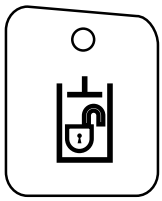

T194312 —UN—11SEP03

Pilot Enable/Boom Down Switch

CAUTION: Prevent possible crushing injury. Keep area around boom clear of personnel when performing this check.

Raise boom.

Stop engine.

Push engine start switch once to enable ignition ON mode.

Push and hold pilot enable/boom down switch.

Move control lever to boom lower position.

LOOK: Does boom fully lower to the ground?

YES: Go to next check.

NO: See your authorized John Deere dealer.

Continued on next page

ER93822,00001E8 -19-30MAY13-30/47

Pilot Control Valve Boom Float Check

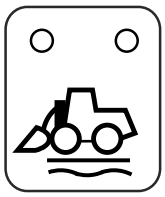

T194313 —UN—11SEP03

Ride Control Switch

Start and run engine at slow idle.

Disable ride control by pushing ride control switch on sealed switch module (SSM) (LEDs off).

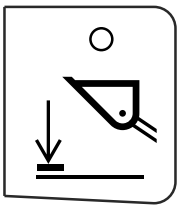

T194315 —UN—11SEP03

Return-to-Carry Enable Switch

Disable return-to-carry by pushing return-to-carry enable switch on SSM (LED off).

With bucket partially dumped, lower boom to raise front of machine.

Push hydraulic control lever to float detent position and release lever.

LOOK: Does front of machine lower to the ground and control lever remain in float detent position when released?

YES: Go to next check.

NO: See your authorized John Deere dealer.

ER93822,00001E8 -19-30MAY13-31/47

Boom and Bucket Cylinder Drift Check

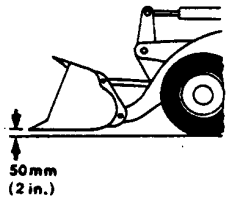

T6564NZ —UN—19OCT88

Bucket Position

Set bucket flat on the ground and raise approximately 50 mm (2 in.).

Stop engine. Observe bucket for 1 minute.

LOOK: Does bucket remain in position? Bucket should not settle to the ground.

YES: Go to next check.

NO: See your authorized John Deere dealer.

Continued on next page

ER93822,00001E8 -19-30MAY13-32/47

Return-to-Dig (RTD) Check

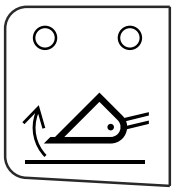

T194314 —UN—11SEP03

Return-to-Dig Enable Switch

Raise boom to about eye level.

Fully dump bucket.

Enable return-to-dig function by pushing return-to-dig enable switch on sealed switch module (SSM) (one LED on).

Put hydraulic control lever in bucket curl (RTD) detent position.

LOOK/FEEL: Does hydraulic control lever stay in detent position?

LOOK: Does bucket travel stop upon reaching dig position?

LOOK: Does hydraulic control lever return to neutral upon reaching dig position?

YES: Go to next check.

NO: See your authorized John Deere dealer.

ER93822,00001E8 -19-30MAY13-33/47

Return-to-Carry (RTC) Check

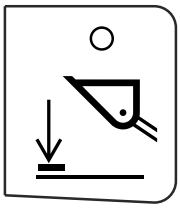

T194315 —UN—11SEP03

Return-to-Carry Enable Switch

Fully raise boom.

Put bucket in dig position.

Push return-to-carry enable switch on sealed switch module (SSM) to enable return-to-carry function (LED on).

Put hydraulic control lever in boom down detent position.

LOOK/FEEL: Does hydraulic control lever stay in detent position?

LOOK: Does boom travel stop upon reaching carry position?

LOOK: Does hydraulic control lever return to neutral upon reaching carry position?

YES: Go to next check.

NO: See your authorized John Deere dealer.

Continued on next page

ER93822,00001E8 -19-30MAY13-34/47

Boom Height Kickout (BHKO) Check

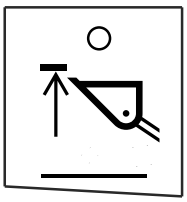

T194316 —UN—11SEP03

Boom Height Kickout Enable Switch

Lower boom to the ground.

Put bucket in dig position.

Push boom height kickout enable switch on sealed switch module (SSM) to enable boom height kickout function (LED on).

Put hydraulic control lever in boom up detent position.

LOOK/FEEL: Does hydraulic control lever stay in detented position?

LOOK: Does boom travel stop upon reaching boom height kickout position?

LOOK: Does hydraulic control lever return to neutral upon reaching boom height kickout position?

YES: Go to next check.

NO: See your authorized John Deere dealer.

ER93822,00001E8 -19-30MAY13-35/47

Pin Disconnect System Check (If Equipped)

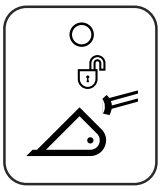

T194317 —UN—11SEP03

Pin Disconnect Switch

Run engine at slow idle.

Position bucket flat on the ground.

Push and hold pin disconnect switch on sealed switch module (SSM).

LOOK: Does pin disconnect cylinder retract both pins when switch is pushed?

Push pin disconnect switch to extend pin disconnect cylinder pins.

YES: Go to next check.

NO: See your authorized John Deere dealer.

Continued on next page

ER93822,00001E8 -19-30MAY13-36/47

Ride Control Check (If Equipped)	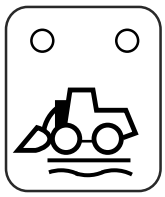 T194313 —UN—11SEP03 *Ride Control Switch* **CAUTION: Boom will jump upward during this check. To avoid personal injury make sure area around bucket is clear.** Disable ride control by pushing ride control switch (LEDs off). Raise boom to maximum height and hold control lever over relief for 2 seconds. Lower boom and bucket to eye level. Push ride control switch once to enable manual mode (left LED on) and observe loader boom. *LOOK/FEEL: Does boom jump upward 30 mm (1.2 in.) or more?* Push ride control switch on SSM to enable auto mode (LEDs on). Raise boom to maximum height and hold control lever over relief for 2 seconds. Lower boom and bucket to eye level and slowly accelerate to 8 km/h (5 mph) while watching speedometer and bucket. *LOOK/FEEL: Does ride control come on at approximately 5 km/h (3 mph) and bucket rise slightly?*	**YES:** Go to next check. **NO:** See your authorized John Deere dealer.

Continued on next page

ER93822,00001E8 -19-30MAY13-37/47

Spin Control Check

CAUTION: Prevent possible injury from machine movement. Perform this check in an open area away from other people and machinery.

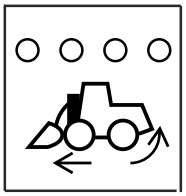

T194320 —UN—11SEP03

Spin Control Enable Switch

Push spin control enable switch until mode 1 is enabled (left LED on).

Release park brake and shift transmission into first gear forward.

Drive machine in an open clear area with engine at fast idle.

Hold hydraulic control lever in bucket roll back position. Observe engine speed drop.

NOTE: The engine fast idle speed will remain at lower speed setting until transmission is shifted to neutral or spin control is disabled (LEDs off).

Release hydraulic control lever and push spin control switch until function is disabled (LEDs off).

Hold hydraulic control lever in bucket roll back position. Observe engine speed drop as hydraulic system is at high standby pressure.

Repeat check with spin control switch at modes 2—4.

LOOK/LISTEN: Does engine fast idle speed decrease to specification for each mode?

Spin Control—Specification

Engine—Mode 1 (one LED on)—Speed	1850 rpm
Engine—Mode 2 (two LEDs on)—Speed	1700 rpm
Engine—Mode 3 (three LEDs on)—Speed	1550 rpm
Engine—Mode 4 (four LEDs on)—Speed	1400 rpm

YES: Go to next check.

NO: See your authorized John Deere dealer.

ER93822,00001E8 -19-30MAY13-38/47

Proportional Fan Check

Manually set fan speed to 0%. To set fan speed, see your authorized John Deere dealer.

LOOK/FEEL: Observe fan speed.

Push BACK button, then push SELECT, to manually set fan speed to 100%.

LOOK/FEEL: Is fan speed higher than at 0%?

YES: Go to next check.

NO: See your authorized John Deere dealer.

ER93822,00001E8 -19-30MAY13-39/47

Reversing Fan Check (If Equipped)

Manually activate by pushing SELECT button on ADU to access MAIN MENU.

Push DOWN button until SETTINGS is highlighted.

Push SELECT button to access SETTINGS menu.

Push SELECT button to access REVERSE FAN.

Push DOWN button to access ON and push SELECT.

NOTE: The reversing fan slows down and then reverses. After a reversing cycle the fan will automatically revert to OFF even if the fan is in automatic mode.

Reversing fan function cannot be operated twice within 1 minute. Wait 1 minute before attempting to reverse fan direction again.

LISTEN/LOOK: Does fan reverse direction and operate at full speed for 15 seconds?

Fan will change directions and operate at normal speed.

YES: Go to next check.

NO: See your authorized John Deere dealer.

Continued on next page

ER93822,00001E8 -19-30MAY13-40/47

Orbital Steering Valve Check

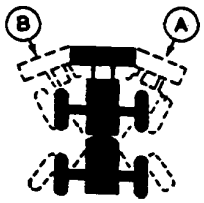

T6471AQ —UN—19OCT88

Machine Articulation (overhead view)

Transmission in neutral.

Run engine at slow idle.

Remove foot from brake pedal.

Release park brake.

Turn orbital steering wheel right until machine frames contact right articulation stops (position A).

Turn orbital steering wheel left until machine frames contact left articulation stops (position B).

LOOK: Does machine steer smoothly in both directions?

FEEL: Is excessive effort required to turn steering wheel?

LOOK: Do frames stop moving when steering wheel is stopped?

NOTE: It is normal for machine frames to drift away from frame stops when steering wheel is released.

YES: Go to next check.

NO: See your authorized John Deere dealer.

ER93822,00001E8 -19-30MAY13-41/47

Joystick Steering Check (If Equipped)

CAUTION: Prevent bodily injury and machine damage. Joystick steering sensitivity changes with speed. Become familiar with steering at all speeds before operating machine in confined areas.

Move steering column FNR/gear select switch to neutral (N) position.

Lower left arm rest.

LISTEN: Does monitor alarm beep?

Push joystick activation switch on left arm rest to activate joystick steering.

LOOK/LISTEN: Does joystick steering indicator flash on monitor? Does monitor alarm sound?

NOTE: Joystick steering will not activate if park brake is applied.

Push gear upshift and gear downshift buttons located on joystick handle.

LOOK: Does monitor display show gear selection as buttons are pushed?

Push joystick horn button.

LISTEN: Does horn activate?

Move joystick left and right.

LOOK/FEEL: Does machine move smoothly left and right?

Push left joystick (steering) forward, neutral, reverse (FNR) switch to forward (F) and reverse (R) positions.

LOOK/FEEL: Does machine move forward and backward?

Select first forward using left joystick (steering) forward, neutral, reverse (FNR) switch, then move steering column FNR/gear select switch to first reverse.

LOOK/FEEL: Does joystick steering deactivate and steering column selection override joystick steering gear selection?

YES: Go to next check.

NO: Joystick steering does not operate. Check joystick steering ignition power 5-amp fuse (F29). See Replacing Fuses. (Section 4-1.)

See your authorized John Deere dealer.

Continued on next page

ER93822,00001E8 -19-30MAY13-42/47

Secondary Steering System Check (If Equipped)	**CAUTION: Prevent possible injury from machine movement. This check involves stopping engine while machine is moving. Perform this check in an open area away from other people and machinery.** **IMPORTANT: Do not operate secondary steering pump for more than 15 seconds with orbital steering in neutral or damage to pump and motor can occur.** *NOTE: A minimum speed of 19 km/h (12 mph) is needed when doing this check to allow the system enough time to lose steering pressure and energize secondary steering pump before park brake applies and vehicle speed reaches 0 km/h (0 mph).* Operate machine on a hard, level surface with frames straight and machine traveling at least 19 km/h (12 mph). *NOTE: An alternative way of stopping the engine is to remove ECU ignition power 5-amp fuse (F10). See Replacing Fuses. (Section 4-1.)* *NOTE: Do not push engine STOP button twice or hold it down for 1 second or more. Doing so will turn off ignition.* Push engine stop switch once on sealed switch module (SSM) to stop engine. When machine travel speed reaches less than 0.5 km/h (0.3 mph), ignition power will turn off. To keep ignition power on, push and release engine start switch when engine speed equals 0 rpm or is slow enough NOT to cause the engine to start again. *NOTE: The secondary steering pump will stop operating when machine travel speed reaches 0 km/h (0 mph) and park brake applies.* *LOOK/FEEL: Does secondary steering activate?* Steer machine to right and left. *LOOK: Does machine steer approximately halfway to stops in both directions?* *LOOK: Does secondary steering icon appear on advanced display unit (ADU) until engine stop switch is pushed?*	**YES:** Go to next check. **NO:** See your authorized John Deere dealer.

Continued on next page

ER93822,00001E8 -19-30MAY13-43/47

Cycle Time Check

CAUTION: Prevent possible injury from unexpected machine movement. Clear all persons from the area before operating machine.

NOTE: All systems must be warmed up to operating range to get accurate test results.

Use advanced display unit (ADU) or Service ADVISOR™ application to observe engine rpm and hydraulic oil temperature.

Specification

Hydraulic Oil—Temperature ..... 44—56°C
110—130°F

Engine—Speed ..... Fast Idle

Perform each function three times and take an average of the times for a cycle time.

Record cycle time for each function.

Standard and High Lift Z-Bar—Specification

Boom Raise—Cycle Time ..... 6.4 seconds
Boom Lower (float)—Cycle Time ..... 3.0 seconds
Boom Lower (power down)—Cycle Time ..... 3.3 seconds
Bucket Dump (boom at full height)—Cycle Time ..... 1.6 seconds
Steering Wheel (stop to stop)—Turns 3.5
Orbital Steering (stop to stop)—Cycle Time ..... 2.4 sec.
Joystick Steering (stop to stop)—Cycle Time ..... 2.7 sec.

PowerIlel—Specification

Boom Raise—Cycle Time ..... 6.4 seconds
Boom Lower (float)—Cycle Time ..... 2.8 seconds
Boom Lower (power down)—Cycle Time ..... 3.3 seconds
Bucket Dump (boom at full height)—Cycle Time ..... 2.1 seconds
Steering Wheel (stop to stop)—Turns 3.5
Orbital Steering (stop to stop)—Cycle Time ..... 2.4 sec.
Joystick Steering (stop to stop)—Cycle Time ..... 2.7 sec.

LOOK: Are cycle times at specification?

YES: Go to next check.

NO: See your authorized John Deere dealer.

Continued on next page

ER93822,00001E8 -19-30MAY13-44/47

Embedded Payload Scale (EPS) Check (If Equipped)	Lower boom fully. Raise boom fully while observing advanced display unit (ADU) screen. *NOTE: A warmup screen may appear when boom reaches trigger point.* *LOOK: Does ADU screen change to weigh screen or warmup screen when bottom of bucket rises above drive lights (trigger point)?*	**YES:** Go to next step in this check. **NO:** See your authorized John Deere dealer.
	Remove any material build up from bucket and boom. 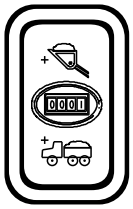 TX1076801 —UN—27APR10 *Counter Switch* With boom below trigger point, push and hold bucket button on counter switch for at least 1 second to zero scale. Put a known weight of at least 454 kg (1000 lb.) into bucket. Raise and lower boom fully through at least three “good lift” cycles while observing weight reading. To obtain a “good lift,” make sure to follow proper lifting instructions. See Embedded Payload Scale—If Equipped. (Section 2-2.) *NOTE: If prompted by a warmup screen, three warmup lift cycles will be required before three test lift cycles can be performed.* *LOOK: Is weight reading on monitor screen within 1% of actual weight in bucket?*	**YES:** Go to next step in this check. **NO:** See your authorized John Deere dealer.

Continued on next page

ER93822,00001E8 -19-30MAY13-45/47

Rear Camera Check (If Equipped)	Clean camera lens of any accumulation of dust, mud, snow, ice, or debris. *NOTE: To select different camera modes of radar object detection system, see Display Unit—Main Menu—Settings—Camera Mode. (Section 2-1.)* *On machines equipped with embedded payload scale (EPS), when EPS is active, INFO button must be pushed twice to activate camera.* Select MANUAL mode in ADU menu. *LOOK: Does image from rear camera appear on monitor when INFO button on ADU is pushed?*	 **YES:** Go to next step in this check. **NO:** See your authorized John Deere dealer.
	Select OBJECT mode in ADU menu. **IMPORTANT: To prevent possible property damage or damage to machine, DO NOT rely only on radar object detection to judge distance to object. Turn and look to rear of machine to verify distance to object. Use rear view mirrors to assist as necessary.** With transmission in first gear reverse, slowly drive machine rearward until rear of machine is within 4—5 m (12—15 ft.) of a large solid object. *LOOK: Does image from rear camera appear on monitor?* Drive machine forward until at least 6 m (20 ft.) away from object. *LOOK: Does monitor display revert back to previous screen?*	 **YES:** Go to next step in this check. **NO:** Check if ROD is activated by accessing SETTINGS submenu in ADU menus. See Display Unit—Main Menu—Settings. (Section 2-1.) IF OK: See your authorized John Deere dealer.
	Select REVERSE mode in ADU menu. Shift transmission in reverse. *LOOK: Does image from rear camera appear on monitor when transmission is shifted into reverse?* Shift transmission to neutral. *LOOK: Does monitor display revert back to previous screen?*	 **YES:** Go to next step in this check. **NO:** See your authorized John Deere dealer.
	Select IN REVERSE WITH OBJECT mode in ADU menu. With transmission in first gear reverse, slowly drive machine until rear of machine is within 4—5 m (12—15 ft.) of large solid object. *LOOK: Does image from rear camera appear when machine gets within 4—5 m (12—15 ft.) of object?* Shift transmission to neutral. *LOOK: Does monitor display revert back to previous screen?*	 **YES:** Go to next check. **NO:** See your authorized John Deere dealer.

Continued on next page

ER93822,00001E8 -19-30MAY13-46/47

Radar Object Detection (ROD) Check (If Equipped)	Clean radar unit of any accumulation of dust, mud, snow, ice, and debris.	
	Select OFF to deactivate radar object detection (ROD) in ADU menu. See Display Unit—Main Menu—Settings. (Section 2-1.)	
	Navigate back to ADU's machine operation screen.	**YES:** Go to next step in this check.
	LOOK: Is ROD icon with slash on steady?	**NO:** See your authorized John Deere dealer.
	Select ON to activate radar object detection (ROD) in ADU menu.	
	Navigate back to ADU's machine operation screen.	**YES:** Go to next step in this check.
	LOOK: Is ROD icon on steady?	**NO:** See your authorized John Deere dealer.
	Verify that ROD is activated by accessing OBJECT DETECT screen in ADU menus. See Display Unit—Main Menu—Diagnostics—Object Detect (If Equipped). (Section 2-1.)	
	LOOK: Is ON displayed in OBJECT DETECT screen?	
	IMPORTANT: To prevent possible property damage or damage to machine, DO NOT rely only on radar object detection to judge distance to object. Turn and look to rear of machine to verify distance to object. Use rear view mirrors to assist as necessary.	
	With transmission in first gear reverse, slowly drive machine until rear of machine is within 4—5 m (12—15 ft.) of a large solid object.	
	NOTE: When ROD system is active and radar unit detects an object, system will cause audible alarm to beep.	
	LISTEN: Does audible alarm beep?	
	LOOK: Does OBJECT DETECT screen indicate target detected?	
	Move machine closer to object.	
	LISTEN: Does audible alarm beep faster as machine moves closer to object?	**YES:** Checks complete.
	LOOK: Does OBJECT DETECT screen indicate target detected is closer in detection zone?	**NO:** See your authorized John Deere dealer.

ER93822,00001E8 -19-30MAY13-47/47

Miscellaneous—Troubleshooting

Troubleshooting Procedure

NOTE: Troubleshooting charts are arranged from the simplest to verify, to least likely, more difficult to verify. When diagnosing a problem, use all possible means to isolate the problem to a single component or system. Use the following steps to diagnose problems:

Step 1. Operational Checkout Procedure

Step 2. Troubleshooting Charts

Step 3. Adjustments

Step 4. See your authorized John Deere dealer.

HG31779,0000020 -19-06MAY10-1/1

Engine

Symptom	Problem	Solution
Engine Will Not Crank	Weak battery	Replace battery.
	Corroded or loose battery connections	Clean battery terminals and connections.
	Battery disconnect switch malfunction	Repair or replace switch as required. See your authorized dealer.
	Starter solenoid malfunction	Replace solenoid. See your authorized dealer.
	Starter malfunction	Replace starter. See your authorized dealer.
	Start circuit malfunction	Check wiring, fuses, and relays. See your authorized dealer.
	Engine is seized	Check by rotating engine by hand. See your authorized dealer.
Engine Cranks/Won't Start	Fuel quality and quantity	If quality is poor, replace fuel with proper fuel. If quantity is low, fill fuel tank.
	Oil viscosity	Check for correct oil viscosity.
	Restricted or plugged air filters	Replace air filters. See Inspect Engine Air Cleaner Elements. (Section 3-3.)
	Restricted or plugged fuel filters	Replace fuel filters. See Replace Primary Fuel Filter and Replace Final Fuel Filter. (Section 3-8.)
	Electronic control system problem or basic engine problem	See your authorized dealer.
Engine Misfires/Runs Irregularly	Fuel quality and quantity	If quality is poor, replace fuel with proper fuel. If quantity is low, fill fuel tank.
	Restricted or plugged air filters	Replace air filters. See Inspect Engine Air Cleaner Elements. (Section 3-3.)
	Restricted or plugged fuel filters	Replace fuel filters. See Replace Primary Fuel Filter and Replace Final Fuel Filter. (Section 3-8.)
	Engine accessories cycling on and off	Check engine accessories, such as air conditioner, cycling on and off.
	Electronic interference	Check for improperly installed radios, etc.

Continued on next page

Symptom	Problem	Solution
	Electronic control system problem or basic engine problem	See your authorized dealer.
Engine Does Not Develop Full Power	Restricted or plugged air filters	Replace air filters. See Inspect Engine Air Cleaner Elements. (Section 3-3.)
	Restricted or plugged fuel filters	Replace fuel filters. See Replace Primary Fuel Filter and Replace Final Fuel Filter. (Section 3-8.)
	Fuel quality and quantity	If quality is poor, replace fuel with proper fuel. If quantity is low, fill fuel tank.
	Electronic control system problem or basic engine problem	See your authorized dealer.
Engine Emits Excessive White Exhaust Smoke	Low engine coolant temperature	Warm engine coolant. *NOTE: For temperatures below -20°C (-4°F), it may take up to 2 minutes for white exhaust smoke to clear.*
Engine Emits Excessive Black or Gray Smoke	Engine overloaded	Reduce load on engine.
	Fuel quality and quantity	If quality is poor, replace fuel with proper fuel. If quantity is low, fill fuel tank.
	Restricted or plugged air filters	Replace air filters. See Inspect Engine Air Cleaner Elements. (Section 3-3.)
	Electronic control system problem or basic engine problem	See your authorized dealer.
	Exhaust filter is cracked or damaged	See your authorized dealer.
Engine Idles Poorly	Fuel quality and quantity	If quality is poor, replace fuel with proper fuel. If quantity is low, fill fuel tank.
	Air leak on suction side of air intake system	Check hose and pipe connections for tightness; repair as required.
	Electronic control system problem or basic engine problem	See your authorized dealer.
Excessive Fuel Consumption	Engine overloaded	Reduce load.
	Restricted or plugged air filters	Replace air filters. See Inspect Engine Air Cleaner Elements. (Section 3-3.)
	Improper type of fuel	Use proper type of fuel. See Diesel Fuel. (Section 3-1.)

Continued on next page

Symptom	Problem	Solution
	Poor fuel quality	Drain fuel and replace with quality fuel of the proper grade. See Diesel Fuel. (Section 3-1.)
	Leaks in fuel supply system	Locate source of leak and repair as needed. See your authorized dealer if necessary.
	Fuel delivery system malfunction	See your authorized dealer.
Engine Overheats	Engine overloaded	Reduce load.
	Low coolant level	Fill surge tank to proper level. Check radiator and hoses for loose connections or leaks. See Check Coolant Level in Surge Tank. (Section 3-4.)
	Faulty radiator cap	Replace cap.
	Low engine oil level	Check engine oil level. Add engine oil as required. See Check Engine Oil Level. (Section 3-4.)
	Incorrect grade of fuel	Use correct grade of fuel. See Diesel Fuel. (Section 3-1.)
	Defective temperature sensor	See your authorized dealer.

OUT4001,00005BB -19-20SEP10-3/3

Transmission

Symptom	Problem	Solution
Transmission Clutch Slippage	Low transmission oil level	Check transmission oil level. See Check Transmission Oil Level. (Section 3-4.)
	Wrong transmission oil grade	Use correct grade of transmission oil. See Transmission, Park Brake, and Axle Oil. (Section 3-1.)
	Restricted transmission pump suction screen	Remove and clean screen.
Machine Will Not Move	Diagnostic trouble code (DTC) related problem	See your authorized dealer.
	Applied park brake (electrical problem)	Check park brake fuse (F23).
		Check operation of park brake.
	Low transmission oil level	Check transmission oil level. See Check Transmission Oil Level. (Section 3-4.)
	Clutch cut-off activated	Check that brake pedal is fully released.
	No power to transmission control unit	Check fuse (F28).
		Check monitor and transmission control unswitched fuse.
	Shift switch malfunction	Check that display window shows correct gear when shift switch is moved.
	Broken drive shafts	Inspect drive shafts and universal joints for external damage.
	Park brake hydraulic malfunction	See your authorized dealer.
Machine Does Not Engage	Clutch cut-off activated	Check that brake pedal is fully released.
	Shift switch problem	Check diagnostic trouble codes to define problem.
Machine Will Not Shift Correctly	Speed sensor disconnected or malfunction	Check electrical connectors on transmission speed sensors.
	Low transmission oil level	Check transmission oil level. See Check Transmission Oil Level. (Section 3-4.)
	Electronic control system problem or basic transmission problem	See your authorized dealer.

Continued on next page

Symptom	Problem	Solution
Transmission Shifts Too Slow	Low transmission oil level (aeration of oil)	Check transmission oil level. See Check Transmission Oil Level. (Section 3-4.)
	Restricted transmission pump suction screen	Remove and clean suction screen.
	Electronic control system problem or basic transmission problem	See your authorized dealer.
Transmission Hydraulic System Overheats	High transmission oil level	Check transmission oil level. See Check Transmission Oil Level. (Section 3-4.)
	Low transmission oil level	Check transmission oil level. See Check Transmission Oil Level. (Section 3-4.)
	Wrong transmission oil grade	Use correct grade of transmission oil. See Transmission, Park Brake, and Axle Oil. (Section 3-1.)
	Park brake dragging	Check for heat in park brake area.
	Pinched, restricted or leaking lube lines	Check cooler lines.
	Malfunction in temperature gauge or sender	Install temperature sensor to verify temperature. See your authorized dealer.
	Restricted air flow through oil cooler or radiator	Check oil cooler and radiator for debris. Clean if needed.
	Internal transmission problem	See your authorized dealer.
Excessive Transmission Noise (under load or no load)	Worn parts or damaged transmission	Inspect suction screen for metal particles. If metal particles are present, see your authorized dealer.
	Damaged output damper	Inspect output damper. If output damper is damaged, see your authorized dealer.
	Driveline or park brake	Inspect driveline and park brake. If any part of the driveline or park brake is damaged, see your authorized dealer.
Foaming Oil	Incorrect type of transmission oil	Check transmission oil type. Change transmission oil if needed. See Drain and Refill Transmission Oil and Replace Filters. (Section 3-10.)
	High transmission oil level	Check transmission oil level. See Check Transmission Oil Level. (Section 3-4.)

Continued on next page

Symptom	Problem	Solution
	Low transmission oil level	Check transmission oil level. See Check Transmission Oil Level. (Section 3-4.)
Transmission Oil Ejected From Dipstick	Plugged breather	Inspect breather on top of transmission. Replace if needed.
Machine Vibrates	Aerated transmission oil	Check transmission oil level. See Check Transmission Oil Level. (Section 3-4.) Add transmission oil if needed.
	Universal joints on transmission drive shaft or axle drive shafts worn or damaged	Check universal joints. Replace if worn or damaged. See your authorized dealer.
	Damaged output damper	Inspect output damper. If output damper is damaged, see your authorized dealer.
Machine Lacks Power and Acceleration	Incorrect transmission oil	Drain transmission oil and refill. See Drain and Refill Transmission Oil and Replace Filters. (Section 3-10.)
	Aerated transmission oil	Check transmission oil level. See Check Transmission Oil Level. (Section 3-4.) Add transmission oil if needed.

OUT4001,00005BC -19-04JUN13-3/3

Differential and Axle

Symptom	Problem	Solution
No Differential Lock Operation	Malfunction in electrical circuit	With engine stopped and ignition on, activate differential lock and listen for a click from solenoid valve. If a click was not heard, see your authorized dealer.
	Electronic control system problem or basic differential or axle problem	See your authorized dealer.
	Stuck differential lock solenoid valve	With engine stopped and ignition on, activate differential lock and listen for a click from solenoid valve. If a click was not heard, see your authorized dealer.
	Excessive leakage in differential lock piston seals	Check axle oil level.
Differential Lock Slips or Chatters When Engaged	Axle oil broken down	Change axle oil. See Drain and Refill Front and Rear Axle Oil. (Section 3-10.)
	Excessive leakage differential lock piston seals	Check axle oil level.
Differential Lock Will Not Release	Stuck foot switch	Release foot switch.
	Malfunction in electrical circuit	With engine stopped and ignition on, activate differential lock and listen for a click from solenoid valve. If a click was not heard, see your authorized dealer.
	Stuck differential lock solenoid valve	With engine stopped and ignition on, activate differential lock and listen for a click from solenoid valve. If solenoid does not click, see your authorized dealer.
Axle Low on Oil	External leakage	Inspect axle for leaks.
Excessive Axle Noise	Low axle oil	Check axle oil. Remove drain plug and inspect for metal particles in axle case. See Check Front and Rear Axle Oil Level. (Section 3-8.)
	Engaged differential lock	Release lock. If circuit remains pressurized, check if foot switch is sticking. Remove and inspect. Check solenoid valve for sticking. Remove and inspect valve. If switch or solenoid valve are sticking, see your authorized dealer.
Oil Seeping From Outer Axle Seal	Dirt in face seal	Inspect face seals.

Continued on next page

Symptom	Problem	Solution
	Overfilled axle	Check differential lock oil return system for excessive internal restriction. Drain axle oil to proper oil level. See Drain and Refill Front and Rear Axle Oil. (Section 3-10.)
	High pressure in axle	Check axle breather. Remove blockage from breather or replace breather.
Axle Overheats	Low axle oil	Check axle oil level. Add oil if needed. See Check Front and Rear Axle Oil Level. (Section 3-8.)
	Overfilled axle	Check axle oil level. Drain oil if needed. See Drain and Refill Front and Rear Axle Oil. (Section 3-10.)
	Axle recirculation motor dual pump screens plugged	Inspect axle recirculation filter screen located in axle housing beneath input yoke.

OUT4001,00005BD -19-14MAY10-2/2

Service Brake

Symptom	Problem	Solution
Poor or No Brakes	Axle overheated	Check axle temperature.
	Brake disks worn or warped	Inspect service brakes. See your authorized dealer.
Aggressive Brakes	Clutch cut-off mode set to steep slope	Press and hold clutch cut-off switch to disable clutch cut-off (all LEDs off).
Brakes Drag	Brake pedal not returning	Inspect floor mat and pedal.
Brakes Chatter	Brake disk friction material worn	Inspect brake disks.
	Axle oil broken down	Change axle oil. See Drain and Refill Front and Rear Axle Oil. (Section 3-10.)
	Wrong oil in axles	Change axle oil. See Drain and Refill Front and Rear Axle Oil. (Section 3-10.) For correct axle oil, see Transmission, Park Brake, and Axle Oil. (Section 3-1.)

OUT4001,00005BE -19-21JUN10-1/1

Driveline

Symptom	Problem	Solution
Excessive Driveline Vibration or Noise	Lack of lube in park brake	Inspect park brake oil level and adjust as required. See Check Park Brake Oil Level. (Section 3-8.)
	Bent drive shaft	Inspect all drive shafts. Replace drive shaft if damaged or not in alignment.
	Loose yoke retaining nuts (drive shafts wobble at high speed)	Inspect. Replace.
	Rear axle oscillating support	Inspect.
	Lack of lubrication	Lubricate with proper grade of grease.

OUT4001,00005BF -19-14MAY10-1/1

Park Brake

Symptom	Problem	Solution
Brake Will Not Hold	Breather plugged	Inspect and clean breather.
	Malfunctioning park brake solenoid	Inspect.
Brake Overheats	Overfilled with park brake oil	Check park brake oil level. See Check Park Brake Oil Level. (Section 3-8.)
	Breather plugged	Inspect and clean breather.
Park Brake Indicator on Display Unit Comes On When Shifting From Fwd to Rev (All Other Gears OK)	Low park brake oil level	Check park brake oil level. See Check Park Brake Oil Level. (Section 3-8.)
	Cold transmission oil	Warm transmission oil. See Cold Weather Warmup. (Section 2-2.)
Park Brake Light Comes On For Each Shift	Cold transmission oil	Warm transmission oil. See Cold Weather Warmup. (Section 2-2.)
Park Brake Indicator on Display Unit Does Not Come On When Brake Applied	Faulty wiring or switch	Inspect for loose or broken wires between brake indicator switch and vehicle control unit (VCU).

OUT4001,00005C0 -19-14MAY10-1/1

Hydraulic System

Symptom	Problem	Solution
No Hydraulic Functions	Pilot enable/boom down switch OFF	Turn pilot enable/boom down switch ON.
	Pilot enable/boom down switch malfunction	Check pilot enable/boom down switch. See your authorized dealer.
Slow Hydraulic Functions	Cold hydraulic oil	Warm hydraulic oil.
	Slow engine speed	See Engine Does Not Develop Full Power in Engine troubleshooting section.
	Suction line air leak	Check for foamy hydraulic oil.
	Low hydraulic oil supply	Add hydraulic oil. See Drain and Refill Hydraulic System Oil. (Section 3-11.)
	Wrong hydraulic oil viscosity	Use recommended hydraulic oil. See Hydraulic System Oil. (Section 3-1.)
	Blocked or damaged line	Inspect lines.
	Slow cycle times due to low hydraulic system pressures	Verify cycle times and check hydraulic system pressure. Cycle times listed in the Operational Checkout. (Section 4-2.)
Noisy Hydraulic Pump	Low hydraulic oil supply or wrong viscosity	Add hydraulic oil. See Drain and Refill Hydraulic System Oil. (Section 3-11.) For recommended hydraulic oil. See Hydraulic System Oil. (Section 3-1.)
	Plugged or pinched suction line	Clean or replace line.
	Air in hydraulic oil	Check for foamy hydraulic oil. Tighten connections. Replace O-rings and/or lines.
	Loose or missing hydraulic line clamps	Tighten or replace clamps.
	Hydraulic lines in contact with frame	Inspect and repair.
Boom Float Function Does Not Work	Return-to-carry (RTC) switch ON	Turn RTC switch OFF.
One Hydraulic Function Does Not Work	Blockage in hydraulic oil lines or valve	Inspect lines for damage.
Function Drifts Down	Leaking cylinders	Check cylinder leakage.
	Boom lower solenoid valve	Check solenoid. See your authorized dealer.

Continued on next page

Symptom	Problem	Solution
	Leaking loader control valve	Replace valve section. See your authorized dealer.
Boom Down Does Not Work (Engine Off)	Pilot enable/boom down switch not held down	Push and hold pilot enable/boom down switch as loader control lever is moved.
	Boom down solenoid malfunction	Replace solenoid. See your authorized dealer.
	Pilot enable/boom down switch malfunction	Replace switch. See your authorized dealer.
Boom Raises After Engine Has Been Turned Off	Stored hydraulic pressure has leaked from ride control accumulator into boom cylinders	Discharge ride control accumulator at every shutdown. See Ride Control (If Equipped). (Section 2-2.)
Hydraulic Oil Overheats	Low hydraulic oil viscosity in hot weather	Use recommended hydraulic oil. See Hydraulic System Oil. (Section 3-1.)
	Cylinder leakage	Check cylinder leakage.
	Restriction in hydraulic oil lines or loader valve	Inspect for dented or kinked lines.
	Cooler plugged or poor fan drive system performance	Clean cooler and check fan drive performance.
	Hydraulic filters restricted	Install new filters. See Replace Hydraulic System Return Filters. (Section 3-11.)
	Contaminated hydraulic oil	Drain hydraulic oil and refill. See Drain and Refill Hydraulic System Oil. (Section 3-11.)
Hydraulic Oil Foams	High or low hydraulic oil level	Adjust hydraulic oil to correct level. See Check Hydraulic Oil Level. (Section 3-4.)
	Wrong hydraulic oil	Drain and refill with recommended hydraulic oil. See Hydraulic System Oil. (Section 3-1.)
	Water in hydraulic oil	Drain hydraulic oil from reservoir and cylinders. Fill with recommended hydraulic oil. See Drain and Refill Hydraulic System Oil. (Section 3-11.)
	Loose or faulty suction lines (air leak in system)	Tighten or install new lines.
Pin Disconnect Cylinders Will Not Retract	Electrical circuit failure	Hold a screwdriver against end of pin disconnect solenoid valve and check for magnetism with switch pushed. See your authorized dealer.

Continued on next page

Symptom	Problem	Solution
	Solenoid valve malfunction	Remove and inspect. See your authorized dealer.
	Cylinder binding	Inspect cylinder and adjust loads.

OUT4001,0000961 -19-28OCT11-3/3

Steering

Symptom	Problem	Solution
No Steering Functions	Articulation locking bar in place	Pin locking bar in unused position.
	Low hydraulic oil level	Add hydraulic oil. See Check Hydraulic Oil Level. (Section 3-4.)
	Pinched steering line	Inspect and repair line.
Erratic Steering	Air in hydraulic oil	Check for foamy hydraulic oil.
	Low hydraulic oil level	Add hydraulic oil. See Check Hydraulic Oil Level. (Section 3-4.)
Spongy or Soft Steering	Air in hydraulic oil	Check for foamy hydraulic oil.
	Low hydraulic oil level	Add hydraulic oil. See Check Hydraulic Oil Level. (Section 3-4.)
Machine Turns in Opposite Direction	Lines to cylinders connected to wrong ports at steering valve	Connect lines to correct ports.

OUT4001,00005C2 -19-07MAY10-1/1

Air Conditioning System

Symptom	Problem	Solution
Air Conditioning System Does Not Operate	Vehicle control unit (VCU) ignition power 15 A fuse (F15)	Replace fuse.
	VCU battery power 15 A fuse (F21)	Replace fuse.
	Blower motor 25 A fuse (F5)	Replace fuse.
	Blower speed switch (S21)	Check switch. See your authorized dealer.
	Blower speed resistor (R3)	Check resistor. See your authorized dealer.
	Main blower motor (M6)	Check motor. See your authorized dealer.
	Precleaner blower motor (M7)	Check motor. See your authorized dealer.
	Air conditioner switch (S50)	Check switch. See your authorized dealer.
	Freeze control switch (B35)	Check switch. See your authorized dealer.
	Air conditioner high/low pressure switch (B50)	Check switch. See your authorized dealer.
	Air conditioner compressor clutch coil (Y16)	Check clutch operation. See your authorized dealer.
Air Conditioner Does Not Cool Interior of Cab	Fresh air filter clogged	Clean or replace fresh air filter. See Check and Clean or Replace Cab Fresh Air Filter. (Section 3-3.)
	Condenser fins clogged with debris	Clean condenser fins. See Clean Cooler Cores. (Section 3-3.)
	Recirculating air filter clogged	Clean or replace recirculating air filter. See Check and Clean or Replace Cab Recirculating Air Filter. (Section 3-3.)
	Compressor pulley worn	Replace pulley. See your authorized dealer.
	Refrigerant hose kinked, pinched or collapsed	Reroute or re-index hoses, replace kinked or collapsed hoses.
	Heater or evaporator core fins clogged with dirt or dust	Clean heater or evaporator core fins.
	Pressurizer blower motor malfunction or operating too slowly	Check motor speed. See your authorized dealer.

Continued on next page

OUT4001,00005C3 -19-09JAN12-1/2

Symptom	Problem	Solution
	Compressor clutch slipping or malfunction	Inspect and/or replace compressor clutch. See your authorized dealer.
	Warm outside air leaking into cab	Inspect, repair or replace door and window seals.
	Heater valve remaining open	Inspect, repair, adjust or replace heater valve or cable. See your authorized dealer.
	System refrigerant (R134A) charge low	Inspect system for leaks.
	Evaporator fins frosting or freezing	Freeze control switch capillary tube not positioned correctly in evaporator core. See your authorized dealer.
Air Conditioner Runs Constantly, Too Cold	Freeze control switch capillary tube not positioned in evaporator correctly	Reposition capillary tube in evaporator core.
Interior Windows Continue to Fog	Fresh air filter clogged	Clean or replace fresh air filter. See Check and Clean or Replace Cab Fresh Air Filter. (Section 3-3.)
	Air conditioning system off	Press and release air conditioner switch to turn ON air conditioner and place temperature control knob at midrange. See Air Conditioner and Heater Operation. (Section 2-1.)

OUT4001,00005C3 -19-09JAN12-2/2

Heater System

Symptom	Problem	Solution
Heater System Does Not Operate	Blower motor 25 A fuse (F5)	Replace fuse.
	Blower speed switch (S21)	Check switch. See your authorized dealer.
Heater Does Not Warm Interior of Cab	Fresh air filter clogged	Clean or replace fresh air filter. See Check and Clean or Replace Cab Fresh Air Filter. (Section 3-3.)
	Recirculating air filter clogged	Clean or replace recirculating air filter. See Check and Clean or Replace Cab Recirculating Air Filter. (Section 3-3.)
	Heater hose kinked, pinched or collapsed	Reroute or re-index hoses, replace collapsed hoses.
	Heater core fins clogged with dirt or dust	Clean heater fins.
	Heater valve remaining closed	Inspect, repair, adjust or replace heater valve or cable. See your authorized dealer.
	Temperature control switch failed	Inspect, repair or replace switch. See your authorized dealer.
Interior Windows Continue to Fog	Fresh air filter clogged	Clean or replace filter.
	Air conditioning system off	Press and release air conditioner switch to turn ON air conditioner and place temperature control knob at midrange. See Air Conditioner and Heater Operation. (Section 2-1.)

OUT4001,00005C4 -19-14MAY10-1/1

Software Update

Symptom	Problem	Solution
Service ADVISOR™ Remote (SAR) Updates Not Operating Properly	Software updates not operating properly	Follow screen instructions on the display monitor. If problem persists, see your authorized John Deere dealer.

Service ADVISOR is a trademark of Deere & Company

OUT4001,00006CA -19-11NOV10-1/1

Prepare Machine for Storage

IMPORTANT: Avoid machine damage, do not use biodiesel during machine storage. When using biodiesel blends, switch to petroleum diesel for long term storage.

1. Before storage, operate engine on at least one complete tank of petroleum diesel fuel to purge the fuel system. Ensure that the fuel tank is full during storage to prevent water build up due to condensation.

NOTE: For blends up to and including B20, it is recommended that biodiesel be used within three months of its manufacture. For blends greater than B20, it is recommended that the biodiesel be used within 45 days. The poor oxidation stability characteristic of biodiesel can result in long-term storage problems. John Deere does not recommend using biodiesel in engines powering standby applications or vehicles operating on a seasonal basis. Consult your John Deere dealer or fuel supplier for additives to improve fuel storage and performance of biodiesel fuels. These additives must be added to the biodiesel close to its time of production for them to be effective.

2. Repair worn or damaged parts. Install new parts, if necessary, to avoid needless delays later.

IMPORTANT: High pressure washing [greater than 1379 kPa (13.8 bar) (200 psi)] can damage freshly painted finishes. Paint should be allowed to air dry for 30 days minimum after receipt of machine before cleaning parts or machine with high pressure. Use low pressure wash operations until 30 days have elapsed.

3. Wash the machine. [Use low pressure wash operations (less than 1379 kPa (13.8 bar) (200 psi) until 30 days after receipt of machine.] Paint areas to prevent rust. Replace decals, where needed.

4. Fill fuel tank, to prevent condensation.

LPS 3 Rust Inhibitor is manufactured by Holt Lloyd Corporation.

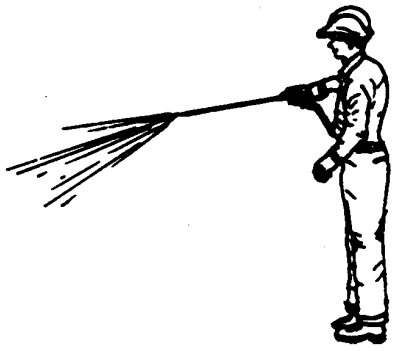

T5813AM —UN—09FEB89

5. Ensure tires are properly inflated.

6. Park machine on a hard surface to prevent tires from freezing to ground.

IMPORTANT: LPS 3 ® Rust Inhibitor can destroy painted finish. DO NOT spray LPS 3 Rust Inhibitor on painted surfaces.

7. Retract all hydraulic cylinders if possible. If not, coat exposed cylinder rods with LPS 3 Rust Inhibitor.

8. Apply grease at all lubrication fittings.

9. Remove batteries or disconnect terminals from batteries.

10. Store machine in a dry, protected place.

IMPORTANT: Prevent possible machine damage from unauthorized persons operating machine. Attach a DO NOT OPERATE tag to steering wheel.

11. Put a DO NOT OPERATE tag on the steering wheel.

12. Close all vent louvers in the cab.

13. Lock all covers and doors.

OUT4001,0000631 -19-09JUN10-1/1

Monthly Storage Procedure

⚠ CAUTION: Prevent possible injury or death from asphyxiation. Engine exhaust fumes can cause sickness or death. Start engine ONLY in a well-ventilated area.

1. Drain water and sediment from fuel tank when air temperature is above freezing.
2. Remove LPS 3 ® Rust Inhibitor from cylinder rods with a cleaning solvent.

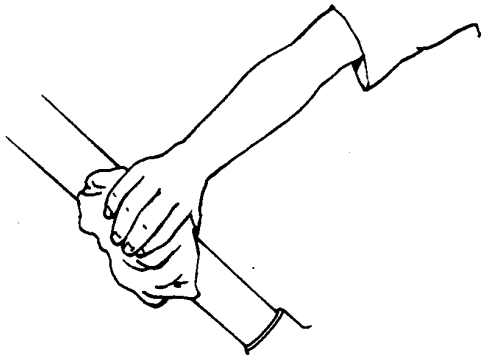

T6191AA —UN—18OCT88

LPS 3 Rust Inhibitor is a trademark of Illinois Tool Works

OUT4001,000037F -19-20APR11-1/2

IMPORTANT: Prevent possible engine damage. During cold temperatures, check fluidity of engine oil on dipstick. If the oil appears waxy and/or jelly-like rather than liquid, DO NOT attempt to start engine. Use external heat source to warm the crankcase until oil appears fluid.

3. Check all fluid levels. If low, check for leaks and add oil as required.
4. Check belts.
5. Check condition of all hoses and connections.
6. Check battery electrolyte level. Charge and install battery.
7. For machines with **tires**, check condition of tires and tire pressure.

   For machines with **tracks**, check condition of tracks and track sag.

   On crawler machines with non sealed-and-lubricated track chains, apply oil to the pin-to-bushing joints. Run machine back and forth several times.
8. Park machine on a hard surface to prevent tracks from freezing to ground.
9. Fill fuel tank.
10. Pre-lubricate turbocharger bearings, if equipped:

    a. Disconnect fuel shutoff fuse.

    b. Crank engine for 10 seconds.

    c. Connect fuel shutoff fuse.
11. Inspect engine compartment, and remove any foreign material that may have accumulated. Start engine and run until it reaches operating temperature. Run at 1/2 speed for five minutes. Do not run at fast or slow idle.

    • If engine fails to start or runs poorly after starting, change fuel filter(s). Bleed fuel system.



T6181AU —UN—18OCT88

12. Operate all controls, levers, seat adjustments, etc.

⚠ CAUTION: Prevent possible injury from unexpected machine movement. Clear the area of all persons before running machine through the operation procedure.

13. Make sure the area is clear to allow for movement. Cycle all hydraulic functions several times. Check condition of all hoses and connections.
14. Park the machine with cylinder rods retracted, if possible. Press engine stop switch.
15. Apply LPS 3 Rust Inhibitor to exposed cylinder rod areas.

OUT4001,000037F -19-20APR11-2/2

Miscellaneous—Machine Numbers

Record Product Identification Number (PIN)

Product Identification Number (PIN):

The PIN plate (1) is located on left side of machine frame under the cab door. Each machine has a 17-character PIN shown on this plate.

NOTE: Record all 17 characters of the PIN.

1— PIN plate

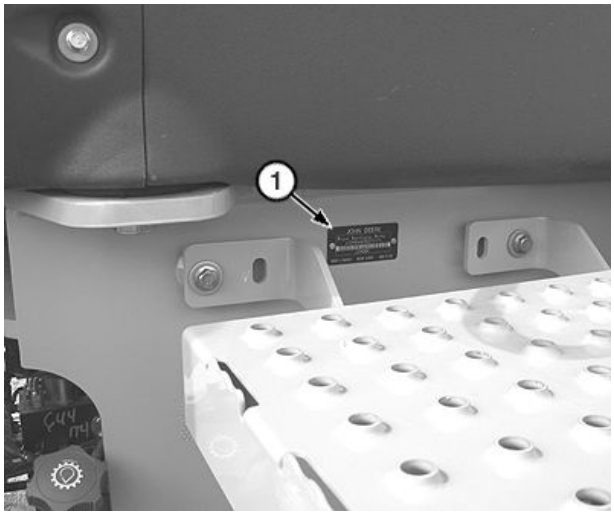

TX1082004A —UN—15APR13

PIN Plate Location

OUT4001,00006D9 -19-11NOV11-1/1

Record Engine Serial Number

Engine Serial Number:

The engine serial number plate (1) is located on the right side of the engine.

1— Engine Serial Number Plate

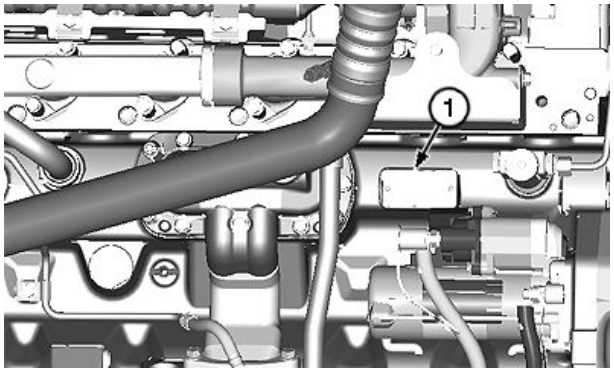

TX1085346A —UN—02DEC10

Engine Serial Number Plate Location

OUT4001,00006DA -19-02DEC10-1/1

Record Transmission Serial Number

Transmission Serial Number:

The transmission serial number plate (1) is located on the right side of the machine, on the lower back side of transmission case.

1— Transmission Serial Number Plate



TX1013120A —UN—05OCT06

Transmission Serial Number Plate Location

OUT4001,00006DB -19-13JUN12-1/1

Record Hydraulic Pump Serial Number

Hydraulic Pump Serial Number:

The hydraulic pump serial number plate (1) is located on left side of machine on the hydraulic pump.

1— Hydraulic Pump Serial Number Plate

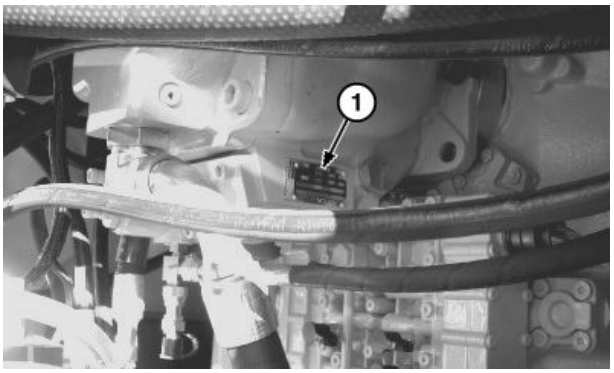

TX1048996A —UN—18SEP08

Hydraulic Pump Serial Number Plate Location

OUT4001,00006DC -19-13JUN12-1/1

Record Front and Rear Axle Housing Serial Numbers

Front Axle Housing Serial Number:

Rear Axle Housing Serial Number:

The front axle serial number plate (1) is located on the top, right side of the front axle housing.

The rear axle serial number plate (2) is located on the top, left side of rear axle housing.

1— Front Axle Serial Number Plate

2— Rear Axle Serial Number Plate

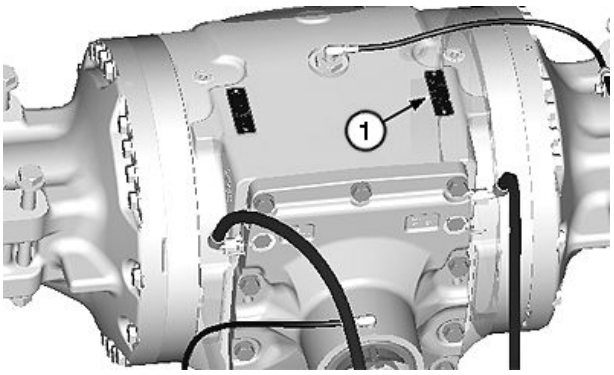

TX1084650A —UN—16NOV10

Front Axle Serial Number Plate Location

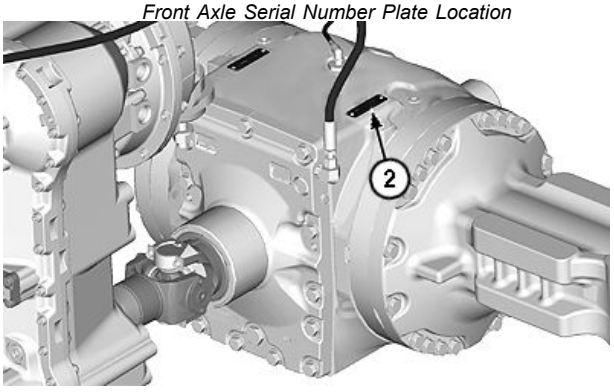

TX1084651A —UN—16NOV10

Rear Axle Serial Number Plate Location

OUT4001,00006DD -19-13JUN12-1/1

Keep Proof of Ownership

1. Maintain in a secure location an up-to-date inventory of all product and component serial numbers.
2. Regularly verify that identification plates have not been removed. Report any evidence of tampering to law enforcement agencies and order duplicate plates.
3. Other steps you can take:
   - Mark your machine with your own numbering system
   - Take color photographs from several angles of each machine

OUT4001,000063E -19-24JUL12-1/1

Keep Machines Secure

1. Install vandal-proof devices.
2. When machine is in storage:
   - Lower equipment to the ground
   - Set wheels to widest position to make loading more difficult
   - Remove batteries
3. When parking indoors, put large equipment in front of exits and lock your storage buildings.
4. When parking outdoors, store in a well-lighted and fenced area.
5. Make note of suspicious activity and report any thefts immediately to law enforcement agencies.
6. Notify your John Deere dealer of any losses.

OUT4001,000063D -19-21JUN10-1/1

Miscellaneous—Specifications

Engine Specifications

Item	Measurement	Specification
Interim Tier 4/Stage III B Engine		
John Deere PowerTech™ PVX 6090HDW13	Aspiration	Turbocharged, Charged Air Cooled
	Bore and Stroke	106 x 127 mm 4.19 x 5.00 in.
	Cylinders	6
	Displacement	9.0 L 548 cu in.
	Net Peak Torque @ 1400 rpm	1062 N·m 783 lb-ft
	Cooling Fan	Hydraulic Driven, Proportionally Controlled
	Electrical system	24 Volt
	Batteries (2) 12 volt	200 Minutes Reserve Capacity

PowerTech is a trademark of Deere & Company

OUT4001,00006CF -19-30NOV10-1/1

Drain and Refill Capacities

Item	Measurement	Specification
Cooling System	Capacity	45.5 L 12.0 gal
Fuel Tank	Capacity	397.0 L 105.0 gal
Engine Crankcase and Filter	Capacity	28.0 L 7.4 gal
Transmission Case and Filter	Capacity	24.0 L 6.3 gal
Front Axle	Capacity	22.0 L 5.8 gal
Rear Axle	Capacity	22.0 L 5.8 gal
Hydraulic Reservoir and Filters	Capacity	110.0 L 29.1 gal
Park Brake	Capacity	600 mL 20 oz.

OUT4001,00006D0 -19-17OCT11-1/1

Standard Z-Bar Specifications

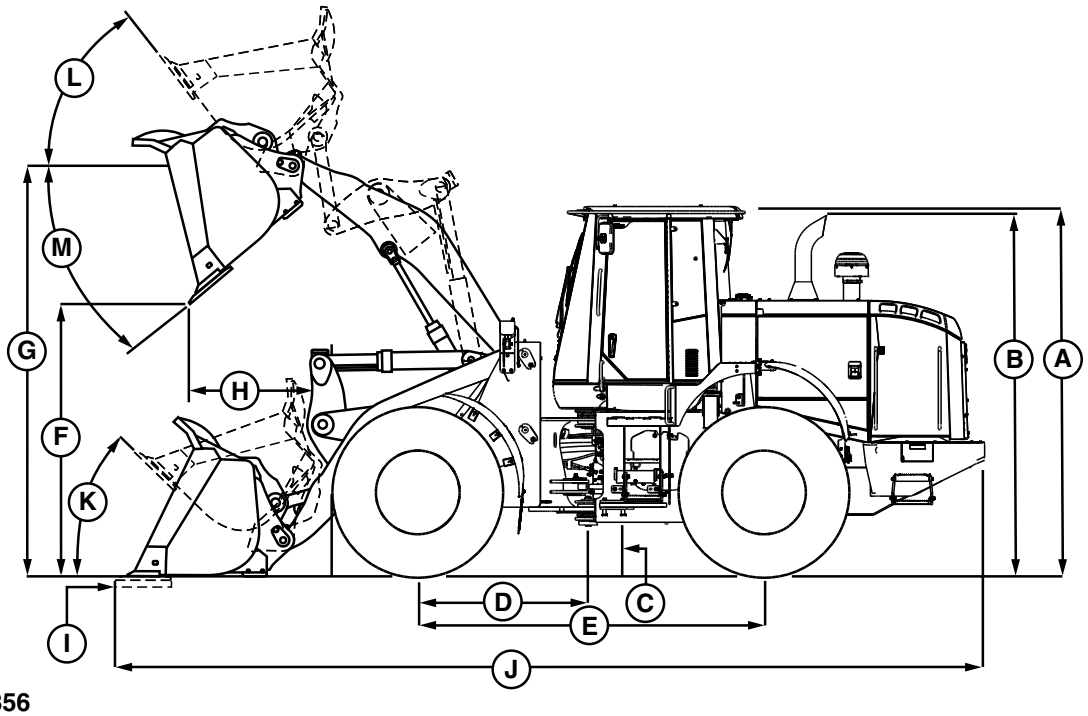

TX1084356 —UN—11NOV10

TX1084356

A—Overall Machine Height
B—Ground to Top of Exhaust Height
C—Machine to Ground Clearance
D—Centerline to Front Axle Length
E—Wheelbase Length
F—Dump Clearance Height
G—Bucket Hinge Height
H—Dump Reach
I— Maximum Digging Depth
J— Overall Machine Length
K—Maximum Rollback at Ground Level
L— Maximum Rollback at Full Height
M—Bucket Dump at Full Height

NOTE: Specifications and design subject to change without notice. Wherever applicable, specifications are in accordance with ISO standards. Loader operating information is based on machine with identified linkage and standard equipment, ROPS cab, rear cast bumper/counterweight, transmission side-frame guards, bottom guards, standard tires, full fuel tank, 4.25 cu. yd. (3.3 m³) general purpose bucket with bolt-on edge, and 175-lb. (79 kg) operator. This information is affected by changes in tires, ballast, and different attachments.

Item	Measurement	Specification
A—Overall Machine	Height	3.43 m 11 ft. 3 in.
B—Ground to Top of Exhaust	Height	3.36 m 11 ft. 0 in.
C—Machine to Ground	Clearance	461 mm 1 ft. 6 in.
D—Centerline to Front Axle	Length	1.60 m 5 ft. 3 in.
E—Wheelbase	Length	3.26 m 10 ft. 8 in.
F—Dump Clearance	Height	2.91 m 9 ft. 7 in.
G—Bucket Hinge	Height	4.12 m 13 ft. 6 in.

Continued on next page

OUT4001,00006D1 -19-13JUN12-1/2

Item	Measurement	Specification
H—Dump	Reach	1.06 m 3 ft. 6 in.
I—Maximum Digging Depth	Depth	106 mm 4.2 in.
J—Overall Machine	Length	8.10 m 26 ft. 7 in.
K—Maximum Rollback at Ground Level	Angle	42°
L—Maximum Rollback at Full Height	Angle	55°
M—Bucket Dump at Full Height	Angle	50°
Overall Machine	Weight	18 333 kg 40 406 lb.

OUT4001,00006D1 -19-13JUN12-2/2

High Lift Z-Bar Specifications

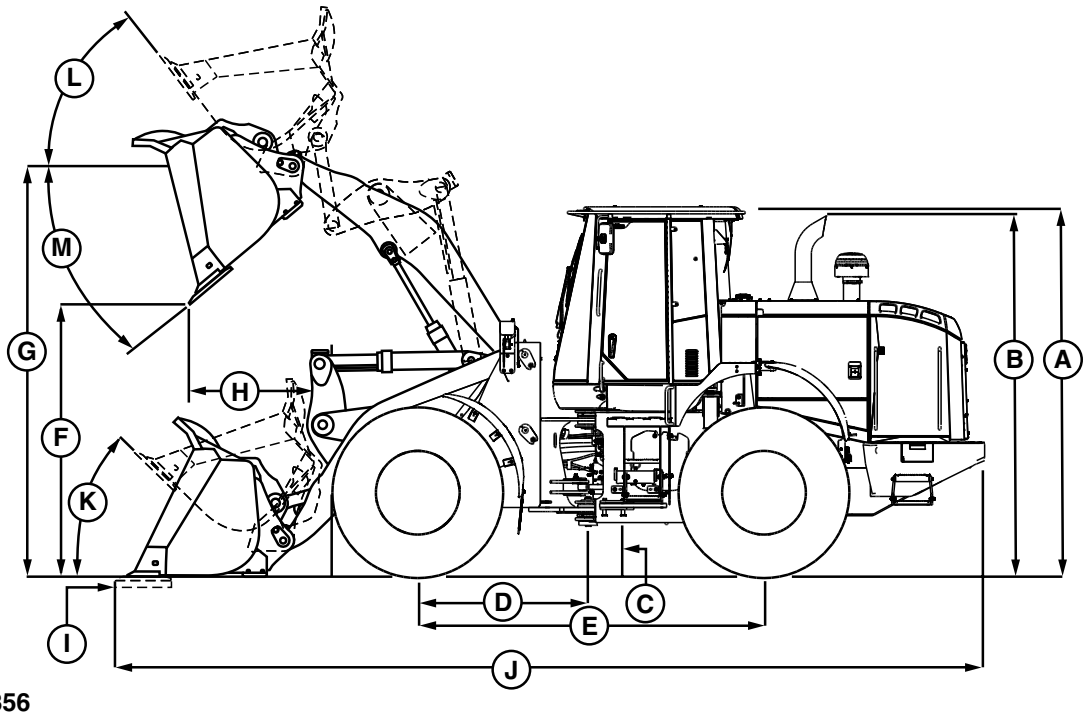

TX1084356 —UN—11NOV10

TX1084356

A—Overall Machine Height
B—Ground to Top of Exhaust Height
C—Machine to Ground Clearance
D—Centerline to Front Axle Length
E—Wheelbase Length
F—Dump Clearance Height
G—Bucket Hinge Height
H—Dump Reach
I— Maximum Digging Depth
J— Overall Machine Length
K—Maximum Rollback at Ground Level
L— Maximum Rollback at Full Height
M—Bucket Dump at Full Height

NOTE: Specifications and design subject to change without notice. Wherever applicable, specifications are in accordance with ISO standards. Loader operating information is based on machine with identified linkage and standard equipment, ROPS cab, rear cast bumper/counterweight, transmission side-frame guards, bottom guards, standard tires, full fuel tank, 4.25 cu. yd. (3.3 m³) general purpose bucket with bolt-on edge, and 175-lb. (79 kg) operator. This information is affected by changes in tires, ballast, and different attachments.

Item	Measurement	Specification
A—Overall Machine	Height	3.43 m 11 ft. 3 in.
B—Ground to Top of Exhaust	Height	3.36 m 11 ft. 0 in.
C—Machine to Ground	Clearance	461 mm 1 ft. 6 in.
D—Centerline to Front Axle	Length	1.60 m 5 ft. 3 in.
E—Wheelbase	Length	3.26 m 10 ft. 8 in.
F—Dump Clearance	Height	3.33 m 10 ft. 11 in.
G—Bucket Hinge	Height	4.54 m 14 ft. 11 in.

Continued on next page

OUT4001,00006D2 -19-13JUN12-1/2

Item	Measurement	Specification
H—Dump	Reach	1.19 m 3 ft. 11 in.
I—Maximum Digging Depth	Depth	200 mm 7.9 in.
J—Overall Machine	Length	8.57 m 28 ft. 1 in.
K—Maximum Rollback at Ground Level	Angle	41°
L—Maximum Rollback at Full Height	Angle	47°
M—Bucket Dump at Full Height	Angle	45°
Overall Machine	Weight	18 700 kg 41 215 lb.

OUT4001,00006D2 -19-13JUN12-2/2

PowerIlel™ Specifications

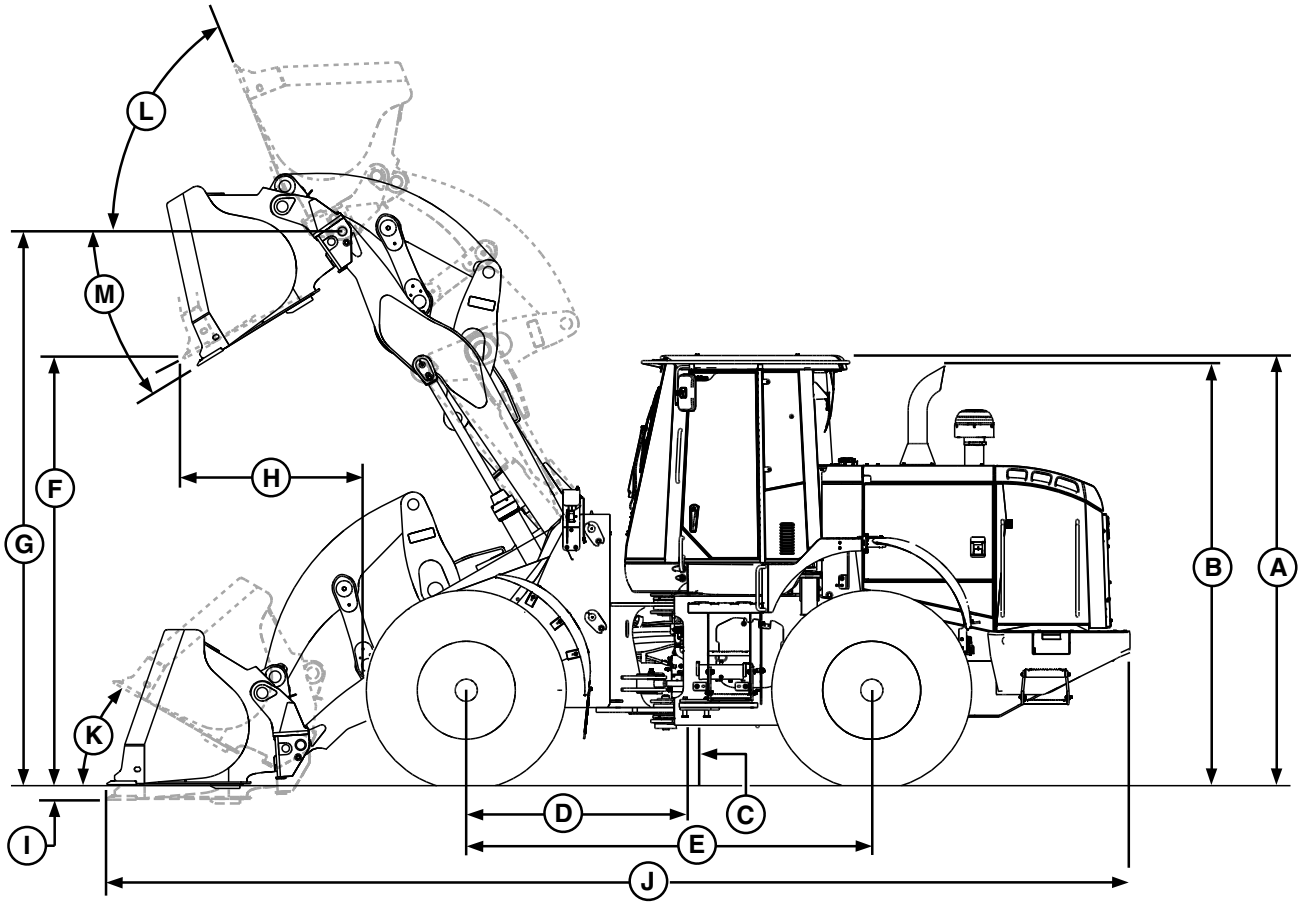

TX1084357 —UN—11NOV10

TX1084357

A—Overall Machine Height
B—Ground to Top of Exhaust Height
C—Machine to Ground Clearance
D—Centerline to Front Axle Length
E—Wheelbase Length
F—Dump Clearance Height
G—Bucket Hinge Height
H—Dump Reach
I— Maximum Digging Depth
J— Overall Machine Length
K—Maximum Rollback at Ground Level
L—Maximum Rollback at Full Height
M—Bucket Dump at Full Height

NOTE: Specifications and design subject to change without notice. Wherever applicable, specifications are in accordance with ISO standards. Loader operating information is based on machine with identified linkage and standard equipment, ROPS cab, rear cast bumper/counterweight, transmission side-frame guards, bottom guards, standard tires, full fuel tank, hi vis attachment coupler, 4.0 cu. yd. (3.05 m³) hook-on bucket with bolt-on edge, and 175-lb. (79 kg) operator. This information is affected by changes in tires, ballast, and different attachments.

Item	Measurement	Specification
A—Overall Machine	Height	3.43 m 11 ft. 3 in.
B—Ground to Top of Exhaust	Height	3.36 m 11 ft. 0 in.
C—Machine to Ground	Clearance	461 mm 1 ft. 6 in.
D—Centerline to Front Axle	Length	1.60 m 5 ft. 3 in.

Continued on next page

OUT4001,00006D3 -19-13JUN12-1/2

Item	Measurement	Specification
E—Wheelbase	Length	3.26 m 10 ft. 8 in.
F—Dump Clearance	Height	2.79 m 9 ft. 2 in.
G—Bucket Hinge	Height	4.12 m 13 ft. 6 in.
H—Dump	Reach	1.20 m 3 ft. 11 in.
I—Maximum Digging Depth	Depth	91 mm 3.6 in.
J—Overall Machine	Length	8.50 m 27 ft. 11 in.
K—Maximum Rollback at Ground Level	Angle	41°
L—Maximum Rollback at Full Height	Angle	55°
M—Bucket Dump at Full Height	Angle	50°
Overall Machine	Weight	19 966 kg 44 005 lb.

OUT4001,00006D3 -19-13JUN12-2/2

Travel Speeds

NOTE: Travel speeds listed are with standard 23.5R25 L3 tires*

Travel Speeds—4 Speed Transmission (standard equipment)	
Gear	**Forward Maximum Speed**
1	7.6 km/h (4.7 mph)
2	12.6 km/h (7.8 mph)
3	24.7 km/h (15.3 mph)
4	36.6 km/h (22.7 mph)
Gear	**Reverse Maximum Speed**
1	7.9 km/h (4.9 mph)
2	12.9 km/h (8.0 mph)
3	24.9 km/h (15.5 mph)

Travel Speeds—5 Speed Transmission with Lockup Torque Converter (optional equipment)	
Gear	**Forward Maximum Speed with Lockup ON**
1	7.8 km/h (4.8 mph)
2	13.4 km/h (8.3 mph)
3	22.6 km/h (14.0 mph)
4	27.4 km/h (17.0 mph)
5	40.0 km/h (24.9 mph)
Gear	**Reverse Maximum Speed with Lockup ON**
1	8.2 km/h (5.1 mph)
2	13.6 km/h (8.5 mph)
3	28.8 km/h (17.9 mph)

OUT4001,00006D4 -19-11NOV10-1/1

Index

Page

A

Acid burns ... 3-8-4
Adjustment
  Boom height kickout ... 2-2-30
  Engine valve clearance ... 3-10-4
  Return-to-carry kickout ... 2-2-30
  Return-to-dig (Powerllel linkage) ... 2-2-33
  Return-to-dig (Z-bar linkage) ... 2-2-31
  Seat ... 2-1-53
  Steering column tilt ... 2-1-5
Advanced display unit (ADU) ... 2-1-10
  Operational check ... 4-2-2
Air cleaner
  Dust unloader valve ... 3-4-1
  Inspect elements ... 3-3-6
  Replace elements ... 3-9-3
Air conditioner
  Controls and operation ... 2-1-49
Air conditioner compressor
  Belt inspection ... 3-3-7
Air conditioner condenser
  External cleaning ... 3-3-9
Air conditioning
  Diagnose malfunctions ... 4-3-14
  Service ... 4-1-12
Air inlet cover ... 4-1-1
Air intake hoses
  Check ... 3-8-6
Alternator ... 4-1-2
  Belt inspection ... 3-3-7
Anti-theft system ... 2-2-2
  Personal identification number (PIN) ... 2-1-37
Armrest, joystick steering ... 2-1-48
Attachments
  Adding safely ... 1-3-5
  Operating safely ... 1-3-5
Auto differential lock
  Diagnostics menu ... 2-1-32
  Switch ... 2-1-7
Auto-differential lock
  Operational check ... 4-2-14
Automatic idle ... 2-2-11
Automatic shift
  Operational check ... 4-2-15
Automatic shutdown ... 2-2-11
Auxiliary operation
  Attachment ... 2-2-14
Auxiliary power outlet
  12-volt ... 4-1-7
Axle
  Input seals ... 3-8-3
  Oil change ... 3-10-3
    Initial 250 hours ... 3-6-1
  Oil filters ... 3-9-4
    Initial 250 hours ... 3-6-2
  Oil level ... 3-8-2

Page

  Oil recirculation screens
    Front and rear ... 3-10-4
  Oil specification ... 3-1-9
Axle switches
  Status display ... 2-1-27
Axles
  Oil cooler cleaning, if equipped
    Front and rear ... 3-3-9
  Temperature information ... 2-1-27

B

Backdragging ... 2-2-36
Backover Accidents ... 1-3-3
Bar, frame locking ... 3-2-3
Batteries
  Acid burns ... 3-8-4
  Booster ... 4-1-4
  Charging ... 4-1-5
  Check electrolyte level ... 3-8-4
  Clean and tighten terminals ... 3-8-4
  Diagnostics display ... 2-1-26
  Prevent explosion ... 3-8-4
  Remove and install ... 4-1-6
  Replacement ... 4-1-5
Battery
  Handling, checking, and servicing ... 4-1-3
  Operational check ... 4-2-4
Battery disconnect switch ... 2-2-2
Belt
  Inspect ... 3-3-7
Bleed fuel system ... 4-1-2
Bleeding procedure
  Service brake ... 4-1-14
Bolt and screw torque values
  Metric ... 4-1-18
  Unified inch ... 4-1-19
Boom and bucket cylinder drift
  Operational check ... 4-2-19
Boom height kickout
  Adjustment ... 2-2-30
Boom height kickout (BHKO)
  Operational check ... 4-2-21
Boom lock
  Installation ... 3-2-4
  Storage ... 3-2-4
Brakes
  External inspection ... 4-1-13
Break-In Plus engine oil ... 3-1-7
Breather
  Hydraulic reservoir ... 3-8-10

C

Cab
  Air conditioner operation ... 2-1-49

Continued on next page

Page

- Fresh air filter ... 3-3-12
- Heater operation ... 2-1-49
- Recirculating air filter ... 3-3-13

Cab switches
- Diagnostic information display ... 2-1-29

Cab system
- Operational check ... 4-2-5

Calibration
- Transmission clutch ... 3-10-4

Camera
- Operation ... 2-2-23

Capacities
- All systems
  - Drain and refill ... 4-6-1
- Axle, front and rear ... 4-6-1
- Coolant ... 4-6-1
- Engine ... 4-6-1
- Fuel ... 4-6-1
- Hydraulic system ... 4-6-1
- Park brake ... 4-6-1
- Transmission ... 4-6-1

Case drain in-line screen
- Fan drive
  - Clean ... 3-9-1

Case drain in-line screens
- Hydraulic pump
  - Clean ... 3-11-1

Charge air cooler
- Check tube couplings ... 3-8-6
- External cleaning ... 3-3-9

Charging batteries ... 4-1-5

Checklist, service intervals ... 3-2-9

Cleaning
- Air conditioner condenser ... 3-3-9
- Axle oil coolers, if equipped
  - Front and rear ... 3-3-9
- Charge air cooler ... 3-3-9
- Front axle oil cooler, if equipped ... 3-3-9
- Fuel cooler ... 3-3-9
- Hydraulic oil cooler ... 3-3-9
- Radiator ... 3-3-9
- Rear axle oil cooler, if equipped ... 3-3-9
- Transmission oil cooler ... 3-3-9

Clutch cut-off
- Operation ... 2-1-7
- Operational check ... 4-2-12

Cold weater
- Start aid ... 2-2-6

COOL-GARD II test strips ... 3-3-8

Coolant
- Add coolant extender ... 3-3-8, 3-9-4
- Additional information ... 3-1-14
- Check ... 3-9-4
- Check level ... 3-4-1
- Diesel engine ... 3-1-11
- Disposing ... 3-1-15
- Heater ... 2-2-6
- John Deere Cool-Gard II Coolant Extender ... 3-1-12

Page

- Sample ... 3-8-7
- Supplemental additives ... 3-1-12
- Test ... 3-9-4
- Testing ... 3-1-15
- Warm temperature climates ... 3-1-13

Cooling system
- Access doors ... 3-2-7
- Clean cooler cores ... 3-3-9
- Deaerate ... 3-13-2
- Drain and flush ... 3-13-1
- Refill ... 3-13-2
- Service safely ... 1-4-3

Counter switch
- Location ... 2-1-50
- Operation ... 2-2-25

Courtesy lights
- Operation ... 2-1-21

Cycle time
- Operational check ... 4-2-26

Cylinder ... 4-1-2

D

Daily inspection ... 2-2-1

Damper
- Driveline ... 3-12-1

Diagnose malfunctions
- Air conditioning system ... 4-3-14
- Differential and axle ... 4-3-8
- Driveline ... 4-3-10
- Engine ... 4-3-2
- Heater system ... 4-3-16
- Hydraulic system ... 4-3-11
- Park brake ... 4-3-10
- Service brakes ... 4-3-9
- Software update ... 4-3-16
- Steering ... 4-3-13
- Transmission ... 4-3-5
- Troubleshooting procedure ... 4-3-1

Diagnostic trouble codes
- Active ... 2-1-18
- Stored ... 2-1-19

Diesel fuel ... 3-1-1, 3-1-3
- Sample ... 3-8-7
- Specifications ... 3-1-1

Diesel fuel specifications ... 3-1-1

Diesel fuel, testing
- Testing Diesel Fuel ... 3-1-4

Differential and axle
- Diagnose malfunctions ... 4-3-8

Differential lock
- Automatic ... 2-1-7
- Foot switch ... 2-1-5, 2-2-19
- Operation ... 2-2-19
- Operational check ... 4-2-14

Digging
- Loader bucket ... 2-2-35

Continued on next page

Page

Display and clear trouble codes
Operational check ... 4-2-1
Display unit ... 2-1-10
Active diagnostic trouble codes ... 2-1-18
Auto add menu ... 2-1-36
Auto cleaning menu ... 2-1-43
Auto diff lock menu ... 2-1-32
Battery monitor menu ... 2-1-26
Buttons
Description ... 2-1-11
Cab switches menu ... 2-1-29
Camera mode menu ... 2-1-24
Change owner PIN menu ... 2-1-38
Codes menu ... 2-1-18
Counters ... 2-1-23
Courtesy lights ... 2-1-21
Crank requested status ... 2-1-27
Delayed operator logout menu ... 2-1-41
Diagnostics
Payload scale menu ... 2-1-33
Diagnostics menu ... 2-1-25
Engine sensors menu ... 2-1-27
Exhaust filter menu ... 2-1-42
FNR selector menu ... 2-1-29
Functions ... 2-1-11
Gauges
Description ... 2-1-11
Hour meter ... 3-2-1
Hydraulic sensors menu ... 2-1-28
Indicators
Description ... 2-1-11
JDLink system info menu ... 2-1-33
Job timer menu ... 2-1-22
Joystick steering menu ... 2-1-30
Long total menu ... 2-1-35
Machine identification menu ... 2-1-26
Machine sensors menu ... 2-1-28
Main menu ... 2-1-17
Manage operator PINs menu ... 2-1-39
Manage transport PIN menu ... 2-1-40
Normal display ... 2-1-16
Object detect menu ... 2-1-32
Operator configuration menu ... 2-1-24
Park brake test ... 2-1-34
Parked cleaning menu ... 2-1-44
Payload scale
Diagnostics menu ... 2-1-36
Display units menu ... 2-1-36
Setup menu ... 2-1-36
Payload scale menu ... 2-1-35
Pressure data displays ... 2-1-27
Quick shift selection menu ... 2-1-22
Reverse fan cycle menu ... 2-1-21
Ride control setting menu ... 2-1-23
Security enable menu ... 2-1-38
Security menu ... 2-1-37
Security system status ... 2-1-27
Settings menu ... 2-1-20

Page

Software delivery menu ... 2-1-45
Software update menu ... 2-1-46
Starter status ... 2-1-27
Stopwatch menu ... 2-1-23
Stored diagnostic trouble codes ... 2-1-19
Switch module menu ... 2-1-29
Throttle sensor voltage ... 2-1-27
Tire pressure menu ... 2-1-31
Transmission/axle menu ... 2-1-27
Doors
Cab ... 2-1-51
Cooling package access ... 3-2-7
Engine service ... 3-2-6
Fan grille ... 3-2-7
Drain Intervals for Diesel Engine Coolant
Diesel Engine Coolant, Drain Intervals ... 3-1-11
Driveline
Damper inspection ... 3-12-1
Diagnose malfunctions ... 4-3-10
Sliding joints
Upper and lower ... 3-8-1
U-joints
Lower ... 3-8-1
Dust unloader valve ... 3-9-3
Clean ... 3-4-1

E

Electrical
Battery disconnect switch ... 2-2-2
Fuse specifications ... 4-1-8
Embedded payload scale ... 2-2-26
Embedded payload scale (EPS) ... 2-1-35
Auto add menu ... 2-1-36
Diagnostics menu ... 2-1-36
Display units menu ... 2-1-36
Long total menu ... 2-1-35
Operational check ... 4-2-27
Engine
Boost starting ... 4-1-4
Break-in ... 2-2-3
Cold weather warmup ... 2-2-7
Compartment light ... 3-2-6
Diagnose malfunctions ... 4-3-2
Oil change ... 3-8-7
Oil level ... 3-4-2
Oil specification
Break-In Plus ... 3-1-7
Replace oil filter ... 3-8-7
Serial number ... 4-5-1
Service doors ... 3-2-6
Specifications ... 4-6-1
Starting ... 2-2-4
Valve clearance adjust ... 3-10-4
Engine compartment light ... 3-2-6
Engine coolant
Disposing of ... 3-1-15

Continued on next page

Page

Engine Coolant
Check ... 3-3-8
Test ... 3-3-8
Engine oil
Sample ... 3-7-1
Engine oil and filter service intervals ... 3-1-9
Engine sensors
Diagnostic information display ... 2-1-27
Engine side shields ... 3-2-6
Enginel
Oil specification
IT4 and Stage III B ... 3-1-8
Exhaust filter ... 1-2-6
Ash removal ... 2-2-21
ADU indication ... 3-3-1
Auto cleaning ... 2-2-20
Activation ... 2-1-43
Disable ... 2-1-43
Cleaning types ... 2-2-20
Information ... 2-2-20
Menu ... 2-1-42
Natural/passive cleaning ... 2-2-20
Parked cleaning ... 2-2-21
Activation ... 2-1-44
Restriction levels ... 2-2-20
Exhaust Filter, Safety
Safety, Exhaust Filter ... 1-4-2

F

Fan grille door ... 3-2-7
Fast fill fuel filter replacement ... 3-8-6
Features
Operator convenience ... 1-1-1
Safety ... 1-1-1
Filter
Axle oil ... 3-9-4
Initial 250 hours ... 3-6-2
Cab fresh air ... 3-3-12
Cab recirculating air ... 3-3-13
Engine oil ... 3-8-7
Fast fill fuel ... 3-8-6
Fuel tank breather
Replace ... 3-9-4
Fuel, final ... 3-8-10
Fuel, primary ... 3-8-9
Drain water ... 3-3-11
Hydraulic reservoir breather ... 3-8-10
Hydraulic return ... 3-11-3
Transmission oil ... 3-10-1
Fire extinguisher
Location ... 2-1-54
Fire prevention ... 1-2-4
Fluid analysis test kit ... 3-2-8
Fluid sampling test ports ... 4-1-10
FNR selector
Diagnostic information display ... 2-1-29
Fork attachment ... 2-2-37

Page

Forward, neutral, or reverse switch ... 2-2-9
Frame locking bar ... 3-2-3
Front axle
Oil cooler cleaning, if equipped ... 3-3-9
Front axle housing
Serial number ... 4-5-2
Fuel
Diesel ... 3-1-1, 3-1-3
Filter replacement, final ... 3-8-10
Filter replacement, primary ... 3-8-9
Handling and storing ... 3-1-2
In-line strainer ... 3-8-8
Lubricity ... 3-1-2
Tank capacity ... 3-2-8
Fuel cooler
External cleaning ... 3-3-9
Fuel filter
Final ... 3-8-10
Primary ... 3-8-9
Fuel system bleeding ... 4-1-2
Fuel tank
Capacity ... 3-2-8
Fuel tank breather filter
Replace ... 3-9-4
Fuse specifications ... 4-1-8

G

Gauge
Engine coolant temperature ... 2-1-10
Engine oil pressure ... 2-1-10
Fuel ... 2-1-10
Hydraulic oil temperature ... 2-1-10
Transmission oil temperature ... 2-1-10
Grease
Axle input seals ... 3-8-3
Boom and cylinder pivots
Powerllel linkage ... 3-5-2
Z-bar linkage ... 3-5-1
Driveline
Lower U-joints ... 3-8-1
Upper and lower sliding joints ... 3-8-1
Frame hinge pivots ... 3-9-5
Park brake shaft seals ... 3-8-11
Specifications ... 3-1-10

H

Halogen bulbs
Remove and install ... 4-1-10
Hardware torque values
Metric ... 4-1-18
Unified inch ... 4-1-19
Heater
Controls and operation ... 2-1-49
Coolant ... 2-2-6
Diagnose malfunctions ... 4-3-16

Continued on next page

Page

Engine block ... 2-2-6
Horn
Operational check ... 4-2-1
Horn button ... 2-1-47
Hoses
Air intake ... 3-8-6
Hour meter ... 3-2-1
Hydraulic
Diagnose malfunctions ... 4-3-11
Hydraulic fan drive
Case drain in-line screen ... 3-9-1
Hydraulic pump
Case drain in-line screen ... 3-11-1
Serial number ... 4-5-2
Hydraulic sensors
Diagnostic information display ... 2-1-28
Hydraulic system
Fan drive case drain in-line screen ... 3-9-1
Fill strainer ... 3-11-5
Oil ... 3-1-10
Oil change ... 3-11-4
Oil cooler cleaning ... 3-3-9
Oil level ... 3-4-2
Pump case drain in-line screen ... 3-11-1
Reservoir breather filter ... 3-8-10
Return filter ... 3-11-3

I

Identification
Manual ... -3
Indicators
Joystick steering ... 2-2-15
Location ... 2-1-10
Park brake ... 2-2-8
Ride control ... 2-2-17
Inspect
Outer pin seals ... 3-4-4
Inspection
Before starting ... 2-2-1
Instruments
Check before starting ... 2-2-1

J

JDLink ... 4-1-7
JDLink system info
Machine readings ... 2-1-33
Job timer
Mode selection ... 2-1-22
Joystick operation
Bucket and boom control ... 2-2-12
Joystick steering
Activation and deactivation ... 2-2-15
Armrest adjustment ... 2-1-48
Diagnostic information display ... 2-1-30
Operational check ... 4-2-24

Page

Jump starting ... 4-1-4

L

Lever
Neutral lock ... 2-1-48
Levers
Four function hydraulic control ... 2-1-4
Joystick steering control ... 2-1-4
Three function hydraulic control ... 2-1-2
Two function hydraulic control ... 2-1-1
Lifting machine ... 2-2-44
Loader coupler
Operation ... 2-2-34
Loading machine on a trailer ... 2-2-40
Lock, neutral ... 2-1-48
Locking bar, frame ... 3-2-3
Locking machine frame ... 3-2-3
Lubricant
Mixing ... 3-1-6
Lubricant Storage
Storage, Lubricant ... 3-1-6
Lubricants, Safety
Safety, Lubricants ... 3-1-6
Lubricate
Axle input seals ... 3-8-3
Boom and cylinder pivots
Powerllel linkage ... 3-5-2
Z-bar linkage ... 3-5-1
Driveline
Lower U-joints ... 3-8-1
Upper and lower sliding joints ... 3-8-1
Frame hinge pivots ... 3-9-5
Park brake shaft seals ... 3-8-11
Lubricity of diesel fuel ... 3-1-2

M

Machine
Boom lock ... 3-2-4
Frame locking bar ... 3-2-3
Storage ... 4-4-1
Machine ID
Control unit part numbers ... 2-1-26
Control unit software versions ... 2-1-26
Machine serial number ... 2-1-26
Machine modifications
Avoid ... 1-2-2
Machine sensors
Diagnostic information display ... 2-1-28
Machine,inspect ... 1-2-2
Main menu
Codes ... 2-1-18
Diagnostics ... 2-1-25
Exhaust filter ... 2-1-42
Payload scale ... 2-1-35
Security ... 2-1-37

Continued on next page

Page

Settings 2-1-20
Software delivery 2-1-45
Maintenance
Preparing machine 3-2-2
Required parts 3-2-11
Manual
Identification ..... -3
Metric bolt and screw torque values 4-1-18
Mixing lubricants 3-1-6
Motor 4-1-2

N

Neutral lock 2-1-48
Neutral start
Operational check 4-2-8
NeverGrease™ 3-2-1

O

Object detect
Diagnostic information display 2-1-32
Oil
Axle sample 3-8-7
Change engine 3-8-7
Change park brake 3-9-5
Change, axle 3-10-3
Initial 250 hours 3-6-1
Check axle level 3-8-2
Check engine level 3-4-2
Check hydraulic system level 3-4-2
Check park brake level 3-8-11
Check transmission level 3-4-3
Engine sample 3-7-1
Hydraulic sample 3-8-7
Hydraulic system 3-1-10
Drain, flush, and refill 3-11-4
Specification-axle 3-1-9
Specification-park brake 3-1-9
Specification-transmission 3-1-9
Transmission
Change 3-10-1
Transmission sample 3-8-7
Oil, engine
IT4 and Stage III B 3-1-8
Operation
Auxiliary control
Attachment 2-2-14
Joystick
Bucket and boom control 2-2-12
Loader coupler 2-2-34
Two lever
Bucket and boom control 2-2-13
Operation qualification 1-2-1
Operational check
Advanced display unit (ADU) 4-2-2
Auto-differential lock 4-2-14

Page

Automatic shift 4-2-15
Battery 4-2-4
Boom and bucket cylinder drift 4-2-19
Boom height kickout (BHKO) 4-2-21
Cab system 4-2-5
Clutch cut-off 4-2-12
Cycle time 4-2-26
Differential lock 4-2-14
Display and clear trouble codes 4-2-1
Embedded payload scale (EPS) 4-2-27
Horn 4-2-1
Joystick steering 4-2-24
Neutral start 4-2-8
Orbital steering valve 4-2-24
Park brake 4-2-9
Pilot control valve boom float 4-2-19
Pilot controller lock 4-2-18
Pilot enable solenoid and pilot accumulator 4-2-18
Pin disconnect 4-2-21
Proportional fan 4-2-23
Radar object detection (ROD) 4-2-29
Rear camera 4-2-28
Return-to-carry (RTC) 4-2-20
Return-to-dig (RTD) 4-2-20
Reversing fan 4-2-23
Ride control 4-2-22
Seat control 4-2-1
Secondary steering system 4-2-25
Service brake 4-2-10
Service brake and brake accumulator precharge .. 4-2-11
Spin control 4-2-23
Torque converter and engine power 4-2-13
Transmission gear shift switch and neutral lock latch, hydraulic control lever mount 4-2-8
Transmission gear shift switch and neutral lock latch, steering column mount 4-2-7
Transmission shift mode 4-2-16
Transmission shift modulation 4-2-17
Operator configuration settings 2-1-24
Orbital steering valve
Operational check 4-2-24

P

Park brake
Change oil 3-9-5
Diagnose malfunctions 4-3-10
Oil level 3-8-11
Oil specification 3-1-9
Operation 2-2-8
Operational check 4-2-9
Shaft seals 3-8-11
Switch 2-2-8
Park brake test 2-1-34
Parking machine 2-2-39
Parts required 3-2-11
Parts, moving
Stay clear 1-2-2

Continued on next page

Page

Payload scale 2-2-26
Diagnostics menu 2-1-36
Machine readings..... 2-1-33, 2-1-36
Setup menu..... 2-1-36
Pedals
Accelerator..... 2-1-5
Brake..... 2-1-5
Steering column release
Tilt adjustment 2-1-5
Personal identification number (PIN)
Change 2-1-38
Setup..... 2-1-37
Pilot control valve boom float
Operational check..... 4-2-19
Pilot controller lock
Operational check..... 4-2-18
Pilot enable solenoid and pilot accumulator
Operational check..... 4-2-18
Pin disconnect
Operation 2-1-7
Operational check..... 4-2-21
Pins, metal
Drive safely 1-4-4
Prepare machine for maintenance 3-2-2
Primary fuel filter
Drain water..... 3-3-11
Product Identification Number (PIN)..... 4-5-1
Proportional fan
Operational check..... 4-2-23
Pump
Service..... 4-1-2

Q

Quick service connectors
Location 4-1-10
Quick shift switch
Mode selection..... 2-1-22

R

Radar object detection (ROD)
Operational check..... 4-2-29
Radar object detection (ROD) system
Clean sensor..... 3-3-10
Detailed checkout 3-3-10
Operation 2-1-20, 2-2-23
Radiator
External cleaning 3-3-9
Rear axle
Oil cooler cleaning, if equipped..... 3-3-9
Rear axle housing
Serial number..... 4-5-2
Rear camera
Clean lens..... 3-3-10
Operational check..... 4-2-28

Page

Rear camera system
Operating modes 2-1-24
Operation 2-2-23
Rear side window
Opening 2-1-52
Recognize
Safety, information 1-2-1
Regulator..... 4-1-2
Replace
Outer pin seals..... 3-10-1
Required parts..... 3-2-11
Return-to-carry
Kickout height adjustment..... 2-2-30
Return-to-carry (RTC)
Operational check..... 4-2-20
Return-to-dig
Adjustment (Powerllel linkage)..... 2-2-33
Adjustment (Z-bar linkage)..... 2-2-31
Return-to-dig (RTD)
Operational check..... 4-2-20
Reversing fan
Cycle time 2-1-21
Operation 2-1-20
Operational check..... 4-2-23
Ride control
Change speed setpoint..... 2-1-23
Check accumulator pressure 3-8-12
Maintenance 3-8-12
Operation 2-2-17
Operational check..... 4-2-22
Switch 2-2-17
Roads
Operating or traveling 1-3-5
Roll-over protective structure
Torque values..... 4-1-17
ROPS
Inspect 1-3-5
Maintain 1-3-5

S

Safety
Add cab guarding for special uses..... 1-2-1, 1-2-6
Clean debris from machine..... 1-2-5
Features..... 1-1-1
Operator's seat 1-3-1
Protective equipment 1-2-2
Signs..... 1-5-1
Safety, Avoid High-Pressure Fluids
Avoid High-Pressure Fluids 1-2-3
Safety, information
Recognize..... 1-2-1
Sealed switch module (SSM) 2-1-6
Functions 2-1-7
Seals, outer pin
Inspect 3-4-4
Replace..... 3-10-1
Seat adjustment..... 2-1-53

Continued on next page

Page

Seat control
Operational check 4-2-1
Secondary exit
Opening 2-1-52
Secondary steering
Operation 2-2-19
Secondary steering system
Operational check 4-2-25
Security system 2-2-2
Default owner PIN 2-2-2
Personal identification number (PIN) 2-1-37
Serial number
Engine 4-5-1
Front axle housing 4-5-2
Hydraulic pump 4-5-2
Rear axle housing 4-5-2
Transmission 4-5-1
Serpentine belt
Inspect 3-3-7
Service
Required parts 3-2-11
Service ADVISOR Remote
Overview 2-2-22
Reprogramming 2-2-22
Terms and conditions ..... -12
Service brake
Bleeding procedure 4-1-14
Inspection 4-1-13
Operational check 4-2-10
Service brake and brake accumulator precharge
Operational check 4-2-11
Service brakes
Diagnose malfunctions 4-3-9
Service doors
Cooling system 3-2-7
Engine 3-2-6
Service intervals 3-2-1
Service intervals checklist 3-2-9
Service record 3-2-9
Shifting transmission 2-2-9
Side window
Opening 2-1-52
Snap-to-connect (STC) fittings
Service recommendations 4-1-15
Software delivery 2-1-45
Software update
Diagnose malfunctions 4-3-16
Download and installation 2-1-46
Specification
Hardware torque 4-1-17
Specifications
Axle oil 3-1-9
Engine 4-6-1
Fuse 4-1-8
Grease 3-1-10
High lift linkage 4-6-4
Hydraulic system oil 3-1-10

Page

Operating weight
High lift linkage 4-6-4
Powerllel linkage 4-6-6
Standard Z-bar linkage 4-6-2
Park brake oil 3-1-9
Powerllel linkage 4-6-6
Transmission oil 3-1-9
Travel speeds 4-6-7
Z-Bar linkage 4-6-2
Speeds
4 speed transmission 4-6-7
5 speed transmission with lockup torque converter on 4-6-7
Spin control
Operation 2-1-7
Operational check 4-2-23
SSM 2-1-6
Functions 2-1-7
Starting engine 2-2-4
Using booster batteries 4-1-4
Using starting fluid 2-2-6
Starting fluid (if equipped) 2-2-6
STC fittings
Service recommendations 4-1-15
Steering
Diagnose malfunctions 4-3-13
Joystick
Activation and deactivation 2-2-15
Armrest adjustment 2-1-48
Steering column
Tilt adjustment pedal 2-1-5
Steps
Use correctly
Handholds 1-3-1
Stopwatch
Mode selection 2-1-23
Storage
Machine 4-4-1
Monthly 4-4-2
Storing fuel 3-1-2
Strainer
Fuel 3-8-8
Hydraulic system 3-11-5
Surge tank
Coolant level 3-4-1
Switch
Differential lock 2-1-5, 2-2-19
Forward, neutral, or reverse 2-2-9
Park brake 2-2-8
Ride control 2-2-17
Switch module 2-1-6
Diagnostic information display 2-1-29
Functions 2-1-7

T

Test ports
Fluid sampling 4-1-10

Continued on next page

Page

Tire pressure
Alarm values ... 2-1-31
Diagnostic information display ... 2-1-31
Tires
Check pressure ... 3-3-2
Inspect ... 3-3-2
Installation with sensor ... 4-1-1
Pressures ... 3-3-3
Removal with sensor ... 4-1-1
Sensor removal ... 4-1-1
Torque charts
Metric ... 4-1-18
Unified inch ... 4-1-19
Torque converter and engine power
Operational check ... 4-2-13
Torque specifications
Wheel retaining bolt ... 3-3-5
Torque values
Roll-over protective structure ... 4-1-17
Towing procedure ... 2-2-42
TPM system
Sensor remove and replace ... 4-1-1
Tire removal ... 4-1-1
Transmission
Automatic mode operation ... 2-1-7
Diagnose malfunctions ... 4-3-5
Diagnostic information display ... 2-1-27
Filter change ... 3-10-1
Forward, neutral, or reverse switch ... 2-2-9
Oil change ... 3-10-1
Oil cooler cleaning ... 3-3-9
Oil level ... 3-4-3
Oil specification ... 3-1-9
Quick shift function
Mode selection ... 2-1-22
Operation ... 2-1-22
Serial number ... 4-5-1
Shifting ... 2-2-9
Transmission clutch calibration ... 3-10-4
Transmission gear shift switch and neutral lock latch
Operational check, hydraulic control lever mount ... 4-2-8
Operational check, steering column mount ... 4-2-7
Transmission shift mode
Operational check ... 4-2-16

Page

Transmission shift modulation
Operational check ... 4-2-17
Transmission switches
Status display ... 2-1-27
Traveling
On public roads ... 1-3-5
Troubleshooting procedure ... 4-3-1
Turn signals ... 2-1-47
Two lever operation
Bucket and boom control ... 2-2-13

U

Unified inch bolt and screw torque values ... 4-1-19
Unloader valve
Air cleaner dust ... 3-4-1

V

Valve
Air cleaner dust unloader ... 3-4-1
Control ... 4-1-2
Dust unloader ... 3-9-3
Vibration
Driveline damper ... 3-12-1

W

Warmup
Engine, cold weather ... 2-2-7
Warmup procedure ... 2-2-7
Warranty
Non-road emissions control warranty statement--compression ignition
CARB ... -7
EPA ... -5
Weighing system ... 2-2-26
Welding ... 4-1-16
Welding repairs ... 1-4-4
Wheel bolt torque ... 3-3-5
Windshield washer fluid ... 3-3-11
Work lights
Remove and install ... 4-1-10