RUTHZIL TRATOR COMERCIAL DE PEÇAS LTDA 11 97083-6812 ROLANDO CITRANGULO

JULHO 2011

644K 4WD Loader
Engine 6090HDW13

(Serial No. 634315 -)

TECHNICAL MANUAL

644K Loader
Repair

TM12107 26JUL11 (ENGLISH)

For complete service information also see:

644K Loader Test Manual	TM12105
644K Loader Operator's Manual	OMT260553
9.0 L OEM Diesel Engines — Interim Tier 4/Stage III B platform	CTM104819
TeamMate™ IV 1200 - 1400 Series Inboard Planetary Axles	CTM442
120 Series Hydraulic Cylinders	CTM114319
185 Series Hydraulic Cylinders	CTM114919
Super Caddy Oil Cleanup Procedure	CTM310
JDLink™ (MTG) Diagnosis and Tests Manual	TM114519
Specifications Manual	SP458

Worldwide Construction And Forestry Division

LITHO IN U.S.A.

Introduction

Foreword

This manual is written for an experienced technician. Essential tools required in performing certain service work are identified in this manual and are recommended for use.

Live with safety: Read the safety messages in the introduction of this manual and the cautions presented throughout the text of the manual.

This is the safety-alert symbol. When you see this symbol on the machine or in this manual, be alert to the potential for personal injury.

Technical manuals are divided in two parts: repair and operation and tests. Repair sections tell how to repair the components. Operation and tests sections help you identify the majority of routine failures quickly.

Information is organized in groups for the various components requiring service instruction. At the beginning of each group are summary listings of all applicable essential tools, service equipment and tools, other materials needed to do the job, service parts kits, specifications, wear tolerances, and torque values.

Technical Manuals are concise guides for specific machines. They are on-the-job guides containing only the vital information needed for diagnosis, analysis, testing, and repair.

Fundamental service information is available from other sources covering basic theory of operation, fundamentals of troubleshooting, general maintenance, and basic type of failures and their causes.

DX,TMIFC -19-29SEP98-1/1

Manual Identification—READ THIS FIRST!

IMPORTANT: Use only supporting manuals designated for your specific machine. If incorrect manual is chosen, improper service may occur. Verify product identification number (PIN) and engine model number when choosing the correct manual.

Choosing the Correct Supporting Manuals

John Deere four wheel drive (4WD) loaders are available in different machine configurations based on the various markets into which they are sold. Different supporting manuals exist for different machine configurations.

When necessary, product serial numbers and engine model numbers are listed on the front covers of 4WD loader manuals. These numbers are used to identify the correct supporting manual for your machine.

Product Serial Number Identification

The product identification number (PIN) plate (1) is located on left side of machine frame under the cab door. Each machine has a 13 digit PIN (2) or 17 digit PIN (3) shown on this plate. The last 6 digits of the PIN represent the machine's product serial number.

1— PIN Plate
2— 13 Digit PIN
3— 17 Digit PIN

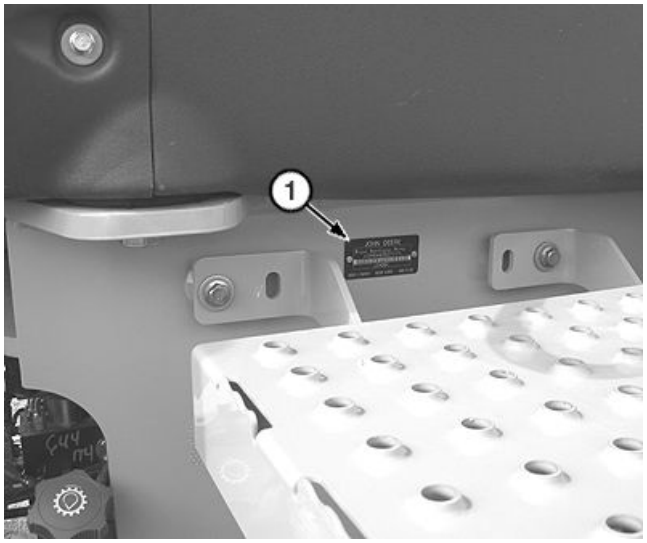

TX1082004A —UN—17SEP10

PIN Plate Location

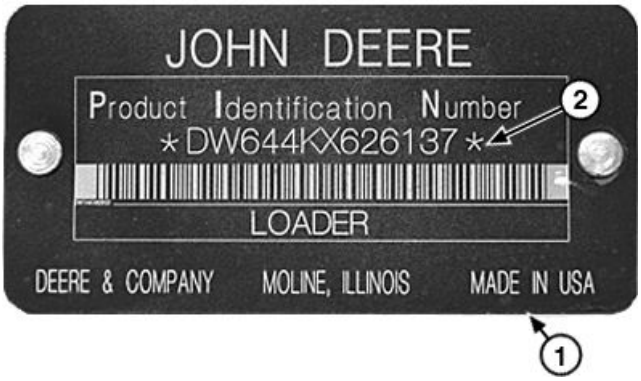

TX1081996A —UN—17SEP10

PIN Plate (13 digit)

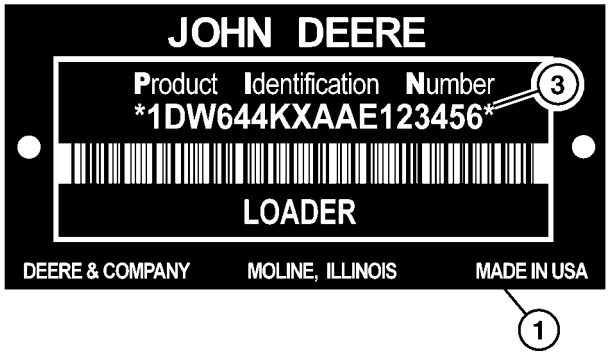

TX1082023 —UN—21SEP10

PIN Plate (17 digit)

Continued on next page

Engine Model Number Identification

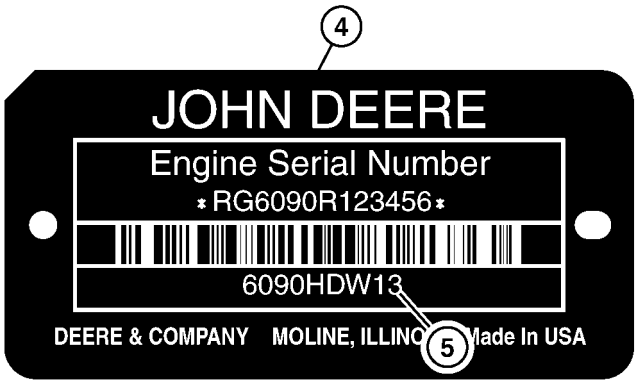

TX1082024 —UN—21SEP10

Engine Serial Number Plate

The engine serial number plate (4) is located on the right side of the engine for engine model 6090HDW13. It is located on the left side of engine for engine models 6068HDW80 and 6068HDW83. Each engine has a 9 digit engine model number (5) shown on this plate.

Engine Emissions Level Identification

The 9 digit engine model number corresponds to a specific engine emissions level.

Engine Model Number	Engine Emissions Level
6090HDW13	Interim Tier 4/Stage III B
6068HDW80	Tier 3/Stage III A
6068HDW83	Stage II

For machines equipped with a 17 digit PIN, where the 11th digit is “E”, “D”, or “C”, this digit also corresponds to a specific engine emissions level.

NOTE: Later machines with a 17 digit PIN identify engine emissions level (“E”, “D”, or “C”) with the 11th digit. Earlier machines with a 17 digit PIN do not identify engine emissions level with the 11th digit.

17 Digit PIN (11th digit)	Engine Emissions Level
xxxxxxxxxx**E**xxxxxx	Interim Tier 4/Stage III B
xxxxxxxxxx**D**xxxxxx	Tier 3/Stage III A
xxxxxxxxxx**C**xxxxxx	Stage II

4— Engine Serial Number Plate

5— 9 Digit Engine Model Number

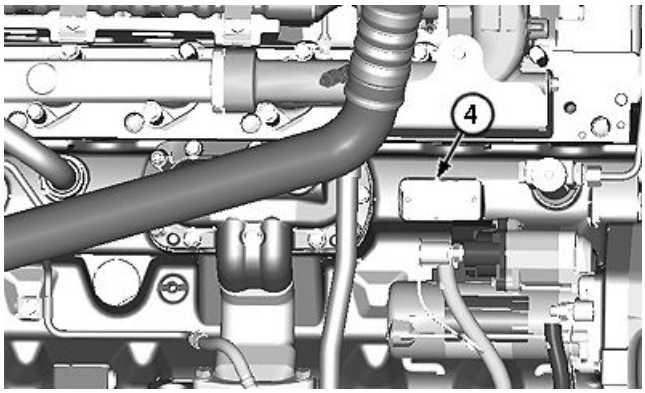

TX1082090A —UN—08NOV10

Engine Serial Number Plate Location—6090HDW13

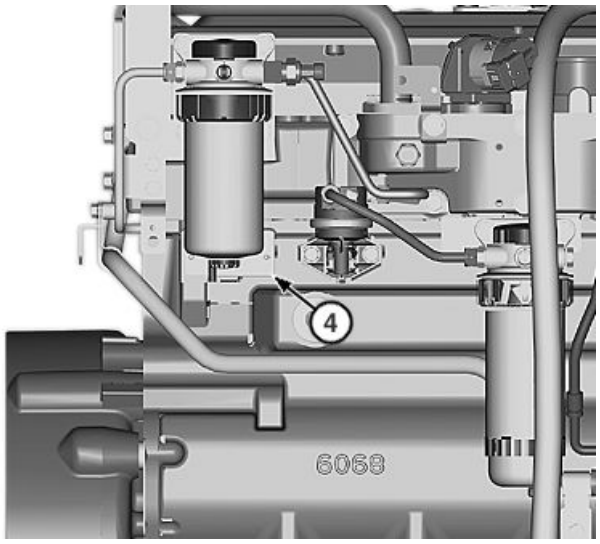

TX1081900A —UN—16SEP10

Engine Serial Number Plate Location—6068HDW80

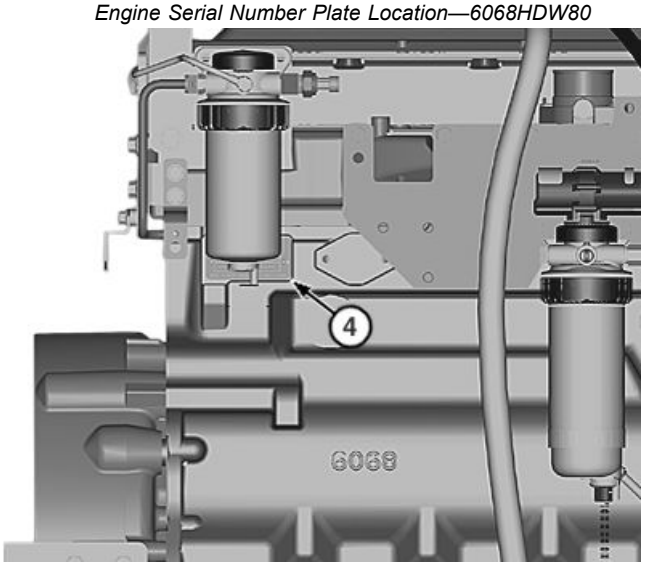

TX1081901A —UN—16SEP10

Engine Serial Number Plate Location—6068HDW83

OUT4001,000069C -19-22SEP10-2/2

Contents

Section 00—General Information
- Group 01—Safety Information
- Group 0003—Torque Values

Section 01—Wheels
- Group 0110—Powered Wheels and Fasteners

Section 02—Axles and Suspension Systems
- Group 0200—Removal and Installation
- Group 0225—Input Drive Shafts And U-Joints
- Group 0250—Axle Shaft, Bearings, And Reduction Gears
- Group 0260—Hydraulic System

Section 03—Transmission
- Group 0300—Removal and Installation
- Group 0350—Gears, Shafts, Bearings and Power Shift Clutch
- Group 0360—Hydraulic System

Section 04—Engine
- Group 0400—Removal and Installation

Section 05—Engine Auxiliary Systems
- Group 0505—Cold Weather Starting Aids
- Group 0510—Cooling System
- Group 0520—Intake System
- Group 0530—External Exhaust System
- Group 0560—External Fuel Supply Systems

Section 07—Dampener Drive
- Group 0752—Elements

Section 09—Steering System
- Group 0960—Hydraulic System

Section 10—Service Brakes
- Group 1011—Active Elements
- Group 1060—Hydraulic System

Section 11—Park Brake
- Group 1111—Active Elements
- Group 1160—Hydraulic System

Section 17—Frame or Supporting Structure
- Group 1740—Frame Installation
- Group 1746—Frame Bottom Guards
- Group 1749—Chassis Weights

Section 18—Operator's Station
- Group 1800—Removal and Installation
- Group 1810—Operator Enclosure
- Group 1821—Seat and Seat Belts
- Group 1830—Heating and Air Conditioning

Section 19—Sheet Metal and Styling
- Group 1910—Hood or Engine Enclosure

Section 31—Loader
- Group 3102—Bucket
- Group 3140—Frames
- Group 3160—Hydraulic System

Section 99—Dealer Fabricated Tools
- Group 9900—Dealer Fabricated Tools

Original Instructions. All information, illustrations and specifications in this manual are based on the latest information available at the time of publication. The right is reserved to make changes at any time without notice.

COPYRIGHT © 2011
DEERE & COMPANY
Moline, Illinois
All rights reserved.
A John Deere ILLUSTRUCTION ® Manual
Previous Editions
Copyright © 2008, 2009, 2010

Section 00
General Information

Contents

Page

Group 01—Safety Information
Recognize Safety Information 00-01-1
Follow Safety Instructions..... 00-01-1
Operate Only If Qualified 00-01-1
Wear Protective Equipment..... 00-01-2
Avoid Unauthorized Machine Modifications..... 00-01-2
Inspect Machine 00-01-2
Stay Clear of Moving Parts..... 00-01-2
Avoid High-Pressure Oils 00-01-3
Avoid High-Pressure Fluids 00-01-3
Work In Ventilated Area..... 00-01-3
Prevent Fires 00-01-4
Clean Debris from Machine..... 00-01-4
Prevent Battery Explosions 00-01-5
Handle Chemical Products Safely..... 00-01-5
Dispose of Waste Properly 00-01-5
Exhaust Filter Ash Handling and Disposal..... 00-01-6
Prepare for Emergencies..... 00-01-6
Add Cab Guarding For Special Uses 00-01-6
Use Steps and Handholds Correctly 00-01-6
Start Only From Operator's Seat 00-01-7
Use and Maintain Seat Belt..... 00-01-7
Prevent Unintended Machine Movement..... 00-01-7
Avoid Work Site Hazards..... 00-01-8
Use Special Care When Operating Loader 00-01-8
Keep Riders Off Machine 00-01-9
Avoid Backover Accidents..... 00-01-9
Avoid Machine Tip Over 00-01-10
Operating on Slopes..... 00-01-10
Operating or Traveling On Public Roads 00-01-11
Inspect and Maintain ROPS 00-01-11
Add and Operate Attachments Safely..... 00-01-11
Park And Prepare For Service Safely..... 00-01-12
Clean Exhaust Filter Safely 00-01-13
Service Cooling System Safely 00-01-14
Service Tires Safely..... 00-01-14
Remove Paint Before Welding or Heating 00-01-15
Make Welding Repairs Safely 00-01-15
Drive Metal Pins Safely 00-01-15

Group 0003—Torque Values
Torque Value
Metric Bolt and Cap Screw.....00-0003-1

Page

Additional Metric Cap Screw Torque Values..... 00-0003-2
Unified Inch Bolt and Cap Screw 00-0003-3
Service Recommendations for 37° Flare and 30° Cone Seat Connectors 00-0003-4
Service Recommendations for O-Ring Boss Fittings..... 00-0003-4
Service Recommendations For Flared Connections—Straight or Tapered Threads 00-0003-6
Service Recommendations For Flat Face O-Ring Seal Fittings 00-0003-7
Service Recommendation O-Ring Face Seal Fittings with SAE Inch Hex Nut and Stud End for High Pressure.....00-0003-8
O-Ring Face Seal Fittings with Metric Hex Nut and Stud End for Standard Pressure.....00-0003-10
O-Ring Face Seal Fittings with Metric Hex Nut and Stud End for High Pressure.....00-0003-12
Service Recommendations for Metric Series Four Bolt Flange Fitting..... 00-0003-14
Service Recommendations For Inch Series Four Bolt Flange Fittings 00-0003-15
Inch Series Four Bolt Flange Fitting For High Pressure Service Recommendations..... 00-0003-16
Service Recommendations For Non-Restricted Banjo (Adjustable) Fittings..... 00-0003-17
Service Recommendations For O-Ring Boss Fittings With Shoulder 00-0003-18
Metric 24 O-Ring Seal DIN 20078.....00-0003-20

Recognize Safety Information

This is the safety alert symbol. When you see this symbol on your machine or in this manual, be alert for the potential of personal injury.

Follow the precautions and safe operating practices highlighted by this symbol.

A signal word — DANGER, WARNING, or CAUTION — is used with the safety alert symbol. DANGER identifies the most serious hazards.

On your machine, DANGER signs are red in color, WARNING signs are orange, and CAUTION signs are yellow. DANGER and WARNING signs are located near specific hazards. General precautions are on CAUTION labels.



T133555 —UN—28AUG00

T133588 —19—28AUG00

TX,RECOGNIZE -19-28JUN10-1/1

Follow Safety Instructions

Carefully read all safety messages in this manual and on your machine safety signs. Keep safety signs in good condition. Replace missing or damaged safety signs. Be sure new equipment components and repair parts include the current safety signs. Replacement safety signs are available from your John Deere dealer.

There can be additional safety information contained on parts and components sourced from suppliers that is not reproduced in this operator's manual.

Learn how to operate the machine and how to use controls properly. Do not let anyone operate without instruction.

Keep your machine in proper working condition. Unauthorized modifications to the machine may impair the function and/or safety and affect machine life.

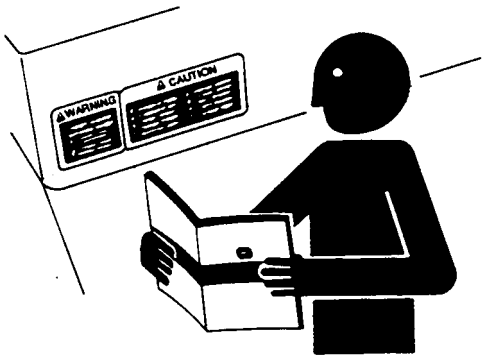

TS201 —UN—23AUG88

If you do not understand any part of this manual and need assistance, contact your John Deere dealer.

DX,READ -19-16JUN09-1/1

Operate Only If Qualified

Do not operate this machine unless you have read the operator's manual carefully and you have been qualified by supervised training and instruction.

Familiarize yourself with the job site and your surroundings before operating. Try all controls and machine functions with the machine in an open area before starting to work.

Know and observe all safety rules that may apply to your work situation and your work site.

TX03679,00016FA -19-03NOV08-1/1

Wear Protective Equipment

Guard against injury from flying pieces of metal or debris; wear goggles or safety glasses.

Wear close fitting clothing and safety equipment appropriate to the job.

Operating equipment safely requires the full attention of the operator. Do not wear radio or music headphones while operating machine.

Prolonged exposure to loud noise can cause impairment or loss of hearing. Wear suitable hearing protection such as earmuffs or earplugs to protect against objectionable or uncomfortable loud noises. Radio or music headphones are not suitable to use for hearing protection.

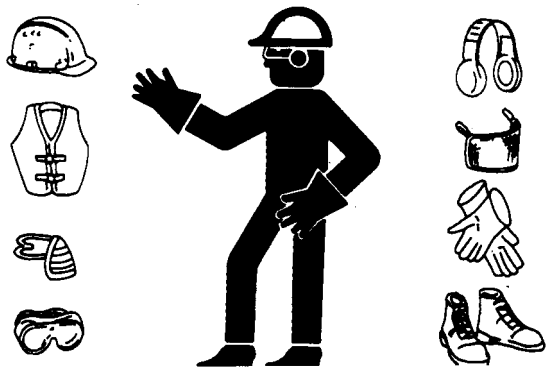

TS206 —UN—23AUG88

OUT4001,0000570 -19-12FEB10-1/1

Avoid Unauthorized Machine Modifications

John Deere recommends using only genuine John Deere replacement parts to ensure machine performance. Never substitute genuine John Deere parts with alternate parts not intended for the application as these can create hazardous situations or hazardous performance. Non-John Deere Parts, or any damage or failures resulting from their use are not covered by any John Deere warranty.

Modifications of this machine, or addition of unapproved products or attachments, may affect machine stability or reliability, and may create a hazard for the operator or others near the machine. The installer of any modification which may affect the electronic controls of this machine is responsible for establishing that the modification does not adversely affect the machine or its performance.

Always contact an authorized John Deere dealer before making machine modifications that change the intended use, weight or balance of the machine, or that alter machine controls, performance or reliability.

AM40430,00000A9 -19-14JAN08-1/1

Inspect Machine

Inspect machine carefully each day by walking around it before starting.

Keep all guards and shields in good condition and properly installed. Fix damage and replace worn or broken parts immediately. Pay special attention to hydraulic hoses and electrical wiring.



T6607AQ —UN—18OCT88

TX03679,0001734 -19-03NOV08-1/1

Stay Clear of Moving Parts

Entanglements in moving parts can cause serious injury.

Stop engine before examining, adjusting or maintaining any part of machine with moving parts.

Keep guards and shields in place. Replace any guard or shield that has been removed for access as soon as service or repair is complete.

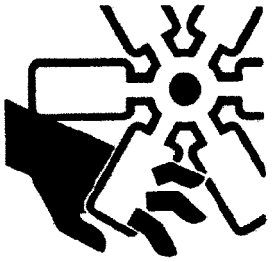

T133592 —UN—12SEP01

TX03679,00016D2 -19-03NOV08-1/1

Avoid High-Pressure Oils

This machine uses a high-pressure hydraulic system. Escaping oil under pressure can penetrate the skin causing serious injury.

Never search for leaks with your hands. Protect hands. Use a piece of cardboard to find location of escaping oil. Stop engine and relieve pressure before disconnecting lines or working on hydraulic system.

If hydraulic oil penetrates your skin, see a doctor immediately. Injected oil must be removed surgically within hours or gangrene may result. Contact a knowledgeable medical source or the Deere & Company Medical Department in Moline, Illinois, U.S.A.

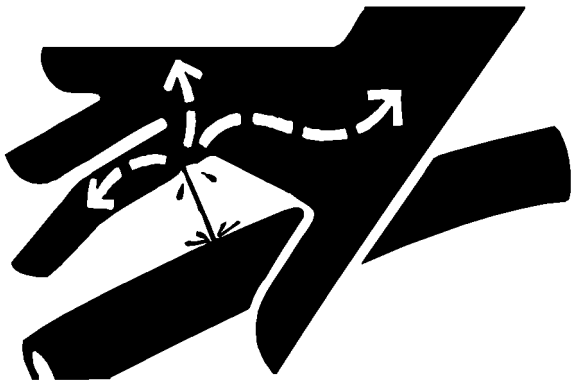

T133509 —UN—17MAR06

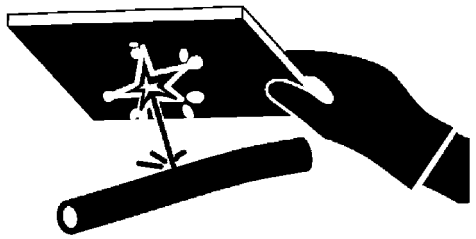

T133840 —UN—20SEP00

TX03679,00016D3 -19-03NOV08-1/1

Avoid High-Pressure Fluids

Escaping fluid under pressure can penetrate the skin causing serious injury.

Avoid the hazard by relieving pressure before disconnecting hydraulic or other lines. Tighten all connections before applying pressure.

Search for leaks with a piece of cardboard. Protect hands and body from high-pressure fluids.

If an accident occurs, see a doctor immediately. Any fluid injected into the skin must be surgically removed within a few hours or gangrene may result. Doctors unfamiliar with this type of injury should reference a knowledgeable medical source. Such information is available in English from Deere & Company Medical Department in Moline, Illinois, U.S.A., by calling 1-800-822-8262 or +1 309-748-5636.

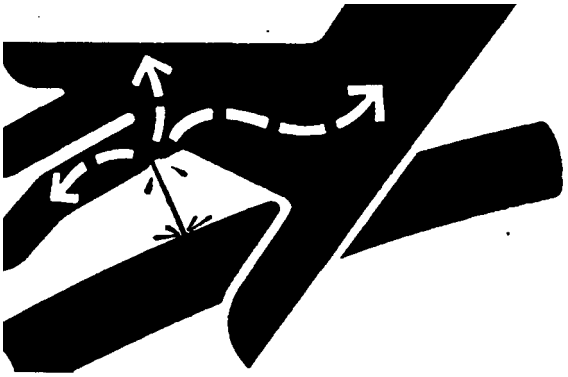

X9811 —UN—23AUG88

DX,FLUID -19-20AUG09-1/1

Work In Ventilated Area

Engine exhaust fumes can cause sickness or death. If it is necessary to run an engine in an enclosed area, remove the exhaust fumes from the area with an exhaust pipe extension.

If you do not have an exhaust pipe extension, open the doors and get outside air into the area.

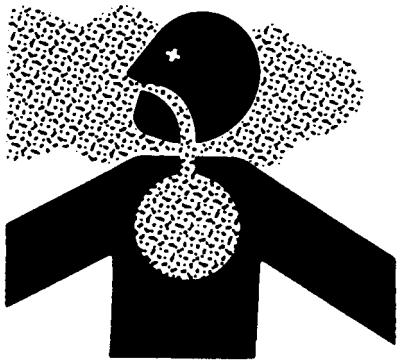

TS220 —UN—23AUG88

DX,AIR -19-17FEB99-1/1

Prevent Fires

Handle Fuel Safely: Store flammable fluids away from fire hazards. Never refuel machine while smoking or when near sparks or flame.

Clean Machine Regularly: Keep trash, debris, grease and oil from accumulating in engine compartment, around fuel lines, hydraulic lines, exhaust components, and electrical wiring. Never store oily rags or flammable materials inside a machine compartment.

Maintain Hoses and Wiring: Replace hydraulic hoses immediately if they begin to leak, and clean up any oil spills. Examine electrical wiring and connectors frequently for damage.

Keep A Fire Extinguisher Available: Always keep a multipurpose fire extinguisher on or near the machine. Know how to use extinguisher properly.



T133552 —UN—14SEP00

T133553 —UN—07SEP00



T133554 —UN—07SEP00



TX03679,00016F5 -19-03NOV08-1/1

Clean Debris from Machine

Keep engine compartment, radiator, batteries, hydraulic lines, exhaust components, fuel tank, and operator's station clean and free of debris.

Clean any oil spills or fuel spills on machine surfaces.

Temperature in engine compartment may go up immediately after engine is stopped. BE ON GUARD FOR FIRES DURING THIS PERIOD.

Open access door(s) to cool the engine faster, and clean engine compartment.

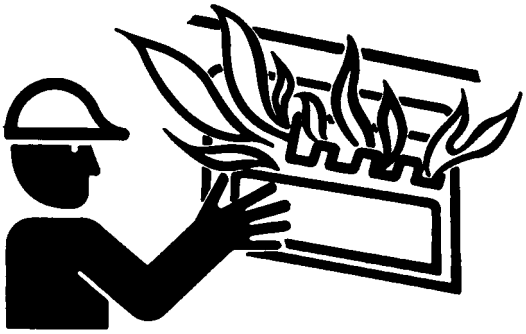

T6669AG —UN—18OCT88

OUT4001,00000E3 -19-20AUG09-1/1

Prevent Battery Explosions

Keep sparks, lighted matches, and open flame away from the top of battery. Battery gas can explode.

Never check battery charge by placing a metal object across the posts. Use a volt-meter or hydrometer.

Do not charge a frozen battery; it may explode. Warm battery to 16°C (60°F).



TS204 —UN—23AUG88

DX,SPARKS -19-03MAR93-1/1

Handle Chemical Products Safely

Direct exposure to hazardous chemicals can cause serious injury. Potentially hazardous chemicals used with John Deere equipment include such items as lubricants, coolants, paints, and adhesives.

A Material Safety Data Sheet (MSDS) provides specific details on chemical products: physical and health hazards, safety procedures, and emergency response techniques.

Check the MSDS before you start any job using a hazardous chemical. That way you will know exactly what the risks are and how to do the job safely. Then follow procedures and recommended equipment.

(See your John Deere dealer for MSDS's on chemical products used with John Deere equipment.)

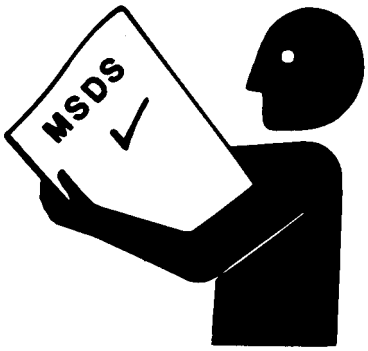

TS1132 —UN—26NOV90

DX,MSDS,NA -19-03MAR93-1/1

Dispose of Waste Properly

Improperly disposing of waste can threaten the environment and ecology. Potentially harmful waste used with John Deere equipment include such items as oil, fuel, coolant, brake fluid, filters, and batteries.

Use leakproof containers when draining fluids. Do not use food or beverage containers that may mislead someone into drinking from them.

Do not pour waste onto the ground, down a drain, or into any water source.

Air conditioning refrigerants escaping into the air can damage the Earth's atmosphere. Government regulations may require a certified air conditioning service center to recover and recycle used air conditioning refrigerants.

Inquire on the proper way to recycle or dispose of waste from your local environmental or recycling center, or from your John Deere dealer.

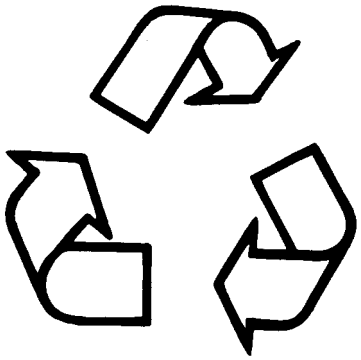

TS1133 —UN—26NOV90

DX,DRAIN -19-03MAR93-1/1

Exhaust Filter Ash Handling and Disposal

CAUTION: Under federal, state, and/or local laws or regulations, exhaust filter ash may be classified as a hazardous waste. Hazardous waste must be disposed of in accordance with all applicable federal, state and local laws or regulations governing hazardous waste disposal. Only a qualified service provider should remove ash from the exhaust filter. Personal protective equipment and clothing, maintained in a sanitary and reliable condition, should be used when handling and cleaning exhaust filter. See your authorized dealer for exhaust filter ash handling and disposal.

OUT4001,00005BA -19-28JUL10-1/1

Prepare for Emergencies

Be prepared if a fire starts.

Keep a first aid kit and fire extinguisher handy.

Keep emergency numbers for doctors, ambulance service, hospital, and fire department near your telephone.

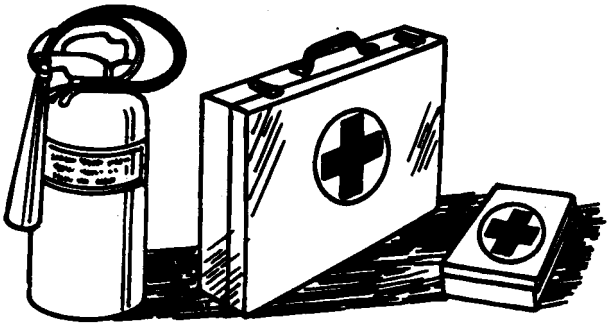

TS291 —UN—23AUG88

DX,FIRE2 -19-03MAR93-1/1

Add Cab Guarding For Special Uses

Special work situations or machine attachments may create an environment with falling or flying objects. Working near an overhead bank, demolition work, using a hydraulic hammer or winch, working in a forestry application/wooded area, or working in a waste management application, for example, may require added guarding to protect the operator.

Additional level II FOPS (falling object protective structures), forestry protection packages, and/or special screens or guarding should be installed when falling or flying objects may enter or damage the machine. A rear screen should always be used with a winch to protect against a snapping cable. Before operating in any special work environments, follow the operator protection recommendations of the manufacturer of any specialized attachment or equipment. Contact your authorized John Deere dealer for information on protective guarding.

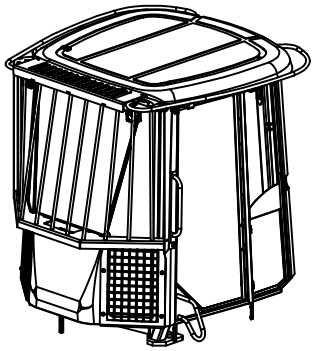

Cab Guarding

T141893 —UN—09JUN11

VD76477,0000504 -19-26JAN10-1/1

Use Steps and Handholds Correctly

Prevent falls by facing the machine when getting on and off. Maintain 3-point contact with steps and handrails. Never use machine controls as handholds.

Use extra care when mud, snow, or moisture present slippery conditions. Keep steps clean and free of grease or oil. Never jump when exiting machine. Never mount or dismount a moving machine.

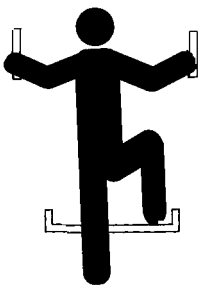

T133468 —UN—30AUG00

TX03679,00016F2 -19-15MAR07-1/1

Start Only From Operator's Seat

Avoid unexpected machine movement. Start engine only while sitting in operator's seat. Ensure all controls and working tools are in proper position for a parked machine.

Never attempt to start engine from the ground. Do not attempt to start engine by shorting across the starter solenoid terminals.



T133715 —UN—07SEP00

TX03679,0001799 -19-22APR10-1/1

Use and Maintain Seat Belt

Use seat belt when operating machine. Remember to fasten seat belt when loading and unloading from trucks and during other uses.

Examine seat belt frequently. Be sure webbing is not cut or torn. Replace seat belt immediately if any part is damaged or does not function properly.

The complete seat belt assembly should be replaced every 3 years, regardless of appearance.



T133716 —19—14SEP00

TX03679,00016DD -19-03NOV08-1/1

Prevent Unintended Machine Movement

Lower all equipment to the ground during work interruptions. Place transmission control in neutral, press park brake switch (1) to engage park brake, press pilot enable/boom down switch (2) to disable the hydraulics, and stop engine before allowing anyone to approach the machine.

Follow these same precautions before standing up, leaving the operator's seat, or exiting the machine.

1— Park Brake Switch

2— Pilot Enable/Boom Down Switch



TX1041772A —UN—02MAY08

DP99999,00000A3 -19-02MAY08-1/1

Avoid Work Site Hazards

Avoid contact with gas lines, buried cables and water lines. Call utility line location services to identify all underground utilities before starting work.

Prepare work site properly. Avoid operating near structures or objects that could fall onto the machine. Clear away debris that could move unexpectedly if run over.

Avoid boom or attachment contact with overhead obstacles or overhead electrical lines. Never move machine closer than 3 m (10 ft) plus twice the line insulator length to overhead wires.

Keep bystanders clear at all times. Keep bystanders away from raised booms, attachments, and unsupported loads. Avoid swinging or raising booms, attachments, or loads over or near personnel. Use barricades or a signal person to keep vehicles and pedestrians away. Use a signal person if moving machine in congested areas or where visibility is restricted. Always keep signal person in view. Coordinate hand signals before starting machine.

Operate only on solid footing with strength sufficient to support machine. Be especially alert working near embankments or excavations.

Avoid working under over-hanging embankments or stockpiles that could collapse under or on machine.

Reduce machine speed when operating with tool on or near ground when obstacles may be hidden (e.g., during snow removal or clearing mud, dirt, etc.). At high speeds hitting obstacles (rocks, uneven concrete or manholes) can cause a sudden stop. Always wear your seat belt.

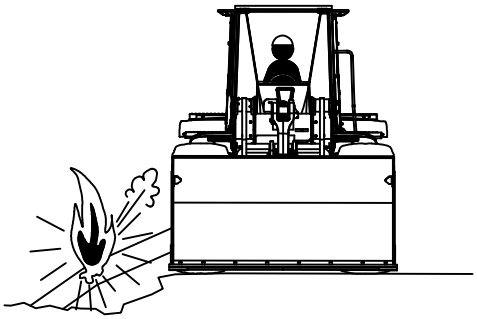

T141894 —UN—15JUN01

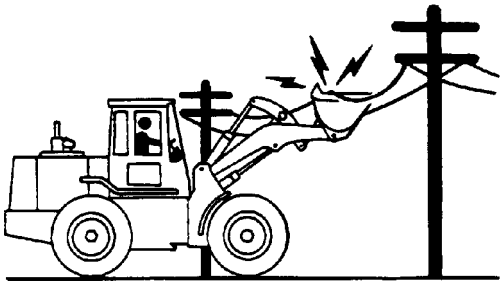

T141670 —UN—24APR01

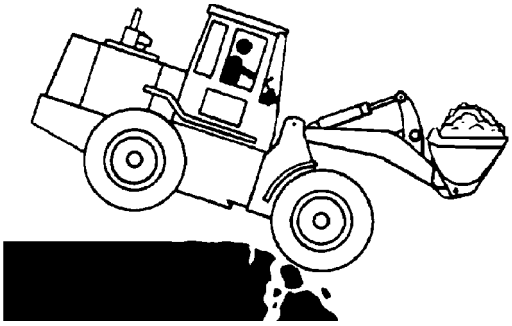

T141672 —UN—04MAY01

DP99999,0000113 -19-19AUG10-1/1

Use Special Care When Operating Loader

Never use the loader to lift people. Do not allow anyone to ride in the bucket or use the bucket as a work platform.

Operate carefully with raised loads. Raising the load reduces machine stability, especially on side slopes or an unstable surface. Drive and turn slowly with a raised load.

Ensure that objects in the bucket are secure. Do not attempt to lift or carry objects that are too big or too long to fit inside the bucket unless secured with an adequate chain or other device. Keep bystanders away from raised loads.

Be careful when lifting objects. Never attempt to lift objects too heavy for your machine. Assure machine stability and hydraulic capability with a test lift before attempting other maneuvers. Use an adequate chain or sling and proper rigging techniques to attach and stabilize loads. Never lift an object above or near another person.

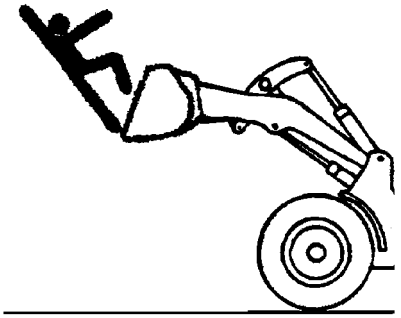

T141957 —UN—15MAY01

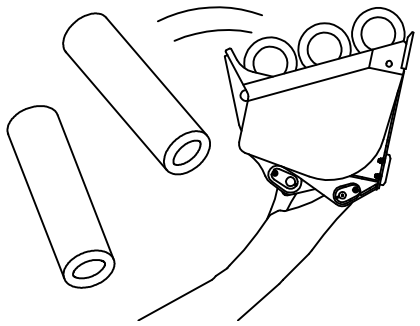

T141902 —UN—07MAY01

TX03768,0000B70 -19-14MAY01-1/1

Keep Riders Off Machine

Only allow operator on machine.

Riders are subject to injury. They may fall from machine, be caught between machine parts, or be struck by foreign objects.

Riders may obstruct operator's view or impair his ability to operate machine safely.

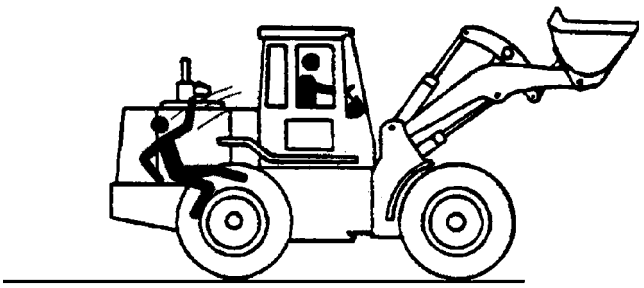

TX03679,000179B -19-20APR01-1/1

Avoid Backover Accidents

Before moving machine, be sure that all persons are clear of machine path. Turn around and look directly for best visibility. Use mirrors to assist in checking all around machine. Keep windows and mirrors clean, adjusted, and in good repair.

Be certain reverse warning alarm is working properly.

Use a signal person when backing if view is obstructed or when in close quarters. Keep signal person in view at all times. Use prearranged hand signals to communicate.

Do not rely on the rear camera and radar object detection systems to determine if personnel are behind the machine.

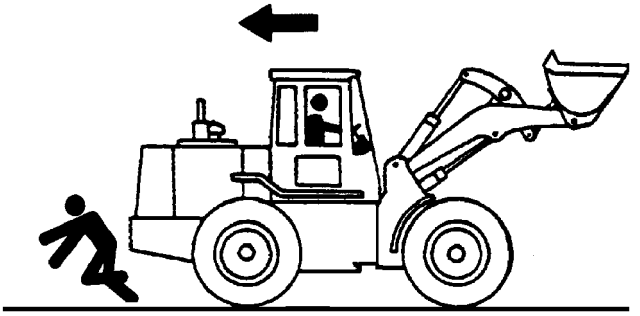

The system has limitations due to maintenance practices, environmental conditions, and operating range.

DP99999,00001D7 -19-13MAY09-1/1

Avoid Machine Tip Over

Use seat belt at all times.

Do not jump if the machine tips. You will be unlikely to jump clear and the machine may crush you.

Load and unload from trucks or trailers carefully. Be sure truck is wide enough and on a firm level surface. Use loading ramps and attach them properly to truck bed.

Be careful on slopes. Avoid sharp turns. Balance loads so weight is evenly distributed and load is stable. Carry tools and loads close to the ground to aid visibility and lower center of gravity. Use extra care on soft, rocky or frozen ground.

Know the capacity of the machine. Do not overload. Be careful with heavy loads. Using oversize buckets or lifting heavy objects reduces machine stability.

Ensure solid footing. Use extra care in soft ground conditions that may not uniformly support the wheels, especially when raising the boom. Do not operate close to banks or open excavations that may cave in and cause machine to tip or fall.

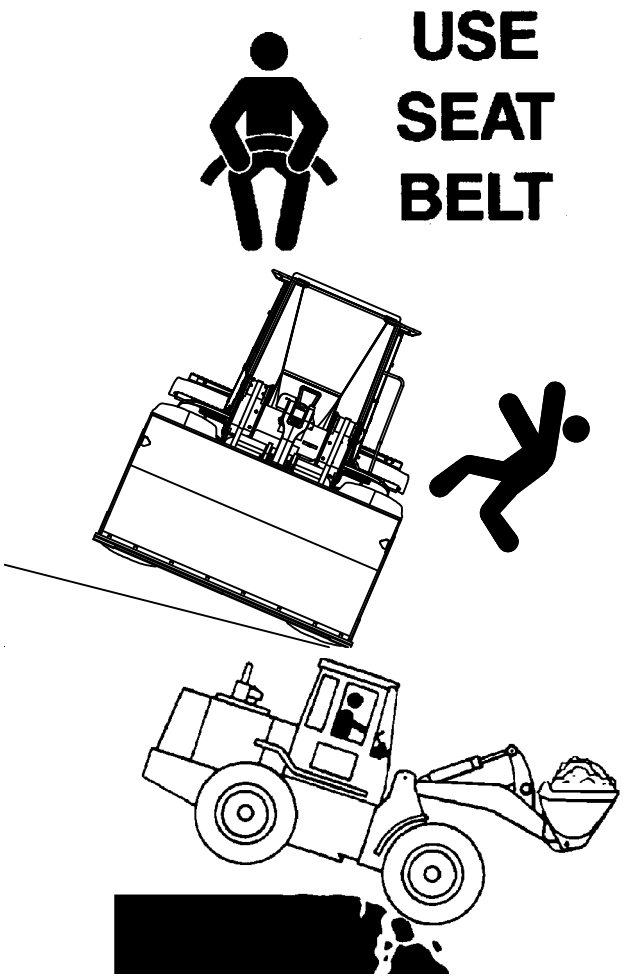

T133716 —19—14SEP00

T141676 —UN—04MAY01

T141672 —UN—04MAY01

TX03679,000179D -19-02MAY01-1/1

Operating on Slopes

Avoid side slope travel whenever possible. Drive up steep slope in forward and down in reverse.

Select low gear speed before starting down slope. The grade of the slope will be limited by ground condition and load being handled.

Use service brakes to control speed. Sudden brake application with a loaded bucket on downhill side could cause machine to tip forward.

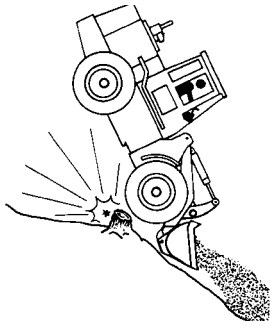

T141681 —UN—30APR01

TX03679,000179E -19-14MAY01-1/1

Operating or Traveling On Public Roads

Machines that work near vehicle traffic or travel slower than normal highway speeds must have proper lighting and markings to assure they are visible to other drivers.

Install additional lights, beacons, slow moving vehicle (SMV) emblems, or other devices and use as required to make the machine visible and identify it as a work machine. Check state and local regulations to assure compliance. Keep these devices clean and in working condition.

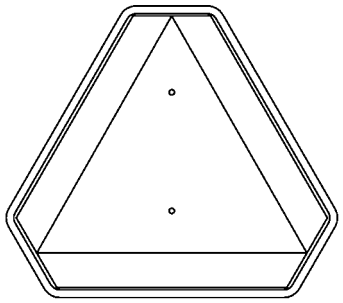

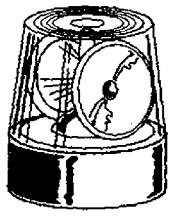

T141891—UN—22MAY01

TX03679,00017C8 -19-02MAR07-1/1

Inspect and Maintain ROPS

A damaged roll-over protective structure (ROPS) should be replaced, not reused.

The protection offered by ROPS will be impaired if ROPS is subjected to structural damage, is involved in an overturn incident, or is in any way altered by welding, bending, drilling, or cutting.

If ROPS was loosened or removed for any reason, inspect it carefully before operating the machine again.

To maintain the ROPS:

- Replace missing hardware using correct grade hardware.
- Check hardware torque.
- Check isolation mounts for damage, looseness or wear; replace them if necessary.
- Check ROPS for cracks or physical damage.

TX03679,000179F -19-07SEP06-1/1

Add and Operate Attachments Safely

Always verify compatibility of attachments by contacting your authorized dealer. Adding unapproved attachments may affect machine stability or reliability, and may create a hazard for others near the machine.

Ensure that a qualified person is involved in attachment installation. Add guards to machine if operator protection is required or recommended. Verify that all connections are secure and attachment responds properly to controls.

Carefully read attachment manual and follow all instructions and warnings. In an area free of bystanders and obstructions, carefully operate attachment to learn its characteristics and range of motion.

TX03679,00016F0 -19-24JAN07-1/1

Park And Prepare For Service Safely

Warn others of service work. Always park and prepare your machine for service or repair properly.

- Park machine on a level surface and lower equipment to the ground.
- Engage park brake.
- Stop engine.
- Install frame locking bar.
- Attach a DO NOT OPERATE tag in an obvious place in the operator's station.

Securely support machine or attachment before working under it.

- Do not support machine with boom, bucket, or other hydraulically actuated equipment.
- Do not support machine with cinder blocks or wooden pieces that can crumble or crush.
- Do not support machine with a single jack or other devices that could slip out of place.

Understand service procedures before beginning repairs. Keep service area clean and dry. Use two people whenever the engine must be running for service work.



T133332 —19—14DEC01

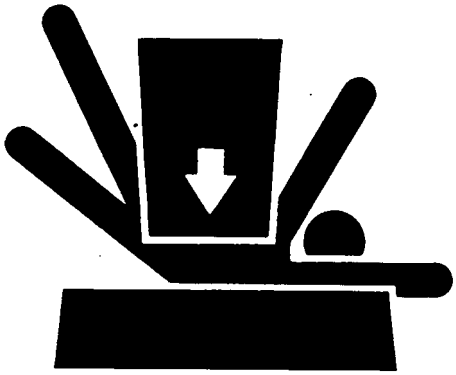

TS229 —UN—23AUG88

DP99999,0000391 -19-12MAR10-1/1

Clean Exhaust Filter Safely

During exhaust filter cleaning operations, the engine may run at elevated idle and hot temperatures for an extended period of time. Exhaust gases and exhaust filter components reach temperatures hot enough to burn people, or ignite or melt common materials.

Keep machine away from people, animals, or structures which may be susceptible to harm or damage from hot exhaust gases or components. Avoid potential fire or explosion hazards from flammable materials and vapors near the exhaust. Keep exhaust outlet away from people and anything that can melt, burn, or explode.

Closely monitor machine and surrounding area for smoldering debris during and after exhaust filter cleaning.

Adding fuel while an engine is running can create a fire or explosion hazard. Always stop engine before refueling machine and clean up any spilled fuel.

Always make sure that engine is stopped while hauling machine on a truck or trailer.

Contact with exhaust components while still hot can result in serious personal injury.

Avoid contact with these components until cooled to safe temperatures.

If service procedure requires engine to be running:

- Only engage power-driven parts required by service procedure
- Ensure that other people are clear of operator station and machine

Keep hands, feet, and clothing away from power-driven parts.

Always disable movement (neutral), set the parking brake or mechanism and disconnect power to attachments or tools before leaving the operator's station.

Shut off engine and remove key (if equipped) before leaving the machine unattended.



TS227 —UN—23AUG88

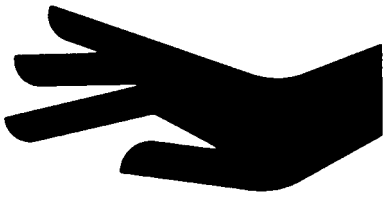



TS271 —UN—23AUG88

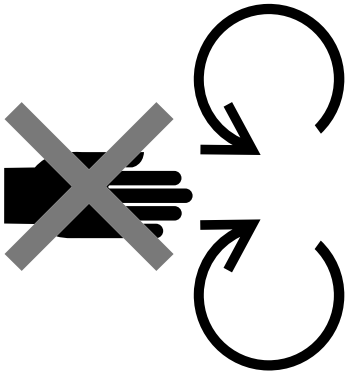

TS1693 —UN—09DEC09

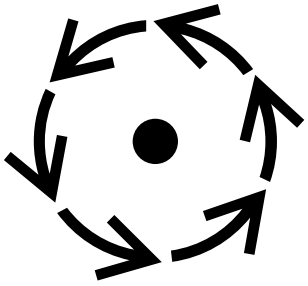



TS1695 —UN—07DEC09

DX,EXHAUST,FILTER -19-12JAN11-1/1

Service Cooling System Safely

Explosive release of fluids from pressurized cooling system can cause serious burns.

Do not service radiator through the radiator cap. Only fill through the surge tank filler cap. Shut off engine. Only remove surge tank filler cap when cool enough to touch with bare hands. Slowly loosen cap to relieve pressure before removing completely.



TS281 —UN—23AUG88

VD76477,0001157 -19-20DEC06-1/1

Service Tires Safely

Explosive separation of a tire and rim parts can cause serious injury or death.

Do not attempt to mount a tire unless you have the proper equipment and experience to perform the job.

Always maintain the correct tire pressure. Do not inflate the tires above the recommended pressure. Never weld or heat a wheel and tire assembly. The heat can cause an increase in air pressure resulting in a tire explosion. Welding can structurally weaken or deform the wheel.

When inflating tires, use a clip-on chuck and extension hose long enough to allow you to stand to one side and NOT in front of or over the tire assembly. Use a safety cage if available.

Check wheels for low pressure, cuts, bubbles, damaged rims or missing lug bolts and nuts.

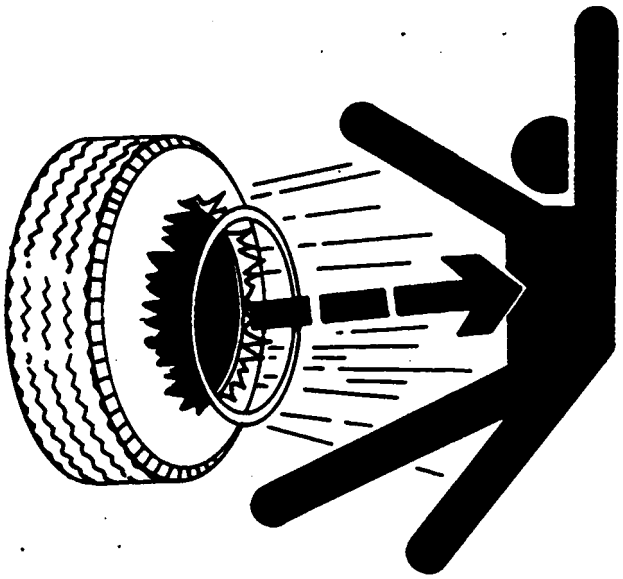

TS211 —UN—23AUG88

DX,RIM -19-24AUG90-1/1

Remove Paint Before Welding or Heating

Avoid potentially toxic fumes and dust.

Hazardous fumes can be generated when paint is heated by welding, soldering, or using a torch.

Remove paint before heating:

- Remove paint a minimum of 100 mm (4 in.) from area to be affected by heating. If paint cannot be removed, wear an approved respirator before heating or welding.
- If you sand or grind paint, avoid breathing the dust. Wear an approved respirator.
- If you use solvent or paint stripper, remove stripper with soap and water before welding. Remove solvent or paint stripper containers and other flammable material from area. Allow fumes to disperse at least 15 minutes before welding or heating.

Do not use a chlorinated solvent in areas where welding will take place.



TS220 —UN—23AUG88

Do all work in an area that is well ventilated to carry toxic fumes and dust away.

Dispose of paint and solvent properly.

DX,PAINT -19-24JUL02-1/1

Make Welding Repairs Safely

IMPORTANT: Disable electrical power before welding. Turn off main battery switch or disconnect positive battery cable. Separate harness connectors to engine and vehicle microprocessors.

Avoid welding or heating near pressurized fluid lines. Flammable spray may result and cause severe burns if pressurized lines fail as a result of heating. Do not let heat go beyond work area to nearby pressurized lines.

Remove paint properly. Do not inhale paint dust or fumes. Use a qualified welding technician for structural repairs.



T133547 —UN—31AUG00

Make sure there is good ventilation. Wear eye protection and protective equipment when welding.

TX03679,00016D5 -19-25APR08-1/1

Drive Metal Pins Safely

Always wear protective goggles or safety glasses and other protective equipment before striking hardened parts. Hammering hardened metal parts such as pins and bucket teeth may dislodge chips at high velocity.

Use a soft hammer or a brass bar between hammer and object to prevent chipping.

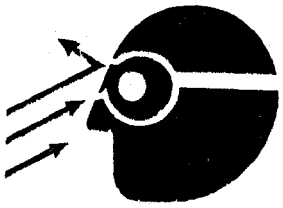

T133738 —UN—14SEP00

TX03679,0001745 -19-03JAN07-1/1

Metric Bolt and Cap Screw Torque Values

METRIC BOLT AND CAP SCREW TORQUE VALUES—Tolerance is ±10% unless otherwise specified

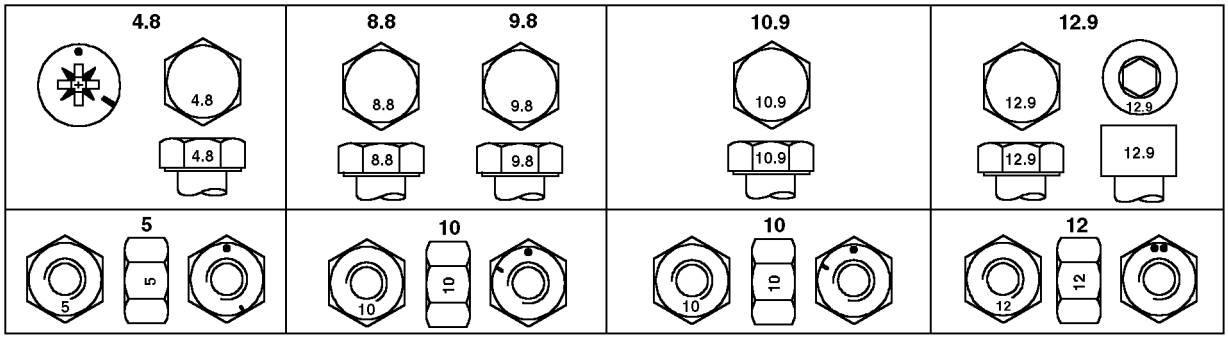

TORQ2 —UN—07SEP99

Top—Property Class and Head Markings; Bottom—Property Class and Nut Markings

	Class 4.8		Class 8.8 or 9.8		Class 10.9		Class 12.9	
Thread Size	Lubricated[a] N·m (lb-ft)	Dry[b] N·m (lb-ft)	Lubricated[a] N·m (lb-ft)	Dry[b] N·m (lb-ft)	Lubricated[a] N·m (lb-ft)	Dry[b] N·m (lb-ft)	Lubricated[a] N·m (lb-ft)	Dry[b] N·m (lb-ft)
M6	4.7 (3.5)	6 (4.4)	9 (6.6)	11.5 (8.5)	13 (9.5)	16.5 (12.2)	15.5 (11.5)	19.5 (14.5)
M8	11.5 (8.5)	14.5 (10.7)	22 (16)	28 (20.5)	32 (23.5)	40 (29.5)	37 (27.5)	47 (35)
M10	23 (17)	29 (21)	43 (32)	55 (40)	63 (46)	80 (59)	75 (55)	95 (70)
M12	40 (29.5)	50 (37)	75 (55)	95 (70)	110 (80)	140 (105)	130 (95)	165 (120)
M14	63 (46)	80 (59)	120 (88)	150 (110)	175 (130)	220 (165)	205 (150)	260 (190)
M16	100 (74)	125 (92)	190 (140)	240 (175)	275 (200)	350 (255)	320 (235)	400 (300)
M18	135 (100)	170 (125)	265 (195)	330 (245)	375 (275)	475 (350)	440 (325)	560 (410)
M20	190 (140)	245 (180)	375 (275)	475 (350)	530 (390)	675 (500)	625 (460)	790 (580)
M22	265 (195)	330 (245)	510 (375)	650 (480)	725 (535)	920 (680)	850 (625)	1080 (800)
M24	330 (245)	425 (315)	650 (480)	820 (600)	920 (680)	1150 (850)	1080 (800)	1350 (1000)
M27	490 (360)	625 (460)	950 (700)	1200 (885)	1350 (1000)	1700 (1250)	1580 (1160)	2000 (1475)
M30	660 (490)	850 (625)	1290 (950)	1630 (1200)	1850 (1350)	2300 (1700)	2140 (1580)	2700 (2000)
M33	900 (665)	1150 (850)	1750 (1300)	2200 (1625)	2500 (1850)	3150 (2325)	2900 (2150)	3700 (2730)
M36	1150 (850)	1450 (1075)	2250 (1650)	2850 (2100)	3200 (2350)	4050 (3000)	3750 (2770)	4750 (3500)

[a] *"Lubricated" means coated with a lubricant such as engine oil, or fasteners with phosphate and oil coatings.*

[b] *"Dry" means plain or zinc plated without any lubrication.*

CAUTION: Use only metric tools on metric hardware. Other tools may not fit properly. Tool may slip and cause injury.

DO NOT use these values if a different torque value or tightening procedure is given for a specific application. Torque values listed are for general use only. Check tightness of fasteners periodically.

Shear bolts are designed to fail under predetermined loads. Always replace shear bolts with identical property class.

Fasteners should be replaced with the same or higher property class. If higher property class fasteners are used, these should only be tightened to the strength of the original.

Make sure fastener threads are clean and that you properly start thread engagement. This will prevent them from failing when tightening.

Tighten plastic insert or crimped steel-type lock nuts to approximately 50 percent of the dry torque shown in the chart, applied to the nut, not to the bolt head. Tighten toothed or serrated-type lock nuts to the full torque value.

OUT3035,TORQUE2 -19-22MAR06-1/1

Additional Metric Cap Screw Torque Values

CAUTION: Use only metric tools on metric hardware. Other tools may not fit properly. They may slip and cause injury.

Check tightness of cap screws periodically. Torque values listed are for general use only. Do not use these values if a different torque value or tightening procedure is listed for a specific application.

Shear bolts are designed to fail under predetermined loads. Always replace shear bolts with identical grade.

Fasteners should be replaced with the same or higher grade. If higher grade fasteners are used, these should only be tightened to the strength of the original.

Make sure fastener threads are clean and you properly start thread engagement. This will prevent them from failing when tightening.

Tighten cap screws having lock nuts to approximately 50 percent of amount shown in chart.

METRIC CAP SCREW TORQUE VALUES[a]						
	T-Bolt		H-Bolt		M-Bolt	
Nominal Dia	N·m	lb-ft	N·m	lb-ft	N·m	lb-ft
8	29	21	20	15	10	7
10	63	46	45	33	20	15
12	108	80	88	65	34	25
14	176	130	137	101	54	40
16	265	195	206	152	78	58
18	392	289	294	217	118	87
20	539	398	392	289	167	125
22	735	542	539	398	216	159
24	931	687	686	506	274	202
27	1372	1012	1029	759	392	289
30	1911	1410	1421	1049	539	398
33	2548	1890	1911	1410	735	542
36	3136	2314	2401	1772	931	687

[a] *Torque tolerance is ±10%.*

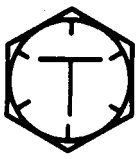

T6873AA

T6873AA —UN—18OCT88



T6873AB

T6873AB —UN—18OCT88



T6873AC

T6873AC —UN—18OCT88

04T,90,M170 -19-29SEP99-1/1

Unified Inch Bolt and Cap Screw Torque Values

UNIFIED INCH BOLT AND CAP SCREW TORQUE VALUES—Tolerance is ±10% unless otherwise specified

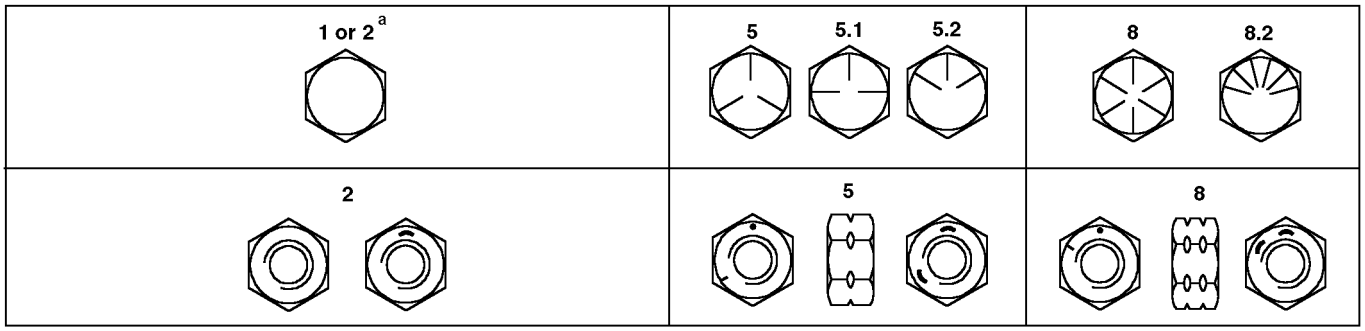

TORQ1A —UN—27SEP99

Top—SAE Grade and Head Markings; Bottom—SAE Grade and Nut Markings

	Grade 1 (No Mark)		Grade 2[a] (No Mark)		Grade 5, 5.1 or 5.2		Grade 8 or 8.2	
Thread Size	Lubricated[b] N·m (lb-ft)	Dry[c] N·m (lb-ft)	Lubricated[b] N·m (lb-ft)	Dry[c] N·m (lb-ft)	Lubricated[b] N·m (lb-ft)	Dry[c] N·m (lb-ft)	Lubricated[b] N·m (lb-ft)	Dry[c] N·m (lb-ft)
1/4	3.8 (2.8)	4.7 (3.5)	6 (4.4)	7.5 (5.5)	9.5 (7)	12 (9)	13.5 (10)	17 (12.5)
5/16	7.7 (5.7)	9.8 (7.2)	12 (9)	15.5 (11.5)	19.5 (14.5)	25 (18.5)	28 (20.5)	35 (26)
3/8	13.5 (10)	17.5 (13)	22 (16)	27.5 (20)	35 (26)	44 (32.5)	49 (36)	63 (46)
7/16	22 (16)	28 (20.5)	35 (26)	44 (32.5)	56 (41)	70 (52)	80 (59)	100 (74)
1/2	34 (25)	42 (31)	53 (39)	67 (49)	85 (63)	110 (80)	120 (88)	155 (115)
9/16	48 (35.5)	60 (45)	76 (56)	95 (70)	125 (92)	155 (115)	175 (130)	220 (165)
5/8	67 (49)	85 (63)	105 (77)	135 (100)	170 (125)	215 (160)	240 (175)	305 (225)
3/4	120 (88)	150 (110)	190 (140)	240 (175)	300 (220)	380 (280)	425 (315)	540 (400)
7/8	190 (140)	240 (175)	190 (140)	240 (175)	490 (360)	615 (455)	690 (510)	870 (640)
1	285 (210)	360 (265)	285 (210)	360 (265)	730 (540)	920 (680)	1030 (760)	1300 (960)
1-1/8	400 (300)	510 (375)	400 (300)	510 (375)	910 (670)	1150 (850)	1450 (1075)	1850 (1350)
1-1/4	570 (420)	725 (535)	570 (420)	725 (535)	1280 (945)	1630 (1200)	2050 (1500)	2600 (1920)
1-3/8	750 (550)	950 (700)	750 (550)	950 (700)	1700 (1250)	2140 (1580)	2700 (2000)	3400 (2500)
1-1/2	990 (730)	1250 (930)	990 (730)	1250 (930)	2250 (1650)	2850 (2100)	3600 (2650)	4550 (3350)

[a] Grade 2 applies for hex cap screws (not hex bolts) up to 6 in. (152 mm) long. Grade 1 applies for hex cap screws over 6 in. (152 mm) long, and for all other types of bolts and screws of any length.

[b] "Lubricated" means coated with a lubricant such as engine oil, or fasteners with phosphate and oil coatings.

[c] "Dry" means plain or zinc plated without any lubrication.

DO NOT use these values if a different torque value or tightening procedure is given for a specific application. Torque values listed are for general use only. Check tightness of fasteners periodically.

Shear bolts are designed to fail under predetermined loads. Always replace shear bolts with identical grade.

Fasteners should be replaced with the same or higher grade. If higher grade fasteners are used, these should only be tightened to the strength of the original.

Make sure fastener threads are clean and that you properly start thread engagement. This will prevent them from failing when tightening.

Tighten plastic insert or crimped steel-type lock nuts to approximately 50 percent of the dry torque shown in the chart, applied to the nut, not to the bolt head. Tighten toothed or serrated-type lock nuts to the full torque value.

OUT3035,TORQUE1 -19-14JAN04-1/1

Service Recommendations for 37° Flare and 30° Cone Seat Connectors

1. Inspect flare and flare seat. They must be free of dirt or obvious defects.
2. Defects in tube flare cannot be repaired. Overtightening a defective flared fitting will not stop leaks.
3. Align tube with fitting before attempting to start nut.
4. Lubricate male threads with hydraulic fluid or petroleum jelly.
5. Index angle fittings and tighten by hand.
6. Tighten fitting or nut to torque value shown on torque chart. Do not allow hoses to twist when tightening fittings.



T6234AC —UN—18OCT88

STRAIGHT FITTING OR SPECIAL NUT TORQUE CHART		
Thread Size	**N·m**	**lb-ft**
3/8 - 24 UNF	8	6
7/16 - 20 UNF	12	9
1/2 - 20 UNF	16	12
9/16 - 18 UNF	24	18
3/4 - 16 UNF	46	34
7/8 - 14 UNF	62	46
1-1/16 - 12 UN	102	75
1-3/16 - 12 UN	122	90
1-5/16 - 12 UN	142	105
1-5/8 - 12	190	140
1-7/8 - 12 UN	217	160

NOTE: Torque tolerance is ± 10%.

T82,BHMA,EL -19-29SEP99-1/1

Service Recommendations for O-Ring Boss Fittings

Straight Fitting

1. Inspect O-ring boss seat for dirt or defects.
2. Lubricate O-ring with petroleum jelly. Place electrical tape over threads to protect O-ring. Slide O-ring over tape and into O-ring groove of fitting. Remove tape.
3. Tighten fitting to torque value shown on chart.

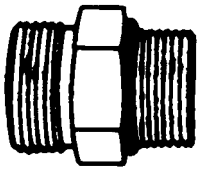

T6243AE —UN—18OCT88

Continued on next page

04T,90,K66 -19-29SEP99-1/2

Angle Fitting

1. Back-off lock nut (A) and back-up washer (B) completely to head-end (C) of fitting.
2. Turn fitting into threaded boss until back-up washer contacts face of boss.
3. Turn fitting head-end counterclockwise to proper index (maximum of one turn).

NOTE: Do not allow hoses to twist when tightening fittings.

4. Hold fitting head-end with a wrench and tighten locknut and back-up washer to proper torque value.

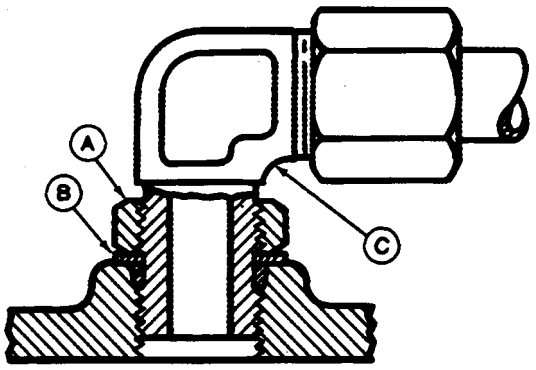

T6520AB —UN—18OCT88

STRAIGHT FITTING OR SPECIAL NUT TORQUE CHART		
Thread Size	**N·m**	**lb-ft**
3/8-24 UNF	8	6
7/16-20 UNF	12	9
1/2-20 UNF	16	12
9/16-18 UNF	24	18
3/4-16 UNF	46	34
7/8-14 UNF	62	46
1-1/16-12 UN	102	75
1-3/16-12 UN	122	90
1-5/16-12 UN	142	105
1-5/8-12 UN	190	140
1-7/8-12 UN	217	160

NOTE: Torque tolerance is ± 10%.

04T,90,K66 -19-29SEP99-2/2

Service Recommendations For Flared Connections—Straight or Tapered Threads

1. Inspect flare and flare seat. They must be free of dirt or obvious defects.
2. Defects in the tube flare cannot be repaired. Overtightening a defective flared fitting will not stop leaks.
3. Align the tube with the fitting before attempting to start the nut.
4. Lubricate the male threads with hydraulic fluid or petroleum jelly.
5. Index angle fittings and tighten by hand.
6. Tighten fitting or nut to torque value shown on the chart. Do not allow hoses to twist when tightening fittings.

TORQUE CHART [a]				
	Straight Thread [b]		Tapered Thread	
Thread Size	N·m	lb-ft	N·m	lb-ft
1/8	15	11		
1/4	20	15	45	33
3/8	29	21	69	51
1/2	49	36	93	69
3/4	69	51	176	130
1	157	116	343	253
1-1/2	196	145	539	398
2	255	188	588	434

[a] *Torque tolerance is ±10%.*
[b] *With seat face.*

NOTE: If female thread is cast iron (control valves, brake valves motors, etc.), torque must be reduced approximately 10%.

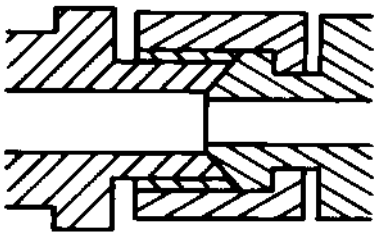

T6873AE —UN—18OCT88

Straight Thread

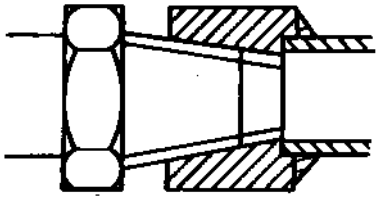

T6873AD —UN—18OCT88

Tapered Thread

04T,90,M171 -19-28JAN92-1/1

Service Recommendations For Flat Face O-Ring Seal Fittings

1. Inspect the fitting sealing surfaces and O-ring. They must be free of dirt or defects.
2. Lubricate O-rings and install into grove using petroleum jelly to hold in place.
3. Index angle fittings and tighten by hand pressing joint together to insure O-ring remains in place.
4. Tighten fitting or nut to torque value shown on the chart. Do not allow hoses to twist when tightening fittings, use backup wrench on straight hose couplings.

IMPORTANT: Tighten fittings to 150% of listed torque value if indexing is necessary or if fitting is attached to an actuating device.

Tighten fittings to 50% of listed torque value if used in aluminum housing.

FLAT FACE O-RING SEAL FITTING TORQUE*

Nomial Tube O.D.		Thread Size	Swivel Nut		Bulkhead Nut	
mm	in.	in.	N·m	lb-ft	N·m	lb-ft
6.35	0.250	9/16-18	16	12	12	9
9.52	0.375	11/16-16	24	18	24	18
12.70	0.500	13/16-16	50	37	46	34
15.88	0.625	1-14	69	51	62	46
19.05	0.750	1 3/16-12	102	75	102	75
22.22	0.875	1 3/16-12	102	75	102	75
25.40	1.000	1 7/16-12	142	105	142	105
31.75	1.250	1 11/16-12	190	140	190	140
38.10	1.500	2-12	217	160	217	160

*Torque tolerance is +15 -20% unless otherwise specified.

Stud End O-ring Seal Torque for Straight and Adjustable Fittings*

Thread Size	Straight Hex Size	Locknut Hex Size	Straight Fitting or Locknut Toque	
Inch	Inch	Inch	N·m	lb-ft
3/8-24	5/8	9/16	12	9
7/16-20	5/8	5/8	21	15
1/2-20	3/4	11/16	26	19
9/16-18	3/4	3/4	34	25
3/4-16	7/8	15/16	73	55
7/8-14	1 1/16	1 1/16	104	76
1 1/16-12	1 1/4	1 3/8	176	130
1 3/16-12	1 3/8	1 1/2	230	170
1 5/16-12	1 1/2	1 5/8	285	210

*Torque tolerance is +15 -20% unless otherwise specified.

OUO6092,00010A4 -19-31MAY11-1/1

O-Ring Face Seal Fittings With SAE Inch Hex Nut And Stud End For High Pressure Service Recommendations

O-RING FACE SEAL FITTINGS WITH SAE INCH HEX NUT AND STUD END FOR HIGH PRESSURE, ABOVE 27 600 kPa (276 bar) (4000 psi), TORQUE VALUES—Tolerance is +15 -20% unless otherwise specified

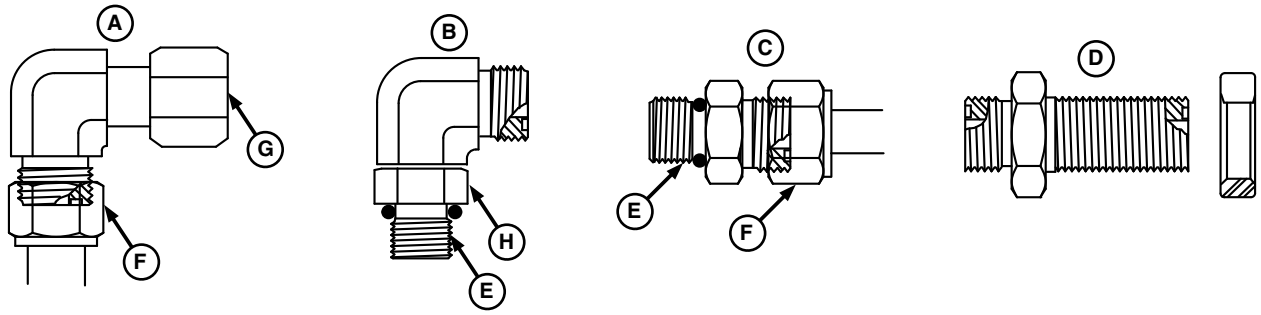

H70406 —UN—12DEC01

A—90° Swivel Elbow and Tube Nut
B—90° Adjustable Stud Elbow
C—Stud Straight and Tube Nut
D—Bulkhead Union and Nut
E—Stud End
F—Tube Nut
G—Swivel Nut
H—Hex Nut

Nominal Tube OD or Hose ID			O-Ring Face Seal Hose or Tube Swivel Nut			Bulkhead Nut	
Metric Tube OD	Inch Tube OD or Hose ID		Thread Size	Hex Size	Torque	Hex Size	Torque
mm	Dash Size	mm (in.)	in.	in.	Nm (lb-ft)	in.	Nm (lb-ft)
5	-3	4.78 (0.188)	—	—	—	—	—
6	-4	6.35 (0.250)	9/16-18	11/16	24 (18)	13/16	32 (24)
8	-5	7.92 (0.312)	—	—	—	—	—
10	-6	9.53 (0.375)	11/16-16	13/16	37 (27)	1	42 (31)
12	-8	12.70 (0.500)	13/16-16	15/16	75 (55)	1-1/8	93 (69)
16	-10	15.88 (0.625)	1-14	1-1/8	103 (76)	1-5/16	118 (87)
20	-12	19.05 (0.750)	1-3/16-12	1-3/8	152 (112)	1-1/2	175 (129)
22	-14	22.23 (0.875)	1-3/16-12	—	152 (112)	—	175 (129)
25	-16	25.40 (1.000)	1-7/16-12	1-5/8	214 (158)	1-3/4	247 (182)
32	-20	31.75 (1.250)	1-11/16-12	1-7/8	286 (211)	2	328 (242)
38	-24	38.10 (1.500)	2-12	2-1/4	326 (240)	2-3/8	374 (276)

O-RING STRAIGHT, ADJUSTABLE, AND EXTERNAL HEX PLUG WITH SAE INCH STUD END FOR HIGH PRESSURE, ABOVE 27 600 kPa (276 bar) (4000 psi), TORQUE VALUES—Tolerance is +15 -20% unless otherwise specified

Thread Size	Straight Hex Size[a]	Adjustable Nut Hex Size	Steel or Gray Iron Torque
in.	in.	in.	Nm (lb-ft)
3/8-24	5/8	9/16	18 (13)
7/16-20	5/8	5/8	24 (18)
1/2-20	3/4	11/16	30 (22)
9/16-18	3/4	3/4	37 (27)
3/4-16	7/8	15/16	75 (55)
7/8-14	1-1/16	1-1/16	103 (76)
1-1/16-12	1-1/4	1-3/8	177 (131)
1-3/16-12	1-3/8	1-1/2	231 (170)
1-5/16-12	1-1/2	1-5/8	270 (199)
1-5/8-12	1-3/4	1-7/8	286 (211)
1-7/8-12	2-1/8	2-1/8	326 (240)

[a] Straight hex size applies to fittings only and may not be the same as the corresponding plug of the same thread size.

1. Inspect fitting and connector sealing surfaces and the O-rings. They must be free of dirt, scratches, nicks, and burrs. O-ring must be free of dirt, cuts, cracks, swelling or flatten condition.
2. Back the stud end hex nut off as far as possible. Push backup washer towards the nut to fully expose the turn down section. Washer must fit turned down section and not be too loose

Continued on next page

OUT3035,0000420 -19-04MAY09-1/2

3. Lubricate O-rings using a thin film of clean hydraulic oil or as needed, petroleum jelly to hold O-ring in place.

   Install O-ring into groove making sure it is seated at the bottom. Excess petroleum jelly will prevent seating of O-ring and cause it to pop out.

   To protect an O-ring from threads, wrap electrical tape over the threads. Slide O-ring over the tape into the turned down section. Remove the tape.

4. Turn fitting into the boss by hand until face of nut or washer squeezes the O-ring into the seat and contacts face of boss. Loosen adjustable fittings no more than one turn for alignment.

   Hold connections together while tightening nut to ensure O-ring remains in place.

5. Tighten fitting or nut to torque value shown. Use a second wrench to hold the fitting in position or to keep hose from twisting while tightening nut.

OUT3035,0000420 -19-04MAY09-2/2

O-Ring Face Seal Fittings With Metric Hex Nut And Stud End For Standard Pressure Service Recommendations

O-RING FACE SEAL AND FITTINGS WITH METRIC HEX NUT AND STUD END FOR STANDARD PRESSURE, BELOW 27 600 kPa (275.8 bar) (4,000 psi), TORQUE VALUES—Tolerance is +15 -20% unless otherwise specified

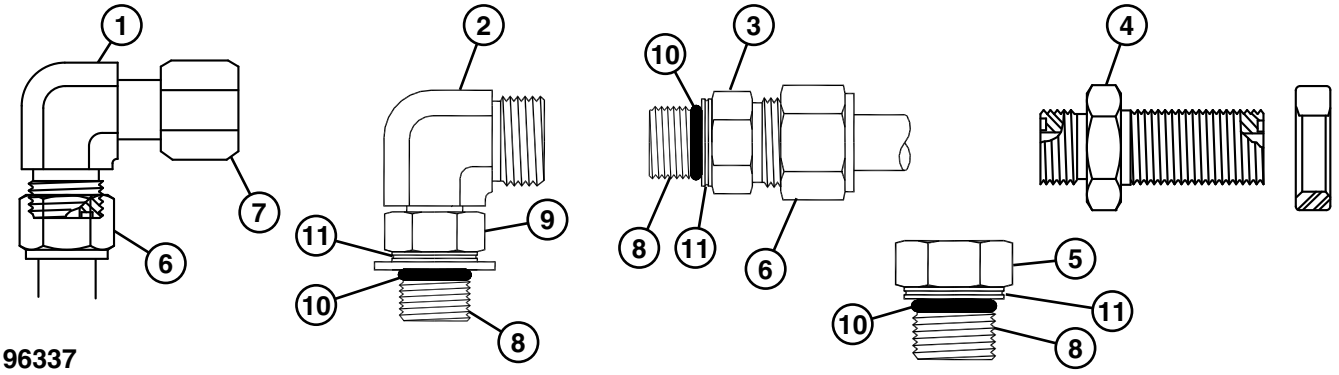

1— 90° Swivel Elbow
2— 90° Adjustable Stud Elbow
3— Stud Straight
4— Bulkhead Union and Nut
5— External Hex Stud End Plug
6— Tube Nut
7— Swivel Nut
8— Stud End
9— Hex Nut
10— O-Ring
11— Identification Groove

Nominal Tube OD or Hose ID			O-Ring Face Seal Hose or Tube Swivel Nut			Bulkhead Nut	
Metric Tube OD	Inch Tube OD or Hose ID		Thread Size	Hex Size	Torque	Hex Size	Torque
mm	Dash Size	mm (in.)	in.	mm	Nm (lb-ft)	mm	Nm (lb-ft)
4	-2	3.18 (0.125)	—	—	—	—	—
5	-3	4.78 (0.188)	—	—	—	—	—
6	-4	6.35 (0.250)	9/16-18	17	16 (12)	22	32 (24)
8	-5	7.92 (0.312)	—	—	—	—	—
10	-6	9.53 (0.375)	11/16-16	22	24 (18)	27	42 (31)
12	-8	12.70 (0.500)	13/16-16	24	50 (37)	30	93 (69)
16	-10	15.88 (0.625	1-14	30	69 (51)	36	118 (87)
20	-12	19.05 (0.750)	1-3/16-12	36	102 (75)	41	175 (129)
22	-14	22.23 (0.875)	1-3/16-12	36	102 (75)	41	175 (129)
25	-16	25.40 (1.000)	1-7/16-12	41	142 (105)	46	247 (182)
28	—	—	—	—	—	—	—
32	-20	31.75 (1.250)	1-11/16-12	50	190 (140)	50	328 (242)
38	-24	38.10 (1.500)	2-12	60	217 (160)	60	374 (276)
50	-32	50.80 (2.000)	—	—	—	—	—

O-RING STRAIGHT, ADJUSTABLE, AND EXTERNAL HEX PLUG WITH METRIC STUD END FOR STANDARD PRESSURE, BELOW 27 600 kPa (275.8 bar) (4,000 psi), TORQUE VALUES—Tolerance is +15 -20% unless otherwise specified

Thread Size[a]	Straight Hex Size[b]	Adjustable Nut Hex Size	Steel or Gray Iron Torque	Aluminum or Brass Torque
mm.	mm	mm	Nm (lb-ft)	Nm (lb-ft)
M8 x 1	12	12	8 (6)	5 (4)
M10 x 1	14	14	15 (11)	10 (7)
M12 x 1.5	17	17	25 (18)	17 (12)
M14 x 1.5	19	19	40 (30)	27 (20)
M16 x 1.5	22	22	45 (33)	30 (22)
M18 x 1.5	24	24	50 (37)	33 (25)
M22 x 1.5	27	27	69 (51)	46 (34)
M27 x 2	32	32	100 (74)	67 (49)
M30 x 2	36	36	130 (96)	87 (64)
M33 x 2	41	41	160 (118)	107 (79)
M38 x 2	46	46	176 (130)	117 (87)
M42 x 2	50	50	210 (155)	140 (103)

Continued on next page

OUT3035,0000366 -19-04MAY09-1/2

O-RING STRAIGHT, ADJUSTABLE, AND EXTERNAL HEX PLUG WITH METRIC STUD END FOR STANDARD PRESSURE, BELOW 27 600 kPa (275.8 bar) (4,000 psi), TORQUE VALUES—Tolerance is +15 -20% unless otherwise specified				
Thread Size[a]	**Straight Hex Size[b]**	**Adjustable Nut Hex Size**	**Steel or Gray Iron Torque**	**Aluminum or Brass Torque**
mm.	**mm**	**mm**	**Nm (lb-ft)**	**Nm (lb-ft)**
M48 x 2	55	55	260 (192)	173 (128)
M60 x 2	65	65	315 (232)	210 (155)
[a] Stud end threads are identified as metric by an identification groove in the hex nut next to the O-ring.				
[b] Straight hex size applies to fittings only and may not be the same as the corresponding plug of the same thread size.				

1. Inspect fitting and connector sealing surfaces and the O-rings. They must be free of dirt, scratches, nicks, and burrs. O-ring must be free of dirt, cuts, cracks, swelling or flatten condition.
2. Back the stud end hex nut off as far as possible. Push backup washer towards the nut to fully expose the turn down section. Washer must fit turned down section and not be too loose
3. Lubricate O-rings using a thin film of clean hydraulic oil or as needed, petroleum jelly to hold O-ring in place.

   Install O-ring into groove making sure it is seated at the bottom. Excess petroleum jelly will prevent seating of O-ring and cause it to pop out.

   To protect an O-ring from threads, wrap electrical tape over the threads. Slide O-ring over the tape into the turned down section. Remove the tape.
4. Turn fitting into the boss by hand until face of nut or washer squeezes the O-ring into the seat and contacts face of boss. Loosen adjustable fittings no more than one turn for alignment.

   Hold connections together while tightening nut to ensure O-ring remains in place.
5. Tighten fitting or nut to torque value shown. Use a second wrench to hold the fitting in position or to keep hose from twisting while tightening nut.

OUT3035,0000366 -19-04MAY09-2/2

O-Ring Face Seal Fittings With Metric Hex Nut And Stud End For High Pressure Service Recommendations

O-RING FACE SEAL FITTINGS WITH METRIC HEX NUT AND STUD END FOR HIGH PRESSURE, ABOVE 27 600 kPa (275.8 bar) (4,000 psi), TORQUE VALUES—Tolerance is +15 -20% unless otherwise specified

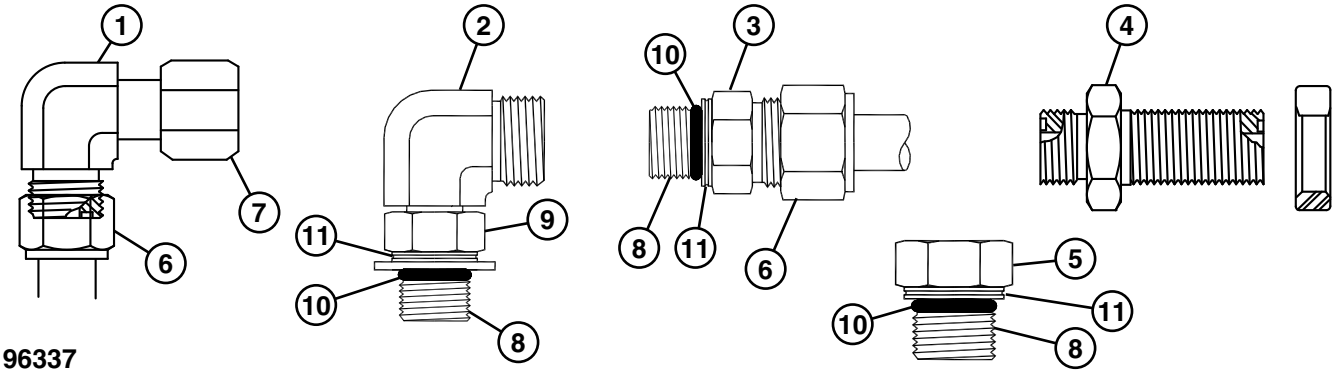

T196337

T196337 —UN—18NOV03

1— 90° Swivel Elbow
2— 90° Adjustable Stud Elbow
3— Stud Straight
4— Bulkhead Union and Nut
5— External Hex Stud End Plug
6— Tube Nut
7— Swivel Nut
8— Stud End
9— Hex Nut
10— O-Ring
11— Identification Groove

Nominal Tube OD or Hose ID			O-Ring Face Seal Hose or Tube Swivel Nut			Bulkhead Nut	
Metric Tube OD	Inch Tube OD or Hose ID		Thread Size	Hex Size	Torque	Hex Size	Torque
mm	Dash Size	mm (in.)	in.	mm	Nm (lb-ft)	mm	Nm (lb-ft)
4	-2	3.18 (0.125)	—	—	—	—	—
5	-3	4.78 (0.188)	—	—	—	—	—
6	-4	6.35 (0.250)	9/16-18	17	24 (18)	22	32 (24)
8	-5	7.92 (0.312)	—	—	—	—	—
10	-6	9.53 (0.375)	11/16-16	22	37 (27)	27	42 (31)
12	-8	12.70 (0.500)	13/16-16	24	75 (55)	30	93 (69)
16	-10	15.88 (0.625)	1-14	30	103 (76)	36	118 (87)
20	-12	19.05 (0.750)	1-3/16-12	36	152 (112)	41	175 (129)
22	-14	22.23 (0.875)	1-3/16-12	36	152 (112)	41	175 (129)
25	-16	25.40 (1.000)	1-7/16-12	41	214 (158)	46	247 (182)
28	—	—	—	—	—	—	—
32	-20	31.75 (1.250)	1-11/16-12	—	286 (211)	50	328 (242)
38	-24	38.10 (1.500)	2-12	—	326 (240)	60	374 (276)

O-RING STRAIGHT, ADJUSTABLE, AND EXTERNAL HEX PLUG WITH METRIC STUD END FOR HIGH PRESSURE, ABOVE 27 600 KPA (275.8 BAR) (4,000 PSI), TORQUE VALUES—Tolerance is +15 -20% unless otherwise specified

Thread Size[a]	Straight Hex Size[b]	Adjustable Nut Hex Size	Steel or Gray Iron Torque
mm.	mm	mm	Nm (lb-ft)
M8 x 1	12	12	8 (6)
M10 x 1	14	14	15 (11)
M12 x 1.5	17	17	35 (26)
M14 x 1.5	19	19	45 (33)
M16 x 1.5	22	22	55 (41)
M18 x 1.5	24	24	70 (52)
M22 x 1.5	27	27	100 (74)
M27 x 2	32	32	170 (125)
M30 x 2	36	36	215 159)
M33 x 2	41	41	260 (192)
M38 x 2	46	46	320 (236)
M42 x 2	50	50	360 (266)
M48 x 2	55	55	420 (310)

Continued on next page

OUT3035,0000421 -19-04MAY09-1/2

O-RING STRAIGHT, ADJUSTABLE, AND EXTERNAL HEX PLUG WITH METRIC STUD END FOR HIGH PRESSURE, ABOVE 27 600 KPA (275.8 BAR) (4,000 PSI), TORQUE VALUES—Tolerance is +15 -20% unless otherwise specified			
Thread Size[a]	Straight Hex Size[b]	Adjustable Nut Hex Size	Steel or Gray Iron Torque
mm.	mm	mm	Nm (lb-ft)
[a] *Stud end threads are identified as metric by an identification groove in the hex nut next to the O-ring.*			
[b] *Straight hex size applies to fittings only and may not be the same as the corresponding plug of the same thread size.*			

1. Inspect fitting and connector sealing surfaces and the O-rings. They must be free of dirt, scratches, nicks, and burrs. O-ring must be free of dirt, cuts, cracks, swelling or flatten condition.
2. Back the stud end hex nut off as far as possible. Push backup washer towards the nut to fully expose the turn down section. Washer must fit turned down section and not be too loose
3. Lubricate O-rings using a thin film of clean hydraulic oil or as needed, petroleum jelly to hold O-ring in place.

   Install O-ring into groove making sure it is seated at the bottom. Excess petroleum jelly will prevent seating of O-ring and cause it to pop out.

   To protect an O-ring from threads, wrap electrical tape over the threads. Slide O-ring over the tape into the turned down section. Remove the tape.
4. Turn fitting into the boss by hand until face of nut or washer squeezes the O-ring into the seat and contacts face of boss. Loosen adjustable fittings no more than one turn for alignment.

   Hold connections together while tightening nut to ensure O-ring remains in place.
5. Tighten fitting or nut to torque value shown. Use a second wrench to hold the fitting in position or to keep hose from twisting while tightening nut.

OUT3035,0000421 -19-04MAY09-2/2

Service Recommendations for Metric Series Four Bolt Flange Fitting

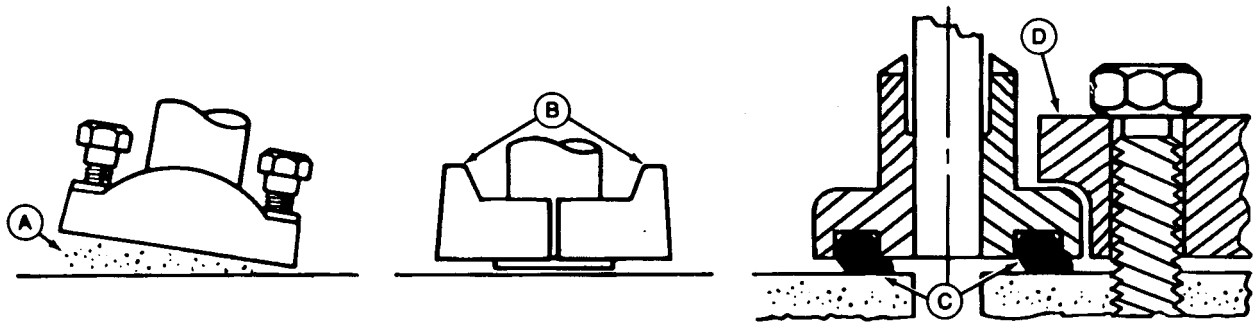

T6890BB —UN—01MAR90

A—Sealing Surface **B—Split Flange** **C—Pinched O-Ring** **D—Single Piece Flange**

1. Clean sealing surfaces (A). Inspect. Scratches cause leaks. Roughness causes seal wear. Out-of-flat causes seal extrusion. If defects cannot be polished out, replace component.
2. Install the correct O-ring (and backup washer if required) into groove using petroleum jelly to hold it in place.
3. Split flange: Loosely assemble split flange (B) halves. Make sure split is centrally located and perpendicular to the port. Hand tighten cap screws to hold parts in place. Do not pinch O-ring (C).
4. Single piece flange (D): Place hydraulic line in center of flange and install four cap screws. Flange must be centrally located on port. Hand tighten cap screws to hold flange in place. Do not pinch O-ring.
5. After components are properly positioned and cap screws are hand tightened, tighten one cap screw, then tighten the diagonally opposite cap screw. Tighten two remaining cap screws. Tighten all cap screws as specified in the chart below.

DO NOT use air wrenches. DO NOT tighten one cap screw fully before tightening the others. DO NOT over tighten.

TORQUE CHART[a]		
Thread[b]	**N·m**	**lb-ft**
M6	12	9
M8	30	22
M10	57	42
M12	95	70
M14	157	116
M16	217	160
M18	334	246
M20	421	318

[a] Tolerance ± 10%. The torques given are enough for the given size connection with the recommended working pressure. Increasing cap screw torque beyond these amounts will result in flange and cap screw bending and connection failures.
[b] Metric standard thread.

04T,90,K175 -19-29SEP99-1/1

Service Recommendations For Inch Series Four Bolt Flange Fittings

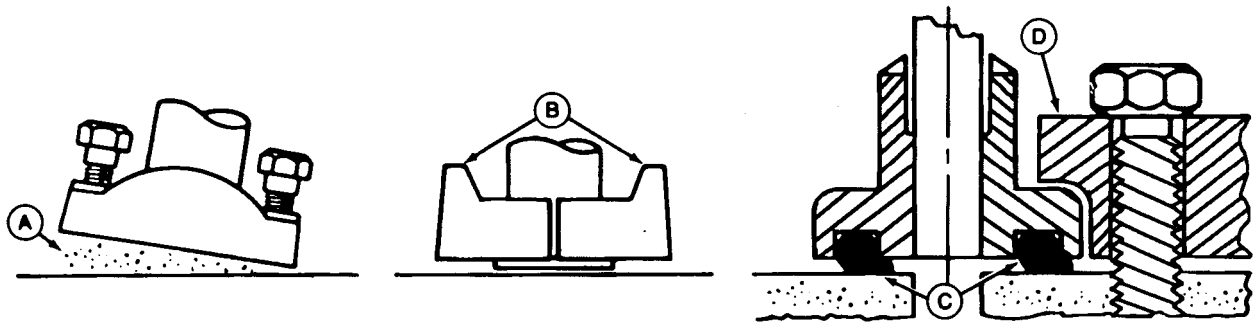

T6890BB —UN—01MAR90

A—Sealing Surface **B—Split Flange** **C—Pinched O-Ring** **D—Single Piece Flange**

1. Clean sealing surfaces (A). Inspect. Scratches cause leaks. Roughness causes seal wear. Out-of-flat causes seal extrusion. If defects cannot be polished out, replace component.
2. Install O-ring (and backup washer if required) into groove using petroleum jelly to hold it in place.
3. Split flange: Loosely assemble split flange (B) halves. Make sure split is centrally located and perpendicular to port. Hand tighten cap screws to hold parts in place. Do not pinch O-ring (C).
4. Single piece flange (D): Place hydraulic line in center of flange and install cap screws. Flange must be centrally located on port. Hand tighten cap screws to hold flange in place. Do not pinch O-ring.
5. Tighten one cap screw, then tighten the diagonally opposite cap screw. Tighten two remaining cap screws. Tighten all cap screws as specified in the chart below.

   DO NOT use air wrenches. DO NOT tighten one cap screw fully before tightening the others. DO NOT over tighten.

TORQUE CHART					
		N·m		lb-ft	
Nominal Flange Size	Cap Screw Size	Min	Max	Min	Max
1/2	5/16-18 UNC	20	31	15	23
3/4	3/8-16 UNC	28	54	21	40
1	3/8-16 UNC	37	54	27	40
1-1/4	7/16-14 UNC	47	85	35	63
1-1/2	1/2-13 UNC	62	131	46	97
2	1/2-13 UNC	73	131	54	97
2-1/2	1/2-13 UNC	107	131	79	97
3	5/8-11 UNC	158	264	117	195
3-1/2	5/8-11 UNC	158	264	117	195
4	5/8-11 UNC	158	264	117	195
5	5/8-11 UNC	158	264	117	195

04T,90,K174 -19-01AUG94-1/1

Inch Series Four Bolt Flange Fitting For High Pressure Service Recommendations

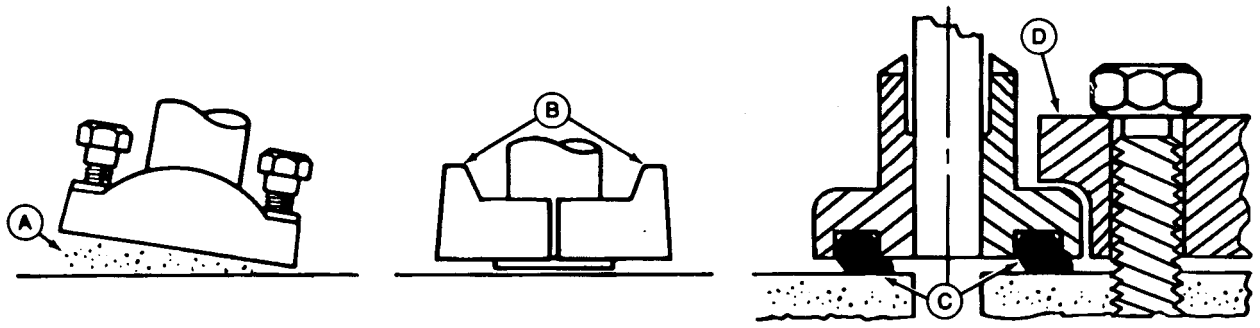

T6890BB —UN—01MAR90

A—Sealing Surface **B—Split Flange** **C—Pinched O-Ring** **D—Single Piece Flange**

INCH SERIES FOUR BOLT FLANGE FITTING FOR 41 400 kPa (414 bar) (6000 psi) PRESSURE SERIES TORQUE VALUES—Tolerance is ± 10% unless otherwise specified		
Nominal Flange Size	**Cap Screw Size[a]**	**Min—Max Torque**
in.	**in.**	**Nm (lb-ft)[b]**
1/2	5/16-18 UNC	20—31 (15—23)
3/4	3/8-16 UNC	34—54 (25—40)
1	7/16-14 UNC	57—85 (42—63)
1-1/4	1/2-13 UNC	85—131 (63—97)
1-1/2	5/8-11 UNC	159—264 (117—195)
2	3/4-10 UNC	271—468 (200—345)
[a] JDM A17D, SAE Grade 5 or better cap screws with plated hardware. Lock washers are permissible but not recommended.		
[b] Minimum torques given are enough for the given size connection with the recommended working pressure. Torques can be increased to the maximum shown for each cap screw size if desired. Increasing cap screw torque beyond the maximum will result in flange and cap screw bending and connection failures.		

1. Clean sealing surfaces (A). Inspect. Scratches, nicks, and burrs cause leaks. Roughness causes O-ring wear. Out-of-flat causes O-ring extrusion. If imperfection cannot be polished out, replace component.
2. Install the O-ring (and backup ring, if used) into groove. Use petroleum jelly to hold it in place.

IMPORTANT: DO NOT use air wrenches. DO NOT tighten one cap screw fully before tightening the others. DO NOT over tighten.

3. Split flange: Loosely assemble split flange (B) halves. Make sure split is centrally located and perpendicular to port. Hand tighten cap screws to hold flange halves and line in place. Do not pinch O-ring (C).

   Single piece flange (D): Make sure flange is centrally located on port and line is centered in flange. Install the cap screws. Hand tighten cap screws to hold flange and line in place. Do not pinch O-ring.
4. Tighten one cap screw and then the diagonally opposite cap screw. Tighten the two remaining cap screws. Tighten cap screws within the specified torque values.

OUT3035,0000422 -19-05MAR09-1/1

Service Recommendations For Non-Restricted Banjo (Adjustable) Fittings

1. Inspect all fitting sealing surfaces. They must be free of dirt and defects.
2. Inspect O-ring (A). It must be free of damage or defects.
3. Inspect sealing ring (B) for damage or defects.
4. Hold body in desired position while tightening stud by hand.
5. Tighten stud (C) to torque value shown on the chart. Do not allow body to twist when tightening stud.

NOTE: The L in the Tube Fitting OD Size column indicates "light" designed fitting and the S indicates "heavy" designed fitting.

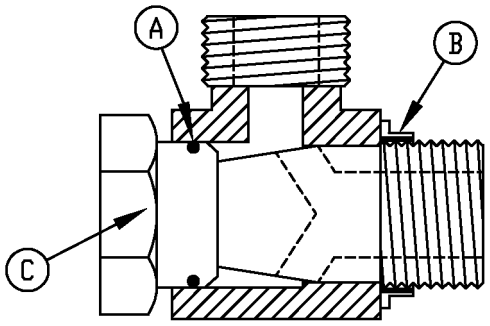

T113948

T113948 —UN—06MAR98

	Torque Value		
Tube Fitting O.D. Size	Metric Thread	N·m	lb-ft
6 L	M 10 x 1	30	22
8 L	M 12 x 1.5	40	30
10 L	M 14 x 1.5	60	44
12 L	M 16 x 1.5	100	74
15 L	M 18 x 1.5	130	96
18 L	M 22 x 1.5	160	118
22 L	M 26 x 1.5	250	184
28 L	M 33 x 2	400	295
35 L	M 42 x 2	600	443
42 L	M48 x 2	800	590
6 S	M 12 x 1.5	40	30
8 S	M 14 x 1.5	60	44
10 S	M 16 x 1.5	100	74
12 S	M 18 x 1.5	130	96
14 S	M 20 x 1.5	160	118
16 S	M 22 x 1.5	160	118
20 S	M 27 x 2	250	184
25 S	M 33 x 2	400	295
30 S	M 42 x 2	600	443
38 S	M 48 x 2	800	590

	Torque Value		
Tube Fitting O.D. Size	Inch Size	N·m	lb-ft
6 L	1/8	25	18
8 L	1/4	50	37
10 L	1/4	50	37
12 L	3/8	90	66
15 L	1/2	130	96
18 L	1/2	150	111
22 L	3/4	250	184
28 L	1	400	295
35 L	1-1/4	600	443
42 L	1-1/2	800	590
6 S	1/4	50	37
8 S	1/4	50	37
10 S	3/8	90	66
12 S	3/8	100	74
14 S	1/2	130	96
16 S	1/2	150	111
20 S	3/4	250	184
25 S	1	400	295
30 S	1-1/4	600	443
38 S	1-1/2	800	590

CS33148,00036E5 -19-29APR10-1/1

Service Recommendations For O-Ring Boss Fittings With Shoulder

1. Inspect component seal boss seat for dirt or defects.
2. Inspect EOlastic seal (A) for damage. Replace seal or fitting as necessary.

   To replace seal, put electrical tape over threads to protect seal. Slide seal over tape and into seal groove of fitting. Remove tape.
3. Tighten fitting to torque value shown on chart.

IMPORTANT: Do not allow hoses to twist when tightening fittings.

NOTE: The L in the Tube Fitting OD Size column indicates "light" designed fitting and the S indicates "heavy" designed fitting.

	Torque Value		
Tube Fitting O.D. Size	**Metric Thread**	**N·m**	**lb-ft**
6 L	M 10 x 1	20	15
8 L	M 12 x 1.5	30	22
10 L	M 14 x 1.5	45	33
12 L	M 16 x 1.5	60	44
15 L	M 18 x 1.5	80	59
18 L	M 22 x 1.5	130	96
22 L	M 26 x 1.5	190	140
28 L	M 33 x 2	300	221
35 L	M 42 x 2	600	443
42 L	M48 x 2	800	590
6 S	M 12 x 1.5	40	30
8 S	M 14 x 1.5	60	44
10 S	M 16 x 1.5	80	59
12 S	M 18 x 1.5	110	81
14 S	M 20 x 1.5	140	103
16 S	M 22 x 1.5	170	125
20 S	M 27 x 2	250	184
25 S	M 33 x 2	450	332
30 S	M 42 x 2	600	443
38 S	M 48 x 2	800	590

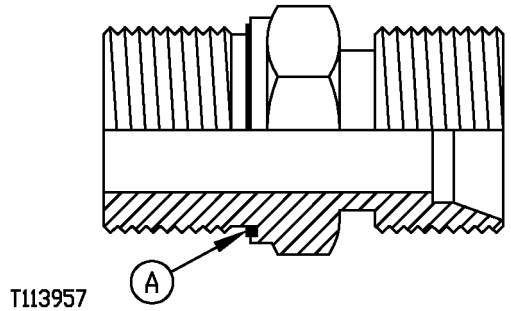

T113957 —UN—06MAR98

	Torque Value		
Tube Fitting O.D. Size	**Inch Size**	**N·m**	**lb-ft**
6 L	1/8	20	15
8 L	1/4	40	30
10 L	1/4	40	30
12 L	3/8	80	59
15 L	1/2	140	103
18 L	1/2	100	74
22 L	3/4	180	133
28 L	1	300	221
35 L	1-1/4	600	443
42 L	1-1/2	800	590
6 S	1/4	50	37
8 S	1/4	50	37
10 S	3/8	90	66
12 S	3/8	90	66
14 S	1/2	160	118
16 S	1/2	140	103
20 S	3/4	250	184
25 S	1	400	295
30 S	1-1/4	650	479
38 S	1-1/2	800	590

Continued on next page

CED,OUO1002,563 -19-09MAR98-1/2

Hex Socket Head Plugs Only		
Torque Value		
Thread Size	**N·m**	**lb-ft**
M 10 x 1	13	10
M 12 x 1.5	30	22
M 14 x 1.5	40	30
M 16 x 1.5	60	44
M 18 x 1.5	70	52
M 20 x 1.5	90	66
M 22 x 1.5	100	74
M 26 x 1.5	120	89
M 27 x 2	150	111
M 33 x 2	250	184
M 42 x 2	400	295
M 48 x 2	500	369
1/8	15	11
1/4	33	24
3/8	70	52
1/2	90	66
3/4	150	111
1	220	162
1-1/4	600	443
1-1/2	800	590

CED,OUO1002,563 -19-09MAR98-2/2

Metric 24° O-Ring Seal DIN 20078 Service Recommendations

METRIC 24° O-RING SEAL DIN 20078 TORQUE VALUES			
Fitting Tube OD Size	Heavy Fitting Size	Light Fitting Size	Torque
mm	mm	mm	Turns
6	—	M12 x 1.5	Hand tighten so O-ring contacts seat plus an additional 1/4—1/3 turn using a wrench
8	M16 x 1.5	M14 x 1.5	
10	M18 x 1.5	M16 x 1.5	
12	M20 x 1.5	M18 x 1.5	
14	M22 x 1.5	—	
15	—	M22 x 1.5	
16	M24 x 1.5	—	
18	—	M26 x 1.5	
20	M30 x 2	—	
22	—	M30 x 2	
25	M36 x 2	—	
28	—	M36 x 2	
30	M42 x 2	—	
35	—	M45 x 2	
38	M52 x 2	—	

NOTE: These fittings are also referred to as EO and EO-2 Bite Type or Ermeto style fittings.

IMPORTANT: In this style of fittings, there are “heavy” and “light” designs. Usually “heavy” is used for pressure lines and “light” for return lines.

Some “heavy” and “light” sizes can be threaded together but do not seal properly. Be sure not to mix “heavy” and “light” fittings.

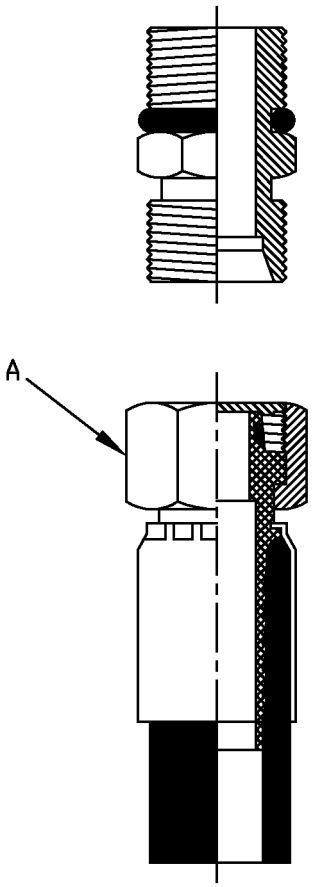

T113889

T113889 —UN—06MAR98

1. Inspect the fitting sealing surfaces. They must be free of dirt scratches, nicks, and burrs.
2. Inspect the O-ring. It must be free dirt, cuts, cracks, swelling or flatten condition.
3. Lubricate O-rings using a thin film of clean hydraulic oil.
4. Align an adjustable fitting with the tube.

   Hold connections together while tightening nut to ensure proper seal.
5. Tighten nut (A) hand tight so O-ring contacts seat and then an additional 1/4—1/3 turn using a wrench.

CED,OUO1002,517 -19-14JAN04-1/1

Section 01
Wheels

Contents

Page

Group 0110—Powered Wheels and Fasteners
Wheel Remove and Install..... 01-0110-1
Tire Remove and Install..... 01-0110-2

Wheel Remove and Install

SPECIFICATIONS	
Wheel Retainer Cap Screws Dry Torque	950 N·m 700 lb.-ft.

SERVICE EQUIPMENT AND TOOLS
10-Ton Shop Stand
Wheel Lift

NOTE: If machine is equipped with tire pressure monitor (TPM) system and wheel position is changed to a different axle the tire pressure monitor system must be reprogrammed. See TPM—Programming Sensors with SmartWave® Advanced Maintenance Tool. (Group 9015-20.)

1. Park and Prepare for Service Safely. (Group 0001.)

CAUTION: Prevent crushing injury from heavy component. Use appropriate lifting device when lifting component.

2. Raise machine and place 10-ton shop stand under axle.
3. Place wheel lift under wheel and fasten safety chain around upper part of tire.
4. Remove cap screws (1) and wheel from machine.
5. Clean and inspect parts. Repair or replace parts as necessary.

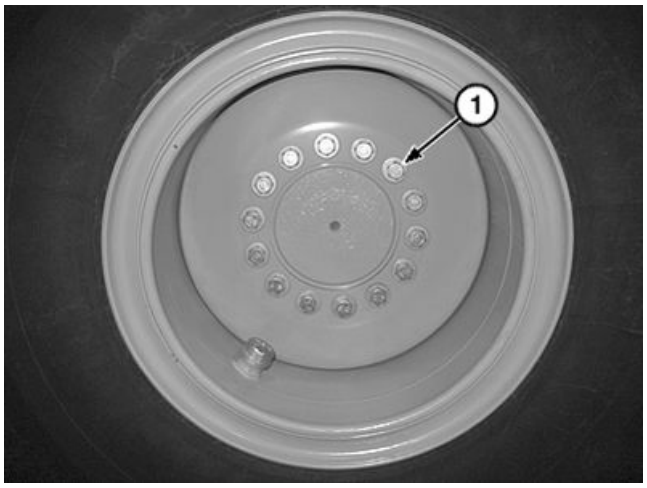

TX1043030A —UN—29MAY08

Wheel Remove and Install

1— Cap Screw M24 X 70 (14 used)

6. Clean mounting surface on wheel and axle flange.
7. Install wheel to axle with cap screws. Tighten cap screws to specification.

Specification

Wheel Retainer Cap Screws—Dry Torque.....950 N·m
700 lb.-ft.

AS79221,00001CA -19-06APR11-1/1

Tire Remove and Install

CAUTION: Refer to supplied Off-The-Road Tire Maintenance Manual for tire repair. Tire repair should only be performed by a qualified tire repair service. Do not attempt to mount or demount a tire unless you have the proper equipment and experience to perform the job safely. Failure to follow proper procedures when mounting or demounting a tire from a wheel or rim can result in explosive separation of a tire and rim parts, causing serious injury or death.

IMPORTANT: Avoid damage to wheel or tire while mounting or demounting. Refer to the supplied Off-The-Road Tire Maintenance Manual for tire repair. Failure to follow proper mounting or demounting procedures could cause damage to tire or wheel.

IMPORTANT: Avoid tire pressure sensor damage on machines equipped with the tire pressure monitoring (TPM) system. Always follow these instructions, along with the instructions in the TPM—Tire Pressure Sensor Remove and Install (Group 9015-20.) procedure, when removing tire from rim.

IMPORTANT: Avoid damage to tire pressure monitoring (TPM) system, if equipped. TPM sensor may not function if liquids are present inside tire. Do not expose TPM sensor to liquids (rust inhibitors, calcium chloride, etc.).

Always maintain the correct tire pressure. Do not inflate the tires above the recommended pressure. Never weld or heat a wheel and tire assembly, as heating can increase air pressure and result in tire explosion. Welding can also structurally weaken or deform the wheel.

For initial inflation, always use a clip-on chuck and extension hose long enough to allow you to stand to one side and NOT in front of, or over, the tire assembly. Inflate in a safety cage if available. Use safety chains, cables, or equivalent restraining devices during inflation.

CAUTION: Stand clear when using a cable or chain sling. These devices can snap and lash out, causing serious injury or death.

Check tire and wheel assemblies for low pressure, cuts, bubbles, damaged rim components, or missing lug bolts and nuts.

Check that the tire size exactly matches the rim size. Improperly-sized tires may not perform as intended.



TS952 —UN—12APR90

Explosive Single Piece Rim and Tire

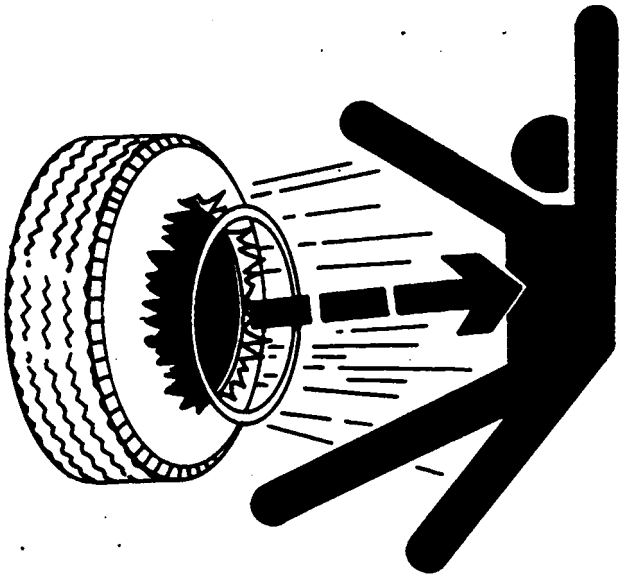

TS211 —UN—23AUG88

Explosive Multi-Piece Rim and Tire

Wheels may contain multi-piece rim components. Inspect all rim components and replace those that are cracked, worn, damaged, or severely rusted. Use only rim components designed to work with one another. Do not combine rim components from different rim types or rim manufacturers. Incorrectly assembled or mismatched rim components can fly apart with explosive force.

AS79221,00001CB -19-16DEC10-1/1

Section 02
Axles and Suspension Systems

Contents

Page

Group 0200—Removal and Installation
TeamMate™ IV Axles 02-0200-1
Front Axle and Differential Remove and Install 02-0200-2
Rear Axle and Differential Remove and Install 02-0200-4
Axle Oscillating Supports Disassemble and Assemble 02-0200-8

Group 0225—Input Drive Shafts And U-Joints
Universal Joint and Drive Shaft Remove and Install 02-0225-1

Group 0250—Axle Shaft, Bearings, And Reduction Gears
TeamMate™ IV Axles 02-0250-1

Group 0260—Hydraulic System
Differential Lock Solenoid Valve Remove and Install 02-0260-1
Axle Circulation Pump Remove and Install—If Equipped 02-0260-1

TeamMate™ IV Axles

For additional information on TeamMate ™ IV axles and components, see TeamMate™ IV 1200 - 1400 Series Inboard Planetary Axles. (CTM442.)

TeamMate is a trademark of Deere & Company

RM58335,000120E -19-17DEC10-1/1

Front Axle and Differential Remove and Install

SPECIFICATIONS	
Front Axle and Differential Weight (approximate)	953 kg 2100 lb.
Axle Mounting Nut Torque	675 N·m 498 lb.-ft.

SERVICE EQUIPMENT AND TOOLS
12-1/2-Ton Floor Stands
JT01642A Low-Lift Transmission Jack

1. Prepare machine for service. Park and Prepare for Service Safely. (Group 0001.)
2. Raise boom and install boom lock. See Boom Lock. (Operator's Manual.)

CAUTION: To avoid injury from escaping fluid under pressure, stop engine and relieve the pressure in the system before disconnecting or connecting hydraulic or other lines. Tighten all connections before applying pressure.

3. Relieve hydraulic system pressure. See Hydraulic System Pressure and Accumulators Discharge. (Group 9025-25.)

CAUTION: Prevent possible crushing injury from heavy component. Use appropriate lifting device.

4. Remove wheels. See Wheel Remove and Install. (Group 0110.)
5. Drain front axle. See Drain and Refill Front and Rear Axle Oil. (Operator's Manual.)

CAUTION: Prevent possible crushing injury from heavy component. Use appropriate lifting device.

6. Raise front of machine. Support loader frame with 12-1/2 ton floor stands. For machine weights:
   - For standard Z-Bar linkage, see Standard Z-Bar Specifications. (Operator's Manual.)
   - For high lift Z-Bar linkage, see High Lift Z-Bar Specifications. (Operator's Manual.)
   - For Powerllel™ linkage, see Powerllel™ Specifications. (Operator's Manual.)

IMPORTANT: Avoid machine damage. Do not reuse drive shaft universal joint cap screws.

7. Disconnect drive shaft from front axle. Discard universal joint cap screws. See Universal Joint and Drive Shaft Remove and Install. (Group 0225.)
8. Tag and disconnect lines (3—6). Close all openings using caps and plugs.
9. Disconnect front axle oil temperature sensor (B73) (if equipped) from loader frame harness.

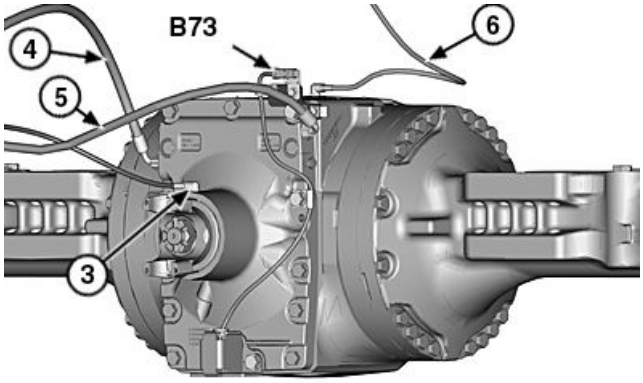

Front Axle

3— Grease Line
4— Differential Lock Line
5— Service Brake Line
6— Breather Line
B73— Front Axle Oil Temperature Sensor (if equipped)

Continued on next page

RM58335,00012DF -19-06APR11-1/4

PowerIlel is a trademark of Deere & Company

RM58335,00012DF -19-06APR11-2/4

CAUTION: Prevent possible crushing injury from heavy component. Use appropriate lifting device.

10. Install JT01642A Low-Lift Transmission Jack (7) under front axle and differential.

Specification	
Front Axle and Differential—Weight (approximate)	953 kg 2100 lb.

11. Remove axle mounting nuts (8), washers, and cap screws.
12. Lower axle and differential assembly.
13. Clean and inspect parts. Repair or replace axle or differential as necessary. See TeamMate™ IV 1200 - 1400 Series Inboard Planetary Axles. (CTM442.)
14. Clean mating surfaces on axle housing and loader frame.

CAUTION: Prevent possible crushing injury from heavy component. Use appropriate lifting device.

15. Install axle and differential to loader frame with existing hardware.
16. Tighten axle mounting nuts to specification.

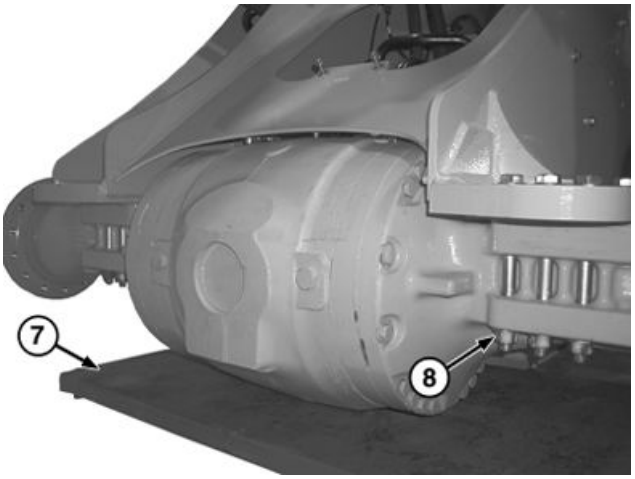

TX1029035A —UN—06SEP07

JT01642A Low-Lift Transmission Jack

7— JT01642A Low-Lift Transmission Jack
8— Axle Mounting Nut (12 used)

Specification	
Axle Mounting Nut—Torque	675 N·m 498 lb.-ft.

RM58335,00012DF -19-06APR11-3/4

17. Connect lines to front axle.
18. Connect front axle oil temperature sensor (if equipped) to loader frame harness.

IMPORTANT: Avoid machine damage. Do not reuse drive shaft universal joint cap screws.

19. Connect drive shaft to front axle. See Universal Joint and Drive Shaft Remove and Install. (Group 0225.)
20. Install wheels. See Wheel Remove and Install. (Group 0110.)
21. Remove 12-1/2 ton floor stands.
22. Fill front axle. See Drain and Refill Front and Rear Axle Oil. (Operator's Manual.) Check differential oil level with machine on level ground.
23. Bleed service brakes. See Service Brake Bleeding Procedure. (Group 9020-20.)

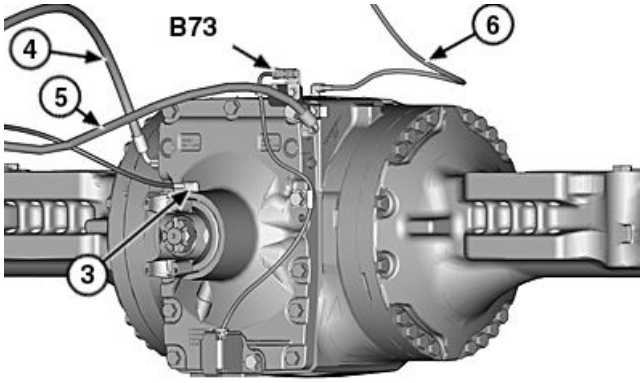

TX1086047A —UN—17DEC10

Front Axle

3— Grease Line
4— Differential Lock Line
5— Service Brake Line
6— Breather Line
B73— Front Axle Oil Temperature Sensor (if equipped)

RM58335,00012DF -19-06APR11-4/4

Rear Axle and Differential Remove and Install

SPECIFICATIONS	
Axle and Differential with Oscillating Supports Weight (approximate)	953 kg 2100 lb
Axle and Differential with Oscillating Supports Weight (approximate)	953 kg 2100 lb
Axle and Differential Mounting Cap Screw Torque	675 N·m 500 lb-ft

SERVICE EQUIPMENT AND TOOLS
12-1/2 Ton Floor Stands
JT01642A Low-Lift Transmission Jack

1. Prepare machine for service. Park and Prepare for Service Safely. (Group 0001.)

CAUTION: To avoid injury from escaping fluid under pressure, stop engine and relieve the pressure in the system before disconnecting or connecting hydraulic or other lines. Tighten all connections before applying pressure.

2. Relieve hydraulic system pressure. See Hydraulic System Pressure and Accumulators Discharge. (Group 9025-25.)
3. Drain rear axle. See Drain and Refill Front and Rear Axle Oil. (Operator's Manual.)

CAUTION: Prevent possible crushing injury from heavy component. Use appropriate lifting device.

4. Raise rear of machine and support with 12-1/2 ton floor stands. For machine weights:
   - For standard Z-Bar linkage, see Standard Z-Bar Specifications. (Operator's Manual.)
   - For high lift Z-Bar linkage, see High Lift Z-Bar Specifications. (Operator's Manual.)
   - For Powerllel™ linkage, see Powerllel™ Specifications. (Operator's Manual.)
5. Remove wheels. See Wheel Remove and Install. (Group 0110.)

IMPORTANT: Avoid machine damage. Do not reuse drive shaft universal joint cap screws.

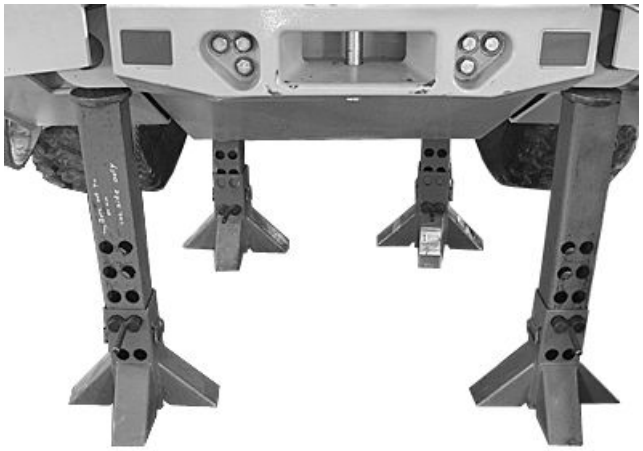

TX1086896A —UN—13JAN11

Shop Stands

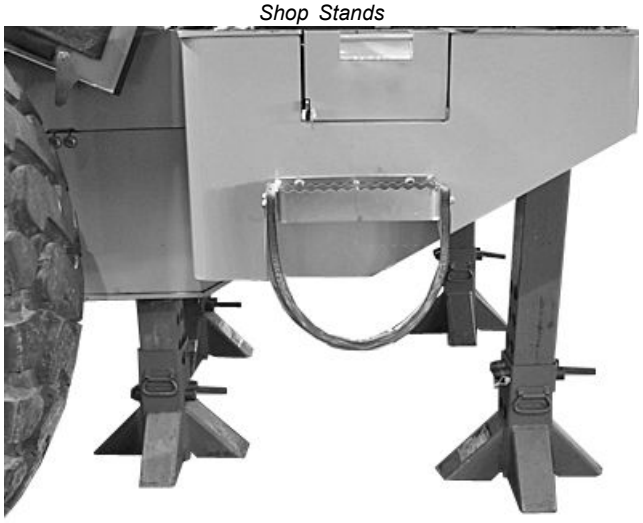

TX1086899A —UN—13JAN11

Shop Stands

6. Disconnect drive shaft from rear axle. Discard universal joint cap screws. See Universal Joint and Drive Shaft Remove and Install. (Group 0225.)

Powerllel is a trademark of Deere & Company

Continued on next page

RM58335,00012E0 -19-06APR11-1/4

7. Tag and disconnect lines (2—5).

⚠ CAUTION: Prevent possible crushing injury from heavy component. Use appropriate lifting device.

8. Install JT01642A Low-Lift Transmission Jack under axle assembly.

Specification	
Axle and Differential with Oscillating Supports—Weight (approximate)	953 kg 2100 lb

9. Remove axle and differential mounting cap screws (6 and 11) from oscillating supports.
10. Lower rear axle assembly.

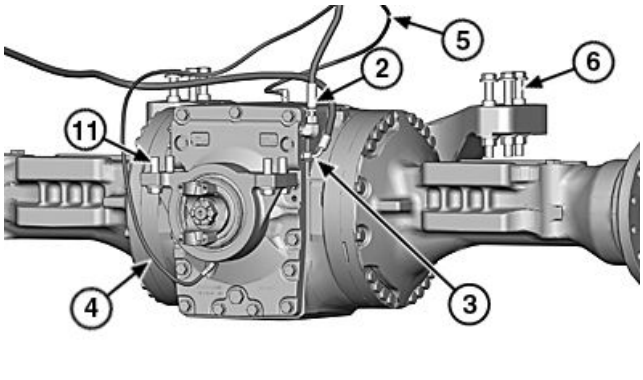

Rear Axle

2— Service Brake Line
3— Differential Lock Line
4— Lubrication Line
5— Breather Line
6— Cap Screw (6 used)
11— Cap Screw (4 used)

Continued on next page

RM58335,00012E0 -19-06APR11-2/4

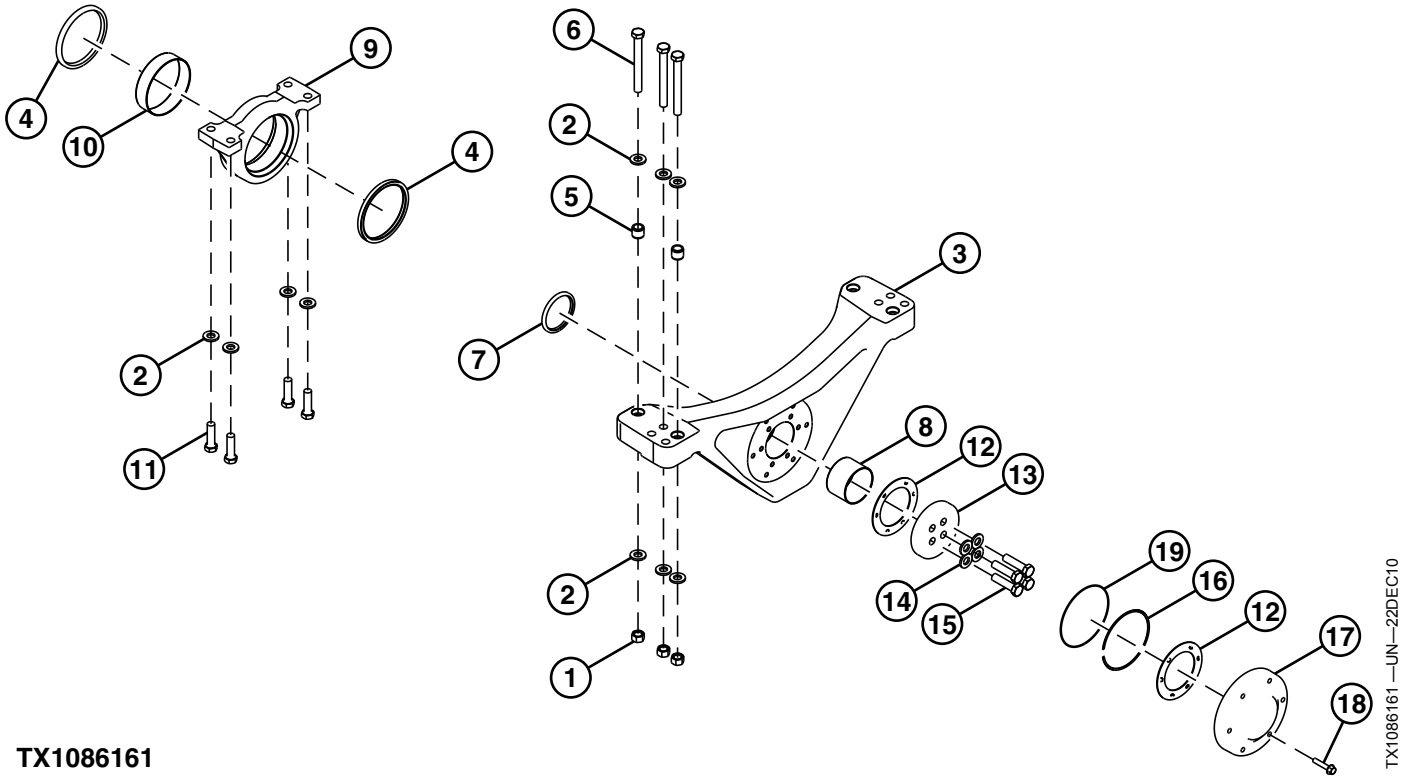

TX1086161

Oscillating Supports

1— Nut (6 used)
2— Washer (16 used)
3— Rear Oscillating Support
4— Seal (2 used)
5— Bushing (4 used)
6— Cap Screw (6 used)
7— Seal
8— Bushing
9— Rear Axle Support
10— Bushing
11— Cap Screw (4 used)
12— Thrust Bearing (2 used)
13— Thrust Plate
14— Washer (4 used)
15— Thrust Plate Cap Screw (4 used)
16— Retaining Ring
17— Pivot Cover
18— Pivot Cover Cap Screw (6 used)
19— O-Ring

11. Remove rear axle support (9) and rear oscillating support (3) from axle assembly.
12. Clean and inspect parts. Repair or replace axle or differential as necessary. See TeamMate™ IV 1200 - 1400 Series Inboard Planetary Axles (CTM442) and see Axle Oscillating Supports Disassemble and Assemble. (Group 0200.)
13. Clean mating surfaces on oscillating supports and machine frame.

IMPORTANT: Avoid damage to rear axle support or oscillating joints. DO NOT apply grease to rear axle support or rear oscillating support bushings. These joints are designed to run dry. Greasing these bushings will reduce the life of the oscillating joints.

14. Install rear axle support and rear oscillating support to axle assembly.

CAUTION: Prevent possible crushing injury from heavy component. Use appropriate lifting device.

15. Install axle assembly to machine frame with existing hardware.

Specification	
Axle and Differential with Oscillating Supports—Weight (approximate)	953 kg (2100 lb)

16. Tighten axle and differential mounting cap screws to specification.

Specification	
Axle and Differential Mounting Cap Screw—Torque	675 N·m (500 lb-ft)

Continued on next page

RM58335,00012E0 -19-06APR11-3/4

17. Connect lines to rear axle.

IMPORTANT: Do not reuse drive shaft universal joint cap screws. Install new cap screws to avoid machine damage.

18. Connect drive shaft to rear axle. See Universal Joint and Drive Shaft Remove and Install. (Group 0225.)
19. Install wheels. See Wheel Remove and Install. (Group 0110.)
20. Remove 12-1/2 ton floor stands.
21. Fill rear axle. See Drain and Refill Front and Rear Axle Oil. (Operator's Manual.)
22. Bleed service brakes. See Service Brake Bleeding Procedure. (Group 9020-20.)

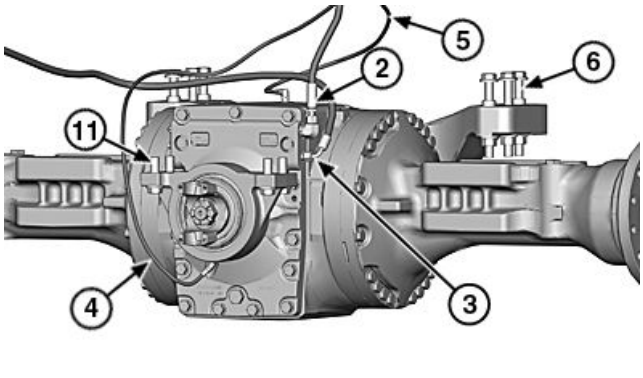

Rear Axle

2— Service Brake Line
3— Differential Lock Line
4— Lubrication Line
5— Breather Line
6— Cap Screw (6 used)
11— Cap Screw (4 used)

RM58335,00012E0 -19-06APR11-4/4

Axle Oscillating Supports Disassemble and Assemble

SPECIFICATIONS	
Rear Axle Support-to-Differential Housing End Play (maximum)	0.762 mm 0.30 in.
Thrust Plate Wear Depth (maximum)	0.254 mm 0.10 in.
Thrust Plate-to-Axle Cap Screw Torque	350 N·m 255 lb-ft
Pivot Cover-to-Rear Oscillation Support Torque	140 N·m 105 lb-ft
Axle and Differential with Oscillating Supports Weight (approximate)	953 kg 2100 lb.

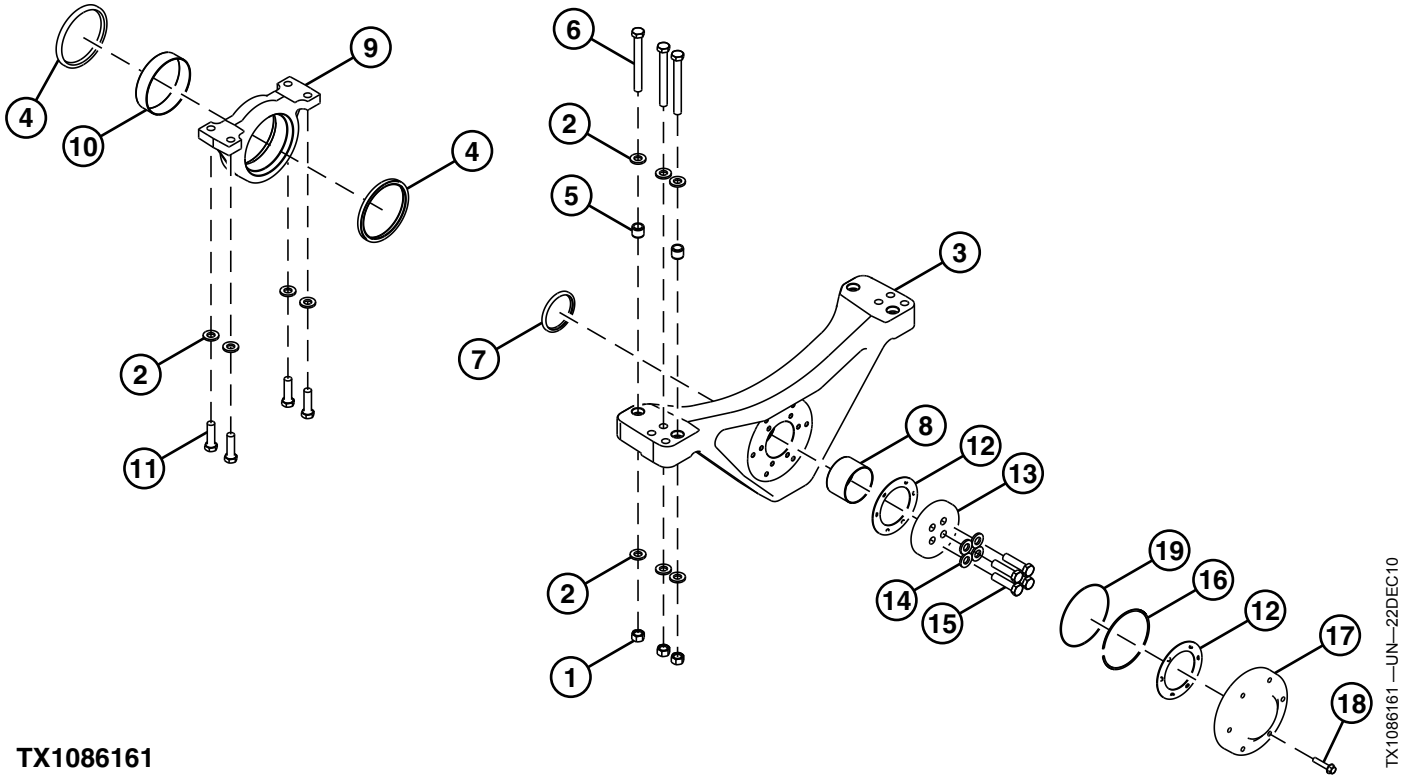

TX1086161

Oscillating Supports

1— Nut (6 used)
2— Washer (16 used)
3— Rear Oscillating Support
4— Seal (2 used)
5— Bushing (4 used)
6— Cap Screw (6 used)
7— Seal
8— Bushing
9— Rear Axle Support
10— Bushing
11— Cap Screw (4 used)
12— Thrust Bearing (2 used)
13— Thrust Plate
14— Washer (4 used)
15— Thrust Plate Cap Screw (4 used)
16— Retaining Ring
17— Pivot Cover
18— Pivot Cover Cap Screw (6 used)
19— O-Ring

NOTE: The axle oscillation support assembly does not contain any shims for setting end play. If excessive end play occurs due to wear, thrust bearings (12) should be replaced.

1. Check oscillation support assembly end play.
   a. Using a dial indicator, measure between rear axle support (9) and differential housing.
   b. Compare dial indicator reading to specification.

	Specification
Rear Axle Support-to-Differential Housing—End Play (maximum)	0.762 mm 0.30 in.

   c. If end play is above specification, replace thrust bearings.
2. Remove rear axle and differential assembly. See Rear Axle and Differential Remove and Install. (Group 0200.)

Continued on next page

3. Remove rear axle support (9).
4. Remove pivot cover (17), thrust bearing, retaining ring (16), and O-ring (19) from rear oscillating support (3).
5. Remove thrust plate (13) and thrust bearing from rear axle.
6. Remove rear oscillating support from rear axle.
7. Check wear on front face of thrust plate.
8. Compare thrust plate wear to specification.

Specification

Thrust Plate Wear—Depth (maximum)..... 0.254 mm
0.10 in.

9. If wear step on thrust plate is above specification, replace thrust plate and thrust bearings.
10. Clean and inspect bushings (8 and 10) and thrust bearings for wear.
11. Repair or replace parts as necessary.
12. Clean mating surfaces on oscillating supports and machine frame.

IMPORTANT: Avoid damage to rear axle support or oscillating joints. DO NOT apply grease to rear axle support or rear oscillating support bushings. These joints are designed to run dry. Greasing these bushings will reduce the life of the oscillating joints.

13. Press bushings into rear axle support and rear oscillating support. Be careful not to damage bushings.
14. Install rear axle support and rear oscillating support to axle assembly.
15. Install thrust bearing and thrust plate to rear axle.
16. Tighten cap screws (15) to specification.

Specification

Thrust Plate-to-Axle Cap Screw—Torque..... 350 N·m
255 lb-ft

17. Install O-ring, retaining ring, thrust bearing, and pivot cover to rear oscillating support.
18. Tighten cap screws (18) to specification.

Specification

Pivot Cover-to-Rear Oscillation Support—Torque..... 140 N·m
105 lb-ft

CAUTION: Prevent possible crushing injury from heavy component. Use appropriate lifting device.

19. Install rear axle and differential assembly. See Rear Axle and Differential Remove and Install. (Group 0200.)

Specification

Axle and Differential with Oscillating Supports—Weight (approximate)..... 953 kg
2100 lb.

RM58335,000120F -19-06APR11-2/2

Universal Joint and Drive Shaft Remove and Install

SPECIFICATIONS	
Drive Shaft Universal Joint Cap Screw Torque	78 N·m 58 lb-ft
Engine Drive Shaft Universal-to-Transmission Cap Screw Torque	45 N·m 32 lb-ft
Engine Drive Shaft-to-Engine Cap Screw Torque	140 N·m 105 lb-ft

Continued on next page

RM58335,0001212 -19-06APR11-1/2

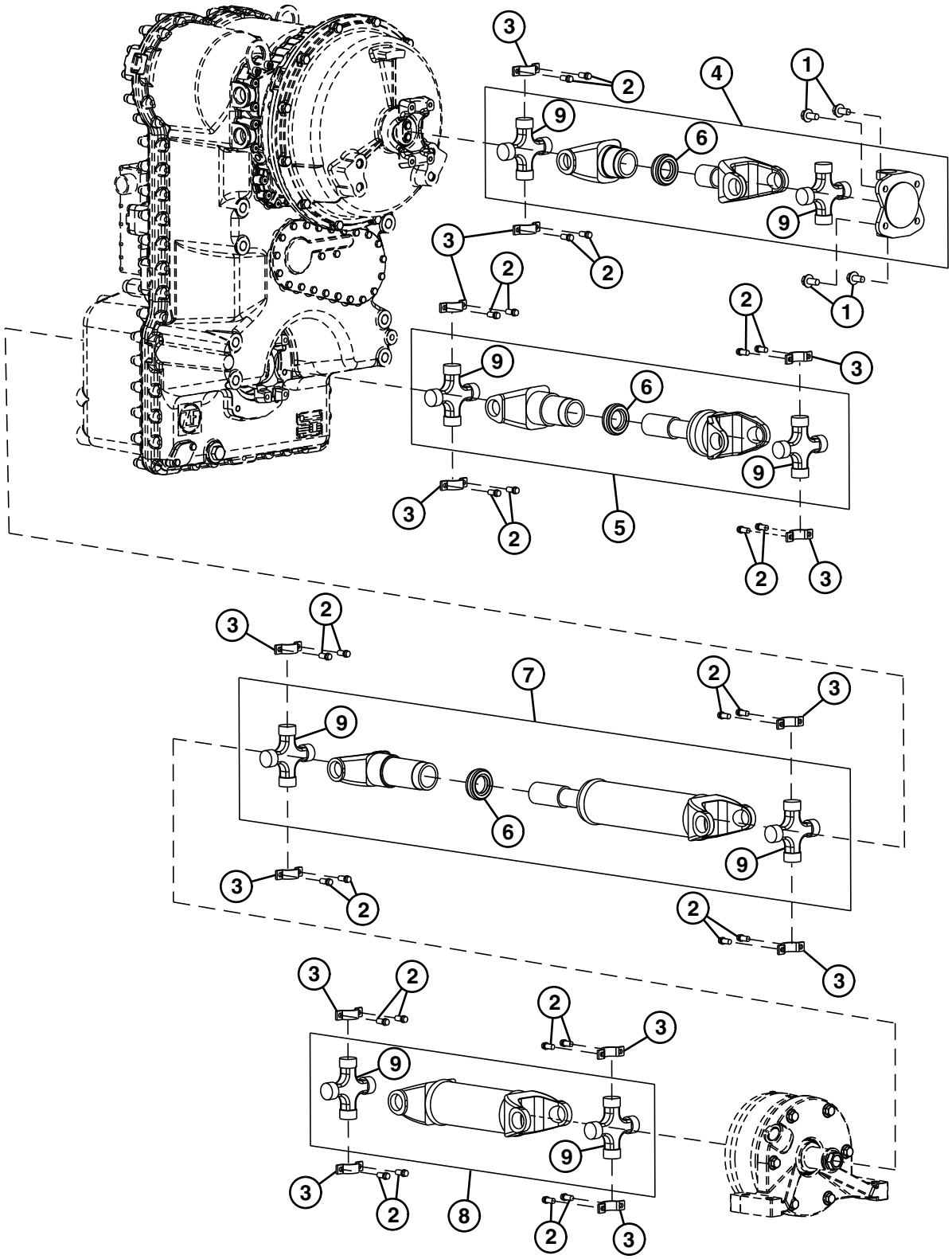

TX1029271

Universal Joint and Drive Shaft Remove and Install

RM58335,0001212 -19-06APR11-2/2

1— Cap Screw
2— Cap Screw
3— Strap
4— Engine-to-Transmission Drive Shaft
5— Transmission-to-Rear Axle Drive Shaft
6— Dust Cap
7— Transmission-to-Park Brake Drive Shaft
8— Park Brake-to- Front Axle
9— Universal Joint

CAUTION: Prevent possible injury from unexpected machine movement. Place blocks front and rear of tires to prevent machine from rolling.

1. Prepare machine for service. Park and Prepare for Service Safely. (Group 0001.)
2. Remove drive shaft universal joint cap screws and discard.
3. Inspect and replace parts as necessary.

IMPORTANT: Avoid machine damage. Do not reuse drive shaft universal joint cap screws.

4. Install new drive shaft universal joint cap screws.

Specification	
Drive Shaft Universal Joint Cap Screw—Torque	78 N·m 58 lb-ft
Engine Drive Shaft Universal-to-Transmission Cap Screw—Torque	45 N·m 32 lb-ft
Engine Drive Shaft-to-Engine Cap Screw—Torque	140 N·m 105 lb-ft

RM58335,0001212 -19-06APR11-3/2

TeamMate™ IV Axles

For additional information on TeamMate ™ IV axles and components, See TeamMate™ IV 1200 - 1400 Series Inboard Planetary Axles. (CTM442.)

TeamMate is a trademark of Deere & Company

RM58335,0001213 -19-22DEC10-1/1

Differential Lock Solenoid Valve Remove and Install

See Hydraulic Pump Manifold Disassemble and Assemble. (Group 3160.)

RM58335,0001216 -19-22DEC10-1/1

Axle Circulation Pump Remove and Install—If Equipped

SPECIFICATIONS	
Axle Circulation Pump Mounting Cap Screw Torque	40 N·m 29.5 lb-ft

1. Prepare machine for service. See Park and Prepare for Service Safely. (Group 0001.)
2. Tag and disconnect front axle circulation lines (2 and 3). Close all openings using caps and plugs.
3. Remove mounting bracket (6).
4. Remove cap screws (4).
5. Remove front axle circulation pump (1).
6. Clean and inspect parts. Repair or replace parts as necessary.
7. Install axle circulation pump with new gasket (5).

Specification

Axle Circulation Pump Mounting Cap Screw—Torque.....40 N·m
29.5 lb-ft

8. Install mounting bracket.
9. Connect front axle circulation lines. See Service Brake, Park Brake, Differential Lock, and Axle Cooling Circuit Line Identification. (Group 9025-15.)
10. Repeat procedure for rear axle circulation pump as necessary.

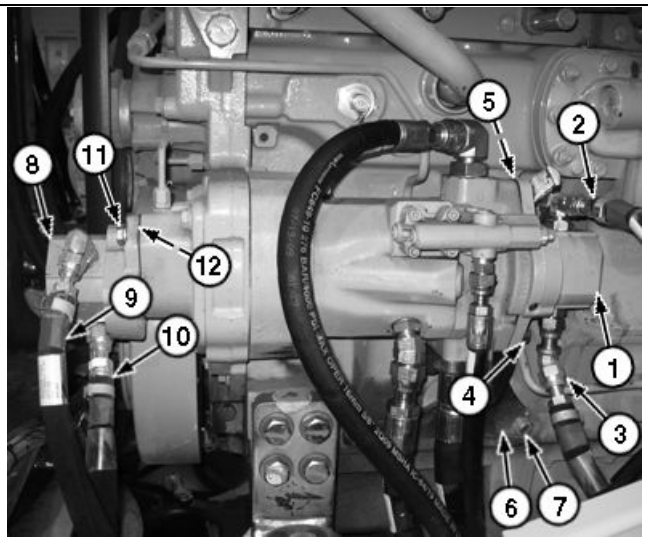

TX1085645A —UN—13DEC10

Engine (right side shown)

1— Front Axle Circulation Pump
2— Front Axle Circulation Pump-to-Front Axle Oil Manifold Line
3— Front Axle-to-Front Axle Circulation Pump Line
4— Cap Screw (2 used)
5— Gasket
6— Mounting Bracket
7— Cap Screw (2 used)
8— Rear Axle Circulation Pump
9— Rear Axle Circulation Pump-to-Rear Axle Oil Manifold Line
10— Rear Axle-to-Rear Axle Circulation Pump Line
11— Cap Screw (2 used)
12— Gasket

TK40086,0000849 -19-12JAN11-1/1

Section 03
Transmission

Contents

Page

Group 0300—Removal and Installation
Transmission Remove and Install 03-0300-1

Group 0350—Gears, Shafts, Bearings and Power Shift Clutch
Torque Converter and Housing Remove 03-0350-1
Torque Converter and Housing Install 03-0350-4
Clutches and Input and Output Shafts Remove 03-0350-8
Clutches and Input and Output Shafts Install 03-0350-14
Clutch Pack KV and KR Disassemble 03-0350-23
Clutch Pack KV and KR Assemble 03-0350-27
Clutch Pack K1, K2, and K3 Disassemble 03-0350-33
Clutch Pack K1, K2, and K3 Assemble 03-0350-36
Clutch Pack K4 Disassemble 03-0350-45
Clutch Pack K4 Assemble 03-0350-47
Input Shaft Disassemble 03-0350-54
Input Shaft Assemble 03-0350-54
Transmission Speed Sensors Remove and Install 03-0350-57

Group 0360—Hydraulic System
Transmission Pump Remove and Install 03-0360-1
Converter Minimum Pressure Regulator Valve Remove and Install 03-0360-6
Transmission Hydraulic Control Valve Remove and Install 03-0360-8
Transmission Hydraulic Control Valve Cross Section View 03-0360-14
Transmission Hydraulic Control Valve Disassemble and Assemble 03-0360-15
Torque Converter Relief Valve Remove, Disassemble, and Install 03-0360-25

Transmission Remove and Install

SPECIFICATIONS	
Transmission with Hydraulic Pump Attached Weight (approximate)	431 kg 950 lb
Isolator Cap Screw Torque	475 N·m 350 lb-ft
Mounting Bracket-to-Transmission Cap Screw (front) Torque	435 N·m 320 lb-ft
Mounting Bracket-to-Transmission Cap Screw (rear) Torque	350 N·m 255 lb-ft
Transmission-to-Rear Axle Drive Shaft U-Joint Torque	78 N·m 58 lb-ft
Engine-to-Transmission Drive Shaft U-Joint Torque	41 N·m 30 lb-ft

ESSENTIAL TOOLS
JDG1129A Mounting Bracket

SERVICE EQUIPMENT AND TOOLS
D01003AA Repair Stand

1. Prepare machine for service. Park and Prepare for Service Safely. (Group 0001.)

CAUTION: To avoid injury from escaping fluid under pressure, stop engine and relieve the pressure in the system before disconnecting or connecting hydraulic or other lines. Tighten all connections before applying pressure.

2. Relieve hydraulic system pressure. See Hydraulic System Pressure and Accumulators Discharge. (Group 9025-25.)
3. Remove cab. See Cab Remove and Install. (Group 1800.)
4. Apply vacuum or drain hydraulic reservoir. See Drain, Flush, and Refill Hydraulic System Oil. (Operator's Manual.)

IMPORTANT: Avoid machine damage. Do not reuse drive shaft universal joint cap screws.

5. Disconnect drive shafts (1—3) from transmission. Discard universal joint cap screws. See Universal Joint and Drive Shaft Remove and Install. (Group 0225.)
6. Tag and disconnect hydraulic lines from main hydraulic pump and transmission.
   - See Power Train Component Location. (Group 9020-15.)
   - See Power Train Line Identification. (Group 9020-15.)
   - See Loader and Hydraulic Cooling Circuit Component Location. (Group 9025-15.)

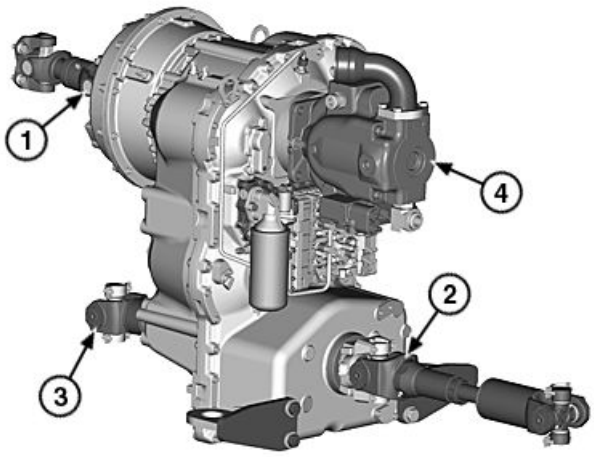

TX1086394A —UN—03JAN11

1— Drive Shaft U-Joint
2— Drive Shaft U-Joint
3— Drive Shaft U-Joint
4— Main Hydraulic Pump

   - See Loader and Hydraulic Cooling Circuit Line Identification. (Group 9025-15.)
7. Tag and disconnect electrical connectors from transmission. See Transmission Harness (W10) Component Location. (Group 9015-10.)
8. Drain transmission oil into an appropriate container for storage or disposal. See Drain and Refill Transmission Oil and Replace Filter. (Operator's Manual.)
9. Remove transmission oil fill tube.

CAUTION: Prevent crushing injury from heavy component. Use appropriate lifting device.

10. Install appropriate lifting device to transmission lifting brackets and support transmission.

Specification

Transmission with Hydraulic Pump Attached—Weight (approximate)..... 431 kg 950 lb

11. Remove transmission isolator cap screws.
12. Remove transmission front mounts from transmission.
13. Remove transmission and place in D01003AA Repair Stand using JDG1129A Mounting Bracket.
14. Clean and inspect parts. Repair or replace parts as necessary.

Continued on next page

RM58335,0001217 -19-28FEB11-1/2

15. Install transmission in machine. Tighten cap screws to specification.

Specification	
Isolator Cap Screw—Torque	475 N·m 350 lb-ft
Mounting Bracket-to-Transmission Cap Screw (front)—Torque	435 N·m 320 lb-ft
Mounting Bracket-to-Transmission Cap Screw (rear)—Torque	350 N·m 255 lb-ft

16. Connect all hydraulic lines and electrical harnesses to transmission and hydraulic pump.

IMPORTANT: Avoid machine damage. Do not reuse drive shaft universal joint cap screws.

17. Install transmission drive shafts using new cap screws. Tighten universal joint cap screws to specification.

Specification	
Transmission-to-Rear Axle Drive Shaft U-Joint—Torque	78 N·m 58 lb-ft
Engine-to-Transmission Drive Shaft U-Joint—Torque	41 N·m 30 lb-ft

18. Install cab. See Cab Remove and Install. (Group 1800.)

19. Fill transmission and remove vacuum or fill hydraulic reservoir to specification. See Drain, Flush, and Refill Hydraulic System Oil and see Drain and Refill Transmission Oil and Replace Filter. (Operator's Manual.)

RM58335,0001217 -19-28FEB11-2/2

Torque Converter and Housing Remove

SPECIFICATIONS	
Transmission Weight (approximate)	504 kg 1110 lb

ESSENTIAL TOOLS
JDG1129 Transmission Mounting Brackets

SERVICE EQUIPMENT AND TOOLS
Repair Stand
M20 and M12 Eyebolt

1. Remove transmission. See Transmission Remove and Install. (Group 0350.)

CAUTION: Prevent possible injury from crushing. Heavy component, use appropriate lifting device.

Specification	
Transmission—Weight (approximate)	504 kg 1110 lb

NOTE: Earlier JDG1129 Transmission Mounting Brackets require that the right side bracket be revised. Note bracket sketch showing revised mounting hole (A). Revise hole by elongating the existing hole as required.

2. Install transmission in repair stand using JDG1129 Transmission Mounting Brackets (1).

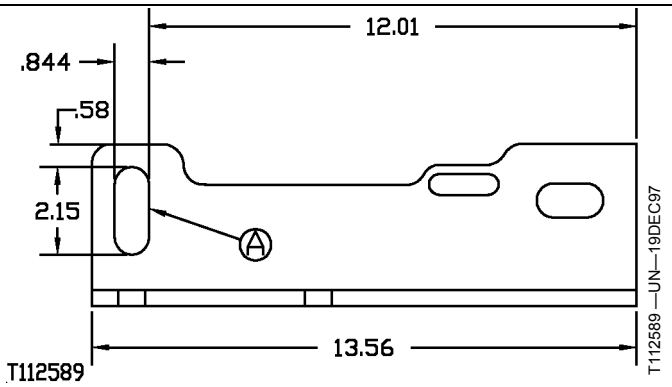

Bracket Sketch Showing Revised Mounting Hole (A)

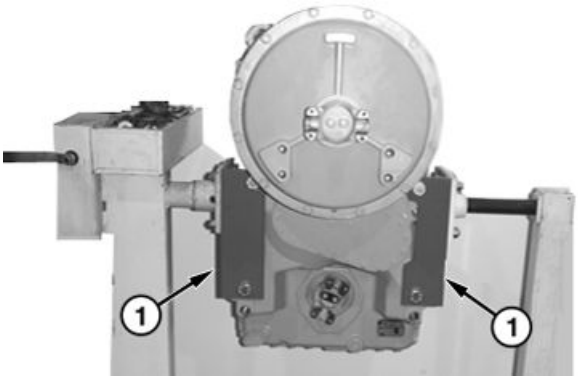

JDG1129 Transmission Mounting Brackets

A—Mounting Hole

1— JDG1129 Transmission Mounting Bracket (2 used)

SW03989,0000422 -19-25FEB08-1/10

3. Remove lock plate and cap screws from input flange washer.
4. Remove washer and input flange from the shaft.

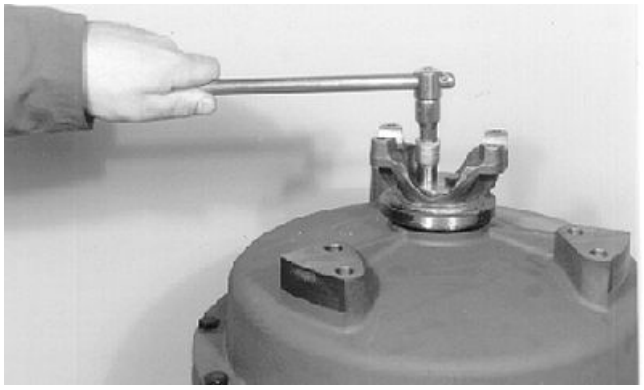

Lock Plate and Cap Screws

Continued on next page

SW03989,0000422 -19-25FEB08-2/10

5. Remove cap screws from torque converter housing.

NOTE: Identify location of cover and housing for proper alignment during assembly.

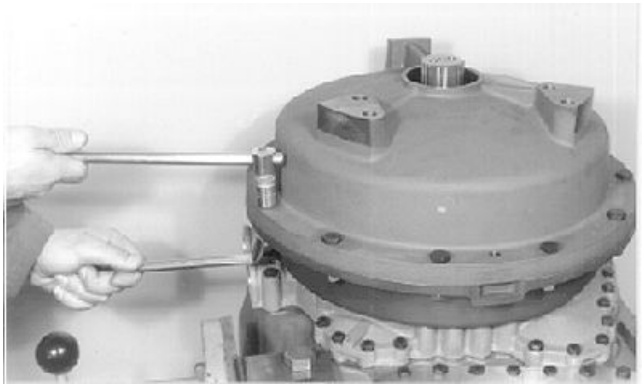

T108722 —UN—17APR97

Housing Cap Screws Removal

SW03989,0000422 -19-25FEB08-3/10

CAUTION: Prevent possible injury from crushing. Heavy component, use appropriate lifting device.

6. Remove torque converter and cover from gearbox, using appropriate lifting device and an M20 or M12 eyebolt.



T108723 —UN—17APR97

Cover-Converter Separation

SW03989,0000422 -19-25FEB08-4/10

7. Press input shaft and torque converter out of housing.

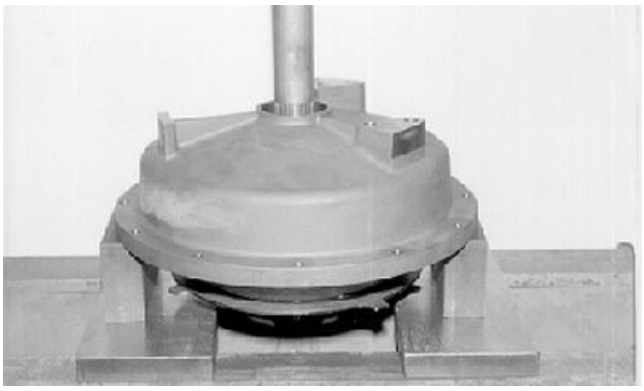

T108724 —UN—17APR97

Input Shaft Press

Continued on next page

SW03989,0000422 -19-25FEB08-5/10

8. Remove snap ring and bearing from housing.



T108717 —UN—17APR97

Bearing Removal

SW03989,0000422 -19-25FEB08-6/10

9. Remove drive plate from torque converter.

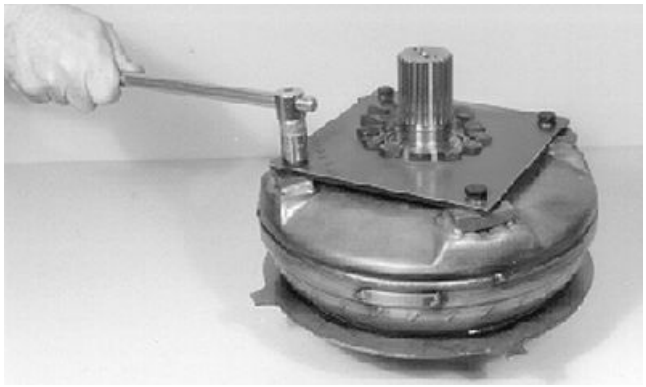

T112416 —UN—05DEC97

Drive Plate-to-Converter Cap Screw

SW03989,0000422 -19-25FEB08-7/10

10. Remove cap screws, separating the input shaft and drive plate.

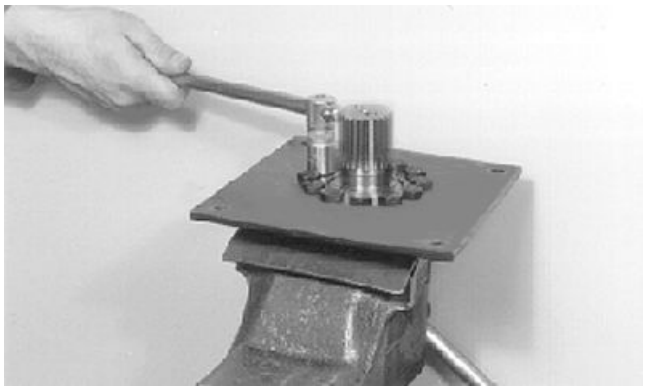

T112415 —UN—05DEC97

Input Shaft-to-Drive Plate Cap Screws

Continued on next page

SW03989,0000422 -19-25FEB08-8/10

11. Remove speed sensor from torque converter housing.

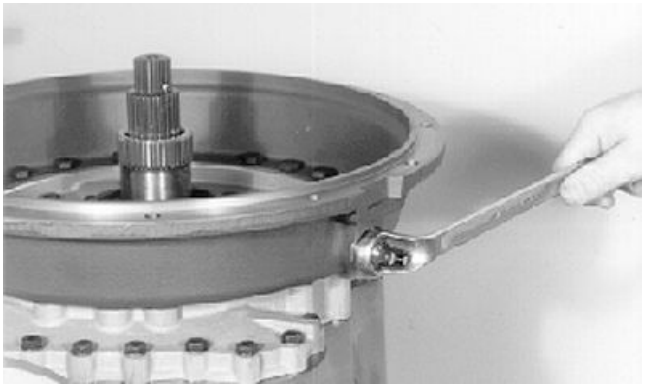

Speed Sensor Removal

SW03989,0000422 -19-25FEB08-9/10

12. Remove cap screws, separating the torque converter lower housing from the transmission case.
13. Repair or replace parts as necessary.

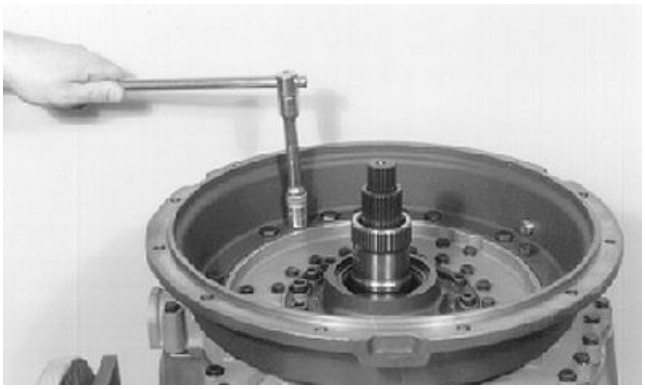

Converter Lower Housing Removal

SW03989,0000422 -19-25FEB08-10/10

Torque Converter and Housing Install

SPECIFICATIONS	
Converter Housing Cap Screw Torque	68 N·m 50 lb-ft
Input Shaft-to-Drive Plate Cap Screw Torque	115 N·m 85 lb-ft
Input Shaft Drive Plate-to-Torque Converter Cap Screw Torque	115 N·m 85 lb-ft
Input Yoke Preheat Temperature	80—120° C 175—250° F
Input Yoke Cap Screw Torque	34 N·m 25 lb-ft
Torque Converter Top Cover Cap Screw Torque	46 N·m 34 lb-ft
Output Yoke Cap Screws Torque	34 N·m 25 lb-ft

OTHER MATERIAL
271 LOCTITE® High Strength Thread Lock and Sealer

1. Install torque converter housing to the transmission case using cap screws. Tighten to specification.

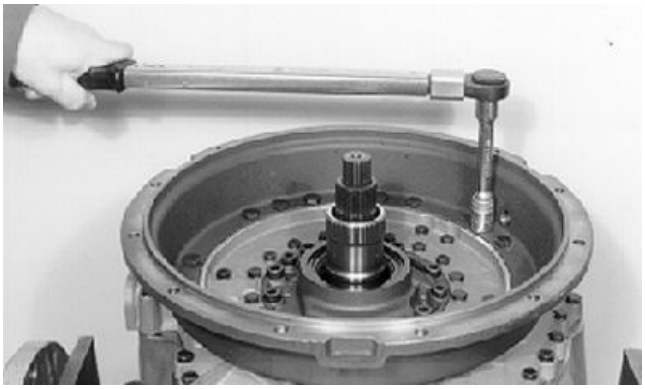

Torque Converter Cap Screw Install

Specification

Converter Housing Cap Screw—Torque.....68 N·m
50 lb-ft

LOCTITE is a trademark of Henkel Corporation

Continued on next page

MH66O88,0000722 -19-18FEB08-1/8

2. Assemble the input shaft to drive plate. Tighten to specification.

Specification

Input Shaft-to-Drive Plate Cap Screw—Torque	115 N·m 85 lb-ft

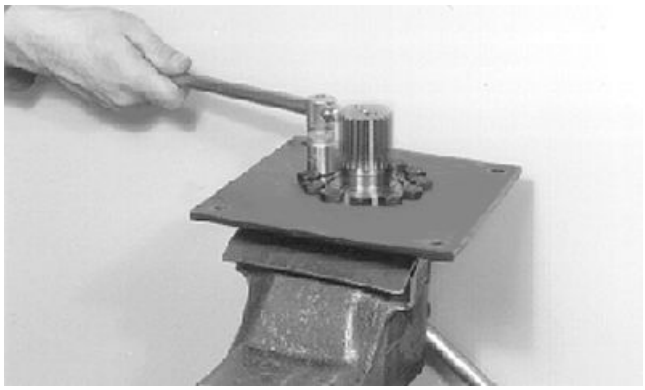

T112415 —UN—05DEC97

Input Shaft-to-Converter Hex Head Screws

MH66O88,0000722 -19-18FEB08-2/8

3. Install input shaft drive plate assembly to torque converter. Apply PM38654 High Strength Thread Lock and Sealer to cap screws. Install washer and cap screws. Tighten to specification.

Specification

Input Shaft Drive Plate-to-Torque Converter Cap Screw—Torque	115 N·m 85 lb-ft

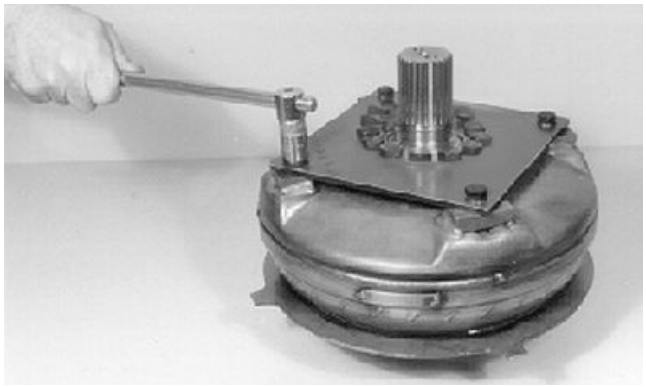

T112416 —UN—05DEC97

Drive Plate-to-Converter Cap Screw

Continued on next page

MH66O88,0000722 -19-18FEB08-3/8

4. Install torque converter into housing until contact is made.

NOTE: Speed pickup disk in the converter must be centered to the bore of the speed sensor (arrow). This ensures that the converter is seated properly.



T112417 —UN—05DEC97

Converter Installation

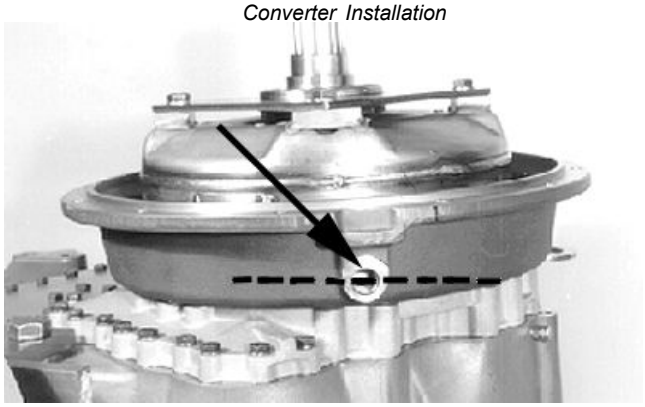

T109098 —UN—30APR97

Centered Speed Pickup Disk

MH66O88,0000722 -19-18FEB08-4/8

5. Insert bearing until contact is obtained in bore and install snap ring.

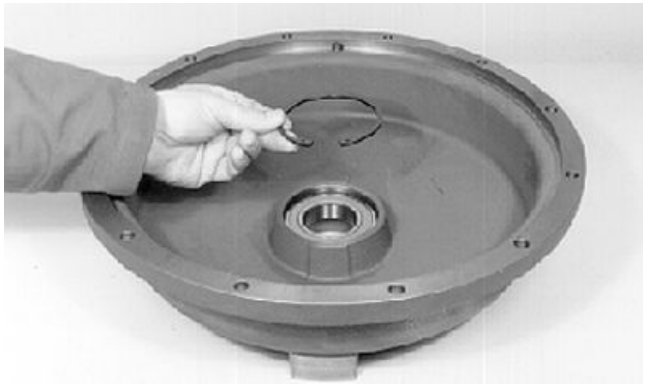

T109099 —UN—15APR97

Continued on next page

MH66O88,0000722 -19-18FEB08-5/8

NOTE: Alignment of both housings needs to be the same as in the disassembly process.

6. Assemble housing.

CAUTION: Prevent possible injury from heated components. Use proper safety equipment while handling heated components.

7. Heat yoke shaft splines evenly to specifications before installing. Use temperature measuring stick or infrared meter to verify temperature.

Specification

Input Yoke
Preheat—Temperature.....80—120° C
175—250° F

Install input yoke and washer. Draw cover down evenly against shoulder with cap screws.

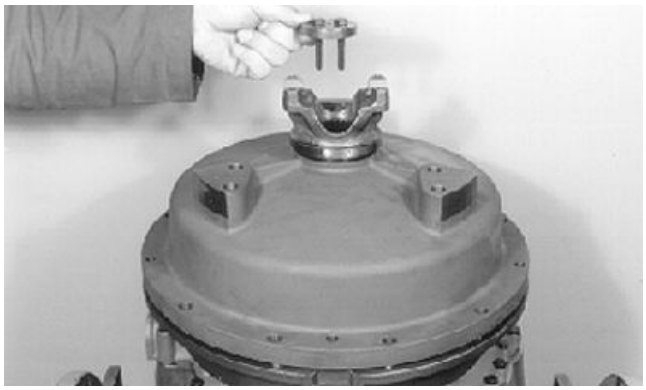

T109100 —UN—15APR97

Input Flange Installation

Specification

Input Yoke Cap
Screw—Torque.....34 N·m
25 lb-ft

MH66O88,0000722 -19-18FEB08-6/8

8. Install cover with cap screws and nuts on the torque converter housing. Tighten to specification.

Specification

Torque Converter
Top Cover Cap
Screw—Torque.....46 N·m
34 lb-ft

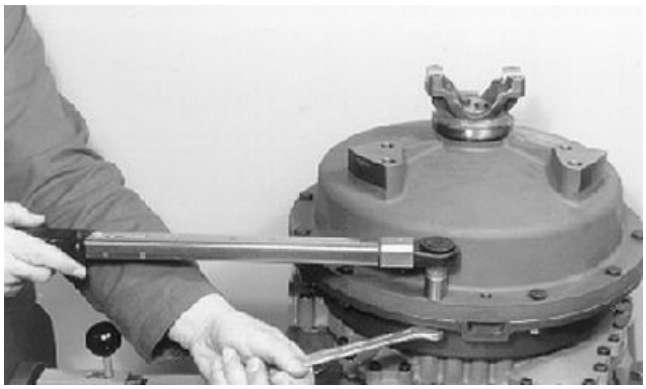

T109101 —UN—15APR97

Torque Converter Top Cover Installation

MH66O88,0000722 -19-18FEB08-7/8

9. Install input and output flange to drive plate. Install cap screw and tighten to specification.

Specification

Output Yoke Cap
Screws—Torque.....34 N·m
25 lb-ft

Install lock plate using hammer and two deep well sockets (A) taped together with a hex nut between them for proper spacing.

A—Deep Well Socket (2 used)



T109147B —UN—02MAY97

Output Flange Shown

MH66O88,0000722 -19-18FEB08-8/8

Clutches and Input and Output Shafts Remove

ESSENTIAL TOOLS
JDG1129A Transmission Mounting Brackets

1. Remove front and rear output flange from output shafts.
2. Remove output shaft seals from housing bores.

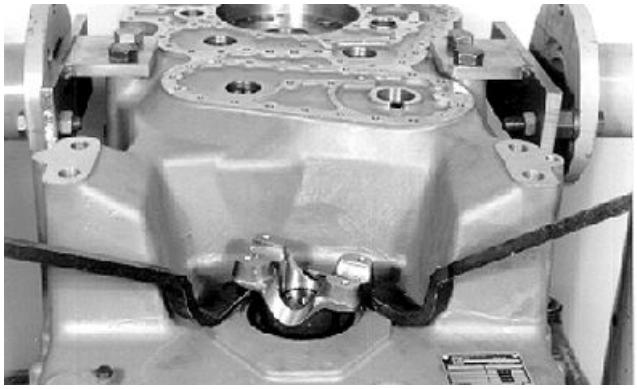

Remove Output Flange from Shaft

MH66O88,0000723 -19-06APR11-1/19

3. Remove torque converter input speed sensor, internal clutch speed sensor, and torque converter output speed sensor.

1— Sensor (3 used)

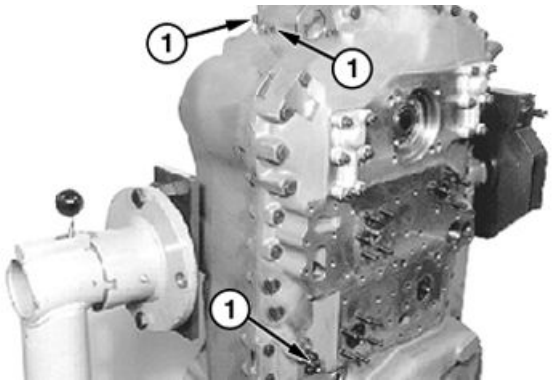

Sensor Location

MH66O88,0000723 -19-06APR11-2/19

4. Remove cap screws (2) from transmission cover
5. Drive both dowel pins (3) down far enough to clear cover for removal.

2— Cap Screw **3— Dowel Pin (2 used)**

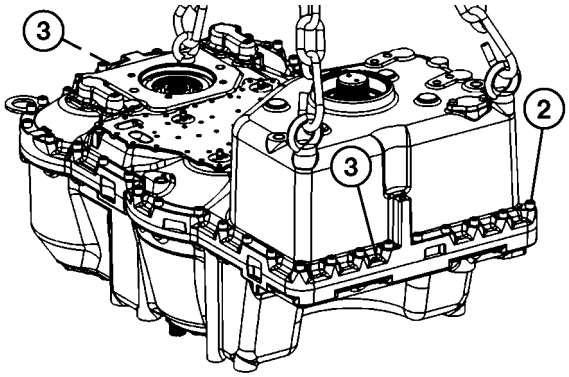

Cap Screws and Dowel Pins

Continued on next page

MH66O88,0000723 -19-06APR11-3/19

CAUTION: Prevent possible injury from crushing. Heavy component; use appropriate lifting device.

6. Using an appropriate lifting device, separate housing cover carefully from gear case housing and remove.

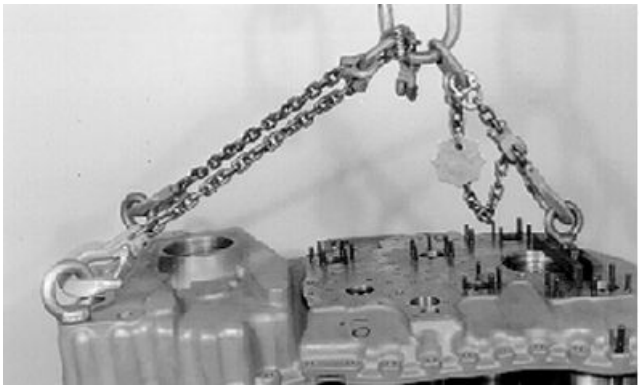

Housing Cover/Gear Case Separation

MH66O88,0000723 -19-06APR11-4/19

7. The figure on the right shows the proper position of the single clutches as well as of the input shaft (5) and output shaft (4).

4— Output Shaft (AB)
5— Input Shaft (AN)
6— First Speed Clutch (K1)
7— Second Speed Clutch (K2)
8— Third Speed Clutch (K3)
9— Forth Speed Forward Clutch (K4)
10— Reverse Clutch (KR)
11— Forward Clutch (KV)

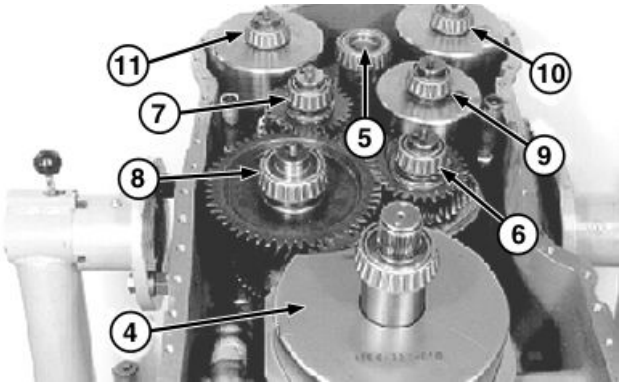

Single Clutch Proper Positions

MH66O88,0000723 -19-06APR11-5/19

NOTE: When removing clutches, remove output shaft first.

8. Loosen socket head cap screws from covers and remove output shaft with covers.



Clutch Removal

Continued on next page

MH66O88,0000723 -19-06APR11-6/19

IMPORTANT: Remove sealing rings from clutch pack shafts (cover side only) before installing cover. Sealing rings may be damaged while removing and installing clutch packs.

IMPORTANT: Clutches KV, KR, and input shaft (13) are only held in by gear mesh.

NOTE: Four Flat Washers and M10 nuts are substituted for special handles shown in graphic.

9. Install cover on transmission until it contacts the mounting surface so clutch packs can be removed from housing for repair or inspection.

12— Special Handle (4 used)

13— Clutch KR, Clutch KV, and Input Shaft

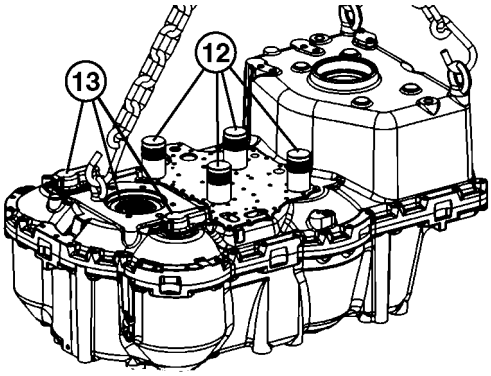

TX1049936 —UN—09OCT08

Special Handles Shown

MH66O88,0000723 -19-06APR11-7/19

NOTE: Transmission cover is used to properly remove packs from transmission housing.

10. Install four flat washers and four nuts (14) on end of clutch packs. This will hold clutch packs in place while mounting cover in rollover repair stand. This method must be used to remove clutch packs from transmission housing.

14— Flat Washers and M10 Nuts

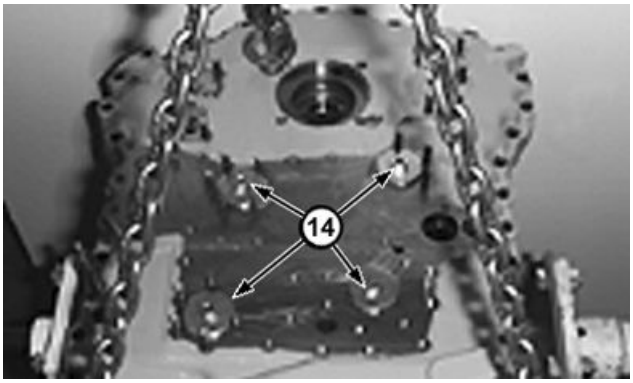

TX1049941A —UN—09OCT08

Flat Washers and M10 Nuts (4 used)

MH66O88,0000723 -19-06APR11-8/19

⚠ CAUTION: Prevent possible injury from crushing. Heavy component; use appropriate lifting device.

11. Remove housing cover along with all clutch packs from gear case housing using an appropriate lifting device.

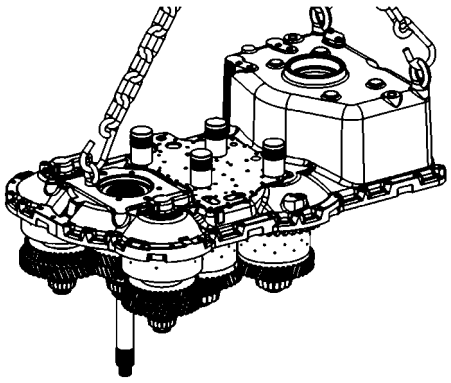

TX1049937 —UN—09OCT08

Housing Cover/Gear Case Housing Separation

Continued on next page

MH66O88,0000723 -19-06APR11-9/19

12. Remove transmission housing from repair stand. Install transmission cover with clutch packs into repair stand using JDG1129A Mounting Brackets. Fasten transmission cover to mounting brackets using cap screws, washers, and nuts as shown.

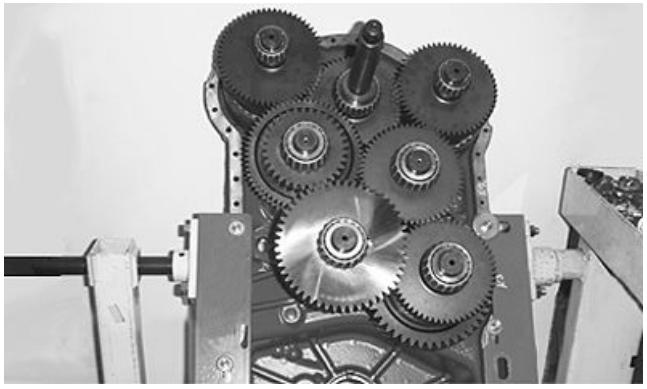

TX1028696A —UN—29AUG07

Mounting Bracket Positions

MH66O88,0000723 -19-06APR11-10/19

13. Rotate the repair stand so clutch packs are facing up. This will allow them to be removed from the cover.
14. Remove washers and nuts retaining clutch packs.

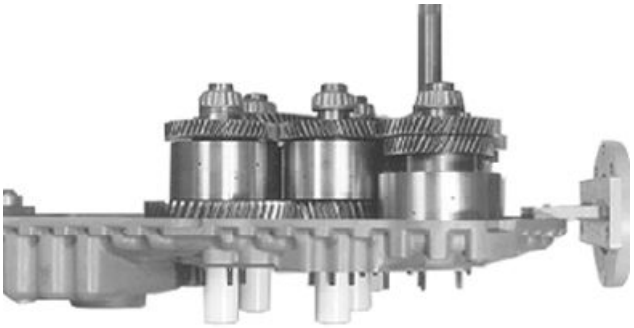

TX1049945A —UN—09OCT08

MH66O88,0000723 -19-06APR11-11/19

15. Clutch pack layout viewed from torque converter side of transmission.

6— First Speed Clutch (K1)
7— Second Speed Clutch (K2)
8— Third Speed Clutch (K3)
9— Forth Speed Forward Clutch (K4)
10— Reverse Clutch (KR)
11— Forward Clutch (KV)

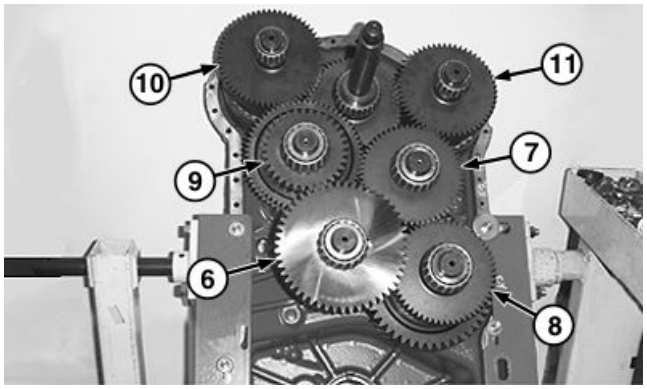

TX1028698A —UN—29AUG07

View from Torque Converter Side

Continued on next page

MH66O88,0000723 -19-06APR11-12/19

CAUTION: Use special care while removing clutch packs from cover due to closeness of packs and spline engagement to each other.

16. Remove second speed clutch (K2).



Remove Second Speed Clutch (K2)

MH66O88,0000723 -19-06APR11-13/19

17. Remove first speed clutch (K1) while lifting forth speed forward clutch (K4) to the side for clearance.



Remove First Speed Clutch (K1)

MH66O88,0000723 -19-06APR11-14/19

18. Remove third speed clutch (K3).



Remove Third Speed Clutch (K3)

Continued on next page

MH66O88,0000723 -19-06APR11-15/19

19. Remove forth speed forward clutch (K4) while lifting input shaft slightly.



Remove Forth Speed Forward Clutch (K4)

MH66O88,0000723 -19-06APR11-16/19

NOTE: Clutches KV and KR can be serviced.

20. Remove forward (KV) and reverse (KR) clutches together with input shaft from the housing cover. To disassemble forward and reverse clutches, see Clutch Pack KV and KR Disassemble. (Group 0350.)

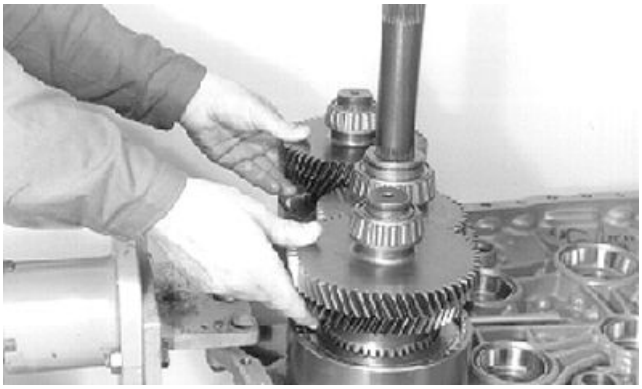

Separate Forward (KV) and Reverse (KR) Clutches

MH66O88,0000723 -19-06APR11-17/19

21. Remove bearing outer race and pull output shaft from housing bore.

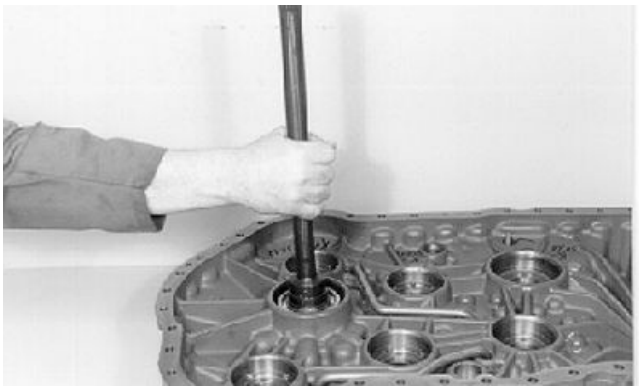

Remove Output Shaft

Continued on next page

MH66O88,0000723 -19-06APR11-18/19

22. Remove snap ring (16) and bearing (15) from shaft.

15— Bearing **16— Snap Ring**



TX1049946A —UN—09OCT08

Snap Ring

MH66O88,0000723 -19-06APR11-19/19

Clutches and Input and Output Shafts Install

ESSENTIAL TOOLS
JDG10941 Output Shaft Seal Installer

SERVICE EQUIPMENT AND TOOLS
M20 and M12 Eyebolt
Repair Stand

OTHER MATERIAL
242 LOCTITE® Loctite Medium-Strength Thread Lock and Sealer
17430 LOCTITE® High Flex Form-In-Place Gasket

IMPORTANT: High tolerance bearings are used in all clutch pack applications. Use only John Deere sourced bearings when replacing.

NOTE: If bearings are reused, they must be assembled in the same bores from which they were removed.

1. Insert all bearing outer races into the housing cover until contact with bottom of bore is obtained.

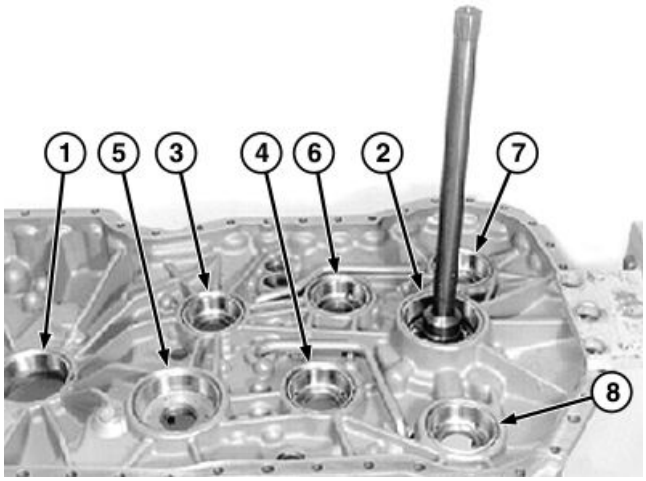

TX1028716A —UN—29AUG07

Bearing Outer Race Installation

1— Output Shaft (AB)
2— Input Shaft (AN)
3— First Speed Clutch (K1)
4— Second Speed Clutch (K2)
5— Third Speed Clutch (K3)
6— Forth Speed Forward Clutch (K4)
7— Reverse Clutch (KR)
8— Forward Clutch (KV)

LOCTITE is a trademark of Henkel Corporation

TW73308,0000384 -19-10OCT08-1/28

2. Install reverse clutch (1), input shaft (2), and forward clutch (3) into housing cover.

2— Input Shaft (AN) **8— Forward Clutch (KV)**
7— Reverse Clutch (KR)

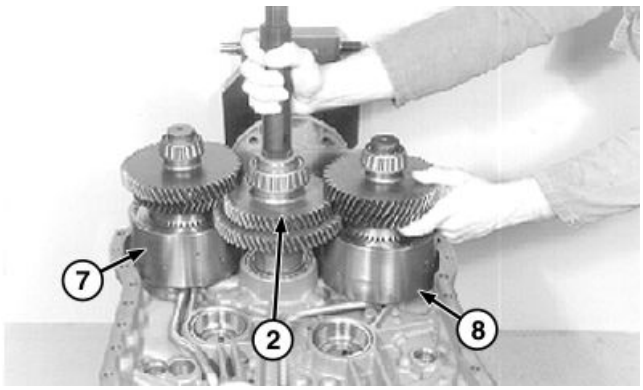

TX1028717A —UN—30AUG07

KR, KV, and Input Shaft Installation

Continued on next page

TW73308,0000384 -19-10OCT08-2/28

3. Install forth speed forward clutch.



TX1029592A —UN—20SEP07

Clutch K4 Installation

TW73308,0000384 -19-10OCT08-3/28

4. Install third speed clutch.



T109007 —UN—09MAY97

Clutch K3 Installation

TW73308,0000384 -19-10OCT08-4/28

5. Install second speed clutch.



T112554B —UN—17DEC97

Clutch K2 Installation

Continued on next page

TW73308,0000384 -19-10OCT08-5/28

6. Install first speed clutch.



T112553B —UN—17DEC97

Clutch K1 Installation

TW73308,0000384 -19-10OCT08-6/28

7. Install single clutches in the housing cover as shown.

3— First Speed Clutch (K1)
4— Second Speed Clutch (K2)
5— Third Speed Clutch (K3)
6— Forth Speed Forward Clutch (K4)
7— Reverse Clutch (KR)
8— Forward Clutch (KV)

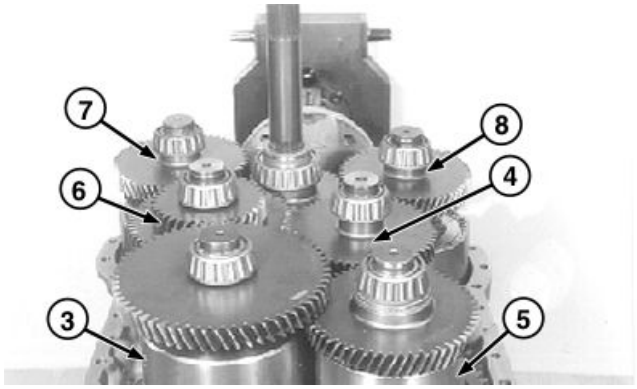

TX1028761A —UN—31AUG07

Proper Installation Positions

TW73308,0000384 -19-10OCT08-7/28

8. Retain clutches K1, K2, K3, and K4 using four M10 nuts and four flat washers.

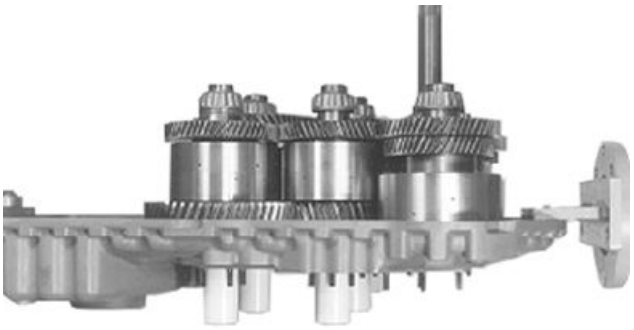

TX1049945A —UN—09OCT08

Clutch Retaining

Continued on next page

TW73308,0000384 -19-10OCT08-8/28

9. Install sealing rings (7 used) on clutch pack shafts. Grease sealing rings and align.

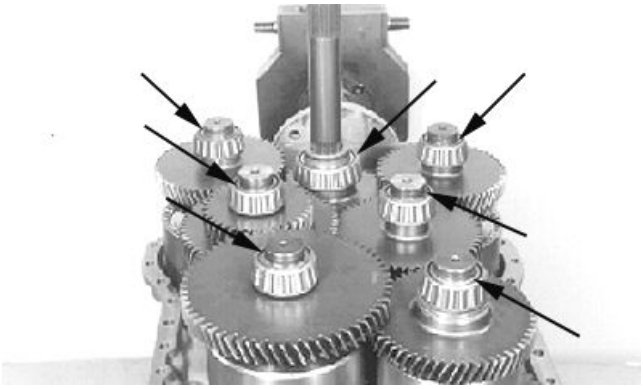

T109012 —UN—29APR97

Sealing Ring Installation

TW73308,0000384 -19-10OCT08-9/28

IMPORTANT: Clutches KV, KR, and input shaft (13) are only held in by gear mesh.

10. Turn housing cover 180° and install eyebolts.
11. Remove transmission cover with clutch packs from repair stand. Install transmission housing into repair stand.

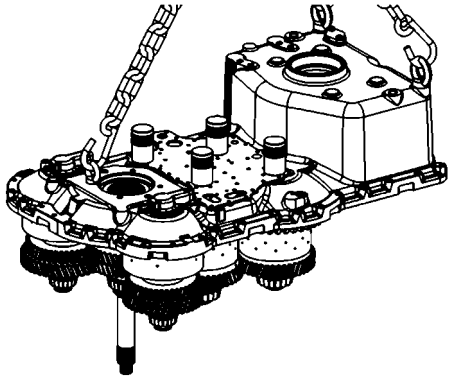

TX1049937 —UN—09OCT08

Eyebolts Mounted

TW73308,0000384 -19-10OCT08-10/28

NOTE: Note the engagement of the oil pipes with the bores in the housing cover.

12. Install alignment studs in the housing. Install cover with clutch packs carefully onto housing. Make sure all components are properly seated.
13. Remove nuts and flat washers retaining clutch packs.

12— Special Handle (4 used)

13— Clutch KV, Clutch KR, and Input Shaft

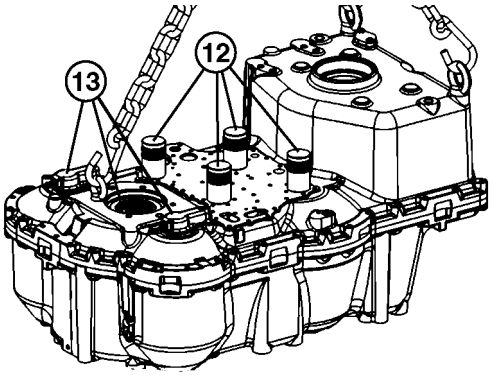

TX1049936 —UN—09OCT08

Cover Installation

Continued on next page

TW73308,0000384 -19-10OCT08-11/28

14. Remove housing cover from gear case housing.

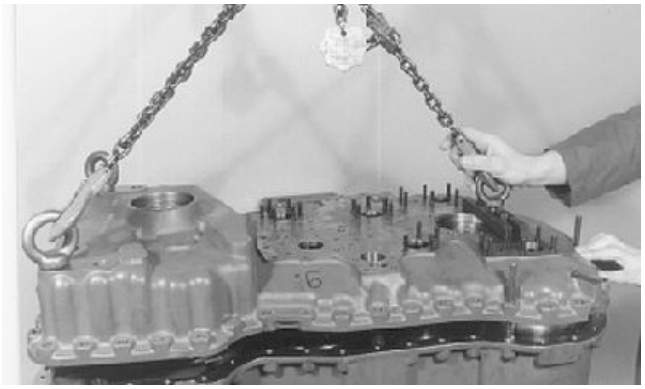

T109016 —UN—09MAY97

Housing Cover Removal

TW73308,0000384 -19-10OCT08-12/28

15. Assemble oil cover onto shaft and press both bearing inner races against shoulder until contact is obtained.

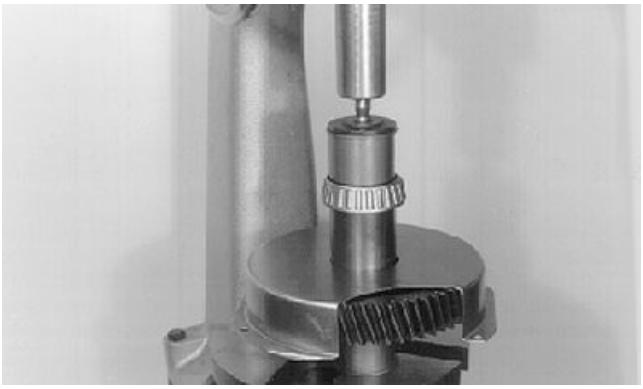

T109066 —UN—15APR97

Oil Cover over Shaft

TW73308,0000384 -19-10OCT08-13/28

16. Install bearing outer race into the housing bore until contact is obtained.

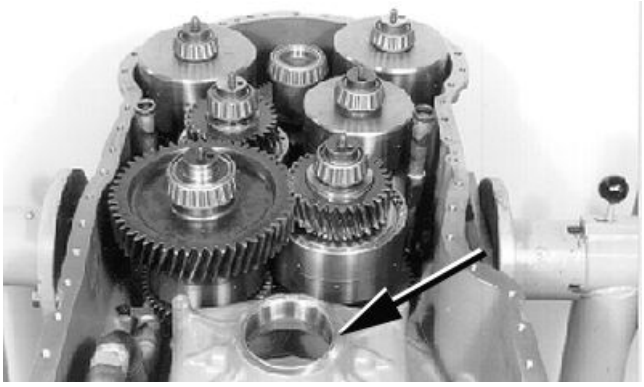

T109068 —UN—29APR97

Bearing Outer Race Installation

Continued on next page

TW73308,0000384 -19-10OCT08-14/28

17. Position inner oil cover.



T109069 —UN—15APR97

Inner Oil Cover Position

TW73308,0000384 -19-10OCT08-15/28

18. Install output shaft with cover in housing.



T109070 —UN—15APR97

Output Shaft Installation

TW73308,0000384 -19-10OCT08-16/28

19. Apply PM37418 Loctite Medium-Strength Thread Lock and Sealer to socket head cap screws. Install socket head cap screws and tighten to specification to fasten both covers.

Specification

Output Shaft Socket Head Cap Screw—Torque	23 N·m 17 lb-ft

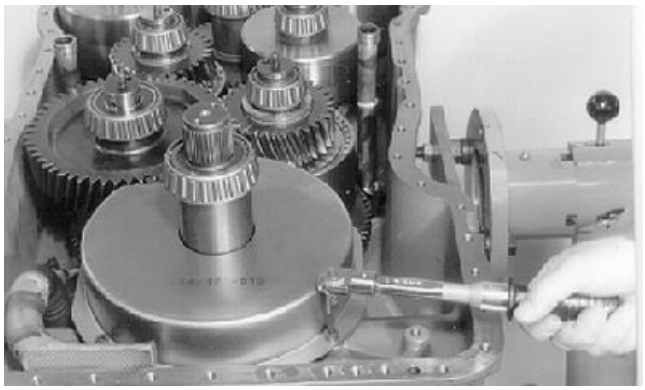

T109071 —UN—15APR97

Socket Head Cap Screw Installation

Continued on next page

TW73308,0000384 -19-10OCT08-17/28

20. Install sealing rings (6 used) into the recesses of the clutch shafts. Grease sealing rings and align.

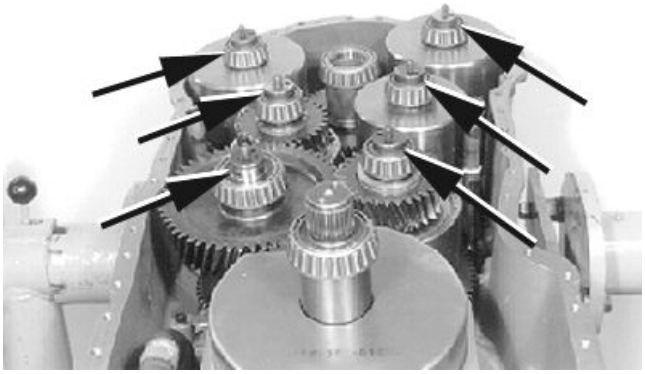

T109072 —UN—29APR97

Sealing Ring Installation

TW73308,0000384 -19-10OCT08-18/28

NOTE: Note the engagement of the oil pipe with the bores in the housing cover.

21. Lubricate and install both O-rings into the groove of the oil pipes.



T109075 —UN—29APR97

O-Ring Installation

TW73308,0000384 -19-10OCT08-19/28

CAUTION: Prevent possible injury from crushing. Heavy component; use appropriate lifting device.

22. Apply PM38657 High Flex Form-in-Place Gasket to mounting face of cover. Install housing cover carefully against gear case housing until contact is obtained.

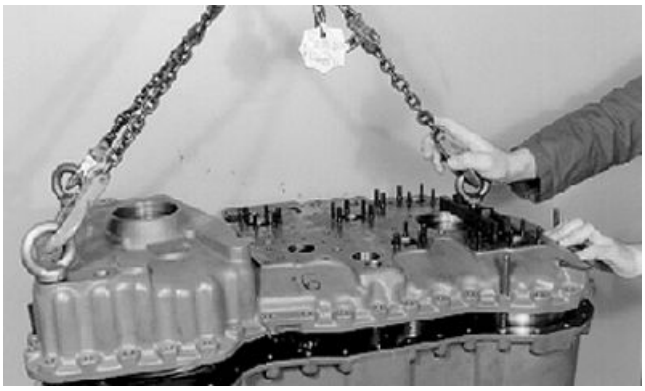

T109076 —UN—15APR97

Housing Cover Installation

Continued on next page

TW73308,0000384 -19-10OCT08-20/28

23. Install dowel pins (2).

14— Dowel Pin (2 used)

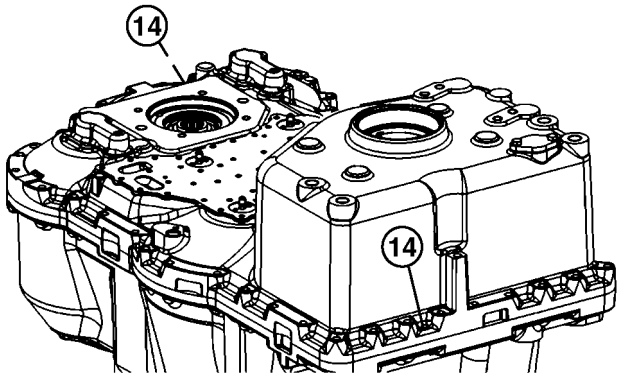

TX1049939 —UN—09OCT08

Dowel Pin Installation

TW73308,0000384 -19-10OCT08-21/28

NOTE: Locate hanger in same position as it was removed from.

24. Install housing cover cap screws and tighten to specification.

Specification

Housing Cover Cap Screw—Torque.....46 N·m
34 lb-ft

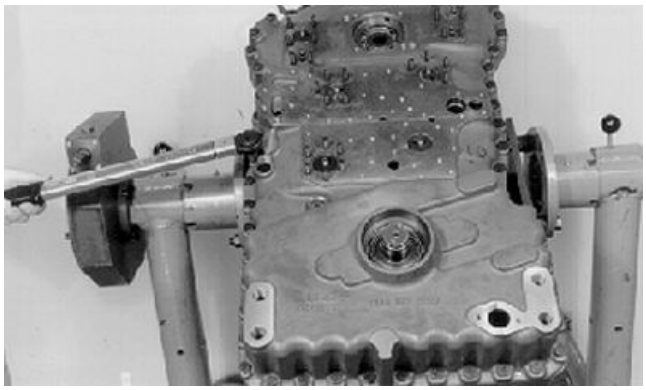

T109078 —UN—15APR97

Torque Cap Screw

TW73308,0000384 -19-10OCT08-22/28

NOTE: Grease sealing lip of shaft seal.

25. Using JDG10941 Output Shaft Seal Installer, install shaft seal with the lip facing inward.



T109079 —UN—15APR97

Shaft Seal Installation

Continued on next page

TW73308,0000384 -19-10OCT08-23/28

26. Apply PM38657 High Flex Form-in-Place Gasket to contact area of washer.

CAUTION: Prevent possible injury from heated components. Use proper safety equipment while handling heated components.

27. Heat yoke shaft splines evenly to specifications before installing. Use temperature measuring stick or infrared meter to verify temperature.

Specification	
Output Flange—Pre-heat	66—93°C 150—200°F

Install input yoke and washer. Draw cover down evenly against shoulder with cap screws.

Specification	
Input Yoke Cap Screw—Torque	34 N·m 25 lb-ft

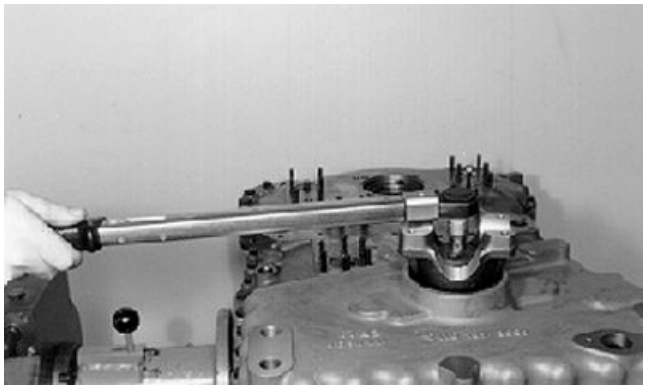

T109080 —UN—15APR97

Flange Installation

TW73308,0000384 -19-10OCT08-24/28

28. Install locking plate using two 5/8 in. deep well sockets (A). Install flange in same manner on opposite side.

A—Deep Well Socket (2 used)



T109147B —UN—02MAY97

Locking Plate Installation

TW73308,0000384 -19-10OCT08-25/28

29. If removed, install flat gasket and cover. Install cover cap screws and tighten to specification.

Specification	
Flat Gasket and Cover Cap Screw—Torque	23 N·m 17 lb-ft

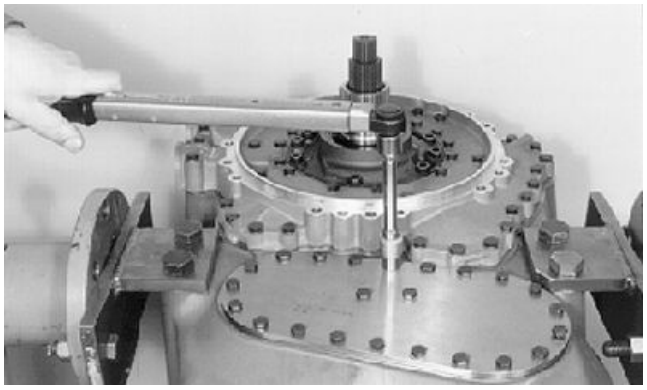

T109094 —UN—15APR97

Cover Installation

Continued on next page

TW73308,0000384 -19-10OCT08-26/28

30. Install oil level tube and tighten cap screw to specification.

Specification	
Oil Level Tube Cap Screw—Torque	23 N·m 17 lb-ft.

31. Install torque converter input speed sensor, clutch internal speed sensor, and torque converter output speed sensor. Tighten sensors to specification.

Specification	
Torque Converter Input Sensor—Torque	30 N·m 22 lb-ft
Internal Clutch Speed Sensor—Torque	30 N·m 22 lb-ft
Torque Converter Output Sensor—Torque	30 N·m 22 lb-ft

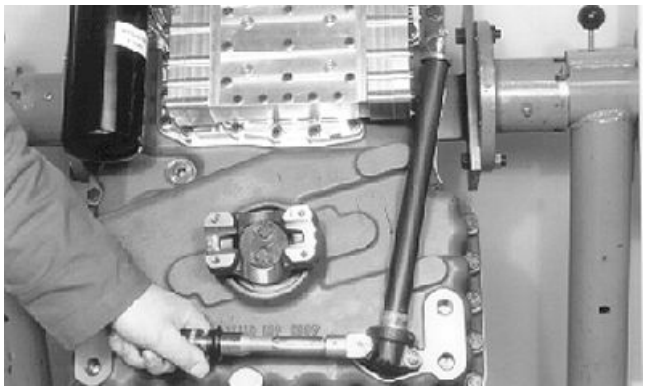

T109117 —UN—15APR97

Oil Level Tube Installation

TW73308,0000384 -19-10OCT08-27/28

32. Install drain plug and tighten to specification.

Specification	
Oil Drain Plug—Torque	80 N·m 59 lb-ft

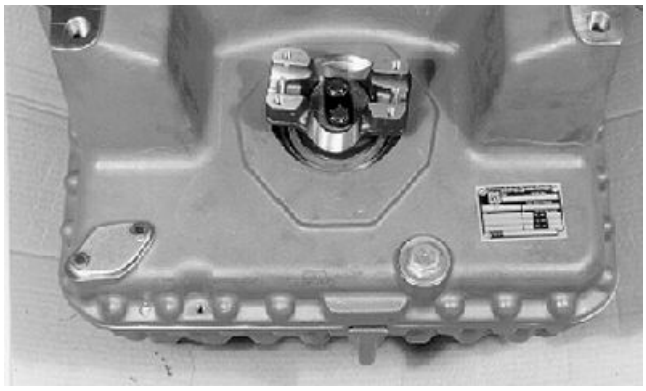

T109120 —UN—15APR97

Oil Drain Plug Installation

TW73308,0000384 -19-10OCT08-28/28

Clutch Pack KV and KR Disassemble

ESSENTIAL TOOLS
JDG1134 Bearing Puller
JDG1035 Bearing Puller Mandrel
JDG10911 Assembly Fixture (Inner Installer and Pressure Piece)

1. Remove sealing ring (1).

1— Sealing Ring

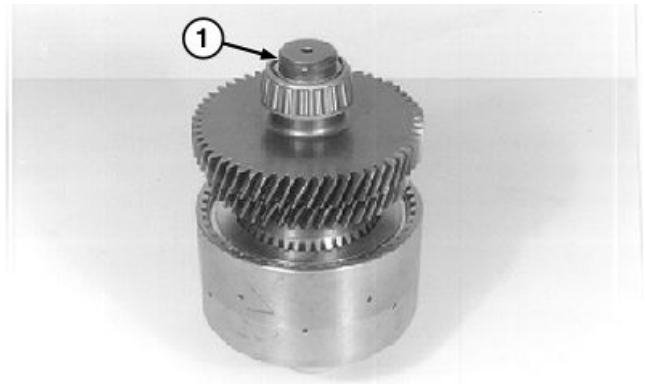

TX1028771A —UN—31AUG07

Sealing Ring

Continued on next page

MH66O88,00006EB -19-06APR11-1/10

2. Remove tapered roller bearing from shaft using JDG1134 Bearing Puller and JDG1035 Bearing Puller Mandrel. Remove opposite tapered roller bearing.



Tapered Roller Bearing

MH66O88,00006EB -19-06APR11-2/10

3. Using a soft faced mallet, separate plate carrier from shaft.

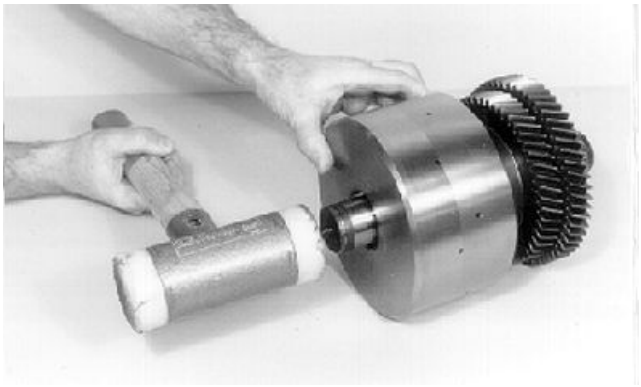

Plate Carrier and Shaft

MH66O88,00006EB -19-06APR11-3/10

4. Remove clutch pack.

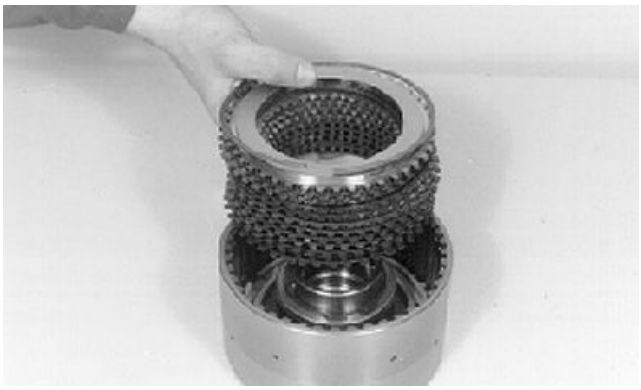

Clutch Plates

Continued on next page

MH66O88,00006EB -19-06APR11-4/10

5. Preload compression spring with JDG10911 Assembly Fixture (Inner Installer and Pressure Piece) and a press. Remove L-Ring.
6. Remove piston from carrier.



T108761 —UN—17APR97

Preload Compression Spring

MH66O88,00006EB -19-06APR11-5/10

7. Remove O-rings from piston.

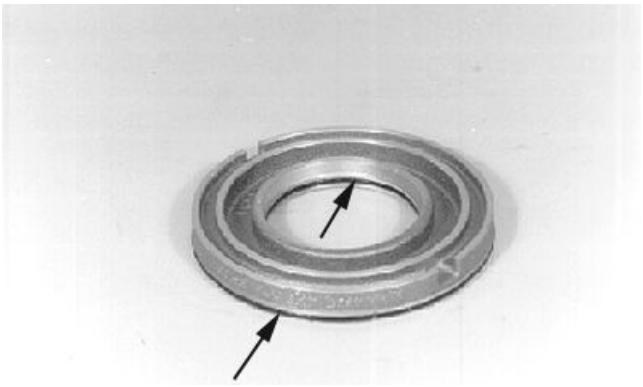

T108758 —UN—29APR97

Piston O-Rings

MH66O88,00006EB -19-06APR11-6/10

8. Remove inner snap ring.



T108759 —UN—17APR97

Inner Snap Ring.

Continued on next page

MH66O88,00006EB -19-06APR11-7/10

9. Remove idler gear from shaft using a press.

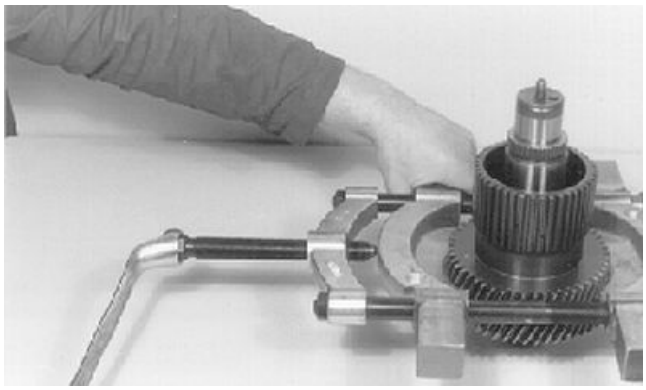

Idler Gear

MH66O88,00006EB -19-06APR11-8/10

10. Remove released needle bearing.

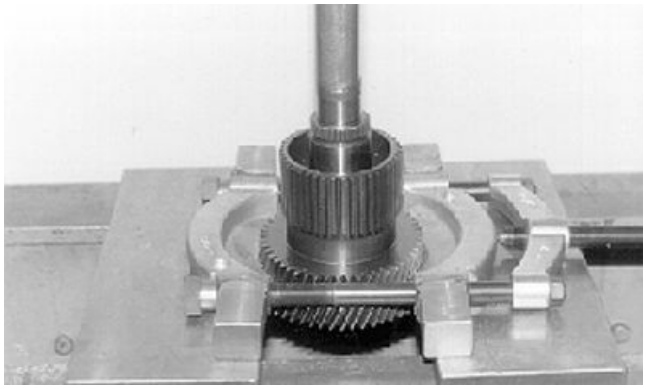

Needle Bearing

MH66O88,00006EB -19-06APR11-9/10

11. Remove snap ring and bearing.
12. Repair or replace parts as necessary.



MH66O88,00006EB -19-06APR11-10/10

Clutch Pack KV and KR Assemble

SPECIFICATIONS	
KV and KR Clutch Pack Plate Clearance	2.5—2.7 mm 0.098—0.106 in.
Shaft Stud Torque	17 N·m 150 lb-in.

ESSENTIAL TOOLS
JDG10911 Assembly Fixture (Inner Installer and Pressure Piece)
JDG10910 Assembly Aid

OTHER MATERIAL
242 LOCTITE® Loctite Medium-Strength Thread Lock and Sealer

IMPORTANT: Check function of the drain valve and drain ball (1). Ball must move freely. If ball does not move freely, check for contamination or replace.

NOTE: Clutches KV and KR are assembled in the same manner. Clutch KV is shown.

1. Apply oil to new O-rings (1) and install to piston ID and OD.

LOCTITE is a trademark of Henkel Corporation

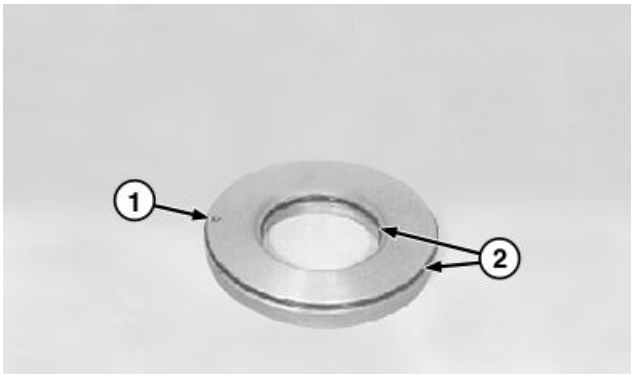

TX1028798A —UN—30AUG07

Drain Ball O-Rings

1— Drain Ball **2— O-Ring (2 used)**

MH66O88,00006EC -19-14AUG08-1/18

NOTE: For proper installation of piston, install same way as removed.

2. Install piston until it bottoms in plate carrier.

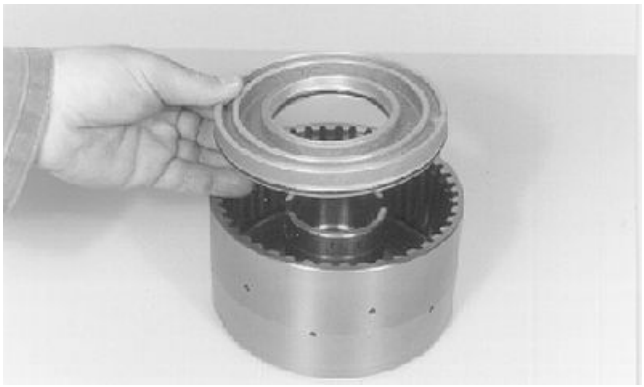

T108662 —UN—10APR97

Assemble Piston

Continued on next page

MH66O88,00006EC -19-14AUG08-2/18

3. Install spring and guides.

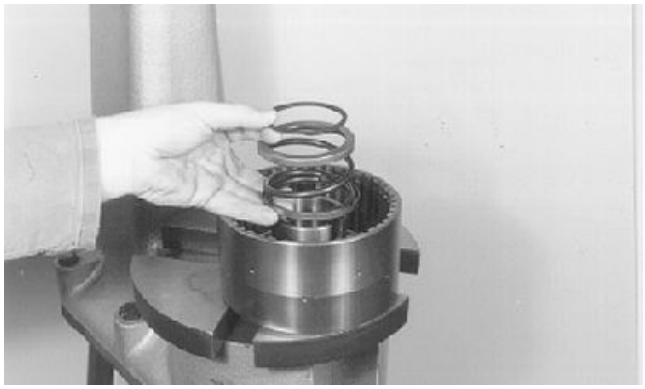

T108663 —UN—10APR97

Install Spring and Guides

MH66O88,00006EC -19-14AUG08-3/18

NOTE: Always install new L-ring during assembly of clutch pack.

4. Compress the spring using JDG10911 Assembly Fixture (Inner Installer and Pressure Piece), JDG10910 Assembly Aid, and a press. Install new L-ring into plate carrier groove.

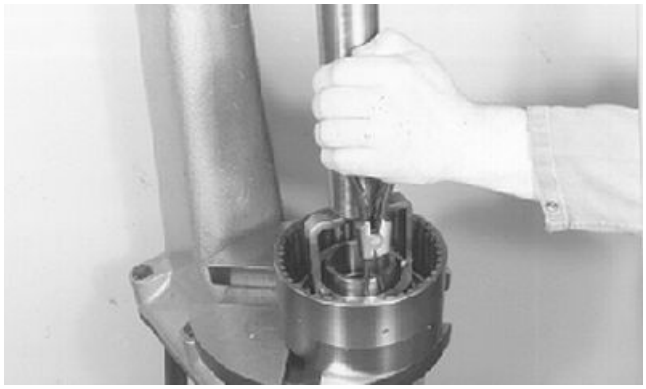

T108664 —UN—10APR97

Install New L-ring.

MH66O88,00006EC -19-14AUG08-4/18

IMPORTANT: Install one-sided friction disk (5) with the fiber side always facing toward other disk or plate. Smooth side should be against piston or end shim, depending on which end of stack it is used on.

NOTE: Plate and disk position is the same for clutches KV and KR.

For proper adjustment of plate clearance, install disk and plates temporarily without being oiled.

5. Install a one-sided fiber disk (5) into the plate carrier (3) with the fiber side facing out or away from piston (4). Install a two-sided fiber disk (7) into the plate carrier and alternate with a plate (6), until all ten plates and nine disks are installed in carrier.
6. Install the remaining one-sided fiber disk into carrier with the fiber side facing in or away from the end shim.

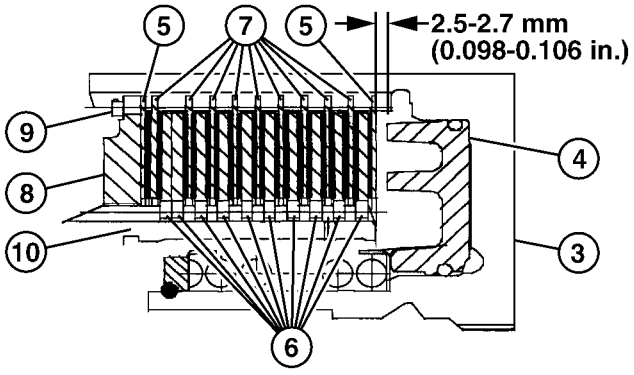

TX1028824 —UN—30AUG07

Clutch Packs KV and KR

3— Plate Carrier
4— Piston
5— One-Sided Fiber Disk (Friction) (2 used)
6— Plate (Separator) (10 used)
7— Two-Sided Fiber Disk (Friction) (9 used)
8— End Shim
9— L-Ring
10— Idler

Continued on next page

MH66O88,00006EC -19-14AUG08-5/18

7. Install end shim and L-ring.

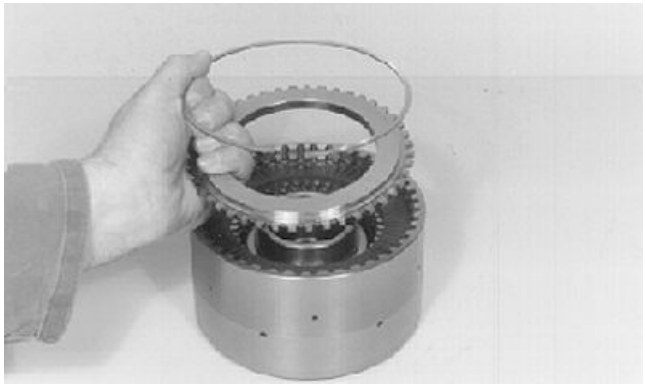

T108666 —UN—10APR97

End Shim and L-Ring

MH66O88,00006EC -19-14AUG08-6/18

NOTE: For the adjustment of plate clearance there are snap rings of different thicknesses available that can be used if proper clearance cannot be obtained. To ensure proper measuring result, install plates temporarily without oil.

8. Press down on end shim and measure the dimension from the end face/plate carrier to the end shim with depth gauge. Record dimension as No. 1.

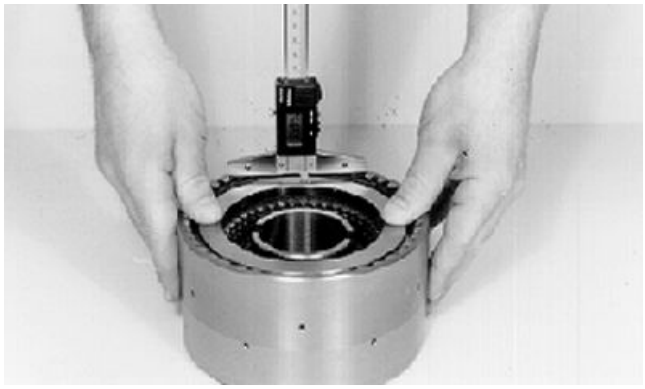

T108667 —UN—10APR97

Adjust Plate Clearance

MH66O88,00006EC -19-14AUG08-7/18

9. Press end shim against L-Ring (upward) until contact is made and measure with gauge. Record dimension as No. 2.

Example for Clutch Pack Clearance Check	
Dimension No. 1	7.24 mm (0.285 in.)
Dimension No. 2	4.75 mm (0.187 in.)
Difference = Plate Clearance	2.5 mm (0.098 in.)
Specification = Pack Clearance	2.5—2.7 mm (0.098—0.106 in.)

10. If a clutch pack clearance is not in specification, correct by using the proper corresponding snap ring from service parts to increase or decrease clearance. Snap rings come in various sizes.

Specification

KV and KR Clutch Pack
Plate—Clearance.....2.5—2.7 mm
0.098—0.106 in.



T108668 —UN—10APR97

Press End Shim Against L-Ring

11. After proper clearance is obtained, remove disks and plates from assembly. Add oil to plates and disks, and reassemble clutch pack assembly.

Continued on next page

MH66O88,00006EC -19-14AUG08-8/18

12. Install idler gear until all inner plates are engaged. This step makes later assembling of the idler gear easier. Remove idler gear from clutch pack assembly.



T108669 —UN—10APR97

Install Idler Gear

MH66O88,00006EC -19-14AUG08-9/18

13. Apply PM37418 Loctite Medium-Strength Thread Lock and Sealer to stud. Install stud on end of shaft if removed. Tighten to specification.

Specification

Shaft Stud—Torque.....17 N·m
150 lb-in.



T108670 —UN—10APR97

Install Stud on End of Shaft

MH66O88,00006EC -19-14AUG08-10/18

14. Insert ball bearing until seated and install snap ring.



T108671 —UN—10APR97

Ball Bearing

Continued on next page

MH66O88,00006EC -19-14AUG08-11/18

15. Install needle bearing.



T108672 —UN—10APR97

Install Needle Bearing

MH66O88,00006EC -19-14AUG08-12/18

NOTE: Push against cone of bearing.

On clutch KR, there is no recess in the shaft. Installation of snap ring will be in contact of bearing cone.

16. Press idler gear against shoulder.



T108673 —UN—10APR97

Press Idler Gear Against Shoulder

MH66O88,00006EC -19-14AUG08-13/18

17. Retain idler gear by means of snap ring.

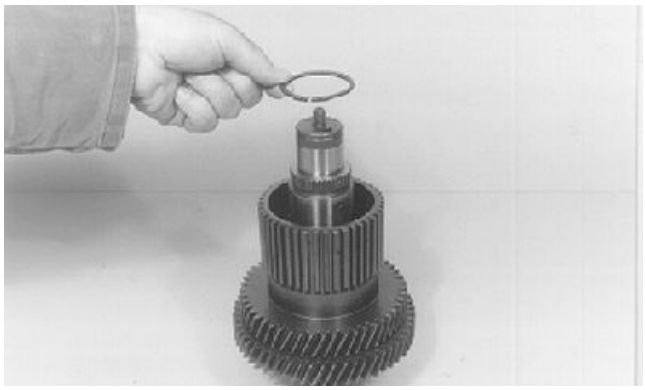

T108674 —UN—10APR97

Retain Idler Gear

Continued on next page

MH66O88,00006EC -19-14AUG08-14/18

18. Assemble pre-assembled plate carrier until all plates are engaged.

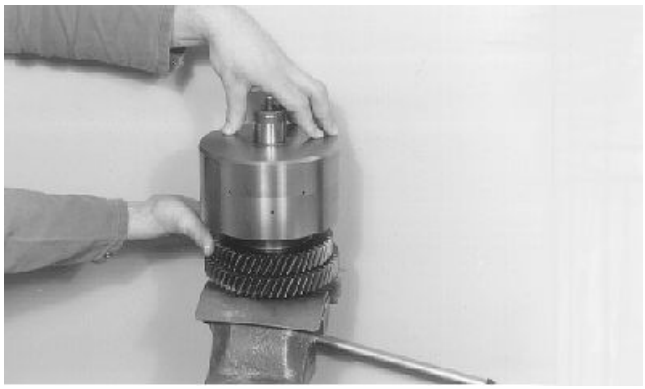

T108675 —UN—10APR97

Assemble Plate Carrier

MH66O88,00006EC -19-14AUG08-15/18

19. Ensure carrier face is flush with shaft spline.

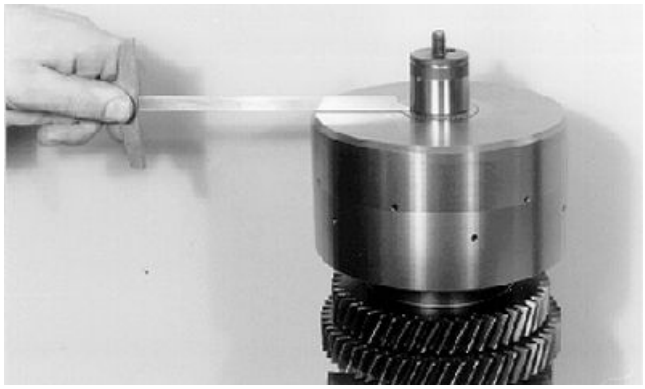

T108676 —UN—10APR97

Carrier Face Flush With Shaft Spline

MH66O88,00006EC -19-14AUG08-16/18

20. Press tapered roller bearing against shoulder. Installation of opposite tapered roller bearing will be the same.



T108677 —UN—10APR97

Continued on next page

MH66O88,00006EC -19-14AUG08-17/18

NOTE: Make sure clutch pack components are correctly installed, apply compressed air as shown and listen for movement of the clutch pack. The clutch pack will move freely when installed correctly.

21. Check function of clutch by means of compressed air.



T108678 —UN—10APR97

Check Clutch Function

MH66O88,00006EC -19-14AUG08-18/18

Clutch Pack K1, K2, and K3 Disassemble

ESSENTIAL TOOLS
JDG1041 Bearing Puller
JDG1034 Bearing Puller Mandrel
JDG1197 Bearing Puller
JDG1035 Bearing Puller Mandrel
JDG10911 Assembly Fixture (Inner Installer and Pressure Piece)

NOTE: The following art shows the disassembly of clutch K3. K1 and K2 are identical in disassembly methods.

1. Remove rectangular sealing ring from shaft.

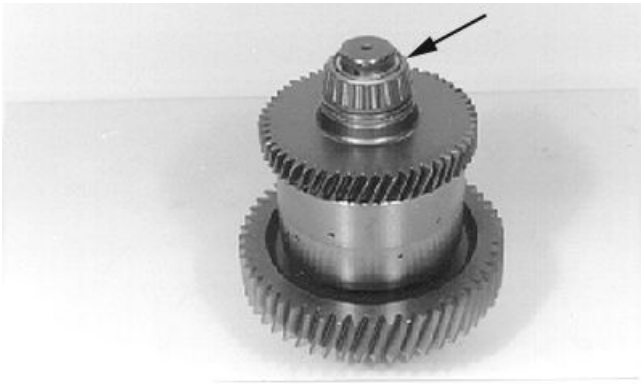

T108755 —UN—29APR97

MH66O88,000097F -19-15JUL11-1/9

2. Pull tapered roller bearing from the shaft using mandrel and puller as shown below.

Tool Usage Chart		
Clutch Shaft	Bearing Puller No.	Bearing Puller Mandrel No.
K1	JDG1041	JDG1034
	JDG1197	JDG1035
K2	JDG1197	JDG1035
K3	JDG1197	JDG1034
	JDG1041	JDG1034

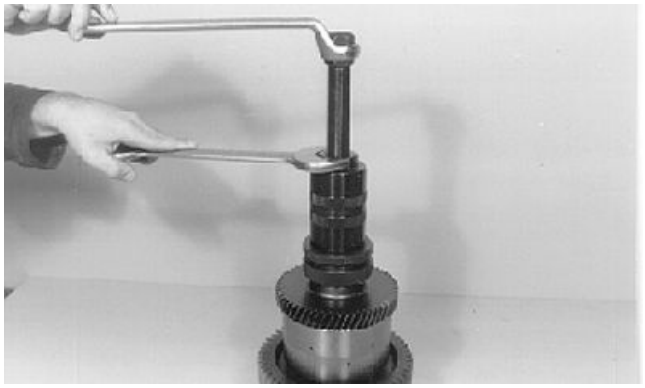

T108764 —UN—17APR97

Continued on next page

MH66O88,000097F -19-15JUL11-2/9

3. Remove snap ring, disk, needle bearing, and washer.



T108765 —UN—17APR97

MH66O88,000097F -19-15JUL11-3/9

4. Remove idler gear.



T108766 —UN—17APR97

MH66O88,000097F -19-15JUL11-4/9

5. Remove both needle bearings as well as axial bearing.

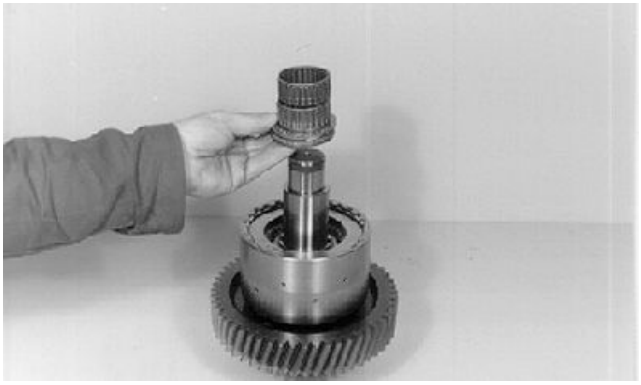

T108767 —UN—17APR97

Continued on next page

MH66O88,000097F -19-15JUL11-5/9

6. Remove snap ring and remove plates and disks.



T108760 —UN—17APR97

MH66O88,000097F -19-15JUL11-6/9

7. Preload compression spring using JDG10911 Assembly Fixture (Inner Installer and Pressure Piece) in a press.

NOTE: Discard L-ring and install a new one when assembling clutch pack.

8. Remove L-ring and discard. Remove components.



T108761 —UN—17APR97

MH66O88,000097F -19-15JUL11-7/9

⚠ CAUTION: Prevent possible injury from flying debris. Clear area of bystanders. Wear personal protection equipment including eye protection.

9. Press piston out of the plate carrier, using compressed air.

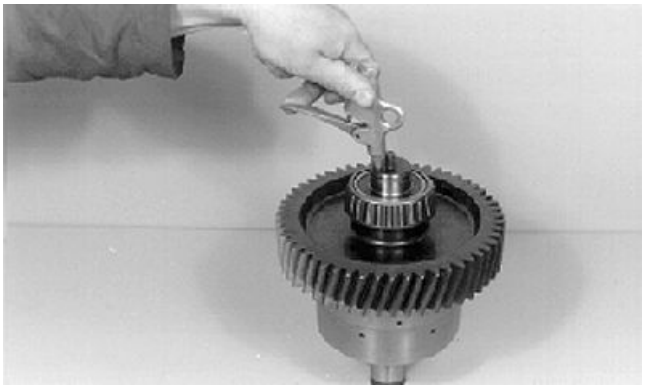

T108762 —UN—17APR97

Press Piston Out

Continued on next page

MH66O88,000097F -19-15JUL11-8/9

10. Pry plate carrier from the shaft.



Pry Plate Carrier From Shaft

MH66O88,000097F -19-15JUL11-9/9

Clutch Pack K1, K2, and K3 Assemble

SPECIFICATIONS	
Shaft Stud Torque	17 Nm
Shaft Stud	150 lb-in.
K1 Clutch Pack Plate Clearance	2.4—2.6 mm 0.094—0.102 in.
K2 and K3 Clutch Pack Plate Clearance	1.8—2.0 mm 0.071—0.079 in.

ESSENTIAL TOOLS
JDG10911 Assembly Fixture (Inner Installer and Pressure Piece)
JDG10910 Assembly Aid

OTHER MATERIAL
242 LOCTITE® Thread Lock and Sealer (Medium Strength)

NOTE: Clutches K1, K2 and K3 are assembled in a similar manner. The following assembly story art shows clutch K3.

1. Apply PM37477 Thread Lock and Sealer (medium strength) to stud.

LOCTITE is a trademark of Henkel Corp.

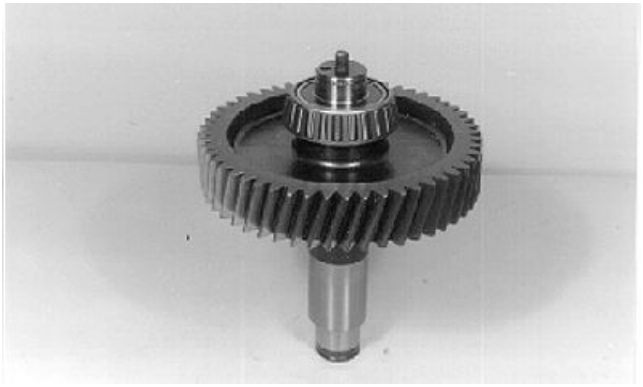

Stud-to-Shaft Installation

2. Install stud on end of shaft. Tighten stud to specification.

Specification

Shaft Stud—Torque.....17 Nm
150 lb-in.

MH66O88,0000980 -19-20AUG08-1/23

3. Assemble plate carrier until bottomed.

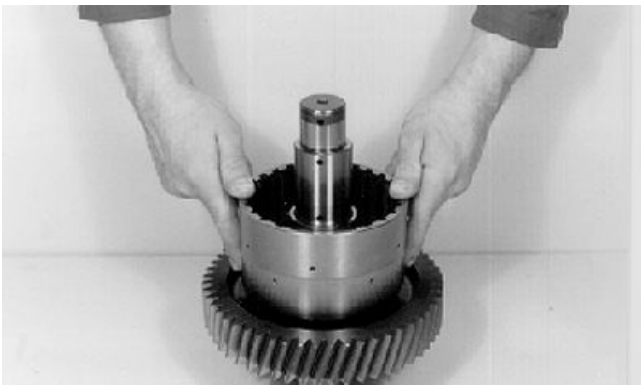

Plate Carrier Assembly

Continued on next page

MH66O88,0000980 -19-20AUG08-2/23

IMPORTANT: Check function of the drain valve. Check function of drain ball. Ball must move freely. If ball does not move freely, check for contamination or replace.

4. Install new O-rings (arrows) into the ID and OD of the piston. Apply a light coat of oil to O-rings.

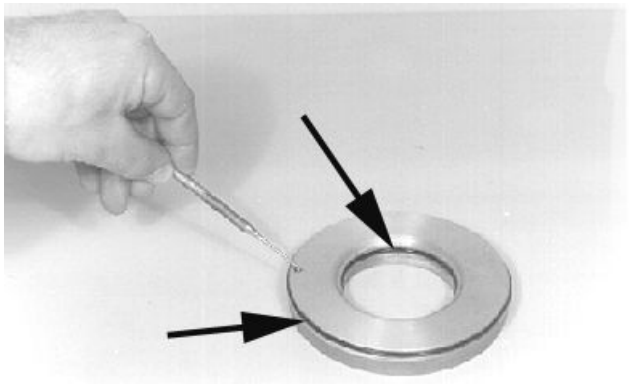

T108981 —UN—29APR97

O-Ring Installation

MH66O88,0000980 -19-20AUG08-3/23

5. Install piston in carrier until seated.

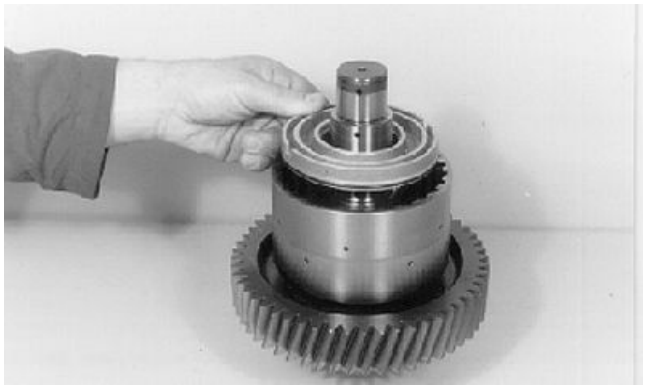

T108734 —UN—10APR97

Proper Piston Installation

MH66O88,0000980 -19-20AUG08-4/23

6. Install compression spring and two spring guides into plate carrier.



T108735 —UN—10APR97

Spring Type Shown May Vary

Continued on next page

MH66O88,0000980 -19-20AUG08-5/23

NOTE: Always install new L-ring during assembly of clutch pack.

7. Use JDG10911 Assembly Fixture (Inner Installer and Pressure Piece), JDG10910 Assemble Aid, and a press to install new L-ring into plate carrier groove for clutch K1, K2, and K3.



T108736 —UN—10APR97

Install L-Ring

MH66O88,0000980 -19-20AUG08-6/23

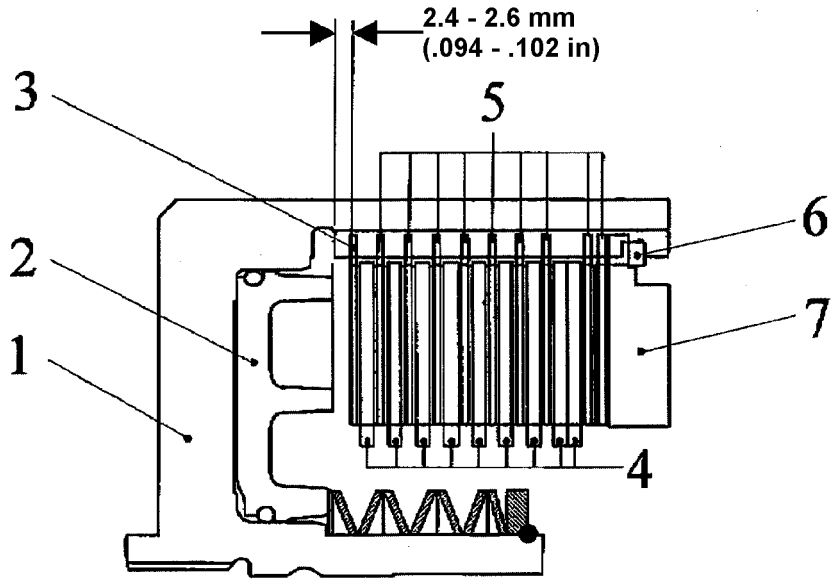

T112161

T112161 —UN—20NOV97

Clutch Pack K1

1— Plate Carrier
2— Piston
3— Disk (Friction) (One Side Fiber Coated)
4— Plate (Separator) (9 used)
5— Disk (Friction) (9 used)
6— Snap Ring
7— End Shim

IMPORTANT: Install one-sided friction disk (3) with the fiber side always facing toward plate. Smooth side should be against piston.

8. Install one-sided fiber disk into carrier with the fiber side facing out or away from piston.

NOTE: For proper adjustment of plate clearance, install disk and plates temporarily without being oiled.

Continued on next page

MH66O88,0000980 -19-20AUG08-7/23

9. Install plate and then disk, alternately, until seven plates and seven disks are installed in carrier.
10. Install two plates, then two disks.

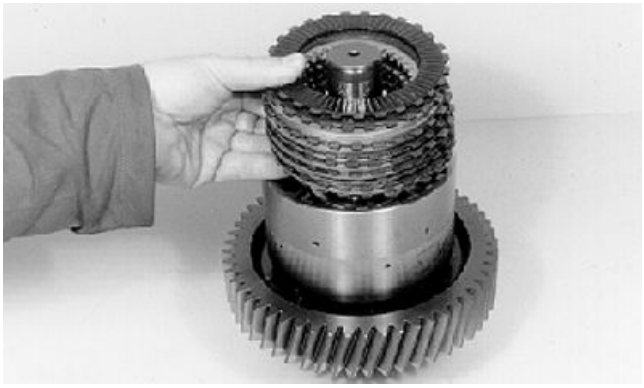

T108737 —UN—10APR97

Plates and Disks Installation

MH66O88,0000980 -19-20AUG08-8/23

11. Install end shim and snap ring.

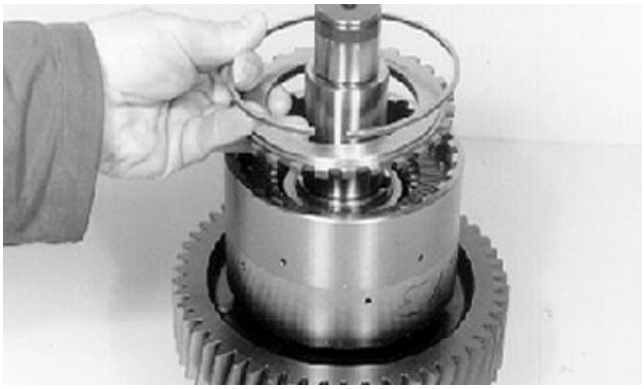

T108738 —UN—10APR97

End Shim and Snap Ring Installation

MH66O88,0000980 -19-20AUG08-9/23

NOTE: For the adjustment of the plate clearance there are snap rings of different thicknesses available that can be used if proper clearance cannot be obtained. To ensure proper measuring result, install plates temporarily without oil.

12. Adjust plate clearance to specification.

Specification

K1 Clutch Pack
Plate—Clearance.....2.4—2.6 mm (0.094—0.102 in.)

a. Press end shim and measure the dimension from the end face/plate carrier to the end shim with depth gauge. Record dimension (No. 1).

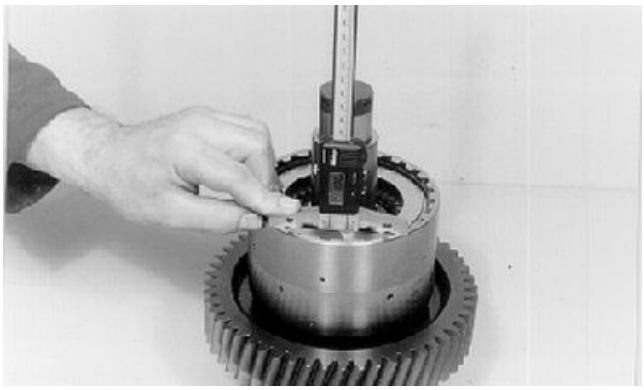

T108739 —UN—10APR97

End Shim Press

Continued on next page

MH66O88,0000980 -19-20AUG08-10/23

b. Press end shim against snap ring (upward) until contact and measure with gauge. Record dimension (No. 2).

Example for Clutch Pack Clearance Check	
Dimension No. 1	8.50 mm (0.335 in.)
Dimension No. 2	6.00 mm (0.236 in.)
Difference = Plate Clearance	2.50 mm (0.079 in.)
Specification = Pack Clearance	2.4—2.6 mm (0.094—0.102 in.)

c. If a clutch pack clearance is not to specification, correct by using the proper corresponding snap ring from service parts to increase or decrease clearance. Snap rings come in various sizes.

d. After proper clearance is obtained, remove disks and plates from assembly.

13. Add oil to plates and disks.

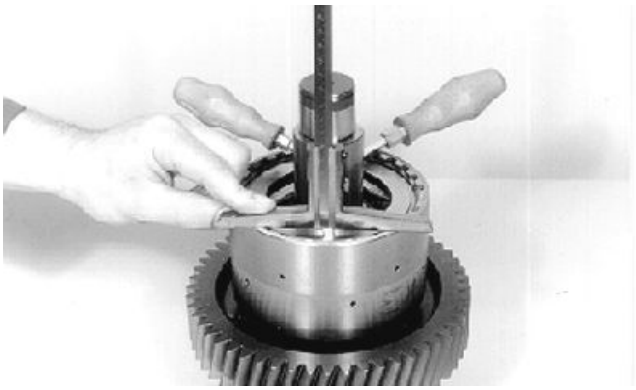

T108740 —UN—09MAY97

Clutch Pack Clearance Check

14. Reassemble clutch pack assembly.

Continued on next page

MH66O88,0000980 -19-20AUG08-11/23

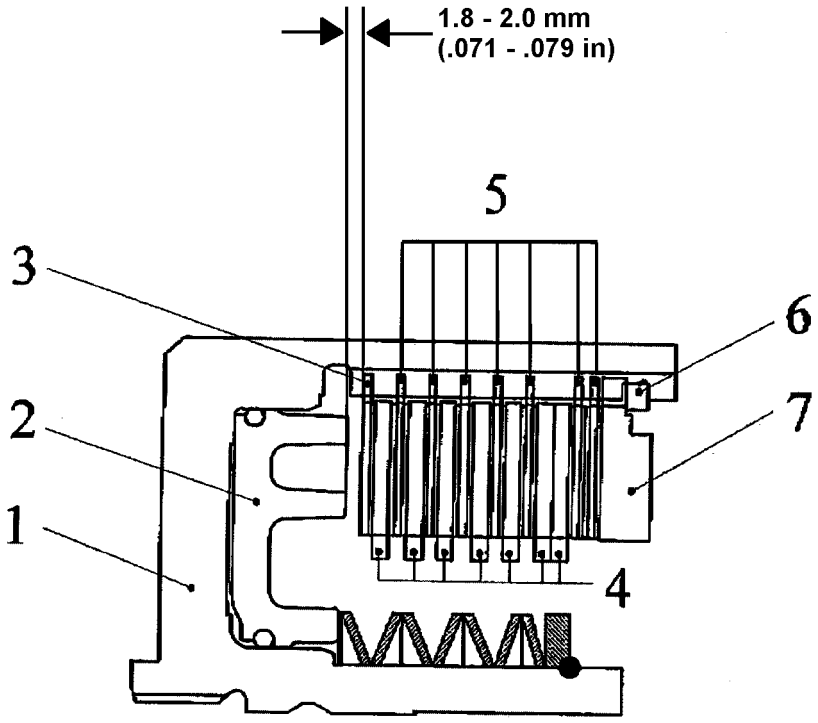

T112160

T112160 —UN—20NOV97

Clutch Packs K2 and K3

1— Plate Carrier
2— Piston
3— Disk (Friction) (One Side Fiber Coated)
4— Plate (Separator) (7 used)
5— Disk (Friction) (7 used)
6— Snap Ring
7— End Shim

IMPORTANT: Install one sided friction disk (3) with the fiber side always facing toward plate. Smooth side should be against piston.

NOTE: Plate and disk position is the same for clutches K2 and K3.

For proper adjustment of plate clearance, install disk and plates temporarily without being oiled.

15. Install one-sided fiber disk into carrier with the fiber side facing out or away from piston.

MH66O88,0000980 -19-20AUG08-12/23

16. Install plate and then disk, alternately, until five plates and five disks are installed in carrier.
17. Install two plates, then two disks.

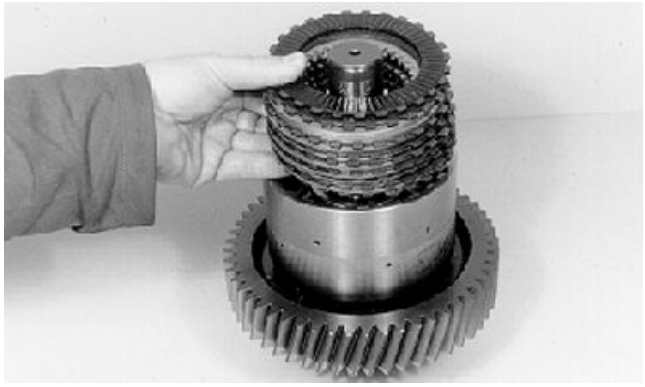

T108737 —UN—10APR97

Plates and Disks Installation

Continued on next page

MH66O88,0000980 -19-20AUG08-13/23

18. Install end shim and snap ring.

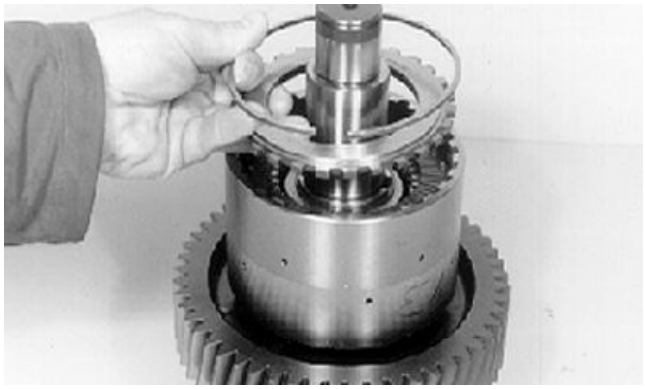

End Shim and Snap Ring Installation

MH66O88,0000980 -19-20AUG08-14/23

NOTE: For the adjustment of the plate clearance there are snap rings of different thicknesses available that can be used if proper clearance cannot be obtained. To ensure proper measuring result, install plates temporarily without oil.

19. Adjust plate clearance to specification.

Specification

K2 and K3 Clutch Pack
Plate—Clearance.....1.8—2.0 mm (0.071—0.079 in.)

a. Press end shim and measure the dimension from the end face/plate carrier to the end shim with depth gauge. Record dimension (No. 1).

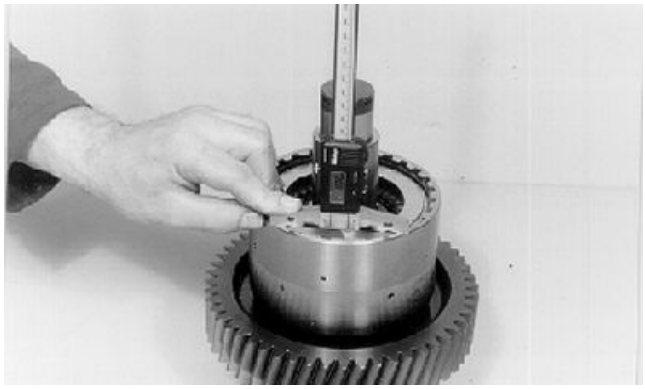

End Shim Press

MH66O88,0000980 -19-20AUG08-15/23

b. Press end shim against snap ring (upward) until contact and measure with gauge. Record dimension (No. 2).

Example for Clutch Pack Clearance Check	
Dimension No. 1	8.00 mm (0.315 in.)
Dimension No. 2	6.00 mm (0.236 in.)
Difference = Plate Clearance	2.0 mm (0.079 in.)
Specification = Pack Clearance	1.8—2.0 mm (0.071—0.079 in.)

c. If a clutch pack clearance is not to specification, correct by using the proper corresponding snap ring from service parts to increase or decrease clearance. Snap rings come in various sizes.

d. After proper clearance is obtained, remove disks and plates from assembly.

20. Add oil to plates and disks.

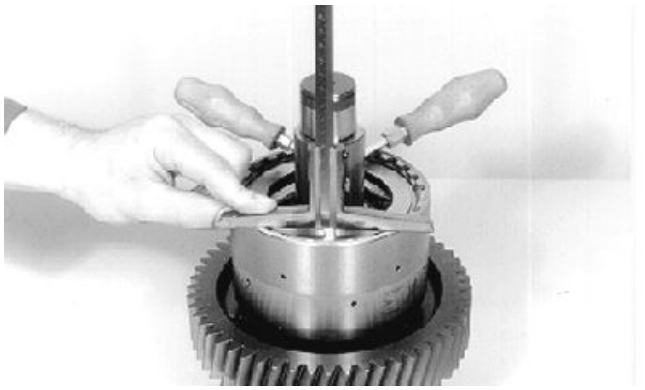

Clutch Pack Clearance Check

21. Reassemble clutch pack assembly.

Continued on next page

MH66O88,0000980 -19-20AUG08-16/23

22. Assemble thrust disk (1), thrust bearing (2), and thrust washer (3).

1— Thrust Disk
2— Thrust Bearing
3— Thrust Washer

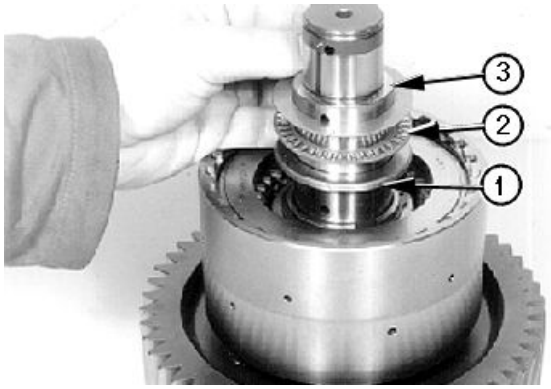

T108741 —UN—09MAY97

Thrust Disk, Bearing, and Washer

MH66O88,0000980 -19-20AUG08-17/23

23. Install both needle bearings.



T108742 —UN—09MAY97

Needle Bearings Installation

MH66O88,0000980 -19-20AUG08-18/23

24. Install idler gear until all inner plates are engaged with splines.



T108743 —UN—09MAY97

Idler Gear Installation

Continued on next page

MH66O88,0000980 -19-20AUG08-19/23

25. Install thrust washer (3), thrust bearing (2), and thrust disk (1).

NOTE: Install disk (1) with chamfer facing the thrust bearing.

26. To ensure proper assembly, top surface of thrust disk must be flush with shaft step.

1— Thrust Disk
2— Thrust Bearing
3— Thrust Washer

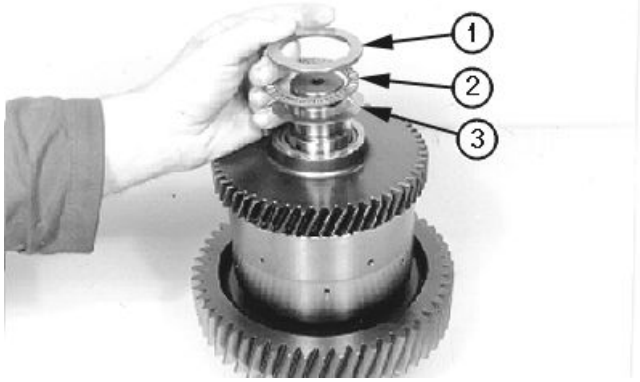

T108744 —UN—09MAY97

MH66O88,0000980 -19-20AUG08-20/23

27. Install snap ring (4).

4— Snap Ring

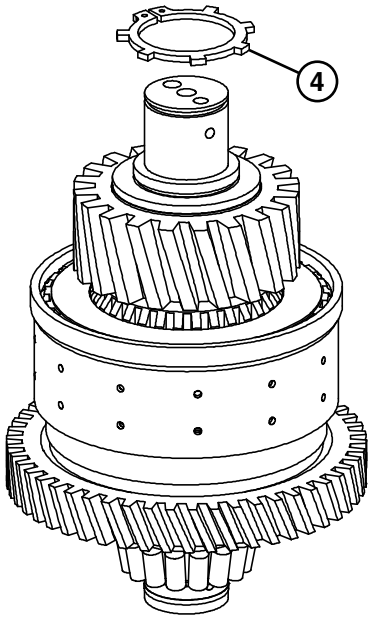

TX1042857 —UN—27MAY08

MH66O88,0000980 -19-20AUG08-21/23

28. Press tapered roller bearing against shoulder.

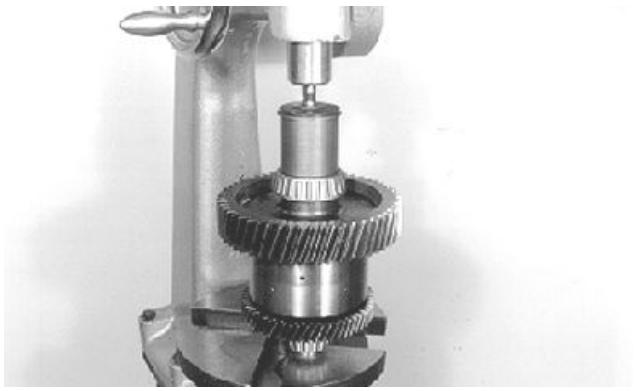

T108746 —UN—09MAY97

Tapered Roller Bearing Press

Continued on next page

MH66O88,0000980 -19-20AUG08-22/23

CAUTION: Prevent possible injury from flying debris. Clear area of bystanders, and wear personal protection equipment including eye protection.

NOTE: Make sure clutch pack components are correctly installed, apply compressed air as shown, and listen for movement of the clutch pack. The clutch pack will move freely when installed correctly.

29. Check function of clutch by means of compressed air.

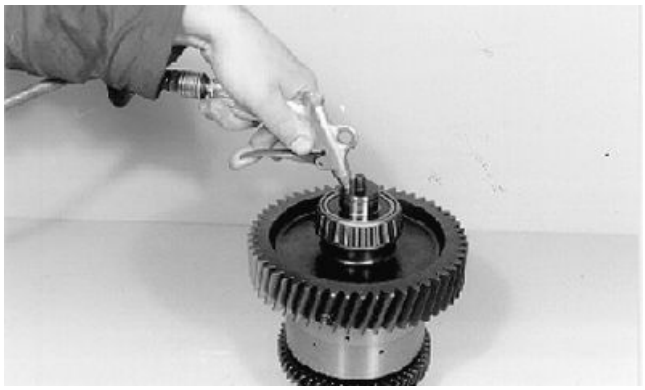

T108747 —UN—09MAY97

Function Check With Compressed Air

MH66O88,0000980 -19-20AUG08-23/23

Clutch Pack K4 Disassemble

ESSENTIAL TOOLS
JDG1035 Bearing Puller Mandrel
JDG1134 Bearing Puller
JDG1197 Bearing Puller
JDG10911 Assembly Fixture (Inner Installer and Pressure Piece)

1. Remove sealing ring.



T108768 —UN—17APR97

MH66O88,0000981 -19-15AUG08-1/5

2. Pull tapered roller bearing from the shaft with JDG1035 Bearing Puller Mandrel and JDG1134 and JDG1197 Bearing Pullers.
3. Remove opposite tapered roller bearing accordingly.

T104040 —UN—27SEP96

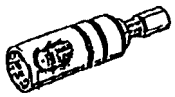

JDG-1035

T112434 —UN—10DEC97



T112434

T112434 —UN—10DEC97

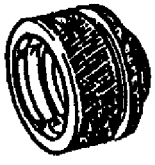

T112434

Continued on next page

MH66O88,0000981 -19-15AUG08-2/5

4. Remove snap ring and plate carrier from shaft.

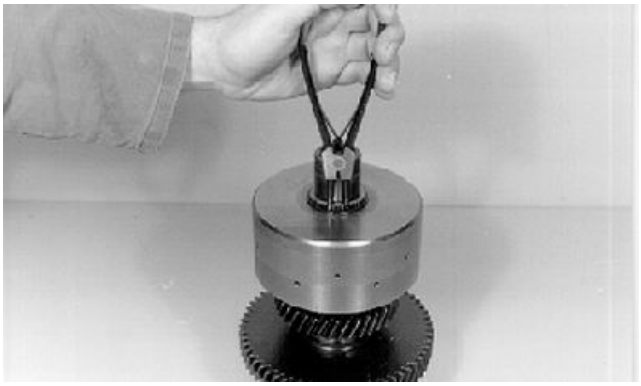

T108769 —UN—17APR97

MH66O88,0000981 -19-15AUG08-3/5

5. Remove snap ring and remove plates and disks.

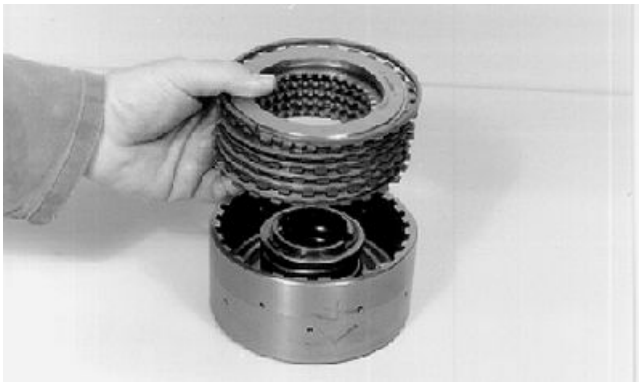

T108770 —UN—18APR97

MH66O88,0000981 -19-15AUG08-4/5

NOTE: Remove and discard L-ring. Replace with new during assembly.

6. Use JDG10911 Assembly Fixture (Inner Installer and Pressure Piece) and a press to preload compression spring.
7. Remove L-ring and components. Remove piston.



T108983 —UN—14APR97

MH66O88,0000981 -19-15AUG08-5/5

Clutch Pack K4 Assemble

SPECIFICATIONS	
K4 Clutch Pack Shaft Temperature	Cools at -80°C -112°F
K4 Clutch Pack Gear Temperature	Heats at 120°C 248°F
Shaft Stud Torque	17 Nm 150 lb-in.
K4 Clutch Pack Plate Clearance	1.2—1.4 mm 0.047—0.055 in.

ESSENTIAL TOOLS
JDG10911 Assembly Fixture (Inner Installer and Pressure Piece)
JDG10910 Assembly Aid

OTHER MATERIAL
242 LOCTITE® Thread Lock and Sealer (Medium Strength)

NOTE: Gear is a very tight press fit. Shaft or gear may be damaged if pressed apart.

1. Cool shaft to specification. Heat gear to specification and install it until bottomed.

LOCTITE is a trademark of Henkel Corp.

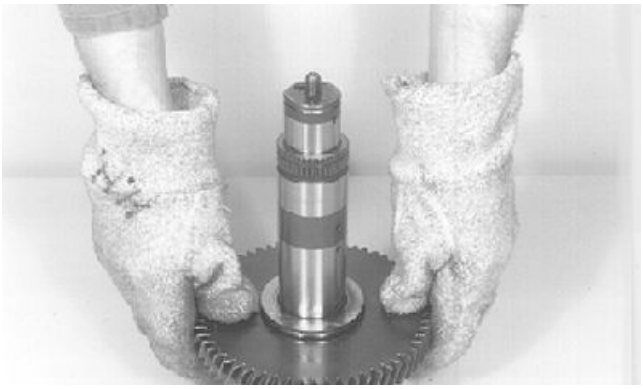

T108748 —UN—14APR97

Specification

K4 Clutch Pack Shaft—Temperature.....Cools at -80°C -112°F

K4 Clutch Pack Gear—Temperature.....Heats at 120°C 248°F

MH66O88,0000982 -19-15AUG08-1/20

2. Install snap ring to retain gear.



T108749 —UN—14APR97

Snap Ring Installation

MH66O88,0000982 -19-15AUG08-2/20

3. Apply PM37477 Thread Lock and Sealer (medium strength) to stud.
4. Install shaft stud to end of shaft. Tighten to specification.

Specification

Shaft Stud—Torque.....17 Nm 150 lb-in.



T108750 —UN—29APR97

Continued on next page

MH66O88,0000982 -19-15AUG08-3/20

IMPORTANT: Check function of the drain valve. Check function of drain ball. Ball must move freely. If ball does not move freely, check for contamination or replace.

5. Install new O-rings into the ID and OD of the piston as shown. Lightly oil O-rings before installing piston.

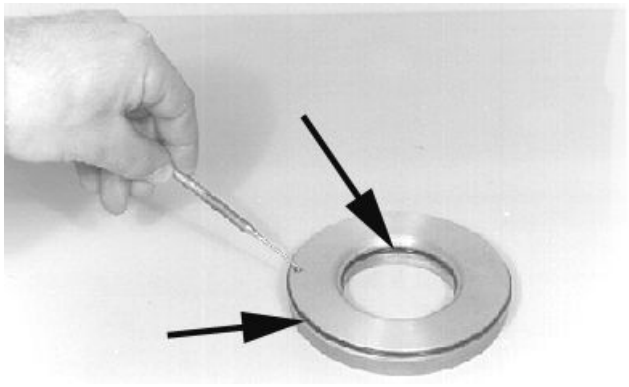

T108981 —UN—29APR97

MH66O88,0000982 -19-15AUG08-4/20

6. Assemble piston until contact is made with bottom of disk carrier.



T108982 —UN—14APR97

MH66O88,0000982 -19-15AUG08-5/20

NOTE: Always install new L-ring during assembly of clutch pack.

7. Install compression spring and spring guides into disk carrier.
8. Use JDG10911 Assembly Fixture (Inner Installer and Pressure Piece) and JDG10910 Assembly Aid in a press to preload compression spring. Install new L-ring into disk carrier groove.



T108983 —UN—14APR97

Continued on next page

MH66O88,0000982 -19-15AUG08-6/20

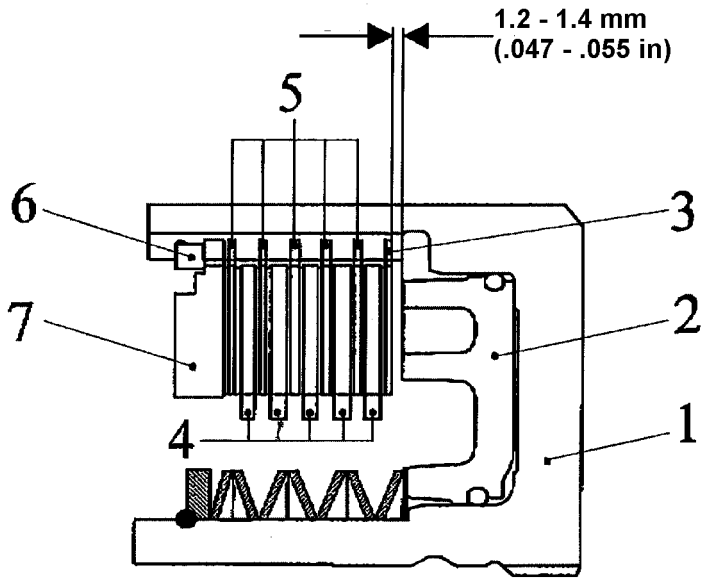

T112159

T112159 —UN—20NOV97

Clutch Packs K4

1— Plate Carrier
2— Piston
3— Disk (Friction) (One Side Fiber Coated)
4— Plate (Separator) (5 used)
5— Disk (Friction) (5 used)
6— Snap Ring
7— End Shim

IMPORTANT: Install one sided friction disk (3) with fiber side always facing toward the plate. Smooth side should be against piston.

NOTE: For proper adjustment of plate clearance, install disk and plates temporarily without being oiled.

9. Install one sided fiber disk into carrier with the fiber side facing out or away from piston.

MH66O88,0000982 -19-15AUG08-7/20

10. Install plate and then disk alternately until five plates and five disks are installed in carrier.

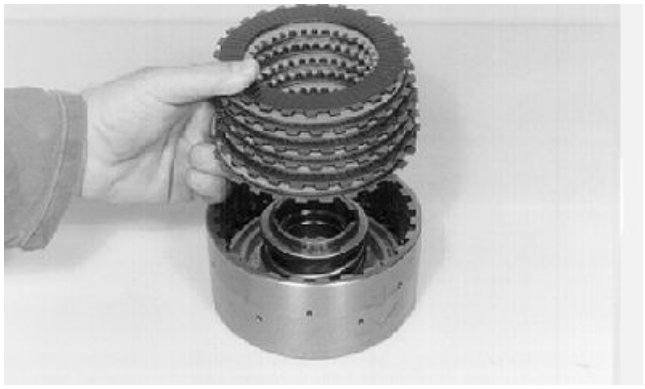

T108984 —UN—14APR97

Continued on next page

MH66O88,0000982 -19-15AUG08-8/20

NOTE: For the adjustment of plate clearance, there are snap rings of different thicknesses available that can be used if proper clearance is unable to be obtained. To ensure proper measuring result, install plates temporarily without oil.

11. Install end shim and snap ring.

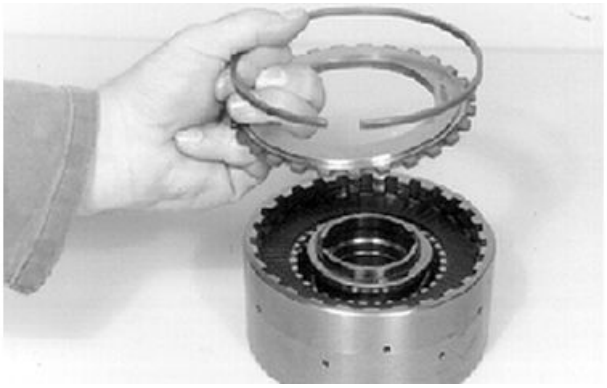

T108985 —UN—09MAY97

MH66O88,0000982 -19-15AUG08-9/20

12. Adjust plate clearance to specification.

Specification

K4 Clutch Pack
Plate—Clearance.....1.2—1.4 mm
0.047—0.055 in.

a. Press end shim and measure the dimension from the end face/plate carrier to the end shim with a depth gauge. Record dimension (No. 1).

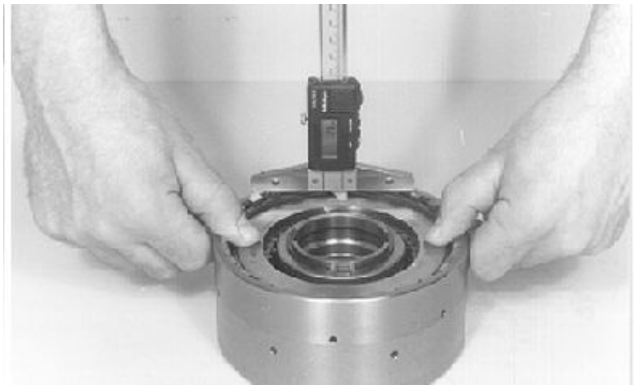

T108986 —UN—14APR97

MH66O88,0000982 -19-15AUG08-10/20

b. Press end shim against snap ring (upward) until contact and measure with gauge. Record dimension (No. 2).

Example for Clutch Pack Clearance Check	
Dimension No. 1	7.20 mm (0.283 in.)
Dimension No. 2	6.00 mm (0.236 in.)
Difference = Plate Clearance	1.2 mm (0.047 in.)
Specification = Pack Clearance	1.2—1.4 mm (0.047—0.055 in.)

c. If clutch pack clearance is not in specification, correct by using the proper corresponding snap ring from service parts to increase or decrease clearance. After proper clearance is obtained, remove disk and plates from assembly.

13. Add oil to plates and disks.

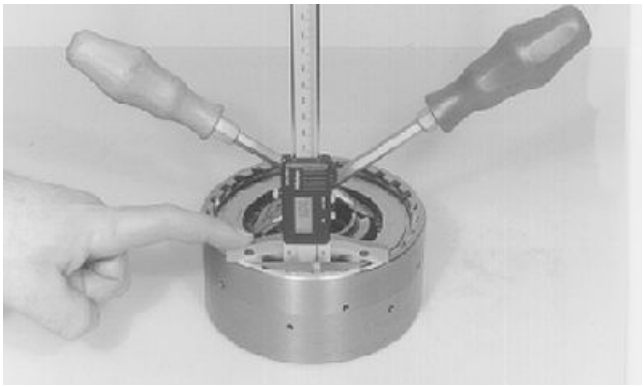

T108987 —UN—14APR97

14. Assemble clutch pack assembly.

Continued on next page

MH66O88,0000982 -19-15AUG08-11/20

15. Install idler gear until inner plates are meshed with splines.
16. Remove idler gear.



T108988 —UN—14APR97

MH66O88,0000982 -19-15AUG08-12/20

17. Install thrust washers and bearing.

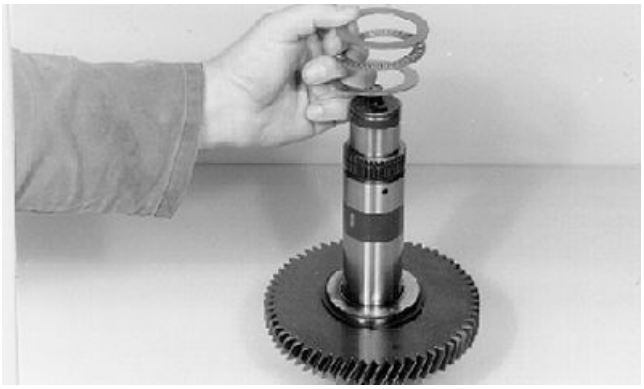

T108989 —UN—14APR97

MH66O88,0000982 -19-15AUG08-13/20

18. Install two needle bearings.



T108990 —UN—14APR97

Continued on next page

MH66O88,0000982 -19-15AUG08-14/20

19. Assemble idler gear.

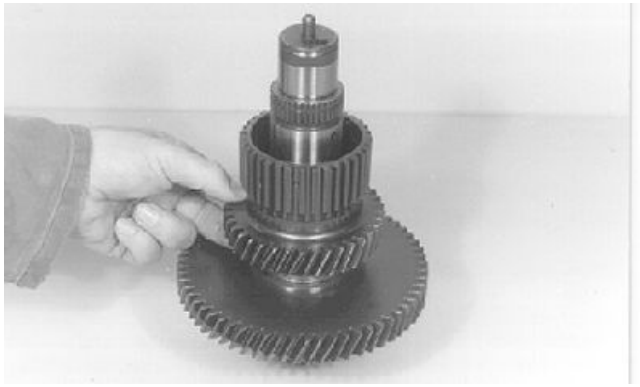

T108991 —UN—14APR97

MH66O88,0000982 -19-15AUG08-15/20

NOTE: Install thrust disk (1) with chamfer facing thrust washer.

20. Install thrust washer (3), bearing (2), and disk (1).

1— Disc
2— Bearing
3— Thrust Washer

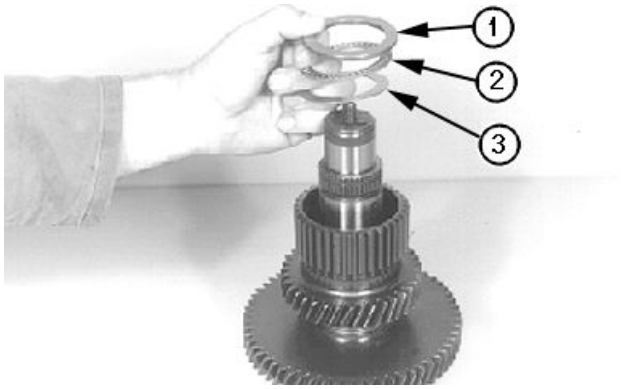

T108992 —UN—29APR97

MH66O88,0000982 -19-15AUG08-16/20

21. Assemble K4 carrier assembly onto shaft until seated and all plates are engaged.

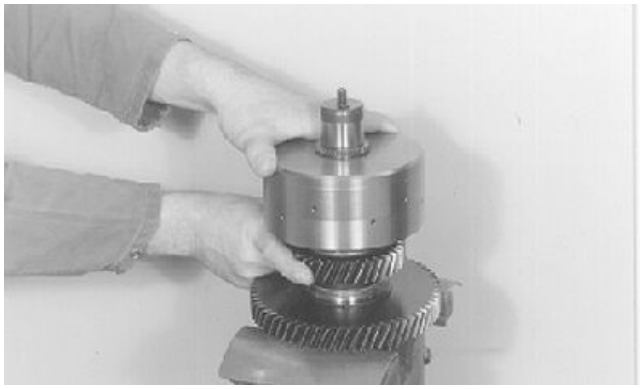

T108993 —UN—14APR97

Continued on next page

MH66O88,0000982 -19-15AUG08-17/20

22. Install snap ring to retain plate.



T108994 —UN—14APR97

MH66O88,0000982 -19-15AUG08-18/20

23. Press tapered roller bearing against shoulder. Install opposite tapered roller bearing.



T108995 —UN—14APR97

MH66O88,0000982 -19-15AUG08-19/20

CAUTION: Prevent possible injury from flying debris. Reduce compressed air pressure to less than 210 kPa (2 bar) (30 psi) when using for cleaning purposes. Clear area of bystanders, guard against flying chips, and wear personal protection equipment including eye protection.

NOTE: Make sure clutch pack components are correctly installed, apply compressed air as shown, and listen for movement of the clutch pack. The clutch pack will move freely when installed correctly.

24. Check function of clutch by means of compressed air.



T108996 —UN—14APR97

MH66O88,0000982 -19-15AUG08-20/20

Input Shaft Disassemble

ESSENTIAL TOOLS
JDG1035 Basic Set for Bearing Puller (Mandrel)
JDG1134 Bearing Puller

NOTE: The turbine shaft is axially fixed by means of a snap ring. The snap ring will be destroyed when pressing the turbine shaft out of the input shaft.

1. If necessary, press the turbine shaft out of the input shaft.
2. Remove rectangular ring (1).
3. Remove the tapered roller bearings (2) using JDG1035 Mandrel and JDG1134 Bearing Puller.

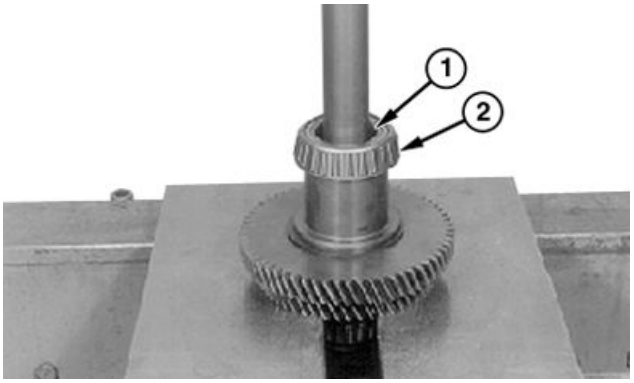

TX1021155A —UN—27MAR07

Remove Tapered Roller Bearings

1— Rectangular Ring

2— Tapered Roller Bearing (2 used)

MH66O88,0000727 -19-06APR11-1/2

4. Remove snap ring (3). Using a press, remove input shaft gear (4) from input shaft (5) .
5. Repair or replace parts as necessary.

3— Snap Ring

4— Input Shaft Gear

5— Input Shaft



TX1021169A —UN—28MAR07

Shaft-to-Gear Assembly

MH66O88,0000727 -19-06APR11-2/2

Input Shaft Assemble

CAUTION: Prevent possible burn injury. Hot equipment and fluids can cause burns to unprotected skin. Wear gloves and protective clothes when working with hot equipment and fluids.

1. Cool the input shaft to about -80°C (-112°F). Heat the input gear to about 120°C (250°F) and assemble gear to shaft until seated.
2. Install snap ring to retain input shaft gear.
3. Install snap ring (6) into recess on turbine shaft (7).

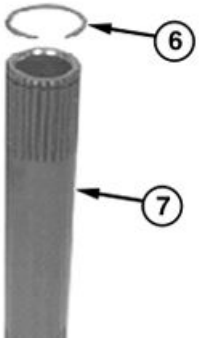

TX1021177A —UN—28MAR07

Snap Ring Installation

6— Snap Ring

7— Snap Ring Recess

Continued on next page

MH66O88,0000728 -19-18FEB08-1/6

4. Install turbine shaft (9) into input shaft. Make sure snap ring “snaps” into groove of input shaft.

8— Turbine Shaft **9— Snap Ring Recess**

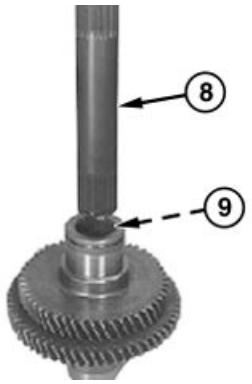

TX1021178A —UN—28MAR07

Turbine Shaft Installation

MH66O88,0000728 -19-18FEB08-2/6

NOTE: Tapered roller bearings must contact shoulder on input shaft.

5. Press both bearing inner races against shoulder of input shaft.

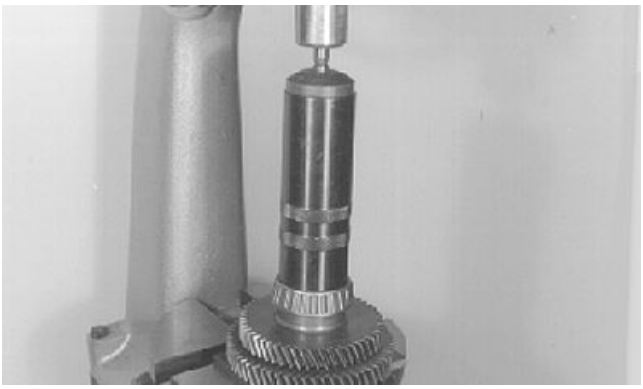

T109001 —UN—09MAY97

Press On Bearings

MH66O88,0000728 -19-18FEB08-3/6

6. Install ball bearing and sealing ring to turbine shaft.



TX1021179A —UN—28MAR07

Install Bearing

Continued on next page

MH66O88,0000728 -19-18FEB08-4/6

7. Install output shaft into housing bore until seated.



Install Output Shaft

MH66O88,0000728 -19-18FEB08-5/6

NOTE: If bearings are reused, they must be installed in the same bores they were removed from.

8. Install bearings.

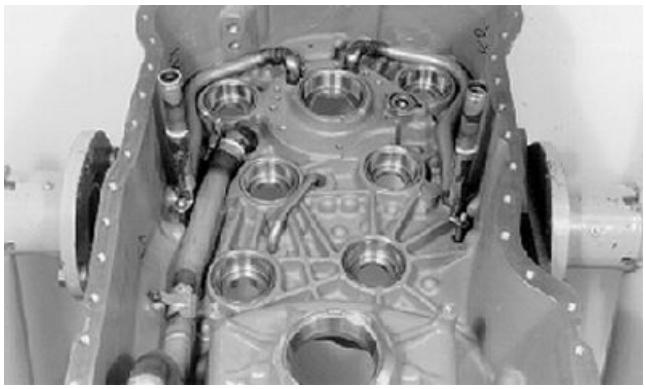

Transmission Bearing Bores

MH66O88,0000728 -19-18FEB08-6/6

Transmission Speed Sensors Remove and Install

SPECIFICATIONS	
Sensor Torque	30 N·m 22 lb-ft

1. Prepare machine for service. See Park and Prepare for Service Safely. (Group 0001.)
2. Disconnect transmission harness (W10) from sensor. See Transmission Harness (W10) Component Location. (Group 9015-10.)
3. Remove sensor.
4. Repair or replace as necessary.
5. Apply PM37418 Thread Lock and Sealer (medium strength) Loctite® to threads of sensor.
6. Install sensor to transmission. Tighten sensor to specification.

Specification

Sensor—Torque.....30 N·m
22 lb-ft

7. Connect transmission harness (W10) to sensor. See Transmission Harness (W10) Component Location. (Group 9015-10.)

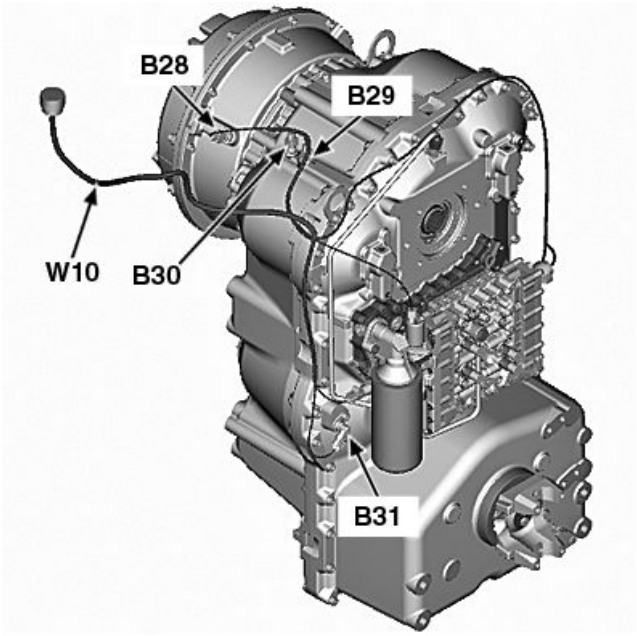

TX1086865A —UN—13JAN11

Transmission

B28— Torque Converter Input Speed Sensor
B29— Torque Converter Output Speed Sensor
B30— Internal Clutch Speed Sensor
B31— Transmission Output Shaft Speed Sensor
W10—Transmission Harness

Loctite is a trademark of Henkel Corporation

TK40086,0000854 -19-13JAN11-1/1

Transmission Pump Remove and Install

SPECIFICATIONS	
Socket Head Cap Screw Torque	46 N·m 34 lb-ft
Pump Cap Screw Torque	25 N·m 221 lb-in.

ESSENTIAL TOOLS
JDG10840 Transmission Seal Installer

SERVICE EQUIPMENT AND TOOLS
Puller

1. Remove socket head cap screws.

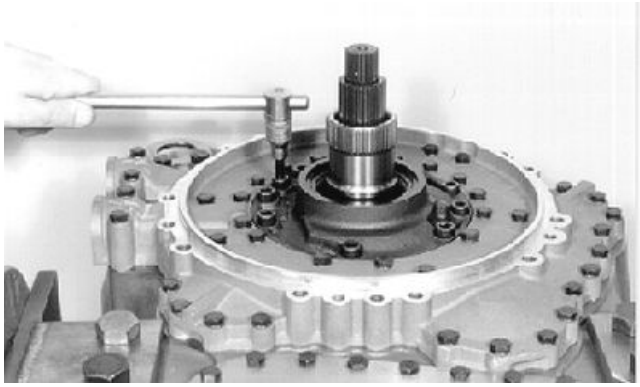
T108730 —UN—17APR97

Transmission Pump

RM58335,000127F -19-19JAN11-1/15

2. Install puller on the recess below the splines of the stator shaft. Pull pump assembly out of the housing bore.

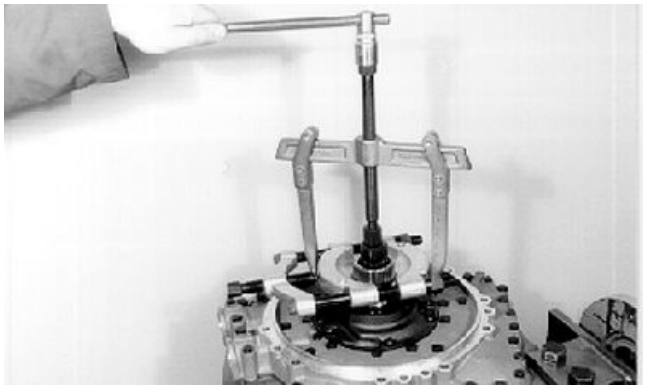
T108731 —UN—17APR97

Pump Assembly Removal

Continued on next page

RM58335,000127F -19-19JAN11-2/15

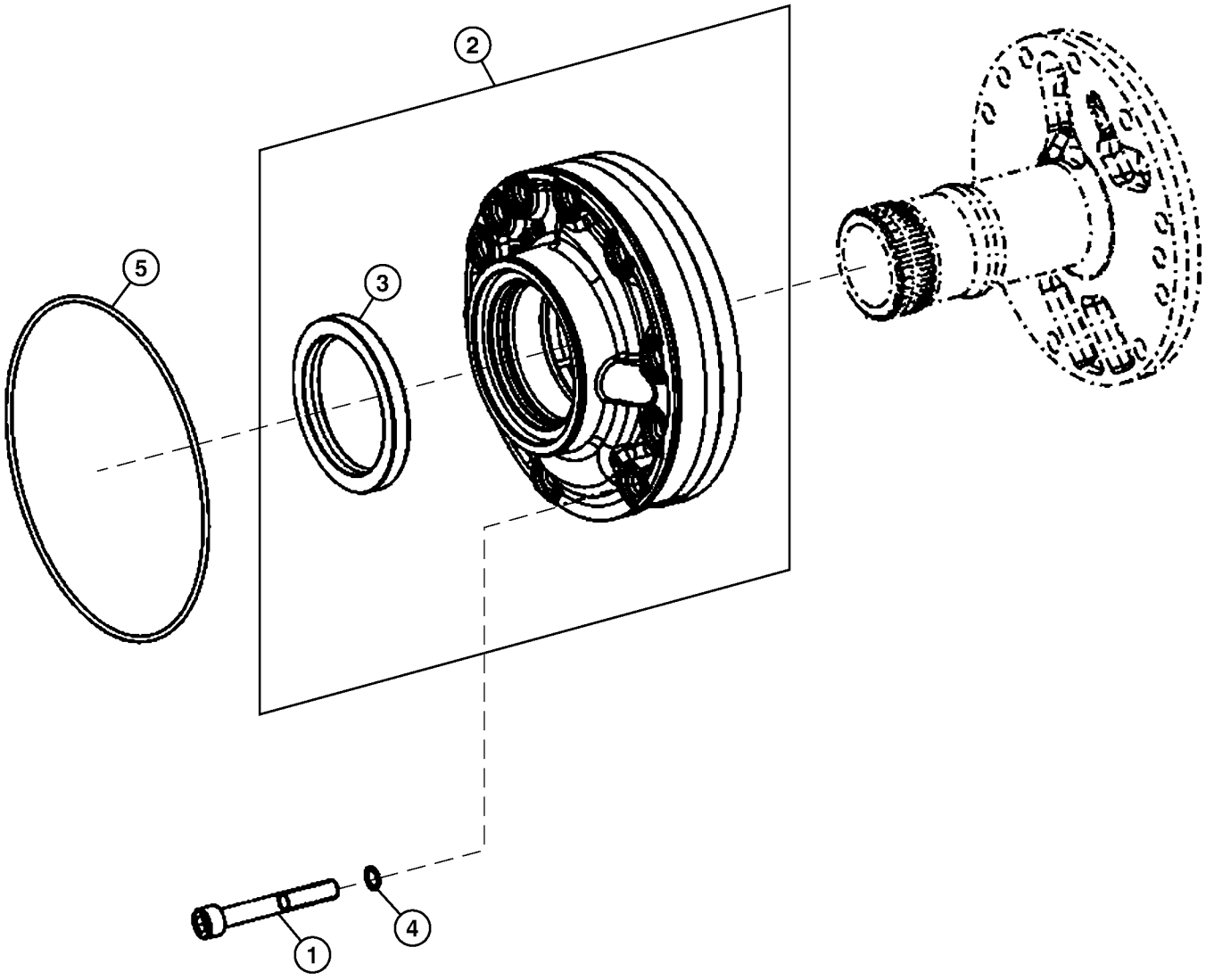

TX1035549 —UN—30JAN08

TX1035549

Transmission Pump Assembly

1— Cap Screw (10 used)
2— Oil Pump
3— Seal
4— O-Ring (10 used)
5— O-Ring

Continued on next page

RM58335,000127F -19-19JAN11-3/15

IMPORTANT: Avoid transmission damage. If signs of wear are noticed within the pump housing or the cam disk, the complete pump must be replaced.

3. Remove transmission pump from stator.

RM58335,000127F -19-19JAN11-4/15

4. Remove cam plate from pump. Observe drive gear spline location and two small dowel pins.

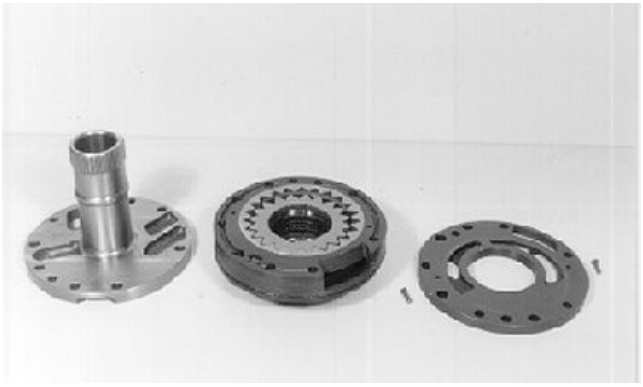

T108732 —UN—17APR97

Transmission Pump Components

RM58335,000127F -19-19JAN11-5/15

5. Loosen cap screws and remove oil feed housing.
6. Remove flat gasket.
7. Inspect and replace parts as required.
8. Install cam disk and retain it by means of grooved pins (2 used).

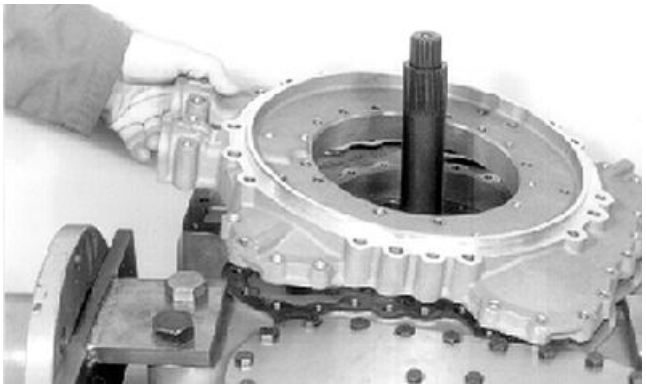

T108725 —UN—17APR97

Remove Oil Feed Housing

RM58335,000127F -19-19JAN11-6/15

9. Install alignment studs (1) and install flat gasket.

1— Alignment Stud (2 used)



TX1028774A —UN—29AUG07

Install Oil Feed Housing

Continued on next page

RM58335,000127F -19-19JAN11-7/15

NOTE: Install cap screws until contact is obtained. Do not tighten.

10. Install oil feed housing, washers and cap screws.
11. Leave loose at this time. This allows for oil pump alignment later in assembly.

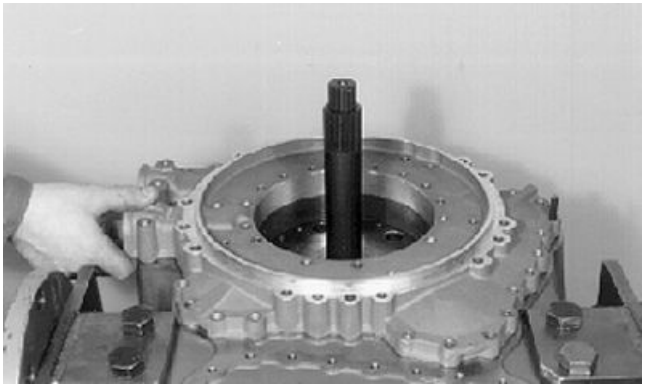

T109086 —UN—15APR97

Oil Feed Housing

RM58335,000127F -19-19JAN11-8/15

NOTE: Observe overlapping of the bores.

12. Install alignment studs and stator shaft until it is bottomed in housing.

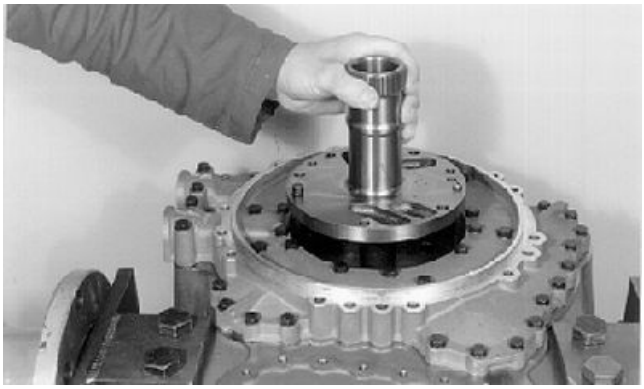

T109087 —UN—15APR97

RM58335,000127F -19-19JAN11-9/15

13. Using JDG10840 Transmission Seal Installer (2), install transmission pump seal (3).

2— JDG10840 Transmission Seal Installer

3— Transmission Pump Seal

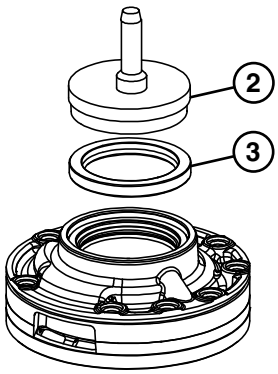

TX1047325 —UN—10SEP08

Transmission Pump Seal

Continued on next page

RM58335,000127F -19-19JAN11-10/15

14. Lubricate and install O-ring (4).

4— O-Ring

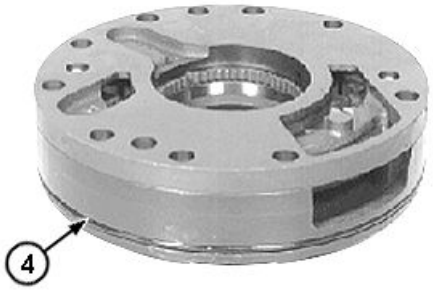

TX1047323A —UN—19AUG08

Lubricate and Install O-Ring

RM58335,000127F -19-19JAN11-11/15

IMPORTANT: Avoid transmission pump failure. Do not tighten assembly screws, they are used to hold pump together for installation and are not to be torqued or removed.

15. Install transmission pump.

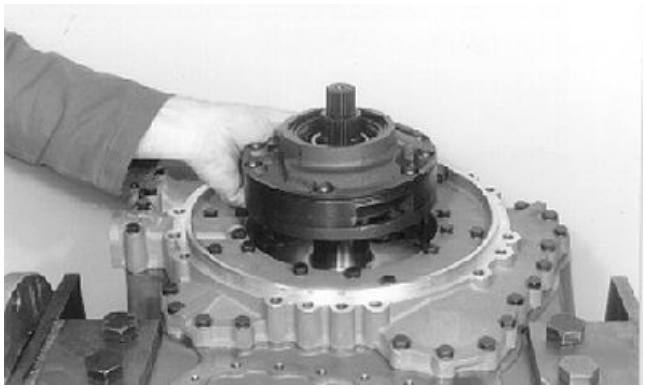

T109089 —UN—15APR97

Transmission Pump

RM58335,000127F -19-19JAN11-12/15

NOTE: Apply multipurpose grease to O-rings.

16. Install new O-rings (5) to socket head cap screws.

5— O-Ring



TX1047324A —UN—19AUG08

Socket Head Screws

Continued on next page

RM58335,000127F -19-19JAN11-13/15

17. Install transmission pump and socket head cap screws.

Specification	
Socket Head Cap Screw—Torque	46 N·m 34 lb-ft

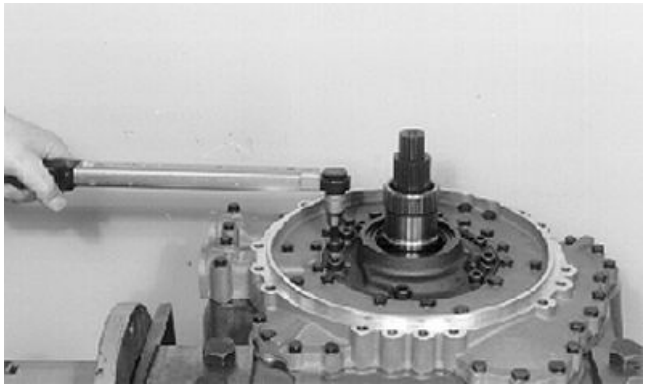

T109091 —UN—15APR97

Transmission Pump

RM58335,000127F -19-19JAN11-14/15

NOTE: Note locations of hanger strap from original location.

18. Tighten cap screws to specification.

Specification	
Pump Cap Screw—Torque	25 N·m 221 lb-in.

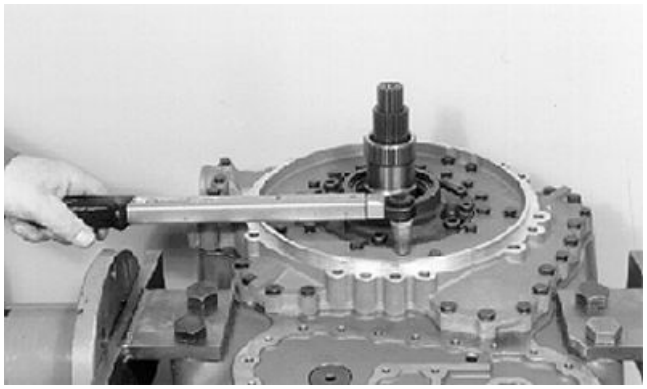

T109092 —UN—15APR97

Transmission Pump

RM58335,000127F -19-19JAN11-15/15

Converter Minimum Pressure Regulator Valve Remove and Install

1. Remove transmission pump. See Transmission Pump Remove and Install. (Group 0360.)
2. Remove converter minimum pressure regulator valve from housing bore.

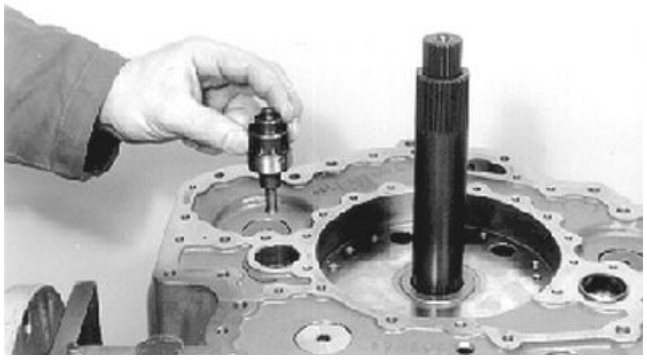

T108726 —UN—17APR97

Continued on next page

RM58335,0001219 -19-03JAN11-1/2

NOTE: Pressure must be relieved on roll pin (4) before removing.

3. Preload the compression spring (2), and remove roll pin (4) from the pressure regulator valve.
4. Inspect and replace parts as required.
5. Install pre-assembled converter minimum pressure regulator valve into housing bore.

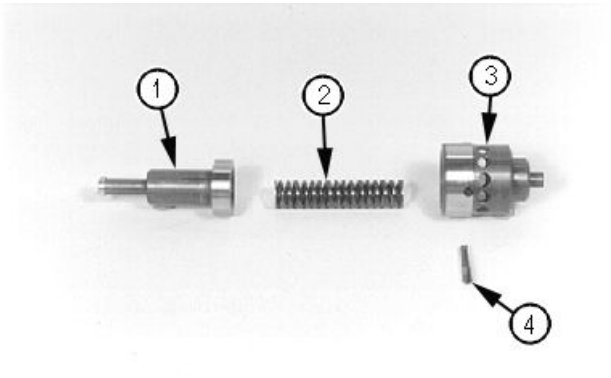

T109082 —UN—29APR97

1— Piston
2— Compression Spring
3— Valve Insert
4— Roll Pin

RM58335,0001219 -19-03JAN11-2/2

Transmission Hydraulic Control Valve Remove and Install

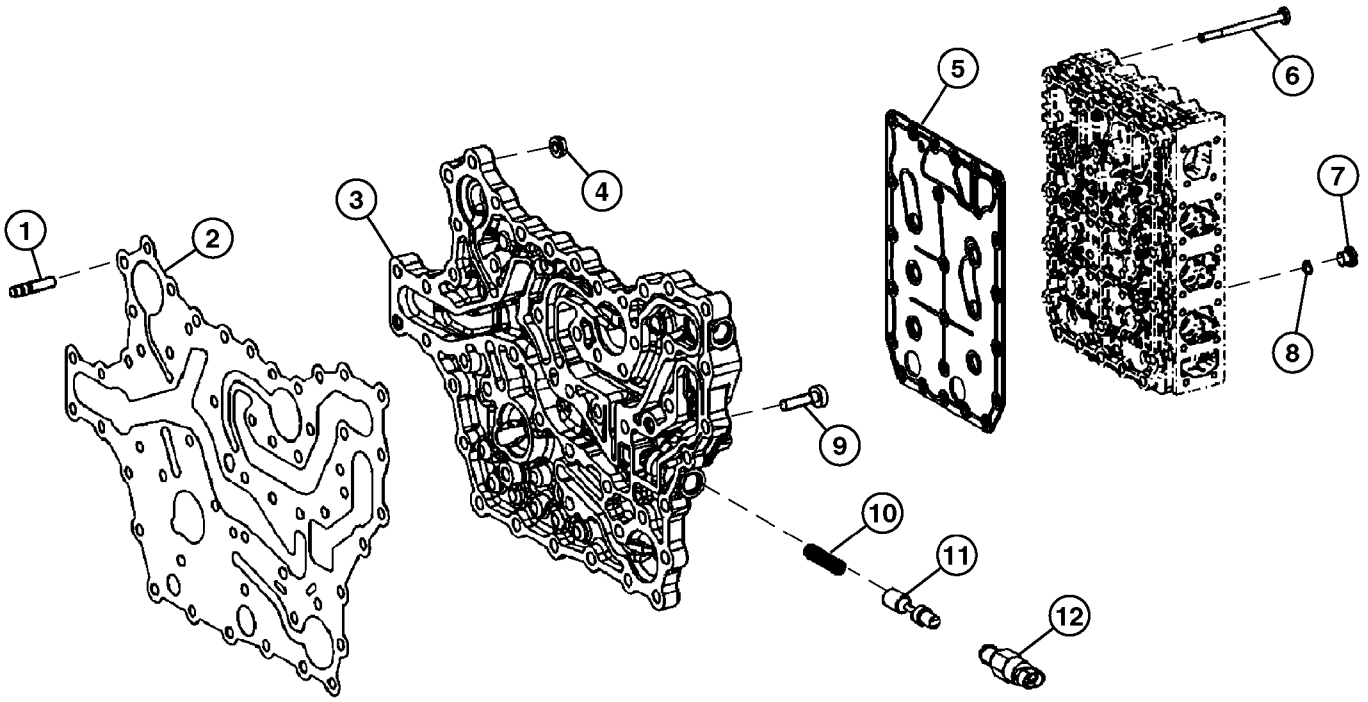

TX1048258 —UN—09SEP08

TX1048258

Transmission Hydraulic Control Valve Assembly

1— Stud (14 used)
2— Gasket
3— Manifold Plate
4— Nut (14 used)
5— Plate
6— Cap Screw (23 used)
7— Plug
8— O-Ring (8 used)
9— Cap Screw (36 used)
10— Spring
11— Valve Spool
12— Pressure Switch

SPECIFICATIONS	
Manifold Plate Cap Screw Torque	23 N·m 204 lb-in.
Manifold Plate Nut Torque	23 N·m 204 lb-in.
Transmission Control Valve Mounting Cap Screw Torque	9.5 N·m 84 lb-in.
Torque Converter Lockup Solenoid Valve Fitting Torque	35 N·m 25 lb-ft
System Pressure-to-Torque Converter Lockup Solenoid Banjo Bolt Torque	45 N·m 33 lb-ft
System Pressure-to-Torque Converter Lockup Solenoid Fitting Torque	35 N·m 25 lb-ft
Transmission Oil Filter Manifold Cap Screw Torque	35 N·m 25 lb-ft

1. Prepare machine for service. Park and Prepare for Service Safely. (Group 0001.)
2. Remove main hydraulic pump. See Main Hydraulic Pump Remove and Install. (Group 3160.)

Continued on next page

RM58335,000121A -19-10JAN11-1/10

3. Disconnect electrical connector from torque converter lockup solenoid (Y27) (if equipped).
4. Remove transmission oil filter (15) and transmission oil filter manifold (14).

14— Transmission Oil Filter Manifold
15— Transmission Oil Filter
Y27— Torque Converter Lockup Solenoid

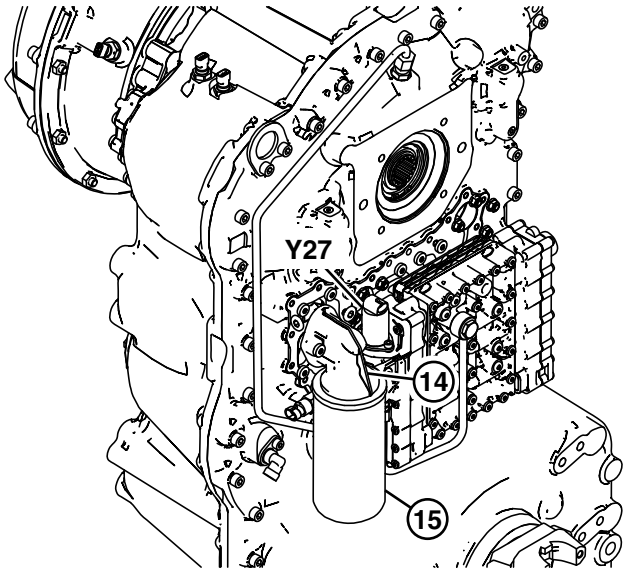

TX1086370

Transmission Oil Filter

RM58335,000121A -19-10JAN11-2/10

5. Remove banjo bolt (16) and system pressure-to-torque converter lockup solenoid valve supply line (17) (if equipped).
6. Disconnect torque converter lockup solenoid valve-to-torque converter lockup supply line (18) (if equipped).

16— Banjo Bolt
17— System Pressure-to-Torque Converter Lockup Solenoid Valve Supply Line
18— Torque Converter Lockup Solenoid Valve-to-Torque Converter Lockup Supply Line

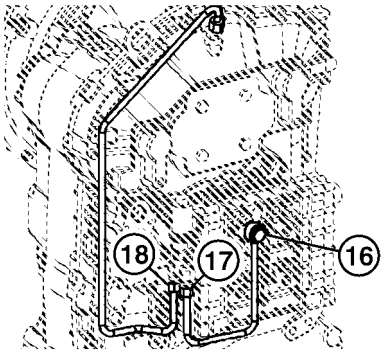

Continued on next page

RM58335,000121A -19-10JAN11-3/10

7. Replace any two cap screws (6) with alignment studs.
8. Remove the remaining cap screws and remove control valve from manifold plate (3).
9. Remove plate (5).

6— Cap Screw (23 used)

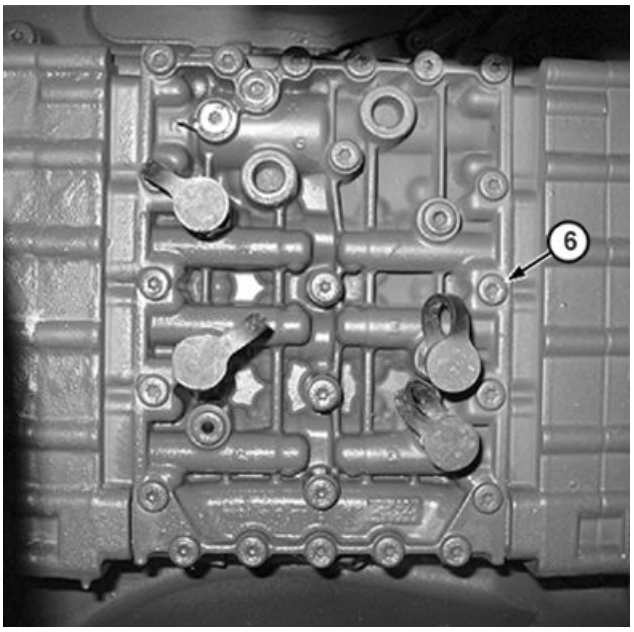

TX1048486A —UN—10SEP08

RM58335,000121A -19-10JAN11-4/10

10. Remove manifold plate and gasket (2) from the transmission housing.
11. Clean and inspect parts. Repair parts as necessary. See Transmission Hydraulic Control Valve Disassemble and Assemble. (Group 0360.)

2— Gasket **3— Manifold Plate**

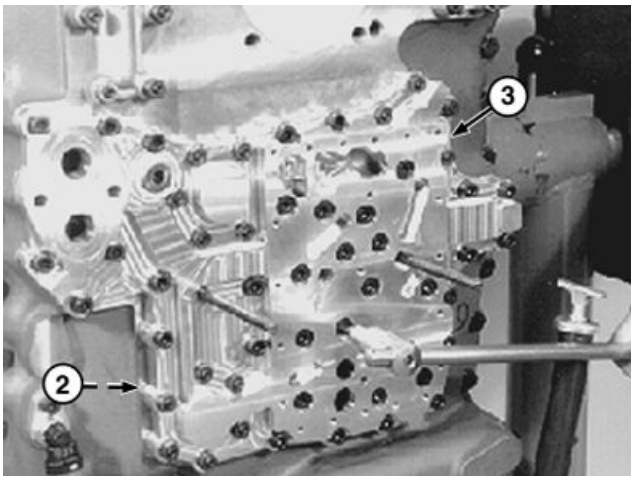

TX1029379A —UN—13SEP07

Continued on next page

RM58335,000121A -19-10JAN11-5/10

12. Clean mating surfaces on transmission and manifold plate.

3— Manifold Plate

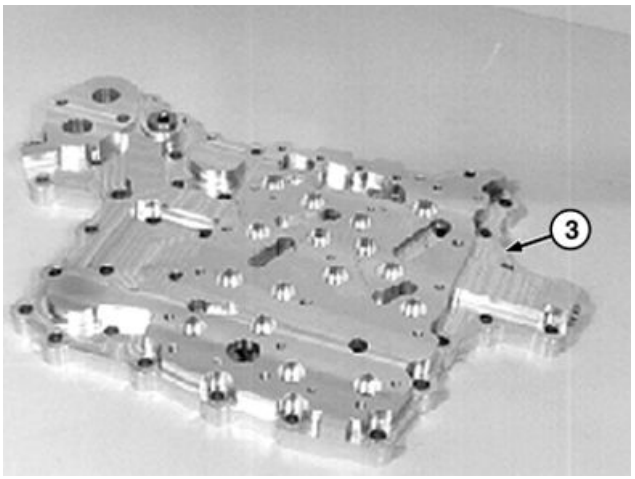

TX1029382A —UN—17SEP07

RM58335,000121A -19-10JAN11-6/10

13. Install gasket and manifold plate to the transmission housing.
14. Install cap screws (9) and nuts (4). Tighten to specification.

Specification	
Manifold Plate Cap Screw—Torque	23 N·m 204 lb-in.
Manifold Plate Nut—Torque	23 N·m 204 lb-in.

15. Install alignment studs to the manifold plate.
16. Install plate to the manifold plate.

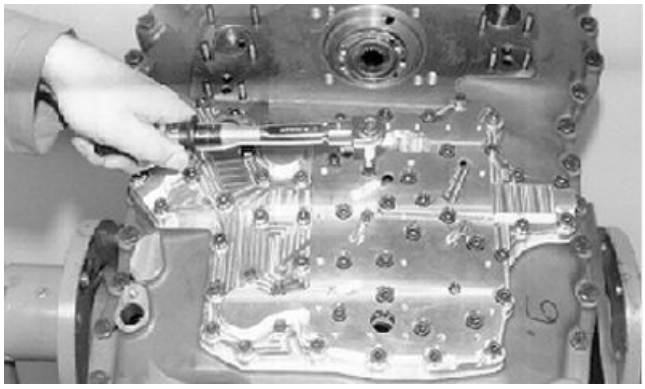

T109107 —UN—15APR97

Continued on next page

RM58335,000121A -19-10JAN11-7/10

17. Install the transmission control valve with cap screws. Tighten cap screws to specification.

Specification

Transmission Control Valve Mounting Cap Screw—Torque.....9.5 N·m
84 lb-in.

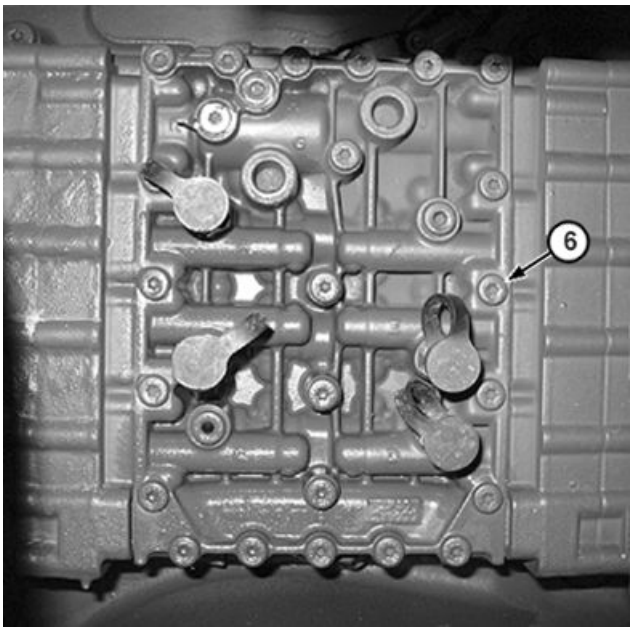

TX1048486A —UN—10SEP08

6— Cap Screw (23 used)

RM58335,000121A -19-10JAN11-8/10

18. Connect torque converter lockup solenoid valve-to-torque converter lockup supply line (if equipped). Tighten fitting to specification.

Specification

Torque Converter Lockup Solenoid Valve Fitting—Torque.....35 N·m
25 lb-ft

19. Install system pressure-to-torque converter lockup solenoid valve supply line to transmission control valve with banjo bolt. Tighten banjo bolt to specification (if equipped).

Specification

System Pressure-to-Torque Converter Lockup Solenoid Banjo Bolt—Torque.....45 N·m
33 lb-ft

20. Connect system pressure-to-torque converter lockup solenoid valve supply line (if equipped). Tighten fitting to specification.

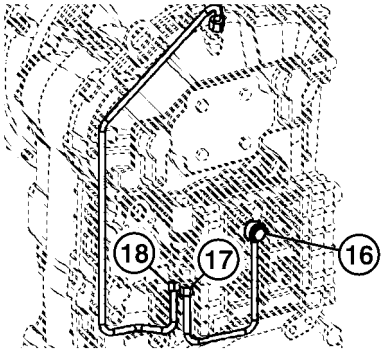

TX1049192 —UN—24SEP08

16— Banjo Bolt
17— System Pressure-to-Torque Converter Lockup Solenoid Valve Supply Line
18— Torque Converter Lockup Solenoid Valve-to-Torque Converter Lockup Supply Line

Specification

System Pressure-to-Torque Converter Lockup Solenoid Fitting—Torque.....35 N·m
25 lb-ft

Continued on next page

RM58335,000121A -19-10JAN11-9/10

21. Install transmission oil filter manifold and O-rings with cap screws. Tighten to specification.

Specification	
Transmission Oil Filter Manifold Cap Screw—Torque	35 N·m 25 lb-ft

NOTE: Apply oil to seal. Tighten until seal contacts manifold, then tighten by hand an additional one-third to one-half rotation.

22. Install transmission oil filter.
23. Connect electrical connector to torque converter lockup solenoid valve (if equipped).
24. Install main hydraulic pump. See Main Hydraulic Pump Remove and Install. (Group 3160.)

14— Transmission Oil Filter Manifold
15— Transmission Oil Filter
Y27— Torque Converter Lockup Solenoid

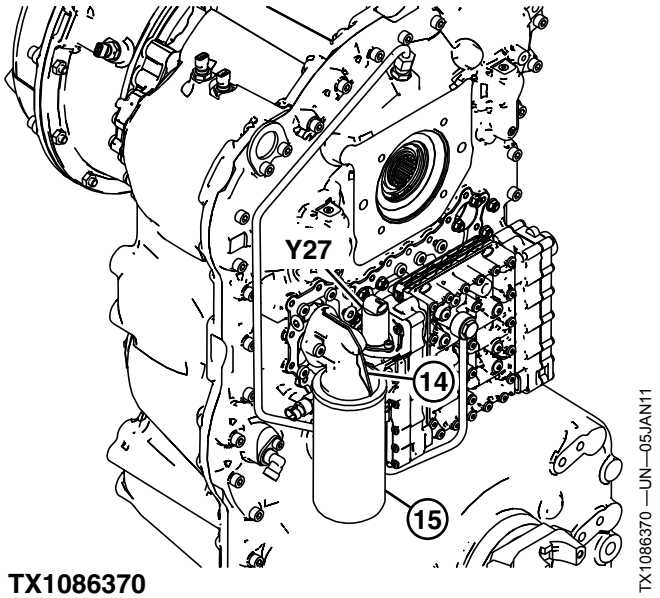

TX1086370

Transmission Oil Filter

RM58335,000121A -19-10JAN11-10/10

Transmission Hydraulic Control Valve Cross Section View

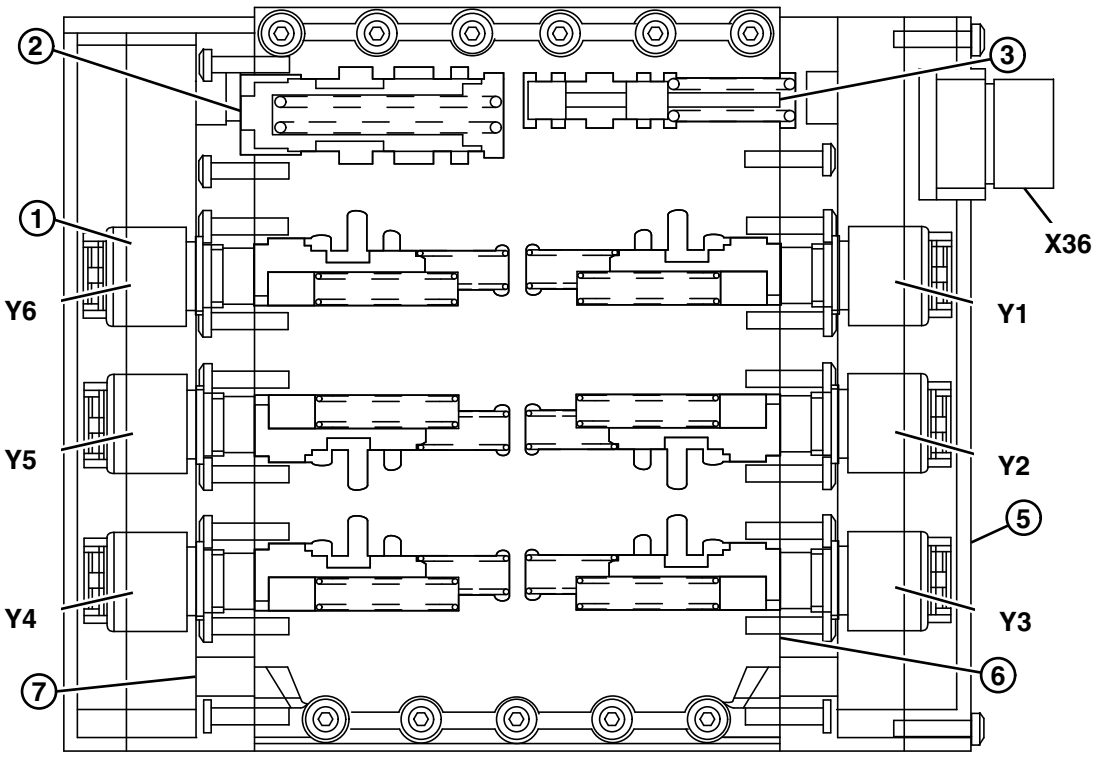

TX1086372 —UN—10JAN11

Transmission Control Valve (cross section shown)

1— Solenoid Valve—Proportional (6 used)
2— Pressure Regulating Valve—Piston
3— Pressure Reducing Valve—Piston
5— Cover (2 used)
6— Valve Block—Control Valve
7— Housing (2 used)
X36— Transmission Harness-to-Transmission Control Valve Harness Connector
Y1— Transmission Control Solenoid 1
Y2— Transmission Control Solenoid 2
Y3— Transmission Control Solenoid 3
Y4— Transmission Control Solenoid 4
Y5— Transmission Control Solenoid 5
Y6— Transmission Control Solenoid 6

RM58335,000121B -19-10JAN11-1/1

Transmission Hydraulic Control Valve Disassemble and Assemble

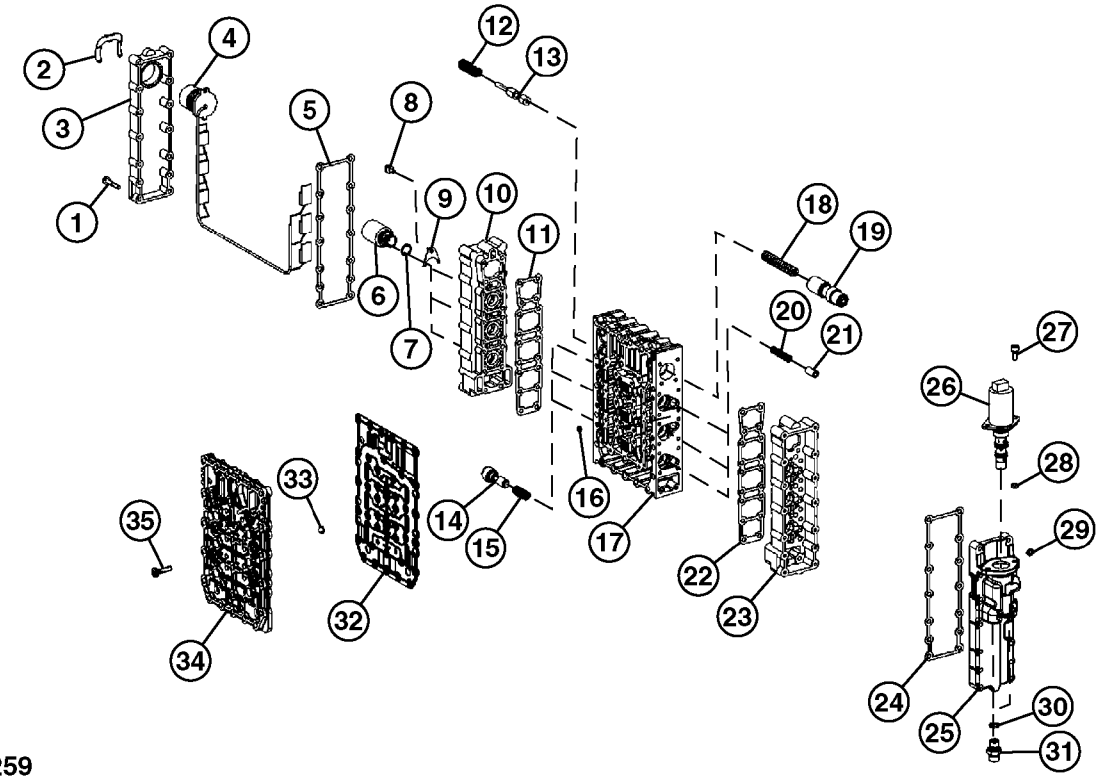

TX1048259 —UN—08SEP08

TX1048259

1— Cap Screw (64 used)
2— Clamp (clip)
3— Cover
4— Wiring Harness
5— Gasket
6— Solenoid Valve—Proportional (6 used)
7— O-Ring (6 used)
8— Cap Screw (6 used)
9— Plate (6 used)
10— Housing
11— Gasket
12— Spring
13— Piston (system pressure reducing valve)
14— Piston (pressure control valve) (6 used)
15— Spring (6 used)
16— Orifice (6 used)
17— Valve Block (control)
18— Spring
19— Piston (system pressure regulating valve)
20— Spring (6 used)
21— Piston (dampening valve) (6 used)
22— Gasket
23— Housing
24— Gasket
25— Cover
26— Lockup Solenoid Control Valve (if equipped)
27— Cap Screw (2 used) (if equipped)
28— Ring (if equipped)
29— Ring (if equipped)
30— O-Ring (2 used) (if equipped)
31— Union Fitting (2 used) (if equipped)
32— Intermediate Plate
33— Screen (6 used)
34— Duct Plate
35— Cap Screw (18 used)

RM58335,000121C -19-03JAN11-1/29

1. Remove cap screws (35)
2. Remove duct plate (34) and intermediate plate (32).

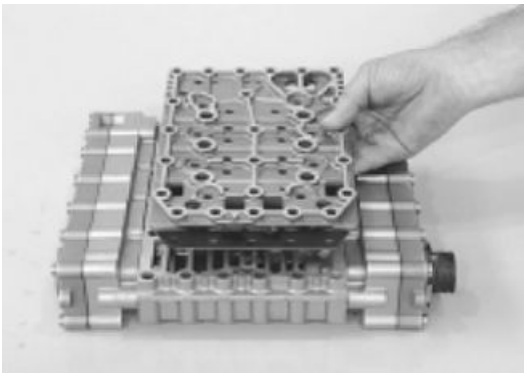

TX1048754A —UN—18SEP08

Duct Plate and Intermediate Plate

Continued on next page

RM58335,000121C -19-03JAN11-2/29

3. Identify position of lockup solenoid control valve (26) to cover (25) and position of cover (25) to valve block (17) before disassembling.
4. Remove cap screws (27) and lockup solenoid control valve (26) (if equipped).
5. Remove union fittings (31) and O-rings (30) (if equipped).

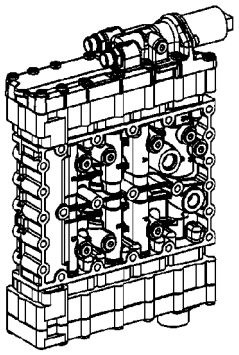

TX1049104 —UN—24SEP08

Lockup Solenoid Control Valve and Cover Position

RM58335,000121C -19-03JAN11-3/29

6. Remove cap screws (1), cover (25), and gasket (24).

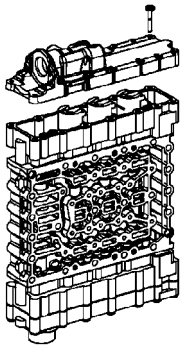

TX1049103 —UN—24SEP08

Lockup Solenoid Control Valve Cover (if equipped)

RM58335,000121C -19-03JAN11-4/29

7. Disconnect wiring harness connectors from solenoid valves (6).
8. Remove cap screws (8), retaining plates (9), and solenoid valves (6).

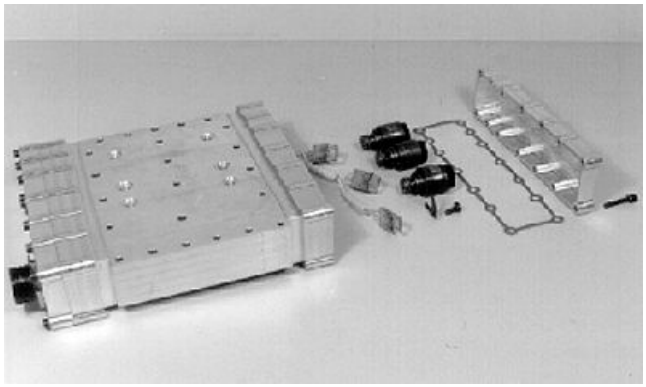

T108687 —UN—16APR97

Solenoid Valves Pulled Out

Continued on next page

RM58335,000121C -19-03JAN11-5/29

9. Remove cap screws (1), housing (23), and gasket (22).
10. Remove three pressure control valve pistons (14) and compression springs (15).
11. Remove three dampening valve pistons (21) and compression springs (20).
12. Remove system pressure regulating valve piston (19) and compression spring (18).
13. Identify position of wiring harness connector to valve block.

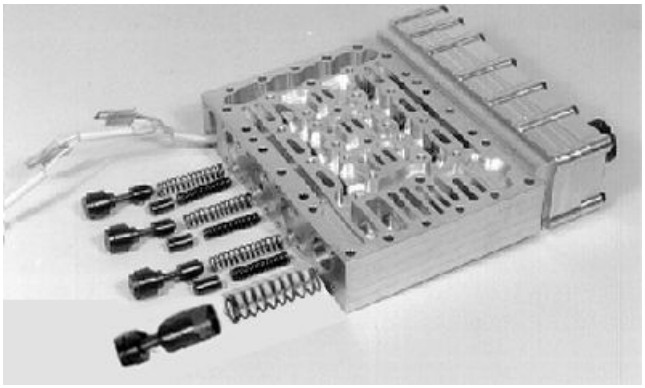

T135928 —UN—12JAN01

Remove Housing and Solenoid Valves

RM58335,000121C -19-03JAN11-6/29

14. Remove clamp (clip) (2) from wiring harness connector.

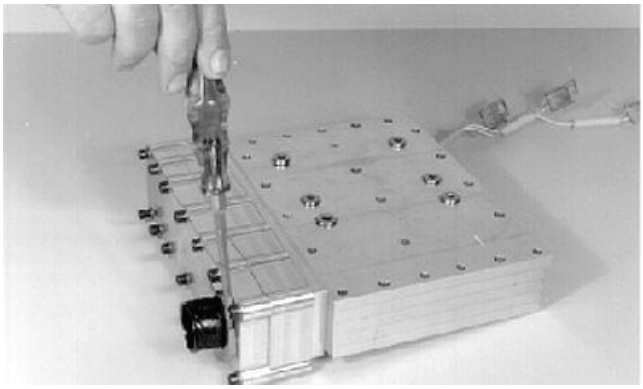

T108689 —UN—16APR97

Clamp Removal from Wiring Harness Connector

RM58335,000121C -19-03JAN11-7/29

15. Remove cap screws (1), cover (3), and gasket (5).
16. Disconnect wiring harness from solenoid valves (6).
17. Remove cap screws (8), retaining plates (9), and solenoid valves (6).

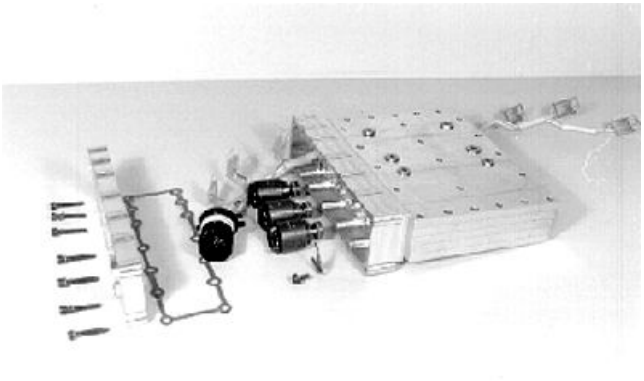

T108682 —UN—16APR97

Cover and Solenoid Valve Removal

Continued on next page

RM58335,000121C -19-03JAN11-8/29

18. Remove cap screws (1), housing (10), and gasket (11).
19. Remove three pressure control valve pistons (14) and compression springs (15).
20. Remove three dampening valve pistons (21) and compression springs (20).
21. Remove compression spring (12) and system pressure reducing valve piston (13).
22. Inspect and replace parts as necessary.
23. Check all components for damage and replace if necessary.
24. Before installation, check free travel of moving parts within housing.
25. Oil components before assembly.



T108683 —UN—16APR97

Housing and Valves Removed

RM58335,000121C -19-03JAN11-9/29

26. Install orifices (16) (if removed) with concave facing upward until contact is made

16— Orifices (6 used)

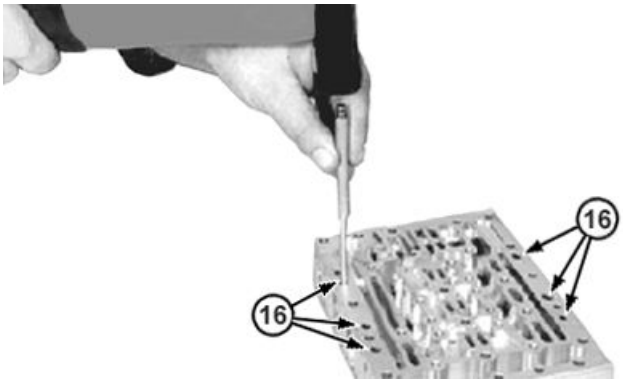

TX1048500A —UN—10SEP08

Valve Block

RM58335,000121C -19-03JAN11-10/29

27. Install three compression springs (15) and pressure control valve pistons (14).
28. Install three compression springs (20) and dampening valve pistons (21).
29. Install system pressure reducing valve piston (13) and compression spring (12).



T108683 —UN—16APR97

Valve Installation in Control Valve Block

Continued on next page

RM58335,000121C -19-03JAN11-11/29

NOTE: To aid assembly of solenoid housing, push pistons into bore and retain by using a 5 mm pin or cap screw.

30. Install two alignment studs into valve block. Install gasket (11).

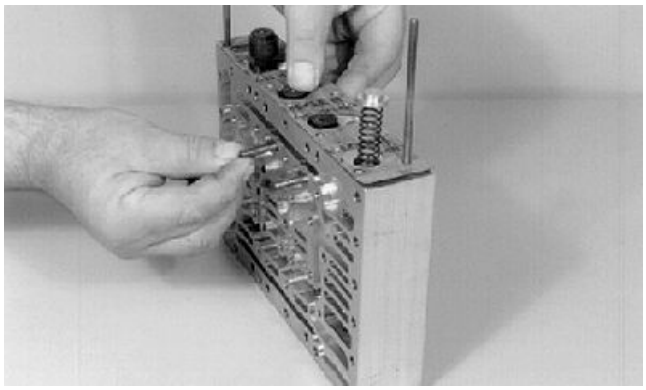

T108694 —UN—16APR97

Piston Installation

RM58335,000121C -19-03JAN11-12/29

31. Install housing (10) while routing wiring harness (4) into position.

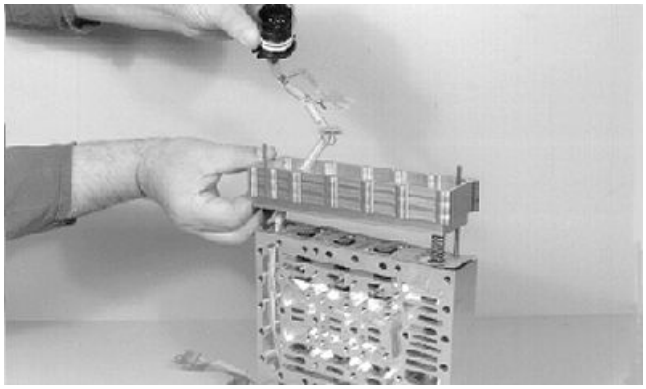

T108695 —UN—16APR97

Wiring Harness Routing for Housing Installation

RM58335,000121C -19-03JAN11-13/29

32. Fasten housing (10) with cap screws (1) and remove alignment studs. Tighten to specification.

    Remove assembly aid pins or cap screws.

Specification	
Housing-to-Valve Block Cap Screw—Torque	5 N·m 44 lb-in.

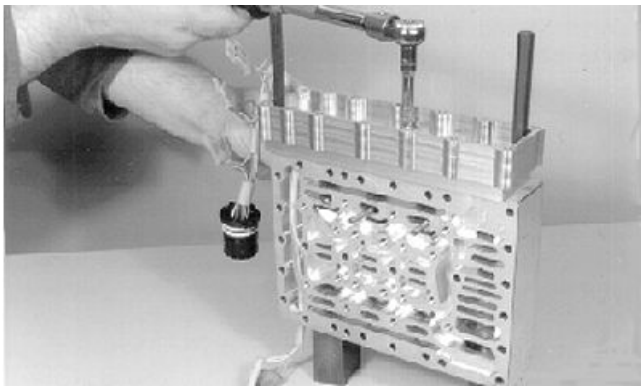

T108696 —UN—16APR97

Torque Housing

Continued on next page

RM58335,000121C -19-03JAN11-14/29

NOTE: Install retaining plate with the claw facing the housing bottom.

33. Install three solenoid valves (6) with O-rings (7). Fasten with retaining plate (9) and cap screws (8). Tighten to specification.

Specification

Retaining Plate Cap Screw—Torque.....5 N·m
44 lb-in.

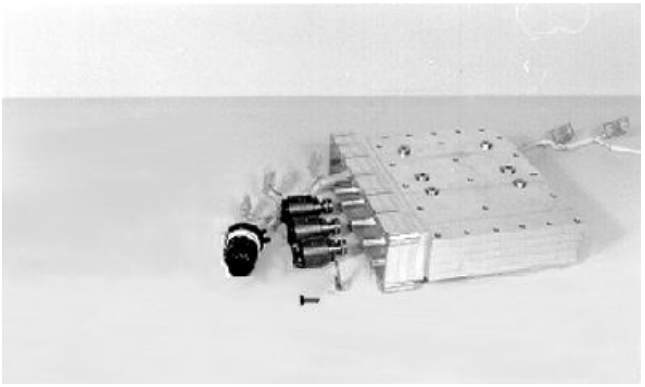

T108697 —UN—16APR97

Solenoid Valves Installation

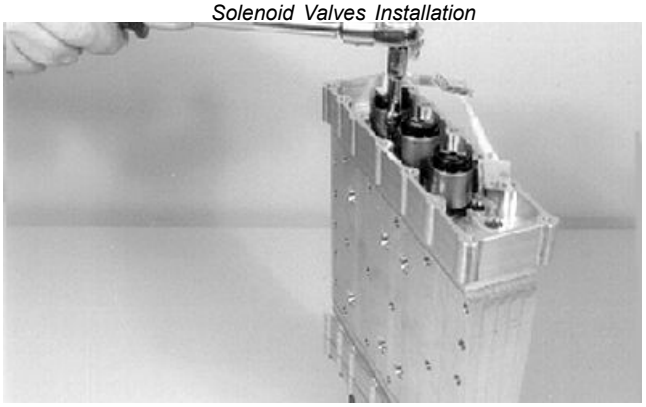

T108698 —UN—16APR97

Solenoid Valves Torque

RM58335,000121C -19-03JAN11-15/29

34. Connect wiring harness to solenoid valves.

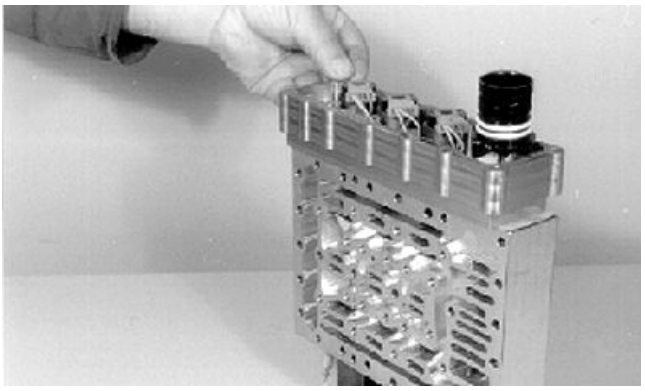

T108691 —UN—16APR97

Wiring Harness and Connectors Installation

Continued on next page

RM58335,000121C -19-03JAN11-16/29

35. Install two alignment studs into housing. Install gasket (5)

    Install cover (3), cap screws (1), and remove alignment studs. Tighten to specification.

Specification

Solenoid Cover-to-Housing Cap Screw—Torque	5 N·m 44 lb-in.

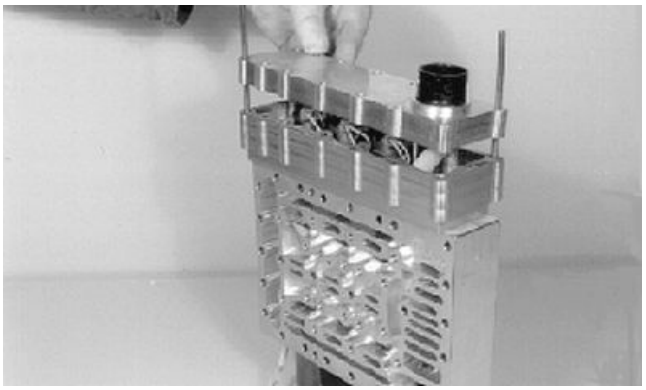

T108692 —UN—16APR97

Solenoid Cover Installation

RM58335,000121C -19-03JAN11-17/29

36. Install wiring harness connector (4) with clamp (2) to cover (3).

NOTE: Ensure that the clamp snaps in.

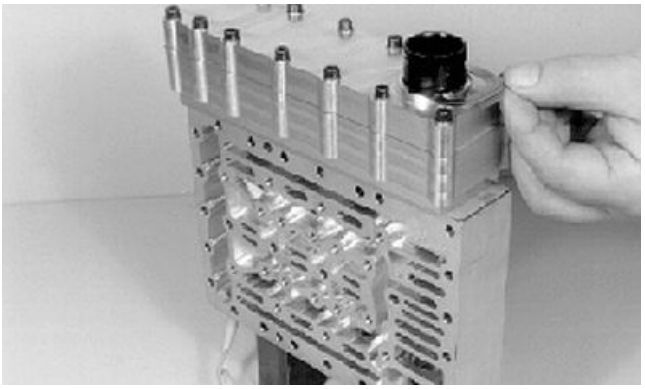

T108693 —UN—16APR97

Wiring Harness Connector Installation

RM58335,000121C -19-03JAN11-18/29

37. Install three compression springs (15) and pressure control valve pistons (14).
38. Install three compression springs (20) and dampening valve pistons (21).
39. Install compression spring (18) and system pressure regulating valve piston (19).

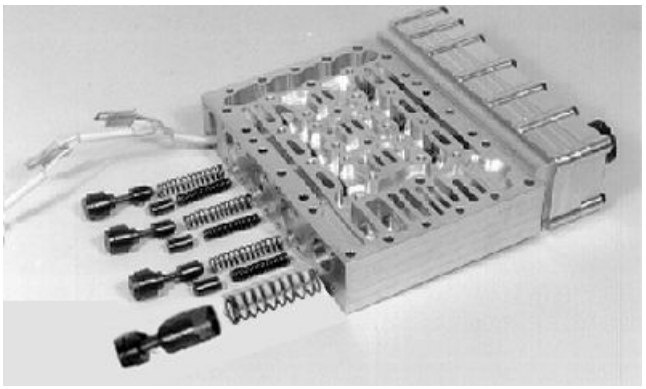

T135928 —UN—12JAN01

Valves Installed Into Control Valve Block

Continued on next page

RM58335,000121C -19-03JAN11-19/29

NOTE: To aid assembly of solenoid housing, push pistons into bore and retain by using a 5 mm pin or cap screw.

40. Install pressure control valve pistons (14) into position.

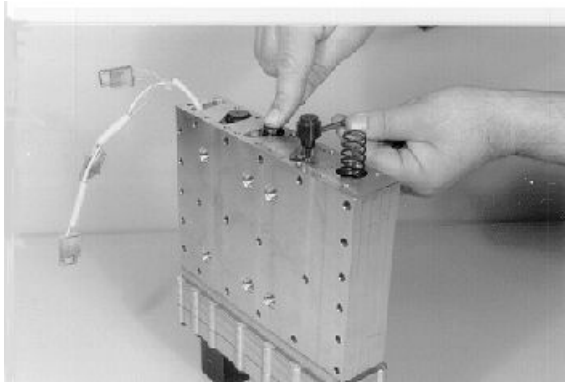

T108703 —UN—16APR97

Piston Installation

RM58335,000121C -19-03JAN11-20/29

41. Install two alignment studs into valve block. Install gasket (22).

    Install housing (23) while routing wiring harness (4) into position.

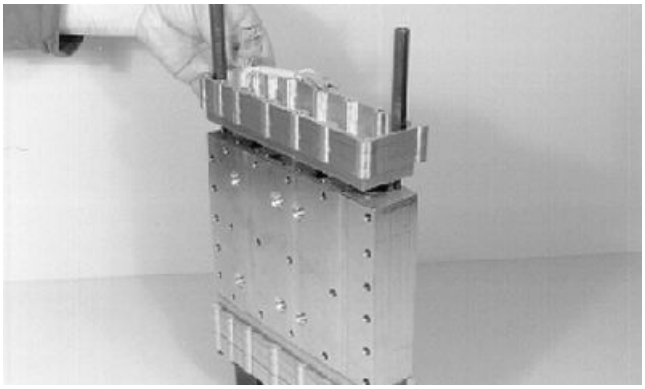

T108704 —UN—16APR97

Alignment Stud Placement

RM58335,000121C -19-03JAN11-21/29

42. Install cap screws and remove alignment studs. Tighten to specification.

    Remove assembly aid pins or cap screws.

Specification	
Housing-to-Valve Block	
Cap Screw—Torque	5 N·m
	44 lb-in.

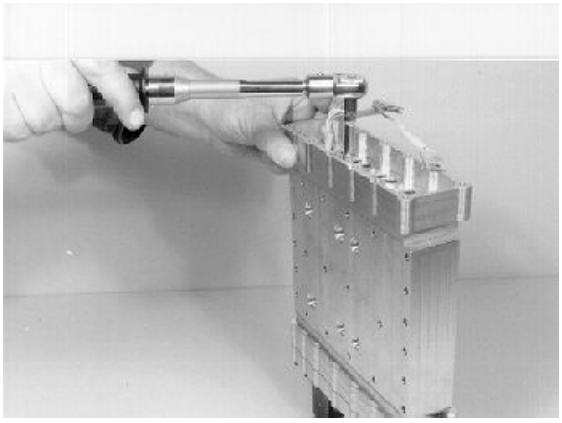

T108705 —UN—16APR97

Torque Housing

Continued on next page

RM58335,000121C -19-03JAN11-22/29

NOTE: Install retaining plate with the claw facing the housing bottom.

43. Install three solenoid valves (6) with O-rings (7). Fasten with retaining plate (9) and cap screw (8). Tighten to specification.

Specification

Retaining Plate Cap Screw—Torque.....5 N·m
44 lb-in.

44. Connect wiring harness to solenoid valves.

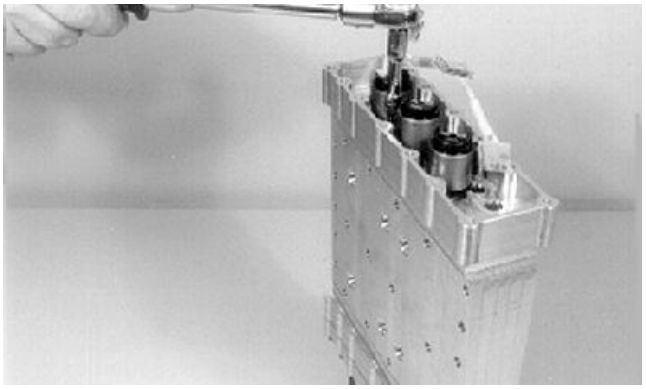

T108698 —UN—16APR97

Solenoid Valves Tightening

RM58335,000121C -19-03JAN11-23/29

NOTE: Observe position of cover and lockup solenoid control valve during installation.

45. Install two alignment studs in housing. Install gasket (24).

Install cover (25) and cap screws (1) and remove alignment studs. Tighten to specification.

Specification

Solenoid Cover-to-Housing Cap Screw—Torque.....5 N·m
44 lb-in.

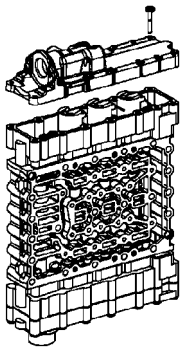

TX1049103 —UN—24SEP08

Lockup Solenoid Control Valve Cover (if equipped)

RM58335,000121C -19-03JAN11-24/29

46. Install union fittings and O-rings. Tighten to specification.

Specification

Union Fitting—Torque.....25 N·m
221 lb-in.

47. Install lockup solenoid control valve with cap screws. Tighten to specification.

Specification

Lockup Solenoid Control Valve Cap Screw—Torque.....10 N·m
88 lb-in.

48. Install plug and O-ring in cover, if removed. Tighten to specification.

Specification

Plug—Torque.....10 N·m
88 lb-in.

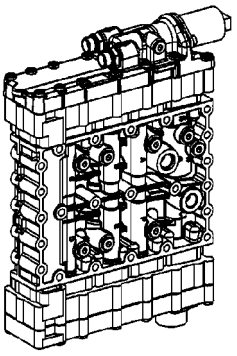

TX1049104 —UN—24SEP08

Lockup Solenoid Control Valve

Continued on next page

RM58335,000121C -19-03JAN11-25/29

49. Install diagnostic plugs with O-rings, in ports, if removed. Tighten to specification.

Specification	
Diagnostic Port Plug—Torque	6 N·m 55 lb-in.

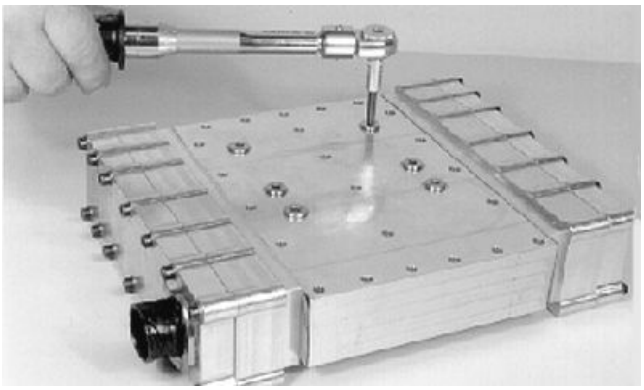

T108700 —UN—16APR97

Diagnostic Plugs Installation

RM58335,000121C -19-03JAN11-26/29

50. Install screens (if removed) flush with intermediate plate facing valve block.

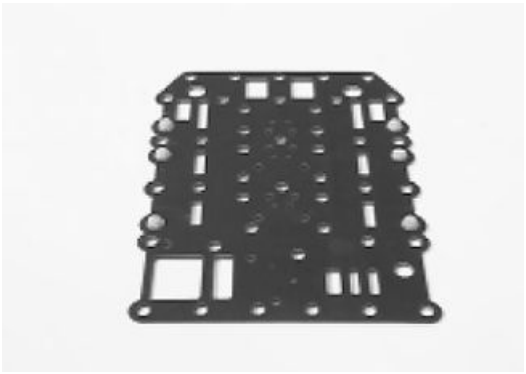

TX1048789A —UN—18SEP08

Intermediate Plate Screens

RM58335,000121C -19-03JAN11-27/29

51. Install two alignment pins.

    Install intermediate plate with screens facing upward.

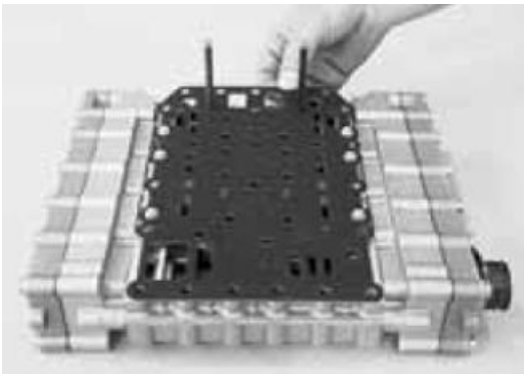

TX1048790A —UN—18SEP08

Continued on next page

RM58335,000121C -19-03JAN11-28/29

NOTE: Tighten inboard cap screws first and continue toward the outside.

52. Install duct plate to valve block with cap screws and remove alignment studs. Tighten to specification.

Specification	
Plate-to-Valve Block Cap Screw—Torque	10.5 N·m 93 lb-in.

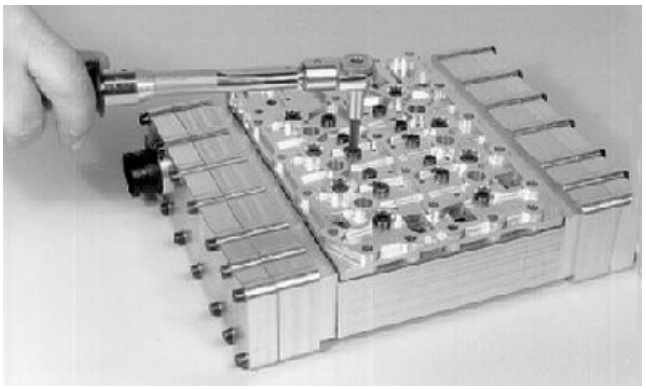

T108708 —UN—17APR97

Plate-to-Valve Block

RM58335,000121C -19-03JAN11-29/29

Torque Converter Relief Valve Remove, Disassemble, and Install

1. Remove transmission hydraulic control valve. See Transmission Hydraulic Control Valve Remove and Install. (Group 0360.)
2. Remove torque converter relief valve out of housing bore.

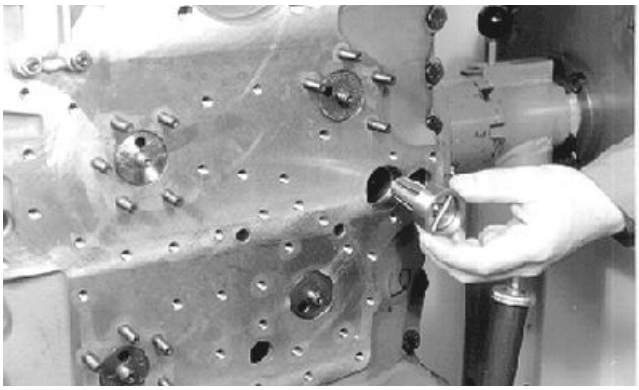

T108715 —UN—17APR97

Removing Torque Converter Relief Valve

RM58335,000121D -19-03JAN11-1/3

3. Remove preload compression spring (3) carefully, remove roll pin (6) as required to inspect and replace parts as needed.
4. Assemble torque converter relief valve.

1— Plate
2— Ball
3— Compression Spring
4— Valve Insert
5— Valve Sleeve
6— Roll Pin

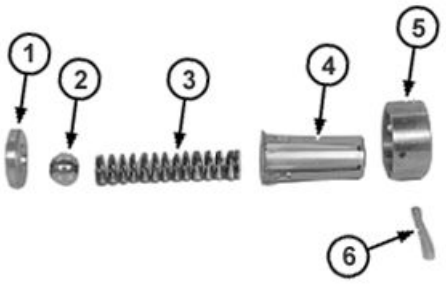

TX1048502A —UN—10SEP08

Torque Converter Relief Valve Components

Continued on next page

RM58335,000121D -19-03JAN11-2/3

5. Install torque converter relief valve into housing bore until it bottoms.
6. Install transmission hydraulic control valve. See Transmission Hydraulic Control Valve Remove and Install. (Group 0360.)

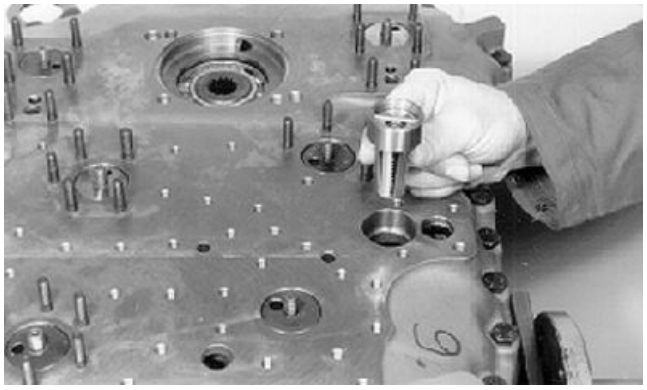

Insert Converter Relief Valve

RM58335,000121D -19-03JAN11-3/3

Section 04
Engine

Contents

Page

Group 0400—Removal and Installation
John Deere Engine..... 04-0400-1
Engine Remove and Install..... 04-0400-1
Crankshaft Dampener Remove
and Install 04-0400-5

John Deere Engine

For additional information on John Deere PowerTech™ PVX engines and components for engine model 6090HDW13, see the following component technical manual (CTM).

PowerTech is a trademark of Deere & Company

9.0L OEM Diesel Engines—Interim Tier 4/Stage III B Platform. (CTM104819.)

JH38101,0001CB0 -19-01MAR11-1/1

Engine Remove and Install

SPECIFICATIONS	
Engine Weight (approximate)	1173 kg 2585 lb.
Engine Mount Cap Screw Torque	522 N·m 384 lb-ft
Universal Joint Cap Screw Torque	78 N·m 58 lb-ft

ESSENTIAL TOOLS
JDG11256 Lifting Bracket (rear)
JDG11252 Lifting Bracket (front)

SERVICE EQUIPMENT AND TOOLS
JDG23 Lifting Sling

1. Prepare machine for service. See Park and Prepare for Service Safely. (Group 0001.)

CAUTION: To avoid injury from escaping fluid under pressure, stop engine and relieve the pressure in the system before disconnecting or connecting hydraulic or other lines. Tighten all connections before applying pressure.

2. Relieve hydraulic system pressure. See Hydraulic System Pressure and Accumulators Discharge. (Group 9025-25.)
3. Remove radiator. See Radiator Remove and Install. (Group 0510.)
4. Disconnect air conditioner compressor clutch solenoid (Y16) electrical connector and alternator (G4) from engine interface harness (W7). See Engine Interface Harness (W7) Component Location. (Group 9015-10.)
5. Disconnect engine interface harness-to-engine harness electrical connectors (X86 and X87) and remove engine interface harness from engine. See Engine Interface Harness (W7) Component Location. (Group 9015-10.)

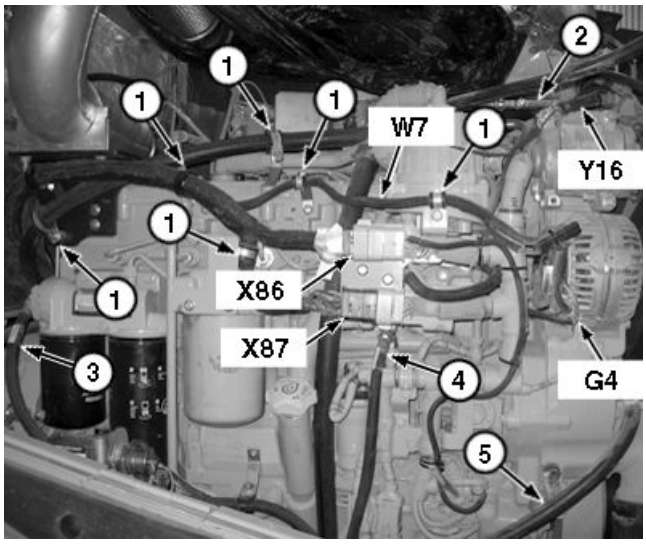

TX1086167A —UN—29DEC10

Engine (left side shown)

1— Clamp (6 used)
2— Air Conditioner Expansion Valve-to-Compressor Line
3— Fuel Tank-to-Fuel Transfer Pump Line
4— Fuel Return-to-Fuel Cooler Line
5— Engine Block-to-Heater Core Line
G4—Alternator
W7—Engine Interface Harness
X86— Engine Interface Harness-to-Engine Harness 40-Pin Connector
X87— Engine Interface Harness-to-Engine Harness 40-Pin Connector
Y16— Air Conditioner Compressor Clutch Solenoid

6. Remove air conditioner line (2). Close all openings using caps and plugs.
7. Disconnect fuel lines (3 and 4). Collect fuel in proper container for storage or disposal.
8. Disconnect coolant line (5). Close all openings using caps and plugs.

Continued on next page

TK40086,000084D -19-13JAN11-1/9

9. Tag and disconnect axle circulation pump lines (6—9). Close all openings using caps and plugs.
10. Tag and disconnect hydraulic fan pump lines (10—13). Close all openings using caps and plugs.

6— Rear Axle Circulation Pump-to-Rear Axle Oil Manifold Line
7— Rear Axle-to-Rear Axle Circulation Pump Line
8— Front Axle Circulation Pump-to-Front Axle Oil Manifold Line
9— Front Axle-to-Front Axle Circulation Pump Line
10— Hydraulic Fan Pump Pressure Line
11— Hydraulic Fan Pump Load Sense Line
12— Hydraulic Fan Pump Case Drain Line
13— Hydraulic Fan Pump Suction Line

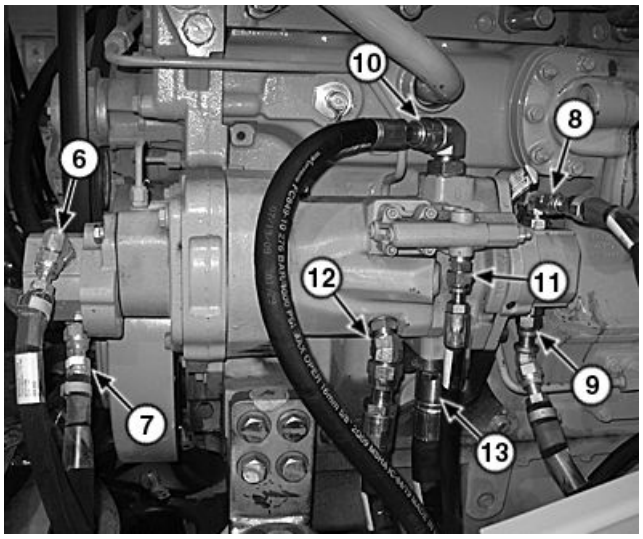

TX1086824A —UN—12JAN11

Engine (right side shown)

TK40086,000084D -19-13JAN11-2/9

11. Disconnect coolant line (14).
12. Tag and disconnect power and ground cables from starter motor (M1). For power and ground component locations:
    - See Power and Ground Cables (W1) Component Location. (Group 9015-10.)
    - See Load Center Harness (W3) Component Location. (Group 9015-10.)
    - See Engine Interface Harness (W7) Component Location. (Group 9015-10.)
    - See Secondary Steering Harness (W17) Component Location—If Equipped. (Group 9015-10.)

14— Heater Core-to-Engine Block Line
M1—Starter Motor

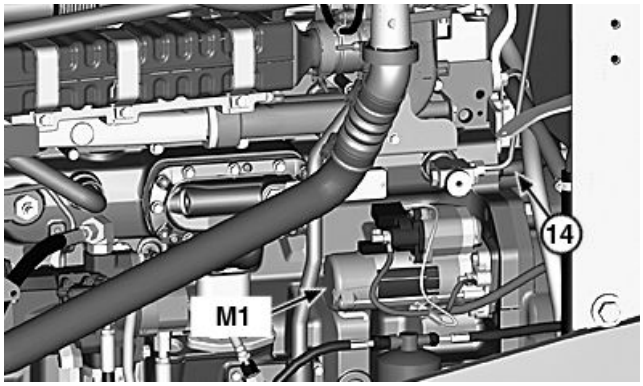

TX1086172A —UN—12JAN11

Engine (right side shown)

TK40086,000084D -19-13JAN11-3/9

13. Remove and discard cap screws (17) and disconnect drive shaft (15) at torque converter housing (16).

15— Drive Shaft
16— Torque Converter Housing
17— Cap Screw (4 used)

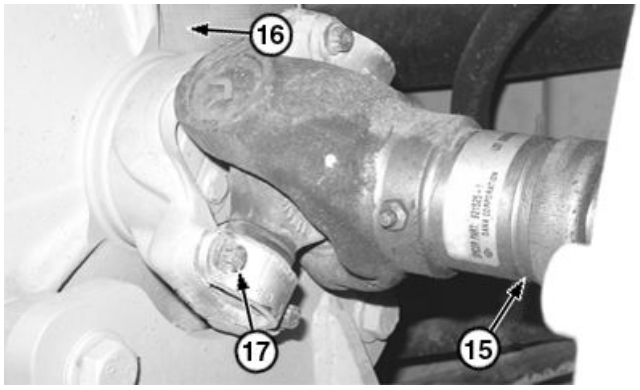

TX1086177A —UN—12JAN11

Drive Shaft

Continued on next page

TK40086,000084D -19-13JAN11-4/9

14. Install JDG11252 and JDG11256 Lifting Brackets (18 and 19).

CAUTION: Prevent possible crushing injury from heavy component. Use appropriate lifting device.

15. Attach JDG23 Lifting Sling (20) to engine lifting brackets.

Specification

Engine—Weight (approximate).....1173 kg 2585 lb.

18— JDG11252 Lifting Bracket
19— JDG11256 Lifting Bracket
20— JDG23 Lifting Sling

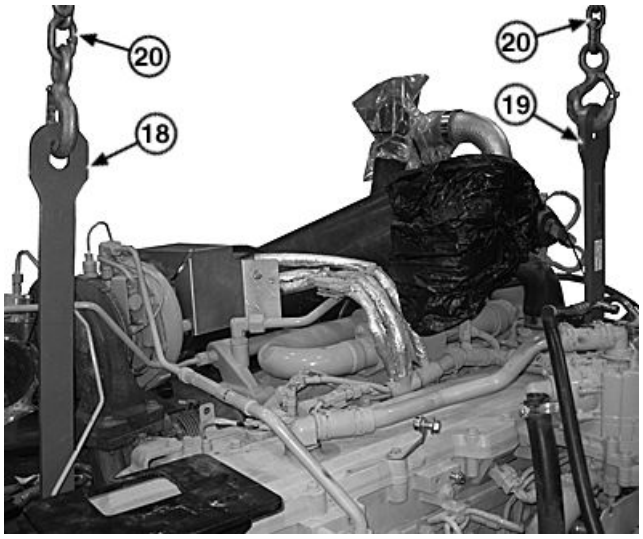

Engine Lifting Brackets

TK40086,000084D -19-13JAN11-5/9

16. Remove engine mount cap screws (21) and remove engine from machine.
17. Repair or replace as necessary. See 9.0L OEM Diesel Engines—Interim Tier 4/Stage III B Platform. (CTM104819.)
18. Install engine to frame. Tighten engine mount cap screws to specification.

Specification

Engine Mount Cap Screw—Torque.....522 N·m 384 lb-ft

19. Remove engine lifting brackets.
20. Using new universal joint cap screws, install drive shaft. Tighten to specification.

Specification

Universal Joint Cap Screw—Torque.....78 N·m 58 lb-ft

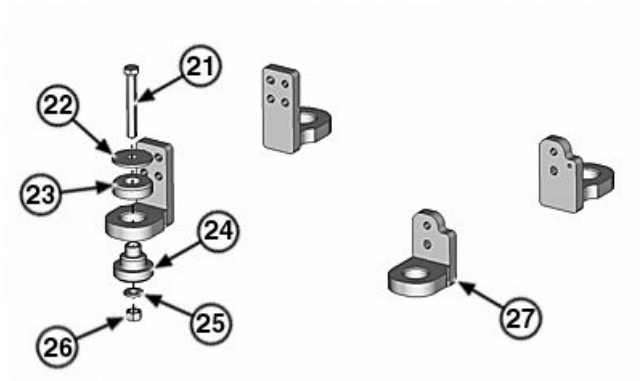

Engine Mount

21— Engine Mount Cap Screw (4 used)
22— Washer (4 used)
23— Isolator (4 used)
24— Isolator (4 used)
25— Washer (4 used)
26— Nut (4 used)
27— Support Bracket (4 used)

Continued on next page

TK40086,000084D -19-13JAN11-6/9

21. Connect power and ground cables to starter motor (M1). For power and ground component locations:
    - See Power and Ground Cables (W1) Component Location. (Group 9015-10.)
    - See Load Center Harness (W3) Component Location. (Group 9015-10.)
    - See Engine Interface Harness (W7) Component Location. (Group 9015-10.)
    - See Secondary Steering Harness (W17) Component Location—If Equipped. (Group 9015-10.)
22. Connect coolant line (14). See Air Conditioner and Heater Component Location. (Group 9031-15.)

14— Heater Core-to-Engine Block Line
M1—Starter Motor

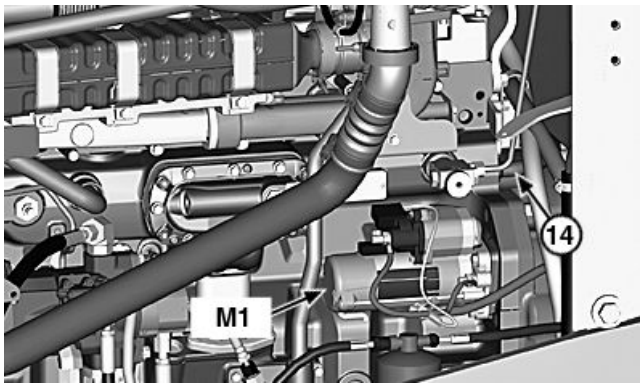

Engine (right side shown)

TK40086,000084D -19-13JAN11-7/9

23. Connect hydraulic fan pump lines (10—13).
24. Connect axle circulation pump lines (6—9).

6— Rear Axle Circulation Pump-to-Rear Axle Oil Manifold Line
7— Rear Axle-to-Rear Axle Circulation Pump Line
8— Front Axle Circulation Pump-to-Front Axle Oil Manifold Line
9— Front Axle-to-Front Axle Circulation Pump Line
10— Hydraulic Fan Pump Pressure Line
11— Hydraulic Fan Pump Load Sense Line
12— Hydraulic Fan Pump Case Drain Line
13— Hydraulic Fan Pump Suction Line

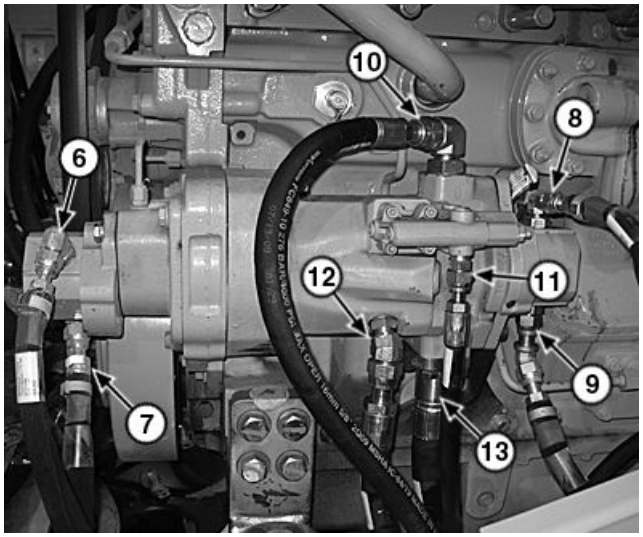

Engine (right side shown)

Continued on next page

TK40086,000084D -19-13JAN11-8/9

25. Connect coolant line (5). See Air Conditioner and Heater Component Location. (Group 9031-15.)
26. Connect fuel lines (3 and 4). See Engine Fuel System Component Location. (Group 9010-15.)
27. Install air conditioner line (2). See Air Conditioner and Heater Component Location. (Group 9031-15.)
28. Install engine interface harness (W7) to engine and connect engine interface harness-to-engine harness electrical connectors (X86 and X87). See Engine Interface Harness (W7) Component Location. (Group 9015-10.)
29. Connect air conditioner compressor clutch solenoid (Y16) electrical connector and alternator (G4) to engine interface harness. See Engine Interface Harness (W7) Component Location. (Group 9015-10.)
30. Install radiator. See Radiator Remove and Install. (Group 0510.)

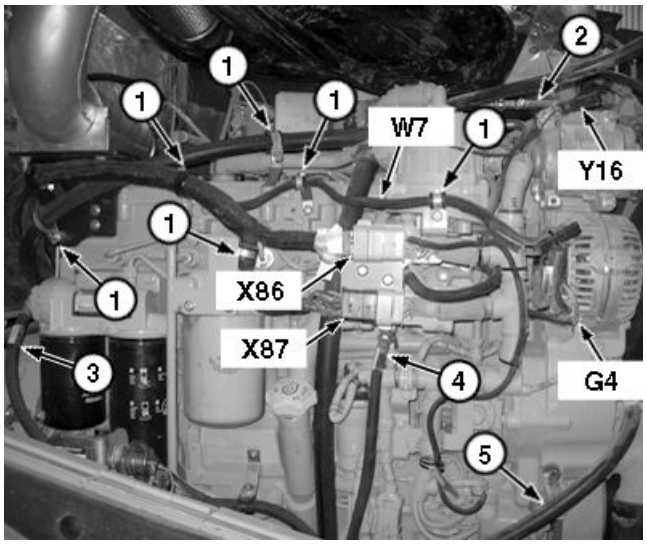

TX1086167A —UN—29DEC10

Engine (left side shown)

1— Clamp (6 used)
2— Air Conditioner Expansion Valve-to-Compressor Line
3— Fuel Tank-to-Fuel Transfer Pump Line
4— Fuel Return-to-Fuel Cooler Line
5— Engine Block-to-Heater Core Line
G4—Alternator
W7—Engine Interface Harness
X86— Engine Interface Harness-to-Engine Harness 40-Pin Connector
X87— Engine Interface Harness-to-Engine Harness 40-Pin Connector
Y16— Air Conditioner Compressor Clutch Solenoid

TK40086,000084D -19-13JAN11-9/9

Crankshaft Dampener Remove and Install

1. Prepare machine for service. See Park and Prepare for Service Safely. (Group 0001.)
2. Turn battery disconnect switch to the OFF position or remove battery negative (-) ground cables.
3. Remove radiator. See Radiator Remove and Install. (Group 0510.)
4. Remove serpentine belt. See Inspect Air Conditioner Compressor and Alternator Belt. (Operator's Manual.)
5. Remove engine crankshaft dampener. See Crankshaft Vibration Damper and Hub — Removal. (CTM104819.)
6. Install engine crankshaft dampener. See Crankshaft Vibration Damper and Hub — Installation. (CTM104819.)
7. Install serpentine belt. See Inspect Air Conditioner Compressor and Alternator Belt. (Operator's Manual.)
8. Install radiator. See Radiator Remove and Install. (Group 0510.)
9. Turn battery disconnect switch to the ON position or install battery negative (-) ground cables.

TK40086,000084F -19-05JAN11-1/1

Section 05
Engine Auxiliary Systems

Contents

Page

Group 0505—Cold Weather Starting Aids
Start Aid Nozzle Remove and Install—If Equipped 05-0505-1
Start Aid Solenoid Remove and Install—If Equipped 05-0505-2
Engine Coolant Heater Remove and Install—If Equipped 05-0505-3

Group 0510—Cooling System
Charge Air Cooler Remove and Install 05-0510-1
Radiator Remove and Install 05-0510-2
Hydraulic Oil Cooler Remove and Install 05-0510-6
Transmission Oil Cooler Remove and Install 05-0510-8
Axle Oil Cooler Disassemble and Assemble—If Equipped 05-0510-9
Fuel Cooler Remove and Install 05-0510-10
Cooling Package Plenum Remove and Install 05-0510-11

Group 0520—Intake System
Air Cleaner Remove and Install..... 05-0520-1
Precleaner Remove and Install 05-0520-1

Group 0530—External Exhaust System
Exhaust Tube Remove and Install..... 05-0530-1
JDG11335 Bellows Alignment Fixture..... 05-0530-2
Exhaust Bellows Alignment Procedure 05-0530-5
Diesel Particulate Filter (DPF) Remove and Install..... 05-0530-15
Exhaust Filter Remove and Install..... 05-0530-16
Service Filter Cleaning 05-0530-18

Group 0560—External Fuel Supply Systems
Fuel Tank Remove and Install 05-0560-1
Primary Fuel Filter (Water Separator) Remove and Install..... 05-0560-3
Fast Fill Fuel System Disassemble and Assemble—If Equipped 05-0560-4

Start Aid Nozzle Remove and Install—If Equipped

OTHER MATERIAL
271 High-Strength Thread Lock and Sealer

1. Prepare machine for service. See Park and Prepare for Service Safely. (Group 0001.)
2. Disconnect start aid tube (1).
3. Loosen start aid nozzle jam nut (3).
4. Remove start aid nozzle (2) from air inlet.
5. Clean or replace as necessary. Inspect start aid nozzle O-ring (4) and replace if necessary.

NOTE: Red paint dot indexing mark (5) on nozzle indicates direction of nozzle opening.

6. Apply PM37421 High-Strength Thread Lock and Sealer to nozzle before installing into air inlet with red paint dot indexing mark (5) pointing upwards, and tighten jam nut.
7. Connect start aid tube (1) to start aid nozzle (2).

1— Start Aid Tube
2— Start Aid Nozzle
3— Start Aid Nozzle Jam Nut
4— Start Aid Nozzle O-Ring
5— Red Paint Dot Indexing Mark

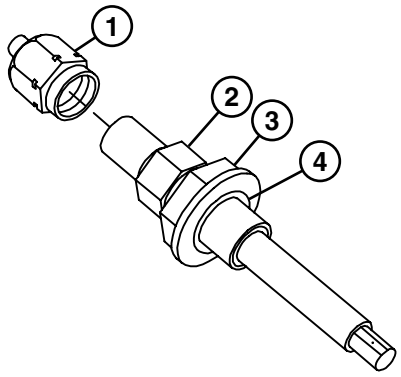

TX1046091 —UN—25JUL08

Start Aid Nozzle

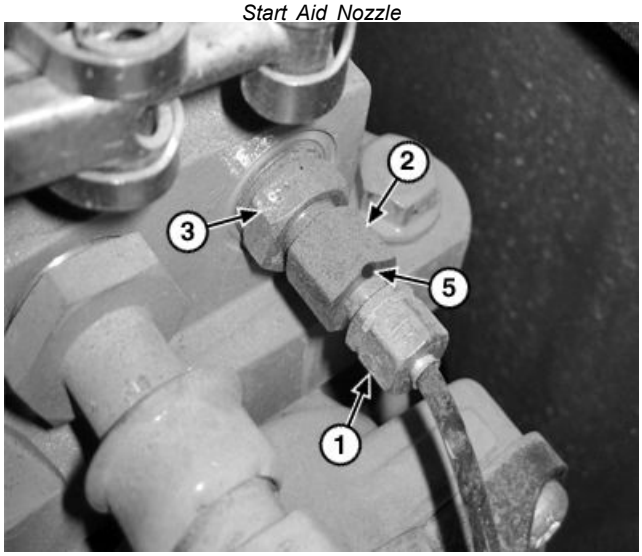

TX1079886A —UN—13JUL10

Start Aid Nozzle Alignment

TK40086,00007A2 -19-14DEC10-1/1

Start Aid Solenoid Remove and Install—If Equipped

1. Prepare machine for service. See Park and Prepare for Service Safely. (Group 0001.)

IMPORTANT: When start aid fluid container (1) is removed, protect components from possible damage. Install dust cap (4) in start aid solenoid (Y7).

2. Loosen start aid fluid container mounting clamp (2) and remove start aid fluid container (1).
3. Disconnect start aid solenoid (Y7) electrical connector. See Engine Frame Harness (W5) Component Location. (Group 9015-10.)
4. Disconnect start aid fluid line (3).
5. Remove start aid solenoid.
6. Repair or replace as necessary.
7. Install start aid solenoid.
8. Connect start aid fluid line.
9. Connect start aid solenoid electrical connector. See Engine Frame Harness (W5) Component Location. (Group 9015-10.)
10. Install start aid fluid container and tighten mounting clamp.

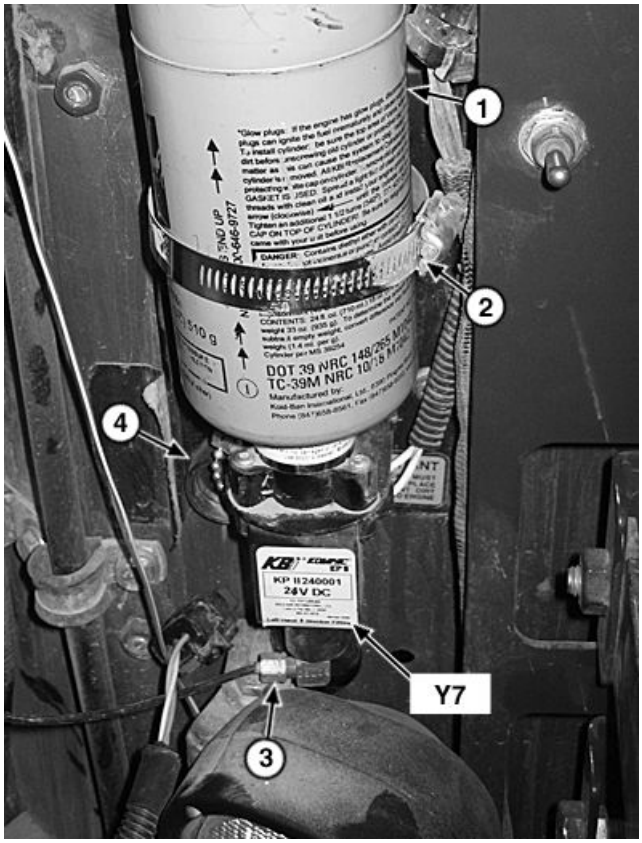

TX1085472A —UN—07DEC10

Cold Weather Start Aid

1— Start Aid Fluid Container
2— Start Aid Fluid Container Mounting Clamp
3— Start Aid Fluid Line
4— Dust Cap
Y7— Start Aid Solenoid

TK40086,000083E -19-14DEC10-1/1

Engine Coolant Heater Remove and Install—If Equipped

SPECIFICATIONS	
Engine Coolant Heater Nut Torque	34 N·m 25 lb-ft

CAUTION: Prevent possible injury. Explosive release of fluids from pressurized cooling system can cause serious burns.

Shut off engine. Remove filler cap when cool to touch. Slowly loosen filler cap to relieve the pressure, then remove.

1. Prepare machine for service. See Park and Prepare for Service Safely. (Group 0001.)
2. Drain cooling system into appropriate container for storage or disposal. See Drain Cooling System. (Operator's Manual.)
3. Remove power cord (1). Loosen nut (2) and remove heater element (6) from block.

CAUTION: Prevent possible injury, keep electrical connectors clean to prevent arcing. Only plug coolant heater into electrical power if heater element is immersed in coolant. Sheath could burst and result in personal injury.

Use a heavy-duty grounded cord to connect coolant heater to electrical power.

4. Disassemble parts (3—6).

NOTE: The heater element (6) cannot be repaired. Replace if defective.

5. Inspect and replace parts as necessary.
6. Assemble parts (3—6). Install heater into cylinder block with element pointing to the rear of engine.
7. Turn element clockwise and then counterclockwise until element contacts casting. Move element midway between contact points.
8. Hold assembly, using a wrench. Tighten nut (2) to specification.

Specification

Engine Coolant Heater Nut—Torque.....34 N·m
25 lb-ft



T6642EK —UN—01NOV88

Coolant May Be Hot

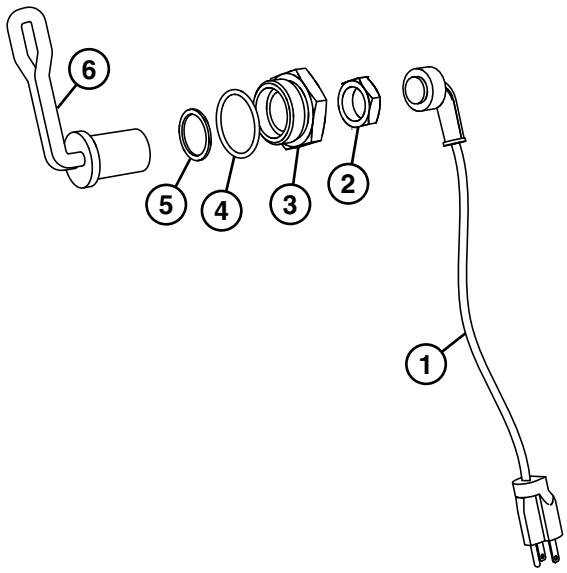

TX1028458 —UN—09JAN08

Coolant Heating Element Assembly

1— Power Cord
2— Nut
3— Adapter
4— O-Ring
5— Gasket
6— Heater Element

9. Install power cord (1).
10. Refill cooling system. See Refill Cooling System. (Operator's Manual.)

TK40086,00007AC -19-14DEC10-1/1

Charge Air Cooler Remove and Install

SPECIFICATIONS	
Charge Air Cooler Weight (approximate)	25 kg 55 lb.

1. Prepare machine for service. See Park and Prepare for Service Safely. (Group 0001.)

CAUTION: Prevent possible injury from hot charge air cooler. Allow charge air cooler to cool before removing.

2. Disconnect upper and lower charge air cooler tubes (2 and 3). Close all openings using caps and plugs.

CAUTION: Prevent possible crushing injury from heavy component. Use appropriate lifting device.

3. Support charge air cooler (1).

Specification

Charge Air Cooler—Weight (approximate)..... 25 kg
55 lb.

4. Remove charge air cooler mounting cap screws (4) and remove charge air cooler.
5. Repair or replace as necessary.

CAUTION: Prevent possible crushing injury from heavy component. Use appropriate lifting device.

6. Install charge air cooler.
7. Install upper and lower charge air cooler tubes.

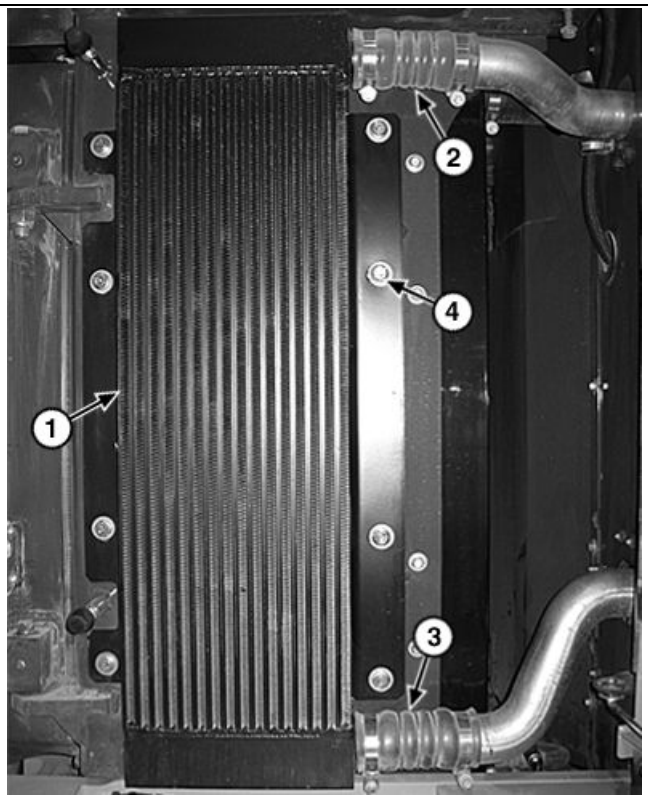

Charge Air Cooler

1— Charge Air Cooler
2— Upper Charge Air Cooler Tube
3— Lower Charge Air Cooler Tube
4— Cap Screw (6 used)

TK40086,0000830 -19-20DEC10-1/1

Radiator Remove and Install

SPECIFICATIONS	
Cooling Package Top Access Door Weight (approximate)	45 kg 100 lb.
Hood Support Weight (approximate)	102 kg 225 lb.
Radiator Weight (approximate)	48 kg 105 lb.

1. Prepare machine for service. See Park and Prepare for Service Safely. (Group 0001.)
2. Evacuate and recover refrigerant from air conditioning system. See R134a System Evacuate and see R134a System Recover. (Group 1830.)
3. Turn battery disconnect switch to the OFF position or remove battery negative (-) cable.
4. Drain cooling system. See Drain Cooling System. (Operator's Manual.)
5. Remove hood. See Hood Remove and Install. (Group 1910.)
6. Remove exhaust filter. See Exhaust Filter Remove and Install. (Group 0530.)
7. Remove cooling package access doors. See Cooling Package Access Doors Remove and Install. (Group 1910.)

CAUTION: Prevent possible crushing injury from heavy component. Use appropriate lifting device.

8. Remove cooling package top access door.

Specification	
Cooling Package Top Access Door—Weight (approximate)	45 kg 100 lb.

9. Tag and disconnect air conditioning lines (1 and 2). Close all openings using caps and plugs.

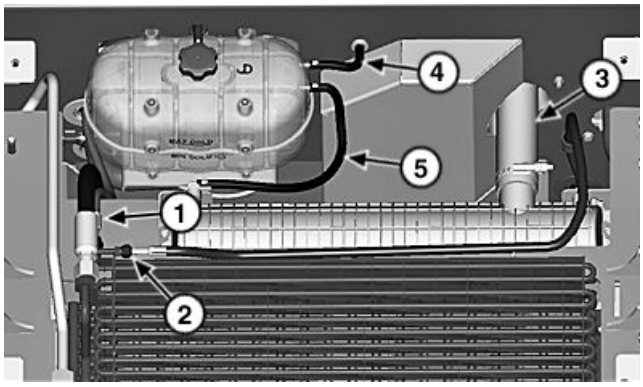

TX1085504A —UN—07DEC10

Cooling Package (top shown)

1— Condenser-to-Air Conditioning Compressor Line
2— Receiver-Dryer-to-Condenser Line
3— Upper Radiator Hose
4— Surge Tank-to-Thermostat Housing Hose
5— Radiator-to-Surge Tank Hose

10. Tag and disconnect coolant hoses (3—5). Close all openings using caps and plugs.

Continued on next page

TK40086,0000840 -19-12JAN11-1/5

11. Remove engine frame harness (W5) from hood support (10). See Engine Frame Harness (W5) Component Location. (Group 9015-10.)
12. Tag and disconnect coolant hoses (6 and 7). Close all openings using caps and plugs.

IMPORTANT: Prevent fuel system contamination. Use a clean container to collect fuel.

13. Place proper container under fuel cooler.
14. Tag and disconnect fuel lines (8 and 9) at fuel cooler. Collect fuel in proper container for storage or disposal.
15. Disconnect ether cold start aid fluid line (11) (if equipped).

6— Lower Radiator Hose
7— Surge Tank-to-Coolant Pump Hose
8— High Pressure Common Rail-to-Fuel Cooler Line
9— Fuel Cooler-to-Fuel Tank Line
10— Hood Support
11— Ether Cold Start Aid Fluid Line (if equipped)
W5—Engine Frame Harness

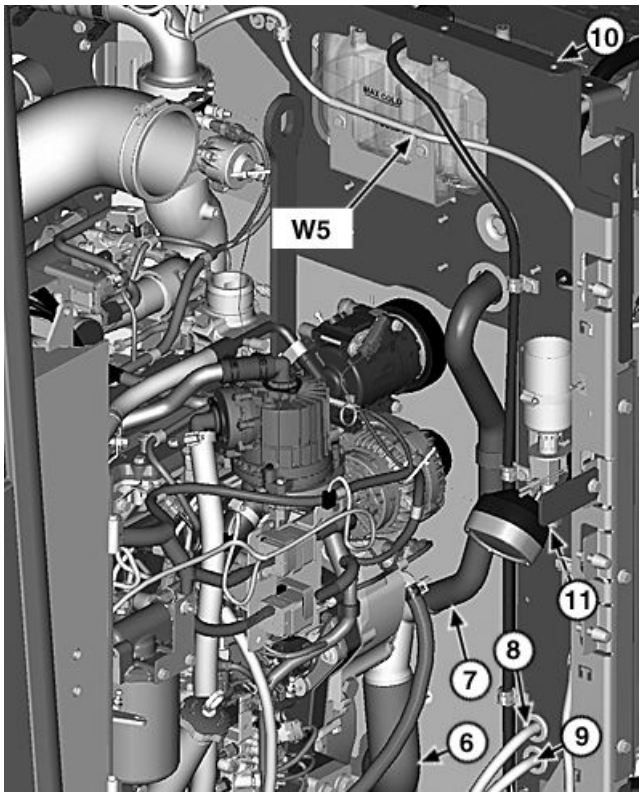

Hood Support (left side shown)

TK40086,0000840 -19-12JAN11-2/5

16. Remove upper and lower charge air cooler tubes (12 and 13). Close all openings using caps and plugs.
17. Disconnect fast fill radiator hose (15) (if equipped). Close all openings using caps and plugs.
18. Remove fuel tank breather (14) from hood support.

⚠ CAUTION: Prevent possible crushing injury from heavy component. Use appropriate lifting device.

19. Support hood support.

Specification	
Hood Support—Weight (approximate)	102 kg 225 lb.

12— Upper Charge Air Cooler Tube
13— Lower Charge Air Cooler Tube
14— Fuel Tank Breather
15— Fast Fill Radiator Hose (if equipped)

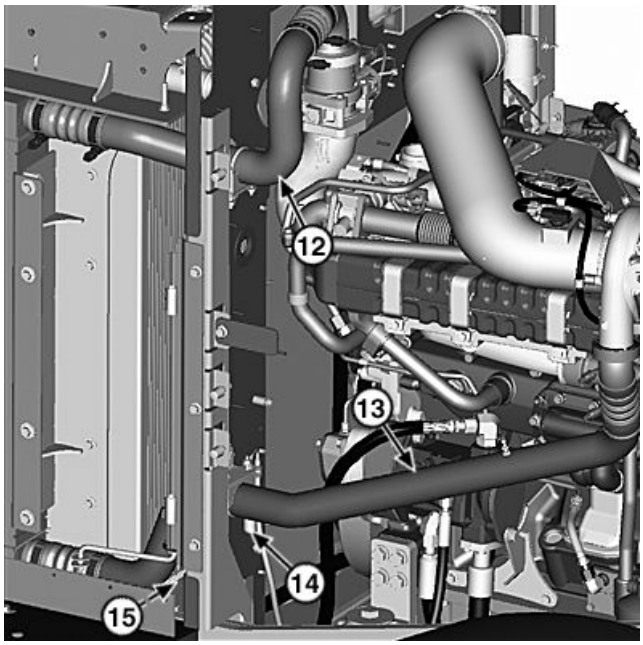

Hood Support (right side shown)

Continued on next page

TK40086,0000840 -19-12JAN11-3/5

20. Remove cap screws (16) and remove hood support.

16— Cap Screw (4 used)

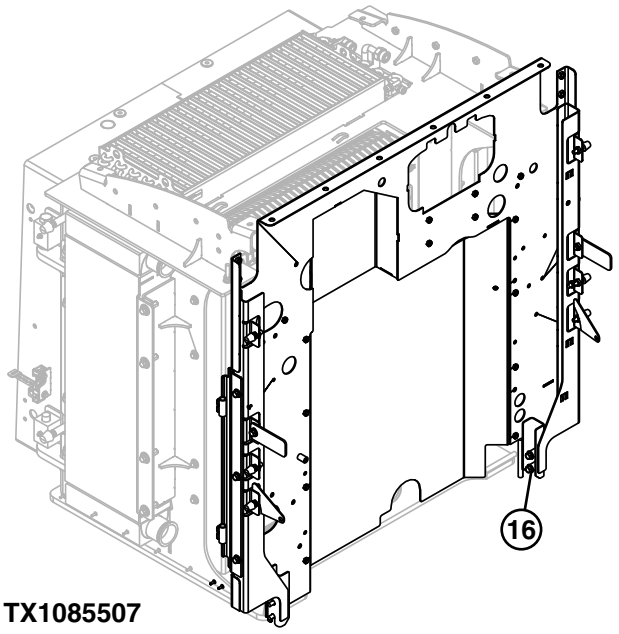

Hood Support

Continued on next page

TK40086,0000840 -19-12JAN11-4/5

CAUTION: Prevent possible crushing injury from heavy component. Use appropriate lifting device.

21. Support radiator (18).

Specification	
Radiator—Weight (approximate)	48 kg (105 lb.)

22. Remove radiator.
23. Repair or replace as necessary.
24. Install radiator.
25. Install hood support.
26. Install fuel tank breather to hood support.
27. Install upper and lower charge air cooler tubes.
28. Connect ether cold start aid fluid line (if equipped).
29. Connect fast fill radiator hose (if equipped).
30. Connect fuel lines. See Engine Fuel System Component Location. (Group 9010-15.)
31. Connect coolant hoses. See Engine Cooling System Component Location. (Group 9010-15.)
32. Install engine frame harness (W5) to hood support. See Engine Frame Harness (W5) Component Location. (Group 9015-10.)
33. Connect air conditioning lines. See Air Conditioner and Heater Component Location. (Group 9031-15.)
34. Install cooling package top access door.
35. Install cooling package access doors. See Cooling Package Access Doors Remove and Install. (Group 1910.)
36. Install exhaust filter. See Exhaust Filter Remove and Install. (Group 0530.)
37. Install hood. See Hood Remove and Install. (Group 1910.)
38. Turn battery disconnect switch to the ON position or install battery negative (-) cable.
39. Fill cooling system. See Refill Cooling System. (Operator's Manual.)
40. Bleed fuel system. See Bleed Fuel System. (Operator's Manual.)

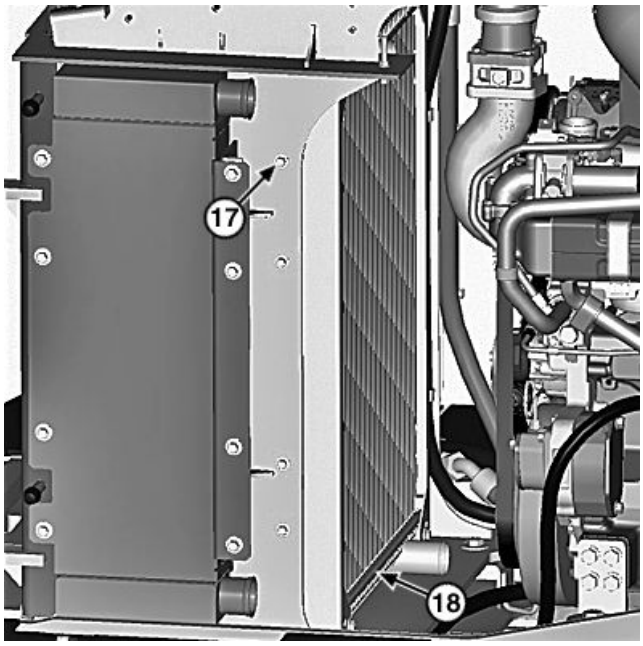

Cooling Package (right side shown)

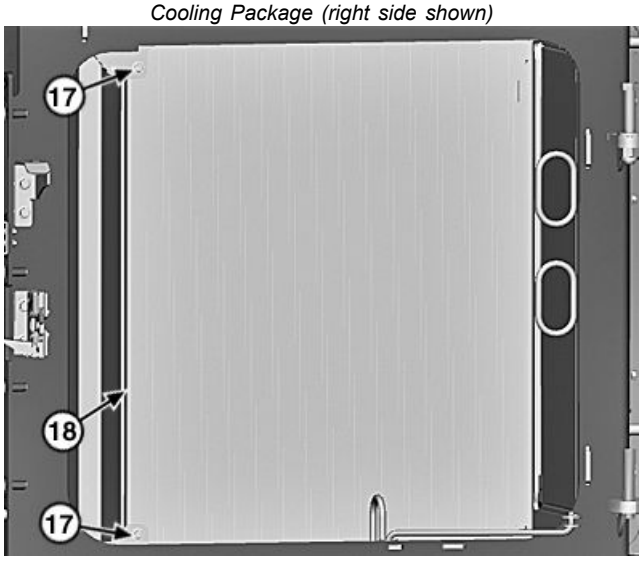

Cooling Package (rear shown)

17— Cap Screw (6 used) **18— Radiator**

41. Charge air conditioning system. See R134a System Charge. (Group 1830.)

TK40086,0000840 -19-12JAN11-5/5

Hydraulic Oil Cooler Remove and Install

SPECIFICATIONS	
Hydraulic Oil Cooler Weight (approximate)	23 kg 50 lb.

NOTE: This machine is equipped with two hydraulic oil coolers. One is mounted on the left side of the cooling package, the second is manufactured as one component with the air conditioning condenser and mounts on top of the cooling package. For remove and install of the top mounted hydraulic oil cooler, see Condenser Remove and Install. (Group 1830.)

1. Prepare machine for service. See Park and Prepare for Service Safely. (Group 0001.)

CAUTION: To avoid injury from escaping fluid under pressure, stop engine and relieve the pressure in the system before disconnecting or connecting hydraulic or other lines. Tighten all connections before applying pressure.

2. Relieve hydraulic system pressure. See Hydraulic System Pressure and Accumulators Discharge. (Group 9025-25.)
3. Turn battery disconnect switch to the OFF position or remove battery negative (-) cable.

CAUTION: Prevent possible crushing injury from heavy component. Use appropriate lifting device.

4. Remove left cooling package access door. See Cooling Package Access Doors Remove and Install. (Group 1910.)
5. Apply vacuum to or drain hydraulic reservoir. If draining hydraulic reservoir, see Drain and Refill Capacities. (Operator's Manual.)
6. Unlatch clip (2) and swing out fuel cooler (1).

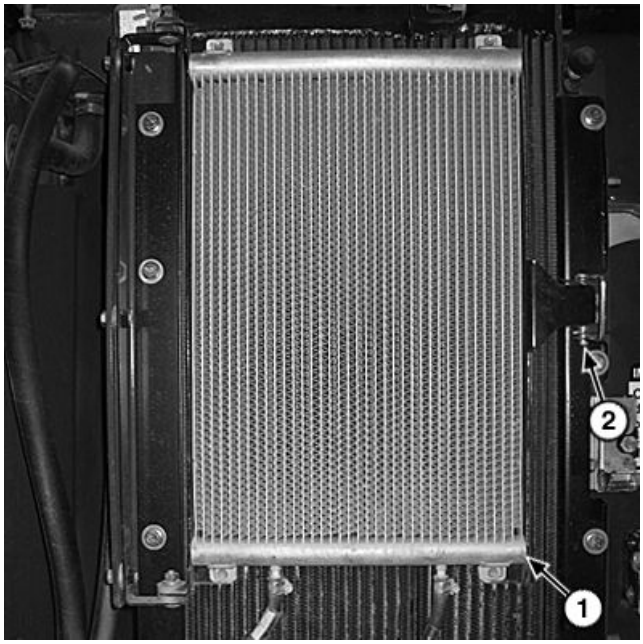

Fuel Cooler

1— Fuel Cooler **2— Clip**

Continued on next page

7. Remove fuel cooler latch (7).
8. Tag and disconnect upper and lower hydraulic lines (4 and 5). Close all openings using caps and plugs.

CAUTION: Prevent possible crushing injury from heavy component. Use appropriate lifting device.

9. Remove hydraulic oil cooler (3).

Specification	
Hydraulic Oil Cooler—Weight (approximate)	23 kg 50 lb.

10. Repair or replace as necessary.
11. Install hydraulic oil cooler.
12. Connect upper and lower hydraulic oil cooler lines.
13. Install latch and secure fuel cooler.
14. Remove vacuum or fill hydraulic reservoir. See Drain, Flush, and Refill Hydraulic System Oil. (Operator's Manual.)
15. Install left cooling package access door.
16. Turn battery disconnect switch to the ON position or install battery negative (-) cable.
17. Check hydraulic system oil level. See Check Hydraulic System Oil Level. (Operator's Manual.)

3— Hydraulic Oil Cooler
4— Upper Hydraulic Oil Line
5— Lower Hydraulic Oil Line
6— Cap Screw and Washer (11 used)
7— Latch

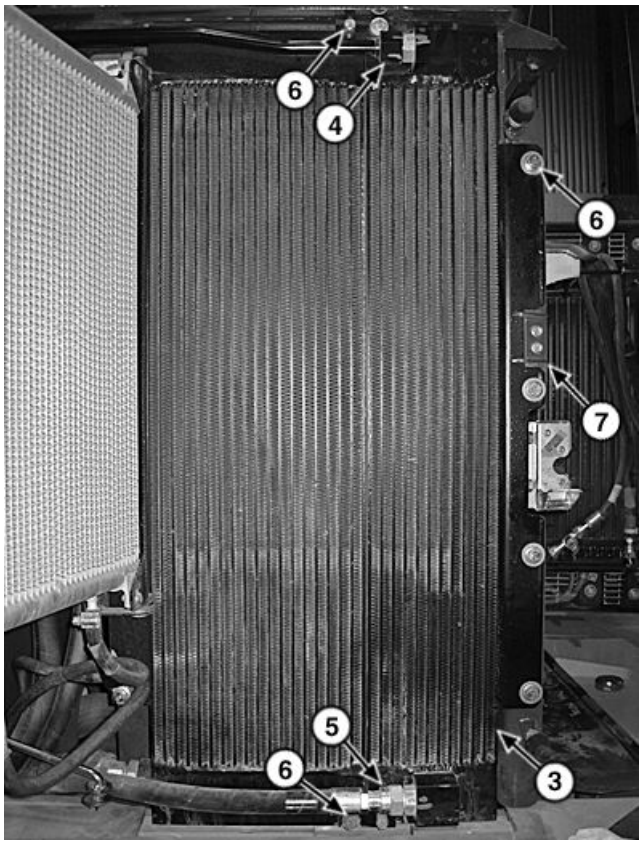

TX1085153A —UN—02DEC10

Hydraulic Oil Cooler

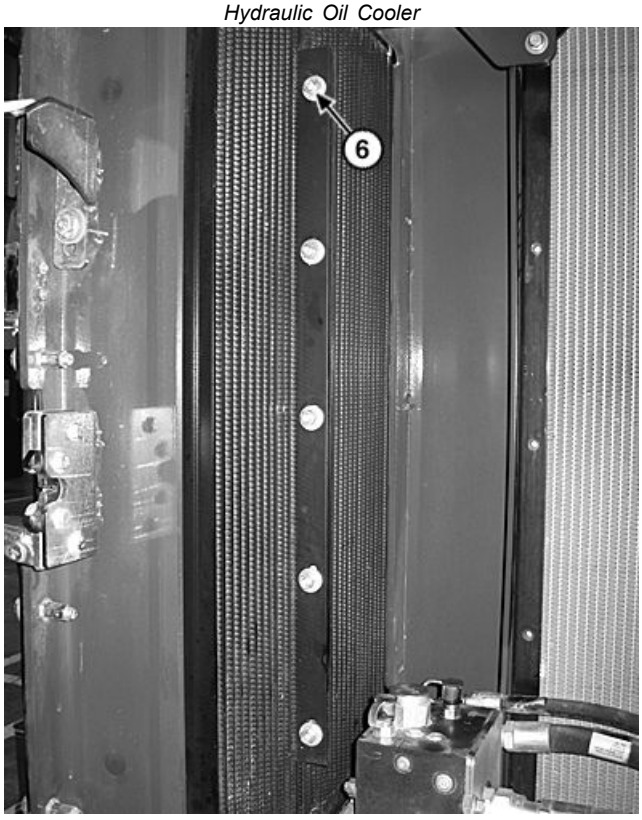

TX1085161A —UN—01DEC10

Cooling Package (inside shown)

TK40086,000082F -19-12JAN11-2/2

Transmission Oil Cooler Remove and Install

SPECIFICATIONS	
Transmission Oil Cooler Weight (approximate)	36 kg 80 lb.

1. Prepare machine for service. See Park and Prepare for Service Safely. (Group 0001.)

CAUTION: To avoid injury from escaping fluid under pressure, stop engine and relieve the pressure in the system before disconnecting or connecting hydraulic or other lines. Tighten all connections before applying pressure.

2. Relieve hydraulic system pressure. See Hydraulic System Pressure and Accumulators Discharge. (Group 9025-25.)

NOTE: Fuel cooler can be moved aside without disconnecting the fuel lines.

3. Remove fuel cooler from cooling package plenum and secure out of the way. See Fuel Cooler Remove and Install. (Group 0510.)
4. Apply vacuum to or drain hydraulic reservoir. If draining hydraulic reservoir, see Drain and Refill Capacities. (Operator's Manual.)
5. Tag and disconnect hydraulic oil cooler lines (2 and 3). Close all openings using caps and plugs.
6. Tag and disconnect transmission oil cooler lines (4 and 5) at the transmission oil cooler (6). Close all openings using caps and plugs.

CAUTION: Prevent possible crushing injury from heavy component. Use appropriate lifting device.

7. Remove transmission oil cooler.

Specification	
Transmission Oil Cooler—Weight (approximate)	36 kg 80 lb.

8. Repair or replace as necessary.
9. Install transmission oil cooler.
10. Connect transmission oil cooler lines.

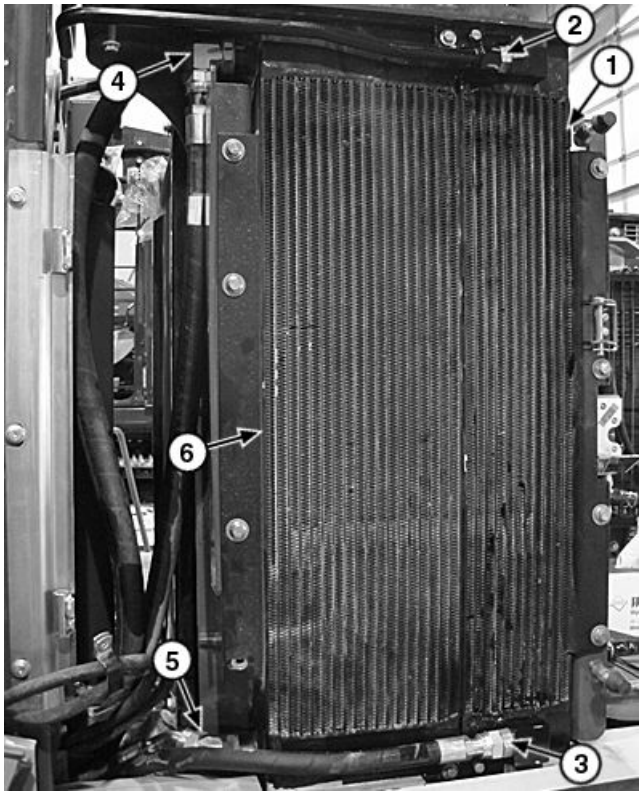

TX1086940A —UN—14JAN11

Cooling Package (left side shown)

1— Hydraulic Oil Cooler
2— Side Mounted Hydraulic Oil Cooler-to-Top Mounted Hydraulic Oil Cooler Line
3— Hydraulic Oil Cooler-to-Hydraulic Reservoir Line
4— Transmission Oil Cooler-to-Thermal Bypass Valve Hydraulic Line
5— Thermal Bypass Valve-to-Transmission Oil Cooler Hydraulic Line
6— Transmission Oil Cooler

11. Connect hydraulic oil cooler lines.
12. Install fuel cooler.
13. Remove vacuum or fill hydraulic reservoir. See Drain, Flush, and Refill Hydraulic System Oil. (Operator's Manual.)
14. Check hydraulic system oil level. See Check Hydraulic System Oil Level. (Operator's Manual.)
15. Check transmission oil level. See Check Transmission Oil Level. (Operator's Manual.)

TK40086,0000855 -19-14JAN11-1/1

Axle Oil Cooler Disassemble and Assemble—If Equipped

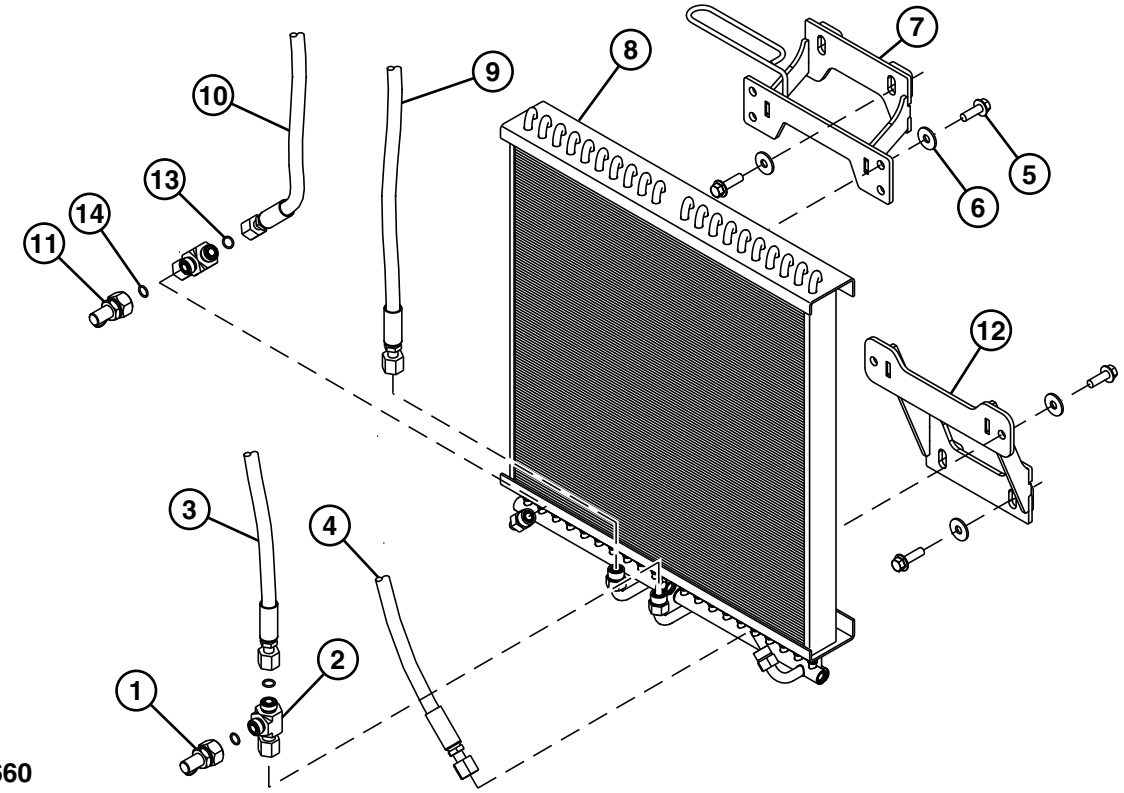

Axle Oil Cooler—Exploded View

1— Front Axle Test Port	**5— Cap Screw (4 used)**	**9— Hydraulic Hose**	**13— O-Ring (2 used)**
2— Tee Fitting (2 used)	**6— Washer (4 used)**	**10— Hydraulic Hose**	**14— O-Ring (2 used)**
3— Hydraulic Hose	**7— Top Bracket**	**11— Rear Axle Test Port**	
4— Hydraulic Hose	**8— Cooler**	**12— Lower Bracket**	

1. Disassemble parts (1—14) as shown.
2. Inspect for worn or damaged parts.
3. Repair or replace parts as necessary.
4. Assemble parts (1—14) as shown.

TK40086,0000852 -19-12JAN11-1/1

Fuel Cooler Remove and Install

1. Prepare machine for service. See Park and Prepare for Service Safely. (Group 0001.)
2. Turn battery disconnect switch to the OFF position or remove battery (-) cable.
3. Open left cooling package access door.

IMPORTANT: Prevent fuel system contamination. Use a clean container to collect fuel.

4. Place proper container under fuel cooler (1).
5. Disconnect fuel lines (2 and 3). Collect fuel in proper container for storage or disposal.
6. Remove fuel cooler.
7. Repair or replace as necessary.
8. Install fuel cooler and connect fuel lines. See Engine Fuel System Component Location. (Group 9010-15.)
9. Turn battery disconnect switch to the ON position or connect battery (-) cable.
10. Bleed fuel system. See Bleed Fuel System. (Operator's Manual.)
11. Operate machine and check for leaks.
12. Close left cooling package access door.

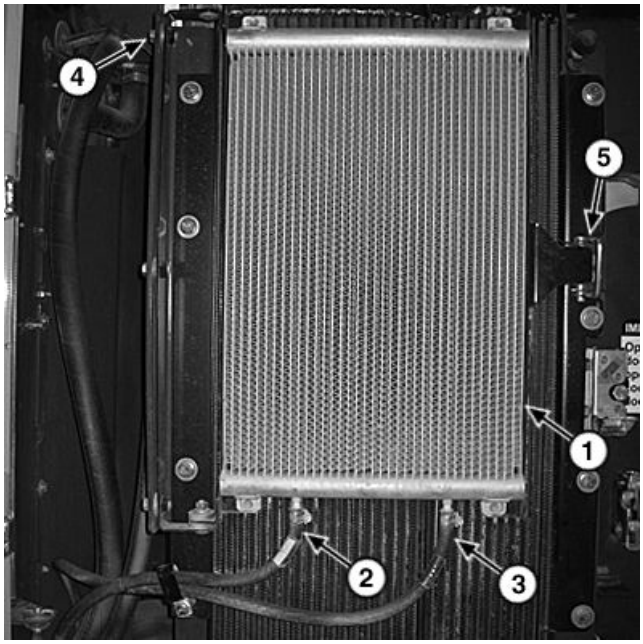

Fuel Cooler

1— Fuel Cooler
2— High Pressure Common Rail-to-Fuel Cooler Line
3— Fuel Cooler-to-Fuel Tank Line
4— Cap Screw (3 used)
5— Clip

TK40086,0000817 -19-21DEC10-1/1

Cooling Package Plenum Remove and Install

SPECIFICATIONS	
Cooling Package Top Access Cover Weight (approximate)	45 kg 100 lb.
Cooling Package Plenum Weight (approximate)	492 kg 1085 lb.
Cooling Package Top Access Cover Weight (approximate)	45 kg 100 lb.

ESSENTIAL TOOLS
JT01748 Lifting Bracket

1. Prepare machine for service. See Park and Prepare for Service Safely. (Group 0001.)

CAUTION: To avoid injury from escaping fluid under pressure, stop engine and relieve the pressure in the system before disconnecting or connecting hydraulic or other lines. Tighten all connections before applying pressure.

2. Relieve hydraulic system pressure. See Hydraulic System Pressure and Accumulators Discharge. (Group 9025-25.)
3. Turn battery disconnect switch to the OFF position or remove battery negative (-) cable.
4. Evacuate and recover refrigerant from air conditioning system. See R134a System Evacuate and see R134a System Recover. (Group 1830.)
5. Drain cooling system. See Drain Cooling System. (Operator's Manual.)
6. Remove cooling package access doors. See Cooling Package Access Doors Remove and Install. (Group 1910.)

CAUTION: Prevent possible crushing injury from heavy component. Use appropriate lifting device.

7. Remove cooling package top access cover.

Specification	
Cooling Package Top Access Cover—Weight (approximate)	45 kg 100 lb.

8. Remove exhaust filter. See Exhaust Filter Remove and Install. (Group 0530.)
9. Disconnect upper and lower charge air cooler tubes (2 and 3). Close all openings using caps and plugs.
10. Disconnect lower radiator hose (5). Close all openings using caps and plugs.

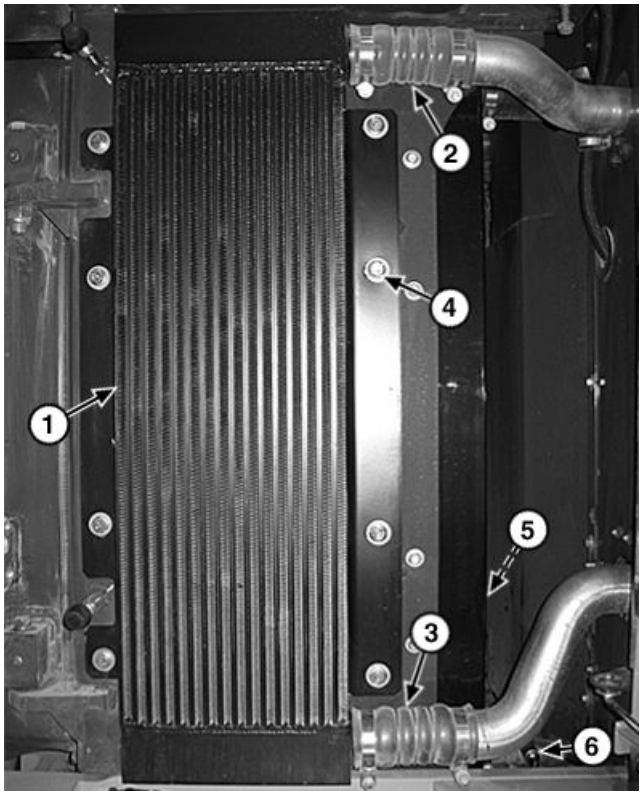

Cooling Package (right shown)

1— Charge Air Cooler
2— Upper Charge Air Cooler Tube
3— Lower Charge Air Cooler Tube
4— Cap Screw (6 used)
5— Lower Radiator Hose
6— Fast Fill Radiator Hose (if equipped)

11. If equipped with fast fill, disconnect fast fill radiator hose (6). Close all openings using caps and plugs.

Continued on next page

TK40086,0000851 -19-13JAN11-1/15

12. Tag and disconnect air conditioning lines (7 and 8). Close all openings using caps and plugs.
13. Tag and disconnect coolant hoses (9—11). Close all openings using caps and plugs.
14. Tag and disconnect hydraulic oil cooler line (12).
15. Disconnect engine frame harness-to-surge tank harness (X7) electrical connector. See Engine Frame Harness (W5) Component Location. (Group 9015-10.)
16. Remove surge tank. See Engine Cooling System Component Location. (Group 9010-15.)

7— Condenser-to-Air Conditioning Compressor Line
8— Receiver-Dryer-to-Condenser Line
9— Upper Radiator Hose
10— Surge Tank-to-Thermostat Housing Hose
11— Radiator-to-Surge Tank Hose
12— Hydraulic Oil Cooler-to-Hydraulic Filter Line
X7— Engine Frame Harness-to-Surge Tank Harness 4-Pin Connector

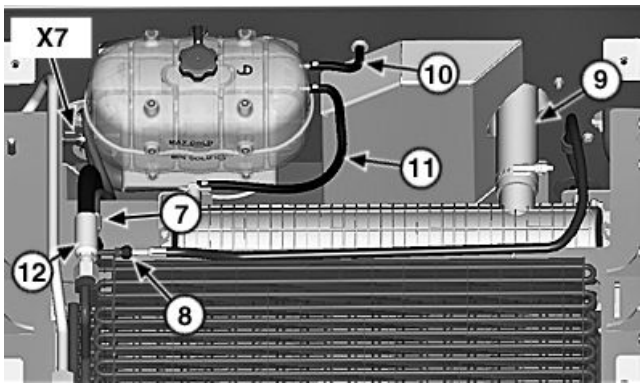

Cooling Package (top shown)

TK40086,0000851 -19-13JAN11-2/15

17. Remove clamp (13) and disconnect fuel lines (14 and 15). Close all openings using caps and plugs.
18. Apply vacuum to or drain hydraulic reservoir. If draining hydraulic reservoir, see Drain, Flush, and Refill Hydraulic System Oil. (Operator's Manual.)
19. Tag and disconnect lower hydraulic oil cooler line (16). Close all openings using caps and plugs.
20. Tag and disconnect hydraulic lines (17 and 18). Close all openings using caps and plugs.
21. Disconnect engine frame harness-to-rear frame harness 23-pin electrical connector (X39). Remove harness from engine frame. See Rear Frame Harness (W13) Component Location. (Group 9015-10.)
22. If equipped with radar object detection, disconnect load center harness-to-radar object detection harness 6-pin electrical connector (X101) and radar object detection harness-to-load center harness 3-pin CAN electrical connector (X116). Remove harness from engine frame. See Radar Object Detection Harness (W21) Component Location—If Equipped. (Group 9015-10.)

13— Clamp
14— High Pressure Common Rail-to-Fuel Cooler Line
15— Fuel Cooler-to-Fuel Tank Line
16— Lower Hydraulic Oil Cooler Line
17— Thermal Bypass Valve-to-Transmission Oil Cooler Hydraulic Line
18— Transmission Oil Cooler-to-Thermal Bypass Valve Hydraulic Line

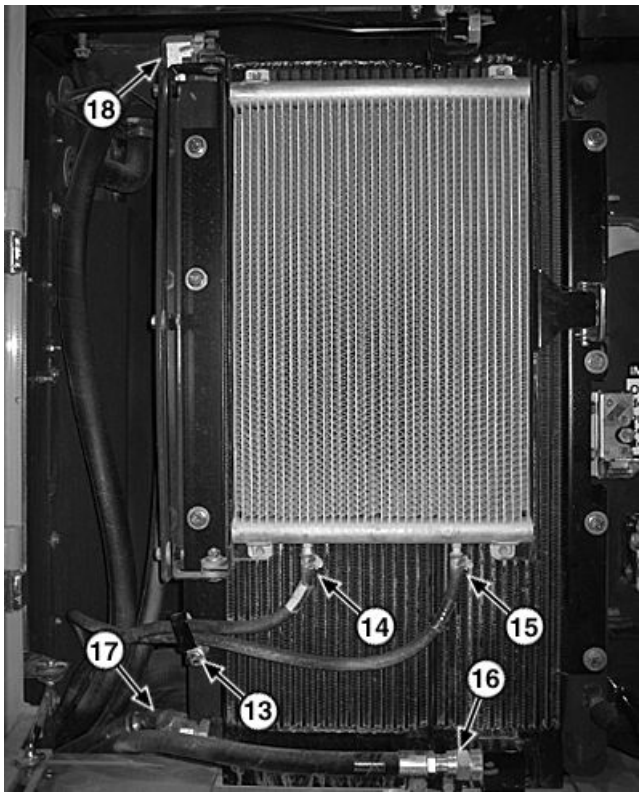

Cooling Package (left side shown)

Continued on next page

TK40086,0000851 -19-13JAN11-3/15

23. If equipped with axle oil cooler, tag and disconnect axle oil cooler hydraulic lines (21—24) and remove axle oil cooler (19). Close all openings using caps and plugs.

24. Disconnect hydraulic lines from fan valve.

19— Axle Oil Cooler (if equipped)
20— Cap Screw (4 used)
21— Rear Axle Cooler-to-Rear Axle Hydraulic Line
22— Axle Cooler-to-Rear Axle Oil Manifold Hydraulic Line
23— Axle Cooler-to-Front Axle Oil Manifold Hydraulic Line
24— Front Axle Cooler-to-Front Axle Hydraulic Line

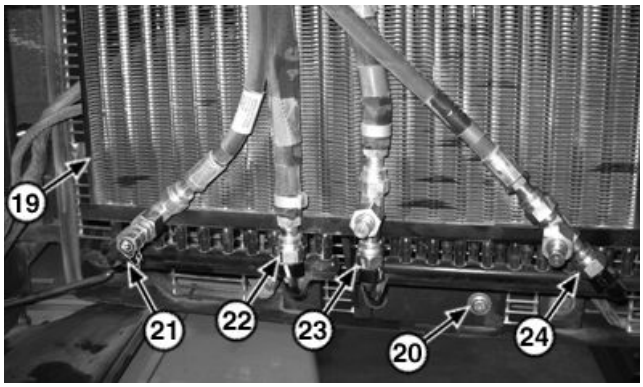

Axle Oil Cooler (if equipped)

TK40086,0000851 -19-13JAN11-4/15

a. If equipped with standard fan valve, tag and disconnect hydraulic lines (26—28). Close all openings using caps and plugs.

25— Standard Fan Valve
26— Standard Fan Valve-to-Hydraulic Fan Pump Line
27— Hydraulic Fan Motor-to-Standard Fan Valve Line
28— Standard Fan Valve-to-Hydraulic Fan Pump Load Sense Line

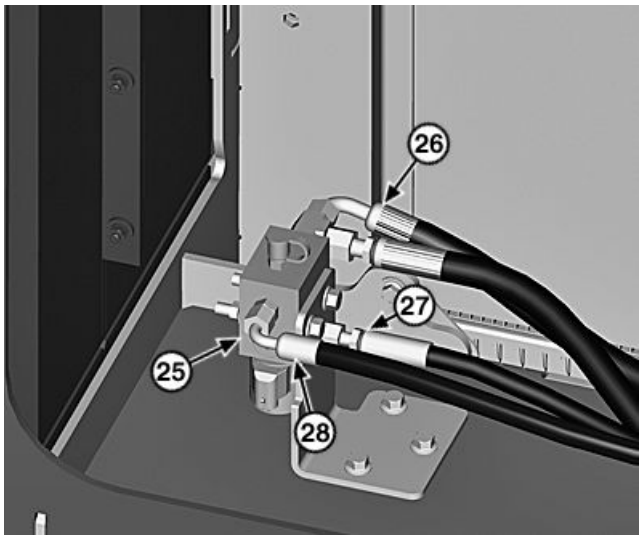

Standard Fan Valve

TK40086,0000851 -19-13JAN11-5/15

b. If equipped with reversing fan valve, tag and disconnect hydraulic lines (30—33). Close all openings using caps and plugs.

29— Reversing Fan Valve (if equipped)
30— Reversing Fan Valve-to-Hydraulic Filter Line
31— Reversing Fan Valve-to-Hydraulic Fan Motor Load Sense Line
32— Hydraulic Fan Pump-to-Reversing Fan Valve Line
33— Reversing Fan Valve-to-Hydraulic Reservoir Line

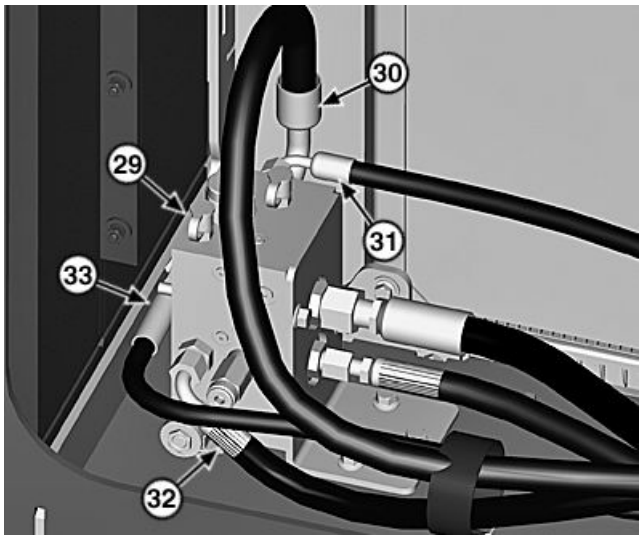

Reversing Fan Valve (if equipped)

Continued on next page

TK40086,0000851 -19-13JAN11-6/15

25. Disconnect hydraulic lines from fan motor.
    a. If equipped with standard fan valve, tag and disconnect hydraulic lines (34 and 35). Close all openings using caps and plugs.
    b. If equipped with reversing fan valve, tag and disconnect hydraulic line (34). Close all openings using caps and plugs.

34— Fan Motor Supply Line **35— Fan Motor Return Line**

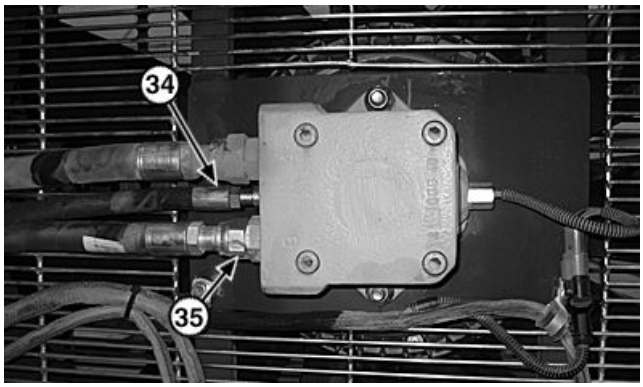

Fan Motor

TK40086,0000851 -19-13JAN11-7/15

26. Install JT01748 Lifting Brackets (36) into hand rail holes.

⚠ CAUTION: Prevent possible crushing injury from heavy component. Use appropriate lifting device.

27. Support cooling package plenum (37) using appropriate lifting device.

Specification	
Cooling Package Plenum—Weight (approximate)	492 kg 1085 lb.

28. Remove cooling package plenum retaining cap screws.

NOTE: Guide cooling package hydraulic lines through the grommet when removing cooling package plenum.

29. Remove cooling package plenum.
30. Repair or replace parts as necessary.

NOTE: Guide cooling package hydraulic lines through the grommet when installing cooling package plenum.

31. Use appropriate lifting device and lift cooling package plenum into place.
32. Install cooling package plenum retaining cap screws.
33. Remove JT01748 Lifting Brackets.

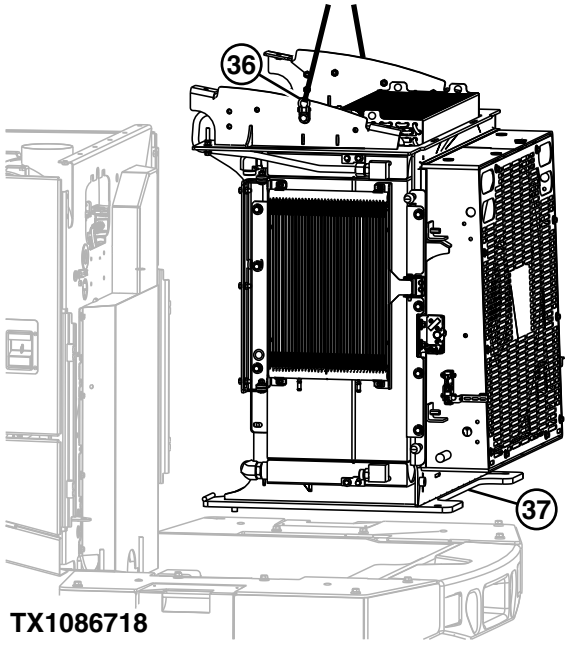

Cooling Package Plenum

36— JT01748 Lifting Bracket (2 used) **37— Cooling Package Plenum**

Continued on next page

TK40086,0000851 -19-13JAN11-8/15

34. Connect hydraulic lines to fan motor.
    a. If equipped with standard fan valve, connect hydraulic lines (34 and 35).
    b. If equipped with reversing fan valve, connect hydraulic line (34).
35. Connect hydraulic lines to fan valve.

34— Fan Motor Supply Line
35— Fan Motor Return Line

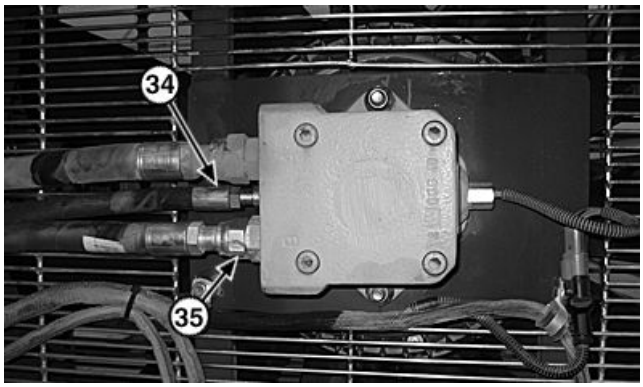

Fan Motor

TK40086,0000851 -19-13JAN11-9/15

a. If equipped with standard fan valve, connect hydraulic lines (26—28).

25— Standard Fan Valve
26— Standard Fan Valve-to-Hydraulic Fan Pump Line
27— Hydraulic Fan Motor-to-Standard Fan Valve Line
28— Standard Fan Valve-to-Hydraulic Fan Pump Load Sense Line

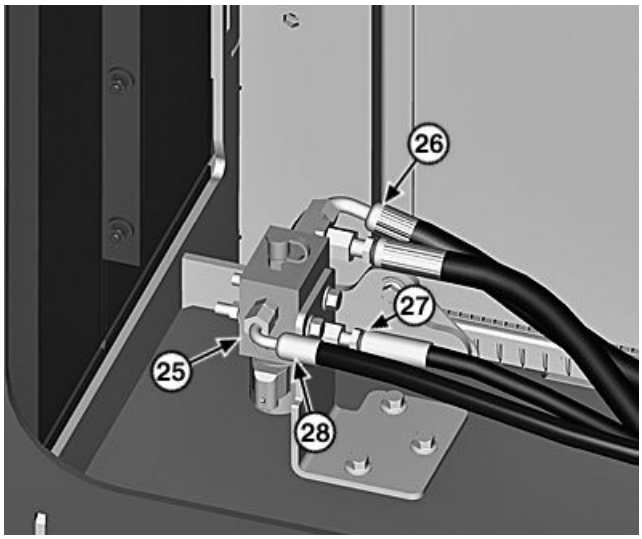

Standard Fan Valve

TK40086,0000851 -19-13JAN11-10/15

b. If equipped with reversing fan valve, connect hydraulic lines (30—33).

29— Reversing Fan Valve (if equipped)
30— Reversing Fan Valve-to-Hydraulic Filter Line
31— Reversing Fan Valve-to-Hydraulic Fan Motor Load Sense Line
32— Hydraulic Fan Pump-to-Reversing Fan Valve Line
33— Reversing Fan Valve-to-Hydraulic Reservoir Line

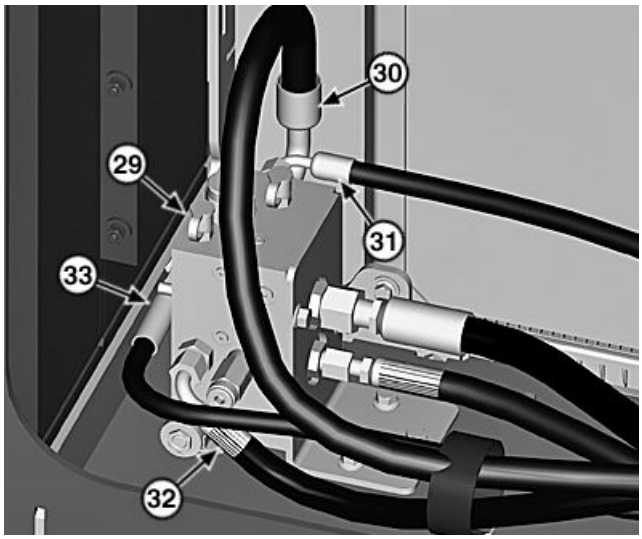

Reversing Fan Valve (if equipped)

Continued on next page

TK40086,0000851 -19-13JAN11-11/15

36. If equipped with axle oil cooler, install axle oil cooler (19) and connect axle oil cooler hydraulic lines (21—24).
37. If equipped with radar object detection, install radar object detection harness to engine frame, connect load center harness-to-radar object detection harness 6-pin electrical connector (X101) and radar object detection harness-to-load center harness 3-pin CAN electrical connector (X116). See Radar Object Detection Harness (W21) Component Location—If Equipped. (Group 9015-10.)
38. Install rear frame harness to engine frame and connect engine frame harness-to-rear frame harness 23-pin electrical connector (X39). See Rear Frame Harness (W13) Component Location. (Group 9015-10.)

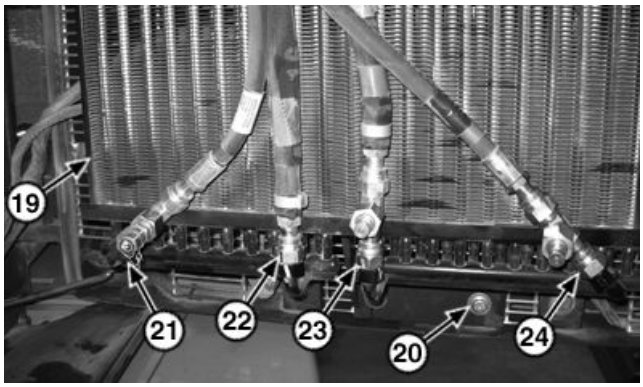

Axle Oil Cooler (if equipped)

19— Axle Oil Cooler (if equipped)
20— Cap Screw (4 used)
21— Rear Axle Cooler-to-Rear Axle Hydraulic Line
22— Axle Cooler-to-Rear Axle Oil Manifold Hydraulic Line
23— Axle Cooler-to-Front Axle Oil Manifold Hydraulic Line
24— Front Axle Cooler-to-Front Axle Hydraulic Line

TK40086,0000851 -19-13JAN11-12/15

39. Connect hydraulic lines (17 and 18).
40. Connect lower hydraulic oil cooler line (16).
41. Remove vacuum from or fill hydraulic reservoir. See Drain, Flush, and Refill Hydraulic System Oil. (Operator's Manual.)
42. Connect fuel lines (14 and 15) and install clamp (13). See Engine Fuel System Component Location. (Group 9010-15.)
43. Install surge tank. See Engine Cooling System Component Location. (Group 9010-15.)

13— Clamp
14— High Pressure Common Rail-to-Fuel Cooler Line
15— Fuel Cooler-to-Fuel Tank Line
16— Lower Hydraulic Oil Cooler Line
17— Thermal Bypass Valve-to-Transmission Oil Cooler Hydraulic Line
18— Transmission Oil Cooler-to-Thermal Bypass Valve Hydraulic Line

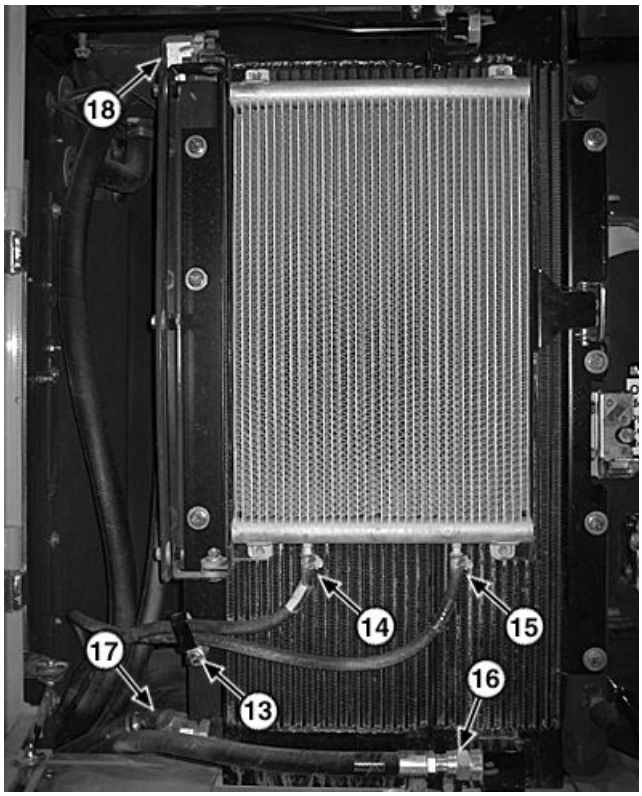

Cooling Package (left side shown)

Continued on next page

TK40086,0000851 -19-13JAN11-13/15

44. Connect engine frame harness-to-surge tank harness (X7) electrical connector. See Engine Frame Harness (W5) Component Location. (Group 9015-10.)
45. Connect hydraulic oil cooler line (12).
46. Connect coolant hoses (9—11).
47. Connect air conditioning lines (7 and 8).

7— Condenser-to-Air Conditioning Compressor Line
8— Receiver-Dryer-to-Condenser Line
9— Upper Radiator Hose
10— Surge Tank-to-Thermostat Housing Hose
11— Radiator-to-Surge Tank Hose
12— Hydraulic Oil Cooler-to-Hydraulic Filter Line
X7— Engine Frame Harness-to-Surge Tank Harness 4-Pin Connector

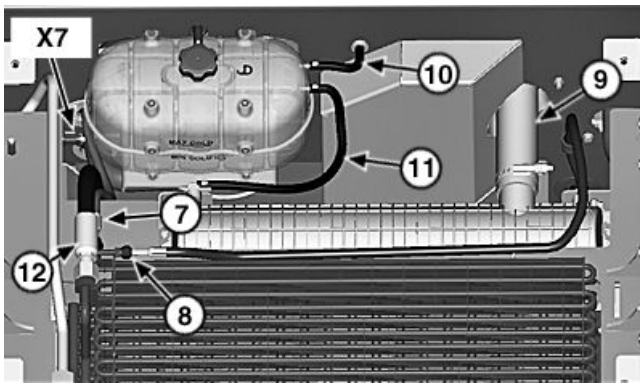

Cooling Package (top shown)

TK40086,0000851 -19-13JAN11-14/15

48. If equipped with fast fill, connect fast fill radiator hose (6) and lower radiator hose (5). See Engine Cooling System Component Location. (Group 9010-15.)
49. Connect upper and lower charge air cooler tubes (2 and 3).
50. Install exhaust filter. See Exhaust Filter Remove and Install. (Group 0530.)

CAUTION: Prevent possible crushing injury from heavy component. Use appropriate lifting device.

51. Install cooling package top access cover.

Specification	
Cooling Package Top Access Cover—Weight (approximate)	45 kg 100 lb.

52. Install cooling package access doors. See Cooling Package Access Doors Remove and Install. (Group 1910.)
53. Fill cooling system. See Refill Cooling System. (Operator's Manual.)
54. Check transmission oil level. See Check Transmission Oil Level. (Operator's Manual.)
55. Charge air conditioning system. See R134a System Charge. (Group 1830.)
56. Turn battery disconnect switch to the ON position or install battery negative (-) cable.

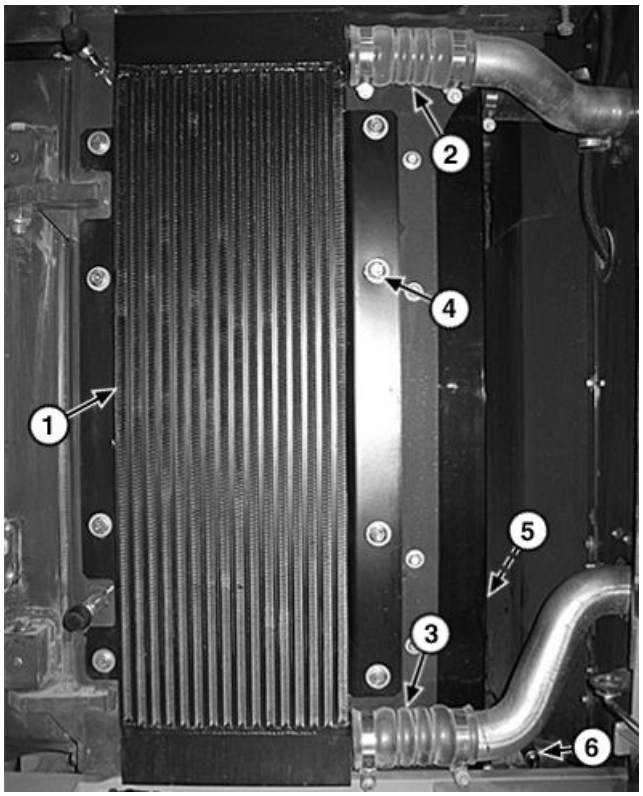

Cooling Package (right shown)

1— Charge Air Cooler
2— Upper Charge Air Cooler Tube
3— Lower Charge Air Cooler Tube
4— Cap Screw (6 used)
5— Lower Radiator Hose
6— Fast Fill Radiator Hose (if equipped)

TK40086,0000851 -19-13JAN11-15/15

Air Cleaner Remove and Install

1. Prepare machine for service. See Park and Prepare for Service Safely. (Group 0001.)
2. Turn battery disconnect switch to the OFF position or remove battery negative (-) cable.
3. Open left and right engine access doors.
4. Disconnect intake air sensor (B10) electrical connector. See Engine Harness (W6) Component Location. (Group 9015-10.)
5. Loosen clamps (3) and remove intake air tube (2).
6. Loosen mounting bands (4) and remove air cleaner (1).
7. Repair or replace as necessary.
8. Install air cleaner and tighten mounting bands.
9. Connect intake air tube and tighten clamps.
10. Connect intake air sensor (B10) electrical connector. See Engine Harness (W6) Component Location. (Group 9015-10.)
11. Close engine access doors.
12. Turn battery disconnect switch to the ON position or install battery negative (-) cable.

1— Air Cleaner
2— Intake Air Tube
3— Clamp (2 used)
4— Mounting Band (2 used)
B10— Intake Air Sensor

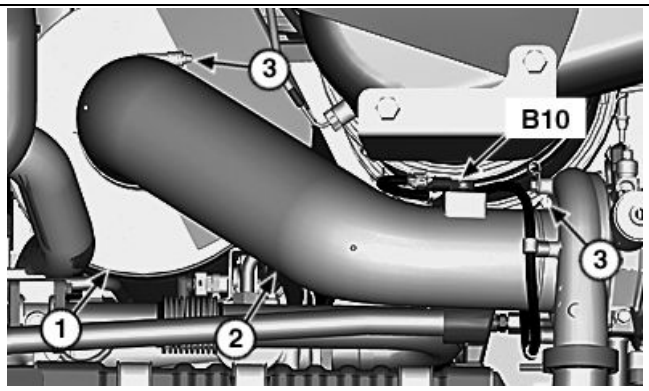

TX1084777A —UN—17NOV10

Air Cleaner (right side shown)

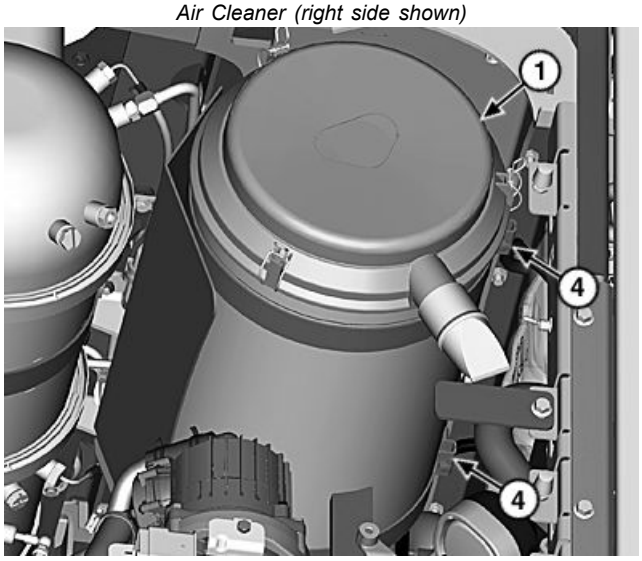

TX1084778A —UN—17NOV10

Air Cleaner (left side shown)

TK40086,0000815 -19-21DEC10-1/1

Precleaner Remove and Install

1. Prepare machine for service. See Park and Prepare for Service Safely. (Group 0001.)
2. Loosen clamp (2) and remove precleaner (1).
3. Remove cap screws (4) and inlet tube (3).
4. Repair or replace as necessary.
5. Install inlet tube and cap screws.
6. Install precleaner and tighten clamp.

1— Precleaner
2— Clamp
3— Inlet Tube
4— Cap Screw (4 used)

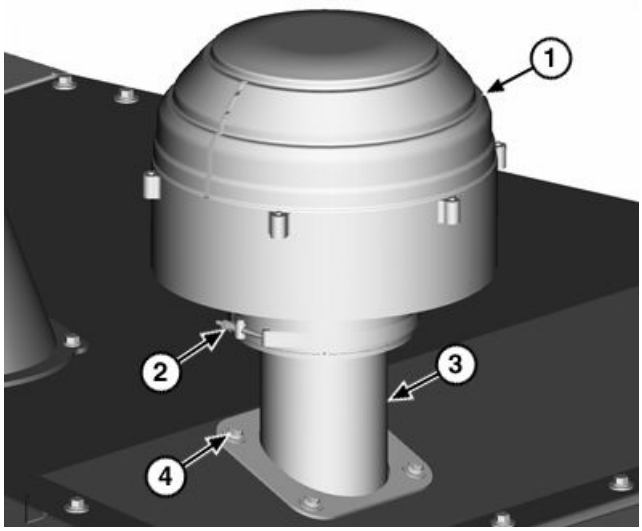

TX1080053A —UN—20JUL10

Precleaner

AS79221,00001F7 -19-14DEC10-1/1

Exhaust Tube Remove and Install

SPECIFICATIONS	
Exhaust Tube-to-Turbo Clamp Nut Torque	20 N·m 177 lb.-in.
Exhaust Tube-to-Turbo Clamp Nut Torque	20 N·m 177 lb-in.

1. Prepare machine for service. See Park and Prepare for Service Safely. (Group 0001.)

IMPORTANT: The life of the exhaust bellows is dependant on being properly aligned. If not aligned correctly, the life of the exhaust bellows will significantly decrease and may risk unfiltered exhaust into the atmosphere.

2. Verify witness marks for all adjustment cap screws are correct. Perform Exhaust Bellows Alignment Procedure. (Group 0530.)
3. Remove clamps (3) and mounting nuts (2).
4. Remove exhaust tube with bellows (1).
5. Repair or replace as necessary.
6. Install exhaust tube with bellows. Tighten exhaust tube-to-turbo clamp nut to specification.

Specification

Exhaust Tube-to-Turbo Clamp Nut—Torque.....20 N·m
177 lb.-in.

7. Tap the circumference of the exhaust tube-to-turbo clamp nut repeatedly with a dead blow hammer and tighten nut again.

Specification

Exhaust Tube-to-Turbo Clamp Nut—Torque.....20 N·m
177 lb-in.

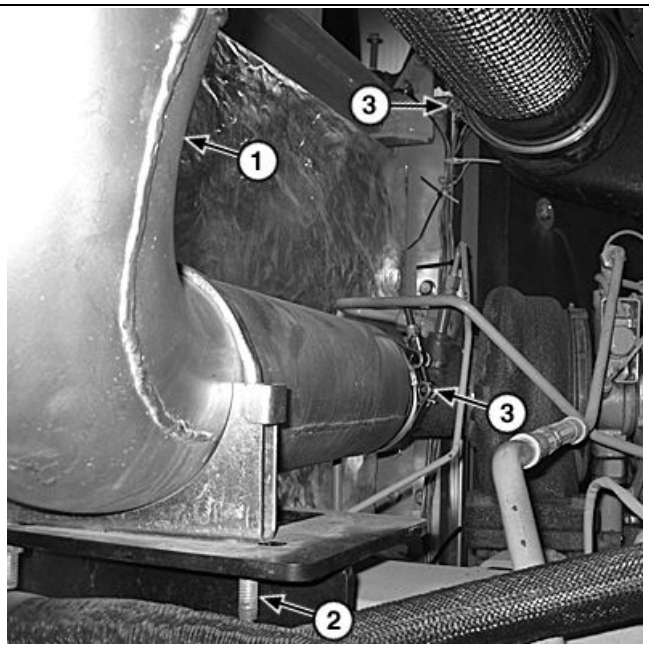

TX1085428A —UN—03DEC10

Exhaust Tube With Bellows

1— Exhaust Tube With Bellows 3— Clamp (2 used)
2— Mounting Nut (2 used)

IMPORTANT: The life of the exhaust bellows is dependant on being properly aligned. If not aligned correctly, the life of the exhaust bellows will significantly decrease and may risk unfiltered exhaust into the atmosphere.

8. Align exhaust bellows. See Exhaust Bellows Alignment Procedure. (Group 0530.)
9. Install mounting clamps and nuts.

TK40086,000084A -19-23MAR11-1/1

JDG11335 Bellows Alignment Fixture

The table below lists the model and series of machine with the required configuration of JDG11335 Bellows Alignment Fixture.

Crawlers	
Model/Series	**Configuration**
755K	B
850K	C

Excavators	
Model/Series	**Configuration**
250G	B
290G	B
350G	B

4WD Loaders	
Model/Series	**Configuration**
644K	A
724K	A
744K	A

Motor Graders	
Model/Series	**Configuration**
600, 700, and 800 G and GP	B

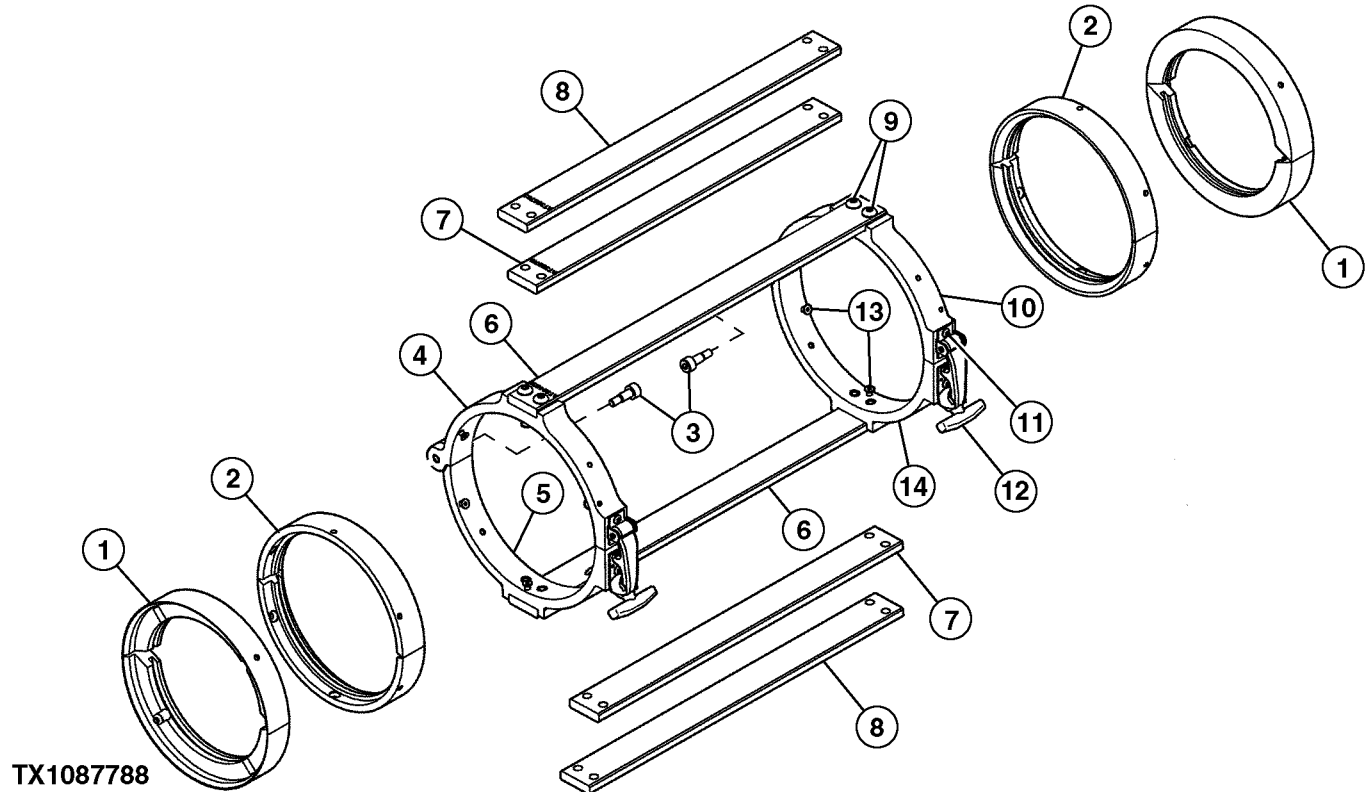

JDG11335 Bellows Alignment Fixture Components

1— JDG11335P5P1 Insert (4 used)
2— JDG11335P4P1 Insert (4 used)
3— Cap Screw (2 used)
4— JDG11335P7P2 Collar
5— JDG11335P6P2 Collar
6— JDG11335P1P1 Bar (2 used)
7— JDG11335P2P1 Bar (2 used)
8— JDG11335P3P1 Bar (2 used)
9— Cap Screw (8 used)
10— JDG11335P7P1 Collar
11— Cap Screw (6)
12— Latch (2 used)
13— Cap Screw (16 used)
14— JDG11335P6P1 Collar

Continued on next page

JB3888,00003AA -19-16JUN11-1/3

NOTE: All tool parts are common except the inserts and bars. Refer to the tables below for configurations and part numbers for the inserts and bars.

Using the tables below, construct tool with proper configuration.

Continued on next page

JB3888,00003AA -19-16JUN11-2/3

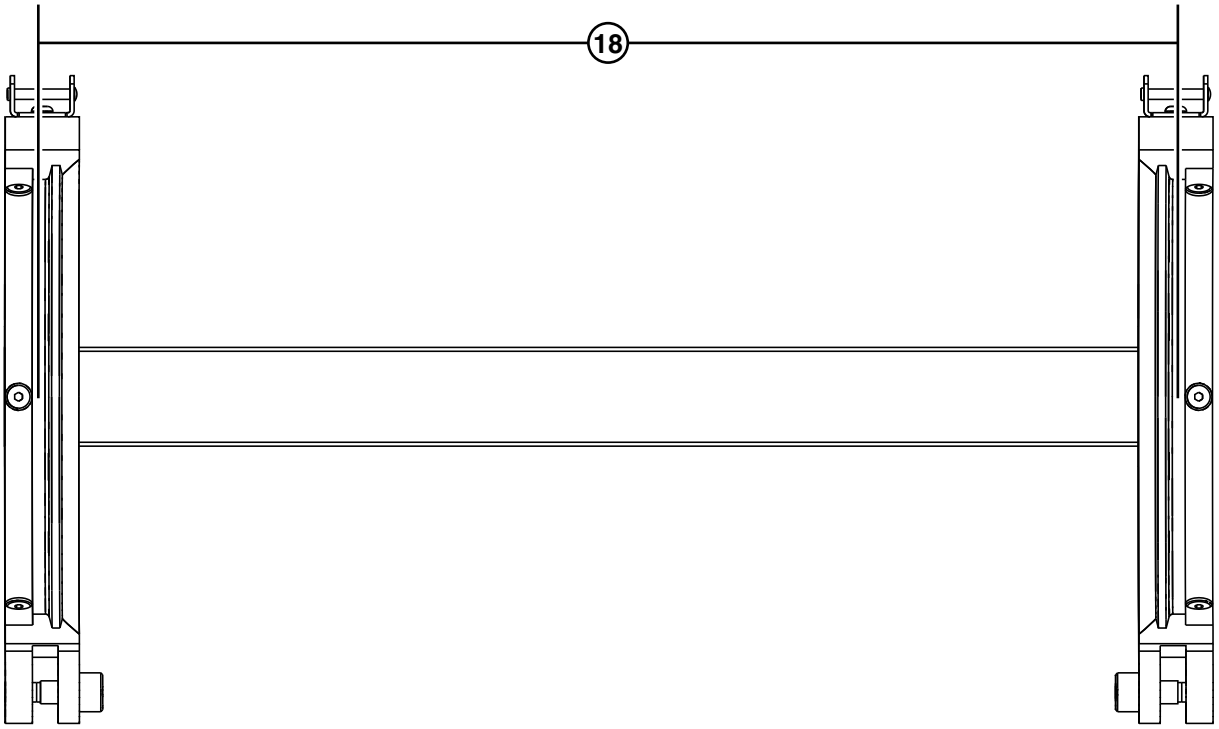

TX1091780 —UN—06MAY11

TX1091780

Center of Groove-to-Center of Groove Measurement

For assembly of all inserts, install inserts with groove (15) closest to the bar.

To verify the tool is built correctly, measure center of groove-to-center of groove (18) for the required configuration.

Configuration A	
Insert	JDG11335P4P1
Bar 310 mm (12.2 in.)	JDG11335P1P1
Center of Groove-to-Center of Groove Measurement	284.5 mm 11.20 in.

Configuration B	
Insert	JDG11335P4P1
Bar 269 mm (10.6 in.)	JDG11335P2P1
Center of Groove-to-Center of Groove Measurement	243.5 mm 9.59 in.

Configuration C	
Insert	JDG11335P5P1
Bar 278.1 mm (10.9 in.)	JDG11335P3P1
Center of Groove-to-Center of Groove Measurement	247.5 mm 9.74 in.

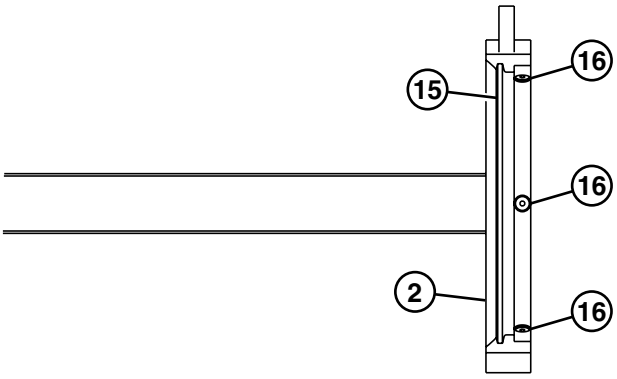

TX1088673 —UN—03MAR11

JDG11335P4P1 Insert Installation

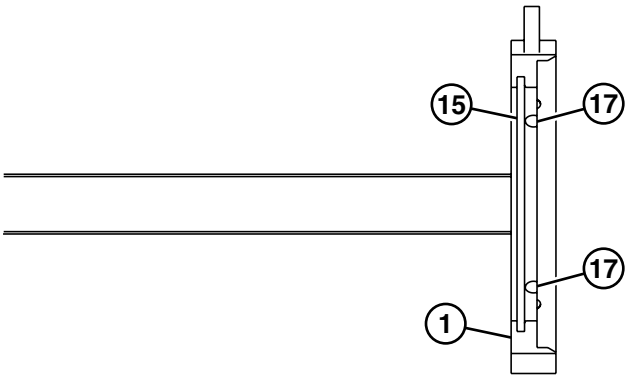

TX1088674 —UN—02MAR11

JDG11335P5P1 Insert Installation

1— JDG11335P5P1 Insert (4 used)
2— JDG11335P4P1 Insert (4 used)
15— Groove
16— Cap Screw (3 used)
17— Cap Screw (2 used)
18— Center of Groove-to-Center of Groove Measurement

JB3888,00003AA -19-16JUN11-3/3

Exhaust Bellows Alignment Procedure

SPECIFICATIONS	
Exhaust Bellows Length	297.1—309.9 mm 11.7—12.20 in.
Exhaust Filter-to-Exhaust Bellows Clamp nut Torque	20 N·m 177 lb-in.

ESSENTIAL TOOLS
JDG11095 Exhaust Bellows Alignment Fixture

IMPORTANT: The life of the exhaust bellows is dependant on being properly aligned. If not aligned correctly, the life of the exhaust bellows will significantly decrease and may risk unfiltered exhaust into the atmosphere.

NOTE: Graphic is for reference only.

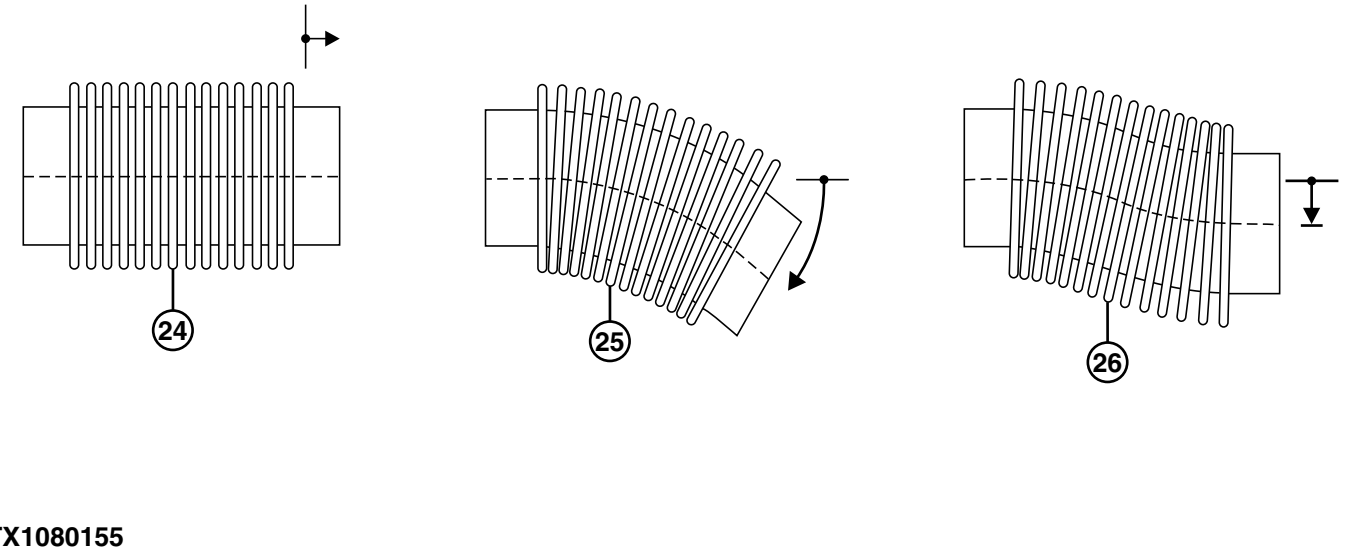

TX1080155

Axial, Angular and Lateral Specifications

24— Axial **25— Angular** **26— Lateral**

This procedure is to be performed whenever the exhaust tube or exhaust bellows is disconnected. The JDG11095 Exhaust Bellows Alignment Tool is used to hold the exhaust bellows at nominal alignment. While the exhaust bellows is held at nominal alignment, it allows the technician to visually see and measure to verify that the exhaust bellows is in alignment with the exhaust filter. The life of the bellows depends on how well the exhaust bellows is aligned axially (24), angularly (25), and laterally (26). Axial tolerance is ±6.4 mm (±0.252 in.), angular tolerance is 2°, and lateral tolerance is ±8.5 mm. (±0.335 in.). Use the adjustable frame with the adjustment points to align the exhaust bellows with the exhaust filter inlet.

1. Assemble JDG11335 Bellows Alignment Fixture. See JDG11335 Bellows Alignment Fixture. (Group 0530.)

Continued on next page

TX1085945 —UN—20DEC10

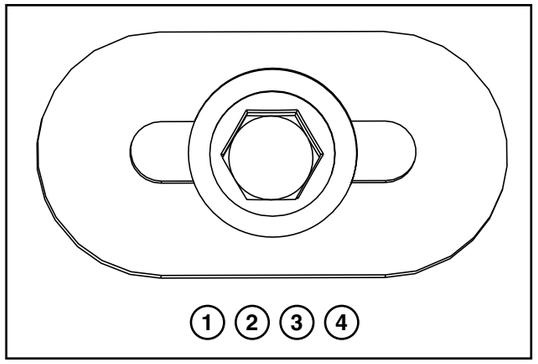

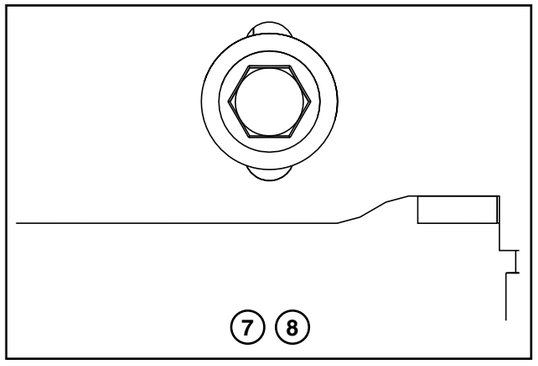

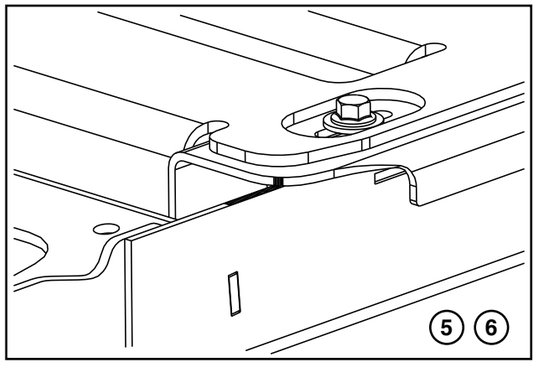

TX1085945

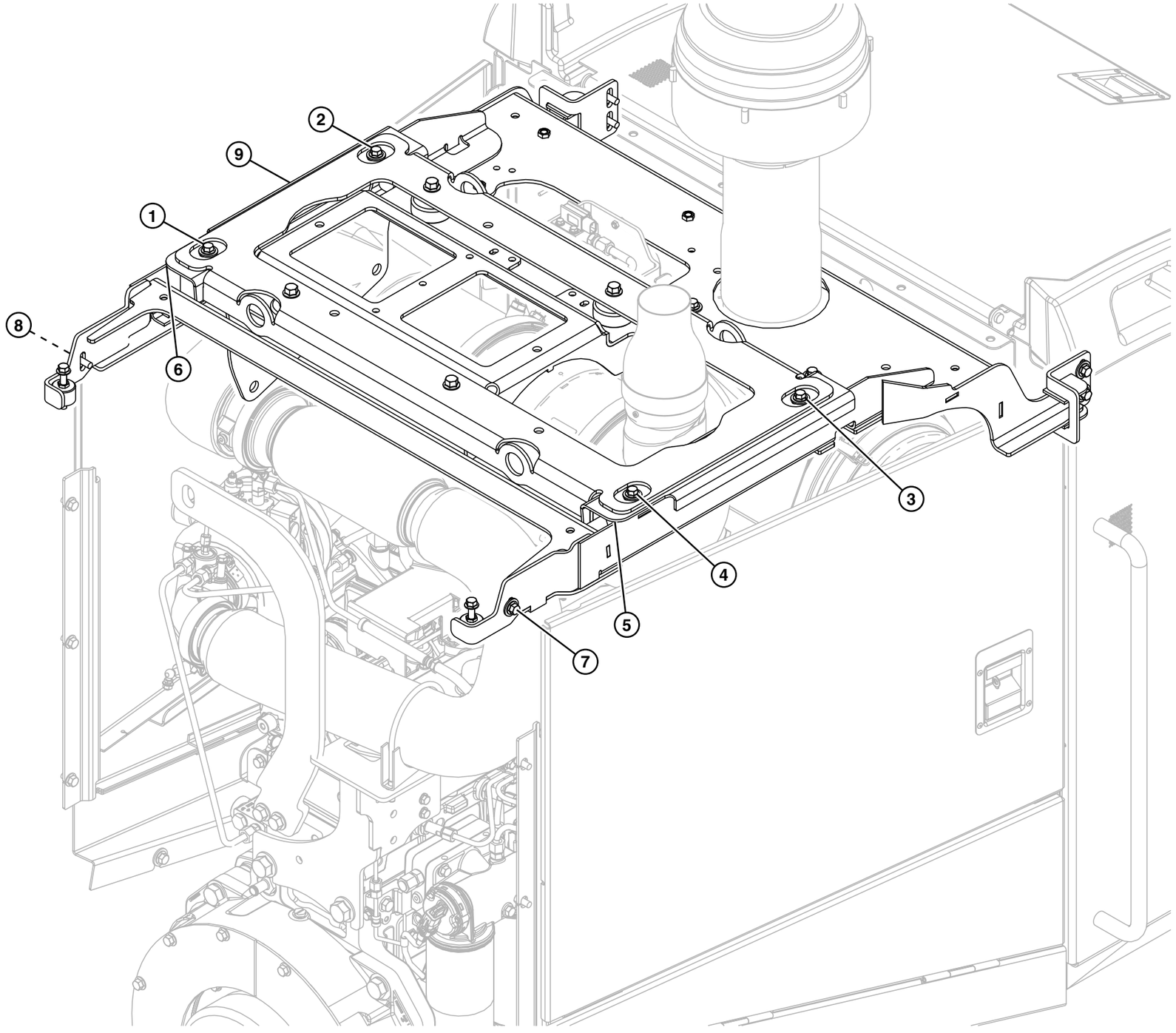

Witness Marks 1

Continued on next page

AS79221,00001F9 -19-28FEB11-2/10

1— Front Right Forward/Back Adjustment Bolt
2— Rear Right Forward/Back Adjustment Bolt
3— Rear Left Forward/Back Adjustment Bolt
4— Front Left Forward/Back Adjustment Bolt
5— Left Front of Adjustable Frame
6— Right Front of Adjustable Frame
7— Left Front Up/Down Adjustment Locking Bolt
8— Right Front Up/Down Adjustment Locking Bolt
9— Adjustable Frame
10— Left Rear Up/Down Adjustment Locking Bolt (2 used)
11— Right Rear Up/Down Adjustment Locking Bolt (2 used)
12— Left Rear Adjustable Frame Witness Mark
13— Right Rear Adjustable Frame Witness Mark
14— Left Front Up/Down Adjustment
15— Right Front Up/Down Adjustment
16— Right Rear Up/Down Adjustment
17— Left Rear Up/Down Adjustment

Continued on next page

18— Front Frame Cap Screw Witness Mark (2 used)

19— Left Side Frame Cap Screw Witness Mark (2 used)

TX1085957 —UN—21DEC10

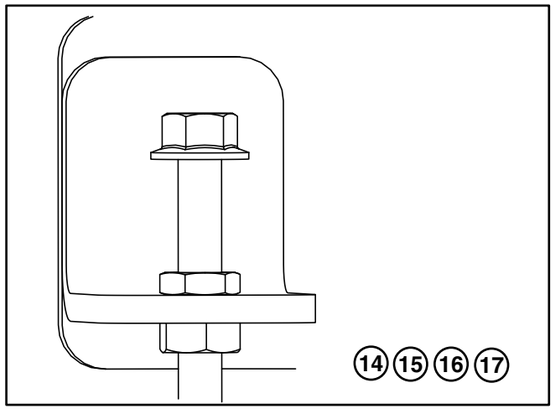

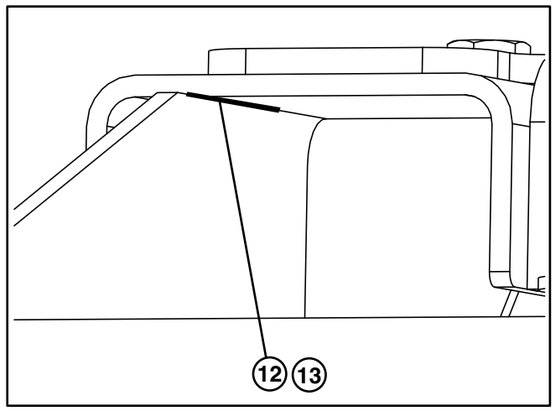

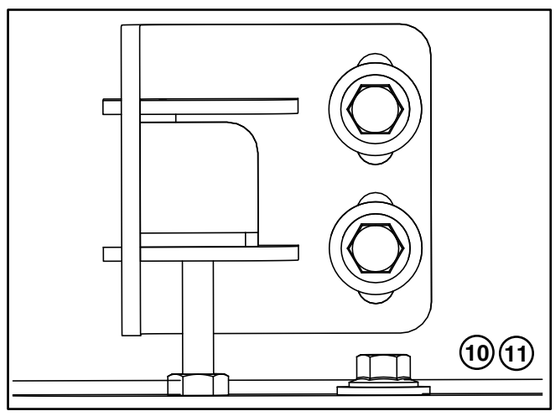

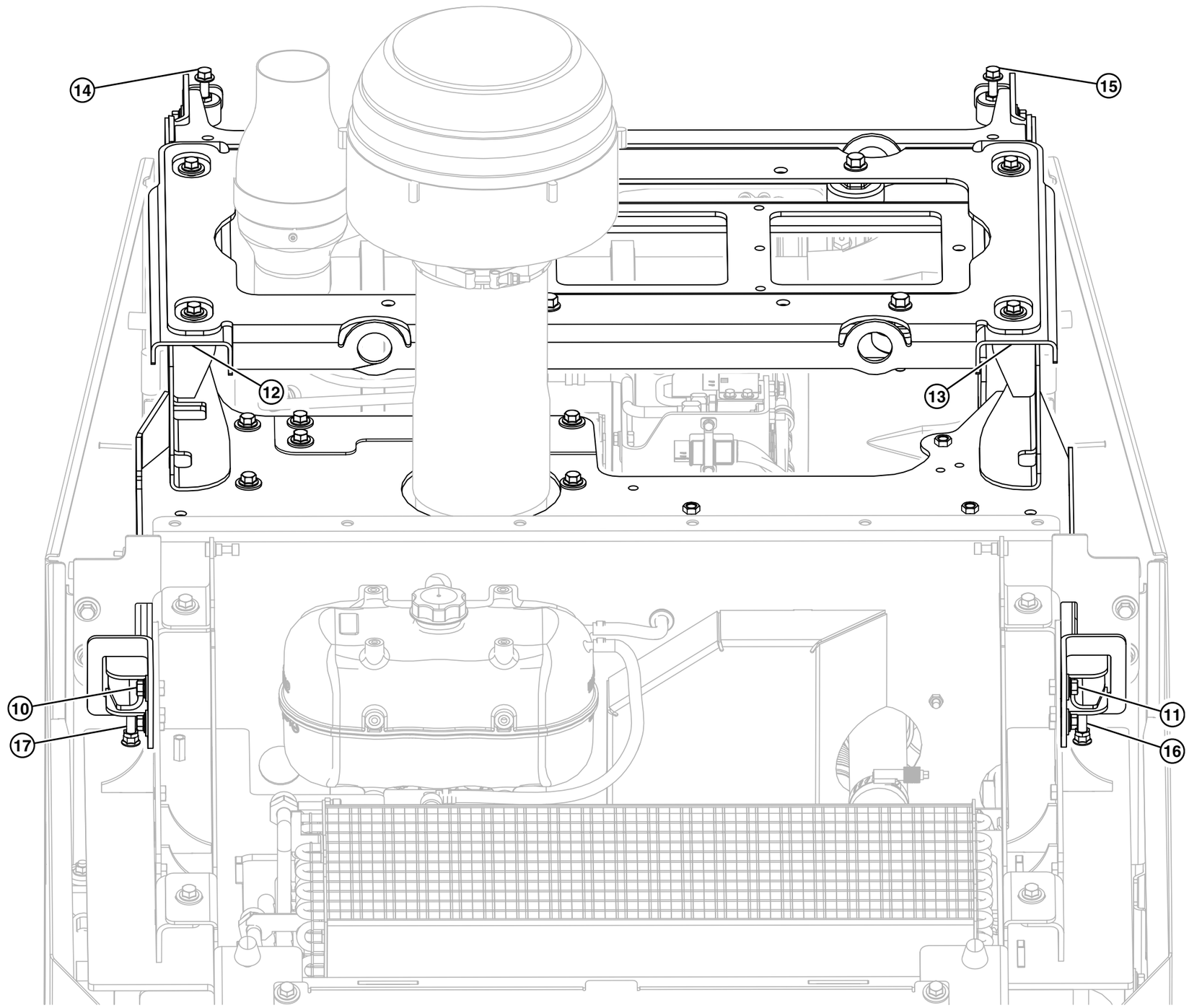

TX1085957

Witness Marks 2

Continued on next page

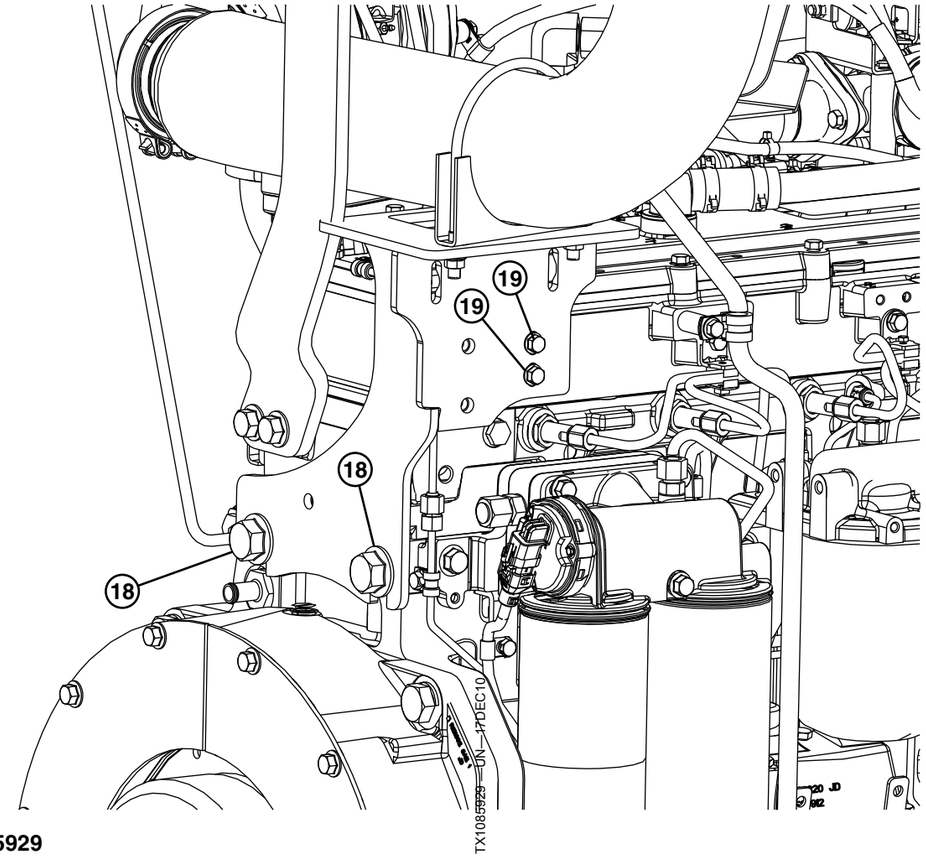

Witness Marks 3

NOTE: Witness marks were placed from the factory to aid in alignment.

2.

Verify witness marks prior to adjustment.

If witness marks are not aligned, mark new witness marks for reference.

Continued on next page

AS79221,00001F9 -19-28FEB11-5/10

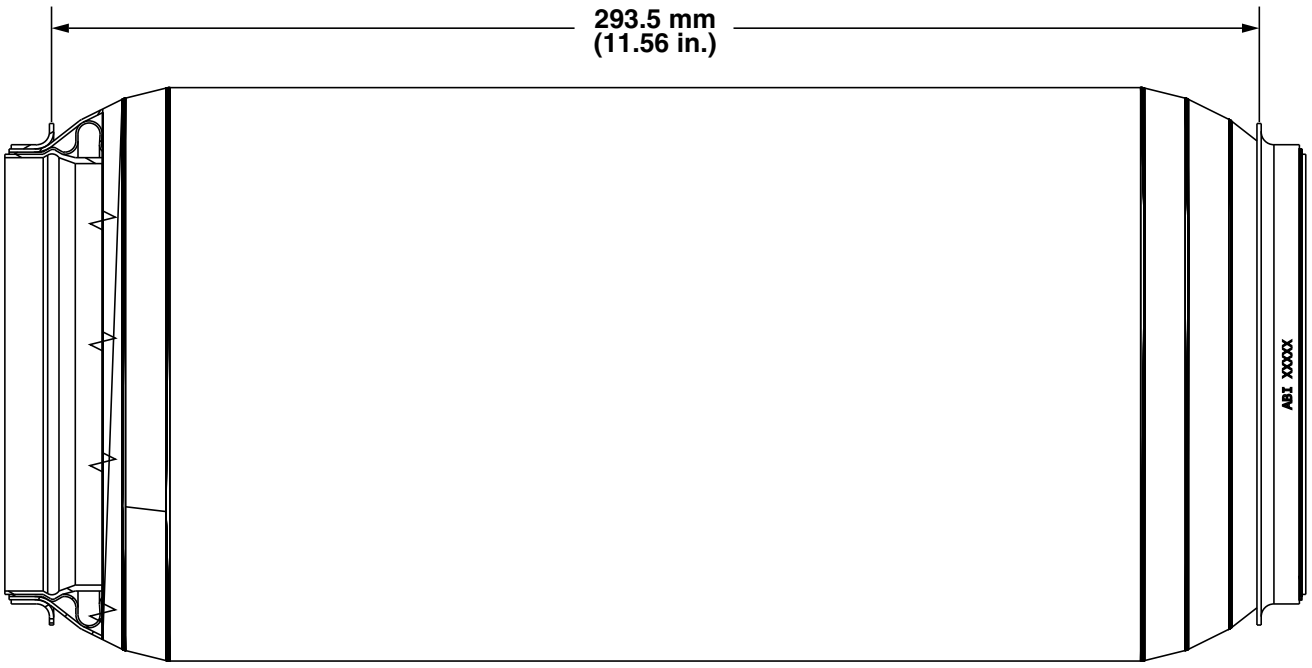

TX1080161 —UN—02AUG10

TX1080161

Exhaust Bellows Length

3. Measure length of exhaust bellows. If bellows is not within specification use adjustment points to shorten or lengthen the exhaust bellows.

Specification	
Exhaust Bellows—Length	297.1—309.9 mm 11.7—12.20 in.

AS79221,00001F9 -19-28FEB11-6/10

IMPORTANT: Verify that clamp between the exhaust bellows and the exhaust filter is loose or removed. If clamp is not loose, damage to the exhaust bellows or to JDG11335 Exhaust Bellows Alignment Tool may occur.

4. Verify that clamp (23) is loose or removed.
5. Install JDG11095 Exhaust Bellows Alignment Fixture (21) on outer ring of exhaust bellows (20).

20— Exhaust Bellows
21— Exhaust Bellows Alignment Fixture
22— Clip (2 used)
23— Clamp

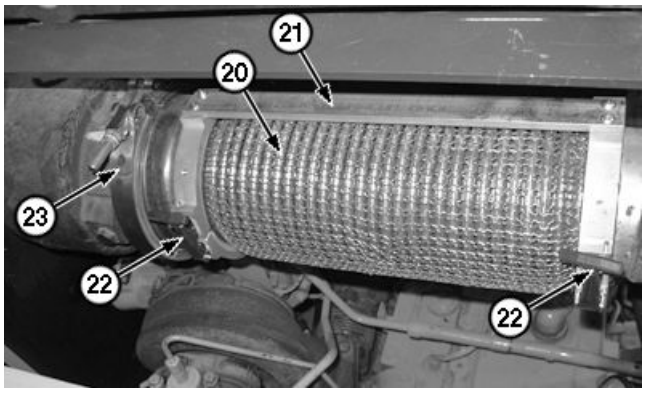

TX1087994A —UN—15FEB11

JDG11335 Bellows Alignment Fixture

Continued on next page

AS79221,00001F9 -19-28FEB11-7/10

6. Visually inspect gap between exhaust bellows (20) and the exhaust filter (23) inlet from the top. If gap is not observed go to step 7.

A—Gap A
B—Gap B
C—Gap C

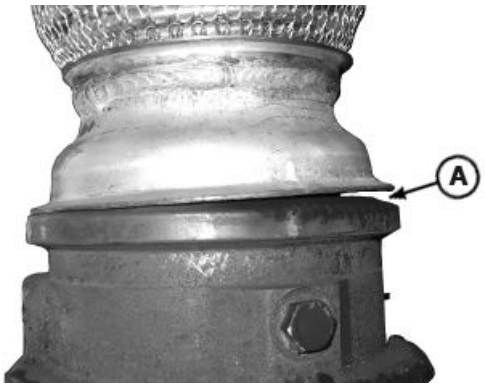

TX1079988A —UN—20JUL10

Gap A

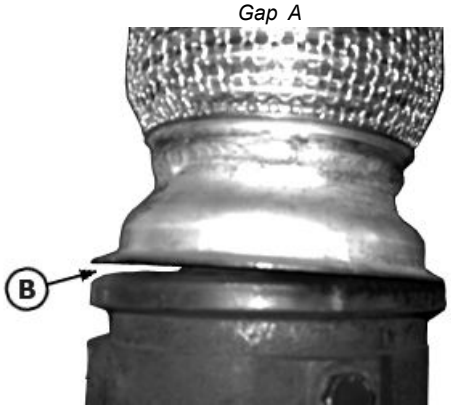

TX1079992A —UN—20JUL10

Gap B

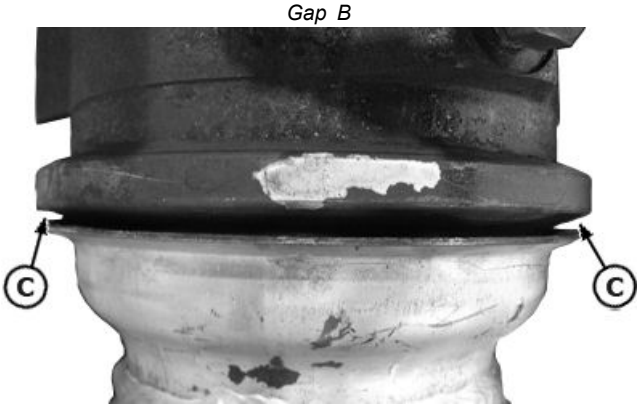

TX1079999A —UN—30JUL10

Gap C

Continued on next page

AS79221,00001F9 -19-28FEB11-8/10

a. If gap A is observed, adjustment bolts (1 and 2) are out of adjustment. Adjust bolts (1 and 2) accordingly to align exhaust filter inlet with the exhaust bellows.

b. If gap B is observed, adjustment bolts (3 and 4) are out of adjustment. Adjust bolts (3 and 4) accordingly to align exhaust filter inlet with the exhaust bellows.

c. If gap C is observed, adjustment bolts (1—4) are equally out of adjustment. Move adjustable frame equally forward or to the rear until the exhaust filter inlet aligns with the exhaust bellows.

1— Front Right Forward/Back Adjustment Bolt
2— Rear Right Forward/Back Adjustment Bolt
3— Rear Left Forward/Back Adjustment Bolt
4— Front Left Forward/Back Adjustment Bolt
7— Left Front Up/Down Adjustment Locking Bolt
8— Right Front Up/Down Adjustment Locking Bolt
9— Adjustable Frame
10— Left Rear Up/Down Adjustment Locking Bolt (2 used)
11— Right Rear Up/Down Adjustment Locking Bolt (2 used)
14— Left Front Up/Down Adjustment
15— Right Front Up/Down Adjustment
16— Right Rear Up/Down Adjustment
17— Left Rear Up/Down Adjustment

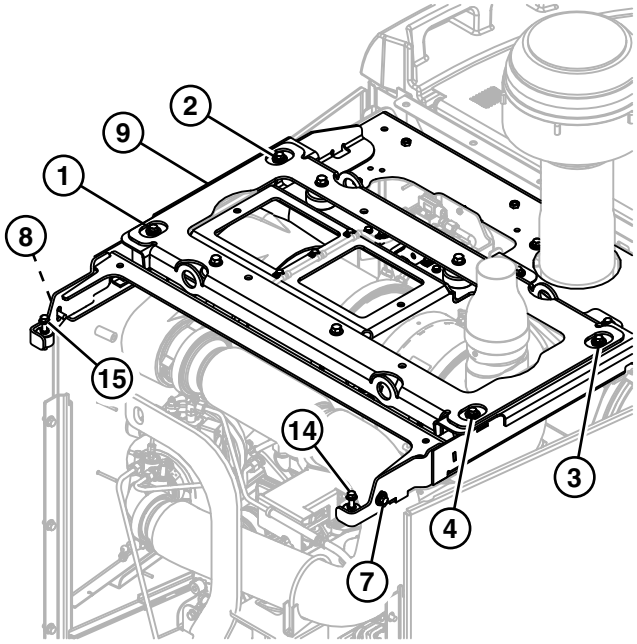

TX1085964 —UN—20DEC10

Adjustment Points Front View

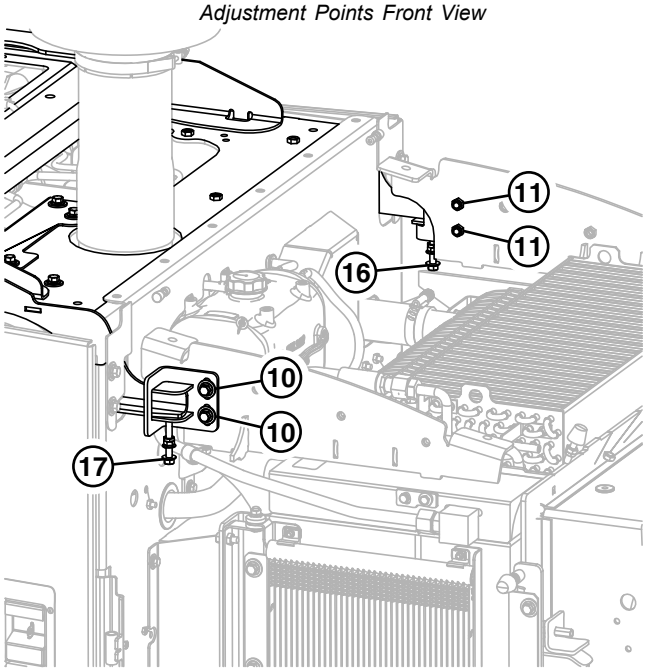

TX1085965 —UN—17DEC10

Adjustment Points Rear View

Continued on next page

AS79221,00001F9 -19-28FEB11-9/10

7. Visually inspect gap between exhaust bellows (20) and the exhaust filter (23) inlet from the front side. If gap is observed go to next step. If gap is not observed go to step 9.
8. If gap D ore E is observed, adjustment bolts (14—17) are out of adjustment.
   a. Loosen locking bolts (7,8,10 and 11).
   b. Raise adjustable frame if gap D is observed and lower adjustable frame if Gap E is observed. Adjust up/down adjustment points (14—17) equally until the exhaust filter inlet aligns with the exhaust bellows.

D—Gap D **E—Gap E**

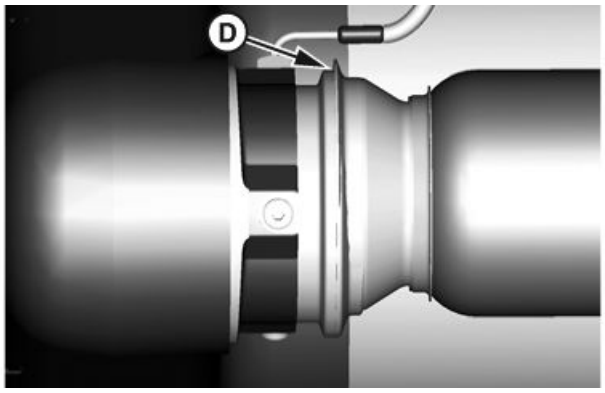

TX1080019 —UN—19JUL10

Gap D

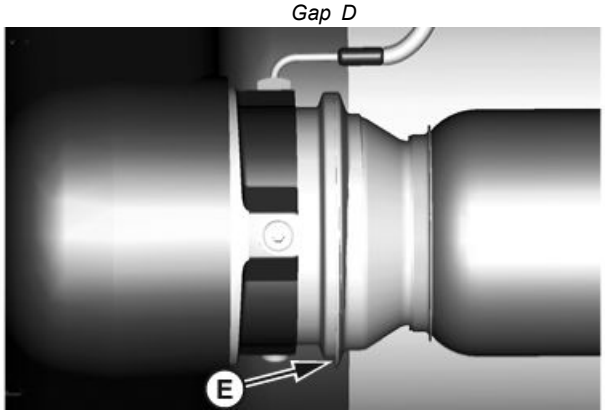

TX1080020 —UN—19JUL10

Gap E

AS79221,00001F9 -19-28FEB11-10/10

9. Measure area between exhaust bellows and the inside edge of the exhaust filter inlet at all measuring positions and record.

   If all measurements are not within 2.0 mm (0.079 in.) see previous steps to adjust appropriately and re-measure.
10. Fasten locking bolts.
11. Remove exhaust bellows alignment tool.
12. Install clamp on exhaust bellows and tighten to specification.

Specification

Exhaust Filter-to-Exhaust Bellows Clamp nut—Torque.....20 N·m 177 lb-in.

13. Tap the circumference of the exhaust filter-to-exhaust bellows clamp repeatedly with a dead blow hammer and tighten nut again.



TX1080049A —UN—20JUL10

Alignment Measurement

Specification

Exhaust Filter-to-Exhaust Bellows Clamp Nut—Torque.....20 N·m 177 lb-in.

AS79221,00001F9 -19-28FEB11-11/10

Diesel Particulate Filter (DPF) Remove and Install

SPECIFICATIONS	
Clamp Torque	17 N·m 150 lb-in.
Clamp Torque	17 N·m 150 lb-in.

OTHER MATERIAL
Loctite 41205 Heavy Duty Anti-Seize U.S. High Temperature Lubricant

CAUTION: Avoid possible burns from hot surface. Allow exhaust filter to cool before servicing.

1. Prepare machine for service. See Park and Prepare for Service Safely. (Group 0001.)
2. Turn battery disconnect switch to the OFF position or remove (-) battery cable.
3. Remove hood. See Hood Remove and Install. (Group 1910.)
4. Disconnect diesel particulate filter (DPF) differential pressure sensor line (4).
5. Remove exhaust filter temperature sensor (3).
6. Mark location of diesel particulate filter (DPF) and outlet cone (2) to aid in installation.
7. Loosen clamp (1) and remove outlet cone.
8. Loosen clamp (5).
9. Remove DPF filter mounting band (6) and remove DPF filter.
10. Repair or replace as necessary.
11. Install DPF filter and mounting band.
12. Tighten clamp (5) to specification. Using a dead blow hammer, tap clamp on all sides and retighten to specification.

Specification

Clamp—Torque.....17 N·m
150 lb-in.

Loctite is a trademark of Henkel Corporation

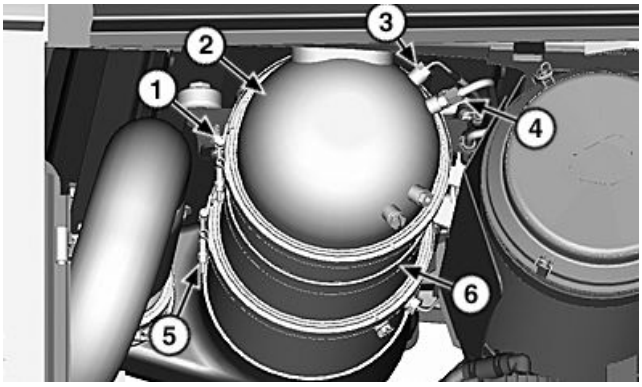

TX1085791A —UN—13DEC10

Diesel Particulate Filter (DPF) (left side shown)

1— Clamp
2— Outlet Cone
3— Exhaust Filter Temperature Sensor
4— Diesel Particulate Filter (DPF) Differential Pressure Sensor Line
5— Clamp
6— Mounting Band

NOTE: Align diesel particulate filter (DPF) differential pressure sensor line to outlet cone before tightening clamp (1).

13. Install outlet cone and tighten clamp (1) to specification. Using a dead blow hammer, tap clamp on all sides and retighten to specification.

Specification

Clamp—Torque.....17 N·m
150 lb-in.

14. Connect diesel particulate filter (DPF) differential pressure sensor line.
15. Apply Loctite® 41205 Heavy Duty Anti-Seize to threads of exhaust filter temperature sensor.
16. Install exhaust filter temperature sensor.
17. Turn battery disconnect switch to the ON position or install (-) battery cable.

TK40086,00007AE -19-28JAN11-1/1

Exhaust Filter Remove and Install

SPECIFICATIONS	
Exhaust Filter Upperstructure Weight (approximate)	154 kg 340 lb.

NOTE: Exhaust filter does not need to be removed to remove diesel particulate filter (DPF).

1. Prepare machine for service. See Park and Prepare for Service Safely. (Group 0001.)
2. Remove hood. See Hood Remove and Install. (Group 1910.)
3. Remove left cooling package access door. See Cooling Package Access Doors Remove and Install. (Group 1910.)
4. Disconnect air cleaner intake tube from air cleaner.
5. Disconnect diesel particulate filter (DPF) differential pressure sensor (B59) and exhaust filter temperature module (B80) electrical connectors.
6. Remove engine frame harness (W5) from exhaust filter upperstructure. See Engine Frame Harness (W5) Component Location. (Group 9015-10.)

IMPORTANT: The life of the exhaust bellows is dependant on being properly aligned. If not aligned correctly, the life of the exhaust bellows will significantly decrease and may risk unfiltered exhaust into the atmosphere.

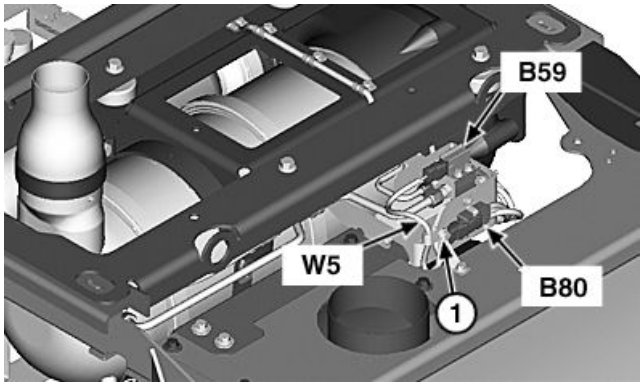

Exhaust Filter

1— Clamp (2 used)
B59— Diesel Particulate Filter (DPF) Differential Pressure Sensor
B80— Exhaust Filter Temperature Module
W5—Engine Frame Harness

7. Verify witness marks for all adjustment cap screws. See Exhaust Bellows Alignment Procedure. (Group 0530.)

TK40086,0000833 -19-04JAN11-1/5

8. Loosen clamp (2) and disconnect exhaust tube with bellows (3) from exhaust filter (4).

CAUTION: Prevent possible crushing injury from heavy component. Use appropriate lifting device.

9. Support exhaust filter upperstructure.

Specification	
Exhaust Filter Upperstructure—Weight (approximate)	154 kg 340 lb.

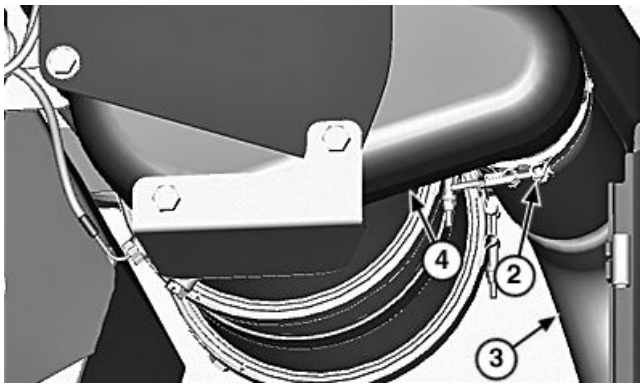

Exhaust Filter

2— Clamp
3— Exhaust Tube With Bellows
4— Exhaust Filter

Continued on next page

TK40086,0000833 -19-04JAN11-2/5

10. Remove plate (5) and adjustment bracket (7).

5— Plate
6— Cap Screw (2 used)
7— Adjustment Bracket
8— Cap Screw (3 used)

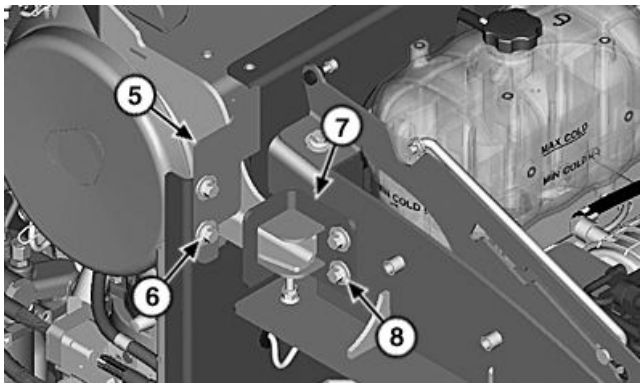

Rear Adjustment (left side shown)

TK40086,0000833 -19-04JAN11-3/5

11. Remove cap screw (9) and remove exhaust filter upperstructure.
12. Repair or replace as necessary.
13. Install exhaust filter upperstructure.
14. Install plate and adjustment bracket.

IMPORTANT: The life of the exhaust bellows is dependant on being properly aligned. If not aligned correctly, the life of the exhaust bellows will significantly decrease and may risk unfiltered exhaust into the atmosphere.

15. Connect exhaust tube with bellows to exhaust filter and align exhaust bellows. See Exhaust Bellows Alignment Procedure. (Group 0530.)

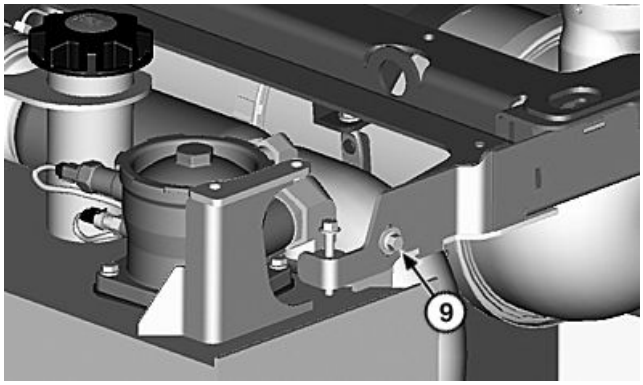

Front Adjustment (left side shown)

9— Cap Screw

TK40086,0000833 -19-04JAN11-4/5

16. Install engine frame harness (W5) to exhaust filter upperstructure. See Engine Frame Harness (W5) Component Location. (Group 9015-10.)
17. Connect diesel particulate filter (DPF) differential pressure sensor (B59) and exhaust filter temperature module (B80) electrical connectors. See Engine Frame Harness (W5) Component Location. (Group 9015-10.)
18. Connect air cleaner intake tube to air cleaner.
19. Install cooling package access door. See Cooling Package Access Doors Remove and Install. (Group 1910.)
20. Install hood. See Hood Remove and Install. (Group 1910.)

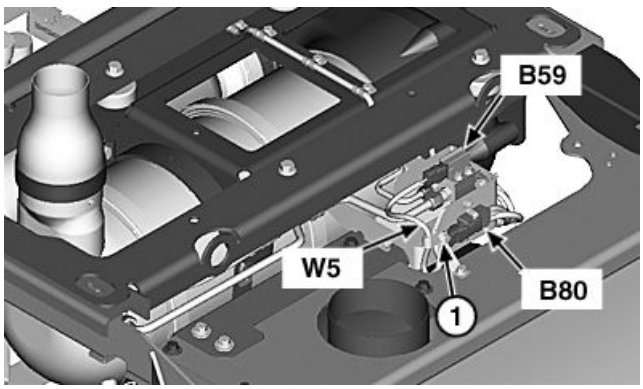

Exhaust Filter

1— Clamp (2 used)
B59— Diesel Particulate Filter (DPF) Differential Pressure Sensor
B80— Exhaust Filter Temperature Module
W5—Engine Frame Harness

TK40086,0000833 -19-04JAN11-5/5

Service Filter Cleaning

For more information on service filter cleaning, see Service Filter Cleaning. (Group 9015-16.)

TK40086,00007C1 -19-13DEC10-1/1

Fuel Tank Remove and Install

SPECIFICATIONS	
Empty Fuel Tank with Guard Weight (approximate)	306 kg 675 lb.
Fuel Tank Guard Cap Screw Torque	318 N·m 235 lb-ft

1. Prepare machine for service. See Park and Prepare for Service Safely. (Group 0001.)
2. Turn battery disconnect switch to the OFF position or remove battery (-) cable.

NOTE: Both counterweights must be removed if machine is equipped with fast fill fuel system.

3. Remove counterweight assembly from left side of machine. See Counterweights Remove and Install. (Group 1749.)
4. Remove hose clamp (2).

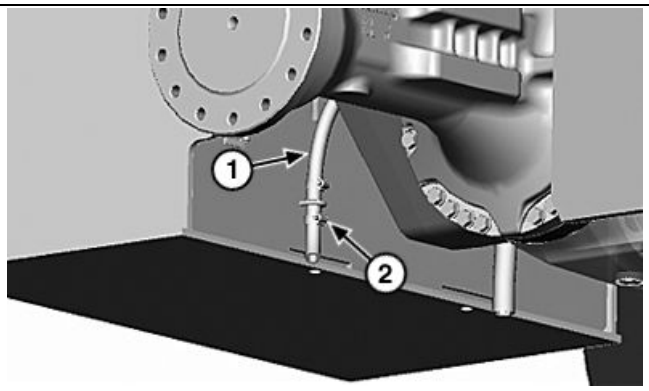

Fuel Tank (front shown)

1— Oil Drain Hose **2— Hose Clamp**

TK40086,0000841 -19-21DEC10-1/5

5. Loosen clamp on breather tube (3) and disconnect from fuel tank.
6. Disconnect electrical connector from fuel level sensor (B17).

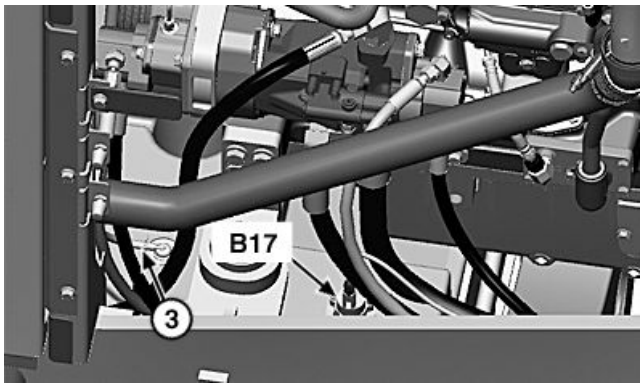

Fuel Tank (right side shown)

3— Breather Tube **B17— Fuel Level Sensor**

Continued on next page

TK40086,0000841 -19-21DEC10-2/5

7. Tag and disconnect fuel supply hose (4) and fuel return hose (5) from fuel tank. Close all openings using caps and plugs.

IMPORTANT: Prevent fuel system contamination. Use a clean container to collect fuel.

8. Drain fuel tank. See Drain and Refill Capacities. (Operator's Manual.)

CAUTION: Prevent possible crushing injury from heavy component. Use appropriate lifting device.

NOTE: Fuel tank is mounted inside of fuel tank guard.

9. Support fuel tank and fuel tank guard.

Specification	
Empty Fuel Tank with Guard—Weight (approximate)	306 kg 675 lb.

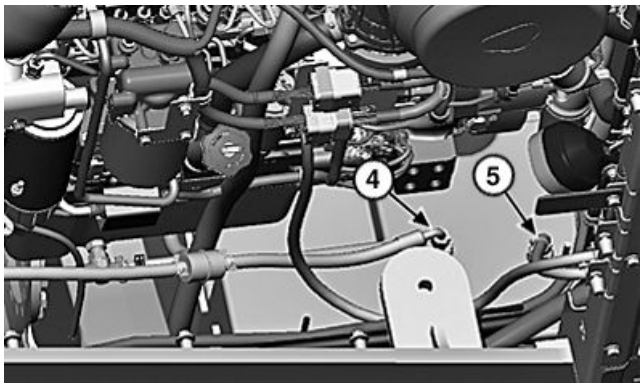

Fuel Tank (components removed for clarity)

4— Fuel Supply Hose **5— Fuel Return Hose**

TK40086,0000841 -19-21DEC10-3/5

10. Remove fuel tank guard (6).

6— Fuel Tank Guard **7— Cap Screw and Washer (8 used)**

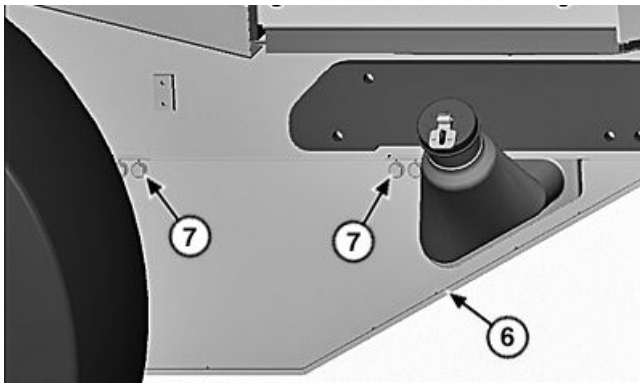

Fuel Tank Guard (left side shown)

Continued on next page

TK40086,0000841 -19-21DEC10-4/5

11. Remove fuel tank retaining straps (7) and remove fuel tank from fuel tank guard.
12. Inspect and repair parts as necessary.
13. Install fuel tank retaining straps securing fuel tank to fuel tank guard.

CAUTION: Prevent possible crushing injury from heavy component. Use appropriate lifting device.

14. Install fuel tank guard with fuel tank. Tighten fuel tank guard cap screws to specification.

Specification	
Fuel Tank Guard Cap Screw—Torque	318 N·m 235 lb-ft

15. Connect fuel supply hose and fuel return hose to fuel tank.
16. Connect electrical connector to fuel level sensor (B17). See Engine Frame Harness (W5) Component Location. (Group 9015-10.)
17. Connect breather tube to fuel tank and tighten clamp.
18. Install hose clamp to oil drain hose.
19. Fill fuel tank. See Drain and Refill Capacities. (Operator's Manual.)
20. Install counterweight assembly to machine. See Counterweights Remove and Install. (Group 1749.)

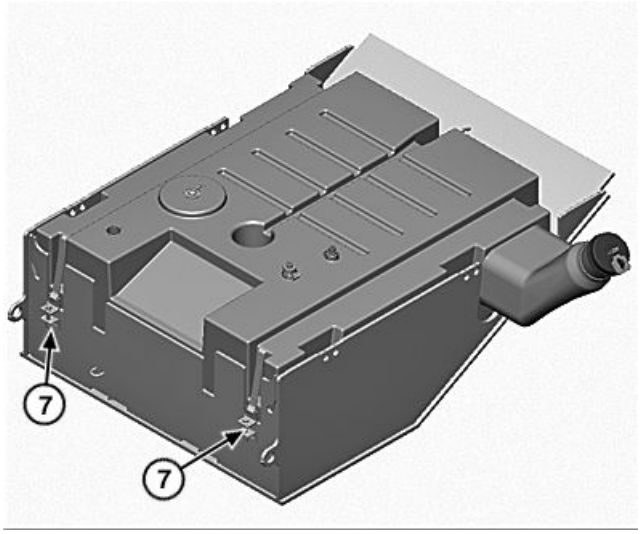

TX1085559A —UN—07DEC10

Fuel Tank and Fuel Tank Guard

7— Retaining Strap (2 used)

21. Turn battery disconnect switch to the ON position or connect battery (-) cable.
22. Bleed fuel system. See Bleed Fuel System. (Operator's Manual.)
23. Operate machine and check for leaks.

TK40086,0000841 -19-21DEC10-5/5

Primary Fuel Filter (Water Separator) Remove and Install

For more information, see Replace Primary Fuel Filter. (Operator's Manual.)

TK40086,0000818 -19-18NOV10-1/1

Fast Fill Fuel System Disassemble and Assemble—If Equipped

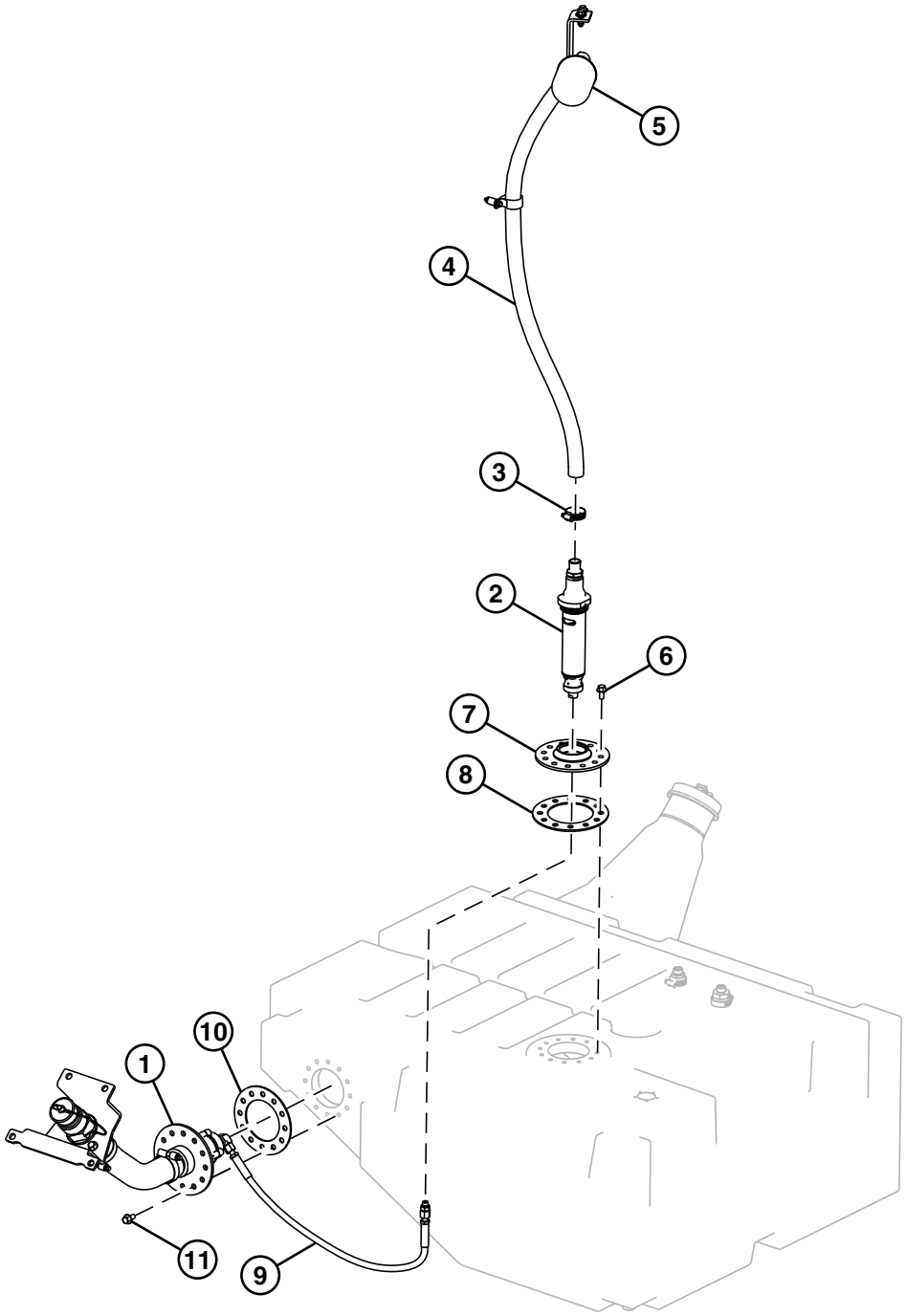

TX1085374

TX1085374 —UN—07DEC10

Fast Fill Fuel System

1— Filler Valve Assembly
2— Breather Valve Assembly
3— Clamp
4— Breather Hose
5— Breather Filter
6— Cap Screw (12 used)
7— Plate
8— Gasket
9— Signal Line
10— Gasket
11— Cap Screw (12 used)

SPECIFICATIONS	
Filler Valve Assembly Cap Screw Torque	31 N·m 23 lb-ft
Breather Valve Assembly Cap Screw Torque	31 N·m 23 lb-ft

1. Remove cap screws (6).
2. Remove plate (7) and breather valve assembly (2).
3. Disconnect signal line (9).
4. Disassemble and replace parts (1—11) as necessary.
5. Install filler valve assembly (1) with signal line (9).

Continued on next page

6. Install cap screws (11) and tighten to specification.

Specification	
Filler Valve Assembly	
Cap Screw—Torque	31 N·m 23 lb-ft

7. Connect signal line (9) to breather valve assembly (2).

8. Install plate (7) and gasket (8). Tighten cap screws (6) to specification.

Specification	
Breather Valve Assembly	
Cap Screw—Torque	31 N·m 23 lb-ft

TK40086,0000836 -19-02DEC10-2/2

Section 07
Dampener Drive

Contents

Page

Group 0752—Elements
Output Dampener Remove and Install 07-0752-1

Output Dampener Remove and Install

SPECIFICATIONS	
Output Dampener Weight (approximate)	25 kg 55 lb.
Output Dampener-to-Flywheel Cap Screw Torque	68 N·m 50 lb-ft

1. Remove engine. See Engine Remove and Install. (Group 0400.)

CAUTION: Prevent possible crushing injury from heavy component. Use appropriate lifting device.

2. Remove covers (1) and output dampener (3).

Specification

Output Dampener—Weight (approximate)..... 25 kg
55 lb.

3. Inspect and replace as necessary.
4. Install output dampener. Tighten cap screws (4) to specification.

Specification

Output Dampener-to-Flywheel Cap Screw—Torque.....68 N·m
50 lb-ft

5. Install covers.
6. Install engine. See Engine Remove and Install. (Group 0400.)

1— Cover (2 used)
2— Cap Screw (12 used)
3— Output Dampener
4— Cap Screw (8 used)

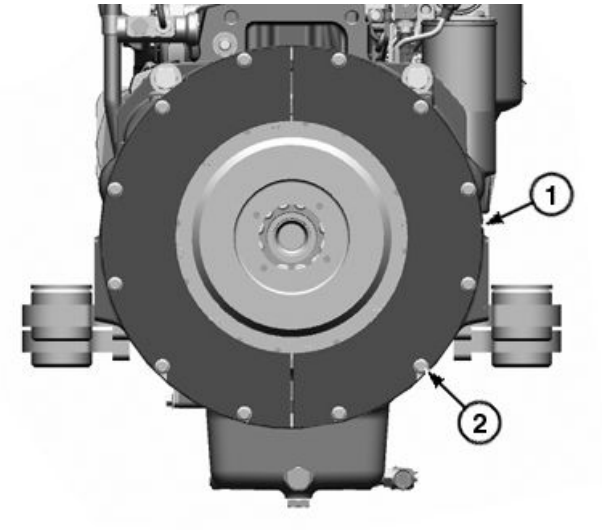

TX1086182A —UN—29DEC10

Output Dampener Cover

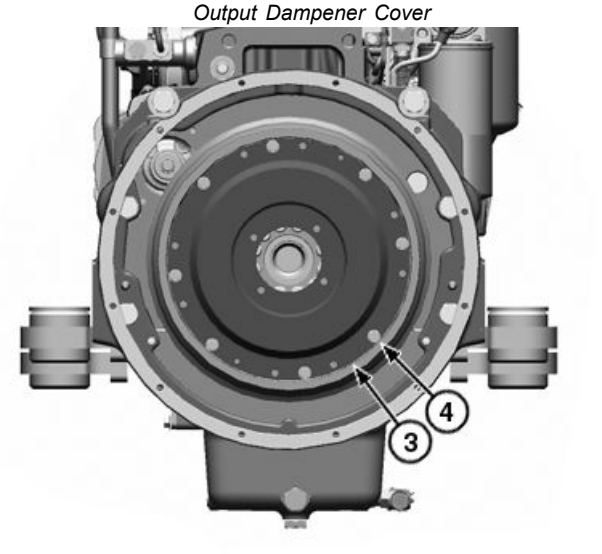

TX1086183A —UN—29DEC10

Output Dampener

TK40086,0000850 -19-04JAN11-1/1

Section 09
Steering System

Contents

Page

Group 0960—Hydraulic System
NeverGrease™ Pin Joints 09-0960-1
Orbital Steering Valve Remove and Install 09-0960-3
Steering Column Remove and Install 09-0960-5
Steering Column Disassemble and Assemble 09-0960-6
Steering Cylinders Remove and Install 09-0960-8
Steering Cylinder Bushings Remove and Install 09-0960-9
Secondary Steering Pump Remove and Install—If Equipped 09-0960-10
Secondary Steering Valve Remove and Install—If Equipped 09-0960-11
Joystick Steering Valve Remove and Install—If Equipped 09-0960-12
Joystick Steering Valve Disassemble and Assemble—If Equipped 09-0960-13
Loader Start-Up Procedure (Steering Cylinder) 09-0960-14

NeverGrease™ Pin Joints

SPECIFICATIONS	
Bearing Type Joint (roller bearing) Clearance (maximum total of both sides)	1 mm .040 in

SERVICE EQUIPMENT AND TOOLS
D01047AA (17 1/2 and 30 Ton) Hydraulic Puller Set
D01013AA (100 Ton) Hydraulic Press

NOTE: Machines equipped with NeverGrease™ Pin Joints **do not** *require lubrication. Machines with this option still require some service maintenance points for grease in specified areas. These are listed on the periodic maintenance chart on the machine and in the operator's manual listed under service intervals.*

IMPORTANT: Prevent decreasing service life. Replacement of NeverGrease™ pin joints require special methods for replacement of bushings and shims.

There are two types of NeverGrease™ pin joints. They are a bushing (sliding element) type or a bearing (rolling element or roller bearing) type. The application determines what type is used. Both types require the same replacement methods.

Throughout this information the term “bushing” will be used to simplify procedures, with the exception when a special instruction is needed for a certain type bushing such as “bearing type” it will be called out specifically.

Cleanliness

Cleanliness is very critical. The bushing must be kept clean at all times. Nothing should come in contract with the bushing surfaces which can contaminate or damage the surfaces. If replacing with new service bushing keep in clean shipping containers until installation. No lubrication should be used on any surfaces of the bore, pin or bushing itself when installing.

No lubrication should be used on any components of joint including pin when servicing. This may decrease life of joint.

Removal and Replacement of Pins

IMPORTANT: Prevent damage or severely affecting the life of the joint from debris contamination. Removal and reinstallation of any pin requires extra cleanliness attention to the area supported by the pin.

Prior to pin removal, all material must be completely removed from both ends of the pin and from the area surrounding the structures connected by the pin by means of a thorough power wash. Prior to pin reinstallation, any remaining material on the pin or surrounding structure must be removed. The NeverGrease™ bushing must also be inspected and any material must be removed through the use of compressed air or a clean dry rag only. Any debris inside of the joint will severely affect the life of the joint.

Removal and Replacement of Bushings

IMPORTANT: Only use a hydraulic puller for removal and installing bushing . Never use slide hammer or impact type puller.

Shimming is required where specified. Some joints are more critical and will be specified when required. Alignment in the joint is important to prevent premature wear.

1. Remove the old bushing from bore with Hydraulic Puller Set D01047AA or Hydraulic Press D01013AA for larger bushings.
2. Clean bores thoroughly.
3. Check to make sure bore, bushing is perfectly clean and dry. **Do not** apply lubrication to any components in joint.
4. Measure bore I.D. for size to determine what disk (3) size will be required for installation of bushing. It must pass through the bore I.D. for proper centering in frame bore with a hydraulic puller.

IMPORTANT: Prevent decreasing life of joint. DO NOT use lubrication on any components of joint including pin.

5. Assemble Hydraulic Puller Set D01047AA and rod (4) through center of bushing and bore and attach proper size disk (3). Support tooling should not come in contact with bushing surfaces.

IMPORTANT: Prevent damage or misalignment of bushing. Bushing MUST be aligned square to the bore while installing.

6. Make sure the bushing (2) is square to the bore. With hydraulic puller install bushing into bore or frame. Keep perfectly square and aligned to bore while installing. Center bushing in bore by pulling slightly past face of boss. Check each side to make sure bushing is centered in bore.
7. Make sure pin (9) and bore are clean.
8. Align frame with bore.
9. Using different size shims (5) from service, place shims at frame and boss joint for setting up proper clearance. Center boss in frame (6) by shimming evenly. Add shims as required to reduce clearance but not bind joint.

Continued on next page

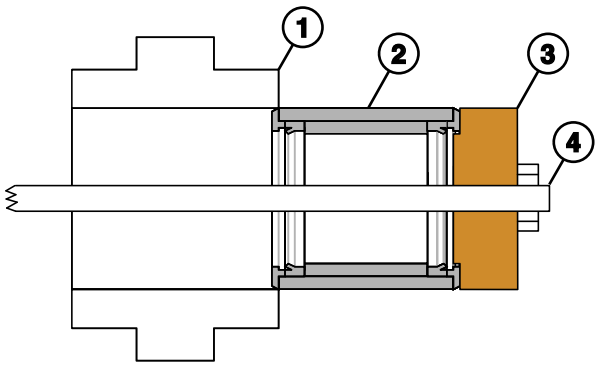

TX1020245 —UN—03APR07

Installing Bushing

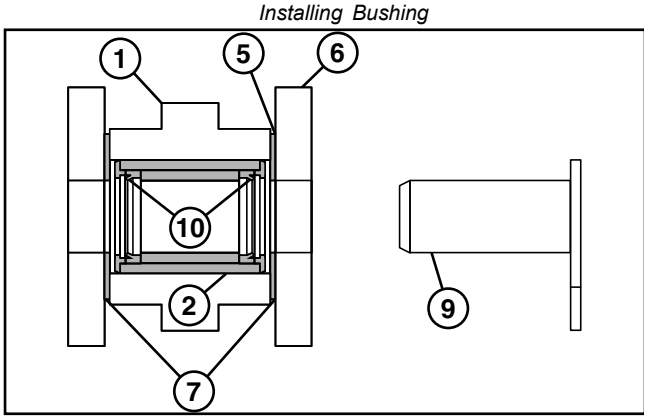

TX1020247 —UN—03APR07

Bushing Type Joint

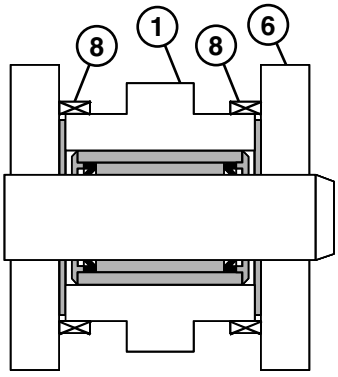

TX1020248 —UN—03APR07

Bushing Type Joint with External Split Seal (optional type seals shown)

NeverGrease is a trademark of Deere & Company

1— Boss
2— Bushing
3— Disk
4— Hydraulic Puller Rod
5— Shim (as required)
6— Frame
7— Clearance
8— Split Seal (as required)
9— Pin
10— Internal Bushing Seal

Bearing type joints (roller bearing type) require a specified clearance (7), see specification. Use a smaller size shim as gauge to check final clearance between boss and frame joint when required on specified tolerances.

Specification

Bearing Type Joint (roller bearing)—Clearance (maximum total of both sides)	1 mm .040 in

IMPORTANT: Prevent decreasing life of joint. DO NOT use lubrication on any parts of joint including pin.

10. Check for alignment, cleanliness of joint and install clean pin. No interference should be felt while installing pin when proper alignment is established.

    If restriction or interference is noted make sure of proper alignment in joint. Also, when using the bushing type which has internal edge lip seals (10) make sure they are in the retracted position to allow for smooth pin installation. Note art work item (10).

11. Install external split seals (8) if required.

    Split seals that have a larger lip are installed with large O.D. lip away form bushing center. Seal must be placed tight against boss face.

    Split seals with O-ring configuration are placed tight against the boss face. Tighten banding screw.

RM58335,000121E -19-03JAN11-2/2

Orbital Steering Valve Remove and Install

SPECIFICATIONS	
Orbital Steering Valve Socket Head Cap Screw Torque	28 N·m 21 lb-ft

CAUTION: Prevent possible injury from unexpected machine movement. Install articulation lock bar before working in frame hinge area.

1. Install frame articulation lock bar.

CAUTION: Escaping fluid under pressure can penetrate the skin, causing serious injury. Avoid the hazard by relieving pressure before disconnecting hydraulic or other lines. Tighten all connections before applying pressure. Search for leaks with a piece of cardboard. Protect hands and body from high-pressure fluids.

If an accident occurs, see a doctor immediately. Any fluid injected into the skin must be surgically removed within a few hours or gangrene may result. Doctors unfamiliar with this type of injury should reference a knowledgeable medical source. Such information is available from Deere & Company Medical Department in Moline, Illinois, U.S.A.

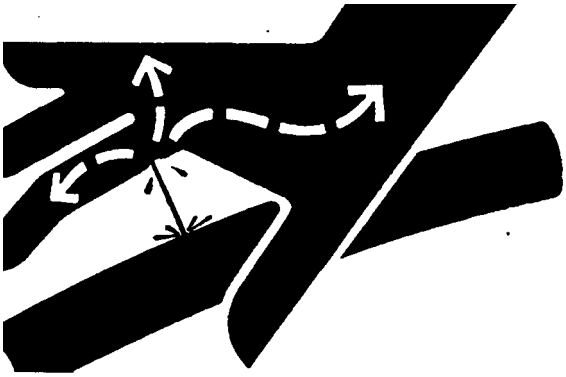

X9811 —UN—23AUG88

2. Stop engine and relieve hydraulic pressure. Perform Hydraulic System Pressure and Accumulators Discharge. (Group 9025-25.)
3. Turn battery disconnect switch to the OFF position.

MH66O88,000070A -19-18JAN11-1/4

4. Remove front cab panel (1).
5. Remove cover from steering column.
6. Apply vacuum or drain hydraulic reservoir. If draining hydraulic reservoir, see Drain and Refill Capacities. (Operator's Manual.)

1— Front Cab Panel

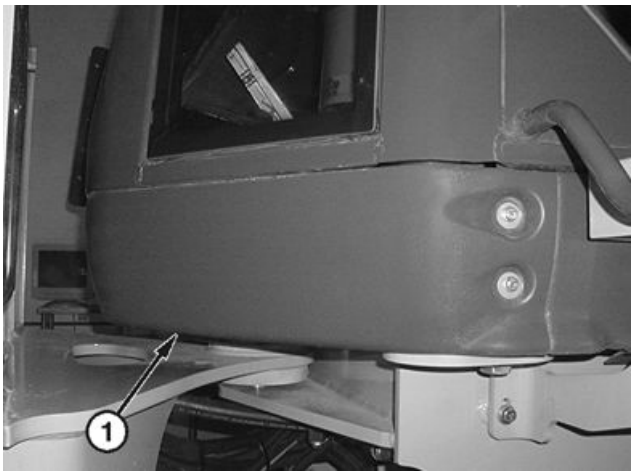

TX1022021A —UN—17APR07

Front Cab Panel

Continued on next page

MH66O88,000070A -19-18JAN11-2/4

NOTE: For assembly purposes, identify all orbital steering valve hydraulic lines before removing.

7. Tag and disconnect hydraulic steering lines (2, 3, and 5—7). Close all openings using caps and plugs.

2— Hydraulic Pressure Line (Port P)
3— Return to Hydraulic Reservoir Line (Port T)
4— Load Sense Port to Joystick Steering Valve (if equipped)
5— Load Sense Line to Hydraulic Pump Manifold (Port LS)
6— Left Turn Supply Hydraulic Line to Steering Cylinders (Port L)
7— Right Turn Supply Hydraulic Line to Steering Cylinders (Port R)

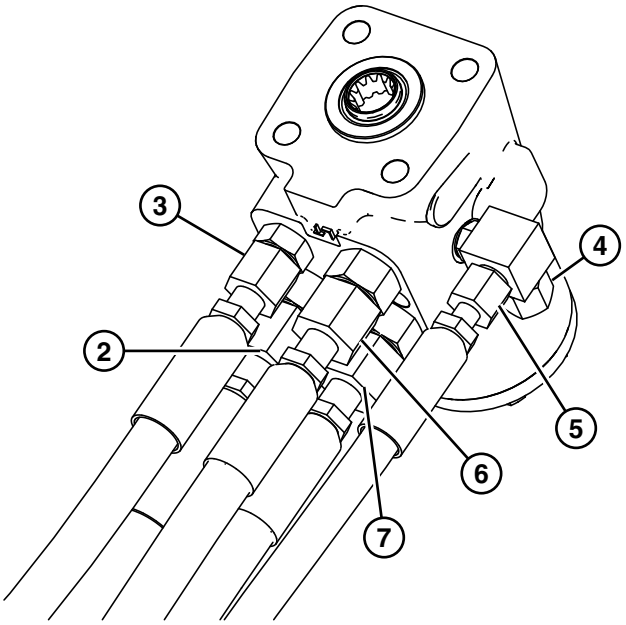

Orbital Steering Valve Hydraulic Lines

MH66O88,000070A -19-18JAN11-3/4

NOTE: Avoid dropping the orbital steering valve. Support orbital steering valve before removing.

8. Support orbital steering valve and remove cap screws (9) and washers (8).
9. Remove orbital steering valve.
10. Repair or replace parts as necessary.
11. Install orbital steering valve.
12. Install washers and cap screws; finger tighten cap screws.
13. Rotate orbital steering shaft two revolutions in both clockwise and counterclockwise directions.
14. Tighten socket head cap screws to specification in a criss-cross pattern.

Specification	
Orbital Steering Valve Socket Head Cap Screw—Torque	28 N·m 21 lb-ft

15. Rotate orbital steering shaft two revolutions in both clockwise and counterclockwise directions.
16. Connect orbital steering valve hydraulic lines.
17. Remove vacuum or fill hydraulic reservoir. If filling hydraulic reservoir, see Drain and Refill Capacities. (Operator's Manual.)

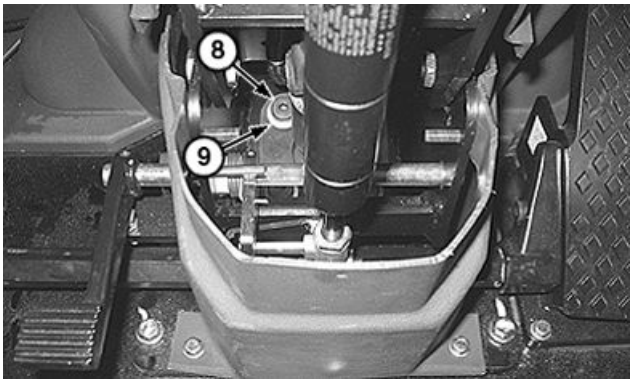

Orbital Steering Valve Mounting Hardware

8— Washer (4 used) **9— Cap Screw (4 used)**

18. Install front cab panel.
19. Install cover to steering column.
20. Remove frame articulation lock bar.
21. Turn battery disconnect switch to the ON position.
22. Follow correct start-up procedure. See Loader Start-Up Procedure (Steering Cylinder). (Group 0960.)

MH66O88,000070A -19-18JAN11-4/4

Steering Column Remove and Install

OTHER MATERIAL
PM37566 U.S. Silver-Grade Anti-SeizeNEVER-SEEZ® Lubricant

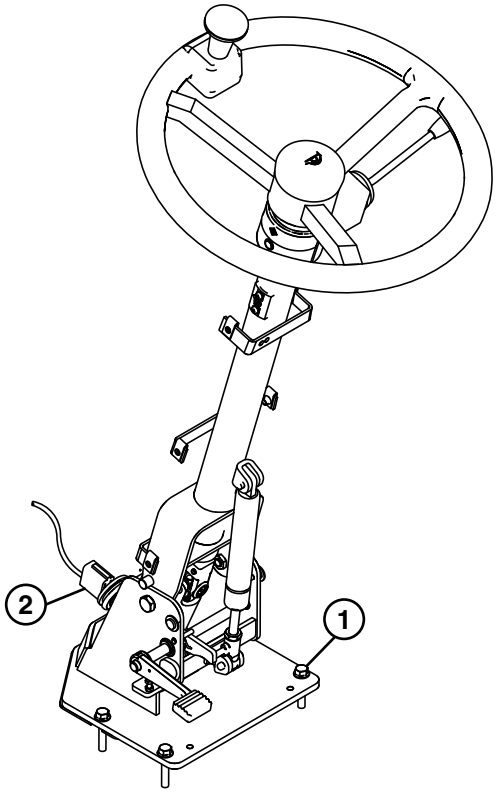

TX1028869 —UN—04SEP07

TX1028869

Steering Column (shown with steering column covers removed)

1— Cap Screw (4 used) **2— Electrical Connector**

1. Remove steering column covers.
2. Disconnect orbital steering valve from steering column. See Orbital Steering Valve Remove and Install. (Group 0960.)
3. Disconnect electrical connector (2) from front console harness.
4. Remove cap screws (1).
5. Remove steering column and repair or replace parts as needed.
6. Apply PM37566 Silver-Grade Anti-Seize lubricant or equivalent to steering column tilt pivots.
7. Install steering column.
8. Install cap screws and tighten securely.
9. Connect electrical connector to front console harness.
10. Connect orbital steering valve to steering column. See Orbital Steering Valve Remove and Install. (Group 0960.)
11. Install steering column covers.

NEVER-SEEZ is a trademark of Bostik Findley, Inc.

AS79221,0000203 -19-18OCT10-1/1

Steering Column Disassemble and Assemble

SPECIFICATIONS	
Steering Wheel-to-Steering Column Nut Torque	68 N·m 50 lb-ft

OTHER MATERIAL
PM37566 U.S. Silver-Grade Anti-SeizeNEVER-SEEZ® Lubricant

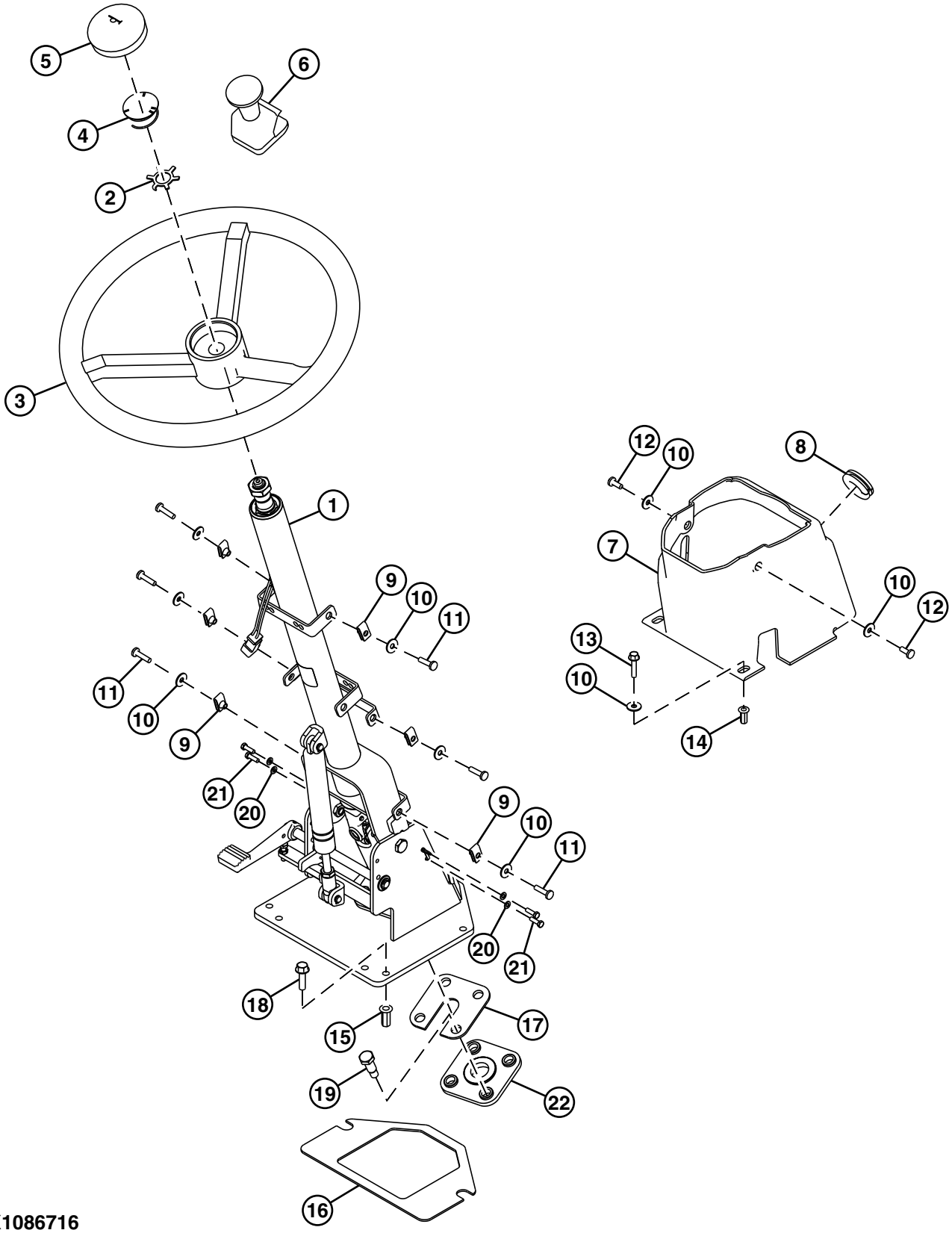

TX1086716

Continued on next page

RM58335,0001220 -19-18JAN11-1/2

TX1086716 —UN—1

Steering Column Components

1— Steering Column
2— Lock Washer
3— Steering Wheel
4— Switch
5— Cover
6— Knob
7— Cover
8— Grommet
9— Nut (6 used)
10— Washer (10 used)
11— Cap Screw (6 used)
12— Cap Screw (2 used)
13— Cap Screw (2 used)
14— Nut (2 used)
15— Nut (4 used)
16— Gasket
17— Plate
18— Cap Screw (4 used)
19— Cap Screw (4 used)
20— Washer (4 used)
21— Cap Screw (4 used)
22— Isolator

1. Disassemble orbital steering column.
2. Clean and inspect parts. Repair or replace parts as necessary.
3. Apply PM37566 Silver-Grade Anti-Seize Lubricant or equivalent to steering column tilt pivot points and threads on steering shaft.
4. Assemble orbital steering column.

Specification	
Steering Wheel-to-Steering Column Nut—Torque	68 N·m 50 lb-ft

NEVER-SEEZ is a trademark of Bostik Findley, Inc.

RM58335,0001220 -19-18JAN11-2/2

Steering Cylinders Remove and Install

SPECIFICATIONS	
Steering Cylinder Weight (approximate)	50 kg 100 lb

1. Prepare machine for service. Park and Prepare for Service Safely. (Group 0001.)

CAUTION: To avoid injury from escaping fluid under pressure, stop engine and relieve the pressure in the system before disconnecting or connecting hydraulic or other lines. Tighten all connections before applying pressure.

2. Relieve hydraulic system pressure. See Hydraulic System Pressure and Accumulators Discharge. (Group 9025-25.)
3. Turn battery disconnect switch to OFF position.
4. Apply vacuum or drain hydraulic reservoir. See Drain, Flush, and Refill Hydraulic System Oil. (Operator's Manual.)
5. Tag and disconnect hydraulic lines from steering cylinder. Close all openings with caps or plugs.
6. Remove pins from rod end (3) and head end (2) of cylinder.

CAUTION: Prevent possible crushing injury from heavy component. Use appropriate lifting device.

7. Remove steering cylinder from machine.

Specification	
Steering Cylinder—Weight (approximate)	50 kg 100 lb

8. Clean and inspect parts. Repair or replace parts as necessary. See Disassemble Cylinder and see Assemble Cylinder. (CTM114319.)

IMPORTANT: NeverGrease™ Pin Joints have servicing requirements to follow to maintain a long life. Shimming is required in some applications. Some joints are more critical and will be specified when required. Alignment in the joint is critical to prevent premature wear. Cleanliness is also necessary for all joint components. Clean and burr free pins must be used when replacing. See NeverGrease™ Pin Joints. (Group 0960.)

9. Install steering cylinder to frame with head end first. Use shims equally on both sides of the head end to center steering cylinder in frame. Install shims as required to remove gap but not bind cylinder.

NeverGrease is a trademark of Deere & Company

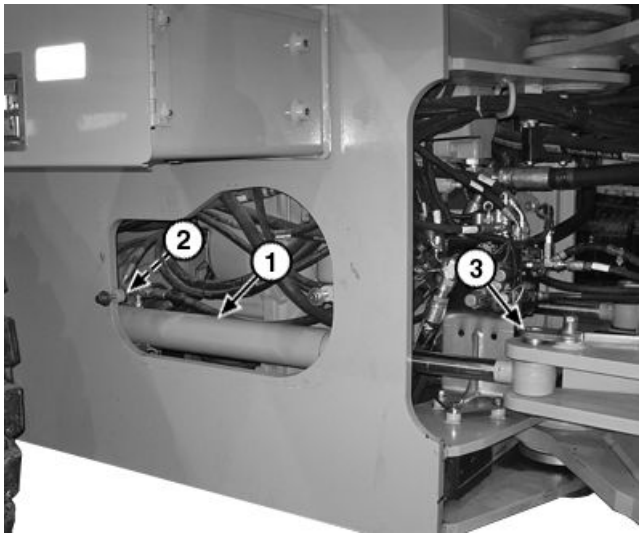

Steering Cylinder

1— Steering Cylinder
2— Head End Pin
3— Rod End Pin

10. Install clean pin with NO lubrication. No lubrication should be used on any of the joint components. For more information See NeverGrease™ Pin Joints. (Group 3140.)
11. Install rod end of cylinder. Fill gap on both sides of rod end as required to remove gap but not bind cylinder.
12. Install clean pin with NO lubrication. No lubrication should be used on any of the joint components. For more information See NeverGrease™ Pin Joints. (Group 3140.)

IMPORTANT: Prefill cylinders prior to connecting hydraulic lines.

13. Connect hydraulic lines.
14. Check hydraulic oil level or fill if system was drained. See Check Hydraulic System Oil Level or see Drain, Flush, and Refill Hydraulic System Oil. (Operator's Manual.)
15. Turn battery disconnect switch to ON position.

IMPORTANT: When a machine is started for the first time after cylinder rebuild or oil is drained from cylinder, the loader start-up procedure must be performed to prevent oil from "dieseling" inside the cylinder.

16. Remove frame articulation lock bar and perform loader start-up procedure for steering cylinders. See Loader Start-Up Procedure (Steering Cylinder). (Group 0960.)

RM58335,0001221 -19-18JAN11-1/1

Steering Cylinder Bushings Remove and Install

IMPORTANT: Prevent damage to pin join bushings. Only use a hydraulic puller for removal and installing NeverGrease™ Pin Joint type bushings. Never use slide hammer or impact type puller.

Shimming is required where specified. Some joints are more critical and will be specified when required. Alignment in the joint is important to prevent premature wear.

Remove and install bushings in steering cylinder using Hydraulic Puller Set D01047AA. See NeverGrease™ Pin Joints. (Group 0960.)

NeverGrease is a trademark of Deere & Company

RM58335,0001222 -19-03JAN11-1/1

Secondary Steering Pump Remove and Install—If Equipped

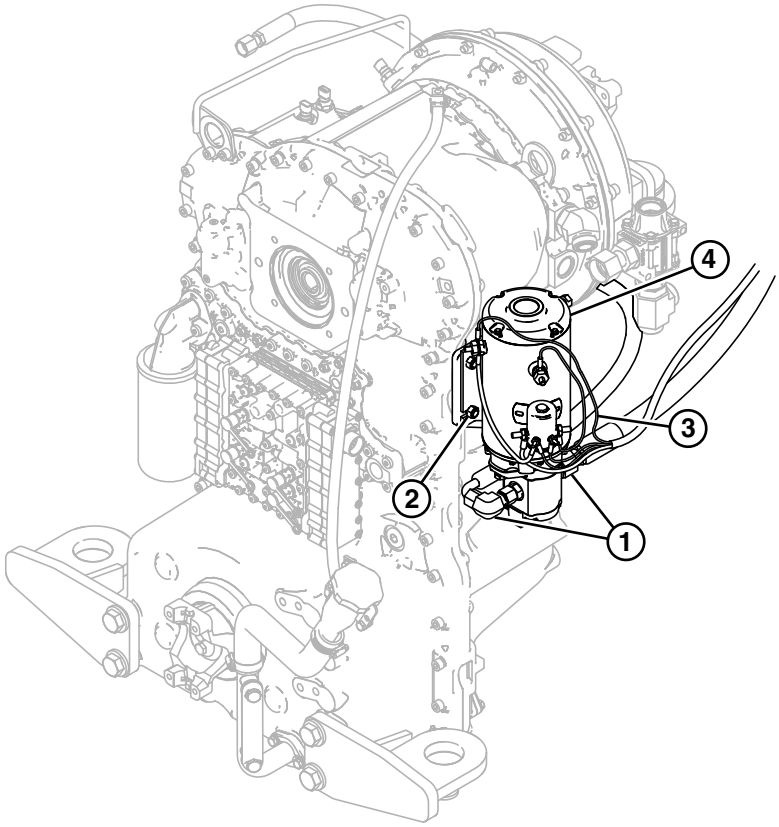

TX1035011 —UN—16JAN08

TX1035011

Secondary Steering Pump

1— Hydraulic Lines **2— Cap Screw (4 used)** **3— Wiring Harness** **4— Secondary Steering Pump**

1. Prepare machine for service. Park and Prepare for Service Safely. (Group 0001.)

CAUTION: To avoid injury from escaping fluid under pressure, stop engine and relieve the pressure in the system before disconnecting or connecting hydraulic or other lines. Tighten all connections before applying pressure.

2. Relive hydraulic system pressure. See Hydraulic System Pressure and Accumulators Discharge. (Group 9025-25.)
3. Turn battery disconnect switch to OFF position.
4. Apply vacuum or drain hydraulic reservoir. See Drain, Flush, and Refill Hydraulic System Oil. (Operator's Manual.)
5. Tag and disconnect hydraulic lines (1) from secondary steering pump (4). Close all openings using caps and plugs.
6. Tag and disconnect wiring harness (3).
7. Remove cap screws (2) and secondary steering pump.
8. Clean and inspect parts. Repair or replace parts as necessary.
9. Install secondary steering pump.
10. Connect wiring harness.
11. Connect hydraulic lines.
12. Remove vacuum or fill hydraulic reservoir. See Drain, Flush, and Refill Hydraulic System Oil. (Operator's Manual.)
13. Turn battery disconnect switch to ON position.
14. Remove frame articulation lock bar.

RM58335,0001225 -19-03JAN11-1/1

Secondary Steering Valve Remove and Install—If Equipped

1. Prepare machine for service. See Park and Prepare for Service Safely. (Group 0001.)

CAUTION: To avoid injury from escaping fluid under pressure, stop engine and relieve the pressure in the system before disconnecting or connecting hydraulic or other lines. Tighten all connections before applying pressure.

2. Relieve hydraulic system pressure. See Hydraulic System Pressure and Accumulators Discharge. (Group 9025-25.)
3. Turn battery disconnect switch to the OFF position or remove battery negative (-) cable.
4. Apply vacuum to or drain hydraulic reservoir. If draining hydraulic reservoir, See Drain, Flush, and Refill Hydraulic System Oil. (Operator's Manual.)
5. Tag and disconnect hydraulic lines (2—8). Close all openings using caps and plugs.
6. Disconnect steering system pressure switch (B25) electrical connector from engine frame harness (W5).
7. Remove secondary steering valve (9).
8. Repair or replace as necessary.
9. Install secondary steering valve.
10. Connect steering system pressure switch (B25) electrical connector. See Engine Frame Harness (W5) Component Location. (Group 9015-10.)
11. Connect hydraulic lines. See Steering and Hydraulic Cooling Fan Circuit Component Location. (Group 9025-15.)
12. Remove vacuum or fill hydraulic reservoir. See Drain, Flush, and Refill Hydraulic System Oil. (Operator's Manual.)

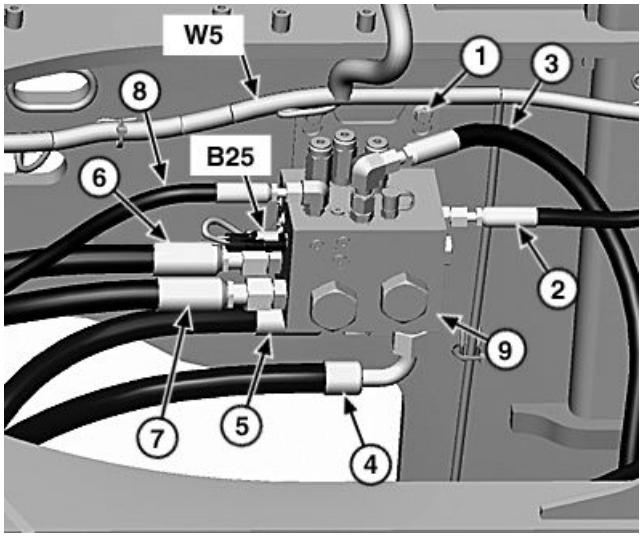

Secondary Steering Valve Plumbing

1— Cap Screw (3 used)
2— Secondary Steering Valve-to-Hydraulic Reservoir Line
3— Secondary Steering Valve-to-Secondary Steering Pump Line
4— Joystick Steering Valve-to-Secondary Steering Valve Line (if equipped)
5— Secondary Steering Valve-to-Hydraulic Pump Manifold Line (joystick steering)
6— Secondary Steering Valve-to-Hydraulic Pump Manifold Line (orbital steering)
7— Secondary Steering Valve-to-Orbital Steering Valve Line
8— Secondary Steering Valve-to-Hydraulic Pump Manifold Load Sense Line
9— Secondary Steering Valve
B25— Steering System Pressure Switch
W5—Engine Frame Harness

13. Turn battery disconnect switch to the ON position or install battery negative (-) cable.

TK40086,0000842 -19-04JAN11-1/1

Joystick Steering Valve Remove and Install—If Equipped

1. Prepare machine for service. Park and Prepare for Service Safely. (Group 0001.)

CAUTION: To avoid injury from escaping fluid under pressure, stop engine and relieve the pressure in the system before disconnecting or connecting hydraulic or other lines. Tighten all connections before applying pressure.

2. Relieve hydraulic system pressure. See Hydraulic System Pressure and Accumulators Discharge. (Group 9025-25.)
3. Turn battery disconnect switch to OFF position.
4. Apply vacuum or drain hydraulic reservoir. See Drain, Flush, and Refill Hydraulic System Oil. (Operator's Manual.)
5. Tag and disconnect hydraulic lines (3—10) from joystick steering valve (1). Close all openings with caps and plugs.
6. Remove cap screws (2) and joystick steering valve (1).
7. Clean and inspect parts. Repair or replace parts as necessary. See Joystick Steering Valve Disassemble and Assemble—If Equipped. (Group 0960.)
8. Install joystick steering valve.
9. Connect hydraulic lines.
10. Remove vacuum or fill hydraulic reservoir. See Drain, Flush, and Refill Hydraulic System Oil. (Operator's Manual.)
11. Check hydraulic oil level. See Check Hydraulic System Oil Level. (Operator's Manual.)

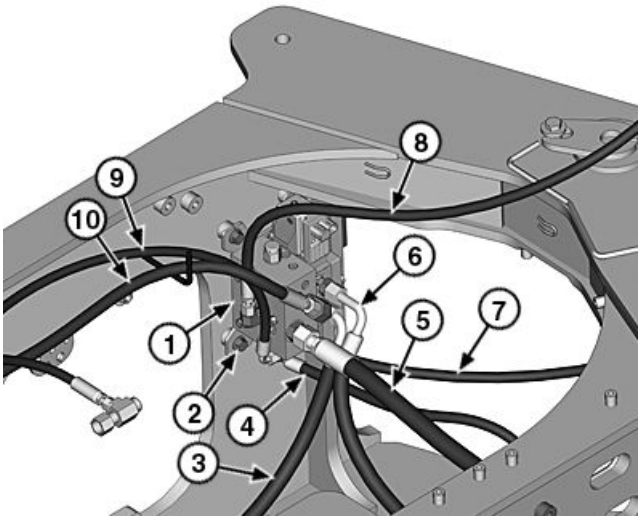

Joystick Steering Valve

1— Joystick Steering Valve
2— Cap Screw (4 used)
3— Joystick Steering Valve-to-Steering Cylinder Line
4— Joystick Steering Valve-to-Hydraulic Pump Manifold Line
5— Joystick Steering Valve-to-Secondary Steering Valve Line (if equipped)
6— Joystick Steering Valve-to-Steering Cylinder Line
7— Joystick Steering Valve-to-Loader Control Valve Line
8— Joystick Steering Valve-to-Orbital Steering Valve Line
9— Joystick Steering Valve-to-Hydraulic Reservoir Line
10— Joystick Steering Valve-to-Hydraulic Filter Line

12. Turn battery disconnect switch to ON position.
13. Remove frame articulation lock bar.

RM58335,0001226 -19-03JAN11-1/1

Joystick Steering Valve Disassemble and Assemble—If Equipped

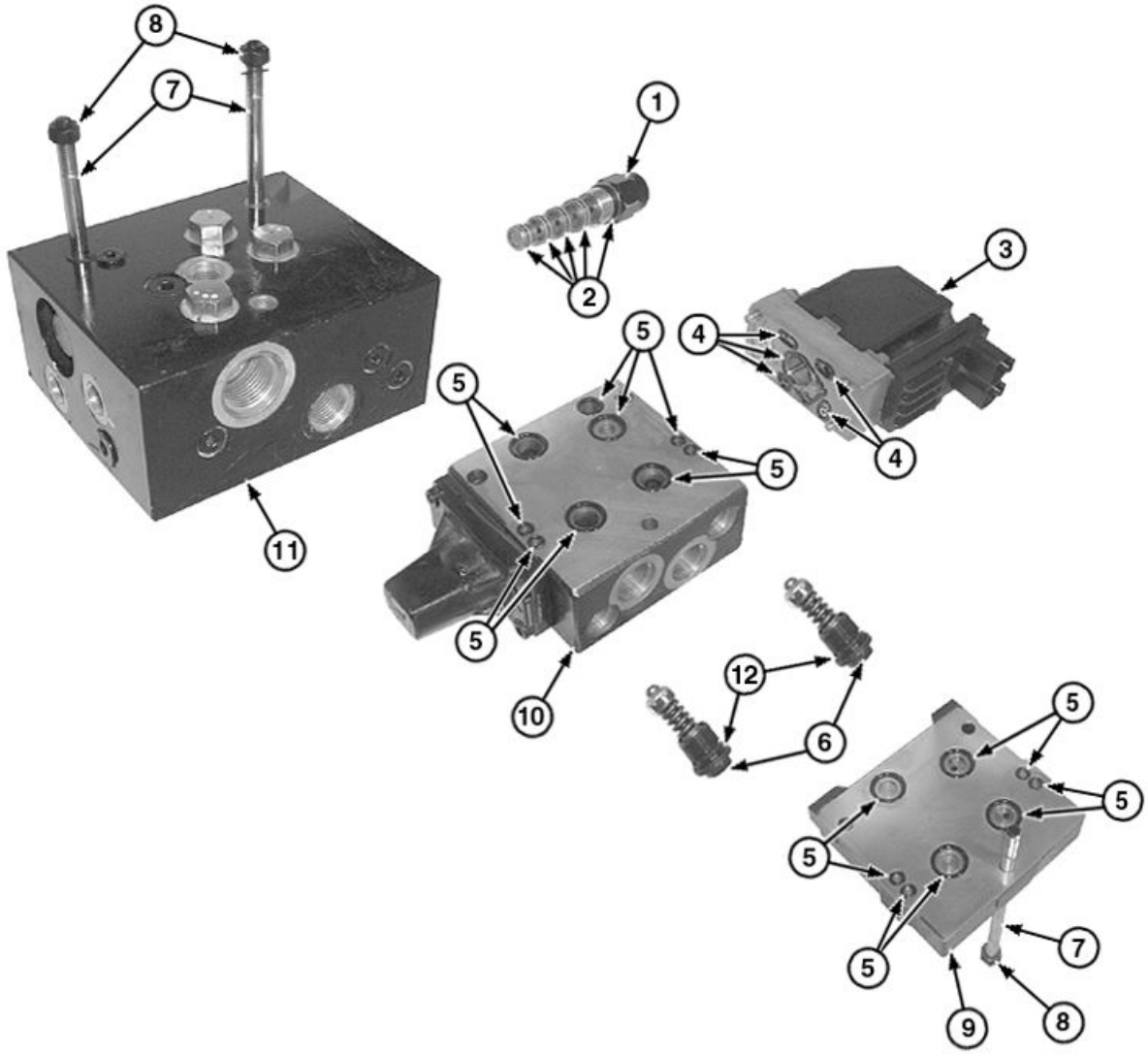

TX1046665A —UN—07AUG08

Joystick Steering Valve

1— Cartridge, Piloted 3-Way
2— Cartridge Seals
3— Joystick Steering Valve Controller (JSVC)
4— JSVC Seal Kit
5— Joystick Steering Valve Seal Kit
6— Circuit Relief Valve (2 used)
7— Tie Rod (3 used)
8— Nut (6 used)
9— End Plate
10— Steering Section
11— Inlet Section
12— Circuit Relief Valve O-Ring (2 used)

1. Disassemble and inspect components for contamination, wear, or damage. Repair or replace as necessary.

IMPORTANT: Avoid O-ring damage or component failure. Apply clean hydraulic oil to all internal parts before assembling and apply petroleum jelly to backup rings and O-rings before installation.

2. Apply petroleum jelly to O-rings. Install O-rings.
3. Assemble joystick steering valve parts in the same position and orientation as disassembled.
4. Insert tie rods and tighten nuts to specification.

Specification

Tie Rod Nuts—Torque	40 N·m
	30 lb-ft

RM58335,0001227 -19-06JAN11-1/1

Loader Start-Up Procedure (Steering Cylinder)

IMPORTANT: Avoid possible machine damage, perform procedure with engine at low idle (no acceleration).

1. Slowly articulate the loader 3/4 turn to the right and then 3/4 turn to the left. **Do not** make contact at loader frame stops.
2. Repeat previous step four times.
3. Articulate the loader fully to the right and then fully to the left. Repeat four times.

RM58335,0001228 -19-03JAN11-1/1

Section 10
Service Brakes

Contents

Page

Group 1011—Active Elements
Service Brake Assembly Remove and Install 10-1011-1

Group 1060—Hydraulic System
Service Brake Valve Remove and Install 10-1060-1
Service Brake Accumulator Remove and Install 10-1060-2

Service Brake Assembly Remove and Install

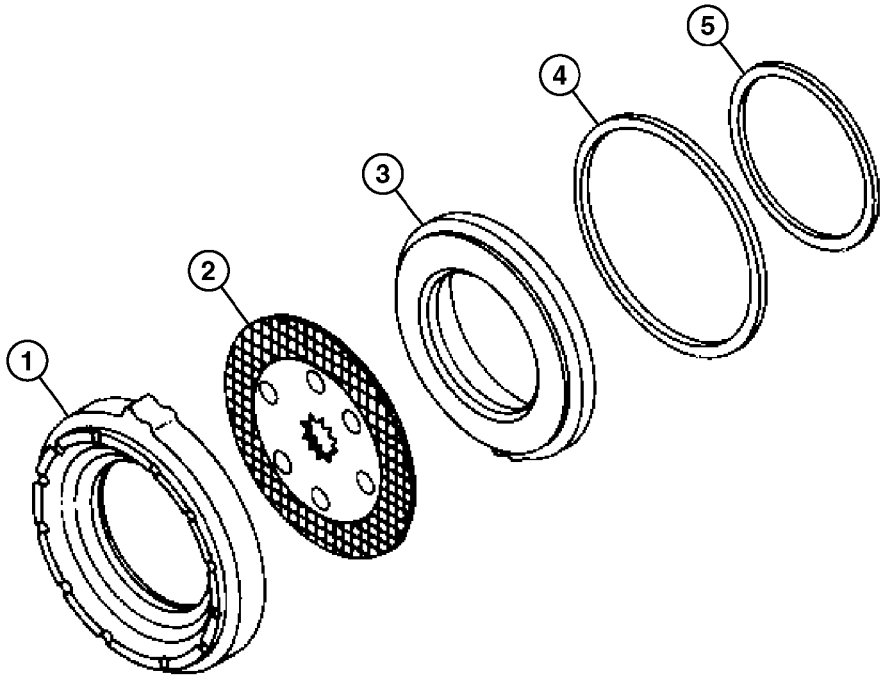

TX1049986 —UN—10OCT08

TX1049986

Brake Assembly

1— Backing Plate With Retaining Pins
2— Brake Disk
3— Piston
4— OD Packing Ring
5— ID Packing Ring

For more information on brake assembly, see Disassemble and Assemble Brakes. (CTM442.)

AS79221,000020C -19-28FEB11-1/1

Service Brake Valve Remove and Install

1. Prepare machine for service. Park and Prepare for Service Safely. (Group 0001.)

CAUTION: To avoid injury from escaping fluid under pressure, stop engine and relieve the pressure in the system before disconnecting or connecting hydraulic or other lines. Tighten all connections before applying pressure.

2. Relieve hydraulic system pressure. See Hydraulic System Pressure and Accumulators Discharge. (Group 9025-25.)
3. Remove front and left-side trim panels.
4. Apply vacuum or drain hydraulic reservoir. See Drain, Flush, and Refill Hydraulic System Oil. (Operator's Manual.)
5. Tag and disconnect hydraulic lines from service brake valve. Close all openings with caps and plugs.
6. Disconnect service brake accumulator pressure sensor (front axle) (B27).
7. Support service brake valve and remove two socket head cap screws under service brake pedal (3).
8. Remove service brake valve (1).
9. Clean and inspect parts. Repair or replace parts as necessary.
10. Install service brake valve.
11. Connect hydraulic lines.
12. Connect service brake accumulator pressure sensor (front axle).

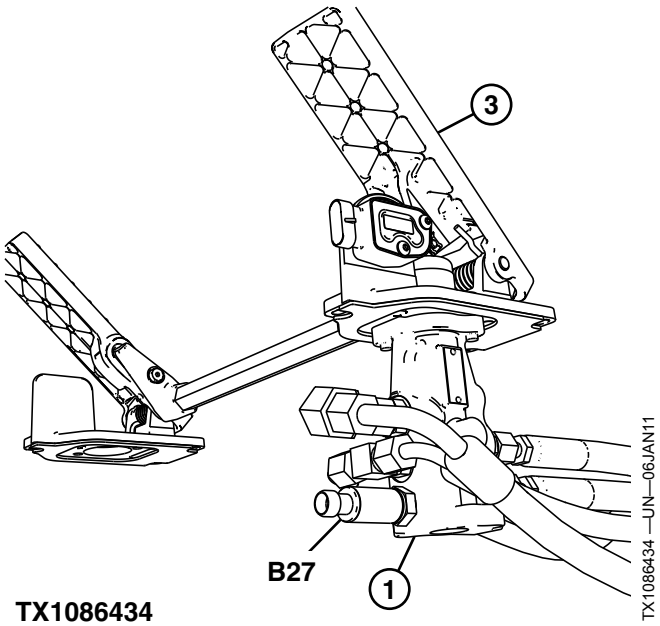

TX1086434

Service Brake Valve

1— Service Brake Valve
3— Service Brake Pedal
B27— Service Brake Accumulator Pressure Sensor (front axle)

13. Remove vacuum or fill hydraulic reservoir. See Drain, Flush, and Refill Hydraulic System Oil. (Operator's Manual.)
14. Remove frame articulation lock bar.

RM58335,000122A -19-05APR11-1/1

Service Brake Accumulator Remove and Install

1. Prepare machine for service. Park and Prepare for Service Safely. (Group 0001.)

CAUTION: To avoid injury from escaping fluid under pressure, stop engine and relieve the pressure in the system before disconnecting or connecting hydraulic or other lines. Tighten all connections before applying pressure.

2. Relieve hydraulic system pressure. See Hydraulic System Pressure and Accumulators Discharge. (Group 9025-25.)
3. Remove left side cab trim panel.
4. Apply vacuum or drain hydraulic reservoir. See Drain, Flush, and Refill Hydraulic System Oil. (Operator's Manual.)
5. Tag and disconnect hydraulic lines from service brake accumulators (1). Close all openings using caps and plugs.
6. Remove brackets (2).
7. Remove service brake accumulators.

NOTE: Service brake accumulators are not serviceable. New accumulators come precharged.

8. Clean and inspect parts. Replace parts as necessary.
9. Install service brake accumulators and brackets.
10. Connect hydraulic lines.

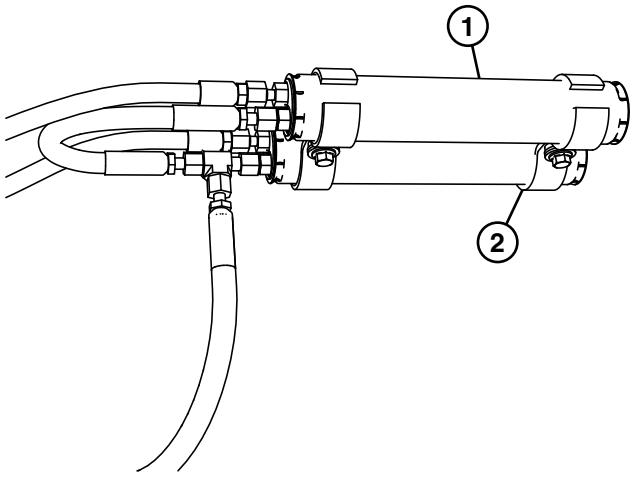

TX1028839 —UN—31AUG07

Service Brake Accumulators

1— Service Brake Accumulator (2 used) 2— Bracket (2 used)

11. Remove vacuum or fill hydraulic reservoir. See Drain, Flush, and Refill Hydraulic System Oil. (Operator's Manual.)
12. Remove frame articulation lock bar.

RM58335,000122B -19-03JAN11-1/1

Section 11
Park Brake

Contents

Page

Group 1111—Active Elements
Park Brake Remove and Install 11-1111-1
Park Brake Disassemble and Assemble 11-1111-3

Group 1160—Hydraulic System
Park Brake Release Solenoid Valve Remove and Install 11-1160-1

Park Brake Remove and Install

SPECIFICATIONS	
Park Brake Assembly Weight (approximate)	60 kg 132 lb
Park Brake Mounting Cap Screw Torque	319 N·m 235 lb-ft
Universal Joint Cap Screw Torque	78 N·m 58 lb-ft
Park Brake Oil Capacity	600 mL 20 oz

1. Prepare machine for service. Park and Prepare for Service Safely. (Group 0001.)
2. Disconnect park brake-to-hydraulic pump manifold line (3).
3. Disconnect breather hose (5).

IMPORTANT: Prevent machine damage. Do not reuse universal joint cap screws.

4. Remove front drive shaft (1) and articulation drive shaft (4) from park brake. Discard universal joint cap screws. See Universal Joint and Drive Shaft Remove and Install. (Group 0225.)
5. Remove park brake mounting cap screws (7).

CAUTION: Prevent possible injury from heavy component. Use appropriate lifting device when lifting component.

6. Remove park brake assembly (2).

Specification

Park Brake Assembly—Weight (approximate)..... 60 kg
132 lb

7. Clean and inspect parts. Repair or replace parts as necessary. See Park Brake Disassemble and Assemble. (Group 1111.)
8. Install park brake assembly (2). Tighten park brake mounting cap screws (7) to specification.

Specification

Park Brake Mounting Cap Screw—Torque.....319 N·m
235 lb-ft

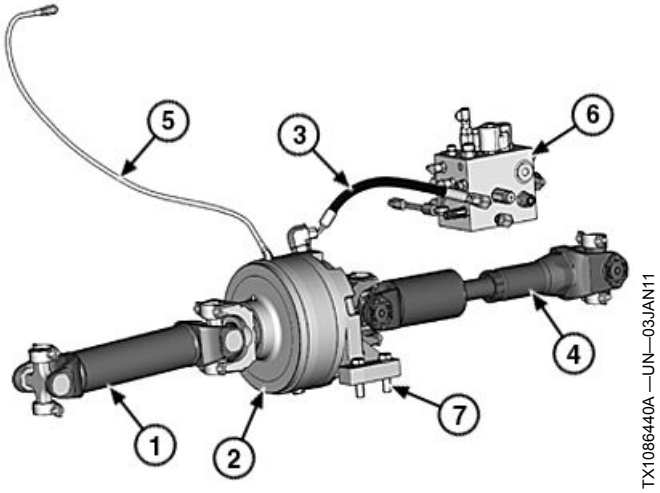

TX1086440A —UN—03JAN11

Park Brake

1— Front Drive Shaft
2— Park Brake Assembly
3— Park Brake-to-Hydraulic Pump Manifold Line
4— Articulation Drive Shaft
5— Breather Hose
6— Hydraulic Pump Manifold
7— Park Brake Mounting Cap Screw (4 used)

IMPORTANT: Prevent machine damage. Do not reuse universal joint cap screws.

NOTE: Drive shaft yokes must be in line.

9. Install front drive shaft and articulation drive shaft with new cap screws. See Universal Joint and Drive Shaft Remove and Install. (Group 0225.)
10. Tighten universal joint cap screws to specification.

Specification

Universal Joint Cap Screw—Torque.....78 N·m
58 lb-ft

11. Install breather hose (5).
12. Install park brake-to-hydraulic pump manifold line.

Continued on next page

RM58335,00012DC -19-11JAN11-1/2

IMPORTANT: Avoid machine damage. Do not overfill park brake. Fill only to port.

13. Check and add park brake oil at fill level plug (8) as necessary. See Transmission, Park Brake, and Axle Oil. (Operator's Manual.)

Specification

Park Brake Oil—Capacity	600 mL 20 oz

14. Add grease to grease fittings (11) at each end of park brake assembly until grease purges out between the outer seals and yokes.

8— Fill Level Plug
9— Drain Plug
10— Shaft
11— Grease Fitting (2 used)

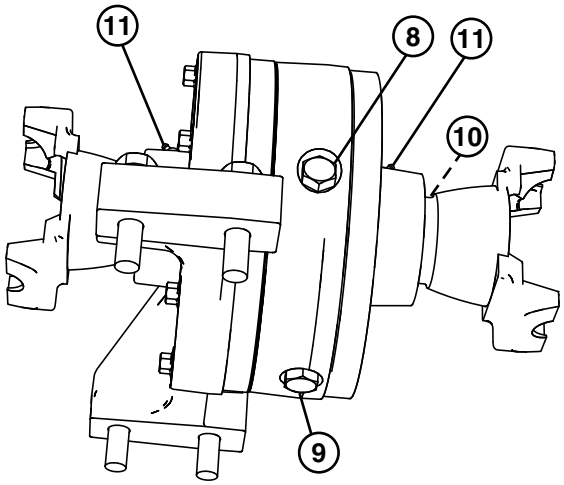

TX1028891 —UN—13FEB08

RM58335,00012DC -19-11JAN11-2/2

Park Brake Disassemble and Assemble

SPECIFICATIONS	
Cover Plate-to-Housing Cap Screw Torque	75 N·m 55 lb-ft
Yoke-to-Drive Shaft Nut Torque	407 N·m 300 lb-ft
Park Brake Release Pressure	896—1068 kPa 8.9—10.6 bar 130—155 psi
Park Brake Increase Pressure	3450 kPa 34.5 bar 500 psi
Park Brake Pressure Change	210 kPa 2.1 bar 30 psi

SERVICE EQUIPMENT AND TOOLS
D01018AA Hydraulic Hand Pump

OTHER MATERIAL
PM37566 U.S. Silver-Grade Anti-SeizeNEVER-SEEZ® Lubricant

Continued on next page

AS79221,0000211 -19-18OCT10-1/5

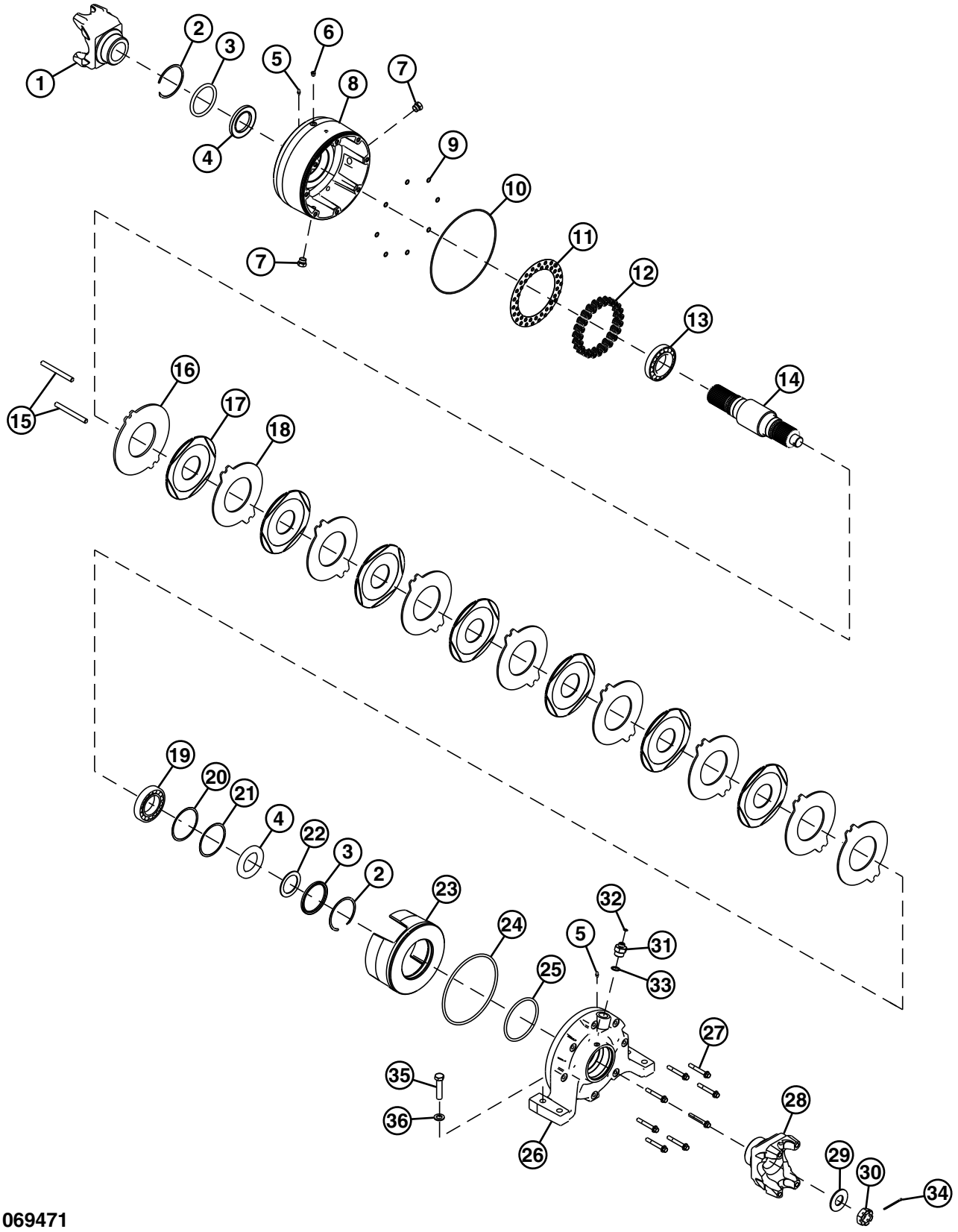

TX1069471

Continued on next page

AS79221,0000211 -19-18OCT10-2/5

1— Yoke
2— Snap Ring
3— Outer Seal
4— Inner Seal
5— Grease Fitting
6— Fitting
7— Plug and O-Ring
8— Housing
9— O-Ring (8 used)
10— O-Ring
11— Spring Retainer
12— Spring (46 used)
13— Outer Bearing
14— Drive Shaft
15— Dowel Pin
16— Backing Plate
17— Friction Disk (7 used)
18— Separator Plate (8 used)
19— Inner Bearing
20— Shim
21— Shim
22— Spacer
23— Piston
24— O-Ring
25— O-Ring
26— Housing Cover
27— Cap Screw (8 used)
28— Yoke
29— Washer
30— Drive Shaft Nut
31— Fitting
32— O-Ring
33— O-Ring
34— Cotter Pin
35— Cap Screw (4 used)
36— Washer (4 used)

1. Remove yoke (1) from drive shaft (14).
2. Remove cotter pin (34), drive shaft nut (30), washer (29), and remove yoke (28).

CAUTION: Prevent possible injury from flying objects. Cover plate under pressure. Remove cap screws evenly to avoid possible injury.

3. Remove cover plate cap screws (27) evenly.
4. Remove housing cover (26) from housing (8).
5. Remove drive shaft (14) with friction disks (17) and separator plates (18).
6. Remove backing plate (16) from housing (8).
7. Remove springs (12) and spring retainer (11).
8. Remove seals (3 and 4) from housing (8).
9. Remove piston (23) from housing cover (26).
10. Remove O-rings (24 and 25) from piston.
11. Remove seal (3), spacer (22) and seal (4) from housing cover (26).

NEVER-SEEZ is a trademark of Bostik Findley, Inc.

AS79221,0000211 -19-18OCT10-3/5

12. Remove outer bearing (13) using a bearing puller.
13. Remove friction disks (17) and separator plates (18).
14. Remove inner bearing (19).
15. Replace parts as necessary.
16. Lubricate O-rings (24 and 25) and piston (23) with clean oil. Install O-rings on piston.

13— Outer Bearing
19— Inner Bearing

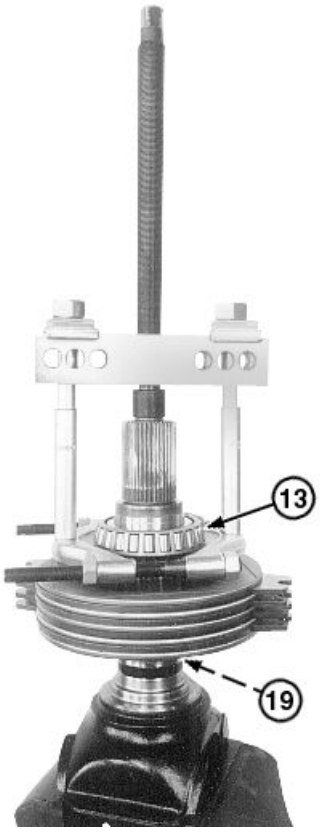

TX1049584A —UN—10OCT08

Outer Bearing Removal

Continued on next page

AS79221,0000211 -19-18OCT10-4/5

17. Install piston (23) in cover so dowel pins (15) are centered between slots.
18. Install spring retainer (11) and compression springs (12).
19. Remove dowel pins (15) from housing cover (26) and install in housing.
20. Install inner bearing (19) to drive shaft end with the long splines.
21. Install backing plate (16).
22. Apply clean oil to friction disks (17) and separator plates (18). Install friction disk, then alternate between disks and separator plates, ending with a separator plate on top.
23. Install inner bearing (19).

NOTE: Ensure long splined end of drive shaft is installed into housing first.

24. Install drive shaft (14) with assembled disks and plates into housing. Align separator plates on dowel pins.
25. Install housing cover with O-ring onto housing, making sure dowel pins align in cover.
26. Install housing cover-to-housing cap screws and tighten evenly to specification.

Specification	
Cover Plate-to-Housing Cap Screw—Torque	75 N·m 55 lb-ft

NOTE: Bearing and race are a select pair to create a shaft end play of 0.051—0.305 mm (0.002—0.012 in.).

27. Install seals in housing.
28. Install seal (4) in cover plate.
29. Install spacer (23) and seal (3).
30. Apply PM37566 Silver-Grade Anti-Seize lubricant or equivalent to drive shaft splines.
31. Install yoke (28), washer (29), and nut (30). Tighten nut to specification.

Specification	
Yoke-to-Drive Shaft Nut—Torque	407 N·m 300 lb-ft

32. Turn nut counterclockwise until cotter pin (34) can be installed. Spread cotter pin ends to lock in place.

NOTE: Yokes must be in line.

33. Install yoke (1) on drive shaft.
34. Fill park brake with oil. See Drain and Refill Park Brake Oil. (Operator's Manual.)
35. Bench test the park brake.

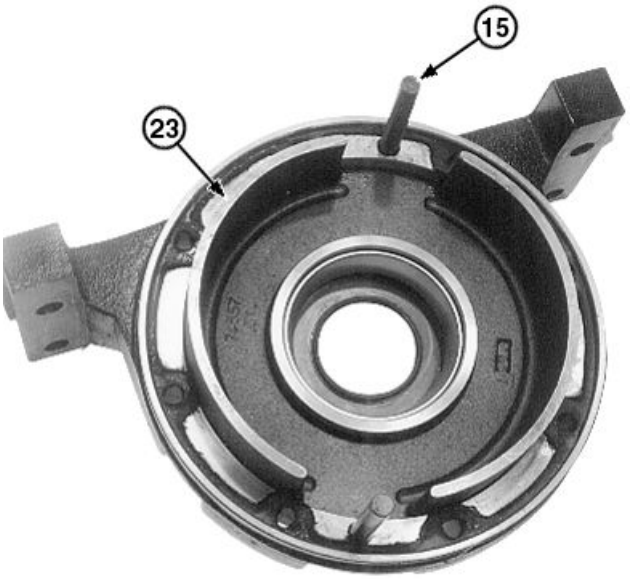

TX1049585A —UN—10OCT08

Piston Installation

15— Dowel Pin **23— Piston**

36. Install D01018AA Hydraulic Hand Pump to park brake.
37. Slowly increase pressure until shaft rotates freely and compare to specification.

Specification	
Park Brake Release—Pressure	896—1068 kPa 8.9—10.6 bar 130—155 psi

38. Increase pressure to specification.

Specification	
Park Brake Increase—Pressure	3450 kPa 34.5 bar 500 psi

39. Slowly release brake pressure until free rotation of the shaft stops and compare to specification. Brake engagement pressure range must not be more than the brake release pressure.

Specification	
Park Brake—Pressure Change	210 kPa 2.1 bar 30 psi

AS79221,0000211 -19-18OCT10-5/5

IMPORTANT: Avoid machine damage. DO NOT reuse drive shaft universal joint cap screws.

40. Install park brake on machine. See Park Brake Remove and Install. (Group 1111.)

AS79221,0000211 -19-18OCT10-6/5

Park Brake Release Solenoid Valve Remove and Install

See Hydraulic Pump Manifold Disassemble and Assemble. (Group 3160.)

AS79221,0000212 -19-18OCT10-1/1

Section 17
Frame or Supporting Structure

Contents

Page

Group 1740—Frame Installation
Welding Major Structure 17-1740-1
Engine and Loader Frame Separate 17-1740-2
Upper Pivot Bearing and Seals Remove and Install 17-1740-5
Lower Pivot Bearing and Seals Remove and Install 17-1740-7

Group 1746—Frame Bottom Guards
Fuel Tank Guard Remove and Install 17-1746-1
Front Axle Guard Remove and Install 17-1746-1
Transmission Bottom Guard Remove and Install—Powerlell™ 17-1746-2
Transmission Bottom Guard Remove and Install—Z-Bar 17-1746-3

Group 1749—Chassis Weights
Counterweights Remove and Install 17-1749-1
Rear Counterweight Remove and Install 17-1749-3

Welding Major Structure

CAUTION: Avoid potentially toxic fumes and dust. Hazardous fumes can be generated when paint is heated by welding, soldering, or using a torch. Do all work outside or in a well ventilated area. Dispose of paint and solvent properly.

If you sand or grind paint, avoid breathing the dust. Wear an approved respirator. If you use solvent or paint stripper, remove stripper with soap and water before welding. Remove solvent or paint stripper containers and other flammable material from area. Allow fumes to disperse at least 15 minutes before welding or heating.

IMPORTANT: Have only a qualified welder do this job. Connect welder ground clamp close to each weld area so electrical current does not pass through any bearings.

Remove or protect all parts that can be damaged by heat or weld splatter.

1. Disconnect both negative and positive cables from batteries.
2. Disconnect the following controllers. See Load Center Harness (W3) Component Location. (Group 9015-10.)
   - Advance Display Unit (ADU)
   - Sealed Switch Module (SSM)
   - Vehicle Control Unit (VCU)
   - Engine Control Unit (ECU)
   - Transmission Control Unit (TCU)
3. Remove paint before welding.

Use one of the following weld processes:
- AWS-E-7018 covered electrode with shielded metal arc welding (SMAW) process.
- AWS-ER-70S-3f wire electrode with gas metal arc welding (GMAW) process.
- AWS-E70T-1 or E71T-1 wire electrode with flux core arc welding (FCAW) process.

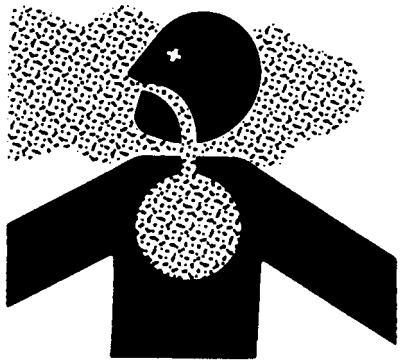

TS220 —UN—23AUG88

Specification

Weld Metal—Tensile Strength	482.6 mPa (70 000 psi)
Yield Strength	413.7 mPa (60 000 psi)
Elongation	22%

Preheat area to be repaired to allow better weld penetration.

To repair weld metal failure, remove failed weld metal using arc or grinding equipment. Thoroughly clean area to be welded. Preheat structural assemblies to a minimum of 38°C (100°F). Preheat structural ground engaging tools (cutting edges, skid shoes, and teeth shanks) to 177°C (350°F).

Specification

Structural Assemblies—Preheat Temperature	38°C (100°F)
Ground Engaging Tools—Preheat Temperature	177°C (350°F)

To repair base metal failure remove enough material to allow weld to penetrate to the bottom of crack. Preheat structural ground engaging tools (cutting edges, skid shoes, and teeth shanks) to 177°C (350°F).

RM58335,0001061 -19-25AUG10-1/1

Engine and Loader Frame Separate

SPECIFICATIONS	
644K with Standard Z-Bar Weight	18 333 kg 40 406 lb.
644K with High-Lift Z-Bar Weight	18 700 kg 41 215 lb.
644K with Powerllel™ Weight	19 966 kg 44 005 lb.
Universal Joint Cap Screws Torque	175 N·m 130 lb-ft

1. Prepare machine for service. See Park and Prepare for Service Safely. (Group 0001.)

CAUTION: To avoid injury from escaping fluid under pressure, stop engine and relieve the pressure in the system before disconnecting or connecting hydraulic or other lines. Tighten all connections before applying pressure.

2. Relieve hydraulic system pressure. See Hydraulic System Pressure and Accumulators Discharge. (Group 9025-25.)
3. Turn battery disconnect switch to the OFF position or remove battery negative (-) cable.

CAUTION: Prevent possible crushing injury from heavy component. Use appropriate lifting device.

NOTE: Service jack wheels must roll freely and straight ahead when loader frame is moved forward.

4. Place a 10-ton service jack under center of bucket.

Specification	
644K with Standard Z-Bar—Weight	18 333 kg 40 406 lb.
644K with High-Lift Z-Bar—Weight	18 700 kg 41 215 lb.
644K with Powerllel™ —Weight	19 966 kg 44 005 lb.

5. Attach an appropriate lifting device to the front loader frame.

CAUTION: Prevent possible injury from unexpected machine movement. Place supports under the front and rear of engine frame section of the machine.

6. Install 20-ton floor stands under the front and rear of engine frame.
7. Disconnect load center harness-to-loader frame harness 31-pin connector (X67). See Loader Frame Harness (W2) Component Location. (Group 9015-10.)
8. Apply vacuum to or drain hydraulic reservoir. If draining hydraulic reservoir, see Drain, Flush, and Refill Hydraulic System Oil. (Operator's Manual.)
9. Tag and disconnect hydraulic lines routed from front loader frame to engine frame. Close all openings with caps and plugs. For hydraulic line routing:
   - See Loader and Hydraulic Cooling Circuit Line Identification. (Group 9025-15.)
   - See Ride Control, Pin Disconnect, and Hydraulic Filter Circuit Line Identification. (Group 9025-15.)
   - See Service Brake, Park Brake, Differential Lock, and Axle Cooling Circuit Line Identification. (Group 9025-15.)
10. Disconnect universal joints on transmission-to-park brake drive shaft and park brake-to-front axle drive shaft. See Universal Joint and Drive Shaft Remove and Install. (Group 0225.)
11. Remove steering cylinder pins (2).
12. Remove nut (4).
13. Remove cap screws (7) holding bushing (5) to the frame.
14. Remove lower pivot pin (3). See Lower Pivot Bearing and Seals Remove and Install. (Group 1740.)
15. Remove upper pivot pin (1). See Upper Pivot Bearing and Seals Remove and Install. (Group 1740.)

Continued on next page

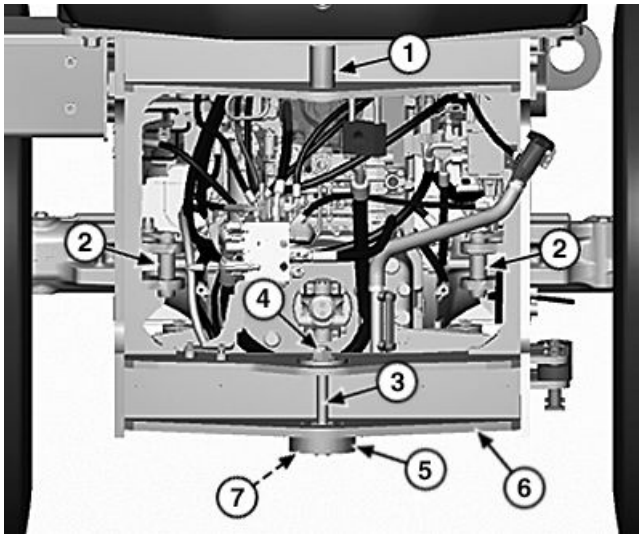

TX1085593A —UN—08DEC10

Center Articulating Point

1— Upper Pivot Pin
2— Steering Cylinder Pin (2 used)
3— Lower Pivot Pin
4— Nut
5— Bushing
6— Engine Frame
7— Cap Screw (4 used)

Continued on next page

TK40086,0000843 -19-05JAN11-2/3

Powerllel is a trademark of Deere & Company

16. Slowly roll front loader frame, service jack, and overhead hoist forward and away from engine frame (6).
17. Inspect and replace parts as necessary.
18. Attach front loader frame to engine frame. Install upper pivot pin.
19. Install bushing and lower pivot pin.
20. Connect all hydraulic lines. For hydraulic line routing:
    - See Loader and Hydraulic Cooling Circuit Line Identification. (Group 9025-15.)
    - See Ride Control, Pin Disconnect, and Hydraulic Filter Circuit Line Identification. (Group 9025-15.)
    - See Service Brake, Park Brake, Differential Lock, and Axle Cooling Circuit Line Identification. (Group 9025-15.)
21. Connect load center harness-to-loader frame harness 31-pin connector (X67). See Loader Frame Harness (W2) Component Location. (Group 9015-10.)

IMPORTANT: Avoid machine damage. Do not reuse drive shaft universal joint cap screws.

22. Install new drive shaft universal joint cap screws.

Specification	
Universal Joint Cap Screws—Torque	175 N·m 130 lb-ft

23. Connect steering cylinders. Install maximum number of washers between loader frame and steering cylinder rod end. Install equal number above and below rod end.
24. Remove vacuum or fill hydraulic reservoir. See Drain, Flush, and Refill Hydraulic System Oil. (Operator's Manual.)

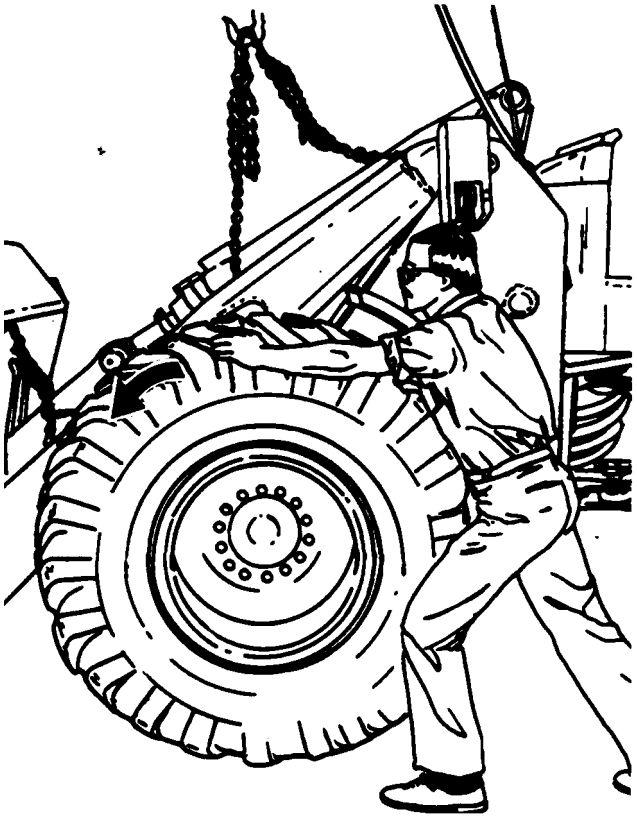

Front Loader Frame

25. Turn battery disconnect switch to the ON position or install battery negative (-) cable.
26. Bleed service brakes. See Service Brake Bleeding Procedure. (Group 9020-20.)
27. Perform loader start-up procedure. See Loader Start-Up Procedure. (Group 3160.)

Upper Pivot Bearing and Seals Remove and Install

SPECIFICATIONS	
Upper Pivot Bearing Preload	0.03—0.13 mm 0.001—0.005 in.
Upper Pivot Bearing Cover Cap Screw Torque	128 N·m 95 lb-ft

SERVICE EQUIPMENT AND TOOLS
D01047AA 17-1/2 Ton Puller Set
JT01933 17 1/2-Ton Capacity Driver Set
D01072AA Bushing, Bearing and Seal Driver Set

OTHER MATERIAL
TY6341 U.S. Multi purpose Grease

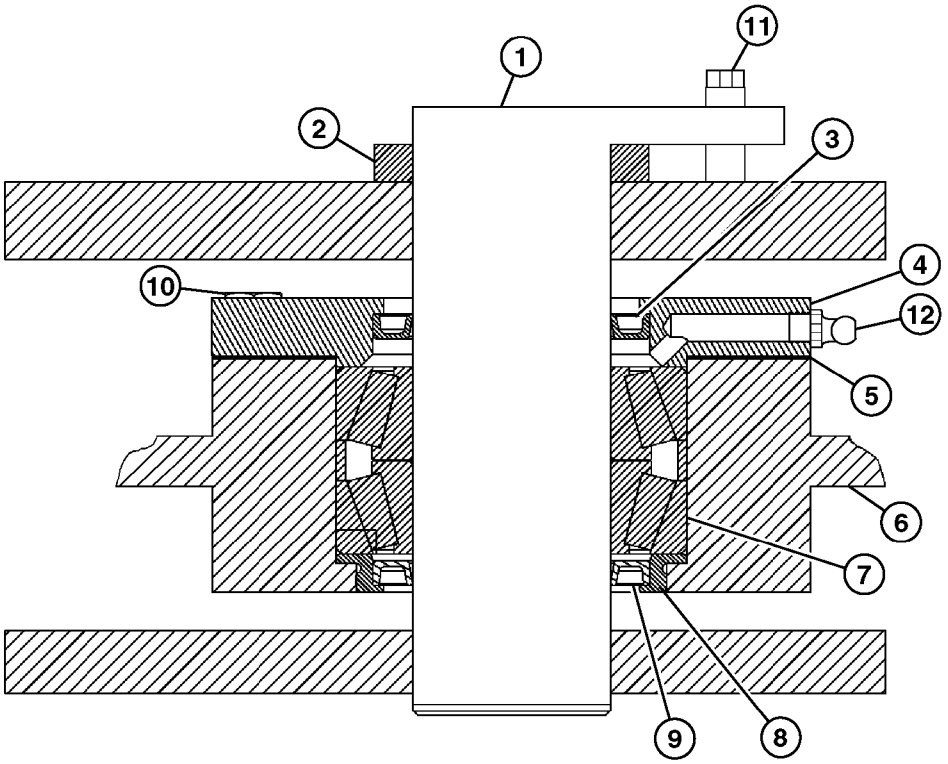

TX1028986 —UN—05SEP07

TX1028986

1— Pivot Pin
2— Engine Frame
3— Seal
4— Cover Plate
5— Shim (as needed)
6— Loader Frame
7— Bearing
8— Seal Spacer
9— Seal
10— Cap Screw (6 used)
11— Pin Cap Screw
12— Grease Fitting

1. Remove upper and lower pivot pins (1) and separate frames. See Engine and Loader Frame Separate. (Group 1740.)
2. Remove cap screws (10), cover plate (4), and seal (3).

NOTE: Lower seal cannot be pushed through spacer. Remove seal spacer to remove seal.

3. Using D01047AA 17-1/2-Ton Puller Set and JT01933 Driver Set, remove the bearing (7), seal spacer (8), and seal (9) from loader frame bore.
4. Inspect and replace parts as necessary.
5. Apply TY6341 Multi-Purpose SD Polyurea Grease to the bearing (7).
6. Press seal (9) into seal spacer (8) with lip facing out. The seal must seat against seal spacer shoulder.
7. Install seal spacer (8) in bottom of loader frame bore.
8. Use D01072AA Bushing, Bearing and Seal Driver Set to press bearing (7) into frame bore.
9. Install seal (3) into cover with lip facing out. Press seal to cover plate (4) shoulder.
10. Hold cover in place and measure gap between cover plate and loader frame. Take a measurement in three places. Cover must contact top of bearing. Calculate the average of these three measurements to determine the correct shim pack required.
11. Install shims to obtain the specified preload of bearings.

Specification

Upper Pivot Bearing—Preload.....0.03—0.13 mm
0.001—0.005 in.

12. Apply grease to the top of bearing. Fill cavity above bearing to machined surface to prevent moisture from entering bearing through shims.

Continued on next page

MM61211,0001C45 -19-06APR11-1/2

13. Tighten cap screws (10) to specification. Rotate bearing after tightening.

Specification	
Upper Pivot Bearing Cover Cap Screw—Torque	128 N·m 95 lb-ft

MM61211,0001C45 -19-06APR11-2/2

Lower Pivot Bearing and Seals Remove and Install

SPECIFICATIONS	
Lower Pivot Bearing Shim Pack Thickness	0.03—0.13 mm 0.001—0.005 in.
Lower Pivot Bearing Cap Screw Torque	128 N·m 95 lb-ft
Cap Screw Torque	128 N·m 95 lb-ft
Pin Retaining Cap Screw Torque	2129 N·m 1570 lb-ft

SERVICE EQUIPMENT AND TOOLS
D01047AA 17-1/2 Ton Puller Set
JT01933 17 1/2-Ton Capacity Driver Set
TY6341 Multi purpose Grease

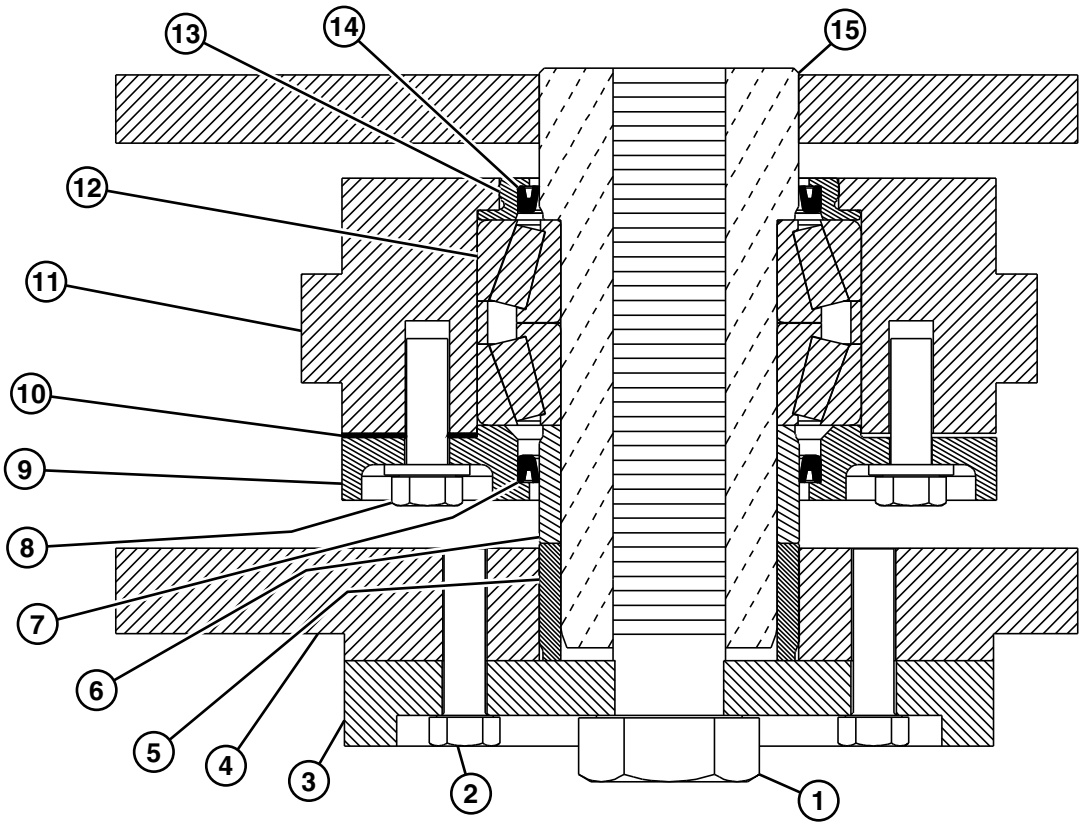

TX1028998 —UN—11SEP07

TX1028998

1— Pin Retaining Cap Screw
2— Cap Screw (6 used)
3— Plate
4— Engine Frame
5— Spacer (Engine Frame)
6— Spacer (Loader Frame)
7— Cover Seal
8— Cap Screw (6 used)
9— Cover Plate
10— Shim (as needed)
11— Loader Frame
12— Bearing
13— Spacer Seal
14— Seal
16— Lower Pivot Pin

1. Remove pin retaining cap screw (1) and lower pivot pin (16) and separate machine frames. See Engine and Loader Frame Separate. (Group 1740.)
2. Remove cap screws (8), cover plate (9), spacer (6), cover seal (7), and shims (10).

NOTE: Spacer seal cannot be pushed through spacer. Remove seal and spacer to remove seal.

3. Using D01047AA 17-1/2 Ton Puller Set and JT01933 Driver Set, remove the bearing (12), seal spacer (13), and seal (14) from loader frame bore.
4. Press out spacer (5) from engine frame bore.
5. Inspect and replace parts as necessary.
6. Install spacer (5) into engine frame bore flush with bottom of frame.

Continued on next page

MM61211,0001C44 -19-13FEB08-1/3

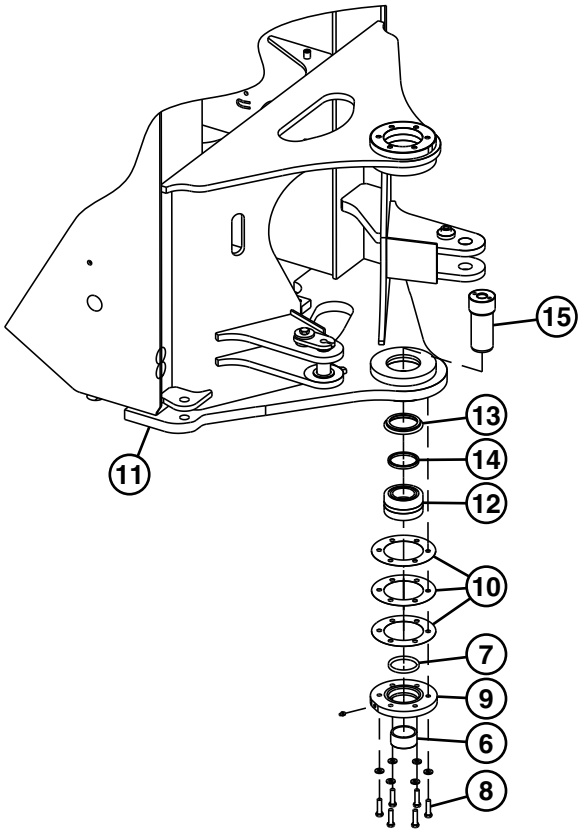

TX1028999 —UN—19AUG08

TX1028999

6— Spacer (Loader Frame)
7— Cover Seal
8— Cap Screw (6 used)
9— Cover Plate
10— Shim (as needed)
11— Loader Frame
12— Bearing
13— Spacer Seal
14— Seal
16— Lower Pivot Pin

7. Apply TY6341 Multi-Purpose SD Polyurea Grease to the bearing (12).
8. Press seal (13) into spacer seal (14), with lips facing out. Seal must seat against the seal spacer shoulder.
9. Install seal spacer and seal to bottom of loader frame bore.
10. Press bearing (12) into loader frame bore.
11. Install seal into cover plate (9) with lips facing out. Press seal to cover shoulder.
12. Hold cover plate (9) in place and measure gap between cover and frame. Take a measurement in three places. Cover plate (9) must contact top of bearing. Calculate the average of these three measurements to determine the correct shim pack required.
13. Install shims (10) to obtain the specified preload of bearings.

Specification	
Lower Pivot Bearing—Shim Pack Thickness	0.03—0.13 mm 0.001—0.005 in.

14. Apply grease to the top of bearing. Fill cavity above bearing to machined surface to prevent moisture from entering bearing through shims.
15. Tighten lower pivot cap screws (8) to specification. Rotate bearing after tightening.

Specification	
Lower Pivot Bearing Cap Screw—Torque	128 N·m 95 lb-ft

16. Install spacer (6) into cover plate (9).
17. Move frames together and install lower pivot pin (16) and plate (3). Install pin retaining cap screw (1) and cap screws (2) finger tight before tightening.

Continued on next page

MM61211,0001C44 -19-13FEB08-2/3

18. Tighten pin retaining cap screw (1) to specification. Steel dowels or cap screws may be inserted into holes in top of pivot pin and a bar inserted between them to prevent pin from turning during tightening of cap screw. Tighten cap screws (2) and plate (3) to specification.

Specification	
Cap Screw—Torque	128 N·m 95 lb-ft
Pin Retaining Cap Screw—Torque	2129 N·m 1570 lb-ft

MM61211,0001C44 -19-13FEB08-3/3

Fuel Tank Guard Remove and Install

The fuel tank guard is removed along with the fuel tank.
See Fuel Tank Remove and Install. (Group 0560.)

TK40086,000084B -19-14DEC10-1/1

Front Axle Guard Remove and Install

SPECIFICATIONS	
Front Axle Guard Weight (approximate)	32 kg 72 lb

CAUTION: Prevent possible injury from crushing. Heavy component, use appropriate lifting device.

Weight may increase due to build up of mud and debris.

1. Remove caps screws and use appropriate lifting device to lower front axle guard.

Specification

Front Axle Guard—Weight (approximate)..... 32 kg 72 lb

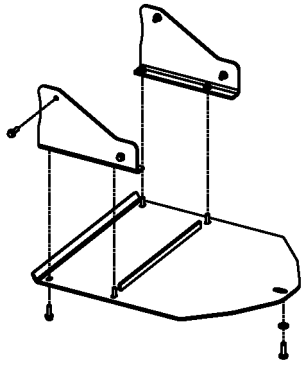

T108117 —UN—12MAR97

Front Axle Guard

2. Repair or replace as necessary.
3. Install front axle guard and tighten cap screws securely.

TK40086,0000847 -19-09DEC10-1/1

Transmission Bottom Guard Remove and Install—Powerlell™

SPECIFICATIONS	
Front Transmission Guard Weight	91 kg 200 lb.
Rear Transmission Guard Weight	95 kg 210 lb.

CAUTION: Prevent possible crushing injury. Use appropriate lifting device when lifting component. Weight may increase due to the buildup of mud and debris.

IMPORTANT: Ground speed radar (if equipped) must be disconnected prior to rear transmission guard removal.

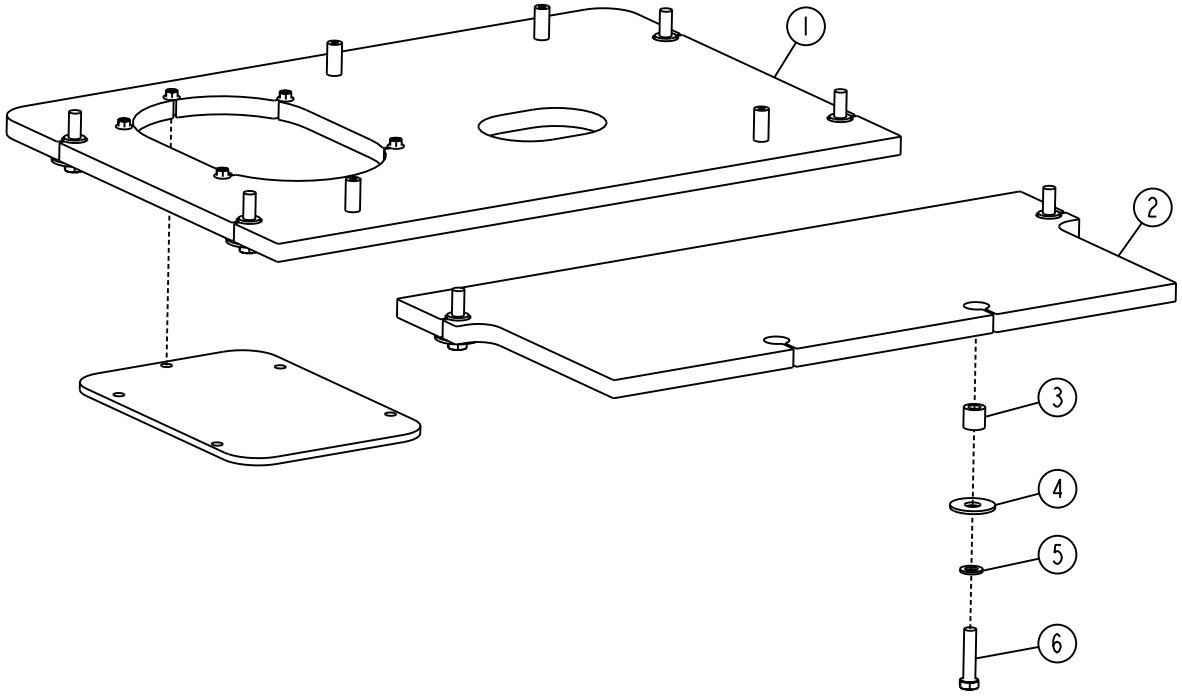

TX1048482

TX1048482 —UN—25JAN10

Transmission Bottom Guard—Powerlell

1— Rear Transmission Guard
2— Front Transmission Guard
3— Bushing (8 used)
4— Washer (8 used)
5— Washer (8 used)
6— Cap Screw (8 used)

Remove and install parts as shown.

Specification

Front Transmission Guard—Weight..... 91 kg 200 lb.

Rear Transmission Guard—Weight..... 95 kg 210 lb.

TK40086,0000846 -19-09DEC10-1/1

Transmission Bottom Guard Remove and Install—Z-Bar

SPECIFICATIONS	
Transmission Bottom Guard Weight (approximate)	62 kg 137 lb.

CAUTION: Prevent possible crushing injury. Use appropriate lifting device when lifting component. Weight may increase due to the buildup of mud and debris.

IMPORTANT: Ground speed radar (if equipped) must be disconnected prior to rear transmission guard removal.

Remove and install parts as shown.

	Specification
Transmission Bottom Guard—Weight (approximate)	62 kg 137 lb.

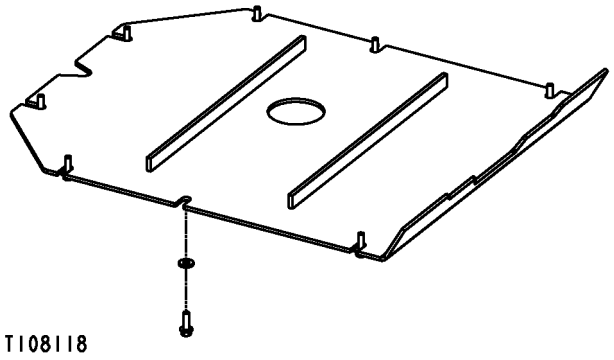

T108118 —UN—12MAR97

TK40086,0000845 -19-09DEC10-1/1

Counterweights Remove and Install

CAUTION: Avoid possible injury or death from machine roll over or tipping.

Loader is unbalanced without counterweight. If travel of loader is necessary, make sure the bucket is as close to the ground as possible and never load the bucket when counterweights are removed.

1. Prepare machine for service. See Park and Prepare for Service Safely. (Group 0001.)
2. Remove left cooling package access door. See Cooling Package Access Doors Remove and Install. (Group 1910.)
3. Remove cap screws and washers (2) and remove counterweight housing cover (1).

CAUTION: Prevent possible crushing injury from heavy component. Use appropriate lifting device.

Specification	
Counterweight Housing Cover—Weight (approximate)	23 kg 50 lb.

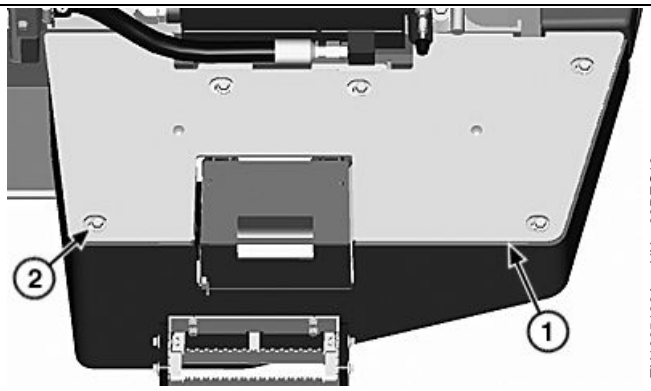

Counterweight Housing Cover

1— Counterweight Housing Cover
2— Cap Screw and Washer (5 used)

4. Remove fuel filler access door.

TK40086,000082E -19-01JUL11-1/3

5. Remove plugs from counterweight tapped holes (4) and install JT01748 Lifting Brackets using M12 x 45 mm cap screws grade 8.8 or higher.

CAUTION: Prevent possible crushing injury from heavy component. Use appropriate lifting device.

6. Attach an appropriate lifting device to JT01748 Lifting Brackets. Remove cap screws and washers (5) and remove counterweight (3).

Specification	
Counterweight—Weight (approximate)	215 kg 475 lb.

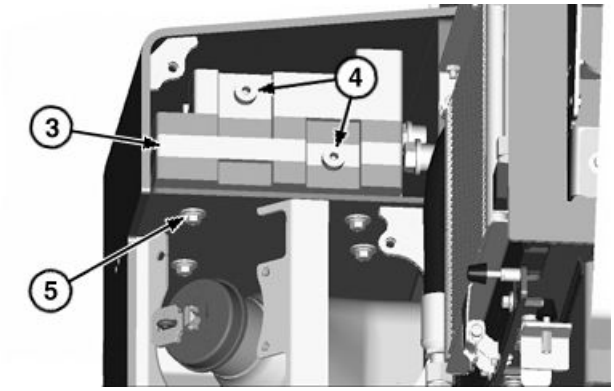

Counterweight Removal (some components removed for clarity)

3— Counterweight
4— Counterweight Tapped Hole (2 used)
5— Cap Screw and Washer (4 used)

Continued on next page

TK40086,000082E -19-01JUL11-2/3

7. Install JT01748 Lifting Brackets to counterweight housing lifting points (7) using M12 x 45 mm cap screws grade 8.8 or higher.
8. Attach an appropriate lifting device to JT01748 Lifting Brackets. Remove cap screws and washers (6) and carefully remove counterweight housing (8) past fuel filler neck and away from machine.

Specification	
Counterweight Housing—Weight (approximate)	186 kg 410 lb.

9. Repair or replace parts as necessary.

IMPORTANT: Avoid damage to machine or components. Do not allow counterweight housing to come in contact with fuel filler neck.

CAUTION: Prevent possible crushing injury from heavy component. Use appropriate lifting device.

10. Lift counterweight housing into position and secure with cap screws to specification.

Specification	
Counterweight Housing Cap Screw—Torque	1070 N·m 790 lb.-ft.
Counterweight Housing—Weight (approximate)	186 kg 410 lb.

11. Lift counterweight into position in counterweight housing and secure with cap screws to specification.

Specification	
Counterweight Cap Screw—Torque	130 N·m 95 lb.-ft.

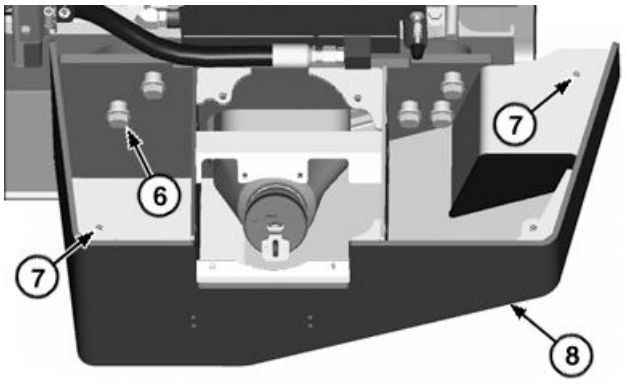

TX1093387A —UN—15JUN11

Counterweight Housing

6— Cap Screw and Washer (5 used)
7— Counterweight Housing Lifting Point (2 used)
8— Counterweight Housing

Counterweight—Weight (approximate)	215 kg 475 lb.

12. Install fuel filler access door.
13. Install counterweight housing cover.

Specification	
Counterweight Housing Cover—Weight (approximate)	23 kg 50 lb.

14. Install left cooling package access door. See Cooling Package Access Doors Remove and Install. (Group 1910.)

TK40086,000082E -19-01JUL11-3/3

Rear Counterweight Remove and Install

SPECIFICATIONS	
Rear counterweight Weight (approximate)	281 kg 620 lb.

1. Prepare machine for service. See Park and Prepare for Service Safely. (Group 0001.)

CAUTION: Prevent crushing injury from heavy component. Use appropriate lifting device.

2. Support rear counterweight (1).

Specification

Rear counterweight—Weight (approximate)..... 281 kg
620 lb.

3. Remove cap screws (2) and remove rear counterweight.
4. Repair or replace as necessary.

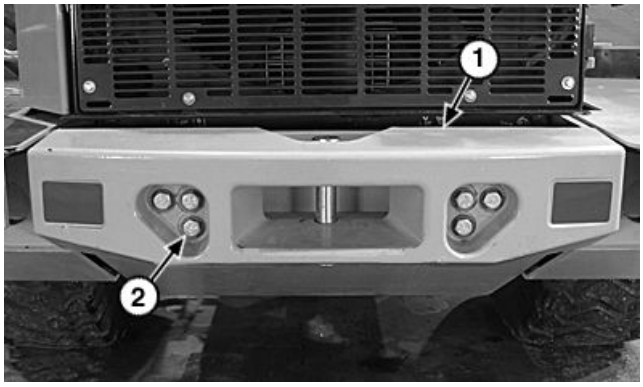

Rear Counterweight

1— Rear Counterweight **2— Cap Screw (6 used)**

5. Install rear counterweight.

TK40086,0000814 -19-14DEC10-1/1

Section 18
Operator's Station

Contents

Page

Group 1800—Removal and Installation
Cab Remove and Install 18-1800-1

Group 1810—Operator Enclosure
Windowpanes Remove and Install 18-1810-1
Cab Door Hold-Open Release Adjust 18-1810-1
Cab Door Hold-Open Latch Pin Adjust 18-1810-1
Front and Rear Windshield Wiper Motor Remove and Install 18-1810-2

Group 1821—Seat and Seat Belts
Seat Remove and Install 18-1821-1
Seat Belt Remove and Install 18-1821-2
Steering Joystick Disassemble and Assemble—If Equipped 18-1821-3
Joystick Steering Armrest Disassemble and Assemble—If Equipped 18-1821-12
Joystick Steering Armrest Rear Pivot Adjustment—If Equipped 18-1821-16

Group 1830—Heating and Air Conditioning
Proper Refrigerant Handling 18-1830-1
R134a Refrigerant Cautions 18-1830-1
R134a Compressor Oil Charge Check 18-1830-1
R134a Compressor Oil Removal 18-1830-2
R134a Component Oil Charge 18-1830-2
Refrigerant Leak Testing 18-1830-3
Refrigerant Hoses and Tubing Inspection 18-1830-3
R134a Refrigerant Recovery/Recycling and Charging Station Installation Procedure 18-1830-3
R134a System Recover 18-1830-5
R134a System Evacuate 18-1830-6
R134a System Charge 18-1830-7
Air Conditioner System Cleaning Procedures 18-1830-8
Air Conditioner System Purge 18-1830-8
Air Conditioner System Flush 18-1830-9
Heater/Evaporator Coil Remove and Install 18-1830-11
Expansion Valve Remove and Install 18-1830-12
Heater Control Valve Remove and Install 18-1830-12
Blower Motor Assembly Remove and Install 18-1830-13

Page

Receiver-Dryer Remove and Install 18-1830-13
Condenser Remove and Install 18-1830-14
Fresh Air Filter Remove and Install 18-1830-15
Recirculating Air Filter Remove and Install 18-1830-16
Compressor Remove and Install 18-1830-17
Clutch Hub Clearance—R134a Check 18-1830-18

Cab Remove and Install

SPECIFICATIONS	
Cab Weight (approximate)	916 kg 2020 lb.
Cab Mounting Hardware Torque	854 N·m 630 lb-ft

1. Prepare machine for service. See Park and Prepare for Service Safely. (Group 0001.)

CAUTION: To avoid injury from escaping fluid under pressure, stop engine and relieve the pressure in the system before disconnecting or connecting hydraulic or other lines. Tighten all connections before applying pressure.

2. Relieve hydraulic system pressure. See Hydraulic System Pressure and Accumulators Discharge. (Group 9025-25.)
3. Turn battery disconnect switch to the OFF position or disconnect battery negative (-) cable.
4. Evacuate and recover refrigerant from air conditioning system. See R134a System Evacuate. (Group 1830.)
5. Remove left and right handrails, steps, and platforms.
6. Remove front, left, and right cab shields.
7. Apply vacuum or drain hydraulic reservoir. If draining hydraulic reservoir, see Drain, Flush, and Refill Hydraulic System Oil. (Operator's Manual.)
8. Remove left and right air ducts (1).

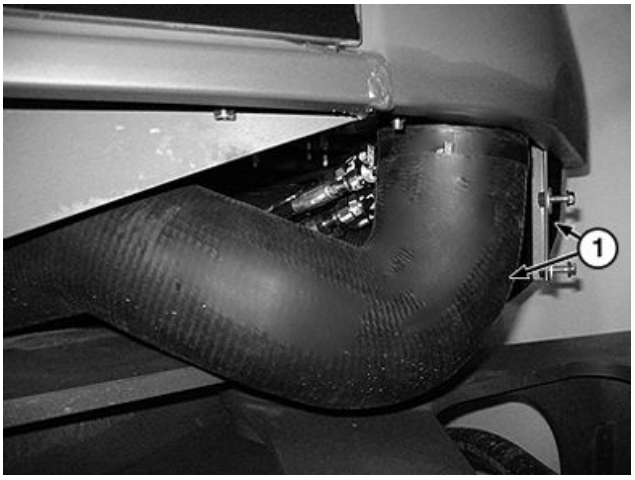

Air Ducts

1— Air Duct (2 used)

TF44157,0001467 -19-05JAN11-1/9

9. Tag and disconnect steering valve hydraulic lines (2). Close all openings using caps and plugs.

2— Steering Valve Hydraulic Line (5 used)

3— Steering Valve



Steering Valve

Continued on next page

TF44157,0001467 -19-05JAN11-2/9

10. Tag and disconnect hydraulic lines (4) from brake valve (5). Close all openings using caps and plugs.
11. Disconnect service brake accumulator pressure sensor (front axle) (B27) connector from brake valve.

4— Hydraulic Line (3 used)
5— Brake Valve
B27— Service Brake Accumulator Pressure Sensor (front axle)

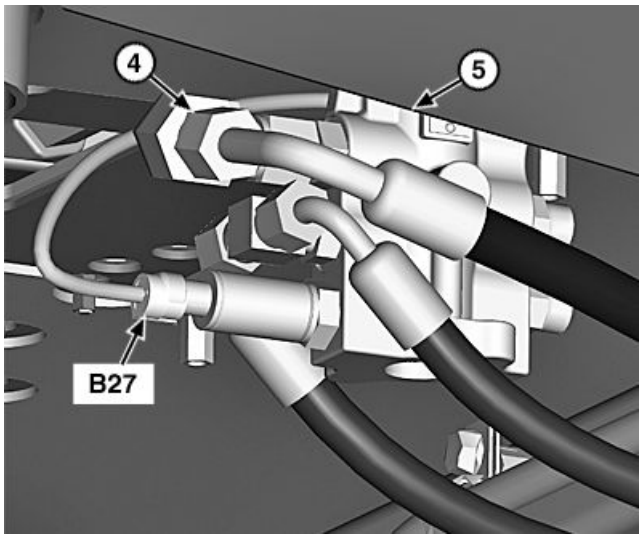

Brake Valve

Continued on next page

TF44157,0001467 -19-05JAN11-3/9

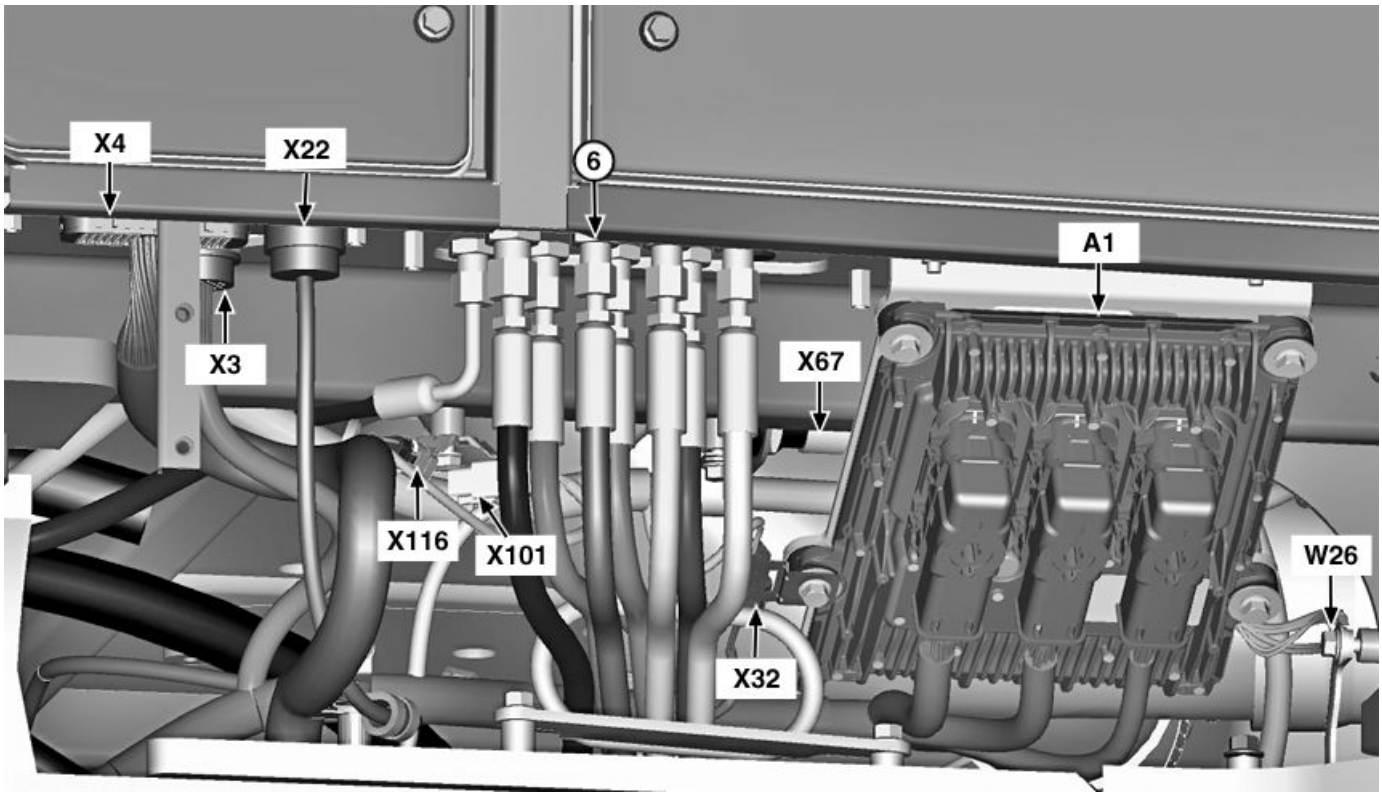

Right Side of Cab

6— Pilot Control Hydraulic Lines (8 used)
A1— Engine Control Unit (ECU)
W26— Ground at Right Front Cab Leg
X3— Load Center Harness-to-Engine Interface Harness 31-Pin Connector
X4— Load Center Harness-to-Engine Frame Harness 70-Pin Connector
X22— Load Center Harness-to-Transmission Harness 23-Pin Connector
X32— Load Center Harness-to-Engine Interface Harness CAN 1 Connector
X67— Load Center Harness-to-Loader Frame Harness 31-Pin Connector
X101— Load Center Harness-to-Radar Object Detection Harness 6-Pin Connector (if equipped)
X116— ROD Harness-to-Load Center Harness 3-Pin CAN Connector (if equipped)

12. Tag and disconnect pilot control hydraulic lines (6). Close all openings using caps and plugs.
13. Remove ECU (A1) with mounting bracket.
14. Disconnect ground at right front cab leg (W26).
15. Disconnect electrical connectors (X3, X4, X22, X32, X67, X101, and X106).

TF44157,0001467 -19-05JAN11-4/9

16. Tag and disconnect wires (7—9) from load center harness (W3) to starter motor. See Load Center Harness (W3) Component Location. (Group 9015-10.)

7— White Wire on Starter Solenoid (2 used)
8— Red Wire on Starter Solenoid (3 used)
9— Black Wire on Starter Motor Body (2 used)

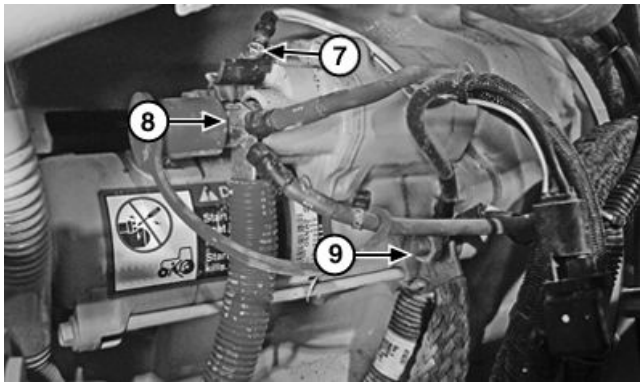

Starter Motor

Continued on next page

TF44157,0001467 -19-05JAN11-5/9

17. Disconnect air conditioning system lines (10). Close all openings using caps and plugs.
18. Clamp off and disconnect heater hoses (11). Close all openings using caps and plugs.
19. Disconnect precleaner blower motor (M7).

10— Air Conditioning System Line (2 used)
11— Heater Hose (2 used)
M7—Precleaner Blower Motor

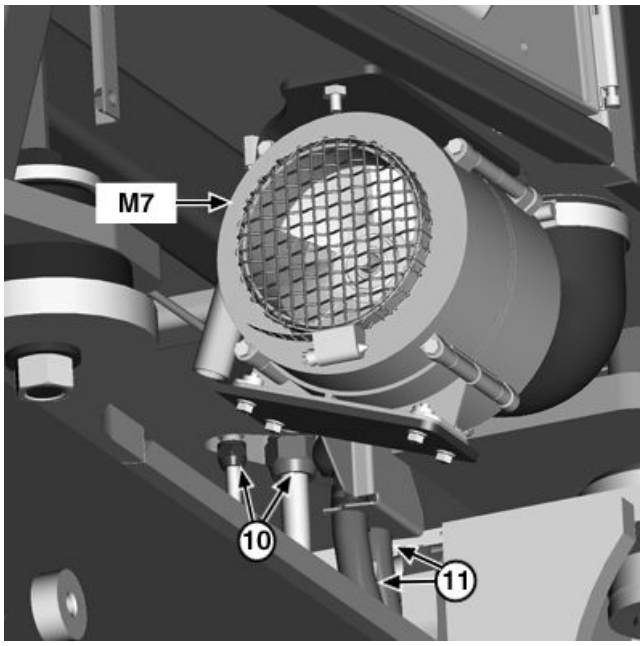

Left Side of Cab

TF44157,0001467 -19-05JAN11-6/9

20. Disconnect joystick steering valve (JSV) (A7), if equipped.
21. Disconnect front window washer hose from left front of cab.
22. Disconnect rear window washer hose at left rear of cab.

A7—Joystick Steering Valve (JSV)
X61— Joystick Steering Valve (JSV) 4 Pin Connector

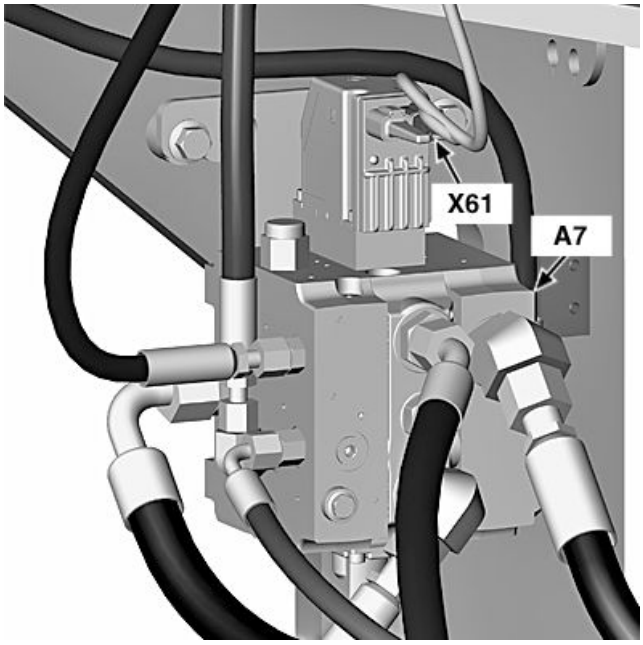

Joystick Steering Valve (if equipped)

Continued on next page

TF44157,0001467 -19-05JAN11-7/9

CAUTION: Prevent possible crushing injury from heavy component. Use appropriate lifting device.

23. Attach appropriate lifting device to lifting brackets (12) on cab roof.

Specification

Cab—Weight (approximate)..... 916 kg 2020 lb.

12— Lifting Bracket (4 used)

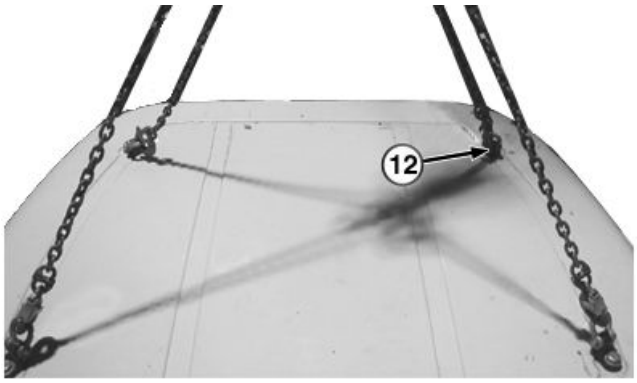

Cab Removal

TF44157,0001467 -19-05JAN11-8/9

24. Remove cab mounting hardware from front and rear of cab.
25. Remove cab.
26. Inspect cab mounting hardware. Replace as necessary.
27. Install cab.
28. Install cab mounting hardware and tighten to specification.

Specification

Cab Mounting Hardware—Torque.....854 N·m 630 lb-ft

29. Connect front and rear window washer hoses.
30. Connect joystick steering valve (JSV), if equipped.
31. Connect precleaner blower motor.
32. Connect heater hoses.
33. Connect air conditioning system lines.
34. Connect wires from load center harness to starter motor.
35. Connect electrical connectors on right side of cab.
36. Connect ground at right front cab leg.
37. Connect ECU with mounting bracket on right side of cab.
38. Connect pilot control hydraulic fittings on right side of cab.
39. Connect service brake accumulator pressure sensor (front axle) connector to brake valve.
40. Connect hydraulic lines to brake valve.
41. Connect steering valve hydraulic lines.
42. Install left and right air ducts.

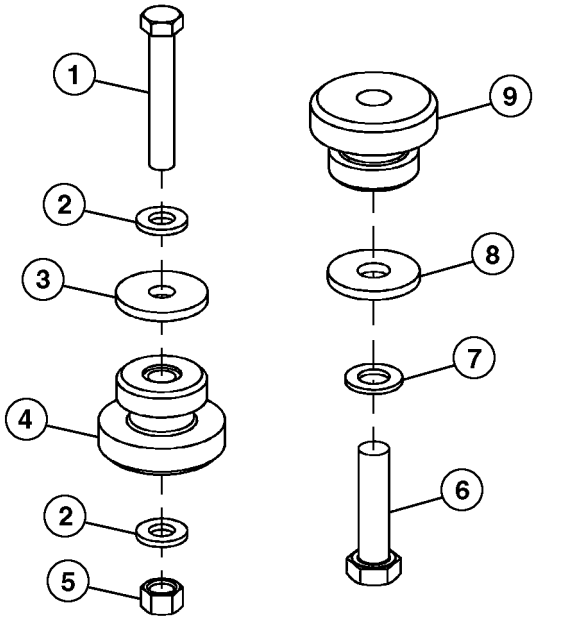

Cab Mounting Hardware

1— Front Cap Screw (2 used)
2— Washer (4 used)
3— Washer (2 used)
4— Isolator (2 used)
5— Nut (2 used)
6— Rear Cap Screw (2 used)
7— Washer (2 used)
8— Washer (2 used)
9— Isolator (2 used)

43. Remove vacuum or fill hydraulic reservoir, if hydraulic reservoir was drained.
44. Install front, left, and right cab shields.
45. Install left and right handrails, steps, and platforms.
46. Charge air conditioning system. See R134a System Charge. (Group 1830.)
47. Turn battery disconnect switch to the ON position or connect battery negative (-) cable.

TF44157,0001467 -19-05JAN11-9/9

Windowpanes Remove and Install

The adhesive used to hold the windowpanes in place is a urethane adhesive that is used on most automobile windshields. Urethane adhesive manufactured by Loctite Corporation or equivalent is recommended. Do not use any other type of adhesive. It is also recommended that an auto glass dealer install the windowpanes.

IMPORTANT: Windowpanes must have an ultra-violet barrier around the edge of the glass since ultra-violet rays will deteriorate the adhesive. Windowpanes ordered through John Deere Parts have the ultra-violet barrier. If the windowpane is purchased through a glass dealer, the dealer must put an ultra-violet barrier on the glass. Do not apply paint to the border of the glass.

If an auto glass dealer is not installing the windowpanes, use the following procedure:

1. Purchase urethane adhesive from your local auto glass dealer.
2. If window frame is removable, remove frame from cab.
3. Scrape broken glass off existing adhesive. Do not remove adhesive from window frame or cab.

IMPORTANT: Adhesive will not stick to bare metal.

4. If existing adhesive is removed from frame and paint is scraped off window frame, paint window frame. Paint must be fully cured before installing windowpane.
5. Trim existing adhesive so it has a smooth surface.
6. Follow the manufacturer's instructions for using the adhesive.
7. Apply a 6 mm (1/4 in.) bead of adhesive on top of the existing adhesive.
8. Put a new windowpane into position. Use hand pressure to force windowpane down around the edges until even with metal frame.
9. If windowpane is installed directly on cab, use duct tape to hold it in place while adhesive cures.
10. Allow adhesive to cure for 24 hours before operating machine.

T52,1810,C19 -19-05JUN98-1/1

Cab Door Hold-Open Release Adjust

OTHER MATERIAL
242 LOCTITE® Thread Lock and Sealer (Medium Strength)

1. Remove door striker cover from left rear side of ROPS.
2. Adjust cable length so door release latch releases door when lever is moved 1/3 of full travel distance.
3. Apply Thread Lock and Sealer (medium strength) to cable eye retaining nut. Cable eye must remain loose.

LOCTITE is a trademark of Henkel Corporation

MH66O88,000072C -19-29JUL08-1/1

Cab Door Hold-Open Latch Pin Adjust

OTHER MATERIAL
242 LOCTITE® Medium-Strength Thread Lock and Sealer

1. Adjust door latch pin (1) to fit center of release latch on door when opened.
2. Apply PM37418 Medium-Strength Thread Lock and Sealer to door latch pin retaining nut.

1— Latch Pin

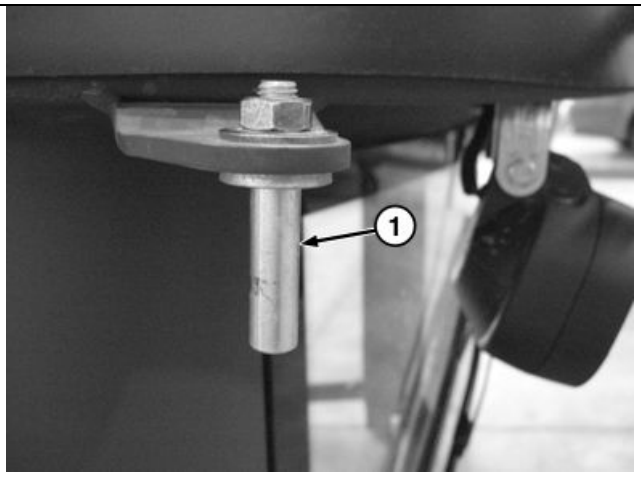

TX1028890A —UN—04SEP07

Latch Pin

LOCTITE is a trademark of Henkel Corporation

SW03989,00007D7 -19-21JAN11-1/1

Front and Rear Windshield Wiper Motor Remove and Install

SPECIFICATIONS	
Wiper Arm Retaining Nut Torque	25 N·m 220 lb-in.

Front Windshield Wiper Motor Remove and Install

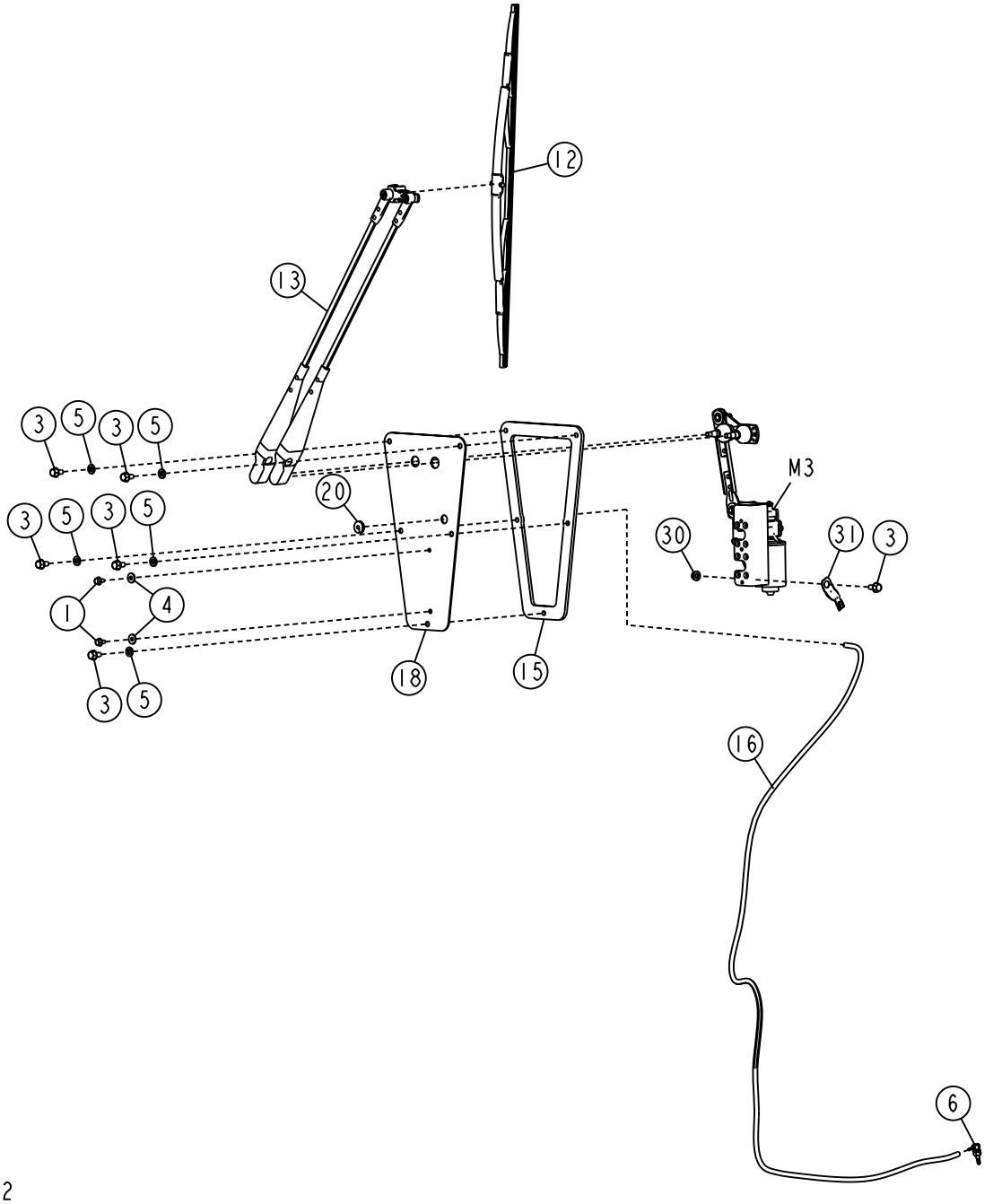

TX1080362 —UN—05AUG10

Front Wiper Assembly

1— Cap Screw (2 used)
3— Cap Screw (5 used)
4— Washer (2 used)
5— Washer (5 used)
6— Elbow Fitting
12— Front Wiper Blade
13— Front Wiper Arm
15— Seal
16— Front Washer Hose
18— Front Wiper Motor Access Plate
20— Grommet
30— Flange Nut
31— Electrical Connector Accessory
M3—Front Wiper Motor

Continued on next page

TF44157,0001468 -19-24AUG10-1/4

1. Disconnect front washer hose (16).
2. Remove front wiper arm (13).
3. Remove front wiper motor access plate (18) with front wiper motor (M3).
4. Disconnect front wiper motor connector.
5. Remove front wiper motor from front wiper motor access plate.
6. Repair or replace parts as necessary.
7. Install front wiper motor on front wiper motor access plate.
8. Connect front wiper motor connector
9. Install front wiper motor access plate with front wiper motor.
10. Install front wiper arm.

Specification

Wiper Arm Retaining Nut—Torque.....25 N·m
220 lb-in.

1— Cap Screw (2 used)
3— Cap Screw (5 used)
13— Front Wiper Arm
16— Front Washer Hose
18— Front Wiper Motor Access Plate
M3—Front Wiper Motor

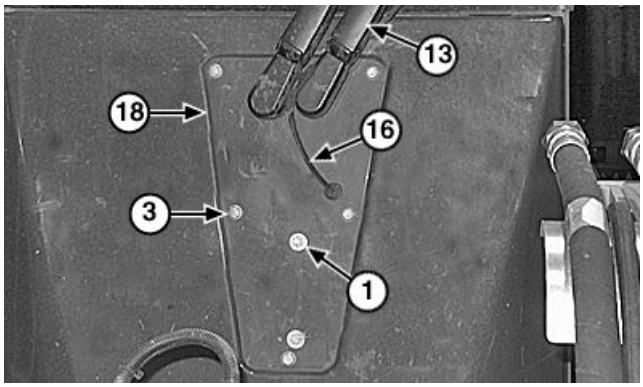

TX1080367A —UN—29JUL10

Front Wiper Motor Access Plate

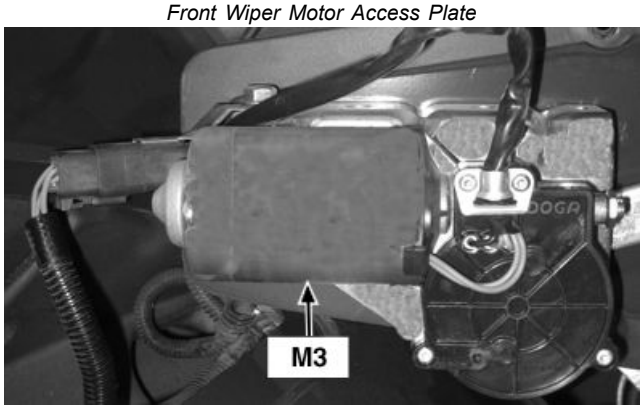

TX1081169A —UN—20AUG10

Front Wiper Motor

Continued on next page

TF44157,0001468 -19-24AUG10-2/4

Rear Windshield Wiper Motor Remove and Install

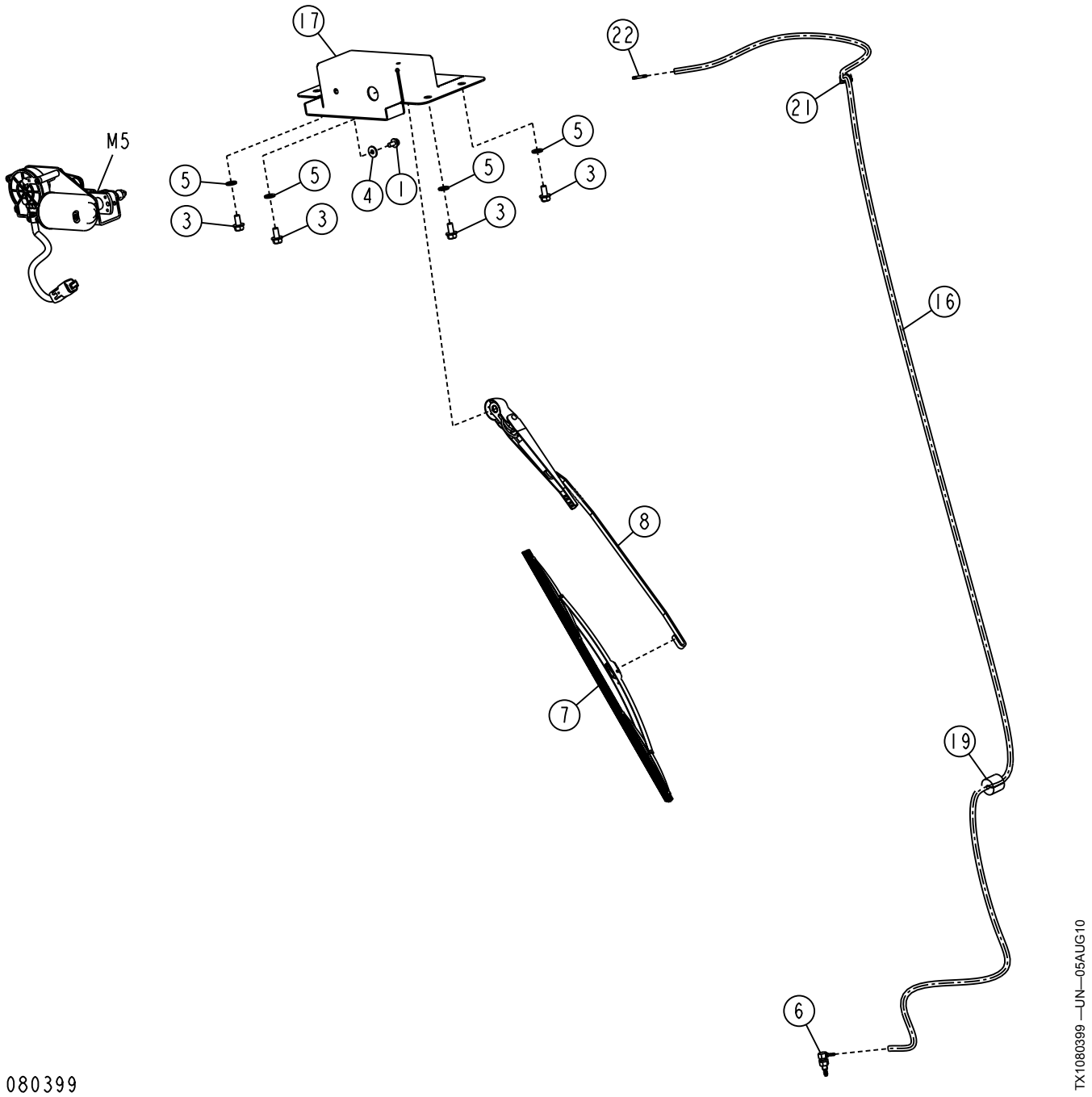

Rear Wiper Assembly

1— Cap Screw
3— Cap Screw (4 used)
4— Washer
5— Washer (4 used)
6— Elbow Fitting
7— Rear Wiper Blade
8— Rear Wiper Arm
16— Rear Washer Hose
17— Rear Wiper Motor Mounting Tray
19— Isolator
21— Clip
22— Fitting
M5—Rear Wiper Motor

Continued on next page

TF44157,0001468 -19-24AUG10-3/4

1. Remove roof.
2. Disconnect rear wiper motor (M5) connector.
3. Disconnect rear washer hose (16).
4. Remove rear wiper arm (8).
5. Remove cap screws (3).
6. Lower rear wiper motor mounting tray (17) with rear wiper motor.
7. Remove rear wiper motor from rear wiper motor mounting tray.
8. Inspect and replace parts as necessary.
9. Install rear wiper motor to rear wiper motor mounting tray.
10. Install rear wiper motor mounting tray with rear wiper motor.
11. Install rear wiper arm.
12. Connect rear washer hose.
13. Connect rear wiper motor connector.
14. Install roof.

3— Cap Screw (4 used)
8— Rear Wiper Arm
16— Rear Washer Hose
17— Rear Wiper Motor Mounting Tray
M5—Rear Wiper Motor

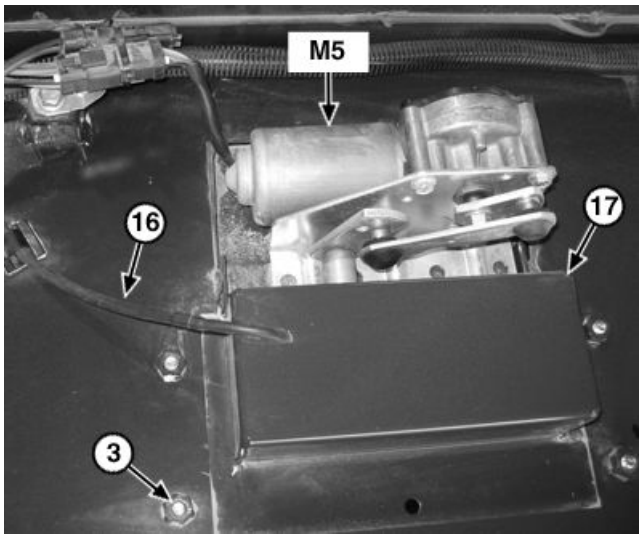

TX1081172A —UN—20AUG10

Rear Wiper Motor

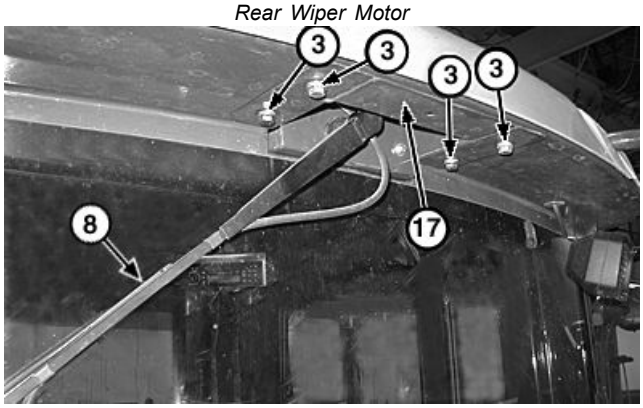

TX1080439A —UN—24AUG10

Rear Windshield Wiper

TF44157,0001468 -19-24AUG10-4/4

Seat Remove and Install

SPECIFICATIONS	
Seat Back Weight	19 kg 42 lb
Seat Suspension Weight	31 kg 68 lb

1. Park machine on flat level surface. Lower all implements to ground.
2. Lift seat cushion.
3. Disconnect harness to seat cushion and seat suspension.
4. Remove cushion.
5. Remove cap screws (1—3) and remove seat back from machine.

Specification

Seat Back—Weight..... 19 kg
42 lb

6. Remove cap screws from under seat suspension.

CAUTION: Avoid crushing injury from heavy component. Use appropriate lifting device when removing seat suspension.

7. Use appropriate lifting device and remove seat suspension.

Specification

Seat Suspension—Weight..... 31 kg
68 lb

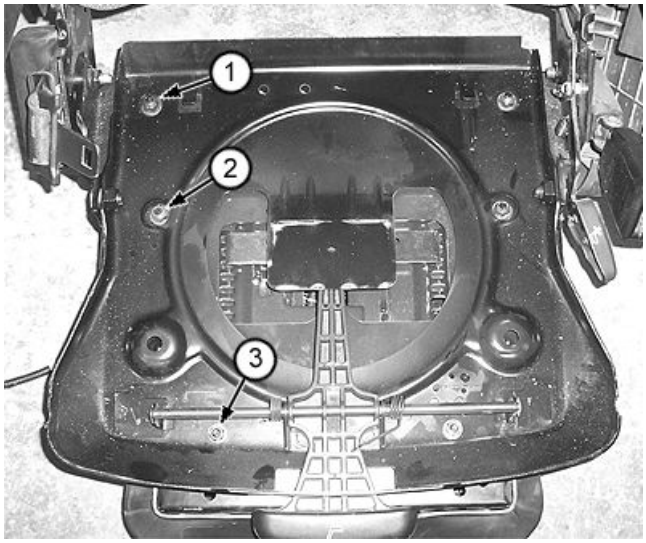

T206685A —UN—05JAN05

Seat Back

1— Cap Screw (2 used)
2— Cap Screw (2 used)
3— Cap Screw (2 used)

8. Repair or replace parts as necessary.
9. Install seat suspension and connect harness.
10. Install seat back and cushion.

AA95137,0001B45 -19-13AUG08-1/1

Seat Belt Remove and Install

SPECIFICATIONS	
Seat Belt Torque	39 N·m 29 lb-ft
Seat Belt Buckle Torque	39 N·m 29 lb-ft

1. Park machine on flat level surface. Lower all implements to ground.
2. Remove cap screw (1) and seat belt buckle (2).
3. Remove cap screw (4) and seat belt (3).
4. Repair or replace parts as necessary.
5. Install seat belt and cap screw.

Specification

Seat Belt—Torque.....39 N·m
29 lb-ft

6. Install seat belt buckle and cap screw.

Specification

Seat Belt
Buckle—Torque.....39 N·m
29 lb-ft

1— Cap Screw
2— Seat Belt Buckle
3— Seat Belt
4— Cap Screw

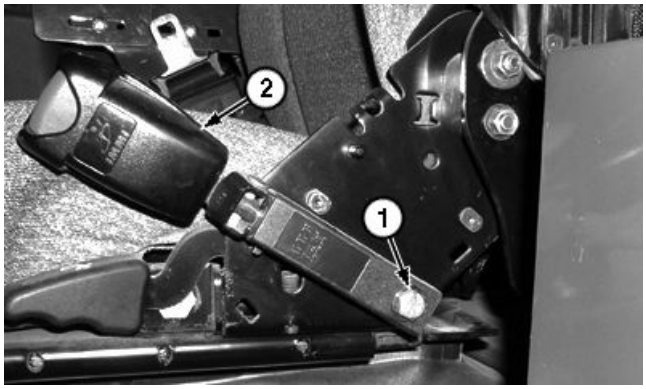

T216764A —UN—27OCT05

Seat Belt Buckle

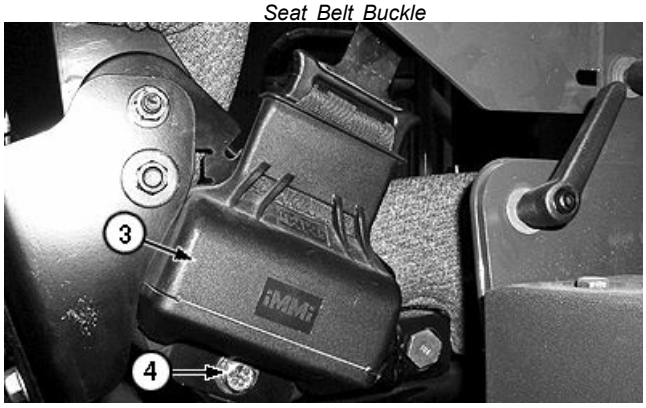

T216765A —UN—27OCT05

Seat Belt

AA95137,0001B46 -19-13AUG08-1/1

Steering Joystick Disassemble and Assemble—If Equipped

SPECIFICATIONS	
Hand Grip Cap Screws Torque	3.5 N·m 31 lb-in.
Hand Grip Cap Screws Torque	3.5 N·m 31 lb-in.
Three-Button Cap Screws Torque	0.5 N·m 4.40 lb-in.

SERVICE EQUIPMENT AND TOOLS
JDG1383 Deutsch Terminal Tool

OTHER MATERIAL
242 LOCTITE® Thread Lock and Sealer (Medium Strength)
7649 LOCTITE® Cure Primer

NOTE: The joystick controller is serviceable as individual components and parts. Hand grips, forward neutral and reverse (FNR) switch, harness, three-button cap, three-button switch, and adaptor can be replaced as components. The joystick controller shown in this procedure has the FNR switch and the electrohydraulic control unit.

Continued on next page

TF44157,000146E -19-28SEP10-1/17

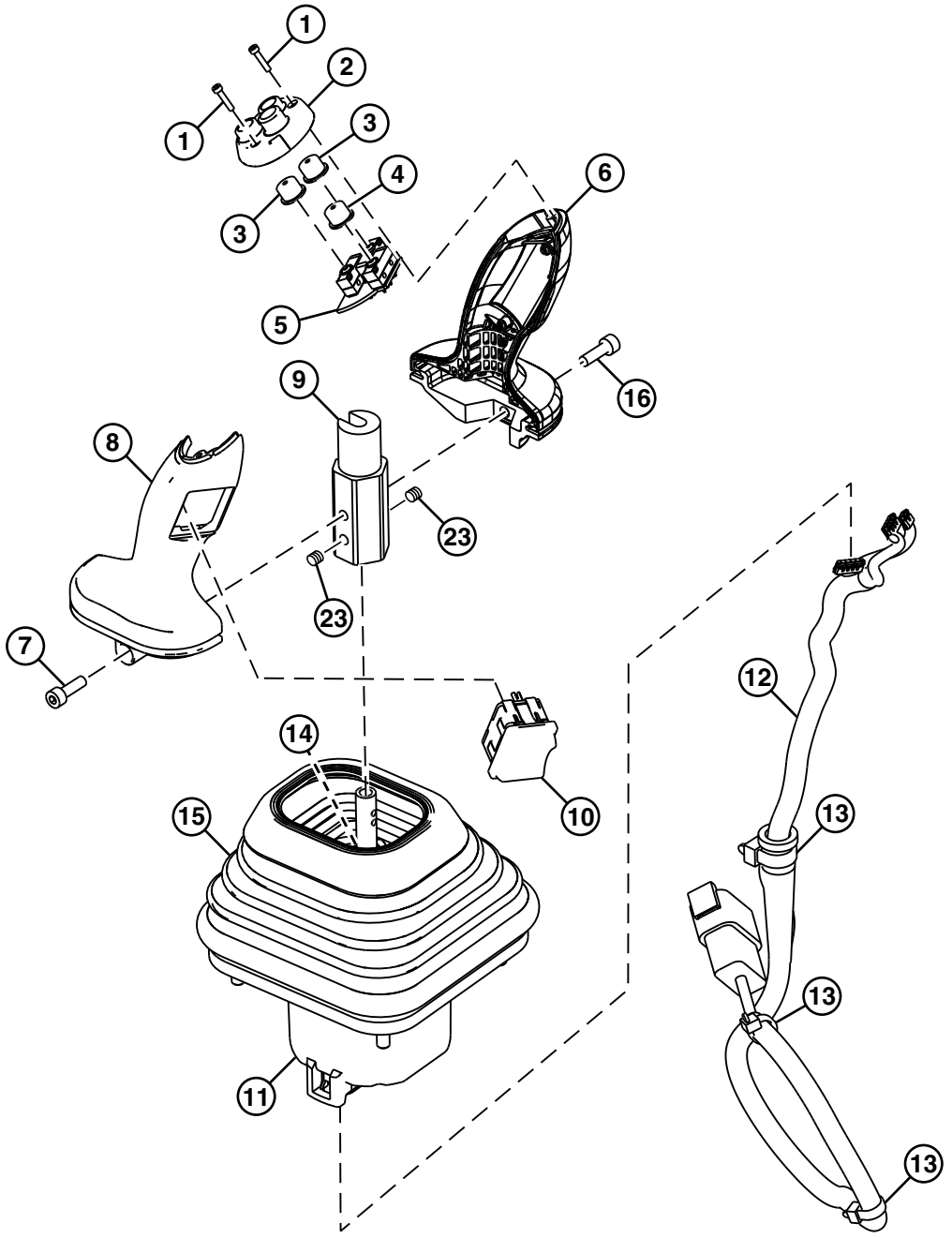

TX1077305 —UN—11MAY10

TX1077305

Joystick Controller (electrohydraulic controller shown)

1— Screw (2 used)
2— Three-Button Cap
3— Short Button (2 used)
4— Long Button
5— Three-Button Switch
6— Left Hand Grip
7— Cap Screw
8— Right Hand Grip
9— Adaptor
10— Forward, Neutral, and Reverse (FNR) Switch
11— Joystick Control Unit
12— Harness
13— Tie Band (3 used)
14— Spring
15— Boot
16— Cap Screw
23— Set Screw (2 used)

The joystick controller is serviceable as individual components. Serviceable components include:

- Three-button cap
- Three-button switch
- Forward, Neutral, and Reverse (FNR) Switch
- Hand grips
- Joystick adaptor
- Joystick harness

IMPORTANT: Avoid damage to three-button cap switch. Remove joystick controller from machine.

Continued on next page

TF44157,000146E -19-28SEP10-2/17

1. Place joystick on clean work bench.

LOCTITE is a trademark of Henkel Corporation

TF44157,000146E -19-28SEP10-3/17

NOTE: Buttons will fall out when three-button cap is removed.

2. Make note of button locations for assembly later. Remove screws (1) and three-button cap (2) with buttons (3 and 4).

1— Screw (2 used)
2— Three-Button Cap
3— Short Button (2 used)
4— Long Button



TX1077317A —UN—10MAY10

Three-Button Cap

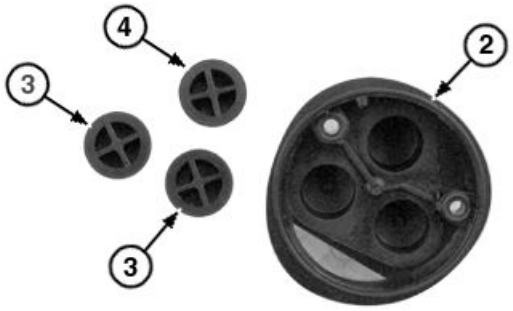

TX1077318A —UN—17MAY10

Three-Button Cap and Buttons

TF44157,000146E -19-28SEP10-4/17

NOTE: If only the three-button cap and buttons are being replaced they can be replaced at this time.

Refer to steps later in this procedure for installing three-button cap and buttons.

3. Disconnect boot (15) from hand grips (6 and 8).

6— Left Hand Grip
8— Right Hand Grip
15— Boot



TX1077341A —UN—11MAY10

Joystick Boot and Grips

Continued on next page

TF44157,000146E -19-28SEP10-5/17

4. Remove cap screw (7) and right hand grip (8).

7— Cap Screw

8— Right Hand Grip



TX1077344A —UN—11MAY10

Hand Grip Cap Screw Location

TF44157,000146E -19-28SEP10-6/17

5. Push retaining clips (21) in to release FNR switch (10).
6. Disconnect FNR switch connector (20), remove FNR switch and right side hand grip.

8— Right Side Hand Grip

10— Forward, Neutral, and Reverse (FNR) Switch

20— Forward, Neutral, and Reverse (FNR) Switch Connector

21— Retaining Clip (2 used)



TX1077360A —UN—11MAY10

Forward, Neutral, and Reverse (FNR) Switch

TF44157,000146E -19-28SEP10-7/17

7. Disconnect connectors (18) and remove three-button switch (17).

17— Three-Button Switch

18— Three-Button Switch Connector (2 used)



TX1077352A —UN—11MAY10

Three-Button Switch

Continued on next page

TF44157,000146E -19-28SEP10-8/17

8. Remove cap screw (16) and left hand grip (6).

6— Left Hand Grip **16— Cap Screw**



TX1077363A —UN—11MAY10

Left Hand Grip and Cap Screw

TF44157,000146E -19-28SEP10-9/17

9. Remove boot (15) from joystick control.

NOTE: Note position of harness for reassembly.

10. Remove harness (12) from adaptor (9).

NOTE: Make note of tie band location for assembly.

11. Remove three tie bands (13).

NOTE: Harness wires and connector pin locations are marked for reassembly.

12. Make note of wire locations in connector for assembly. With JDG1383 Deutsch Terminal Tool, remove all wires from connector (27) to allow harness to be removed from hole in the joystick controller. See DEUTSCH™ Replace DEUTSCH® Rectangular or Triangular Connectors. (Group 9015-20.)

13. Remove harness (12).

DEUTSCH is a trademark of Deutsch Co.



TX1077391A —UN—11MAY10

Joystick Controller Harness

9— Adaptor
11— Joystick Control Unit
12— Harness
13— Tie Band (3 used)
15— Boot
27— Connector

Continued on next page

TF44157,000146E -19-28SEP10-10/17

NOTE: It is not necessary to completely remove the two set screws (23).

14. Loosen set screws on each side of adaptor (9) with 2.5 mm wrench.

NOTE: Note location of adaptor slot (26) and harness for reassembly.

15. Remove adaptor from joystick control unit shaft (24).
16. Repair or replace parts as necessary.
17. Install adaptor.

9— Adaptor
11— Joystick Control Unit
12— Harness
14— Spring
23— Set Screw (2 used)
24— Joystick Control Unit Shaft
26— Adaptor Slot



TX1077395A —UN—11MAY10

Adaptor Slot



TX1077397A —UN—11MAY10

Joystick Set Screws

TF44157,000146E -19-28SEP10-11/17

IMPORTANT: Avoid damage to wiring harness. Wire harness must follow same routing as original factory routing to allow for proper joystick movement.

NOTE: See photo for correct harness installation.

18. Install harness.
19. Attach tie bands (13) to secure harness.
20. Install harness wires into wire connector (27).

9— Adaptor
11— Joystick Control Unit
12— Harness
13— Tie Band (3 used)
27— Connector

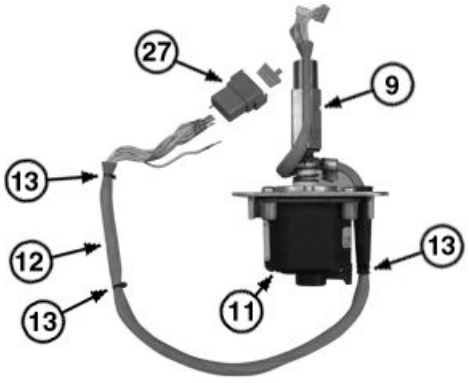

TX1077389A —UN—11MAY10

Harness and Tie Band Location

Continued on next page

TF44157,000146E -19-28SEP10-12/17

21. Install boot on joystick controller with cut out (28) aligned as shown.
22. Apply PM37509 Cure Primer and PM37418 Thread Lock and Sealer (medium strength) to the threads of the cap screw. Install left hand grip and cap screw. Tighten to specification.

Specification	
Hand Grip Cap Screws—Torque	3.5 N·m 31 lb-in.

15— Boot

28— Cut Out

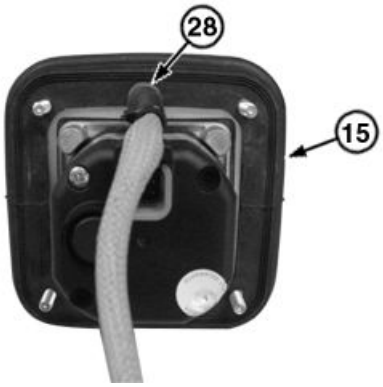

TX1077453A —UN—11MAY10

Boot Installation Location

TF44157,000146E -19-28SEP10-13/17

23. Connect three-button switch connectors.
24. Install three-button switch.

17— Three-Button Switch

18— Three-Button Switch Connector (2 used)



TX1077352A —UN—11MAY10

Three-Button Switch

TF44157,000146E -19-28SEP10-14/17

NOTE: Install FNR switch with the white connector at the bottom.

25. Attach FNR switch connector (20), install FNR switch (10) by pushing switch into right side grip.

8— Right Side Hand Grip
10— Forward, Neutral, and Reverse (FNR) Switch
20— Forward, Neutral, and Reverse (FNR) Switch Connector
21— Retaining Clip (2 used)



TX1077360A —UN—11MAY10

Forward, Neutral, and Reverse (FNR) Switch

Continued on next page

TF44157,000146E -19-28SEP10-15/17

IMPORTANT: Avoid joystick controller malfunction. Make sure wiring harness is not pinched between the hand grip sections.

26. Apply PM37509 Cure Primer and PM37418 Thread Lock and Sealer (medium strength) to the threads of the cap screw. Install right hand grip (8) and cap screw (7). Tighten to specification.

Specification	
Hand Grip Cap Screws—Torque	3.5 N·m 31 lb-in.

7— Cap Screw

8— Right Hand Grip



TX1077344A —UN—11MAY10

Hand Grip Cap Screw Location

TF44157,000146E -19-28SEP10-16/17

27. Attach boot (15) into hand grips.

6— Left Hand Grip
8— Right Hand Grip

15— Boot



TX1077341A —UN—11MAY10

Joystick Boot and Grips

TF44157,000146E -19-28SEP10-17/17

NOTE: To keep the long and short buttons in place while installing the three-button cap, turn the joystick controller upside down. The three-button cap screws are self tapping. Make sure screws are engaged in original threads.

28. Turn the joystick controller upside down and, install buttons (3 and 4), three-button cap (2), and screws (1). Tighten to specification.

Specification

Three-Button Cap Screws—Torque.....0.5 N·m
4.40 lb-in.

IMPORTANT: Avoid three-button switch damage. Test each button by listening for a click.

29. Push each button and listen for a click. To avoid three-button switch damage, position three-button cap until a click is heard on each button.

30. Install joystick controller in machine.

1— Screw (2 used)
2— Three-Button Cap
3— Short Button (2 used)
4— Long Button



TX1077317A —UN—10MAY10

Three-Button Cap

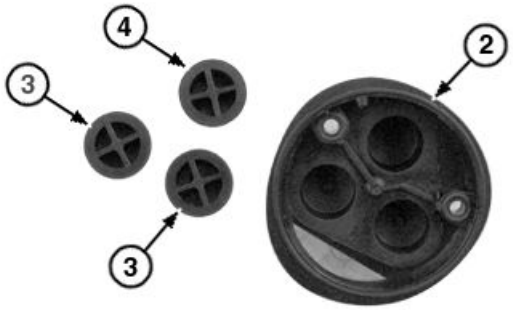

TX1077318A —UN—17MAY10

Three-Button Cap and Buttons

TF44157,000146E -19-28SEP10-18/17

Joystick Steering Armrest Disassemble and Assemble—If Equipped

SPECIFICATIONS	
Cap Screws Torque	5 N·m 50 lb.-in.
Nuts Torque	15 N·m 135 lb.-in.
Cap Screws Torque	2 N·m 20 lb.-in.

Continued on next page

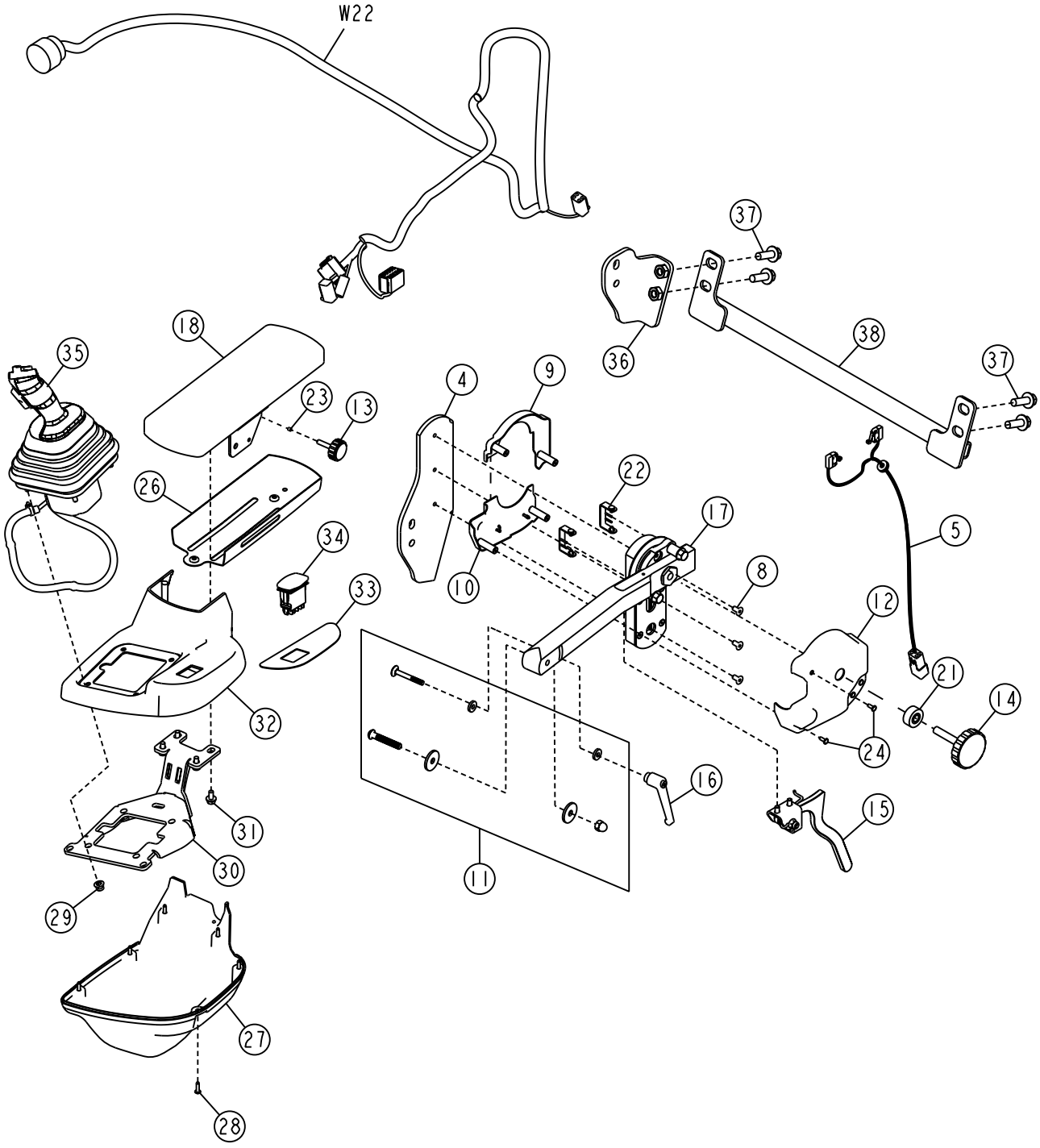

TX1080965 —UN—18AUG10

Joystick Steering Armrest

Continued on next page

TF44157,000146B -19-27AUG10-2/3

4— Bracket
5— Push Switch
8— Cap Screw (3 used)
9— Cover
10— Cover
11— Tilt Joint Hardware
12— Cover
13— Knob
14— Knob
15— Lever
16— Handle
17— Pivot
18— Armrest Kit
21— Spacer
22— Bracket (2 used)
23— Pin
24— Cap Screw (4 used)
26— Bracket
27— Cover
28— Cap Screw (6 used)
29— Lock Nut (4 used)
30— Bracket
31— Cap Screw (7 used)
32— Cover
33— Label
34— Joystick Steering Rocker Switch
35— Joystick Steering Controller
36— Bracket
37— Cap Screw (4 used)
38— Bracket
W22—Joystick Steering Harness

TF44157,000146B -19-27AUG10-3/3

1. Remove cap screws (28) and cover (27).
2. Disconnect joystick steering harness (W22) from joystick steering controller (35) and joystick steering rocker switch (34).
3. Remove lock nuts (29) securing joystick steering controller.
4. Remove cap screws (31) securing bracket (30) and cover (32).
5. Disassemble and assemble the rest of joystick steering armrest, as necessary.
6. Install cap screws (31) securing bracket (30) and cover (32).

Specification

Cap Screws—Torque.....5 N·m
50 lb.-in.

7. Install lock nuts (29) securing joystick steering controller.

Specification

Nuts—Torque.....15 N·m
135 lb.-in.

8. Connect joystick steering harness to joystick steering controller and joystick steering rocker switch.
9. Install cap screws (28) and cover (27).

Specification

Cap Screws—Torque.....2 N·m
20 lb.-in.

27— Cover
28— Cap Screw (6 used)
29— Lock Nut (4 used)
34— Joystick Steering Rocker Switch
35— Joystick Steering Controller
W22—Joystick Steering Harness

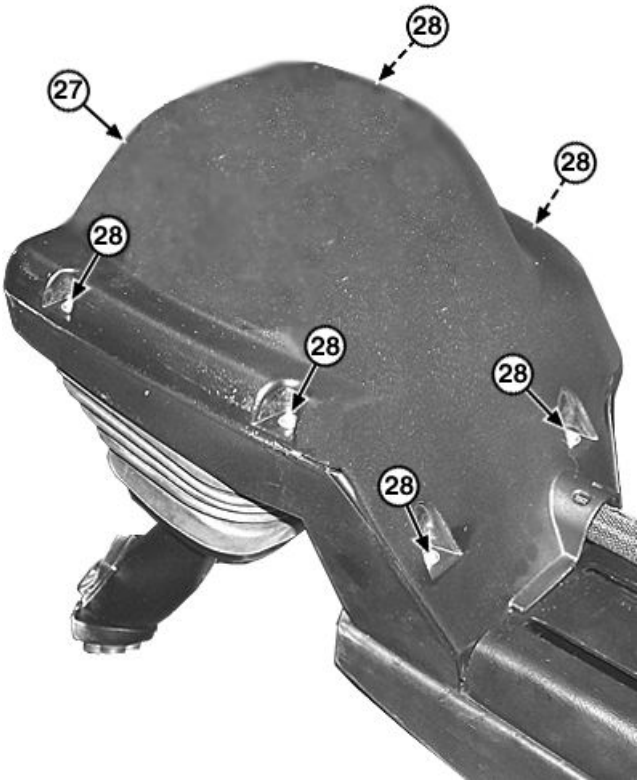

Joystick Steering Armrest with Cover

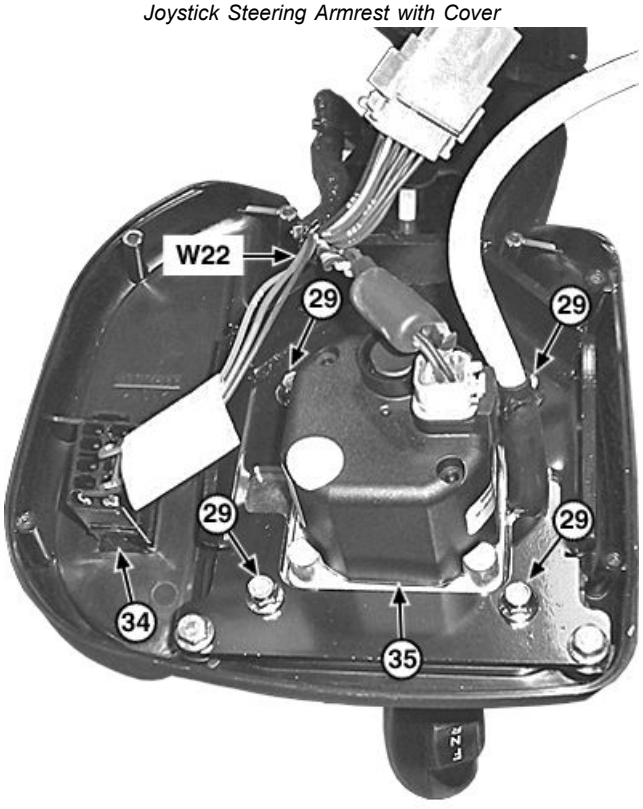

Joystick Steering Armrest without Cover

TF44157,000146B -19-27AUG10-4/3

Joystick Steering Armrest Rear Pivot Adjustment—If Equipped

SPECIFICATIONS	
Pivot Nut Torque	54.N·m 40 lb-ft
Pivot Nut Torque	61 N·m 45 lb-ft
Pivot Nut Torque	61 N·m 45 lb-ft

OTHER MATERIAL
271 Loctite® Thread Lock and Sealer (High Strength)

Continued on next page

TF44157,000146A -19-25AUG10-1/5

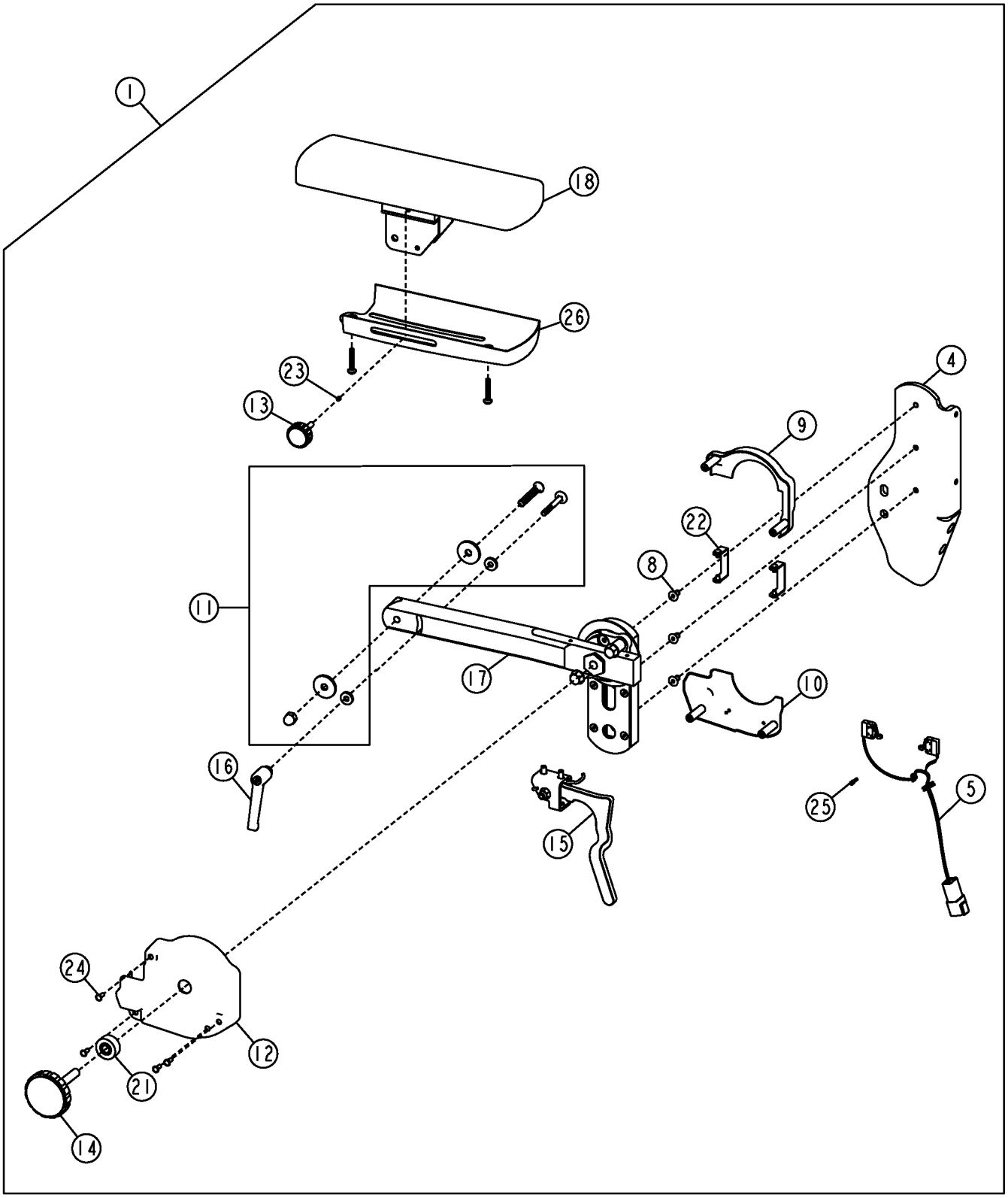

TX1036939

Joystick Steering Armrest

Continued on next page

TF44157,000146A -19-25AUG10-2/5

1— Armrest
4— Bracket
5— Push Switch
8— Cap Screw (3 used)
9— Cover
10— Cover
11— Tilt Joint Hardware
12— Cover
13— Knob
14— Knob
15— Lever
16— Handle
17— Pivot
18— Armrest Kit
21— Spacer
22— Bracket (2 used)
23— Pin
24— Cap Screw (4 used)
25— Tie Band (2 used)
26— Bracket

1. Remove knob (14), spacer (21), cap screws (24), and cover (12).
2. Cut tie bands (25). Remove covers (9 and 10).

Loctite is a trademark of Henkel Corporation

TF44157,000146A -19-25AUG10-3/5

3. Remove pivot nut (27) and washers (28).
4. Remove pivot (17).
5. Clean pivot threads.

27— Pivot Nut
28— Washer (2 used)

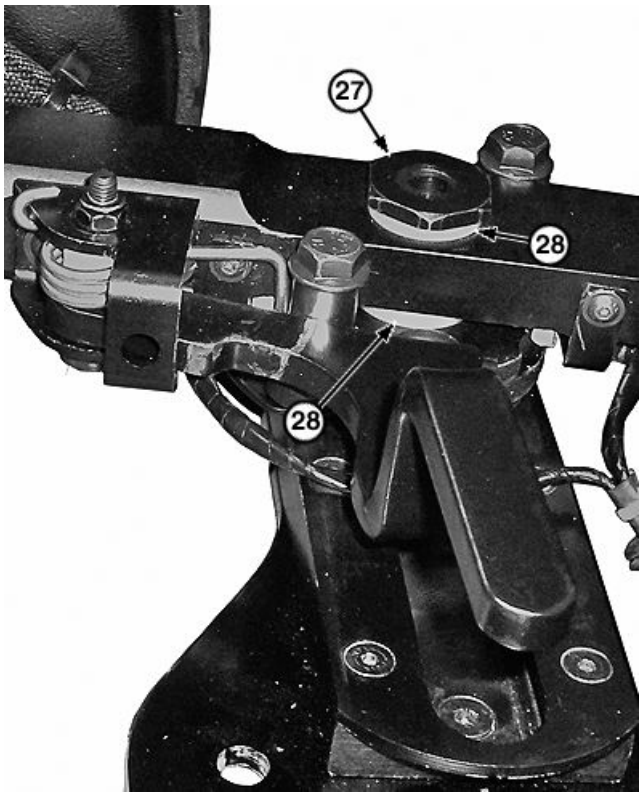

TX1081059A —UN—18AUG10

Joystick Steering Armrest Pivot

Continued on next page

TF44157,000146A -19-25AUG10-4/5

NOTE: If excessive thread lock is applied, it may get inside joint causing washers to stick. Apply thread lock to pivot threads only.

6. Apply PM38654 Thread Lock and Sealer (high strength) to inside threads of pivot.
7. Release spring (29) on lever (15).
8. Pull lever down.
9. Install pivot at 90° angle.

IMPORTANT: Microswitches will be damaged if push switch (5) is not aligned with groove in pivot, when installed.

10. Install washers and nut on pivot and tighten to specification.

Specification	
Pivot Nut—Torque	54 N·m 40 lb-ft

11. Cycle pivot 2—4 times to set the washers.
12. Tighten pivot nut to specification.

Specification	
Pivot Nut—Torque	61 N·m 45 lb-ft

13. Cycle pivot 2—4 times. Verify arm doesn't fall at any angle between 10° and 90°.
14. Tighten pivot nut to specification.

Specification	
Pivot Nut—Torque	61 N·m 45 lb-ft

IMPORTANT: Thread lock must set overnight.

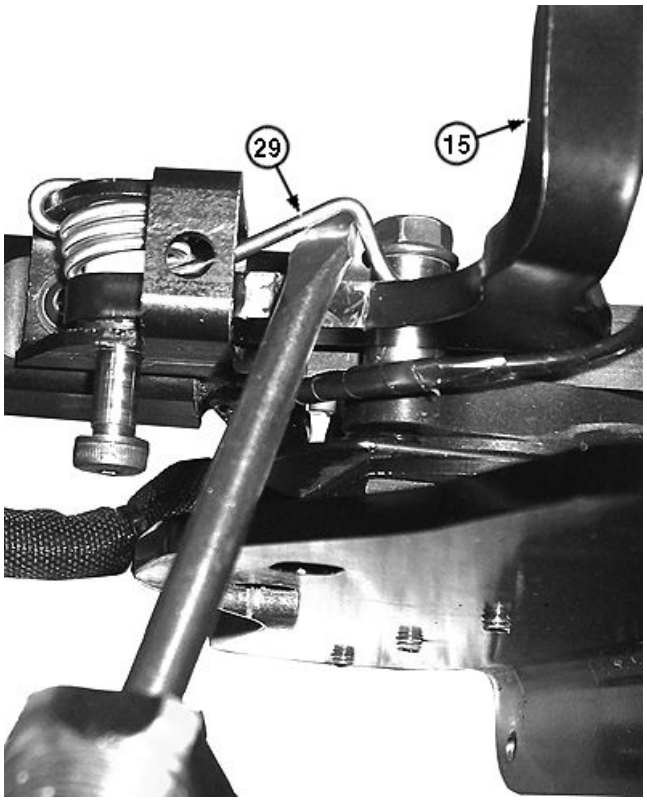

TX1004890A —UN—16MAR06

Joystick Steering Armrest Lever

15— Lever **29— Spring**

15. Let thread lock set overnight.
16. Reset spring on lever.

TF44157,000146A -19-25AUG10-5/5

IMPORTANT: Avoid damage to wires from being pinched in pivot. Replace tie bands.

17. Install new tie bands (25) in cover (10) to secure push switch (5).
18. Install covers (9 and 10).
19. Install cover (12), cap screws (24), spacer (21), and knob (14).

10— Cover

25— Tie Band (2 used)

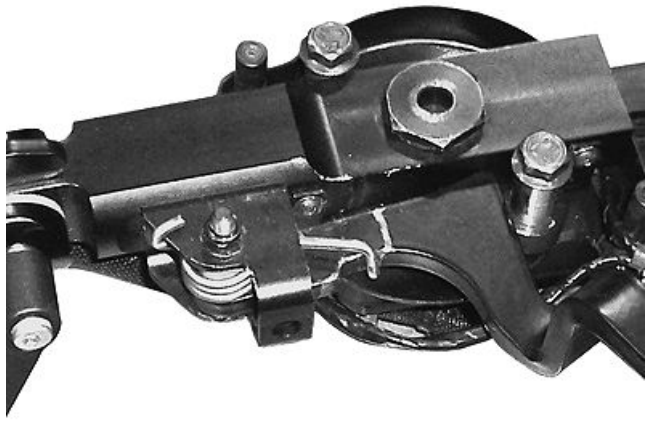

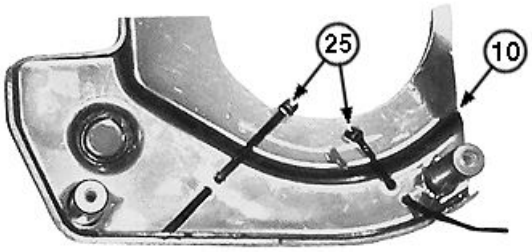

TX1004888A —UN—16MAR06

Cover

TF44157,000146A -19-25AUG10-6/5

Proper Refrigerant Handling

The U.S. Environmental Protection Agency prohibits discharge of any refrigerant into the atmosphere, and requires that refrigerant be recovered using the approved recovery equipment.

IMPORTANT: Use correct refrigerant recovery, recycling and charging stations. Do not use refrigerant, hoses, fittings, components or refrigerant oils intended for use with R12 refrigerant.

Recovery, recycling and charging stations for R12 and R134a refrigerants must not be interchanged. Systems containing R12 refrigerant use a different oil than systems using R134a. Certain seals are not compatible with both types of refrigerants.

MH66O88,0000931 -19-18FEB08-1/1

R134a Refrigerant Cautions

CAUTION: Do not allow liquid refrigerant to contact eyes or skin. Liquid refrigerant will freeze eyes or skin on contact. Wear goggles, gloves and protective clothing.

If liquid refrigerant contacts eyes or skin, Do not rub the area. Splash large amounts of cool water on affected area. Go to a physician or hospital immediately for treatment.

Do not allow refrigerant to contact open flames or very hot surfaces such as electric welding arc, electric heating element and lighted smoking materials.

Do not heat refrigerant over 52°C (125°F) in a closed container. Heated refrigerant will develop high pressure which can burst the container.

Keep refrigerant containers away from heat sources. Store refrigerant in a cool place.

Do not handle damp refrigerant container with your bare hands. Skin may freeze to container. Wear gloves.

If skin freezes to container, pour cool water over container to free the skin. Go to a physician or hospital immediately for treatment.

MH66O88,0000932 -19-18FEB08-1/1

R134a Compressor Oil Charge Check

ESSENTIAL TOOLS
JT02045[a] R134a Refrigerant Recovery/Recycling and Charging Station

[a] JT02046 and JT02050 Recovery and Charging Stations can be substituted for the JT02045 Station.

OTHER MATERIAL
TY16134 U.S. R134a Flushing Solvent
TY22025 (8.5 oz) U.S. R134a Compressor Oil

Remove compressor if R134a leakage was detected and repaired. See Compressor Remove and Install. (Group 1830.)

Drain oil from the compressor and record the amount. See R134a Compressor Oil Removal. (Group 1830.)

NOTE: Drain oil and save if this is a new compressor.

If the oil drained from a compressor removed from operation is very black or the amount of oil is less than 6 mL (0.2 fl oz), perform the following:

1. Remove and discard the receiver-dryer.
2. Remove, clean, but do not disassemble the valve.
3. Flush the complete system with TY16134 Air Conditioning Flushing Solvent.

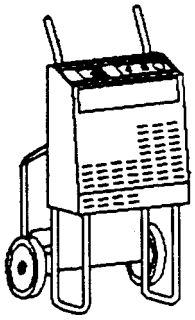

RW21613 —UN—17AUG92

4. If the compressor is serviceable, pour flushing solvent in the manifold ports and internally wash out the old oil.
5. Install a new receiver-dryer.
6. Install required amount of TY22025 Refrigerant Oil in the compressor. See R134a Component Oil Charge. (Group 1830.)
7. Connect all components, evacuate and charge the system. See Evacuate R134a System, and see Charge R134a System. (Group 1830.)

MH66O88,0000913 -19-11JUL11-1/1

R134a Compressor Oil Removal

OTHER MATERIAL
TY22025 (8.5 oz) U.S. R134a Compressor Oil

1. Remove compressor from machine. See Compressor Remove and Install. (Group 1830.)
2. Remove inlet/outlet manifold from compressor, and clutch dust cover.
3. Drain oil into graduated container while rotating compressor shaft.
4. Record measured oil and discard oil properly.
5. Install new oil. See R134a Component Oil Charge. (Group 1830.)
6. Install compressor. See Compressor Remove and Install. (Group 1830.)

MH66O88,0000914 -19-06APR11-1/1

R134a Component Oil Charge

CAUTION: All new compressors are charged with a mixture of nitrogen, R134a refrigerant and TY22025 (R134a) refrigerant oil. Wear safety goggles and discharge the compressor slowly to avoid possible injury.

Do not leave the system or R134a compressor oil containers open. This oil easily absorbs moisture. Do not spill R134a compressor oil on acrylic or ABS plastic. This oil will deteriorate these materials rapidly. Identify R134a oil containers and measures to eliminate accidental mixing of different oils.

IMPORTANT: Determine the amount of system oil charge before installing compressor on machine.

1. Compressors can be divided into the following three categories when determining the correct oil charge for the system:
   - New compressor from parts depot
   - Used compressor removed from operation
   - Compressor internally washed with flushing solvent
2. If the complete system, lines, and components were flushed add the correct amount of oil as described.
   - A new compressor from parts depot contains 210—250 mL (7.10—8.46 fl oz) of new oil. The system requires an additional 121 mL (4.08 fl oz) of new oil.
   - A Used compressor removed from operation, drained and flushed requires 351 mL (11.86 fl oz) of new oil.
3. If the complete system was not flushed add the correct amount of oil for the compressor plus the amount of oil for each component that was serviced.
   - New compressor from parts depot, drain and return 45 mL (1.5 fl oz) of oil to the compressor. See R134a Compressor Oil Removal. (Group 1830.)
   - Used compressor removed from operation and oil drained. Add 45 mL (1.5 fl oz) of new oil. See R134a Compressor Oil Removal. (Group 1830.)
   - Used compressor removed from operation, drained and flushed. Add 60 mL (2.0 fl oz) of new oil. See R134a Compressor Oil Removal, and see Air Conditioner System Flush. (Group 1830.)

NOTE: Components listed below which have been removed, drained or flushed, require the removal of the compressor to determine the correct oil charge.

4. Use the following chart as a guide for adding oil to components:

Evaporator	158 mL (5.4 fl oz)
Condenser	100 mL (3.4 fl oz)
Receiver-Dryer	37 mL (1.25 fl oz)

5. If any section of hose is removed and flushed, or replaced, measure the length of hose and use the following formula to determine the correct amount of oil to be added:
   - Hoses = 3 mL per 30 cm (0.1 fl oz per ft).

TW73308,000038C -19-29SEP08-1/1

Refrigerant Leak Testing

SERVICE EQUIPMENT AND TOOLS
JT02081 Electronic Leak Detector

1. Inspect all lines, fittings and components for oily or dusty spots. When refrigerant leaks from the system, a small amount of oil is carried out with it.
2. A soap and water solution can be sprayed on the components in the system to form bubbles at the source of the leak.
3. If a leak detector is used, move the leak detector probe under the hoses and around the connections at a rate of 25 mm (1 in.) per second.
4. Some Freon manufacturers add dye to Freon to aid in leak detection.

MH66O88,0000916 -19-06APR11-1/1

Refrigerant Hoses and Tubing Inspection

IMPORTANT: Hose used for air conditioning systems contains special barriers in its walls to prevent migration of refrigerant gas.

Do not use hydraulic hoses as replacement hoses in the air conditioning system. Use ONLY certified hose meeting SAE J51b requirements.

When a component is disconnected from the system, special care should be given to inspecting hoses and tubing for moisture, grease, dirt, rust, or other foreign material. If such contamination is present in hoses, tubing, or fittings and cannot be removed by cleaning, then replace parts.

Fittings that have grease or dirt on them should be wiped clean with a cloth dampened with alcohol. Chlorinated solvents (such as trichloroethylene) are contaminants, and must not be used for cleaning.

To assist in making leak-proof joints in R134a systems, use a small amount of clean polyakyleneglycol (PAG) refrigerant oil on all hoses and tube connections. Dip O-rings in PAG oil before assembly.

MH66O88,0000917 -19-21FEB08-1/1

R134a Refrigerant Recovery/Recycling and Charging Station Installation Procedure

ESSENTIAL TOOLS
JT02045[a] R134a Refrigerant Recovery/Recycling and Charging Station

[a]JT02046 and JT02050 Recovery and Charging Stations can be substituted for the JT02045 Station.

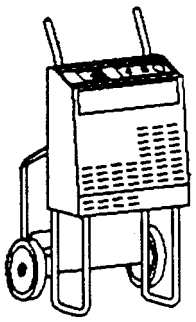

RW21613 —UN—17AUG92

Continued on next page

MH66O88,0000918 -19-04MAY11-1/2

1.

CAUTION: Do not remove high pressure relief valve (1). Air conditioning system will discharge rapidly causing possible injury.

IMPORTANT: Use correct refrigerant recovery/recycling and charging stations. Do not mix refrigerant, hoses, fittings, components or refrigerant oils.

Close both high and low pressure valves on refrigerant recovery/recycling and charging station (4).

2. Remove cap from low pressure test port (8).
3. Connect low pressure blue hose (5) from refrigerant recovery/recycling and charging station (4) to low pressure test port (8) on compressor.
4. Connect high pressure red hose (3) to high pressure test port (2).
5. Follow the manufacturers instructions when using the refrigerant recovery/recycling and charging station.

1— High Pressure Relief Valve
2— High Pressure Test Port
3— Red Hose
4— Refrigerant Recovery/Recycling and Charging Station
5— Blue Hose
6— High Pressure Hose
7— Low Pressure Hose
8— Low Pressure Test Port

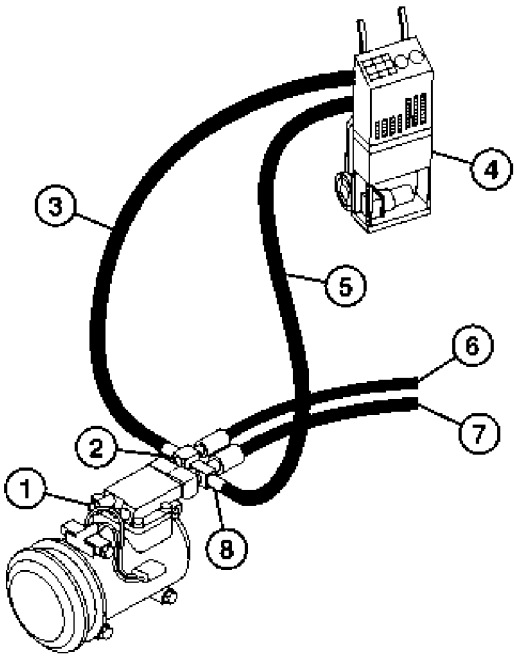

TX1029096 —UN—11SEP07

MH66O88,0000918 -19-04MAY11-2/2

R134a System Recover

ESSENTIAL TOOLS
JT02045 R134a Refrigerant Recovery, Recycling and Charging Station

1.

CAUTION: Do not remove high pressure relief valve (1). Air conditioning system will discharge rapidly causing possible injury.

IMPORTANT: Use correct refrigerant recovery, recycling and charging stations. Do not mix refrigerant, hoses, fittings, components or refrigerant oils.

Run air conditioning system for three minutes to help in the recovery process.

2. Put air conditioning system in the OFF position.
3. With engine OFF, connect refrigerant recovery, recycling and charging station. See R134a Refrigerant Recovery/Recycling and Charging Station Installation Procedure. (Group 1830.)
4. Follow the manufacturer's instructions when using the refrigerant recovery, recycling and charging station.

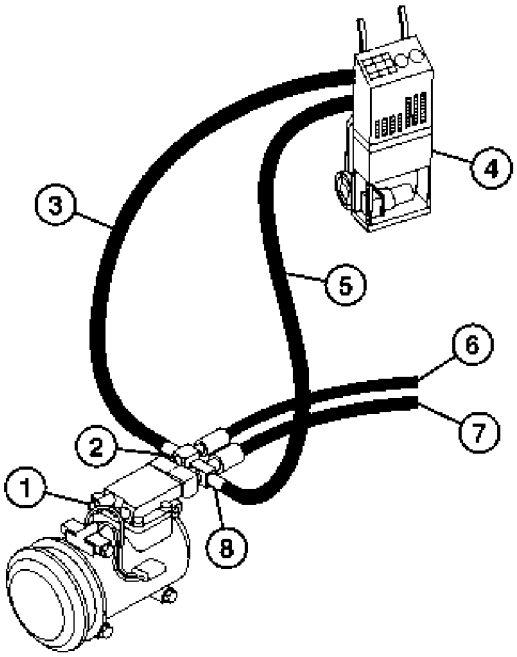

TX1029096 —UN—11SEP07

1— High Pressure Relief Valve
2— High Pressure Test Port
3— Red Hose
4— Refrigerant Recovery/Recycling and Charging Station
5— Blue Hose
6— High Pressure Hose
7— Low Pressure Hose
8— Low Pressure Test Port

MH66O88,0000919 -19-04MAY11-1/1

R134a System Evacuate

ESSENTIAL TOOLS
JT02045 R134a Refrigerant Recovery, Recycling and Charging Station
D05267ST Vacuum Pump

1.

CAUTION: Do not remove high pressure relief valve (1). Air conditioning system will discharge rapidly causing possible injury.

IMPORTANT: Use correct refrigerant recovery, recycling and charging stations. Do not mix refrigerant, hoses, fittings, components or refrigerant oils.

Do not run compressor while evacuating.

Connect refrigerant recovery, recycling and charging station. See R134a Refrigerant Recovery/Recycling and Charging Station Installation Procedure. (Group 1830.)

2. Open low and high pressure valves on refrigerant recovery, recycling and charging station.
3. Follow the manufacturers instructions and evacuate the system.

NOTE: The vacuum specifications listed are for sea level conditions. Subtract 3.4 kPa (34 mbar) (1 in. Hg) from 98 kPa (980 mbar) (29 in. Hg) for each 300 m (1000 ft) elevation above sea level.

4. Evacuate system until low pressure gauge registers 98 kPa (980 mbar) (29 in. Hg) vacuum.

   If 98 kPa (980 mbar) (29 in. Hg) vacuum cannot be obtained in 15 minutes, test the system for leaks. See Refrigerant Leak Testing. (Group 9031-25.) Repair any leaks.

5. When vacuum is 98 kPa (980 mbar) (29 in. Hg), close low-side and high-side valves. Turn vacuum pump off.
6. If the vacuum decreases more than 3.4 kPa (34 mbar) (1 in. Hg) in 5 minutes, there is a leak in the system.
7. Repair leak.

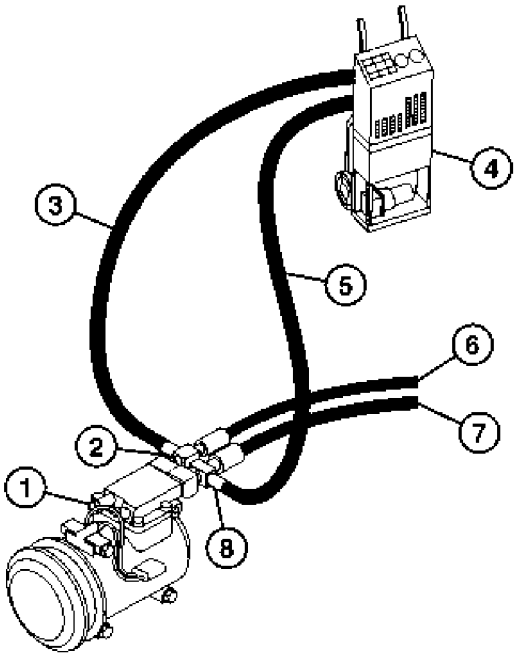

TX1029096 —UN—11SEP07

1— High Pressure Relief Valve
2— High Pressure Test Port
3— Red Hose
4— Refrigerant Recovery/Recycling and Charging Station
5— Blue Hose
6— High Pressure Hose
7— Low Pressure Hose
8— Low Pressure Test Port

8. Start to evacuate.
9. Open low-side and high-side valves.
10. Evacuate system for 30 minutes after 98 kPa (980 mbar) (29 in. Hg) vacuum is reached.
11. Close low-side and high-side valves. Stop evacuation.
12. Charge the system. See R134a System Charge. (Group 1830.)

MH66O88,000091A -19-04MAY11-1/1

R134a System Charge

SPECIFICATIONS	
Refrigerant Capacity	2.38 kg 5.25 lb

ESSENTIAL TOOLS
JT02045[a] R134a Refrigerant Recovery/Recycling and Charging Station

[a]JT02046 and JT02050 Recovery and Charging Stations can be substituted for the JT02045 Station.

OTHER MATERIAL
TY15949 (12 oz) U.S. R134a Refrigerant
TY15950 (15 lb) U.S. R134a Refrigerant
TY15951 (30 lb) U.S. R134a Refrigerant

CAUTION: Do not remove high pressure relief valve (1). Air conditioning system will discharge rapidly causing possible injury.

IMPORTANT: Use correct refrigerant recovery, recycling and charging stations. Do not mix refrigerant, hoses, fittings, components or refrigerant oils.

1. Connect JT02045 R134a refrigerant recovery, recycling and charging station. See R134a Refrigerant Recovery/Recycling and Charging Station Installation Procedure. (Group 1830.)
2. Evacuate the system. See R134a System Evacuate. (Group 1830.)

NOTE: Before beginning to charge air conditioning system, the following conditions must exist: Engine STOPPED, the pump must be capable of pulling at least 28.6 in. Hg vacuum (sea level). Subtract 3.4 kPa (34 mbar) (1 in. Hg) from 98 kPa (980 mbar) (29 in. Hg) for each 300 m (1000 ft) elevation above sea level.

3. Add required amount of oil if any component has been purged, flushed, or replaced. See R134a Component Oil Charge. (Group 1830.)
4. Follow the manufacturer's instructions and charge the system until system is charged to specification.

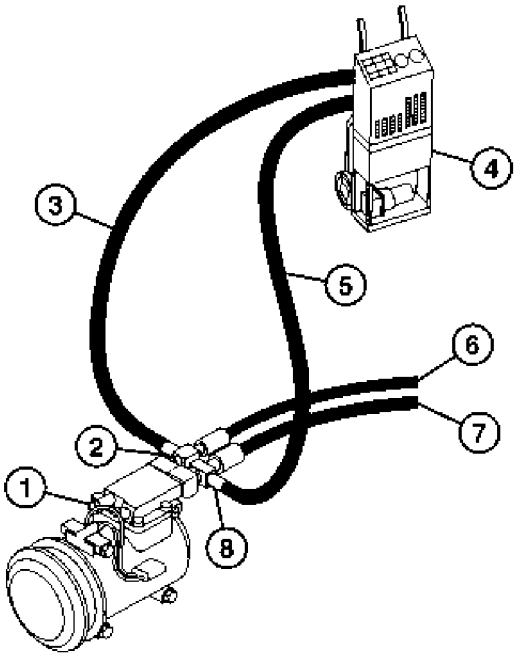

TX1029096 —UN—11SEP07

1— High Pressure Relief Valve
2— High Pressure Test Port
3— Red Hose
4— Refrigerant Recovery/Recycling and Charging Station
5— Blue Hose
6— High Pressure Hose
7— Low Pressure Hose
8— Low Pressure Test Port

Specification

Refrigerant—Capacity..... 2.38 kg
5.25 lb

5. Conduct air conditioner checks and tests. See R134a Air Conditioning System Test. (Group 9031-25.)

TW73308,000038D -19-11APR11-1/1

Air Conditioner System Cleaning Procedures

OTHER MATERIAL
TY16134 U.S. R134a Flushing Solvent

Flushing: Flushing the system or component is a cleaning process using a liquid solvent to remove oil and debris. Purging is always necessary after flushing to remove solvent from the system or component.

Following is a list of situations that require a flushing procedure be done:

- The compressor has an internal failure.
- No oil remains in used compressor.
- Oil drained from compressor appears or smells overheated.
- System was contaminated with a mixture of refrigerant oils.
- System was left open to the atmosphere long enough for dirt, moisture, or debris to enter the tubing or components.
- System has an internal blockage.

The following solvent is recommended for flushing air conditioner systems. Use only solvents with an equivalent MSDS.

- TY16134 John Deere Air Conditioning System Flushing Solvent

Purging: Purging the system or a component is a cleaning process using a gas to force liquid from the system. Purging alone will not remove refrigerant oil from the system.

Following is a list of situations that require a purging procedure be done:

- After flushing system with solvent, to prevent oil dilution
- System was contaminated with nitrogen or two refrigerants.
- System was left open to the atmosphere and flushing could not be performed.
- Installation of new lines, condenser, or evaporator was required.

Evacuating: Evacuating the system is a process to remove air and moisture from the system, creating a vacuum.

MH66O88,000091C -19-06APR11-1/1

Air Conditioner System Purge

SPECIFICATIONS	
Nitrogen Tank Valve Regulator Pressure	275 kPa 2.75 bar 40 psi

SERVICE EQUIPMENT AND TOOLS
JT02051 Manifold Pressure Gauge Assembly

IMPORTANT: Air compressors used for purging systems require a water separator. Purging without a separator adds moisture, creating hydrofluoric acid when combined with refrigerant oil. Acid is corrosive to metal tubing.

1. Connect dry nitrogen hose to gauge manifold center hose.
2. Connect gauge manifold suction hose to compressor suction port, and open valves.
3. Connect gauge manifold discharge hose to compressor discharge post, and open valve. Disconnect discharge hose from gauge manifold to allow purging nitrogen to atmosphere.
4. Open nitrogen tank valve and adjust regulator to 275 kPa (40 psi) (2.75 bar). Purge system for two minutes. Disconnect nitrogen supply.

Specification

Nitrogen Tank Valve Regulator—Pressure ..... 275 kPa
2.75 bar
40 psi

5. Evacuate system. See R134a System Evacuate. (Group 1830.)

MH66O88,000091D -19-21FEB08-1/1

Air Conditioner System Flush

ESSENTIAL TOOLS
JT02075 Air Conditioning Flusher
JT02098 Air Conditioning Flushing Fitting Kit

OTHER MATERIAL
TY16134 U.S. R134a Flushing Solvent

Add flushing solvent to system with JT02075 Flusher and JT02098 Fitting Kit.

NOTE: Flushing can be performed on vehicle.

1. Recover refrigerant. See R134a System Recover. (Group 1830.)
2. Remove compressor.
3. Drain oil from compressor. See R134a Compressor Oil Removal. (Group 1830.)
4. Clean compressor as follows:
   a. Pour 240 mL (8 fl oz) of flushing solvent into suction port and 120 mL (4 fl oz) into discharge port. Plug both ports in compressor manifold using JT02099 and JT02100 with JT03194 Caps.
   b. Turn compressor end for end and roll it side to side.
   c. Remove both plugs from manifold ports and drain solvent from compressor.
   d. Connect battery power to compressor clutch coil. Rotate pulley at least five revolutions to move solvent out of cylinders.
   e. Invert compressor, roll end for end, and side to side. Drain thoroughly.
   f. Let compressor sit inverted for three to five minutes.
   g. Repeat previous two steps at least three times.
5. Remove and discard receiver-dryer.
6. Divide system into two circuits:
   a. Condenser, including inlet and outlet hoses. (Steps 6—12)
   b. Evaporator, including inlet and outlet hoses. (Steps 13—26)

IMPORTANT: Do not attempt to flush through compressor or receiver-dryer. Flushing through expansion valve is acceptable if refrigerant oil has normal odor and appearance.

7. **To Flush/Purge Condenser:**

   Connect flusher outlet hose to inlet end of compressor discharge line using JT02102 Adapter.
8. Attach a return hose and aerator nozzle to outlet end of receiver-dryer inlet hose using JT03197 Adapter. Put nozzle in container to collect flushing solvent.
9. Fill flusher tank with 4 L (1 gal) of solvent and fasten all connections.

NOTE: Air pressure must be at least 620 kPa (6.2 bar) (90 psi) for flushing and purging.

10. Connect a supply line of moisture-free compressed air or dry nitrogen to flusher air valve.
11. Open air valve to force flushing solvent into condenser circuit. Flusher tank is empty when hose pulsing stops. Additional flushing cycles are required if system is heavily contaminated with burned oil or metal particles.

NOTE: Purging the condenser circuit takes 10—12 minutes to thoroughly remove solvent.

12. Disconnect hose from aeration nozzle to check circuit for solvent. Hold hose close to a piece of cardboard; continue purging until cardboard is dry.
13. Go to Step 13 to flush evaporator. Go to Step 22 if evaporator does not require flushing.
14. **To Flush Evaporator:**

    If system is contaminated with burned refrigerant oil or debris, remove and bench flush evaporator. Go to Step 18 to flush evaporator through expansion valve, if oil appears normal. See Heater/Evaporator Coil Remove and Install. (Group 1830.)
15. Force flushing solvent through evaporator inlet with compressed air.
16. Purge system until dry.
17. Reinstall evaporator.
18. Go to Step 22.
19. **To Flush Evaporator Through Expansion Valve:**

    Connect flusher outlet hose to connection of receiver-dryer outlet hose using JT03188 Adapter.
20. Attach a hose and aerator nozzle to compressor inlet line using JT02101 Adapter. Put nozzle in a container to collect solvent.
21. Repeat steps 8, 9 and 10 to flush evaporator.

NOTE: Purging the evaporator circuit takes 12—15 minutes to thoroughly remove solvent.

22. Disconnect hose from aeration nozzle to check circuit for solvent. Hold hose close to a piece of cardboard. Continue purging until cardboard is dry.
23. Install a new receiver-dryer compatible with R134a refrigerant. Fasten connections and mounting bracket.
24. Add required oil. See R134a System Charge. (Group 1830.)

Continued on next page

25. Install compressor. See Compressor Remove and Install. (Group 1830.)
26. Purge system. See Air Conditioner System Purge. (Group 1830.)
27. Evacuate system. See R134a System Evacuate. (Group 1830.)
28. Charge system. See R134a System Charge. (Group 1830.)

MH66O88,000091E -19-06APR11-2/2

Heater/Evaporator Coil Remove and Install

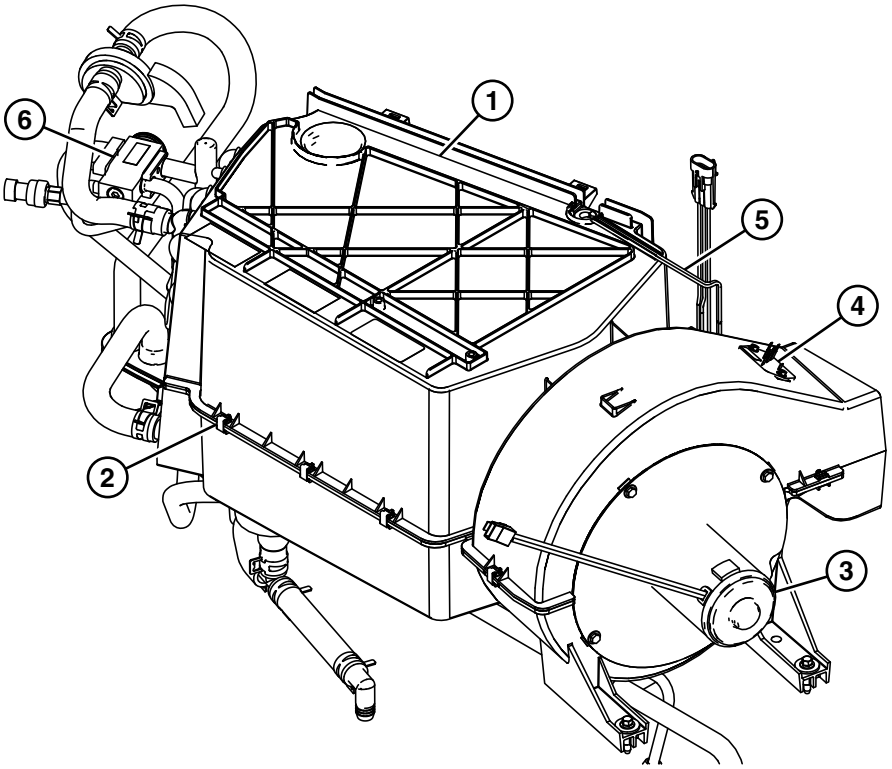

TX1029249 —UN—11SEP07

TX1029249

1— Heater/Evaporator Coil Upper Case
2— Clip (11 used)
3— Blower Motor
4— Resistor
5— Freeze Control Switch Probe
6— Expansion Valve

1. Recover refrigerant from the system. See R134a System Recover. (Group 1830.)
2. Remove seat cap screws and move seat forward to access air conditioning-heater components.
3. Remove console tray and fresh air filter. See Fresh Air Filter Remove and Install. (Group 1830.)
4. Remove upper panel behind seat to expose heater/evaporator coil housing.
5. Remove upper two cap screws from blower motor (3).
6. Disconnect wire harness from freeze control switch and resistor (4).
7. Remove clips (2) attaching heater/evaporator coil top cover (1) to lower case.
8. Remove heater/evaporator coil top cover.
9. Remove freeze control switch probe (5) from coil.
10. Disconnect air conditioning lines from expansion valve (6) and heater hoses from coil.
11. Remove heater/evaporator coil.
12. Install expansion valve on heater/evaporator coil.
13. Check lower housing to make sure drain tube is not plugged.
14. Install heater/evaporator coil.
15. Connect air conditioner lines and heater hoses.
16. Install freeze control switch in coil.
17. Install heater/evaporator coil top cover with clips.
18. Install upper panel behind seat.
19. Connect wire harness to freeze control switch and resistor.
20. Install cab filter and console tray. See Fresh Air Filter Remove and Install. (Group 1830.)
21. Move seat back and tighten cap screws securely.
22. If the system is contaminated, each component in the system must be flushed and purged individually. See Air Conditioner System Flush and see Air Conditioner System Purge. (Group 1830.)
23. Drain oil from compressor. See R134a Compressor Oil Removal. (Group 1830.)
24. If system was not completely flushed, see Air Conditioner System Flush. (Group 1830.)

Continued on next page

SW03989,00004C0 -19-20MAR08-1/2

25. Purge, evacuate, and charge the system. See Air Conditioner System Purge, see R134a System Evacuate, and see R134a System Charge. (Group 1830.)

SW03989,00004C0 -19-20MAR08-2/2

Expansion Valve Remove and Install

1. Recover refrigerant from the system. See R134a System Recover. (Group 1830.)
2. Remove rear cover behind seat.
3. Disconnect air conditioning lines (1) from expansion valve (2).
4. Remove expansion valve.
5. Install expansion valve.
6. Connect air conditioning lines to expansion valve.
7. Install rear cover behind seat.
8. Purge, evacuate, and charge the system. See Air Conditioner System Purge, see R134a System Evacuate, and see R134a System Charge. (Group 1830.)

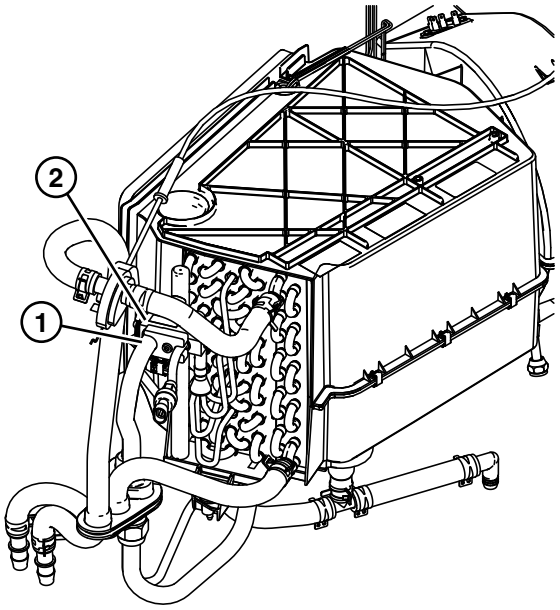

TX1029255 —UN—11SEP07

1— Air Conditioning Lines **2— Expansion Valve**

MH66O88,0000921 -19-13AUG08-1/1

Heater Control Valve Remove and Install

1. Remove console tray. See Fresh Air Filter Remove and Install. (Group 1830.)
2. Remove rear cover behind seat.
3. Disconnect temperature control cable from heater control valve.
4. Remove and inspect heater control valve (1) and replace as required.
5. Inspect heater hoses and replace as required.
6. Connect the temperature control cable. Tighten all hose connections.
7. Install rear cover behind seat.
8. Install console tray.
9. Add coolant to the surge tank to account for coolant lose in the heater circuit. See Check Coolant Level in Surge Tank. (Operator's Manual.)
10. Start engine and run the heating system to check for leaks.



TX1029307A —UN—17SEP07

1— Heater Control Valve

TF44157,0001465 -19-19JUL10-1/1

Blower Motor Assembly Remove and Install

1. Turn battery disconnect switch to the OFF position.
2. Remove cap screws from seat pedestal to cab floor and move pedestal and seat assembly forward.
3. Remove left console tray.
4. Remove rear cover behind seat.
5. Disconnect electrical connectors (1).
6. Remove cap screws from blower motor assembly to housing.
7. Remove blower motor assembly (2).
8. Repair or replace parts as necessary.
9. Install blower motor assembly to housing and secure using cap screws.
10. Connect electrical connectors.
11. Install rear cover behind seat.
12. Install console tray.

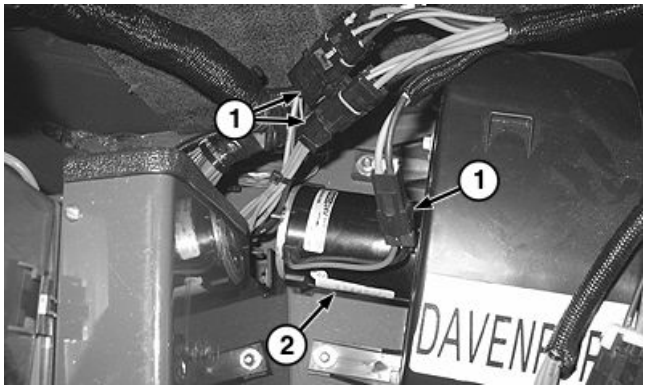

TX1029269A —UN—11SEP07

Blower Motor Assembly

1— Electrical Connector (4 used)
2— Blower Motor Assembly

13. Position pedestal and seat assembly and secure to cab floor using cap screws.
14. Turn battery disconnect switch to the ON position.

TW73308,0000241 -19-21APR08-1/1

Receiver-Dryer Remove and Install

OTHER MATERIAL
TY22025 (8.5 oz) U.S. R134a Compressor Oil

1. Evacuate and recover refrigerant from air conditioning system. See R134a System Evacuate (Group 1830.) and see R134a System Recover. (Group 1830.)
2. Disconnect lines (2 and 4) from receiver-dryer (3).
3. Loosen mounting clamps (1) on receiver-dryer.
4. Remove receiver-dryer.

IMPORTANT: A new receiver-dryer must always be installed after purging the system. Do not use a flushed or used receiver-dryer. Contamination of system can cause component failure.

5. Remove plug from new receiver-dryer and add 15 mL (0.5 fl oz) of compressor oil. Install plug.
6. Install new receiver-dryer.
7. Apply compressor oil to new O-rings. Remove plugs from receiver-dryer inlet and outlet ports and immediately connect lines.

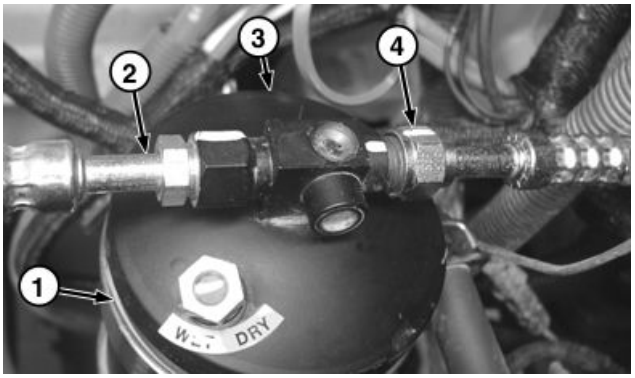

TX1029492A —UN—19SEP07

1— Mounting Clamp (2 used)
2— Line
3— Receiver-Dryer
4— Line

8. Tighten mounting clamps on receiver-dryer .
9. Charge air conditioning system. See R134a System Charge. (Group 1830.)

TW73308,0000389 -19-06APR11-1/1

Condenser Remove and Install

SPECIFICATIONS	
Condenser and Hydraulic Oil Cooler Weight (approximate)	27 kg 60 lb.

NOTE: Condenser and top mounted hydraulic oil cooler are manufactured as one component. Top mounted hydraulic oil cooler and side mounted hydraulic oil cooler are connected in series.

1. Prepare machine for service. See Park and Prepare for Service Safely. (Group 0001.)

CAUTION: To avoid injury from escaping fluid under pressure, stop engine and relieve the pressure in the system before disconnecting or connecting hydraulic or other lines. Tighten all connections before applying pressure.

2. Relieve hydraulic system pressure. See Hydraulic System Pressure and Accumulators Discharge. (Group 9025-25.)
3. Evacuate and recover refrigerant from air conditioning system. See R134a System Evacuate and see R134a System Recover. (Group 1830.)
4. Open cooling package top access door.
5. Disconnect air conditioning lines (2 and 3). Close all openings using caps and plugs.
6. Apply vacuum to or drain hydraulic reservoir. If draining hydraulic reservoir, see Drain and Refill Capacities. (Operator's Manual.)
7. Tag and disconnect hydraulic oil lines (4 and 5). Close all openings using caps and plugs.

CAUTION: Prevent possible crushing injury from heavy component. Use appropriate lifting device.

8. Remove condenser and hydraulic oil cooler (1).

Specification	
Condenser and Hydraulic Oil Cooler—Weight (approximate)	27 kg 60 lb.

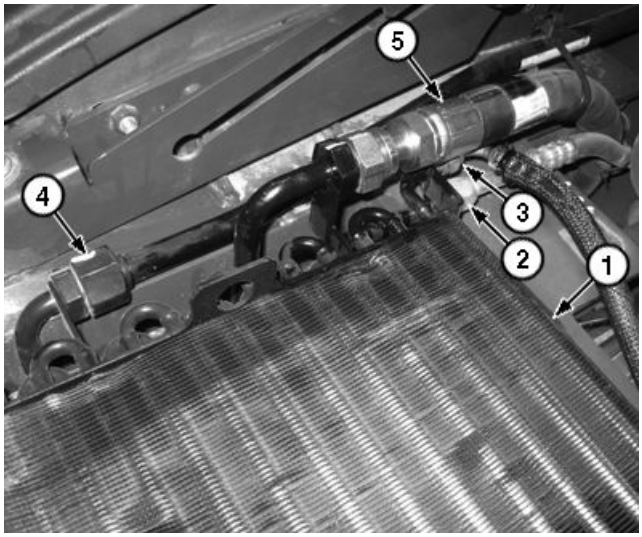

Condenser and Hydraulic Oil Cooler

1— Condenser and Hydraulic Oil Cooler
2— Condenser-to-Air Conditioning Compressor Line
3— Receiver-Dryer-to-Condenser Line
4— Side Mounted Hydraulic Oil Cooler-to-Top Mounted Hydraulic Oil Cooler Line
5— Top Mounted Hydraulic Oil Cooler-to-Hydraulic Oil Tank Line

9. Repair or replace as necessary.
10. Install condenser and hydraulic oil cooler.
11. Connect hydraulic oil lines.
12. Connect air conditioning lines.
13. Remove vacuum or fill hydraulic reservoir. See Drain, Flush, and Refill Hydraulic System Oil. (Operator's Manual.)
14. Charge air conditioning system. See R134a System Charge. (Group 1830.)
15. Check and fill hydraulic fluid. See Drain and Refill Capacities. (Operator's Manual.)

TK40086,0000831 -19-15DEC10-1/1

Fresh Air Filter Remove and Install

NOTE: The fresh air filter is located inside left console.

1. Remove knob (1).
2. Remove console tray (2).
3. Remove fresh air filter retainer (5).
4. Remove fresh air filter (6).

CAUTION: Prevent possible injury from flying debris. Reduce compressed air to less than 210 kPa (2 bar) (30 psi) when using for cleaning purposes. Clear area of bystanders, guard against flying chips, and wear personal protection equipment, including eye protection.

5. Clean filter in one of these ways:
   - Tap filter on a flat surface with the dirty side down.
   - Use compressed air opposite to the normal air flow.
   - Wash filter in warm, soapy water. Flush filter and let it dry before using the air conditioner.
6. Install fresh air filter.
7. Install retainer.
8. Install console tray and secure with knob.

1— Knob
2— Console Tray
3— Recirculating Air Filter Retainer
4— Recirculating Air Filter
5— Fresh Air Filter Retainer
6— Fresh Air Filter

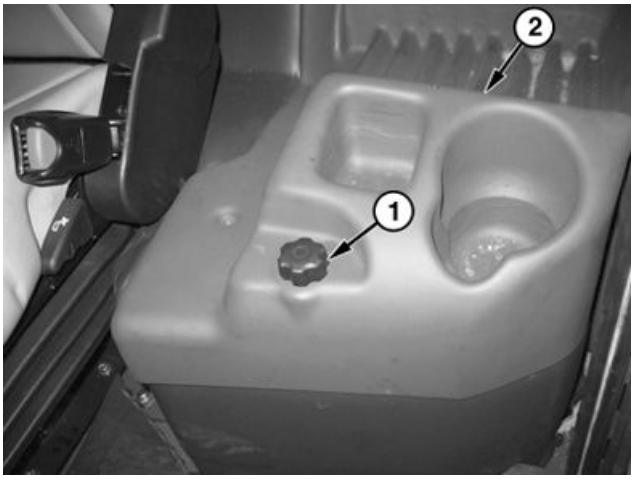

TX1037230A —UN—25FEB08

Console Tray

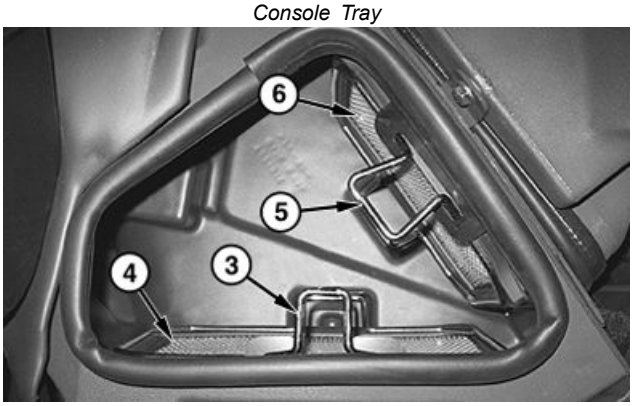

TX1037231A —UN—25FEB08

Air Filters

MH66O88,000092A -19-25FEB08-1/1

Recirculating Air Filter Remove and Install

NOTE: The recirculating air filter is located inside left console.

1. Remove knob (1).
2. Remove console tray (2).
3. Remove recirculating air filter retainer (3).
4. Remove recirculating air filter (4).

CAUTION: Prevent possible injury from flying debris. Reduce compressed air to less than 210 kPa (2 bar) (30 psi) when using for cleaning purposes. Clear area of bystanders, guard against flying chips, and wear personal protection equipment, including eye protection.

5. Clean filter in one of these ways:
   - Tap filter on a flat surface with the dirty side facing down.
   - Use compressed air opposite to the normal air flow.
   - Wash the filter in warm, soapy water. Flush the filter and let it dry before using the air conditioner.
6. Install recirculating air filter.
7. Install retainer.
8. Install console tray and secure with knob.

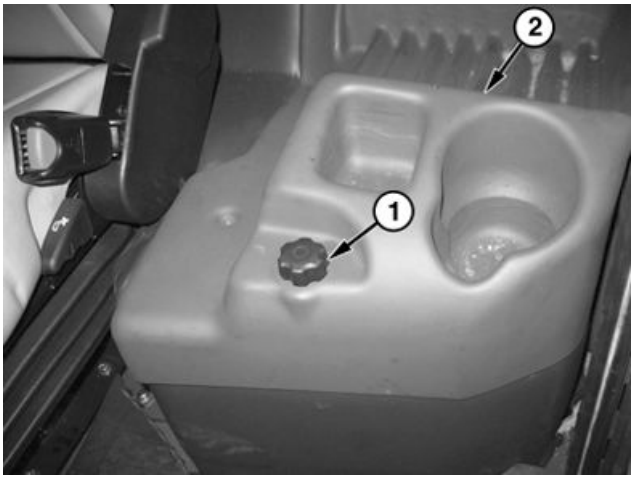

TX1037230A —UN—25FEB08

Console Tray

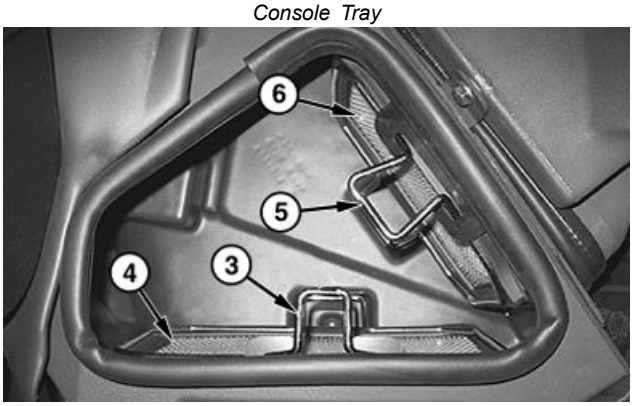

TX1037231A —UN—25FEB08

Air Filters

1— Knob
2— Console Tray
3— Recirculating Air Filter Retainer
4— Recirculating Air Filter
5— Fresh Air Filter Retainer
6— Fresh Air Filter

MH66O88,000092B -19-21FEB08-1/1

Compressor Remove and Install

1. Park and Prepare for Service Safely. (Group 0001.)
2. Recover refrigerant from system. See R134a System Recover. (Group 1830.)
3. Remove serpentine belt (3) from air conditioner compressor (4). See Inspect Air Conditioner Compressor and Alternator Belt. (Operator's Manual.)
4. Disconnect air conditioner compressor clutch solenoid (Y16) connector.
5. Disconnect air conditioner compressor high-pressure outlet line (2) and low-pressure inlet line (1).
6. Remove cap screws (5) and air conditioner compressor.
7. Repair or replace parts as necessary.

IMPORTANT: If air conditioner compressor was replaced due to an internal failure, flush and purge each component in the air conditioner system individually. Flush and purge each component of the air conditioning system. See Air Conditioner System Flush and Air Conditioner System Purge. (Group 1830.)

8. Install air conditioner compressor.
9. Connect air conditioner compressor high-pressure outlet line and low-pressure inlet line.
10. Connect air conditioner compressor clutch solenoid connector.

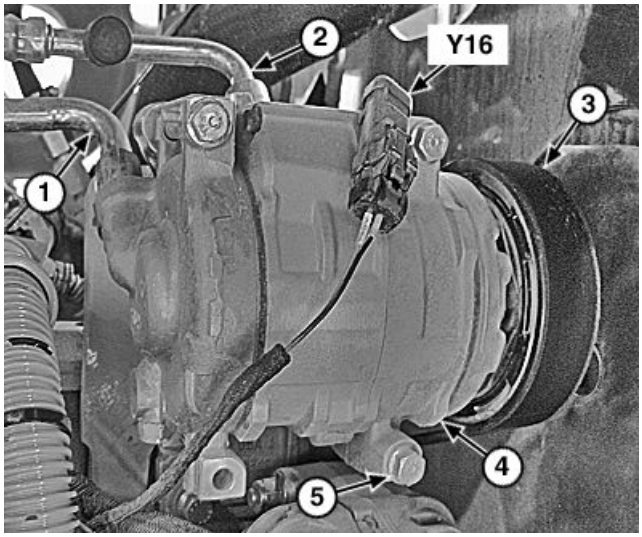

TX1080099A —UN—21JUL10

Air Conditioner Compressor

1— Low-Pressure Inlet Line
2— High-Pressure Outlet Line
3— Serpentine Belt
4— Air Conditioner Compressor
5— Cap Screw (3 used)
Y16— Air Conditioner Compressor Clutch Solenoid

11. Install serpentine belt on air conditioner compressor.
12. Charge system. See R134a System Charge. (Group 1830.)

TF44157,0001466 -19-03AUG10-1/1

Clutch Hub Clearance—R134a Check

SPECIFICATIONS	
Pulley-to-Clutch Hub Clearance	0.35—0.65 mm 0.014—0.026 in.
Clutch Shaft Cap Screw Torque	14 N·m 120 lb-in.

NOTE: The clutch coil is not polarity sensitive.

1. Check pulley-to-clutch hub clearance using a dial indicator. Mount the gauge to the pulley as illustrated and connect a set of jumper wires from the compressor to a 12 V battery.
2. Rotate the pulley and check clearance in three equally spaced locations around the clutch hub. Compare readings to specification.

Specification

Pulley-to-Clutch Hub—Clearance.....0.35—0.65 mm
0.014—0.026 in.

3. Add or remove shims as required.
4. After clearance is set within specification, tighten clutch shaft cap screw to specification.

Specification

Clutch Shaft Cap Screw—Torque.....14 N·m
120 lb-in.



RW21159 —UN—24JUN92

Clutch Hub Clearance Check

TF44157,000146D -19-01SEP10-1/1

Section 19
Sheet Metal and Styling

Contents

Page

Group 1910—Hood or Engine Enclosure
Hood Remove and Install 19-1910-1
Engine Side Shields Remove and Install 19-1910-1
Cooling Package Access Doors Remove and Install 19-1910-2

Hood Remove and Install

SPECIFICATIONS	
Hood Weight (approximate)	59 kg 130 lb.

1. Prepare machine for service. Park and Prepare for Service Safely. (Group 0001.)
2. Remove cap screws and washers (2).

CAUTION: Prevent possible crushing injury from heavy component. Use appropriate lifting device.

NOTE: Exhaust stack and air precleaner can remain attached to hood during removal and installation.

3. Attach appropriate lifting device to hood (1) and remove.

Specification

Hood—Weight (approximate)..... 59 kg
130 lb.

4. Repair or replace as necessary.
5. Install hood.

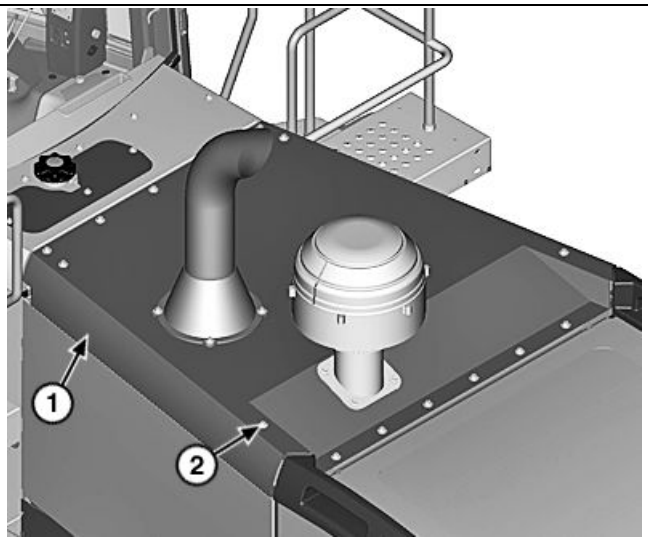

TX1080593A —UN—05AUG10

Hood Assembly

1— Hood
2— Cap Screw and Washer (15 used)

TK40086,0000832 -19-04JAN11-1/1

Engine Side Shields Remove and Install

SPECIFICATIONS	
Engine Side Shields Weight (approximate)	29 kg 65 lb.

NOTE: Door (4) is also removable.

1. Open door (1).
2. Disconnect cylinder (2) by removing clip from cylinder ball joint (3) and lift cylinder off ball joint.

CAUTION: Prevent possible crushing injury from heavy component. Use appropriate lifting device.

3. Remove door.

Specification

Engine Side Shields—Weight (approximate)..... 29 kg
65 lb.

4. Repair or replace parts as necessary.
5. Install door.
6. Connect cylinder to ball joint and install clip.

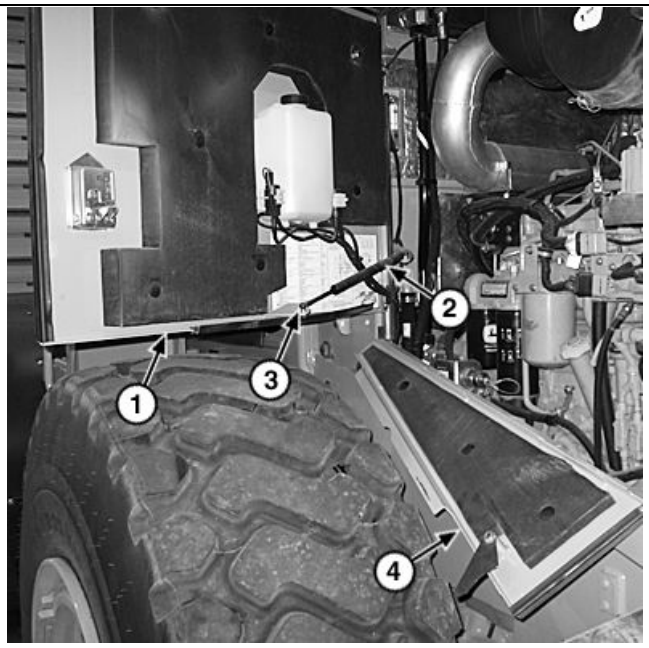

TX1085358A —UN—02DEC10

Engine Side Shields (left side shown)

1— Door
2— Cylinder
3— Ball Joint
4— Door

TK40086,0000835 -19-02DEC10-1/1

Cooling Package Access Doors Remove and Install

SPECIFICATIONS	
Door Weight (approximate)	25 kg 55 lb.

1. Open door (1).
2. Remove handrail (2).
3. Remove pin (4) and disconnect rod (5).

CAUTION: Prevent possible crushing injury from heavy component. Use appropriate lifting device.

4. Remove door.

Specification

Door—Weight (approximate)..... 25 kg
55 lb.

5. Repair or replace as necessary.
6. Install door.
7. Connect rod and install pin.
8. Install handrail.

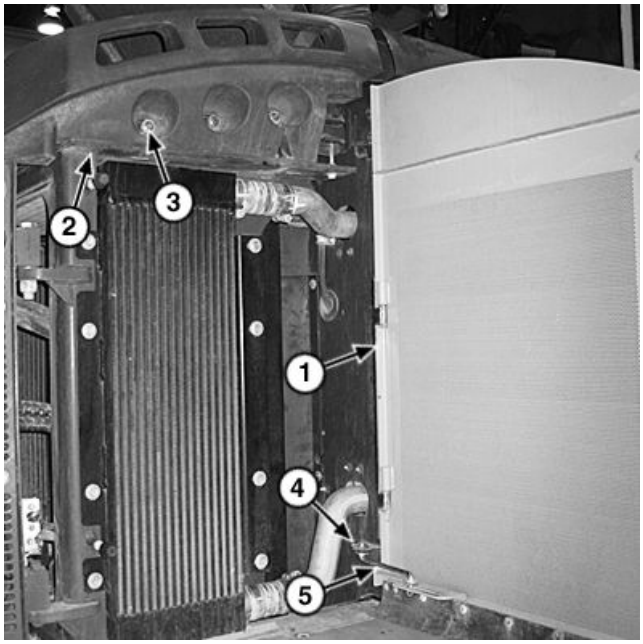

TX1085369A —UN—02DEC10

Cooling Package Access Door (right side shown)

1— Door
2— Handrail
3— Cap Screw and Washer (3 used)
4— Pin
5— Rod

TK40086,0000834 -19-20DEC10-1/1

Section 31
Loader

Contents

Page

Group 3102—Bucket
Bucket Remove and Install 31-3102-1
Powerllel Pin-On Bucket Remove and Install 31-3102-4
Welded Bucket Cutting Edges Remove and Install 31-3102-5
Bucket Teeth and Shank Remove and Install 31-3102-6
Bolt-On Cutting Edges Remove and Install 31-3102-7
Cracked Cutting Edge Repair 31-3102-7

Group 3140—Frames
NeverGrease™ Pin Joints 31-3140-1
Loader Bucket Tilt Linkage Remove and Install 31-3140-2
Bucket Linkage Seals and Bushings Remove and Install 31-3140-6
Boom Remove and Install 31-3140-9
Powerllel™ Leveling Link Remove and Install 31-3140-12
Powerllel™ Bellcrank Remove and Install 31-3140-16
Powerllel™ Bucket Cylinder Remove and Install 31-3140-20
Powerllel™ Bucket Link Remove and Install 31-3140-27
Powerllel™ Guide Links Remove and Install 31-3140-32
Powerllel™ Coupler Remove and Install 31-3140-40
Powerllel™ Loader Boom Remove and Install 31-3140-44
Hi-Vis Coupler Disassemble and Assemble 31-3140-50

Group 3160—Hydraulic System
General Oil Cleanup Procedure 31-3160-1
Hydraulic Component Failure Cleanup Procedure 31-3160-3
Main Hydraulic Pump Remove and Install 31-3160-5
Main Hydraulic Pump Disassemble and Assemble 31-3160-7
Loader Control Valve Remove and Install 31-3160-9
Loader Control Valve Disassemble and Assemble 31-3160-10
Boom Section Disassemble and Assemble 31-3160-11
Bucket Section Disassemble and Assemble 31-3160-13
Auxiliary Section Disassemble and Assemble—If Equipped 31-3160-15

Page

Main Relief Valve Disassemble and Assemble 31-3160-16
Load Sense Relief Valve Disassemble and Assemble 31-3160-17
Circuit Relief With Anticavitation Valve Disassemble and Assemble 31-3160-18
Anticavitation Valve Disassemble and Assemble 31-3160-19
Auxiliary, Bucket, and Boom Section Pilot Orifice Check Valve 31-3160-20
Boom Cylinder Remove and Install 31-3160-20
Bucket Cylinder Remove and Install 31-3160-22
Boom and Bucket Cylinder Disassemble and Assemble 31-3160-23
Loader Start-Up Procedure 31-3160-23
Hydraulic Reservoir Remove and Install 31-3160-24
Pilot Control Valve Remove and Install 31-3160-33
Pilot Control Valve Disassemble and Assemble 31-3160-35
Auxiliary Function Pilot Control Valve Remove and Install—If Equipped 31-3160-37
Pilot Accumulator Remove and Install 31-3160-39
Hydraulic Pump Manifold Remove and Install 31-3160-40
Hydraulic Pump Manifold Disassemble and Assemble 31-3160-42
Ride Control Valve Remove and Install—If Equipped 31-3160-44
Ride Control Valve Disassemble and Assemble—If Equipped 31-3160-46
Pin Disconnect Valve Remove and Install—If Equipped 31-3160-47
Pin Disconnect Valve Disassemble and Assemble—If Equipped 31-3160-48
Hydraulic Fan Pump Remove and Install 31-3160-49
Hydraulic Fan Motor Remove and Install 31-3160-51
Reversing Fan Valve Remove and Install—If Equipped 31-3160-53
Reversing Fan Valve Disassemble and Assemble—If Equipped 31-3160-54

Bucket Remove and Install

SPECIFICATIONS	
Boom End-to-Bucket Clearance (maximum)	1 mm 0.04 in.
Link-to-Bucket Clearance (maximum)	2 mm 0.08 in.
Boom End-to-Bucket Clearance	1 mm (maximum) 0.04 in. (maximum)

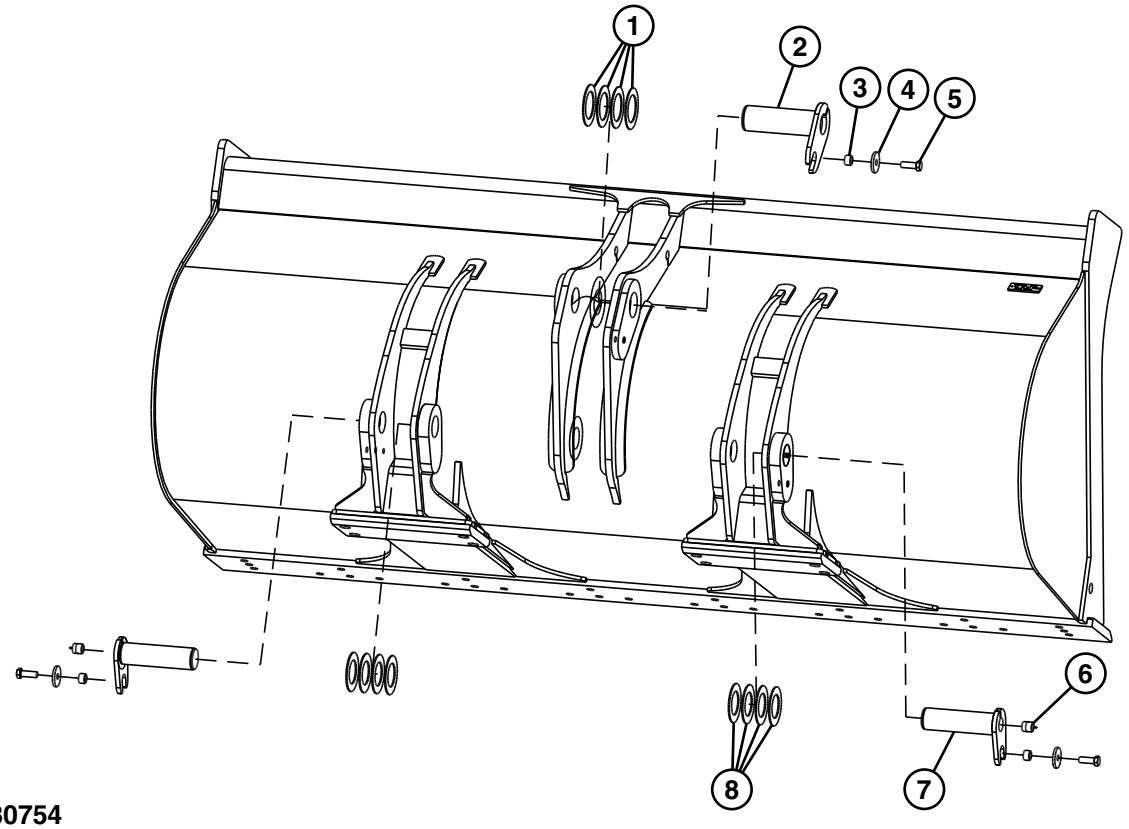

TX1030754

TX1030754 —UN—18OCT07

Bucket with Standard Pin Joint

1— Shim (as needed)
2— Pin
3— Spacer (3 used)
4— Washer (3 used)
5— Cap Screw (3 used)
6— Lubrication Fitting (2 used)
7— Pin (2 used)
8— Shim (as needed)

Bucket with Standard Pin Joints

1. Prepare machine for service. Park and Prepare for Service Safely. (Group 0001.)

CAUTION: Prevent possible crushing injury from heavy component. Use appropriate lifting device.

2. Remove cap screws (5), washers (4), spacers (3), and pins (2 and 7).
3. Align boom ends with bucket. Install shims (8) between boom ends and bucket as needed to obtain maximum clearance.

Specification

Boom End-to-Bucket—Clearance (maximum)..... 1 mm
0.04 in.

4. Install pins (7), spacers (3), washers (4), and cap screws (5).
5. Align bucket link with bucket. Install shims (1) between bucket link and bucket to obtain maximum clearance.

Specification

Link-to-Bucket—Clearance (maximum)..... 2 mm
0.08 in.

6. Install pin (2), spacers (3), washers (4), and cap screws (5).

Continued on next page

RM58335,00012A5 -19-10JAN11-1/3

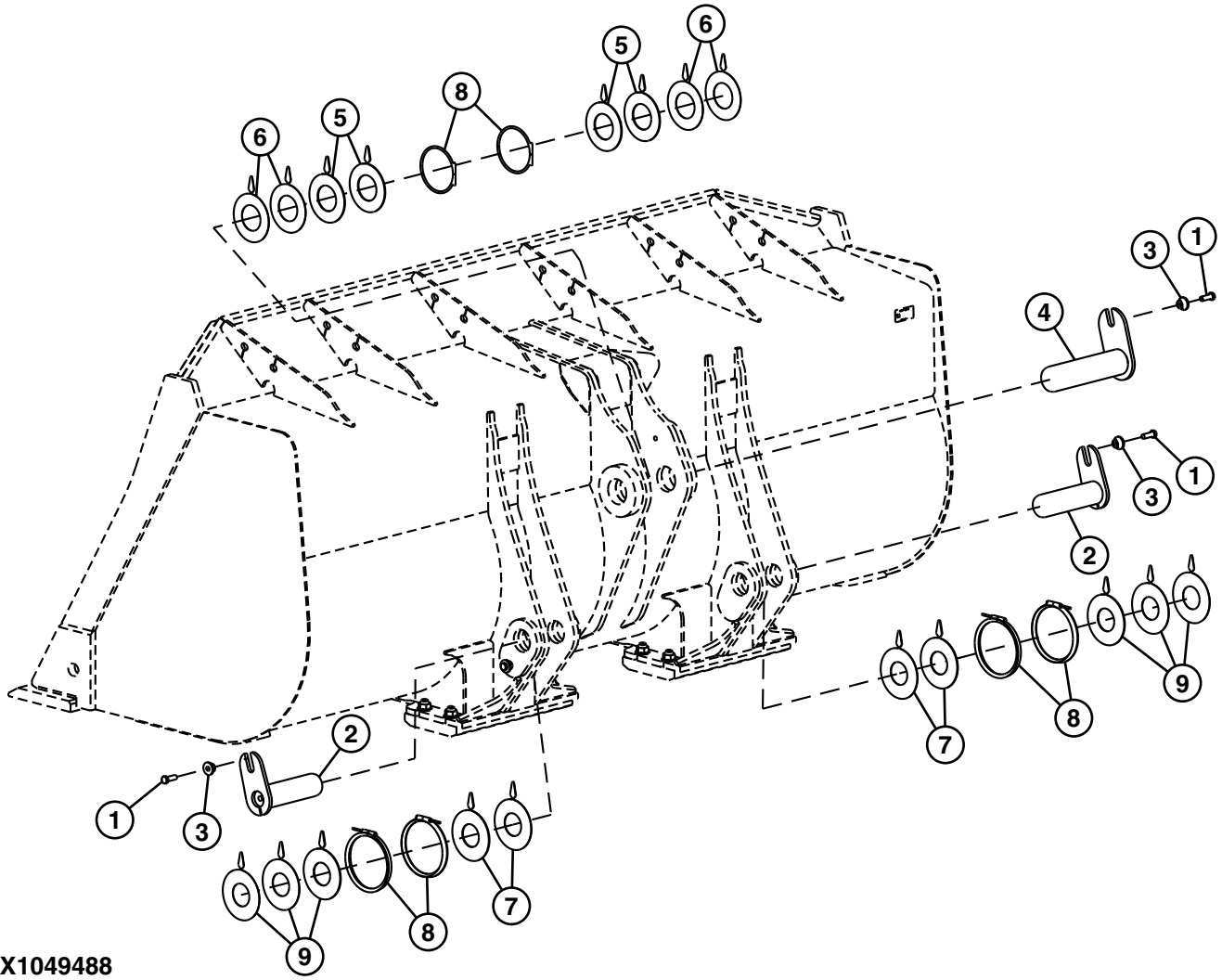

Bucket with NeverGrease Pin Joint

1— Cap Screw (3 used)
2— Boom Pin (2 used)
3— Bushing (3 used)
4— Bucket Link Pin
5— Shims
6— Shims
7— Shims
8— Split Seal (6 used)
9— Shims

Bucket with NeverGrease ™ Pin Joints

IMPORTANT: NeverGrease™ Pin Joints have servicing requirements to follow to maintain a long life. Shimming is required in some applications. Some joints are more critical and will be specified when required. Alignment in the joint is critical to prevent premature wear. Cleanliness is also necessary for all joint components. Clean and burr free pins must be used when replacing. See NeverGrease™ Pin Joints. (Group 3140.)

1. Prepare machine for service. Park and Prepare for Service Safely. (Group 0001.)

CAUTION: Prevent possible crushing injury from heavy component. Use appropriate lifting device.

NOTE: Keep shims in order during bucket removal to aid in installation procedure.

2. Remove cap screws (1), boom pins (2), and bucket link pin (4).
3. Align boom ends with bucket by centering in opening. Install equal shims (5, 6, and 9) on both outside clearances first. Then fill inside clearance with shims on both sides as required to meet specification. Use smaller (1 mm) shim to use as a gauge for checking maximum clearance specification. See NeverGrease™ Pin Joints. (Group 3140.)

Specification	
Boom End-to-Bucket—Clearance	1 mm (maximum) 0.04 in. (maximum)

NOTE: **DO NOT** *lubricate any joint components with NeverGrease™ Pin Joints.*

4. Install clean and burr free boom pins and tighten cap screws.

Continued on next page

RM58335,00012A5 -19-10JAN11-2/3

5. Install split seals (8) on bucket to boom joint with large O.D. lip away from center of joint (toward bucket boss) but tight against the boss face. Tighten cap screws.
6. Install bucket link pin and shim as required to remove clearance.
7. Install split seals on bucket link joint tight against the boss face. Tighten cap screws.

RM58335,00012A5 -19-10JAN11-3/3

Powerllel Pin-On Bucket Remove and Install

SPECIFICATIONS	
Powerllel Pin-On Bucket Weight (approximate)	1193 kg 2630 lb.
Boom End-to-Bucket Clearance (maximum)	1 mm 0.04 in.
Link-to-Bucket Clearance (maximum)	2 mm 0.08 in.

OTHER MATERIAL
PM37566 U.S. Silver-Grade Anti-SeizeNEVER-SEEZ® Lubricant

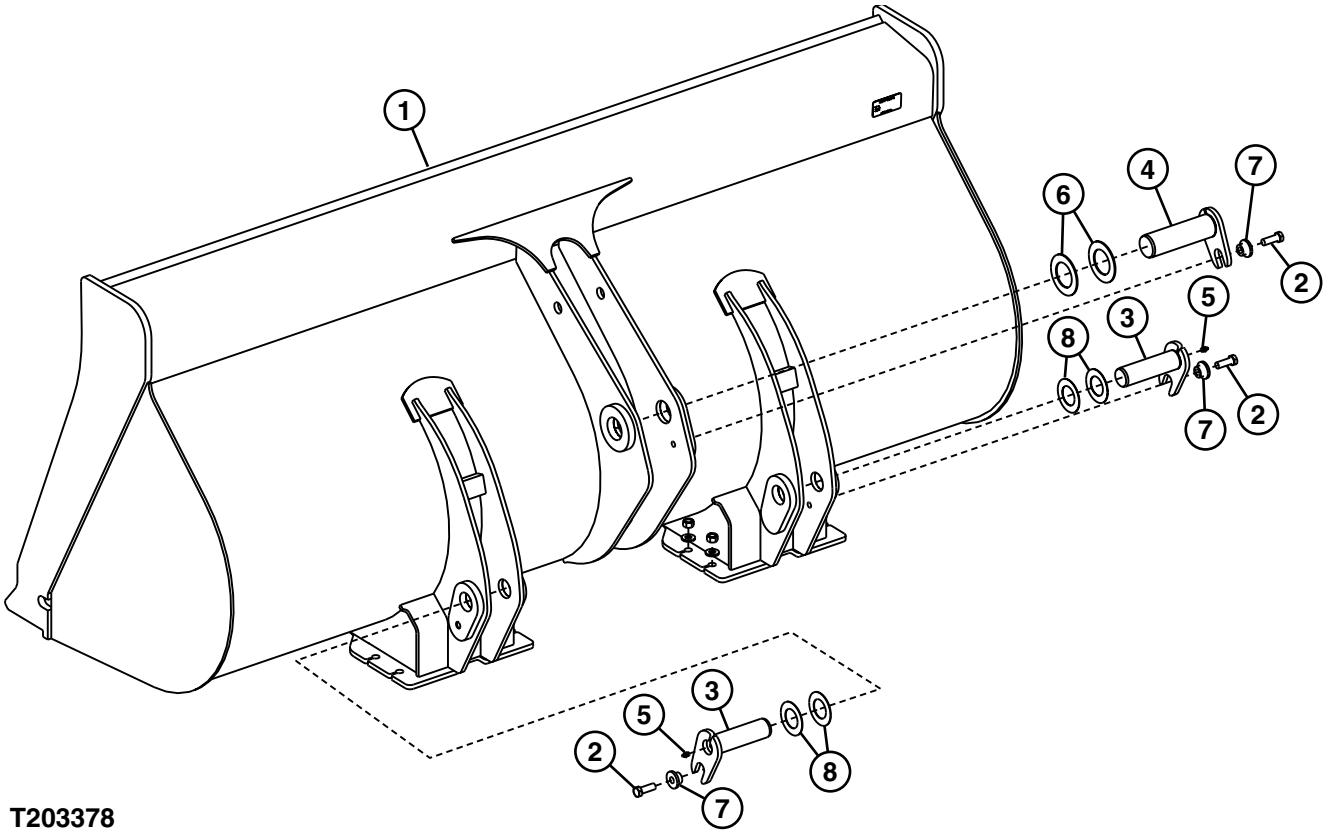

T203378

Powerllel Pin-On Bucket

1— Powerllel Pin-On Bucket
2— Cap Screw (3 used)
3— Pin (2 used)
4— Pin
5— Lubrication Fitting (2 used)
6— Shim (as required)
7— Bushing (3 used)
8— Shim (as required)

1. Prepare machine for service. Park and Prepare for Service Safely. (Group 0001.)

CAUTION: Prevent possible injury from unexpected machine movement.

2. Support bellcrank with appropriate lifting device.

CAUTION: Prevent possible crushing injury from heavy component. Use appropriate lifting device.

3. Remove cap screws (2), bushings (7), and pins (3 and 4).

Specification

Powerllel Pin-On Bucket—Weight (approximate)..... 1193 kg 2630 lb.

4. Apply PM37566 Silver-Grade Anti-Seize lubricant or an equivalent to bores of bucket, loader boom, bucket link, and corresponding pivot pins.

5. Align boom ends with bucket. Install shims (8) between boom ends and bucket as needed to obtain maximum clearance.

Specification

Boom End-to-Bucket—Clearance (maximum)..... 1 mm 0.04 in.

Install pins (3), bushings (7), and cap screws (2).

Continued on next page

RM58335,00012A6 -19-10JAN11-1/2

6. Align bucket link with bucket. Install shims (6) between bucket link and bucket to obtain maximum clearance.

Specification	
Link-to-Bucket—Clearance (maximum)	2 mm 0.08 in.

Install pin (4), bushings (7), and cap screws (2).

NEVER-SEEZ is a trademark of Bostik Findley, Inc.

RM58335,00012A6 -19-10JAN11-2/2

Welded Bucket Cutting Edges Remove and Install

SPECIFICATIONS	
Bucket Cutting Edge Preheat Temperature—Minimum throughout entire thickness of parts	204°C 400°F
Bucket Cutting Edge Distance—Minimum back from joint	51 mm 2 in.

1. Perform welding in an environment with a minimum ambient temperature of 10°C (50°F).
2. Clean all joints to be welded of all foreign matter such as dirt, rust, mill scale, oil, etc. with grinders and/or solvents.
3. Use dry AWS-E7018 low hydrogen electrodes or either of the following equivalent low hydrogen wire feed electrodes: gas metal arc welding (CO_2 or argon CO_2) AWS-E70S6 or flux cored arc welding AWS-E70T1.
4. Preheat parts to be welded (both tack and final welds) to minimum of 204°C (400°F). **Preheat temperature must be throughout the entire thickness of the parts joined and at least** 51 mm (2 in.) **back from the joint**. Maintain preheat throughout the entire welding operation. Tempilstiks™ should be used if possible.

Specification	
Bucket Cutting Edge—Preheat Temperature—Minimum throughout entire thickness of parts	204°C 400°F
Distance—Minimum back from joint	51 mm 2 in.

5. Tack weld preheated plates starting at center of bucket and working toward the outside ends.
6. Final weld preheated plates starting at the center of the front edge of the bucket backing plate and working toward the outside ends.

   Repeat this operation at back edge of loader blade.

   Tack welds may be incorporated into the final weld, providing they have been made with electrodes that meet the requirements of the final welds and no cracking has occurred in the weld metal. Tack welds not meeting these requirements must be completely removed by grinding or air arc gouging just prior to making the final weld in that area.
7. Do not remove bucket from welding environment until weld metal temperature has dropped to the ambient temperature. Do not force cooling rate of weld metal.

RM58335,00012A7 -19-10JAN11-1/1

Bucket Teeth and Shank Remove and Install

SPECIFICATIONS	
Standard Z-Bar Bucket Weight (approximate)	1735 kg 3826 lb.
Shank Cap Screw Torque	230 N·m 170 lb.-ft.

1. Prepare machine for service. Park and Prepare for Service Safely. (Group 0001.)

CAUTION: Prevent possible crushing injury from heavy component. Use appropriate lifting device.

2. Raise boom and support bucket.

Specification

Standard Z-Bar Bucket—Weight (approximate)..... 1735 kg
3826 lb.

3. Remove pin retainer (2) and drive out pin (3). Remove bucket tooth (1) from shank (4).
4. Remove cap screws (5), nuts (7), washers (6), and shank (4).
5. Clean and inspect parts. Replace parts as necessary.
6. Install shank. Tighten cap screws to specification.

Specification

Shank Cap Screw—Torque.....230 N·m
170 lb.-ft.

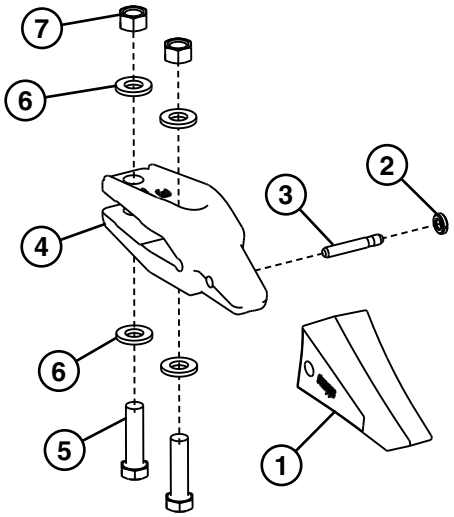

TX1086462 —UN—06JAN11

Bucket Tooth and Shank

1— Bucket Tooth
2— Pin Retainer
3— Pin
4— Shank
5— Cap Screw (2 used)
6— Washer (4 used)
7— Nut (2 used)

7. Install bucket tooth to shank.

RM58335,00012A8 -19-10JAN11-1/1

Bolt-On Cutting Edges Remove and Install

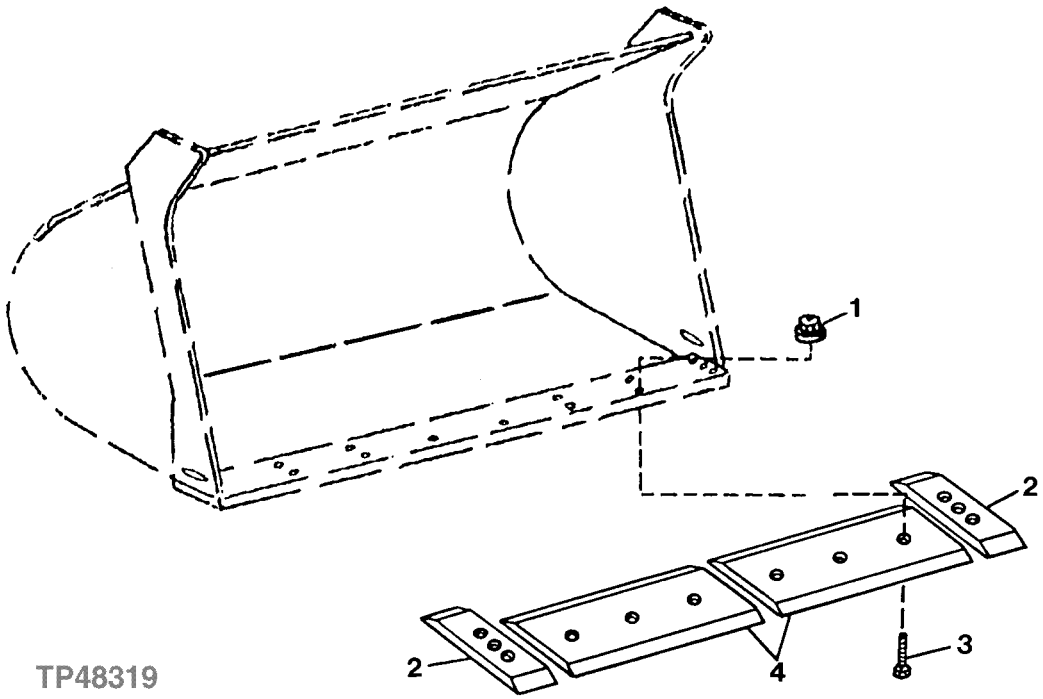

TP48319 —UN—17APR96

Bolt-On Cutting Edges

1— Nut (12 used) **2— Cutting Edge (2 used)** **3— Cap Screw (12 used)** **4— Cutting Edge (2 used)**

SPECIFICATIONS	
Cutting Edge-to-Bucket Cap Screw Torque	495 N·m 365 lb.-ft.

⚠ CAUTION: Prevent possible crushing injury from heavy component. Use appropriate lifting device.

1. Remove cap screws (3) and remove cutting edges (2 and 4) from bucket using appropriate lifting device.
2. Install cutting edge in position using appropriate lifting device and install new cap screws.

Specification

Cutting Edge-to-Bucket Cap Screw—Torque.....495 N·m
365 lb.-ft.

RM58335,00012A9 -19-10JAN11-1/1

Cracked Cutting Edge Repair

SPECIFICATIONS	
Cracked Cutting Edge Preheat Temperature	149°—260°C 300°—500°F
Cracked Cutting Edge Distance—Beyond End of Crack	13 mm 0.5 in.

1. If cutting edge has any cracks, clean the area to find end of crack.
2. Drill a small hole at end of crack to prevent spreading.
3. Grind V-grooves along crack on top and bottom of cutting edge.
4. Preheat the cracked area.

Specification

Cracked Cutting Edge—Preheat Temperature..... 149°—260°C
300°—500°F

5. Fill the V-grooves with weld. Use E7018 electrodes. Extend the weld.

Specification

Cracked Cutting Edge—Distance—Beyond End of Crack..... 13 mm
0.5 in.

RM58335,00012AA -19-10JAN11-1/1

NeverGrease™ Pin Joints

See NeverGrease™ Pin Joints. (Group 0960.)

RM58335,00012AB -19-10JAN11-1/1

Loader Bucket Tilt Linkage Remove and Install

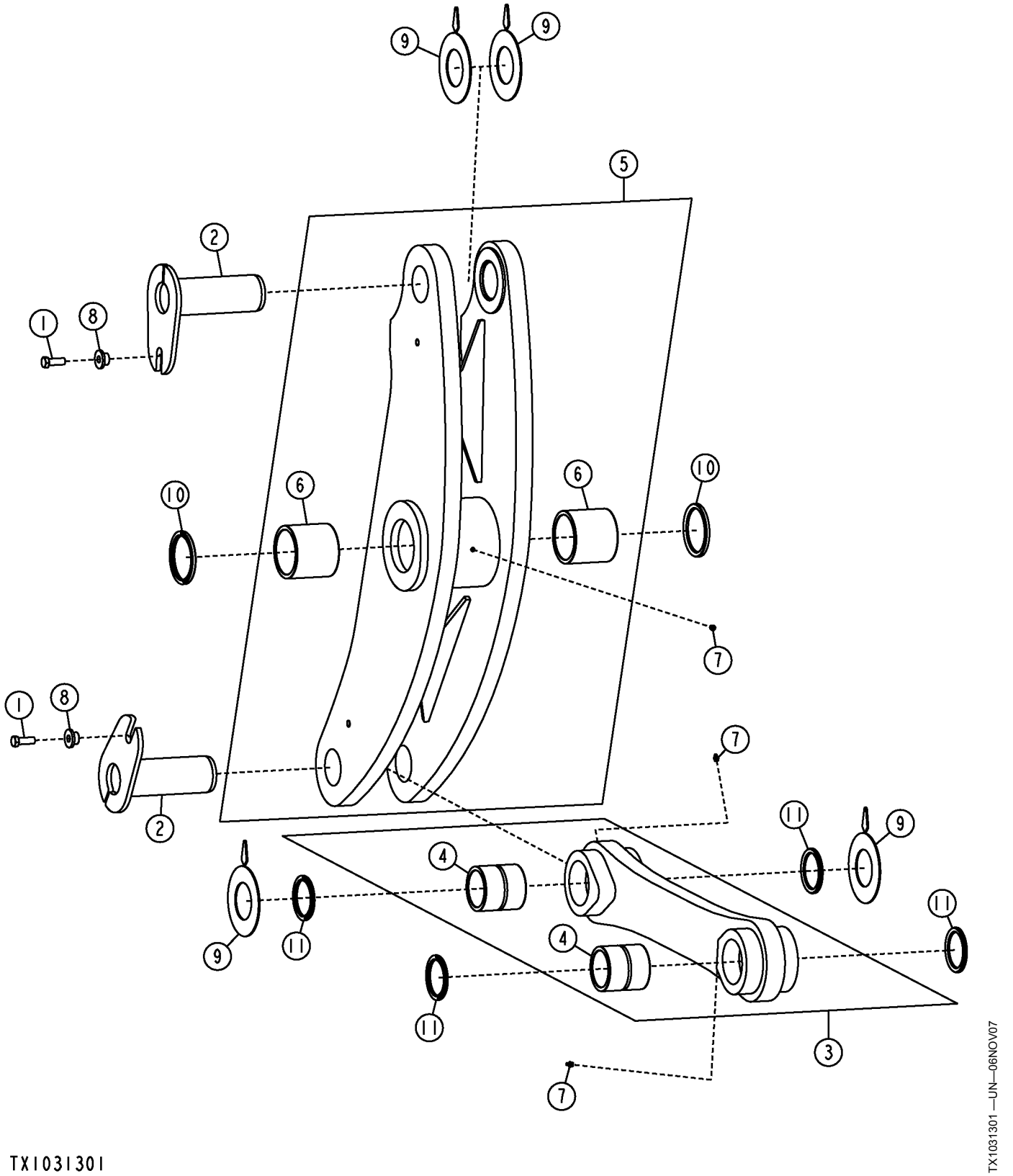

Loader Bucket Tilt Linkage (standard bushings)

Continued on next page

RM58335,00012AC -19-27JAN11-1/3

1— Cap Screw (2 used)
2— Pin (2 used)
3— Bucket Link
4— Bushing (2 used)
5— Bellcrank
6— Bushing (2 used)
7— Lubrication Fitting (3 used)
8— Bushing (2 used)
9— Washer (4 used)
10— Seal (2 used)
11— Seal (4 used)

SPECIFICATIONS	
Bucket Link and Bellcrank Weight (approximate)	204 kg 450 lb.
Bucket Cylinder Rod End-to-Bellcrank Clearance (maximum)	3 mm 0.12 in.
Bucket Link and Bellcrank Weight (approximate)	204 kg 450 lb.
Bucket Cylinder Rod End-to-Bellcrank Clearance (maximum)	3 mm 0.12 in.

OTHER MATERIAL
PM37566 U.S. Silver-Grade Anti-SeizeNEVER-SEEZ® Lubricant

Loader Bucket Tilt Linkage with Standard Bushing

1. Prepare machine for service. Park and Prepare for Service Safely. (Group 0001.)

CAUTION: Prevent possible crushing injury from heavy component. Use appropriate lifting device.

2. Remove parts as necessary with appropriate lifting device.

Specification

Bucket Link and Bellcrank—Weight (approximate)..... 204 kg 450 lb.

3. Clean and inspect parts. Replace parts as necessary.
4. Install shims (9) to obtain maximum clearance.

Specification

Bucket Cylinder Rod End-to-Bellcrank—Clearance (maximum)..... 3 mm 0.12 in.

5. Apply PM37566 Silver-Grade Anti-Seize Lubricant or equivalent lubricant to bore of bellcrank pivot pin.

NEVER-SEEZ is a trademark of Bostik Findley, Inc.

Continued on next page

RM58335,00012AC -19-27JAN11-2/3

Loader Bucket Tilt Linkage with NeverGrease™ Bushing

1. Prepare machine for service. Park and Prepare for Service Safely. (Group 0001.)

⚠ CAUTION: Prevent possible crushing injury from heavy component. Use appropriate lifting device.

2. Remove link (2) and bellcrank (1) with appropriate lifting device.

Specification	
Bucket Link and Bellcrank—Weight (approximate)	204 kg 450 lb.

IMPORTANT: NeverGrease™ Pin Joints have servicing requirements to follow to maintain a long life. Shimming is required in some applications where specified. Some joints are more critical and will be specified when required. Alignment in the joint is critical to prevent premature wear. Cleanliness is also necessary for all joint components. Clean and burr free pins must be used when replacing. For more information on bushing replacement see NeverGrease™ Pin Joints. (Group 3140.)

3. Remove bushings as required. See Bucket Linkage Seals and Bushings Remove and Install. (Group 3140.)

4. Clean and inspect parts. Replace parts as necessary.

IMPORTANT: Use of lubrication on NeverGrease™ Pin Joints may decrease the life of the joint. It is not recommended to use lubrication on components of NeverGrease™ Pin Joints. Joint must be aligned and clean to avoid damage to joint components.

5. With hoist align bellcrank (1) to boom crossover tube. Ensure bellcrank is centered.

6. Install shims (7) to remove any clearance in joint without binding.

Specification	
Bucket Cylinder Rod End-to-Bellcrank—Clearance (maximum)	3 mm 0.12 in.

7. Install clean dry pin (3).

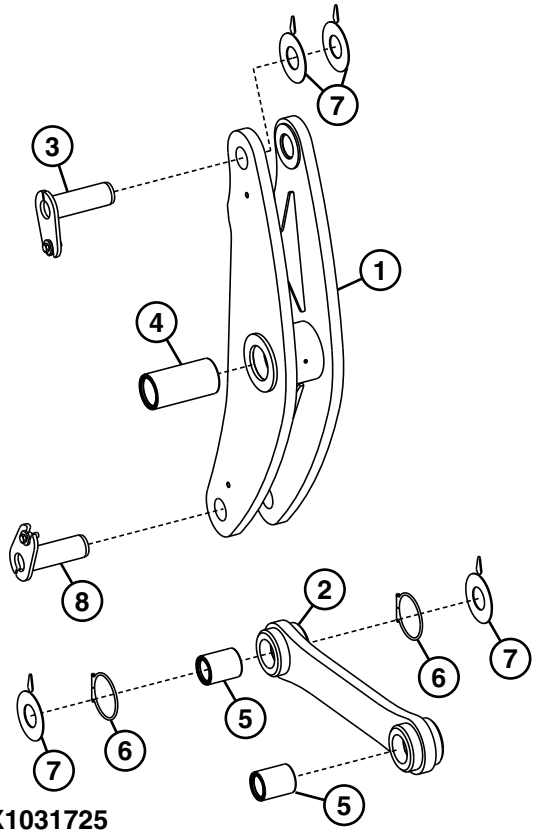

TX1031725

TX1031725 —UN—14NOV07

Bucket Tilt Linkage (NeverGrease bushings)

1— Bellcrank
2— Bucket Link
3— Pin
4— Bushing
5— Bushing
6— Seal (2 used)
7— Shim (as required)
8— Pin

8. Install cylinder rod to upper bellcrank boss with pin and shims (7) as required to remove clearance in joint without binding.

IMPORTANT: Link to bellcrank must be centered in opening. Shim as required to keep centered.

9. Install bucket link (2). Ensure bucket link is centered.

10. Install shims to remove any clearance in joint without binding.

11. Install clean dry pin (8).

12. Install seals (6) on link boss (link-to-bellcrank joint) tight up to face of boss and tighten attaching screws.

NeverGrease is a trademark of Deere & Company

RM58335,00012AC -19-27JAN11-3/3

Bucket Linkage Seals and Bushings Remove and Install

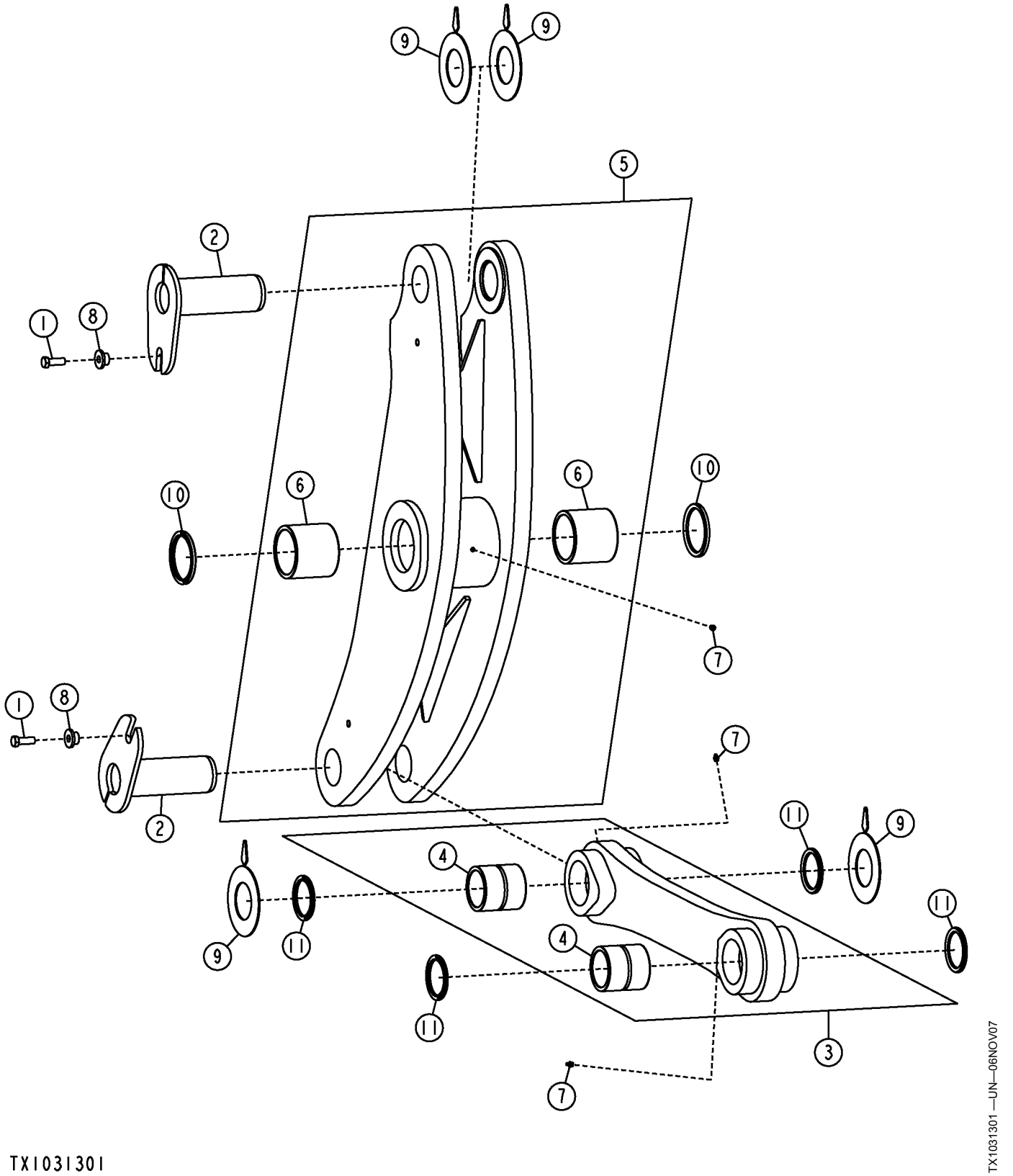

Bucket Linkage Seals and Bushings (standard bushings)

Continued on next page

RM58335,00012AD -19-18JAN11-1/3

1— Cap Screw (2 used)
2— Pin (2 used)
3— Bucket Link
4— Bushing (2 used)
5— Bellcrank
6— Bushing (2 used)
7— Lubrication Fitting (3 used)
8— Bushing (2 used)
9— Shim (4 used)
10— Seal (2 used)
11— Seal (4 used)

SPECIFICATIONS	
Bucket Linkage Bushing Distance (below surface)	6.4 mm 0.25 in.
Bellcrank-to-Bucket Link Clearance (maximum)	3 mm 0.12 in.
Bellcrank-to-Bucket Clearance (maximum)	2 mm 0.08 in.
Bellcrank-to-Loader Boom Clearance (maximum)	3 mm 0.12 in.

SERVICE EQUIPMENT AND TOOLS
D01072AA Bushing, Bearing, and Seal Driver Set
D01013AA (100 Ton) Hydraulic Press
D01044AA Bushing, Bearing and Seal Driver Set

OTHER MATERIAL
PM37566 U.S. Silver-Grade Anti-SeizeNEVER-SEEZ® Lubricant

Bucket Tilt Linkage with Standard Bushing

1. Prepare machine for service. Park and Prepare for Service Safely. (Group 0001.)
2. Remove bushings (6 and 4) and seals (10 and 11) in bucket link (3) and bellcrank (5) using D01072AA Bushing, Bearing, and Seal Driver Set.
3. Clean and inspect parts. Replace parts as necessary.
4. Apply PM37566 Silver-Grade Anti-Seize Lubricant or equivalent to new bushings and bushing bores.
5. Install bellcrank and bucket link bushings below surface.

Specification

Bucket Linkage Bushing—Distance (below surface)..... 6.4 mm
0.25 in.

6. Install seals into bores against bushings.
7. Install shims (9) between bellcrank and bucket link to obtain maximum clearance.

Specification

Bellcrank-to-Bucket Link—Clearance (maximum)..... 3 mm
0.12 in.

8. Install shims between bellcrank and bucket to obtain maximum clearance.

Specification

Bellcrank-to-Bucket—Clearance (maximum)..... 2 mm
0.08 in.

9. Install shims between bellcrank and loader boom to obtain maximum clearance.

Specification

Bellcrank-to-Loader Boom—Clearance (maximum)..... 3 mm
0.12 in.

NEVER-SEEZ is a trademark of Bostik Findley, Inc.

Continued on next page

RM58335,00012AD -19-18JAN11-2/3

Bucket Tilt Linkage with NeverGrease™ Bushing

IMPORTANT: NeverGrease™ Pin Joints have servicing requirements to follow to maintain a long life. Shimming is required in some applications where specified. Some joints are more critical and will be specified when required. Alignment in the joint is critical to prevent premature wear. Cleanliness is also necessary for all joint components. Clean and burr free pins must be used when replacing. For more information on bushing replacement see NeverGrease™ Pin Joints. (Group 3140.)

Remove and install bushings (4 and 5) and seals (6) from bellcrank (1) and bucket link (2) using D01013AA 100-Ton Hydraulic Shop Press and D01044AA Bushing, Bearing, and Seal Driver Set.

1— Bellcrank
2— Bucket Link
3— Pin
4— Bushing
5— Bushing
6— Seal (2 used)
7— Shim (as required)
8— Pin

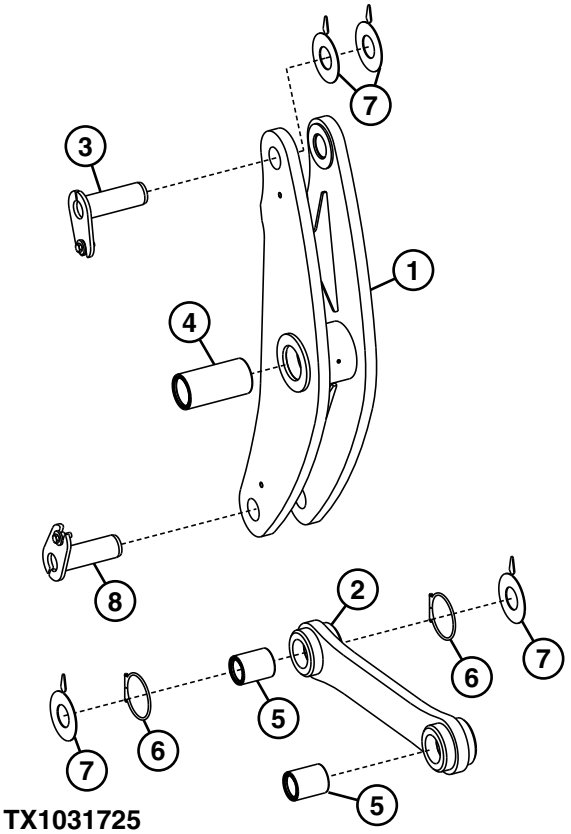

TX1031725

TX1031725 —UN—14NOV07

Bucket Tilt Linkage (NeverGrease™ bushings)

NeverGrease is a trademark of Deere & Company

RM58335,00012AD -19-18JAN11-3/3

Boom Remove and Install

SPECIFICATIONS	
Boom Weight—Approximate	1265 kg 2788 lb

OTHER MATERIAL
PT569 U.S. NEVER-SEEZ® Lubricant

1. Lower bucket to ground.

⚠ CAUTION: To prevent possible injury from unexpected machine movement, install frame locking bar before working in frame hinge area.

2. Install frame locking bar.
3. Stop engine.
4. Remove bucket. See Bucket Remove and Install. (Group 3102.)
5. Remove bucket cylinder. See Bucket Cylinder Remove and Install. (Group 3160.)
6. Remove bucket linkage. See Bucket Linkage Seals and Bushings Remove and Install. (Group 3140.)

⚠ CAUTION: Prevent possible crushing injury from heavy component. Use appropriate lifting device.

7. Connect hoist to boom using lifting straps or chains.

Specification	
Boom—Weight—Approximate	1265 kg 2788 lb

8. Remove cap screw and washers (2) to remove boom rod cylinder pin (1) from each side of boom.

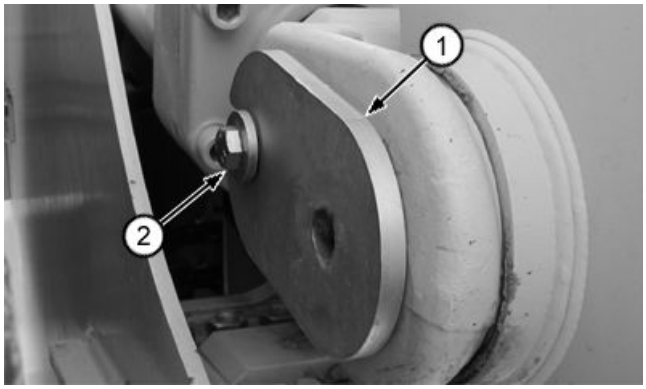

TX1032162A —UN—19NOV07

Boom-Cylinder-To-Boom Pin

1— Boom Cylinder Pin **2— Cap Screw and Washer**

NEVER-SEEZ is a trademark of Emhart Chemical Group.

Continued on next page

RM58335,00012AF -19-10JAN11-1/4

IMPORTANT: Replacement of NeverGrease Pin Joints require special methods for replacement of pins. If not followed the service life may be decreased. See NeverGrease™ Pin Joints. (Group 3140.)

9. Remove cap screw and washer (2) to remove boom cylinder head end pin (1) from each side of boom.
10. Slowly raise boom.
11. Inspect and replace parts as necessary.
12. **Standard Bushing Option**

    Apply NEVER-SEEZ® Anti-Seize Lubricant or equivalent on outer surface of bushings and bores.
13. Center boom in frame by adding shims to the outside of the boom boss on each side. Then fill in with shims on both inside boss-to-boom gaps to remove excess clearance but do not bind joint.

NEVER-SEEZ is a trademark of Emhart Chemical Group.

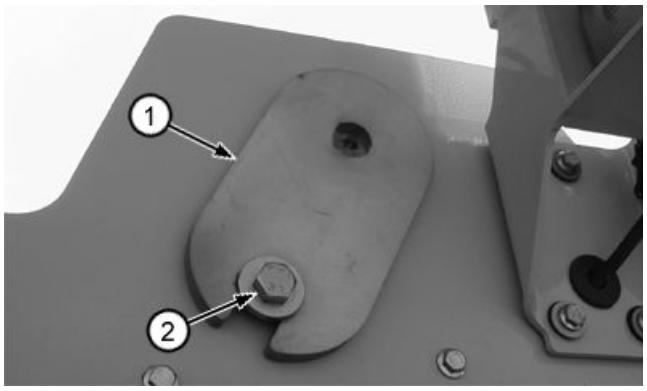

TX1032163A —UN—19NOV07

Loader Frame To Boom Pin

1— Frame-to-Boom Pin **2— Cap Screw and Washer**

RM58335,00012AF -19-10JAN11-2/4

14. Install frame-to-boom pins with cap screws and washers.
15. **NeverGrease Pin Joint Option:**

    For more information see NeverGrease™ Pin Joints. (Group 3140.)

IMPORTANT: NeverGrease™ Pin Joint requirements to follow to maintain a long life are: Shimming is required in all applications. Some joints are more critical and will be specified when required. Alignment in the joint is critical to prevent premature wear. Cleanliness is also necessary to note in all joint components. Clean and burr free pins must be used while replacing.

Center boom in frame by adding shims to the outside of the boom boss on each side. Then fill in with shims on both inside boss-to-boom gaps to remove excess clearance but do not bind joint.

Install frame-to-boom pins (1) and foam seal. Make sure all components are aligned and clean. Install cap screws and washers (2). Tighten cap screws.

NeverGrease is a trademark of Deere & Company

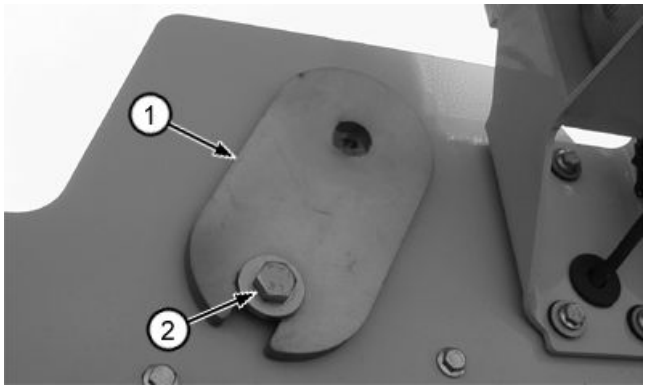

TX1032163A —UN—19NOV07

Loader Frame To Boom Pin

1— Frame-to-Boom Pin **2— Cap Screw and Washer**

16. Align cylinder rod eye to boom and shim as required to remove any clearances but do not bind.

Continued on next page

RM58335,00012AF -19-10JAN11-3/4

17. Install boom cylinder-to-boom pin (1).
18. Install cap screw and washer (2).
19. Remove lifting straps from each side.
20. Install bucket. See Bucket Remove and Install. (Group 3102.)
21. Install bucket linkage. See Bucket Linkage Seals and Bushings Remove and Install. (Group 3140.)
22. Install bucket cylinder. See Bucket Cylinder Remove and Install. (Group 3160.)

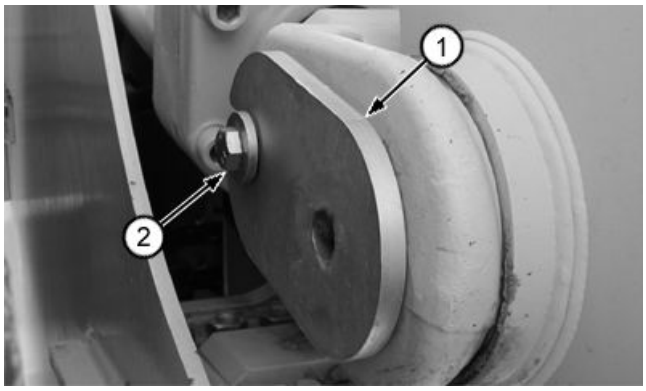

TX1032162A —UN—19NOV07

Boom-Cylinder-To-Boom Pin

1— Boom Cylinder Pin **2— Cap Screw and Washer**

RM58335,00012AF -19-10JAN11-4/4

Powerllel™ Leveling Link Remove and Install

SPECIFICATIONS	
Leveling Link Weight (approximate)	358 kg 790 lb.
Leveling Link-to-Loader Frame Distance below outer surface of levelling link	8.5—11.5 mm 0.34—0.45 in.
Leveling Link-to-Bellcrank Distance below outer surface of levelling link	10.5—13.5 mm 0.41—0.53 in.
Leveling Link-to-Loader Frame Clearance (maximum)	3 mm 0.12 in.
Leveling Link-to-Bellcrank Clearance (maximum)	3 mm 0.12 in.

SERVICE EQUIPMENT AND TOOLS
D01013AA (100 Ton) Hydraulic Press
D01044AA Bushing, Bearing, and Seal Driver Set

OTHER MATERIAL
PM37566 U.S. Silver-Grade Anti-SeizeNEVER-SEEZ® Lubricant

Continued on next page

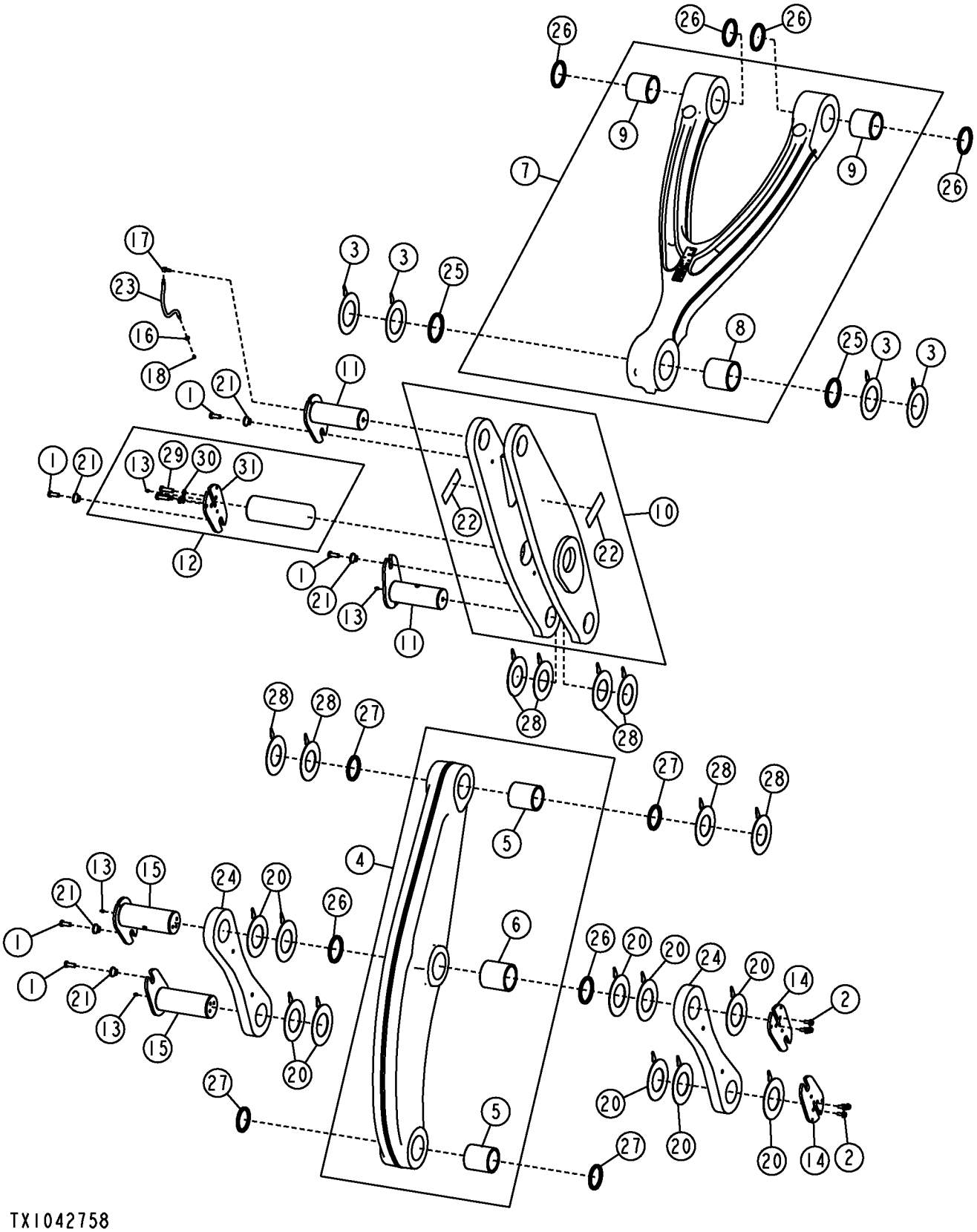

Powerllel™ Linkage

Continued on next page

JH38101,0001CB5 -19-05APR11-2/6

1— Cap Screw (5 used)
2— Cap Screw (6 used)
3— Shim (4 used)
4— Bucket Link
5— Bushing (2 used)
6— Bushing
7— Leveling Link
8— Bushing
9— Bushing (2 used)
10— Bellcrank
11— Pin (2 used)
12— Pin
13— Lubrication Fitting (4 used)
14— Retainer (2 used)
15— Pin (2 used)
16— Nut
17— 90° Elbow Fitting
18— Lubrication Fitting
20— Shim (10 used)
21— Bushing (5 used)
22— Safety Decal (2 used)
23— Hydraulic Hose
24— Guide Link (2 used)
25— Seal (2 used)
26— Seal (6 used)
27— Seal (4 used)
28— Shim (8 used)
29— Cap Screw (3 used)
30— Washer (3 used)
31— Retainer

1. Prepare machine for service. See Park and Prepare for Service Safely. (Group 0001.)

NEVER-SEEZ is a trademark of Bostik Findley, Inc.
Powerllel is a trademark of Deere & Company

JH38101,0001CB5 -19-05APR11-3/6

⚠ CAUTION: Prevent possible crushing injury from heavy component. Use appropriate lifting device.

2. Support boom with 10-ton shop stands. Roll bucket forward until touching ground. If bucket is not attached to coupler, roll coupler forward and support with 10-ton shop stand.



T201101A —UN—13AUG04

Boom Support

JH38101,0001CB5 -19-05APR11-4/6

⚠ CAUTION: Prevent possible crushing injury from heavy component. Use appropriate lifting device.

3. Attach appropriate lifting device to leveling link (7).

Specification	
Leveling Link—Weight (approximate)	358 kg (790 lb.)

4. Mark and record placement and location of shims at pins (12 and 33).

NOTE: Remove light brackets as necessary to drive pins out.

5. Remove leveling link pins.
6. Identify position of leveling link for assembly purposes and remove leveling link.

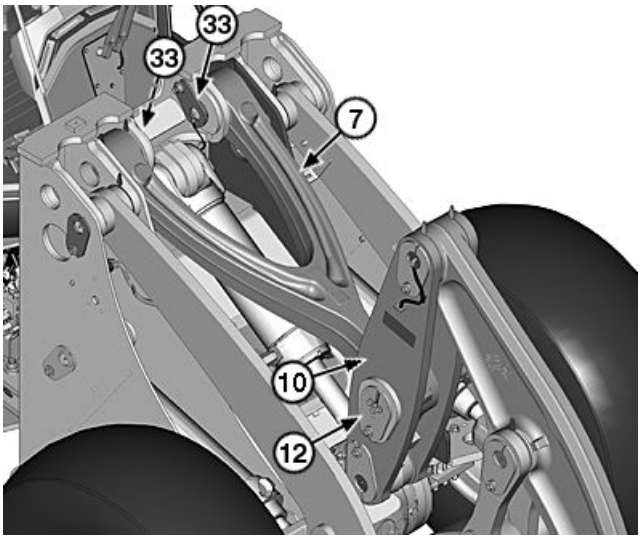

TX1086936A —UN—30MAR11

Leveling Link

7— Leveling Link
10— Bellcrank
12— Pin
33— Pin (2 used)

Continued on next page

JH38101,0001CB5 -19-05APR11-5/6

7. Remove seals (25 and 26).
8. Remove bushings (8 and 9) using D01013AA Hydraulic Press and D01044AA Bushing, Bearing, and Seal Driver Set.
9. Inspect and replace parts as necessary.
10. Apply PM37566 Silver-Grade Anti-Seize Lubricant or equivalent to outer surface of new bushings and bores.

    Install bushings below outer surface of leveling link using disks from D01044AA Bushing, Bearing and Seal Driver Set.

Specification	
Leveling Link-to-Loader Frame—Distance below outer surface of levelling link	8.5—11.5 mm 0.34—0.45 in.
Leveling Link-to-Bellcrank—Distance below outer surface of levelling link	10.5—13.5 mm 0.41—0.53 in.

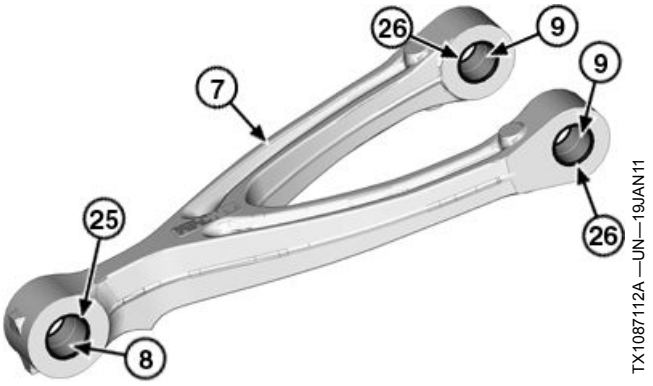

Leveling Link

7— Leveling Link
8— Bushing
9— Bushing (2 used)
25— Seal (2 used)
26— Seal (4 used)

11. Install seals against bushings with lips toward outside of bore.

JH38101,0001CB5 -19-05APR11-6/6

⚠ CAUTION: Prevent possible crushing injury from heavy component. Use appropriate lifting device.

12. Install leveling link.
13. Install shims in original locations. Measure clearances and adjust shims as required.

Specification	
Leveling Link-to-Loader Frame—Clearance (maximum)	3 mm 0.12 in.
Leveling Link-to-Bellcrank—Clearance (maximum)	3 mm 0.12 in.

14. Install pins.
15. Install light brackets if removed.

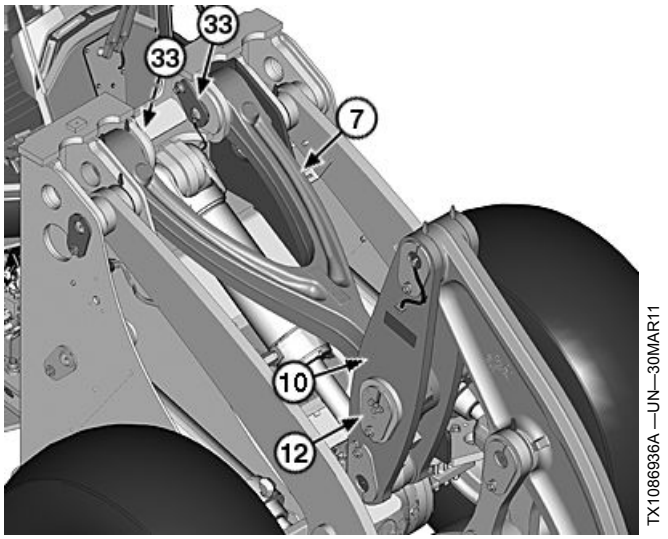

Leveling Link

7— Leveling Link
12— Pin
33— Pin (2 used)

JH38101,0001CB5 -19-05APR11-7/6

Powerllel™ Bellcrank Remove and Install

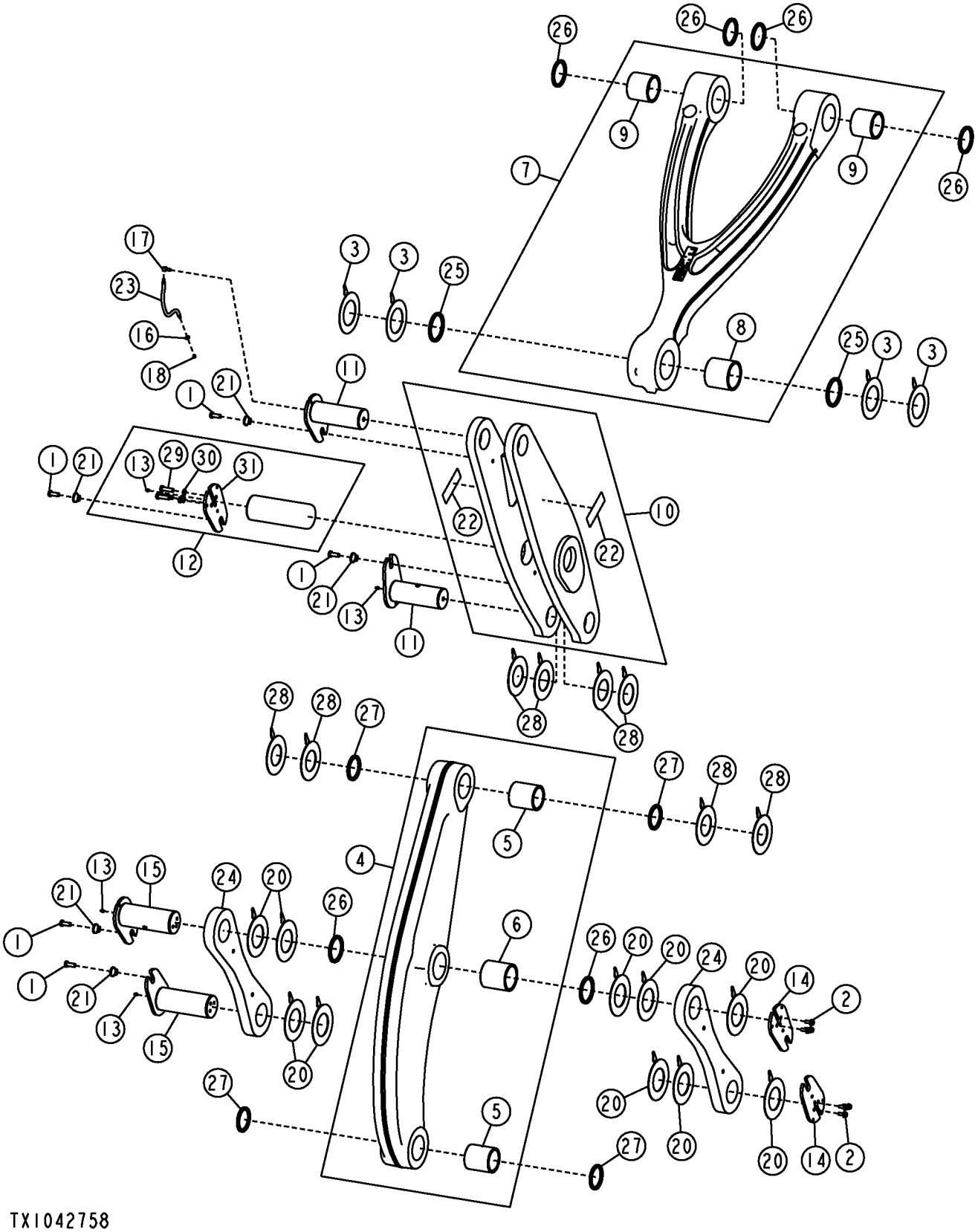

Powerllel™ Linkage

Continued on next page

JH38101,0001CB7 -19-28MAR11-1/5

1— Cap Screw (5 used)
2— Cap Screw (6 used)
3— Shim (4 used)
4— Bucket Link
5— Bushing (2 used)
6— Bushing
7— Leveling Link
8— Bushing
9— Bushing (2 used)
10— Bellcrank
11— Pin (2 used)
12— Pin
13— Lubrication Fitting (4 used)
14— Retainer (2 used)
15— Pin (2 used)
16— Nut
17— 90° Elbow Fitting
18— Lubrication Fitting
20— Shim (10 used)
21— Bushing (5 used)
22— Safety Decal (2 used)
23— Hydraulic Hose
24— Guide Link (2 used)
25— Seal (2 used)
26— Seal (6 used)
27— Seal (4 used)
28— Shim (8 used)
29— Cap Screw (3 used)
30— Washer (3 used)
31— Retainer

SPECIFICATIONS	
Leveling Link Weight (approximate)	245 kg 540 lb
Powerllel™ Bucket Cylinder Weight	197 kg 434 lb.
Powerllel™ Bellcrank Weight (approximate)	162 kg 357 lb
Bellcrank-to-Bucket Link Clearance (maximum)	3 mm 0.12 in.
Bellcrank-to-Bucket Cylinder Clearance (maximum)	3 mm 0.12 in.
Bellcrank-to-Leveling Link Clearance (maximum)	3 mm 0.12 in.

OTHER MATERIAL
PM37566 U.S. Silver-Grade Anti-SeizeNEVER-SEEZ® Lubricant

1. Prepare machine for service. See Park and Prepare for Service Safely. (Group 0001.)

Powerllel is a trademark of Deere & Company
NEVER-SEEZ is a trademark of Bostik Findley, Inc.

JH38101,0001CB7 -19-28MAR11-2/5

⚠ CAUTION: Prevent possible crushing injury from heavy component. Use appropriate lifting device.

2. Support boom with 10-ton shop stands. Roll bucket forward until touching ground. If bucket is not attached to coupler, roll coupler forward and support with 10-ton shop stand.



T201101A —UN—13AUG04

Boom Support

Continued on next page

JH38101,0001CB7 -19-28MAR11-3/5

CAUTION: Avoid possible crushing injury from heavy component. Use appropriate lifting device.

3. Support leveling link (7) with appropriate lifting device.

Specification	
Leveling Link—Weight (approximate)	245 kg 540 lb

4. Remove pin (12).
5. Start machine and curl bucket.

CAUTION: Avoid possible crushing injury from heavy component. Use appropriate lifting device.

6. Lift and support leveling link with appropriate lifting device.
7. Support bucket cylinder with appropriate lifting device.

Specification	
Powerllel™ Bucket Cylinder—Weight	197 kg 434 lb.

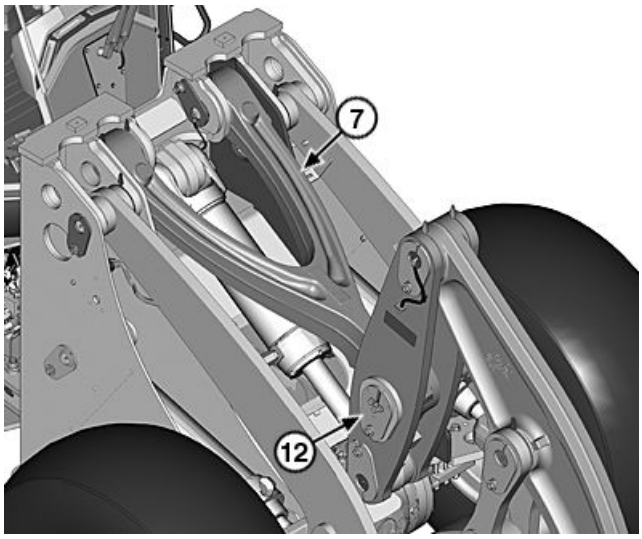

Leveling Link

7— Leveling Link **12— Pin**

Continued on next page

JH38101,0001CB7 -19-28MAR11-4/5

8. Remove bucket cylinder-to-bellcrank pin (11).
9. Lower bucket cylinder to loader frame. Place wood block between bucket cylinder and loader frame.

CAUTION: Prevent personal injury from sudden linkage movement. Support Powerllel™ bellcrank before removing any pins.

10. Support bellcrank with appropriate lifting device.
11. Remove bellcrank-to-bucket link pin (11).

CAUTION: Prevent possible injury from crushing. Heavy component, use appropriate lifting device.

Specification	
Powerllel™ Bellcrank—Weight (approximate)	162 kg 357 lb

12. Identify position of bellcrank to aid in assembly and remove using appropriate lifting device.
13. Apply PM37566 Silver-Grade Anti-Seize lubricant or an equivalent to bores of bellcrank, bucket link, leveling link, bucket cylinder rod end, and corresponding pivot pins.
14. Using appropriate lifting device, install and support bellcrank (8) in position as identified during removal.
15. Install shims (2) in original locations. Measure clearances and adjust shims as required.

Specification	
Bellcrank-to-Bucket Link—Clearance (maximum)	3 mm 0.12 in.

16. Install bellcrank-to-bucket link pin (11).
17. Lift bucket cylinder using appropriate lifting device.
18. Start engine. Extend or retract bucket cylinder as needed to pin components.
19. Install shims (20) in original locations. Measure clearances and adjust shims as required.

Powerllel is a trademark of Deere & Company

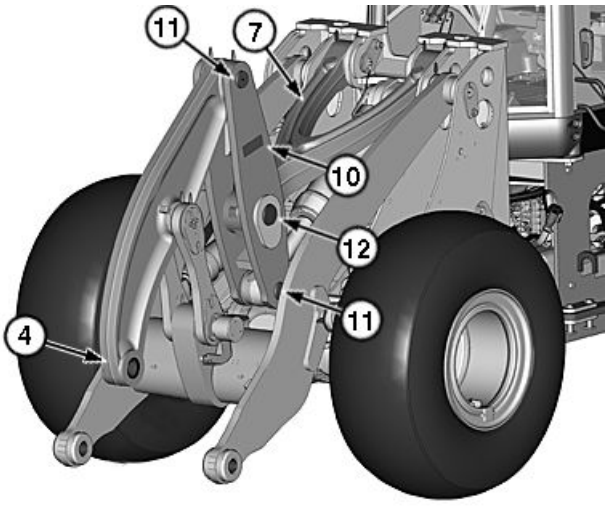

Bellcrank Front View

4— Bucket Link
7— Leveling Link
10— Bellcrank
11— Pin (2 Used)
12— Pin

Specification	
Bellcrank-to-Bucket Cylinder—Clearance (maximum)	3 mm 0.12 in.

20. Install bellcrank-to-bucket cylinder pin (11).
21. Lift leveling link (12) using appropriate lifting device.
22. Start engine. Extend or retract bucket cylinder as needed to pin components.
23. Install shims (19) in original locations. Measure clearances and adjust shims as required.

Specification	
Bellcrank-to-Leveling Link—Clearance (maximum)	3 mm 0.12 in.

24. Install bellcrank-to-leveling link pin (10).

JH38101,0001CB7 -19-28MAR11-5/5

Powerllel™ Bucket Cylinder Remove and Install

SPECIFICATIONS	
Powerllel™ Bucket cylinder Weight	197 kg 434 lb.
Bucket Cylinder-to-Loader Frame Clearance (maximum)	3 mm 0.12 in.
Bellcrank-to-Bucket Cylinder Clearance (maximum)	3 mm 0.12 in.

OTHER MATERIAL
PM37566 U.S. Silver-Grade Anti-SeizeNEVER-SEEZ® Lubricant

Continued on next page

JH38101,0001CB8 -19-28MAR11-1/7

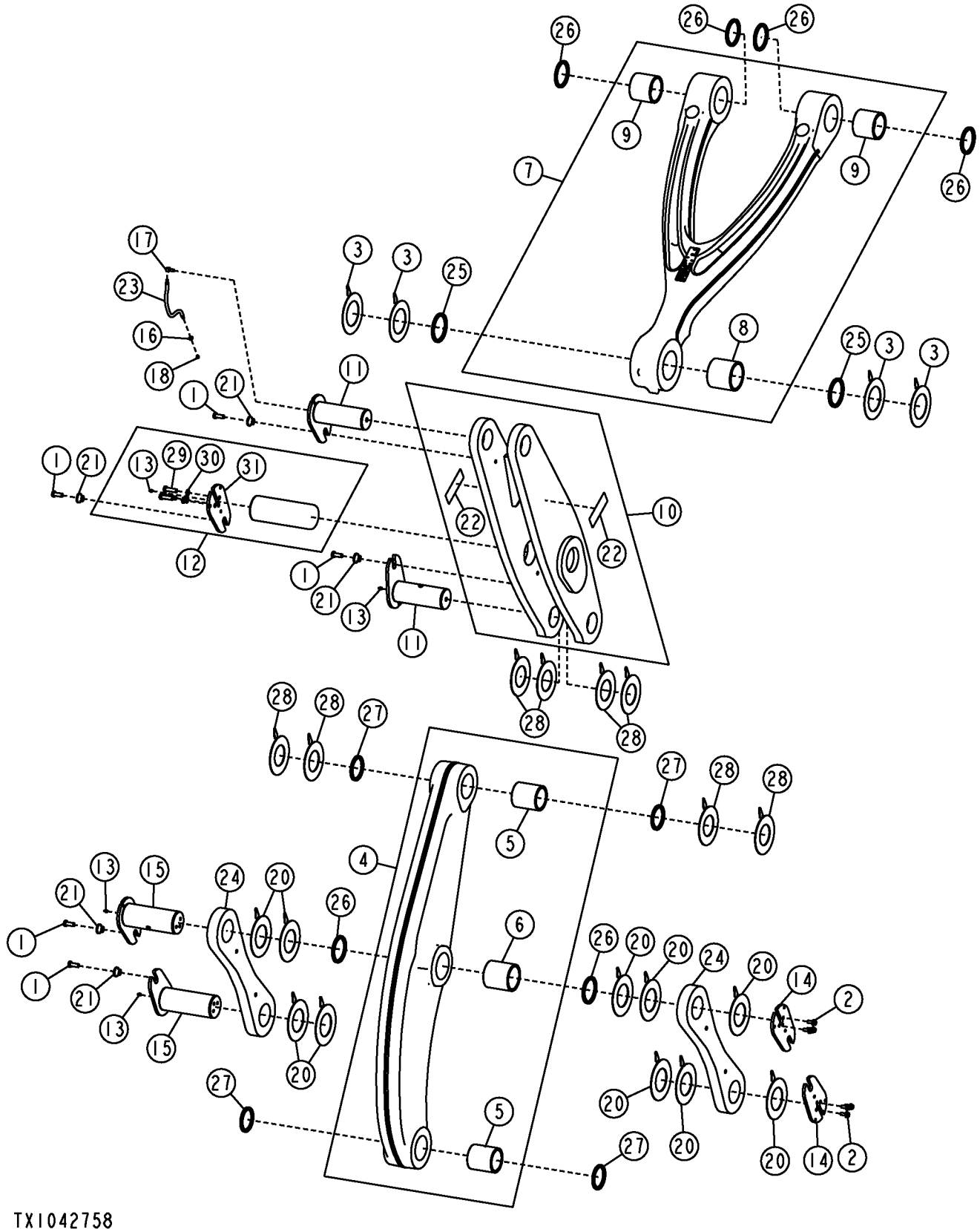

Powerllel™ Linkage

Continued on next page

JH38101,0001CB8 -19-28MAR11-2/7

1— Cap Screw (5 used)
2— Cap Screw (6 used)
3— Shim (4 used)
4— Bucket Link
5— Bushing (2 used)
6— Bushing
7— Leveling Link
8— Bushing
9— Bushing (2 used)
10— Bellcrank
11— Pin (2 used)
12— Pin
13— Lubrication Fitting (4 used)
14— Retainer (2 used)
15— Pin (2 used)
16— Nut
17— 90° Elbow Fitting
18— Lubrication Fitting
20— Shim (10 used)
21— Bushing (5 used)
22— Safety Decal (2 used)
23— Hydraulic Hose
24— Guide Link (2 used)
25— Seal (2 used)
26— Seal (6 used)
27— Seal (4 used)
28— Shim (8 used)
29— Cap Screw (3 used)
30— Washer (3 used)
31— Retainer

1. Prepare machine for service. See Park and Prepare for Service Safely. (Group 0001.)

CAUTION: To avoid injury from escaping fluid under pressure, stop engine and relieve the pressure in the system before disconnecting or connecting hydraulic or other lines. Tighten all connections before applying pressure.

2. Relieve hydraulic system pressure. See Hydraulic System Pressure and Accumulators Discharge. (Group 9025-25.)
3. Lower boom to ground and remove front attachment (if equipped) from coupler. See Bucket Remove and Install. (Group 3102.)

NEVER-SEEZ is a trademark of Bostik Findley, Inc.
Powerllel is a trademark of Deere & Company

JH38101,0001CB8 -19-28MAR11-3/7

CAUTION: Prevent personal injury from sudden movement. Secure coupler to cross tube on boom BEFORE removing any pins.

4. Roll coupler (34) back and support with wood block (32).
5. Secure coupler to cross tube with tie down ratchet winch (33).

32— Wood Block
33— Tie Down Ratchet Winch
34— Coupler

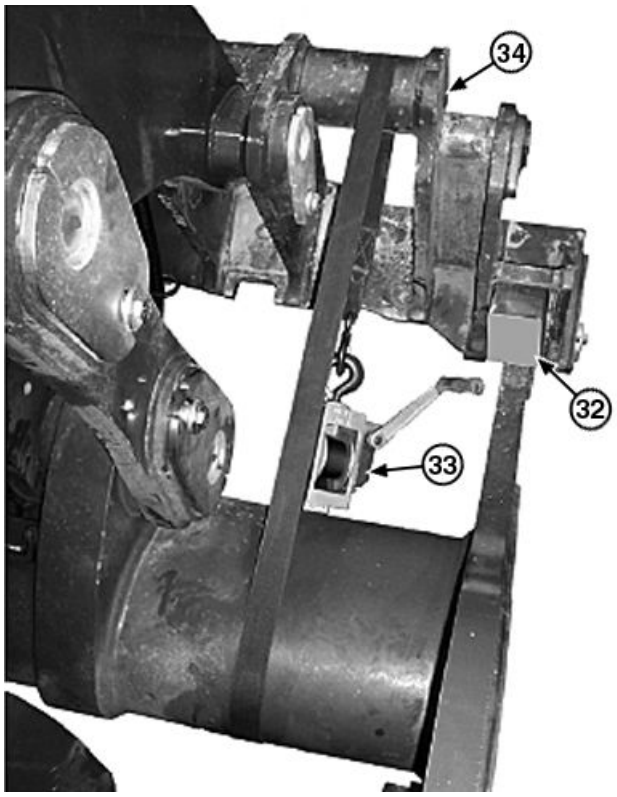

Tie Down Ratchet Winch (fabricated style coupler shown)

Continued on next page

JH38101,0001CB8 -19-28MAR11-4/7

6. Raise boom to easily access bucket cylinder pin. Support boom with 10-ton shop stand.

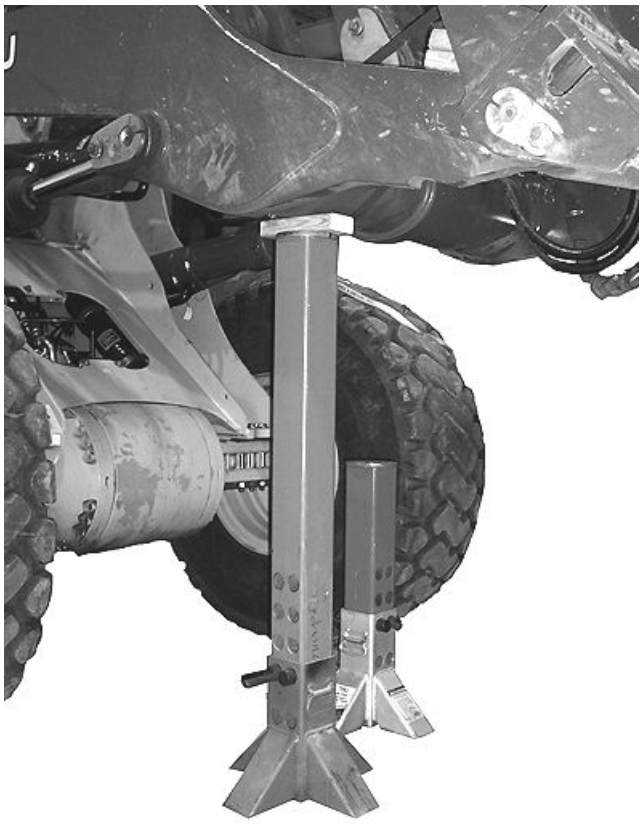

T203567A —UN—29SEP04

10-Ton Shop Stand (fabricated style boom shown)

Continued on next page

JH38101,0001CB8 -19-28MAR11-5/7

CAUTION: Prevent possible crushing injury from heavy component. Use appropriate lifting device.

7. Support bucket cylinder (35) with appropriate lifting device.

Specification	
PowerIlel™ Bucket cylinder—Weight	197 kg 434 lb.

8. Mark and record position and location of shims at pins (11 and 36).
9. Remove pin (11).
10. Retract bucket cylinder rod.
11. Stop engine.
12. Tag and disconnect hydraulic lines from bucket cylinder. Close all lines and openings with caps and plugs.

CAUTION: To avoid injury from escaping fluid under pressure, stop engine and relieve the pressure in the system before disconnecting or connecting hydraulic or other lines. Tighten all connections before applying pressure.

13. Relieve hydraulic system pressure. See Hydraulic System Pressure and Accumulators Discharge. (Group 9025-25.)
14. Remove pin (36) and bucket cylinder.
15. Clean and inspect parts. Repair or replace as necessary.
    - See Disassemble Cylinder. (CTM114319.)
    - See Assemble Cylinder. (CTM114319.)
16. Apply PM37566 Silver-Grade Anti-Seize Lubricant or equivalent to bores of bellcrank, bucket cylinder, loader frame, and corresponding pivot pins.

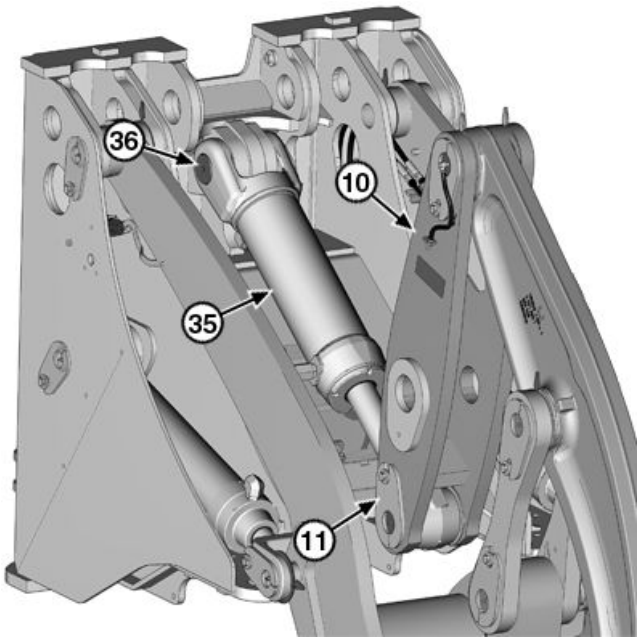

TX1087173A —UN—20JAN11

Bucket Cylinder (some components removed for clarity)

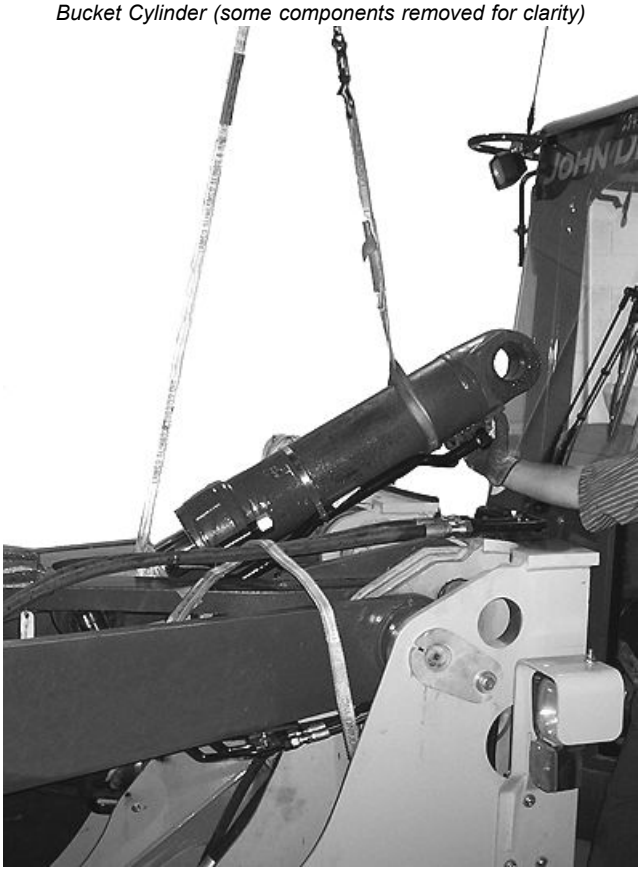

T203568A —UN—29SEP04

10— Bellcrank
11— Pin
35— Bucket Cylinder
36— Pin

Continued on next page

JH38101,0001CB8 -19-28MAR11-6/7

17. Using appropriate lifting device, lower bucket cylinder into position in loader frame.
18. Install shims at head end of bucket cylinder in original locations. Measure clearances and adjust shims as required.

Specification

Bucket Cylinder-to-Loader Frame—Clearance (maximum)	3 mm 0.12 in.

19. Install pin (36).
20. Connect hydraulic lines.
21. Start engine. Extend or retract bucket cylinder as needed align bellcrank and bucket cylinder bores.
22. Install shims at rod end of bucket cylinder in original locations. Measure clearances and adjust shims as required.

Specification

Bellcrank-to-Bucket Cylinder—Clearance (maximum)	3 mm 0.12 in.

23. Install pin (11).

10— Bellcrank
11— Pin
35— Bucket Cylinder
36— Pin

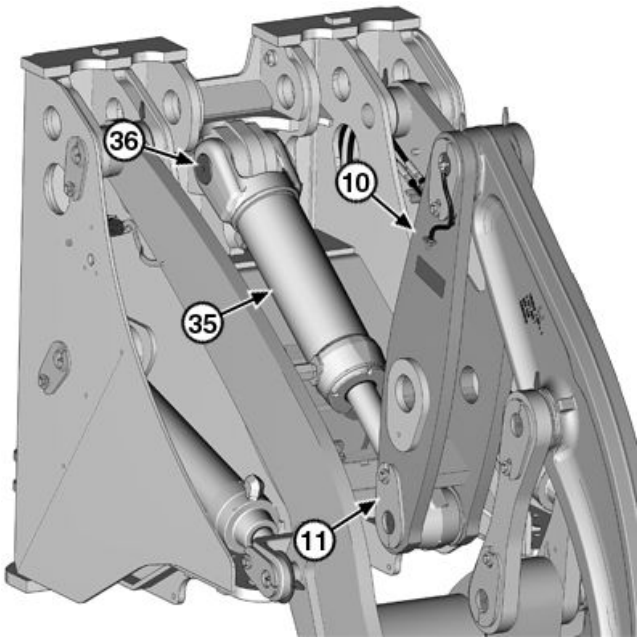

TX1087173A —UN—20JAN11

Bucket Cylinder (some components removed for clarity)

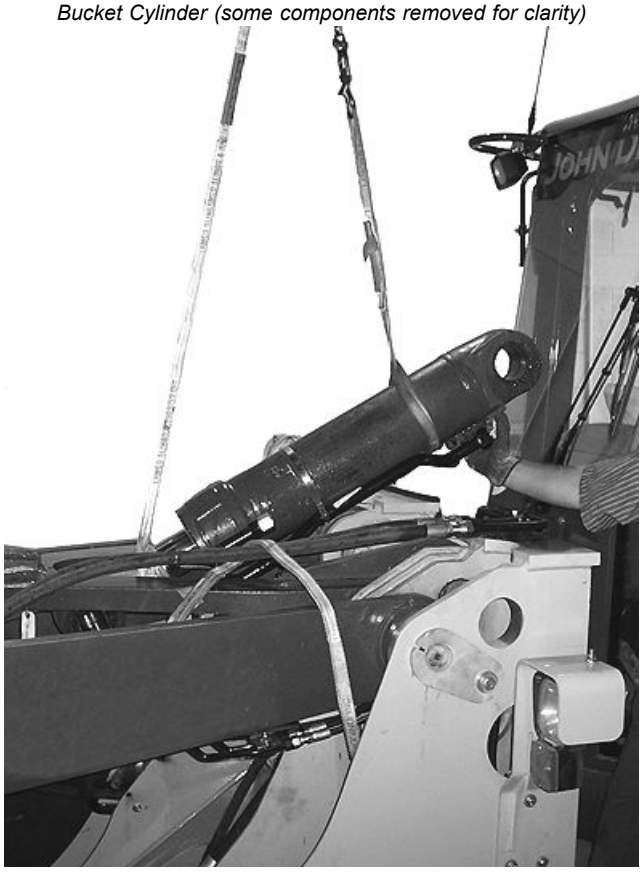

T203568A —UN—29SEP04

JH38101,0001CB8 -19-28MAR11-7/7

24. Remove tie down ratchet winch and wood block.
25. Lower coupler to ground.
26. Install front attachment, if removed. See Bucket Remove and Install. (Group 3102.)

32— Wood Block
33— Tie Down Ratchet Winch
34— Coupler

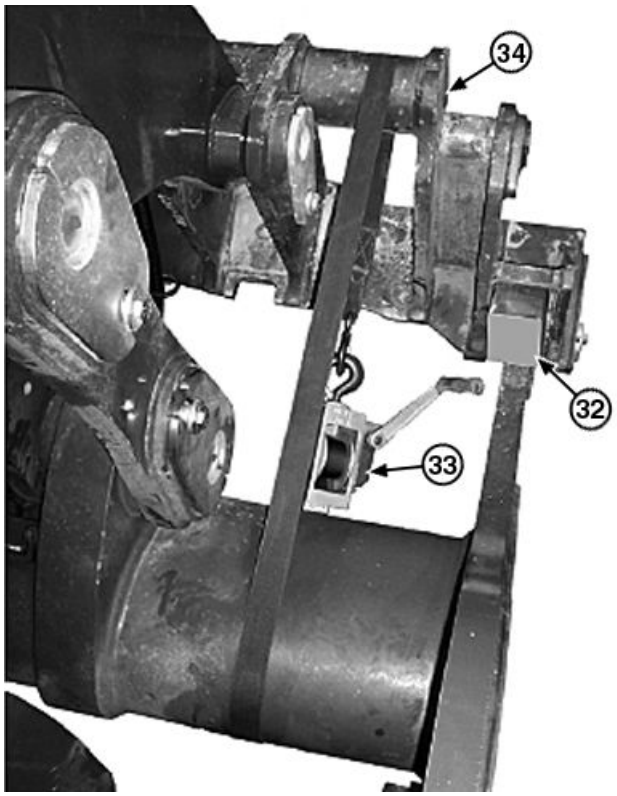

TX1087170A —UN—20JAN11

Tie Down Ratchet Winch (fabricated style coupler shown)

JH38101,0001CB8 -19-28MAR11-8/7

Powerllel™ Bucket Link Remove and Install

SPECIFICATIONS	
Boom Raise Height	1041 mm 41 in.
Bellcrank Weight (approximate)	162 kg 357 lb
Powerllel™ Bucket Link Weight (approximate)	133 kg 294 lb
Powerllel™ Bucket Link Bushing Distance below outer face of link	9—11 mm 0.355—0.433 in.
Powerllel™ Bucket Link-to-Guide Links Clearance (maximum)	3 mm 0.12 in.
Powerllel™ Bucket Link-to-Coupler Clearance (maximum)	3 mm 0.12 in.
Powerllel™ Bucket Link-to-Bellcrank Clearance (maximum)	3 mm 0.12 in.

SERVICE EQUIPMENT AND TOOLS
Bushing, Bearing and Seal Driver Set

OTHER MATERIAL
PM37566 U.S. Silver-Grade Anti-SeizeNEVER-SEEZ® Lubricant
PM37566 U.S. Silver-Grade Anti-SeizeNEVER-SEEZ® Lubricant

Continued on next page

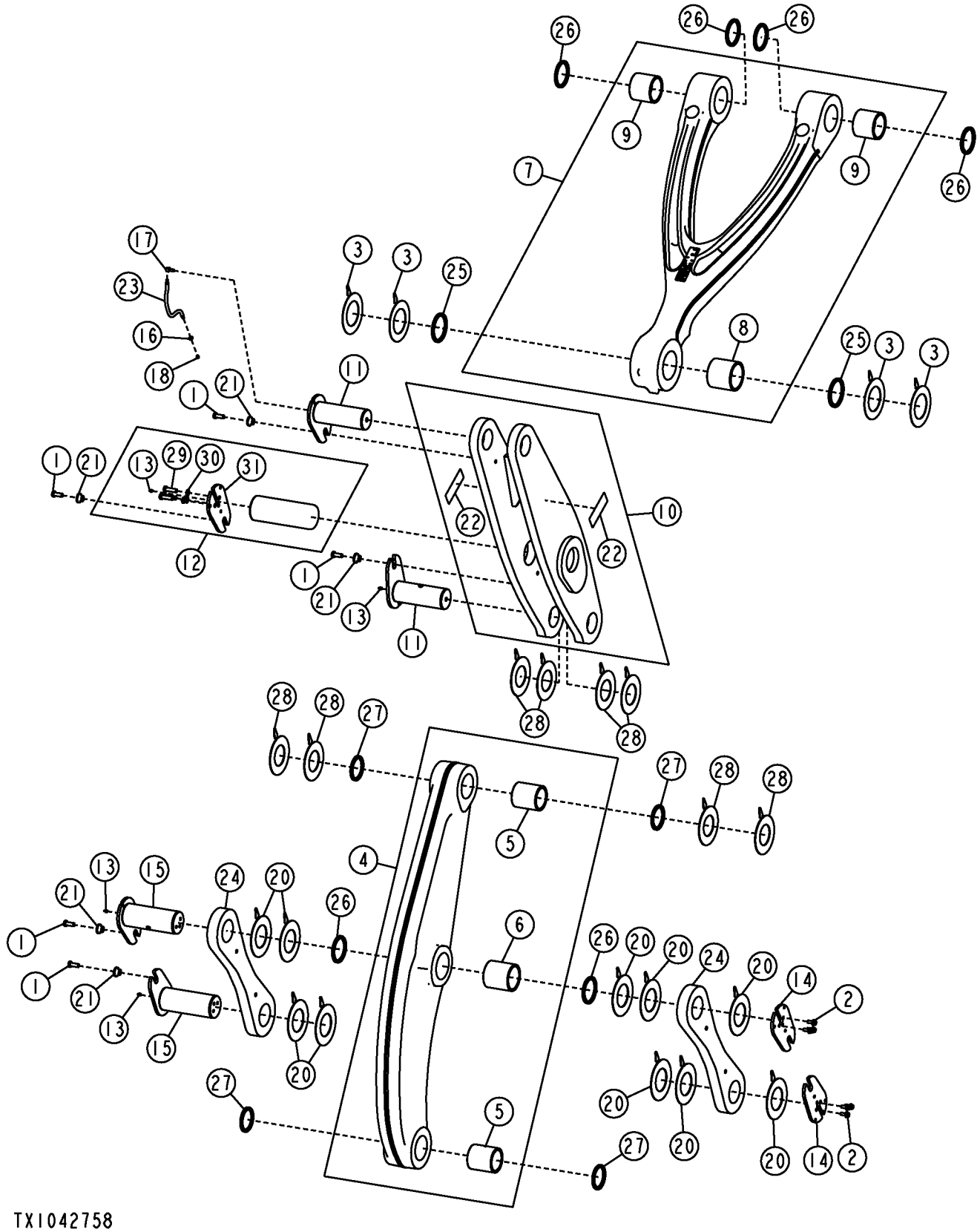

Powerllel™ Linkage

Continued on next page

JH38101,0001CB9 -19-28MAR11-2/5

1— Cap Screw (5 used)
2— Cap Screw (6 used)
3— Shim (4 used)
4— Bucket Link
5— Bushing (2 used)
6— Bushing
7— Leveling Link
8— Bushing
9— Bushing (2 used)
10— Bellcrank
11— Pin (2 used)
12— Pin
13— Lubrication Fitting (4 used)
14— Retainer (2 used)
15— Pin (2 used)
16— Nut
17— 90° Elbow Fitting
18— Lubrication Fitting
20— Shim (10 used)
21— Bushing (5 used)
22— Safety Decal (2 used)
23— Hydraulic Hose
24— Guide Link (2 used)
25— Seal (2 used)
26— Seal (6 used)
27— Seal (4 used)
28— Shim (8 used)
29— Cap Screw (3 used)
30— Washer (3 used)
31— Retainer

1. Prepare machine for service. Park and Prepare for Service Safely. (Group 0001.)

NEVER-SEEZ is a trademark of Bostik Findley, Inc.
Powerllel is a trademark of Deere & Company

JH38101,0001CB9 -19-28MAR11-3/5

⚠ CAUTION: Prevent possible crushing injury from heavy component. Use appropriate lifting device.

2. Support boom.

NOTE: Raise boom to easily access linkage pins.

   a. Raise and support boom at cross tube (32) with 10-ton shop stands.

Specification	
Boom Raise—Height	1041 mm 41 in.

   b. Roll bucket forward until touching ground (if equipped).

   c. If bucket is not attached to coupler, roll coupler forward and support with 10-ton shop stand.

⚠ CAUTION: Prevent personal injury from sudden movement. Support Powerllel™ bellcrank before removing any pins.

3. Support bell crank (8) with appropriate lifting device.

Specification	
Bellcrank—Weight (approximate)	162 kg 357 lb

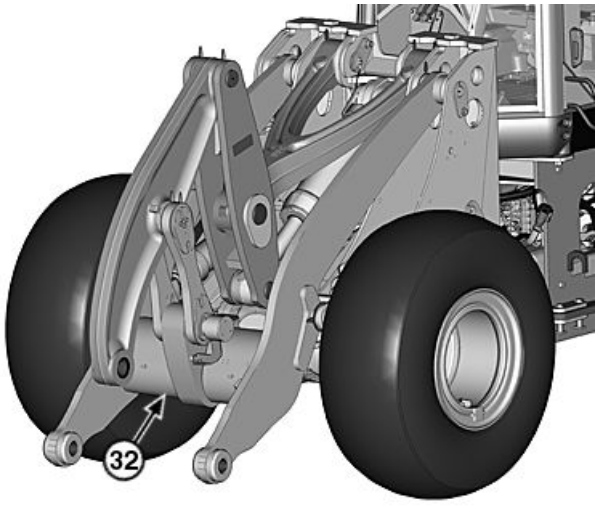

TX1086929A —UN—14JAN11

Powerllel™ Boom

32— Cross Tube

4. Remove bellcrank-to-Powerllel™ bucket link pin (11).

5. Lower bellcrank and remove support. Place wood block between bellcrank and loader frame.

Powerllel is a trademark of Deere & Company

Continued on next page

JH38101,0001CB9 -19-28MAR11-4/5

6. Support Powerllel™ bucket link (4) with appropriate lifting device.
7. Remove Powerllel™ bucket link-to-coupler pin.

4— Powerllel™ Bucket Link

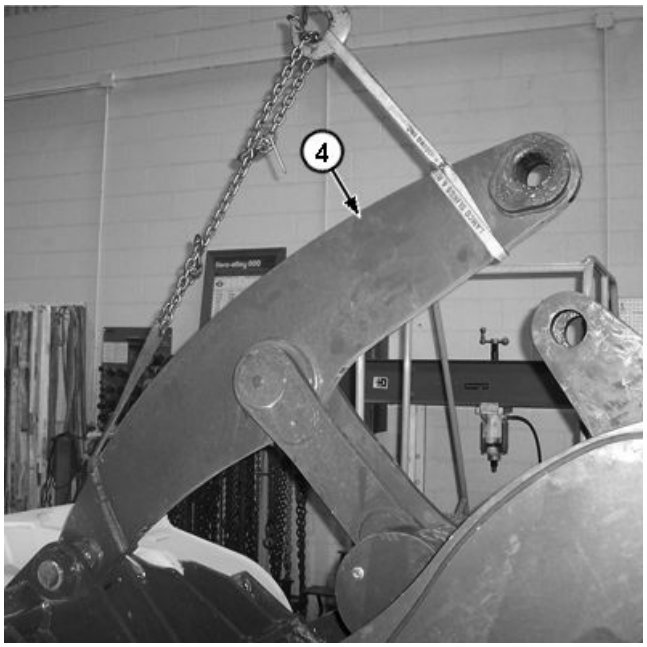

T201138A —UN—13AUG04

Powerllel™ Bucket Link Support

JH38101,0001CB9 -19-28MAR11-5/5

8. Using appropriate lifting device, move Powerllel™ bucket link towards cab. Rest guide links (3) against bellcrank.
9. Remove Powerllel™ bucket link-to-guide links pin (9).

⚠ CAUTION: Prevent possible injury from crushing. Heavy component, use appropriate lifting device.

Specification	
Powerllel™ Bucket Link—Weight (approximate)	133 kg 294 lb

10. Identify position of Powerllel™ bucket link to aid in assembly and remove using appropriate lifting device.
11. Remove seals (17, 18, and 24).
12. Remove bushings (5, 6, and 7) using disks from driver set.
13. Apply PM37566 Silver-Grade Anti-Seize lubricant or an equivalent to outer surface of new bushings and bores.
14. Install bushings (5, 6, and 7) below outer surface of leveling link using disks from driver set.

Specification	
Powerllel™ Bucket Link Bushing—Distance below outer face of link	9—11 mm 0.355—0.433 in.

15. Install seals (17, 18, and 24) against bushings (5, 6, and 7) with lips toward outside of bore.
16. Apply PM37566 Silver-Grade Anti-Seize lubricant or an equivalent to bores of bellcrank, Powerllel™ bucket link, guide links, and corresponding pivot pins.
17. Using appropriate lifting device, install Powerllel™ bucket link in guide links as identified during removal.
18. Install shims (16) in original locations. Measure clearances and adjust shims as required.

Specification	
Powerllel™ Bucket Link-to-Guide Links—Clearance (maximum)	3 mm 0.12 in.

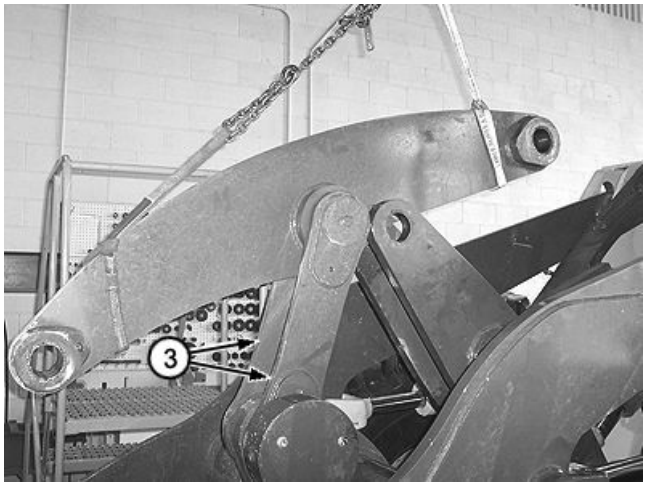

T201139A —UN—18AUG04

Powerllel™ Bucket Link/Guide Link

3— Guide Link

19. Install Powerllel™ bucket link-to-guide link pin (9).
20. Rotate Powerllel™ bucket link and guide links toward Powerllel™ bucket.
21. Install Powerllel™ bucket link-to-coupler shims in original locations. Measure clearances and adjust shims as required.

Specification	
Powerllel™ Bucket Link-to-Coupler—Clearance (maximum)	3 mm 0.12 in.

22. Install Powerllel™ bucket link-to-coupler pin.
23. Raise bellcrank with appropriate lifting device.
24. Install shims (19) in original locations. Measure clearances and adjust shims as required.

Specification	
Powerllel™ Bucket Link-to-Bellcrank—Clearance (maximum)	3 mm 0.12 in.

25. Install bellcrank-to-Powerllel™ bucket link pin (11).

JH38101,0001CB9 -19-28MAR11-6/5

Powerllel™ Guide Links Remove and Install

SPECIFICATIONS	
Boom Raise Height	1041 mm 41 in.
Powerllel Guide Link Weight (approximate)	49 kg 108 lb
Powerllel Guide Links-to-Bucket Link Clearance (maximum)	3 mm 0.12 in.
Powerllel Guide Links-to-Loader Frame Clearance (maximum)	3 mm 0.12 in.

OTHER MATERIAL
PM37566 U.S. Silver-Grade Anti-SeizeNEVER-SEEZ® Lubricant

Continued on next page

JH38101,0001CBB -19-24MAR11-1/8

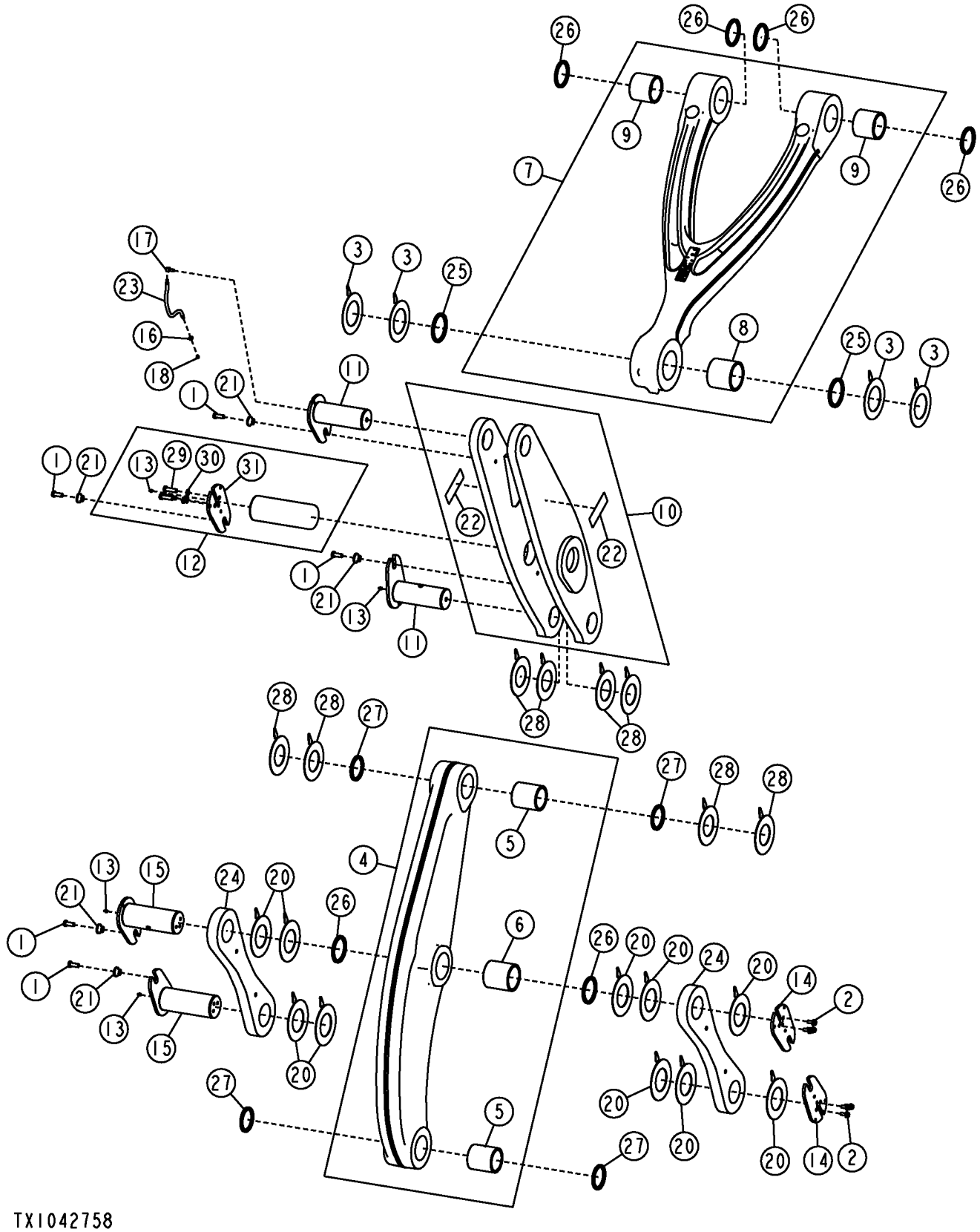

Powerllel™ Linkage

Continued on next page

JH38101,0001CBB -19-24MAR11-2/8

1— Cap Screw (5 used)
2— Cap Screw (6 used)
3— Shim (4 used)
4— Bucket Link
5— Bushing (2 used)
6— Bushing
7— Leveling Link
8— Bushing
9— Bushing (2 used)
10— Bellcrank
11— Pin (2 used)
12— Pin
13— Lubrication Fitting (4 used)
14— Retainer (2 used)
15— Pin (2 used)
16— Nut
17— 90° Elbow Fitting
18— Lubrication Fitting
20— Shim (10 used)
21— Bushing (5 used)
22— Safety Decal (2 used)
23— Hydraulic Hose
24— Guide Link (2 used)
25— Seal (2 used)
26— Seal (6 used)
27— Seal (4 used)
28— Shim (8 used)
29— Cap Screw (3 used)
30— Washer (3 used)
31— Retainer

1. Prepare machine for service. Park and Prepare for Service Safely. (Group 0001.)

NEVER-SEEZ is a trademark of Bostik Findley, Inc.
Powerllel is a trademark of Deere & Company

JH38101,0001CBB -19-24MAR11-3/8

⚠ CAUTION: Prevent possible crushing injury from heavy component. Use appropriate lifting device.

2. Support boom.

NOTE: Raise boom to easily access linkage pins.

   a. Raise and support boom at cross tube (32) with 10-ton shop stands.

Specification	
Boom Raise—Height	1041 mm 41 in.

   b. Roll bucket forward until touching ground (if equipped).

   c. If bucket is not attached to coupler, roll coupler forward and support with 10-ton shop stand.

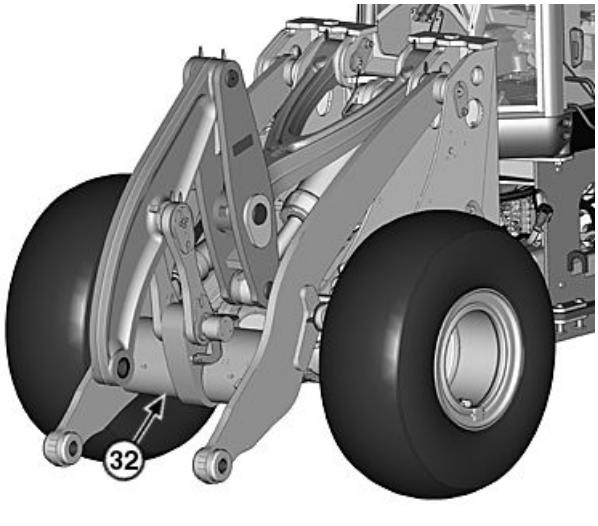

TX1086929A —UN—14JAN11

Powerllel™ Boom

32— Cross Tube

Continued on next page

JH38101,0001CBB -19-24MAR11-4/8

CAUTION: Prevent possible injury from crushing. Heavy component, use appropriate lifting device.

3. Support bucket link (4) and bellcrank (10) with appropriate lifting device.

4— Bucket Link **10— Bellcrank**

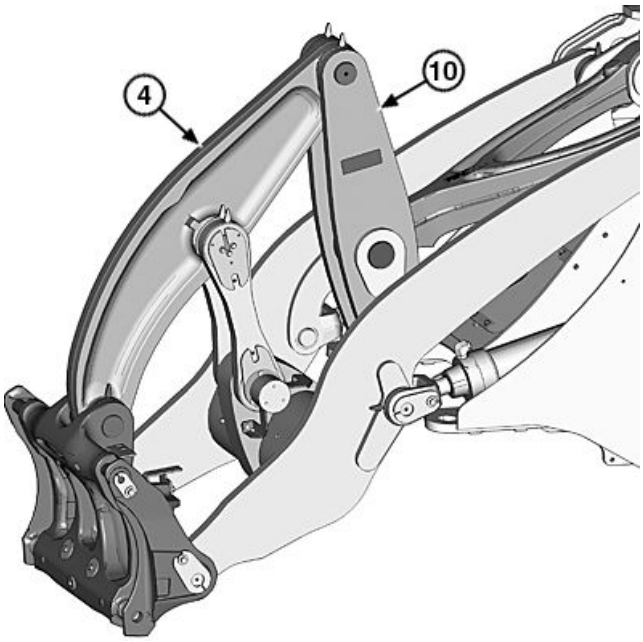

Powerllel™ Boom (some components removed for clarity)

Continued on next page

JH38101,0001CBB -19-24MAR11-5/8

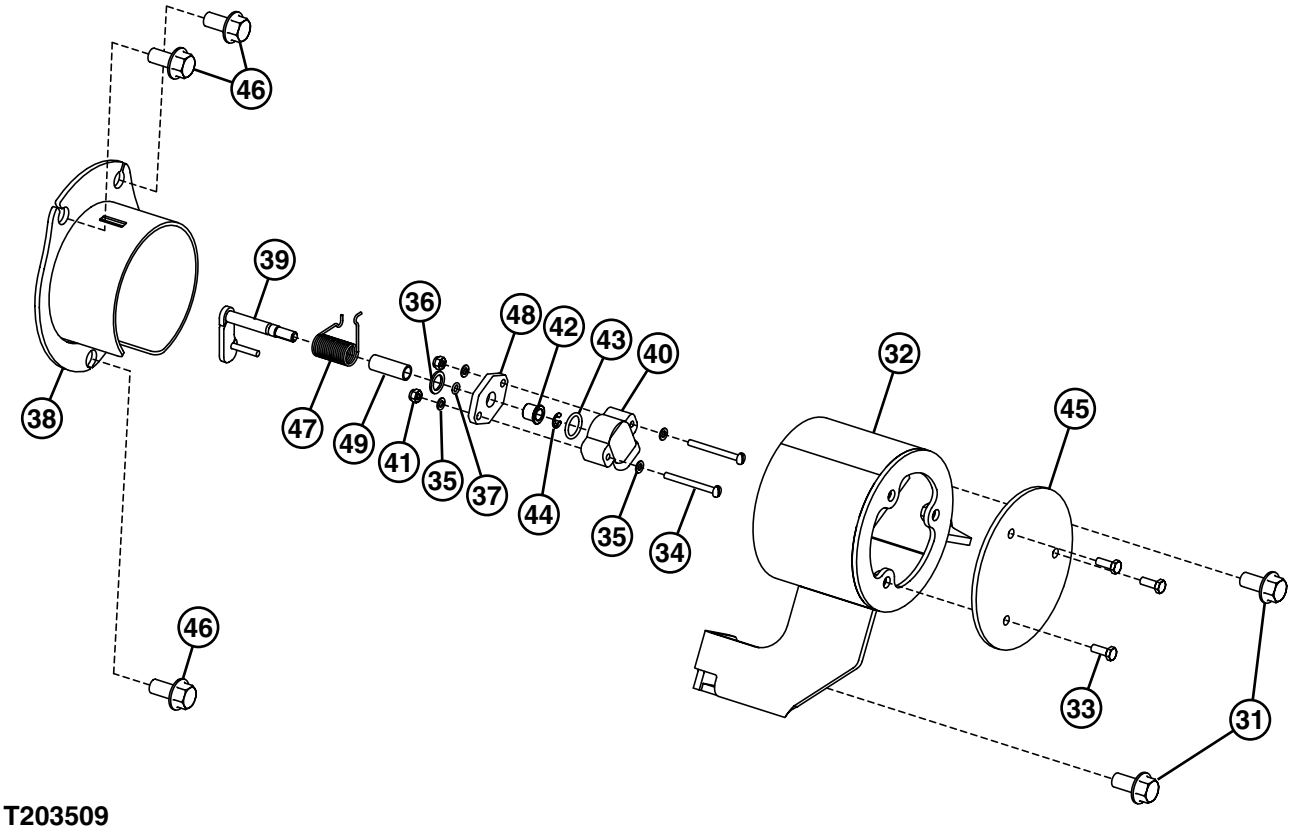

T203509 —UN—29SEP04

T203509

Return-to-Dig

31— Cap Screw (2 used)
32— Guard
33— Cap Screw (3 used)
34— Screw (2 used)
35— Washer (4 used)
36— Washer
37— O-Ring
38— Bracket
39— Arm
40— RTD Position Sensor
41— Lock Nut (2 used)
42— Bushing
43— O-Ring
44— Snap Ring
45— Plate
46— Cap Screw (3 used)
47— Torsion Spring
48— Plate
49— Spacer

4. Remove return-to-dig guard plate (45), return-to-dig guard (32), and bracket (38).
5. Disconnect electrical connector from RTD Position Sensor (Powerllel) (40).

Continued on next page

JH38101,0001CBB -19-24MAR11-6/8

6. Mark and record location and position of shims (20) between guide links (24), bucket link, and retainers (14).

CAUTION: Prevent possible crushing injury from heavy component. Use appropriate lifting device.

7. Support guide links with appropriate lifting device.

Specification	
Powerllel Guide Link—Weight (approximate)	49 kg 108 lb

8. Remove retainers, pins (15) and guide links (24).
9. Apply PM37566 Silver-Grade Anti-Seize lubricant or an equivalent to bores of bucket link, loader boom, guide links, and corresponding pivot pins.

4— Bucket Link
10— Bellcrank
14— Retainer (2 used)
15— Pin (2 used)
20— Shims (as needed)
24— Guide Link (2 used)

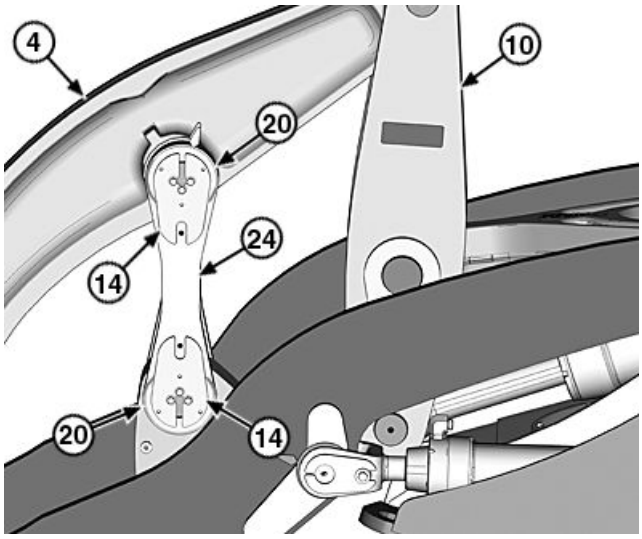

Guide Links (left side of machine shown)

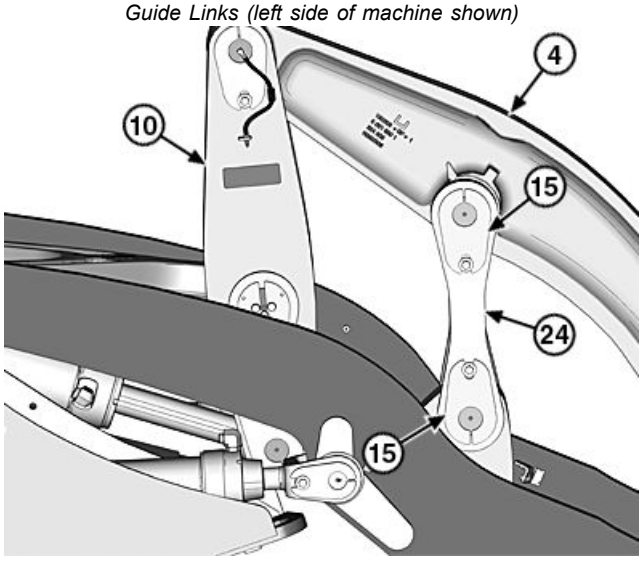

Guide Links (right side of machine shown)

Continued on next page

JH38101,0001CBB -19-24MAR11-7/8

10. Install upper guide link shims in original locations. Measure clearances and adjust shims as required.

Specification

Powerllel Guide Links-to-Bucket Link—Clearance (maximum)	3 mm 0.12 in.

11. Install guide links to bucket link.

12. Install lower guide link shims in original locations. Measure clearances and adjust shims as required.

Specification

Powerllel Guide Links-to-Loader Frame—Clearance (maximum)	3 mm 0.12 in.

13. Install guide links to boom

14. Install plate (22) and return-to-dig bracket (38).

4— Bucket Link
10— Bellcrank
14— Retainer (2 used)
15— Pin (2 used)
20— Shims (as needed)
24— Guide Link (2 used)

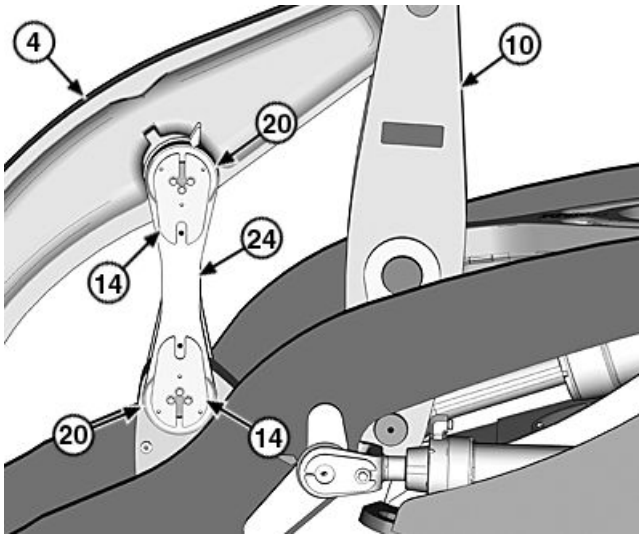

Guide Links (left side of machine shown)

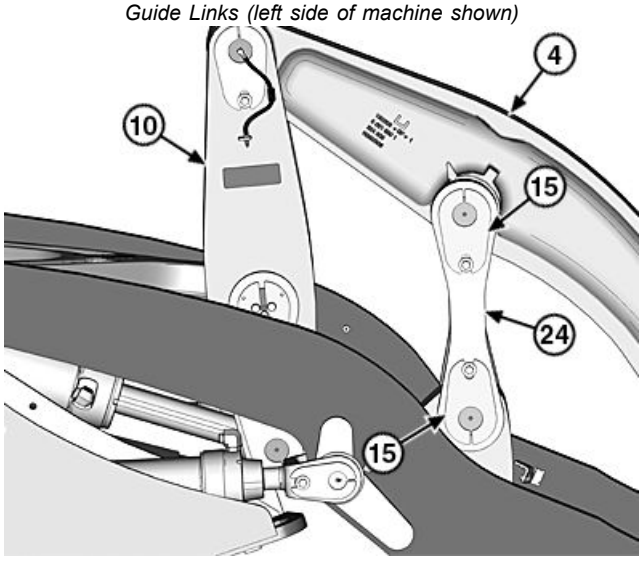

Guide Links (right side of machine shown)

JH38101,0001CBB -19-24MAR11-8/8

NOTE: When installed, arm must be resting against stop.

15. While holding return-to-dig arm (39) away from return-to-dig arm stop, install return-to-dig guard (32) over bracket (38).
16. Connect RTD Position Sensor (Powerllel) (40) connector.
17. Install cover.
18. Recalibrate return-to-dig. See Return-to-Dig Adjustment—Powerllel Linkage. (Group 9015-20.)

39— Arm

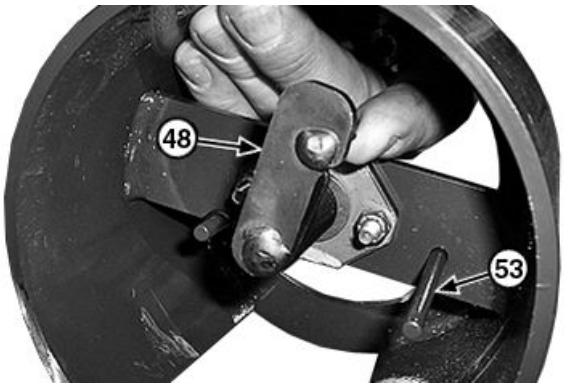

TX1087223A —UN—21JAN11

RTD Arm

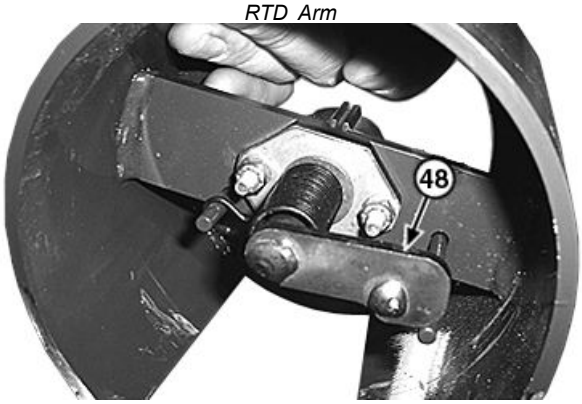

TX1087221A —UN—21JAN11

RTD Arm

JH38101,0001CBB -19-24MAR11-9/8

Powerllel™ Coupler Remove and Install

SPECIFICATIONS	
Powerllel™ Coupler Weight (approximate)	451 kg 995 lb
Powerllel™ Coupler Boom End Clearance (maximum)	2 mm 0.07 in.
Powerllel™ Coupler Bucket Link End Clearance (maximum)	3 mm 0.12 in.

OTHER MATERIAL
PM37566 U.S. Silver-Grade Anti-SeizeNEVER-SEEZ® Lubricant

Continued on next page

JH38101,0001CBC -19-24MAR11-1/4

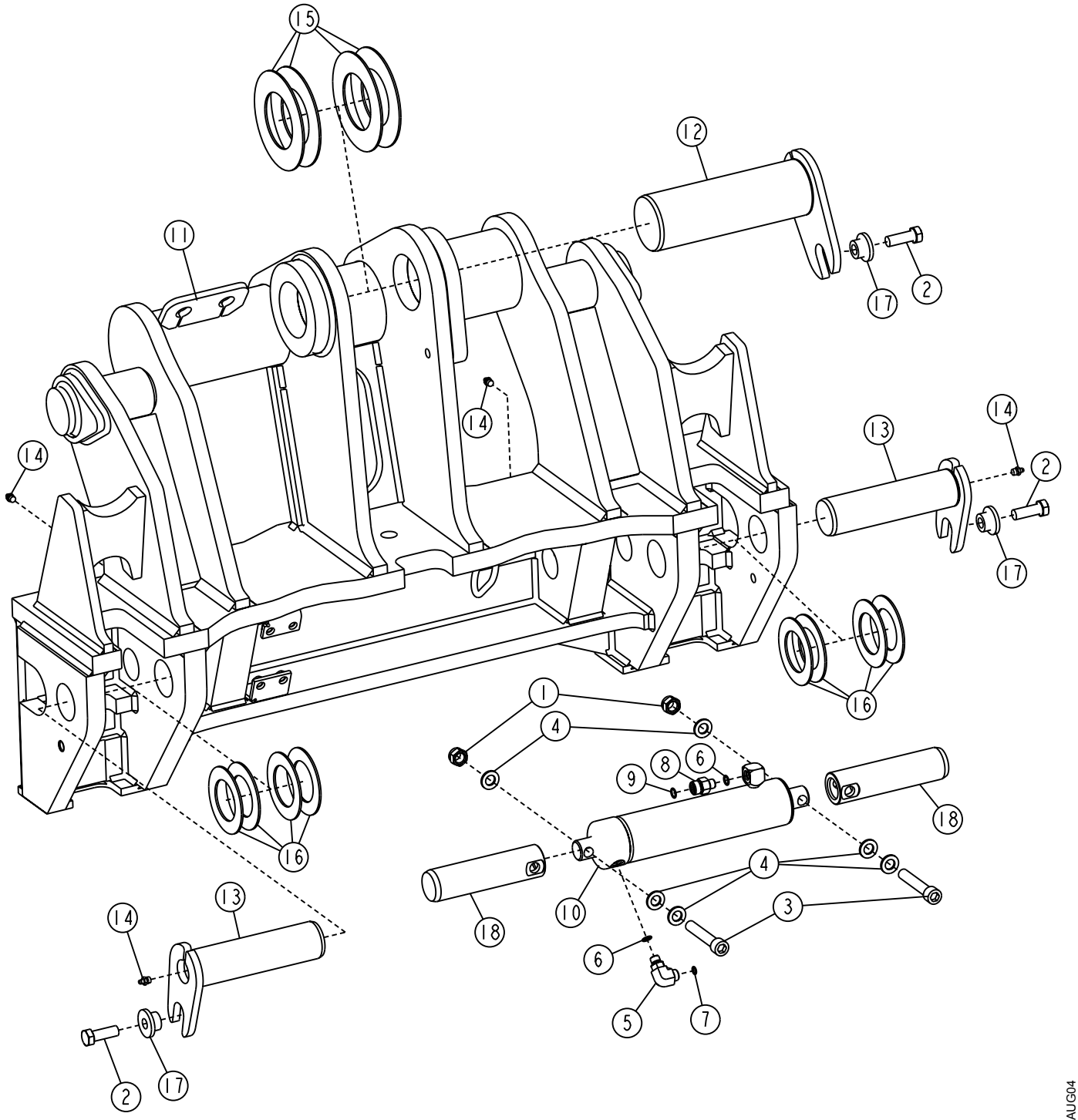

T202013 —UN—03AUG04

T202013

Powerllel™ Coupler

Continued on next page

JH38101,0001CBC -19-24MAR11-2/4

1— Lock Nut (2 used)
2— Cap Screw (3 used)
3— Socket Head Cap Screw (2 used)
4— Washer (6 used)
5— Elbow Fitting
6— O-Ring (2 used)
7— O-Ring
8— Fitting
9— O-Ring
10— Hydraulic Cylinder
11— Coupler
12— Pin, Coupler-to-Bucket Link
13— Pin, Coupler-to-Boom (2 used)
14— Lubrication Fitting (4 used)
15— Shim, Coupler-to-Bucket Link (as required)
16— Shim, Coupler-to-Boom (as required)
17— Bushing (3 used)
18— Pin, Coupler-to-Bucket (2 used)

NEVER-SEEZ is a trademark of Bostik Findley, Inc.

JH38101,0001CBC -19-24MAR11-3/4

CAUTION: Escaping fluid under pressure can penetrate the skin causing serious injury.

Avoid the hazard by relieving pressure before disconnecting hydraulic or other lines. Tighten all connections before applying pressure.

Search for leaks with a piece of cardboard. Protect hands and body from high pressure fluids.

If an accident occurs, see a doctor immediately. Any fluid injected into the skin must be surgically removed within a few hours or gangrene may result. Doctors unfamiliar with this type of injury should reference a knowledgeable medical source. Such information is available from Deere & Company Medical Department in Moline, Illinois, U.S.A.

1. Perform Hydraulic System Pressure and Accumulators Discharge. (Group 9025-25.)
2. Remove attachment from Powerllel™ coupler.

CAUTION: Prevent possible injury from crushing. Heavy component, support Powerllel™ coupler before removing any pins.

Powerllel is a trademark of Deere & Company

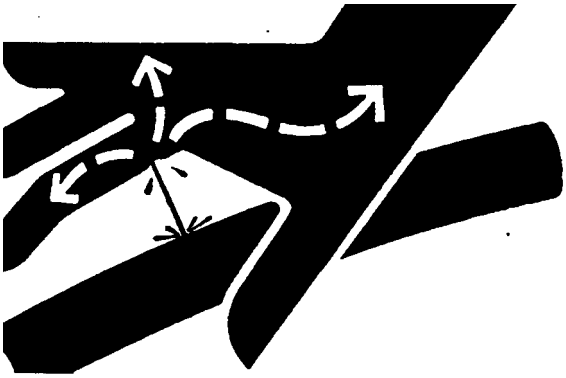

X9811 —UN—23AUG88

Escaping Fluid Under Pressure

Specification

Powerllel™ Coupler—Weight (approximate)	451 kg 995 lb

3. Roll Powerllel™ coupler forward and support with wood blocks.

JH38101,0001CBC -19-24MAR11-4/4

CAUTION: Prevent personal injury from sudden movement. Support bellcrank before removing any pins.

4. Support bellcrank with appropriate lifting device.
5. Remove Powerllel™ coupler-to-bucket link pin (12).
6. Remove hydraulic hose support plate with hoses from Powerllel™ coupler.
7. Disconnect hydraulic hoses from hydraulic cylinder (10).
8. Remove coupler-to-boom pins (13).
9. Remove socket head cap screws (3) from hydraulic cylinder (18).
10. Remove hydraulic cylinder and pins.
11. Install pins and hydraulic cylinder into Powerllel™ coupler.
12. Apply PM37566 Silver-Grade Anti-Seize lubricant or an equivalent to bores of Powerllel™ coupler, bucket link, loader boom, and corresponding pivot pins.
13. Using appropriate lifting device, move coupler in position. Support with wood blocks as required.
14. Install shims (15 and 16) in original locations. Measure clearances and adjust shims as required.

Specification	
Powerllel™ Coupler Boom End—Clearance (maximum)	2 mm 0.07 in.
Powerllel™ Coupler Bucket Link End—Clearance (maximum)	3 mm 0.12 in.

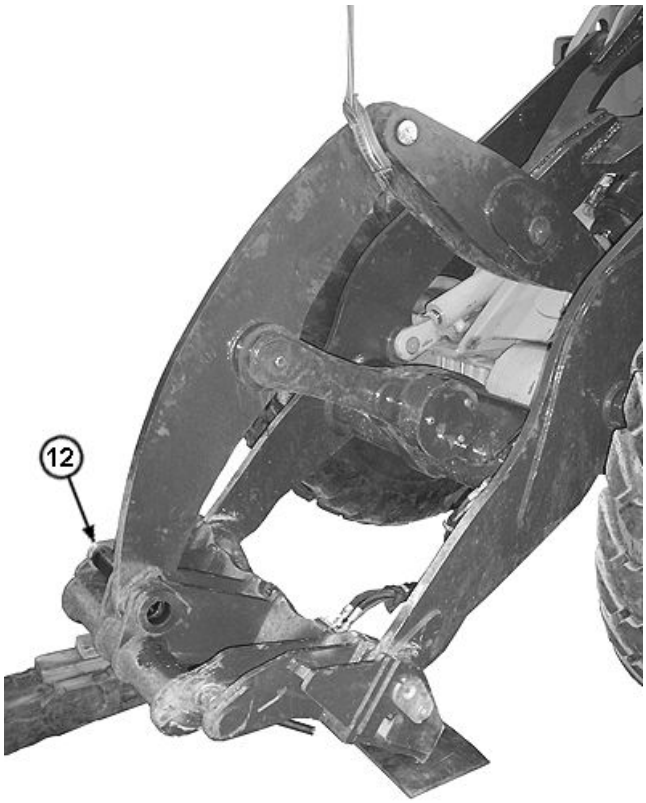

T202191A —UN—23SEP04

Bellcrank Support

12— Pin

15. Install pins.
16. Install hydraulic hose support plate and hoses onto coupler. Connect hydraulic hoses.

JH38101,0001CBC -19-24MAR11-5/4

Powerllel™ Loader Boom Remove and Install

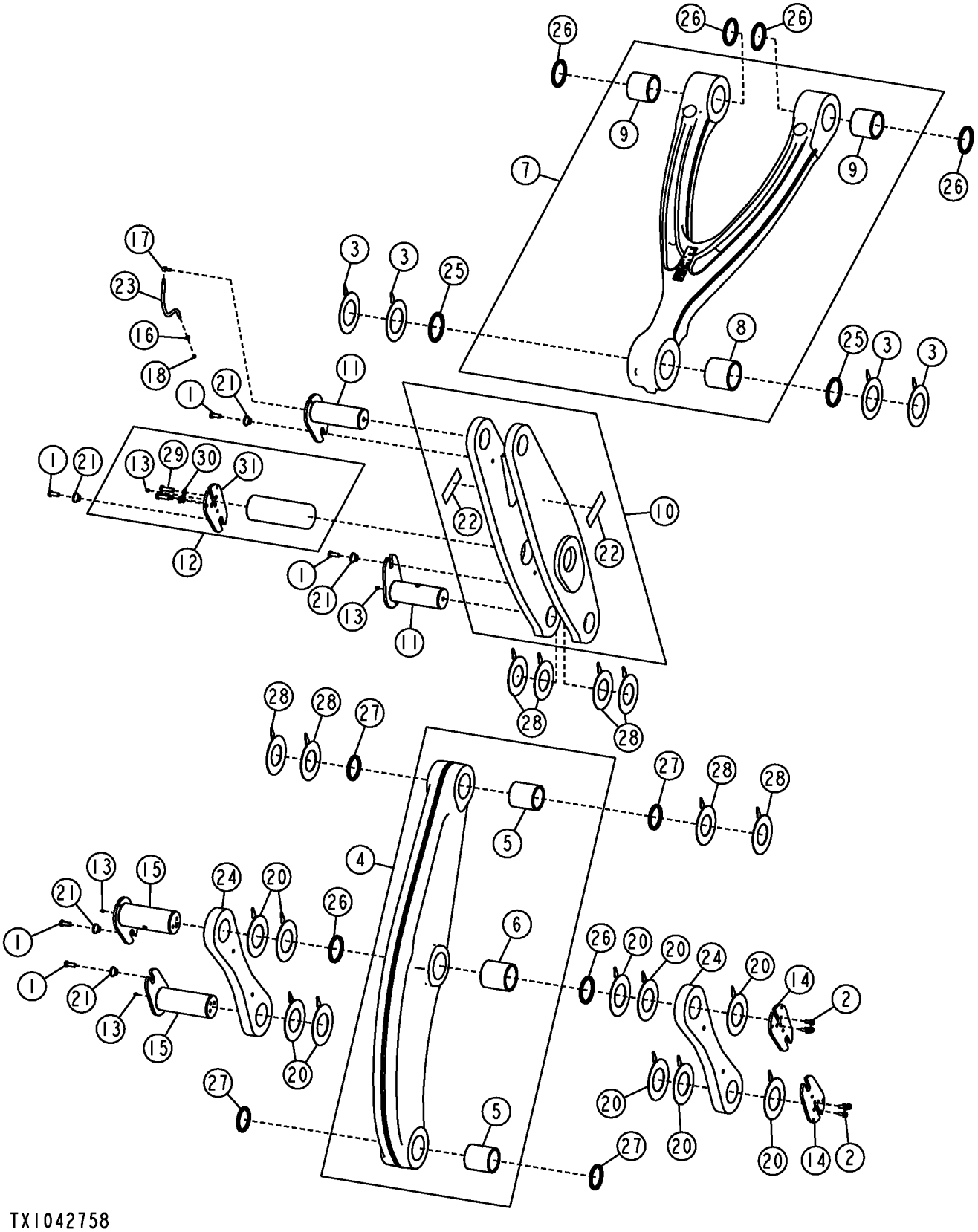

Powerllel™ Linkage

Continued on next page

JH38101,0001CBD -19-29MAR11-1/5

1— Cap Screw (5 used)
2— Cap Screw (6 used)
3— Shim (4 used)
4— Bucket Link
5— Bushing (2 used)
6— Bushing
7— Leveling Link
8— Bushing
9— Bushing (2 used)
10— Bellcrank
11— Pin (2 used)
12— Pin
13— Lubrication Fitting (4 used)
14— Retainer (2 used)
15— Pin (2 used)
16— Nut
17— 90° Elbow Fitting
18— Lubrication Fitting
20— Shim (10 used)
21— Bushing (5 used)
22— Safety Decal (2 used)
23— Hydraulic Hose
24— Guide Link (2 used)
25— Seal (2 used)
26— Seal (6 used)
27— Seal (4 used)
28— Shim (8 used)
29— Cap Screw (3 used)
30— Washer (3 used)
31— Retainer

SPECIFICATIONS	
Powerllel™ Boom, Coupler, Guide Links, and Bucket Link Weight (approximate)	2043 kg 4504 lb
Powerllel™ Bucket Cylinder Weight (approximate)	197 kg 434 lb
Powerllel™ Boom Coupler Bushings (2) Distance below outer face of boom	6.5—9.5 mm 0.26—0.37 in.
Powerllel™ Boom Guide Link Bushing (5) Distance below outer face of boom	9—12 mm 0.35—0.47 in.
Powerllel™ Boom Cylinder Bushings (4) Distance below outer face of boom	6.5—9.5 mm 0.26—0.37 in.
Powerllel™ Boom Leveling Link Bushings (3) Distance below outer face of boom	11.2—14.2 mm 0.44—0.56 in.

SERVICE EQUIPMENT AND TOOLS
Bushing, Bearing and Seal Driver Set

OTHER MATERIAL
PM37566 U.S. Silver-Grade Anti-SeizeNEVER-SEEZ® Lubricant

1. Lower boom to ground and remove attachment from coupler.

Powerllel is a trademark of Deere & Company
NEVER-SEEZ is a trademark of Bostik Findley, Inc.

Continued on next page

JH38101,0001CBD -19-29MAR11-2/5

CAUTION: Prevent personal injury from sudden movement. Secure coupler to loader boom torque tube before removing any pins.

2. Roll coupler back and block with wood (25). Secure to loader boom torque tube with tie down ratchet winch (26).
3. Remove leveling link and bellcrank with appropriate lifting device. See Powerllel™ Leveling Link Remove and Install and see Powerllel™ Bellcrank Remove and Install. (Group 3140.)
4. Remove boom lock and lower loader boom.
5. Disconnect return-to-dig sensor connector.
6. Support loader boom with appropriate lifting device.
7. Remove loader cylinder-to-loader boom pins.
8. Remove loader boom-to-loader frame pins.

CAUTION: Prevent possible injury from crushing. Heavy component, use appropriate lifting device.

Specification	
Powerllel™ Boom, Coupler, Guide Links, and Bucket Link—Weight (approximate)	2043 kg 4504 lb

9. Remove boom, coupler, guide links, and bucket link with appropriate lifting device.

CAUTION: Prevent possible injury from crushing. Heavy component, use appropriate lifting device.

Specification	
Powerllel™ Bucket Cylinder—Weight (approximate)	197 kg 434 lb

Powerllel is a trademark of Deere & Company

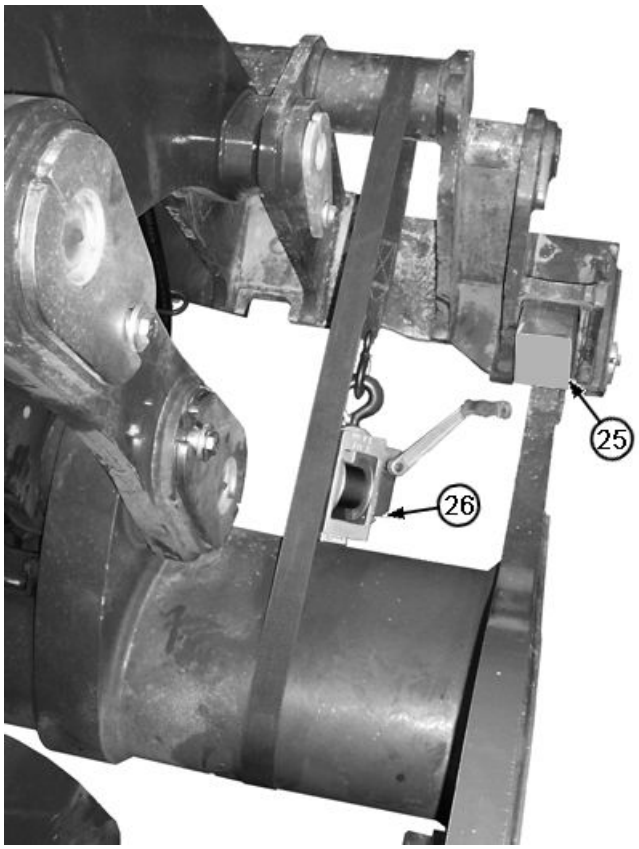

T203563A —UN—29SEP04

Tie Down Ratchet Winch

25— Wood Block **26— Tie Down Ratchet Winch**

10. Remove bucket cylinder using appropriate lifting device.

Continued on next page

JH38101,0001CBD -19-29MAR11-3/5

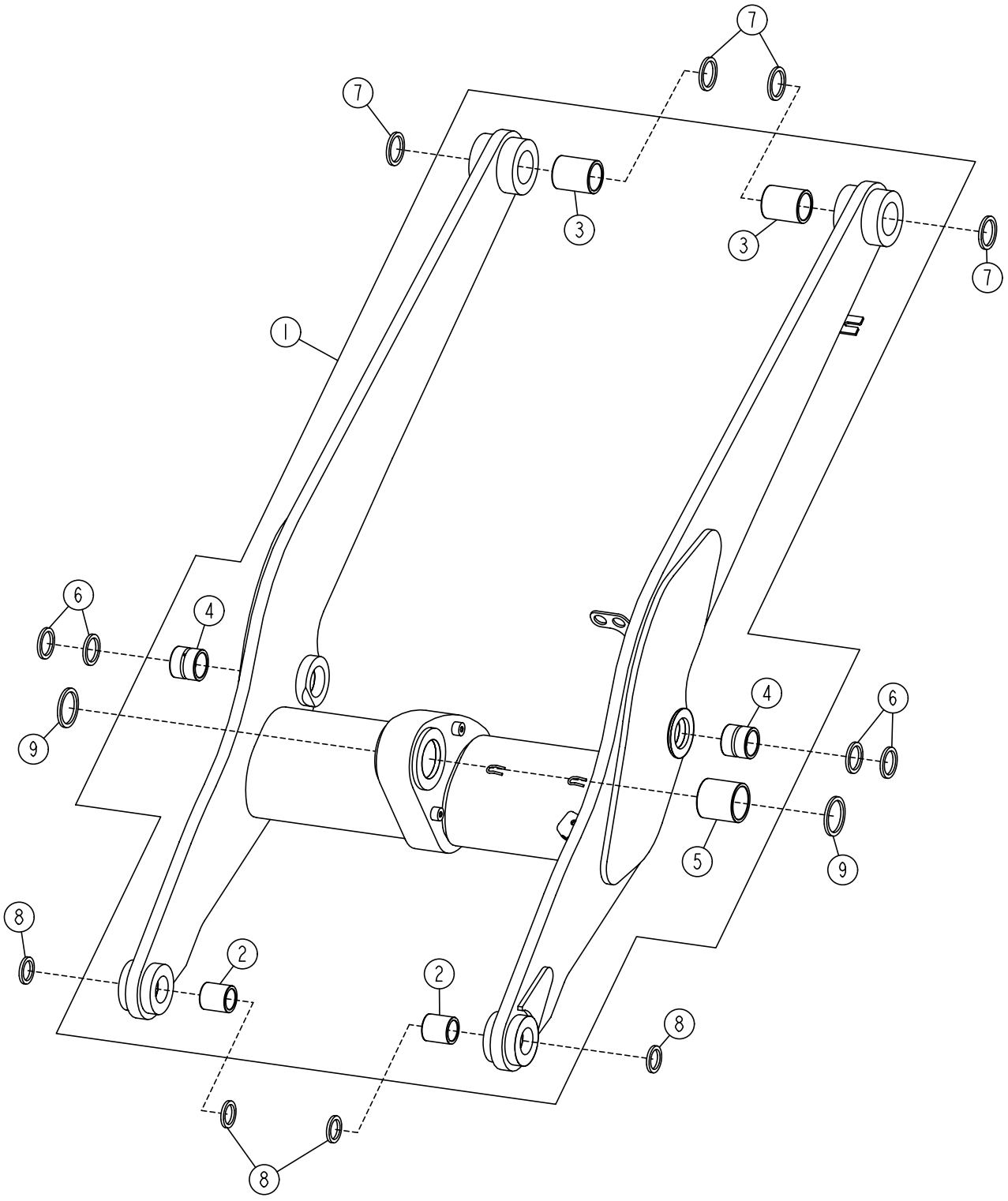

T202014 —UN—03AUG04

T202014

Powerllel™ Loader Boom

1— Powerllel™ Loader Boom
2— Bushing
3— Bushing
4— Bushing
5— Bushing
6— Seal
7— Seal
8— Seal
9— Seal

Continued on next page

JH38101,0001CBD -19-29MAR11-4/5

11. Remove seals (6—9) from boom.
12. Remove bushings (2—5) from boom using discs from bushing, bearing and seal driver set.
13. Apply PM37566 Silver-Grade Anti-Seize lubricant or an equivalent on outer surface of new bushings and bores.

    Install bushings (2—5) below outer surface of boom using disks from bushing, bearing and seal driver set.

Specification	
Powerllel™ Boom Coupler Bushings (2)—Distance below outer face of boom	6.5—9.5 mm 0.26—0.37 in.
Powerllel™ Boom Guide Link Bushing (5)—Distance below outer face of boom	9—12 mm 0.35—0.47 in.
Powerllel™ Boom Cylinder Bushings (4)—Distance below outer face of boom	6.5—9.5 mm 0.26—0.37 in.
Powerllel™ Boom Leveling Link Bushings (3)—Distance below outer face of boom	11.2—14.2 mm 0.44—0.56 in.

14. Install boom on machine and replace cylinders, linkage and bucket. Install shims in original locations. Adjust shims as required.
15. Connect return-to-dig wire harness and hydraulic lines.

JH38101,0001CBD -19-29MAR11-5/5

Hi-Vis Coupler Disassemble and Assemble

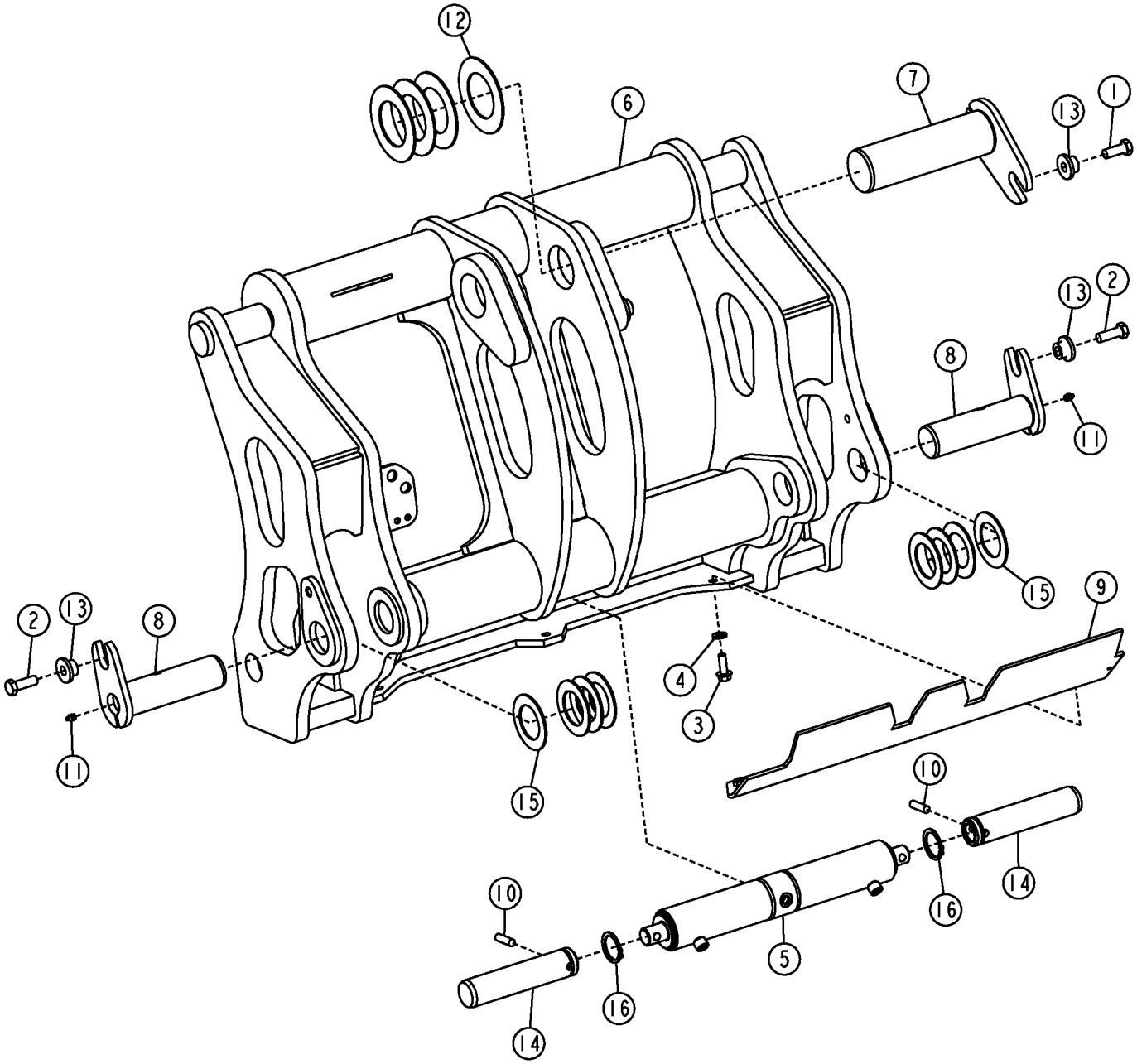

Hi-Vis Coupler Exploded View (Powerllel™ Coupler Shown)

Continued on next page

RM58335,00012B7 -19-24MAR11-1/5

1— Cap Screw
2— Cap Screw
3— Cap Screw
4— Washer
5— Hydraulic Cylinder
6— Hi-Vis Coupler
7— Pin
8— Pin
9— Cover
10— Pin (2 used)
11— Lubrication Fitting (2 used)
12— Washers
13— Bushing (3 used)
14— Pin (2 used)
15— Washers
16— Snap Ring (2 used)

SPECIFICATIONS	
Hi-Vis Coupler Weight (approximate)	451 kg 995 lb
Hi-Vis Coupler Boom End Clearance (maximum)	2 mm 0.07 in.
Hi-Vis Coupler Bucket Link End Clearance (maximum)	3 mm 0.12 in.

OTHER MATERIAL
PM37566 U.S. Silver-Grade Anti-SeizeNEVER-SEEZ® Lubricant

NEVER-SEEZ is a trademark of Bostik Findley, Inc.

RM58335,00012B7 -19-24MAR11-2/5

CAUTION: Escaping fluid under pressure can penetrate the skin causing serious injury.

Avoid the hazard by relieving pressure before disconnecting hydraulic or other lines. Tighten all connections before applying pressure.

Search for leaks with a piece of cardboard. Protect hands and body from high pressure fluids.

If an accident occurs, see a doctor immediately. Any fluid injected into the skin must be surgically removed within a few hours or gangrene may result. Doctors unfamiliar with this type of injury should reference a knowledgeable medical source. Such information is available from Deere & Company Medical Department in Moline, Illinois, U.S.A.

1. Perform Hydraulic System Pressure and Accumulators Discharge. (Group 9025-25.)
2. Remove attachment from coupler. Hydraulic attachment coupler cylinder should remain in retracted position.

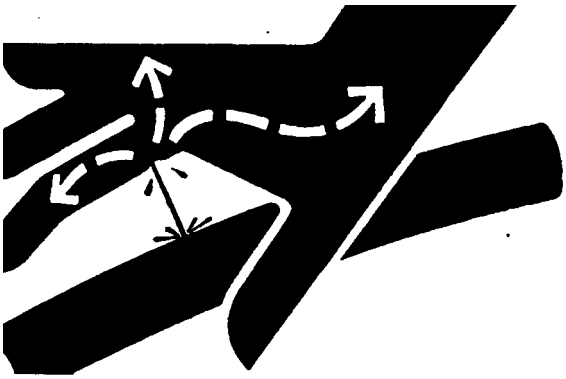

X9811 —UN—23AUG88

Escaping Fluid Under Pressure

CAUTION: Prevent possible injury from crushing. Heavy component, use appropriate lifting device.

Specification

Hi-Vis Coupler—Weight (approximate)..... 451 kg
995 lb

3. Roll coupler forward and support with wood blocks.

Continued on next page

RM58335,00012B7 -19-24MAR11-3/5

CAUTION: Prevent possible injury from sudden movement. Support bellcrank before removing any pins.

4. Support bellcrank with appropriate lifting device.
5. Disconnect hydraulic hoses (18 and 19), close all openings using caps and plugs.
6. Remove coupler-to-bucket link pin (7).
7. Remove coupler-to-boom pins (8).
8. Remove cover (9).
9. Remove snap rings (16) and pins (10).
10. Slide pins (14) away from hydraulic cylinder (5).
11. Remove hydraulic cylinder and pins.
12. To repair hydraulic cylinder, see Disassemble Cylinder. (CTM114319.)
13. Apply PM37566 Silver-Grade Anti-Seize lubricant or an equivalent to bores of coupler, bucket link, loader boom, and corresponding pivot pins.
14. Using appropriate lifting device, move coupler into position. Support with wood blocks as required.
15. Install shims (12 and 15) in original locations. Measure clearances and adjust shims as required.

Specification	
Hi-Vis Coupler Boom End—Clearance (maximum)	2 mm 0.07 in.

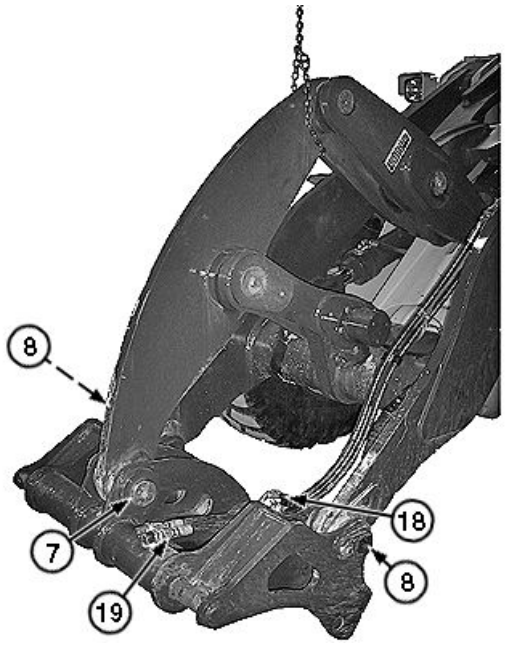

TX1002802A —UN—26JAN06

Hi-Vis Coupler (Powerllel™ Coupler Shown)

7— Coupler-To-Bucket Link Pin
8— Coupler-To-Boom Pin (2 used)
18— Coupler Pin Disconnect Hoses
19— 4th Function Hoses (if installed)

Hi-Vis Coupler Bucket Link End—Clearance (maximum)	3 mm 0.12 in.

16. Install coupler-to-boom pins (8) and coupler-to-bucket link pin (7).

RM58335,00012B7 -19-24MAR11-4/5

17. Install left and right pins (14) to openings (17) on Hi-Vis coupler as shown.
18. Slide snap ring (16) past grooves in left and right pins (14).
19. Install hydraulic cylinder (5) into coupler with cylinder guide inserted through hole in coupler.
20. Install pin (10) through pins (14) and hydraulic cylinder (5).
21. Slide snap rings (16) to groove in pins (14) to retain pin (10).
22. Install cover (9).
23. Connect hydraulic hoses.

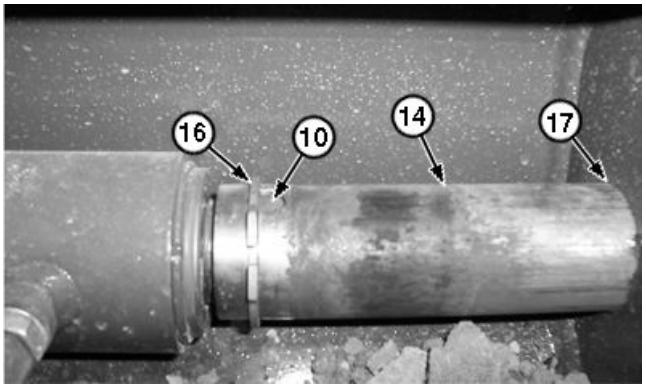

TX1001760A —UN—28DEC05

Coupler Right Side

10— Pin
14— Pin
16— Snap Ring
17— Pin Opening

RM58335,00012B7 -19-24MAR11-5/5

General Oil Cleanup Procedure

SERVICE EQUIPMENT AND TOOLS
JDG10712 Super Caddy
One Suction Hose 4.6 m (15 ft) x 25 mm (1.0 in.) I.D. 100R1 Hose with 1.0 in. M NPT Ends
One Discharge Hose 4.6 m (15 ft) x 19 mm (0.75 in.) I.D. 100R1 Hose with 0.75 in. M NPT Ends
3 Foot Suction Wand 25 mm (1.00 in.) O.D. (with angle cut tip)
3 Foot Discharge Wand 19 mm (0.75 in.) O.D.

This procedure is to be used on machines that have had hydraulic system repair without a catastrophic component failure. Filter procedure must be done prior to starting machine after a component has been repaired or replaced.

IMPORTANT: Intermixing of oils can cause premature hydraulic component damage and oil contamination. Oil types and filters must not be intermixed. Use filter element in same type oil to avoid intermixing of oils.

Avoid oil contamination. Oil contamination could result if Super Caddy is used in dusty or wet conditions. Instrument cleanliness and clean work practices are critical when filtering or taking oil samples. Dust, wind, and moisture, as well as contaminated sample pumps, bottles and tubing can affect results.

Super Caddy requires a 20 amp electric circuit. Use of electrical extension cord is not recommended.

1. Filter oil at 27°C (80°F) or above for best Super Caddy performance. Reduce flow rate to filter oil below 27°C (80°F).
2. Prepare machine for service. Park and Prepare for Service Safely. (Group 0001.)
3. Clean oil fill cap (31) and area surrounding it to prevent hydraulic system contamination.
4. Remove and clean fill cap and strainer (32). Store fill cap and strainer in sealed plastic bag.

NOTE: Ensure maximum oil movement during cleanup procedure. Orient submerged ends of suction and discharge wands as far away from each other as possible.

5. Insert suction and discharge wands from JDG10712 Super Caddy into hydraulic reservoir filler neck (24).

NOTE: Ensure suction and discharge wands maintain position in hydraulic reservoir.

6. Seal suction and discharge wands to oil fill tube to secure wands to hydraulic reservoir and prevent contamination.

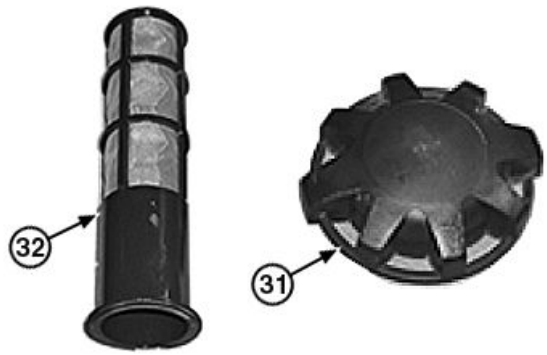

TX1082070A —UN—21SEP10

Oil Fill Cap and Strainer

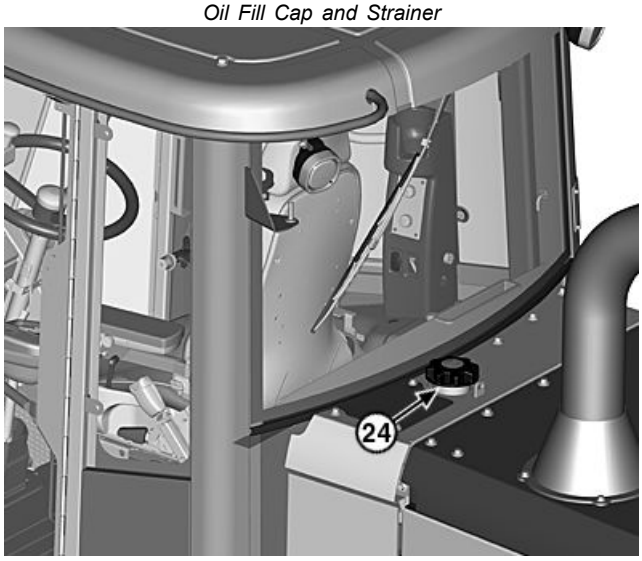

TX1086554A —UN—10JAN11

Hydraulic Reservoir

24— Filler Neck
31— Oil Fill Cap
32— Strainer

7. Use JDG10712 Super Caddy to remove oil contaminants. Refer to operator's manual included with Super Caddy or see Super Caddy in Service ADVISOR™ for operating procedure.
8. Install new machine system filters for cleanup procedure. See Replace Hydraulic System Return Filter. (Operator's Manual.)
9. Install hydraulic oil fill cap and strainer.

CAUTION: Prevent possible personal injury from unexpected machine movement. Clear all persons from area before operating machine.

CAUTION: Avoid entanglement and possible electrocution from Super Caddy power cord. DO NOT operate machine while Super Caddy is connected to machine.

Continued on next page

RM58335,00012B8 -19-28FEB11-1/2

10. Make sure area is clear and large enough to operate all functions of machine.
11. Fill hydraulic oil tank to operating level. See Check Hydraulic System Oil Level. (Operator's Manual.)

IMPORTANT: Avoid hydraulic system damage or further oil contamination. DO NOT force hydraulic system over system relief or over return filter bypass.

12. Run machine at slow idle. Operate each circuit a minimum of 3—5 minutes in each direction to flush any remaining contaminants.
13. Stop machine and install suction and discharge wands.
14. Repeat JDG10712 Super Caddy operation procedure until contaminant value is at specifications per Super Caddy operation manual. Refer to operator's manual included with Super Caddy or see Super Caddy in Service ADVISOR™ for operating procedure.
15. When oil reaches acceptable value of cleanliness, remove suction and discharge wands.
16. Install new machine oil filters. See Replace Hydraulic System Return Filter. (Operator's Manual.)

NOTE: Instrument cleanliness and clean work practices are critical when filtering oil or taking oil samples. Dust, wind, and moisture, as well as contaminated sample pumps, bottles and tubing can affect results.

NOTE: To prevent oil sample contamination, machines not equipped with fluid sampling ports will follow same oil sample collection procedure as machines equipped with fluid sampling ports. Follow link provided.

Service ADVISOR is a trademark of Deere & Company

17. Obtain oil sample for fluid analysis. Oil sample must be taken from system **before** oil passes through return filter when oil is warm. See Fluid Sampling Procedure—If Equipped. (Group 9010-25.)
18. Fill hydraulic reservoir to proper operating level. See Check Hydraulic System Oil Level. (Operator's Manual.)
19. Return machine to service.

NOTE: Some hydraulic systems may not be able to maintain correct specification without additional filtration equipment. Additional filtration equipment is recommended for machines in extreme environments. Bypass filtration systems are available.

20. Check and record oil particle counts. After 100 hours of operation check hydraulic oil to confirm system is within specification according to Super Caddy operation manual. Refer to operator's manual included with Super Caddy or see Super Caddy in Service ADVISOR™ for operating procedure.

    Auxiliary hydraulic attachments or components can be a point of entry for contamination. Frequent attachment changes also increase chances for contaminants to enter hydraulic system. Use care when connecting and removing components to prevent system contamination. Quick couplers must not be connected until they have been cleaned and capped when not in use. Fluid sampling and filter changes should increase if application requires frequent attachment changes.

RM58335,00012B8 -19-28FEB11-2/2

Hydraulic Component Failure Cleanup Procedure

SERVICE EQUIPMENT AND TOOLS
JDG10712 Super Caddy III
One Suction Hose 4.6 m (15 ft) x 25 mm (1.0 in.) I.D. 100R1 Hose with 1.0 in. M NPT Ends
One Discharge Hose 4.6 m (15 ft) x 19 mm (0.75 in.) I.D. 100R1 Hose with 0.75 in. M NPT Ends
3 Foot Suction Wand 25 mm (1.00 in.) O.D. (with angle cut tip)
3 Foot Discharge Wand 19 mm (0.75 in.) O.D.
JDG1770 Ultra Clean Hose Kit

This procedure is to be used on machines that have had a system catastrophic component failure. Cleanup procedure must be done prior to starting machine after a component has been repaired or replaced. The use of attachments increases the need to monitor and filter oil to a safe contamination value.

IMPORTANT: Intermixing of oils can cause premature hydraulic component damage and oil contamination. Oil types and filters must not be intermixed. Use filter element in same type oil to avoid intermixing of oils.

Avoid oil contamination. Oil contamination could result if filter caddy is used in dusty or wet conditions. Instrument cleanliness and clean work practices are critical when filtering or taking oil samples. Dust, wind, and moisture, as well as contaminated sample pumps, bottles and tubing can affect results.

Filter caddy requires a 20 amp electric circuit. Use of electrical extension cord is not recommended.

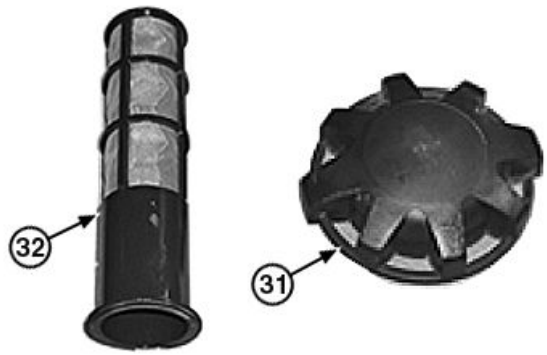

TX1082070A —UN—21SEP10

Oil Fill Cap and Strainer

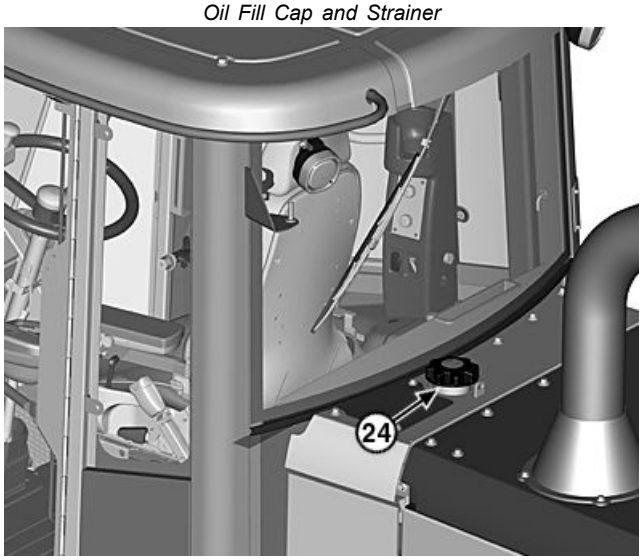

TX1086554A —UN—10JAN11

Hydraulic Reservoir

24— Suction Wand
31— Oil Fill Cap
32— Strainer

1. Filter oil at 27°C (80°F) or above for best filter caddy performance. Reduce flow rate to filter oil below 27°C (80°F).
2. Prepare machine for service. Park and Prepare For Service Safely. (Group 0001.)
3. Clean oil fill cap (31) and area surrounding it to prevent contamination.
4. Remove and clean oil fill cap and strainer (32). Store oil fill cap and strainer in sealed plastic bag.

NOTE: Ensure maximum oil movement during cleanup procedure. Orient submerged ends of suction and discharge wands as far away from each other as possible.

5. Insert suction and discharge wands from JDG10712 Super Caddy III into hydraulic reservoir filler neck.

NOTE: Ensure suction and discharge wands maintain position in hydraulic reservoir.

6. Seal suction and discharge wands to oil fill tube to secure wands to hydraulic reservoir and prevent contamination.
7. Use JDG10712 Super Caddy III to remove oil contaminants. Refer to operator's manual included with Super Caddy or see Super Caddy in Service ADVISOR™ for operating procedure.
8. Remove suction and discharge wands from hydraulic reservoir.
9. Clean hydraulic reservoir.
10. Remove each hydraulic component from machine. Disassemble, clean and inspect components working one circuit at a time. Repair or replace parts as necessary.
    - Hydraulic Oil Tank: See Hydraulic Reservoir Remove and Install. (Group 3160.)
    - Hydraulic Oil Cooler: See Hydraulic Oil Cooler Remove and Install. (Group 0510.)
    - Hydraulic Pump: See Main Hydraulic Pump Remove and Install. (Group 3160.)

Continued on next page

- Loader Control Valve: See Loader Control Valve Remove and Install. (Group 3160.)
- Axle Cooling Pump
- Pilot Controls: See Pilot Control Valve Remove and Install. (Group 3160.)
- Loader Cylinders: See Boom Cylinder Remove and Install. (Group 3160.)
- Auxiliary Systems

IMPORTANT: Debris trapped, then later dislodged from oil coolers can cause premature hydraulic component failure. If system contains a large amount of debris, oil cooler can not be completely cleaned of contamination and must be replaced.

11. Replace oil cooler when required. See Hydraulic Oil Cooler Remove and Install. (Group 0510.)

IMPORTANT: Prevent cleaning sponge from becoming trapped as it passes through a tee fitting. Disconnect hoses and lines from all tee fittings before cleaning.

12. Tag and disconnect all hydraulic hoses and lines. Cap and plug all hoses, lines and openings.
    - See Steering and Hydraulic Cooling Fan Circuit Component Location. (Group 9025-15.)
    - See Steering and Hydraulic Cooling Fan Circuit Line Identification. (Group 9025-15.)
    - See Loader and Hydraulic Cooling Circuit Component Location. (Group 9025-15.)
    - See Loader and Hydraulic Cooling Circuit Line Identification. (Group 9025-15.)
    - See Ride Control, Pin Disconnect, and Hydraulic Filter Circuit Component Location. (Group 9025-15.)
    - See Ride Control, Pin Disconnect, and Hydraulic Filter Circuit Line Identification. (Group 9025-15.)
    - See Service Brake, Park Brake, Differential Lock, and Axle Cooling Circuit Component Location. (Group 9025-15.)
    - See Service Brake, Park Brake, Differential Lock, and Axle Cooling Circuit Line Identification. (Group 9025-15.)
    - See Power Train Component Location. (Group 9020-15.)

    For schematic reference see Hydraulic System Schematic. (Group 9025-15.)

13. Clean all hydraulic lines and hoses using JDG1770 Ultra Clean Hose Kit.

IMPORTANT: Airborne foreign debris can cause premature hydraulic component failure. Cap and plug all hoses, lines and openings to minimize additional contamination.

14. Install new hydraulic system filters for cleanup procedure. See Replace Hydraulic System Return Filter. (Operator's Manual.)

IMPORTANT: Trapped air suddenly compressed in a cylinder can make enough heat to ignite the oil used for assembly causing cap seal and ring damage. To remove trapped air see Loader Start-Up Procedure. (Group 3160.)

15. Install all serviced hydraulic components on machine.
16. Connect or install hydraulic lines and hoses.
17. With all components installed fill tank to proper operating level. See Drain, Flush, and Refill Hydraulic System Oil. (Operator's Manual.)
18. Remove residual oil contaminants using JDG10712 Super Caddy III. See General Oil Cleanup Procedure. (Group 3160.)

Service ADVISOR is a trademark of Deere & Company

RM58335,00012B9 -19-28FEB11-2/2

Main Hydraulic Pump Remove and Install

SPECIFICATIONS	
Main Hydraulic Pump Weight (approximate)	82 kg 181 lb.
Main Hydraulic Pump Weight (approximate)	82 kg 181 lb.

IMPORTANT: Perform hydraulic pump flow test procedure before removing hydraulic pump for repair. See Main Hydraulic Pump Flow Test. (Group 9025-25.)

1. Prepare machine for service. Park and Prepare for Service Safely. (Group 0001.)

CAUTION: To avoid injury from escaping fluid under pressure, stop engine and relieve the pressure in the system before disconnecting or connecting hydraulic or other lines. Tighten all connections before applying pressure.

2. Relieve hydraulic system pressure. See Hydraulic System Pressure and Accumulators Discharge. (Group 9025-25.)
3. Turn battery disconnect switch to OFF position.
4. Apply vacuum or drain hydraulic reservoir. See Drain, Flush, and Refill Hydraulic System Oil. (Operator's Manual.)
5. Remove cab. See Cab Remove and Install. (Group 1800.)
6. Tag and disconnect hydraulic lines (2 and 4—6) from main hydraulic pump (3). Close all openings using caps and plugs. See Loader and Hydraulic Cooling Circuit Line Identification. (Group 9025-15.)

CAUTION: Prevent possible crushing injury from heavy component. Use appropriate lifting device.

7. Attach appropriate lifting device to main hydraulic pump.

Specification

Main Hydraulic Pump—Weight (approximate)..... 82 kg 181 lb.

8. Remove main hydraulic pump.

NOTE: Internal components of the main hydraulic pump rotating group are not serviceable individually. Entire rotating group must be serviced as an assembly.

9. Clean and inspect parts. Replace parts as necessary.

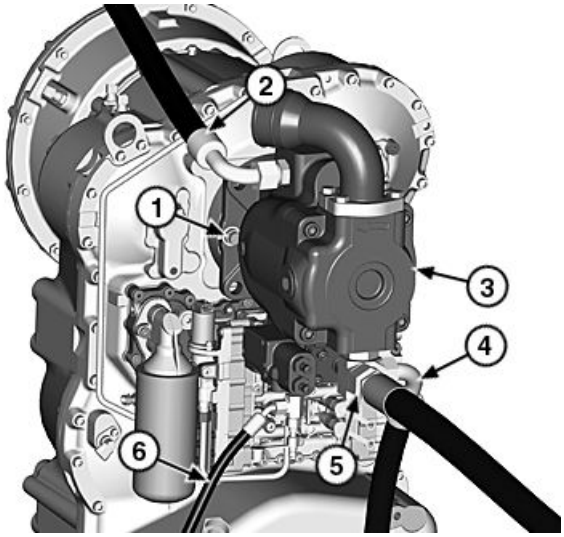

Main Hydraulic Pump

1— Cap Screw (2 used)
2— Case Drain Line
3— Main Hydraulic Pump
4— Main Hydraulic Pump-to-Hydraulic Pump Manifold Line
5— Main Hydraulic Pump-to-Loader Control Valve Line
6— Main Hydraulic Pump-to-Accumulator Line

IMPORTANT: Avoid O-ring damage or component failure. Apply petroleum jelly to O-rings before installation.

10. Apply petroleum jelly to O-ring.
11. Install O-ring to mounting surface on main hydraulic pump.

CAUTION: Prevent possible crushing injury from heavy component. Use appropriate lifting device.

12. Install main hydraulic pump.

Specification

Main Hydraulic Pump—Weight (approximate)..... 82 kg 181 lb.

13. Connect all hydraulic lines to main hydraulic pump.
    - See Loader and Hydraulic Cooling Circuit Component Location. (Group 9025-15.)
    - See Loader and Hydraulic Cooling Circuit Line Identification. (Group 9025-15.)

Continued on next page

14. Fill main hydraulic pump with hydraulic oil through case drain line (2) to ensure lubrication for start-up.
15. Perform loader start-up procedure. See Loader Start-Up Procedure. (Group 3160.)
16. Install cab. See Cab Remove and Install. (Group 1800.)
17. Remove vacuum or fill hydraulic reservoir. See Drain, Flush, and Refill Hydraulic System Oil. (Operator's Manual.)
18. Perform main hydraulic pump control valve test and adjustment.
    - See Main Hydraulic Pump Control Valve Test and Adjustment. (Group 9025-25.)
    - See Load Sense Relief Valve Pressure Test and Adjustment. (Group 9025-25.)
19. Turn battery disconnect switch to ON position.
20. Remove frame articulation lock bar.

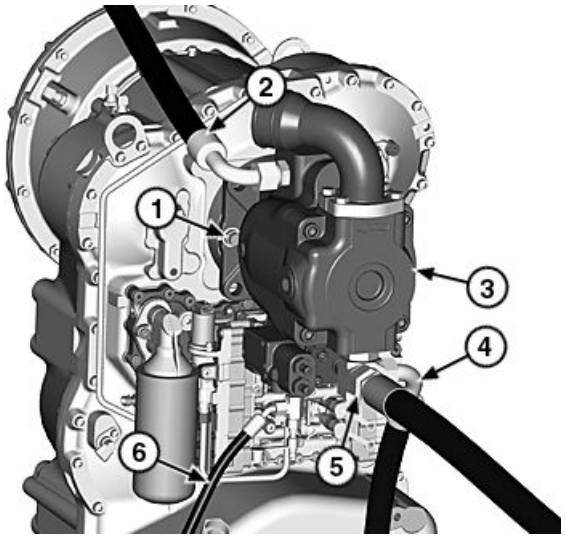

Main Hydraulic Pump

1— Cap Screw (2 used)
2— Case Drain Line
3— Main Hydraulic Pump
4— Main Hydraulic Pump-to-Hydraulic Pump Manifold Line
5— Main Hydraulic Pump-to-Loader Control Valve Line
6— Main Hydraulic Pump-to-Accumulator Line

RM58335,00012BB -19-20JAN11-2/2

Main Hydraulic Pump Disassemble and Assemble

SPECIFICATIONS	
Spring Plug Torque	43 N·m 32 lb-ft
Rear Cover Cap Screw Torque	290 N·m 214 lb-ft
Maximum Volume Cover Cap Screw Torque	75 N·m 55 lb-ft
Maximum Volume Stop Screw Locknut Torque	50 N·m 37 lb-ft

1. Clean and drain main hydraulic pump.

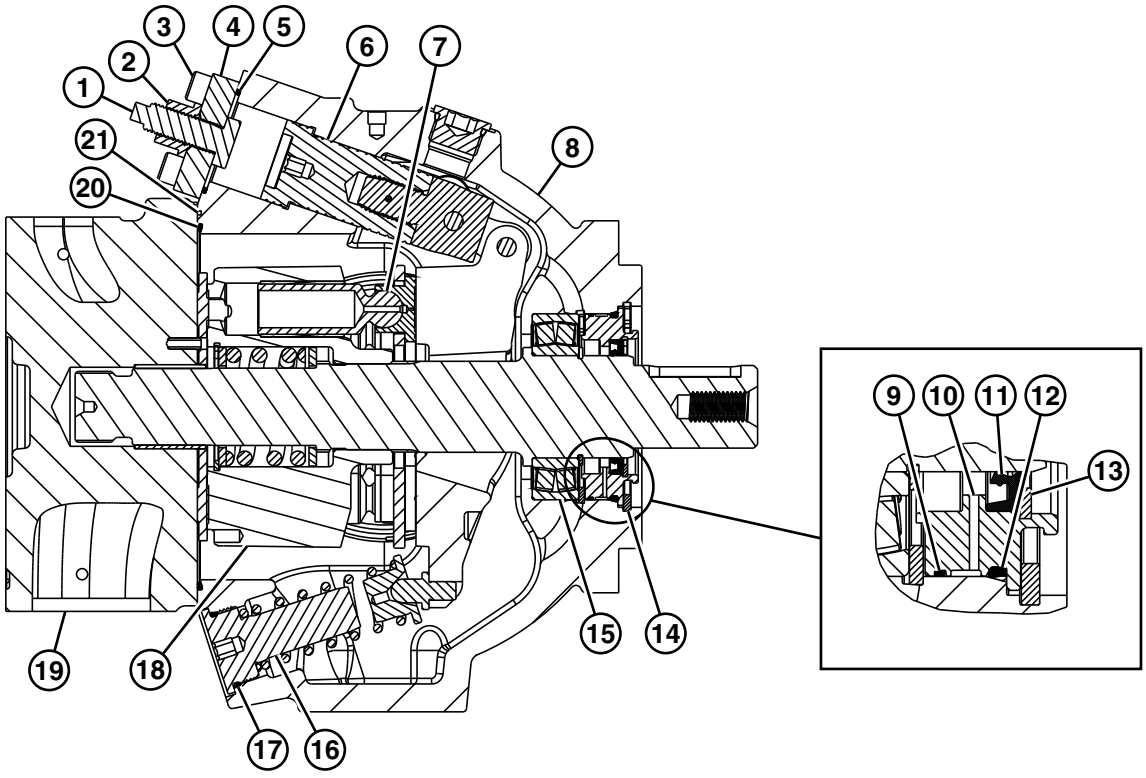

TX1087219 —UN—28JAN11

TX1087219

Main Hydraulic Pump Cross Section View

1— Maximum Volume Stop Screw
2— Lock Nut Seal
3— Cap Screw (4 used)
4— Maximum Volume Cover
5— O-Ring
6— Maximum Volume Piston
7— Piston (9 used)
8— Pump Housing
9— O-Ring
10— Shaft Seal Carrier
11— Oil Seal
12— O-Ring
13— Snap Ring
14— Snap Ring
15— Bearing
16— Spring Plug
17— O-Ring
18— Cylinder Block
19— Rear Cover
20— O-Ring
21— O-Ring (6 used)

2. Scribe an index line across rear cover (19) and pump housing (8).
3. Remove rear cover (19), maximum volume cover (4), and spring plug (16).
4. Remove snap rings (13 and 14).
5. Remove shaft seal carrier (10).
6. Clean and inspect all parts for wear and damage. Replace parts as necessary.

IMPORTANT: Replace all oil seals and O-rings. Old seals and O-rings will leak.

7. Install O-rings (9 and 12) onto shaft seal carrier (10).

IMPORTANT: Apply clean oil to all internal parts as they are assembled to reduce the possibility of damage on startup.

8. Install shaft seal carrier and snap ring (14).
9. Apply petroleum jelly to sealing lip of oil seal (11).
10. Install oil seal with lip facing inside of housing.
11. Press oil seal into housing just far enough to install snap ring (13).
12. Install spring plug (16) and tighten to specification.

Continued on next page

Specification	
Spring Plug—Torque	43 N·m 32 lb-ft

NOTE: Use index line to ensure proper alignment during installation.

13. Install rear cover (19) and tighten to specification.

Specification	
Rear Cover Cap Screw—Torque	290 N·m 214 lb-ft

14. Install maximum volume cover (4) and tighten to specification.

Specification	
Maximum Volume Cover Cap Screw—Torque	75 N·m 55 lb-ft
Maximum Volume Stop Screw Locknut—Torque	50 N·m 37 lb-ft

BR98087,0000148 -19-17FEB11-2/2

Loader Control Valve Remove and Install

SPECIFICATIONS	
Loader Control Valve Weight (approximate)	50 kg 110 lb

1. Prepare machine for service. Park and Prepare for Service Safely. (Group 0001.)
2. Remove bucket or attachment. See Bucket Remove and Install. (Group 3102.)

CAUTION: Prevent serious injury or death from unexpected loader movement. Always install the loader boom service lock, or lower the front loader boom fully to the ground. Move control levers to release hydraulic pressure before working near the front of the machine.

3. Raise boom and install boom lock. See Boom Lock. (Operator's Manual.)

CAUTION: To avoid injury from escaping fluid under pressure, stop engine and relieve the pressure in the system before disconnecting or connecting hydraulic or other lines. Tighten all connections before applying pressure.

4. Stop engine and relieve hydraulic system pressure. See Hydraulic System Pressure and Accumulators Discharge. (Group 9025-25.)
5. Turn battery disconnect switch to OFF position.
6. Apply vacuum or drain hydraulic reservoir. See Drain, Flush, and Refill Hydraulic System Oil. (Operator's Manual.)
7. Remove loader control valve access panel from front of machine.
8. Loosen hold-down clamps on bucket and boom cylinder lines.
9. Tag and disconnect all hydraulic lines from loader control valve. Close all openings using caps and plugs. See Loader and Hydraulic Cooling Circuit Component Location. (Group 9025-15.)
10. Tag and disconnect electrical harness from pressure sensors (if equipped). See Loader Frame Harness (W2) Component Location. (Group 9015-10.)
11. Remove cap screws (2).

CAUTION: Prevent crushing injury from heavy component. Use appropriate lifting device.

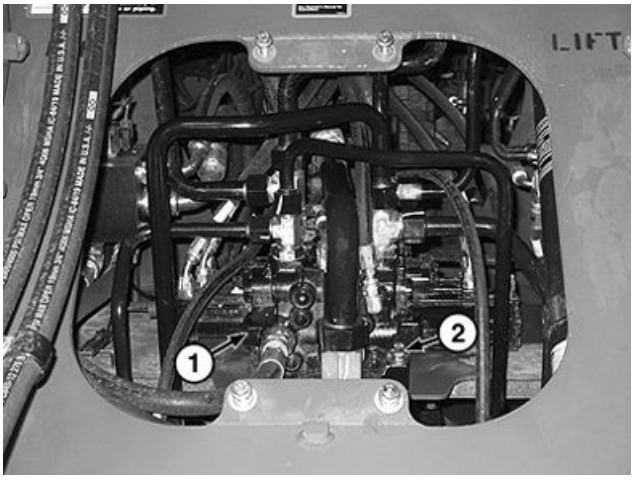

TX1028993A —UN—05SEP07

Loader Control Valve

1— Loader Control Valve **2— Cap Screw (4 used)**

12. Remove loader control valve (1) with appropriate lifting device.

Specification

Loader Control Valve—Weight (approximate)..... 50 kg 110 lb

13. Clean and inspect parts. Repair or replace parts as necessary. See Loader Control Valve Disassemble and Assemble. (Group 3160.)
14. Install loader control valve.
15. Connect hydraulic lines.
16. Connect electrical harness to pressure sensors (if equipped). See Loader Frame Harness (W2) Component Location. (Group 9015-10.)
17. Remove vacuum or fill hydraulic reservoir. See Drain, Flush, and Refill Hydraulic System Oil. (Operator's Manual.)
18. Turn battery disconnect switch to ON position.
19. Remove boom lock and frame articulation lock bar.

RM58335,00012BC -19-11APR11-1/1

Loader Control Valve Disassemble and Assemble

SPECIFICATIONS	
Tie-Bolt Nut Torque	203 N·m 150 lb-ft

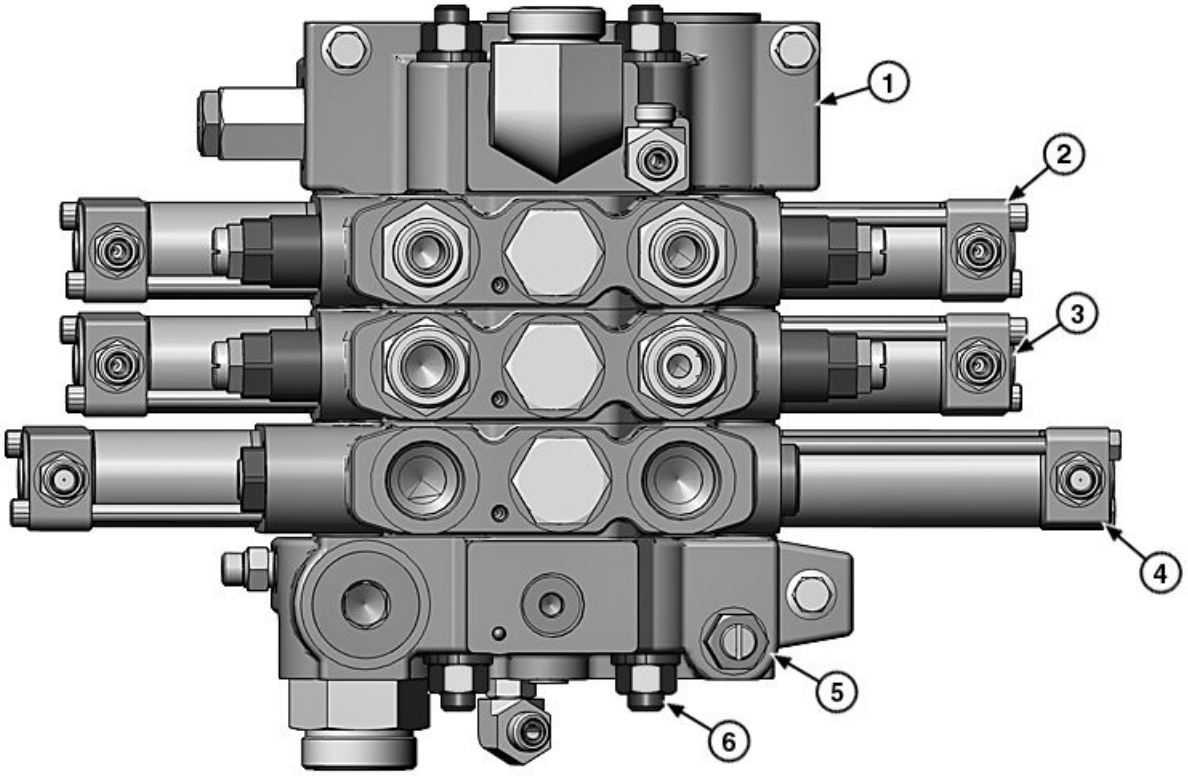

TX1086574A —UN—13JAN11

Loader Control Valve

1— Inlet Section
2— Auxiliary Section
3— Bucket Section
4— Boom Section
5— Outlet Section
6— Tie Rod (4 used)

1. Place loader control valve on a clean level work surface.
2. Remove tie rods (6) and washers. Separate each valve section.
3. Clean and inspect parts. Repair or replace parts as necessary.
   - See Boom Section Disassemble and Assemble. (Group 3160.)
   - See Bucket Section Disassemble and Assemble. (Group 3160.)
   - See Auxiliary Section Disassemble and Assemble—If Equipped. (Group 3160.)

IMPORTANT: Avoid O-ring damage or component failure. Apply clean hydraulic oil to all internal parts before assembling and apply petroleum jelly to backup rings and O-rings before installation.

4. Apply petroleum jelly to O-rings and seals. Install O-rings and seals.
5. Apply clean hydraulic oil to all internal parts.
6. Assemble valve sections. Tighten tie-bolt nuts to specification.

Specification	
Tie-Bolt Nut—Torque	203 N·m 150 lb-ft

RM58335,00012BD -19-18JAN11-1/1

Boom Section Disassemble and Assemble

SPECIFICATIONS	
Cap Screw Torque	11 N·m 100 lb-in.
Anticavitation Valve Torque	39.5 N·m 350 lb-in.
Load Check Valve Torque	5.6 N·m 50 lb-in.

OTHER MATERIAL
PM37421 U.S. Heavy-Duty Thread Lock and Sealer
PM38623 Canadian Heavy-Duty Thread Lock and Sealer
271 LOCTITE® Heavy-Duty Thread Lock and Sealer

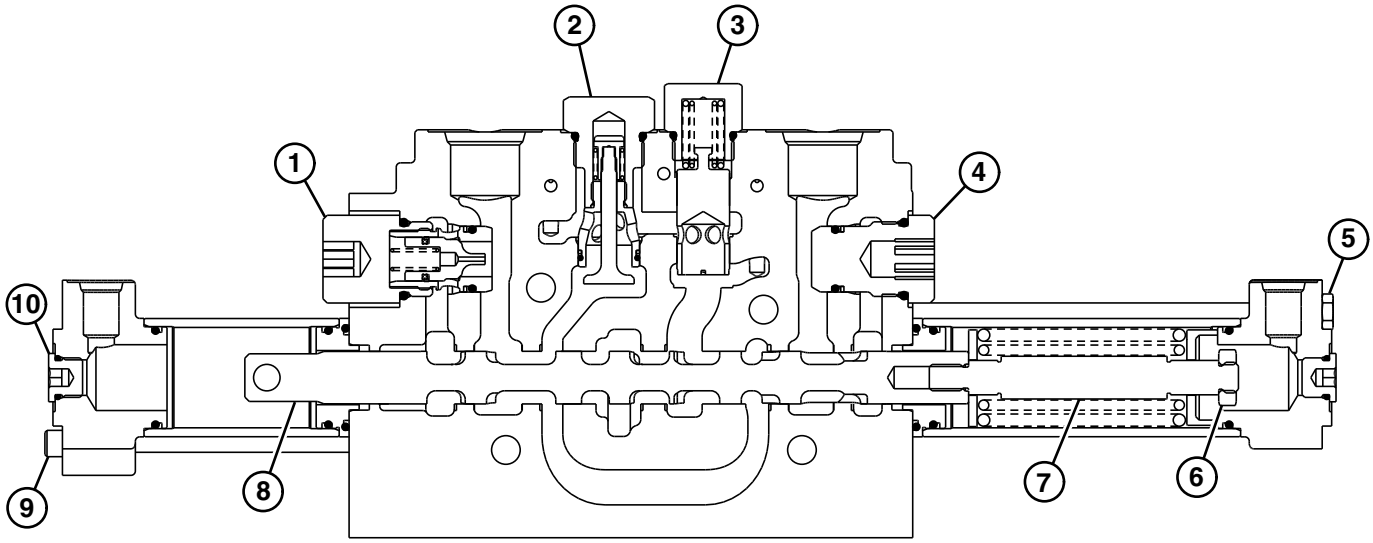

TX1029032 —UN—10SEP07

TX1029032

Boom Section

1— Anticavitation Valve
2— Load Check Valve
3— Pressure Compensator
4— Plug
5— Cap Screw (2 used)
6— Nut
7— Shuttle Pin
8— Spool
9— Cap Screw (2 used)
10— Plug (2 used)

1. Disassemble and inspect parts for contamination, wear, or damage. Replace as necessary.

IMPORTANT: Avoid O-ring damage or component failure. Apply clean hydraulic oil to all internal parts before assembling and apply petroleum jelly to backup rings and O-rings before installation.

2. Apply clean hydraulic oil to all internal parts of valve section.
3. Apply petroleum jelly to O-rings and seals. Install O-rings and seals.
4. Assemble valve sections.
5. Apply PM37421 Heavy-Duty Thread Lock and Sealer to threads of cap screws and tighten to specification.

Specification

Cap Screw—Torque ..... 11 N·m
100 lb-in.

6. Install anticavitation valve and tighten to specification.

Specification

Anticavitation Valve—Torque ..... 39.5 N·m
350 lb-in.

7. Install load check valve and tighten to specification.

Specification

Load Check Valve—Torque ..... 5.6 N·m
50 lb-in.

Continued on next page

RM58335,00012BE -19-10JAN11-1/2

8. Install pressure compensator and plug. Tighten securely.

LOCTITE is a trademark of Henkel Corporation

RM58335,00012BE -19-10JAN11-2/2

Bucket Section Disassemble and Assemble

SPECIFICATIONS	
Cap Screw Torque	11 N·m 100 lb-in.
Circuit Relief with Anticavitation Valve Torque	39.5 N·m 350 lb-in.
Load Check Valve Torque	5.6 N·m 50 lb-in.

OTHER MATERIAL
PM37421 U.S. Heavy-Duty Thread Lock and Sealer
PM38623 Canadian Heavy-Duty Thread Lock and Sealer
271 LOCTITE® Heavy-Duty Thread Lock and Sealer

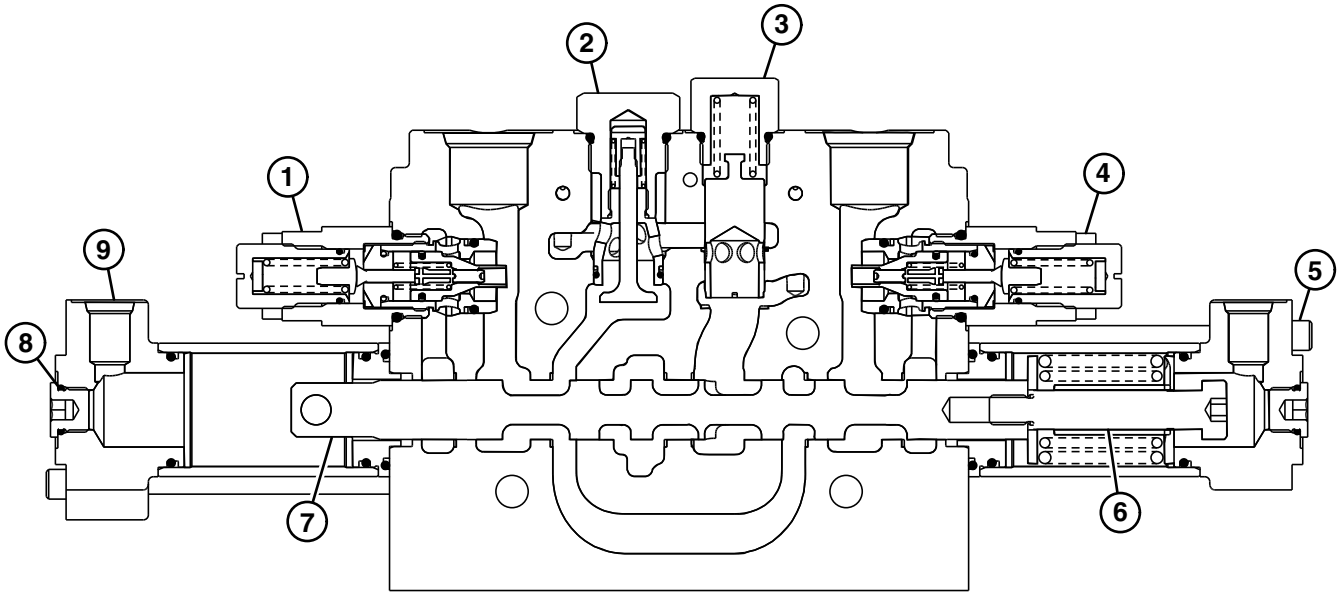

TX1029001 —UN—13SEP07

TX1029001

Bucket Section

1— Circuit Relief with Anticavitation Valve
2— Load Check Valve
3— Pressure Compensator
4— Circuit Relief with Anticavitation Valve
5— Cap Screw (4 used)
6— Shuttle Pin
7— Spool
8— Plug (2 used)
9— Pilot Orifice (2 used)

1. Disassemble and inspect parts for contamination, wear, or damage. Replace as necessary.

IMPORTANT: Avoid O-ring damage or component failure. Apply clean hydraulic oil to all internal parts before assembling and apply petroleum jelly to backup rings and O-rings before installation.

2. Apply clean hydraulic oil to all internal parts of valve section.
3. Apply petroleum jelly to new O-rings and backup rings. Install O-rings and seals.
4. Assemble valve sections.
5. Apply PM37421 Heavy-Duty Thread Lock and Sealer to threads of cap screws and tighten to specification.

Specification

Cap Screw—Torque.....11 N·m
100 lb-in.

6. Install circuit relief with anticavitation valves and tighten to specification.

Specification

Circuit Relief with Anticavitation Valve—Torque.....39.5 N·m
350 lb-in.

7. Install load check valve and tighten to specification.

Specification

Load Check Valve—Torque.....5.6 N·m
50 lb-in.

Continued on next page

RM58335,00012BF -19-10JAN11-1/2

8. Install pressure compensator and plugs. Tighten securely.

LOCTITE is a trademark of Henkel Corporation

RM58335,00012BF -19-10JAN11-2/2

Auxiliary Section Disassemble and Assemble—If Equipped

SPECIFICATIONS	
Cap Screw Torque	11 N·m 100 lb-in.
Circuit Relief with Anticavitation Valve Torque	39.5 N·m 350 lb-in.
Load Check Valve Torque	5.6 N·m 50 lb-in.

OTHER MATERIAL
PM37421 U.S. Heavy-Duty Thread Lock and Sealer
PM38623 Canadian Heavy-Duty Thread Lock and Sealer
271 LOCTITE® Heavy-Duty Thread Lock and Sealer

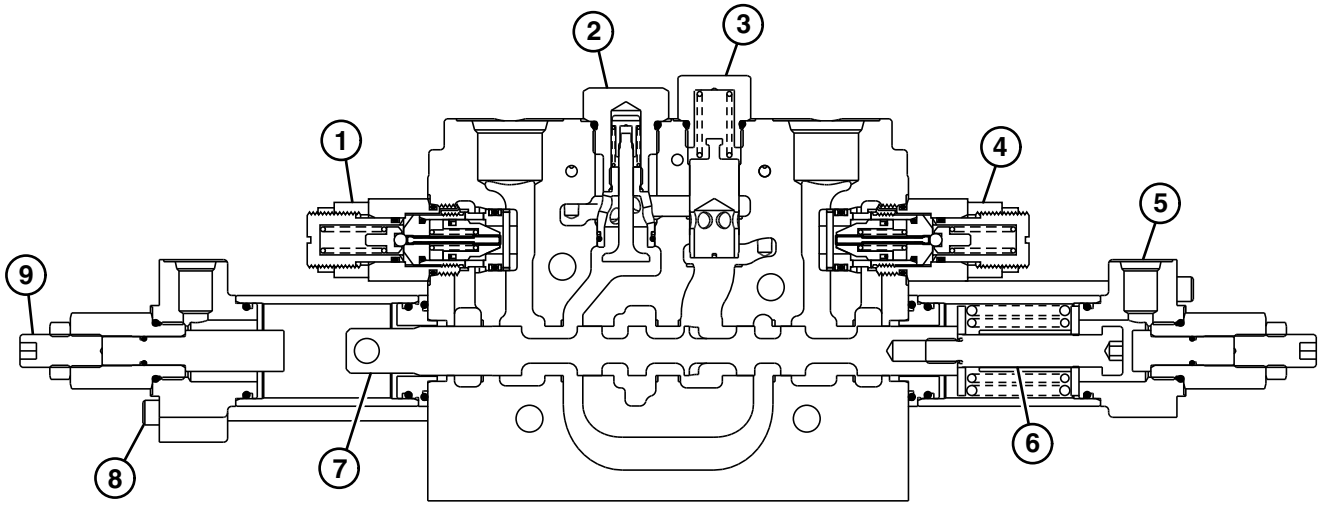

TX1034675 —UN—14JAN08

TX1034675

Auxiliary Section

1— Circuit Relief with Anticavitation Valve
2— Load Check Valve
3— Pressure Compensator
4— Circuit Relief with Anticavitation Valve
5— Pilot Orifice (2 used)
6— Shuttle Pin
7— Spool
8— Cap Screw (4 used)
9— Adjuster Screw (2 used)

1. Disassemble and inspect parts for contamination, wear, or damage. Replace as necessary.

IMPORTANT: Avoid O-ring damage or component failure. Apply clean hydraulic oil to all internal parts before assembling and apply petroleum jelly to backup rings and O-rings before installation.

2. Apply clean hydraulic oil to all internal parts of valve section.
3. Apply petroleum jelly to O-rings and seals. Install O-rings and seals.
4. Assemble valve sections.
5. Apply PM37421 Heavy-Duty Thread Lock and Sealer to threads of cap screws and tighten to specification.

Specification

Cap Screw—Torque.....11 N·m
100 lb-in.

6. Install circuit relief with anticavitation valves and tighten to specification.

Specification

Circuit Relief with Anticavitation Valve—Torque.....39.5 N·m
350 lb-in.

7. Install load check valve and tighten to specification.

Specification

Load Check Valve—Torque.....5.6 N·m
50 lb-in.

Continued on next page

RM58335,00012C0 -19-10JAN11-1/2

8. Install pressure compensator and plugs. Tighten securely.

LOCTITE is a trademark of Henkel Corporation

RM58335,00012C0 -19-10JAN11-2/2

Main Relief Valve Disassemble and Assemble

SPECIFICATIONS	
Main Relief Valve Torque	60 N·m 44 lb-ft

NOTE: Internal components of main relief valve are not serviceable.

1. Inspect parts for contamination, wear, or damage. Clean or replace as necessary.

IMPORTANT: Avoid O-ring damage or component failure. Apply clean hydraulic oil to all internal parts before assembling and apply petroleum jelly to backup rings and O-rings before installation.

2. Apply clean hydraulic oil to internal surfaces.
3. Apply petroleum jelly to new O-rings. Install O-rings.
4. Install main relief valve and tighten to specification.

Specification

Main Relief Valve—Torque.....60 N·m
44 lb-ft

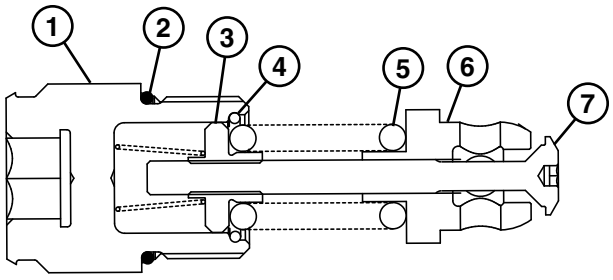

TX1029356 —UN—14SEP07

Main Relief Valve

1— Valve Body
2— O-Ring
3— Floating Pilot Poppet
4— Retaining Spring Clip
5— Spring
6— Floating Poppet
7— Pin Poppet

5. Check pressure setting. See Main Relief Valve Pressure Test. (Group 9025-25.)

RM58335,00012C1 -19-11APR11-1/1

Load Sense Relief Valve Disassemble and Assemble

SPECIFICATIONS	
Load Sense Relief Valve Torque	56.4 N·m 42 lb-ft..

1. Loosen nut (2) and remove adjusting screw (1) from body.
2. Inspect parts for wear or damage. Replace if necessary.
3. O-rings (7), backup ring (4) and spring (9) are the only repair parts available.

IMPORTANT: Avoid O-ring damage or component failure. Apply clean hydraulic oil to all internal parts before assembling and apply petroleum jelly to backup rings and O-rings before installation.

4. Apply clean hydraulic oil to all internal surfaces.
5. Apply petroleum jelly to new O-ring and backup ring. Install O-rings and back up ring.
6. Assemble load sense relief valve.
7. Install load sense relief valve and tighten to specification.

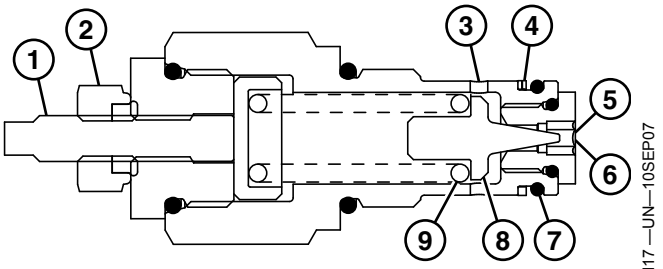

Load Sense Relief Valve

1— Adjusting Screw
2— Nut
3— Outlet
4— Backup Ring
5— Inlet
6— Inlet Screen
7— O-Ring
8— Poppet
9— Spring

Specification

Load Sense Relief Valve—Torque.....56.4 N·m
42 lb-ft..

8. Check pressure setting. See Load Sense Relief Valve Pressure Test and Adjustment. (Group 9025-25.)

RM58335,00012C2 -19-10JAN11-1/1

Circuit Relief With Anticavitation Valve Disassemble and Assemble

SPECIFICATIONS	
Circuit Relief with Anticavitation Valve Torque	39.5 N·m 29 lb-ft.

Bucket Section

NOTE: If circuit relief with anticavitation valve does not meet test specification, it must be removed. Inspect for contaminants, wear, or damage. Internal components of the circuit relief with anticavitation valve are not serviceable.

1. Inspect parts for contamination, wear, or damage. Replace as necessary.

IMPORTANT: Avoid O-ring damage or component failure. Apply clean hydraulic oil to all internal parts before assembling and apply petroleum jelly to backup rings and O-rings before installation.

2. Apply clean hydraulic oil to all internal surfaces.
3. Apply petroleum jelly to new O-rings and backup rings. Install O-rings and backup rings.
4. Install circuit relief with anticavitation valve and tighten to specification.

Specification	
Circuit Relief with Anticavitation Valve—Torque	39.5 N·m 29 lb-ft.

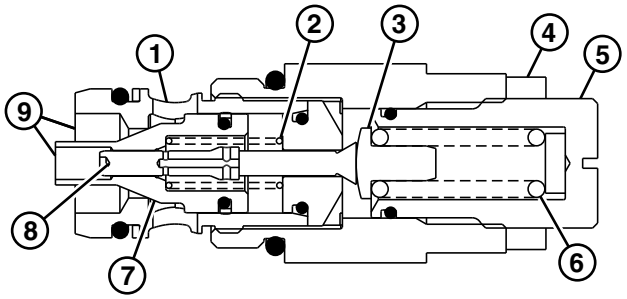

TX1037870 —UN—03MAR08

Bucket Section—Circuit Relief With Anticavitation Valve

1— Outlet
2— Poppet Spring
3— Pilot Poppet
4— Nut
5— Adjusting Screw
6— Circuit Relief Spring
7— Poppet
8— Poppet Pin
9— Inlet

5. Check pressure setting. See Circuit Relief With Anticavitation Valve Pressure Test. (Group 9025-25.)

Continued on next page

Auxiliary Section

NOTE: If circuit relief with anticavitation valve does not meet test specification, it must be removed. Inspect for contaminants, wear, or damage. Internal components of the circuit relief with anticavitation valve are not serviceable.

1. Inspect parts for contamination, wear, or damage. Replace as necessary.

IMPORTANT: Avoid O-ring damage or component failure. Apply clean hydraulic oil to all internal parts before assembling and apply petroleum jelly to backup rings and O-rings before installation.

2. Apply clean hydraulic oil to all internal surfaces.
3. Apply petroleum jelly to new O-rings and backup rings. Install O-rings and backup rings.
4. Install circuit relief with anticavitation valve and tighten to specification.

Specification

Circuit Relief with Anticavitation Valve—Torque.....39.5 N·m
29 lb-ft

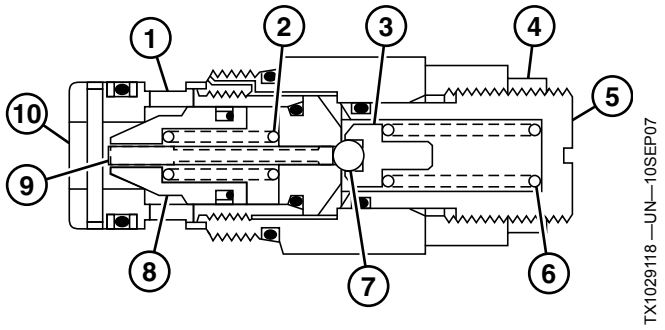

Auxiliary Section—Circuit Relief With Anticavitation Valve

1— Outlet
2— Poppet Spring
3— Pilot Poppet
4— Nut
5— Adjusting Screw
6— Circuit Relief Spring
7— Poppet Ball
8— Poppet
9— Poppet Pin
10— Inlet

5. Check pressure setting. See Circuit Relief With Anticavitation Valve Pressure Test. (Group 9025-25.)

RM58335,00012C3 -19-10JAN11-2/2

Anticavitation Valve Disassemble and Assemble

SPECIFICATIONS	
Anticavitation Valve Torque	5.6 N·m 50 lb-in.

1. Inspect anticavitation valve for wear or damage. Replace as necessary.

IMPORTANT: Avoid O-ring damage or component failure. Apply clean hydraulic oil to all internal parts before assembling and apply petroleum jelly to backup rings and O-rings before installation.

2. Apply clean hydraulic oil to all internal surfaces.
3. Apply petroleum jelly to backup rings and O-rings. Install O-rings and backup rings.
4. Install anticavitation valve and tighten to specification.

Specification

Anticavitation Valve—Torque.....5.6 N·m
50 lb-in.

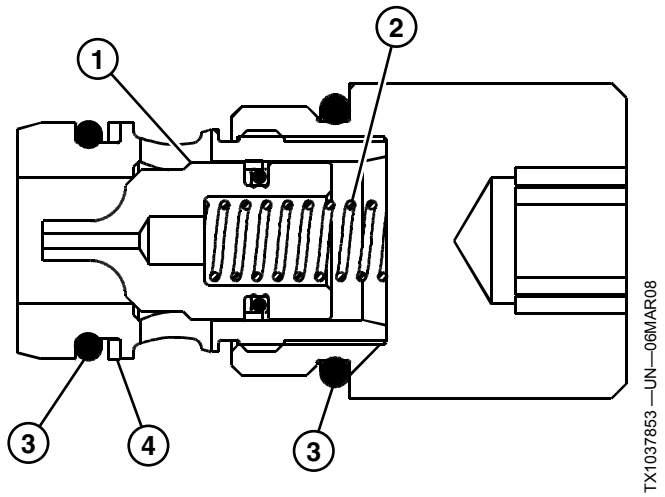

Anticavitation Valve

1— Poppet
2— Spring
3— O-Ring
4— Backup Ring

RM58335,00012C4 -19-10JAN11-1/1

Auxiliary, Bucket, and Boom Section Pilot Orifice Check Valve

NOTE: Orifice check plate (A) is not located in either boom work port section or the bucket rollback work port. The function of the pilot orifice check valve is part of the hydraulic work port fitting on both boom work ports and the bucket rollback work port.

Orifice (A) dampens the control valve spool movement to stop unwanted bucket or boom movement when the pilot controller lever is centering itself. It also stops unwanted bucket or boom correction in other direction as the lever kicks out of bucket return-to-dig, or boom height kick out function.

Clean and inspect orifice check valve for wear or damage. Replace if necessary.

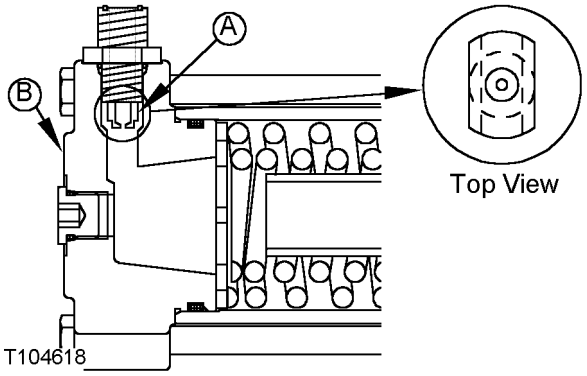

T104618 —UN—22OCT96

A—Pilot Orifice Check Plate **B—Control Valve End Cap**

RM58335,00012C5 -19-10JAN11-1/1

Boom Cylinder Remove and Install

SPECIFICATIONS	
Boom Cylinder Weight (approximate)	97 kg 215 lb.

NOTE: Boom cylinder may be disassembled on the machine for seal and packing replacement.

1. Prepare machine for service. Park and Prepare for Service Safely. (Group 0001.)
2. Install boom lock to boom cylinder **NOT** being removed. See Boom Lock. (Operator's Manual.)
3. Put bucket in full dump position.

CAUTION: To avoid injury from escaping fluid under pressure, stop engine and relieve the pressure in the system before disconnecting or connecting hydraulic or other lines. Tighten all connections before applying pressure.

4. Stop engine and relieve hydraulic system pressure. See Hydraulic System Pressure and Accumulators Discharge. (Group 9025-25.)
5. Turn battery disconnect switch to OFF position.
6. Tag and disconnect boom cylinder hydraulic lines (1 and 2). Close all openings using caps and plugs.

CAUTION: Prevent possible crushing injury from heavy component. Use appropriate lifting device.

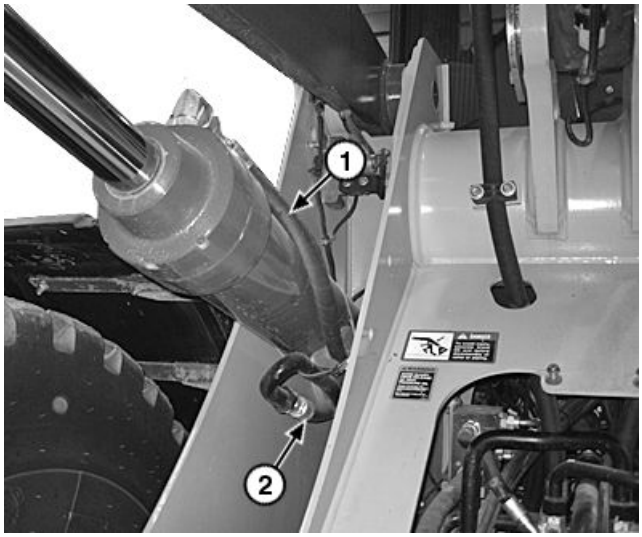

TX1086612A —UN—10JAN11

Boom Cylinder Plumbing

1— Boom Cylinder Rod End Hydraulic Line **2— Boom Cylinder Head End Hydraulic Line**

7. Connect appropriate lifting device to boom cylinder using lifting straps.

Specification	
Boom Cylinder—Weight (approximate)	97 kg 215 lb.

Continued on next page

RM58335,0001307 -19-27JAN11-1/2

IMPORTANT: Replacement of NeverGrease™ Pin Joints require special methods for replacement of pins. If not followed the service life can be decrease. See NeverGrease™ Pin Joints. (Group 0960.)

8. Remove rod and head end pins (3 and 4).
9. Remove boom cylinder.
10. Clean and inspect parts. Repair or replace as necessary.
    - See Disassemble Cylinder. (CTM114319.)
    - See Assemble Cylinder. (CTM114319.)
11. Install boom cylinder.

IMPORTANT: NeverGrease™ Pin Joints require the following to maintain a long life. Shimming is required in specified applications. Some joints are more critical and will be specified when required. Alignment in the joint is critical to prevent premature wear. Cleanliness is also necessary to note in all joint components. Clean and burr free pins must be used while replacing.

12. If NeverGrease™ pin option is used, shim as required to remove clearance between cylinder and mounting boss at rod ends only. See NeverGrease™ Pin Joints. (Group 0960.)
13. Install rod and head end pins.
14. Connect hydraulic lines.
15. Turn battery disconnect to ON position.
16. Remove boom lock and frame articulation lock bar.

NeverGrease is a trademark of Deere & Company



Boom Cylinder (644K shown)

3— Rod End Pin **4— Head End Pin**

IMPORTANT: Prevent oil from "dieseling" inside cylinder. Rapid movement of dry cylinders at high pressure will cause damage to cylinder seals and premature failure. When machine is started for the first time after cylinder rebuild or oil is drained from cylinder, perform loader start-up procedure.

17. Perform loader start-up procedure. See Loader Start-Up Procedure. (Group 3160.)

RM58335,0001307 -19-27JAN11-2/2

Bucket Cylinder Remove and Install

SPECIFICATIONS	
Bucket Cylinder Weight (approximate)	160 kg 350 lb

NOTE: Bucket cylinder may be disassembled on the machine for seal and packing replacement.

1. Prepare machine for service. Park and Prepare for Service Safely. (Operator's Manual.)

CAUTION: To avoid injury from escaping fluid under pressure, stop engine and relieve the pressure in the system before disconnecting or connecting hydraulic or other lines. Tighten all connections before applying pressure.

2. Stop engine and relieve hydraulic system pressure. See Hydraulic System Pressure and Accumulators Discharge. (Group 9025-25.)
3. Turn battery disconnect switch to OFF position.
4. Remove bucket level indicator (1) and return-to-dig switch (2).
5. Tag and disconnect head and rod end hydraulic lines (5 and 6). Close all openings using caps and plugs.

CAUTION: Prevent possible crushing injury from heavy component. Use appropriate lifting device.

6. Support boom cylinder using lifting straps and appropriate lifting device.

Specification	
Bucket Cylinder—Weight (approximate)	160 kg 350 lb

7. Remove head and rod end pins (3 and 4).
8. Remove bucket cylinder.

IMPORTANT: Replacement of NeverGrease™ Pin Joints require special methods for replacement of pins. If not followed the service life can be decreased. See NeverGrease™ Pin Joints. (Group 3140.)

9. Clean and inspect parts. Repair or replace as necessary.
   - See Disassemble Cylinder. (CTM114319.)
   - See Assemble Cylinder. (CTM114319.)
10. Install bucket cylinder with pins and connect hydraulic lines.

IMPORTANT: If NeverGrease™ Pin Joint option is used, use a clean pin and make sure boss area and bushing are dry and NO lubrication is used. Ensure joint is fully aligned when installing pin.

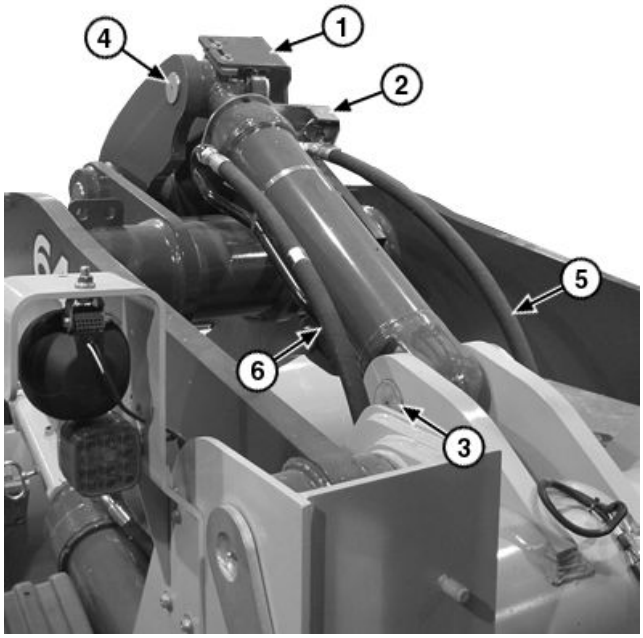

TX1086634A —UN—18JAN11

Boom

1— Bucket Level Indicator
2— Return-to-Dig Switch
3— Head End Pin
4— Rod End Pin
5— Rod End Hydraulic Line
6— Head End Hydraulic Line

IMPORTANT: Avoid machine damage. If joint is bound tight, premature wear and bushing damage may occur. Ensure joint is not bound tight.

11. If NeverGrease™ pin option is used, shim as required to remove clearance between cylinder and mounting boss at rod end only. **Do not** bind tight. See NeverGrease™ Pin Joints. (Group 3140.)
12. Install bucket level indicator and return-to-dig switch. Adjust return-to-dig brackets. See Return-to-Dig Adjustment—Z-Bar Linkage and see Return-to-Dig Adjustment—Powerllel Linkage. (Group 9015-20.)
13. Turn battery disconnect switch to ON position.
14. Remove frame articulation lock bar.

IMPORTANT: Prevent oil from "dieseling" inside cylinder. Rapid movement of dry cylinders at high pressure will cause damage to cylinder seals and premature failure. When machine is started for the first time after cylinder rebuild or oil is drained from cylinder, perform loader start-up procedure.

15. Perform loader start-up procedure. See Loader Start-Up Procedure. (Group 3160.)
16. Remove frame articulation lock bar.

Continued on next page

NeverGrease is a trademark of Deere & Company

RM58335,00012C7 -19-27JAN11-2/2

Boom and Bucket Cylinder Disassemble and Assemble

NOTE: John Deere™ 120 series cylinders are used on both boom and bucket.

John Deere is a trademark of Deere & Company

To repair John Deere™ 120 Series cylinders:

- See Disassemble Cylinder. (CTM114319.)
- See Assemble Cylinder. (CTM114319.)

RM58335,00012C8 -19-13JAN11-1/1

Loader Start-Up Procedure

IMPORTANT: Failure to properly remove air from cylinders will result in internal seal damage and premature failure of components. This procedure must be preformed whenever boom, bucket or steering cylinders are purged of oil.

The following procedure is recommended to purge all air from system.

1. Pre-fill cylinder before connecting hydraulic lines.

IMPORTANT: "Dieseling" of oil inside cylinder can occur causing seal damage if cylinders are cycled too fast. Perform procedure with engine at low idle (no acceleration) and cycle cylinders slowly to purge air from components.

2. **Boom Cylinder:** Raise boom until you are within 2—4 feet of full height.
3. Slowly lower the boom until bucket is 2—4 feet from ground and stop.
4. Repeat previous steps five times.
5. Slowly raise the boom to full height.
6. Slowly lower the boom to ground.
7. Repeat previous steps three times.
8. **Bucket Cylinder:** Position boom at half way height and roll bucket within two feet of full roll back position.
9. Position bucket within 1 foot of full dump.
10. Repeat previous steps five times.
11. Position bucket to full rollback position.
12. Position bucket to full dump.
13. Repeat previous steps three times.
14. **Steering Cylinders:** Slowly articulate machine to the right until loader frame is 2—3 in. from stops. Repeat procedure 4 times.
15. Slowly articulate machine to the left until loader frame is 2—3 in. from stops. Repeat procedure 4 times.
16. Slowly articulate machine fully to the right stop then fully to the left stop. Repeat this step four times.

RM58335,00012C9 -19-10JAN11-1/1

Hydraulic Reservoir Remove and Install

SPECIFICATIONS	
Left Side Platform Weight (approximate)	48 kg 105 lb.
Right Side Platform Weight (approximate)	73 kg 160 lb.
Cab Height	57 mm 2.25 in.
Cab Weight (approximate)	916 kg 2020 lb.
Hydraulic Reservoir Weight (approximate)	220 kg 485 lb.
Hydraulic Reservoir Weight (approximate)	220 kg 485 lb.
Cab Weight (approximate)	916 kg 2020 lb.
Cab Mounting Hardware Torque	1150 N·m 850 lb.-ft.
Left Side Platform Weight (approximate)	48 kg 105 lb.
Right Side Platform Weight (approximate)	73 kg 160 lb.

SERVICE EQUIPMENT AND TOOLS
JT01748 Lifting Bracket

1. Prepare machine for service. Park and Prepare for Service Safely. (Group 0001.)

CAUTION: To avoid injury from escaping fluid under pressure, stop engine and relieve the pressure in the system before disconnecting or connecting hydraulic or other lines. Tighten all connections before applying pressure.

2. Relieve hydraulic system pressure. See Hydraulic System Pressure and Accumulators Discharge. (Group 9025-25.)
3. Turn battery disconnect switch to OFF position.
4. Drain hydraulic reservoir. See Drain, Flush, and Refill Hydraulic System Oil. (Operator's Manual.)
5. Remove full coverage rear fenders (if equipped).

CAUTION: Prevent possible crushing injury from heavy component. Use appropriate lifting device.

6. Attach JT01748 Lifting Bracket to cab left and right side platforms. Remove left and right side platforms.



TX1086894A —UN—13JAN11

Side Platform

Specification

Left Side Platform—Weight (approximate)..... 48 kg 105 lb.

Right Side Platform—Weight (approximate)..... 73 kg 160 lb.

Continued on next page

RM58335,00012E1 -19-19JAN11-1/17

7. Remove transmission access panels (1) from both sides of engine frame.

1— Transmission Access Panel (2 used)

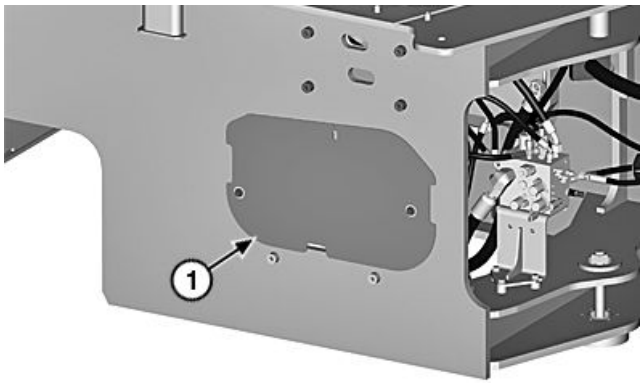

Engine Frame

RM58335,00012E1 -19-19JAN11-2/17

8. Remove cab skirting (28) from left and right sides of cab.
9. Remove hood. See Hood Remove and Install. (Group 1910.)
10. Remove exhaust filter upper structure. See Exhaust Filter Remove and Install. (Group 0530.)

28— Cab Skirting (2 used)

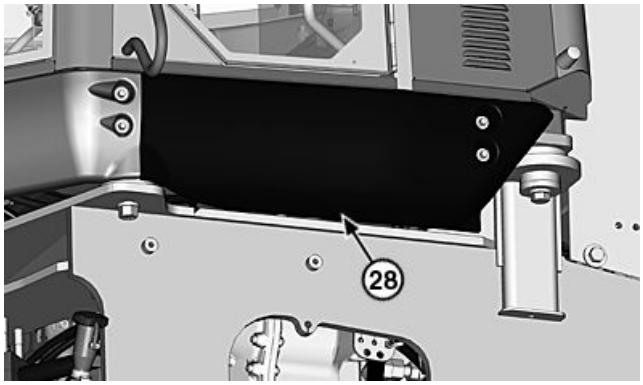

Cab Skirting (left side of machine shown)

RM58335,00012E1 -19-19JAN11-3/17

11. Remove cab mounting cap screws (29).

CAUTION: Prevent possible crushing injury from heavy component. Use appropriate lifting device.

12. Using appropriate lifting device raise and support cab to specification.

Specification	
Cab—Height	57 mm 2.25 in.
Cab—Weight (approximate)	916 kg 2020 lb.

29— Cap Screw (4 used)



Cab Mounting Hardware

Continued on next page

RM58335,00012E1 -19-19JAN11-4/17

IMPORTANT: Prevent damage to cab window, hydraulic reservoir may make contact with cab window during machine operation causing it to shatter. Improper alignment of hydraulic reservoir will also make it difficult to install or make adjustments to exhaust filter upper structure and engine side shields. Ensure hydraulic reservoir is properly aligned, take and record accurate measurements.

13. Measure and record distance from fixed measurement point (2) to corner of hydraulic reservoir (3) at locations shown. Repeat step for opposite side of hydraulic reservoir.

2— Fixed Measurement Point **3— Hydraulic Reservoir**

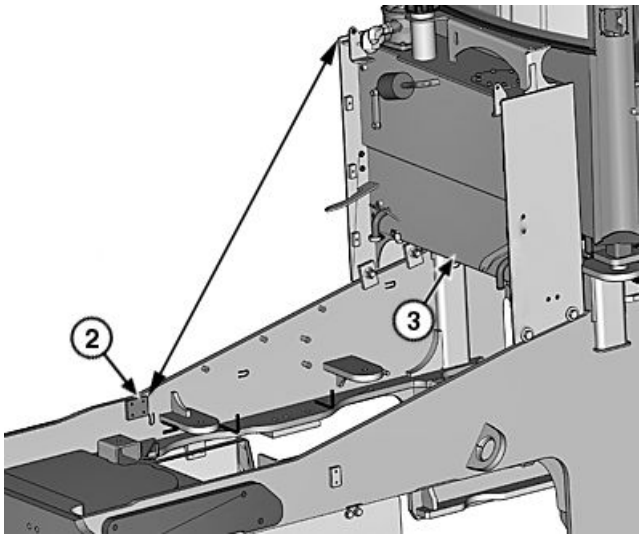

Fixed Measurement Point (some components removed for clarity)

RM58335,00012E1 -19-19JAN11-5/17

14. Measure and record distances from engine frame to bottom of hydraulic reservoir at measurement locations (6 and 7).
15. Measure and record distance from cab mount (4) to front of hydraulic reservoir at measurement location (5).
16. Repeat measurement steps for opposite side of hydraulic reservoir.

3— Hydraulic Reservoir
4— Cab Mount
5— Measurement Location
6— Measurement Location
7— Measurement Location

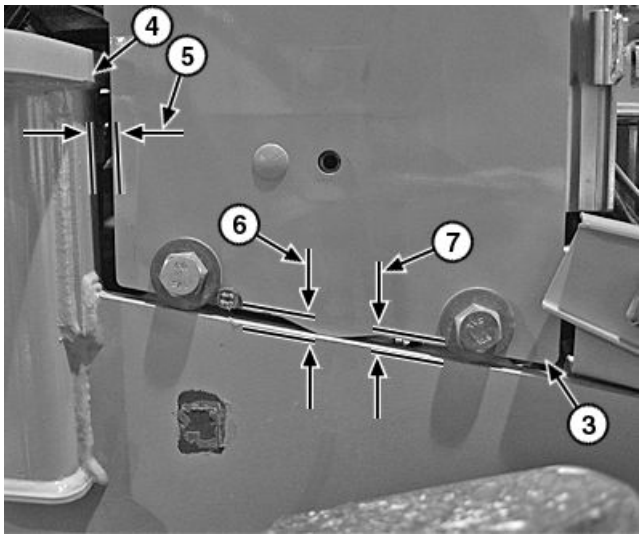

Hydraulic Reservoir Cab Mount

Continued on next page

RM58335,00012E1 -19-19JAN11-6/17

17. Record amount of shims (26) used on each side of hydraulic reservoir.

3— Hydraulic Reservoir
26— Shim (as required)

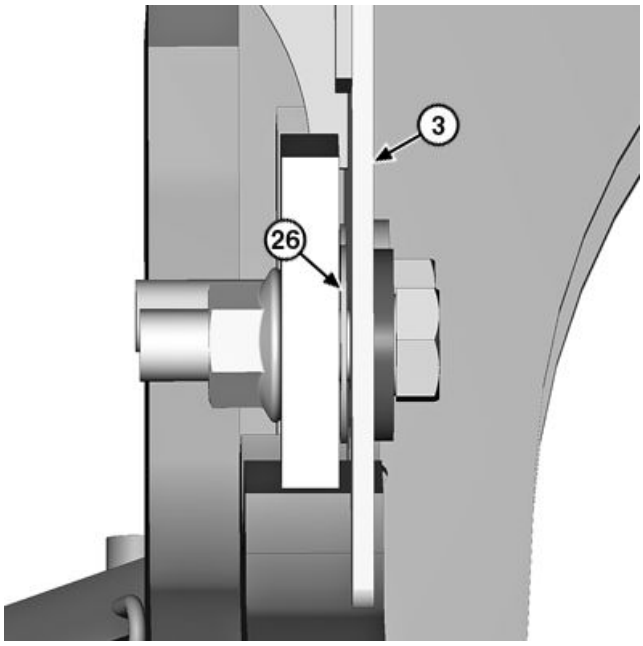

Shim Location

RM58335,00012E1 -19-19JAN11-7/17

IMPORTANT: Prevent hydraulic system contamination. Close all openings with caps and plugs.

18. Tag and disconnect lines (8—14). Close all openings with caps and plugs.

8— Pilot Return Line
9— Hydraulic Reservoir-to-Secondary Steering Valve Line
10— Main Hydraulic Pump Suction Line
11— Hydraulic Reservoir-to-Main Hydraulic Pump Line
12— Hydraulic Reservoir-to-Hydraulic Pump Manifold Line
13— Hydraulic Reservoir-to-Service Brake Valve Line
14— Hydraulic Reservoir-to-Secondary Steering Pump Line

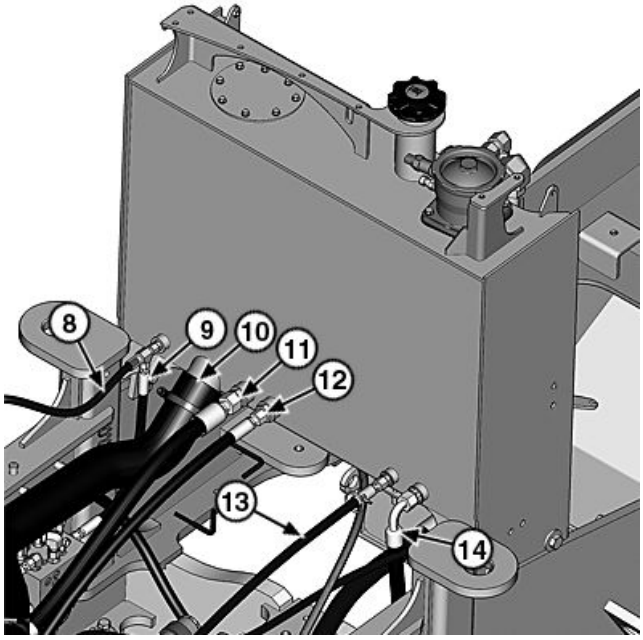

Hydraulic Reservoir Plumbing (front view shown) (some components removed for clarity)

Continued on next page

RM58335,00012E1 -19-19JAN11-8/17

19. Tag and disconnect lines (15—18). Close all openings with caps and plugs.

15— Hydraulic Reservoir Filter Line
16— Hydraulic Oil Cooler Inlet Line
17— Hydraulic Oil Cooler Outlet Line
18— Hydraulic Fan Pump Suction Line

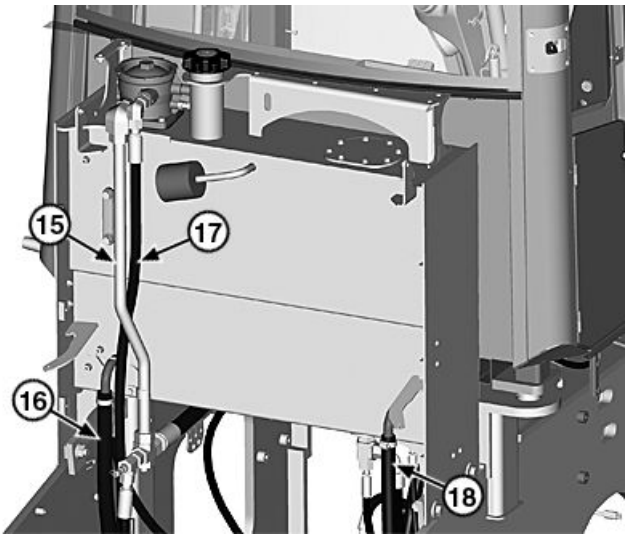

Hydraulic Reservoir Plumbing (rear view shown) (some components removed for clarity)

RM58335,00012E1 -19-19JAN11-9/17

20. Tag and disconnect lines (19—22). Close all openings with caps and plugs.

19— Hydraulic Reservoir-to-Fan Valve Line
20— Hydraulic Reservoir-to-Hydraulic Fan Pump Line
21— Hydraulic Reservoir-to-Fan Motor Line
22— Hydraulic Reservoir Drain Line

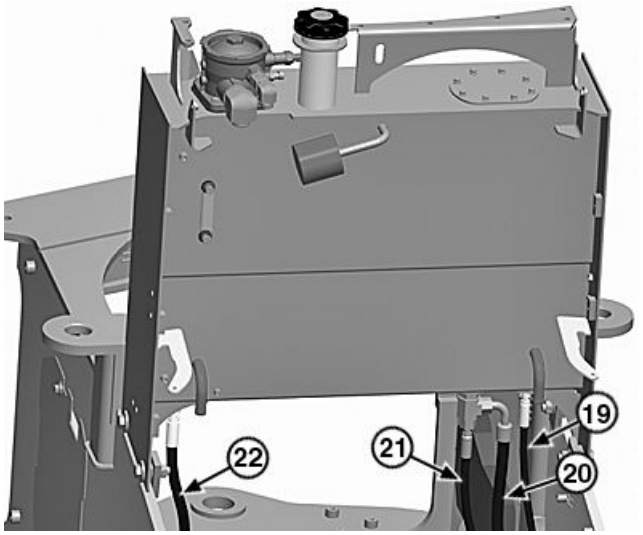

Hydraulic Reservoir Plumbing (some components removed for clarity)

Continued on next page

RM58335,00012E1 -19-19JAN11-10/17

21. Tag and disconnect electrical connectors (B15 and B21) from hydraulic filter housing.

23— Engine Frame Harness
B15— Hydraulic Oil Temperature Sensor
B21— Hydraulic Oil Filter Restriction Switch

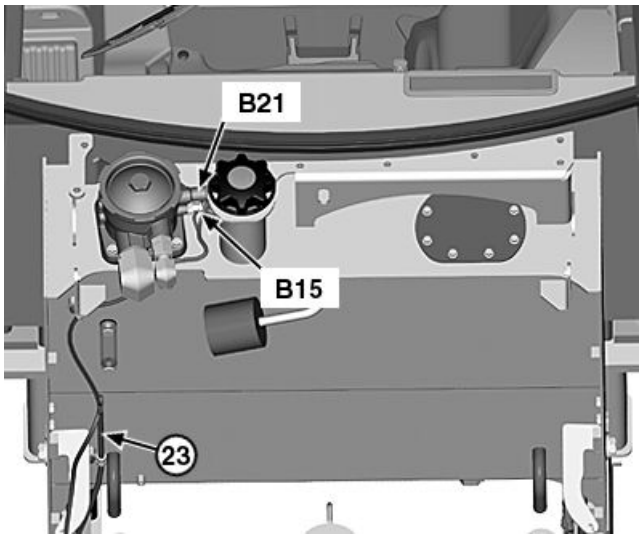

Engine Frame Harness

RM58335,00012E1 -19-19JAN11-11/17

⚠ CAUSTION: Prevent possible crushing injury from heavy component. Use appropriate lifting device.

22. Attach appropriate lifting device to hydraulic reservoir.

Specification	
Hydraulic Reservoir—Weight (approximate)	220 kg 485 lb.



Hydraulic Reservoir

Continued on next page

RM58335,00012E1 -19-19JAN11-12/17

IMPORTANT: Prevent damage to cab window, clearance is tight between cab window and engine. Protect cab window from hydraulic reservoir during removal or installation.

NOTE: Be careful not to lose shims when removing hydraulic reservoir, shims will fall when cap screws are removed. Shims are located between engine frame and hydraulic reservoir as shown.

23. Remove hydraulic reservoir.

NOTE: If hydraulic reservoir shows signs of contamination, see General Oil Cleanup Procedure. (Group 3160.)

24. Clean and inspect parts. Repair or replace parts as necessary.

CAUTION: Prevent possible crushing injury from heavy component. Use appropriate lifting device.

IMPORTANT: Prevent damage to cab window, clearance is tight between cab window and engine. Protect cab window from hydraulic reservoir during removal or installation.

25. Install shims and hydraulic reservoir.

Specification	
Hydraulic Reservoir—Weight (approximate)	220 kg 485 lb.

3— Hydraulic Reservoir
24— Cap Screw (4 used)
25— Washer (4 used)
26— Shim (as required)
27— Nut (4 used)

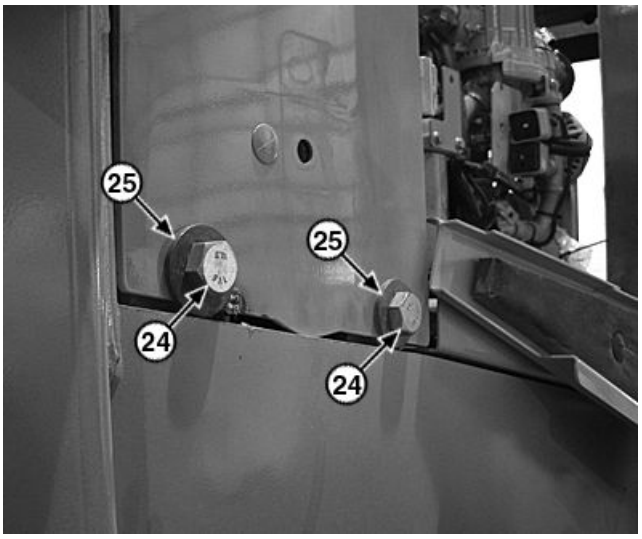

TX1086779A —UN—11JAN11

Hydraulic Reservoir

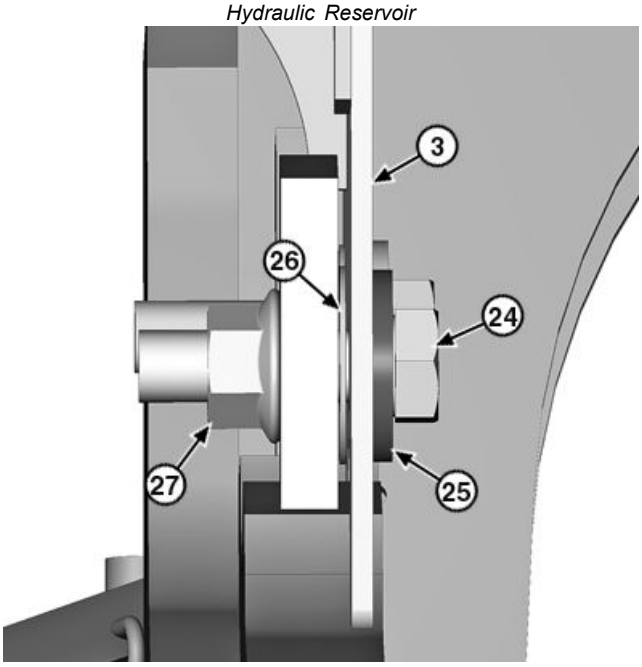

TX1086780A —UN—11JAN11

Hydraulic Reservoir Mounting Location

Continued on next page

RM58335,00012E1 -19-19JAN11-13/17

IMPORTANT: Prevent damage to cab window, hydraulic reservoir may make contact with cab window during machine operation causing it to shatter. Improper alignment of hydraulic reservoir will also make it difficult to install or make adjustments to exhaust filter upper structure and engine side shields. Ensure hydraulic reservoir is properly aligned.

26. Align hydraulic reservoir to measurements taken prior to removing hydraulic reservoir. Tighten hydraulic reservoir mounting hardware.
27. Connect all hydraulic lines.
28. Connect and install engine frame harness.
29. Fill hydraulic reservoir. See Drain, Flush, and Refill Hydraulic System Oil. (Operator's Manual.)

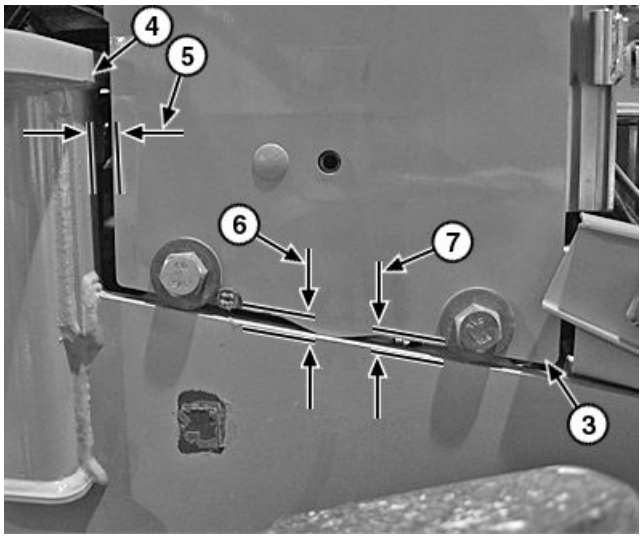

TX1086743A —UN—10JAN11

Hydraulic Reservoir Cab Mount

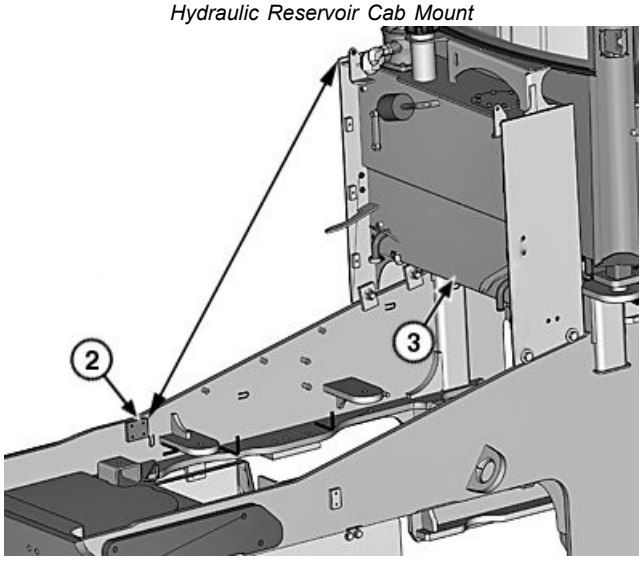

TX1086739A —UN—10JAN11

Fixed Measurement Point (some components removed for clarity)

2— Fixed Measurement Point
3— Hydraulic Reservoir
4— Cab Mount
5— Measurement Location
6— Measurement Location
7— Measurement Location

Continued on next page

RM58335,00012E1 -19-19JAN11-14/17

CAUTION: Prevent possible crushing injury from heavy component. Use appropriate lifting device.

30. Raise cab. Remove cab supports and install cab mounting hardware.
31. Tighten cab mounting hardware to specification.

Specification	
Cab—Weight (approximate)	916 kg (2020 lb.)
Cab Mounting Hardware—Torque	1150 N·m (850 lb.-ft.)

32. Install exhaust filter upper structure. See Exhaust Filter Remove and Install. (Group 0530.)
33. Align exhaust bellows. See Exhaust Bellows Alignment Procedure. (Group 0530.)
34. Install hood. See Hood Remove and Install. (Group 1910.)

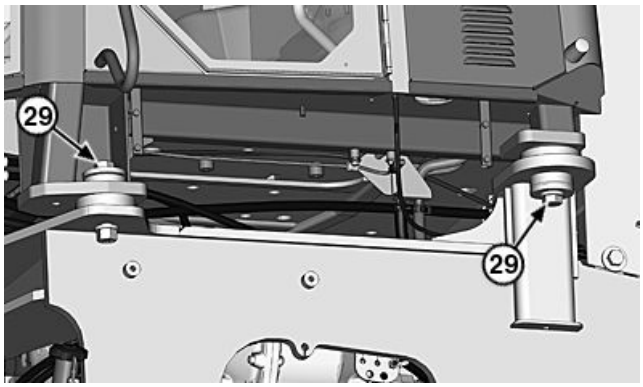

Cab Mounting Hardware

29— Cap Screw (4 used)

35. Install transmission access panels.

RM58335,00012E1 -19-19JAN11-15/17

36. Install cab skirting.

28— Cab Skirting (2 used)

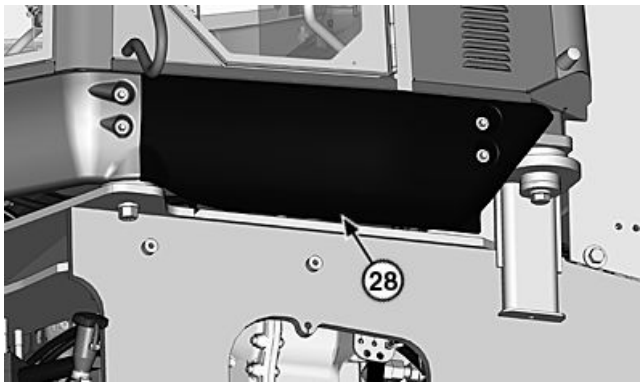

Cab Skirting (left side of machine shown)

Continued on next page

RM58335,00012E1 -19-19JAN11-16/17

CAUTION: Prevent possible crushing injury from heavy component. Use appropriate lifting device.

37. Install left and right side platforms and remove JT01748 Lifting Brackets.

Specification	
Left Side Platform—Weight (approximate)	48 kg (105 lb.)
Right Side Platform—Weight (approximate)	73 kg (160 lb.)

38. Install full coverage rear fenders (if equipped).
39. Turn battery disconnect switch to the ON position.
40. Remove frame articulation lock bar.



TX1086894A —UN—13JAN11

Side Platform

RM58335,00012E1 -19-19JAN11-17/17

Pilot Control Valve Remove and Install

ESSENTIAL TOOLS
JDG1385 Snap-to-Connect® (STC)

CAUTION: Prevent possible injury from unexpected machine movement. Install frame articulation lock bar before working in frame hinge area.

1. Install frame articulation lock bar.

CAUTION: Escaping fluid under pressure can penetrate the skin, causing serious injury. Avoid the hazard by relieving pressure before disconnecting hydraulic or other lines. Tighten all connections before applying high-pressure. Search for leaks with a piece of cardboard. Protect hands and body from high-pressure fluids.

If an accident occurs, see a doctor immediately. Any fluid injected into the skin must be surgically removed within a few hours or gangrene may result. Doctors unfamiliar with this type of injury should reference a knowledgeable medical source. Such information is available from Deere & Company Medical Department in Moline, Illinois, U.S.A.

2. Perform Hydraulic System Pressure and Accumulators Discharge. (Group 9025-25.)

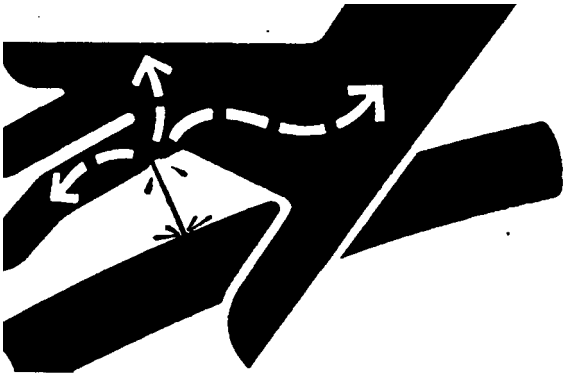

X9811 —UN—23AUG88

Escaping Fluid Under Pressure

3. Turn battery disconnect switch to the OFF position.
4. Remove right armrest assembly.
5. Remove switch pad and pilot control trim panel.
6. Apply vacuum or drain hydraulic reservoir. If draining hydraulic reservoir, see Drain and Refill Capacities. (Operator's Manual.)
7. Open pilot control access panel on outside right of machine.
8. Disconnect all electrical connectors from pilot control valve.

Snap-to-Connect is a registered trademark of Eaton Corporation

Continued on next page

RM58335,00012CB -19-06APR11-1/2

IMPORTANT: Avoid damage to wires. Do not twist control lever handle or knobs.

NOTE: Remove control lever support to access auxiliary function pilot control valve connections.

The pilot control valve uses Snap-to-Connect® (STC) Fittings. An STC tool is supplied with vehicle and located in operators manual packet.

9. Disconnect pilot control valve lines by performing the following:
   a. Clean around the STC fitting.
   b. Identify hydraulic lines for installation purposes.

IMPORTANT: Do not pry against release sleeve (5) or damage to fitting could result.

Do not force release sleeve beyond normal range of travel, otherwise release sleeve could fall off when hose is disconnected. If damage fitting is connected without the release sleeve installed, fitting will not disconnected again.

   c. Insert JDG1385 Snap-to-Connect (STC) Tool (4) between release sleeve (5) and shoulder (6) of fitting.
   d. Gently push, do not pry, release sleeve away from shoulder to disconnect the STC fitting.
   e. Pull hydraulic line to disconnect.
   f. Close all openings using caps and plugs.
10. Remove pilot control valve (7).
11. Repair or replace parts as necessary.
12. Install pilot control valve.
13. Connect pilot control valve hydraulic lines. See Loader and Hydraulic Cooling Circuit Component Location. (Group 9025-15.)
14. Connect all electrical connectors to pilot control valve.
15. Remove vacuum or fill hydraulic reservoir. See Drain and Refill Capacities. (Operator's Manual.)
16. Install pilot control trim panel and switch pad.
17. Install right armrest assembly.
18. Turn battery disconnect to the ON position.
19. Operate machine and check for leaks at hydraulic line connections.
20. Close access panel.

Snap-to-Connect is a registered trademark of Eaton Corporation

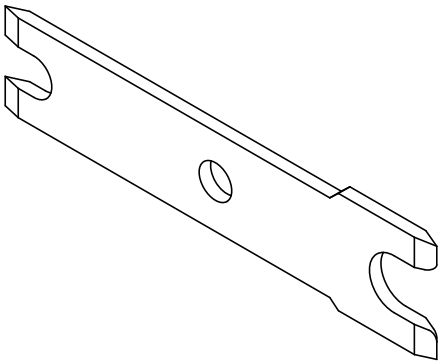

TX1022106 —UN—17APR07

JDG1385 Snap-to-Connect® Tool

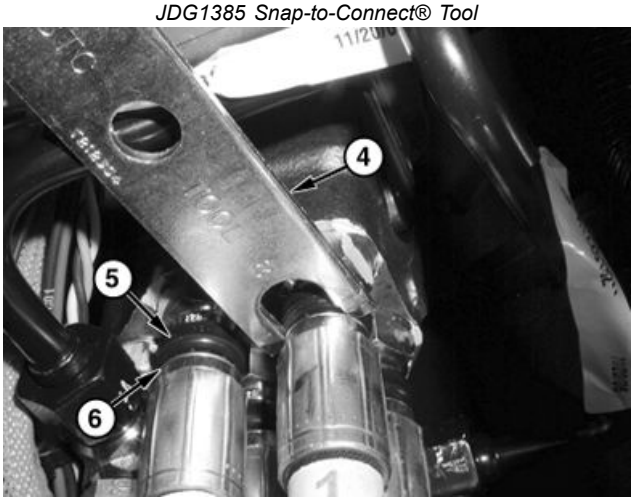

TX1022723A —UN—25APR07

Snap-to-Connect® Tool/Pilot Control Valve Lines

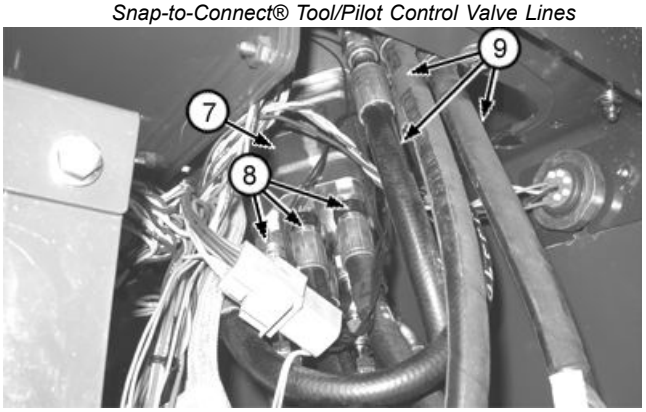

T196380A —UN—24NOV03

Pilot Control Lines (Single Lever with Auxiliary Function Pilot Control Valve Shown)

4— JDG1385 Snap-to-Connect® (STC) Tool
5— Release Sleeve
6— Shoulder
7— Pilot Control Valve
8— Pilot Control Valve Lines
9— Auxiliary Function Pilot Control Valve Lines

21. Remove articulation lock bar.

RM58335,00012CB -19-06APR11-2/2

Pilot Control Valve Disassemble and Assemble

1. Perform Pilot Control Valve Remove and Install. (Group 3160.)

1— Boom Lower Valve
2— Bucket Dump Valve
3— Boom Raise Valve
4— Pressure Oil
5— Bucket Rollback Valve
6— Return Oil (hydraulic reservoir)

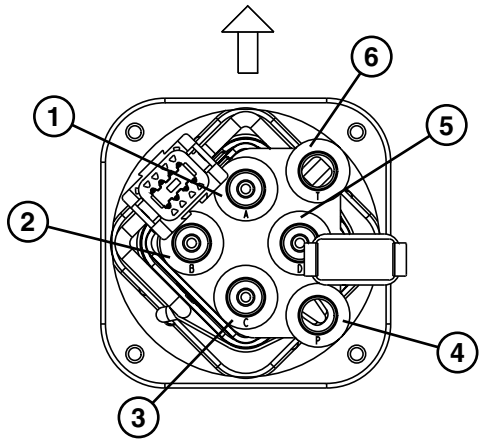

TX1022237 —UN—17APR07

Bottom View of Pilot Control Lever—Single Lever Shown

Continued on next page

RM58335,00012CC -19-10JAN11-1/3

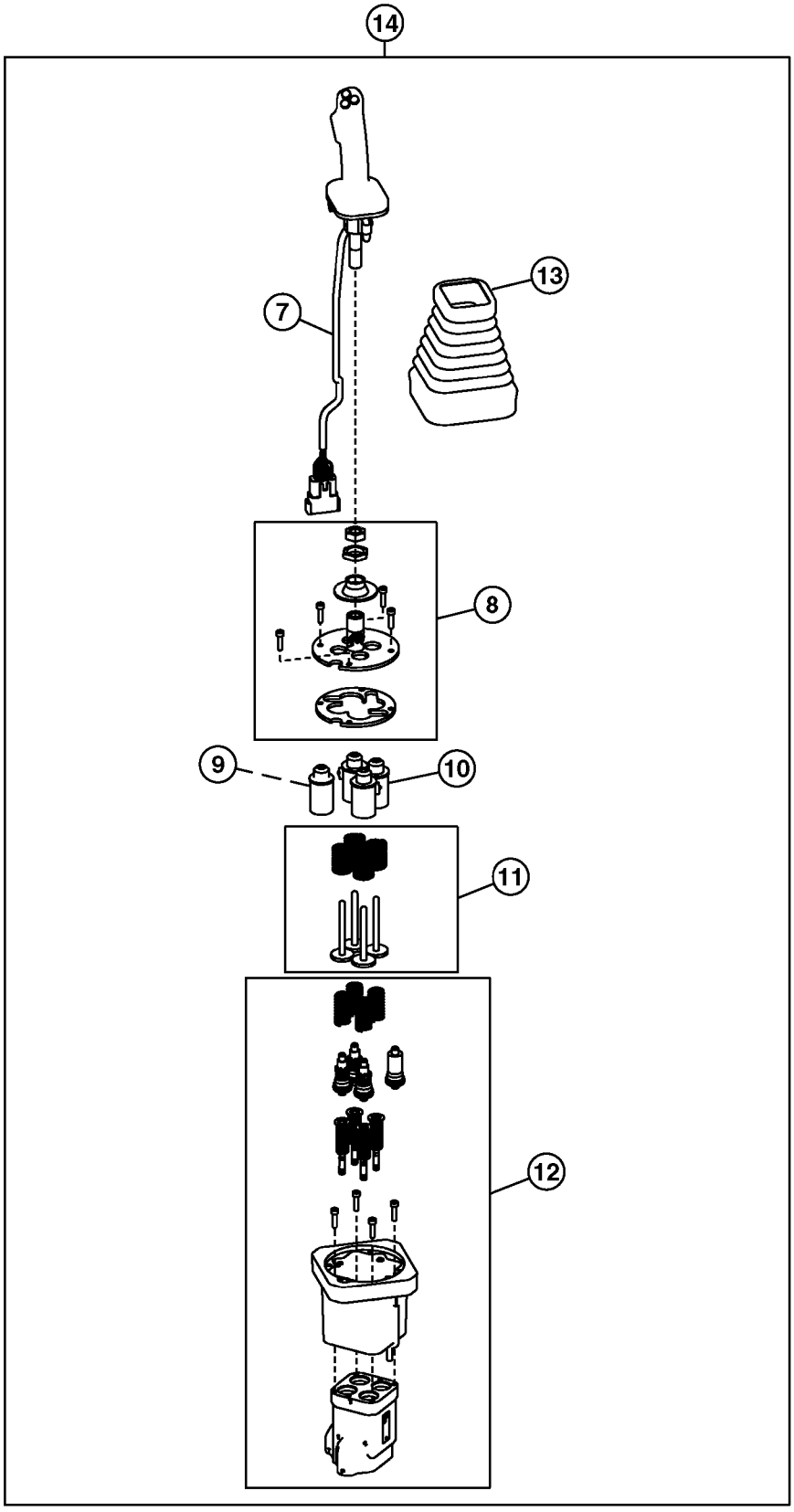

TX1029144

Pilot Control Lever—Single Lever Shown

7— Pilot Control Lever with Wiring Harness
8— Universal Joint
9— Solenoid
10— Guide
11— Push Pin
12— Pilot Control Spool Assembly
13— Boot
14— Pilot Control Valve

TX1029144 —UN—10SEP07

Continued on next page

RM58335,00012CC -19-10JAN11-2/3

NOTE: Parts shown are for reference only.

2. Disassemble and assemble parts as shown. Not all the parts shown are serviceable individually.

RM58335,00012CC -19-10JAN11-3/3

Auxiliary Function Pilot Control Valve Remove and Install—If Equipped

ESSENTIAL TOOLS
JDG1385 Snap-to-Connect® (STC)

CAUTION: Prevent possible injury from unexpected machine movement. Install frame articulation lock bar before working in frame hinge area.

1. Install frame articulation lock bar.

CAUTION: Escaping fluid under pressure can penetrate the skin, causing serious injury. Avoid the hazard by relieving pressure before disconnecting hydraulic or other lines. Tighten all connections before applying pressure. Search for leaks with a piece of cardboard. Protect hands and body from high-pressure fluids.

If an accident occurs, see a doctor immediately. Any fluid injected into the skin must be surgically removed within a few hours or gangrene may result. Doctors unfamiliar with this type of injury should reference a knowledgeable medical source. Such information is available from Deere & Company Medical Department in Moline, Illinois, U.S.A.

2. Perform Hydraulic System Pressure and Accumulators Discharge. (Group 9025-25.)

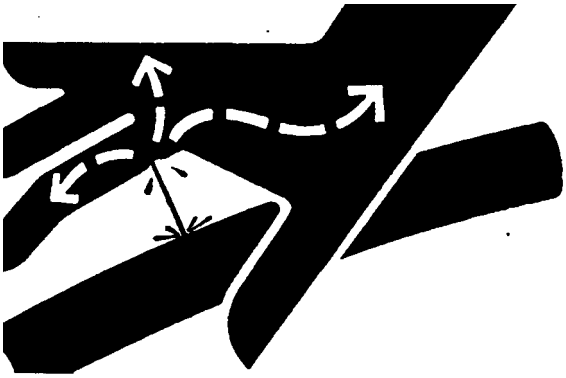

X9811 —UN—23AUG88

Escaping Fluid Under Pressure

3. Turn battery disconnect switch to the OFF position.
4. Apply vacuum or drain hydraulic reservoir. If draining hydraulic reservoir, see Drain and Refill Capacities. (Operator's Manual.)
5. Remove right armrest assembly.
6. Remove switch pad and pilot control trim panel.
7. Open auxiliary function pilot control valve access panel on outside right of machine.
8. Disconnect all electrical connectors from auxiliary function pilot control valve (1).

Snap-to-Connect is a registered trademark of Eaton Corporation

Continued on next page

RM58335,00012CD -19-06APR11-1/3

NOTE: The auxiliary function pilot control valve uses Snap-to-Connect® (STC) Fittings. An STC tool is supplied with vehicle and located in Operator's Manual Packet.

9. Disconnect auxiliary function pilot control valve hydraulic lines (5 and 8) by performing the following:
   a. Clean around the STC fittings.
   b. Identify hydraulic lines for installation purposes.

IMPORTANT: Do not pry against release sleeve (2) or damage to Snap-to-Connect® fitting could result.

Do not force release sleeve beyond normal range of travel, otherwise release sleeve could fall off when hose is disconnected. If damage fitting is connected without the release sleeve installed, fitting will not disconnected again.

   c. Insert JDG1385 Snap-to-Connect® (STC) Tool (4) between release sleeve (5) and shoulder (6) of fitting.
   d. Gently push, do not pry, release sleeve away from shoulder to disconnect the STC fitting.
   e. Pull hydraulic line to disconnect.
   f. Close all openings using caps and plugs.
10. Disconnect auxiliary function pilot control valve hydraulic lines (6 and 7). Close all openings using caps and plugs.
11. Remove auxiliary function pilot control valve (1).
12. Repair or replace parts as necessary.
13. Install auxiliary function pilot control valve.
14. Connect auxiliary function pilot control valve hydraulic lines (5—8). See Loader and Hydraulic Cooling Circuit Component Location. (Group 9025-15.)
15. Connect all electrical connectors to auxiliary function pilot control valve.
16. Remove vacuum or fill hydraulic reservoir. See Drain and Refill Capacities. (Operator's Manual.)
17. Start machine. Operate controls and check for leaks.
18. Install switch pad and pilot control trim panel.
19. Install right armrest assembly.
20. Turn battery disconnect switch to the ON position.
21. Remove frame articulation lock bar.

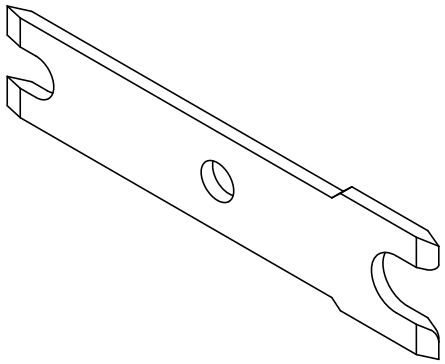

TX1022106 —UN—17APR07

JDG1385 Snap-to-Connect® Tool

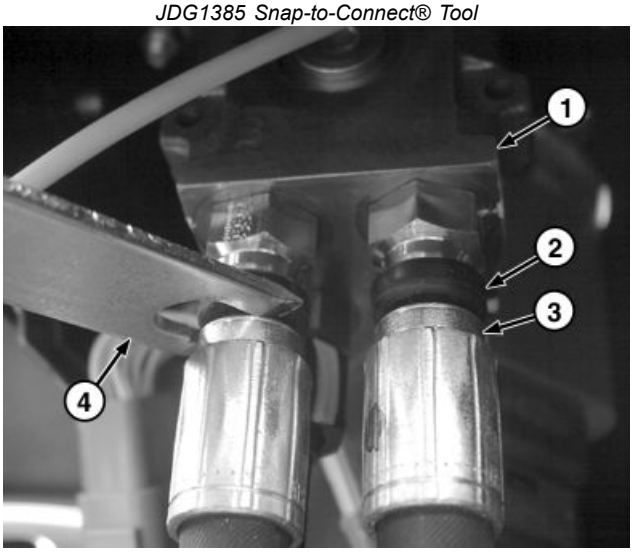

TX1029503A —UN—17SEP07

Snap-to-Connect® Tool/Auxiliary Function Pilot Control Valve

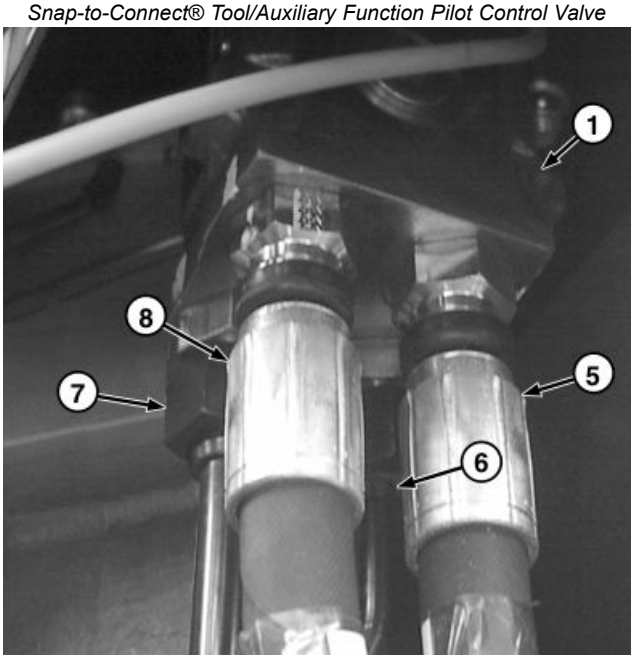

TX1029502A —UN—17SEP07

Auxiliary Function Pilot Control Valve Hydraulic Lines

1— Auxiliary Function Pilot Control Valve
2— Release Sleeve
3— Shoulder
4— JDG1385 Snap-to-Connect® (STC) Tool
5— Work Port A Hydraulic Line
6— Hydraulic Pressure Line
7— Hydraulic Return Line
8— Work Port B Hydraulic Line

Continued on next page

Snap-to-Connect is a registered trademark of Eaton Corporation

RM58335,00012CD -19-06APR11-3/3

Pilot Accumulator Remove and Install

1. Prepare machine for service. Park and Prepare for Service Safely. (Group 0001.)

CAUTION: To avoid injury from escaping fluid under pressure, stop engine and relieve the pressure in the system before disconnecting or connecting hydraulic or other lines. Tighten all connections before applying pressure.

2. Relieve hydraulic system pressure. See Hydraulic System Pressure and Accumulators Discharge. (Group 9025-25.)
3. Turn battery disconnect to OFF position.
4. Disconnect hydraulic line (4).

NOTE: Accumulator is not serviceable.

5. Remove pilot accumulator (3).
6. Replace accumulator.
7. Install pilot accumulator.
8. Connect hydraulic line.
9. Remove frame articulation lock bar.

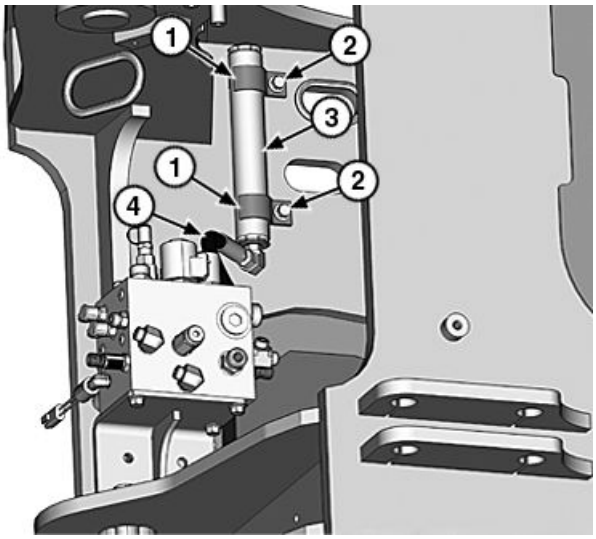

TX1086827A —UN—12JAN11

Pilot Accumulator

1— Clamp (2 used)
2— Cap Screw (2 used)
3— Pilot Accumulator
4— Hydraulic Line

RM58335,00012CF -19-18JAN11-1/1

Hydraulic Pump Manifold Remove and Install

SPECIFICATIONS	
Hydraulic Pump Manifold Cap Screws Torque	50 N·m 40 lb.-ft.

NOTE: Disassembly and assembly of hydraulic pump manifold can be performed without removing hydraulic pump manifold. See Hydraulic Pump Manifold Disassemble and Assemble. (Group 3160.)

1. Prepare machine for service. Park and Prepare for Service Safely. (Group 0001.)

CAUTION: To avoid injury from escaping fluid under pressure, stop engine and relieve the pressure in the system before disconnecting or connecting hydraulic or other lines. Tighten all connections before applying pressure.

2. Relieve hydraulic system pressure. See Hydraulic System Pressure and Accumulators Discharge. (Group 9025-25.)
3. Turn battery disconnect switch to OFF position.
4. Apply vacuum or drain hydraulic reservoir. See Drain, Flush, and Refill Hydraulic System Oil. (Operator's Manual.)
5. Tag and disconnect electrical connectors from hydraulic pump manifold (1).
6. Tag and disconnect hydraulic lines from hydraulic pump manifold. Close all lines and openings with caps and plugs. For location of hydraulic pump manifold and hydraulic line identification, see Hydraulic Pump Manifold. (Group 9025-15.)
7. Remove hydraulic pump manifold.
8. Clean and inspect for contamination, wear, or damage. See Hydraulic Pump Manifold Disassemble and Assemble. (Group 3160.)
9. Repair or replace parts as necessary.
10. Install hydraulic pump manifold. Tighten cap screws to specification.

Specification

Hydraulic Pump Manifold
Cap Screws—Torque.....50 N·m
40 lb.-ft.

11. Connect hydraulic lines to hydraulic pump manifold. See Hydraulic Pump Manifold. (Group 9025-15.)

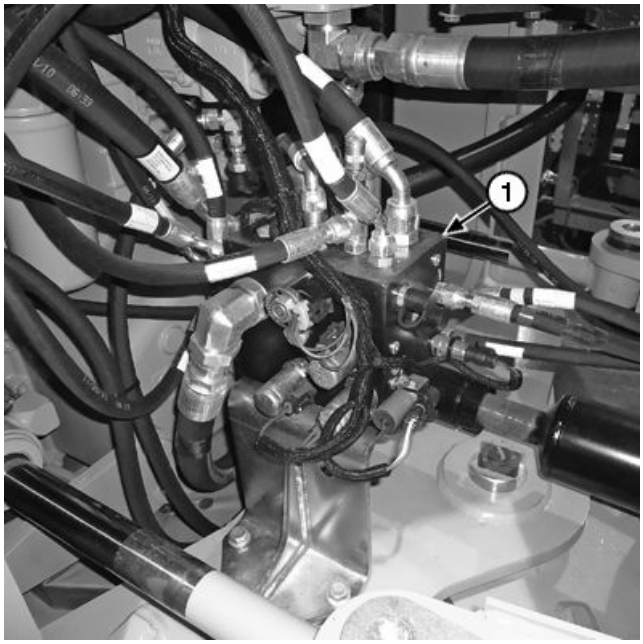

TX1086830A —UN—03MAR11

Hydraulic Pump Manifold

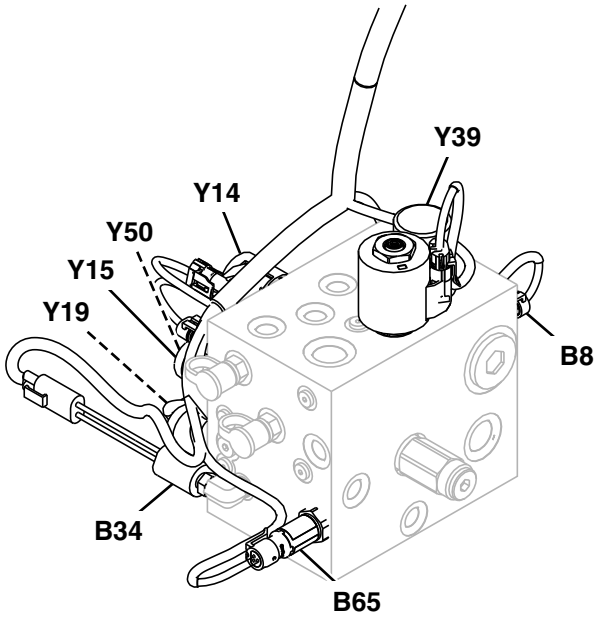

TX1089007 —UN—07MAR11

Hydraulic Pump Manifold Electrical Connections

1— Hydraulic Pump Manifold
B8— Hydraulic System Pressure Sensor
B34— Park Brake Pressure Switch
B65— Hydraulic Power Management (HPM) Pressure Sensor
Y14— Pilot Enable Solenoid
Y15— Boom Down Accumulator Solenoid
Y19— Park Brake Release Solenoid
Y39— Hydraulic Power Management Solenoid
Y50— Differential Lock Solenoid

Continued on next page

RM58335,00012D0 -19-07MAR11-1/2

12. Connect electrical connectors to hydraulic pump manifold.
13. Remove vacuum or fill hydraulic reservoir. See Drain, Flush, and Refill Hydraulic System Oil. (Operator's Manual.)
14. Turn battery disconnect switch to ON position.
15. Remove frame articulation lock bar.

B8— Hydraulic System Pressure Sensor
B34— Park Brake Pressure Switch
B65— Hydraulic Power Management (HPM) Pressure Sensor
Y14— Pilot Enable Solenoid
Y15— Boom Down Accumulator Solenoid
Y19— Park Brake Release Solenoid
Y39— Hydraulic Power Management Solenoid
Y50— Differential Lock Solenoid

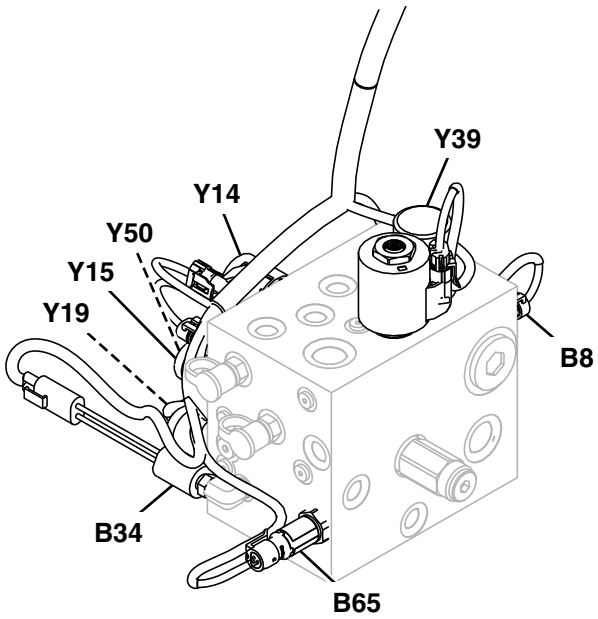

Hydraulic Pump Manifold Electrical Connections

RM58335,00012D0 -19-07MAR11-2/2

Hydraulic Pump Manifold Disassemble and Assemble

SPECIFICATIONS	
Pilot Accumulator Check Valve (CV1) Torque	27.1 N·m 20 lb-ft
External Compensator Valve (EC1) Torque	68 N·m 50 lb-ft
Park Brake Solenoid Valve Mounting Screw Torque	3.5 N·m 31.2 lb-in
Park Brake Check Valve (CV2) Torque	27.1 N·m 20 lb-ft
Pilot Pressure Solenoid Valve Mounting Screw Torque	3.5 N·m 31.2 lb-in
Differential Lock Solenoid Valve Mounting Screw Torque	3.5 N·m 31.2 lb-in
Load Sense Check Valve (LS1) Torque	27.1 N·m 20 lb-ft
Pilot Accumulator Valve Mounting Screw Torque	27.1 N·m 20 lb-ft
Pilot Pressure Reducing Valve (PR1) Torque	33.8 N·m 25 lb-ft

NOTE: Disassembly and assembly of hydraulic pump manifold can be done without removing hydraulic pump manifold from loader. If removal is necessary, see Hydraulic Pump Manifold Remove and Install. (Group 3160.)

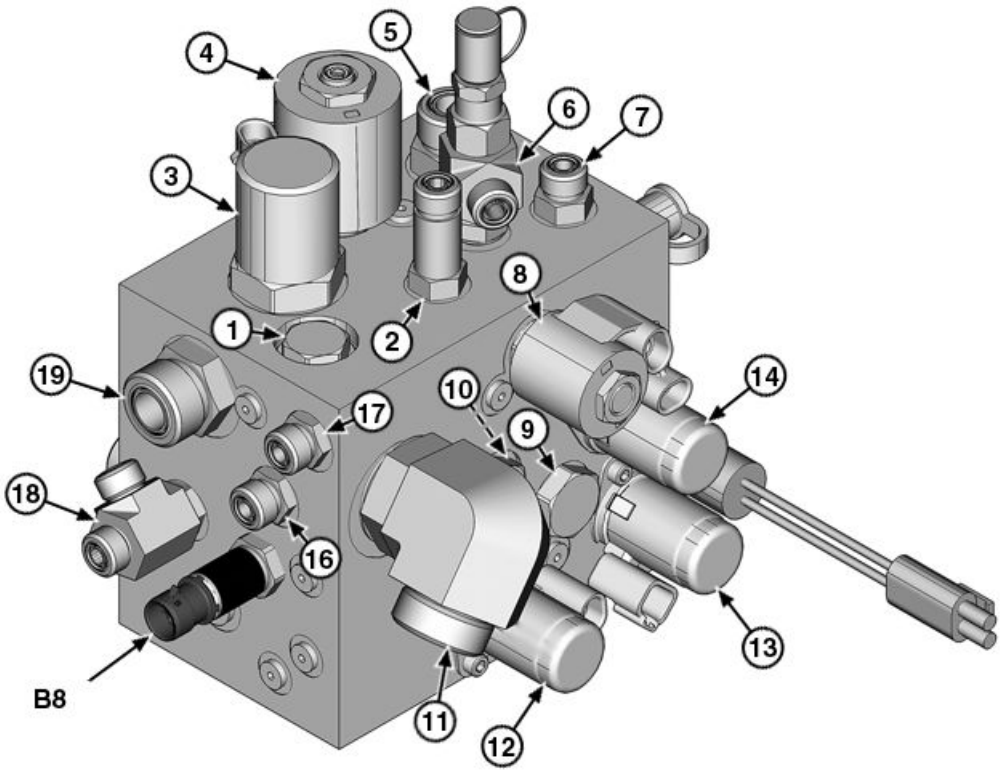

TX1083243A —UN—02NOV10

Hydraulic Pump Manifold

Continued on next page

RM58335,00012D1 -19-18JAN11-1/2

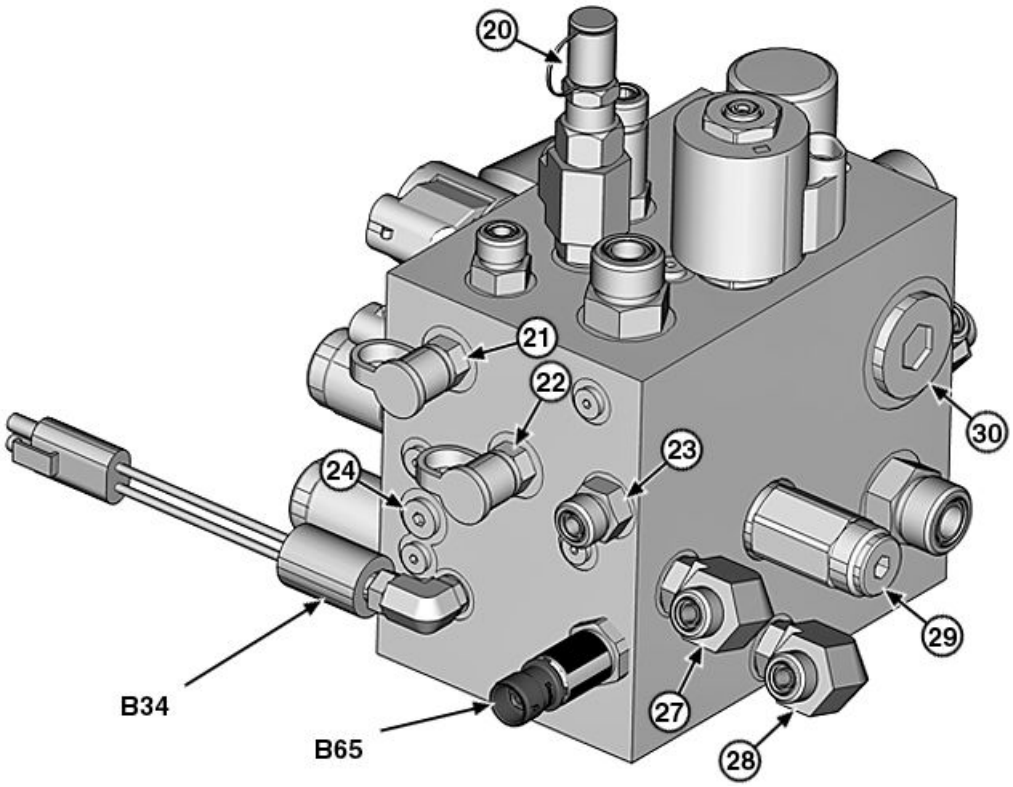

TX1083244A —UN—18OCT10

Hydraulic Pump Manifold

1— Pilot Accumulator Isolation Check Valve (CV1)
2— Main Hydraulic Pump Load Sense Port
3— External Compensator (EC1)
4— Power Management—Load Sense Relief Valve (TS1)
5— Hydraulic Return Port
6— Transmission Pressure Inlet Port
7— Pilot Pressure Port
8— Pilot Accumulator Solenoid Valve (SF1)
9— Park Brake Pressure Isolation Check Valve (CV2)
10— Load Sense Check Valve (LS1)
11— Main Hydraulic Pump Port
12— Differential Lock Solenoid Valve
13— Park Brake Solenoid Valve
14— Pilot Accumulator Solenoid Valve
16— Service Brake Pressure Port
17— Pilot Accumulator Pressure Port
18— Orbital Steering Load Sense Port
19— Orbital Steering Pressure Port
20— Transmission Pressure Test Port
21— Pilot Pressure Test Port
22— Main Hydraulic Pump Pressure Test Port
23— Loader Load Sense Port
24— Transmission Oil Warmup Orifice (ORF2)
27— Park Brake Pressure Port
28— Differenital Lock Pressure Port
29— Pilot Pressure Reducing Valve (PR1)
30— Joystick Steering Pressure Port
B8— Hydraulic System Pressure Sensor
B34— Park Brake Pressure Switch
B65— Hydraulic Power Management (HPM) Pressure Sensor

1. Remove parts from hydraulic pump manifold as necessary.
2. Inspect parts for contamination, wear, or damage. Clean parts of any contaminants.
3. Repair or replace parts as necessary.

IMPORTANT: Avoid O-ring damage or component failure. Apply clean hydraulic oil to all internal parts before assembling and apply petroleum jelly to backup rings and O-rings before installation.

4. Apply petroleum jelly to O-rings and backup rings. Install O-rings and backup rings.

RM58335,00012D1 -19-18JAN11-2/2

5. Install parts in hydraulic pump manifold and tighten to specification.

Specification	
Pilot Accumulator Check Valve (CV1)—Torque	27.1 N·m 20 lb-ft
External Compensator Valve (EC1)—Torque	68 N·m 50 lb-ft
Park Brake Solenoid Valve Mounting Screw—Torque	3.5 N·m 31.2 lb-in
Park Brake Check Valve (CV2)—Torque	27.1 N·m 20 lb-ft
Pilot Pressure Solenoid Valve Mounting Screw—Torque	3.5 N·m 31.2 lb-in
Differential Lock Solenoid Valve Mounting Screw—Torque	3.5 N·m 31.2 lb-in
Load Sense Check Valve (LS1)—Torque	27.1 N·m 20 lb-ft
Pilot Accumulator Valve Mounting Screw—Torque	27.1 N·m 20 lb-ft
Pilot Pressure Reducing Valve (PR1)—Torque	33.8 N·m 25 lb-ft

RM58335,00012D1 -19-18JAN11-3/2

Ride Control Valve Remove and Install—If Equipped

CAUTION: Prevent possible injury from unexpected machine movement. Install frame articulation lock bar before working in frame hinge area.

1. Install frame articulation lock bar.

CAUTION: Escaping fluid under pressure can penetrate the skin, causing serious injury. Avoid the hazard by relieving pressure before disconnecting hydraulic or other lines. Tighten all connections before applying pressure. Search for leaks with a piece of cardboard. Protect hands and body from high-pressure fluids.

If an accident occurs, see a doctor immediately. Any fluid injected into the skin must be surgically removed within a few hours or gangrene may result. Doctors unfamiliar with this type of injury should reference a knowledgeable medical source. Such information is available from Deere & Company Medical Department in Moline, Illinois, U.S.A.

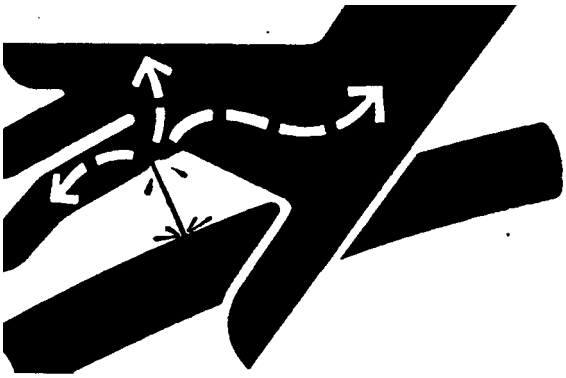

X9811 —UN—23AUG88

Escaping Fluid Under Pressure

2. Perform Hydraulic System Pressure and Accumulators Discharge. (Group 9025-25.)
3. Turn battery disconnect switch to the OFF position.

Continued on next page

RM58335,00012D2 -19-10JAN11-1/2

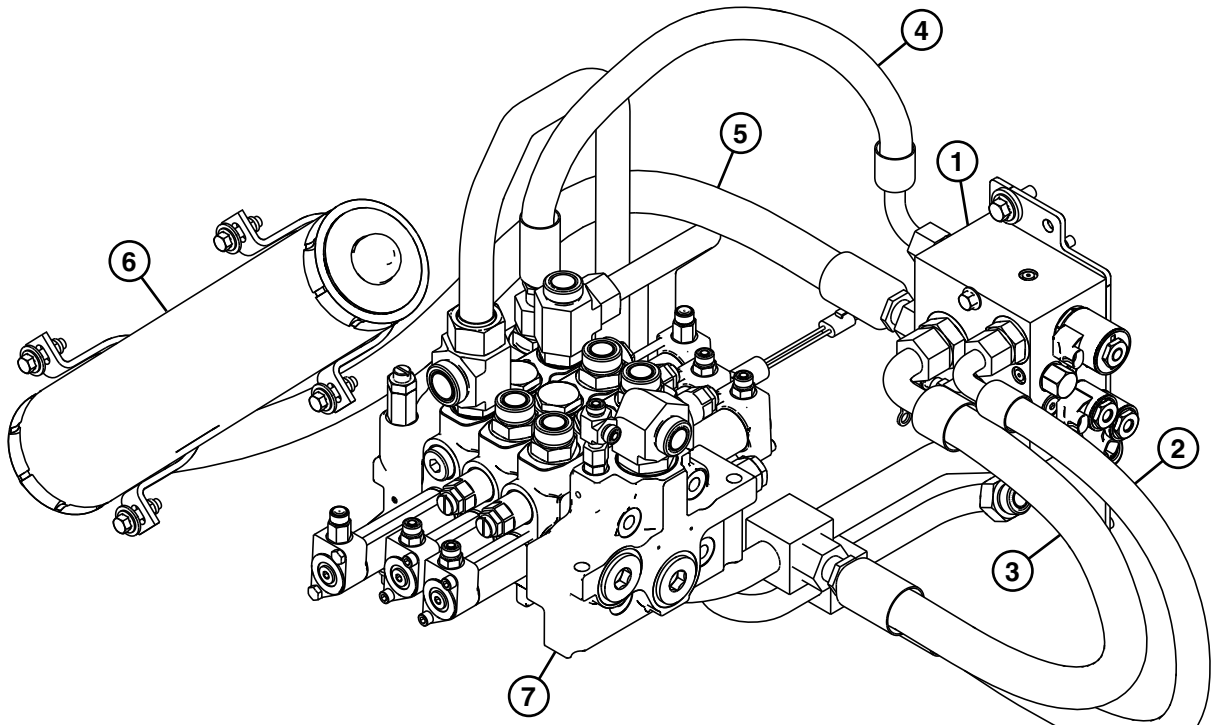

TX1049614 —UN—03OCT08

TX1049614

Ride Control Valve Remove and Install

1— Ride Control Valve
2— Ride Control Valve-to-Hydraulic Cylinder Rod End Line Tee
3— Ride Control Valve-to-Hydraulic Cylinder Head End Line Tee
4— Loader Control Valve-to-Ride Control Valve Line
5— Ride Control Valve-to-Ride Control Accumulator Line
6— Ride Control Accumulator
7— Loader Control Valve

4. Tag and disconnect electrical connectors from ride control valve (1).
5. Tag and disconnect hydraulic lines (2-5) from ride control valve. Close all openings using caps and plugs.
6. Remove ride control valve.
7. Repair or replace as necessary. See Ride Control Valve Disassemble and Assemble—If Equipped. (Group 3160.)
8. Install ride control valve.
9. Connect hydraulic lines.
10. Connect electrical connectors.
11. Turn battery disconnect switch to the ON position.
12. Remove frame articulation lock bar.

RM58335,00012D2 -19-10JAN11-2/2

Ride Control Valve Disassemble and Assemble—If Equipped

SPECIFICATIONS	
On/Off Solenoid Valve Torque	67.7 N·m 50 lb-ft
Bucket Dump Solenoid Valve Torque	27.1 N·m 20 lb-ft
Ride Control Shuttle Valve Torque	33.8 N·m 25 lb-ft
High Flow Spool Valve Torque	95.0 N·m 70 lb-ft
Low Flow Spool Valve Torque	33.9 N·m 25 lb-ft

NOTE: Ride control valve components can be replaced while ride control valve is on machine. Internal parts of solenoid and check valves are not serviceable.

To remove and install ride control valve, see Ride Control Valve Remove and Install—If Equipped. (Group 3160.)

1. Tag and remove solenoids and valves.
2. Inspect parts for contamination, wear, or damage. Clean parts of any contaminants.
3. Repair or replace parts as necessary.

NOTE: Apply clean hydraulic oil to all internal parts before assembling and apply petroleum jelly to backup rings and O-rings before installation.

4. Install new O-rings and backup rings.
5. Install solenoids and valves and tighten to specification.

Specification

On/Off Solenoid Valve—Torque.....67.7 N·m (50 lb-ft)

Bucket Dump Solenoid Valve—Torque.....27.1 N·m (20 lb-ft)

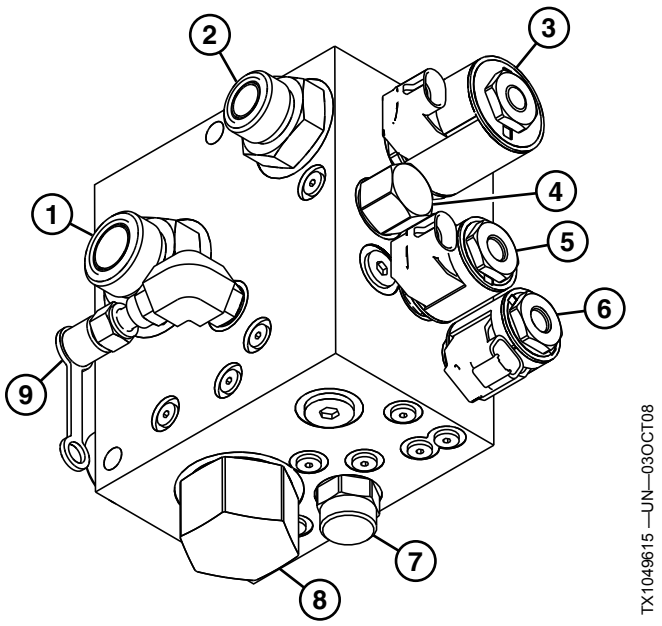

Ride Control Valve

1— Hydraulic Cylinder Head End Port
2— Hydraulic Cylinder Rod End Port
3— On/Off Solenoid Valve
4— Low Flow Spool Valve
5— On/Off Solenoid Valve
6— Bucket Dump Solenoid Valve
7— Ride Control Shuttle Valve
8— High Flow Spool Valve
9— Accumulator Test Port

Ride Control Shuttle Valve—Torque.....33.8 N·m (25 lb-ft)

High Flow Spool Valve—Torque.....95.0 N·m (70 lb-ft)

Low Flow Spool Valve—Torque.....33.9 N·m (25 lb-ft)

RM58335,00012D3 -19-10JAN11-1/1

Pin Disconnect Valve Remove and Install—If Equipped

1. Prepare machine for service. Park and Prepare for Service Safely. (Group 0001.)

CAUTION: To avoid injury from escaping fluid under pressure, stop engine and relieve the pressure in the system before disconnecting or connecting hydraulic or other lines. Tighten all connections before applying pressure.

2. Relieve hydraulic system pressure. See Hydraulic System Pressure and Accumulators Discharge. (Group 9025-25.)
3. Turn battery disconnect switch to OFF position.
4. Tag and disconnect hydraulic lines (3—6). Close all openings using caps and plugs.
5. Disconnect electrical connector from pin disconnect solenoid (Y20).
6. Remove pin disconnect valve.
7. Clean and inspect parts. Repair or replace parts as necessary. See Pin Disconnect Valve Disassemble and Assemble—If Equipped. (Group 3160.)
8. Install pin disconnect valve.
9. Connect hydraulic lines.
10. Connect electrical connector to pin disconnect solenoid.

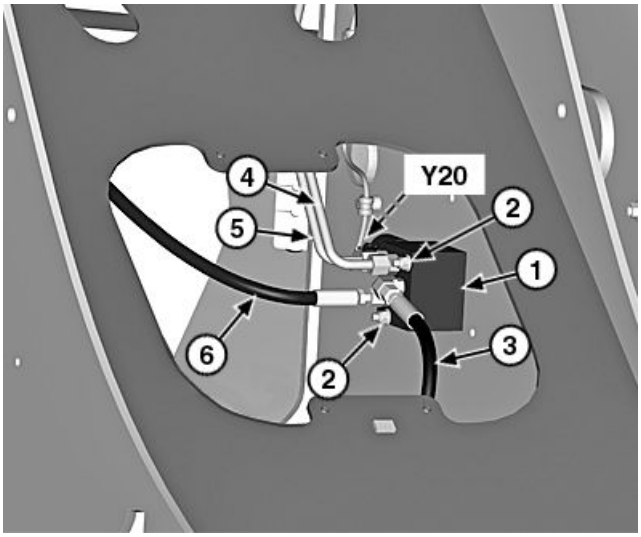

Pin Disconnect Valve

1— Pin Disconnect Valve
2— Nut (2 used)
3— Return Line
4— Pin Disconnect Line (PDA)
5— Pin Disconnect Line (PDB)
6— Pressure Line
Y20— Pin Disconnect Solenoid

11. Turn battery disconnect switch to ON position.
12. Remove frame articulation lock bar.

RM58335,00012D4 -19-12JAN11-1/1

Pin Disconnect Valve Disassemble and Assemble—If Equipped

SPECIFICATIONS	
Pin Disconnect Solenoid Valve Torque	33.8 N·m 25 lb.-ft.
Pin Disconnect Pressure Reducing Valve Torque	33.8 N·m 25 lb.-ft.

NOTE: Pin disconnect valve components can be replaced while pin disconnect valve is on machine. Internal parts of solenoid and check valves are not serviceable.

To remove and install pin disconnect valve, see Pin Disconnect Valve Remove and Install—If Equipped. (Group 3160.)

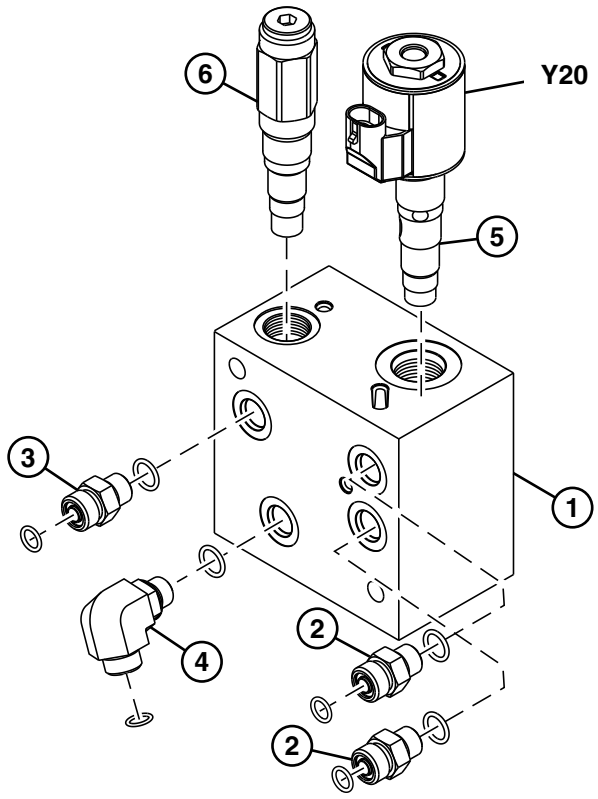

TX1086810 —UN—14JAN11

TX1086810

Pin Disconnect Valve

1— Pin Disconnect Valve
2— Straight Fitting (2 used)
3— 90° Elbow Fitting
4— Straight Fitting
5— Pin Disconnect Solenoid Valve
6— Pin Disconnect Pressure Reducing Valve
Y20— Pin Disconnect Solenoid

1. Remove pin disconnect solenoid valve (5) and pin disconnect pressure reducing valve (6).
2. Remove fittings (2—4).
3. Clean and inspect parts. Repair or replace parts as necessary.

IMPORTANT: Avoid O-ring damage or component failure. Apply clean hydraulic oil to all internal parts before assembling and apply petroleum jelly to O-rings before installation.

4. Apply clean hydraulic oil to all internal surfaces.
5. Apply petroleum jelly to O-rings. Install O-rings.
6. Install fittings.
7. Install pin disconnect solenoid valve (5) and pin disconnect pressure reducing valve (6). Tighten to specification.

Specification

Pin Disconnect Solenoid Valve—Torque.....33.8 N·m
25 lb.-ft.

Pin Disconnect Pressure Reducing Valve—Torque.....33.8 N·m
25 lb.-ft.

RM58335,00012D5 -19-27JAN11-1/1

Hydraulic Fan Pump Remove and Install

SPECIFICATIONS	
Hydraulic Fan Pump Cap Screw Torque	88 N·m 65 lb.-ft.
Axle Circulation Pump Cap Screw Torque	40 N·m 29.5 lb-ft

CAUTION: Escaping fluid under pressure can penetrate the skin, causing serious injury. Avoid the hazard by relieving pressure before disconnecting hydraulic or other lines. Tighten all connections before applying pressure. Search for leaks with a piece of cardboard. Protect hands and body from high-pressure fluids.

If an accident occurs, see a doctor immediately. Any fluid injected into the skin must be surgically removed within a few hours or gangrene may result. Doctors unfamiliar with this type of injury should reference a knowledgeable medical source. Such information is available from Deere & Company Medical Department in Moline, Illinois, U.S.A

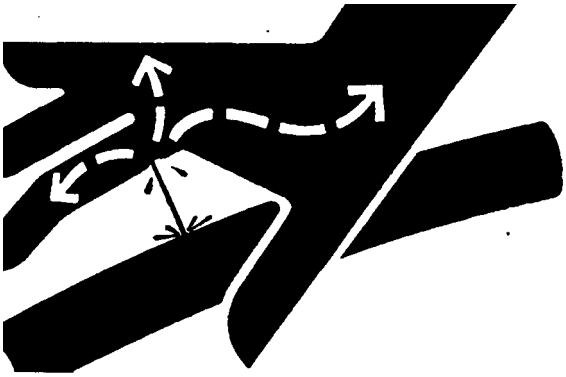

Escaping Fluid Under Pressure

1. Perform Hydraulic System Pressure and Accumulators Discharge. (Group 9025-25.)
2. Turn battery disconnect switch to the OFF position.
3. Apply vacuum or drain hydraulic reservoir. If draining hydraulic reservoir, see Drain and Refill Capacities. (Operator's Manual.)

Continued on next page

RM58335,00012D6 -19-10JAN11-1/2

4. Tag and remove the hydraulic fan pump pressure line (2), and hydraulic fan pump suction line (5). Close all openings using caps and plugs.
5. Remove axle circulation pump cap screws (4).
6. Remove axle circulation pump (if equipped) and set to the side.
7. Remove hydraulic fan pump cap screws (6), hydraulic fan pump (1), and hydraulic fan pump flange seal (7).
8. Repair or replace hydraulic fan pump.
9. Replace hydraulic fan pump mounting flange seal.
10. Fill replacement hydraulic fan pump with hydraulic oil.
11. Install hydraulic fan pump and hydraulic fan pump mounting flange seal using hydraulic fan pump cap screws. Tighten hydraulic fan pump cap screws to specification.

Specification	
Hydraulic Fan Pump Cap Screw—Torque	88 N·m 65 lb.-ft.

12. Install hydraulic fan pump hydraulic lines.
13. Install axle circulation pump (if equipped) using axle circulation pump cap screws. Tighten axle circulation pump cap screws to specification.

Specification	
Axle Circulation Pump Cap Screw—Torque	40 N·m 29.5 lb-ft

14. Remove vacuum or fill hydraulic reservoir. If filling hydraulic reservoir, see Drain and Refill Capacities. (Operator's Manual.)

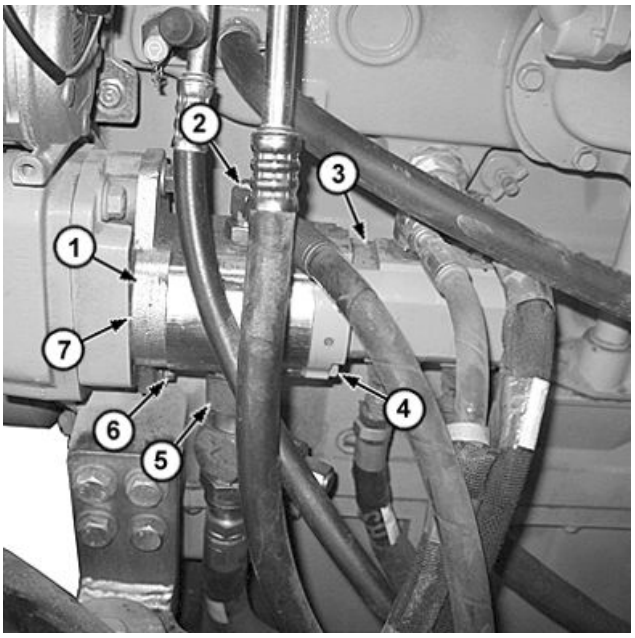

TX1050007A —UN—13OCT08

1— Hydraulic Fan Pump
2— Hydraulic Fan Pump Pressure Line
3— Axle Circulation Pump (If Equipped)
4— Axle Circulation Pump Cap Screw (2 used)
5— Hydraulic Fan Pump Suction Line
6— Hydraulic Fan Pump Cap Screw (2 used)
7— Hydraulic Fan Pump Flange Seal

15. Turn battery disconnect switch to the ON position.

RM58335,00012D6 -19-10JAN11-2/2

Hydraulic Fan Motor Remove and Install

SPECIFICATIONS	
Hub Retaining Nut Torque	81 N·m 60 lb-ft

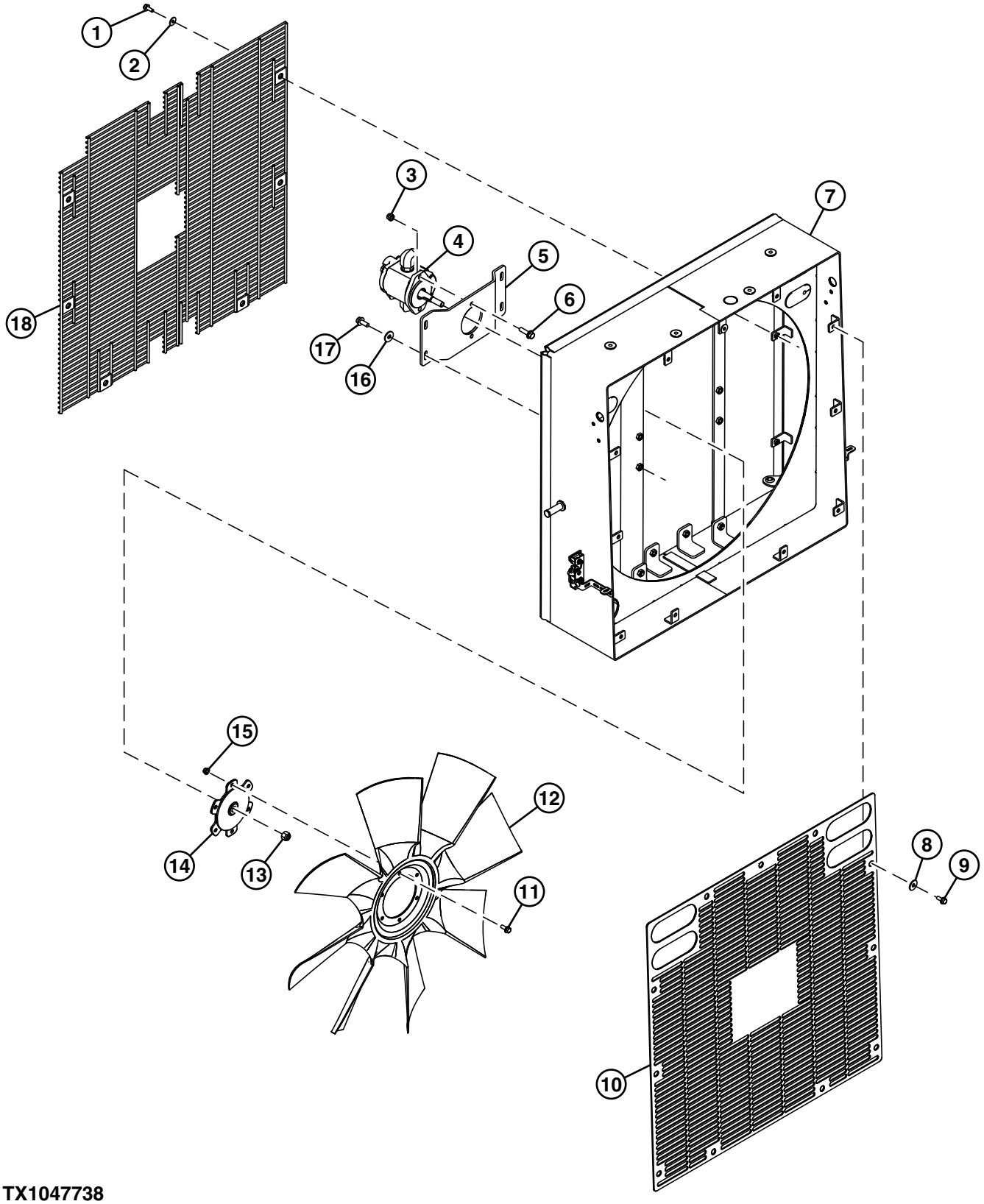

TX1047738

TX1047738 —UN—25AUG08

Continued on next page

RM58335,00012D7 -19-10JAN11-1/2

Hydraulic Fan Motor Remove and Install

1— Fan Guard Retaining Cap Screw (6 used)
2— Washer (6 used)
3— Nut (2 used)
4— Hydraulic Fan Motor
5— Bracket
6— Hydraulic Fan Motor Mounting Cap Screw (2 used)
7— Fan Housing
8— Washer (11 used)
9— Grille Retaining Cap Screw (11 used)
10— Grille
11— Fan Blade Mounting Cap Screw (6 used)
12— Fan Blade
13— Hub Retaining Nut
14— Hub
15— Nut (6 used)
16— Washer (4 used)
17— Bracket Mounting Cap Screw (4 used)
18— Fan Guard

1. Turn battery disconnect switch to OFF position or disconnect negative battery cable.
2. Remove axle oil cooler (if equipped) and set aside. See Power Train Component Location. (Group 9020-15.)
3. Remove grille retaining cap screws (9), disconnect rear light electrical connectors, and remove grille (10).
4. Remove fan blade mounting cap screws (11) and remove fan blade (12).
5. Apply vacuum or drain hydraulic reservoir into appropriate container for storage or disposal. See Drain and Refill Capacities. (Operator's Manual.)
6. Tag and disconnect hydraulic lines to hydraulic fan motor. Close all openings using caps and plugs.
7. Remove fan guard retaining cap screws (1) and remove fan guard (18).
8. Remove hydraulic fan motor (4) with bracket (5) and hub (14).
9. Remove hub (14) and bracket (5) from hydraulic fan motor (4).
10. Remove hydraulic fittings from hydraulic fan motor.
11. Repair or replace parts as necessary.
12. Install hydraulic fittings to hydraulic fan motor.
13. Install bracket to hydraulic fan motor.

IMPORTANT: Avoid machine damage. Install new fan hub retaining lock nut.

14. Install hub to hydraulic fan motor. Tighten hub retaining nut (13) to specification.

Specification

Hub Retaining Nut—Torque	81 N·m 60 lb-ft

15. Install hydraulic fan motor (4) to fan housing (7).
16. Connect hydraulic lines.
17. Remove vacuum or fill hydraulic oil reservoir. See Drain and Refill Capacities. (Operator's Manual.)
18. Install fan guard (18).
19. Install fan blade (12) to hub (14).
20. Connect rear light electrical connectors and install grille (10).
21. Install axle oil cooler (if equipped).

RM58335,00012D7 -19-10JAN11-2/2

Reversing Fan Valve Remove and Install—If Equipped

CAUTION: To avoid injury from escaping fluid under pressure, stop engine and relieve the pressure in the system before disconnecting or connecting hydraulic or other lines. Tighten all connections before applying pressure.

1. Relieve hydraulic system pressure. Hydraulic System Pressure and Accumulators Discharge. (Group 9025-25.)
2. Turn battery disconnect switch to the OFF position.
3. Apply vacuum or drain hydraulic reservoir. If draining hydraulic reservoir, See Drain, Flush, and Refill Hydraulic System Oil. (Operator's Manual.)
4. Tag and disconnect electrical connectors (1) from fan reversing valve.
5. Tag and disconnect hydraulic lines (2) from reversing fan valve. Close all openings using caps and plugs.
6. Remove retaining cap screws (3).
7. Repair or replace parts as necessary. See Reversing Fan Valve Disassemble and Assemble—If Equipped.
8. Install reversing fan valve and retaining cap screws. Tighten securely.
9. Connect hydraulic lines to reversing fan valve.
10. Connect electrical connectors to reversing fan valve.

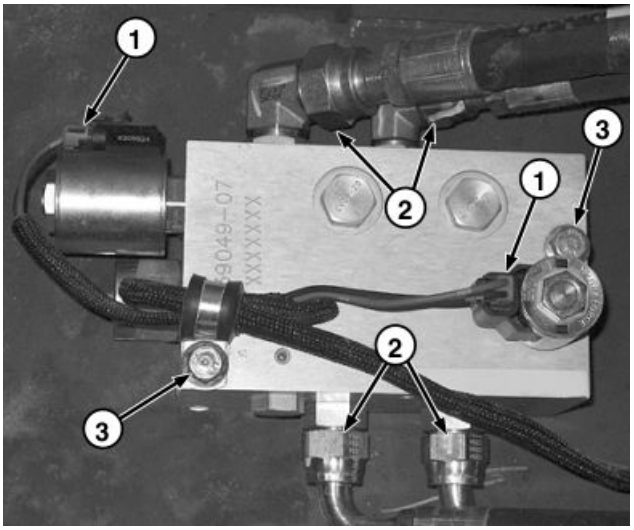

TX1038750A —UN—17MAR08

Reversing Fan Valve

1— Electrical Connectors (2 used)
2— Hydraulic Lines (4 used)
3— Cap Screw (2 used)

11. Remove vacuum or fill hydraulic reservoir. See Drain, Flush, and Refill Hydraulic System Oil. (Operator's Manual.)
12. Turn battery disconnect switch to the ON position.

RM58335,00012D8 -19-18JAN11-1/1

Reversing Fan Valve Disassemble and Assemble—If Equipped

SPECIFICATIONS	
Fan Proportional/Relief Solenoid Valve Torque	27.2 N·m 20 lb.-ft.
Reversing Fan Solenoid Valve Torque	27.2 N·m 20 lb.-ft.
Reversing Fan Spool Valve Torque	68 N·m 50 lb.-ft.
Check Valves Torque	27.2 N·m 20 lb.-ft.

NOTE: Reversing fan valve components can be replaced while reversing fan valve is on machine. Internal parts of solenoid valves and check valves are not serviceable.

To remove and install reversing fan valve, see Reversing Fan Valve Remove and Install—If Equipped. (Group 3160.)

1. Remove fan anticavitation valve (7), proportional fan solenoid valve, reversing fan solenoid valve, and reversing fan spool valve (2).
2. Clean and inspect parts for contamination, wear, or damage.
3. Remove hydraulic fittings (3—5) and (8—11).
4. Remove plugs, filter screen and orifices.
5. Clean and inspect all parts for any contaminants. Replace parts as necessary.

IMPORTANT: Avoid O-ring damage or component failure. Apply clean hydraulic oil to all internal parts before assembling and apply petroleum jelly to backup rings and O-rings before installation.

6. Apply clean hydraulic oil to all internal surfaces.
7. Apply petroleum jelly to O-rings and backup rings.
8. Install new O-rings and backup rings.
9. Install hydraulic fittings.
10. Install plugs, filter screen, and orifices.
11. Install fan anticavitaiton valve, proportional fan solenoid valve, check valves, and reversing fan spool valve. Tighten to specifications.

Specification

Fan Proportional/Relief Solenoid Valve—Torque.....27.2 N·m 20 lb.-ft.

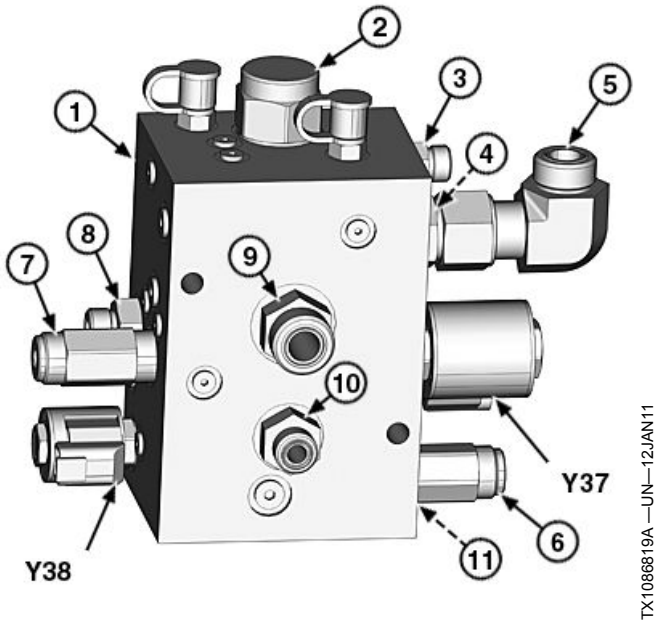

Reversing Fan Valve

1— Reversing Fan Valve
2— Reversing Fan Spool Valve
3— Straight Fitting (LSOUT)
4— Straight Fitting (FLTRHD)
5— 90° Swivel Run Elbow Fitting
6— Pressure Relief Valve
7— Fan Anticavitation Valve
8— Straight Fitting (PUMP)
9— Straight Fitting (MOUT)
10— Straight Fitting (MIN)
11— 90° Elbow Fitting (TRES)
Y37— Proportional Fan Solenoid
Y38— Reversing Fan Solenoid

Specification

Reversing Fan Solenoid Valve—Torque.....27.2 N·m 20 lb.-ft.

Specification

Reversing Fan Spool Valve—Torque.....68 N·m 50 lb.-ft.

Specification

Check Valves—Torque.....27.2 N·m 20 lb.-ft.

RM58335,00012D9 -19-11APR11-1/1

Section 99
Dealer Fabricated Tools

Contents

Page

Group 9900—Dealer Fabricated Tools
DFT1044 Air Deflector Bushing..... 99-9900-1

DFT1044 Air Deflector Bushing

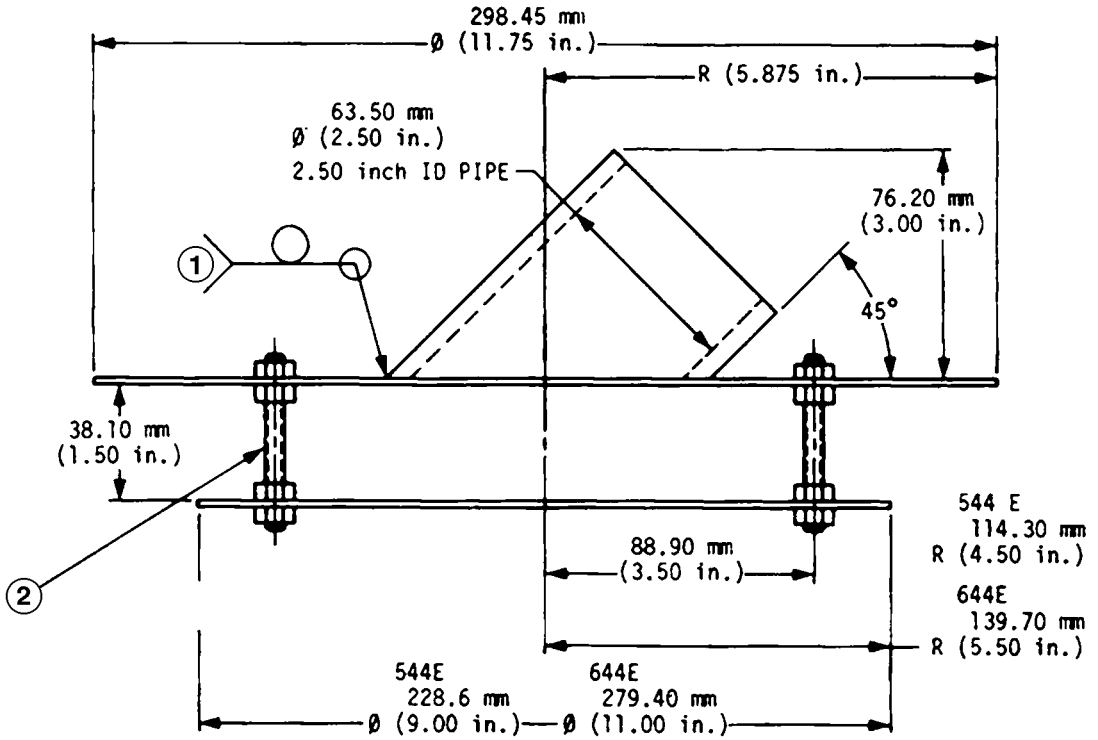

TX1071793

DFT1044 Air Deflector Bushing

1— Tack Weld

2— 1/4 in. x 2 1/4 in. Full Thread Rod with Nut (2 used)

The Air Deflector Bushing is used to direct heat to the oil supply flange bore area of transmission housing to facilitate oil supply flange installation.

Material required is:

- One piece of 298.45 mm (11.75 in.) diameter sheet metal
- One piece of 279.4 mm (11.00 in.) diameter sheet metal
- One piece of 63.5 mm (2.5 in.) I.D. x 107.95 mm (4.24 in.) long pipe
- Two 1/4 x 2-1/4 in. full thread rods
- Four 1/4 in. hex. nuts

AS79221,000026B -19-18OCT10-1/1

Index

Page

A

Accumulator
Service brake, remove and install 10-1060-2
Air cleaner
Remove and install 05-0520-1
Air conditioner
Compressor, remove and install 18-1830-17
Air conditioner system
Purge 18-1830-8
Air conditioning
Blower motor assembly 18-1830-13
Charge R134a system 18-1830-7
Cleaning procedures 18-1830-8
Component oil charge 18-1830-2
Compressor oil removal 18-1830-2
Condenser, remove and install 18-1830-14
Evacuate R134a system 18-1830-6
Expansion valve 18-1830-12
Flush 18-1830-9
Heater control valve 18-1830-12
Heater/evaporator coil, remove and install 18-1830-11
Leak testing 18-1830-3
Receiver-dryer 18-1830-13
Recover R134a system 18-1830-5
Refrigerant hoses and tubing inspection 18-1830-3
Refrigerant R134a caution 18-1830-1
Air conditioning R134a component oil Charge 18-1830-2
Air conditioning R134a compressor oil Removal 18-1830-2
Air conditioning R134a compressor oil charge
Check 18-1830-1
Air conditioning R134a refrigerant
Cautions 18-1830-1
Air conditioning R134a system
Evacuate 18-1830-6
Recover 18-1830-5
Air conditioning, R134a refrigerant, recovery, recycling and charging
Station installation 18-1830-3
Air conditioning, R134a system
Charge 18-1830-7
Air deflector bushing DF1044
Dealer fabricated tool 99-9900-1
Anticavitation valve
Disassemble and assemble 31-3160-19
Armrest, joystick steering
Disassemble and assemble 18-1821-12
Armrest, joystick steering rear pivot
Adjustment 18-1821-16
Assemble
Hydraulic pump manifold 31-3160-42
Steering column 09-0960-6

Page

Attachments
Adding safely 00-01-11
Operating safely 00-01-11
Auxiliary function pilot control valve
Remove and install 31-3160-37
Auxiliary section
Disassemble and assemble 31-3160-15
Pilot orfice check valve 31-3160-20
Axle circulation pump
Remove and install 02-0260-1
Axle cooler
Disassemble and assemble 05-0510-9
Axle oscillating supports
Disassemble and assemble 02-0200-8

B

Bellcrank, powerllel
Remove and install 31-3140-16
Bellows
Alignment procedure 05-0530-5
Bellows alignment
JDG11335 bellows alignment fixture 05-0530-2
Blower motor assembly
Remove and install 18-1830-13
Boom
Remove and install 31-3140-9
Boom cylinder
Disassemble and assemble 31-3160-23
Loader start-up procedure 31-3160-23
Remove and install 31-3160-20
Boom section
Disassemble and assemble 31-3160-11
Boom section, pilot orifice check valve
Service 31-3160-20
Boom, powerllel loader
Disassemble and assemble 31-3140-44
Bottom guard, transmission—Powerlell
Remove and install 17-1746-2
Bottom guard, transmission—Z-Bar
Remove and install 17-1746-3
Brake
Park, disassemble and assemble 11-1111-3
Park, remove and install 11-1111-1
Brake assembly
Remove and install 10-1011-1
Bucket
Remove and install 31-3102-1
Bucket bolt-on cutting edges
Remove and install 31-3102-7
Bucket cylinder
Disassemble and assemble 31-3160-23
Remove and install 31-3160-22
Bucket cylinder, powerllel
Remove and install 31-3140-20
Bucket link, powerllel
Disassemble and assemble 31-3140-27

Continued on next page

Page

Bucket linkage seals and bushings
Remove and install 31-3140-6
Bucket section
Disassemble and assemble 31-3160-13
Bucket section, pilot orifice check valve
Service 31-3160-20
Bucket teeth
Remove and install 31-3102-6
Bucket tilt linkage
Remove and install 31-3140-2
Bucket welded-on cutting edge
Remove and install 31-3102-5
Bucket, powerllel
Remove and install 31-3102-4
Bushings, steering cylinder
Remove and install 09-0960-9

C

Cab
Fresh air filter 18-1830-15
Recirculating air filter 18-1830-16
Remove and install 18-1800-1
Cab door
Adjust hold-open release 18-1810-1
Adjust latch pin 18-1810-1
Cab door hold-open latch pin
Adjust 18-1810-1
Cab door hold-open release
Adjust 18-1810-1
Charge air cooler
Remove and install 05-0510-1
Charging station, R134a refrigerant
Recovery, recycling and charging 18-1830-3
Circuit relief with anticavitation valve
Disassemble and assemble 31-3160-18
Cleanup procedure
General oil 31-3160-1
Hydraulic component failure 31-3160-3
Clutch
Compressor, check hub clearance 18-1830-18
Clutch pack K1, K2, and K3
Assemble 03-0350-36
Disassemble 03-0350-33
Clutch pack K4
Assemble 03-0350-47
Disassemble 03-0350-45
Clutch pack KV and KR
Assemble 03-0350-27
Disassemble 03-0350-23
Clutches and input and output shafts
Install 03-0350-14
Compressor
Clutch hub clearance 18-1830-18
Remove and install 18-1830-17
Compressor, air conditioning, R134a oil
Removal 18-1830-2
Compressor, R134a oil charge
Check 18-1830-1

Page

Compressor, R134a, component oil
Charge 18-1830-2
Condenser
Remove and install 18-1830-14
Control valve
Disassemble and assemble 03-0360-15
Converter minimum pressure regulator valve
Install 03-0360-6
Remove 03-0360-6
Converter relief valve
Disassemble 03-0360-25
Install 03-0360-25
Remove 03-0360-25
Converter, torque and housing
Install 03-0350-4
Remove 03-0350-1
Cooling package access doors
Remove and Install 19-1910-2
Cooling package plenum
Remove and install 05-0510-11
Cooling system
Service safely 00-01-14
Counterweights
Remove and install 17-1749-1
Coupler, Hi-Vis
Disassemble and assemble 31-3140-50
Coupler, powerllel
Disassemble and assemble 31-3140-40
Crankshaft dampener
Remove and install 04-0400-5
Cross section view
Transmission control valve 03-0360-14
Transmission hydraulic control valve 03-0360-14
Cutting edge
Crack repair 31-3102-7
Cutting edge, welded-on
Remove and install 31-3102-5
Cutting edges, bucket bolt-on
Remove and install 31-3102-7
Cylinder
Boom cylinder remove and install 31-3160-20
Bucket cylinder remove and install 31-3160-22
Cylinder bushings, steering
Remove and install 09-0960-9
Cylinder, boom
Loader start-up procedure 31-3160-23

D

Dampener
Output, remove and install 07-0752-1
Dealer fabricated tool
DF1044 air deflector bushing 99-9900-1
DF1044 air deflector bushing
Dealer fabricatd tool 99-9900-1
Diesel particulate filter (DPF)
Remove and install 05-0530-15
Differential and front axle
Remove and install 02-0200-2

Continued on next page

Page

Differential lock solenoid valve
Remove and install 02-0260-1
Disassemble
Hydraulic pump manifold 31-3160-42
Steering column 09-0960-6
Disassemble and assemble
Auxiliary section 31-3160-15
Boom section 31-3160-11
Bucket section 31-3160-13
Fast fill fuel system 05-0560-4
Load sense relief valve 31-3160-17
Loader control valve 31-3160-10
Main relief valve 31-3160-16
Pin disconnect valve 31-3160-48
Reversing fan valve 31-3160-54
Drive shaft
Remove and install 02-0225-1
Driving metal pins 00-01-15

E

Engine
Crankshaft dampener, remove and install 04-0400-5
Remove and install 04-0400-1
Side shields, remove and install 19-1910-1
Theory of operation 04-0400-1
Engine and loader frame
Separate 17-1740-2
Engine coolant heater
Remove and install 05-0505-3
Evaporator
Remove and install 18-1830-11
Exhaust
Alignment procedure 05-0530-5
Bellows alignment procedure 05-0530-5
Exhaust filter
Ash handling and disposal 00-01-6
Remove and install 05-0530-16
Exhaust Filter, Safety
Safety, Exhaust Filter 00-01-13
Exhaust tube
Remove and install 05-0530-1
Expansion valve
Remove and install 18-1830-12

F

Fast fill fuel system
Disassemble and assemble 05-0560-4
Filter
Cab air recirculating 18-1830-16
Cab fresh air 18-1830-15
Diesel particulate filter (DPF), remove and install 05-0530-15
Exhaust, remove and install 05-0530-16
Fuel, remove and install 05-0560-3
Primary fuel, remove and install 05-0560-3
Service cleaning 05-0530-18
Fire prevention 00-01-4
Frame
Separate 17-1740-2
Frame pivot bearing
Lower, remove and install 17-1740-7
Upper, remove and install 17-1740-5
Front axle
Remove and install 02-0200-2
Front axle and differential
Remove and install 02-0200-2
Front axle guard
Remove and install 17-1746-1
Front differential
Remove and install 02-0200-2
Front wiper motor
Remove and install 18-1810-2
Fuel cooler
Remove and install 05-0510-10
Fuel tank
Remove and install 05-0560-1
Fuel tank guard
Remove and install 17-1746-1

G

Guard, front axle
Ramove and install 17-1746-1
Guard, transmission bottom—Powerlell
Remove and install 17-1746-2
Guard, transmission bottom—Z-Bar
Remove and install 17-1746-3
Guide links, powerllel
Disassemble and assemble 31-3140-32

H

Handhold Use 00-01-6
Heater coil
Remove and install 18-1830-11
Heater control valve
Remove and install 18-1830-12
Hi-Vis coupler
Disassemble and assemble 31-3140-50
High-pressure oils
Avoid 00-01-3
Hood
Remove and install 19-1910-1
Hydraulic
Component failure cleanup procedure 31-3160-3
Fittings, 30° cone seat 00-0003-4
Fittings, 37° flare 00-0003-4
General oil cleanup procedure 31-3160-1
Hydraulic control valve
Cross section view 03-0360-14
Disassemble and assemble 03-0360-15
Remove and install 03-0360-8
Hydraulic fan motor
Remove and install 31-3160-51

Continued on next page

Page

Hydraulic fan pump
Remove and install 31-3160-49
Hydraulic fitting
Flared connections..... 00-0003-6
Non-restricted banjo (adjustable)..... 00-0003-17
O-ring boss with shoulder 00-0003-18
Hydraulic oil cooler
Remove and install 05-0510-6
Hydraulic pump
Main, disassemble and assemble..... 31-3160-7
Hydraulic pump manifold
Disassemble and assemble..... 31-3160-42
Remove an install 31-3160-40
Hydraulic reservoir
remove and install..... 31-3160-24

I

Identification
Manual ..... --3
Inch bolt and cap screw
Torque value 00-0003-3
Inch series four bolt flange fitting
Service recommendation, torque value for high pressure 00-0003-16
Input and output clutches
Install..... 03-0350-14
Input shaft
Assemble 03-0350-54
Disassemble 03-0350-54
Remove..... 03-0350-8
Install
Hydraulic pump manifold 31-3160-40

J

JDG11335 bellows alignment fixture 05-0530-2
Joystick steering
Steering joystick disassemble and assemble..... 18-1821-3
Joystick steering armrest
Disassemble and assemble..... 18-1821-12
Joystick steering armrest rear pivot
Adjustment..... 18-1821-16
Joystick steering valve
Disassemble and assemble..... 09-0960-13
Remove and install 09-0960-12

L

Leveling link, powerllel
Disassemble and assemble..... 31-3140-12
Link, powerllel bucket
Disassemble and assemble..... 31-3140-27
Link, powerllel leveling
Disassemble and assemble..... 31-3140-12
Links, powerllel guide
Disassemble and assemble..... 31-3140-32

Page

Load sense relief valve
Disassemble and assemble..... 31-3160-17
Loader boom, powerllel
Disassemble and assemble..... 31-3140-44
Loader control valve
Disassemble and assemble..... 31-3160-10
Remove and install 31-3160-9
Lower pivot bearing and seals
Remove and install 17-1740-7

M

Machine modifications
Avoid..... 00-01-2
Main hydraulic pump
Disassemble and assemble..... 31-3160-7
Remove and install 31-3160-5
Main relief valve
Disassemble and assemble..... 31-3160-16
Manual
Identification..... --3
Metal pins 00-01-15
Metric bolt and cap screw
Torque value 00-0003-1

N

NeverGrease
Pin joints and bushings.....09-0960-1, 31-3140-1

O

O-ring boss fittings..... 00-0003-4
O-ring face seal fitting
Inch hex nut and stud end for high pressure torque values..... 00-0003-8
Metric hex nut and stud end for high pressure torque values..... 00-0003-12
Metric hex nut and stud end for standard pressure torque values..... 00-0003-10
O-ring seal, metric 24
Service recommendation 00-0003-20
Oil pump
Transmission, remove and install 03-0360-1
Oil, component, R134a air conditioning
Charge 18-1830-2
Orbital steering valve
Remove and install 09-0960-3
Oscillating supports
Disassemble and assemble..... 02-0200-8
Output and input clutches
Install..... 03-0350-14
Output dampener
Remove and install 07-0752-1
Output shaft
Remove..... 03-0350-8

Continued on next page

Page

P

Park brake
Assemble and disassemble 11-1111-3
Release solenoid valve, remove and install 11-1160-1
Remove and install 11-1111-1
Pilot accumulator
Remove and install 31-3160-39
Pilot control valve
Disassemble and assemble 31-3160-35
Remove and install 31-3160-33
Pin disconnect valve
Disassemble and assemble 31-3160-48
Remove and install 31-3160-47
Pivot bearing and seals
Lower, remove and install 17-1740-7
Upper, remove and install 17-1740-5
Powerllel bellcrank
Remove and install 31-3140-16
Powerllel Bucket
Remove and install 31-3102-4
Powerllel bucket cylinder
Remove and install 31-3140-20
Powerllel bucket link
Disassemble and assemble 31-3140-27
Powerllel coupler
Disassemble and assemble 31-3140-40
Powerllel guide links
Remove and install 31-3140-32
Powerllel leveling link
Disassemble and assemble 31-3140-12
Powerllel loader boom
Disassemble and assemble 31-3140-44
Precleaner
Remove and install 05-0520-1
Pump
Main hydraulic, disassemble and assemble 31-3160-7
Transmission oil, remove and install 03-0360-1

R

R134a compressor oil charge
Check 18-1830-1
Radiator
Remove and install 05-0510-2
Rear axle
Remove and install 02-0200-4
Rear axle and differential
Remove and install 02-0200-4
Rear counterweight
Remove and install 17-1749-3
Rear differential
Remove and install 02-0200-4
Rear pivot, joystick steering armrest
Adjustment 18-1821-16

Page

Rear wiper motor
Remove and install 18-1810-2
Receiver-dryer
Remove and install 18-1830-13
Recognize
Safety, information 00-01-1
Refrigerant cautions, air conditioning R134a 18-1830-1
Refrigerant handling 18-1830-1
Refrigerant, air conditioning R134a system
Evacuate 18-1830-6
Recover 18-1830-5
Refrigerant, R134a
Recovery, recycling and charging 18-1830-3
Refrigerant, R134a system
Charge 18-1830-7
Remove
Hydraulic pump manifold 31-3160-40
Remove and install
Auxiliary function pilot control valve 31-3160-37
Axle circulation pump 02-0260-1
Front axle 02-0200-2
Front differential 02-0200-2
Hydraulic fan motor 31-3160-51
Loader control valve 31-3160-9
Main hydraulic pump 31-3160-5
Pilot control valve 31-3160-33
Rear axle 02-0200-4
Rear axle and differential 02-0200-4
Rear differential 02-0200-4
Reversing fan valve 31-3160-53
Ride control valve 31-3160-44
Remove and Install
Bucket 31-3102-1
Reservoir, hydraulic
Remove and install 31-3160-24
Reversing fan valve
Disassemble and assemble 31-3160-54
Remove and install 31-3160-53
Ride control valve
Disassemble and assemble 31-3160-46
Remove and install 31-3160-44
Roads
Operating or traveling 00-01-11
ROPS
Inspect 00-01-11
Maintain 00-01-11

S

Safety
Add cab guarding for special uses 00-01-6
Clean debris from machine 00-01-4
Inspect machine 00-01-2
Operate only if qualified 00-01-1
Operator's seat 00-01-7
Protective equipment 00-01-2
Stay clear of moving parts 00-01-2

Continued on next page

Page

Safety, information
Recognize 00-01-1
Seals and bushings
Bucket linkage, remove and install 31-3140-6
Seat
Belt remove and install 18-1821-2
Remove and install 18-1821-1
Seat belt
Remove and install 18-1821-2
Use and maintenance 00-01-7
Secondary steering pump
Remove and install 09-0960-10
Secondary steering valve
Remove and install 09-0960-11
Service brake
Valve remove and install 10-1060-1
Service brake accumulator
Remove and install 10-1060-2
Service brake valve
Remove and install 10-1060-1
Service filter
Cleaning 05-0530-18
Service recommendation
Inch series four bolt flange fitting for high pressure 00-0003-16
O-ring face seal fittings with inch hex nut and stud end for high pressure 00-0003-8
O-ring face seal fittings with metric hex nut and stud end for high pressure 00-0003-12
O-ring face seal fittings with metric hex nut and stud end for standard pressure 00-0003-10
O-ring seal, metric 24 00-0003-20
Side shields
Engine, remove and install 19-1910-1
Solenoid valve
Differential lock, remove and install 02-0260-1
Speed sensors
Transmission, remove and install 03-0350-57
Start aid
Solenoid, remove and install 05-0505-2
Start aid nozzle
Remove and install 05-0505-1
Start-up procedure
Steering cylinder 09-0960-14
Steering
Joystick, disassemble and assemble 18-1821-3
Valve, remove and install 09-0960-3
Steering column
Disassemble and assemble 09-0960-6
Remove and install 09-0960-5
Steering cylinder
Remove and install 09-0960-8
Steering cylinder bushings
Remove and install 09-0960-9
Steering valve
Secondary, remove and install 09-0960-11
Steps Use 00-01-6
Structure
Welding 17-1740-1

Page

T

Theory of operation
Engine 04-0400-1
Tilt linkage
Bucket, remove and install 31-3140-2
Tire
Remove and install 01-0110-2
Tool
JDG11335 bellows alignment fixture 05-0530-2
Torque converter and housing
Install 03-0350-4
Remove 03-0350-1
Torque converter relief valve
Remove 03-0360-25
Torque value
30° cone seat hydraulic fittings 00-0003-4
37° flare hydraulic fittings 00-0003-4
Flared connections 00-0003-6
Flat face O-ring seal fitting 00-0003-7
Inch SAE four bolt flange fitting 00-0003-15
Inch series four bolt flange fitting for high pressure 00-0003-16
Metric bolt and cap screw 00-0003-1
Metric cap screw 00-0003-2
Metric four bolt flange fitting 00-0003-14
Non-restricted banjo fittings 00-0003-17
O-Ring boss fitting 00-0003-4
O-ring boss fittings with shoulder 00-0003-18
O-ring face seal fittings with inch hex nut and stud end for high pressure 00-0003-8
O-ring face seal fittings with metric hex nut and stud end for high pressure 00-0003-12
O-ring face seal fittings with metric hex nut and stud end for standard pressure 00-0003-10
O-ring seal, metric 24 00-0003-20
Unified inch bolt and cap screw 00-0003-3
Transmission
Input shaft assemble 03-0350-54
Install 03-0300-1
Oil pump, remove and install 03-0360-1
Remove 03-0300-1
Transmission control valve
Cross section view 03-0360-14
Transmission hydraulic control valve
Cross section view 03-0360-14
Disassemble and assemble 03-0360-15
Transmission oil cooler
Remove and install 05-0510-8
Transmission speed sensors
Remove and install 03-0350-57
Traveling
On public roads 00-01-11

U

Universal joint
Remove and install 02-0225-1

Continued on next page

Page

Upper pivot bearing and seals
Remove and install 17-1740-5

V

Valve
Joystick steering valve remove and install 09-0960-12
Minimum pressure regulator 03-0360-6
Orbital steering, remove and install 09-0960-3
Pilot orifice check 31-3160-20
Service brake remove and install 10-1060-1
Valve, pilot control
Remove and install 31-3160-33
Valve, pin disconnect
Remove and install 31-3160-47
Valve, ride control
Disassemble and assemble 31-3160-46
Remove and install 31-3160-44
Valve, transmission control
Remove and install 03-0360-8

Page

W

Welding
Structure 17-1740-1
Welding repairs 00-01-15
Wheel
Remove and Install 01-0110-1
Windowpanes
Remove and install 18-1810-1
Windshield, wiper, front
Remove and install 18-1810-2
Windshield, wiper, rear
Remove and install 18-1810-2
Wiper, front
Remove and install 18-1810-2
Wiper, rear
Remove and install 18-1810-2