INTRODUCTION AND CUSTOMER INFORMATION

DEZEMBRO 2004

T204231A -UN-13DEC04

RUTHZIL TRATOR COMERCIAL DE PEÇAS LTDA 11 97083-6812 ROLANDO



RIGHT SIDE VIEW OF JOHN DEERE 670D/672D MOTOR GRADER
(MANUFACTURED 2005-)

TO THE CUSTOMER

THE PART NUMBERS IN THIS PARTS CATALOG WERE CORRECT AT THE TIME THIS CATALOG WAS PUBLISHED. IT IS OUR POLICY TO CONSTANTLY IMPROVE OUR MACHINES AND THEREFORE, PART NUMBERS MAY CHANGE. WHEN ORDERING PARTS, VERIFY PART NUMBERS THROUGH YOUR DEALER.

(SPECIFICATIONS AND DESIGN SUBJECT TO CHANGE WITHOUT NOTICE.)

COPYRIGHT © 2005 DEERE & COMPANY Moline, Illinois All rights reserved

SERIAL NUMBER LOCATION

EACH 670D AND 672D MOTOR GRADER MAY HAVE EIGHT SERIAL NUMBER PLATES: ONE FOR THE PRODUCT IDENTIFICATION NUMBER, ONE FOR THE ENGINE, ONE FOR THE TRANSMISSION, ONE FOR THE HYDRAULIC PUMP, ONE FOR THE FRONT WHEEL DRIVE, ONE FOR THE DIFFERENTIAL AND ONE EACH FOR THE FRONT WHEEL DRIVE MOTORS.

THE PRODUCT IDENTIFICATION NUMBER PLATE IS LOCATED BELOW THE OPERATOR'S PLATFORM ON THE LEFT-HAND SIDE OF THE MAIN FRAME. THIS IS THE SERIAL NUMBER USED IN THIS CATALOG UNLESS OTHERWISE NOTED IN THE SERIAL NUMBER COLUMN.

THE ENGINE SERIAL NUMBER PLATE IS LOCATED ON THE RIGHT-HAND SIDE OF THE CYLINDER BLOCK ABOVE THE STARTING MOTOR.

THE TRANSMISSION SERIAL NUMBER PLATE IS LOCATED ON THE FRONT OF THE TRANSMISSION HOUSING ABOVE THE OUTPUT SHAFT.

THE HYDRAULIC PUMP SERIAL NUMBER PLATE IS LOCATED ON THE BOTTOM OF THE PUMP.

THE FRONT WHEEL DRIVE HYDRAULIC PUMP IS LOCATED ON THE LEFT REAR OF THE TRANSMISSION AND THE SERIAL NUMBER PLATE IS LOCATED ON THE BOTTOM OF THE PUMP.

THE HYDRAULIC FRONT WHEEL DRIVE (HFWD) MOTOR SERIAL NUMBER PLATE IS LOCATED ON THE INSIDE REAR OF EACH RIGHT AND LEFT HFWD MOTOR HOUSINGS.

THE DIFFERENTIAL SERIAL NUMBER PLATE IS LOCATED ON THE COVER, RIGHT LOWER, BELOW THE DRIVESHAFT INPUT.

NOTE: IN THE TRANSMISSION SECTION, TRANSMISSION SERIAL NUMBER INFORMATION IS PROVIDED AS FOLLOWS: (1) WHEN ASTERISKS (******) ARE LISTED IN PLACE OF A SERIAL NUMBER, A SERIAL NUMBER NUMBER CHANGE WAS MADE AND "IT" CAN BE FOUND IN THE REMARKS COLUMN IN THE PUBLICATION. (2) WHEN X'S (XXXXXX) ARE LISTED IN PLACE OF A SERIAL NUMBER, A SERIAL NUMBER CHANGE WAS NOT AVAILABLE AT TIME OF PUBLICATION.

LEFT SIDE AND RIGHT SIDE, FRONT AND REAR OF THE MOTOR GRADER ARE VIEWED BY FACING IN THE DIRECTION OF MOTOR GRADER FORWARD TRAVEL.

WHENEVER SERIAL NUMBERS ARE REQUIRED ON ALL WARRANTY CLAIMS OR CORRESPONDENCE PERTAINING TO THIS PRODUCT, IT IS EXTREMELY IMPORTANT THAT ALL CHARACTERS BE FURNISHED. THIS POINT CANNOT BE OVEREMPHASIZED.

PRODUCT IDENTIFICATION NUMBER

TP16004 -UN-01JAN94

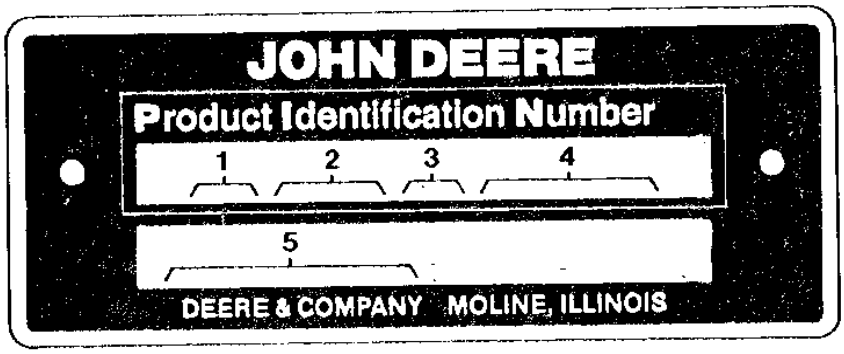

TP16004

1. DESIGNATES GRADER MANUFACTURER	DW - JOHN DEERE DAVENPORT WORKS
2. DESIGNATES GRADER MODEL	670D, 672D,
3. DESIGNATES GRADER CONFIGURATION	X
4. DESIGNATES GRADER SERIAL NUMBER	123456
5. DESIGNATES UNIT TYPE	MOTOR GRADER

ENGINE SERIAL NUMBER PLATE

RGP3513 -UN-01JAN94

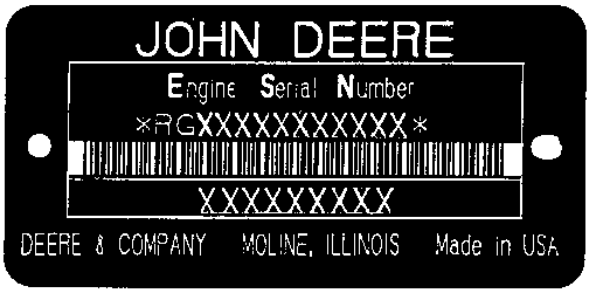

RGP3513

FIRST LINE	DEFINES
PE - JOHN DEERE TORREON ENGINE WORKS	DESIGNATES ENGINE MANUFACTURER
6	DESIGNATES NUMBER OF CYLINDERS
068 (6.8 LITERS)	DESIGNATES LITER DISPLACEMENT
H (AIR-TO-AIR)	DESIGNATES TYPE OF AIR INTAKE SYSTEM
DW - JOHN DEERE DAVENPORT WORKS	DESIGNATES USER FACTORY
XXXXXX	DESIGNATES ENGINE SERIAL NUMBER

SECOND LINE	APPLICATION
6068HDW61	670D/672D MOTOR GRADER

SERIAL NUMBER LISTING INFORMATION

SERIAL NUMBER INFORMATION IS LISTED TO SHOW ON WHICH MACHINES EACH PART CAN BE USED; FOR EXAMPLE:

- THE PART CAN BE USED ON ALL MACHINES.
000000- THE PART CAN BE USED ON ALL MACHINES BEGINNING WITH THE SERIAL NUMBER LISTED.
-000000 THE PART CAN BE USED ON ALL MACHINES UP TO AND INCLUDING THE SERIAL NUMBER LISTED.
000000-000000 THE PART CAN BE USED ON ALL MACHINES BETWEEN AND INCLUDING THE SERIAL NUMBERS LISTED.

WHEN XXXXXX'S ARE LISTED IN PLACE OF A SERIAL NUMBER, A SERIAL NUMBER CHANGE WAS MADE BUT THE EXACT SERIAL NUMBER WAS NOT AVAILABLE WHEN THE CATALOG WAS PRODUCED.

DIRECTION ARROW

ARROWS ARE USED WITH ILLUSTRATIONS TO INDICATE THE FRONT OF THE UNIT. "RIGHT-HAND" AND "LEFT-HAND" SIDES ARE DETERMINED BY FACING IN THE DIRECTION OF MACHINE FORWARD TRAVEL.

BOX-ENCLOSED ILLUSTRATIONS

A KEY NUMBER, SHOWN IN THE PARTS LIST, IS ASSIGNED TO A BOX ENCLOSING ALL PARTS SOLD AS A SERVICE ASSEMBLY.

COMPLETE GOODS LISTINGS

COMPLETE GOODS ARE LISTED IN BOLD FACE TYPE. ORDER SEPARATELY. DO NOT INCLUDE ON REPLACEMENT PARTS ORDER.

SI UNITS OF MEASURE

METRIC DIMENSIONS ARE GIVEN, WHERE APPLICABLE, THROUGHOUT THIS PARTS CATALOG.

CHANGE INDICATOR LINE

CHANGES AFFECTING THE ORDERING OF PARTS ARE IDENTIFIED BY VERTICAL LINES MARKED IN THE LEFT-HAND MARGIN OF REVISED PARTS LISTING IMAGES. A LINE IS ALSO AT THE LEFT-HAND EDGE OF THE SAME PART NUMBER IN THE NUMERICAL INDEX TO SHOW THE LOCATION OF REVISED INFORMATION.

ALPHABETICAL INDEX

GRID		PAGE
	A	
2J1	A/C AND HEAT TEMPERATURE CONTROL SWITCH	1830 - 18
2J1	A/C AND HEATER CONTROL CABLE	1830 - 18
2J1	A/C AND HEATER CONTROL KNOB	1830 - 18
2J1	A/C AND HEATER FAN SPEED SWITCH	1830 - 18
2J1	A/C AND HEATER ON AND OFF SWITCH	1830 - 18
2J1	A/C AND HEATER WIRING HARNESS	1830 - 18
2I21	A/C COMPRESSOR	1830 - 14
2H9	A/C CONTROL CONSOLE (CAB)	1810 - 30
2J1	A/C CONTROL SWITCH	1830 - 18
2I21	A/C MANIFOLD	1830 - 14
2J1	A/C PRESSURE SWITCH	1830 - 18
2I21	A/C PULLEY KIT	1830 - 14
2I21	A/C SERVICE KIT	1830 - 14
2I23	ACCUMULATOR, AIR CONDITIONING	1830 - 16
3E19	ACCUMULATOR, BLADE IMPACT	3460 - 18
2C3	ACCUMULATOR, BRAKE	1060 - 4
2B2	ACCUMULATOR, SECONDARY STEERING	0930 - 2
1H3	ACCUMULATOR, TRANSMISSION	0363 - 2
1I19	ADAPTER, ENGINE OIL COOLER	0419 - 2
1I3	ADAPTER, ENGINE OIL FILTER	0407 - 8
1I10	ADAPTER, EXHAUST	0410 - 2
1H13	ADAPTER, FAN DRIVE	0402 - 6
1J1	ADAPTER, FUEL FILTER LINE	0420 - 6
1I11	ADAPTER, FUEL INJECTION PUMP	0413 - 2
2E17	AGRESSIVENESS SWITCH, HFWD	1674 - 18
1K9	AIR CLEANER	0520 - 2
2I17	AIR CONDITIONER AND HEATER COVER	1830 - 10
2I21	AIR CONDITIONER COMPRESSOR	1830 - 14
2I23	AIR CONDITIONING ACCUMULATOR	1830 - 16
2I23	AIR CONDITIONING COMPRESSOR BRACKET	1830 - 16
2I23	AIR CONDITIONING CONDENSER	1830 - 16
2I23	AIR CONDITIONING LINES, CONDENSER, AND RECEIVER-DRYER	1830 - 16
2I23	AIR CONDITIONING RECEIVER-DRYER	1830 - 16
1K11	AIR FILTER PRECLEANER	0520 - 4
1K9	AIR FILTER RESTRICTION SENSOR	0520 - 2
2I17	AIR FILTER, CAB FRESH	1830 - 10
1I13	AIR INTAKE	0414 - 1
2J23	ALARM, BACK-UP	2004 - 4
2D9	ALTERNATOR	1672 - 2
1J6	ALTERNATOR BRACKET	0423 - 1
2D9	ALTERNATOR BRACKET	1672 - 2
2D9	ALTERNATOR PULLEY	1672 - 2
2D9	ALTERNATOR WIRING HARNESS	1672 - 2
2J13	AM/FM RADIO	2001 - 2
2J13	ANTENNA, RADIO	2001 - 2
2I1	ARM REST (AIR)	1821 - 2
2I5	ARM REST (MECHANICAL)	1821 - 6
1H9	ARM, ROCKER	0402 - 2
2H21	ARTICULATION CONTROL LEVER	1810 - 42
2B8	ARTICULATION CYLINDER	0960 - 6
2B14	ARTICULATION CYLINDER HOSES	0960 - 12
2F8	ARTICULATION CYLINDER PIN	1740 - 2
2F8	ARTICULATION PIN	1740 - 2
2E19	ARTICULATION SENSOR	1674 - 20
2E19	ARTICULATION SENSOR AND LINKAGE	1674 - 20
3B14	ARTICULATION VALVE SECTION	2160 - 18
2H23	AUXILIARY CONTROL LEVER, RIGHT	1810 - 44
3C3	AUXILIARY VALVE SECTION (WITH FLOAT)	2160 - 32
3C5	AUXILIARY VALVE SECTION (WITHOUT FLOAT)	2160 - 34
3B4	AUXILLARY DRIVE, MAIN HYDRAULIC PUMP	2160 - 2
1D3	AXLE AND DRIVE CHAIN	0250 - 6
1D3	AXLE BEARING	0250 - 6
1B23	AXLE DRIVE SHAFT	0201 - 4
1D3	AXLE DRIVE SPROCKET	0250 - 6
1C10	AXLE DRIVESHAFT	0225 - 2
1D3	AXLE HOUSING	0250 - 6
1D3	AXLE HOUSING OIL SEAL	0250 - 6
1C12	AXLE, FRONT (670D)	0230 - 2
1C18	AXLE, FRONT (672D)	0240 - 2
1C16	AXLE, FRONT, TIE ROD (670D)	0230 - 6
	B	
2J23	BACK-UP ALARM	2004 - 4
2I1	BACKREST CUSHION (AIR)	1821 - 2
2I5	BACKREST CUSHION (MECHANICAL)	1821 - 6
3D16	BALL RETAINER, DRAFT FRAME	3440 - 2
2D7	BATTERY	1671 - 2
2D7	BATTERY CABLE	1671 - 2
2D7	BATTERY CLAMP	1671 - 2
2J4	BATTERY COVERS	1910 - 2
2D19	BEACON BRACKET KIT	1673 - 8
2D19	BEACON LIGHT BRACKET	1673 - 8
1H16	BEARING CAP, MAIN AND THRUST	0404 - 2
1D3	BEARING, AXLE	0250 - 6
1D15	BEARING, HFWD MOTOR	0260 - 10
1D19	BEARING, HFWD PUMP	0260 - 14
1H15	BEARINGS, C0NNECTING ROD	0403 - 1
1H8	BEARINGS, MAIN	0401 - 1
1J7	BELT TENSIONER	0429 - 1
1K3	BELT TENSIONER, FAN	0512 - 2
2D11	BELT, ENGINE ACCESSORY DRIVE	1672 - 4
1K3	BELT, FAN	0512 - 2
2D11	BELT, SERPENTINE	1672 - 4
2J1	BINARY PRESSURE SWITCH, A/C	1830 - 18
3E19	BLADE IMPACT ACCUMULATOR	3460 - 18
3E19	BLADE IMPACT SYSTEM	3460 - 18
3E19	BLADE IMPACT SYSTEM KIT	3460 - 18
3E21	BLADE IMPACT VALVE	3460 - 20
3E19	BLADE IMPACT VALVE MOUNTING BRACKET	3460 - 18
3E21	BLADE IMPACT VALVE SEAL KIT	3460 - 20
3E19	BLADE IMPACT VALVE WIRING HARNESS	3460 - 18
3D20	BLADE LIFT ARM	3440 - 6
2H23	BLADE LIFT CONTROL LEVER	1810 - 44
3E9	BLADE LIFT CYLINDER	3460 - 8
3D20	BLADE LIFT CYLINDER BUSHING	3440 - 6
3E15	BLADE LIFT CYLINDER FITTINGS	3460 - 14
3E15	BLADE LIFT CYLINDER HYDRAULIC HOSES	3460 - 14
3E9	BLADE LIFT CYLINDER SEAL KIT	3460 - 8
3B20	BLADE LIFT VALVE RELIEF VALVE	2160 - 24
3B20	BLADE LIFT VALVE SECTION	2160 - 24
2H23	BLADE SIDE SHIFT CONTROL LEVER	1810 - 44
3B18	BLADE SIDE SHIFT VALVE SECTION	2160 - 22
3E11	BLADE SLIDE CYLINDER	3460 - 10
3E23	BLADE SLIDE CYLINDER HYDRAULIC HOSES	3460 - 22
3E11	BLADE SLIDE CYLINDER SEAL KIT	3460 - 10
3E23	BLADE TILT AND SLIDE CYLINDER HYRDRAULIC HOSES	3460 - 22
3E13	BLADE TILT CYLINDER	3460 - 12
3E23	BLADE TILT CYLINDER HYDRAULIC HOSES	3460 - 22
3E13	BLADE TILT CYLINDER SEAL KIT	3460 - 12
3D18	BLADE TILT FRAME	3440 - 4
3D18	BLADE TILT FRAME WEAR INSERTS	3440 - 4
3B14	BLADE TILT VALVE SECTION	2160 - 18
1K3	BLADE, FAN	0512 - 2
2G7	BLADE, FRONT WINDSHIELD WIPER	1810 - 4
2G11	BLADE, LOWER FRONT WINDSHIELD WIPER	1810 - 8
2G9	BLADE, REAR WINDOW WIPER	1810 - 6
1H18	BLOCK ASSEMBLY, ENGINE SHORT	0404 - 4
1D19	BLOCK, CYLINDER, HFWD PUMP	0260 - 14

ALPHABETICAL INDEX - CONTINUED

GRID		PAGE
1H16	BLOCK, ENGINE CYLINDER	0404 - 2
2F20	BLOCK, PUSH	1747 - 2
2H21	BOOT, LEFT CONTROL LEVERS	1810 - 42
2H23	BOOT, RIGHT CONTROL LEVERS	1810 - 44
2F14	BOTTOM GUARD (W/O RIPPER)	1746 - 2
2F14	BOTTOM GUARD KIT (W/O RIPPER)	1746 - 2
2F16	BOTTOM GUARD SIDE SHIELD (W/O RIPPER)	1746 - 4
2F16	BOTTOM GUARD SIDE SHIELD KIT (W/O RIPPER)	1746 - 4
2F18	BOTTOM GUARD SIDE SHIELDS (WITH RIPPER)	1746 - 6
2F18	BOTTOM GUARDS AND SIDE SHIELDS (WITH RIPPER)	1746 - 6
2F18	BOTTOM GUARDS AND SIDE SHIELDS KIT (WITH RIPPER)	1746 - 6
2I23	BRACKET, AIR CONDITIONING COMPRESSOR	1830 - 16
1J6	BRACKET, ALTERNATOR	0423 - 1
2D9	BRACKET, ALTERNATOR	1672 - 2
2J23	BRACKET, BACK-UP ALARM MOUNTING	2004 - 4
2D19	BRACKET, BEACON LIGHT	1673 - 8
3E19	BRACKET, BLADE IMPACT VALVE MOUNTING	3460 - 18
2F14	BRACKET, BOTTOM GUARD	1746 - 2
2C1	BRACKET, BRAKE VALVE/PEDAL MOUNTING	1060 - 2
2I9	BRACKET, CAB STEP	1822 - 2
2H9	BRACKET, CONVERTER MOUNTING (CAB)	1810 - 30
2H7	BRACKET, CONVERTER MOUNTING (CANOPY)	1810 - 28
2J17	BRACKET, EXTERIOR MIRROR	2002 - 4
1I21	BRACKET, FINAL FUEL FILTER	0420 - 2
2J19	BRACKET, FIRE EXTINGUISHER	2003 - 2
2H9	BRACKET, FLC MOUNTING (CAB)	1810 - 30
2H7	BRACKET, FLC MOUNTING (CANOPY)	1810 - 28
3F6	BRACKET, FRONT MOUNTED SCARIFIER	4240 - 2
1J1	BRACKET, FUEL FILTER LINE	0420 - 6
1I11	BRACKET, FUEL INJECTION LINE RAIL	0413 - 2
1E17	BRACKET, HFWD ENGAGEMENT MANIFOLD MOUNTING	0260 - 36
3B6	BRACKET, MAIN MANIFOLD VALVE MOUNTING	2160 - 4
2J13	BRACKET, RADIO	2001 - 2
3D20	BRACKET, SADDLE LOCK PIN	3440 - 6
1F4	BRACKET, TRANSMISSION CONTROL UNIT MOUNTING	0315 - 2
1D17	BRACKETS, HFWD PUMP	0260 - 12
3C15	BRACKETS, MAIN CONTROL VALVE MOUNTING	2160 - 44
2I1	BRACKETS, SEAT (AIR)	1821 - 2
2I5	BRACKETS, SEAT (MECHANICAL)	1821 - 6
2D13	BRACKETS, SNOW LIGHTS	1673 - 2
2C3	BRAKE ACCUMULATOR	1060 - 4
2C3	BRAKE ACCUMULATOR HOSES	1060 - 4
2B23	BRAKE DISK	1011 - 2
1D1	BRAKE DISK, SECOND STAGE PINION, HFWD MOTOR	0250 - 4
2C1	BRAKE LIGHT SWITCH	1060 - 2
2C1	BRAKE PEDAL	1060 - 2
1D1	BRAKE PISTON HOUSING, HFWD MOTOR	0250 - 4
2B23	BRAKE SEPARATOR PLATE	1011 - 2
2C1	BRAKE VALVE	1060 - 2
2C3	BRAKE VALVE HOSES	1060 - 4
2C1	BRAKE VALVE/PEDAL MOUNTING BRACKET	1060 - 2
1G15	BRAKE, PARK	0350 - 28
1G15	BRAKE, TRANSMISSION	0350 - 28
2B23	BRAKES, SERVICE	1011 - 2
1E15	BREATHER, DIFFERENTIAL LOCK	0260 - 34
2D21	BULB, CAB ROOF LIGHT	1673 - 10
2D21	BULB, CAB WORK LIGHT	1673 - 10
2D23	BULB, FRONT DRIVE LIGHT	1673 - 12
2D15	BULB, FRONT SIGNAL LIGHT	1673 - 4
2E1	BULB, MID-FRAME WORK LIGHT	1673 - 14
2E1	BULB, REAR WORK LIGHT	1673 - 14
2E1	BULB, UNDER CAB WORK LIGHT	1673 - 14
2J4	BUMPER, DOOR, SERVICE	1910 - 2
3D20	BUSHING, BLADE LIFT CYLINDER	3440 - 6
1H20	BUSHING, IDLER GEAR	0404 - 6

C

2G5	CAB (COMPLETE)	1810 - 2
2G5	CAB AND CANOPY (COMPLETE)	1810 - 2
2I15	CAB B-POST HEATER AND AIR CONDITIONER DUCT	1830 - 8
2I15	CAB B-POST HEATER AND AIR CONDITIONER DUCT LOUVER	1830 - 8
2H19	CAB CONTROL LEVER CONSOLE	1810 - 40
2H19	CAB CONTROL LEVER CONSOLE COVER	1810 - 40
2H21	CAB CONTROL LEVERS (LEFT)	1810 - 42
2H23	CAB CONTROL LEVERS (RIGHT)	1810 - 44
2H13	CAB DOOR HOLD OPEN LATCH (LEFT)	1810 - 34
2H11	CAB DOOR HOLD OPEN LATCH (RIGHT)	1810 - 32
2H13	CAB DOOR, LEFT	1810 - 34
2H11	CAB DOOR, RIGHT	1810 - 32
2H5	CAB FLOORMAT	1810 - 26
2I17	CAB FRESH AIR FILTER	1830 - 10
2I17	CAB FRESH AIR FILTER HOUSING	1830 - 10
2I11	CAB HEATER HOSES	1830 - 2
2G21	CAB INTERIOR PANELS	1810 - 18
2E9	CAB INTERIOR WIRING HARNESS	1674 - 8
2G13	CAB ISOLATORS	1810 - 10
2G5	CAB KREMNUTS	1810 - 2
2E9	CAB MONITOR	1674 - 8
2H15	CAB MONITOR CONSOLE	1810 - 36
2F1	CAB MONITOR UNIT WIRING HARNESS	1674 - 26
2G13	CAB MOUNT ISOLATORS	1810 - 10
2E9	CAB POWER WIRING HARNESS	1674 - 8
2H1	CAB REAR INTERIOR PANELS	1810 - 22
2H1	CAB REAR WALL PANELS	1810 - 22
2H3	CAB ROOF	1810 - 24
2H3	CAB ROOF COVER	1810 - 24
2D21	CAB ROOF LIGHTS	1673 - 10
2E11	CAB ROOF WIRING HARNESS	1674 - 10
2H9	CAB SIDE CONSOLE	1810 - 30
2H15	CAB STATIONARY FRONT CONSOLE	1810 - 36
2H15	CAB STATIONARY FRONT CONSOLE COVER	1810 - 36
2I9	CAB STEP BRACKET	1822 - 2
2I9	CAB STEPS	1822 - 2
2H19	CAB TILT CONSOLE	1810 - 40
2H19	CAB TILT CONSOLE GAS SHOCK	1810 - 40
2F1	CAB TILT CONSOLE WIRING HARNESS	1674 - 26
2F1	CAB TILT CONSOLE WIRING HARNESS AND SWITCHES	1674 - 26
2I17	CAB TRAY	1830 - 10
2D21	CAB WORK AND DRIVE LIGHTS	1673 - 10
2D21	CAB WORK LIGHTS	1673 - 10
2J1	CABLE, A/C AND HEATER CONTROL	1830 - 18
2D7	CABLE, BATTERY	1671 - 2
2J13	CABLE, RADIO ANTENNA	2001 - 2
2I19	CABLE, TEMPERATURE CONTROL	1830 - 12
1H12	CAMSHAFT	0402 - 5
2G5	CANOPY (COMPLETE)	1810 - 2
2G23	CANOPY INTERIOR PANELS	1810 - 20
2H7	CANOPY SIDE CONSOLE	1810 - 28
1H22	CAP, ENGINE OIL FILLER NECK	0407 - 2
1K17	CAP, FUEL TANK	0560 - 2
3D3	CAP, HYDRAULIC RESERVOIR	2164 - 4
1H16	CAP, MAIN AND THRUST BEARING	0404 - 2
1C24	CARRIER, FIRST PLANET PINION, HFWD MOTOR	0250 - 2

ALPHABETICAL INDEX - CONTINUED

GRID		PAGE
1D5	CARRIER, PLANET PINION	0250 - 8
1C4	CASE, DIFFERENTIAL	0210 - 6
1F19	CASE, REAR TRANSMISSION	0350 - 6
2J13	CD PLAYER	2001 - 2
2H17	CENTER COVER, STEERING WHEEL	1810 - 38
2C21	CENTRAL LUBRICATION, FRAME HINGE	1370 - 2
1D3	CHAIN, TANDEM DRIVE	0250 - 6
1J23	CHARGE AIR COOLER	0510 - 4
1K1	CHARGE AIR COOLER	0510 - 6
1E9	CHARGE HOSES, HFWD	0260 - 28
1E7	CHARGE PUMP, HFWD	0260 - 26
3D24	CIRCLE DRIVE GEARBOX	3450 - 2
3D24	CIRCLE DRIVE GEARBOX MOUNTING SCREWS	3450 - 2
3E1	CIRCLE DRIVE GEARBOX, WITH SLIP CLUTCH	3450 - 4
3E5	CIRCLE DRIVE MOTOR	3460 - 4
3E5	CIRCLE DRIVE MOTOR HOUSING	3460 - 4
3E5	CIRCLE DRIVE MOTOR SEAL KIT	3460 - 4
3D22	CIRCLE FRAME	3440 - 8
3D22	CIRCLE INSERTS	3440 - 8
2H21	CIRCLE ROTATE CONTROL LEVER	1810 - 42
3E5	CIRCLE ROTATE MOTOR	3460 - 4
3F1	CIRCLE ROTATE MOTOR HYDRAULIC HOSES	3460 - 24
3B16	CIRCLE ROTATE VALVE SECTION	2160 - 20
2H23	CIRCLE SIDE SHIFT CONTROL LEVER	1810 - 44
3B14	CIRCLE SIDE SHIFT VALVE SECTION	2160 - 18
3E7	CIRCLE SIDESHIFT CYLINDER	3460 - 6
3F3	CIRCLE SIDESHIFT CYLINDER HYDRAULIC HOSES	3460 - 26
3E7	CIRCLE SIDESHIFT CYLINDER SEAL KIT	3460 - 6
3D22	CIRCLE SUPPORT	3440 - 8
3D22	CIRCLE WEAR STRIPS	3440 - 8
2D7	CLAMP, BATTERY	1671 - 2
1I11	CLAMP, FUEL INJECTOR	0413 - 2
1K9	CLEANER, AIR	0520 - 2
1G3	CLUTCH PLATE, TRANSMISSION	0350 - 16
1G5	CLUTCH PLATE, TRANSMISSION	0350 - 18
1G7	CLUTCH PLATE, TRANSMISSION	0350 - 20
1G9	CLUTCH PLATE, TRANSMISSION	0350 - 22
1C8	CLUTCH PLATES, DIFFERENTIAL	0210 - 10
3E1	CLUTCH, SLIP, CIRCLE DRIVE GEARBOX AND	3450 - 4
1J4	CLUTCH, STARTING MOTOR	0422 - 2
2E9	CMU	1674 - 8
2F1	CMU WIRING HARNESS	1674 - 26
1E19	COIL, HFWD SOLENOID	0260 - 38
3C11	COLD START DISCONNECT HOSES AND FITTINGS	2160 - 40
3C13	COLD START DISCONNECT SOLENOID VALVE	2160 - 42
2H17	COLUMN, STEERING	1810 - 38
2I21	COMPRESSOR, AIR CONDITIONER	1830 - 14
2I21	COMPRESSOR,A/C	1830 - 14
2I23	CONDENSER, AIR CONDITIONING	1830 - 16
1H15	CONNECTING ROD	0403 - 1
1H15	CONNECTING ROD BEARINGS	0403 - 1
2H9	CONSOLE, A/C CONTROL (CAB)	1810 - 30
2H19	CONSOLE, CAB CONTROL LEVER	1810 - 40
2H15	CONSOLE, CAB FRONT (STATIONARY)	1810 - 36
2H9	CONSOLE, CAB SIDE	1810 - 30
2H19	CONSOLE, CAB TILT	1810 - 40
2H7	CONSOLE, CANOPY SIDE	1810 - 28
2H9	CONSOLE, GEAR SHIFT LEVER (CAB)	1810 - 30
2H7	CONSOLE, GEARSHIFT LEVER (CANOPY)	1810 - 28
3C9	CONTROL LEVER, ONE HAND BLADE LIFT	2160 - 38
2H21	CONTROL LEVERS (LEFT)	1810 - 42
2H23	CONTROL LEVERS (RIGHT)	1810 - 44
1K20	CONTROL UNIT,ENGINE	0575 - 2
3C7	CONTROL VALVE KIT, FIFTH FUNCTION	2160 - 36
3C7	CONTROL VALVE KIT, FOURTH FUNCTION	2160 - 36
3C7	CONTROL VALVE KIT, SIXTH FUNCTION	2160 - 36
1G19	CONTROL VALVE MOUNTING, TRANSMISSION	0350 - 32
3B10	CONTROL VALVE, MAIN HYDRAULIC	2160 - 10
1G21	CONTROL VALVE, TRANSMISSION	0350 - 34
1D21	CONTROL, HFWD PUMP EP	0260 - 16
3B4	CONTROL, MAIN HYDRAULIC PUMP	2160 - 2
2E17	CONTROLLER, HFWD	1674 - 18
1F4	CONTROLLER, TRANSMISSION	0315 - 2
2F3	CONVERTER, POWER (24 VOLT TO 12 VOLT)	1674 - 28
1H16	COOLANT DRAIN VALVE, ENGINE	0404 - 2
1J17	COOLANT HEATER	0505 - 2
1I17	COOLANT SIDE OUTLET, ENGINE	0418 - 2
1K22	COOLANT TEMPERATURE SENSOR	0578 - 1
1K19	COOLANT TEMPERATURE SWITCH, ENGINE	0574 - 1
1E11	COOLER HOSE, DIFFERENTIAL LOCK	0260 - 30
1J23	COOLER, CHARGE AIR	0510 - 4
1K1	COOLER, CHARGE AIR	0510 - 6
1I19	COOLER, ENGINE OIL	0419 - 2
1J23	COOLER, HYDRAULIC OIL	0510 - 4
1K1	COOLER, HYDRAULIC OIL	0510 - 6
2I19	CORE, EVAPORATOR/HEATER	1830 - 12
1E13	COUPLING, DIFF LOCK PUMP TO TRANS	0260 - 32
2I17	COVER, AIR CONDITIONER AND HEATER	1830 - 10
1I13	COVER, AIR INTAKE	0414 - 1
2H19	COVER, CAB CONTROL LEVER CONSOLE	1810 - 40
2H1	COVER, CAB REAR	1810 - 22
2H3	COVER, CAB ROOF	1810 - 24
2H15	COVER, CAB STATIONARY FRONT CONSOLE	1810 - 36
3D24	COVER, CIRCLE DRIVE GEARBOX	3450 - 2
3E1	COVER, CIRCLE DRIVE GEARBOX, WITH SLIP CLUTCH	3450 - 4
1C2	COVER, DIFFERENTIAL CASE	0210 - 4
1I17	COVER, ENGINE COOLANT THERMOSTAT HOUSING	0418 - 2
1H23	COVER, ENGINE OIL DIPSTICK HOLE	0407 - 3
1H23	COVER, ENGINE OIL FILLER NECK INLET PORT	0407 - 3
2G21	COVER, FRONT WIPER (CAB)	1810 - 18
2G23	COVER, FRONT WIPER (CANOPY)_	1810 - 20
2I17	COVER, HEATER AND AIR CONDITIONER	1830 - 10
1D23	COVER, HFWD PUMP END	0260 - 18
3D3	COVER, HYDRAULIC RESERVOIR CLEAN OUT	2164 - 4
1F8	COVER, INCHING PEDAL	0315 - 6
2J8	COVER, MAIN FRAME SIDE	1913 - 2
1C24	COVER, PLANET PINION, HFWD MOTOR	0250 - 2
2G21	COVER, REAR WIPER (CAB)	1810 - 18
2G23	COVER, REAR WIPER (CANOPY)	1810 - 20
1H11	COVER, ROCKER ARM	0402 - 4
1D21	COVER, SERVO PISTON, HFWD PUMP	0260 - 16
2H17	COVER, STEERING WHEEL CENTER	1810 - 38
1H13	COVER, TIMING GEAR	0402 - 6
1F6	COVER, TRANS GEAR SELECTOR	0315 - 4
1H11	COVER, VALVE	0402 - 4
2J4	COVERS, BATTERY	1910 - 2
2F12	COVERS, MAIN FRAME	1740 - 6
1B21	COVERS, TANDEM HOUSING	0201 - 2
2F12	COWL COVER, MAIN FRAME	1740 - 6
1H8	CRANKSHAFT AND BEARINGS	0401 - 1
1H8	CRANKSHAFT GEAR	0401 - 1
1K22	CRANKSHAFT TIMING GEAR	0578 - 1
1K22	CRANKSHAFT TIMING SENSOR	0578 - 1
2I17	CUPHOLDER	1830 - 10
2I1	CUSHION, BACKREST (AIR)	1821 - 2
2I5	CUSHION, BACKREST (MECHANICAL)	1821 - 6
2I1	CUSHION, SEAT (AIR)	1821 - 2
2I5	CUSHION, SEAT (MECHANICAL)	1821 - 6
3D8	CUTTING EDGES AND MOLDBOARDS	3401 - 2
1H16	CYLINDER BLOCK, ENGINE	0404 - 2
1I6	CYLINDER HEAD	0409 - 2
2B16	CYLINDER HOSE, WHEEL LEAN (672D)	0960 - 14

ALPHABETICAL INDEX - CONTINUED

GRID		PAGE
2B14	CYLINDER HOSES, ARTICULATION	0960 - 12
1H15	CYLINDER LINER	0403 - 1
2B8	CYLINDER, ARTICULATION	0960 - 6
3E9	CYLINDER, BLADE LIFT	3460 - 8
3E11	CYLINDER, BLADE SLIDE	3460 - 10
3E13	CYLINDER, BLADE TILT	3460 - 12
3E7	CYLINDER, CIRCLE SIDESHIFT	3460 - 6
2B10	CYLINDER, FRONT STEERING	0960 - 8
3F12	CYLINDER, RIPPER/REAR SCARIFIER	4240 - 8
3F8	CYLINDER, SCARIFIER	4240 - 4
2B4	CYLINDER, WHEEL LEAN (670D)	0960 - 2
2B6	CYLINDER, WHEEL LEAN (672D)	0960 - 4

D

1F10	DAMPENER, TORSIONAL	0325 - 2
1J8	DAMPENER, TORSIONAL	0429 - 2
2C11	DECALS, ENGLISH	1320 - 2
2C15	DECALS, FRENCH	1320 - 6
2C13	DECALS, SPANISH	1320 - 4
1K7	DECELERATOR PEDAL	0515 - 4
1C6	DIAGNOSTIC FITTING, DIFFERENTIAL LOCK	0210 - 8
1E17	DIAGNOSTIC FITTING, HFWD ENGAGEMENT MANIFOLD	0260 - 36
1G24	DIAGNOSTIC FITTING, TRANSMISSION CONTROL VALVE	0360 - 2
2E17	DIAL, HFWD AGRESSIVENESS	1674 - 18
1E13	DIFF LOCK PUMP	0260 - 32
1E13	DIFF LOCK PUMP MOUNTING	0260 - 32
1C8	DIFFERENTIAL	0210 - 10
1C4	DIFFERENTIAL CASE	0210 - 6
1C2	DIFFERENTIAL CASE COVER	0210 - 4
1C7	DIFFERENTIAL CASE OIL LINE	0210 - 9
1C8	DIFFERENTIAL CLUTCH PLATES	0210 - 10
1E11	DIFFERENTIAL LOCK COOLER HOSES	0260 - 30
1C6	DIFFERENTIAL LOCK DIAGNOSTIC FITTING	0210 - 8
1E15	DIFFERENTIAL LOCK FILTER	0260 - 34
1E15	DIFFERENTIAL LOCK HOSES AND FILTER	0260 - 34
1E15	DIFFERENTIAL LOCK HYDRAULIC HOSES	0260 - 34
1E11	DIFFERENTIAL LOCK OIL LINE	0260 - 30
1E13	DIFFERENTIAL LOCK PUMP	0260 - 32
1E15	DIFFERENTIAL LOCK PUMP HOSES	0260 - 34
2F1	DIFFERENTIAL LOCK SWITCH	1674 - 26
1C6	DIFFERENTIAL LOCK VALVE	0210 - 8
1C6	DIFFERENTIAL LOCK VALVE SOLENOID	0210 - 8
2E21	DIODES, VEC	1674 - 22
1F12	DIPSTICK, TRANSMISSION OIL	0341 - 2
1H21	DIPSTICK,ENGINE OIL	0407 - 1
3C13	DISCONNECT VALVE, COLD START	2160 - 42
3C11	DISCONNECT, MAIN HYD PUMP COLD START	2160 - 40
2B23	DISK, BRAKE	1011 - 2
1D1	DISK, BRAKE, SECOND STAGE PINION, HFWD MOTOR	0250 - 4
2I15	DISTRIBUTION DUCT, HEATER AND AIR CONDITIONER	1830 - 8
2G21	DOMELIGHT (CAB)	1810 - 18
2G23	DOMELIGHT (CANOPY)	1810 - 20
2J4	DOOR BUMPER, SERVICE	1910 - 2
2J4	DOOR HINGE, SERVICE	1910 - 2
2H13	DOOR LATCH, CAB (LEFT)	1810 - 34
2H11	DOOR LATCH, CAB (RIGHT)	1810 - 32
2H13	DOOR, CAB LEFT	1810 - 34
2H11	DOOR, CAB RIGHT	1810 - 32
2J4	DOORS, ENGINE	1910 - 2
2J4	DOORS, SERVICE	1910 - 2
3D16	DRAFT FRAME	3440 - 2
3D16	DRAFT FRAME BALL RETAINER	3440 - 2
1I21	DRAIN VALVE KIT, FINAL FUEL FILTER	0420 - 2
1I23	DRAIN VALVE KIT, PRIMARY FUEL FILTER	0420 - 4
1I1	DRAIN VALVE, ENGINE OIL PAN	0407 - 6
1H16	DRAIN VALVE,ENGINE COOLANT	0404 - 2
1D3	DRIVE CHAIN, TANDEM	0250 - 6
2D21	DRIVE LIGHTS, CAB	1673 - 10
2D23	DRIVE LIGHTS, FRONT	1673 - 12
1B23	DRIVE SHAFT, FINAL DRIVE AND TANDEM PIVOT	0201 - 4
1B23	DRIVE SPROCKET	0201 - 4
3B4	DRIVE, AUXILLARY, MAIN HYDRAULIC PUMP	2160 - 2
1D5	DRIVE, TANDEM	0250 - 8
1D11	DRIVE, WHEEL, HFWD	0260 - 6
1C10	DRIVESHAFT	0225 - 2
1K3	DRIVESHAFT, FAN	0512 - 2
1D21	DRIVESHAFT, HFWD PUMP	0260 - 16
2F1	DRIVING LIGHT HIGH/LOW BEAM SWITCH	1674 - 26
2I15	DUCT, CAB B-POST HEATER AND AIR CONDITIONER	1830 - 8
2I15	DUCT, DISTRIBUTION, HEATER AND AIR CONDITIONER	1830 - 8
2I17	DUCTS, HEATER AND AIR CONDITIONER	1830 - 10

E

1K20	ECU	0575 - 2
3D8	EDGE, CUTTING	3401 - 2
1I5	ELBOW FITTING, ENGINE VENTILATING SYSTEM	0408 - 1
1I10	ELBOW, EXHAUST	0410 - 2
2E21	ELECTRICAL CENTER, VEHICLE	1674 - 22
1I3	ELEMENT, ENGINE OIL FILTER	0407 - 8
1I21	ELEMENT, FINAL FUEL FILTER	0420 - 2
1I23	ELEMENT, PRIMARY FUEL FILTER	0420 - 4
3D10	END BIT OVERLAYS	3401 - 4
3D8	END BIT, MOLDBOARD	3401 - 2
1D13	END CAP, HFWD MOTOR	0260 - 8
1D23	END COVER, HFWD PUMP	0260 - 18
2B10	END, STEERING CYLINDER TIE ROD	0960 - 8
1C16	END, TIE ROD, FRONT AXLE (670D)	0230 - 6
1C20	END, TIE ROD, FRONT AXLE (672D)	0240 - 4
1E19	ENGAGEMENT MANIFOLD, HFWD	0260 - 38
1E19	ENGAGEMENT SOLENOID, HFWD	0260 - 38
2D11	ENGINE ACCESSORY DRIVE BELT	1672 - 4
1K9	ENGINE AIR CLEANER	0520 - 2
1K9	ENGINE AIR FILTER	0520 - 2
1K15	ENGINE AND TRANSMISSION MOUNTING	0540 - 2
1K15	ENGINE AND TRANSMISSION MOUNTING BRACKETS AND ISOLATORS	0540 - 2
1K20	ENGINE CONTROL UNIT	0575 - 2
1J17	ENGINE COOLANT HEATER	0505 - 2
1K19	ENGINE COOLANT TEMPERATURE SWITCH	0574 - 1
1I17	ENGINE COOLANT THERMOSTAT AND HOUSING	0418 - 2
2J4	ENGINE DOORS	1910 - 2
2F10	ENGINE FRAME	1740 - 4
1K15	ENGINE MOUNTING SUPPORTS	0540 - 2
2C17	ENGINE OIL DRAIN HOSE	1369 - 2
1J12	ENGINE OVERHAUL KIT	0452 - 2
1H15	ENGINE PISTON	0403 - 1
1K22	ENGINE SENSORS	0578 - 1
1H18	ENGINE SHORT BLOCK ASSEMBLY	0404 - 4
1K5	ENGINE SPEED CONTROL ON/OFF SWITCH	0515 - 2
1K5	ENGINE SPEED CONTROL PEDAL AND SWITCHES	0515 - 2
1K5	ENGINE SPEED CONTROL SET SWITCH	0515 - 2
2H9	ENGINE SPEED CONTROL SWITCH LABEL (CAB)	1810 - 30

ALPHABETICAL INDEX - CONTINUED

GRID		PAGE
2H7	ENGINE SPEED CONTROL SWITCH LABEL (CANOPY)	1810 - 28
2H9	ENGINE SPEED CONTROL SWITCH PANEL (CAB)	1810 - 30
2H7	ENGINE SPEED CONTROL SWITCH PANEL (CANOPY)	1810 - 28
1K7	ENGINE SPEED DECELERATOR PEDAL	0515 - 4
1I5	ENGINE VENTILATING SYSTEM	0408 - 1
2E7	ENGINE WIRING HARNESS	1674 - 6
2C11	ENGLISH LABELS AND TRADEMARKS	1320 - 2
2C11	ENGLISH TRADEMARKS AND LABELS	1320 - 2
1D21	EP CONTROL GASKET	0260 - 16
1D21	EP CONTROL, HFWD PUMP	0260 - 16
2I19	EVAPORATOR/HEATER CORE	1830 - 12
1K13	EXHAUST CLAMP	0530 - 2
1I10	EXHAUST ELBOW AND ADAPTER	0410 - 2
1I9	EXHAUST MANIFOLD	0410 - 1
1I6	EXHAUST VALVE	0409 - 2
2I19	EXPANSION VALVE,HEATER AND A/C	1830 - 12
3D12	EXTENSION KIT, MOLDBOARD (24" MOLDBOARD)	3401 - 6
3D14	EXTENSION KIT, MOLDBOARD (27" MOLDBOARD)	3401 - 8
3D12	EXTENSION, MOLDBOARD (24" MOLDBOARD)	3401 - 6
3D14	EXTENSION, MOLDBOARD (27" MOLDBOARD)	3401 - 8
2D13	EXTENSIONS, SNOW LIGHT	1673 - 2
2J17	EXTERIOR MIRROR	2002 - 4
2J19	EXTINGUISHER, FIRE	2003 - 2

F

1K3	FAN	0512 - 2
1K3	FAN AND FAN TOWER	0512 - 2
1K3	FAN BELT	0512 - 2
1K3	FAN BELT IDLER PULLEY	0512 - 2
1K3	FAN BELT TENSIONER	0512 - 2
1K3	FAN BLADE	0512 - 2
1H13	FAN DRIVE ADAPTER	0402 - 6
1K3	FAN DRIVESHAFT	0512 - 2
1J23	FAN GUARD	0510 - 4
1J21	FAN GUARD (WITHOUT AIR CONDITIONING)	0510 - 2
1K3	FAN HUB	0512 - 2
1K3	FAN PULLEY	0512 - 2
1J23	FAN SHROUD	0510 - 4
1K1	FAN SHROUD	0510 - 6
1K3	FAN TOWER	0512 - 2
3C7	FIFTH FUNCTION CONTROL VALVE KIT	2160 - 36
1G9	FIFTH STAGE ASSEMBLY, TRANSMISSION	0350 - 22
1G9	FIFTH STAGE INPUT SHAFT	0350 - 22
1H23	FILLER NECK INLET PORT COVER, ENGINE OIL	0407 - 3
1H22	FILLER NECK, ENGINE OIL	0407 - 2
1E15	FILTER HEAD, DIFFERENTIAL LOCK FILTER	0260 - 34
1I3	FILTER HEAD, ENGINE OIL	0407 - 8
1G24	FILTER HEAD, TRANSMISSION	0360 - 2
1J1	FILTER LINES, FUEL	0420 - 6
3D1	FILTER RESTRICTION SWITCH, MAIN HYDRAULIC FILTER	2164 - 2
1G24	FILTER RESTRICTION SWITCH, TRANSMISSION	0360 - 2
2I17	FILTER, CAB FRESH AIR	1830 - 10
1E15	FILTER, DIFFERENTIAL LOCK	0260 - 34
1K9	FILTER, ENGINE AIR	0520 - 2
1I3	FILTER, ENGINE OIL	0407 - 8
1I21	FILTER, FINAL FUEL	0420 - 2
3D1	FILTER, MAIN HYDRAULIC	2164 - 2
1K9	FILTER, PRIMARY ENGINE AIR	0520 - 2
1I23	FILTER, PRIMARY FUEL	0420 - 4
1K9	FILTER, SECONDARY ENGINE AIR	0520 - 2
1G24	FILTER, TRANSMISSION	0360 - 2
1B23	FINAL DRIVE HOUSING	0201 - 4
1J1	FINAL FUEL FILTER LINES	0420 - 6
2J19	FIRE EXTINGUISHER	2003 - 2
2J19	FIRE EXTINGUISHER BRACKET	2003 - 2
1C24	FIRST PLANET PINION, HFWD MOTOR	0250 - 2
1G11	FIRST SIXTH ASSEMBLY	0350 - 24
1G1	FIRST STAGE ASSEMBLY	0350 - 14
1G1	FIRST STAGE INPUT SHAFT	0350 - 14
1C24	FIRST STAGE PINION, HFWD MOTOR	0250 - 2
1E17	FITTING, DIAGNOSTIC, HFWD ENGAGEMENT MANIFOLD	0260 - 36
1J1	FITTING, FUEL FILTER LINE	0420 - 6
2B14	FITTINGS, ARTICULATION CYLINDER HOSE	0960 - 12
3E19	FITTINGS, BLADE IMPACT VALVE	3460 - 18
3E15	FITTINGS, BLADE LIFT CYLINDER	3460 - 14
3E23	FITTINGS, BLADE SLIDE CYLINDER	3460 - 22
3E23	FITTINGS, BLADE TILT CYLINDER	3460 - 22
3F1	FITTINGS, CIRCLE ROTATE MOTOR	3460 - 24
3F3	FITTINGS, CIRCLE SIDESHIFT CYLINDER	3460 - 26
1C4	FITTINGS, DIFFERENTIAL CASE	0210 - 6
2C19	FITTINGS, FLUID SAMPLING	1369 - 4
2B12	FITTINGS, FRONT STEERING CYLINDER HOSE	0960 - 10
1E17	FITTINGS, HFWD ENGAGEMENT MANIFOLD	0260 - 36
3C21	FITTINGS, MAIN HYDRAULIC PUMP(670D)	2163 - 6
3C23	FITTINGS, MAIN HYDRAULIC PUMP(672D)	2163 - 8
2C8	FITTINGS, PARK BRAKE VALVE	1111 - 4
3F20	FITTINGS, RIPPER CYLINDER	4260 - 10
3E17	FITTINGS, SADDLE LOCK PIN	3460 - 16
3F18	FITTINGS, SCARIFIER CYLINDER (FRONT)	4260 - 8
3F20	FITTINGS, SCARIFIER CYLINDER (REAR)	4260 - 10
2C1	FITTINGS, SERVICE BRAKE VALVE	1060 - 2
3B10	FIVE FUNCTION HYDRAULIC CONTROL VALVE	2160 - 10
2F5	FLC	1675 - 2
2H7	FLC MOUNTING BRACKET (CANOPY)	1810 - 28
2H9	FLC MOUNTING BRACKET(CAB)	1810 - 30
2F5	FLEX LOAD CENTER (FLC)	1675 - 2
2H5	FLOORMAT, CAB	1810 - 26
2C19	FLUID SAMPLING FITTINGS	1369 - 4
1D23	FLUSHING PUMP, HFWD MOTOR	0260 - 18
1J9	FLYWHEEL	0433 - 1
1J10	FLYWHEEL HOUSING	0433 - 2
3B10	FOUR FUNCTION HYDRAULIC CONTROL VALVE	2160 - 10
1G7	FOURTH STAGE ASSEMBLY, TRANSMISSION	0350 - 20
1G7	FOURTH STAGE INPUT SHAFT	0350 - 20
3D22	FRAME, CIRCLE	3440 - 8
3D16	FRAME, DRAFT	3440 - 2
2F10	FRAME, ENGINE	1740 - 4
2F8	FRAME, MAIN	1740 - 2
3F10	FRAME, REAR RIPPER/SCARIFIER	4240 - 6
3D20	FRAME, SADDLE	3440 - 6
3D18	FRAME, TILT, BLADE	3440 - 4
2C15	FRENCH LABELS AND TRADEMARKS	1320 - 6
2C15	FRENCH TRADEMARKS AND LABELS	1320 - 6
2I17	FRESH AIR FILTER, CAB	1830 - 10
2E1	FRONT AND REAR WORK LIGHTS	1673 - 14
1C12	FRONT AXLE (670D)	0230 - 2
1C18	FRONT AXLE (672D)	0240 - 2
1C18	FRONT AXLE GUARD (672D)	0240 - 2
1C12	FRONT AXLE PIVOT PIN (670D)	0230 - 2
1C18	FRONT AXLE PIVOT PIN (672D)	0240 - 2
1C16	FRONT AXLE TIE ROD (670D)	0230 - 6
1C20	FRONT AXLE TIE ROD (672D)	0240 - 4
2D23	FRONT DRIVE LIGHTS	1673 - 12
3F16	FRONT EQUIPMENT HOSES	4260 - 6
1D17	FRONT HFWD PUMP	0260 - 12
2E15	FRONT HFWD WIRING HARNESS	1674 - 16
2G11	FRONT LOWER WINDSHIELD WIPER	1810 - 8

ALPHABETICAL INDEX - CONTINUED

GRID		PAGE
3F16	FRONT MOUNTED EQUIPMENT HYDRAULIC HOSES	4260 - 6
3F6	FRONT MOUNTED SCARIFIER	4240 - 2
3F6	FRONT MOUNTED SCARIFIER KIT	4240 - 2
3F6	FRONT MOUNTED SCARIFIER MOUNTING BRACKET	4240 - 2
2F22	FRONT MOUNTED WEIGHT	1749 - 2
1H13	FRONT OIL SEAL	0402 - 6
1H20	FRONT PLATE AND IDLER GEARS	0404 - 6
2E3	FRONT PLATFORM WIRING HARNESS	1674 - 2
3D20	FRONT SADDLE PIN	3440 - 6
3F18	FRONT SCARIFIER HOSE KIT	4260 - 8
3F18	FRONT SCARIFIER HYDRAULIC HOSES	4260 - 8
2D15	FRONT SIGNAL LIGHTS	1673 - 4
2D15	FRONT SIGNAL LIGHTS, LED	1673 - 4
2B10	FRONT STEERING CYLINDER	0960 - 8
2B12	FRONT STEERING CYLINDER HOSES	0960 - 10
1F15	FRONT TRANSMISSION HOUSING (670D)	0350 - 2
1F17	FRONT TRANSMISSION HOUSING (672D)	0350 - 4
2E3	FRONT TURN/DRIVING LIGHT WIRING HARNESS	1674 - 2
1B12	FRONT WHEEL (10" X 24" SPLIT RIM)	0110 - 12
1B14	FRONT WHEEL (12" X 25")	0110 - 14
1B10	FRONT WHEEL (14" X 25" SPLIT RIM)	0110 - 10
1C14	FRONT WHEEL BEARING (670D)	0230 - 4
1C14	FRONT WHEEL HUB (670D)	0230 - 4
2K5	FRONT WINDOW SUNVISOR	2007 - 4
2G17	FRONT WINDOWS, LOWER (OPENABLE)	1810 - 14
2G15	FRONT WINDOWS, LOWER (STATIONARY)	1810 - 12
2G7	FRONT WINDSHIELD WASHER PUMP	1810 - 4
2G7	FRONT WINDSHIELD WIPER	1810 - 4
2G21	FRONT WIPER COVER (CAB)	1810 - 18
2G23	FRONT WIPER COVER (CANOPY)	1810 - 20
2E3	FRONT WIRING HARNESS, MAIN	1674 - 2
2E1	FRONT WORK LIGHTS	1673 - 14
1J1	FUEL FILTER LINES	0420 - 6
1I21	FUEL FILTER, FINAL	0420 - 2
1I23	FUEL FILTER, PRIMARY	0420 - 4
1K17	FUEL HOSES	0560 - 2
1I11	FUEL INJECTION NOZZLE	0413 - 2
1I11	FUEL INJECTION PUMP	0413 - 2
1K22	FUEL INJECTION PUMP TIMING SENSOR	0578 - 1
1I11	FUEL LINE, INJECTION PUMP	0413 - 2
1K17	FUEL TANK	0560 - 2
1K17	FUEL TANK AND FUEL HOSES	0560 - 2
1K17	FUEL TANK CAP	0560 - 2
1K17	FUEL TANK SENDING UNIT	0560 - 2
1J3	FUEL TRANSFER PUMP	0421 - 1
1J19	FUSE, GLOW PLUG	0505 - 4
2E21	FUSES, VEC	1674 - 22

G

2H19	GAS SHOCK, CAB CONTROL LEVER CONSOLE	1810 - 40
1J11	GASKET KIT, ENGINE IN-CHASSIS OVERHAUL	0452 - 1
1J12	GASKET KIT, ENGINE MAJOR OVERHAUL	0452 - 2
1I6	GASKET, CYLINDER HEAD	0409 - 2
1D21	GASKET, HFWD PUMP EP CONTROL	0260 - 16
3D3	GASKET, HYDRAULIC RESERVOIR CLEAN OUT GASKET	2164 - 4
1H11	GASKET, ROCKER ARM COVER	0402 - 4
1G19	GASKET, TRANS CONTROL VALVE	0350 - 32
1F6	GEAR SELECTOR, TRANSMISSION	0315 - 4
1H12	GEAR, CAMSHAFT	0402 - 5
1H8	GEAR, CRANKSHAFT	0401 - 1
1K22	GEAR, CRANKSHAFT TIMING	0578 - 1
1H24	GEAR, ENGINE OIL PUMP	0407 - 4
1J9	GEAR, FLYWHEEL RING	0433 - 1
1I11	GEAR, FUEL INJECTION PUMP DRIVE	0413 - 2
1H20	GEAR, IDLER	0404 - 6
3D24	GEARBOX	3450 - 2
3D24	GEARBOX COVER, CIRCLE DRIVE	3450 - 2
3E1	GEARBOX COVER, CIRCLE DRIVE, WITH SLIP CLUTCH	3450 - 4
3D24	GEARBOX, CIRCLE DRIVE	3450 - 2
3D24	GEARBOX, CIRCLE DRIVE MOUNTING SCREWS	3450 - 2
3E1	GEARBOX, CIRCLE DRIVE, WITH SLIP CLUTCH	3450 - 4
3E1	GEARBOX, WITH SLIP CLUTCH	3450 - 4
1F15	GEARS, PUMP DRIVE (670D)	0350 - 2
1F17	GEARS, PUMP DRIVE (672D)	0350 - 4
2H9	GEARSHIFT LEVER CONSOLE (CAB)	1810 - 30
2H7	GEARSHIFT LEVER CONSOLE (CANOPY)	1810 - 28
1J16	GLOW PLUG	0505 - 1
1J19	GLOW PLUG FUSE	0505 - 4
1J19	GLOW PLUG RELAY	0505 - 4
1J19	GLOW PLUG WIRING HARNESS	0505 - 4
2C21	GREASE FITTINGS, FRAME HINGE CENTRAL LUBRICATION	1370 - 2
2J10	GRILLE	1921 - 2
2J10	GRILLE HOUSING	1921 - 2
2J10	GRILLE HOUSING, REAR	1921 - 2
2J10	GRILLE, REAR	1921 - 2
2G21	GRILLE, SPEAKER (CAB)	1810 - 18
2G23	GRILLE, SPEAKER (CANOPY)	1810 - 20
2D7	GROUNDING STRAPS	1671 - 2
2F14	GUARD, BOTTOM (W/O RIPPER)	1746 - 2
1J23	GUARD, FAN	0510 - 4
1J21	GUARD, FAN (WITHOUT AIR CONDITIONING)	0510 - 2
1C18	GUARD, FRONT AXLE (672D)	0240 - 2
1E1	GUARD, HFWD HOSES	0260 - 20
1D11	GUARD, HFWD MOTOR HOSE	0260 - 6
1H1	GUARD, VALVE, TRANSMISSION	0360 - 4
2F18	GUARDS, BOTTOM (WITH RIPPER)	1746 - 6

H

2J1	HARNESS, A/C AND HEATER WIRING	1830 - 18
2D9	HARNESS, ALTERNATOR WIRING	1672 - 2
3E19	HARNESS, BLADE IMPACT VALVE WIRING	3460 - 18
2E9	HARNESS, CAB INTERIOR WIRING	1674 - 8
2E9	HARNESS, CAB POWER WIRING	1674 - 8
2E11	HARNESS, CAB ROOF WIRING	1674 - 10
2E7	HARNESS, ENGINE WIRING	1674 - 6
1J16	HARNESS, GLOW PLUG WIRING	0505 - 1
1J19	HARNESS, GLOW PLUG WIRING	0505 - 4
2E15	HARNESS, HFWD WIRING	1674 - 16
2E3	HARNESS, MAIN WIRING (FRONT)	1674 - 2
2E5	HARNESS, MAIN WIRING (REAR)	1674 - 4
2D13	HARNESS, SNOW LIGHT WIRING	1673 - 2
2D17	HARNESS, TAIL LIGHT WIRING	1673 - 6
2E13	HARNESS, TRANSMISSION WIRING	1674 - 14
1I11	HARNESS, WIRING, FUEL INJECTOR	0413 - 2
2F1	HAZARD WARNING LIGHT SWITCH	1674 - 26
1I6	HEAD, CYLINDER	0409 - 2
1I21	HEAD, FINAL FUEL FILTER	0420 - 2
1I23	HEAD, PRIMARY FUEL FILTER	0420 - 4
1I23	HEADER KIT, PRIMARY FUEL FILTER	0420 - 4
2G21	HEADLINER (CAB)	1810 - 18
2G23	HEADLINER (CANOPY)	1810 - 20
2I1	HEADREST (AIR)	1821 - 2
2I5	HEADREST (MECHANICAL)	1821 - 6
1H11	HEAT SHIELD, ROCKER ARM COVER	0402 - 4
2J17	HEATED EXTERIOR MIRROR	2002 - 4
2I19	HEATER AND A/C BLOWER MOTOR	1830 - 12

ALPHABETICAL INDEX - CONTINUED

GRID		PAGE
2I19	HEATER AND A/C BLOWER MOTOR IMPELLER	1830 - 12
2I19	HEATER AND A/C EXPANSION VALVE	1830 - 12
2I19	HEATER AND A/C HOUSING	1830 - 12
2I19	HEATER AND A/C RESISTOR	1830 - 12
2I19	HEATER AND A/C THERMOSTAT	1830 - 12
2I17	HEATER AND AIR CONDITIONER COVER	1830 - 10
2I15	HEATER AND AIR CONDITIONER DUCTS	1830 - 8
2I17	HEATER AND AIR CONDITIONER DUCTS	1830 - 10
2I17	HEATER AND AIR CONDITIONER FILTER, FILTER HOUSING, AND COVER	1830 - 10
2J1	HEATER AND AIR CONDITIONER LINES AND CONTROLS	1830 - 18
2I11	HEATER HOSES, CAB	1830 - 2
1J17	HEATER, COOLANT	0505 - 2
2E17	HFWD AGRESSIVENESS SWITCH	1674 - 18
2E17	HFWD CAB COMPONENTS	1674 - 18
1E9	HFWD CHARGE HOSES	0260 - 28
1D17	HFWD CHARGE PRESSURE SWITCH	0260 - 12
1E7	HFWD CHARGE PUMP	0260 - 26
1E9	HFWD CHARGE PUMP HOSES	0260 - 28
1E7	HFWD CHARGE PUMP SEAL KIT	0260 - 26
2E17	HFWD CONTROLLER	1674 - 18
1E19	HFWD ENGAGEMENT MANIFOLD	0260 - 38
1E17	HFWD ENGAGEMENT MANIFOLD FITTINGS AND TEMPERATURE SENSOR	0260 - 36
1E17	HFWD ENGAGEMENT MANIFOLD MOUNTING BRACKET	0260 - 36
1E19	HFWD ENGAGEMENT MANIFOLD SEAL KIT	0260 - 38
1E19	HFWD ENGAGEMENT SOLENOID	0260 - 38
1E19	HFWD ENGAGEMENT SOLENOID VALVE	0260 - 38
1E19	HFWD FLUSHING VALVE	0260 - 38
1D7	HFWD FRONT HUB AND MOTOR (COMPLETE)	0260 - 2
1E1	HFWD HOSE GUARD	0260 - 20
1E3	HFWD HOSES (BULKHEAD TO HFWD ENGAGMENT VALVE)	0260 - 22
1E1	HFWD HOSES (HFWD ENGAGEMENT VALVE TO HFWD MOTORS)	0260 - 20
1E5	HFWD HOSES (HFWD PUMP TO BULKHEAD)	0260 - 24
1D7	HFWD HUB (COMPLETE)	0260 - 2
1D11	HFWD HUB AND YOKE	0260 - 6
2E17	HFWD INCHING MODE SWITCH	1674 - 18
1D7	HFWD MOTOR (COMPLETE)	0260 - 2
1D15	HFWD MOTOR BEARING	0260 - 10
1D9	HFWD MOTOR BRAKE LINE	0260 - 4
1E3	HFWD MOTOR CASE DRAIN HOSE (BULKHEAD TO HFWD ENGAGEMENT VALVE)	0260 - 22
1E1	HFWD MOTOR CASE DRAIN HOSE (HFWD ENGAGEMENT VALVE TO HFWD MOTOR)	0260 - 20
1E5	HFWD MOTOR CASE DRAIN HOSE (HFWD PUMP TO BULKHEAD)	0260 - 24
1D13	HFWD MOTOR END CAP	0260 - 8
1E3	HFWD MOTOR FLUSHING HOSE (BULKHEAD TO HFWD ENGAGEMENT VALVE)	0260 - 22
1E3	HFWD MOTOR FLUSHING HOSE (BULKHEAD TO HFWD ENGAGEMENT VALVE)	0260 - 22
1E1	HFWD MOTOR FLUSHING HOSE (HFWD ENGAGEMENT VALVE TO HFWD MOTOR)	0260 - 20
1E1	HFWD MOTOR FLUSHING HOSE (HFWD ENGAGEMENT VALVE TO HFWD MOTORS)	0260 - 20
1E5	HFWD MOTOR FLUSHING HOSE (HFWD PUMP TO BULKHEAD)	0260 - 24
1E5	HFWD MOTOR FLUSHING HOSE (HFWD PUMP TO BULKHEAD)	0260 - 24
1D23	HFWD MOTOR FLUSHING PUMP	0260 - 18
1E3	HFWD MOTOR FORWARD HOSE (BULKHEAD TO HFWD ENGAGEMENT VALVE)	0260 - 22
1E1	HFWD MOTOR FORWARD HOSE (HFWD ENGAGEMENT VALVE TO HFWD MOTOR)	0260 - 20
1E5	HFWD MOTOR FORWARD HOSE (HFWD PUMP TO BULKHEAD)	0260 - 24
1D9	HFWD MOTOR HYDRAULIC LINES	0260 - 4
1D15	HFWD MOTOR PISTON RINGS	0260 - 10
1D9	HFWD MOTOR PRESSURE LINE	0260 - 4
1E3	HFWD MOTOR REVERSE HOSE (BULKHEAD TO HFWD ENGAGEMENT VALVE)	0260 - 22
1E1	HFWD MOTOR REVERSE HOSE (HFWD ENGAGEMENT VALVE TO HFWD MOTOR)	0260 - 20
1E5	HFWD MOTOR REVERSE HOSE (HFWD PUMP TO BULKHEAD)	0260 - 24
1D9	HFWD MOTOR RIGHT DRAIN LINE	0260 - 4
1D15	HFWD MOTOR ROTATING COMPONENTS	0260 - 10
1D13	HFWD MOTOR SEAL KIT	0260 - 8
1D15	HFWD MOTOR SEAL KIT	0260 - 10
1D13	HFWD MOTOR SERVO PISTON	0260 - 8
1D13	HFWD MOTOR SOLENOID AND SERVO PISTON	0260 - 8
1D15	HFWD MOTOR SPEED SENSOR	0260 - 10
1D15	HFWD MOTOR SWASH PLATE	0260 - 10
2E17	HFWD ON/OFF SWITCH	1674 - 18
1E19	HFWD OPERATING CHARGE PRESSURE REGULATING VALVE	0260 - 38
1D17	HFWD PUMP AND MOUNTING	0260 - 12
1D19	HFWD PUMP BEARING	0260 - 14
1D19	HFWD PUMP CYLINDER BLOCK, SWASH PLATE, AND PISTONS	0260 - 14
1D21	HFWD PUMP DRIVESHAFT	0260 - 16
1D23	HFWD PUMP END COVER AND HFWD MOTOR FLUSHING PUMP	0260 - 18
1D21	HFWD PUMP EP CONTROL	0260 - 16
1D21	HFWD PUMP EP CONTROL GASKET	0260 - 16
1D21	HFWD PUMP EP CONTROL SEAL KIT	0260 - 16
1D21	HFWD PUMP EP CONTROL SOLENOID	0260 - 16
1D21	HFWD PUMP HOUSING AND EP CONTROL	0260 - 16
1D21	HFWD PUMP MAIN HOUSING	0260 - 16
1D23	HFWD PUMP OVERHAUL SEAL KIT	0260 - 18
1D19	HFWD PUMP PISTONS	0260 - 14
1D23	HFWD PUMP PRESSURE OVERRIDE VALVE	0260 - 18
1E17	HFWD PUMP PRESSURE SENSOR	0260 - 36
1D21	HFWD PUMP SEAL KIT	0260 - 16
1E5	HFWD PUMP SUCTION HOSE	0260 - 24
1E3	HFWD TANK RETURN HOSE (BULKHEAD TO HFWD ENGAGEMENT VALVE)	0260 - 22
1E5	HFWD TANK RETURN HOSE (HFWD PUMP TO BULKHEAD)	0260 - 24
2E15	HFWD WHEEL SPEED SENSOR WIRING HARNESS	1674 - 16
2E15	HFWD WIRING HARNESS	1674 - 16
2F1	HIGH/LOW BEAM LIGHT SWITCH	1674 - 26
1D13	HIGH/LOW SPEED SOLENOID, HFWD MOTOR	0260 - 8
2J4	HINGE, DOOR, SERVICE	1910 - 2
2D2	HITCH	1511 - 2
2D2	HITCH KIT, REAR	1511 - 2
2D2	HITCH PIN	1511 - 2
2J6	HOOD	1910 - 4
2J6	HOOD SUPPORT	1910 - 4
2J21	HORN	2004 - 2
2F1	HORN SWITCH	1674 - 26
1D11	HOSE GUARD, HFWD MOTOR	0260 - 6
3E19	HOSE, BLADE IMPACT ACCUMULATOR	3460 - 18
3E19	HOSE, BLADE IMPACT VALVE	3460 - 18
3E15	HOSE, BLADE LIFT CYLINDER	3460 - 14
3E23	HOSE, BLADE SLIDE CYLINDER	3460 - 22
3E23	HOSE, BLADE TILT CYLINDER	3460 - 22
1E9	HOSE, CHARGE, HFWD	0260 - 28

ALPHABETICAL INDEX - CONTINUED

GRID		PAGE
3F1	HOSE, CIRCLE ROTATE MOTOR	3460 - 24
3F3	HOSE, CIRCLE SIDESHIFT CYLINDER	3460 - 26
1E11	HOSE, DIFFERENTIAL LOCK COOLER	0260 - 30
1E11	HOSE, DIFFERENTIAL LOCK COOLER TO DIFFERENTIAL LOCK VALVE	0260 - 30
1E15	HOSE, DIFFERENTIAL LOCK FILTER TO DIFFERENTIAL LOCK VALVE	0260 - 34
1E15	HOSE, DIFFERENTIAL LOCK PUMP TO DIFFERENTIAL LOCK VALVE	0260 - 34
1I5	HOSE, ENGINE VENTILATING SYSTEM	0408 - 1
1E9	HOSE, HFWD CHARGE PUMP	0260 - 28
1E9	HOSE, HFWD CHARGE PUMP SUCTION	0260 - 28
1E3	HOSE, HFWD MOTOR CASE DRAIN (BULKHEAD TO HFWD ENGAGEMENT VALVE)	0260 - 22
1E1	HOSE, HFWD MOTOR CASE DRAIN (HFWD ENGAGEMENT VALVE TO HFWD MOTOR)	0260 - 20
1E5	HOSE, HFWD MOTOR CASE DRAIN (HFWD PUMP TO BULKHEAD)	0260 - 24
1E3	HOSE, HFWD MOTOR FLUSHING (BULKHEAD TO HFWD ENGAGEMENT VALVE)	0260 - 22
1E1	HOSE, HFWD MOTOR FLUSHING (HFWD ENGAGEMENT VALVE TO HFWD MOTOR)	0260 - 20
1E5	HOSE, HFWD MOTOR FLUSHING (HFWD PUMP TO BULKHEAD)	0260 - 24
1E5	HOSE, HFWD PUMP SUCTION	0260 - 24
1E3	HOSE, HFWD TANK RETURN (BULKHEAD TO HFWD ENGAGEMENT VALVE)	0260 - 22
1E5	HOSE, HFWD TANK RETURN (HFWD PUMP TO BULKHEAD)	0260 - 24
3C21	HOSE, HYDRAULIC ACCUMULATOR (670D)	2163 - 6
3C23	HOSE, HYDRAULIC ACCUMULATOR (672D)	2163 - 8
3C17	HOSE, HYDRAULIC LOAD SENSE	2163 - 2
3C21	HOSE, HYDRAULIC PUMP (670D)	2163 - 6
3C23	HOSE, HYDRAULIC PUMP (672D)	2163 - 8
3C11	HOSE, HYDRAULIC, MAIN HYD COLD START DISCONNECT	2160 - 40
1E1	HOSE, LEFT HFWD MOTOR BRAKE (HFWD ENGAGEMENT VALVE TO HFWD MOTOR)	0260 - 20
1E3	HOSE, LEFT HFWD MOTOR FORWARD (BULKHEAD TO HFWD ENGAGEMENT VALVE)	0260 - 22
1E1	HOSE, LEFT HFWD MOTOR FORWARD (HFWD ENGAGEMENT VALVE TO HFWD MOTOR)	0260 - 20
1E5	HOSE, LEFT HFWD MOTOR FORWARD (HFWD PUMP TO BULKHEAD)	0260 - 24
1E3	HOSE, LEFT HFWD MOTOR REVERSE (BULKHEAD TO HFWD ENGAGEMENT VALVE)	0260 - 22
1E1	HOSE, LEFT HFWD MOTOR REVERSE (HFWD ENGAGEMENT VALVE TO HFWD MOTOR)	0260 - 20
1E5	HOSE, LEFT HFWD MTOR REVERSE (HFWD PUMP TO BULKHEAD)	0260 - 24
3C21	HOSE, MAIN HYDRAULIC MANIFOLD VALVE TO HYDRAULIC ACCUMULATOR (670D)	2163 - 6
3C23	HOSE, MAIN HYDRAULIC MANIFOLD VALVE TO HYDRAULIC ACCUMULATOR (672D)	2163 - 8
3C21	HOSE, MAIN HYDRAULIC MANIFOLD VALVE TO HYDRAULIC FILTER (670D)	2163 - 6
3C21	HOSE, MAIN HYDRAULIC MANIFOLD VALVE TO MAIN HYDRAULIC CONTROL VALVE (670D)	2163 - 6
3C23	HOSE, MAIN HYDRAULIC MANIFOLD VALVE TO MAIN HYDRAULIC CONTROL VALVE (672D)	2163 - 8
3C21	HOSE, MAIN HYDRAULIC PUMP (670D)	2163 - 6
3C23	HOSE, MAIN HYDRAULIC PUMP (672D)	2163 - 8
3C17	HOSE, MAIN HYDRAULIC PUMP LOAD SENSE	2163 - 2
2C8	HOSE, PARK BRAKE VALVE TO TRANSMISSION	1111 - 4
3F20	HOSE, REAR SCARIFIER	4260 - 10
1E1	HOSE, RIGHT HFWD MOTOR BRAKE (HFWD ENGAGEMENT VALVE TO HFWD MOTOR)	0260 - 20
1E3	HOSE, RIGHT HFWD MOTOR FORWARD (BULKHEAD TO HFWD ENGAGEMENT VALVE)	0260 - 22
1E1	HOSE, RIGHT HFWD MOTOR FORWARD (HFWD ENGAGEMENT VALVE TO HFWD MOTOR)	0260 - 20
1E5	HOSE, RIGHT HFWD MOTOR FORWARD (HFWD PUMP TO BULKHEAD)	0260 - 24
1E3	HOSE, RIGHT HFWD MOTOR REVERSE (BULKHEAD TO HFWD ENGAGEMENT VALVE)	0260 - 22
1E1	HOSE, RIGHT HFWD MOTOR REVERSE (HFWD ENGAGEMENT VALVE TO HFWD MOTOR)	0260 - 20
1E5	HOSE, RIGHT HFWD MOTOR REVERSE (HFWD PUMP TO BULKHEAD)	0260 - 24
3F20	HOSE, RIPPER	4260 - 10
3E17	HOSE, SADDLE LOCK PIN	3460 - 16
2B2	HOSE, SECONDARY STEERING	0930 - 2
3C21	HOSE, SUCTION, MAIN HYDRAULIC PUMP (670D (670D)	2163 - 6
3C23	HOSE, SUCTION, MAIN HYDRAULIC PUMP (670D (670D)	2163 - 8
1H3	HOSE, TRANSMISSION ACUMULATOR	0363 - 2
1I14	HOSE, TURBOCHARGER OIL	0416 - 1
2B14	HOSES, ARTICULATION CYLINDER	0960 - 12
2C3	HOSES, BRAKE ACCUMULATOR	1060 - 4
2C3	HOSES, BRAKE VALVE	1060 - 4
2I11	HOSES, CAB HEATER	1830 - 2
1E15	HOSES, DIFFERENTIAL LOCK PUMP	0260 - 34
2C17	HOSES, ENGINE OIL DRAIN	1369 - 2
3F16	HOSES, FRONT MOUNTED EQUIPMENT	4260 - 6
3F18	HOSES, FRONT SCARIFIER	4260 - 8
2B12	HOSES, FRONT STEERING CYLINDER	0960 - 10
1K17	HOSES, FUEL	0560 - 2
3C19	HOSES, HYDRAULIC OIL COOLER	2163 - 4
2C8	HOSES, PARK BRAKE	1111 - 4
3F18	HOSES, SCARIFIER (FRONT)	4260 - 8
2C3	HOSES, SERVICE BRAKE	1060 - 4
2B20	HOSES, STEERING VALVE	0960 - 18
1G24	HOSES, TRANSMISSION FILTER	0360 - 2
1H3	HOSES, TRANSMISSION OIL COOLER	0363 - 2
2B18	HOSES, WHEEL LEAN CYLINDER (670D)	0960 - 16
2B16	HOSES, WHEEL LEAN CYLINDER (672D)	0960 - 14
1D3	HOUSING, AXLE	0250 - 6
2I17	HOUSING, CAB FRESH AIR FILTER	1830 - 10
3E5	HOUSING, CIRCLE DRIVE MOTOR	3460 - 4
1I17	HOUSING, ENGINE COOLANT THERMOSTAT	0418 - 2
1I19	HOUSING, ENGINE OIL COOLER	0419 - 2
1B23	HOUSING, FINAL DRIVE	0201 - 4
1C24	HOUSING, FIRST PLANET PINION, HFWD MOTOR	0250 - 2
1J10	HOUSING, FLYWHEEL	0433 - 2
2J10	HOUSING, GRILLE	1921 - 2
2I19	HOUSING, HEATER AND A/C	1830 - 12
1D11	HOUSING, HFWD MOTOR	0260 - 6
1D21	HOUSING, MAIN, HFWD PUMP	0260 - 16
1D1	HOUSING, PISTON BRAKE, HFWD MOTOR	0250 - 4
1B23	HOUSING, PIVOT	0201 - 4
2G21	HOUSING, RADIO (CAB)	1810 - 18
2G23	HOUSING, RADIO (CANOPY)	1810 - 20
2J10	HOUSING, REAR GRILLE	1921 - 2
1F19	HOUSING, REAR TRANSMISSION	0350 - 6
1B21	HOUSING, TANDEM	0201 - 2
1F23	HOUSING, TRANSMISSION	0350 - 12
1G21	HOUSING, TRANSMISSION CONTROL VALVE	0350 - 34
1F6	HOUSING, TRANSMISSION GEAR SHIFT	0315 - 4
1K3	HUB, FAN	0512 - 2
1C14	HUB, FRONT WHEEL (670D)	0230 - 4
1D11	HUB, HFWD	0260 - 6
1D7	HUB, HFWD (COMPLETE)	0260 - 2
1D1	HUB, SECOND STAGE PINION, HFWD MOTOR	0250 - 4

ALPHABETICAL INDEX - CONTINUED

GRID		PAGE
2I13	HVAC POWERED PRECLEANER	1830 - 4
3C21	HYDRAULIC ACCUMULATOR HOSES (670D)	2163 - 6
3C23	HYDRAULIC ACCUMULATOR HOSES (672D)	2163 - 8
2H19	HYDRAULIC CONTROL LEVER PIVOT ROD	1810 - 40
2H21	HYDRAULIC CONTROL LEVERS (LEFT)	1810 - 42
2H23	HYDRAULIC CONTROL LEVERS (RIGHT)	1810 - 44
2B8	HYDRAULIC CYLINDER, ARTICULATION	0960 - 6
3E9	HYDRAULIC CYLINDER, BLADE LIFT	3460 - 8
3E11	HYDRAULIC CYLINDER, BLADE SLIDE	3460 - 10
3E13	HYDRAULIC CYLINDER, BLADE TILT	3460 - 12
3E7	HYDRAULIC CYLINDER, CIRCLE SIDESHIFT	3460 - 6
3F12	HYDRAULIC CYLINDER, RIPPER/REAR SCARIFIER	4240 - 8
3F8	HYDRAULIC CYLINDER, SCARIFIER	4240 - 4
2B10	HYDRAULIC CYLINDER, STEERING	0960 - 8
2B4	HYDRAULIC CYLINDER, WHEEL LEAN (670D)	0960 - 2
2B6	HYDRAULIC CYLINDER, WHEEL LEAN (672D)	0960 - 4
3C17	HYDRAULIC LOAD SENSE HOSES	2163 - 2
3B8	HYDRAULIC MANIFOLD VALVE, MAIN	2160 - 6
1J23	HYDRAULIC OIL COOLER	0510 - 4
1K1	HYDRAULIC OIL COOLER	0510 - 6
3C19	HYDRAULIC OIL COOLER HOSES	2163 - 4
3B4	HYDRAULIC PUMP, MAIN	2160 - 2
3D3	HYDRAULIC RESERVOIR	2164 - 4
3D3	HYDRAULIC RESERVOIR CAP	2164 - 4

I

1H20	IDLER GEAR	0404 - 6
2D11	IDLER PULLEY, ENGINE ACCESSORY DRIVE BELT	1672 - 4
1K3	IDLER PULLEY, FAN BELT	0512 - 2
2E9	IGNITION RELAY	1674 - 8
2F1	IGNITION SWITCH	1674 - 26
2H9	IGNITION SWITCH LABEL (CAB)	1810 - 30
2H7	IGNITION SWITCH LABEL (CANOPY)	1810 - 28
3E21	IMPACT VALVE, BLADE	3460 - 20
2I19	IMPELLER, HEATER AND A/C BLOWER MOTOR	1830 - 12
1F8	INCHING PEDAL	0315 - 6
1F8	INCHING PEDAL COVER	0315 - 6
3E17	INDICATOR SWITCH, SADDLE LOCKING PIN	3460 - 16
1I11	INJECTION NOZZLE, FUEL	0413 - 2
1I11	INJECTION PUMP, FUEL	0413 - 2
3B24	INLET SECTION, LEFT MAIN HYDRAULIC CONTROL VALVE	2160 - 28
3B22	INLET SECTION, RIGHT MAIN HYDRAULIC CONTROL VALVE	2160 - 26
1H22	INLET, ENGINE OIL FILLER	0407 - 2
1I16	INLET, WATER PUMP	0417 - 2
1C2	INPUT QUILL	0210 - 4
1B25	INPUT YOKE	0210 - 2
1I6	INSERT, VALVE SEAT	0409 - 2
3D18	INSERTS, BLADE TILT FRAME WEAR	3440 - 4
3D22	INSERTS, CIRCLE	3440 - 8
1I6	INTAKE VALVE	0409 - 2
1I13	INTAKE, AIR	0414 - 1
1H24	INTAKE, ENGINE OIL PUMP	0407 - 4
2G21	INTERIOR PANELS, CAB	1810 - 18
2G23	INTERIOR PANELS, CANOPY	1810 - 20
2J15	INTERIOR REARVIEW MIRROR	2002 - 2
1F10	ISOLATOR, TORSIONAL	0325 - 2
2G13	ISOLATORS, CAB	1810 - 10
1K15	ISOLATORS, ENGINE AND TRANSMISSION MOUNTING	0540 - 2

J

1C10	JOINT, DRIVESHAFT	0225 - 2

K

1H12	KEY, CAMSHAFT	0402 - 5
2B8	KIT, ARTICULATION CYLINDER SEAL	0960 - 6
2D19	KIT, BEACON BRACKET	1673 - 8
3E19	KIT, BLADE IMPACT SYSTEM	3460 - 18
3E21	KIT, BLADE IMPACT VALVE SEAL	3460 - 20
3E9	KIT, BLADE LIFT CYLINDER SEAL	3460 - 8
3E11	KIT, BLADE SLIDE CYLINDER SEAL	3460 - 10
3E13	KIT, BLADE TILT CYLINDER SEAL	3460 - 12
2F14	KIT, BOTTOM GUARD (W/O RIPPER)	1746 - 2
2F16	KIT, BOTTOM GUARD SIDE SHIELD KIT (W/O RIPPER)	1746 - 4
2F18	KIT, BOTTOM GUARDS AND SIDE SHIELDS (WITH RIPPER)	1746 - 6
3E5	KIT, CIRCLE DRIVE MOTOR SEAL	3460 - 4
3E7	KIT, CIRCLE SIDESHIFT CYLINDER SEAL	3460 - 6
3B4	KIT, CYL BLOCK, MAIN HYDRAULIC PUMP	2160 - 2
1H15	KIT, CYLINDER LINER AND PISTON	0403 - 1
1H15	KIT, CYLINDER LINER O-RING	0403 - 1
3C7	KIT, FIFTH FUNCTION CONTROL VALVE KIT	2160 - 36
1I21	KIT, FINAL FUEL FILTER DRAIN VALVE	0420 - 2
1I21	KIT, FINAL FUEL FILTER SEAL	0420 - 2
3F6	KIT, FRONT MOUNTED SCARIFIER	4240 - 2
1H13	KIT, FRONT OIL SEAL	0402 - 6
2B10	KIT, FRONT STEERING CYLINDER SEAL	0960 - 8
1E7	KIT, HFWD CHARGE PUMP SEAL	0260 - 26
1D13	KIT, HFWD MOTOR SEAL	0260 - 8
1D15	KIT, HFWD MOTOR SEAL	0260 - 10
1D23	KIT, HFWD PUMP OVERHAUL SEAL	0260 - 18
1D21	KIT, HFWD PUMP SEAL	0260 - 16
1H8	KIT, MAIN AND THRUST BEARING	0401 - 1
3B8	KIT, MAIN MANIFOLD VALVE SEAL	2160 - 6
3D12	KIT, MOLDBOARD EXTENSION (24" MOLDBOARD)	3401 - 6
3D14	KIT, MOLDBOARD EXTENSION (27" MOLDBOARD)	3401 - 8
3C9	KIT, ONE HAND BLADE LIFT CONTROL	2160 - 38
1H15	KIT, PISTON RING	0403 - 1
1I23	KIT, PRIMARY FUEL FILTER DRAIN VALVE	0420 - 4
1I23	KIT, PRIMARY FUEL FILTER HEADER	0420 - 4
1I23	KIT, PRIMARY FUEL FILTER SEAL	0420 - 4
2D2	KIT, REAR HITCH	1511 - 2
3F10	KIT, REAR RIPPER/SCARIFIER	4240 - 6
3F20	KIT, RIPPER/REAR SCARIFIER HYDRAULIC HOSES	4260 - 10
3F12	KIT, RIPPER/REAR SCARIFIER SEAL KIT	4240 - 8
3E3	KIT, ROTARY MANIFOLD SEAL	3460 - 2
3F8	KIT, SCARIFIER CYLINDER SEAL	4240 - 4
3F18	KIT, SCARIFIER HYDRAULIC HOSE (FRONT)	4260 - 8
1D21	KIT, SEAL, HFWD PUMP EP CONTROL	0260 - 16
3B4	KIT, SEAL, MAIN HYDRAULIC PUMP	2160 - 2
2B2	KIT, SECONDARY STEERING	0930 - 2
2C1	KIT, SERVICE BRAKE VALVE SEAL	1060 - 2
3C7	KIT, SEVENTH FUNCTION CONTROL VALVE KIT	2160 - 36
3C7	KIT, SIXTH FUNCTION CONTROL VALVE KIT	2160 - 36
1J4	KIT, STARTING MOTOR SOLENOID	0422 - 2
2B20	KIT, STEERING VALVE SEAL	0960 - 18
1H13	KIT, TIMING GEAR COVER SERVICE	0402 - 6
1H13	KIT, WATER PUMP INSERT REPAIR	0402 - 6
2B4	KIT, WHEEL LEAN CYLINDER SEAL (670D)	0960 - 2
2B6	KIT, WHEEL LEAN CYLINDER SEAL (672D)	0960 - 4
2I21	KIT,A/C PULLEY	1830 - 14
2I21	KIT,A/C SERVICE	1830 - 14

ALPHABETICAL INDEX - CONTINUED

GRID		PAGE
2I21	KIT,A/C SHAFT SEAL	1830 - 14
1I15	KIT,WATER PUMP REPAIR	0417 - 1
3C9	KNOB, ONE HAND BLADE LIFT CONTROL LEVER	2160 - 38
2G5	KREMNUTS, CAB	1810 - 2

L

2H9	LABEL, ENGINE SPEED CONTROL SWITCH (CAB)	1810 - 30
2H7	LABEL, ENGINE SPEED CONTROL SWITCH (CANOPY)	1810 - 28
2H9	LABEL, IGNITION SWITCH (CAB)	1810 - 30
2H7	LABEL, IGNITION SWITCH (CANOPY)	1810 - 28
2E23	LABEL, SSM	1674 - 24
2C11	LABELS AND TRADEMARKS, ENGLISH	1320 - 2
2C15	LABELS AND TRADEMARKS, FRENCH	1320 - 6
2C13	LABELS AND TRADEMARKS, SPANISH	1320 - 4
2C11	LABELS, ENGLISH	1320 - 2
2C15	LABELS, FRENCH	1320 - 6
2C13	LABELS, SPANISH	1320 - 4
2D17	LAMP, LED STOP	1673 - 6
2D17	LAMP, LED TAIL	1673 - 6
2D17	LAMP, LED TURN	1673 - 6
2H13	LATCH, CAB DOOR (LEFT)	1810 - 34
2H11	LATCH, CAB DOOR (RIGHT)	1810 - 32
2H13	LATCH, CAB DOOR HOLD OPEN (LEFT)	1810 - 34
2H11	LATCH, CAB DOOR HOLD OPEN (RIGHT)	1810 - 32
2J4	LATCH, ENGINE DOOR	1910 - 2
2G17	LATCH, OPENABLE LOWER FRONT WINDOWS	1810 - 14
2G19	LATCH, OPENABLE SIDE WINDOWS	1810 - 16
2J4	LATCH, SERVICE DOORS	1910 - 2
2K1	LATCH, TOOLBOX SPRING HOOK	2005 - 2
1C22	LEAN BAR LINK (672D)	0240 - 6
2B4	LEAN CYLINDER, WHEEL (670D)	0960 - 2
2B6	LEAN CYLINDER, WHEEL (672D)	0960 - 4
2D15	LED FRONT SIGNAL LIGHT	1673 - 4
2D17	LED STOP LAMP	1673 - 6
2D17	LED STOP LIGHT	1673 - 6
2D17	LED TAIL LIGHT	1673 - 6
2D17	LED TURN LAMP	1673 - 6
2D17	LED TURN LIGHT	1673 - 6
3B20	LEFT BLADE LIFT VALVE SECTION	2160 - 24
2H21	LEFT CONTROL LEVER BOOT	1810 - 42
2H21	LEFT HYDRAULIC CONTROL LEVERS	1810 - 42
3B10	LEFT MAIN HYDRAULIC CONTROL VALVE	2160 - 10
3B24	LEFT MAIN HYDRAULIC CONTROL VALVE INLET AND OUTLET SECTIONS	2160 - 28
2H13	LEFT SIDE CAB DOOR	1810 - 34
3B24	LEFT VALVE INLET SECTION	2160 - 28
3B24	LEFT VALVE OUTLET SECTION	2160 - 28
2H21	LEVER, ARTICULATION CONTROL	1810 - 42
2H23	LEVER, BLADE LIFT CONTROL	1810 - 44
2H23	LEVER, BLADE SIDE SHIFT CONTROL	1810 - 44
2H21	LEVER, CIRCLE ROTATE CONTROL	1810 - 42
2H23	LEVER, CIRCLE SIDE SHIFT CONTROL	1810 - 44
2H23	LEVER, LEFT BLADE LIFT CONTROL	1810 - 44
3C9	LEVER, ONE HAND BLADE LIFT CONTROL	2160 - 38
2H21	LEVER, RIGHT AUXILIARY CONTROL	1810 - 42
2H21	LEVER, RIGHT BLADE LIFT CONTROL	1810 - 42
2H23	LEVER, RIPPER CONTROL	1810 - 44
2H21	LEVER, SCARIFIER CONTROL	1810 - 42
2H21	LEVER, WHEEL LEAN CONTROL	1810 - 42
2H21	LEVERS, CAB CONTROL (LEFT)	1810 - 42
2H23	LEVERS, CAB CONTROL (RIGHT)	1810 - 44
3D20	LIFT ARM, BLADE	3440 - 6
3E15	LIFT CYLINDER HOSES	3460 - 14
3E9	LIFT CYLINDER, BLADE	3460 - 8
1I8	LIFT STRAP, ENGINE	0409 - 4
2D19	LIGHT BRACKET, BEACON	1673 - 8
2J10	LIGHT PANEL, REAR	1921 - 2
2D17	LIGHT, LED STOP	1673 - 6
2D17	LIGHT, LED TURN	1673 - 6
2D21	LIGHTS, CAB ROOF	1673 - 10
2D23	LIGHTS, FRONT DRIVE	1673 - 12
2D15	LIGHTS, FRONT SIGNAL	1673 - 4
2E1	LIGHTS, FRONT WORK	1673 - 14
2E1	LIGHTS, REAR WORK	1673 - 14
1C7	LINE, DIFFERENTIAL CASE OIL	0210 - 9
1I11	LINE, FUEL INJECTION PUMP	0413 - 2
1D9	LINE, HFWD MOTOR BRAKE	0260 - 4
1D9	LINE, HFWD MOTOR PRESSURE	0260 - 4
1D9	LINE, HFWD MOTOR RIGHT DRAIN	0260 - 4
1I14	LINE, TURBOCHARGER OIL	0416 - 1
1H15	LINER, CYLINDER	0403 - 1
2C21	LINES AND FITTINGS, FRAME HINGE CENTRAL LUBRICATION	1370 - 2
2I23	LINES, AIR CONDITIONING	1830 - 16
1J1	LINES, FUEL FILTER	0420 - 6
1D9	LINES, HFWD MOTOR	0260 - 4
1C22	LINK, LEAN BAR (672D)	0240 - 6
1C12	LINK, WHEEL LEAN (670D)	0230 - 2
1C22	LINK, WHEEL LEAN BAR (672D)	0240 - 6
2E19	LINKAGE, ARTICULATION SENSOR	1674 - 20
2F5	LOAD CENTER	1675 - 2
3C17	LOAD SENSE HOSE, MAIN HYDRAULIC PUMP	2163 - 2
3C17	LOAD SENSE HOSES, HYDRAULIC	2163 - 2
3E17	LOCK PIN, SADDLE	3460 - 16
2J4	LOCK, SERVICE DOORS	1910 - 2
3B14	LOCKOUT VALVE, ARTICULATION VALVE SECTION	2160 - 18
3C3	LOCKOUT VALVE, AUXILIARY VALVE SECTION (WITH FLOAT)	2160 - 32
3C5	LOCKOUT VALVE, AUXILIARY VALVE SECTION (WITHOUT FLOAT)	2160 - 34
3B20	LOCKOUT VALVE, BLADE LIFT VALVE SECTION	2160 - 24
3B18	LOCKOUT VALVE, BLADE SIDE SHIFT VALVE SECTION	2160 - 22
3B14	LOCKOUT VALVE, BLADE TILT VALVE SECTION	2160 - 18
3B14	LOCKOUT VALVE, CIRCLE SIDE SHIFT VALVE SECTION	2160 - 18
3C1	LOCKOUT VALVE, RIPPER VALVE SECTION	2160 - 30
3C3	LOCKOUT VALVE, SCARIFIER VALVE SECTION	2160 - 32
3B14	LOCKOUT VALVE, WHEEL LEAN VALVE SECTION	2160 - 18
2I15	LOUVER, CAB B-POST HEATER AND AIR CONDITIONER DUCT	1830 - 8
2G11	LOWER FRONT WINDSHIELD WIPER	1810 - 8
2G11	LOWER FRONT WINDSHIELD WIPER BLADE	1810 - 8
1B14	LUBGOLT, FRONT WHEEL (12" X 25")	0110 - 14
2C21	LUBRICATION LINES, FRAME HINGE	1370 - 2
2C21	LUBRICATION, CENTRAL, FRAME HINGE	1370 - 2
1B10	LUGBOLT, FRONT WHEEL (14" X 25")	0110 - 10
1B2	LUGBOLT, REAR WHEEL (10" X 24") (SPLIT RIM)	0110 - 2
1B2	LUGBOLT, WHEEL (10" X 24") (SPLIT RIM)	0110 - 2
1B4	LUGBOLT, WHEEL (14" X 25")	0110 - 4
1B4	LUGBOLT, WHEEL (17" X 25")	0110 - 4

M

1H8	MAIN BEARINGS	0401 - 1
3C15	MAIN CONTROL VALVE MOUNTING BRACKETS	2160 - 44

ALPHABETICAL INDEX - CONTINUED

GRID		PAGE
1B23	MAIN DRIVE AXLE HOUSING	0201 - 4
2F8	MAIN FRAME	1740 - 2
2F12	MAIN FRAME COVERS	1740 - 6
2F12	MAIN FRAME COWL COVER	1740 - 6
2J8	MAIN FRAME FRONT SIDE COVERS	1913 - 2
2F12	MAIN FRAME TOP COVER	1740 - 6
2E3	MAIN FRAME WIRING HARNESS	1674 - 2
3D1	MAIN HYD FILTER MOUNTING	2164 - 2
3B10	MAIN HYDRAULIC CONTROL VALVE	2160 - 10
3B24	MAIN HYDRAULIC CONTROL VALVE INLET SECTION (LEFT)	2160 - 28
3B22	MAIN HYDRAULIC CONTROL VALVE INLET SECTION (RIGHT)	2160 - 26
3B24	MAIN HYDRAULIC CONTROL VALVE OUTLET SECTION (LEFT)	2160 - 28
3B22	MAIN HYDRAULIC CONTROL VALVE OUTLET SECTION (RIGHT)	2160 - 26
3B12	MAIN HYDRAULIC CONTROL VALVE TIE RODS	2160 - 12
3D1	MAIN HYDRAULIC FILTER	2164 - 2
3B8	MAIN HYDRAULIC MANIFOLD VALVE	2160 - 6
3C21	MAIN HYDRAULIC MANIFOLD VALVE HOSES (670D)	2163 - 6
3C23	MAIN HYDRAULIC MANIFOLD VALVE HOSES (672D)	2163 - 8
3C21	MAIN HYDRAULIC PLUMBING (670D)	2163 - 6
3C23	MAIN HYDRAULIC PLUMBING (672D)	2163 - 8
3B4	MAIN HYDRAULIC PUMP	2160 - 2
3C21	MAIN HYDRAULIC PUMP FITTINGS (670D)	2163 - 6
3C23	MAIN HYDRAULIC PUMP FITTINGS (672D)	2163 - 8
3C17	MAIN HYDRAULIC PUMP LOAD SENSE HOSE	2163 - 2
3B4	MAIN HYDRAULIC PUMP SEAL KIT	2160 - 2
3C21	MAIN HYDRAULIC PUMP SUCTION HOSE (670D)	2163 - 6
3C23	MAIN HYDRAULIC PUMP SUCTION HOSE (670D)	2163 - 8
3B8	MAIN MANIFOLD VALVE	2160 - 6
3B6	MAIN MANIFOLD VALVE MOUNTING BRACKET	2160 - 4
3B8	MAIN MANIFOLD VALVE SEAL KIT	2160 - 6
2E3	MAIN WIRING HARNESS (FRONT)	1674 - 2
2E5	MAIN WIRING HARNESS (REAR)	1674 - 4
1K22	MANIFOLD AIR TEMPERATURE SENSOR	0578 - 1
3B8	MANIFOLD VALVE, MAIN	2160 - 6
1I13	MANIFOLD, AIR INTAKE	0414 - 1
1I9	MANIFOLD, EXHAUST	0410 - 1
1E19	MANIFOLD, HFWD ENGAGEMENT	0260 - 38
3E3	MANIFOLD, ROTARY	3460 - 2
2I21	MANIFOLD,A/C	1830 - 14
2E1	MID-FRAME WORK LIGHTS	1673 - 14
2J17	MIRROR BRACKET, EXTERIOR	2002 - 4
2J17	MIRROR, EXTERIOR	2002 - 4
2J17	MIRROR, EXTERIOR HEATED	2002 - 4
2J15	MIRROR, INTERIOR REARVIEW	2002 - 2
2E23	MODULE, SSM	1674 - 24
1F6	MODULE, TRANSMISSION SWITCH BOX	0315 - 4
1I23	MOISTURE SENSOR, PRIMARY FUEL FILTER	0420 - 4
1K23	MOISTURE SENSOR, PRIMARY FUEL FILTER	0578 - 2
3D8	MOLDBOARD END BIT	3401 - 2
3D12	MOLDBOARD EXTENSION (24" MOLDBOARD)	3401 - 6
3D14	MOLDBOARD EXTENSION (27" MOLDBOARD)	3401 - 8
3D12	MOLDBOARD EXTENSION KIT (24" MOLDBOARD)	3401 - 6
3D14	MOLDBOARD EXTENSION KIT (27" MOLDBOARD)	3401 - 8
3D10	MOLDBOARD OVERLAYS	3401 - 4
3D8	MOLDBOARDS AND CUTTING EDGES	3401 - 2
2E9	MONITOR	1674 - 8
2H15	MONITOR CONSOLE, CAB	1810 - 36
1D11	MOTOR HOUSING, HFWD	0260 - 6
3E5	MOTOR, CIRCLE DRIVE	3460 - 4
2G7	MOTOR, FRONT WINDSHIELD WIPER	1810 - 4
2I19	MOTOR, HEATER AND A/C BLOWER	1830 - 12
1D7	MOTOR, HFWD (COMPLETE)	0260 - 2
1J4	MOTOR, STARTING	0422 - 2
3B6	MOUNTING BRACKET, MAIN MANIFOLD VALVE	2160 - 4
3C15	MOUNTING BRACKETS, MAIN CONTROL VALVE	2160 - 44
1E13	MOUNTING, DIFF LOCK PUMP	0260 - 32
1K15	MOUNTING, ENGINE	0540 - 2
3D1	MOUNTING, MAIN HYD FILTER	2164 - 2
1G19	MOUNTING, TRANSMISSION CONTROL VALVE	0350 - 32
1K15	MOUNTS, ENGINE AND TRANSMISSION	0540 - 2
1K13	MUFFLER	0530 - 2
1K13	MUFFLER CLAMP	0530 - 2

N

1H22	NECK, ENGINE OIL FILLER	0407 - 2
1E9	NEUTRAL CHARGE PRESSURE REGULATING VALVE	0260 - 28
1I11	NOZZLE, FUEL INJECTION	0413 - 2

O

1H15	O-RING KIT, CYLINDER LINER	0403 - 1
1G21	OIL COOLER BYPASS RELIEF VALVE	0350 - 34
3C19	OIL COOLER HOSES, HYDRAULIC	2163 - 4
1H3	OIL COOLER HOSES, TRANSMISSION	0363 - 2
1I19	OIL COOLER, ENGINE	0419 - 2
1J23	OIL COOLER, HYDRAULIC	0510 - 4
1K1	OIL COOLER, HYDRAULIC	0510 - 6
1H21	OIL DIPSTICK, ENGINE	0407 - 1
1H23	OIL FILLER NECK INLET PORT COVER, ENGINE	0407 - 3
1H22	OIL FILLER NECK, ENGINE	0407 - 2
1I3	OIL FILTER HEAD, ENGINE	0407 - 8
1I3	OIL FILTER, ENGINE	0407 - 8
1C7	OIL LINE, DIFFERENTIAL CASE	0210 - 9
1E11	OIL LINE, DIFFERENTIAL LOCK	0260 - 30
1I14	OIL LINE, TURBOCHARGER	0416 - 1
1I1	OIL PAN, ENGINE	0407 - 6
1D1	OIL PLUG, HFWD	0250 - 4
1H13	OIL PRESSURE REGULATING VALVE	0402 - 6
1H16	OIL PRESSURE REGULATING VALVE, ENGINE	0404 - 2
1K22	OIL PRESSURE SENSOR	0578 - 1
1H24	OIL PUMP, ENGINE	0407 - 4
1D3	OIL SEAL, AXLE HOUSING	0250 - 6
1H13	OIL SEAL, FRONT	0402 - 6
1J10	OIL SEAL, REAR	0433 - 2
1F15	OIL TROUGH, TRANS CASE (670D)	0350 - 2
1F17	OIL TROUGH, TRANS CASE (672D)	0350 - 4
3C9	ONE HAND BLADE LIFT CONTROL	2160 - 38
2G19	OPENABLE SIDE WINDOWS	1810 - 16
2G17	OPENABLE WINDOWS (LOWER FRONT)	1810 - 14
2G19	OPENABLE WINDOWS (SIDE)	1810 - 16
1E19	OPERATING CHARGE PRESSURE REGULATING VALVE, HFWD	0260 - 38
3B24	OUTLET SECTION, LEFT MAIN HYDRAULIC CONTROL VALVE	2160 - 28
3B22	OUTLET SECTION, RIGHT MAIN HYDRAULIC CONTROL VALVE	2160 - 26
1I17	OUTLET, ENGINE COOLANT SIDE	0418 - 2
1G13	OUTPUT, TRANSMISSION	0350 - 26
1J12	OVERHAUL KIT, ENGINE	0452 - 2
3D10	OVERLAYS, MOLDBOARD	3401 - 4

P

1I1	PAN, ENGINE OIL	0407 - 6

ALPHABETICAL INDEX - CONTINUED

GRID		PAGE
2H9	PANEL, ENGINE SPEED CONTROL SWITCH (CAB)	1810 - 30
2H7	PANEL, ENGINE SPEED CONTROL SWITCH (CANOPY)	1810 - 28
2J10	PANEL, REAR LIGHT	1921 - 2
2G21	PANELS, CAB INTERIOR	1810 - 18
2H1	PANELS, CAB REAR INTERIOR	1810 - 22
2G23	PANELS, CANOPY INTERIOR	1810 - 20
1G15	PARK BRAKE	0350 - 28
2C8	PARK BRAKE HOSES	1111 - 4
2C6	PARK BRAKE PRESSURE SWITCH	1111 - 2
2C6	PARK BRAKE SOLENOID VALVE	1111 - 2
2C6	PARK BRAKE VALVE	1111 - 2
2C8	PARK BRAKE VALVE FITTINGS	1111 - 4
2C8	PARK BRAKE VALVE HOSES	1111 - 4
2C1	PEDAL, BRAKE	1060 - 2
1K7	PEDAL, DECELERATOR	0515 - 4
1K5	PEDAL, ENGINE SPEED CONTROL	0515 - 2
1F8	PEDAL, INCHING	0315 - 6
2C1	PEDAL, SERVICE BRAKE	1060 - 2
2F8	PIN, ARTICULATION CYLINDER	1740 - 2
1C12	PIN, FRONT AXLE PIVOT (670D)	0230 - 2
1C18	PIN, FRONT AXLE PIVOT (672D)	0240 - 2
3D20	PIN, FRONT SADDLE	3440 - 6
2D2	PIN, HITCH	1511 - 2
1B23	PIN, PIVOT	0201 - 4
2F8	PIN, PIVOT, MAIN FRAME	1740 - 2
3D20	PIN, REAR SADDLE	3440 - 6
1C12	PIN, STEERING CYLINDER (670D)	0230 - 2
1C12	PIN, WHEEL LEAN (670D)	0230 - 2
1C22	PIN, WHEEL LEAN BAR LINK (672D)	0240 - 6
1C12	PIN, WHEEL LEAN LINK (670D)	0230 - 2
1C24	PINION, FIRST PLANET, HFWD MOTOR	0250 - 2
1C24	PINION, FIRST STAGE, HFWD MOTOR	0250 - 2
1D1	PINION, SECOND STAGE, HFWD MOTOR	0250 - 4
2B8	PINS, ARTICULATION CYLINDER	0960 - 6
2B10	PINS, STEERING CYLINDER	0960 - 8
2B4	PINS, WHEEL LEAN CYLINDER (670D)	0960 - 2
2B6	PINS, WHEEL LEAN CYLINDER (672D)	0960 - 4
1H15	PISTON RINGS	0403 - 1
1D15	PISTON RINGS, HFWD MOTOR	0260 - 10
1H15	PISTON, ENGINE	0403 - 1
1D13	PISTON, HFWD MOTOR SERVO	0260 - 8
1D19	PISTON, HFWD PUMP	0260 - 14
1D21	PISTON, SERVO, HFWD PUMP	0260 - 16
1D19	PISTONS, HFWD PUMP	0260 - 14
1B23	PIVOT HOUSING	0201 - 4
1B23	PIVOT PIN	0201 - 4
2F8	PIVOT PIN, MAIN FRAME	1740 - 2
1B23	PIVOT, TANDEM	0201 - 4
1D5	PLANET PINION CARRIER	0250 - 8
1C24	PLANET PINION CARRIER, FIRST, HFWD MOTOR	0250 - 2
1D5	PLANETARY, TANDEM DRIVE	0250 - 8
1H20	PLATE, FRONT	0404 - 6
2F22	PLATE, FRONT MOUNTED WEIGHT	1749 - 2
2B23	PLATE, SEPARATOR, BRAKE	1011 - 2
1C8	PLATES, DIFFERENTIAL CLUTCH	0210 - 10
1J16	PLUG, GLOW	0505 - 1
1D1	PLUG, HFWD OIL	0250 - 4
2F3	POWER CONVERTER (24 VOLT TO 12 VOLT)	1674 - 28
2I13	POWERED PRECLEANER, HVAC	1830 - 4
1K11	PRECLEANER	0520 - 4
1K11	PRECLEANER TUBE	0520 - 4
1K11	PRECLEANER WITH SEPARATOR	0520 - 4
2I13	PRECLEANER, HVAC POWERED	1830 - 4
1K11	PRECLEANER, ROTARY EJECTOR	0520 - 4
1D23	PRESSURE OVERRIDE VALVE, HFWD CHARGE PUMP	0260 - 18
3B8	PRESSURE REDUCING VALVE, SADDLE LOCK PIN	2160 - 6
1E9	PRESSURE REGULATING VALVE, NEUTRAL CHARGE	0260 - 28
1E17	PRESSURE SENSOR, HFWD PUMP	0260 - 36
1D17	PRESSURE SWITCH, HFWD CHARGE	0260 - 12
3D1	PRESSURE SWITCH, MAIN HYDRAULIC	2164 - 2
2C6	PRESSURE SWITCH, PARK BRAKE	1111 - 2
1K9	PRIMARY ENGINE AIR FILTER	0520 - 2
1J1	PRIMARY FUEL FILTER LINES	0420 - 6
2D9	PULLEY, ALTERNATOR	1672 - 2
1J8	PULLEY, CRANKSHAFT	0429 - 2
2D11	PULLEY, ENGINE ACCESSORY DRIVE BELT IDLER	1672 - 4
1K3	PULLEY, FAN	0512 - 2
1K3	PULLEY, FAN BELT IDLER	0512 - 2
1I16	PULLEY, WATER PUMP	0417 - 2
1F15	PUMP DRIVE GEARS (670D)	0350 - 2
1F17	PUMP DRIVE GEARS (672D)	0350 - 4
1I16	PUMP PULLEY AND INLET, WATER	0417 - 2
1E13	PUMP, DIFF LOCK	0260 - 32
1E13	PUMP, DIFFERENTIAL LOCK	0260 - 32
1H24	PUMP, ENGINE OIL	0407 - 4
2G7	PUMP, FRONT WINDSHIELD WASHER	1810 - 4
1I11	PUMP, FUEL INJECTION	0413 - 2
1J3	PUMP, FUEL TRANSFER	0421 - 1
1D17	PUMP, HFWD	0260 - 12
1E7	PUMP, HFWD CHARGE	0260 - 26
1D23	PUMP, HFWD MOTOR FLUSHING	0260 - 18
1D21	PUMP, HFWD, MAIN HOUSING	0260 - 16
3B4	PUMP, MAIN HYDRAULIC	2160 - 2
2G9	PUMP, REAR WINDSHIELD WASHER	1810 - 6
1I15	PUMP,WATER	0417 - 1
2F20	PUSH BLOCK	1747 - 2
1H9	PUSH ROD	0402 - 2
1J3	PUSH ROD, FUEL TRANSFER PUMP	0421 - 1

Q

1C2	QUILL, INPUT	0210 - 4

R

1J23	RADIATOR	0510 - 4
1J23	RADIATOR, CHARGE AIR COOLER AND HYDRAULIC OIL COOLER	0510 - 4
1K1	RADIATOR, CHARGE AIR COOLER AND HYDRAULIC OIL COOLER	0510 - 6
2J13	RADIO	2001 - 2
2J13	RADIO ANTENNA	2001 - 2
2J13	RADIO ANTENNA CABLE	2001 - 2
2J13	RADIO BRACKET	2001 - 2
2G21	RADIO HOUSING (CAB)	1810 - 18
2G23	RADIO HOUSING (CANOPY)	1810 - 20
2E9	RADIO SPEAKER WIRING HARNESS	1674 - 8
2J13	RADIO SPEAKERS	2001 - 2
1I11	RAIL, FUEL INJECTION LINE	0413 - 2
2J10	REAR GRILLE	1921 - 2
2J10	REAR GRILLE HOUSING	1921 - 2
1D17	REAR HFWD PUMP	0260 - 12
2E15	REAR HFWD WIRING HARNESS	1674 - 16
2D2	REAR HITCH	1511 - 2
2D2	REAR HITCH KIT	1511 - 2
2J10	REAR LIGHT PANEL	1921 - 2

ALPHABETICAL INDEX - CONTINUED

GRID		PAGE
2E5	REAR MAIN WIRING HARNESS	1674 - 4
1J10	REAR OIL SEAL	0433 - 2
2E5	REAR PLATFORM WIRING HARNESS	1674 - 4
3F10	REAR RIPPER SHANK	4240 - 6
3F10	REAR RIPPER/SCARIFIER	4240 - 6
3F10	REAR RIPPER/SCARIFIER KIT	4240 - 6
3D20	REAR SADDLE PIN	3440 - 6
3F14	REAR SCARIFIER SHANK	4240 - 10
3F14	REAR SCARIFIER TEETH	4240 - 10
1F19	REAR TRANSMISSION CASE	0350 - 6
1F19	REAR TRANSMISSION HOUSING	0350 - 6
1B2	REAR WHEEL (10" X 24") (SPLIT RIM)	0110 - 2
1B4	REAR WHEEL (14" X 25")	0110 - 4
1B4	REAR WHEEL (17" X 25")	0110 - 4
2G15	REAR WINDOW	1810 - 12
2K3	REAR WINDOW SUNVISOR	2007 - 2
2G9	REAR WINDSHIELD WASHER PUMP	1810 - 6
2G9	REAR WINDSHIELD WIPER	1810 - 6
2G21	REAR WIPER COVER (CAB)	1810 - 18
2G23	REAR WIPER COVER (CANOPY)	1810 - 20
2E1	REAR WORK LIGHTS	1673 - 14
2E1	REAR, MID-FRAME, AND UNDER CAB WORK LIGHTS	1673 - 14
2J15	REARVIEW MIRROR, INTERIOR	2002 - 2
2I23	RECEIVER-DRYER, AIR CONDITIONING	1830 - 16
1J19	RELAY, GLOW PLUG	0505 - 4
2E9	RELAY, IGNITION	1674 - 8
2E21	RELAYS, VEC	1674 - 22
3B20	RELIEF VALVE, BLADE LIFT VALVE SECTION	2160 - 24
1G21	RELIEF VALVE, OIL COOLER BYPASS	0350 - 34
3D3	RESERVOIR, HYDRAULIC	2164 - 4
2G7	RESERVOIR, WINDSHIELD WASHER	1810 - 4
2I19	RESISTOR, HEATER AND A/C	1830 - 12
1K9	RESTRICTION SENSOR, AIR FILTER	0520 - 2
3D16	RETAINER, DRAFT FRAME BALL	3440 - 2
1E3	RETURN HOSE, HFWD TANK (BULKHEAD TO HFWD ENGAGEMENT VALVE)	0260 - 22
1E5	RETURN HOSE, HFWD TANK (HFWD PUMP TO BULKHEAD)	0260 - 24
2H23	RIGHT AUXILIARY CONTROL LEVER	1810 - 44
2H21	RIGHT AUXLIARY CONTROL LEVER	1810 - 42
2H23	RIGHT BLADE LIFT CONTROL	1810 - 44
2H21	RIGHT BLADE LIFT CONTROL LEVER	1810 - 42
3B20	RIGHT BLADE LIFT VALVE SECTION	2160 - 24
2H23	RIGHT CONTROL LEVER BOOT	1810 - 44
2H23	RIGHT HYDRAULIC CONTROL LEVERS	1810 - 44
3B10	RIGHT MAIN HYDRAULIC CONTROL VALVE	2160 - 10
3B22	RIGHT MAIN HYDRAULIC CONTROL VALVE INLET AND OUTLET SECTIONS	2160 - 26
2H11	RIGHT SIDE CAB DOOR	1810 - 32
3B22	RIGHT VALVE INLET SECTION	2160 - 26
3B22	RIGHT VALVE OUTLET SECTION	2160 - 26
1B2	RIM WHEEL (10" X 24")	0110 - 2
1B12	RIM, FRONT WHEEL (10" X 24" SPLIT RIM)	0110 - 12
1B14	RIM, FRONT WHEEL (12" X 25")	0110 - 14
1B10	RIM, FRONT WHEEL (14" X 25")	0110 - 10
1B2	RIM, REAR WHEEL (10" X 24")	0110 - 2
1B8	RIM, REAR WHEEL (13" X 25")	0110 - 8
1B4	RIM, REAR WHEEL (14" X 25")	0110 - 4
1B4	RIM, REAR WHEEL (17" X 25")	0110 - 4
1B6	RIM, REAR WHEEL (9" X 24")	0110 - 6
1B6	RIM, WHEEL	0110 - 6
1B8	RIM, WHEEL	0110 - 8
1B2	RIM, WHEEL (10" X 24")	0110 - 2
1B4	RIM, WHEEL (14" X 25")	0110 - 4
1B4	RIM, WHEEL (17" X 25")	0110 - 4
1J9	RING GEAR, FLYWHEEL	0433 - 1
1H15	RINGS, PISTON	0403 - 1
2H23	RIPPER CONTROL LEVER	1810 - 44
3F20	RIPPER HYDRAULIC HOSES	4260 - 10
3F10	RIPPER TEETH	4240 - 6
3C1	RIPPER VALVE SECTION	2160 - 30
3F12	RIPPER/REAR SCARIFIER CYLINDER	4240 - 8
3F12	RIPPER/REAR SCARIFIER CYLINDER SEAL KIT	4240 - 8
3F20	RIPPER/REAR SCARIFIER HYDRAULIC HOSES	4260 - 10
3F20	RIPPER/REAR SCARIFIER HYDRAULIC HOSE KIT	4260 - 10
3F10	RIPPER, REAR	4240 - 6
1H11	ROCKER ARM COVER	0402 - 4
1H9	ROCKER ARM, SHAFT, TAPPET AND PUSH ROD	0402 - 2
2H19	ROD, CAB CONTROL LEVER PIVOT	1810 - 40
1H15	ROD, CONNECTING	0403 - 1
2H19	ROD, HYDRAULIC CONTROL LEVER PIVOT	1810 - 40
1H9	ROD, PUSH	0402 - 2
1J3	ROD, PUSH, FUEL TRANSFER PUMP	0421 - 1
1C20	ROD, TIE, FRONT AXLE (672D)	0240 - 4
1F6	ROD, TRANSMISSION SHIFTER GEAR	0315 - 4
3B12	RODS, MAIN HYDRAULIC CONTROL VALVE TIE	2160 - 12
2H3	ROOF, CAB	1810 - 24
3B14	ROTARY ACTUATOR, ARTICULATION VALVE SECTION	2160 - 18
3C3	ROTARY ACTUATOR, AUXLIARY VALVE SECTION (WITH FLOAT)	2160 - 32
3C5	ROTARY ACTUATOR, AUXLIARY VALVE SECTION (WITHOUT FLOAT)	2160 - 34
3B20	ROTARY ACTUATOR, BLADE LIFT VALVE SECTION	2160 - 24
3B18	ROTARY ACTUATOR, BLADE SIDE SHIFT VALVE SECTION	2160 - 22
3B14	ROTARY ACTUATOR, BLADE TILT VALVE SECTION	2160 - 18
3B16	ROTARY ACTUATOR, CIRCLE ROTATE VALVE SECTION	2160 - 20
3B14	ROTARY ACTUATOR, CIRCLE SIDE SHIFT VALVE SECTION	2160 - 18
3C1	ROTARY ACTUATOR, RIPPER VALVE SECTION	2160 - 30
3C3	ROTARY ACTUATOR, SCARIFIERVALVE SECTION	2160 - 32
3B14	ROTARY ACTUATOR, WHEEL LEAN VALVE SECTION	2160 - 18
1K11	ROTARY EJECTOR PRECLEANER	0520 - 4
3E3	ROTARY MANIFOLD	3460 - 2
3E3	ROTARY MANIFOLD SEAL KIT	3460 - 2

S

3D20	SADDLE FRAME	3440 - 6
3E17	SADDLE LOCK PIN AND HYDRAULIC HOSES	3460 - 16
3D20	SADDLE LOCK PIN BRACKET	3440 - 6
3B8	SADDLE LOCK PIN PRESSURE REDUCING VALVE	2160 - 6
3B8	SADDLE LOCK PIN SOLENOID	2160 - 6
3E17	SADDLE LOCKING PIN INDICATOR SWITCH	3460 - 16
3C3	SCARIFIER AND AUXILIARY VALVE SECTION (WITH FLOAT)	2160 - 32
2H21	SCARIFIER CONTROL LEVER	1810 - 42
3F8	SCARIFIER CYLINDER	4240 - 4
3F8	SCARIFIER CYLINDER SEAL KIT	4240 - 4
3F18	SCARIFIER HOSES, FRONT	4260 - 8
3F18	SCARIFIER HYDRAULIC HOSE KIT (FRONT)	4260 - 8
3F20	SCARIFIER HYDRAULIC HOSES (REAR)	4260 - 10
3F14	SCARIFIER TEETH, REAR	4240 - 10

ALPHABETICAL INDEX - CONTINUED

GRID		PAGE
3C3	SCARIFIER VALVE SECTION	2160 - 32
3F6	SCARIFIER, FRONT MOUNTED	4240 - 2
3F10	SCARIFIER, REAR	4240 - 6
1F23	SCREEN, TRANSMISSION	0350 - 12
2B8	SEAL KIT, ARTICULATION CYLINDER	0960 - 6
3E21	SEAL KIT, BLADE IMPACT VALVE	3460 - 20
3E9	SEAL KIT, BLADE LIFT CYLINDER	3460 - 8
3E11	SEAL KIT, BLADE SLIDE CYLINDER	3460 - 10
3E13	SEAL KIT, BLADE TILT CYLINDER	3460 - 12
3E5	SEAL KIT, CIRCLE DRIVE MOTOR	3460 - 4
3E7	SEAL KIT, CIRCLE SIDESHIFT CYLINDER	3460 - 6
1I21	SEAL KIT, FINAL FUEL FILTER	0420 - 2
2B10	SEAL KIT, FRONT STEERING CYLINDER	0960 - 8
1E7	SEAL KIT, HFWD CHARGE PUMP	0260 - 26
1E19	SEAL KIT, HFWD ENGAGEMENT MANIFOLD	0260 - 38
1D13	SEAL KIT, HFWD MOTOR	0260 - 8
1D15	SEAL KIT, HFWD MOTOR	0260 - 10
1D21	SEAL KIT, HFWD PUMP	0260 - 16
1D21	SEAL KIT, HFWD PUMP EP CONTROL	0260 - 16
1D23	SEAL KIT, HFWD PUMP OVERHAUL	0260 - 18
3B4	SEAL KIT, MAIN HYDRAULIC PUMP	2160 - 2
3B8	SEAL KIT, MAIN MANIFOLD VALVE	2160 - 6
1I23	SEAL KIT, PRIMARY FUEL FILTER	0420 - 4
3F12	SEAL KIT, RIPPER/REAR SCARIFIER SEAL KIT	4240 - 8
3E3	SEAL KIT, ROTARY MANIFOLD	3460 - 2
3F8	SEAL KIT, SCARIFIER CYLINDER	4240 - 4
2C1	SEAL KIT, SERVICE BRAKE VALVE	1060 - 2
2B20	SEAL KIT, STEERING VALVE	0960 - 18
2B4	SEAL KIT, WHEEL LEAN CYLINDER (670D)	0960 - 2
2B6	SEAL KIT, WHEEL LEAN CYLINDER (672D)	0960 - 4
1D3	SEAL, AXLE HOUSING OIL	0250 - 6
1H13	SEAL, FRONT OIL	0402 - 6
1J10	SEAL, REAR OIL	0433 - 2
1I6	SEAL, VALVE	0409 - 2
2E23	SEALED SWITCH MODULE (SSM)	1674 - 24
1B25	SEALS, INPUT YOKE	0210 - 2
2I1	SEAT BRACKETS (AIR)	1821 - 2
2I5	SEAT BRACKETS (MECHANICAL)	1821 - 6
2I1	SEAT CUSHION (AIR)	1821 - 2
2I5	SEAT CUSHION (MECHANICAL)	1821 - 6
2I1	SEAT SUSPENSION (AIR)	1821 - 2
2I3	SEAT SUSPENSION (AIR)	1821 - 4
2I5	SEAT SUSPENSION (MECHANICAL)	1821 - 6
2I7	SEAT SUSPENSION (MECHANICAL)	1821 - 8
2I3	SEAT SUSPENSION BOOT KIT (AIR)	1821 - 4
2I7	SEAT SUSPENSION BOOT KIT (MECHANICAL)	1821 - 8
2I3	SEAT SUSPENSION SHOCK KIT (AIR)	1821 - 4
2I7	SEAT SUSPENSION SHOCK KIT (MECHANICAL)	1821 - 8
2I3	SEAT, SUSPENSION (AIR)	1821 - 4
2I7	SEAT, SUSPENSION (MECHANICAL)	1821 - 8
1G3	SECOND STAGE ASSEMBLY	0350 - 16
1G3	SECOND STAGE INPUT SHAFT	0350 - 16
1D1	SECOND STAGE PINION, HFWD MOTOR	0250 - 4
1K9	SECONDARY ENGINE AIR FILTER	0520 - 2
2B2	SECONDARY STEERING	0930 - 2
2B2	SECONDARY STEERING ACCUMULATOR	0930 - 2
2B2	SECONDARY STEERING HOSE	0930 - 2
2B2	SECONDARY STEERING KIT	0930 - 2
1I23	SEDIMENT BOWL, PRIMARY FUEL FILTER	0420 - 4
1K17	SENDING UNIT, FUEL GAUGE	0560 - 2
1K9	SENSOR, AIR FILTER RESTRICTION	0520 - 2
2E19	SENSOR, ARTICULATION	1674 - 20
1K22	SENSOR, COOLANT TEMPERATURE	0578 - 1
1K22	SENSOR, CRANKSHAFT TIMING	0578 - 1
1I11	SENSOR, FUEL INJECTION PUMP	0413 - 2
1K22	SENSOR, FUEL INJECTION PUMP TIMING	0578 - 1
1I11	SENSOR, FUEL PRESSURE	0413 - 2
1I11	SENSOR, FUEL TEMPERATURE	0413 - 2
1D15	SENSOR, HFWD MOTOR SPEED	0260 - 10
1E17	SENSOR, HFWD PUMP PRESSURE	0260 - 36
1K22	SENSOR, MANIFOLD AIR TEMPERATURE	0578 - 1
1K22	SENSOR, OIL PRESSURE	0578 - 1
1I23	SENSOR, PRIMARY FUEL FILTER MOISTURE	0420 - 4
1K23	SENSOR, PRIMARY FUEL FILTER MOISTURE	0578 - 2
1F21	SENSOR, SPEED, TRANS	0350 - 8
1F21	SENSOR, TRANS OUTPUT SHAFT SPEED	0350 - 8
1G21	SENSOR, TRANS TEMPERATURE	0350 - 34
1K23	SENSOR, WATER IN FUEL	0578 - 2
1K22	SENSORS, ENGINE	0578 - 1
2B23	SEPARATOR PLATE, BRAKE	1011 - 2
2D11	SERPENTINE BELT AND IDLER PULLEY	1672 - 4
2C3	SERVICE BRAKE ACCUMULATOR AND HOSES	1060 - 4
2C3	SERVICE BRAKE HOSES	1060 - 4
2C1	SERVICE BRAKE PEDAL	1060 - 2
2C1	SERVICE BRAKE VALVE	1060 - 2
2C1	SERVICE BRAKE VALVE SEAL KIT	1060 - 2
2B23	SERVICE BRAKES	1011 - 2
2J4	SERVICE DOOR LATCH	1910 - 2
2J4	SERVICE DOORS	1910 - 2
1D21	SERVO PISTON COVER, HFWD PUMP	0260 - 16
1D13	SERVO PISTON, HFWD MOTOR	0260 - 8
1D21	SERVO PISTON, HFWD PUMP	0260 - 16
3B10	SEVEN FUNCTION HYDRAULIC CONTROL VALVE	2160 - 10
3C7	SEVENTH FUNCTION CONTROL VALVE KIT	2160 - 36
1C1	SHAFT AND SPIRAL BEVEL GEAR	0210 - 3
1B23	SHAFT, AXLE DRIVE	0201 - 4
1B23	SHAFT, DRAIVE, FINAL DRIVE AND TANDEM PIVOT	0201 - 4
1H20	SHAFT, IDLER GEAR	0404 - 6
1G9	SHAFT, INPUT, FIFTH STAGE	0350 - 22
1G1	SHAFT, INPUT, FIRST STAGE	0350 - 14
1G7	SHAFT, INPUT, FOURTH STAGE	0350 - 20
1G3	SHAFT, INPUT, SECOND STAGE	0350 - 16
1G11	SHAFT, INPUT, SIXTH STAGE	0350 - 24
1G5	SHAFT, INPUT, THIRD STAGE	0350 - 18
1G13	SHAFT, OUTPUT, TRANSMISSION	0350 - 26
1H9	SHAFT, ROCKER ARM	0402 - 2
3F6	SHANK, FRONT MOUNTED SCARIFIER	4240 - 2
3F10	SHANK, REAR RIPPER	4240 - 6
3F14	SHANK, REAR SCARIFIER	4240 - 10
1H11	SHIELD, HEAT, ROCKER ARM COVER	0402 - 4
2F16	SHIELD, SIDE, BOTTOM GUARD (W/O RIPPER)	1746 - 4
1G21	SHIFT SOLENOID, TRANSMISSION	0350 - 34
1F6	SHIFTER, TRANSMISSION	0315 - 4
2H19	SHOCK, CAB CONTROL LEVER CONSOLE GAS	1810 - 40
1H18	SHORT BLOCK ASSEMBLY, ENGINE	0404 - 4
1J23	SHROUD, FAN	0510 - 4
1K1	SHROUD, FAN	0510 - 6
2J8	SIDE COVERS, MAIN FRAME	1913 - 2
2F16	SIDE SHIELD, BOTTOM GUARD (W/O RIPPER)	1746 - 4
2F18	SIDE SHIELDS, BOTTOM GUARD (WITH RIPPER)	1746 - 6
2G19	SIDE WINDOWS (OPENABLE)	1810 - 16
3E7	SIDESHIFT CYLINDER, CIRCLE	3460 - 6
2D15	SIGNAL LIGHTS, FRONT	1673 - 4
2D15	SIGNAL LIGHTS, LED FRONT	1673 - 4
3B10	SIX FUNCTION HYDRAULIC CONTROL VALVE	2160 - 10
3C7	SIXTH FUNCTION CONTROL VALVE KIT	2160 - 36
1G11	SIXTH STAGE INPUT SHAFT	0350 - 24
3E23	SLIDE CYLINDER HOSES	3460 - 22
3E11	SLIDE CYLINDER, BLADE	3460 - 10
3E1	SLIP CLUTCH, CIRCLE DRIVE GEARBOX AND	3450 - 4
2K7	SMV SIGN	2008 - 2
2D13	SNOW LIGHT BRACKET WIRING HARNESS	1673 - 2

ALPHABETICAL INDEX - CONTINUED

GRID		PAGE
2D13	SNOW LIGHT BRACKETS	1673 - 2
2D13	SNOW LIGHT EXTENSION BRACKETS	1673 - 2
1J4	SOLENOID KIT, STARTING MOTOR	0422 - 2
3C13	SOLENOID VALVE, COLD START DISCONNECT VALVE SECTION	2160 - 42
2C6	SOLENOID VALVE, PARK BRAKE	1111 - 2
3E21	SOLENOID, BLADE IMPACT VALVE	3460 - 20
3C13	SOLENOID, COLD START DISCONNECT	2160 - 42
1C6	SOLENOID, DIFFERENTIAL LOCK VALVE	0210 - 8
1E19	SOLENOID, HFWD ENGAGEMENT	0260 - 38
1D13	SOLENOID, HFWD MOTOR	0260 - 8
1D21	SOLENOID, HFWD PUMP EP CONTROL	0260 - 16
3B8	SOLENOID, SADDLE LOCK PIN	2160 - 6
1G21	SOLENOID, TRANS SHIFT	0350 - 34
2C13	SPANISH LABELS AND TRADEMARKS	1320 - 4
2C13	SPANISH TRADEMARKS AND LABELS	1320 - 4
2G21	SPEAKER GRILLE (CAB)	1810 - 18
2G23	SPEAKER GRILLE (CANOPY)	1810 - 20
2J13	SPEAKERS	2001 - 2
1K5	SPEED CONTROL PEDAL, ENGINE	0515 - 2
1D15	SPEED SENSOR, HFWD MOTOR	0260 - 10
1F21	SPEED SENSOR, TRANS	0350 - 8
1H8	SPEED SENSOR, WHEEL	0401 - 1
1C14	SPINDLE, STEERING (670D)	0230 - 4
1C1	SPIRAL BEVEL GEAR AND SHAFT	0210 - 3
1I6	SPRING, VALVE	0409 - 2
1D3	SPROCKET, AXLE DRIVE	0250 - 6
1B23	SPROCKET, DRIVE	0201 - 4
2E23	SSM LABEL	1674 - 24
1J4	STARTING MOTOR	0422 - 2
2H15	STATIONARY CONSOLE, CAB FRONT	1810 - 36
2G15	STATIONARY LOWER FRONT WINDOWS	1810 - 12
2G15	STATIONARY SIDE WINDOWS	1810 - 12
2G15	STATIONARY WINDOWS	1810 - 12
2H17	STEERING COLUMN	1810 - 38
2B12	STEERING CYLINDER HOSES, FRONT	0960 - 10
1C12	STEERING CYLINDER PIN (670D)	0230 - 2
2B10	STEERING CYLINDER TIE ROD END	0960 - 8
2B10	STEERING CYLINDER, FRONT	0960 - 8
1C14	STEERING SPINDLE (670D)	0230 - 4
2B20	STEERING VALVE	0960 - 18
2B20	STEERING VALVE HOSES	0960 - 18
2B20	STEERING VALVE SEAL KIT	0960 - 18
2H17	STEERING WHEEL	1810 - 38
2H17	STEERING WHEEL CENTER COVER	1810 - 38
1B2	STEM, VALVE WHEEL (10" X 24")	0110 - 2
1B12	STEM, VALVE, FRONT WHEEL (10" X 24" SPLIT RIM)	0110 - 12
1B14	STEM, VALVE, FRONT WHEEL (12" X 25")	0110 - 14
1B10	STEM, VALVE, FRONT WHEEL (14" X 25")	0110 - 10
1B2	STEM, VALVE, REAR WHEEL (10" X 24")	0110 - 2
1B8	STEM, VALVE, REAR WHEEL (13" X 25")	0110 - 8
1B4	STEM, VALVE, REAR WHEEL (14" X 25")	0110 - 4
1B4	STEM, VALVE, REAR WHEEL (17" X 25")	0110 - 4
1B6	STEM, VALVE, REAR WHEEL (9" X 24")	0110 - 6
1B6	STEM, VALVE, WHEEL	0110 - 6
1B2	STEM, VALVE, WHEEL (10" X 24")	0110 - 2
1B8	STEM, VALVE, WHEEL (13" X 25")	0110 - 8
1B4	STEM, VALVE, WHEEL (14" X 25")	0110 - 4
1B4	STEM, VALVE, WHEEL (17" X 25")	0110 - 4
1B21	STEP, TANDEM HOUSING	0201 - 2
2I9	STEPS, CAB	1822 - 2
1I8	STRAP, ENGINE LIFT	0409 - 4
2D7	STRAPS, GROUNDING	1671 - 2
1E9	SUCTION HOSE, HFWD CHARGE PUMP	0260 - 28
1E5	SUCTION HOSE, HFWD PUMP	0260 - 24
3C21	SUCTION HOSE, MAIN HYDRAULIC PUMP (670D)	2163 - 6
3C23	SUCTION HOSE, MAIN HYDRAULIC PUMP (670D)	2163 - 8
1F21	SUCTION SCREEN, TRANSMISSION	0350 - 8
1F21	SUCTION TUBE, TRANSMISSION	0350 - 8
2K3	SUNSHADE, REAR WINDOW	2007 - 2
2K5	SUNSHADE, REAR WINDOW	2007 - 4
2K3	SUNVISOR, REAR WINDOW	2007 - 2
2K5	SUNVISOR, REAR WINDOW	2007 - 4
1J7	SUPPORT, BELT TENSIONER	0429 - 1
3D22	SUPPORT, CIRCLE	3440 - 8
1J23	SUPPORT, COOLING PACKAGE	0510 - 4
1K1	SUPPORT, COOLING PACKAGE	0510 - 6
1D17	SUPPORT, HFWD PUMP	0260 - 12
2J6	SUPPORT, HOOD	1910 - 4
1J23	SUPPORT, RADIATOR	0510 - 4
1K1	SUPPORT, RADIATOR	0510 - 6
1K15	SUPPORTS, ENGINE MOUNTING	0540 - 2
2I3	SUSPENSION SEAT (AIR)	1821 - 4
2I7	SUSPENSION SEAT (MECHANICAL)	1821 - 8
2I1	SUSPENSION, SEAT (AIR)	1821 - 2
2I5	SUSPENSION, SEAT (MECHANICAL)	1821 - 6
1D15	SWASH PLATE, HFWD MOTOR	0260 - 10
1D19	SWASH PLATE, HFWD PUMP	0260 - 14
3B4	SWASHPLATE, MAIN HYDRAULIC PUMP	2160 - 2
2E23	SWITCH MODULE, SEALED	1674 - 24
2H9	SWITCH PANEL, ENGINE SPEED CONTROL (CAB)	1810 - 30
2H7	SWITCH PANEL, ENGINE SPEED CONTROL (CANOPY)	1810 - 28
2J1	SWITCH, A/C AND HEAT TEMPERATURE CONTROL	1830 - 18
2J1	SWITCH, A/C AND HEATER FAN SPEED	1830 - 18
2J1	SWITCH, A/C AND HEATER ON/OFF	1830 - 18
2J1	SWITCH, A/C PRESSURE	1830 - 18
2C1	SWITCH, BRAKE LIGHT	1060 - 2
2F1	SWITCH, DIFFERENTIAL LOCK	1674 - 26
2F1	SWITCH, DRIVING LIGHT HIGH/LOW BEAM SWITCH	1674 - 26
1K19	SWITCH, ENGINE COOLANT TEMPERATURE	0574 - 1
1K5	SWITCH, ENGINE SPEED CONTROL ON/OFF	0515 - 2
1K5	SWITCH, ENGINE SPEED CONTROL SET	0515 - 2
3D1	SWITCH, FILTER RESTRICTION, MAIN HYDRAULIC FILTER	2164 - 2
2F1	SWITCH, HAZARD WARNING LIGHT	1674 - 26
2E17	SWITCH, HFWD AGRESSIVENESS	1674 - 18
1D17	SWITCH, HFWD CHARGE PRESSURE	0260 - 12
2E17	SWITCH, HFWD INCHING MODE	1674 - 18
2E17	SWITCH, HFWD ON/OFF	1674 - 18
2F1	SWITCH, HORN	1674 - 26
2F1	SWITCH, IGNITION	1674 - 26
3D1	SWITCH, MAIN HYD FILTER PRESSURE	2164 - 2
2C6	SWITCH, PARK BRAKE PRESSURE	1111 - 2
3E17	SWITCH, SADDLE LOCKING PIN INDICATOR	3460 - 16
2E23	SWITCH, SEALED	1674 - 24
1G24	SWITCH, TRANSMISSION OIL FILTER RESTRICTION	0360 - 2
2F1	SWITCH, TURN SIGNAL	1674 - 26
3B8	SYSTEM RELIEF VALVE, MAIN MANIFOLD	2160 - 6

T

2D17	TAIL LIGHT WIRING HARNESS	1673 - 6
2D17	TAIL LIGHTS	1673 - 6
1D5	TANDEM DRIVE	0250 - 8
1D3	TANDEM DRIVE CHAIN	0250 - 6
1D5	TANDEM DRIVE PLANETARY	0250 - 8
1B21	TANDEM HOUSING	0201 - 2
1B21	TANDEM HOUSING COVERS	0201 - 2

ALPHABETICAL INDEX - CONTINUED

GRID		PAGE
1B23	TANDEM PIVOT	0201 - 4
1K17	TANK, FUEL	0560 - 2
1H9	TAPPET, ROCKER ARM	0402 - 2
1F4	TCU	0315 - 2
3F6	TEETH, FRONT MOUNTED SCARIFIER	4240 - 2
3F14	TEETH, REAR SCARIFIER	4240 - 10
3F10	TEETH, RIPPER	4240 - 6
2I19	TEMPERATURE CONTROL CABLE	1830 - 12
1E17	TEMPERATURE SENSOR, HFWD ENGAGEMENT MANIFOLD	0260 - 36
1K19	TEMPERATURE SWITCH, ENGINE COOLANT	0574 - 1
1J7	TENSIONER, BELT	0429 - 1
1K3	TENSIONER, FAN BELT	0512 - 2
1I17	THERMOSTAT, ENGINE COOLANT	0418 - 2
2I19	THERMOSTAT, HEATER AND A/C	1830 - 12
1G5	THIRD STAGE ASSEMBLY, TRANSMISSION	0350 - 18
1G5	THIRD STAGE INPUT SHAFT	0350 - 18
1C16	TIE ROD END, FRONT AXLE (670D)	0230 - 6
1C20	TIE ROD END, FRONT AXLE (672D)	0240 - 4
2B10	TIE ROD END, STEERING CYLINDER	0960 - 8
1C16	TIE ROD, FRONT AXLE (670D)	0230 - 6
1C20	TIE ROD, FRONT AXLE (672D)	0240 - 4
3B12	TIE RODS, MAIN HYDRAULIC CONTROL VALVE	2160 - 12
1J7	TIGHTENER, BELT	0429 - 1
2H19	TILT CONSOLE, CAB	1810 - 40
3E23	TILT CYLINDER HOSES	3460 - 22
3E13	TILT CYLINDER, BLADE	3460 - 12
3D18	TILT FRAME, BLADE	3440 - 4
1H13	TIMING GEAR COVER	0402 - 6
2K1	TOOLBOX	2005 - 2
2K1	TOOLBOX TRAY	2005 - 2
2F12	TOP COVER, MAIN FRAME	1740 - 6
1F10	TORSIONAL DAMPENER	0325 - 2
1J8	TORSIONAL DAMPENER	0429 - 2
1F10	TORSIONAL ISOLATOR	0325 - 2
1K3	TOWER, FAN	0512 - 2
2C11	TRADEMARKS AND LABELS, ENGLISH	1320 - 2
2C15	TRADEMARKS AND LABELS, FRENCH	1320 - 6
2C13	TRADEMARKS AND LABELS, SPANISH	1320 - 4
1F15	TRANS CASE OIL TROUGH (670D)	0350 - 2
1F17	TRANS CASE OIL TROUGH (672D)	0350 - 4
1G19	TRANS CONTROL VALVE GASKET	0350 - 32
1F6	TRANS GEAR SELECTOR COVER	0315 - 4
1F21	TRANS OUTPUT SHAFT SPEED SENSOR	0350 - 8
1F14	TRANSMISSION (COMPLETE)	0350 - 1
1H3	TRANSMISSION ACCUMULATOR	0363 - 2
1G15	TRANSMISSION BRAKE	0350 - 28
1F21	TRANSMISSION CASE BOLTS	0350 - 8
1F21	TRANSMISSION CASE HARDWARE	0350 - 8
1F19	TRANSMISSION CASE, REAR	0350 - 6
1G3	TRANSMISSION CLUTCH PLATE	0350 - 16
1G5	TRANSMISSION CLUTCH PLATE	0350 - 18
1G7	TRANSMISSION CLUTCH PLATE	0350 - 20
1G9	TRANSMISSION CLUTCH PLATE	0350 - 22
1F4	TRANSMISSION CONTROL UNIT	0315 - 2
1F4	TRANSMISSION CONTROL UNIT MOUNTING BRACKET	0315 - 2
1G21	TRANSMISSION CONTROL VALVE	0350 - 34
1G24	TRANSMISSION CONTROL VALVE DIAGNOSTIC FITTING	0360 - 2
1G19	TRANSMISSION CONTROL VALVE MOUNTING	0350 - 32
1F4	TRANSMISSION CONTROLLER	0315 - 2
1F12	TRANSMISSION DIPSTICK TUBE	0341 - 2
1G9	TRANSMISSION FIFTH STAGE ASSEMBLY	0350 - 22
1G24	TRANSMISSION FILTER	0360 - 2
1G24	TRANSMISSION FILTER HEAD	0360 - 2
1G24	TRANSMISSION FILTER HOSES	0360 - 2
1G1	TRANSMISSION FIRST STAGE ASSEMBLY	0350 - 14
1G7	TRANSMISSION FOURTH STAGE ASSEMBLY	0350 - 20
1F6	TRANSMISSION GEAR SELECTOR	0315 - 4
1F6	TRANSMISSION GEAR SHIFT ROD	0315 - 4
1F6	TRANSMISSION GEAR SHIFT SELECTOR	0315 - 4
1F23	TRANSMISSION HOUSING	0350 - 12
1F19	TRANSMISSION HOUSING, REAR	0350 - 6
1H3	TRANSMISSION OIL COOLER HOSES	0363 - 2
1H3	TRANSMISSION OIL COOLER HOSES AND ACCUMULATOR	0363 - 2
1F12	TRANSMISSION OIL DIPSTICK AND FLYWHEEL HOUSING DRAIN	0341 - 2
1G24	TRANSMISSION OIL FILTER RESTRICTION SWITCH	0360 - 2
1G13	TRANSMISSION OUTPUT	0350 - 26
1G13	TRANSMISSION OUTPUT SHAFT	0350 - 26
1F23	TRANSMISSION SCREEN	0350 - 12
1G3	TRANSMISSION SECOND STAGE ASSEMBLY	0350 - 16
1G21	TRANSMISSION SHIFT SOLENOID	0350 - 34
1F6	TRANSMISSION SHIFTER	0315 - 4
1G11	TRANSMISSION SIXTH STAGE ASSEMBLY	0350 - 24
1F21	TRANSMISSION SUCTION SCREEN	0350 - 8
1F21	TRANSMISSION SUCTION TUBE	0350 - 8
1F6	TRANSMISSION SWITCH BOX MODULE	0315 - 4
1G21	TRANSMISSION TEMPERATURE SENSOR	0350 - 34
1G5	TRANSMISSION THIRD STAGE ASSEMBLY	0350 - 18
1G3	TRANSMISSION UNIVERSAL DRIVESHAFT	0350 - 16
1G5	TRANSMISSION UNIVERSAL DRIVESHAFT	0350 - 18
1G7	TRANSMISSION UNIVERSAL DRIVESHAFT	0350 - 20
1G9	TRANSMISSION UNIVERSAL DRIVESHAFT	0350 - 22
1H1	TRANSMISSION VALVE GUARD	0360 - 4
1G15	TRANSMISSION WET BRAKE	0350 - 28
2E13	TRANSMISSION WIRING HARNESS	1674 - 14
1G17	TRANSMISSION YOKE	0350 - 30
2I17	TRAY, CAB	1830 - 10
2K1	TRAY, TOOLBOX	2005 - 2
1F15	TROUGH, TRANS CASE OIL (670D)	0350 - 2
1F17	TROUGH, TRANS CASE OIL (672D)	0350 - 4
1I17	TUBE, ENGINE COOLANT THERMOSTAT HOUSING	0418 - 2
1I11	TUBE, FUEL INJECTOR FEED	0413 - 2
1K11	TUBE, PRECLEANER	0520 - 4
1F12	TUBE, TRANSMISSION OIL DIPSTICK	0341 - 2
1H21	TUBE,ENGINE OIL DIPSTICK	0407 - 1
1I14	TURBOCHARGER AND OIL LINES	0416 - 1
1I10	TURBOCHARGER EXHAUST ELBOW AND ADAPTER	0410 - 2
2F1	TURN SIGNAL SWITCH	1674 - 26

U

2E1	UNDER CAB WORK LIGHTS	1673 - 14
1G3	UNIVERSAL DRIVESHAFT, TRANSMISSION	0350 - 16
1G5	UNIVERSAL DRIVESHAFT, TRANSMISSION	0350 - 18
1G7	UNIVERSAL DRIVESHAFT, TRANSMISSION	0350 - 20
1G9	UNIVERSAL DRIVESHAFT, TRANSMISSION	0350 - 22
1C10	UNIVERSAL JOINT, DRIVESHAFT	0225 - 2

V

1H11	VALVE COVER	0402 - 4
1H1	VALVE GUARD, TRANSMISSION	0360 - 4
3C15	VALVE MOUNTING BRACKETS, MAIN CONTROL	2160 - 44
1I6	VALVE SEAT INSERT	0409 - 2
3B14	VALVE SECTION, ARTICULATION	2160 - 18
3C3	VALVE SECTION, AUXILIARY (WITH FLOAT)	2160 - 32
3C5	VALVE SECTION, AUXILIARY (WITHOUT FLOAT)	2160 - 34

ALPHABETICAL INDEX - CONTINUED

GRID		PAGE
3B20	VALVE SECTION, BLADE LIFT	2160 - 24
3B18	VALVE SECTION, BLADE SIDE SHIFT	2160 - 22
3B16	VALVE SECTION, CIRCLE ROTATE	2160 - 20
3B14	VALVE SECTION, CIRCLE SIDE SHIFT	2160 - 18
3B24	VALVE SECTION, INLET (LEFT)	2160 - 28
3B22	VALVE SECTION, INLET (RIGHT)	2160 - 26
3B24	VALVE SECTION, OUTLET (LEFT)	2160 - 28
3B22	VALVE SECTION, OUTLET (RIGHT)	2160 - 26
3C1	VALVE SECTION, RIPPER	2160 - 30
3C3	VALVE SECTION, SCARIFIER	2160 - 32
3B14	VALVE SECTION, WHEEL LEAN	2160 - 18
1B12	VALVE STEM, FRONT WHEEL (10" X 24" SPLIT RIM)	0110 - 12
1B14	VALVE STEM, FRONT WHEEL (12" X 25")	0110 - 14
1B10	VALVE STEM, FRONT WHEEL (14" X 25")	0110 - 10
1B2	VALVE STEM, REAR WHEEL (10" X 24")	0110 - 2
1B8	VALVE STEM, REAR WHEEL (13" X 25")	0110 - 8
1B4	VALVE STEM, REAR WHEEL (14" X 25")	0110 - 4
1B4	VALVE STEM, REAR WHEEL (17" X 25")	0110 - 4
1B6	VALVE STEM, REAR WHEEL (9" X 24")	0110 - 6
1B6	VALVE STEM, WHEEL	0110 - 6
1B2	VALVE STEM, WHEEL (10" X 24")	0110 - 2
1B8	VALVE STEM, WHEEL (13" X 25")	0110 - 8
1B4	VALVE STEM, WHEEL (14" X 25")	0110 - 4
1B4	VALVE STEM, WHEEL (17" X 25")	0110 - 4
3B14	VALVE, ARTICULATION	2160 - 18
3C3	VALVE, AUXILIARY (WITH FLOAT)	2160 - 32
3C5	VALVE, AUXILIARY (WITHOUT FLOAT)	2160 - 34
3E21	VALVE, BLADE IMPACT	3460 - 20
3B20	VALVE, BLADE LIFT	2160 - 24
3B18	VALVE, BLADE SIDE SHIFT	2160 - 22
3B14	VALVE, BLADE TILT	2160 - 18
2C1	VALVE, BRAKE	1060 - 2
3B16	VALVE, CIRCLE ROTATE	2160 - 20
3B14	VALVE, CIRCLE SIDE SHIFT	2160 - 18
3C13	VALVE, COLD START SOLENOID	2160 - 42
1C6	VALVE, DIFFERENTIAL LOCK	0210 - 8
3C13	VALVE, DISCONNECT	2160 - 42
1H16	VALVE, ENGINE COOLANT DRAIN	0404 - 2
1I1	VALVE, ENGINE OIL PAN DRAIN	0407 - 6
1H16	VALVE, ENGINE OIL PRESSURE REGULATING	0404 - 2
1E19	VALVE, HFWD ENGAGEMENT SOLENOID	0260 - 38
1E19	VALVE, HFWD FLUSHING	0260 - 38
1E19	VALVE, HFWD OPERATING CHARGE PRESSURE REGULATING	0260 - 38
1D23	VALVE, HFWD PUMP PRESSURE OVERRIDE	0260 - 18
1I6	VALVE, INTAKE AND EXHAUST	0409 - 2
3B14	VALVE, LOCKOUT, ARTICULATION VALVE SECTION	2160 - 18
3C3	VALVE, LOCKOUT, AUXILIARY VALVE SECTION (WITH FLOAT)	2160 - 32
3C5	VALVE, LOCKOUT, AUXILIARY VALVE SECTION (WITHOUT FLOAT)	2160 - 34
3B20	VALVE, LOCKOUT, BLADE LIFT VALVE SECTION	2160 - 24
3B18	VALVE, LOCKOUT, BLADE SIDE SHIFT VALVE SECTION	2160 - 22
3B14	VALVE, LOCKOUT, BLADE TILT VALVE SECTION	2160 - 18
3B14	VALVE, LOCKOUT, CIRCLE SIDE SHIFT VALVE SECTION	2160 - 18
3C1	VALVE, LOCKOUT, RIPPER VALVE SECTION	2160 - 30
3C3	VALVE, LOCKOUT, SCARIFIER VALVE SECTION	2160 - 32
3B14	VALVE, LOCKOUT, WHEEL LEAN VALVE SECTION	2160 - 18
3B10	VALVE, MAIN HYDRAULIC CONTROL	2160 - 10
3B8	VALVE, MAIN HYDRAULIC MANIFOLD	2160 - 6
3B8	VALVE, MAIN MANIFOLD	2160 - 6
1E9	VALVE, NEUTRAL CHARGE PRESSURE REGULATING	0260 - 28
1G21	VALVE, OIL COOLER BYPASS RELIEF	0350 - 34
1H13	VALVE, OIL PRESSURE REGULATING	0402 - 6
2C6	VALVE, PARK BRAKE	1111 - 2
3B8	VALVE, PRESSURE REDUCING, SADDLE LOCK PIN	2160 - 6
3B20	VALVE, RELIEF, BLADE LIFT VALVE SECTION	2160 - 24
3C1	VALVE, RIPPER	2160 - 30
3C3	VALVE, SCARIFIER	2160 - 32
2C1	VALVE, SERVICE BRAKE	1060 - 2
2C6	VALVE, SOLENOID, PARK BRAKE	1111 - 2
2B20	VALVE, STEERING	0960 - 18
3B8	VALVE, SYSTEM RELIEF, MAIN MANIFOLD	2160 - 6
2I19	VALVE, WATER	1830 - 12
3B14	VALVE, WHEEL LEAN	2160 - 18
2E21	VEHICLE ELECTRICAL CENTER	1674 - 22
1I5	VENTILATING SYSTEM, ENGINE	0408 - 1

W

1I15	WATER PUMP	0417 - 1
1I16	WATER PUMP INLET	0417 - 2
1H13	WATER PUMP INSERT REPAIR KIT	0402 - 6
1I16	WATER PUMP PULLEY	0417 - 2
1I15	WATER PUMP REPAIR KIT	0417 - 1
2I19	WATER VALVE	1830 - 12
3D18	WEAR INSERTS, BLADE TILT FRAME	3440 - 4
3D22	WEAR STRIP, CIRCLE	3440 - 8
2F22	WEIGHT, FRONT MOUNTED	1749 - 2
1G15	WET BRAKE, TRANSMISSION	0350 - 28
1B2	WHEEL (10" X 24") (SPLIT RIM)	0110 - 2
1B8	WHEEL (13" X 25" ONE-PIECE)	0110 - 8
1B4	WHEEL (14" X 25")	0110 - 4
1B4	WHEEL (17" X 25")	0110 - 4
1B6	WHEEL (9" X 24" ONE-PIECE)	0110 - 6
1B6	WHEEL (9" X 24")	0110 - 6
1C14	WHEEL BEARING, FRONT (670D)	0230 - 4
1D11	WHEEL DRIVE, HFWD	0260 - 6
1C14	WHEEL HUB, FRONT (670D)	0230 - 4
1C22	WHEEL LEAN BAR LINK (672D)	0240 - 6
2H21	WHEEL LEAN CONTROL LEVER	1810 - 42
2B4	WHEEL LEAN CYLINDER (670D)	0960 - 2
2B6	WHEEL LEAN CYLINDER (672D)	0960 - 4
2B18	WHEEL LEAN CYLINDER HOSES (670D)	0960 - 16
2B16	WHEEL LEAN CYLINDER HOSES (672D)	0960 - 14
1C12	WHEEL LEAN LINK (670D)	0230 - 2
1C12	WHEEL LEAN LINK PIN (670D)	0230 - 2
1C12	WHEEL LEAN PIN (670D)	0230 - 2
3B14	WHEEL LEAN VALVE SECTION	2160 - 18
2E15	WHEEL SPEED SENSOR WIRING HARNESS, HFWD	1674 - 16
1B4	WHEEL(14" X 25" AND 17" X 25" SPLIT RIM)	0110 - 4
1B12	WHEEL, FRONT (10" X 24" SPLIT RIM)	0110 - 12
1B14	WHEEL, FRONT (12" X 25")	0110 - 14
1B10	WHEEL, FRONT (14" X 25")	0110 - 10
1B2	WHEEL, REAR (10" X 24") (SPLIT RIM)	0110 - 2
1B8	WHEEL, REAR (13" X 25")	0110 - 8
1B4	WHEEL, REAR (14" X 25")	0110 - 4
1B4	WHEEL, REAR (17" X 25")	0110 - 4
1B6	WHEEL, REAR (9" X 24")	0110 - 6
1H8	WHEEL, SPEED SENSOR	0401 - 1
2H17	WHEEL, STEERING	1810 - 38
2K3	WINDOW SHADE, REAR	2007 - 2
2H13	WINDOW, CAB DOOR (LEFT)	1810 - 34

ALPHABETICAL INDEX - CONTINUED

GRID		PAGE
2H11	WINDOW, CAB DOOR (RIGHT)	1810 - 32
2G15	WINDOW, REAR	1810 - 12
2G17	WINDOWS, FRONT OPENABLE	1810 - 14
2G17	WINDOWS, LOWER FRONT OPENABLE	1810 - 14
2G15	WINDOWS, LOWER FRONT STATIONARY	1810 - 12
2G19	WINDOWS, OPENABLE SIDE	1810 - 16
2G19	WINDOWS, SIDE OPENABLE	1810 - 16
2G15	WINDOWS, STATIONARY	1810 - 12
2G15	WINDOWS, STATIONARY SIDE	1810 - 12
2G15	WINDSHIELD	1810 - 12
2G7	WINDSHIELD WASHER RESERVOIR	1810 - 4
2G7	WINDSHIELD WIPER MOTOR, FRONT	1810 - 4
2G9	WINDSHIELD WIPER MOTOR, REAR	1810 - 6
2G7	WINDSHIELD WIPER, FRONT	1810 - 4
2G9	WINDSHIELD WIPER, REAR	1810 - 6
2G7	WIPER BLADE, FRONT WINDSHIELD	1810 - 4
2G11	WIPER BLADE, LOWER FRONT WINDSHIELD	1810 - 8
2G9	WIPER BLADE, REAR WINDOW	1810 - 6
2G11	WIPER, WINDSHIELD LOWER FRONT	1810 - 8
2J1	WIRING HARNESS, A/C AND HEATER	1830 - 18
2D9	WIRING HARNESS, ALTERNATOR	1672 - 2
3E19	WIRING HARNESS, BLADE IMPACT VALVE	3460 - 18
2E9	WIRING HARNESS, CAB INTERIOR	1674 - 8
2F1	WIRING HARNESS, CAB MONITOR UNIT	1674 - 26
2E9	WIRING HARNESS, CAB POWER	1674 - 8
2E11	WIRING HARNESS, CAB ROOF	1674 - 10
2F1	WIRING HARNESS, CAB TILT CONSOLE	1674 - 26
2F1	WIRING HARNESS, CMU	1674 - 26
2E7	WIRING HARNESS, ENGINE	1674 - 6
2E15	WIRING HARNESS, FRONT HFWD	1674 - 16
2E3	WIRING HARNESS, FRONT PLATFORM	1674 - 2
2E3	WIRING HARNESS, FRONT TURN/DRIVING LIGHT	1674 - 2
1I11	WIRING HARNESS, FUEL INJECTOR	0413 - 2
1J16	WIRING HARNESS, GLOW PLUG	0505 - 1
1J19	WIRING HARNESS, GLOW PLUG	0505 - 4
2E15	WIRING HARNESS, HFWD	1674 - 16
2E3	WIRING HARNESS, MAIN (FRONT)	1674 - 2
2E5	WIRING HARNESS, MAIN (REAR)	1674 - 4
2E9	WIRING HARNESS, RADIO SPEAKER	1674 - 8
2E15	WIRING HARNESS, REAR HFWD	1674 - 16
2E5	WIRING HARNESS, REAR PLATFORM	1674 - 4
2D13	WIRING HARNESS, SNOW LIGHT	1673 - 2
2D17	WIRING HARNESS, TAIL LIGHT	1673 - 6
2E13	WIRING HARNESS, TRANSMISSION	1674 - 14

Y

1C10	YOKE, DRIVESHAFT	0225 - 2
1D11	YOKE, HFWD	0260 - 6
1B25	YOKE, INPUT	0210 - 2
1G17	YOKE, TRANSMISSION	0350 - 30

WHEEL (10" X 24" SPLIT RIM)

T200473 -UN-01JUN04

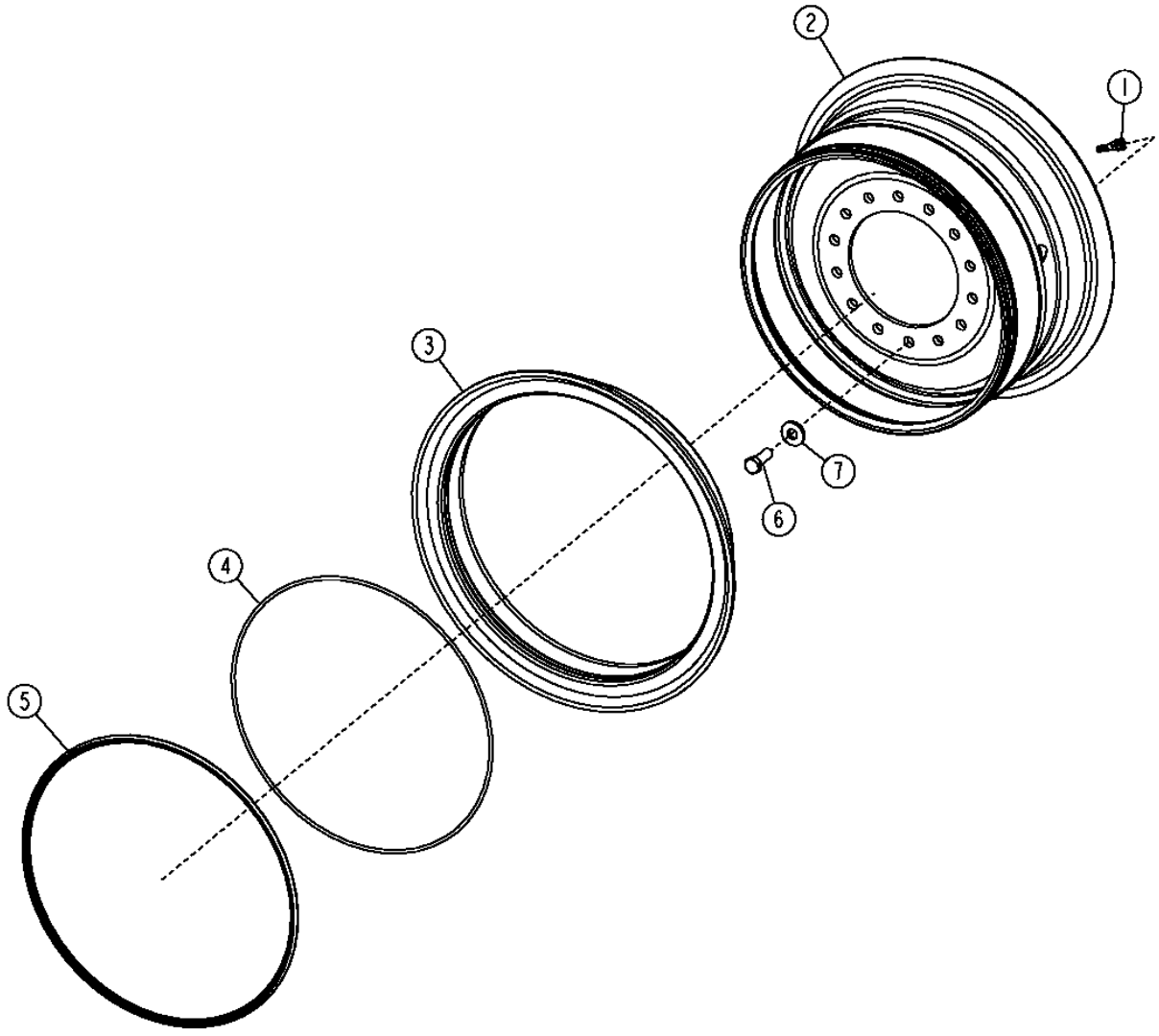

T200473

WHEEL (10" X 24" SPLIT RIM)

KEY	PART NO.	PART NAME	QTY	SERIAL NO.	670D	672D	REMARKS
1	AT25226	TIRE VALVE STEM	1		X	X	
2	AT43231	WHEEL	1		X		254MM X 610MM (10" X 24") (13-14 X 24 TIRE) (QUANTITY OF 6 PER MACHINE)
	AT43231	WHEEL	1			X	254 MM X 610 MM (10" X 24") (13-14 X 24 TIRE) (QUANTITY OF 4 PER MACHINE) (USE AS REAR WHEEL ONLY ON 672D)
3	T27183	WHEEL RING	1		X	X	WITH 254 MM X 610 MM (10" X 24") WHEEL
4	T59932	O-RING	1		X	X	254 MM X 610 MM (10" X 24") WHEEL
5	T27184	WHEEL RING	1		X	X	WITH 254 MM X 610 MM (10" X 24") WHEEL
6	19H3158	CAP SCREW	14		X	X	3/4" X 2"
7	T151797	WASHER	14		X	X	0.812" X 1-7/8" X 0.245"

WHEEL (14" X 25" AND 17" X 25" SPLIT RIM)

T200475 -UN-01JUN04

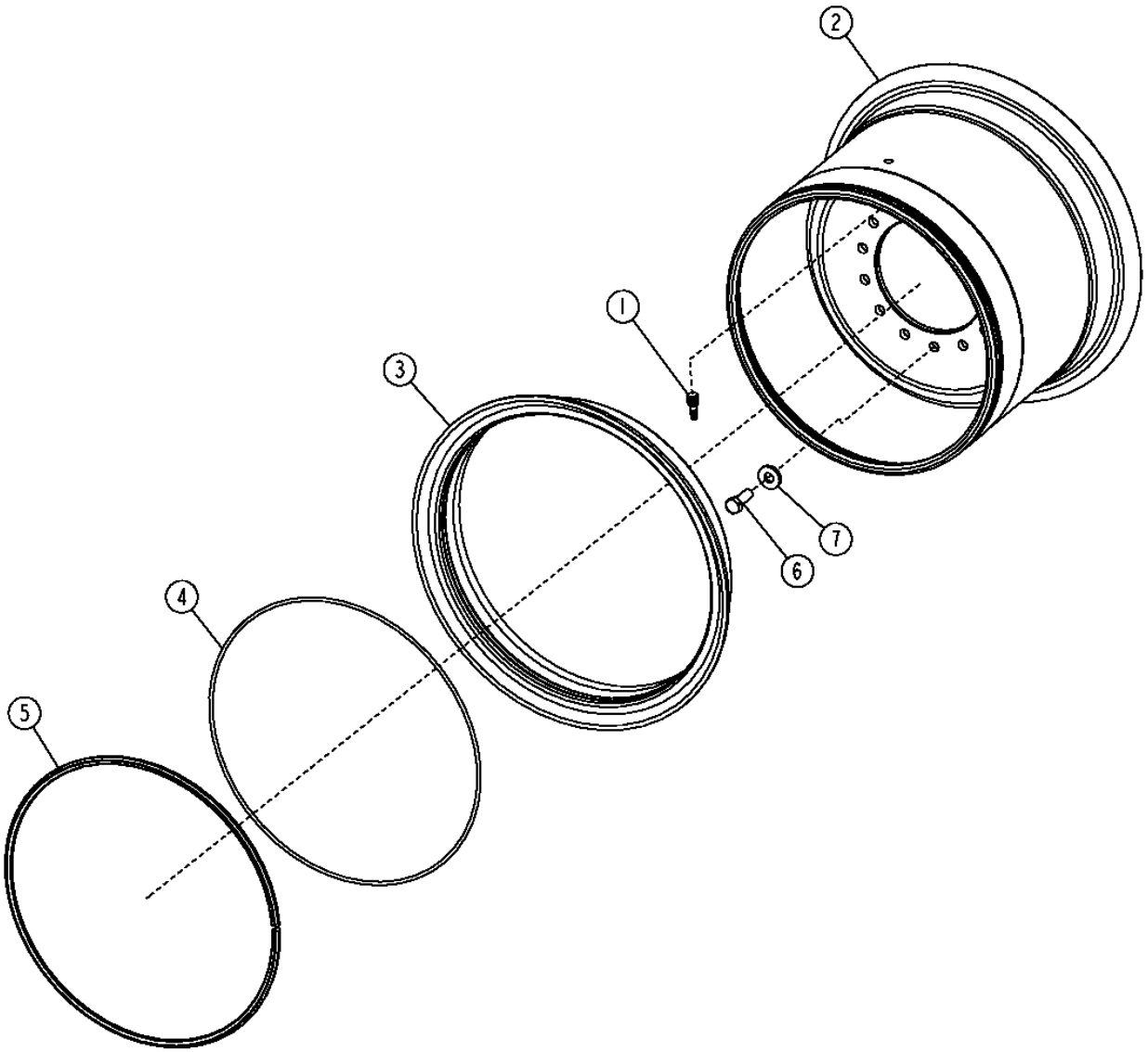

T200475

WHEEL (14" X 25" AND 17" X 25" SPLIT RIM)

KEY	PART NO.	PART NAME	QTY	SERIAL NO.	670D	672D	REMARKS
1	AT25226	TIRE VALVE STEM	1		X	X	
2	AT68940	WHEEL	1		X		356 MM X 635 MM (14" X 25") (17.5-25 TIRE) (QUANTITY OF 6 PER MACHINE)
	AT68940	WHEEL	1			X	356 MM X 635 MM (14" X 25") (17.5-25 TIRE) (QUANTITY OF 4 PER MACHINE) (USE AS REAR WHEEL ONLY ON 672D)
	AT177661	WHEEL	1		X		(12" X 25") (15.5-25 TIRE) (QUANTITY OF 6 PER MACHINE)
	AT177661	WHEEL	1			X	(12" X 25") (QUANTITY OF 4 PER MACHINE) (USE AS REAR WHEEL ONLY ON 672D)
3	T27193	WHEEL RING	1		X	X	WITH 356 MM X 635 MM (14" X 25") OR 432 MM X 635 MM (17" X 25") WHEEL
4	T59933	O-RING	1		X	X	
5	T27194	WHEEL RING	1		X	X	
6	19H3158	CAP SCREW	14		X	X	3/4" X 2"
7	T151797	WASHER	14		X	X	0.812" X 1-7/8" X 0.245"

WHEEL (9" X 24" ONE-PIECE)

T200485 -UN-02JUN04

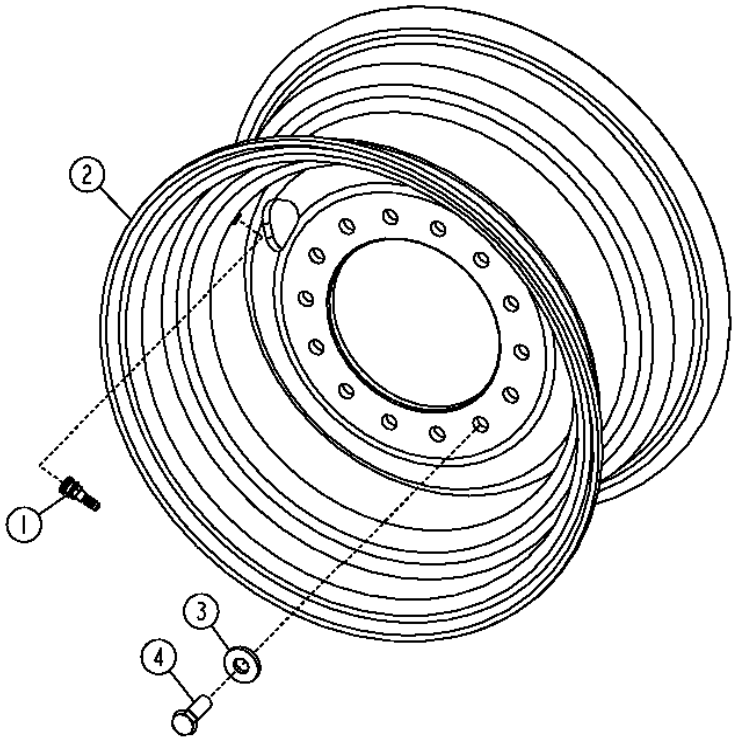

WHEEL (9" X 24" ONE-PIECE)

KEY	PART NO.	PART NAME	QTY	SERIAL NO.	670D	672D	REMARKS
1	AT25226	TIRE VALVE STEM	1		X	X	
2	AT103567	WHEEL	1		X		229 MM X 610 MM (9" X 24") (13-14 X 24 TIRE) (QUANTITY OF 6 PER MACHINE)
	AT103567	WHEEL	1			X	229 MM X 610 MM (9" X 24") (13 X 24 TIRE) (QUANTITY OF 4 PER MACHINE) (FOR USE AS REAR WHEEL ONLY ON 672D)
3	T151797	WASHER	14		X	X	0.812" X 1-7/8" X 0.245"
4	19H3158	CAP SCREW	14		X	X	3/4" X 2"

WHEEL (13" X 25" ONE-PIECE)

T200485 -UN-02JUN04

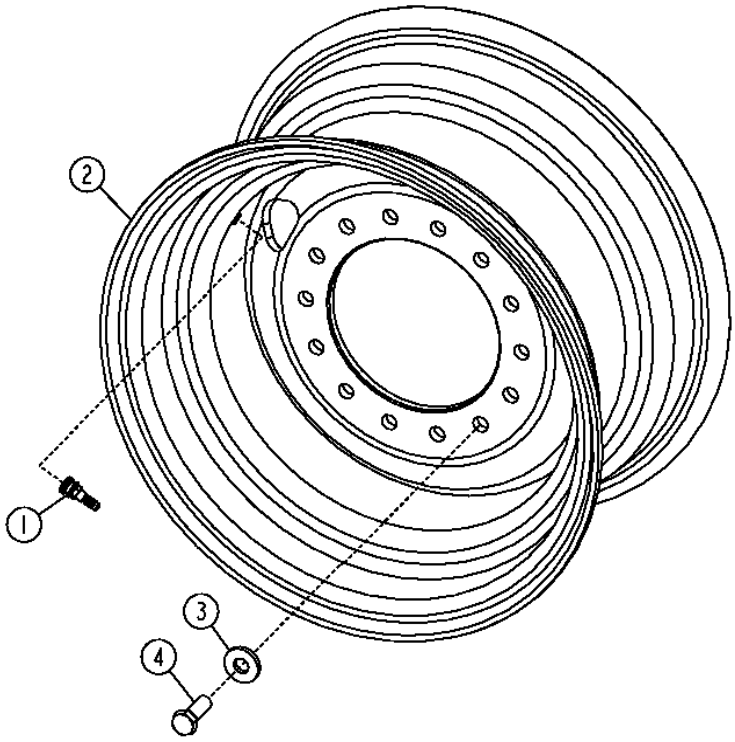

T200485

1B9

WHEEL (13" X 25" ONE-PIECE)

KEY	PART NO.	PART NAME	QTY	SERIAL NO.	670D	672D	REMARKS
1	AT25226	TIRE VALVE STEM	1		X	X	
2	AT105608	WHEEL	1		X	X	330 MM X 635 MM (13" X 25") (15.5-17.5 X 25 TIRE) (QUANTITY OF 6 PER MACHINE)
	AT105608	WHEEL	1			X	330 MM X 635 MM (13" X 25") (17.5-25 TIRE) (QUANTITY OF 4 PER MACHINE) (USE AS REAR WHEEL ONLY ON 672D)
3	T151797	WASHER	14		X	X	0.812" X 1-7/8" X 0.245"
4	19H3158	CAP SCREW	14		X	X	3/4" X 2"

FRONT WHEEL (14" X 25" SPLIT RIM)

T200486 -UN-01JUN04

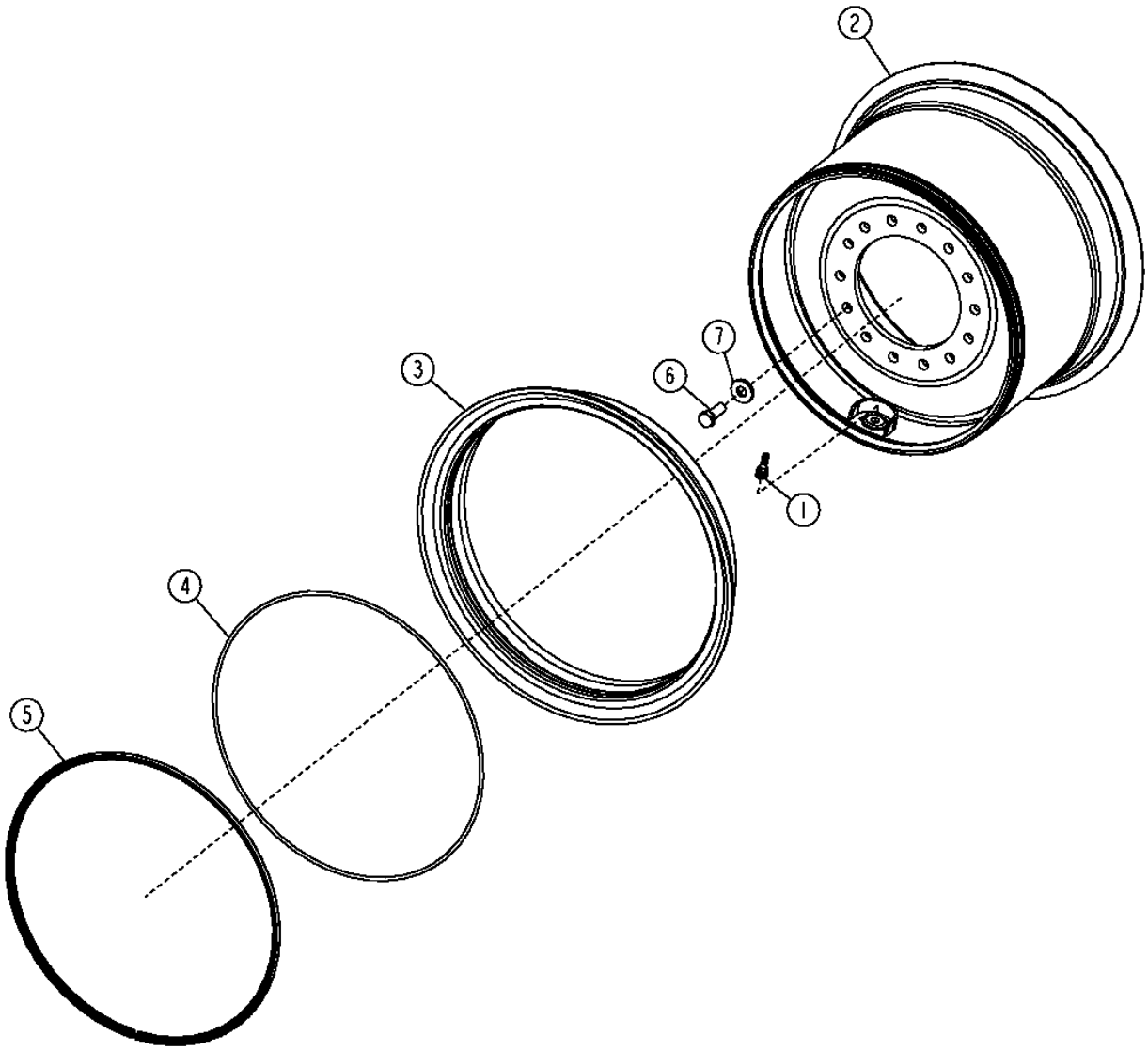

T200486

THIS PARTS LISTING IS CONTINUED

FRONT WHEEL (14" X 25" SPLIT RIM)

KEY	PART NO.	PART NAME	QTY	SERIAL NO.	670D	672D	REMARKS
1	AT25226	TIRE VALVE STEM	1		X		
2	AT190417	WHEEL	1		X		356 MM X 635 MM (14" X 25") (17.5-25 TIRE)
3	T27193	WHEEL RING	1		X		
4	T59933	O-RING	1		X		
5	T27194	WHEEL RING	1		X		
6	19H3158	CAP SCREW	14		X		3/4" X 2"
7	T151797	WASHER	14		X		0.812" X 1-7/8" X 0.245"

FRONT WHEEL (10" X 24" SPLIT RIM)

T148646 -UN-03DEC01

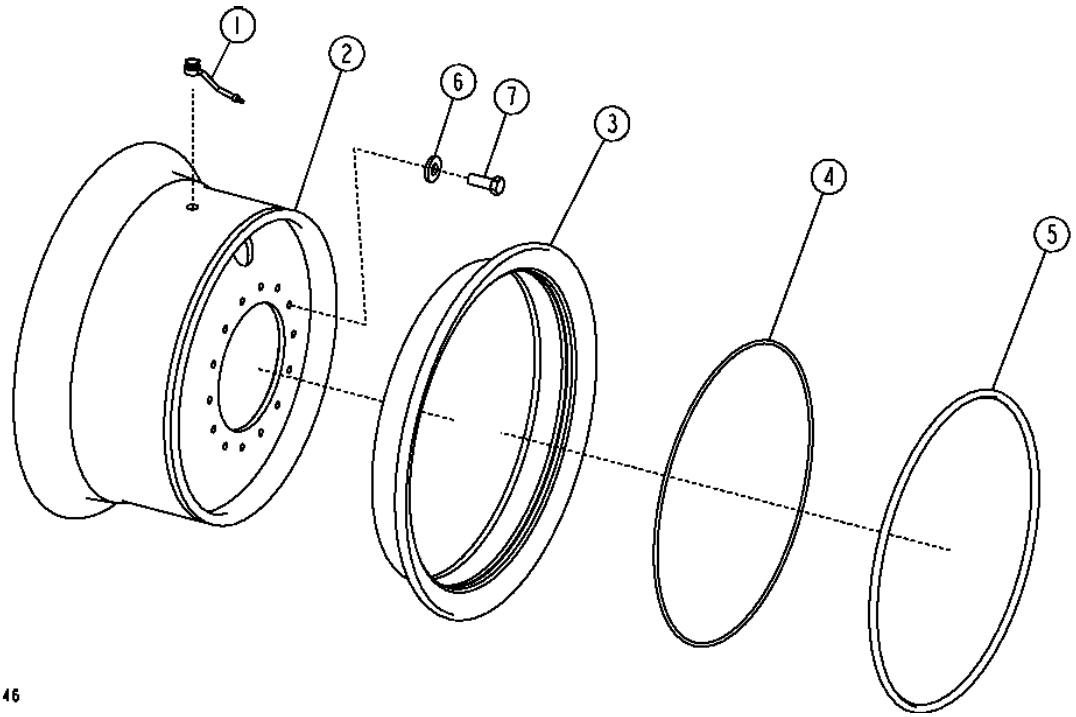

1B13

FRONT WHEEL (10" X 24" SPLIT RIM)

KEY	PART NO.	PART NAME	QTY	SERIAL NO.	670D	672D	REMARKS
1	AT197613	TIRE VALVE STEM	1		X		
2	AT193866	WHEEL	1		X		254 MM X 610 MM (10" X 24") (13-14 X 24 TIRE)
3	T27183	WHEEL RING	1		X		
4	T59932	O-RING	1		X		
5	T27184	WHEEL RING	1		X		
6	T151797	WASHER	14		X		
7	19H3158	CAP SCREW	14		X		3/4" X 2"

FRONT WHEEL (12" X 25" SPLIT RIM)

T151782 -UN-22FEB02

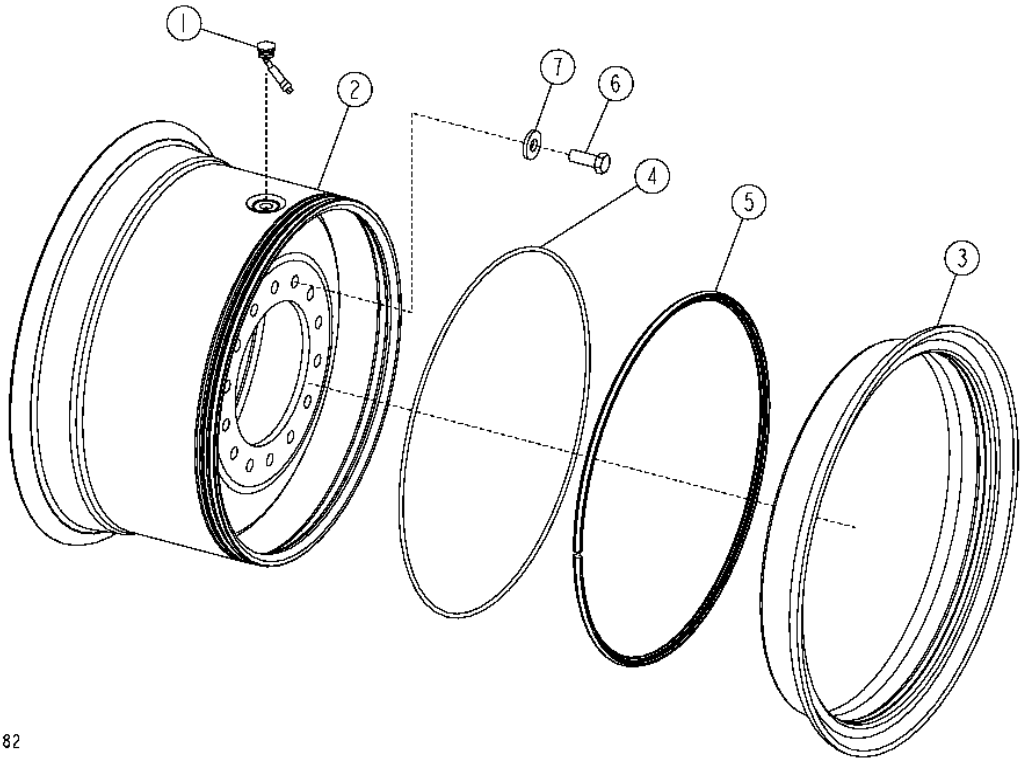

FRONT WHEEL (12" X 25" SPLIT RIM)

KEY	PART NO.	PART NAME	QTY	SERIAL NO.	670D	672D	REMARKS
1	AT197844	TIRE VALVE STEM	1		X		
2	AT194842	WHEEL	1		X		305 MM X 635 MM (12" X 25") (15.5-25 TIRE)
3	T27193	WHEEL RING	1		X		
4	T59933	O-RING	1		X		
5	T27194	WHEEL RING	1		X		
6	19H3158	CAP SCREW	14		X		3/4" X 2"
7	T151797	WASHER	14		X		

TANDEM HOUSING

T203244 -UN-17SEP04

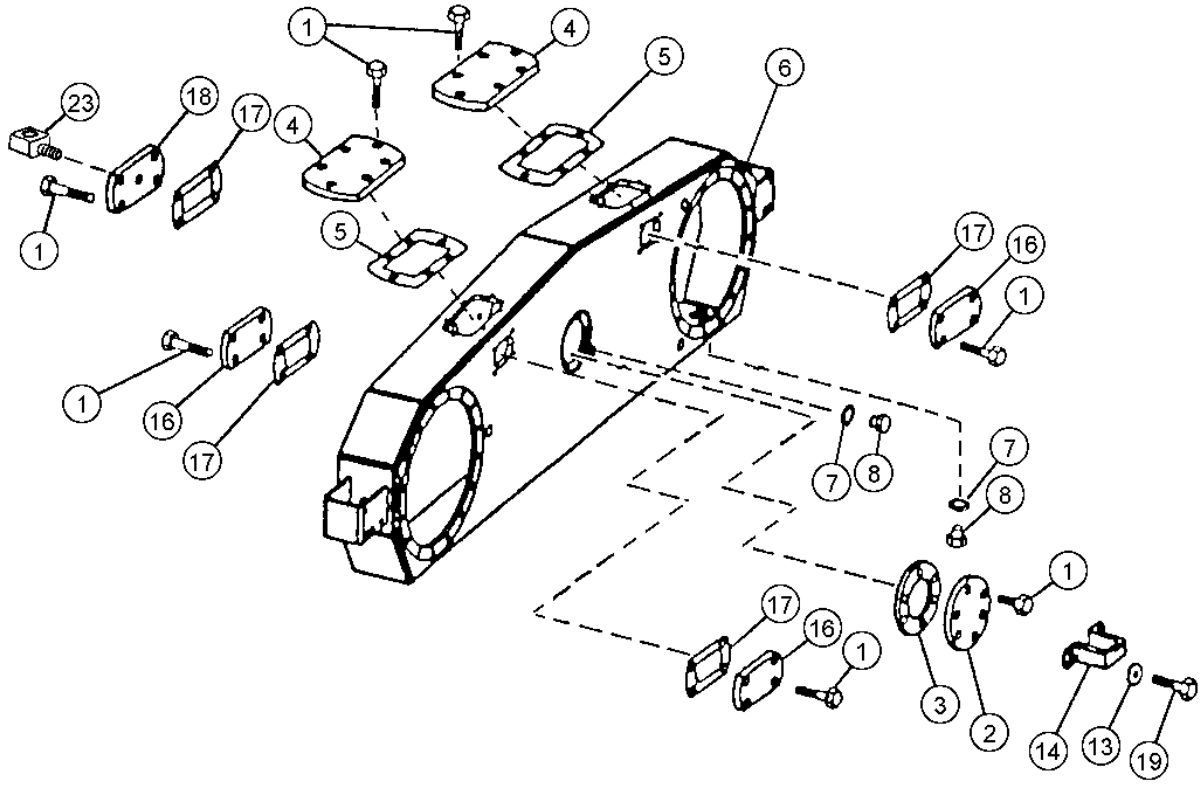

T203244

TANDEM HOUSING

KEY	PART NO.	PART NAME	QTY	SERIAL NO.	670D	672D	REMARKS
1	H150941	CAP SCREW	32		X	X	
2	T158338	COVER	1		X	X	
3	T158340	GASKET	1		X	X	
4	T158514	PLATE	2		X	X	TOP
5	T158513	GASKET	2		X	X	TOP
6	AT305639	HOUSING	1		X	X	
7	U17409	O-RING	2		X	X	
8	T78662	DRAIN PLUG	4		X	X	(OIL DRAIN AND OIL LEVEL)
13	24M7239	WASHER	2		X	X	
14	T160368	STEP	1		X	X	
16	T158509	COVER	3		X	X	
17	T158511	GASKET	4		X	X	
18	T158510	COVER	1		X	X	
19	19M7402	CAP SCREW	2		X	X	M10 X 25
23	JD7838	ADAPTER	1		X	X	

FINAL DRIVE AND TANDEM PIVOT

T150727 -UN-04FEB02

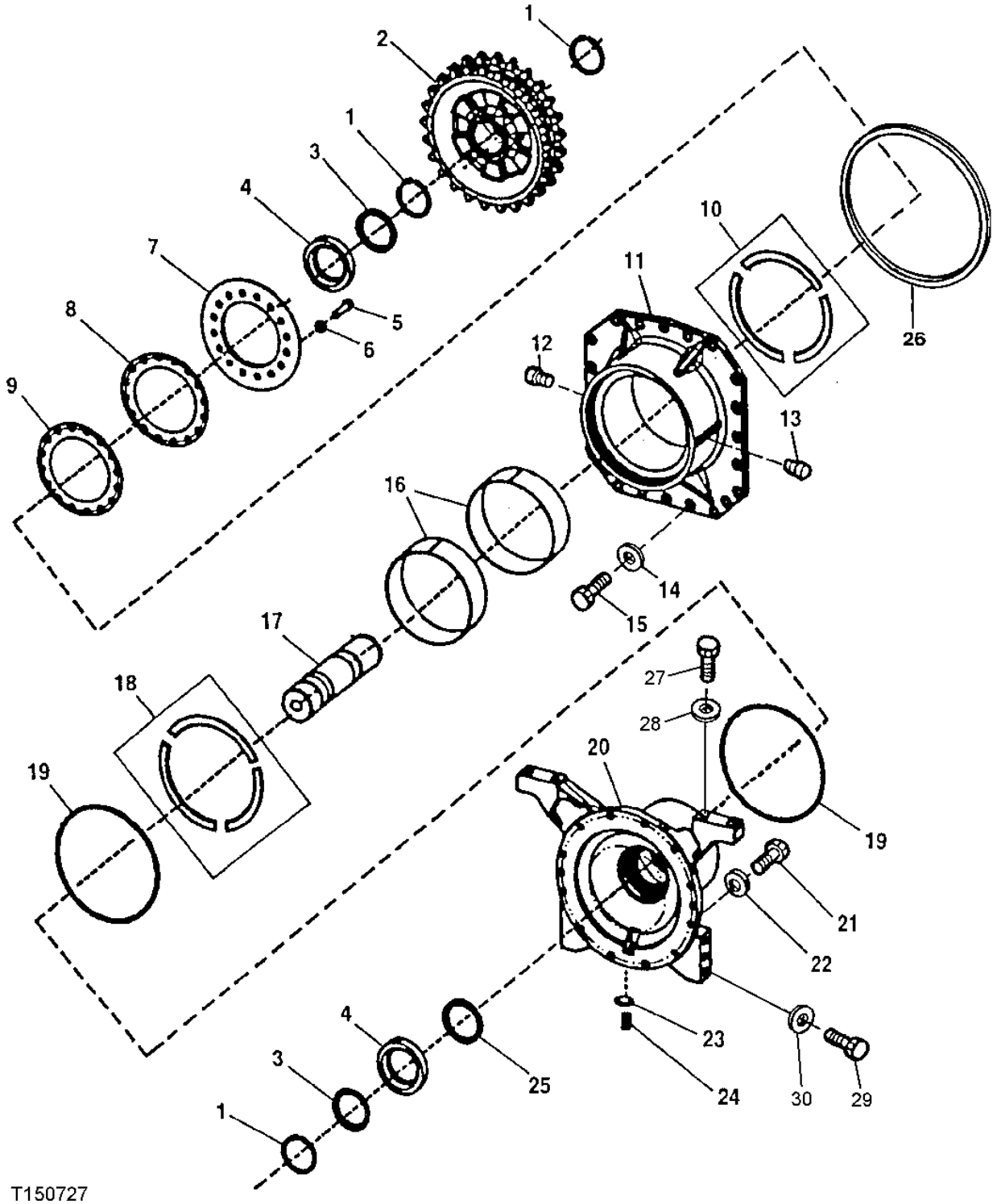

FINAL DRIVE AND TANDEM PIVOT

KEY	PART NO.	PART NAME	QTY	SERIAL NO.	670D	672D	REMARKS
1	T157952	SNAP RING	3		X	X	
2	T157945	DRIVE SPROCKET	1		X	X	
3	JD8989	BEARING CONE	2		X	X	
4	JD8272	BEARING CUP	2		X	X	
5	19M7417	CAP SCREW	16		X	X	M16 X 65
6	24M7338	WASHER	16		X	X	
7	T157944	RETAINER	1		X	X	
8	T158335	SHIM	AR		X	X	.07 MM
9	T158334	SHIM	AR		X	X	.2 MM
10	T158492	THRUST WASHER	3		X	X	
11	T157943	PIVOT	1		X	X	(TANDEM)
12	T71306	ORIFICE	1		X	X	
13	JD7781	LUBRICATION FITTING	1		X	X	
14	R135543	WASHER	22		X	X	
15	19M7488	CAP SCREW	22		X	X	M16 X 40
16	T158332	BUSHING	2		X	X	
17	T157942	DRIVE SHAFT	1		X	X	(TANDEM)
18	T158492	THRUST WASHER	3		X	X	
19	T206434	O-RING	2		X	X	
20	T157941	HOUSING	1		X	X	(FINAL DRIVE AXLE)
21	19M8190	CAP SCREW	12		X	X	M16 X 180
22	R135543	WASHER	12		X	X	
23	U17409	O-RING	1		X	X	
24	T78662	DRAIN PLUG	1		X	X	
25	AR75527	SEAL	1		X	X	
26	T41677	O-RING	1		X	X	
27	19M7889	CAP SCREW	4		X	X	M24 X 80
28	24M7294	WASHER	4		X	X	
29	19M7892	CAP SCREW	3		X	X	M20 X 80
30	24M7242	WASHER	3		X	X	

INPUT YOKE

RXP021502 -UN-12MAR97

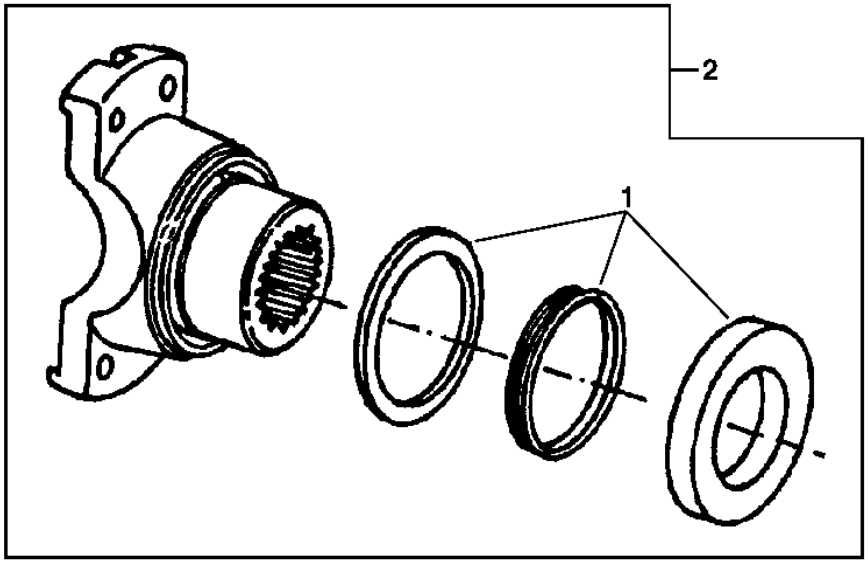

RXP021502

KEY	PART NO.	PART NAME	QTY	AXLE SERIAL NO.	670D	672D	REMARKS
1	RE45315	SEAL KIT	1		X	X	
	R100500	SEAL	1		X	X	
2	RE45317	KIT	1		X	X	

SPIRAL BEVEL INPUT PINION AND RING GEAR SET

RXP6492 -UN-01JAN94

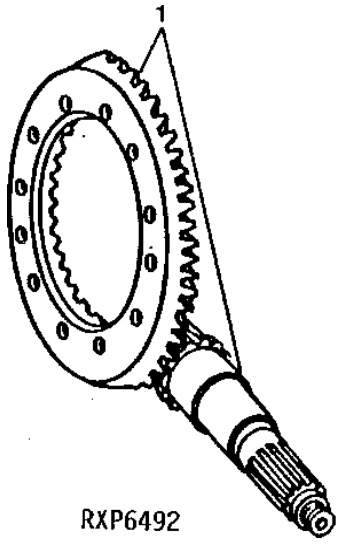

KEY	PART NO.	PART NAME	QTY	AXLE SERIAL NO.	670D	672D	REMARKS
1	YZ120662	RING GEAR AND PINION	1		X	X	(MARKED YZ120661 AND YZ120589) (ALSO ORDER RE50114) (SUB YZ120595) R.H. ASSEMBLY
	YZ120167	WASHER	1		X	X	

INPUT QUILL ASSEMBLY

RXP9482 -UN-01JAN94

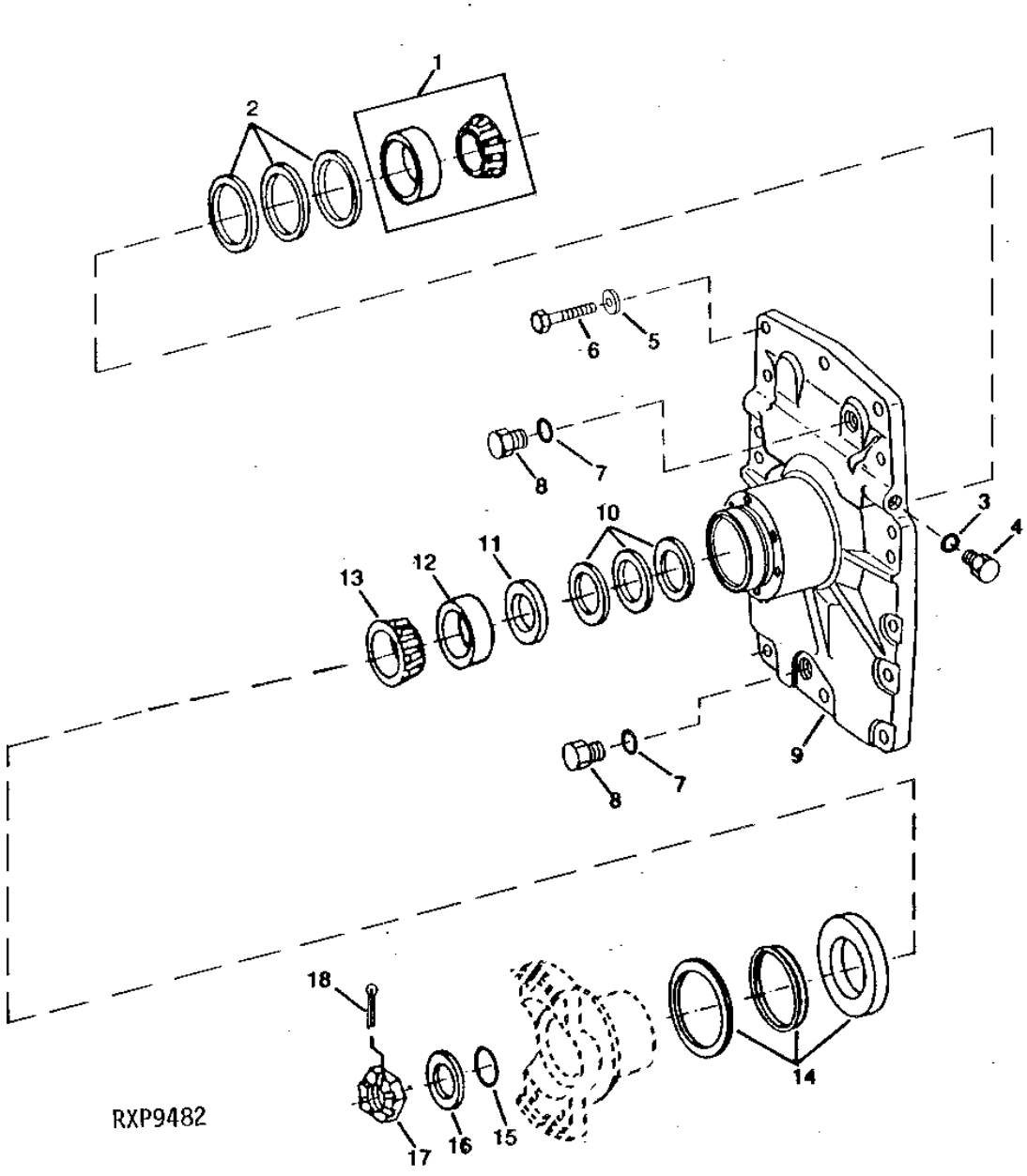

INPUT QUILL ASSEMBLY

KEY	PART NO.	PART NAME	QTY	AXLE SERIAL NO.	670D	672D	REMARKS
1	RE49486	TAPERED ROLLER BEARING	1		X	X	
2	R35365	SHIM	AR		X	X	
	R35366	SHIM	AR		X	X	
	R35367	SHIM	AR		X	X	
3	R26448	O-RING	2		X	X	
4	R27218	FITTING PLUG	2		X	X	
5	R135543	WASHER	15		X	X	
6	19M7409	CAP SCREW	15		X	X	
7	F3171R	O-RING	2		X	X	
8	R27175	DRAIN PLUG	2		X	X	
9	R116261	COVER	1		X	X	(SUB R126117)
10	R51196	SHIM	AR		X	X	
	R51197	SHIM	AR		X	X	
	R51198	SHIM	AR		X	X	
	R51199	SHIM	AR		X	X	
11	R56308	WASHER	1		X	X	
12	JD8255	BEARING CUP	1		X	X	
13	JD9078	BEARING CONE	1		X	X	
14	RE45315	SEAL KIT	1		X	X	
	R100500	SEAL	1		X	X	
15	A4540R	O-RING	1		X	X	
16	R48733	WASHER	AR		X	X	
	R48734	WASHER	AR		X	X	
	R48735	WASHER	AR		X	X	
17	R48776	NUT	1		X	X	
18	11M7032	COTTER PIN	1		X	X	5 X 50 MM
..	UN7189	SEALANT	1		X	X	(SUB TY16021)

DIFFERENTIAL CASE

RXP021560 -UN-30MAY96

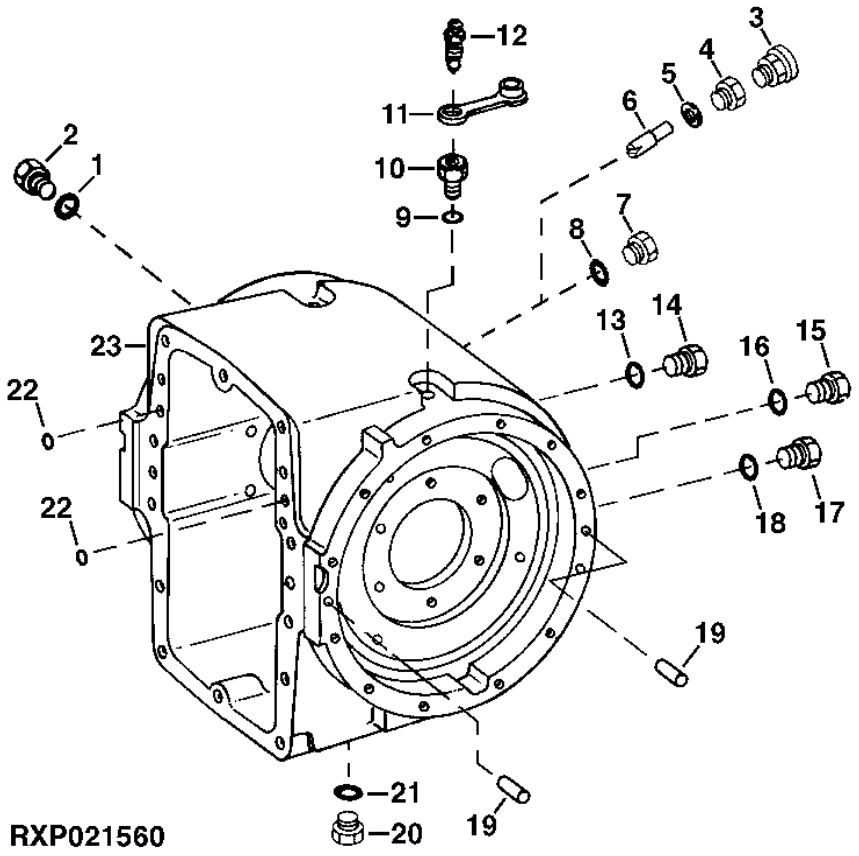

DIFFERENTIAL CASE

KEY	PART NO.	PART NAME	QTY	SERIAL NO.	670D	672D	REMARKS
1	R26375	O-RING	1		X	X	
2	R39112	FITTING	1		X	X	
3	RE62981	PRESSURE RELIEF VALVE	1		X	X	
4	R112210	ADAPTER	1		X	X	
5	U17409	O-RING	1		X	X	
6	R132574	STRUCTURAL TUBING	1		X	X	
7	15H666	PIPE PLUG	1		X	X	
8	U17409	O-RING	1		X	X	
9	R26448	O-RING	2		X	X	
10	R106789	BUSHING	2		X	X	
11	YZ120455	PLUG	2		X	X	
12	R21612	BLEED VALVE	2		X	X	
13	F3171R	O-RING	1		X	X	
14	R116801	PIPE PLUG	1		X	X	
15	R27175	DRAIN PLUG	1		X	X	
16	F3171R	O-RING	1		X	X	
17	R116801	PIPE PLUG	1		X	X	
18	F3171R	O-RING	1		X	X	
19	R27315	DOWEL PIN	4		X	X	
20	R84262	FITTING PLUG	1		X	X	
21	F3171R	O-RING	1		X	X	
22	R375R	O-RING	2		X	X	
23	YZ120522	CASE	1		X	X	LOW PRESSURE WITH VALVE

DIFFERENTIAL LOCK WITH VALVE

T212903 -UN-20JUL05

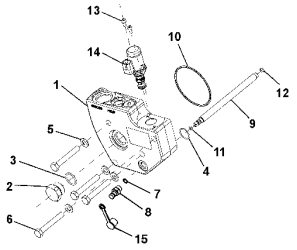

T212903

KEY	PART NO.	PART NAME	QTY	SERIAL NO.	670D	672D	REMARKS
1	YZ120442	HOUSING	1		X	X	
2	R27175	DRAIN PLUG	1		X	X	
3	F3171R	O-RING	1		X	X	
4	F37010020	O-RING	1		X	X	
5	24M7028	WASHER	4		X	X	
6	19M7328	CAP SCREW	4		X	X	
7	R28782	O-RING	1		X	X	
8	AH125760	HYD. QUICK-CONNECT COUPLER	1		X	X	
9	YZ120826	OIL LINE	1		X	X	
10	F37020153	O-RING	1		X	X	
11	F37010010	O-RING	1		X	X	
12	R26287	O-RING	1		X	X	
13	19M7887	SCREW	2		X	X	
14	AT303799	VALVE	1		X	X	
	AT224873	SEAL KIT	1		X	X	
15	R77175	COVER	1		X	X	

DIFFERENTIAL CASE OIL LINE

RXP021510 -UN-13MAR97

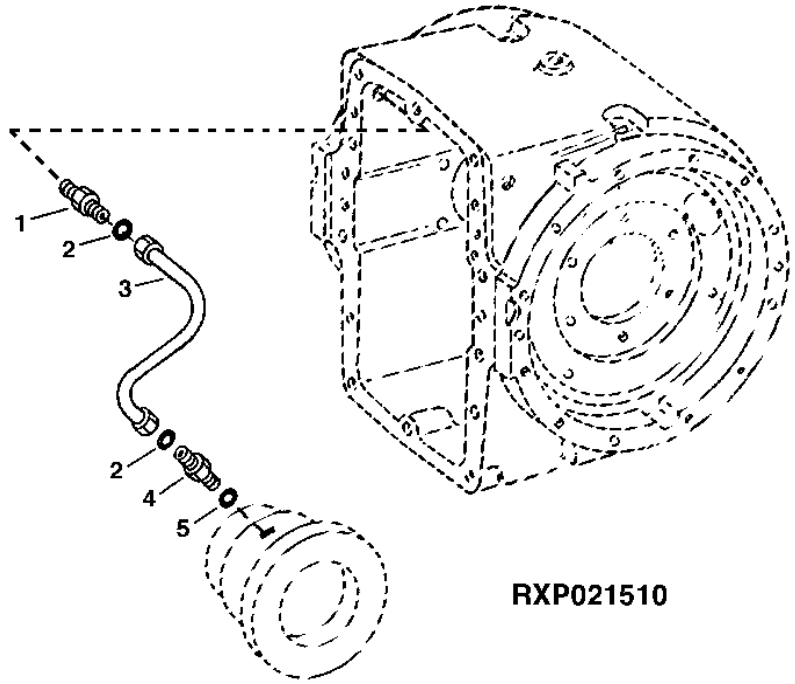

KEY	PART NO.	PART NAME	QTY	AXLE SERIAL NO.	667702DD	REMARKS
1	T80938	ADAPTER	1		X X	
2	T77814	O-RING	2		X X	
3	RE52859	OIL LINE	1		X X	HIGH PRESSURE
	YZ120508	OIL LINE	1		X X	LOW PRESSURE
4	R115176	ADAPTER	1		X X	
5	R26287	O-RING	1		X X	

DIFFERENTIAL

YZ120447D -UN-22NOV04

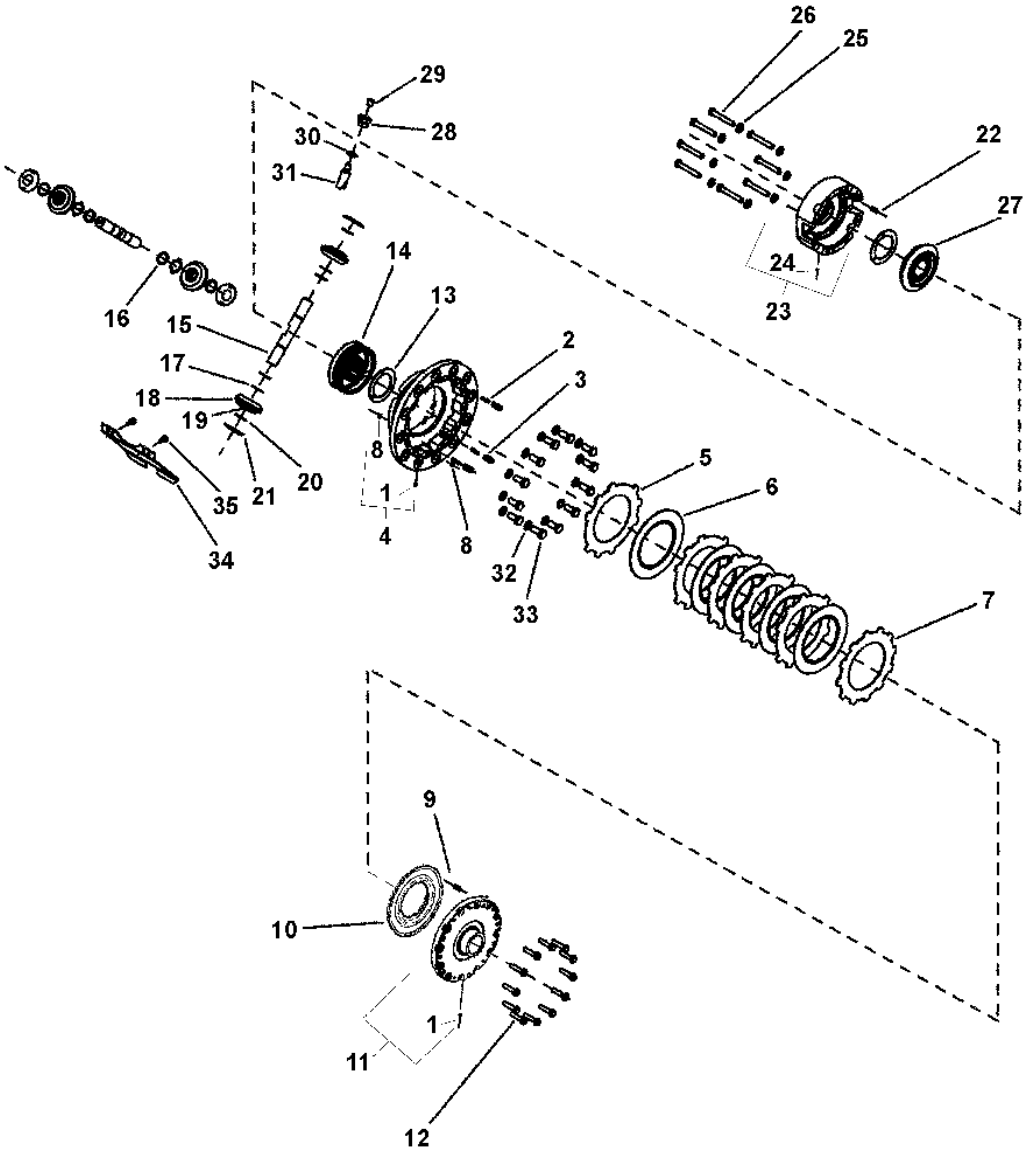

YZ120447D

DIFFERENTIAL

KEY	PART NO.	PART NAME	QTY	SERIAL NO.	670D	672D	REMARKS
1	400R	BALL	2		X	X	
2	34H328	SPRING PIN	3		X	X	
3	YZ120398	SPRING	3		X	X	
4	YZ120913	HOUSING	1		X	X	(ALSO ORDER 34M7224) (MARKED YZ120859)
5	R34858	CLUTCH PLATE	5		X	X	
6	RE53823	DISK	5		X	X	
7	R34857	CLUTCH PLATE	1		X	X	
8	R60038	PACKING	2		X	X	
9	34M7224	SPRING PIN	1		X	X	USE WITH COVER MARKED YZ120858 AND HOUSING MARKED YZ120859- ONLY
10	R95116	PISTON	1		X	X	
11	YZ120912	COVER	1		X	X	(MARKED YZ120859)
12	R116214	SCREW	12		X	X	
13	R93623	THRUST WASHER	2		X	X	
14	YZ120386	BEVEL GEAR	1		X	X	
15	R70111	PINION SHAFT	2		X	X	
16	YZ120471	RING	4		X	X	
17	R70113	THRUST WASHER	4		X	X	
18	R134726	PINION	1		X	X	
19	R70115	NEEDLE ROLLER	26		X	X	
20	R70112	THRUST WASHER	4		X	X	
21	R59460	THRUST WASHER	4		X	X	
22	YZ120909	SPRING PIN	1		X	X	(SUB FOR 34H171)
23	YZ120690	HOUSING	1		X	X	(MARKED YZ120503)
24	H871R	BALL	2		X	X	(ALSO ORDER YZ120909) (SUB FOR H871)
25	24H1111	WASHER	8		X	X	
26	19H2668	CAP SCREW	8		X	X	
27	R59289	BEVEL GEAR	1		X	X	
28	R112210	ADAPTER	1		X	X	
29	.....	PLUG	1		X	X	R116373 NO LONGER AVAILABLE (FURNISH 15H563)
30	U17409	O-RING	1		X	X	
31	R132574	STRUCTURAL TUBING	1		X	X	
32	R85226	WASHER	12		X	X	
33	19H3718	CAP SCREW	12		X	X	
34	R130036	DEFLECTOR	1		X	X	
35	T106596	SCREW	2		X	X	

DRIVESHAFT

T200588 -UN-02JUN04

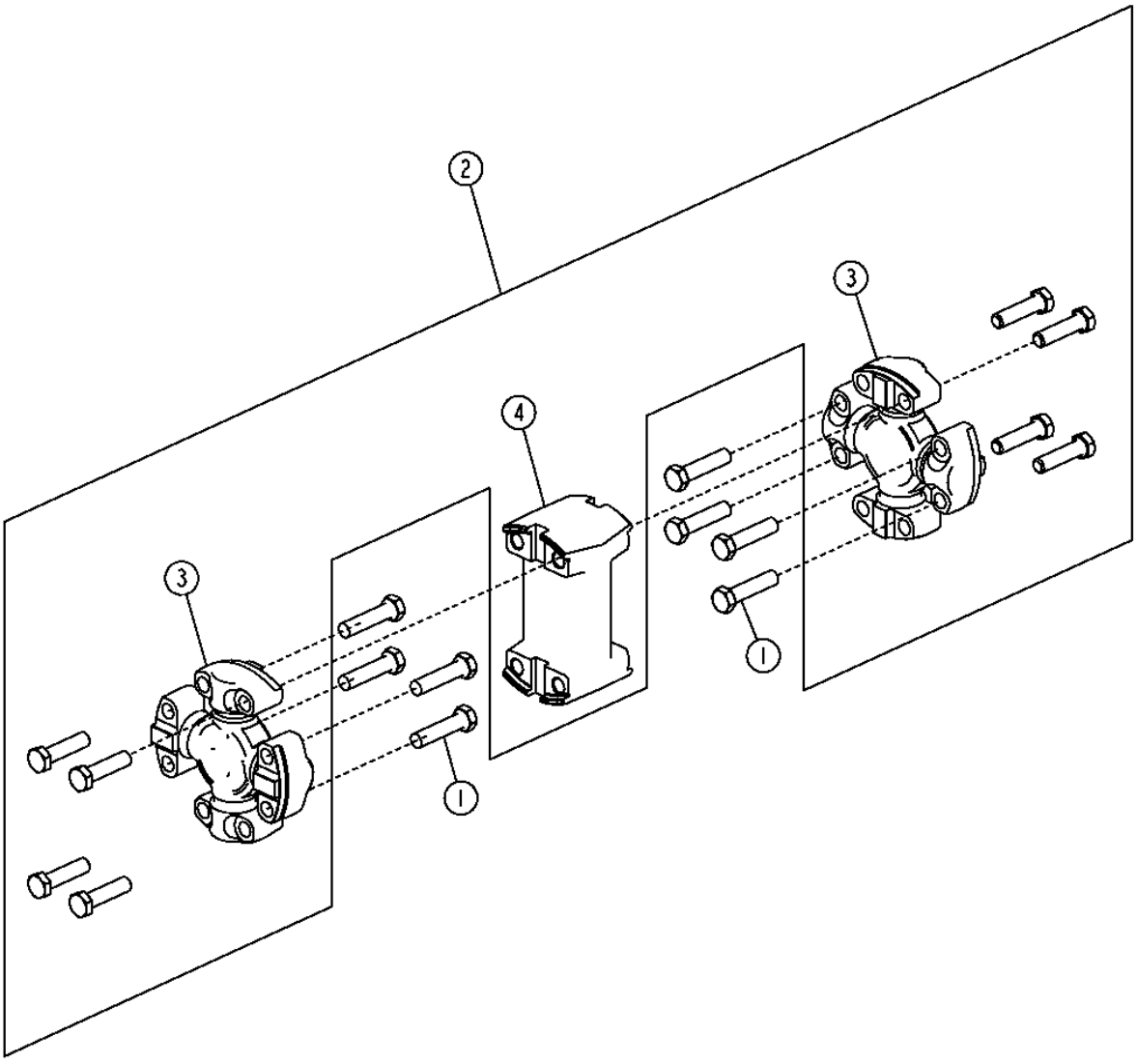

T200588

DRIVESHAFT

KEY	PART NO.	PART NAME	QTY	SERIAL NO.	670D	672D	REMARKS
1	19H3752	CAP SCREW	8		X	X	1/2" X 2-1/8"
2	AT199661	DRIVE SHAFT	1		X	X	
3	AT199084	CROSS AND BEARING ASSEMBLY	2		X	X	
4	T191021	YOKE	1		X	X	

FRONT AXLE AND WHEEL LEAN LINK (670D)

T193519 -UN-07AUG03

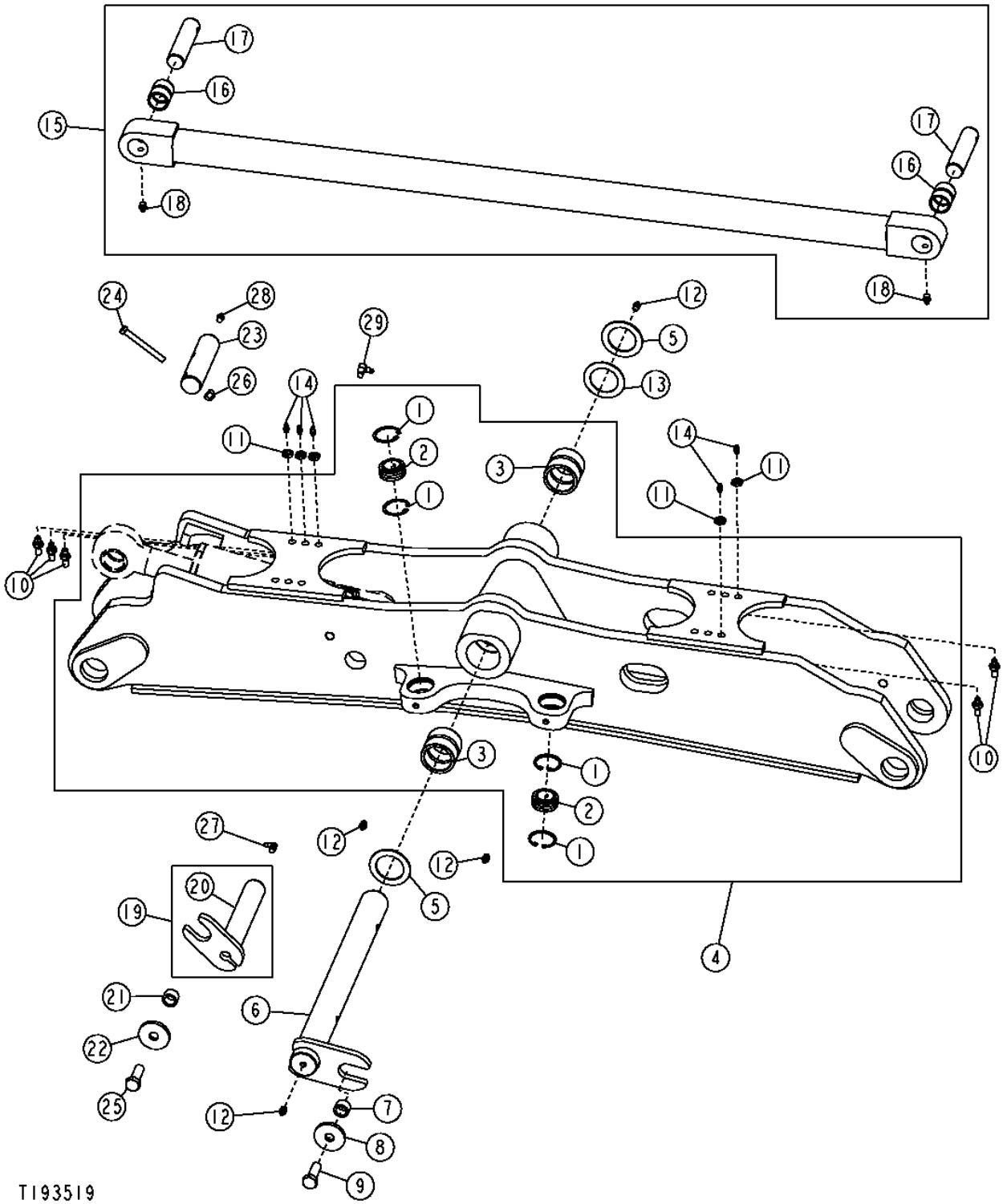

FRONT AXLE AND WHEEL LEAN LINK (670D)

KEY	PART NO.	PART NAME	QTY	SERIAL NO.	670D	672D	REMARKS
1	40M1863	SNAP RING	4		X		
2	AT101224	BUSHING	2		X		
3	T33933	BUSHING	2		X		
4	AT313342	FRONT AXLE SUPPORT	1		X		
5	24H1595	WASHER	2		X		
6	AT313362	PIN	1		X		
7	28H3401	SPACER	1		X		
8	T146246	WASHER	1		X		
9	19M7489	CAP SCREW	1		X		M16 X 45
10	T75644	ADAPTER	5		X		
11	E12379	NUT	5		X		
12	JD7759	LUBRICATION FITTING	4		X		
13	24H1595	WASHER	2		X		
14	JD7797	LUBRICATION FITTING	5		X		
15	AT193885	LINK	1		X		
16	T41961	BUSHING	2		X		
17	T152859	PIN	2		X		
18	JD7798	LUBRICATION FITTING	2		X		
19	AT314624	PIN	1		X		
20	T209581	SHIM	3		X		
21	28H3401	SPACER	1		X		
22	T146246	WASHER	1		X		
23	T152862	PIN	1		X		
24	19H1912	CAP SCREW	1		X		3/8" X 3-1/2"
25	19M7489	CAP SCREW	1		X		M16 X 45
26	T11234	LOCK NUT	1		X		
27	JD7781	LUBRICATION FITTING	1		X		
28	JD7759	LUBRICATION FITTING	1		X		
29	H80936	ELBOW FITTING	1		X		

FRONT WHEEL HUBS (670D)

T204046 -UN-12DEC04

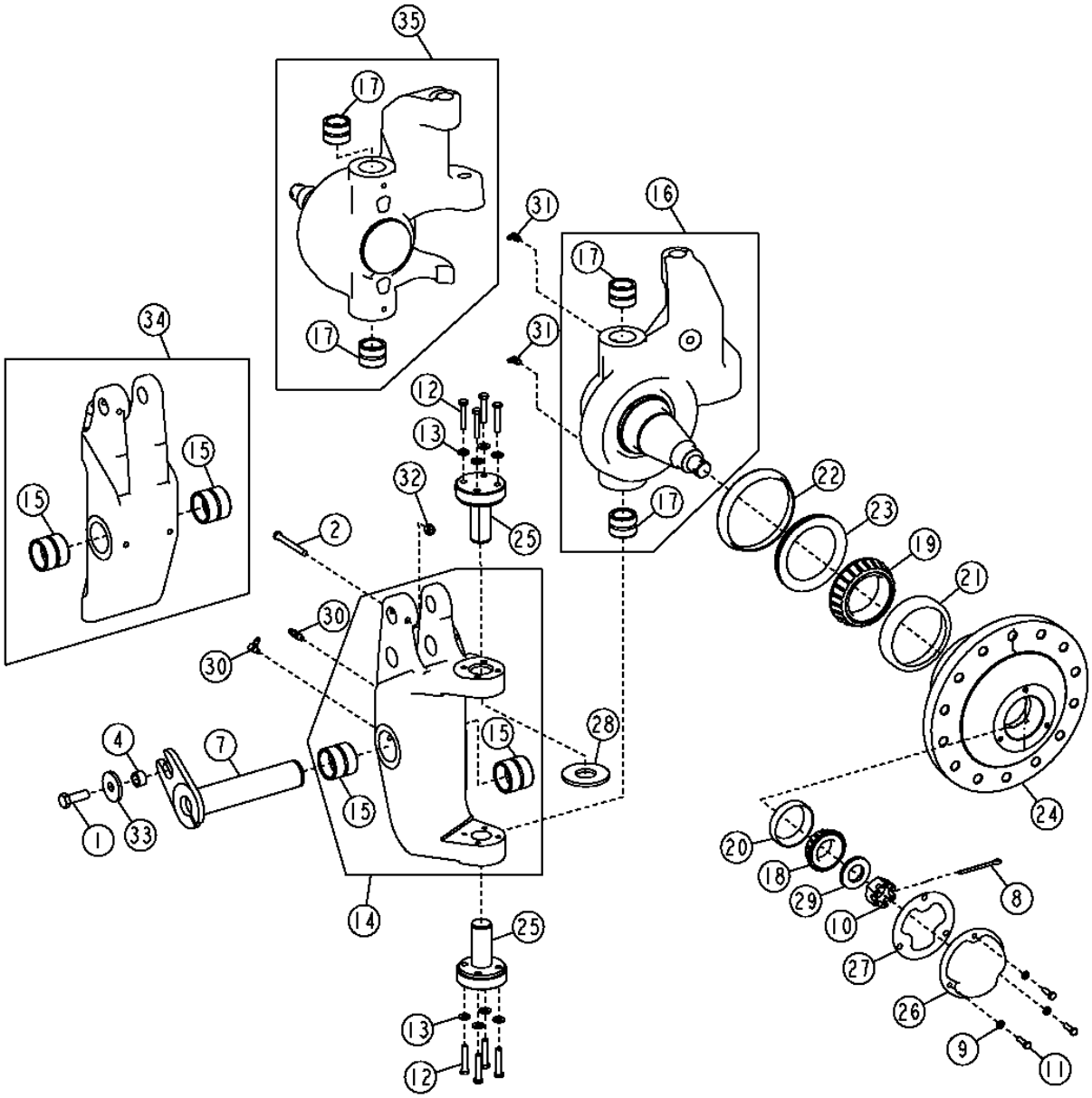

T204046

FRONT WHEEL HUBS (670D)

KEY	PART NO.	PART NAME	QTY	SERIAL NO.	670D	672D	REMARKS
1	19M7489	CAP SCREW	1		X		
2	19H1912	CAP SCREW	1		X		
3	19M7489	CAP SCREW	1		X		M16 X 45
4	28H3401	SPACER	1		X		
7	AT198517	PIN FASTENER	1		X		
8	11H251	COTTER PIN	1		X		
9	12M7065	LOCK WASHER	1		X		8 MM
10	14H927	NUT	1		X		1-1/4"
11	19H1905	CAP SCREW	3		X		
12	19H3065	CAP SCREW	8		X		
13	24M7239	WASHER	8		X		
14	AT169875	PIVOT	1		X		
15	T41953	BUSHING	2		X		
16	AT303854	SPINDLE	1		X		
17	T41963	BUSHING	2		X		
18	JD9048	BEARING CONE	1		X		
19	JD9082	BEARING CONE	1		X		
20	JD9113	BEARING CUP	1		X		
21	JD9141	BEARING CUP	1		X		
22	R59074	OIL CUP	1		X		
23	RE31702	SEAL	1		X		
24	T162428	HUB	1		X		
25	T184404	SPINDLE	1		X		
26	T41982	CAP	1		X		
27	T41983	GASKET	1		X		
28	T41984	WASHER	1		X		
29	U42462	WASHER	1		X		
30	H80936	ELBOW FITTING	2		X		
31	JD7781	LUBRICATION FITTING	2		X		
32	T11234	LOCK NUT	1		X		
33	T146246	WASHER	1		X		(SUB FOR 11M7017)
34	AT169874	PIVOT	1		X		
35	AT303855	SPINDLE	1		X		

FRONT AXLE TIE ROD (670D)

T200608 -UN-02JUN04

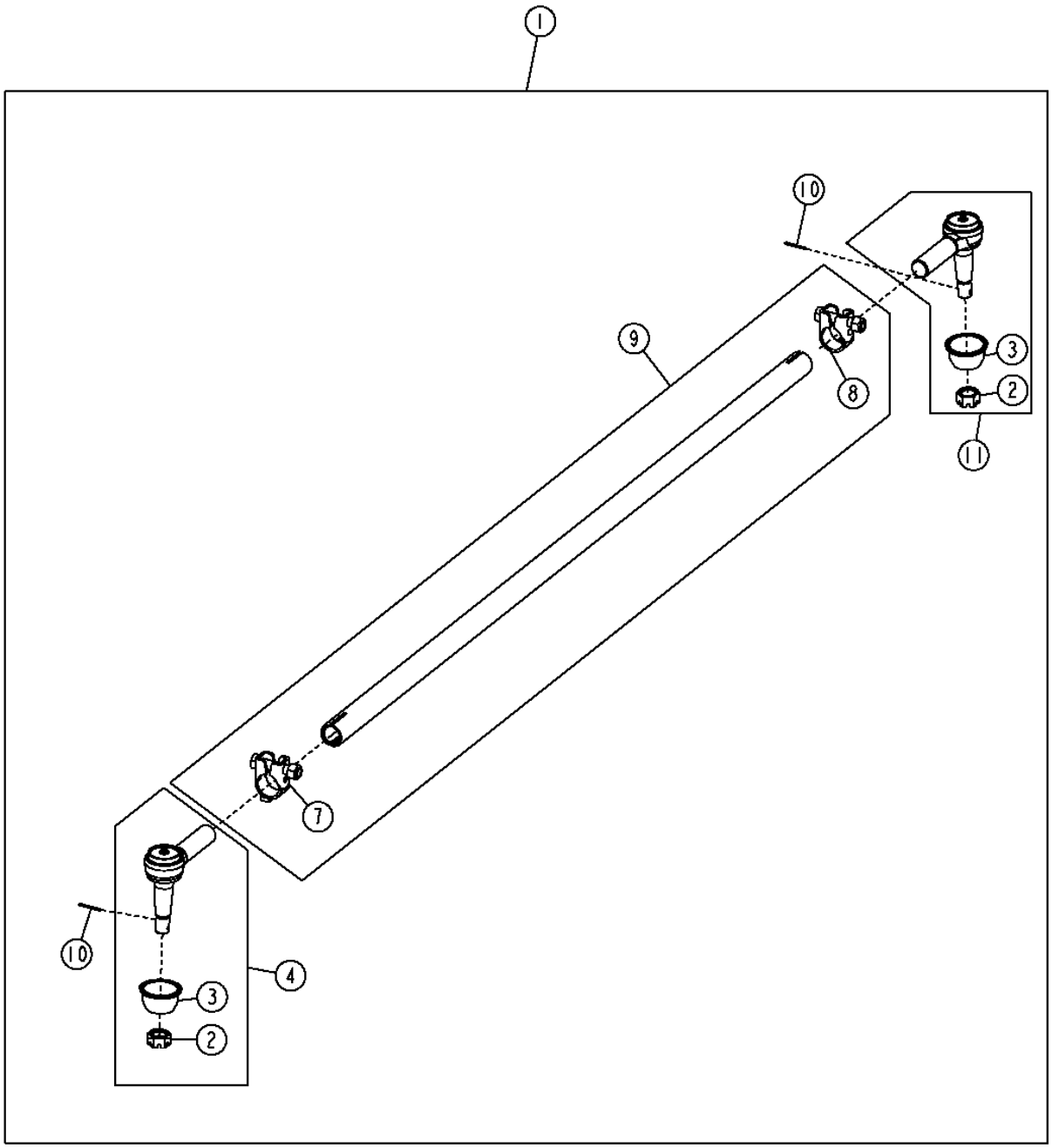

T200608

FRONT AXLE TIE ROD (670D)

KEY	PART NO.	PART NAME	QTY	SERIAL NO.	670D	672D	REMARKS
1	AT304615	TIE ROD	1		X		
2	14H875	NUT	1		X		7/8"
3	T159656	BOOT	1		X		
4	AT191260	TIE ROD END	1		X		(RH THREAD)
7	AT191739	CLAMP	1		X		
8	AT191299	CLAMP	1		X		
9	AT199999	TIE ROD	1		X		
10	11M7023	COTTER PIN	2		X		4 X 32 MM, (SUB FOR 11M7017)
11	AT191261	TIE ROD END	1		X		(LH THREAD)

FRONT AXLE AND MOUNTING PIN (672D)

T201043 -UN-16AUG04

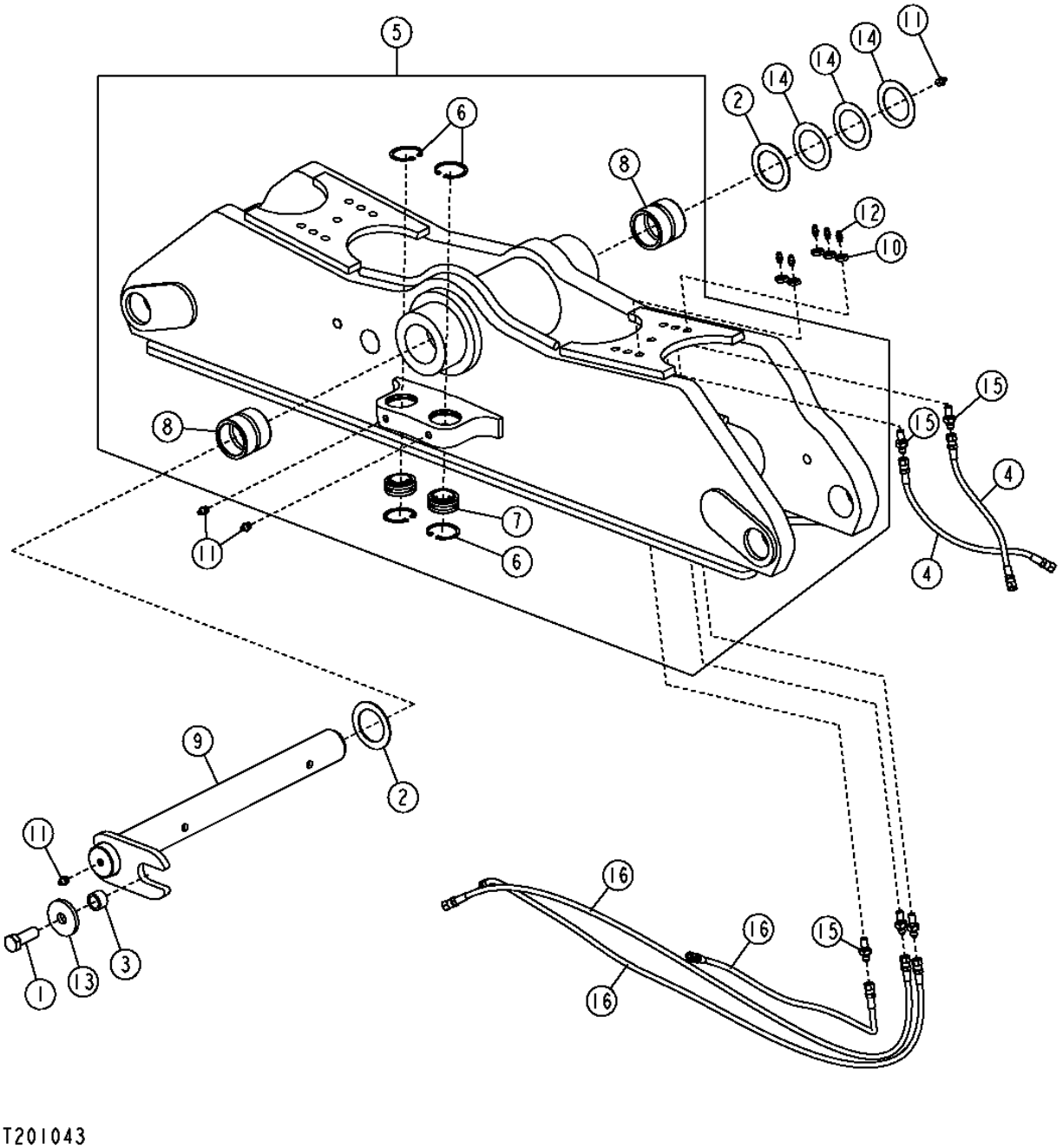

T201043

FRONT AXLE AND MOUNTING PIN (672D)

KEY	PART NO.	PART NAME	QTY	SERIAL NO.	670D	672D	REMARKS
1	19M7489	CAP SCREW	1		X	X	M16 X 45
2	24H1595	WASHER	2		X	X	1/4"
3	28H3401	SPACER	1		X	X	
4	AT194405	HYDRAULIC HOSE	2		X	X	
5	AT313340	AXLE	1		X	X	
6	40M1863	SNAP RING	4		X	X	
7	AT101224	BUSHING	2		X	X	
8	T33933	BUSHING	2		X	X	
9	AT313362	PIN	1		X	X	
10	E12379	NUT	5		X	X	
11	JD7759	LUBRICATION FITTING	4		X	X	
12	JD7797	LUBRICATION FITTING	5		X	X	
13	T146246	WASHER	1		X	X	
14	T209581	SHIM	3		X	X	
15	T75644	ADAPTER	5		X	X	
16	AT57326	HYDRAULIC HOSE	3		X	X	

FRONT AXLE TIE ROD (672D)

T200624 -UN-07JUN04

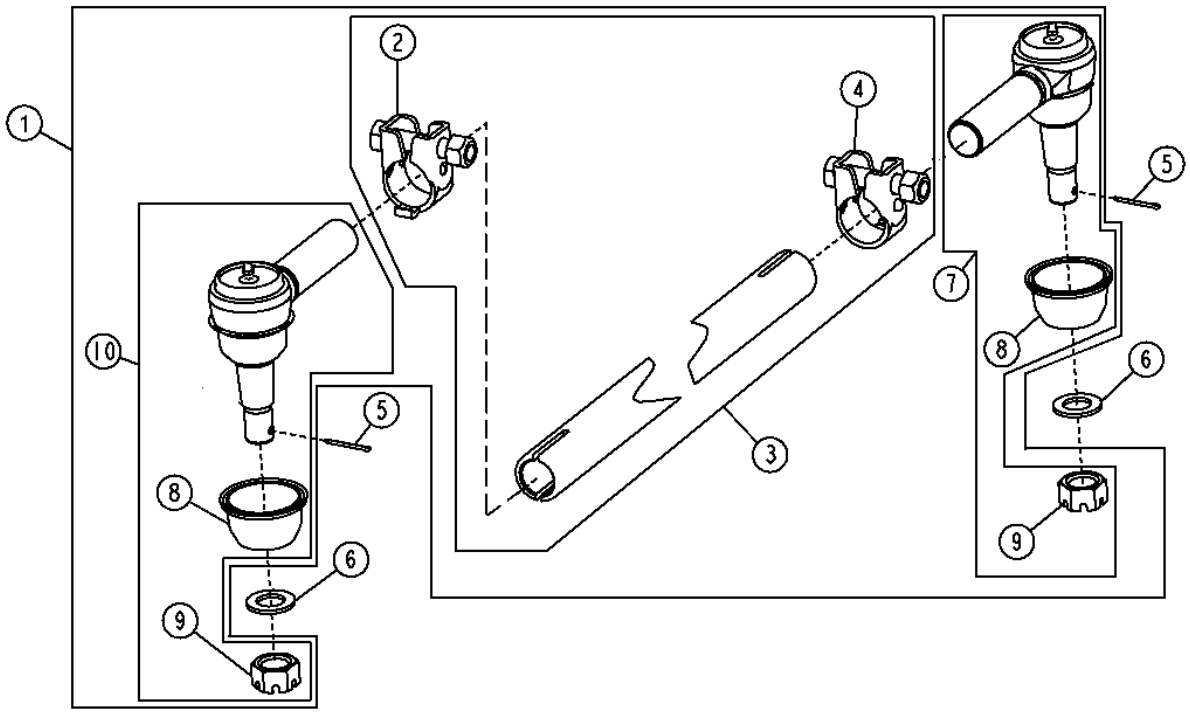

T200624

FRONT AXLE TIE ROD (672D)

KEY	PART NO.	PART NAME	QTY	SERIAL NO.	670D	672D	REMARKS
1	AT193805	TIE ROD	1		X		
2	AT191739	CLAMP	1		X		
3	AT280508	LINE	1		X		
4	AT191299	CLAMP	1		X		
5	11M7023	COTTER PIN	2		X		4 X 32 MM
6	24M7359	WASHER	2		X		
7	AT191261	TIE ROD END	1		X		(LH THREAD)
8	T159656	BOOT	1		X		
9	14H875	NUT	1		X		22.225 MM
10	AT191260	TIE ROD END	1		X		(RH THREAD)

WHEEL LEAN BAR (672D)

T145721 -UN-23OCT01

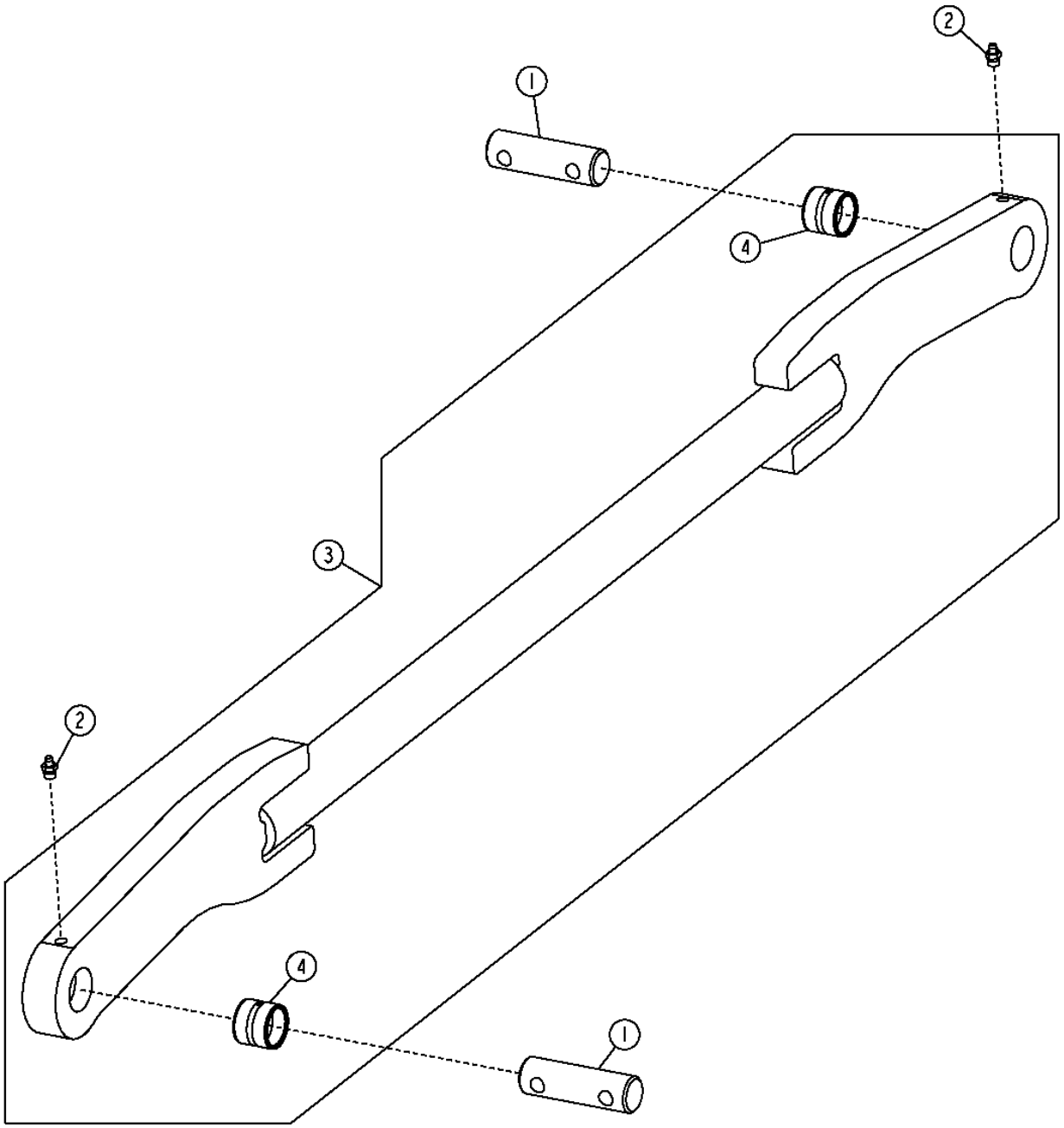

WHEEL LEAN BAR (672D)

KEY	PART NO.	PART NAME	QTY	SERIAL NO.	670D	672D	REMARKS
1	T187561	PIN	2			X	
2	JD7759	LUBRICATION FITTING	2			X	
3	AT195880	LINK	1			X	LEAN BAR
4	T187566	BUSHING	2			X	

HFWD FIRST STAGE PINION, CARRIER AND HOUSING (RIGHT SIDE ILLUSTRATED)

T146114 -UN-07NOV01

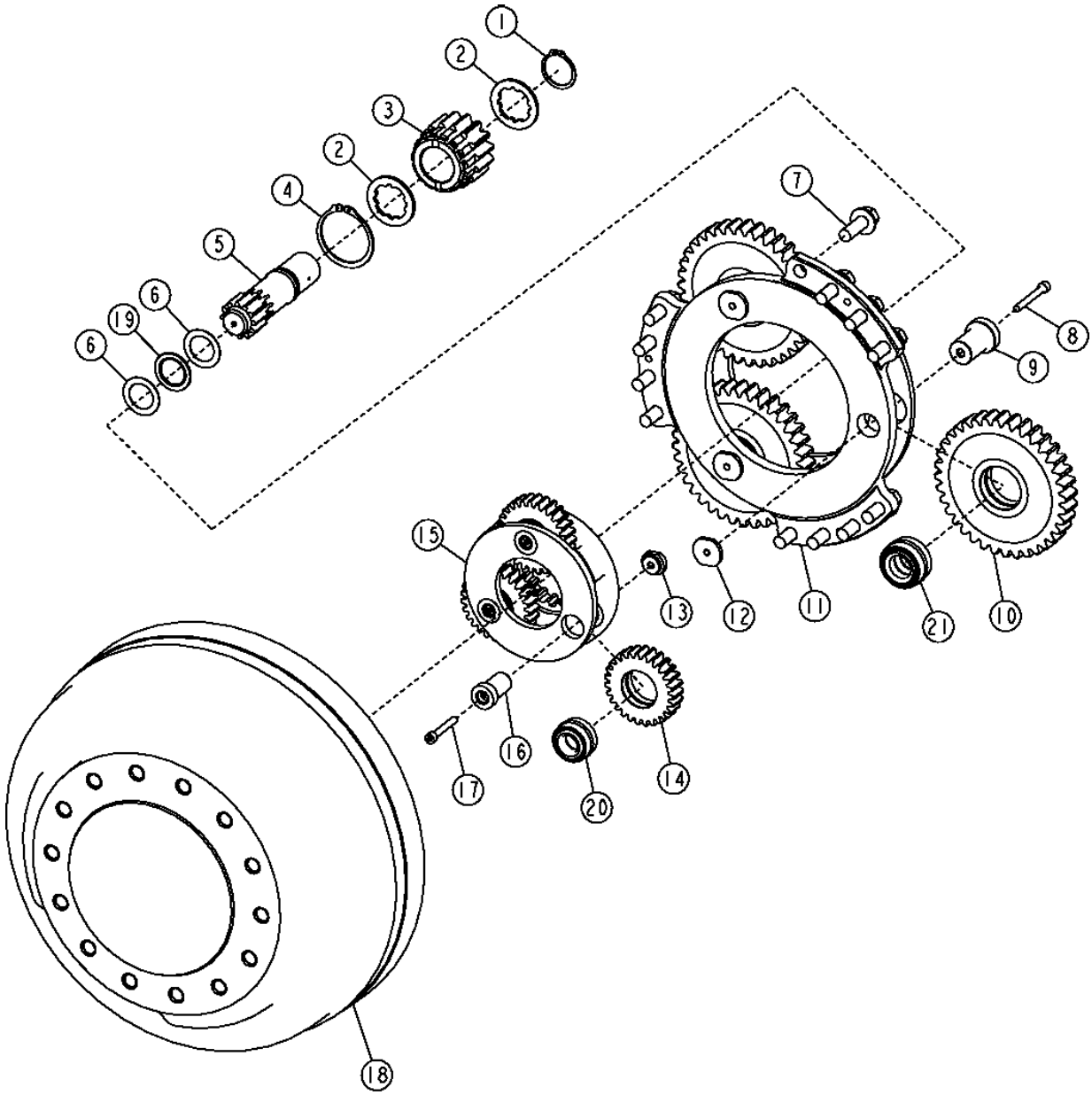

T146114

HFWD FIRST STAGE PINION, CARRIER AND HOUSING (RIGHT SIDE ILLUSTRATED)

KEY	PART NO.	PART NAME	QTY	MOTOR SERIAL NO.	672D	672D	REMARKS
1	40M1837	SNAP RING	1		X		
2	T166928	THRUST WASHER	2		X		
3	T166927	PLANET PINION	1		X		
4	40M7187	SNAP RING	1		X		
5	T166922	PLANET PINION	1		X		
6	T166934	BEARING RACE	2		X		
7	19M7844	SCREW	12		X		
8	19M8554	SCREW	3		X		
9	T166930	SHAFT	3		X		
10	T166929	PLANET PINION	3		X		
11	T166932	PLANET PINION CARRIER	1		X		SECOND STAGE
12	T166931	RETAINER	3		X		
13	T166925	RETAINER	3		X		
14	T166923	PLANET PINION	3		X		
15	T166926	PLANET PINION CARRIER	1		X		
16	T166924	SHAFT	3		X		
17	19M8335	SCREW	3		X		M8 X 55
18	AT193864	HOUSING	1		X		(INCLUDES THREE R26650 DOWEL PINS)
	R26650	DOWEL PIN	3		X		(NOT ILLUSTRATED)
19	AT187119	THRUST BEARING RACE	1		X		
20	AT187117	TAPERED ROLLER BEARING	3		X		
21	DE18970	BEARING	3		X		

HFWD HUB, BRAKE PISTON HOUSING AND SECOND STAGE PINION (RIGHT SIDE ILLUSTRATED)

T155072 -UN-22MAY02

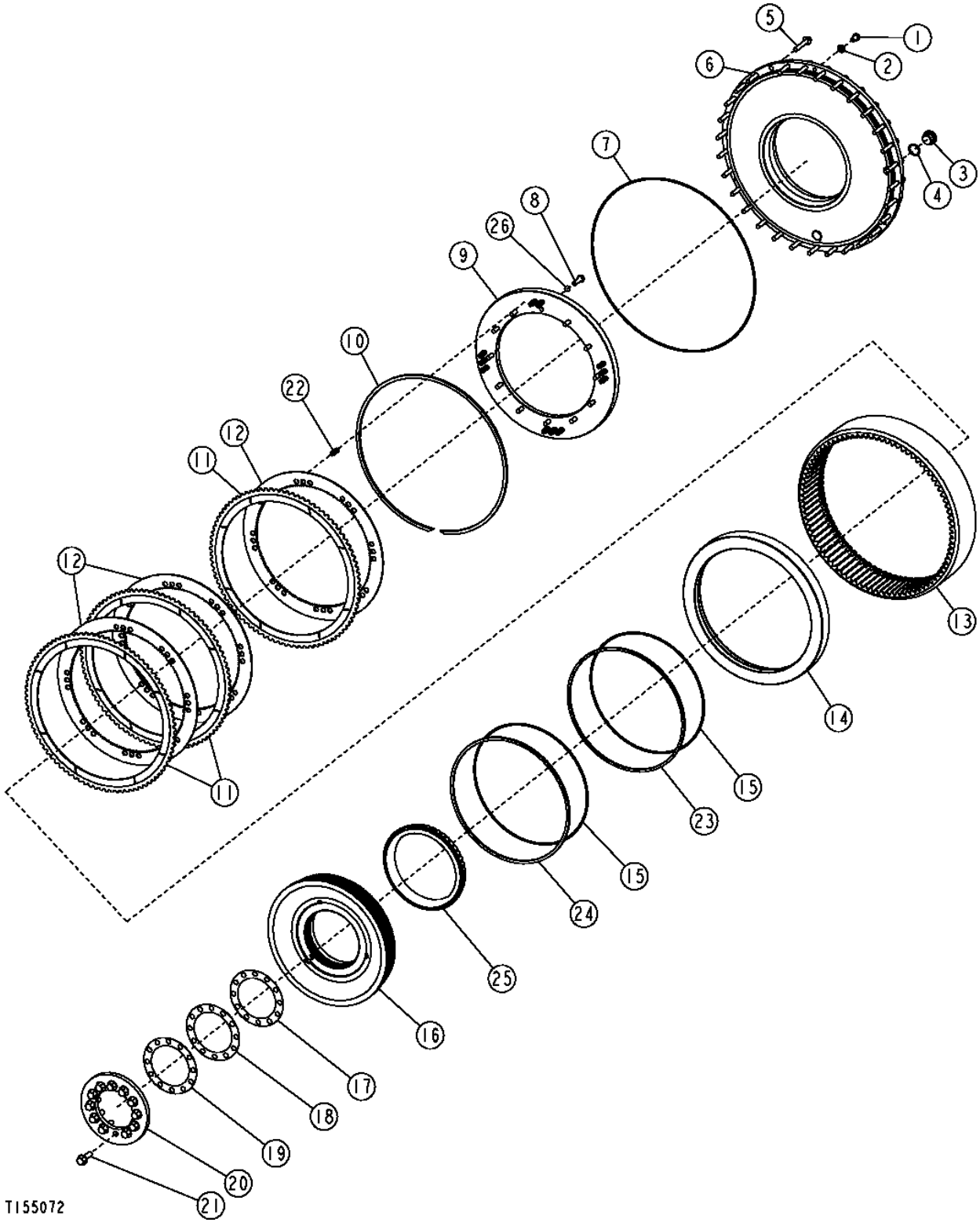

HFWD HUB, BRAKE PISTON HOUSING AND SECOND STAGE PINION (RIGHT SIDE ILLUSTRATED)

KEY	PART NO.	PART NAME	QTY	MOTOR SERIAL NO.	670D	672D	REMARKS
1	19M8451	CAP SCREW	3		X		M10 X 14
2	24M7028	WASHER	3		X		
3	T78662	DRAIN PLUG	2		X		
4	U17409	O-RING	2		X		
5	19M7807	SCREW	30		X		M10 X 60
6	T186956	COVER	1		X		
7	T166933	PACKING	1		X		
8	T188745	CAP SCREW	24		X		
9	T186989	PLATE	1		X		
10	T166921	SNAP RING	1		X		
11	AT187115	BRAKE DISK	3		X		
12	T166916	PLATE	3		X		
13	T166920	RING GEAR	1		X		
14	T186988	PISTON	1		X		
15	T186655	PACKING	2		X		
16	T186656	PLANET PINION CARRIER	1		X		
17	T183810	SHIM	3		X		(.1)
18	T183811	SHIM	2		X		(.15)
19	T183812	SHIM	1		X		(.5)
20	T166919	PLATE	1		X		
21	19M7791	BOLT	12		X		M12 X 40
22	T166917	SPRING	12		X		
23	T188352	RING	1		X		
24	JD10423	BEARING CUP	1		X		
25	AT187114	BEARING CONE	1		X		
26	24M7346	WASHER	24		X		

AXLE AND DRIVE CHAIN

T203245 -UN-17SEP04

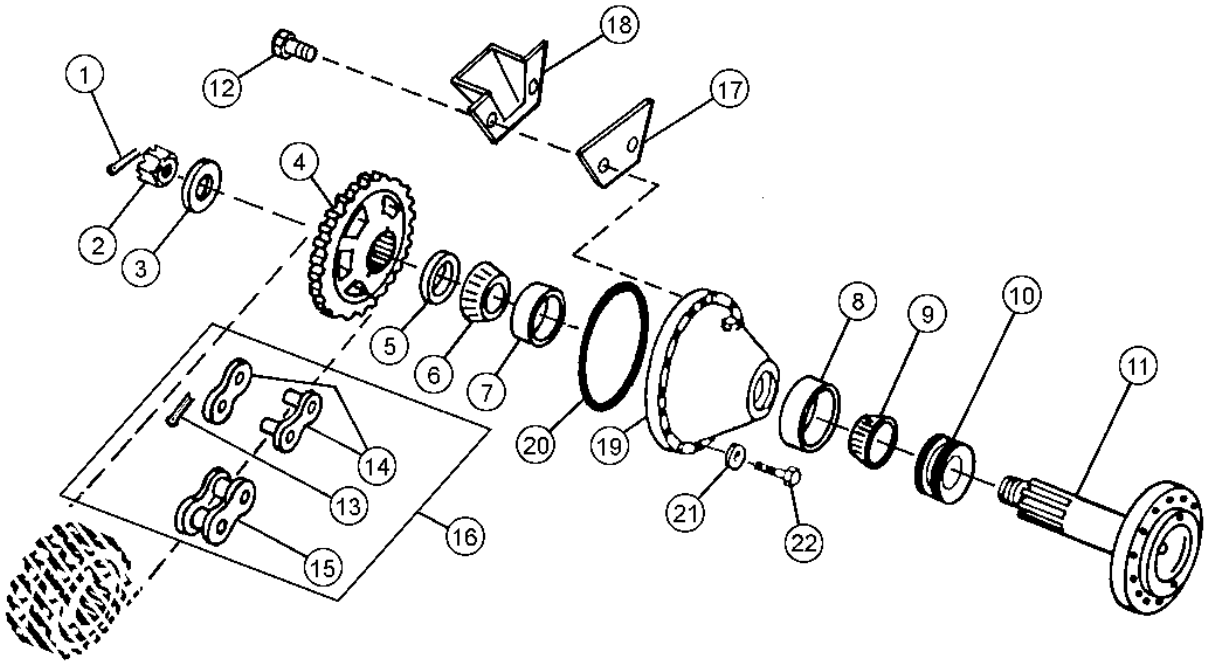

T203245

AXLE AND DRIVE CHAIN

KEY	PART NO.	PART NAME	QTY	SERIAL NO.	670D	672D	REMARKS
1	11M7085	COTTER PIN	1		X	X	
2	T158600	NUT	1		X	X	
3	T158599	WASHER	1		X	X	
4	T158248	CHAIN SPROCKET	1		X	X	
5	R48437	SHIM	1		X	X	.202 MM (.008")
6	JD9080	BEARING CONE	1		X	X	
7	JD9138	BEARING CUP	1		X	X	
8	JD9120	BEARING CUP	1		X	X	
9	JD8962	BEARING CONE	1		X	X	
10	AT72157	SEAL	1		X	X	
11	T158250	HALF AXLE	1		X	X	
12	19M7300	CAP SCREW	1		X	X	M6 X 10
13	11M7021	COTTER PIN	2		X	X	4 X 25 MM
14	AT44582	LINK	4		X	X	CONNECTING
15	AT44583	CHAIN LINK	AR		X	X	ROLLER
16	AT40729	ROLLER CHAIN	1		X	X	
17	T159985	PLATE	1		X	X	(USE ON FRONT AXLE ONLY)
18	T159984	OIL CUP	1		X	X	(USE ON REAR AXLE ONLY)
19	T158249	HOUSING	1		X	X	
20	T158339	O-RING	1		X	X	
21	R135543	WASHER	16		X	X	
22	19M7489	CAP SCREW	16		X	X	

TANDEM DRIVE AND PLANETARY

T204201 -UN-16OCT04

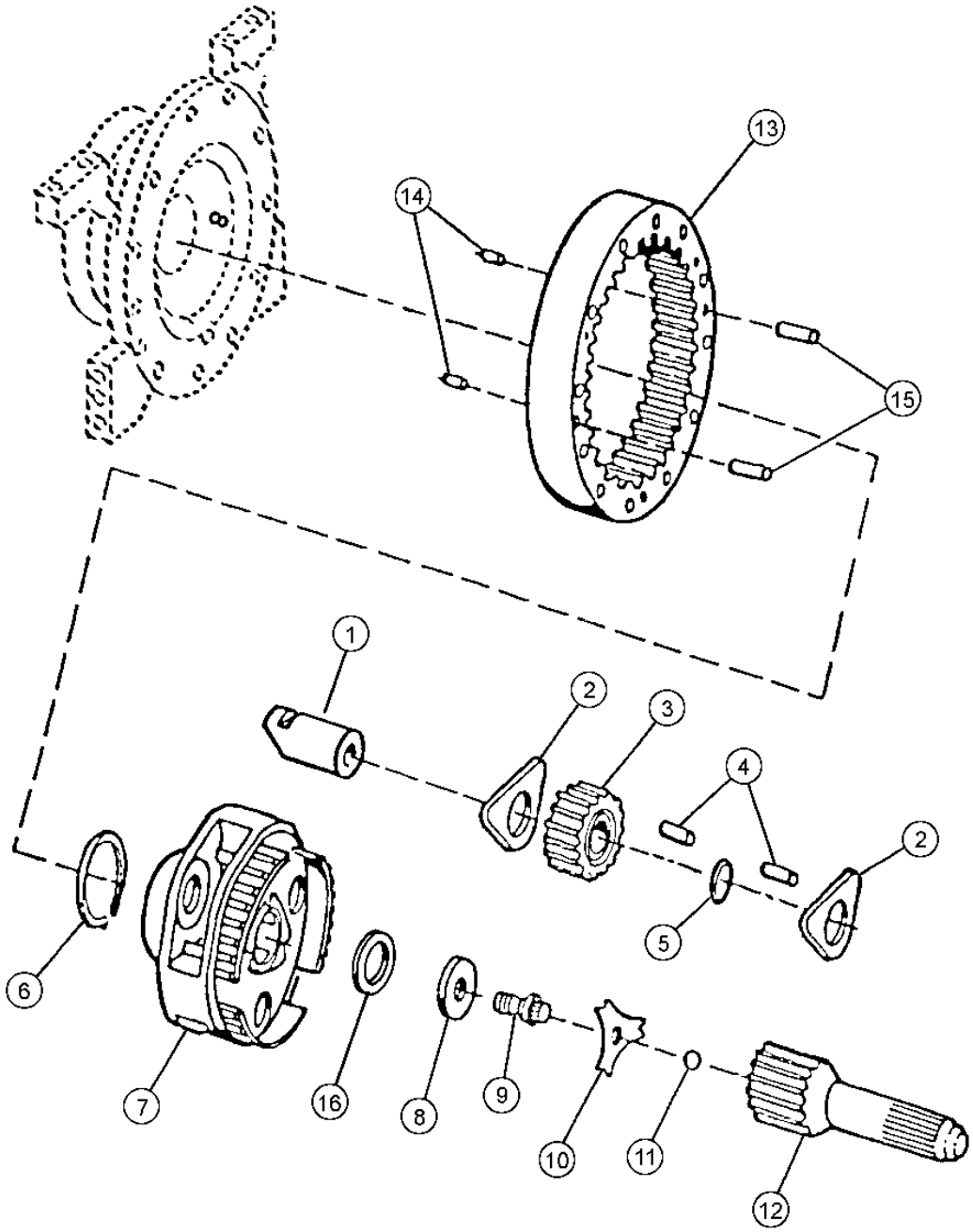

T204201

TANDEM DRIVE AND PLANETARY

KEY	PART NO.	PART NAME	QTY	SERIAL NO.	670D	672D	REMARKS
1	R77664	SHAFT	3		X	X	
2	R112079	THRUST WASHER	6		X	X	
3	R108997	PLANET PINION	3		X	X	
4	R63575	NEEDLE ROLLER	144		X	X	
5	R71929	WASHER	3		X	X	
6	R72430	SNAP RING	1		X	X	
7	R131113	PLANET PINION CARRIER	1		X	X	
8	R94546	SPACER	1		X	X	
9	R81162	BOLT	1		X	X	
10	R94545	LOCK PLATE	1		X	X	
11	F3171R	O-RING	3		X	X	
12	R131114	PINION SHAFT	1		X	X	
13	R93937	GEAR	1		X	X	
14	R54380	DOWEL PIN	2		X	X	
15	R27315	DOWEL PIN	2		X	X	
16	R52389	SHIM	1		X	X	

HFWD FRONT HUB AND MOTOR (COMPLETE)

T205141 -UN-03DEC04

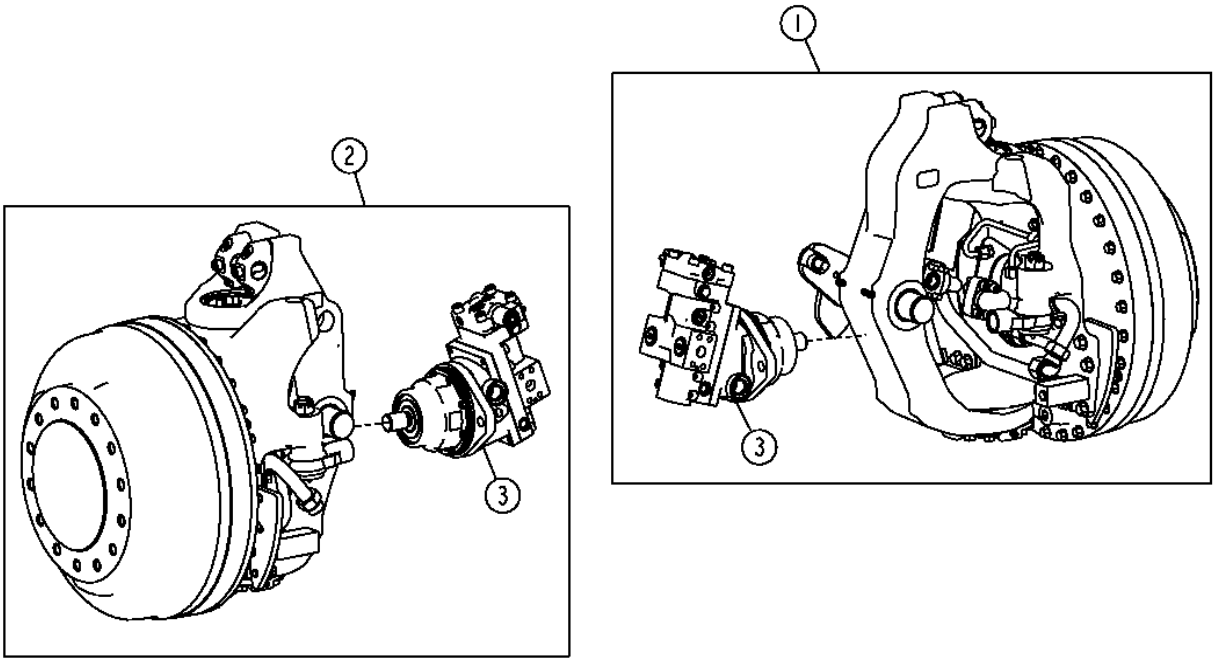

T205141

THIS PARTS LISTING IS CONTINUED

HFWD FRONT HUB AND MOTOR (COMPLETE)

KEY	PART NO.	PART NAME	QTY	MOTOR SERIAL NO.	670D	672D	REMARKS
1	AT188625	WHEEL	1		X		(CONVENIENCE ASSEMBLY)(RH HFWD HUB AND MOTOR) (COMPONENTS LISTED ON SEPARATE PAGES)
2	AT188624	WHEEL	1		X		(CONVENIENCE ASSEMBLY)(LH HFWD HUB AND MOTOR) (COMPONENTS LISTED ON SEPARATE PAGES)
3	AT194472	HYDRAULIC MOTOR	1		X		(HFWD MOTOR)(COMPLETE) (COMPONENTS LISTED ON SEPARATE PAGES)

HFWD MOTOR HYDRAULIC LINES

T205102 -UN-29DEC04

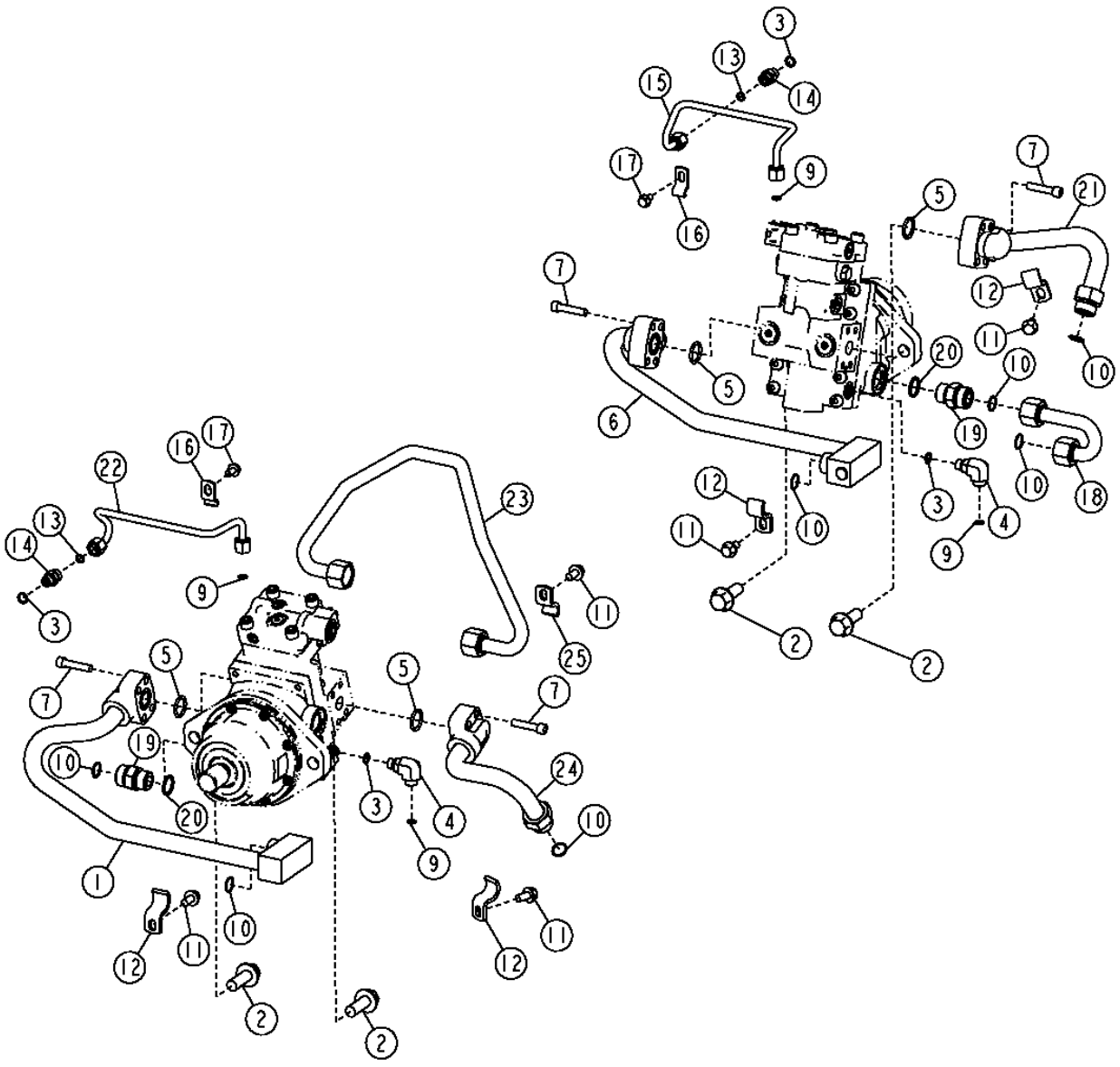

HFWD MOTOR HYDRAULIC LINES

KEY	PART NO.	PART NAME	QTY	SERIAL NO.	670D	672D	REMARKS
1	AT191729	LINE	1		X		(LEFT FRONT PRESSURE)
2	19M7844	SCREW	4		X		M16 X 45
3	R26448	O-RING	4		X		
4	38H1004	ELBOW FITTING	2		X		
5	T59014	O-RING	4		X		
6	AT191725	LINE	1		X		(RIGHT FRONT PRESSURE)
7	19H3750	SCREW	16		X		3/8" X 1-3/4"
9	T77613	O-RING	4		X		
10	T77858	O-RING	6		X		
11	19M7784	SCREW	6		X		M10 X 20
12	T185959	CLAMP	4		X		
13	R28782	O-RING	2		X		
14	38H1160	ADAPTER	2		X		
15	AT191506	LINE	1		X		(RIGHT BRAKE)
16	T185960	CLAMP	2		X		
17	19M7865	SCREW	2		X		M8 X 16
18	AT192114	LINE	1		X		(RIGHT DRAIN)
19	38H1163	ADAPTER	2		X		
20	U12547	O-RING	2		X		
21	AT191724	LINE	1		X		(RIGHT REAR PRESSURE)
22	AT191505	LINE	1		X		(LEFT BRAKE)
23	AT191730	LINE	1		X		(LEFT DRAIN)
24	AT191728	LINE	1		X		(LEFT REAR PRESSURE)

HFWD HUB AND YOKE

T205081 -UN-21DEC04

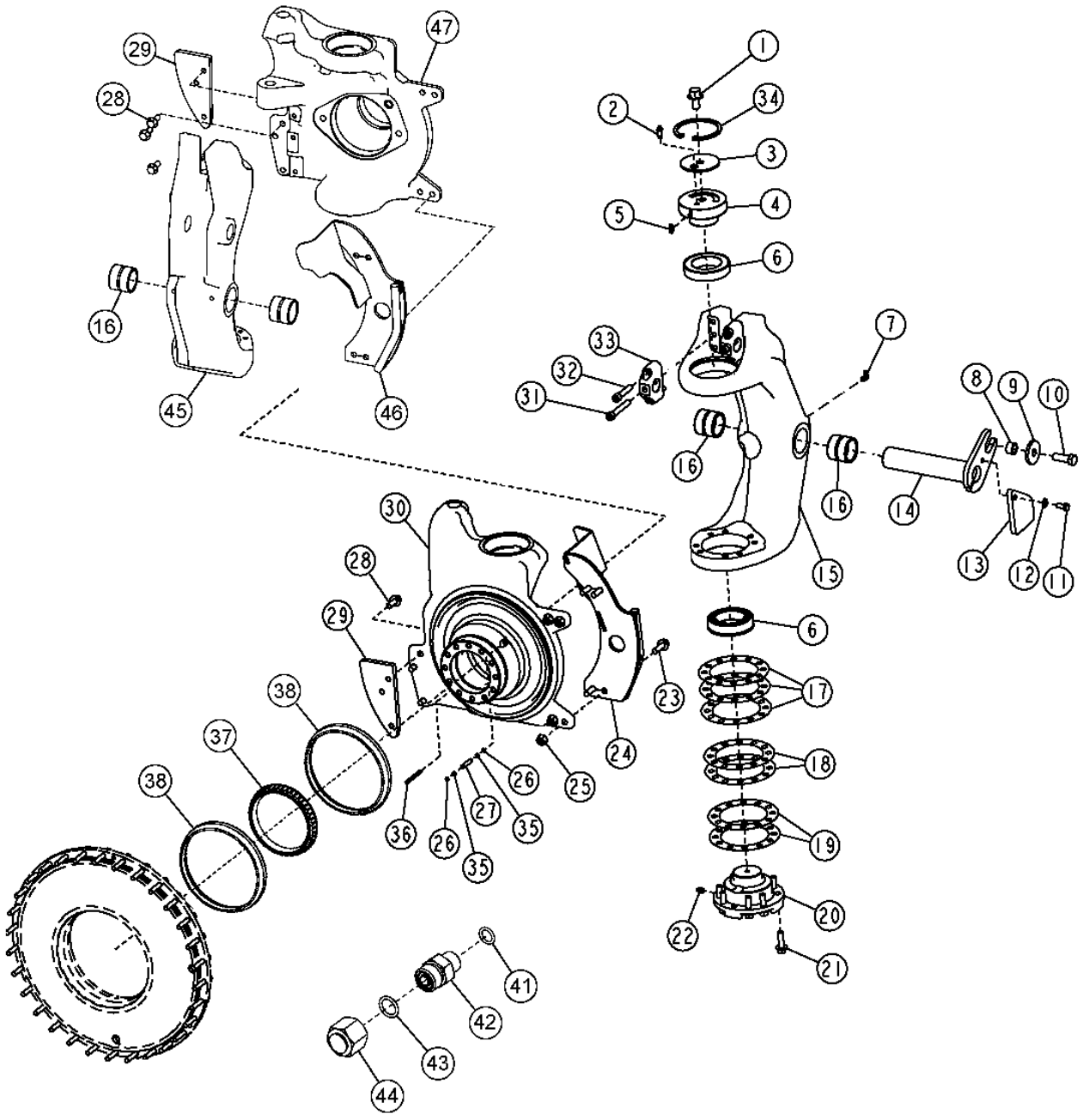

HFWD HUB AND YOKE

KEY	PART NO.	PART NAME	QTY	SERIAL NO.	670D	672D	REMARKS
1	19M7792	SCREW	1		X		M16 X 30
2	JD7771	LUBRICATION FITTING	1		X		
3	T184460	PLATE	1		X		
4	T183816	KINGPIN	1		X		
5	CE17368	SHAFT KEY	1		X		
6	AT188662	TAPERED ROLLER BEARING	2		X		
7	T75447	ELBOW FITTING	2		X		
8	28H3401	SPACER	1		X		
9	T146246	WASHER	1		X		
10	19M7489	CAP SCREW	1		X		M16 X 45
11	19M7938	CAP SCREW	1		X		M10 X 20
12	24M7296	WASHER	1		X		
13	T188984	STRAP	1		X		(BUMPER)
14	AT198516	PIN FASTENER	1		X		(SUB FOR AT196745)
15	T183821	YOKE	1		X		(RIGHT)
16	T41953	BUSHING	2		X		
17	T183818	SHIM	3		X		(.1)
18	T183819	SHIM	2		X		(.15)
19	T183820	SHIM	2		X		(.5)
20	T183817	KINGPIN	1		X		
21	19M7791	BOLT	8		X		M12 X 40
22	JD7798	LUBRICATION FITTING	1		X		
23	19M7791	BOLT	4		X		M12 X 40
24	AT198028	ISOLATOR	1		X		
25	14M7299	FLANGE NUT	4		X		M12
26	T186658	O-RING	2		X		
27	T186657	STRUCTURAL TUBING	1		X		(CONNECTOR)
28	19M7789	SCREW	3		X		M12 X 30
29	T185370	GUARD	1		X		
30	T166907	HOUSING	1		X		
31	T188856	SCREW	2		X		
32	T188857	SCREW	4		X		
33	T187196	RETAINER	2		X		
34	T183822	WEAR RING	1		X		
35	T186659	SEALING TRIM	2		X		
36	34M5564	SPRING PIN	1		X		
37	DE19507	WHEEL SEAL O-RING	1		X		(CONTAINS SET OF TWO SEAL HALVES - BOTH HALVES REQUIRED FOR ONE WHEEL DRIVE)
38	AT187114	BEARING CONE	2		X		
41	R26448	O-RING	1		X		
42	38H1160	ADAPTER	1		X		
43	R28782	O-RING	1		X		
44	38H1415	FITTING	1		X		
45	T183823	YOKE	1		X		(LEFT)
46	AT198029	ISOLATOR	1		X		
47	T183824	HOUSING	1		X		

HFWD MOTOR SOLENOID AND SERVO PISTON

T204743 -UN-30NOV04

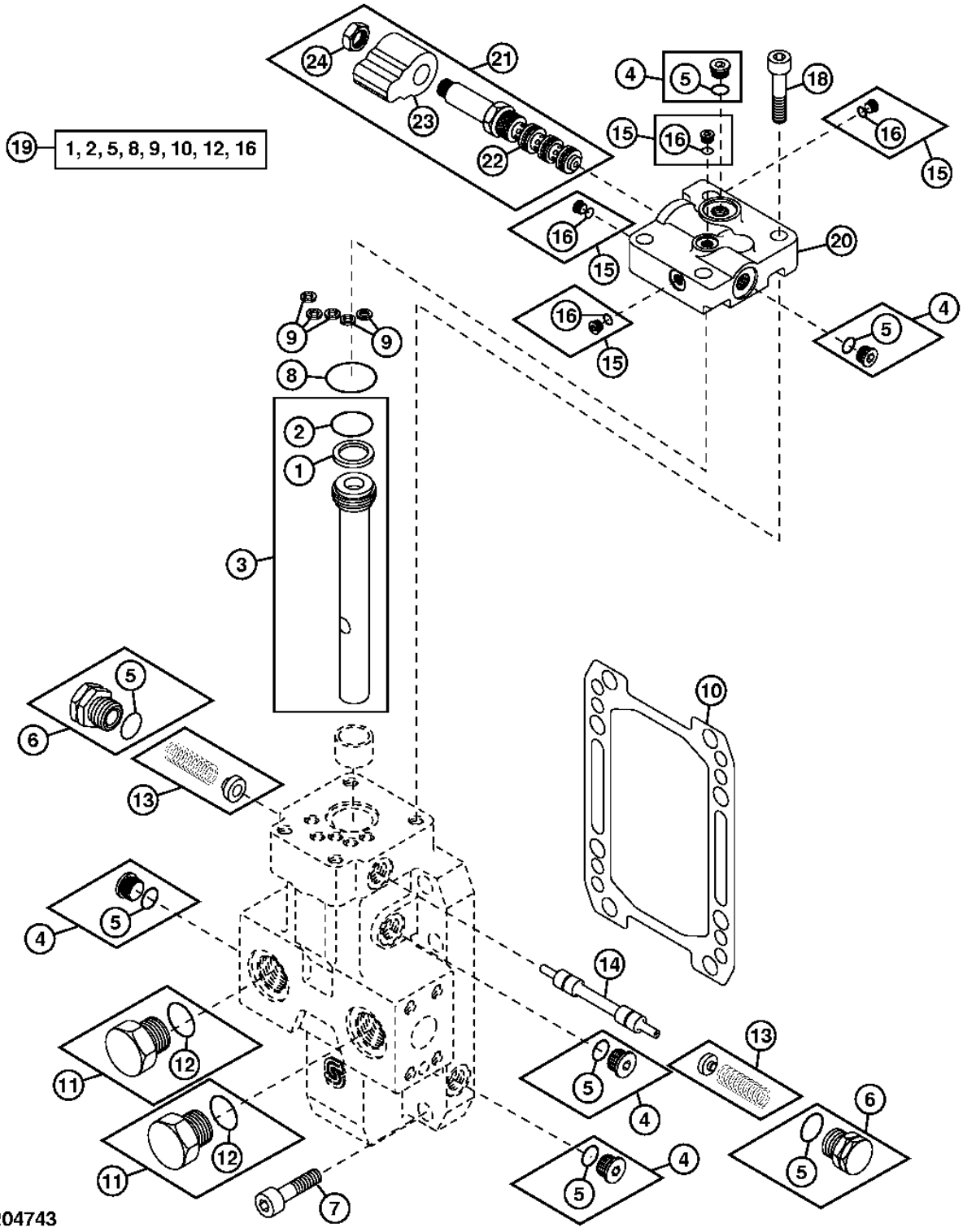

HFWD MOTOR SOLENOID AND SERVO PISTON

KEY	PART NO.	PART NAME	QTY	SERIAL NO.	670D	672D	REMARKS
1	T162854	RING	1		X		
2	T155757	O-RING	1		X		
3	AN208022	PISTON	1		X		
4	AT184868	FITTING PLUG	4		X		
5	M74600	O-RING	6		X		
6	AT180814	PLUG	2		X		
7	T214109	SCREW	2		X		
8	T158241	O-RING	1		X		
9	T155988	O-RING	5		X		
10	N306882	GASKET	1		X		
11	M74877	PLUG	2		X		
12	M45387	O-RING	2		X		
13	AT196462	PLATE	1		X		
14	T176405	SPOOL	1		X		
15	AT184869	PLUG	4		X		
16	T165535	O-RING	4		X		
18	T214110	SCREW	4		X		
19	AT319117	SEAL KIT	1		X		
20	T214145	HYDRAULIC CYLINDER CAP	1		X		
21	AT195921	SOLENOID VALVE	1		X		
22	AT195922	HYD ACTUATED CONTROL VALVE	1		X		
23	AT192055	SOLENOID VALVE COIL	1		X		
24	T181306	NUT	1		X		

HFWD MOTOR SWASH PLATE, BEARINGS, AND SPEED SENSOR

T204742 -UN-22NOV04

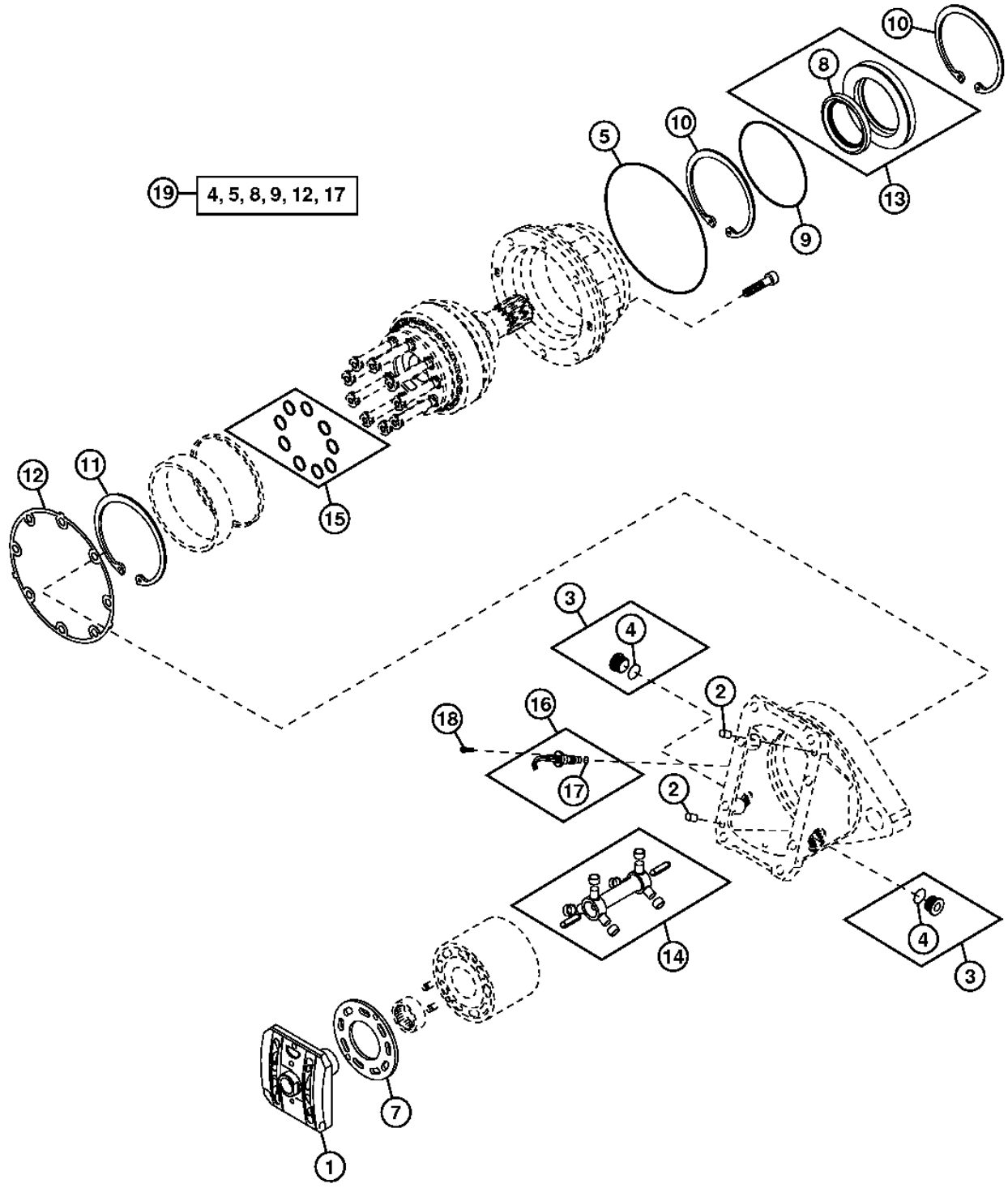

T204742

HFWD MOTOR SWASH PLATE, BEARINGS, AND SPEED SENSOR

KEY	PART NO.	PART NAME	QTY	SERIAL NO.	670D	672D	REMARKS
1	N306880	VALVE	1		X		
2	R726R	DOWEL PIN	2		X		
3	AT214801	PLUG	2		X		
4	T59014	O-RING	2		X		
5	F37030250	O-RING	1		X		
7	N306881	PLATE	1		X		
8	AT173174	SEAL	1		X		
9	T187896	O-RING	1		X		
10	N306885	SNAP RING	2		X		
11	N306886	SNAP RING	1		X		
12	N306887	GASKET	1		X		
13	AT195723	SEAL	1		X		
14	AN208024	SHAFT	1		X		
15	AT319115	PISTON RING KIT	1		X		
16	AT194596	GROUND SPEED SENSOR	1		X		
17	M74600	O-RING	1		X		
18	T214111	SCREW	1		X		
19	AT319117	SEAL KIT	1		X		

HFWD PUMP AND MOUNTING

T203978 -UN-23NOV04

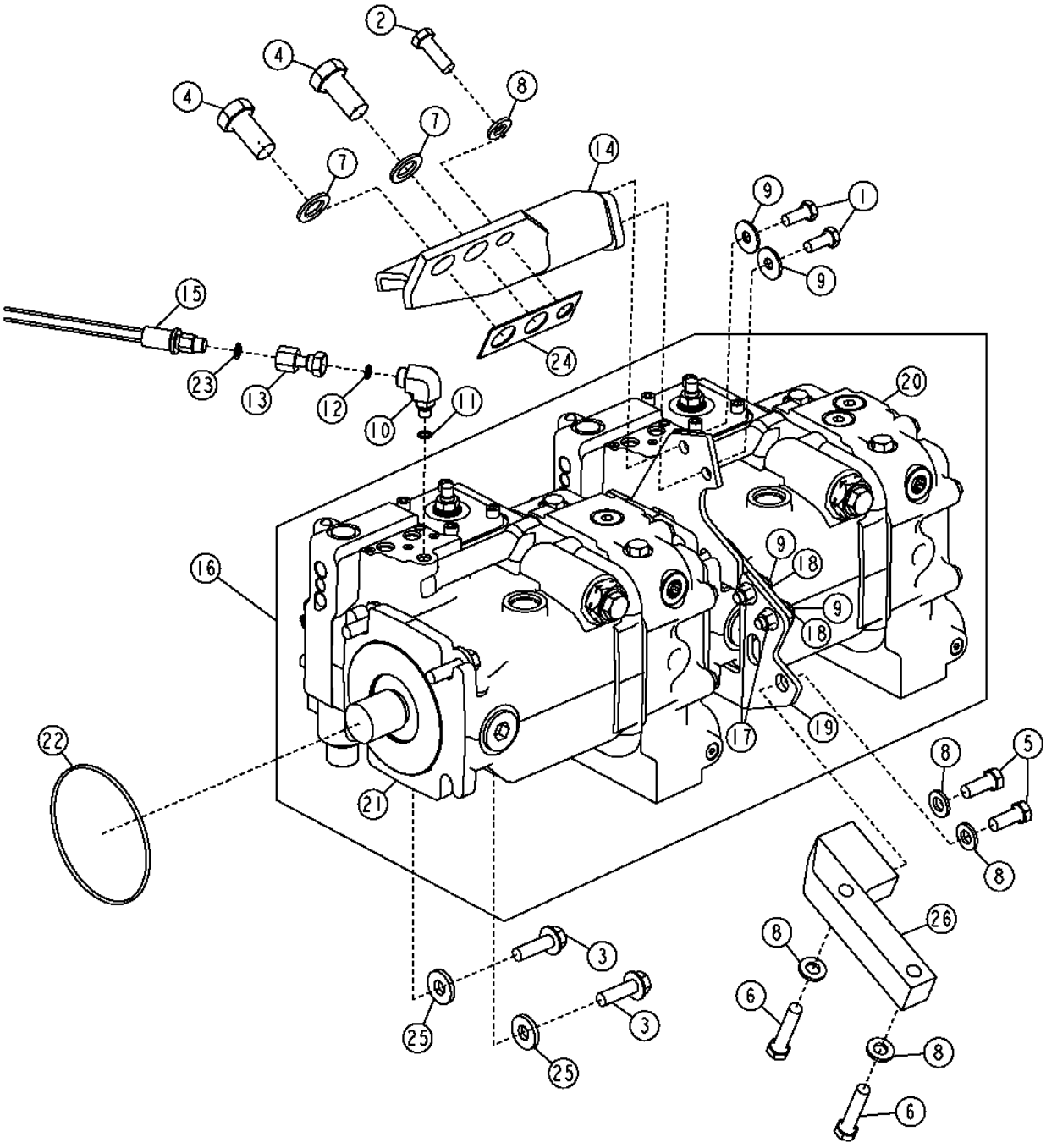

HFWD PUMP AND MOUNTING

KEY	PART NO.	PART NAME	QTY	SERIAL NO.	670D	672D	REMARKS
1	19M7402	CAP SCREW	2		X		M10 X 25
2	19M7403	CAP SCREW	1		X		M12 X 35
3	19M7791	BOLT	4		X		M12 X 40
4	19M7946	CAP SCREW	2		X		M20 X 40
5	19M8011	CAP SCREW	2		X		M12 X 30
6	19M8313	CAP SCREW	2		X		M12 X 55
7	24M7099	WASHER	2		X		
8	24M7240	WASHER	5		X		
9	24M7296	WASHER	4		X		
10	38H1435	ELBOW FITTING	1		X		
11	R28782	O-RING	1		X		
12	T77613	O-RING	1		X		
13	AT191214	ADAPTER	1		X		
14	AT194555	SUPPORT	1		X		
15	AT194815	PRESSURE SWITCH	1		X		(HFWD CHARGE PRESSURE)
16	AT307760	HYDRAULIC PUMP	1		X		(FRONT AND REAR HFWD PUMP) (COMPONENTS LISTED ON SEPARATE PAGES)
17	14M7296	FLANGE NUT	2		X		M10
18	19M7662	CAP SCREW	2		X		M10 X 30
19	AT307775	BRACKET	1		X		
20	AT317887	PUMP	1		X		(REAR HFWD PUMP)
21	AT317891	PUMP	1		X		(FRONT HFWD PUMP)
22	F37020159	O-RING	1		X		
23	R26286	O-RING	1		X		
24	T187206	SHIM	1		X		
25	T29342	WASHER	4		X		
26	T184651	BRACKET	1		X		

HFWD PUMP CYLINDER BLOCK, SWASH PLATE, AND PISTONS

T148543 -UN-29NOV01

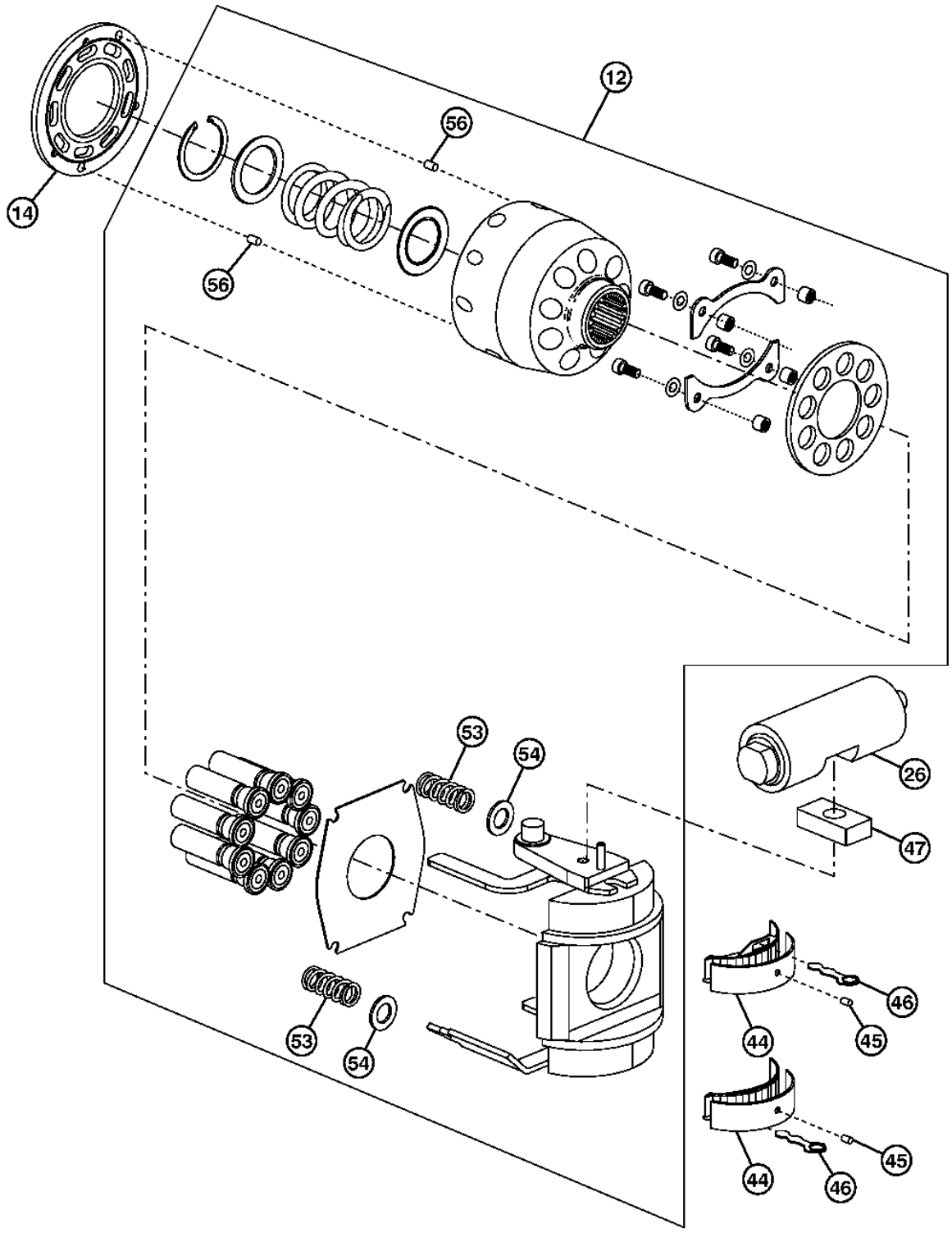

T148543

HFWD PUMP CYLINDER BLOCK, SWASH PLATE, AND PISTONS

KEY	PART NO.	PART NAME	QTY	SERIAL NO.	670D	672D	REMARKS
12	AT195063	HYDRAULIC PUMP REPAIR KIT	1		X		SWASH / ROTATING GROUP
14	T187714	PLATE	1		X		
26	AT195062	PISTON	1		X		SERVO
44	AT195057	BEARING	2		X		
45	T162211	PIN	2		X		
46	T187726	LINK	2		X		
47	T187721	LINK	1		X		SLIDE BLOCK
53	T162212	SPRING	2		X		
54	T162213	WASHER	2		X		
56	T162215	DOWEL PIN	3		X		

HFWD PUMP HOUSING AND EP CONTROL

T205107 -UN-05JAN05

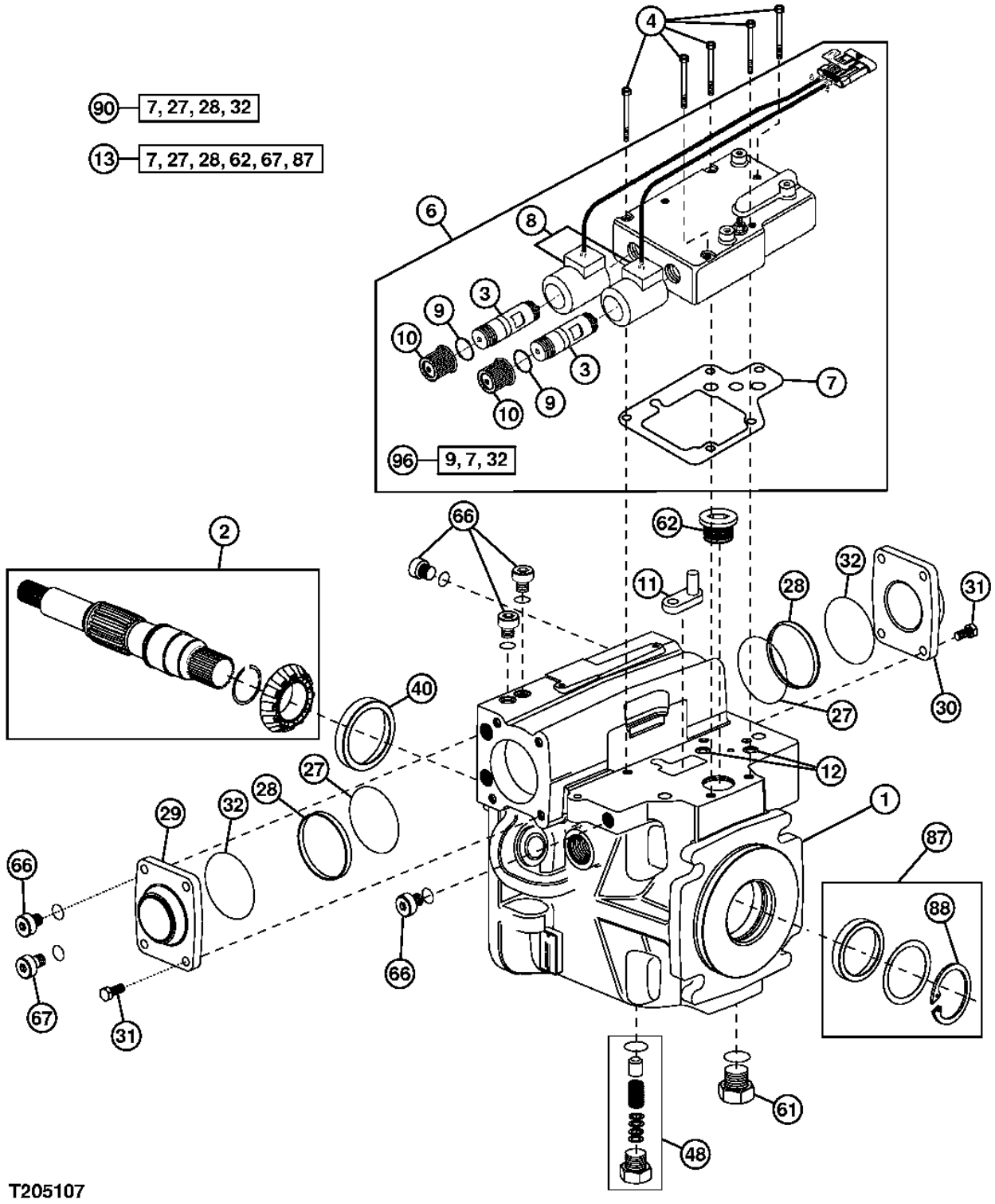

HFWD PUMP HOUSING AND EP CONTROL

KEY	PART NO.	PART NAME	QTY	SERIAL NO.	670D	672D	REMARKS
1	T187734	HOUSING	1		X		(REAR PUMP)
	T190814	HOUSING	1		X		(FRONT PUMP)
2	T187719	DRIVE SHAFT	1		X		(FRONT PUMP)
	T187736	DRIVE SHAFT	1		X		(REAR PUMP)
3	T187733	TUBE	1		X		
4	T187741	CAP SCREW	1		X		
6	AT195066	CONTROL	1		X		(EP CONTROL-24 VOLT)
7	T187729	GASKET	1		X		
8	AT198322	SOLENOID VALVE COIL	1		X		
9	T187745	O-RING	1		X		
10	T187744	NUT	1		X		
11	T187731	LINK	1		X		
12	T187711	ORIFICE	1		X		
13	AT317889	KIT	1		X		(PUMP OVERHAUL SEAL KIT-FRONT PUMP ONLY)
27	T187772	O-RING	2		X		
28	T187722	RING	2		X		
29	T187720	COVER	1		X		
30	T187728	COVER	1		X		
31	T187769	BOLT	8		X		
32	T187774	O-RING	AR		X		
40	T187713	BEARING CUP	1		X		
48	AT195065	PRESSURE RELIEF VALVE	1		X		
61	AT195068	PLUG	1		X		
62	T162216	PLUG	1		X		
66	AT180965	PLUG	3		X		
67	AT180966	PLUG	1		X		
87	AT317918	SEAL KIT	1		X		(FRONT PUMP SHAFT SEAL KIT)
88	T187712	SNAP RING	1		X		(FRONT PUMP ONLY)
90	AT195133	KIT	1		X		(PUMP OVERHAUL SEAL KIT-REAR PUMP ONLY)
96	AT195125	KIT	1		X		(EP SEAL KIT)

HFWD PUMP END COVER AND HFWD MOTOR FLUSHING PUMP

T205108 -UN-15DEC04

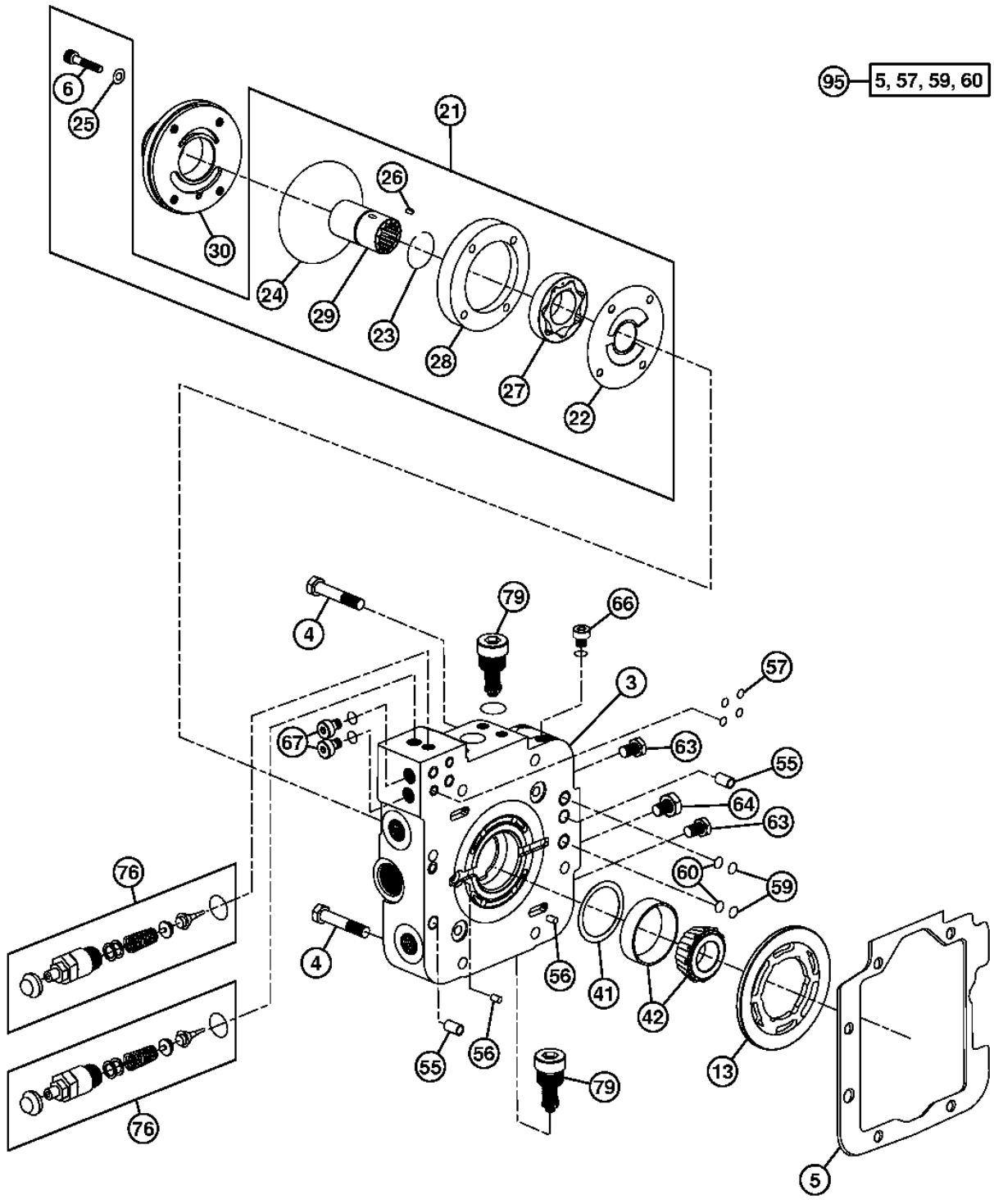

T205108

HFWD PUMP END COVER AND HFWD MOTOR FLUSHING PUMP

KEY	PART NO.	PART NAME	QTY	SERIAL NO.	670D	672D	REMARKS
3	T187738	COVER	1		X		(FRONT PUMP)
	T187737	COVER	1		X		(REAR PUMP)
4	T187767	BOLT	8		X		
5	T187724	GASKET	1		X		
6	AT195073	KIT	1		X		(HFWD CHARGE PUMP HARDWARE KIT) (INCLUDES 4 SOCKET HEAD CAP SCREWS)
13	T187735	PLATE	1		X		
21	AT195074	KIT	1		X		(HFWD MOTOR FLUSHING PUMP REPAIR KIT)
22	T162157	PLATE	1		X		
23	T162155	SNAP RING	1		X		(RETAINING RING)
24	T162152	O-RING	1		X		
25	AT180935	SEAL KIT	1		X		(INCLUDES 4 SEALS)
26	N126638	PIN	1		X		
27	T187716	ROTATOR	1		X		
28	T187717	RING	1		X		(FRONT PUMP)
	T187716	ROTATOR	1		X		(REAR PUMP)
29	T187727	SHAFT	1		X		
30	AT180936	COVER	1		X		
41	AT195075	KIT	1		X		(HFWD PUMP DRIVESHAFT SHIM KIT)
42	AT195060	BEARING	1		X		
55	T187715	PIN	2		X		
56	T162215	DOWEL PIN	3		X		
57	T187730	SEAL	4		X		
59	T187740	RING	2		X		
60	T187725	RING	1		X		
63	AT180964	FITTING	2		X		
64	AT195069	PLUG	1		X		(FRONT PUMP)
66	AT180965	PLUG	2		X		
67	AT180966	PLUG	2		X		
76	AT317886	PRESSURE RELIEF VALVE	2		X		(PRESSURE OVERRIDE VALVE)
79	AT195064	PRESSURE RELIEF FITTING	2		X		
95	AT317889	KIT	1		X		(PUMP OVERHAUL SEAL KIT-FRONT PUMP)
	AT195124	KIT	1		X		(COVER SEAL KIT-REAR PUMP)

HFWD HOSES (HFWD ENGAGEMENT VALVE TO HFWD MOTORS)

T203261 -UN-09NOV04

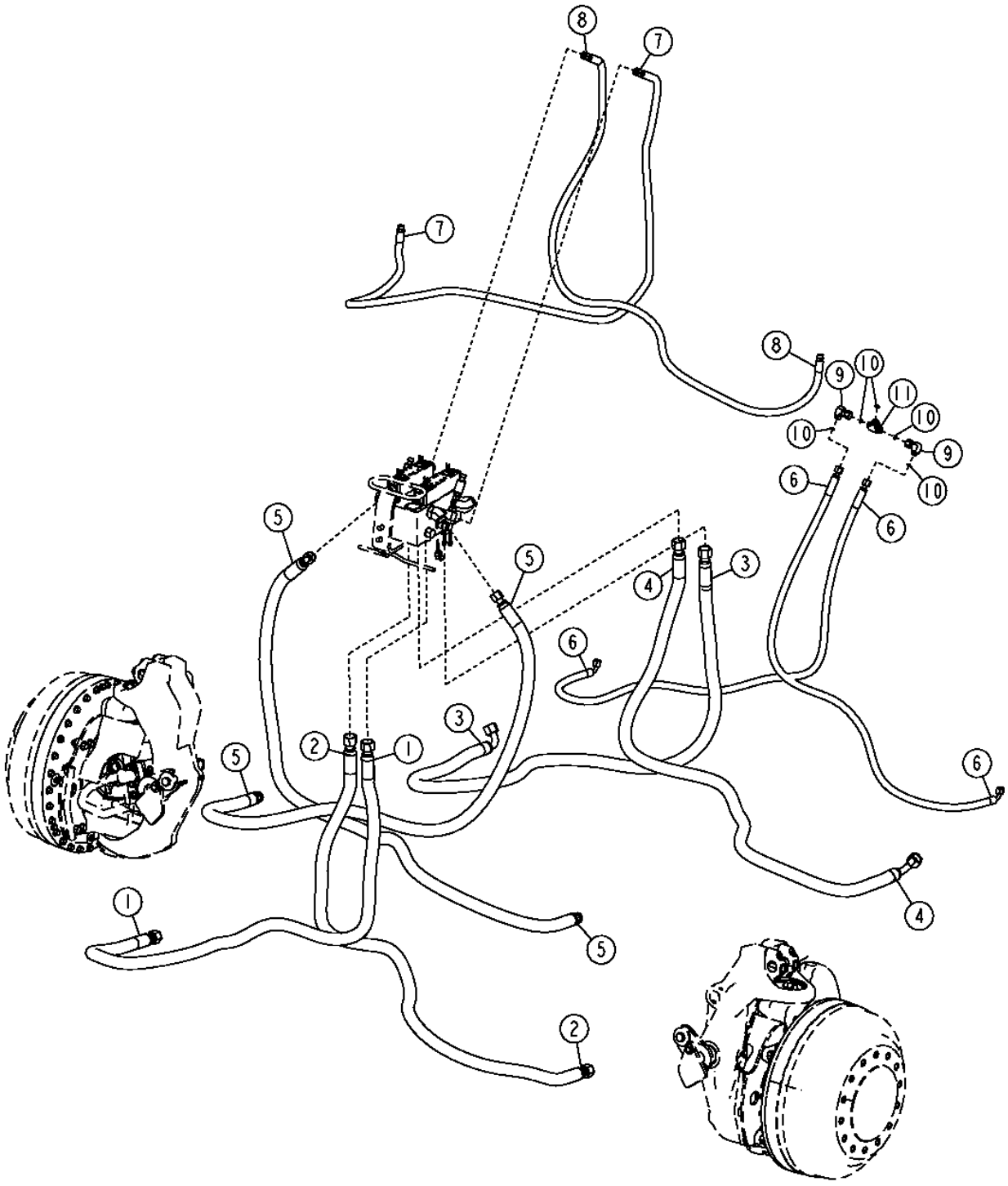

THIS PARTS LISTING IS CONTINUED

HFWD HOSES (HFWD ENGAGEMENT VALVE TO HFWD MOTORS)

KEY	PART NO.	PART NAME	QTY	SERIAL NO.	670D	672D	REMARKS
1	AT196253	HYDRAULIC HOSE - FABRICATE	1		X		(RIGHT HFWD MOTOR FORWARD)
2	AT196249	HYDRAULIC HOSE - FABRICATE	1		X		(LEFT HFWD MOTOR FORWARD)
3	AT196254	HYDRAULIC HOSE - FABRICATE	1		X		(RIGHT HFWD MOTOR REVERSE)
4	AR21839	CLAMP	1		X		(LEFT HFWD MOTOR REVERSE) (SUB FOR AT196250, THIS APPLICATION)
5	AT197098	HYDRAULIC HOSE - FABRICATE	2		X		(HFWD MOTOR CASE DRAIN)
6	AT308073	HYDRAULIC HOSE - FABRICATE	2		X		(RIGHT AND LEFT HFWD MOTOR FLUSHING HOSE)
7	AT196256	HYDRAULIC HOSE - FABRICATE	1		X		(RIGHT HFWD BRAKE HOSE)
8	AT196252	HYDRAULIC HOSE - FABRICATE	1		X		(LEFT HFWD BRAKE HOSE)
9	38H1094	ELBOW FITTING	2		X		
10	T77613	O-RING	9		X		
11	38H1205	TEE FITTING	1		X		
12	T188182	HOSE GUARD	2		X		(PROTECTIVE SLEEVE FOR HFWD HOSES) (NOT ILLUSTRATED)

HFWD HOSES (BULKHEAD TO HFWD ENGAGEMENT VALVE)

T203262 -UN-09NOV04

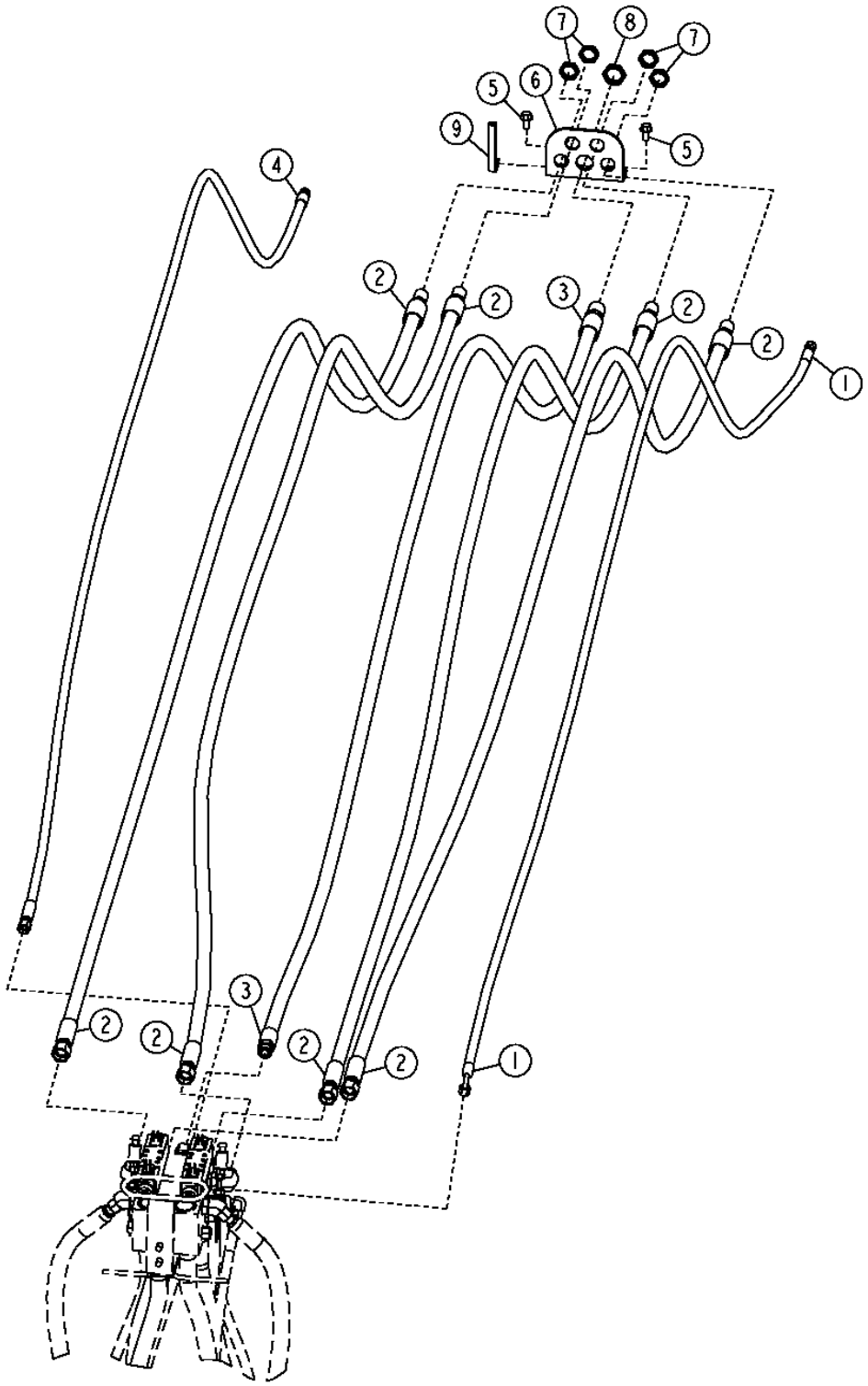

THIS PARTS LISTING IS CONTINUED

HFWD HOSES (BULKHEAD TO HFWD ENGAGEMENT VALVE)

KEY	PART NO.	PART NAME	QTY	SERIAL NO.	670D	672D	REMARKS
1	AT305512	HYDRAULIC HOSE - FABRICATE	1		X		(HFWD MOTOR FLUSHING)
2	AT305505	HYDRAULIC HOSE	4		X		(HFWD MOTOR FORWARD/REVERSE)
3	AT305510	HYDRAULIC HOSE	1		X		(HFWD MOTOR TANK)
4	AT305509	HYDRAULIC HOSE - FABRICATE	1		X		(HFWD MOTOR CASE DRAIN)
5	19M7788	SCREW	2		X		
6	T210043	BRACKET	1		X		
7	T78707	NUT	4		X		
8	T78715	NUT	1		X		
9	.....	PAD	1		X		(MAKE FROM T61861) (CUT TO LENGTH)

HFWD HOSES (HFWD PUMP TO BULKHEAD)

T204637 -UN-09DEC04

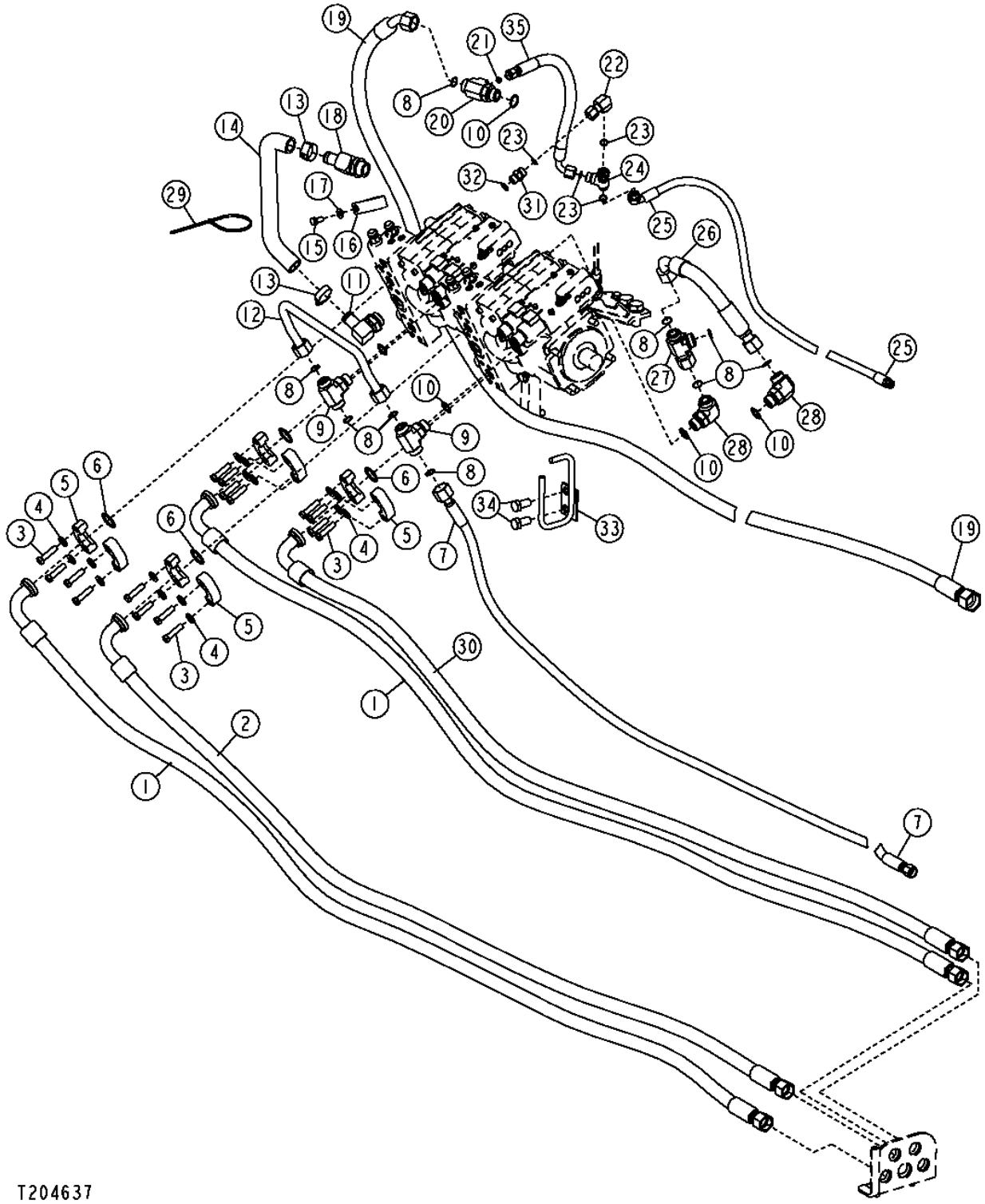

HFWD HOSES (HFWD PUMP TO BULKHEAD)

KEY	PART NO.	PART NAME	QTY	SERIAL NO.	670D	672D	REMARKS
1	AT309957	HYDRAULIC HOSE - FABRICATE	2		X		(LEFT FORWARD AND REVERSE)
2	AT305507	HYDRAULIC HOSE - FABRICATE	1		X		(RIGHT FORWARD)
3	19H2563	CAP SCREW	16		X		7/16" X 1-3/4"
4	24M7240	WASHER	16		X		
5	H122182	FLANGE FITTING	8		X		
6	T78313	O-RING	4		X		
7	AT309959	HYDRAULIC HOSE - FABRICATE	1		X		(HFWD MOTOR CASE DRAIN HOSE)
8	T77858	O-RING	9		X		
9	38H1019	TEE FITTING	2		X		
10	U12547	O-RING	5		X		
11	AH75162	FITTING	1		X		
12	AT302098	TUBE	1		X		
13	AT145650	HOSE CLAMP	2		X		
14	AT310272	HOSE	1		X		
15	19M7938	CAP SCREW	1		X		M10 X 20
16	T149597	CLAMP	1		X		
17	24M7239	WASHER	1		X		
18	AT223584	FITTING	1		X		
19	AT305508	HYDRAULIC HOSE - FABRICATE	1		X		(HFWD MOTOR TANK HOSE)
20	38H1598	TEE FITTING	1		X		
21	T77613	O-RING	1		X		
22	38H1095	ELBOW FITTING	1		X		
23	T77857	O-RING	4		X		
24	AT197488	CHECK VALVE	1		X		
25	AT305513	HYDRAULIC HOSE - FABRICATE	1		X		(HFWD MOTOR FLUSHING HOSE)
26	AT193948	HYDRAULIC HOSE - FABRICATE	1		X		
27	38H1033	TEE FITTING	1		X		
28	38H1007	ELBOW FITTING	2		X		
29	H77698	TIE BAND	1		X		
30	AT305506	HYDRAULIC HOSE - FABRICATE	1		X		(RIGHT REVERSE)
31	38H1161	ADAPTER	1		X		
32	R26375	O-RING	1		X		
33	AT312998	HOSE SUPPORT	1		X		
34	19M8029	CAP SCREW	2		X		M16 X 30
35	AT317166	HYDRAULIC HOSE - FABRICATE	1		X		

HFWD CHARGE PUMP

T209458 -UN-22MAR05

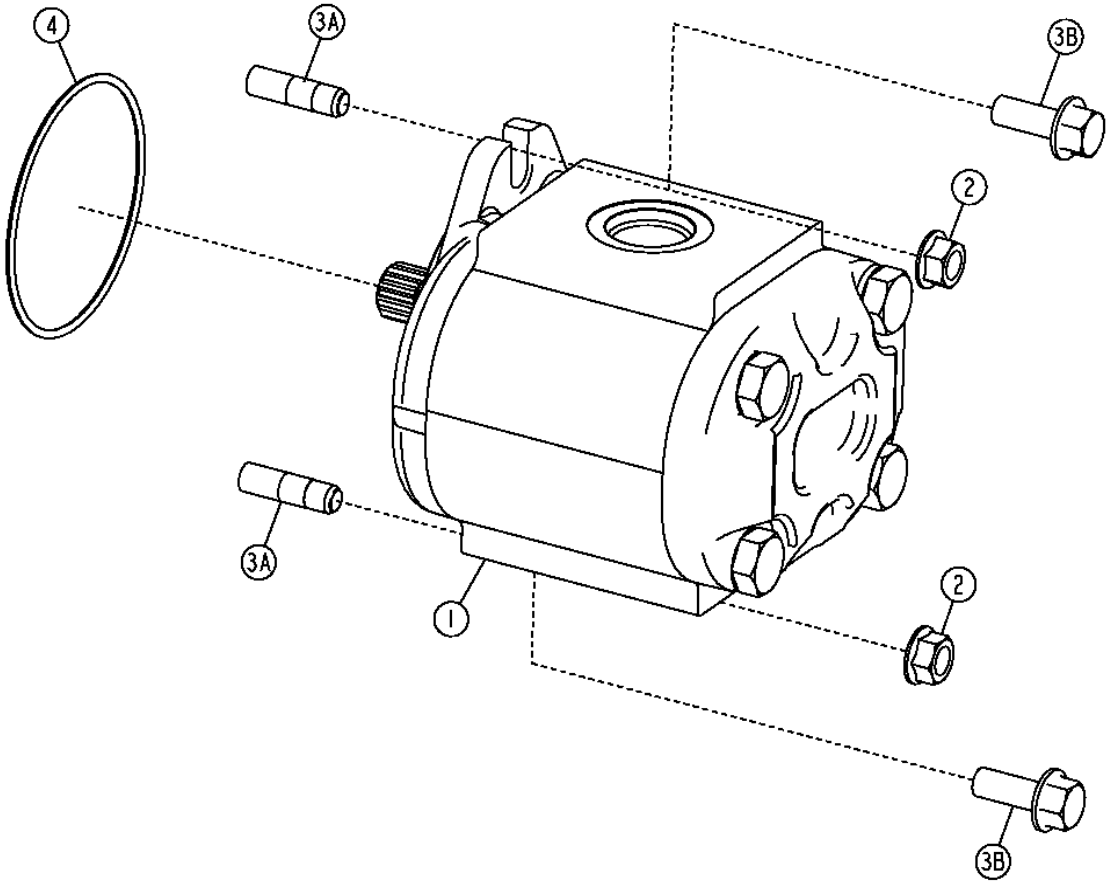

T209458

HFWD CHARGE PUMP

KEY	PART NO.	PART NAME	QTY	SERIAL NO.	670D	672D	REMARKS
1	AT317637	HYDRAULIC PUMP	1		X	X	(HFWD CHARGE PUMP)
	AT317595	SEAL KIT	1		X	X	(HFWD CHARGE PUMP SEAL KIT)
2	E55662	FLANGE NUT	2	-597330	X	X	3/8"
3A	T20052	STUD	2	-597330	X		
3B	19H3771	SCREW	2	597331-	X		
4	U42702	O-RING	1		X		

HFWD CHARGE PUMP HOSES

T203846 -UN-09NOV04

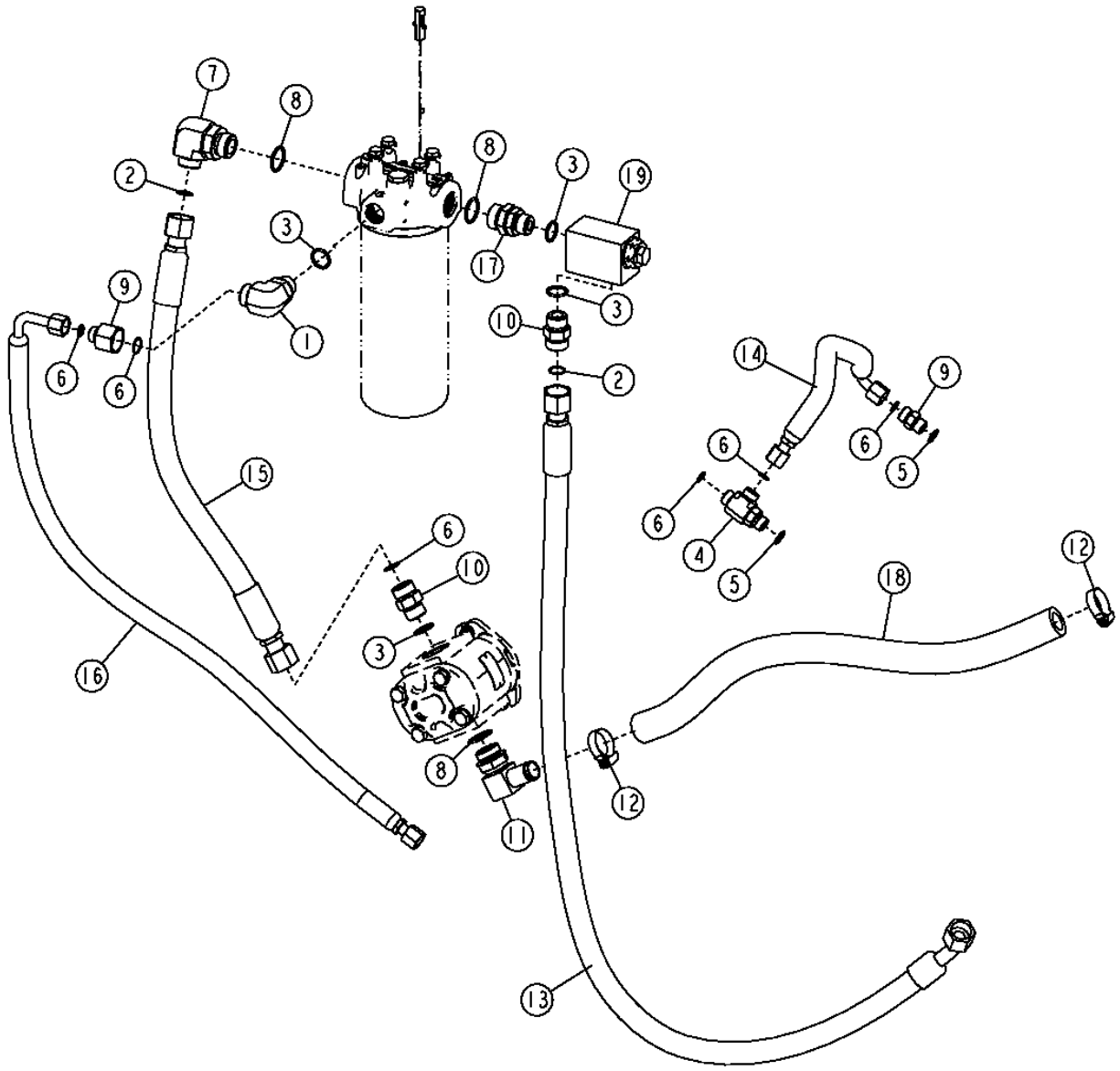

THIS PARTS LISTING IS CONTINUED

HFWD CHARGE PUMP HOSES

KEY	PART NO.	PART NAME	QTY	SERIAL NO.	670D	672D	REMARKS
1	38H1007	ELBOW FITTING	1		X		
2	T77858	O-RING	4		X		
3	U12547	O-RING	4		X		
4	38H1024	TEE FITTING	1		X		
5	R26375	O-RING	2		X		
6	T77857	O-RING	3		X		
7	38H1052	ELBOW FITTING	1		X		
8	R29936	O-RING	3		X		
9	38H1161	ADAPTER	1		X		
10	38H1163	ADAPTER	2		X		
11	AH75162	FITTING	1		X		
12	AR21839	CLAMP	2		X		(SUB FOR AT145650, THIS APPLICATION)
13	AT188217	HYDRAULIC HOSE - FABRICATE	1		X		
14	AT191879	HYDRAULIC HOSE - FABRICATE	1		X		
15	AT312910	HYDRAULIC HOSE - FABRICATE	1		X		
16	AT312912	HYDRAULIC HOSE - FABRICATE	1		X		
17	AT83306	ADAPTER	1		X		
18	T186987	SUCTION HOSE	1		X		
19	AT194980	PRESSURE RELIEF VALVE	1		X		(NEUTRAL CHARGE PRESSURE REGULATING VALVE)
	AT194982	HYD ACTUATED CONTROL VALVE	1		X		(NOT ILLUSTRATED)
	AT194983	SHIM	1		X		(NOT ILLUSTRATED)
	AZ42092	GANG	1		X		(NOT ILLUSTRATED)
	T187664	HOUSING	1		X		(NOT ILLUSTRATED)

DIFFERENTIAL LOCK COOLER HOSES

T211055 -UN-16MAY05

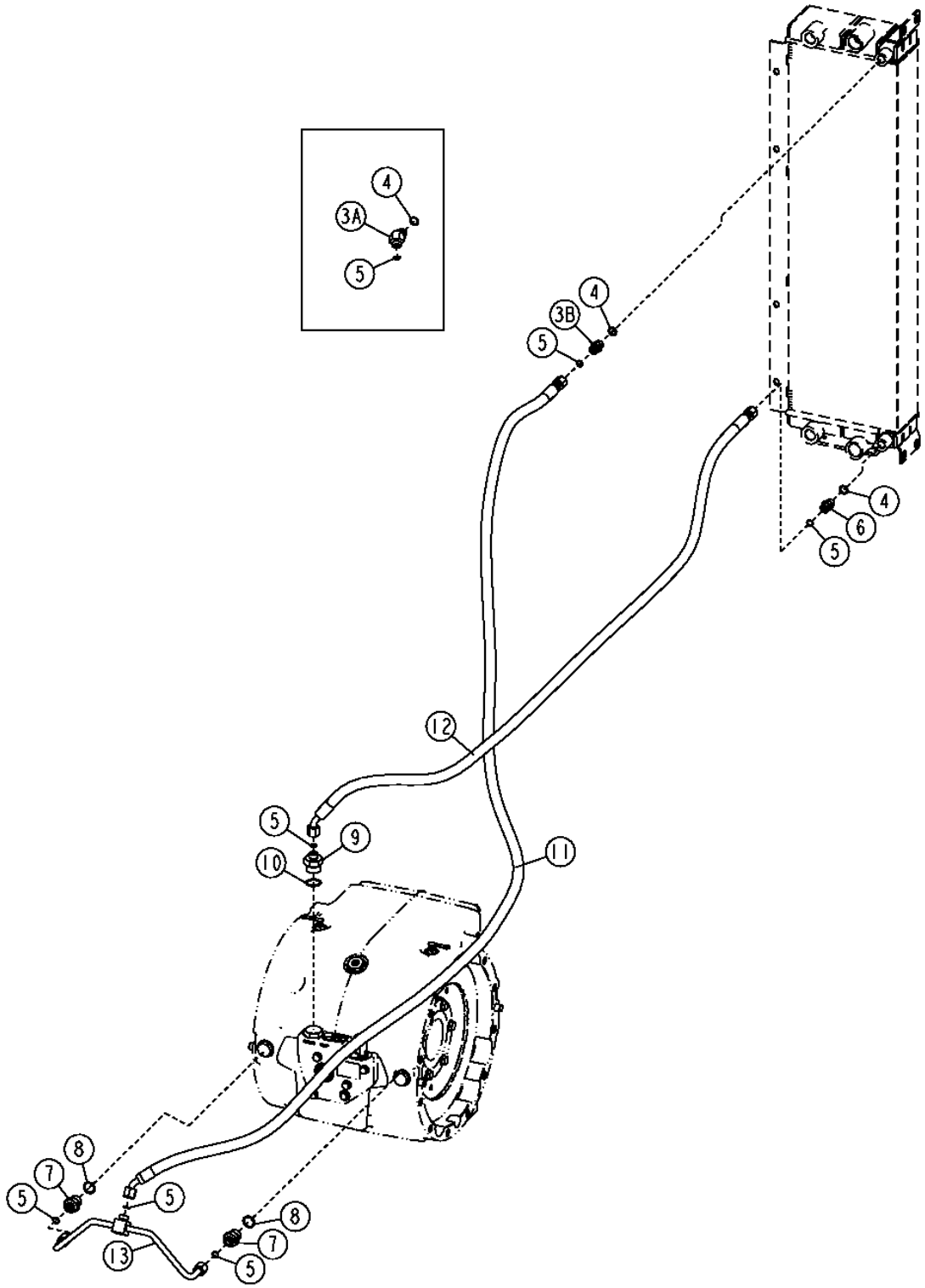

DIFFERENTIAL LOCK COOLER HOSES

KEY	PART NO.	PART NAME	QTY	SERIAL NO.	670D	672D	REMARKS
1	14M7274	NUT	1	-598033	X	X	M10
2	19M7938	CAP SCREW	2	-598033	X	X	M10 X 20
	24M7239	WASHER	2	-598033	X	X	
3A	38H1046	ELBOW FITTING	1	-598033	X	X	
3B	38H1161	ADAPTER	1	598034-	X	X	
4	R26375	O-RING	2		X	X	
5	T77857	O-RING	7		X	X	
6	38H1161	ADAPTER	1		X	X	
7	38H1175	ADAPTER	2		X	X	
8	U12547	O-RING	2		X	X	
9	38H1176	ADAPTER	1		X	X	
10	R29936	O-RING	1		X	X	
11	AT303539	HYDRAULIC HOSE - FABRICATE	1		X	X	
12	AT305832	HYDRAULIC HOSE - FABRICATE	1		X	X	
13	AT305833	OIL LINE	1		X	X	
14	T38377	CLAMP	2	-598033	X	X	

DIFFERENTIAL LOCK PUMP, HYDRAULIC FITTINGS AND MOUNTING

T200634 -UN-07JUN04

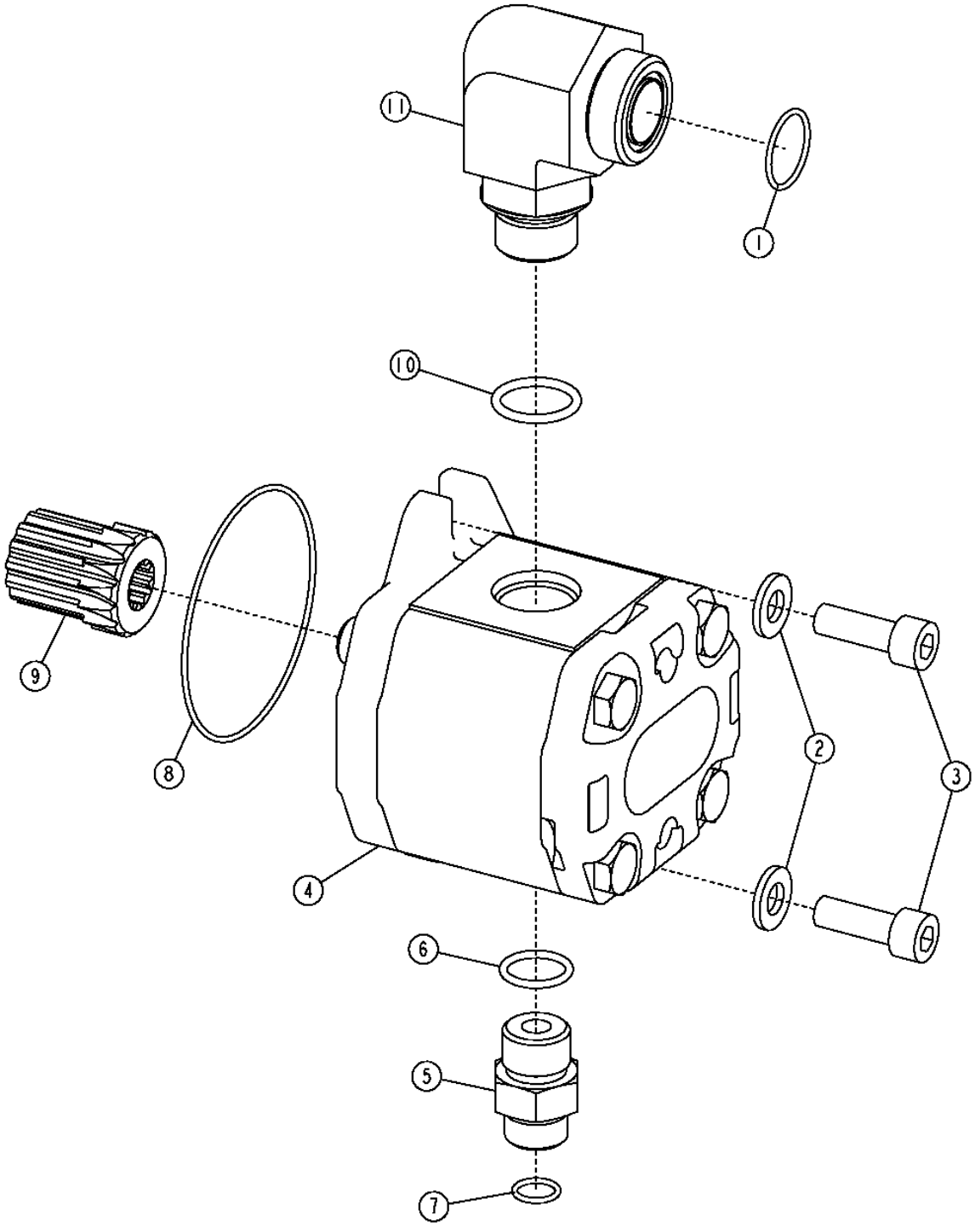

DIFFERENTIAL LOCK PUMP, HYDRAULIC FITTINGS AND MOUNTING

KEY	PART NO.	PART NAME	QTY	SERIAL NO.	670D	672D	REMARKS
1	T76938	O-RING	1		X	X	
2	24M7239	WASHER	2		X	X	
3	19M7576	SCREW	2		X	X	M10 X 30
4	AT191095	PUMP	1		X	X	(DIFFERENTIAL LOCK)
5	38H1174	ADAPTER	1		X	X	
6	R26906	O-RING	1		X	X	
7	T77857	O-RING	1		X	X	
8	T160541	O-RING	1		X	X	
9	YZ103042	SLEEVE	1		X	X	(DIFF LOCK PUMP TO TRANSMISSION)
10	U12547	O-RING	1		X	X	
11	38H1305	ELBOW FITTING	1		X	X	

DIFFERENTIAL LOCK HYDRAULIC HOSES AND FILTER

T202051 -UN-12DEC04

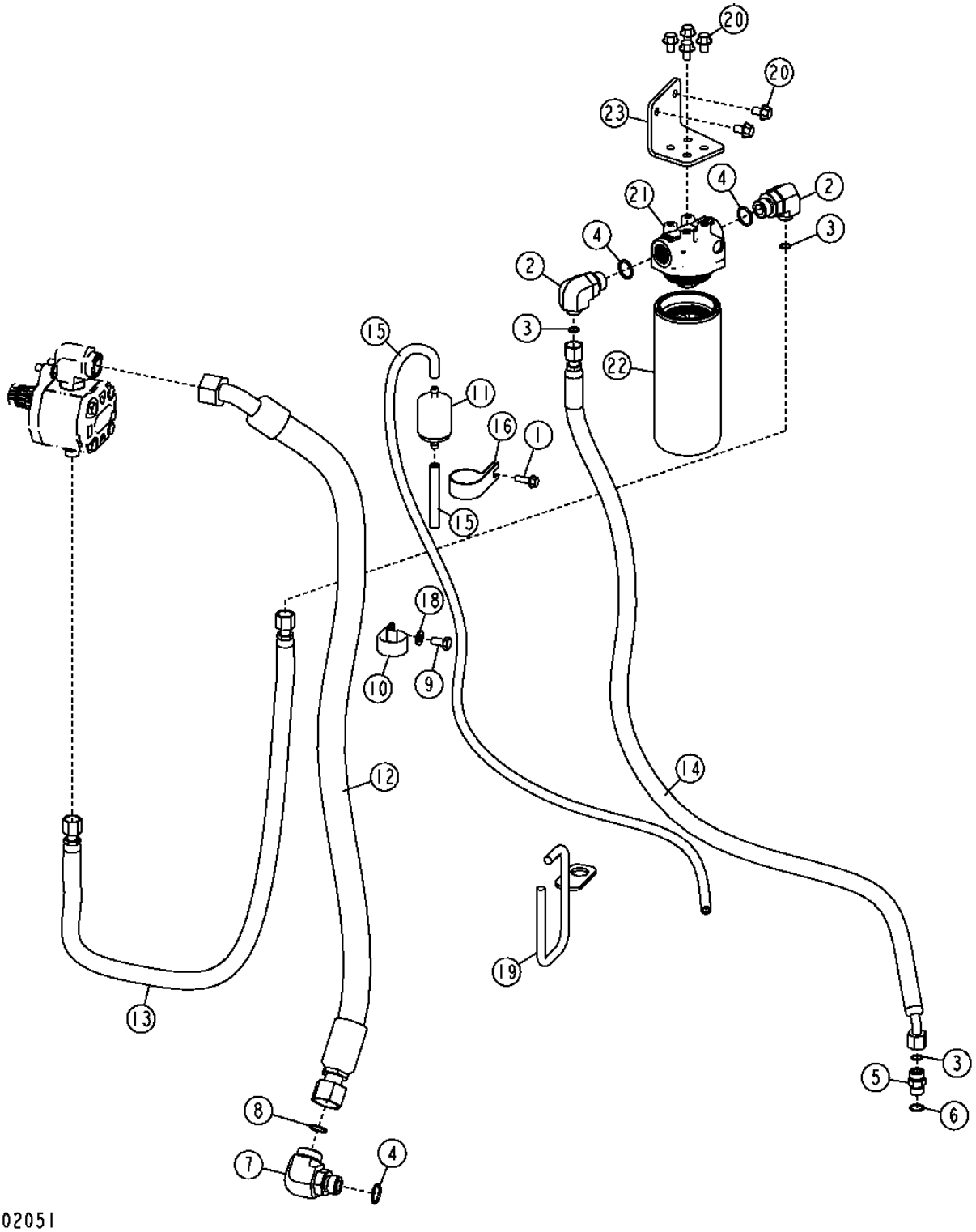

THIS PARTS LISTING IS CONTINUED

DIFFERENTIAL LOCK HYDRAULIC HOSES AND FILTER

KEY	PART NO.	PART NAME	QTY	SERIAL NO.	670D	672D	REMARKS
1	19M7867	SCREW	1		X	X	M8 X 25
2	38H1013	ELBOW FITTING	2		X	X	
3	T77857	O-RING	3		X	X	
4	U12547	O-RING	3		X	X	
5	38H1161	ADAPTER	1		X	X	
6	R26375	O-RING	1		X	X	
7	38H1305	ELBOW FITTING	1		X	X	
8	T76938	O-RING	1		X	X	
9	19M7938	CAP SCREW	1		X	X	
10	AH77714	CLIP	1		X	X	
11	AT101565	AIR FILTER	1		X	X	
12	AT191160	HYDRAULIC HOSE - FABRICATE	1		X	X	
13	AT305831	HYDRAULIC HOSE - FABRICATE	1		X	X	
14	AT305834	HYDRAULIC HOSE - FABRICATE	1		X	X	
15	.....	BULK HOSE	2		X	X	(MAKE FROM M87571) (CUT TO LENGTH)
16	E69975	CLAMP	1		X	X	
17	H77698	TIE BAND	2		X	X	(NOT ILLUSTRATED)
18	24M7239	WASHER	1		X	X	
19	AT309711	HOSE SUPPORT	1		X	X	
20	19M7783	SCREW	6		X	X	M10 X 16
21	AT305053	FILTER HEAD	1		X	X	
22	AT306605	HYDRAULIC FILTER	1		X	X	(DIFFERENTIAL LOCK FILTER)
23	T205883	BRACKET	1		X	X	

HFWD ENGAGEMENT MANIFOLD FITTINGS AND TEMPERATURE SENSOR

T206131 -UN-18DEC04

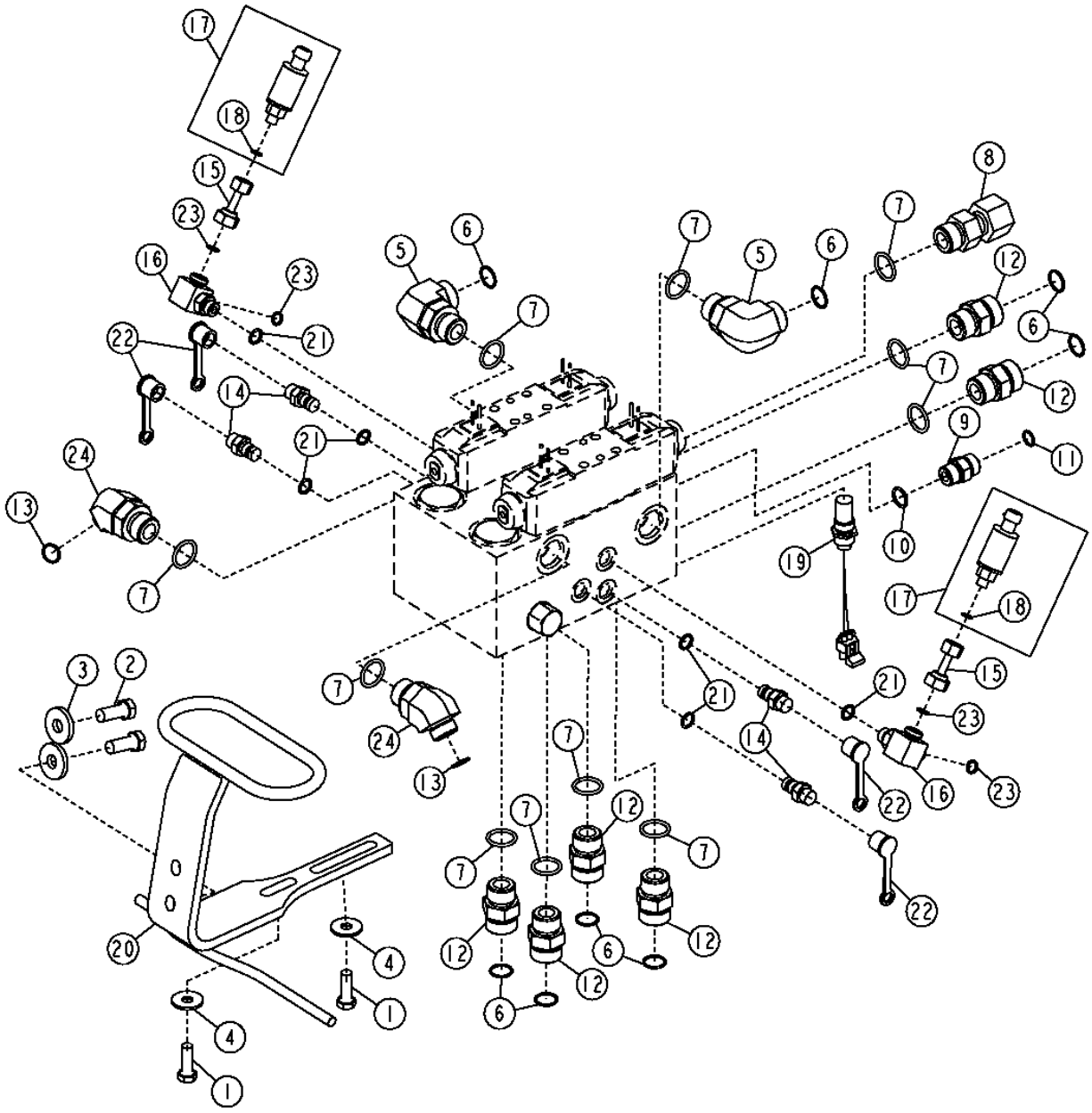

THIS PARTS LISTING IS CONTINUED

HFWD ENGAGEMENT MANIFOLD FITTINGS AND TEMPERATURE SENSOR

KEY	PART NO.	PART NAME	QTY	SERIAL NO.	670D	672D	REMARKS
1	19M7662	CAP SCREW	2		X	X	M10 X 30
2	19M8011	CAP SCREW	2		X	X	M12 X 30
3	24M7226	WASHER	2		X	X	
4	24M7266	WASHER	2		X	X	
5	38H1007	ELBOW FITTING	2		X	X	
6	T77858	O-RING	8		X	X	
7	U12547	O-RING	10		X	X	
8	38H1070	FITTING	1		X	X	
9	38H1161	ADAPTER	1		X	X	
10	R26375	O-RING	1		X	X	
11	T77857	O-RING	1		X	X	
12	38H1163	ADAPTER	6		X	X	
13	T77932	O-RING	2		X	X	
14	AH125760	HYD. QUICK-CONNECT COUPLER	4		X	X	
15	AT191639	ELBOW FITTING	2		X	X	
16	AT195285	TEE FITTING	2		X	X	
17	AT302927	TRANSDUCER	2		X	X	(HFWD PUMP PRESSURE SENSOR)
18	R26287	O-RING	1		X	X	
19	AT307707	SWITCH	1		X	X	(HFWD TEMPERATURE SWITCH) (INCLUDES O-RING)
20	AT310959	BRACKET	1		X	X	
21	R26448	O-RING	6		X	X	
22	R77175	COVER	4		X	X	
23	T77613	O-RING	4		X	X	
24	38H1577	ELBOW FITTING	2		X	X	

HFWD ENGAGEMENT MANIFOLD

T206902 -UN-12JAN05

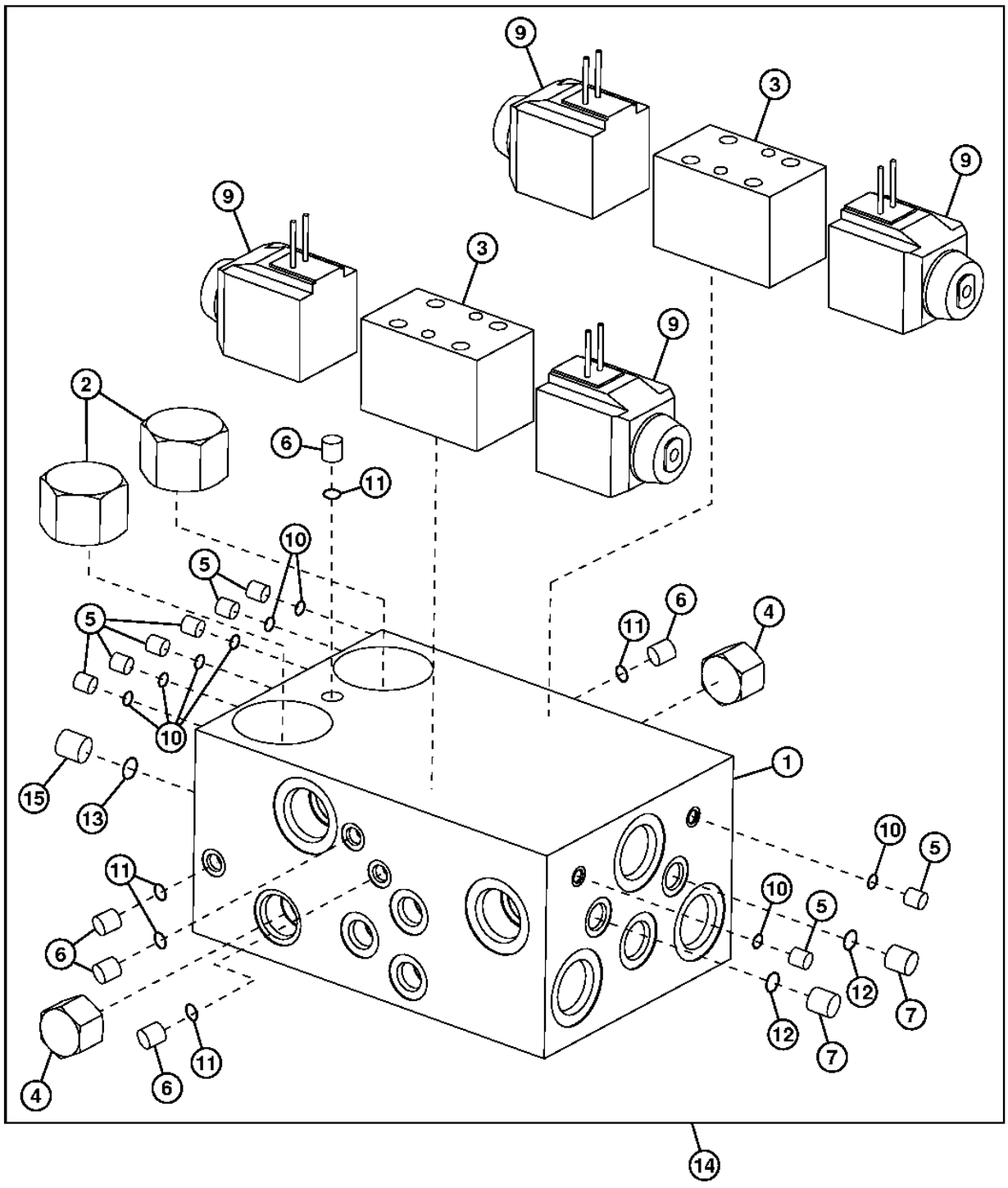

T206902

HFWD ENGAGEMENT MANIFOLD

KEY	PART NO.	PART NAME	QTY	SERIAL NO.	670D	672D	REMARKS
1	AT194986	CYLINDER BLOCK	1		X		
2	AT194988	PRESSURE RELIEF VALVE	2		X		
3	AT194990	HYD ACTUATED CONTROL VALVE	2		X		
4	AT194991	HYD ACTUATED CONTROL VALVE	2		X		
5	AT320199	PLUG	8		X		
6	AT320198	PLUG	5		X		
7	AT320179	PLUG	2		X		
8	AT194983	SHIM	2		X		(NOT ILLUSTRATED)
9	AT194989	STEEL	4		X		(SOLENOID COIL)
10	R30903	O-RING	8		X		
11	R26286	O-RING	5		X		
12	U12547	O-RING	2		X		
13	R26375	O-RING	1		X		
14	AT199626	FLOW CONTROL HYD. VALVE	1		X		(HFWD ENGAGEMENT MANIFOLD)
	AZ42092	GANG	1		X		(HFWD ENGAGEMENT MANIFOLD SEAL KIT)
15	AT320176	FITTING PLUG	1		X		

TRANSMISSION CONTROL UNIT

T201735 -UN-30JUL04

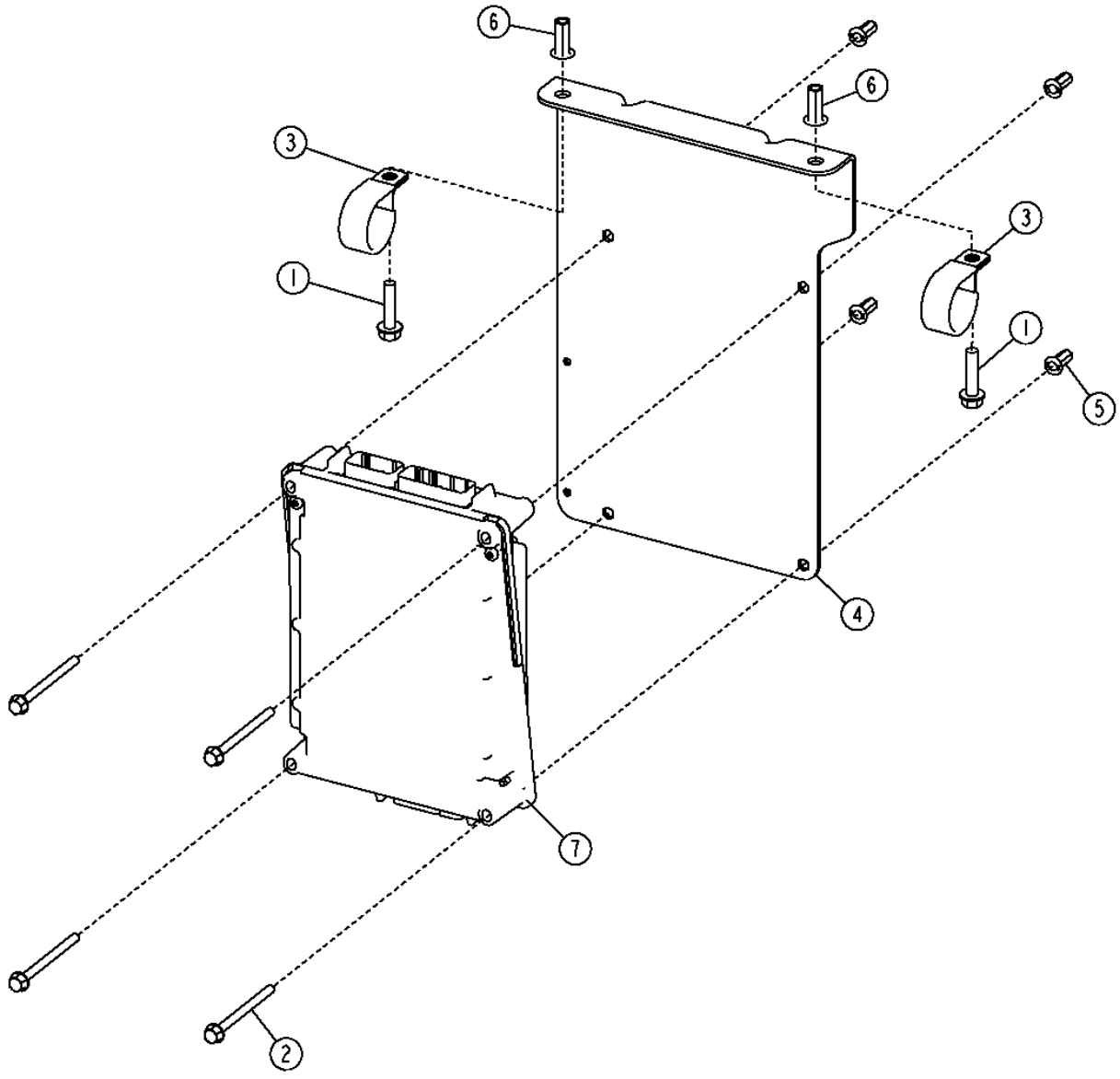

T201735

TRANSMISSION CONTROL UNIT

KEY	PART NO.	PART NAME	QTY	SERIAL NO.	670D	672D	REMARKS
1	19M7897	SCREW	2		X	X	M8 X 35
2	19M8145	SCREW	4		X	X	M6 X 80
3	AH77714	CLIP	2		X	X	
4	AT312607	BRACKET	1		X	X	
5	T196077	NUT	4		X	X	M6
6	T196079	NUT	2		X	X	
7	YZ105856	TRANSMISSION CONTROLLER	1		X	X	(TCU) (PREPROGRAMMED)

TRANSMISSION GEAR SELECTOR

T201740 -UN-08NOV04

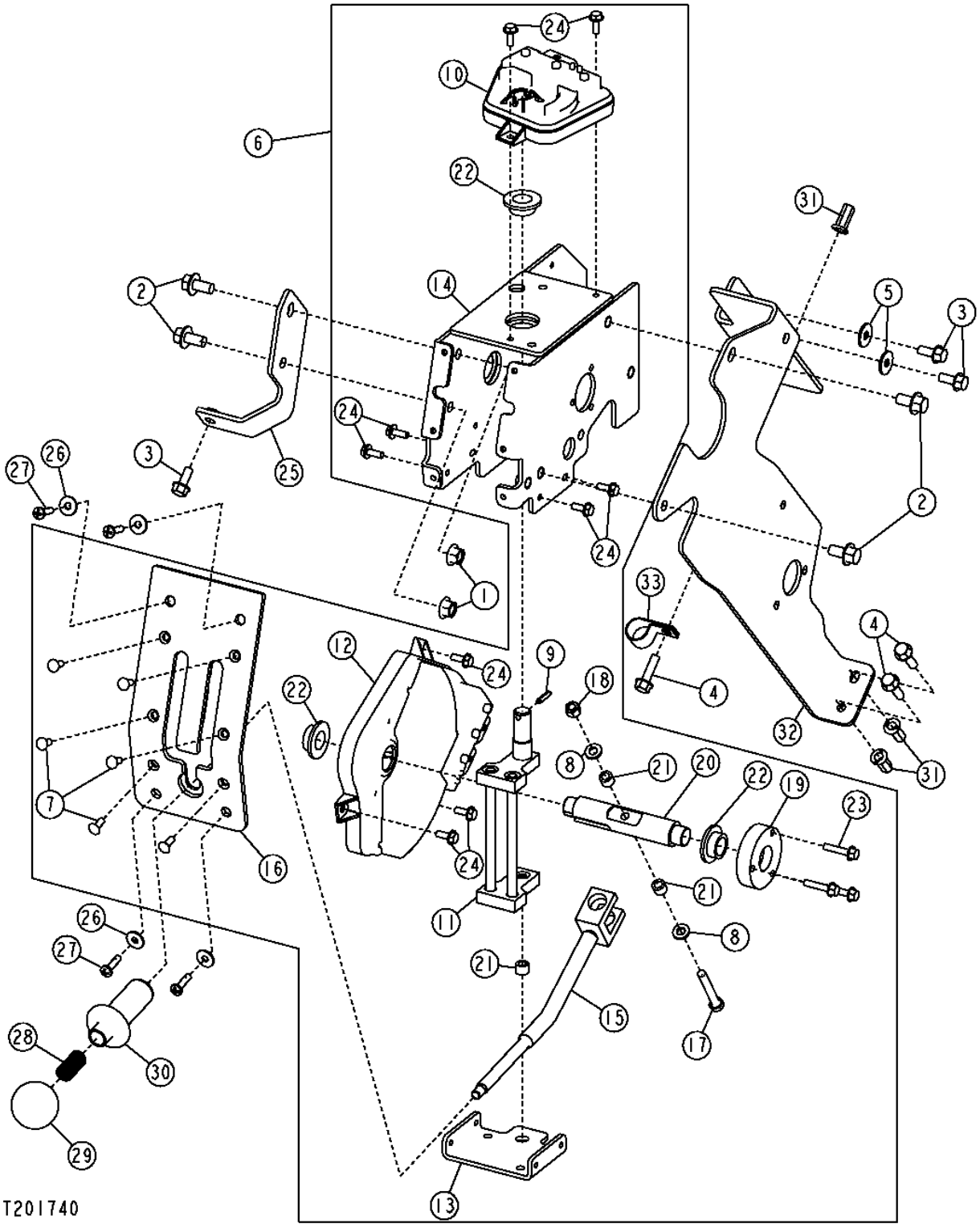

THIS PARTS LISTING IS CONTINUED

TRANSMISSION GEAR SELECTOR

KEY	PART NO.	PART NAME	QTY	SERIAL NO.	670D	672D	REMARKS
1	14M7296	FLANGE NUT	2		X	X	M10
2	19M7784	SCREW	4		X	X	M10 X 20
3	19M7866	BOLT	3		X	X	M8 X 20
4	19M7868	SCREW	2		X	X	M8 X 30
5	24M7298	WASHER	2		X	X	
6	AT302388	SHIFTER	1		X	X	
7	21M7399	SCREW	6		X	X	M6 X 16
8	24M7238	WASHER	2		X	X	
9	34H280	SPRING PIN	1		X	X	
10	AT174935	MODULE	1		X	X	
11	AT180923	CRADLE	1		X	X	
12	AT184684	TRANSMISSION CONTROLLER	1		X	X	
13	AT302104	BRACKET	1		X	X	
14	AT302105	FRAME	1		X	X	
15	AT304327	LEVER	1		X	X	
16	AT305398	PLATE	1		X	X	
17	T163333	CAP SCREW	1		X	X	
18	T16464	LOCK NUT	1		X	X	
19	T201461	BUSHING	1		X	X	
20	T201462	SHAFT	1		X	X	
21	T201481	BUSHING	3		X	X	
22	T201482	BUSHING	3		X	X	
23	19M7796	SCREW	3		X	X	M6 X 30
24	19M7775	SCREW	9		X	X	M6 X 16
25	AT305433	BRACKET	1		X	X	
26	24H1821	WASHER	4		X	X	
27	21M7310	SCREW	4		X	X	M6 X 25
28	T140922	COMPRESSION SPRING	1		X	X	
29	T162876	KNOB	1		X	X	
30	T164264	LOCKING COLLAR	1		X	X	
31	T196079	NUT	3		X	X	
32	T202792	BRACKET	1		X	X	(ALSO ORDER (3) T196077 AND (2) T196079)
33	T120536	CLAMP	1		X	X	(SUB FOR T78787, THIS APPLICATION)

INCHING PEDAL

T207178 -UN-28JAN05

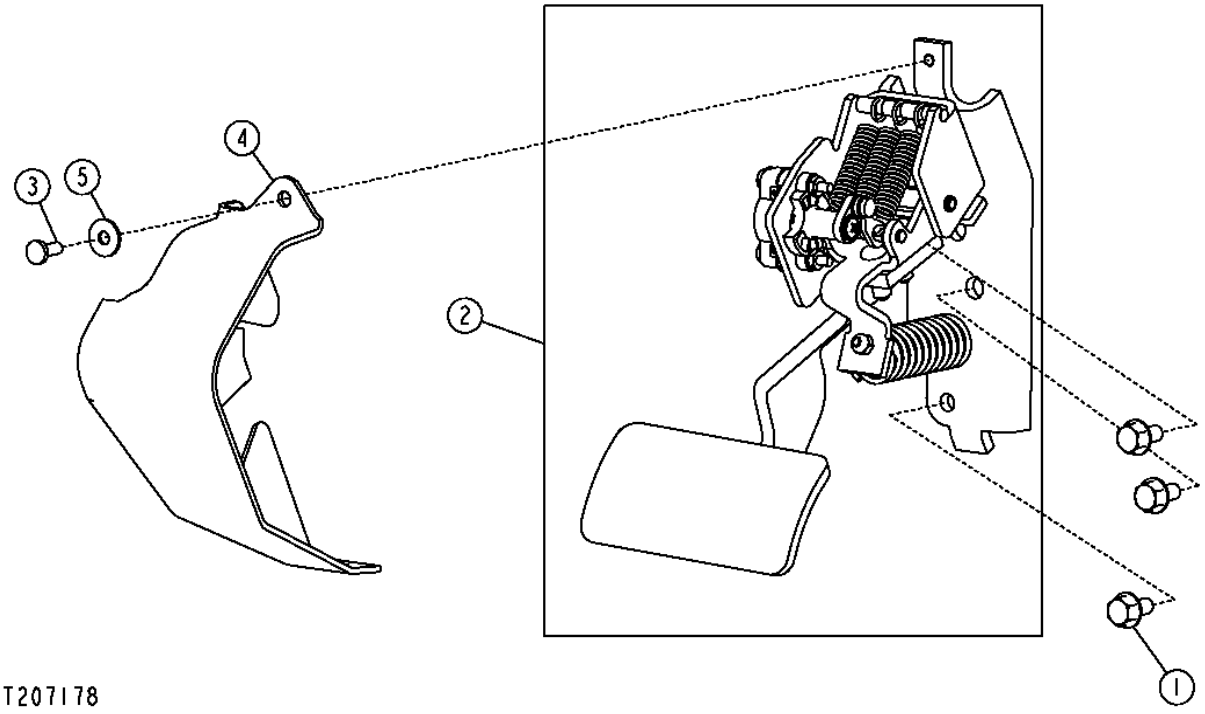

1F9

INCHING PEDAL

KEY	PART NO.	PART NAME	QTY	SERIAL NO.	670D	672D	REMARKS
1	19M7865	SCREW	3		X	X	M8 X 16
2	AT307200	PEDAL	1		X	X	
3	21M7292	SCREW	1		X	X	M6 X 16
4	T209947	COVER	1		X	X	
5	24H1821	WASHER	1		X	X	

TORSIONAL ISOLATOR

T155122 -UN-23MAY02

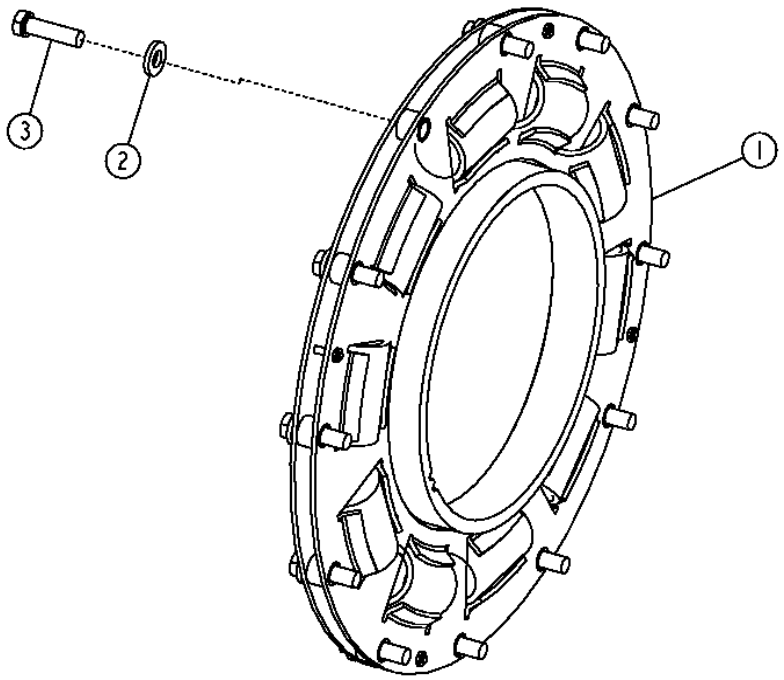

T155122

TORSIONAL ISOLATOR

KEY	PART NO.	PART NAME	QTY	SERIAL NO.	670D	672D	REMARKS
1	AT199018	ABSORBER	1		X	X	
2	T185424	WASHER	12		X	X	
3	19H3219	CAP SCREW	12		X	X	3/8" X 1-3/8"

TRANSMISSION OIL DIPSTICK AND FLYWHEEL HOUSING DRAIN

T212758 -UN-19JUL05

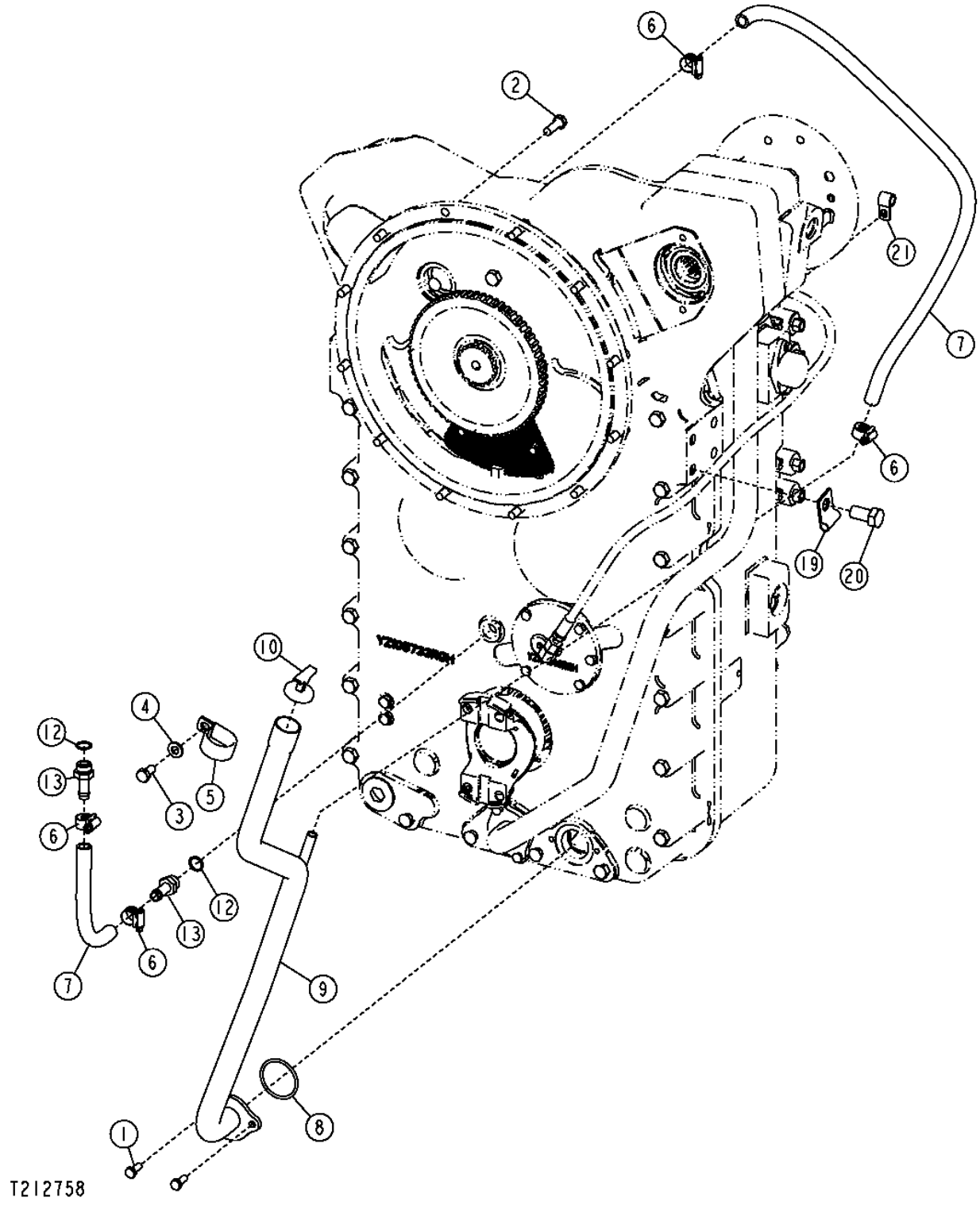

TRANSMISSION OIL DIPSTICK AND FLYWHEEL HOUSING DRAIN

KEY	PART NO.	PART NAME	QTY	SERIAL NO.	670D	672D	REMARKS
1	19M7139	CAP SCREW	2		X	X	M8 X 20
2	19M7662	CAP SCREW	12		X	X	M10 X 30
3	19M7938	CAP SCREW	1		X	X	M10 X 20
4	24M7239	WASHER	1		X	X	
5	AH77714	CLIP	1		X	X	
6	AR21836	CLAMP	2		X	X	
7	.....	BULK HOSE	2		X	X	(MAKE FROM T168383) (CUT TO LENGTH)
8	P50631	O-RING	1		X	X	
9	YZ104048	DIPSTICK TUBE	1		X	X	
10	YZ105042	DIPSTICK	1		X	X	
11	YZ105419	CLAMP	1		X	X	
12	R26375	O-RING	2		X	X	
13	T38282	HOSE FITTING	2		X	X	
19	AA31281	CLAMP	1		X	X	
20	19M8029	CAP SCREW	1		X	X	M16 X 30
21	YZ105419	CLAMP	1		X	X	

MEMORANDA

TRANSMISSION (COMPLETE)

T206634 -UN-05JAN05

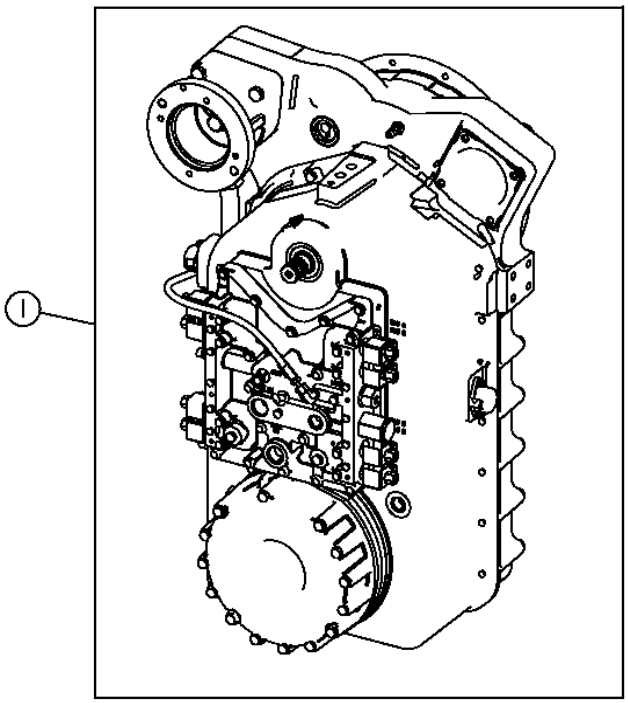

T206634

KEY	PART NO.	PART NAME	QTY	SERIAL NO.	670D	672D	REMARKS
1	AT317808	TRANSMISSION	1		X		REMANUFACTURED (COMPONENT EXCHANGE) (NON-HFWD)(YZ19068 ORIGINAL TRANSMISSION)
	AT317809	TRANSMISSION	1			X	REMANUFACTURED (COMPONENT EXCHANGE)(HFWD) (YZ19067 ORIGINAL TRANSMISSION)

FRONT TRANSMISSION CASE (670D)

YZ105133PCD01 -UN-23AUG04

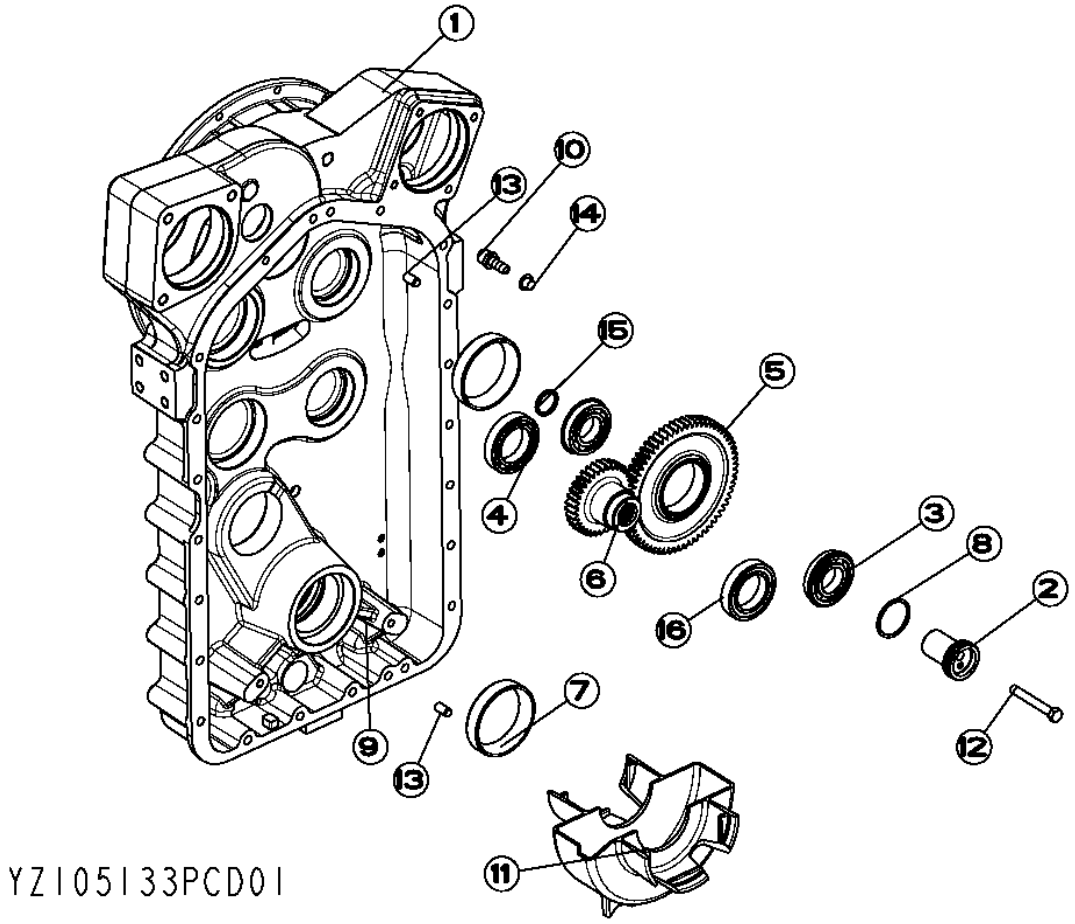

FRONT TRANSMISSION CASE (670D)

KEY	PART NO.	PART NAME	QTY	SERIAL NO.	670D	672D	REMARKS
1	YZ105385	HOUSING	1		X		FRONT HOUSING, (INCLUDES (2) F2710616, (2) F85004 AND (2) R28782)
2	YZ101474	SHAFT	2		X		
3	YZ103148	BALL BEARING	2		X		
4	F40111	BALL BEARING	1		X		
5	YZ105096	GEAR	1		X		
6	YZ105097	GEAR	1		X		
7	YZ103146	BEARING CUP	2		X		
8	B3690R	O-RING	2		X		(SUB FOR F37030226)
9	F85120	FITTING PLUG	1		X		
10	.....	HOSE FITTING	1		X		(F3310305 NO LONGER AVAILABLE)
11	YZ105375	TROUGH	1		X		(SUB FOR YZ103405)
12	.....	CAP SCREW	2		X		(19M2900 NO LONGER AVAILABLE)
13	F2710616	DOWEL PIN	2		X		
14	F2310018	PLUG	1		X		
15	F37030219	O-RING	1		X		
16	YZ100100	BALL BEARING	1		X		

FRONT TRANSMISSION CASE (672D)

YZ105123PCD01 -UN-24AUG04

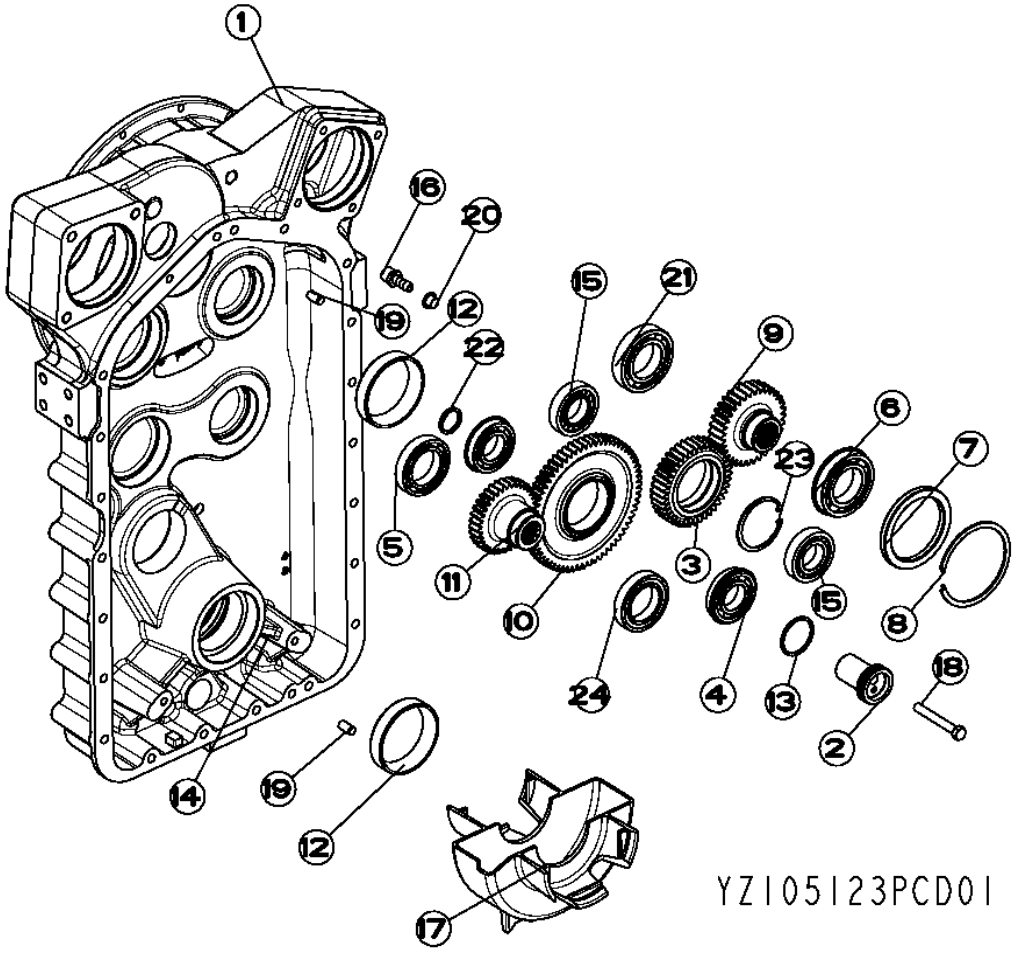

FRONT TRANSMISSION CASE (672D)

KEY	PART NO.	PART NAME	QTY	SERIAL NO.	670D	672D	REMARKS
1	YZ105385	HOUSING	1			X	(INCLUDES (2) F2710616, (2) U44115, (2) R28782, F85108, YZ105538, (2) 24M1604, (2) 19M3115, YZ105539) FRONT HOUSING KIT
2	YZ101474	SHAFT	2			X	
3	YZ105094	GEAR	1			X	
4	YZ103148	BALL BEARING	2			X	
5	F40111	BALL BEARING	1			X	
6	F40211R	BALL BEARING	1			X	
7	YZ105320	SPACER	1			X	
8	N131806	SNAP RING	1			X	
9	YZ105319	GEAR	1			X	
10	YZ105096	GEAR	1			X	
11	YZ105097	GEAR	1			X	
12	YZ103146	BEARING CUP	2			X	
13	P50631	O-RING	2			X	(SUB FOR F37030226)
14	F85120	FITTING PLUG	1			X	
15	YZ105122	CYLINDRICAL ROLLER BEARING	2			X	
16	.....	FITTING	1			X	HOSE FITTING, (F3310305 NO LONGER AVAILABLE)
17	YZ105375	TROUGH	1			X	(SUB FOR YZ103405)
18	.....	BOLT	2			X	CAPSCREW, (19M2900 NO LONGER AVAILABLE)
19	F2710616	DOWEL PIN	2			X	
20	F2310018	PLUG	1			X	
21	YZ103455	BEARING	1			X	
22	F37030219	O-RING	1			X	
23	F39000315	SNAP RING	1			X	
24	YZ100100	BALL BEARING	1			X	

REAR TRANSMISSION HOUSING

YZ105125PCD02 -UN-26JUL05

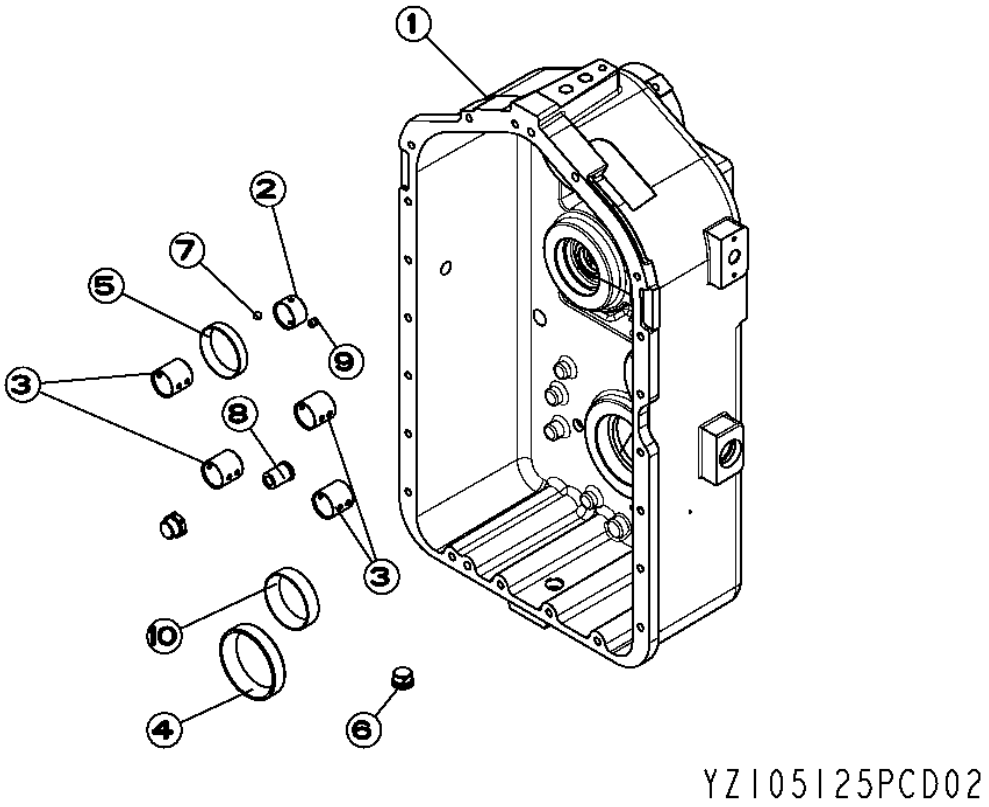

REAR TRANSMISSION HOUSING

KEY	PART NO.	PART NAME	QTY	SERIAL NO.	670D	672D	REMARKS
1	YZ105533	HOUSING	1		X	X	REAR
2	4008024	SLEEVE	1		X	X	
3	4008023	SLEEVE	4		X	X	
4	YZ103146	BEARING CUP	1		X	X	
5	YZ104280	BEARING CUP	1		X	X	
6	F85112	DRAIN PLUG	1		X	X	
	F37060912	O-RING	1		X	X	
7	F7400014D	BALL	1		X	X	
8	YZ250262	PRESSURE RELIEF VALVE	1		X	X	(SUB FOR YZ102752)
9	YZ101353	PLUG	1		X	X	(SUB FOR YZ105851)
10	YZ104087	BEARING CUP	1		X	X	

TRANSMISSION CASE HARDWARE

YZ105131 -UN-27JUL05

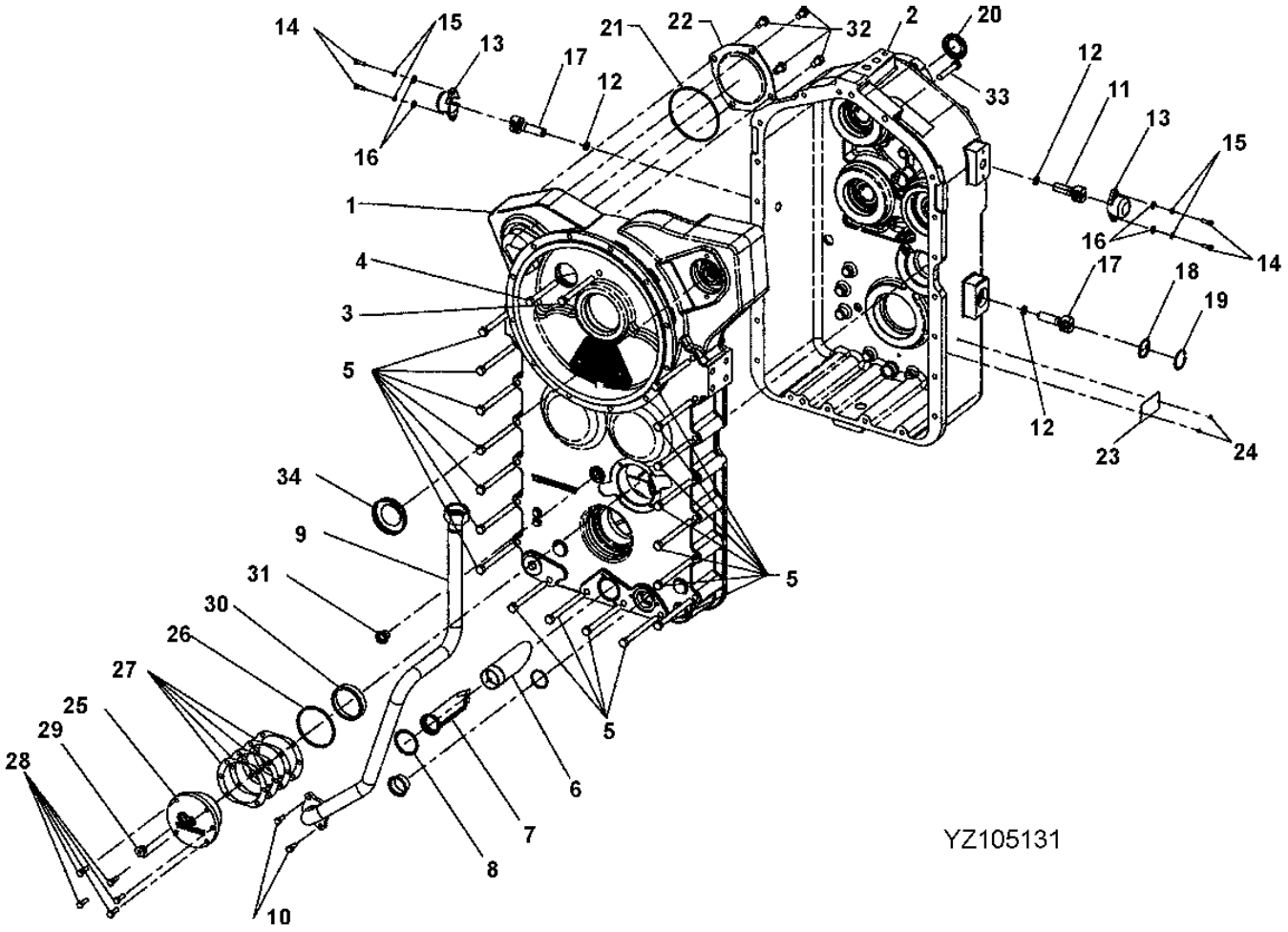

TRANSMISSION CASE HARDWARE

KEY	PART NO.	PART NAME	QTY	SERIAL NO.	670D	672D	REMARKS
1	.....	HOUSING	1		X	X	FRONT HOUSING
2	.....	HOUSING	1		X	X	REAR HOUSING
3	19M2905	CAP SCREW	2		X	X	M12 X 120
4	19M7289	CAP SCREW	1		X	X	M12 X 110, (SUB FOR 19M2903)
5	19M7758	CAP SCREW	18		X	X	M12 X 130, (SUB FOR 19M2906)
6	YZ102234	DEFLECTOR	1		X	X	BAFFLE
7	YZ104125	SCREEN	1		X	X	
8	P50631	O-RING	1		X	X	(SUB FOR F37030226)
9	YZ105259	OIL LINE	1		X	X	
10	19M9064	SCREW	2		X	X	M8 X 16, (SUB FOR 19M3129)
11	RE12119	WHEEL SPEED SENSOR	1		X	X	
12	F37020114	O-RING	3		X	X	
13	R67230	COVER	2		X	X	
14	19M3118	CAP SCREW	4		X	X	M6 X 20
15	12H302	LOCK WASHER	4		X	X	1/4"
16	24H1287	WASHER	4		X	X	9/32" X 5/8" X 0.065"
17	YZ104746	SENSOR	2		X	X	
18	YZ104678	LOCK WASHER	1		X	X	(SUB FOR YZ104114)
19	F39000175	SNAP RING	1		X	X	(SUB FOR YZ104121)
20	YZ105354	SEAL	1		X	X	
21	YZ105724	PLATE	1		X	X	
22	F37020159	O-RING	1		X	X	
23	YZ250086	SERIAL NUMBER PLATE	1		X	X	
24	F310063	SCREW	2		X	X	
25	YZ104140	RETAINER	1		X	X	
26	F37030239	O-RING	1		X	X	
27	YZ104170	SHIM	1		X	X	
28	19M3131	CAP SCREW	5		X	X	M8 X 25
29	F85108	FITTING PLUG	1		X	X	
30	YZ104280	BEARING CUP	1		X	X	
31	.....	PLUG	1		X	X	(R66405 NO LONGER AVAILABLE)
32	19M3160	CAP SCREW	4		X	X	
33	19M6458	CAP SCREW	1		X	X	
34	F23303	PLUG	1		X	X	

TRANSMISSION SCREEN

YZ105123A -UN-25AUG04

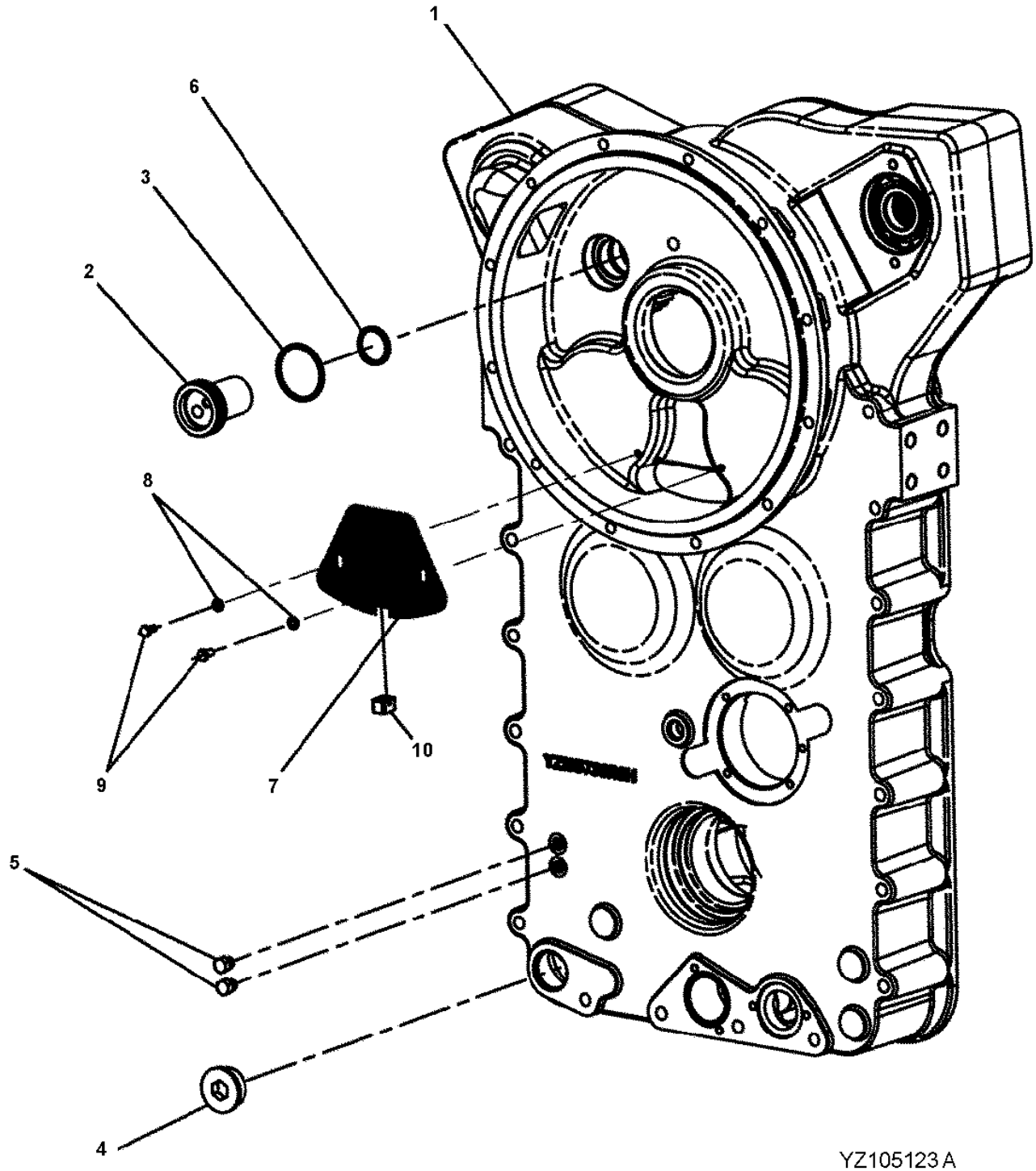

TRANSMISSION SCREEN

KEY	PART NO.	PART NAME	QTY	SERIAL NO.	670D	672D	REMARKS
1	YZ106205	HOUSING	1		X	X	(SUB FOR YZ105575) FRONT
2	YZ101474	SHAFT	1		X	X	
3	P50631	O-RING	1		X	X	(SUB FOR F37030226)
4	F85120	FITTING PLUG	1		X	X	
	F37060920	O-RING	1		X	X	(USE WITH F85120) (NOT ILLUSTRATED)
5	U44115	FITTING PLUG	2		X	X	
	R28782	O-RING	2		X	X	(USE WITH U44115) (NOT ILLUSTRATED)
6	F37030219	O-RING	1		X	X	
7	YZ105538	SCREEN	1		X	X	
8	24M7088	WASHER	1		X	X	
9	19M3115	CAP SCREW	2		X	X	M6 X 12
10	YZ105539	MAGNET	1		X	X	

TRANSMISSION FIRST STAGE ASSEMBLY

YZ103673PCD01 -UN-14DEC04

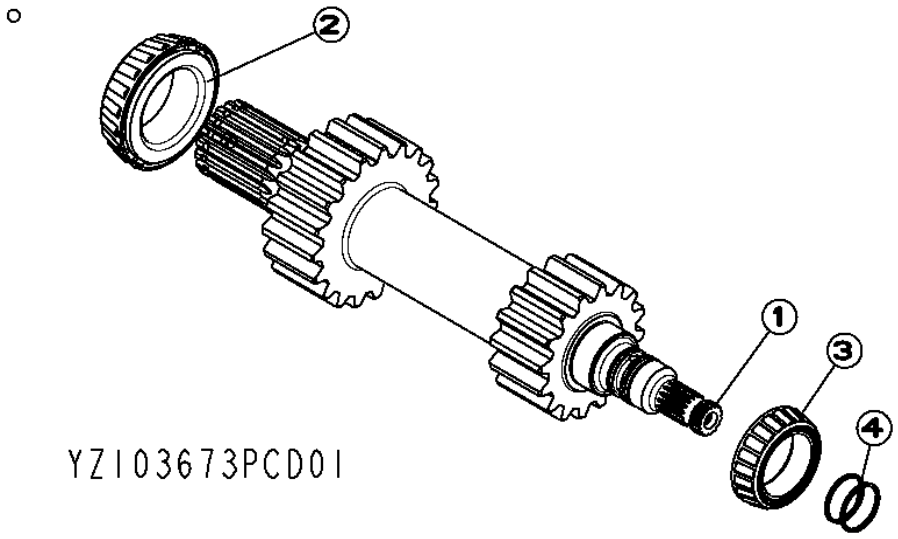

TRANSMISSION FIRST STAGE ASSEMBLY

KEY	PART NO.	PART NAME	QTY	SERIAL NO.	670D	672D	REMARKS
1	YZ106202	SHAFT	1		X	X	INPUT, (SUB FOR YZ103847)
2	YZ103188	BEARING CONE	1		X	X	
3	YZ104281	BEARING CUP	1		X	X	
4	YZ250161	SEAL	2		X	X	(SUB FOR 40B1113)

TRANSMISSION SECOND STAGE ASSEMBLY
(YZ105413)

T148929A -UN-27AUG04

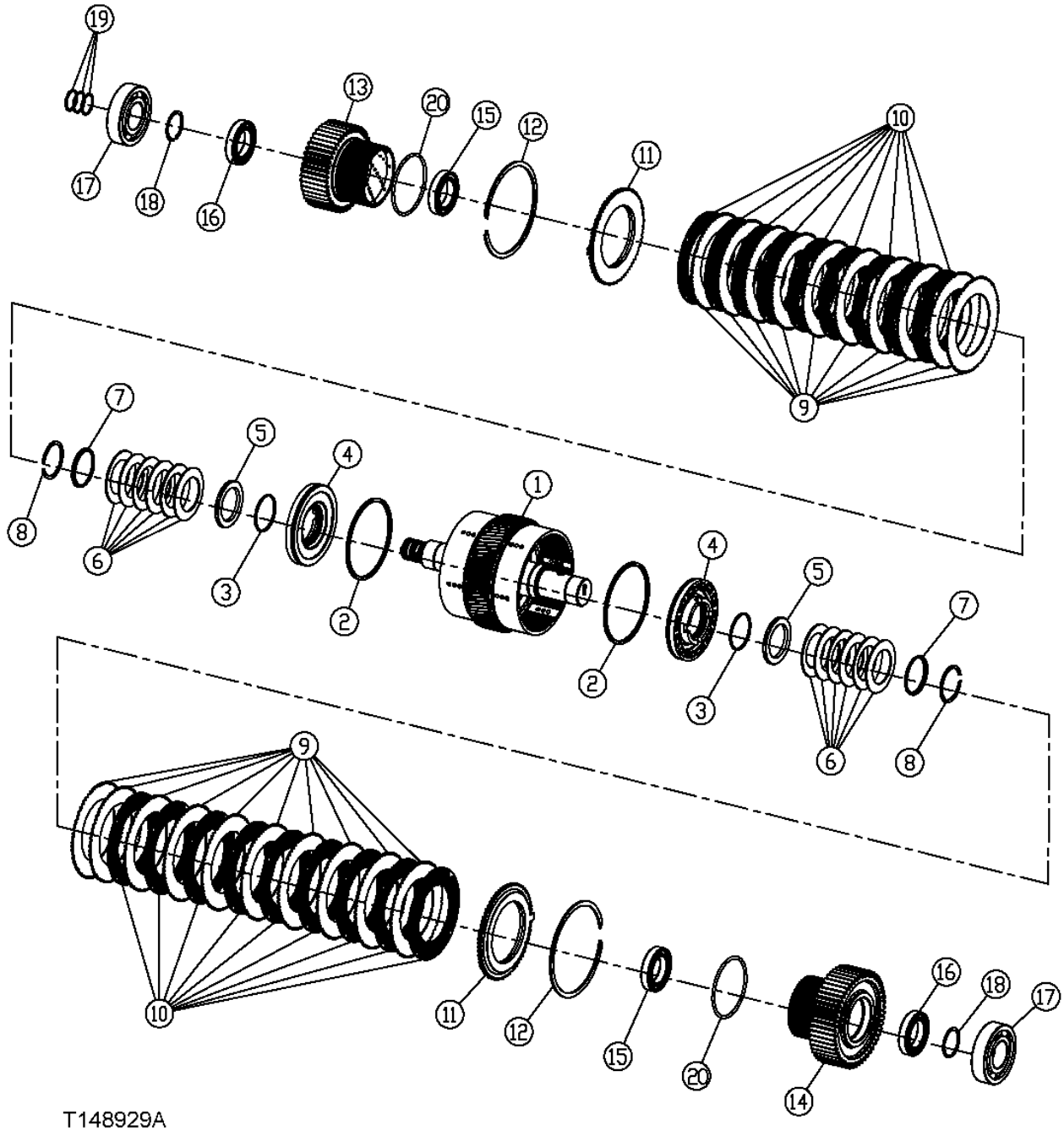

TRANSMISSION SECOND STAGE ASSEMBLY

KEY	PART NO.	PART NAME	QTY	SERIAL NO.	670D	672D	REMARKS
1	YZ105508	UNIVERSAL DRIVESHAFT	1		X	X	SECOND STAGE
2	YZ150119	SEAL	2		X	X	
3	F37020144	O-RING	2		X	X	
4	YZ105689	PISTON	2		X	X	(SUB FOR 4008520)
5	4008521	WASHER	2		X	X	
6	4003725	DISK SPRING	12		X	X	
7	4009711	RETAINER	2		X	X	
8	F81743	SNAP RING	2		X	X	
9	YZ106211	SEPARATOR	20		X	X	(SUB YZ104908)
10	YZ105493	CLUTCH PLATE	18		X	X	(SUB FOR YZ105892)
11	YZ105454	RETAINER	2		X	X	
12	YZ105465	SNAP RING	2		X	X	
13	YZ105059	GEAR	1		X	X	59 T
14	YZ103113	GEAR	1		X	X	51 T
15	YZ105415	BALL BEARING	2		X	X	
16	YZ106078	BALL BEARING	2		X	X	(SUB FOR F40110)
17	YZ106184	BALL BEARING	2		X	X	(SUB FOR YZ150041)
18	YZ105485	SNAP RING	2		X	X	(SUB FOR F81696)
19	YZ250161	SEAL	3		X	X	
20	F37030244G	O-RING	2		X	X	

TRANSMISSION THIRD STAGE ASSEMBLY

T148930A -UN-30AUG04

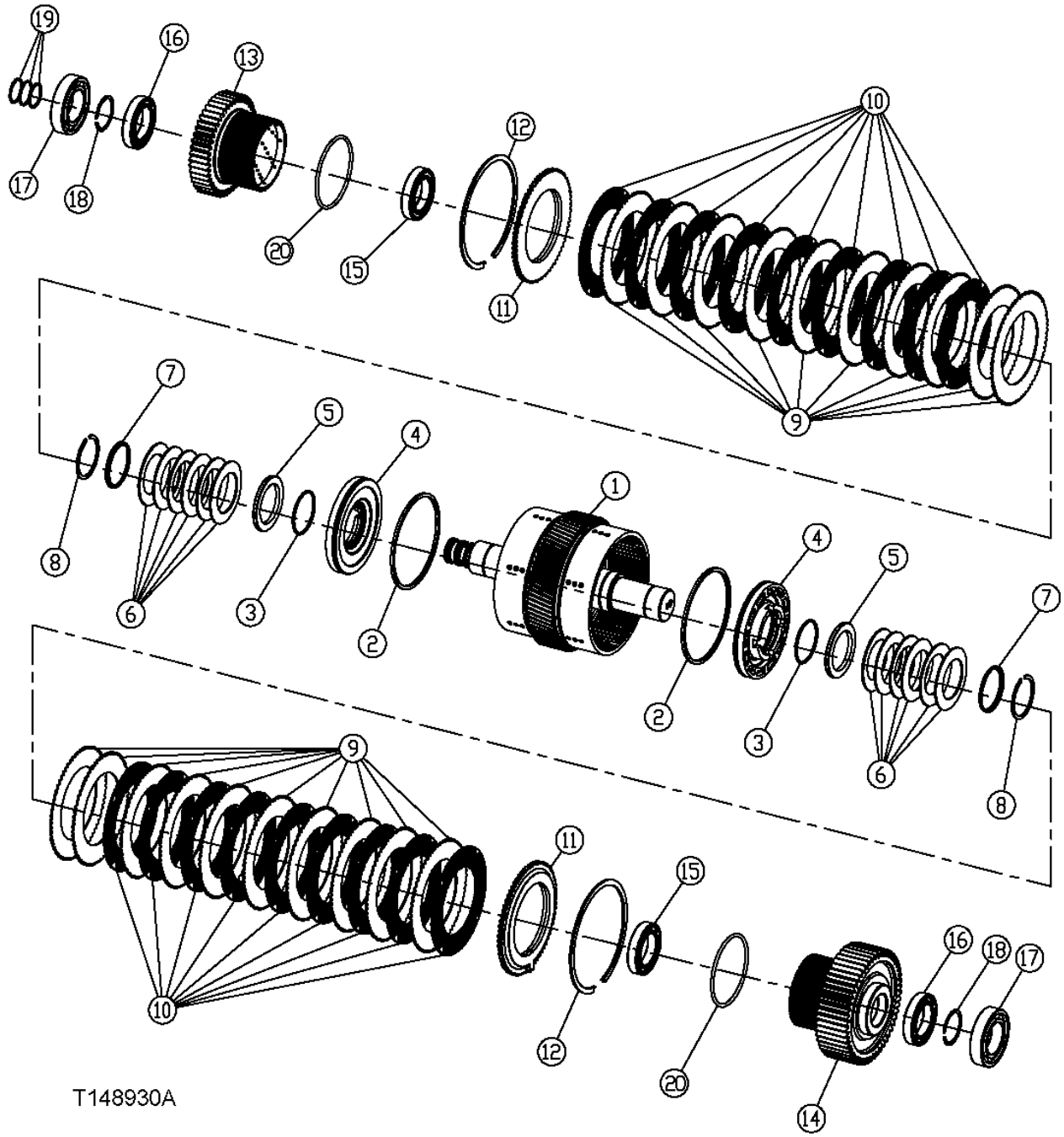

TRANSMISSION THIRD STAGE ASSEMBLY

KEY	PART NO.	PART NAME	QTY	SERIAL NO.	670D	672D	REMARKS
1	YZ105509	UNIVERSAL DRIVESHAFT	1		X	X	THIRD STAGE, (SUB FOR YZ102996)
2	YZ150119	SEAL	2		X	X	
3	F37020144	O-RING	2		X	X	
4	YZ105689	PISTON	2		X	X	(SUB FOR 4008520)
5	4008521	WASHER	2		X	X	
6	4003725	DISK SPRING	12		X	X	
7	4009711	RETAINER	2		X	X	
8	F81743	SNAP RING	2		X	X	
9	YZ106211	SEPARATOR	20		X	X	(SUB YZ104908)
10	YZ105493	CLUTCH PLATE	18		X	X	(SUB FOR YZ105892)
11	YZ105454	RETAINER	2		X	X	
12	YZ105465	SNAP RING	2		X	X	
13	YZ103111	GEAR	1		X	X	59 T
14	YZ103112	GEAR	1		X	X	51 T
15	YZ105415	BALL BEARING	2		X	X	
16	YZ106078	BALL BEARING	2		X	X	(SUB FOR F40110)
17	YZ106185	BALL BEARING	2		X	X	(SUB FOR YZ103129)
18	YZ105485	SNAP RING	2		X	X	(SUB FOR F81696)
19	YZ250161	SEAL	3		X	X	
20	F37030244G	O-RING	2		X	X	

TRANSMISSION FOURTH STAGE ASSEMBLY

T148933 -UN-10DEC01

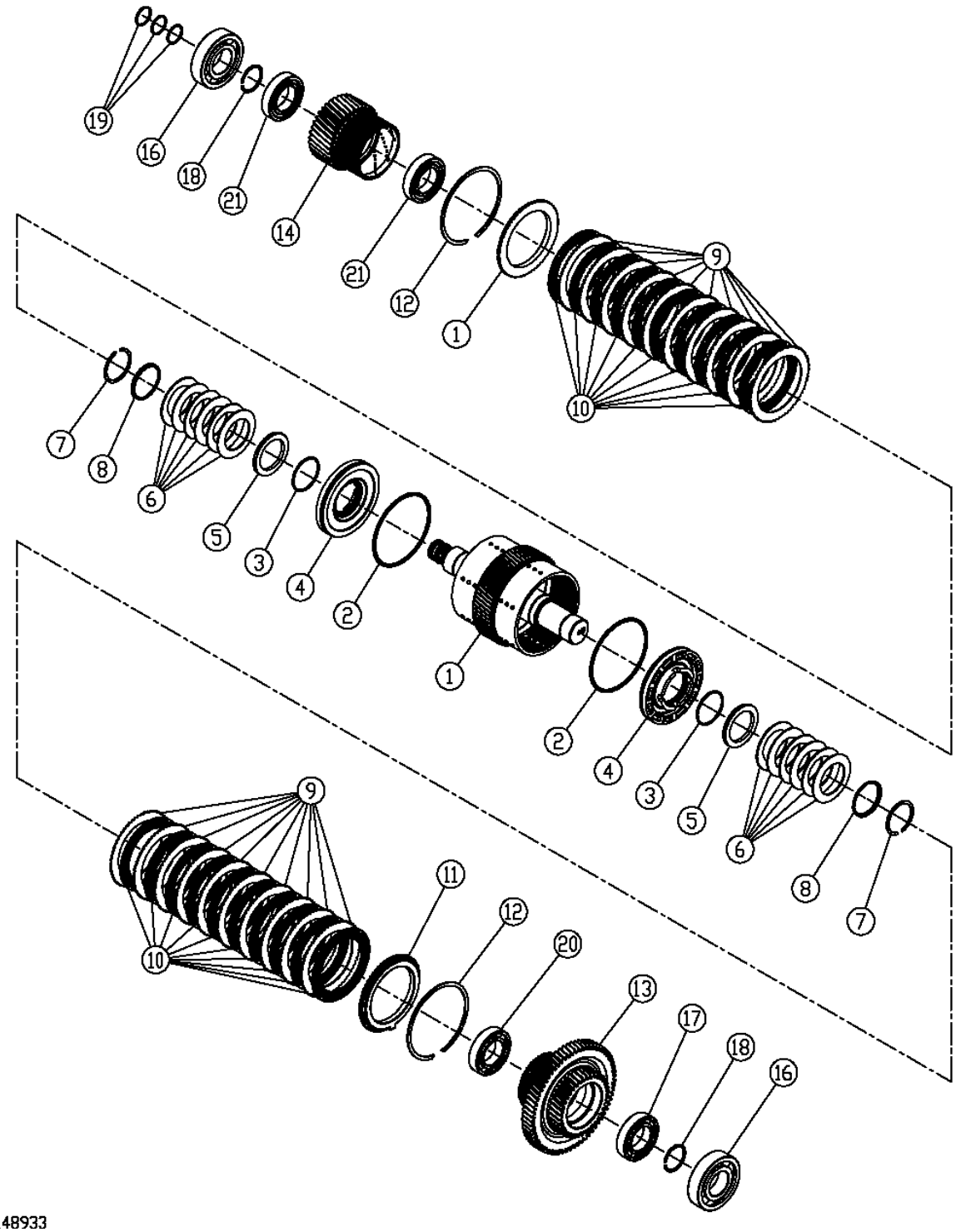

T148933

TRANSMISSION FOURTH STAGE ASSEMBLY

KEY	PART NO.	PART NAME	QTY	SERIAL NO.	670D	672D	REMARKS
1	YZ105464	UNIVERSAL DRIVESHAFT	1		X	X	FOURTH STAGE, (SUB FOR YZ105464)
2	YZ150119	SEAL	2		X	X	
3	F37020144	O-RING	2		X	X	
4	YZ105689	PISTON	2		X	X	(SUB FOR 4008520)
5	4008521	WASHER	2		X	X	
6	4003725	DISK SPRING	12		X	X	
7	F81743	SNAP RING	2		X	X	
8	4009711	RETAINER	2		X	X	
9	YZ106212	SEPARATOR	20		X	X	(SUB YZ150185)
10	YZ105891	CLUTCH PLATE	20		X	X	(SUB FOR YZ105494)
11	YZ150217	RETAINER	2		X	X	(SUB FOR YZ100356)
12	YZ105982	SNAP RING	2		X	X	(SUB FOR YZ103040)
13	YZ105443	GEAR	1		X	X	38/39 T
14	YZ103100	GEAR	1		X	X	38 T
16	YZ106163	BALL BEARING	2		X	X	(SUB FOR YZ103876)
17	YZ103875	BALL BEARING	1		X	X	
18	YZ105485	SNAP RING	2		X	X	(SUB FOR F81696)
19	YZ250161	SEAL	3		X	X	
20	YZ103144	BALL BEARING	1		X	X	
21	YZ104733	BEARING	2		X	X	

TRANSMISSION FIFTH STAGE ASSEMBLY

T148939 -UN-10DEC01

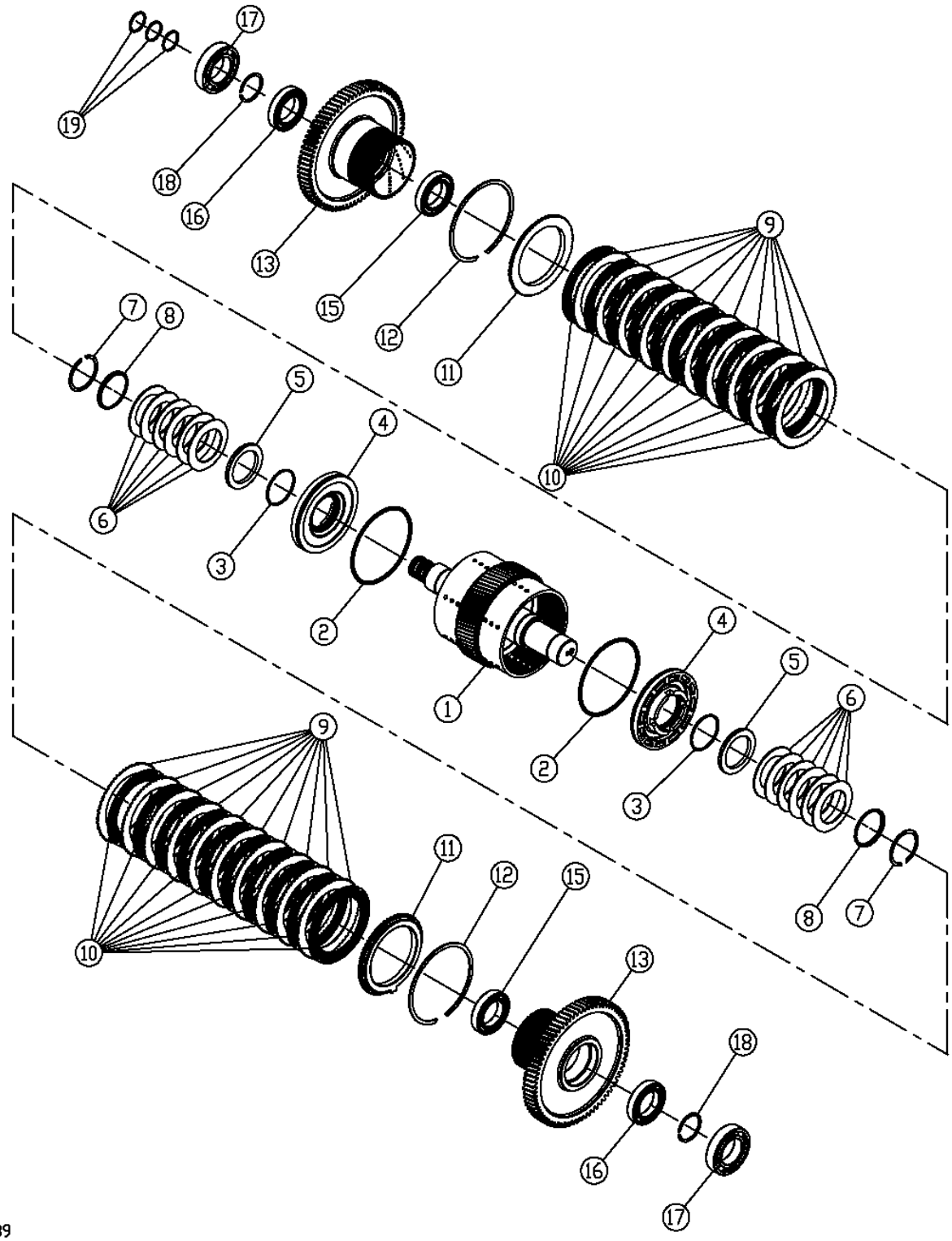

TRANSMISSION FIFTH STAGE ASSEMBLY

KEY	PART NO.	PART NAME	QTY	SERIAL NO.	670D	672D	REMARKS
1	YZ105463	UNIVERSAL DRIVESHAFT	1		X	X	FIFTH STAGE, (SUB FOR YZ103130)
2	YZ150119	SEAL	2		X	X	
3	F37020144	O-RING	2		X	X	
4	YZ105689	PISTON	2		X	X	(SUB FOR 4008520)
5	4008521	WASHER	2		X	X	
6	4003725	DISK SPRING	12		X	X	
7	F81743	SNAP RING	2		X	X	
8	4009711	RETAINER	2		X	X	
9	YZ106212	SEPARATOR	20		X	X	(SUB YZ150185)
10	YZ105891	CLUTCH PLATE	20		X	X	(SUB FOR YZ105494)
11	YZ150217	RETAINER	2		X	X	(SUB FOR YZ100356)
12	YZ105982	SNAP RING	2		X	X	(SUB FOR YZ103040)
13	YZ103102	GEAR	2		X	X	75 T
15	YZ105415	BALL BEARING	2		X	X	
16	YZ106078	BALL BEARING	2		X	X	(SUB FOR F40110)
17	YZ106185	BALL BEARING	2		X	X	(SUB FOR YZ103129)
18	YZ105485	SNAP RING	2		X	X	(SUB FOR F81696)
19	YZ250161	SEAL	3		X	X	

TRANSMISSION SIXTH STAGE ASSEMBLY

T148940 -UN-10DEC01

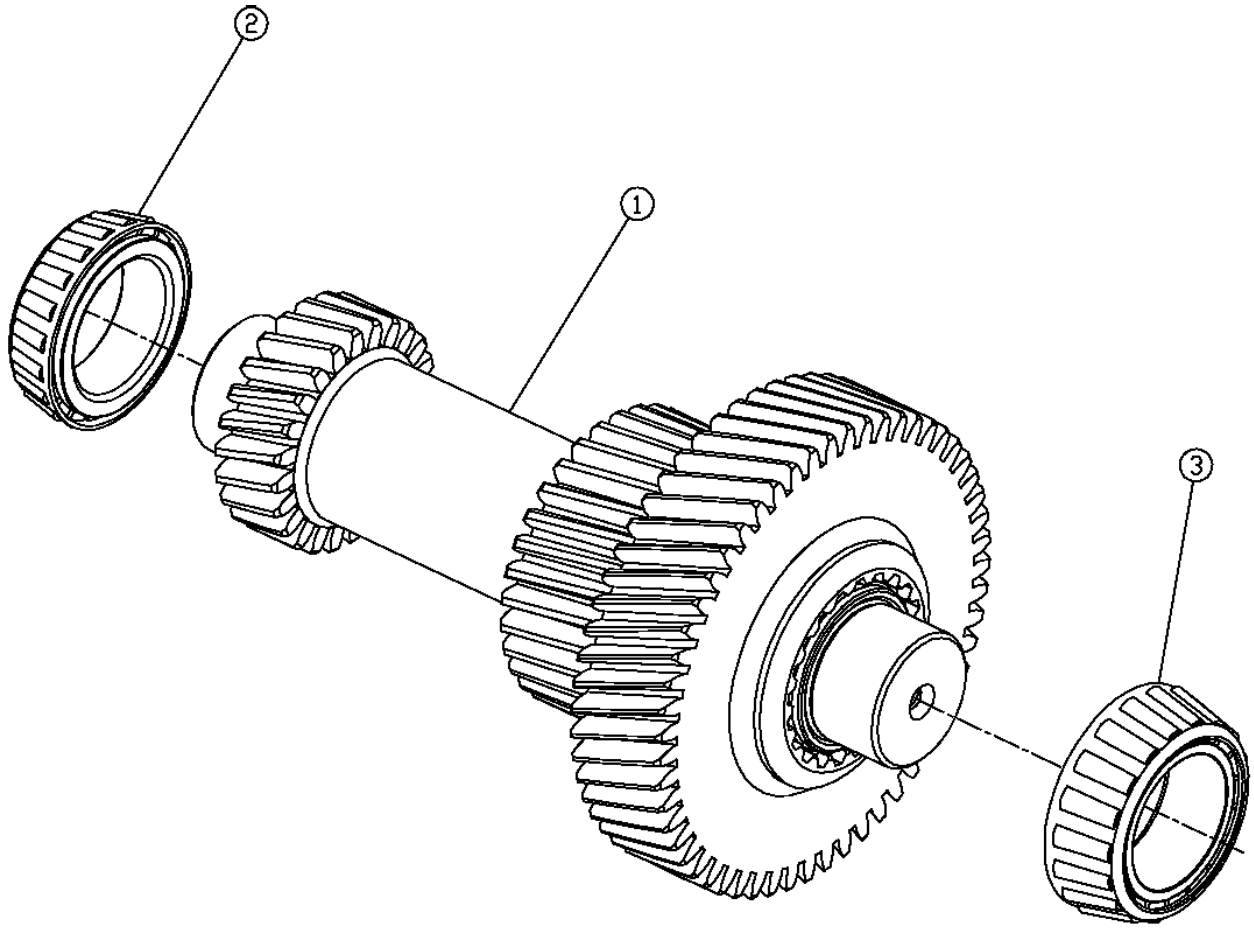

T148940

TRANSMISSION SIXTH STAGE ASSEMBLY

KEY	PART NO.	PART NAME	QTY	SERIAL NO.	670D	672D	REMARKS
1	YZ104653	SHAFT	1		X	X	
2	YZ104281	BEARING CUP	1		X	X	
3	YZ104088	BEARING CONE	1		X	X	

TRANSMISSION OUTPUT

TP48791 -UN-09MAY96

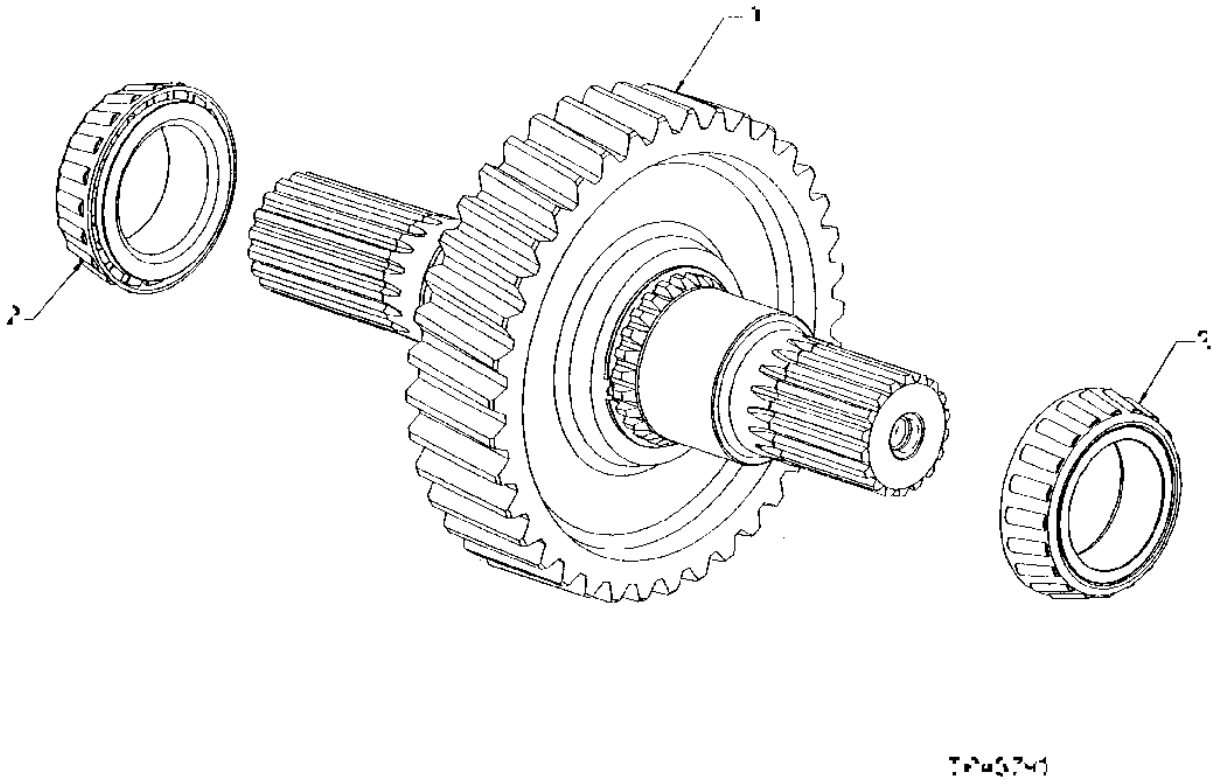

TRANSMISSION OUTPUT

KEY	PART NO.	PART NAME	QTY	SERIAL NO.	670D	672D	REMARKS
1	YZ104154	SHAFT	1		X	X	
2	YZ103188	BEARING CONE	2		X	X	

PARK BRAKE

T148941C -UN-30AUG04

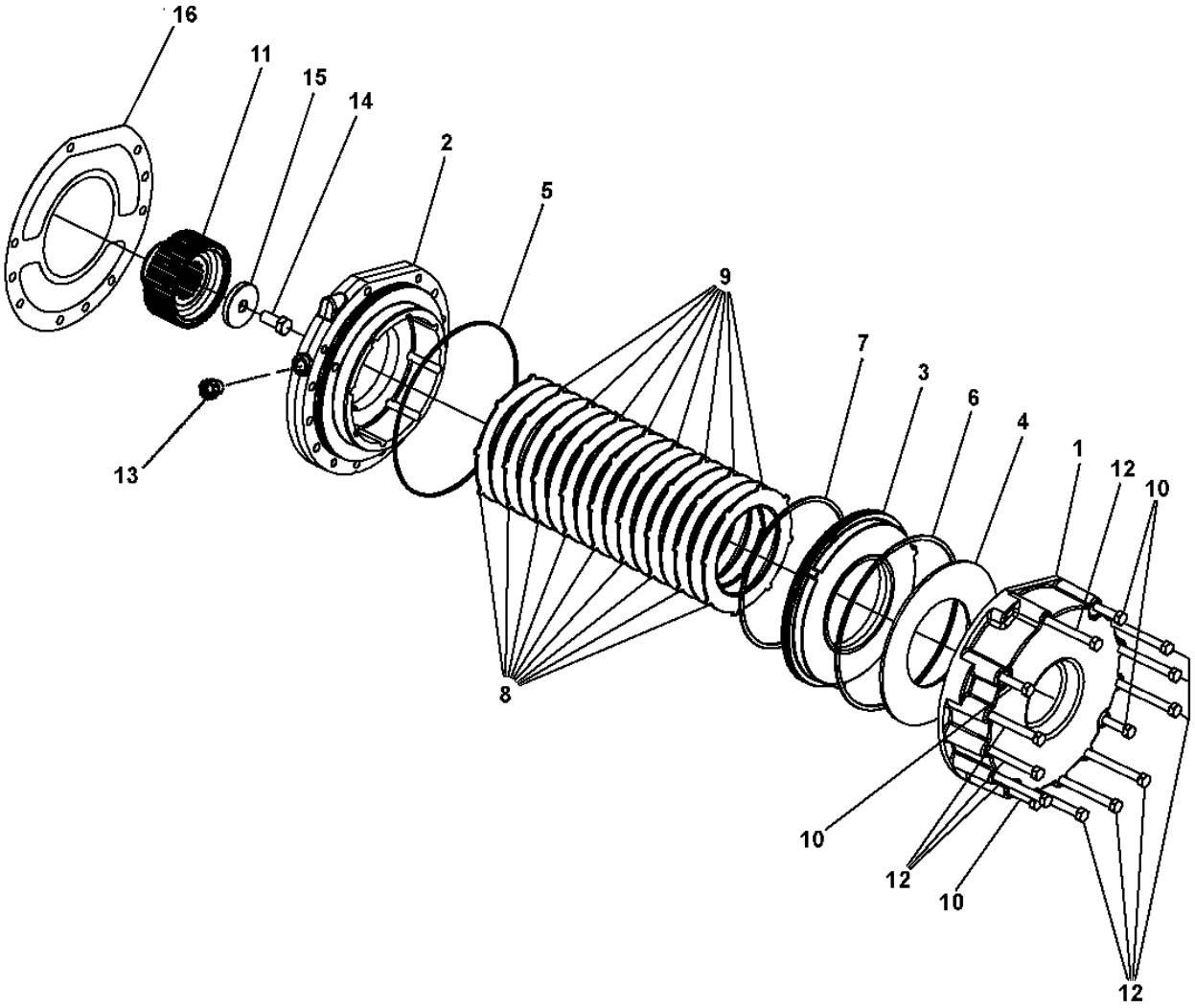

T148941C

PARK BRAKE

KEY	PART NO.	PART NAME	QTY	SERIAL NO.	670D	672D	REMARKS
1	YZ104052	COVER	1		X	X	
2	YZ103067	HOUSING	1		X	X	
3	YZ103185	PISTON	1		X	X	
4	YZ103115	DISK SPRING	1		X	X	PISTON RETURN
5	F37030275	O-RING	1		X	X	
6	YZ101349	SEAL	1		X	X	OUTER PISTON
7	YZ101350	SEAL	1		X	X	INNER PISTON
8	YZ100952	CLUTCH PLATE	9		X	X	SEPARATOR
9	RE234261	BRAKE DISK	8		X	X	(SUB FOR AR94517)
10	19M7289	CAP SCREW	4		X	X	M12 X 110, (SUB FOR 19M2903)
11	YZ105386	HUB	1		X	X	
12	19M7716	CAP SCREW	10		X	X	
13	.....	PLUG	1		X	X	(R66405 NO LONGER AVAILABLE)
14	19M3187	CAP SCREW	1		X	X	
15	4005234	WASHER	1		X	X	
16	YZ104871	GASKET	1		X	X	

TRANSMISSION YOKE

YZ105897PCD01 -UN-20AUG04

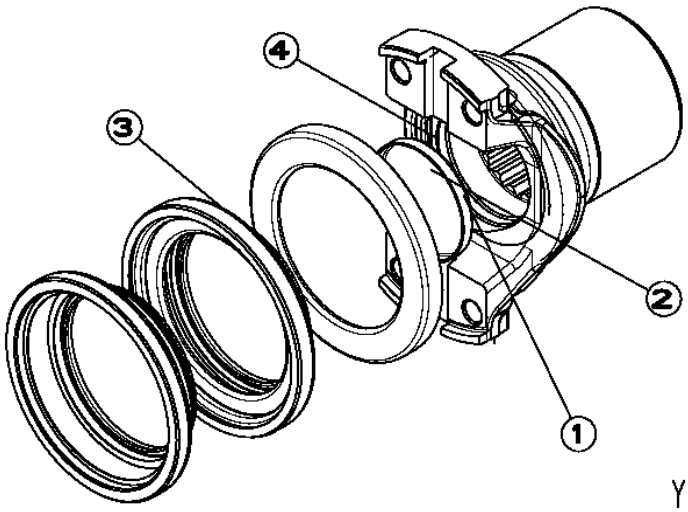

TRANSMISSION YOKE

KEY	PART NO.	PART NAME	QTY	SERIAL NO.	670D	672D	REMARKS
1	YZ105685	YOKE	1			X	
	YZ105685	YOKE	1		X		
2	YZ105914	SEAL	1		X	X	(SUB YZ104237)
3	YZ101905	CAP	1		X	X	EXPANSION
4	YZ105893	SEAL	1		X	X	

TRANSMISSION CONTROL VALVE MOUNTING

YZ104586PCD01 -UN-30AUG04

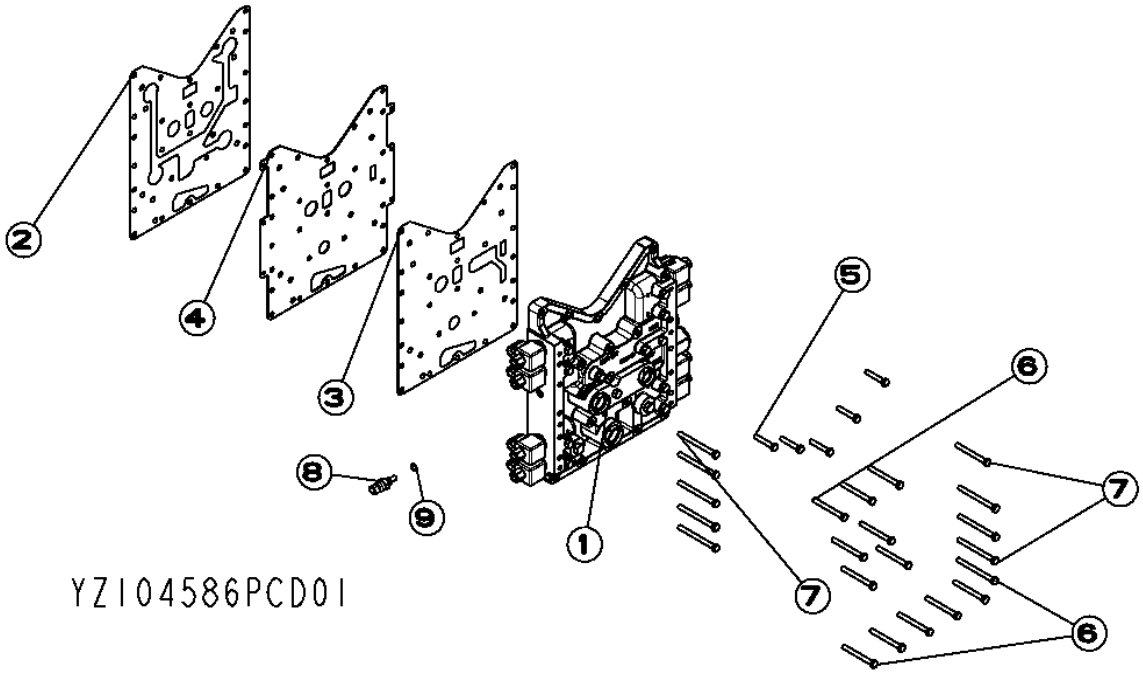

TRANSMISSION CONTROL VALVE MOUNTING

KEY	PART NO.	PART NAME	QTY	SERIAL NO.	670D	672D	REMARKS
1	YZ104198	HOUSING	1		X	X	
2	YZ104179	GASKET	1		X	X	(TRANS HOUSING TO PLATE)
3	YZ104180	GASKET	1		X	X	(VALVE HOUSING TO PLATE)
4	YZ104959	PLATE	1		X	X	
5	19M2972	CAP SCREW	5		X	X	M8 X 45
6	19M9050	CAP SCREW	13		X	X	M8 X 75
7	19M9066	CAP SCREW	9		X	X	M8 X 90
8	RE38310	SENSOR	1		X	X	
9	R26286	O-RING	1		X	X	

TRANSMISSION CONTROL VALVE

YZ07026 -UN-26JUL05

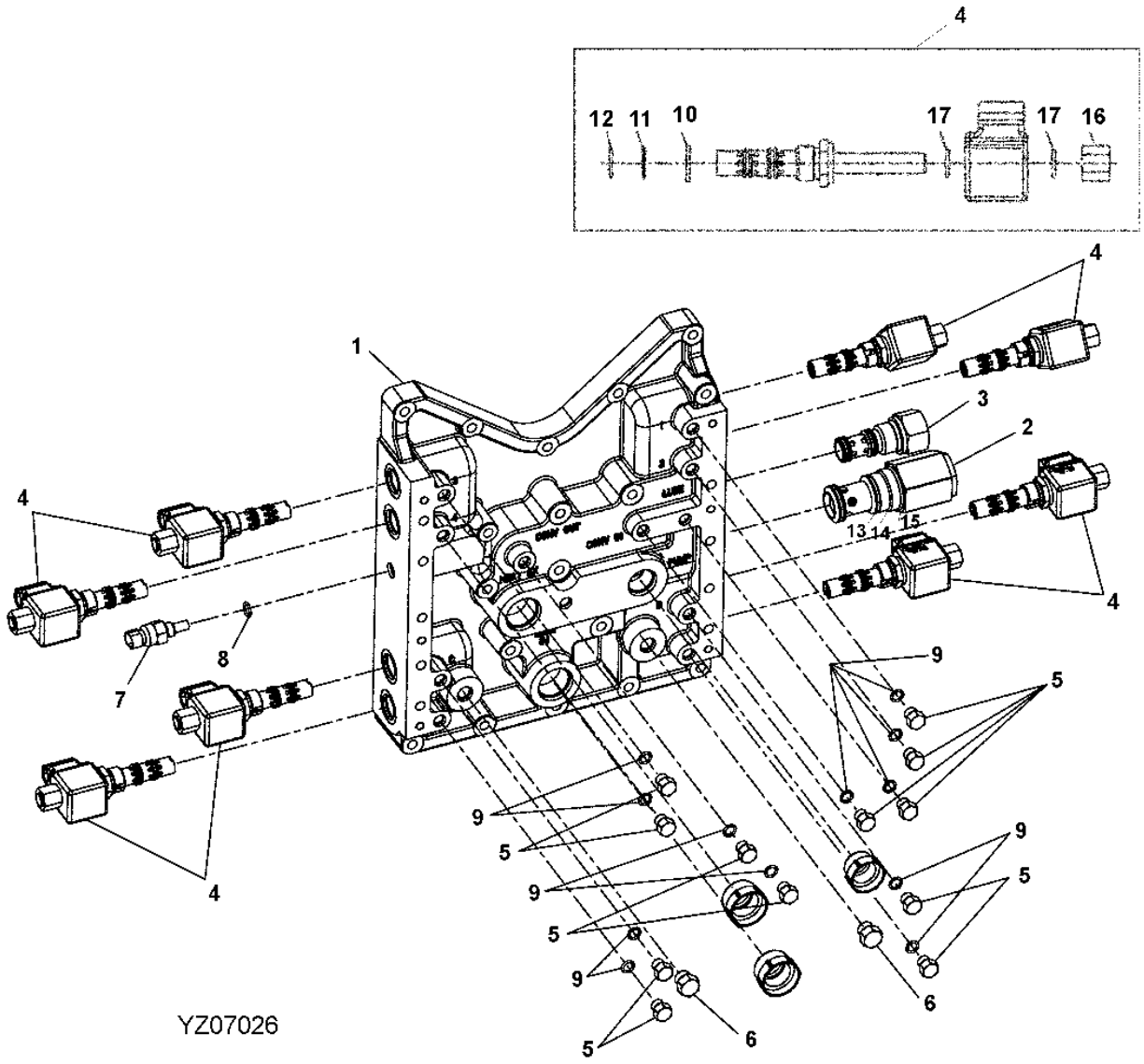

TRANSMISSION CONTROL VALVE

KEY	PART NO.	PART NAME	QTY	SERIAL NO.	670D	672D	REMARKS
1	YZ104198	HOUSING	1		X	X	(SUB FOR YZ103114)
2	YZ250249	REGULATOR	1		X	X	TRANSMISSION PRESSURE, (SUB FOR YZ501639)
3	YZ106316	PRESSURE RELIEF VALVE	1		X	X	OIL COOLER BYPASS, (SUB YZ105065)
	YZ105486	SEAL KIT	1		X	X	
4	YZ501931	VALVE	8		X	X	(SUB FOR YZ150141)
5	U44115	FITTING PLUG	12		X	X	TEST PORT
6	F85006	FITTING PLUG	2		X	X	TEST PORT
	F37060906	O-RING	2		X	X	
7	RE38310	SENSOR	1		X	X	TRANS TEMPERATURE
8	R26286	O-RING	1		X	X	
9	R28782	O-RING	12		X	X	
10	F37060910	O-RING	1		X	X	(ONE USED ON EACH SOLENOID VALVE)
11	F37010016	O-RING	1		X	X	(ONE USED ON EACH SOLENOID VALVE)
12	YZ101612	O-RING	1		X	X	(ONE USED ON EACH SOLENOID VALVE)
13	F37020122	O-RING	1		X	X	(ONE USED ON EACH SOLENOID VALVE)
14	F37020123	O-RING	1		X	X	(ONE USED ON EACH SOLENOID VALVE)
15	F37020124	O-RING	1		X	X	(ONE USED ON EACH SOLENOID VALVE)
16	YZ150204	NUT	1		X	X	
17	W37636	O-RING	2		X	X	

TRANSMISSION CHARGE PUMP
(YZ105130)

YZ105129PCD02 -UN-26JUL05

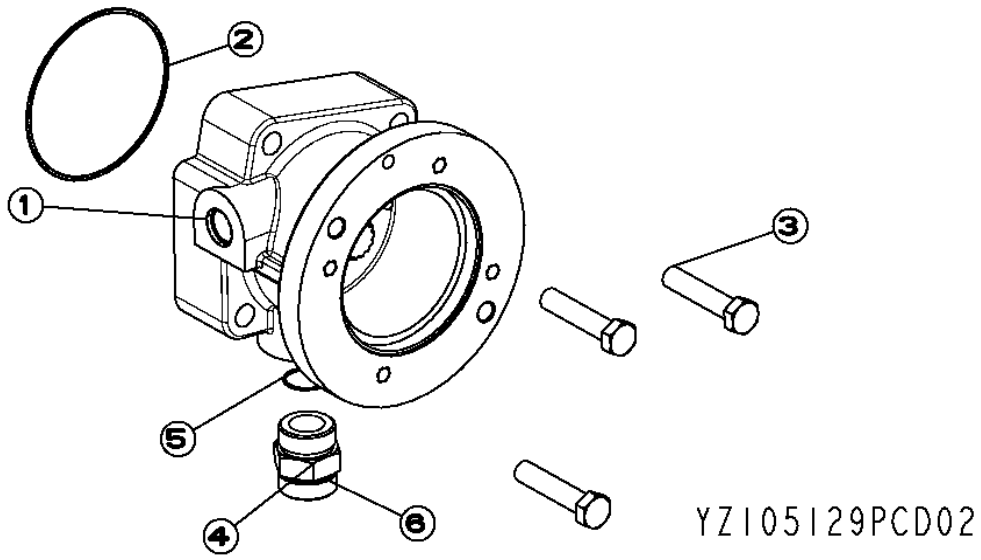

KEY	PART NO.	PART NAME	QTY	SERIAL NO.	670D	672D	REMARKS
1	YZ105258	OIL PUMP	1		X	X	50CC
2	F37020159	O-RING	1		X	X	
3	19M6754	CAP SCREW	3		X	X	
4	38H1165	ADAPTER	1		X	X	
5	U13639	O-RING	1		X	X	
6	T78612	O-RING	1		X	X	FITTING, FLAT FACE

MEMORANDA

TRANSMISSION FILTER AND HOSES

T202000 -UN-29NOV04

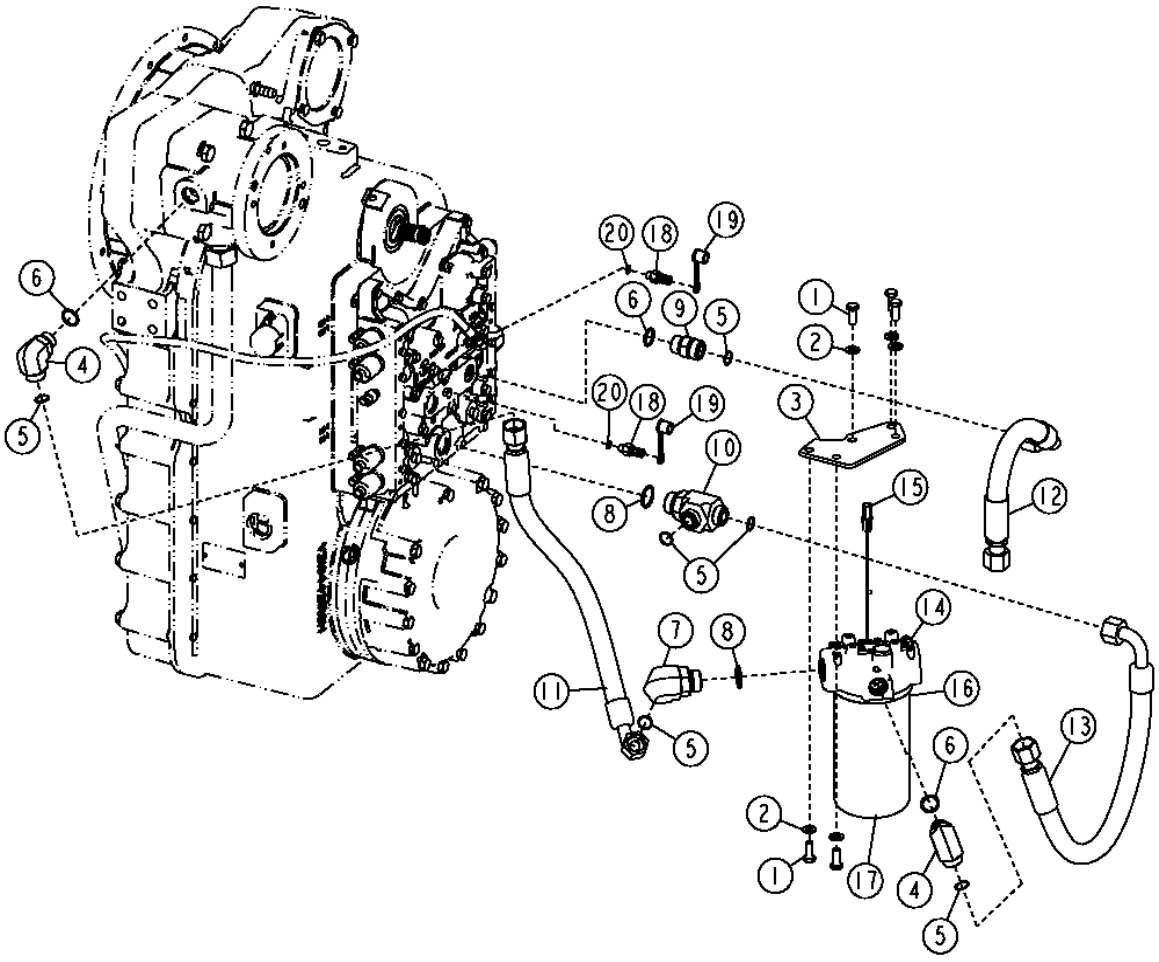

TRANSMISSION FILTER AND HOSES

KEY	PART NO.	PART NAME	QTY	TRANSMISSION SERIAL NO.	670D	672D	REMARKS
1	19M7402	CAP SCREW	5		X	X	M10 X 25
2	24M7239	WASHER	5		X	X	
3	T204678	PLATE	1		X	X	
4	38H1007	ELBOW FITTING	2		X	X	
5	T77858	O-RING	6		X	X	
6	U12547	O-RING	3		X	X	
7	38H1052	ELBOW FITTING	1		X	X	
8	R29936	O-RING	2		X	X	
9	38H1163	ADAPTER	1		X	X	
10	38H1438	TEE FITTING	1		X	X	
11	AT307581	HYDRAULIC HOSE - FABRICATE	1		X	X	
12	AT307582	HYDRAULIC HOSE - FABRICATE	1		X	X	
13	AT307588	HYDRAULIC HOSE - FABRICATE	1		X	X	
14	AT305048	FILTER HEAD	1		X	X	
15	AT307045	PRESSURE SWITCH	1		X	X	(TRANSMISSION FILTER RESTRICTION SWITCH)
16	P46051	O-RING	1		X	X	
17	AT305049	HYDRAULIC FILTER	1		X	X	(TRANSMISSION FILTER)
18	AT180119	FITTING	2		X	X	
19	R77175	COVER	2		X	X	
20	R28782	O-RING	2		X	X	

TRANSMISSION VALVE GUARDS

T202316 -UN-02SEP04

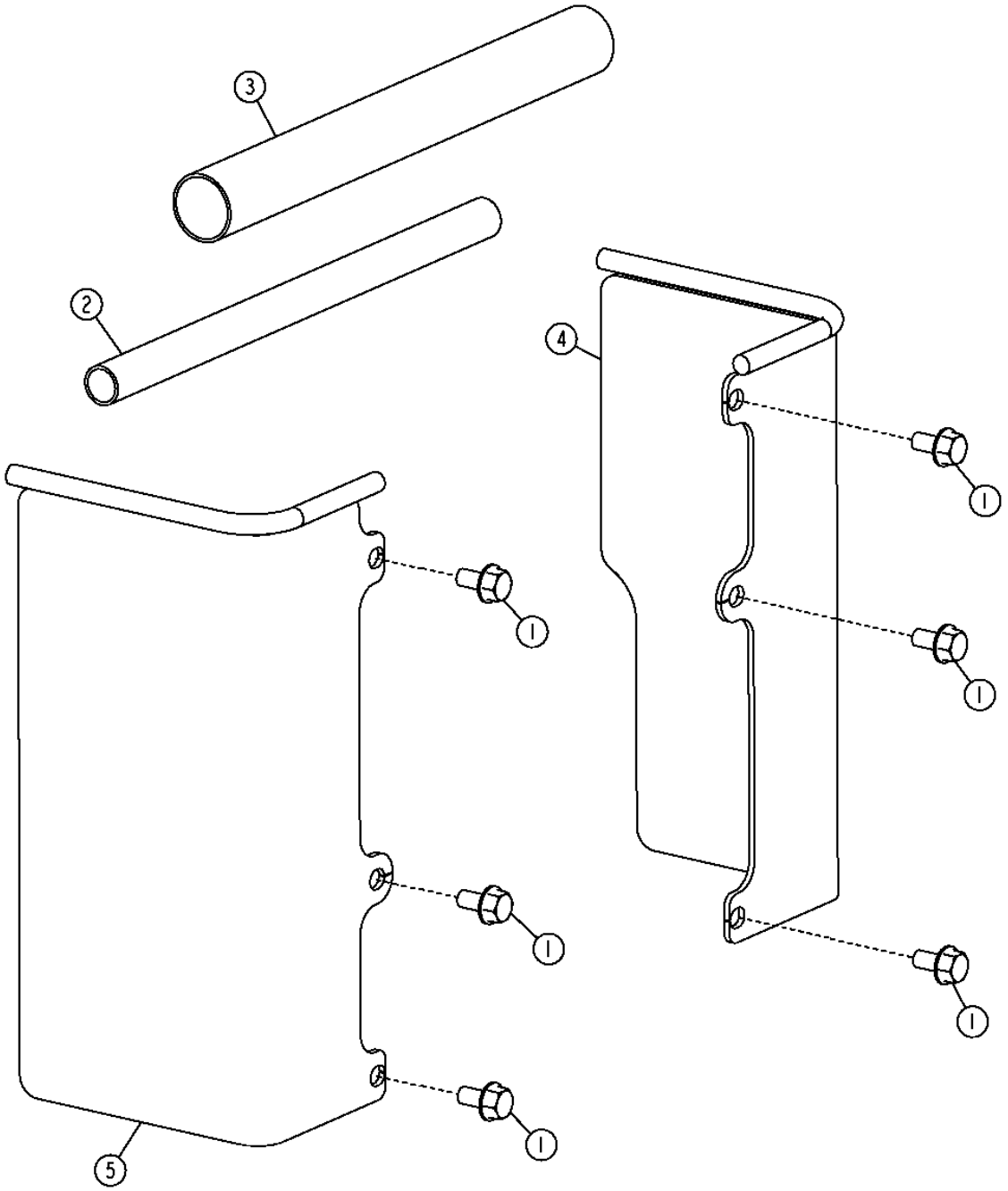

T202316

TRANSMISSION VALVE GUARDS

KEY	PART NO.	PART NAME	QTY	SERIAL NO.	670D	672D	REMARKS
1	19M7865	SCREW	6		X	X	M8 X 16
2	AT226446	DUST SHIELD	3		X	X	.75" HEAT SHRINK, HIGH RATIO
3	AT226447	DUST SHIELD	1		X	X	1.3" HEAT SHRINK, HIGH RATIO
4	AT312106	SHIELD	1		X	X	TRANSMISSION VALVE GUARD, LEFT
5	AT312107	SHIELD	1		X	X	TRANSMISSION VALVE GUARD, RIGHT

TRANSMISSION OIL COOLER HOSES AND ACCUMULATOR

T208489 -UN-18FEB05

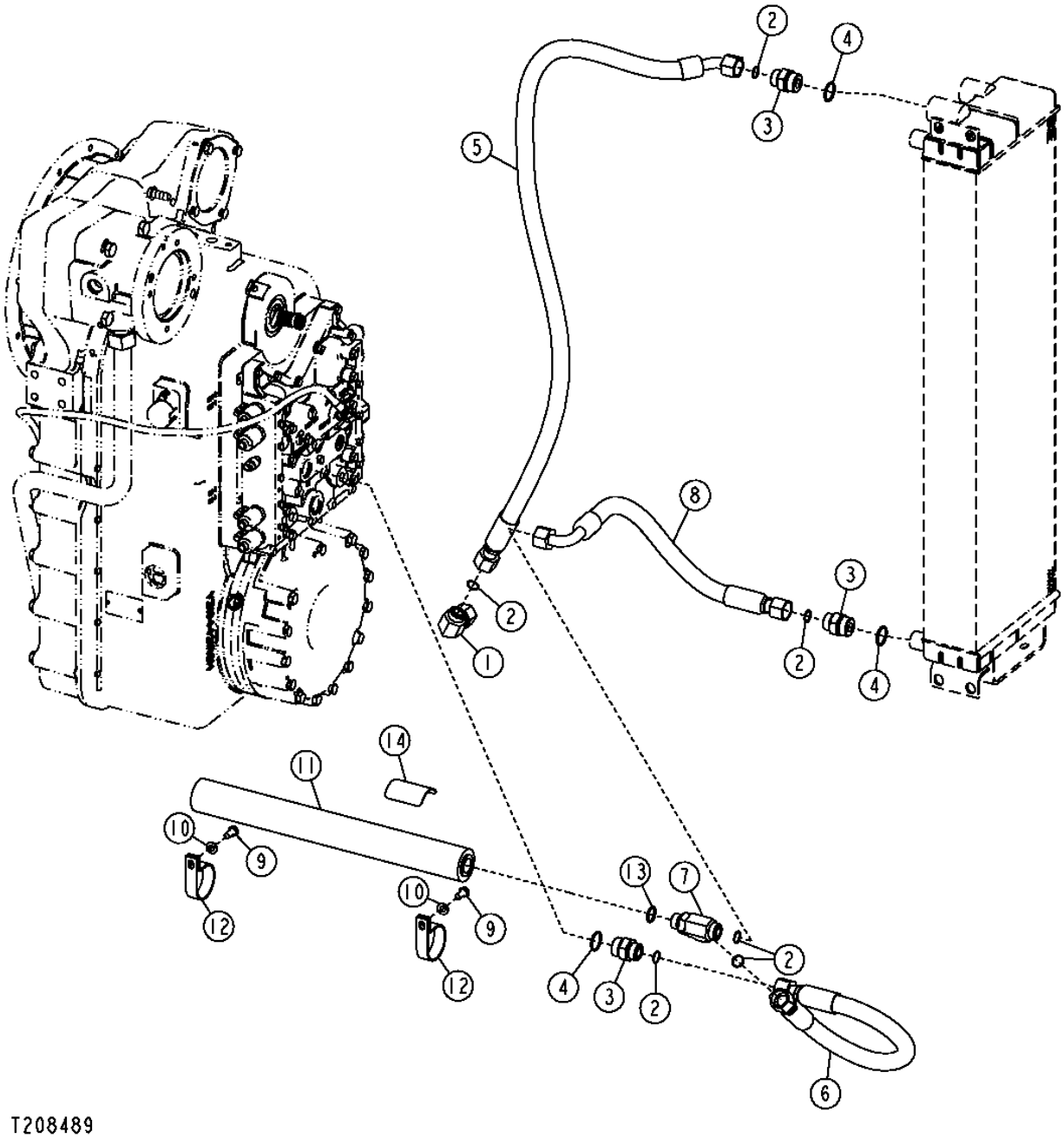

TRANSMISSION OIL COOLER HOSES AND ACCUMULATOR

KEY	PART NO.	PART NAME	QTY	SERIAL NO.	670D	672D	REMARKS
1	38H1097	ELBOW FITTING	1		X	X	
2	T77858	O-RING	4		X	X	
3	38H1194	ADAPTER	3		X	X	
4	R29936	O-RING	3		X	X	
5	AT307165	HYDRAULIC HOSE - FABRICATE	1		X	X	
6	AT320242	HYDRAULIC HOSE - FABRICATE	1		X	X	
7	38H1026	TEE FITTING	1		X	X	
8	AT320243	HYDRAULIC HOSE - FABRICATE	1		X	X	
9	19M7938	CAP SCREW	2		X	X	M10 X 20
10	24M7239	WASHER	2		X	X	
11	AT313425	HYDRAULIC ACCUMULATOR	1		X	X	
12	T126204	CLAMP	2		X	X	
13	U12547	O-RING	2		X	X	
14	T155572	SAFETY SIGN	1		X	X	

MEMORANDA

CRANKSHAFT AND MAIN BEARINGS

RGP10122 -UN-06NOV03

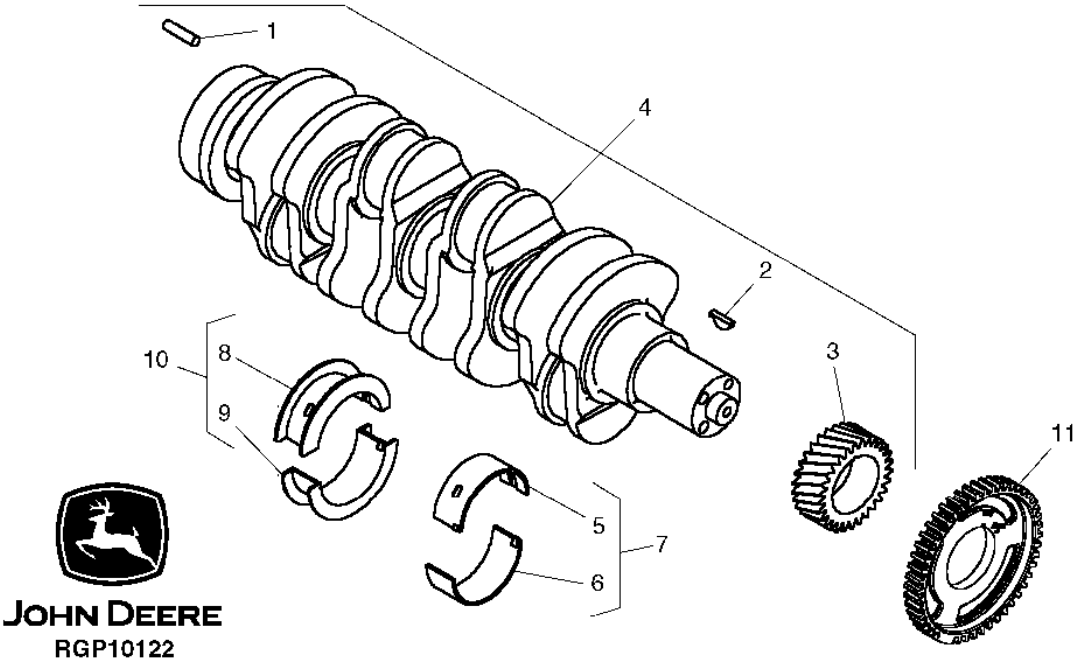

KEY	PART NO.	PART NAME	QTY	ENGINE SERIAL NO.	670D	672D	REMARKS
1	R48685	DOWEL PIN	1		X	X	12.700 X 28.448 MM (1/2" X 1.120")
2	R505609	SHAFT KEY	1		X	X	4 X 16 MM
3	R120631	HELICAL GEAR	1		X	X	Z= 30
4	RE505921	CRANKSHAFT	1		X	X	(MARKED R503470)
5	.....	BEARING	6		X	X	(MARKED R123561)
	.....	BEARING	6		X	X	0.254MM (.010") US, (MARKED R130576)
6	.....	BEARING	6		X	X	(MARKED R123562)
	.....	BEARING	6		X	X	0.254MM (.010") US, (MARKED R130577)
7	RE65165	BEARING KIT	6		X	X	STD
	RE65911	BEARING	6		X	X	0.254MM (.010") US
8	.....	BEARING	1		X	X	(MARKED R123563)
	.....	BEARING	1		X	X	0.254MM (.010") US, (MARKED R130574)
9	.....	BEARING	1		X	X	(MARKED R123564)
	.....	BEARING	1		X	X	0.254MM (.010") US, (MARKED R130575)
10	RE65168	BEARING KIT	1		X	X	STD
	RE65912	THRUST BEARING	1		X	X	0.254MM (.010") US
11	R517471	WHEEL	1		X	X	CRANKSHAFT TIMING

MEMORANDA

MEMORANDA

ROCKER ARM SHAFT, PUSH RODS AND ROCKER ARMS

RGP9825 -UN-22JUL03

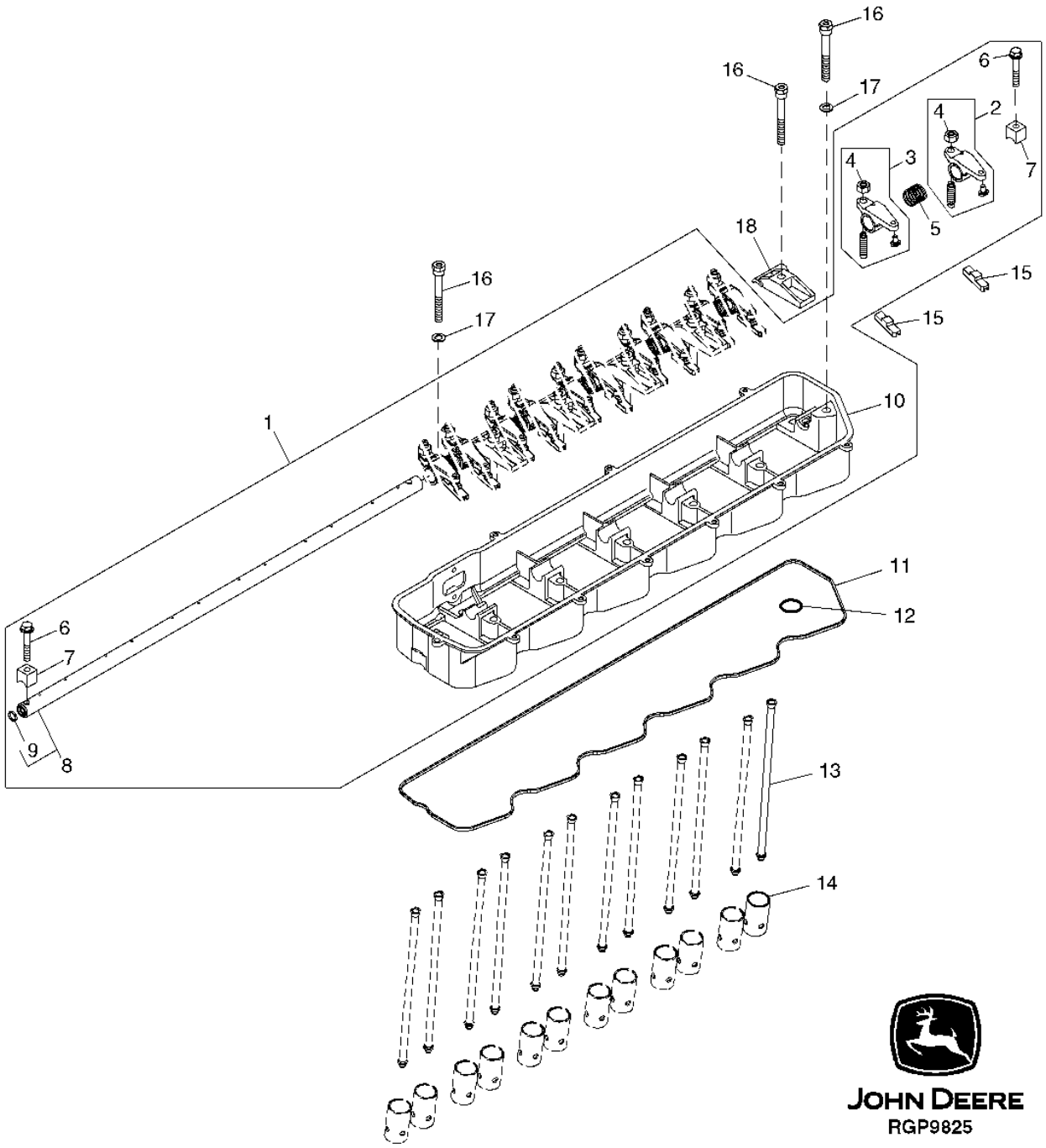

ROCKER ARM SHAFT, PUSH RODS AND ROCKER ARMS

KEY	PART NO.	PART NAME	QTY	ENGINE SERIAL NO.	670D	672D	REMARKS
1	RE519895	ROCKER ARM SHAFT	1		X	X	
2	RE504210	ROCKER ARM	6		X	X	(A) 84.5MM
3	RE504209	ROCKER ARM	6		X	X	(B) 68MM, NLA, (ORDER RE523023)
4	14M7148	NUT	1		X	X	M10
5	R505543	SPRING	6		X	X	
6	19M9170	SCREW	2		X	X	M8 X 50
7	R504631	CLAMP	2		X	X	
8	RE516491	ROCKER ARM SHAFT	1		X	X	(MARKED RE504782)
9	30M7004	PLUG	2		X	X	
10	R519739	CRADLE	1		X	X	
11	R504882	GASKET	1		X	X	
12	R72328	O-RING	1		X	X	18.720 X 2.616 MM (0.737" X 0.103")
13	R504209	PUSH ROD	12		X	X	
14	R123565	FOLLOWER	12		X	X	
15	R502341	LEVER	12		X	X	
16	R519292	SCREW	7		X	X	
17	24M7096	WASHER	2		X	X	10.500 X 18 X 1.600 MM
18	R516140	STRAP	5		X	X	

(A) EXHAUST

(B) INTAKE

ROCKER ARM COVER

CDP45557 -UN-24MAR03

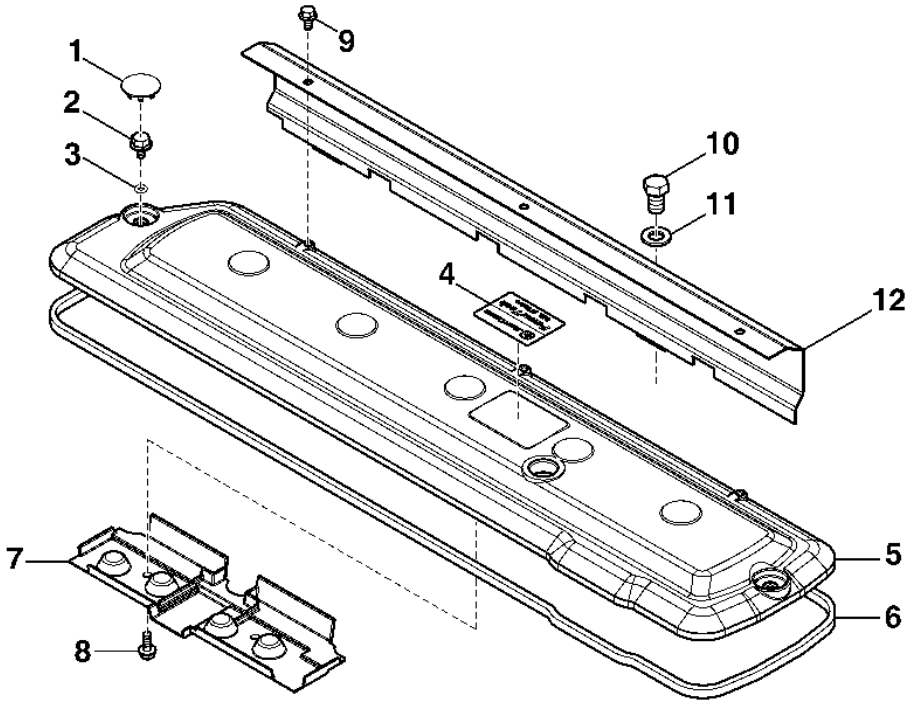

CDP45557

KEY	PART NO.	PART NAME	QTY	ENGINE SERIAL NO.	670D	672D	REMARKS
1	H23125	PLUG	7		X	X	
2	R516181	SCREW	7		X	X	
3	R516158	O-RING	7		X	X	5.232 X 2.616 MM (0.206" X 0.103")
4	R516138	SIGN	1		X	X	
5	R504630	VALVE COVER	1		X	X	
6	R504882	GASKET	1		X	X	
7	R515555	DEFLECTOR	1		X	X	
8	19M7775	SCREW	2		X	X	M6 X 16
9	19M7774	SCREW	3		X	X	M6 X 12
10	19M8017	CAP SCREW	2		X	X	M12 X 20
11	24M7047	WASHER	2		X	X	13 X 24 X 2.500 MM
12	R516174	HEAT SHIELD	1		X	X	

CAMSHAFT

RGP9826 -UN-22JUL03

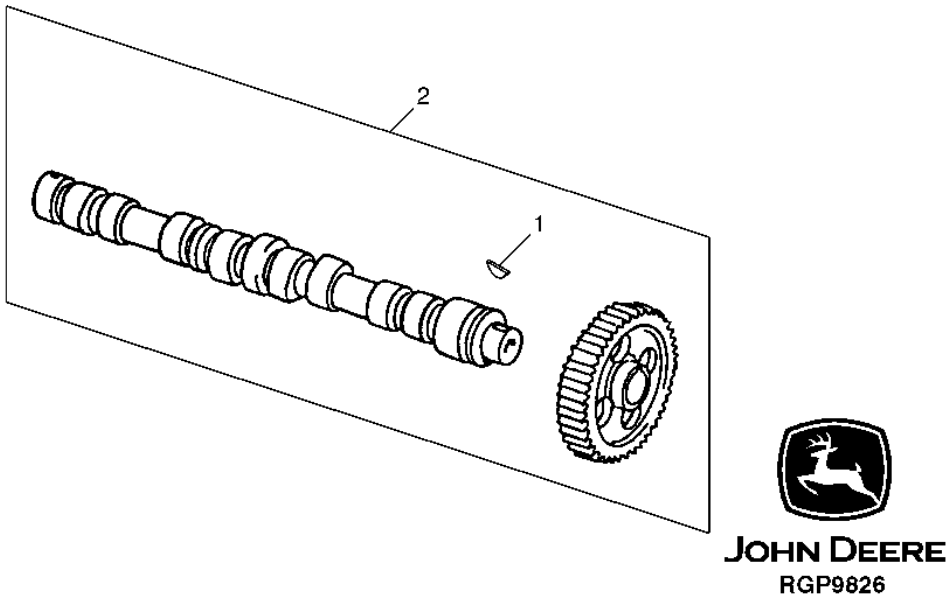

KEY	PART NO.	PART NAME	QTY	ENGINE SERIAL NO.	670D	672D	REMARKS
1	R133303	SHAFT KEY	1		X	X	
2	RE515611	CAMSHAFT	1		X	X	(MARKED R515245)

TIMING GEAR COVER

RGP10672 -UN-09NOV04

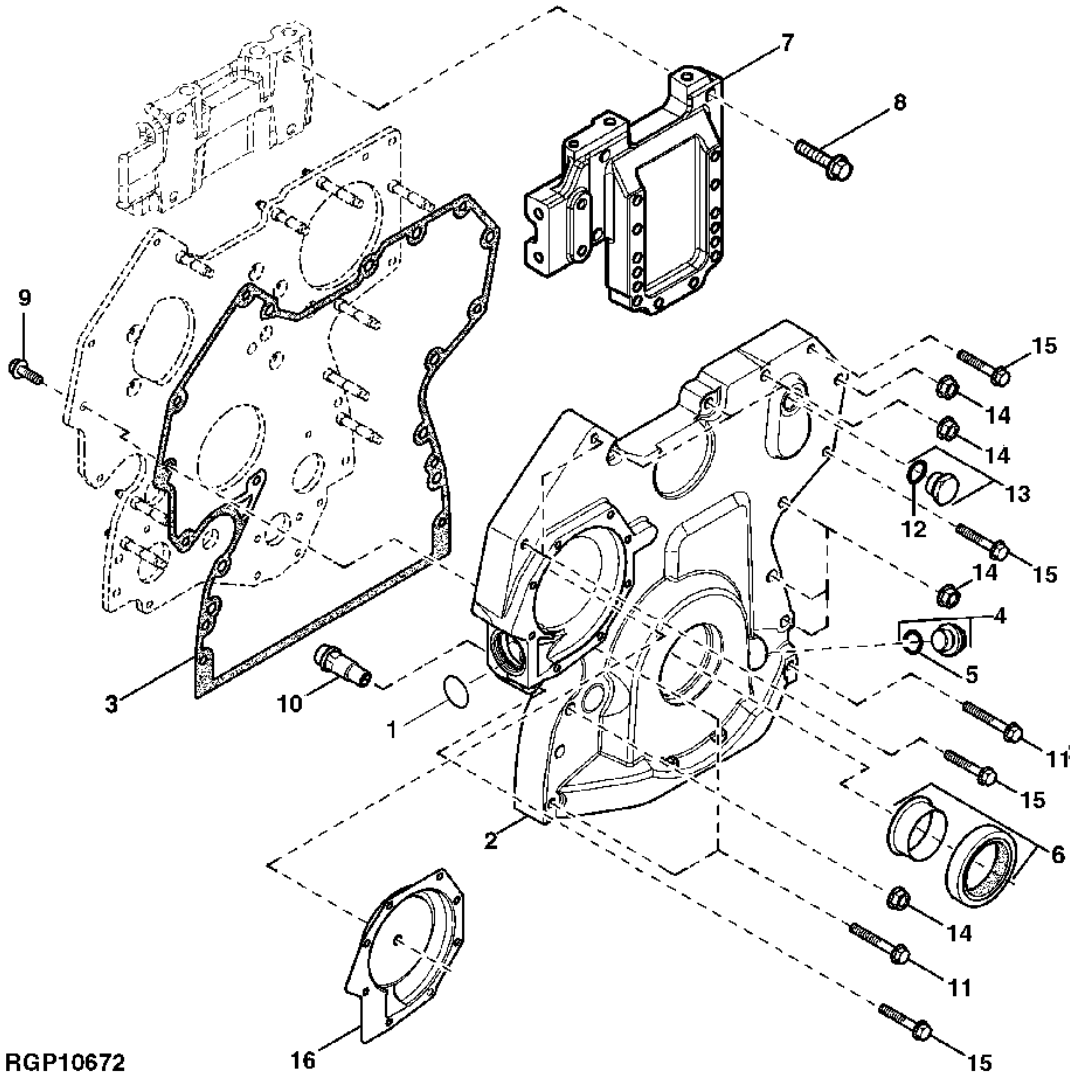

TIMING GEAR COVER

KEY	PART NO.	PART NAME	QTY	ENGINE SERIAL NO.	670D	672D	REMARKS
1	R504734	O-RING	1		X	X	37.694 X 3.531 MM (1.484" X 0.139")
2	R503769	COVER	1		X	X	(ALSO ORDER RE515978 AND R504734)
3	R519656	GASKET	1		X	X	
4	RE517370	FITTING PLUG	NA		X	X	M20 X 1.5
5	51M7044	O-RING	1		X	X	17.300 X 2.200 MM (0.681" X 0.087")
6	RE516340	KIT	1		X	X	FRONT SEAL
7	R516557	ADAPTER	1		X	X	
8	19M7805	SCREW	4		X	X	M10 X 45
9	19M7867	SCREW	1		X	X	M8 X 25
10	RE505501	OIL PRESSURE REG. VALVE	1		X	X	OIL PRESSURE REGULATING
11	19M7801	SCREW	3		X	X	M8 X 60
12	51M7045	O-RING	1		X	X	19.300 X 2.200 MM (0.760" X 0.087")
13	RE46687	DRAIN PLUG	1		X	X	M22 X 1.5
14	14M7296	FLANGE NUT	9		X	X	M10
15	19M7800	SCREW	5		X	X	M8 X 50
16	RE508566	KIT	1		X	X	WATER PUMP INSERT REPAIR
..	RE515978	KIT	1		X	X	(CONTAINS RE517370, RE516340, RE505501 AND RE508566)

MEMORANDA

CONNECTING ROD AND BEARINGS, PISTON AND CYLINDER LINER

RGP9893 -UN-01AUG03

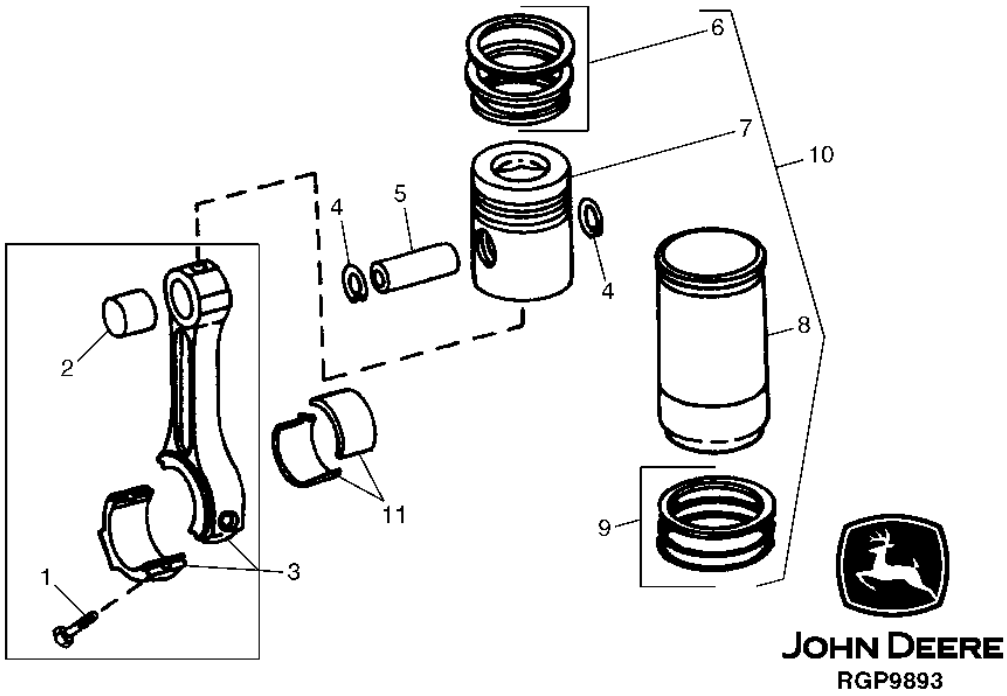

KEY	PART NO.	PART NAME	QTY	ENGINE SERIAL NO.	670D	672D	REMARKS
1	R501124	SCREW	12		X	X	
2	R114082	BUSHING	12		X	X	
3	RE500608	CONNECTING ROD	6		X	X	(MARKED R500335)
4	R54114	SNAP RING	12		X	X	
5	R502755	PISTON PIN	6		X	X	
6	RE516268	PISTON RING KIT	6		X	X	
7	.....	PISTON	6		X	X	(MARKED RE507758) (ORDER RE516228)
8	.....	CYLINDER LINER	6		X	X	(ORDER RE516228)
9	AR65507	O-RING KIT	6		X	X	
10	RE516228	CYLINDER AND PISTON KIT	6		X	X	
11	RE65908	BEARING	6		X	X	STD
	RE65909	BEARING	6		X	X	0.254MM (.010") US

MEMORANDA

MEMORANDA

CYLINDER BLOCK

RGP10669 -UN-08NOV04

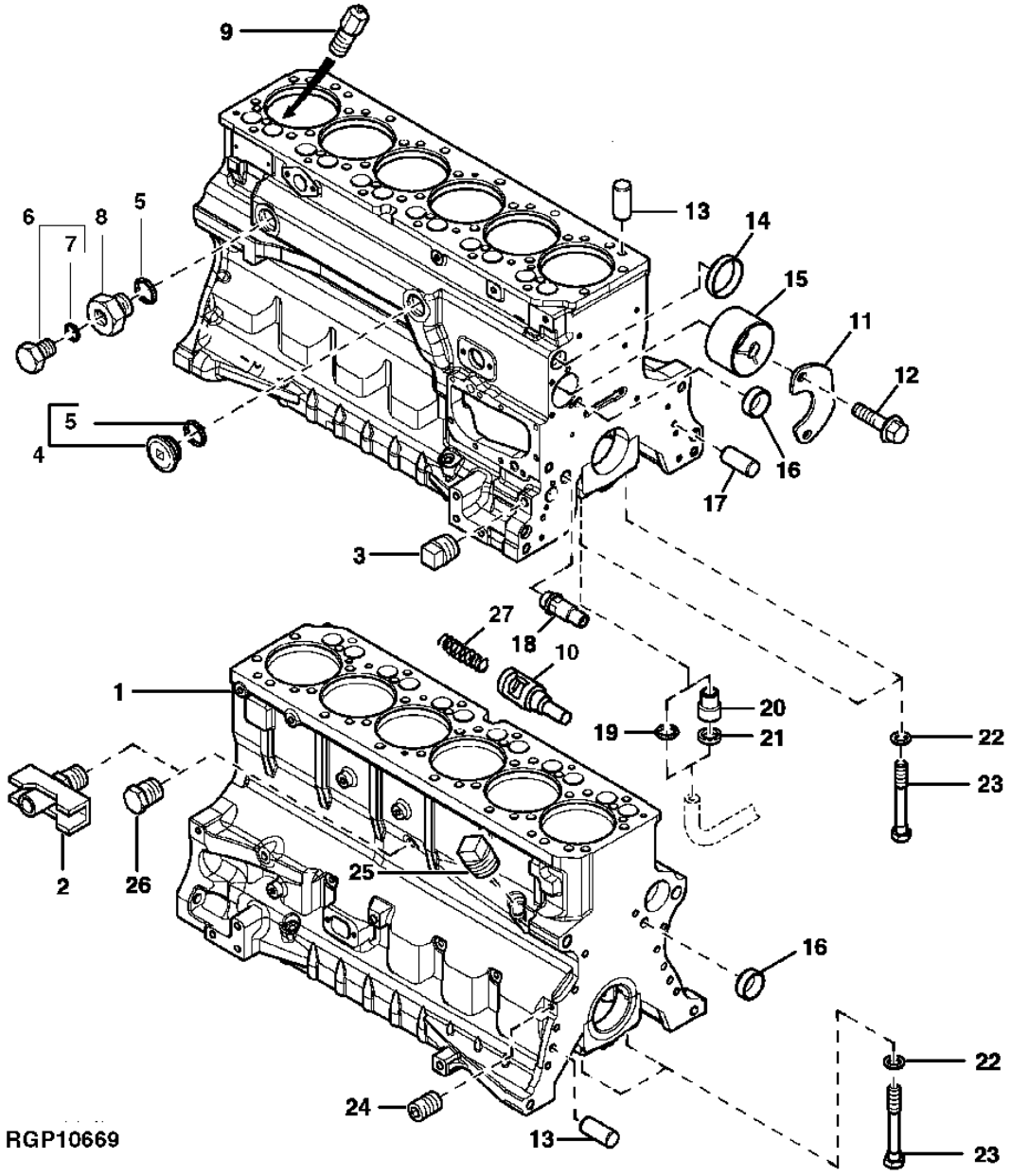

CYLINDER BLOCK

KEY	PART NO.	PART NAME	QTY	ENGINE SERIAL NO.	670D	672D	REMARKS
1	.....	CYLINDER BLOCK	1		X	X	(MARKED R504850)
	37H26	SCREW	2		X	X	NO. 4 X 1/4" TYPE U, ENG. SERIAL NO. PLATE
	D2361R	BALL	1		X	X	1/2", (NOT SHOWN)
2	AT13740	DRAIN VALVE	1		X	X	1/4"-18NPT
3	15H623	PIPE PLUG	1		X	X	3/8"
4	RE508185	DRAIN PLUG	1		X	X	1-5/8"-12UN
5	U13639	O-RING	2		X	X	37.465 X 2.997 MM (1.475" X 0.118")
6	RE46685	PLUG	1		X	X	M18 X 1.5
7	51M7043	O-RING	1		X	X	15.300 X 2.200 MM (0.602" X 0.087")
8	R123616	PLUG	1		X	X	CAB HEATER
9	R131182	ORIFICE	6		X	X	PISTON COOLING JET
10	R121043	FLOW CONTROL HYD. VALVE	1		X	X	ENGINE OIL BY-PASS
11	R132518	PLATE	1		X	X	CAMSHAFT THRUST
12	19M8999	SCREW	2		X	X	M8 X 25
13	R48685	DOWEL PIN	4		X	X	12.700 X 28.448 MM (1/2" X 1.120")
14	R116466	PLUG	1		X	X	OD 30MM
15	R119874	BUSHING	1		X	X	CAMSHAFT
16	T18891	PLUG	2		X	X	OD 16MM
17	R26650	DOWEL PIN	2		X	X	9.525 X 25.400 MM (3/8" X 1")
18	RE505501	OIL PRESSURE REG. VALVE	1		X	X	OIL PRESSURE REGULATING
19	R97185	O-RING	1		X	X	15.469 X 3.531 MM (39/64" X 0.139")
20	R115390	BUSHING	1		X	X	
21	R75892	O-RING	1		X	X	14.884 X 4.064 MM (0.586" X 0.160")
22	T20168	WASHER	14		X	X	
23	T23474	CAP SCREW	14		X	X	
24	R104592	PIPE PLUG	6		X	X	1/8"-27NPT
25	RE57836	PIPE PLUG	NA		X	X	1/2"-14NPT
26	R55233	PIPE PLUG	1		X	X	1/4"-18NPT
27	R111137	SPRING	1		X	X	
..	T173311	HELICAL GEAR	1		X	X	FOR HYDRAULIC PUMP W/O AUX DRIVE ADAPTER

SHORT BLOCK ASSEMBLY

RGP8837 -UN-09JUL02

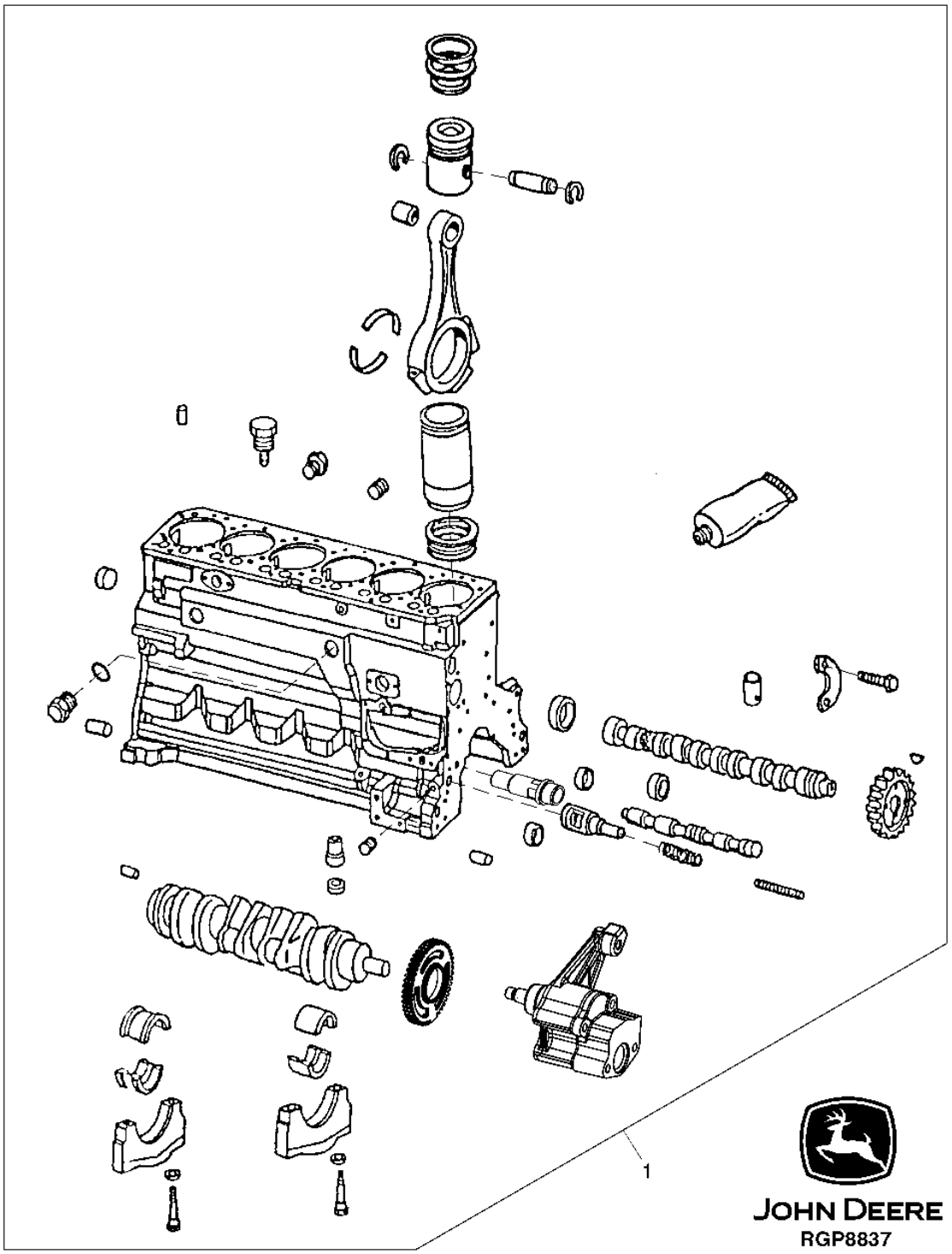

1H19

SHORT BLOCK ASSEMBLY

KEY	PART NO.	PART NAME	QTY	ENGINE SERIAL NO.	670D	672D	REMARKS
1	RE522680	SHORT BLOCK ASSEMBLY	1		X	X	PISTON MARKED RE507758

FRONT PLATE AND IDLER GEARS

CDP45206A -UN-11OCT02

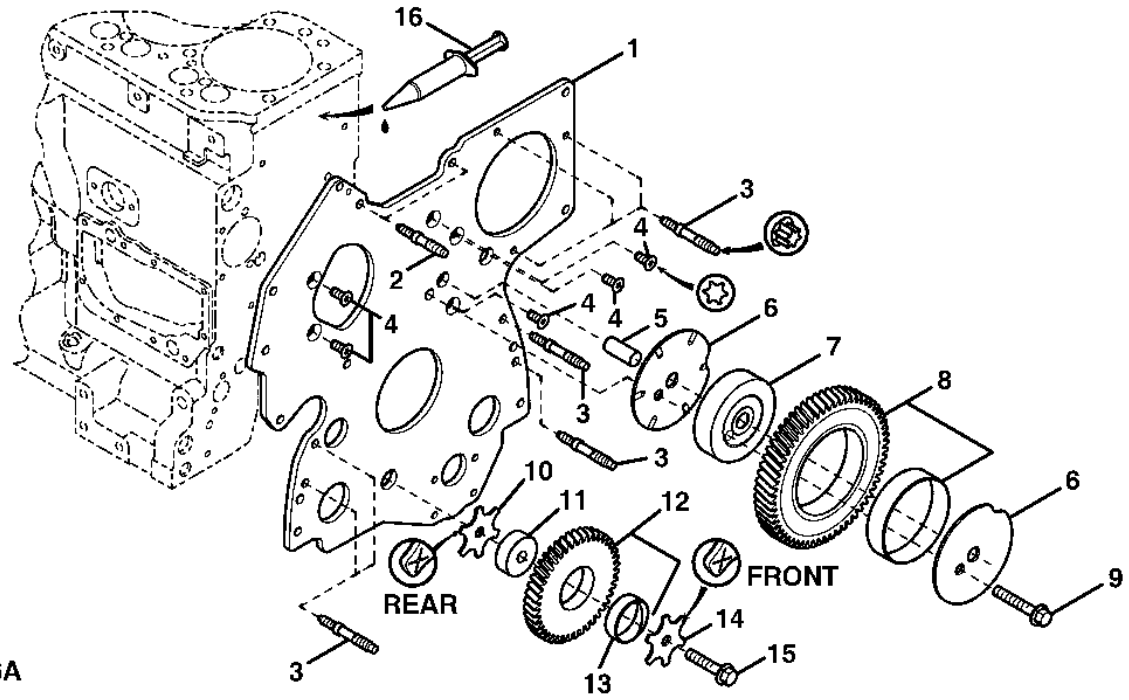

CDP45206A

KEY	PART NO.	PART NAME	QTY	ENGINE SERIAL NO.	6 6 7 7 0 2 D D	REMARKS
1	R504576	PLATE	1		X X	
2	R134518	STUD	2		X X	LGTH 68MM
3	R123584	STUD	7		X X	LGTH 79MM
4	R136475	SCREW	5		X X	
5	R515408	DOWEL PIN	1		X X	
6	R515494	LOCK WASHER	2		X X	
7	R504843	SHAFT	1		X X	
8	RE508489	GEAR	1		X X	Z= 60, (MARKED R504614)
9	19M8844	SCREW	1		X X	M10 X 60
10	R101225	THRUST WASHER	1		X X	
11	R114194	SHAFT	1		X X	
12	RE56369	GEAR	1		X X	Z= 43, (MARKED R120636)
13	R114193	BUSHING	1		X X	
14	R131283	THRUST WASHER	1		X X	
15	19M8966	SCREW	1		X X	M10 X 50
16	PM38655	SEALANT	AR		X X	GASKET MAKER 515® (NON-CALIFORNIA ONLY)

1H21

OIL DIPSTICK

RGP10406 -UN-02JUL04

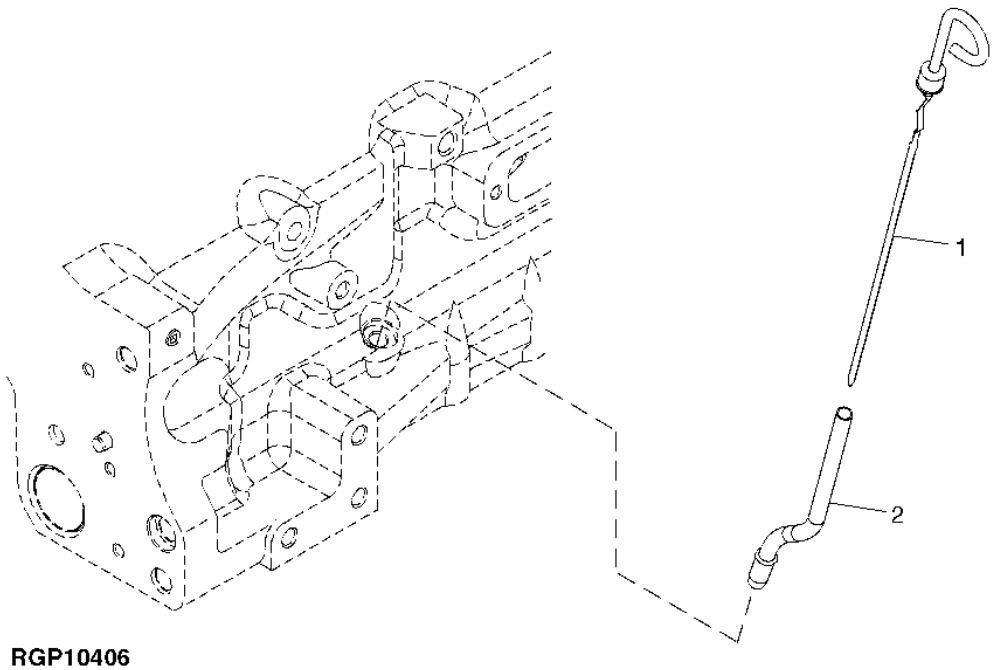

RGP10406

KEY	PART NO.	PART NAME	QTY	ENGINE SERIAL NO.	6 7 0 D	6 7 2 D	REMARKS
1	RE69243	DIPSTICK	1		X	X	LGTH 322MM
2	R130055	DIPSTICK TUBE	1		X	X	

OIL FILLER INLET

RGP10407 -UN-29APR04

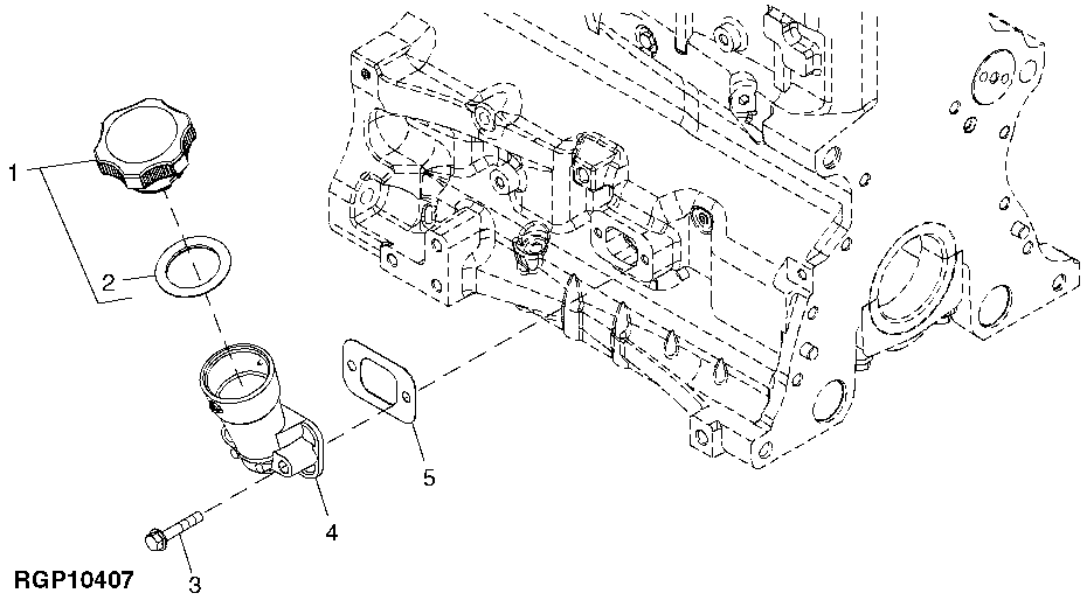

KEY	PART NO.	PART NAME	QTY	ENGINE SERIAL NO.	667 702 D D	REMARKS
1	RE500005	FILLER CAP	1		X X	
2	R502902	PACKING	1		X X	
3	RE67239	SCREW	2		X X	M8 X 45, WITH PRE-APPLIED SEALANT
4	RE501377	FILLER NECK	1		X X	
5	R136495	GASKET	1		X X	

COVER WITHOUT OIL FILLER NECK AND OIL DIPSTICK

RGP10408 -UN-29APR04

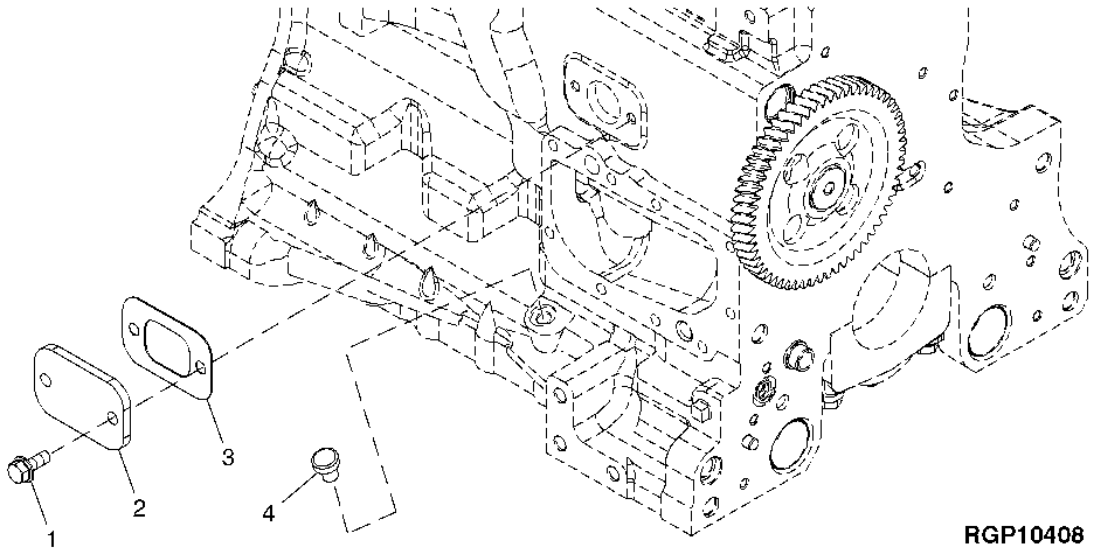

KEY	PART NO.	PART NAME	QTY	ENGINE SERIAL NO.	667 702	REMARKS
1	RE67238	SCREW	2		X X	M8 X 20, WITH PRE-APPLIED SEALANT
2	R116296	COVER	1		X X	
3	R136495	GASKET	1		X X	
4	R502725	PLUG	1		X X	

OIL PUMP AND OIL PUMP INTAKE

RGP8839 -UN-09JUL02

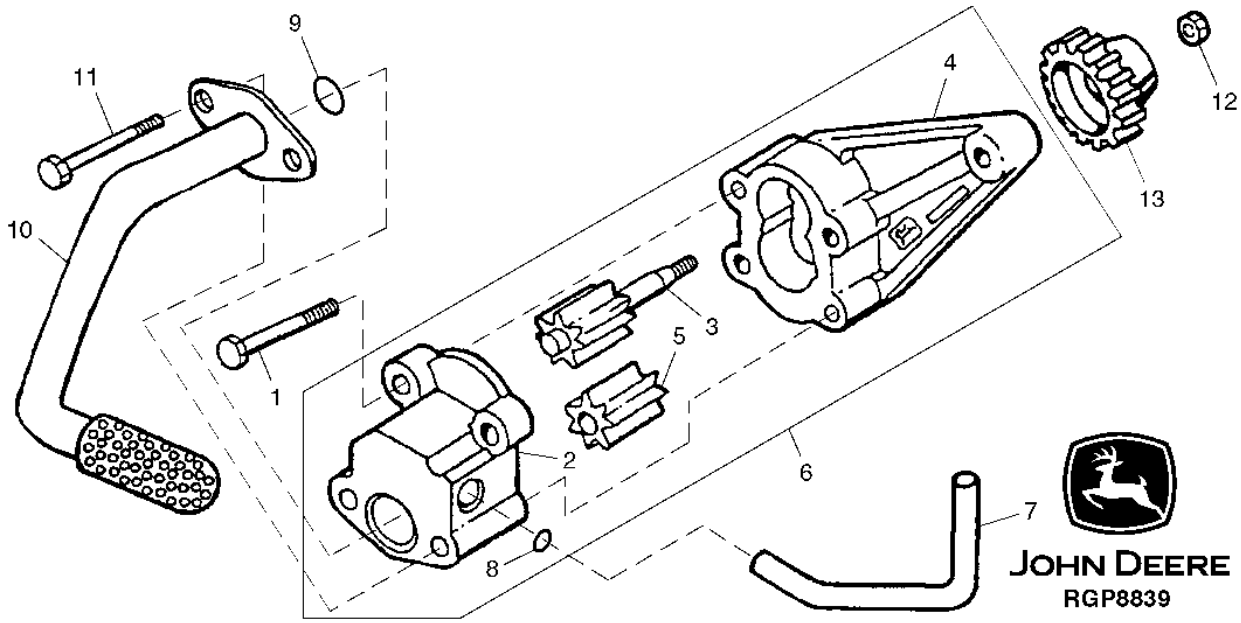

KEY	PART NO.	PART NAME	QTY	ENGINE SERIAL NO.	6 7 0 D	6 7 2 D	REMARKS
1	19M8987	SCREW	2		X	X	M8 X 65
2	.....	COVER	1		X	X	
3	.....	GEAR	1		X	X	
4	.....	HOUSING	1		X	X	
5	.....	GEAR	1		X	X	
6	RE504914	OIL PUMP	1		X	X	(MARKED R502867)
7	R121376	TUBE	1		X	X	
8	R97185	O-RING	1		X	X	15.469 X 3.531 MM (39/64" X 0.139")
9	R61871	O-RING	1		X	X	24.994 X 3.531 MM (63/64" X 0.139")
10	RE515881	OIL PUMP INTAKE	1		X	X	
11	19M8986	SCREW	2		X	X	M8 X 100
12	14M7066	NUT	1		X	X	M12
13	R120638	GEAR	1		X	X	Z= 30

MEMORANDA

OIL PAN AND DRAIN VALVE

RGP9870 -UN-23JUL03

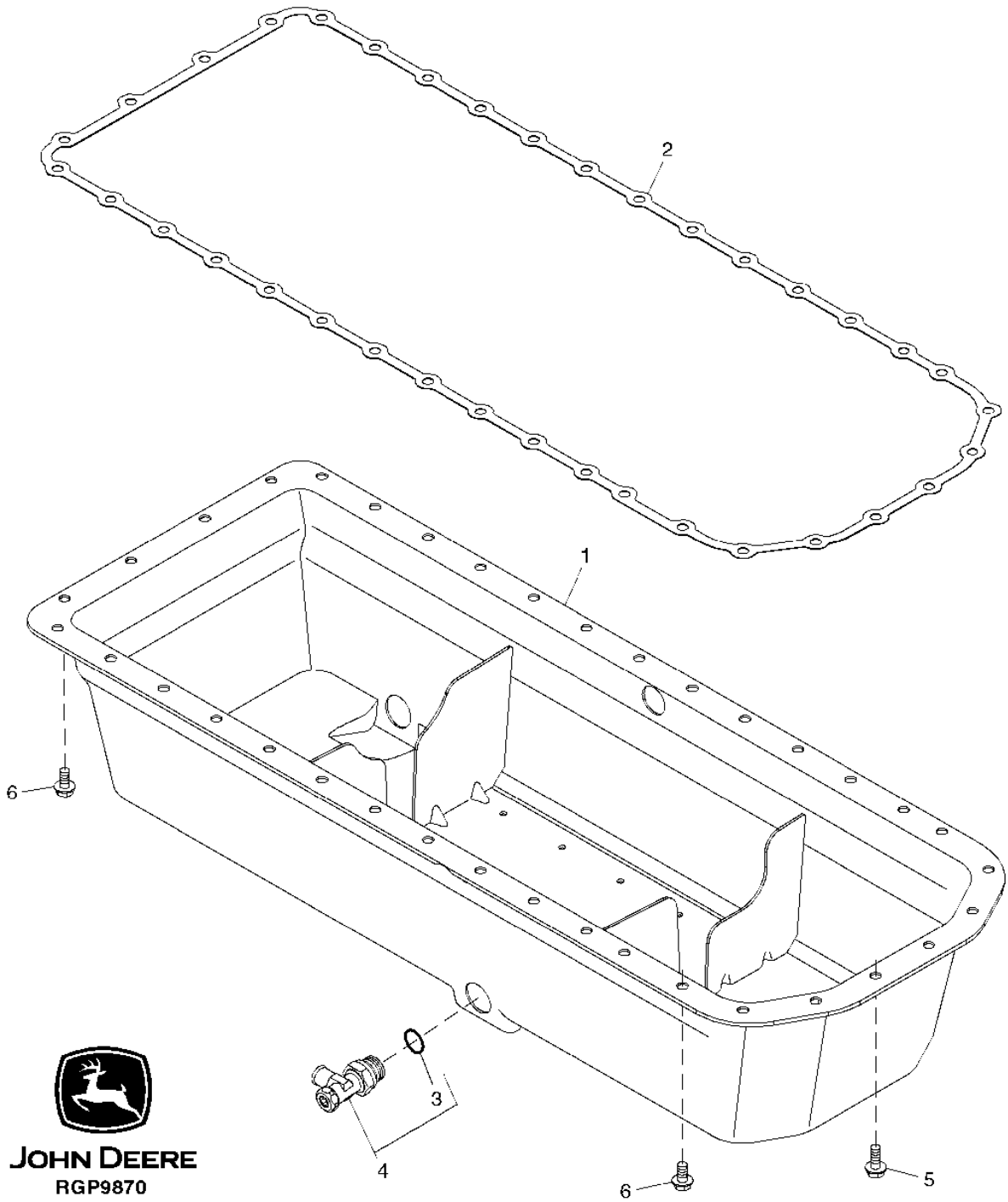

OIL PAN AND DRAIN VALVE

KEY	PART NO.	PART NAME	QTY	ENGINE SERIAL NO.	670D	672D	REMARKS
1	RE515642	OIL PAN	1		X	X	(MARKED RE515643)
2	R500349	GASKET	1		X	X	
3	51M7043	O-RING	1		X	X	15.300 X 2.200 MM (0.602" X 0.087")
4	RE507950	DRAIN VALVE	1		X	X	
5	19M8062	SCREW	6		X	X	M8 X 20
6	19M8163	CAP SCREW	30		X	X	M8 X 16

OIL FILTER

RGP10589 -UN-30AUG04

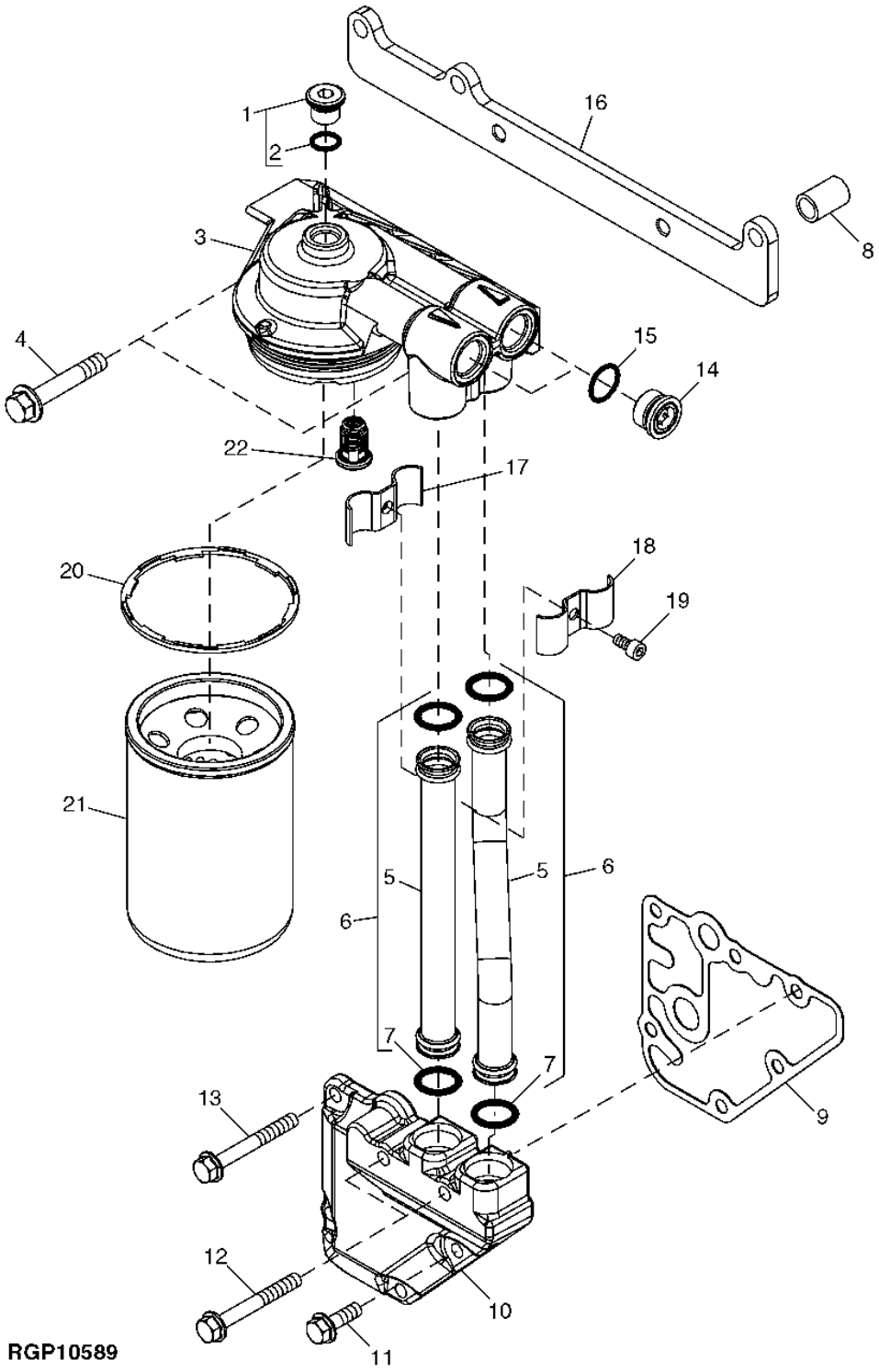

OIL FILTER

KEY	PART NO.	PART NAME	QTY	ENGINE SERIAL NO.	670D	672D	REMARKS
1	RE52242	DRAIN PLUG	NA		X	X	M16 X 1.5
2	51M7042	O-RING	1		X	X	13.300 X 2.200 MM (0.524" X 0.087")
3	RE504563	FILTER HEAD	1		X	X	(MARKED R502504) (INCLUDES R502513 AND RE504543)
4	19M7784	SCREW	2		X	X	M10 X 20
5	R515344	OIL TUBE	2		X	X	199.5MM
6	RE520397	TUBE	2		X	X	
7	R517488	O-RING	4		X	X	19.790 X 3.580 MM (0.779" X 0.141")
8	28H1495	SPACER	1		X	X	0.493" X 0.675" X 1"
9	R123525	GASKET	1		X	X	
10	R504153	ADAPTER	1		X	X	
11	RE67238	SCREW	1		X	X	(A) M8 X 20
12	19M8528	SCREW	1		X	X	M10 X 55
13	19M7802	SCREW	5		X	X	M8 X 65
14	R116115	FITTING	2		X	X	
15	51M7045	O-RING	2		X	X	19.300 X 2.200 MM (0.760" X 0.087")
16	R505145	BRACKET	1		X	X	
17	R518146	HALF CLAMP	1		X	X	
18	R518145	HALF CLAMP	1		X	X	
19	19M8618	SCREW	1		X	X	M6 X 12
20	R502513	SEAL	1		X	X	
21	RE504836	OIL FILTER	1		X	X	(ALSO ORDER R502513)
22	RE504543	FLOW CONTROL HYD. VALVE	1		X	X	

(A) WITH PRE-APPLIED SEALANT

MEMORANDA

VENTILATING SYSTEM

RGP9845 -UN-29JUL03

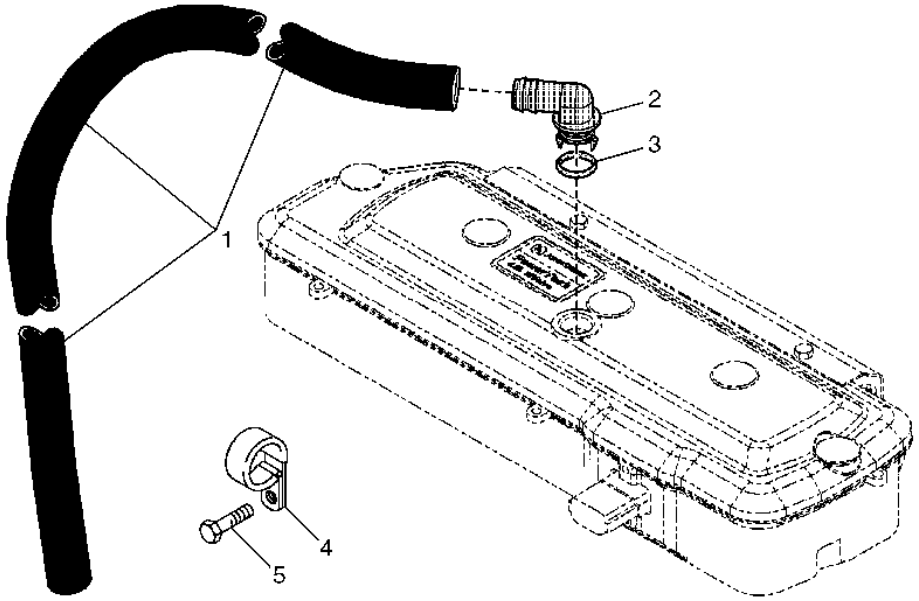

JOHN DEERE
RGP9845

KEY	PART NO.	PART NAME	QTY	ENGINE SERIAL NO.	6 6 7 7 0 2 D D	REMARKS
1	.....	BULK HOSE	1		X X	(MAKE FROM TY22450) (CUT TO 1350MM)
2	R120467	ELBOW FITTING	1		X X	90°
3	R72328	O-RING	1		X X	18.720 X 2.616 MM (0.737" X 0.103")
4	R72659	CLAMP	1		X X	(ATTACH TO FINAL FUEL FILTER BRACKET)
5	19M7784	SCREW	1		X X	M10 X 20

MEMORANDA

MEMORANDA

CYLINDER HEAD, HEAD GASKET AND VALVES

RGP10886 -UN-12NOV04

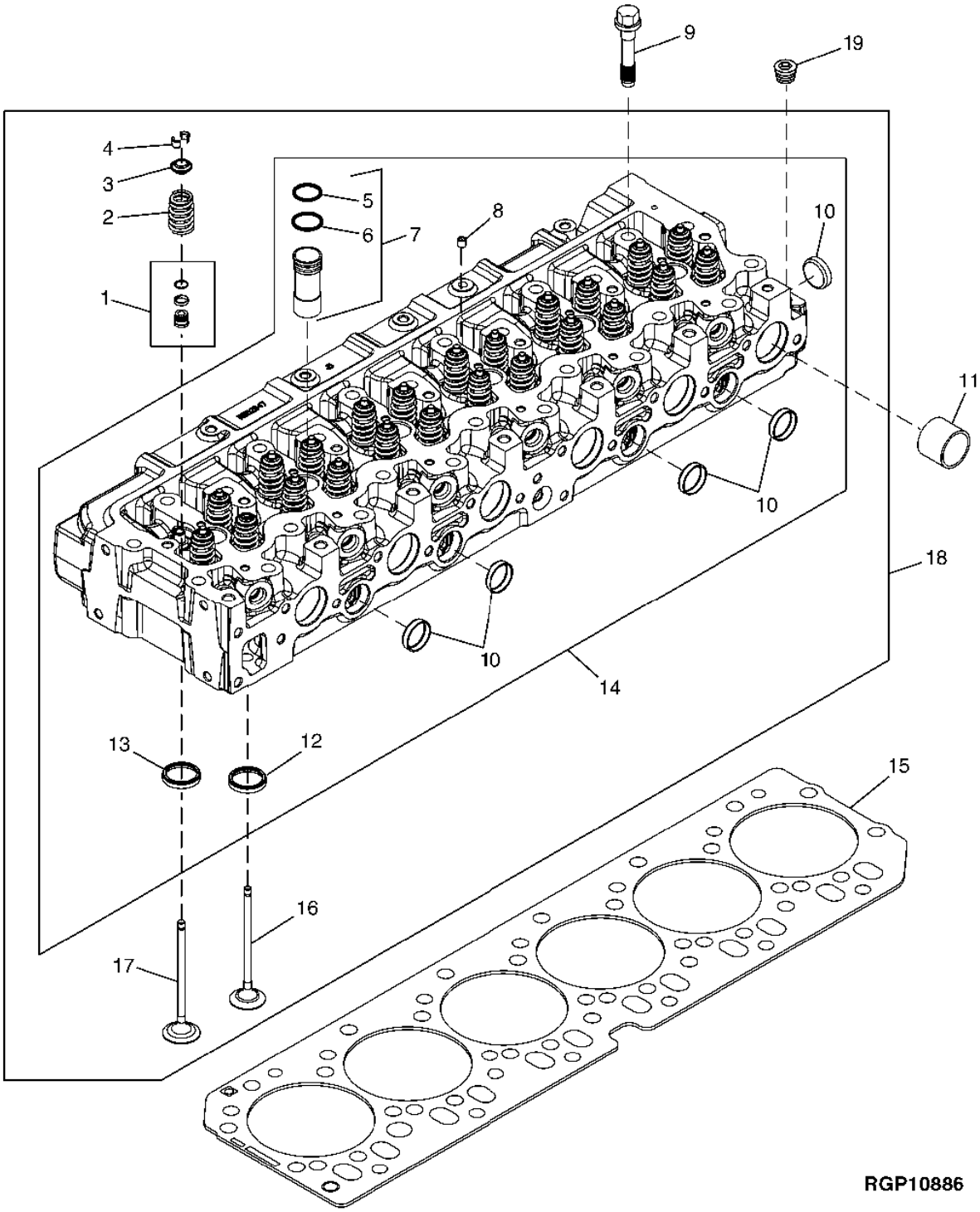

CYLINDER HEAD, HEAD GASKET AND VALVES

KEY	PART NO.	PART NAME	QTY	ENGINE SERIAL NO.	REMARKS
1	RE519115	SEAL	24		
2	.....	COMPRESSION SPRING	24		(R503906 IS NOT AVAILABLE FOR SERVICE) (ORDER RE516486)
	RE516486	KIT	12		COMPRESSION SPRING, (CONTAINS (2) R503906)
3	R502367	CAP	24		
4	R502371	RETAINER	48		
5	R516647	O-RING	6		
6	R516622	O-RING	6		
7	RE517435	SLEEVE	6		
8	R104592	PIPE PLUG	1		
9	R502511	SCREW	26		
10	CD16284	PLUG	5		
11	R502512	SLEEVE	6		
12	RE518083	VALVE SEAT INSERT	12		EXHAUST
13	RE518082	VALVE SEAT INSERT	12		INTAKE
14	RE507778	CYLINDER HEAD	1		(MARKED R502547)
15	R116516	ENGINE CYLINDER HEAD GASKET	1		
16	.....	EXHAUST VALVE	12		(R502370 IS NOT AVAILABLE FOR SERVICE) (ORDER RE518081)
	RE518081	EXHAUST VALVE	6		KIT, (CONTAINS (2) R502370)
17	.....	INTAKE VALVE	12		(R502369 IS NOT AVAILABLE FOR SERVICE) (ORDER RE518080)
	RE518080	INTAKE VALVE	6		KIT, (CONTAINS (2) R502369)
18	RE507777	CYLINDER HEAD	1		(MARKED R502547)
19	RE57836	PIPE PLUG	1		1/2"-14NPF, COOLANT TEMPERATURE SWITCH PORT

LIFT STRAPS

RGP7560 -UN-26JUN01

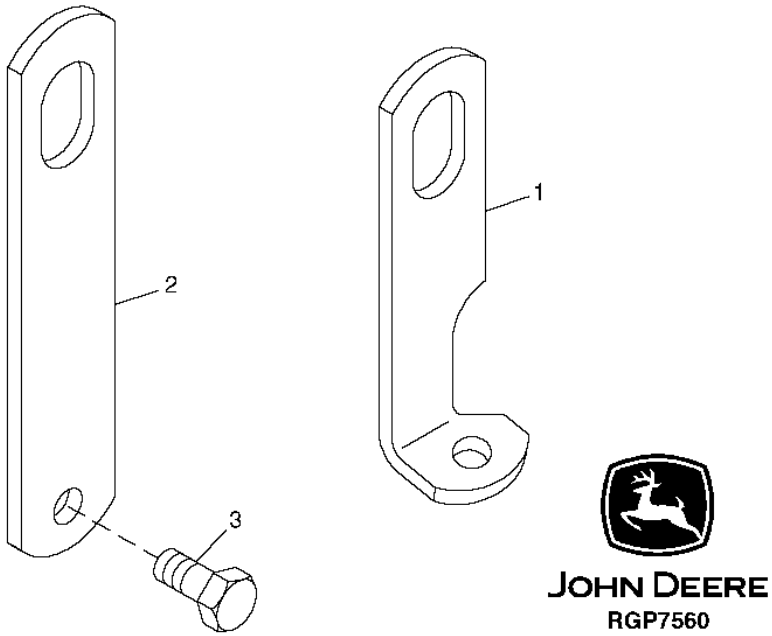

KEY	PART NO.	PART NAME	QTY	ENGINE SERIAL NO.	6 6 7 7 0 2 D D	REMARKS
1	.....	STRAP	1		X X	(R502175 NOT FOR SERVICE) (FRONT)
2	R502329	STRAP	1		X X	(REAR)
3	19M7788	SCREW	2		X X	M12 X 25

EXHAUST MANIFOLD

TP53379 -UN-15JAN97

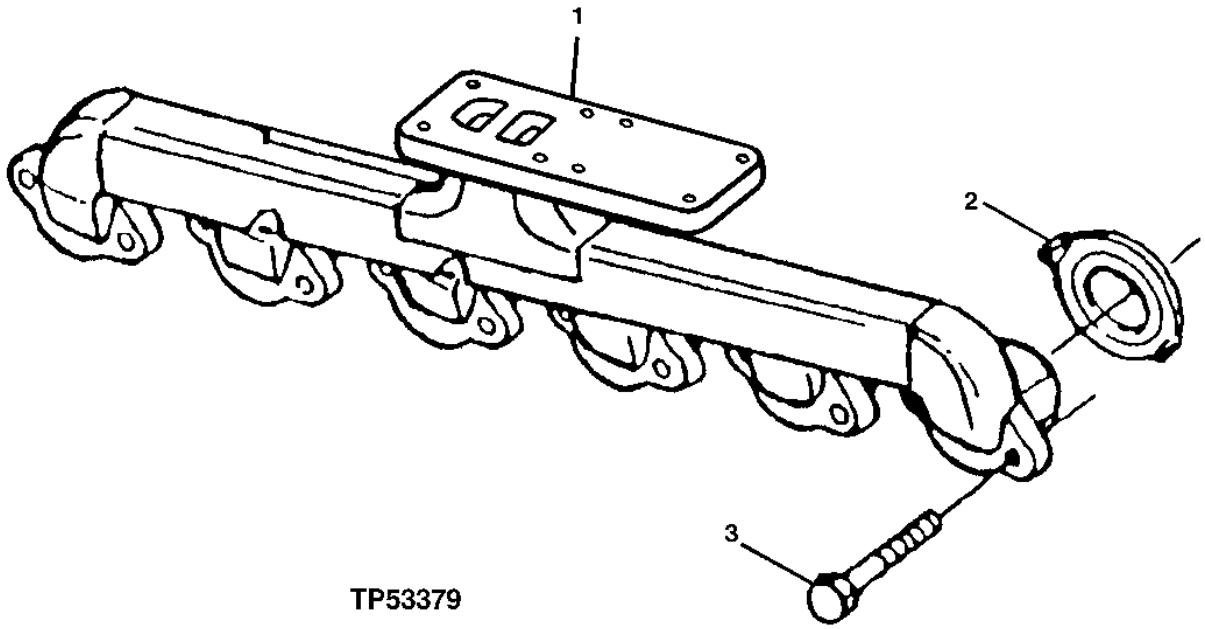

TP53379

KEY	PART NO.	PART NAME	QTY	ENGINE SERIAL NO.	670D	672D	REMARKS
1	R133819	MANIFOLD	1		X	X	
2	R521439	GASKET	6		X	X	(SUB FOR R90658)
3	19M7810	SCREW	12		X	X	M10 X 80

EXHAUST ELBOW AND ADAPTER

TP49256 -UN-15MAY95

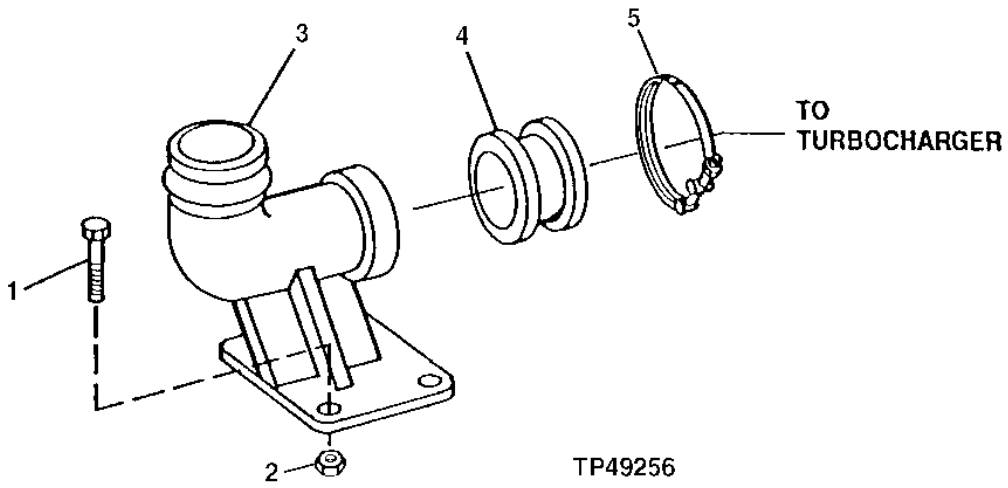

KEY	PART NO.	PART NAME	QTY	ENGINE SERIAL NO.	670D	672D	REMARKS
1	19M8162	SCREW	4		X	X	M10 X 40
2	14M7296	FLANGE NUT	4		X	X	M10
3	R123246	PIPE ELBOW	1		X	X	
4	R87732	ADAPTER	1		X	X	
5	RE40048	CLAMP	1		X	X	

MEMORANDA

FUEL INJECTION PUMP, FUEL LINES AND INJECTION NOZZLES

RGP9926 -UN-12AUG03

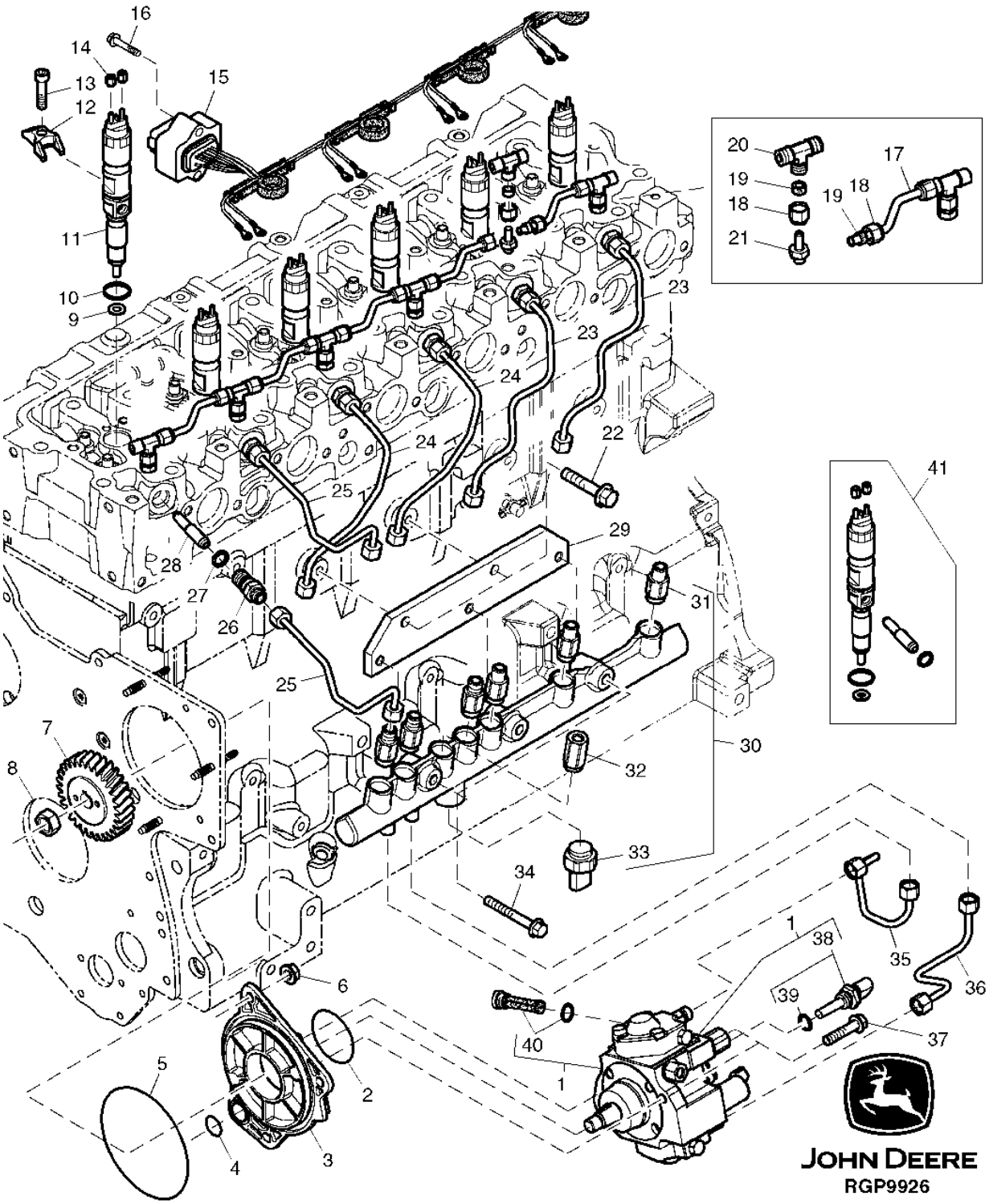

FUEL INJECTION PUMP, FUEL LINES AND INJECTION NOZZLES

KEY	PART NO.	PART NAME	QTY	ENGINE SERIAL NO.	670D	672D	REMARKS
1	RE507959	PUMP	1		X	X	DENSO HP3 HPCR WITHOUT ECU
2	R516125	O-RING	1		X	X	53.645 X 2.616 MM (2.112" X 0.103")
3	R504577	ADAPTER	1		X	X	
4	R116031	O-RING	1		X	X	21.946 X 1.778 MM (0.864" X 0.070")
5	R55453	O-RING	1		X	X	117.069 X 3.531 MM (4-39/64" X 0.139")
6	14M7298	FLANGE NUT	3		X	X	M8
7	R502541	GEAR	1		X	X	Z= 30
8	R91360	NUT	1		X	X	M14
9	R515535	WASHER	6		X	X	
10	R505452	O-RING	6		X	X	20.218 X 3.530 MM (0.796" X 0.139")
11	.....	INJECTION NOZZLE	6		X	X	(ORDER RE516540)
12	R518345	CLAMP	6		X	X	
13	R504781	CAP SCREW	6		X	X	
14	R134920	NUT	12		X	X	
15	RE509093	WIRING HARNESS	1		X	X	
	R518390	TIE BAND	11		X	X	
16	19M7775	SCREW	2		X	X	M6 X 16
17	R503307	TUBE	4		X	X	
18	R123593	TUBE NUT	14		X	X	1/2"-24UNS
19	R51936	SEALING WASHER	14		X	X	
20	R97061	TEE FITTING	6		X	X	1/2"-24UNS
21	R503308	FITTING	6		X	X	M8 X 1.25 (THREADS WITH PRE-APPLIED SEALANT)
22	19M7784	SCREW	2		X	X	M10 X 20
23	RE507541	FUEL LINE	2		X	X	NO. 5 & 6
24	RE507540	FUEL LINE	2		X	X	NO. 3 & 4
25	RE507539	FUEL LINE	2		X	X	NO. 1 & 2
26	R515044	NUT	6		X	X	(ALSO ORDER R65397)
27	R65397	O-RING	6		X	X	12.370 X 2.616 MM (0.487" X 0.103")
28	RE515986	TUBE	6		X	X	
29	R504239	BRACKET	1		X	X	
30	RE520928	RAIL	1		X	X	
31	RE515636	RESTRICTOR	6		X	X	
32	RE516335	KIT	1		X	X	PRESSURE RELIEF VALVE, (INCLUDES R515454)
	R515454	SHIM	1		X	X	
33	RE520930	SENSOR	1		X	X	FUEL PRESSURE
34	19M8528	SCREW	3		X	X	M10 X 55
35	RE507537	FUEL LINE	1		X	X	
36	RE507538	FUEL LINE	1		X	X	
37	19M7868	SCREW	2		X	X	M8 X 30
38	RE516336	SENSOR	1		X	X	FUEL TEMPERATURE
39	R50919	O-RING	1		X	X	9.804 X 1.905 MM (0.386" X 0.075")
40	RE516999	SCREEN	1		X	X	
41	RE516540	INJECTION NOZZLE	6		X	X	
	PM38653	SEALANT	1		X	X	THREADLOCKER 222® (NON-CALIFORNIA ONLY)

MEMORANDA

AIR INTAKE

RGP9864 -UN-24JUL03

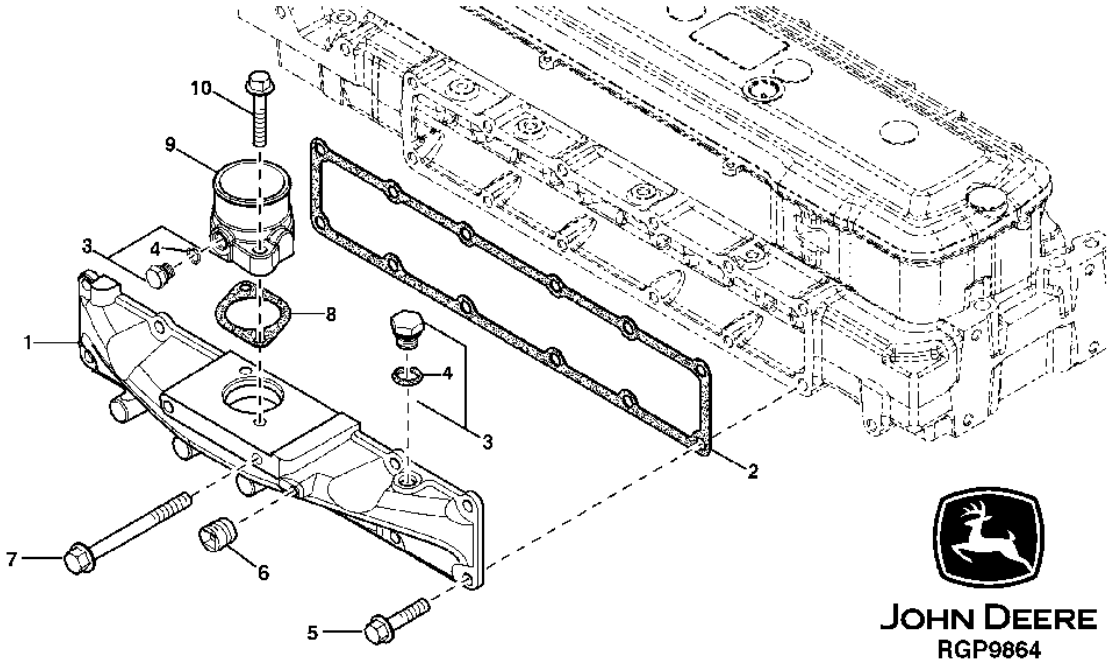

KEY	PART NO.	PART NAME	QTY	ENGINE SERIAL NO.	670D	672D	REMARKS
1	R515029	COVER	1		X	X	
2	R515030	GASKET	1		X	X	
3	RE46684	PLUG	AR		X	X	M14 X 1.5
4	51M7041	O-RING	1		X	X	11.300 X 2.200 MM (0.445" X 0.087")
5	19M7785	SCREW	10		X	X	M10 X 25
6	R104592	PIPE PLUG	1		X	X	1/8"-27NPT
7	19M7812	SCREW	2		X	X	M10 X 100
8	R81275	GASKET	1		X	X	
9	R505166	AIR INTAKE	1		X	X	
10	R500394	SCREW	2		X	X	M10 X 35, WITH PRE-APPLIED SEALANT

MEMORANDA

TURBOCHARGER AND OIL LINES

RGP9928 -UN-11AUG03

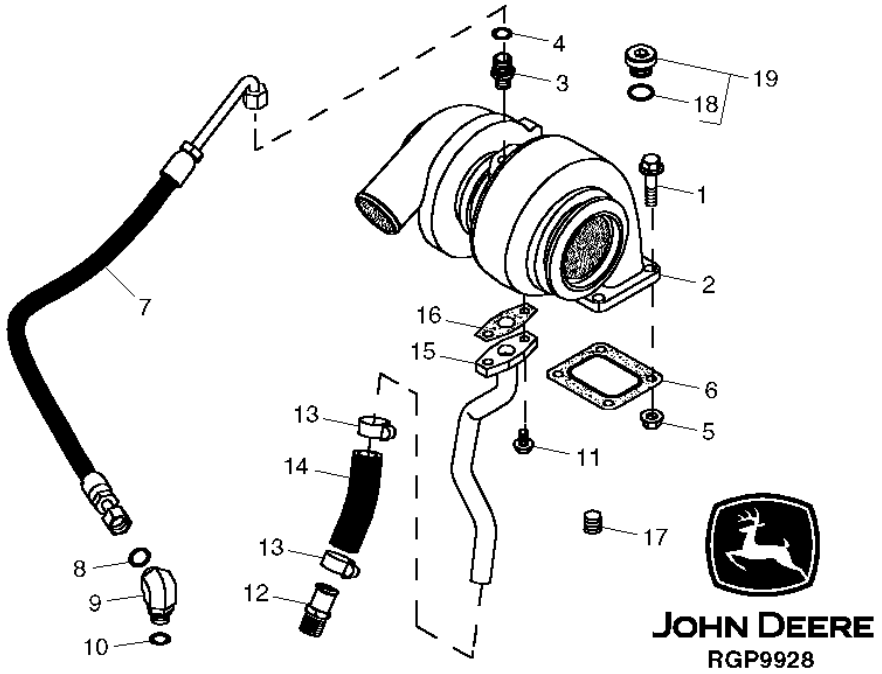

KEY	PART NO.	PART NAME	QTY	ENGINE SERIAL NO.	6 7 0 D	6 7 2 D	REMARKS
1	19M8637	CAP SCREW	4		X	X	M10 X 40
	24M7096	WASHER	4		X	X	10.500 X 18 X 1.600 MM
2	RE520650	TURBOCHARGER	1		X	X	REMANUFACTURED, (MARKED RE520643)
	RE520651	TURBOCHARGER	1		X	X	SERVICE, (MARKED RE520643)
3	M87733	ADAPTER	1		X	X	
4	R63548	O-RING	1		X	X	9.246 X 1.778 MM (0.364" X 0.070")
5	14M7296	FLANGE NUT	4		X	X	M10
6	R123572	GASKET	1		X	X	
7	RE503208	OIL LINE	1		X	X	
8	T77613	O-RING	1		X	X	9.246 X 1.778 MM (0.364" X 0.070")
9	38H5154	ELBOW FITTING	1		X	X	
10	51M7042	O-RING	1		X	X	13.300 X 2.200 MM (0.524" X 0.087")
11	19M7866	BOLT	2		X	X	M8 X 20
12	RE54885	HOSE FITTING	1		X	X	1/2"-14NPT, WITH PRE-APPLIED SEALANT
13	RE65978	CLAMP	2		X	X	
14	R120013	HOSE	AR		X	X	
15	RE68234	OIL LINE	1		X	X	DRAIN
16	R123570	GASKET	1		X	X	
17	RE57836	PIPE PLUG	NA		X	X	1/2"-14NPT
18	51M7042	O-RING	NA		X	X	13.300 X 2.200 MM (0.524" X 0.087")
19	RE52242	DRAIN PLUG	NA		X	X	M16X1.5

MEMORANDA

WATER PUMP AND WATER PUMP REPAIR KIT

T158422 -UN-13AUG02

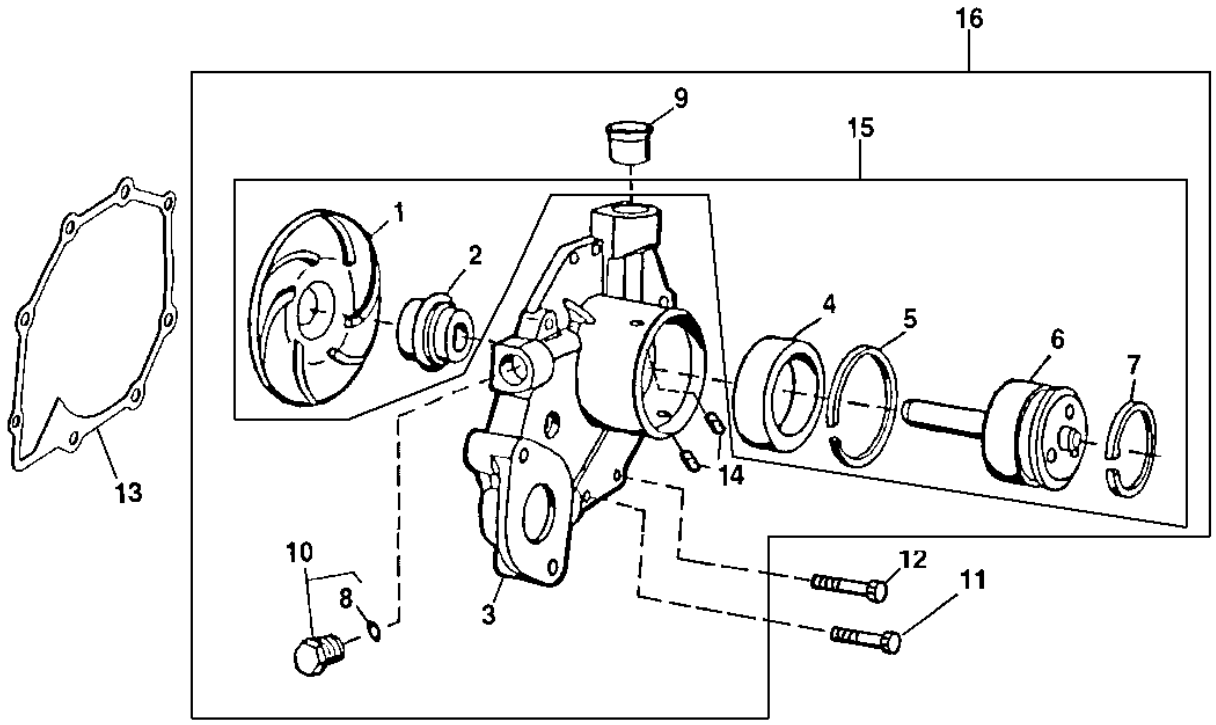

T158422

KEY	PART NO.	PART NAME	QTY	ENGINE SERIAL NO.	6 6 7 7 0 2 D D	REMARKS
1	.....	IMPELLER	1		X X	(MARKED R123395)
2	.....	SEAL	1		X X	
3	.....	HOUSING	1		X X	(MARKED RE505980)
4	.....	BALL BEARING	1		X X	
5	R71228	RING	1		X X	
6	.....	SHAFT	1		X X	
7	A364R	SNAP RING	1		X X	
8	51M7043	O-RING	1		X X	15.300 X 2.200 MM (0.602" X 0.087")
9	R123226	SEAL	1		X X	
10	RE46685	PLUG	1		X X	M18 X 1.5
11	19M7796	SCREW	3		X X	M6 X 30
12	19M7863	SCREW	5		X X	M6 X 25
13	R123417	GASKET	1		X X	
14	R100369	FILTER	2		X X	
15	RE509813	KIT	1		X X	REPAIR, (ALSO ORDER R123226 AND R123417)
16	RE505980	WATER PUMP	1		X X	(MARKED RE505980)

WATER PUMP PULLEY AND INLET

TP49462 -UN-05SEP96

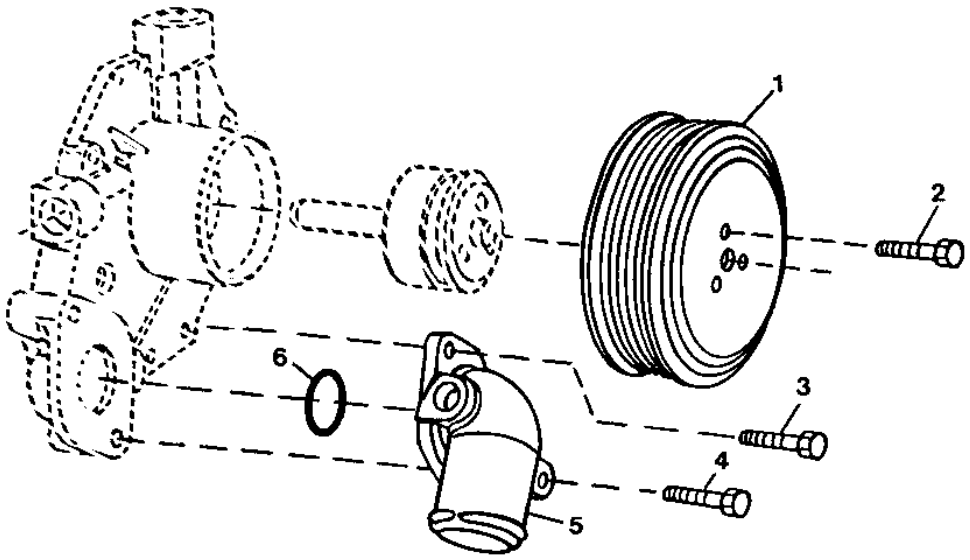

TP49462

KEY	PART NO.	PART NAME	QTY	ENGINE SERIAL NO.	6 7 0 D	6 7 2 D	REMARKS
1	R115250	PULLEY	1		X	X	OD 93MM
2	19M7774	SCREW	3		X	X	M6 X 12
3	19M7867	SCREW	1		X	X	M8 X 25
4	19M7802	SCREW	1		X	X	M8 X 65
5	R502983	HOUSING	1		X	X	
6	R89944	O-RING	1		X	X	50.394 X 3.531 MM (1-63/64" X 0.139")

MEMORANDA

COOLANT SIDE OUTLET, THERMOSTAT HOUSING AND COVER

RGP10887 -UN-16NOV04

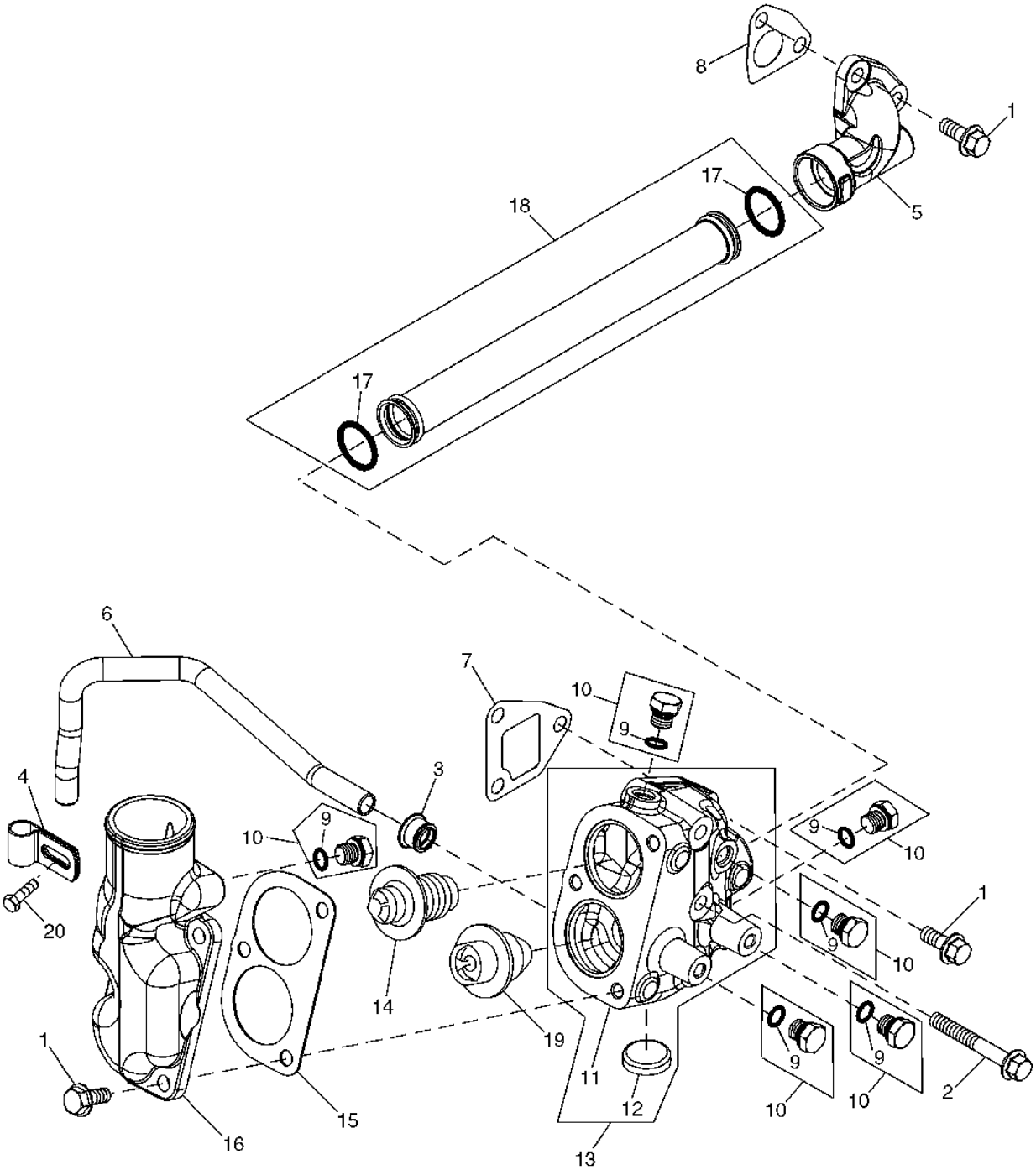

RGP10887

COOLANT SIDE OUTLET, THERMOSTAT HOUSING AND COVER

KEY	PART NO.	PART NAME	QTY	ENGINE SERIAL NO.	670D	672D	REMARKS
1	19M7785	SCREW	6		X	X	M10 X 25
2	19M7810	SCREW	2		X	X	M10 X 80
3	R123226	SEAL	1		X	X	
4	R123324	CLAMP	1		X	X	
5	R504754	MANIFOLD	1		X	X	
6	R504854	TUBE	1		X	X	
7	R505479	GASKET	1		X	X	
8	R505480	GASKET	1		X	X	
9	51M7041	O-RING	5		X	X	11.300 X 2.200 MM (0.445" X 0.087")
10	RE46684	PLUG	5		X	X	M14 X 1.5
11	R515580	HOUSING	1		X	X	
12	CD16284	PLUG	1		X	X	OD 32.5MM (1.2795")
13	RE517057	HOUSING	1		X	X	(MARKED R515580)
14	RE33705	THERMOSTAT	1		X	X	UPPER, 82°C (180°F)
15	R124607	GASKET	1		X	X	
16	R515581	COVER	1		X	X	
17	R63185	O-RING	2		X	X	29.743 X 3.531 MM (1.171" X 0.139")
18	RE516027	TUBE	1		X	X	
19	RE524562	THERMOSTAT	1		X	X	LOWER, 82°C (180°F) (SUB FOR AR48675, THIS APPLICATION)
20	19M7801	SCREW	1		X	X	M8 X 60

MEMORANDA

MEMORANDA

OIL COOLER

RGP8849 -UN-08JUL02

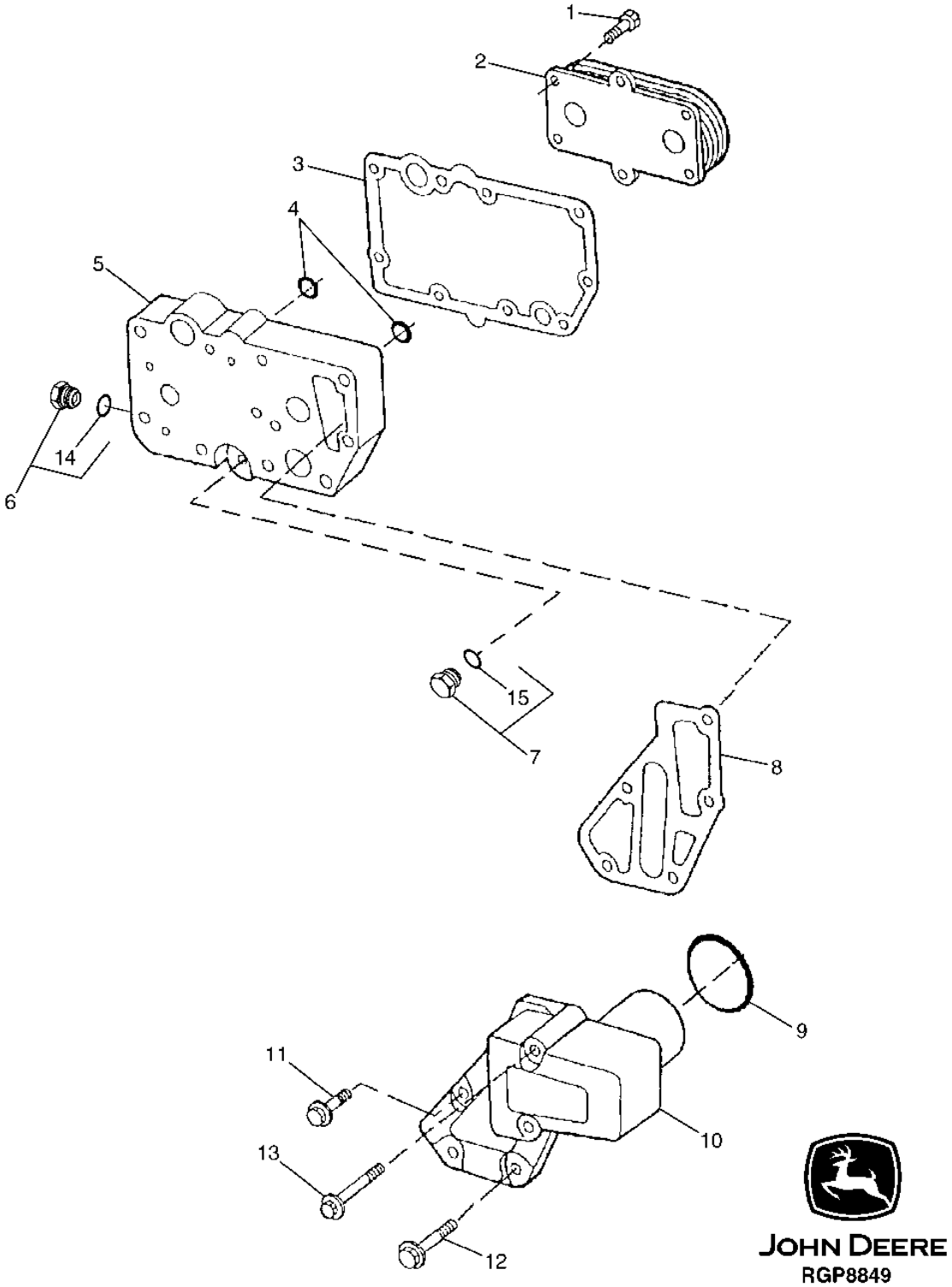

OIL COOLER

KEY	PART NO.	PART NAME	QTY	ENGINE SERIAL NO.	670D	672D	REMARKS
1	RE67231	SCREW	6		X	X	M6 X 16, WITH PRE-APPLIED SEALANT
2	RE59298	OIL COOLER	1		X	X	9 PLATE
3	R123501	GASKET	1		X	X	
4	T122075	O-RING	2		X	X	29.820 X 2.616 MM (1.174" X 0.103")
5	R123471	HOUSING	1		X	X	
6	RE46685	PLUG	1		X	X	
7	RE46686	PLUG	1		X	X	
8	R501428	GASKET	1		X	X	
9	R504734	O-RING	1		X	X	37.694 X 3.531 MM (1.484" X 0.139")
10	R502811	ADAPTER	1		X	X	
11	RE67238	SCREW	1		X	X	M8 X 20, WITH PRE-APPLIED SEALANT
12	19M7802	SCREW	2		X	X	M8 X 65
13	19M7970	SCREW	2		X	X	M8 X 100
14	51M7043	O-RING	1		X	X	15.300 X 2.200 MM (0.602" X 0.087")
15	51M7040	O-RING	1		X	X	9.300 X 2.200 MM (0.366" X 0.087")

MEMORANDA

MEMORANDA

FINAL FUEL FILTER

RGP10673 -UN-09NOV04

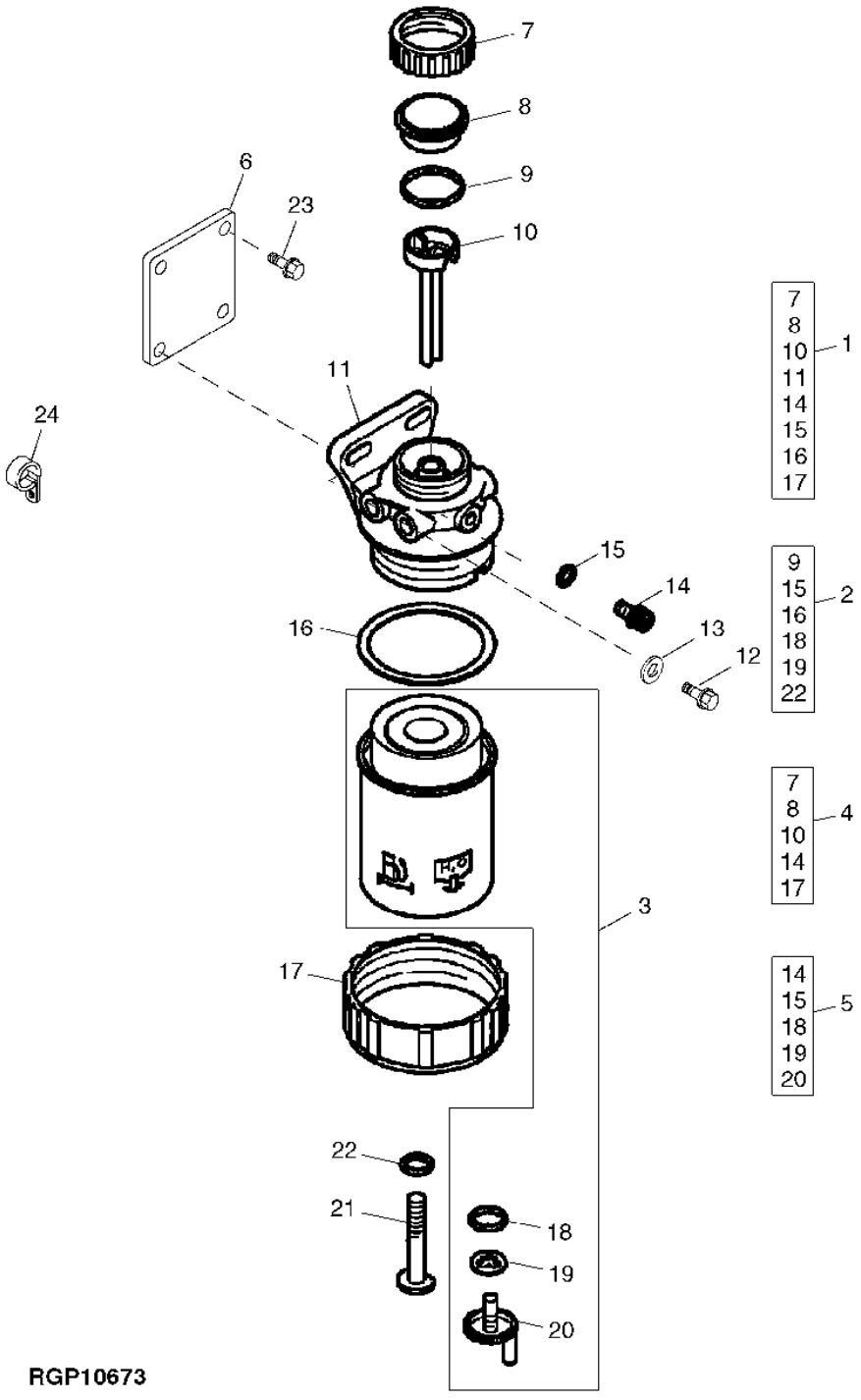

RGP10673

FINAL FUEL FILTER

KEY	PART NO.	PART NAME	QTY	ENGINE SERIAL NO.	670D	672D	REMARKS
1	RE509794	KIT	1		X	X	FILTER HEAD (INCLUDES PARTS MARKED (A))
2	RE516553	KIT	1		X	X	SEAL (INCLUDES PARTS MARKED (D))
3	RE509032	FILTER ELEMENT	1		X	X	(ALSO ORDER R113565)
4	RE51649	SEAL KIT	1		X	X	MECHANICAL COMPONENTS (INCLUDES PARTS MARKED (B))
5	RE60854	KIT	1		X	X	DRAIN VALVE (INCLUDES PARTS MARKED (C))
6	R516437	BRACKET	1		X	X	
7	F431875	NUT	1		X	X	(A) (B)
8	.....	RETAINER	1		X	X	(A) (B)
9	RE516512	KIT	1		X	X	(D) O-RING (PKG 10)
10	.....	RETAINER	1		X	X	(A) (B)
11	.....	FILTER HEAD	1		X	X	(A) (ORDER RE509794)
12	19M8328	SCREW	2		X	X	M10 X 25
13	24M7096	WASHER	2		X	X	10.500 X 18 X 1.600 MM
14	R113563	DRAIN PLUG	1		X	X	(A) (B) (C)
15	R113562	RING	1		X	X	(A) (C) (D)
16	R113565	SEAL	1		X	X	(A) (D)
17	.....	RETAINER	1		X	X	(A) (B)
18	.....	O-RING	1		X	X	(C) (D)
19	.....	GASKET	1		X	X	(C) (D)
20	.....	DRAIN PLUG	1		X	X	(C)
21	.....	SCREW	1		X	X	
22	.....	O-RING	1		X	X	(D)
23	19M7784	SCREW	2		X	X	M10 X 20
24	R72659	CLAMP	1		X	X	ENGINE VENTILATING HOSE

PRIMARY FUEL FILTER

RGP10674 -UN-11NOV04

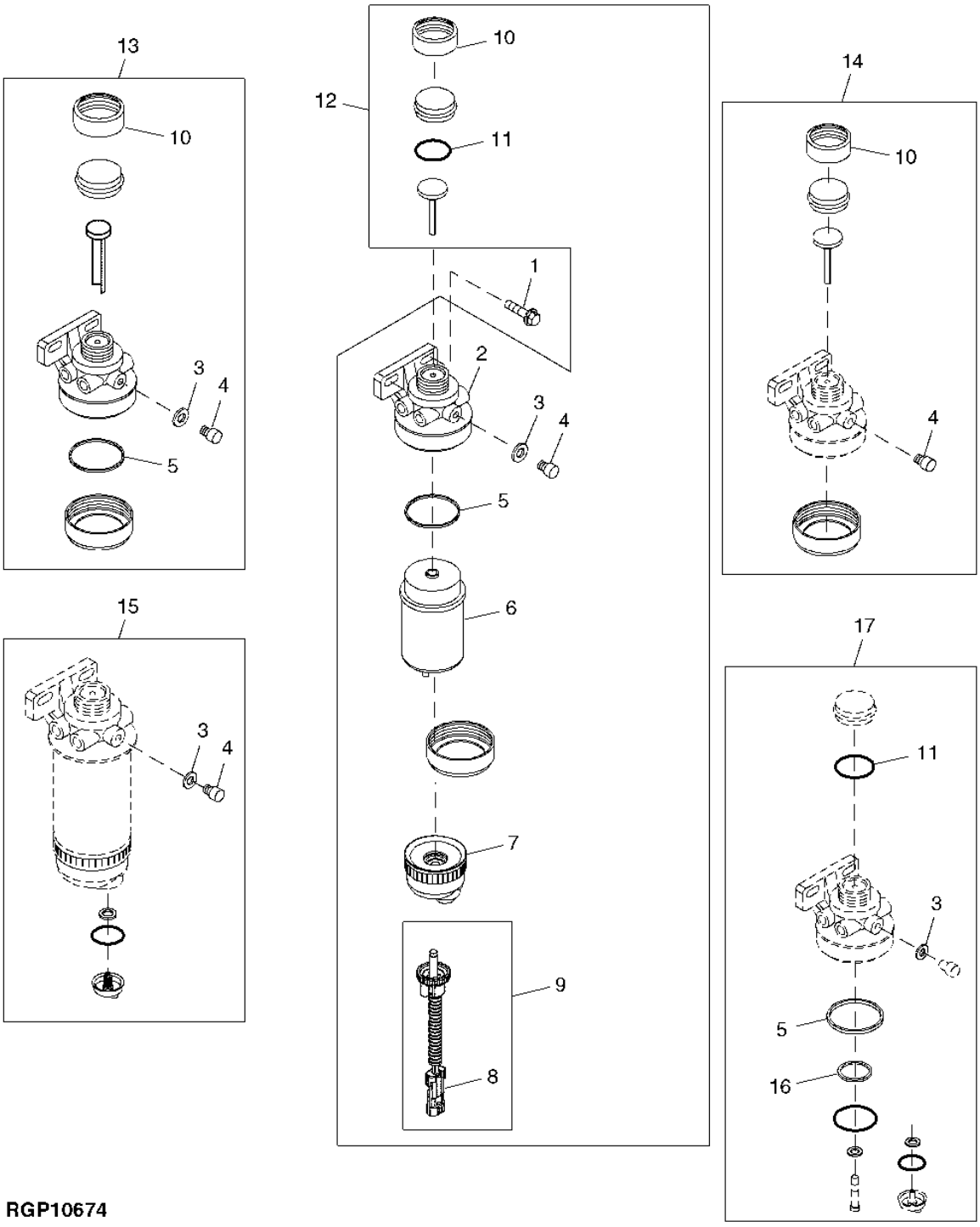

RGP10674

PRIMARY FUEL FILTER

KEY	PART NO.	PART NAME	QTY	ENGINE SERIAL NO.	670D	672D	REMARKS
1	19M7804	SCREW	2		X	X	M10 X 40
2	.....	FILTER HEAD	1		X	X	(ORDER RE508847)
3	R113562	RING	1		X	X	
4	R113563	DRAIN PLUG	1		X	X	
5	R113565	SEAL	1		X	X	
6	RE517180	FILTER	1		X	X	(ALSO ORDER R113565)
7	RE51650	SEDIMENT BOWL	1		X	X	
8	57M7256	ELECTRICAL CONNECTOR ASSY	1		X	X	(ALSO ORDER (2) 57M7258, 57M7289 AND (2) R104919)
9	RE519696	MOISTURE SENSOR	1		X	X	WATER IN FUEL
10	F431875	NUT	1		X	X	
11	RE516512	KIT	1		X	X	O-RING (PKG 10)
12	RE520600	FILTER	1		X	X	ASSY
13	RE508847	FILTER HEAD	1		X	X	KIT, (MARKED R504948)
14	RE51649	SEAL KIT	1		X	X	MECHANICAL COMPONENTS
15	RE60854	KIT	1		X	X	DRAIN VALVE
16	R460R	O-RING	1		X	X	26.568 X 3.531 MM (1.046" X 0.139")
17	RE516553	KIT	1		X	X	SEAL

FUEL FILTER LINES

RGP10676 -UN-10NOV04

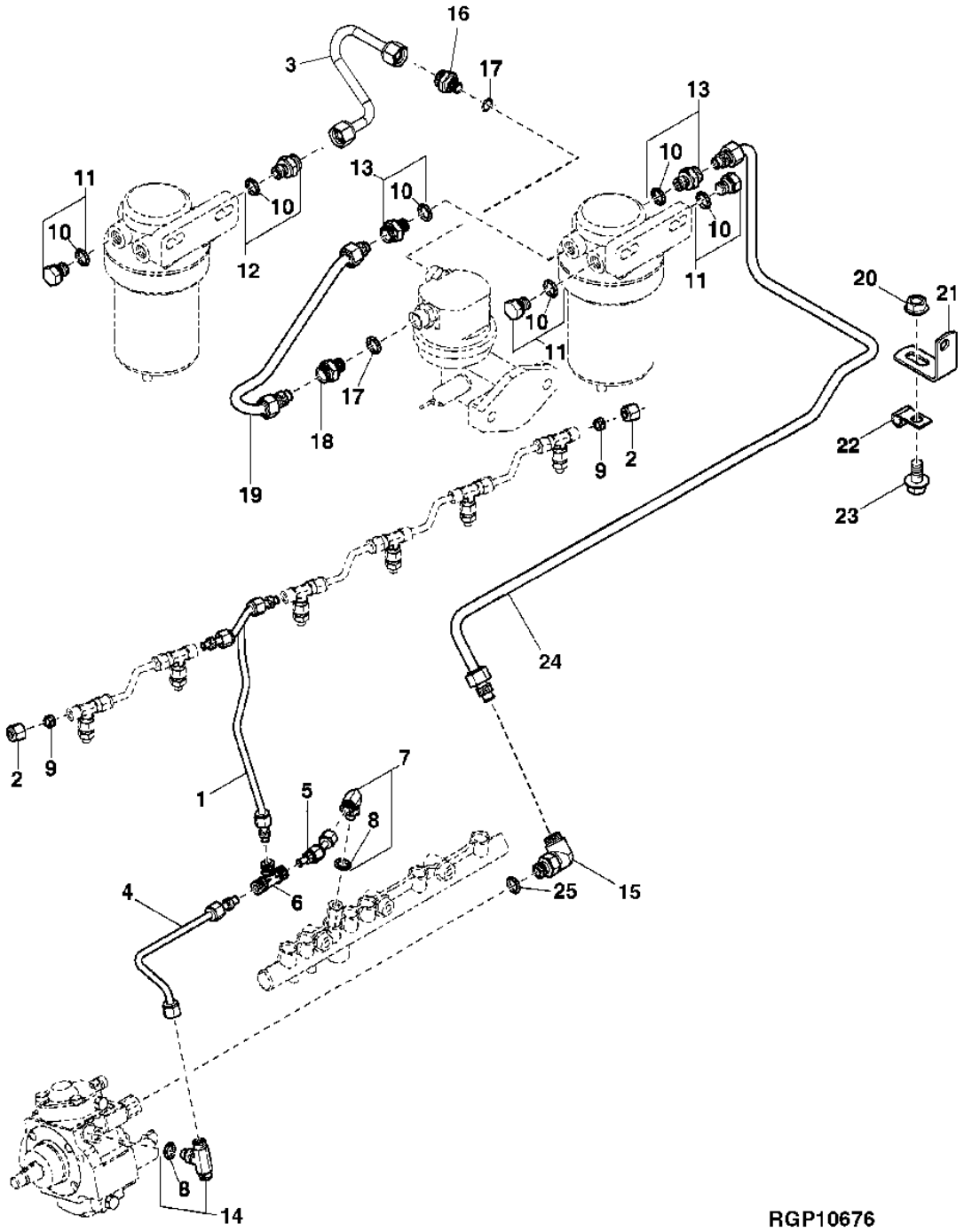

FUEL FILTER LINES

KEY	PART NO.	PART NAME	QTY	ENGINE SERIAL NO.	670D	672D	REMARKS
1	RE508892	FUEL LINE	1		X	X	(INCLUDES (2) R51963)
2	R123593	TUBE NUT	2		X	X	1/2"-24UNS
3	RE508981	FUEL LINE	1		X	X	(INCLUDES (2) R74012)
4	RE508893	FUEL LINE	1		X	X	(INCLUDES (2) R51963)
5	RE515560	FUEL LINE	1		X	X	(INCLUDES (2) R51963)
6	R97061	TEE FITTING	1		X	X	1/2"-24UNS
7	RE502173	ADAPTER	1		X	X	M10X1 X 1/2"-24UNS
8	51M7039	O-RING	2		X	X	8.100 X 1.600 MM (0.319" X 0.063")
9	AR85519	PLUG	2		X	X	
10	51M7040	O-RING	8		X	X	9.300 X 2.200 MM (0.366" X 0.087")
11	RE46686	PLUG	4		X	X	M12X1.5
12	RE60029	ADAPTER	1		X	X	M12X1.5 X 9/16"-24UNEF
13	RE60030	FITTING	2		X	X	M12X1.5 X 5/8"-24UNEF
14	RE502175	FITTING	1		X	X	M10X1 X 1/2"-24UNS
15	RE502174	ELBOW FITTING	1		X	X	M14X1.5 X 5/8"-24UNEF
16	R500270	FITTING	1		X	X	M10X1 X 9/16"-24UNEF
17	R500271	O-RING	2		X	X	10.100 X 1.600 MM (0.398" X 0.063")
18	R516453	ADAPTER	1		X	X	M10X1 X 5/8"-24UNEF
19	RE517245	FUEL LINE	1		X	X	(INCLUDES (2) R67092)
20	14M7296	FLANGE NUT	1		X	X	M10
21	R116116	BRACKET	1		X	X	
22	T13814	CLAMP	1		X	X	
23	19M7784	SCREW	1		X	X	M10 X 20
24	RE522827	FUEL LINE	1		X	X	(INCLUDES (2) R67092)
25	51M7041	O-RING	1		X	X	11.300 X 2.200 MM (0.445" X 0.087")

MEMORANDA

FUEL TRANSFER PUMP

RGP10670 -UN-08NOV04

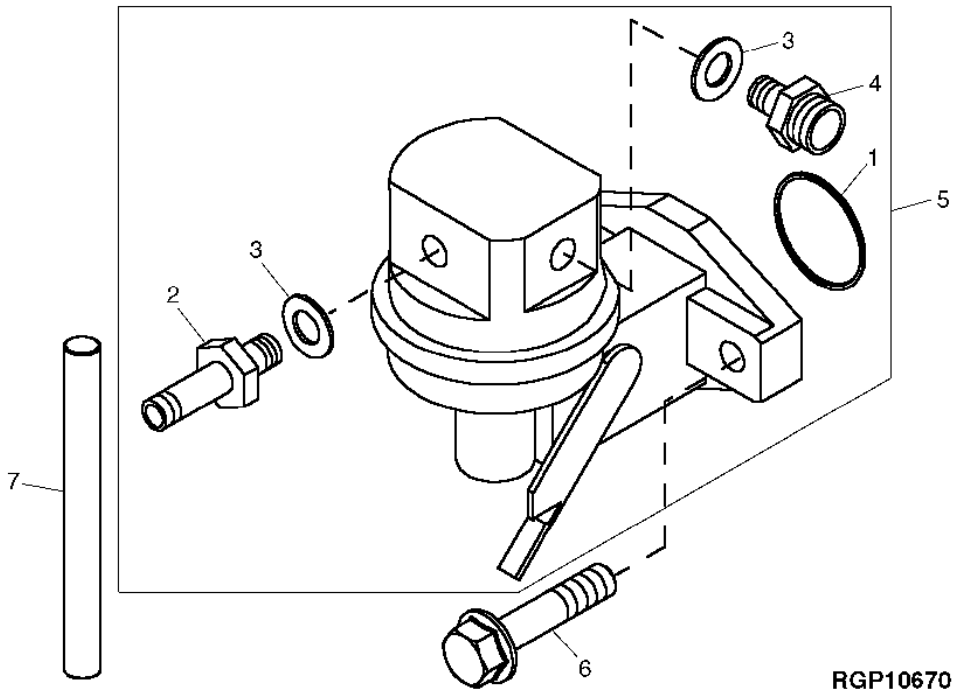

KEY	PART NO.	PART NAME	QTY	ENGINE SERIAL NO.	6 6 7 7 0 2 D D	REMARKS
1	R123273	O-RING	1		X X	31.420 X 2.616 MM (1.237" X 0.103")
2	R500269	FITTING	NA		X X	
3	R500271	O-RING	2		X X	10.100 X 1.600 MM (0.398" X 0.063")
4	R500270	FITTING	1		X X	M10X1 X 9/16"-24UNEF
5	RE68345	FUEL PUMP	1		X X	
6	RE504233	SCREW	2		X X	M8 X 30, WITH PRE-APPLIED SEALANT
7	R133405	PUSH ROD	1		X X	

MEMORANDA

MEMORANDA

STARTING MOTOR (24-VOLT DENSO)

RGP10677 -UN-12NOV04

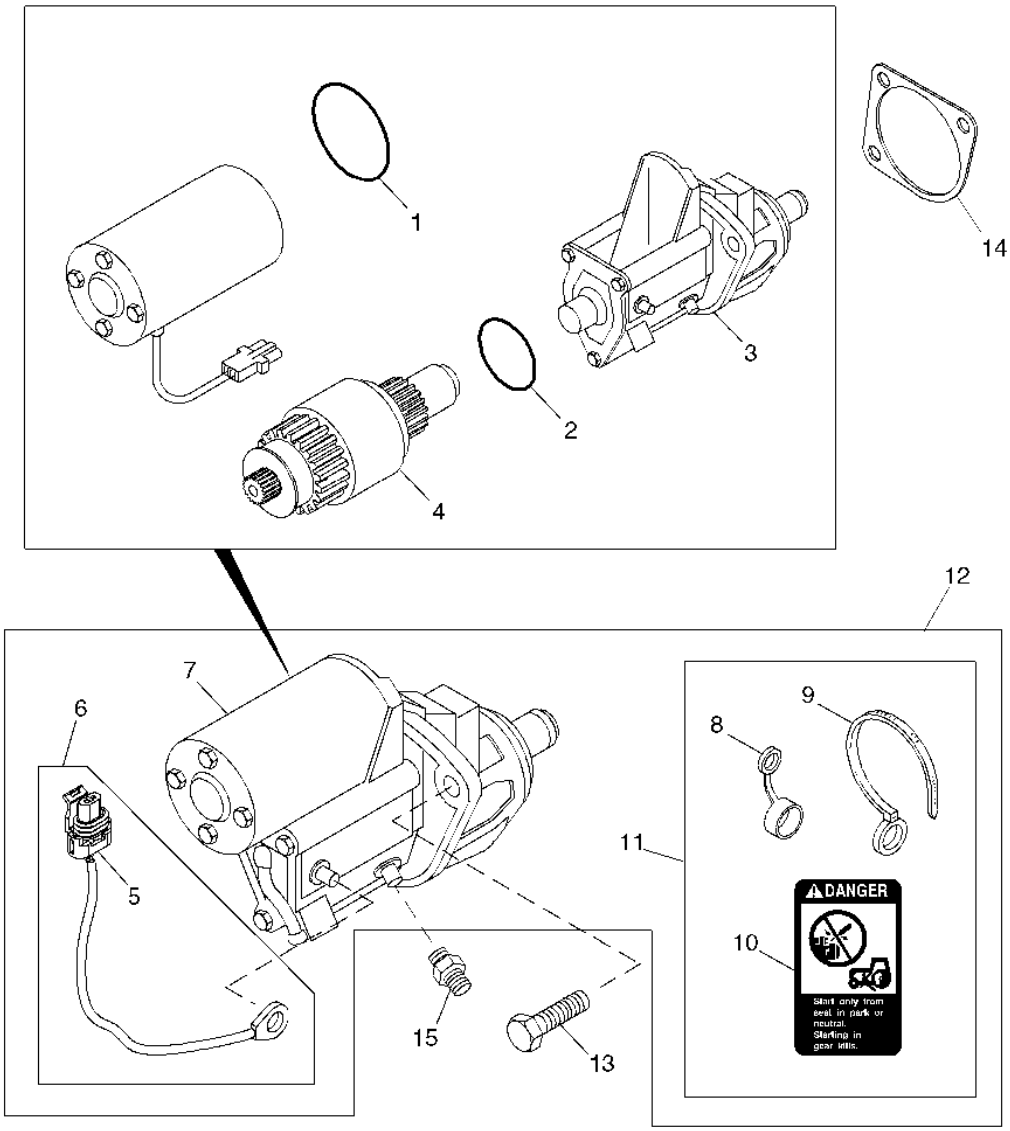

RGP10677

STARTING MOTOR (24-VOLT DENSO)

KEY	PART NO.	PART NAME	QTY	ENGINE SERIAL NO.	670D	672D	REMARKS
1	R135509	SEAL	1		X	X	
2	R135510	O-RING	1		X	X	47.200 X 2.400 MM (1.858" X 0.094")
3	RE70681	SWITCH	1		X	X	
4	RE70487	CLUTCH	1		X	X	
5	RE12362	ELECTRICAL CONNECTOR ASSY	1		X	X	
	57M7271	ELEC. CONNECTOR TERMINAL	1		X	X	
6	RE505399	WIRING LEAD	1		X	X	TERMINAL M
7	.....	STARTER MOTOR	1		X	X	24V
8	.....	COVER	1		X	X	TERMINAL 50
9	R96703	TIE BAND	1		X	X	
10	T146102	LABEL	1		X	X	BYPASS START
11	RE70756	KIT	1		X	X	SOLENOID COVER
12	RE506078	STARTER MOTOR KIT	1		X	X	24V, (MARKED RE505465)
13	19M7786	SCREW	3		X	X	M10 X 30
14	R53108	GASKET	1		X	X	
15	T185188	STUD	1		X	X	(USE WITH RE506078)
..	RE71256	SCREW WITH WASHER	1		X	X	(NOT SHOWN) M5X0.8, TERMINAL 50
..	R136052	STUD	1		X	X	(NOT SHOWN) M12X1.75, TERMINAL G

MEMORANDA

ALTERNATOR BRACKET

TP61878 -UN-17MAY99

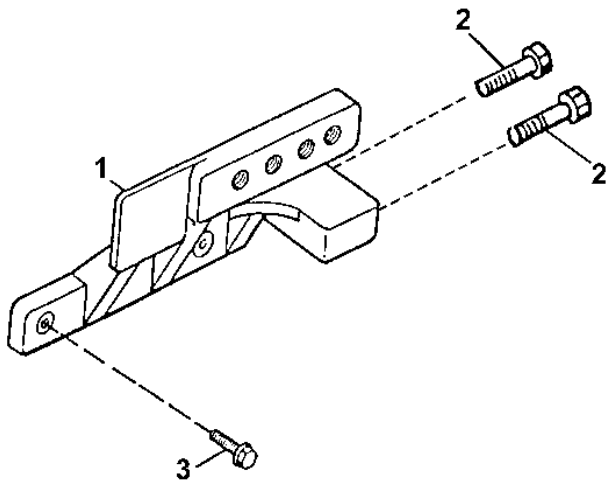

TP61878

KEY	PART NO.	PART NAME	QTY	ENGINE SERIAL NO.	6 6 7 7 0 2 D D	REMARKS
1	R515574	SUPPORT	1		X X	
2	19M7785	SCREW	2		X X	M10 X 25
3	19M7786	SCREW	2		X X	M10 X 30

MEMORANDA

BELT TENSIONER

RGP10678 -UN-11NOV04

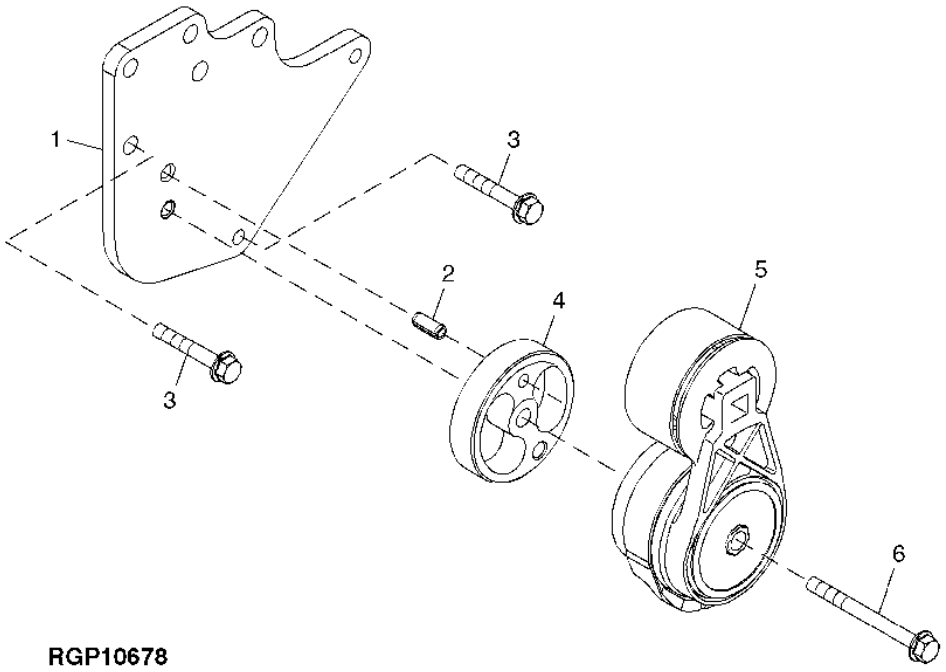

RGP10678

KEY	PART NO.	PART NAME	QTY	ENGINE SERIAL NO.	670D	672D	REMARKS
1	R516508	SUPPORT	1		X	X	
2	34M7061	SPRING PIN	1		X	X	8 X 20 MM
3	19M7801	SCREW	2		X	X	M8 X 60
4	R516623	SPACER	1		X	X	
5	RE518097	TIGHTENER	1		X	X	
6	19M7811	SCREW	1		X	X	M10 X 90

CRANKSHAFT PULLEY AND DAMPENER

RGP9824 -UN-22JUL03

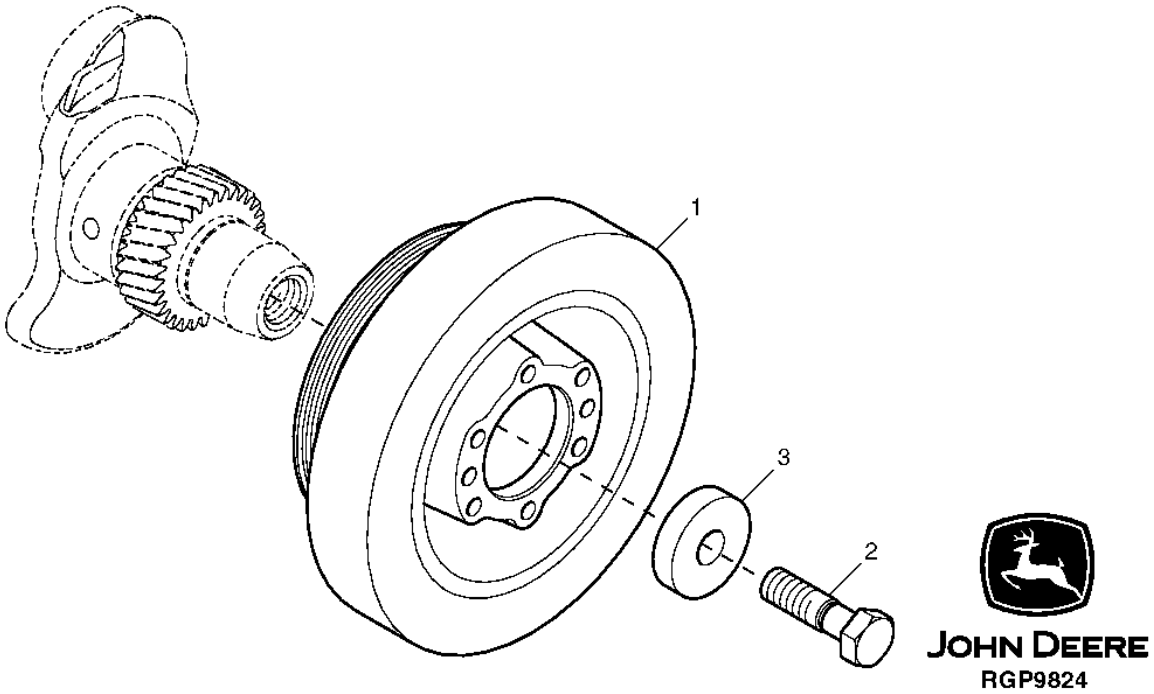

KEY	PART NO.	PART NAME	QTY	ENGINE SERIAL NO.	670D	672D	REMARKS
1	RE508577	PULLEY WITH DAMPENER	1		X	X	OD 168MM
2	R516648	CAP SCREW	1		X	X	
3	R517237	BUSHING	1		X	X	

FLYWHEEL

TP53380 -UN-25FEB97

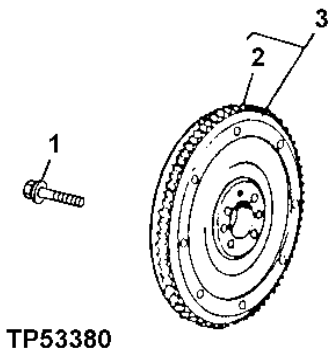

TP53380

KEY	PART NO.	PART NAME	QTY	ENGINE SERIAL NO.	670D	672D	REMARKS
1	R135918	BOLT	6		X	X	
2	R28811	RING GEAR	1		X	X	129 TEETH
3	RE515257	FLYWHEEL	1		X	X	(MARKED R515039)

FLYWHEEL HOUSING

RGP10885 -UN-12NOV04

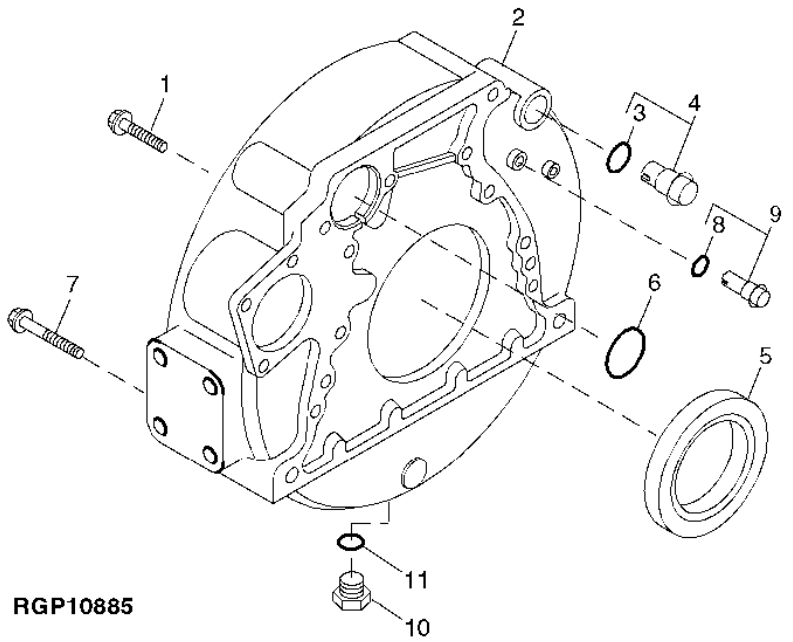

KEY	PART NO.	PART NAME	QTY	ENGINE SERIAL NO.	670D	672D	REMARKS
1	R135918	BOLT	8		X	X	M12 X 38
2	R518550	HOUSING	1		X	X	(ALSO ORDER R61467)
3	R27149	O-RING	1		X	X	23.393 X 3.531 MM (0.921" X 0.139")
4	AR61533	PLUG	1		X	X	
5	RE44574	SEAL	1		X	X	
6	R61467	O-RING	1		X	X	69.520 X 2.616 MM (2.737" X 0.103")
7	19M8306	SCREW	4		X	X	M12 X 50
8	A4365R	O-RING	1		X	X	6.071 X 1.778 MM (0.239" X 0.070")
9	RE504552	PLUG	1		X	X	
10	R39112	FITTING	1		X	X	3/4"-16UNF
11	R47150	O-RING	1		X	X	16.358 X 2.210 MM (0.644" X 0.087")

GASKET KIT - IN-CHASSIS OVERHAUL

RGP8855 -UN-09JUL02

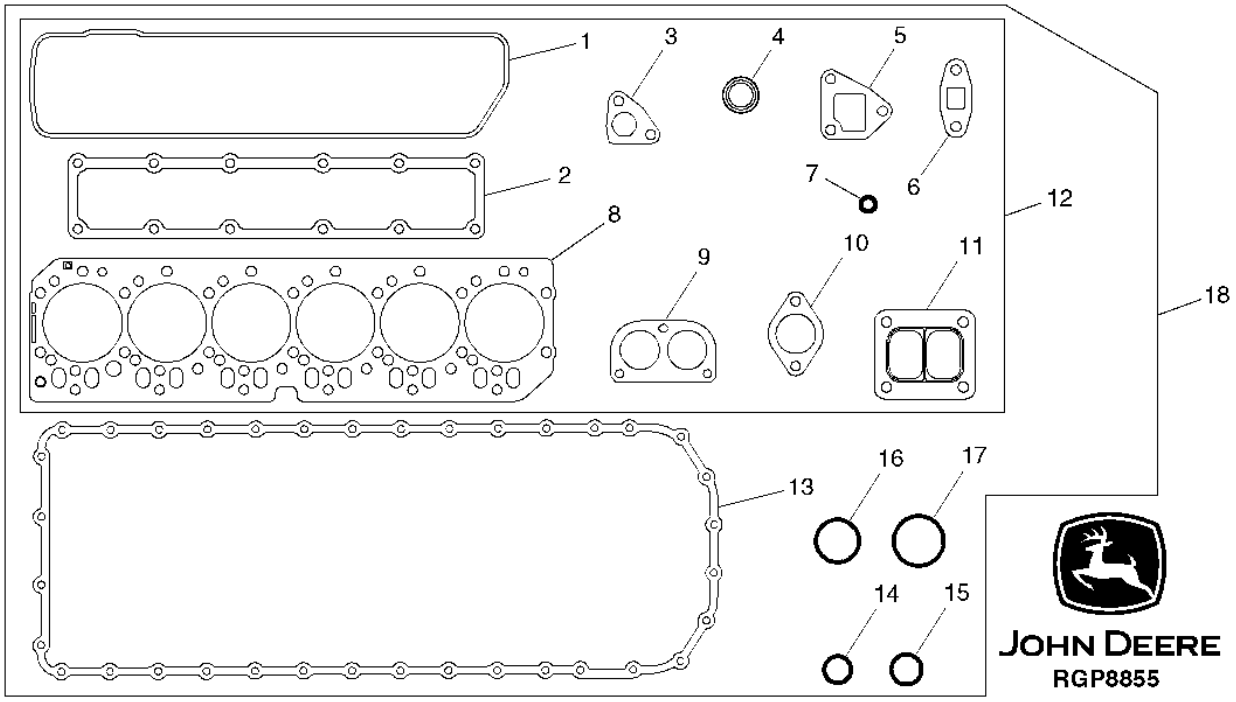

KEY	PART NO.	PART NAME	QTY	ENGINE SERIAL NO.	670D	672D	REMARKS
1	R504882	GASKET	1		X	X	ROCKER ARM COVER
2	R515030	GASKET	1		X	X	AIR INLET
3	R505480	GASKET	1		X	X	SIDE OUTLET
4	R123226	SEAL	2		X	X	WATER BY-PASS TUBE
5	R505479	GASKET	1		X	X	THERMOSTAT HOUSING
6	R123570	GASKET	1		X	X	TURBOCHARGER OIL OUTLET LINE
7	R516158	O-RING	7		X	X	ROCKER ARM COVER
8	R116516	ENGINE CYLINDER HEAD GASKET	1		X	X	
9	R124607	GASKET	1		X	X	THERMOSTAT COVER
10	R521439	GASKET	6		X	X	EXHAUST MANIFOLD
11	R123572	GASKET	1		X	X	TURBOCHARGER TO EXHAUST MANIFOLD
12	.....	GASKET KIT	1		X	X	NLA
13	R500349	GASKET	1		X	X	OIL PAN
14	R75892	O-RING	1		X	X	OIL PUMP TUBE CONNECTOR
15	R97185	O-RING	2		X	X	OIL PUMP OUTLET TUBE
16	R61871	O-RING	1		X	X	OIL PUMP INTAKE TUBE
17	R63185	O-RING	2		X	X	THERMOSTAT HOUSING TO SIDE COVER
18	RE527014	GASKET KIT	1		X	X	IN-CHASSIS OVERHAUL

MAJOR OVERHAUL GASKET KIT AND ENGINE OVERHAUL KIT

RGP9894 -UN-05AUG03

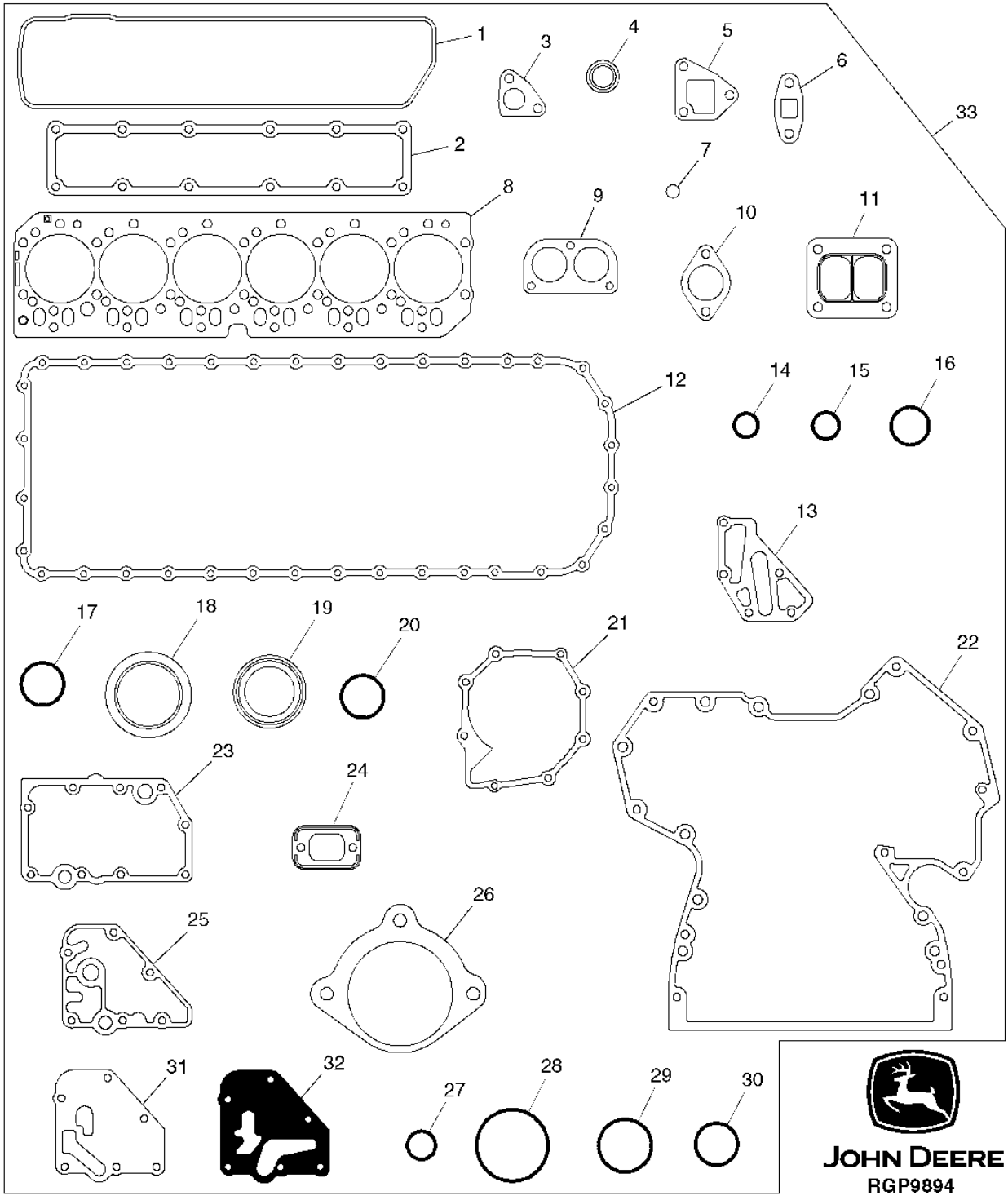

MAJOR OVERHAUL GASKET KIT AND ENGINE OVERHAUL KIT

KEY	PART NO.	PART NAME	QTY	ENGINE SERIAL NO.	670D	672D	REMARKS
1	R504882	GASKET	1		X	X	ROCKER ARM COVER
2	R515030	GASKET	1		X	X	AIR INLET
3	R505480	GASKET	1		X	X	SIDE OUTLET
4	R123226	SEAL	2		X	X	WATER BY-PASS TUBE
5	R505479	GASKET	1		X	X	THERMOSTAT HOUSING
6	R123570	GASKET	1		X	X	TURBOCHARGER OIL OUTLET LINE
7	R516158	O-RING	7		X	X	ROCKER ARM COVER
8	R116516	ENGINE CYLINDER HEAD GASKET	1		X	X	
9	R124607	GASKET	1		X	X	THERMOSTAT COVER
10	R521439	GASKET	6		X	X	EXHAUST MANIFOLD
11	R123572	GASKET	1		X	X	TURBOCHARGER TO EXHAUST MANIFOLD
12	R500349	GASKET	1		X	X	OIL PAN
13	R501428	GASKET	1		X	X	COOLANT PASSAGE ADAPTER
14	R75892	O-RING	1		X	X	OIL PUMP TUBE CONNECTOR
15	R97185	O-RING	2		X	X	OIL PUMP OUTLET TUBE
16	R61871	O-RING	1		X	X	OIL PUMP INTAKE TUBE
17	R63185	O-RING	2		X	X	THERMOSTAT HOUSING TO SIDE COVER
18	RE44574	SEAL	1		X	X	REAR OIL
19	RE516340	KIT	1		X	X	FRONT OIL SEAL
20	R123273	O-RING	1		X	X	FUEL TRANSFER PUMP
21	R123417	GASKET	1		X	X	WATER PUMP
22	R519656	GASKET	1		X	X	TIMING GEAR COVER W/O AUX DRIVE
	R519657	GASKET	NA		X	X	TIMING GEAR COVER WITH AUX DRIVE (NOT SHOWN)
23	R123501	GASKET	1		X	X	OIL COOLER HOUSING
24	R136495	GASKET	2		X	X	OIL FILL
25	R123525	GASKET	1		X	X	OIL FILTER HEADER
	R502864	GASKET	NA		X	X	REMOTE OIL FILTER ADAPTER (NOT SHOWN)
26	R53108	GASKET	1		X	X	STARTING MOTOR
27	R72328	O-RING	4		X	X	REMOTE OIL FILTER TUBES
28	R89944	O-RING	1		X	X	WATER PUMP INLET
29	R61105	O-RING	2		X	X	CONNECTOR TUBE TO TIMING GEAR COVER
30	T122075	O-RING	2		X	X	OIL COOLER TO HOUSING
31	R500374	GASKET	NA		X	X	OIL FILTER HEADER
32	R501484	GASKET	NA		X	X	OIL FILTER HEADER
33	RE527015	GASKET KIT	1		X	X	MAJOR OVERHAUL
	RE526975	ENGINE OVERHAUL KIT	1		X	X	(NOT ILLUSTRATED) (INCLUDES MAJOR OVERHAUL GASKET SET, CONNECTING ROD BEARINGS, MAIN BEARINGS, AND PISTON AND CYLINDER LINER KITS) PISTON MARKED RE507758

MEMORANDA

1J16

GLOW PLUGS

CDP45711 -UN-04JUN03

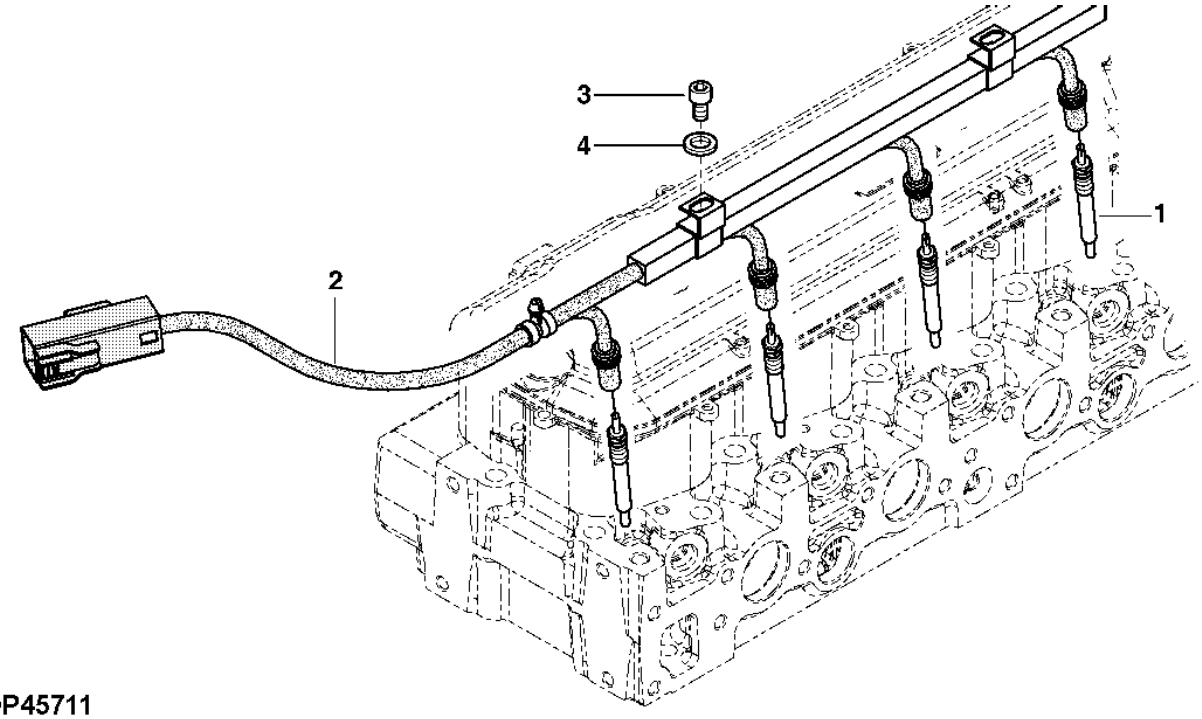

CDP45711

KEY	PART NO.	PART NAME	QTY	ENGINE SERIAL NO.	670D	672D	REMARKS
1	RE515622	GLOW PLUG	6		X	X	
2	RE520238	POWER CORD	1		X	X	
3	19M8618	SCREW	3		X	X	M6 X 12
4	24M7088	WASHER	3		X	X	

ENGINE COOLANT HEATER

T211181 -UN-16MAY05

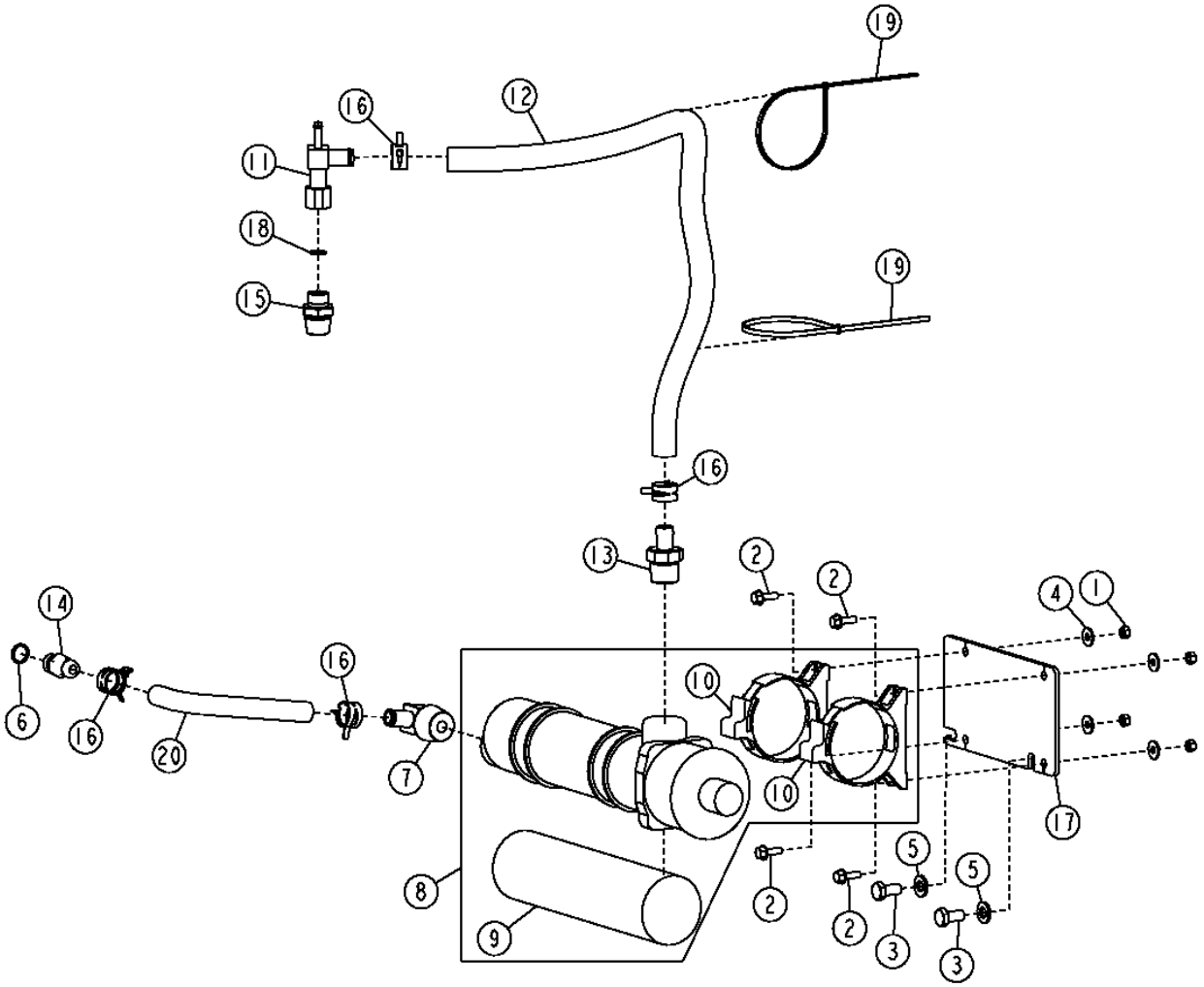

1J18

ENGINE COOLANT HEATER

KEY	PART NO.	PART NAME	QTY	SERIAL NO.	670D	672D	REMARKS
1	14M7528	LOCK NUT	4		X	X	M6
2	19M7862	SCREW	4		X	X	M6 X 20
3	19M7938	CAP SCREW	2		X	X	M10 X 20
4	24M7139	WASHER	4		X	X	
5	24M7239	WASHER	2		X	X	
6	51M7043	O-RING	1		X	X	
7	AR48369	ELBOW FITTING	1		X	X	
8	AT306681	COOLANT HEATER	1		X	X	
9	AT306682	COOLANT HEATER	1		X	X	
10	T205065	BLOCK CLAMP	2		X	X	
11	AT307054	TEE FITTING	1		X	X	
12	.....	BULK HOSE	2		X	X	(MAKE FROM T60811) (CUT TO LENGTH)
13	L100913	FITTING	2		X	X	
14	L155376	FITTING	1		X	X	
15	M87683	ADAPTER	1		X	X	
16	R117721	CLAMP	4		X	X	
17	T205452	BRACKET	1		X	X	
18	T77857	O-RING	1		X	X	
19	H77698	TIE BAND	2		X	X	
20	TY22399	HOSE	1		X	X	

GLOW PLUG WIRING HARNESS

T203301 -UN-16NOV04

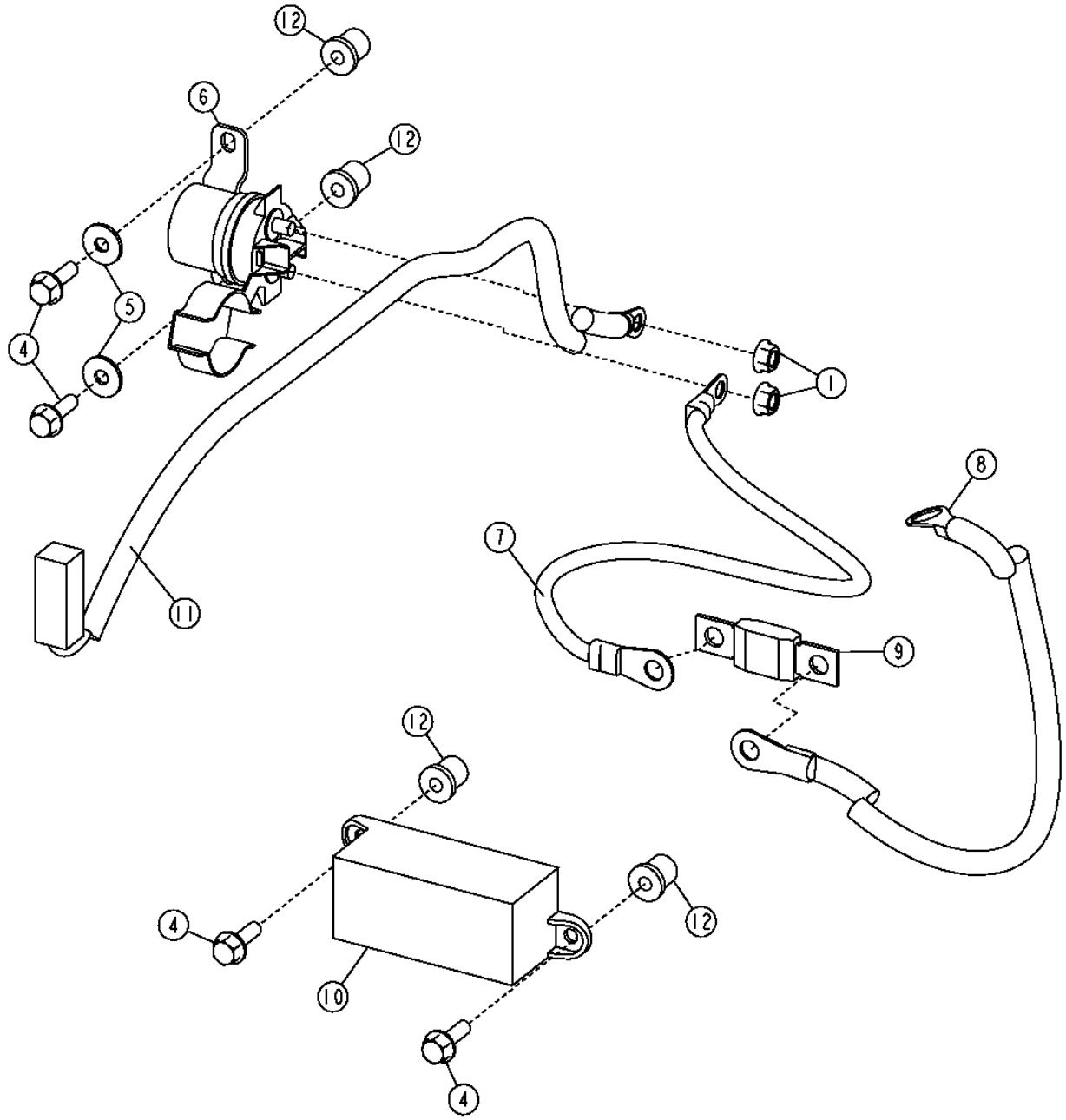

T203301

GLOW PLUG WIRING HARNESS

KEY	PART NO.	PART NAME	QTY	ENGINE SERIAL NO.	670D	672D	REMARKS
1	14M7303	FLANGE NUT	2		X	X	M6
4	19M7862	SCREW	4		X	X	M6 X 20
5	24M7139	WASHER	2		X	X	
6	AT145341	RELAY	1		X	X	
7	AT184618	WIRE	1		X	X	
8	AT196538	WIRING HARNESS	1		X	X	
9	AT203566	FUSE	1		X	X	
10	AT206818	FUSE HOLDER	1		X	X	
11	AT302515	WIRING HARNESS	1		X	X	
12	T160333	NUT	4		X	X	

FAN GUARD (WITHOUT AIR CONDITIONING)

T203916 -UN-05NOV04

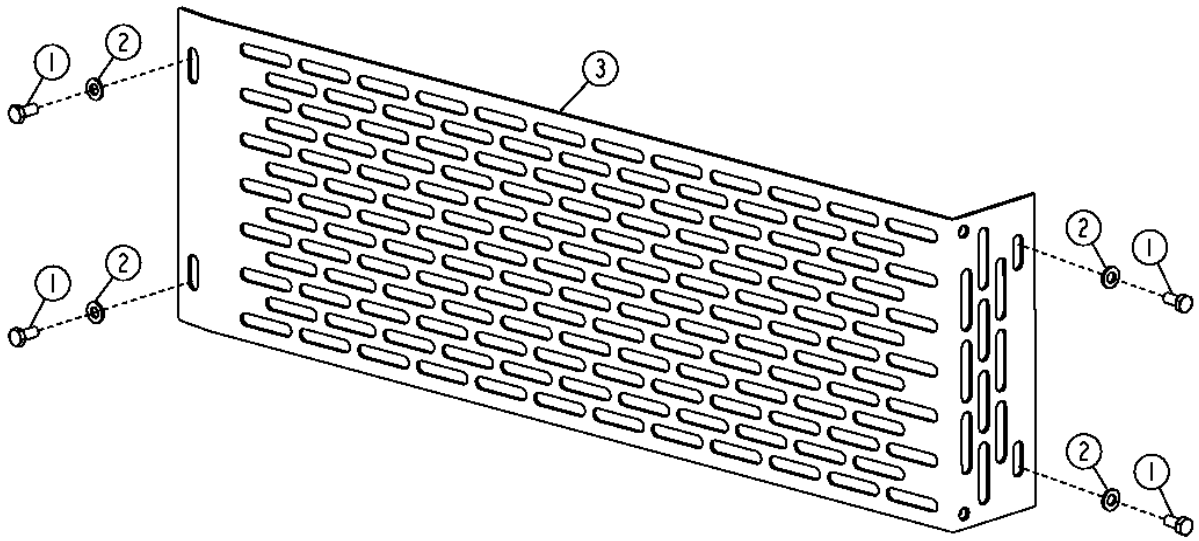

T203916

1J22

FAN GUARD (WITHOUT AIR CONDITIONING)

KEY	PART NO.	PART NAME	QTY	SERIAL NO.	670D	672D	REMARKS
1	19M7938	CAP SCREW	4		X	X	
2	24M7239	WASHER	4		X	X	
3	AT312995	GUARD	1		X	X	

1J23

RADIATOR, CHARGE AIR COOLER AND HYDRAULIC OIL COOLER

T204317 -UN-18DEC04

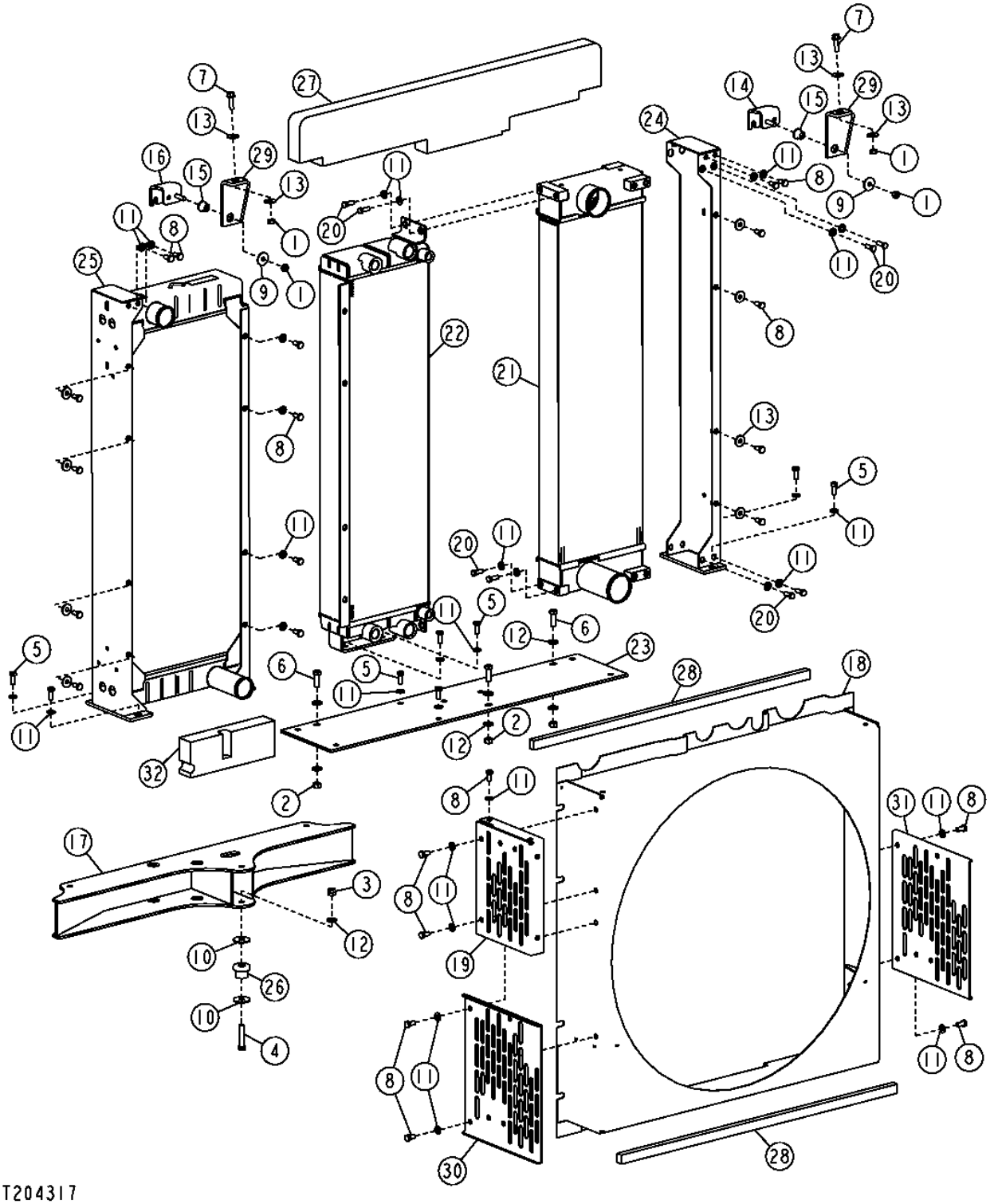

RADIATOR, CHARGE AIR COOLER AND HYDRAULIC OIL COOLER

KEY	PART NO.	PART NAME	QTY	SERIAL NO.	670D	672D	REMARKS
1	14M7274	NUT	4		X	X	M10
2	14M7275	NUT	3		X	X	M12
3	14M7313	LOCK NUT	3		X	X	M12
4	19M7363	CAP SCREW	3		X	X	M12 X 60
5	19M7402	CAP SCREW	8		X	X	M10 X 25
6	19M7403	CAP SCREW	3		X	X	M12 X 35
7	19M7835	SCREW	2		X	X	M10 X 35
8	19M7938	CAP SCREW	23		X	X	M10 X 20
9	24H1312	WASHER	2		X	X	
10	24H1346	WASHER	6		X	X	
11	24M7239	WASHER	35		X	X	
12	24M7240	WASHER	9		X	X	
13	24M7296	WASHER	12		X	X	
14	AT179925	BRACKET	1		X	X	
15	U42208	ISOLATOR	2		X	X	
16	AT179947	BRACKET	1		X	X	
17	AT307001	SUPPORT	1		X	X	
18	AT307011	SHROUD	1		X	X	
19	AT307591	BRACKET	1		X	X	
20	19H2676	CAP SCREW	12		X	X	
21	AT174363	AFTERCOOLER	1		X	X	(CHARGE AIR COOLER)
22	AT174366	OIL COOLER	1		X	X	(HYDRAULIC OIL COOLER)
23	AT180144	HYDRAULIC HOSE - FABRICATE	1		X	X	
24	AT180115	CHANNEL	1		X	X	
25	AT317704	RADIATOR	1		X	X	
26	AT318649	ISOLATOR	3		X	X	
27	T205712	SEAL	1		X	X	
28	T206558	ISOLATOR	2		X	X	
29	T210767	ANGLE	2		X	X	
30	T212467	GUARD	1		X	X	
31	T212468	GUARD	1		X	X	
32	T213647	ISOLATOR	1		X	X	

RADIATOR AND CHARGE AIR COOLER HOSES AND TUBES

T209450 -UN-18MAR05

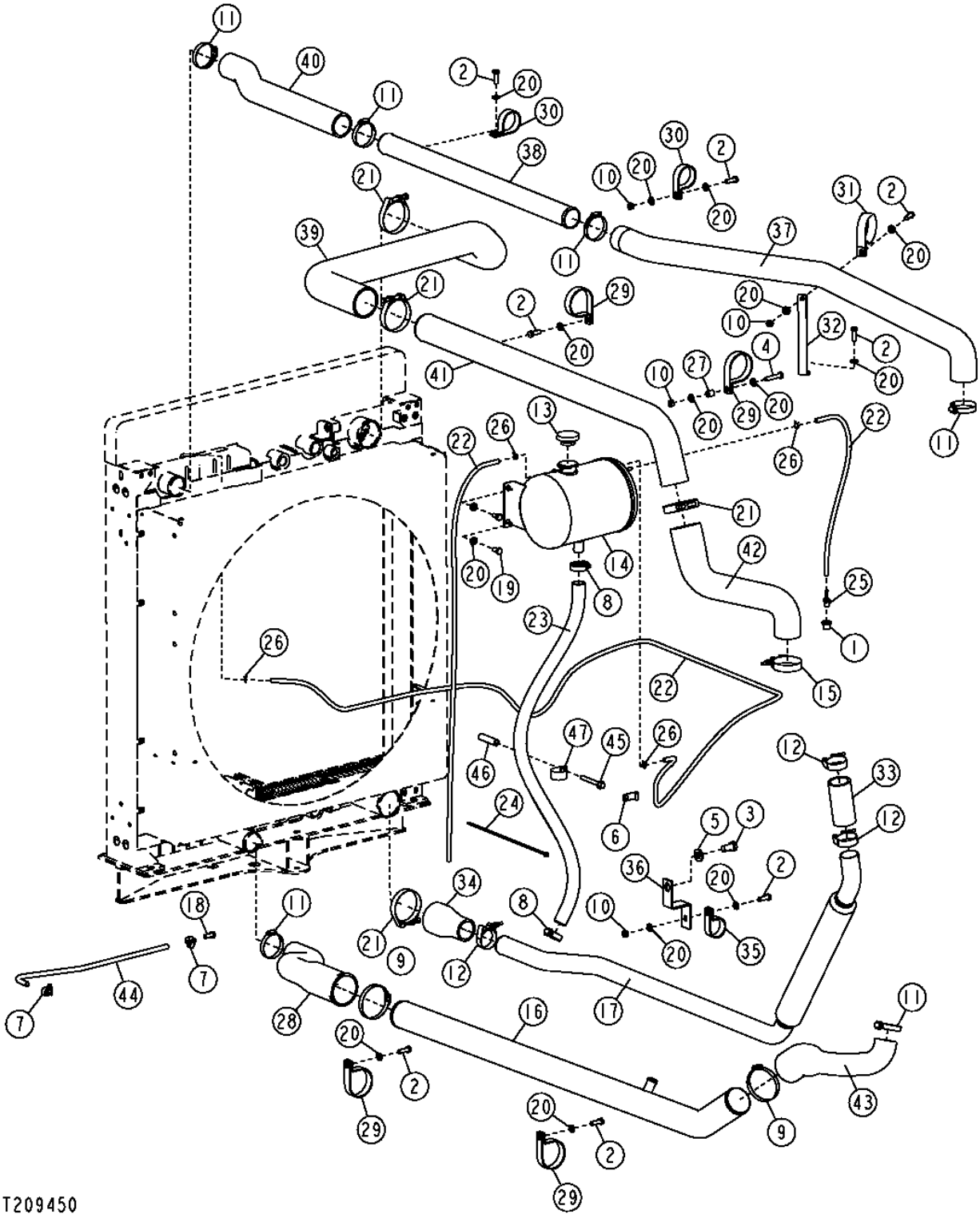

RADIATOR AND CHARGE AIR COOLER HOSES AND TUBES

KEY	PART NO.	PART NAME	QTY	SERIAL NO.	670D	672D	REMARKS
1	15H625	PIPE BUSHING	1		X	X	
2	19M7662	CAP SCREW	8		X	X	M10 X 30
3	19M8029	CAP SCREW	1		X	X	M16 X 30
4	19M8600	CAP SCREW	1		X	X	M10 X 50
5	24M7241	WASHER	1		X	X	
6	AH89557	CLIP	1		X	X	
7	AR21836	CLAMP	2		X	X	
8	AR21839	CLAMP	2		X	X	
9	AR21841	CLAMP	2		X	X	
10	14M7274	NUT	4		X	X	
11	AR40418	HOSE CLAMP	6		X	X	
12	AT105289	CLAMP	3		X	X	
13	AT173610	FILLER CAP	1		X	X	
14	AT181162	TANK	1		X	X	
	T107141	O-RING	1		X	X	
	T162965	SIGHT PLUG	1		X	X	
15	AT198270	CLAMP	2		X	X	
16	AT307343	TUBE	1		X	X	
17	AT307344	TUBE	1		X	X	
18	AT307011	SHROUD	1		X	X	
19	19M7402	CAP SCREW	1		X	X	M10 X 25
20	24M7239	WASHER	17		X	X	
21	AT37476	HOSE CLAMP	4		X	X	
22	.....	HOSE	1		X	X	(MAKE FROM T79477) (CUT TO LENGTH)
23	.....	HOSE	1		X	X	(MAKE FROM T139131) (CUT TO LENGTH)
24	H77698	TIE BAND	1		X	X	
25	R43583	FITTING	1		X	X	
26	T13254	CLAMP	4		X	X	
27	T158436	SPACER	1		X	X	
28	T158888	RADIATOR HOSE	1		X	X	
29	T160608	CLAMP	4		X	X	
30	T160609	CLAMP	2		X	X	
31	T162575	CLAMP	1		X	X	
32	T162576	HOSE SUPPORT	1		X	X	
33	T162877	HOSE	1		X	X	
34	T162878	HOSE	1		X	X	
35	T162937	CLAMP	1		X	X	
36	T162938	STRAP	1		X	X	
37	T200265	HOSE	1		X	X	
38	T202242	TUBE	1		X	X	
39	T205709	HOSE	1		X	X	
40	T205710	RADIATOR HOSE	1		X	X	
41	T206594	TUBE	1		X	X	
42	T206676	HOSE	1		X	X	
43	T211366	RADIATOR HOSE	1		X	X	
44	T72856	HOSE	1		X	X	
45	19M8977	SCREW	1		X	X	M10 X 85
46	28H3399	SPACER	1		X	X	
47	AH77714	CLIP	1		X	X	

FAN AND FAN TOWER

T204675 -UN-22NOV04

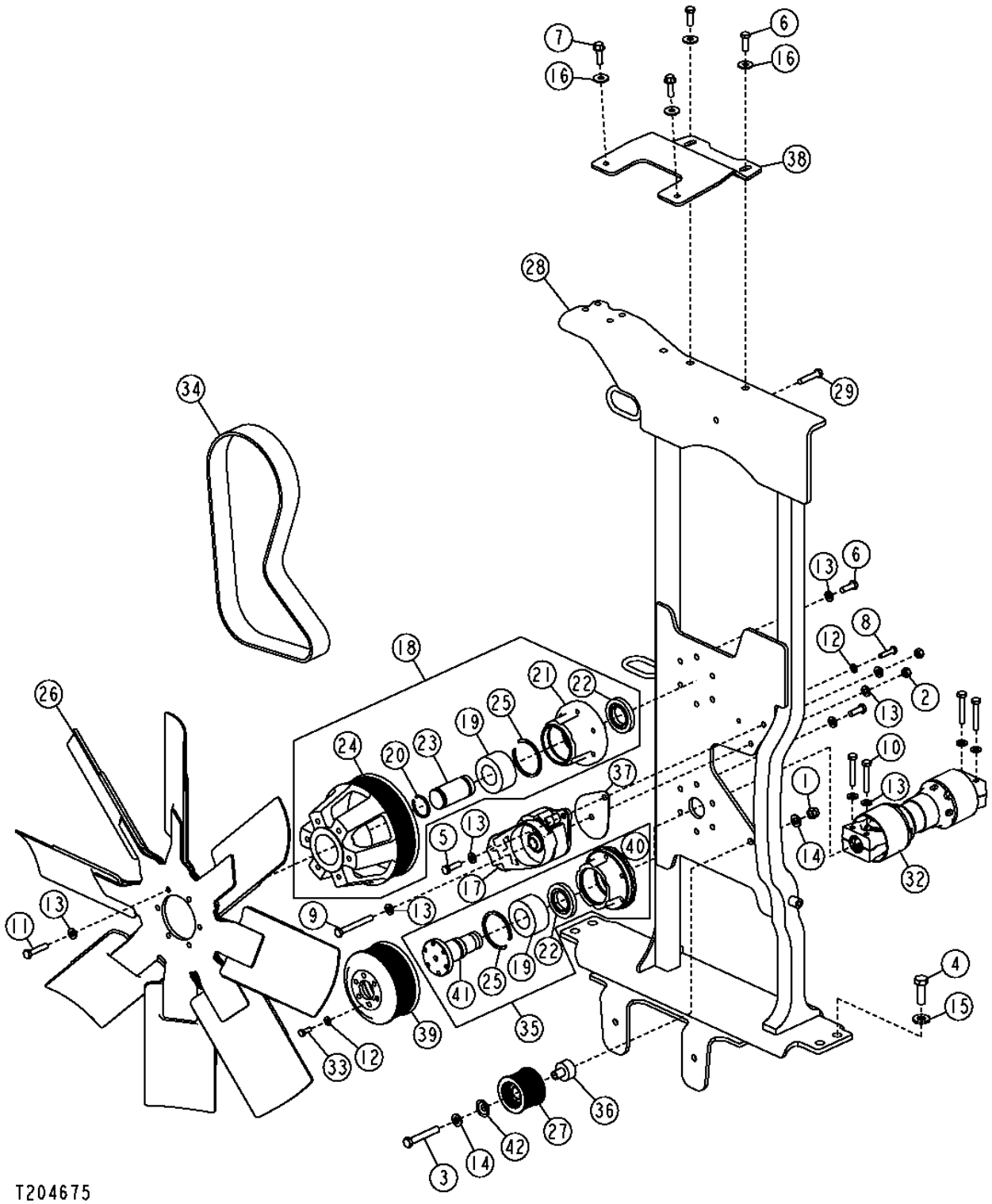

FAN AND FAN TOWER

KEY	PART NO.	PART NAME	QTY	SERIAL NO.	670D	672D	REMARKS
1	14M7313	LOCK NUT	1		X	X	M12
2	14M7520	LOCK NUT	2		X	X	M10
3	19M7364	CAP SCREW	1		X	X	M12 X 80
4	19M7489	CAP SCREW	4		X	X	M16 X 45
5	19M7550	CAP SCREW	1		X	X	M10 X 35
6	19M7662	CAP SCREW	14		X	X	M10 X 30
7	19M7835	SCREW	2		X	X	M10 X 35
8	19M8008	CAP SCREW	1		X	X	M8 X 35
9	19M8183	CAP SCREW	1		X	X	M10 X 90
10	19M7658	CAP SCREW	4		X	X	M10 X 50
11	19M8600	CAP SCREW	6		X	X	M10 X 50
12	24M7238	WASHER	13		X	X	
13	24M7239	WASHER	26		X	X	
14	24M7240	WASHER	2		X	X	
15	24M7241	WASHER	4		X	X	
16	24M7296	WASHER	4		X	X	
17	AT194587	TIGHTENER	1		X	X	
18	AT194588	HUB	1		X	X	
19	AE53905	TAPERED ROLLER BEARING	2		X	X	
20	R31291	SNAP RING	1		X	X	
21	T158400	HUB	1		X	X	
22	T159052	ADJUSTER	2		X	X	
23	T159883	SHAFT	1		X	X	
24	T187386	PULLEY	1		X	X	
25	T24513	RING	2		X	X	
26	AT194773	FAN BLADE	1		X	X	
27	AT194965	IDLER	1		X	X	
28	AT305057	SUPPORT	1		X	X	
29	19M2870	CAP SCREW	1		X	X	
32	AT308399	UNIVERSAL DRIVESHAFT	1		X	X	
33	19M7881	SCREW	12		X	X	M8 X 20
34	T213775	FLAT BELT	1		X	X	
35	AT309043	HUB	1		X	X	
36	T187416	BUSHING	1		X	X	
37	T187818	PLATE	1		X	X	
38	AT313691	SUPPORT	1		X	X	
39	T187387	PULLEY	1		X	X	
40	T159884	HUB	1		X	X	
41	T207072	SHAFT	1		X	X	
42	T187477	COVER	1		X	X	

ENGINE SPEED CONTROL PEDAL AND SWITCHES

T202482 -UN-03SEP04

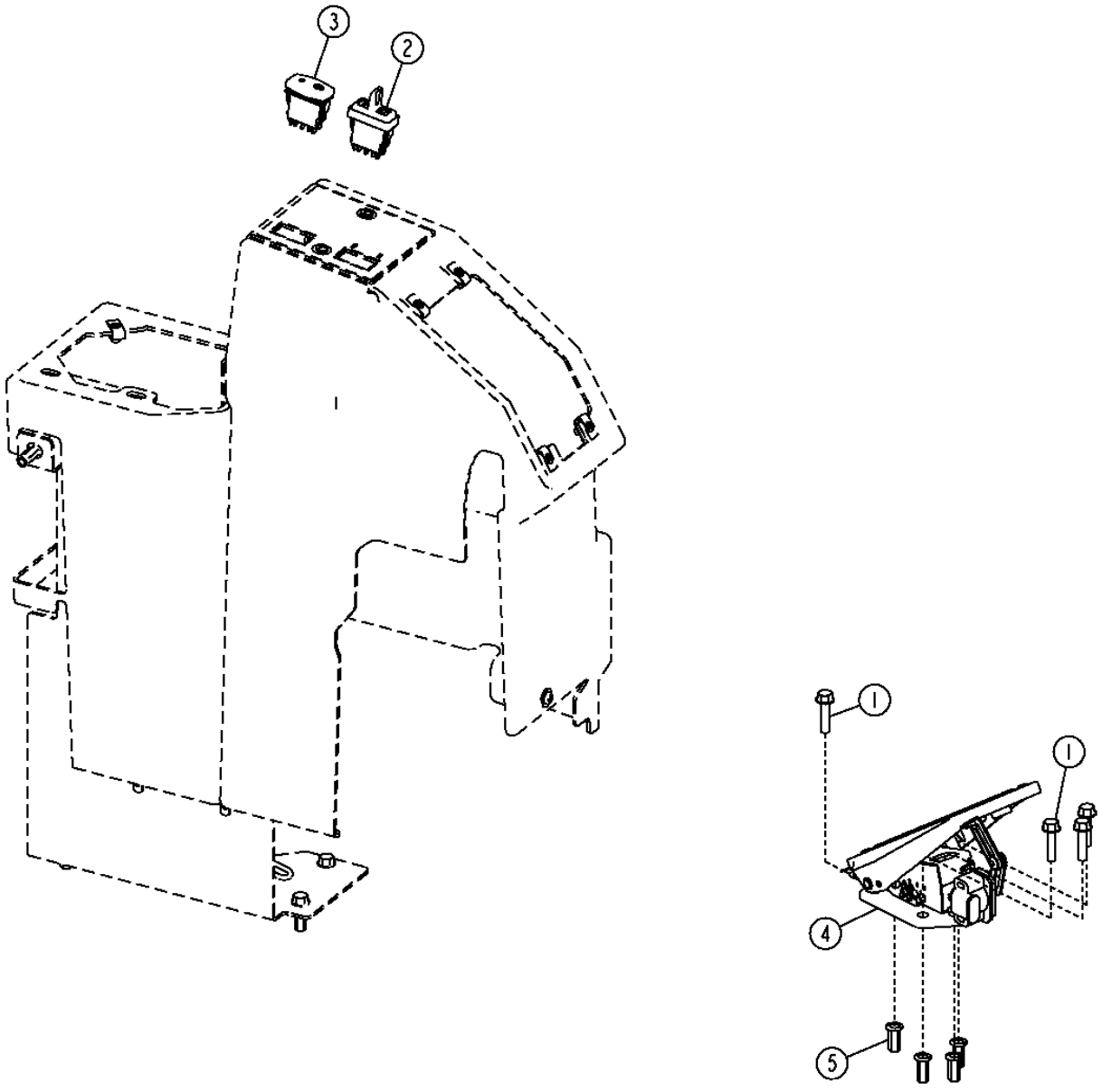

T202482

ENGINE SPEED CONTROL PEDAL AND SWITCHES

KEY	PART NO.	PART NAME	QTY	SERIAL NO.	670D	672D	REMARKS
1	19M7897	SCREW	4		X	X	M8 X 35
2	AT302731	SWITCH	1		X	X	(ENGINE SPEED CONTROL SET SWITCH)
3	AT302732	TOGGLE/ROCKER SWITCH	1		X	X	(ENGINE SPEED CONTROL ON/OFF SWITCH)
4	RE519877	ACCELERATOR	1		X	X	
5	T196079	NUT	4		X	X	M8

ENGINE SPEED DECELERATOR PEDAL

T203067 -UN-28OCT04

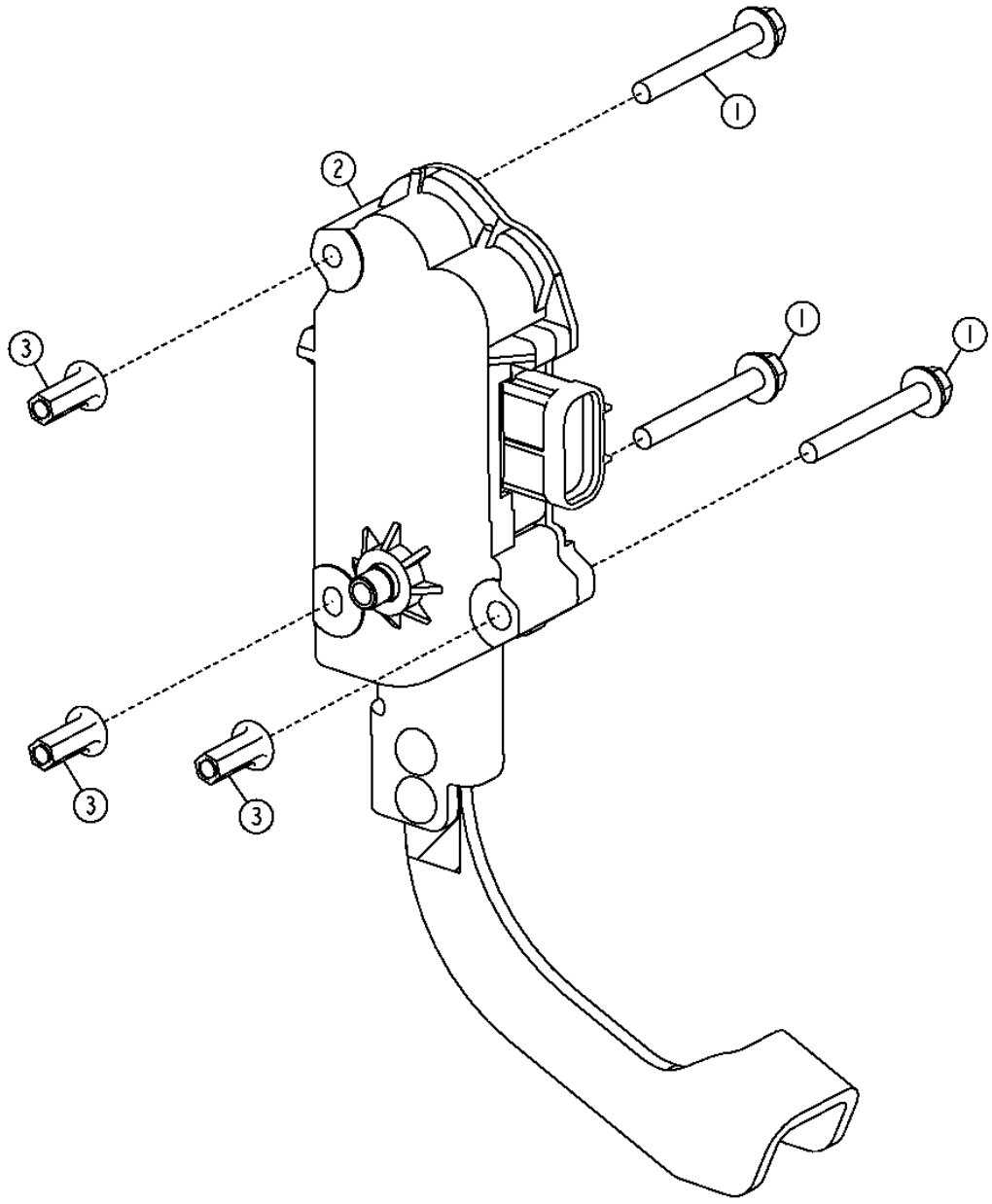

T203067

ENGINE SPEED DECELERATOR PEDAL

KEY	PART NO.	PART NAME	QTY	SERIAL NO.	670D	672D	REMARKS
1	19M8092	SCREW	3		X	X	M6 X 50
2	AT314814	PEDAL	1		X	X	
3	T196077	NUT	1		X	X	

AIR CLEANER

T200571 -UN-03JUN04

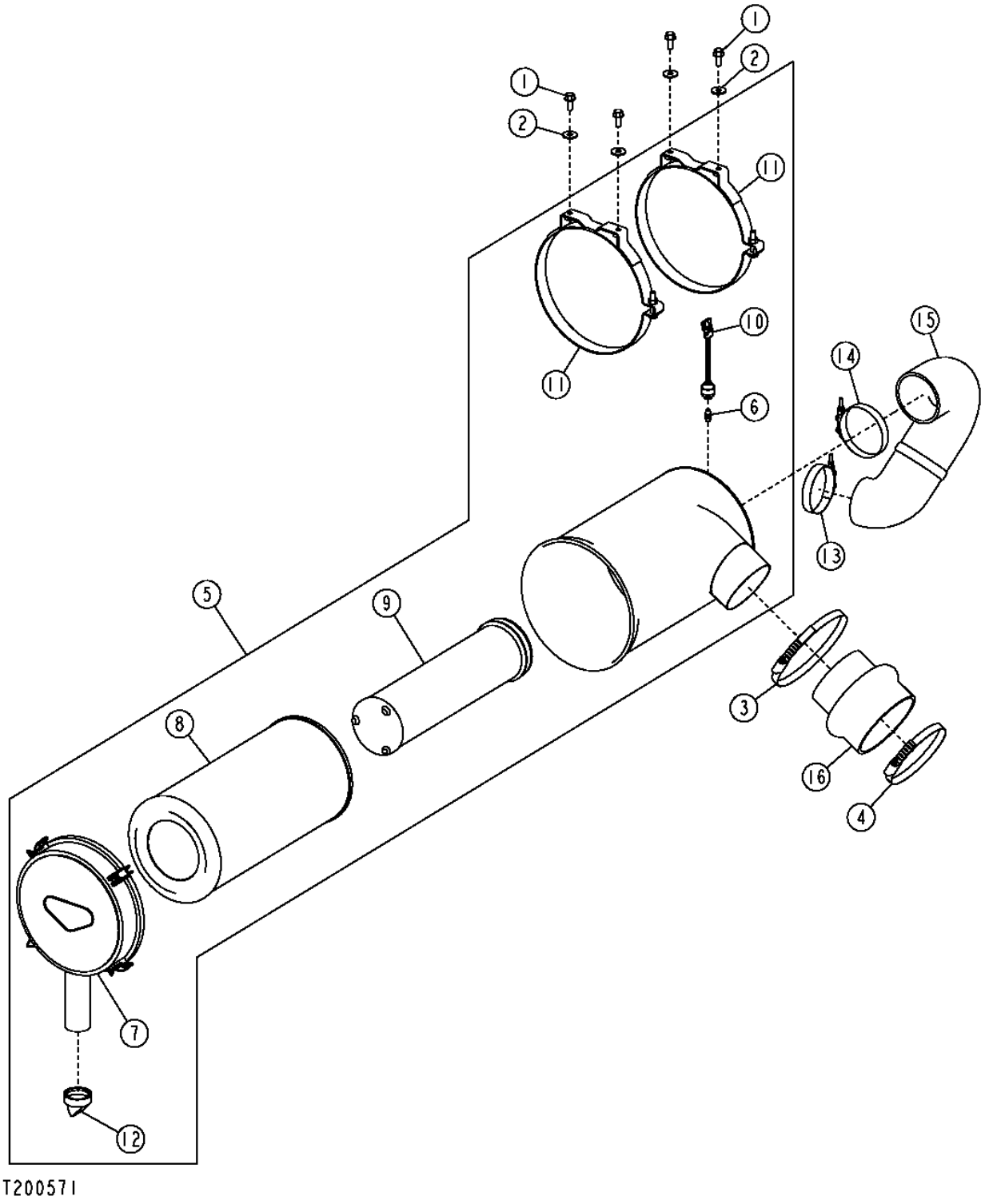

AIR CLEANER

KEY	PART NO.	PART NAME	QTY	SERIAL NO.	670D	672D	REMARKS
1	19M7785	SCREW	4		X	X	M10 X 25
2	24M7296	WASHER	4		X	X	
3	AR85327	CLAMP	1		X	X	
4	AR89602	CLAMP	1		X	X	
5	AT174480	AIR CLEANER	1		X	X	
6	AR44361	FITTING	1		X	X	
7	AT178515	COVER	1		X	X	
8	AT178516	FILTER ELEMENT	1		X	X	(PRIMARY)
9	AT178517	FILTER ELEMENT	1		X	X	(SECONDARY)
10	AT178542	AIR RESTRICTION SENSOR	1		X	X	
11	AT208137	BAND	2		X	X	
12	R48568	VALVE	1		X	X	
13	AT37477	HOSE CLAMP	1		X	X	
14	RE19429	CLAMP	1		X	X	
15	T158601	SUCTION HOSE	1		X	X	
16	T162600	SUCTION HOSE	1		X	X	

ROTARY EJECTOR PRECLEANER

T204342 -UN-12NOV04

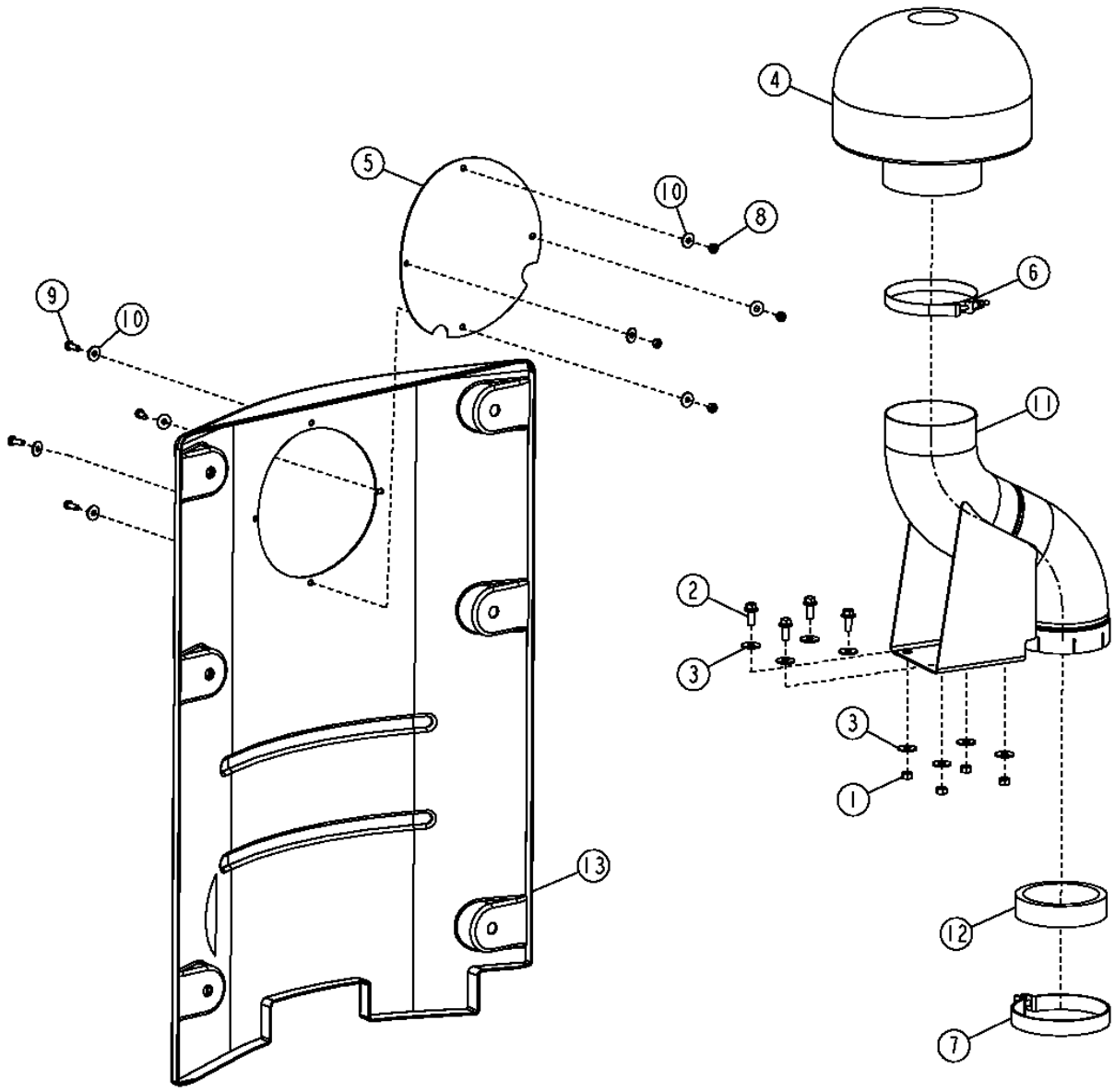

T204342

ROTARY EJECTOR PRECLEANER

KEY	PART NO.	PART NAME	QTY	SERIAL NO.	670D	672D	REMARKS
1	14M7274	NUT	4		X	X	
2	19M7785	SCREW	4		X	X	M10 X 25
3	24M7296	WASHER	8		X	X	
4	AT184015	PRECLEANER	1		X	X	
	AT184016	SEPARATOR	1		X	X	
5	T208503	CAP	1		X	X	
6	AT53440	CLAMP	1		X	X	
7	AT189052	CLAMP	4		X	X	(NO LONGER REQUIRED)
8	19M7077	CAP SCREW	10		X	X	M6 X 20
9	24M7139	WASHER	10		X	X	
10	T208181	SCREEN	1		X	X	
11	AT317539	TUBE	1		X	X	
12	T216983	SPACER	1		X	X	(SUB FOR T183750)
13	T208184	COVER	1		X	X	

MUFFLER

T210772 -UN-03MAY05

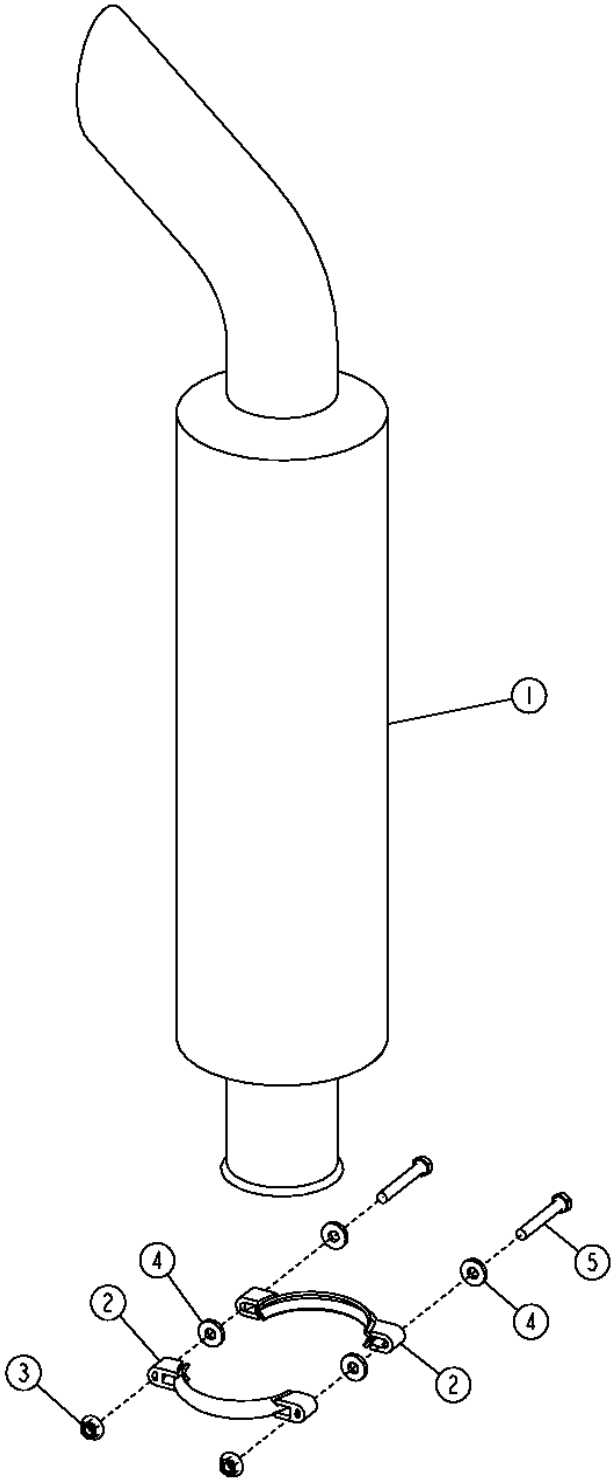

T210772

MUFFLER

KEY	PART NO.	PART NAME	QTY	SERIAL NO.	670D	672D	REMARKS
1	AT151476	MUFFLER	1		X	X	
2	AR43705	CLAMP	2		X	X	
3	M142955	LOCK NUT	2		X	X	
4	24M7213	WASHER	4		X	X	10.500 X 25 X 4 MM, (SUB FOR 24M7239)
5	19M7328	CAP SCREW	2		X	X	M10 X 70, (SUB FOR 19M8081, 19M7875, THIS APPLICATION)

ENGINE AND TRANSMISSION MOUNTING BRACKETS AND ISOLATORS

T200630 -UN-04JUN04

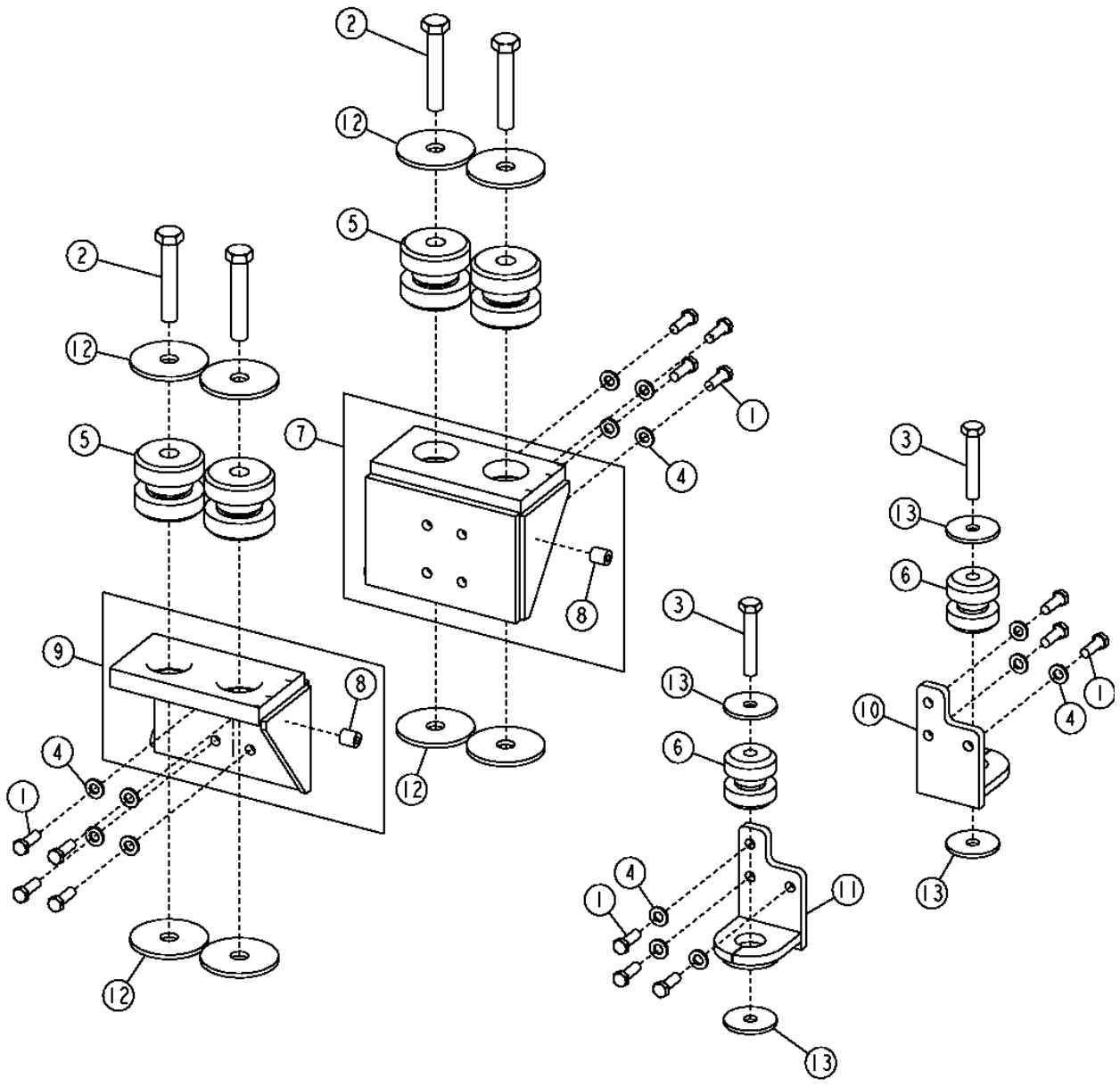

ENGINE AND TRANSMISSION MOUNTING BRACKETS AND ISOLATORS

KEY	PART NO.	PART NAME	QTY	SERIAL NO.	670D	672D	REMARKS
1	19M7403	CAP SCREW	14		X	X	M12 X 35
2	19M7969	CAP SCREW	4		X	X	M20 X 110
3	19M8485	CAP SCREW	2		X	X	M16 X 90
4	24M7240	WASHER	14		X	X	
5	AT107738	ISOLATOR	4		X	X	
6	AT170854	ISOLATOR	2		X	X	
7	AT176047	BRACKET	1		X	X	(REAR LEFT)
8	T72414	BUSHING	2		X	X	
9	AT192493	BRACKET	1		X	X	(REAR RIGHT)
10	AT300744	SUPPORT	1		X	X	(FRONT LEFT)
11	AT302819	SUPPORT	1		X	X	(FRONT RIGHT)
12	T158949	WASHER	8		X	X	
13	T179952	WASHER	4		X	X	

THIS PARTS LISTING IS CONTINUED

FUEL TANK AND FUEL HOSES

T209454 -UN-18MAR05

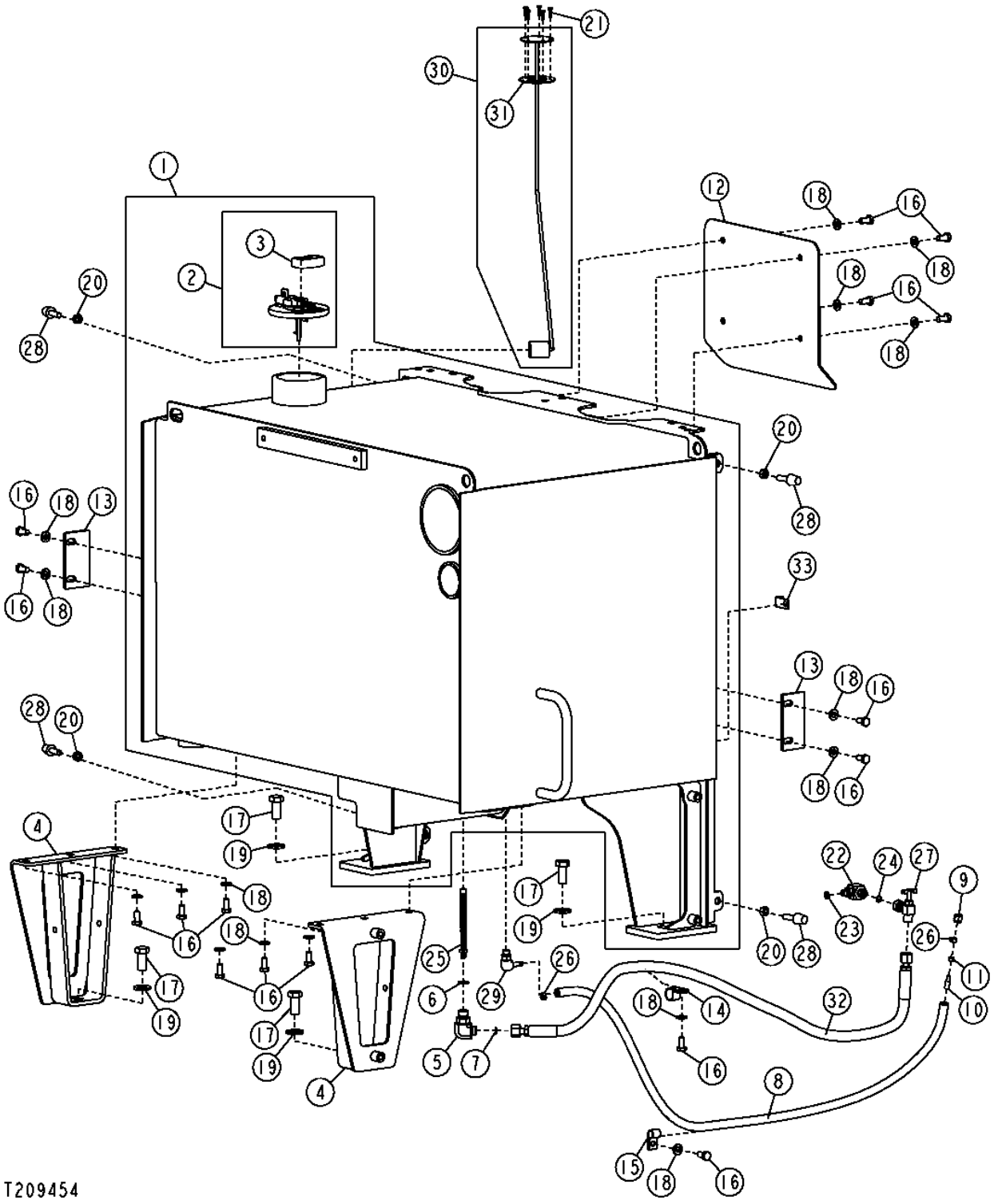

FUEL TANK AND FUEL HOSES

KEY	PART NO.	PART NAME	QTY	SERIAL NO.	670D	672D	REMARKS
1	AT307361	FUEL TANK	1		X	X	
2	AT185695	CAP	1		X	X	
3	T165992	BREATHER	1		X	X	
4	AT318171	SUPPORT	2		X	X	
5	AT306124	ELBOW FITTING	1		X	X	
6	R26375	O-RING	1		X	X	
7	T77613	O-RING	1		X	X	
8	.....	BULK HOSE	1		X	X	(MAKE FROM TY22502) (CUT TO LENGTH)
9	R123593	TUBE NUT	1		X	X	
10	R500731	HOSE FITTING	1		X	X	
11	R51936	SEALING WASHER	1		X	X	
12	T162343	PLATE	1		X	X	
13	T201999	PLATE	1		X	X	
14	T38377	CLAMP	1		X	X	
15	T75197	CLAMP	1		X	X	
16	19M7938	CAP SCREW	16		X	X	M10 X 20
17	19M8035	CAP SCREW	4		X	X	
18	24M7239	WASHER	16		X	X	
19	24M7241	WASHER	4		X	X	
20	14M7274	NUT	4		X	X	M10
21	19M8078	CAP SCREW	5		X	X	M4 X 16
22	38H5022	ELBOW FITTING	1		X	X	
23	51M7040	O-RING	1		X	X	
24	T77613	O-RING	1		X	X	
25	AH106982	SCREEN	1		X	X	
26	AR28236	BATTERY CABLE	2		X	X	
27	AT176011	HAND OPERATED VALVE	1		X	X	
28	AT219974	BUMPER	4		X	X	
29	AT301034	FITTING	1		X	X	
30	AT301133	FUEL SENDER	1		X	X	
31	R81596	GASKET	1		X	X	
32	AT305529	HYDRAULIC HOSE - FABRICATE	1		X	X	
33	AH89557	CLIP	1		X	X	

MEMORANDA

COOLANT TEMPERATURE SWITCH

RE500556PCDD01 -UN-28JUL04

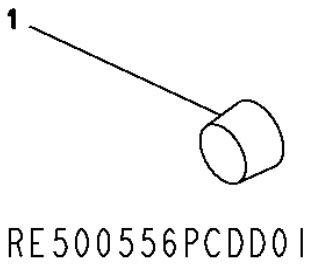

KEY	PART NO.	PART NAME	QTY	SERIAL NO.	670D	672D	REMARKS
1	RE57836	PIPE PLUG	1		X	X	1/2"-14NPF

ENGINE CONTROL UNIT (ECU)

T202532 -UN-03SEP04

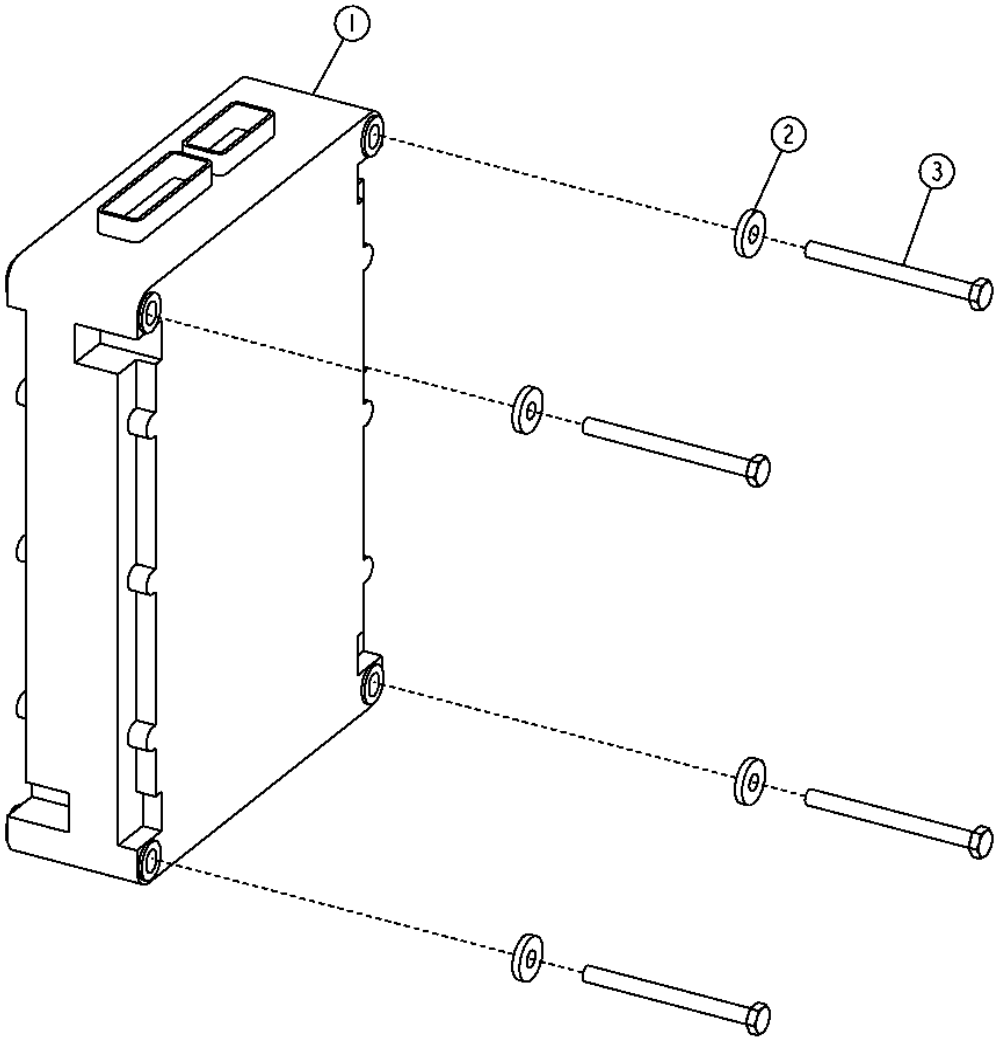

T202532

ENGINE CONTROL UNIT (ECU)

KEY	PART NO.	PART NAME	QTY	SERIAL NO.	670D	672D	REMARKS
1	19M8786	SCREW	4		X	X	M6 X 70
2	24M7250	WASHER	4		X	X	
3	RE522510	ENGINE CONTROLLER	1		X	X	(ECU)

MEMORANDA

ENGINE SENSORS

RGP10889 -UN-16NOV04

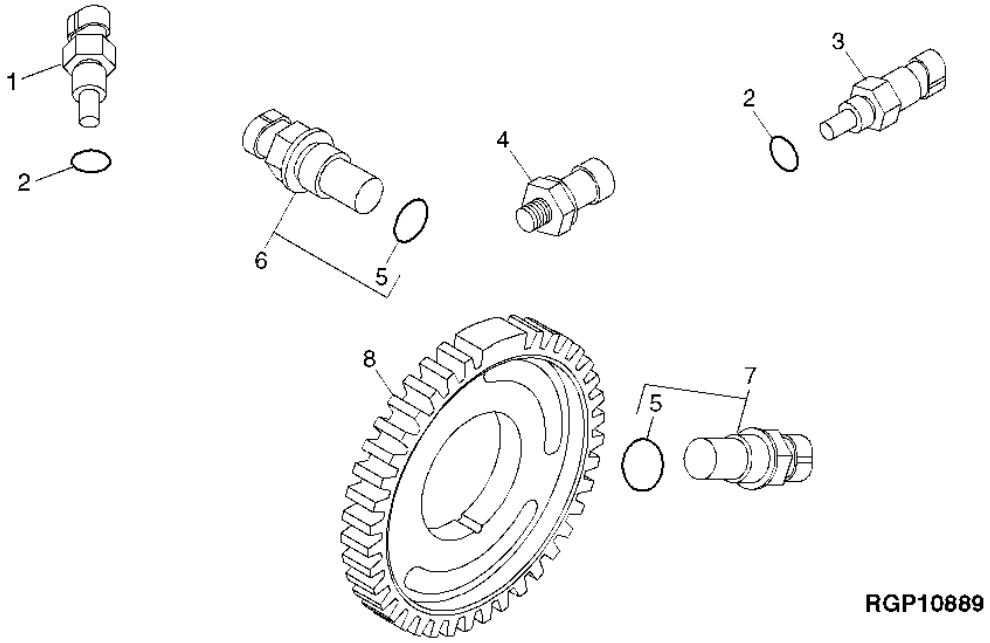

KEY	PART NO.	PART NAME	QTY	ENGINE SERIAL NO.	670D	672D	REMARKS
1	RE61812	SENSOR	1		X	X	M14 X 1.5, MANIFOLD AIR TEMPERATURE
2	51M7041	O-RING	2		X	X	11.300 X 2.200 MM (0.445" X 0.087")
3	RE52722	SENSOR	1		X	X	M14 X 1.5, COOLANT TEMPERATURE
4	RE167207	PRESSURE SENSOR	1		X	X	1/8"-27NPT, OIL PRESSURE
5	51M7044	O-RING	2		X	X	17.300 X 2.200 MM (0.681" X 0.087")
6	RE519144	SENSOR	1		X	X	M20 X 1.5, F.I. PUMP TIMING
7	RE519144	SENSOR	1		X	X	M20 X 1.5, CRANKSHAFT TIMING
8	R517471	WHEEL	1		X	X	CRANKSHAFT TIMING

WATER IN FUEL SENSOR

RGP10888 -UN-16NOV04

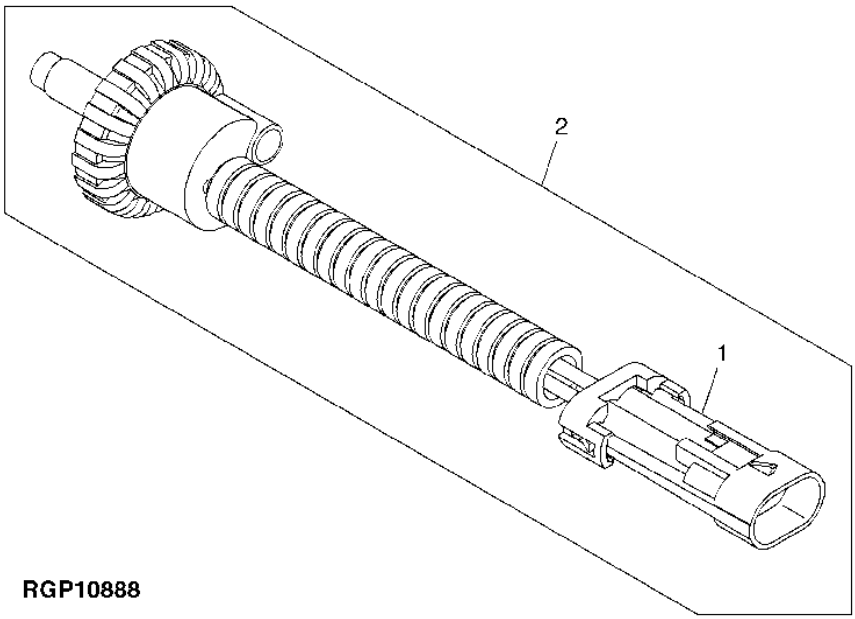

KEY	PART NO.	PART NAME	QTY	ENGINE SERIAL NO.	670D	672D	REMARKS
1	57M7256	ELECTRICAL CONNECTOR ASSY	1		X	X	(ALSO ORDER 57M7258, 57M7289 AND (2) R104919)
2	RE519696	MOISTURE SENSOR	1		X	X	WATER IN FUEL

MEMORANDA

SECONDARY STEERING

T202623 -UN-20OCT04

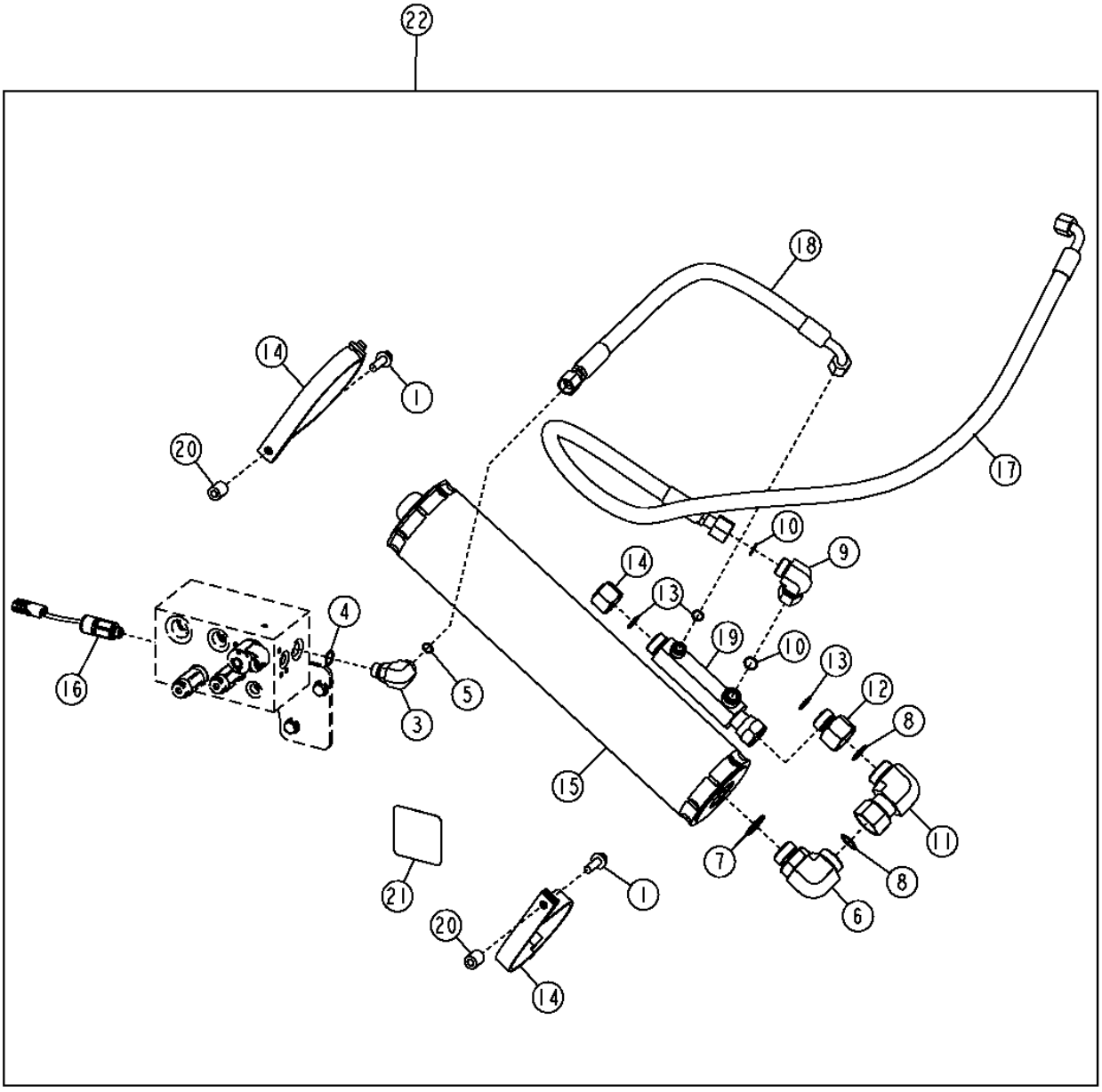

T202623

SECONDARY STEERING

KEY	PART NO.	PART NAME	QTY	SERIAL NO.	670D	672D	REMARKS
1	19M7786	SCREW	2		X	X	M10 X 30
2	38H1418	FITTING	1		X	X	
3	38H1005	ELBOW FITTING	1		X	X	
4	R26375	O-RING	1		X	X	
5	T77857	O-RING	2		X	X	
6	38H1037	ELBOW FITTING	1		X	X	
7	R29936	O-RING	1		X	X	
8	T76938	O-RING	2		X	X	
9	38H1096	ELBOW FITTING	1		X	X	
10	T77932	O-RING	2		X	X	
11	38H1098	ELBOW FITTING	1		X	X	
12	38H1483	REDUCER	1		X	X	
13	T77858	O-RING	2		X	X	
14	AT186653	CLAMP	2		X	X	
15	AT227717	HYDRAULIC ACCUMULATOR	1		X	X	
16	AT313352	PRESSURE SWITCH	1		X	X	
17	AT313541	HYDRAULIC HOSE - FABRICATE	1		X	X	
18	AT313542	HYDRAULIC HOSE - FABRICATE	1		X	X	
19	RE211000	CHECK VALVE	1		X	X	
20	T72414	BUSHING	2		X	X	
21	T164124	LABEL	1		X	X	
22	**AT313338**	**KIT**	**1**		**X**	**X**	**(WHOLEGOODS) (SECONDARY STEERING)**

WHEEL LEAN CYLINDER (670D)

T201465 -UN-08DEC04

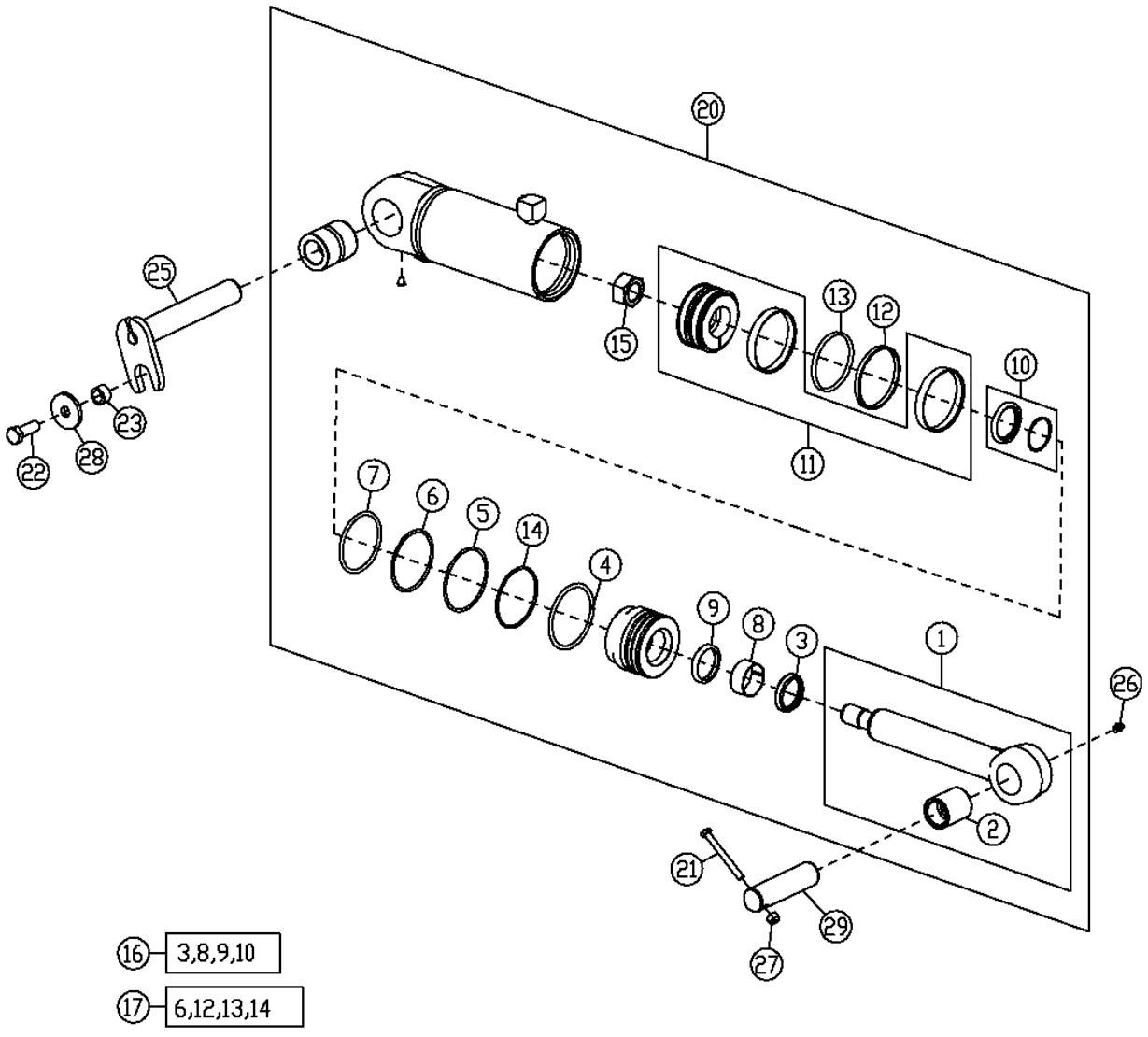

T201465

WHEEL LEAN CYLINDER (670D)

KEY	PART NO.	PART NAME	QTY	SERIAL NO.	670D	672D	REMARKS
1	AH139128	HYDRAULIC CYLINDER ROD	1		X		
2	H145104	BUSHING	1		X		
3	AH146557	SEAL	1		X		
4	H180080	SNAP RING	1		X		
5	H180094	SNAP RING	1		X		
6	R81862	BACK-UP RING	1		X		
7	F950R	O-RING	1		X		
8	H208987	WEAR RING	1		X		
9	H152203	SEAL	1		X		
10	AH146561	SEAL	1		X		
11	AH205062	PISTON	1		X		
12	H168248	WASHER	1		X		
13	H168249	WASHER	1		X		
14	.....	O-RING	1		X		(ORDER AH212101)
15	H170539	NUT	1		X		
16	AH210484	HYDRAULIC CYLINDER KIT	1		X		(ROD SEAL KIT)
17	AH212102	HYDRAULIC CYLINDER KIT	1		X		(BORE SEAL KIT)
20	AH212494	HYDRAULIC CYLINDER	1		X		(WHEEL LEAN)
21	19H1912	CAP SCREW	1		X		3/8" X 3-1/2"
22	19M7489	CAP SCREW	1		X		M16 X 45
23	28H3401	SPACER	1		X		0.742" X 1.050" X 5/8"
25	AT314624	PIN	1		X		
26	JD7759	LUBRICATION FITTING	1		X		
27	T11234	LOCK NUT	1		X		
28	T146246	WASHER	1		X		
29	T152862	PIN	1		X		

WHEEL LEAN CYLINDER (672D)

T201466 -UN-19JUL04

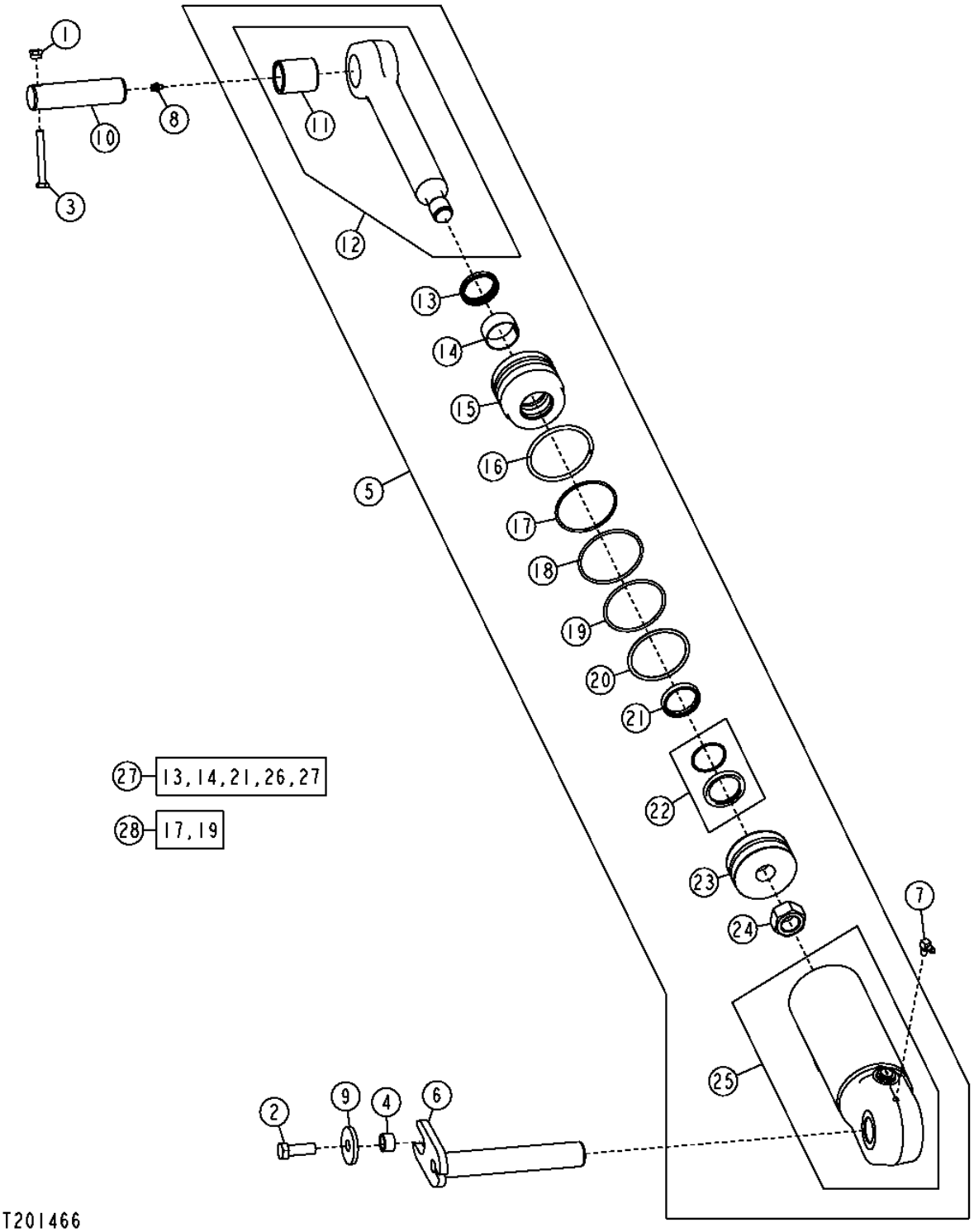

WHEEL LEAN CYLINDER (672D)

KEY	PART NO.	PART NAME	QTY	SERIAL NO.	670D	672D	REMARKS
1	14M7517	LOCK NUT	1		X		M10
2	19M7489	CAP SCREW	1		X		M16 X 45
3	19M8081	CAP SCREW	1		X		M10 X 80
4	28H3401	SPACER	1		X		0.742" X 1.050" X 5/8"
5	AH208859	HYDRAULIC CYLINDER	1		X		(WHEEL LEAN) (6WD)
6	AT314624	PIN	1		X		
7	H80936	ELBOW FITTING	1		X		
8	JD7798	LUBRICATION FITTING	1		X		
9	T146246	WASHER	1		X		
10	T185047	PIN FASTENER	1		X		
11	H145104	BUSHING	1		X		
12	AH168200	ROD	1		X		
13	AH146557	SEAL	1		X		
14	H208987	WEAR RING	1		X		
15	.....	HYDR. CYLINDER ROD GUIDE	1		X		(SUB AH212102)
16	H180080	SNAP RING	1		X		
17	.....	O-RING	1		X		(SUB AH212102)
18	H180094	SNAP RING	1		X		
19	R81862	BACK-UP RING	1		X		
20	F950R	O-RING	1		X		
21	H152203	SEAL	1		X		
22	AH146561	SEAL	1		X		
23	AH205062	PISTON	1		X		
24	H170539	NUT	1		X		
25	AH212500	HYDRAULIC CYLINDER BARREL	1		X		
26	H154856	WEAR RING	1		X		(NOT ILLUSTRATED)(WIPER INSTALLATION TOOLS)
27	AH210484	HYDRAULIC CYLINDER KIT	1		X		(ROD SEAL KIT)
28	AH212102	HYDRAULIC CYLINDER KIT	1		X		(BORE SEAL KIT)

ARTICULATION CYLINDER

T201468 -UN-27JUL04

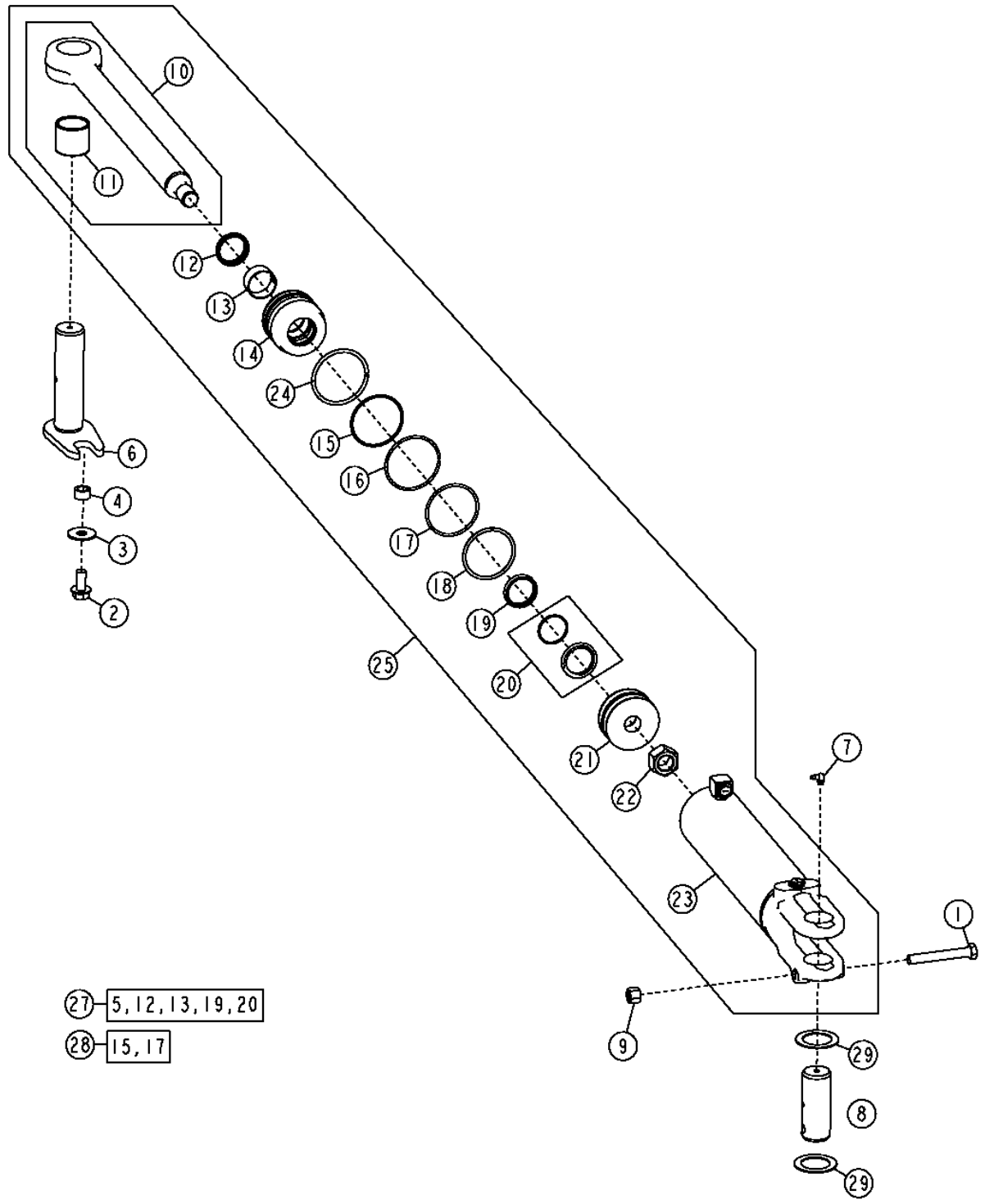

ARTICULATION CYLINDER

KEY	PART NO.	PART NAME	QTY	SERIAL NO.	670D	672D	REMARKS
1	19H2133	CAP SCREW	1		X	X	5/8" X 4-1/2"
2	19M7843	SCREW	1		X	X	M16 X 35
3	24M7315	WASHER	1		X	X	17 X 50 X 3 MM
4	28H3401	SPACER	1		X	X	
5	H154856	WEAR RING	1		X	X	
6	AT175953	PIN	1		X	X	
7	JD7799	LUBRICATION FITTING	1		X	X	
8	T42217	PIN FASTENER	1		X	X	
9	U44915	LOCK NUT	1		X	X	
10	RE37693	HYDRAULIC CYLINDER ROD	1		X	X	
11	R98953	BUSHING	1		X	X	
12	AH146557	SEAL	1		X	X	
13	H208987	WEAR RING	1		X	X	
14	H208995	HYDR. CYLINDER ROD GUIDE	1		X	X	
15	.....	O-RING	1		X	X	(SUB AH212102)
16	H180094	SNAP RING	1		X	X	
17	R81862	BACK-UP RING	1		X	X	
18	F950R	O-RING	1		X	X	
19	H152203	SEAL	1		X	X	
20	AH146561	SEAL	1		X	X	
21	AH205062	PISTON	1		X	X	
22	H170539	NUT	1		X	X	M30
23	AH212545	HYDRAULIC CYLINDER BARREL	1		X	X	
24	H180080	SNAP RING	1		X	X	
25	AH212473	HYDRAULIC CYLINDER	1		X	X	(ARICULATION CYLINDER)
27	AH210484	HYDRAULIC CYLINDER KIT	1		X	X	(ROD SEAL KIT)
28	AH212102	HYDRAULIC CYLINDER KIT	1		X	X	(BORE SEAL KIT)
29	24H1595	WASHER	2		X	X	

FRONT STEERING CYLINDER

T201469 -UN-29NOV04

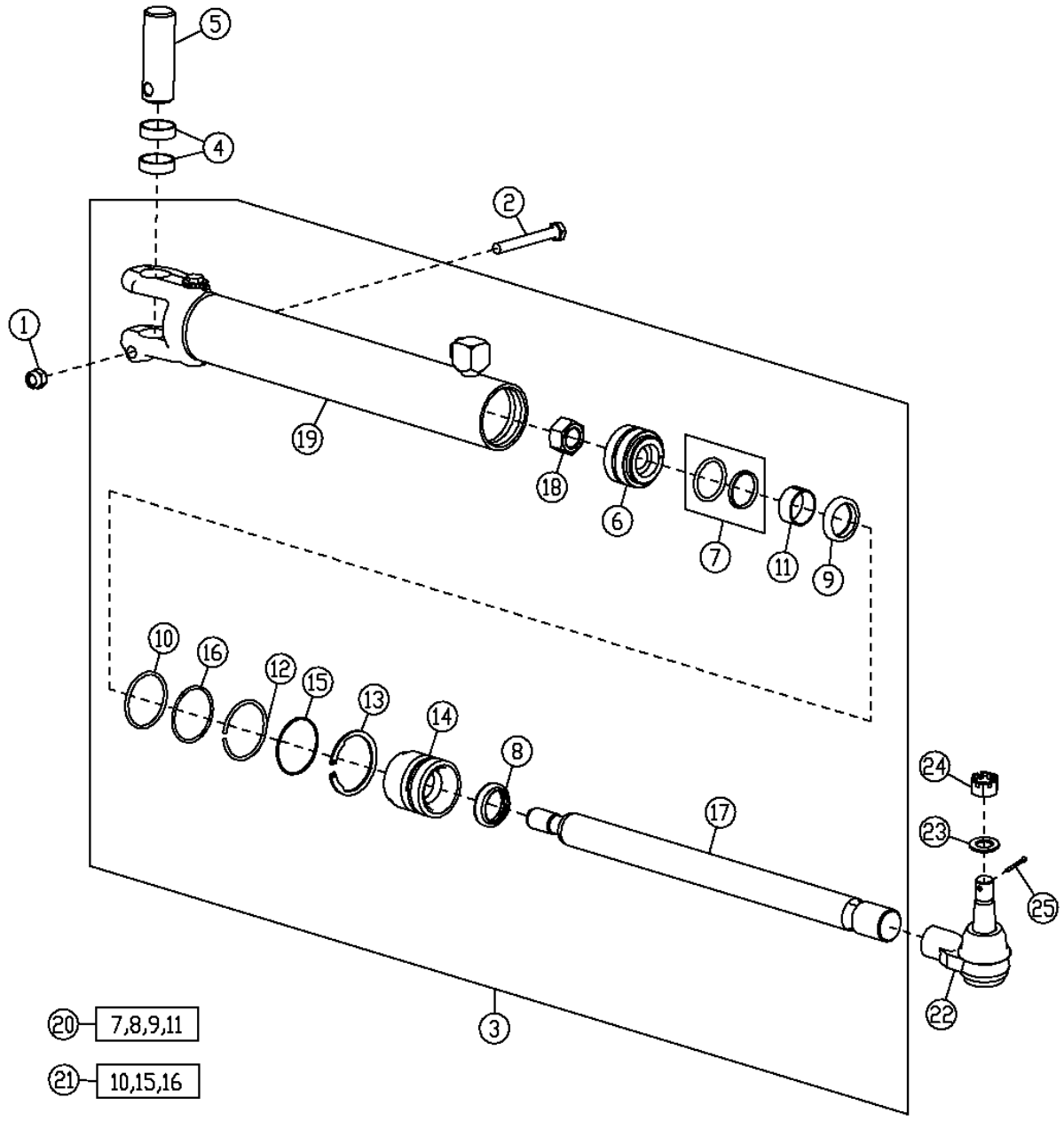

T201469

FRONT STEERING CYLINDER

KEY	PART NO.	PART NAME	QTY	SERIAL NO.	670D	672D	REMARKS
1	14M7517	LOCK NUT	1		X	X	M10
2	19M8081	CAP SCREW	1		X	X	M10 X 80
3	AH215390	HYDRAULIC CYLINDER	1		X	X	(FRONT STEERING)
4	T184629	SPACER	1		X	X	
5	T204711	PIN FASTENER	1		X	X	
6	AH140072	PISTON	1		X	X	
7	AH147976	SEAL	1		X	X	
8	AH150452	SEAL	1		X	X	
9	H154514	SEAL	1		X	X	
10	H155964	O-RING	1		X	X	
11	H156058	WEAR RING	1		X	X	
12	H164204	SNAP RING	1		X	X	
13	H164205	SNAP RING	1		X	X	
14	H171332	HYDR. CYLINDER ROD GUIDE	1		X	X	
15	M44162	O-RING	1		X	X	
16	R78393	BACK-UP RING	1		X	X	
17	H150956	HYDRAULIC CYLINDER ROD	1		X	X	
18	H170535	NUT	1		X	X	
19	AH215391	HYDRAULIC CYLINDER BARREL	1		X	X	
20	AH161589	HYDRAULIC CYLINDER KIT	1		X	X	(ROD SEAL KIT)
21	AH164325	HYDRAULIC CYLINDER KIT	1		X	X	(BORE SEAL KIT)
22	AT169864	TIE ROD END	1		X	X	
23	24M7359	WASHER	1		X	X	
24	14H875	NUT	1		X	X	
25	11M7023	COTTER PIN	1		X	X	

FRONT STEERING CYLINDER HYDRAULIC HOSES

T208052 -UN-12FEB05

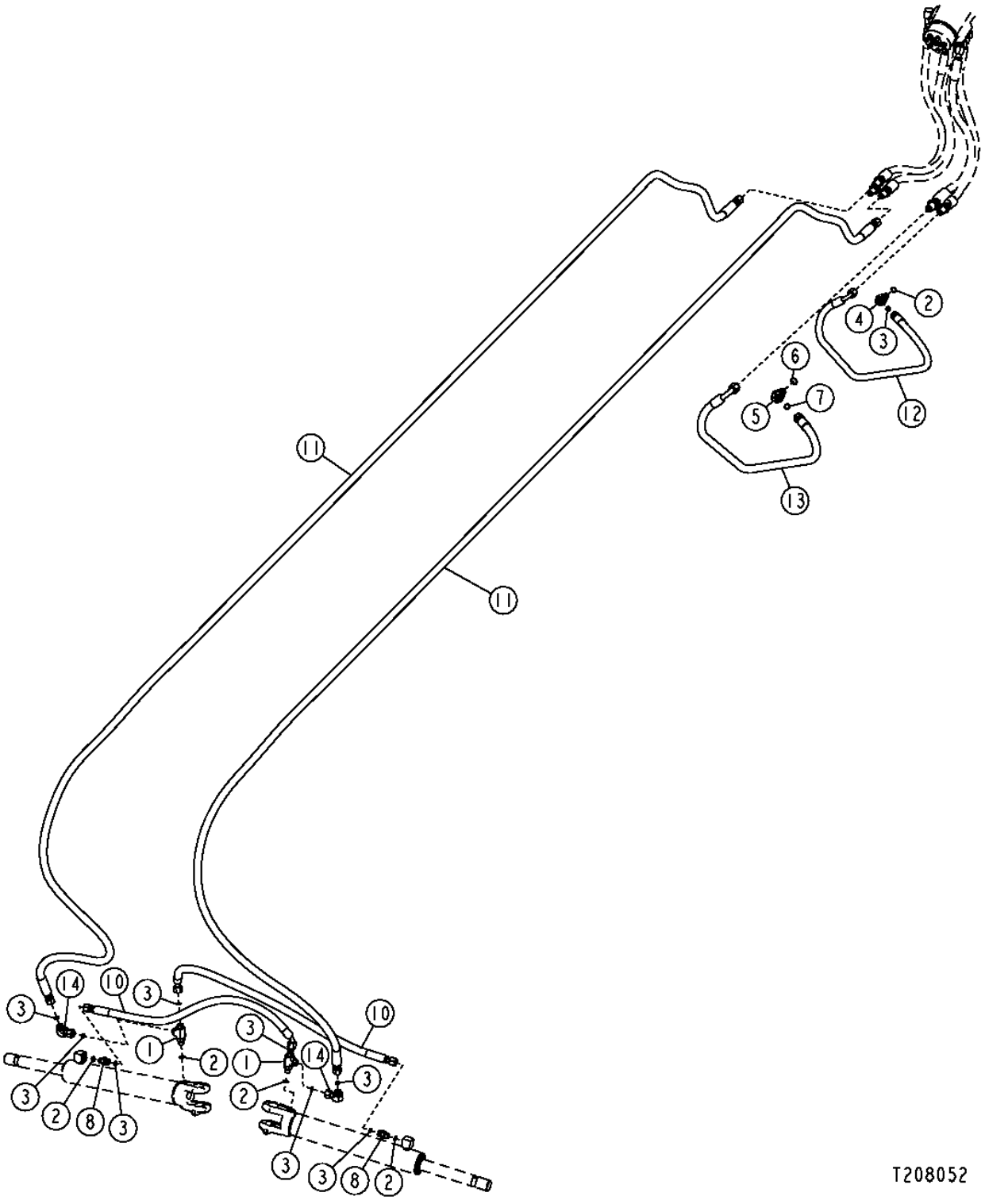

2B13

FRONT STEERING CYLINDER HOSES

KEY	PART NO.	PART NAME	QTY	SERIAL NO.	670D	672D	REMARKS
1	38H1023	TEE FITTING	2		X	X	
2	R26448	O-RING	3		X	X	
3	T77613	O-RING	9		X	X	
4	38H1045	ELBOW FITTING	1		X	X	
5	38H1046	ELBOW FITTING	1		X	X	
6	R26375	O-RING	1		X	X	
7	T77857	O-RING	1		X	X	
8	38H1160	ADAPTER	2		X	X	
10	AT180301	HYDRAULIC HOSE - FABRICATE	2		X		
	AT192380	HYDRAULIC HOSE - FABRICATE	2			X	
11	AT304794	HYDRAULIC HOSE - FABRICATE	2		X	X	
12	AT305768	HYDRAULIC HOSE - FABRICATE	1		X	X	
13	AT309952	HYDRAULIC HOSE - FABRICATE	1		X	X	
14	38H1094	ELBOW FITTING	2		X	X	

ARTICULATION CYLINDER HOSES

T202582 -UN-08SEP04

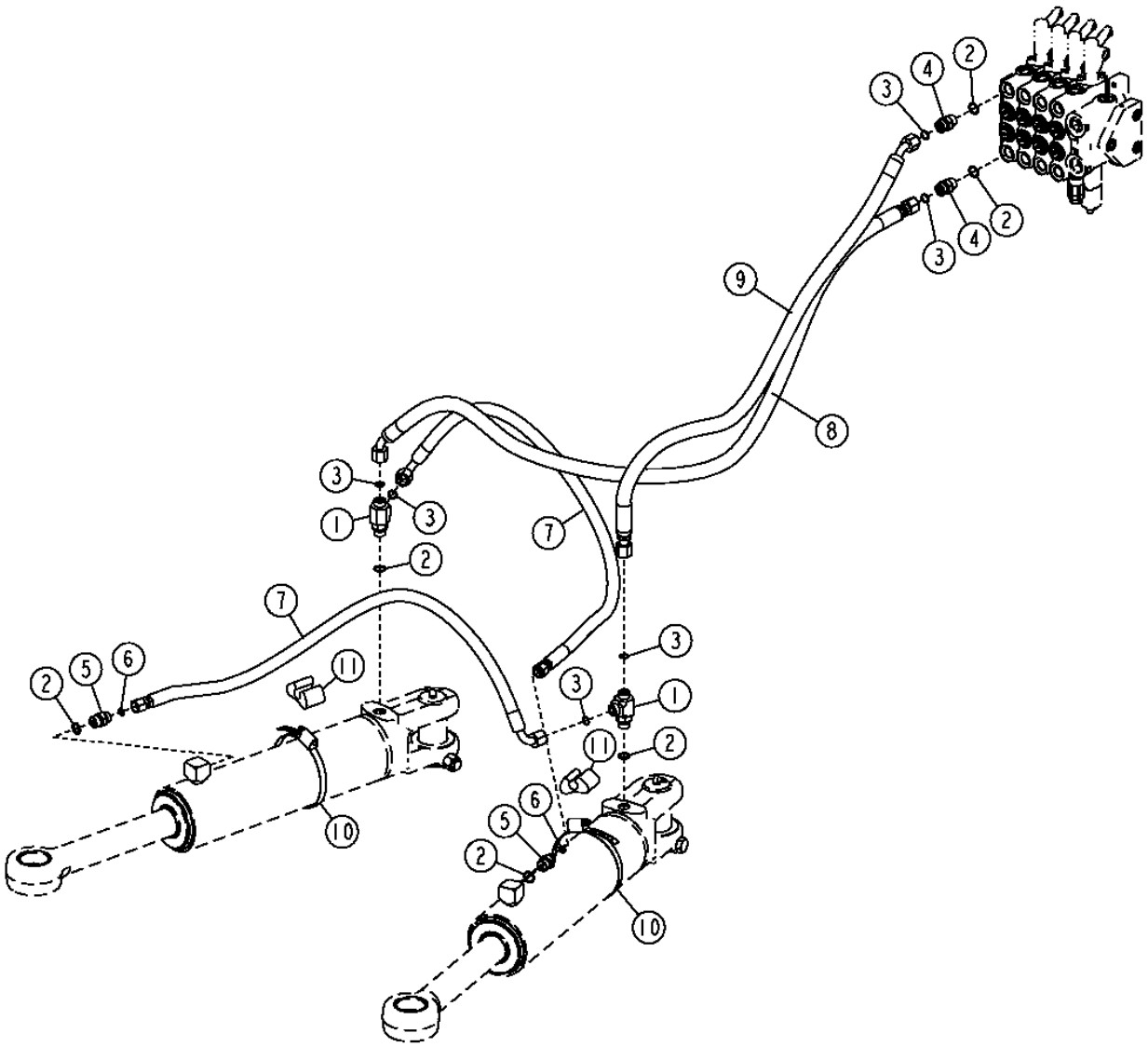

ARTICULATION CYLINDER HOSES

KEY	PART NO.	PART NAME	QTY	SERIAL NO.	670D	672D	REMARKS
1	38H1024	TEE FITTING	2		X	X	
2	R26375	O-RING	6		X	X	
3	T77857	O-RING	6		X	X	
4	38H1161	ADAPTER	2		X	X	
5	38H1171	ADAPTER	2		X	X	
6	T77613	O-RING	2		X	X	
7	AT306154	HYDRAULIC HOSE - FABRICATE	2		X	X	
8	AT306155	HYDRAULIC HOSE - FABRICATE	1		X	X	
9	AT306156	HYDRAULIC HOSE - FABRICATE	1		X	X	
10	C16054	CLAMP	2		X	X	
11	T105773	GUIDE	2		X	X	
12	H77698	TIE BAND	AR		X	X	(NOT ILLUSTRATED)

WHEEL LEAN CYLINDER HOSES (672D)

T202583 -UN-19OCT04

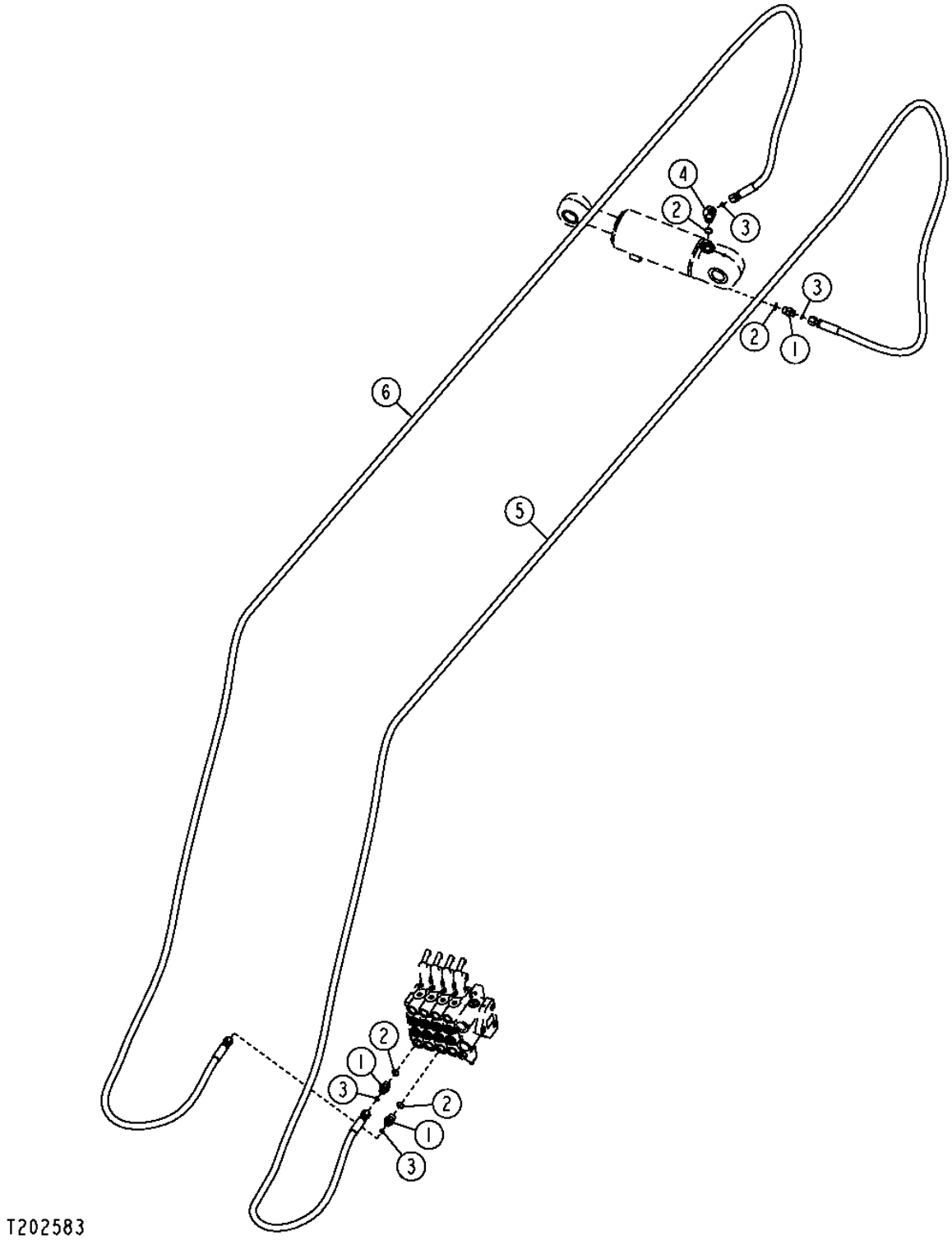

2B17

WHEEL LEAN CYLINDER HOSES (672D)

KEY	PART NO.	PART NAME	QTY	SERIAL NO.	670D	672D	REMARKS
1	38H1171	ADAPTER	3		X		
2	R26375	O-RING	4		X		
3	T77613	O-RING	4		X		
4	38H1522	ELBOW FITTING	1		X		
5	AT305624	HYDRAULIC HOSE - FABRICATE	1		X		
6	AT305625	HYDRAULIC HOSE - FABRICATE	1		X		

WHEEL LEAN CYLINDER HYDRAULIC HOSES (670D)

T202584 -UN-19OCT04

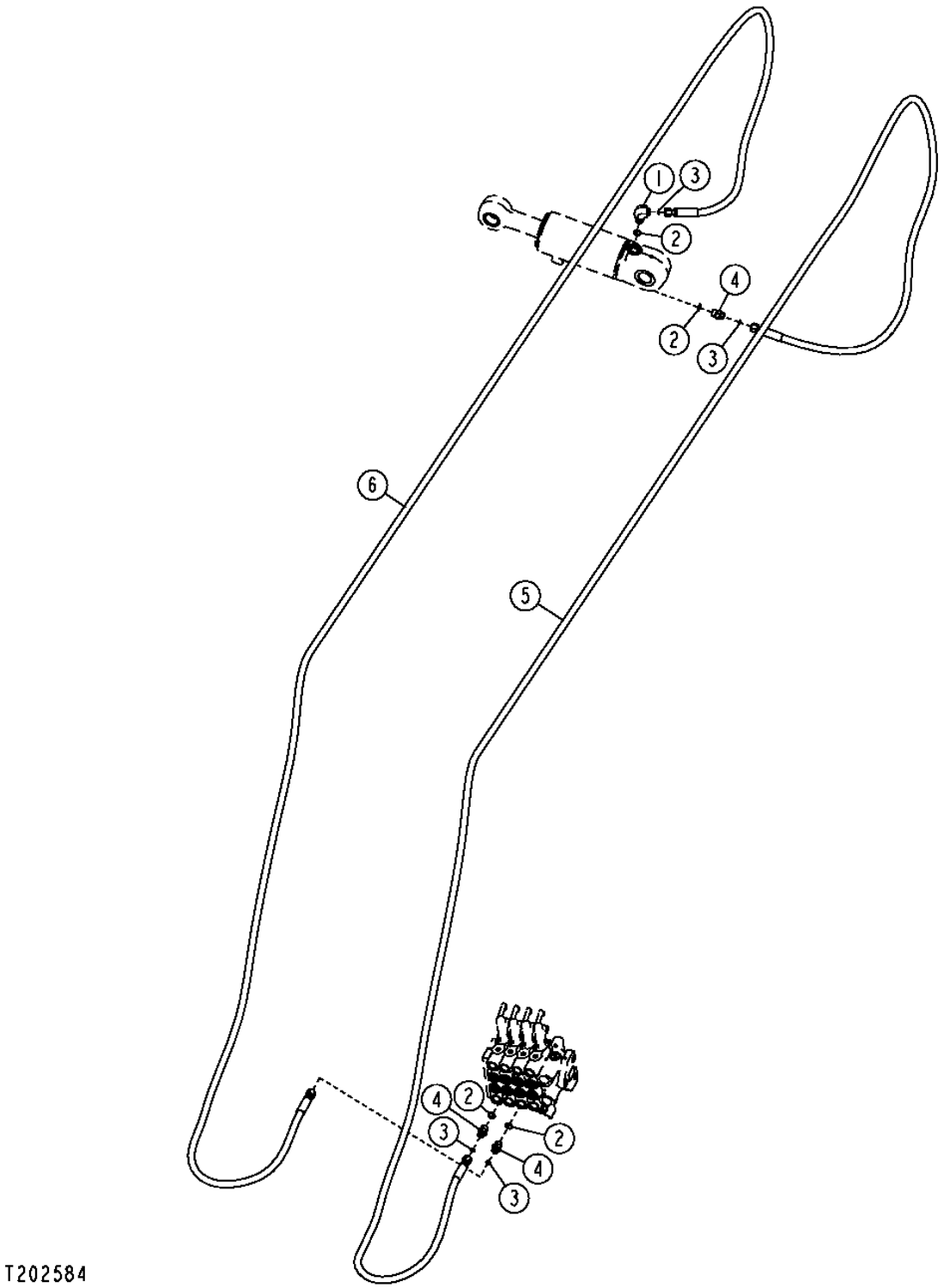

WHEEL LEAN CYLINDER HYDRAULIC HOSES (670D)

KEY	PART NO.	PART NAME	QTY	SERIAL NO.	670D	672D	REMARKS
1	38H1010	ELBOW FITTING	1		X	X	
2	R26375	O-RING	4		X	X	
3	T77613	O-RING	4		X	X	
4	38H1171	ADAPTER	1		X	X	
5	AT305991	HYDRAULIC HOSE - FABRICATE	1		X	X	
6	AT305992	HYDRAULIC HOSE - FABRICATE	1		X	X	

STEERING VALVE AND STEERING VALVE HOSES

T203906 -UN-08DEC04

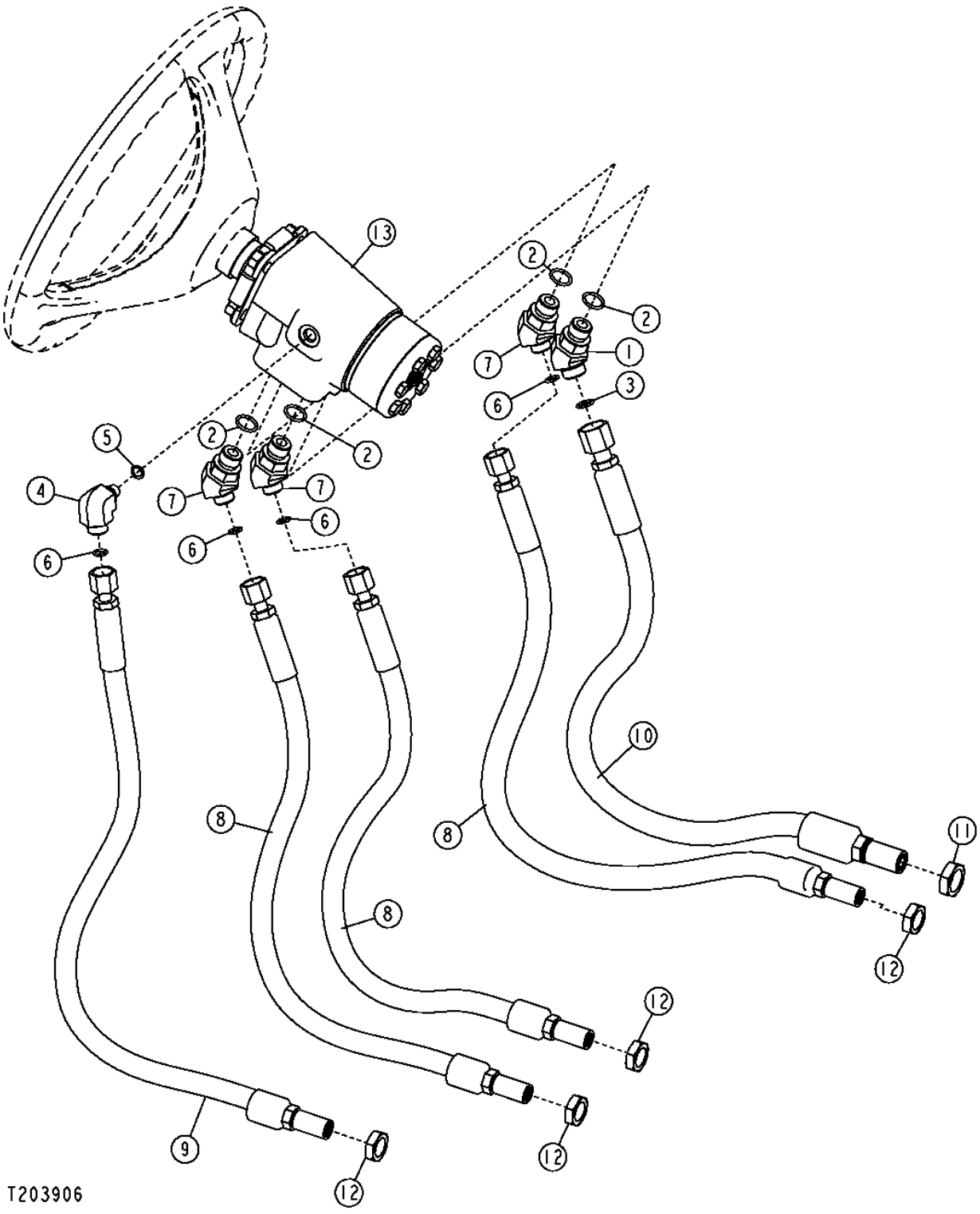

STEERING VALVE AND STEERING VALVE HOSES

KEY	PART NO.	PART NAME	QTY	SERIAL NO.	670D	672D	REMARKS
1	38H1046	ELBOW FITTING	1		X	X	
2	R26375	O-RING	4		X	X	
3	T77857	O-RING	1		X	X	
4	38H1435	ELBOW FITTING	1		X	X	
5	R28782	O-RING	1		X	X	
6	T77613	O-RING	4		X	X	
7	38H1522	ELBOW FITTING	3		X	X	
8	AT302166	HYDRAULIC HOSE - FABRICATE	3		X	X	
9	AT302175	HYDRAULIC HOSE - FABRICATE	1		X	X	
10	AT309953	HYDRAULIC HOSE - FABRICATE	1		X	X	
11	T78716	NUT	1		X	X	
12	T81029	NUT	4		X	X	
13	AT303489	CONTROL VALVE	1		X	X	(STEERING VALVE)
	AT316249	SEAL KIT	1		X	X	(STEERING VALVE SEAL KIT)

SERVICE BRAKES

TP57409 -UN-13MAR98

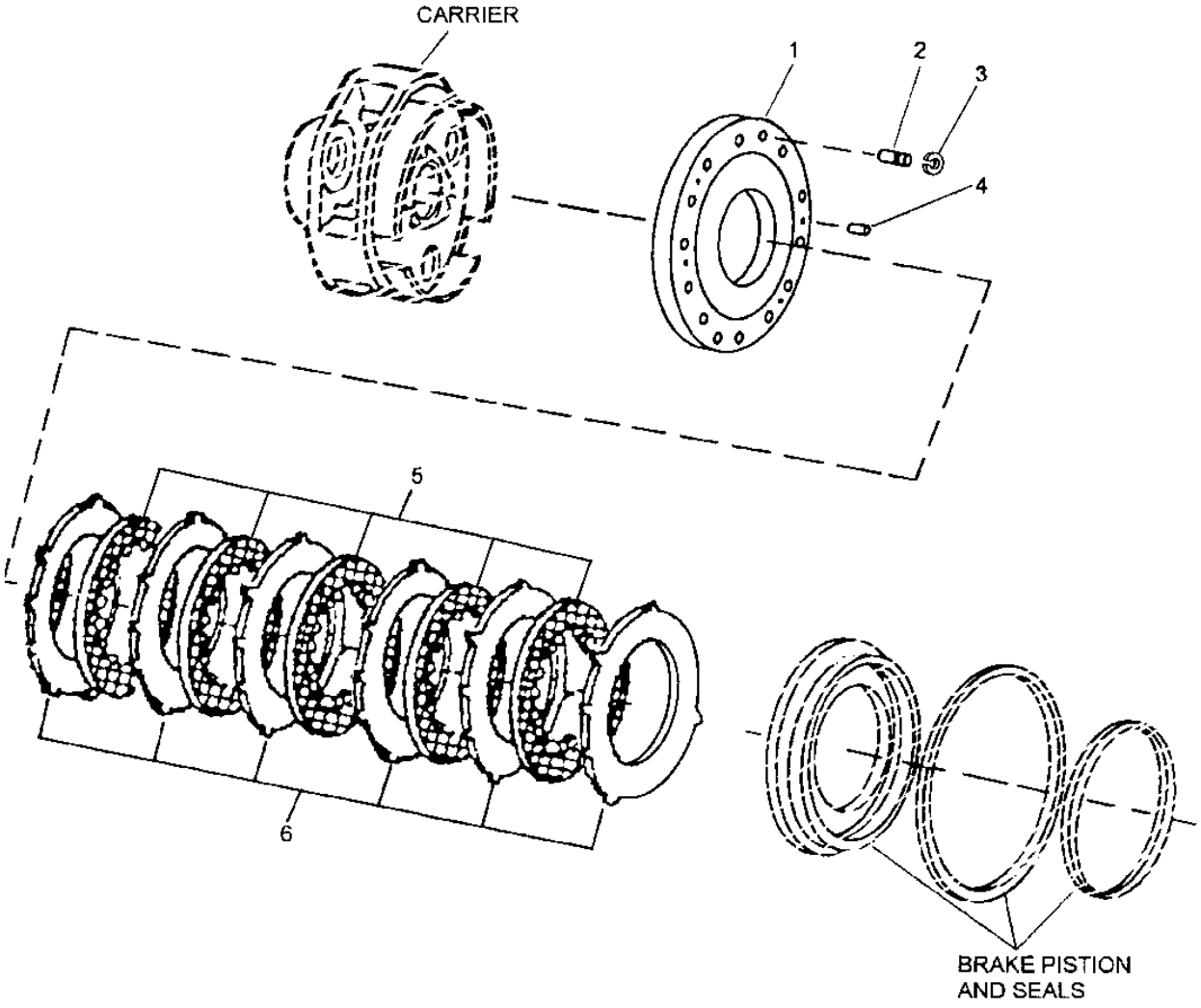

TP57409

SERVICE BRAKES

KEY	PART NO.	PART NAME	QTY	SERIAL NO.	670D	672D	REMARKS
1	R131225	PLATE	1		X	X	
2	R129628	DOWEL PIN	2		X	X	
3	40M7042	SNAP RING	2		X	X	
4	R27315	DOWEL PIN	2		X	X	15.875 X 28.575 MM (5/8" X 1-1/8")
5	RE65008	BRAKE DISK	5		X	X	
6	R150895	PLATE	6		X	X	SEPARATOR

SERVICE BRAKE PEDAL AND VALVE

T201823 -UN-02SEP04

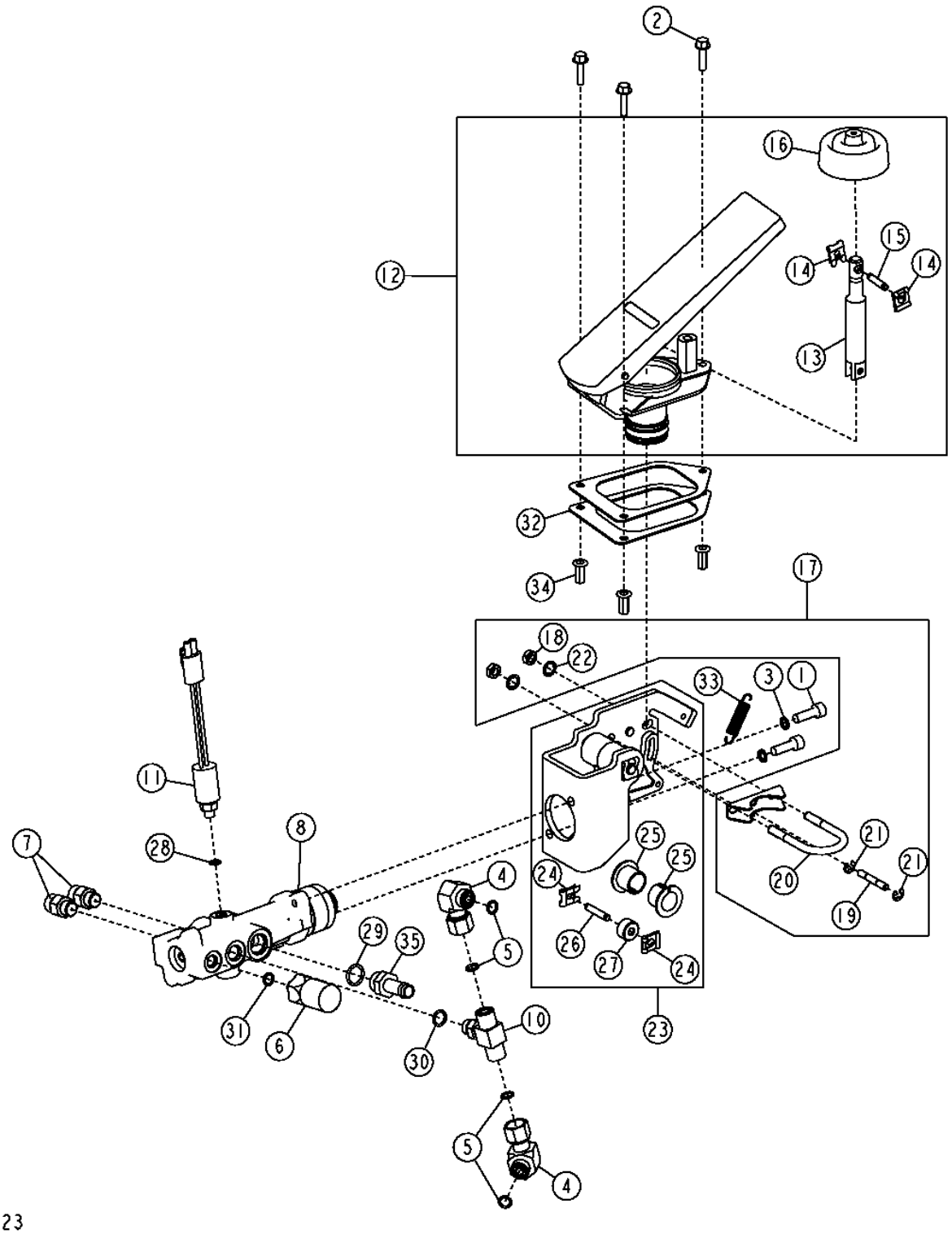

SERVICE BRAKE PEDAL AND VALVE

KEY	PART NO.	PART NAME	QTY	SERIAL NO.	670D	672D	REMARKS
1	19M7657	SCREW	2		X	X	
2	19M7863	SCREW	3		X	X	
3	24M7313	WASHER	2		X	X	
4	38H1094	ELBOW FITTING	2		X	X	
5	T77613	O-RING	4		X	X	
6	AT150024	SWITCH	1		X	X	
7	AT181313	CHECK VALVE	2		X	X	
8	AT187021	MANUAL HYDRAULIC VALVE	1		X	X	(SERVICE BRAKE VALVE)
	AT150112	SEAL KIT	1				(SERVICE BRAKE VALVE SEAL KIT)
10	AT207529	CHECK VALVE	1		X	X	
11	AT314827	SWITCH	1		X	X	(BRAKE LIGHT SWITCH)
12	AT317654	PEDAL	1		X	X	
13	AT317655	PUSH ROD	1		X	X	
14	T157212	CLIP	2		X	X	
15	T157258	PIN	1		X	X	
16	T174634	BOOT	1		X	X	
17	AT304479	PACKAGE OF PARTS	1		X	X	
18	R53317	LOCK NUT	2		X	X	
19	T157211	PIN	1		X	X	
20	T157220	CLAMP	1		X	X	
21	T170180	SNAP RING	2		X	X	
22	T170181	LOCK WASHER	2		X	X	
23	AT304480	KIT	1		X	X	
24	T157212	CLIP	2		X	X	
25	T157223	BEARING	2		X	X	
26	T157257	PIN	1		X	X	
27	T175236	ROLLER	1		X	X	
28	R26287	O-RING	1		X	X	
29	R26375	O-RING	1		X	X	
30	R26448	O-RING	1		X	X	
31	R28782	O-RING	1		X	X	
32	T172927	GASKET	2		X	X	
33	T176108	SPRING	1		X	X	
34	T196077	NUT	3		X	X	
35	T38282	HOSE FITTING	1		X	X	

SERVICE BRAKE ACUMULATOR AND HOSES

T202006 -UN-03AUG04

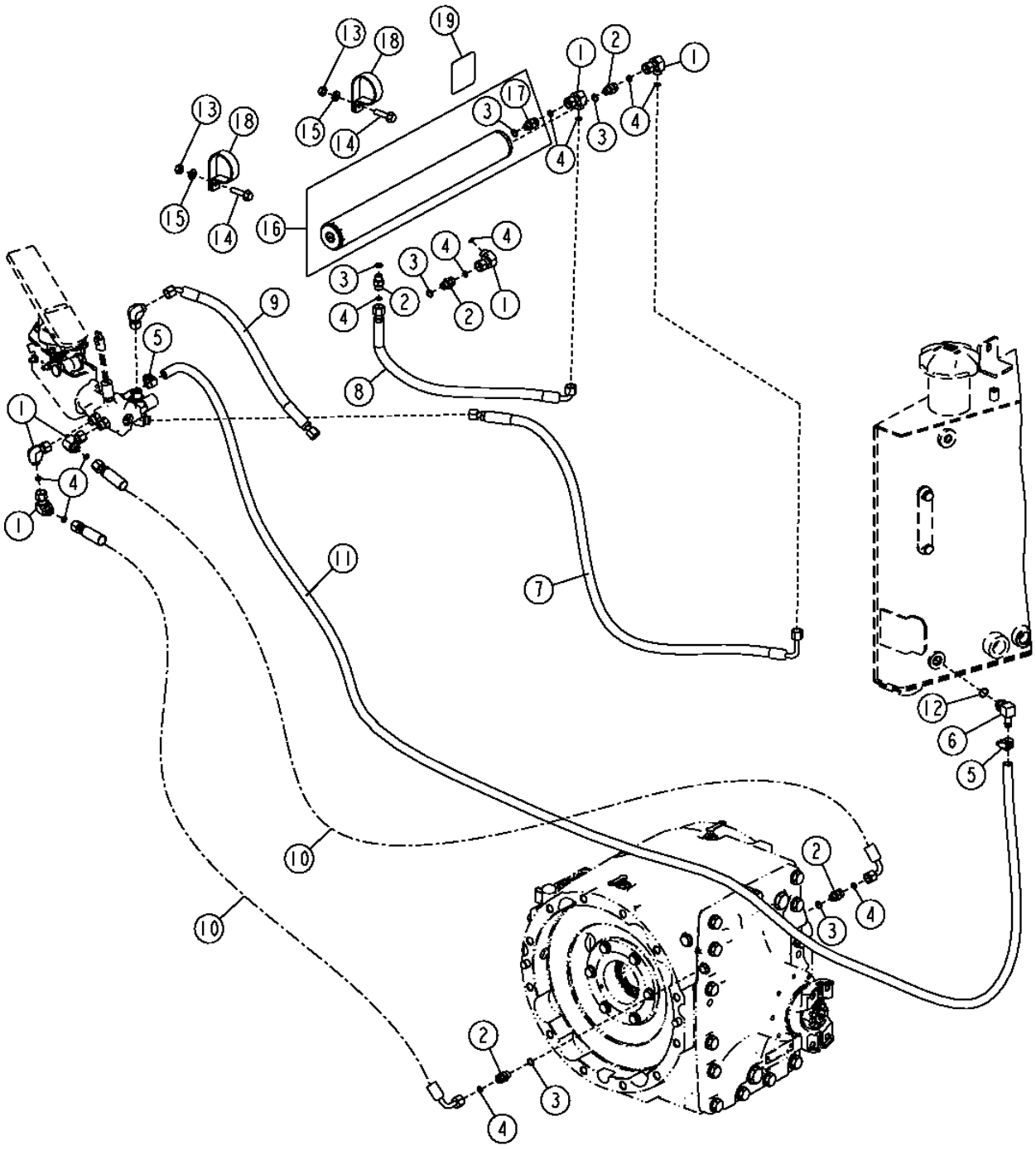

SERVICE BRAKE ACUMULATOR AND HOSES

KEY	PART NO.	PART NAME	QTY	SERIAL NO.	670D	672D	REMARKS
1	38H1094	ELBOW FITTING	6		X	X	
2	38H1160	ADAPTER	5		X	X	
3	R26448	O-RING	5		X	X	
4	T77613	O-RING	11		X	X	
5	AR21836	CLAMP	2		X	X	
6	AT124317	ELBOW FITTING	1		X	X	
7	AT305627	HYDRAULIC HOSE - FABRICATE	1		X	X	
8	AT305739	HYDRAULIC HOSE - FABRICATE	1		X	X	
9	AT305740	HYDRAULIC HOSE - FABRICATE	2		X	X	
10	AT305741	HYDRAULIC HOSE - FABRICATE	2		X	X	
11	.....	BULK HOSE	1		X	X	(MAKE FROM T168383) (CUT TO LENGTH)
12	R26375	O-RING	1		X	X	
13	14M7274	NUT	2		X	X	M10
14	19M8162	SCREW	2		X	X	M10 X 40
15	24M7239	WASHER	2		X	X	
16	AT306749	HYDRAULIC ACCUMULATOR	1		X	X	
17	AT225573	CHECK VALVE	1		X	X	
18	T126204	CLAMP	1		X	X	
19	T164124	LABEL	1		X	X	

PARK BRAKE VALVE

T201054 -UN-22JUN04

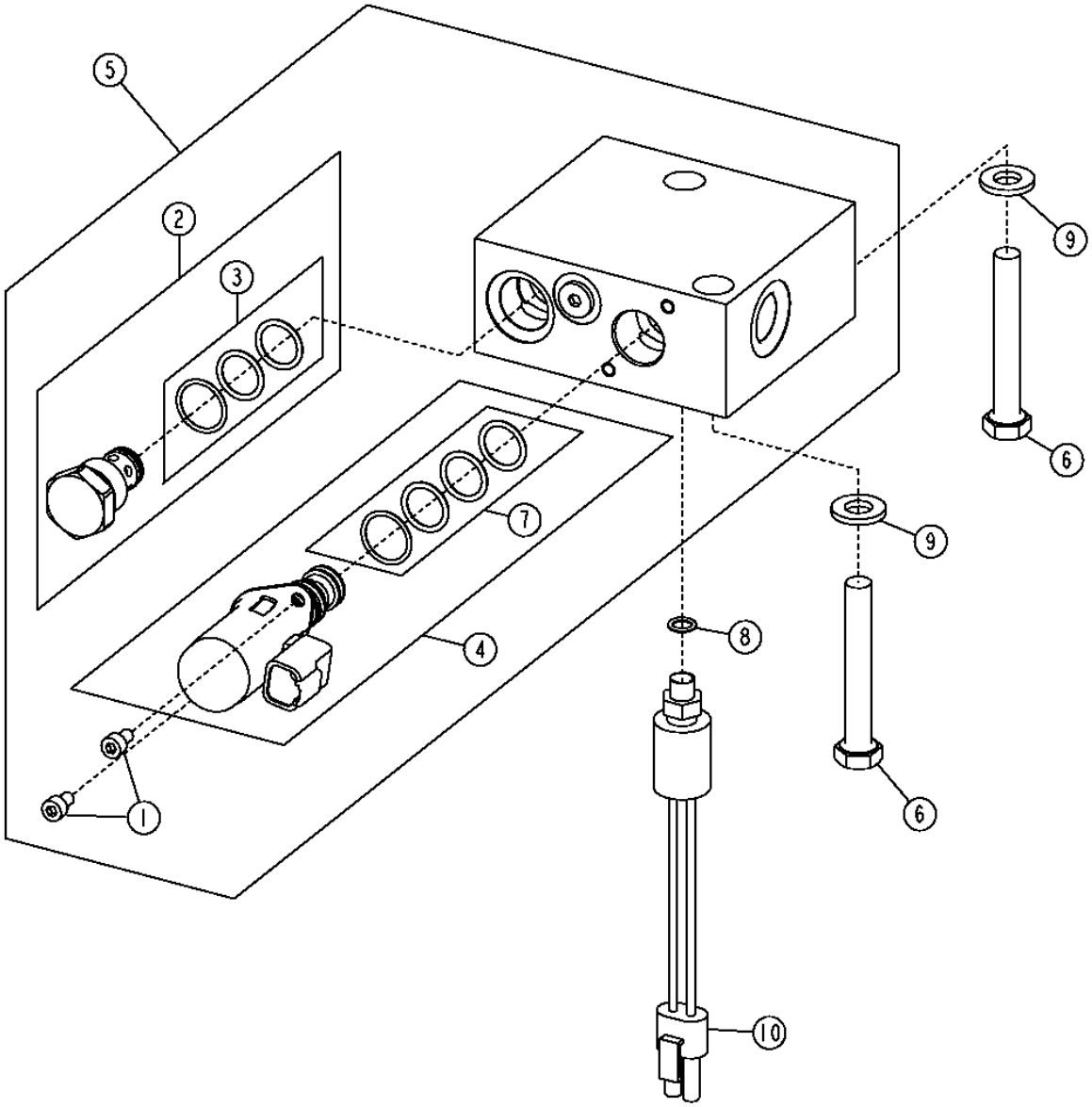

T201054

PARK BRAKE VALVE

KEY	PART NO.	PART NAME	QTY	SERIAL NO.	670D	672D	REMARKS
1	19M9150	SCREW	2		X	X	
2	AT224863	CHECK VALVE	1		X	X	
3	AT224864	SEAL KIT	1		X	X	
4	AT224576	SOLENOID VALVE	1		X	X	
5	AT224497	FLOW CONTROL HYD. VALVE	1		X	X	(PARK BRAKE VALVE)
6	19M7875	CAP SCREW	2		X	X	
7	AT224873	SEAL KIT	1		X	X	
8	R26287	O-RING	1		X	X	
9	24M7239	WASHER	2		X	X	
10	AT223537	PRESSURE SWITCH	1		X	X	(PARK BRAKE PRESSURE SWITCH)

PARK BRAKE HYDRAULIC HOSES

T203307 -UN-02NOV04

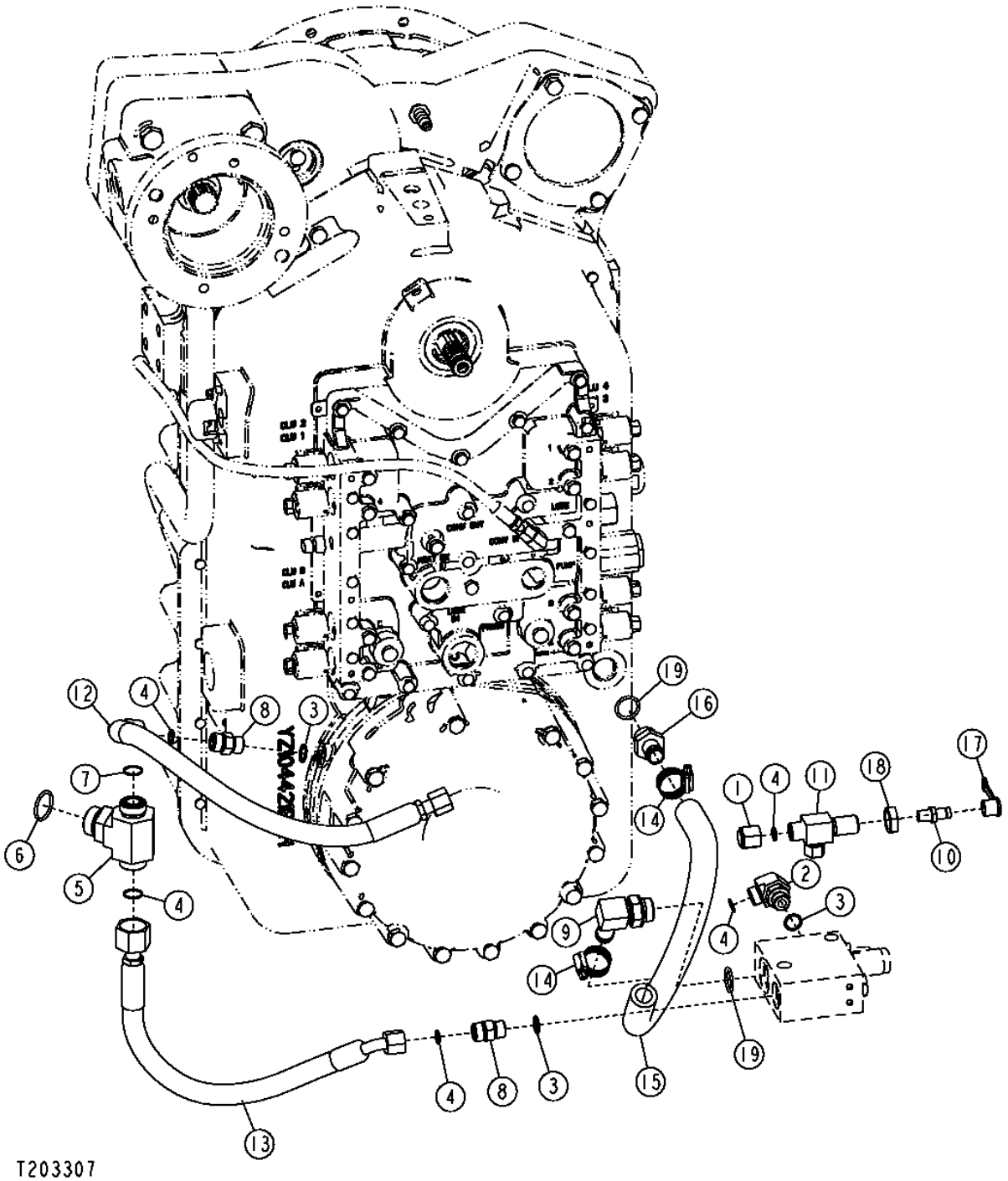

PARK BRAKE HYDRAULIC HOSES

KEY	PART NO.	PART NAME	QTY	SERIAL NO.	670D	672D	REMARKS
1	38H1416	FITTING	1		X	X	
2	38H1005	ELBOW FITTING	1		X	X	
3	R26375	O-RING	3		X	X	
4	T77857	O-RING	4		X	X	
5	38H1055	TEE FITTING	1		X	X	
6	R29936	O-RING	1		X	X	
7	T77858	O-RING	2		X	X	
8	38H1161	ADAPTER	2		X	X	
9	AH61472	HOSE FITTING	1		X	X	
10	AT177142	FITTING	1		X	X	
11	AT183612	PRESSURE RELIEF VALVE	1		X	X	
12	AT304974	HYDRAULIC HOSE - FABRICATE	1		X	X	
13	AT304996	HYDRAULIC HOSE - FABRICATE	1		X	X	
14	AT79195	CLAMP	2		X	X	
15	.....	BULK HOSE	1		X	X	(MAKE FROM T78497) (CUT TO LENGTH)
16	R53540	HOSE FITTING	1		X	X	
17	R77175	COVER	1		X	X	
18	T78716	NUT	1		X	X	
19	U12547	O-RING	2		X	X	

TRADEMARKS AND LABELS (ENGLISH)

T204355 -UN-15DEC04

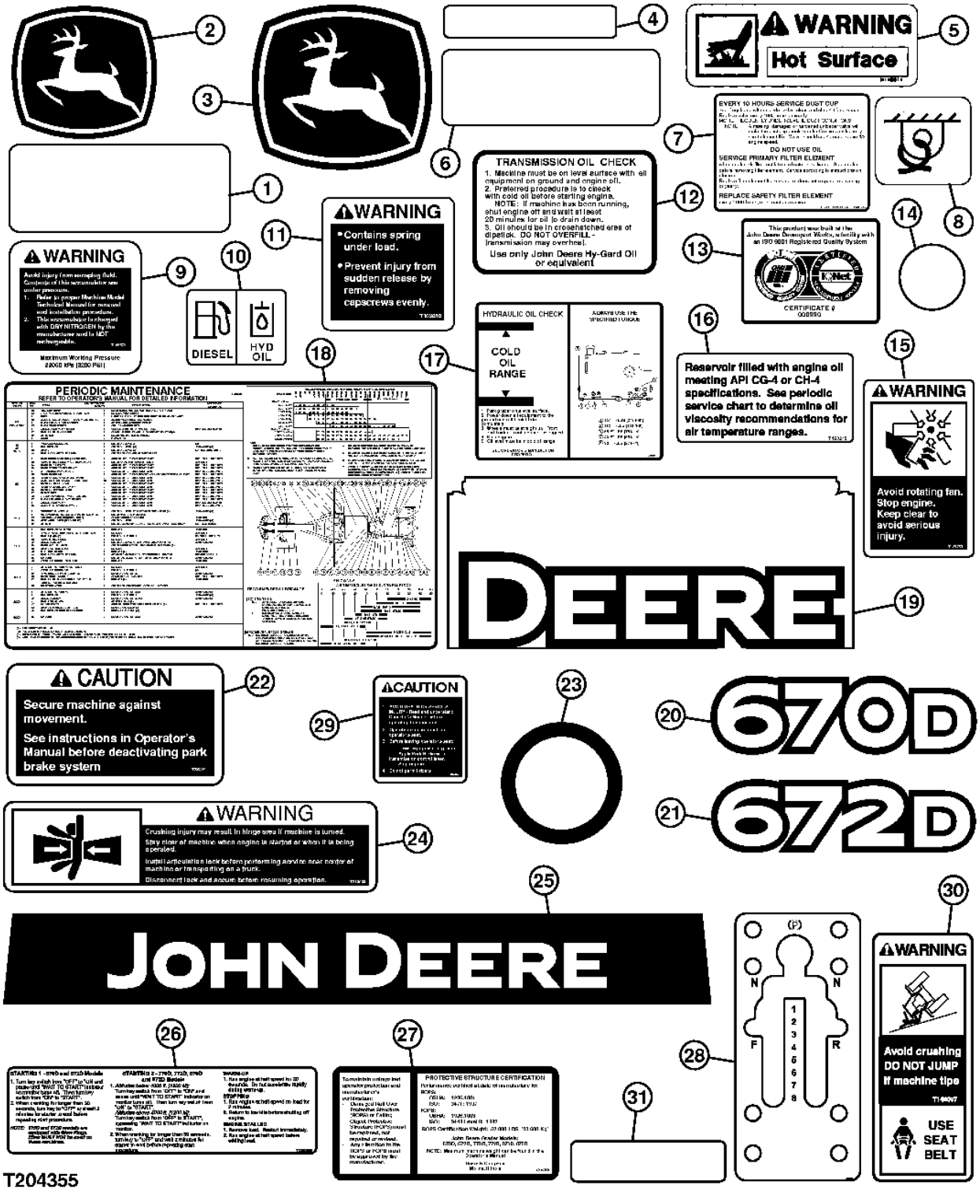

TRADEMARKS AND LABELS (ENGLISH)

KEY	PART NO.	PART NAME	QTY	SERIAL NO.	670D	672D	REMARKS
1	H21259	MAT	4		X	X	(15.5" X 6" ANTI-SKID)
2	JD5756	LABEL	1		X	X	(LEAPING DEERE FOR REAR GRILLE)
3	JD5822	LABEL	2		X	X	(LEAPING DEERE FOR MAIN FRAME COWL COVER)
4	JD5921	REFLECTOR	8		X	X	(YELLOW REFLECTIVE LABEL)
5	M118611	LABEL	1		X	X	(HOT SURFACE)
6	T103395	MAT	4		X	X	(8" X 6" ANTI-SKID)
7	T146605	LABEL	1		X	X	(AIR CLEANER SERVICE)
8	T153680	LABEL	6		X	X	(TIE DOWN LOCATION)
9	T155572	SAFETY SIGN	1		X	X	(ACCUMULATOR SAFETY)
10	T161674	LABEL	1		X	X	(HYDRAULIC RESERVOIR/FUEL TANK CAPS)
11	T162050	LABEL	1		X	X	(BRAKE COVER REMOVAL WARNING)
12	T163658	LABEL	1		X	X	(TRANSMISSION OIL LEVEL CHECK)
13	T175744	LABEL	1		X	X	(ISO 9001 REGISTERED)
14	T186793	LABEL	2		X	X	(GRAY CIRCULAR COVER)
15	T187757	LABEL	2		X	X	(WARNING-FAN)
16	T190212	LABEL	1		X	X	(OIL DESCRIPTION)
17	T215268	LABEL	1		X	X	(HYDRAULIC OIL LEVEL CHECK)
18	T206088	LABEL	1		X	X	(PERIODIC MAINTENANCE)
19	T206091	LABEL	2		X	X	
20	T206093	LABEL	2		X	X	
21	T206094	LABEL	2		X	X	
22	T206289	SAFETY SIGN	2		X	X	(CAUTION-PARK BRAKE)
23	T210871	SAFETY SIGN	1		X	X	(ARTICULATION LOCK)
24	T210933	SAFETY SIGN	2		X	X	(WARNING-ARTICULATION)
25	T182184	LABEL	1		X	X	(SUNSCREEN)
26	T206295	LABEL	1		X	X	(START/STOP PROCEDURE)
27	T205368	LABEL	1		X	X	(ROPS/FOPS CERTIFICATION)
28	T205367	LABEL	1		X	X	(SHIFT PATTERN)
29	T160152	LABEL	1		X	X	(CAUTION-SHUTDOWN)
30	T146097	LABEL	1		X	X	(MULTIPLE HAZARDS)
31	JD5938	REFLECTOR	2		X	X	(RED REFLECTOR)

TRADEMARKS AND LABELS (SPANISH)

T205367 -UN-30NOV04

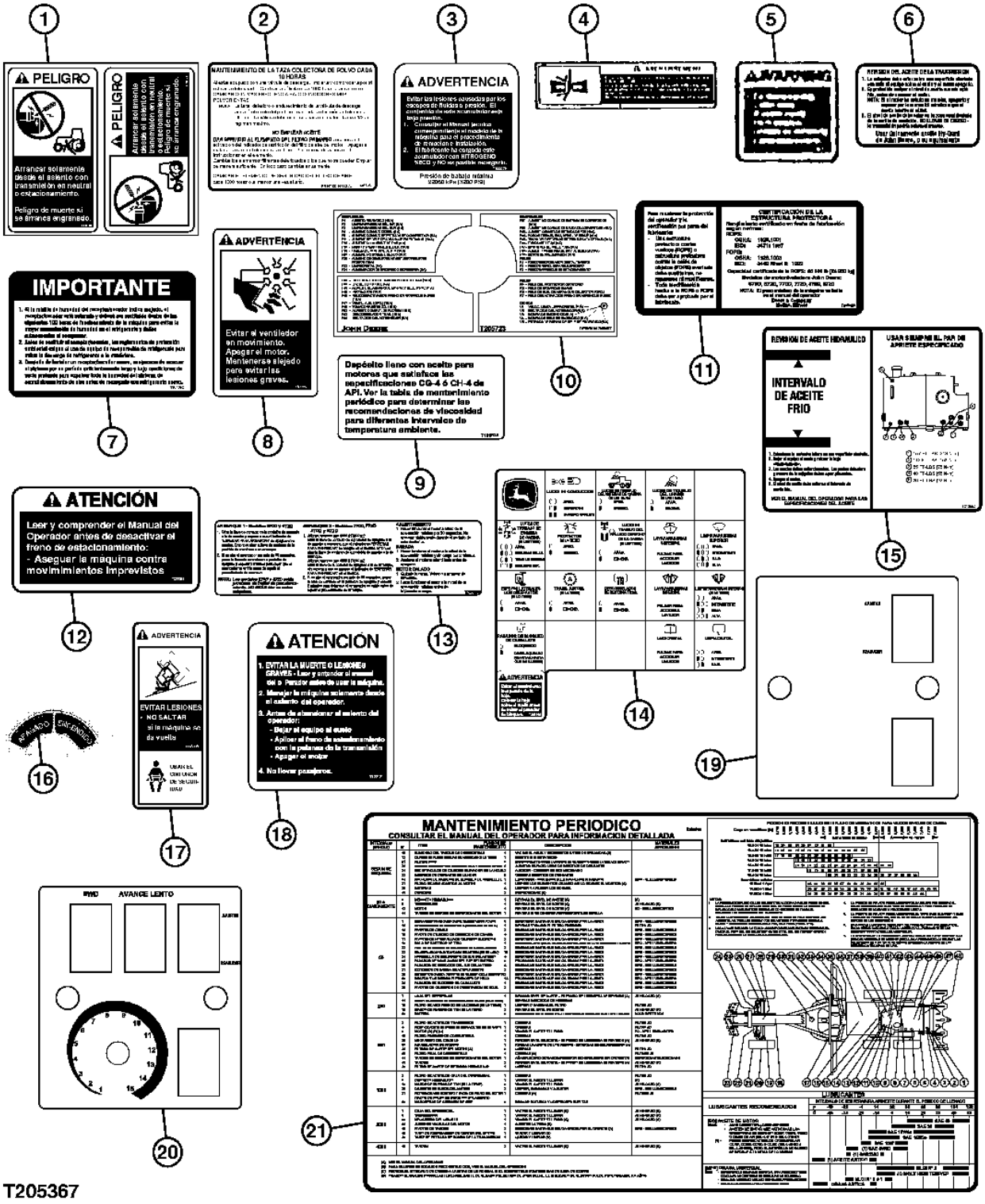

TRADEMARKS AND LABELS (SPANISH)

KEY	PART NO.	PART NAME	QTY	SERIAL NO.	670D	672D	REMARKS
1	T146106	SAFETY SIGN	1		X	X	
2	T146606	LABEL	1		X	X	
3	T155579	SAFETY SIGN	1		X	X	
4	T214972	SAFETY SIGN	2		X	X	
5	T162052	LABEL	1		X	X	
6	T163660	LABEL	1		X	X	
7	T164692	LABEL	1		X	X	
8	T187759	LABEL	4		X	X	
9	T190533	LABEL	1		X	X	
10	T205723	LABEL	1		X	X	
11	T205920	LABEL	1		X	X	
12	T206291	SAFETY SIGN	1		X	X	
13	T206297	LABEL	1		X	X	
14	T206346	LABEL	1		X	X	
15	T215270	LABEL	1		X	X	
16	T63225	LABEL	1		X	X	
17	T146098	SAFETY SIGN	1		X	X	
18	T160154	LABEL	1		X	X	
19	T213215	LABEL	1		X		
20	T213209	LABEL	1			X	
21	T206090	LABEL	1		X	X	

TRADEMARKS AND LABELS (FRENCH)

T205375 -UN-30NOV04

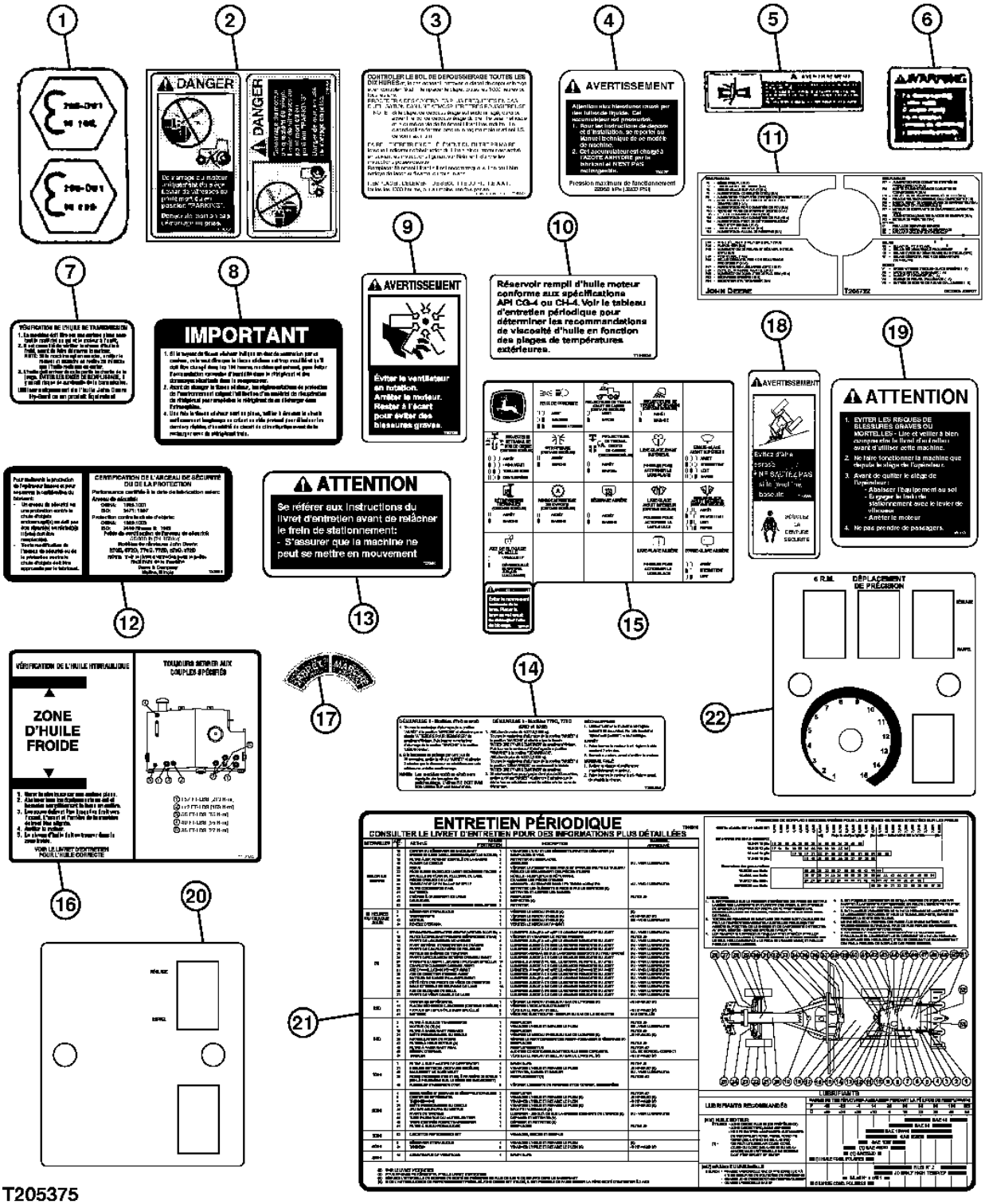

T205375

TRADEMARKS AND LABELS (FRENCH)

KEY	PART NO.	PART NAME	QTY	SERIAL NO.	670D	672D	REMARKS
1	T145453	LABEL	1		X	X	
2	T146104	SAFETY SIGN	1		X	X	
3	T146607	LABEL	1		X	X	
4	T155581	SAFETY SIGN	1		X	X	
5	T214971	SAFETY SIGN	2		X	X	
6	T162051	LABEL	1		X	X	
7	T163659	LABEL	1		X	X	
8	T164691	LABEL	1		X	X	
9	T187758	LABEL	4		X	X	
10	T190534	LABEL	1		X	X	
11	T205722	LABEL	1		X	X	
12	T205919	LABEL	1		X	X	
13	T206290	LABEL	1		X	X	
14	T206296	LABEL	1		X	X	
15	T206345	LABEL	1		X	X	
16	T215269	LABEL	1		X	X	
17	T63224	LABEL	1		X	X	
18	T146099	SAFETY SIGN	1		X	X	
19	T160153	LABEL	1		X	X	
20	T213210	LABEL	1		X		
21	T206089	LABEL	1		X	X	
22	T213207	LABEL	1		X	X	

ENGINE OIL DRAIN

T202063 -UN-03DEC04

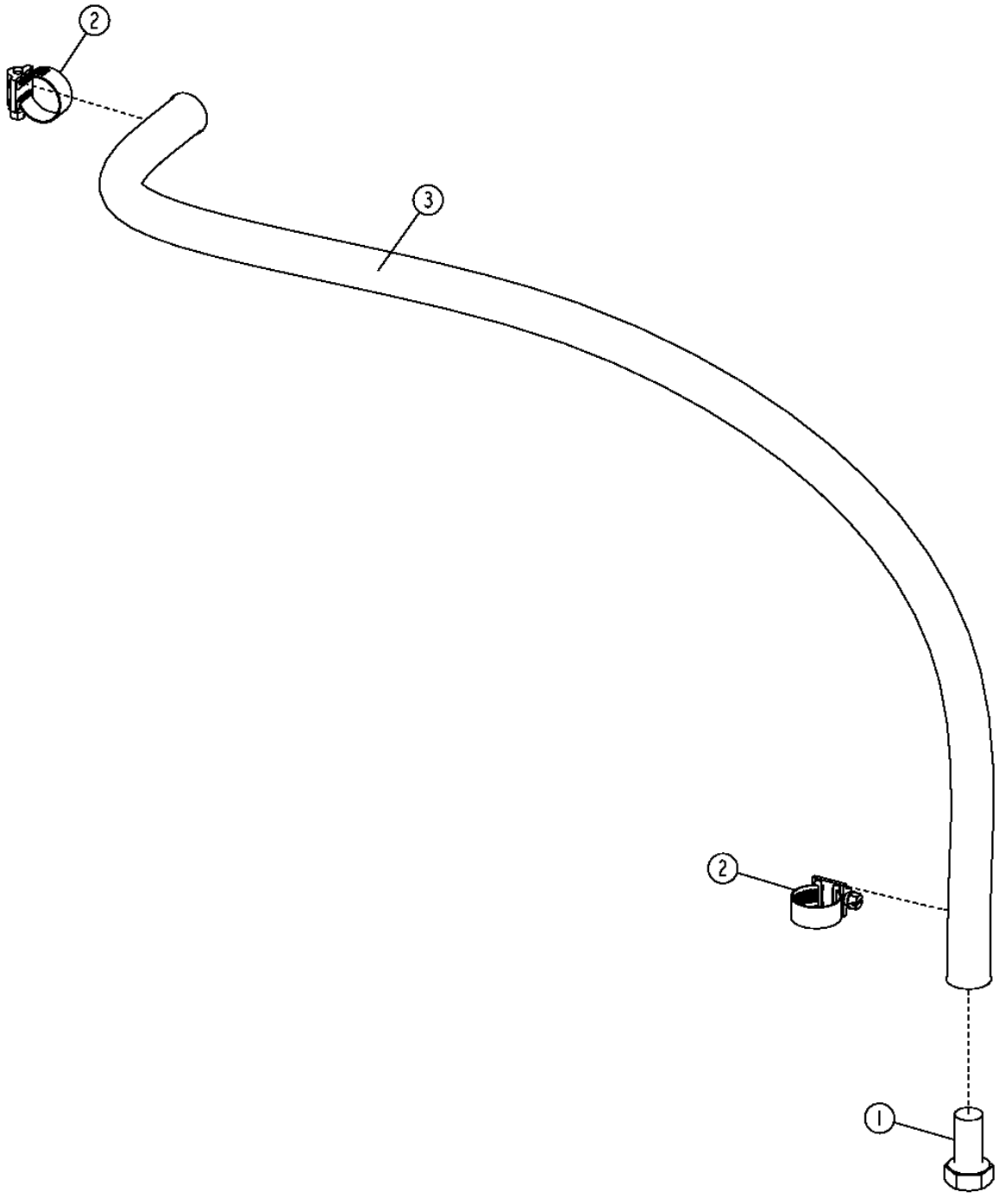

T202063

ENGINE OIL DRAIN

KEY	PART NO.	PART NAME	QTY	SERIAL NO.	REMARKS
1	19H1833	CAP SCREW	1		5/8" X 1-1/4"
2	AR21837	CLAMP	2		
3	.....	BULK HOSE	1		(MAKE FROM T60811) (CUT TO 3.2 FT LENGTH)

FLUID SAMPLING FITTINGS

T205803 -UN-12DEC04

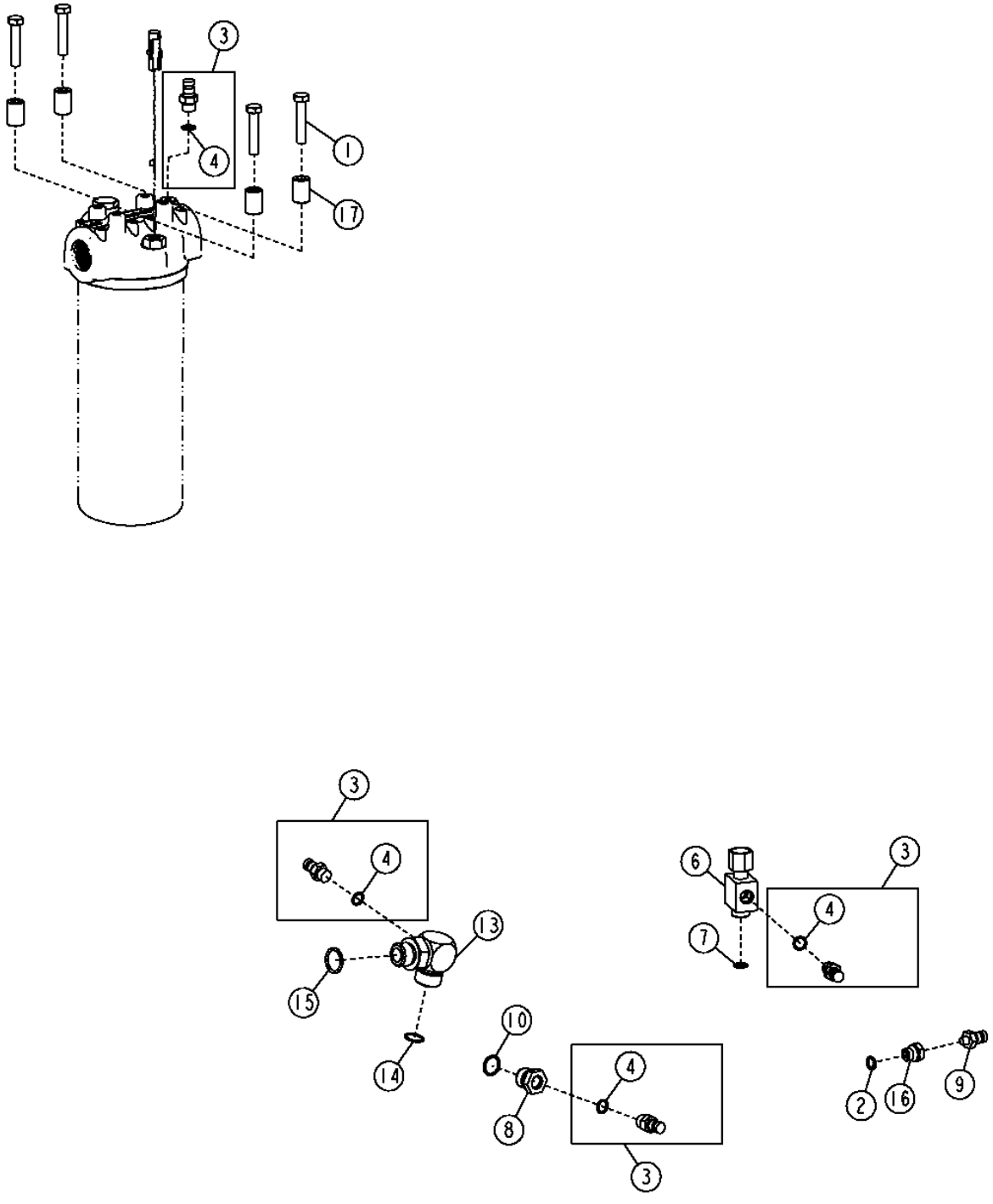

FLUID SAMPLING FITTINGS

KEY	PART NO.	PART NAME	QTY	SERIAL NO.	670D	672D	REMARKS
1	19M8600	CAP SCREW	4		X	X	M10 X 50
2	51M7041	O-RING	1		X	X	
3	AT306111	FITTING	4		X	X	(HYDRAULIC OIL, TRANSMISSION OIL, ENGINE OIL AND DIFFERENTIAL OIL)
4	R26448	O-RING	4		X	X	
6	T213462	TEE FITTING	1		X	X	
7	T77857	O-RING	1		X	X	
8	T208904	FITTING	1		X	X	
9	AT306133	FITTING	1		X	X	(COOLANT)
10	51M7045	O-RING	1		X	X	
13	T210739	TEE FITTING	1		X	X	
14	T77858	O-RING	1		X	X	
15	U12547	O-RING	1		X	X	
16	R63016	ADAPTER	1		X	X	
17	T147891	BUSHING	1		X	X	

FRAME HINGE CENTRAL LUBRICATION LINES AND FITTINGS

T201046 -UN-18JUN04

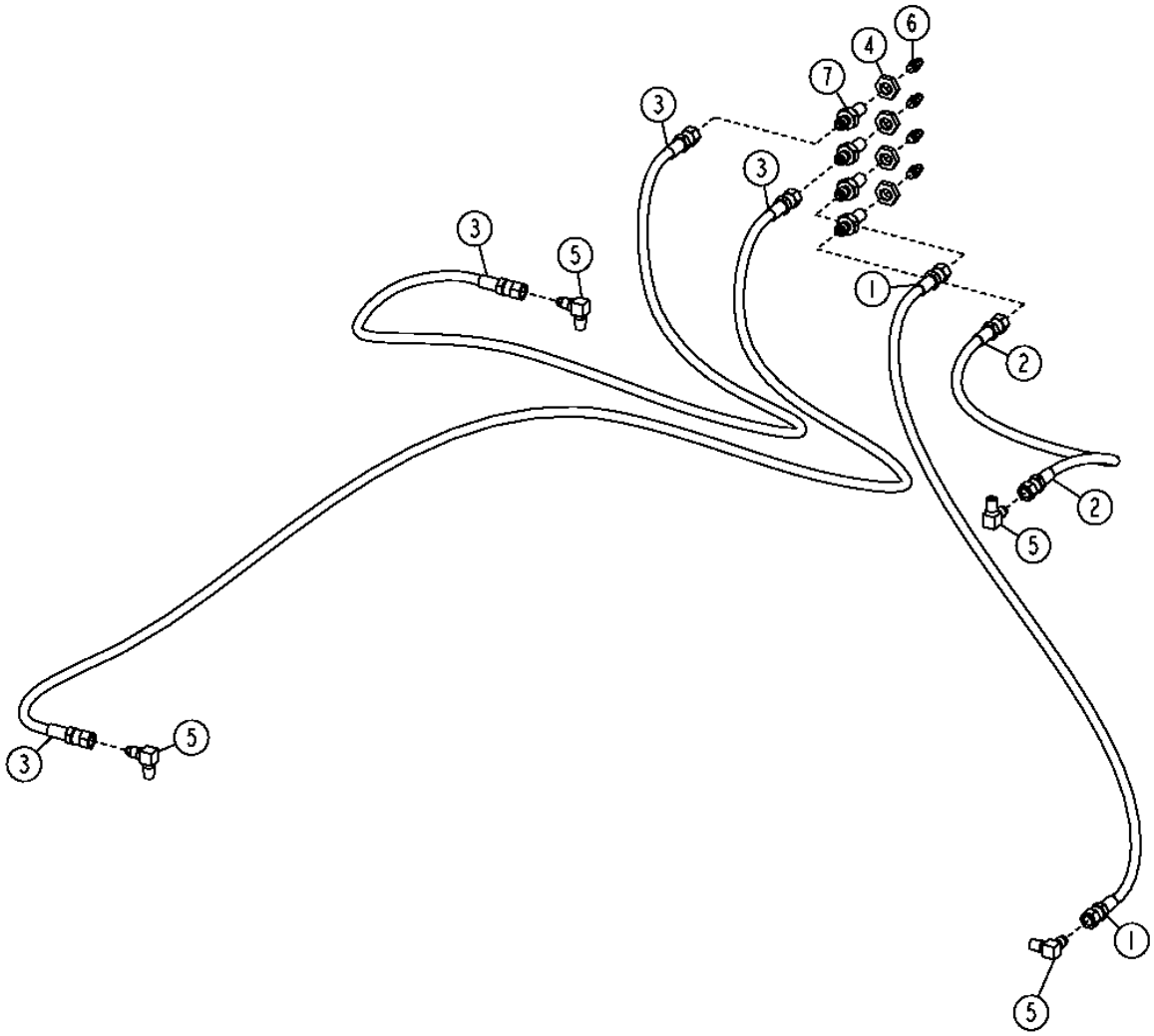

T201046

FRAME HINGE CENTRAL LUBRICATION LINES AND FITTINGS

KEY	PART NO.	PART NAME	QTY	SERIAL NO.	670D	672D	REMARKS
1	AT112769	HYDRAULIC HOSE	1		X	X	(TO BOTTOM FRAME HINGE PIN)
2	AT62699	HYDRAULIC HOSE	1		X	X	(TO TOP FRAME HINGE PIN)
3	AT62703	HYDRAULIC HOSE	2		X	X	(TO ARTICULATION CYLINDER PINS)
4	E12379	NUT	4		X	X	
5	H80936	ELBOW FITTING	4		X	X	
6	JD7797	LUBRICATION FITTING	4		X	X	
7	T75644	ADAPTER	4		X	X	

REAR HITCH

T202478 -UN-03SEP04

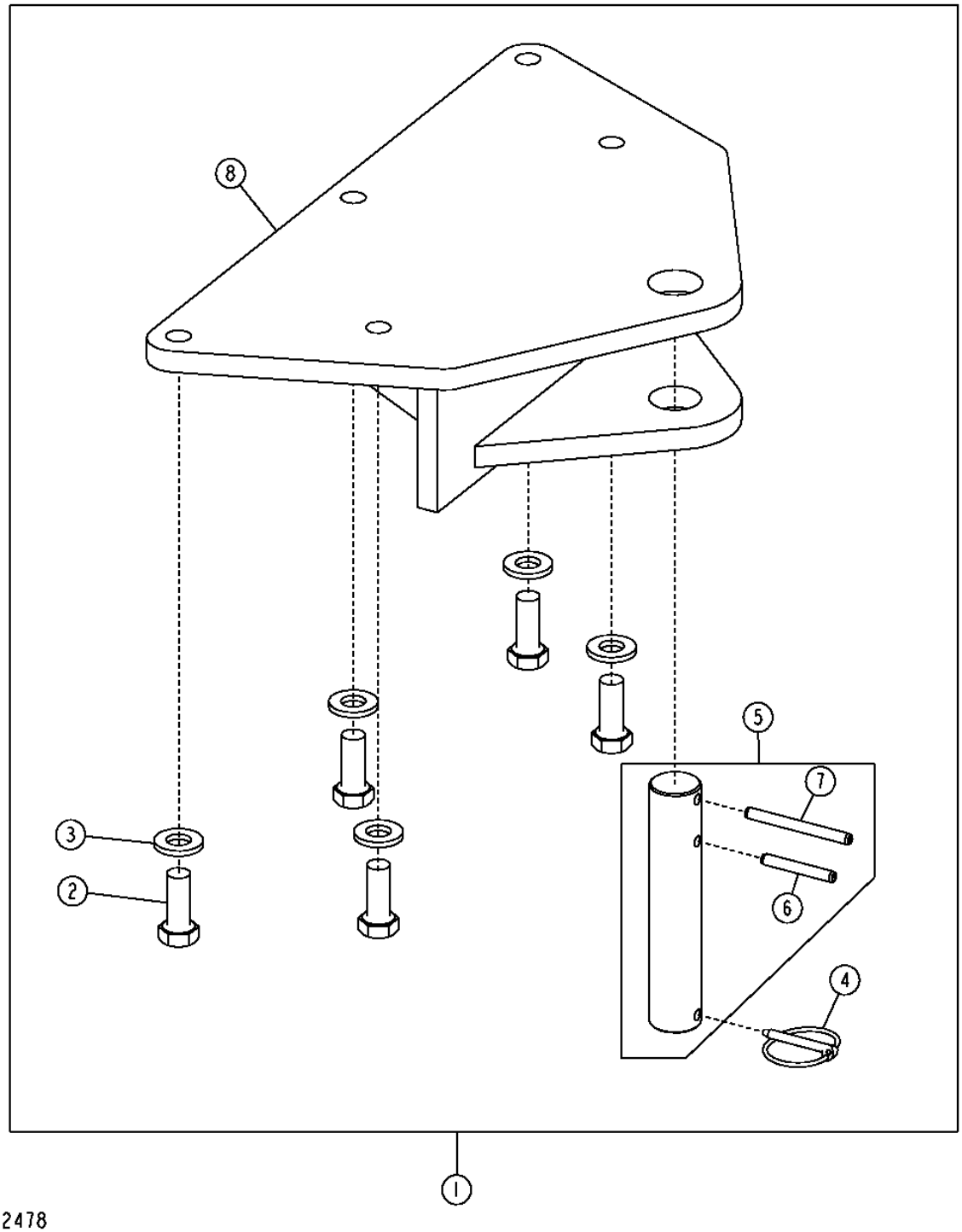

REAR HITCH

KEY	PART NO.	PART NAME	QTY	SERIAL NO.	670D	672D	REMARKS
1	**AT316746**	**KIT**	**1**		**X**	**X**	**(WHOLEGOODS)(REAR HITCH KIT)**
2	19M7597	CAP SCREW	5		X	X	M20 X 50
3	24M7242	WASHER	5		X	X	
4	AR83396	QUICK LOCK PIN	1		X	X	
5	AT186723	PIN FASTENER	1		X	X	
6	34H358	SPRING PIN	1		X	X	
7	34H363	SPRING PIN	1		X	X	
8	AT187234	HITCH	1		X	X	

BATTERIES, CABLES, CLAMPS AND GROUNDING STRAPS

T199768 -UN-12DEC04

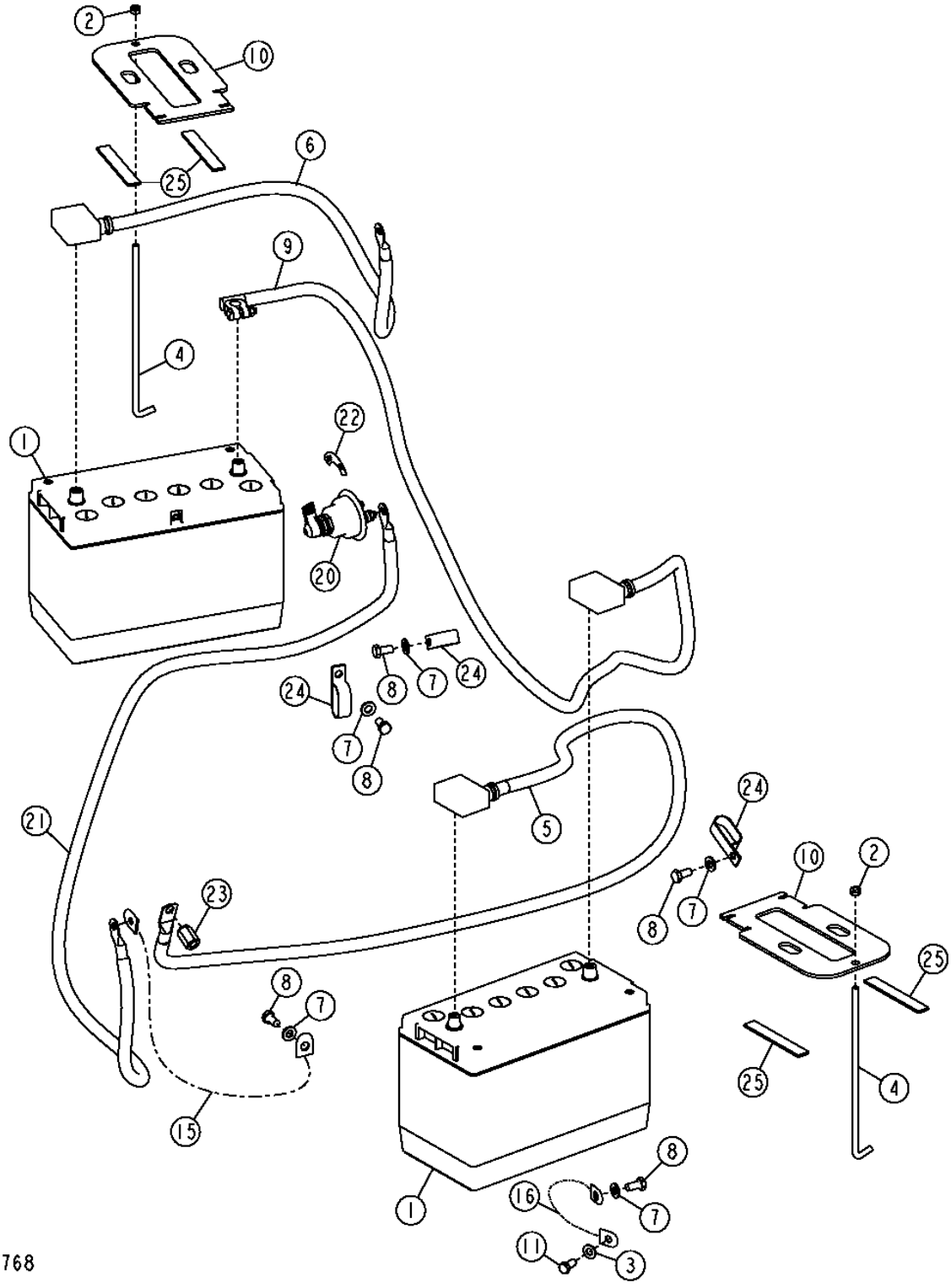

BATTERIES, CABLES, CLAMPS AND GROUNDING STRAPS

KEY	PART NO.	PART NAME	QTY	SERIAL NO.	670D	672D	REMARKS
1	TY25803	DRY CHARGED BATTERY	2		X	X	(750 CCA) (SUB FOR TY21766)
	TY23020	DRY CHARGED BATTERY	2		X	X	(1400 CCA)
2	14M7166	LOCK NUT	2		X	X	
3	24H1305	WASHER	1		X	X	
4	T161376	HOOK BOLT	2		X	X	
5	AT175549	BATTERY CABLE	1		X	X	(BATTERY TO STARTER)
	T107115	COVER	1		X	X	
6	AT177869	BATTERY CABLE	1		X	X	
	T107115	COVER	1		X	X	
7	24M7239	WASHER	5		X	X	10.700 X 21 X 2.500 MM
8	19M7938	CAP SCREW	5		X	X	M10 X 20
9	AT175548	BATTERY CABLE	1		X	X	
	T107115	COVER	1		X	X	
10	T208242	PLATE	2		X	X	
11	19H1648	CAP SCREW	1		X	X	3/8" X 3/4"
15	AT38449	GROUND CABLE	1		X	X	
16	R36545	GROUND CABLE	2		X	X	
20	AT41188	SWITCH	1		X	X	(MANUAL BATTERY DISCONNECT)
21	AT177870	CABLE	1		X	X	
	T107115	COVER	1		X	X	
22	T42199	LABEL	1		X	X	(MANUAL BATTERY DISCONNECT)
23	T174530	NUT	1		X	X	(STARTER B+ TERMINAL)
	T134104	COVER	1		X	X	(STARTER B+ TERMINAL) (NOT ILLUSTRATED)
24	AH77869	CLIP	3		X	X	
25	.....	WEATHERSTRIP	4		X	X	

ALTERNATOR AND ALTERNATOR BRACKETS

T212837 -UN-20JUL05

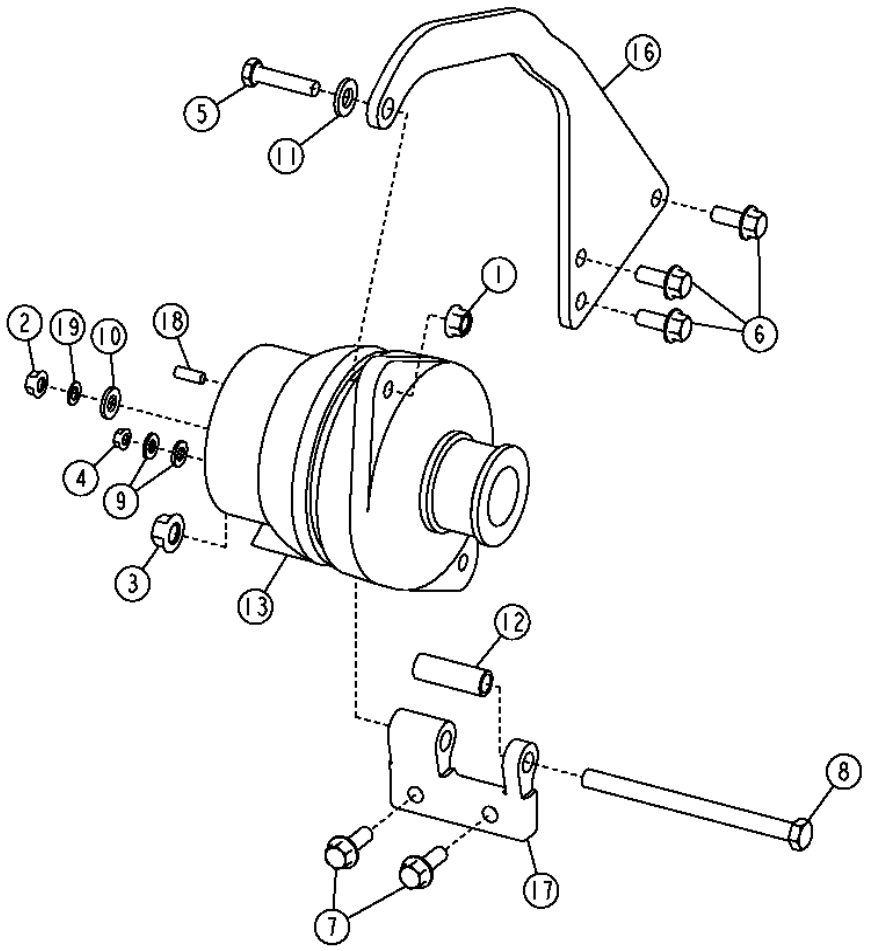

T212837

ALTERNATOR AND ALTERNATOR BRACKETS

KEY	PART NO.	PART NAME	QTY	SERIAL NO.	670D	672D	REMARKS
1	14M7296	FLANGE NUT	1		X	X	M10
2	14M7298	FLANGE NUT	1		X	X	M8
3	14M7299	FLANGE NUT	1		X	X	M12
4	14M7303	FLANGE NUT	1		X	X	M6
5	19M7180	CAP SCREW	1		X	X	M10 X 45
6	19M7785	SCREW	3		X	X	
7	19M7786	SCREW	2		X	X	M10 X 30
8	19M7904	CAP SCREW	1		X	X	M12 X 160
9	24M7238	WASHER	2		X	X	
10	24M7239	WASHER	1		X	X	
11	24M7240	WASHER	1		X	X	
12	28H3402	SPACER	1		X	X	12.522 X 17.145 X 50.800 MM
13	AT300167	ALTERNATOR	1		X	X	(100 AMP)
	T201538	PULLEY	1		X	X	
14	AT300684	WIRING HARNESS	1		X	X	(NOT ILLUSTRATED)
16	T162085	STRAP	1		X	X	
17	T179468	BRACKET	1		X	X	
18	T201537	CAP	1		X	X	
19	12H291	LOCK WASHER	1		X	X	5/16"

ENGINE ACCESSORY DRIVE BELT

T202018 -UN-04AUG04

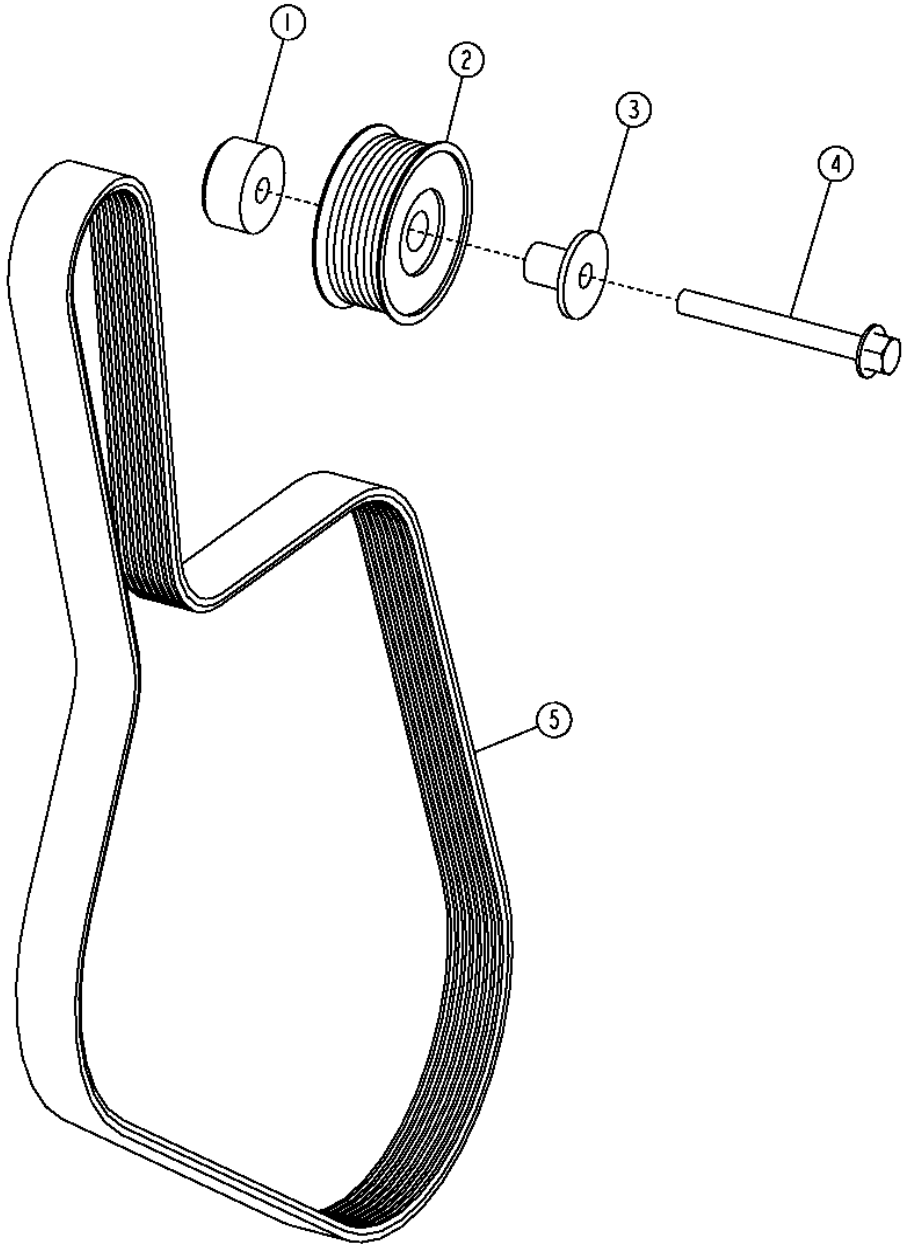

T202018

ENGINE ACCESSORY DRIVE BELT

KEY	PART NO.	PART NAME	QTY	SERIAL NO.	670D	672D	REMARKS
1	R107654	SPACER	1		X	X	(WITH AIR CONDITIONING)
	R133643	SPACER	1		X	X	
2	AT211041	IDLER	1		X	X	
	RE505264	IDLER	1		X	X	(WITH AIR CONDITIONING)
3	R502079	SLEEVE	1		X	X	
4	19M7811	SCREW	1		X	X	M10 X 90
5	T213049	FLAT BELT	1		X	X	(WITH AIR CONDITIONING)
	T213048	FLAT BELT	1		X	X	

SNOW LIGHT BRACKETS

T208054 -UN-12FEB05

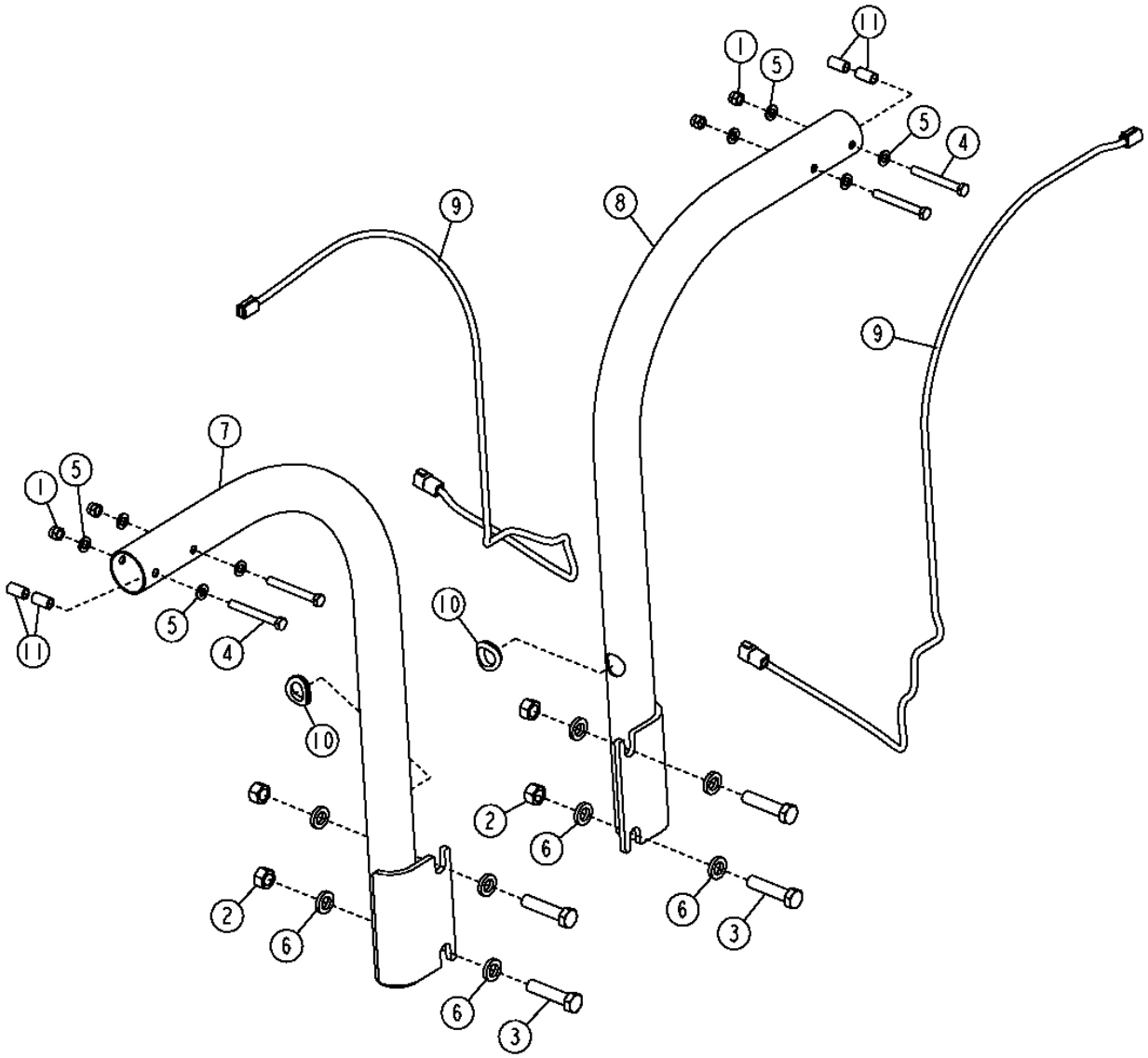

2D14

SNOW LIGHT BRACKETS

KEY	PART NO.	PART NAME	QTY	SERIAL NO.	670D	672D	REMARKS
1	14M7313	LOCK NUT	4		X	X	M12
2	14M7277	NUT	4		X	X	M20
3	19M3167	CAP SCREW	4		X	X	M12 X 60
4	19M7949	CAP SCREW	4		X	X	M12 X 100
5	24M7047	WASHER	8		X	X	13 X 24 X 2.500 MM
6	T83426	WASHER	8		X	X	20.580 X 35 X 6.415 MM
7	AT306612	BRACKET	1		X	X	(RH)
8	AT306632	BRACKET	1		X	X	(LH)
9	AT307780	WIRING HARNESS	2		X	X	(FRONT WORKLIGHT EXTENSION)
10	M86690	GROMMET	2		X	X	
11	28H3387	BUSHING	4		X	X	

FRONT SIGNAL LIGHTS

T202181 -UN-14SEP04

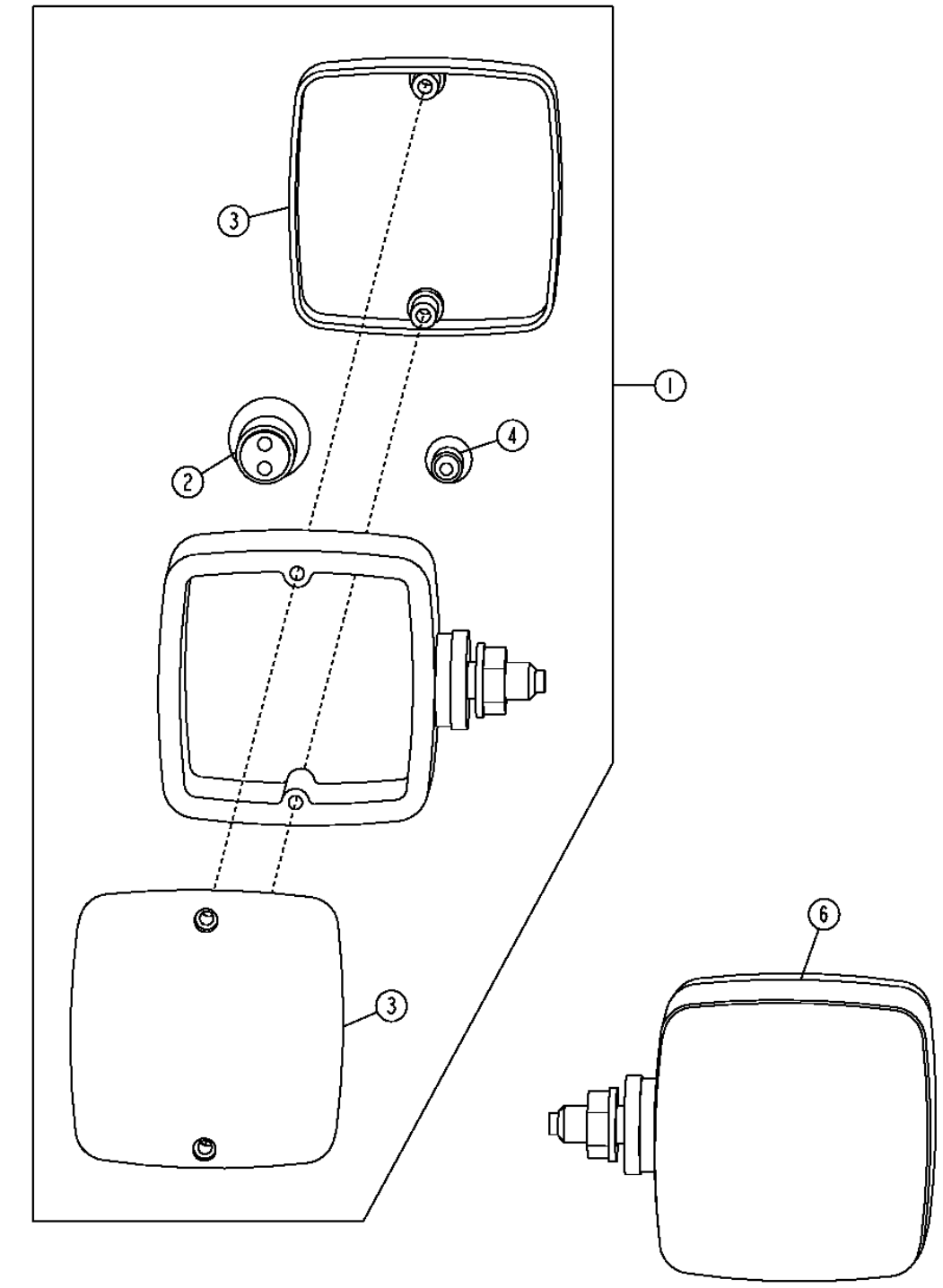

2D16

FRONT SIGNAL LIGHTS

KEY	PART NO.	PART NAME	QTY	SERIAL NO.	670D	672D	REMARKS
1	AT206878	LAMP	2		X	X	(STANDARD)
2	AT210333	BULB	2		X	X	
3	T176372	LENS	4		X	X	
4	U44537	BULB	4		X	X	
5	AT307090	LAMP	2		X	X	

TAIL LIGHTS

T202186 -UN-12DEC04

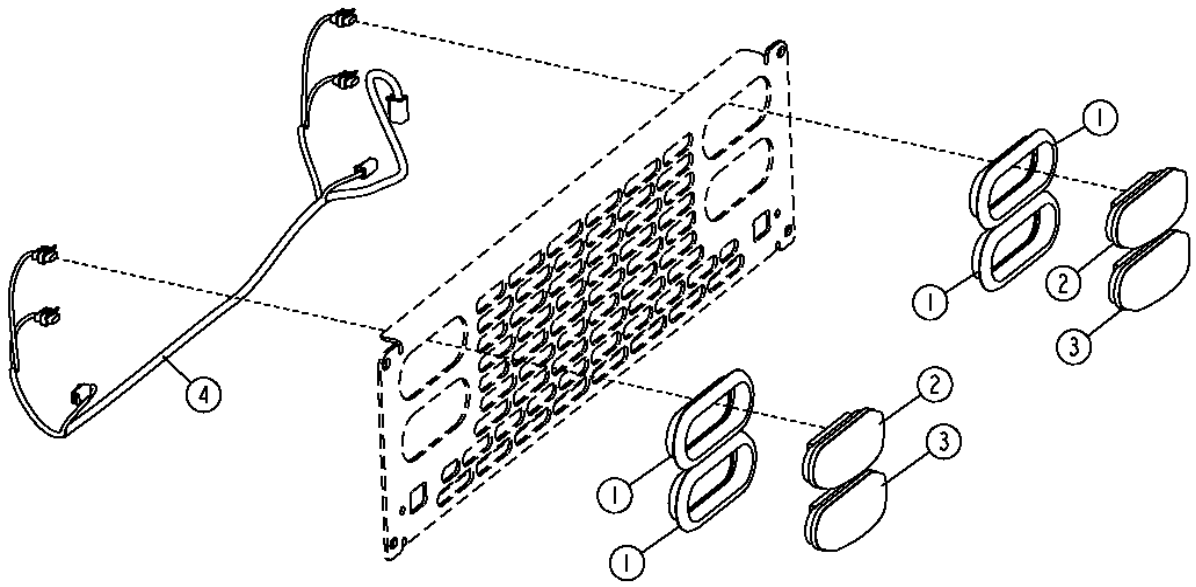

T202186

2D18

TAIL LIGHTS

KEY	PART NO.	PART NAME	QTY	SERIAL NO.	670D	672D	REMARKS
1	T178948	RETAINER	4		X	X	
2	T180074	TURN SIGNAL LAMP	2		X	X	(AMBER LED)
	T178947	TURN SIGNAL LAMP	2		X	X	(AMBER STANDARD)
3	T180075	TAIL LAMP	2		X	X	(RED LED)
	T178946	TAIL LAMP	2		X	X	(RED STANDARD)
4	AT305935	WIRING HARNESS	1		X	X	(USE WITH LED LIGHTS)
	AT305934	WIRING HARNESS	1		X	X	(USE WITH STANDARD LIGHTS)

BEACON LIGHT BRACKET

T210192 -UN-14APR05

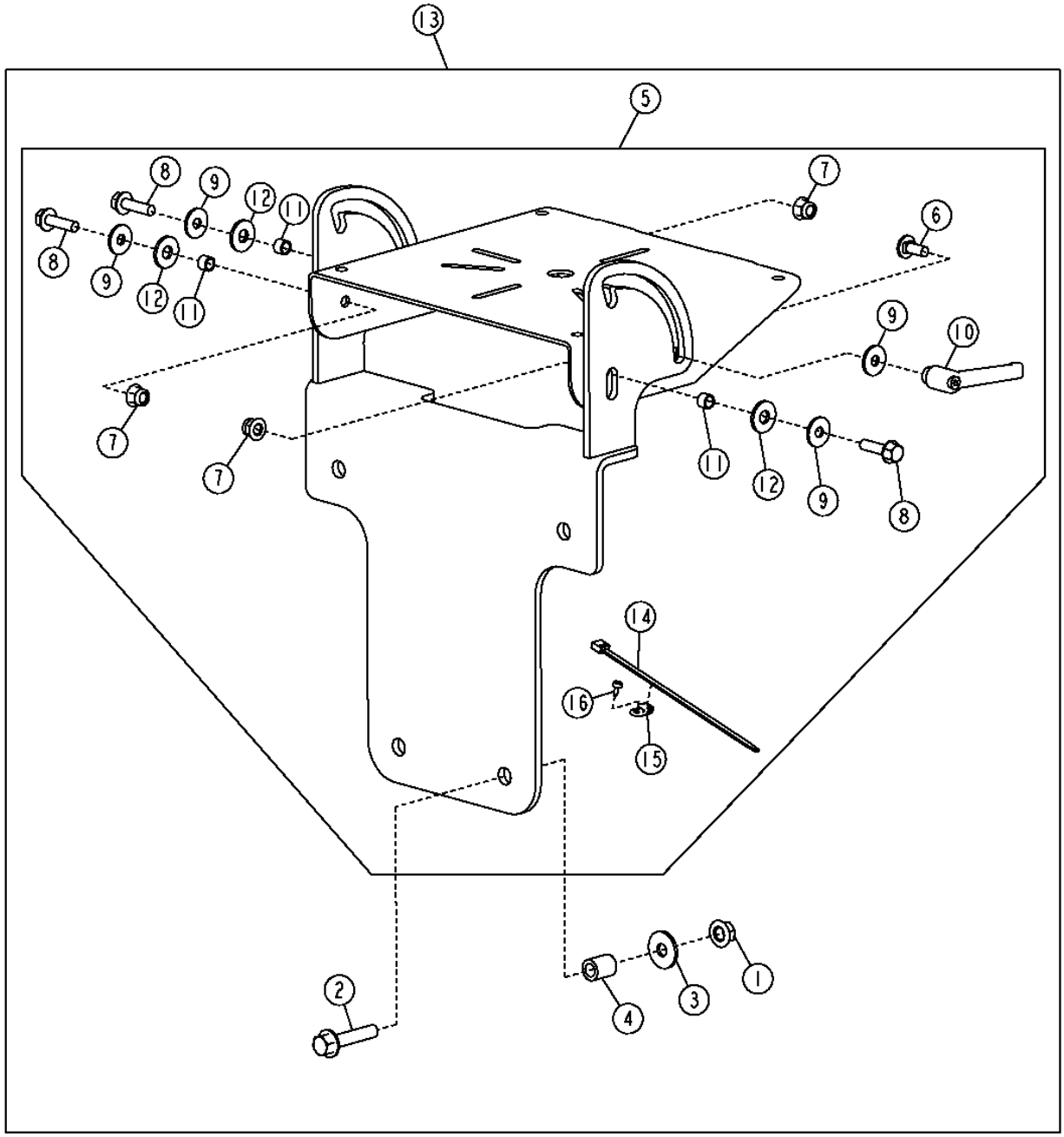

T210192

BEACON LIGHT BRACKET

KEY	PART NO.	PART NAME	QTY	SERIAL NO.	670D	672D	REMARKS
1	14M7296	FLANGE NUT	3		X	X	M10
2	19M7806	SCREW	3		X	X	M10 X 50
3	24M7296	WASHER	3		X	X	
4	H140461	BUSHING	4		X	X	
5	AT304295	BRACKET	1		X	X	
6	03M7184	BOLT	1		X	X	M8 X 20
7	14M7396	LOCK NUT	3		X	X	M8
8	19M7868	SCREW	3		X	X	M8 X 30
9	24M7298	WASHER	4		X	X	
10	AT227063	LEVER	1		X	X	
11	T131169	WASHER	3		X	X	
12	R52921	WASHER	3		X	X	
13	**AT318620**	**KIT**	**1**		**X**	**X**	**(WHOLEGOODS) (BEACON BRACKET KIT)**
14	R44302	TIE BAND	3		X	X	
15	T187394	ANCHOR	3		X	X	
16	T185769	SCREW	3		X	X	

CAB WORK AND DRIVE LIGHTS

T209115 -UN-04MAR05

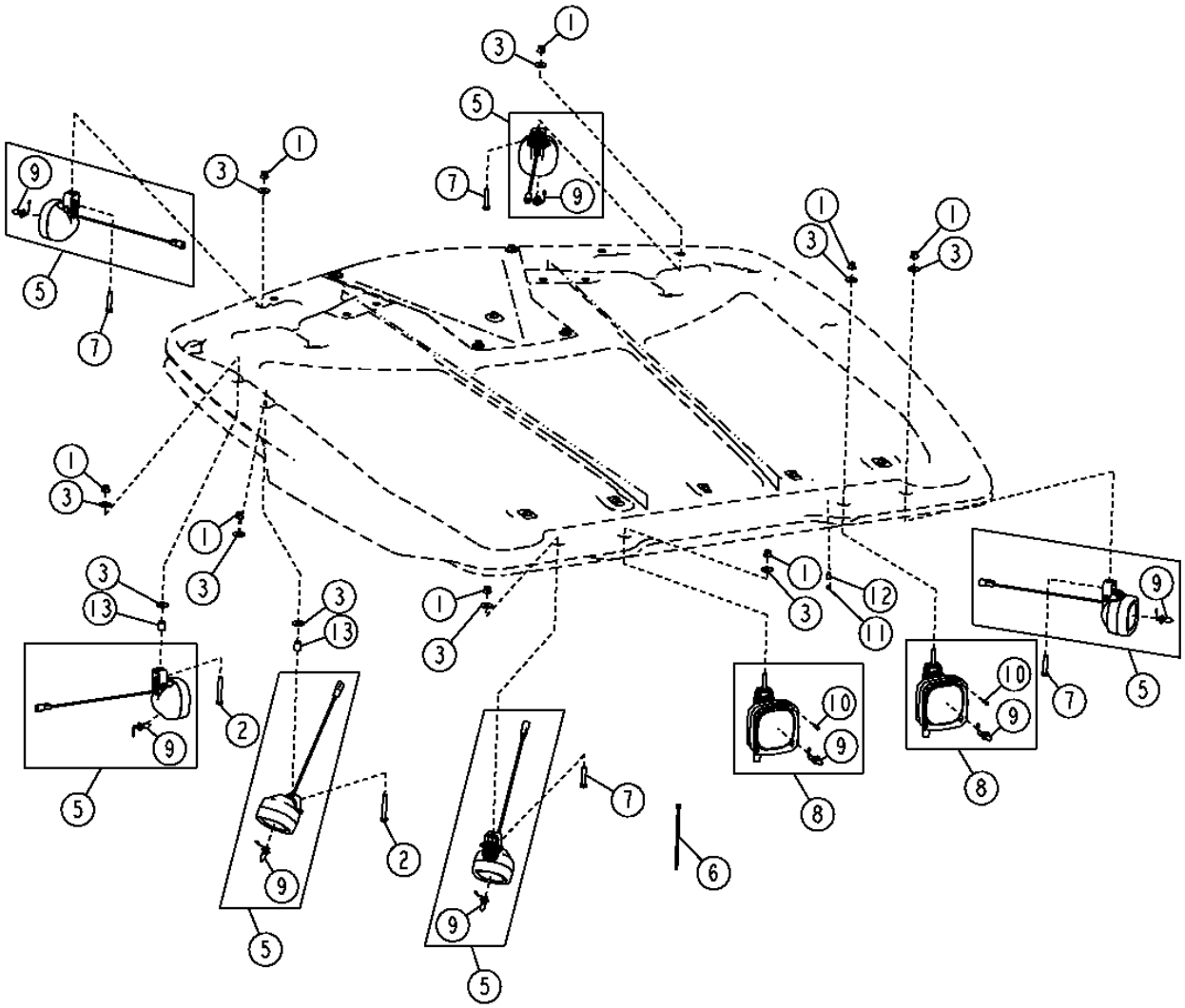

T209115

CAB WORK AND DRIVE LIGHTS

KEY	PART NO.	PART NAME	QTY	SERIAL NO.	670D	672D	REMARKS
1	14M7400	LOCK NUT	8		X	X	M10
2	19M7875	CAP SCREW	2		X	X	M10 X 70
3	24M7296	WASHER	10		X	X	
5	AT305931	FLOODLAMP	6		X	X	
6	R44302	TIE BAND	16		X	X	
7	19M8637	CAP SCREW	4		X	X	M10 X 40
8	AT306335	FLOODLAMP	2		X	X	
9	AT135758	BULB	1		X	X	
10	T80394	SCREW	4		X	X	
11	T185769	SCREW	10		X	X	
12	T187394	ANCHOR	10		X	X	
13	H140461	BUSHING	2				

FRONT DRIVING LIGHTS

T203343 -UN-28OCT04

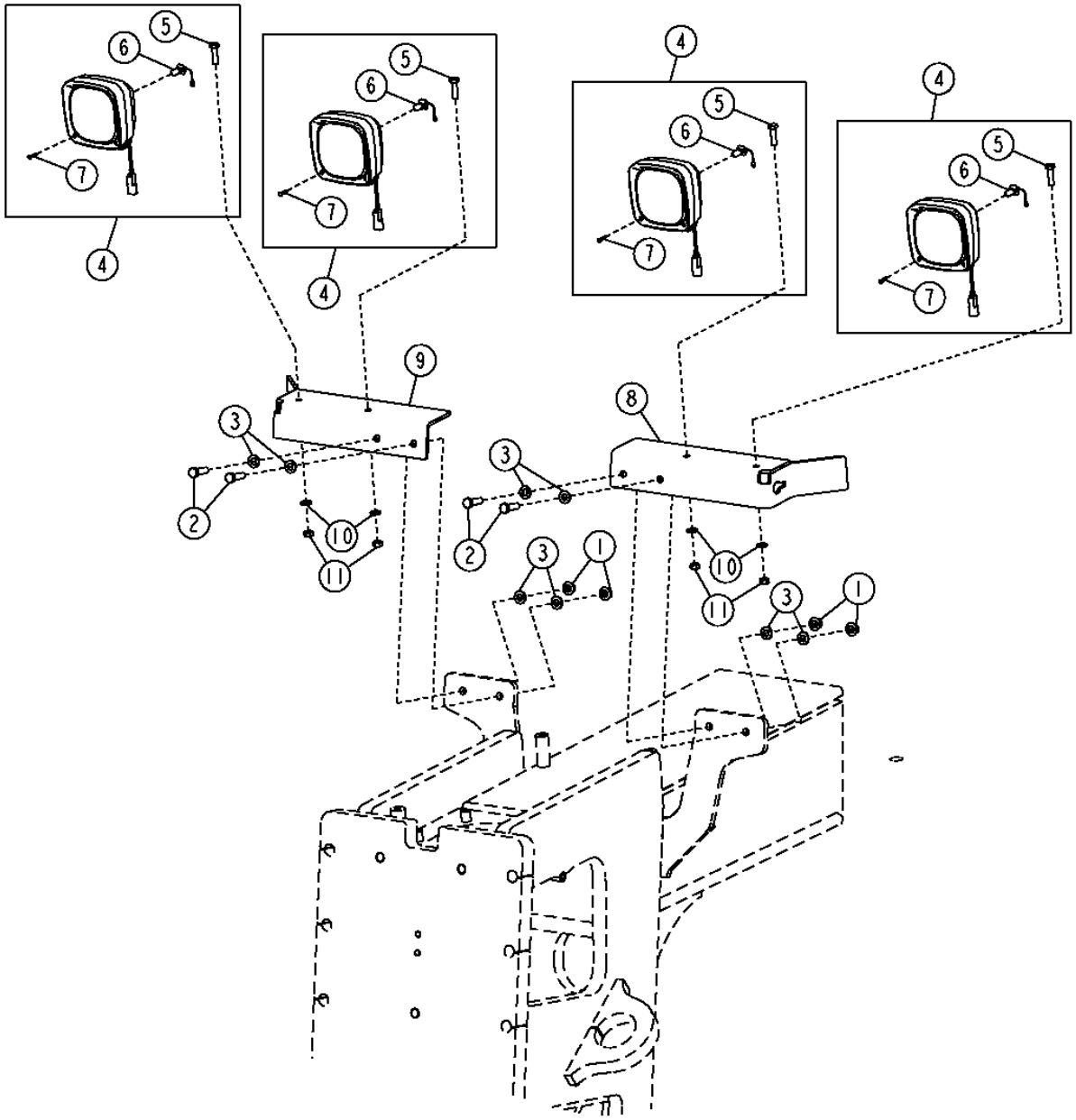

2D24

FRONT DRIVING LIGHTS

KEY	PART NO.	PART NAME	QTY	SERIAL NO.	670D	672D	REMARKS
1	14M7275	NUT	4		X	X	M12
2	19M7403	CAP SCREW	4		X	X	M12 X 35
3	24M7240	WASHER	8		X	X	
4	AT305932	FLOODLAMP	4		X	X	
5	19M7550	CAP SCREW	1		X	X	M10 X 35
6	AT135758	BULB	1		X	X	
7	T80394	SCREW	4		X	X	
8	AT315249	BRACKET	1		X	X	
9	AT315250	BRACKET	1		X	X	
10	24M7239	WASHER	4		X	X	
11	14M7274	NUT	4		X	X	M10

REAR, MID-FRAME, AND UNDER CAB WORK LIGHTS

T203344 -UN-20OCT04

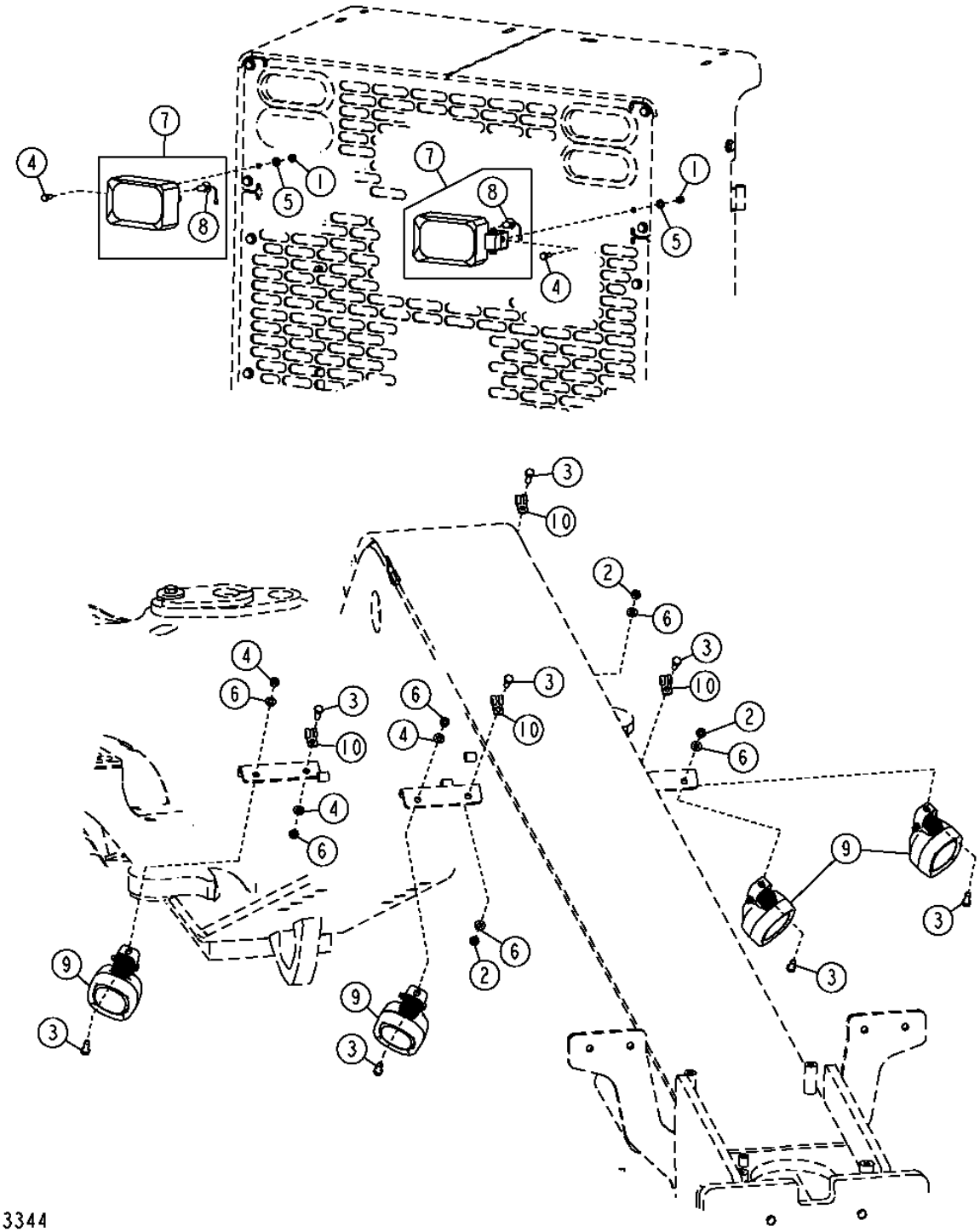

REAR, MID-FRAME, AND UNDER CAB WORK LIGHTS

KEY	PART NO.	PART NAME	QTY	SERIAL NO.	670D	672D	REMARKS
1	14M7166	LOCK NUT	2		X	X	M8
2	14M7274	NUT	8		X	X	M10
3	19M7402	CAP SCREW	8		X	X	M10 X 25
4	19M7881	SCREW	2		X	X	M8 X 20
5	24M7238	WASHER	2		X	X	
6	24M7239	WASHER	8		X	X	
7	AT305926	FLOODLAMP	2		X	X	
8	AT135758	BULB	1		X	X	(USE FOR FRONT AND REAR WORK LIGHT)
9	AT305931	FLOODLAMP	4		X	X	
10	T75276	CLAMP	4		X	X	

MAIN WIRING HARNESS (FRONT)

T208809 -UN-25FEB05

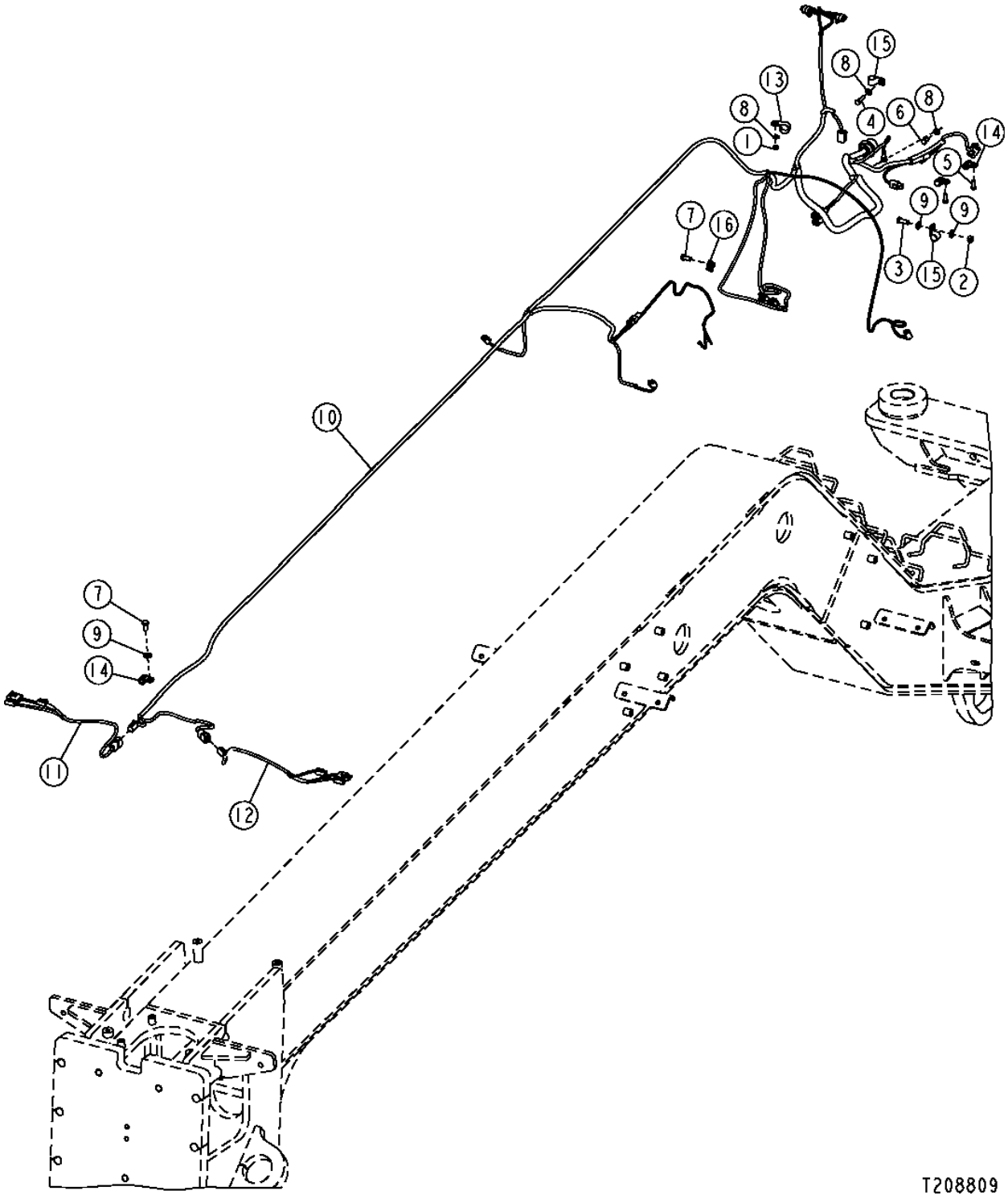

MAIN WIRING HARNESS (FRONT)

KEY	PART NO.	PART NAME	QTY	SERIAL NO.	670D	672D	REMARKS
1	14M7298	FLANGE NUT	1		X	X	M8
2	14M7274	NUT	1		X	X	M10
3	19M7402	CAP SCREW	1		X	X	M10 X 25
4	19M7513	CAP SCREW	1		X	X	M8 X 30
5	19M7513	CAP SCREW	1		X	X	M8 X 30
6	19M7932	CAP SCREW	1		X	X	M8 X 16
7	19M7938	CAP SCREW	2		X	X	M10 X 20
8	24M7238	WASHER	3		X	X	
9	24M7239	WASHER	3		X	X	
10	AT305927	WIRING HARNESS	1		X	X	(FRONT PLATFORM)
11	AT307807	WIRING HARNESS	1		X	X	(RIGHT FRONT DRIVE/TURN)
12	AT307807	WIRING HARNESS	1		X	X	(LEFT FRONT DRIVE/TURN)
13	T102934	CLAMP	1		X	X	
14	T74412	CLAMP	3		X	X	
15	T74416	CLAMP	1	-597628	X	X	
	T78787	CLAMP	1	597629-	X	X	
16	T75276	CLAMP	1		X	X	

MAIN WIRING HARNESS (REAR)

T208810 -UN-25FEB05

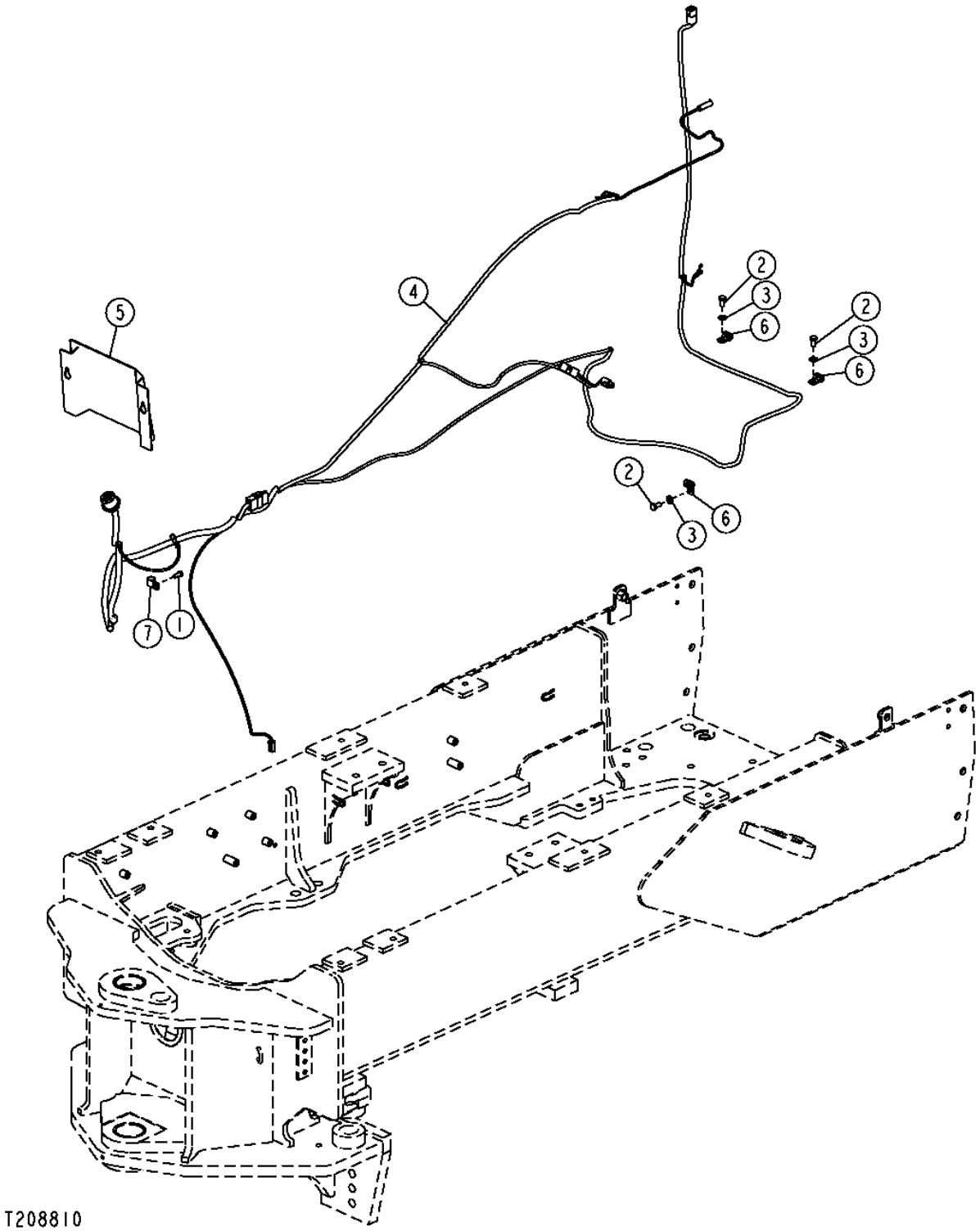

MAIN WIRING HARNESS (REAR)

KEY	PART NO.	PART NAME	QTY	SERIAL NO.	670D	672D	REMARKS
1	19M7881	SCREW	1		X	X	M8 X 20
2	19M7938	CAP SCREW	3		X	X	M10 X 20
3	24M7239	WASHER	3		X	X	
4	AT305936	WIRING HARNESS	1		X	X	(REAR PLATFORM HARNESS)
5	T209889	COVER	3		X	X	
6	T74412	CLAMP	3		X	X	
7	T74416	CLAMP	3		X	X	

ENGINE WIRING HARNESS

T208915 -UN-25FEB05

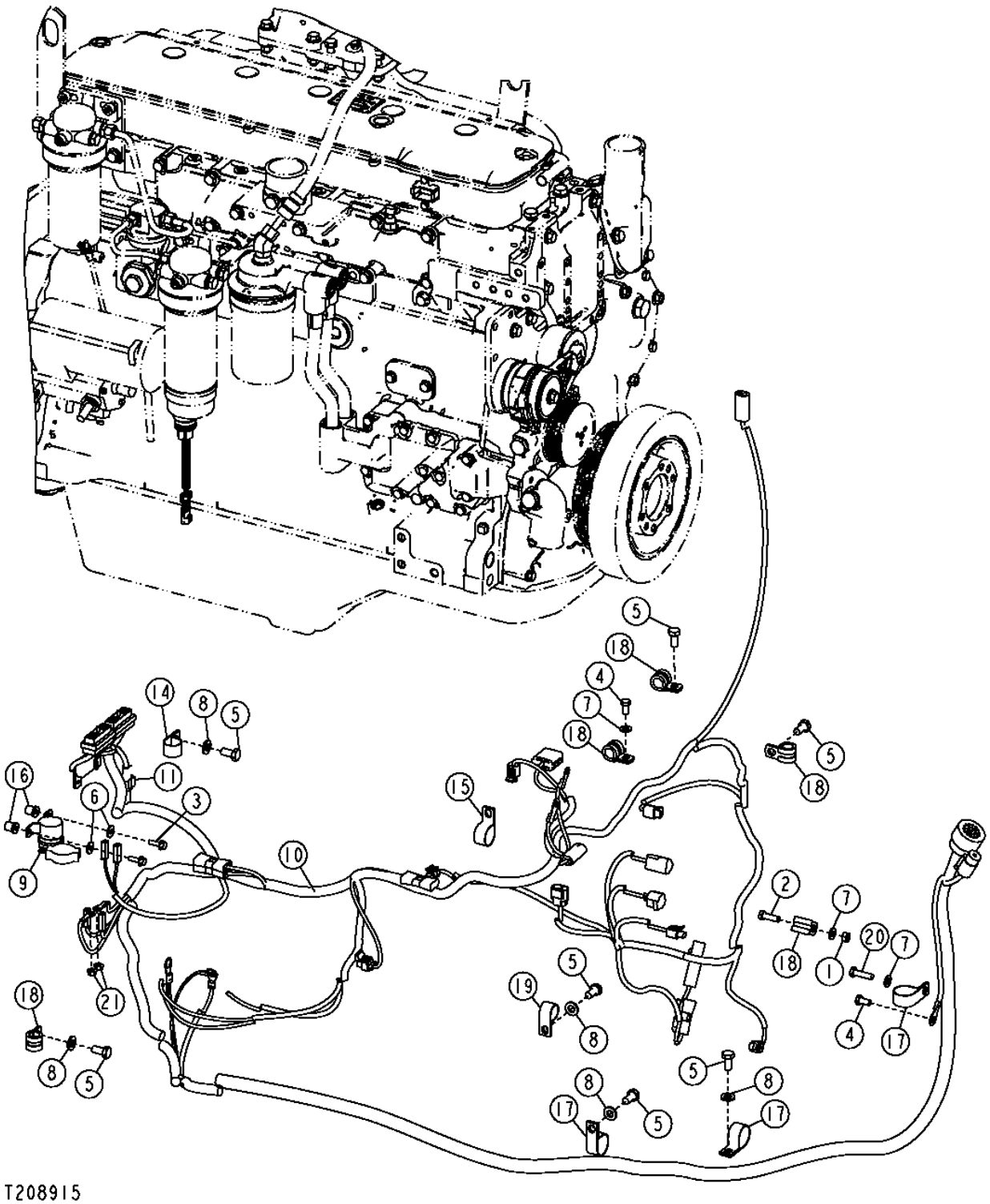

ENGINE WIRING HARNESS

KEY	PART NO.	PART NAME	QTY	SERIAL NO.	670D	672D	REMARKS
1	14M7273	NUT	1		X	X	M8
2	19M7407	CAP SCREW	1		X	X	M8 X 25
3	19M7862	SCREW	2		X	X	M6 X 20
4	19M7932	CAP SCREW	2		X	X	M8 X 16
5	19M7938	CAP SCREW	7		X	X	M10 X 20
6	24M7139	WASHER	2		X	X	
7	24M7238	WASHER	3		X	X	
8	24M7239	WASHER	5		X	X	
9	AT145341	RELAY	1		X	X	
10	AT306365	WIRING HARNESS	1		X	X	(ENGINE WIRING HARNESS)
11	57M8131	ELEC. CONNECTOR TERMINAL	1		X	X	
12	H77698	TIE BAND	5		X	X	(NOT ILLUSTRATED)
13	R44302	TIE BAND	3		X	X	(NOT ILLUSTRATED)
14	T102934	CLAMP	1		X	X	
15	T120536	CLAMP	1		X	X	
16	T160333	NUT	2		X	X	
17	T162675	CLAMP	3		X	X	
18	T74416	CLAMP	5		X	X	(SUB FOR T76252, THIS APPLICATION)
19	T78787	CLAMP	1		X	X	
20	19M7513	CAP SCREW	1		X	X	M8 X 30
21	14M7303	FLANGE NUT	2		X	X	M6

CAB INTERIOR WIRING HARNESS

T211372 -UN-08JUN05

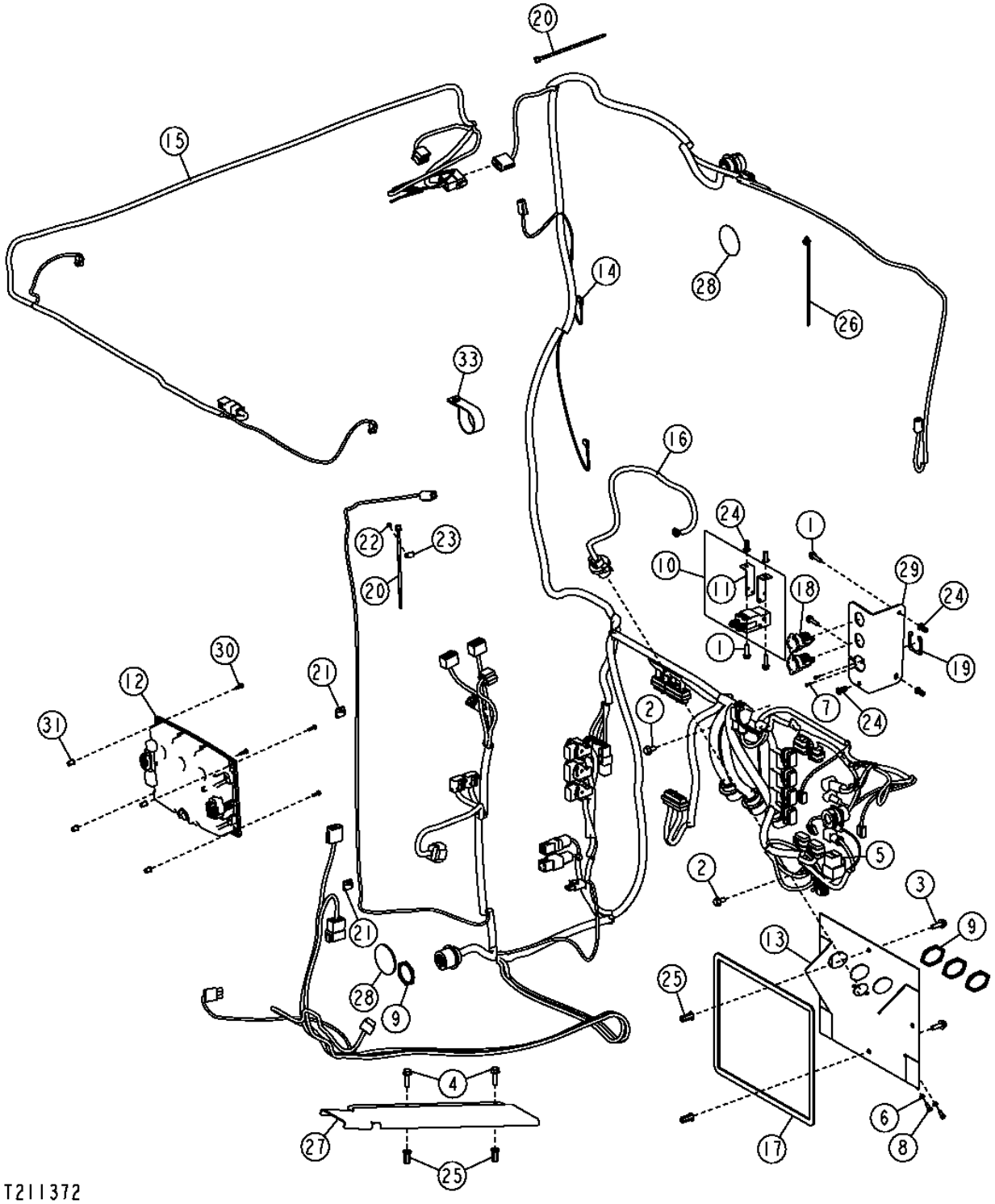

CAB INTERIOR WIRING HARNESS

KEY	PART NO.	PART NAME	QTY	SERIAL NO.	670D	672D	REMARKS
1	19M7863	SCREW	4		X	X	M6 X 25
2	19M7865	SCREW	2		X	X	M8 X 16
3	19M7867	SCREW	4		X	X	M8 X 25
4	19M7868	SCREW	2		X	X	M8 X 30
5	19M9224	CAP SCREW	1		X	X	M4 X 14, (SUB FOR 21M7250)
6	24M7087	WASHER	7		X	X	
7	37M7095	SCREW	2		X	X	
8	37M7218	SCREW	2		X	X	
9	57M8035	NUT	4		X	X	
10	AT317063	RELAY	1		X	X	(IGNITION-100 AMP)
11	T200363	BRACKET	2		X	X	
12	AT302638	MONITOR	1		X	X	(CMU)
13	AT304953	BRACKET	1		X	X	
14	AT305385	CAB WIRING HARNESS	1		X		(INTERIOR HARNESS)
	AT305386	CAB WIRING HARNESS	1			X	(INTERIOR HARNESS HFWD)
15	AT306180	RADIO SPEAKER WRG HARNESS	1		X	X	
16	AT307810	CAB WIRING HARNESS	1		X	X	(CAB POWER HARNESS)
17	.....	ISOLATOR	1		X	X	(MAKE FROM T63019 BULK MATERIAL, CUT TO LENGTH)
18	GY20126	SOCKET OUTLET	2		X	X	(12 VOLT)
19	L155075	PLATE	1		X	X	
20	R44302	TIE BAND	10		X	X	
	H77698	TIE BAND	7		X	X	
21	T182909	CLIP	2		X	X	
22	T185769	SCREW	1		X	X	
23	T187394	ANCHOR	1		X	X	
24	T196077	NUT	5		X	X	
25	T196079	NUT	6		X	X	
26	T205819	TIE BAND	5		X	X	
27	T205829	COVER	1		X	X	
28	T206106	LABEL	3		X	X	
29	T210672	BRACKET	1		X	X	
30	T82791	SCREW	4		X	X	
31	T82792	NUT	4		X	X	
32	T186793	LABEL	1				(T186973 NOT ILLISTRATED)
33	N198631	CLAMP	1			X	(6-WD HARNESS)

CAB ROOF WIRING HARNESS

T201539 -UN-30JUL04

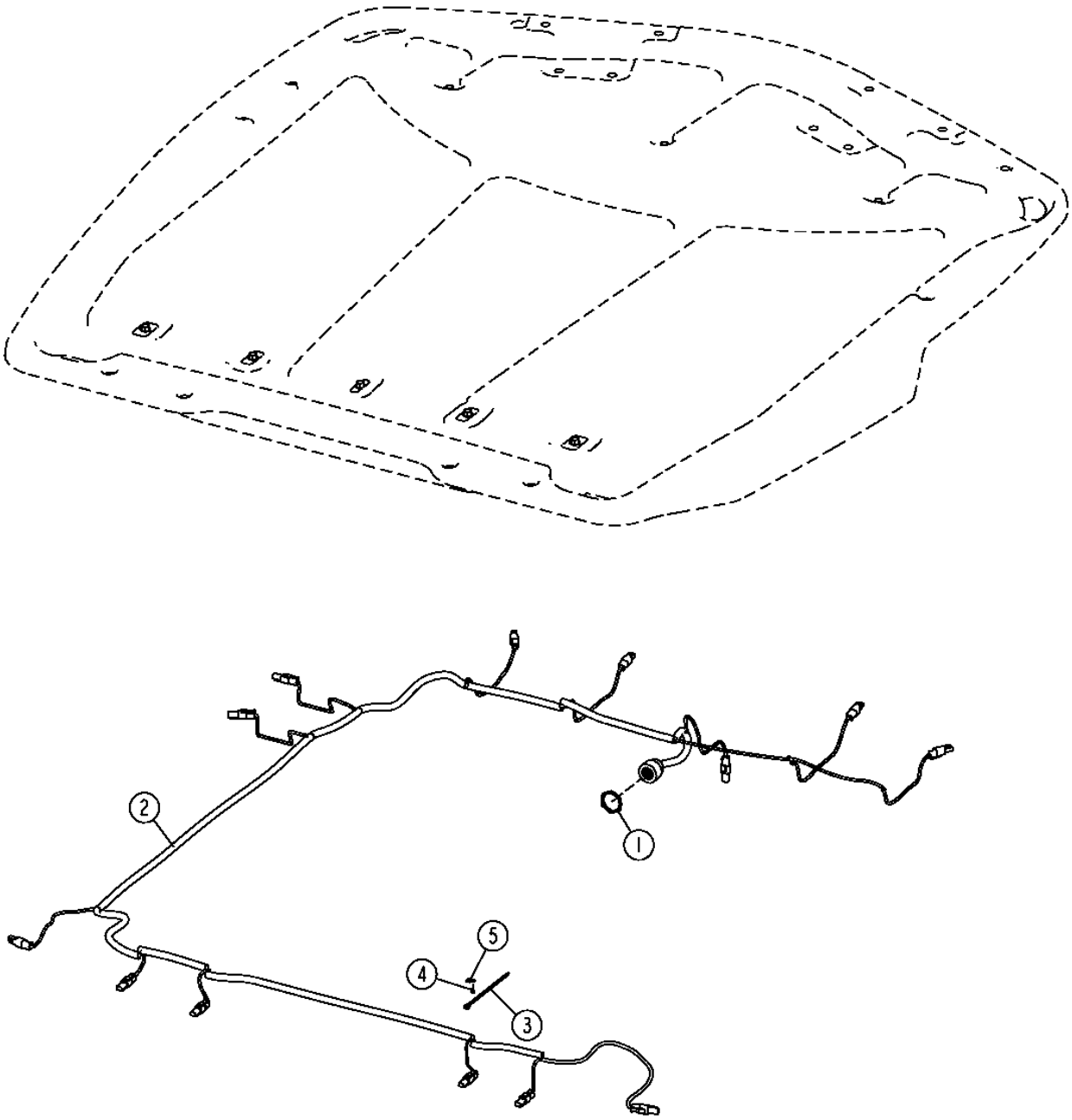

CAB ROOF WIRING HARNESS

KEY	PART NO.	PART NAME	QTY	SERIAL NO.	670D	672D	REMARKS
1	57M8035	NUT	1		X	X	
2	AT305387	CAB WIRING HARNESS	1		X	X	(CAB ROOF HARNESS)
3	R44302	TIE BAND	22		X	X	
4	T185769	SCREW	22		X	X	
5	T187394	ANCHOR	22		X	X	

TRANSMISSION WIRING HARNESS

T210302 -UN-15APR05

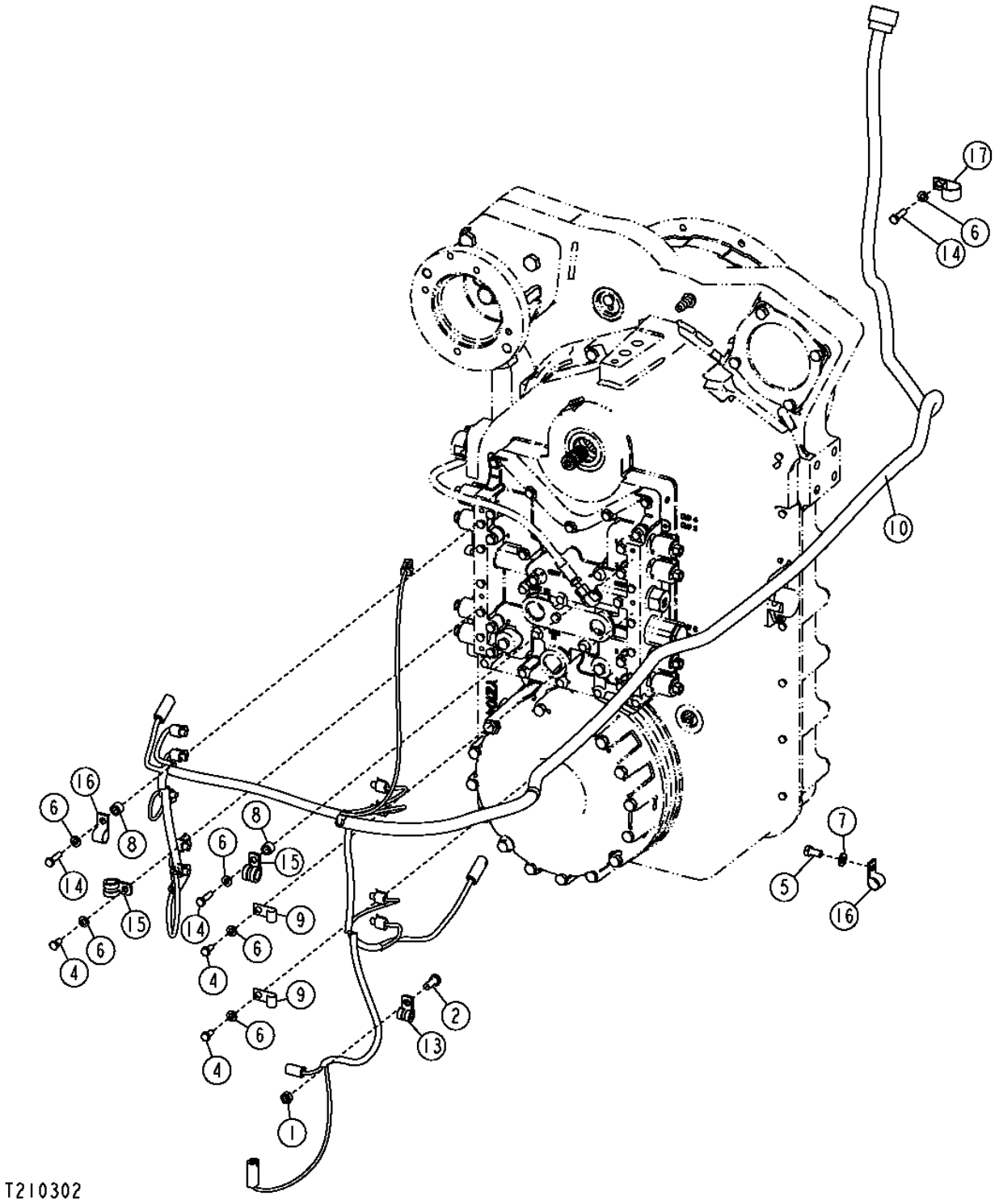

TRANSMISSION WIRING HARNESS

KEY	PART NO.	PART NAME	QTY	SERIAL NO.	670D	672D	REMARKS
1	14M7274	NUT	1		X	X	M10
2	19M7402	CAP SCREW	1		X	X	M10 X 25
3	19M7513	CAP SCREW	3		X	X	M8 X 30
4	19M7932	CAP SCREW	3		X	X	M8 X 16
5	19M7938	CAP SCREW	1		X	X	M10 X 20
6	24M7238	WASHER	6		X	X	
7	24M7239	WASHER	1		X	X	
8	28H3385	BUSHING	2		X	X	
9	AH89557	CLIP	2		X	X	
10	AT305928	WIRING HARNESS	1		X	X	(TRANSMISSION WIRING HARNESS)
11	H77698	TIE BAND	10		X	X	(NOT ILLUSTRATED)
12	T102934	CLAMP	1		X	X	
13	T74412	CLAMP	1		X	X	
14	19M7513	CAP SCREW	2		X	X	
15	T76252	CLAMP	2		X	X	
16	T74416	CLAMP	2		X	X	
17	T120536	CLAMP	1		X	X	

HFWD WIRING HARNESS

T201551 -UN-10NOV04

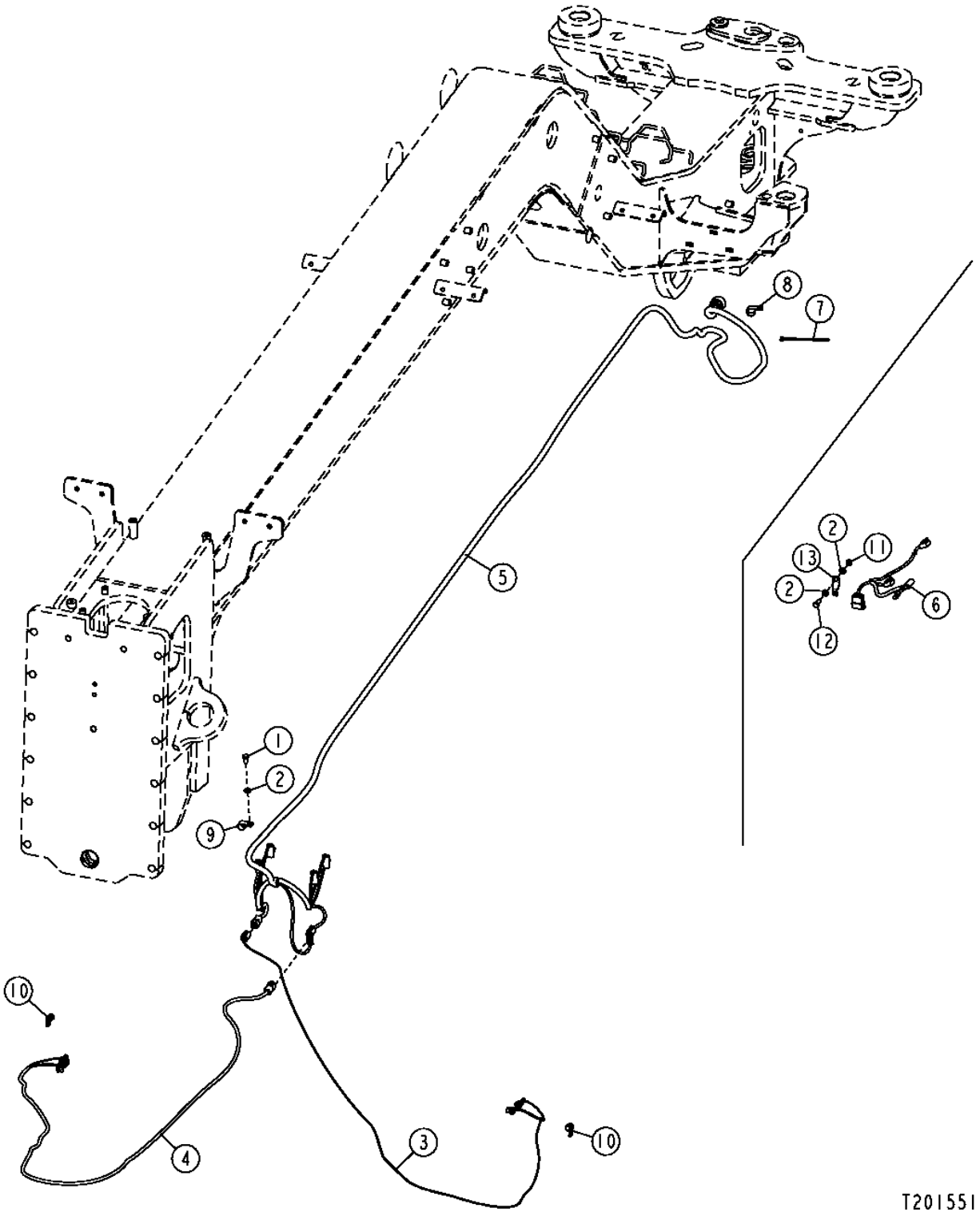

HFWD WIRING HARNESS

KEY	PART NO.	PART NAME	QTY	SERIAL NO.	670D	672D	REMARKS
1	19M7938	CAP SCREW	1		X		M10 X 20
2	24M7239	WASHER	3		X		
3	AT280296	WIRING HARNESS	1		X		(LEFT WHEEL SPEED SENSOR HARNESS)
4	AT280297	WIRING HARNESS	1		X		(RIGHT WHEEL SPEED SENSOR HARNESS)
5	AT305929	WIRING HARNESS	1		X		(HFWD FRONT HARNESS)
6	AT305930	WIRING HARNESS	1		X		(HFWD REAR HARNESS)
7	R44302	TIE BAND	16		X		(NOT ILLUSTRATED)
8	T102934	CLAMP	1		X		
9	T78787	CLAMP	1		X		
10	T75276	CLAMP	2		X		
11	14M7274	NUT	1		X		M10
12	19M7402	CAP SCREW	1		X		M10 X 25
13	57M8736	ELEC. CONNECTOR ACCESSORY	1		X		

HFWD CONTROL UNIT AND SWITCHES

T201552 -UN-28JUL04

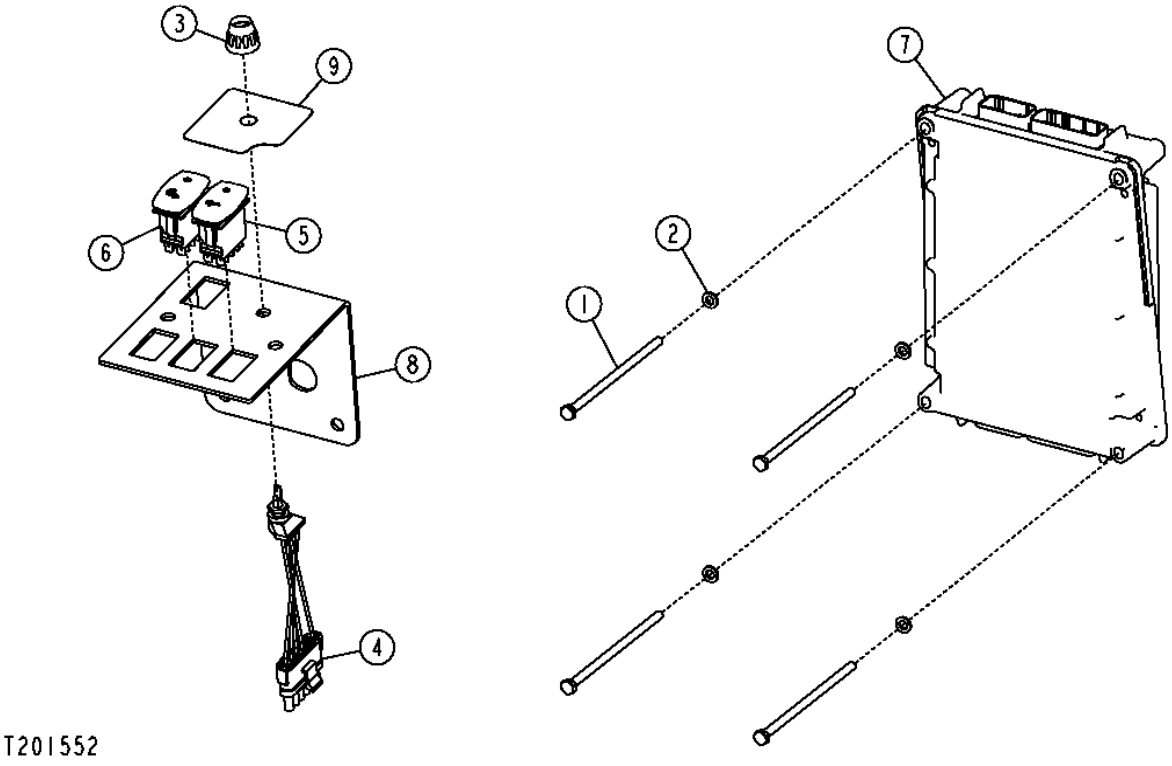

T201552

HFWD CONTROL UNIT AND SWITCHES

KEY	PART NO.	PART NAME	QTY	SERIAL NO.	670D	672D	REMARKS
1	19M8827	SCREW	4		X		M6 X 130
2	24M7347	WASHER	4		X		
3	AL58295	KNOB	1		X		
4	AT303859	ROTARY SWITCH	1		X		(HFWD AGRESSIVENESS)
5	AT304023	SWITCH	1		X		(HFWD ON/OFF)
6	AT304024	SWITCH	1		X		(HFWD INCHING MODE)
7	AT314667	ELECTRONIC CONTROL UNIT	1		X		(HFWD CONTROLLER)
8	T203912	INSTRUMENT PANEL	1		X		(HFWD CONTROLS)
9	T203987	LABEL	1		X		(HFWD AGRESSIVENESS DIAL)

ARTICULATION SENSOR AND LINKAGE

T206900 -UN-28JAN05

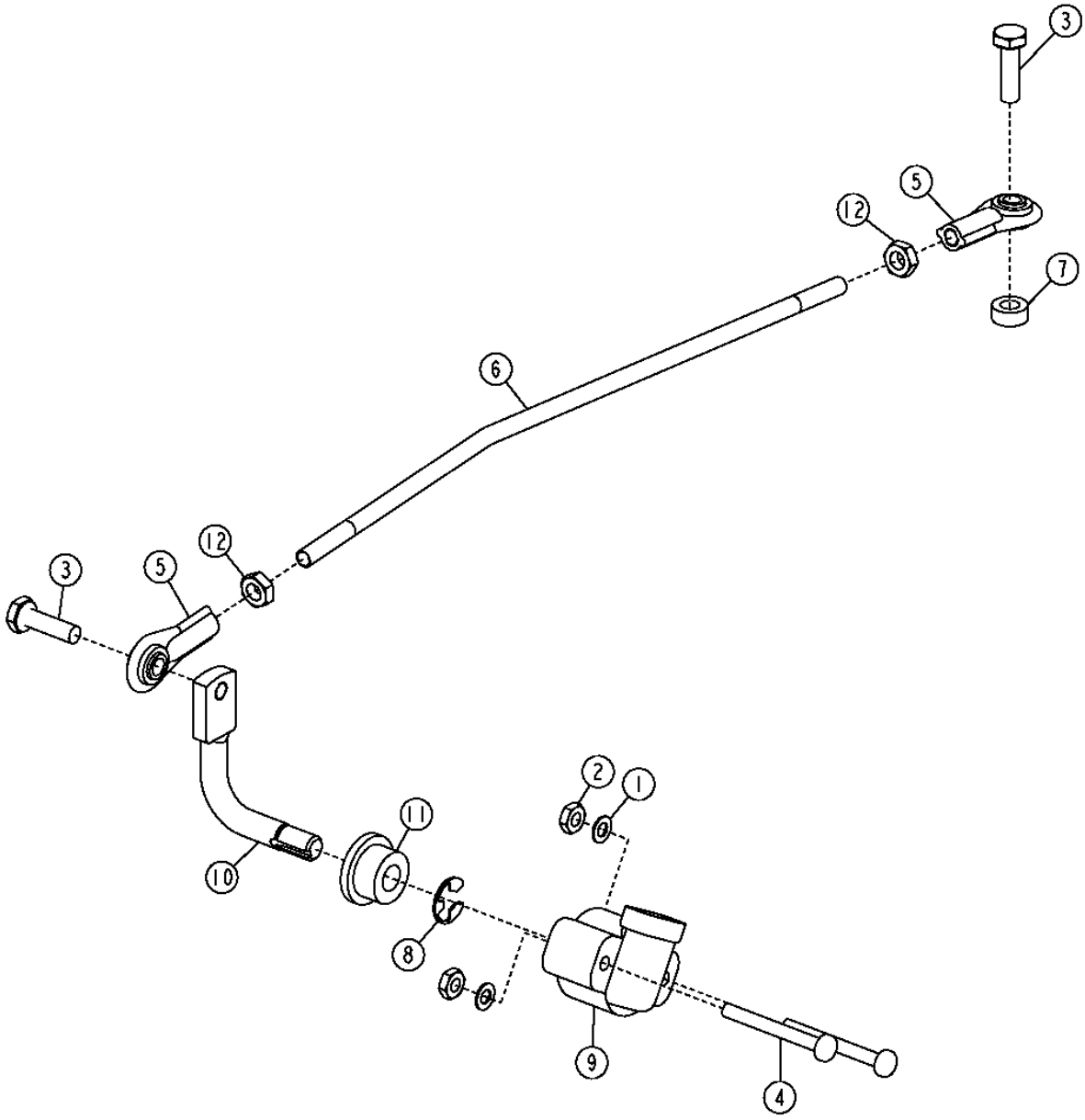

T206900

ARTICULATION SENSOR AND LINKAGE

KEY	PART NO.	PART NAME	QTY	SERIAL NO.	670D	672D	REMARKS
1	12M7060	WASHER	2		X		
2	14H778	NUT	2		X		
3	19H2036	CAP SCREW	2		X		
4	21H1401	SCREW	2		X		
5	RE56489	LINK END	2		X		(SUB FOR RE39224)
6	T203646	LEVER	1		X		
7	M82772	WASHER	1		X		
8	R72655	SNAP RING	1		X		
9	RE56165	POTENTIOMETER	1		X		
10	T215784	ARM	1		X		
11	T82861	BUSHING	1		X		
12	14H649	NUT	2		X		1/4"

VEHICLE ELECTRICAL CENTER (VEC)

T201875 -UN-30JUL04

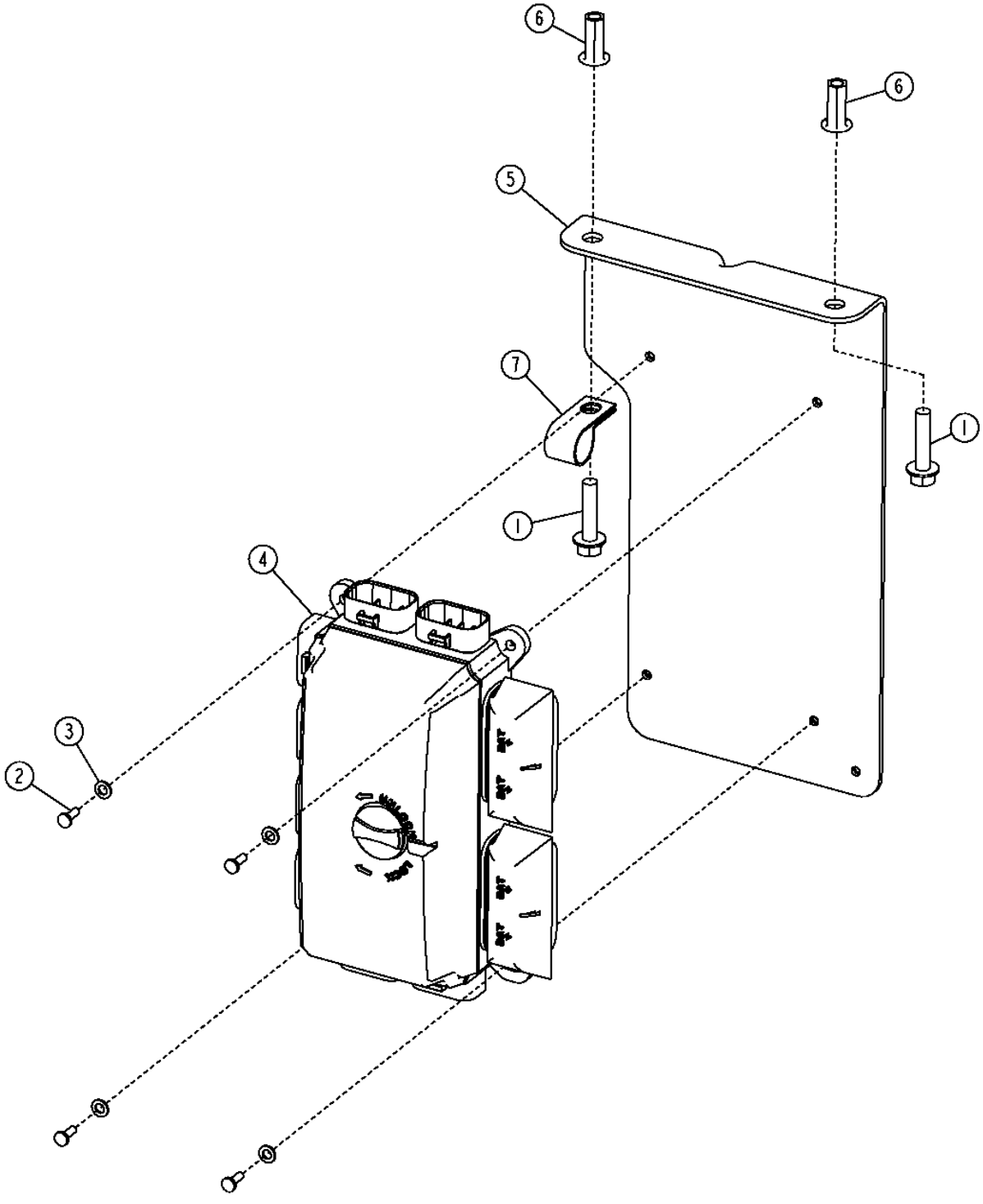

VEHICLE ELECTRICAL CENTER (VEC)

KEY	PART NO.	PART NAME	QTY	SERIAL NO.	670D	672D	REMARKS
1	19M7897	SCREW	2		X	X	M8 X 35
2	19M9224	CAP SCREW	4		X	X	M4 X 14, (SUB FOR 21M7250)
3	24M7087	WASHER	4		X	X	
4	AT304788	VEHICLE CONTROLLER	1		X	X	(VEC)(INCLUDES ALL FUSES, DIODES, AND RELAYS)
5	AT308628	BRACKET	1		X	X	(VEC MOUNTING)
6	T196079	NUT	2		X	X	
7	T120536	CLAMP	1		X	X	
8	57M7688	FUSE	10		X	X	5 AMP, (NOT ILLUSTRATED)
9	57M7690	FUSE	3		X	X	15 AMP, (NOT ILLUSTRATED)
10	AT305389	RELAY	5		X	X	(NOT ILLUSTRATED)
11	57M7691	FUSE	1		X	X	20 AMP, (NOT ILLUSTRATED)
12	57M7689	FUSE	15		X	X	10 AMP, (NOT ILLUSTRATED)
13	57M8623	FUSE	1		X	X	25 AMP, (NOT ILLUSTRATED)
14	57M8641	DIODE	5		X	X	(NOT ILLUSTRATED)

SEALED SWITCH MODULE (SSM)

T202038 -UN-13AUG04

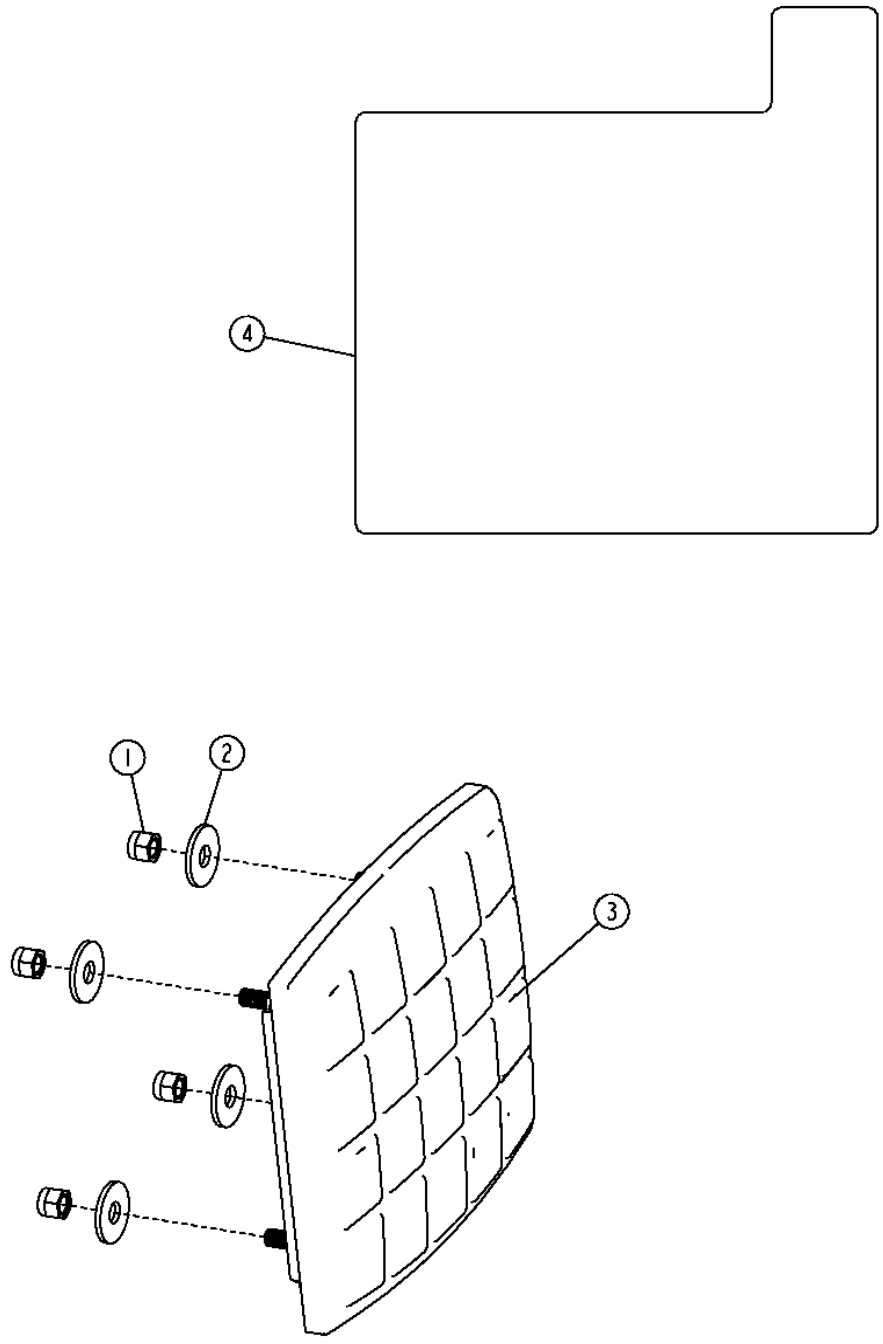

SEALED SWITCH MODULE (SSM)

KEY	PART NO.	PART NAME	QTY	SERIAL NO.	670D	672D	REMARKS
1	14M7360	LOCK NUT	4		X	X	M5
2	24M7139	WASHER	4		X	X	
3	AT303896	PUSH SWITCH	1		X	X	(SSM)
4	T206344	LABEL	1		X	X	(SSM IDENTIFICATION)

CAB TILT CONSOLE WIRING HARNESS AND SWITCHES

T202039 -UN-28JAN05

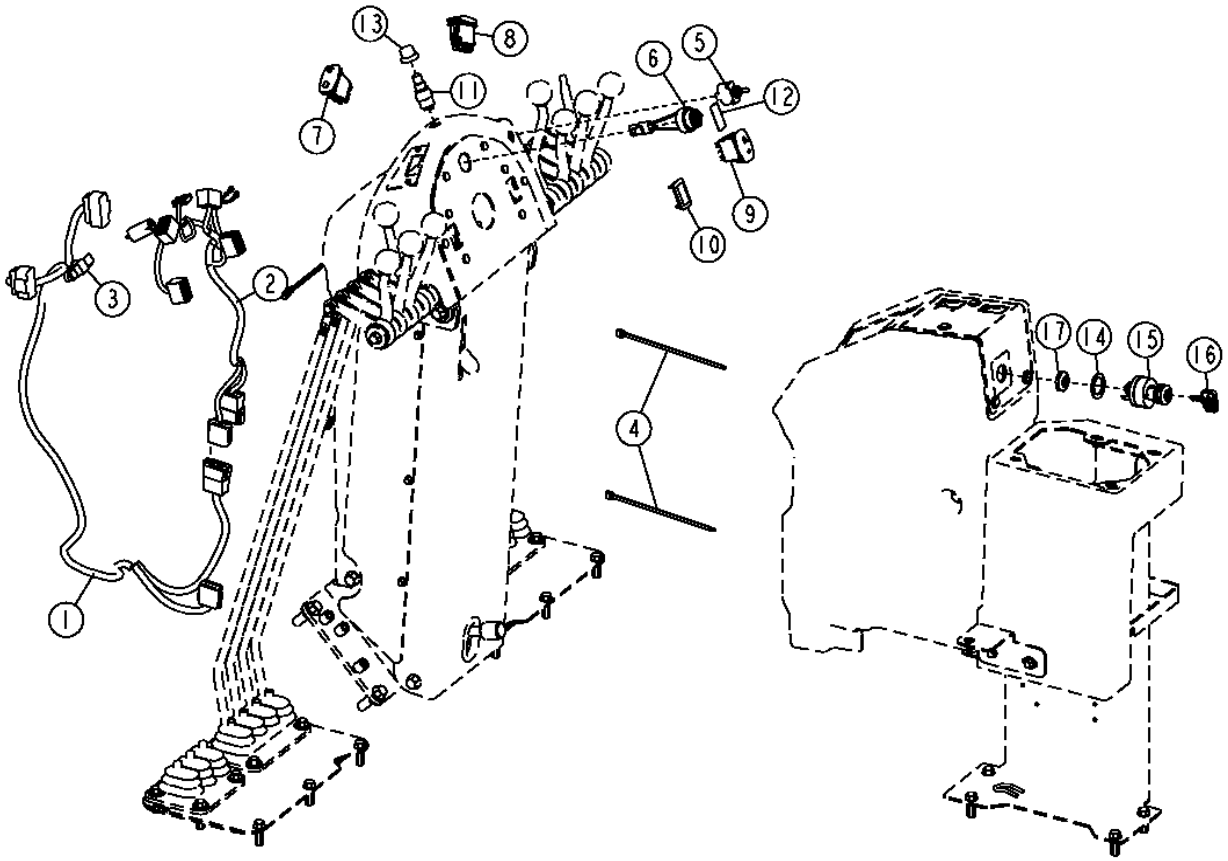

T202039

CAB TILT CONSOLE WIRING HARNESS AND SWITCHES

KEY	PART NO.	PART NAME	QTY	SERIAL NO.	670D	672D	REMARKS
1	AT305384	INSTRUMENT PNL WRG HARNESS	1		X	X	(CMU WIRING HARNESS)
2	AT307628	MONITOR WIRING HARNESS	1		X	X	(CAB TILT CONSOLE WIRING HARNESS)
3	57M8131	ELEC. CONNECTOR TERMINAL	1		X	X	
4	R44302	TIE BAND	2		X	X	
5	AT106154	TOGGLE/ROCKER SWITCH	1		X	X	(DIFFERENTIAL LOCK SWITCH)
6	AT160480	ALARM SYSTEM	1		X	X	
7	AT302730	TOGGLE/ROCKER SWITCH	1		X	X	(TURN SIGNAL SWITCH)
8	AT302769	SWITCH	1		X	X	(DRIVING LIGHT HIGH/LOW BEAM SWITCH)
9	AT304026	SWITCH	1		X	X	(HAZARD WARNING LIGHT SWITCH)
10	M115279	PLUG	1		X	X	
11	R39554	SWITCH	1		X	X	(HORN)
12	T205821	LABEL	1		X	X	(DIFFERENTIAL LOCK)
13	T55501	CAP	1		X	X	
14	24H1441	WASHER	1		X	X	
15	AT195301	SWITCH	1		X	X	(IGNITION SWITCH)
16	AT195302	KEY	1		X	X	
17	R44302	TIE BAND	1		X	X	

POWER CONVERTER (24 VOLT TO 12 VOLT)

T202054 -UN-05AUG04

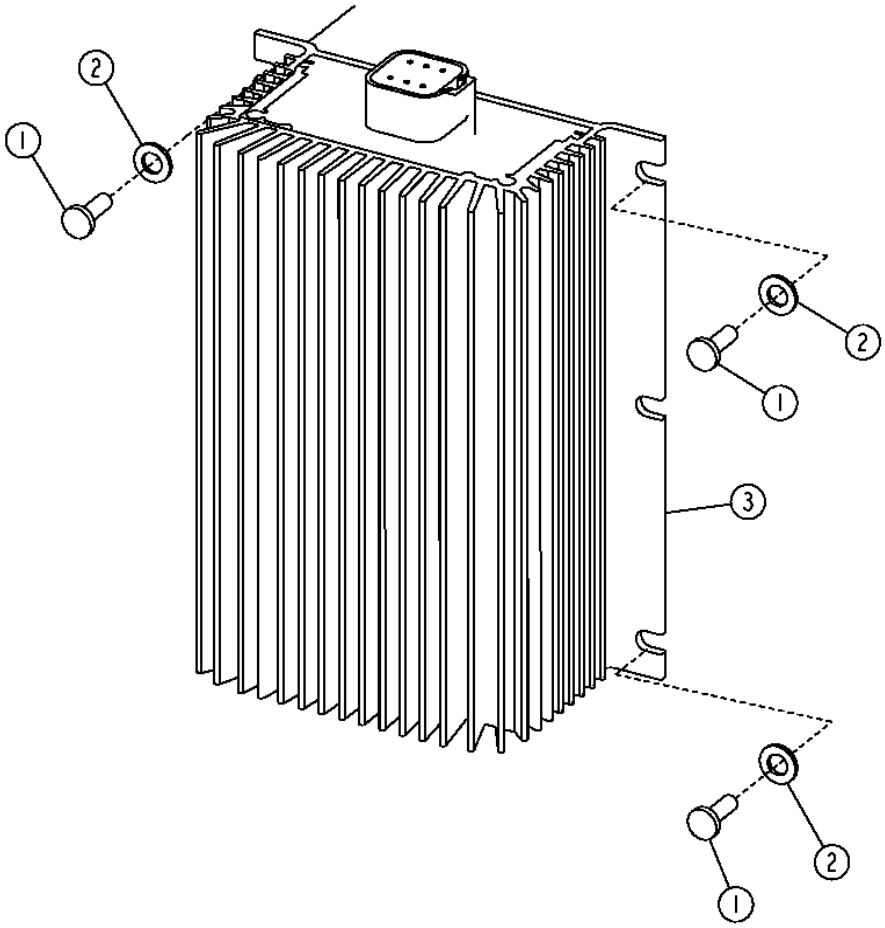

T202054

POWER CONVERTER (24 VOLT TO 12 VOLT)

KEY	PART NO.	PART NAME	QTY	SERIAL NO.	670D	672D	REMARKS
1	19M9224	CAP SCREW	3		X	X	M4 X 14, (SUB FOR 21M7250)
2	24M7087	WASHER	3		X	X	
3	AT224894	CONVERTER	1		X	X	(10 AMP)
	AT302797	CONVERTER	1		X	X	(25 AMP)

FLEX LOAD CENTER (FLC)

T201879 -UN-29JUL04

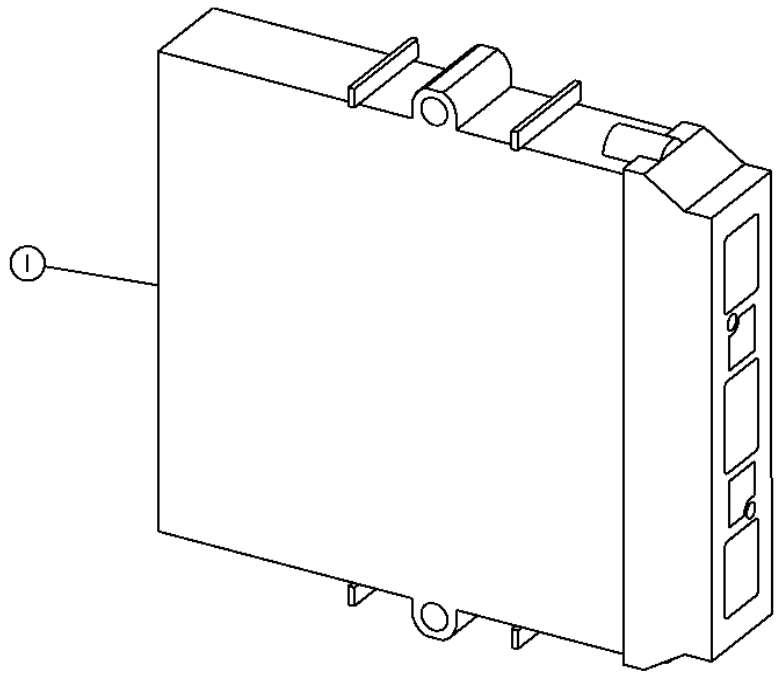

T201879

FLEX LOAD CENTER (FLC)

KEY	PART NO.	PART NAME	QTY	SERIAL NO.	670D	672D	REMARKS
1	AT305854	VEHICLE CONTROLLER	1		X	X	(FLEX LOAD CENTER) (FLC) (SOFTWARE MUST BE DOWNLOADED FROM SDS SERVER BY VEHICLE SERIAL NO.)

MAIN FRAME

T201886 -UN-29JUL04

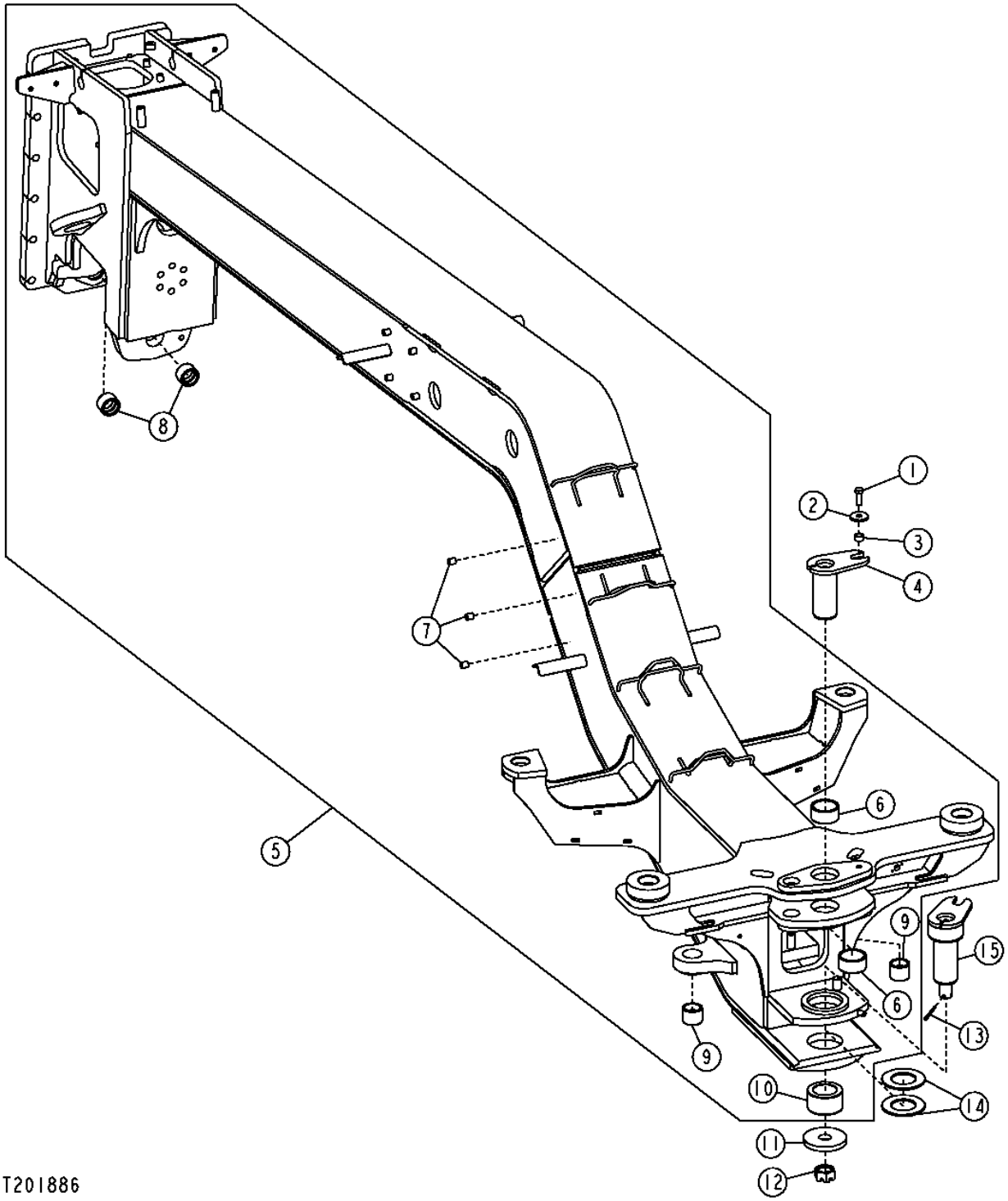

MAIN FRAME

KEY	PART NO.	PART NAME	QTY	SERIAL NO.	670D	672D	REMARKS
1	19M7489	CAP SCREW	1		X	X	M16 X 45
2	T146246	WASHER	1		X	X	
3	28H3401	SPACER	1		X	X	
4	AT320496	PIN	1		X	X	
5	**AT302401**	**MAIN FRAME**	**1**		**X**	**X**	**(CONVENIENCE ASSEMBLY)**
6	T158102	BUSHING	2		X	X	
7	T72414	BUSHING	1		X	X	
8	T82886	BUSHING	4		X	X	
9	T158229	BUSHING	2		X	X	
10	T157829	BUSHING	1		X	X	
11	T157828	BUSHING	1		X	X	
12	14H991	NUT	1		X	X	1-1/2"
13	11H251	COTTER PIN	1		X	X	1/4" X 3"
14	T157827	WASHER	2		X	X	
15	AT173971	PIN FASTENER	1		X	X	

ENGINE FRAME

T203055 -UN-22OCT04

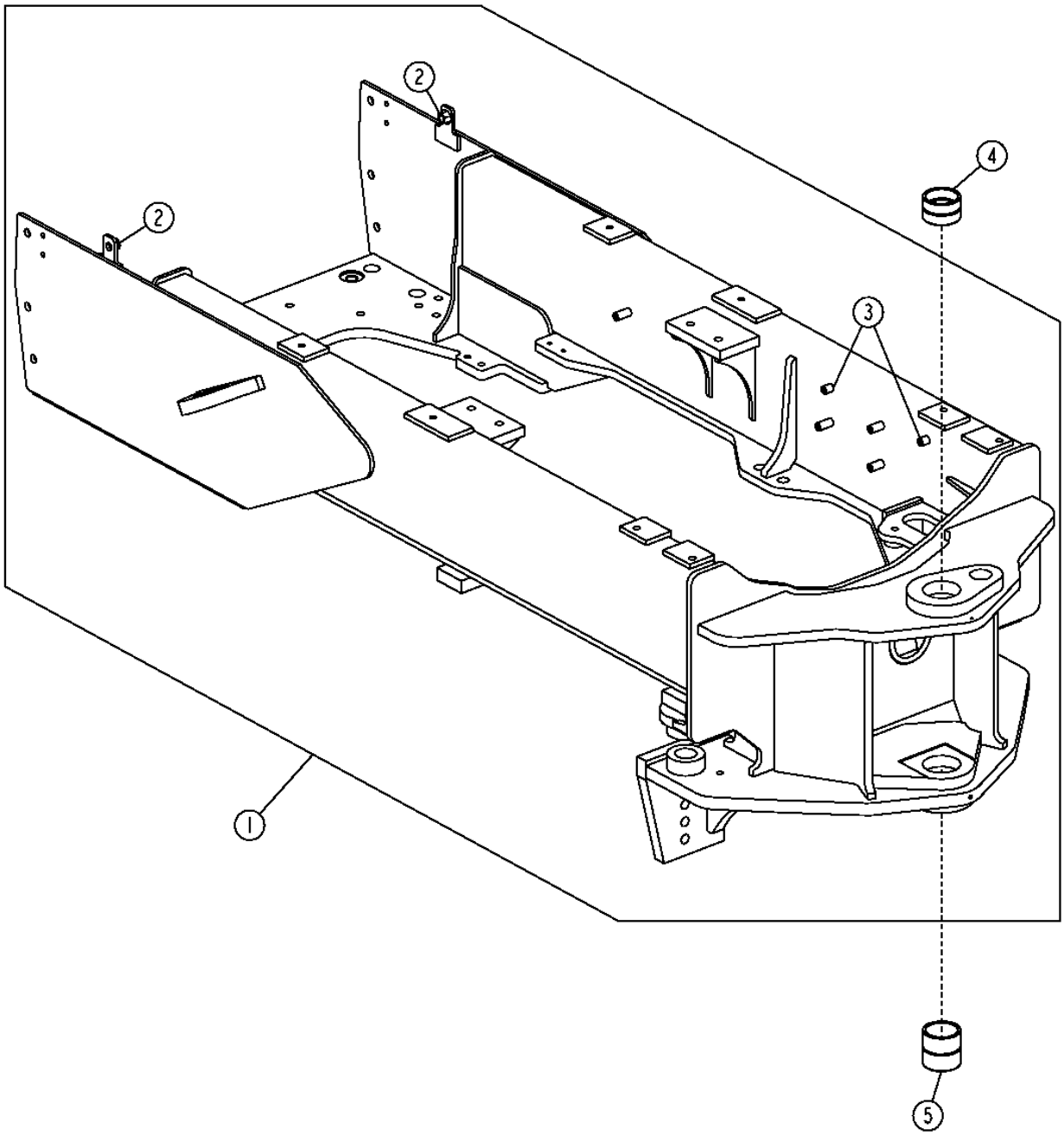

T203055

ENGINE FRAME

KEY	PART NO.	PART NAME	QTY	SERIAL NO.	670D	672D	REMARKS
1	**AT303670**	**FRAME**	**1**		**X**	**X**	**(CONVENIENCE ASSEMBLY)**
2	14M7291	FLANGE NUT	1		X	X	M16
3	T72414	BUSHING	10		X	X	
4	T42843	BUSHING	1		X	X	
5	T42844	BUSHING	1		X	X	

MAIN FRAME COVERS

T210079 -UN-11APR05

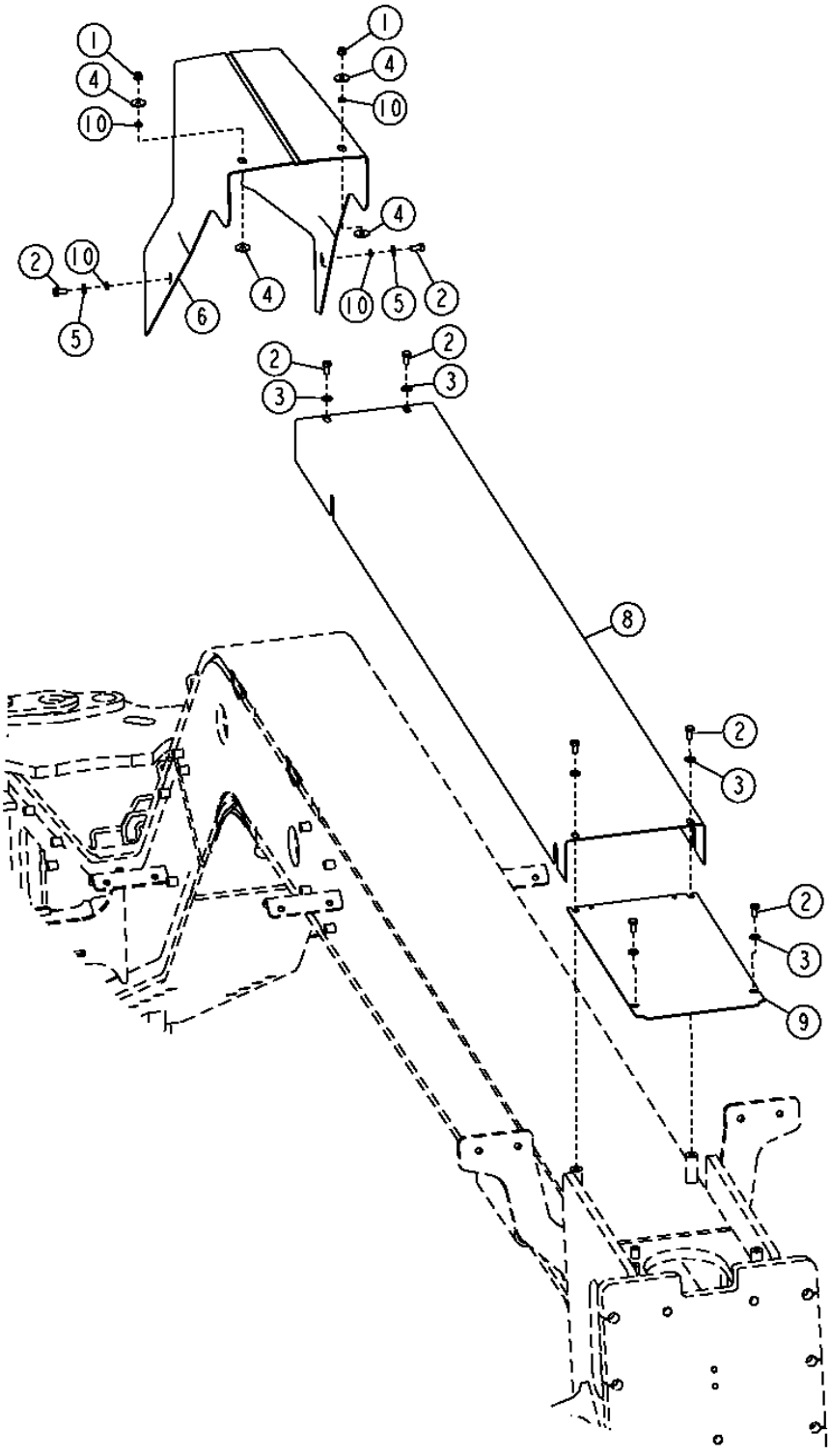

MAIN FRAME COVERS

KEY	PART NO.	PART NAME	QTY	SERIAL NO.	670D	672D	REMARKS
1	14M7396	LOCK NUT	2		X	X	M8
2	19M7938	CAP SCREW	8		X	X	M10 X 20
3	24H1308	WASHER	6		X	X	
4	24H1657	WASHER	4		X	X	
5	24M7028	WASHER	2		X	X	
6	AT307275	COVER	1		X	X	
8	T204556	COVER	1		X	X	
9	T206293	COVER	1		X	X	
10	T77706	WASHER	4		X	X	

BOTTOM GUARD (WITHOUT RIPPER)

T201048 -UN-16AUG04

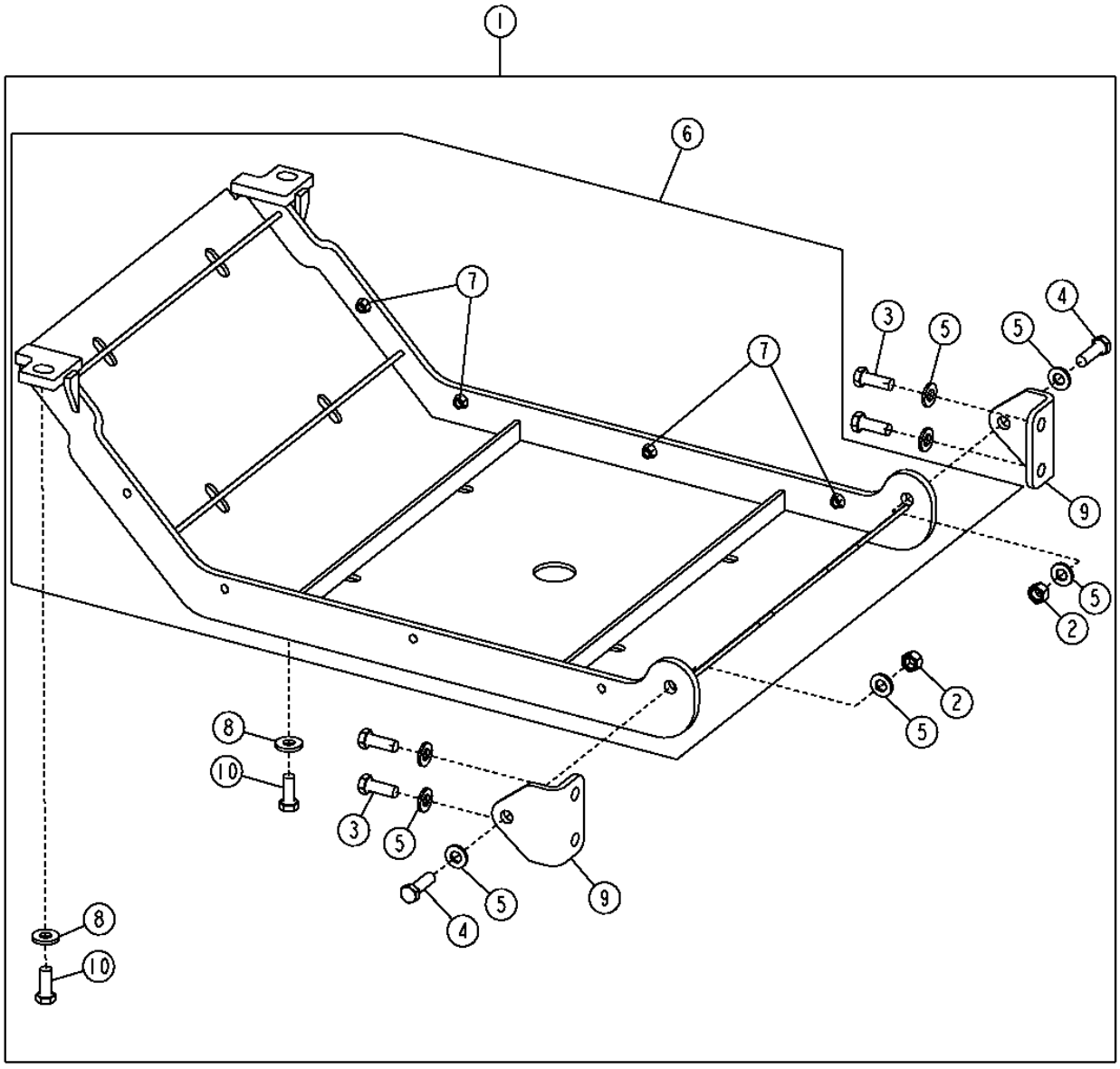

T201048

BOTTOM GUARD (WITHOUT RIPPER)

KEY	PART NO.	PART NAME	QTY	SERIAL NO.	670D	672D	REMARKS
1	**AT306846**	**KIT**	**1**		**X**	**X**	**(WHOLEGOODS)(BOTTOM GUARD WITHOUT RIPPER)**
2	14M7277	NUT	2		X	X	M20
3	19M8002	CAP SCREW	6		X	X	M20 X 55
4	19M8638	CAP SCREW	2		X	X	M20 X 65
5	24M7242	WASHER	8		X	X	21.400 X 42 X 5 MM
6	AT306816	GUARD	1		X	X	
7	14M7443	FLANGE NUT	8		X	X	M12
8	T151797	WASHER	2		X	X	
9	T160698	BRACKET	2		X	X	
10	19M7597	CAP SCREW	2		X	X	M20 X 50

BOTTOM GUARD SIDE SHIELDS (WITHOUT RIPPER)

T208599 -UN-18FEB05

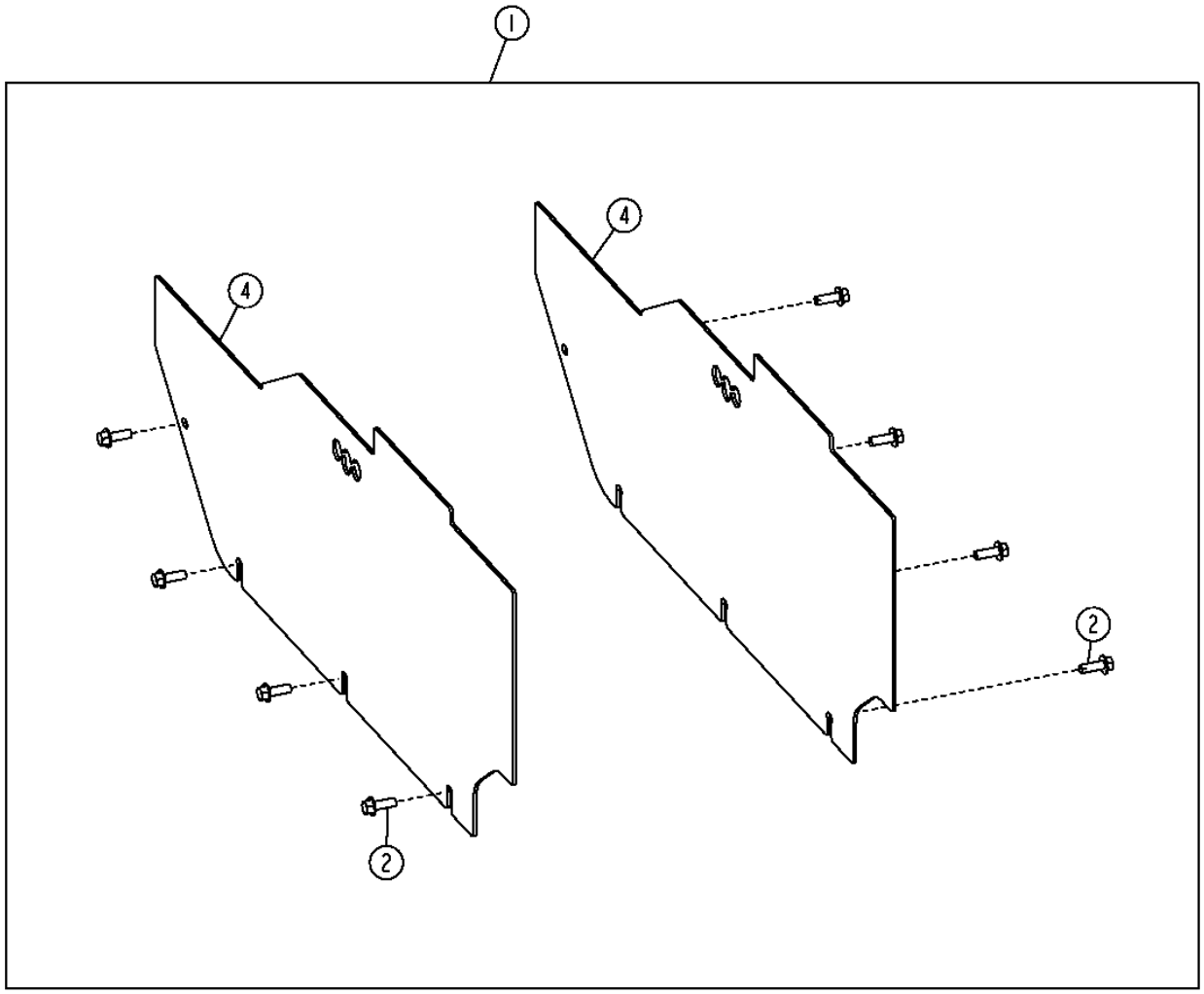

T208599

BOTTOM GUARD SIDE SHIELDS (WITHOUT RIPPER)

KEY	PART NO.	PART NAME	QTY	SERIAL NO.	670D	672D	REMARKS
1	**AT306847**	**KIT**	**2**		**X**	**X**	**(WHOLEGOODS)(BOTTOM GUARD SIDE SHIELDS WITHOUT RIPPER)**
2	19M7790	SCREW	8		X	X	M12 X 35
4	T205202	PLATE	2		X	X	

BOTTOM GUARDS AND SIDE SHIELDS (WITH RIPPER)

T208600 -UN-18FEB05

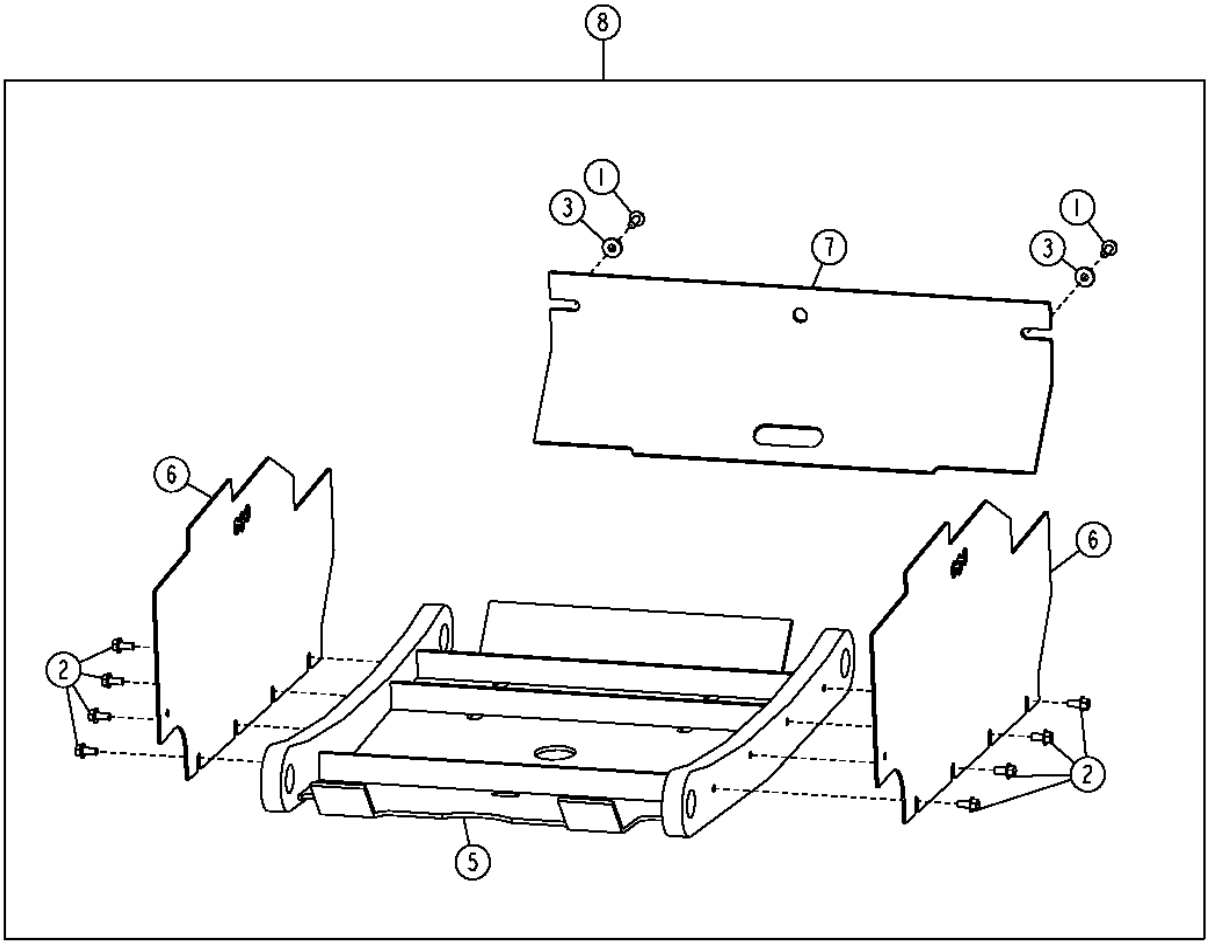

T208600

BOTTOM GUARDS AND SIDE SHIELDS (WITH RIPPER)

KEY	PART NO.	PART NAME	QTY	SERIAL NO.	670D	672D	REMARKS
1	19M7790	SCREW	2		X	X	M12 X 35
2	19M7788	SCREW	8		X	X	M12 X 25
5	AT312431	KIT	1		X	X	
6	T205317	PLATE	2		X	X	
7	T205547	PLATE	1		X	X	
8	**AT306944**	**KIT**	**1**		**X**	**X**	**(WHOLEGOODS) (RIPPER GUARD KIT)**

PUSH BLOCK

T200685 -UN-12DEC04

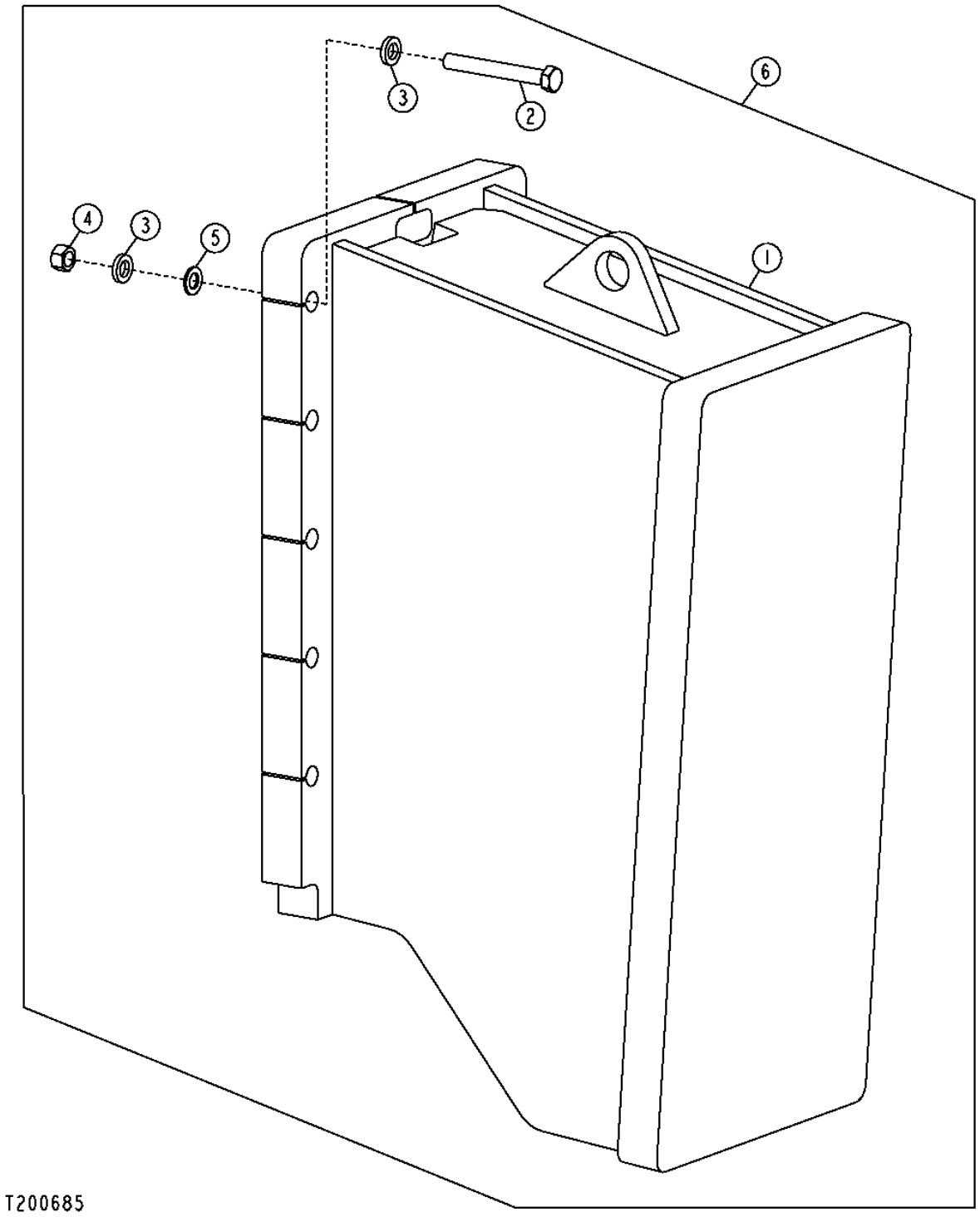

PUSH BLOCK

KEY	PART NO.	PART NAME	QTY	SERIAL NO.	670D	672D	REMARKS
1	AT164240	FRAME	1		X	X	(PUSH BLOCK)
2	19H3307	CAP SCREW	10		X	X	3/4" X 6"
3	T83426	WASHER	20		X	X	
4	14H1058	NUT	10		X	X	
5	T10510	WASHER	10		X	X	
6	**AT158292**	**KIT**	**1**		**X**	**X**	**(WHOLEGOODS) (FRONT PUSH BLOCK KIT)**

FRONT MOUNTED WEIGHT

T200684 -UN-07JUN04

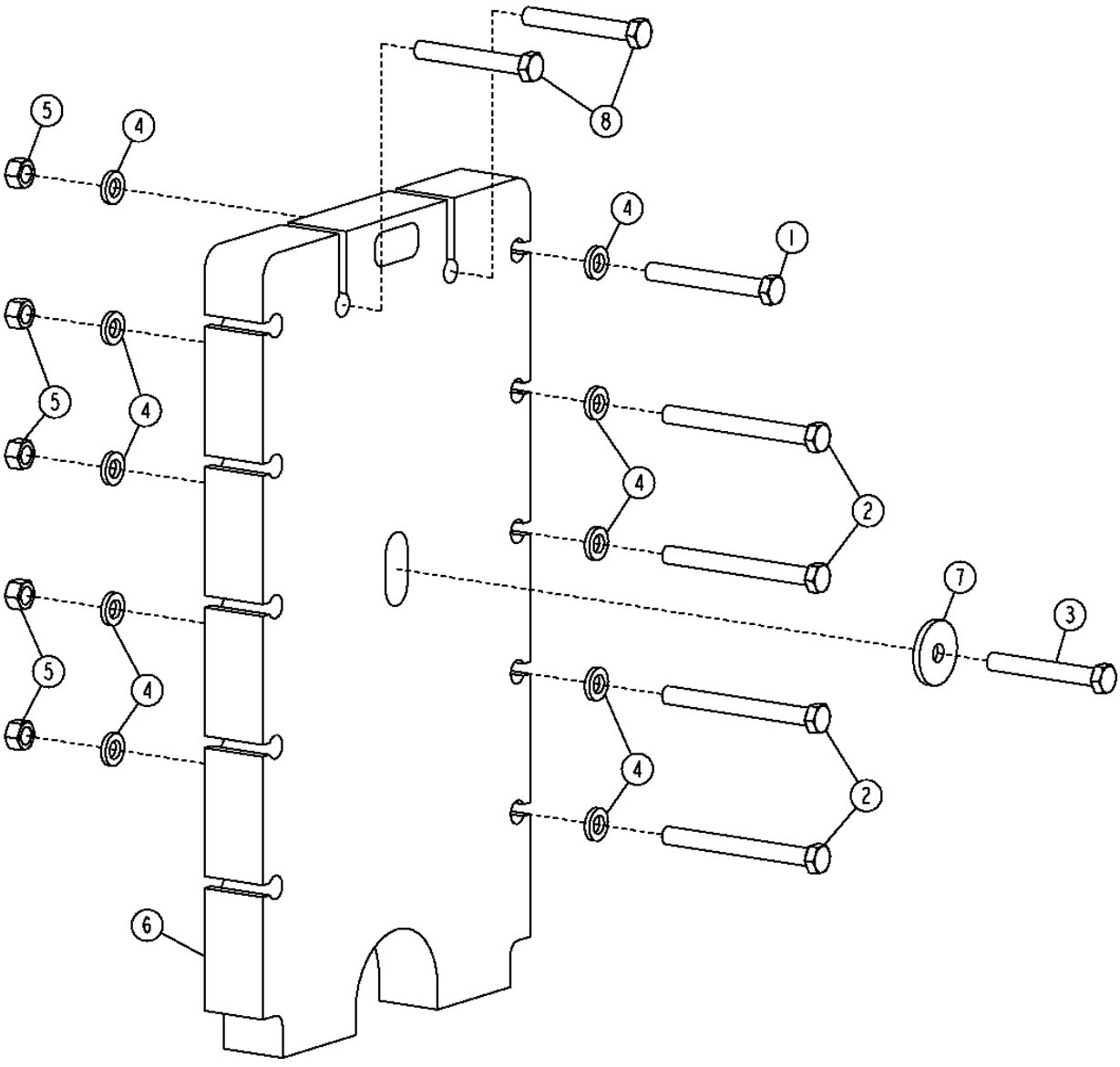

FRONT MOUNTED WEIGHT

KEY	PART NO.	PART NAME	QTY	SERIAL NO.	670D	672D	REMARKS
1	19H3307	CAP SCREW	2		X	X	19.050 X 152.400 MM (3/4" X 6") (SUB FOR 19H1988, THIS APPLICATION) (WITH 550 POUND FRONT WEIGHT WITH FRONT EQUIPMENT)
	19H3307	CAP SCREW	10		X	X	19.050 X 152.400 MM (3/4" X 6") (SUB FOR 19H1988, THIS APPLICATION) (WITH 550 POUND FRONT WEIGHT)
2	19H3740	CAP SCREW	4		X	X	3/4" X 7-1/2", (WITHOUT FRONT MOUNTED EQUIPMENT)
	19H3740	CAP SCREW	10		X	X	19.050 X 190.500 MM (3/4" X 7-1/2") (WITH 550 POUND FRONT WEIGHT WITH FRONT EQUIPMENT)
	19H3234	CAP SCREW	10		X	X	19.050 X 215.900 MM (3/4" X 8-1/2") (WITH 500 POUND FRONT WEIGHT WITH PUSH BLOCK)
3	19H3415	CAP SCREW	3		X	X	19.050 X 139.700 MM (3/4" X 5-1/2") (WITH 550 POUND FRONT WEIGHT WITH FRONT EQUIPMENT)
	19H2826	CAP SCREW	1		X	X	19.050 X 114.300 MM (3/4" X 4-1/2") (SUB FOR 19H3105, THIS APPLICATION) (WITH FRONT MOUNTED EQUIPMENT)
4	T83426	WASHER	8		X	X	0.810" X 1.378" X 0.253", (SUB FOR T17776) (WITHOUT FRONT MOUNTED EQUIPMENT)
	T83426	WASHER	20		X	X	20.580 X 35 X 6.415 MM (0.810" X 1.378" X 0.253") (SUB FOR T17776) (WITH 550 POUND FRONT WEIGHT)
	T83426	WASHER	4		X	X	20.580 X 35 X 6.415 MM (0.810" X 1.378" X 0.253") (SUB FOR T17776) (WITH 550 POUND FRONT WEIGHT WITH FRONT EQUIPMENT)
5	14H1058	NUT	4		X	X	3/4", (WITHOUT FRONT MOUNTED EQUIPMENT)
	14H1058	NUT	2		X	X	19.050 MM (3/4") (WITH 550 POUND FRONT WEIGHT WITH FRONT EQUIPMENT)
	14H1058	NUT	10		X	X	19.050 MM (3/4") (WITH 550 POUND FRONT WEIGHT)
6	T103590	PLATE	1		X	X	
7	R64283	LOCK WASHER	1		X	X	19.840 X 70 X 7.930 MM (0.781" X 2.756" X 0.312") (WITH 550 POUND FRONT WEIGHT WITH FRONT EQUIPMENT)
8	19H3415	CAP SCREW	3		X	X	19.050 X 139.700 MM (3/4" X 5-1/2") (WITH 550 POUND FRONT WEIGHT WITH FRONT EQUIPMENT)

THIS PARTS LISTING IS CONTINUED

CAB AND CANOPY FRAME

T203066 -UN-17SEP04

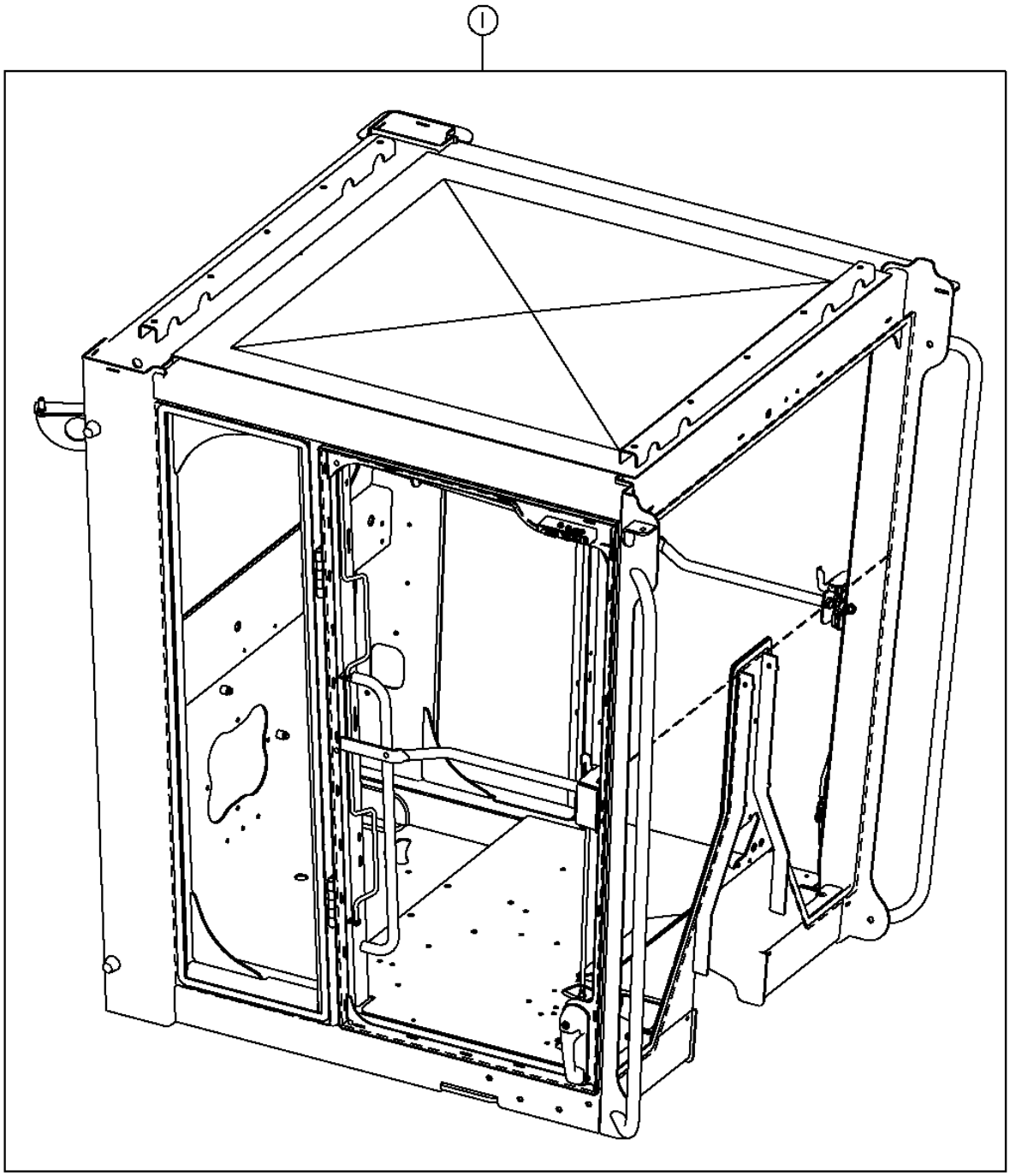

T203066

CAB AND CANOPY FRAME

KEY	PART NO.	PART NAME	QTY	SERIAL NO.	670D	672D	REMARKS
1	AT308196	CAB	1		X	X	(LOW PROFILE)(INCLUDES DOORS AND WINDOWS)
	AT308197	CAB	1		X	X	(FULL HEIGHT)(INCLUDES DOORS AND WINDOWS)
	AT310373	CAB	1		X	X	(LOW PROFILE W/OPENABLE WINDOWS)(INCLUDES DOORS AND WINDOWS)
	AT310374	CAB	1		X	X	(FULL HEIGHT WITH OPENABLE WINDOWS)(INCLUDES DOORS AND WINDOWS)
	AT310375	CANOPY	1		X	X	(LOW PROFILE CANOPY-NOT ILLUSTRATED) (INCLUDES REAR WINDOW)
2	T196077	NUT	24		X	X	M6, (CAB OR CANOPY)(KREMNUT-NOT ILLUSTRATED) (M6 FOR 2.5 TO 5.0 MM THICKNESS)
	T196079	NUT	65		X	X	M8, (CAB)(KREMNUT-NOT ILLUSTRATED) (M8 FOR 2.5 TO 5.0 MM THICKNESS)
	T196079	NUT	48		X	X	M8, (CANOPY)(KREMNUT-NOT ILLUSTRATED) (M8 FOR 2.5 TO 5.0 MM THICKNESS)
	T196080	NUT	8		X	X	M8, (CAB OR CANOPY)(KREMNUT-NOT ILLUSTRATED) (M8 FOR 5.0 TO 7.0 MM THICKNESS)
	H173411	NUT	22		X	X	M10, (CAB)(KREMNUT-NOT ILLUSTRATED) (M10 FOR 3.0 TO 4.5 MM THICKNESS)
	H173411	NUT	19		X	X	M10, (CANOPY)(KREMNUT-NOT ILLUSTRATED) (M10 FOR 3.0 TO 4.5 MM THICKNESS)
	T148409	NUT	8		X	X	(CAB OR CANOPY)(KREMNUT-NOT ILLUSTRATED) (M10 FOR 5.0 TO 7.0 MM THICKNESS)

FRONT WINDSHIELD WIPER

T208500 -UN-18FEB05

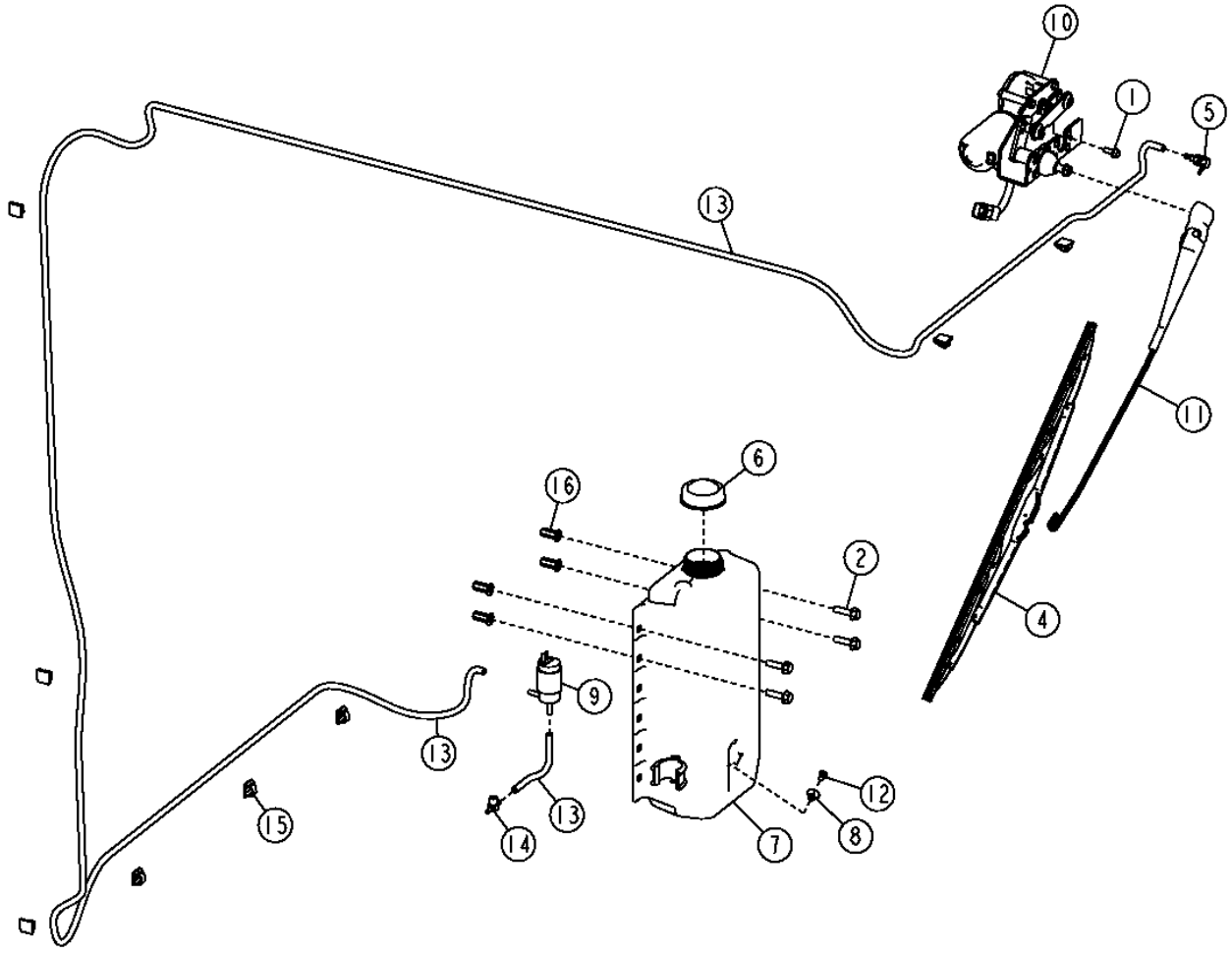

T208500

FRONT WINDSHIELD WIPER

KEY	PART NO.	PART NAME	QTY	SERIAL NO.	670D	672D	REMARKS
1	19M7775	SCREW	1		X	X	M6 X 16
2	19M7868	SCREW	4		X	X	M8 X 30
4	AL153661	WIPER BLADE	1		X	X	(USE WITH FULL HEIGHT CAB)
	AL153660	WIPER BLADE	1		X	X	(USE WITH LOW PROFILE CAB)
5	AT116970	ELBOW FITTING	1		X	X	
6	AT106413	CAP	1		X	X	
7	T125860	TANK	1		X	X	
8	T127280	GROMMET	1		X	X	
9	AT173192	PUMP	1		X	X	
10	AT304630	WIPER MOTOR	1		X	X	(USE WITH FULL HEIGHT CAB)
	AT304635	WIPER MOTOR	1		X	X	(USE WITH LOW PROFILE CAB)
11	AT304633	WIPER ARM	1		X	X	(USE WITH FULL HEIGHT CAB)
	AT304634	WIPER ARM	1		X	X	(USE WITH LOW PROFILE CAB)
12	B2976R	PLUG	1		X	X	
13	.....	BULK HOSE	1		X	X	(MAKE FROM R120653) (CUT TO LENGTH)
14	T126400	HOSE FITTING	1		X	X	
15	T182909	CLIP	8		X	X	
16	T196079	NUT	4		X	X	

REAR WINDSHIELD WIPER

T208501 -UN-18FEB05

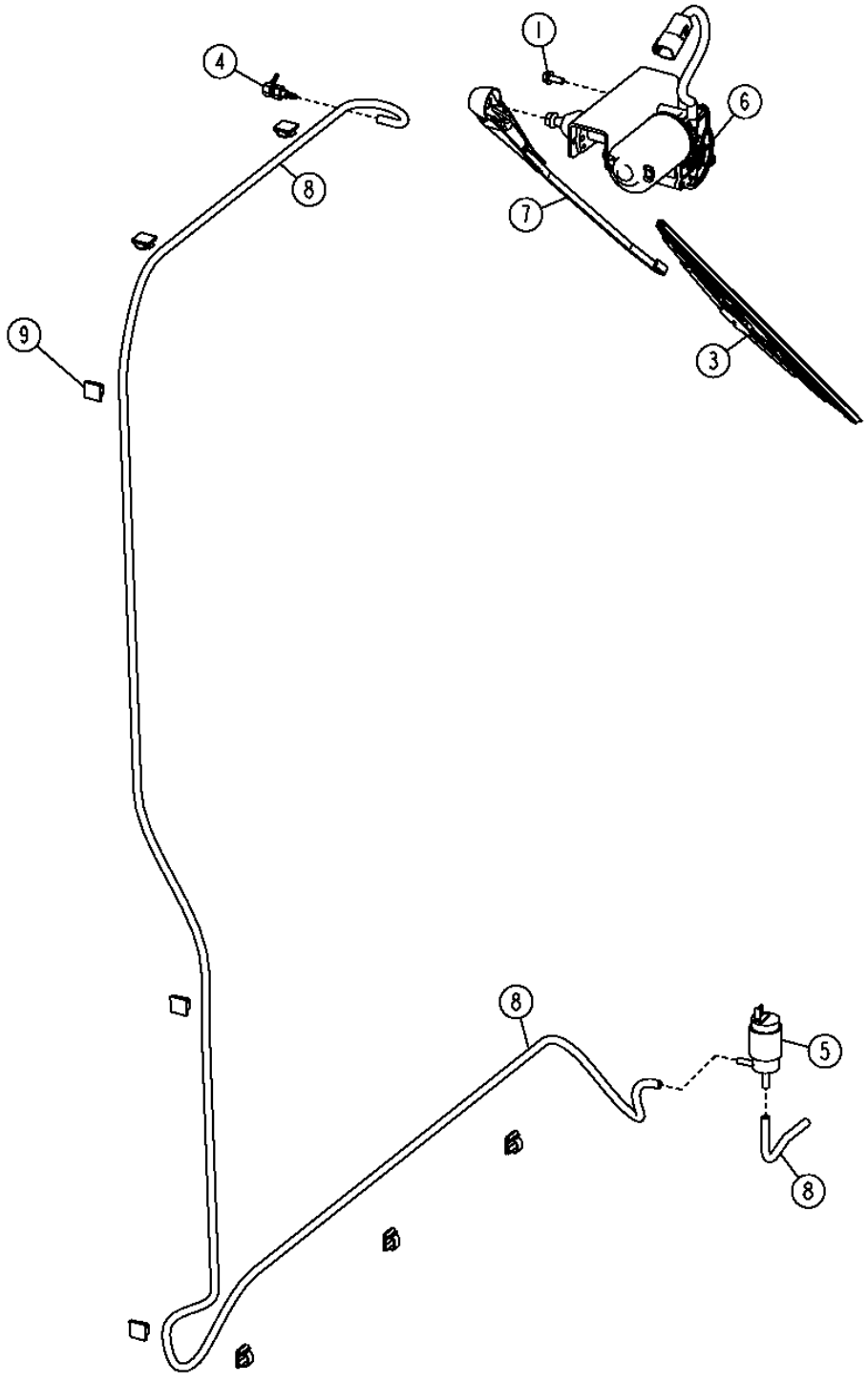

REAR WINDSHIELD WIPER

KEY	PART NO.	PART NAME	QTY	SERIAL NO.	670D	672D	REMARKS
1	19M7775	SCREW	1		X	X	M6 X 16
3	AL153661	WIPER BLADE	1		X	X	(USE WITH FULL HEIGHT CAB)
	AL153660	WIPER BLADE	1		X	X	(USE WITH LOW PROFILE CAB)
4	AT116970	ELBOW FITTING	1		X	X	(USE WITH FULL HEIGHT CAB)
5	AT173192	PUMP	1		X	X	
6	AT304630	WIPER MOTOR	1		X	X	(USE WITH FULL HEIGHT CAB)
	AT304635	WIPER MOTOR	1		X	X	(USE WITH LOW PROFILE CAB)
7	AT304633	WIPER ARM	1		X	X	(USE WITH FULL HEIGHT CAB)
	AT304634	WIPER ARM	1		X	X	(USE WITH LOW PROFILE CAB)
8	.....	BULK HOSE	1		X	X	(CUT TO LENGTH) (MAKE FROM R120653)
9	T182909	CLIP	1		X	X	

LOWER FRONT WINDSHIELD WIPER

T207943 -UN-12FEB05

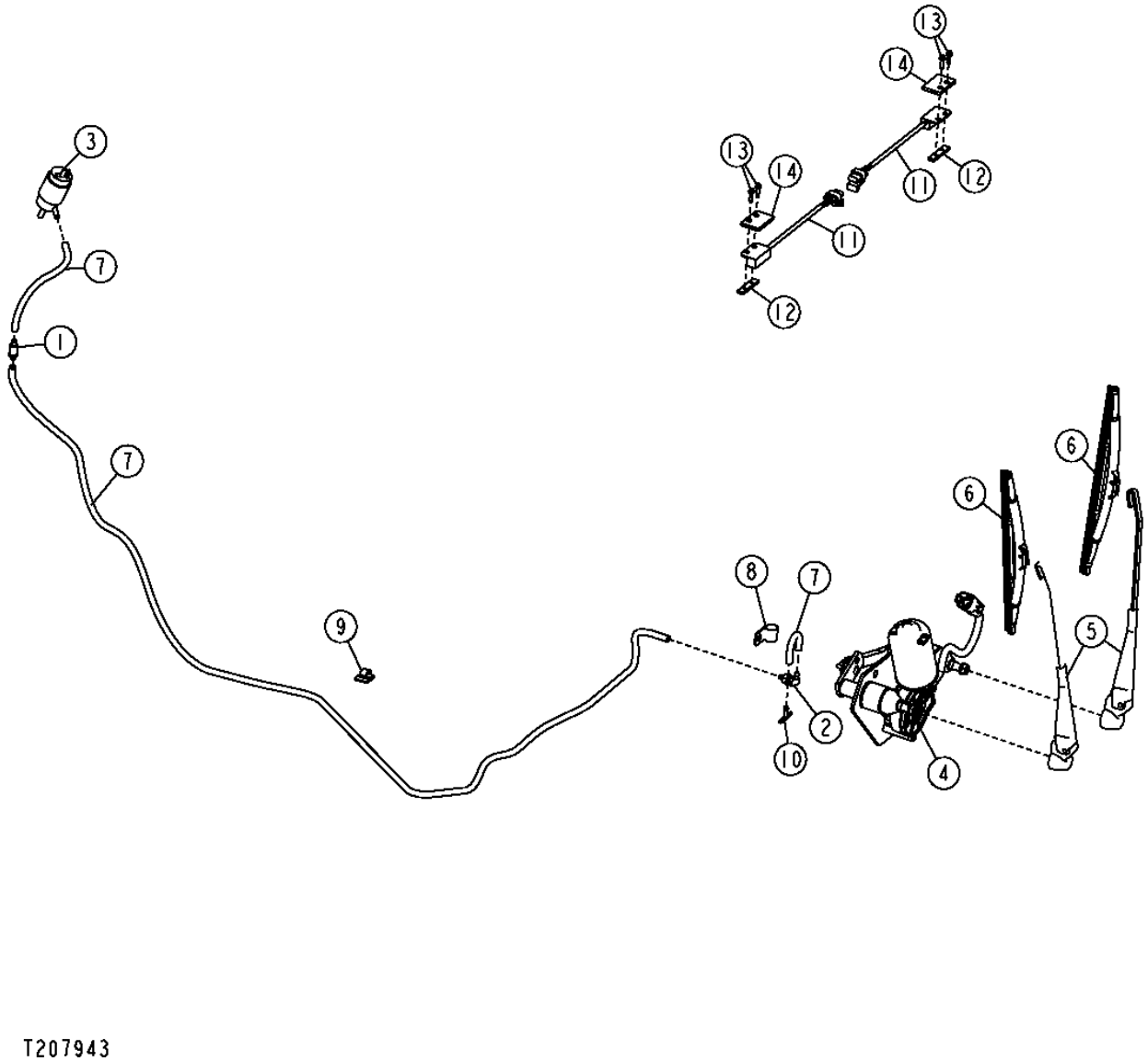

T207943

LOWER FRONT WINDSHIELD WIPER

KEY	PART NO.	PART NAME	QTY	SERIAL NO.	670D	672D	REMARKS
1	AL114275	CHECK VALVE	1		X	X	
2	AT188681	KIT	1		X	X	
3	AT173192	PUMP	1		X	X	
4	AT303926	WIPER MOTOR	1		X	X	
5	AT305663	WIPER ARM	2		X	X	
6	AT305698	WIPER BLADE	2		X	X	
7	.....	BULK HOSE	1		X	X	(MAKE FROM R120653) (CUT TO LENGTH)
8	M47566	CLIP	1		X	X	
9	T182909	CLIP	1		X	X	
10	T58542	FITTING	1		X	X	
11	AT307779	SENSOR	2		X	X	
12	T208283	PLATE	2		X	X	
13	37M7314	SCREW	4		X	X	M4 X 16
14	T215218	PLATE	2		X	X	

CAB ISOLATORS

T202057 -UN-02SEP04

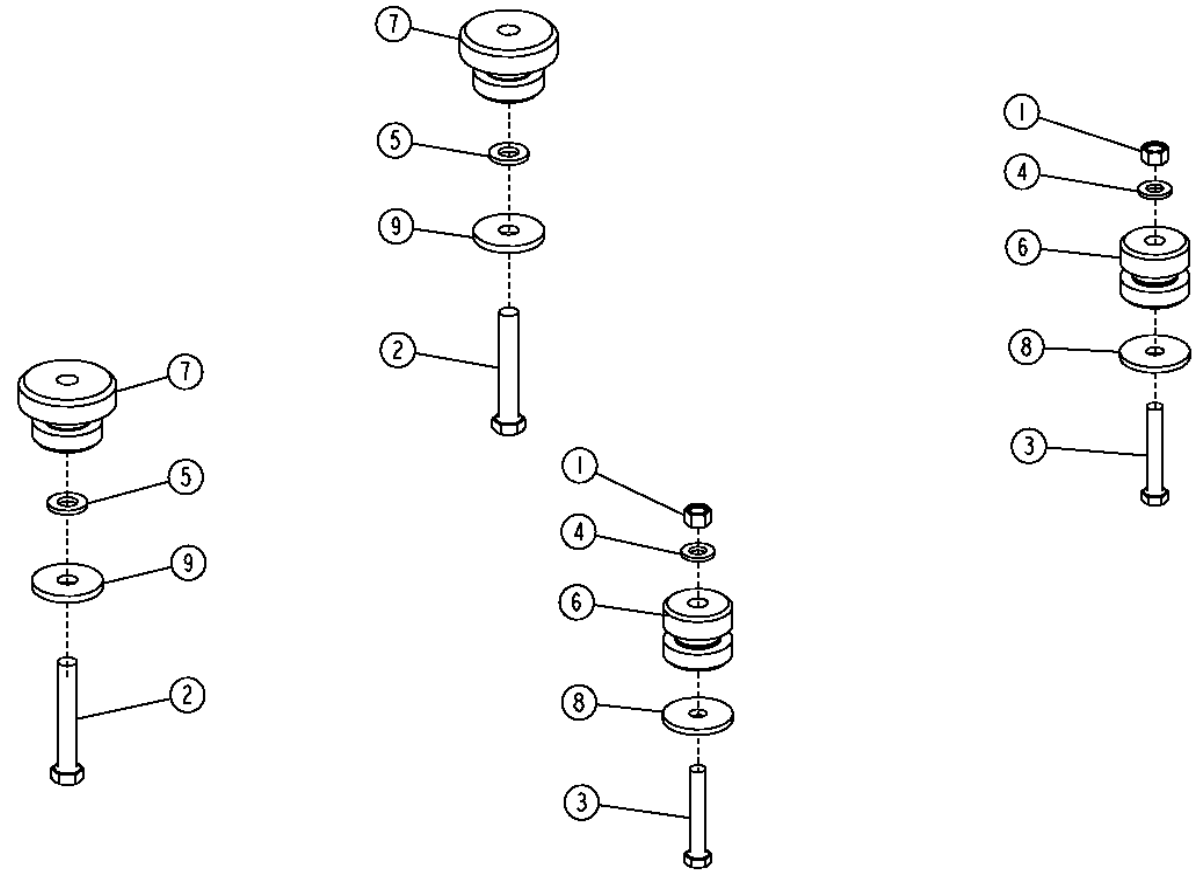

T202057

2G14

CAB ISOLATORS

KEY	PART NO.	PART NAME	QTY	SERIAL NO.	670D	672D	REMARKS
1	14M7277	NUT	1		X	X	M20
2	19M7781	CAP SCREW	1		X	X	M24 X 150
3	19M7883	SCREW	1		X	X	M20 X 120
4	24M7242	WASHER	1		X	X	
5	24M7243	WASHER	1		X	X	
6	AT165288	ISOLATOR	1		X	X	(FRONT)
7	AT170005	ISOLATOR	1		X	X	(REAR)
8	T101807	WASHER	1		X	X	
9	T153535	WASHER	1		X	X	

STATIONARY WINDOWS

T202649 -UN-08DEC04

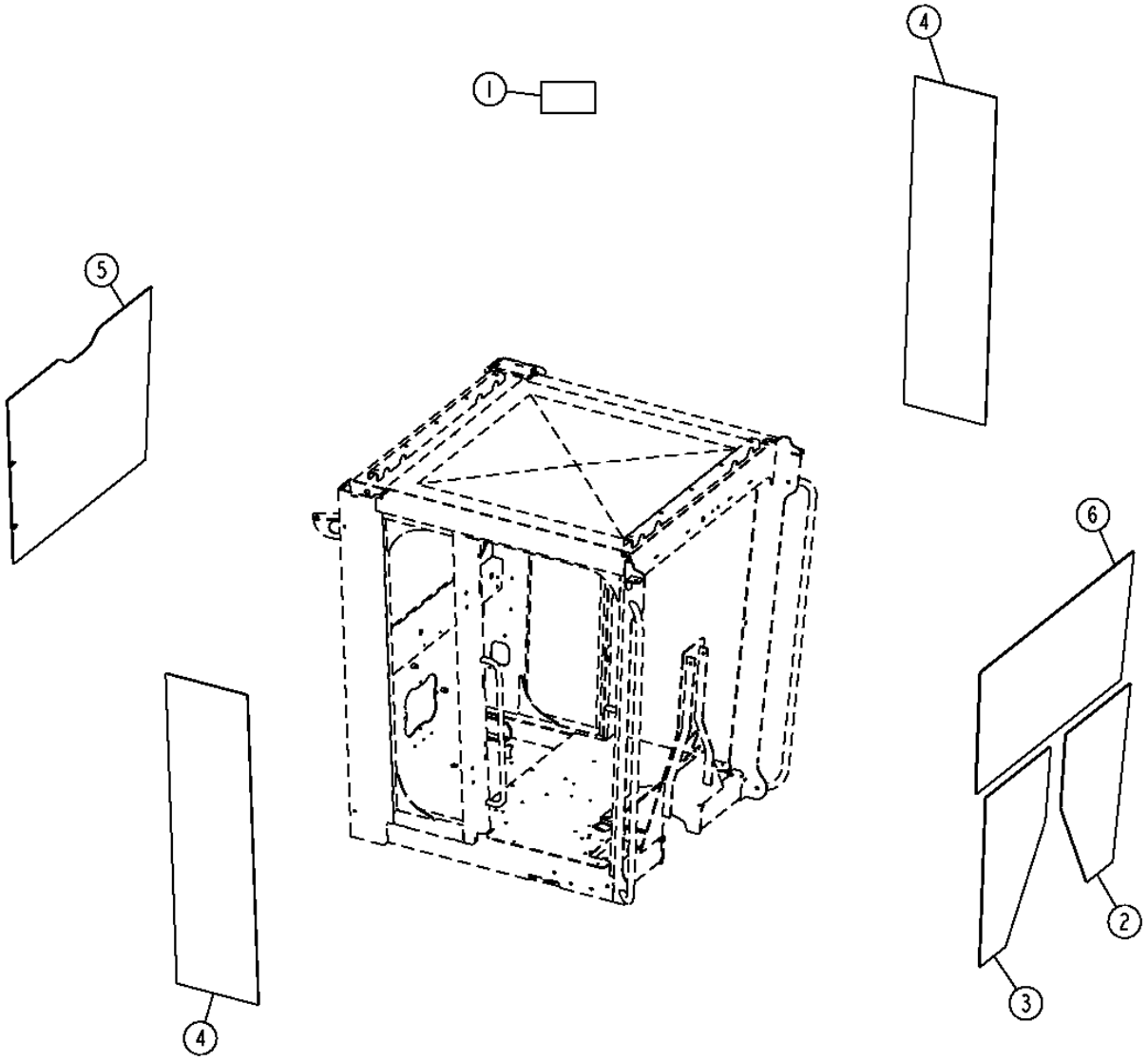

T202649

2G16

STATIONARY WINDOWS

KEY	PART NO.	PART NAME	QTY	SERIAL NO.	670D	672D	REMARKS
1	T135675	STAND-OFF	AR		X	X	(USED BETWEEN WINDOW AND CAB)
2	T202076	WINDOWPANE	1		X	X	LH FRONT LOWER
3	T202077	WINDOWPANE	1		X	X	RH FRONT LOWER
4	T202074	WINDOWPANE	2		X	X	SIDE-LOW PROFILE CAB,64"(1629MM)TALL
	T202131	WINDOWPANE	2		X	X	SIDE-FULL HEIGHT CAB,72.5"(1854MM)TALL
5	T202075	WINDOWPANE	1		X	X	REAR-LOW PROFILE CANOPY AND CAB,34"(858MM) TALL
	T202132	WINDOWPANE	1		X	X	REAR-FULL HEIGHT CAB,42.5"(1083MM)TALL
6	T202078	WINDSHIELD	1		X	X	LOW PROFILE CAB,26"(652 MM)TALL
	T202133	WINDSHIELD	1		X	X	FULL HEIGHT CAB,34.5"(878MM)TALL
7	T214023	ISOLATOR	1		X	X	(FRONT WINDOW EDGE PROTECTOR 17' LONG)

OPENABLE WINDOWS (LOWER FRONT)

T208146 -UN-12FEB05

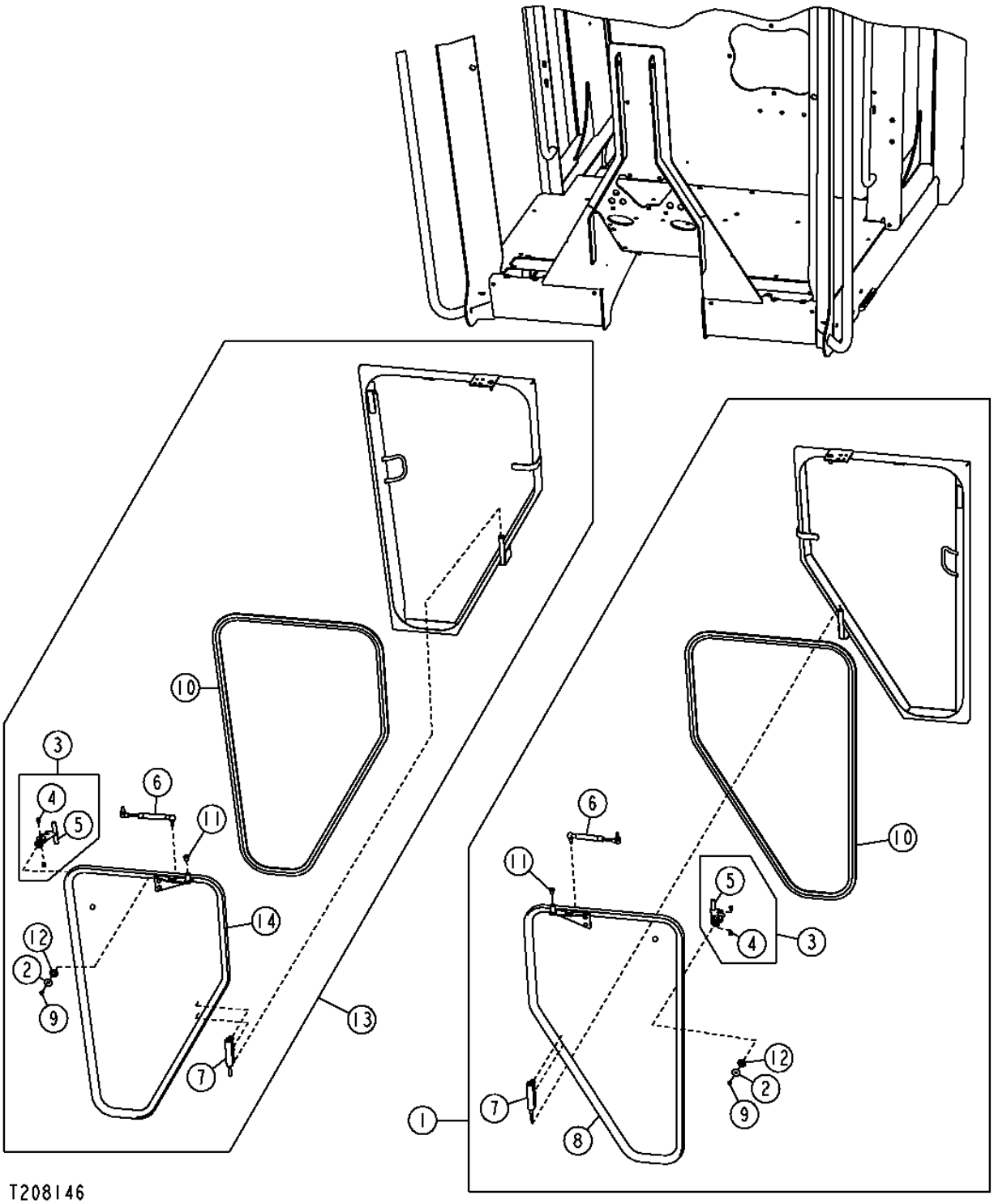

2G18

OPENABLE WINDOWS (LOWER FRONT)

KEY	PART NO.	PART NAME	QTY	SERIAL NO.	670D	672D	REMARKS
1	AT304098	WINDOW	1		X	X	LH LOWER OPENABLE-COMPLETE
2	24H1288	WASHER	1		X	X	
3	AT196522	LATCH	1		X	X	
4	A48970	DUAL LOCK FASTENER	2		X	X	
5	T119153	LATCH	1		X	X	
6	AT315903	GAS OPERATED CYLINDER	1		X	X	
7	AT315906	HINGE	1		X	X	
8	AT315909	WINDOW	1		X	X	
9	T188806	SCREW	1		X	X	
10	T211943	ISOLATOR	1		X	X	
11	T213917	BUSHING	1		X	X	
12	T76833	WASHER	1		X	X	
13	AT304099	WINDOW	1		X	X	RH LOWER OPENABLE-COMPLETE
14	AT315910	WINDOW	1		X	X	

OPENABLE WINDOWS (SIDE)

T202929 -UN-20OCT04

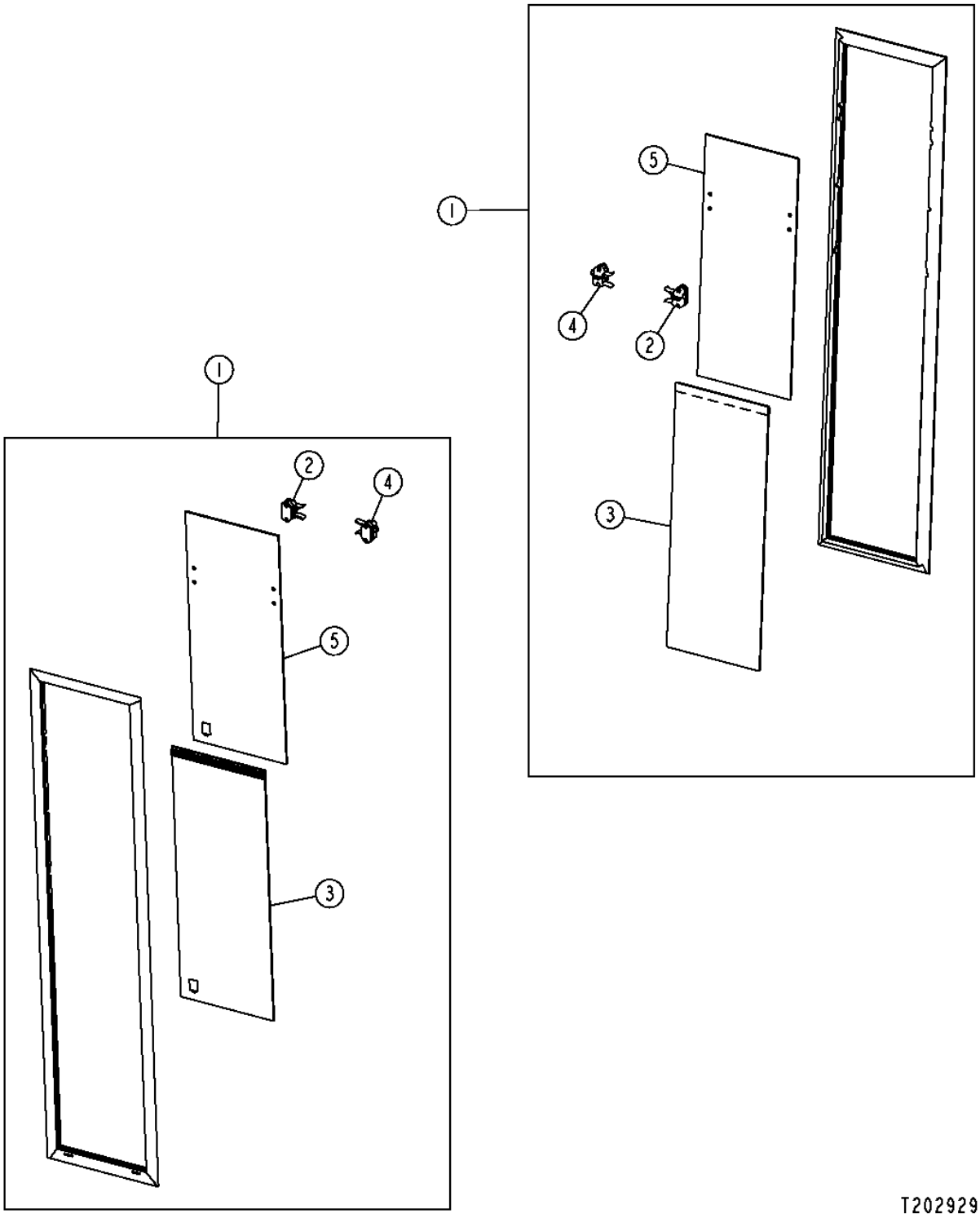

OPENABLE WINDOWS (SIDE)

KEY	PART NO.	PART NAME	QTY	SERIAL NO.	670D	672D	REMARKS
1	AT305416	WINDOW	2		X	X	(FULL HEIGHT)
	AT305414	WINDOW	2		X	X	(LOW PROFILE)
2	AT315844	LATCH	1		X	X	
3	AT315896	WINDOWPANE	1		X	X	(FULL HEIGHT AND LOW PROFILE)
4	AT316267	LATCH	2		X	X	
5	T211868	WINDOWPANE	1		X	X	(FULL HEIGHT)
	T211864	WINDOWPANE	1		X	X	(LOW PROFILE)

CAB INTERIOR PANELS

T211691 -UN-03JUN05

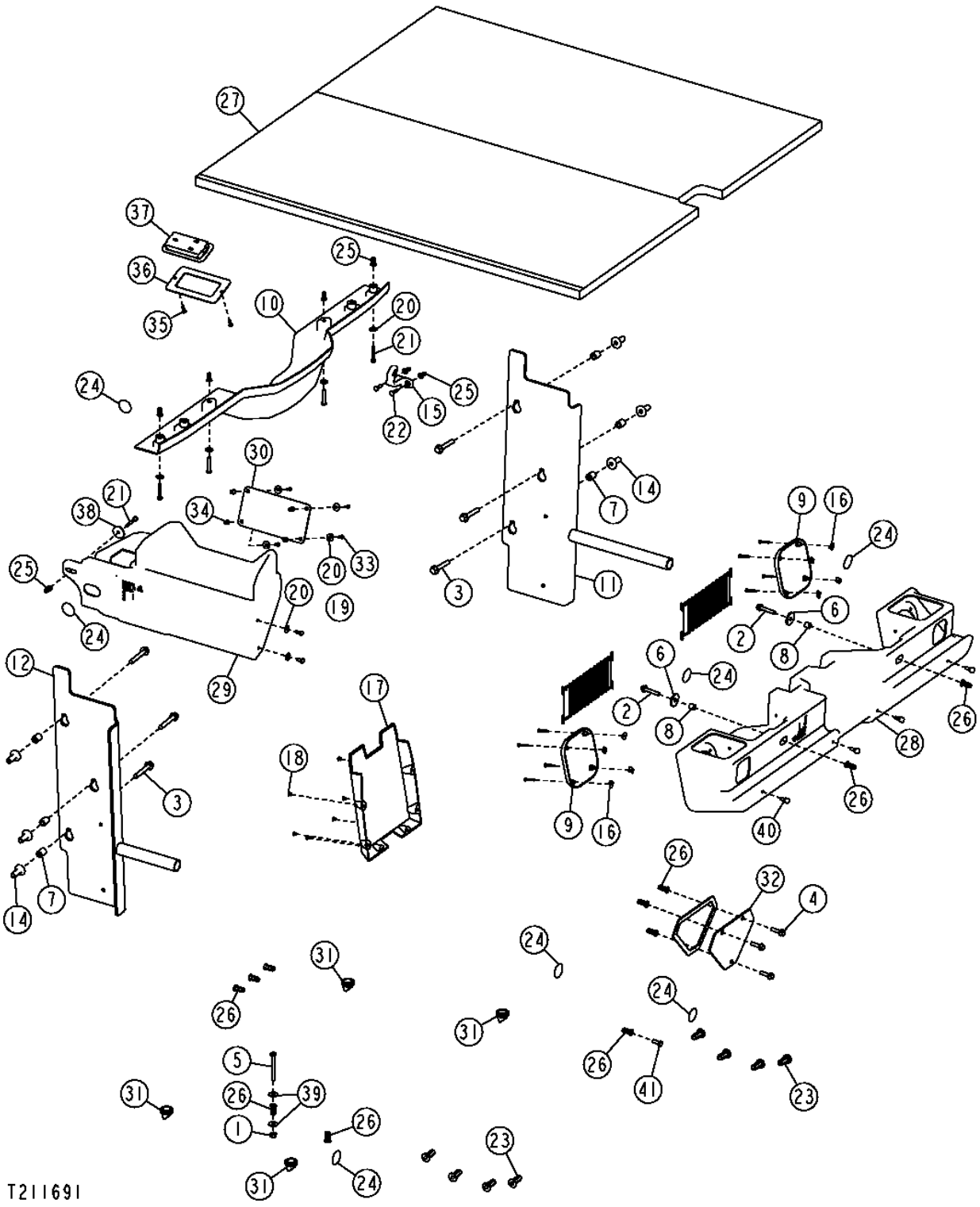

CAB INTERIOR PANELS

KEY	PART NO.	PART NAME	QTY	SERIAL NO.	670D	672D	REMARKS
1	14M7298	FLANGE NUT	1		X	X	M8
2	19M7799	SCREW	2		X	X	M8 X 45
3	19M7808	SCREW	6		X	X	M10 X 65
4	19M7868	SCREW	3		X	X	M8 X 30
5	19M8403	CAP SCREW	1		X	X	M8 X 75
6	24H1296	WASHER	2		X	X	
7	H140461	BUSHING	6		X	X	(SUB FOR 28H3436)
8	28H3450	SPACER	2		X	X	
9	AT305406	GRILLE	2		X	X	(SPEAKER GRILLE)
10	AT307650	COVER	1		X	X	(REAR WIPER COVER)
11	AT314363	BRACKET	1		X	X	(ALSO ORDER (2) T196077)
12	AT314364	BRACKET	1		X	X	(ALSO ORDER (2) T196077)
13	.....	ISOLATOR	1		X	X	(MAKE FROM T63019) (CUT TO LENGTH)
14	H173411	NUT	6		X	X	
15	L102023	HOOK	1		X	X	
16	R53528	NUT	8		X	X	
17	R77915	HOLDER	1		X	X	(OPERATOR'S MANUAL HOLDER)
18	R79033	RIVET	6		X	X	
19	21M7292	SCREW	2		X	X	M6 X 16
20	24H1821	WASHER	10		X	X	9/32" X 47/64" X 1/16"
21	21M7403	SCREW	5		X	X	M6 X 40
22	21M7310	SCREW	2		X	X	M6 X 25
23	T148409	NUT	8		X	X	
24	T186793	LABEL	7		X	X	
25	T196077	NUT	7		X	X	
26	T196079	NUT	11		X	X	
27	T202687	HEADLINER	1		X	X	(LOW PROFILE CAB)
	T205243	HEADLINER	1		X	X	(FULL HEIGHT CAB)
28	T202799	HOUSING	1		X	X	(FRONT WIPER COVER)
29	T202921	HOUSING	1		X	X	(RADIO HOUSING)
30	T203390	BRACKET	1		X	X	
31	T203950	PLUG	4		X	X	
32	T204645	COVER	1		X	X	
33	T82791	SCREW	4		X	X	
34	T82792	NUT	4		X	X	
35	37M7218	SCREW	2		X	X	
36	T212073	PLATE	1		X	X	
37	TT206940	LAMP	1		X	X	(DOMELIGHT)
38	24H1695	WASHER	1		X	X	
39	24M7298	WASHER	2		X	X	8.400 X 25 X 2 MM
40	U43012	STRIKER	4		X	X	
41	19M7881	SCREW	1		X	X	(USED TO PLUG HOLE IN CAB)

CANOPY INTERIOR PANELS

T211693 -UN-03JUN05

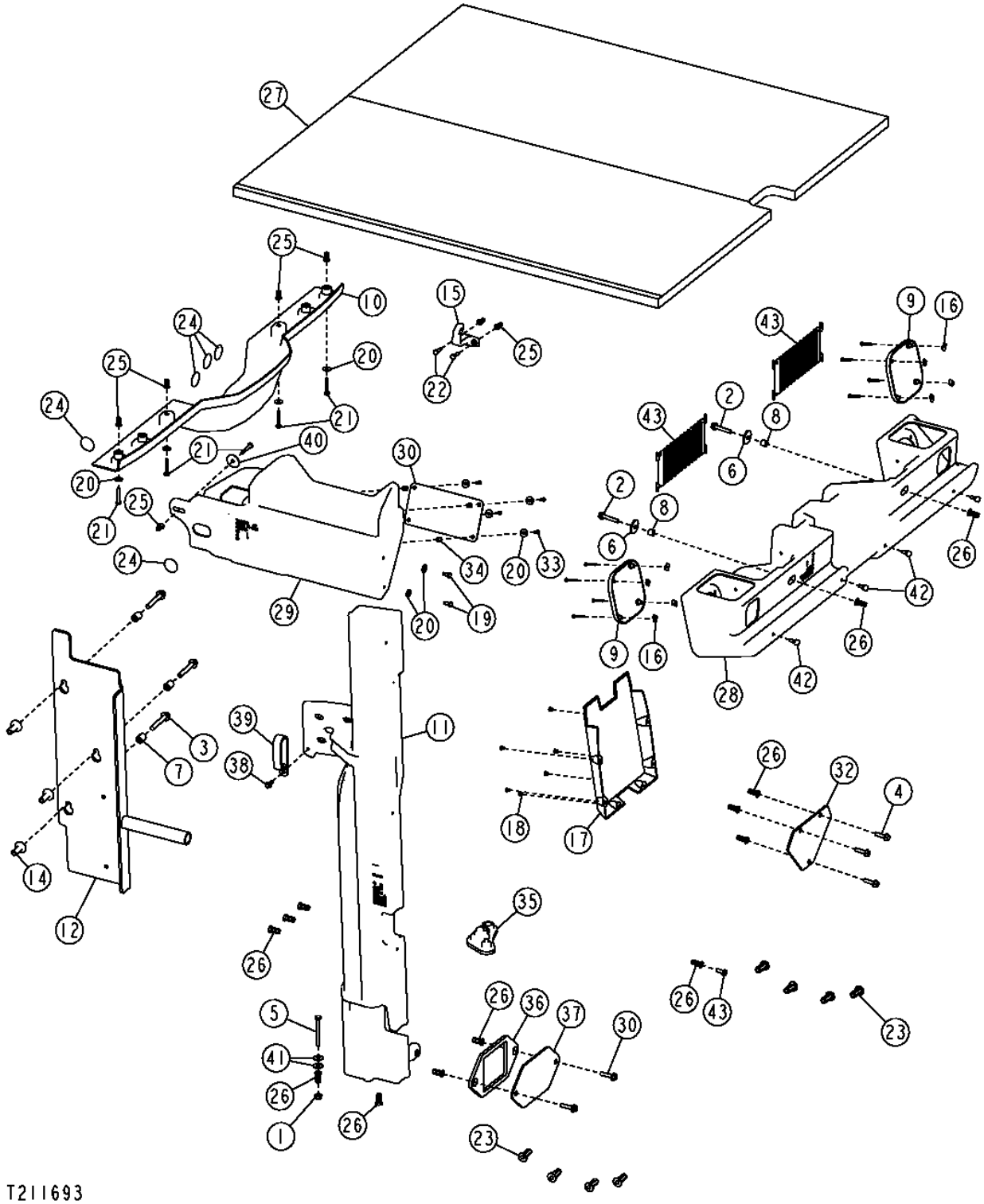

CANOPY INTERIOR PANELS

KEY	PART NO.	PART NAME	QTY	SERIAL NO.	670D	672D	REMARKS
1	14M7298	FLANGE NUT	1		X	X	M8
2	19M7799	SCREW	2		X	X	M8 X 45
3	19M7808	SCREW	3		X	X	M10 X 65
4	19M7868	SCREW	3		X	X	M8 X 30
5	19M8403	CAP SCREW	1		X	X	M8 X 75
6	24H1296	WASHER	2		X	X	
7	H140461	BUSHING	3		X	X	(SUB FOR 28H3436)
8	28H3450	SPACER	2		X	X	
9	AT305406	GRILLE	2		X	X	
10	AT307650	COVER	1		X	X	
11	AT308941	SUPPORT	1		X	X	
12	AT314364	KIT	1		X	X	
14	H173411	NUT	3		X	X	
15	L102023	HOOK	1		X	X	
16	R53528	NUT	8		X	X	
17	R77915	HOLDER	1		X	X	
18	R79033	RIVET	6		X	X	
19	21M7292	SCREW	2		X	X	M6 X 16
20	24H1821	WASHER	11		X	X	9/32" X 47/64" X 1/16"
21	21M7403	SCREW	5		X	X	M6 X 40
22	21M7310	SCREW	3		X	X	
23	T148409	NUT	8		X	X	
24	T186793	LABEL	4		X	X	
25	T196077	NUT	7		X	X	
26	T196079	NUT	13		X	X	
27	T202687	HEADLINER	1		X	X	(LOW PROFILE CAB)
28	T202799	HOUSING	1		X	X	
29	T202921	HOUSING	1		X	X	
30	19M7897	SCREW	2		X	X	
32	T204645	COVER	1		X	X	
33	T82791	SCREW	4		X	X	
34	T82792	NUT	4		X	X	
35	T166297	GROMMET	1		X	X	
36	T206985	SEAL	1		X	X	
37	T207637	BRACKET	1		X	X	
38	19M7775	SCREW	1		X	X	
39	T215319	CLAMP	1		X	X	
40	24H1695	WASHER	1		X	X	
41	24M7298	WASHER	2		X	X	
42	U43021	BUMPER	4		X	X	
43	19M7881	SCREW	1		X	X	(USED TO PLUG HOLE IN CAB)

CAB REAR INTERIOR PANELS

T203161 -UN-01NOV04

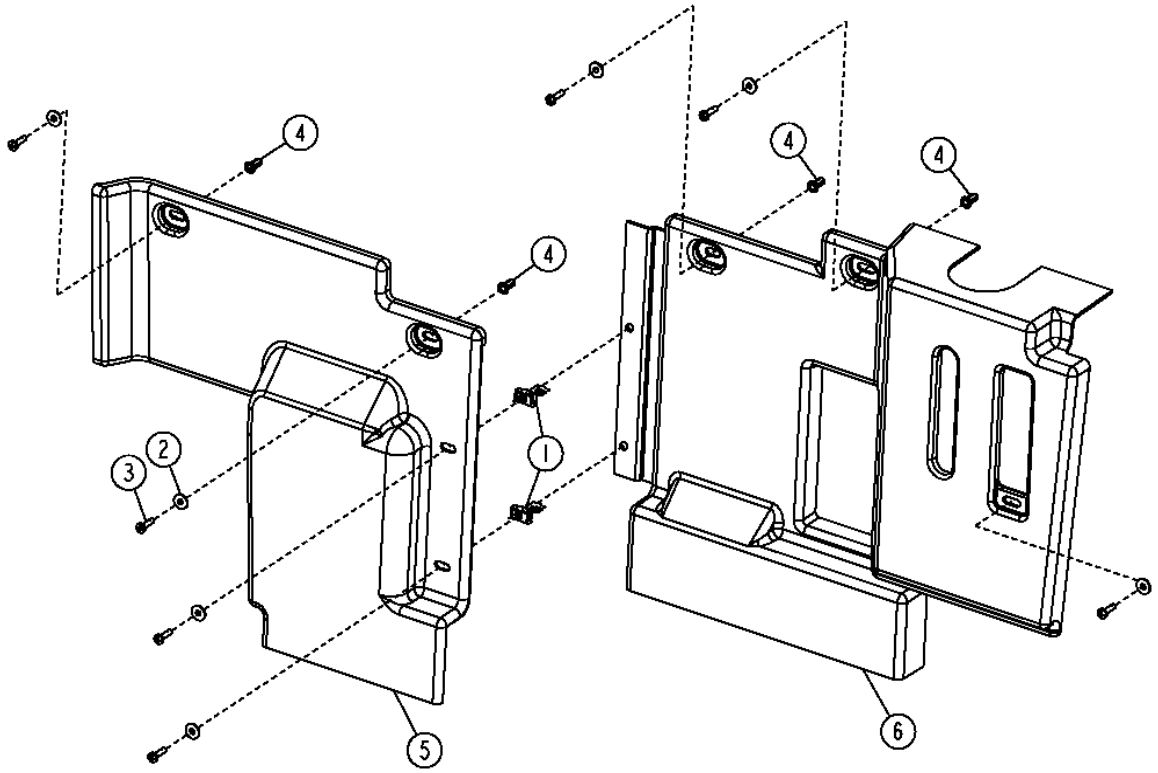

T203161

CAB REAR INTERIOR PANELS

KEY	PART NO.	PART NAME	QTY	SERIAL NO.	670D	672D	REMARKS
1	R134098	NUT	2		X	X	
2	24H1821	WASHER	7		X	X	
3	21M7310	SCREW	7		X	X	M6 X 25
4	T196077	NUT	4		X	X	
5	T202793	COVER	1		X	X	
6	T205354	COVER	1		X	X	

CAB ROOF

T209064 -UN-04MAR05

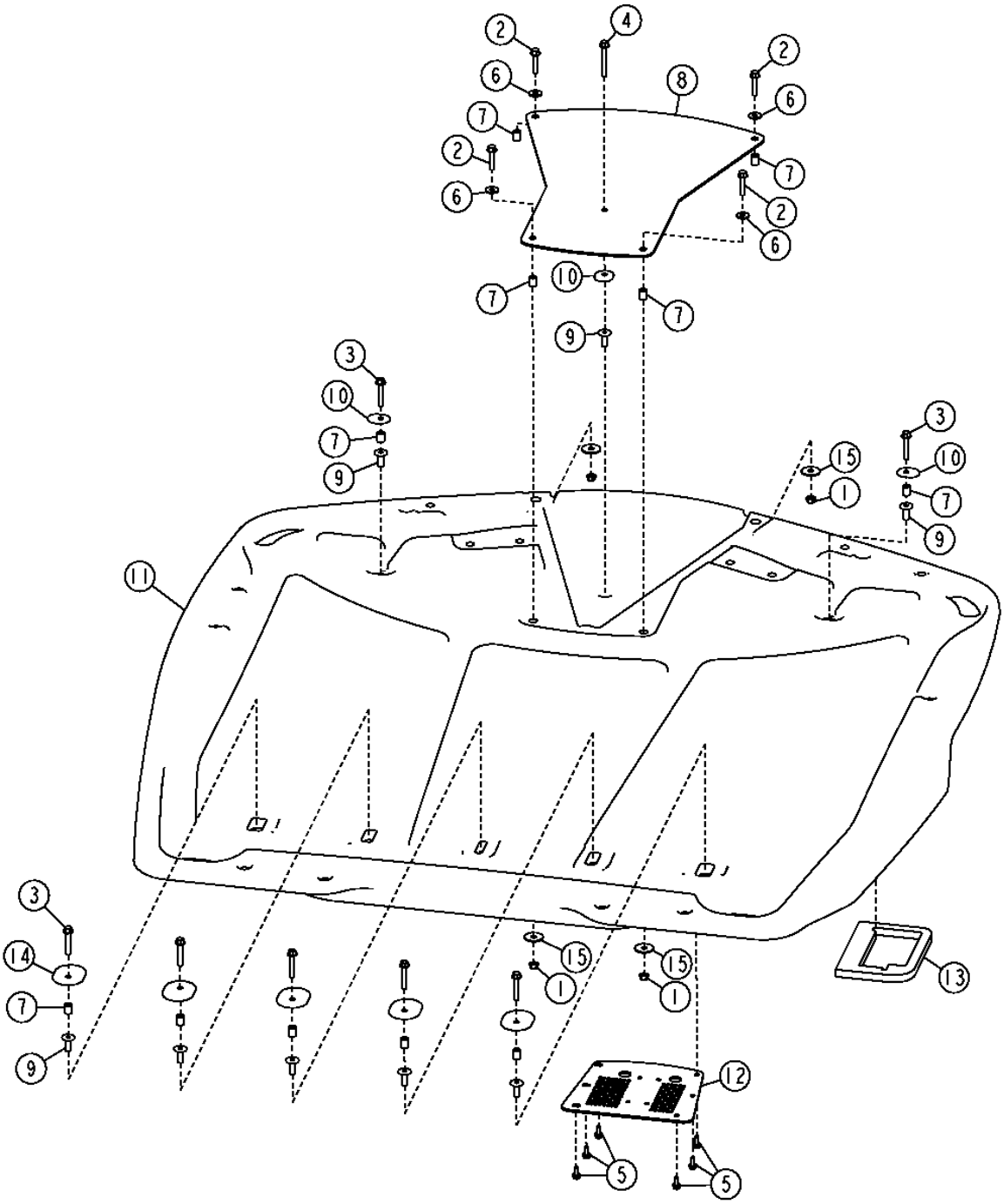

T209064

CAB ROOF

KEY	PART NO.	PART NAME	QTY	SERIAL NO.	670D	672D	REMARKS
1	14M7296	FLANGE NUT	4		X	X	M10
2	19M7805	SCREW	4		X	X	M10 X 45
3	19M7807	SCREW	7		X	X	M10 X 60, (SUB FOR 19M7808)
4	19M7810	SCREW	1		X	X	M10 X 80
5	19M7866	BOLT	6		X	X	M8 X 20
6	24M7296	WASHER	4		X	X	
7	H140461	BUSHING	11		X	X	(SUB FOR 28H3436)
8	AT317562	PLATE	1		X	X	
9	H173411	NUT	8		X	X	
10	T185664	SEALING WASHER	3		X	X	
11	T203896	ROOF	1		X	X	
12	T204319	PLATE	1		X	X	
13	T205066	ISOLATOR	1		X	X	
14	T205068	SEALING WASHER	5		X	X	
15	24H1334	WASHER	4				

CAB FLOORMAT

T201842 -UN-29JUL04

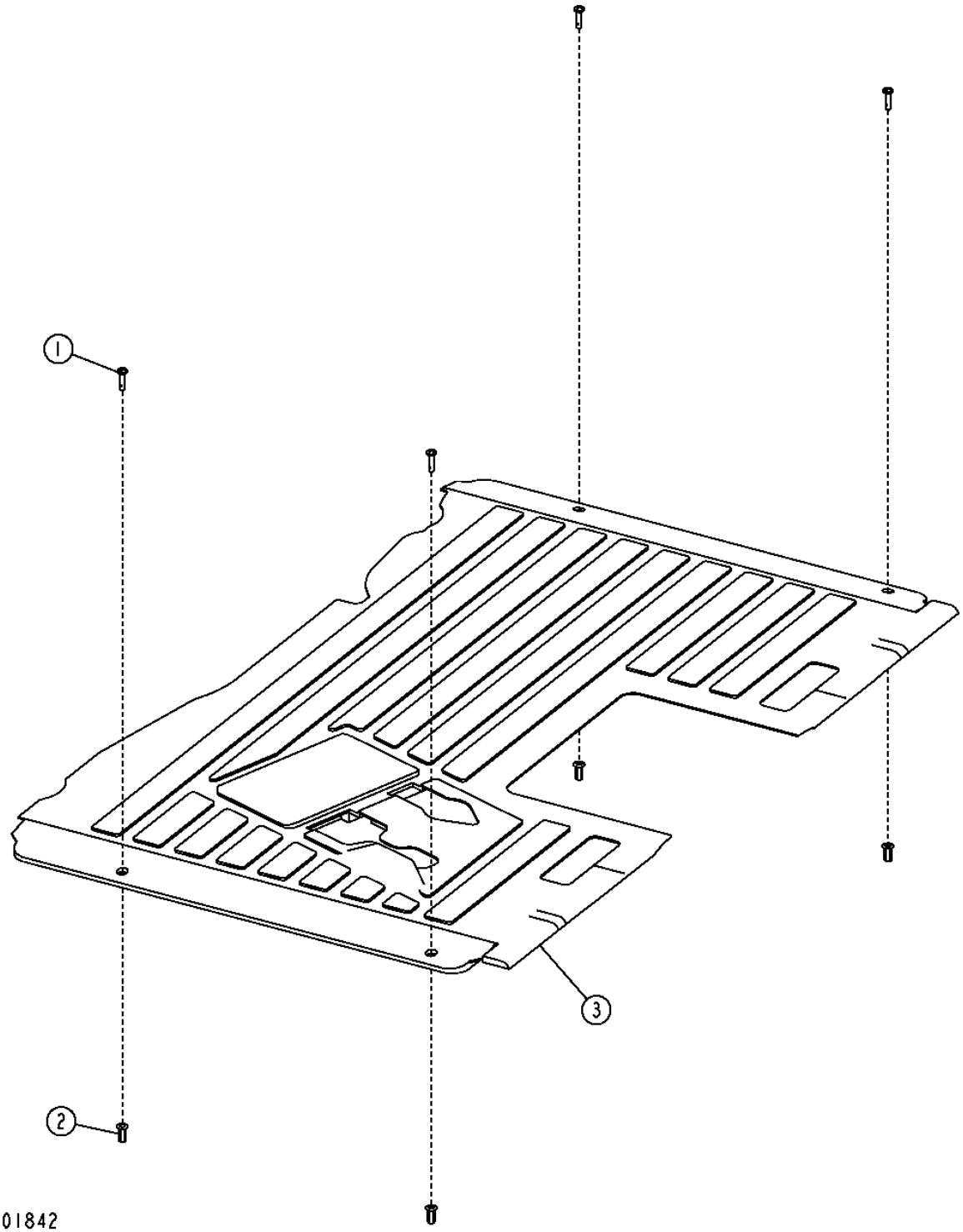

2H6

CAB FLOORMAT

KEY	PART NO.	PART NAME	QTY	SERIAL NO.	670D	672D	REMARKS
1	21M7310	SCREW	4		X	X	M6 X 25
2	T196077	NUT	1		X	X	
3	T202357	MAT	1		X	X	

CANOPY SIDE CONSOLE

T203909 -UN-19NOV04

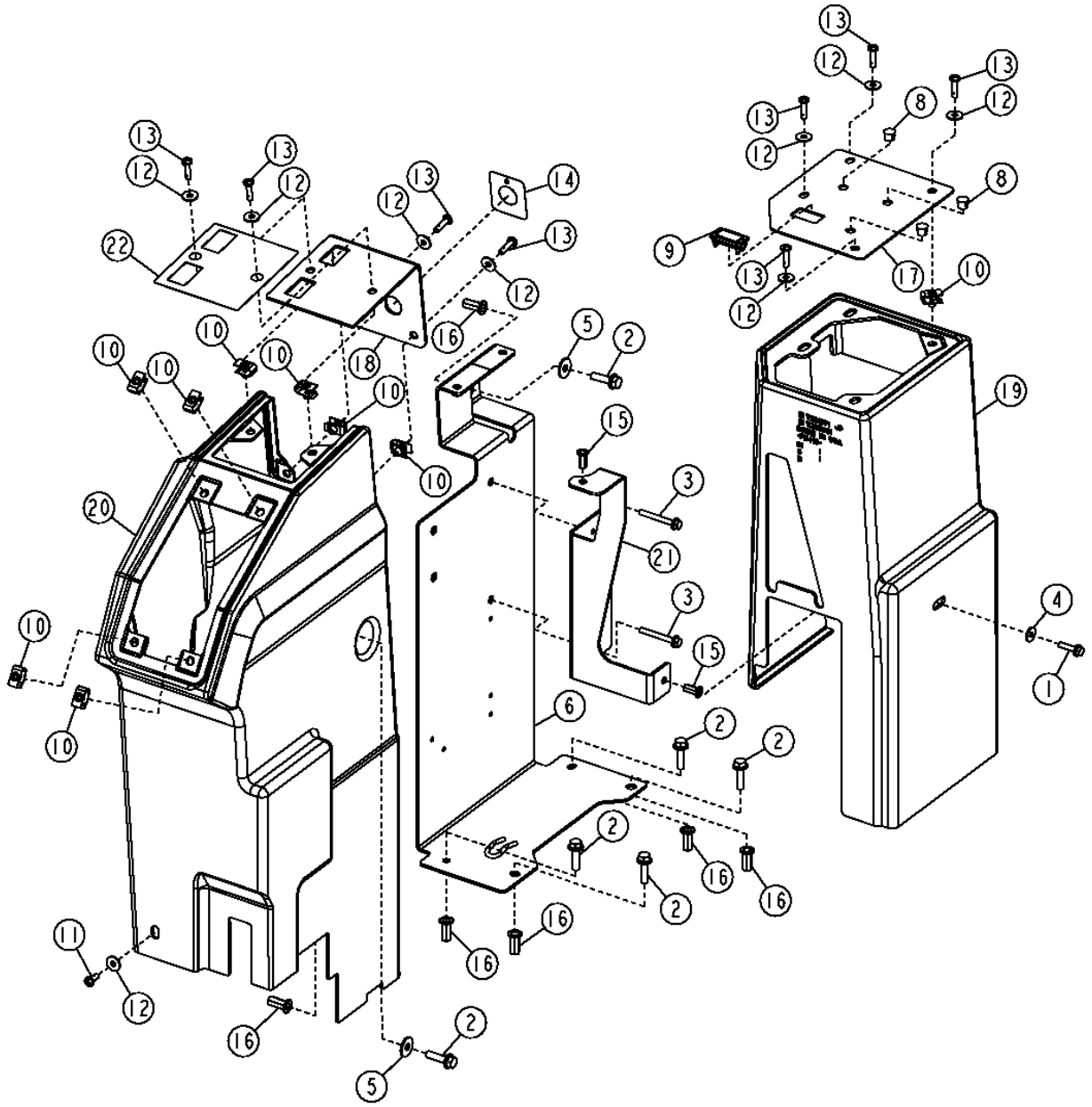

T203909

CANOPY SIDE CONSOLE

KEY	PART NO.	PART NAME	QTY	SERIAL NO.	670D	672D	REMARKS
1	19M7863	SCREW	1		X	X	M6 X 25
2	19M7868	SCREW	6		X	X	M8 X 30
3	19M8092	SCREW	2		X	X	M6 X 50
4	24M7139	WASHER	1		X	X	
5	24M7298	WASHER	2		X	X	
6	AT306848	BRACKET	1		X	X	(FLC AND POWER CONVERTER MOUNTING BRACKET)
8	H113924	PLUG	3		X	X	
9	M115279	PLUG	1		X	X	
10	R134098	NUT	9		X	X	
11	21M7292	SCREW	1		X	X	M6 X 16
12	24H1646	WASHER	9		X	X	(SUB FOR T134530)
13	21M7310	SCREW	8		X	X	M6 X 25
14	T157172	LABEL	1		X	X	
15	T196077	NUT	2		X	X	
16	T196079	NUT	6		X	X	
17	T202800	INSTRUMENT PANEL	1		X	X	
18	T203961	INSTRUMENT PANEL	1		X	X	
19	T205661	HOUSING	1		X	X	
20	T205662	HOUSING	1		X	X	
21	T205671	BRACKET	1		X	X	(ALSO ORDER (2) T196077)
22	T213199	LABEL	1		X	X	

CAB SIDE CONSOLE

T203914 -UN-18DEC04

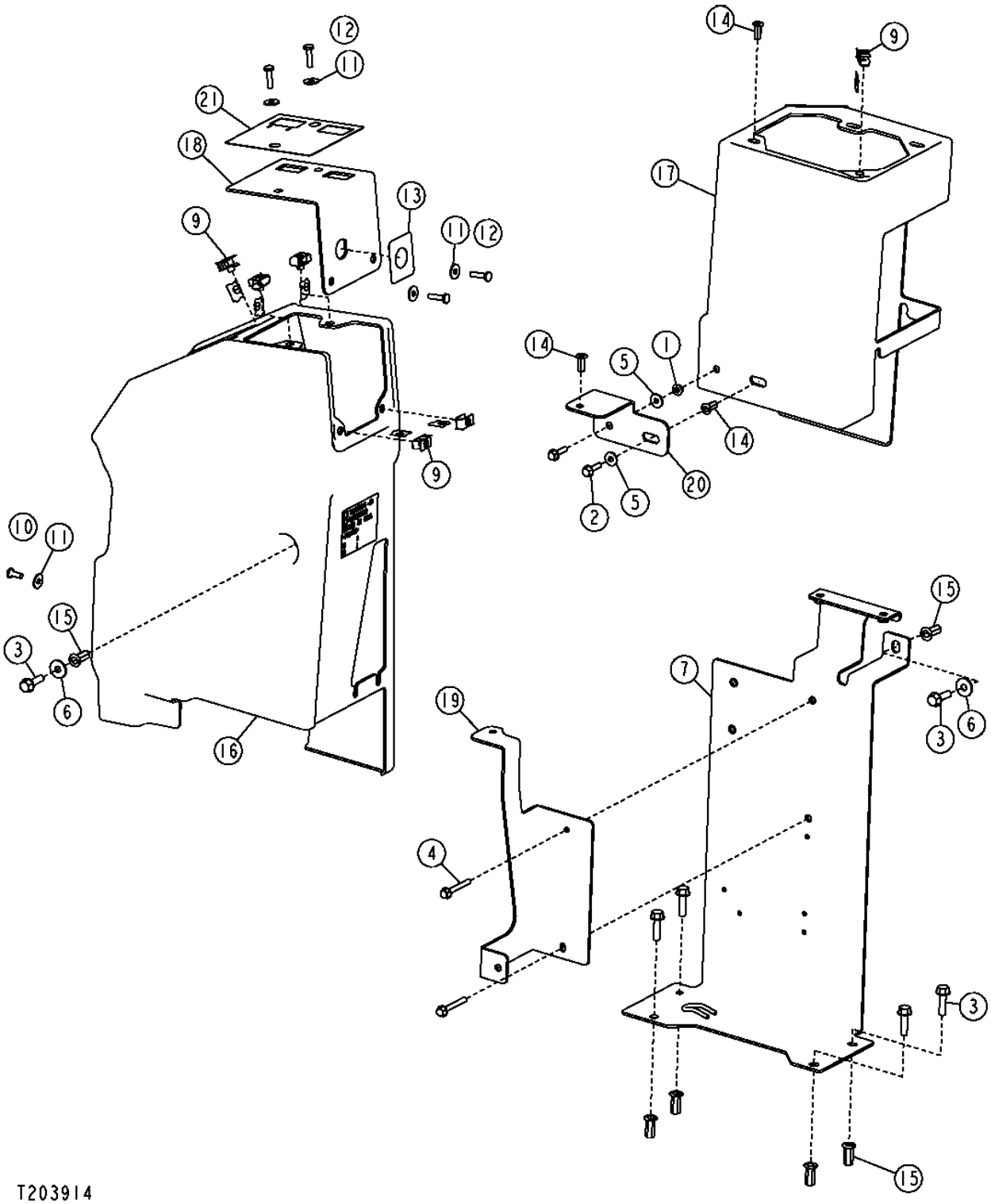

2H10

CAB SIDE CONSOLE

KEY	PART NO.	PART NAME	QTY	SERIAL NO.	670D	672D	REMARKS
1	14M7303	FLANGE NUT	1		X	X	M6
2	19M7863	SCREW	2		X	X	M6 X 25
3	19M7868	SCREW	6		X	X	M8 X 30
4	19M8092	SCREW	2		X	X	M6 X 50
5	24M7139	WASHER	2		X	X	
6	24M7298	WASHER	2		X	X	
7	AT306848	BRACKET	1		X	X	(FLC AND POWER CONVERTER MOUNTING BRACKET)
10	21M7292	SCREW	1		X	X	M6 X 16
11	24H1821	WASHER	5		X	X	
12	21M7310	SCREW	4		X	X	M6 X 25
13	T157172	LABEL	1		X	X	
14	T196077	NUT	3		X	X	
15	T196079	NUT	6		X	X	
16	T201564	CONTROL CONSOLE	1		X	X	(GEARSHIFT LEVER CONSOLE)
17	T201571	CONSOLE	1		X	X	(A/C CONSOLE)
18	T203961	INSTRUMENT PANEL	1		X	X	
19	T205671	BRACKET	1		X	X	(ALSO ORDER (2) T196077)
20	T213140	BRACKET	1		X	X	(ALSO ORDER T196077)
21	T213199	LABEL	1		X	X	

2H11

RIGHT SIDE CAB DOOR

T204838 -UN-11NOV04

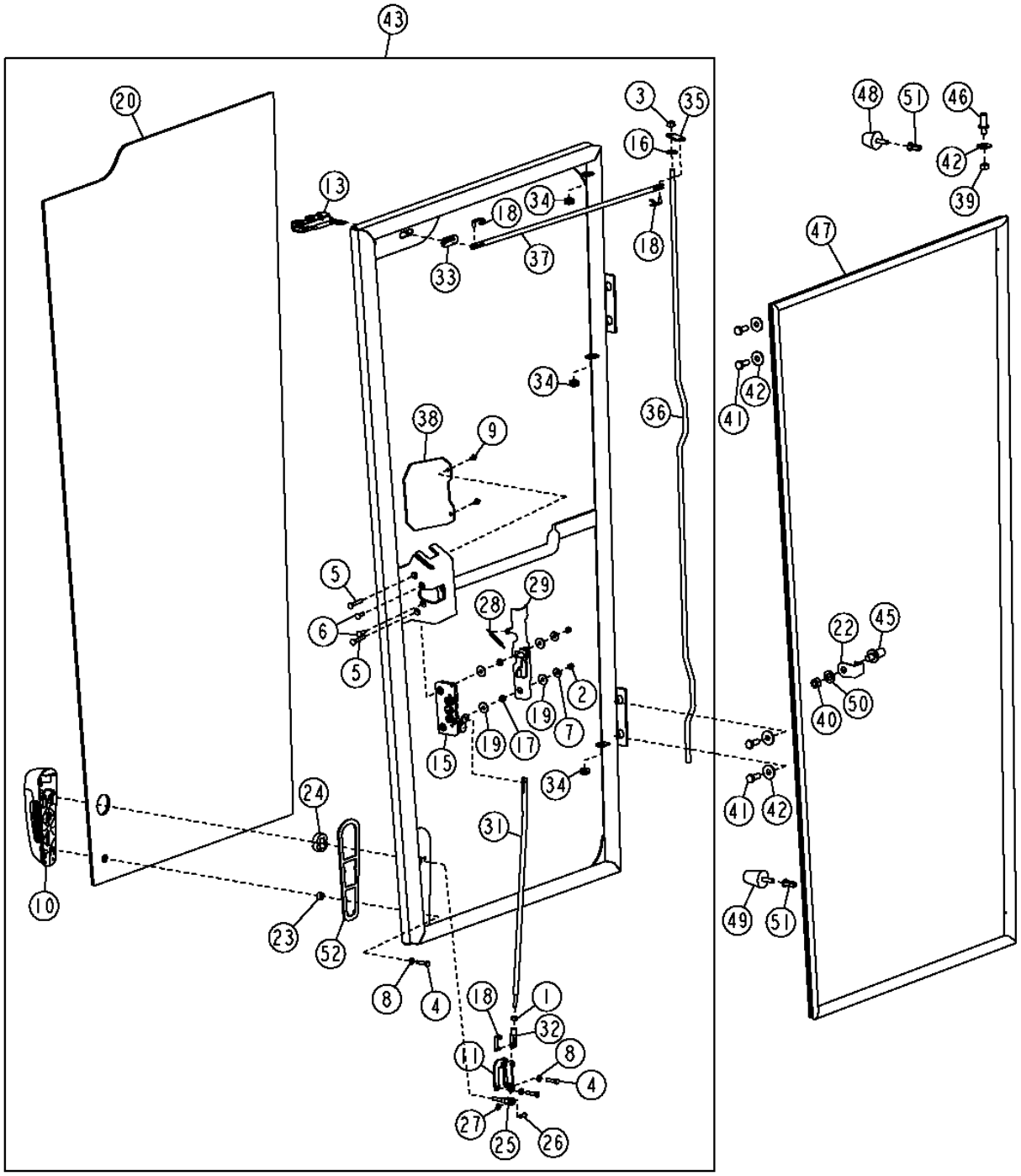

2H12

RIGHT SIDE CAB DOOR

KEY	PART NO.	PART NAME	QTY	SERIAL NO.	670D	672D	REMARKS
1	14H786	NUT	2		X	X	
2	14M7165	LOCK NUT	4		X	X	M6
3	14M7298	FLANGE NUT	2		X	X	M8
4	19M7933	CAP SCREW	12		X	X	M6 X 25
5	21M7289	SCREW	4		X	X	M6 X 40
6	21M7326	SCREW	4		X	X	M6 X 20
7	24H1646	WASHER	4		X	X	
8	24M7293	WASHER	12		X	X	
9	37M7059	SCREW	4		X	X	M5 X 12
10	AT306181	HANDLE	2		X	X	
11	AT317981	BELLCRANK	2		X	X	
13	AT317983	LATCH	1		X	X	
15	AT317985	LATCH	1		X	X	
16	H110232	WASHER	2		X	X	
17	T160017	SPACER	4		X	X	
18	T160020	PIN	8		X	X	
19	T175675	WASHER	8		X	X	
20	T202653	WINDOWPANE	1		X	X	(RH LOW PROFILE)
	T202655	WINDOWPANE	1		X	X	(RH FULL HEIGHT)
22	T204599	GASKET	2		X	X	
23	T205901	WASHER	2		X	X	
24	T205902	SPACER	2		X	X	
25	T210101	YOKE	2		X	X	
26	T210102	PIN FASTENER	2		X	X	
27	T210103	RING	2		X	X	
28	T210106	SPRING	2		X	X	
29	T213167	LEVER	1		X	X	
31	T213443	ROD	2		X	X	
32	T213444	CLEVIS	2		X	X	
33	T213445	GROMMET	2		X	X	
34	L152397	GROMMET	6		X	X	(SUB FOR T213447)
35	T213448	STRAP	2		X	X	
36	T213450	ROD	2		X	X	(LOW PROFILE)
	T213449	ROD	2		X	X	(FULL HEIGHT)
37	T213451	ROD	2		X	X	
38	T213452	COVER	2		X	X	
39	14M7274	NUT	2		X	X	M10
40	14M7275	NUT	2		X	X	M12
41	19M7402	CAP SCREW	8		X	X	M10 X 25
42	24M7296	WASHER	10		X	X	10.500 X 30 X 2.500 MM
43	AT303744	DOOR	1		X	X	(RH LOW PROFILE)
	AT303748	DOOR	1		X	X	(RH FULL HEIGHT)
45	AT307096	STRIKER	2		X	X	
46	T201880	STUD	2		X	X	
47	AT322428	ISOLATOR	2		X	X	
48	AT317979	BUMPER	2		X	X	
49	AT317980	BUMPER	2		X	X	
50	R70663	WASHER	2		X	X	
51	T196079	NUT	4		X	X	
52	T205499	GUARD	2		X	X	

2H13

LEFT SIDE CAB DOOR

T204307 -UN-18DEC04

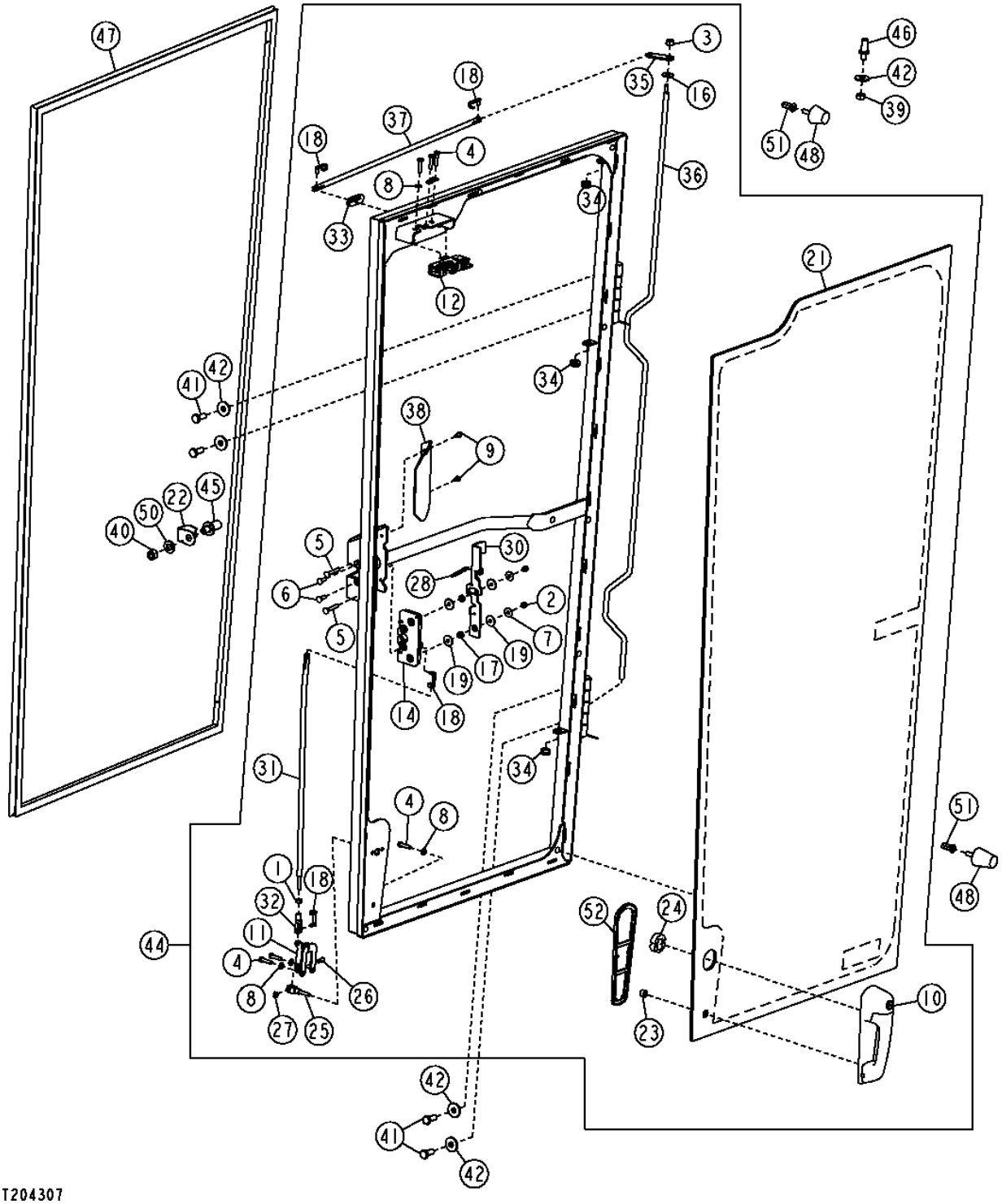

2H14

LEFT SIDE CAB DOOR

KEY	PART NO.	PART NAME	QTY	SERIAL NO.	670D	672D	REMARKS
1	14H786	NUT	2		X	X	
2	14M7165	LOCK NUT	4		X	X	M6
3	14M7298	FLANGE NUT	2		X	X	M8
4	19M7933	CAP SCREW	12		X	X	M6 X 25
5	21M7289	SCREW	4		X	X	M6 X 40
6	21M7326	SCREW	4		X	X	M6 X 20
7	24H1646	WASHER	4		X	X	
8	24M7293	WASHER	12		X	X	6.500 X 13 X 1.600 MM
9	37M7059	SCREW	4		X	X	M5 X 12
10	AT306181	HANDLE	2		X	X	
11	AT317981	BELLCRANK	2		X	X	
12	AT317982	LATCH	1		X	X	
14	AT317984	LATCH	1		X	X	
16	H110232	WASHER	2		X	X	
17	T160017	SPACER	4		X	X	
18	T160020	PIN	8		X	X	
19	T175675	WASHER	8		X	X	
21	T202654	WINDOWPANE	1		X	X	(LH LOW PROFILE)
	T202656	WINDOWPANE	1		X	X	(LH FULL HEIGHT)
22	T204599	GASKET	2		X	X	
23	T205901	WASHER	2		X	X	
24	T205902	SPACER	2		X	X	
25	T210101	YOKE	2		X	X	
26	T210102	PIN FASTENER	2		X	X	
27	T210103	RING	2		X	X	
28	T210106	SPRING	2		X	X	
30	T213167	LEVER	1		X	X	
31	T213443	ROD	2		X	X	
32	T213444	CLEVIS	2		X	X	
33	T213445	GROMMET	2		X	X	
34	T213447	GROMMET	6		X	X	
35	T213448	STRAP	2		X	X	
36	T213450	ROD	2		X	X	(LOW PROFILE)
	T213449	ROD	2		X	X	(FULL HEIGHT)
37	T213451	ROD	2		X	X	
38	T213452	COVER	2		X	X	
39	14M7274	NUT	2		X	X	M10
40	14M7275	NUT	2		X	X	M12
41	19M7402	CAP SCREW	8		X	X	M10 X 25
42	24M7296	WASHER	10		X	X	
44	AT303745	DOOR	1		X	X	(LH LOW PROFILE)
	AT303749	DOOR	1		X	X	(LH FULL HEIGHT)
45	AT307096	STRIKER	2		X	X	
46	T201880	STUD	2		X	X	
47	AT322428	ISOLATOR	2		X	X	
48	AT317979	BUMPER	2		X	X	
50	R70663	WASHER	2		X	X	
51	T196079	NUT	4		X	X	
52	T205499	GUARD	2		X	X	

CAB STATIONARY FRONT CONSOLE

T204497 -UN-12NOV04

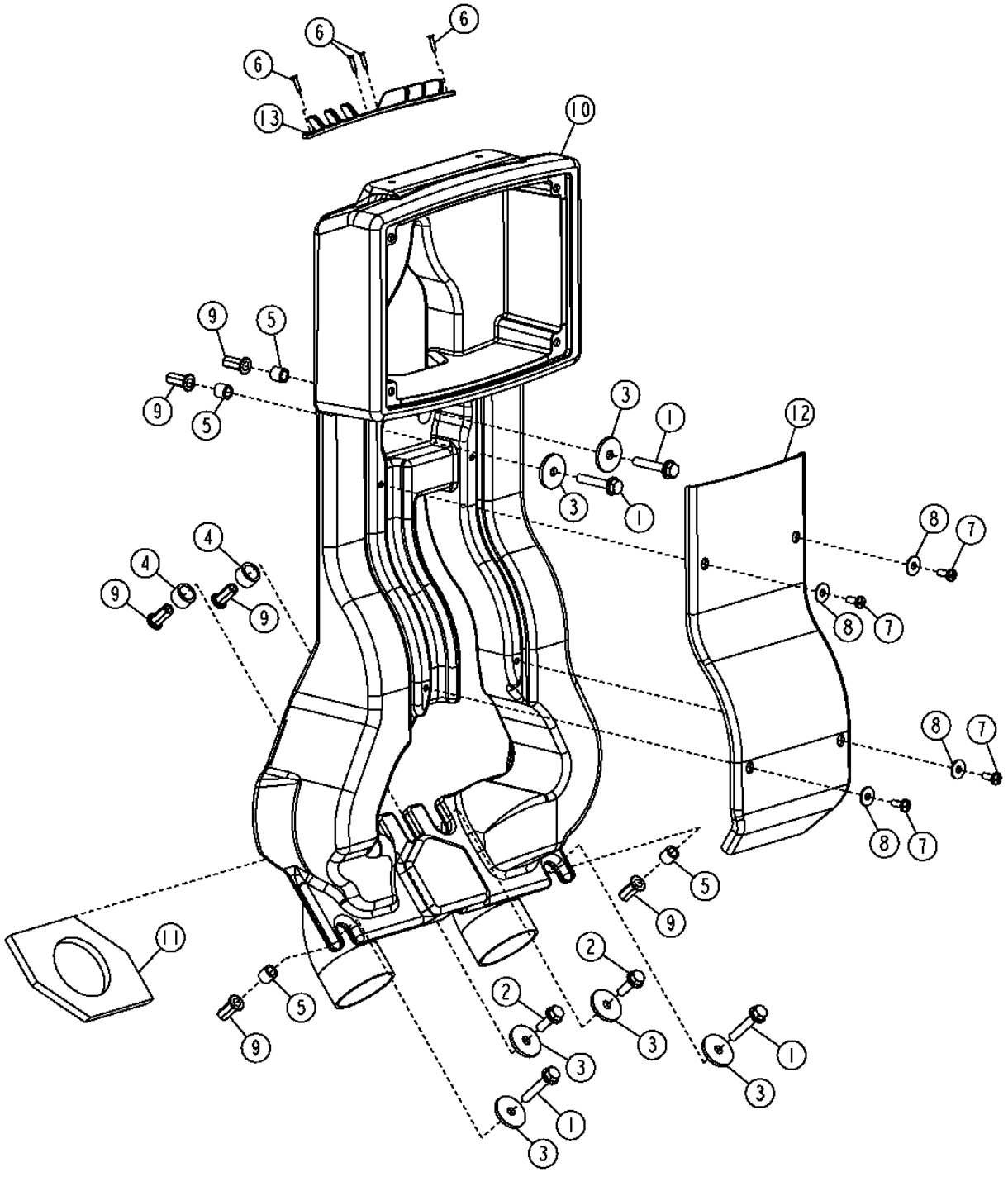

2H16

CAB STATIONARY FRONT CONSOLE

KEY	PART NO.	PART NAME	QTY	SERIAL NO.	670D	672D	REMARKS
1	19M7799	SCREW	4		X	X	M8 X 45
2	19M7867	SCREW	2		X	X	M8 X 25
3	24H1296	WASHER	6		X	X	
4	28H3393	BUSHING	2		X	X	
5	28H3450	SPACER	4		X	X	
6	37M7333	SCREW	4		X	X	
7	21M7292	SCREW	4		X	X	M6 X 16
8	24H1646	WASHER	4		X	X	(SUB FOR T134530)
9	T196079	NUT	6		X	X	
10	T201565	AIR DUCT	1		X	X	
11	T202746	SEAL	2		X	X	
12	T202797	COVER	1		X	X	
13	T212947	LOUVER	1		X	X	

STEERING WHEEL AND STEERING COLUMN

T205167 -UN-29NOV04

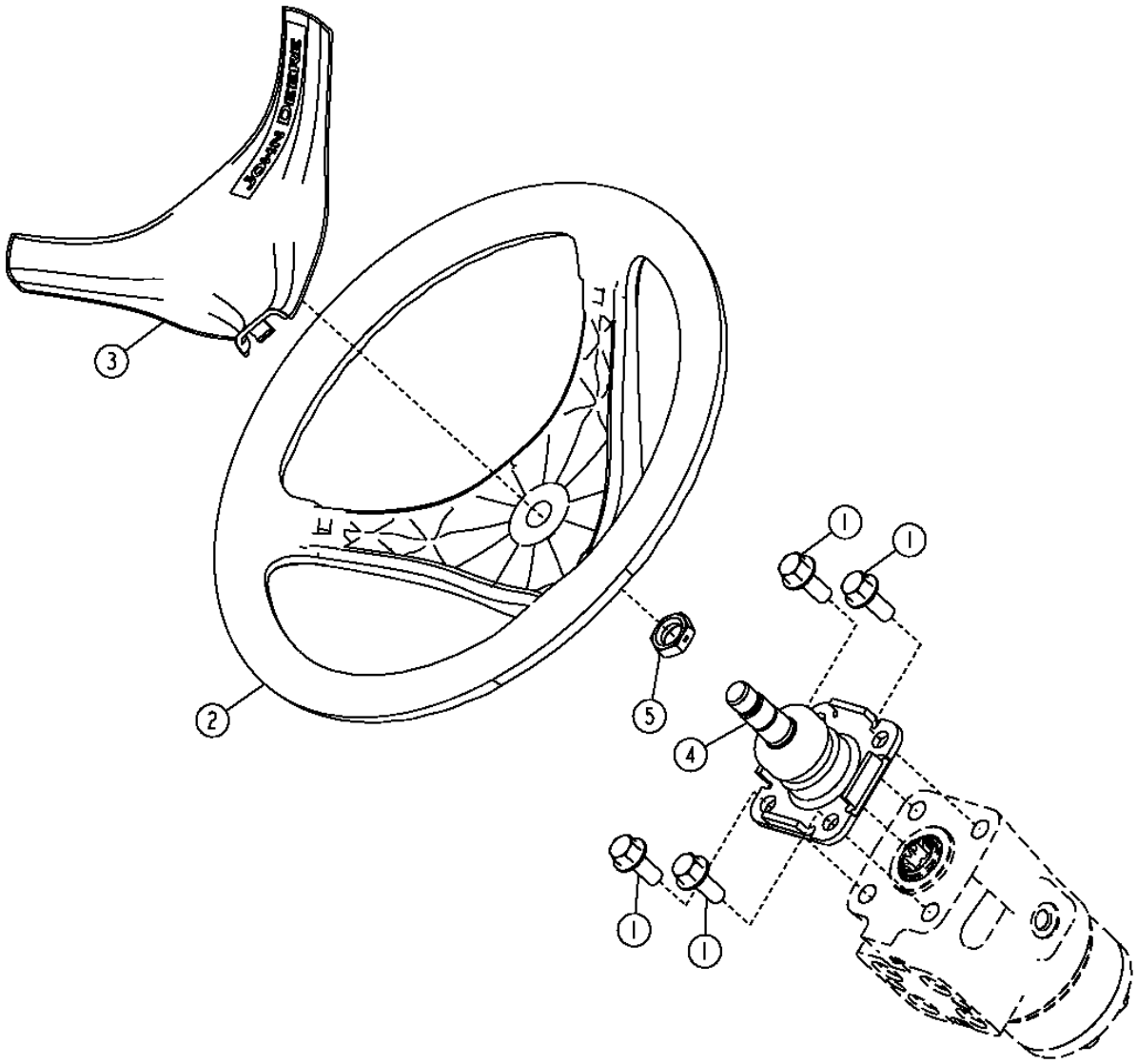

T205167

2H18

STEERING WHEEL AND STEERING COLUMN

KEY	PART NO.	PART NAME	QTY	SERIAL NO.	670D	672D	REMARKS
1	19M7785	SCREW	4		X	X	M10 X 25
2	M142218	STEERING WHEEL	1		X	X	
3	M142219	COVER	1		X	X	
4	AT322881	STEERING COLUMN	2		X	X	
5	T213896	NUT	1		X	X	

2H19

CAB CONTROL LEVER CONSOLE

T212873 -UN-21JUL05

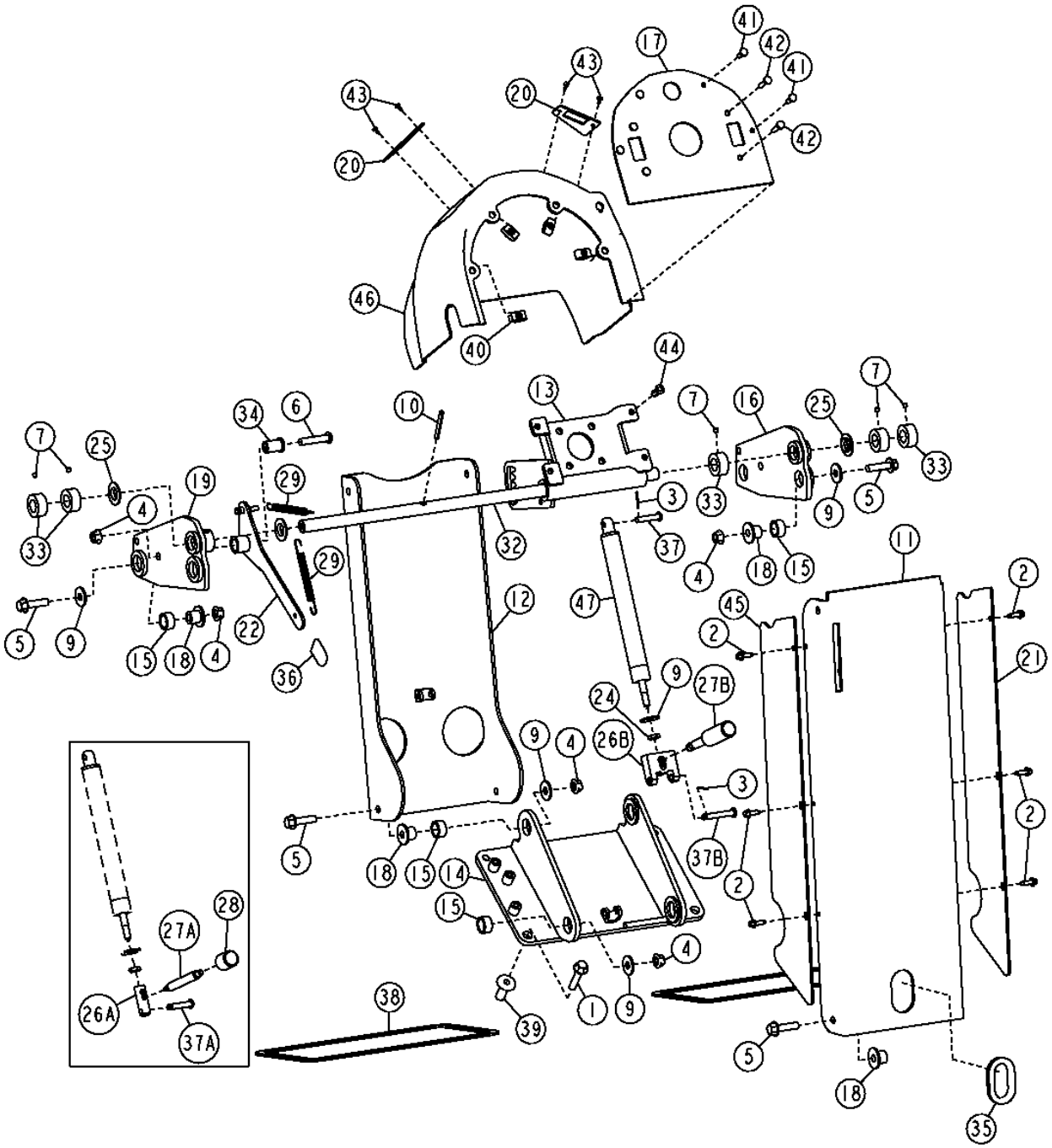

THIS PARTS LISTING IS CONTINUED

CAB CONTROL LEVER CONSOLE

KEY	PART NO.	PART NAME	QTY	SERIAL NO.	670D	672D	REMARKS
1	19M7805	SCREW	4		X	X	M10 X 45
2	37M7131	SCREW	6		X	X	
3	11M7078	COTTER PIN	2		X	X	
4	14M7296	FLANGE NUT	9		X	X	M10
5	19M7804	SCREW	8		X	X	M10 X 40
6	21M7497	SCREW	1		X	X	M10 X 50
7	22M7111	SET SCREW	5		X	X	M6 X 6
9	24M7296	WASHER	9		X	X	
10	34M7044	SPRING PIN	1		X	X	
11	AT305051	CONTROL SUPPORT	1		X	X	
12	AT305052	CONTROL SUPPORT	1		X	X	
13	AT305070	BRACKET	1		X	X	(ALSO ORDER (4) T196078)
14	AT305018	CONTROL SUPPORT	1		X	X	
15	T203544	BUSHING	8		X	X	
16	AT305297	BRACKET	1		X	X	
17	T204643	PLATE	1		X	X	
18	T203545	BUSHING	8		X	X	
19	AT305310	BRACKET	1		X	X	
20	T205401	PLATE	2		X	X	
21	T206080	COVER	1		X	X	
22	AT305397	LEVER	1		X	X	
24	14M7500	NUT	1		X	X	M10
25	T104220	WASHER	4		X	X	
26A	.....	ADAPTER	1		X	X	(SUB T217649, T217650, R69166) (T210698 NO LONGER AVAILABLE)
26B	T217649	ADAPTER	1		X	X	
27A	.....	LEVER	1		X	X	(SUB T217649, T217650, R69166) (T210699 NO LONGER AVAILABLE)
27B	T217650	LEVER	1		X	X	
28	.....	PIN FASTENER	1		X	X	(SUB T217649, T217650, R69166) (T210700 NO LONGER AVAILABLE)
29	M145875	EXTENSION SPRING	2		X	X	
32	T203569	SHAFT	1		X	X	
33	T203576	SPACER	5		X	X	
34	T203871	SPACER	1		X	X	
35	T210711	GROMMET	1		X	X	
36	T81012	CAP	1		X	X	
37	Z21059	PIN FASTENER	1		X	X	
37A	Z21059	PIN FASTENER	1		X	X	
37B	R69166	PIN	1		X	X	
38	.....	ISOLATOR	1		X	X	(MAKE FROM T59938) (CUT TO LENGTH)
39	H173411	NUT	4		X	X	
40	M84972	NUT	4		X	X	
41	T133674	SELF-LOCKING SCREW	4		X	X	
42	T134895	SELF-LOCKING SCREW	4		X	X	
43	T185769	SCREW	4		X	X	
44	T196078	NUT	4		X	X	
45	T203589	COVER	1		X	X	
46	T204301	COVER	1		X	X	
47	AT305734	WIRING HARNESS	1		X	X	

CAB CONTROL LEVERS (LEFT)

T210167 -UN-14APR05

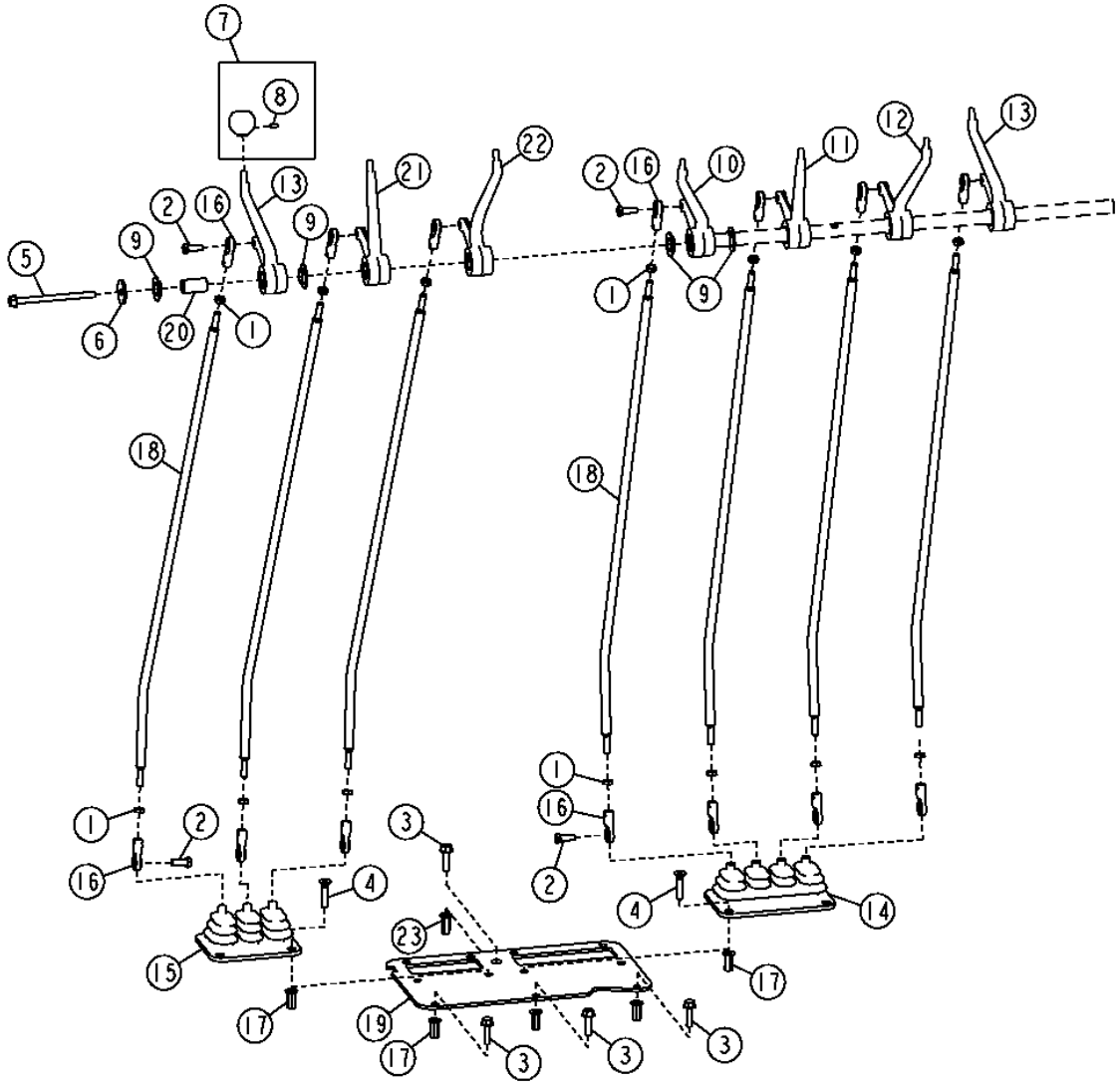

CAB CONTROL LEVERS (LEFT)

KEY	PART NO.	PART NAME	QTY	SERIAL NO.	670D	672D	REMARKS
1	14H882	NUT	14		X	X	
2	19H2127	CAP SCREW	14		X	X	
3	19M7868	SCREW	4		X	X	M8 X 30
4	N278790	SCREW	16		X	X	
5	19M7865	SCREW	2		X	X	M8 X 16, (USE WITH FOUR LEVERS)
	19M7800	SCREW	1		X	X	M8 X 50, (USE WITH FIVE LEVERS)
	19M7913	SCREW	1		X	X	M8 X 90, (USE WITH SIX LEVERS)
	19M8006	SCREW	1		X	X	M8 X 120, (USE WITH SEVEN LEVERS)
6	24H1296	WASHER	1		X	X	
7	AT317737	KNOB	1		X	X	(CIRCLE ROTATE)
	AT317739	KNOB	1		X	X	(ARTICULATION)
	AT317740	KNOB	1		X	X	(WHEEL LEAN)
	AT317741	KNOB	1		X	X	(RIGHT BLADE LIFT)
	AT317744	KNOB	1		X	X	(AUXILIARY)
	AT317742	KNOB	1		X	X	(SCARIFIER)
8	T213242	SET SCREW	1		X	X	
9	T104220	WASHER	32		X	X	
10	T202160	CONTROL LEVER	1		X	X	
11	T202161	CONTROL LEVER	1		X	X	
12	T202162	CONTROL LEVER	1		X	X	
13	T202163	CONTROL LEVER	1		X	X	
14	AT305667	BOOT	1		X	X	
15	AT305939	BOOT	1		X	X	
16	AT317778	LINK END	14		X	X	
17	T196079	NUT	11		X	X	
18	T202586	LEVER	7		X	X	
19	T204044	PLATE	2		X	X	
20	T204457	SPACER	1		X	X	
21	T202164	CONTROL LEVER	1		X	X	
22	T202159	CONTROL LEVER	2		X	X	
23	T196080	NUT	2		X	X	

CAB CONTROL LEVERS (RIGHT)

T210168 -UN-14APR05

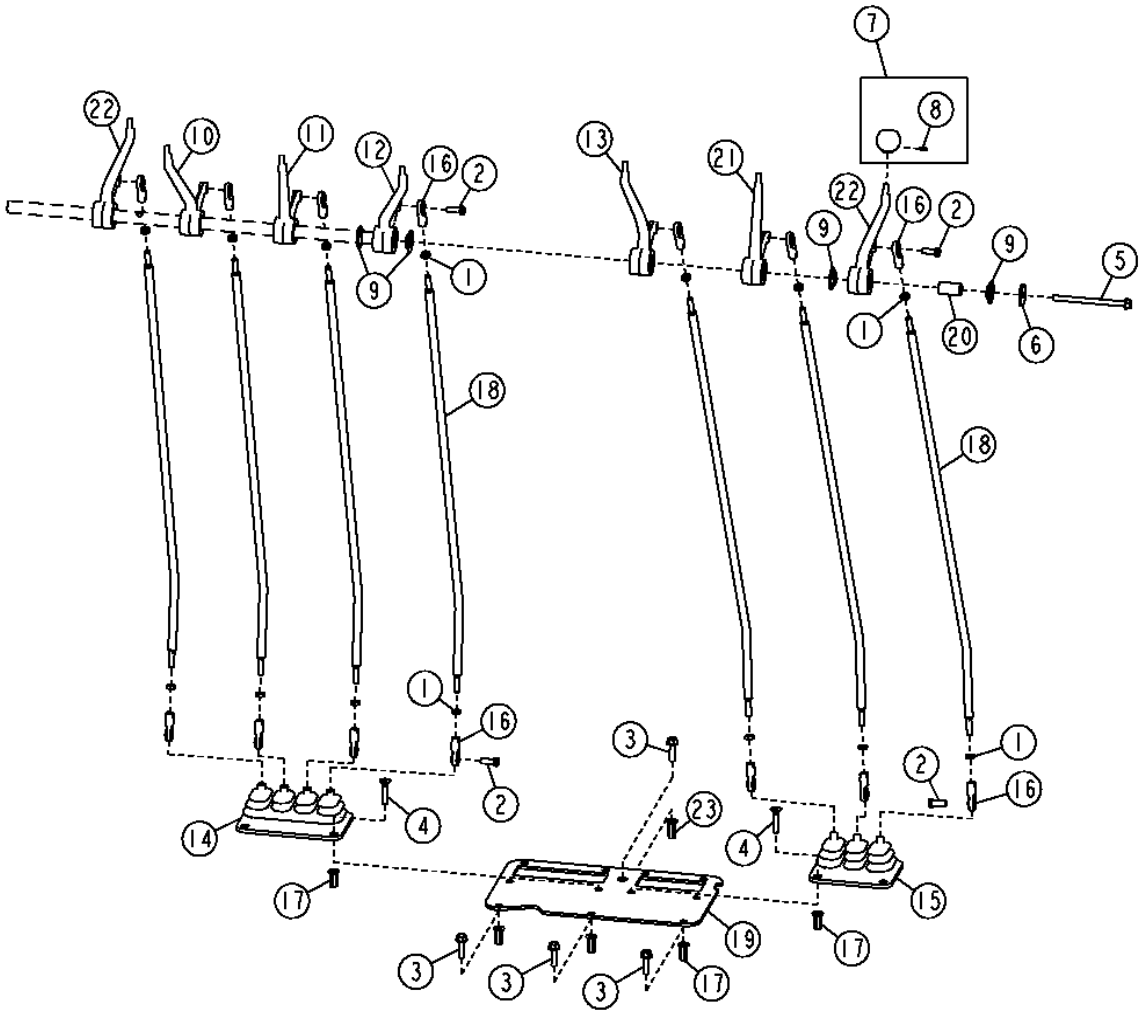

CAB CONTROL LEVERS (RIGHT)

KEY	PART NO.	PART NAME	QTY	SERIAL NO.	670D	672D	REMARKS
1	14H882	NUT	14		X	X	
2	19H2127	CAP SCREW	14		X	X	
3	19M7868	SCREW	4		X	X	M8 X 30
4	N278790	SCREW	16		X	X	
5	19M7865	SCREW	2		X	X	M8 X 16, (USE WITH FOUR LEVERS)
	19M7800	SCREW	1		X	X	M8 X 50, (USE WITH FIVE LEVERS)
	19M7913	SCREW	1		X	X	M8 X 90, (USE WITH SIX LEVERS)
	19M8006	SCREW	1		X	X	M8 X 120, (USE WITH SEVEN LEVERS)
6	24H1296	WASHER	1		X	X	
7	AT317734	KNOB	1		X	X	(LEFT BLADE LIFT)
	AT317735	KNOB	1		X	X	(BLADE SIDE SHIFT)
	AT317736	KNOB	1		X	X	(BLADE TILT)
	AT317738	KNOB	1		X	X	(CIRCLE SIDE SHIFT)
	AT317743	KNOB	1		X	X	(RIPPER)
	AT317744	KNOB	1		X	X	(AUXILIARY)
8	T213242	SET SCREW	1		X	X	
9	T104220	WASHER	32		X	X	
10	T202160	CONTROL LEVER	1		X	X	
11	T202161	CONTROL LEVER	1		X	X	
12	T202162	CONTROL LEVER	1		X	X	
13	T202163	CONTROL LEVER	1		X	X	
14	AT305667	BOOT	1		X	X	
15	AT305939	BOOT	1		X	X	
16	AT317778	LINK END	14		X	X	
17	T196079	NUT	11		X	X	
18	T202586	LEVER	7		X	X	
19	T204044	PLATE	2		X	X	
20	T204457	SPACER	1		X	X	
21	T202164	CONTROL LEVER	1		X	X	
22	T202159	CONTROL LEVER	2		X	X	
23	T196080	NUT	2		X	X	

AIR SUSPENSION SEAT

T204097 -UN-10NOV04

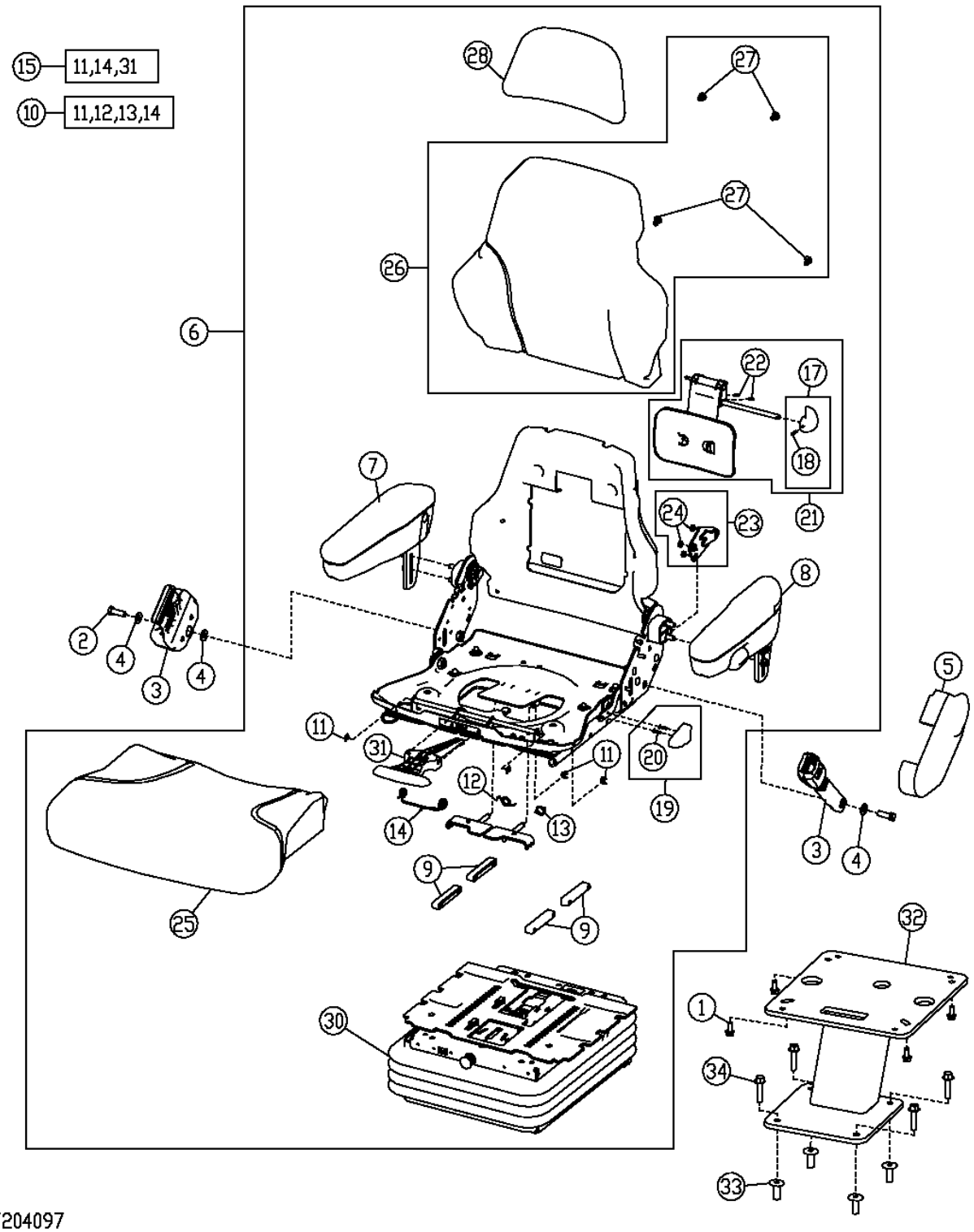

AIR SUSPENSION SEAT

KEY	PART NO.	PART NAME	QTY	SERIAL NO.	670D	672D	REMARKS
1	19M7866	BOLT	4		X	X	
2	19H3569	CAP SCREW	2		X	X	
3	AT308199	SEAT BELT	1		X	X	
4	T105740	WASHER	4		X	X	
5	T163962	COVER	1		X	X	
6	AT224248	SEAT	1		X	X	GRAY CLOTH
7	AT195441	ARMREST KIT	1		X	X	(R.H.)
	AT315715	PAD	1		X	X	
8	AT195442	ARMREST KIT	1		X	X	(L.H.)
	AT315761	PAD	1		X	X	
9	AT209020	KIT	1		X	X	SLIDE PUCK KIT
10	AT209021	KIT	1		X	X	SLIDE SPRING KIT
11	R72655	SNAP RING	4		X	X	
12	T163334	SPRING	1		X	X	
13	T163335	SPRING	1		X	X	
14	T163336	TORSION SPRING	1		X	X	
15	AT209022	KIT	1		X	X	SLIDE CONTROL KIT
17	AT209024	KIT	1		X	X	LUMBAR KNOB KIT
18	34H262	SPRING PIN	1		X	X	
19	AT209025	KIT	1		X	X	RECLINER KNOB KIT
20	37H121	SCREW	1		X	X	
21	AT209026	KIT	1		X	X	LUMBAR SERVICE KIT
22	34H387	SPRING PIN	2		X	X	
23	AT209225	KIT	1		X	X	RECLINER SERVICE KIT (INCLUDES RECLINER KNOB KIT AND TORSION SPRING)
24	M453T	LOCK NUT	3		X	X	
25	AT308795	CUSHION	1		X	X	(SUB FOR AT221019) GRAY CLOTH
26	AT308796	CUSHION	1		X	X	(SUB FOR AT221020) GRAY CLOTH
27	T171686	CLIP	4		X	X	
28	AT308797	CUSHION	1		X	X	(SUB FOR AT221021) GRAY CLOTH
29	N119177	GROMMET	1		X	X	(NOT ILLUSTRATED)
30	AT208531	SEAT SUSPENSION	1		X	X	(AIR)(COMPONENTS ON SEPARATE PAGE)
31	.....	CONTROL	1		X	X	
32	AT305437	PEDESTAL	1		X	X	
33	H173411	NUT	4		X	X	
34	19M7805	SCREW	4		X	X	M10 X 45

AIR SEAT SUSPENSION COMPONENTS

T195125 -UN-25SEP03

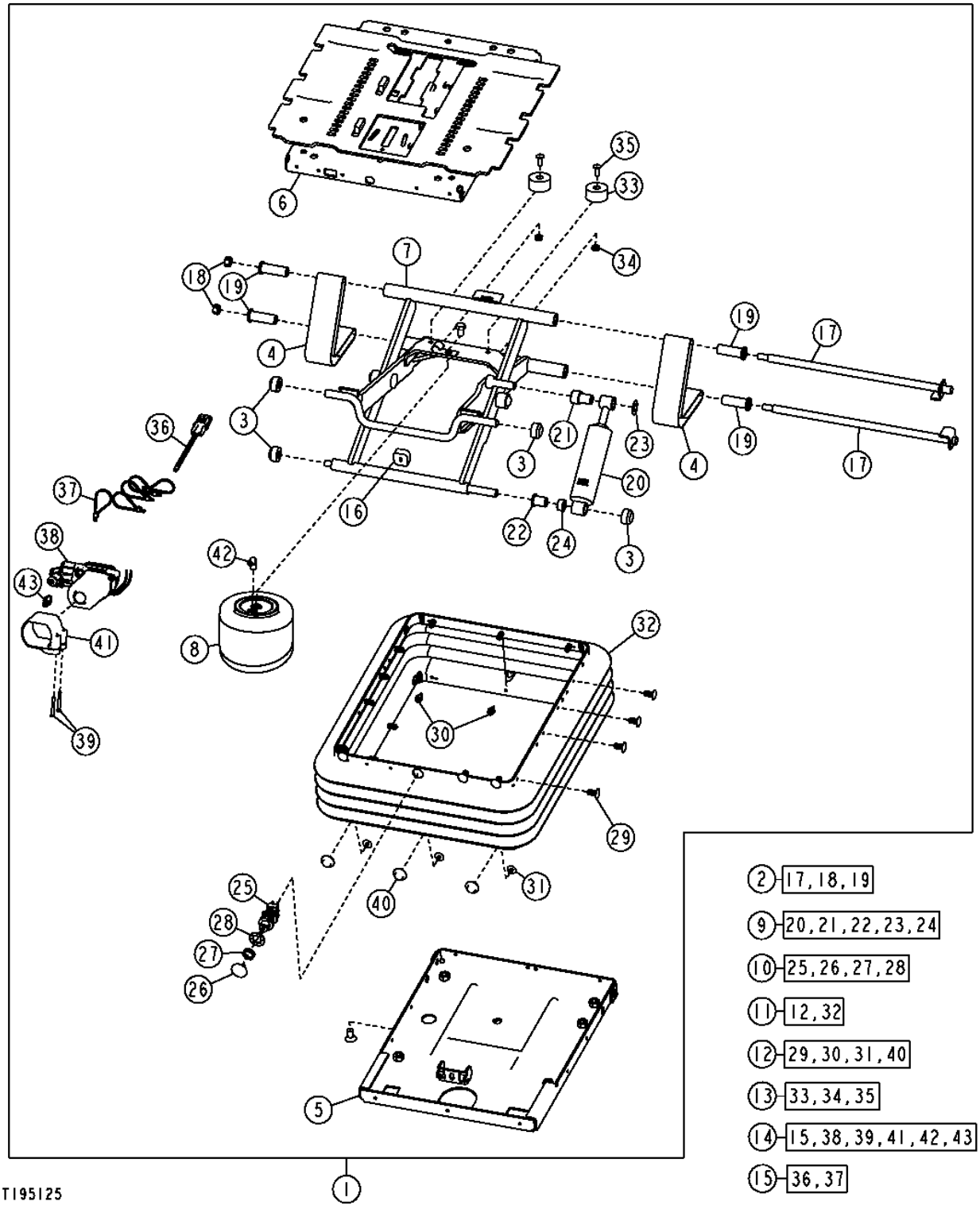

AIR SEAT SUSPENSION COMPONENTS

KEY	PART NO.	PART NAME	QTY	SERIAL NO.	REMARKS
1	AT208531	SEAT SUSPENSION	1		
2	AT173313	SHAFT	1		
3	AT173314	SEAT BEARING ROLLER KIT	1		
4	AT173315	KIT	1		TETHER BELT SERVICE KIT
5	AT208483	HOUSING	1		
6	AT208484	HOUSING	1		
7	AT208485	ARM	1		
8	AT208486	SPRING	1		(AIR BLADDER SPRING)
9	AT208487	KIT	1		SUSPENSION SHOCK SERVICE KIT
10	AT208490	SELECTIVE CONTROL VALVE	1		
11	AT208491	KIT	1		BOOT SERVICE KIT (INCLUDES AT173321)
12	AT173321	SEAT SUSPENSION BOOT KIT	1		
13	AT209469	KIT	1		BUMPER SERVICE KIT
14	AT226676	COMPRESSOR	1		
15	AT208488	WIRING HARNESS	1		
16	T55224	BUMPER	1		
17	.....	SHAFT	2		(SUB AT173313)
18	.....	LOCK NUT	2		(SUB AT173313)
19	.....	BUSHING	4		(SUB AT173313)
20	.....	SHOCK ABSORBER	1		(SUB AT208487)
21	.....	BEARING	1		(SUB AT208487)
22	.....	ECCENTRIC LOCKING COLLAR	1		(SUB AT208487)
23	.....	PUSH NUT	1		(SUB AT208487)
24	.....	SPACER	1		(SUB AT208487)
25	.....	HYD ACTUATED CONTROL VALVE	1		(SUB AT208490)
26	.....	KNOB	1		(SUB AT208490)
27	.....	NUT	1		(SUB AT208490)
28	.....	LOCK WASHER	1		(SUB AT208490)
29	.....	CLIP	23		(SUB AT173321)
30	.....	RIVET	3		(SUB AT173321)
31	.....	RIVET	3		(SUB AT173321)
32	.....	BOOT	1		(SUB AT208491)
33	.....	BUMPER	2		(SUB AT209469)
34	.....	LOCK NUT	2		(SUB AT209469)
35	.....	SCREW	2		(SUB AT209469)
36	.....	WIRING HARNESS	1		(SUB AT208488)
37	.....	TIE BAND	4		(SUB AT208488)
38	.....	COMPRESSOR	1		(SUB AT226676)
39	.....	SPRING PIN	2		(SUB AT226676)
40	.....	RIVET	6		(SUB AT173321)
41	.....	CLAMP	1		(SUB AT226676)
42	.....	PIPE ELBOW	1		(SUB AT226676)
43	.....	TAB CONNECTOR BODY	1		(SUB AT226676)
44	AT208493	FITTING KIT	1		(AIRLINE HOSE AND FITTING KIT) (NOT ILLUSTRATED)

MECHANICAL SUSPENSION SEAT

T204659 -UN-21DEC04

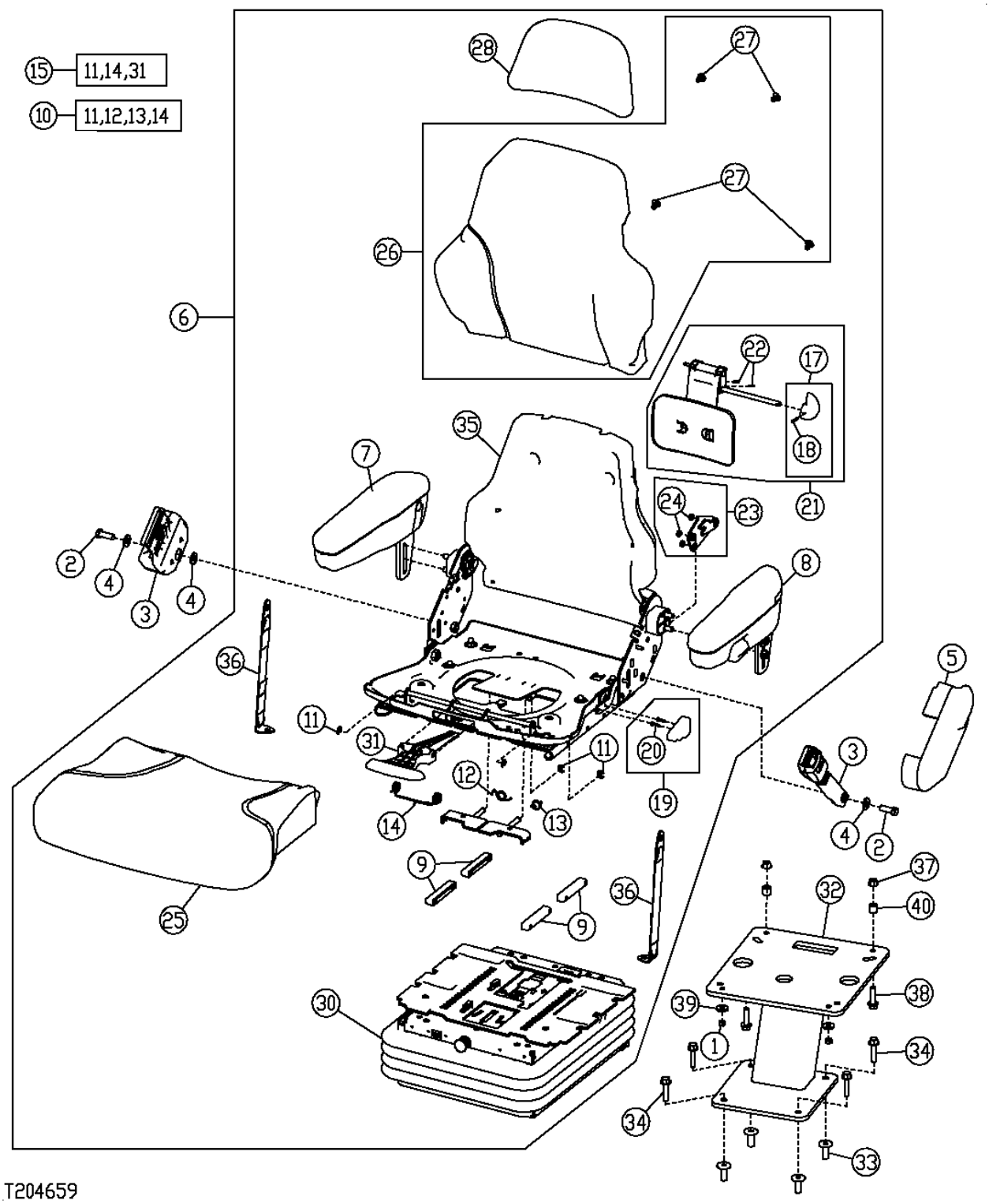

MECHANICAL SUSPENSION SEAT

KEY	PART NO.	PART NAME	QTY	SERIAL NO.	670D	672D	REMARKS
1	14H785	NUT	4		X	X	5/16"
2	19H3569	CAP SCREW	2		X	X	
3	AT308199	SEAT BELT	1		X	X	
4	T105740	WASHER	4		X	X	
5	T163962	COVER	1		X	X	
6	AT195440	SEAT	1		X	X	GRAY CLOTH
7	AT195441	ARMREST KIT	1		X	X	(R.H.)
	AT315715	PAD	1		X	X	
8	AT195442	ARMREST KIT	1		X	X	(L.H.)
	AT315761	PAD	1		X	X	
9	AT209020	KIT	1		X	X	SLIDE PUCK KIT
10	AT209021	KIT	1		X	X	SLIDE SPRING KIT
11	R72655	SNAP RING	4		X	X	
12	T163334	SPRING	1		X	X	
13	T163335	SPRING	1		X	X	
14	T163336	TORSION SPRING	1		X	X	
15	AT209022	KIT	1		X	X	SLIDE CONTROL KIT
17	AT209024	KIT	1		X	X	LUMBAR KNOB KIT
18	34H262	SPRING PIN	1		X	X	
19	AT209025	KIT	1		X	X	RECLINER KNOB KIT
20	37H121	SCREW	1		X	X	
21	AT209026	KIT	1		X	X	LUMBAR SERVICE KIT
22	34H387	SPRING PIN	2		X	X	
23	AT209225	KIT	1		X	X	RECLINER SERVICE KIT (INCLUDES RECLINER KNOB KIT AND TORSION SPRING)
24	M453T	LOCK NUT	3		X	X	
25	AT308795	CUSHION	1		X	X	(SUB FOR AT221019) GRAY CLOTH
26	AT308796	CUSHION	1		X	X	(SUB FOR AT221020) GRAY CLOTH
27	T171686	CLIP	4		X	X	
28	AT308797	CUSHION	1		X	X	(SUB FOR AT221021) GRAY CLOTH
29	N119177	GROMMET	1		X	X	(NOT ILLUSTRATED)
30	AT180126	SEAT SUSPENSION	1		X	X	(MECHANICAL)(COMPONENTS ON SEPARATE PAGE)
31	.....	CONTROL	1		X	X	
32	AT303518	PEDESTAL	1		X	X	
33	H173411	NUT	4		X	X	
34	19M7805	SCREW	4		X	X	M10 X 45
35	AT280583	PAN	1		X	X	
36	AT181392	KIT	2		X	X	
37	14M7296	FLANGE NUT	2		X	X	M10
38	19M7804	SCREW	2		X	X	M10 X 40
39	24H1887	WASHER	4		X	X	
40	28H3425	SPACER	2		X	X	

MECHANICAL SEAT SUSPENSION COMPONENTS

T206425 -UN-29DEC04

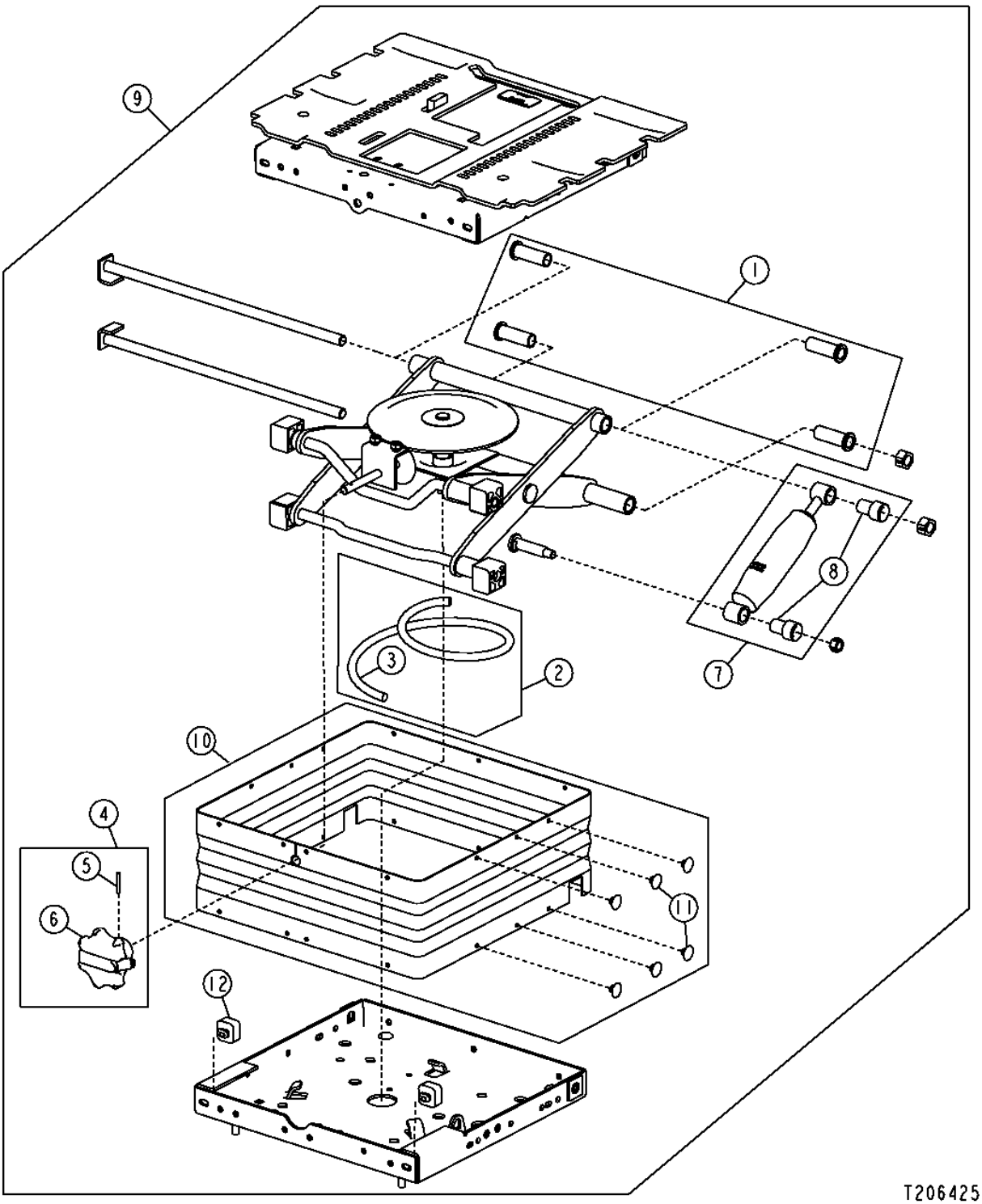

MECHANICAL SEAT SUSPENSION COMPONENTS

KEY	PART NO.	PART NAME	QTY	SERIAL NO.	670D	672D	REMARKS
1	AT106397	BEARING KIT	1		X	X	
2	AT125801	SPRING	1		X	X	
3	T55210	SPRING	1		X	X	
4	AT125805	KIT	1		X	X	(ADJUSTING KNOB KIT)
5	34H266	SPRING PIN	1		X	X	
6	AT125829	KNOB	1		X	X	
7	AT175436	KIT	1		X	X	(SHOCK ABSORBER KIT)
8	T55222	BUSHING	2		X	X	
9	AT180126	SEAT SUSPENSION	1		X	X	(MECHANICAL SEAT SUSPENSION)
10	AT180135	SEAT SUSPENSION	1		X	X	(BOOT AND CLIP KIT)
11	T63798	PLUG	25		X	X	
12	T55224	BUMPER	2		X	X	

CAB STEPS

T202320 -UN-02SEP04

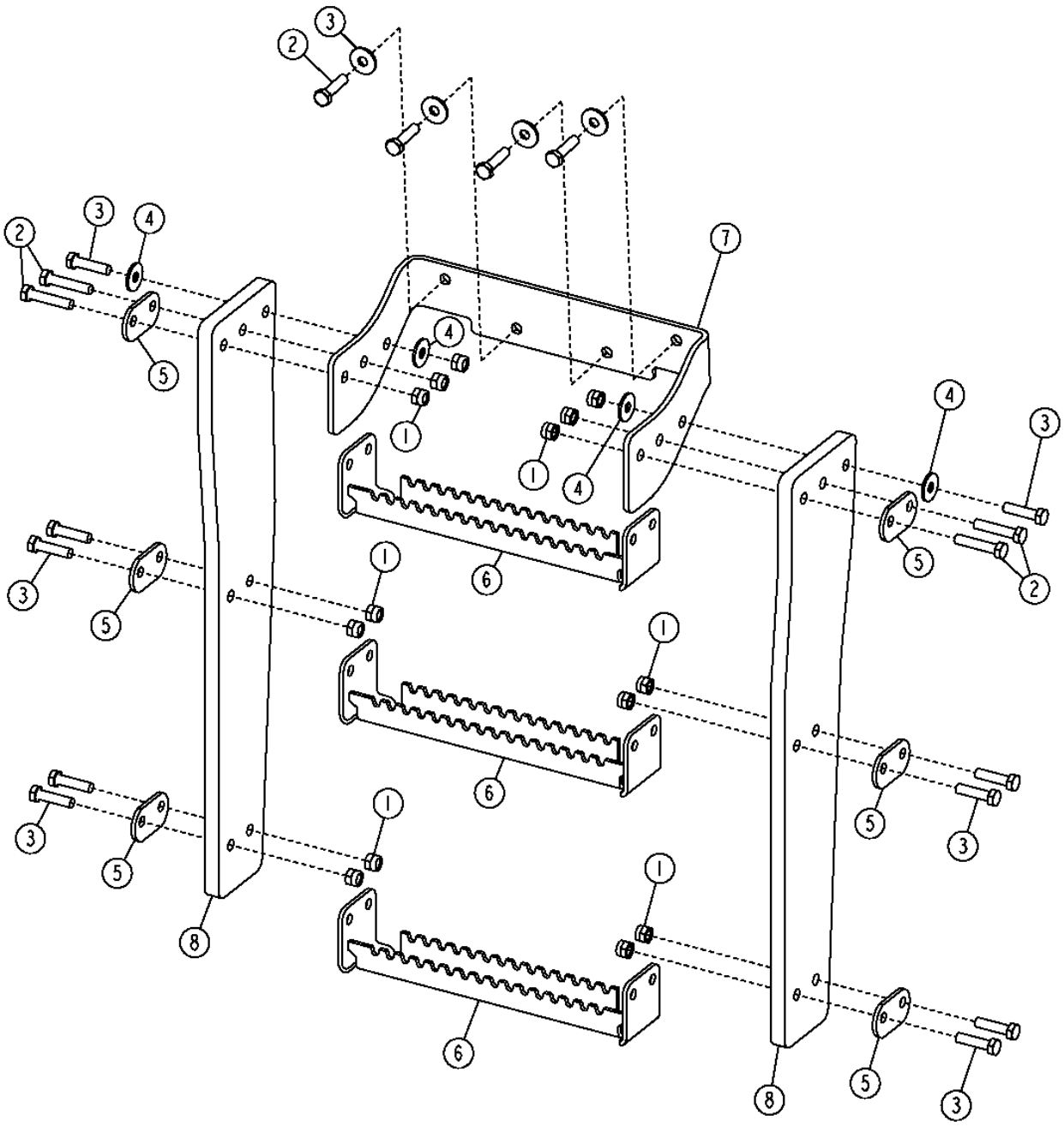

CAB STEPS

KEY	PART NO.	PART NAME	QTY	SERIAL NO.	670D	672D	REMARKS
1	14M7517	LOCK NUT	28		X	X	M10
2	19M8600	CAP SCREW	8		X	X	M10 X 50
3	19M8637	CAP SCREW	28		X	X	M10 X 40
4	24M7296	WASHER	16		X	X	
5	T173779	STRAP	12		X	X	
6	T176870	STEP	6		X	X	
7	T201673	BRACKET	2		X	X	
8	T202374	STRAP	4		X	X	

CAB HEATER HOSES

T202489 -UN-09NOV04

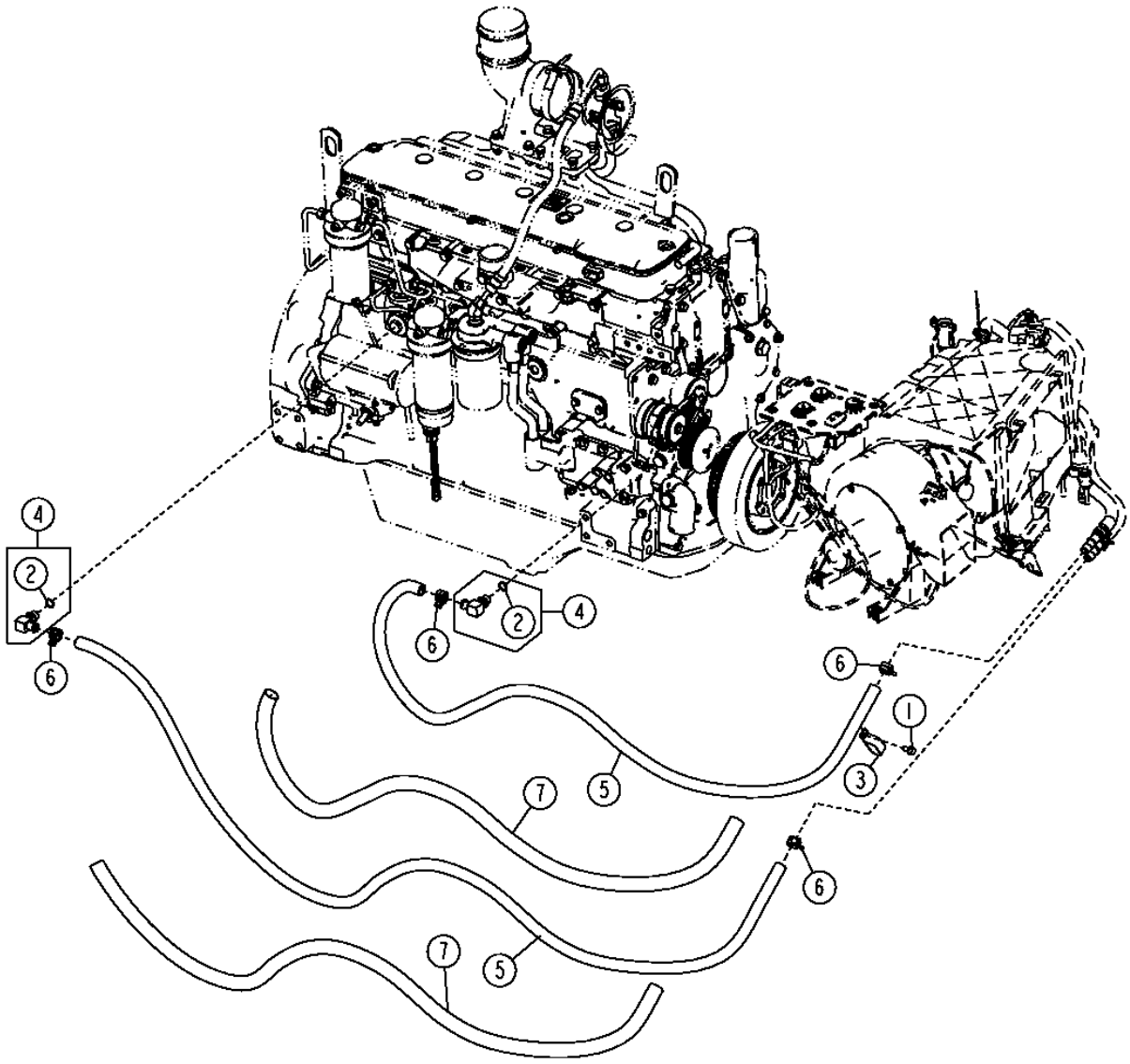

T202489

CAB HEATER HOSES

KEY	PART NO.	PART NAME	QTY	SERIAL NO.	670D	672D	REMARKS
1	19M7865	SCREW	1		X	X	M8 X 16
2	51M7043	O-RING	4		X	X	
3	AH77869	CLIP	1		X	X	
4	AT174697	PIPE ELBOW	2		X	X	(MAKE FROM T60811) (CUT TO LENGTH)
5	.....	BULK HOSE	1		X	X	
6	R117721	CLAMP	4		X	X	
7	T213932	HOSE GUARD	2		X	X	

HVAC POWERED PRECLEANER

T202492 -UN-28OCT04

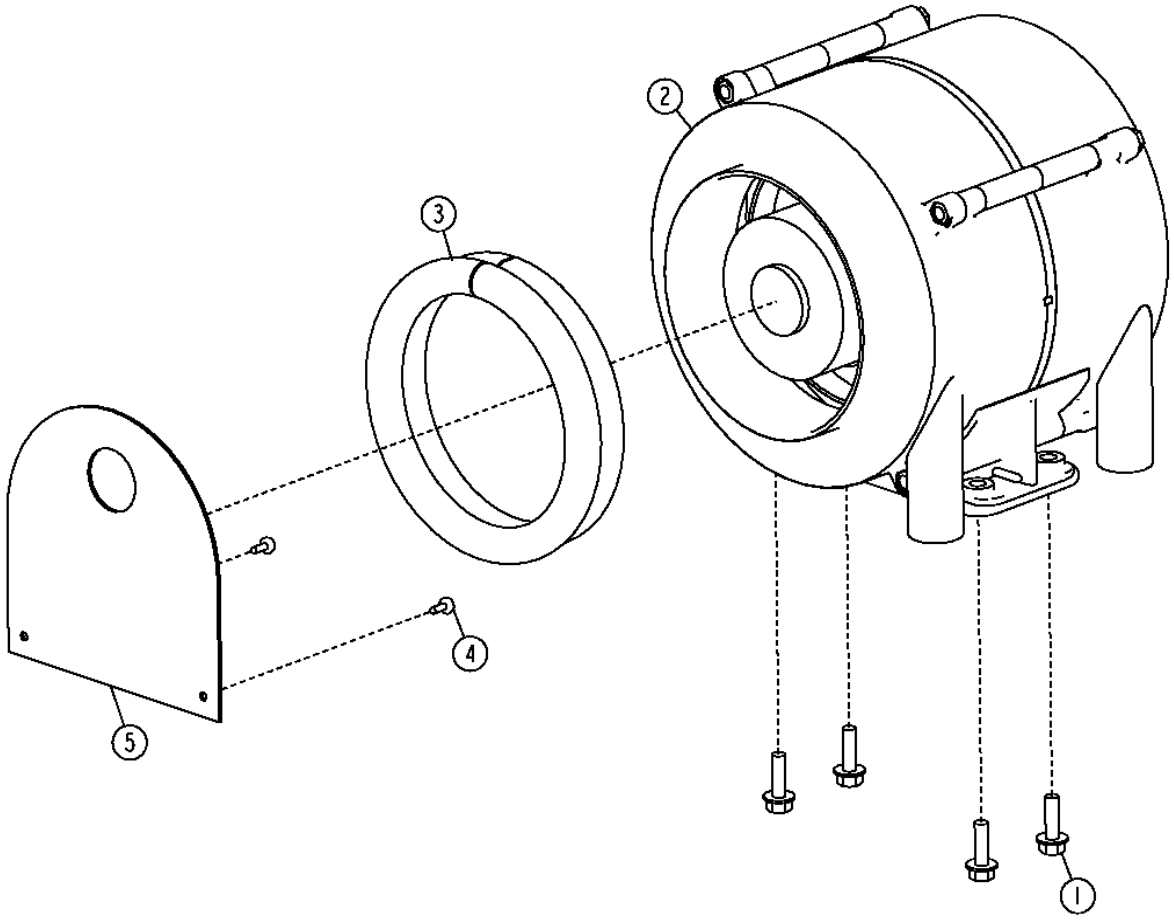

T202492

HVAC POWERED PRECLEANER

KEY	PART NO.	PART NAME	QTY	SERIAL NO.	670D	672D	REMARKS
1	19M7862	SCREW	4		X	X	M6 X 20
2	AT302794	PRECLEANER	1		X	X	
3	T185326	ISOLATOR	1		X	X	
4	T185769	SCREW	2		X	X	
5	T213349	PLATE	1		X	X	

HEATER AND AIR CONDITIONER DUCTS

T212742 -UN-15JUL05

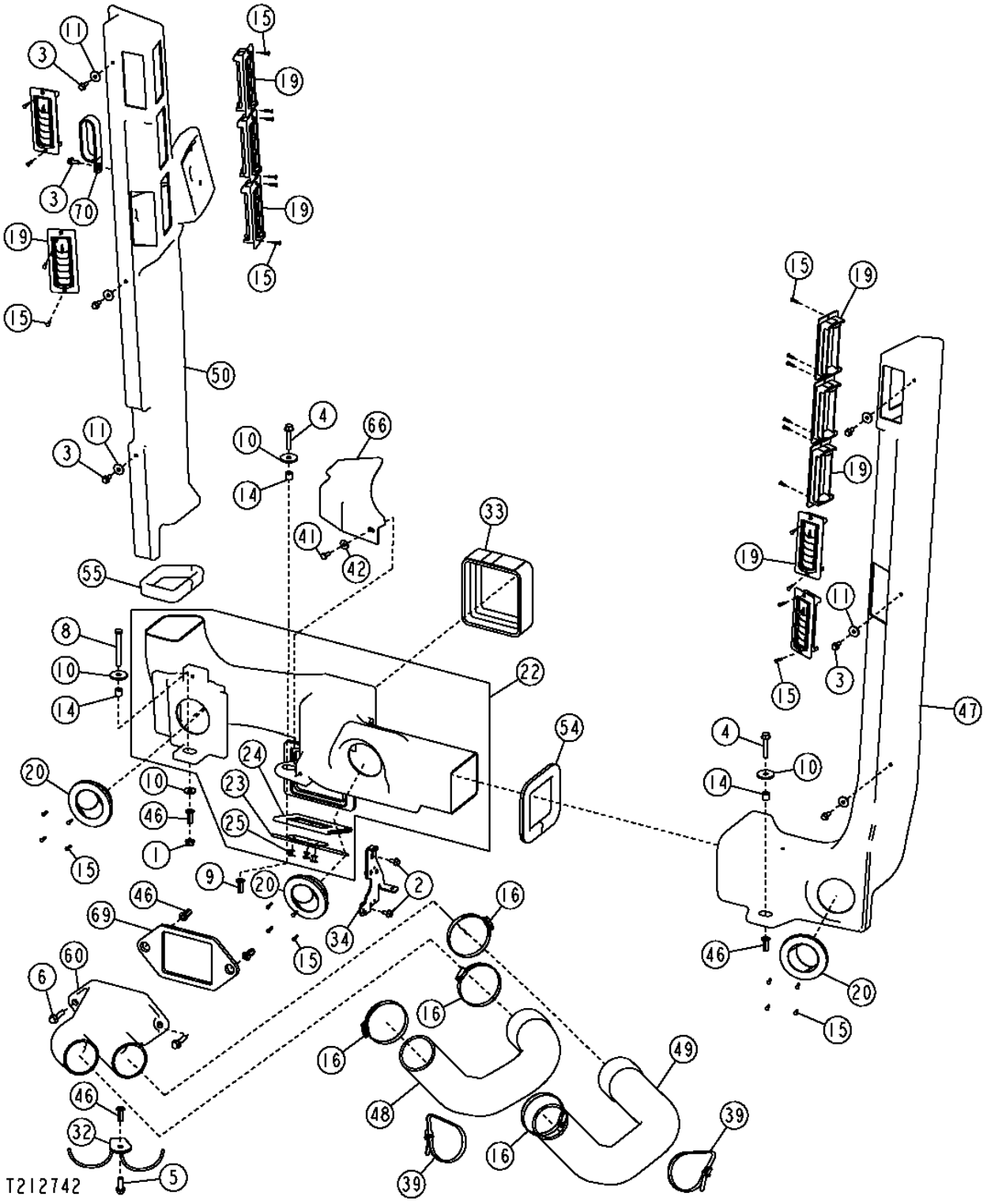

HEATER AND AIR CONDITIONER DUCTS

KEY	PART NO.	PART NAME	QTY	SERIAL NO.	670D	672D	REMARKS
1	14M7298	FLANGE NUT	1		X	X	M8
2	19M7774	SCREW	2		X	X	M6 X 12
3	19M7775	SCREW	4		X	X	M6 X 16
4	19M7799	SCREW	1		X	X	M8 X 45
5	19M7867	SCREW	1		X	X	M8 X 25
6	19M7897	SCREW	2		X	X	M8 X 35
8	19M8403	CAP SCREW	1		X	X	M8 X 75
9	T196079	NUT	1		X	X	
10	24H1296	WASHER	2		X	X	
11	24M7100	WASHER	3		X	X	
14	28H3450	SPACER	2		X	X	
15	37M7333	SCREW	32		X	X	
16	AR62936	CLAMP	4		X	X	
19	AT227668	LOUVER	10		X	X	
20	AT227669	LOUVER	3		X	X	
22	AT308017	AIR DUCT	1		X	X	
23	AT305524	GATE	1		X	X	
24	AT305869	DOOR	1		X	X	
25	T184345	RIVET	3		X	X	
32	AT308314	HOSE SUPPORT	1		X	X	
33	AT308935	ISOLATOR	1		X	X	
34	AT309837	BRACKET	1		X	X	
39	N189220	TIE BAND	2		X	X	
41	21M7292	SCREW	1		X	X	M6 X 16
42	24H1646	WASHER	3		X	X	(SUB FOR T134530)
46	T196079	NUT	9		X	X	
47	T201561	AIR DUCT	1		X	X	
48	T201562	AIR DUCT	1		X	X	
49	T201566	AIR DUCT	1		X	X	
50	T201568	AIR DUCT	1		X	X	
54	T202743	ISOLATOR	1		X	X	
55	T202744	ISOLATOR	1		X	X	
60	T203560	AIR DUCT	1		X	X	
66	T206718	PLATE	1		X	X	
69	T206985	SEAL	1		X	X	
70	T215319	CLAMP	1		X	X	

HEATER AND AIR CONDITIONER FILTER, FILTER HOUSING, AND COVER

T207941 -UN-12FEB05

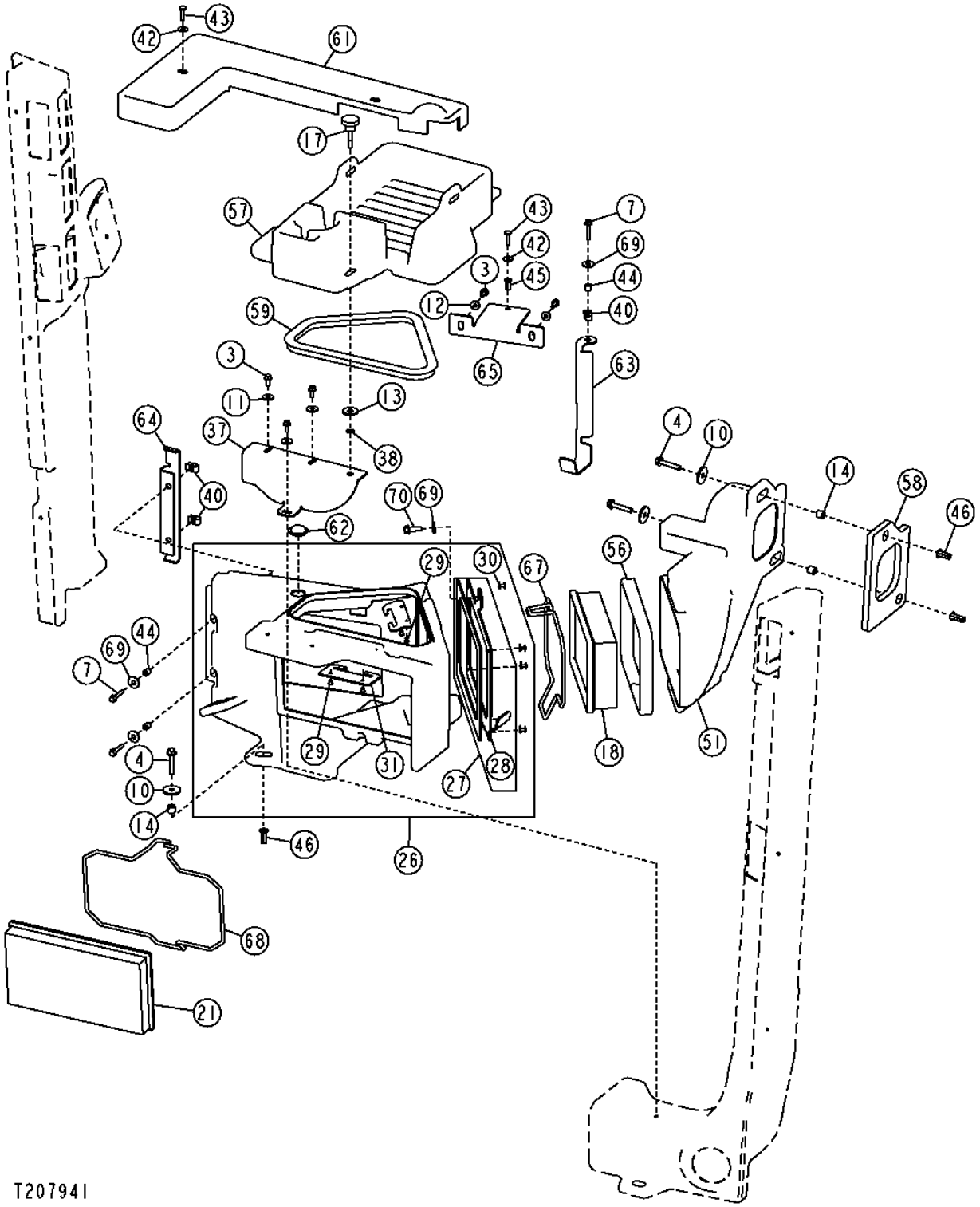

HEATER AND AIR CONDITIONER FILTER, FILTER HOUSING, AND COVER

KEY	PART NO.	PART NAME	QTY	SERIAL NO.	670D	672D	REMARKS
3	19M7775	SCREW	11		X	X	M6 X 16
4	19M7799	SCREW	5		X	X	M8 X 45
7	19M8290	SCREW	3		X	X	M6 X 35
10	24H1296	WASHER	6		X	X	11/32" X 1-3/8" X 0.134"
11	24M7100	WASHER	10		X	X	6.600 X 22 X 2 MM
12	24M7139	WASHER	2		X	X	6.400 X 18 X 1.600 MM
13	24M7296	WASHER	1		X	X	10.500 X 30 X 2.500 MM
14	28H3450	SPACER	6		X	X	0.364" X 0.540" X 1/2"
17	AR83434	KNOB	1		X	X	
18	AT191102	AIR FILTER	1		X	X	
21	AT307501	AIR FILTER	1		X	X	
26	AT308283	HOUSING	1		X	X	
27	.....	SUPPORT	1		X	X	(AT309672 NO LONGER AVAILABLE)
28	T206616	PLATE	1		X	X	
29	R79033	RIVET	5		X	X	
30	T184345	RIVET	4		X	X	
31	T206813	BRACKET	1		X	X	
37	AT315465	KIT	1		X	X	
38	H131531	PUSH NUT	1		X	X	
40	R134098	NUT	3		X	X	
42	24H1646	WASHER	3		X	X	17/64" X 3/4" X 0.060", (SUB FOR T134530)
43	21M7310	SCREW	3		X	X	M6 X 25
44	T164945	SPACER	3		X	X	
45	T196077	NUT	1		X	X	
46	T196079	NUT	9		X	X	
51	T201570	AIR DUCT	1		X	X	
56	T202745	ISOLATOR	1		X	X	
57	T203143	COVER	1		X	X	
58	T203494	SEAL	1		X	X	
59	T203495	ISOLATOR	1		X	X	
61	T204278	COVER	1		X	X	
62	T206624	PLUG	1		X	X	
63	T206625	BRACKET	1		X	X	
64	T206626	BRACKET	1		X	X	
65	T206627	STRAP	1		X	X	(ALSO ORDER (2) T196077)
67	T206809	RETAINER	1		X	X	
68	T206812	RETAINER	1		X	X	
69	24M7298	WASHER	4		X	X	8.400 X 25 X 2 MM
70	19M7867	SCREW	2		X	X	M8 X 25

HEATER/AIR CONDITIONING MODULE ASSEMBLY

T212380 -UN-28JUN05

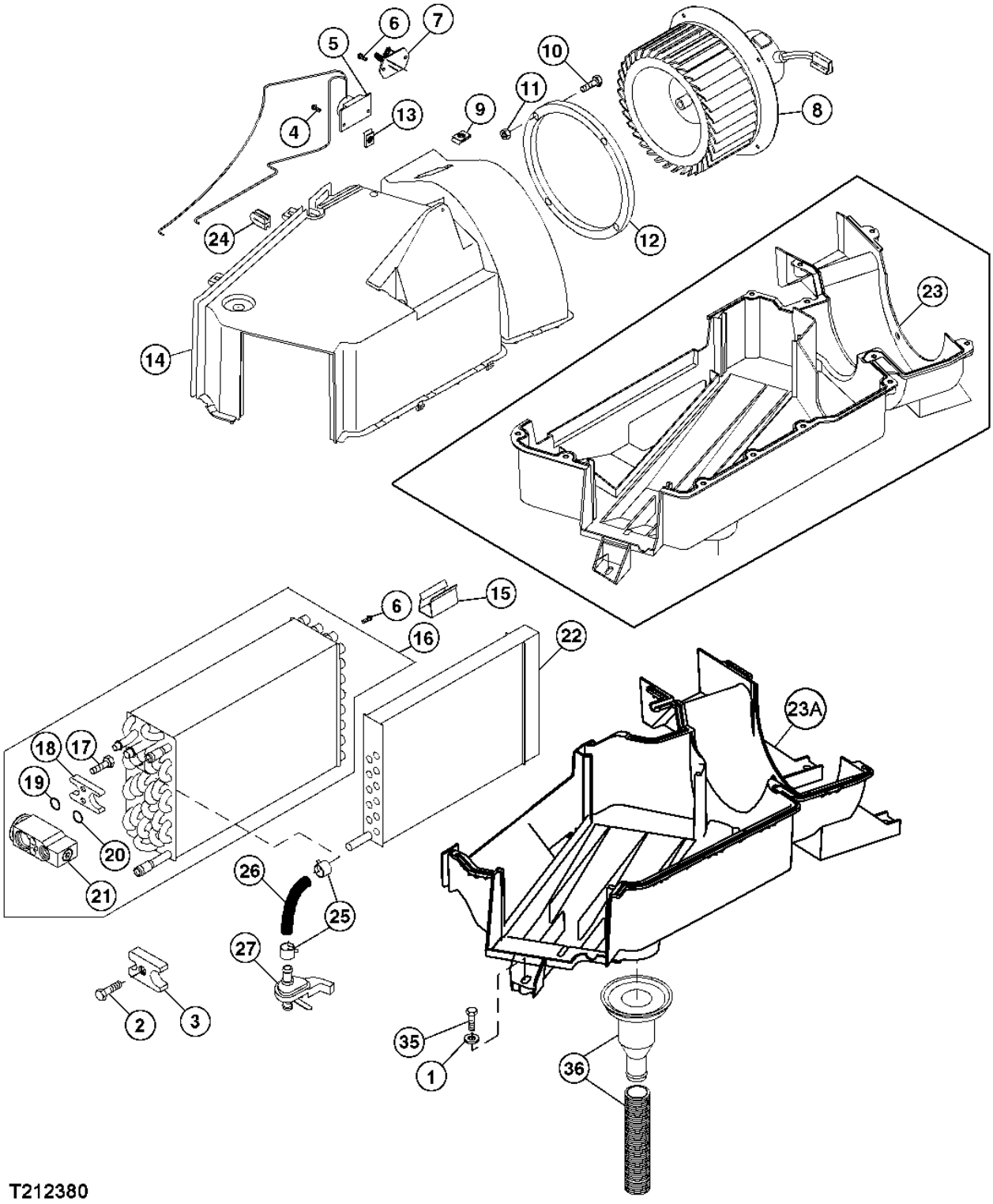

HEATER/AIR CONDITIONING MODULE ASSEMBLY

KEY	PART NO.	PART NAME	QTY	SERIAL NO.	670D	672D	REMARKS
1	24M7100	WASHER	2		X	X	
2	19M8553	SCREW	2		X	X	M6 X 16
3	R125223	PLATE	1		X	X	
4	H85092	SCREW	2		X	X	
5	RE198074	TEMPERATURE SWITCH	1		X	X	
6	37M7073	SCREW	6		X	X	
7	AT318987	RESISTOR	1		X	X	
8	AT302953	BLOWER MOTOR	1		X	X	
9	M74782	NUT	4		X	X	
10	19M7775	SCREW	4		X	X	
11	M84972	NUT	4		X	X	
12	R162769	SEAL	1		X	X	
13	R50279	NUT	2		X	X	
14	R190722	HOUSING	1		X	X	
15	R96248	CLIP	11		X	X	
16	RE187311	EVAPORATOR	1		X	X	
17	PT11778	BOLT	2		X	X	
18	L77943	PLATE	1		X	X	
19	R113050	O-RING	1		X	X	
20	R33259	O-RING	1		X	X	
21	RE174764	VALVE	1		X	X	
22	RE177967	HEATER	1		X	X	
23	R190723	HOUSING	1	-XXXXXX	X	X	
23A	R244664	HOUSING	1	XXXXXX-	X	X	
24	R163985	GROMMET	2		X	X	
25	T184924	HOSE CLAMP	1		X	X	
26	R125454	RADIATOR HOSE	1		X	X	
27	AT193500	HAND OPERATED VALVE	1		X	X	
35	37M7104	SCREW	3		X	X	
36	AT191178	LINE	1		X	X	

AIR CONDITIONING COMPRESSOR,PULLEY AND SERVICE KITS

T204668 -UN-19NOV04

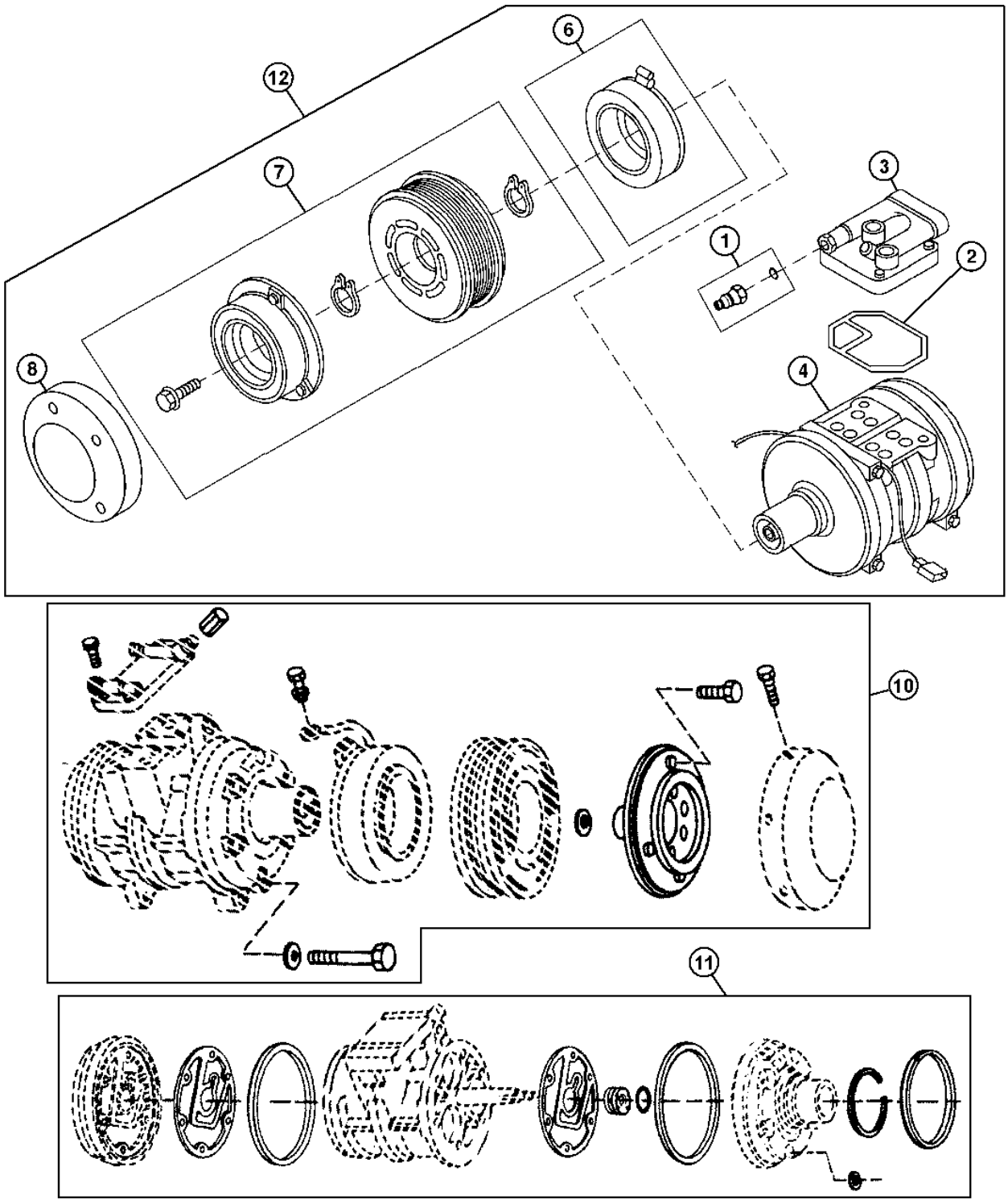

T204668

AIR CONDITIONING COMPRESSOR,PULLEY AND SERVICE KITS

KEY	PART NO.	PART NAME	QTY	SERIAL NO.	670D	672D	REMARKS
1	RE52506	FLOW CONTROL HYD. VALVE	1		X	X	
2	R115742	SEAL	1		X	X	
3	RE55423	MANIFOLD	1		X	X	
4	RE52454	COMPRESSOR	1		X	X	WITHOUT CLUTCH
6	AT163872	KIT	1		X	X	STATOR
7	RE52508	KIT	1		X	X	8 RIBBED PULLEY
8	R115743	COVER	1		X	X	
9	RE12363	ELECTRICAL CONNECTOR ASSY	1		X	X	(NOT ILLUSTRATED)
	R78057	ELEC. CONNECTOR TERMINAL	2		X	X	(NOT ILLUSTRATED)
	R78059	ELECTRICAL CONNECTOR ASSY	2		X	X	(NOT ILLUSTRATED)
	14M7273	NUT	1		X	X	M8
10	RE52507	KIT	1		X	X	HARDWARE
11	RE52509	SEAL KIT	1		X	X	SHAFT SEAL
12	AT168543	COMPRESSOR	1		X	X	

AIR CONDITIONING LINES, CONDENSER, AND RECEIVER-DRYER

T212277 -UN-06JUL05

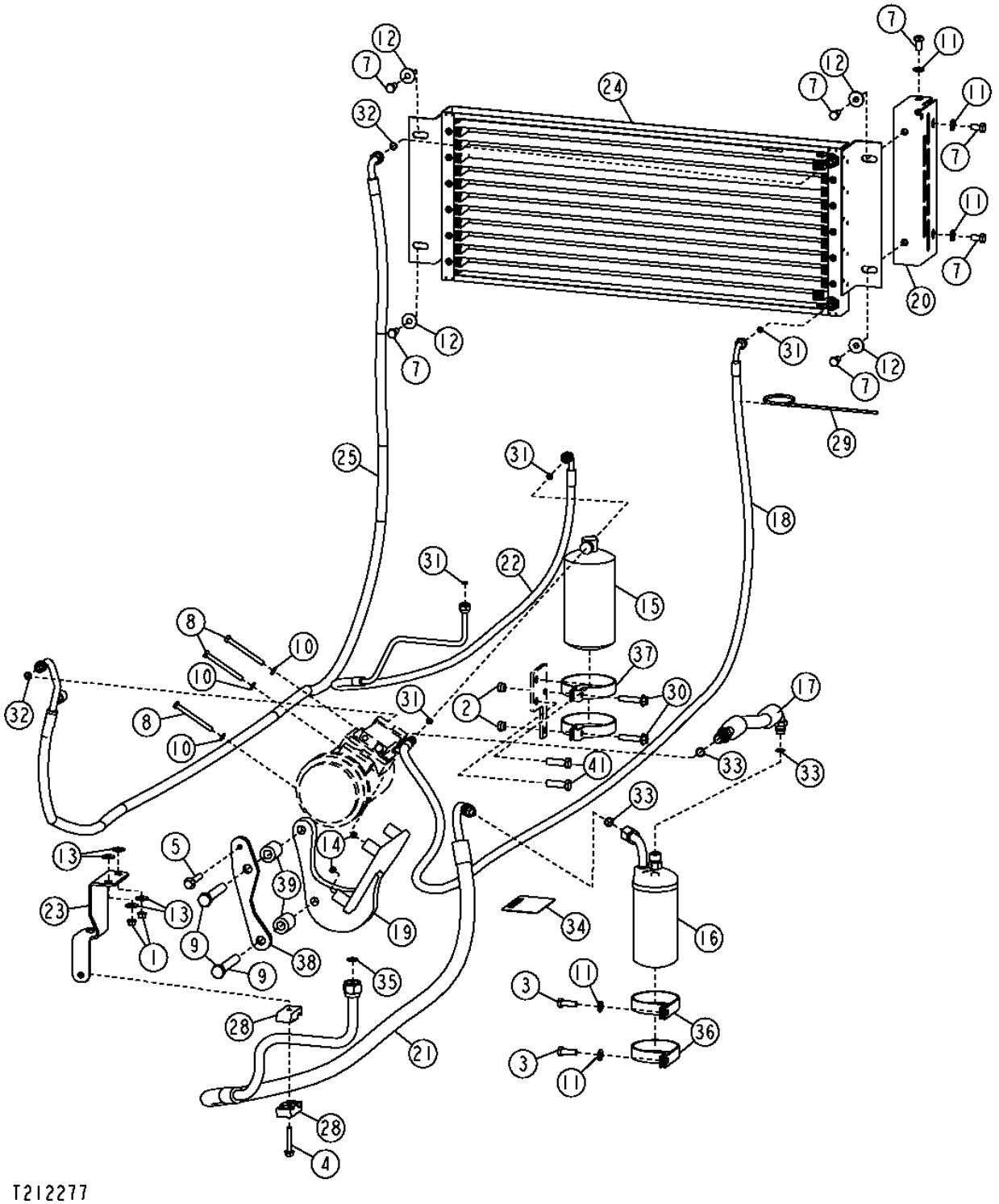

AIR CONDITIONING LINES, CONDENSER, AND RECEIVER-DRYER

KEY	PART NO.	PART NAME	QTY	SERIAL NO.	670D	672D	REMARKS
1	14M7298	FLANGE NUT	2		X	X	M8
2	14M7517	LOCK NUT	2		X	X	M10
3	19M7662	CAP SCREW	2		X	X	M10 X 30
4	19M7800	SCREW	1		X	X	M8 X 50
5	19M7807	SCREW	1		X	X	M10 X 60, (SUB FOR 19M7808, THIS APPLICATION)
6	19M7811	SCREW	1		X	X	M10 X 90
7	19M7938	CAP SCREW	7		X	X	M10 X 20
8	19M8014	SCREW	3		X	X	M8 X 85
9	19M8020	CAP SCREW	2		X	X	M16 X 100
10	24M7238	WASHER	3		X	X	
11	24M7239	WASHER	5		X	X	
12	24M7296	WASHER	4		X	X	
13	24M7298	WASHER	4		X	X	
14	34M7189	SPRING PIN	2		X	X	
15	AT162848	RECEIVER-DRYER	1		X	X	
16	AT190809	PNEUMATIC ACCUMULATOR	1		X	X	
17	AT191742	REFRIGERANT HOSE	1		X	X	
18	AT280631	REFRIGERANT HOSE	1		X	X	
19	AT306851	BRACKET	1		X	X	
20	AT307592	BRACKET	1		X	X	
21	AT307666	REFRIGERANT HOSE	1		X	X	
22	AT307667	REFRIGERANT HOSE	1		X	X	
23	AT307847	BRACKET	1		X	X	
24	AT312058	VAPOR CONDENSER	1		X	X	
25	AT318798	REFRIGERANT HOSE	1		X	X	
	AT318965	VALVE	1		X	X	
	T213979	CAP	1		X	X	
28	H114865	CLAMP	2		X	X	
29	H77698	TIE BAND	1		X	X	
30	N275650	SCREW	2		X	X	
31	R10093	O-RING	4		X	X	
32	R113050	O-RING	2		X	X	
33	R33259	O-RING	3		X	X	
34	T138914	LABEL	1		X	X	
35	T143169	O-RING	1		X	X	
36	T164030	CLAMP	2		X	X	
37	T190513	CLAMP	2		X	X	
38	T200422	BRACKET	1		X	X	
39	T202405	SPACER	2		X	X	
40	19M7493	CAP SCREW	2		X	X	M12 X 40

HEATER AND AIR CONDITIONER LINES AND CONTROLS

T212743 -UN-15JUL05

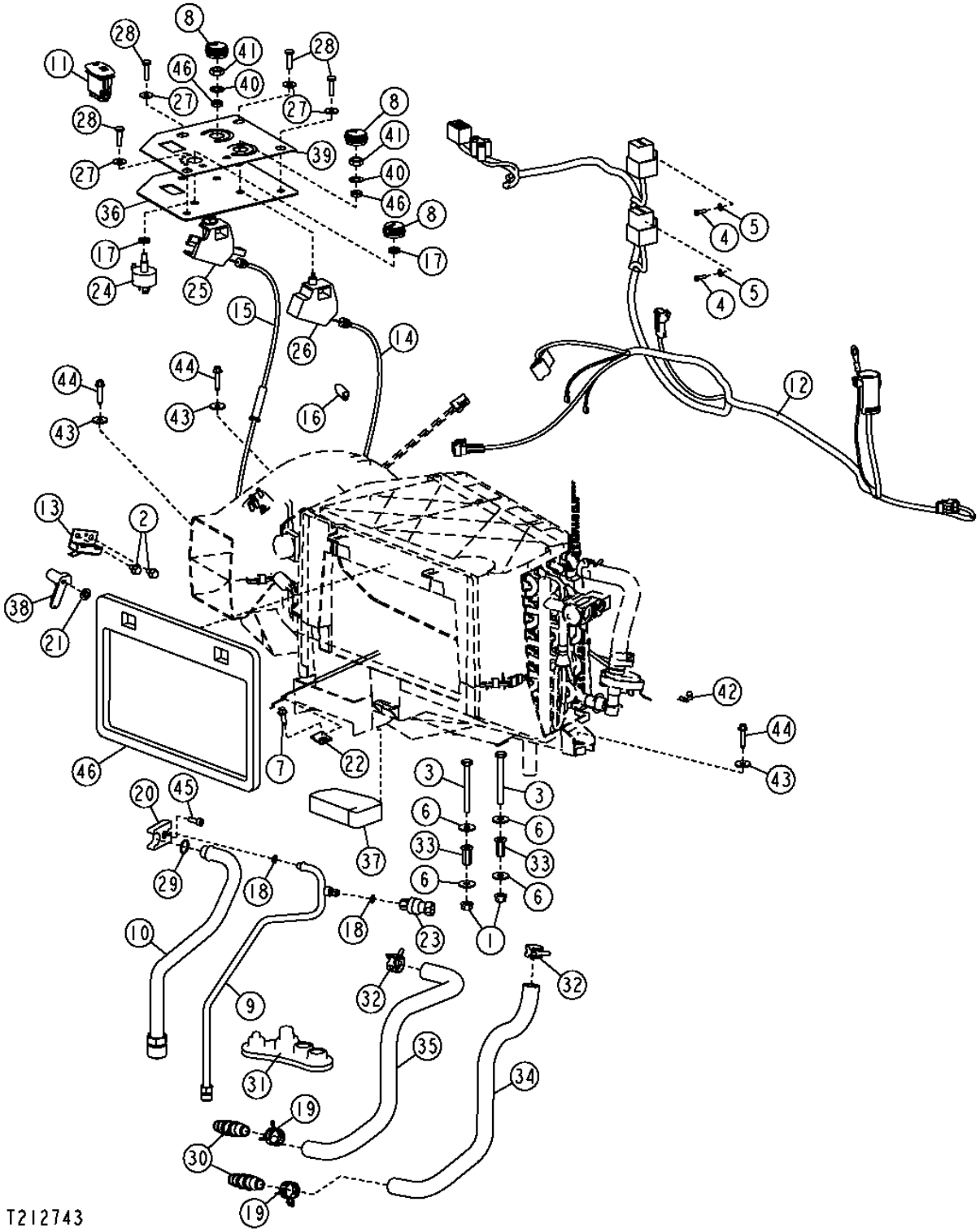

THIS PARTS LISTING IS CONTINUED

HEATER AND AIR CONDITIONER LINES AND CONTROLS

KEY	PART NO.	PART NAME	QTY	SERIAL NO.	670D	672D	REMARKS
1	14M7298	FLANGE NUT	1		X	X	M8
2	19M7774	SCREW	2		X	X	M6 X 12
3	19M8403	CAP SCREW	2		X	X	M8 X 75
4	19M9224	CAP SCREW	2		X	X	M4 X 14, (SUB FOR 21M7250)
5	24M7087	WASHER	2		X	X	5.500 X 10 X 1 MM
6	24M7298	WASHER	4		X	X	8.400 X 25 X 2 MM
7	37M7131	SCREW	1		X	X	M6 X 20
8	AL76568	KNOB	3		X	X	
9	AT303467	LINE	1		X	X	
10	AT303469	LINE	1		X	X	
11	AT303865	TOGGLE/ROCKER SWITCH	1		X	X	(A/C AND HEATER ON/OFF)
12	AT305547	AC COMPRESSOR WRG HARNESS	1		X	X	
13	AT306056	SWITCH	1		X	X	
14	AT310795	PUSH PULL CABLE	1		X	X	
15	AT310810	PUSH PULL CABLE	1		X	X	
16	.....	WEATHERSTRIP	4		X	X	(MAKE FROM T58056) (CUT TO LENGTH)
17	E46066	NUT	2		X	X	
18	R10093	O-RING	2		X	X	
19	R117721	CLAMP	2		X	X	
20	R125223	PLATE	1		X	X	
21	R192109	PUSH NUT	1		X	X	
22	R31654	CLAMP	1		X	X	
23	RE157329	SWITCH	1		X	X	
24	RE43497	ROTARY SWITCH	1		X	X	
25	RE46742	TEMPERATURE SWITCH	1		X	X	(A/C AND HEAT TEMPERATURE)
	12H292	LOCK WASHER	1		X	X	1/2"
	14H934	NUT	1		X	X	7/16"
26	RE46743	CONTROL	1		X	X	(FAN SPEED)
27	24H1646	WASHER	4		X	X	17/64" X 3/4" X 0.060", (SUB FOR T134530)
28	21M7310	SCREW	4		X	X	M6 X 25
29	T143169	O-RING	1		X	X	
30	T160492	ELEC. CONNECTOR ACCESSORY	2		X	X	
31	T166297	GROMMET	1		X	X	
32	T184924	HOSE CLAMP	2		X	X	
33	T196079	NUT	2		X	X	
34	T202034	HOSE	1		X	X	
35	T202035	HOSE	1		X	X	
36	T202800	INSTRUMENT PANEL	1		X	X	
37	T204124	PAD	1		X	X	
38	T204274	ARM	1		X	X	
39	T205370	LABEL	1		X	X	
40	12H325	LOCK WASHER	2		X	X	(NO LONGER REQUIRED)
41	14H934	NUT	2		X	X	(NO LONGER REQUIRED)
42	L57881	CLIP	1		X	X	
43	24M7100	WASHER	3		X	X	6.600 X 22 X 2 MM
44	37M7104	SCREW	3		X	X	M6 X 30
45	19M8553	SCREW	1		X	X	M6 X 16
46	R203687	NUT	2		X	X	
47	T202742	SEAL	1		X	X	

SERVICE DOORS

T210142 -UN-06APR05

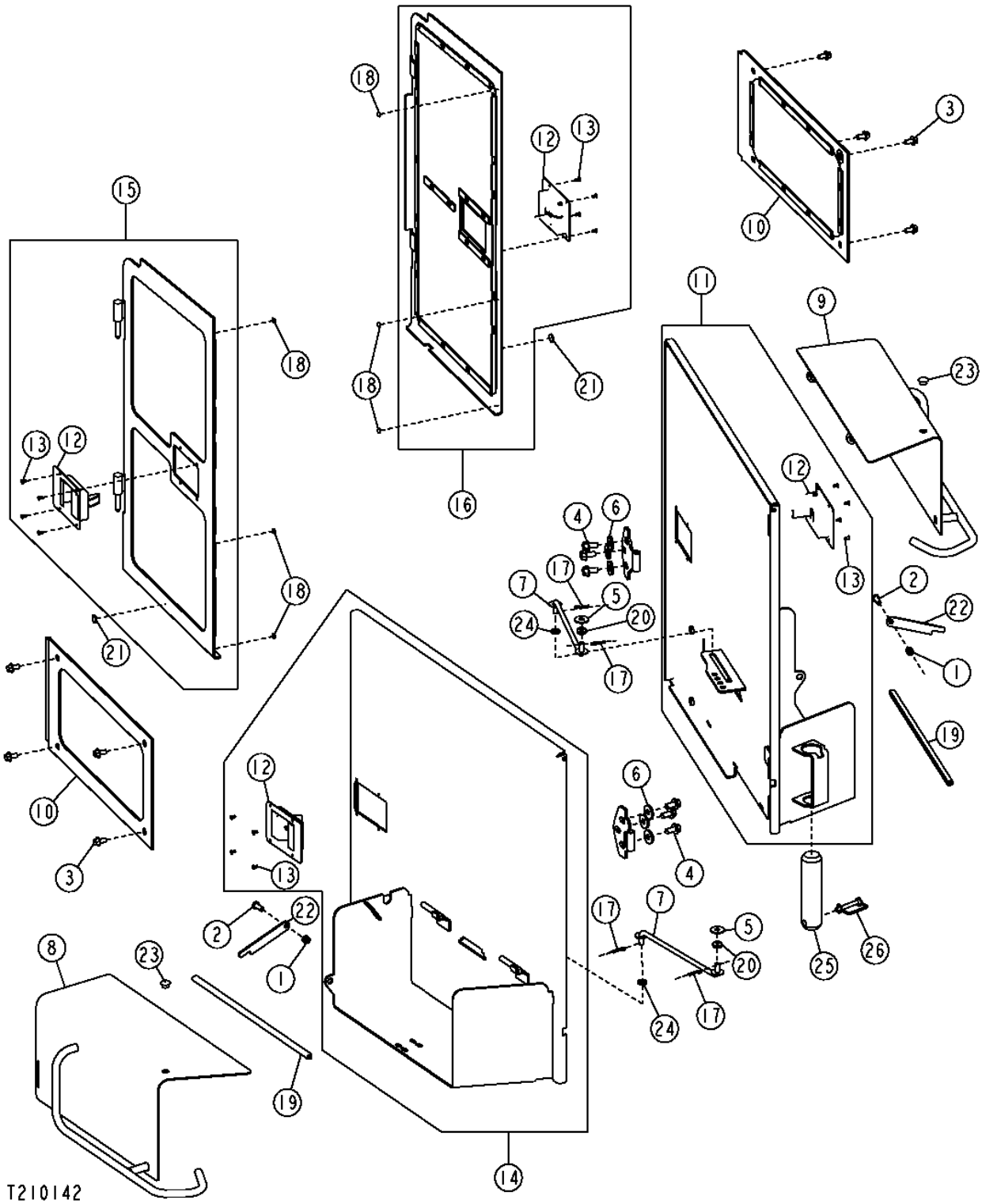

SERVICE DOORS

KEY	PART NO.	PART NAME	QTY	SERIAL NO.	670D	672D	REMARKS
1	14M7517	LOCK NUT	2		X	X	M10
2	19M7167	CAP SCREW	2		X	X	M10 X 25
3	19M7784	SCREW	8		X	X	M10 X 20
4	19M7788	SCREW	6		X	X	M12 X 25
5	24H1330	WASHER	2		X	X	
6	24M7226	WASHER	6		X	X	
7	AT312053	ROD	2		X	X	
8	AT311438	KIT	1		X	X	(RIGHT BATTERY BOX COVER)
9	AT311431	KIT	1		X	X	(LEFT BATTERY BOX COVER)
10	AT228826	SHIELD	2		X	X	
11	AT311915	KIT	1		X	X	(LEFT ENGINE DOOR)
12	AT221696	LATCH	4		X	X	
13	H85233	RIVET	16		X	X	
14	AT311916	KIT	1		X	X	(RIGHT ENGINE DOOR)
15	AT306771	DOOR	1		X	X	(RIGHT RADIATOR COMPARTMENT DOOR)
16	AT306772	DOOR	1		X	X	(LEFT RADIATOR COMPARTMENT DOOR)
17	J16931	PIN	4		X	X	
18	R96753	SPACER	6		X	X	
19	T161531	MOLDING	2		X	X	
20	T162238	GROMMET	2		X	X	
21	T173591	BUMPER	2		X	X	
22	T188651	LATCH	2		X	X	
23	T21387	BUMPER	2		X	X	
24	T27260	WASHER	1		X	X	
25	T204009	SHEAR PIN	1		X	X	
26	N279068	COTTER PIN	1		X	X	

HOOD

T203582 -UN-12DEC04

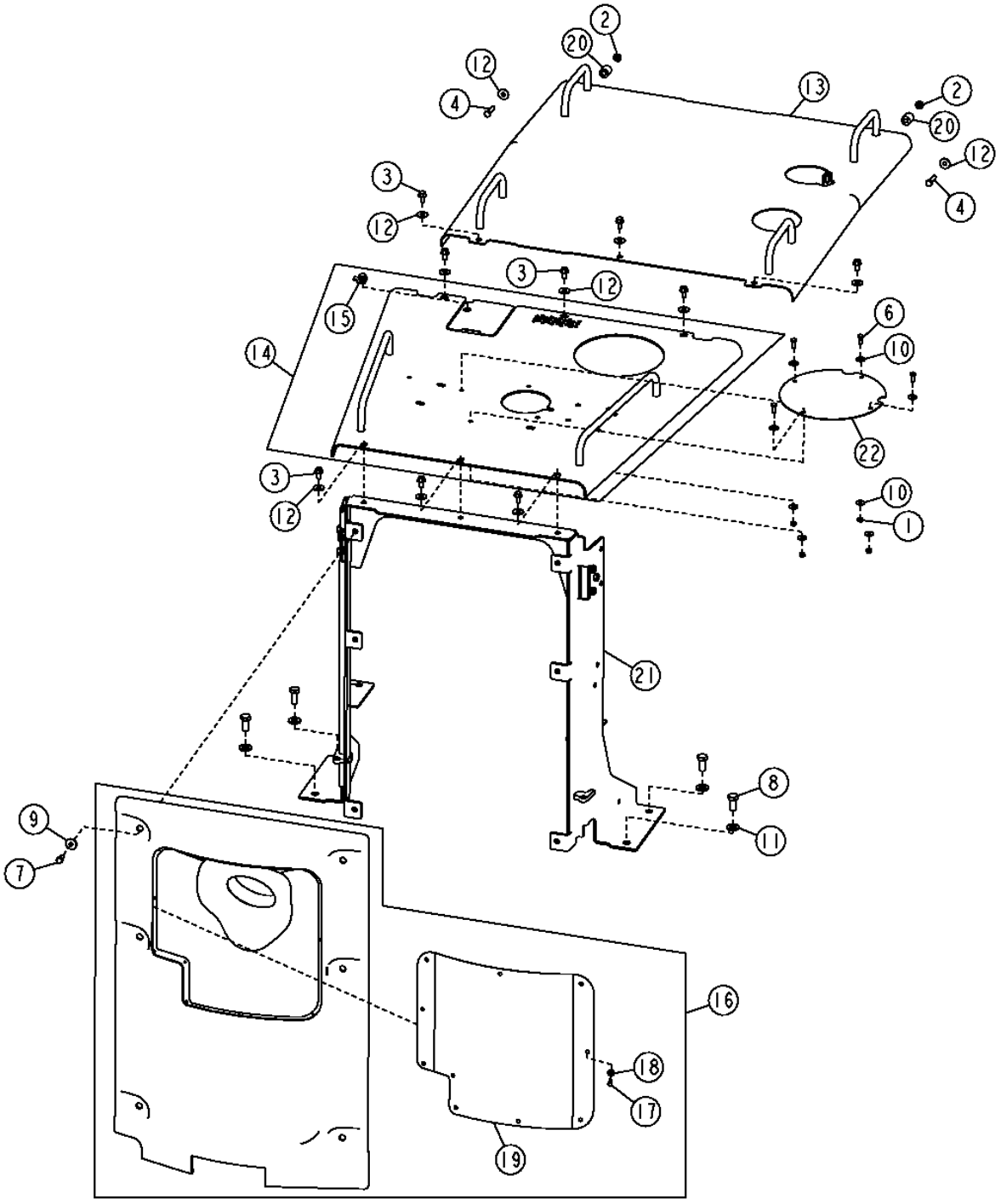

T203582

SERVICE DOORS

KEY	PART NO.	PART NAME	QTY	SERIAL NO.	670D	672D	REMARKS
1	14M7273	NUT	4		X	X	M8
2	14M7334	FLANGE NUT	2		X	X	M10
3	19M7784	SCREW	9		X	X	M10 X 20
4	19M7572	CAP SCREW	2		X	X	M10 X 45
6	19M7881	SCREW	4		X	X	M8 X 20
7	19M7938	CAP SCREW	6		X	X	M10 X 20
8	19M8035	CAP SCREW	4		X	X	M16 X 35
9	24H1653	WASHER	6		X	X	
10	24M7207	WASHER	8		X	X	
11	24M7241	WASHER	4		X	X	
12	24M7296	WASHER	17		X	X	
13	AT306539	HOOD	1		X	X	
14	AT309695	KIT	1		X	X	
15	AT38176	LOCK	1		X	X	
16	AT310836	COVER	1		X	X	
17	19M7077	CAP SCREW	10		X	X	M6 X 20
18	24M7139	WASHER	10		X	X	6.400 X 18 X 1.600 MM
19	T208181	SCREEN	1		X	X	
20	R117879	BUSHING	2		X	X	(SUB FOR (2) AT320236)
	14M7296	FLANGE NUT	2		X	X	M10, (SUB FOR (2) AT320236)
21	AT316715	SUPPORT	2		X	X	
22	T187863	COVER	1		X	X	

MAIN FRAME FRONT SIDE COVERS

T203248 -UN-28OCT04

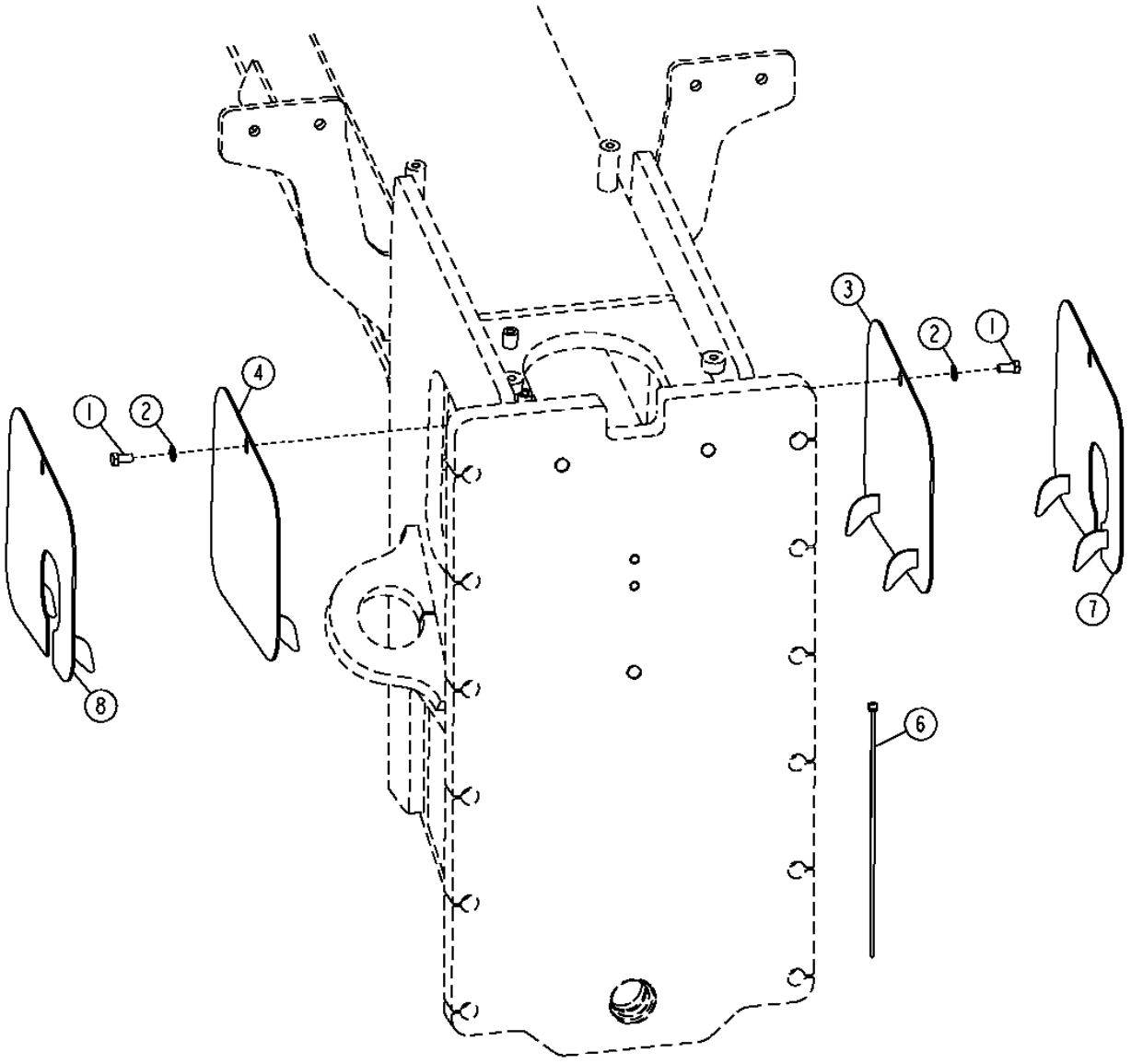

T203248

MAIN FRAME FRONT SIDE COVERS

KEY	PART NO.	PART NAME	QTY	SERIAL NO.	670D	672D	REMARKS
1	19M7938	CAP SCREW	2		X	X	M10 X 20
2	24H1308	WASHER	2		X	X	13/32" X 1" X 0.134", (SUB FOR 24M7028, THIS APPLICATION)
3	AT316321	COVER	1		X		
4	AT316322	COVER	1		X		
5	.....	CONDUIT	1		X	X	(MAKE FROM T157991) (CUT TO LENGTH)(NOT ILLUSTRATED)
6	H77698	TIE BAND	3		X	X	
7	AT316323	COVER	1			X	
8	AT316324	COVER	1			X	

GRILLE AND GRILLE HOUSING

T201156 -UN-05AUG04

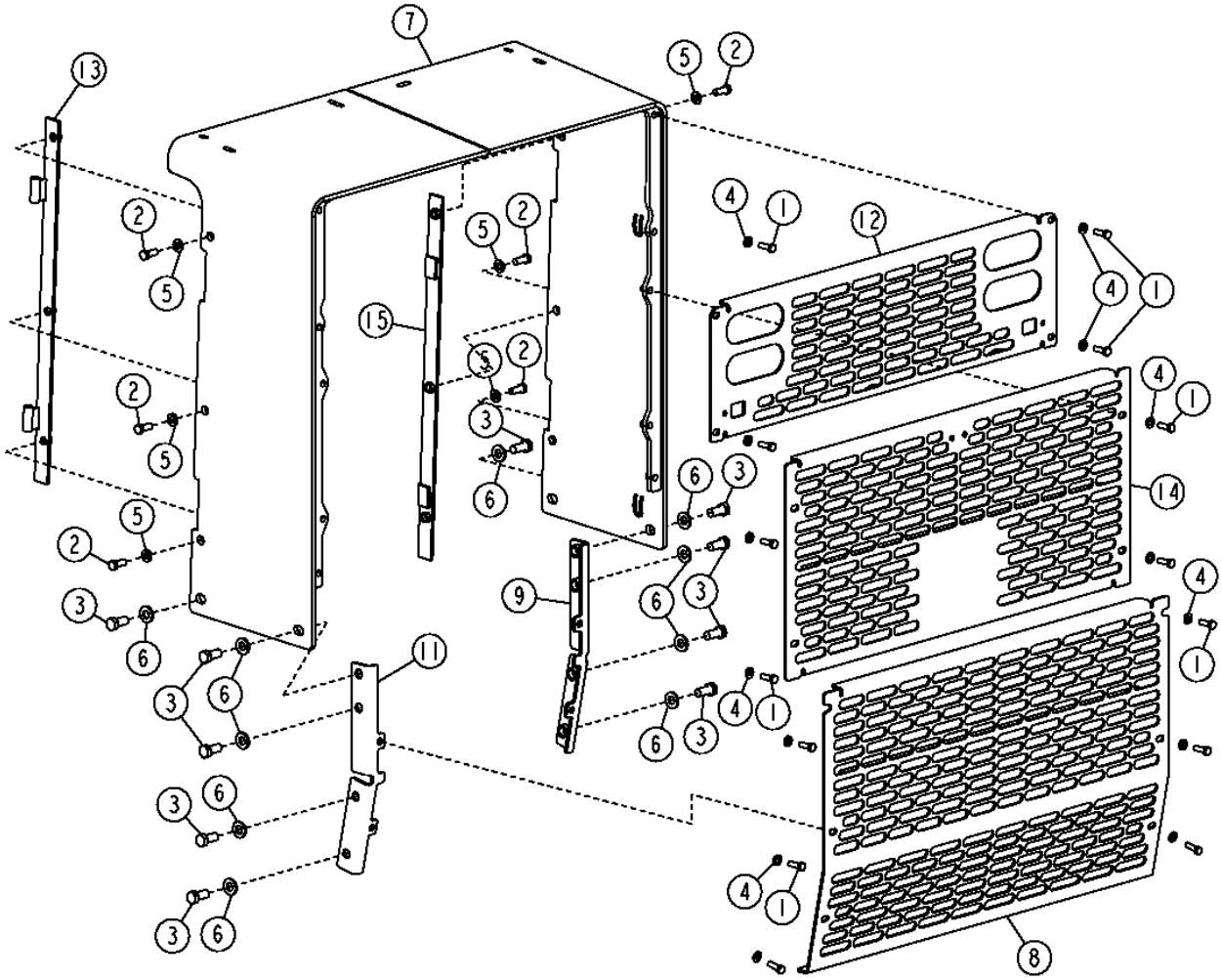

T201156

GRILLE AND GRILLE HOUSING

KEY	PART NO.	PART NAME	QTY	SERIAL NO.	670D	672D	REMARKS
1	19M7662	CAP SCREW	14		X	X	M10 X 30
2	19M8011	CAP SCREW	6		X	X	M12 X 30
3	19M8035	CAP SCREW	10		X	X	M16 X 35
4	24M7239	WASHER	14		X	X	
5	24M7240	WASHER	6		X	X	
6	24M7241	WASHER	10		X	X	
7	AT306536	FRAME	1		X	X	(GRILLE HOUSING)
8	AT306953	GRILLE	1		X	X	(LOWER)
9	AT306973	ANGLE	1		X	X	
11	AT306974	ANGLE	1		X	X	
12	AT307723	GRILLE	1		X	X	(UPPER)
13	AT309380	HINGE	1		X	X	(LEFT RADIATOR COMPARTMENT DOOR)
14	AT308110	GRILLE	1		X	X	(MIDDLE)
15	AT309379	HINGE	1		X	X	(RIGHT RADIATOR COMPARTMENT DOOR)

RADIO AND SPEAKERS

T201726 -UN-30JUL04

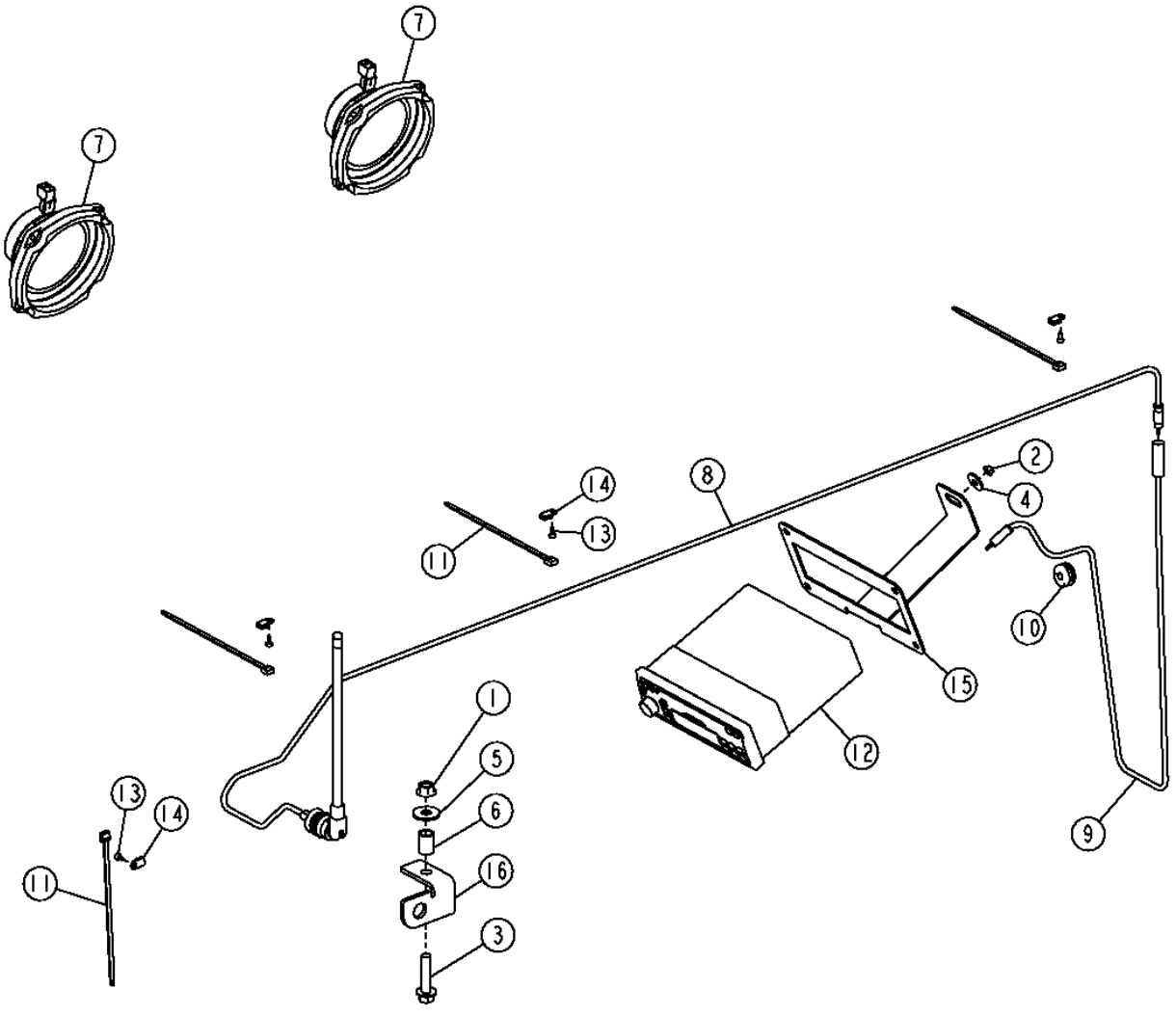

T201726

RADIO AND SPEAKERS

KEY	PART NO.	PART NAME	QTY	SERIAL NO.	670D	672D	REMARKS
1	14M7296	FLANGE NUT	1		X	X	M10
2	14M7375	FLANGE NUT	1		X	X	M5
3	19M7805	SCREW	1		X	X	M10 X 45
4	24M7100	WASHER	1		X	X	
5	24M7296	WASHER	1		X	X	
6	H140461	BUSHING	1		X	X	
7	AT188759	SPEAKER	2		X	X	(5 1/4")
8	AT199388	ANTENNA	1		X	X	
9	AT302520	ANTENNA CABLE	1		X	X	
10	R28193	GROMMET	1		X	X	
11	R44302	TIE BAND	3		X	X	
12	RE227953	RADIO	1		X	X	(AM/FM WITH CD)
	RE190139	RADIO	1		X	X	(AM/FM WITH WEATHERBAND)
	RE190140	RADIO	1		X	X	(AM/FM WITH WEATHERBAND AND CASSETTE)
13	T185769	SCREW	4		X	X	
14	T187394	ANCHOR	4		X	X	
15	T203389	BRACKET	1		X	X	
16	T204635	BRACKET	1		X	X	

INTERIOR REARVIEW MIRROR

T203162 -UN-01NOV04

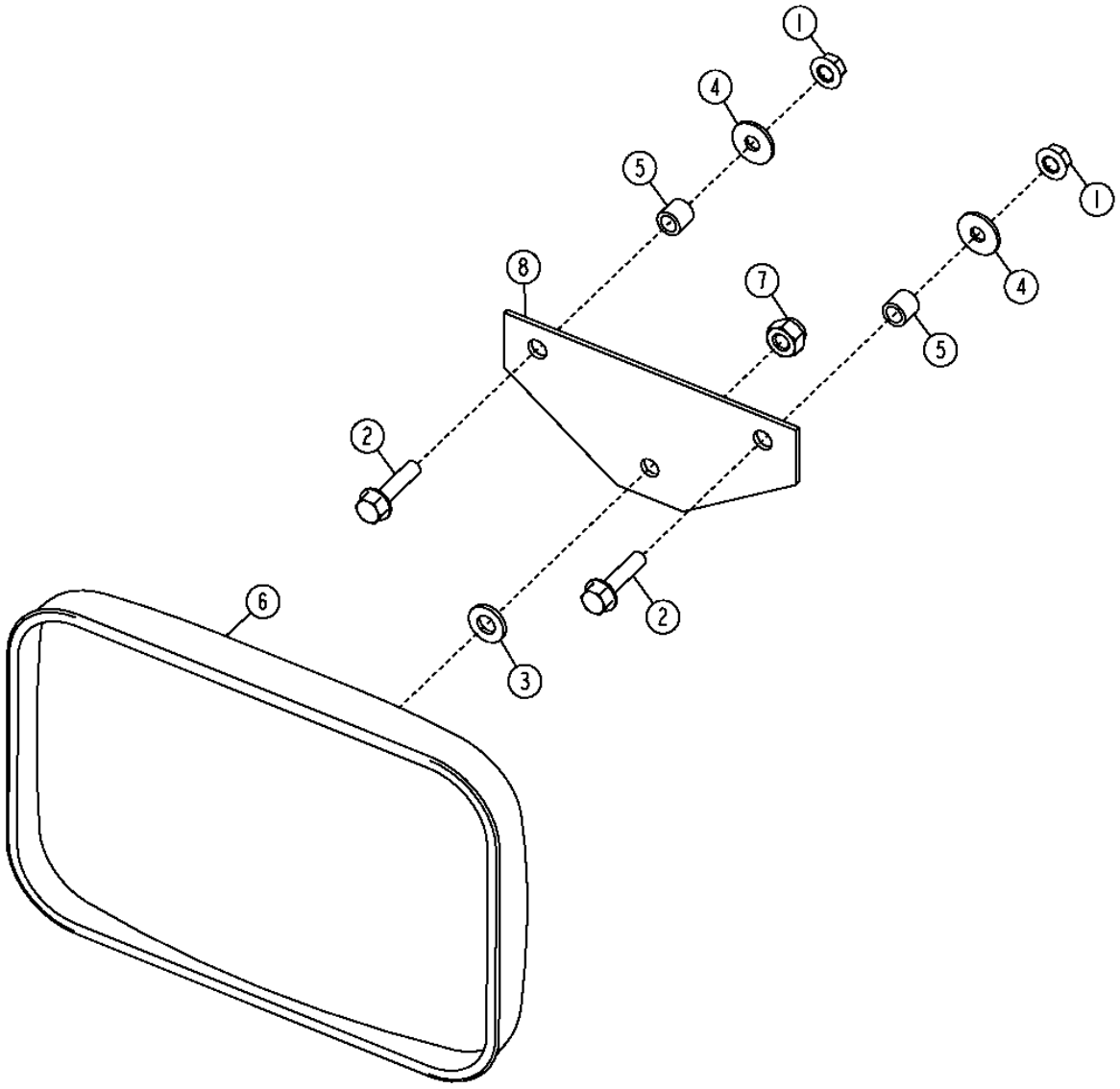

T203162

INTERIOR REARVIEW MIRROR

KEY	PART NO.	PART NAME	QTY	SERIAL NO.	670D	672D	REMARKS
1	14M7298	FLANGE NUT	2		X	X	M8
2	19M7897	SCREW	2		X	X	M8 X 35
3	24M7239	WASHER	1		X	X	10.700 X 21 X 2.500 MM
4	24M7298	WASHER	2		X	X	8.400 X 25 X 2 MM
5	28H3450	SPACER	2		X	X	0.364" X 0.540" X 1/2"
6	AT157226	REAR VIEW MIRROR	1		X	X	
7	T11234	LOCK NUT	2		X	X	
8	T145360	PLATE	1		X	X	

EXTERIOR MIRROR

T208065 -UN-12FEB05

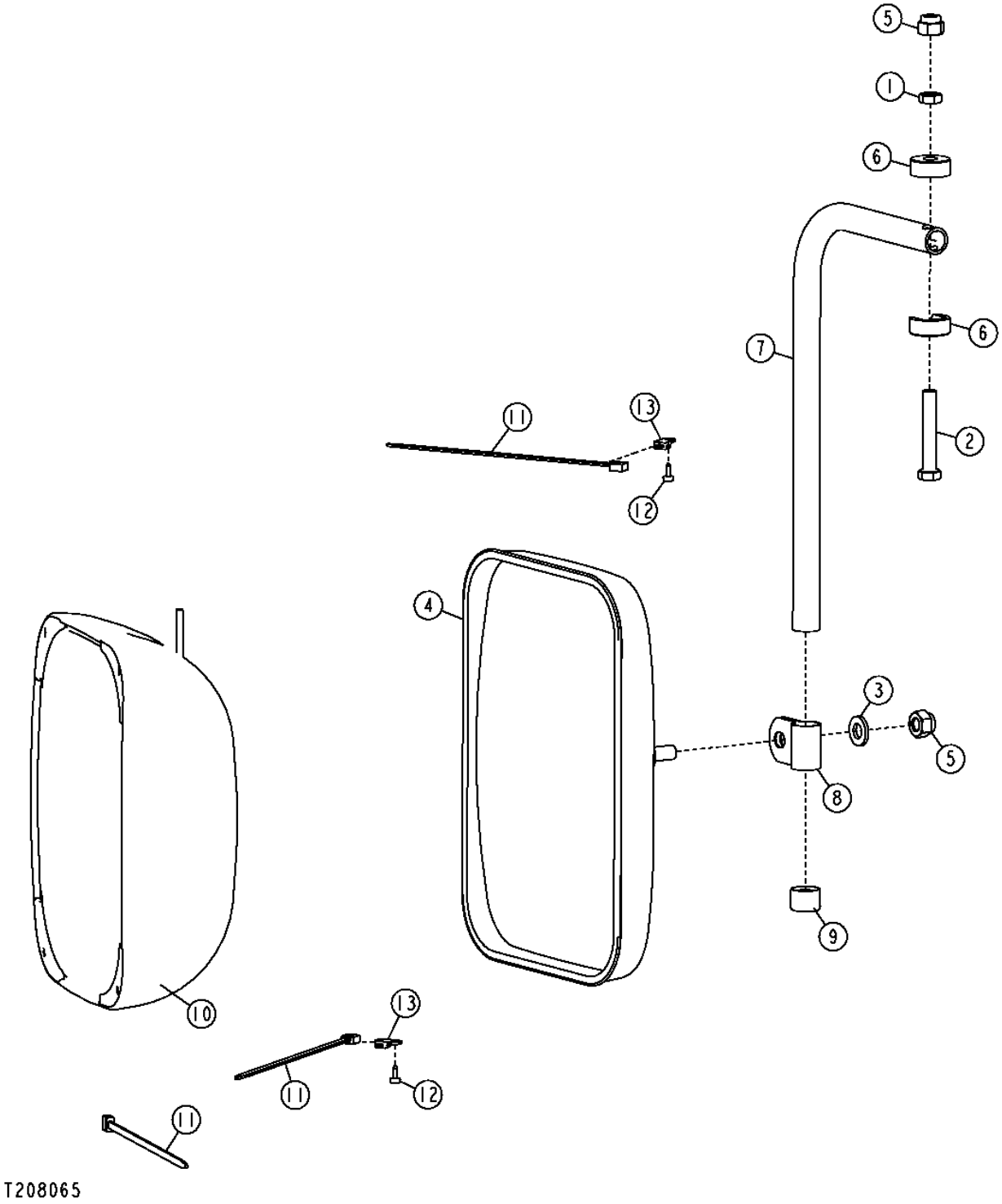

EXTERIOR MIRROR

KEY	PART NO.	PART NAME	QTY	SERIAL NO.	670D	672D	REMARKS
1	14H732	NUT	1		X	X	3/8"
2	19H1726	CAP SCREW	1		X	X	3/8" X 2-1/4"
3	24M7239	WASHER	1		X	X	
4	AT157226	REAR VIEW MIRROR	1		X	X	
5	T11234	LOCK NUT	2		X	X	3/8"
6	T115030	HALF CLAMP	2		X	X	
7	T115031	RIB	1		X	X	
8	T119564	CLAMP	1		X	X	
9	T128437	CAP	1		X	X	
10	AT304638	REAR VIEW MIRROR	1		X	X	
11	R44302	TIE BAND	AR		X	X	
12	T185769	SCREW	2		X	X	
13	T187394	ANCHOR	2		X	X	

FIRE EXTINGUISHER

T202720 -UN-03SEP04

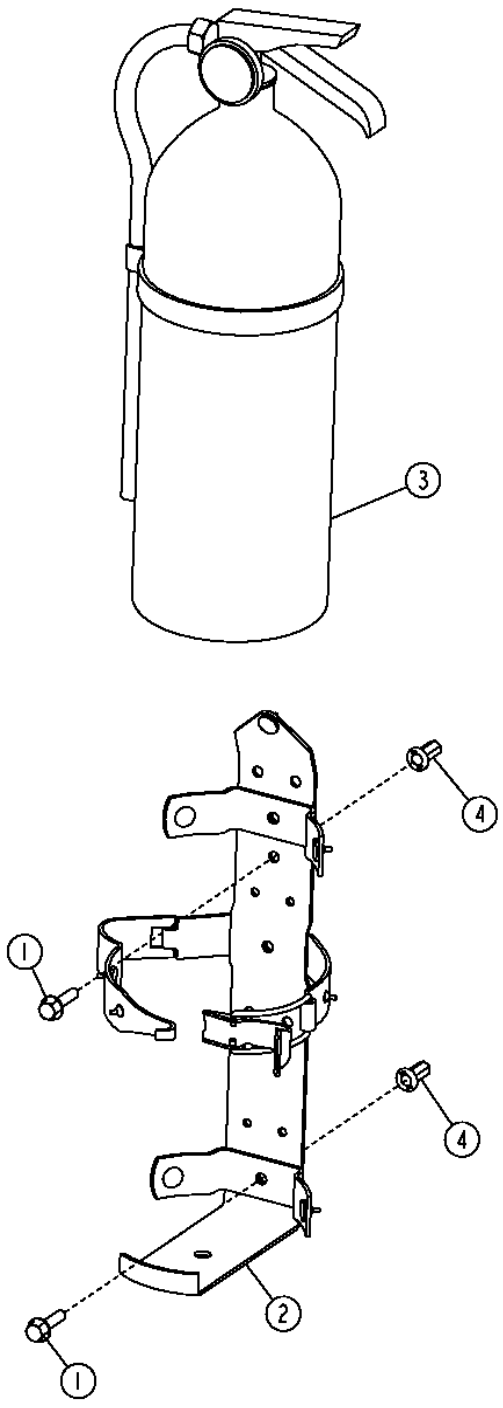

T202720

FIRE EXTINGUISHER

KEY	PART NO.	PART NAME	QTY	SERIAL NO.	670D	672D	REMARKS
1	19M7863	SCREW	2		X	X	M6 X 25
2	AT189390	BRACKET	1		X	X	
3	AT189487	FIRE EXTINGUISHER	1		X	X	
4	T196078	NUT	2		X	X	

HORN

TP15206 -UN-01JAN94

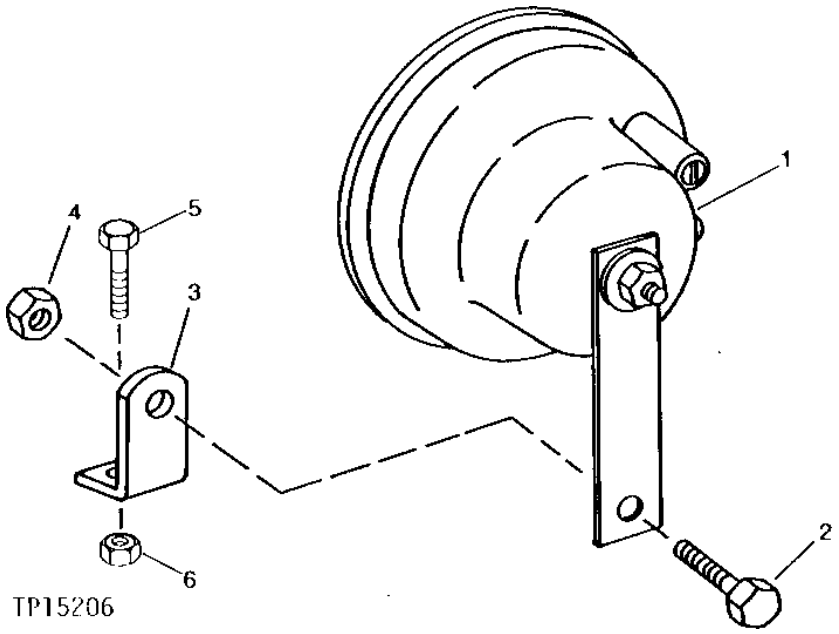

HORN

KEY	PART NO.	PART NAME	QTY	SERIAL NO.	670D	672D	REMARKS
1	AT226282	HORN	1		X	X	
2	19H2664	CAP SCREW	1		X	X	5/16" X 3/4"
3	R46791	BRACKET	1		X	X	
4	14H785	NUT	1		X	X	5/16"
5	19H2676	CAP SCREW	1		X	X	3/8" X 1"
6	14H812	NUT	1		X	X	3/8"

BACK-UP ALARM

T202061 -UN-05AUG04

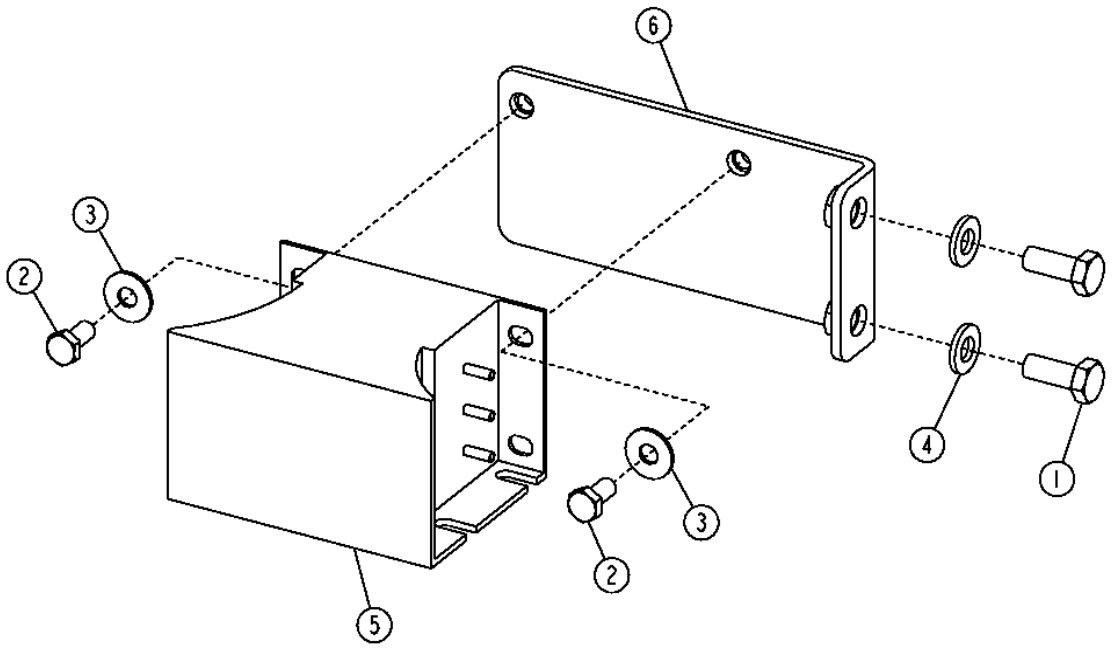

T202061

BACK-UP ALARM

KEY	PART NO.	PART NAME	QTY	SERIAL NO.	670D	672D	REMARKS
1	19M7402	CAP SCREW	2		X	X	M10 X 25
2	19M7932	CAP SCREW	2		X	X	M8 X 16
3	24H1822	WASHER	2		X	X	
4	24M7239	WASHER	2		X	X	
5	AT120461	TRAVEL WARNING ALARM	1		X	X	
6	AT307351	BRACKET	1		X	X	

TOOLBOX

T200761 -UN-09JUN04

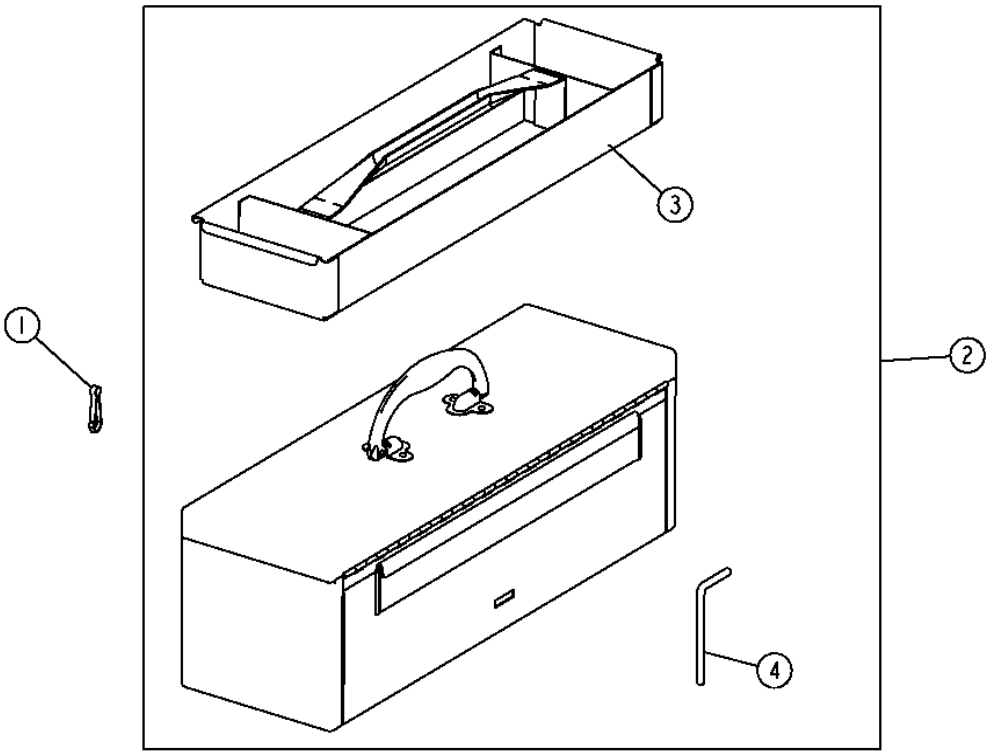

T200761

TOOLBOX

KEY	PART NO.	PART NAME	QTY	SERIAL NO.	670D	672D	REMARKS
1	99M7039	HOOK	1		X	X	
2	AT22070	TOOLBOX	1		X	X	
3	AT22073	HOLDER	1		X	X	
4	T23027	PIN	1		X	X	

REAR WINDOW SUNVISOR

T203172 -UN-01NOV04

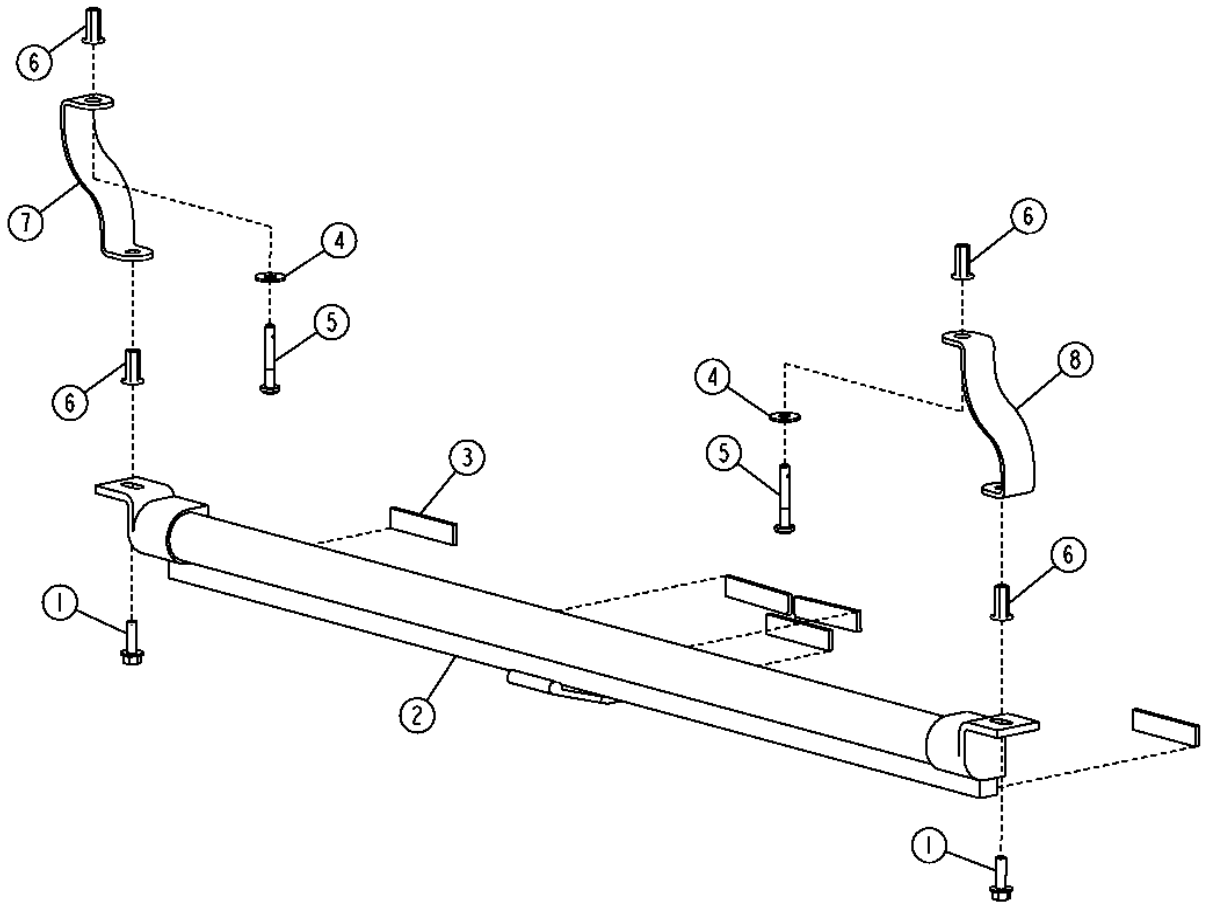

T203172

REAR WINDOW SUNVISOR

KEY	PART NO.	PART NAME	QTY	SERIAL NO.	670D	672D	REMARKS
1	19M7862	SCREW	2		X	X	M6 X 20
2	AT305193	SHADE CURTAIN	1		X	X	
3	.....	WEATHERSTRIP	1		X	X	(MAKE FROM T63019) (CUT TO LENGTH)
4	24H1821	WASHER	2		X	X	
5	21M7403	SCREW	2		X	X	M6 X 40
6	T196077	NUT	4		X	X	
7	T204938	BRACKET	1		X	X	(ALSO ORDER (2) T196077)
8	T205088	BRACKET	1		X	X	(ALSO ORDER (2) T196077)

FRONT WINDOW SUNVISOR

T205801 -UN-12DEC04

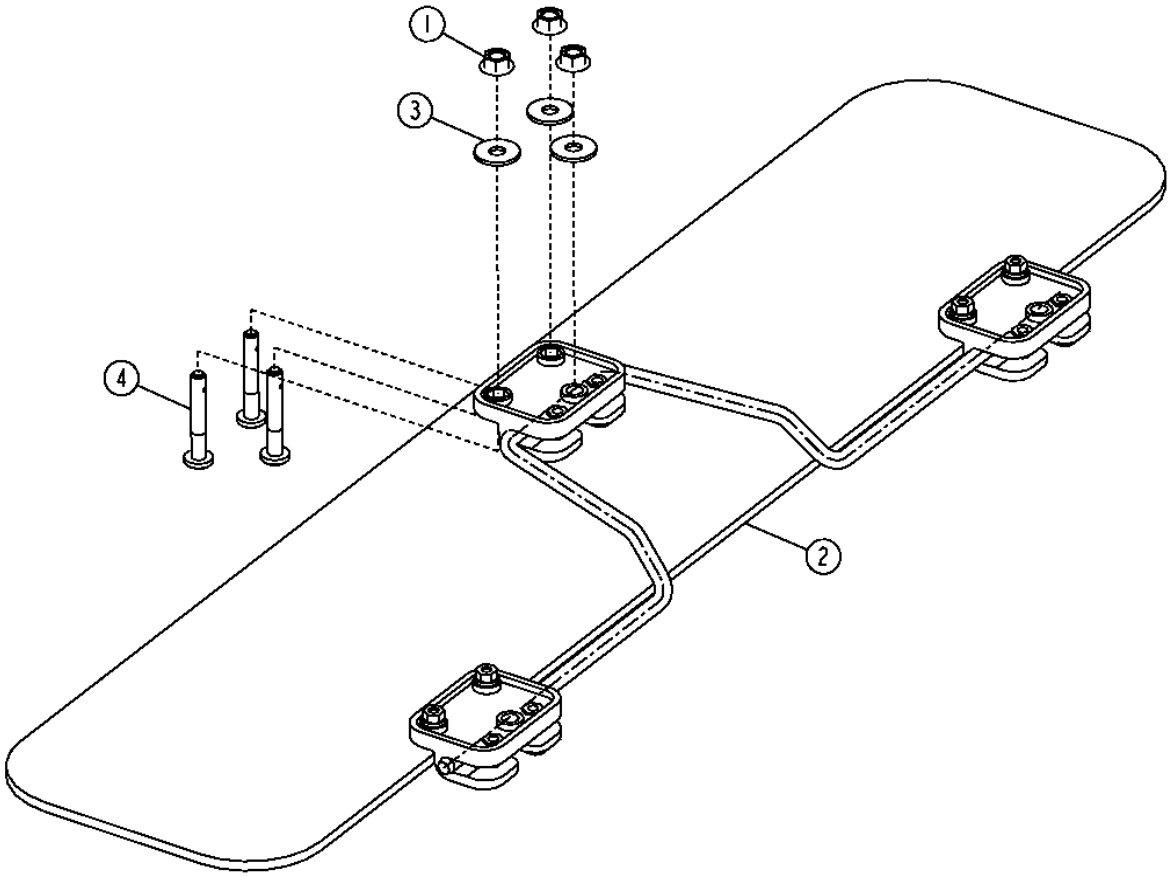

T205801

FRONT WINDOW SUNVISOR

KEY	PART NO.	PART NAME	QTY	SERIAL NO.	670D	672D	REMARKS
1	14M7303	FLANGE NUT	3		X	X	M6
2	AT306350	SUN VISOR	1		X	X	
3	24H1821	WASHER	3		X	X	
4	21M7403	SCREW	3		X	X	M6 X 40

SMV SIGN

T202479 -UN-18DEC04

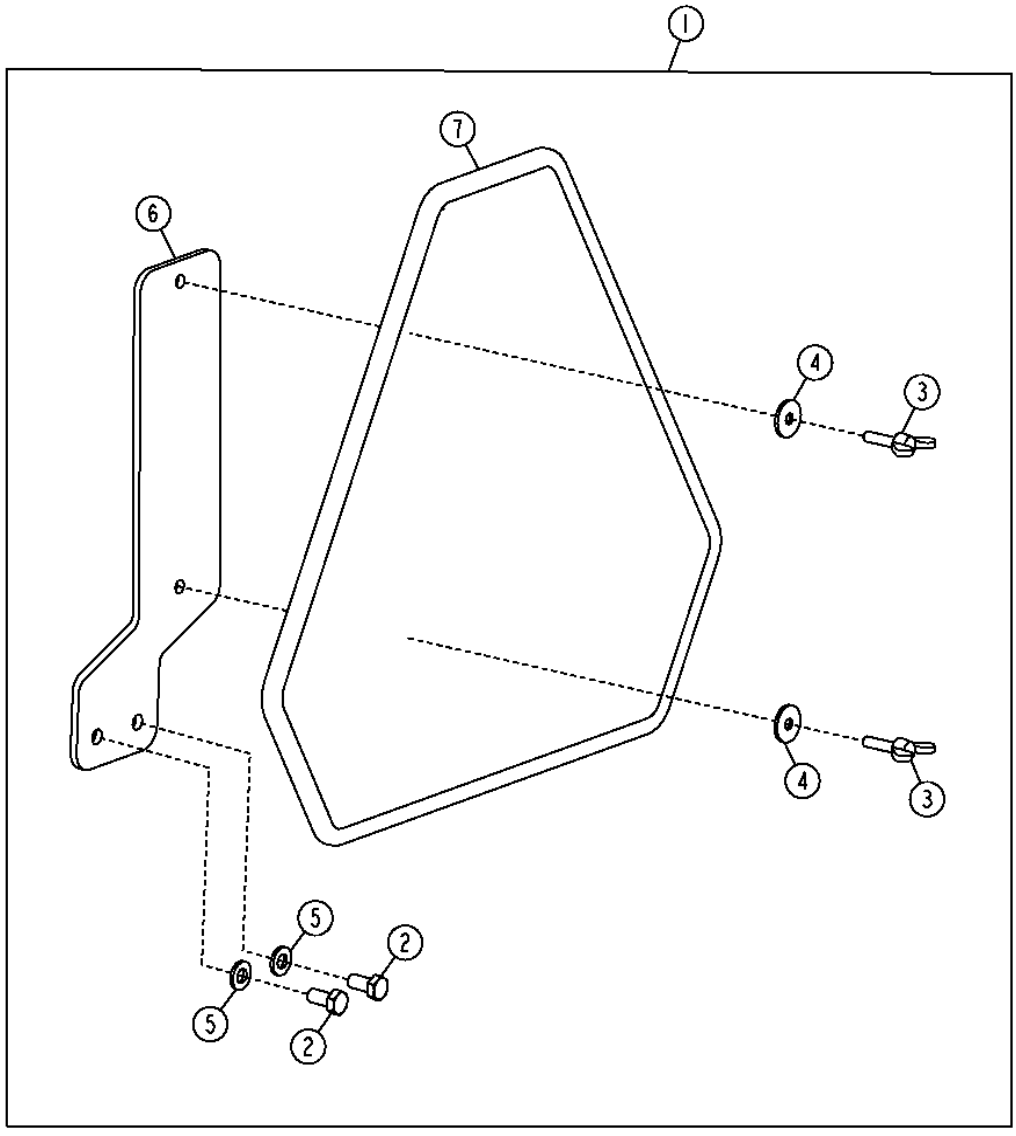

T202479

SMV SIGN

KEY	PART NO.	PART NAME	QTY	SERIAL NO.	670D	672D	REMARKS
1	**AT315341**	**KIT**	**1**		**X**	**X**	**(WHOLEGOODS) (SMV SIGN KIT)**
2	19M7932	CAP SCREW	2		X	X	M8 X 16
3	21M7344	SCREW	2		X	X	M6 X 25
4	24M7100	WASHER	2		X	X	
5	24M7238	WASHER	2		X	X	
6	AT315334	BRACKET	1		X	X	
9	JD5929	SMV EMBLEM	1		X	X	

MAIN HYDRAULIC PUMP

T201567 -UN-10DEC04

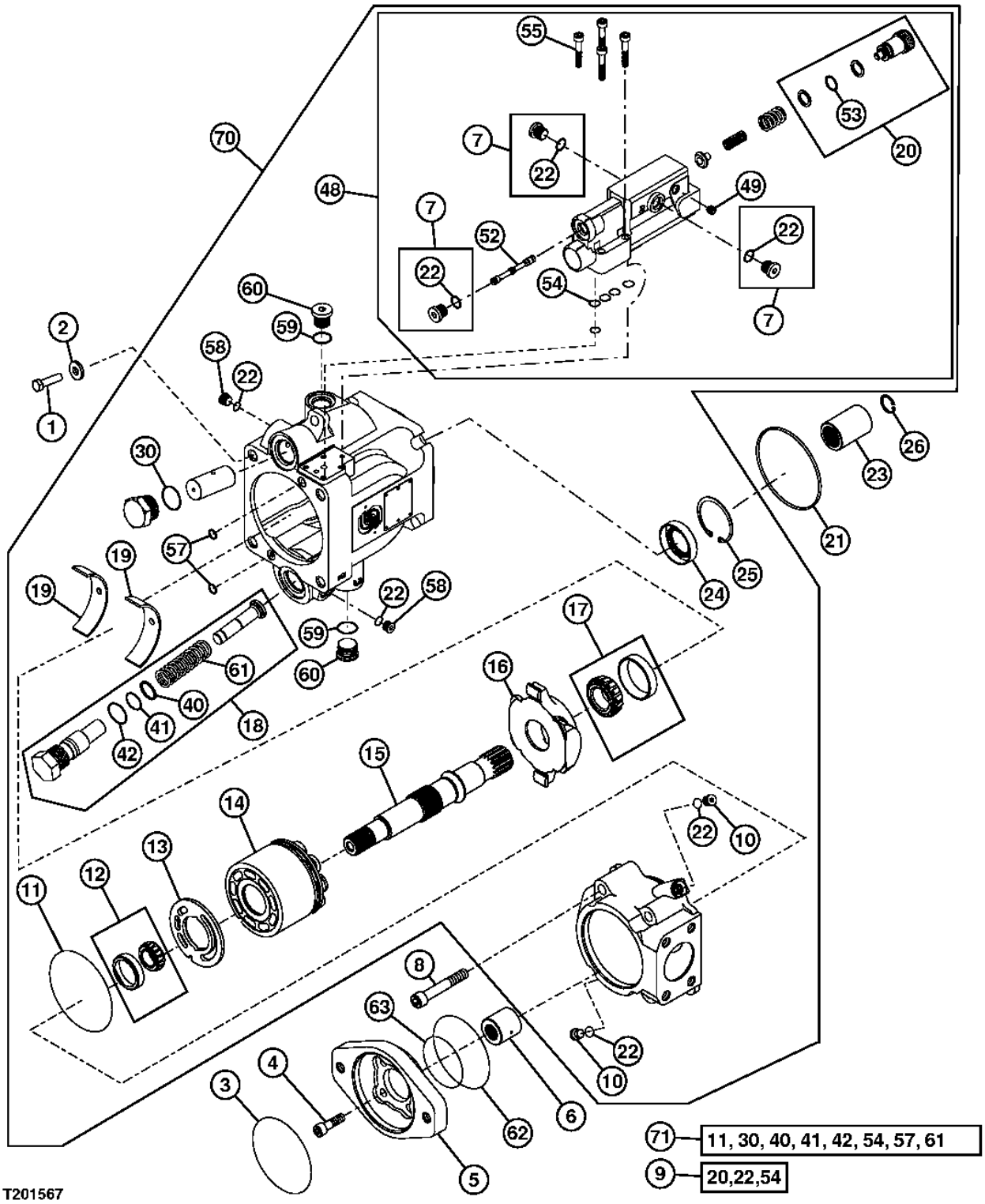

MAIN HYDRAULIC PUMP

KEY	PART NO.	PART NAME	QTY	SERIAL NO.	670D	672D	REMARKS
1	19M7496	CAP SCREW	4		X	X	M12 X 45
2	T29342	WASHER	4		X	X	
3	.....	O-RING	1			X	(USED WITH AUXILIARY DRIVE)
4	19M8440	SCREW	4			X	M10 X 25, (USED WITH AUXILIARY DRIVE)
5	.....	PLATE	1			X	ADAPTER (USED WITH AUXILIARY DRIVE)
6	T188690	HYDR.QUICK COUPLER SOCKET	1			X	(USED WITH AUXILIARY DRIVE)
7	T176425	PLUG	3		X	X	
8	.....	SCREW	4			X	(USED WITH AUXILIARY DRIVE)
9	AT305110	SEAL KIT	1		X	X	
10	T54904	FITTING PLUG	2		X	X	
11	N203952	O-RING	1		X	X	
12	AT191366	BEARING KIT	1		X	X	
13	T188686	PLATE	1		X	X	
14	AT196346	KIT	1		X	X	(CONTAINS PUMP PISTONS AND HOUSING)
15	T185138	DRIVE SHAFT	1			X	(USED WITH AUXILIARY DRIVE)
	T188698	SHAFT	1		X		(USED WITHOUT AUXILIARY DRIVE)
16	AT280244	MOUNTING PARTS	1		X	X	SWASHPLATE ASSEMBLY, (SUB FOR AT197420)
17	AT191367	BEARING KIT	1		X	X	
18	AT191369	PISTON REPLACEMENT KIT	1		X	X	
19	AT191368	BEARING	2		X	X	SWASHPLATE
20	.....	PLUG	1		X	X	(SUB AT305110)
21	F37020159	O-RING	1		X	X	
22	R28782	O-RING	6		X	X	
23	4001456	SLEEVE	1		X	X	
24	T185183	SEAL	1		X	X	
25	T185254	SNAP RING	1		X	X	
26	F39000106	SNAP RING	1		X	X	
30	T24212	O-RING	1		X	X	
40	T185185	BACK-UP RING	1		X	X	
41	T76938	O-RING	1		X	X	
42	T24212	O-RING	1		X	X	
48	AT199076	KIT	1		X	X	(PUMP CONTROL)
49	T188687	SCREW	1		X	X	
52	T190243	SPOOL	1		X	X	
53	.....	O-RING	1		X	X	
54	T185181	RING	4		X	X	
55	T185186	SCREW	4		X	X	
57	T185184	RING	2		X	X	
58	T54904	FITTING PLUG	2		X	X	
59	M45387	O-RING	2		X	X	
60	M74877	PLUG	2		X	X	
61	T185135	SPRING	1		X	X	
62	T42302	O-RING	1			X	(WITH AUXILIARY DRIVE)
63	E65288	O-RING	1			X	(WITH AUXILIARY DRIVE)
70	AT302661	HYDRAULIC PUMP	1			X	(MAIN HYDRAULIC PUMP WITH AUXILIARY DRIVE)
	AT302662	HYDRAULIC PUMP	1		X		(MAIN HYDRAULIC PUMP WITHOUT AUXILIARY DRIVE)
71	AT191371	SEAL KIT	1		X	X	PUMP OVERHAUL

MAIN MANIFOLD VALVE MOUNTING BRACKET

T202314 -UN-02SEP04

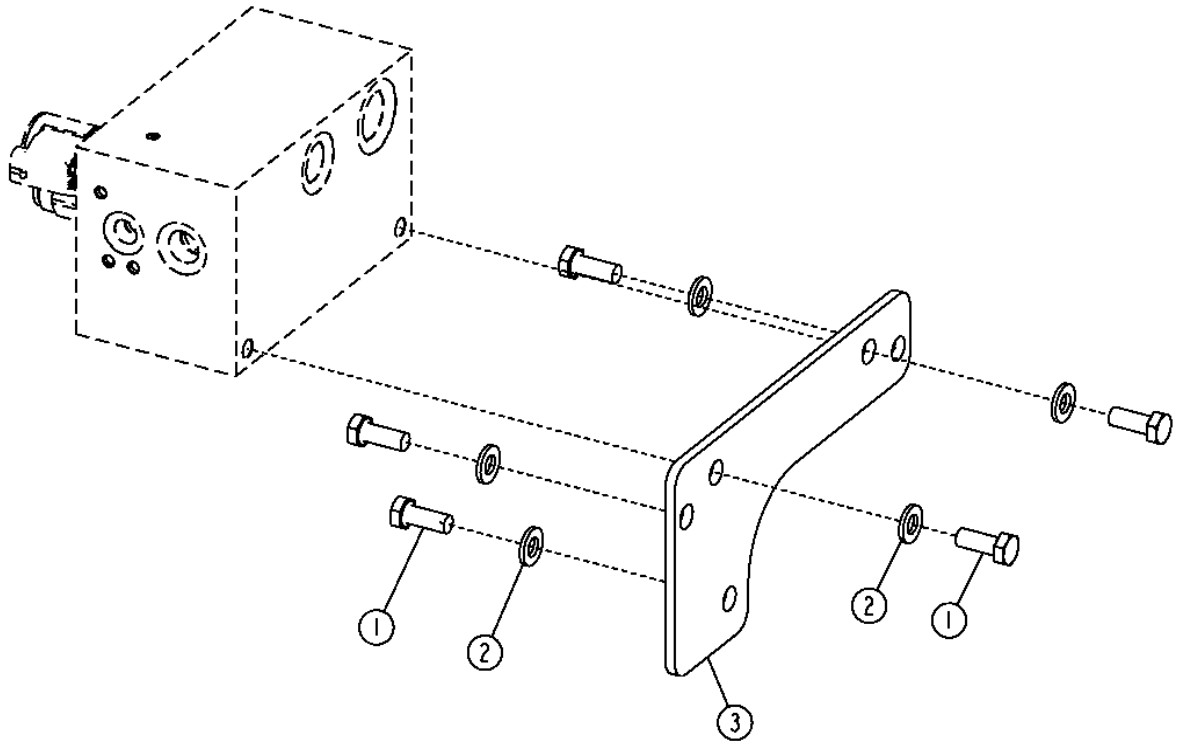

T202314

MAIN MANIFOLD VALVE MOUNTING BRACKET

KEY	PART NO.	PART NAME	QTY	SERIAL NO.	670D	672D	REMARKS
1	19M7402	CAP SCREW	5		X	X	M10 X 25
2	24M7239	WASHER	5		X	X	
3	T205720	PLATE	1		X	X	

MAIN HYDRAULIC MANIFOLD VALVE

T202315 -UN-01SEP04

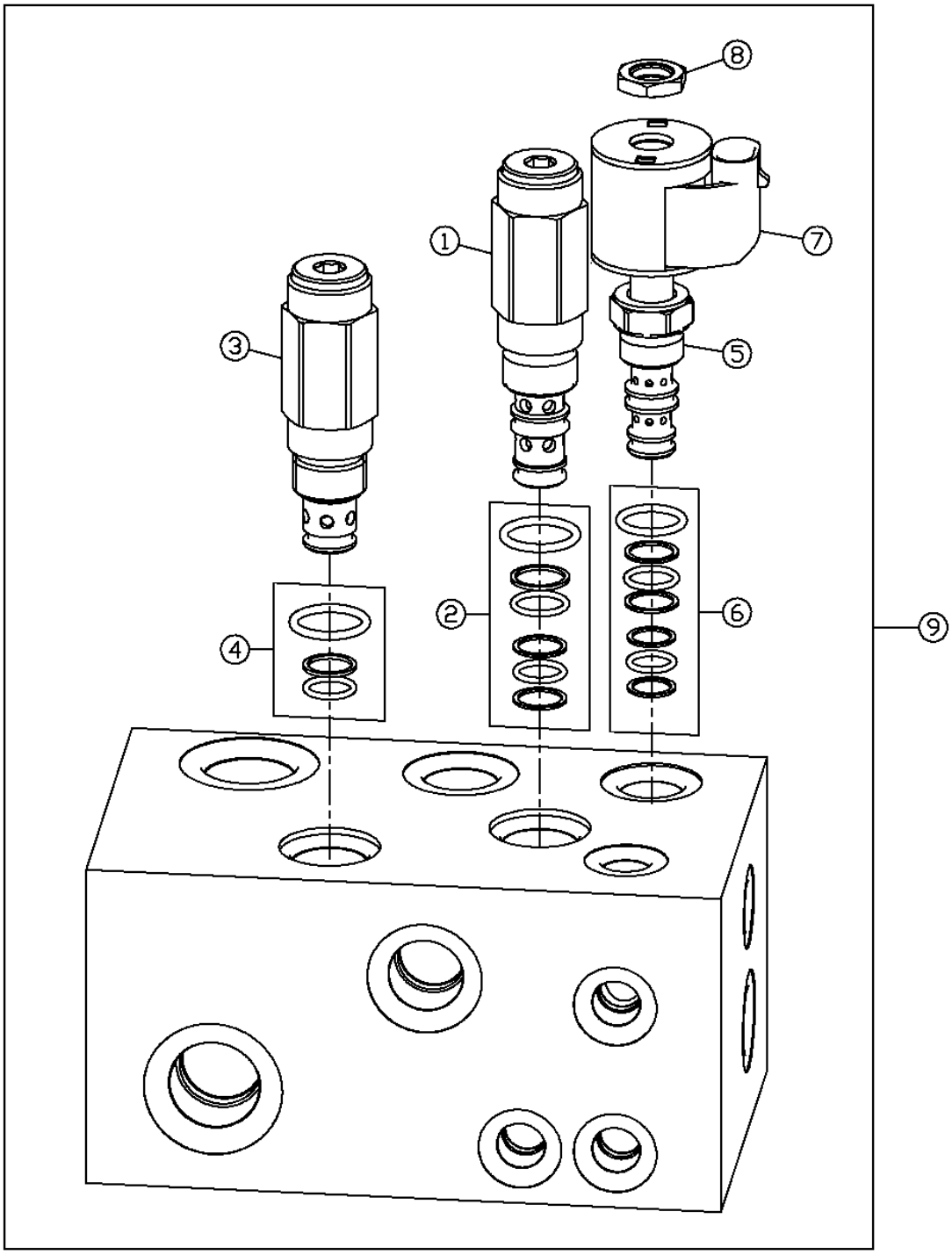

T202315

MAIN HYDRAULIC MANIFOLD VALVE

KEY	PART NO.	PART NAME	QTY	SERIAL NO.	670D	672D	REMARKS
1	AT307811	VALVE	1		X	X	(SADDLE LOCK PIN PRESSURE REDUCING VALVE)
2	AT196943	SEAL KIT	1		X	X	
3	AT302907	PRESSURE RELIEF VALVE	1		X	X	(SYSTEM RELIEF VALVE)
4	AT224864	SEAL KIT	1		X	X	
5	AT302908	SOLENOID VALVE	1		X	X	
6	AH209121	SEAL KIT	1		X	X	
7	AT224574	SOLENOID VALVE COIL	1		X	X	(SADDLE LOCK PIN SOLENOID)
8	N223292	NUT	1		X	X	
9	AT302150	MANIFOLD	1		X	X	(MAIN MANIFOLD VALVE)

MAIN HYDRAULIC CONTROL VALVE (RIGHT AND LEFT COMPLETE)

T204802 -UN-09NOV04

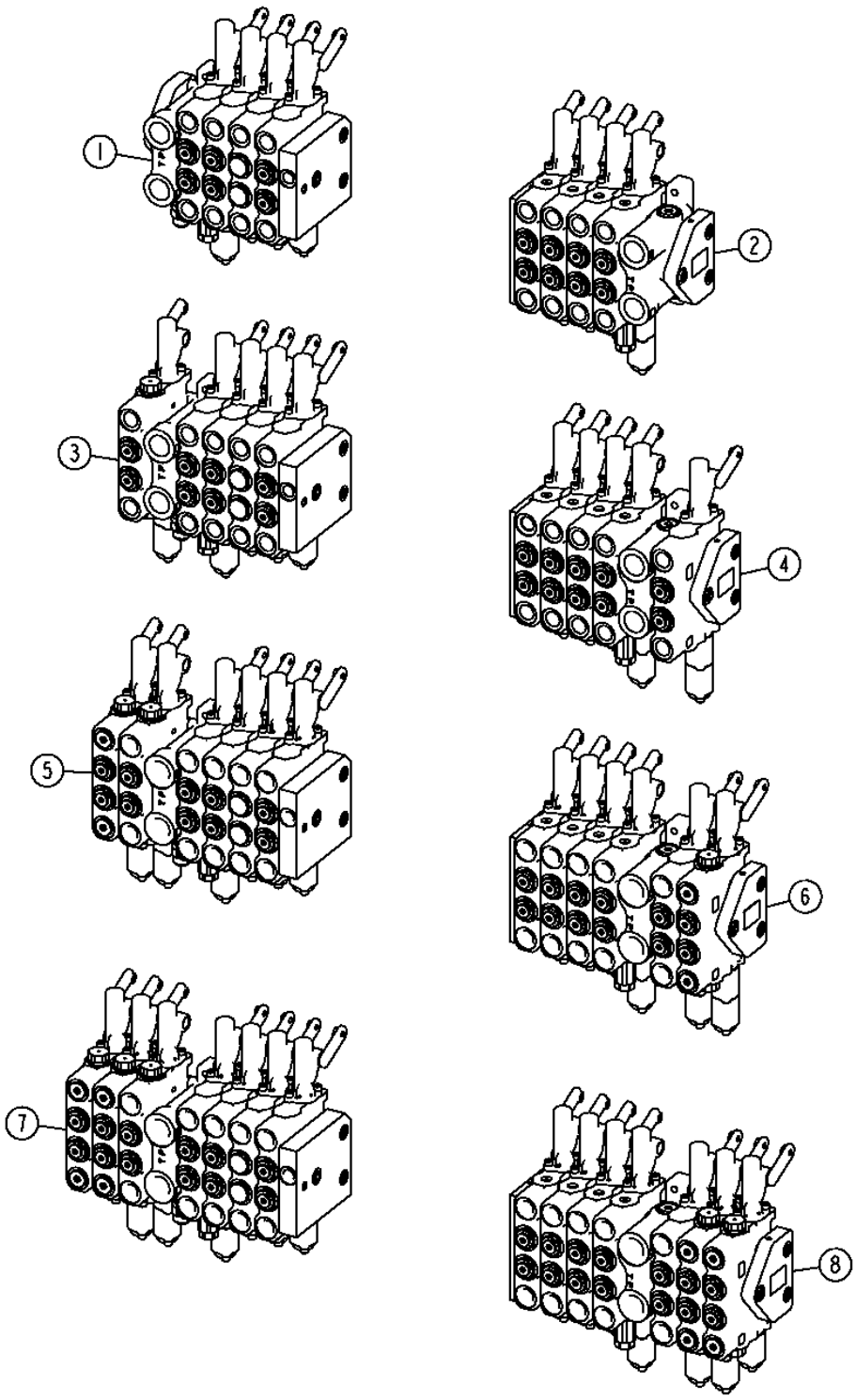

MAIN HYDRAULIC CONTROL VALVE (RIGHT AND LEFT COMPLETE)

KEY	PART NO.	PART NAME	QTY	SERIAL NO.	670D	672D	REMARKS
1	AT302284	CONTROL VALVE	1		X	X	(LEFT 4 FUNCTION)(COMPONENTS ON SEPARATE PAGES)
2	AT302283	CONTROL VALVE	1		X	X	(RIGHT 4 FUNCTION)(COMPONENTS ON SEPARATE PAGES)
3	AT302286	CONTROL VALVE	1		X	X	(LEFT 5 FUNCTION)(COMPONENTS ON SEPARATE PAGES)
4	AT302285	CONTROL VALVE	1		X	X	(RIGHT 5 FUNCTION)(COMPONENTS ON SEPARATE PAGES)
5	AT309235	CONTROL VALVE	1		X	X	(LEFT 6 FUNCTION)(COMPONENTS ON SEPARATE PAGES)
6	AT309234	CONTROL VALVE	1		X	X	(RIGHT 6 FUNCTION)(COMPONENTS ON SEPARATE PAGES)
7	AT302288	CONTROL VALVE	1		X	X	(LEFT 7 FUNCTION)(COMPONENTS ON SEPARATE PAGES)
8	AT302287	CONTROL VALVE	1		X	X	(RIGHT 7 FUNCTION)(COMPONENTS ON SEPARATE PAGES)

MAIN HYDRAULIC CONTROL VALVE TIE RODS

T204807 -UN-16NOV04

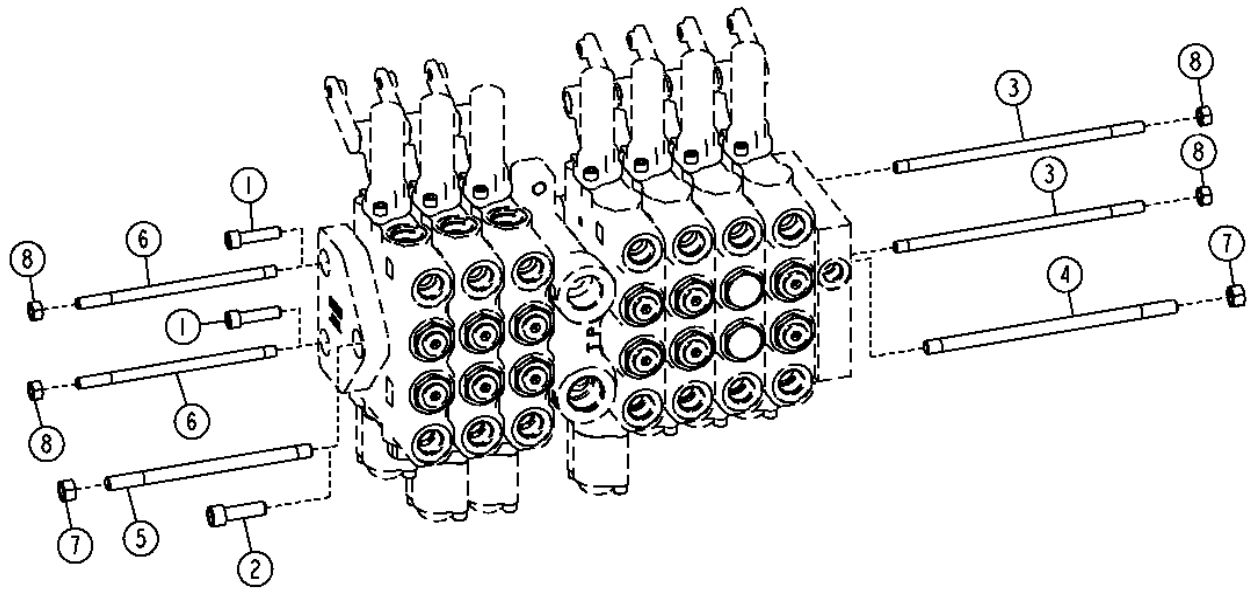

T204807

MAIN HYDRAULIC CONTROL VALVE TIE RODS

KEY	PART NO.	PART NAME	QTY	SERIAL NO.	670D	672D	REMARKS
1	19H3920	SCREW	2		X	X	5/16" X 1-1/4", (4 FUNCTION)
2	19H3921	SCREW	1		X	X	3/8" X 1-1/4", (4 FUNCTION)
3	T213026	STUD	2		X	X	
4	T213029	STUD	1		X	X	
5	T213030	STUD	1		X	X	(5 FUNCTION)
	T76128	STUD	1		X	X	(6 FUNCTION)
	T213031	STUD	1		X	X	(7 FUNCTION)
6	T213027	STUD	2		X	X	(5 FUNCTION)
	T76127	STUD	2		X	X	(6 FUNCTION)
	T213028	STUD	2		X	X	(7 FUNCTION)
7	14H1080	NUT	1		X	X	3/8", (4 FUNCTION)
	14H1080	NUT	2		X	X	3/8", (5,6,7 FUNCTION)
8	14H1042	NUT	2		X	X	5/16", (4 FUNCTION)
	14H1042	NUT	4		X	X	5/16", (5,6,7 FUNCTION)

BLADE TILT, ARTICULATION, CIRCLE SIDE SHIFT AND WHEEL LEAN VALVE SECTIONS

T203404 -UN-09NOV04

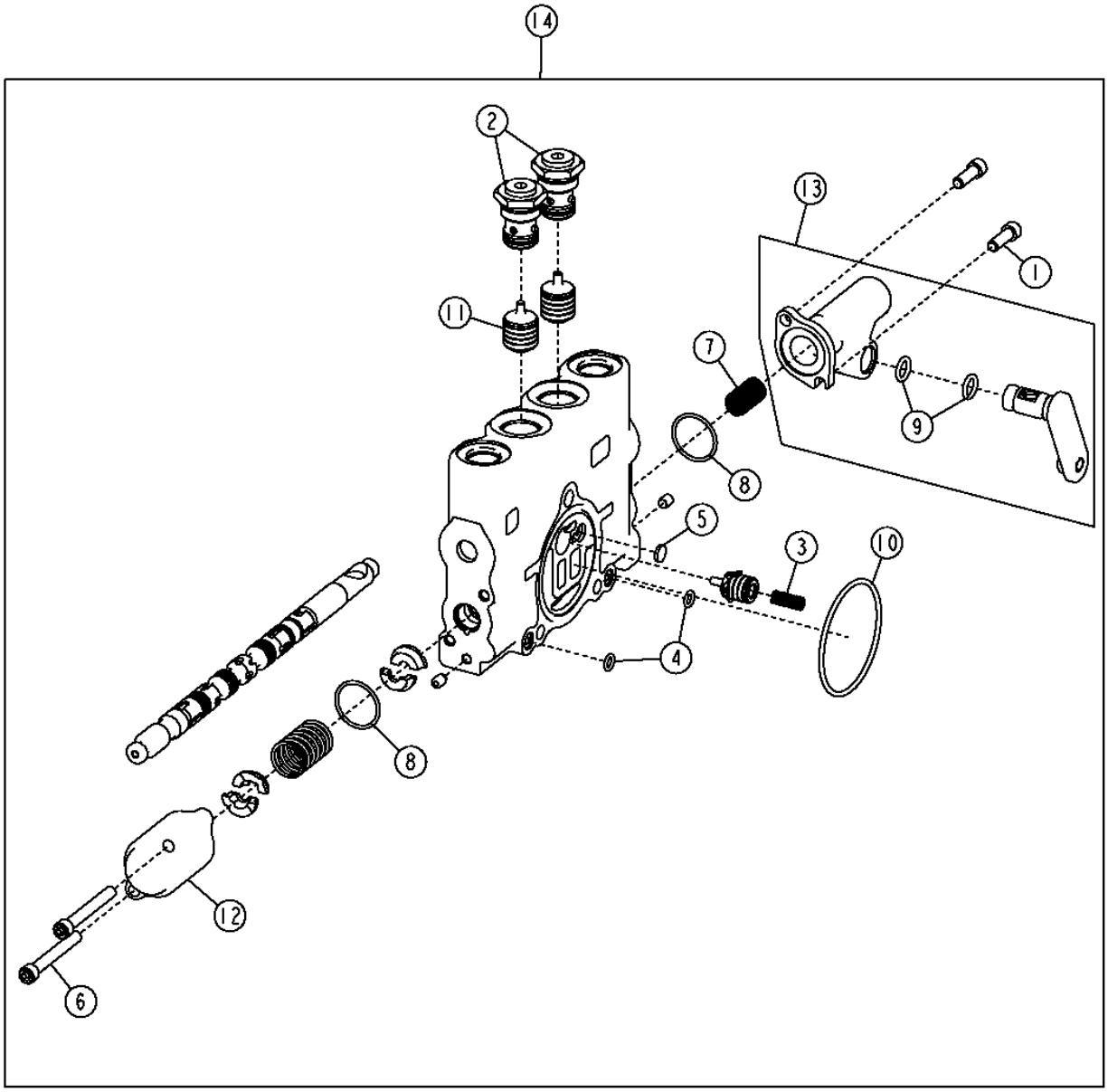

T203404

BLADE TILT, ARTICULATION, CIRCLE SIDE SHIFT AND WHEEL LEAN VALVE SECTIONS

KEY	PART NO.	PART NAME	QTY	SERIAL NO.	670D	672D	REMARKS
1	19H2924	SCREW	2		X	X	1/4" X 3/4"
2	AT317328	CHECK VALVE	2		X	X	
3	R111238	SPRING	1		X	X	
4	R76578	O-RING	3		X	X	
5	R95493	DISK	1		X	X	
6	T118712	SCREW	2		X	X	
7	T190767	SPRING	1		X	X	
8	T213022	O-RING	2		X	X	
9	T213023	O-RING	2		X	X	
10	T213025	O-RING	1		X	X	
11	T213031	STUD	2		X	X	
12	T213033	HOUSING	1		X	X	
13	AT317305	ACTUATOR	1		X	X	(USE WITH BLADE TILT VALVE SECTION)
	AT317304	ACTUATOR	1		X	X	(USE WITH ARTICULATION, CIRCLE SIDE SHIFT, AND WHEEL LEAN VALVE SECTIONS)
14	AT317315	CONTROL VALVE	1		X	X	(BLADE TILT VALVE SECTION)
	AT317316	CONTROL VALVE	1		X	X	(ARTICULATION VALVE SECTION)
	AT317317	CONTROL VALVE	1		X	X	(CIRCLE SIDE SHIFT VALVE SECTION)
	AT317318	CONTROL VALVE	1		X	X	(WHEEL LEAN VALVE SECTION)

CIRCLE ROTATE VALVE SECTION

T203405 -UN-09NOV04

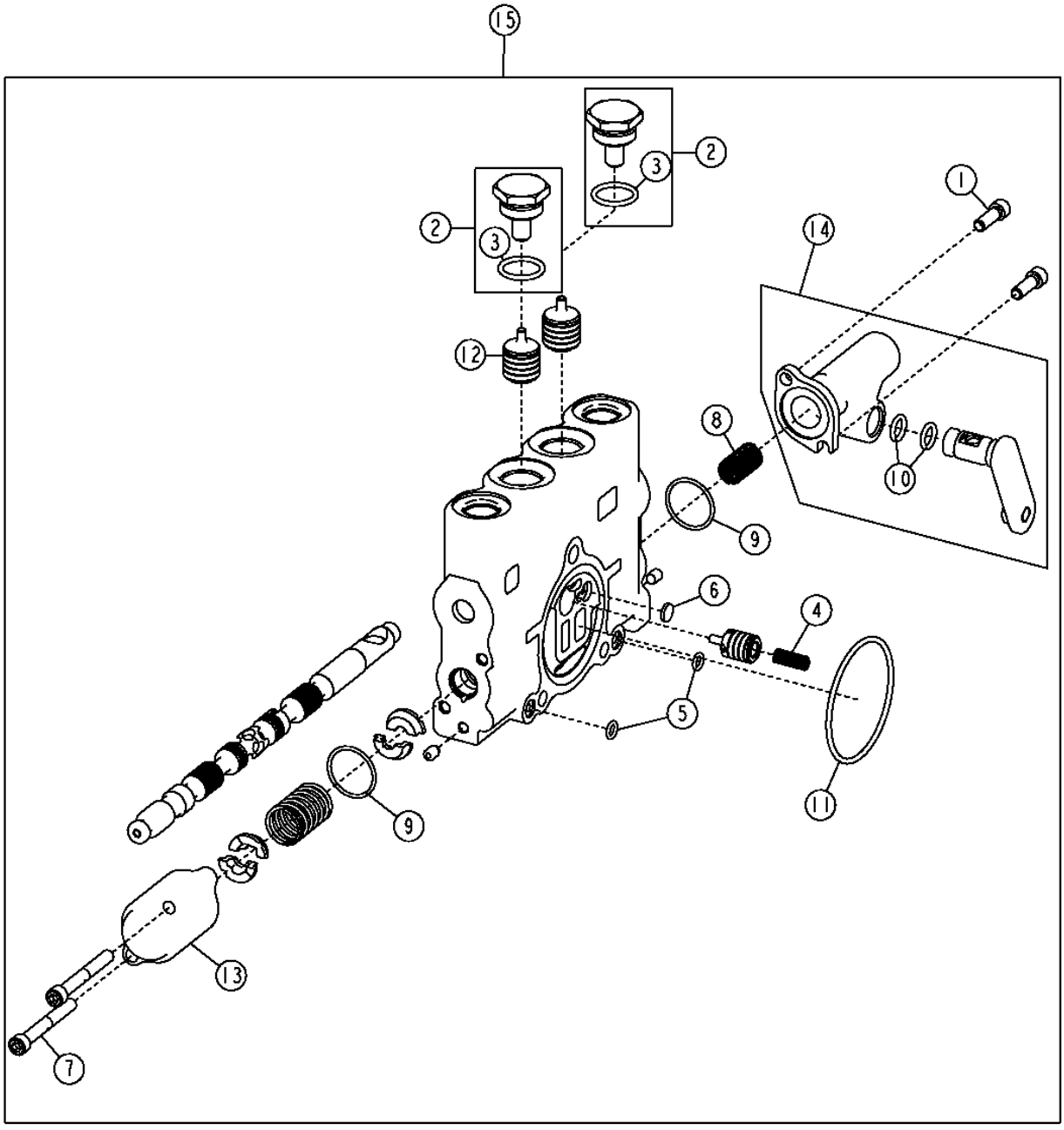

T203405

CIRCLE ROTATE VALVE SECTION

KEY	PART NO.	PART NAME	QTY	SERIAL NO.	670D	672D	REMARKS
1	19H2924	SCREW	2		X	X	1/4" X 3/4"
2	AT317820	FITTING	2		X	X	
3	R26906	O-RING	1		X	X	
4	R111238	SPRING	1		X	X	
5	R76578	O-RING	3		X	X	
6	R95493	DISK	1		X	X	
7	T118712	SCREW	2		X	X	
8	T190767	SPRING	1		X	X	
9	T213022	O-RING	2		X	X	
10	T213023	O-RING	2		X	X	
11	T213025	O-RING	1		X	X	
12	T213031	STUD	2		X	X	
13	T213033	HOUSING	1		X	X	
14	AT317305	ACTUATOR	1		X	X	
15	AT317314	CONTROL VALVE	1		X	X	(CIRCLE ROTATE VALVE SECTION)

BLADE SIDE SHIFT VALVE SECTION

T203406 -UN-09NOV04

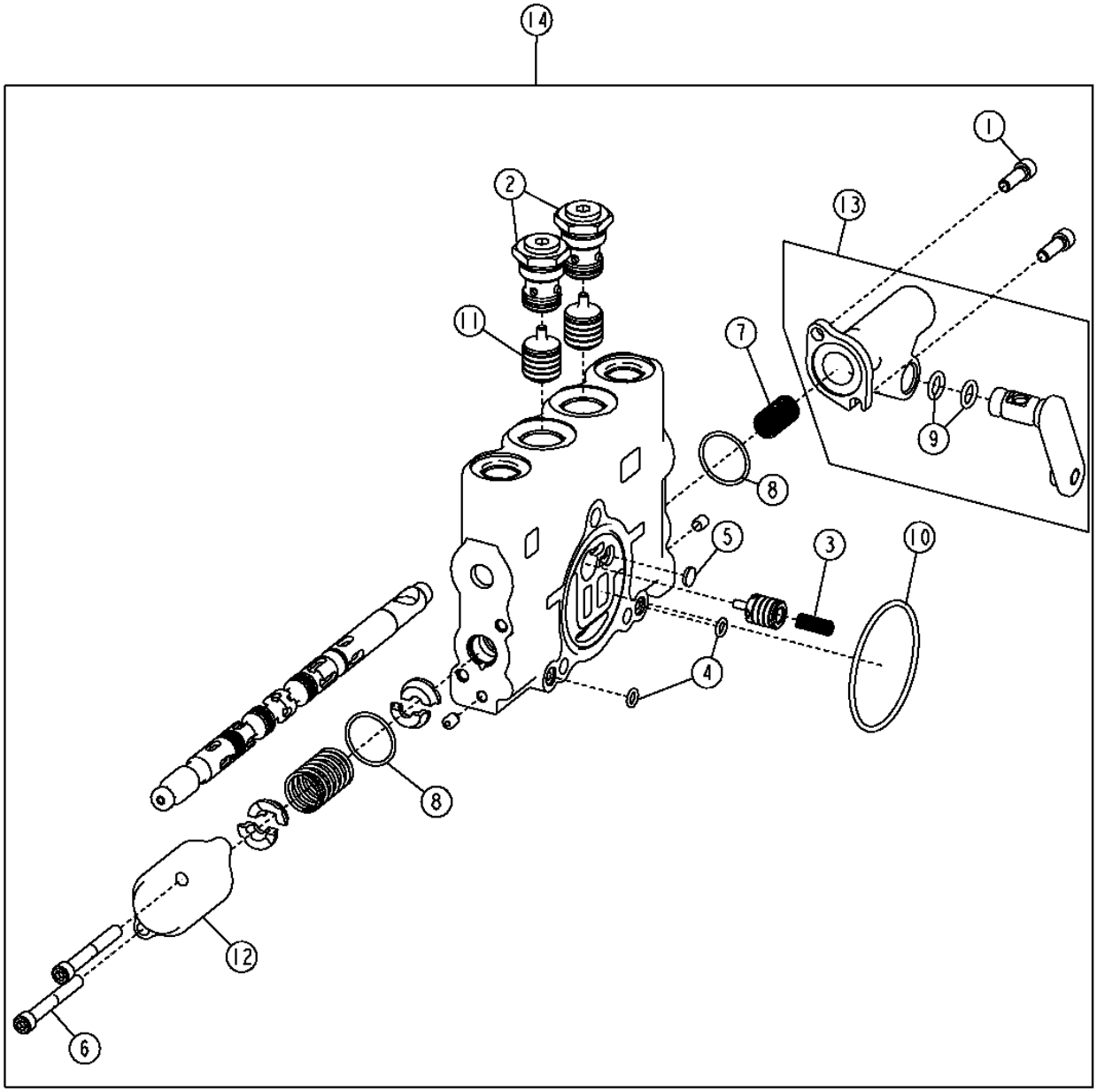

T203406

BLADE SIDE SHIFT VALVE SECTION

KEY	PART NO.	PART NAME	QTY	SERIAL NO.	670D	672D	REMARKS
1	19H2924	SCREW	2		X	X	1/4" X 3/4"
2	AT317328	CHECK VALVE	2		X	X	
3	R111238	SPRING	1		X	X	
4	R76578	O-RING	3		X	X	
5	R95493	DISK	1		X	X	
6	T118712	SCREW	2		X	X	
7	T190767	SPRING	1		X	X	
8	T213022	O-RING	2		X	X	
9	T213023	O-RING	2		X	X	
10	T213025	O-RING	1		X	X	
11	T213031	STUD	2		X	X	
12	T213033	HOUSING	2		X	X	
13	AT317305	ACTUATOR	1		X	X	
14	AT317313	CONTROL VALVE	1		X	X	(BLADE SIDE SHIFT VALVE SECTION)

BLADE LIFT VALVE SECTION

T203541 -UN-09NOV04

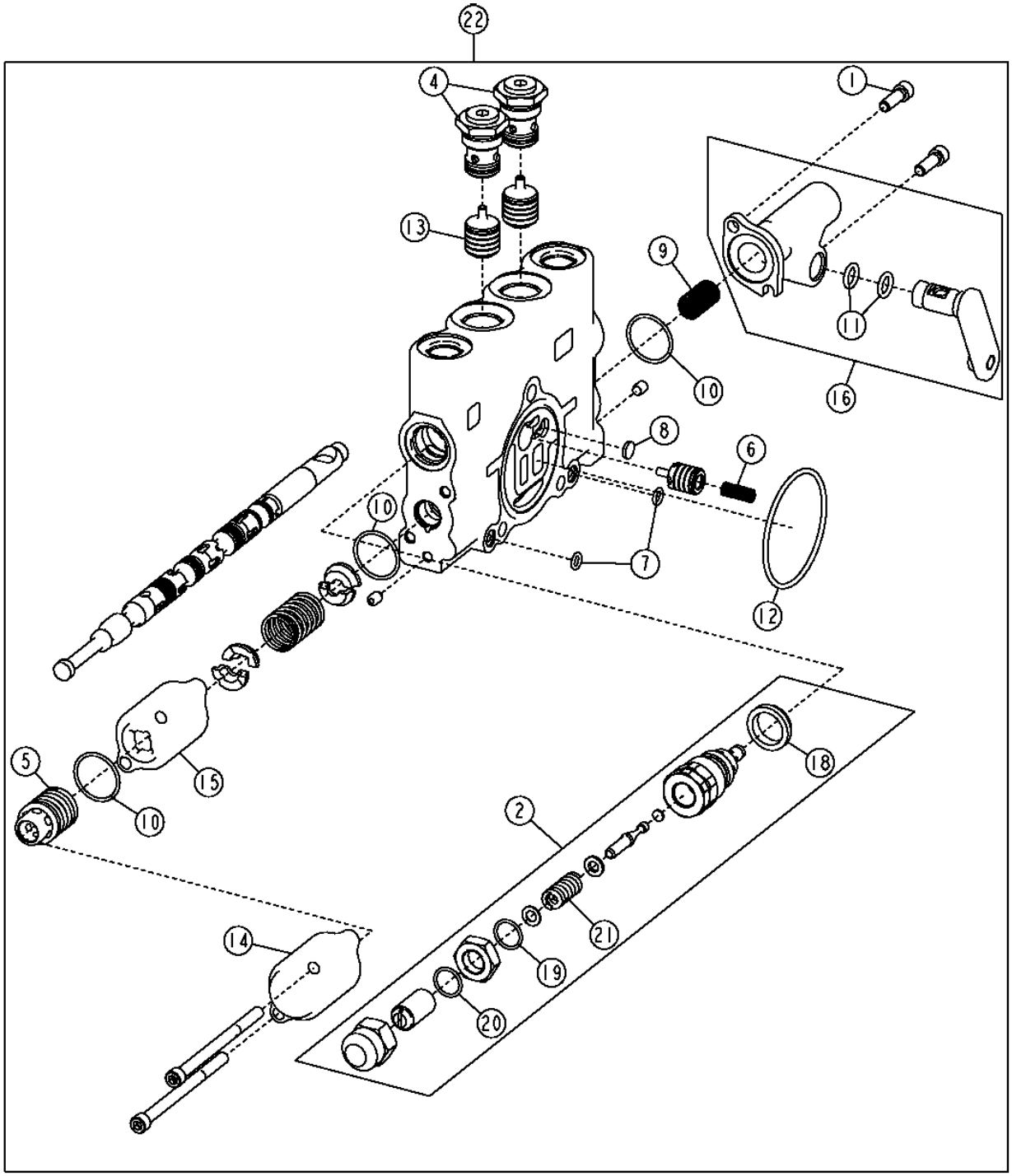

BLADE LIFT VALVE SECTION

KEY	PART NO.	PART NAME	QTY	SERIAL NO.	670D	672D	REMARKS
1	19H2924	SCREW	2		X	X	1/4" X 3/4"
2	AT301226	PRESSURE RELIEF VALVE	1		X	X	
3	AT301227	SEAL KIT	1		X	X	
4	AT317328	CHECK VALVE	2		X	X	
5	AT317822	DETENT	1		X	X	
6	R111238	SPRING	1		X	X	
7	R76578	O-RING	3		X	X	
8	R95493	DISK	1		X	X	
9	T190767	SPRING	1		X	X	
10	T213022	O-RING	3		X	X	
11	T213023	O-RING	2		X	X	
12	T213025	O-RING	1		X	X	
13	T213031	STUD	2		X	X	
14	T213033	HOUSING	1		X	X	
15	T213318	HOUSING	1		X	X	
16	AT317305	ACTUATOR	1		X	X	(LEFT)
	AT317304	ACTUATOR	1		X	X	(RIGHT)
18	T183756	SEAL	1		X	X	
19	R63548	O-RING	1		X	X	
20	.....	O-RING	1		X	X	
21	.....	SPRING	1		X	X	
22	AT317308	CONTROL VALVE	1		X	X	(LEFT BLADE LIFT VALVE SECTION)
	AT317309	CONTROL VALVE	1		X	X	(RIGHT BLADE LIFT VALVE SECTION)

RIGHT MAIN HYDRAULIC CONTROL VALVE INLET AND OUTLET SECTIONS

T203556 -UN-16NOV04

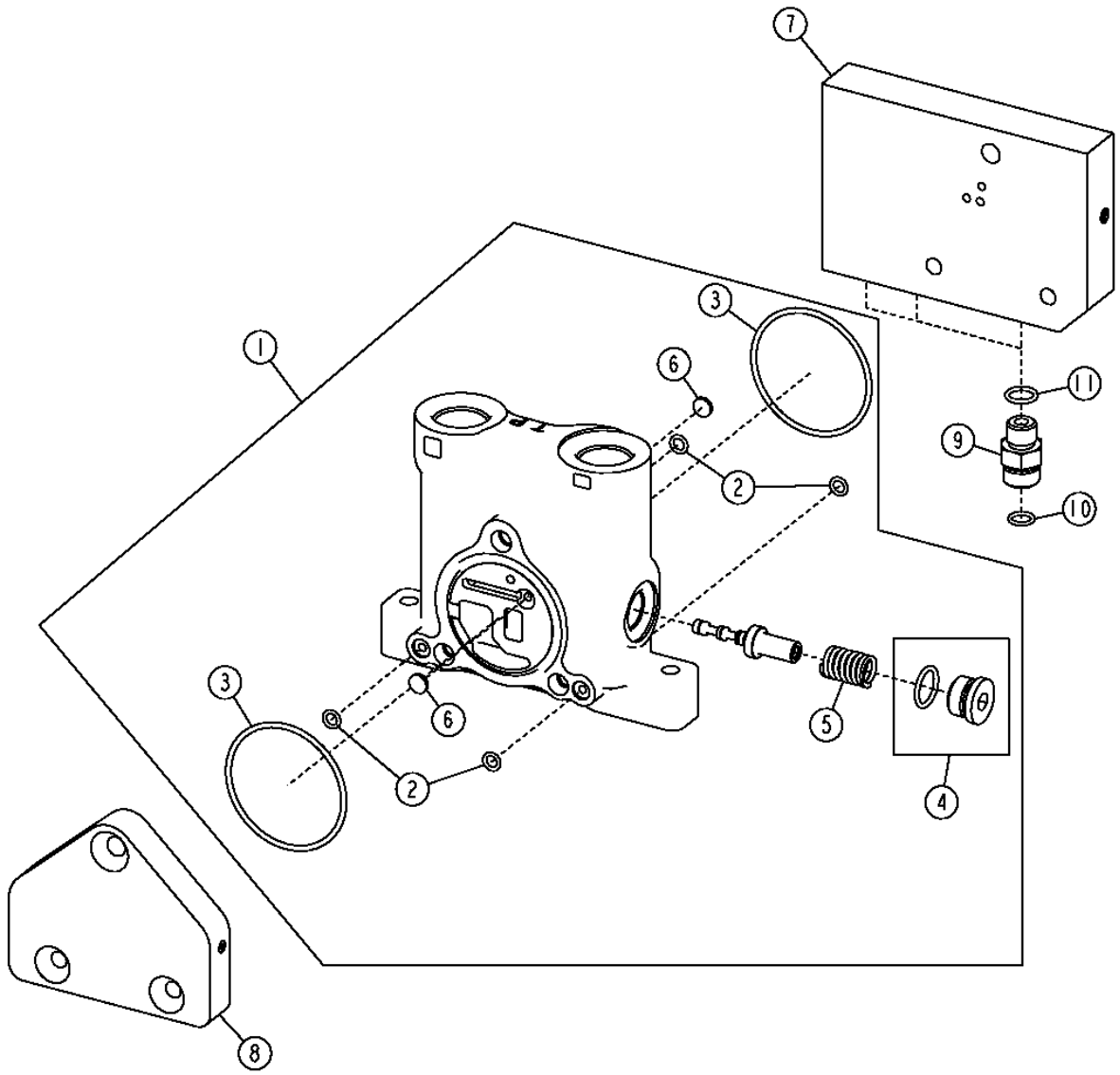

T203556

RIGHT MAIN HYDRAULIC CONTROL VALVE INLET AND OUTLET SECTIONS

KEY	PART NO.	PART NAME	QTY	SERIAL NO.	670D	672D	REMARKS
1	AT317306	HOUSING	1		X	X	
2	R76578	O-RING	4		X	X	
3	T213025	O-RING	2		X	X	
4	RE49624	PLUG	4		X	X	
5	T213032	COMPRESSION SPRING	1		X	X	
6	R95493	DISK	2		X	X	
7	AT317329	HOUSING	1		X	X	
8	AT317331	HOUSING	1		X	X	
9	38H1160	ADAPTER	3		X	X	
10	T77613	O-RING	3		X	X	
11	R26448	O-RING	3		X	X	

LEFT MAIN HYDRAULIC CONTROL VALVE INLET AND OUTLET SECTIONS

T203544 -UN-08DEC04

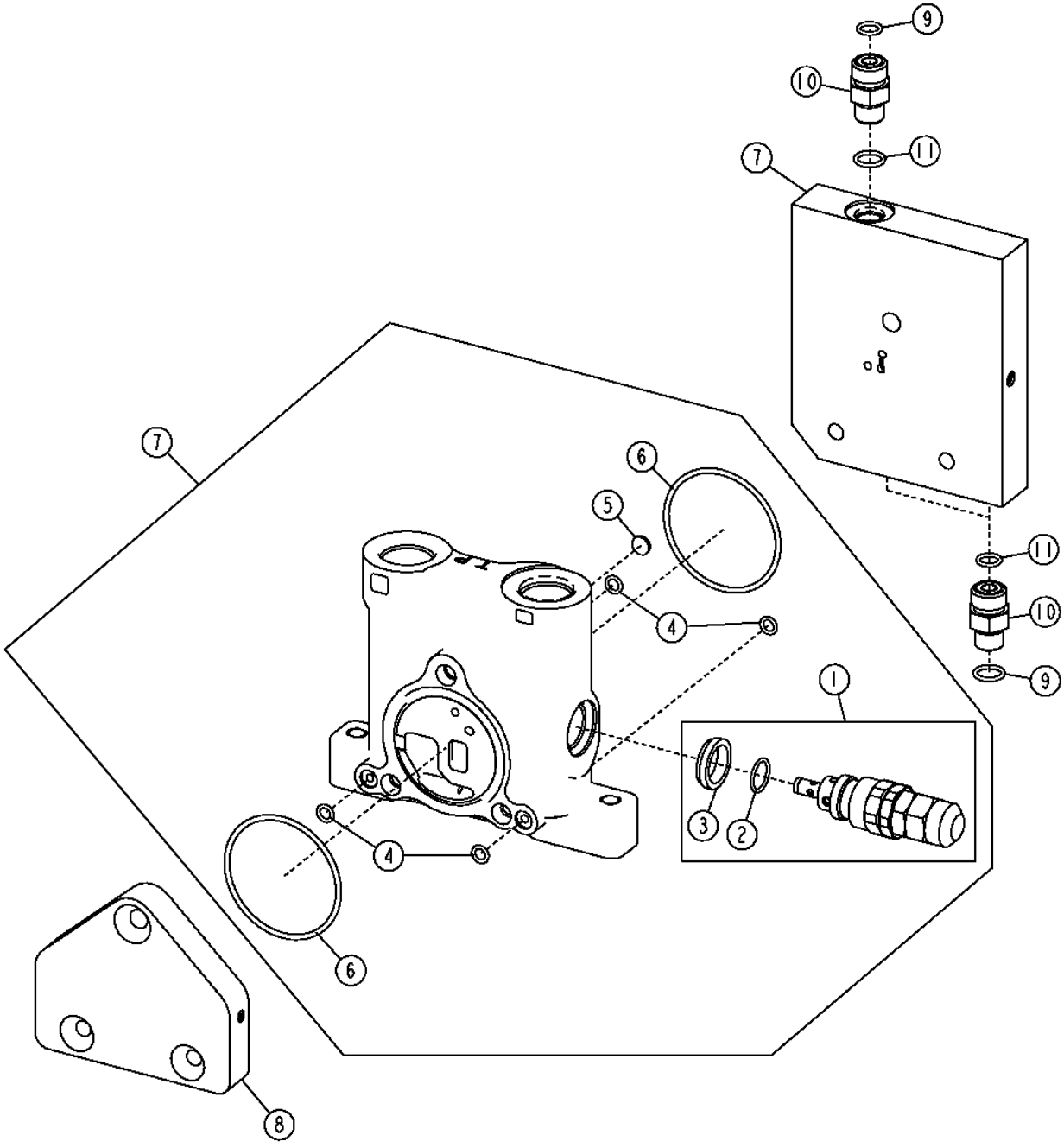

T203544

LEFT MAIN HYDRAULIC CONTROL VALVE INLET AND OUTLET SECTIONS

KEY	PART NO.	PART NAME	QTY	SERIAL NO.	670D	672D	REMARKS
1	AT317323	PRESSURE RELIEF VALVE	1		X	X	
2	T150961	O-RING	2		X	X	
3	T183756	SEAL	1		X	X	
4	R76578	O-RING	4		X	X	
5	R95493	DISK	2		X	X	
6	T213025	O-RING	1		X	X	
7	AT317330	HOUSING	1		X	X	
8	AT317331	HOUSING	1		X	X	
9	T77613	O-RING	3		X	X	
10	38H1160	ADAPTER	3		X	X	
11	R26448	O-RING	3		X	X	
12	AT317307	HOUSING	1		X	X	

RIPPER VALVE SECTION

T210408 -UN-15APR05

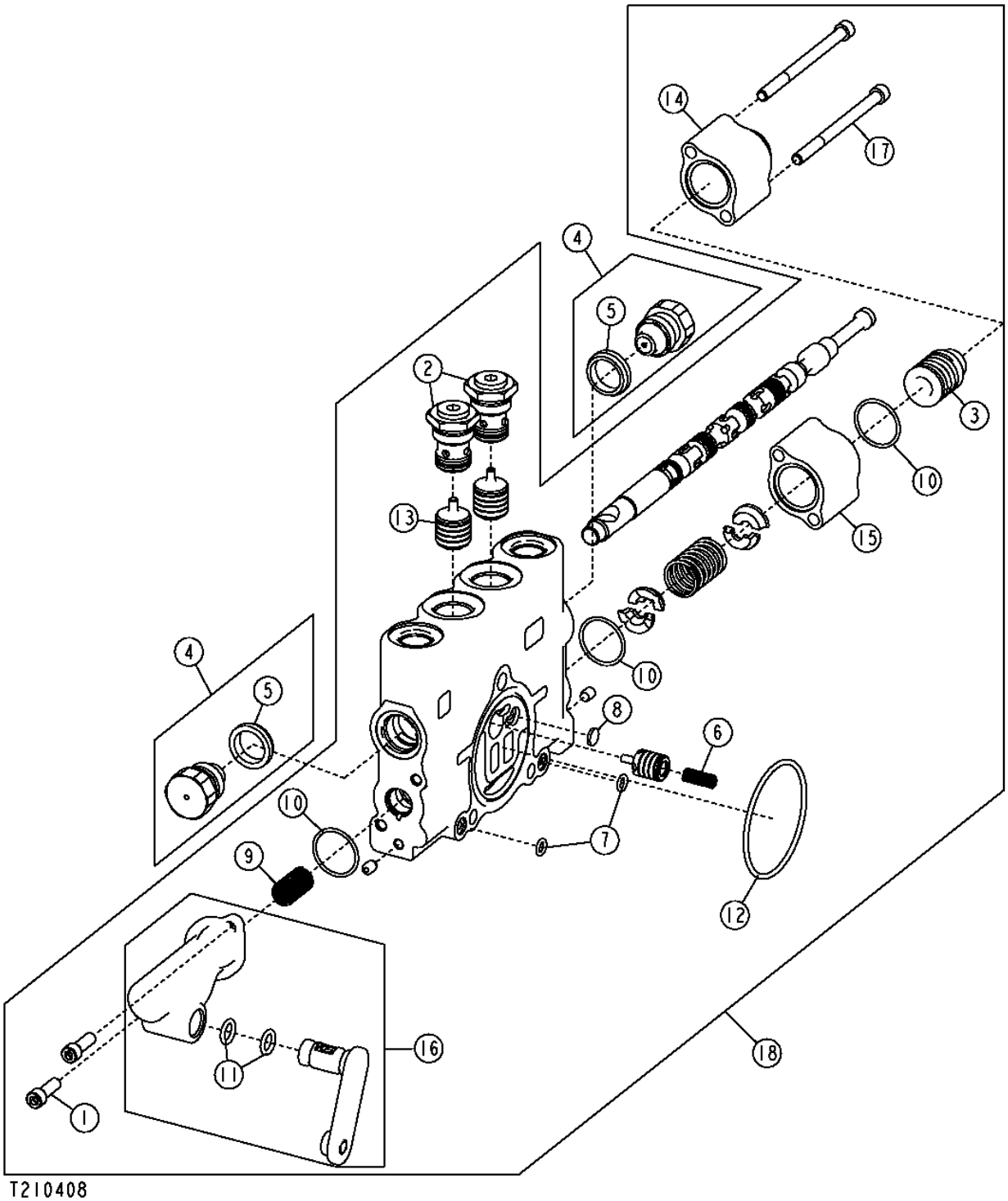

RIPPER VALVE SECTION

KEY	PART NO.	PART NAME	QTY	SERIAL NO.	670D	672D	REMARKS
1	19H2924	SCREW	2		X	X	1/4" X 3/4"
2	AT317328	CHECK VALVE	2		X	X	
3	AT317822	DETENT	1		X	X	
4	AT78527	PLUG	2		X	X	
5	T183756	SEAL	1		X	X	
6	R111238	SPRING	1		X	X	
7	R76578	O-RING	3		X	X	
8	R95493	DISK	1		X	X	
9	T190767	SPRING	1		X	X	
10	T213022	O-RING	3		X	X	
11	T213023	O-RING	2		X	X	
12	T213025	O-RING	1		X	X	
13	T213031	STUD	2		X	X	
14	T213033	HOUSING	1		X	X	
15	T213318	HOUSING	1		X	X	
16	AT317304	ACTUATOR	1		X	X	
17	T118712	SCREW	2		X	X	
18	AT317321	CONTROL VALVE	1		X	X	(RIPPER VALVE SECTION)

SCARIFIER AND AUXILIARY VALVE SECTION (WITH FLOAT)

T210407 -UN-15APR05

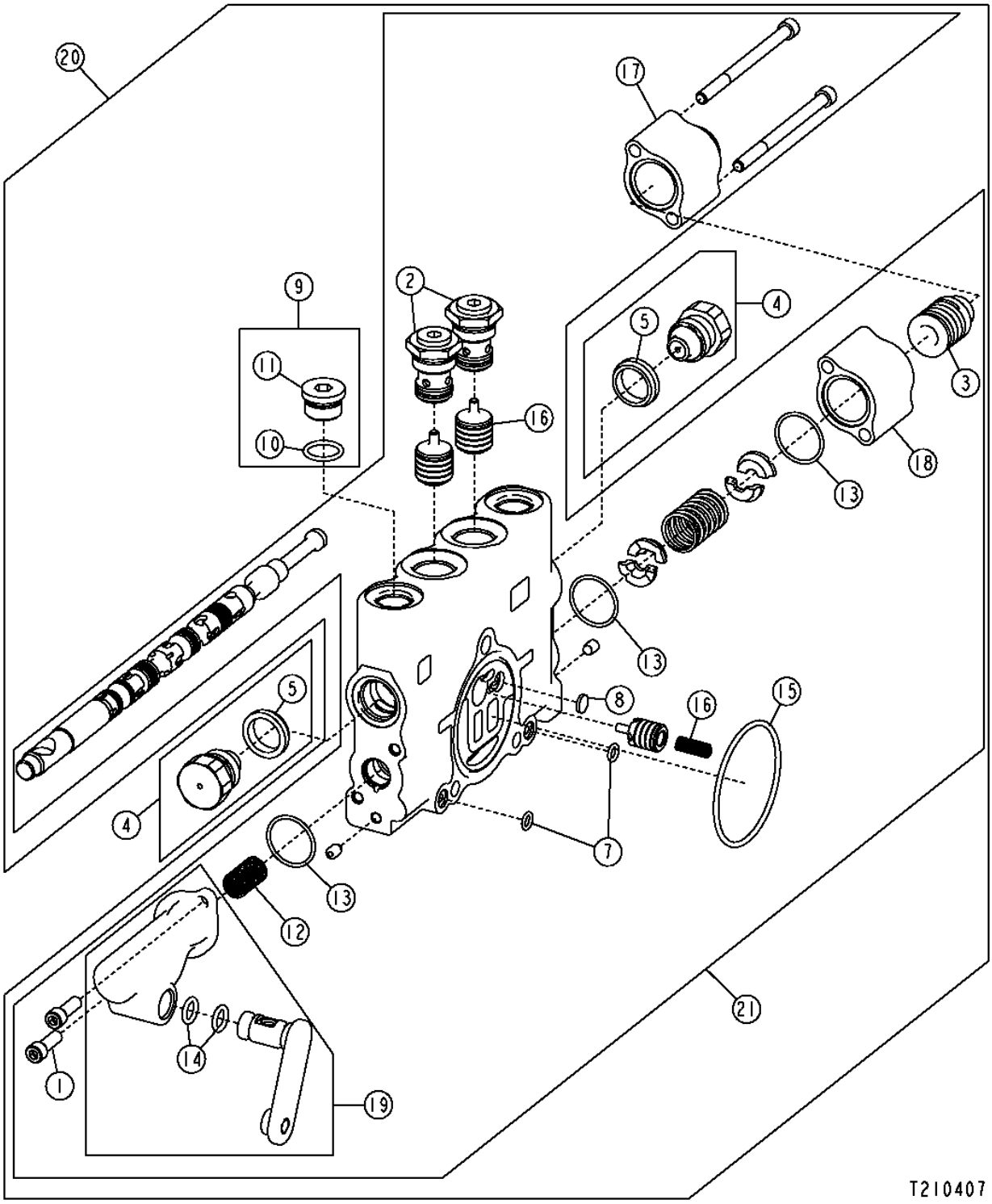

SCARIFIER AND AUXILIARY VALVE SECTION (WITH FLOAT)

KEY	PART NO.	PART NAME	QTY	SERIAL NO.	670D	672D	REMARKS
1	19H2924	SCREW	2		X	X	1/4" X 3/4"
2	AT317328	CHECK VALVE	2		X	X	
3	AT317822	DETENT	1		X	X	
4	AT78527	PLUG	2		X	X	
5	T183756	SEAL	1		X	X	
6	R111238	SPRING	1		X	X	
7	R76578	O-RING	3		X	X	
8	R95493	DISK	1		X	X	
9	RE49624	PLUG	2		X	X	
10	R26375	O-RING	1		X	X	
11	R39112	FITTING	2		X	X	
12	T190767	SPRING	1		X	X	
13	T213022	O-RING	3		X	X	
14	T213023	O-RING	1		X	X	
15	T213025	O-RING	1		X	X	
16	T213031	STUD	1		X	X	
17	T213033	HOUSING	1		X	X	
18	T213318	HOUSING	1		X	X	
19	AT317304	KIT	1		X	X	(USE WITH LEFT AUXILIARY VALVE SECTION)
	AT317305	KIT	1		X	X	(USE WITH SCARIFIER AND RIGHT AUX. SECTION)
20	AT317322	CONTROL VALVE	1		X	X	(LEFT AUXILIARY VALVE SECTION WITH FLOAT)
	AT317319	CONTROL VALVE	1		X	X	(SCARIFIER VALVE SECTION)
21	AT319023	CONTROL VALVE	1		X	X	(RIGHT AUXILIARY SECTION WITH FLOAT)

AUXILIARY VALVE SECTION (WITHOUT FLOAT)

T210409 -UN-15APR05

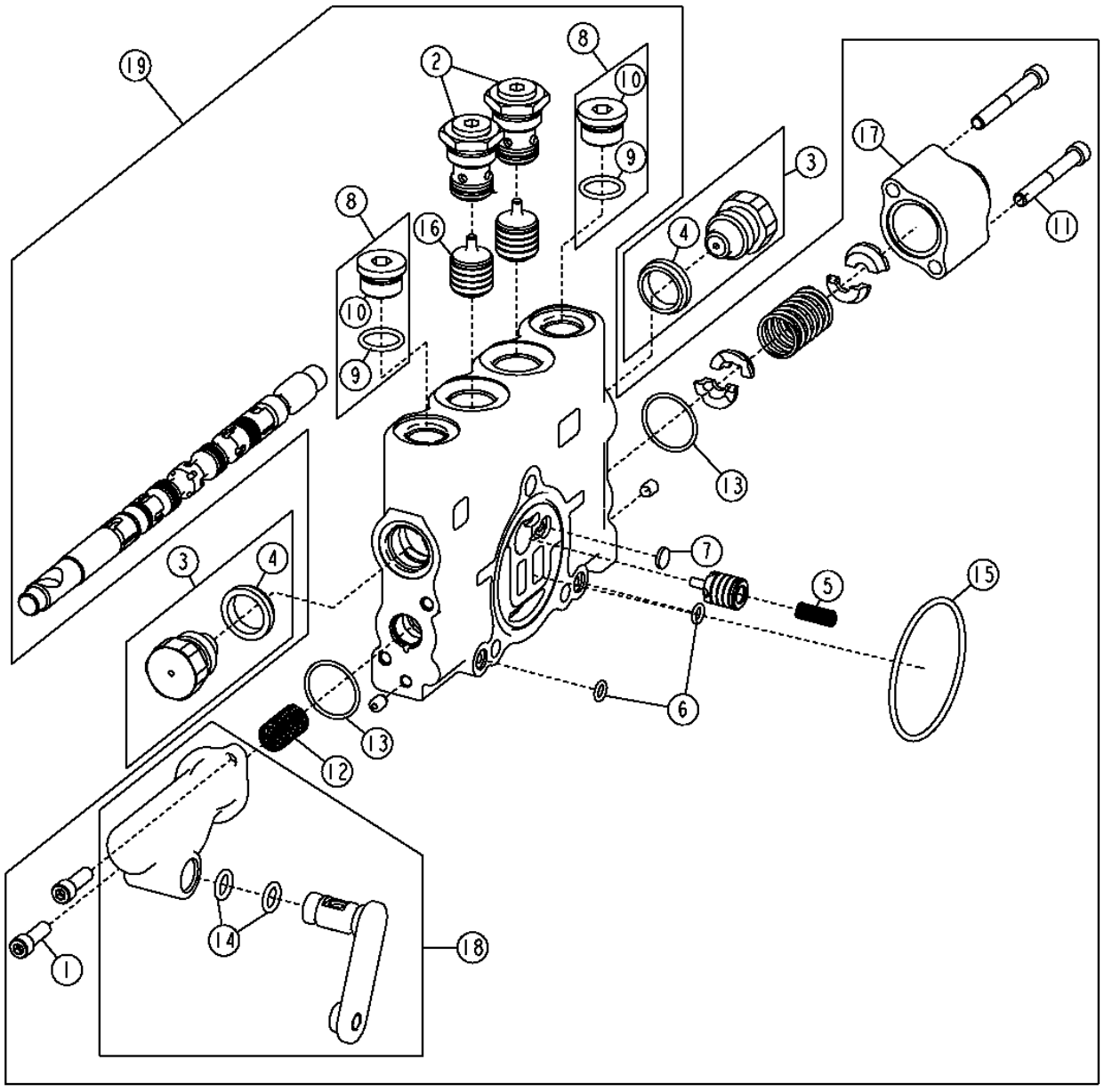

T210409

AUXILIARY VALVE SECTION (WITHOUT FLOAT)

KEY	PART NO.	PART NAME	QTY	SERIAL NO.	670D	672D	REMARKS
1	19H2924	SCREW	2		X	X	1/4" X 3/4"
2	AT317328	CHECK VALVE	2		X	X	
3	AT78527	PLUG	2		X	X	
4	T183756	SEAL	1		X	X	
5	R111238	SPRING	1		X	X	
6	R76578	O-RING	3		X	X	
7	R95493	DISK	1		X	X	
8	RE49624	PLUG	2		X	X	
9	R26375	O-RING	1		X	X	
10	R39112	FITTING	1		X	X	
11	T118712	SCREW	2		X	X	
12	T190767	SPRING	1		X	X	
13	T213022	O-RING	3		X	X	
14	T213023	O-RING	1		X	X	
15	T213025	O-RING	1		X	X	
16	T213031	STUD	1		X	X	
17	T213033	HOUSING	1		X	X	
18	AT317304	ACTUATOR	1		X	X	
19	AT317310	CONTROL VALVE	1		X	X	(LEFT AUXILIARY VALVE SECTION WITHOUT FLOAT)
	AT317312	CONTROL VALVE	1		X	X	(RIGHT AUXILIARY VALVE SECTION WITHOUT FLOAT)

ADDITIONAL HYDRAULIC CONTROL VALVE KIT

T204997 -UN-18NOV04

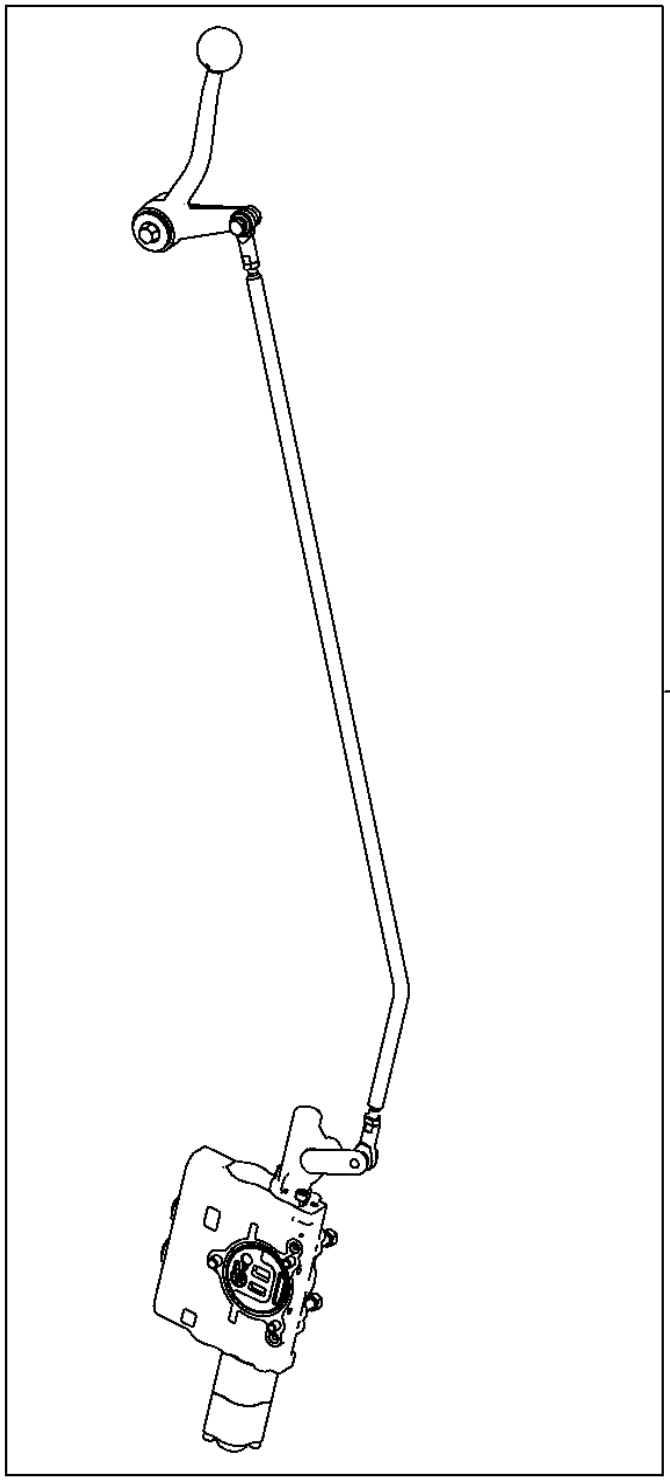

T204997

ADDITIONAL HYDRAULIC CONTROL VALVE KIT

KEY	PART NO.	PART NAME	QTY	SERIAL NO.	670D	672D	REMARKS
1	**AT317287**	**KIT**	**1**		**X**	**X**	**(RIGHT 5TH FUNCTION CONTROL VALVE KIT)**
	AT317288	**KIT**	**1**		**X**	**X**	**(LEFT 5TH FUNCTION CONTROL VALVE KIT)**
	AT317289	**KIT**	**1**		**X**	**X**	**(RIGHT 6TH FUNCTION CONTROL VALVE KIT)**
	AT317290	**KIT**	**1**		**X**	**X**	**(LEFT 6TH FUNCTION CONTROL VALVE KIT)**
	AT317291	**KIT**	**1**		**X**	**X**	**(RIGHT 7TH FUNCTION CONTROL VALVE KIT)**
	AT317293	**KIT**	**1**		**X**	**X**	**(LEFT 7TH FUNCTION CONTROL VALVE KIT)**

ONE HAND BLADE LIFT CONTROL

T211056 -UN-16MAY05

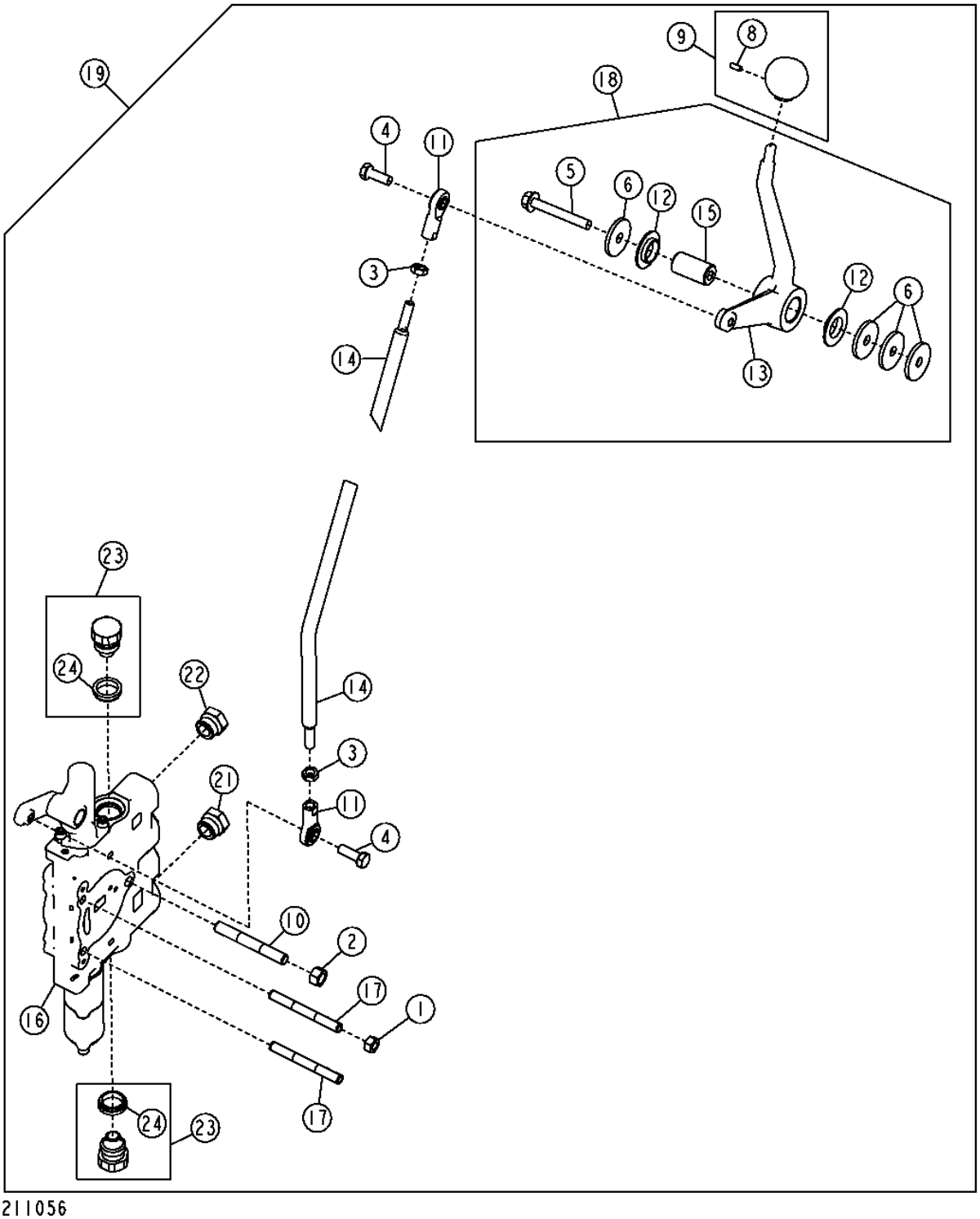

T211056

ONE HAND BLADE LIFT CONTROL

KEY	PART NO.	PART NAME	QTY	SERIAL NO.	670D	672D	REMARKS
1	14H1042	NUT	2		X	X	
2	14H1080	NUT	1		X	X	
3	14H882	NUT	2		X	X	
4	19H2127	CAP SCREW	2		X	X	
5	19M7801	SCREW	1		X	X	M8 X 60
6	24H1296	WASHER	4		X	X	
8	T213242	SET SCREW	1		X	X	
9	AT317742	KNOB	1		X	X	
10	T213030	STUD	1		X	X	
11	AT317778	LINK END	2		X	X	
12	T104220	WASHER	2		X	X	
13	T202162	CONTROL LEVER	1		X	X	
14	T202586	LEVER	1		X	X	
15	T204457	SPACER	1		X	X	
16	AT319023	CONTROL VALVE	1		X	X	
17	T213027	STUD	2		X	X	
18	**AT302544**	**KIT**	**1**		**X**	**X**	**(WHOLEGOODS) (ONE HAND BLADE LIFT CONTROL LEVER KIT)**
19	**AT317339**	**KIT**	**1**		**X**	**X**	**(WHOLEGOODS) (ONE HAND BLADE LIFT CONTROL LEVER AND VALVE KIT)**
20	AT322617	HYDRAULIC HOSE - FABRICATE	4		X	X	(NOT ILLUSTRATED)
21	R26375	O-RING	2		X	X	
22	R39112	FITTING	2		X	X	
23	AT78527	PLUG	2		X	X	
24	T183756	SEAL	2		X	X	

COLD START DISCONNECT HOSES AND FITTINGS

T205433 -UN-29NOV04

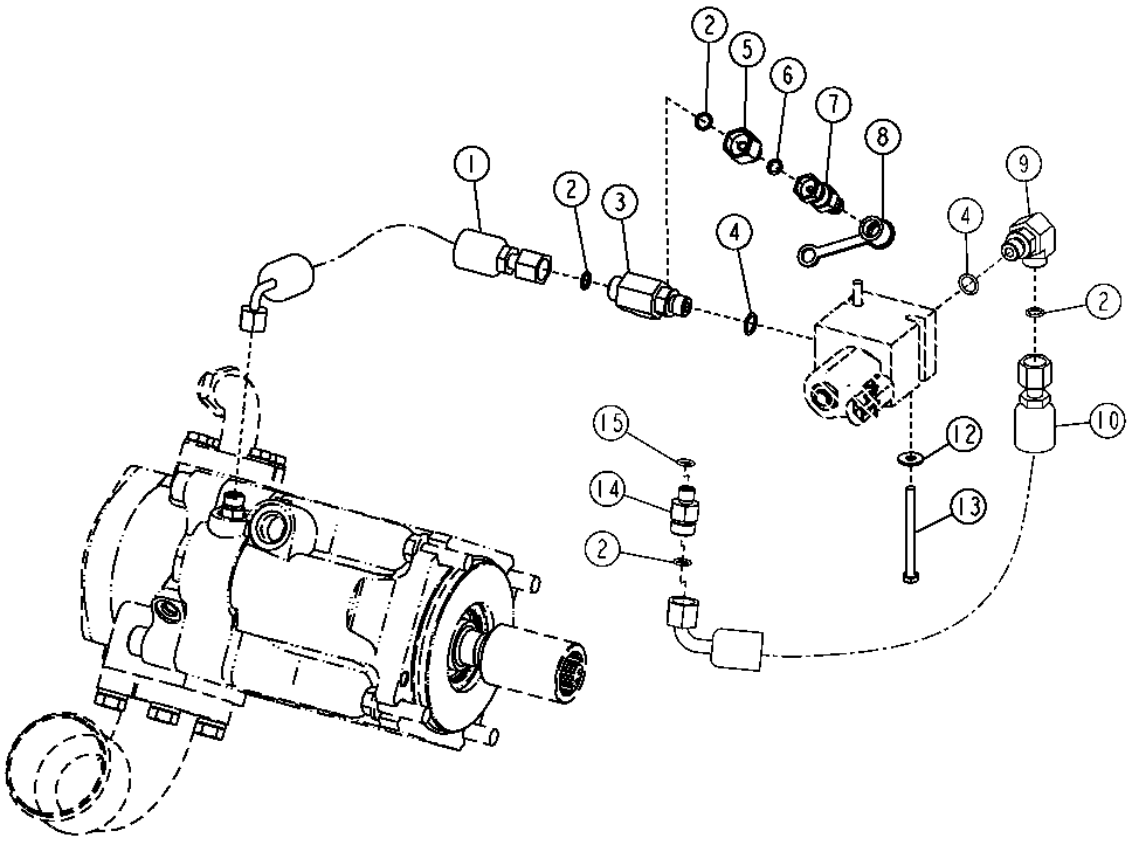

T205433

COLD START DISCONNECT HOSES AND FITTINGS

KEY	PART NO.	PART NAME	QTY	SERIAL NO.	670D	672D	REMARKS
1	AT195917	HYDRAULIC HOSE - FABRICATE	1		X	X	
2	T77613	O-RING	4		X	X	
3	38H1023	TEE FITTING	1		X	X	
4	R26448	O-RING	2		X	X	
5	38H1480	REDUCER	1		X	X	
6	T77814	O-RING	1		X	X	
7	RE60700	DIAGNOSTIC COUPLING	1		X	X	DIAGNOSTIC
8	R77175	COVER	1		X	X	
9	38H1004	ELBOW FITTING	1		X	X	
10	AT195918	HYDRAULIC HOSE - FABRICATE	1		X	X	
12	24M7139	WASHER	2		X	X	
13	19M8786	SCREW	2		X	X	M6 X 70
14	38H1309	ADAPTER	1		X	X	
15	R28782	O-RING	1		X	X	

COLD START DISCONNECT SOLENOID VALVE

T205434 -UN-29NOV04

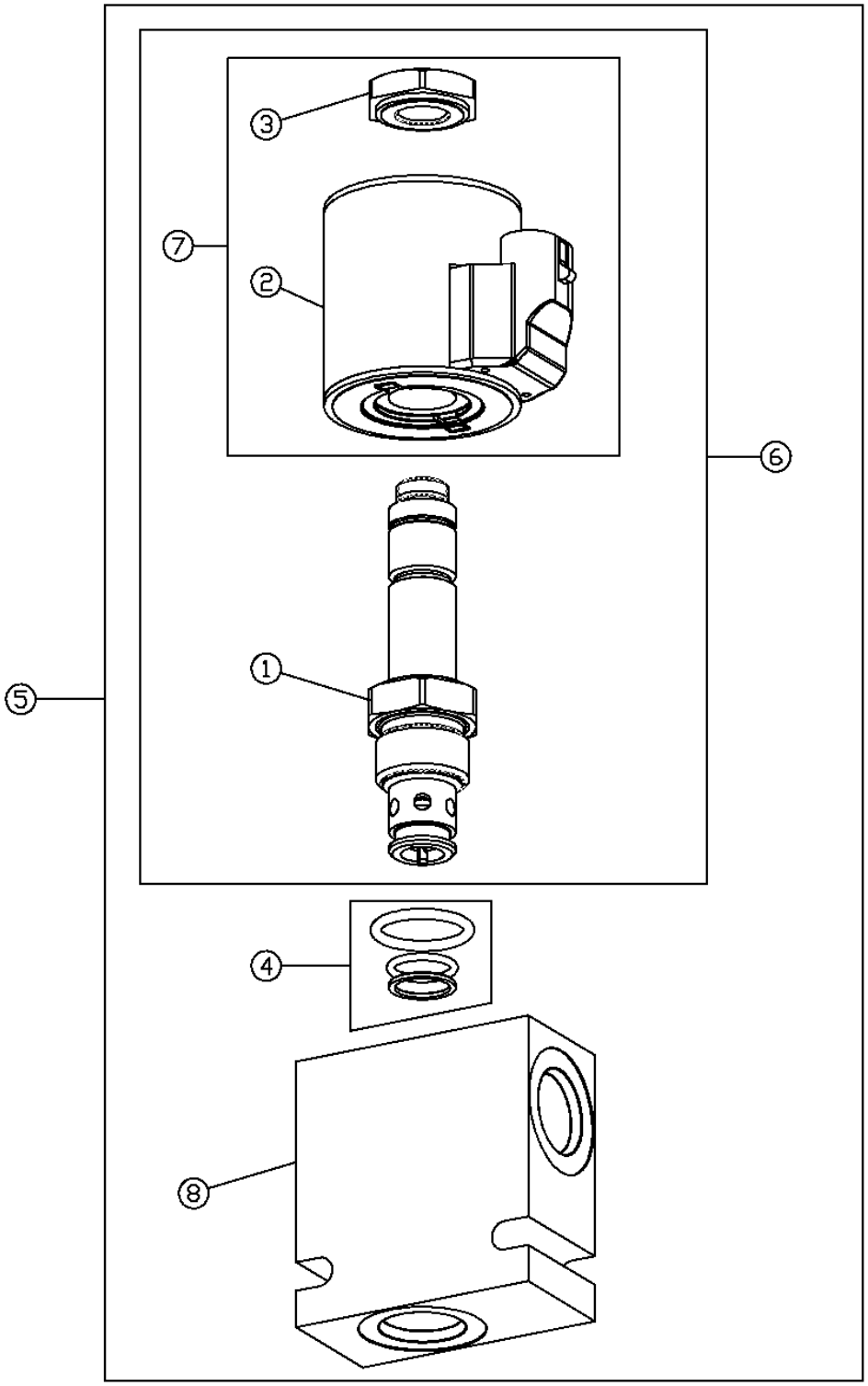

COLD START DISCONNECT SOLENOID VALVE

KEY	PART NO.	PART NAME	QTY	SERIAL NO.	670D	672D	REMARKS
1	AT195900	SOLENOID VALVE	1		X	X	
2	AT147011	SOLENOID	1		X	X	
3	R109691	NUT	1		X	X	
4	AT216348	SEAL KIT	1		X	X	
5	AT195860	ELEC.PROPORTIONAL VALVE	1		X	X	(COLD START DISCONNECT SOLENOID VALVE)
6	AT195898	MOUNTING PARTS	1		X	X	
7	AT139434	KIT	1		X	X	
8	T188288	HOUSING	1		X	X	

MAIN CONTROL VALVE MOUNTING BRACKETS

T203168 -UN-01NOV04

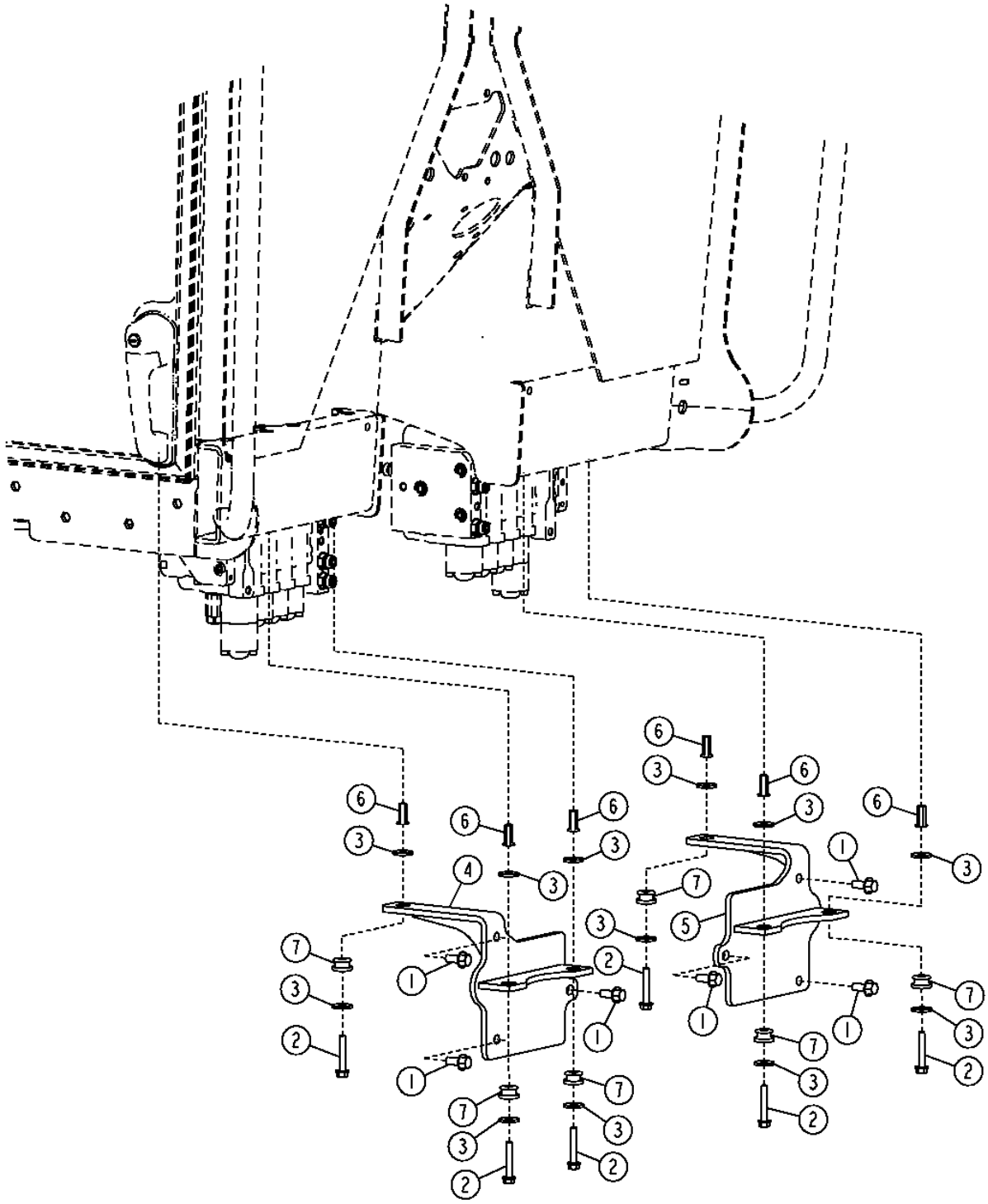

T203168

MAIN CONTROL VALVE MOUNTING BRACKETS

KEY	PART NO.	PART NAME	QTY	SERIAL NO.	670D	672D	REMARKS
1	19M7785	SCREW	6		X	X	M10 X 25
2	19M7800	SCREW	6		X	X	M8 X 50
3	24M7024	WASHER	12		X	X	
4	AT303129	BRACKET	1		X	X	
5	AT303678	BRACKET	1		X	X	
6	T196080	NUT	6		X	X	
7	U42208	ISOLATOR	6		X	X	

HYDRAULIC LOAD SENSE HOSES

T208053 -UN-12FEB05

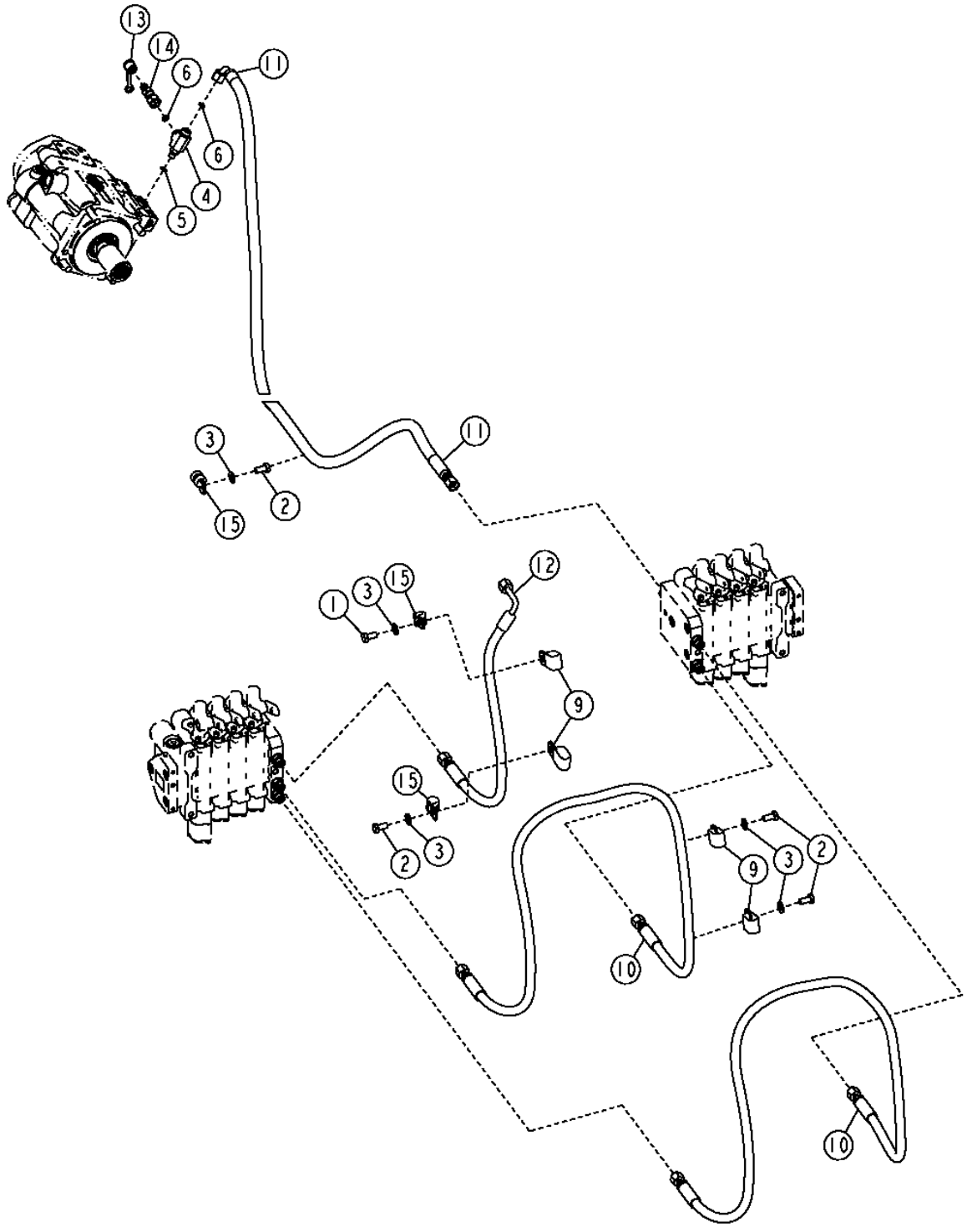

HYDRAULIC LOAD SENSE HOSES

KEY	PART NO.	PART NAME	QTY	SERIAL NO.	670D	672D	REMARKS
1	19M7932	CAP SCREW	1		X	X	M8 X 16
2	19M7938	CAP SCREW	4		X	X	M10 X 20
3	24M7239	WASHER	5		X	X	
4	38H1434	TEE FITTING	1		X	X	
5	R28782	O-RING	1		X	X	
6	T77613	O-RING	2		X	X	
9	AH97280	CLIP	4		X	X	
10	AT305628	HYDRAULIC HOSE - FABRICATE	2		X	X	
11	AT305630	HYDRAULIC HOSE - FABRICATE	1		X	X	
12	AT305738	HYDRAULIC HOSE - FABRICATE	1		X	X	
13	R77175	COVER	1		X	X	
14	RE60701	DIAGNOSTIC COUPLING	1		X	X	
15	T76719	CLAMP	3		X	X	

HYDRAULIC OIL COOLER HOSES

T203291 -UN-02NOV04

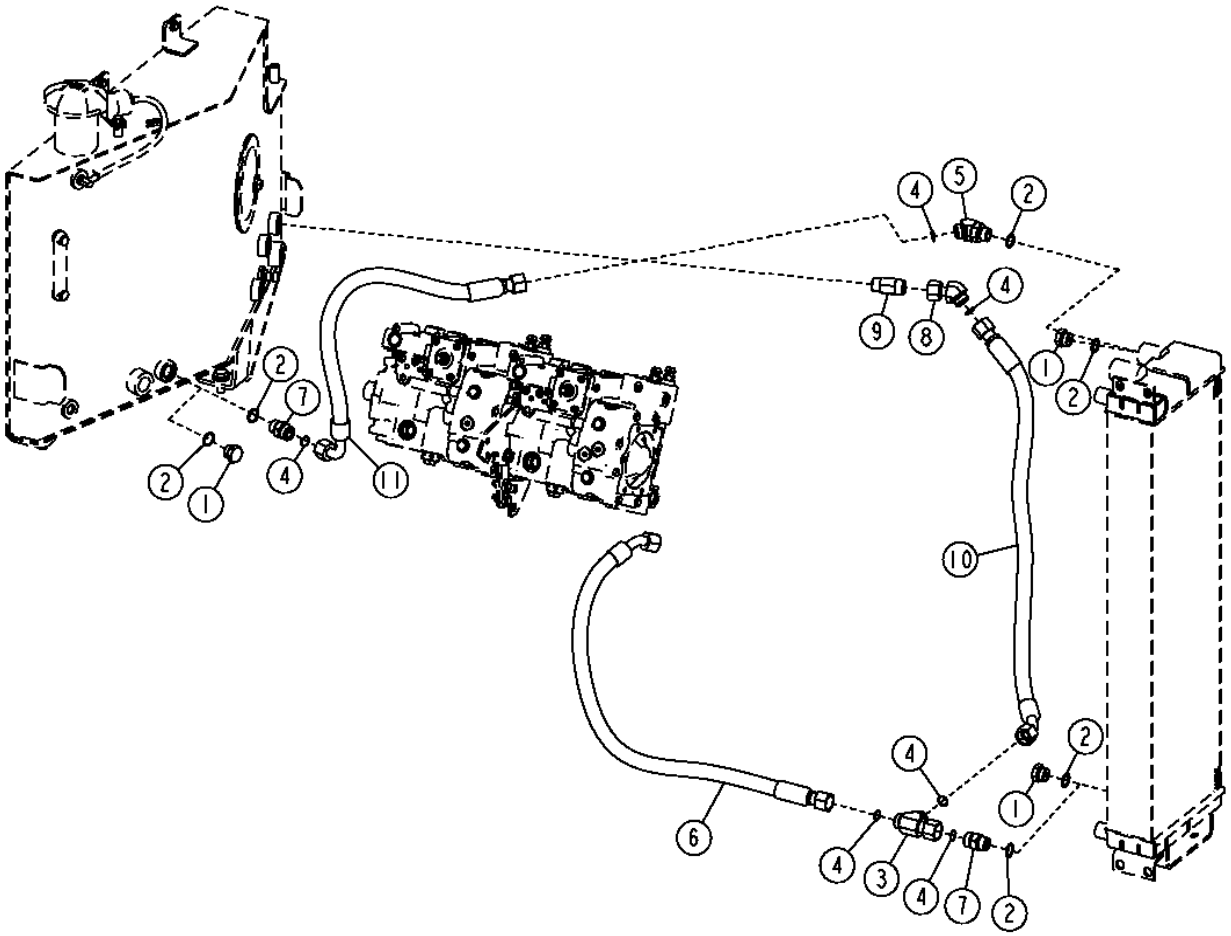

HYDRAULIC OIL COOLER HOSES

KEY	PART NO.	PART NAME	QTY	SERIAL NO.	670D	672D	REMARKS
1	R27175	DRAIN PLUG	3		X		
2	U12547	O-RING	5		X	X	
	U12547	O-RING	5			X	
3	38H1033	TEE FITTING	1			X	
4	T77858	O-RING	6			X	
5	38H1048	ELBOW FITTING	1			X	
6	AT307263	HYDRAULIC HOSE - FABRICATE	2			X	
7	38H1163	ADAPTER	2			X	
8	38H1609	ADAPTER	1			X	
9	AT175957	PRESSURE RELIEF VALVE	1			X	
10	AT307220	HYDRAULIC HOSE - FABRICATE	1			X	
11	AT307231	HYDRAULIC HOSE - FABRICATE	1			X	

MAIN HYDRAULIC PLUMBING (670D)

T203898 -UN-03DEC04

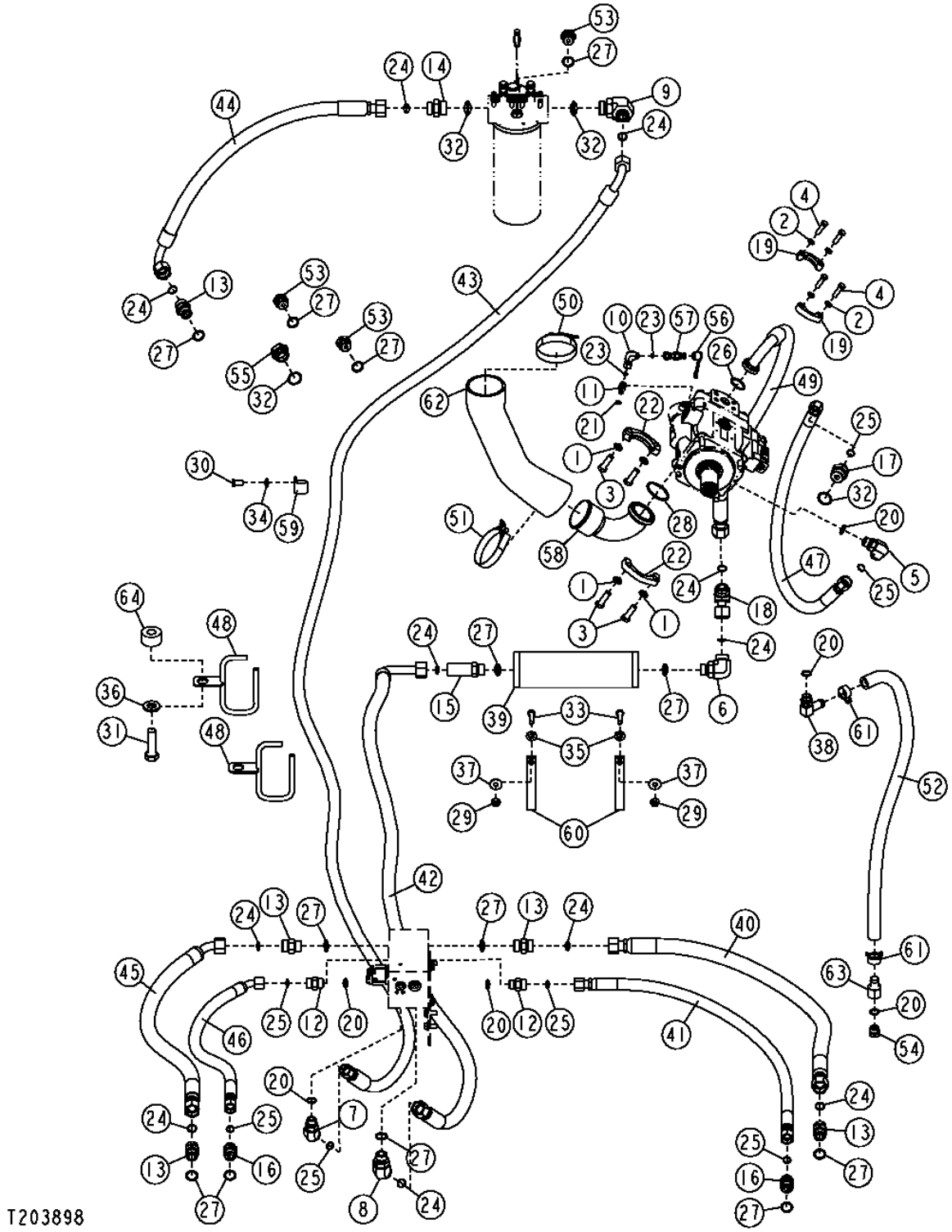

MAIN HYDRAULIC PLUMBING (670D)

KEY	PART NO.	PART NAME	QTY	SERIAL NO.	670D	672D	REMARKS
1	12H301	LOCK WASHER	4		X		
2	12H304	LOCK WASHER	4		X		9.525 MM
3	19H2993	CAP SCREW	4		X		
4	19H3239	CAP SCREW	4		X		
5	38H1006	ELBOW FITTING	1		X		
6	38H1007	ELBOW FITTING	1		X		
7	38H1047	ELBOW FITTING	1		X		
8	38H1048	ELBOW FITTING	1		X		
9	38H1052	ELBOW FITTING	1		X		
10	38H1093	ELBOW FITTING	1		X		
11	38H1159	ADAPTER	1		X		
12	38H1162	ADAPTER	2		X		
13	38H1163	ADAPTER	5		X		
14	38H1194	ADAPTER	1		X		
15	38H1215	ADAPTER	1		X		
16	38H1329	ADAPTER	2		X		
17	38H1447	ADAPTER	1		X		
18	38H1609	ADAPTER	1		X		
19	H61354	FLANGE FITTING	2		X		
20	R26906	O-RING	6		X		
21	R28782	O-RING	1		X		
22	R37023	FLANGE FITTING	2		X		
23	T77814	O-RING	2		X		
24	T77858	O-RING	11		X		
25	T77932	O-RING	7		X		
26	T78313	O-RING	1		X		
27	U12547	O-RING	13		X		
28	U46457	O-RING	1		X		
29	14M7296	FLANGE NUT	2		X		M10
30	19M7938	CAP SCREW	1		X		M10 X 20
31	19M8002	CAP SCREW	1		X		M20 X 55
32	R29936	O-RING	4		X		
33	19M8637	CAP SCREW	2		X		M10 X 40
34	24M7239	WASHER	1		X		
35	24M7240	WASHER	2		X		
36	24M7242	WASHER	1		X		
37	24M7296	WASHER	2		X		
38	AH64349	HOSE FITTING	1		X		
39	AT300859	ATTENUATOR	1		X		
40	AT304144	HYDRAULIC HOSE - FABRICATE	1		X		
41	AT304147	HYDRAULIC HOSE - FABRICATE	1		X		
42	AT304888	HYDRAULIC HOSE - FABRICATE	1		X		
43	AT305277	HYDRAULIC HOSE - FABRICATE	1		X		
44	AT305916	HYDRAULIC HOSE - FABRICATE	1		X		
45	AT307299	HYDRAULIC HOSE - FABRICATE	1		X		
46	AT307300	HYDRAULIC HOSE - FABRICATE	1		X		
47	AT308909	HYDRAULIC HOSE - FABRICATE	1		X		
48	AT309711	HOSE SUPPORT	2		X		
49	AT311425	HYDRAULIC HOSE	1		X		
50	AT37477	HOSE CLAMP	1		X		
51	RE52702	CLAMP	1		X		
52	.....	BULK HOSE	1		X		(MAKE FROM T78497) (CUT TO LENGTH)
53	R27175	DRAIN PLUG	3		X		
54	R27474	DRAIN PLUG	1		X		
55	R36636	FITTING PLUG	1		X		
56	R77175	COVER	1		X		
57	RE60700	DIAGNOSTIC COUPLING	1		X		
58	T158298	LINE	1		X		
59	AH77714	CLIP	1		X		
60	T164030	CLAMP	2		X		
61	T185826	CLAMP	2		X		
62	T187526	SUCTION HOSE	1		X		
63	T190892	HOSE FITTING	1		X		
64	H134114	SPACER	1		X		

MAIN HYDRAULIC PLUMBING (672D)

T203903 -UN-03DEC04

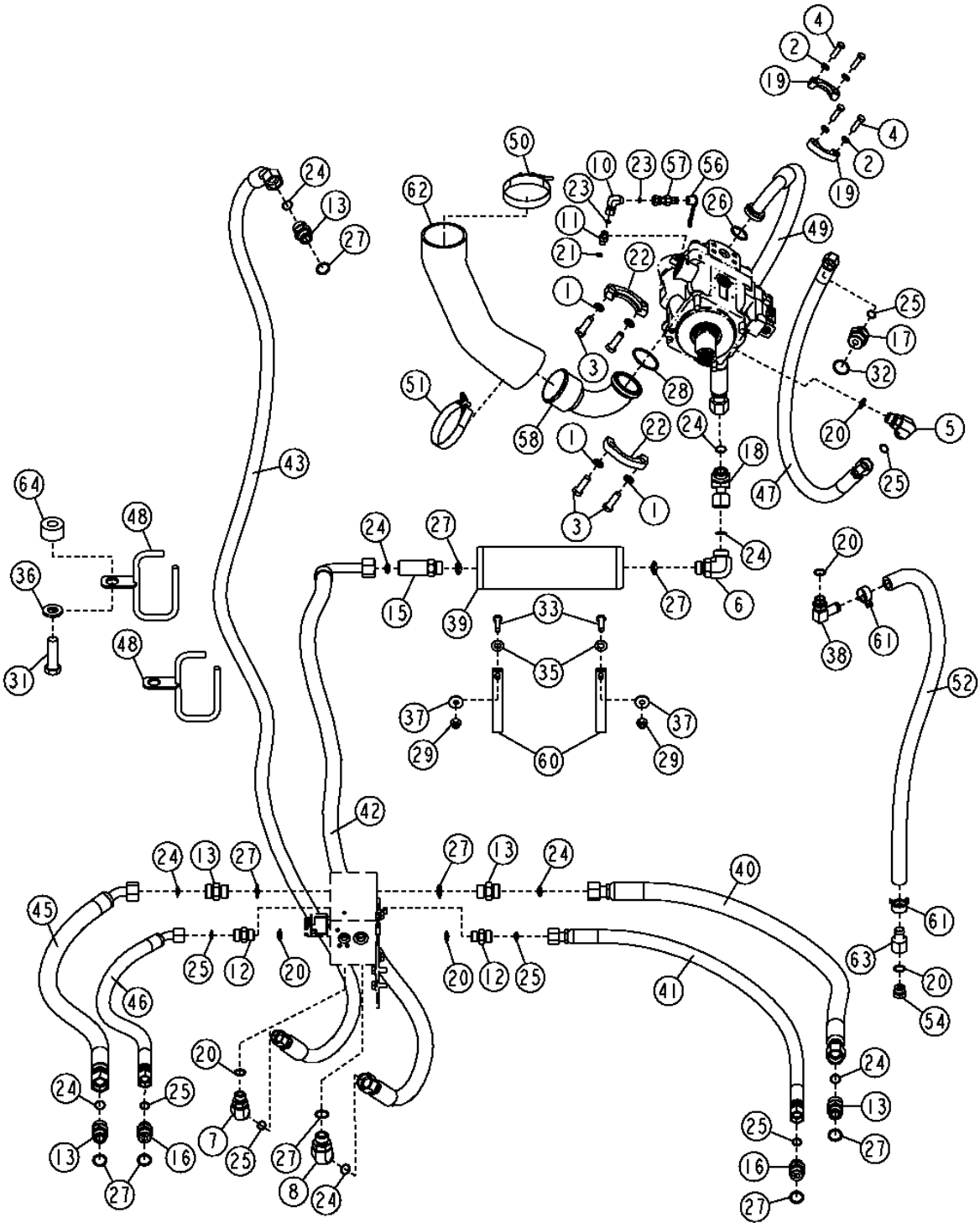

MAIN HYDRAULIC PLUMBING (672D)

KEY	PART NO.	PART NAME	QTY	SERIAL NO.	670D	672D	REMARKS
1	12H301	LOCK WASHER	4		X		
2	12H304	LOCK WASHER	4		X		9.525 MM
3	19H2993	CAP SCREW	4		X		
4	19H3239	CAP SCREW	4		X		
5	38H1006	ELBOW FITTING	1		X		
6	38H1007	ELBOW FITTING	1		X		
7	38H1047	ELBOW FITTING	1		X		
8	38H1048	ELBOW FITTING	1		X		
10	38H1093	ELBOW FITTING	1		X		
11	38H1159	ADAPTER	1		X		
12	38H1162	ADAPTER	2		X		
13	38H1163	ADAPTER	5		X		
15	38H1215	ADAPTER	1		X		
16	38H1329	ADAPTER	2		X		
17	38H1447	ADAPTER	1		X		
18	38H1609	ADAPTER	1		X		
19	H61354	FLANGE FITTING	2		X		
20	R26906	O-RING	6		X		
21	R28782	O-RING	1		X		
22	R37023	FLANGE FITTING	2		X		
23	T77814	O-RING	2		X		
24	T77858	O-RING	9		X		
25	T77932	O-RING	7		X		
26	T78313	O-RING	1		X		
27	U12547	O-RING	11		X		
28	U46457	O-RING	1		X		
29	14M7296	FLANGE NUT	2		X		M10
31	19M8002	CAP SCREW	1		X		M20 X 55
32	R29936	O-RING	1		X		
33	19M8637	CAP SCREW	2		X		M10 X 40
35	24M7240	WASHER	2		X		
36	24M7242	WASHER	1		X		
37	24M7296	WASHER	2		X		
38	AH64349	HOSE FITTING	1		X		
39	AT300859	ATTENUATOR	1		X		
40	AT304144	HYDRAULIC HOSE - FABRICATE	1		X		
41	AT304147	HYDRAULIC HOSE - FABRICATE	1		X		
42	AT304888	HYDRAULIC HOSE - FABRICATE	1		X		
43	AT304967	HYDRAULIC HOSE - FABRICATE	1		X		
45	AT307299	HYDRAULIC HOSE - FABRICATE	1		X		
46	AT307300	HYDRAULIC HOSE - FABRICATE	1		X		
47	AT308909	HYDRAULIC HOSE - FABRICATE	1		X		
48	AT309711	HOSE SUPPORT	2		X		
49	AT311425	HYDRAULIC HOSE	1		X		
50	AT37477	HOSE CLAMP	1		X		
51	AT56659	HOSE CLAMP	1		X		
52	.....	BULK HOSE	1		X		(MAKE FROM T78497) (CUT TO LENGTH)
54	R27474	DRAIN PLUG	1		X		
56	R77175	COVER	1		X		
57	RE60700	DIAGNOSTIC COUPLING	1		X		
58	T158298	LINE	1		X		
60	T164030	CLAMP	2		X		
61	T185826	CLAMP	2		X		
62	T187526	SUCTION HOSE	1		X		
63	T190892	HOSE FITTING	1		X		

MAIN HYDRAULIC FILTER

T212747 -UN-15JUL05

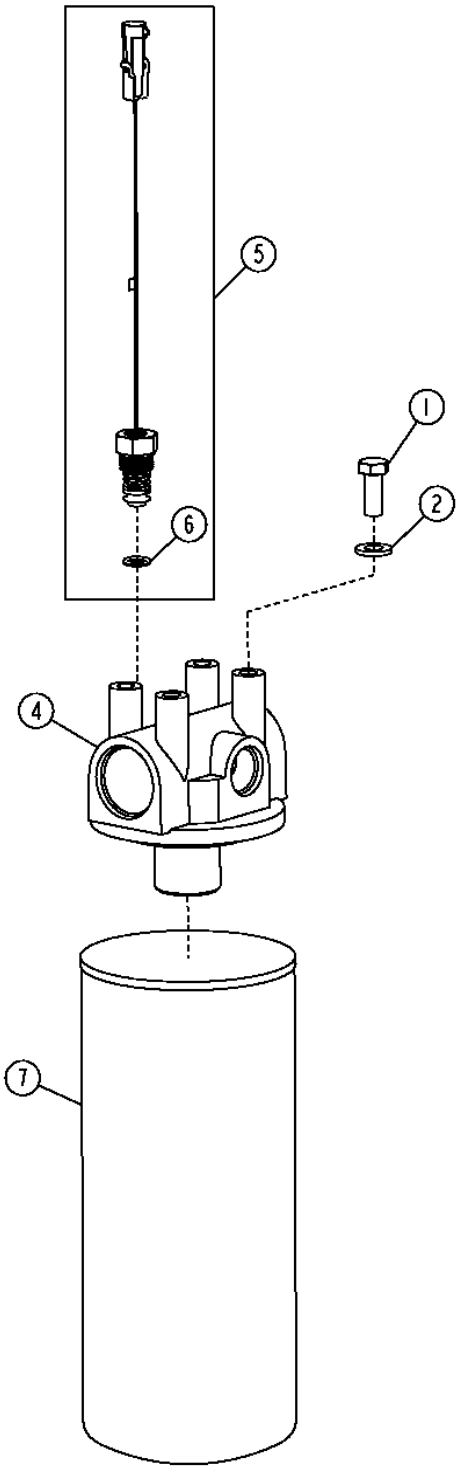

MAIN HYDRAULIC FILTER

KEY	PART NO.	PART NAME	QTY	SERIAL NO.	670D	672D	REMARKS
1	19M7402	CAP SCREW	4		X	X	M10 X 25
2	24M7239	WASHER	1		X	X	
4	AT302906	FILTER HEAD	1		X	X	
5	AT307045	PRESSURE SWITCH	1		X	X	(MAIN HYDRAULIC FILTER RESTRICTION)
6	P46051	O-RING	1		X	X	
7	AT308274	OIL FILTER	1		X	X	(MAIN HYDRAULIC FILTER)

HYDRAULIC RESERVOIR

T204331 -UN-12DEC04

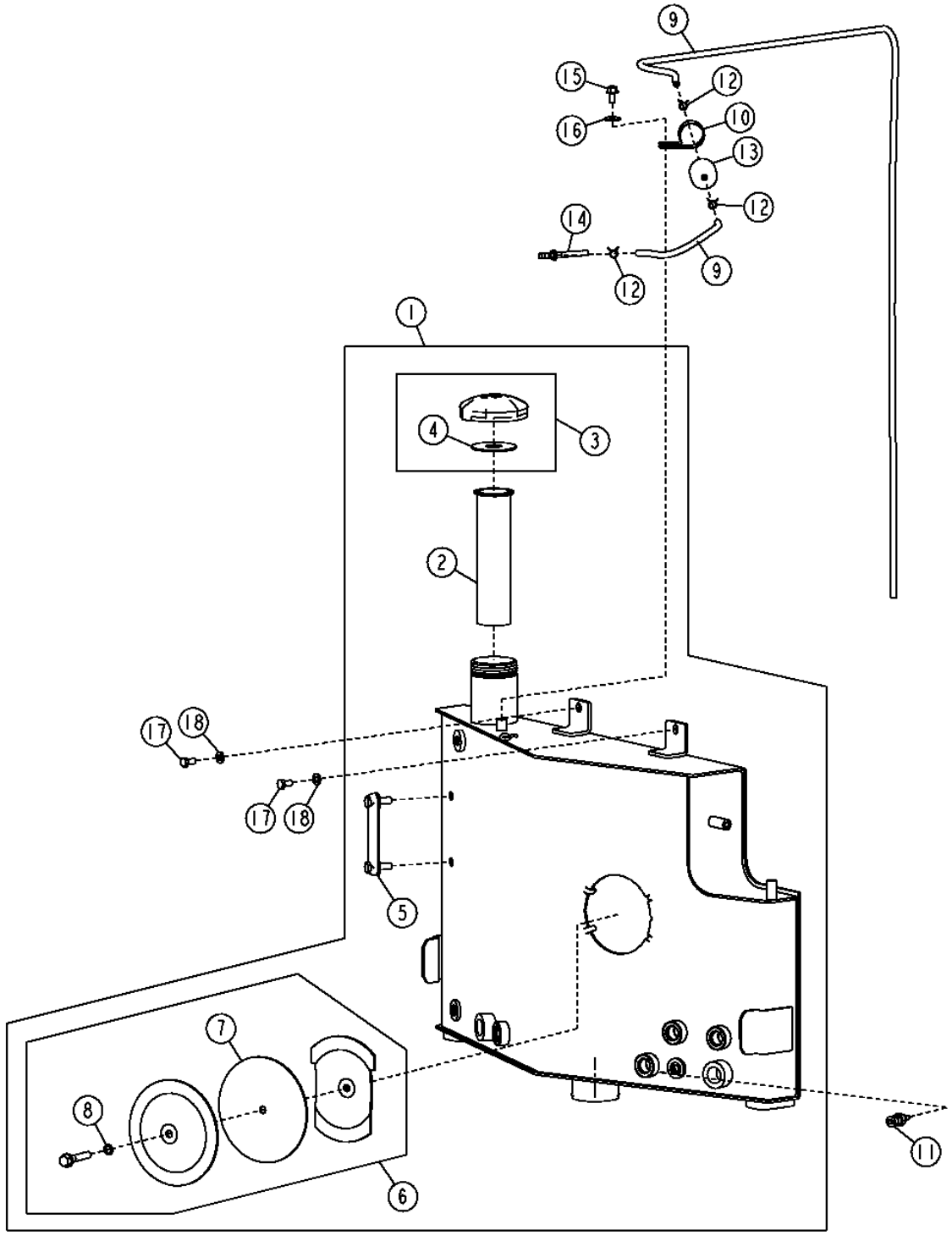

THIS PARTS LISTING IS CONTINUED

HYDRAULIC RESERVOIR

KEY	PART NO.	PART NAME	QTY	SERIAL NO.	670D	672D	REMARKS
1	AT305981	HYDRAULIC RESERVOIR	1		X	X	
2	AT161638	STRAINER	1		X	X	
3	AT177950	FILLER CAP	1		X	X	
4	H148166	WASHER	1		X	X	
5	AT227279	LEVEL GAUGE	1		X	X	
6	AT227441	COVER	1		X	X	
7	T195585	GASKET	1		X	X	
8	T195587	O-RING	1		X	X	
9	.....	HOSE	1		X	X	(MAKE FROM M87571) (CUT TO LENGTH)
10	E69975	CLAMP	1		X	X	
11	RE38310	SENSOR	1		X	X	
12	T13254	CLAMP	3		X	X	
13	AT101565	AIR FILTER	1		X	X	
14	AT176384	ELBOW FITTING	1		X	X	
15	19M7784	SCREW	1		X	X	M10 X 20
16	24M7296	WASHER	1		X	X	
17	19M7938	CAP SCREW	2		X	X	
18	24M7239	WASHER	2		X	X	

MOLDBOARDS AND CUTTING EDGES

T201129 -UN-25JUN04

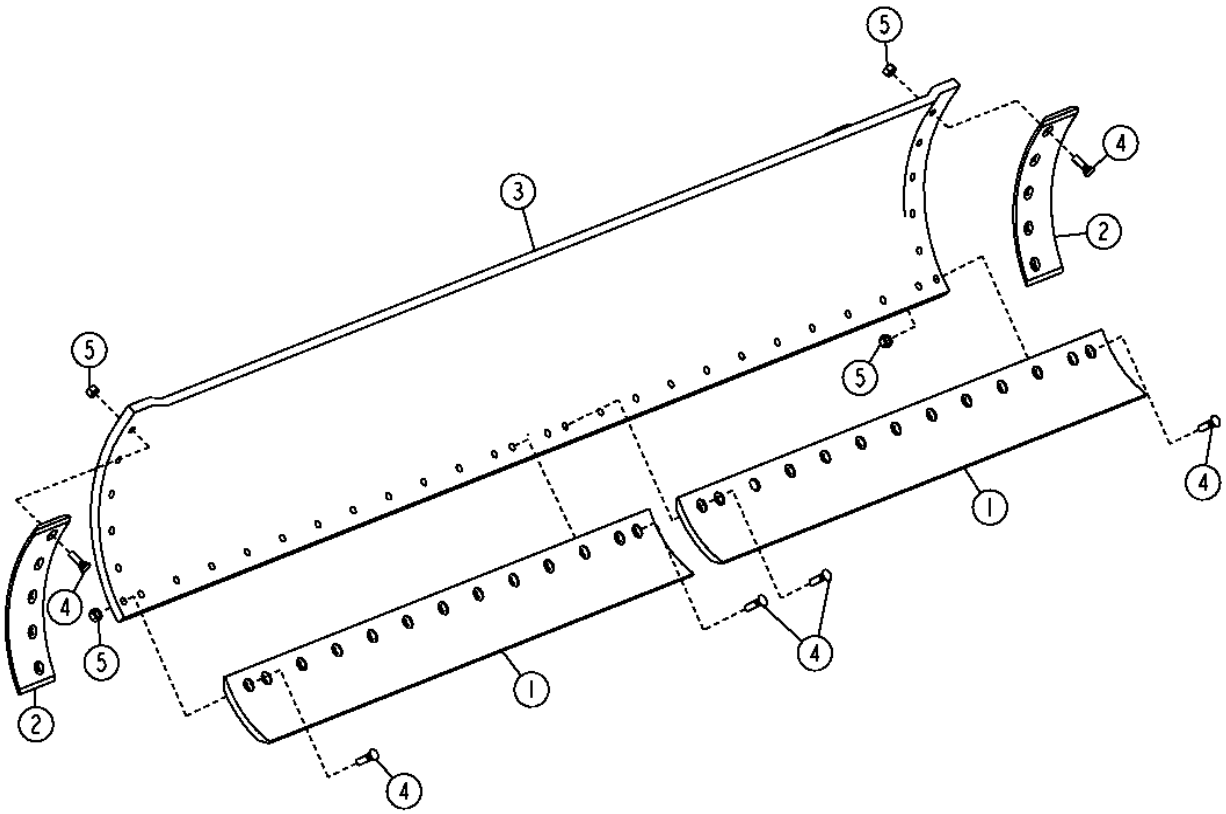

T201129

MOLDBOARDS AND CUTTING EDGES

KEY	PART NO.	PART NAME	QTY	SERIAL NO.	670D	672D	REMARKS
1	T66702	DURA-MAX TM CUTTING EDGE	AR		X	X	DURA-MAX THROUGH HARDENED DOUBLE BEVEL EDGE, 16 MM X 152 MM X 1 829 MM (5/8" X 6" X 6')
	T66707	DURA-MAX TM CUTTING EDGE	AR		X	X	DURA-MAX THROUGH HARDENED DOUBLE BEVEL EDGE, 16 MM X 152 MM X 2 134 MM (5/8" X 6" X 7')
	T66703	DURA-MAX TM CUTTING EDGE	AR		X	X	DURA-MAX THROUGH HARDENED DOUBLE BEVEL EDGE, 19 MM X 203 MM X 1 829 MM (3/4" X 8" X 6')
	T66704	DURA-MAX TM CUTTING EDGE	AR		X	X	DURA-MAX THROUGH HARDENED DOUBLE BEVEL EDGE, 19 MM X 203 MM X 2 134 MM (3/4" X 8" X 7')
2	T202876	CUTTING EDGE	2		X	X	(RECOMMENDED WITH 16 MM (5/8") CUTTING EDGE)
3	AT303240	MOLDBOARD	1		X	X	22 MM X 3648 MM (7/8" X 12' X 24")
	AT303282	MOLDBOARD	1		X	X	22 MM X 4 268 MM (7/8" X 14' X 24")
	AT303296	MOLDBOARD	1		X	X	22 MM X 3 963 MM (7/8" X 13' X 27")
	AT310278	MOLDBOARD	1		X	X	25 MM X 3648 MM (1" X 12' X 27")
4	09H1759	BOLT	40		X	X	5/8" X 2-1/4", (WITH 14' MOLDBOARD)
	09H1759	BOLT	38		X	X	5/8" X 2-1/4", (WITH 13' MOLDBOARD)
	09H1759	BOLT	36		X	X	5/8" X 2-1/4", (WITH 12' MOLDBOARD)
5	14H800	NUT	40		X	X	5/8", (WITH 14" MOLDBOARD)
	14H800	NUT	38		X	X	5/8", (WITH 13' MOLDBOARD)
	14H800	NUT	36		X	X	5/8", (WITH 12' MOLDBOARD)

MOLDBOARD OVERLAYS

T201130 -UN-24JUN04

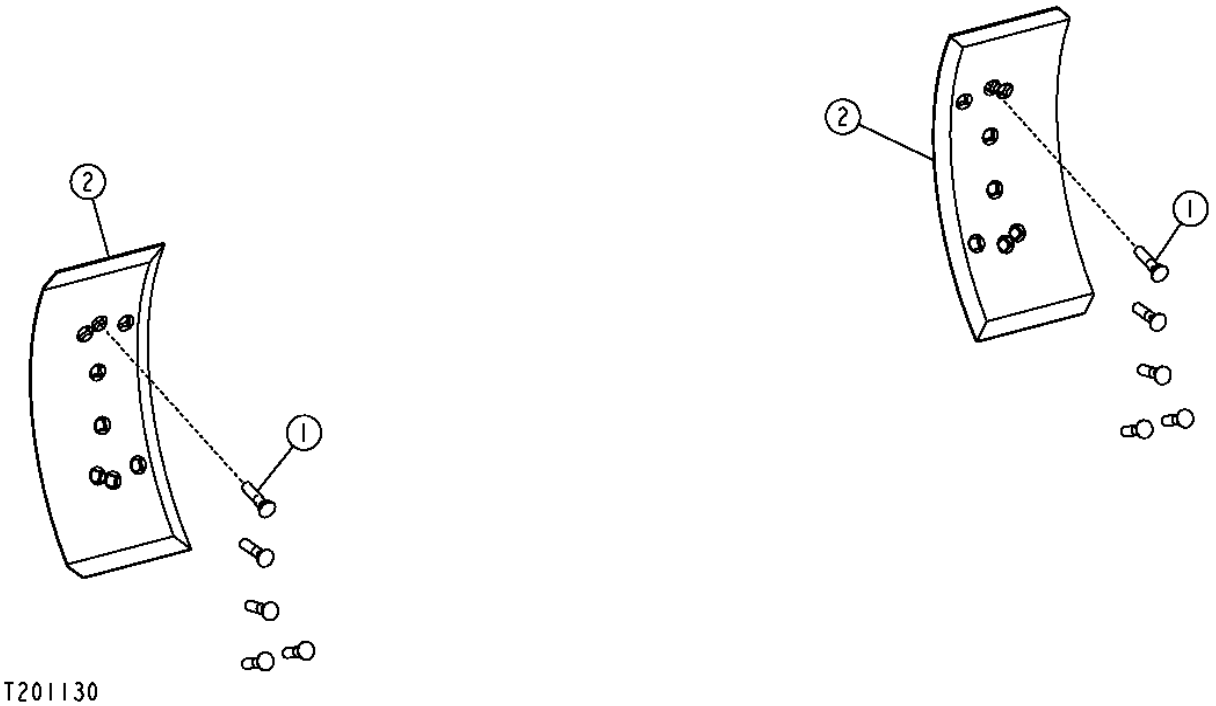

MOLDBOARD OVERLAYS

KEY	PART NO.	PART NAME	QTY	SERIAL NO.	670D	672D	REMARKS
1	09H1773	BOLT	10		X	X	DURA-MAX THROUGH HARDENED DOUBLE BEVEL EDGE, 16 MM X 152 MM X 1 829 MM (5/8" X 6" X 6')
2	T202940	OVERLAY END BIT	2		X	X	(8" CUTTING EDGE)
	T202938	OVERLAY END BIT	2		X	X	(6" CUTTING EDGE)

MOLDBOARD EXTENSION (24" MOLDBOARD)

T201131 -UN-05JAN05

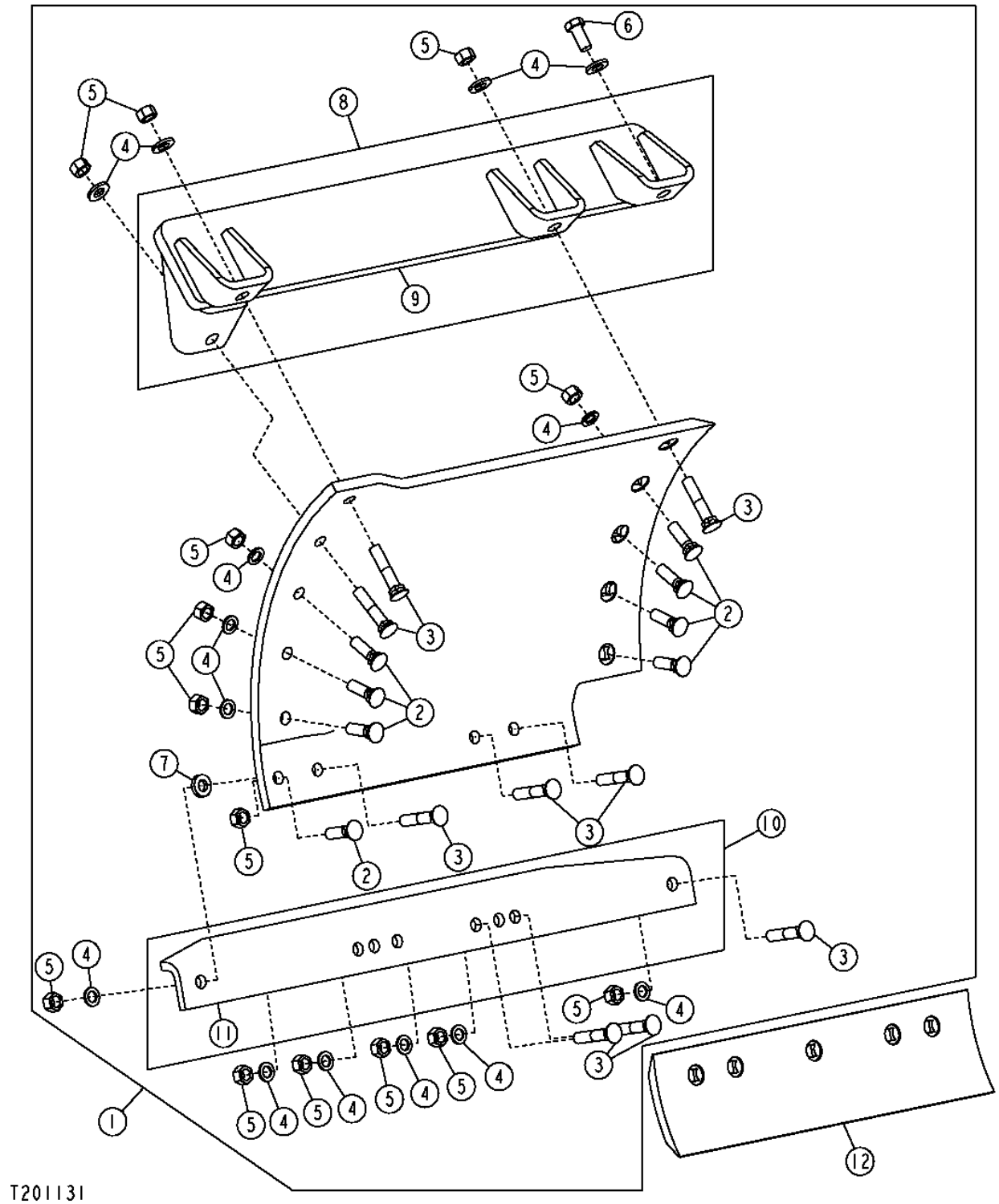

MOLDBOARD EXTENSION (24" MOLDBOARD)

KEY	PART NO.	PART NAME	QTY	SERIAL NO.	670D	672D	REMARKS
1	**AT307731**	**KIT**	**1**		**X**	**X**	**(WHOLEGOODS) RH EXTENSION FOR 24" MOLDBOARD**
	AT307730	**KIT**	**1**		**X**	**X**	**(WHOLEGOODS) LH EXTENSION FOR 24" MOLDBOARD**
2	09H1759	BOLT	8		X	X	5/8" X 2-1/4"
3	09H1773	BOLT	9		X	X	5/8" X 3-1/4"
4	R73290	WASHER	14		X	X	0.641" X 1.063" X 0.105"
5	14H760	NUT	17		X	X	5/8"
6	19M8035	CAP SCREW	1		X	X	M16 X 35
7	24H1367	WASHER	3		X	X	21/32" X 1-1/4" X 1/4"
8	AT306162	SUPPORT	1		X	X	RH (UPPER MOLDBOARD STIFFENER)
	AT306163	SUPPORT	1		X	X	LH (UPPER MOLDBOARD STIFFENER)
9	T204543	BRACKET	2		X	X	
10	AT47241	REINFORCEMENT	1		X	X	(LOWER MOLDBOARD STIFFENER)
11	T43726	SUPPORT	1		X	X	
12	T66709	DURA-MAX TM CUTTING EDGE	1		X	X	(5/8 X 6 X 2 FT)
	T66708	DURA-MAX TM CUTTING EDGE	1		X	X	(3/4 X 8 X 2 FT)

MOLDBOARD EXTENSION (27" MOLDBOARD)

T211356 -UN-02JUN05

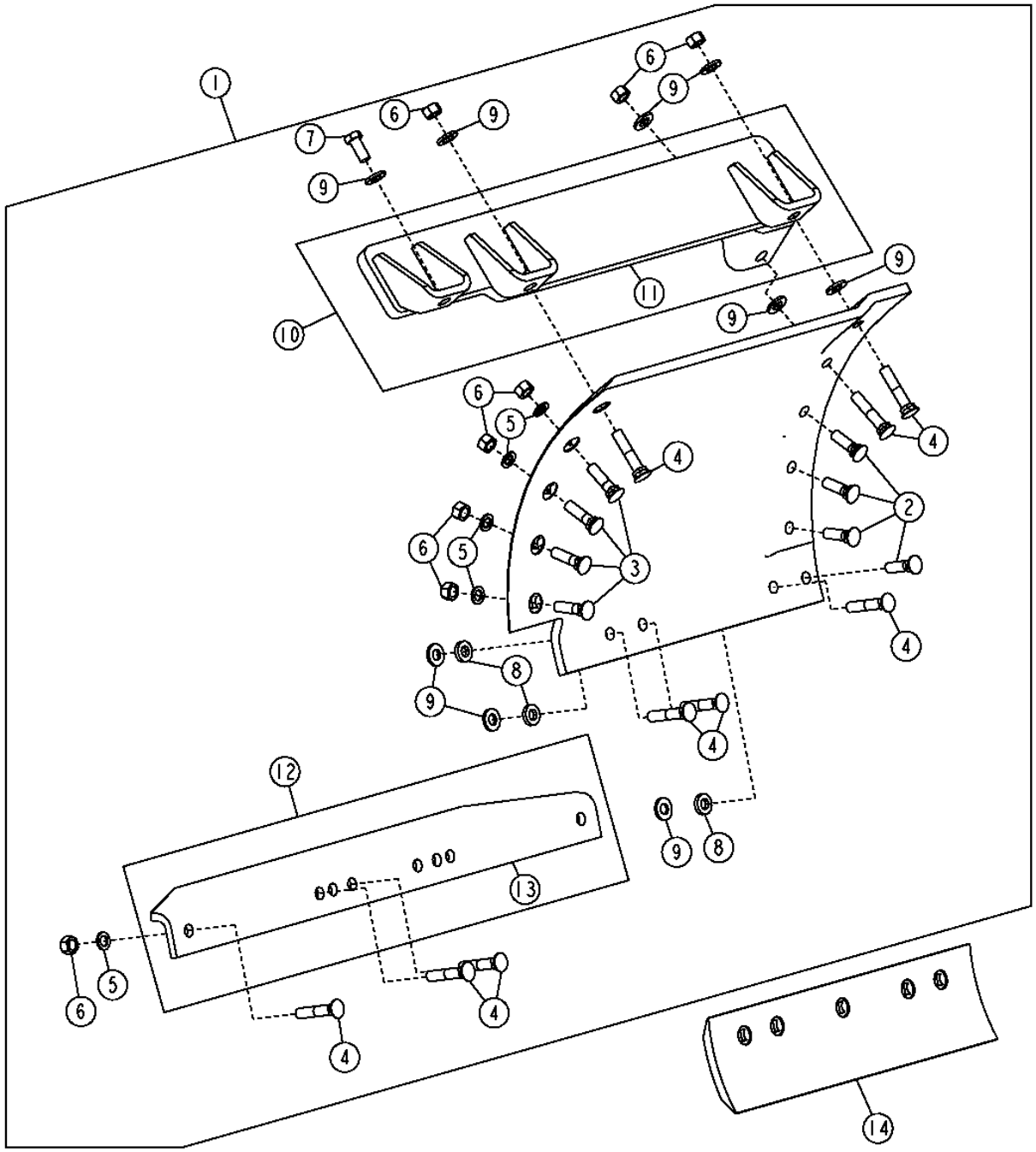

T211356

3D15

MOLDBOARD EXTENSION (27" MOLDBOARD)

KEY	PART NO.	PART NAME	QTY	SERIAL NO.	670D	672D	REMARKS
1	**AT307732**	**KIT**	**1**		**X**	**X**	**(WHOLEGOODS) LH EXTENSION FOR 27" MOLDBOARD**
	AT307733	**KIT**	**1**		**X**	**X**	**(WHOLEGOODS) RH EXTENSION FOR 27" MOLDBOARD**
2	09H1759	BOLT	4		X	X	5/8" X 2-1/4"
3	09H1764	BOLT	4		X	X	5/8" X 2-1/2"
4	09H1773	BOLT	9		X	X	5/8" X 3-1/4"
5	R73290	WASHER	14		X	X	0.641" X 1.063" X 0.105"
6	14H760	NUT	17		X	X	5/8"
7	19M8035	CAP SCREW	1		X	X	M16 X 35
8	24H1367	WASHER	3		X	X	21/32" X 1-1/4" X 1/4"
9	24M7241	WASHER	9		X	X	17 X 34 X 4 MM, (SUB FOR (4) 24H1378, THIS APPLICATION)
10	AT306163	SUPPORT	1		X	X	LH (UPPER MOLDBOARD STIFFENER)
	AT306162	SUPPORT	1		X	X	RH (UPPER MOLDBOARD STIFFENER)
11	T204543	BRACKET	2		X	X	
12	AT47241	REINFORCEMENT	1		X	X	(LOWER MOLDBOARD STIFFENER)
13	T43726	SUPPORT	1		X	X	
14	T66709	DURA-MAX TM CUTTING EDGE	1		X	X	(5/8 X 6 X 2 FT)
	T66708	DURA-MAX TM CUTTING EDGE	1		X	X	(3/4 X 8 X 2 FT)

DRAFT FRAME

T201050 -UN-22JUN04

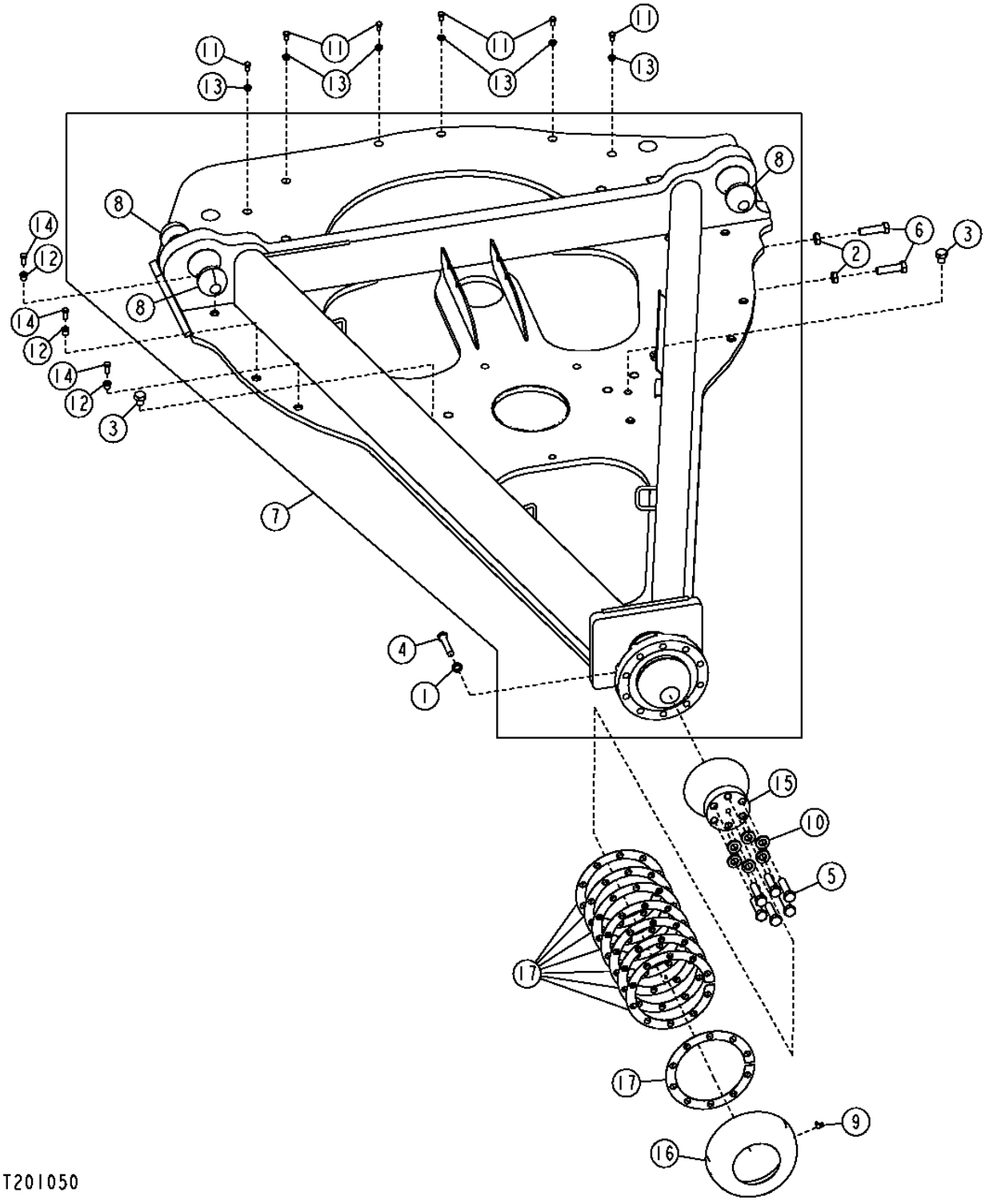

3D17

DRAFT FRAME

KEY	PART NO.	PART NAME	QTY	SERIAL NO.	670D	672D	REMARKS
1	12H294	LOCK WASHER	10		X	X	5/8"
2	14H793	NUT	12		X	X	3/4"
3	19H2368	CAP SCREW	2		X	X	3/4" X 3/4"
4	19H2641	CAP SCREW	10		X	X	5/8" X 3-1/4"
5	19M8639	CAP SCREW	6		X	X	M20 X 70
6	19H2913	CAP SCREW	12		X	X	3/4" X 2-3/4"
7	**AT305363**	**FRAME**	**1**		**X**	**X**	**(CONVENIENCE ASSEMBLY) (DRAFT FRAME)**
8	T59974	BALL	3		X	X	.914 MM (.036")
9	JD7781	LUBRICATION FITTING	1		X	X	
10	N231749	WASHER	6		X	X	
11	R69629	CAP SCREW	6		X	X	90°, 1/8"
12	T188075	BUSHING	12		X	X	
13	T188076	WASHER	6		X	X	3/8" X 1"
14	T33372	BOLT	12		X	X	
15	T213516	RETAINER	1		X	X	
16	T213579	RETAINER	1		X	X	
17	T42243	WASHER	8		X	X	

BLADE TILT FRAME

T201052 -UN-05JAN05

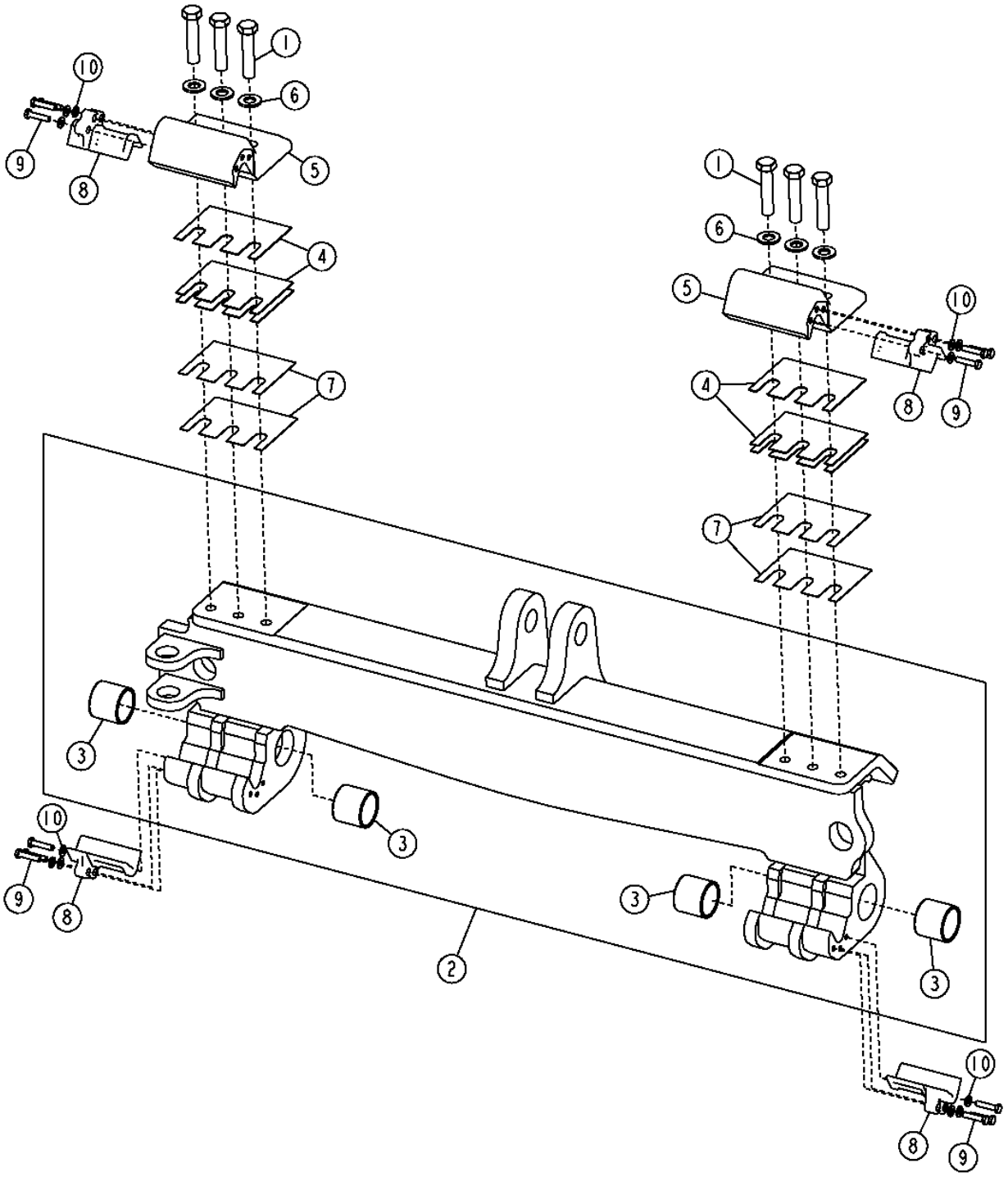

3D19

BLADE TILT FRAME

KEY	PART NO.	PART NAME	QTY	SERIAL NO.	670D	672D	REMARKS
1	19H3255	CAP SCREW	6		X	X	7/8" X 4"
2	AT226520	FRAME	1		X	X	(BLADE TILT FRAME)
3	T143929	BUSHING	4		X	X	
4	T124382	STRAP	6		X	X	
5	T212793	KIT	2		X	X	
6	T19572	WASHER	6		X	X	
7	T158027	STRAP	2		X	X	
8	T183474	INSERT	8		X	X	(EXTENDED LIFE INSERTS)(IF REPLACING T185579 STD. INSERTS, ALSO ORDER 24 19M7572)
	T185579	INSERT	8		X	X	(STANDARD INSERTS)
9	19M7572	CAP SCREW	24		X	X	M10 X 45, (USE WITH EXTENDED LIFE INSERTS)
	19M7662	CAP SCREW	24		X	X	M10 X 30, (USE WITH STANDARD INSERTS)
10	24M7239	WASHER	24		X	X	

SADDLE FRAME

T203298 -UN-08DEC04

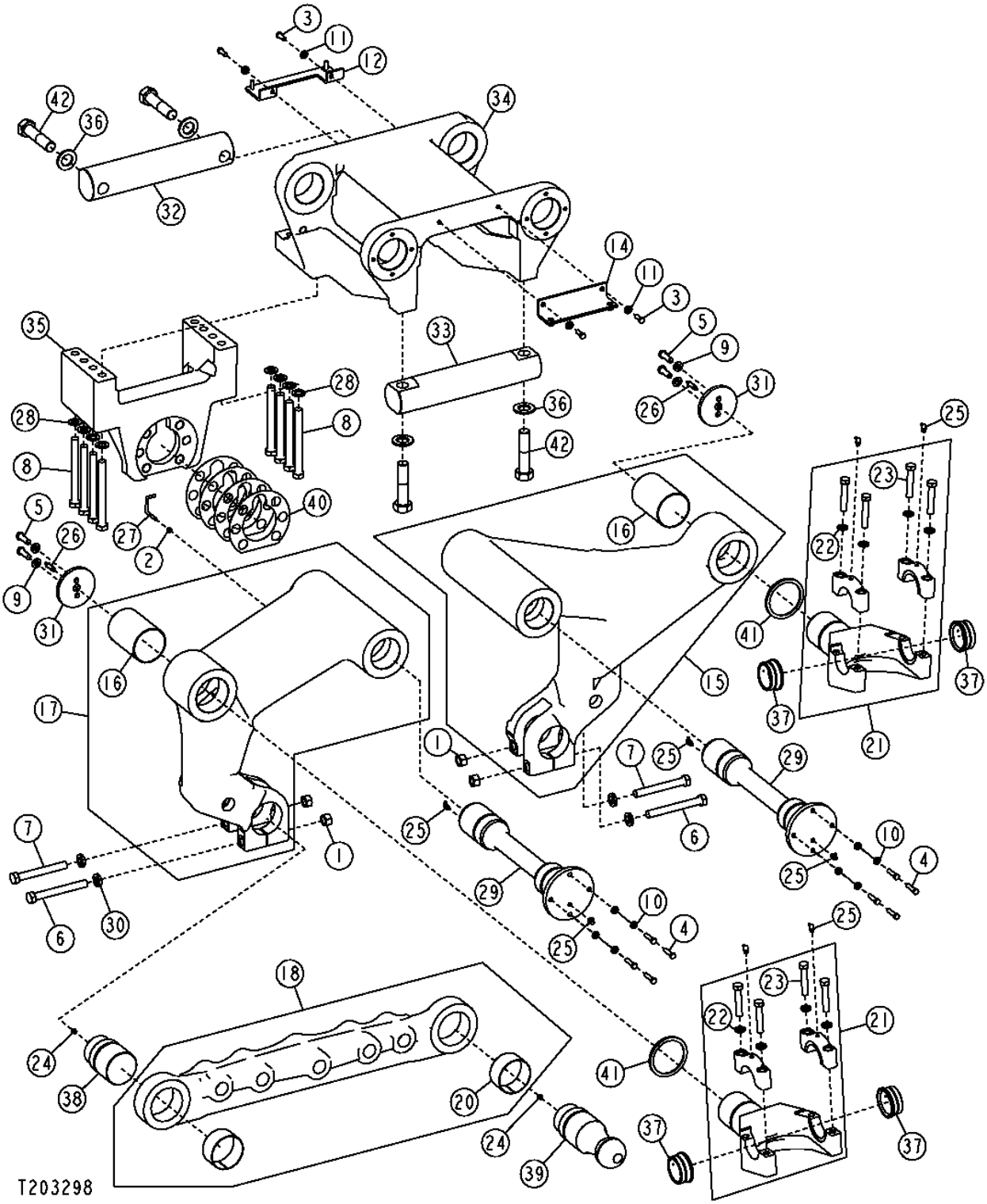

3D21

SADDLE FRAME

KEY	PART NO.	PART NAME	QTY	SERIAL NO.	670D	672D	REMARKS
1	14H1058	NUT	4		X	X	3/4"
2	14H786	NUT	1		X	X	1/4"
3	19H1731	CAP SCREW	4		X	X	3/8" X 1"
4	19H1800	CAP SCREW	8		X	X	3/8" X 1-1/2"
5	19H2993	CAP SCREW	4		X	X	1/2" X 1-1/2"
6	19H3225	CAP SCREW	2		X	X	3/4" X 6-1/2"
7	19H3307	CAP SCREW	2		X	X	3/4" X 6"
8	19H3740	CAP SCREW	8		X	X	3/4" X 7-1/2"
9	24H1625	WASHER	4		X	X	
10	24H1864	WASHER	8		X	X	
11	24M7239	WASHER	4		X	X	
12	AT307326	BRACKET	1		X	X	
14	AT315712	ANGLE	1		X	X	
15	AT317482	ARM	1		X	X	
16	T186350	BUSHING	1		X	X	
17	AT317483	ARM	1		X	X	
18	AT317484	KIT	1		X	X	
20	T42589	BUSHING	2		X	X	
21	AT317485	YOKE	2		X	X	
22	12H294	LOCK WASHER	4		X	X	
23	19H2641	CAP SCREW	4		X	X	
24	JD7759	LUBRICATION FITTING	2		X	X	
25	JD7781	LUBRICATION FITTING	8		X	X	
26	JD7782	LUBRICATION FITTING	2		X	X	
27	T103453	POINTER	1		X	X	
28	T10510	WASHER	8		X	X	
29	T152169	PIN	2		X	X	
30	T83426	WASHER	4		X	X	(SUB FOR T17776)
31	T207483	RETAINER	2		X	X	
32	T208102	PIN FASTENER	1		X	X	
33	T208103	PIN FASTENER	1		X	X	
34	T213096	FRAME	1		X	X	
35	T213102	BRACKET	1		X	X	
36	T24510	WASHER	4		X	X	
37	T42574	BUSHING	4		X	X	
38	T42582	PIN FASTENER	1		X	X	
39	T42583	BALL	1		X	X	
40	T60260	SHIM	4		X	X	
41	T81674	THRUST WASHER	2		X	X	
42	T82855	CAP SCREW	4		X	X	

CIRCLE FRAME

T204655 -UN-03DEC04

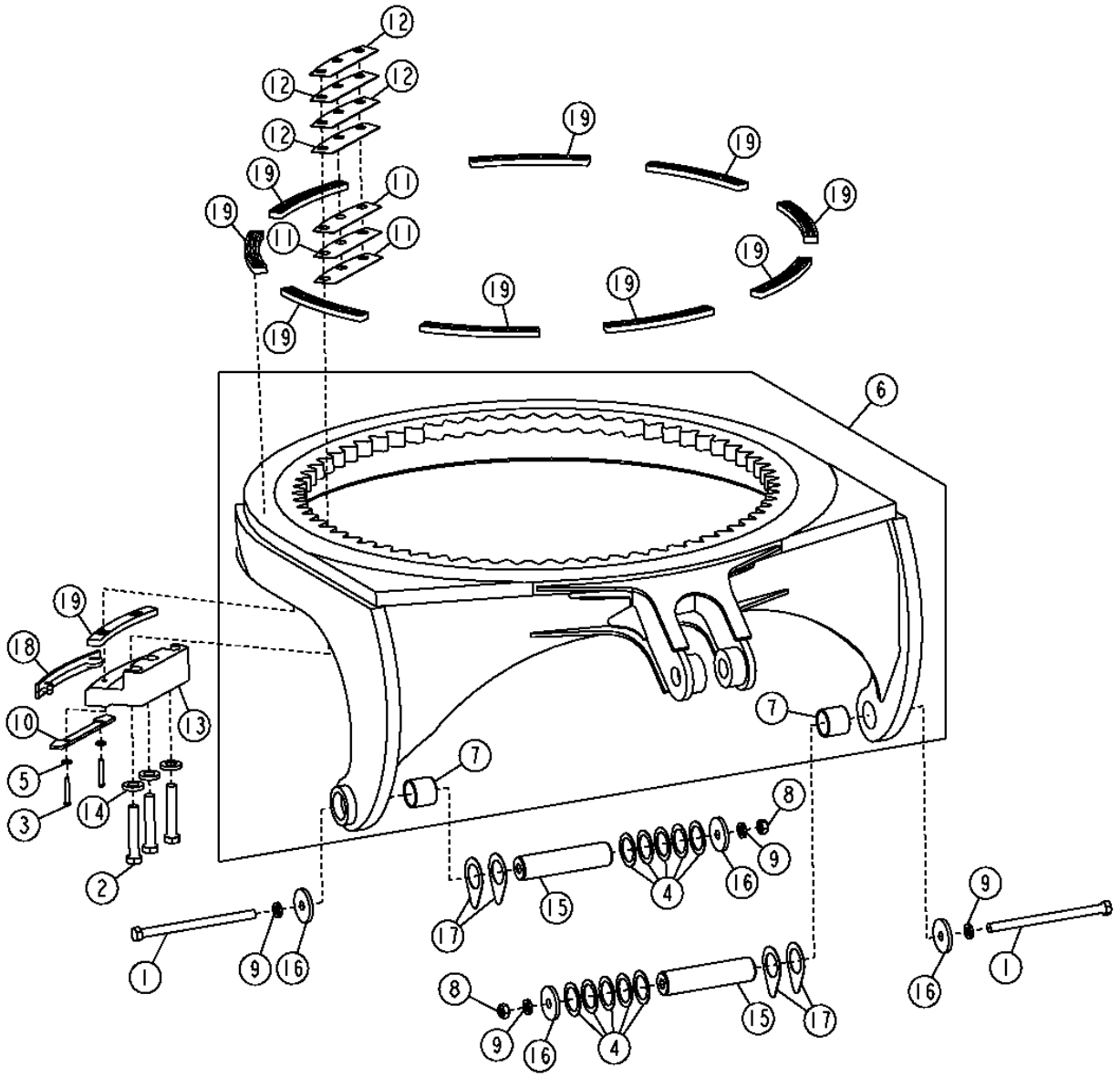

T204655

3D23

CIRCLE FRAME

KEY	PART NO.	PART NAME	QTY	SERIAL NO.	670D	672D	REMARKS
1	08H4845	CAP SCREW	2		X	X	7/8" X 13-1/2"
2	19H2329	CAP SCREW	18		X	X	1" X 5-1/2"
3	19H2553	CAP SCREW	12		X	X	3/8" X 2-5/8"
4	24H1671	WASHER	10		X	X	
5	24M7213	WASHER	12		X	X	10.500 X 25 X 4 MM
6	AT301673	CIRCLE	1		X	X	
7	T143929	BUSHING	1		X	X	
8	K40017	LOCK NUT	2		X	X	7/8"
9	N237603	WASHER	4		X	X	
10	T128502	PLATE	6		X	X	
11	T129981	SHIM	18		X	X	
12	T129982	SHIM	24		X	X	
13	T150614	SUPPORT	6		X	X	
14	T152721	WASHER	18		X	X	
15	T203381	BUSHING	2		X	X	
16	T203388	BUSHING	4		X	X	
17	T208792	SHIM	4		X	X	
18	T141732	INSERT	6		X	X	(STANDARD WITH OR WITHOUT SLIP CLUTCH)
	T163748	INSERT	6		X	X	(EXTENDED LIFE WITH OR WITHOUT SLIP CLUTCH)
19	T141733	INSERT	15		X	X	(STANDARD WITHOUT SLIP CLUTCH)
	T184082	INSERT	15		X	X	(EXTENDED LIFE WITHOUT SLIP CLUTCH, STANDARD WITH SLIP CLUTCH)

CIRCLE DRIVE GEARBOX

T201069 -UN-24JUN04

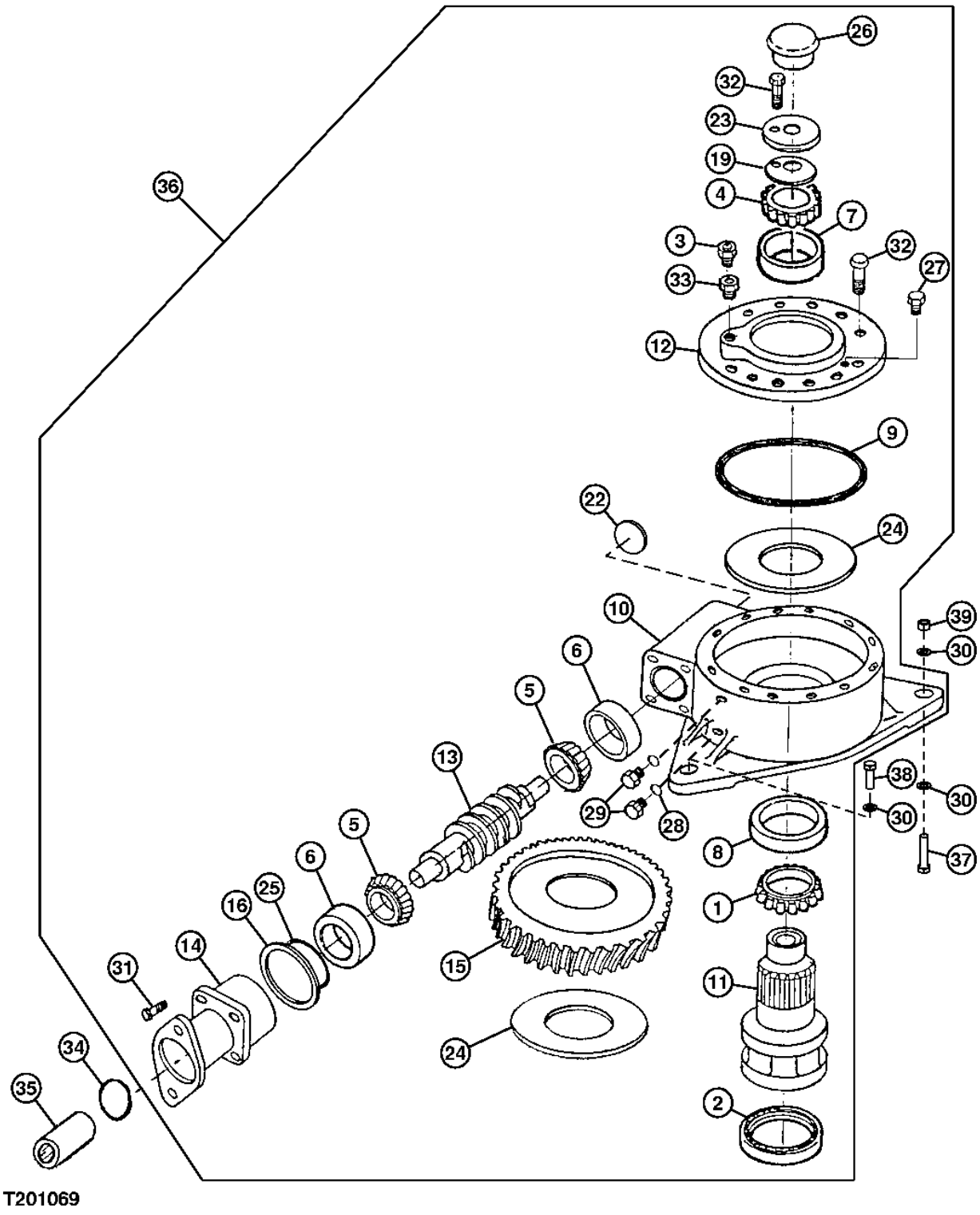

T201069

CIRCLE DRIVE GEARBOX

KEY	PART NO.	PART NAME	QTY	SERIAL NO.	670D	672D	REMARKS
1	AT169451	BEARING CONE	1		X	X	
2	AT169452	SEAL	1		X	X	
3	E14814	PRESSURE RELIEF FITTING	1		X	X	
4	JD10024	BEARING CONE	1		X	X	
5	JD10144	BEARING CONE	2		X	X	
6	JD8240	BEARING CUP	2		X	X	
7	JD9021	BEARING CUP	1		X	X	
8	JD9134	BEARING CUP	1		X	X	
9	R37287	O-RING	1		X	X	
10	T151485	HOUSING	1		X	X	
11	T152876	PINION SHAFT	1		X	X	
12	T152877	COVER	1		X	X	
13	T167010	SHAFT	1		X	X	(USE WITH T167011)
14	T152879	FLANGE	1		X	X	
15	T167011	WORM GEAR	1		X	X	(USE WITH T167010)
16	T152881	SHIM	AR		X	X	(.1 MM)
	T152882	SHIM	AR		X	X	(.2 MM)
	T152883	SHIM	AR		X	X	(.5 MM)
19	T152990	SHIM	AR		X	X	(.1 MM)
	T152991	SHIM	AR		X	X	(.2 MM)
	T152992	SHIM	AR		X	X	(.5 MM)
22	T152993	PLUG	1		X	X	
23	T152994	WASHER	1		X	X	HS, SAE 8, 1/2" X 2"
24	T152995	THRUST WASHER	2		X	X	
25	T42302	O-RING	1		X	X	
26	Z40239	CAP	1		X	X	
27	R39112	FITTING	1		X	X	
28	R26448	O-RING	2		X	X	
29	R27218	FITTING PLUG	1		X	X	
30	T10510	WASHER	5		X	X	
31	19M7790	SCREW	4		X	X	M12 X 35
32	19M7835	SCREW	15		X	X	M10 X 35
33	CE17879	ADAPTER	1		X	X	
34	U42702	O-RING	1		X	X	
35	T150942	SPLINED COUPLING	1		X	X	
36	AT190539	GEAR CASE	1		X	X	
37	19H3026	CAP SCREW	2		X	X	3/4" X 3-1/2"
38	19H2991	CAP SCREW	1		X	X	3/4" X 2-1/4", (FRONT MOUNTING SCREW)
39	14H1046	NUT	2		X	X	3/4"

CIRCLE DRIVE GEARBOX (WITH SLIP CLUTCH)

T201073 -UN-04DEC04

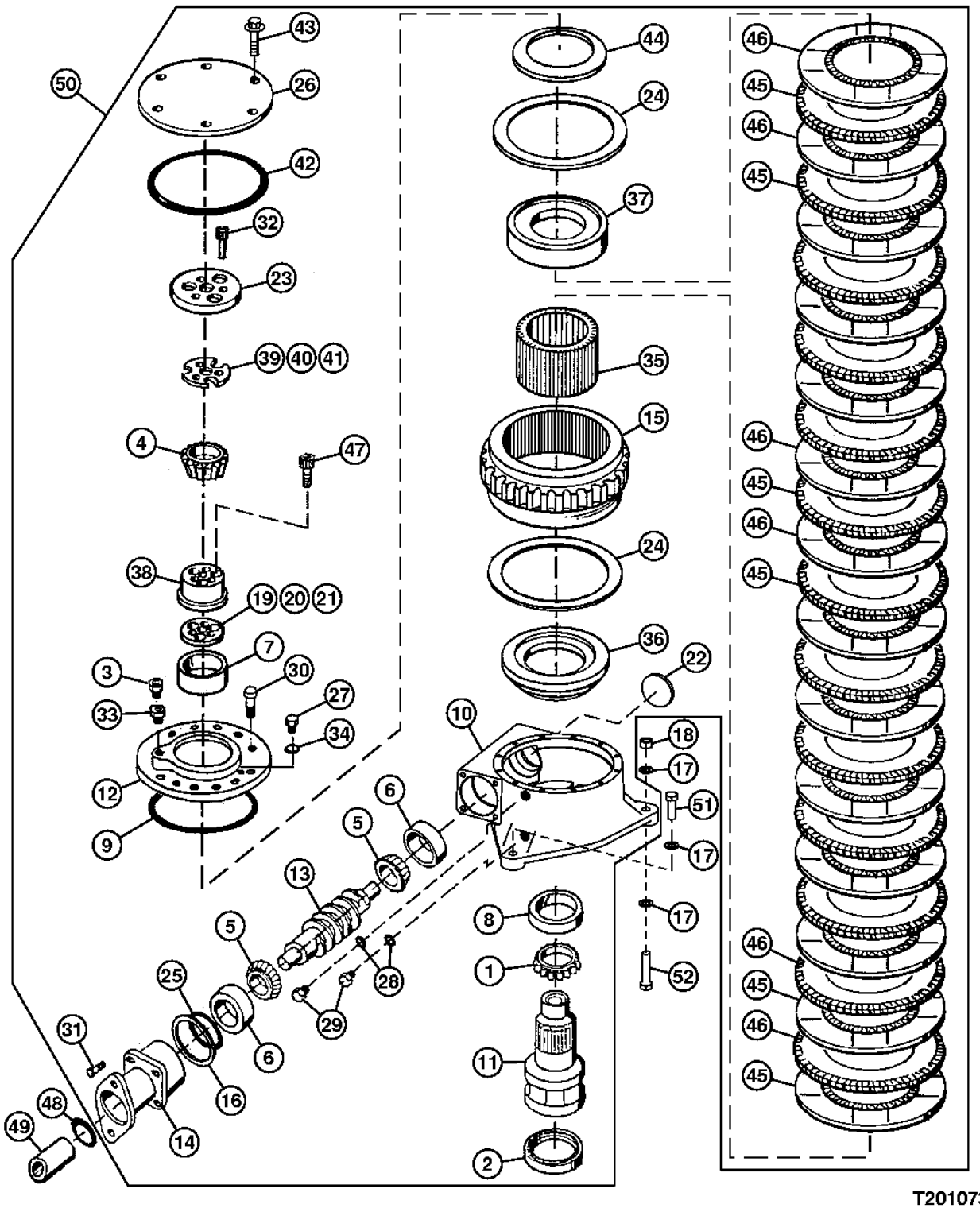

THIS PARTS LISTING IS CONTINUED

CIRCLE DRIVE GEARBOX (WITH SLIP CLUTCH)

KEY	PART NO.	PART NAME	QTY	SERIAL NO.	670D	672D	REMARKS
1	AT169451	BEARING CONE	1		X	X	
2	AT169452	SEAL	1		X	X	
3	E14814	PRESSURE RELIEF FITTING	1		X	X	
4	JD9082	BEARING CONE	1		X	X	
5	JD10144	BEARING CONE	2		X	X	
6	JD8240	BEARING CUP	2		X	X	
7	JD9141	BEARING CUP	1		X	X	
8	JD9134	BEARING CUP	1		X	X	
9	R37287	O-RING	1		X	X	
10	T165055	HOUSING	1		X	X	
11	T165061	PINION SHAFT	1		X	X	
12	T165056	CAP	1		X	X	
13	T167010	SHAFT	1		X	X	
14	T152879	FLANGE	1		X	X	
15	T184228	WORM GEAR	1		X	X	
16	T152881	SHIM	AR		X	X	0.1 MM
	T152882	SHIM	AR		X	X	0.15 MM
	T152883	SHIM	AR		X	X	0.5 MM
17	T10510	WASHER	5		X	X	0.15 MM
18	14H1046	NUT	2		X	X	3/4", 0.5 MM
19	T165072	SHIM	AR		X	X	0.1 MM
	T165073	SHIM	AR		X	X	0.15 MM
	T165074	SHIM	AR		X	X	0.5 MM
20	T165073	SHIM	1		X	X	0.15 MM
21	T165074	SHIM	6		X	X	0.5 MM
22	T152993	PLUG	1		X	X	
23	T165062	WASHER	1		X	X	HS, SAE 8, 1/2" X 2"
24	T165063	THRUST WASHER	2		X	X	
25	T42302	O-RING	1		X	X	101.270 X 2.616 MM (3.987" X 0.103")
26	T165077	COVER	1		X	X	
27	R39112	FITTING	1		X	X	
28	R26448	O-RING	2		X	X	0.468" X 5/64"
29	R27218	FITTING PLUG	2		X	X	
30	19M7835	SCREW	12		X	X	M10 X 35
31	19M7790	SCREW	4		X	X	M12 X 35
32	T165075	SCREW	3		X	X	
33	CE17879	ADAPTER	1		X	X	
34	R26375	O-RING	1		X	X	
35	T165064	HUB	1		X	X	
36	T165065	PLATE	1		X	X	
37	T165066	PLATE	1		X	X	
38	T165067	SLEEVE	1		X	X	
39	T165068	SHIM	5		X	X	0.1 MM
	T165069	SHIM	AR		X	X	0.15 MM
	T165069	SHIM	AR		X	X	0.5 MM
40	T165069	SHIM	1		X	X	0.15 MM
41	T165070	SHIM	3		X	X	0.5 MM
42	T80123	O-RING	1		X	X	
43	19M7866	BOLT	6		X	X	
44	T165791	DISK SPRING	1		X	X	
45	T164986	PLATE	13		X	X	
46	AT184409	CLUTCH DISK	14		X	X	
47	T165071	SCREW	3		X	X	
48	U42702	O-RING	1		X	X	
49	T150942	SPLINED COUPLING	1		X	X	(T150942 IS NOT INCLUDED IN AT184413)
50	**AT184413**	**GEAR CASE**	**1**		**X**	**X**	**(CONVENIENCE ASSEMBLY)**
51	19H2991	CAP SCREW	1		X	X	3/4" X 2-1/4", (SUB FOR 19H1388, THIS APPLICATION) (FRONT MOUNTING SCREW)
52	19H3026	CAP SCREW	2		X	X	3/4" X 3-1/2"

ROTARY MANIFOLD

T201027 -UN-18JUN04

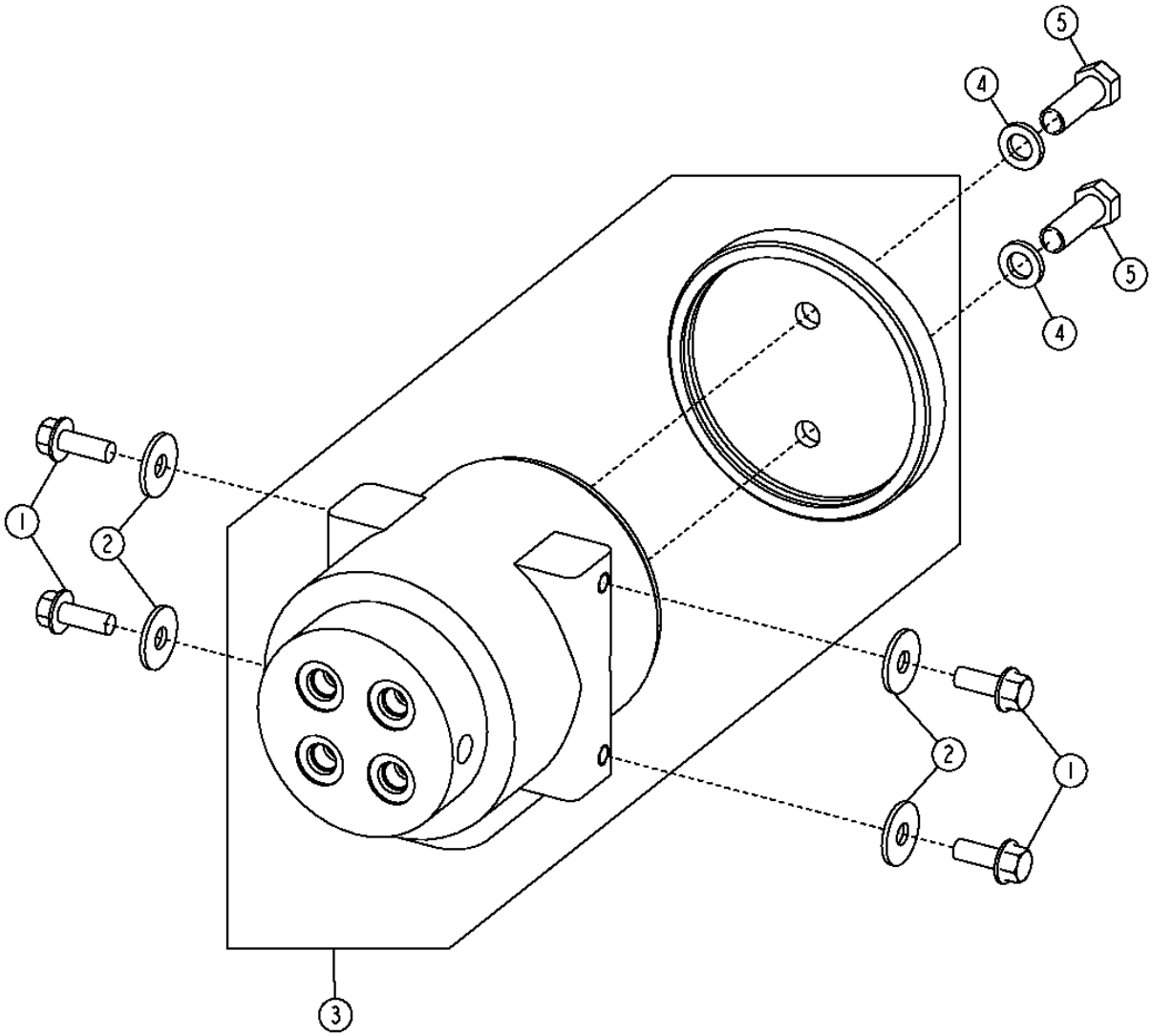

T201027

ROTARY MANIFOLD

KEY	PART NO.	PART NAME	QTY	SERIAL NO.	670D	672D	REMARKS
1	19H3771	SCREW	4		X	X	3/8" X 1"
2	24M7296	WASHER	4		X	X	
3	AT169948	MANIFOLD	1		X	X	(ROTARY)
	AT169949	SEAL KIT	1		X	X	
4	12H301	LOCK WASHER	2		X	X	1/2"
5	19H2676	CAP SCREW	2		X	X	3/8" X 1"

CIRCLE DRIVE MOTOR

T201064 -UN-04DEC04

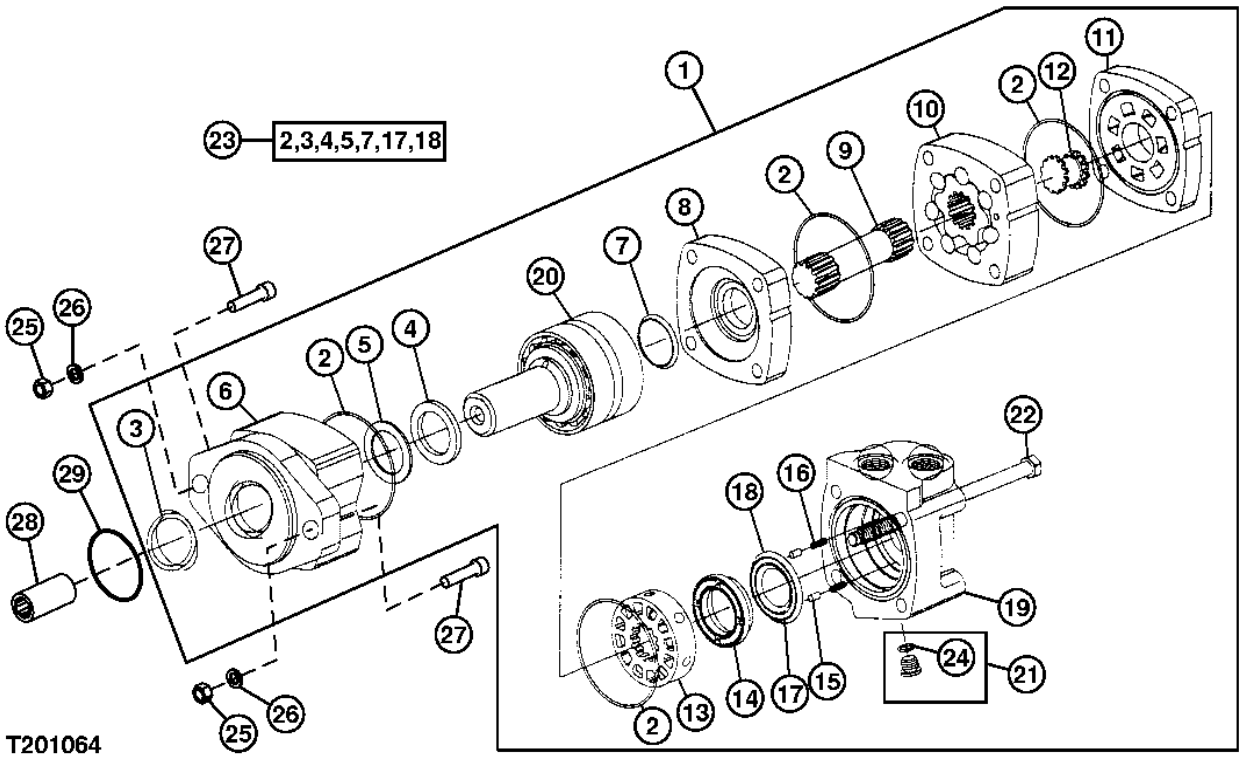

CIRCLE DRIVE MOTOR

KEY	PART NO.	PART NAME	QTY	SERIAL NO.	670D	672D	REMARKS
1	AT197057	MOTOR	1		X	X	(CIRCLE DRIVE)
2	T190610	SEAL	4		X	X	
3	T190611	SEAL	1		X	X	
4	T190612	SEAL	1		X	X	
5	T190613	BACK-UP RING	1		X	X	
6	T190614	BEARING HOUSING W/ BEARING	1		X	X	
7	T190615	SEAL	1		X	X	
8	T190616	WEAR PLATE	1		X	X	
9	T190617	DRIVE	1		X	X	
10	AT197907	MOUNTING PARTS	1		X	X	
11	T190639	PLATE	1		X	X	
12	T190640	FLOW CONTROL HYD. VALVE	1		X	X	
13	T190641	FLOW CONTROL HYD. VALVE	1		X	X	
14	T190642	PLATE	1		X	X	
15	T190643	PIN	2		X	X	
16	T190644	SPRING	2		X	X	
17	T190645	SEAL	1		X	X	
18	T190646	SEAL	1		X	X	
19	T190647	HOUSING	1		X	X	
20	AT197906	SHAFT	1		X	X	
21	AT197908	MOUNTING PARTS	1		X	X	
22	T190648	CAP SCREW	1		X	X	
23	AT197924	SEAL KIT	1		X	X	
24	R28782	O-RING	1		X	X	
25	12H301	LOCK WASHER	2		X	X	1/2"
26	14H809	NUT	2		X	X	1/2"
27	19H3033	SCREW	2		X	X	1/2" X 2"
28	T150942	SPLINED COUPLING	1		X	X	
29	U42702	O-RING	1		X	X	

CIRCLE SIDESHIFT CYLINDER

T201164 -UN-02OCT04

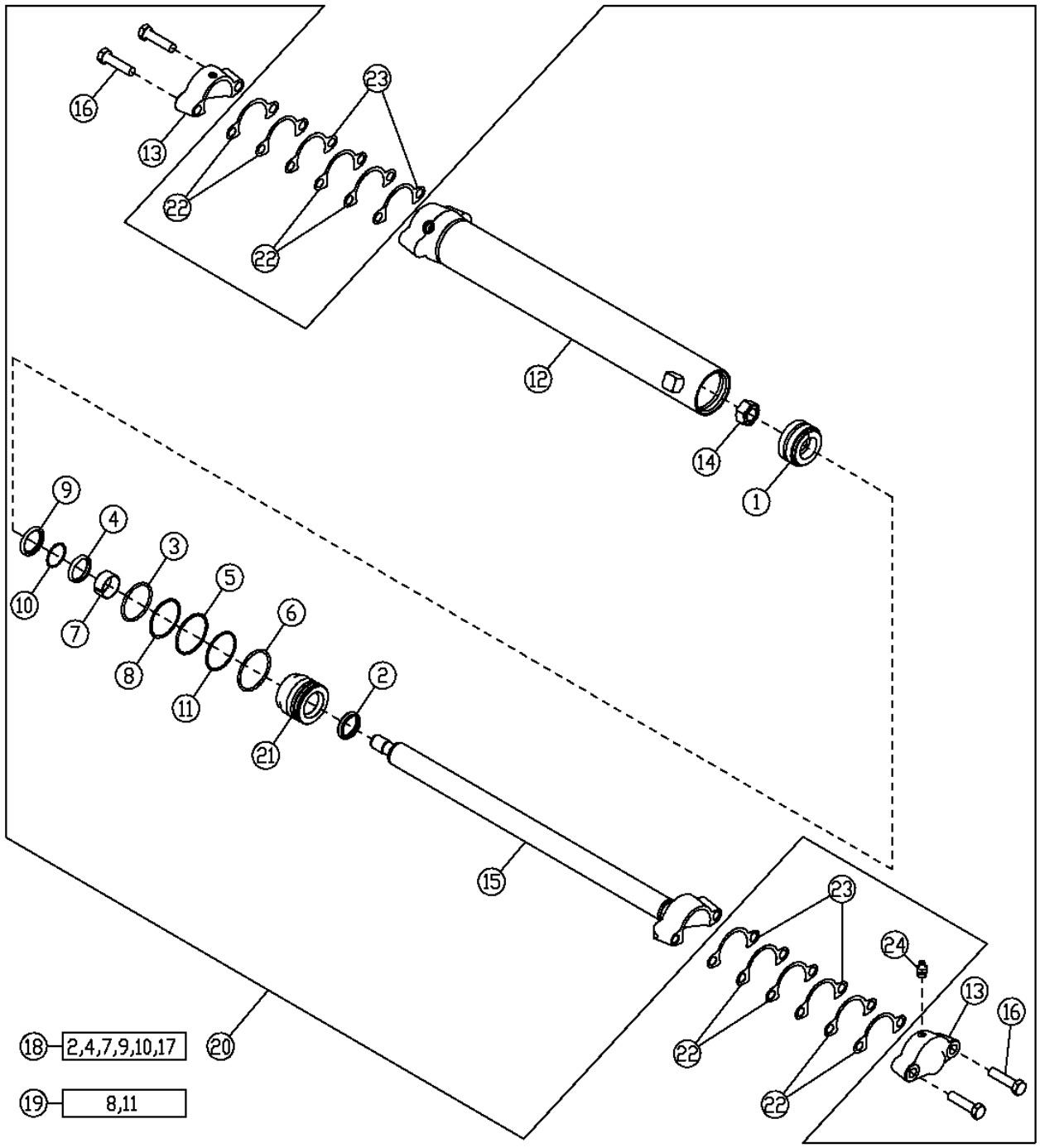

CIRCLE SIDESHIFT CYLINDER

KEY	PART NO.	PART NAME	QTY	SERIAL NO.	670D	672D	REMARKS
1	AH141183	PISTON	1		X	X	
2	AH146557	SEAL	1		X	X	
3	F1430R	O-RING	1		X	X	
4	H152203	SEAL	1		X	X	
5	H180103	SNAP RING	1		X	X	
6	H206859	SNAP RING	1		X	X	
7	H208987	WEAR RING	1		X	X	
8	R79101	BACK-UP RING	1		X	X	
9	.....	SEAL	1		X	X	(SUB AH210184)
10	.....	RING	1		X	X	(SUB AH210184)
11	.....	O-RING	1		X	X	(SUB AH212097)
12	AH212503	HYDRAULIC CYLINDER BARREL	1		X	X	
13	H142036	END	2		X	X	
14	H170539	NUT	1		X	X	
15	RE37331	HYDRAULIC CYLINDER ROD	1		X	X	
16	19H1440	CAP SCREW	4		X	X	3/4" X 3"
17	H154856	WEAR RING	1		X	X	(WIPER INSTALLATION TOOL) (NOT ILLUSTRATED)
18	AH210484	HYDRAULIC CYLINDER KIT	1		X	X	(ROD SEAL KIT)
19	AH212097	HYDRAULIC CYLINDER KIT	1		X	X	(BORE SEAL KIT)
20	AH208873	HYDRAULIC CYLINDER	1		X	X	(CIRCLE SIDESHIFT CYLINDER)
21	H208631	HYDR. CYLINDER ROD GUIDE	1		X	X	
22	T147623	SHIM	3		X	X	
23	T148164	SHIM	4		X	X	
24	JD7844	LUBRICATION FITTING	2		X	X	

BLADE LIFT CYLINDER

T201280 -UN-09DEC04

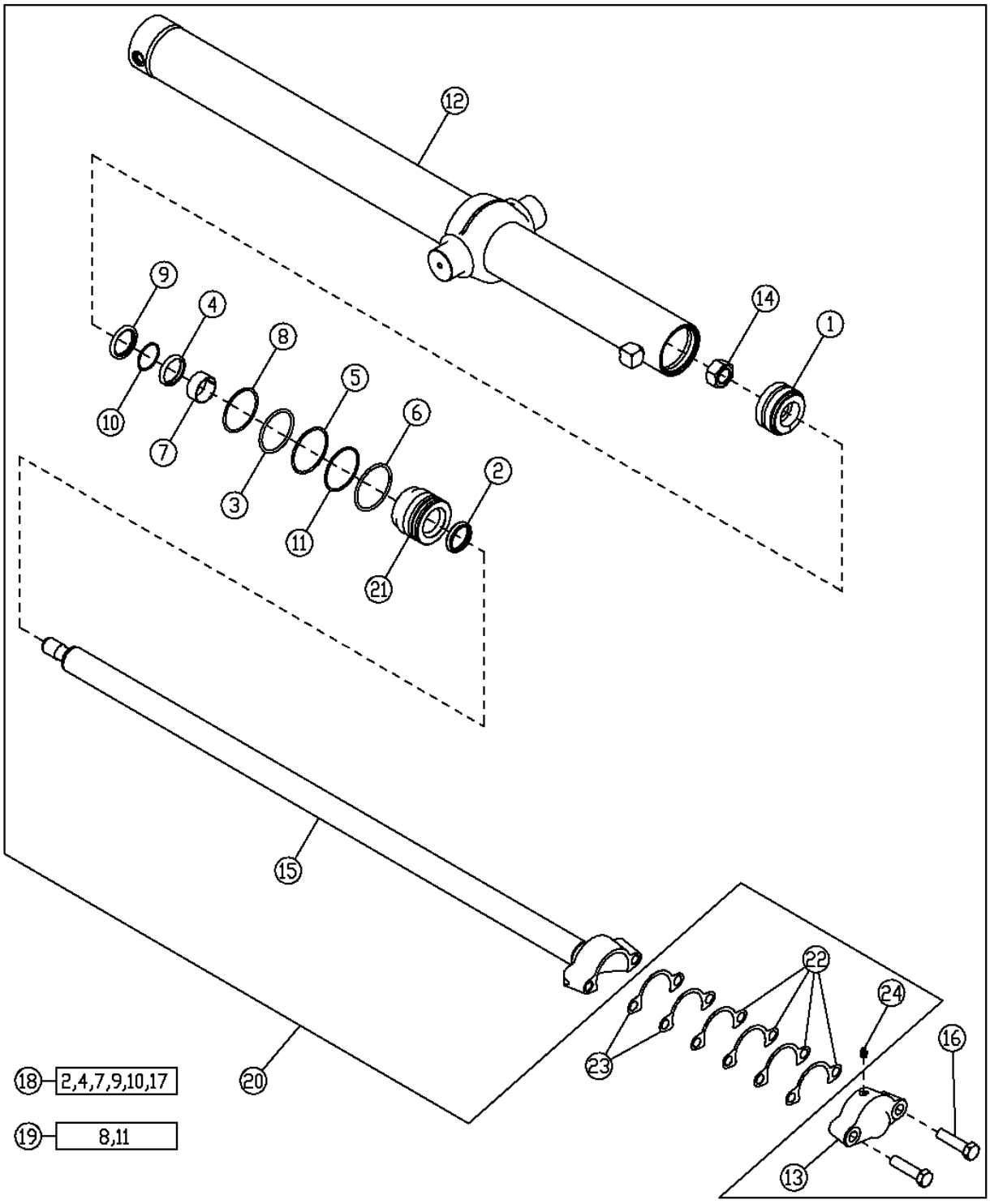

BLADE LIFT CYLINDER

KEY	PART NO.	PART NAME	QTY	SERIAL NO.	670D	672D	REMARKS
1	AH141183	PISTON	1		X	X	
2	AH146557	SEAL	1		X	X	
3	F1430R	O-RING	1		X	X	
4	H152203	SEAL	1		X	X	
5	H180103	SNAP RING	1		X	X	
6	H206859	SNAP RING	1		X	X	
7	H208987	WEAR RING	1		X	X	
8	R79101	BACK-UP RING	1		X	X	
9	.....	SEAL	1		X	X	(SUB AH210184)
10	.....	RING	1		X	X	(SUB AH210184)
11	.....	O-RING	1		X	X	(SUB AH212097)
12	AH212502	HYDRAULIC CYLINDER BARREL	1		X	X	
13	H142036	END	1		X	X	
14	H170539	NUT	1		X	X	
15	RE37382	HYDRAULIC CYLINDER ROD	1		X	X	
16	19H1440	CAP SCREW	2		X	X	3/4" X 3"
17	H154856	WEAR RING	1		X	X	(WIPER INSTALLATION TOOL) (NOT ILLUSTRATED)
18	AH210484	HYDRAULIC CYLINDER KIT	1		X	X	(ROD SEAL KIT)
19	AH212097	HYDRAULIC CYLINDER KIT	1		X	X	(BORE SEAL KIT)
20	AH208875	HYDRAULIC CYLINDER	1		X	X	(BLADE LIFT CYLINDER)
21	H208631	HYDR. CYLINDER ROD GUIDE	1		X	X	
22	T147623	SHIM	8		X	X	
23	T148164	SHIM	4		X	X	
24	JD7798	LUBRICATION FITTING	2		X	X	

BLADE SLIDE CYLINDER

T201378 -UN-30JUN04

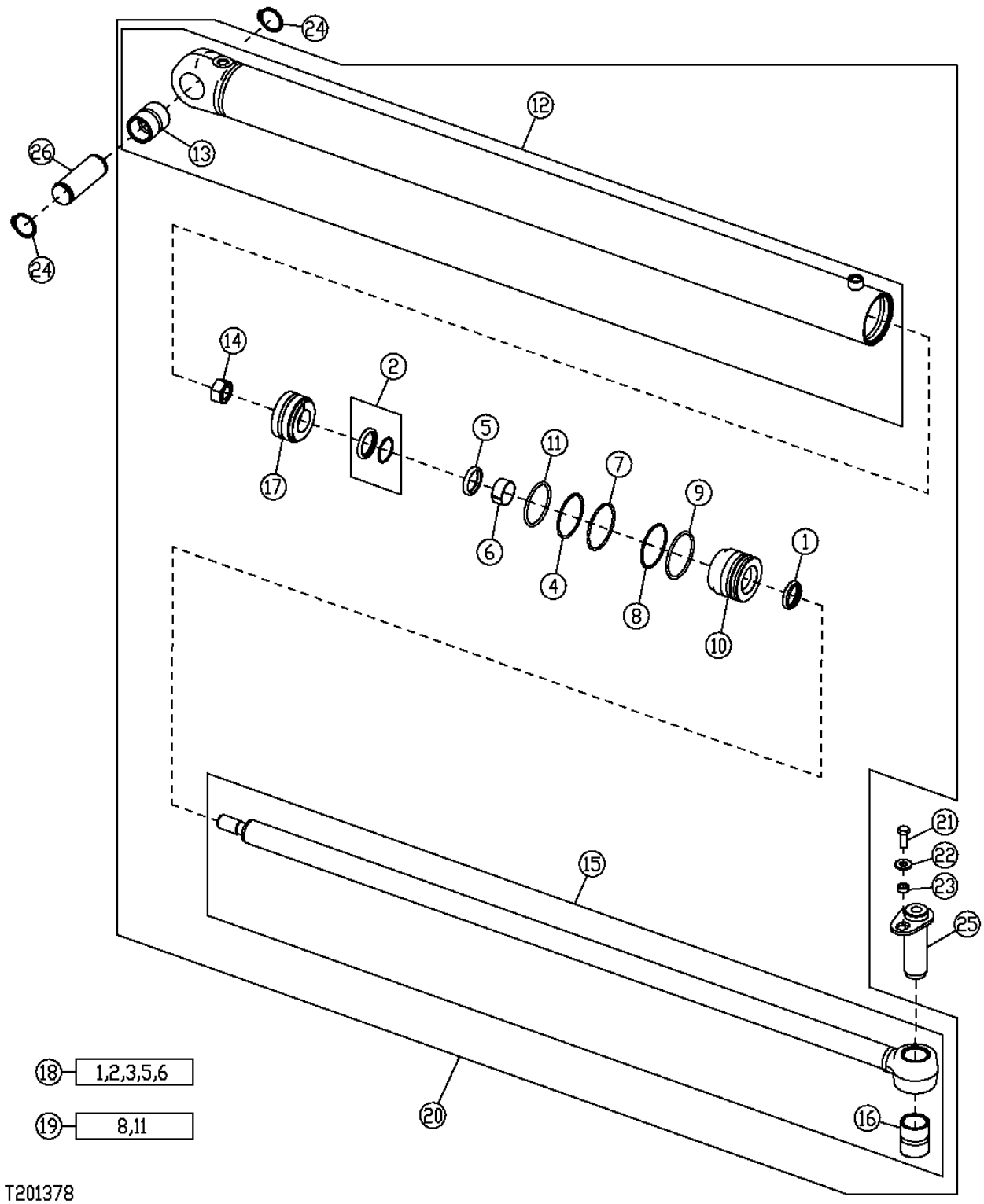

BLADE SLIDE CYLINDER

KEY	PART NO.	PART NAME	QTY	SERIAL NO.	670D	672D	REMARKS
1	AH146556	SEAL	1		X	X	
2	AH146560	SEAL	1		X	X	
3	H155629	SEAL	1		X	X	(WIPER INSTALLATION TOOL) (NOT ILLUSTRATED)
4	F1430R	O-RING	1		X	X	
5	H152202	SEAL	1		X	X	
6	H157898	WEAR RING	1		X	X	
7	H180103	SNAP RING	1		X	X	
8	.....	O-RING	1		X	X	(SUB AH212097)
9	H206859	SNAP RING	1		X	X	
10	H208999	HYDR. CYLINDER ROD GUIDE	1		X	X	
11	R79101	BACK-UP RING	1		X	X	
12	AH212901	HYDRAULIC CYLINDER BARREL	1		X	X	
13	R89940	BUSHING	1		X	X	
14	H170538	NUT	1		X	X	M27
15	RE36349	HYDRAULIC CYLINDER ROD	1		X	X	
16	R89940	BUSHING	1		X	X	
17	AH136453	PISTON	1		X	X	
18	AH149813	HYDRAULIC CYLINDER KIT	1		X	X	(ROD SEAL KIT)
19	AH212097	HYDRAULIC CYLINDER KIT	1		X	X	(BORE SEAL KIT)
20	AH212900	HYDRAULIC CYLINDER	1		X	X	(BLADE SLIDE CYLINDER)
21	19H2898	CAP SCREW	1		X	X	1/2" X 1-1/4"
22	24H1349	WASHER	1		X	X	
23	28H3418	WASHER	1		X	X	
24	40M7180	SNAP RING	2		X	X	
25	AT41245	PIN	1		X	X	
26	T124495	PIN FASTENER	1		X	X	44.450 X 131 MM

BLADE TILT CYLINDER

T201392 -UN-02JUL04

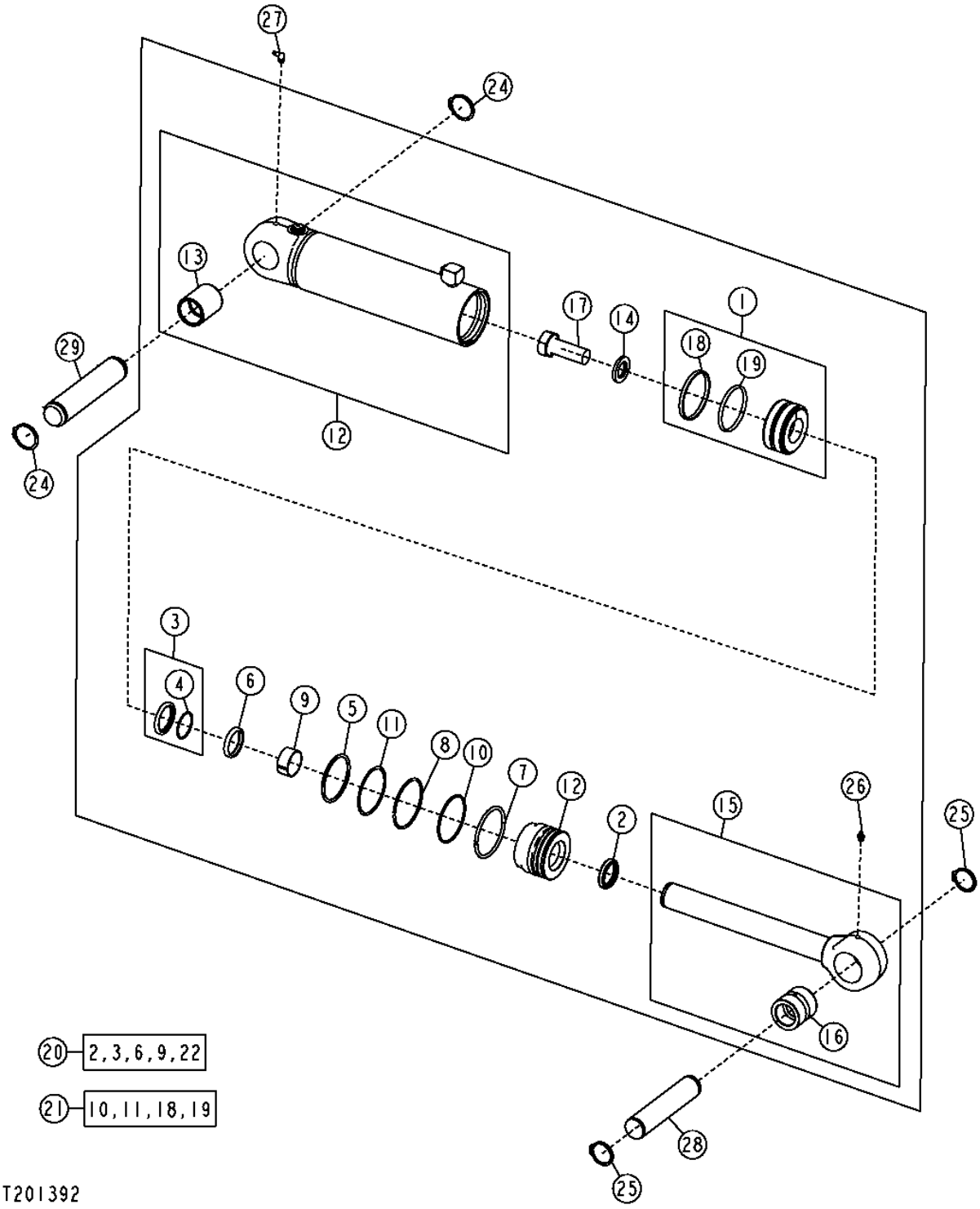

BLADE TILT CYLINDER

KEY	PART NO.	PART NAME	QTY	SERIAL NO.	670D	672D	REMARKS
1	AH205062	PISTON	1		X	X	
2	AH146557	SEAL	1		X	X	
3	AH146561	SEAL	1		X	X	
4	H208995	HYDR. CYLINDER ROD GUIDE	1		X	X	
5	F950R	O-RING	1		X	X	
6	H152203	SEAL	1		X	X	
7	H180080	SNAP RING	1		X	X	
8	H180094	SNAP RING	1		X	X	
9	H208987	WEAR RING	1		X	X	
10	.....	O-RING	1		X	X	(SUB AH212102)
11	R81862	BACK-UP RING	1		X	X	
12	AH212812	HYDRAULIC CYLINDER BARREL	1		X	X	
13	R81968	BUSHING	1		X	X	
14	H145175	WASHER	1		X	X	
15	RE28364	HYDRAULIC CYLINDER ROD	1		X	X	
16	R82960	BUSHING	1		X	X	
17	19M8353	CAP SCREW	1		X	X	M30 X 80
18	H168248	WASHER	1		X	X	
19	H168249	WASHER	1		X	X	
20	AH210484	HYDRAULIC CYLINDER KIT	1		X	X	(ROD SEAL KIT)
21	AH212102	HYDRAULIC CYLINDER KIT	1		X	X	(BORE SEAL KIT)
22	H154856	WEAR RING	1		X	X	(WIPER INSTALLATION TOOL) (NOT ILLUSTRATED)
23	AH212811	HYDRAULIC CYLINDER	1		X	X	(BLADE TILT)
24	40M7166	SNAP RING	2		X	X	
25	40M7180	SNAP RING	2		X	X	
26	JD7798	LUBRICATION FITTING	1		X	X	
27	JD7799	LUBRICATION FITTING	1		X	X	
28	T151953	PIN	1		X	X	
29	T77067	PIN FASTENER	1		X	X	

BLADE LIFT CYLINDER HYDRAULIC HOSES

T201521 -UN-29JUL04

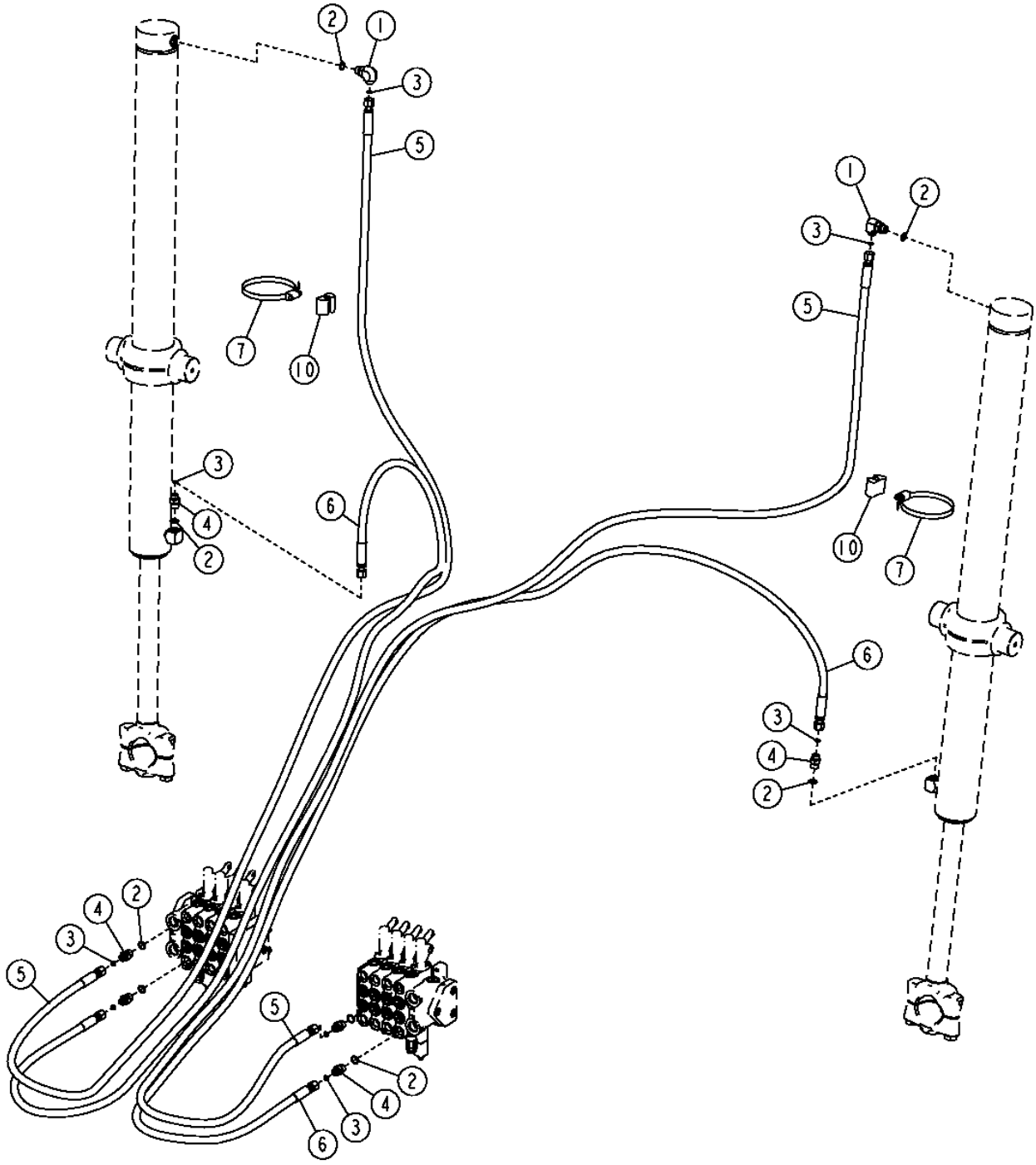

THIS PARTS LISTING IS CONTINUED

BLADE LIFT CYLINDER HYDRAULIC HOSES

KEY	PART NO.	PART NAME	QTY	SERIAL NO.	670D	672D	REMARKS
1	38H1010	ELBOW FITTING	2		X	X	
2	R26375	O-RING	8		X	X	
3	T77613	O-RING	8		X	X	
4	38H1171	ADAPTER	6		X	X	
5	AT304148	HYDRAULIC HOSE - FABRICATE	2		X	X	
6	AT304149	HYDRAULIC HOSE - FABRICATE	2		X	X	
7	C16054	CLAMP	2		X	X	
10	T105773	GUIDE	2		X	X	

SADDLE LOCK PIN AND HYDRAULIC HOSES

T201523 -UN-28OCT04

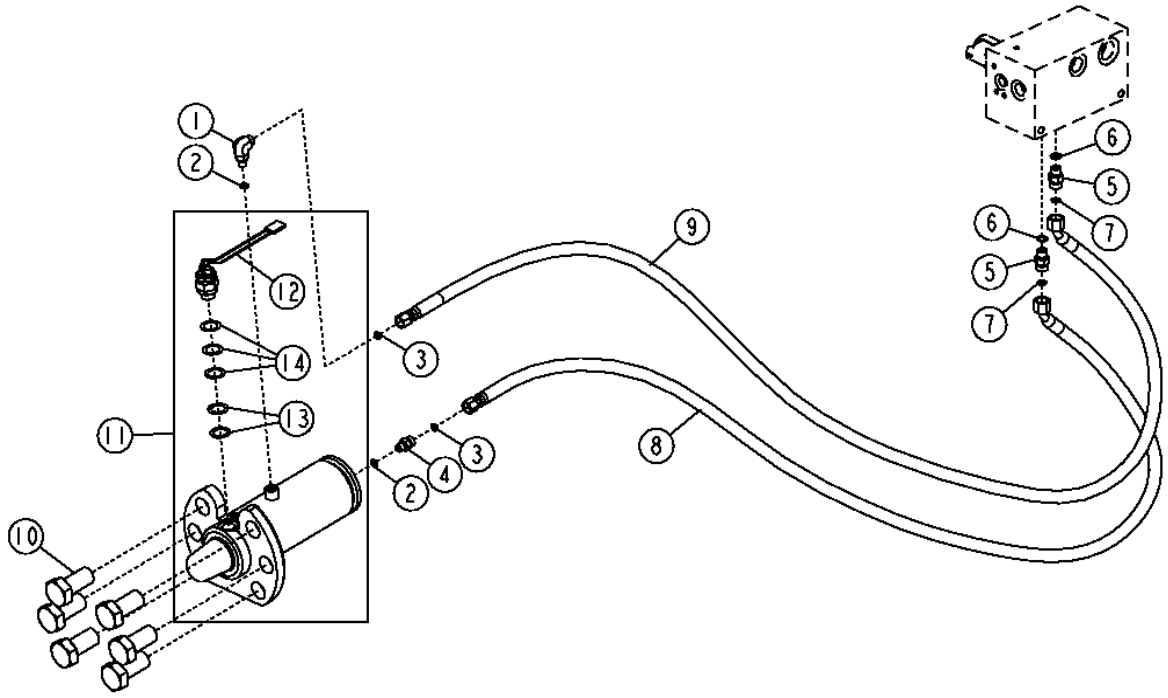

T201523

SADDLE LOCK PIN AND HYDRAULIC HOSES

KEY	PART NO.	PART NAME	QTY	SERIAL NO.	670D	672D	REMARKS
1	38H1003	ELBOW FITTING	1		X	X	
2	R28782	O-RING	2		X	X	
3	T77814	O-RING	2		X	X	
4	38H1159	ADAPTER	1		X	X	
5	38H1160	ADAPTER	2		X	X	
6	R26448	O-RING	2		X	X	
7	T77613	O-RING	2		X	X	
8	AT304150	HYDRAULIC HOSE - FABRICATE	1		X	X	
9	AT304151	HYDRAULIC HOSE - FABRICATE	1		X	X	
10	19H3700	CAP SCREW	6		X	X	1" X 2"
11	AT303325	SPRING LOCKING PIN	1		X	X	
	AT303536	SEAL KIT	1		X	X	
12	AT303600	SWITCH	1		X	X	
13	T42598	SHIM	2		X	X	
14	T70438	SHIM	3		X	X	

BLADE IMPACT SYSTEM

T204683 -UN-19NOV04

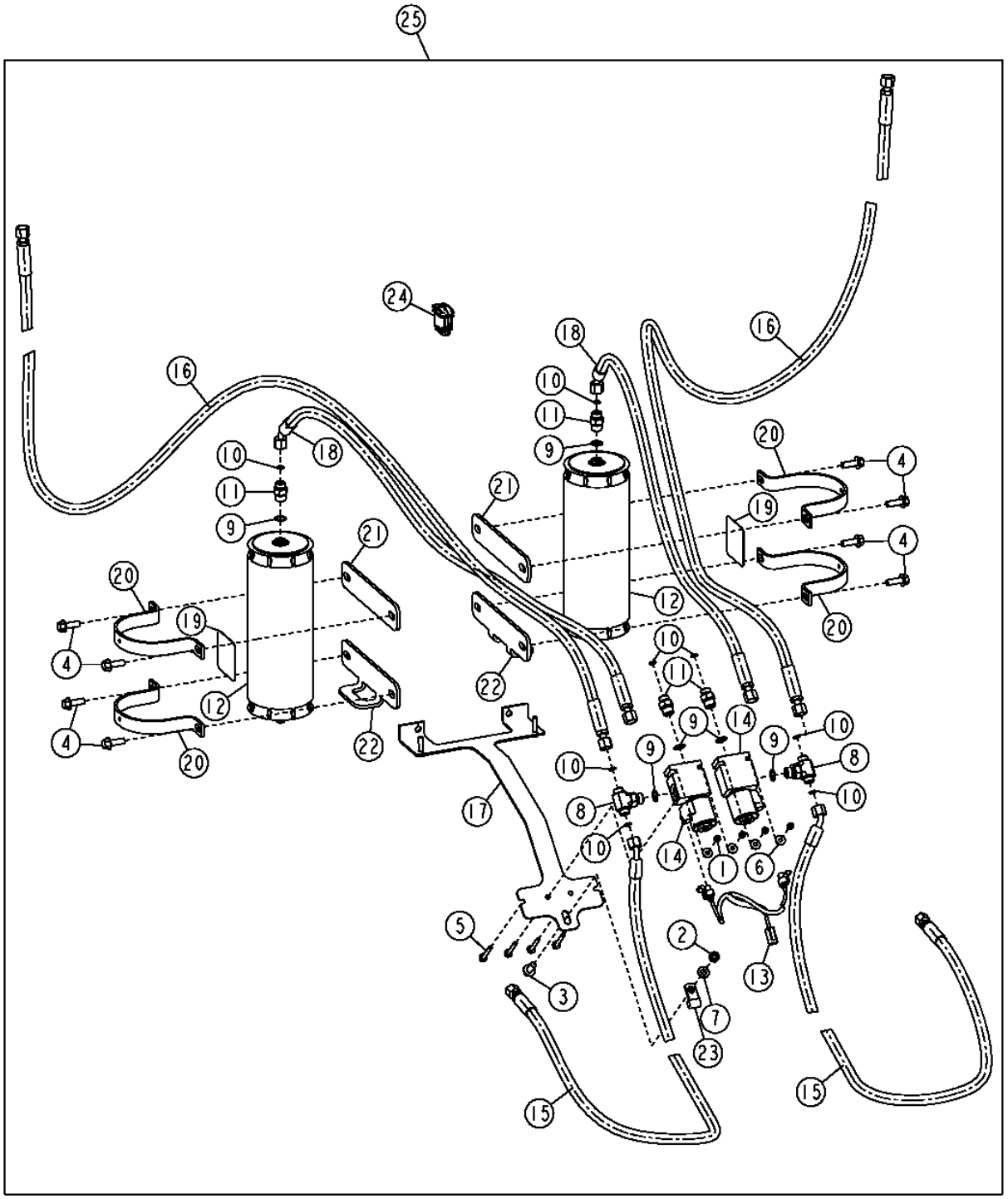

T204683

BLADE IMPACT SYSTEM

KEY	PART NO.	PART NAME	QTY	SERIAL NO.	670D	672D	REMARKS
1	14M7272	NUT	4		X	X	M6
2	14M7274	NUT	2		X	X	M10
3	19M7785	SCREW	1		X	X	M10 X 25
4	19M7786	SCREW	8		X	X	M10 X 30
5	19M8321	SCREW	4		X	X	M6 X 45
6	24M7139	WASHER	4		X	X	
7	24M7239	WASHER	1		X	X	
8	38H1054	TEE FITTING	2		X	X	
9	R26375	O-RING	6		X	X	
10	T77613	O-RING	6		X	X	
11	38H1171	ADAPTER	4		X	X	
12	AT196351	HYDRAULIC ACCUMULATOR	2		X	X	
	AT196760	KIT	2		X	X	(ACCUMULATOR GAS VALVE-NOT ILLUSTRATED)
13	AT305055	WIRING HARNESS	1		X	X	(BLADE IMPACT VALVE WIRING HARNESS)
14	AT302918	SOLENOID VALVE	2		X	X	(COMPONENTS LISTED ON SEPARATE PAGE)
15	AT306340	HYDRAULIC HOSE - FABRICATE	2		X	X	
16	AT306341	HYDRAULIC HOSE - FABRICATE	2		X	X	
17	AT312997	BRACKET	1		X	X	
18	AT315980	HYDRAULIC HOSE - FABRICATE	2		X	X	
19	T164124	LABEL	2		X	X	(ENGLISH)
	T164128	LABEL	2		X	X	(FRENCH)
	T164129	LABEL	2		X	X	(SPANISH)
20	T166761	CLAMP	4		X	X	
21	T203984	PLATE	2		X	X	
22	T211465	PLATE	2		X	X	
23	T28862	CLAMP	1		X	X	
24	AT305054	TOGGLE/ROCKER SWITCH	1		X	X	
25	**AT315881**	**KIT**	**1**		**X**	**X**	**(WHOLEGOODS)(BLADE IMPACT SYSTEM)**

BLADE IMPACT VALVE

T202312 -UN-01SEP04

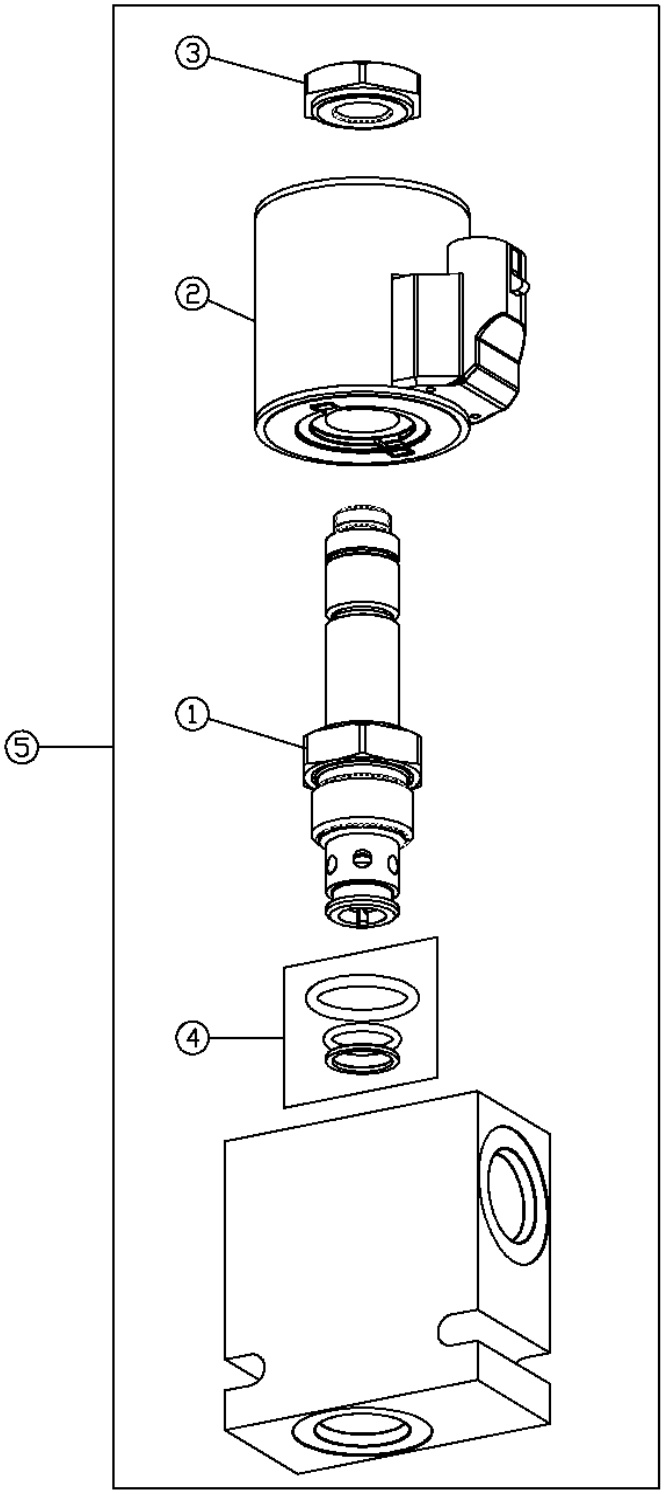

BLADE IMPACT VALVE

KEY	PART NO.	PART NAME	QTY	SERIAL NO.	670D	672D	REMARKS
1	AT302919	SOLENOID VALVE	1		X	X	
2	AT224703	SOLENOID VALVE COIL	1		X	X	
3	T181306	NUT	1		X	X	
4	AT224864	SEAL KIT	1		X	X	
5	AT302918	SOLENOID VALVE	2		X	X	(BLADE IMPACT VALVE)

BLADE TILT AND SLIDE CYLINDER HYDRAULIC HOSES

T202729 -UN-19OCT04

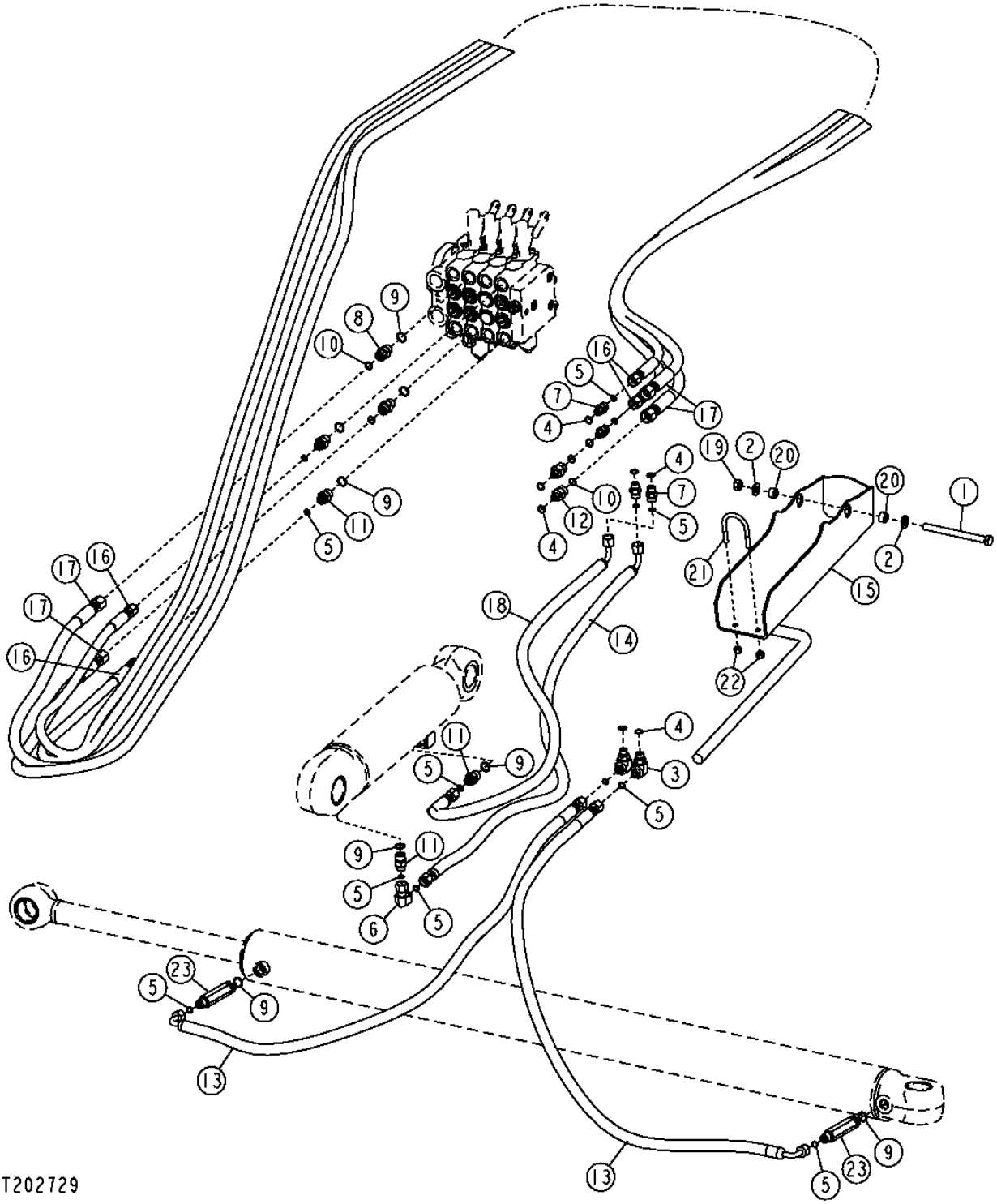

BLADE TILT AND SLIDE CYLINDER HYDRAULIC HOSES

KEY	PART NO.	PART NAME	QTY	SERIAL NO.	670D	672D	REMARKS
1	19H3136	CAP SCREW	1		X	X	1/2" X 5-3/4"
2	24M7240	WASHER	2		X	X	
3	38H1004	ELBOW FITTING	2		X	X	
4	R26448	O-RING	8		X	X	
5	T77613	O-RING	13		X	X	
6	38H1094	ELBOW FITTING	1		X	X	
7	38H1160	ADAPTER	4		X	X	
8	38H1161	ADAPTER	2		X	X	
9	R26375	O-RING	8		X	X	
10	T77857	O-RING	4		X	X	
11	38H1171	ADAPTER	4		X	X	
12	38H1173	ADAPTER	2		X	X	
13	AT166150	HYDRAULIC HOSE - FABRICATE	2		X	X	
14	AT179875	HYDRAULIC HOSE - FABRICATE	1		X	X	
15	AT304373	GUARD	1		X	X	
16	AT306446	HYDRAULIC HOSE - FABRICATE	2		X	X	
17	AT307845	HYDRAULIC HOSE - FABRICATE	2		X	X	
18	AT309961	HYDRAULIC HOSE - FABRICATE	1		X	X	
19	K40014	LOCK NUT	1		X	X	
20	M40509	SPACER	2		X	X	
21	T151806	U-BOLT	1		X	X	
22	T16464	LOCK NUT	2		X	X	
23	T82612	ADAPTER	2		X	X	

CIRCLE ROTATE MOTOR HYDRAULIC HOSES

T202731 -UN-08SEP04

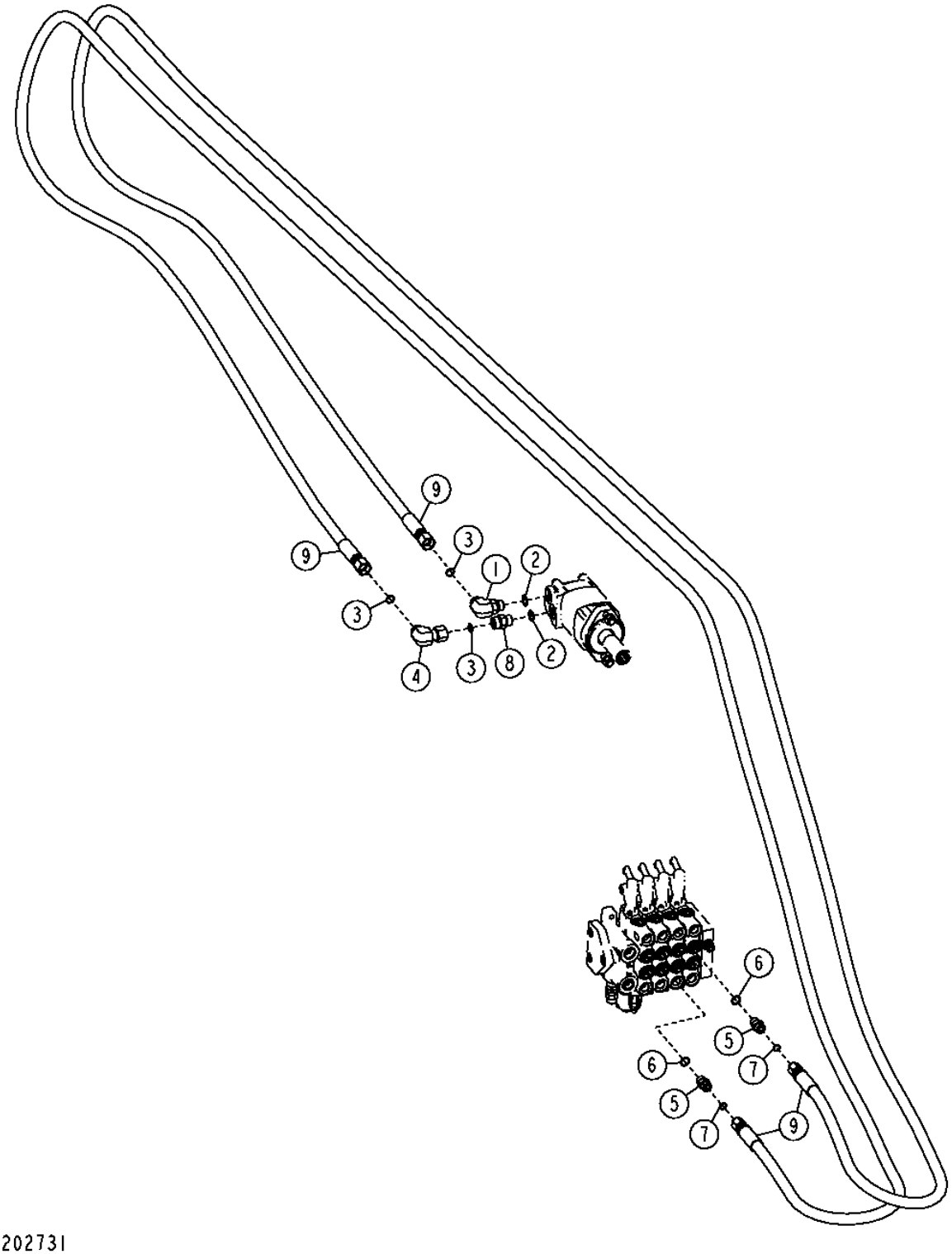

CIRCLE ROTATE MOTOR HYDRAULIC HOSES

KEY	PART NO.	PART NAME	QTY	SERIAL NO.	670D	672D	REMARKS
1	38H1006	ELBOW FITTING	1		X	X	
2	R26906	O-RING	2		X	X	
3	T77932	O-RING	3		X	X	
4	38H1096	ELBOW FITTING	1		X	X	
5	38H1161	ADAPTER	2		X	X	
6	R26375	O-RING	2		X	X	
7	T77857	O-RING	2		X	X	
8	38H1162	ADAPTER	1		X	X	
9	AT304862	HYDRAULIC HOSE - FABRICATE	2		X	X	

CIRCLE SIDESHIFT CYLINDER HYDRAULIC HOSES

T202733 -UN-07SEP04

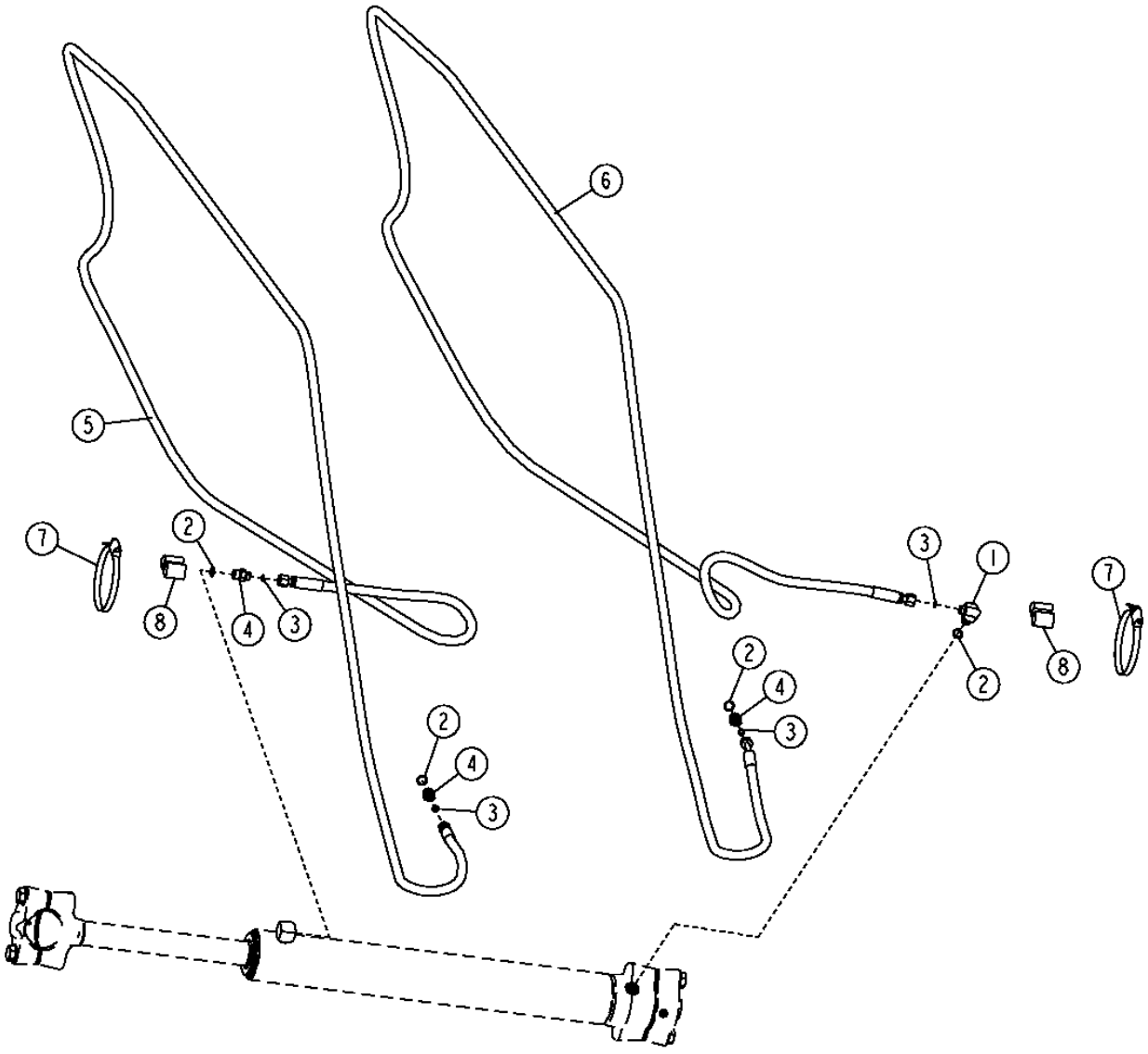

T202733

CIRCLE SIDESHIFT CYLINDER HYDRAULIC HOSES

KEY	PART NO.	PART NAME	QTY	SERIAL NO.	670D	672D	REMARKS
1	38H1010	ELBOW FITTING	1		X	X	
2	R26375	O-RING	4		X	X	
3	T77613	O-RING	4		X	X	
4	38H1171	ADAPTER	3		X	X	
5	AT305548	HYDRAULIC HOSE - FABRICATE	1		X	X	
6	AT305769	HYDRAULIC HOSE - FABRICATE	1		X	X	
7	C16054	CLAMP	2		X	X	
8	T105773	GUIDE	2		X	X	

FRONT MOUNTED SCARIFIER

T204191 -UN-19NOV04

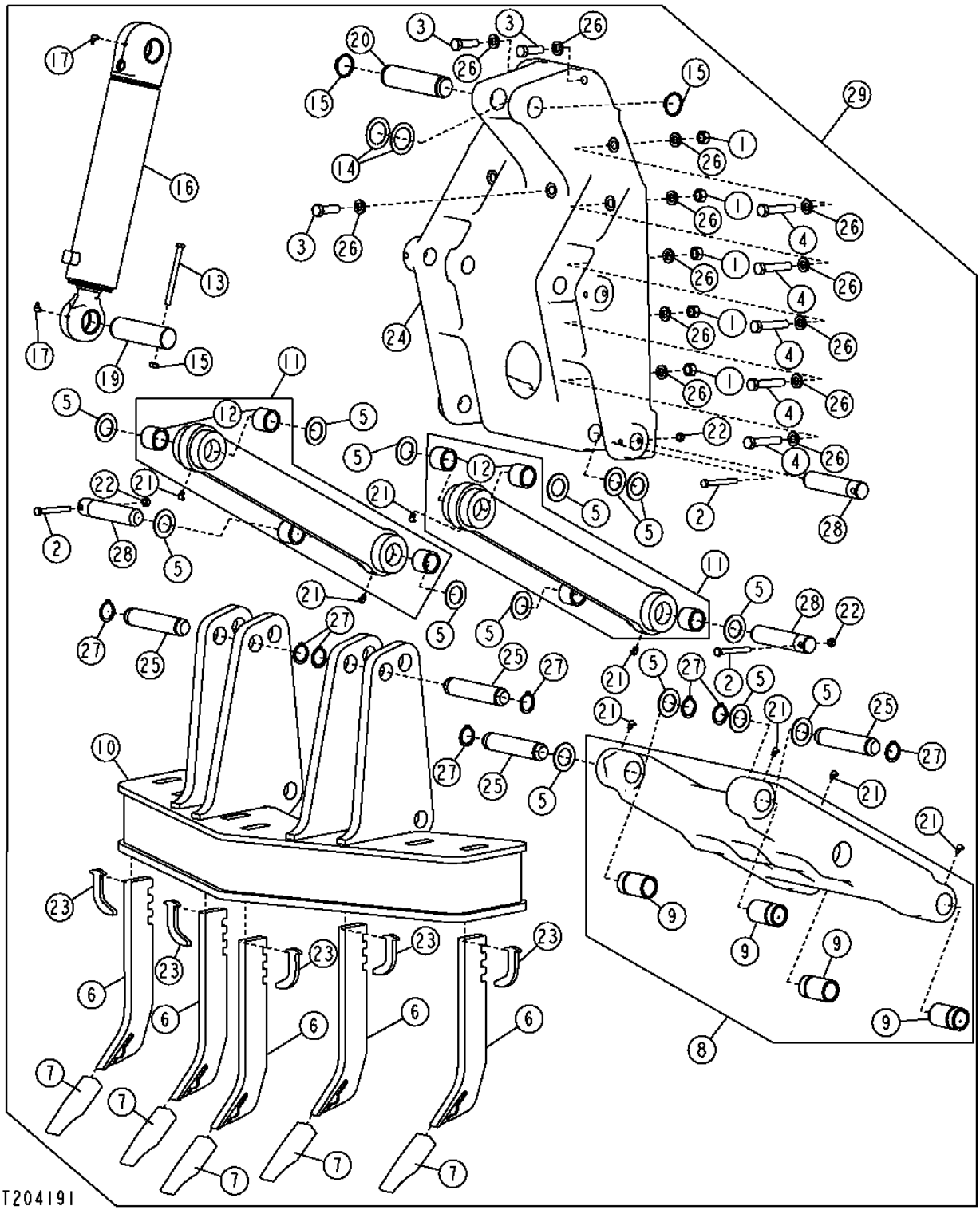

FRONT MOUNTED SCARIFIER

KEY	PART NO.	PART NAME	QTY	SERIAL NO.	670D	672D	REMARKS
1	14H1058	NUT	10		X	X	3/4"
2	19H3586	CAP SCREW	4		X	X	1/2" X 4-1/4", (WHOLEGOODS)
3	19H2411	CAP SCREW	3		X	X	3/4" X 2-1/2"
4	19H3196	CAP SCREW	10		X	X	3/4" X 4"
5	24H1571	WASHER	16		X	X	
6	T114792	SHANK	1		X	X	
7	T6Y5230	TOOTH	1		X	X	
8	AT162731	SCARIFIER BOOM	1		X	X	
9	T59506	BUSHING	4		X	X	
10	AT168327	SCARIFIER ATTACHMENT	1		X	X	
11	AT302889	LINK	2		X	X	
12	T25875	BUSHING	4		X	X	
13	19H3535	CAP SCREW	1		X	X	1/2" X 6"
14	24H1679	WASHER	2		X	X	
15	40M7066	SNAP RING	2		X	X	
16	AH212650	HYDRAULIC CYLINDER	1		X	X	(COMPONENTS ON SEPARATE PAGE)
17	JD7799	LUBRICATION FITTING	2		X	X	
19	T125945	PIN FASTENER	1		X	X	
20	T142485	PIN	1		X	X	
21	JD7781	LUBRICATION FITTING	8		X	X	
22	K40014	LOCK NUT	4		X	X	
23	T104223	RETAINER	5		X	X	
24	T147700	BRACKET	1		X	X	
25	T152047	PIN	4		X	X	
26	T17776	WASHER	23		X	X	(SUB FOR T17776)
27	U12167	SNAP RING	8		X	X	
28	U41528	PIN FASTENER	1		X	X	
29	**AT317749**	**KIT**	**1**		**X**	**X**	**(WHOLEGOODS) (FRONT MOUNTED SCARIFIER KIT)**

SCARIFIER CYLINDER

T204186 -UN-10NOV04

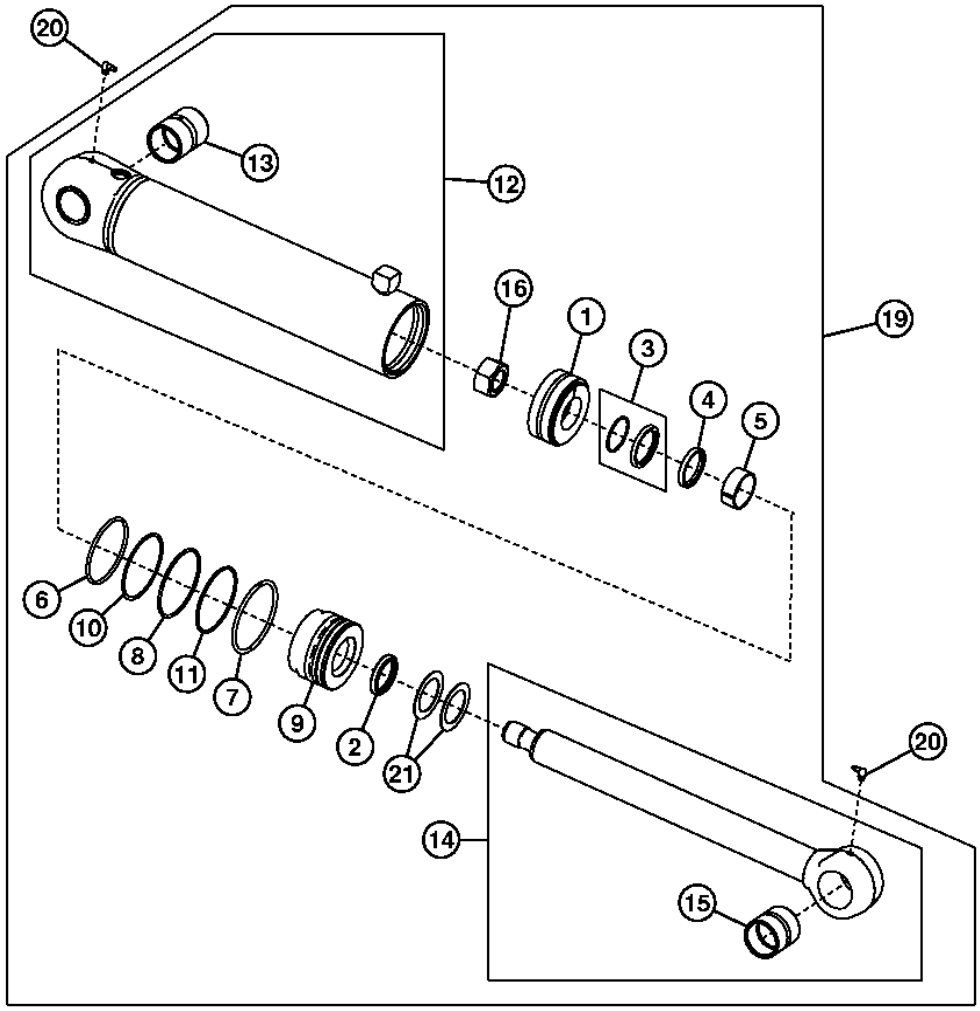

18 2,3,4,5,17

T204186

SCARIFIER CYLINDER

KEY	PART NO.	PART NAME	QTY	SERIAL NO.	670D	672D	REMARKS
1	AH168884	PISTON	1		X	X	
2	AH146558	SEAL	1		X	X	
3	AH146562	SEAL	1		X	X	
4	H152204	SEAL	1		X	X	
5	H152795	WEAR RING	1		X	X	
6	R83578	O-RING	1		X	X	
7	H179659	SNAP RING	1		X	X	
8	H180100	SNAP RING	1		X	X	
9	H210841	HYDR. CYLINDER ROD GUIDE	1		X	X	
10	R79001	BACK-UP RING	1		X	X	
11	U10746	O-RING	1		X	X	
12	AH212657	HYDRAULIC CYLINDER BARREL	1		X	X	
13	R82075	BUSHING	1		X	X	
14	.....	ROD	1		X	X	(SUB AH212650)
15	R82076	BUSHING	1		X	X	
16	H170541	LOCK NUT	1		X	X	
17	H155630	SEAL	1		X	X	(WIPER INSTALLATION TOOL)(NOT ILLUSTRATED)
18	AH149814	HYDRAULIC CYLINDER KIT	1		X	X	(ROD SEAL KIT)
19	AH212650	HYDRAULIC CYLINDER	1		X	X	(SCARIFIER CYLINDER)
20	JD7799	LUBRICATION FITTING	2		X	X	
21	24H1697	WASHER	2		X	X	

REAR RIPPER/SCARIFIER AND RIPPER TEETH

T204198 -UN-03DEC04

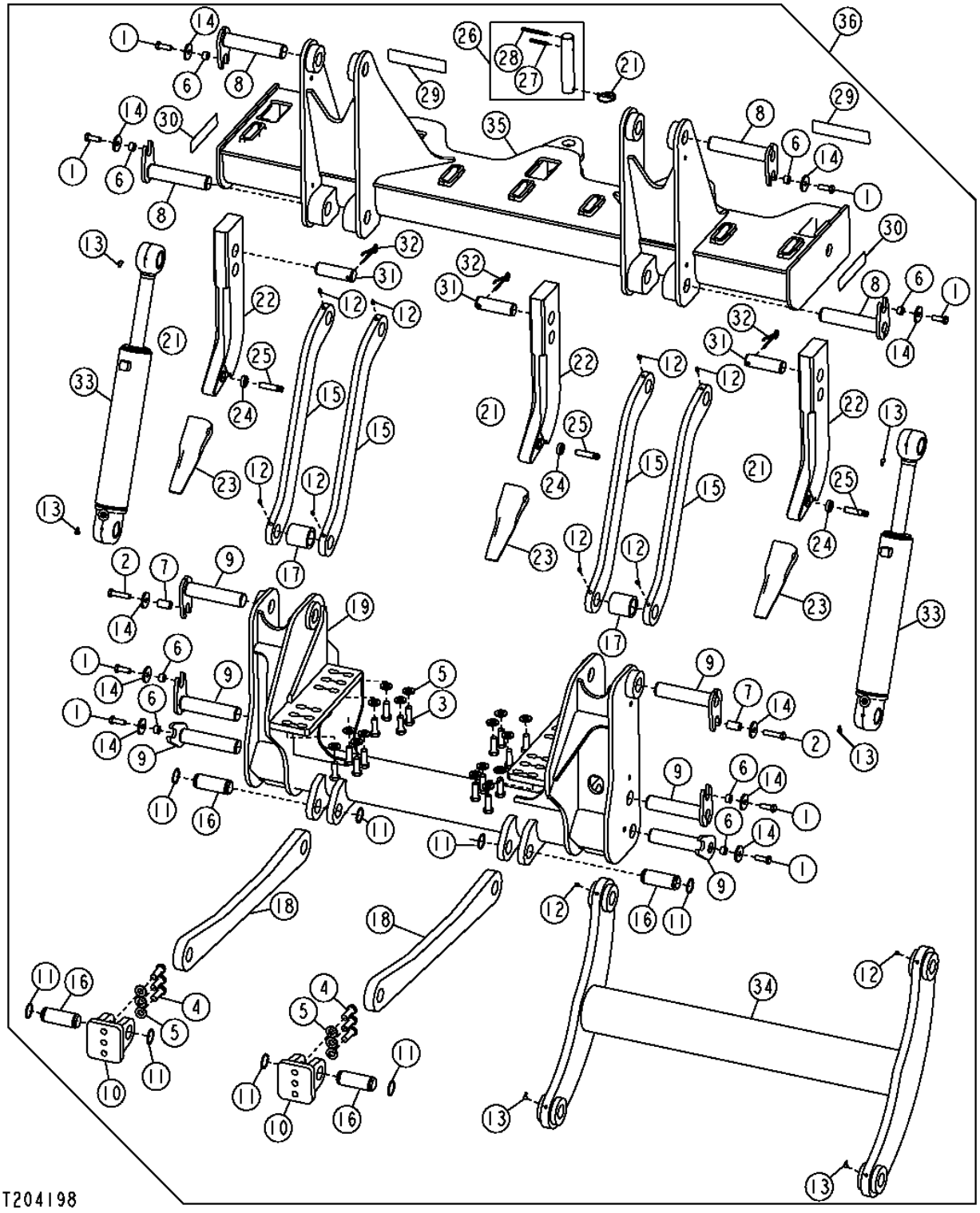

REAR RIPPER/SCARIFIER AND RIPPER TEETH

KEY	PART NO.	PART NAME	QTY	SERIAL NO.	670D	672D	REMARKS
1	19M7489	CAP SCREW	8		X	X	M16 X 45
2	19M7719	CAP SCREW	2		X	X	M16 X 70
3	19M8002	CAP SCREW	16		X	X	M20 X 55
4	19M8224	CAP SCREW	6		X	X	M20 X 60
5	24M7242	WASHER	22		X	X	21.400 X 42 X 5 MM
6	28H3401	SPACER	8		X	X	
7	28H3415	BUSHING	2		X	X	
8	AT166094	PIN	4		X	X	
9	AT166095	PIN	6		X	X	
10	AT175786	BRACKET	2		X	X	
11	E52817	SNAP RING	8		X	X	
12	JD7798	LUBRICATION FITTING	10		X	X	
13	JD7799	LUBRICATION FITTING	6		X	X	
14	T146246	WASHER	10		X	X	(SUB AH212650)
15	T149818	PLATE	4		X	X	
16	T149822	PIN	4		X	X	
17	T153019	SPACER	2		X	X	(WIPER INSTALLATION TOOL)(NOT ILLUSTRATED)
18	T204905	PLATE	2		X	X	(ROD SEAL KIT)
19	AT306509	FRAME	1		X	X	(SCARIFIER CYLINDER)
21	AR83396	QUICK LOCK PIN	1		X	X	
22	T211749	SHANK	3		X	X	
23	T6Y0309	TOOTH	3		X	X	
24	T8E6359	RETAINER	3		X	X	
25	T9W2668	PIN	3		X	X	
26	AT186723	PIN FASTENER	1		X	X	
27	34H358	SPRING PIN	1		X	X	
28	34H363	SPRING PIN	1		X	X	
29	JD5920	REFLECTOR	2		X	X	
30	JD5921	REFLECTOR	2		X	X	
31	T108521	PIN	3		X	X	
32	T108524	PIN	3		X	X	
33	AH212649	HYDRAULIC CYLINDER	2		X	X	
34	AT306503	SIDEBOOM	1		X	X	
35	**AT160581**	**KIT**	**1**		**X**	**X**	
36	**AT306505**	**KIT**	**1**		**X**	**X**	

REAR RIPPER/SCARIFIER HYDRAULIC CYLINDER

T201463 -UN-06JUL04

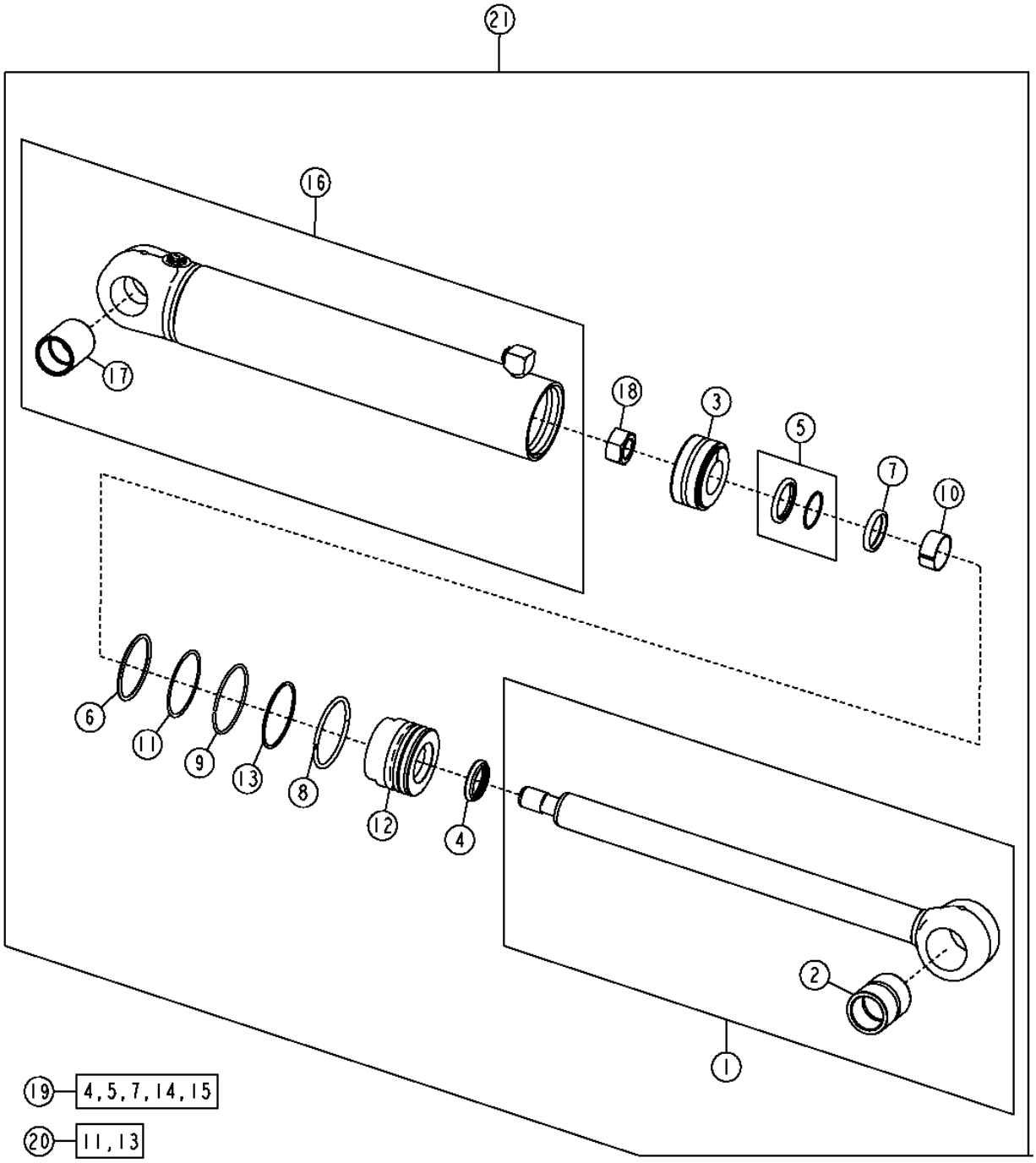

REAR RIPPER/SCARIFIER HYDRAULIC CYLINDER

KEY	PART NO.	PART NAME	QTY	SERIAL NO.	670D	672D	REMARKS
1	AH144879	HYDRAULIC CYLINDER ROD	1		X	X	
2	R81971	BUSHING	1		X	X	
3	AH205062	PISTON	1		X	X	
4	AH146557	SEAL	1		X	X	
5	AH146561	SEAL	1		X	X	
6	F950R	O-RING	1		X	X	
7	H152203	SEAL	1		X	X	
8	H180080	SNAP RING	1		X	X	
9	H180094	SNAP RING	1		X	X	
10	H208987	WEAR RING	1		X	X	
11	R81862	BACK-UP RING	1		X	X	
12	H208995	HYDR. CYLINDER ROD GUIDE	1		X	X	
13	.....	O-RING	1		X	X	(SUB AH212102)
14	H154856	WEAR RING	1		X	X	(NOT ILLUSTRATED)
15	H208987	WEAR RING	1		X	X	
16	AH212656	HYDRAULIC CYLINDER BARREL	1		X	X	
17	R81968	BUSHING	1		X	X	
18	H170539	NUT	1		X	X	
19	AH210484	HYDRAULIC CYLINDER KIT	1		X	X	(ROD SEAL KIT)
20	AH212102	HYDRAULIC CYLINDER KIT	1		X	X	(BORE SEAL KIT)
21	AH212649	HYDRAULIC CYLINDER	1		X	X	(RIPPER CYLINDER)

REAR SCARIFIER TEETH

T204200 -UN-28OCT04

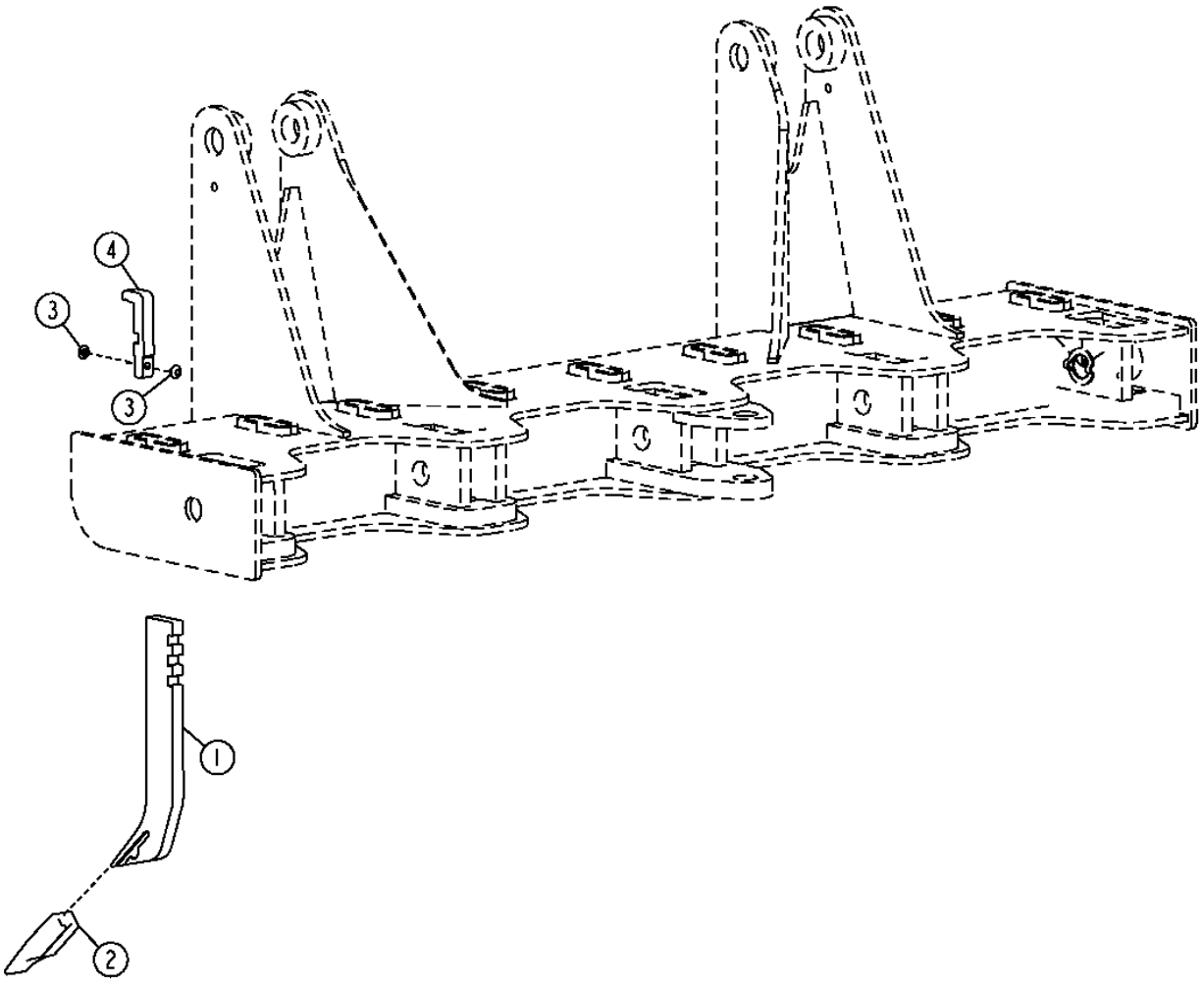

T204200

REAR SCARIFIER TEETH

KEY	PART NO.	PART NAME	QTY	SERIAL NO.	670D	672D	REMARKS
1	T114792	SHANK	9		X	X	
2	T6Y5230	TOOTH	9		X	X	
3	T150347	PLUG	18		X	X	
4	T204018	RETAINER	6		X	X	

FRONT MOUNTED EQUIPMENT HYDRAULIC HOSES

T202723 -UN-07SEP04

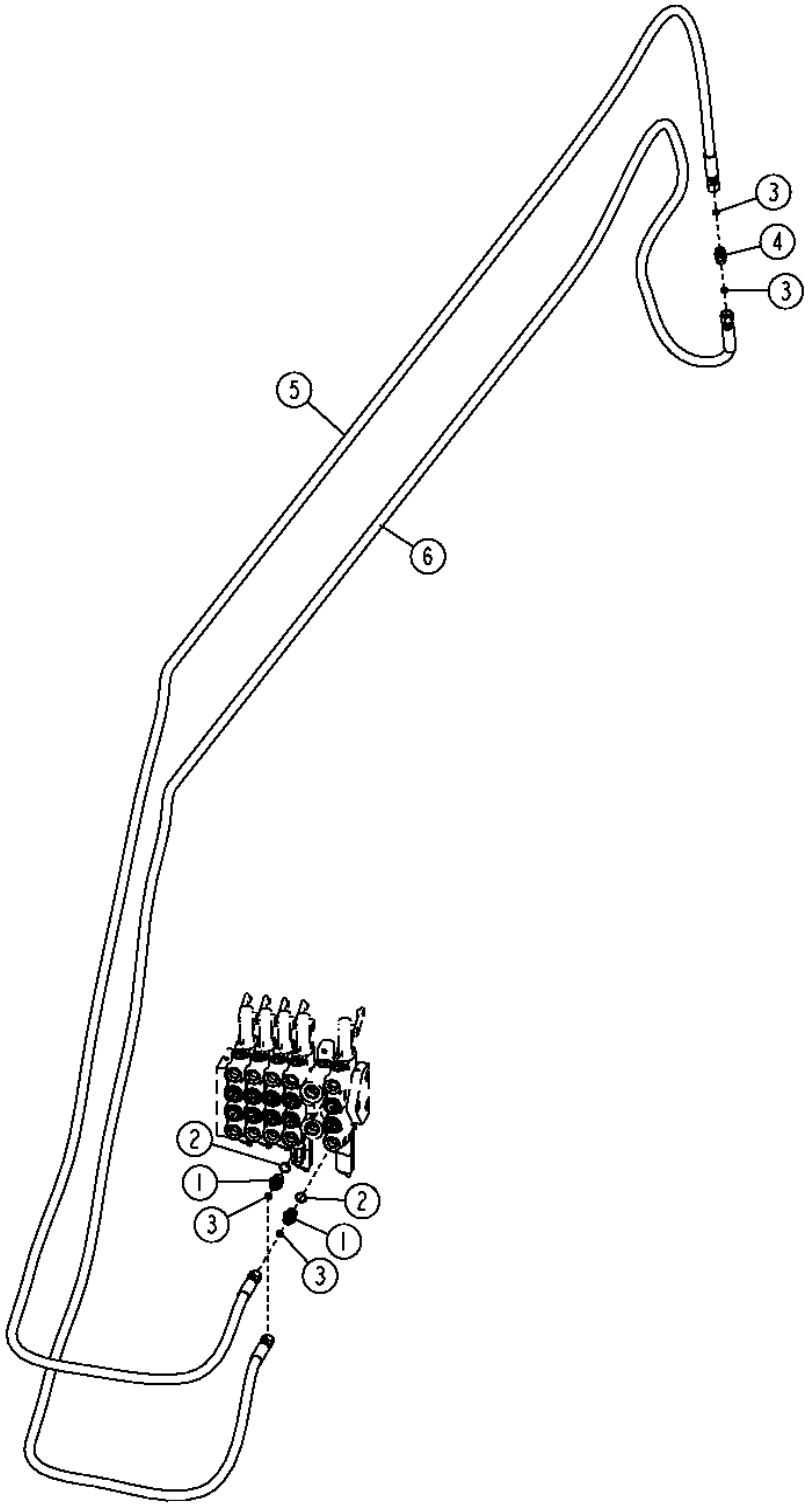

FRONT MOUNTED EQUIPMENT HYDRAULIC HOSES

KEY	PART NO.	PART NAME	QTY	SERIAL NO.	670D	672D	REMARKS
1	38H1171	ADAPTER	2		X	X	
2	R26375	O-RING	2		X	X	
3	T77613	O-RING	4		X	X	
4	38H1278	UNION FITTING	1		X	X	
5	AT305770	HYDRAULIC HOSE - FABRICATE	1		X	X	
6	AT305771	HYDRAULIC HOSE - FABRICATE	1		X	X	

FRONT SCARIFIER HYDRAULIC HOSES

T203169 -UN-19NOV04

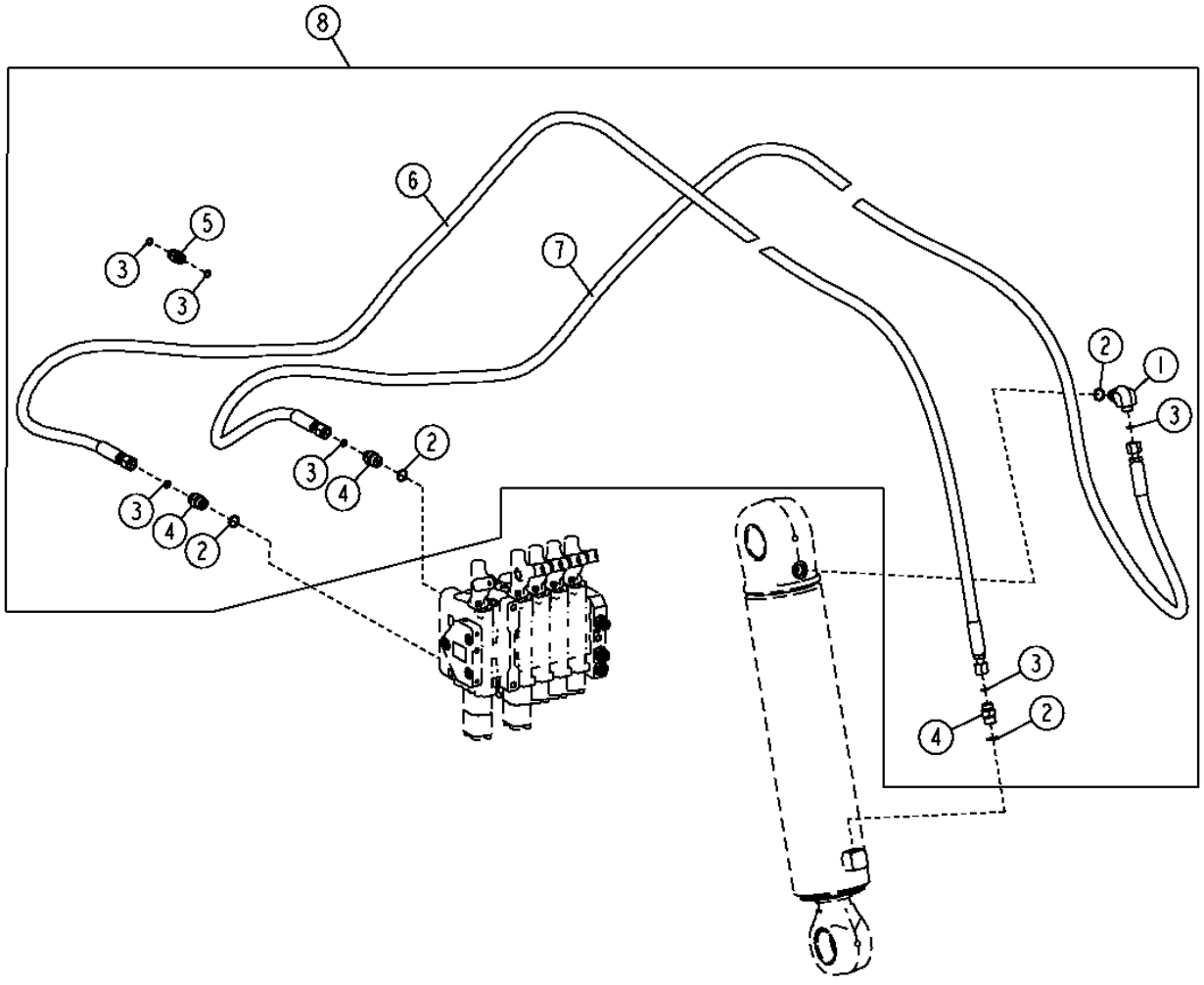

T203169

FRONT SCARIFIER HYDRAULIC HOSES

KEY	PART NO.	PART NAME	QTY	SERIAL NO.	670D	672D	REMARKS
1	38H1010	ELBOW FITTING	1		X	X	
2	R26375	O-RING	2		X	X	
3	T77613	O-RING	3		X	X	
4	38H1171	ADAPTER	3		X	X	
5	38H1278	UNION FITTING	1		X	X	
6	AT305770	HYDRAULIC HOSE - FABRICATE	1		X	X	
7	AT305771	HYDRAULIC HOSE - FABRICATE	1		X	X	
8	**AT318528**	**KIT**	**1**		**X**	**X**	**(WHOLEGOODS) (FRONT SCARIFIER HYDRAULIC HOSE KIT)**

REAR RIPPER/REAR SCARIFIER HYDRAULIC HOSES

T204377 -UN-22NOV04

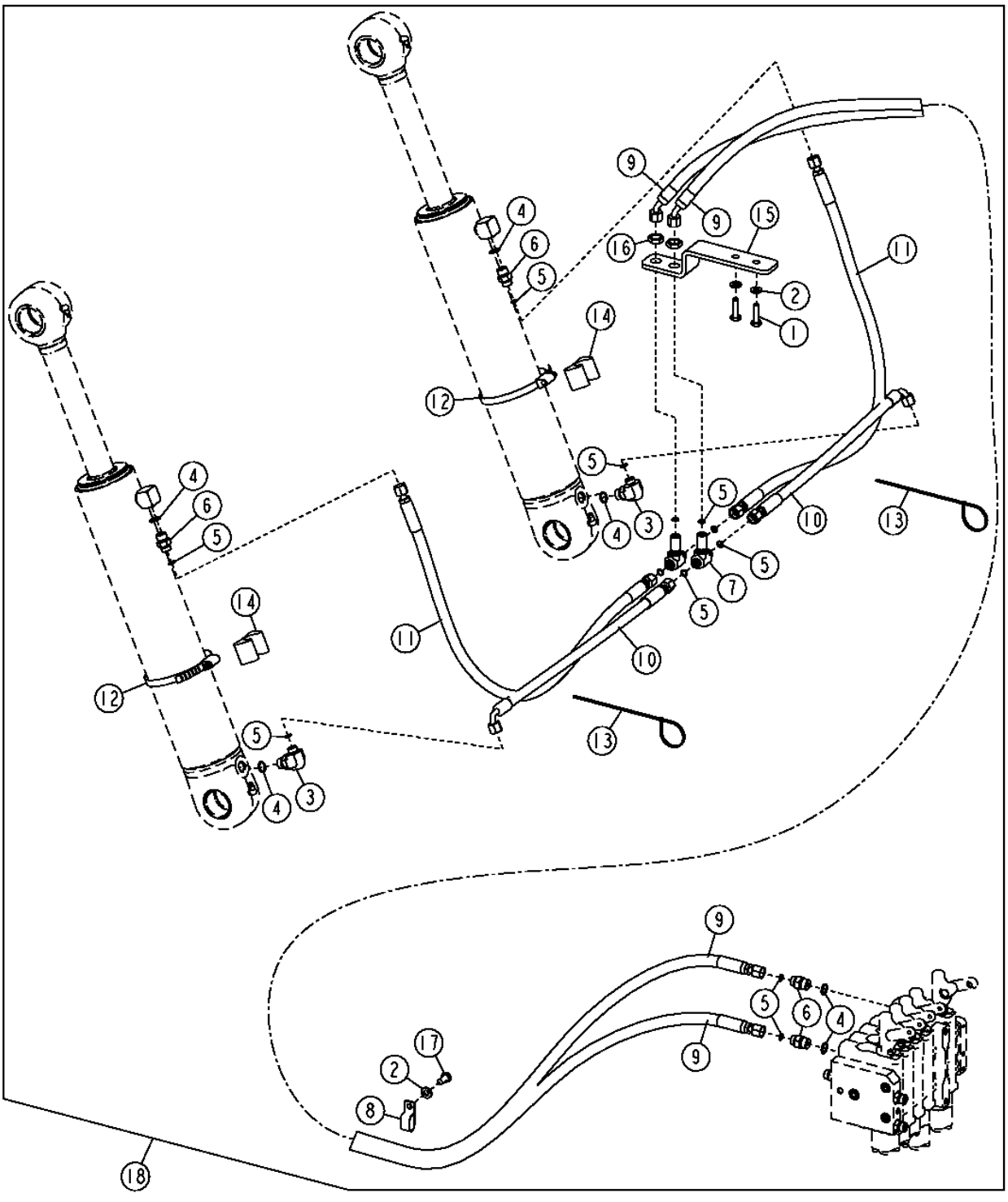

REAR RIPPER/REAR SCARIFIER HYDRAULIC HOSES

KEY	PART NO.	PART NAME	QTY	SERIAL NO.	670D	672D	REMARKS
1	19M7550	CAP SCREW	2		X	X	M10 X 35
2	24M7239	WASHER	2		X	X	10.700 X 21 X 2.500 MM
3	38H1010	ELBOW FITTING	2		X	X	
4	R26375	O-RING	6		X	X	
5	T77613	O-RING	12		X	X	
6	38H1171	ADAPTER	4		X	X	
7	38H1291	TEE FITTING	2		X	X	
8	AH97280	CLIP	1		X	X	
9	AT306388	HYDRAULIC HOSE - FABRICATE	2		X	X	
10	AT307458	HYDRAULIC HOSE - FABRICATE	2		X	X	
11	AT307459	HYDRAULIC HOSE - FABRICATE	2		X	X	
12	C16054	CLAMP	2		X	X	
13	H77698	TIE BAND	2		X	X	
14	T105773	GUIDE	2		X	X	
15	T205713	BRACKET	1		X	X	
16	T81029	NUT	2		X	X	
17	19M7938	CAP SCREW	1		X	X	M10 X 20
18	**AT318529**	**KIT**	**1**		**X**	**X**	**(WHOLEGOODS)(RIPPER/REAR SCARIFIER PLUMBING)**

MEMORANDA

NUMERICAL INDEX

PART NO.	GRID	KEY	PAGE
AA31281	1F13	19	0341 - 3
AE53905	1K4	19	0512 - 3
AH106982	1K18	25	0560 - 3
AH125760	1C6	8	0210 - 8
AH125760	1E18	14	0260 - 37
AH136453	3E12	17	3460 - 11
AH139128	2B5	1	0960 - 3
AH140072	2B11	6	0960 - 9
AH141183	3E8	1	3460 - 7
AH141183	3E10	1	3460 - 9
AH144879	3F13	1	4240 - 9
AH146556	3E12	1	3460 - 11
AH146557	2B5	3	0960 - 3
AH146557	2B7	13	0960 - 5
AH146557	2B9	12	0960 - 7
AH146557	3E8	2	3460 - 7
AH146557	3E10	2	3460 - 9
AH146557	3E14	2	3460 - 13
AH146557	3F13	4	4240 - 9
AH146558	3F9	2	4240 - 5
AH146560	3E12	2	3460 - 11
AH146561	2B5	10	0960 - 3
AH146561	2B7	22	0960 - 5
AH146561	2B9	20	0960 - 7
AH146561	3E14	3	3460 - 13
AH146561	3F13	5	4240 - 9
AH146562	3F9	3	4240 - 5
AH147976	2B11	7	0960 - 9
AH149813	3E12	18	3460 - 11
AH149814	3F9	18	4240 - 5
AH150452	2B11	8	0960 - 9
AH161589	2B11	20	0960 - 9
AH164325	2B11	21	0960 - 9
AH168200	2B7	12	0960 - 5
AH168884	3F9	1	4240 - 5
AH205062	2B5	11	0960 - 3
AH205062	2B7	23	0960 - 5
AH205062	2B9	21	0960 - 7
AH205062	3E14	1	3460 - 13
AH205062	3F13	3	4240 - 9
AH208859	2B7	5	0960 - 5
AH208873	3E8	20	3460 - 7
AH208875	3E10	20	3460 - 9
AH209121	3B9	6	2160 - 7
AH210184	3E8	9	3460 - 7
AH210184	3E8	10	3460 - 7
AH210184	3E10	9	3460 - 9
AH210184	3E10	10	3460 - 9
AH210484	2B5	16	0960 - 3
AH210484	2B7	27	0960 - 5
AH210484	2B9	27	0960 - 7
AH210484	3E8	18	3460 - 7
AH210484	3E10	18	3460 - 9
AH210484	3E14	20	3460 - 13
AH210484	3F13	19	4240 - 9
AH212097	3E8	11	3460 - 7
AH212097	3E8	19	3460 - 7
AH212097	3E10	11	3460 - 9
AH212097	3E10	19	3460 - 9
AH212097	3E12	8	3460 - 11
AH212097	3E12	19	3460 - 11
AH212101	2B5	14	0960 - 3
AH212102	2B5	17	0960 - 3
AH212102	2B7	15	0960 - 5
AH212102	2B7	17	0960 - 5
AH212102	2B7	28	0960 - 5
AH212102	2B9	15	0960 - 7
AH212102	2B9	28	0960 - 7
AH212102	3E14	10	3460 - 13
AH212102	3E14	21	3460 - 13
AH212102	3F13	13	4240 - 9
AH212102	3F13	20	4240 - 9
AH212473	2B9	25	0960 - 7
AH212494	2B5	20	0960 - 3
AH212500	2B7	25	0960 - 5
AH212502	3E10	12	3460 - 9
AH212503	3E8	12	3460 - 7
AH212545	2B9	23	0960 - 7
AH212649	3F11	33	4240 - 7
AH212649	3F13	21	4240 - 9
AH212650	3F7	16	4240 - 3
AH212650	3F9	14	4240 - 5
AH212650	3F9	19	4240 - 5
AH212650	3F11	14	4240 - 7
AH212656	3F13	16	4240 - 9
AH212657	3F9	12	4240 - 5
AH212811	3E14	23	3460 - 13
AH212812	3E14	12	3460 - 13
AH212900	3E12	20	3460 - 11
AH212901	3E12	12	3460 - 11
AH215390	2B11	3	0960 - 9
AH215391	2B11	19	0960 - 9
AH61472	2C9	9	1111 - 5
AH64349	3C22	38	2163 - 7
AH64349	3C24	38	2163 - 9
AH75162	1E6	11	0260 - 25
AH75162	1E10	11	0260 - 29
AH77714	1E16	10	0260 - 35
AH77714	1F5	3	0315 - 3
AH77714	1F13	5	0341 - 3
AH77714	1K2	47	0510 - 7
AH77714	3C22	59	2163 - 7
AH77869	2D8	24	1671 - 3
AH77869	2I12	3	1830 - 3
AH89557	1K2	6	0510 - 7
AH89557	1K18	33	0560 - 3
AH89557	2E14	9	1674 - 15
AH97280	3C18	9	2163 - 3
AH97280	3F21	8	4260 - 11
AL114275	2G12	1	1810 - 9
AL153660	2G8	4	1810 - 5
AL153660	2G10	3	1810 - 7
AL153661	2G8	4	1810 - 5
AL153661	2G10	3	1810 - 7
AL58295	2E18	3	1674 - 19
AL76568	2J2	8	1830 - 19
AN208022	1D14	3	0260 - 9
AN208024	1D16	14	0260 - 11
AR21836	1F13	6	0341 - 3
AR21836	1K2	7	0510 - 7
AR21836	2C4	5	1060 - 5
AR21837	2C18	2	1369 - 3
AR21839	1E2	4	0260 - 21
AR21839	1E10	12	0260 - 29
AR21839	1K2	8	0510 - 7
AR21841	1K2	9	0510 - 7
AR28236	1K18	26	0560 - 3
AR40418	1K2	11	0510 - 7
AR43705	1K14	2	0530 - 3
AR44361	1K10	6	0520 - 3
AR48369	1J18	7	0505 - 3
AR48675	1I18	19	0418 - 3
AR61533	1J10	4	0433 - 2
AR62936	2I16	16	1830 - 9
AR65507	1H15	9	0403 - 1
AR75527	1B24	25	0201 - 5
AR83396	2D3	4	1511 - 3
AR83396	3F11	21	4240 - 7
AR83434	2I18	17	1830 - 11
AR85327	1K10	3	0520 - 3
AR85519	1J2	9	0420 - 7
AR89602	1K10	4	0520 - 3
AR94517	1G16	9	0350 - 29
AT101224	1C13	2	0230 - 3
AT101224	1C19	7	0240 - 3
AT101565	1E16	11	0260 - 35
AT101565	3D4	13	2164 - 5
AT103567	1B7	2	0110 - 7
AT105289	1K2	12	0510 - 7
AT105608	1B9	2	0110 - 9
AT106154	2F2	5	1674 - 27
AT106397	2I8	1	1821 - 9
AT106413	2G8	6	1810 - 5
AT107738	1K16	5	0540 - 3
AT112769	2C22	1	1370 - 3
AT116970	2G8	5	1810 - 5
AT116970	2G10	4	1810 - 7
AT120461	2J24	5	2004 - 5
AT124317	2C4	6	1060 - 5
AT125801	2I8	2	1821 - 9
AT125805	2I8	4	1821 - 9
AT125829	2I8	6	1821 - 9
AT135758	2D22	9	1673 - 11
AT135758	2D24	6	1673 - 13
AT135758	2E2	8	1673 - 15
AT13740	1H17	2	0404 - 3
AT139434	3C14	7	2160 - 43
AT145341	1J20	6	0505 - 5
AT145341	2E8	9	1674 - 7
AT145650	1E6	13	0260 - 25
AT145650	1E10	12	0260 - 29
AT147011	3C14	2	2160 - 43
AT150024	2C2	6	1060 - 3
AT150112	2C2	8	1060 - 3
AT151476	1K14	1	0530 - 3
AT157226	2J16	6	2002 - 3
AT157226	2J18	4	2002 - 5
AT158292	2F21	6	1747 - 3
AT160480	2F2	6	1674 - 27
AT160581	3F11	35	4240 - 7
AT161638	3D4	2	2164 - 5
AT162731	3F7	8	4240 - 3
AT162848	2I24	15	1830 - 17
AT163872	2I22	6	1830 - 15
AT164240	2F21	1	1747 - 3
AT165288	2G14	6	1810 - 11
AT166094	3F11	8	4240 - 7
AT166095	3F11	9	4240 - 7
AT166150	3E24	13	3460 - 23
AT168327	3F7	10	4240 - 3
AT168543	2I22	12	1830 - 15
AT169451	3D25	1	3450 - 3
AT169451	3E2	1	3450 - 5
AT169452	3D25	2	3450 - 3
AT169452	3E2	2	3450 - 5
AT169864	2B11	22	0960 - 9
AT169874	1C15	34	0230 - 5
AT169875	1C15	14	0230 - 5
AT169948	3E4	3	3460 - 3
AT169949	3E4	3	3460 - 3
AT170005	2G14	7	1810 - 11

NUMERICAL INDEX - CONTINUED

PART NO.	GRID	KEY	PAGE
AT170854	1K16	6	0540 - 3
AT173174	1D16	8	0260 - 11
AT173192	2G8	9	1810 - 5
AT173192	2G10	5	1810 - 7
AT173192	2G12	3	1810 - 9
AT173313	2I4	2	1821 - 5
AT173313	2I4	17	1821 - 5
AT173313	2I4	18	1821 - 5
AT173313	2I4	19	1821 - 5
AT173314	2I4	3	1821 - 5
AT173315	2I4	4	1821 - 5
AT173321	2I4	11	1821 - 5
AT173321	2I4	12	1821 - 5
AT173321	2I4	29	1821 - 5
AT173321	2I4	30	1821 - 5
AT173321	2I4	31	1821 - 5
AT173321	2I4	40	1821 - 5
AT173610	1K2	13	0510 - 7
AT173971	2F9	15	1740 - 3
AT174363	1J24	21	0510 - 5
AT174366	1J24	22	0510 - 5
AT174480	1K10	5	0520 - 3
AT174697	2I12	4	1830 - 3
AT174935	1F7	10	0315 - 5
AT175436	2I8	7	1821 - 9
AT175548	2D8	9	1671 - 3
AT175549	2D8	5	1671 - 3
AT175786	3F11	10	4240 - 7
AT175953	2B9	6	0960 - 7
AT175957	3C20	9	2163 - 5
AT176011	1K18	27	0560 - 3
AT176047	1K16	7	0540 - 3
AT176384	3D4	14	2164 - 5
AT177142	2C9	10	1111 - 5
AT177661	1B5	2	0110 - 5
AT177869	2D8	6	1671 - 3
AT177870	2D8	21	1671 - 3
AT177950	3D4	3	2164 - 5
AT178515	1K10	7	0520 - 3
AT178516	1K10	8	0520 - 3
AT178517	1K10	9	0520 - 3
AT178542	1K10	10	0520 - 3
AT179875	3E24	14	3460 - 23
AT179925	1J24	14	0510 - 5
AT179947	1J24	16	0510 - 5
AT180115	1J24	24	0510 - 5
AT180119	1G25	18	0360 - 3
AT180126	2I6	30	1821 - 7
AT180126	2I8	9	1821 - 9
AT180135	2I8	10	1821 - 9
AT180144	1J24	23	0510 - 5
AT180301	2B13	10	0960 - 11
AT180814	1D14	6	0260 - 9
AT180923	1F7	11	0315 - 5
AT180935	1D24	25	0260 - 19
AT180936	1D24	30	0260 - 19
AT180964	1D24	63	0260 - 19
AT180965	1D22	66	0260 - 17
AT180965	1D24	66	0260 - 19
AT180966	1D22	67	0260 - 17
AT180966	1D24	67	0260 - 19
AT181162	1K2	14	0510 - 7
AT181313	2C2	7	1060 - 3
AT181392	2I6	36	1821 - 7
AT183612	2C9	11	1111 - 5
AT184015	1K12	4	0520 - 5
AT184016	1K12	4	0520 - 5
AT184409	3E2	46	3450 - 5
AT184413	3E2	49	3450 - 5
AT184413	3E2	50	3450 - 5
AT184618	1J20	7	0505 - 5
AT184684	1F7	12	0315 - 5
AT184868	1D14	4	0260 - 9
AT184869	1D14	15	0260 - 9
AT185695	1K18	2	0560 - 3
AT186653	2B3	14	0930 - 3
AT186723	2D3	5	1511 - 3
AT186723	3F11	26	4240 - 7
AT187021	2C2	8	1060 - 3
AT187114	1D2	25	0250 - 5
AT187114	1D12	38	0260 - 7
AT187115	1D2	11	0250 - 5
AT187117	1C25	20	0250 - 3
AT187119	1C25	19	0250 - 3
AT187234	2D3	8	1511 - 3
AT188217	1E10	13	0260 - 29
AT188624	1D8	2	0260 - 3
AT188625	1D8	1	0260 - 3
AT188662	1D12	6	0260 - 7
AT188681	2G12	2	1810 - 9
AT188759	2J14	7	2001 - 3
AT189052	1K12	7	0520 - 5
AT189390	2J20	2	2003 - 3
AT189487	2J20	3	2003 - 3
AT190417	1B11	2	0110 - 11
AT190539	3D25	36	3450 - 3
AT190809	2I24	16	1830 - 17
AT191095	1E14	4	0260 - 33
AT191102	2I18	18	1830 - 11
AT191160	1E16	12	0260 - 35
AT191178	2I20	36	1830 - 13
AT191214	1D18	13	0260 - 13
AT191260	1C17	4	0230 - 7
AT191260	1C21	10	0240 - 5
AT191261	1C17	11	0230 - 7
AT191261	1C21	7	0240 - 5
AT191299	1C17	8	0230 - 7
AT191299	1C21	4	0240 - 5
AT191366	3B5	12	2160 - 3
AT191367	3B5	17	2160 - 3
AT191368	3B5	19	2160 - 3
AT191369	3B5	18	2160 - 3
AT191371	3B5	71	2160 - 3
AT191505	1D10	22	0260 - 5
AT191506	1D10	15	0260 - 5
AT191639	1E18	15	0260 - 37
AT191724	1D10	21	0260 - 5
AT191725	1D10	6	0260 - 5
AT191728	1D10	24	0260 - 5
AT191729	1D10	1	0260 - 5
AT191730	1D10	23	0260 - 5
AT191739	1C17	7	0230 - 7
AT191739	1C21	2	0240 - 5
AT191742	2I24	17	1830 - 17
AT191879	1E10	14	0260 - 29
AT192055	1D14	23	0260 - 9
AT192114	1D10	18	0260 - 5
AT192380	2B13	10	0960 - 11
AT192493	1K16	9	0540 - 3
AT193500	2I20	27	1830 - 13
AT193805	1C21	1	0240 - 5
AT193864	1C25	18	0250 - 3
AT193866	1B13	2	0110 - 13
AT193885	1C13	15	0230 - 3
AT193948	1E6	26	0260 - 25
AT194405	1C19	4	0240 - 3
AT194472	1D8	3	0260 - 3
AT194555	1D18	14	0260 - 13
AT194587	1K4	17	0512 - 3
AT194588	1K4	18	0512 - 3
AT194596	1D16	16	0260 - 11
AT194773	1K4	26	0512 - 3
AT194815	1D18	15	0260 - 13
AT194842	1B15	2	0110 - 15
AT194965	1K4	27	0512 - 3
AT194980	1E10	19	0260 - 29
AT194982	1E10	19	0260 - 29
AT194983	1E10	19	0260 - 29
AT194983	1E20	8	0260 - 39
AT194986	1E20	1	0260 - 39
AT194988	1E20	2	0260 - 39
AT194989	1E20	9	0260 - 39
AT194990	1E20	3	0260 - 39
AT194991	1E20	4	0260 - 39
AT195057	1D20	44	0260 - 15
AT195060	1D24	42	0260 - 19
AT195062	1D20	26	0260 - 15
AT195063	1D20	12	0260 - 15
AT195064	1D24	79	0260 - 19
AT195065	1D22	48	0260 - 17
AT195066	1D22	6	0260 - 17
AT195068	1D22	61	0260 - 17
AT195069	1D24	64	0260 - 19
AT195073	1D24	6	0260 - 19
AT195074	1D24	21	0260 - 19
AT195075	1D24	41	0260 - 19
AT195124	1D24	95	0260 - 19
AT195125	1D22	96	0260 - 17
AT195133	1D22	90	0260 - 17
AT195285	1E18	16	0260 - 37
AT195301	2F2	15	1674 - 27
AT195302	2F2	16	1674 - 27
AT195440	2I6	6	1821 - 7
AT195441	2I2	7	1821 - 3
AT195441	2I6	7	1821 - 7
AT195442	2I2	8	1821 - 3
AT195442	2I6	8	1821 - 7
AT195723	1D16	13	0260 - 11
AT195860	3C14	5	2160 - 43
AT195880	1C23	3	0240 - 7
AT195898	3C14	6	2160 - 43
AT195900	3C14	1	2160 - 43
AT195917	3C12	1	2160 - 41
AT195918	3C12	10	2160 - 41
AT195921	1D14	21	0260 - 9
AT195922	1D14	22	0260 - 9
AT196249	1E2	2	0260 - 21
AT196250	1E2	4	0260 - 21
AT196252	1E2	8	0260 - 21
AT196253	1E2	1	0260 - 21
AT196254	1E2	3	0260 - 21
AT196256	1E2	7	0260 - 21
AT196346	3B5	14	2160 - 3
AT196351	3E20	12	3460 - 19
AT196462	1D14	13	0260 - 9
AT196522	2G18	3	1810 - 15
AT196538	1J20	8	0505 - 5
AT196745	1D12	14	0260 - 7
AT196760	3E20	12	3460 - 19
AT196943	3B9	2	2160 - 7
AT197057	3E6	1	3460 - 5

NUMERICAL INDEX - CONTINUED

PART NO.	GRID	KEY	PAGE
AT197098	1E2	5	0260 - 21
AT197420	3B5	16	2160 - 3
AT197488	1E6	24	0260 - 25
AT197613	1B13	1	0110 - 13
AT197844	1B15	1	0110 - 15
AT197906	3E6	20	3460 - 5
AT197907	3E6	10	3460 - 5
AT197908	3E6	21	3460 - 5
AT197924	3E6	23	3460 - 5
AT198028	1D12	24	0260 - 7
AT198029	1D12	46	0260 - 7
AT198270	1K2	15	0510 - 7
AT198322	1D22	8	0260 - 17
AT198516	1D12	14	0260 - 7
AT198517	1C15	7	0230 - 5
AT199018	1F11	1	0325 - 3
AT199076	3B5	48	2160 - 3
AT199084	1C11	3	0225 - 3
AT199388	2J14	8	2001 - 3
AT199626	1E20	14	0260 - 39
AT199661	1C11	2	0225 - 3
AT199999	1C17	9	0230 - 7
AT203566	1J20	9	0505 - 5
AT206818	1J20	10	0505 - 5
AT206878	2D16	1	1673 - 5
AT207529	2C2	10	1060 - 3
AT208137	1K10	11	0520 - 3
AT208483	2I4	5	1821 - 5
AT208484	2I4	6	1821 - 5
AT208485	2I4	7	1821 - 5
AT208486	2I4	8	1821 - 5
AT208487	2I4	9	1821 - 5
AT208487	2I4	20	1821 - 5
AT208487	2I4	21	1821 - 5
AT208487	2I4	22	1821 - 5
AT208487	2I4	23	1821 - 5
AT208487	2I4	24	1821 - 5
AT208488	2I4	15	1821 - 5
AT208488	2I4	36	1821 - 5
AT208488	2I4	37	1821 - 5
AT208490	2I4	10	1821 - 5
AT208490	2I4	25	1821 - 5
AT208490	2I4	26	1821 - 5
AT208490	2I4	27	1821 - 5
AT208490	2I4	28	1821 - 5
AT208491	2I4	11	1821 - 5
AT208491	2I4	32	1821 - 5
AT208493	2I4	44	1821 - 5
AT208531	2I2	30	1821 - 3
AT208531	2I4	1	1821 - 5
AT209020	2I2	9	1821 - 3
AT209020	2I6	9	1821 - 7
AT209021	2I2	10	1821 - 3
AT209021	2I6	10	1821 - 7
AT209022	2I2	15	1821 - 3
AT209022	2I6	15	1821 - 7
AT209024	2I2	17	1821 - 3
AT209024	2I6	17	1821 - 7
AT209025	2I2	19	1821 - 3
AT209025	2I6	19	1821 - 7
AT209026	2I2	21	1821 - 3
AT209026	2I6	21	1821 - 7
AT209225	2I2	23	1821 - 3
AT209225	2I6	23	1821 - 7
AT209469	2I4	13	1821 - 5
AT209469	2I4	33	1821 - 5
AT209469	2I4	34	1821 - 5
AT209469	2I4	35	1821 - 5
AT210333	2D16	2	1673 - 5
AT211041	2D12	2	1672 - 5
AT214801	1D16	3	0260 - 11
AT216348	3C14	4	2160 - 43
AT219974	1K18	28	0560 - 3
AT22070	2K2	2	2005 - 3
AT22073	2K2	3	2005 - 3
AT221019	2I2	25	1821 - 3
AT221019	2I6	25	1821 - 7
AT221020	2I2	26	1821 - 3
AT221020	2I6	26	1821 - 7
AT221021	2I2	28	1821 - 3
AT221021	2I6	28	1821 - 7
AT221696	2J5	12	1910 - 3
AT223537	2C7	10	1111 - 3
AT223584	1E6	18	0260 - 25
AT224248	2I2	6	1821 - 3
AT224497	2C7	5	1111 - 3
AT224574	3B9	7	2160 - 7
AT224576	2C7	4	1111 - 3
AT224703	3E22	2	3460 - 21
AT224863	2C7	2	1111 - 3
AT224864	2C7	3	1111 - 3
AT224864	3B9	4	2160 - 7
AT224864	3E22	4	3460 - 21
AT224873	1C6	14	0210 - 8
AT224873	2C7	7	1111 - 3
AT224894	2F4	3	1674 - 29
AT225573	2C4	17	1060 - 5
AT226282	2J22	1	2004 - 3
AT226446	1H2	2	0360 - 5
AT226447	1H2	3	0360 - 5
AT226520	3D19	2	3440 - 5
AT226676	2I4	14	1821 - 5
AT226676	2I4	38	1821 - 5
AT226676	2I4	39	1821 - 5
AT226676	2I4	41	1821 - 5
AT226676	2I4	42	1821 - 5
AT226676	2I4	43	1821 - 5
AT227063	2D20	10	1673 - 9
AT227279	3D4	5	2164 - 5
AT227441	3D4	6	2164 - 5
AT227668	2I16	19	1830 - 9
AT227669	2I16	20	1830 - 9
AT227717	2B3	15	0930 - 3
AT228826	2J5	10	1910 - 3
AT25226	1B3	1	0110 - 3
AT25226	1B5	1	0110 - 5
AT25226	1B7	1	0110 - 7
AT25226	1B9	1	0110 - 9
AT25226	1B11	1	0110 - 11
AT280244	3B5	16	2160 - 3
AT280296	2E16	3	1674 - 17
AT280297	2E16	4	1674 - 17
AT280508	1C21	3	0240 - 5
AT280583	2I6	35	1821 - 7
AT280631	2I24	18	1830 - 17
AT300167	2D10	13	1672 - 3
AT300684	2D10	14	1672 - 3
AT300744	1K16	10	0540 - 3
AT300859	3C22	39	2163 - 7
AT300859	3C24	39	2163 - 9
AT301034	1K18	29	0560 - 3
AT301133	1K18	30	0560 - 3
AT301226	3B21	2	2160 - 25
AT301227	3B21	3	2160 - 25
AT301673	3D23	6	3440 - 9
AT302098	1E6	12	0260 - 25
AT302104	1F7	13	0315 - 5
AT302105	1F7	14	0315 - 5
AT302150	3B9	9	2160 - 7
AT302166	2B21	8	0960 - 19
AT302175	2B21	9	0960 - 19
AT302283	3B11	2	2160 - 11
AT302284	3B11	1	2160 - 11
AT302285	3B11	4	2160 - 11
AT302286	3B11	3	2160 - 11
AT302287	3B11	8	2160 - 11
AT302288	3B11	7	2160 - 11
AT302388	1F7	6	0315 - 5
AT302401	2F9	5	1740 - 3
AT302515	1J20	11	0505 - 5
AT302520	2J14	9	2001 - 3
AT302544	3C10	18	2160 - 39
AT302638	2E10	12	1674 - 9
AT302661	3B5	70	2160 - 3
AT302662	3B5	70	2160 - 3
AT302730	2F2	7	1674 - 27
AT302731	1K6	2	0515 - 3
AT302732	1K6	3	0515 - 3
AT302769	2F2	8	1674 - 27
AT302794	2I14	2	1830 - 5
AT302797	2F4	3	1674 - 29
AT302819	1K16	11	0540 - 3
AT302889	3F7	11	4240 - 3
AT302906	3D2	4	2164 - 3
AT302907	3B9	3	2160 - 7
AT302908	3B9	5	2160 - 7
AT302918	3E20	14	3460 - 19
AT302918	3E22	5	3460 - 21
AT302919	3E22	1	3460 - 21
AT302927	1E18	17	0260 - 37
AT302953	2I20	8	1830 - 13
AT303129	3C16	4	2160 - 45
AT303240	3D9	3	3401 - 3
AT303282	3D9	3	3401 - 3
AT303296	3D9	3	3401 - 3
AT303325	3E18	11	3460 - 17
AT303467	2J2	9	1830 - 19
AT303469	2J2	10	1830 - 19
AT303489	2B21	13	0960 - 19
AT303518	2I6	32	1821 - 7
AT303536	3E18	11	3460 - 17
AT303539	1E12	11	0260 - 31
AT303600	3E18	12	3460 - 17
AT303670	2F11	1	1740 - 5
AT303678	3C16	5	2160 - 45
AT303744	2H12	43	1810 - 33
AT303745	2H14	44	1810 - 35
AT303748	2H12	43	1810 - 33
AT303749	2H14	44	1810 - 35
AT303799	1C6	14	0210 - 8
AT303854	1C15	16	0230 - 5
AT303855	1C15	35	0230 - 5
AT303859	2E18	4	1674 - 19
AT303865	2J2	11	1830 - 19
AT303896	2E24	3	1674 - 25
AT303926	2G12	4	1810 - 9
AT304023	2E18	5	1674 - 19
AT304024	2E18	6	1674 - 19
AT304026	2F2	9	1674 - 27
AT304098	2G18	1	1810 - 15
AT304099	2G18	13	1810 - 15

NUMERICAL INDEX - CONTINUED

PART NO.	GRID	KEY	PAGE
AT304144	3C22	40	2163 - 7
AT304144	3C24	40	2163 - 9
AT304147	3C22	41	2163 - 7
AT304147	3C24	41	2163 - 9
AT304148	3E16	5	3460 - 15
AT304149	3E16	6	3460 - 15
AT304150	3E18	8	3460 - 17
AT304151	3E18	9	3460 - 17
AT304295	2D20	5	1673 - 9
AT304327	1F7	15	0315 - 5
AT304373	3E24	15	3460 - 23
AT304479	2C2	17	1060 - 3
AT304480	2C2	23	1060 - 3
AT304615	1C17	1	0230 - 7
AT304630	2G8	10	1810 - 5
AT304630	2G10	6	1810 - 7
AT304633	2G8	11	1810 - 5
AT304633	2G10	7	1810 - 7
AT304634	2G8	11	1810 - 5
AT304634	2G10	7	1810 - 7
AT304635	2G8	10	1810 - 5
AT304635	2G10	6	1810 - 7
AT304638	2J18	10	2002 - 5
AT304788	2E22	4	1674 - 23
AT304794	2B13	11	0960 - 11
AT304862	3F2	9	3460 - 25
AT304888	3C22	42	2163 - 7
AT304888	3C24	42	2163 - 9
AT304953	2E10	13	1674 - 9
AT304967	3C24	43	2163 - 9
AT304974	2C9	12	1111 - 5
AT304996	2C9	13	1111 - 5
AT305018	2H20	14	1810 - 41
AT305048	1G25	14	0360 - 3
AT305049	1G25	17	0360 - 3
AT305051	2H20	11	1810 - 41
AT305052	2H20	12	1810 - 41
AT305053	1E16	21	0260 - 35
AT305054	3E20	24	3460 - 19
AT305055	3E20	13	3460 - 19
AT305057	1K4	28	0512 - 3
AT305070	2H20	13	1810 - 41
AT305110	3B5	9	2160 - 3
AT305110	3B5	20	2160 - 3
AT305193	2K4	2	2007 - 3
AT305277	3C22	43	2163 - 7
AT305297	2H20	16	1810 - 41
AT305310	2H20	19	1810 - 41
AT305363	3D17	7	3440 - 3
AT305384	2F2	1	1674 - 27
AT305385	2E10	14	1674 - 9
AT305386	2E10	14	1674 - 9
AT305387	2E12	2	1674 - 11
AT305389	2E22	10	1674 - 23
AT305397	2H20	22	1810 - 41
AT305398	1F7	16	0315 - 5
AT305406	2G22	9	1810 - 19
AT305406	2G24	9	1810 - 21
AT305414	2G20	1	1810 - 17
AT305416	2G20	1	1810 - 17
AT305433	1F7	25	0315 - 5
AT305437	2I2	32	1821 - 3
AT305505	1E4	2	0260 - 23
AT305506	1E6	30	0260 - 25
AT305507	1E6	2	0260 - 25
AT305508	1E6	19	0260 - 25
AT305509	1E4	4	0260 - 23
AT305510	1E4	3	0260 - 23
AT305512	1E4	1	0260 - 23
AT305513	1E6	25	0260 - 25
AT305524	2I16	23	1830 - 9
AT305529	1K18	32	0560 - 3
AT305547	2J2	12	1830 - 19
AT305548	3F4	5	3460 - 27
AT305624	2B17	5	0960 - 15
AT305625	2B17	6	0960 - 15
AT305627	2C4	7	1060 - 5
AT305628	3C18	10	2163 - 3
AT305630	3C18	11	2163 - 3
AT305639	1B22	6	0201 - 3
AT305663	2G12	5	1810 - 9
AT305667	2H22	14	1810 - 43
AT305667	2H24	14	1810 - 45
AT305698	2G12	6	1810 - 9
AT305734	2H20	47	1810 - 41
AT305738	3C18	12	2163 - 3
AT305739	2C4	8	1060 - 5
AT305740	2C4	9	1060 - 5
AT305741	2C4	10	1060 - 5
AT305768	2B13	12	0960 - 11
AT305769	3F4	6	3460 - 27
AT305770	3F17	5	4260 - 7
AT305770	3F19	6	4260 - 9
AT305771	3F17	6	4260 - 7
AT305771	3F19	7	4260 - 9
AT305831	1E16	13	0260 - 35
AT305832	1E12	12	0260 - 31
AT305833	1E12	13	0260 - 31
AT305834	1E16	14	0260 - 35
AT305854	2F6	1	1675 - 3
AT305869	2I16	24	1830 - 9
AT305916	3C22	44	2163 - 7
AT305926	2E2	7	1673 - 15
AT305927	2E4	10	1674 - 3
AT305928	2E14	10	1674 - 15
AT305929	2E16	5	1674 - 17
AT305930	2E16	6	1674 - 17
AT305931	2D22	5	1673 - 11
AT305931	2E2	9	1673 - 15
AT305932	2D24	4	1673 - 13
AT305934	2D18	4	1673 - 7
AT305935	2D18	4	1673 - 7
AT305936	2E6	4	1674 - 5
AT305939	2H22	15	1810 - 43
AT305939	2H24	15	1810 - 45
AT305981	3D4	1	2164 - 5
AT305991	2B19	5	0960 - 17
AT305992	2B19	6	0960 - 17
AT306056	2J2	13	1830 - 19
AT306111	2C20	3	1369 - 5
AT306124	1K18	5	0560 - 3
AT306133	2C20	9	1369 - 5
AT306154	2B15	7	0960 - 13
AT306155	2B15	8	0960 - 13
AT306156	2B15	9	0960 - 13
AT306162	3D13	8	3401 - 7
AT306162	3D15	10	3401 - 9
AT306163	3D13	8	3401 - 7
AT306163	3D15	10	3401 - 9
AT306180	2E10	15	1674 - 9
AT306181	2H12	10	1810 - 33
AT306181	2H14	10	1810 - 35
AT306335	2D22	8	1673 - 11
AT306340	3E20	15	3460 - 19
AT306341	3E20	16	3460 - 19
AT306350	2K6	2	2007 - 5
AT306365	2E8	10	1674 - 7
AT306388	3F21	9	4260 - 11
AT306446	3E24	16	3460 - 23
AT306503	3F11	34	4240 - 7
AT306505	3F11	36	4240 - 7
AT306509	3F11	19	4240 - 7
AT306536	2J11	7	1921 - 3
AT306539	2J7	13	1910 - 5
AT306605	1E16	22	0260 - 35
AT306612	2D14	7	1673 - 3
AT306632	2D14	8	1673 - 3
AT306681	1J18	8	0505 - 3
AT306682	1J18	9	0505 - 3
AT306749	2C4	16	1060 - 5
AT306771	2J5	15	1910 - 3
AT306772	2J5	16	1910 - 3
AT306816	2F15	6	1746 - 3
AT306846	2F15	1	1746 - 3
AT306847	2F17	1	1746 - 5
AT306848	2H8	6	1810 - 29
AT306848	2H10	7	1810 - 31
AT306851	2I24	19	1830 - 17
AT306944	2F19	8	1746 - 7
AT306953	2J11	8	1921 - 3
AT306973	2J11	9	1921 - 3
AT306974	2J11	11	1921 - 3
AT307001	1J24	17	0510 - 5
AT307011	1J24	18	0510 - 5
AT307011	1K2	18	0510 - 7
AT307045	1G25	15	0360 - 3
AT307045	3D2	5	2164 - 3
AT307054	1J18	11	0505 - 3
AT307090	2D16	5	1673 - 5
AT307096	2H12	45	1810 - 33
AT307096	2H14	45	1810 - 35
AT307165	1H4	5	0363 - 3
AT307200	1F9	2	0315 - 7
AT307220	3C20	10	2163 - 5
AT307231	3C20	11	2163 - 5
AT307263	3C20	6	2163 - 5
AT307275	2F13	6	1740 - 7
AT307299	3C22	45	2163 - 7
AT307299	3C24	45	2163 - 9
AT307300	3C22	46	2163 - 7
AT307300	3C24	46	2163 - 9
AT307326	3D21	12	3440 - 7
AT307343	1K2	16	0510 - 7
AT307344	1K2	17	0510 - 7
AT307351	2J24	6	2004 - 5
AT307361	1K18	1	0560 - 3
AT307458	3F21	10	4260 - 11
AT307459	3F21	11	4260 - 11
AT307501	2I18	21	1830 - 11
AT307581	1G25	11	0360 - 3
AT307582	1G25	12	0360 - 3
AT307588	1G25	13	0360 - 3
AT307591	1J24	19	0510 - 5
AT307592	2I24	20	1830 - 17
AT307628	2F2	2	1674 - 27
AT307650	2G22	10	1810 - 19
AT307650	2G24	10	1810 - 21
AT307666	2I24	21	1830 - 17
AT307667	2I24	22	1830 - 17
AT307707	1E18	19	0260 - 37
AT307723	2J11	12	1921 - 3

NUMERICAL INDEX - CONTINUED

PART NO.	GRID	KEY	PAGE
AT307730	3D13	1	3401 - 7
AT307731	3D13	1	3401 - 7
AT307732	3D15	1	3401 - 9
AT307733	3D15	1	3401 - 9
AT307760	1D18	16	0260 - 13
AT307775	1D18	19	0260 - 13
AT307779	2G12	11	1810 - 9
AT307780	2D14	9	1673 - 3
AT307807	2E4	11	1674 - 3
AT307807	2E4	12	1674 - 3
AT307810	2E10	16	1674 - 9
AT307811	3B9	1	2160 - 7
AT307845	3E24	17	3460 - 23
AT307847	2I24	23	1830 - 17
AT308017	2I16	22	1830 - 9
AT308073	1E2	6	0260 - 21
AT308110	2J11	14	1921 - 3
AT308196	2G6	1	1810 - 3
AT308197	2G6	1	1810 - 3
AT308199	2I2	3	1821 - 3
AT308199	2I6	3	1821 - 7
AT308274	3D2	7	2164 - 3
AT308283	2I18	26	1830 - 11
AT308314	2I16	32	1830 - 9
AT308399	1K4	32	0512 - 3
AT308628	2E22	5	1674 - 23
AT308795	2I2	25	1821 - 3
AT308795	2I6	25	1821 - 7
AT308796	2I2	26	1821 - 3
AT308796	2I6	26	1821 - 7
AT308797	2I2	28	1821 - 3
AT308797	2I6	28	1821 - 7
AT308909	3C22	47	2163 - 7
AT308909	3C24	47	2163 - 9
AT308935	2I16	33	1830 - 9
AT308941	2G24	11	1810 - 21
AT309043	1K4	35	0512 - 3
AT309234	3B11	6	2160 - 11
AT309235	3B11	5	2160 - 11
AT309379	2J11	15	1921 - 3
AT309380	2J11	13	1921 - 3
AT309672	2I18	27	1830 - 11
AT309695	2J7	14	1910 - 5
AT309711	1E16	19	0260 - 35
AT309711	3C22	48	2163 - 7
AT309711	3C24	48	2163 - 9
AT309837	2I16	34	1830 - 9
AT309952	2B13	13	0960 - 11
AT309953	2B21	10	0960 - 19
AT309957	1E6	1	0260 - 25
AT309959	1E6	7	0260 - 25
AT309961	3E24	18	3460 - 23
AT310272	1E6	14	0260 - 25
AT310278	3D9	3	3401 - 3
AT310373	2G6	1	1810 - 3
AT310374	2G6	1	1810 - 3
AT310375	2G6	1	1810 - 3
AT310795	2J2	14	1830 - 19
AT310810	2J2	15	1830 - 19
AT310836	2J7	16	1910 - 5
AT310959	1E18	20	0260 - 37
AT311425	3C22	49	2163 - 7
AT311425	3C24	49	2163 - 9
AT311431	2J5	9	1910 - 3
AT311438	2J5	8	1910 - 3
AT311915	2J5	11	1910 - 3
AT311916	2J5	14	1910 - 3
AT312053	2J5	7	1910 - 3
AT312058	2I24	24	1830 - 17
AT312106	1H2	4	0360 - 5
AT312107	1H2	5	0360 - 5
AT312431	2F19	5	1746 - 7
AT312607	1F5	4	0315 - 3
AT312910	1E10	15	0260 - 29
AT312912	1E10	16	0260 - 29
AT312995	1J22	3	0510 - 3
AT312997	3E20	17	3460 - 19
AT312998	1E6	33	0260 - 25
AT313338	2B3	22	0930 - 3
AT313340	1C19	5	0240 - 3
AT313342	1C13	4	0230 - 3
AT313352	2B3	16	0930 - 3
AT313362	1C13	6	0230 - 3
AT313362	1C19	9	0240 - 3
AT313425	1H4	11	0363 - 3
AT313541	2B3	17	0930 - 3
AT313542	2B3	18	0930 - 3
AT313691	1K4	38	0512 - 3
AT314363	2G22	11	1810 - 19
AT314364	2G22	12	1810 - 19
AT314364	2G24	12	1810 - 21
AT314624	1C13	19	0230 - 3
AT314624	2B5	25	0960 - 3
AT314624	2B7	6	0960 - 5
AT314667	2E18	7	1674 - 19
AT314814	1K8	2	0515 - 5
AT314827	2C2	11	1060 - 3
AT315249	2D24	8	1673 - 13
AT315250	2D24	9	1673 - 13
AT315334	2K8	6	2008 - 3
AT315341	2K8	1	2008 - 3
AT315465	2I18	37	1830 - 11
AT315712	3D21	14	3440 - 7
AT315715	2I2	7	1821 - 3
AT315715	2I6	7	1821 - 7
AT315761	2I2	8	1821 - 3
AT315761	2I6	8	1821 - 7
AT315844	2G20	2	1810 - 17
AT315881	3E20	25	3460 - 19
AT315896	2G20	3	1810 - 17
AT315903	2G18	6	1810 - 15
AT315906	2G18	7	1810 - 15
AT315909	2G18	8	1810 - 15
AT315910	2G18	14	1810 - 15
AT315980	3E20	18	3460 - 19
AT316249	2B21	13	0960 - 19
AT316267	2G20	4	1810 - 17
AT316321	2J9	3	1913 - 3
AT316322	2J9	4	1913 - 3
AT316323	2J9	7	1913 - 3
AT316324	2J9	8	1913 - 3
AT316715	2J7	21	1910 - 5
AT316746	2D3	1	1511 - 3
AT317063	2E10	10	1674 - 9
AT317166	1E6	35	0260 - 25
AT317287	3C8	1	2160 - 37
AT317288	3C8	1	2160 - 37
AT317289	3C8	1	2160 - 37
AT317290	3C8	1	2160 - 37
AT317291	3C8	1	2160 - 37
AT317293	3C8	1	2160 - 37
AT317304	3B15	13	2160 - 19
AT317304	3B21	16	2160 - 25
AT317304	3C2	16	2160 - 31
AT317304	3C4	19	2160 - 33
AT317304	3C6	18	2160 - 35
AT317305	3B15	13	2160 - 19
AT317305	3B17	14	2160 - 21
AT317305	3B19	13	2160 - 23
AT317305	3B21	16	2160 - 25
AT317305	3C4	19	2160 - 33
AT317306	3B23	1	2160 - 27
AT317307	3B25	12	2160 - 29
AT317308	3B21	22	2160 - 25
AT317309	3B21	22	2160 - 25
AT317310	3C6	19	2160 - 35
AT317312	3C6	19	2160 - 35
AT317313	3B19	14	2160 - 23
AT317314	3B17	15	2160 - 21
AT317315	3B15	14	2160 - 19
AT317316	3B15	14	2160 - 19
AT317317	3B15	14	2160 - 19
AT317318	3B15	14	2160 - 19
AT317319	3C4	20	2160 - 33
AT317321	3C2	18	2160 - 31
AT317322	3C4	20	2160 - 33
AT317323	3B25	1	2160 - 29
AT317328	3B15	2	2160 - 19
AT317328	3B19	2	2160 - 23
AT317328	3B21	4	2160 - 25
AT317328	3C2	2	2160 - 31
AT317328	3C4	2	2160 - 33
AT317328	3C6	2	2160 - 35
AT317329	3B23	7	2160 - 27
AT317330	3B25	7	2160 - 29
AT317331	3B23	8	2160 - 27
AT317331	3B25	8	2160 - 29
AT317339	3C10	19	2160 - 39
AT317482	3D21	15	3440 - 7
AT317483	3D21	17	3440 - 7
AT317484	3D21	18	3440 - 7
AT317485	3D21	21	3440 - 7
AT317539	1K12	11	0520 - 5
AT317562	2H4	8	1810 - 25
AT317595	1E8	1	0260 - 27
AT317637	1E8	1	0260 - 27
AT317654	2C2	12	1060 - 3
AT317655	2C2	13	1060 - 3
AT317704	1J24	25	0510 - 5
AT317734	2H24	7	1810 - 45
AT317735	2H24	7	1810 - 45
AT317736	2H24	7	1810 - 45
AT317737	2H22	7	1810 - 43
AT317738	2H24	7	1810 - 45
AT317739	2H22	7	1810 - 43
AT317740	2H22	7	1810 - 43
AT317741	2H22	7	1810 - 43
AT317742	2H22	7	1810 - 43
AT317742	3C10	9	2160 - 39
AT317743	2H24	7	1810 - 45
AT317744	2H22	7	1810 - 43
AT317744	2H24	7	1810 - 45
AT317749	3F7	29	4240 - 3
AT317778	2H22	16	1810 - 43
AT317778	2H24	16	1810 - 45
AT317778	3C10	11	2160 - 39
AT317808	1F14	1	0350 - 1
AT317809	1F14	1	0350 - 1
AT317820	3B17	2	2160 - 21
AT317822	3B21	5	2160 - 25
AT317822	3C2	3	2160 - 31

NUMERICAL INDEX - CONTINUED

PART NO.	GRID	KEY	PAGE
AT317822	3C4	3	2160 - 33
AT317886	1D24	76	0260 - 19
AT317887	1D18	20	0260 - 13
AT317889	1D22	13	0260 - 17
AT317889	1D24	95	0260 - 19
AT317891	1D18	21	0260 - 13
AT317918	1D22	87	0260 - 17
AT317979	2H12	48	1810 - 33
AT317979	2H14	48	1810 - 35
AT317980	2H12	49	1810 - 33
AT317981	2H12	11	1810 - 33
AT317981	2H14	11	1810 - 35
AT317982	2H14	12	1810 - 35
AT317983	2H12	13	1810 - 33
AT317984	2H14	14	1810 - 35
AT317985	2H12	15	1810 - 33
AT318171	1K18	4	0560 - 3
AT318528	3F19	8	4260 - 9
AT318529	3F21	18	4260 - 11
AT318620	2D20	13	1673 - 9
AT318649	1J24	26	0510 - 5
AT318798	2I24	25	1830 - 17
AT318965	2I24	25	1830 - 17
AT318987	2I20	7	1830 - 13
AT319023	3C4	21	2160 - 33
AT319023	3C10	16	2160 - 39
AT319115	1D16	15	0260 - 11
AT319117	1D14	19	0260 - 9
AT319117	1D16	19	0260 - 11
AT320176	1E20	15	0260 - 39
AT320179	1E20	7	0260 - 39
AT320198	1E20	6	0260 - 39
AT320199	1E20	5	0260 - 39
AT320236	2J7	20	1910 - 5
AT320242	1H4	6	0363 - 3
AT320243	1H4	8	0363 - 3
AT320496	2F9	4	1740 - 3
AT322428	2H12	47	1810 - 33
AT322428	2H14	47	1810 - 35
AT322617	3C10	20	2160 - 39
AT322881	2H18	4	1810 - 39
AT37476	1K2	21	0510 - 7
AT37477	1K10	13	0520 - 3
AT37477	3C22	50	2163 - 7
AT37477	3C24	50	2163 - 9
AT38176	2J7	15	1910 - 5
AT38449	2D8	15	1671 - 3
AT40729	1D4	16	0250 - 7
AT41188	2D8	20	1671 - 3
AT41245	3E12	25	3460 - 11
AT43231	1B3	2	0110 - 3
AT44582	1D4	14	0250 - 7
AT44583	1D4	15	0250 - 7
AT47241	3D13	10	3401 - 7
AT47241	3D15	12	3401 - 9
AT53440	1K12	6	0520 - 5
AT56659	3C24	51	2163 - 9
AT57326	1C19	16	0240 - 3
AT62699	2C22	2	1370 - 3
AT62703	2C22	3	1370 - 3
AT68940	1B5	2	0110 - 5
AT72157	1D4	10	0250 - 7
AT78527	3C2	4	2160 - 31
AT78527	3C4	4	2160 - 33
AT78527	3C6	3	2160 - 35
AT78527	3C10	23	2160 - 39
AT79195	2C9	14	1111 - 5
AT83306	1E10	17	0260 - 29
AZ42092	1E10	19	0260 - 29
AZ42092	1E20	14	0260 - 39
A364R	1I15	7	0417 - 1
A4365R	1J10	8	0433 - 2
A4540R	1C3	15	0210 - 5
A48970	2G18	4	1810 - 15
B2976R	2G8	12	1810 - 5
B3690R	1F16	8	0350 - 3
CD16284	1I7	10	0409 - 3
CD16284	1I18	12	0418 - 3
CE17368	1D12	5	0260 - 7
CE17879	3D25	33	3450 - 3
CE17879	3E2	33	3450 - 5
C16054	2B15	10	0960 - 13
C16054	3E16	7	3460 - 15
C16054	3F4	7	3460 - 27
C16054	3F21	12	4260 - 11
DE18970	1C25	21	0250 - 3
DE19507	1D12	37	0260 - 7
D2361R	1H17	1	0404 - 3
E12379	1C13	11	0230 - 3
E12379	1C19	10	0240 - 3
E12379	2C22	4	1370 - 3
E14814	3D25	3	3450 - 3
E14814	3E2	3	3450 - 5
E46066	2J2	17	1830 - 19
E52817	3F11	11	4240 - 7
E55662	1E8	2	0260 - 27
E65288	3B5	63	2160 - 3
E69975	1E16	16	0260 - 35
E69975	3D4	10	2164 - 5
F1430R	3E8	3	3460 - 7
F1430R	3E10	3	3460 - 9
F1430R	3E12	4	3460 - 11
F2310018	1F16	14	0350 - 3
F2310018	1F18	20	0350 - 5
F23303	1F22	34	0350 - 9
F2710616	1F16	1	0350 - 3
F2710616	1F16	13	0350 - 3
F2710616	1F18	1	0350 - 5
F2710616	1F18	19	0350 - 5
F310063	1F22	24	0350 - 9
F3171R	1C3	7	0210 - 5
F3171R	1C5	13	0210 - 7
F3171R	1C5	16	0210 - 7
F3171R	1C5	18	0210 - 7
F3171R	1C5	21	0210 - 7
F3171R	1C6	3	0210 - 8
F3171R	1D6	11	0250 - 9
F37010010	1C6	11	0210 - 8
F37010016	1G22	11	0350 - 35
F37010020	1C6	4	0210 - 8
F37020114	1F22	12	0350 - 9
F37020122	1G22	13	0350 - 35
F37020123	1G22	14	0350 - 35
F37020124	1G22	15	0350 - 35
F37020144	1G4	3	0350 - 17
F37020144	1G6	3	0350 - 19
F37020144	1G8	3	0350 - 21
F37020144	1G10	3	0350 - 23
F37020153	1C6	10	0210 - 8
F37020159	1D18	22	0260 - 13
F37020159	1F22	22	0350 - 9
F37020159	1G23	2	0350 - 36
F37020159	3B5	21	2160 - 3
F37030219	1F16	15	0350 - 3
F37030219	1F18	22	0350 - 5
F37030219	1F24	6	0350 - 13
F37030226	1F16	8	0350 - 3
F37030226	1F18	13	0350 - 5
F37030226	1F22	8	0350 - 9
F37030226	1F24	3	0350 - 13
F37030239	1F22	26	0350 - 9
F37030244G	1G4	20	0350 - 17
F37030244G	1G6	20	0350 - 19
F37030250	1D16	5	0260 - 11
F37030275	1G16	5	0350 - 29
F37060906	1G22	6	0350 - 35
F37060910	1G22	10	0350 - 35
F37060912	1F20	6	0350 - 7
F37060920	1F24	4	0350 - 13
F39000106	3B5	26	2160 - 3
F39000175	1F22	19	0350 - 9
F39000315	1F18	23	0350 - 5
F40110	1G4	16	0350 - 17
F40110	1G6	16	0350 - 19
F40110	1G10	16	0350 - 23
F40111	1F16	4	0350 - 3
F40111	1F18	5	0350 - 5
F40211R	1F18	6	0350 - 5
F431875	1I22	7	0420 - 3
F431875	1I24	10	0420 - 5
F7400014D	1F20	7	0350 - 7
F81696	1G4	18	0350 - 17
F81696	1G6	18	0350 - 19
F81696	1G8	18	0350 - 21
F81696	1G10	18	0350 - 23
F81743	1G4	8	0350 - 17
F81743	1G6	8	0350 - 19
F81743	1G8	7	0350 - 21
F81743	1G10	7	0350 - 23
F85004	1F16	1	0350 - 3
F85006	1G22	6	0350 - 35
F85108	1F18	1	0350 - 5
F85108	1F22	29	0350 - 9
F85112	1F20	6	0350 - 7
F85120	1F16	9	0350 - 3
F85120	1F18	14	0350 - 5
F85120	1F24	4	0350 - 13
F950R	2B5	7	0960 - 3
F950R	2B7	20	0960 - 5
F950R	2B9	18	0960 - 7
F950R	3E14	5	3460 - 13
F950R	3F13	6	4240 - 9
GY20126	2E10	18	1674 - 9
H110232	2H12	16	1810 - 33
H110232	2H14	16	1810 - 35
H113924	2H8	8	1810 - 29
H114865	2I24	28	1830 - 17
H122182	1E6	5	0260 - 25
H131531	2I18	38	1830 - 11
H134114	3C22	64	2163 - 7
H140461	2D20	4	1673 - 9
H140461	2D22	13	1673 - 11
H140461	2G22	7	1810 - 19
H140461	2G24	7	1810 - 21
H140461	2H4	7	1810 - 25
H140461	2J14	6	2001 - 3
H142036	3E8	13	3460 - 7
H142036	3E10	13	3460 - 9
H145104	2B5	2	0960 - 3
H145104	2B7	11	0960 - 5
H145175	3E14	14	3460 - 13

NUMERICAL INDEX - CONTINUED

PART NO.	GRID	KEY	PAGE
H148166	3D4	4	2164 - 5
H150941	1B22	1	0201 - 3
H150956	2B11	17	0960 - 9
H152202	3E12	5	3460 - 11
H152203	2B5	9	0960 - 3
H152203	2B7	21	0960 - 5
H152203	2B9	19	0960 - 7
H152203	3E8	4	3460 - 7
H152203	3E10	4	3460 - 9
H152203	3E14	6	3460 - 13
H152203	3F13	7	4240 - 9
H152204	3F9	4	4240 - 5
H152795	3F9	5	4240 - 5
H154514	2B11	9	0960 - 9
H154856	2B7	26	0960 - 5
H154856	2B9	5	0960 - 7
H154856	3E8	17	3460 - 7
H154856	3E10	17	3460 - 9
H154856	3E14	22	3460 - 13
H154856	3F13	14	4240 - 9
H155629	3E12	3	3460 - 11
H155630	3F9	17	4240 - 5
H155964	2B11	10	0960 - 9
H156058	2B11	11	0960 - 9
H157898	3E12	6	3460 - 11
H164204	2B11	12	0960 - 9
H164205	2B11	13	0960 - 9
H168248	2B5	12	0960 - 3
H168248	3E14	18	3460 - 13
H168249	2B5	13	0960 - 3
H168249	3E14	19	3460 - 13
H170535	2B11	18	0960 - 9
H170538	3E12	14	3460 - 11
H170539	2B5	15	0960 - 3
H170539	2B7	24	0960 - 5
H170539	2B9	22	0960 - 7
H170539	3E8	14	3460 - 7
H170539	3E10	14	3460 - 9
H170539	3F13	18	4240 - 9
H170541	3F9	16	4240 - 5
H171332	2B11	14	0960 - 9
H173411	2G6	2	1810 - 3
H173411	2G22	14	1810 - 19
H173411	2G24	14	1810 - 21
H173411	2H4	9	1810 - 25
H173411	2H20	39	1810 - 41
H173411	2I2	33	1821 - 3
H173411	2I6	33	1821 - 7
H179659	3F9	7	4240 - 5
H180080	2B5	4	0960 - 3
H180080	2B7	16	0960 - 5
H180080	2B9	24	0960 - 7
H180080	3E14	7	3460 - 13
H180080	3F13	8	4240 - 9
H180094	2B5	5	0960 - 3
H180094	2B7	18	0960 - 5
H180094	2B9	16	0960 - 7
H180094	3E14	8	3460 - 13
H180094	3F13	9	4240 - 9
H180100	3F9	8	4240 - 5
H180103	3E8	5	3460 - 7
H180103	3E10	5	3460 - 9
H180103	3E12	7	3460 - 11
H206859	3E8	6	3460 - 7
H206859	3E10	6	3460 - 9
H206859	3E12	9	3460 - 11
H208631	3E8	21	3460 - 7
H208631	3E10	21	3460 - 9
H208987	2B5	8	0960 - 3
H208987	2B7	14	0960 - 5
H208987	2B9	13	0960 - 7
H208987	3E8	7	3460 - 7
H208987	3E10	7	3460 - 9
H208987	3E14	9	3460 - 13
H208987	3F13	10	4240 - 9
H208987	3F13	15	4240 - 9
H208995	2B9	14	0960 - 7
H208995	3E14	4	3460 - 13
H208995	3F13	12	4240 - 9
H208999	3E12	10	3460 - 11
H210841	3F9	9	4240 - 5
H21259	2C12	1	1320 - 3
H23125	1H11	1	0402 - 4
H61354	3C22	19	2163 - 7
H61354	3C24	19	2163 - 9
H77698	1E6	29	0260 - 25
H77698	1E16	17	0260 - 35
H77698	1J18	19	0505 - 3
H77698	1K2	24	0510 - 7
H77698	2B15	12	0960 - 13
H77698	2E8	12	1674 - 7
H77698	2E10	20	1674 - 9
H77698	2E14	11	1674 - 15
H77698	2I24	29	1830 - 17
H77698	2J9	6	1913 - 3
H77698	3F21	13	4260 - 11
H80936	1C13	29	0230 - 3
H80936	1C15	30	0230 - 5
H80936	2B7	7	0960 - 5
H80936	2C22	5	1370 - 3
H85092	2I20	4	1830 - 13
H85233	2J5	13	1910 - 3
H871	1C9	24	0210 - 11
H871R	1C9	24	0210 - 11
JD10024	3D25	4	3450 - 3
JD10144	3D25	5	3450 - 3
JD10144	3E2	5	3450 - 5
JD10423	1D2	24	0250 - 5
JD5756	2C12	2	1320 - 3
JD5822	2C12	3	1320 - 3
JD5920	3F11	29	4240 - 7
JD5921	2C12	4	1320 - 3
JD5921	3F11	30	4240 - 7
JD5929	2K8	9	2008 - 3
JD5938	2C12	31	1320 - 3
JD7759	1C13	12	0230 - 3
JD7759	1C13	28	0230 - 3
JD7759	1C19	11	0240 - 3
JD7759	1C23	2	0240 - 7
JD7759	2B5	26	0960 - 3
JD7759	3D21	24	3440 - 7
JD7771	1D12	2	0260 - 7
JD7781	1B24	13	0201 - 5
JD7781	1C13	27	0230 - 3
JD7781	1C15	31	0230 - 5
JD7781	3D17	9	3440 - 3
JD7781	3D21	25	3440 - 7
JD7781	3F7	21	4240 - 3
JD7782	3D21	26	3440 - 7
JD7797	1C13	14	0230 - 3
JD7797	1C19	12	0240 - 3
JD7797	2C22	6	1370 - 3
JD7798	1C13	18	0230 - 3
JD7798	1D12	22	0260 - 7
JD7798	2B7	8	0960 - 5
JD7798	3E10	24	3460 - 9
JD7798	3E14	26	3460 - 13
JD7798	3F11	12	4240 - 7
JD7799	2B9	7	0960 - 7
JD7799	3E14	27	3460 - 13
JD7799	3F7	17	4240 - 3
JD7799	3F9	20	4240 - 5
JD7799	3F11	13	4240 - 7
JD7838	1B22	23	0201 - 3
JD7844	3E8	24	3460 - 7
JD8240	3D25	6	3450 - 3
JD8240	3E2	6	3450 - 5
JD8255	1C3	12	0210 - 5
JD8272	1B24	4	0201 - 5
JD8962	1D4	9	0250 - 7
JD8989	1B24	3	0201 - 5
JD9021	3D25	7	3450 - 3
JD9048	1C15	18	0230 - 5
JD9078	1C3	13	0210 - 5
JD9080	1D4	6	0250 - 7
JD9082	1C15	19	0230 - 5
JD9082	3E2	4	3450 - 5
JD9113	1C15	20	0230 - 5
JD9120	1D4	8	0250 - 7
JD9134	3D25	8	3450 - 3
JD9134	3E2	8	3450 - 5
JD9138	1D4	7	0250 - 7
JD9141	1C15	21	0230 - 5
JD9141	3E2	7	3450 - 5
J16931	2J5	17	1910 - 3
K40014	3E24	19	3460 - 23
K40014	3F7	22	4240 - 3
K40017	3D23	8	3440 - 9
L100913	1J18	13	0505 - 3
L102023	2G22	15	1810 - 19
L102023	2G24	15	1810 - 21
L152397	2H12	34	1810 - 33
L155075	2E10	19	1674 - 9
L155376	1J18	14	0505 - 3
L57881	2J2	42	1830 - 19
L77943	2I20	18	1830 - 13
M115279	2F2	10	1674 - 27
M115279	2H8	9	1810 - 29
M118611	2C12	5	1320 - 3
M142218	2H18	2	1810 - 39
M142219	2H18	3	1810 - 39
M142955	1K14	3	0530 - 3
M145875	2H20	29	1810 - 41
M40509	3E24	20	3460 - 23
M44162	2B11	15	0960 - 9
M453T	2I2	24	1821 - 3
M453T	2I6	24	1821 - 7
M45387	1D14	12	0260 - 9
M45387	3B5	59	2160 - 3
M47566	2G12	8	1810 - 9
M74600	1D14	5	0260 - 9
M74600	1D16	17	0260 - 11
M74782	2I20	9	1830 - 13
M74877	1D14	11	0260 - 9
M74877	3B5	60	2160 - 3
M82772	2E20	7	1674 - 21
M84972	2H20	40	1810 - 41
M84972	2I20	11	1830 - 13
M86690	2D14	10	1673 - 3
M87571	1E16	15	0260 - 35
M87571	3D4	9	2164 - 5

NUMERICAL INDEX - CONTINUED

PART NO.	GRID	KEY	PAGE
M87683	1J18	15	0505 - 3
M87733	1I14	3	0416 - 1
N119177	2I2	29	1821 - 3
N119177	2I6	29	1821 - 7
N126638	1D24	26	0260 - 19
N131806	1F18	8	0350 - 5
N189220	2I16	39	1830 - 9
N198631	2E10	33	1674 - 9
N203952	3B5	11	2160 - 3
N223292	3B9	8	2160 - 7
N231749	3D17	10	3440 - 3
N237603	3D23	9	3440 - 9
N275650	2I24	30	1830 - 17
N278790	2H22	4	1810 - 43
N278790	2H24	4	1810 - 45
N279068	2J5	26	1910 - 3
N306880	1D16	1	0260 - 11
N306881	1D16	7	0260 - 11
N306882	1D14	10	0260 - 9
N306885	1D16	10	0260 - 11
N306886	1D16	11	0260 - 11
N306887	1D16	12	0260 - 11
PM38653	1I12	41	0413 - 3
PM38655	1H20	16	0404 - 6
PT11778	2I20	17	1830 - 13
P46051	1G25	16	0360 - 3
P46051	3D2	6	2164 - 3
P50631	1F13	8	0341 - 3
P50631	1F18	13	0350 - 5
P50631	1F22	8	0350 - 9
P50631	1F24	3	0350 - 13
RE12119	1F22	11	0350 - 9
RE12362	1J5	5	0422 - 3
RE12363	2I22	9	1830 - 15
RE157329	2J2	23	1830 - 19
RE167207	1K22	4	0578 - 1
RE174764	2I20	21	1830 - 13
RE177967	2I20	22	1830 - 13
RE187311	2I20	16	1830 - 13
RE190139	2J14	12	2001 - 3
RE190140	2J14	12	2001 - 3
RE19429	1K10	14	0520 - 3
RE198074	2I20	5	1830 - 13
RE211000	2B3	19	0930 - 3
RE227953	2J14	12	2001 - 3
RE234261	1G16	9	0350 - 29
RE28364	3E14	15	3460 - 13
RE31702	1C15	23	0230 - 5
RE33705	1I18	14	0418 - 3
RE36349	3E12	15	3460 - 11
RE37331	3E8	15	3460 - 7
RE37382	3E10	15	3460 - 9
RE37693	2B9	10	0960 - 7
RE38310	1G20	8	0350 - 33
RE38310	1G22	7	0350 - 35
RE38310	3D4	11	2164 - 5
RE39224	2E20	5	1674 - 21
RE40048	1I10	5	0410 - 2
RE43497	2J2	24	1830 - 19
RE44574	1J10	5	0433 - 2
RE44574	1J13	18	0452 - 3
RE45315	1B25	1	0210 - 2
RE45315	1C3	14	0210 - 5
RE45317	1B25	2	0210 - 2
RE46684	1I13	3	0414 - 1
RE46684	1I18	10	0418 - 3
RE46685	1H17	6	0404 - 3
RE46685	1I15	10	0417 - 1
RE46685	1I20	6	0419 - 3
RE46686	1I20	7	0419 - 3
RE46686	1J2	11	0420 - 7
RE46687	1H14	13	0402 - 7
RE46742	2J2	25	1830 - 19
RE46743	2J2	26	1830 - 19
RE49486	1C3	1	0210 - 5
RE49624	3B23	4	2160 - 27
RE49624	3C4	9	2160 - 33
RE49624	3C6	8	2160 - 35
RE500005	1H22	1	0407 - 2
RE500608	1H15	3	0403 - 1
RE50114	1C1	1	0210 - 3
RE501377	1H22	4	0407 - 2
RE502173	1J2	7	0420 - 7
RE502174	1J2	15	0420 - 7
RE502175	1J2	14	0420 - 7
RE503208	1I14	7	0416 - 1
RE504209	1H10	3	0402 - 3
RE504210	1H10	2	0402 - 3
RE504233	1J3	6	0421 - 1
RE504543	1I4	3	0407 - 9
RE504543	1I4	22	0407 - 9
RE504552	1J10	9	0433 - 2
RE504563	1I4	3	0407 - 9
RE504782	1H10	8	0402 - 3
RE504836	1I4	21	0407 - 9
RE504914	1H24	6	0407 - 4
RE505264	2D12	2	1672 - 5
RE505399	1J5	6	0422 - 3
RE505465	1J5	12	0422 - 3
RE505501	1H14	10	0402 - 7
RE505501	1H14	..	0402 - 7
RE505501	1H17	18	0404 - 3
RE505921	1H8	4	0401 - 1
RE505980	1I15	3	0417 - 1
RE505980	1I15	16	0417 - 1
RE506078	1J5	12	0422 - 3
RE506078	1J5	15	0422 - 3
RE507537	1I12	35	0413 - 3
RE507538	1I12	36	0413 - 3
RE507539	1I12	25	0413 - 3
RE507540	1I12	24	0413 - 3
RE507541	1I12	23	0413 - 3
RE507758	1H15	7	0403 - 1
RE507758	1H19	1	0404 - 5
RE507758	1J13	33	0452 - 3
RE507777	1I7	18	0409 - 3
RE507778	1I7	14	0409 - 3
RE507950	1I2	4	0407 - 7
RE507959	1I12	1	0413 - 3
RE508185	1H17	4	0404 - 3
RE508489	1H20	8	0404 - 6
RE508566	1H14	16	0402 - 7
RE508566	1H14	..	0402 - 7
RE508577	1J8	1	0429 - 2
RE508847	1I24	2	0420 - 5
RE508847	1I24	13	0420 - 5
RE508892	1J2	1	0420 - 7
RE508893	1J2	4	0420 - 7
RE508981	1J2	3	0420 - 7
RE509032	1I22	3	0420 - 3
RE509093	1I12	15	0413 - 3
RE509794	1I22	1	0420 - 3
RE509794	1I22	11	0420 - 3
RE509813	1I15	15	0417 - 1
RE515257	1J9	3	0433 - 1
RE515560	1J2	5	0420 - 7
RE515611	1H12	2	0402 - 5
RE515622	1J16	1	0505 - 1
RE515636	1I12	31	0413 - 3
RE515642	1I2	1	0407 - 7
RE515643	1I2	1	0407 - 7
RE515881	1H24	10	0407 - 4
RE515978	1H14	2	0402 - 7
RE515978	1H14	..	0402 - 7
RE515986	1I12	28	0413 - 3
RE516027	1I18	18	0418 - 3
RE516228	1H15	7	0403 - 1
RE516228	1H15	8	0403 - 1
RE516228	1H15	10	0403 - 1
RE516268	1H15	6	0403 - 1
RE516335	1I12	32	0413 - 3
RE516336	1I12	38	0413 - 3
RE516340	1H14	6	0402 - 7
RE516340	1H14	..	0402 - 7
RE516340	1J13	19	0452 - 3
RE516486	1I7	2	0409 - 3
RE51649	1I22	4	0420 - 3
RE51649	1I24	14	0420 - 5
RE516491	1H10	8	0402 - 3
RE51650	1I24	7	0420 - 5
RE516512	1I22	9	0420 - 3
RE516512	1I24	11	0420 - 5
RE516540	1I12	11	0413 - 3
RE516540	1I12	41	0413 - 3
RE516553	1I22	2	0420 - 3
RE516553	1I24	17	0420 - 5
RE516999	1I12	40	0413 - 3
RE517057	1I18	13	0418 - 3
RE517180	1I24	6	0420 - 5
RE517245	1J2	19	0420 - 7
RE517370	1H14	4	0402 - 7
RE517370	1H14	..	0402 - 7
RE517435	1I7	7	0409 - 3
RE518080	1I7	17	0409 - 3
RE518081	1I7	16	0409 - 3
RE518082	1I7	13	0409 - 3
RE518083	1I7	12	0409 - 3
RE518097	1J7	5	0429 - 1
RE519115	1I7	1	0409 - 3
RE519144	1K22	6	0578 - 1
RE519144	1K22	7	0578 - 1
RE519696	1I24	9	0420 - 5
RE519696	1K23	2	0578 - 2
RE519877	1K6	4	0515 - 3
RE519895	1H10	1	0402 - 3
RE520238	1J16	2	0505 - 1
RE520397	1I4	6	0407 - 9
RE520600	1I24	12	0420 - 5
RE520643	1I14	2	0416 - 1
RE520650	1I14	2	0416 - 1
RE520651	1I14	2	0416 - 1
RE520928	1I12	30	0413 - 3
RE520930	1I12	33	0413 - 3
RE52242	1I4	1	0407 - 9
RE52242	1I14	19	0416 - 1
RE522510	1K21	3	0575 - 3
RE522680	1H19	1	0404 - 5
RE522827	1J2	24	0420 - 7
RE523023	1H10	3	0402 - 3
RE52454	2I22	4	1830 - 15
RE524562	1I18	19	0418 - 3

NUMERICAL INDEX - CONTINUED

PART NO.	GRID	KEY	PAGE
RE52506	2I22	1	1830 - 15
RE52507	2I22	10	1830 - 15
RE52508	2I22	7	1830 - 15
RE52509	2I22	11	1830 - 15
RE526975	1J13	33	0452 - 3
RE527014	1J11	18	0452 - 1
RE527015	1J13	33	0452 - 3
RE52702	3C22	51	2163 - 7
RE52722	1K22	3	0578 - 1
RE52859	1C7	3	0210 - 9
RE53823	1C9	6	0210 - 11
RE54885	1I14	12	0416 - 1
RE55423	2I22	3	1830 - 15
RE56165	2E20	9	1674 - 21
RE56369	1H20	12	0404 - 6
RE56489	2E20	5	1674 - 21
RE57836	1H17	25	0404 - 3
RE57836	1I7	19	0409 - 3
RE57836	1I14	17	0416 - 1
RE57836	1K19	1	0574 - 1
RE59298	1I20	2	0419 - 3
RE60029	1J2	12	0420 - 7
RE60030	1J2	13	0420 - 7
RE60700	3C12	7	2160 - 41
RE60700	3C22	57	2163 - 7
RE60700	3C24	57	2163 - 9
RE60701	3C18	14	2163 - 3
RE60854	1I22	5	0420 - 3
RE60854	1I24	15	0420 - 5
RE61812	1K22	1	0578 - 1
RE62981	1C5	3	0210 - 7
RE65008	2B24	5	1011 - 3
RE65165	1H8	7	0401 - 1
RE65168	1H8	10	0401 - 1
RE65908	1H15	11	0403 - 1
RE65909	1H15	11	0403 - 1
RE65911	1H8	7	0401 - 1
RE65912	1H8	10	0401 - 1
RE65978	1I14	13	0416 - 1
RE67231	1I20	1	0419 - 3
RE67238	1H23	1	0407 - 3
RE67238	1I4	11	0407 - 9
RE67238	1I20	11	0419 - 3
RE67239	1H22	3	0407 - 2
RE68234	1I14	15	0416 - 1
RE68345	1J3	5	0421 - 1
RE69243	1H21	1	0407 - 1
RE70487	1J5	4	0422 - 3
RE70681	1J5	3	0422 - 3
RE70756	1J5	11	0422 - 3
RE71256	1J5	..	0422 - 3
R100369	1I15	14	0417 - 1
R100500	1B25	1	0210 - 2
R100500	1C3	14	0210 - 5
R10093	2I24	31	1830 - 17
R10093	2J2	18	1830 - 19
R101225	1H20	10	0404 - 6
R104592	1H17	24	0404 - 3
R104592	1I7	8	0409 - 3
R104592	1I13	6	0414 - 1
R104919	1I24	8	0420 - 5
R104919	1K23	1	0578 - 2
R106789	1C5	10	0210 - 7
R107654	2D12	1	1672 - 5
R108997	1D6	3	0250 - 9
R109691	3C14	3	2160 - 43
R111137	1H17	27	0404 - 3
R111238	3B15	3	2160 - 19
R111238	3B17	4	2160 - 21
R111238	3B19	3	2160 - 23
R111238	3B21	6	2160 - 25
R111238	3C2	6	2160 - 31
R111238	3C4	6	2160 - 33
R111238	3C6	5	2160 - 35
R112079	1D6	2	0250 - 9
R112210	1C5	4	0210 - 7
R112210	1C9	28	0210 - 11
R113050	2I20	19	1830 - 13
R113050	2I24	32	1830 - 17
R113562	1I22	15	0420 - 3
R113562	1I24	3	0420 - 5
R113563	1I22	14	0420 - 3
R113563	1I24	4	0420 - 5
R113565	1I22	3	0420 - 3
R113565	1I22	16	0420 - 3
R113565	1I24	5	0420 - 5
R113565	1I24	6	0420 - 5
R114082	1H15	2	0403 - 1
R114193	1H20	13	0404 - 6
R114194	1H20	11	0404 - 6
R115176	1C7	4	0210 - 9
R115250	1I16	1	0417 - 2
R115390	1H17	20	0404 - 3
R115742	2I22	2	1830 - 15
R115743	2I22	8	1830 - 15
R116031	1I12	4	0413 - 3
R116115	1I4	14	0407 - 9
R116116	1J2	21	0420 - 7
R116214	1C9	12	0210 - 11
R116261	1C3	9	0210 - 5
R116296	1H23	2	0407 - 3
R116466	1H17	14	0404 - 3
R116516	1I7	15	0409 - 3
R116516	1J11	8	0452 - 1
R116516	1J13	8	0452 - 3
R116801	1C5	14	0210 - 7
R116801	1C5	17	0210 - 7
R117721	1J18	16	0505 - 3
R117721	2I12	6	1830 - 3
R117721	2J2	19	1830 - 19
R117879	2J7	20	1910 - 5
R119874	1H17	15	0404 - 3
R120013	1I14	14	0416 - 1
R120467	1I5	2	0408 - 1
R120631	1H8	3	0401 - 1
R120636	1H20	12	0404 - 6
R120638	1H24	13	0407 - 4
R120653	2G8	13	1810 - 5
R120653	2G10	8	1810 - 7
R120653	2G12	7	1810 - 9
R121043	1H17	10	0404 - 3
R121376	1H24	7	0407 - 4
R123226	1I15	9	0417 - 1
R123226	1I15	15	0417 - 1
R123226	1I18	3	0418 - 3
R123226	1J11	4	0452 - 1
R123226	1J13	4	0452 - 3
R123246	1I10	3	0410 - 2
R123273	1J3	1	0421 - 1
R123273	1J13	20	0452 - 3
R123324	1I18	4	0418 - 3
R123395	1I15	1	0417 - 1
R123417	1I15	13	0417 - 1
R123417	1I15	15	0417 - 1
R123417	1J13	21	0452 - 3
R123471	1I20	5	0419 - 3
R123501	1I20	3	0419 - 3
R123501	1J13	23	0452 - 3
R123525	1I4	9	0407 - 9
R123525	1J13	25	0452 - 3
R123561	1H8	5	0401 - 1
R123562	1H8	6	0401 - 1
R123563	1H8	8	0401 - 1
R123564	1H8	9	0401 - 1
R123565	1H10	14	0402 - 3
R123570	1I14	16	0416 - 1
R123570	1J11	6	0452 - 1
R123570	1J13	6	0452 - 3
R123572	1I14	6	0416 - 1
R123572	1J11	11	0452 - 1
R123572	1J13	11	0452 - 3
R123584	1H20	3	0404 - 6
R123593	1I12	18	0413 - 3
R123593	1J2	2	0420 - 7
R123593	1K18	9	0560 - 3
R123616	1H17	8	0404 - 3
R124607	1I18	15	0418 - 3
R124607	1J11	9	0452 - 1
R124607	1J13	9	0452 - 3
R125223	2I20	3	1830 - 13
R125223	2J2	20	1830 - 19
R125454	2I20	26	1830 - 13
R126117	1C3	9	0210 - 5
R129628	2B24	2	1011 - 3
R130036	1C9	34	0210 - 11
R130055	1H21	2	0407 - 1
R130574	1H8	8	0401 - 1
R130575	1H8	9	0401 - 1
R130576	1H8	5	0401 - 1
R130577	1H8	6	0401 - 1
R131113	1D6	7	0250 - 9
R131114	1D6	12	0250 - 9
R131182	1H17	9	0404 - 3
R131225	2B24	1	1011 - 3
R131283	1H20	14	0404 - 6
R132518	1H17	11	0404 - 3
R132574	1C5	6	0210 - 7
R132574	1C9	31	0210 - 11
R133303	1H12	1	0402 - 5
R133405	1J3	7	0421 - 1
R133643	2D12	1	1672 - 5
R133819	1I9	1	0410 - 1
R134098	2H2	1	1810 - 23
R134098	2H8	10	1810 - 29
R134098	2I18	40	1830 - 11
R134518	1H20	2	0404 - 6
R134726	1C9	18	0210 - 11
R134920	1I12	14	0413 - 3
R135509	1J5	1	0422 - 3
R135510	1J5	2	0422 - 3
R135543	1B24	14	0201 - 5
R135543	1B24	22	0201 - 5
R135543	1C3	5	0210 - 5
R135543	1D4	21	0250 - 7
R135918	1J9	1	0433 - 1
R135918	1J10	1	0433 - 2
R136052	1J5	..	0422 - 3
R136475	1H20	4	0404 - 6
R136495	1H22	5	0407 - 2
R136495	1H23	3	0407 - 3
R136495	1J13	24	0452 - 3

NUMERICAL INDEX - CONTINUED

PART NO.	GRID	KEY	PAGE
R150895	2B24	6	1011 - 3
R162769	2I20	12	1830 - 13
R163985	2I20	24	1830 - 13
R190722	2I20	14	1830 - 13
R190723	2I20	23	1830 - 13
R192109	2J2	21	1830 - 19
R203687	2J2	46	1830 - 19
R21612	1C5	12	0210 - 7
R244664	2I20	23A	1830 - 13
R26286	1D18	23	0260 - 13
R26286	1E20	11	0260 - 39
R26286	1G20	9	0350 - 33
R26286	1G22	8	0350 - 35
R26287	1C6	12	0210 - 8
R26287	1C7	5	0210 - 9
R26287	1E18	18	0260 - 37
R26287	2C2	28	1060 - 3
R26287	2C7	8	1111 - 3
R26375	1C5	1	0210 - 7
R26375	1E6	32	0260 - 25
R26375	1E10	5	0260 - 29
R26375	1E12	4	0260 - 31
R26375	1E16	6	0260 - 35
R26375	1E18	10	0260 - 37
R26375	1E20	13	0260 - 39
R26375	1F13	12	0341 - 3
R26375	1K18	6	0560 - 3
R26375	2B3	4	0930 - 3
R26375	2B13	6	0960 - 11
R26375	2B15	2	0960 - 13
R26375	2B17	2	0960 - 15
R26375	2B19	2	0960 - 17
R26375	2B21	2	0960 - 19
R26375	2C2	29	1060 - 3
R26375	2C4	12	1060 - 5
R26375	2C9	3	1111 - 5
R26375	3C4	10	2160 - 33
R26375	3C6	9	2160 - 35
R26375	3C10	21	2160 - 39
R26375	3E2	34	3450 - 5
R26375	3E16	2	3460 - 15
R26375	3E20	9	3460 - 19
R26375	3E24	9	3460 - 23
R26375	3F2	6	3460 - 25
R26375	3F4	2	3460 - 27
R26375	3F17	2	4260 - 7
R26375	3F19	2	4260 - 9
R26375	3F21	4	4260 - 11
R26448	1C3	3	0210 - 5
R26448	1C5	9	0210 - 7
R26448	1D10	3	0260 - 5
R26448	1D12	41	0260 - 7
R26448	1E18	21	0260 - 37
R26448	2B13	2	0960 - 11
R26448	2C2	30	1060 - 3
R26448	2C4	3	1060 - 5
R26448	2C20	4	1369 - 5
R26448	3B23	11	2160 - 27
R26448	3B25	11	2160 - 29
R26448	3C12	4	2160 - 41
R26448	3D25	28	3450 - 3
R26448	3E2	28	3450 - 5
R26448	3E18	6	3460 - 17
R26448	3E24	4	3460 - 23
R26650	1C25	18	0250 - 3
R26650	1H17	17	0404 - 3
R26906	1E14	6	0260 - 33
R26906	3B17	3	2160 - 21
R26906	3C22	20	2163 - 7
R26906	3C24	20	2163 - 9
R26906	3F2	2	3460 - 25
R27149	1J10	3	0433 - 2
R27175	1C3	8	0210 - 5
R27175	1C5	15	0210 - 7
R27175	1C6	2	0210 - 8
R27175	3C20	1	2163 - 5
R27175	3C22	53	2163 - 7
R27218	1C3	4	0210 - 5
R27218	3D25	29	3450 - 3
R27218	3E2	29	3450 - 5
R27315	1C5	19	0210 - 7
R27315	1D6	15	0250 - 9
R27315	2B24	4	1011 - 3
R27474	3C22	54	2163 - 7
R27474	3C24	54	2163 - 9
R28193	2J14	10	2001 - 3
R28782	1C6	7	0210 - 8
R28782	1D10	13	0260 - 5
R28782	1D12	43	0260 - 7
R28782	1D18	11	0260 - 13
R28782	1F16	1	0350 - 3
R28782	1F18	1	0350 - 5
R28782	1F24	5	0350 - 13
R28782	1G22	9	0350 - 35
R28782	1G25	20	0360 - 3
R28782	2B21	5	0960 - 19
R28782	2C2	31	1060 - 3
R28782	3B5	22	2160 - 3
R28782	3C12	15	2160 - 41
R28782	3C18	5	2163 - 3
R28782	3C22	21	2163 - 7
R28782	3C24	21	2163 - 9
R28782	3E6	24	3460 - 5
R28782	3E18	2	3460 - 17
R28811	1J9	2	0433 - 1
R29936	1E10	8	0260 - 29
R29936	1E12	10	0260 - 31
R29936	1G25	8	0360 - 3
R29936	1H4	4	0363 - 3
R29936	2B3	7	0930 - 3
R29936	2C9	6	1111 - 5
R29936	3C22	32	2163 - 7
R29936	3C24	32	2163 - 9
R30903	1E20	10	0260 - 39
R31291	1K4	20	0512 - 3
R31654	2J2	22	1830 - 19
R33259	2I20	20	1830 - 13
R33259	2I24	33	1830 - 17
R34857	1C9	7	0210 - 11
R34858	1C9	5	0210 - 11
R35365	1C3	2	0210 - 5
R35366	1C3	2	0210 - 5
R35367	1C3	2	0210 - 5
R36545	2D8	16	1671 - 3
R36636	3C22	55	2163 - 7
R37023	3C22	22	2163 - 7
R37023	3C24	22	2163 - 9
R37287	3D25	9	3450 - 3
R37287	3E2	9	3450 - 5
R375R	1C5	22	0210 - 7
R39112	1C5	2	0210 - 7
R39112	1J10	10	0433 - 2
R39112	3C4	11	2160 - 33
R39112	3C6	10	2160 - 35
R39112	3C10	22	2160 - 39
R39112	3D25	27	3450 - 3
R39112	3E2	27	3450 - 5
R39554	2F2	11	1674 - 27
R43583	1K2	25	0510 - 7
R44302	2D20	14	1673 - 9
R44302	2D22	6	1673 - 11
R44302	2E8	13	1674 - 7
R44302	2E10	20	1674 - 9
R44302	2E12	3	1674 - 11
R44302	2E16	7	1674 - 17
R44302	2F2	4	1674 - 27
R44302	2F2	17	1674 - 27
R44302	2J14	11	2001 - 3
R44302	2J18	11	2002 - 5
R460R	1I24	16	0420 - 5
R46791	2J22	3	2004 - 3
R47150	1J10	11	0433 - 2
R48437	1D4	5	0250 - 7
R48568	1K10	12	0520 - 3
R48685	1H8	1	0401 - 1
R48685	1H17	13	0404 - 3
R48733	1C3	16	0210 - 5
R48734	1C3	16	0210 - 5
R48735	1C3	16	0210 - 5
R48776	1C3	17	0210 - 5
R500269	1J3	2	0421 - 1
R500270	1J2	16	0420 - 7
R500270	1J3	4	0421 - 1
R500271	1J2	17	0420 - 7
R500271	1J3	3	0421 - 1
R500335	1H15	3	0403 - 1
R500349	1I2	2	0407 - 7
R500349	1J11	13	0452 - 1
R500349	1J13	12	0452 - 3
R500374	1J13	31	0452 - 3
R500394	1I13	10	0414 - 1
R500731	1K18	10	0560 - 3
R501124	1H15	1	0403 - 1
R501428	1I20	8	0419 - 3
R501428	1J13	13	0452 - 3
R501484	1J13	32	0452 - 3
R502079	2D12	3	1672 - 5
R502175	1I8	1	0409 - 4
R502329	1I8	2	0409 - 4
R502341	1H10	15	0402 - 3
R502367	1I7	3	0409 - 3
R502369	1I7	17	0409 - 3
R502370	1I7	16	0409 - 3
R502371	1I7	4	0409 - 3
R502504	1I4	3	0407 - 9
R502511	1I7	9	0409 - 3
R502512	1I7	11	0409 - 3
R502513	1I4	3	0407 - 9
R502513	1I4	20	0407 - 9
R502513	1I4	21	0407 - 9
R502541	1I12	7	0413 - 3
R502547	1I7	14	0409 - 3
R502547	1I7	18	0409 - 3
R502725	1H23	4	0407 - 3
R502755	1H15	5	0403 - 1
R50279	2I20	13	1830 - 13
R502811	1I20	10	0419 - 3
R502864	1J13	25	0452 - 3
R502867	1H24	6	0407 - 4
R502902	1H22	2	0407 - 2
R502983	1I16	5	0417 - 2

NUMERICAL INDEX - CONTINUED

PART NO.	GRID	KEY	PAGE
R503307	1I12	17	0413 - 3
R503308	1I12	21	0413 - 3
R503470	1H8	4	0401 - 1
R503769	1H14	2	0402 - 7
R503906	1I7	2	0409 - 3
R504153	1I4	10	0407 - 9
R504209	1H10	13	0402 - 3
R504239	1I12	29	0413 - 3
R504576	1H20	1	0404 - 6
R504577	1I12	3	0413 - 3
R504614	1H20	8	0404 - 6
R504630	1H11	5	0402 - 4
R504631	1H10	7	0402 - 3
R504734	1H14	1	0402 - 7
R504734	1H14	2	0402 - 7
R504734	1I20	9	0419 - 3
R504754	1I18	5	0418 - 3
R504781	1I12	13	0413 - 3
R504843	1H20	7	0404 - 6
R504850	1H17	1	0404 - 3
R504854	1I18	6	0418 - 3
R504882	1H10	11	0402 - 3
R504882	1H11	6	0402 - 4
R504882	1J11	1	0452 - 1
R504882	1J13	1	0452 - 3
R504948	1I24	13	0420 - 5
R505145	1I4	16	0407 - 9
R505166	1I13	9	0414 - 1
R505452	1I12	10	0413 - 3
R505479	1I18	7	0418 - 3
R505479	1J11	5	0452 - 1
R505479	1J13	5	0452 - 3
R505480	1I18	8	0418 - 3
R505480	1J11	3	0452 - 1
R505480	1J13	3	0452 - 3
R505543	1H10	5	0402 - 3
R505609	1H8	2	0401 - 1
R50919	1I12	39	0413 - 3
R51196	1C3	10	0210 - 5
R51197	1C3	10	0210 - 5
R51198	1C3	10	0210 - 5
R51199	1C3	10	0210 - 5
R515029	1I13	1	0414 - 1
R515030	1I13	2	0414 - 1
R515030	1J11	2	0452 - 1
R515030	1J13	2	0452 - 3
R515039	1J9	3	0433 - 1
R515044	1I12	26	0413 - 3
R515245	1H12	2	0402 - 5
R515344	1I4	5	0407 - 9
R515408	1H20	5	0404 - 6
R515454	1I12	32	0413 - 3
R515494	1H20	6	0404 - 6
R515535	1I12	9	0413 - 3
R515555	1H11	7	0402 - 4
R515574	1J6	1	0423 - 1
R515580	1I18	11	0418 - 3
R515580	1I18	13	0418 - 3
R515581	1I18	16	0418 - 3
R516125	1I12	2	0413 - 3
R516138	1H11	4	0402 - 4
R516140	1H10	18	0402 - 3
R516158	1H11	3	0402 - 4
R516158	1J11	7	0452 - 1
R516158	1J13	7	0452 - 3
R516174	1H11	12	0402 - 4
R516181	1H11	2	0402 - 4
R516437	1I22	6	0420 - 3
R516453	1J2	18	0420 - 7
R516508	1J7	1	0429 - 1
R516557	1H14	7	0402 - 7
R516622	1I7	6	0409 - 3
R516623	1J7	4	0429 - 1
R516647	1I7	5	0409 - 3
R516648	1J8	2	0429 - 2
R517237	1J8	3	0429 - 2
R517471	1H8	11	0401 - 1
R517471	1K22	8	0578 - 1
R517488	1I4	7	0407 - 9
R518145	1I4	18	0407 - 9
R518146	1I4	17	0407 - 9
R518345	1I12	12	0413 - 3
R518390	1I12	15	0413 - 3
R518550	1J10	2	0433 - 2
R519292	1H10	16	0402 - 3
R51936	1I12	19	0413 - 3
R51936	1K18	11	0560 - 3
R51963	1J2	1	0420 - 7
R51963	1J2	4	0420 - 7
R51963	1J2	5	0420 - 7
R519656	1H14	3	0402 - 7
R519656	1J13	22	0452 - 3
R519657	1J13	22	0452 - 3
R519739	1H10	10	0402 - 3
R521439	1I9	2	0410 - 1
R521439	1J11	10	0452 - 1
R521439	1J13	10	0452 - 3
R52389	1D6	16	0250 - 9
R52921	2D20	12	1673 - 9
R53108	1J5	14	0422 - 3
R53108	1J13	26	0452 - 3
R53317	2C2	18	1060 - 3
R53528	2G22	16	1810 - 19
R53528	2G24	16	1810 - 21
R53540	2C9	16	1111 - 5
R54114	1H15	4	0403 - 1
R54380	1D6	14	0250 - 9
R55233	1H17	26	0404 - 3
R55453	1I12	5	0413 - 3
R56308	1C3	11	0210 - 5
R59074	1C15	22	0230 - 5
R59289	1C9	27	0210 - 11
R59460	1C9	21	0210 - 11
R60038	1C9	8	0210 - 11
R61105	1J13	29	0452 - 3
R61467	1J10	2	0433 - 2
R61467	1J10	6	0433 - 2
R61871	1H24	9	0407 - 4
R61871	1J11	16	0452 - 1
R61871	1J13	16	0452 - 3
R63016	2C20	16	1369 - 5
R63185	1I18	17	0418 - 3
R63185	1J11	17	0452 - 1
R63185	1J13	17	0452 - 3
R63548	1I14	4	0416 - 1
R63548	3B21	19	2160 - 25
R63575	1D6	4	0250 - 9
R64283	2F23	7	1749 - 3
R65397	1I12	26	0413 - 3
R65397	1I12	27	0413 - 3
R66405	1F22	31	0350 - 9
R66405	1G16	13	0350 - 29
R67092	1J2	19	0420 - 7
R67092	1J2	24	0420 - 7
R67230	1F22	13	0350 - 9
R69166	2H20	26A	1810 - 41
R69166	2H20	27A	1810 - 41
R69166	2H20	28	1810 - 41
R69166	2H20	37B	1810 - 41
R69629	3D17	11	3440 - 3
R70111	1C9	15	0210 - 11
R70112	1C9	20	0210 - 11
R70113	1C9	17	0210 - 11
R70115	1C9	19	0210 - 11
R70663	2H12	50	1810 - 33
R70663	2H14	50	1810 - 35
R71228	1I15	5	0417 - 1
R71929	1D6	5	0250 - 9
R72328	1H10	12	0402 - 3
R72328	1I5	3	0408 - 1
R72328	1J13	27	0452 - 3
R72430	1D6	6	0250 - 9
R726R	1D16	2	0260 - 11
R72655	2E20	8	1674 - 21
R72655	2I2	11	1821 - 3
R72655	2I6	11	1821 - 7
R72659	1I5	4	0408 - 1
R72659	1I22	24	0420 - 3
R73290	3D13	4	3401 - 7
R73290	3D15	5	3401 - 9
R74012	1J2	3	0420 - 7
R75892	1H17	21	0404 - 3
R75892	1J11	14	0452 - 1
R75892	1J13	14	0452 - 3
R76578	3B15	4	2160 - 19
R76578	3B17	5	2160 - 21
R76578	3B19	4	2160 - 23
R76578	3B21	7	2160 - 25
R76578	3B23	2	2160 - 27
R76578	3B25	4	2160 - 29
R76578	3C2	7	2160 - 31
R76578	3C4	7	2160 - 33
R76578	3C6	6	2160 - 35
R77175	1C6	15	0210 - 8
R77175	1E18	22	0260 - 37
R77175	1G25	19	0360 - 3
R77175	2C9	17	1111 - 5
R77175	3C12	8	2160 - 41
R77175	3C18	13	2163 - 3
R77175	3C22	56	2163 - 7
R77175	3C24	56	2163 - 9
R77664	1D6	1	0250 - 9
R77915	2G22	17	1810 - 19
R77915	2G24	17	1810 - 21
R78057	2I22	9	1830 - 15
R78059	2I22	9	1830 - 15
R78393	2B11	16	0960 - 9
R79001	3F9	10	4240 - 5
R79033	2G22	18	1810 - 19
R79033	2G24	18	1810 - 21
R79033	2I18	29	1830 - 11
R79101	3E8	8	3460 - 7
R79101	3E10	8	3460 - 9
R79101	3E12	11	3460 - 11
R81162	1D6	9	0250 - 9
R81275	1I13	8	0414 - 1
R81596	1K18	31	0560 - 3
R81862	2B5	6	0960 - 3
R81862	2B7	19	0960 - 5
R81862	2B9	17	0960 - 7
R81862	3E14	11	3460 - 13

NUMERICAL INDEX - CONTINUED

PART NO.	GRID	KEY	PAGE
R81862	3F13	11	4240 - 9
R81968	3E14	13	3460 - 13
R81968	3F13	17	4240 - 9
R81971	3F13	2	4240 - 9
R82075	3F9	13	4240 - 5
R82076	3F9	15	4240 - 5
R82960	3E14	16	3460 - 13
R83578	3F9	6	4240 - 5
R84262	1C5	20	0210 - 7
R85226	1C9	32	0210 - 11
R87732	1I10	4	0410 - 2
R89940	3E12	13	3460 - 11
R89940	3E12	16	3460 - 11
R89944	1I16	6	0417 - 2
R89944	1J13	28	0452 - 3
R90658	1I9	2	0410 - 1
R91360	1I12	8	0413 - 3
R93623	1C9	13	0210 - 11
R93937	1D6	13	0250 - 9
R94545	1D6	10	0250 - 9
R94546	1D6	8	0250 - 9
R95116	1C9	10	0210 - 11
R95493	3B15	5	2160 - 19
R95493	3B17	6	2160 - 21
R95493	3B19	5	2160 - 23
R95493	3B21	8	2160 - 25
R95493	3B23	6	2160 - 27
R95493	3B25	5	2160 - 29
R95493	3C2	8	2160 - 31
R95493	3C4	8	2160 - 33
R95493	3C6	7	2160 - 35
R96248	2I20	15	1830 - 13
R96703	1J5	9	0422 - 3
R96753	2J5	18	1910 - 3
R97061	1I12	20	0413 - 3
R97061	1J2	6	0420 - 7
R97185	1H17	19	0404 - 3
R97185	1H24	8	0407 - 4
R97185	1J11	15	0452 - 1
R97185	1J13	15	0452 - 3
R98953	2B9	11	0960 - 7
TT206940	2G22	37	1810 - 19
TY16021	1C3	..	0210 - 5
TY21766	2D8	1	1671 - 3
TY22399	1J18	20	0505 - 3
TY22502	1K18	8	0560 - 3
TY23020	2D8	1	1671 - 3
TY25803	2D8	1	1671 - 3
T101807	2G14	8	1810 - 11
T102934	2E4	13	1674 - 3
T102934	2E8	14	1674 - 7
T102934	2E14	12	1674 - 15
T102934	2E16	8	1674 - 17
T103395	2C12	6	1320 - 3
T103453	3D21	27	3440 - 7
T103590	2F23	6	1749 - 3
T104220	2H20	25	1810 - 41
T104220	2H22	9	1810 - 43
T104220	2H24	9	1810 - 45
T104220	3C10	12	2160 - 39
T104223	3F7	23	4240 - 3
T10510	2F21	5	1747 - 3
T10510	3D21	28	3440 - 7
T10510	3D25	30	3450 - 3
T10510	3E2	17	3450 - 5
T105740	2I2	4	1821 - 3
T105740	2I6	4	1821 - 7
T105773	2B15	11	0960 - 13
T105773	3E16	10	3460 - 15
T105773	3F4	8	3460 - 27
T105773	3F21	14	4260 - 11
T106596	1C9	35	0210 - 11
T107115	2D8	5	1671 - 3
T107115	2D8	6	1671 - 3
T107115	2D8	9	1671 - 3
T107115	2D8	21	1671 - 3
T107141	1K2	14	0510 - 7
T108521	3F11	31	4240 - 7
T108524	3F11	32	4240 - 7
T11234	1C13	26	0230 - 3
T11234	1C15	32	0230 - 5
T11234	2B5	27	0960 - 3
T11234	2J16	7	2002 - 3
T11234	2J18	5	2002 - 5
T114792	3F7	6	4240 - 3
T114792	3F15	1	4240 - 11
T115030	2J18	6	2002 - 5
T115031	2J18	7	2002 - 5
T118712	3B15	6	2160 - 19
T118712	3B17	7	2160 - 21
T118712	3B19	6	2160 - 23
T118712	3C2	17	2160 - 31
T118712	3C6	11	2160 - 35
T119153	2G18	5	1810 - 15
T119564	2J18	8	2002 - 5
T120536	1F7	33	0315 - 5
T120536	2E8	15	1674 - 7
T120536	2E14	17	1674 - 15
T120536	2E22	7	1674 - 23
T122075	1I20	4	0419 - 3
T122075	1J13	30	0452 - 3
T124382	3D19	4	3440 - 5
T124495	3E12	26	3460 - 11
T125860	2G8	7	1810 - 5
T125945	3F7	19	4240 - 3
T126204	1H4	12	0363 - 3
T126204	2C4	18	1060 - 5
T126400	2G8	14	1810 - 5
T127280	2G8	8	1810 - 5
T128437	2J18	9	2002 - 5
T128502	3D23	10	3440 - 9
T129981	3D23	11	3440 - 9
T129982	3D23	12	3440 - 9
T131169	2D20	11	1673 - 9
T13254	1K2	26	0510 - 7
T13254	3D4	12	2164 - 5
T133674	2H20	41	1810 - 41
T134104	2D8	23	1671 - 3
T134530	2H8	12	1810 - 29
T134530	2H16	8	1810 - 37
T134530	2I16	42	1830 - 9
T134530	2I18	42	1830 - 11
T134530	2J2	27	1830 - 19
T134895	2H20	42	1810 - 41
T135675	2G16	1	1810 - 13
T13814	1J2	22	0420 - 7
T138914	2I24	34	1830 - 17
T139131	1K2	23	0510 - 7
T140922	1F7	28	0315 - 5
T141732	3D23	18	3440 - 9
T141733	3D23	19	3440 - 9
T142485	3F7	20	4240 - 3
T143169	2I24	35	1830 - 17
T143169	2J2	29	1830 - 19
T143929	3D19	3	3440 - 5
T143929	3D23	7	3440 - 9
T145360	2J16	8	2002 - 3
T145453	2C16	1	1320 - 7
T146097	2C12	30	1320 - 3
T146098	2C14	17	1320 - 5
T146099	2C16	18	1320 - 7
T146102	1J5	10	0422 - 3
T146104	2C16	2	1320 - 7
T146106	2C14	1	1320 - 5
T146246	1C13	8	0230 - 3
T146246	1C13	22	0230 - 3
T146246	1C15	33	0230 - 5
T146246	1C19	13	0240 - 3
T146246	1D12	9	0260 - 7
T146246	2B5	28	0960 - 3
T146246	2B7	9	0960 - 5
T146246	2F9	2	1740 - 3
T146246	3F11	14	4240 - 7
T146605	2C12	7	1320 - 3
T146606	2C14	2	1320 - 5
T146607	2C16	3	1320 - 7
T147623	3E8	22	3460 - 7
T147623	3E10	22	3460 - 9
T147700	3F7	24	4240 - 3
T147891	2C20	17	1369 - 5
T148164	3E8	23	3460 - 7
T148164	3E10	23	3460 - 9
T148409	2G6	2	1810 - 3
T148409	2G22	23	1810 - 19
T148409	2G24	23	1810 - 21
T149597	1E6	16	0260 - 25
T149818	3F11	15	4240 - 7
T149822	3F11	16	4240 - 7
T150347	3F15	3	4240 - 11
T150614	3D23	13	3440 - 9
T150942	3D25	35	3450 - 3
T150942	3E2	49	3450 - 5
T150942	3E6	28	3460 - 5
T150961	3B25	2	2160 - 29
T151485	3D25	10	3450 - 3
T151797	1B3	7	0110 - 3
T151797	1B5	7	0110 - 5
T151797	1B7	3	0110 - 7
T151797	1B9	3	0110 - 9
T151797	1B11	7	0110 - 11
T151797	1B13	6	0110 - 13
T151797	1B15	7	0110 - 15
T151797	2F15	8	1746 - 3
T151806	3E24	21	3460 - 23
T151953	3E14	28	3460 - 13
T152047	3F7	25	4240 - 3
T152169	3D21	29	3440 - 7
T152721	3D23	14	3440 - 9
T152859	1C13	17	0230 - 3
T152862	1C13	23	0230 - 3
T152862	2B5	29	0960 - 3
T152876	3D25	11	3450 - 3
T152877	3D25	12	3450 - 3
T152879	3D25	14	3450 - 3
T152879	3E2	14	3450 - 5
T152881	3D25	16	3450 - 3
T152881	3E2	16	3450 - 5
T152882	3D25	16	3450 - 3
T152882	3E2	16	3450 - 5
T152883	3D25	16	3450 - 3
T152883	3E2	16	3450 - 5

NUMERICAL INDEX - CONTINUED

PART NO.	GRID	KEY	PAGE
T152990	3D25	19	3450 - 3
T152991	3D25	19	3450 - 3
T152992	3D25	19	3450 - 3
T152993	3D25	22	3450 - 3
T152993	3E2	22	3450 - 5
T152994	3D25	23	3450 - 3
T152995	3D25	24	3450 - 3
T153019	3F11	17	4240 - 7
T153535	2G14	9	1810 - 11
T153680	2C12	8	1320 - 3
T155572	1H4	14	0363 - 3
T155572	2C12	9	1320 - 3
T155579	2C14	3	1320 - 5
T155581	2C16	4	1320 - 7
T155757	1D14	2	0260 - 9
T155988	1D14	9	0260 - 9
T157172	2H8	14	1810 - 29
T157172	2H10	13	1810 - 31
T157211	2C2	19	1060 - 3
T157212	2C2	14	1060 - 3
T157212	2C2	24	1060 - 3
T157220	2C2	20	1060 - 3
T157223	2C2	25	1060 - 3
T157257	2C2	26	1060 - 3
T157258	2C2	15	1060 - 3
T157827	2F9	14	1740 - 3
T157828	2F9	11	1740 - 3
T157829	2F9	10	1740 - 3
T157941	1B24	20	0201 - 5
T157942	1B24	17	0201 - 5
T157943	1B24	11	0201 - 5
T157944	1B24	7	0201 - 5
T157945	1B24	2	0201 - 5
T157952	1B24	1	0201 - 5
T157991	2J9	5	1913 - 3
T158027	3D19	7	3440 - 5
T158102	2F9	6	1740 - 3
T158229	2F9	9	1740 - 3
T158241	1D14	8	0260 - 9
T158248	1D4	4	0250 - 7
T158249	1D4	19	0250 - 7
T158250	1D4	11	0250 - 7
T158298	3C22	58	2163 - 7
T158298	3C24	58	2163 - 9
T158332	1B24	16	0201 - 5
T158334	1B24	9	0201 - 5
T158335	1B24	8	0201 - 5
T158338	1B22	2	0201 - 3
T158339	1D4	20	0250 - 7
T158340	1B22	3	0201 - 3
T158400	1K4	21	0512 - 3
T158436	1K2	27	0510 - 7
T158492	1B24	10	0201 - 5
T158492	1B24	18	0201 - 5
T158509	1B22	16	0201 - 3
T158510	1B22	18	0201 - 3
T158511	1B22	17	0201 - 3
T158513	1B22	5	0201 - 3
T158514	1B22	4	0201 - 3
T158599	1D4	3	0250 - 7
T158600	1D4	2	0250 - 7
T158601	1K10	15	0520 - 3
T158888	1K2	28	0510 - 7
T158949	1K16	12	0540 - 3
T159052	1K4	22	0512 - 3
T159656	1C17	3	0230 - 7
T159656	1C21	8	0240 - 5
T159883	1K4	23	0512 - 3
T159884	1K4	40	0512 - 3
T159984	1D4	18	0250 - 7
T159985	1D4	17	0250 - 7
T160017	2H12	17	1810 - 33
T160017	2H14	17	1810 - 35
T160020	2H12	18	1810 - 33
T160020	2H14	18	1810 - 35
T160152	2C12	29	1320 - 3
T160153	2C16	19	1320 - 7
T160154	2C14	18	1320 - 5
T160333	1J20	12	0505 - 5
T160333	2E8	16	1674 - 7
T160368	1B22	14	0201 - 3
T160492	2J2	30	1830 - 19
T160541	1E14	8	0260 - 33
T160608	1K2	29	0510 - 7
T160609	1K2	30	0510 - 7
T160698	2F15	9	1746 - 3
T161376	2D8	4	1671 - 3
T161531	2J5	19	1910 - 3
T161674	2C12	10	1320 - 3
T162050	2C12	11	1320 - 3
T162051	2C16	6	1320 - 7
T162052	2C14	5	1320 - 5
T162085	2D10	16	1672 - 3
T162152	1D24	24	0260 - 19
T162155	1D24	23	0260 - 19
T162157	1D24	22	0260 - 19
T162211	1D20	45	0260 - 15
T162212	1D20	53	0260 - 15
T162213	1D20	54	0260 - 15
T162215	1D20	56	0260 - 15
T162215	1D24	56	0260 - 19
T162216	1D22	62	0260 - 17
T162238	2J5	20	1910 - 3
T162343	1K18	12	0560 - 3
T162428	1C15	24	0230 - 5
T162575	1K2	31	0510 - 7
T162576	1K2	32	0510 - 7
T162600	1K10	16	0520 - 3
T162675	2E8	17	1674 - 7
T162854	1D14	1	0260 - 9
T162876	1F7	29	0315 - 5
T162877	1K2	33	0510 - 7
T162878	1K2	34	0510 - 7
T162937	1K2	35	0510 - 7
T162938	1K2	36	0510 - 7
T162965	1K2	14	0510 - 7
T163333	1F7	17	0315 - 5
T163334	2I2	12	1821 - 3
T163334	2I6	12	1821 - 7
T163335	2I2	13	1821 - 3
T163335	2I6	13	1821 - 7
T163336	2I2	14	1821 - 3
T163336	2I6	14	1821 - 7
T163658	2C12	12	1320 - 3
T163659	2C16	7	1320 - 7
T163660	2C14	6	1320 - 5
T163748	3D23	18	3440 - 9
T163962	2I2	5	1821 - 3
T163962	2I6	5	1821 - 7
T164030	2I24	36	1830 - 17
T164030	3C22	60	2163 - 7
T164030	3C24	60	2163 - 9
T164124	2B3	21	0930 - 3
T164124	2C4	19	1060 - 5
T164124	3E20	19	3460 - 19
T164128	3E20	19	3460 - 19
T164129	3E20	19	3460 - 19
T164264	1F7	30	0315 - 5
T16464	1F7	18	0315 - 5
T16464	3E24	22	3460 - 23
T164691	2C16	8	1320 - 7
T164692	2C14	7	1320 - 5
T164945	2I18	44	1830 - 11
T164986	3E2	45	3450 - 5
T165055	3E2	10	3450 - 5
T165056	3E2	12	3450 - 5
T165061	3E2	11	3450 - 5
T165062	3E2	23	3450 - 5
T165063	3E2	24	3450 - 5
T165064	3E2	35	3450 - 5
T165065	3E2	36	3450 - 5
T165066	3E2	37	3450 - 5
T165067	3E2	38	3450 - 5
T165068	3E2	39	3450 - 5
T165069	3E2	39	3450 - 5
T165069	3E2	40	3450 - 5
T165070	3E2	41	3450 - 5
T165071	3E2	47	3450 - 5
T165072	3E2	19	3450 - 5
T165073	3E2	19	3450 - 5
T165073	3E2	20	3450 - 5
T165074	3E2	19	3450 - 5
T165074	3E2	21	3450 - 5
T165075	3E2	32	3450 - 5
T165077	3E2	26	3450 - 5
T165535	1D14	16	0260 - 9
T165791	3E2	44	3450 - 5
T165992	1K18	3	0560 - 3
T166297	2G24	35	1810 - 21
T166297	2J2	31	1830 - 19
T166761	3E20	20	3460 - 19
T166907	1D12	30	0260 - 7
T166916	1D2	12	0250 - 5
T166917	1D2	22	0250 - 5
T166919	1D2	20	0250 - 5
T166920	1D2	13	0250 - 5
T166921	1D2	10	0250 - 5
T166922	1C25	5	0250 - 3
T166923	1C25	14	0250 - 3
T166924	1C25	16	0250 - 3
T166925	1C25	13	0250 - 3
T166926	1C25	15	0250 - 3
T166927	1C25	3	0250 - 3
T166928	1C25	2	0250 - 3
T166929	1C25	10	0250 - 3
T166930	1C25	9	0250 - 3
T166931	1C25	12	0250 - 3
T166932	1C25	11	0250 - 3
T166933	1D2	7	0250 - 5
T166934	1C25	6	0250 - 3
T167010	3D25	13	3450 - 3
T167010	3D25	15	3450 - 3
T167010	3E2	13	3450 - 5
T167011	3D25	13	3450 - 3
T167011	3D25	15	3450 - 3
T168383	1F13	7	0341 - 3
T168383	2C4	11	1060 - 5
T170180	2C2	21	1060 - 3
T170181	2C2	22	1060 - 3
T171686	2I2	27	1821 - 3
T171686	2I6	27	1821 - 7

NUMERICAL INDEX - CONTINUED

PART NO.	GRID	KEY	PAGE
T172927	2C2	32	1060 - 3
T173311	1H17	..	0404 - 3
T173591	2J5	21	1910 - 3
T173779	2I10	5	1822 - 3
T174530	2D8	23	1671 - 3
T174634	2C2	16	1060 - 3
T175236	2C2	27	1060 - 3
T175675	2H12	19	1810 - 33
T175675	2H14	19	1810 - 35
T175744	2C12	13	1320 - 3
T176108	2C2	33	1060 - 3
T176372	2D16	3	1673 - 5
T176405	1D14	14	0260 - 9
T176425	3B5	7	2160 - 3
T176870	2I10	6	1822 - 3
T17776	2F23	4	1749 - 3
T17776	3D21	30	3440 - 7
T17776	3F7	26	4240 - 3
T178946	2D18	3	1673 - 7
T178947	2D18	2	1673 - 7
T178948	2D18	1	1673 - 7
T179468	2D10	17	1672 - 3
T179952	1K16	13	0540 - 3
T180074	2D18	2	1673 - 7
T180075	2D18	3	1673 - 7
T181306	1D14	24	0260 - 9
T181306	3E22	3	3460 - 21
T182184	2C12	25	1320 - 3
T182909	2E10	21	1674 - 9
T182909	2G8	15	1810 - 5
T182909	2G10	9	1810 - 7
T182909	2G12	9	1810 - 9
T183474	3D19	8	3440 - 5
T183750	1K12	12	0520 - 5
T183756	3B21	18	2160 - 25
T183756	3B25	3	2160 - 29
T183756	3C2	5	2160 - 31
T183756	3C4	5	2160 - 33
T183756	3C6	4	2160 - 35
T183756	3C10	24	2160 - 39
T183810	1D2	17	0250 - 5
T183811	1D2	18	0250 - 5
T183812	1D2	19	0250 - 5
T183816	1D12	4	0260 - 7
T183817	1D12	20	0260 - 7
T183818	1D12	17	0260 - 7
T183819	1D12	18	0260 - 7
T183820	1D12	19	0260 - 7
T183821	1D12	15	0260 - 7
T183822	1D12	34	0260 - 7
T183823	1D12	45	0260 - 7
T183824	1D12	47	0260 - 7
T184082	3D23	19	3440 - 9
T184228	3E2	15	3450 - 5
T184345	2I16	25	1830 - 9
T184345	2I18	30	1830 - 11
T184404	1C15	25	0230 - 5
T184460	1D12	3	0260 - 7
T184629	2B11	4	0960 - 9
T184651	1D18	26	0260 - 13
T184924	2I20	25	1830 - 13
T184924	2J2	32	1830 - 19
T185047	2B7	10	0960 - 5
T185135	3B5	61	2160 - 3
T185138	3B5	15	2160 - 3
T185181	3B5	54	2160 - 3
T185183	3B5	24	2160 - 3
T185184	3B5	57	2160 - 3
T185185	3B5	40	2160 - 3
T185186	3B5	55	2160 - 3
T185188	1J5	15	0422 - 3
T185254	3B5	25	2160 - 3
T185326	2I14	3	1830 - 5
T185370	1D12	29	0260 - 7
T185424	1F11	2	0325 - 3
T185579	3D19	8	3440 - 5
T185664	2H4	10	1810 - 25
T185769	2D20	16	1673 - 9
T185769	2D22	11	1673 - 11
T185769	2E10	22	1674 - 9
T185769	2E12	4	1674 - 11
T185769	2H20	43	1810 - 41
T185769	2I14	4	1830 - 5
T185769	2J14	13	2001 - 3
T185769	2J18	12	2002 - 5
T185826	3C22	61	2163 - 7
T185826	3C24	61	2163 - 9
T185959	1D10	12	0260 - 5
T185960	1D10	16	0260 - 5
T186350	3D21	16	3440 - 7
T186655	1D2	15	0250 - 5
T186656	1D2	16	0250 - 5
T186657	1D12	27	0260 - 7
T186658	1D12	26	0260 - 7
T186659	1D12	35	0260 - 7
T186793	2C12	14	1320 - 3
T186793	2E10	32	1674 - 9
T186793	2G22	24	1810 - 19
T186793	2G24	24	1810 - 21
T186956	1D2	6	0250 - 5
T186973	2E10	32	1674 - 9
T186987	1E10	18	0260 - 29
T186988	1D2	14	0250 - 5
T186989	1D2	9	0250 - 5
T187196	1D12	33	0260 - 7
T187206	1D18	24	0260 - 13
T187386	1K4	24	0512 - 3
T187387	1K4	39	0512 - 3
T187394	2D20	15	1673 - 9
T187394	2D22	12	1673 - 11
T187394	2E10	23	1674 - 9
T187394	2E12	5	1674 - 11
T187394	2J14	14	2001 - 3
T187394	2J18	13	2002 - 5
T187416	1K4	36	0512 - 3
T187477	1K4	42	0512 - 3
T187526	3C22	62	2163 - 7
T187526	3C24	62	2163 - 9
T187561	1C23	1	0240 - 7
T187566	1C23	4	0240 - 7
T187664	1E10	19	0260 - 29
T187711	1D22	12	0260 - 17
T187712	1D22	88	0260 - 17
T187713	1D22	40	0260 - 17
T187714	1D20	14	0260 - 15
T187715	1D24	55	0260 - 19
T187716	1D24	27	0260 - 19
T187716	1D24	28	0260 - 19
T187717	1D24	28	0260 - 19
T187719	1D22	2	0260 - 17
T187720	1D22	29	0260 - 17
T187721	1D20	47	0260 - 15
T187722	1D22	28	0260 - 17
T187724	1D24	5	0260 - 19
T187725	1D24	60	0260 - 19
T187726	1D20	46	0260 - 15
T187727	1D24	29	0260 - 19
T187728	1D22	30	0260 - 17
T187729	1D22	7	0260 - 17
T187730	1D24	57	0260 - 19
T187731	1D22	11	0260 - 17
T187733	1D22	3	0260 - 17
T187734	1D22	1	0260 - 17
T187735	1D24	13	0260 - 19
T187736	1D22	2	0260 - 17
T187737	1D24	3	0260 - 19
T187738	1D24	3	0260 - 19
T187740	1D24	59	0260 - 19
T187741	1D22	4	0260 - 17
T187744	1D22	10	0260 - 17
T187745	1D22	9	0260 - 17
T187757	2C12	15	1320 - 3
T187758	2C16	9	1320 - 7
T187759	2C14	8	1320 - 5
T187767	1D24	4	0260 - 19
T187769	1D22	31	0260 - 17
T187772	1D22	27	0260 - 17
T187774	1D22	32	0260 - 17
T187818	1K4	37	0512 - 3
T187863	2J7	22	1910 - 5
T187896	1D16	9	0260 - 11
T188075	3D17	12	3440 - 3
T188076	3D17	13	3440 - 3
T188182	1E2	12	0260 - 21
T188288	3C14	8	2160 - 43
T188352	1D2	23	0250 - 5
T188651	2J5	22	1910 - 3
T188686	3B5	13	2160 - 3
T188687	3B5	49	2160 - 3
T188690	3B5	6	2160 - 3
T188698	3B5	15	2160 - 3
T188745	1D2	8	0250 - 5
T188806	2G18	9	1810 - 15
T188856	1D12	31	0260 - 7
T188857	1D12	32	0260 - 7
T18891	1H17	16	0404 - 3
T188984	1D12	13	0260 - 7
T190212	2C12	16	1320 - 3
T190243	3B5	52	2160 - 3
T190513	2I24	37	1830 - 17
T190533	2C14	9	1320 - 5
T190534	2C16	10	1320 - 7
T190610	3E6	2	3460 - 5
T190611	3E6	3	3460 - 5
T190612	3E6	4	3460 - 5
T190613	3E6	5	3460 - 5
T190614	3E6	6	3460 - 5
T190615	3E6	7	3460 - 5
T190616	3E6	8	3460 - 5
T190617	3E6	9	3460 - 5
T190639	3E6	11	3460 - 5
T190640	3E6	12	3460 - 5
T190641	3E6	13	3460 - 5
T190642	3E6	14	3460 - 5
T190643	3E6	15	3460 - 5
T190644	3E6	16	3460 - 5
T190645	3E6	17	3460 - 5
T190646	3E6	18	3460 - 5
T190647	3E6	19	3460 - 5
T190648	3E6	22	3460 - 5
T190767	3B15	7	2160 - 19

NUMERICAL INDEX - CONTINUED

PART NO.	GRID	KEY	PAGE
T190767	3B17	8	2160 - 21
T190767	3B19	7	2160 - 23
T190767	3B21	9	2160 - 25
T190767	3C2	9	2160 - 31
T190767	3C4	12	2160 - 33
T190767	3C6	12	2160 - 35
T190814	1D22	1	0260 - 17
T190892	3C22	63	2163 - 7
T190892	3C24	63	2163 - 9
T191021	1C11	4	0225 - 3
T195585	3D4	7	2164 - 5
T195587	3D4	8	2164 - 5
T19572	3D19	6	3440 - 5
T196077	1F5	5	0315 - 3
T196077	1F7	32	0315 - 5
T196077	1K8	3	0515 - 5
T196077	2C2	34	1060 - 3
T196077	2E10	24	1674 - 9
T196077	2G6	2	1810 - 3
T196077	2G22	11	1810 - 19
T196077	2G22	12	1810 - 19
T196077	2G22	25	1810 - 19
T196077	2G24	25	1810 - 21
T196077	2H2	4	1810 - 23
T196077	2H6	2	1810 - 27
T196077	2H8	15	1810 - 29
T196077	2H8	21	1810 - 29
T196077	2H10	14	1810 - 31
T196077	2H10	19	1810 - 31
T196077	2H10	20	1810 - 31
T196077	2I18	45	1830 - 11
T196077	2I18	65	1830 - 11
T196077	2K4	6	2007 - 3
T196077	2K4	7	2007 - 3
T196077	2K4	8	2007 - 3
T196078	2H20	13	1810 - 41
T196078	2H20	44	1810 - 41
T196078	2J20	4	2003 - 3
T196079	1F5	6	0315 - 3
T196079	1F7	31	0315 - 5
T196079	1F7	32	0315 - 5
T196079	1K6	5	0515 - 3
T196079	2E10	25	1674 - 9
T196079	2E22	6	1674 - 23
T196079	2G6	2	1810 - 3
T196079	2G8	16	1810 - 5
T196079	2G22	26	1810 - 19
T196079	2G24	26	1810 - 21
T196079	2H8	16	1810 - 29
T196079	2H10	15	1810 - 31
T196079	2H12	51	1810 - 33
T196079	2H14	51	1810 - 35
T196079	2H16	9	1810 - 37
T196079	2H22	17	1810 - 43
T196079	2H24	17	1810 - 45
T196079	2I16	9	1830 - 9
T196079	2I16	46	1830 - 9
T196079	2I18	46	1830 - 11
T196079	2J2	33	1830 - 19
T196080	2G6	2	1810 - 3
T196080	2H22	23	1810 - 43
T196080	2H24	23	1810 - 45
T196080	3C16	6	2160 - 45
T200265	1K2	37	0510 - 7
T200363	2E10	11	1674 - 9
T200422	2I24	38	1830 - 17
T20052	1E8	3A	0260 - 27
T201461	1F7	19	0315 - 5
T201462	1F7	20	0315 - 5
T201481	1F7	21	0315 - 5
T201482	1F7	22	0315 - 5
T201537	2D10	18	1672 - 3
T201538	2D10	13	1672 - 3
T201561	2I16	47	1830 - 9
T201562	2I16	48	1830 - 9
T201564	2H10	16	1810 - 31
T201565	2H16	10	1810 - 37
T201566	2I16	49	1830 - 9
T201568	2I16	50	1830 - 9
T201570	2I18	51	1830 - 11
T201571	2H10	17	1810 - 31
T201673	2I10	7	1822 - 3
T20168	1H17	22	0404 - 3
T201880	2H12	46	1810 - 33
T201880	2H14	46	1810 - 35
T201999	1K18	13	0560 - 3
T202034	2J2	34	1830 - 19
T202035	2J2	35	1830 - 19
T202074	2G16	4	1810 - 13
T202075	2G16	5	1810 - 13
T202076	2G16	2	1810 - 13
T202077	2G16	3	1810 - 13
T202078	2G16	6	1810 - 13
T202131	2G16	4	1810 - 13
T202132	2G16	5	1810 - 13
T202133	2G16	6	1810 - 13
T202159	2H22	22	1810 - 43
T202159	2H24	22	1810 - 45
T202160	2H22	10	1810 - 43
T202160	2H24	10	1810 - 45
T202161	2H22	11	1810 - 43
T202161	2H24	11	1810 - 45
T202162	2H22	12	1810 - 43
T202162	2H24	12	1810 - 45
T202162	3C10	13	2160 - 39
T202163	2H22	13	1810 - 43
T202163	2H24	13	1810 - 45
T202164	2H22	21	1810 - 43
T202164	2H24	21	1810 - 45
T202242	1K2	38	0510 - 7
T202357	2H6	3	1810 - 27
T202374	2I10	8	1822 - 3
T202405	2I24	39	1830 - 17
T202586	2H22	18	1810 - 43
T202586	2H24	18	1810 - 45
T202586	3C10	14	2160 - 39
T202653	2H12	20	1810 - 33
T202654	2H14	21	1810 - 35
T202655	2H12	20	1810 - 33
T202656	2H14	21	1810 - 35
T202687	2G22	27	1810 - 19
T202687	2G24	27	1810 - 21
T202742	2J2	47	1830 - 19
T202743	2I16	54	1830 - 9
T202744	2I16	55	1830 - 9
T202745	2I18	56	1830 - 11
T202746	2H16	11	1810 - 37
T202792	1F7	32	0315 - 5
T202793	2H2	5	1810 - 23
T202797	2H16	12	1810 - 37
T202799	2G22	28	1810 - 19
T202799	2G24	28	1810 - 21
T202800	2H8	17	1810 - 29
T202800	2J2	36	1830 - 19
T202876	3D9	2	3401 - 3
T202921	2G22	29	1810 - 19
T202921	2G24	29	1810 - 21
T202938	3D11	2	3401 - 5
T202940	3D11	2	3401 - 5
T203143	2I18	57	1830 - 11
T203381	3D23	15	3440 - 9
T203388	3D23	16	3440 - 9
T203389	2J14	15	2001 - 3
T203390	2G22	30	1810 - 19
T203494	2I18	58	1830 - 11
T203495	2I18	59	1830 - 11
T203544	2H20	15	1810 - 41
T203545	2H20	18	1810 - 41
T203560	2I16	60	1830 - 9
T203569	2H20	32	1810 - 41
T203576	2H20	33	1810 - 41
T203589	2H20	45	1810 - 41
T203646	2E20	6	1674 - 21
T203871	2H20	34	1810 - 41
T203896	2H4	11	1810 - 25
T203912	2E18	8	1674 - 19
T203950	2G22	31	1810 - 19
T203961	2H8	18	1810 - 29
T203961	2H10	18	1810 - 31
T203984	3E20	21	3460 - 19
T203987	2E18	9	1674 - 19
T204009	2J5	25	1910 - 3
T204018	3F15	4	4240 - 11
T204044	2H22	19	1810 - 43
T204044	2H24	19	1810 - 45
T204124	2J2	37	1830 - 19
T204274	2J2	38	1830 - 19
T204278	2I18	61	1830 - 11
T204301	2H20	46	1810 - 41
T204319	2H4	12	1810 - 25
T204457	2H22	20	1810 - 43
T204457	2H24	20	1810 - 45
T204457	3C10	15	2160 - 39
T204543	3D13	9	3401 - 7
T204543	3D15	11	3401 - 9
T204556	2F13	8	1740 - 7
T204599	2H12	22	1810 - 33
T204599	2H14	22	1810 - 35
T204635	2J14	16	2001 - 3
T204643	2H20	17	1810 - 41
T204645	2G22	32	1810 - 19
T204645	2G24	32	1810 - 21
T204678	1G25	3	0360 - 3
T204711	2B11	5	0960 - 9
T204905	3F11	18	4240 - 7
T204938	2K4	7	2007 - 3
T205065	1J18	10	0505 - 3
T205066	2H4	13	1810 - 25
T205068	2H4	14	1810 - 25
T205088	2K4	8	2007 - 3
T205202	2F17	4	1746 - 5
T205243	2G22	27	1810 - 19
T205317	2F19	6	1746 - 7
T205354	2H2	6	1810 - 23
T205367	2C12	28	1320 - 3
T205368	2C12	27	1320 - 3
T205370	2J2	39	1830 - 19
T205401	2H20	20	1810 - 41
T205452	1J18	17	0505 - 3
T205499	2H12	52	1810 - 33
T205499	2H14	52	1810 - 35

NUMERICAL INDEX - CONTINUED

PART NO.	GRID	KEY	PAGE
T205547	2F19	7	1746 - 7
T205661	2H8	19	1810 - 29
T205662	2H8	20	1810 - 29
T205671	2H8	21	1810 - 29
T205671	2H10	19	1810 - 31
T205709	1K2	39	0510 - 7
T205710	1K2	40	0510 - 7
T205712	1J24	27	0510 - 5
T205713	3F21	15	4260 - 11
T205720	3B7	3	2160 - 5
T205722	2C16	11	1320 - 7
T205723	2C14	10	1320 - 5
T205819	2E10	26	1674 - 9
T205821	2F2	12	1674 - 27
T205829	2E10	27	1674 - 9
T205883	1E16	23	0260 - 35
T205901	2H12	23	1810 - 33
T205901	2H14	23	1810 - 35
T205902	2H12	24	1810 - 33
T205902	2H14	24	1810 - 35
T205919	2C16	12	1320 - 7
T205920	2C14	11	1320 - 5
T206080	2H20	21	1810 - 41
T206088	2C12	18	1320 - 3
T206089	2C16	21	1320 - 7
T206090	2C14	21	1320 - 5
T206091	2C12	19	1320 - 3
T206093	2C12	20	1320 - 3
T206094	2C12	21	1320 - 3
T206106	2E10	28	1674 - 9
T206289	2C12	22	1320 - 3
T206290	2C16	13	1320 - 7
T206291	2C14	12	1320 - 5
T206293	2F13	9	1740 - 7
T206295	2C12	26	1320 - 3
T206296	2C16	14	1320 - 7
T206297	2C14	13	1320 - 5
T206344	2E24	4	1674 - 25
T206345	2C16	15	1320 - 7
T206346	2C14	14	1320 - 5
T206434	1B24	19	0201 - 5
T206558	1J24	28	0510 - 5
T206594	1K2	41	0510 - 7
T206616	2I18	28	1830 - 11
T206624	2I18	62	1830 - 11
T206625	2I18	63	1830 - 11
T206626	2I18	64	1830 - 11
T206627	2I18	65	1830 - 11
T206676	1K2	42	0510 - 7
T206718	2I16	66	1830 - 9
T206809	2I18	67	1830 - 11
T206812	2I18	68	1830 - 11
T206813	2I18	31	1830 - 11
T206985	2G24	36	1810 - 21
T206985	2I16	69	1830 - 9
T207072	1K4	41	0512 - 3
T207483	3D21	31	3440 - 7
T207637	2G24	37	1810 - 21
T208102	3D21	32	3440 - 7
T208103	3D21	33	3440 - 7
T208181	1K12	10	0520 - 5
T208181	2J7	19	1910 - 5
T208184	1K12	13	0520 - 5
T208242	2D8	10	1671 - 3
T208283	2G12	12	1810 - 9
T208503	1K12	5	0520 - 5
T208792	3D23	17	3440 - 9
T208904	2C20	8	1369 - 5
T209581	1C13	20	0230 - 3
T209581	1C19	14	0240 - 3
T209889	2E6	5	1674 - 5
T209947	1F9	4	0315 - 7
T210043	1E4	6	0260 - 23
T210101	2H12	25	1810 - 33
T210101	2H14	25	1810 - 35
T210102	2H12	26	1810 - 33
T210102	2H14	26	1810 - 35
T210103	2H12	27	1810 - 33
T210103	2H14	27	1810 - 35
T210106	2H12	28	1810 - 33
T210106	2H14	28	1810 - 35
T210672	2E10	29	1674 - 9
T210698	2H20	26A	1810 - 41
T210699	2H20	27A	1810 - 41
T210700	2H20	28	1810 - 41
T210711	2H20	35	1810 - 41
T210739	2C20	13	1369 - 5
T210767	1J24	29	0510 - 5
T210871	2C12	23	1320 - 3
T210933	2C12	24	1320 - 3
T211366	1K2	43	0510 - 7
T211465	3E20	22	3460 - 19
T211749	3F11	22	4240 - 7
T211864	2G20	5	1810 - 17
T211868	2G20	5	1810 - 17
T211943	2G18	10	1810 - 15
T212073	2G22	36	1810 - 19
T212467	1J24	30	0510 - 5
T212468	1J24	31	0510 - 5
T212793	3D19	5	3440 - 5
T212947	2H16	13	1810 - 37
T213022	3B15	8	2160 - 19
T213022	3B17	9	2160 - 21
T213022	3B19	8	2160 - 23
T213022	3B21	10	2160 - 25
T213022	3C2	10	2160 - 31
T213022	3C4	13	2160 - 33
T213022	3C6	13	2160 - 35
T213023	3B15	9	2160 - 19
T213023	3B17	10	2160 - 21
T213023	3B19	9	2160 - 23
T213023	3B21	11	2160 - 25
T213023	3C2	11	2160 - 31
T213023	3C4	14	2160 - 33
T213023	3C6	14	2160 - 35
T213025	3B15	10	2160 - 19
T213025	3B17	11	2160 - 21
T213025	3B19	10	2160 - 23
T213025	3B21	12	2160 - 25
T213025	3B23	3	2160 - 27
T213025	3B25	6	2160 - 29
T213025	3C2	12	2160 - 31
T213025	3C4	15	2160 - 33
T213025	3C6	15	2160 - 35
T213026	3B13	3	2160 - 13
T213027	3B13	6	2160 - 13
T213027	3C10	17	2160 - 39
T213028	3B13	6	2160 - 13
T213029	3B13	4	2160 - 13
T213030	3B13	5	2160 - 13
T213030	3C10	10	2160 - 39
T213031	3B13	5	2160 - 13
T213031	3B15	11	2160 - 19
T213031	3B17	12	2160 - 21
T213031	3B19	11	2160 - 23
T213031	3B21	13	2160 - 25
T213031	3C2	13	2160 - 31
T213031	3C4	16	2160 - 33
T213031	3C6	16	2160 - 35
T213032	3B23	5	2160 - 27
T213033	3B15	12	2160 - 19
T213033	3B17	13	2160 - 21
T213033	3B19	12	2160 - 23
T213033	3B21	14	2160 - 25
T213033	3C2	14	2160 - 31
T213033	3C4	17	2160 - 33
T213033	3C6	17	2160 - 35
T213048	2D12	5	1672 - 5
T213049	2D12	5	1672 - 5
T213096	3D21	34	3440 - 7
T213102	3D21	35	3440 - 7
T213140	2H10	20	1810 - 31
T213167	2H12	29	1810 - 33
T213167	2H14	30	1810 - 35
T213199	2H8	22	1810 - 29
T213199	2H10	21	1810 - 31
T213207	2C16	22	1320 - 7
T213209	2C14	20	1320 - 5
T213210	2C16	20	1320 - 7
T213215	2C14	19	1320 - 5
T213242	2H22	8	1810 - 43
T213242	2H24	8	1810 - 45
T213242	3C10	8	2160 - 39
T213318	3B21	15	2160 - 25
T213318	3C2	15	2160 - 31
T213318	3C4	18	2160 - 33
T213349	2I14	5	1830 - 5
T213443	2H12	31	1810 - 33
T213443	2H14	31	1810 - 35
T213444	2H12	32	1810 - 33
T213444	2H14	32	1810 - 35
T213445	2H12	33	1810 - 33
T213445	2H14	33	1810 - 35
T213447	2H12	34	1810 - 33
T213447	2H14	34	1810 - 35
T213448	2H12	35	1810 - 33
T213448	2H14	35	1810 - 35
T213449	2H12	36	1810 - 33
T213449	2H14	36	1810 - 35
T213450	2H12	36	1810 - 33
T213450	2H14	36	1810 - 35
T213451	2H12	37	1810 - 33
T213451	2H14	37	1810 - 35
T213452	2H12	38	1810 - 33
T213452	2H14	38	1810 - 35
T213462	2C20	6	1369 - 5
T213516	3D17	15	3440 - 3
T213579	3D17	16	3440 - 3
T213647	1J24	32	0510 - 5
T213775	1K4	34	0512 - 3
T21387	2J5	23	1910 - 3
T213896	2H18	5	1810 - 39
T213917	2G18	11	1810 - 15
T213932	2I12	7	1830 - 3
T213979	2I24	25	1830 - 17
T214023	2G16	7	1810 - 13
T214109	1D14	7	0260 - 9
T214110	1D14	18	0260 - 9
T214111	1D16	18	0260 - 11
T214145	1D14	20	0260 - 9
T214971	2C16	5	1320 - 7

NUMERICAL INDEX - CONTINUED

PART NO.	GRID	KEY	PAGE
T214972	2C14	4	1320 - 5
T215218	2G12	14	1810 - 9
T215268	2C12	17	1320 - 3
T215269	2C16	16	1320 - 7
T215270	2C14	15	1320 - 5
T215319	2G24	39	1810 - 21
T215319	2I16	70	1830 - 9
T215784	2E20	10	1674 - 21
T216983	1K12	12	0520 - 5
T217649	2H20	26A	1810 - 41
T217649	2H20	26B	1810 - 41
T217649	2H20	27A	1810 - 41
T217649	2H20	28	1810 - 41
T217650	2H20	26A	1810 - 41
T217650	2H20	27A	1810 - 41
T217650	2H20	27B	1810 - 41
T217650	2H20	28	1810 - 41
T23027	2K2	4	2005 - 3
T23474	1H17	23	0404 - 3
T24212	3B5	30	2160 - 3
T24212	3B5	42	2160 - 3
T24510	3D21	36	3440 - 7
T24513	1K4	25	0512 - 3
T25875	3F7	12	4240 - 3
T27183	1B3	3	0110 - 3
T27183	1B13	3	0110 - 13
T27184	1B3	5	0110 - 3
T27184	1B13	5	0110 - 13
T27193	1B5	3	0110 - 5
T27193	1B11	3	0110 - 11
T27193	1B15	3	0110 - 15
T27194	1B5	5	0110 - 5
T27194	1B11	5	0110 - 11
T27194	1B15	5	0110 - 15
T27260	2J5	24	1910 - 3
T28862	3E20	23	3460 - 19
T29342	1D18	25	0260 - 13
T29342	3B5	2	2160 - 3
T33372	3D17	14	3440 - 3
T33933	1C13	3	0230 - 3
T33933	1C19	8	0240 - 3
T38282	1F13	13	0341 - 3
T38282	2C2	35	1060 - 3
T38377	1E12	14	0260 - 31
T38377	1K18	14	0560 - 3
T41677	1B24	26	0201 - 5
T41953	1C15	15	0230 - 5
T41953	1D12	16	0260 - 7
T41961	1C13	16	0230 - 3
T41963	1C15	17	0230 - 5
T41982	1C15	26	0230 - 5
T41983	1C15	27	0230 - 5
T41984	1C15	28	0230 - 5
T42199	2D8	22	1671 - 3
T42217	2B9	8	0960 - 7
T42243	3D17	17	3440 - 3
T42302	3B5	62	2160 - 3
T42302	3D25	25	3450 - 3
T42302	3E2	25	3450 - 5
T42574	3D21	37	3440 - 7
T42582	3D21	38	3440 - 7
T42583	3D21	39	3440 - 7
T42589	3D21	20	3440 - 7
T42598	3E18	13	3460 - 17
T42843	2F11	4	1740 - 5
T42844	2F11	5	1740 - 5
T43726	3D13	11	3401 - 7
T43726	3D15	13	3401 - 9
T54904	3B5	10	2160 - 3
T54904	3B5	58	2160 - 3
T55210	2I8	3	1821 - 9
T55222	2I8	8	1821 - 9
T55224	2I4	16	1821 - 5
T55224	2I8	12	1821 - 9
T55501	2F2	13	1674 - 27
T58056	2J2	16	1830 - 19
T58542	2G12	10	1810 - 9
T59014	1D10	5	0260 - 5
T59014	1D16	4	0260 - 11
T59506	3F7	9	4240 - 3
T59932	1B3	4	0110 - 3
T59932	1B13	4	0110 - 13
T59933	1B5	4	0110 - 5
T59933	1B11	4	0110 - 11
T59933	1B15	4	0110 - 15
T59938	2H20	38	1810 - 41
T59974	3D17	8	3440 - 3
T6Y0309	3F11	23	4240 - 7
T6Y5230	3F7	7	4240 - 3
T6Y5230	3F15	2	4240 - 11
T60260	3D21	40	3440 - 7
T60811	1J18	12	0505 - 3
T60811	2C18	3	1369 - 3
T60811	2I12	4	1830 - 3
T61861	1E4	9	0260 - 23
T63019	2E10	17	1674 - 9
T63019	2G22	13	1810 - 19
T63019	2K4	3	2007 - 3
T63224	2C16	17	1320 - 7
T63225	2C14	16	1320 - 5
T63798	2I8	11	1821 - 9
T66702	3D9	1	3401 - 3
T66703	3D9	1	3401 - 3
T66704	3D9	1	3401 - 3
T66707	3D9	1	3401 - 3
T66708	3D13	12	3401 - 7
T66708	3D15	14	3401 - 9
T66709	3D13	12	3401 - 7
T66709	3D15	14	3401 - 9
T70438	3E18	14	3460 - 17
T71306	1B24	12	0201 - 5
T72414	1K16	8	0540 - 3
T72414	2B3	20	0930 - 3
T72414	2F9	7	1740 - 3
T72414	2F11	3	1740 - 5
T72856	1K2	44	0510 - 7
T74412	2E4	14	1674 - 3
T74412	2E6	6	1674 - 5
T74412	2E14	13	1674 - 15
T74416	2E4	15	1674 - 3
T74416	2E6	7	1674 - 5
T74416	2E8	18	1674 - 7
T74416	2E14	16	1674 - 15
T75197	1K18	15	0560 - 3
T75276	2E2	10	1673 - 15
T75276	2E4	16	1674 - 3
T75276	2E16	10	1674 - 17
T75447	1D12	7	0260 - 7
T75644	1C13	10	0230 - 3
T75644	1C19	15	0240 - 3
T75644	2C22	7	1370 - 3
T76127	3B13	6	2160 - 13
T76128	3B13	5	2160 - 13
T76252	2E8	18	1674 - 7
T76252	2E14	15	1674 - 15
T76719	3C18	15	2163 - 3
T76833	2G18	12	1810 - 15
T76938	1E14	1	0260 - 33
T76938	1E16	8	0260 - 35
T76938	2B3	8	0930 - 3
T76938	3B5	41	2160 - 3
T77067	3E14	29	3460 - 13
T77613	1D10	9	0260 - 5
T77613	1D18	12	0260 - 13
T77613	1E2	10	0260 - 21
T77613	1E6	21	0260 - 25
T77613	1E18	23	0260 - 37
T77613	1I14	8	0416 - 1
T77613	1K18	7	0560 - 3
T77613	1K18	24	0560 - 3
T77613	2B13	3	0960 - 11
T77613	2B15	6	0960 - 13
T77613	2B17	3	0960 - 15
T77613	2B19	3	0960 - 17
T77613	2B21	6	0960 - 19
T77613	2C2	5	1060 - 3
T77613	2C4	4	1060 - 5
T77613	3B23	10	2160 - 27
T77613	3B25	9	2160 - 29
T77613	3C12	2	2160 - 41
T77613	3C18	6	2163 - 3
T77613	3E16	3	3460 - 15
T77613	3E18	7	3460 - 17
T77613	3E20	10	3460 - 19
T77613	3E24	5	3460 - 23
T77613	3F4	3	3460 - 27
T77613	3F17	3	4260 - 7
T77613	3F19	3	4260 - 9
T77613	3F21	5	4260 - 11
T77706	2F13	10	1740 - 7
T77814	1C7	2	0210 - 9
T77814	3C12	6	2160 - 41
T77814	3C22	23	2163 - 7
T77814	3C24	23	2163 - 9
T77814	3E18	3	3460 - 17
T77857	1E6	23	0260 - 25
T77857	1E10	6	0260 - 29
T77857	1E12	5	0260 - 31
T77857	1E14	7	0260 - 33
T77857	1E16	3	0260 - 35
T77857	1E18	11	0260 - 37
T77857	1J18	18	0505 - 3
T77857	2B3	5	0930 - 3
T77857	2B13	7	0960 - 11
T77857	2B15	3	0960 - 13
T77857	2B21	3	0960 - 19
T77857	2C9	4	1111 - 5
T77857	2C20	7	1369 - 5
T77857	3E24	10	3460 - 23
T77857	3F2	7	3460 - 25
T77858	1D10	10	0260 - 5
T77858	1E6	8	0260 - 25
T77858	1E10	2	0260 - 29
T77858	1E18	6	0260 - 37
T77858	1G25	5	0360 - 3
T77858	1H4	2	0363 - 3
T77858	2B3	13	0930 - 3
T77858	2C9	7	1111 - 5
T77858	2C20	14	1369 - 5
T77858	3C20	4	2163 - 5
T77858	3C22	24	2163 - 7

NUMERICAL INDEX - CONTINUED

PART NO.	GRID	KEY	PAGE
T77858	3C24	24	2163 - 9
T77932	1E18	13	0260 - 37
T77932	2B3	10	0930 - 3
T77932	3C22	25	2163 - 7
T77932	3C24	25	2163 - 9
T77932	3F2	3	3460 - 25
T78313	1E6	6	0260 - 25
T78313	3C22	26	2163 - 7
T78313	3C24	26	2163 - 9
T78497	2C9	15	1111 - 5
T78497	3C22	52	2163 - 7
T78497	3C24	52	2163 - 9
T78612	1G23	6	0350 - 36
T78662	1B22	8	0201 - 3
T78662	1B24	24	0201 - 5
T78662	1D2	3	0250 - 5
T78707	1E4	7	0260 - 23
T78715	1E4	8	0260 - 23
T78716	2B21	11	0960 - 19
T78716	2C9	18	1111 - 5
T78787	1F7	33	0315 - 5
T78787	2E4	15	1674 - 3
T78787	2E8	19	1674 - 7
T78787	2E16	9	1674 - 17
T79477	1K2	22	0510 - 7
T8E6359	3F11	24	4240 - 7
T80123	3E2	42	3450 - 5
T80394	2D22	10	1673 - 11
T80394	2D24	7	1673 - 13
T80938	1C7	1	0210 - 9
T81012	2H20	36	1810 - 41
T81029	2B21	12	0960 - 19
T81029	3F21	16	4260 - 11
T81674	3D21	41	3440 - 7
T82612	3E24	23	3460 - 23
T82791	2E10	30	1674 - 9
T82791	2G22	33	1810 - 19
T82791	2G24	33	1810 - 21
T82792	2E10	31	1674 - 9
T82792	2G22	34	1810 - 19
T82792	2G24	34	1810 - 21
T82855	3D21	42	3440 - 7
T82861	2E20	11	1674 - 21
T82886	2F9	8	1740 - 3
T83426	2D14	6	1673 - 3
T83426	2F21	3	1747 - 3
T83426	2F23	4	1749 - 3
T83426	3D21	30	3440 - 7
T9W2668	3F11	25	4240 - 7
UN7189	1C3	..	0210 - 5
U10746	3F9	11	4240 - 5
U12167	3F7	27	4240 - 3
U12547	1D10	20	0260 - 5
U12547	1E6	10	0260 - 25
U12547	1E10	3	0260 - 29
U12547	1E12	8	0260 - 31
U12547	1E14	10	0260 - 33
U12547	1E16	4	0260 - 35
U12547	1E18	7	0260 - 37
U12547	1E20	12	0260 - 39
U12547	1G25	6	0360 - 3
U12547	1H4	13	0363 - 3
U12547	2C9	19	1111 - 5
U12547	2C20	15	1369 - 5
U12547	3C20	2	2163 - 5
U12547	3C22	27	2163 - 7
U12547	3C24	27	2163 - 9
U13639	1G23	5	0350 - 36
U13639	1H17	5	0404 - 3
U17409	1B22	7	0201 - 3
U17409	1B24	23	0201 - 5
U17409	1C5	5	0210 - 7
U17409	1C5	8	0210 - 7
U17409	1C9	30	0210 - 11
U17409	1D2	4	0250 - 5
U41528	3F7	28	4240 - 3
U42208	1J24	15	0510 - 5
U42208	3C16	7	2160 - 45
U42462	1C15	29	0230 - 5
U42702	1E8	4	0260 - 27
U42702	3D25	34	3450 - 3
U42702	3E2	48	3450 - 5
U42702	3E6	29	3460 - 5
U43012	2G22	40	1810 - 19
U43021	2G24	42	1810 - 21
U44115	1F18	1	0350 - 5
U44115	1F24	5	0350 - 13
U44115	1G22	5	0350 - 35
U44537	2D16	4	1673 - 5
U44915	2B9	9	0960 - 7
U46457	3C22	28	2163 - 7
U46457	3C24	28	2163 - 9
W37636	1G22	17	0350 - 35
YZ100100	1F16	16	0350 - 3
YZ100100	1F18	24	0350 - 5
YZ100356	1G8	11	0350 - 21
YZ100356	1G10	11	0350 - 23
YZ100952	1G16	8	0350 - 29
YZ101349	1G16	6	0350 - 29
YZ101350	1G16	7	0350 - 29
YZ101353	1F20	9	0350 - 7
YZ101474	1F16	2	0350 - 3
YZ101474	1F18	2	0350 - 5
YZ101474	1F24	2	0350 - 13
YZ101612	1G22	12	0350 - 35
YZ101905	1G18	3	0350 - 31
YZ102234	1F22	6	0350 - 9
YZ102752	1F20	8	0350 - 7
YZ102996	1G6	1	0350 - 19
YZ103040	1G8	12	0350 - 21
YZ103040	1G10	12	0350 - 23
YZ103042	1E14	9	0260 - 33
YZ103067	1G16	2	0350 - 29
YZ103100	1G8	14	0350 - 21
YZ103102	1G10	13	0350 - 23
YZ103111	1G6	13	0350 - 19
YZ103112	1G6	14	0350 - 19
YZ103113	1G4	14	0350 - 17
YZ103114	1G22	1	0350 - 35
YZ103115	1G16	4	0350 - 29
YZ103129	1G6	17	0350 - 19
YZ103129	1G10	17	0350 - 23
YZ103130	1G10	1	0350 - 23
YZ103144	1G8	20	0350 - 21
YZ103146	1F16	7	0350 - 3
YZ103146	1F18	12	0350 - 5
YZ103146	1F20	4	0350 - 7
YZ103148	1F16	3	0350 - 3
YZ103148	1F18	4	0350 - 5
YZ103185	1G16	3	0350 - 29
YZ103188	1G2	2	0350 - 15
YZ103188	1G14	2	0350 - 27
YZ103405	1F16	11	0350 - 3
YZ103405	1F18	17	0350 - 5
YZ103455	1F18	21	0350 - 5
YZ103847	1G2	1	0350 - 15
YZ103875	1G8	17	0350 - 21
YZ103876	1G8	16	0350 - 21
YZ104048	1F13	9	0341 - 3
YZ104052	1G16	1	0350 - 29
YZ104087	1F20	10	0350 - 7
YZ104088	1G12	3	0350 - 25
YZ104114	1F22	18	0350 - 9
YZ104121	1F22	19	0350 - 9
YZ104125	1F22	7	0350 - 9
YZ104140	1F22	25	0350 - 9
YZ104154	1G14	1	0350 - 27
YZ104170	1F22	27	0350 - 9
YZ104179	1G20	2	0350 - 33
YZ104180	1G20	3	0350 - 33
YZ104198	1G20	1	0350 - 33
YZ104198	1G22	1	0350 - 35
YZ104237	1G18	2	0350 - 31
YZ104280	1F20	5	0350 - 7
YZ104280	1F22	30	0350 - 9
YZ104281	1G2	3	0350 - 15
YZ104281	1G12	2	0350 - 25
YZ104653	1G12	1	0350 - 25
YZ104678	1F22	18	0350 - 9
YZ104733	1G8	21	0350 - 21
YZ104746	1F22	17	0350 - 9
YZ104871	1G16	16	0350 - 29
YZ104908	1G4	9	0350 - 17
YZ104908	1G6	9	0350 - 19
YZ104959	1G20	4	0350 - 33
YZ105042	1F13	10	0341 - 3
YZ105059	1G4	13	0350 - 17
YZ105065	1G22	3	0350 - 35
YZ105094	1F18	3	0350 - 5
YZ105096	1F16	5	0350 - 3
YZ105096	1F18	10	0350 - 5
YZ105097	1F16	6	0350 - 3
YZ105097	1F18	11	0350 - 5
YZ105122	1F18	15	0350 - 5
YZ105258	1G23	1	0350 - 36
YZ105259	1F22	9	0350 - 9
YZ105319	1F18	9	0350 - 5
YZ105320	1F18	7	0350 - 5
YZ105354	1F22	20	0350 - 9
YZ105375	1F16	11	0350 - 3
YZ105375	1F18	17	0350 - 5
YZ105385	1F16	1	0350 - 3
YZ105385	1F18	1	0350 - 5
YZ105386	1G16	11	0350 - 29
YZ105415	1G4	15	0350 - 17
YZ105415	1G6	15	0350 - 19
YZ105415	1G10	15	0350 - 23
YZ105419	1F13	11	0341 - 3
YZ105419	1F13	21	0341 - 3
YZ105443	1G8	13	0350 - 21
YZ105454	1G4	11	0350 - 17
YZ105454	1G6	11	0350 - 19
YZ105463	1G10	1	0350 - 23
YZ105464	1G8	1	0350 - 21
YZ105465	1G4	12	0350 - 17
YZ105465	1G6	12	0350 - 19
YZ105485	1G4	18	0350 - 17
YZ105485	1G6	18	0350 - 19
YZ105485	1G8	18	0350 - 21
YZ105485	1G10	18	0350 - 23
YZ105486	1G22	3	0350 - 35

NUMERICAL INDEX - CONTINUED

PART NO.	GRID	KEY	PAGE
YZ105493	1G4	10	0350 - 17
YZ105493	1G6	10	0350 - 19
YZ105494	1G8	10	0350 - 21
YZ105494	1G10	10	0350 - 23
YZ105508	1G4	1	0350 - 17
YZ105509	1G6	1	0350 - 19
YZ105533	1F20	1	0350 - 7
YZ105538	1F18	1	0350 - 5
YZ105538	1F24	7	0350 - 13
YZ105539	1F18	1	0350 - 5
YZ105539	1F24	10	0350 - 13
YZ105575	1F24	1	0350 - 13
YZ105685	1G18	1	0350 - 31
YZ105689	1G4	4	0350 - 17
YZ105689	1G6	4	0350 - 19
YZ105689	1G8	4	0350 - 21
YZ105689	1G10	4	0350 - 23
YZ105724	1F22	21	0350 - 9
YZ105851	1F20	9	0350 - 7
YZ105856	1F5	7	0315 - 3
YZ105891	1G8	10	0350 - 21
YZ105891	1G10	10	0350 - 23
YZ105892	1G4	10	0350 - 17
YZ105892	1G6	10	0350 - 19
YZ105893	1G18	4	0350 - 31
YZ105914	1G18	2	0350 - 31
YZ105982	1G8	12	0350 - 21
YZ105982	1G10	12	0350 - 23
YZ106078	1G4	16	0350 - 17
YZ106078	1G6	16	0350 - 19
YZ106078	1G10	16	0350 - 23
YZ106163	1G8	16	0350 - 21
YZ106184	1G4	17	0350 - 17
YZ106185	1G6	17	0350 - 19
YZ106185	1G10	17	0350 - 23
YZ106202	1G2	1	0350 - 15
YZ106205	1F24	1	0350 - 13
YZ106211	1G4	9	0350 - 17
YZ106211	1G6	9	0350 - 19
YZ106212	1G8	9	0350 - 21
YZ106212	1G10	9	0350 - 23
YZ106316	1G22	3	0350 - 35
YZ120167	1C1	1	0210 - 3
YZ120386	1C9	14	0210 - 11
YZ120398	1C9	3	0210 - 11
YZ120442	1C6	1	0210 - 8
YZ120455	1C5	11	0210 - 7
YZ120471	1C9	16	0210 - 11
YZ120503	1C9	23	0210 - 11
YZ120508	1C7	3	0210 - 9
YZ120522	1C5	23	0210 - 7
YZ120589	1C1	1	0210 - 3
YZ120595	1C1	1	0210 - 3
YZ120661	1C1	1	0210 - 3
YZ120662	1C1	1	0210 - 3
YZ120690	1C9	23	0210 - 11
YZ120826	1C6	9	0210 - 8
YZ120859	1C9	4	0210 - 11
YZ120859	1C9	11	0210 - 11
YZ120909	1C9	22	0210 - 11
YZ120909	1C9	24	0210 - 11
YZ120912	1C9	11	0210 - 11
YZ120913	1C9	4	0210 - 11
YZ150041	1G4	17	0350 - 17
YZ150119	1G4	2	0350 - 17
YZ150119	1G6	2	0350 - 19
YZ150119	1G8	2	0350 - 21
YZ150119	1G10	2	0350 - 23
YZ150141	1G22	4	0350 - 35
YZ150185	1G8	9	0350 - 21
YZ150185	1G10	9	0350 - 23
YZ150204	1G22	16	0350 - 35
YZ150217	1G8	11	0350 - 21
YZ150217	1G10	11	0350 - 23
YZ250086	1F22	23	0350 - 9
YZ250161	1G2	4	0350 - 15
YZ250161	1G4	19	0350 - 17
YZ250161	1G6	19	0350 - 19
YZ250161	1G8	19	0350 - 21
YZ250161	1G10	19	0350 - 23
YZ250249	1G22	2	0350 - 35
YZ250262	1F20	8	0350 - 7
YZ501639	1G22	2	0350 - 35
YZ501931	1G22	4	0350 - 35
Z21059	2H20	37	1810 - 41
Z21059	2H20	37A	1810 - 41
Z40239	3D25	26	3450 - 3
40B1113	1G2	4	0350 - 15
400R	1C9	1	0210 - 11
4001456	3B5	23	2160 - 3
4003725	1G4	6	0350 - 17
4003725	1G6	6	0350 - 19
4003725	1G8	6	0350 - 21
4003725	1G10	6	0350 - 23
4005234	1G16	15	0350 - 29
4008023	1F20	3	0350 - 7
4008024	1F20	2	0350 - 7
4008520	1G4	4	0350 - 17
4008520	1G6	4	0350 - 19
4008520	1G8	4	0350 - 21
4008520	1G10	4	0350 - 23
4008521	1G4	5	0350 - 17
4008521	1G6	5	0350 - 19
4008521	1G8	5	0350 - 21
4008521	1G10	5	0350 - 23
4009711	1G4	7	0350 - 17
4009711	1G6	7	0350 - 19
4009711	1G8	8	0350 - 21
4009711	1G10	8	0350 - 23

PART NO.	GRID	KEY	PAGE