RUTHZIL TRATOR COMERCIAL DE PEÇAS LTDA 11 97083-6812 ROLANDO

Parts Catalog

6B, 6BT, 6BTA5.9

Construction

DEZEMBRO 1986

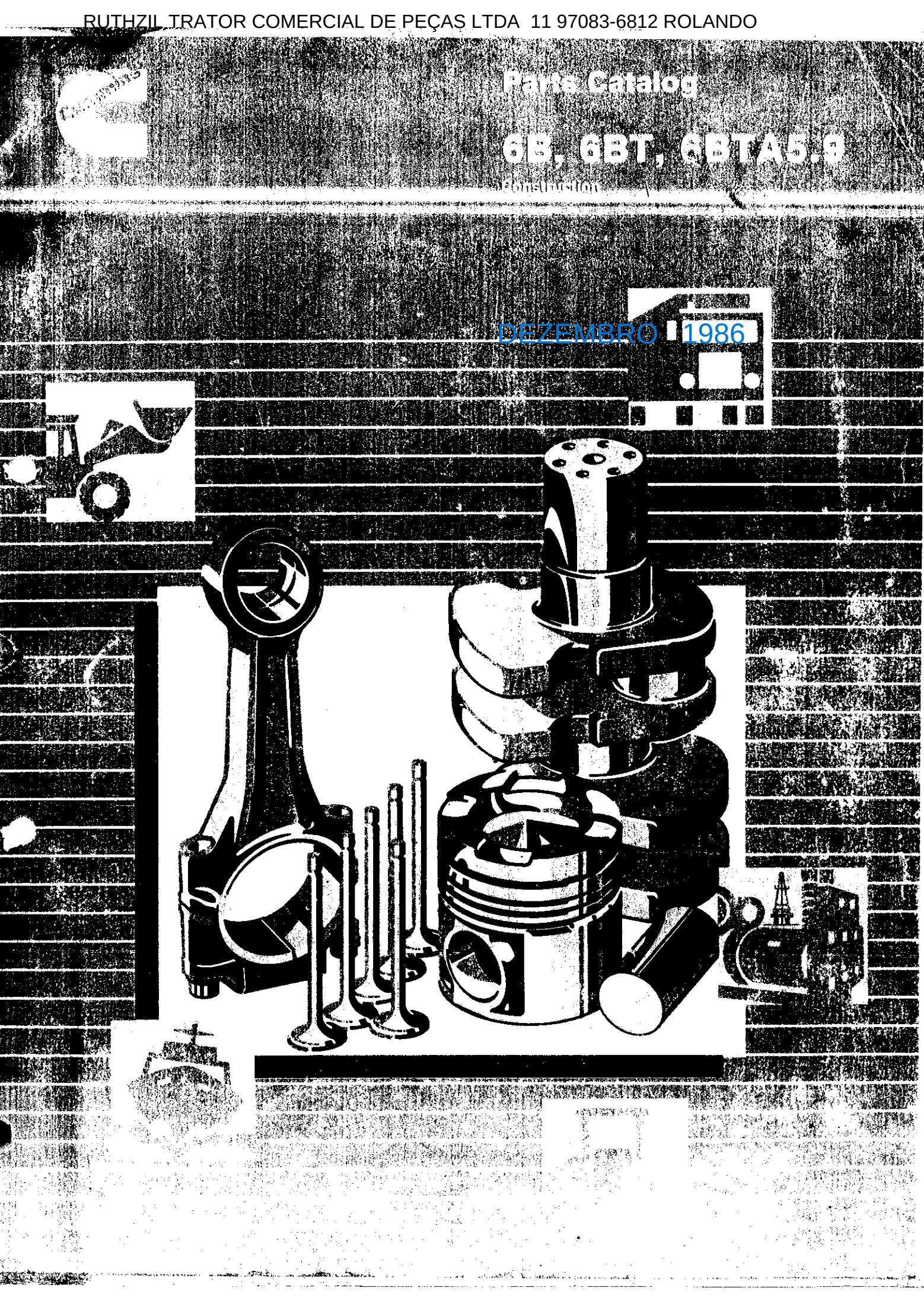

Parts Catalog

6B, 6BT, 6BTA5.9

Construction

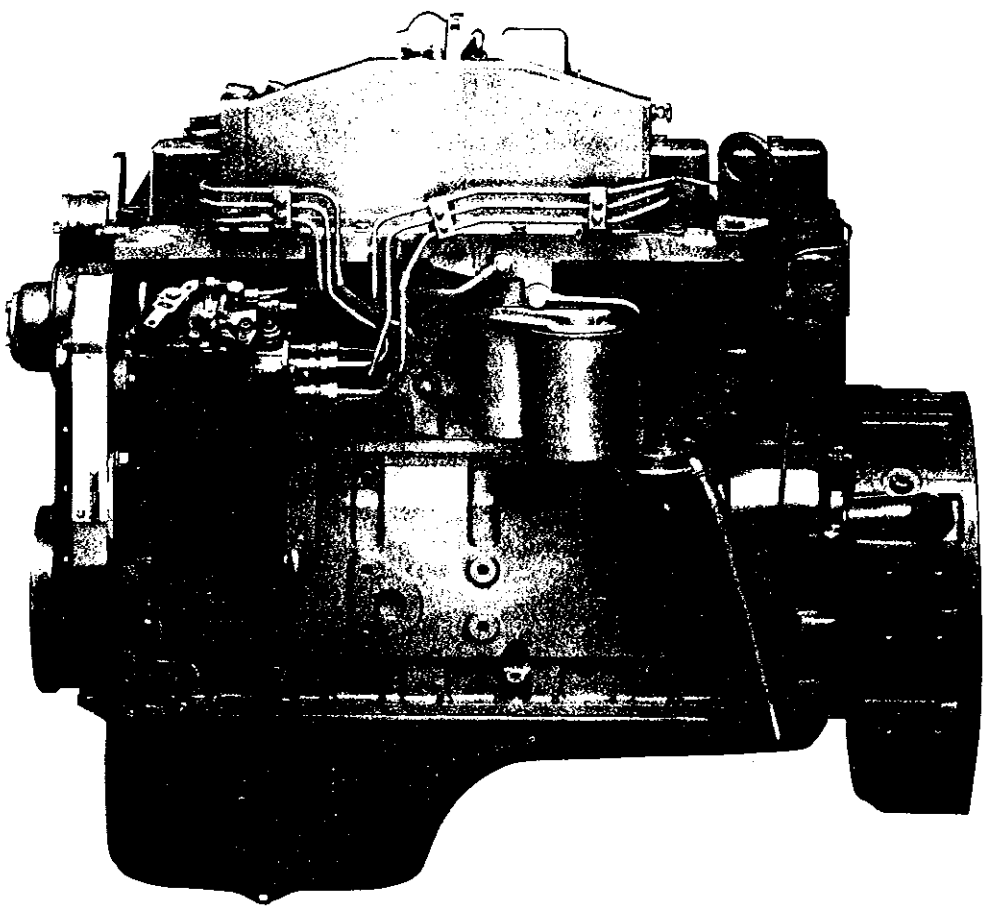

Cummins Engine Co., Inc.

New Parts Warranty
Midrange

ERAGE

UCTS WARRANTED

arranty applies to New Parts marketed by Cummins for its A, B, and C Series engines. It applies anywhere in the world where e is available through a Cummins distributor or A, B, and C Series dealer.*

RAGE

arranty covers any failures of parts on or after December 1, 1986, which result, under normal use and service, from defects kmanship or material (Warrantable Failures). The coverage extends six months from the date of first installation.

arranty continues to all subsequent Owners until the end of the period of coverage.

NS RESPONSIBILITIES

ins will pay for all parts and labor needed to repair the damage to the engine resulting from the Warrantable Failure. All labor will be paid in accordance with Cummins published Standard Repair Time guidelines.

ins will pay for the lubricating oil, antifreeze, filter elements, and other maintenance items that are not reusable due to the ntable Failure.

ins will pay reasonable labor costs for engine removal and reinstallation when necessary to make the warranty repair.

R RESPONSIBILITIES

time when the parts are installed, Owner is responsible for the preparation of a written record containing the following: (1) the of installation of the parts; (2) the engine serial number; (3) the engine miles, hours or kilometers of operation; (4) the parts led, and (5) the location of the parts in the engine. The purpose of this record is to protect Owner's interests and support any for a Warrantable Failure.

r is responsible for the operation and maintenance of the engine as specified in Cummins Operation and Maintenance als.

e expiration of the warranty, Owner must give notice to a Cummins distributor or A, B, and C Series dealer* of a failure dered to be warrantable and deliver the engine to such facility for repair.

r is responsible for the cost of lubricating oil, antifreeze, filter elements and other maintenance items replaced during warranty rs except where such items are not reusable due to a Warrantable Failure.

r is responsible for communication expenses, meals, lodging and similar costs incurred by Owner as a result of a Warrantable re. Owner is responsible for non-engine repairs and for "downtime" expenses, cargo damage and all business costs and s resulting from a Warrantable Failure. **CUMMINS IS NOT RESPONSIBLE FOR INCIDENTAL OR CONSEQUENTIAL AGES.**

e United States, some states do not allow the exclusion or limitation of incidental or consequential damages relating to sumer Products, so the above limitation or exclusion may not apply to you.)

ATIONS

mins is not responsible for failures resulting from Owner or Operator abuse or neglect, such as: operation without adequate ant or lubricants; overfueling; overspeeding; lack of maintenance of lubricating, cooling or air intake systems; improper storage, ing, warm-up, run-in or shutdown practices. Cummins is also not responsible for failures caused by incorrect fuel, or by water, or other contaminants in the fuel.

pt for fuel pumps, Cummins does not warrant parts supplied by Cummins which bear the name of another company. These s are warranted by their manufacturers and not by Cummins. This category of parts includes, but is not limited to: hydraulic ps, alternators, starters, fans, air conditioning compressors, clutches, filters, transmissions, torque converters, marine gears, leaners and non-Cummins air compressors, engine compression brakes, and steering pumps.

s used in warranty repairs may be new Cummins, Cummins approved rebuilt parts, or repaired parts. Cummins is not onsible for failures resulting from the use of parts not approved by Cummins.

ore a claim for excessive oil consumption will be considered, Owner must submit adequate documentation to show that sumption exceeds Cummins published standards.

s warranty does not apply to parts furnished by Cummins at no charge to the Owner.

S WARRANTY IS THE SOLE WARRANTY MADE BY CUMMINS IN REGARD TO THESE PARTS. CUMMINS MAKES NO HER WARRANTIES, EXPRESS OR IMPLIED, OR OF MERCHANTABILITY OR FITNESS FOR A PARTICULAR PURPOSE.

INVEST IN THE BEST

Product Identification Information

Data plates should be referred for parts identification.

1. ENGINE DATA PLATE

Cummins Engine Company, Inc. **Columbus, Indiana** **47202-3005** **Made in U.S.A. 3920701**	Engine Cert. I.D. Certificat d'Identité	C.I.D./L. Pouce Cube/L	Family Famille	CPL	Model Modèle	FEL	EPA	CARB
					Injector P/N Injecteur P/N	NOX		
WARNING: Injury may result and warranty is voided if fuel rate rpm or altitudes exceed published maximum values for this model and application. **AVERTISSEMENT:** Danger de blessures et d'annulation de la garantie si débit de combustible tr/min ou altitude dépassent les valeurs maximum annoncées pour ce modèle et son utilisation.	Timing – T.D.C. Calage – P.M.H.				Engine No. Moteur No.	PM		
	Valve lash cold Jeux Soup. à Froid		Int. Adm.	Exh. Éch.	Ref. No.			
	Firing Order Ordre d'Allumage				Fuel rate at adv. HP Débit combust. à puiss. indiquée			mm³/stroke
Date of Mfg. Date of Fabrication	Idle Speed (rpm) Vitesse Ralenti	E.C.S.			Advertised HP Puiss. indiquée (ch)	at à		rpm

1. Shop order number
2. Model designation
3. Engine serial number
4. Control parts list

2. FUEL PUMP DATA PLATE

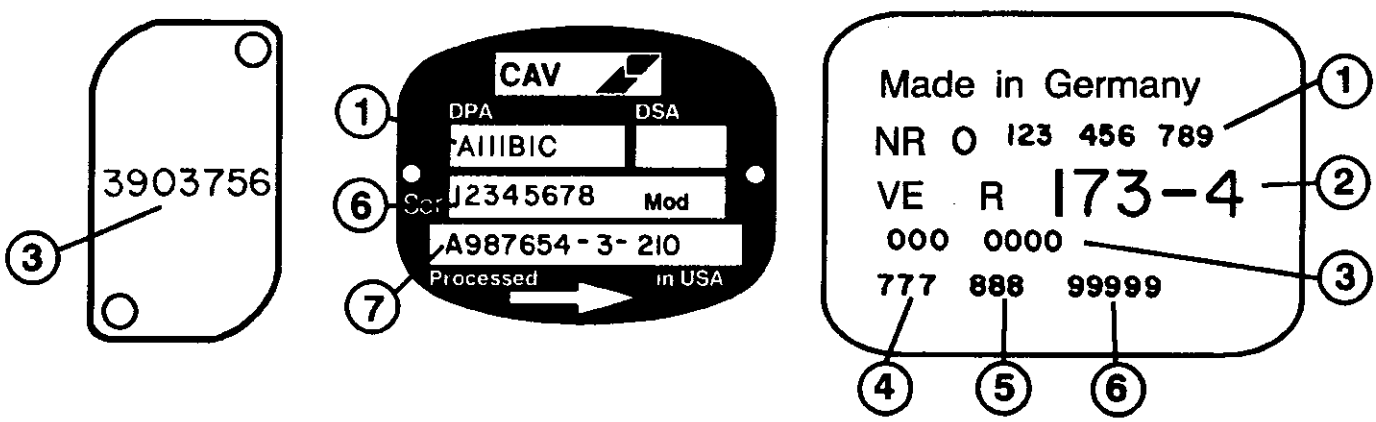

1. Supplier part number
2. Supplier alpha-numerica designation
3. Cummins part number
4. Factory code
5. Manufacturing date code
6. Serial number of pump
7. Pump setting code

This catalog was compiled by Rita Wheeler in Parts Communications.

Customer Service Information

This standard Parts Catalog contains parts information for the following Cummins Engine Model(s):

6B5.9	D401001CX02	CPL 596, 714, 791, 845, 960, 1403, 9723, 9742
6BT5.9	D402002CX02	CPL 728, 729, 761, 807, 938, 943, 947, 949 950, 1168, 1246, 1266, 1279, 1288, 1289
6BTA5.9	D403003CX02	CPL 599, 715, 834, 912, 940, 983, 1209

Certain basic engine components have been matched to give optimum performance to your engine. The part numbers listed in this catalog for these components are for a standard engine configuration. When ordering any of the Control Parts List (CPL) components listed below, please order by part description and engine serial number. Reference to the CPL number stamped on the engine data (name) plate will also help identify the proper service parts for your engine.

Control Parts List (CPL) Components

Camshaft	Page 121	**Piston**	Page 123-131
Cylinder Head	Page 151-165	**Pump, Injection**	Page 37-87
Exhaust Manifold	Page 197-199, 212	**Turbocharger**	Page 166-191
Injector	Page 133-149		

USER INFORMATION

- **Parts numbers appearing in ( ) are for identification purposes only and should not be used when ordering service replacement parts.**
- **The reference numbers appearing on the art pages is for publication use only.**
- **Assembly content is shown by part number indentation.**
- **Options are engineered production part groupings, specifically used for compiling engine orders.**
- **Option numbers are for reference only and are not sold for service.**
- **Use assembly and not option content to determine service parts replacement.**

ALWAYS SPECIFY ENGINE MODEL AND SERIAL NUMBER WHEN ORDERING PARTS FROM THIS CATALOG

Engine Model _____ Engine Serial No. _____

MFG Make _____ Model _____ Chassis No. _____

Fuel Pump Assembly No. _____ Injector No. _____

Belt, Fan _____ Belt, Water Pump _____ Belt, Gen. _____

Element, Fuel Filter _____ Full Flow Lub. Filter _____

Air Cleaner _____ By-Pass Lub. Filter _____

Special Equipment

_____

_____

_____

Table of Contents

Page No.

Aftercooler Plumbing 207
Air Compressor 17
Air Intake Connection 106, 107
Alternator 21, 22
Alternator Location 23, 24, 25, 26

Bosch Injection Pump .. 55, 57, 59, 61, 63, 65, 67, 69, 71, 73, 77, 79, 81, 83, 85
Bosch VE Pump Service Parts 75, 87

Cam Follower Cover 14
Camshaft 121
CAV DPA Service Parts 51
C.A.V. Injection Pump .. 37, 39, 41, 43, 45, 47, 49, 52, 53
Connecting Rod and Piston ... 123, 125, 126, 129, 131
Crankshaft 13
Cylinder Block 11
Cylinder Block Cover 116, 117
Cylinder Head . 151, 153, 155, 157, 159, 161, 163, 165

Dataplate 2

Exhaust Connection 213, 214, 215
Exhaust Manifold 212

Fan Drive 29
Flywheel 104, 105
Flywheel Housing 33, 34
Front Engine Support 28
Front Gear Cover 5
Front Gear Train Accessory Drive 19
Fuel Filter 30
Fuel Filter Plumbing 31, 32
Fuel Injector .. 133, 134, 137, 139, 140, 143, 145, 147, 149
Fuel Pump Coupling 88, 89, 90, 91, 92, 93, 94
Fuel System Accessories 95, 96

Lifting Bracket 108
Lubricating Oil Cooler 111, 113
Lubricating Oil Pump 115

Main Bearing Kits 219
Main Bearing Sets 13
Mechanical Tach Drive 27

Oil Level Gauge 114
Oil Pan 119

Piston Kits 219
Piston Ring Sets 219
Plumbing, Fuel 99, 101, 103
Pump Water 211

Rocker Levers 7

Service Gasket Set 216, 217, 218

Page No.

Service Parts 11, 13, 151, 153, 155, 157, 159, 161, 163, 165
Service Repair Kits 219
Starting Motor 193, 194, 195
Starting Motor Mounting 192

Thermostat 20
Thermostat Housing 201
Turbo Repair Kit 219
Turbocharger . 166, 167, 168, 169, 170, 171, 172, 175, 176, 177, 178, 181, 183, 185, 186, 187, 188, 191
Turbocharger Location 197, 199, 200
Turbocharger Plumbing ..... 203, 205 ,

Valve Cover 206
Valve Tappet 8
Vibration Damper 18

Water Inlet Connection 208, 209, 210

Option Number Index A-1
Part Number Index B-1

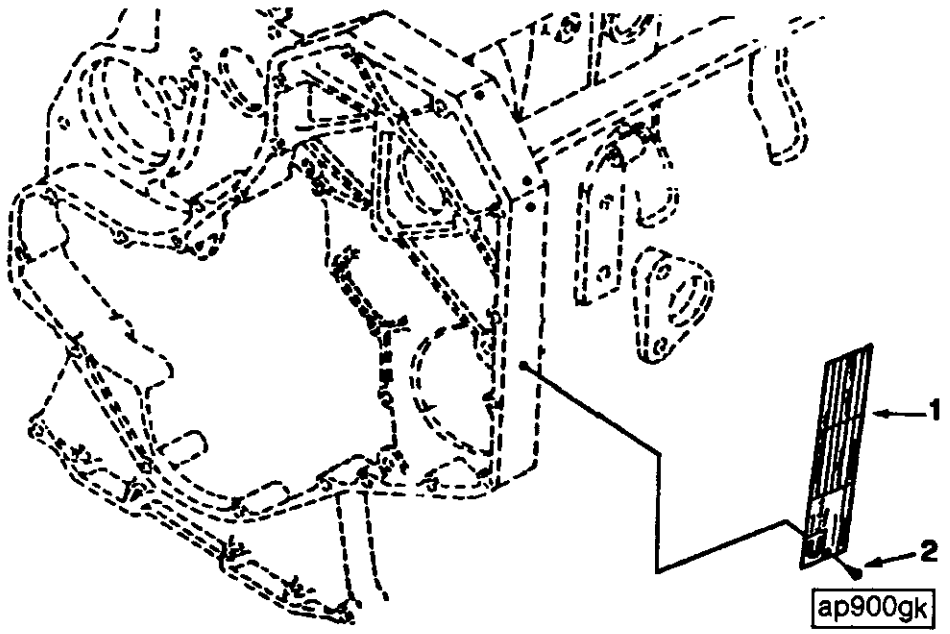

Ref No.	Part Number	Part Name	Req	Remarks
		DATAPLATE		
		OPTION AP9001		Non-certified dataplate for use on engines manufactured for Cummins Engine Company. Located on fuel pump side of engine on the outboard edge of gear housing, oriented 90 degrees counter clockwise from horizontal.
1	3906610	Dataplate	1	
2	3908612	Screw, Drive	2	

NOTES

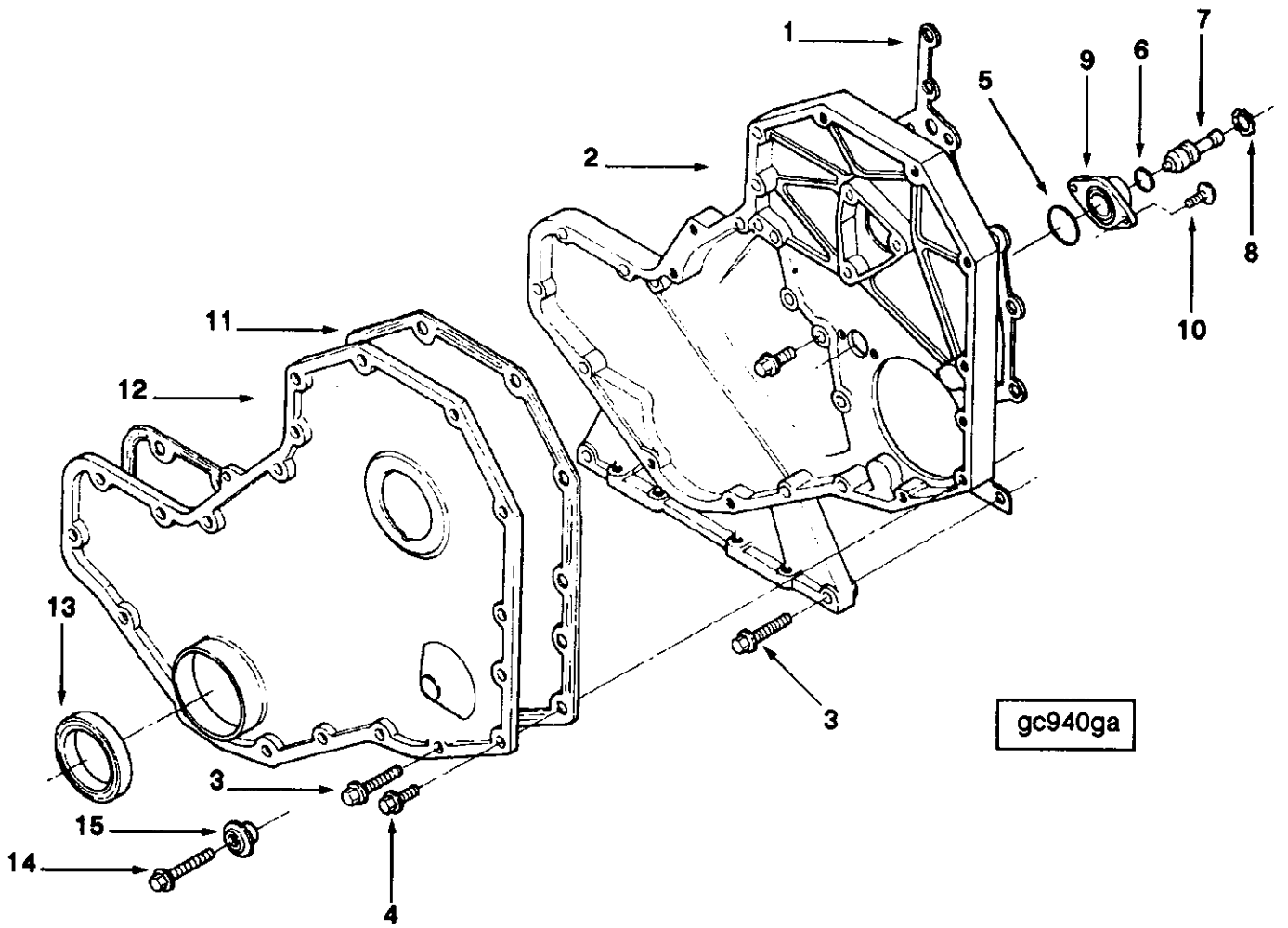
1
2
3
4
5
6
7
8
9
10
11
12
13
14
15
3
gc940ga

Ref No.	Part Number	Part Name	Req	Remarks
		FRONT GEAR COVER		
		OPTION BP9703		Front gear cover assembly.
1	3916131	Gasket, Gear Housing	1	
2	3920518	Housing, Gear	1	
3	3900633	Screw, Hex Flange Head Cap	10	M8 x 1.25 x 50
4	3900629	Screw, Hex Flange Head Cap	16	M8 x 1.25 x 16
5	3915772	Seal, Rectangular Ring	1	
6	3913994	Seal, O Ring	1	
7	3903924	Pin, Timing	1	
8	3904849	Ring, Retaining	1	
9	3919683	Housing, Timing Pin	1	
10	3907998	Screw, Round Head Cap	2	M5 x 0.80 x 17
11	3914385	Gasket, Gear Cover	1	
12	3903794	Cover, Gear	1	
13	3904353	Kit, Front Seal Service	1	
14	3901446	Screw, Hex Flange Head Cap	1	M8 x 1.25 x 60
15	3912772	Retainer, Belt	1	

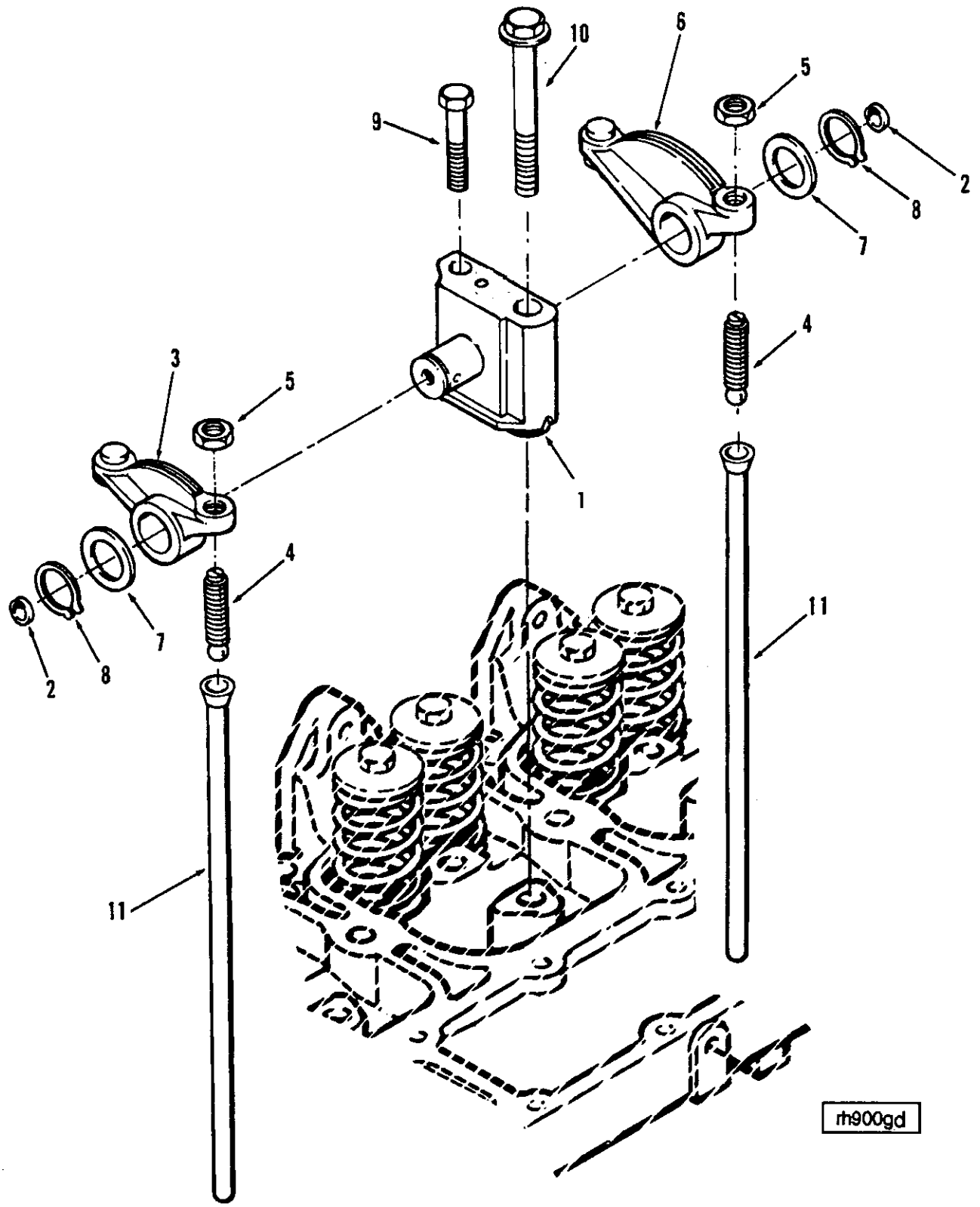
10
6
5
9
2
8
7
4
3
5
1
4
2
8
7
11
11
rh900gd

Ref No.	Part Number	Part Name	Req	Remarks
		ROCKER LEVERS		
		OPTION BP9710		Engine rocker levers.
1	3910814	Support, Rocker Lever	6	
	(3911423)	Support, Rocker Lever	1	
	(3910813)	Shaft, Rocker Lever	1	
2	3907555	Plug, Expansion	2	
3	3910811	Lever, Rocker	6	
	(3910809)	Lever, Rocker	1	Intake
4	3900706	Screw, Slotted Set	1	3/8 - 24 x 1 1/2 inch
5	203131	Nut, Regular Hexagon	1	
6	3910810	Lever, Rocker	6	
	(3910808)	Lever, Rocker	1	Exhaust
4	3900706	Screw, Slotted Set	1	3/8 - 24 x 1 1/2 inch
5	203131	Nut, Regular Hexagon	1	
7	3900245	Washer, Plain	12	
8	3900242	Ring, Retaining	12	
9	3901221	Screw, Hexagon Head Cap	6	M8 x 1.25 x 75
10	3920781	Screw, Hex Flange Head Cap	6	
11	3904679	Rod, Push	12	

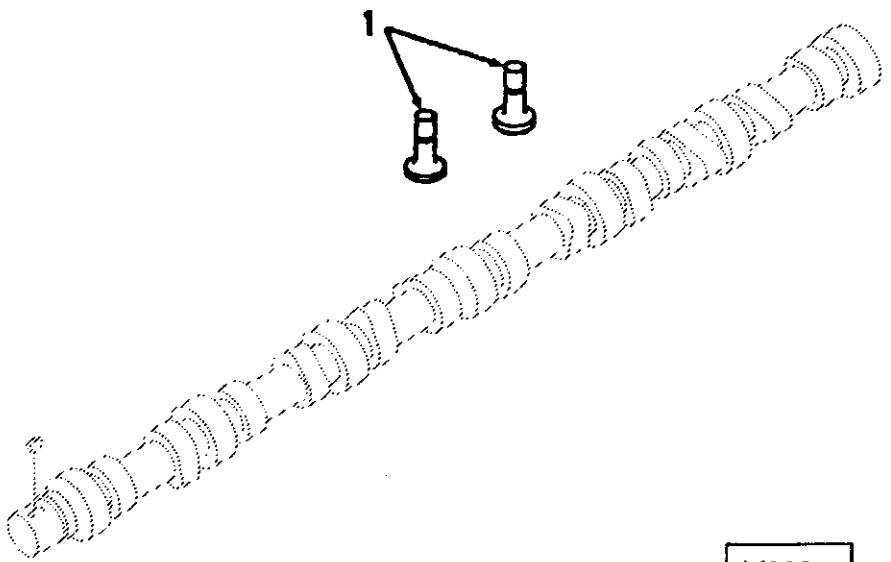

Ref No.	Part Number	Part Name	Req	Remarks
		VALVE TAPPET		
		OPTION BP9711		Engine valve tappets.
1	3907240	Tappet, Valve	12	

NOTES

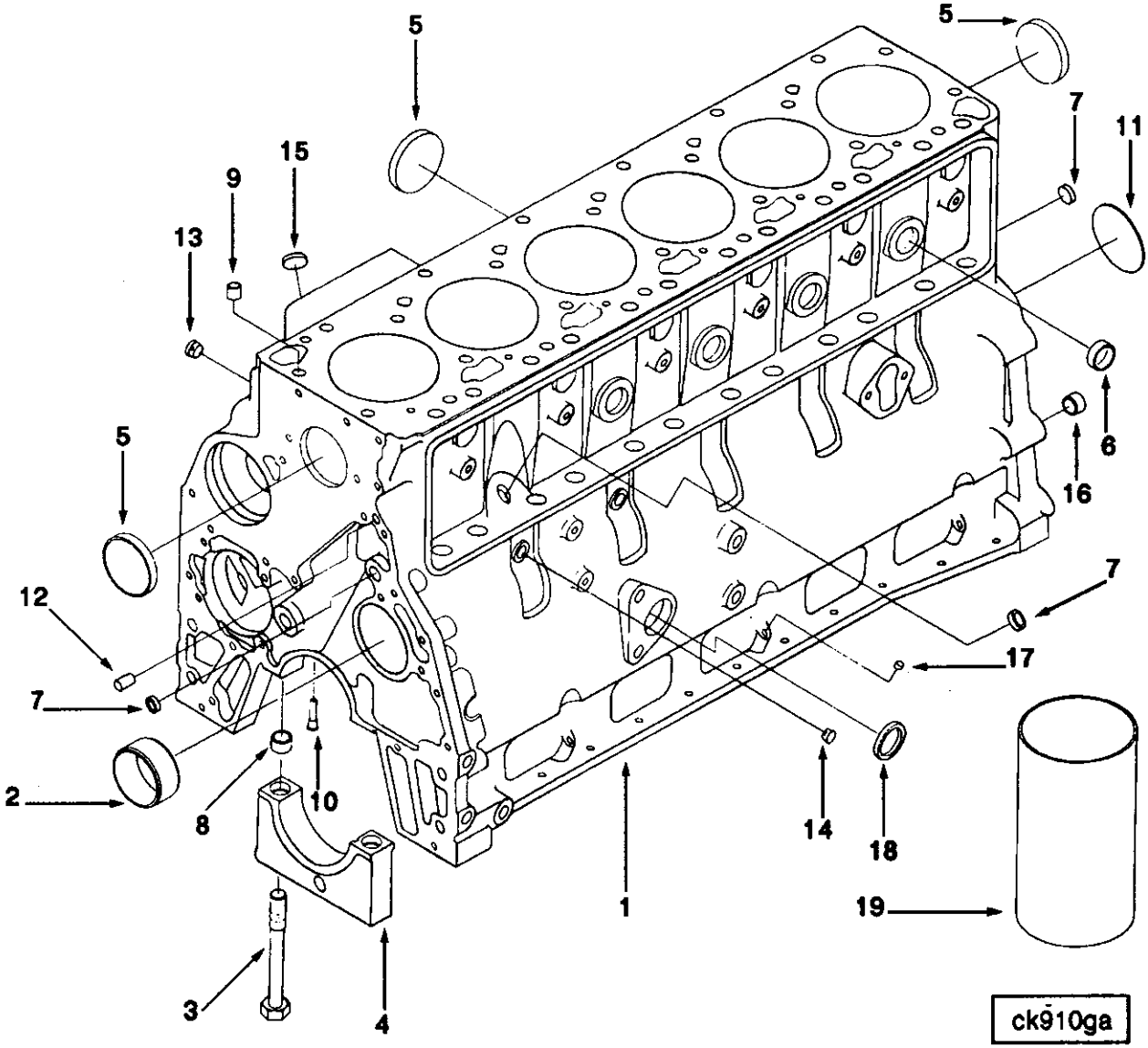
5
5
7
11
15
9
13
5
6
16
12
7
17
7
2
8
10
14
18
1
19
3
4
ck910ga

Ref No.	Part Number	Part Name	Req	Remarks
		CYLINDER BLOCK		
		OPTION BP9786		Engine block assembly for 6 cylinder high mount turbocharged engines. Turbo oil drain is located 269.9mm from ffob to tube end point. The expansion plug 3007635 may be used in Brazil applications in place of 3914035.
		OPTION BP9788		Engine block assembly for 6 cylinder high mount turbocharged aftercooled engines. Turbo oil drain is located 269.9mm from ffob to tube end point. The expansion plug 3007635 may be used in Brazil applications in place 3914035.
		OPTION BP9790		Engine block assembly for 6 cylinder naturally aspirated engines. The expansion plug 3007635 may be used in Brazil applications in place 3914035
	3802270	Block, Service	1	
1	(3916252)	Block, Cylinder	1	
	(3917613)	Block, Cylinder	1	
2	3901306	Bushing	1	
3	3904217	Screw, Hexagon Head Cap	14	M14 x 2.00 x 119
4	3900967	Cap, Main Bearing	7	Semi-Finished
5	3900965	Plug, Expansion	6	58.06mm
6	3007635	Plug, Expansion	4	1 inch
7	3900956	Plug, Expansion	3	17.73mm
8	3900068	Dowel, Ring	14	M18 x 10
	3802237	Kit, Block Hardware	1	
9	3902343	Dowel, Ring	2	M16 x 10
10	3919002	Nozzle, Piston Cooling	6	
11	3900687	Plug, Expansion	1	
12	3900257	Dowel, Pin	2	M10 x 16
13	3008468	Plug, Pipe	1	1/2 NPT
14	3906619	Plug, Pipe	2	1/8 NPT
15	3027646	Plug, Expansion	1	Not used on turbocharged engines.
16	3900068	Dowel, Ring	2	M18 x 10
17	3900955	Plug, Expansion	2	Structured in LG option
18	3900958	Plug, Expansion	1	Structured in OB option; Not used with side oil fill.
		SERVICE PARTS		
2	3904369	Bushing	A/R	Oversize bushing for No. 1 bore
2	3903242	Bushing	A/R	Oversize bushing for No. 2-7 bore
4	3900967	Cap, Main Bearing	7	Semi-Finished
19	3904166	Sleeve, Salvage	A/R	Standard Bore. Use as required.

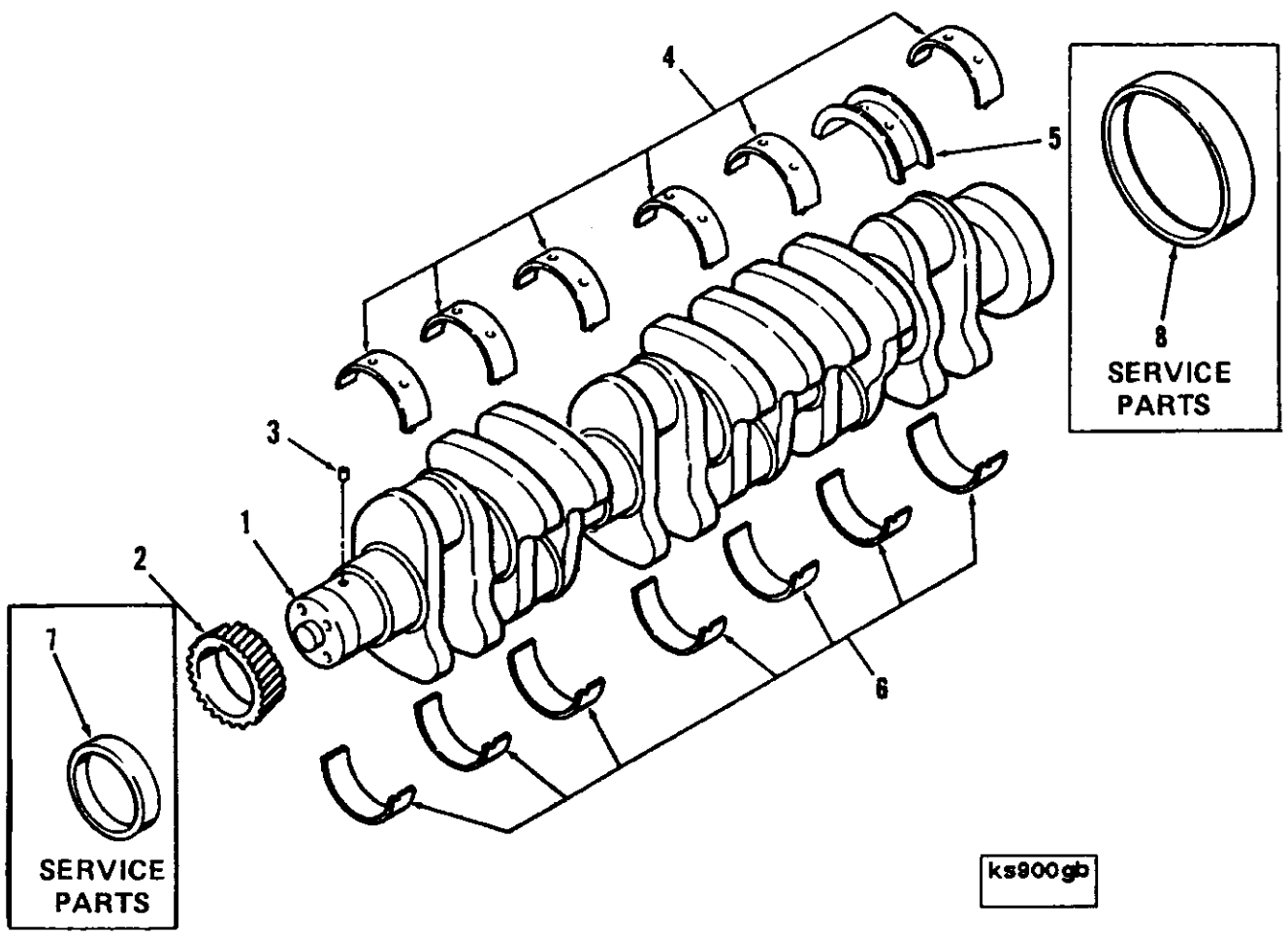
4
5
8
SERVICE PARTS
3
1
2
7
SERVICE PARTS
6
ks900gb

Ref No.	Part Number	Part Name	Req	Remarks
		CRANKSHAFT		
		OPTION BP9786		
		OPTION BP9788		
		OPTION BP9790		
	3908032	Crankshaft, Assembly	1	
1	(3907804)	Crankshaft, Engine	1	
2	3919680	Gear, Crankshaft	1	
3	3904483	Dowel, Pin	1	
		MAIN BEARING SETS		
	3802070	Set, Main Brg. (std.)	1	Standard
4	(3901090)	Bearing, Main	6	
5	(3906230)	Bearing, Crankshaft Thrust	1	
6	(3901150)	Bearing, Main	7	
	3802071	Set, Main Brg.(.010)	1	0.25mm Oversize
4	(3901091)	Bearing, Main	6	
5	(3906231)	Bearing, Crankshaft Thrust	1	
6	(3901151)	Bearing, Main	7	
	3802072	Set, Main Brg.(.020)	1	0.50mm Oversize
4	(3901092)	Bearing, Main	6	
5	(3906231)	Bearing, Crankshaft Thrust	1	
6	(3901152)	Bearing, Main	7	
	3802073	Set, Main Brg.(.030)	1	0.75mm Oversize
4	(3901093)	Bearing, Main	6	
5	(3906233)	Bearing, Crankshaft Thrust	1	
6	(3901153)	Bearing, Main	7	
	3802074	Set, Main Brg.(.040)	1	1.00mm Oversize
4	(3901094)	Bearing, Main	6	
5	(3906234)	Bearing, Crankshaft Thrust	1	
6	(3901154)	Bearing, Main	7	
	3802082	Bearing, Crankshaft Thrust	1	.5mm Oversize Bore/.5mm Oversize Thrust
5	(3906452)	Bearing, Crankshaft Thrust	1	
6	(3901152)	Bearing, Main	1	
	3802084	Bearing, Crankshaft Thrust	1	1.0mm Oversize Bore/1.0mm Oversize Thrust
5	(3906454)	Bearing, Crankshaft Thrust	1	
6	(3901154)	Bearing, Main	1	
		SERVICE PARTS		
7	3906080	Sleeve, Wear	1	Front
8	3906081	Sleeve, Wear	1	Rear

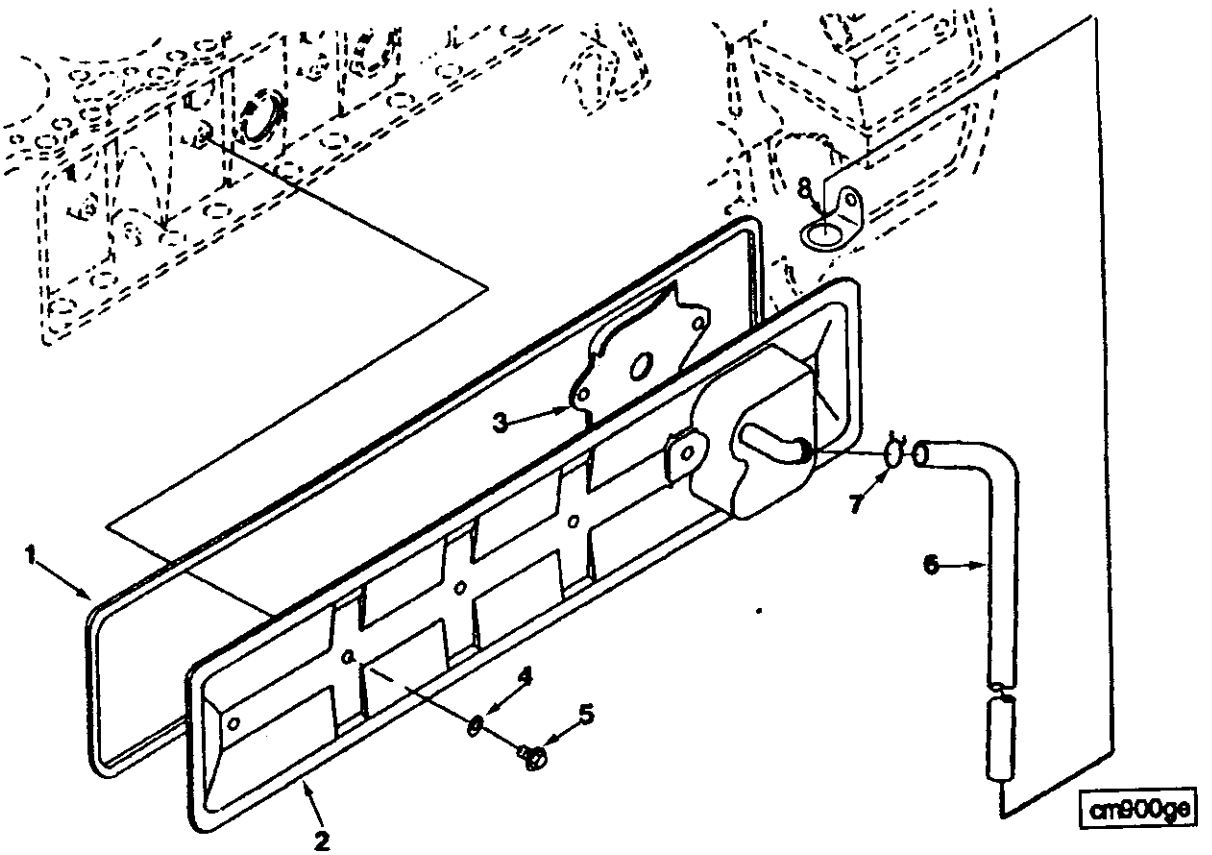

Ref No.	Part Number	Part Name	Req	Remarks
		CAM FOLLOWER COVER		
		OPTION CM9016		Tappet cover with integral crankcase breather. Breather to be oriented 45 degrees plus or minus 3 degrees from vertical for standard 6 cylinder engines. Remaining mounting parts are found in FT option.
1	3907617	Gasket, Push Rod Cover	1	
2	3911822	Cover, Push Rod	1	
3	3907586	Baffle, Breather	1	
4	3900267	Seal, Grommet	6	
5	3900630	Screw, Hex Flange Head Cap	4	M8 x 1.25 x 20
6	3918614	Hose, Plain	1	
7	3904230	Clamp, Spring Hose	1	
8	3909670	Clip	1	

NOTES

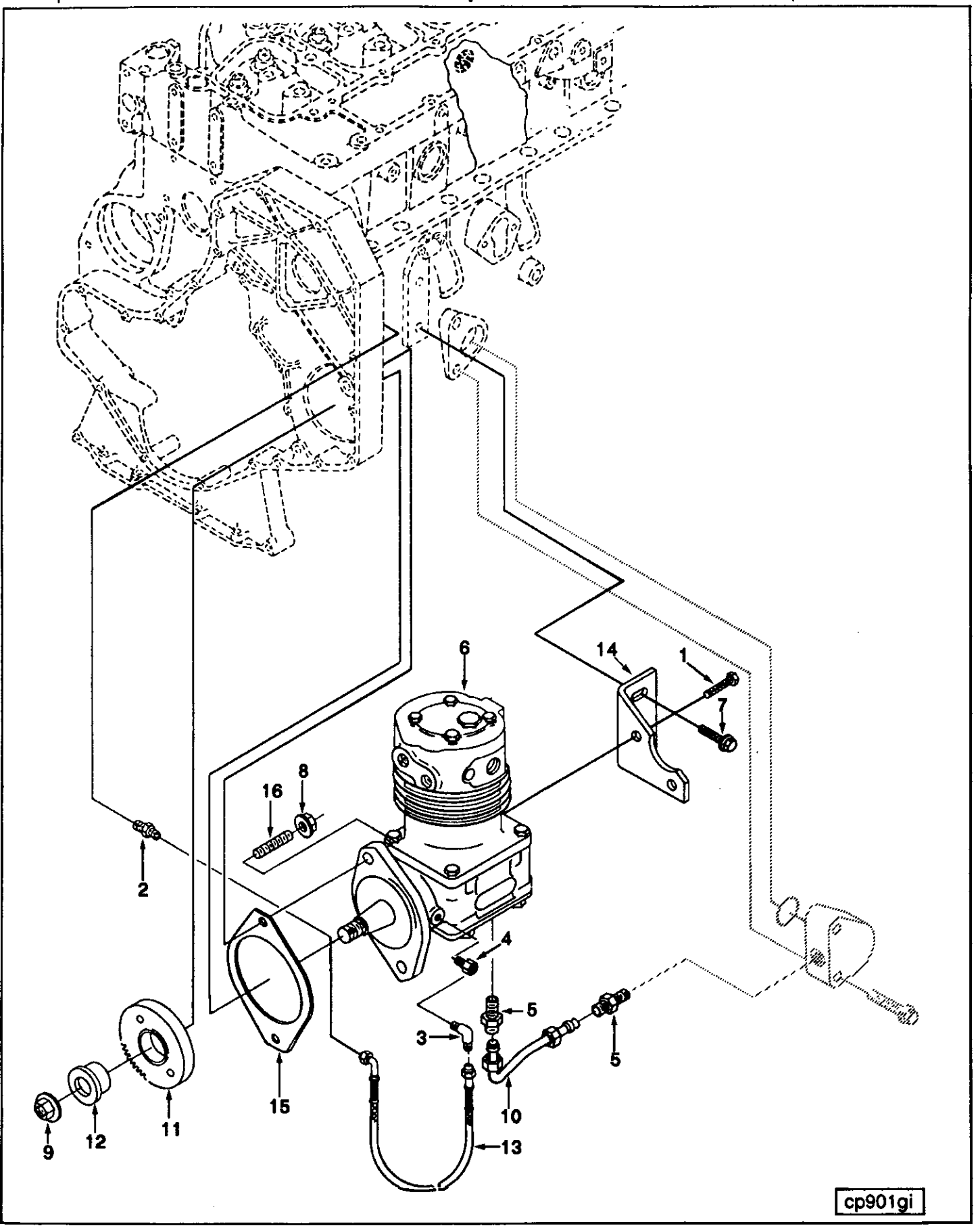
6
14
1
7
16
8
2
4
5
3
5
15
10
11
12
9
13
cp901gi

Ref No.	Part Number	Part Name	Req	Remarks
		AIR COMPRESSOR		
		OPTION CP9036		Holset SS-191 watercooled air compressor without hydraulic pump flange.
1	3918570	Screw, Hexagon Head Cap	2	
2	68138	Connector, Male	1	
3	68139	Elbow, Male Adapter	1	
4	187368	Adapter, Plain	1	
5	204994	Connector, Male	2	
6	3558002	Compressor, Air	1	
7	3902114	Screw, Hex Flange Head Cap	2	M8 x 1.25 x 30
8	3903210	Nut, Hexagon Flange	2	M12 x 1.75
9	3903269	Nut, Hexagon Flange	1	5/8 - 18 UNF
10	3914591	Tube, Lub Oil Drain	1	
	3909381	Gear & Hub	1	
11	3902595	Gear, Accessory Drive	1	
12	3909380	Hub, Acessory Drive	1	
13	3918536	Hose, Flexible	1	
14	3912506	Brace, Air Compressor	1	
15	3008400	Gasket, Hydraulic Pump	1	
16	3913370	Stud	2	
		REPAIR KITS		
	3559501	Kit, Piston & Rod	1	Connecting Rods, Pistons, Rings, and Bearings
	3559502	Kit, Conn Rod Bearing	1	Std. Size
	3559503	Kit, Gasket	1	Gaskets and seals necessary for reassembly of the air compressor (cylinder block gasket, head gasket, bottom cover gasket and end cover or pump mounting adapter gasket), o-ring and cover seals and spring for the unloader (Does not include the unloader pin itself. See 3559506.), as well as, air inlet and engine mounting gaskets.
	3559505	Kit, Head Assembly	1	Complete head assembly plus mounting gaskets.
	3559506	Kit, Unloader	1	Unloader pin assembly with o-ring and spring.
	3559507	Kit, Head Repair	1	Items for complete head assembly rebuild plus mounting gaskets.
	3559508	Kit, Piston Ring Set	1	Std. Size with oil control and compression rings.

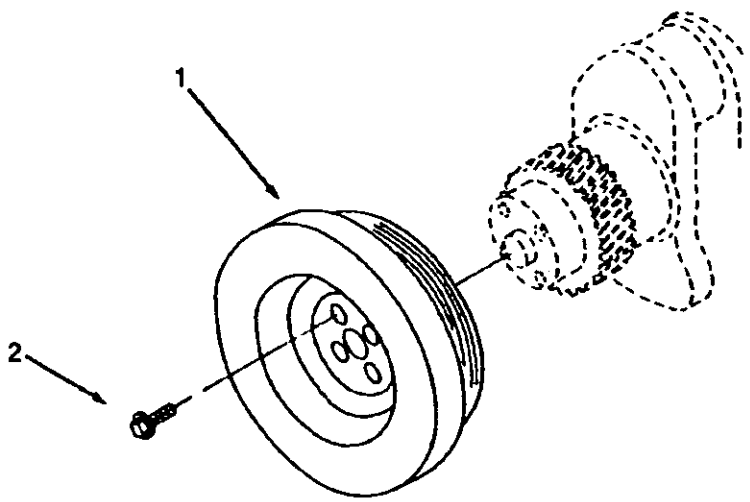

da900gl

Ref No.	Part Number	Part Name	Req	Remarks
		VIBRATION DAMPER		
		OPTION DA9026		Vibration damper, with 174mm dia. 8 groove drive pulley cast on to damper, mounted on front of crankshaft. For use only on engines with rated speeds of 2650 RPM and below.
1	3916436	Damper, Vibration	1	
2	3903857	Screw, Hex Flange Head Cap	4	M12 x 1.25 x 36

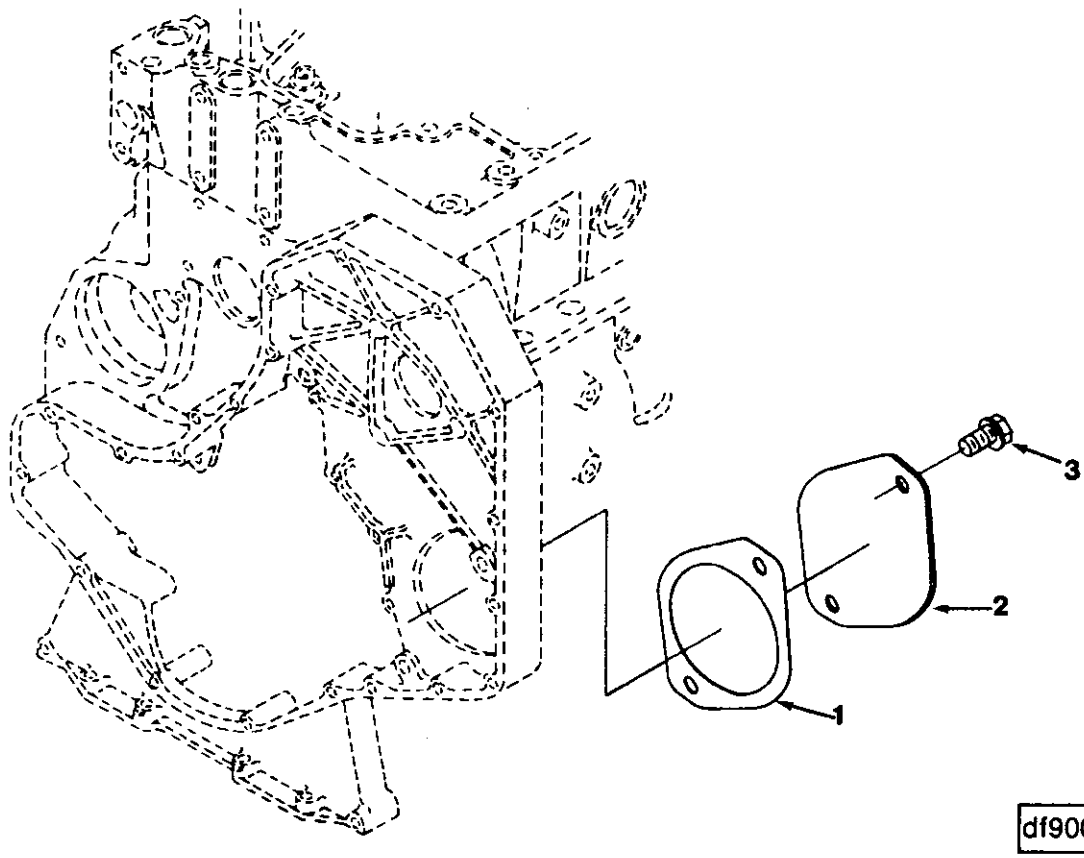

Ref No.	Part Number	Part Name	Req	Remarks
		FRONT GEAR TRAIN ACCESSORY DRIVE		
		OPTION DF9701		Gear train drive cover for use when no provision for hydraulic pump or air compressor is specified.
1	3919601	Gasket, Acc Drive Cover	1	
2	3914868	Plate, Cover	1	
3	3901249	Screw, Hex Flange Head Cap	2	M12 x 1.75 x 25

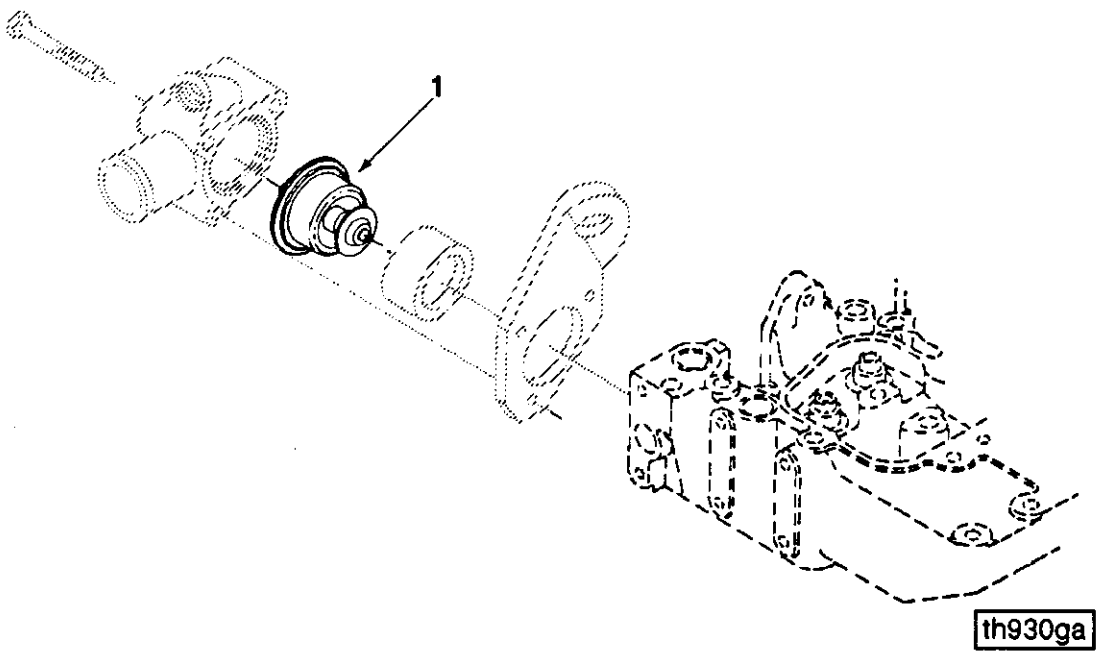

Ref No.	Part Number	Part Name	Req	Remarks
		THERMOSTAT		
		OPTION EC9001		Vented thermostat, opens at 83 degrees (C).
1	3802273	Thermostat	1	

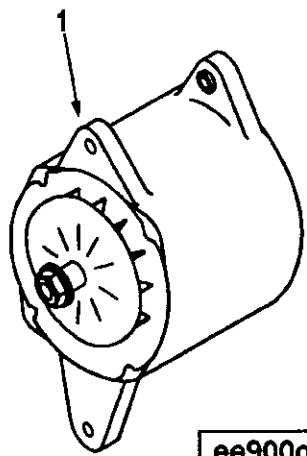

ee900gc

Ref No.	Part Number	Part Name	Req	Remarks
		ALTERNATOR		
		OPTION EE9002		12 Volt, 60 AMP, negative ground Delco-Remy 20 SI type 300 alternator.
1	3016628	Alternator	1	

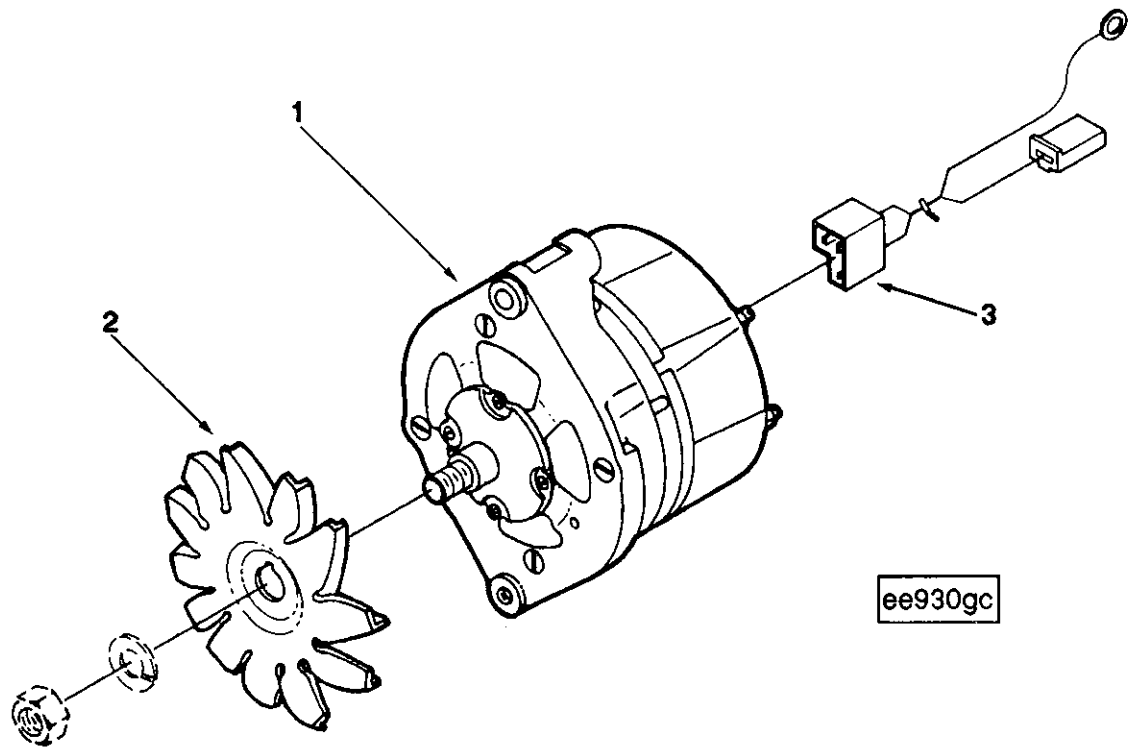

Ref No.	Part Number	Part Name	Req	Remarks
		ALTERNATOR		
		OPTION EE9023		12 Volt, 63 AMP, negative ground Bosch K1 alternator. Includes alternator, wiring harness and fan for clockwise rotation.
1	3920679	Alternator	1	
2	3904981	Fan, Alternator	1	
3	3920831	Harness, Wiring	1	

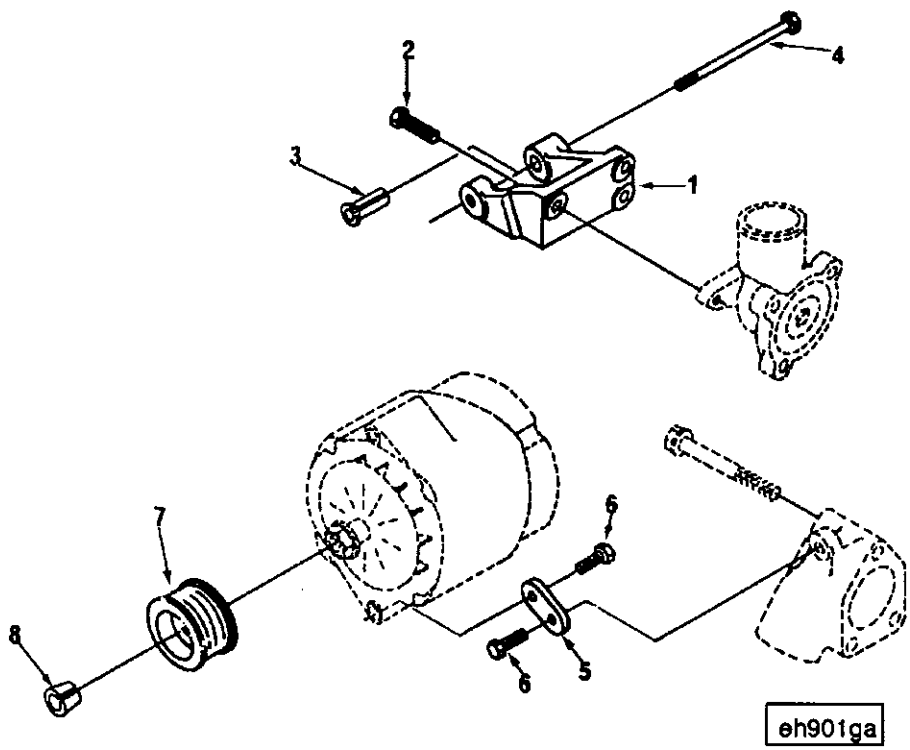

Ref No.	Part Number	Part Name	Req	Remarks
		ALTERNATOR LOCATION		
		OPTION EH9001		Alternator mounting and drive provision for Bosch K1 alternator.
1	3910713	Support, Alternator	1	
2	3900631	Screw, Hex Flange Head Cap	3	M8 x 1.25 x 25
3	3910715	Spacer, Mounting	1	
4	3908226	Screw, Hex Flange Head Cap	1	M10 x 1.50 x 95
5	3903089	Brace, Alternator	1	
6	3900630	Screw, Hex Flange Head Cap	2	M8 x 1.25 x 20
7	3908560	Pulley, Alternator	1	60mm dia
8	3908563	Retainer, Pulley	1	

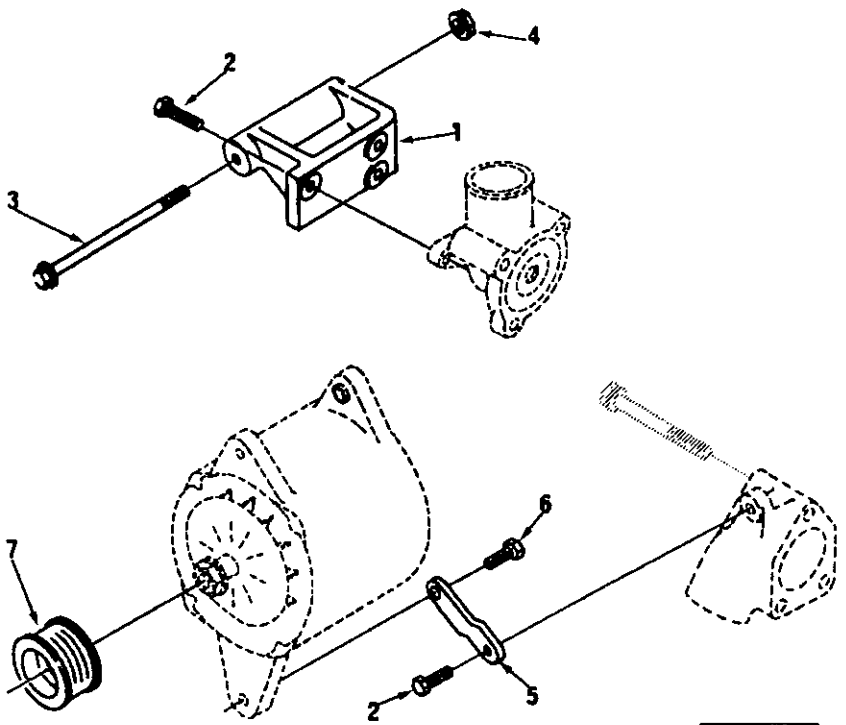

eh901gd

Ref No.	Part Number	Part Name	Req	Remarks
		ALTERNATOR LOCATION		
		OPTION EH9029		NOTE: Replaces EH9002. Alternator mounting and drive provision for Delco 20/27 SI and Bosch N-1 alternators.
1	3910923	Support, Alternator	1	
2	3900631	Screw, Hex Flange Head Cap	3	M8 x 1.25 x 25
3	3903105	Screw, Hex Flange Head Cap	1	M12 x 1.75 x 150
4	3903210	Nut, Hexagon Flange	1	M12 x 1.75
5	3910924	Brace, Alternator	1	
6	S-169	Screw, Hex Flange Head Cap	1	1/2 - 13 x 1 inch
7	3920560	Pulley, Alternator	1	

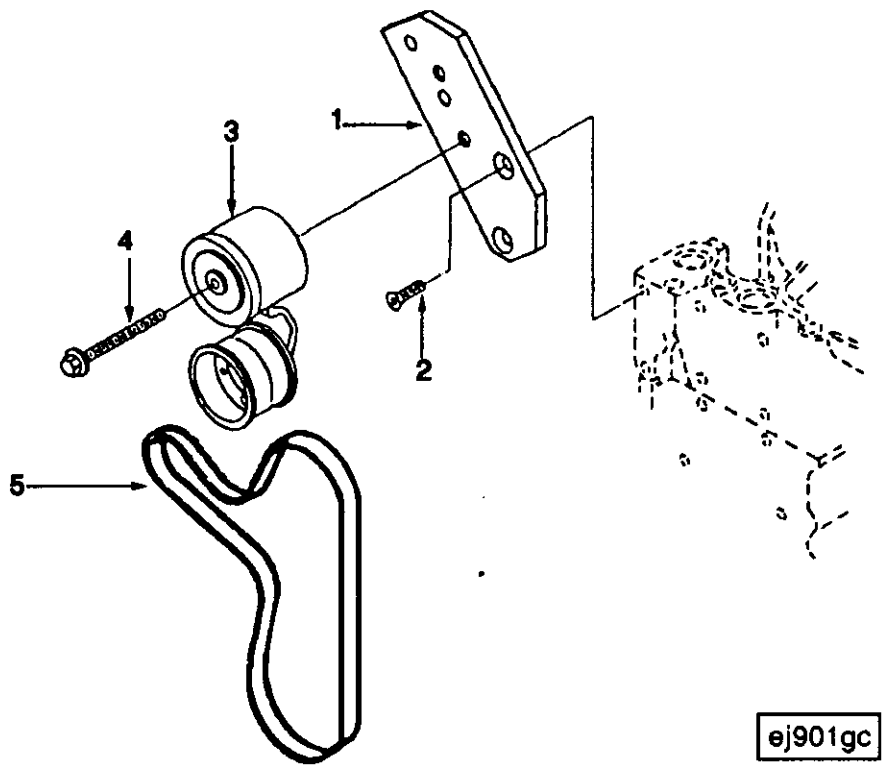

ej901gc

Ref No.	Part Number	Part Name	Req	Remarks
		ALTERNATOR LOCATION		
		OPTION EH9703		Alternator drive belt and items required to adjust belt. Used with Delco-Remy 15SI, CS130 part number 10479976, Lucas A-127, Bosch K1 and Motorcraft 12V 60 Amp alternators and 1.1 to 1 fan drive ratio at 345.0mm center arrangement. Belt tensioner mounted in low location.
1	3904550	Bracket, Belt Tensioner	1	
2	3903095	Screw, Flat Head Cap	2	M8 x 1.25 x 25
3	3914086	Tensioner, Belt	1	
4	3904446	Screw, Hex Flange Head Cap	1	M10 x 1.50 x 70
5	3911558	Belt, V Ribbed	1	

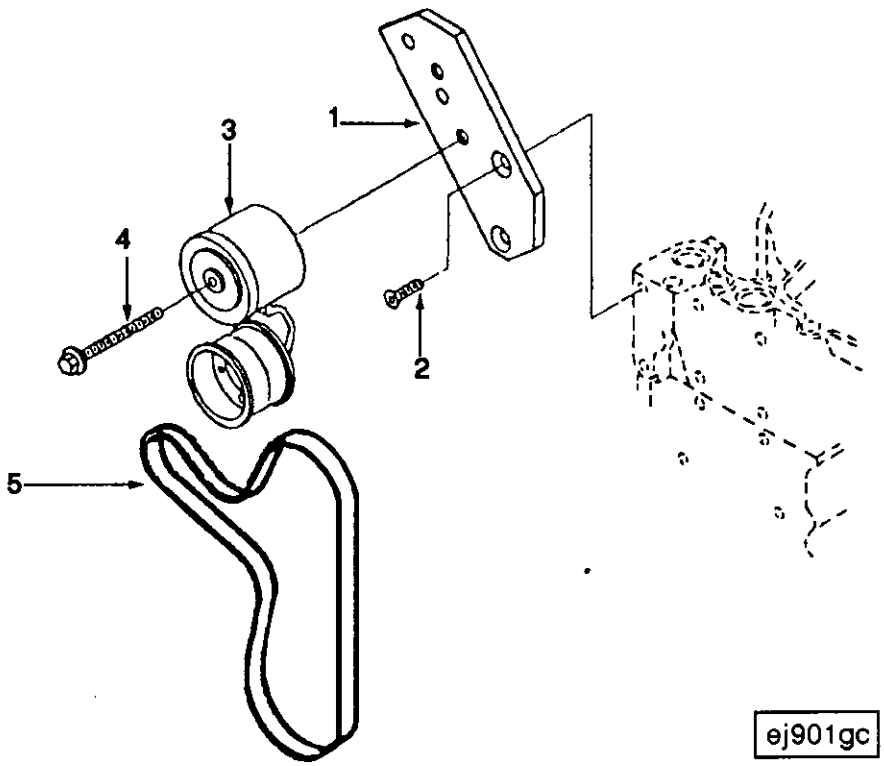

ej901gc

Ref No.	Part Number	Part Name	Req	Remarks
		ALTERNATOR LOCATION		
		OPTION EH9711		Alternator drive belt and items required to adjust belt. Used with 20/27 SI Delco-Remy Motorcraft 100 Amp. Niehoff and Bosch N-1 alternators and 1.1 to 1 fan drive ratio at 345.0mm center arrangement. Belt tensioner mounted in low location.
1	3904554	Bracket, Belt Tensioner	1	
2	3903095	Screw, Flat Head Cap	2	M8 x 1.25 x 25
3	3914086	Tensioner, Belt	1	
4	3904446	Screw, Hex Flange Head Cap	1	M10 x 1.50 x 70
5	3911563	Belt, V Ribbed	1	

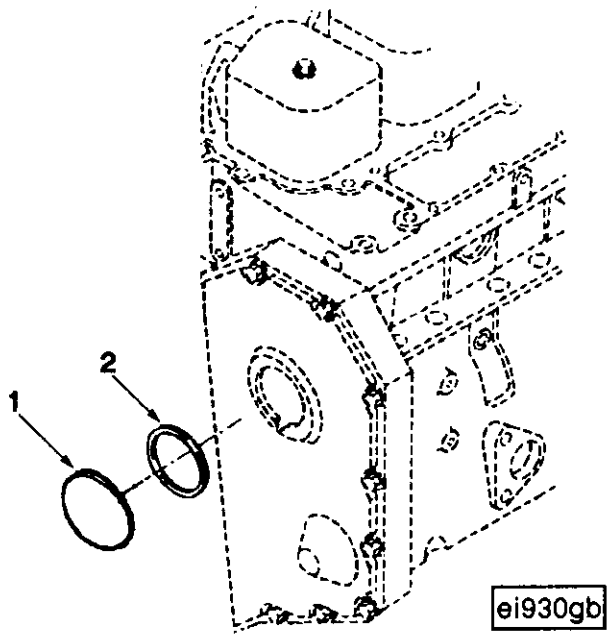

Ref No.	Part Number	Part Name	Req	Remarks
		MECHANICAL TACH DRIVE		
		OPTION EI9701		Accessory hole cover tube used when no mechanical tach drive or front oil fill is used.
1	3903463	Cover, Access Hole	1	
2	3903475	Seal, Rectangular Ring	1	

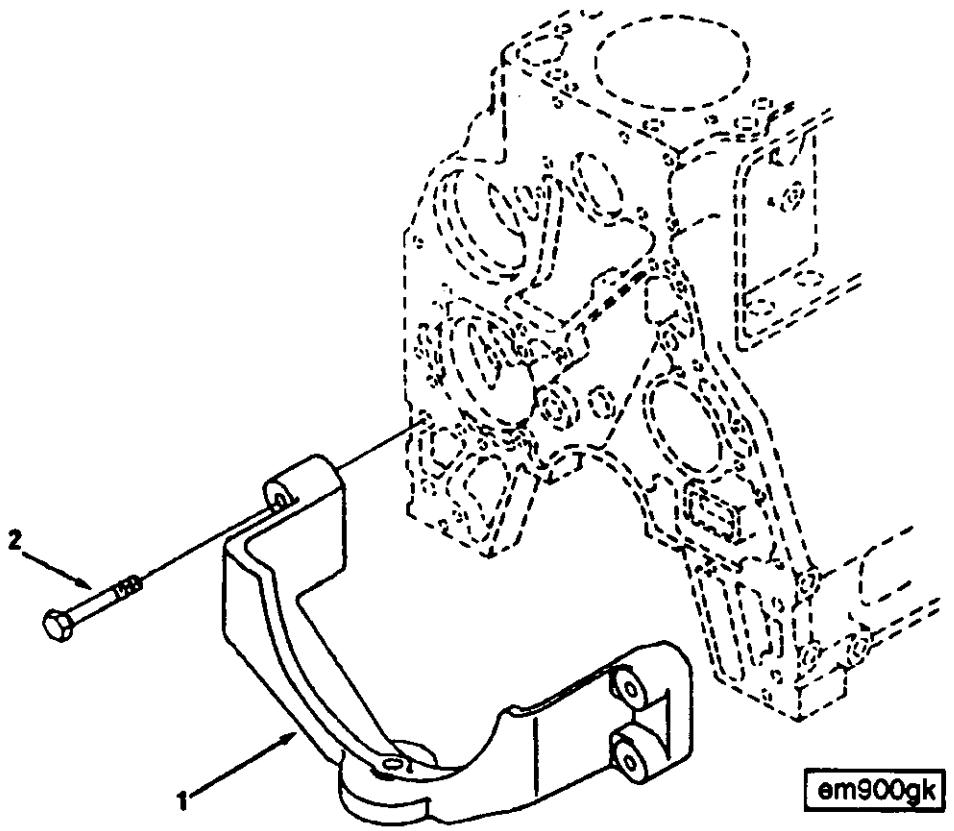

Ref No.	Part Number	Part Name	Req	Remarks
		FRONT ENGINE SUPPORT		
		OPTION EM9001		Front engine support for single point mount with 16mm threaded hole. Will accomodate a maximum damper diameter of 209.0mm.
1	3916665	Support, Front Engine	1	
2	3278480	Screw, Hex Flange Head Cap	4	M12 x 1.75 x 70

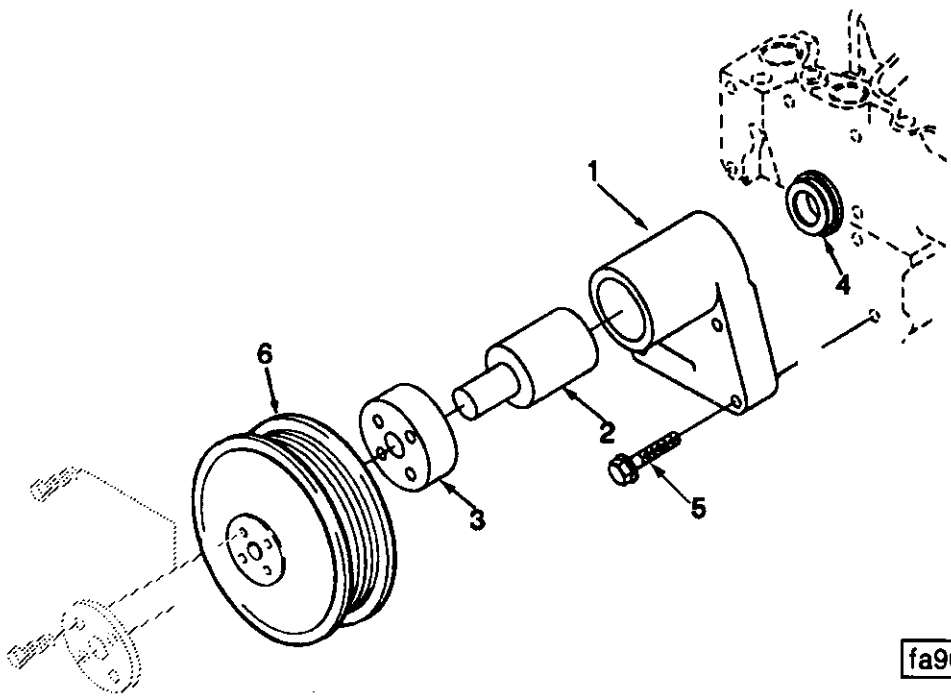

Ref No.	Part Number	Part Name	Req	Remarks
		FAN DRIVE		
		OPTION FA9003		1.1 to 1 drive ratio fan arrangement at 345mm above centerline of crankshaft and on engine centerline. Fan mounting holes are on a 50mm bolt circle
	3909889	Support, Fan	1	
1	(3902349)	Support, Fan	1	Mount to head
2	(3908164)	Shaft, Fan Drive	1	
3	(3901364)	Hub, Fan	1	
4	3909887	Retainer, Shaft	1	
5	3900678	Screw, Hex Flange Head Cap	4	M8 x 1.25 x 40
6	3914463	Pulley, Fan	1	

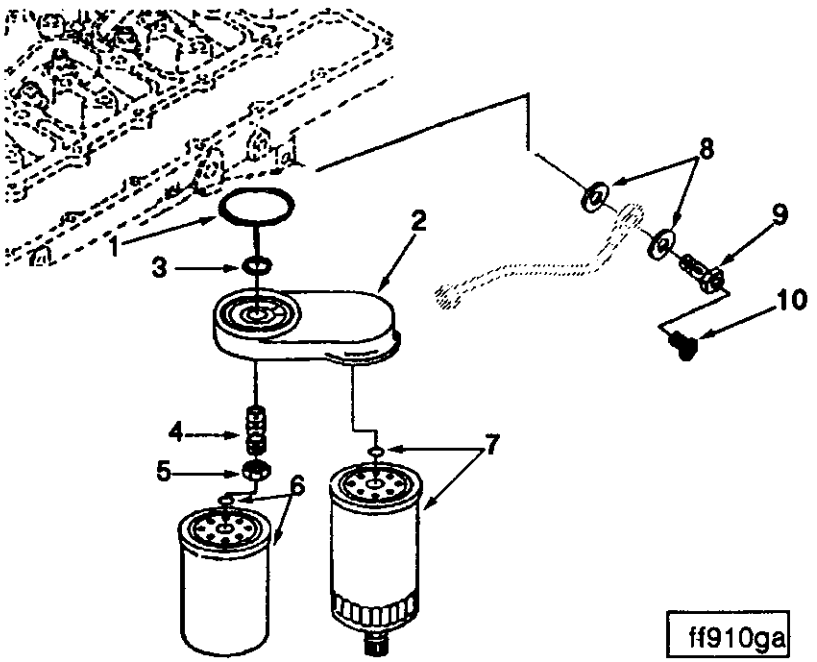

Ref No.	Part Number	Part Name	Req	Remarks
		FUEL FILTER		
		OPTION FF9007		Dual element fuel filter arrangement with primary element mounted rearward, having water seperator and drain, orientated 40 degrees outward from centerline of crank "B" series.
1	3906694	Seal, Rectangular Ring	1	
2	3915240	Head, Fuel Filter	1	
	(3915238)	Head, Fuel Filter	1	
	(3915242)	Ball	1	
3	3906695	Seal, Rectangular Ring	1	
4	3903845	Adapter, Filter Head	1	
5	3903293	Nut, Regular Hexagon Jam	1	
6	3903640	Filter, Fuel	1	
7	3903410	Filter, Fuel	1	
8	3918191	Washer, Sealing	2	1/2 inch
9	3911446	Screw, Banjo Connector	1	M12 x 1.50 x 24
10	3905403	Screw, Captive Washer Cap	1	M6 x 1.00 x 10

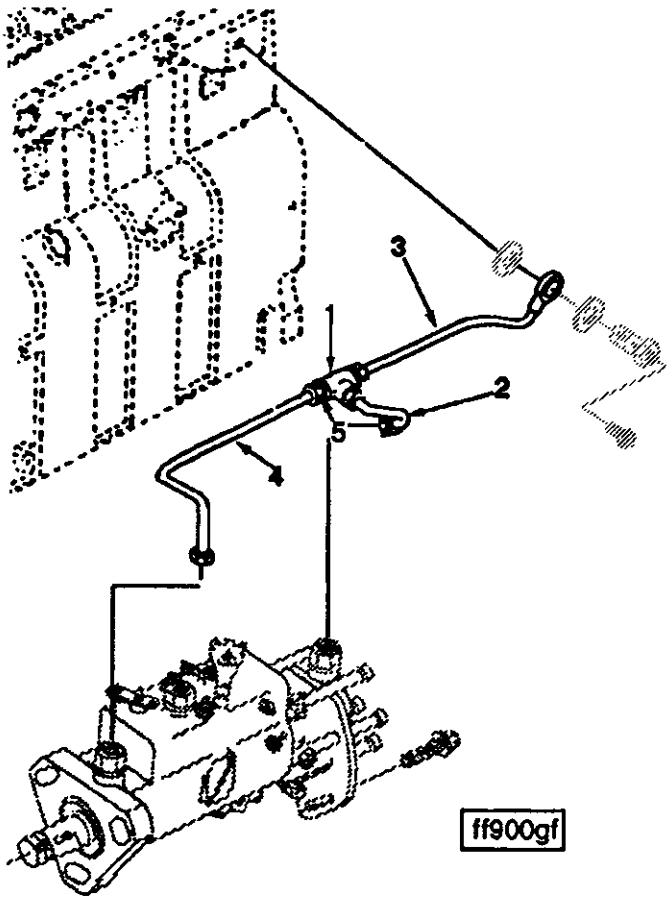

Ref No.	Part Number	Part Name	Req	Remarks
		FUEL FILTER PLUMBING		
		OPTION FF9701		Fuel supply tube, from fuel filter head to CAV'S DPA type fuel injection pump, "B" series.
	3905432	Tube, Fuel Supply	1	
1	3905353	Tee, Male Union	1	
2	3905375	Tube, Fuel Supply	1	
5	3905351	Seal, Grommet	1	
3	3905364	Tube, Fuel Supply	1	
4	3905363	Tube, Fuel Supply	1	
5	3905351	Seal, Grommet	1	

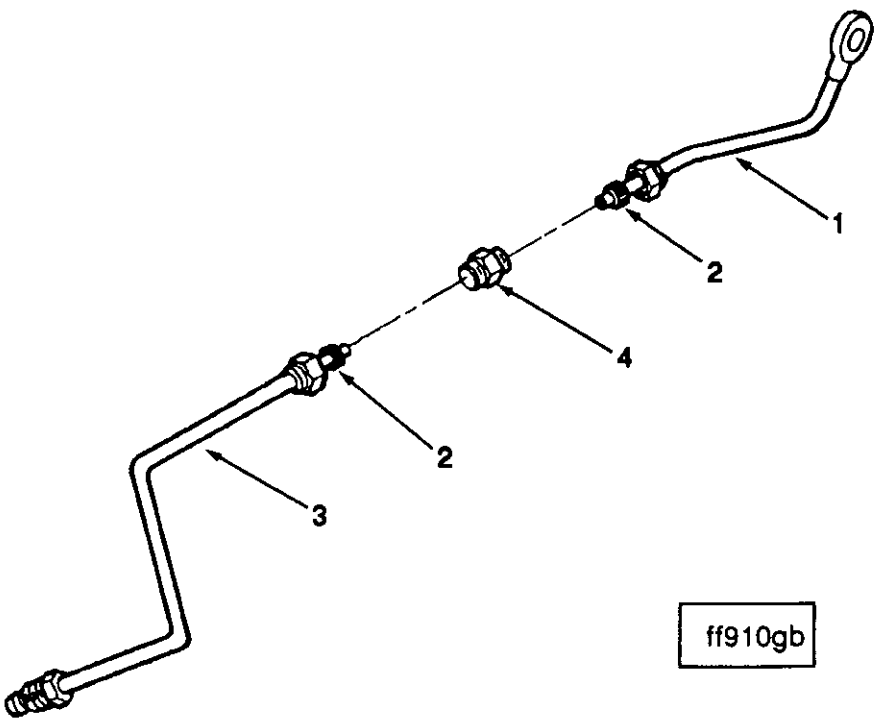

Ref No.	Part Number	Part Name	Req	Remarks
		FUEL FILTER PLUMBING		
		OPTION FF9737		Fuel supply tube, from fuel filter head to Bosch's VE or VP type fuel injection pump "B" series 6 cyl. engine
1	3908988	Tube, Fuel Supply	1	
2	3905351	Seal, Grommet	1	
3	3918641	Tube, Fuel Supply	1	
2	3905351	Seal, Grommet	1	
4	3908985	Union, Male	1	

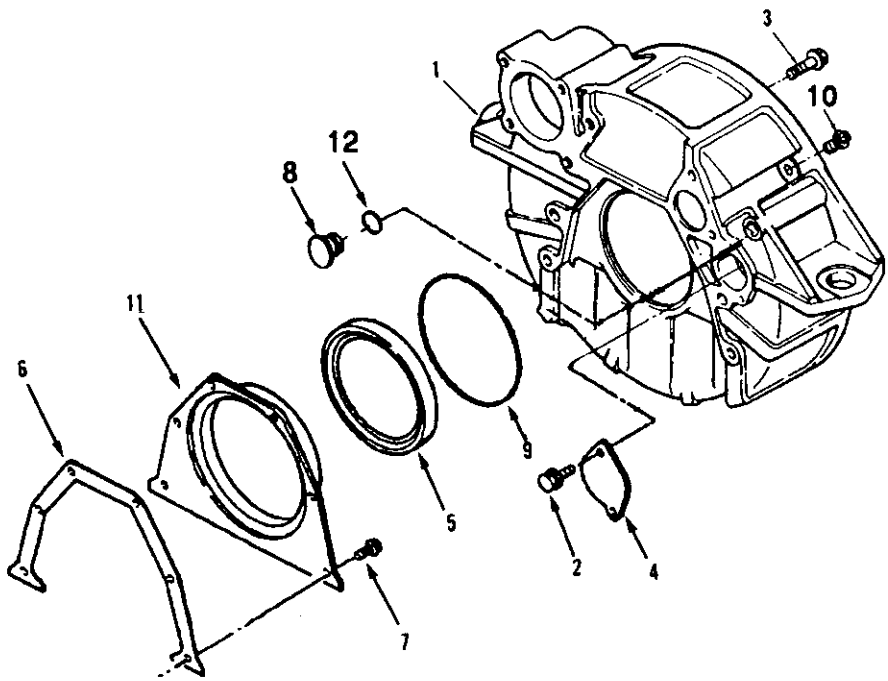

fh900gb

Ref No.	Part Number	Part Name	Req	Remarks
		FLYWHEEL HOUSING		
		OPTION FH9001		Dry arm type SAE #3 aluminum flywheel housing with SAE #1 starter flange center distance at 216mm high on the exhaust side.
1	3903287	Housing, Flywheel	1	
2	3902735	Screw, Self Tapping Metal	2	M8 x 1.25 x 21
3	3920447	Screw, Hex Flange Head Cap	8	
4	3908095	Plate, Cover	1	
	3909410	Rear Crank Seal Serv. Kit	1	Includes Installation Tools
11	3921043	Cover, Rear	1	
5	(3921265)	Seal, Oil	1	
6	3914386	Gasket, Rear Cover	1	
7	3913638	Screw, Hex Flange Head Cap	6	M6 x 1.00 x 15
8	3910248	Plug, O Ring	1	
9	3912473	Seal, Rectangular Ring	1	
10	3904181	Plug, Threaded	1	3/4 - 16 UNF
12	3910260	Seal, O Ring	1	

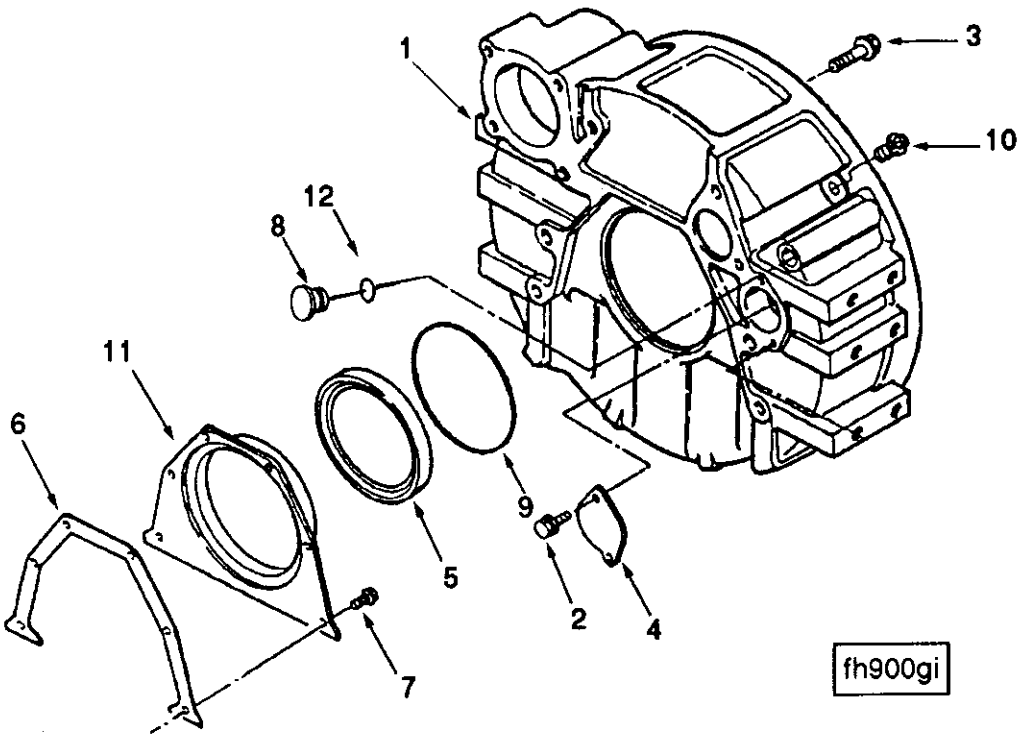

Ref No.	Part Number	Part Name	Req	Remarks
		FLYWHEEL HOUSING		
		OPTION FH9002		SAE #3 aluminum flywheel housing. Dry pad type with SAE #1 starter flange at 216mm center distance high on exhaust side.
1	3903282	Housing, Flywheel	1	
2	3902735	Screw, Self Tapping Metal	2	M8 x 1.25 x 21
3	3920447	Screw, Hex Flange Head Cap	8	
4	3908095	Plate, Cover	1	
	3909410	Rear Crank Seal Serv. Kit	1	Includes Installation Tools
5	(3921265)	Seal, Oil	1	
6	3914386	Gasket, Rear Cover	1	
7	3913638	Screw, Hex Flange Head Cap	6	M6 x 1.00 x 15
8	3910248	Plug, O Ring	1	
9	3912473	Seal, Rectangular Ring	1	
10	3904181	Plug, Threaded	1	3/4 - 16 UNF
11	3921043	Cover, Rear	1	
12	3910260	Seal, O Ring	1	

NOTES

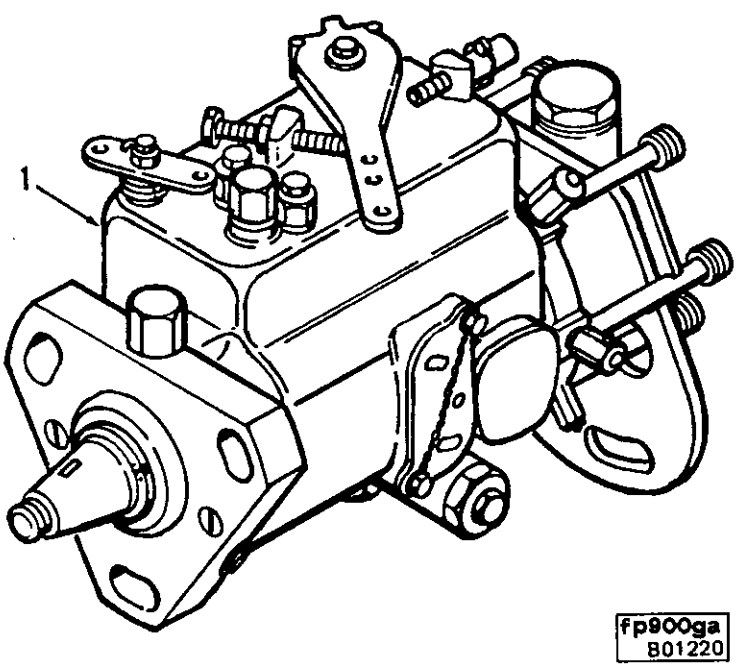
1
fp900ga
801220

Ref No.	Part Number	Part Name	Req	Remarks
		C.A.V. INJECTION PUMP		
		OPTION FP9117		CPL#807 "DPA" type (Non Certified) fuel pump for 99 BHP turbocharged "B" series 6 cylinder engines at 2200 RPM with peak torque of 290 lbs. ft. at 1200 RPM. Has 24 volt actuate to run fuel solenoid and 1.8mm tubing. With FR9240.
1	3908440	Pump, Fuel Injection	1	
		OPTION FP9241		CPL#998 "DPA" type (Non Certified) fuel pump for 200 BHP turbocharged and after-cooled "B" series 6 cylinder engine at 2500 RPM with peak torque of 504 lbs. ft. 1700 RPM with 5% governor droop. Has 12 volt actuate to run fuel solenoid and 2.0mm tubing. With FR9305.
1	3912135	Pump, Fuel Injection	1	
		OPTION FP9242		CPL#998 "DPA" type (Non Certified) fuel pump for 200 BHP turbocharged and after-cooled "B" series 6 cylinder engine at 2500 RPM with peak torque of 504 lbs. ft. at 1700 RPM with 5% governor droop. Has 24 volt actuate to run fuel solenoid and 2.0mm tubing. With FR9305.
1	3912136	Pump, Fuel Injection	1	
		OPTION FP9278		CPL#1168 "DPA" type (Non Certified) fuel pump for 148 BHP turbocharged "B" series 6 cylinder engine at 2300 RPM with peak torque of 410 lbs. ft. at 1500 RPM with 5% governor droop. Has 12 volt actuate to run fuel solenoid and 2.0mm tubing. With FR9360.
1	3914182	Pump, Fuel Injection	1	
		OPTION FP9279		CPL#1168 "DPA" type (Non Certified) fuel pump for 148 BHP turbocharged "B" series 6 cylinder engine at 2300 RPM with peak torque of 410 lbs. ft. at 1500 RPM with 5% governor droop. Has 24 volt actuate to run fuel solenoid and 2.0mm tubing. With FR9360.
1	3914183	Pump, Fuel Injection	1	
		OPTION FP9296		CPL#714 "DPA" type (Non Certified) fuel pump for 112 BHP naturally aspirated "B" series 6 cylinder at 2400 RPM with a peak torque of 270 lbs ft. at 1200 RPM. Has 12 volt actuate to run fuel solenoid and 1.8mm tubing. With FR9311.
1	3912545	Pump, Fuel Injection	1	

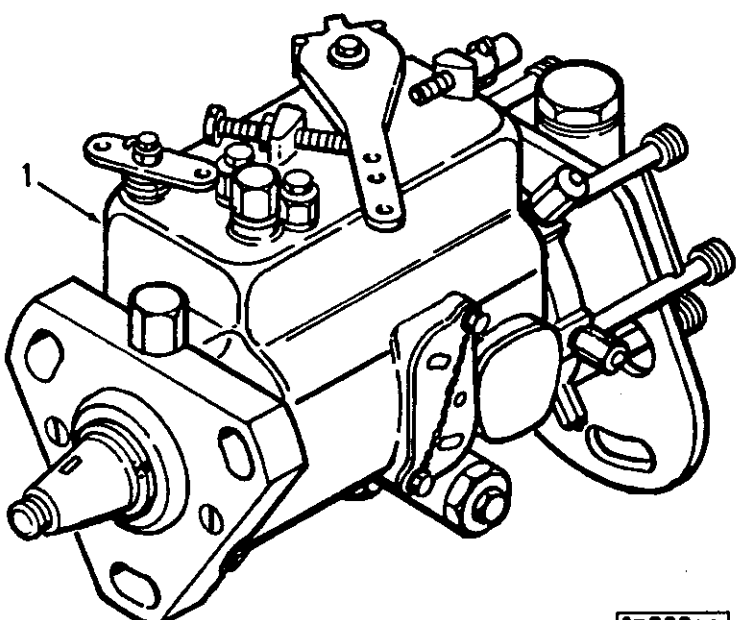
1
fp900ga
801220

Ref No.	Part Number	Part Name	Req	Remarks
		C.A.V. INJECTION PUMP		
		OPTION FP9297		CPL#714 "DPA" type (Non Certified) fuel pump for 112 BHP naturally aspirated "B" series 6 cylinder at 2400 RPM with a peak torque of 270 lbs ft. at 1200 RPM. Has 24 volt actuate to run fuel solenoid and 1.8mm tubing. With FR9311.
1	3912546	Pump, Fuel Injection	1	
		OPTION FP9332		CPL#983 "DPA" type (Non Certified) fuel pump for 177 BHP turbocharged and after-cooled "B" series 6 cylinder engines at 2500 RPM with peak torque of 458 lbs. ft. at 1700 RPM with 5% governor droop. Has 12 volt actuate to run fuel solenoid and 2.0mm tubing. With FR9321.
1	3912914	Pump, Fuel Injection	1	
		OPTION FP9333		CPL#983 "DPA" type (Non Certified) fuel pump for 177 BHP turbocharged and after-cooled "B" series 6 cylinder engines at 2500 RPM with a peak torque of 458 lbs. ft. at 1700 RPM with 5% governor droop. Has 24 volt actuate to run fuel solenoid and 2.0mm tubing. With FR9321.
1	3912915	Pump, Fuel Injection	1	
		OPTION FP9334		CPL#1168 "DPA" type (Non Certified) fuel pump for 152 BHP turbocharged "B" series 6 cylinder engines at 2500 RPM with a peak torque of 410 lbs. ft. at 1500 RPM with 5% governor droop. Has 12 volt actuate to run fuel solenoid and 2.0mm tubing. With FR9322.
1	3912916	Pump, Fuel Injection	1	
		OPTION FP9335		CPL#1168 "DPA" type (Non Certified) fuel pump for 152 BHP turbocharged "B" series 6 cylinder engines at 2500 RPM with a peak torque of 410 lbs. ft. at 1500 RPM with 5% governor droop. Has 24 volt actuate to run fuel solenoid and 2.0mm tubing. With FR9322.
1	3912917	Pump, Fuel Injection	1	
		OPTION FP9468		CPL#983 "DPA" type (Non Certified) fuel pump for 157 BHP turbocharged and after-cooled "B" series 6 cylinder engine at 2500 RPM with a peak torque of 390 lbs. ft. at 1600 RPM. With 5% governor droop. Has manual fuel shutoff only and 2.0mm tubing. With FR9397.
1	3915155	Pump, Fuel Injection	1	

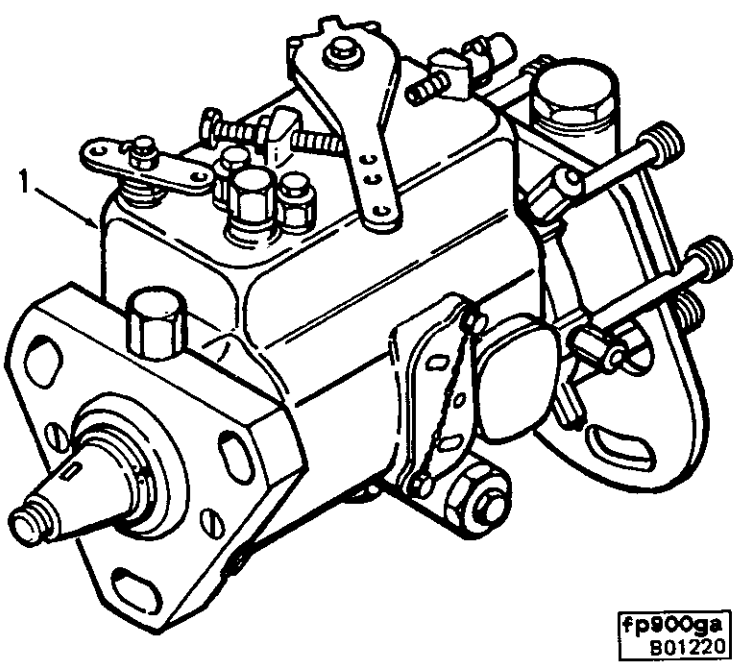
1
fp900ga
B01220

Ref No.	Part Number	Part Name	Req	Remarks
		C.A.V. INJECTION PUMP		
		OPTION FP9586		CPL#1168 "DPA" type (Non Certified) fuel pump for 142 BHP turbocharged "B" series 6 cylinder engine at 2500 RPM. Peak torque 350 lbs. ft. at 1500 RPM. With 4% governor regulation. Manual fuel shutoff only and 2.0mm tubing. With FR9467.
1	3916753	Pump, Fuel Injection	1	
		OPTION FP9588		CPL#960 "DPA" type (EEC Certified) fuel pump for 108 BHP naturally aspirated "B" series 6 cylinder engine at 2200 RPM with a peak torque of 288 lbs. ft. at 1200 RPM. Has 12 volt actuate to run fuel solenoid and 1.8mm tubing. With FR9469.
1	3916803	Pump, Fuel Injection	1	
		OPTION FP9589		CPL#960 "DPA" type (EEC Certified) fuel pump for 103 BHP naturally aspirated "B" series 6 cylinder engine at 2200 RPM with a peak torque of 288 lbs. ft. at 1200 RPM. Has 24 volt actuate to run fuel solenoid and 1.8mm tubing. With FR9469.
1	3916804	Pump, Fuel Injection	1	
		OPTION FP9726		CPL#714/1403 "DPA" type (Non Certified) fuel pump for 115 BHP naturally aspirated B series 6 cylinder engine at 2500 RPM with a peak torque of 270 lbs ft. at 1200 RPM. Has 12 volt actuate to run fuel solenoid and 1.8mm tubing. With FR9029.
1	3908650	Pump, Fuel Injection	1	

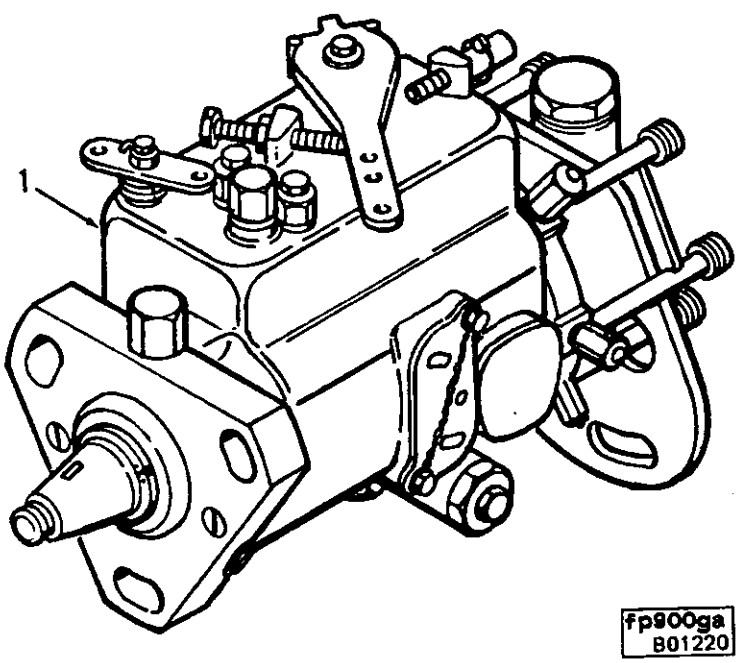
1
fp900ga
B01220

Ref No.	Part Number	Part Name	Req	Remarks
		C.A.V. INJECTION PUMP		
		OPTION FP9727		CPL#714 "DPA" type (Non Certified) fuel pump for 110 BHP naturally aspirated B series 6 cylinder engine at 2300 RPM with a peak torque of 270 lbs ft. at 1200 RPM. Has 12 volt actuate to run fuel solenoid and 1.8mm tubing. With FR9077.
1	3908661	Pump, Fuel Injection	1	
		OPTION FP9728		CPL#714 "DPA" type (Non Certified) fuel pump for 105 BHP naturally aspirated B series 6 cylinder engine at 2200 RPM with a peak torque of 270 lbs ft. at 1200 RPM. Has 12 volt actuate to run fuel solenoid and 1.8mm tubing. With FR9030.
1	3908665	Pump, Fuel Injection	1	
		OPTION FP9729		CPL#714 "DPA" type (Non Certified) fuel pump for 101 BHP naturally aspirated B series 6 cylinder engine at 2100 RPM with a peak torque of 270 lbs ft. at 1200 RPM. Has 12 volt actuate to run fuel solenoid and 1.8mm tubing. With FR9078.
1	3908648	Pump, Fuel Injection	1	
		OPTION FP9732		CPL#596/845 "DPA" type (Non Certified) fuel pump for 98 BHP naturally aspirated B series 6 cylinder engine at 2200 RPM with a peak torque of 259 lbs. ft. at 1200 RPM. Has 12 volt actuate to run fuel solenoid and 1.8mm tubing. With FR9031.
1	3908664	Pump, Fuel Injection	1	
		OPTION FP9772		CPL#596/845 "DPA" type (Non Certified) fuel pump for 98 BHP naturally aspirated B series 6 cylinder engine at 2200 RPM with a peak torque of 259 lbs. ft. at 1200 RPM. Has 24 volt actuate to run fuel solenoid and 1.8mm tubing. With FR9031.
1	3908649	Pump, Fuel Injection	1	
		OPTION FP9773		CPL#596/845 "DPA" type (Non Certified) fuel pump for 88 BHP naturally aspirated B series 6 cylinder engine at 2000 RPM with a peak torque of 262 lbs ft. at 1200 RPM. Has 24 volt actuate to run fuel solenoid and 1.8mm tubing. With FR9108.
1	3908666	Pump, Fuel Injection	1	

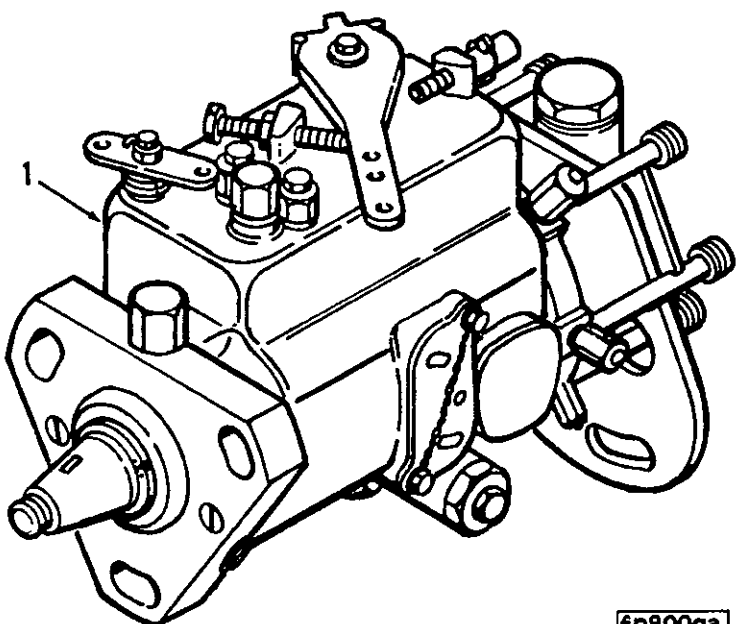
1
fp900ga
801220

Ref No.	Part Number	Part Name	Req	Remarks
		C.A.V. INJECTION PUMP		
		OPTION FP9793		CPL#596/845 "DPA" type (Non Certified) fuel pump for 88 BHP naturally aspirated B series 6 cylinder engine at 2000 RPM with a peak torque of 262 lbs ft. at 1200 RPM. Has 12 volt actuate to run fuel solenoid and 1.8mm tubing. With FR9108.
1	3908663	Pump, Fuel Injection	1	
		OPTION FP9819		CPL#791 "DPA" type fuel pump for 120 BHP naturally aspirated "B" series 6 cylinder engine at 2800 RPM with a peak torque of 271 lbs. ft. at 1200 RPM. Has 12 volt actuate to run fuel solenoid and 2.0mm tubing. With FR9152.
1	3908974	Pump, Fuel Injection	1	
		OPTION FP9842		CPL#714/1403 "DPA" type (Non Certified) fuel pump for 115 BHP naturally aspirated "B" series 6 cylinder engines at 2500 RPM with a peak torque of 270 lbs. ft. at 1200 RPM. Has 24 volt actuate to run fuel solenoid and 1.8mm tubing. With FR9029.
1	3908673	Pump, Fuel Injection	1	
		OPTION FP9878		CPL#596/845 "DPA" type (Non Certified) fuel pump for 98 BHP naturally aspirated "B" series 6 cylinder engines at 2200 RPM with a peak torque of 270 lbs. ft. at 1200 RPM. Has 12 volt actuate to run fuel solenoid and 1.8mm tubing. With FR9155.
1	3908683	Pump, Fuel Injection	1	
		OPTION FP9918		CPL#596/845 "DPA" type (Non Certified) fuel pump for 98 BHP naturally aspirated "B" series 6 cylinder engines at 2200 RPM with a peak torque of 270 lbs. ft. at 1200 RPM. Has 24 volt actuate to run fuel solenoid and 1.8mm tubing. With FR9155.
1	3908440	Pump, Fuel Injection	1	
		OPTION FP9980		CPL#791 "DPA" type fuel pump for 120 BHP naturally aspirated "B" series 6 cylinder engine at 2800 RPM with a peak torque of 271 lbs. ft. at 1200 RPM. Has 24 volt actuate to run fuel solenoid and 2.0mm tubing. With FR9152.
1	3908975	Pump, Fuel Injection	1	

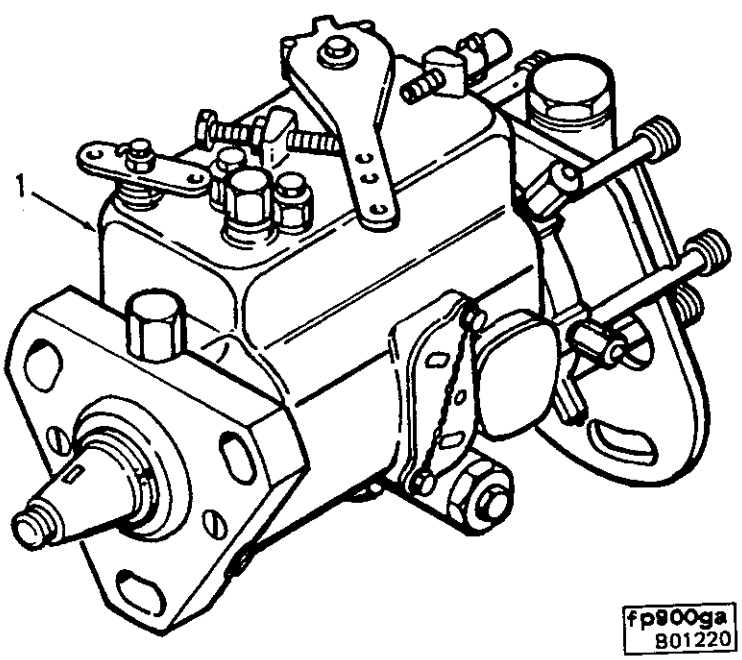
1
fp900ga
801220

Ref No.	Part Number	Part Name	Req	Remarks
		C.A.V. INJECTION PUMP		
		OPTION FP9981		CPL#714 "DPA" type (Non Certified) fuel pump for 101 BHP naturally aspirated "B" series 6 cylinder engine at 2100 RPM with a peak torque of 270 lbs. ft. at 1200 RPM. Has 24 volt actuate to run fuel solenoid and 1.8mm tubing. With FR9078.
1	3908973	Pump, Fuel Injection	1	
		OPTION FP9982		CPL#714 "DPA" type (Non Certified) fuel pump for 110 BHP naturally aspirated "B" series 6 cylinder engine at 2300 RPM with a peak torque of 270 lbs. ft. at 1200 RPM. Has 24 volt actuate to run fuel solenoid and 1.8mm tubing. With FR9077.
1	3908971	Pump, Fuel Injection	1	
		OPTION FP9983		CPL#714 "DPA" type (Non Certified) fuel pump for 105 BHP naturally aspirated "B" series 6 cylinder engine at 2200 RPM with a peak torque of 270 lbs. ft. at 1200 RPM. Has 24 volt actuate to run fuel solenoid and 1.8mm tubing. With FR9030
1	3908690	Pump, Fuel Injection	1	
		OPTION FP97212		CPL#1168 "DPA" type (Non Certified) fuel pump for a 115 BHP turbocharged "B" series 6 cylinder engines at 2200 RPM with peak torque of 300 lbs. ft. at 1500 RPM and with optional check point of 245 lbs. ft. at 800 RPM. Has 24 volt actuate to run fuel solenoid and 2.0mm tubing. With FR#9640.
1	3354602	Pump, Fuel Injection	1	
		OPTION FP97217		CPL#807 "DPA" type (Non Certified) fuel pump for 99 BHP turbocharged B series 6 cylinder engine at 2200 RPM with peak torque of 290 lbs. ft. at 1200 RPM. Has 12 volt actuate to run fuel solenoid and 1.8mm tubing. With FR9240.
1	3908683	Pump, Fuel Injection	1	
		OPTION FP97221		CPL#714 "DPA" type (Non Certified) fuel pump for 111 BHP naturally aspirated B series 6 cylinder engine at 2300 RPM with peak torque of 290 lbs. ft. at 1200 RPM. Has 12 volt actuate to run fuel solenoid, 1.8mm tubing and Brazilian Hydraulic Head #9050-163L. With FR9648.
1	3354546	Pump, Fuel Injection	1	

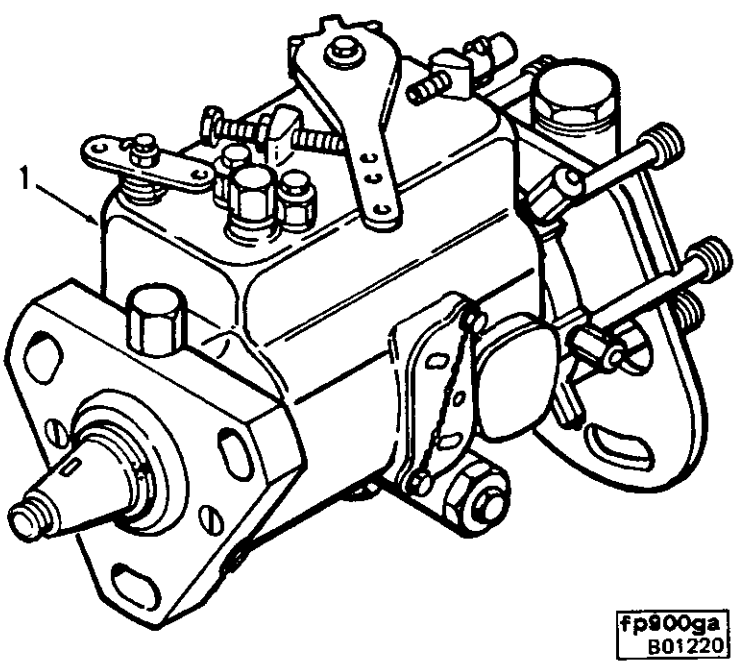
1
fp900ga
B01220

Ref No.	Part Number	Part Name	Req	Remarks
		C.A.V. INJECTION PUMP		
		OPTION FP97224		CPL#1168 "DPA" type (Non Certified) fuel pump for 152 BHP turbocharged B series engine at 2500 RPM with peak torque of 410 lbs. ft. at 1500 RPM. Has 12 volt actuate to run fuel solenoid, 2.0mm tubing, 5% governor droop and Brazilian Hydraulic Head #9050-163L. With FR9651
1	3354519	Pump, Fuel Injection	1	
		OPTION FP97225		CPL#1168 "DPA" type (Non Certified) fuel pump for 152 BHP turbocharged "B" series 6 cylinder engine at 2500 RPM with peak torque of 410 lbs. ft. at 1500 RPM. Has 24 volt actuate to run fuel solenoid, 2.0mm tubing, 5% governor droop and Brazilian Hydraulic Head #9050-163L. With FR9651.
1	3354520	Pump, Fuel Injection	1	
		OPTION FP97229		CPL#1168 "DPA" type (Non Certified) fuel pump for 120 BHP turbocharged "B" series 6 cylinder engine at 2000 RPM with peak torque of 340 lbs. ft. at 1500 RPM. Has 24 volt actuate to run fuel solenoid, 2.0mm tubing, 8% governor droop and Brazilian Hydraulic Head #9050-163L. With FR9654.
1	3354647	Pump, Fuel Injection	1	
		OPTION FP97267		CPL#1433 "DPA" type (Non Certified) fuel pump for 117 BHP naturally aspirated "B" series 6 cylinder engine at 2300 RPM with peak torque of 310 lb. ft. at 1400 RPM. Has 12 volt actuate to run fuel solenoid and 1.8mm tubing and Brazilian Hydraulic Head #9050-163L. With FR9684.
1	3354722	Pump, Fuel Injection	1	

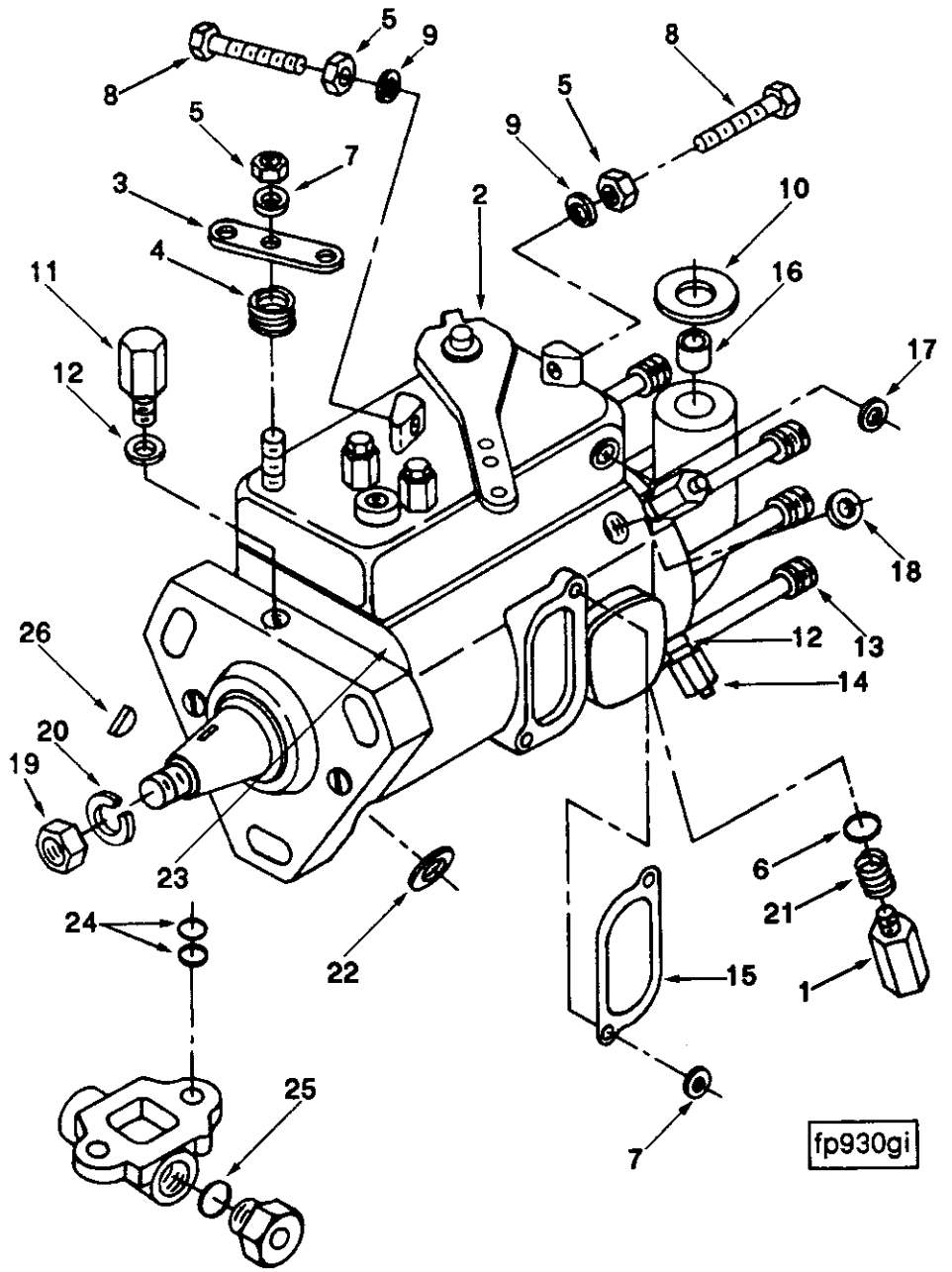
5
9
8
8
5
5
9
7
3
2
10
4
16
11
17
12
18
26
12
13
14
20
19
6
23
21
24
22
15
1
25
7
fp930gi

Ref No.	Part Number	Part Name	Req	Remarks
		CAV DPA SERVICE PARTS		
1	3905124	Kit, Solenoid	1	CAV 12 Volt actuate to stop
1	3904630	Kit, Solenoid	1	CAV 12 Volt actuate to run
1	3905125	Kit, Solenoid	1	CAV 24 Volt actuate to run
2	3905769	Kit, Throttle Lever	1	Non Break-Over
2	3905768	Kit, Throttle Lever	1	Break-Over
3	3904632	Lever, Shut Off	1	
4	3904633	Spring, Shut Off	1	
5	3904634	Locknut	3	
6	3904635	O-Ring, Solenoid	1	
7	3904636	Washer	3	
8	3904637	Screw, Idle Set	2	
9	3904638	Washer, Flat	2	
10	3904642	Washer, Copper Inlet	1	
11	3904643	Fitting, Return	1	
12	3904644	Washer, Sealing	9	
13	3904645	Fitting, Banjo	4	
14	3904646	Bolt, Banjo	4	
15	3904648	Gasket, Cover	1	
16	3904652	Filter, Inlet	1	
17	3904653	Washer, Vent Screw	1	
18	3904654	Washer, Copper	1	
19	S-203-A	Nut, Regular Hexagon Jam	1	
20	S-609	Washer, Lock	1	9/16 inch
21	3904777	Spring, Solenoid	1	
22	3904780	Seal	1	Locked Timing
23	3907486	Gasket	1	
24	3907489	O-Ring	2	
25	3907491	O-Ring	2	
26	3902332	Key, Plain Woodruff	1	4.0mm

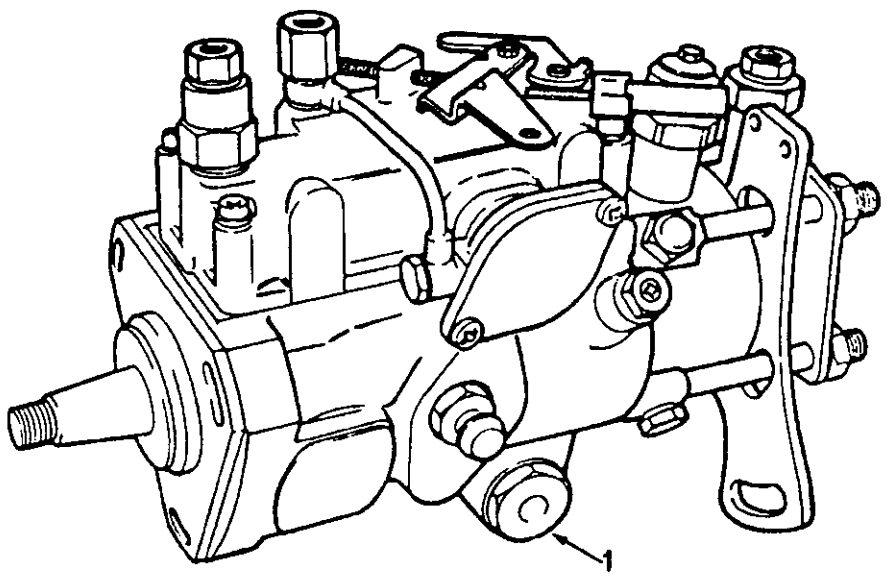

fp900gj

Ref No.	Part Number	Part Name	Req	Remarks
		C.A.V. INJECTION PUMP		
		OPTION FP9235		CPL#940 "DPA" type (Non Certified) fuel pump for 190 BHP turbocharged and after-cooled "B" series 6 cylinder engine at 2500 RPM with peak torque of 459 lbs. ft. at 1950 RPM with 5% governor droop. Has 12 volt actuate to run fuel solenoid and 2.0mm tubing. With FR9302.
1	3912129	Pump, Fuel Injection	1	
		OPTION FP97227		CPL#1168 "DPA" type (Non Certified) fuel pump for 145 BHP turbocharged B series engine at 2200 RPM with peak torque of 410 lbs. ft. at 1500 RPM. Has 24 volt actuate to run fuel solenoid, 2.0mm tubing, 5% governor droop and Brazilian hydraulic head #9050-136L. With FR9653.
1	3354560	Pump, Fuel Injection	1	

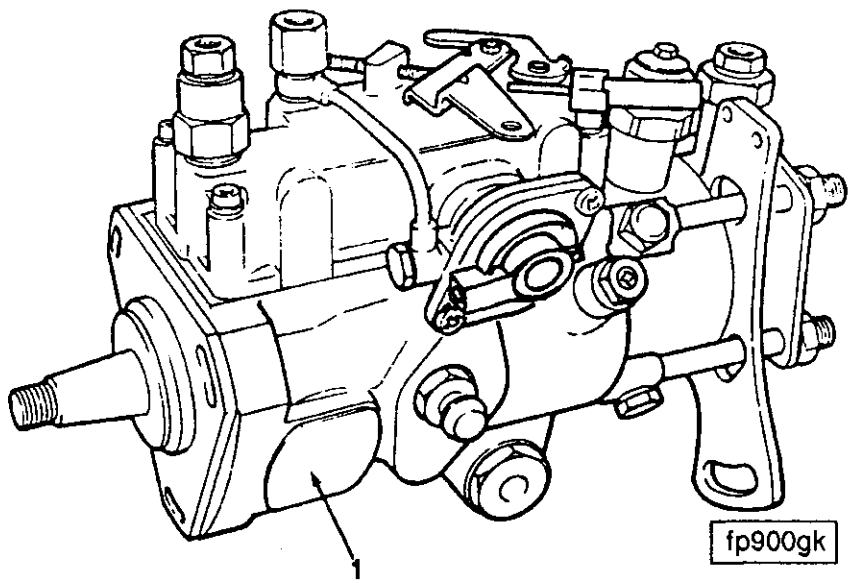

Ref No.	Part Number	Part Name	Req	Remarks
		C.A.V. INJECTION PUMP		
		OPTION FP9397		CPL#947 "DPS" type (Certified/EEC) fuel pump for 160 BHP for turbocharged "B" series 6 cylinder engines at 2500 RPM with a peak torque of 400 lbs ft. at 1550 RPM. Has 12 volt actuate to run fuel solenoid and 2.0mm tubing. With FR9341 and FE9702.
1	3279105	Pump, Fuel Injection	1	
		OPTION FP9398		CPL#947 "DPS" type (Certified/EEC) fuel pump for 160 BHP for turbocharged "B" series 6 cylinder engines at 2500 RPM with a peak torque of 400 lbs. ft. at 1550 RPM. Has 24 volt actuate to run fuel solenoid and 2.0mm tubing. With FR9341 and FE9702.
1	3279106	Pump, Fuel Injection	1	
		OPTION FP9406		CPL#947 "DPS" type (Certified/EEC) fuel pump for 160 BHP turbocharged "B" series 6 cylinder at 2500 RPM with a torque of 400 lbs. ft. at 1550 RPM. Has manual fuel solenoid and 2.0mm tubing. With FR9341 and FE9702.
1	3279279	Pump, Fuel Injection	1	

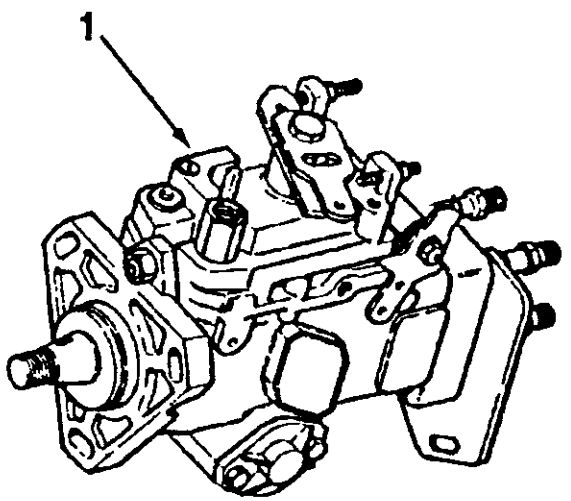

fp900a

Ref No.	Part Number	Part Name	Req	Remarks
		BOSCH INJECTION PUMP		
		OPTION FP97009		CPL#1288. "VE" type (Non Certified) fuel pump for 148 BHP turbocharged B series 6 cylinder engines at 2300 RPM with peak torque of 400 lbs. ft. at 1600 RPM. Has 12 volt actuate to run fuel solenoid and 2.0mm tubing. With FR9081.
1	3916949	Pump, Fuel Injection	1	
		OPTION FP97010		CPL#1288 "VE" type (Non Certified) fuel pump for 148 BHP turbocharged "B" series 6 cylinder engine at 2300 RPM with peak torque of 400 lbs. ft. at 1600 RPM. Has 24 volt actuate to run fuel solenoid and 2.0mm tubing. With FR9081.
1	3918283	Pump, Fuel Injection	1	
		OPTION FP97011		CPL#1289 "VE" type (Non Certified) fuel pump for 152 BHP turbocharged "B" series 6 cylinder engine at 2500 RPM with a peak torque of 414 lbs. ft. at 1600 RPM. Has 12 volt actuate to run fuel solenoid and 2.0mm tubing. With FR9036.
1	3916947	Pump, Fuel Injection	1	
		OPTION FP97012		CPL#1289 "VE" type (Non Certified) fuel pump for 152 BHP turbocharged "B" series 6 cylinder engine at 2500 RPM with a peak torque of 414 lbs. ft. at 1600 RPM. Has 24 volt actuate to run fuel solenoid and 2.0mm tubing. With FR9036.
1	3916948	Pump, Fuel Injection	1	
		OPTION FP97013		CPL#1288 "VE" type (Non Certified) fuel pump for 152 BHP turbocharged "B" series 6 cylinder engine at 2500 RPM with a peak torque of 414 lbs. ft. at 1600 RPM. Has 12 volt actuate to run fuel solenoid and 2.0mm tubing. With FR9036.
1	3916947	Pump, Fuel Injection	1	

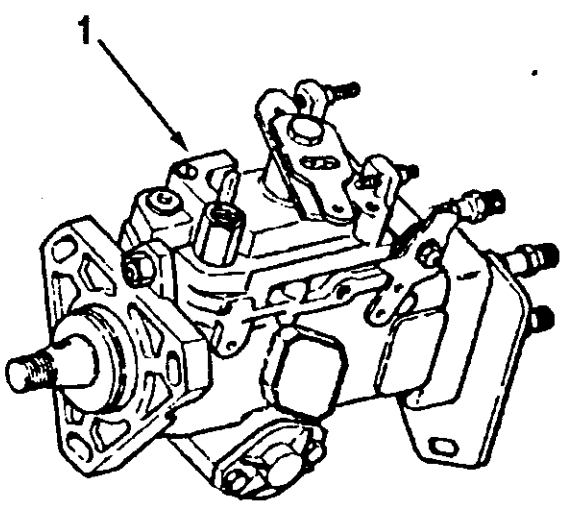

fp900a

Ref No.	Part Number	Part Name	Req	Remarks
		BOSCH INJECTION PUMP		
		OPTION FP97014		CPL#1288 "VE" type (Non Certified) fuel pump for 152 BHP turbocharged "B" series 6 cylinder engine at 2500 RPM with peak torque of 414 lbs. ft. at 1600 RPM. Has 24 volt actuate to run fuel solenoid and 2.0mm tubing. With FR9036.
1	3916948	Pump, Fuel Injection	1	
		OPTION FP97022		CPL#599 "VE" type (Non Certified) fuel pump for 177 BHP turbocharged and aftercooled "B" series 6 cylinder engine at 2500 RPM with peak torque of 459 lbs. ft. at 1500 RPM. Has 12 volt actuate to run fuel solenoid and 2.0mm tubing. With FR9212.
1	3917543	Pump, Fuel Injection	1	
		OPTION FP97023		CPL#728 "VE" type (Non Certified) fuel pump for 128 BHP turbocharged "B" series 6 cylinder engine at 2800 RPM with a peak torque of 335 lbs. ft. at 1200 RPM. Has 12 volt actuate to run fuel solenoid and 2.0mm tubing. With FR9115.
1	3917542	Pump, Fuel Injection	1	
		OPTION FP97025		CPL#729 "VE" type (Certified with EEC) fuel pump for 134 BHP turbocharged B series 6 cylinder engine at 2200 RPM with a peak torque of 371 lbs. ft. at 1500 RPM. Has 12 volt actuate to run fuel solenoid and 2.0mm tubing. With FR9256.
1	3917816	Pump, Fuel Injection	1	
		OPTION FP97026		CPL#728 "VE" type (Non Certified) fuel pump for 130 BHP turbocharged "B" series 6 cylinder engine at 2650 RPM with peak torque of 335 lbs. ft. at 1200 RPM. Has 24 volt actuate to run fuel solenoid and 2.0mm tubing. With FR9116.
1	3916904	Pump, Fuel Injection	1	
		OPTION FP97027		CPL#728 "VE" type (Non Certified) fuel pump for 130 BHP turbocharged "B" series 6 cylinder engine at 2650 RPM with peak torque of 335 lbs. ft. at 1200 RPM. Has 12 volt actuate to run fuel solenoid and 2.0mm tubing. With FR 9116.
1	3916905	Pump, Fuel Injection	1	

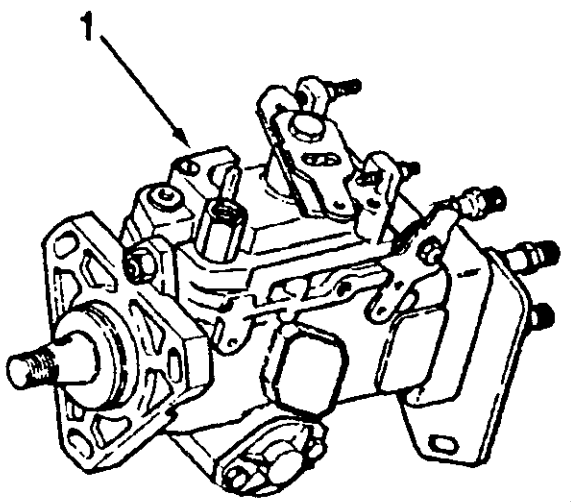

fp900a

Ref No.	Part Number	Part Name	Req	Remarks
		BOSCH INJECTION PUMP		
		OPTION FP97031		CPL#599 "VE" type (Non Certified) fuel pump for 174 BHP turbocharged and aftercooled "B" series 6 cylinder engine at 2200 RPM with peak torque of 455 lbs. ft. at 1500 RPM. Has 24 volt actuate to run fuel solenoid and 2.0mm tubing. With FR9064.
1	3916911	Pump, Fuel Injection	1	
		OPTION FP97034		CPL#943 Dry/CPL#950 Wet "VE" type (Non Certified) fuel pump for 120 BHP turbocharged "B" series 6 cylinder engine at 2100 RPM with peak torque of 391 lbs. ft. at 1200 RPM. Has 12 volt actuate to run fuel solenoid and 2.0mm tubing. With FR9110.
1	3916916	Pump, Fuel Injection	1	
		OPTION FP97035		CPL#943 Dry/CPL#950 Wet "VE" type (Non Certified) fuel pump for 120 BHP turbocharged "B" series 6 cylinder engine at 2100 RPM with peak torque of 391 lbs. ft. at 1200 RPM. Has 24 volt actuate to run fuel solenoid and 2.0mm tubing. With FR9110.
1	3916917	Pump, Fuel Injection	1	
		OPTION FP97036		CPL#938 Dry/CPL#949 Wet "VE" type (Non Certified) fuel pump for 145 BHP turbocharged "B" series 6 cylinder engine at 2200 RPM with a peak torque of 400 lbs. ft. at 1600 RPM. Has 12 volt actuate to run fuel solenoid and 2.0mm tubing. With FR9082.
1	3916919	Pump, Fuel Injection	1	
		OPTION FP97037		CPL#938 Dry/CPL#949 Wet "VE" type (Non Certified) fuel pump for 145 BHP for turbocharged "B" series 6 cylinder engine at 2200 RPM with peak torque of 400 lbs. ft. at 1600 RPM. Has 24 volt actuate to run fuel solenoid and 2.0mm tubing. With FR9082.
1	3916920	Pump, Fuel Injection	1	
		OPTION FP97038		CPL#938 Dry/CPL#949 Wet "VE" type (Non Certified) fuel pump for 142 BHP turbocharged "B" series 6 cylinder engine at 2100 RPM with a peak torque of 400 lbs. ft. at 1600 RPM. Has 12 volt actuate to run fuel solenoid and 2.0mm tubing. With FR9083.
1	3916922	Pump, Fuel Injection	1	

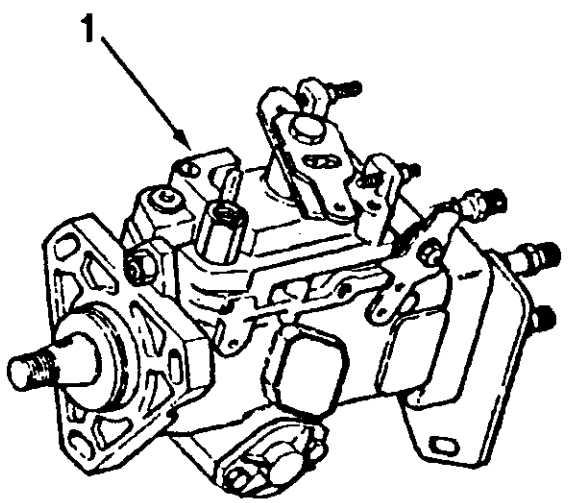

fp900a

Ref No.	Part Number	Part Name	Req	Remarks
		BOSCH INJECTION PUMP		
		OPTION FP97039		CPL#938 Dry/CPL#949 Wet "VE" type (Non Certified) fuel pump for 142 BHP for turbo-charged "B" series 6 cylinder engine at 2100 RPM with peak torque of 400 lbs. ft. at 1600 RPM. Has 24 volt actuate to run fuel solenoid and 2.0mm tubing. With FR9083.
1	3916923	Pump, Fuel Injection	1	
		OPTION FP97040		CPL#938 Dry/CPL#949 Wet "VE" type (Non Certified) fuel pump for 88 BHP turbocharged "B" series 6 cylinder engine at 2000 RPM with peak torque of 265 lbs. ft. at 1200 RPM. Has 12 volt actuate to run fuel solenoid and 2.0mm tubing. With FR9111.
1	3916930	Pump, Fuel Injection	1	
		OPTION FP97041		CPL#938 Dry/CPL#949 Wet "VE" type (Non Certified) fuel pump for 88 BHP turbocharged and aftercooled "B" series 6 cylinder at 2000 RPM with peak torque of 265 lbs. ft. at 1200 RPM. Has 24 volt actuate to run fuel solenoid and 2.0mm tubing. With FR9111.
1	3916931	Pump, Fuel Injection	1	
		OPTION FP97042		CPL#938 Dry/CPL#949 Wet "VE" type (Non Certified) fuel pump for 126 BHP turbo-charged "B" series 6 cylinder engine at 2100 RPM with peak torque of 384 lbs. ft. at 1300 RPM. Has 12 volt actuate to run fuel solenoid and 2.0mm tubing. With FR9223.
1	3916933	Pump, Fuel Injection	1	
		OPTION FP97043		CPL#938/1279 Dry/CPL#949 Wet "VE" type (Non Certified) fuel pump for 126 BHP turbocharged "B" series 6 cylinder engine at 2100 RPM with peak torque of 384 lbs. ft. at 1300 RPM. Has 24 volt actuate to run fuel solenoid and 2.0mm tubing. With FR9223.
1	3916934	Pump, Fuel Injection	1	
		OPTION FP97044		CPL#938/1279 Dry/CPL#949 Wet "VE" type (Non Certified) fuel pump for 130 BHP turbocharged "B" series 6 cylinder engine at 2500 RPM with peak torque of 368 lbs. ft. at 1200 RPM. Has 12 volt actuate to run fuel solenoid and 2.0mm tubing. With FR9118.
1	3916936	Pump, Fuel Injection	1	

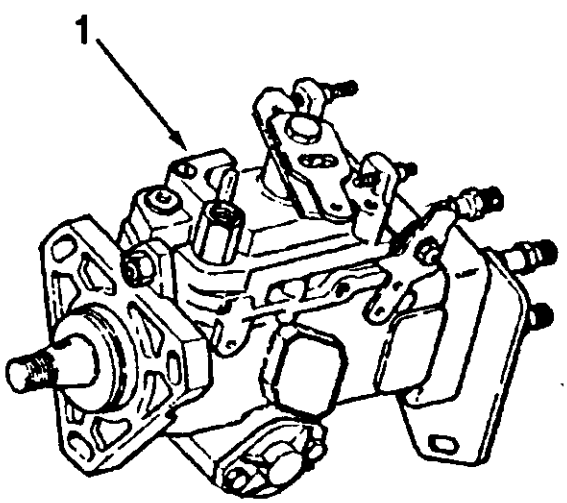

fp900a

Ref No.	Part Number	Part Name	Req	Remarks
		BOSCH INJECTION PUMP		
		OPTION FP97045		CPL#938/1279 Dry/CPL#949 Wet "VE" type (Non Certified) fuel pump for 130 BHP turbocharged "B" series 6 cylinder engine at 2500 RPM with peak torque of 368 lbs. ft. at 1200 RPM. Has 24 volt actuate to run fuel solenoid and 2.0mm tubing. With FR9118.
1	3916937	Pump, Fuel Injection	1	
		OPTION FP97046		CPL#599 Dry "VE" type fuel pump for 141 BHP turbocharged and aftercooled "B" series 6 cylinder engine at 2200 RPM with peak torque of 406 lbs. ft. at 1300 RPM. Has 12 volt actuate to run fuel solenoid and 2.0mm tubing. With FR9045.
1	3916939	Pump, Fuel Injection	1	
		OPTION FP97050		CPL#938 "VE" type (Non Certified) fuel pump for 125 BHP turbocharged "B" series 6 cylinder engines at 2200 RPM with a peak torque of 412 lbs ft. at 1400 RPM. and intermediate torque of 384 lbs. ft. at 1700 RPM. Has 12 volt actuate to run fuel solenoid and 2.0mm tubing. With FR9300.
1	3916945	Pump, Fuel Injection	1	
		OPTION FP97051		CPL#938 "VE" type (Non Certified) fuel pump for 125 BHP turbocharged "B" series 6 cylinder engines at 2200 RPM with a peak torque of 394 lbs lbs. ft. at 1700 RPM. Has 24 volt actuate to run fuel solenoid and 2.0mm tubing. With FR9300.
1	3916946	Pump, Fuel Injection	1	
		OPTION FP97063		CPL#938 Dry/CPL#949 Wet "VE" type (Non Certified) fuel pump for 122 BHP turbo-charged "B" series 6 cyl engine at 2200 RPM with peak torque of 370 lbs. ft. at 1200 RPM. Has 12 volt actuate to run fuel solenoid and 2.0mm tubing. With FR9109.
1	3916968	Pump, Fuel Injection	1	

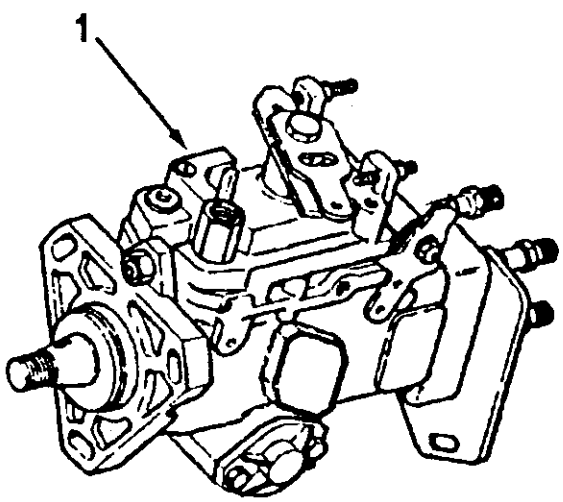

fp900a

Ref No.	Part Number	Part Name	Req	Remarks
		BOSCH INJECTION PUMP		
		OPTION FP97064		CPL#938 Dry/CPL#949 Wet "VE" type (Non Certified) fuel pump for 122 BHP turbo-charged "B" series 6 cylinder engine at 2200 RPM with peak torque of 370 lbs. ft. at 1200 RPM. Has 24 volt actuate to run fuel solenoid and 2.0mm tubing. With FR9109.
1	3916969	Pump, Fuel Injection	1	
		OPTION FP97065		CPL#938 "VE" type (Non Certified) fuel pump for 137 BHP turbocharged B-series 6 cylinder engine at 2000 RPM with peak torque of 380 lbs. ft. at 1500 RPM and 13% droop. Has 12 volt actuate to run fuel solenoid and 2.0mm tubing. With FR9205.
1	3916971	Pump, Fuel Injection	1	
		OPTION FP97066		CPL#938/CPL#1279 "VE" type (Non Certified) fuel pump for 137 BHP turbocharged "B" series 6 cylinder engine at 2000 RPM with peak torque of 380 lbs. ft. at 1500 RPM and 13% droop. Has 24 volt actuate to run fuel solenoid and 2.0mm tubing. With FR9205.
1	3916972	Pump, Fuel Injection	1	
		OPTION FP97067		CPL#938 Dry/CPL#949 Wet "VE" type (Non Certified) fuel pump for 124 BHP turbo-charged "B" series 6 cylinder engine at 2400 RPM with peak torque of 361 lbs. ft. at 1200 RPM. Has 12 volt actuate to run fuel solenoid and 2.0mm tubing. With FR9172.
1	3916974	Pump, Fuel Injection	1	
		OPTION FP97068		CPL#938 Dry/CPL#949 Wet "VE" type (Non Certified) fuel pump for 124 BHP turbo-charged "B" series 6 cyl engine at 2400 RPM with peak torque of 361 lbs. ft. at 1200 RPM. Has 24 volt actuate to run fuel solenoid and 2.0mm tubing. With FR9172.
1	3916975	Pump, Fuel Injection	1	
		OPTION FP97069		CPL#938 Dry/CPL#949 Wet "VE" type (Non Certified) fuel pump for 140 BHP turbo-charged "B" series 6 cylinder engine at 2200 RPM with peak torque of 380 lbs. ft. at 1500 RPM. Has 12 volt actuate to stop fuel solenoid and 2.0mm tubing. With FR9174.
1	3916977	Pump, Fuel Injection	1	

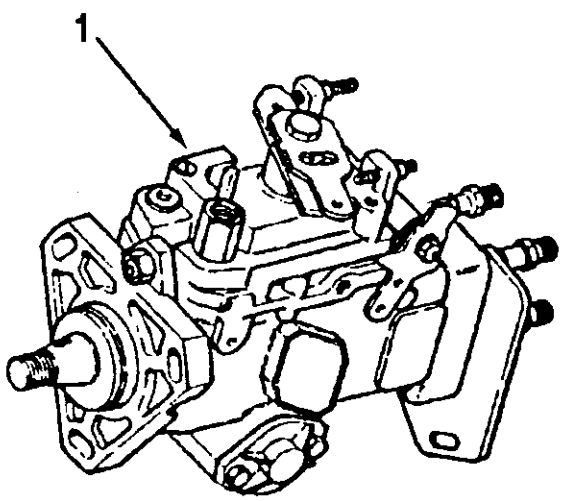

fp900a

Ref No.	Part Number	Part Name	Req	Remarks
		BOSCH INJECTION PUMP		
		OPTION FP97070		CPL#938 Dry/CPL#949 Wet "VE" type (Non Certified) fuel pump for 140 BHP turbo-charged "B" series 6 cylinder engine at 2200 RPM with a peak torque of 380 lbs ft. at 1500 RPM. Has 24 volt actuate to stop fuel solenoid and 2.0mm tubing. With FR9174.
1	3916978	Pump, Fuel Injection	1	
		OPTION FP97071		CPL#943 "VE" type (Non Certified) fuel pump for 126 BHP turbocharged "B" series 6 cylinder engine at 2100 RPM with peak torque of 410 lbs. ft. at 1200 RPM. Has 12 volt actuate to run fuel solenoid and 2.0mm tubing. With FR9351.
1	3917540	Pump, Fuel Injection	1	
		OPTION FP97090		CPL#599 Dry. "VE" type fuel pump for 160 BHP turbocharged and aftercooled B series 6 cylinder engines at 2200 RPM with a peak torque of 476 lbs. ft. at 1500 RPM. Has 24 volt actuate to run fuel solenoid and 2.0mm tubing. With FR9411.
1	3917009	Pump, Fuel Injection	1	
		OPTION FP97091		CPL#599 Dry. "VE" type fuel pump for 160 BHP turbocharged and aftercooled B series 6 cylinder engine at 2200 RPM with a peak torque of 476 lbs. ft. at 1500 RPM. Has 12 volt actuate to run fuel solenoid and 2.0mm tubing. With FR9411.
1	3917010	Pump, Fuel Injection	1	
		OPTION FP97146		CPL#938 "VE" type (Non Certified) fuel pump for 130 BHP turbocharged "B" series 6 cylinder engine at 2100 RPM with peak torque of 421 lbs. ft. at 1300 RPM. Has 12 volt actuate to run fuel solenoid and 2.0mm tubing. With FR9409.
1	3917552	Pump, Fuel Injection	1	
		OPTION FP97147		CPL#938 "VE" type (Non Certified) fuel pump for 130 BHP turbocharged "B" series 6 cylinder engine at 2100 RPM with peak torque of 421 lbs. ft. at 1300 RPM. Has 24 volt actuate to run fuel solenoid and 2.0mm tubing. With FR9409.
1	3917553	Pump, Fuel Injection	1	

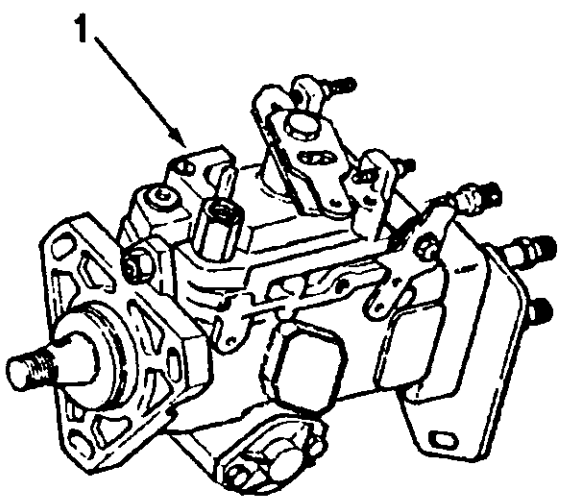

fp900a

Ref No.	Part Number	Part Name	Req	Remarks
		BOSCH INJECTION PUMP		
		OPTION FP97148		CPL#938 "VE" type (Non Certified) fuel pump for 124 BHP turbocharged "B" series 6 cylinder engine at 2500 RPM with a peak torque of 349 lbs. ft. at 1300 RPM. Has 24 volt actuate to run fuel solenoid and 2.0mm tubing. With FR9426.
1	3917556	Pump, Fuel Injection	1	
		OPTION FP97150		CPL#938 "VE" type (Non Certified) fuel pump for 110 BHP turbocharged "B" series 6 cylinder engine at 2000 RPM with a peak torque of 341 lbs. ft. at 1200 RPM. Has 24 volt actuate to run fuel solenoid and 2.0mm tubing. With FR9428.
1	3917558	Pump, Fuel Injection	1	
		OPTION FP97151		CPL#938 "VE" type (Non Certified) fuel pump for 140 BHP turbocharged "B" series 6 cylinder engine at 2200 RPM with a peak torque of 431 lbs. ft. at 1400 RPM. Has 12 volt actuate to run fuel solenoid and 2.0mm tubing. With FR9444.
1	3917559	Pump, Fuel Injection	1	
		OPTION FP97152		CPL#938 "VE" type (Non Certified) fuel pump for 140 BHP turbocharged "B" series 6 cylinder engine at 2200 RPM with a peak torque of 431 lkbs. ft. at 14000 RPM. Has 24 volt actuate to run fuel solenoid and 2.0mm tubing. With FR9444.
1	3917560	Pump, Fuel Injection	1	
		OPTION FP97165		CPL#594 "VE" type (Non Certified) fuel pump for 114 BHP turbocharged "B" series 6 cylinder engine at 2200 RPM with a peak torque 336 lbs. ft. at 1300 RPM. Has 12 volt actuate to run fuel solenoid and 2.0mm tubing. With FR9572.
1	3917935	Pump, Fuel Injection	1	

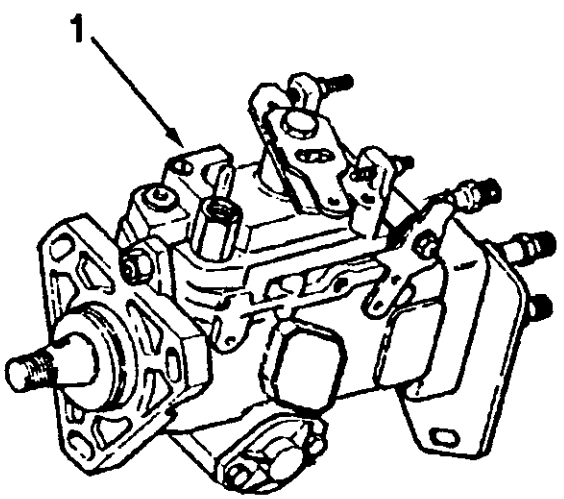

fp900a

Ref No.	Part Number	Part Name	Req	Remarks
		BOSCH INJECTION PUMP		
		OPTION FP97167		CPL#938 Dry/CPL#949 Wet "VE" type (EEC Certified) fuel pump for 145 BHP turbo-charged "B" series 6 cylinder engine at 2200 RPM with 13% governor droop and peak torque of 400 lbs. ft. at 1600 RPM. Has 12 volt actuate to run fuel solenoid and 2.0mm tubing. With FR9575.
1	3916949	Pump, Fuel Injection	1	
		OPTION FP97168		CPL#1288 'VE'(EEC Certified) fuel pump for 145 BHP turbocharged "B" series 6 cylinder engine at 2200 RPM with 13% governor droop and peak torque of 400 lbs. ft. at 1600 RPM. Has 24 volt actuate to run fuel solenoid and 2.0mm tubing. With FR9575.
1	3916950	Pump, Fuel Injection	1	
		OPTION FP97181		CPL#599 Bosch VE type fuel pump for 160 BHP turbocharged and aftercooled B series 6 cylinder engines at 2200 RPM with peak torque of 476 lbs. ft. at 1500 RPM. Has 12 volt actuate to run fuel solenoid, and 2.0mm tubing. Pump has a pre-set nominal low idle setting of 1000 RPM. With FR 9627.
1	3919457	Pump, Fuel Injection	1	
		OPTION FP97182		CPL#599 Dry "VE" type fuel pump for 160 BHP turbocharged and aftercooled "B" series 6 cylinder engines at 2200 RPM with a peak torque of 476 lbs. ft. at 1500 RPM. Has 24 volt actuate to run fuel solenoid and 2.0mm tubing. Pump has a pre-set nominal low idle setting of 1000 RPM. With FR9627.
1	3919458	Pump, Fuel Injection	1	
		OPTION FP97289		CPL#938 Dry/CPL#949 Wet Boschs' "VE" type (non certified) fuel pump for 145 BHP turbocharged B series 6 cylinder engine at 2200 RPM with peak torque of 440 lbs. ft. at 1400 RPM. Has 24 volt actuate to run fuel solenoid, and 2.0mm tubing. With FR9704.
1	3920718	Pump, Fuel Injection	1	

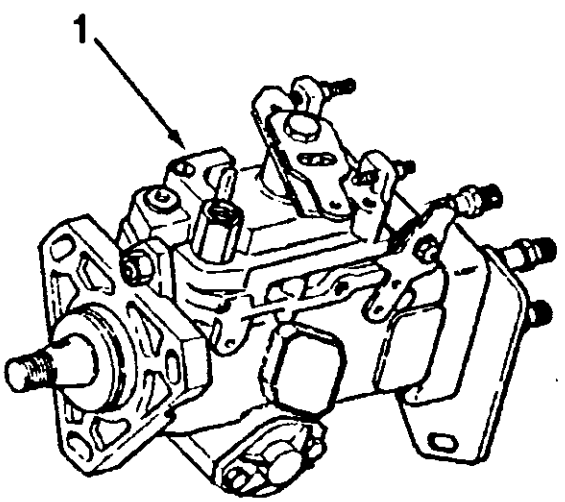

fp900a

Ref No.	Part Number	Part Name	Req	Remarks
		BOSCH INJECTION PUMP		
		OPTION FP97300		CPL#938 Dry/CPL#949 Wet "VE" type (non certified) fuel pump for 87 BHP turbocharged B series 6 cylinder engine at 2200 RPM with peak torque of 265 lbs. ft. at 1200 RPM. Has 12 volt actuate to run fuel solenoid and 2.0mm tubing. With FR9702.
1	3921322	Pump, Fuel Injection	1	
		OPTION FP97301		CPL#938 Dry/CPL#949 Wet "VE" type (Non Certified) fuel pump for 87 BHP turbocharged "B" series 6 cylinder engine at 2200 RPM with peak torque of 265 lbs. ft. at 1200 RPM. Has 24 volt actuate to run fuel solenoid and 2.0mm tubing. With FR9702.
1	3921323	Pump, Fuel Injection	1	
		OPTION FP97304		CPL#938 Boschs' "VE" type (non certified) fuel pump for 137 BHP turbocharged B series 6 cylinder engine at 2000 RPMM with peak torque of 393 lbs. ft. at 1600 RPM and 13% droop. Has 24 volt actuate to run fuel solenoid and 2.0mm tubing. With FR9709.
1	3921501	Pump, Fuel Injection	1	

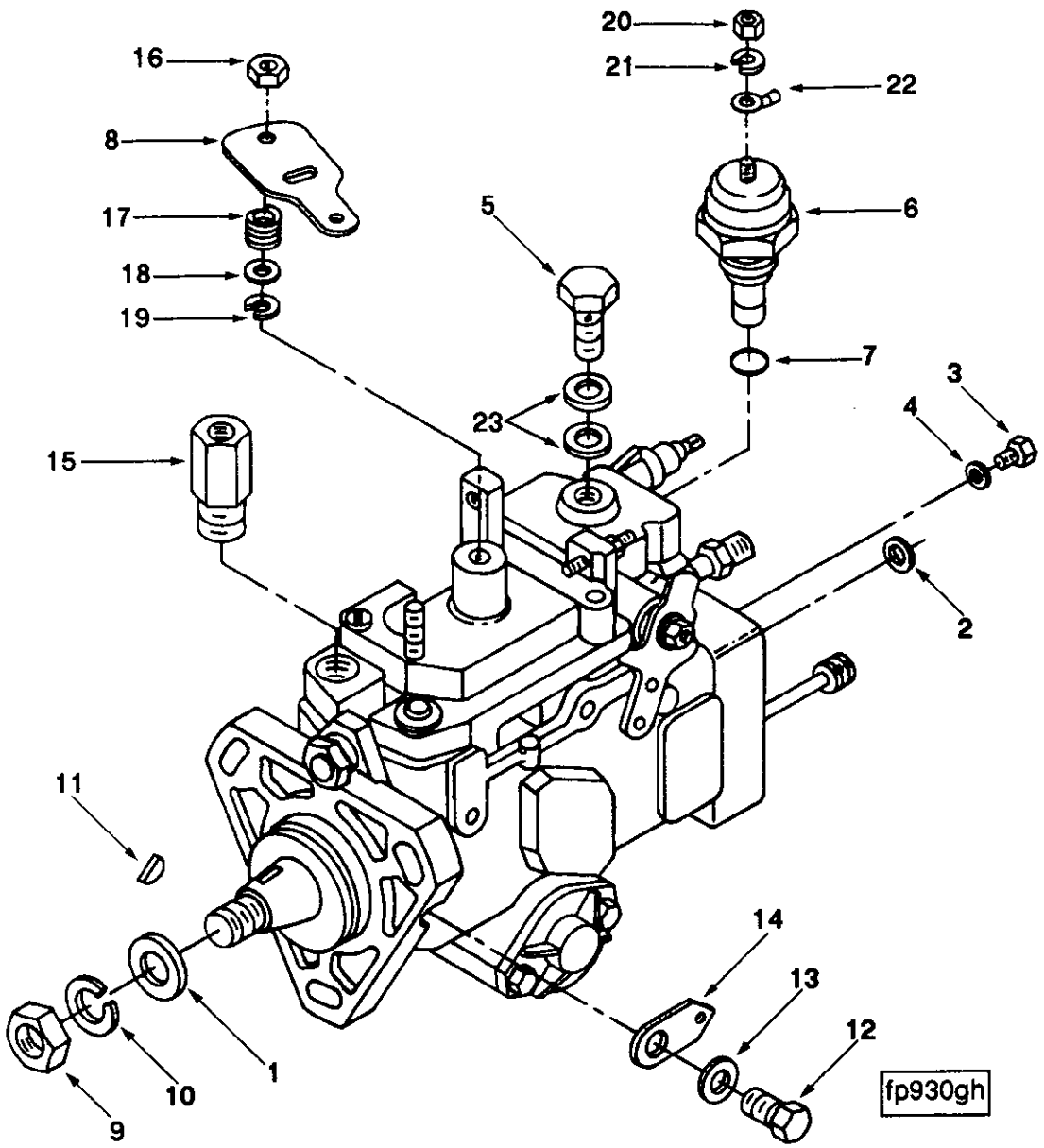
20
21
22
16
8
17
18
19
5
6
7
23
3
4
15
2
11
14
13
12
1
10
9
fp930gh

Ref No.	Part Number	Part Name	Req	Remarks
		BOSCH VE PUMP SERVICE PARTS		
1	3920393	Seal, Shaft	1	
2	3903570	Gasket, Delivery Valve	4	
3	3903572	Screw, Vent	1	
4	3903573	Gasket, Vent Screw	1	
5	3905465	Screw, Banjo Connector	1	M8 x 1.50 x 24
6	3903575	Kit, Solenoid	1	12V actuate to run
7	3903577	O-Ring, Solenoid	1	
6	3903576	Kit, Solenoid	1	24V actuate to run
7	3903577	O-Ring, Solenoid	1	
6	3802205	Kit, Solenoid	1	12V actuate to stop
7	3903577	O-Ring, Solenoid	1	
6	3802353	Kit, Solenoid	1	24V actuate to stop
7	3903577	O-Ring, Solenoid	1	
8	3908765	Lever, Control	1	
9	3903738	Nut, Regular Hexagon	1	
10	S-609	Washer, Lock	1	
11	3902332	Key, Plain Woodruff	1	
12	3904784	Screw, Timing Lock	1	
13	3904785	O-Ring, Timing Lock	1	
14	3904786	Plate, Timing Lock	1	
15	3903382	Adapter, Tube	1	
16	3907475	Nut	1	
17	3907476	Spring	1	
18	3907477	Shim	1	
19	3907478	Lockwasher	1	
20	3907480	Nut	1	
21	3907481	Nut	1	
22	3907482	Blade, Terminal	1	
23	3903037	Washer, Plain	2	
	3802047	Kit, Delivery Bypass Valve	1	Bosch Industrial Engines Only
2	3903570	Gasket, Delivery Valve	1	

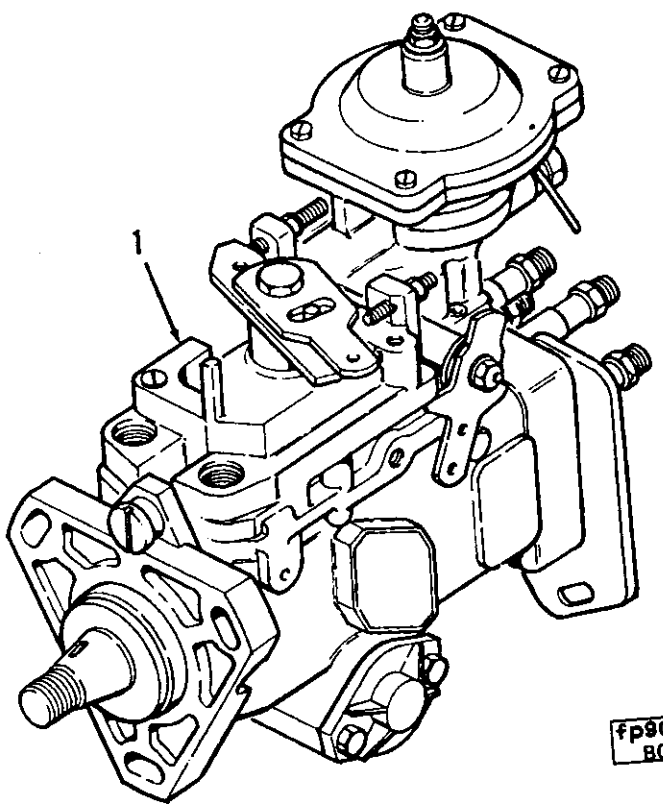
1
fp900gc
B01500

Ref No.	Part Number	Part Name	Req	Remarks
		BOSCH INJECTION PUMP		
		OPTION FP9219		CPL#938. "VE" type (Non Certified) fuel pump for 113 BHP turbocharged "B" series 6 cylinder engines at 2200 RPM with a peak torque of 333 lbs. ft. at 1400 RPM. Has 12 volt actuate to run fuel solenoid and 2.0mm tubing. With FR9294.
1	3912113	Pump, Fuel Injection	1	
		OPTION FP9220		CPL#938 "VE" type (Non Certified) fuel pump for 113 BHP turbocharged "B" series 6 cylinder engines at 2200 RPM with a peak torque of 333 lbs ft. at 1400 RPM. Has 24 volt actuate to run fuel solenoid and 2.0mm tubing. With FR9294.
1	3912114	Pump, Fuel Injection	1	
		OPTION FP97004		CPL#599 Dry "VE" type (non certified) fuel pump for 174 BHP turbocharged and after-cooled B series 6 cylinder engines at 2400 RPM with a peak torque of 455 lbs. ft. at 1500 RPM. Has 24 volt actuate to run fuel solenoid and 2.0mm tubing. With FR9368.
1	3917017	Pump, Fuel Injection	1	
		OPTION FP97007		CPL#599 "VE" type (Non Certified) fuel pump for 177 BHP turbocharged and aftercooled "B" series 6 cylinder engine at 2500 RPM with peak torque of 455 lbs. ft. at 1500 RPM. Has 12 volt actuate to run fuel solenoid and 2.0mm tubing. With FR9043.
1	3917002	Pump, Fuel Injection	1	
		OPTION FP97008		CPL#599 "VE" type (Non Certified) fuel pump for 177 BHP turbocharged and aftercooled "B" series 6 cylinder engine at 2500 RPM with peak torque of 455 lbs. ft. at 1500 RPM. Has 24 volt actuate to run fuel solenoid and 2.0mm tubing. With FR9043 and FE9701.
1	3917003	Pump, Fuel Injection	1	
		OPTION FP97020		CPL#715 "VE" type (Non Certified) fuel pump for 143 BHP turbocharged and aftercooled "B" series 6 cylinder engine at 2100 RPM with peak torque of 455 lbs. ft. at 1200 RPM. Has 12 volt actuate to run fuel solenoid and 2.0mm tubing. With FR9112 and FE9701.
1	3917544	Pump, Fuel Injection	1	

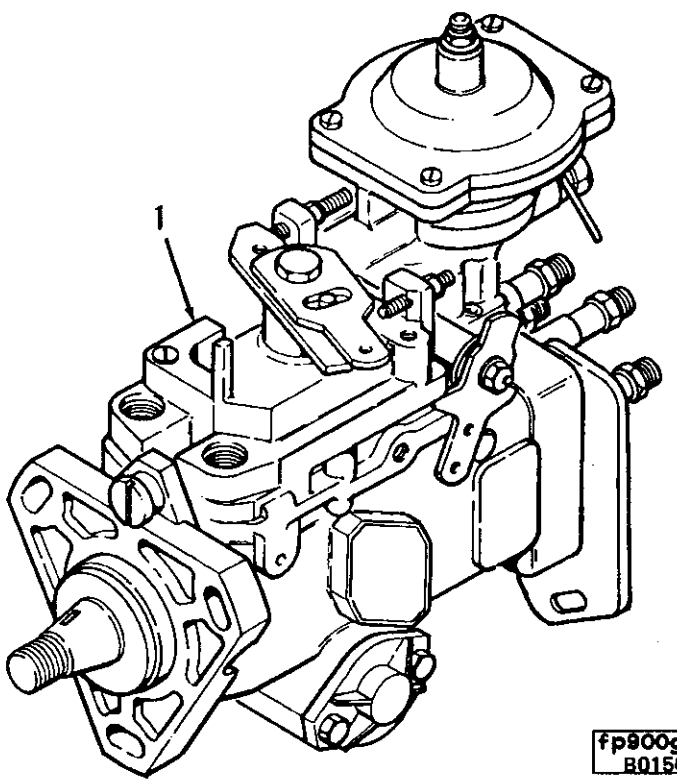
1
fp900gc
B01500

Ref No.	Part Number	Part Name	Req	Remarks
		BOSCH INJECTION PUMP		
		OPTION FP97021		CPL#599 "VE" type (Non Certified) fuel pump for 176 BHP turbocharged and aftercooled "B" series 6 cylinder engine at 2300 RPM with peak torque of 447 lbs. ft. at 1500 RPM. Has 12 volt actuate to run fuel solenoid and 2.0mm tubing. With FR9086 and FE9701.
1	3916894	Pump, Fuel Injection	1	
		OPTION FP97028		CPL#912 "VE" type (Non Certified) fuel pump for 192 BHP turbocharged and aftercooled "B" series 6 cylinder engine at 2800 RPM with peak torque of 458 lbs. ft. at 1700 RPM. Has 24 volt actuate to run fuel solenoid and 2.0mm tubing. With FR9150 and FE9701.
1	3916907	Pump, Fuel Injection	1	
		OPTION FP97029		CPL#912 "VE" type (Non Certified) fuel pump for 192 BHP turbocharged and aftercooled "B" series 6 cylinder engine 2800 RPM with a peak torque of 458 lbs. ft. at 1700 RPM. Has 12 volt actuate to run fuel solenoid and 2.0mm tubing. With FR9150 and FE9701.
1	3916908	Pump, Fuel Injection	1	
		OPTION FP97030		CPL#599 "VE" type (Non Certified) fuel pump for 174 BHP turbocharged and aftercooled "B" series 6 cylinder engine 2200 RPM with a peak torque of 455 lbs. ft. at 1500 RPM. Has 12 vo actuate to run fuel solenoid and 2.0mm tubing. With FR9064 and FE9701.
1	3916910	Pump, Fuel Injection	1	
		OPTION FP97032		CPL#599 "VE" type (Non Certified) fuel pump for 160 BHP turbocharged B series 6 cylinder engine at 2800 RPM with peak torque of 415 lbs. ft. at 1700 RPM. Has 12 volt actuate to run fuel solenoid and 2.0mm tubing. With FR9232 and FE9701.
1	3916913	Pump, Fuel Injection	1	
		OPTION FP97033		CPL#761 "VE" type (Non Certified) fuel pump for 160 BHP turbocharged "B" series 6 cylinder engine 2800 RPM with a peak torque of 415 lbs. ft. at 1700 RPM. Has 24 volt actuate to run fuel solenoid and 2.0mm tubing. With FR9232 and FE9701.
1	3916914	Pump, Fuel Injection	1	

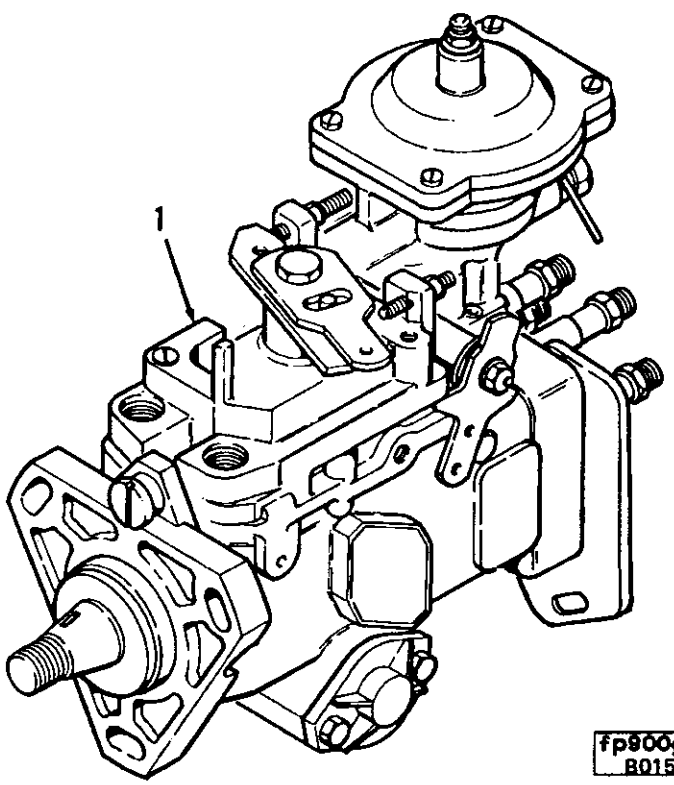
1
fp900gc
B01500

Ref No.	Part Number	Part Name	Req	Remarks
		BOSCH INJECTION PUMP		
		OPTION FP97048		CPL#599 "VE" type (Non Certified) fuel pump for 160 BHP turbocharged and aftercooled "B" series 6 cylinder engine at 2200 RPM with a peak torque of 472 lbs. ft. at 1500 RPM. Has 12 volt actuate to run fuel solenoid and 2.0mm tubing. With FR9304 and FE9701.
1	3916942	Pump, Fuel Injection	1	
		OPTION FP97049		CPL#599 "VE" type (Non Certified) fuel pump for 160 BHP turbocharged and aftercooled "B" series 6 cylinder engine at 2200 RPM with a peak torque of 472 lbs ft. at 1500 RPM. Has 24 volt actuate to run fuel solenoid and 2.0mm tubing. With FR9304 and FE9701.
1	3916943	Pump, Fuel Injection	1	
		OPTION FP97052		CPL#938/Dry (Certified with EEC) fuel pump for 140 BHP turbocharged "B" series 6 cylinder engine at 2200 RPM with peak torque of 418 lbs. ft. at 1400 RPM. Has 12 volt actuate to run fuel solenoid and 2.0mm tubing. With FR9295 and FE9701.
1	3916952	Pump, Fuel Injection	1	
		OPTION FP97053		CPL#938/Dry "VE" type (Certified with EEC) fuel pump for 140 BHP turbocharged "B" series 6 cylinder engine at 2200 RPM with peak torque of 418 lbs. ft. at 1400 RPM. Has 24 volt actuate to run fuel solenoid and 2.0mm tubing. With FR9505 and FE9701.
1	3916953	Pump, Fuel Injection	1	

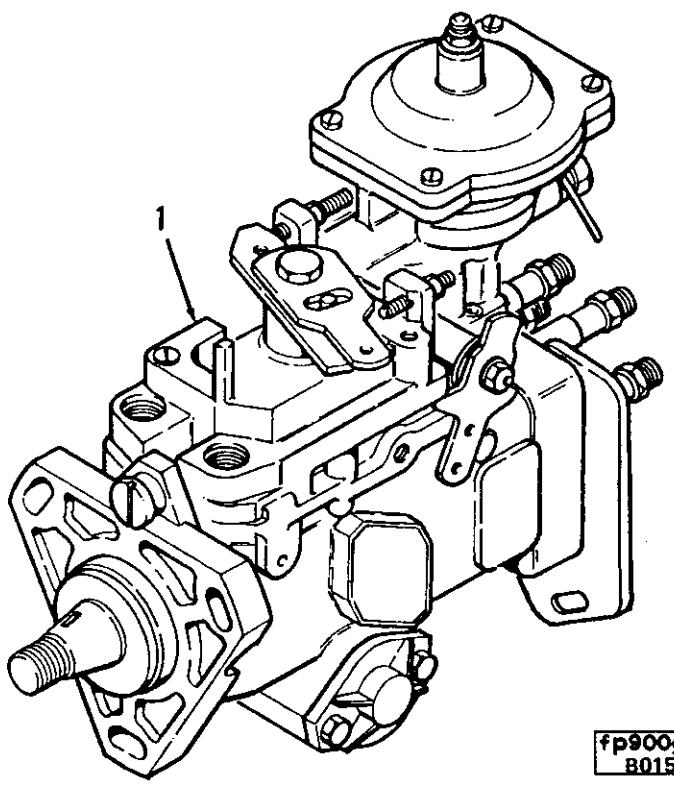
1
fp900gc
B01500

Ref No.	Part Number	Part Name	Req	Remarks
		BOSCH INJECTION PUMP		
		OPTION FP97078		CPL#599 "VE" type (Non Certified) fuel pump for 167 BHP turbocharged and aftercooled "B" series 6 cylinder engine at 2000 RPM with peak torque of 483 lbs. ft. at 1600 RPM has 12 volt actuate to run fuel solenoid and 2.0mm tubing. With FR9337 and FE9701.
1	3916989	Pump, Fuel Injection	1	
		OPTION FP97079		CPL#599/CPL#834 "VE" type (Non Certified) fuel pump for 167 BHP turbocharged and aftercooled "B" series 6 cylinder engine at 2000 RPM with peak torque of 483 lbs. ft. at 1600 RPM has 24 volt actuate to run fuel solenoid and 2.0mm tubing. With FR9337 and FE9701.
1	3916990	Pump, Fuel Injection	1	
		OPTION FP97084		CPL#599 Dry, "VE" type fuel pump for 169 BHP turbocharged and aftercooled "B" series 6 cylinder engines at 2100 RPM with a peak torque of 476 lbs. ft. at 1500 RPM. Has 12 volt actuate to run fuel solenoid and 2.0mm tubing . With boost control, FR9405 and FE9701.
1	3916999	Pump, Fuel Injection	1	
		OPTION FP97085		CPL#599 Dry "VE" type fuel pump for 169 BHP turbocharged and aftercooled "B" series 6 cylinder engines at 2100 RPM with a peak torque of 476 lbs. ft. at 1500 RPM. Has 24 volt actuate to run fuel solenoid and 2.0mm tubing. With boost control, FR9405 and FE9701.
1	3917000	Pump, Fuel Injection	1	
		OPTION FP97093		CPL#1209. "VE" type (Certified EEC) fuel pump for 176 BHP turbocharged and after-cooled "B" series 6 cylinder engine at 2300 RPM with peak torque of 455 lbs. ft. at 1500 RPM. Has 24 volt actuate to run fuel solenoid and 2.0mm tubing. With FR9416 and FE9701. Reduced torque 340 lbs. ft. at 1000 RPM.
1	3917012	Pump, Fuel Injection	1	

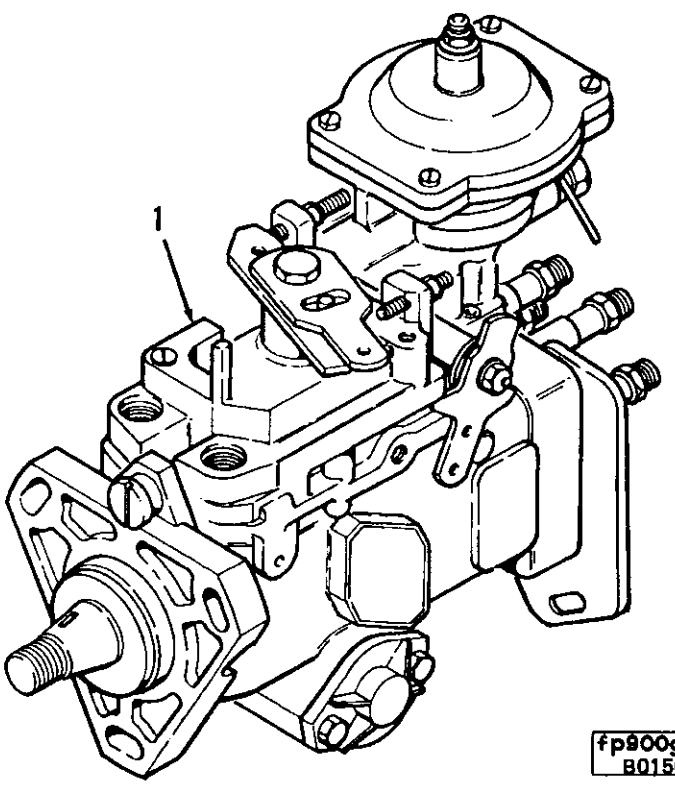
1
fp900gc
B01500

Ref No.	Part Number	Part Name	Req	Remarks
		BOSCH INJECTION PUMP		
		OPTION FP97156		CPL#729 "VE" type (Certified with EEC) fuel pump for 134 BHP turbocharged B series 6 cylinder engine at 2200 RPM with a peak torque of 390 lbs. ft. at 1400 RPM. Has 24 volt actuate to run fuel solenoid and 2.0mm tubing. With FR9256 and FE9701.
1	3917632	Pump, Fuel Injection	1	
		OPTION FP97175		CPL#599 "VE" type (Non Certified) fuel pump for 176 BHP turbocharged and aftercooled "B" series 6 cylinder engine 2300 RPM with a peak torque of 447 lbs. ft. at 1500 RPM. Has 24 volt actuate to run fuel solenoid and 2.0mm tubing. With FR9086 and FE9701.
1	3919004	Pump, Fuel Injection	1	
		OPTION FP97297		CPL#599 "VE" type (Non Certified) fuel pump for 176 BHP turbocharged and aftercooled "B" series 6 cylinder engine 2300 RPM with a peak torque of 447 lbs. ft. at 1500 RPM. Has 24 volt actuate to run fuel solenoid and 2.0mm tubing. With FR9086 and FE9701.
1	3921244	Pump, Fuel Injection	1	

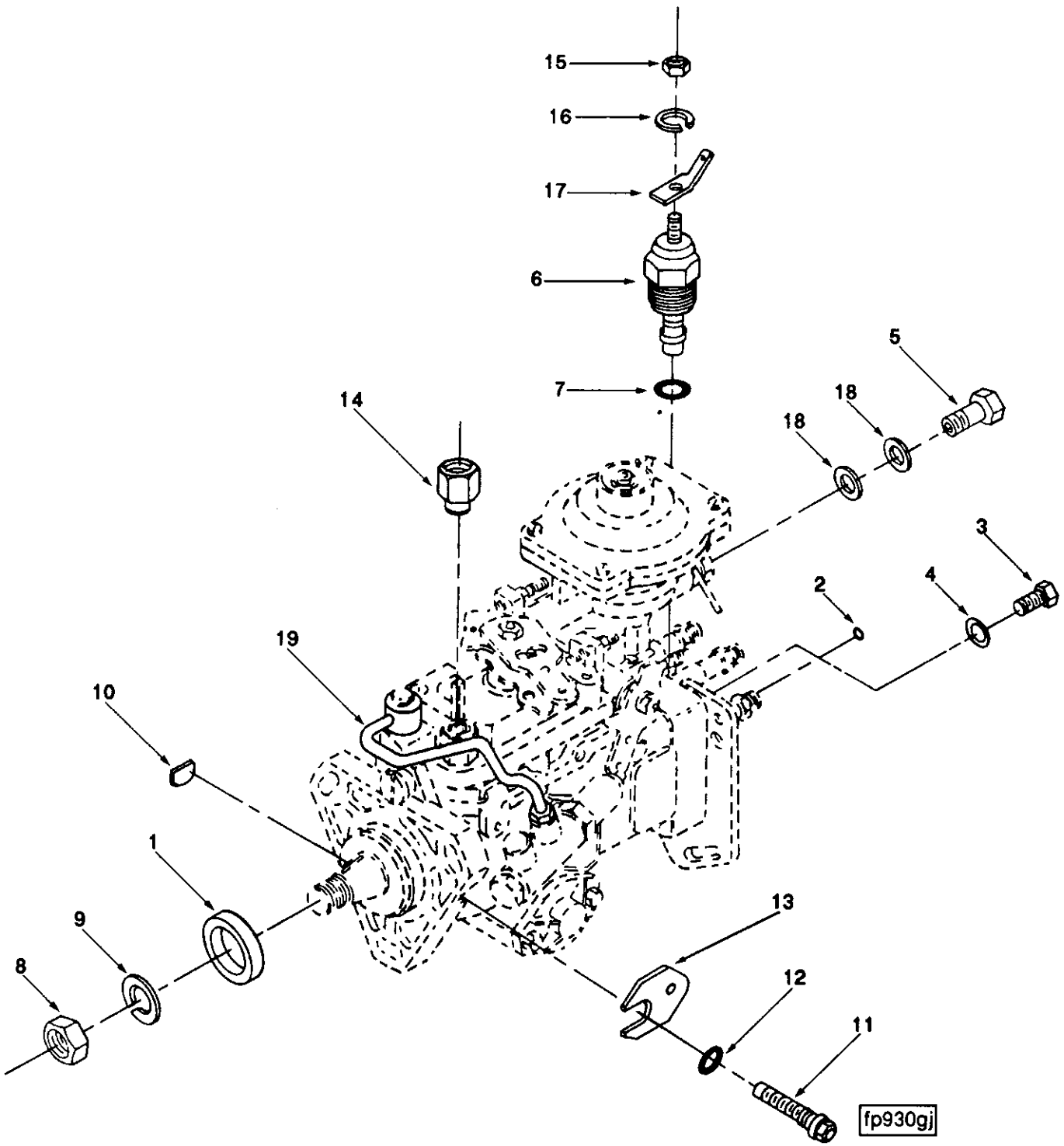
15
16
17
6
7
14
5
18
18
3
4
2
19
10
1
9
8
13
12
11
fp930gj

Ref No.	Part Number	Part Name	Req	Remarks
		BOSCH VE PUMP SERVICE PARTS		
1	3920393	Seal, Shaft	1	
2	3903570	Gasket, Delivery Valve	4	
3	3903572	Screw, Vent	1	
4	3903573	Gasket, Vent Screw	1	
5	3905465	Screw, Banjo Connector	1	M8 x 1.50 x 24
6	3903575	Kit, Solenoid	1	12V actuate to run
7	3903577	O-Ring, Solenoid	1	
6	3903576	Kit, Solenoid	1	24V actuate to run
7	3903577	O-Ring, Solenoid	1	
6	3802205	Kit, Solenoid	1	12V actuate to stop
7	3903577	O-Ring, Solenoid	1	
6	3802353	Kit, Solenoid	1	24V actuate to stop
7	3903577	O-Ring, Solenoid	1	
8	3903738	Nut, Regular Hexagon	1	
9	S-609	Washer, Lock	1	9/16 inch
10	3902332	Key, Plain Woodruff	1	4.0mm
11	3904784	Screw, Timing Lock	1	
12	3904785	O-Ring, Timing Lock	1	
13	3904786	Plate, Timing Lock	1	
14	3903382	Adapater, Reducing	1	
15	3907480	Nut	1	
16	3907481	Lockwasher	1	
17	3907482	Blade, Terminal	2	
18	3903037	Washer, Plain	2	1/2 inch
19	3920938	Tube, Fuel Transfer	1	
	3802047	Kit, Delivery Bypass Valve	1	Bosch Industrial Engines Only
2	3903570	Gasket, Delivery Valve	1	

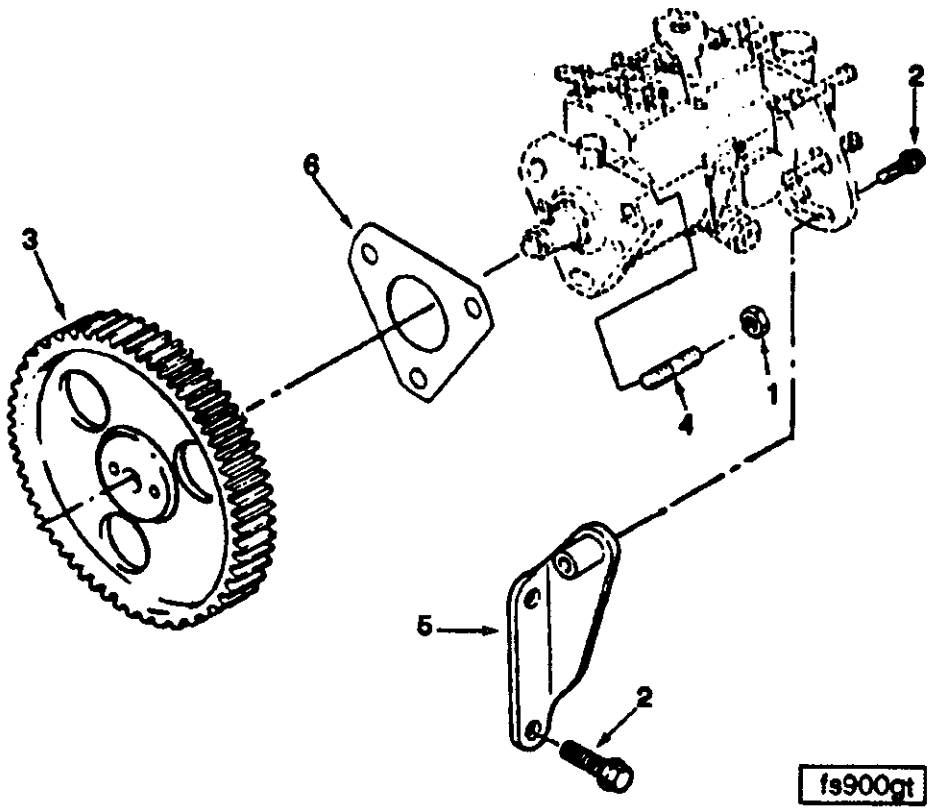

Ref No.	Part Number	Part Name	Req	Remarks
		FUEL PUMP COUPLING		
		OPTION FP9257		Fuel pump coupling assembly for use on engine "CAV DPS fuel pump" without air compressor.
1	3900589	Nut, Hexagon Flange	3	M8 x 1.25
2	3900630	Screw, Hex Flange Head Cap	3	M8 x 1.25 x 20
3	3920593	Gear, Fuel Pump	1	
4	3902501	Stud	3	
5	3905884	Brace, Fuel Pump	1	
6	3914389	Gasket, Fuel Pump	1	

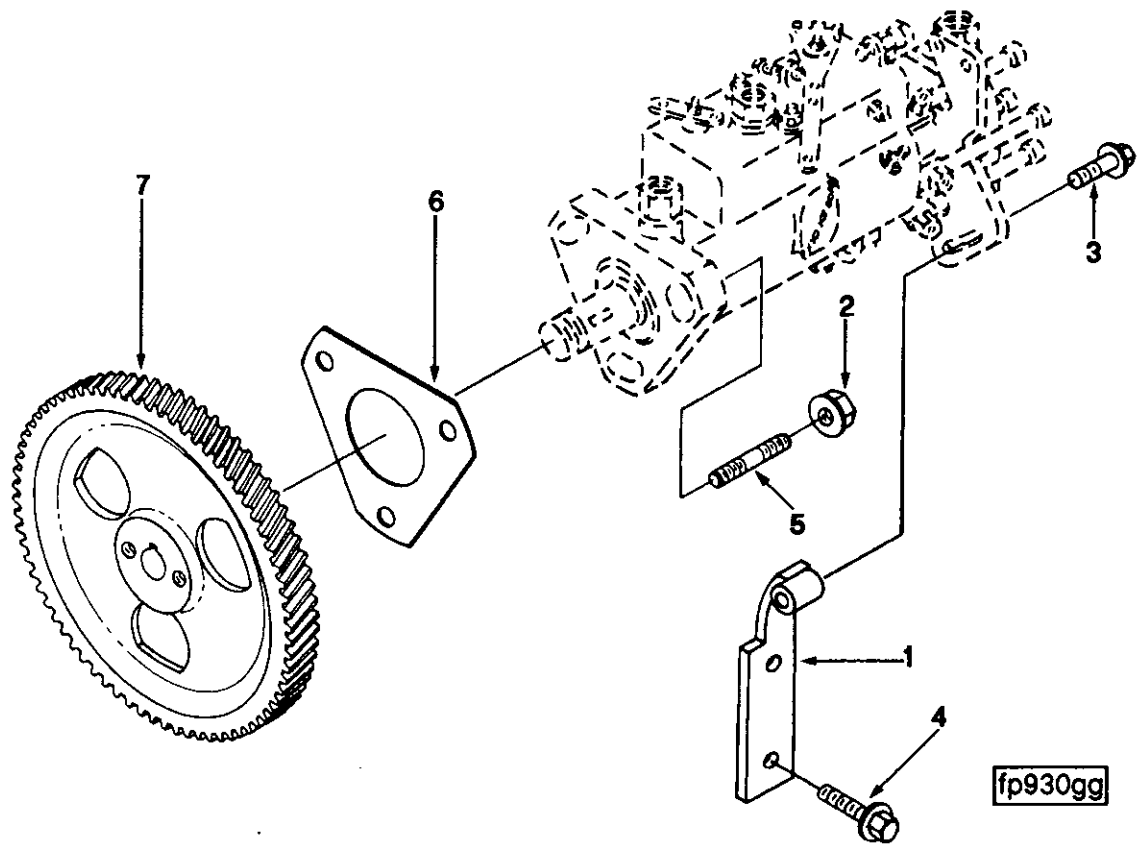

Ref No.	Part Number	Part Name	Req	Remarks
		FUEL PUMP COUPLING		
		OPTION FP9667		Fuel pump coupling assembly for use on B series engines using CAV DPS fuel pump with CP9002 air compressor.
1	3280807	Brace, Fuel Pump	1	
2	3900589	Nut, Hexagon Flang	3	M8 x 1.25
3	3900630	Screw, Hex Flange Head Cap	1	M8 x 1.25 x 20
4	3900631	Screw, Hex Flange Head Cap	2	M8 x 1.25 x 25
5	3902501	Stud	3	M8 x 1.25 x 47.98
6	3914389	Gasket, Fuel Pump	1	
7	3920594	Gear, Fuel Pump	1	

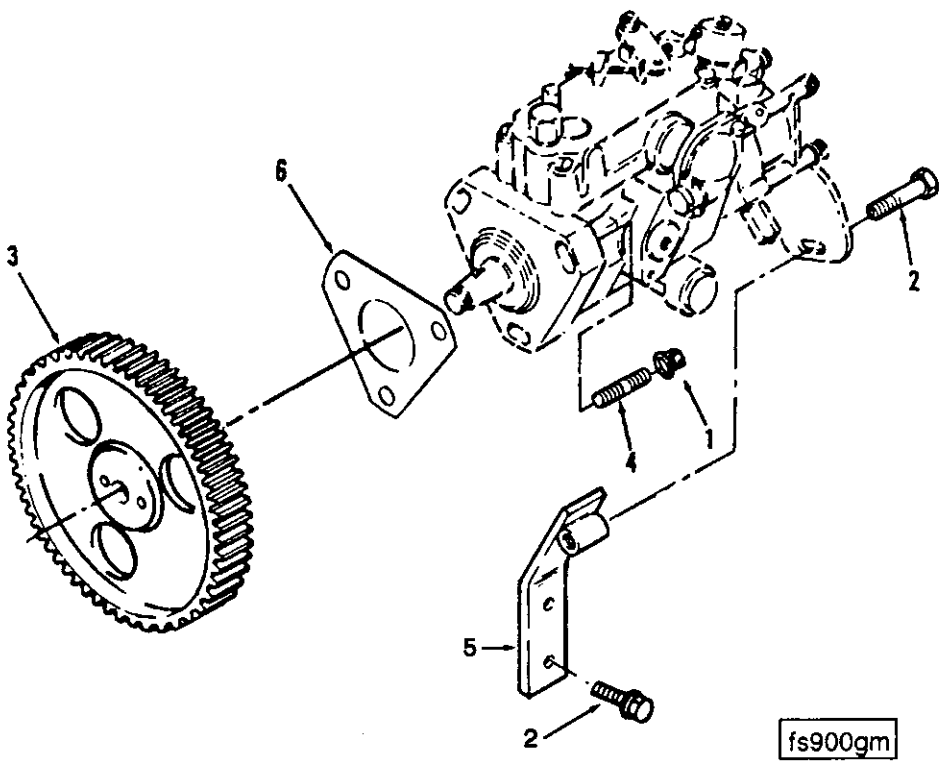

Ref No.	Part Number	Part Name	Req	Remarks
		FUEL PUMP COUPLING		
		OPTION FP9701		Fuel pump coupling assembly for use on engine "CAV DPA fuel pump" without air compressor.
1	3900589	Nut, Hexagon Flange	3	M8 x 1.25
2	3900630	Screw, Hex Flange Head Cap	3	M8 x 1.25 x 20
3	3920593	Gear, Fuel Pump	1	
4	3902501	Stud	3	
5	3916024	Brace, Fuel Pump	1	
6	3914389	Gasket, Fuel Pump	1	

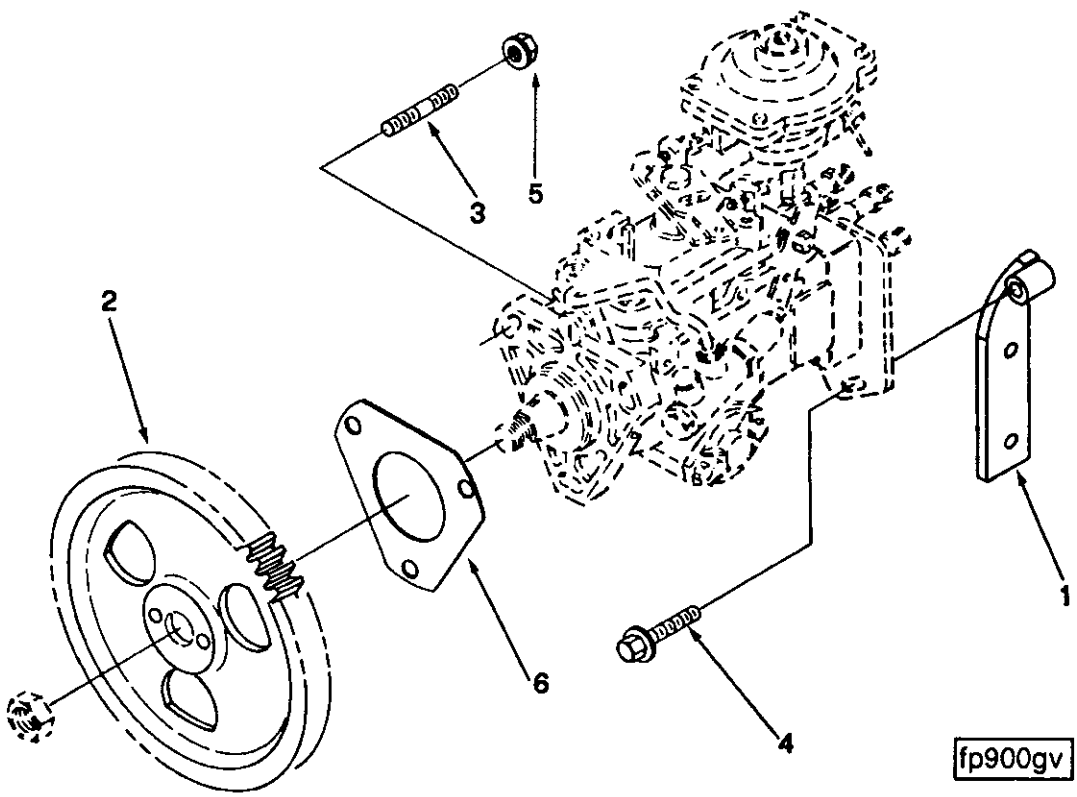

Ref No.	Part Number	Part Name	Req	Remarks
		FUEL PUMP COUPLING		
		OPTION FP9702		Fuel pump coupling assembly for use on turbocharged engines using Bosch injector pumps without air compressor.
1	3905313	Brace, Fuel Pump	1	
2	3920593	Gear, Fuel Pump	1	
3	3902501	Stud	3	
4	3900630	Screw, Hex Flange Head Cap	3	M8 x 1.25 x 20
5	3900589	Nut, Hexagon Flange	3	M8 x 1.25
6	3914389	Gasket, Fuel Pump	1	

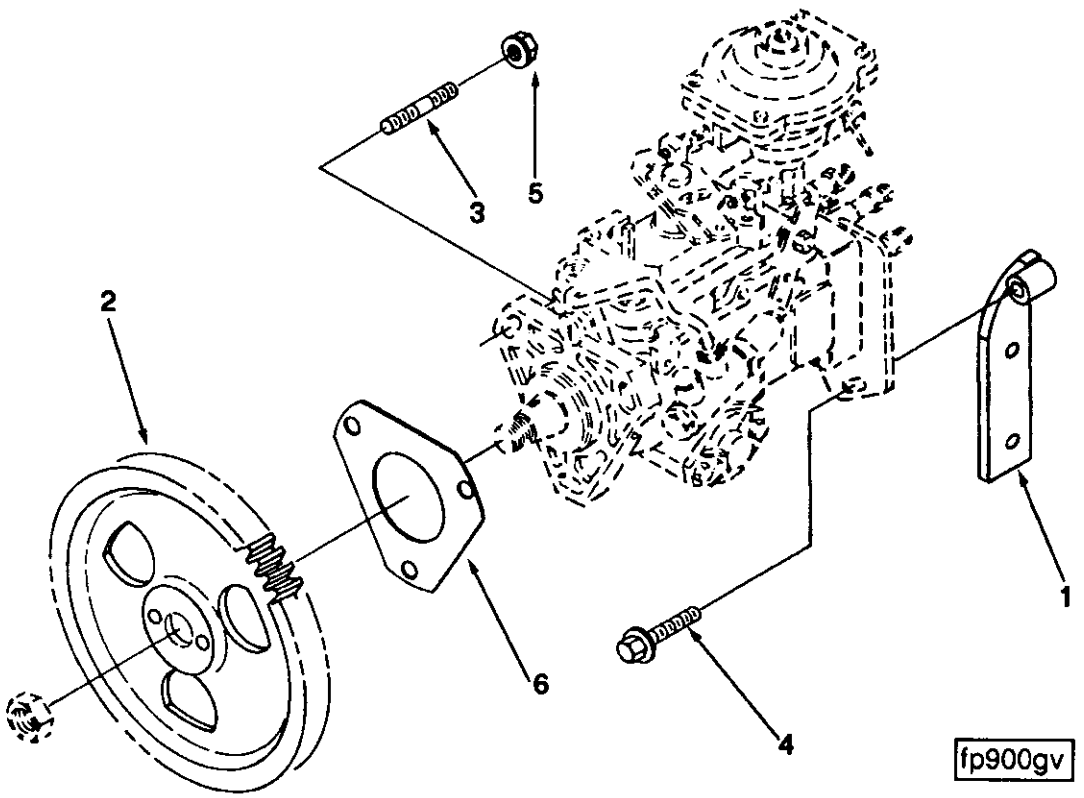

Ref No.	Part Number	Part Name	Req	Remarks
		FUEL PUMP COUPLING		
		OPTION FP9764		Fuel pump coupling assembly for use on turbocharged engines using Bosch injector pumps with air compressor.
1	3905313	Brace, Fuel Pump	1	
2	3920593	Gear, Fuel Pump	1	
3	3902501	Stud	3	
4	3900630	Screw, Hex Flange Head Cap	1	M8 x 1.25 x 20
5	3900589	Nut, Hexagon Flange	3	M8 x 1.25
6	3914389	Gasket, Fuel Pump	1	

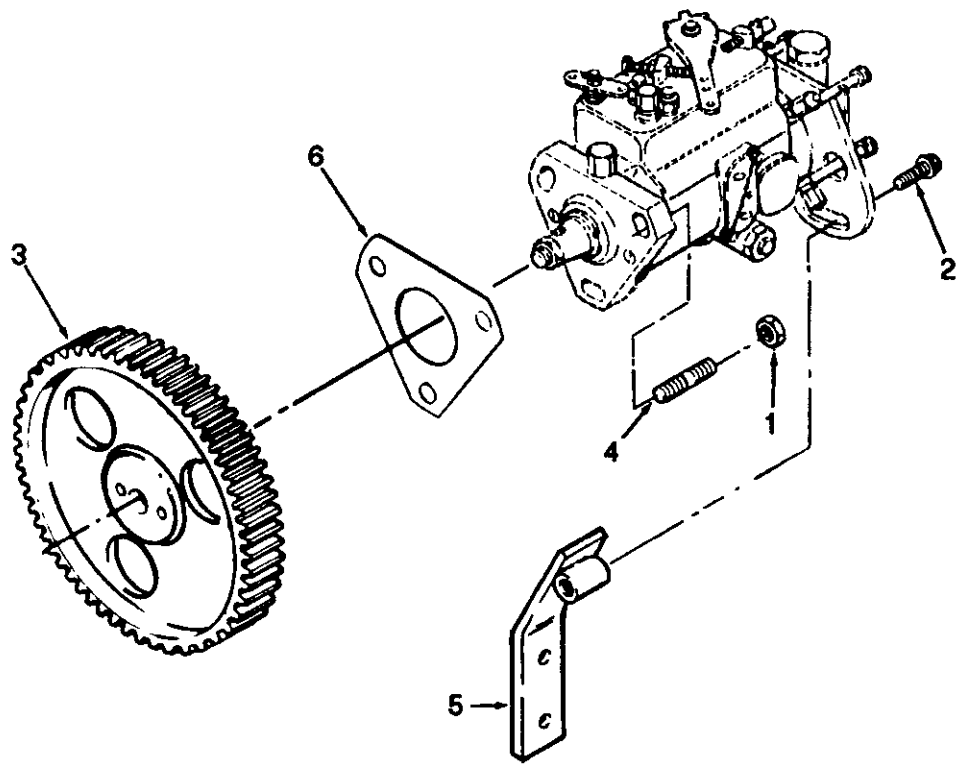

Ref No.	Part Number	Part Name	Req	Remarks
		FUEL PUMP COUPLING		
		OPTION FP9768		Fuel pump coupling assembly for use on engine "CAV DPA fuel pump coupling" with air compressor.
1	3900589	Nut, Hexagon Flange	3	M8 x 1.25
2	3900630	Screw, Hex Flange Head Cap	1	M8 x 1.25 x 20
3	3920593	Gear, Fuel Pump	1	
4	3902501	Stud	3	
5	3905387	Brace, Fuel Pump	1	
6	3914389	Gasket, Fuel Pump	1	

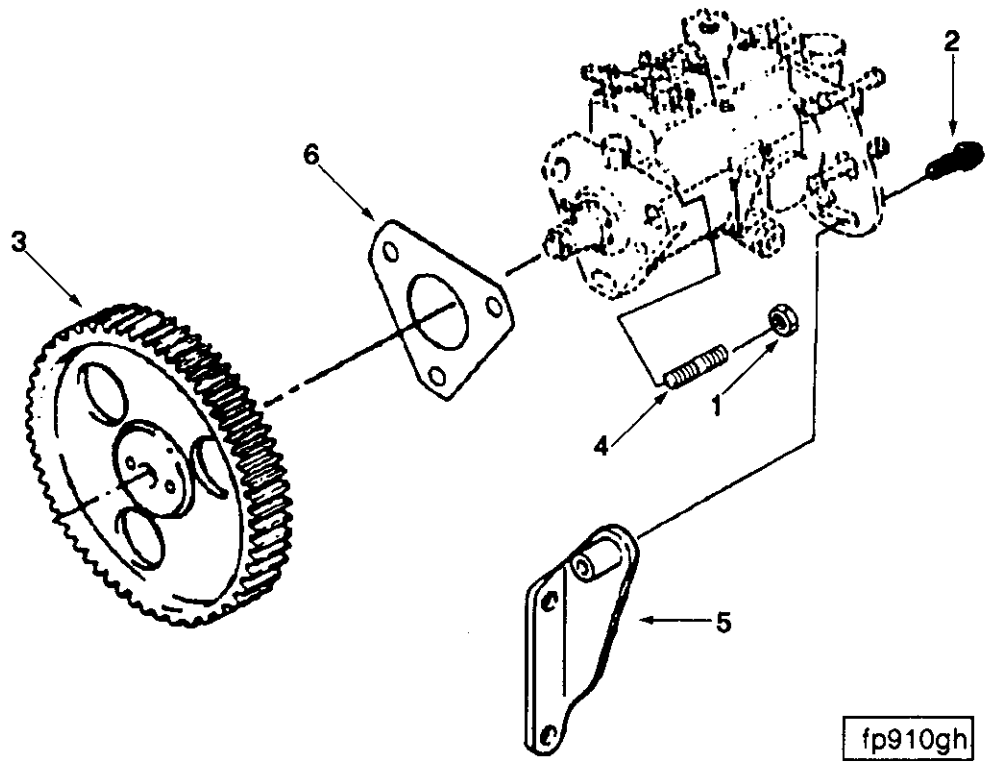

Ref No.	Part Number	Part Name	Req	Remarks
		FUEL PUMP COUPLING		
		OPTION FP9770		Fuel pump coupling assembly for use on engine "CAV DPS fuel pump coupling" with air compressor.
1	3900589	Nut, Hexagon Flange	3	M8 x 1.25
2	3900630	Screw, Hex Flange Head Cap	1	M8 x 1.25 x 20
3	3914912	Gear, Fuel Pump	1	
4	3902501	Stud	3	
5	3905884	Brace, Fuel Pump	1	
6	3914389	Gasket, Fuel Pump	1	

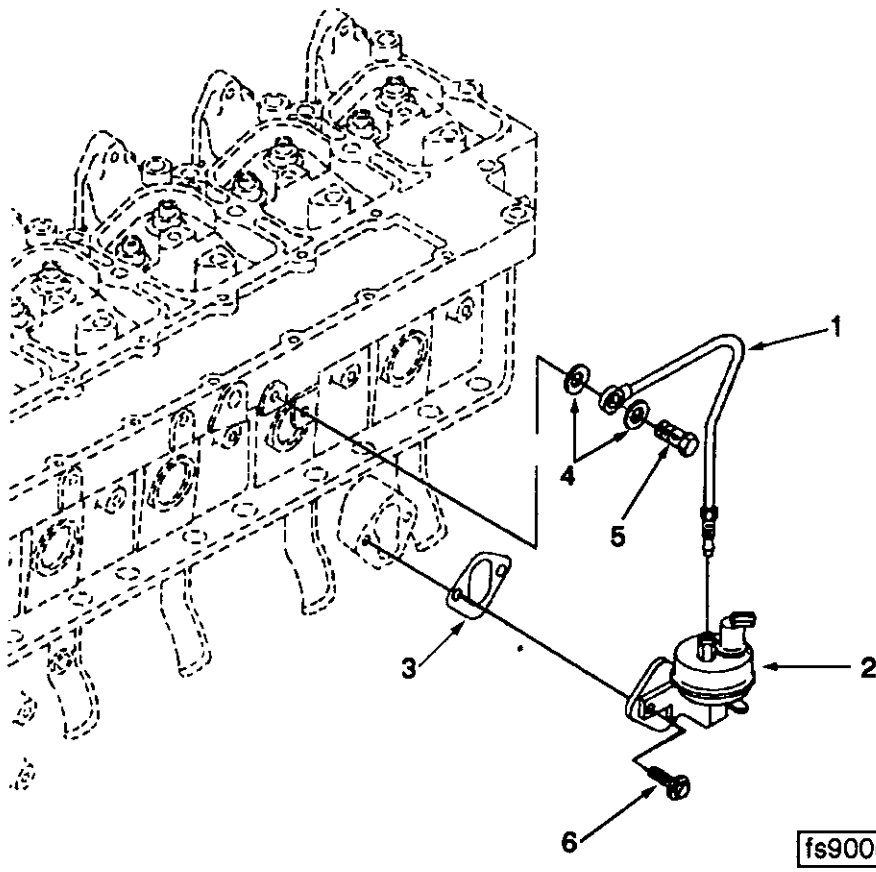

Ref No.	Part Number	Part Name	Req	Remarks
		FUEL SYSTEM ACCESSORIES		
		OPTION FS9004		Lift pump required when fuel supply tank is below regular fuel pump.
1	3904374	Pump, Fuel Transfer	1	
2	3907582	Tube, Fuel Supply	1	
3	3914304	Gasket, Cover Plate	1	
4	3918191	Washer, Sealing	2	1/2 inch
5	3903035	Screw, Banjo Connector	1	M12 x 1.50 x 24
6	3900631	Screw, Hex Flange Head Cap	2	M8 x 1.25 x 25

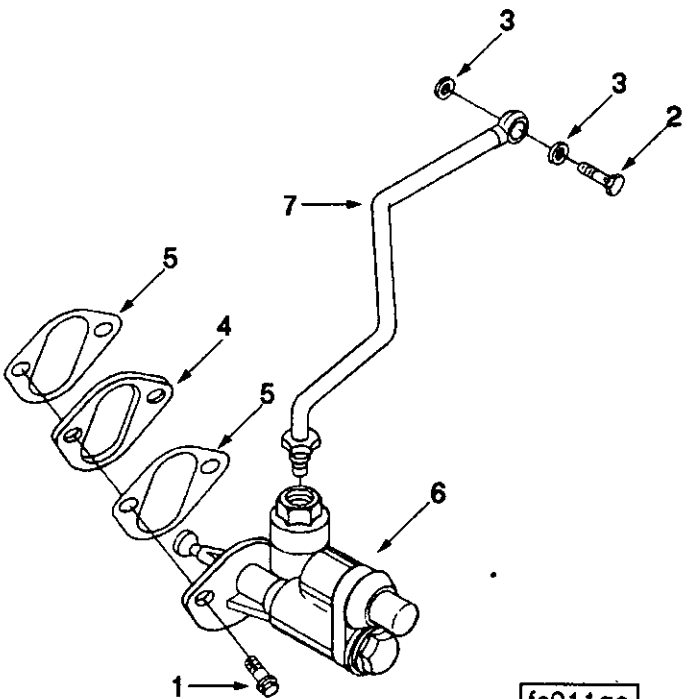

Ref No.	Part Number	Part Name	Req	Remarks
		FUEL SYSTEM ACCESSORIES		
		OPTION FS9052		Piston style fuel lift pump with 8 PSI out pressure for rotary type fuel injection pumps on 6-Cylinder B-Series Engines.
1	3900631	Screw, Hex Flange Head Cap	2	M8 x 1.25 x 25
2	3903035	Screw, Banjo Connector	1	M12 x 1.50 x 24
3	3918191	Washer, Sealing	2	1/2 inch
4	3914284	Spacer, Mounting	1	
5	3914304	Gasket, Cover Plate	2	
6	3918076	Pump, Fuel Transfer	1	
7	3914753	Tube, Fuel Supply	1	

NOTES

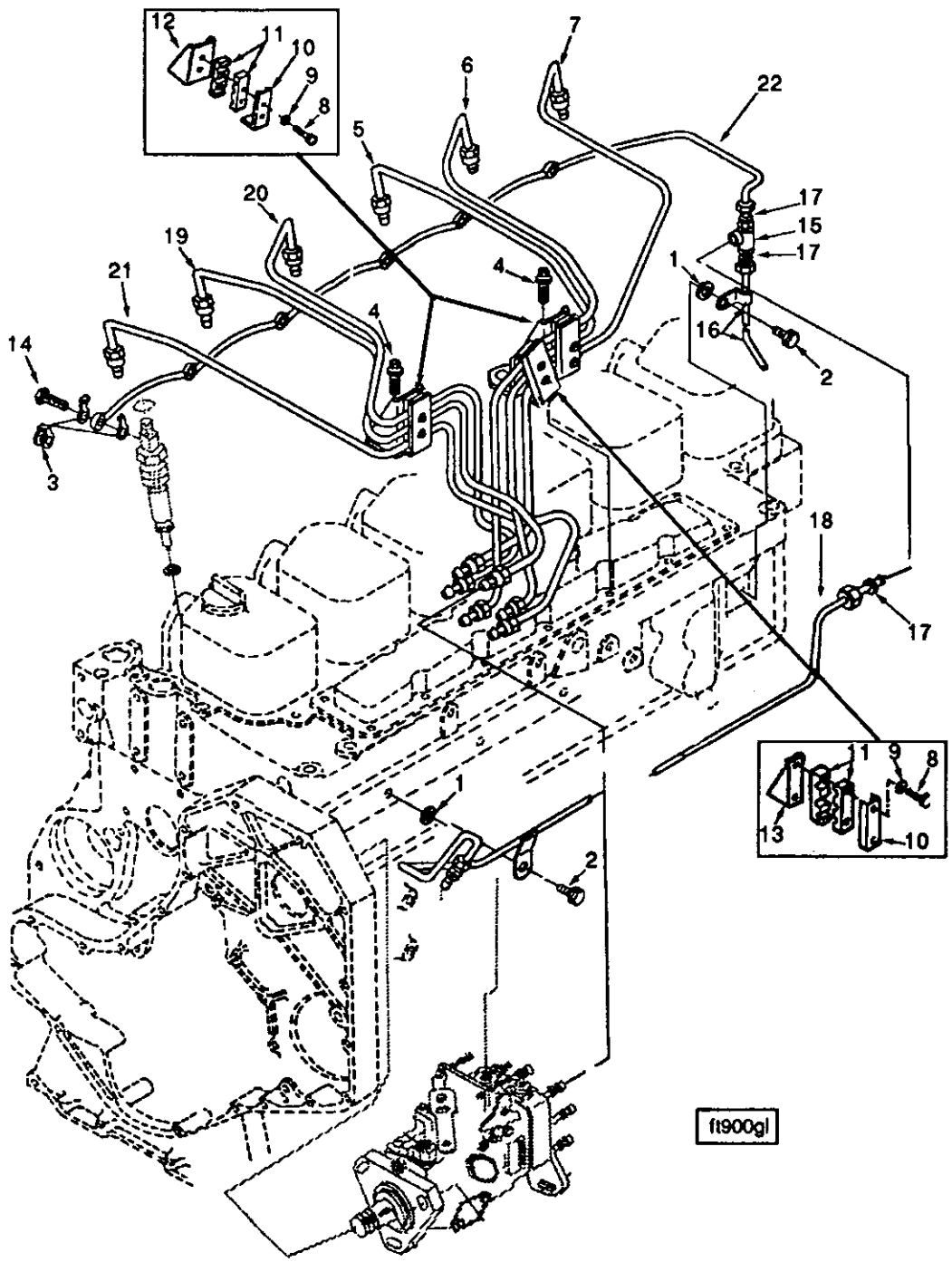
12
11
10
9
8
7
6
5
22
20
19
21
4
4
17
15
17
1
16
2
14
3
18
17
11
9
8
13
10
1
2
ft900gl

Ref No.	Part Number	Part Name	Req	Remarks
		PLUMBING, FUEL		
		OPTION FT9782		1.8mm I.D. Fuel manifold supply and drain tubing for 6 cylinder naturally aspirated or turbocharged engine using CAV DPA injection pump without boost control.
1	3900267	Seal, Grommet	2	
2	3900630	Screw, Hex Flange Head Cap	2	M8 x 1.25 x 20
3	3903380	Seal, Banjo Connector	6	
4	3918109	Screw, Hex Flange Head Cap	2	
5	3914802	Tube, Injector Fuel Supply	1	No. 4 Cylinder
6	3914804	Tube, Injector Fuel Supply	1	No. 5 Cylinder
7	3914806	Tube, Injector Fuel Supply	1	No. 6 Cylinder
8	3917712	Screw, Hexagon Head Cap	6	M5 x 0.80 x 22
9	3903723	Washer, Plain	6	
10	3904519	Brace, Tube	3	
11	3917747	Isolator, Vibration	6	
12	3917778	Brace, Tube	1	
13	3917777	Brace, Tube	2	
14	3905307	Screw, Banjo Connector	6	M6 x 1.00 x 14
15	3905388	Tee, Male Union	1	
16	3905692	Tube, Fuel Drain	1	
17	3905391	Seal, Grommet	1	
18	3905709	Tube, Fuel Drain	1	
17	3905391	Seal, Grommet	1	
19	3914798	Tube, Injector Fuel Supply	1	No. 2 Cylinder
20	3914800	Tube, Injector Fuel Supply	1	No. 3 Cylinder
21	3914796	Tube, Injector Fuel Supply	1	No. 1 Cylinder
22	3909696	Manifold, Fuel	1	
17	3905391	Seal, Grommet	1	

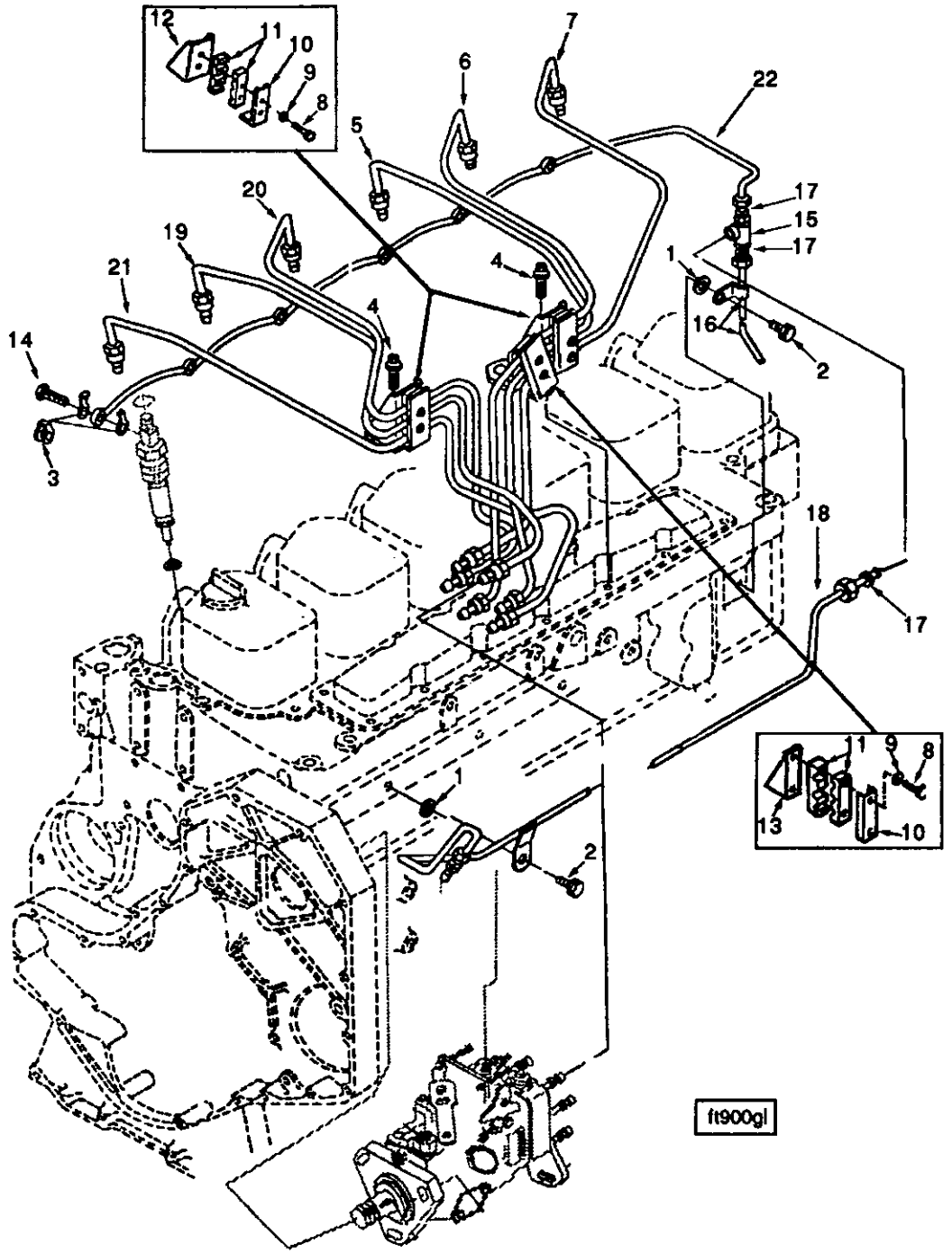
12
11
10
9
8
7
6
5
22
20
19
21
4
4
17
15
17
1
16
2
14
3
18
17
11
9
8
13
10
1
2
ft900gl

Ref No.	Part Number	Part Name	Req	Remarks
		PLUMBING, FUEL		
		OPTION FT9784		2.0mm I.D. Fuel manifold supply and drain tubing for 6 cylinder turbocharged and aftercooled engines using CAV DPA injection pump without boost control.
1	3900267	Seal, Grommet	2	
2	3900630	Screw, Hex Flange Head Cap	2	M8 x 1.25 x 20
3	3903380	Seal, Banjo Connector	6	
4	3918108	Screw, Hex Flange Head Cap	2	M8 x 1.25 x 16
5	3914043	Tube, Injector Fuel Supply	1	No. 4 Cylinder
6	3914044	Tube, Injector Fuel Supply	1	No. 5 Cylinder
7	3914090	Tube, Injector Fuel Supply	1	No. 6 Cylinder
8	3917712	Screw, Hexagon Head Cap	6	M5 x 0.80 x 22
9	3903723	Washer, Plain	6	
10	3904519	Brace, Tube	3	
11	3917747	Isolator, Vibration	6	
12	3917778	Brace, Tube	1	
13	3917777	Brace, Tube	2	
14	3905307	Screw, Banjo Connector	6	M6 x 1.00 x 14
15	3905388	Tee, Male Union	1	
16	3905692	Tube, Fuel Drain	1	
17	3905391	Seal, Grommet	1	
18	3905709	Tube, Fuel Drain	1	
17	3905391	Seal, Grommet	1	
19	3914046	Tube, Injector Fuel Supply	1	No. 2 Cylinder
20	3914091	Tube, Injector Fuel Supply	1	No. 3 Cylinder
21	3914045	Tube, Injector Fuel Supply	1	No. 1 Cylinder
22	3909696	Manifold, Fuel	1	
17	3905391	Seal, Grommet	1	

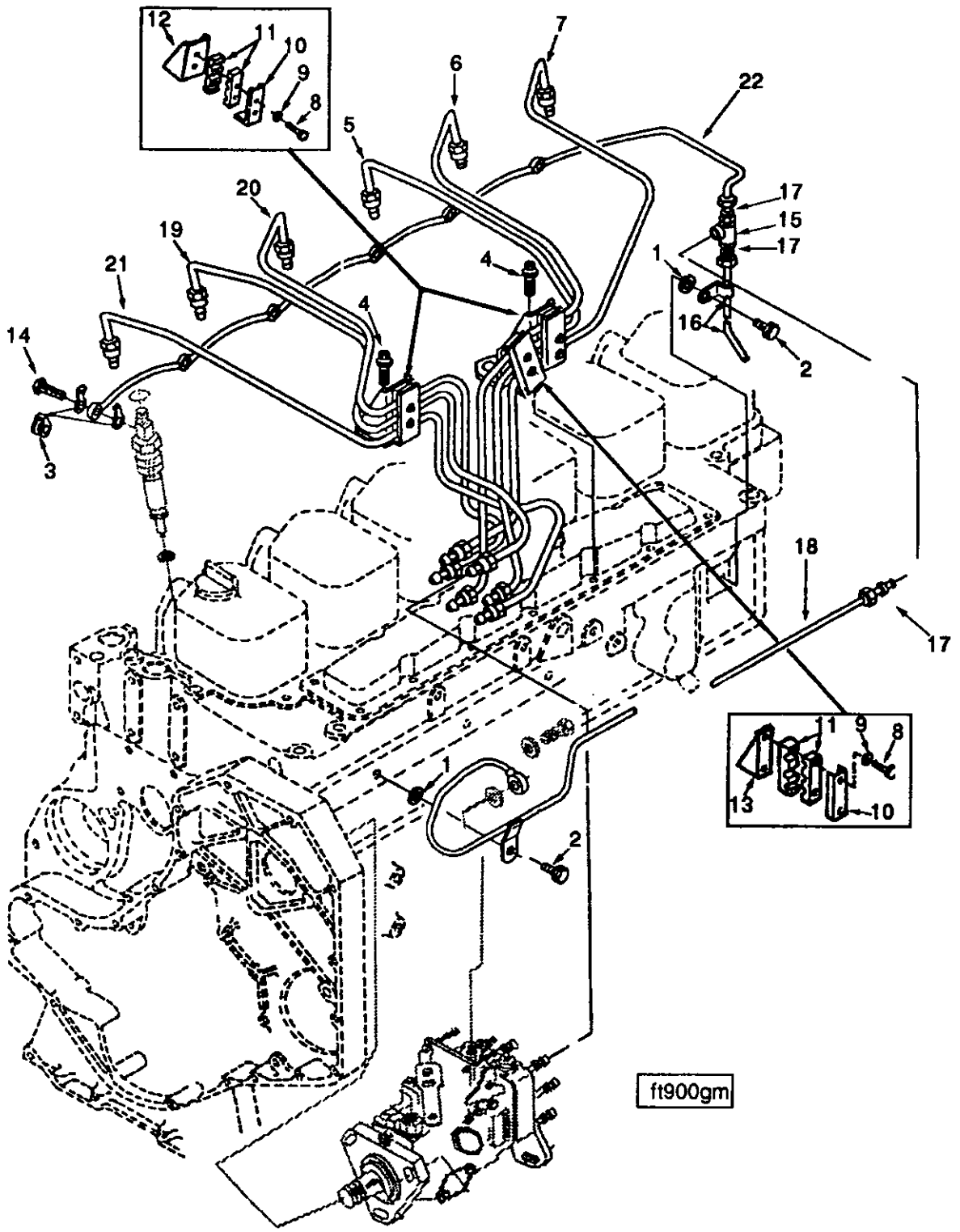
12
11
10
9
8
7
6
22
5
20
17
15
17
19
21
4
1
4
16
2
14
3
18
17
11
9
8
13
10
1
2
ft900gm

Ref No.	Part Number	Part Name	Req	Remarks
		PLUMBING, FUEL		
		OPTION FT9785		2.0mm I.D. fuel manifold supply and drain tubing for 6 cylinder naturally aspirated or turbocharged engines using Bosch VE or VP injection pump without boost control.
1	3900267	Seal, Grommet	2	
2	3900630	Screw, Hex Flange Head Cap	2	M8 x 1.25 x 20
3	3903380	Seal, Banjo Connector	6	
4	3918109	Screw, Hex Flange Head Cap	2	
5	3903488	Tube, Injector Fuel Supply	1	No. 4 Cylinder
6	3903489	Tube, Injector Fuel Supply	1	No. 5 Cylinder
7	3903490	Tube, Injector Fuel Supply	1	No. 6 Cylinder
8	3917712	Screw, Hexagon Head Cap	6	M5 x 0.80 x 22
9	3903723	Washer, Plain	6	
10	3904519	Brace, Tube	3	
11	3917747	Isolator, Vibration	6	
12	3917778	Brace, Tube	1	
13	3917777	Brace, Tube	2	
14	3905307	Screw, Banjo Connector	6	M6 x 1.00 x 14
15	3905388	Tee, Male Union	1	
16	3905692	Tube, Fuel Drain	1	
17	3905391	Seal, Grommet	1	
18	3905705	Tube, Fuel Drain	1	
17	3905391	Seal, Grommet	1	
19	3903486	Tube, Injector Fuel Supply	1	No. 2 Cylinder
20	3903487	Tube, Injector Fuel Supply	1	No. 3 Cylinder
21	3909438	Tube, Injector Fuel Supply	1	No. 1 Cylinder
22	3909696	Manifold, Fuel	1	
17	3905391	Seal, Grommet	1	

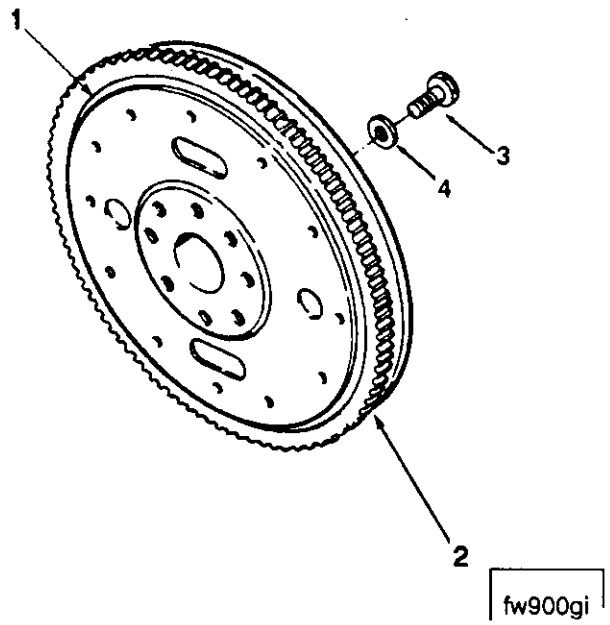

Part Number	Part Name	Req	Remarks
	FLYWHEEL		
	OPTION FW9004		Flywheel for Clark 28000/32000 series transmission with drive ring adaptation and SAE#3 flywheel housing. Includes 159 tooth 10/12 pitch ring gear.
3911223	Flywheel	1	
(3911221)	Flywheel	1	
3901774	Gear, Flywheel Ring	1	
3901395	Screw, Hexagon Head Cap	8	M12 x 1.25 x 32
3900269	Washer, Plain	8	1.65 thick

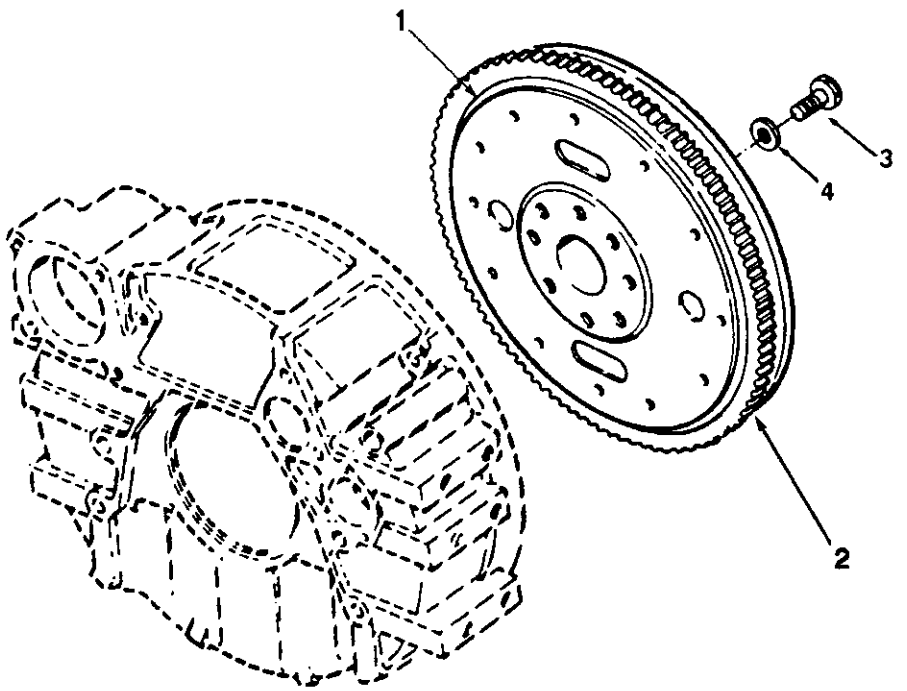

fw900gm

Ref No.	Part Number	Part Name	Req	Remarks
		FLYWHEEL		
		OPTION FW9017		Flywheel for 10" and 11 1/2" over center clutch. Includes 159-tooth, 10/12 pitch ring gear. For use with SAE#3 flywheel housing.
	3914432	Flywheel	1	
1	(3914431)	Flywheel	1	
2	3901774	Gear, Flywheel Ring	1	
3	3901395	Screw, Hexagon Head Cap	8	M12 x 1.25 x 32
4	3900269	Washer, Plain	8	M12

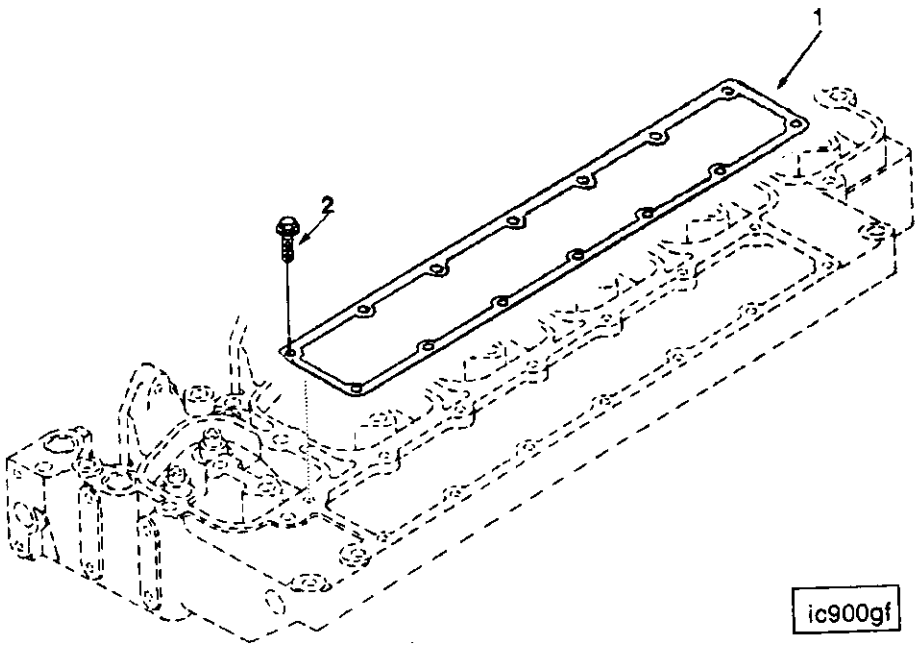

Ref No.	Part Number	Part Name	Req	Remarks
		AIR INTAKE CONNECTION		
		OPTION IC9005		76.2mm dia.(3.00 inch) air intake connection O.D. located on top side of engine 372.0mm from FFOB and 152.5mm to the left of crankshaft centerline when viewed from rear.
1	3914029	Gasket, Int Manifold Cover	1	
2	3918109	Screw, Hex Flange Head Cap	12	

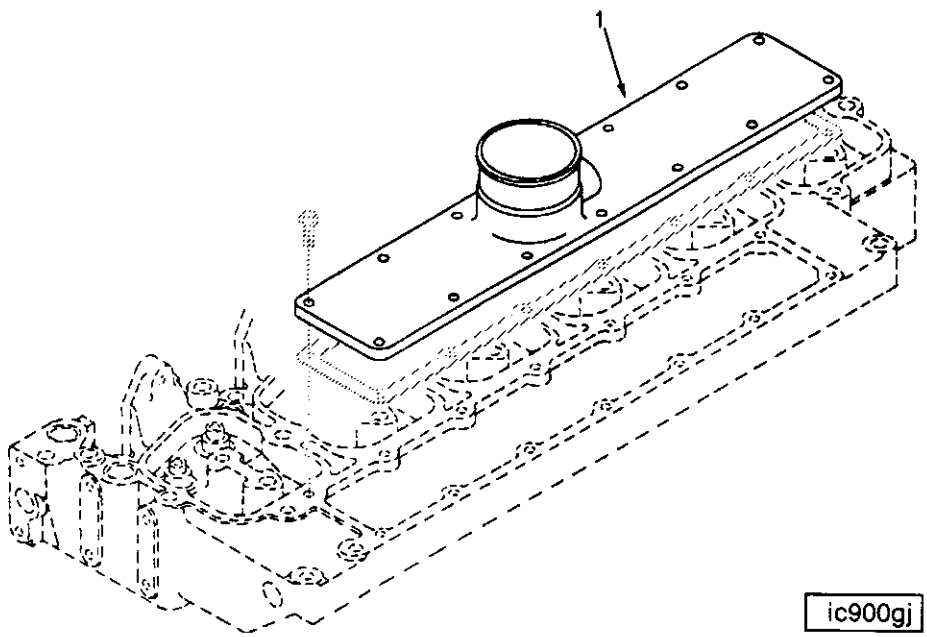

Ref No.	Part Number	Part Name	Req	Remarks
		AIR INTAKE CONNECTION OPTION IC9702		3 inch dia. die cast air intake connection, front and up orientation, no provision for air heater installation. 6 cylinder naturally aspirated.
1	3908084	Cover, Intake Manifold	1	

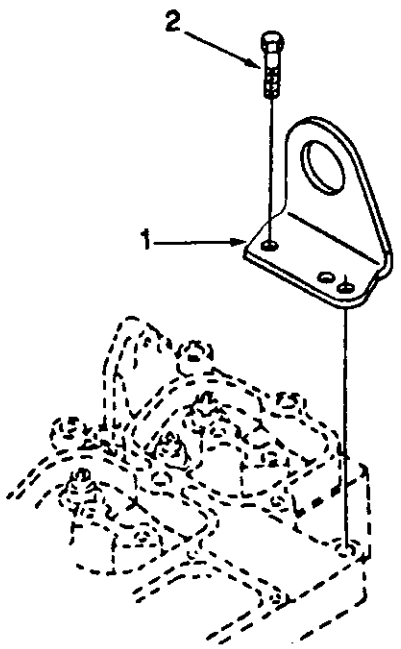

la900gc

f	Part Number	Part Name	Req	Remarks
		LIFTING BRACKET **OPTION LA9007**		Rear engine lifting arrangement. Front lifting is provided with thermostat housing option.
1	3908118	Bracket, Lifting	1	
2	3901249	Screw, Hexagon Head Cap	2	M12 x 1.75 x 25

NOTES

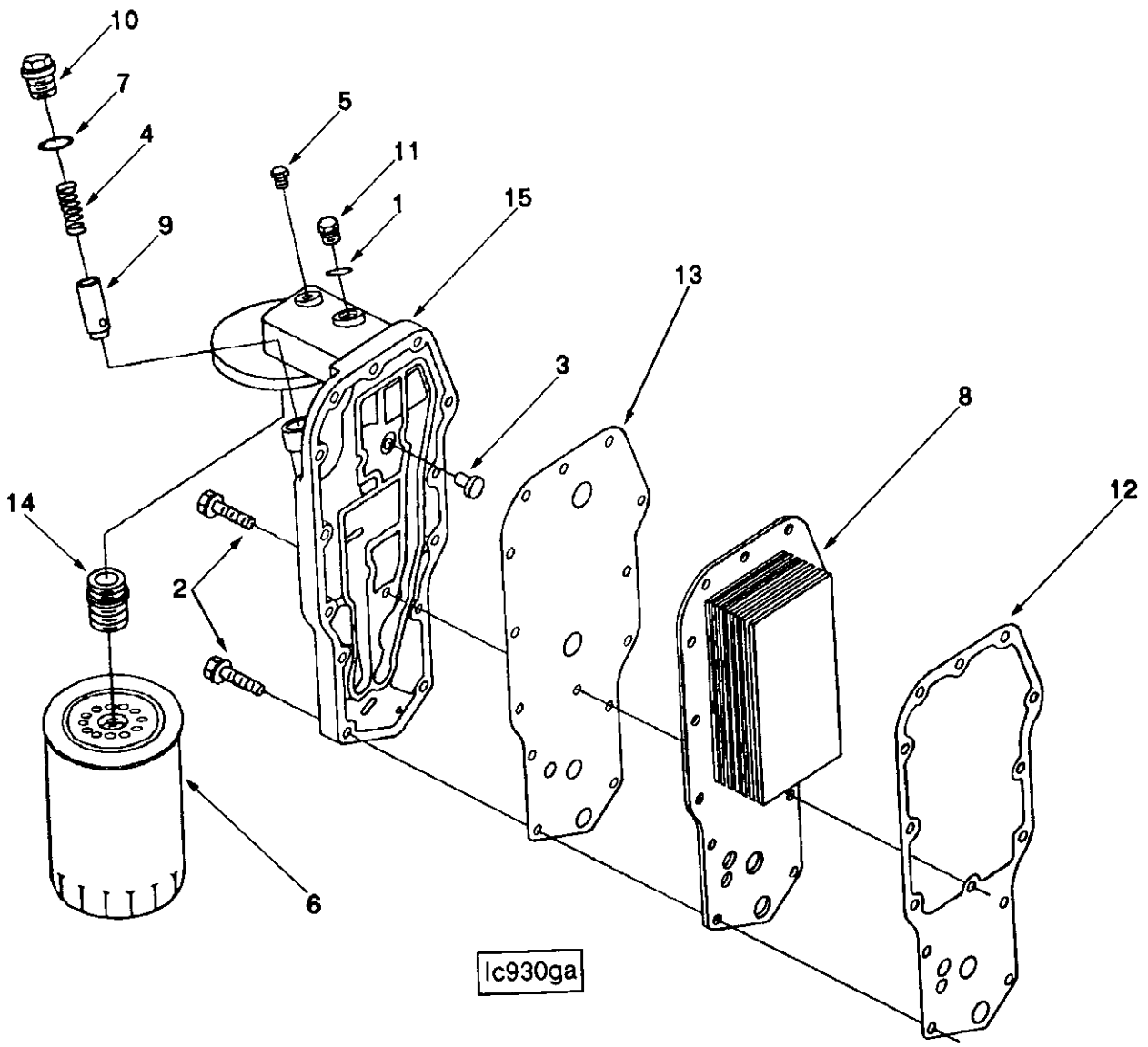
10
7
4
9
5
11
1
15
13
3
8
12
14
2
6
lc930ga

Ref No.	Part Number	Part Name	Req	Remarks
		LUBRICATING OIL COOLER		
		OPTION LC9019		Engine oil cooler assembly for use on naturally aspirated engines.
2	3900632	Screw, Hex Flange Head Cap	14	M8 x 1.25 x 35
3	3902338	Valve, Bypass	1	
4	3918427	Spring, Compression	1	
5	3906619	Plug, Pipe	1	1/8 NPT
6	(3908615)	Cartridge, Lub Oil Filter	1	
7	3909397	Seal, O Ring	1	
8	3918293	Core, Cooler	1	
9	3918428	Plunger, Prs Regulator	1	
10	3915787	Plug, Threaded	1	
	3919686	Plug, Threaded	1	
11	3920802	Plug, Threaded	1	
1	3037236	Seal, O Ring	1	
12	3918256	Gasket, Oil Cooler Core	1	
13	3918257	Gasket, Filter Head	1	
	3918954	Head, Lub Oil Filter	1	
14	3909355	Adapter, Filter Head	1	
15	3918328	Head, Lub Oil Filter	1	

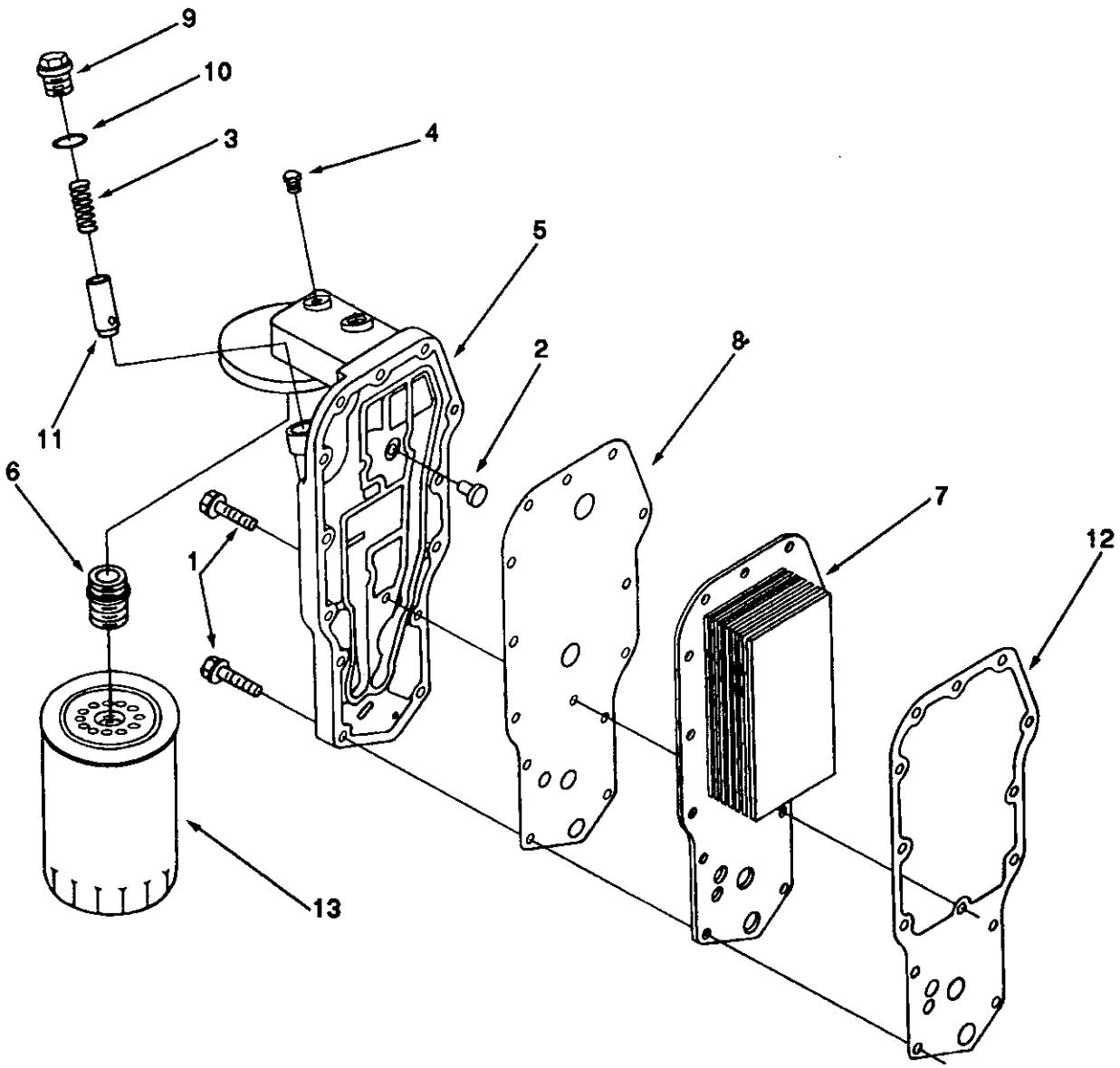
9
10
3
4
5
2
8
11
6
7
12
1
13
lc900gk

Ref No.	Part Number	Part Name	Req	Remarks
		LUBRICATING OIL COOLER		
		OPTION LC9020		Engine oil cooler assembly for use on turbocharged and turbocharged aftercooled engines.
1	3900632	Screw, Hex Flange Head Cap	14	M8 x 1.25 x 35
2	3902338	Valve, Bypass	1	
3	3918427	Spring, Compression	1	
4	3906619	Plug, Pipe	1	1/8 NPT
	3918954	Head, Lub Oil Filter	1	
5	3918328	Head, Lub Oil Filter	1	
6	3909355	Adapter, Filter Head	1	
7	3918293	Core, Cooler	1	
8	3918257	Gasket, Filter Head	1	
9	3915787	Plug, Threaded	1	
10	3909397	Seal, O Ring	1	
11	3918428	Plunger, Prs Regulator	1	
12	3918256	Gasket, Oil Cooler Core	1	
13	3908615	Cartridge, Lub Oil Filter	1	

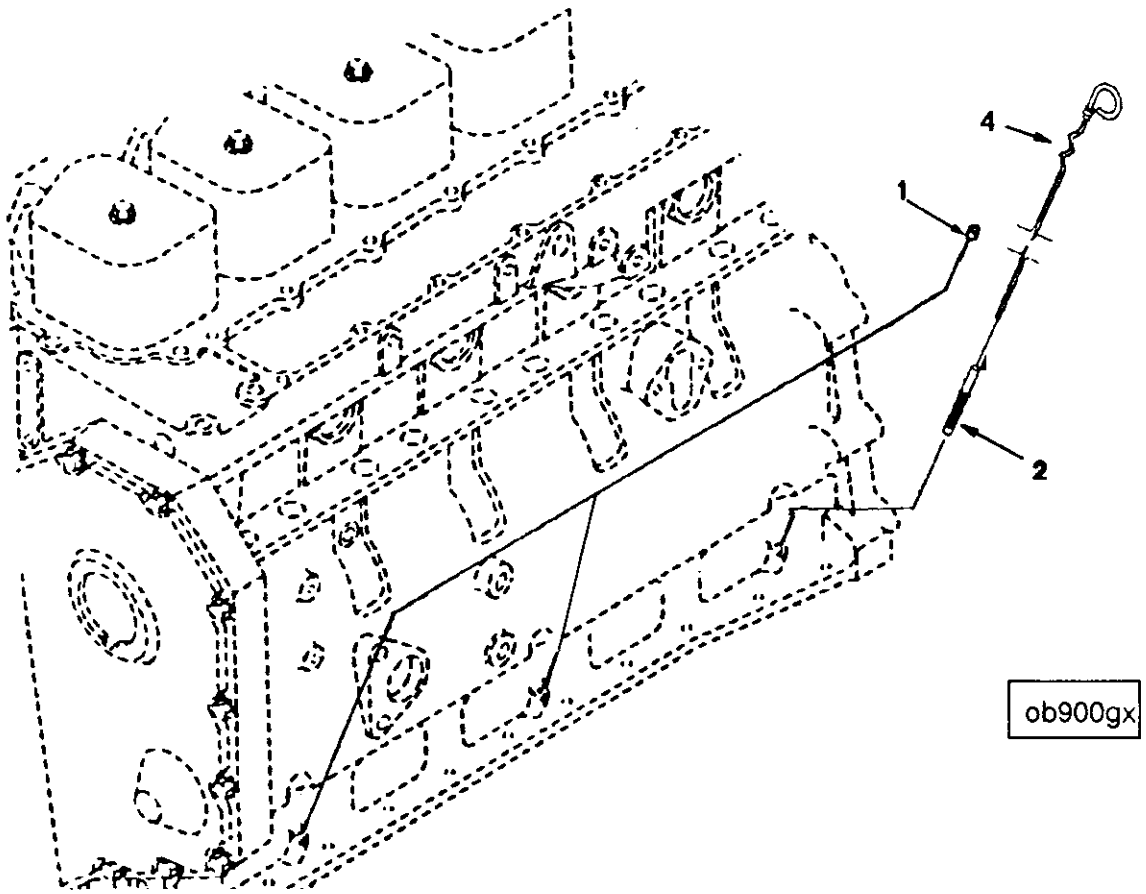

Ref No.	Part Number	Part Name	Req	Remarks
		OIL LEVEL GAUGE		
		OPTION LG9058		65mm straight tube 648mm ffob on fuel pump side of engine. Power angle 0 degree for rear sump oil pan. 65mm handle length.
1	3900955	Plug, Expansion	2	
2	3905425	Tube, Oil Gauge	1	
4	3905786	Dipstick	1	

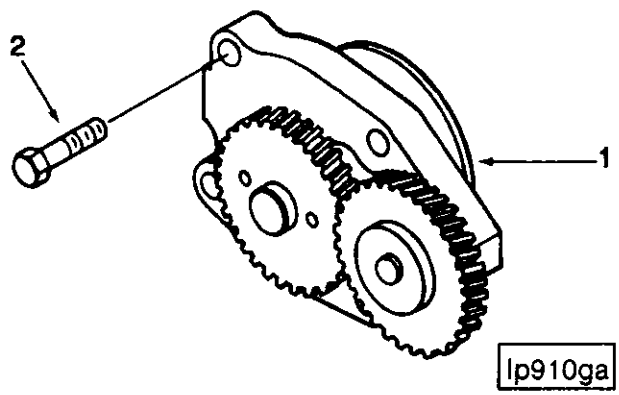

Ref No.	Part Number	Part Name	Req	Remarks
		LUBRICATING OIL PUMP		
		OPTION LP9006		Engine lubricating oil pump for 6 cylinder engines.
1	3918212	Pump, Lubricating Oil	1	
2	3900677	Screw, Hexagon Head Cap	4	M8 x 1.25 x 30

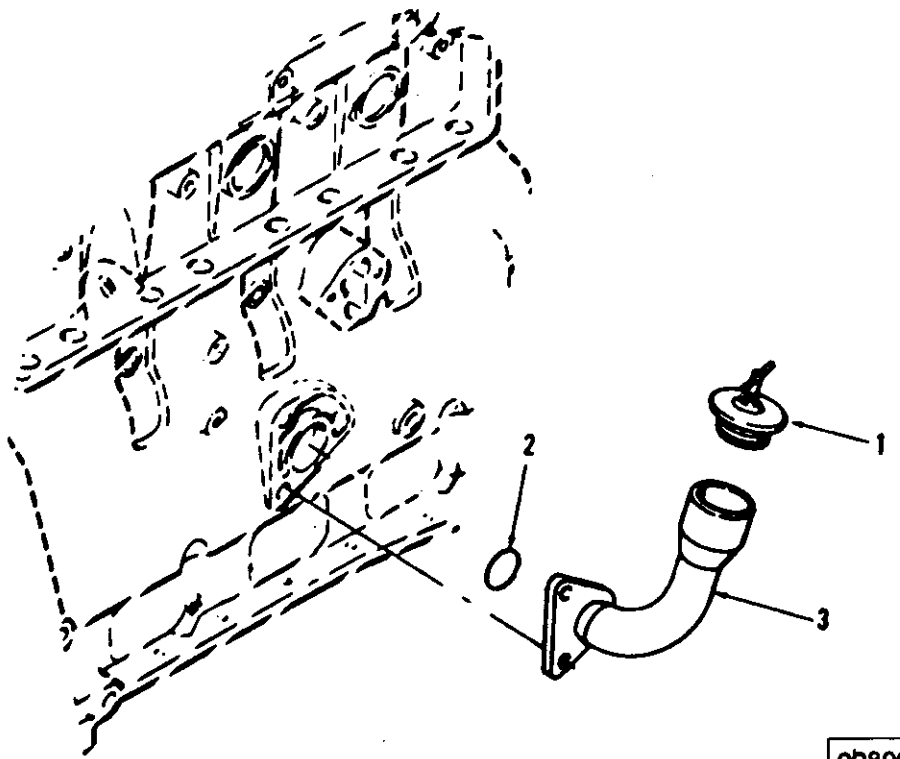

Ref No.	Part Number	Part Name	Req	Remarks
		CYLINDER BLOCK COVER		
		OPTION OB9005		Oil fill tube located on left hand side of block 278.0mm from ffob. P/N 3906704, seal, o ring, is interchangeable with P/N 3906696.
1	101322	Cap, Filler	1	
2	3906696	Seal, Rectangular Ring	1	
3	3905440	Tube, Oil Filler	1	

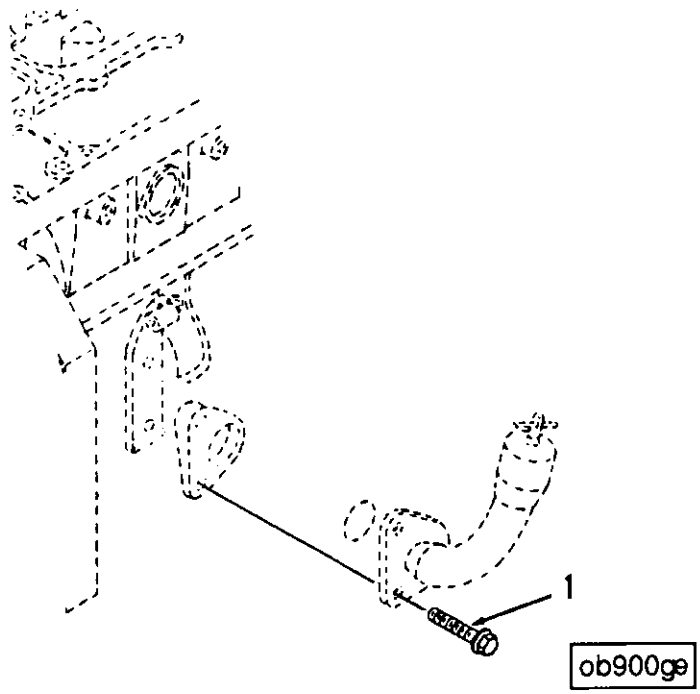

Ref No.	Part Number	Part Name	Req	Remarks
		CYLINDER BLOCK COVER		
		OPTION OB9701		Mounting hardware for cylinder block for use with side oil fill and no air compressor.
1	3903200	Screw, Hex Flange Head Cap	2	M12 x 1.75 x 25

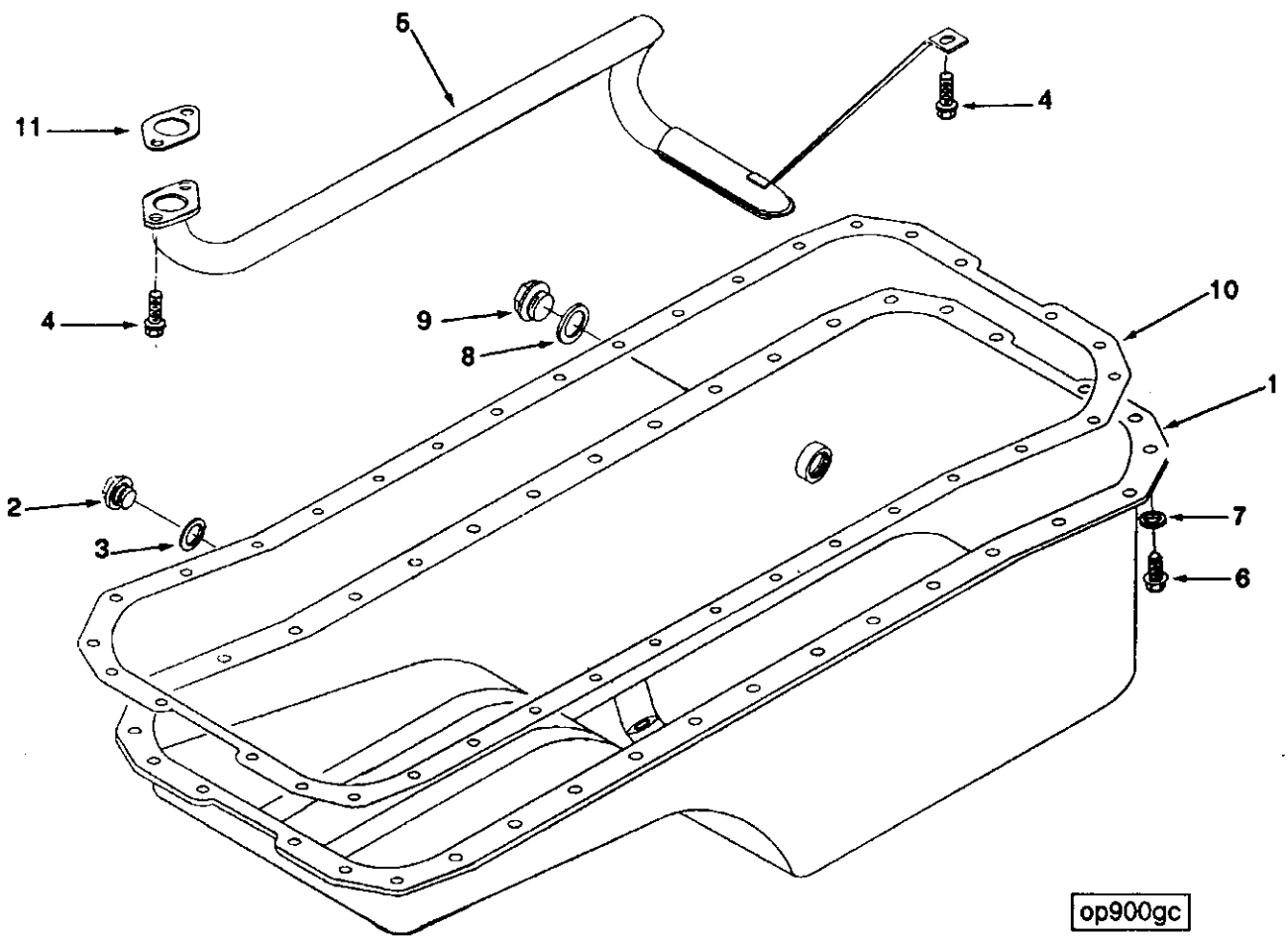
5
11
4
4
9
8
10
1
2
3
7
6
op900gc

Ref No.	Part Number	Part Name	Req	Remarks
		OIL PAN		
		OPTION OP9006		Shallow rear sump oil pan. 22-1.5 hole for immersion heater. Capacity level in U.S. quarts: High, 15 quarts - low, 13 quarts. Angularity limit is about 40 deg. all directions for this pan.
1	3915703	Pan, Oil	1	
2	3911638	Plug, Threaded	1	
3	3900216	Washer, Sealing	1	
4	3900629	Screw, Hex Flange Head Cap	4	M8 x 1.25 x 16
5	3918268	Connection, Oil Suction	1	
6	3907860	Screw, Hex Flange Head Cap	36	M8 x 1.25 x 25
7	3907537	Washer, Spring	36	
8	3902425	Washer, Sealing	1	
9	3904386	Plug, Threaded	1	M22 x 1.50 x 14
10	3911536	Gasket, Oil Pan	1	
11	3914383	Gasket, Flange	1	

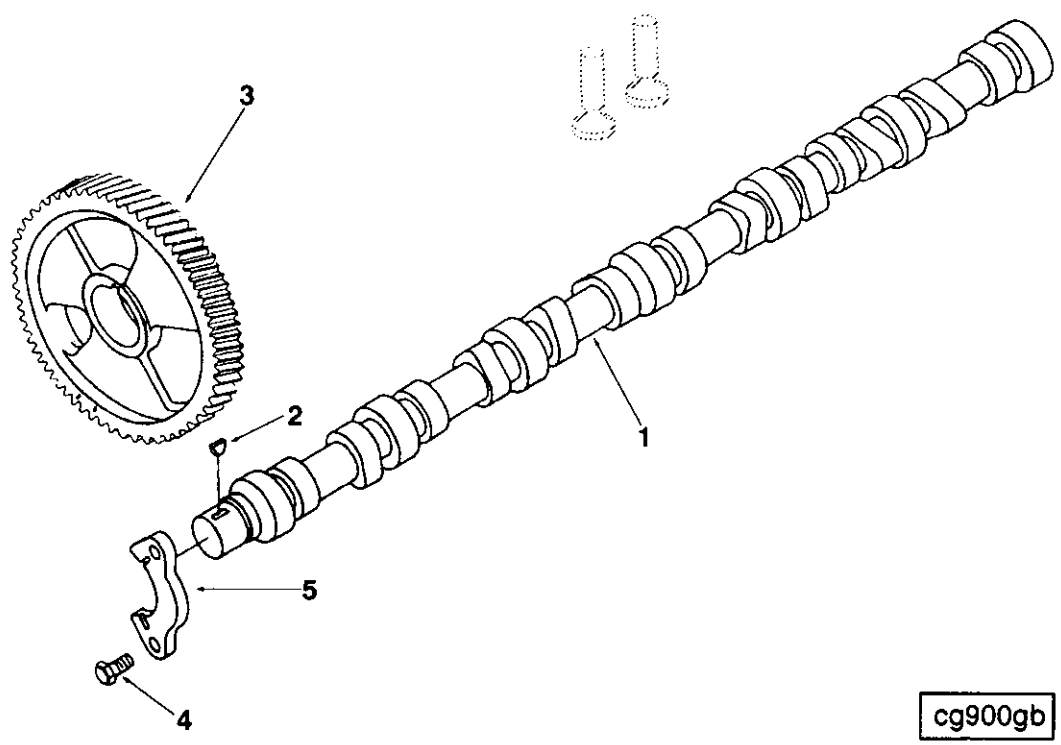
3
2
1
5
4
cg900gb

Ref No.	Part Number	Part Name	Req	Remarks
		CAMSHAFT		
		OPTION PP596		CPL596
		OPTION PP599		CPL599
		OPTION PP714		CPL714
		OPTION PP715		CPL715
		OPTION PP728		CPL728
		OPTION PP729		CPL729
		OPTION PP761		CPL761
		OPTION PP791		CPL791
		OPTION PP807		CPL807
		OPTION PP834		CPL834
		OPTION PP845		CPL845
		OPTION PP912		CPL912
		OPTION PP938		CPL938
		OPTION PP940		CPL940
		OPTION PP943		CPL943
		OPTION PP947		CPL947
		OPTION PP949		CPL949
		OPTION PP950		CPL950
		OPTION PP960		CPL960
		OPTION PP983		CPL983
		OPTION PP998		CPL998
		OPTION PP1168		CPL1168
		OPTION PP1209		CPL1209
		OPTION PP1246		CPL1246
		OPTION PP1266		CPL1266
		OPTION PP1279		CPL1279
		OPTION PP1288		CPL1288
		OPTION PP1289		CPL1289
		OPTION PP1403		CPL1403
1	3914639	Camshaft	1	
	(3910624)	Camshaft	1	
2	3902332	Key, Plain Woodruff	1	4.0 mm
3	3907431	Gear, Camshaft	1	
4	3900227	Screw, Hexagon Head Cap	2	M8 x 1.25 x 22
5	3914641	Support, Camshaft Thrust	1	

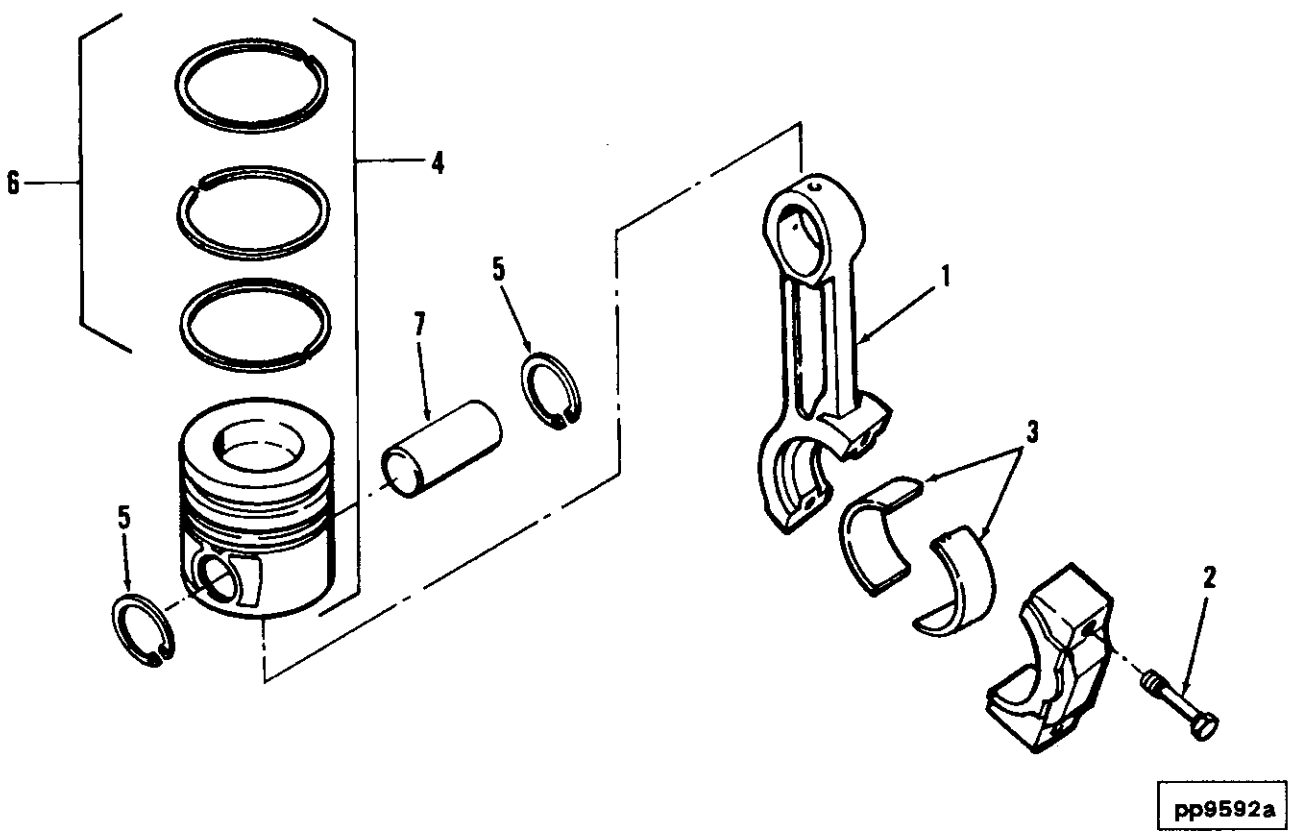
6
4
5
7
5
1
3
2
5
pp9592a

Ref No.	Part Number	Part Name	Req	Remarks
		CONNECTING ROD AND PISTON		
		OPTION PP596		CPL596
		OPTION PP714		CPL714
		OPTION PP791		CPL791
		OPTION PP845		CPL845
		OPTION PP960		CPL960
		OPTION PP1403		CPL1403
1	3901569	Rod, Engine Connecting	6	
	(3901567)	Rod, Engine Connecting	1	
2	3900919	Screw, Connecting Rod Cap	2	MJ11 x 1.25 x 59
3	3901170	Bearing, Connecting Rod	2	Standard
4	3802060	Kit, Engine Piston	6	Standard, Comp Ratio 17.3
	(3906223)	Piston, Engine	1	
5	3901706	Ring, Retaining	2	
6	3802040	Set, Piston Ring	1	Standard
7	3901793	Pin, Piston	6	
3	3901171	Bearing, Connecting Rod	A/R	0.25mm Oversize
3	3901172	Bearing, Connecting Rod	A/R	0.50mm Oversize
3	3901173	Bearing, Connecting Rod	A/R	0.75mm Oversize
3	3901174	Bearing, Connecting Rod	A/R	1.00mm Oversize
4	3802062	Kit, Engine Piston	6	0.50mm Oversize
	(3906209)	Piston, Engine	1	.5mm Oversize
5	3901706	Ring, Retaining	2	
6	3802042	Set, Piston Ring	1	0.50mm Oversize
4	3802064	Kit, Engine Piston	6	1.00mm Oversize
	(3906208)	Piston, Engine	1	1.0mm Oversize
5	3901706	Ring, Retaining	2	
6	3802044	Set, Piston Ring	1	1.00mm Oversize

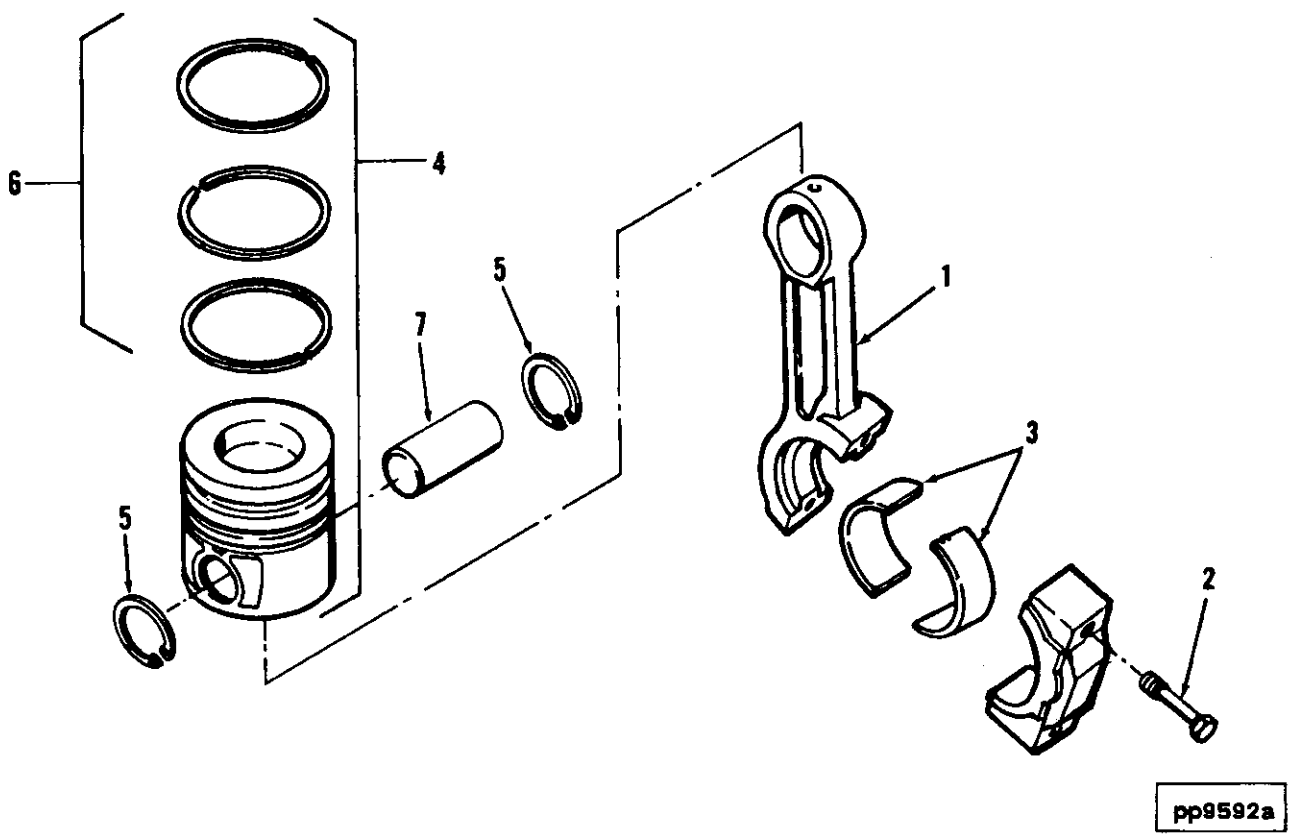
6
4
5
7
5
1
3
2
pp9592a

Group No. 01.04 **Connecting Rod and Piston**

Ref No.	Part Number	Part Name	Req	Remarks
		CONNECTING ROD AND PISTON		
		OPTION PP599		CPL599
		OPTION PP715		CPL715
		OPTION PP834		CPL834
		OPTION PP912		CPL912
		OPTION PP940		CPL940
		OPTION PP983		CPL983
		OPTION PP998		CPL998
		OPTION PP1209		CPL1209
1	3901569	Rod, Engine Connecting	6	
	(3901567)	Rod, Engine Connecting	1	
2	3900919	Screw, Connecting Rod Cap	2	MJ11 x 1.25 x 59
3	3901170	Bearing, Connecting Rod	2	Standard
4	3802100	Kit, Engine Piston	6	Standard, Comp Ratio 16.5
	(3907156)	Piston, Engine	1	
5	3901706	Ring, Retaining	2	
6	3802230	Set, Piston Ring	1	Standard
7	3901793	Pin, Piston	6	
3	3901171	Bearing, Connecting Rod	A/R	0.25mm Oversize
3	3901172	Bearing, Connecting Rod	A/R	0.50mm Oversize
3	3901173	Bearing, Connecting Rod	A/R	0.75mm Oversize
3	3901174	Bearing, Connecting Rod	A/R	1.00mm Oversize
4	3802102	Kit, Engine Piston	6	0.50mm Oversize
	(3907157)	Piston, Engine	1	.5mm Oversize
5	3901706	Ring, Retaining	2	
6	3802052	Set, Piston Ring	1	0.50mm Oversize
4	3802104	Kit, Engine Piston	6	1.00mm Oversize
	(3907158)	Piston, Engine	1	1.0mm Oversize
5	3901706	Ring, Retaining	2	
6	3802054	Set, Piston Ring	1	1.00mm Oversize

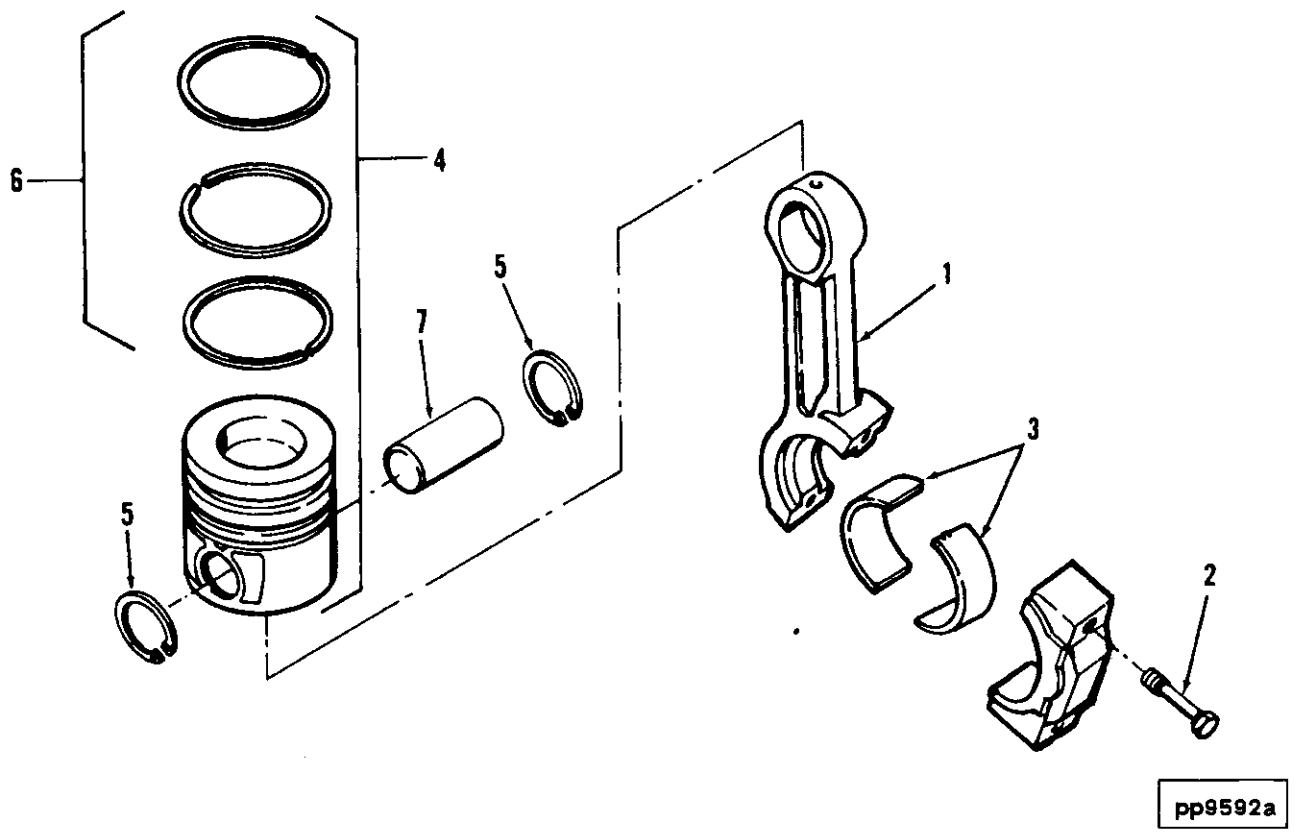

Ref No.	Part Number	Part Name	Req	Remarks
		CONNECTING ROD AND PISTON		
		OPTION PP728		CPL728
1	3901569	Rod, Engine Connecting	6	
	(3901567)	Rod, Engine Connecting	1	
2	3900919	Screw, Connecting Rod Cap	2	MJ11 x 1.25 x 59
3	3901170	Bearing, Connecting Rod	2	Standard
4	3802090	Kit, Engine Piston	6	Standard, Comp Ratio 18.5
	(3903582)	Piston, Engine	1	
5	3901706	Ring, Retaining	2	
6	3802230	Set, Piston Ring	1	Standard
7	3901793	Pin, Piston	6	
3	3901171	Bearing, Connecting Rod	A/R	0.25mm Oversize
3	3901172	Bearing, Connecting Rod	A/R	0.50mm Oversize
3	3901173	Bearing, Connecting Rod	A/R	0.75mm Oversize
3	3901174	Bearing, Connecting Rod	A/R	1.00mm Oversize
4	3802092	Kit, Engine Piston	6	0.50mm Oversize
	(3908035)	Piston, Engine	1	.5mm Oversize
5	3901706	Ring, Retaining	2	
6	3802052	Set, Piston Ring	1	0.50mm Oversize
4	3802094	Kit, Engine Piston	6	1.00mm Oversize
	(3908036)	Piston, Engine	1	1.0mm Oversize
5	3901706	Ring, Retaining	2	
6	3802054	Set, Piston Ring	1	1.00mm Oversize

NOTES

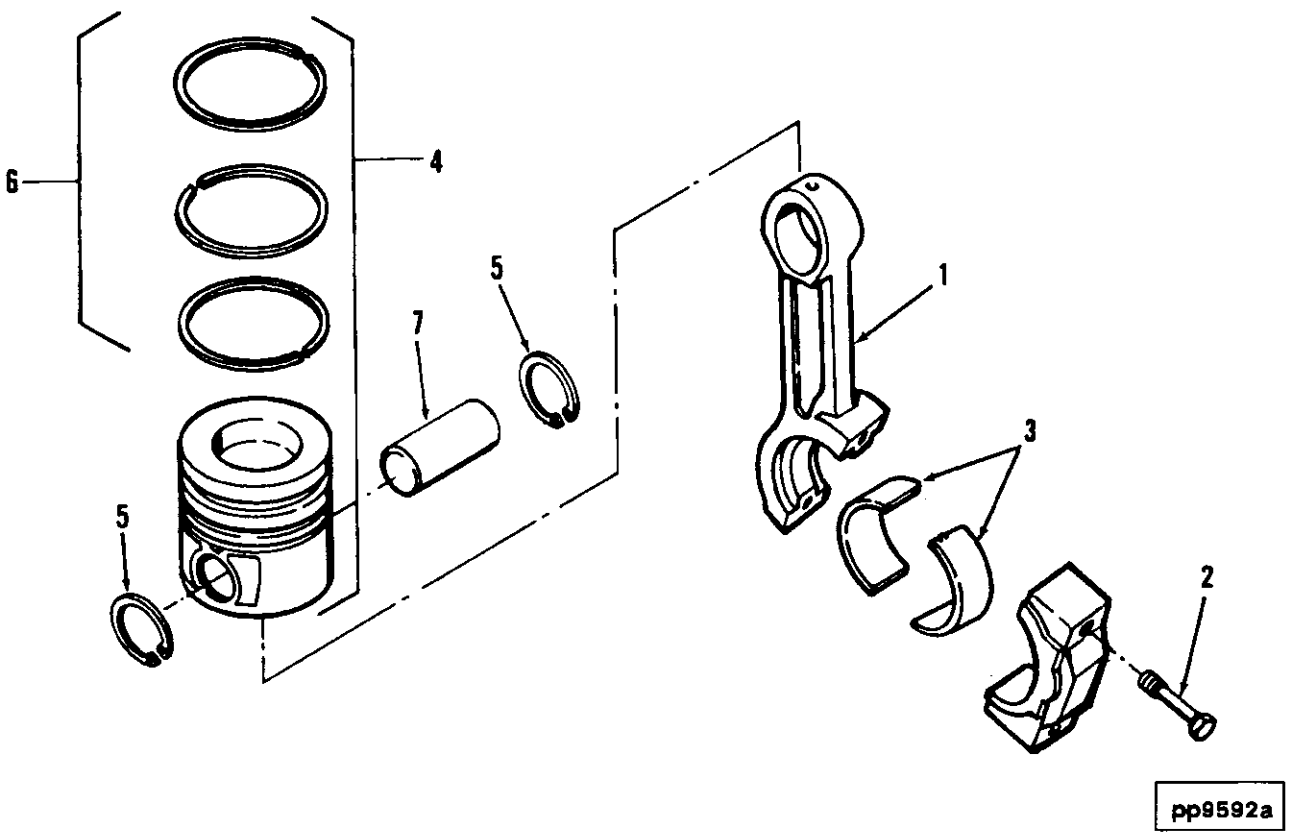
6
4
5
7
5
1
3
2
pp9592a

Ref No.	Part Number	Part Name	Req	Remarks
		CONNECTING ROD AND PISTON		
		OPTION PP729		CPL729
		OPTION PP761		CPL761
		OPTION PP807		CPL807
		OPTION PP938		CPL938
		OPTION PP943		CPL943
		OPTION PP947		CPL947
		OPTION PP949		CPL949
1	3901569	Rod, Engine Connecting	6	
	(3901567)	Rod, Engine Connecting	1	
2	3900919	Screw, Connecting Rod Cap	2	MJ11 x 1.25 x 59
3	3901170	Bearing, Connecting Rod	2	Standard
4	3802160	Kit, Engine Piston	6	Standard, Comp Ratio 17.5
	(3907163)	Piston, Engine	1	
5	3901706	Ring, Retaining	2	
6	3802230	Set, Piston Ring	1	Standard
7	3901793	Pin, Piston	6	
3	3901171	Bearing, Connecting Rod	A/R	0.25mm Oversize
3	3901172	Bearing, Connecting Rod	A/R	0.50mm Oversize
3	3901173	Bearing, Connecting Rod	A/R	0.75mm Oversize
3	3901174	Bearing, Connecting Rod	A/R	1.00mm Oversize
4	3802132	Kit, Engine Piston .5mmo/s	6	0.50mm Oversize
	(3908815)	Piston, Engine	1	.5mm Oversize
5	3901706	Ring, Retaining	2	
6	3802052	Set, Piston Ring	1	0.50mm Oversize
4	3802134	Kit, Engine Piston 1.0mmo/	6	1.00mm Oversize
	(3908816)	Piston, Engine	1	1.0mm Oversize
5	3901706	Ring, Retaining	2	
6	3802054	Set, Piston Ring	1	1.00mm Oversize

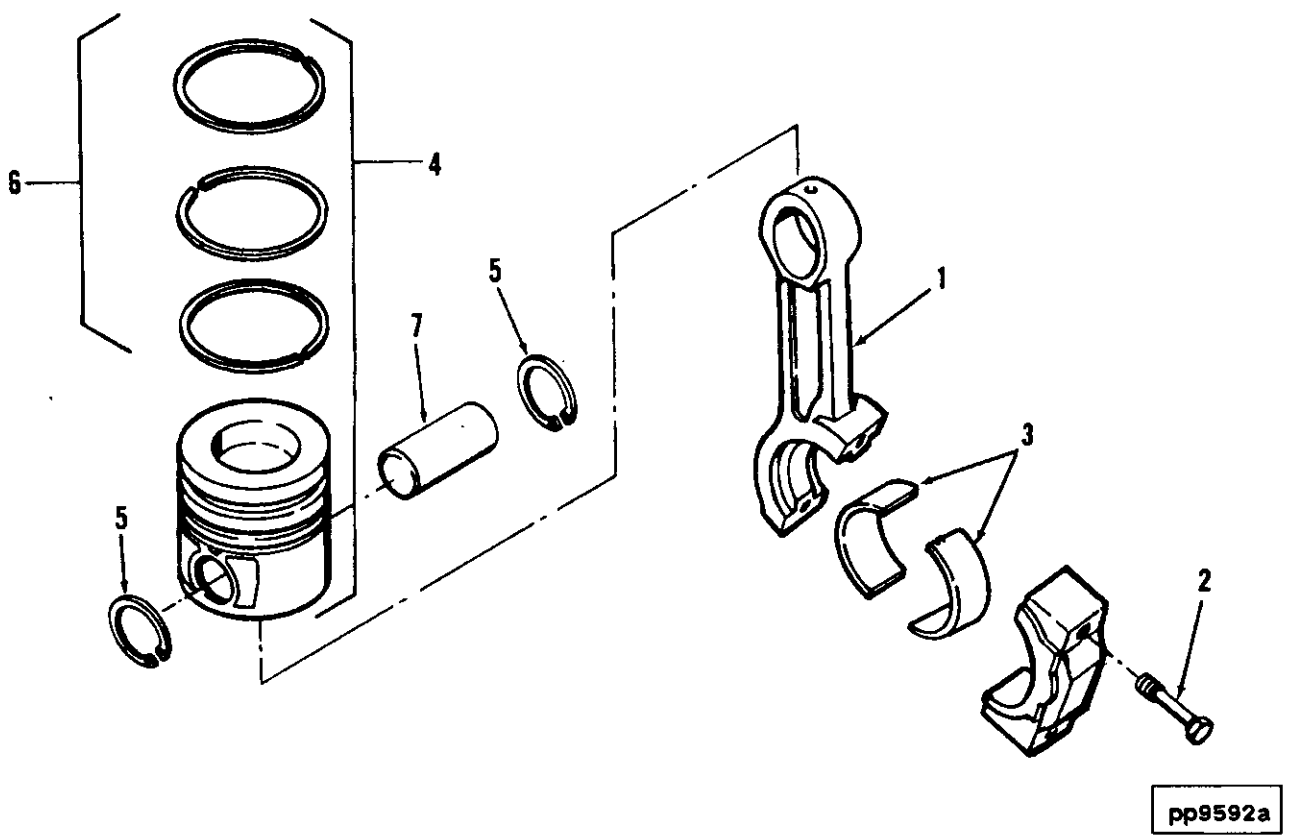
6
4
5
7
5
1
3
2
pp9592a

Group No. 01.04 **Connecting Rod and Piston** Option No. PP950, PP1168, PP1246, PP1266, PP1279, PP1288, PP1289

Ref No.	Part Number	Part Name	Req	Remarks
		CONNECTING ROD AND PISTON		
		OPTION PP950		CPL950
		OPTION PP1168		CPL1168
		OPTION PP1246		CPL1246
		OPTION PP1266		CPL1266
		OPTION PP1279		CPL1279
		OPTION PP1288		CPL1288
		OPTION PP1289		CPL1289
1	3901569	Rod, Engine Connecting	6	
	(3901567)	Rod, Engine Connecting	1	
2	3900919	Screw, Connecting Rod Cap	2	MJ11 x 1.25 x 59
3	3901170	Bearing, Connecting Rod	2	Standard
4	3802160	Kit, Engine Piston	6	Standard, Comp Ratio 17.5
	(3907163)	Piston, Engine	1	
5	3901706	Ring, Retaining	2	
6	3802230	Set, Piston Ring	1	Standard
7	3901793	Pin, Piston	6	
3	3901171	Bearing, Connecting Rod	A/R	0.25mm Oversize
3	3901172	Bearing, Connecting Rod	A/R	0.50mm Oversize
3	3901173	Bearing, Connecting Rod	A/R	0.75mm Oversize
3	3901174	Bearing, Connecting Rod	A/R	1.00mm Oversize
4	3802132	Kit, Engine Piston .5mmo/s	6	0.50mm Oversize
	(3908815)	Piston, Engine	1	.5mm Oversize
5	3901706	Ring, Retaining	2	
6	3802052	Set, Piston Ring	1	0.50mm Oversize
4	3802134	Kit, Engine Piston 1.0mmo/	6	1.00mm Oversize
	(3908816)	Piston, Engine	1	1.0mm Oversize
5	3901706	Ring, Retaining	2	
6	3802054	Set, Piston Ring	1	1.00mm Oversize

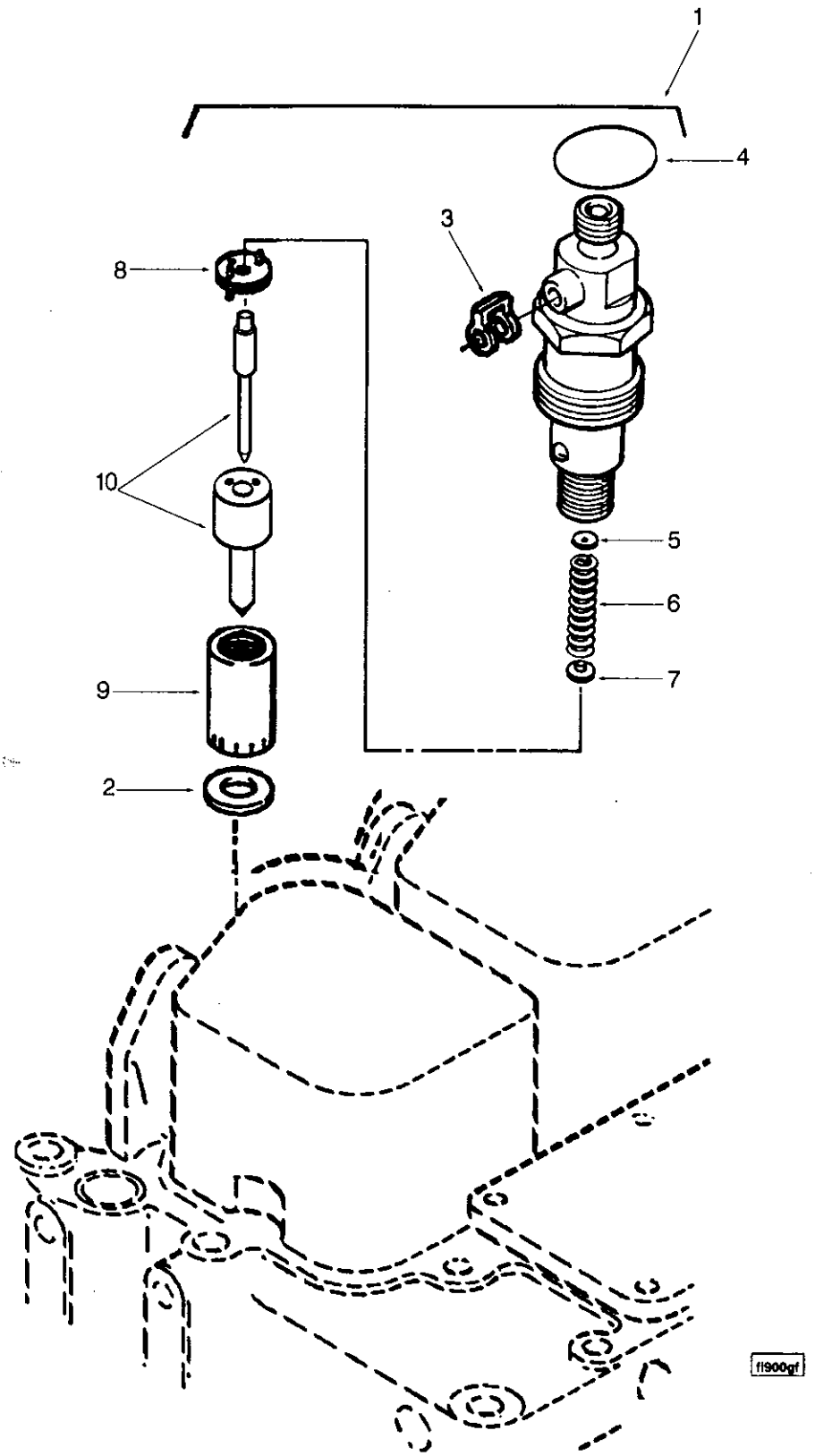
1
4
3
8
10
5
6
7
9
2
fl900gf

Ref No.	Part Number	Part Name	Req	Remarks
		FUEL INJECTOR		
		OPTION PP596		CPL596
		OPTION PP807		CPL807
1	3802176	Injector, Fuel	6	
	(3914472)	Injector	1	
2	3900808	Seal, Injector	1	
3	3903380	Seal, Banjo Connector	1	
4	3909356	Seal, Rectangular Ring	1	
5	3905156	Shim	A/R	1.00 mm Thick
5	3905157	Shim	A/R	1.04 mm Thick
5	3905158	Shim	A/R	1.08 mm Thick
5	3905159	Shim	A/R	1.10 mm Thick
5	3905160	Shim	A/R	1.14 mm Thick
5	3905161	Shim	A/R	1.18 mm Thick
5	3905162	Shim	A/R	1.20 mm Thick
5	3905163	Shim	A/R	1.24 mm Thick
5	3905164	Shim	A/R	1.28 mm Thick
5	3905165	Shim	A/R	1.30 mm Thick
5	3905166	Shim	A/R	1.34 mm Thick
5	3905167	Shim	A/R	1.38 mm Thick
5	3905168	Shim	A/R	1.40 mm Thick
5	3905169	Shim	A/R	1.44 mm Thick
5	3905170	Shim	A/R	1.48 mm Thick
5	3905171	Shim	A/R	1.50 mm Thick
5	3905172	Shim	A/R	1.54 mm Thick
5	3905173	Shim	A/R	1.58 mm Thick
5	3905174	Shim	A/R	1.60 mm Thick
5	3905175	Shim	A/R	1.64 mm Thick
5	3905176	Shim	A/R	1.68 mm Thick
5	3905177	Shim	A/R	1.70 mm Thick
5	3905178	Shim	A/R	1.74 mm Thick
5	3905179	Shim	A/R	1.76 mm Thick
5	3905180	Shim	A/R	1.78 mm Thick
5	3905181	Shim	A/R	1.80 mm Thick
5	3905182	Shim	A/R	1.84 mm Thick
5	3905183	Shim	A/R	1.88 mm Thick
5	3905184	Shim	A/R	1.90 mm Thick
5	3905185	Shim	A/R	1.94 mm Thick
5	3905186	Shim	A/R	1.98 mm Thick
6	3905152	Spring, Compression	6	
7	3905153	Spindle, Injector	6	
8	3905154	Disc, Intermediate	6	
9	3905155	Retainer, Injector Nozzle	6	
10	3903110	Nozzle, Injector	6	

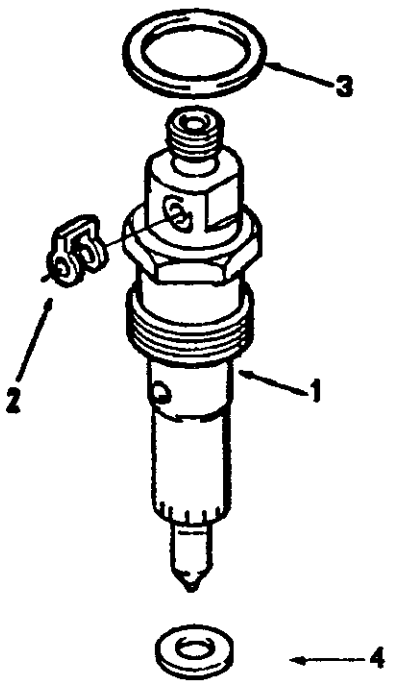

fi900gb

Ref No.	Part Number	Part Name	Req	Remarks
		FUEL INJECTOR		
		OPTION PP599		CPL599
		OPTION PP728		CPL728
		OPTION PP834		CPL834
				Edge filter injector assembly 3920080 may be substituted for 3920074 assembly.
1	3802315	Injector	6	7mm tip
	(3920074)	Injector	1	
2	3903380	Seal, Banjo Connector	1	
3	3909356	Seal, Rectangular Ring	1	
4	3920174	Seal, Injector	1	for 7mm head

NOTES

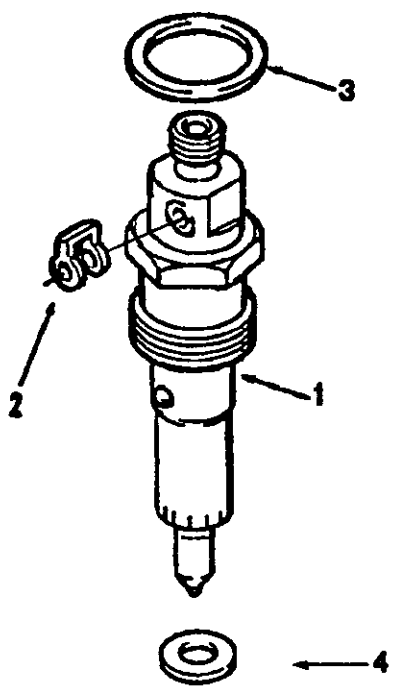

fi900gb

Ref No.	Part Number	Part Name	Req	Remarks
		FUEL INJECTOR		
		OPTION PP714		CPL714. Cav edge filter injector 3920109 may be substituted for Bosch injector 3920081 shown in structure.
1	3802328	Injector	6	7mm tip
	(3920081)	Injector	1	
2	3903380	Seal, Banjo Connector	1	
3	3909356	Seal, Rectangular Ring	1	
4	3920174	Seal, Injector	1	for 7mm head
		OPTION PP715		CPL715. Edge filter injector assembly 3920073 may be substituted for 3920083 assembly.
1	3802311	Injector	6	7mm tip
	(3920083)	Injector	1	
2	3903380	Seal, Banjo Connector	1	
3	3909356	Seal, Rectangular Ring	1	
4	3920174	Seal, Injector	1	for 7mm head
		OPTION PP729		CPL729. Edge filter injector assembly 3920110 may be substituted for 3920085 assembly.
1	3920085	Injector	6	7mm tip
	(3919343)	Injector	1	
2	3903380	Seal, Banjo Connector	1	
3	3909356	Seal, Rectangular Ring	1	
4	3920174	Seal, Injector	1	for 7mm head
		OPTION PP761		CPL761. Edge filter injector assembly 3920111 may be substituted for 3920088 assembly.
1	3802365	Injector	6	7mm tip
	(3920088)	Injector	1	
2	3903380	Seal, Banjo Connector	1	
3	3909356	Seal, Rectangular Ring	1	
4	3920174	Seal, Injector	1	for 7mm head
		OPTION PP791		CPL#791. CAV edge filter injector.
1	3802322	Injector	6	7mm tip
	(3920089)	Injector	1	
2	3903380	Seal, Banjo Connector	1	
3	3909356	Seal, Rectangular Ring	1	
4	3920174	Seal, Injector	1	for 7mm head

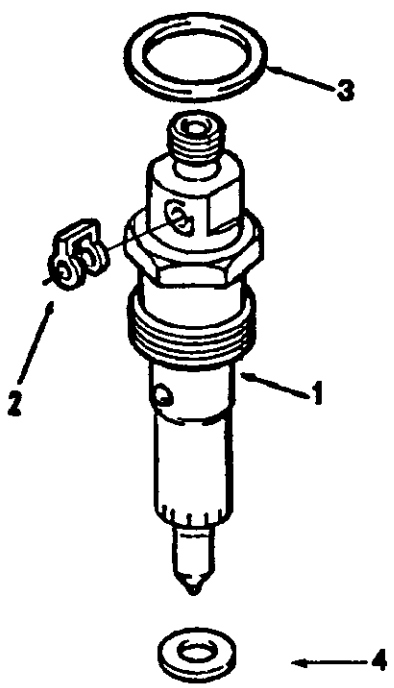

fi900gb

Ref No.	Part Number	Part Name	Req	Remarks
		FUEL INJECTOR		
		OPTION PP845		CPL845. Bosch injector 3920073 assembly may be substituted for Cav injector 3920349 assembly.
1	3802338	Injector	6	7mm tip
	(3920349)	Injector	1	
2	3903380	Seal, Banjo Connector	1	
3	3909356	Seal, Rectangular Ring	1	
4	3920174	Seal, Injector	1	for 7mm head
		OPTION PP912		CPL912. With edge filter injector.
1	3802316	Injector	6	7mm tip
	(3919350)	Injector	1	
2	3903380	Seal, Banjo Connector	1	
3	3909356	Seal, Rectangular Ring	1	
4	3920174	Seal, Injector	1	for 7mm head
		OPTION PP938		CPL938
		OPTION PP1288		CPL1288
1	3919343	Injector	6	7mm tip
	(3920085)	Injector	1	
2	3903380	Seal, Banjo Connector	1	
3	3909356	Seal, Rectangular Ring	1	
4	3920174	Seal, Injector	1	for 7mm head

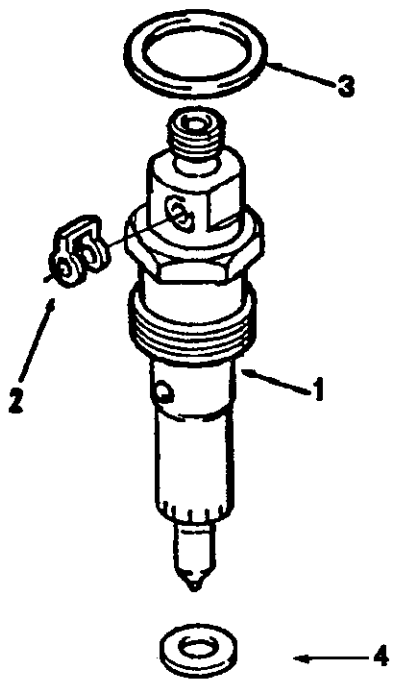

fi900gb

Ref No.	Part Number	Part Name	Req	Remarks
		FUEL INJECTOR		
		OPTION PP940		CPL940. Cav edge filter injector assemblies for 6 cylinder B series engines.
		OPTION PP998		CPL998. Cav edge filter injector assemblies for 6 cylinder B series engines.
1	3802195	Kit, Injector	6	
	(3916740)	Injector	1	
2	3903380	Seal, Banjo Connector	1	
3	3909356	Seal, Rectangular Ring	1	
4	3900808	Seal, Injector	1	

NOTES

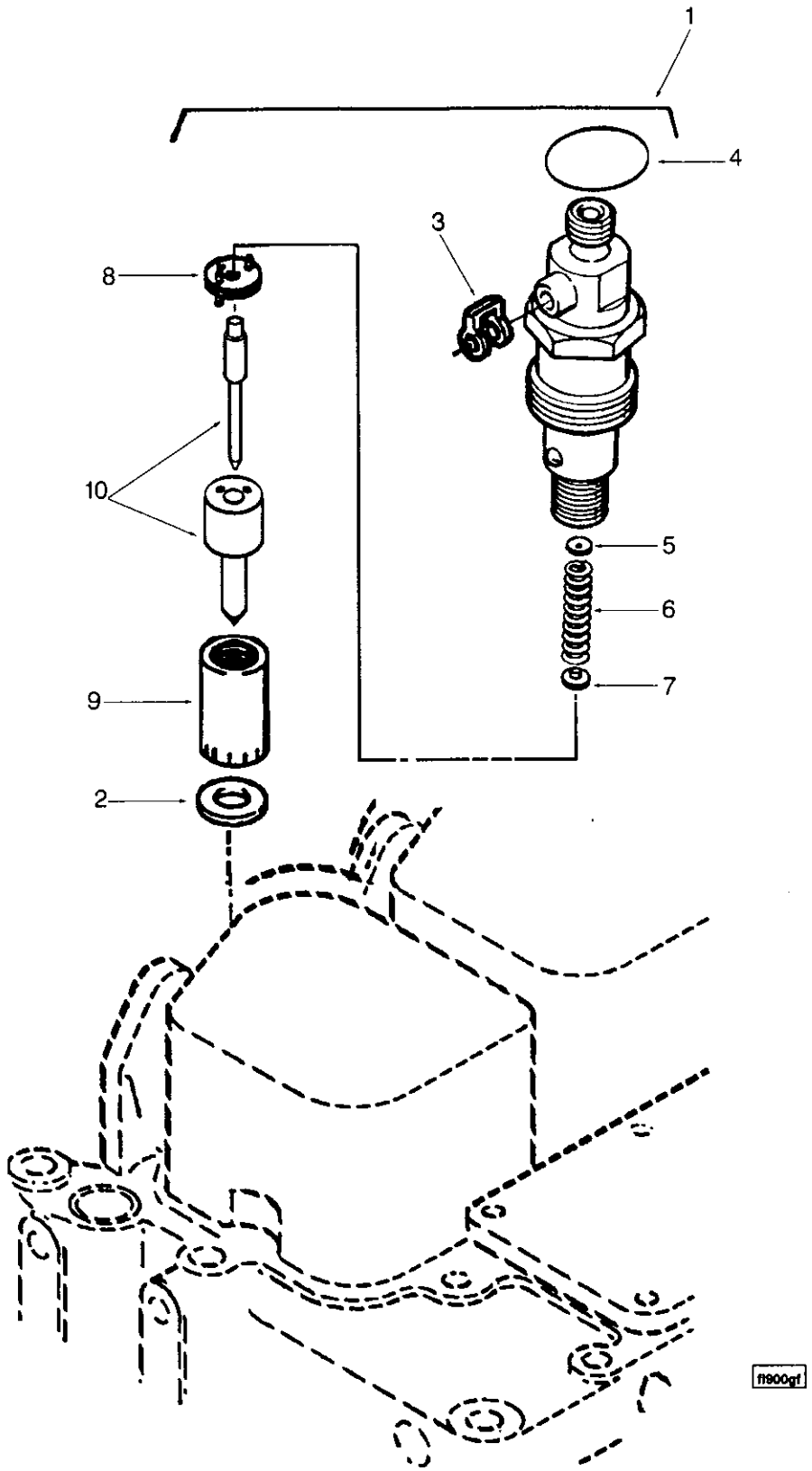
1
4
3
8
10
5
6
7
9
2
ft900gf

Ref No.	Part Number	Part Name	Req	Remarks
		FUEL INJECTOR		
		OPTION PP943		CPL943
		OPTION PP949		CPL949
		OPTION PP950		CPL950
		OPTION PP1209		CPL1209
		OPTION PP1289		CPL1289
1	3802035	Injector, Fuel	6	
	(3909476)	Injector	1	
2	3900808	Seal, Injector	1	
3	3903380	Seal, Banjo Connector	1	
4	3909356	Seal, Rectangular Ring	1	
5	3905156	Shim	A/R	1.00 mm Thick
5	3905157	Shim	A/R	1.04 mm Thick
5	3905158	Shim	A/R	1.08 mm Thick
5	3905159	Shim	A/R	1.10 mm Thick
5	3905160	Shim	A/R	1.14 mm Thick
5	3905161	Shim	A/R	1.18 mm Thick
5	3905162	Shim	A/R	1.20 mm Thick
5	3905163	Shim	A/R	1.24 mm Thick
5	3905164	Shim	A/R	1.28 mm Thick
5	3905165	Shim	A/R	1.30 mm Thick
5	3905166	Shim	A/R	1.34 mm Thick
5	3905167	Shim	A/R	1.38 mm Thick
5	3905168	Shim	A/R	1.40 mm Thick
5	3905169	Shim	A/R	1.44 mm Thick
5	3905170	Shim	A/R	1.48 mm Thick
5	3905171	Shim	A/R	1.50 mm Thick
5	3905172	Shim	A/R	1.54 mm Thick
5	3905173	Shim	A/R	1.58 mm Thick
5	3905174	Shim	A/R	1.60 mm Thick
5	3905175	Shim	A/R	1.64 mm Thick
5	3905176	Shim	A/R	1.68 mm Thick
5	3905177	Shim	A/R	1.70 mm Thick
5	3905178	Shim	A/R	1.74 mm Thick
5	3905179	Shim	A/R	1.76 mm Thick
5	3905180	Shim	A/R	1.78 mm Thick
5	3905181	Shim	A/R	1.80 mm Thick
5	3905182	Shim	A/R	1.84 mm Thick
5	3905183	Shim	A/R	1.88 mm Thick
5	3905184	Shim	A/R	1.90 mm Thick
5	3905185	Shim	A/R	1.94 mm Thick
5	3905186	Shim	A/R	1.98 mm Thick
6	3905152	Spring, Compression	6	
7	3905153	Spindle, Injector	6	
8	3905154	Disc, Intermediate	6	
9	3905155	Retainer, Injector Nozzle	6	
10	3903313	Nozzle, Injector	6	

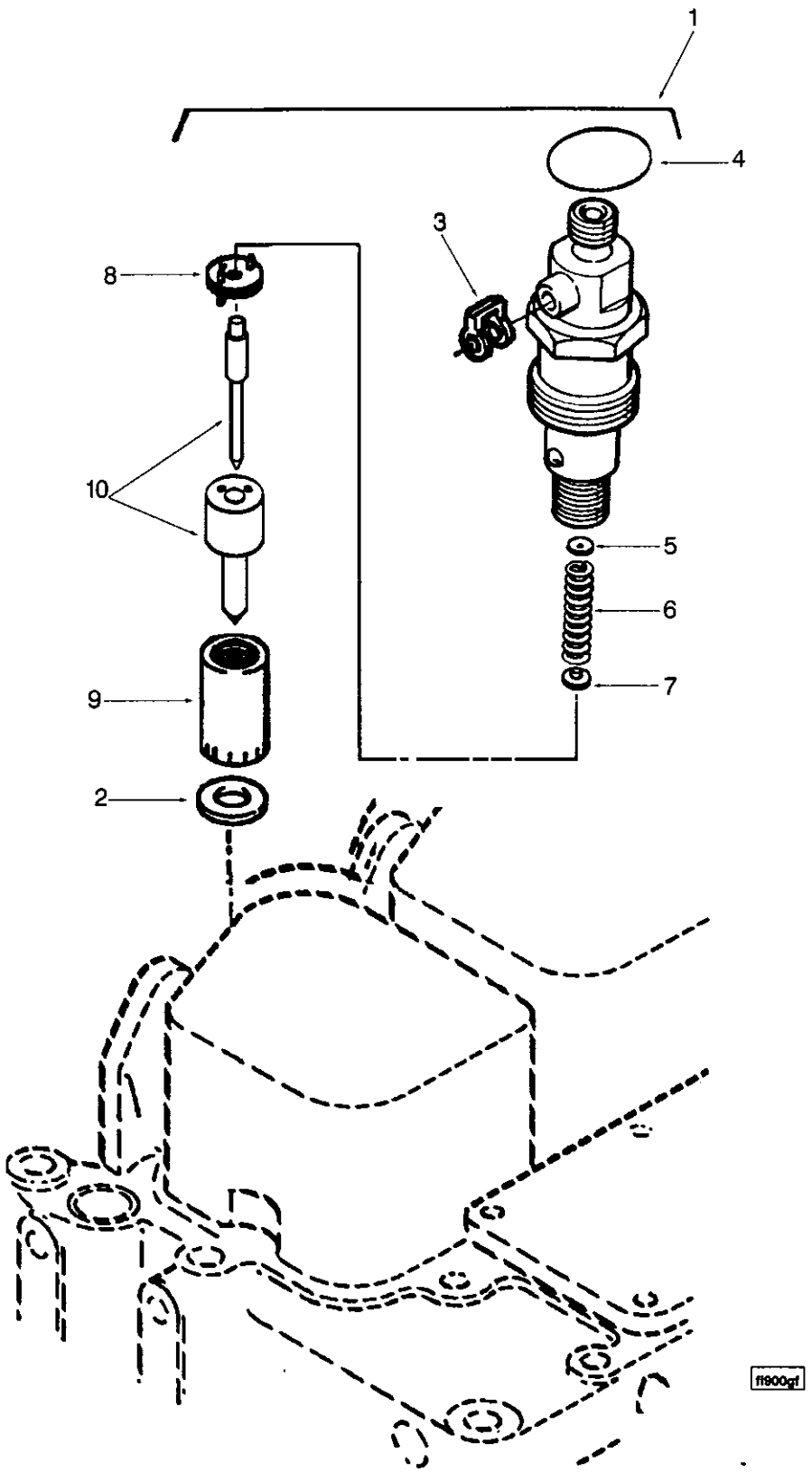
1
4
3
8
10
5
6
7
9
2
ff900gf

Ref No.	Part Number	Part Name	Req	Remarks
		FUEL INJECTOR		
		OPTION PP947		CPL947
1	3802058	Injector, Fuel	6	
	(3908238)	Injector	1	
2	3900808	Seal, Injector	1	
3	3903380	Seal, Banjo Connector	1	
4	3909356	Seal, Rectangular Ring	1	
5	3905156	Shim	A/R	1.00 mm Thick
5	3905157	Shim	A/R	1.04 mm Thick
5	3905158	Shim	A/R	1.08 mm Thick
5	3905159	Shim	A/R	1.10 mm Thick
5	3905160	Shim	A/R	1.14 mm Thick
5	3905161	Shim	A/R	1.18 mm Thick
5	3905162	Shim	A/R	1.20 mm Thick
5	3905163	Shim	A/R	1.24 mm Thick
5	3905164	Shim	A/R	1.28 mm Thick
5	3905165	Shim	A/R	1.30 mm Thick
5	3905166	Shim	A/R	1.34 mm Thick
5	3905167	Shim	A/R	1.38 mm Thick
5	3905168	Shim	A/R	1.40 mm Thick
5	3905169	Shim	A/R	1.44 mm Thick
5	3905170	Shim	A/R	1.48 mm Thick
5	3905171	Shim	A/R	1.50 mm Thick
5	3905172	Shim	A/R	1.54 mm Thick
5	3905173	Shim	A/R	1.58 mm Thick
5	3905174	Shim	A/R	1.60 mm Thick
5	3905175	Shim	A/R	1.64 mm Thick
5	3905176	Shim	A/R	1.68 mm Thick
5	3905177	Shim	A/R	1.70 mm Thick
5	3905178	Shim	A/R	1.74 mm Thick
5	3905179	Shim	A/R	1.76 mm Thick
5	3905180	Shim	A/R	1.78 mm Thick
5	3905181	Shim	A/R	1.80 mm Thick
5	3905182	Shim	A/R	1.84 mm Thick
5	3905183	Shim	A/R	1.88 mm Thick
5	3905184	Shim	A/R	1.90 mm Thick
5	3905185	Shim	A/R	1.94 mm Thick
5	3905186	Shim	A/R	1.98 mm Thick
6	3905152	Spring, Compression	6	
7	3905153	Spindle, Injector	6	
8	3905154	Disc, Intermediate	6	
9	3905155	Retainer, Injector Nozzle	6	
10	3910338	Nozzle, Injector	6	

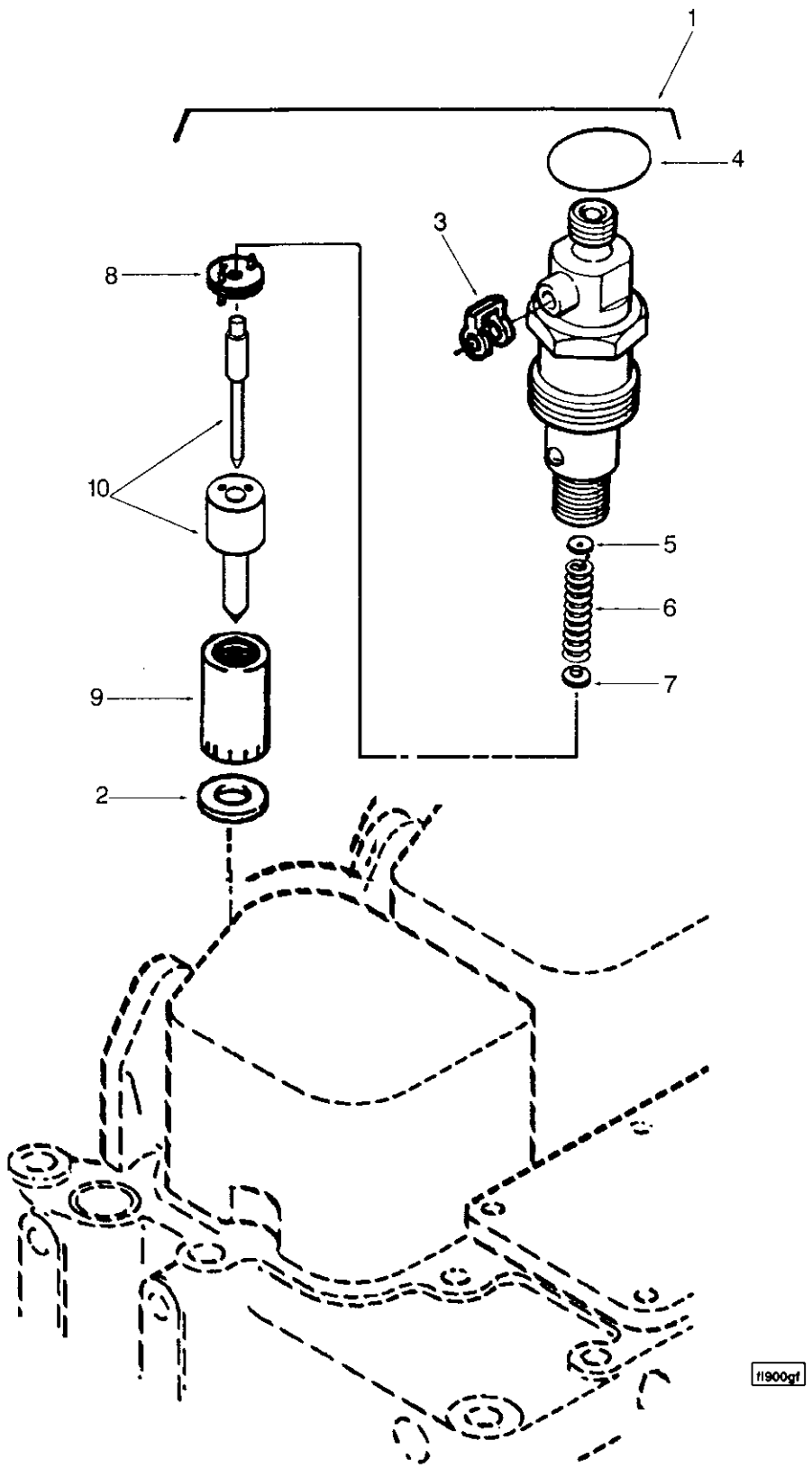
1
4
3
8
10
5
6
7
9
2
fl900gf

Ref No.	Part Number	Part Name	Req	Remarks
		FUEL INJECTOR		
		OPTION PP960		CPL960
		OPTION PP1246		CPL1246
		OPTION PP1403		CPL1403
1	3802178	Injector, Fuel	6	
	(3914474)	Injector	1	
2	3900808	Seal, Injector	1	
3	3903380	Seal, Banjo Connector	1	
4	3909356	Seal, Rectangular Ring	1	
5	3905156	Shim	A/R	1.00 mm Thick
5	3905157	Shim	A/R	1.04 mm Thick
5	3905158	Shim	A/R	1.08 mm Thick
5	3905159	Shim	A/R	1.10 mm Thick
5	3905160	Shim	A/R	1.14 mm Thick
5	3905161	Shim	A/R	1.18 mm Thick
5	3905162	Shim	A/R	1.20 mm Thick
5	3905163	Shim	A/R	1.24 mm Thick
5	3905164	Shim	A/R	1.28 mm Thick
5	3905165	Shim	A/R	1.30 mm Thick
5	3905166	Shim	A/R	1.34 mm Thick
5	3905167	Shim	A/R	1.38 mm Thick
5	3905168	Shim	A/R	1.40 mm Thick
5	3905169	Shim	A/R	1.44 mm Thick
5	3905170	Shim	A/R	1.48 mm Thick
5	3905171	Shim	A/R	1.50 mm Thick
5	3905172	Shim	A/R	1.54 mm Thick
5	3905173	Shim	A/R	1.58 mm Thick
5	3905174	Shim	A/R	1.60 mm Thick
5	3905175	Shim	A/R	1.64 mm Thick
5	3905176	Shim	A/R	1.68 mm Thick
5	3905177	Shim	A/R	1.70 mm Thick
5	3905178	Shim	A/R	1.74 mm Thick
5	3905179	Shim	A/R	1.76 mm Thick
5	3905180	Shim	A/R	1.78 mm Thick
5	3905181	Shim	A/R	1.80 mm Thick
5	3905182	Shim	A/R	1.84 mm Thick
5	3905183	Shim	A/R	1.88 mm Thick
5	3905184	Shim	A/R	1.90 mm Thick
5	3905185	Shim	A/R	1.94 mm Thick
5	3905186	Shim	A/R	1.98 mm Thick
6	3905152	Spring, Compression	6	
7	3905153	Spindle, Injector	6	
8	3905154	Disc, Intermediate	6	
9	3905155	Retainer, Injector Nozzle	6	
10	3903313	Nozzle, Injector	6	

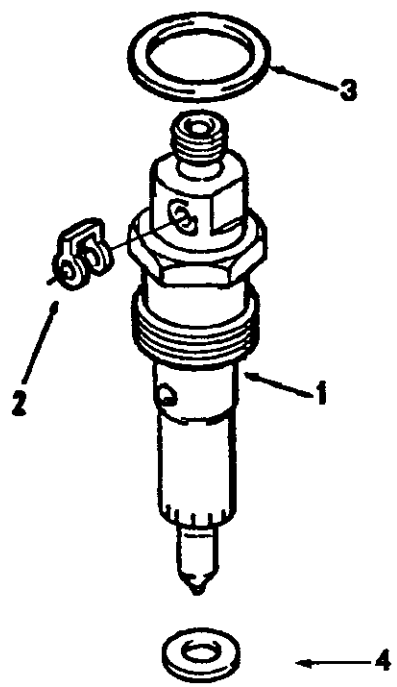

fi900gb

Ref No.	Part Number	Part Name	Req	Remarks
		FUEL INJECTOR		
		OPTION PP983		CPL983. Cav edge filter injector assemblies for 6 cylinder B series engines.
1	3802337	Injector	6	7mm tip
	(3920100)	Injector	1	
2	3903380	Seal, Banjo Connector	1	
3	3909356	Seal, Rectangular Ring	1	
4	3920174	Seal, Injector	1	for 7mm head
		OPTION PP1168		CPL1168. Cav edge filter injector assemblies for 6 cylinder B series engines.
1	3802191	Kit, Injector	6	
	(3915806)	Injector	1	
2	3903380	Seal, Banjo Connector	1	
3	3909356	Seal, Rectangular Ring	1	
4	3900808	Seal, Injector	1	
		OPTION PP1266		CPL1266. Cav edge filter injector assemblies for 6 cylinder B series engines.
1	3802197	Kit, Injector	6	
	(3916745)	Injector	1	
2	3903380	Seal, Banjo Connector	1	
3	3909356	Seal, Rectangular Ring	1	
4	3900808	Seal, Injector	1	
		OPTION PP1279		CPL1279. Edge filter injector assembly 3920110 may be sustituted for 3920085 assembly.
1	3920085	Injector, Fuel	6	
	(3920174)	Injector	1	
2	3900808	Seal, Injector	1	
3	3903380	Seal, Banjo Connector	1	
4	3909356	Seal, Rectangular Ring	1	

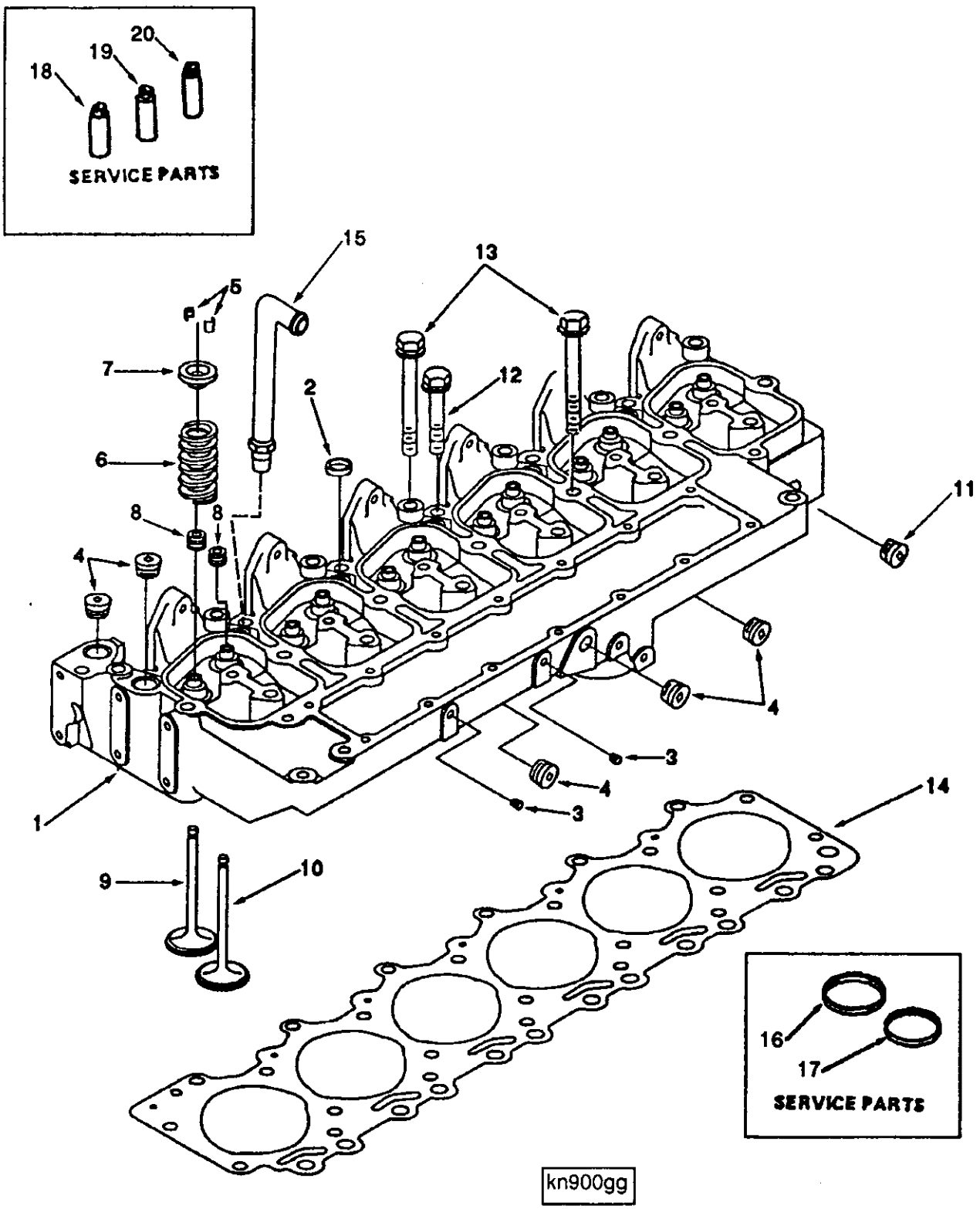
20
19
18
SERVICE PARTS
15
13
5
7
2
12
6
11
8
8
4
4
3
4
3
1
14
9
10
16
17
SERVICE PARTS
kn900gg

Ref No.	Part Number	Part Name	Req	Remarks
		CYLINDER HEAD		
		OPTION PP599		CPL599
		OPTION PP715		CPL715
		OPTION PP834		CPL834
		OPTION PP912		CPL912 Cylinder head for 6 cylinder B series turbo aftercooled engines.
	3802340	Head, Cylinder	1	
1	(3920612)	Head, Cylinder	1	
2	3902606	Plug, Expansion	5	
3	3008465	Plug, Pipe	2	
4	3008468	Plug, Pipe	5	1/2 NPT
	3802355	Valve, Intake	6	
5	3900250	Collet, Valve	12	
9	(3920867)	Valve, Intake	6	
	3802356	Valve, Exhaust	6	
5	3900250	Collet, Valve	12	
10	(3920868)	Valve, Exhaust	6	
6	3900276	Spring, Valve	12	
7	3900299	Retainer, Valve Spring	12	
8	3901097	Seal, Valve Stem	12	
11	3008469	Plug, Pipe	1	3/4 NPT
12	3920779	Screw, Hex Flange Head Cap	6	
13	3920780	Screw, Hex Flange Head Cap	14	
14	3917358	Gasket, Cylinder Head	1	Standard
15	3905639	Tube, Aftercooler	1	
14	3917359	Gasket, Cylinder Head	A/R	.15mm Oversize
14	3915724	Gasket, Cylinder Head	A/R	.50mm Oversize
		SERVICE PARTS		
16	3904105	Insert, Valve		Exhaust
17	3906854	Insert, Valve		Intake
18	3904408	Guide, Valve Stem		Thick wall 60.50mm Long intake
19	3904409	Guide, Valve Stem		Thick wall 51.75mm Long exhaust
20	3906206	Guide, Valve Stem		Thin wall can be used on both intake and exhaust

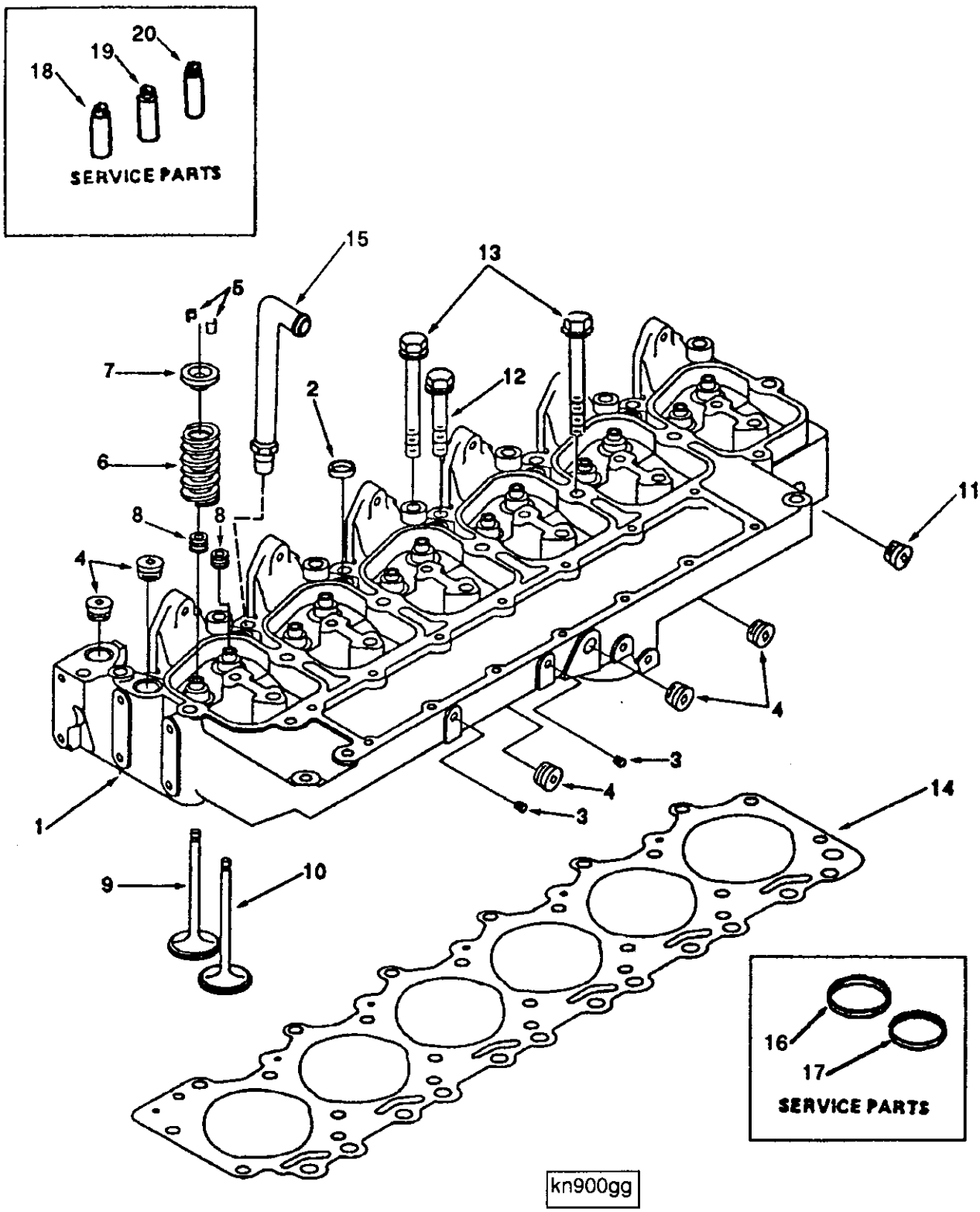
20
19
18
SERVICE PARTS
15
13
5
5
7
12
2
6
11
8
8
4
4
3
4
3
1
14
9
10
16
17
SERVICE PARTS
kn900gg

Ref No.	Part Number	Part Name	Req	Remarks
		CYLINDER HEAD		
		OPTION PP940		CPL940
		OPTION PP983		CPL983
		OPTION PP998		CPL998
		OPTION PP1209		CPL1209 Cylinder head for 6 cylinder B series turbo aftercooled engines.
	3802340	Head, Cylinder	1	
1	(3920612)	Head, Cylinder	1	
2	3902606	Plug, Expansion	5	
3	3008465	Plug, Pipe	2	
4	3008468	Plug, Pipe	5	1/2 NPT
	3802355	Valve, Intake	6	
5	3900250	Collet, Valve	12	
9	(3920867)	Valve, Intake	6	
	3802356	Valve, Exhaust	6	
5	3900250	Collet, Valve	12	
10	(3920868)	Valve, Exhaust	6	
6	3900276	Spring, Valve	12	
7	3900299	Retainer, Valve Spring	12	
8	3901097	Seal, Valve Stem	12	
11	3008469	Plug, Pipe	1	3/4 NPT
12	3920779	Screw, Hex Flange Head Cap	6	
13	3920780	Screw, Hex Flange Head Cap	14	
14	3917358	Gasket, Cylinder Head	1	Standard
15	3905639	Tube, Aftercooler	1	
14	3917359	Gasket, Cylinder Head	A/R	.15mm Oversize
14	3915724	Gasket, Cylinder Head	A/R	.50mm Oversize
		SERVICE PARTS		
16	3904105	Insert, Valve		Exhaust
17	3906854	Insert, Valve		Intake
18	3904408	Guide, Valve Stem		Thick wall 60.50mm Long intake
19	3904409	Guide, Valve Stem		Thick wall 51.75mm Long exhaust
20	3906206	Guide, Valve Stem		Thin wall can be used on both intake and exhaust

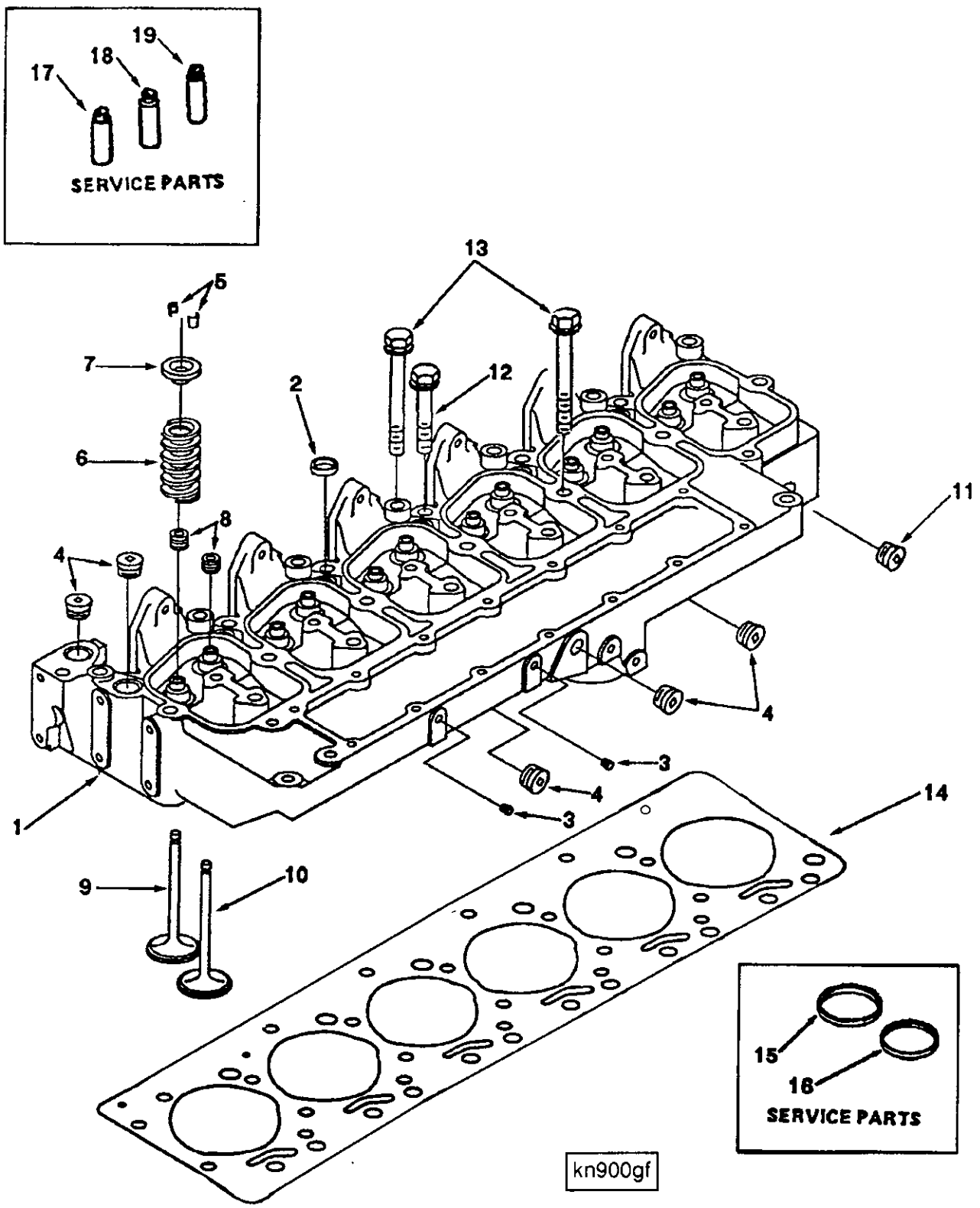
19
18
17
SERVICE PARTS
13
5
7
12
2
6
8
4
11
4
3
4
3
1
14
9
10
15
16
SERVICE PARTS
kn900gf

Ref No.	Part Number	Part Name	Req	Remarks
		CYLINDER HEAD		
		OPTION PP728		CPL728
		OPTION PP729		CPL729
		OPTION PP761		CPL761
		OPTION PP807		CPL807 Cylinder head, intake and exhaust valves. Items captive by the valve spring retainers (For use with ether cold start).
	3802340	Head, Cylinder	1	
1	(3920612)	Head, Cylinder	1	
2	3902606	Plug, Expansion	5	
3	3008465	Plug, Pipe	2	
4	3008468	Plug, Pipe	5	1/2 NPT
	3802355	Valve, Intake	6	
5	3900250	Collet, Valve	12	
9	(3920867)	Valve, Intake	6	
	3802356	Valve, Exhaust	6	
5	3900250	Collet, Valve	12	
10	(3920868)	Valve, Exhaust	6	
6	3900276	Spring, Valve	12	
7	3900299	Retainer, Valve Spring	12	
8	3901097	Seal, Valve Stem	12	
11	3008469	Plug, Pipe	1	3/4 NPT
12	3920779	Screw, Hex Flange Head Cap	6	
13	3920780	Screw, Hex Flange Head Cap	14	
14	3917358	Gasket, Cylinder Head	1	Standard
14	3917359	Gasket, Cylinder Head	A/R	.15mm Oversize
14	3915724	Gasket, Cylinder Head	A/R	.50mm Oversize
		SERVICE PARTS		
15	3904105	Insert, Valve		Exhaust
16	3906854	Insert, Valve		Intake
17	3904408	Guide, Valve Stem		Thick wall 60.50mm Long intake
18	3904409	Guide, Valve Stem		Thick wall 51.75mm Long exhaust
19	3906206	Guide, Valve Stem		Thin wall can be used on both intake and exhaust

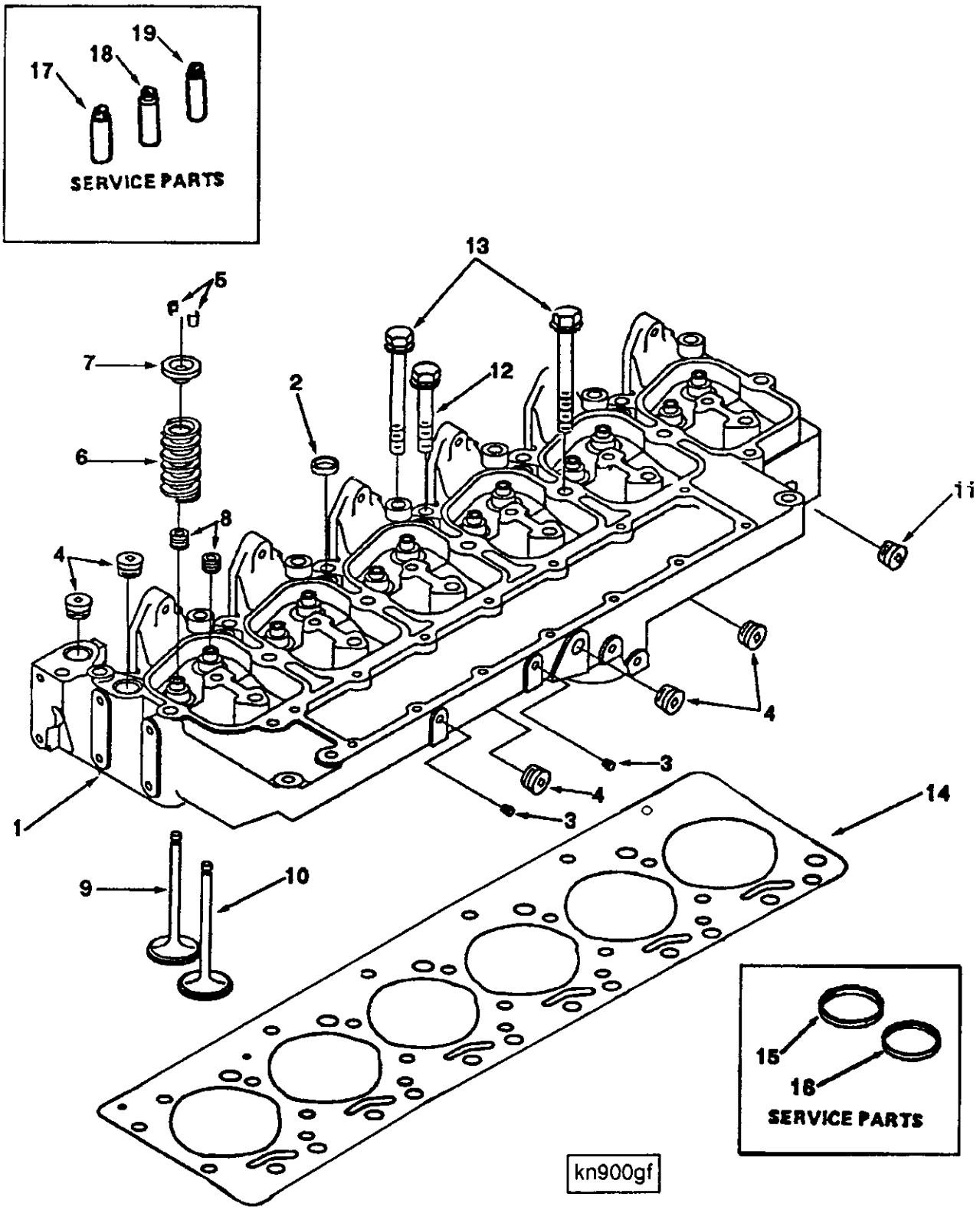
19
18
17
SERVICE PARTS
13
5
7
12
2
6
11
8
4
4
3
4
3
1
14
9
10
15
16
SERVICE PARTS
kn900gf

Ref No.	Part Number	Part Name	Req	Remarks
		CYLINDER HEAD		
		OPTION PP938		CPL938
		OPTION PP943		CPL943
		OPTION PP947		CPL947
		OPTION PP960		CPL960 Cylinder head, intake and exhaust valves. Items captive by the valve spring retainers (For use with ether cold start).
	3802340	Head, Cylinder	1	
1	(3920612)	Head, Cylinder	1	
2	3902606	Plug, Expansion	5	
3	3008465	Plug, Pipe	2	
4	3008468	Plug, Pipe	5	1/2 NPT
	3802355	Valve, Intake	6	
5	3900250	Collet, Valve	12	
9	(3920867)	Valve, Intake	6	
	3802356	Valve, Exhaust	6	
5	3900250	Collet, Valve	12	
10	(3920868)	Valve, Exhaust	6	
6	3900276	Spring, Valve	12	
7	3900299	Retainer, Valve Spring	12	
8	3901097	Seal, Valve Stem	12	
11	3008469	Plug, Pipe	1	3/4 NPT
12	3920779	Screw, Hex Flange Head Cap	6	
13	3920780	Screw, Hex Flange Head Cap	14	
14	3917358	Gasket, Cylinder Head	1	Standard
14	3917359	Gasket, Cylinder Head	A/R	.15mm Oversize
14	3915724	Gasket, Cylinder Head	A/R	.50mm Oversize
		SERVICE PARTS		
15	3904105	Insert, Valve		Exhaust
16	3906854	Insert, Valve		Intake
17	3904408	Guide, Valve Stem		Thick wall 60.50mm Long intake
18	3904409	Guide, Valve Stem		Thick wall 51.75mm Long exhaust
19	3906206	Guide, Valve Stem		Thin wall can be used on both intake and exhaust

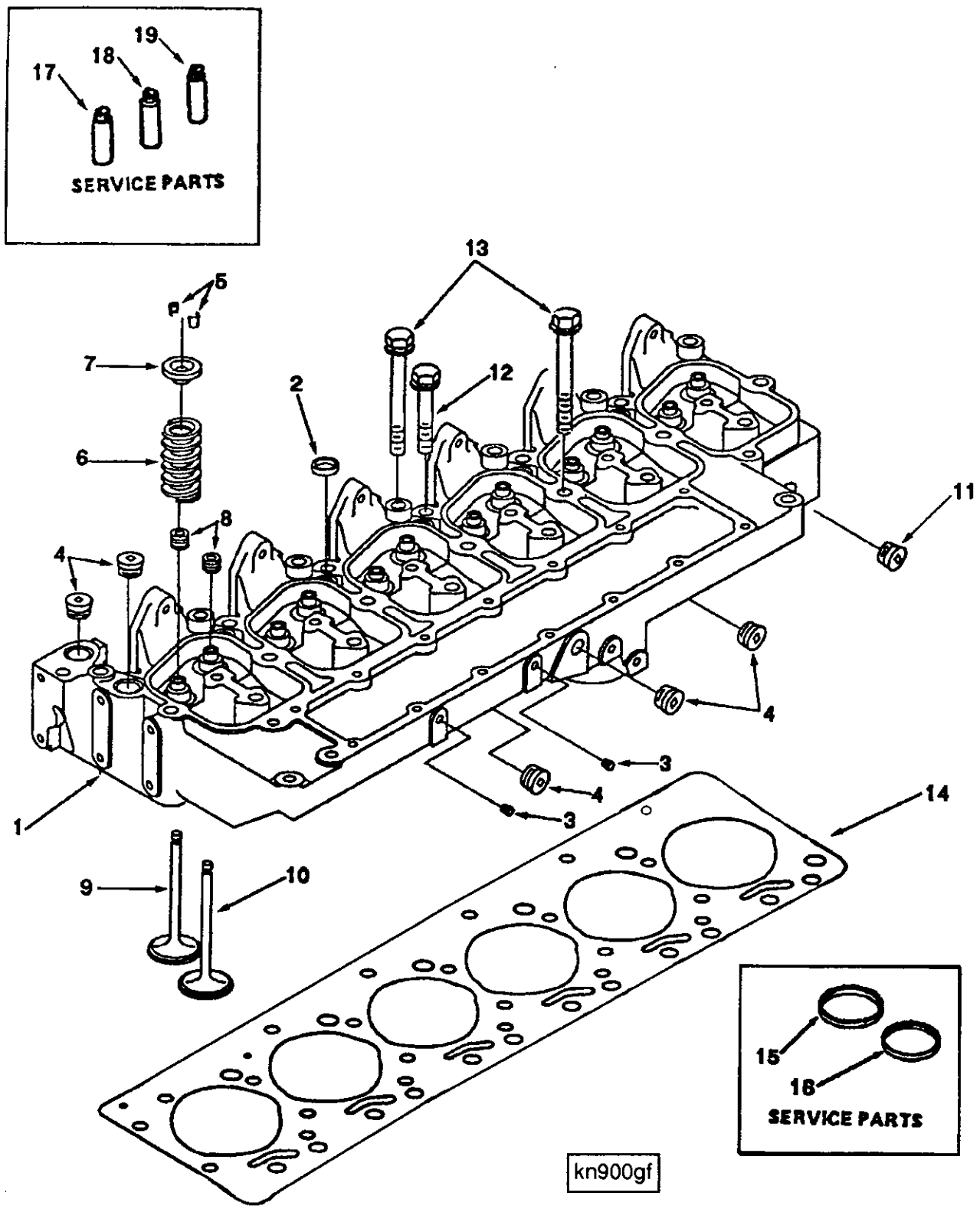
19
18
17
SERVICE PARTS
13
5
7
12
2
6
11
8
4
4
3
4
3
14
1
9
10
15
18
SERVICE PARTS
kn900gf

Ref No.	Part Number	Part Name	Req	Remarks
		CYLINDER HEAD		
		OPTION PP1168		CPL1168
		OPTION PP1246		CPL1246
		OPTION PP1266		CPL1266
		OPTION PP1279		CPL1279
		OPTION PP1288		CPL1279 Cylinder head, intake and exhaust valves. Items captive by the valve spring retainers (For use with ether cold start).
	3802340	Head, Cylinder	1	
1	(3920612)	Head, Cylinder	1	
2	3902606	Plug, Expansion	5	
3	3008465	Plug, Pipe	2	
4	3008468	Plug, Pipe	5	1/2 NPT
	3802355	Valve, Intake	6	
5	3900250	Collet, Valve	12	
9	(3920867)	Valve, Intake	6	
	3802356	Valve, Exhaust	6	
5	3900250	Collet, Valve	12	
10	(3920868)	Valve, Exhaust	6	
6	3900276	Spring, Valve	12	
7	3900299	Retainer, Valve Spring	12	
8	3901097	Seal, Valve Stem	12	
11	3008469	Plug, Pipe	1	3/4 NPT
12	3920779	Screw, Hex Flange Head Cap	6	
13	3920780	Screw, Hex Flange Head Cap	14	
14	3917358	Gasket, Cylinder Head	1	Standard
14	3917359	Gasket, Cylinder Head	A/R	.15mm Oversize
14	3915724	Gasket, Cylinder Head	A/R	.50mm Oversize
		SERVICE PARTS		
15	3904105	Insert, Valve		Exhaust
16	3906854	Insert, Valve		Intake
17	3904408	Guide, Valve Stem		Thick wall 60.50mm Long intake
18	3904409	Guide, Valve Stem		Thick wall 51.75mm Long exhaust
19	3906206	Guide, Valve Stem		Thin wall can be used on both intake and exhaust

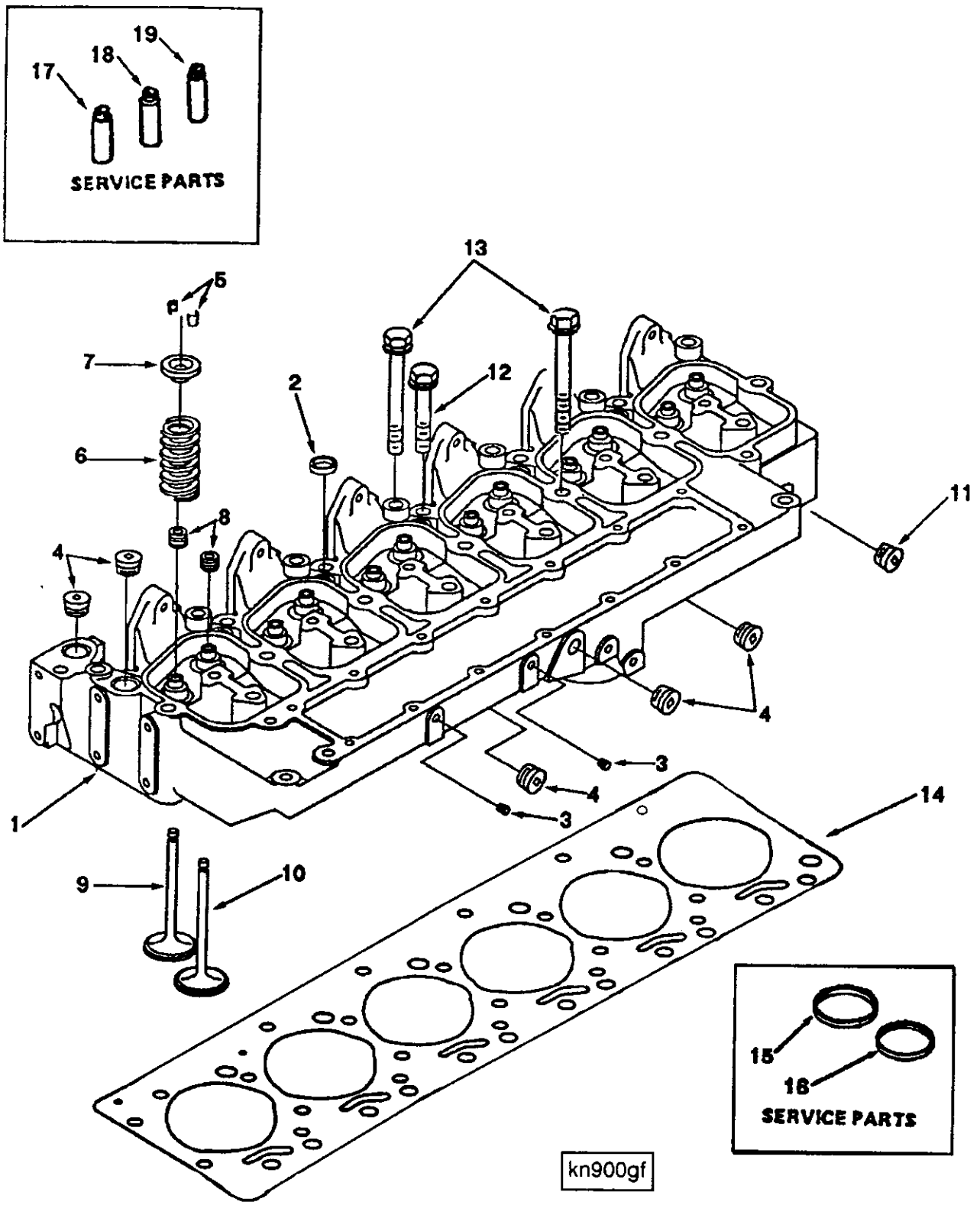
19
18
17
SERVICE PARTS
13
5
p
d
7
12
2
6
11
8
4
4
3
4
3
1
14
9
10
15
16
SERVICE PARTS
kn900gf

Ref No.	Part Number	Part Name	Req	Remarks
		CYLINDER HEAD		
		OPTION PP1403		CPL1403
	3802340	Head, Cylinder	1	
1	(3920612)	Head, Cylinder	1	
2	3902606	Plug, Expansion	5	
3	3008465	Plug, Pipe	2	
4	3008468	Plug, Pipe	5	1/2 NPT
	3802355	Valve, Intake	6	
5	3900250	Collet, Valve	12	
9	(3920867)	Valve, Intake	6	
	3802356	Valve, Exhaust	6	
5	3900250	Collet, Valve	12	
10	(3920868)	Valve, Exhaust	6	
6	3900276	Spring, Valve	12	
7	3900299	Retainer, Valve Spring	12	
8	3901097	Seal, Valve Stem	12	
11	3008469	Plug, Pipe	1	3/4 NPT
12	3920779	Screw, Hex Flange Head Cap	6	
13	3920780	Screw, Hex Flange Head Cap	14	
14	3917358	Gasket, Cylinder Head	1	Standard
14	3917359	Gasket, Cylinder Head	A/R	.15mm Oversize
14	3915724	Gasket, Cylinder Head	A/R	.50mm Oversize
		SERVICE PARTS		
15	3904105	Insert, Valve		Exhaust
16	3906854	Insert, Valve		Intake
17	3904408	Guide, Valve Stem		Thick wall 60.50mm Long intake
18	3904409	Guide, Valve Stem		Thick wall 51.75mm Long exhaust
19	3906206	Guide, Valve Stem		Thin wall can be used on both intake and exhaust

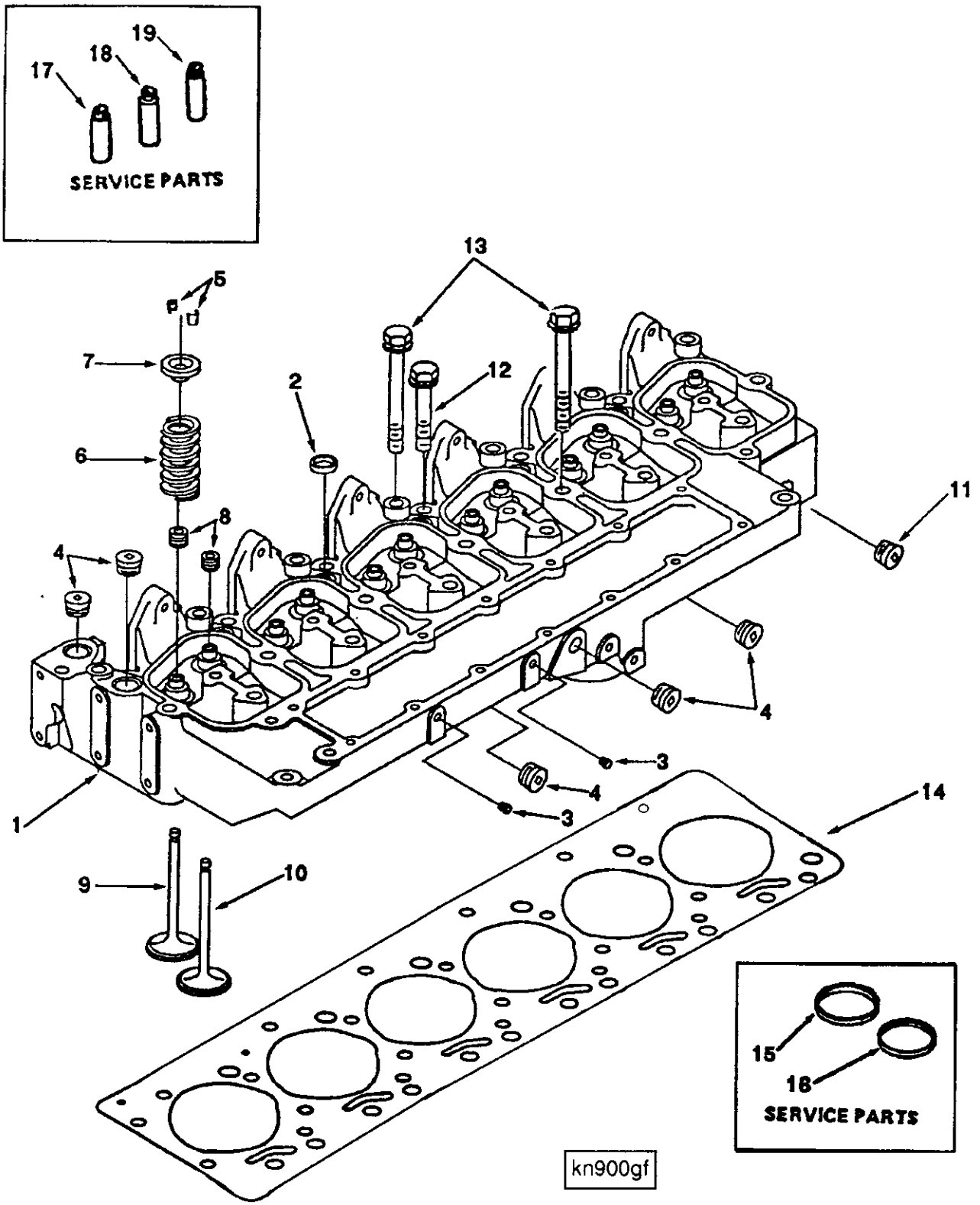
19
18
17
SERVICE PARTS
13
5
7
12
2
6
11
8
4
4
3
4
3
1
14
9
10
15
16
SERVICE PARTS
kn900gf

Ref No.	Part Number	Part Name	Req	Remarks
		CYLINDER HEAD		
		OPTION PP9723		CPL9723 Cylinder head for 6B/BT5.9 litre engines with dry type exhaust manifold and 7mm injectors.
	3802340	Head, Cylinder	1	
1	(3920612)	Head, Cylinder	1	
2	3902606	Plug, Expansion	5	
3	3008465	Plug, Pipe	2	
4	3008468	Plug, Pipe	5	1/2 NPT
	3802355	Valve, Intake	6	
5	3900250	Collet, Valve	12	
9	(3920867)	Valve, Intake	6	
	3802356	Valve, Exhaust	6	
5	3900250	Collet, Valve	12	
10	(3920868)	Valve, Exhaust	6	
6	3900276	Spring, Valve	12	
7	3900299	Retainer, Valve Spring	12	
8	3901097	Seal, Valve Stem	12	
11	3008469	Plug, Pipe	1	3/4 NPT
12	3920779	Screw, Hex Flange Head Cap	6	
13	3920780	Screw, Hex Flange Head Cap	14	
14	3917358	Gasket, Cylinder Head	1	Standard
14	3917359	Gasket, Cylinder Head	A/R	.15mm Oversize
14	3915724	Gasket, Cylinder Head	A/R	.50mm Oversize
		SERVICE PARTS		
15	3904105	Insert, Valve		Exhaust
16	3906854	Insert, Valve		Intake
17	3904408	Guide, Valve Stem		Thick wall 60.50mm Long intake
18	3904409	Guide, Valve Stem		Thick wall 51.75mm Long exhaust
19	3906206	Guide, Valve Stem		Thin wall can be used on both intake and exhaust

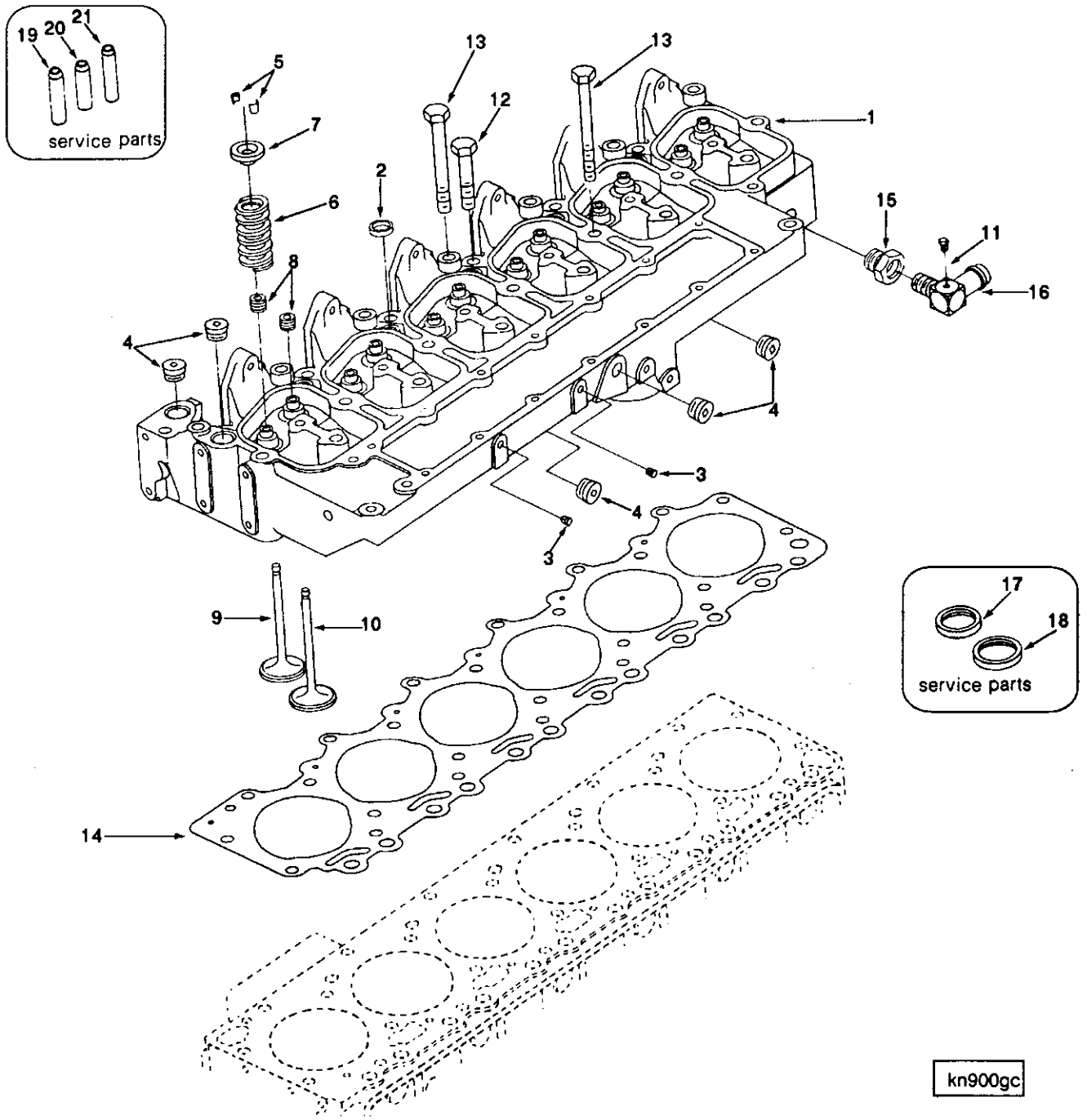
19
20
21
service parts
5
7
6
8
13
13
12
2
1
15
11
16
4
4
4
3
3
9
10
14
17
18
service parts
kn900gc

Ref No.	Part Number	Part Name	Req	Remarks
		CYLINDER HEAD		
		OPTION PP949		CPL949
		OPTION PP950		CPL950
		OPTION PP1289		CPL1289 Cylinder head for use with water cooled exhaust manifolds.
		OPTION PP9742		CPL9742 Cylinder head for 6B/BT5.9 litre engines with wet type exhaust manifold and 7mm injectors.
	3802340	Head, Cylinder	1	
1	(3920612)	Head, Cylinder	1	
2	3902606	Plug, Expansion	5	
3	3008465	Plug, Pipe	2	
4	3008468	Plug, Pipe	5	1/2 NPT
	3802335	Valve, Intake	6	
5	3900250	Collet, Valve	12	
9	(3901117)	Valve, Intake	6	
	3802006	Valve, Exhaust	6	
5	3900250	Collet, Valve	12	
10	(3901607)	Valve, Exhaust	6	
	3008469	Plug, Pipe	1	3/4 NPT
6	3900276	Spring, Valve	12	
7	3900299	Retainer, Valve Spring	12	
8	3901097	Seal, Valve Stem	12	
12	3903938	Screw, Hex Flange Head Cap	6	M12 x 1.75 x 70
13	3920780	Screw, Hex Flange Head Cap	14	M12 x 1.75 x 120
14	3917358	Gasket, Cylinder Head	1	Standard
15	S-982	Bushing, Reducing Pipe	2	
	(3908225)	Coupling, Elbow Hose	1	
11	3906619	Plug, Pipe	1	1/8 NPT
16	3908221	Coupling, Elbow Hose	1	
14	3917359	Gasket, Cylinder Head	A/R	.15mm Oversize
14	3915724	Gasket, Cylinder Head	A/R	.50mm Oversize
		SERVICE PARTS		
17	3904105	Insert, Valve		Exhaust
18	3906854	Insert, Valve		Intake
19	3904408	Guide, Valve Stem		Thick wall 60.50mm Long intake
20	3904409	Guide, Valve Stem		Thick wall 51.75mm Long exhaust
21	3906206	Guide, Valve Stem		Thin wall can be used on both intake and exhaust

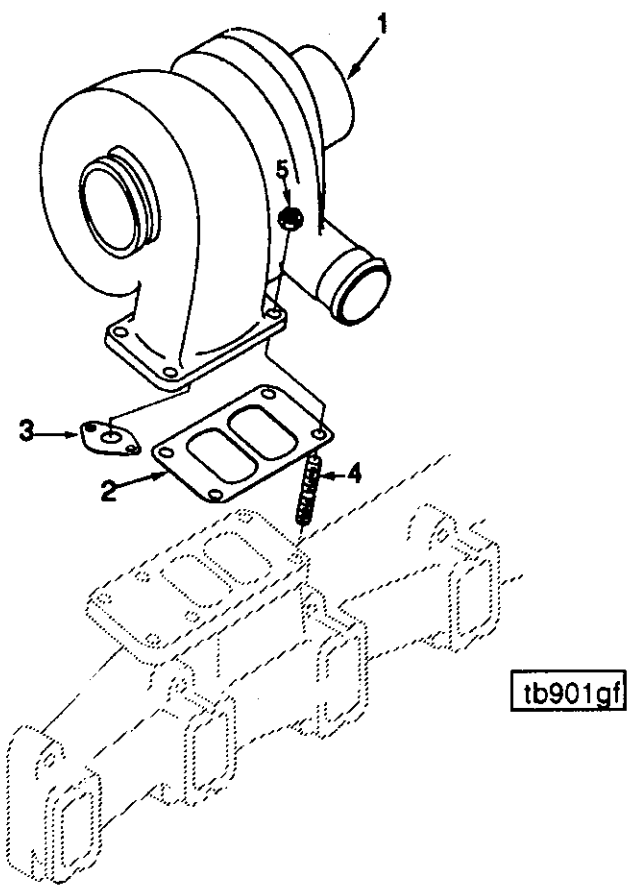

Ref No.	Part Number	Part Name	Req	Remarks
		TURBOCHARGER		
		OPTION PP9708		Turbocharger for aftercooled engines with high front out exhaust arrangement.
	3802115	Turbocharger	1	H1C Dry 6BT
1	(3522778)	Turbocharger	1	
2	3709861	Gasket, Turbocharger	1	
3	3519807	Gasket, Turbocharger	1	
4	3818823	Stud	4	
5	3818824	Nut, Hexagon Flange	4	M10 x 1.50

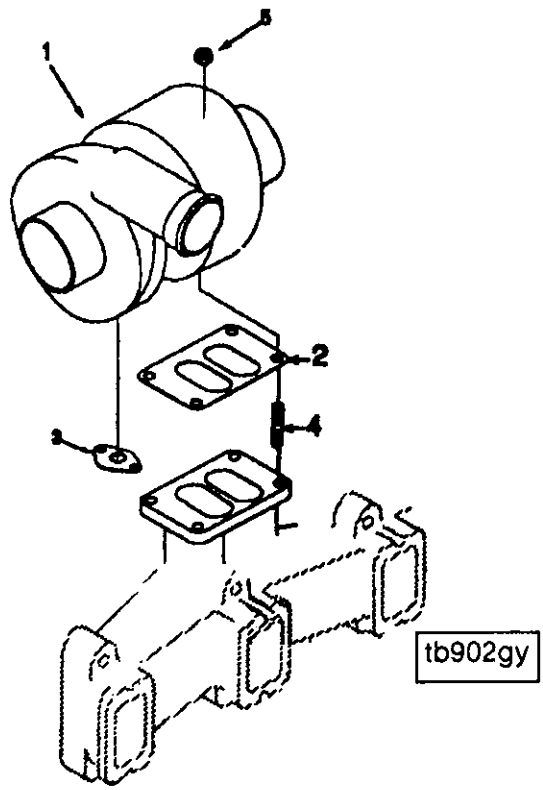

Ref No.	Part Number	Part Name	Req	Remarks
		TURBOCHARGER		
		OPTION PP9708		Turbocharger for aftercooled engines with rear out exhaust arrangement.
	3802115	Turbocharger	1	H1C Dry 6BT
1	(3522778)	Turbocharger	1	
2	3709861	Gasket, Turbocharger	1	
3	3519807	Gasket, Turbocharger	1	
4	3818823	Stud	4	
5	3818824	Nut, Hexagon Flange	4	M10 x 1.50

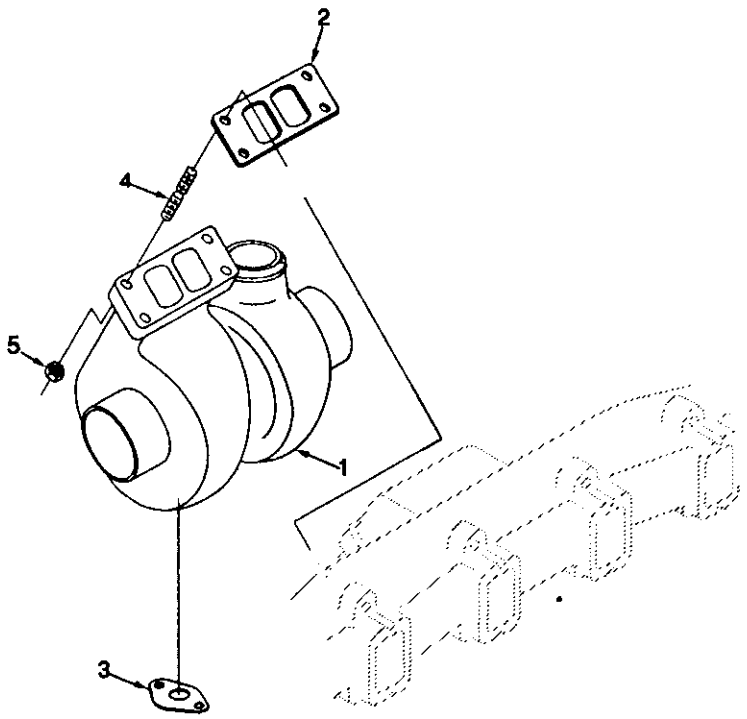

tb901ge

Ref No.	Part Number	Part Name	Req	Remarks
		TURBOCHARGER		
		OPTION PP9712		Turbocharger location for low mounted Turbo with exhaust to front.
	3802115	Turbocharger	1	H1C Dry 6BT
1	(3522778)	Turbocharger	1	
2	3709861	Gasket, Turbocharger	1	
3	3519807	Gasket, Turbocharger	1	
4	3818823	Stud	4	
5	3818824	Nut, Hexagon Flange	4	M10 x 1.50

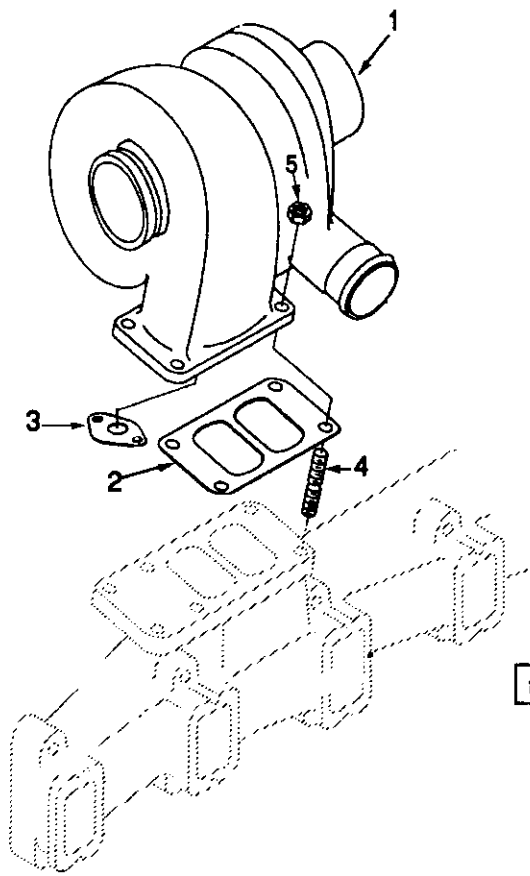

Ref No.	Part Number	Part Name	Req	Remarks
		TURBOCHARGER		
		OPTION PP9730		Turbocharger for non aftercooled engines with a high front out exhaust arrangement.
	3802115	Turbocharger	1	H1C Dry 6BT
1	(3522778)	Turbocharger	1	
2	3709861	Gasket, Turbocharger	1	
3	3519807	Gasket, Turbocharger	1	
4	3818823	Stud	4	
5	3818824	Nut, Hexagon Flange	4	M10 x 1.50

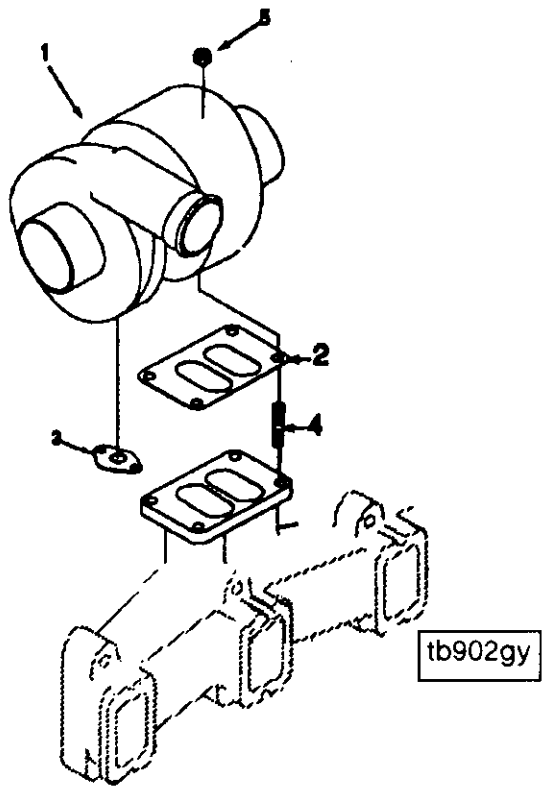

Ref No.	Part Number	Part Name	Req	Remarks
		TURBOCHARGER		
		OPTION PP9731		Turbocharger for non aftercooled engines with a high rear out exhaust.
	3802115	Turbocharger	1	H1C Dry 6BT
1	(3522778)	Turbocharger	1	
2	3709861	Gasket, Turbocharger	1	
3	3519807	Gasket, Turbocharger	1	
4	3818823	Stud	4	
5	3818824	Nut, Hexagon Flange	4	M10 x 1.50

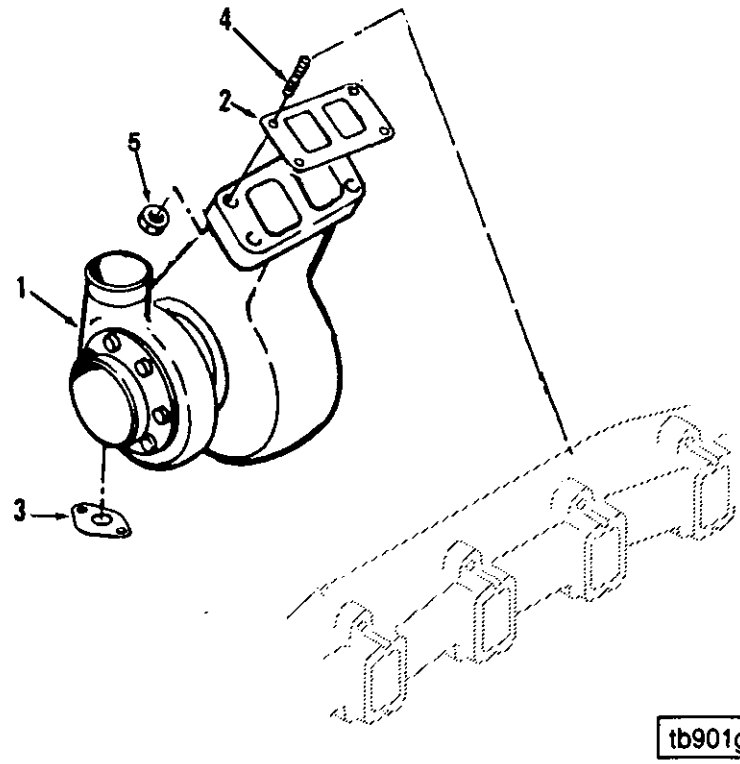

Ref No.	Part Number	Part Name	Req	Remarks
		TURBOCHARGER		
		OPTION PP9767		Turbocharger for low mount rear out exhaust arrangement.
	3802115	Turbocharger	1	H1C Dry 6BT
1	(3522778)	Turbocharger	1	
2	3709861	Gasket, Turbocharger	1	
3	3519807	Gasket, Turbocharger	1	
4	3818823	Stud	4	
5	3818824	Nut, Hexagon Flange	4	M10 x 1.50

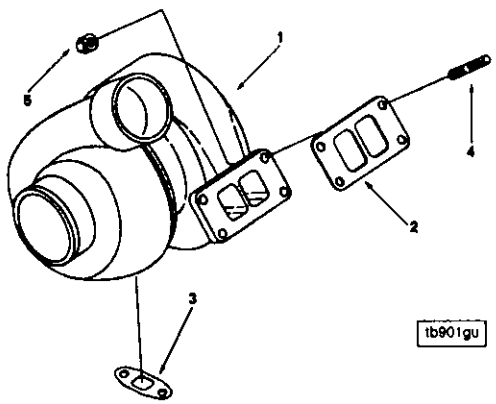

Ref No.	Part Number	Part Name	Req	Remarks
		TURBOCHARGER		
		OPTION PP9768		Turbocharger for mid mount rear out exhaust arrangement.
	3802115	Turbocharger	1	H1C Dry 6BT
1	(3522778)	Turbocharger	1	
2	3709861	Gasket, Turbocharger	1	
3	3519807	Gasket, Turbocharger	1	
4	3818823	Stud	4	
5	3818824	Nut, Hexagon Flange	4	M10 x 1.50

NOTES

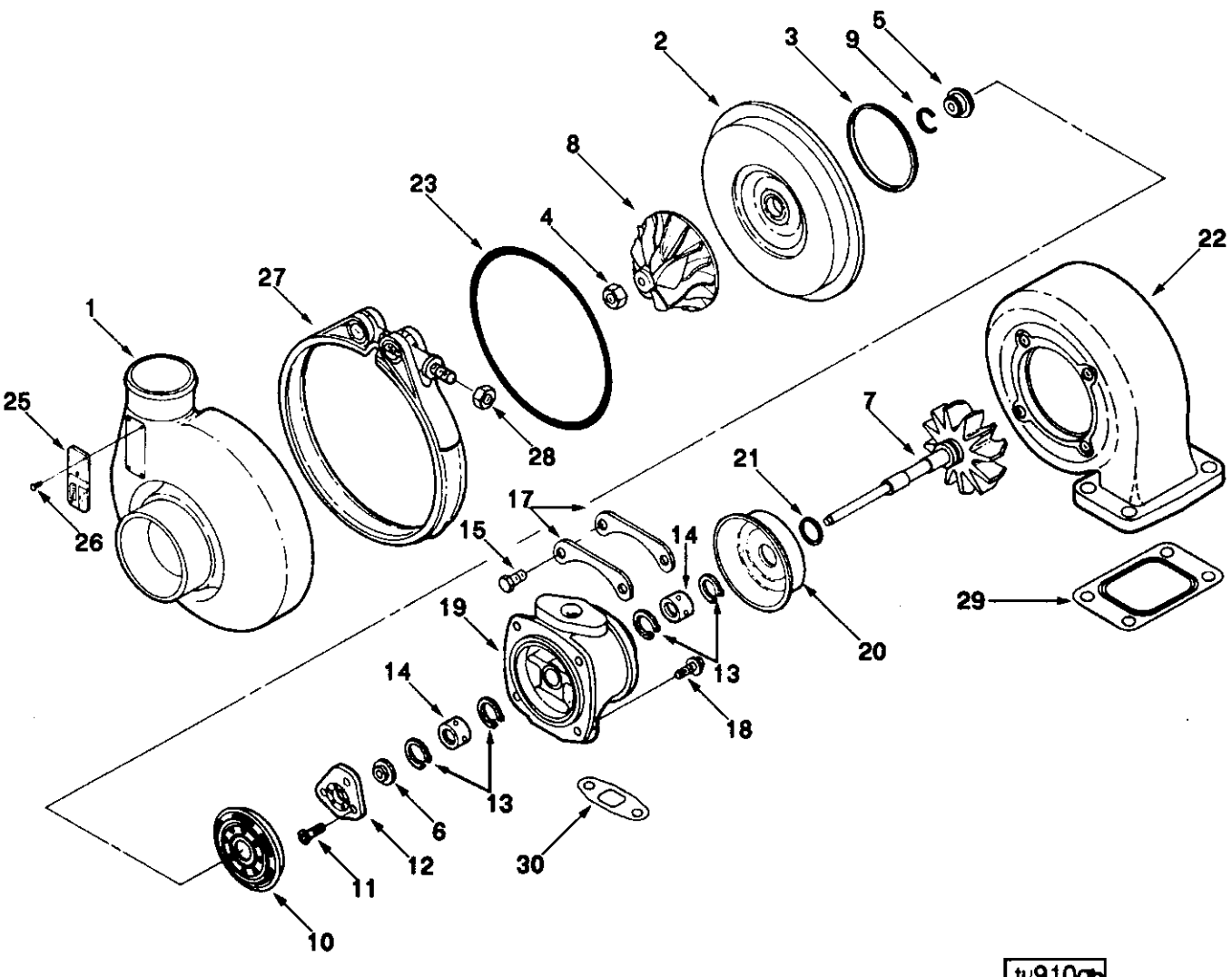
1
2
3
4
5
6
7
8
9
10
11
12
13
14
15
17
18
19
20
21
22
23
25
26
27
28
29
30
tu910gb

Ref No.	Part Number	Part Name	Req	Remarks
		TURBOCHARGER		
		OPTION PP9708		
		OPTION PP9709		
		OPTION PP9712		
		OPTION PP9730		
		OPTION PP9731		
		OPTION PP9767		
		OPTION PP9768		
	3802115	Turbocharger	1	H1C Dry 6BT
	(3522778)	Turbocharger	1	
1	3522390	Housing, Compressor	1	
2	3522801	Diffuser, Turbocharger	1	
3	3502449	Seal, Rectangular Ring	1	
	3523318	Rotor Assembly	1	
4	3503562	Nut, Lock	1	
5	3503662	Slinger, Oil	1	
6	3518980	Collar, Thrust	1	
7	3519336	Shaft & Wheel	1	
8	(3521711)	Impeller, Tur Compressor	1	
9	3758848	Seal, Split Ring	1	
10	3503668	Baffle, Oil	1	
11	3503347	Screw, Flat Head Cap	3	M5 x 0.80 x 16
12	3525739	Bearing, Tur Thrust	1	
13	3762259	Ring, Retaining	4	
14	3503100	Bearing, Turbocharger	2	
15	3759917	Screw, Hexagon Head Set	4	M8 x 1.25 x 12
17	3501188	Plate, Clamping	2	
18	3527184	Screw, Hexagon Head Set	4	
19	3528206	Housing, Tur Bearing	1	
20	3519302	Shield, Turbocharger Heat	1	
21	3756754	Seal, Split Ring	1	
22	3519409	Housing, Turbine	1	
23	3523958	Seal, O Ring	1	
25	3525562	Dataplate	1	
26	3519163	Screw, Drive	2	
27	3803431	Clamp, V Band	1	
28	3529372	Nut, Regular Hexagon	1	
29	3709861	Gasket, Turbocharger	1	Equivalent to 3901356.
30	3519807	Gasket, Oil Drain	1	Equivalent to 3901805.
	3802147	Kit, Turbo Repair	1	
23	3523958	Seal, O Ring	1	
	3545652	Kit, Turbo Repair	1	H1C-H2A
3	3502449	Seal, Rectangular Ring	1	
9	3758848	Seal, Split Ring	1	
11	3503347	Screw, Flat Head Cap	3	M5 x 0.80 x 16
12	3525739	Bearing, Tur Thrust	1	
13	3762259	Ring, Retaining	4	
14	3503100	Bearing, Turbocharger	2	
15	3759917	Screw, Hexagon Head Set	4	M8 x 1.25 x 12
18	3527184	Screw, Hexagon Head Set	4	
21	3756754	Seal, Split Ring	1	
23	3523958	Seal, O Ring	1	
	3501102	Lockplate	2	
	3523176	Seal, Rectangular Ring	1	
	3518004	Washer, Lock	6	
29	3901356	Gasket, Turbocharger	1	
30	3914388	Gasket, Oil Gasket	1	

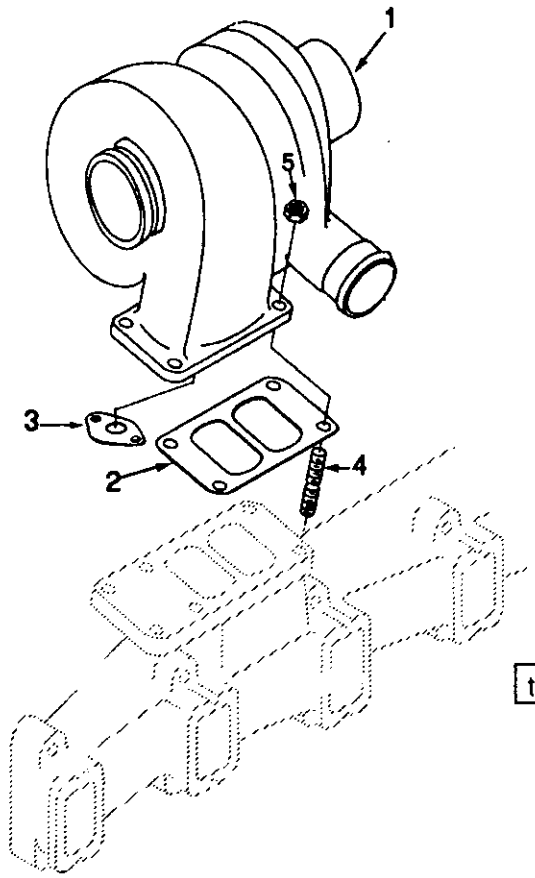

Ref No.	Part Number	Part Name	Req	Remarks
		TURBOCHARGER		
		OPTION PP9713		Turbocharger for non aftercooled engines with a high front out exhaust.
	3802108	Turbocharger	1	H1C Dry 6BT
1	(3525103)	Turbocharger	1	
2	3709861	Gasket, Turbocharger	1	
3	3519807	Gasket, Turbocharger	1	
4	3818823	Stud	4	
5	3818824	Nut, Hexagon Flange	4	M10 x 1.50

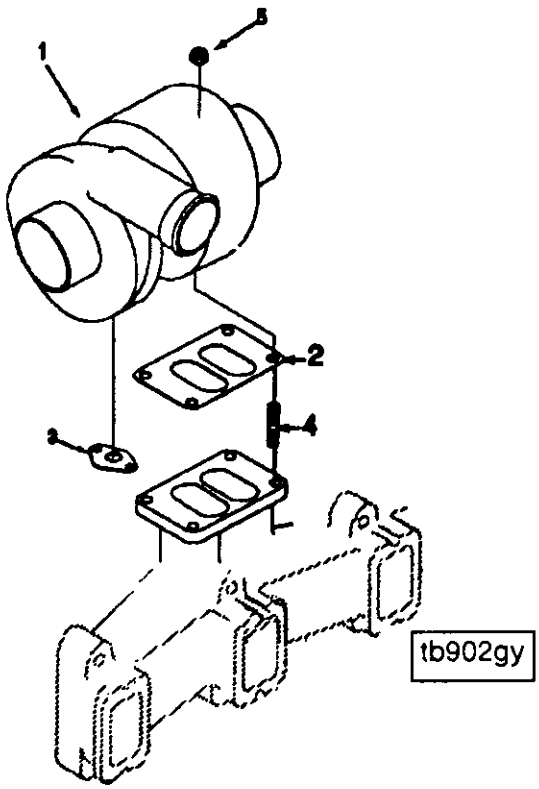

Ref No.	Part Number	Part Name	Req	Remarks
		TURBOCHARGER		
		OPTION PP9714		Turbocharger for non aftercooled engines with a high rear out exhaust.
	3528763	Turbocharger	1	H1C Dry 6BT
1	(3525103)	Turbocharger	1	
2	3709861	Gasket, Turbocharger	1	
3	3519807	Gasket, Turbocharger	1	
4	3818823	Stud	4	
5	3901961	Nut, Hexagon Flange	4	M10 x 1.50

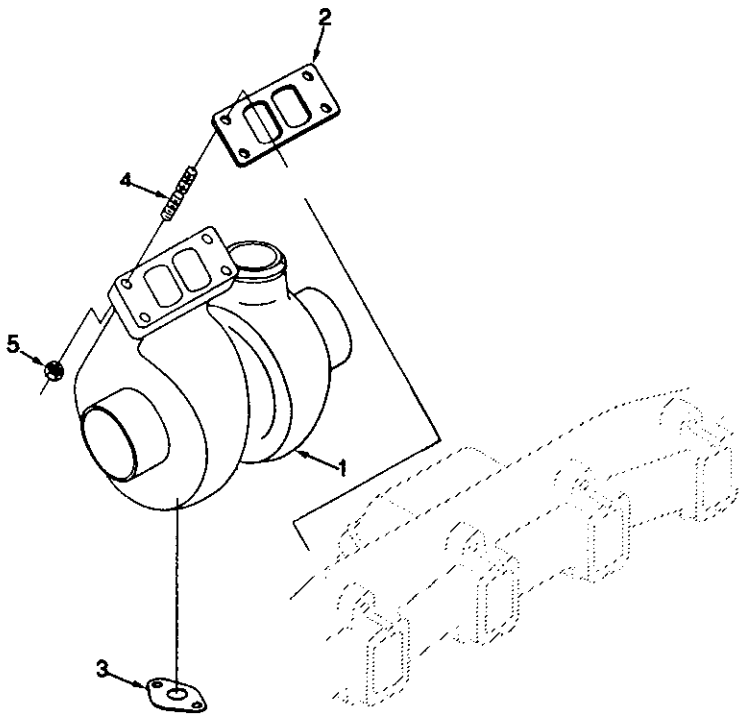

tb901ge

Ref No.	Part Number	Part Name	Req	Remarks
		TURBOCHARGER		
		OPTION PP9715		Turbocharger location for low mounted turbo with exhaust to front.
	3528763	Turbocharger	1	H1C Dry 6BT
1	(3525103)	Turbocharger	1	
2	3709861	Gasket, Turbocharger	1	
3	3519807	Gasket, Turbocharger	1	
4	3818823	Stud	4	
5	3901961	Nut, Hexagon Flange	4	M10 x 1.50

NOTES

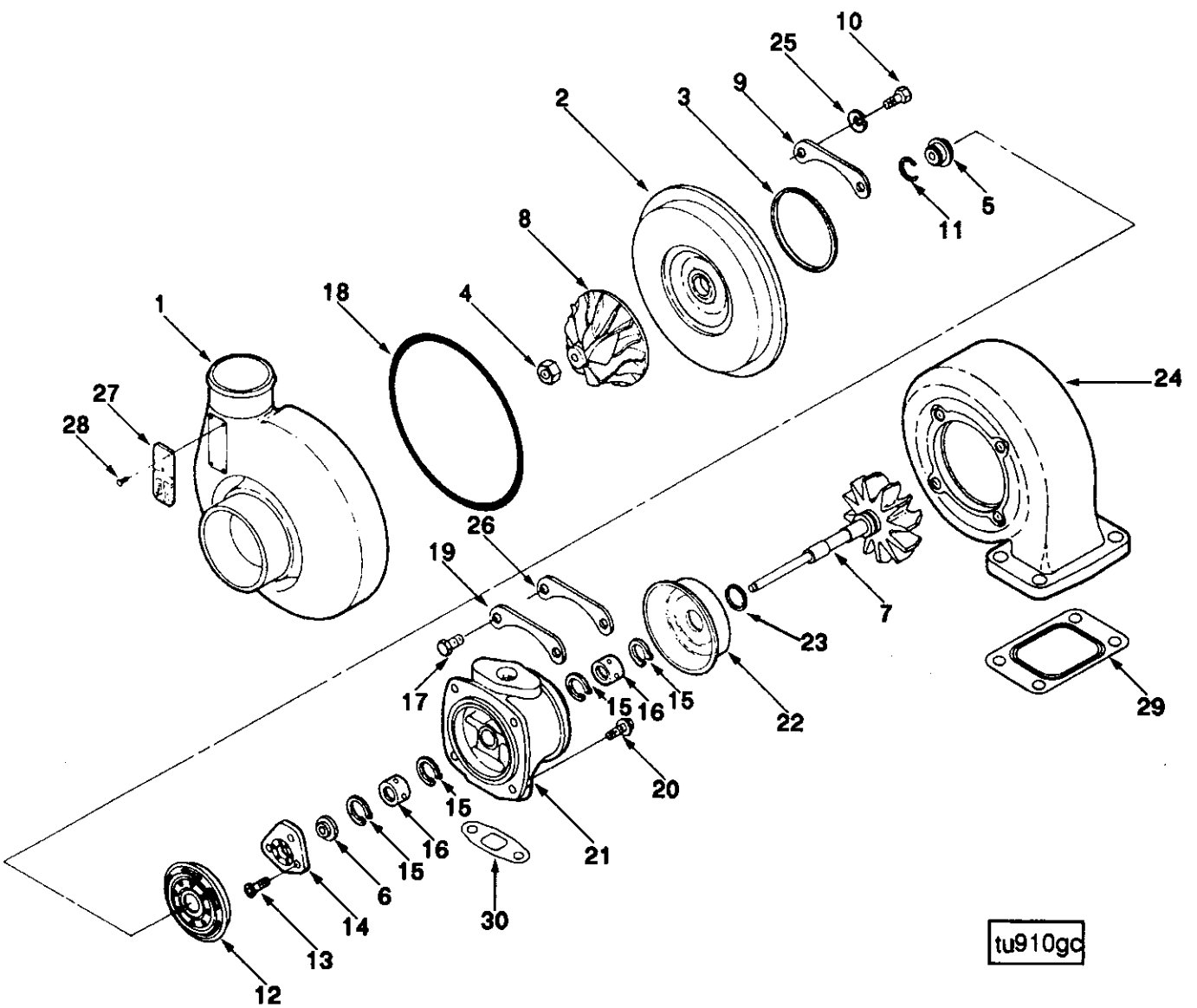
1
2
3
4
5
6
7
8
9
10
11
12
13
14
15
16
17
18
19
20
21
22
23
24
25
26
27
28
29
30
tu910gc

Ref No.	Part Number	Part Name	Req	Remarks
		TURBOCHARGER		
		OPTION PP9713		
		OPTION PP9714		
		OPTION PP9715		
	3528763	Turbocharger	1	H1C Dry 6BT
	(3525103)	Turbocharger	1	
1	3521449	Housing, Compressor	1	
2	3501502	Diffuser, Turbocharger	1	
3	3502449	Seal, Rectangular Ring	1	
	3523321	Rotor Assembly	1	
4	3503562	Nut, Lock	1	
5	3503662	Slinger, Oil	1	
6	3518980	Collar, Thrust	1	
7	3519336	Shaft & Wheel	1	
8	(3504649)	Impeller, Tur Compressor	1	
9	3502520	Plate, Clamping	3	
10	3759526	Screw, Hexagon Head Set	6	M6 x 1.00 x 12
11	3758848	Seal, Split Ring	1	
12	3503668	Baffle, Oil	1	
13	3503347	Screw, Flat Head Cap	3	M5 x 0.80 x 16
14	3525739	Bearing, Tur Thrust	1	
15	3762259	Ring, Retaining	4	
16	3503100	Bearing, Turbocharger	2	
17	3759917	Screw, Hexagon Head Set	4	M8 x 1.25 x 12
19	3501188	Plate, Clamping	2	
20	3527184	Screw, Hex Flange Head Cap	4	M6 x 1.00 x 16
21	3520702	Housing, Tur Bearing	1	
22	3519302	Shield, Turbocharger Heat	1	
23	3756754	Seal, Split Ring	1	
24	3519409	Housing, Turbine	1	
25	3518004	Washer, Lock	6	
27	3525562	Dataplate	1	
28	3519163	Screw, Drive	2	
29	3709861	Gasket, Turbocharger	1	
30	3519807	Gasket, Oil Drain	1	
	3802147	Kit, Turbo Repair	1	
18	3523958	Seal, O Ring	1	
	3545652	Kit, Turbo Repair	1	H1C-H2
3	3502449	Seal, Rectangular Ring	1	
11	3758848	Seal, Split Ring	1	
13	3503347	Screw, Flat Head Cap	3	M5 x 0.80 x 16
14	3525739	Bearing, Tur Thrust	1	
15	3762259	Ring, Retaining	4	
16	3503100	Bearing, Turbocharger	2	
17	3759917	Screw, Hexagon Head Set	4	M8 x 1.25 x 12
18	3523958	Seal, O Ring	1	
	3523176	Seal, Rectangular Ring	1	
	3523958	Seal, O Ring	1	
23	3756754	Seal, Split Ring	1	
25	3518004	Washer, Lock	6	
26	3502066	Lockplate	2	
29	3901356	Gasket, Turbocharger	1	
30	3914388	Gasket, Oil Gasket	1	

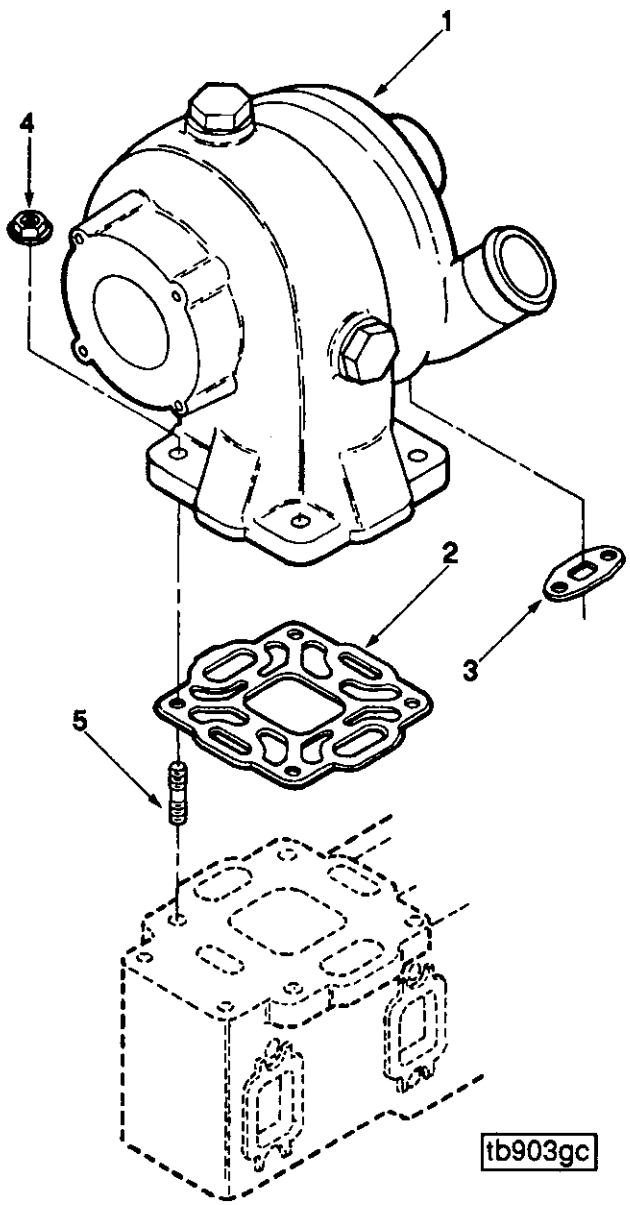
1
4
2
3
5
tb903gc

Ref No.	Part Number	Part Name	Req	Remarks
		TURBOCHARGER		
		OPTION PP9748		Watercooled turbocharger for B-Series engines with a high mount turbo location front out exhaust.
	3528745	Turbocharger	1	H1C Dry 6BT
1	(3523244)	Turbocharger	1	
2	3916300	Gasket, Turbocharger	1	
3	3519807	Gasket, Turbocharger	1	
4	3818824	Stud	4	
5	3907978	Nut, Hexagon Flange	4	M10 x 1.50

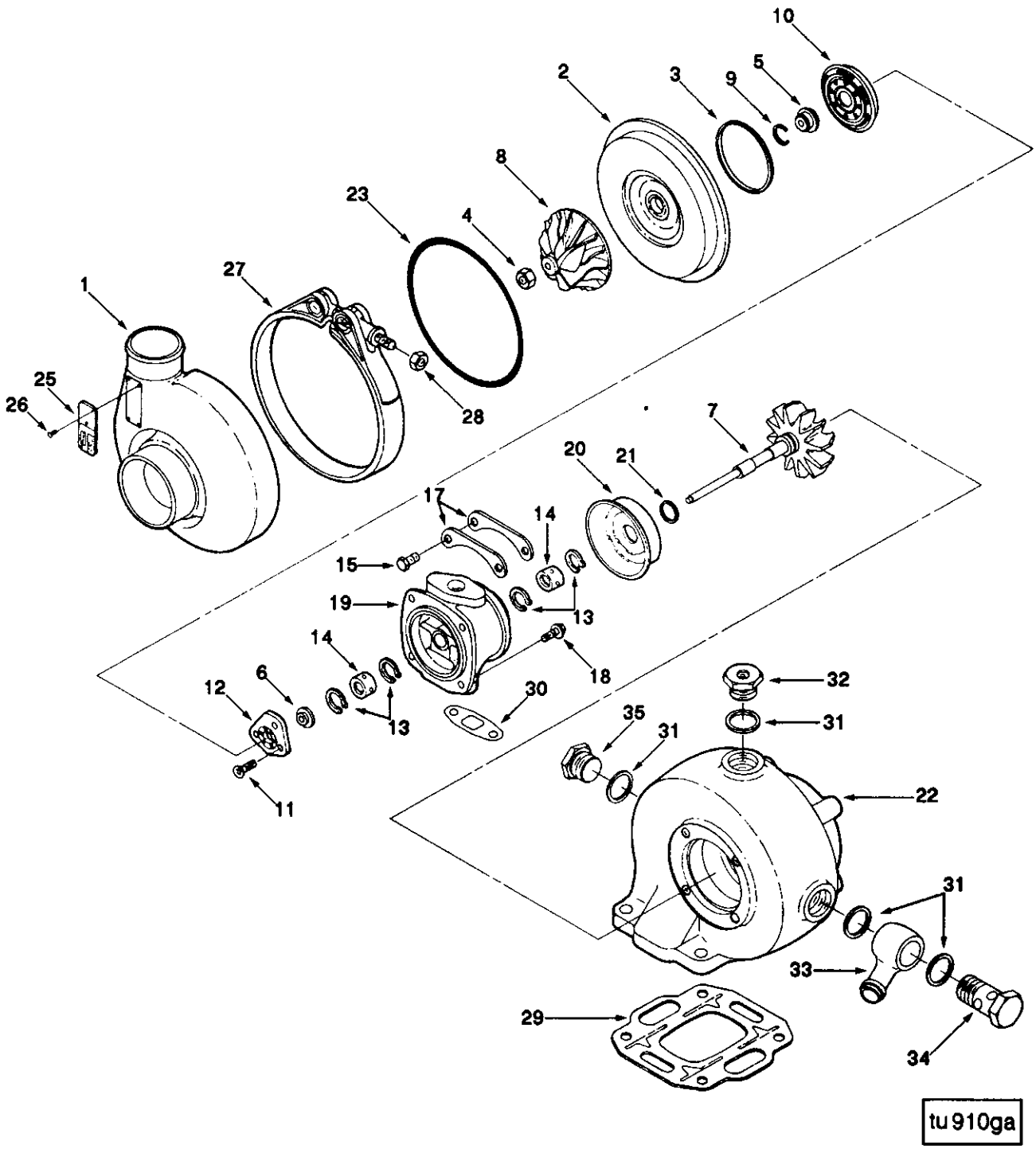
10
2
3
9
5
8
23
4
27
1
25
26
28
7
20
21
17
14
15
19
13
14
18
12
6
13
30
32
35
31
31
22
11
31
33
29
34
tu910ga

Ref No.	Part Number	Part Name	Req	Remarks
		TURBOCHARGER		
		OPTION PP9748		
	3528745	Turbocharger	1	
	(3523244)	Turbocharger	1	
1	3522390	Housing, Compressor	1	
2	3522801	Diffuser, Turbocharger	1	
3	3502449	Seal, Rectangular Ring	1	
	3523318	Rotor Assembly	1	
4	3503562	Nut, Lock	1	
5	3503662	Slinger, Oil	1	
6	3518980	Collar, Thrust	1	
7	3503798	Shaft & Wheel	1	
8	(3521711)	Impeller, Tur Compressor	1	
9	3758848	Seal, Split Ring	1	
10	3503668	Baffle, Oil	1	
11	3503347	Screw, Flat Head Cap	3	M5 x 0.80 x 16
12	3525739	Bearing, Tur Thrust	1	
13	3762259	Ring, Retaining	4	
14	3503100	Bearing, Turbocharger	2	
15	3903112	Screw, Hex Flange Head	4	
17	3501188	Plate, Clamping	2	
18	3527184	Screw, Hex Flange Head Cap	4	
19	3520702	Housing, Tur Bearing	1	
20	3519302	Shield, Turbocharger Heat	1	
21	3756754	Seal, Split Ring	1	
22	3523243	Housing, Turbine	1	
23	3523958	Seal, O Ring	1	
25	3525562	Dataplate	1	
26	3519163	Screw, Drive	2	
27	3803431	Clamp, V Band	1	
28	3529372	Nut, Regular Hexagon	1	1/4 - 28 UNF
31	3755947	Washer, Sealing	4	
32	3503678	Adapter, Reducing	1	
33	3523049	Union, Banjo Connector	1	
34	3523050	Screw, Banjo Connector	1	
35	3503677	Plug, Threaded	1	
29	3916300	Gasket, Turbocharger	1	
30	3519807	Gasket, Oil Drain	1	
	3802148	Kit, Turbo Repair	1	
18	3522827	Screw, Hexagon Head Set	4	M6 x 1.00 x 18
23	3523958	Seal, O Ring	1	
	3545652	Kit, Turbo Repair	1	H1C H2A
3	3502449	Seal, Rectangular Ring	1	
9	3758848	Seal, Split Ring	1	
12	3525739	Bearing, Tur Thrust	1	
11	3503347	Screw, Flat Head Cap	3	M5 x 0.80 x 16
13	3762259	Ring, Retaining	4	
14	3503100	Bearing, Turbocharger	2	
15	3759917	Screw, Hexagon Head Set	4	M8 x 1.25 x 12
21	3756754	Seal, Split Ring	1	
23	3523958	Seal, O Ring	1	
	3501102	Lockplate	2	
	3518004	Washer, Lock	8	
	3523176	Seal, Rectangular Ring	1	
	3527184	Screw, Hex Flange Head Cap	4	
29	3916300	Gasket, Turbocharger	1	
31	3755947	Washer, Sealing	4	
30	3914388	Gasket, Oil Drain	1	

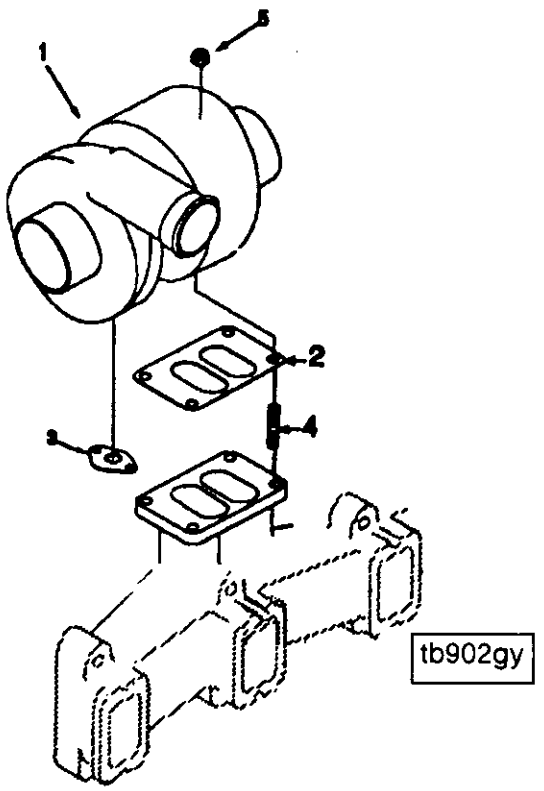

Ref No.	Part Number	Part Name	Req	Remarks
		TURBOCHARGER		
		OPTION PP9774		Turbocharger for aftercooled engines with a high rear outlet exhaust arrangement.
	3528767	Turbocharger	1	H1C Dry 6BT.
1	(3525669)	Turbocharger	1	
2	3709861	Gasket, Turbocharger	1	
3	3519807	Gasket, Turbocharger	1	
4	3818823	Stud	4	
5	3818824	Nut, Hexagon Flange	4	M10 x 1.50

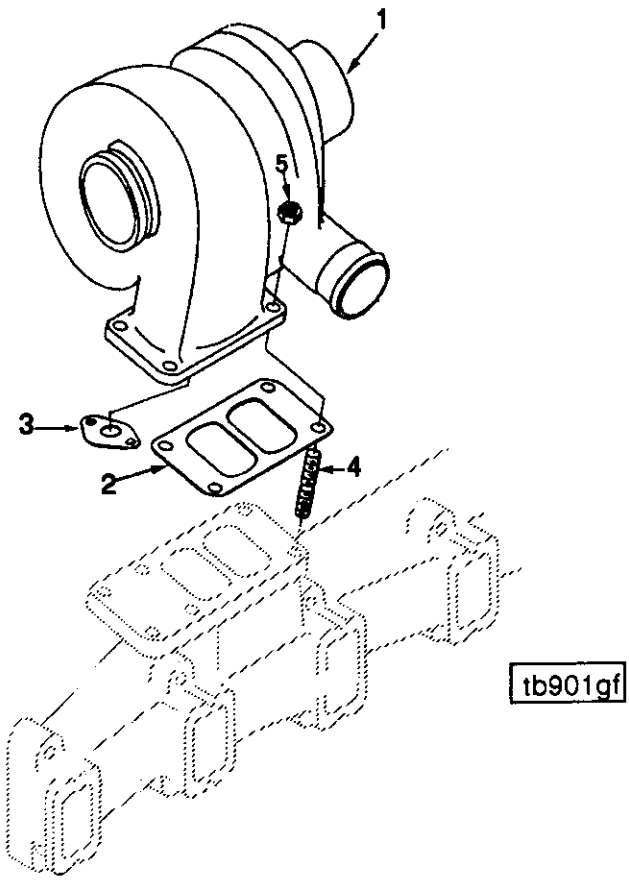

Ref No.	Part Number	Part Name	Req	Remarks
		TURBOCHARGER		
		OPTION PP9775		Turbocharger for aftercooled engines with a high front outlet exhaust arrangement.
	3528767	Turbocharger	1	H1C Dry 6BT
1	(3525669)	Turbocharger	1	
2	3709861	Gasket, Turbocharger	1	
3	3519807	Gasket, Turbocharger	1	
4	3818823	Stud	4	
5	3818824	Nut, Hexagon Flange	4	M10 x 1.50

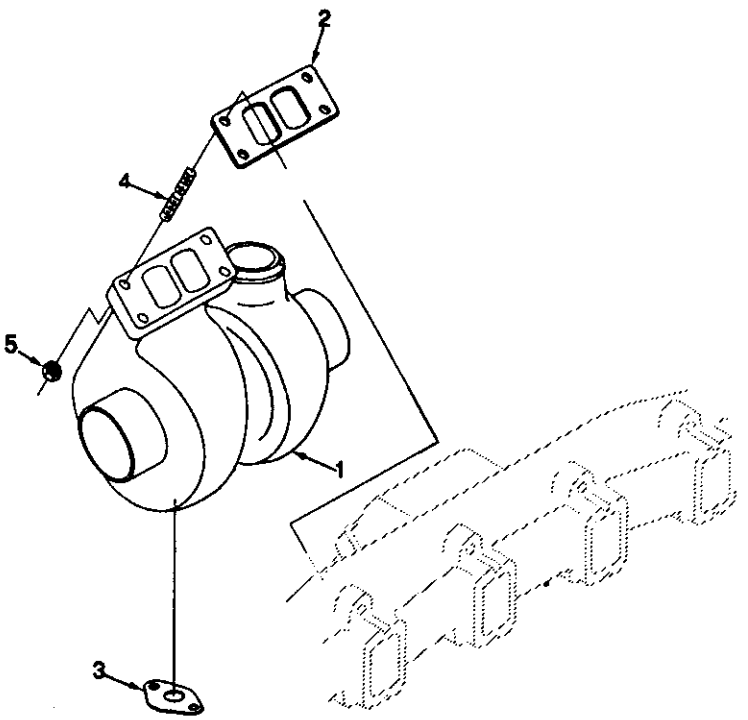

tb901ge

Ref No.	Part Number	Part Name	Req	Remarks
		TURBOCHARGER		
		OPTION PP9775		Turbocharger for aftercooled engines with a high front outlet exhaust arrangement.
	3528767	Turbocharger	1	H1C Dry 6BT
1	(3525669)	Turbocharger	1	
2	3709861	Gasket, Turbocharger	1	
3	3519807	Gasket, Turbocharger	1	
4	3818823	Stud	4	
5	3818824	Nut, Hexagon Flange	4	M10 x 1.50

NOTES

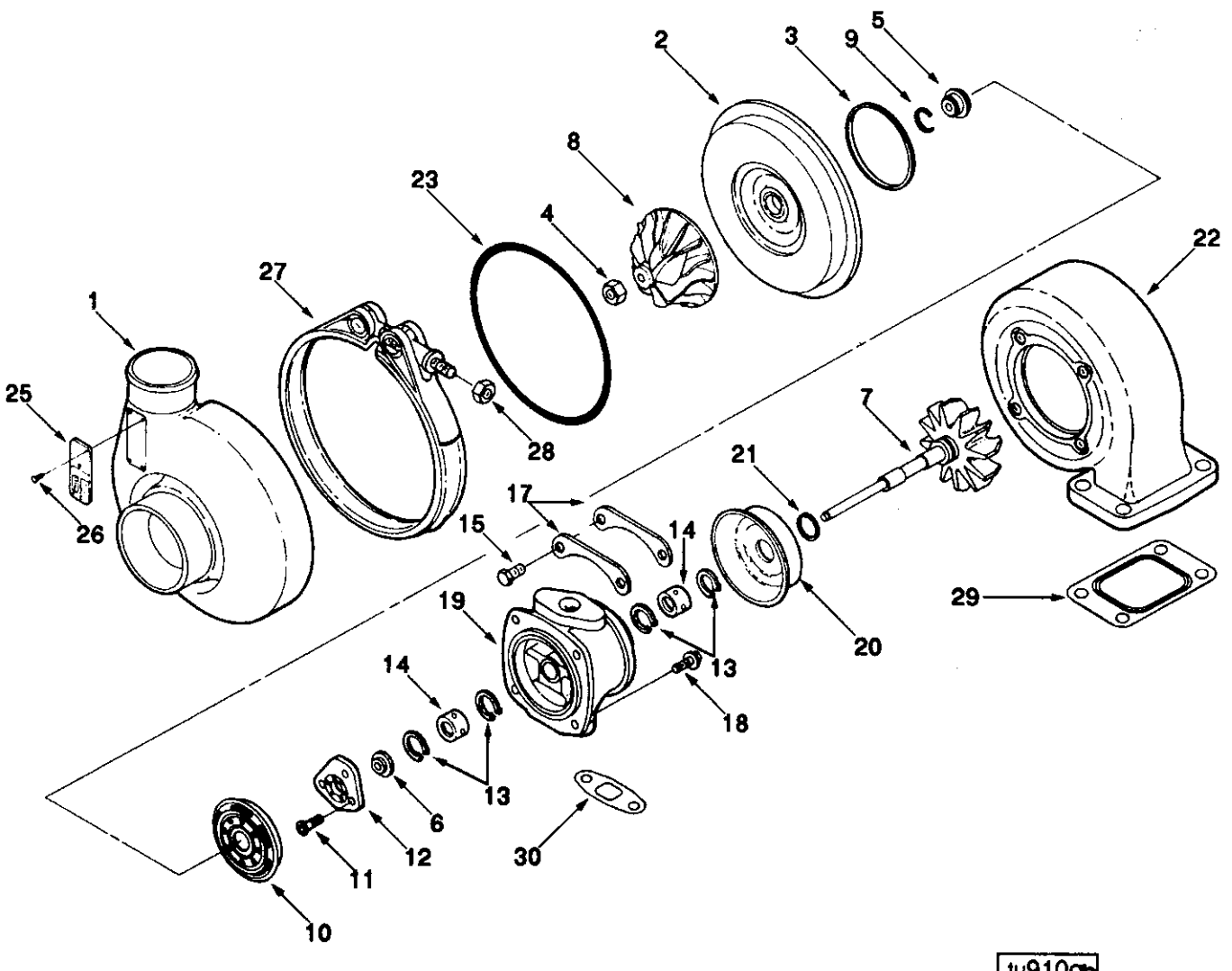
1
2
3
4
5
6
7
8
9
10
11
12
13
14
15
17
18
19
20
21
22
23
25
26
27
28
29
30
tu910gb

Ref No.	Part Number	Part Name	Req	Remarks
		TURBOCHARGER		
		OPTION PP9774		
		OPTION PP9775		
		OPTION PP9776		
	3528767	Turbocharger	1	H1C Dry 6BT
	(3525669)	Turbocharger	1	
1	3522389	Housing, Compressor	1	
2	3522801	Diffuser, Turbocharger	1	
3	3502449	Seal, Rectangular Ring	1	
	3523755	Rotor Assembly	1	
4	3503562	Nut, Lock	1	
5	3503662	Slinger, Oil	1	
6	3518980	Collar, Thrust	1	
7	3519336	Shaft & Wheel	1	
8	(3521710)	Impeller, Tur Compressor	1	
9	3758848	Seal, Split Ring	1	
10	3503668	Baffle, Oil	1	
11	3503347	Screw, Flat Head Cap	3	M5 x 0.80 x 16
12	3525739	Bearing, Tur Thrust	1	
13	3762259	Ring, Retaining	4	
14	3503100	Bearing, Turbocharger	2	
15	3759917	Screw, Hexagon Head Set	4	M8 x 1.25 x 12
17	3501188	Plate, Clamping	1	
18	3527184	Screw, Hex Flange Head Cap	4	
19	3520702	Housing, Tur Bearing	1	
20	3519302	Shield, Turbocharger Heat	1	
21	3756754	Seal, Split Ring	1	
22	3519408	Housing, Turbine	1	
23	3523958	Seal, O Ring	1	
25	3525562	Dataplate	1	
26	3519163	Screw, Drive	2	
27	3803431	Clamp, V Band	1	
28	3529372	Nut, Regular Hexagon	1	1/4 - 28 UNF
29	3913561	Gasket, Turbocharger	1	
30	3519807	Gasket, Oil Drain	1	
	3802147	Kit, Turbo Repair	1	
23	3523958	Seal, O Ring	1	
	3545652	Kit, Turbo Repair	1	H1C-H2A
3	3502449	Seal, Rectangular Ring	1	
9	3758848	Seal, Split Ring	1	
11	3503347	Screw, Flat Head Cap	3	M5 x 0.80 x 16
12	3525739	Bearing, Tur Thrust	1	
13	3762259	Ring, Retaining	4	
14	3503100	Bearing, Turbocharger	2	
15	3759917	Screw, Hexagon Head Set	4	M8 x 1.25 x 12
18	3527184	Screw, Hexagon Head Set	4	
21	3756754	Seal, Split Ring	1	
23	3523958	Seal, O Ring	1	
	3501102	Lockplate	2	
	3523176	Seal, Rectangular Ring	1	
	3518004	Washer, Lock	6	
29	3901356	Gasket, Turbocharger	1	
30	3914388	Gasket, Oil Gasket	1	

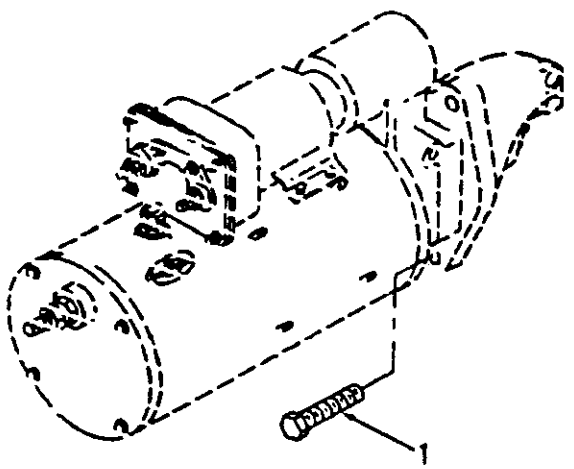

st900go

Ref No.	Part Number	Part Name	Req	Remarks
		STARTING MOTOR MOUNTING		
		OPTION SM9001		B Series starting motor mounting.
				Starter Mount Prov.: SAE#1 & #3 (Bolts Only) SAE#1 FH Starter Pilot Bore Dia. Req'd.: 88.9mm Clutch Type: Dry Capscrew Length: 35mm
1	3903834	Screw, Twelve Point Cap	3	M10 x 1.50 x 35

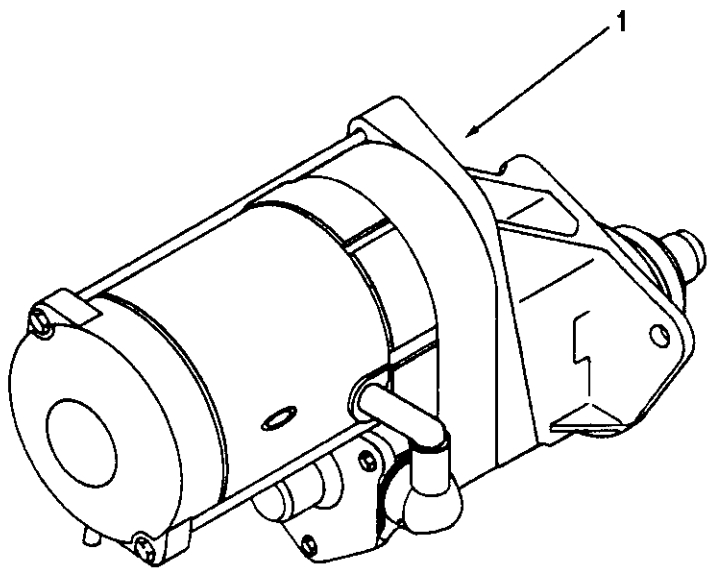

st910gb

Ref No.	Part Number	Part Name	Req	Remarks
		STARTING MOTOR		
		OPTION ST9024		B Series starting motor
				Starter Manufacturer: Nippondenso Starter Model: 128000-4220 Starter Mount Prov.: SAE #4 - 2 bolt 180 deg. Starter Style: Reduction Gear Pinion Gear Pitch: 10/12 For Clutch Type: Dry Starter Voltage: 12 With Heat Shield: Dry Flange Thickness: 16mm Limited usage to flywheel housings with starter location in quadrant 1 and 2.
1	3911343	Motor, Starting	1	

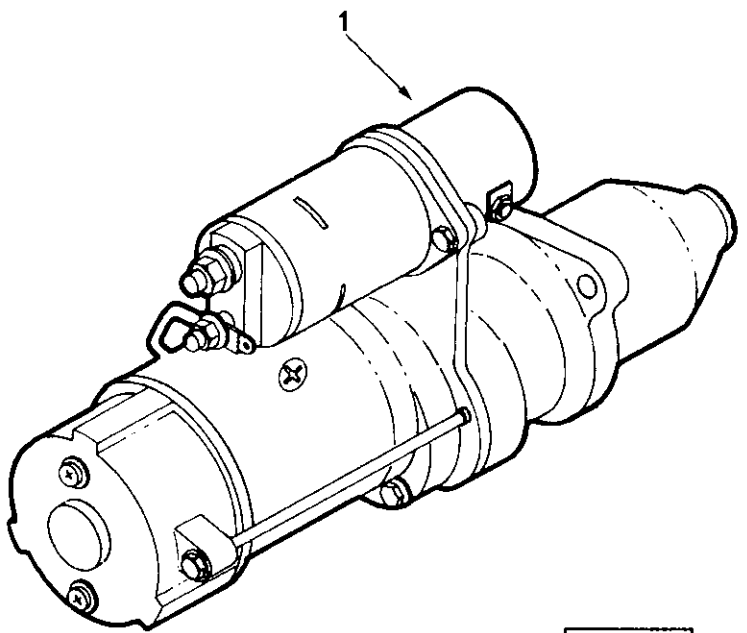

st910gc

Ref No.	Part Number	Part Name	Req	Remarks
		STARTING MOTOR		
		OPTION ST9039		B Series starting motor
				Starter Manufacturer: Delco-Remy Starter Model: 28MT Starter Mount Prov.: SAE #1 - 3 bolt 90 deg. Starter Style: Barrel Pinion Gear Pitch: 10/12 For Clutch Type: Dry Starter Voltage: 12 With Heat Shield: No Flange Thickness: 13mm Type: 171
1	3916854	Motor, Starting	1	

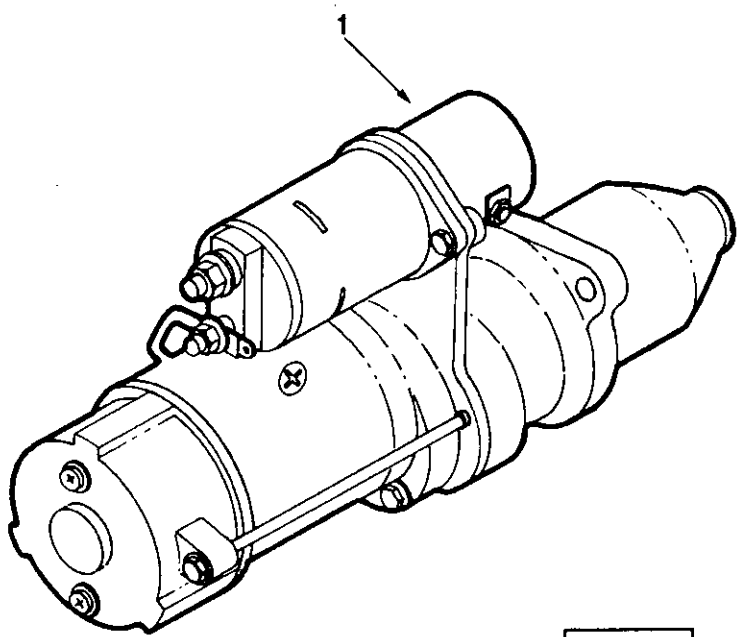

st910gc

Ref No.	Part Number	Part Name	Req	Remarks
		STARTING MOTOR		
		OPTION ST9041		B Series Starting Motor Starter Manufacturer: Delco-Remy Starter Model: 28MT Starter Mount Prov.: SAE #1 - 3 Bolt 90 Deg. Starter Style: Barrel Pinion Gear Pitch: 10/12 For Clutch Type: Wet Starter Voltage: 12 With Heat Shield: No Flange Thickness: 11.56mm Type: 171
1	3918376	Motor, Starting	1	

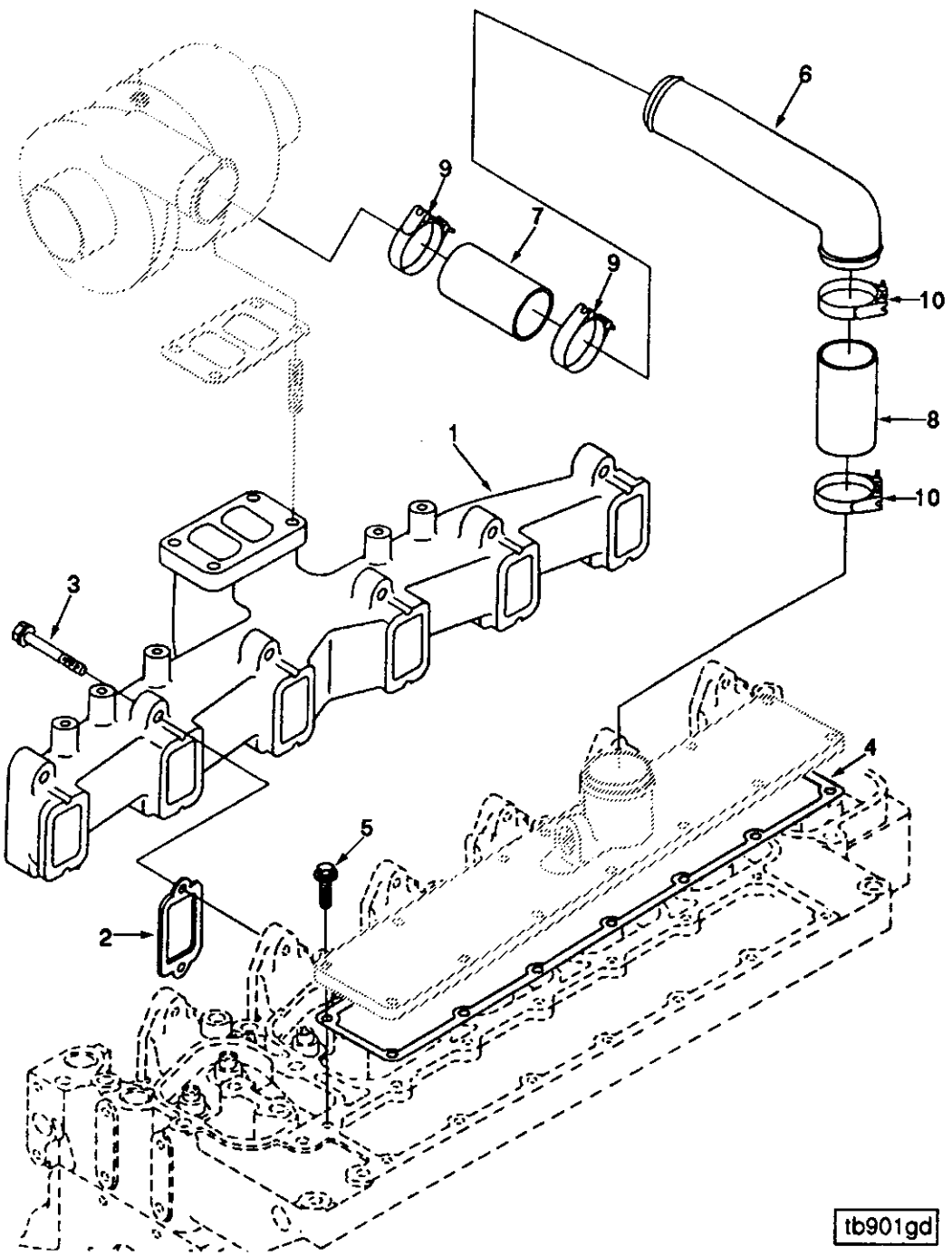
6
9
7
9
10
8
10
1
3
4
5
2
tb901gd

Ref No.	Part Number	Part Name	Req	Remarks
		TURBOCHARGER LOCATION		
		OPTION TB9020		Turbocharger location for high mounted turbo with exhaust outlet to rear. Turbine outlet is 472.7mm from ffob and 522.0mm above crankshaft centerline. The 3279245 and 3279246 hoses may be used to replaces the 3916165 and 3916166 hoses.
1	3902347	Manifold, Exhaust	1	
2	3905443	Gasket, Exhaust Manifold	6	
3	3901448	Screw, Hex Flange Head Cap	12	M10 x 1.50 x 65
4	3914029	Gasket, Int Manifold Cover	1	
5	3918109	Screw, Hex Flange Head Cap	12	M8 x 1.25 x 25
6	3906972	Pipe, Air Inlet	1	
7	3916166	Hose, Plain	1	
8	3916165	Hose, Plain	1	
9	3033033	Clamp, Hose	2	
10	3026396	Clamp, Hose	2	

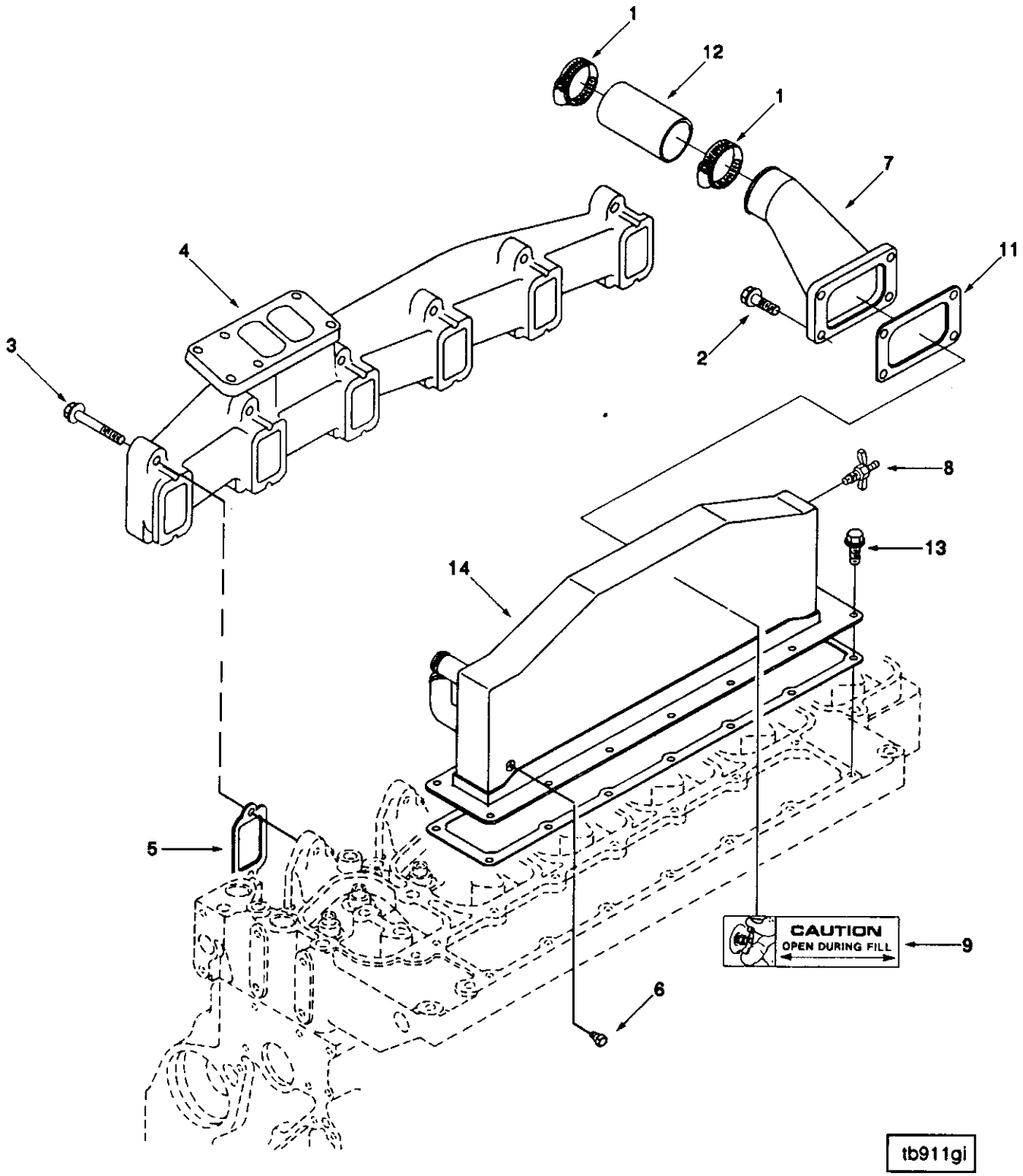
1
12
1
7
11
4
3
2
8
13
14
5
CAUTION
OPEN DURING FILL
9
6
tb911gi

Ref No.	Part Number	Part Name	Req	Remarks
		TURBOCHARGER LOCATION		
		OPTION TB9180		For high mount turbocharged and aftercooled arrangement with exhaust outlet to front. Turbine outlet is 255.8mm from ffob and 572.7mm above crankshaft centerline and 168mm outboard from the engine centerline. Hose 3279245 may be substituted for hose 3916166. "Hybrid core aftercooler 3910282 may be substituted for stainless steel core aftercooler 3919806.
1	3033033	Clamp, Hose	2	
2	3900631	Screw, Hex Flange Head Cap	4	
3	3901448	Screw, Hex Flange Head Cap	12	
4	3901683	Manifold, Exhaust	1	
5	3905443	Gasket, Exhaust Manifold	6	
6	3906619	Plug, Pipe	1	
7	3906918	Connection, Air Crossover	1	
8	3909394	Draincock	1	
9	3910778	Decal	1	
10	3914029	Gasket, Int Manifold Cover	1	
11	3914856	Gasket, Connection	1	
12	3916166	Hose, Plain	1	
13	3918108	Screw, Hex Flange Head Cap	14	
14	3919806	Aftercooler	1	

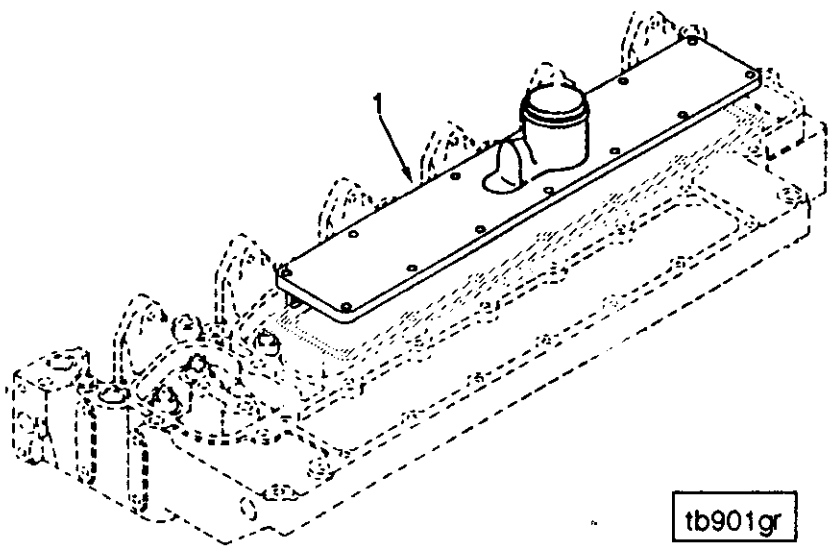

Ref No.	Part Number	Part Name	Req	Remarks
		TURBOCHARGER LOCATION OPTION TB9702		2.5 inch dia. die cast air intake connection. No provision for air heater. 6 cylinder turbo-charged.
1	3908086	Cover, Intake Manifold	1	

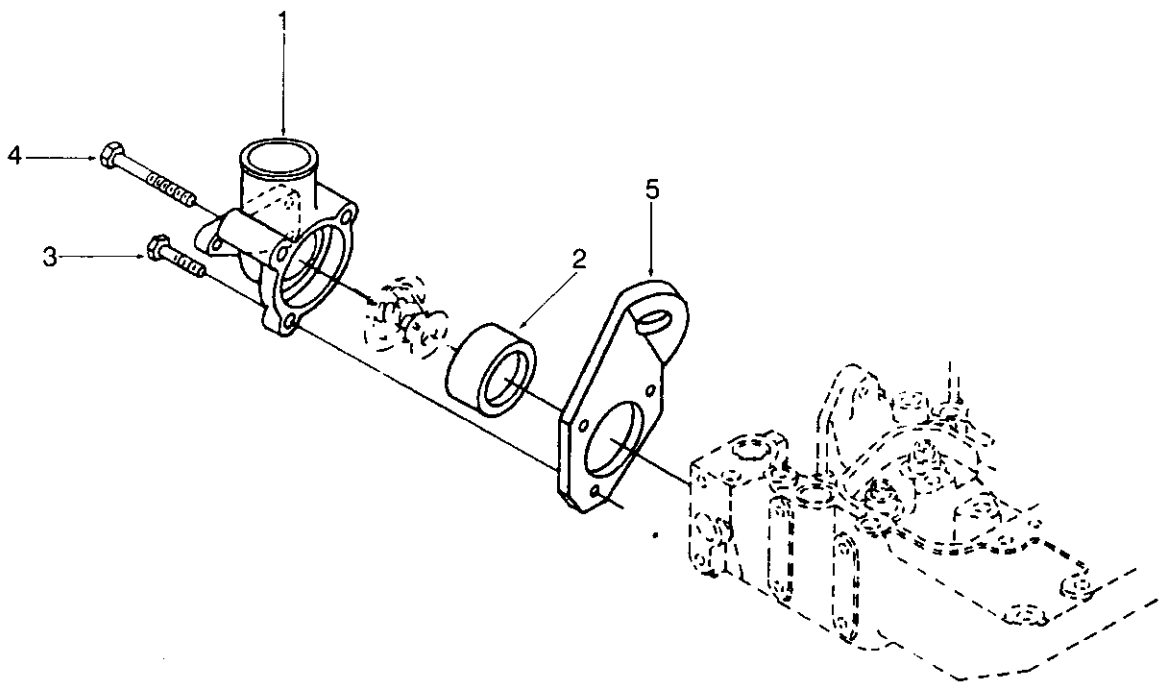

Ref No.	Part Number	Part Name	Req	Remarks
		THERMOSTAT HOUSING		
		OPTION TH9001		Thermostat housing with a cast on water outlet connection 45mm dia. positioned pointing up. Includes front engine lifting bracket.
1	3914409	Housing, Thermostat	1	
2	3920020	Gasket, Thm Housing Cover	1	
3	3900632	Screw, Hex Flange Head Cap	1	M8 x 1.25 x 35
4	3903096	Screw, Hex Flange Head Cap	2	M8 x 1.25 x 70
5	3903757	Bracket, Lifting	1	.250 inch thick

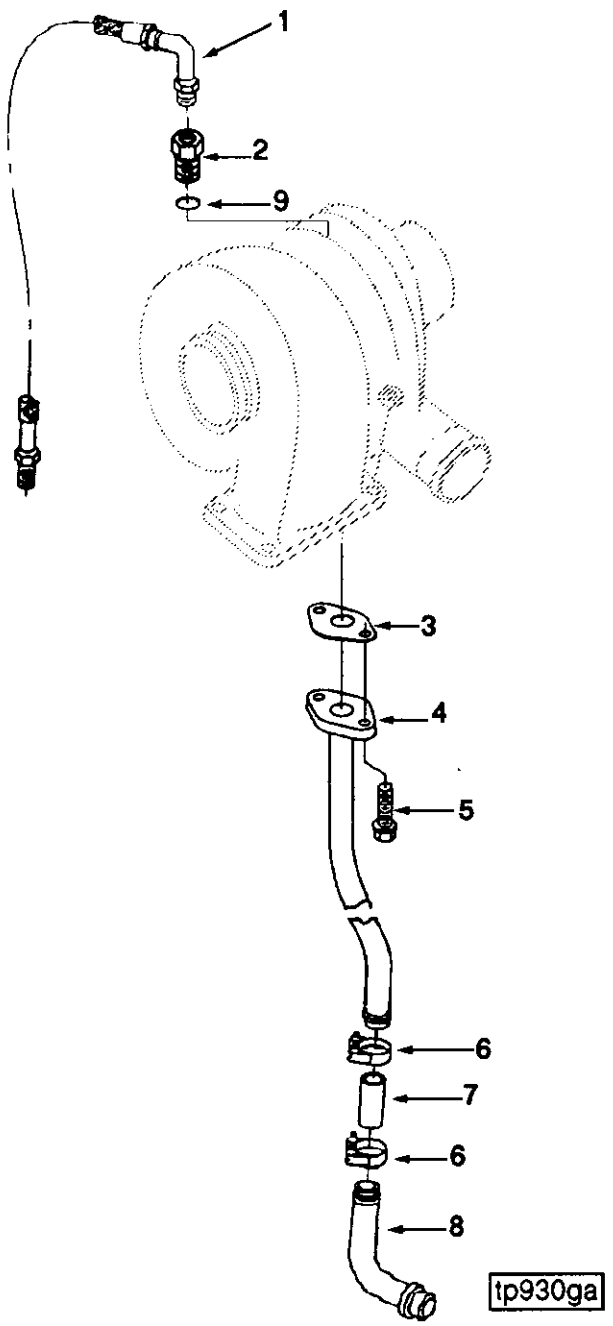
1
2
9
3
4
5
6
7
6
8
tp930ga

Ref No.	Part Number	Part Name	Req	Remarks
		TURBOCHARGER PLUMBING		
		OPTION TP9703		Turbocharger supply and drain plumbing for high front out exhaust. Turbo feed hose routed outboard with engine mounted full flow filter.
1	3909548	Hose, Flexible	1	
	3919687	Connector, Female	2	
2	3920801	Connector, Female	1	
9	3037236	Seal, O Ring	1	
3	3914388	Gasket, Oil Drain	1	
4	3918579	Connection, Tur Oil Drain	1	
5	3900630	Screw, Hex Flange Head Cap	2	M8 x 1.25 x 20
6	43828-A	Clamp, Hose	2	13/16 - 1 1/2 inch
7	3903745	Hose, Plain	1	
8	3903744	Tube, Tur Oil Drain	1	

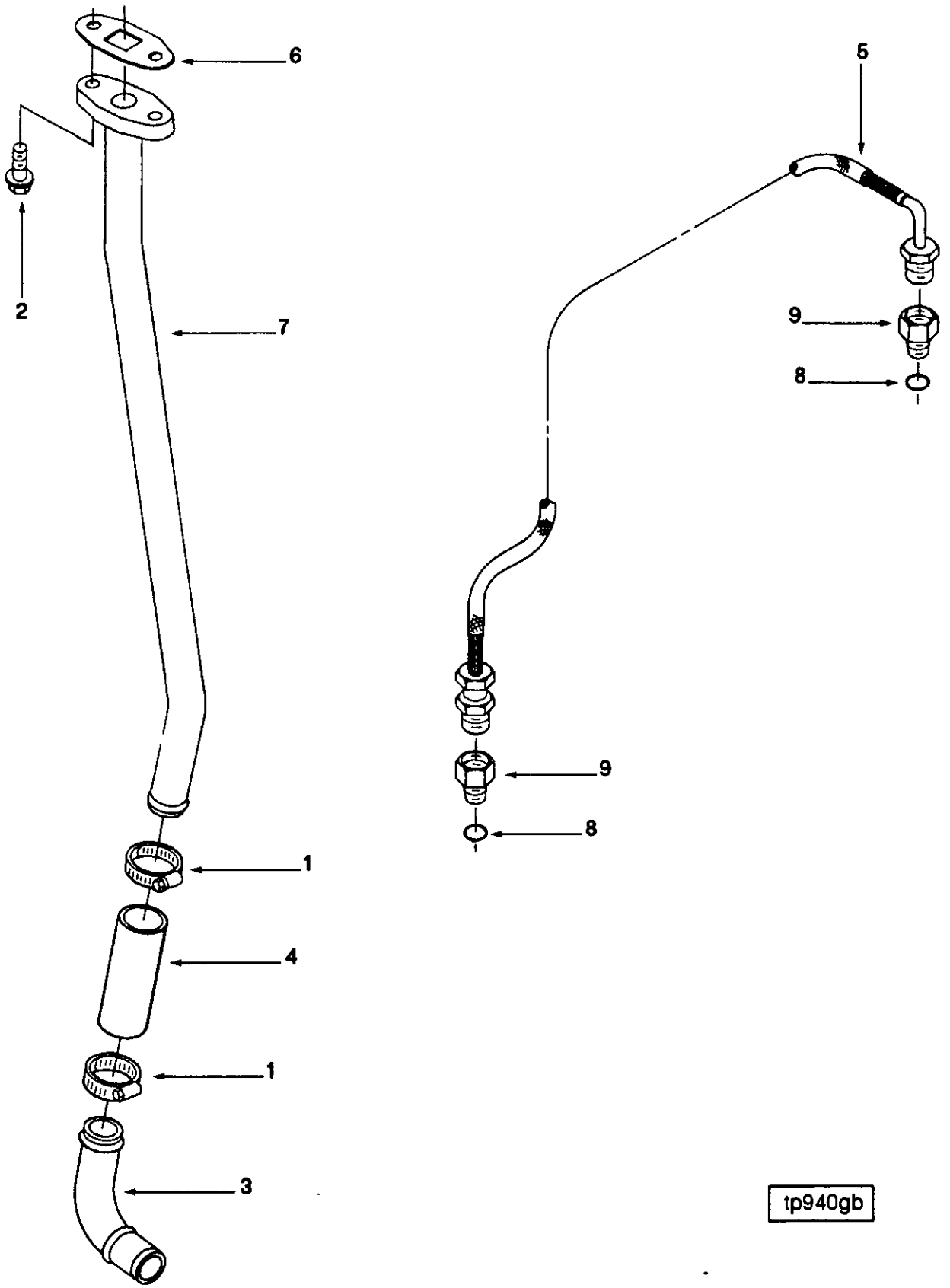
6
2
7
1
4
1
3
5
9
8
9
8
tp940gb

Ref No.	Part Number	Part Name	Req	Remarks
		TURBOCHARGER PLUMBING		
		OPTION TP9704		Turbocharger supply and drain plumbing for high rear out exhaust. Turbo feed hose routed outboard with engine mounted full flow filter.
1	43828-A	Clamp, Hose	2	13/16 - 1 1/2 inch
2	3900630	Screw, Hex Flange Head Cap	2	M8 x 1.25 x 20
3	3903744	Tube, Tur Oil Drain	1	
4	3903745	Hose, Plain	1	
5	3920603	Hose, Flexible	1	
6	3914388	Gasket, Oil Drain	1	
7	3918583	Connection, Tur Oil Drain	1	
9	3919687	Connector, Female	2	
8	3037236	Seal, O Ring	2	

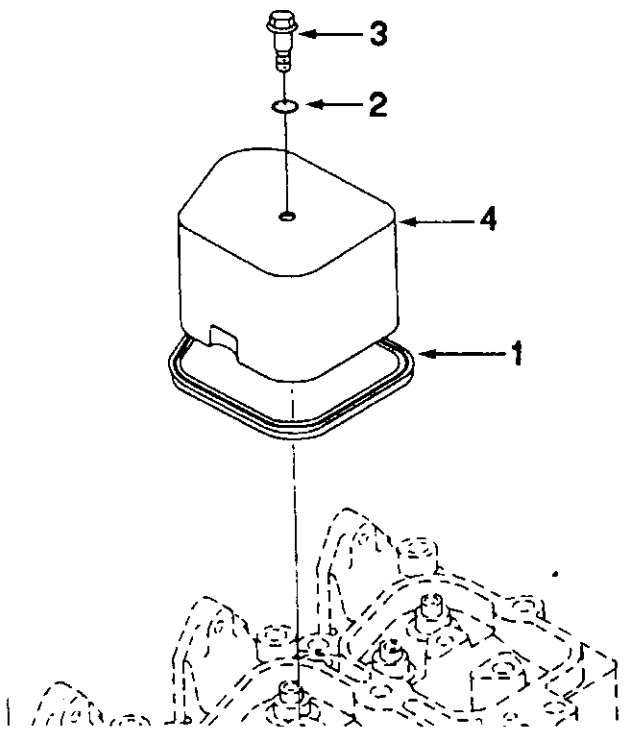

Ref No.	Part Number	Part Name	Req	Remarks
		VALVE COVER		
		OPTION VC9009		Valve cover arrangement without fill provision (6 cylinder). P/N 3901837 seal, o ring may be substituted for P/N 3910824.
1	3902666	Gasket, Valve Cover	6	
2	3910824	Seal, O Ring	6	9.25 dia x 1.78 thick
3	3907049	Screw, Hex Flange Head Cap	6	M8 x 1.25 x 25
4	3902604	Cover, Valve	6	

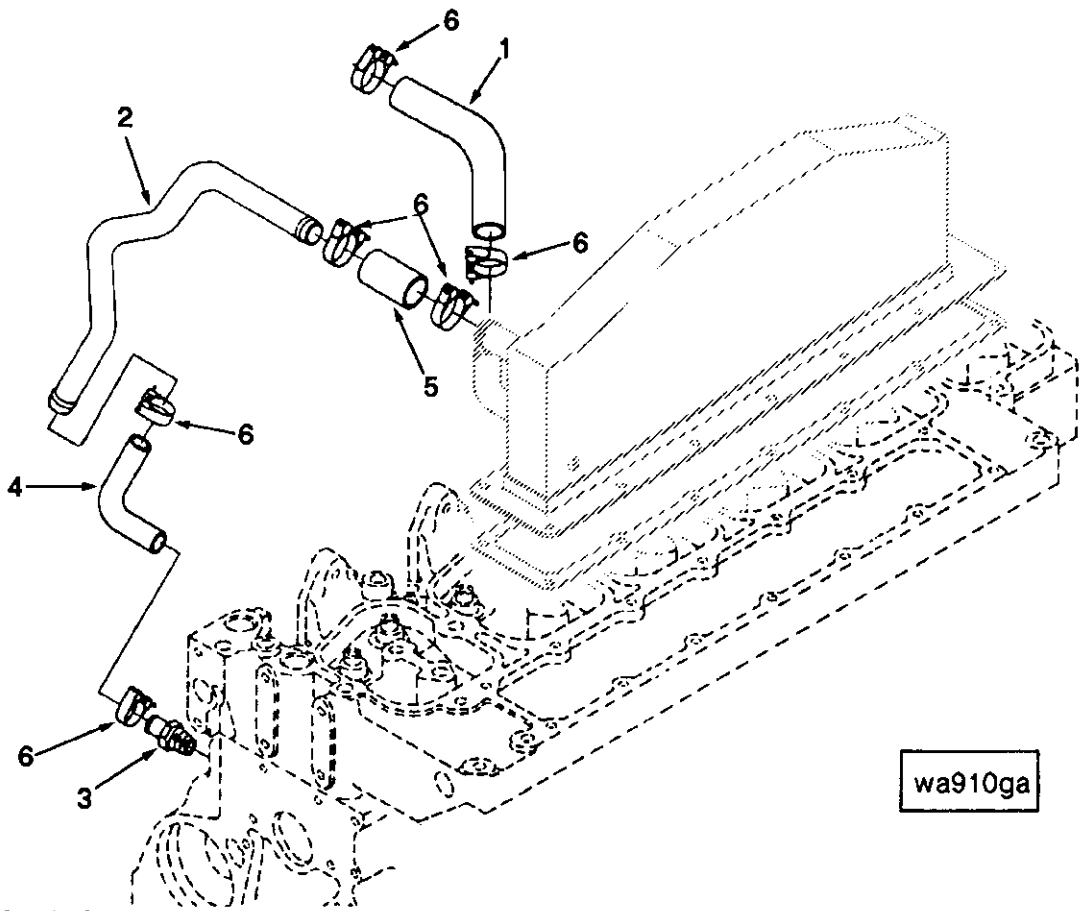

Ref No.	Part Number	Part Name	Req	Remarks
		AFTERCOOLER PLUMBING		
		OPTION WA9702		Aftercooler water plumbing.
1	3918608	Hose, Elbow	1	
2	3914855	Tube, Aftercooler	1	
3	3907167	Coupling, Plain Hose	1	
4	3918611	Hose, Elbow	1	
5	3918607	Hose, Plain	1	
6	210753	Clamp, Hose	6	

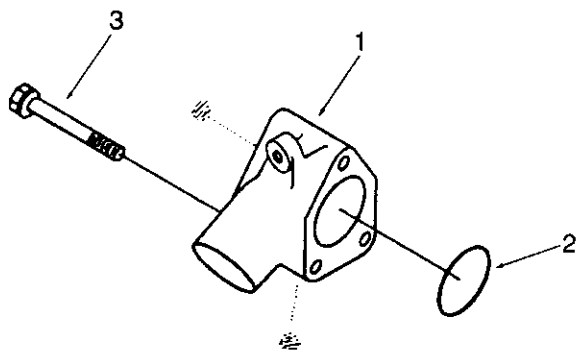

wi900ge

Ref No.	Part Number	Part Name	Req	Remarks
		WATER INLET CONNECTION		
		OPTION WI9001		58mm Water inlet connection pointing 30 degrees down.
1	3903102	Connection, Water Inlet	1	
2	3906697	Seal, Rectangular Ring	1	
3	3901757	Screw, Hex Flange Head Cap	3	M10 x 1.50 x 75

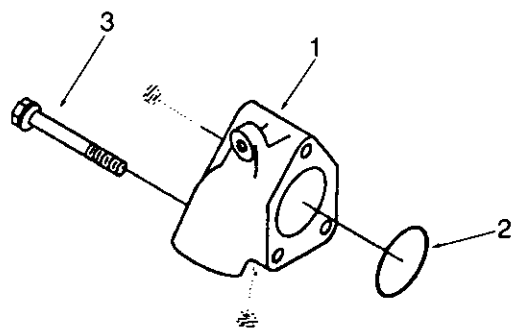

wi900gd

Ref No.	Part Number	Part Name	Req	Remarks
		WATER INLET CONNECTION		
		OPTION WI9002		58mm Water inlet connection pointing 73 degress down.
1	3903103	Connection, Water Inlet	1	
2	3906697	Seal, Rectangular Ring	1	
3	3901757	Screw, Hex Flange Head Cap	3	M10 x 1.50 x 75

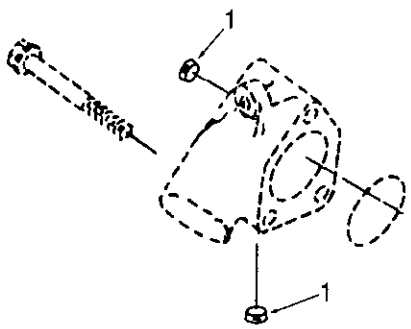

wi900gg

Ref No.	Part Number	Part Name	Req	Remarks
		WATER INLET CONNECTION		
		OPTION WI9701		Plugs for use in water inlet connection to be used without water cooled exhaust manifold
1	3008468	Plug, Pipe	2	1/2 NPT

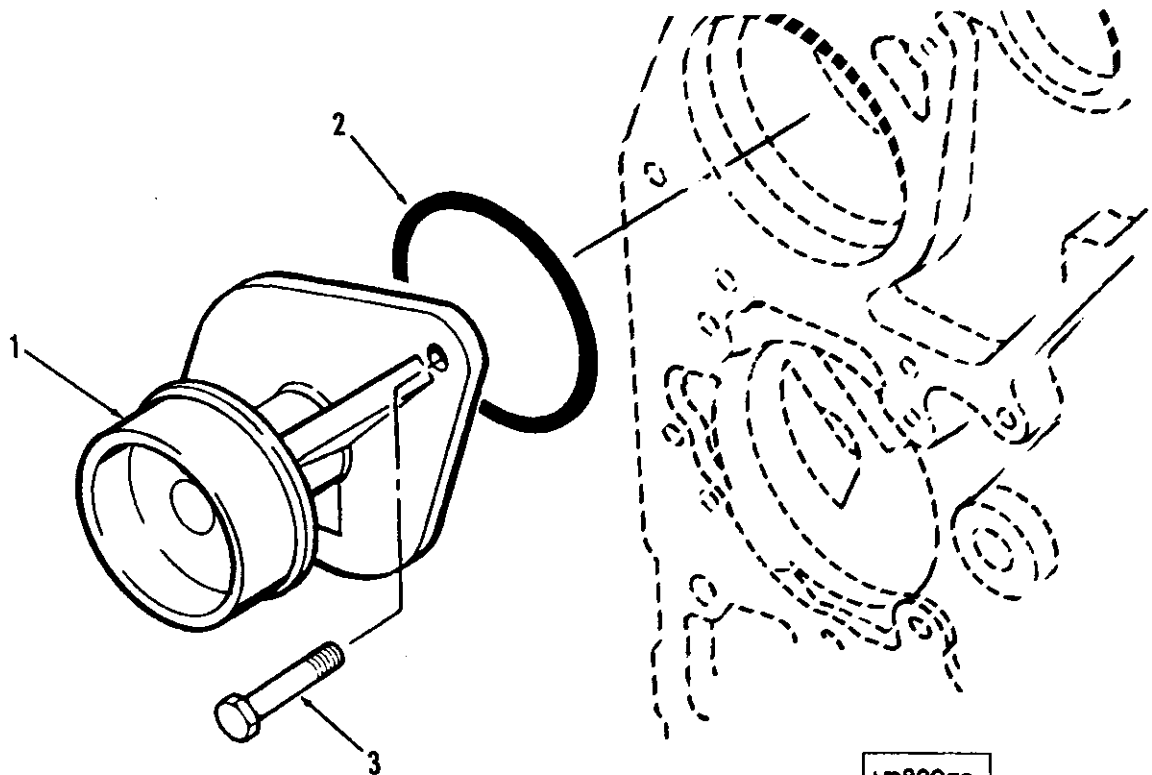

Ref No.	Part Number	Part Name	Req	Remarks
		PUMP WATER		
		OPTION WP9001		B Series Pump, Water Pulley Type: Standard P/N 3903297, O-Ring Seal, is is interchangeable with P/N 3906698.
	3802004	Pump, Water	1	
1	(3913432)	Pump, Water	1	
2	3906698	Seal, Rectangular Ring	1	
3	3900227	Screw, Hexagon Head Cap	2	M8 x 1.25 x 22

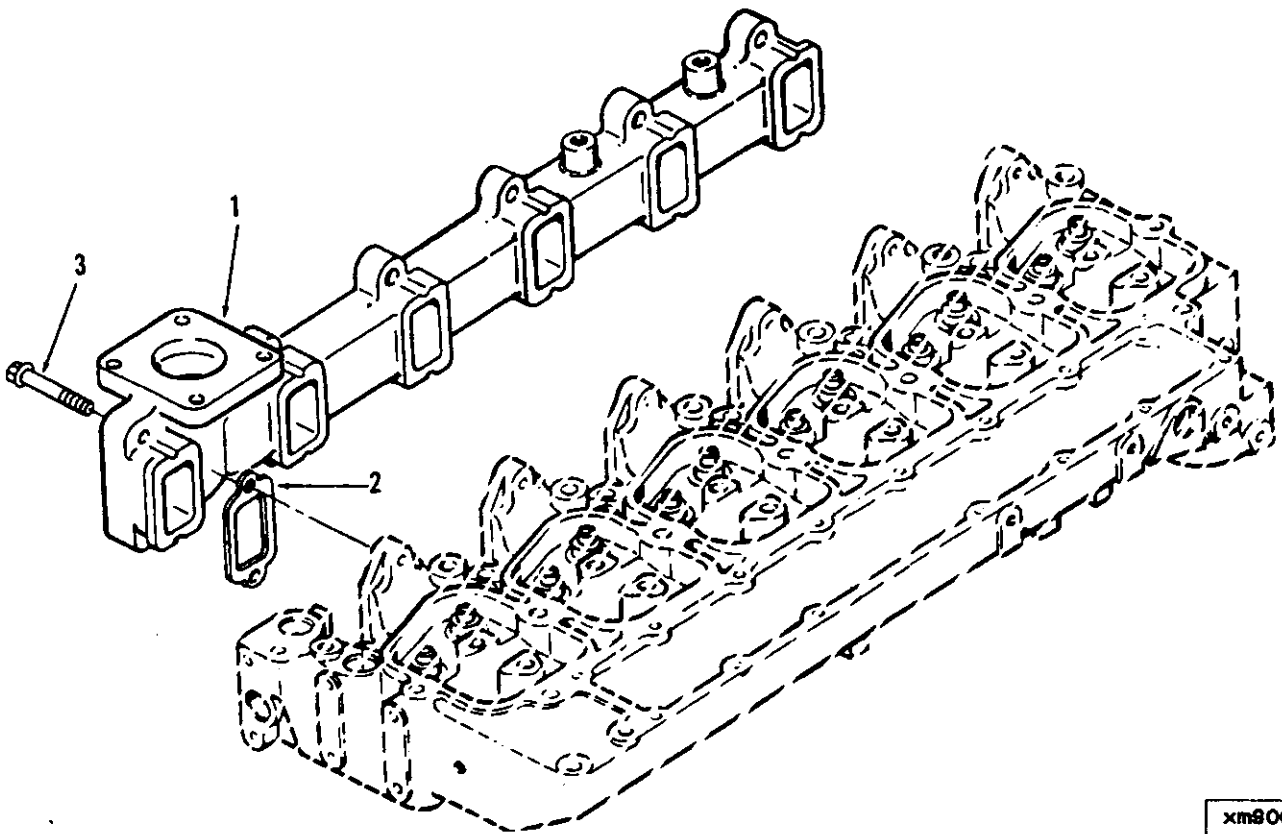

Ref No.	Part Number	Part Name	Req	Remarks
		EXHAUST MANIFOLD		
		OPTION XM9004		Front up exhaust outlet flange location. Flange located on left side of engine 183.3mm from ffob and 141.3mm left of crankshaft centerline.
1	3901326	Manifold, Exhaust	1	
2	3905443	Gasket, Exhaust Manifold	6	
3	3901448	Screw, Hex Flange Head Cap	12	M10 x 1.50 x 65

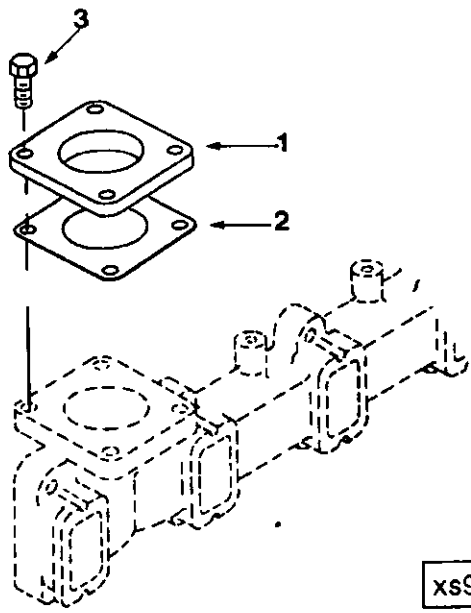

Ref No.	Part Number	Part Name	Req	Remarks
		EXHAUST CONNECTION		
		OPTION XS9001		Exhaust outlet flange and gasket for adapting exhaust to a 3-inch pipe.
1	3904054	Flange, Weld	1	
2	3912220	Gasket, Exh Out Connection	1	.40 thick
3	3900623	Screw, Hexagon Head Cap	4	M10 x 1.50 x 25

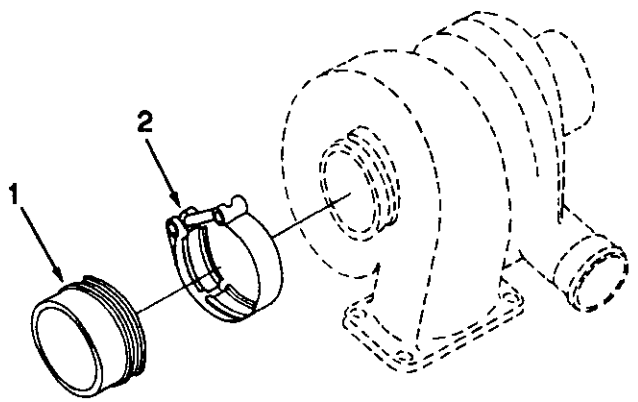

xs900gq

Ref No.	Part Number	Part Name	Req	Remarks
		EXHAUST CONNECTION		
		OPTION XS9008		Straight out turbo exhaust connection for adapting to 76.2mm dia. pipe.
1	3910990	Tube, Exhaust Outlet	1	
2	3903652	Clamp, V Band	1	

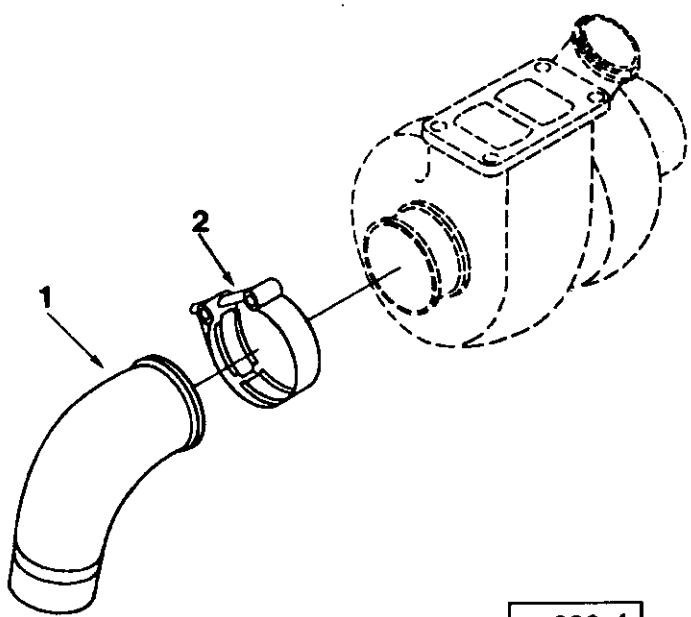

xs900gf

Ref No.	Part Number	Part Name	Req	Remarks
		EXHAUST CONNECTION		
		OPTION XS9018		90 Degree elbow for adapting turbo exhaust to 3.00 inch tubing. Elbow outlet oriented down and out 15 degrees from crank centerline This option must be applied to new installations, using the installation recommendations as a guideline and have the exhaust piping supports approved by S.E.D.C. stress group.
1	3910993	Tube, Exhaust Outlet	1	
2	3903652	Clamp, V Band	1	

Ref No.	Part Number	Part Name	Req	Remarks
		SERVICE GASKET SET		
		UPPER ENGINE SET		
		STANDARD THICKNESS		
	3802243	Set, Upper Engine Gasket	1	
	3900808	Seal, Injector	6	
	3901097	Seal, Valve Stem	12	
	3901356	Gasket, Turbocharger	1	
	3905443	Gasket, Exhaust Manifold	6	
	3914388	Gasket, Oil Drain	1	
	3910824	Seal, O Ring	6	9.25 dia x 1.78 thick
	3914029	Gasket, Int Manifold Cover	6	
	3902363	Seal, Rectangular Ring	1	3.0 thick
	3902425	Washer, Sealing	1	
	3902666	Gasket, Valve Cover	6	
	3920020	Gasket, Thm Housing Cover	1	
	3903380	Seal, Banjo Connector	6	
	3918188	Washer, Sealing	2	
	3912220	Gasket, Exh Out Connection	1	
	3919725	Seal, Injector	6	
	3920174	Seal, Injector	6	
	3906694	Seal, Rectangular Ring	1	
	3906773	Washer, Sealing	1	
	3918305	Gasket, Cylinder Head	1	
	3919358	Sleeve, Injector	6	

Ref No.	Part Number	Part Name	Req	Remarks
		SERVICE GASKET SET		
		UPPER ENGINE SET		
		.15MM OVER THICKNESS		
	3802227	Set, Upper Engine Gasket	1	
	3900808	Seal, Injector	6	
	3901097	Seal, Valve Stem	12	
	3901356	Gasket, Turbocharger	1	
	3902363	Seal, Rectangular Ring	1	3.0 thick
	3902425	Washer, Sealing	1	
	3902666	Gasket, Valve Cover	6	
	3920020	Gasket, Thm Housing Cover	1	
	3903380	Seal, Banjo Connector	6	
	3918188	Washer, Sealing	2	
	3905443	Gasket, Exhaust Manifold	6	
	3906694	Seal, Rectangular Ring	1	
	3906773	Washer, Sealing	1	
	3910824	Seal, O Ring	6	9.25 dia x 1.78 thick
	3912220	Gasket, Exh Out Connection	1	
	3914029	Gasket, Int Manifold Cover	1	
	3914388	Gasket, Oil Drain	1	
	3917359	Gasket, Cylinder Head	1	
		UPPER ENGINE SET		
		.50MM OVER THICKNESS		
	3802228	Set, Upper Engine Gasket	1	
	3900808	Seal, Injector	6	
	3901097	Seal, Valve Stem	12	
	3901356	Gasket, Turbocharger	1	
	3902363	Seal, Rectangular Ring	1	3.0 thick
	3902425	Washer, Sealing	1	
	3902666	Gasket, Valve Cover	6	
	3920020	Gasket, Thm Housing Cover	1	
	3903380	Seal, Banjo Connector	6	
	3918188	Washer, Sealing	2	
	3905443	Gasket, Exhaust Manifold	6	
	3906694	Seal, Rectangular Ring	1	
	3906773	Washer, Sealing	1	
	3910824	Seal, O Ring	6	9.25 dia x 1.78 thick
	3912220	Gasket, Exh Out Connection	1	
	3914029	Gasket, Int Manifold Cover	1	
	3914388	Gasket, Oil Drain	1	
	3915724	Gasket, Cylinder Head	1	

Ref No.	Part Number	Part Name	Req	Remarks
		SERVICE GASKET SET		
		LOWER ENGINE SET		
				3901467 is interchangeable with 3906697. 3903297 is interchangeable with 3906698. 3906704 is interchangeable with 3906696.
	3802029	Set, Lower Engine Gasket	1	
	154916	Gasket, Hydraulic Pump	1	
	3008400	Gasket, Hydraulic Pump	1	
	3916042	Gasket, Hydraulic Pump	1	
	3900216	Washer, Sealing	1	
	3900267	Seal, Grommet	6	
	3901020	Nozzle, Piston Cooling	6	
	3902425	Washer, Sealing	2	
	3903475	Seal, Rectangular Ring	1	
	3904353	Front Seal Service Kit	1	
	3907617	Gasket, Push Rod Cover	1	
	3905595	Gasket, Timing Pin Housing	1	
	3906696	Seal, Rectangular Ring	1	
	3906697	Seal, Rectangular Ring	1	
	3906698	Seal, O Ring	1	
	3908096	Gasket, Cover Plate	1	
	3909410	Rear Crank Seal Serv. Kit	1	
	3911536	Gasket, Oil Pan	1	
	3912473	Seal, Rectangular Ring	1	
	3912532	Gasket, Filter Head	1	
	3913994	Seal, O Ring	1	
	3914304	Gasket, Cover Plate	1	
	3914383	Gasket, Flange	1	
	3914385	Gasket, Gear Cover	1	
	3914386	Gasket, Rear Cover	1	
	3918256	Gasket, Oil Cooler Core	1	
	3914389	Gasket, Fuel Pump	1	
	3915772	Seal, Rectangular Ring	1	
	3915800	Seal, Rectangular Ring	1	
	3916131	Gasket, Gear Housing	1	

Ref No.	Part Number	Part Name	Req	Remarks
		SERVICE REPAIR KITS		
		MAIN BEARING KITS		
	3802070	Set, Main Brg. (std.)	1	Standard
	3802071	Set, Main Brg.(.010)	1	0.25 mm Oversize
	3802072	Set, Main Brg.(.020)	1	0.50 mm Oversize
	3802073	Set, Main Brg.(.030)	1	0.75 mm Oversize
	3802074	Set, Main Brg.(.040)	1	1.00 mm Oversize
	3802082	Bearing, Crankshaft Thrust	1	.5mm Oversize Bore/.5mm Oversize Thrust
	3802084	Bearing, Crankshaft Thrust	1	1.0mm Oversize Bore/1.0mm Oversize Thrust
		PISTON RING SETS		
	3802040	Set, Piston Ring	6	Standard
	3802042	Set, Piston Ring	6	0.50 mm Oversize
	3802044	Set, Piston Ring	6	1.00 mm Oversize
	3802230	Set, Piston Ring	6	Standard
	3802052	Set, Piston Ring	6	0.50 mm Oversize
	3802054	Set, Piston Ring	6	1.00 mm Oversize
		PISTON KITS		
	3802060	Kit, Engine Piston	6	Standard
	3802062	Kit, Engine Piston	6	0.50 mm Oversize
	3802064	Kit, Engine Piston	6	1.00 mm Oversize
	3802090	Kit, Engine Piston	6	Standard
	3802092	Kit, Engine Piston	6	0.50 mm Oversize
	3802094	Kit, Engine Piston	6	1.00 mm Oversize
	3802100	Kit, Engine Piston	6	Standard
	3802102	Kit, Engine Piston	6	0.50 mm Oversize
	3802104	Kit, Engine Piston	6	1.00 mm Oversize
	3802160	Kit, Engine Piston	6	Standard
	3802132	Kit, Engine Piston .5mmo/s	6	0.50 mm Oversize
	3802134	Kit, Engine Piston 1.0mmo/	6	1.00 mm Oversize
		TURBO REPAIR KIT		
	3802147	Kit, Turbo Repair	1	
	3802148	Kit, Turbo Repair	1	

Option Index

Option No.	Description	Page No.
AP9001	Dataplate	2
BP9703	Front Gear Cover	5
BP9710	Rocker Levers	7
BP9711	Valve Tappet	8
BP9786	Crankshaft	13
	Cylinder Block	11
BP9788	Crankshaft	13
	Cylinder Block	11
BP9790	Crankshaft	13
	Cylinder Block	11
CM9016	Cam Follower Cover	14
CP9036	Air Compressor	17
DA9026	Vibration Damper	18
DF9701	Front Gear Train Accessory Drive	19
EC9001	Thermostat	20
EE9002	Alternator	21
EE9023	Alternator	22
EH9001	Alternator Location	23
EH9029	Alternator Location	24
EH9703	Alternator Location	25
EH9711	Alternator Location	26
EI9701	Mechanical Tach Drive	27
EM9001	Front Engine Support	28
FA9003	Fan Drive	29
FF9007	Fuel Filter	30
FF9701	Fuel Filter Plumbing	31
FF9737	Fuel Filter Plumbing	32
FH9001	Flywheel Housing	33
FH9002	Flywheel Housing	34
FP9117	C.A.V. Injection Pump	37
FP9219	Bosch Injection Pump	77
FP9220	Bosch Injection Pump	77
FP9235	C.A.V. Injection Pump	52
FP9241	C.A.V. Injection Pump	37
FP9242	C.A.V. Injection Pump	37
FP9257	Fuel Pump Coupling	88
FP9278	C.A.V. Injection Pump	37
FP9279	C.A.V. Injection Pump	37
FP9296	C.A.V. Injection Pump	37
FP9297	C.A.V. Injection Pump	39
FP9332	C.A.V. Injection Pump	39
FP9333	C.A.V. Injection Pump	39
FP9334	C.A.V. Injection Pump	39
FP9335	C.A.V. Injection Pump	39
FP9397	C.A.V. Injection Pump	53
FP9398	C.A.V. Injection Pump	53
FP9406	C.A.V. Injection Pump	53
FP9468	C.A.V. Injection Pump	39
FP9586	C.A.V. Injection Pump	41
FP9588	C.A.V. Injection Pump	41
FP9589	C.A.V. Injection Pump	41
FP9667	Fuel Pump Coupling	89
FP9701	Fuel Pump Coupling	90
FP9702	Fuel Pump Coupling	91

Option No.	Description	Page No.
FP9726	C.A.V. Injection Pump	41
FP9727	C.A.V. Injection Pump	43
FP9728	C.A.V. Injection Pump	43
FP9729	C.A.V. Injection Pump	43
FP9732	C.A.V. Injection Pump	43
FP9764	Fuel Pump Coupling	92
FP9768	Fuel Pump Coupling	93
FP9770	Fuel Pump Coupling	94
FP9772	C.A.V. Injection Pump	43
FP9773	C.A.V. Injection Pump	43
FP9793	C.A.V. Injection Pump	45
FP9819	C.A.V. Injection Pump	45
FP9842	C.A.V. Injection Pump	45
FP9878	C.A.V. Injection Pump	45
FP9918	C.A.V. Injection Pump	45
FP9980	C.A.V. Injection Pump	45
FP9981	C.A.V. Injection Pump	47
FP9982	C.A.V. Injection Pump	47
FP9983	C.A.V. Injection Pump	47
FP97004	Bosch Injection Pump	77
FP97007	Bosch Injection Pump	77
FP97008	Bosch Injection Pump	77
FP97009	Bosch Injection Pump	55
FP97010	Bosch Injection Pump	55
FP97011	Bosch Injection Pump	55
FP97012	Bosch Injection Pump	55
FP97013	Bosch Injection Pump	55
FP97014	Bosch Injection Pump	57
FP97020	Bosch Injection Pump	77
FP97021	Bosch Injection Pump	79
FP97022	Bosch Injection Pump	57
FP97023	Bosch Injection Pump	57
FP97025	Bosch Injection Pump	57
FP97026	Bosch Injection Pump	57
FP97027	Bosch Injection Pump	57
FP97028	Bosch Injection Pump	79
FP97029	Bosch Injection Pump	79
FP97030	Bosch Injection Pump	79
FP97031	Bosch Injection Pump	59
FP97032	Bosch Injection Pump	79
FP97033	Bosch Injection Pump	79
FP97034	Bosch Injection Pump	59
FP97035	Bosch Injection Pump	59
FP97036	Bosch Injection Pump	59
FP97037	Bosch Injection Pump	59
FP97038	Bosch Injection Pump	59
FP97039	Bosch Injection Pump	61
FP97040	Bosch Injection Pump	61
FP97041	Bosch Injection Pump	61
FP97042	Bosch Injection Pump	61
FP97043	Bosch Injection Pump	61
FP97044	Bosch Injection Pump	61
FP97045	Bosch Injection Pump	63
FP97046	Bosch Injection Pump	63
FP97048	Bosch Injection Pump	81

Option No.	Description	Page No.
FP97049	Bosch Injection Pump	81
FP97050	Bosch Injection Pump	63
FP97051	Bosch Injection Pump	63
FP97052	Bosch Injection Pump	81
FP97053	Bosch Injection Pump	81
FP97063	Bosch Injection Pump	63
FP97064	Bosch Injection Pump	65
FP97065	Bosch Injection Pump	65
FP97066	Bosch Injection Pump	65
FP97067	Bosch Injection Pump	65
FP97068	Bosch Injection Pump	65
FP97069	Bosch Injection Pump	65
FP97070	Bosch Injection Pump	67
FP97071	Bosch Injection Pump	67
FP97078	Bosch Injection Pump	83
FP97079	Bosch Injection Pump	83
FP97084	Bosch Injection Pump	83
FP97085	Bosch Injection Pump	83
FP97090	Bosch Injection Pump	67
FP97091	Bosch Injection Pump	67
FP97093	Bosch Injection Pump	83
FP97146	Bosch Injection Pump	67
FP97147	Bosch Injection Pump	67
FP97148	Bosch Injection Pump	69
FP97150	Bosch Injection Pump	69
FP97151	Bosch Injection Pump	69
FP97152	Bosch Injection Pump	69
FP97156	Bosch Injection Pump	85
FP97165	Bosch Injection Pump	69
FP97167	Bosch Injection Pump	71
FP97168	Bosch Injection Pump	71
FP97175	Bosch Injection Pump	85
FP97181	Bosch Injection Pump	71
FP97182	Bosch Injection Pump	71
FP97212	C.A.V. Injection Pump	47
FP97217	C.A.V. Injection Pump	47
FP97221	C.A.V. Injection Pump	47
FP97224	C.A.V. Injection Pump	49
FP97225	C.A.V. Injection Pump	49
FP97227	C.A.V. Injection Pump	52
FP97229	C.A.V. Injection Pump	49
FP97267	C.A.V. Injection Pump	49
FP97289	Bosch Injection Pump	71
FP97297	Bosch Injection Pump	85
FP97300	Bosch Injection Pump	73
FP97301	Bosch Injection Pump	73
FP97304	Bosch Injection Pump	73
FS9004	Fuel System Accessories	95
FS9052	Fuel System Accessories	96
FT9782	Plumbing, Fuel	99
FT9784	Plumbing, Fuel	101
FT9785	Plumbing, Fuel	103
FW9004	Flywheel	104
FW9017	Flywheel	105
IC9005	Air Intake Connection	106

Option No.	Description	Page No.
IC9702	Air Intake Connection	107
LA9007	Lifting Bracket	108
LC9019	Lubricating Oil Cooler	111
LC9020	Lubricating Oil Cooler	113
LG9058	Oil Level Gauge	114
LP9006	Lubricating Oil Pump	115
OB9005	Cylinder Block Cover	116
OB9701	Cylinder Block Cover	117
OP9006	Oil Pan	119
PP596	Camshaft	121
	Connecting Rod and Piston	123
	Fuel Injector	133
PP599	Camshaft	121
	Connecting Rod and Piston	125
	Cylinder Head	151
	Fuel Injector	134
PP714	Camshaft	121
	Connecting Rod and Piston	123
	Fuel Injector	137
PP715	Camshaft	121
	Connecting Rod and Piston	125
	Cylinder Head	151
	Fuel Injector	137
PP728	Camshaft	121
	Connecting Rod and Piston	126
	Cylinder Head	155
	Fuel Injector	134
PP729	Camshaft	121
	Connecting Rod and Piston	129
	Cylinder Head	155
	Fuel Injector	137
PP761	Camshaft	121
	Connecting Rod and Piston	129
	Cylinder Head	155
	Fuel Injector	137
PP791	Camshaft	121
	Connecting Rod and Piston	123
	Fuel Injector	137
PP807	Camshaft	121
	Connecting Rod and Piston	129
	Cylinder Head	155
	Fuel Injector	133
PP834	Camshaft	121
	Connecting Rod and Piston	125
	Cylinder Head	151
	Fuel Injector	134
PP845	Camshaft	121
	Connecting Rod and Piston	123
	Fuel Injector	139
PP912	Camshaft	121
	Connecting Rod and Piston	125
	Cylinder Head	151
	Fuel Injector	139
PP938	Camshaft	121
	Connecting Rod and Piston	129

Option No.	Description	Page No.
	Cylinder Head	157
	Fuel Injector	139
PP940	Camshaft	121
	Connecting Rod and Piston	125
	Cylinder Head	153
	Fuel Injector	140
PP943	Camshaft	121
	Connecting Rod and Piston	129
	Cylinder Head	157
	Fuel Injector	143
PP947	Camshaft	121
	Connecting Rod and Piston	129
	Cylinder Head	157
	Fuel Injector	145
PP949	Camshaft	121
	Connecting Rod and Piston	129
	Cylinder Head	165
	Fuel Injector	143
PP950	Camshaft	121
	Connecting Rod and Piston	131
	Cylinder Head	165
	Fuel Injector	143
PP960	Camshaft	121
	Connecting Rod and Piston	123
	Cylinder Head	157
	Fuel Injector	147
PP983	Camshaft	121
	Connecting Rod and Piston	125
	Cylinder Head	153
	Fuel Injector	149
PP998	Camshaft	121
	Connecting Rod and Piston	125
	Cylinder Head	153
	Fuel Injector	140
PP1168	Camshaft	121
	Connecting Rod and Piston	131
	Cylinder Head	159
	Fuel Injector	149
PP1209	Camshaft	121
	Connecting Rod and Piston	125
	Cylinder Head	153
	Fuel Injector	143
PP1246	Camshaft	121
	Connecting Rod and Piston	131
	Cylinder Head	159
	Fuel Injector	147
PP1266	Camshaft	121
	Connecting Rod and Piston	131
	Cylinder Head	159
	Fuel Injector	149
PP1279	Camshaft	121
	Connecting Rod and Piston	131
	Cylinder Head	159
	Fuel Injector	149
PP1288	Camshaft	121

Option No.	Description	Page No.
	Connecting Rod and Piston	131
	Cylinder Head	159
	Fuel Injector	139
PP1289	Camshaft	121
	Connecting Rod and Piston	131
	Cylinder Head	165
	Fuel Injector	143
PP1403	Camshaft	121
	Connecting Rod and Piston	123
	Cylinder Head	161
	Fuel Injector	147
PP9708	Turbocharger	166, 167, 175
PP9709	Turbocharger	175
PP9712	Turbocharger	168
	Turbocharger	175
PP9713	Turbocharger	176
	Turbocharger	181
PP9714	Turbocharger	177
	Turbocharger	181
PP9715	Turbocharger	178
	Turbocharger	181
PP9723	Cylinder Head	163
PP9730	Turbocharger	169, 175
PP9731	Turbocharger	170
	Turbocharger	175
PP9742	Cylinder Head	165
PP9748	Turbocharger	183, 185
PP9767	Turbocharger	171
	Turbocharger	175
PP9768	Turbocharger	172
	Turbocharger	175
PP9774	Turbocharger	186
	Turbocharger	191
PP9775	Turbocharger	187
	Turbocharger	188
	Turbocharger	191
PP9776	Turbocharger	191
SM9001	Starting Motor Mounting	192
ST9024	Starting Motor	193
ST9039	Starting Motor	194
ST9041	Starting Motor	195
TB9020	Turbocharger Location	197
TB9180	Turbocharger Location	199
TB9702	Turbocharger Location	200
TH9001	Thermostat Housing	201
TP9703	Turbocharger Plumbing	203
TP9704	Turbocharger Plumbing	205
VC9009	Valve Cover	206
WA9702	Aftercooler Plumbing	207
WI9001	Water Inlet Connection	208
WI9002	Water Inlet Connection	209
WI9701	Water Inlet Connection	210
WP9001	Pump Water	211
XM9004	Exhaust Manifold	212

Option No.	Description	Page No.
XS9001	Exhaust Connection	213
XS9008	Exhaust Connection	214
XS9018	Exhaust Connection	215

INDEX

Part No.	Description	Page No.
S-169	Screw, Hex Flange Head Cap	24
S-203-A	Nut, Regular Hexagon Jam	51
S-609	Washer, Lock	51, 75, 87
43828-A	Clamp, Hose	203, 205
68138	Connector, Male	17
68139	Elbow, Male Adapter	17
101322	Cap, Filler	116
154916	Gasket, Hydraulic Pump	218
187368	Adapter, Plain	17
203131	Nut, Regular Hexagon	7
204994	Connector, Male	17
210753	Clamp, Hose	207
3007635	Plug, Expansion	11
3008400	Gasket, Hydraulic Pump	17, 218
3008465	Plug, Pipe	151, 153, 155, 157, 159, 161, 163
3008468	Plug, Pipe	11, 151, 153, 155, 157, 159, 161
3008469	Plug, Pipe	151, 153, 155, 157, 159, 161, 163
3016628	Alternator	21
3026396	Clamp, Hose	197
3027646	Plug, Expansion	11
3033033	Clamp, Hose	197, 199
3037236	Seal, O Ring	111, 203, 205
3278480	Screw, Hex Flange Head Cap	28
3279105	Pump, Fuel Injection	53
3279106	Pump, Fuel Injection	53
3279279	Pump, Fuel Injection	53
3280807	Brace, Fuel Pump	89
3354519	Pump, Fuel Injection	49
3354520	Pump, Fuel Injection	49
3354546	Pump, Fuel Injection	47
3354560	Pump, Fuel Injection	52
3354602	Pump, Fuel Injection	47
3354647	Pump, Fuel Injection	49
3354722	Pump, Fuel Injection	49
3501102	Lockplate	175, 185, 191
3501188	Plate, Clamping	175, 181, 185, 191
3501502	Diffuser, Turbocharger	181
3502066	Lockplate	181
3502449	Seal, Rectangular Ring	175, 181, 185, 191
3502520	Plate, Clamping	181
3503100	Bearing, Turbocharger	175, 181, 185, 191
3503347	Screw, Flat Head Cap	175, 181, 185, 191
3503562	Nut, Lock	175, 181, 185, 191
3503662	Slinger, Oil	175, 181, 185, 191
3503668	Baffle, Oil	175, 181, 185, 191
3503677	Plug, Threaded	185
3503678	Adapter, Reducing	185
3503798	Shaft & Wheel	185
3518004	Washer, Lock	175, 181, 185, 191
3518980	Collar, Thrust	175, 181, 185, 191
3519163	Screw, Drive	175, 181, 185, 191
3519302	Shield, Turbocharger Heat	175, 181, 185, 191
3519336	Shaft & Wheel	175, 181, 191
3519408	Housing, Turbine	191
3519409	Housing, Turbine	175, 181
3519807	Gasket, Turbocharger	166, 167, 168, 169, 170, 171, 172
3520702	Housing, Tur Bearing	181, 185, 191
3521449	Housing, Compressor	181
3522389	Housing, Compressor	191
3522390	Housing, Compressor	175, 185
3522801	Diffuser, Turbocharger	175, 185, 191
3522827	Screw, Hexagon Head Set	185
3523049	Union, Banjo Connector	185
3523050	Screw, Banjo Connector	185
3523176	Seal, Rectangular Ring	175, 181, 185, 191
3523243	Housing, Turbine	185
3523318	Rotor Assembly	175, 185
3523321	Rotor Assembly	181
3523755	Rotor Assembly	191
3523958	Seal, O Ring	175, 181, 185, 191
3525562	Dataplate	175, 181, 185, 191
3525739	Bearing, Tur Thrust	175, 181, 185, 191
3527184	Screw, Hexagon Head Set	175, 181, 185, 191, 191
3528206	Housing, Tur Bearing	175
3528745	Turbocharger	183, 185
3528763	Turbocharger	177, 178, 181
3528767	Turbocharger	186, 187, 188, 191
3529372	Nut, Regular Hexagon	175, 185, 191
3545652	Kit, Turbo Repair	175, 181, 185, 191
3558002	Compressor, Air	17
3559501	Kit, Piston & Rod	17
3559502	Kit, Conn Rod Bearing	17
3559503	Kit, Gasket	17
3559505	Kit, Head Assembly	17
3559506	Kit, Unloader	17
3559507	Kit, Head Repair	17
3559508	Kit, Piston Ring Set	17
3709861	Gasket, Turbocharger	166, 167, 168, 169, 170, 171, 172
3755947	Washer, Sealing	185
3756754	Seal, Split Ring	175, 181, 185, 191
3758848	Seal, Split Ring	175, 181, 185, 191
3759526	Screw, Hexagon Head Set	181
3759917	Screw, Hexagon Head Set	175, 181, 185, 191
3762259	Ring, Retaining	175, 181, 185, 191
3802004	Pump, Water	211
3802006	Valve, Exhaust	165
3802029	Set, Lower Engine Gasket	218
3802035	Injector, Fuel	143
3802040	Set, Piston Ring	123, 219
3802042	Set, Piston Ring	123, 219

INDEX

Part No.	Description	Page No.
3802044	Set, Piston Ring	123, 219
3802047	Kit, Delivery Bypass Valve	75, 87
3802052	Set, Piston Ring	125, 126, 129, 131, 219
3802054	Set, Piston Ring	125, 126, 129, 131, 219
3802058	Injector, Fuel	145
3802060	Kit, Engine Piston	123, 219
3802062	Kit, Engine Piston	123, 219
3802064	Kit, Engine Piston	123, 219
3802070	Set, Main Brg. (std.)	13, 219
3802071	Set, Main Brg.(.010)	13, 219
3802072	Set, Main Brg.(.020)	13, 219
3802073	Set, Main Brg.(.030)	13, 219
3802074	Set, Main Brg.(.040)	13, 219
3802082	Bearing, Crankshaft Thrust	13, 219
3802084	Bearing, Crankshaft Thrust	13, 219
3802090	Kit, Engine Piston	126, 219
3802092	Kit, Engine Piston	126, 219
3802094	Kit, Engine Piston	126, 219
3802100	Kit, Engine Piston	125, 219
3802102	Kit, Engine Piston	125, 219
3802104	Kit, Engine Piston	125, 219
3802108	Turbocharger	176
3802115	Turbocharger	166, 167, 168, 169, 170, 171, 172
3802132	Kit, Engine Piston .5mmo/s	129, 131, 219
3802134	Kit, Engine Piston 1.0mmo/	129, 131, 219
3802147	Kit, Turbo Repair	175, 181, 191, 219
3802148	Kit, Turbo Repair	185, 219
3802160	Kit, Engine Piston	129, 131, 219
3802176	Injector, Fuel	133
3802178	Injector, Fuel	147
3802191	Kit, Injector	149
3802195	Kit, Injector	140
3802197	Kit, Injector	149
3802205	Kit, Solenoid	75, 87
3802227	Set, Upper Engine Gasket	217
3802228	Set, Upper Engine Gasket	217
3802230	Set, Piston Ring	125, 126, 129, 131, 219
3802237	Kit, Block Hardware	11
3802243	Set, Upper Engine Gasket	216
3802270	Block, Service	11
3802273	Thermostat	20
3802311	Injector	137
3802315	Injector	134
3802316	Injector	139
3802322	Injector	137
3802328	Injector	137
3802335	Valve, Intake	165
3802337	Injector	149
3802338	Injector	139
3802340	Head, Cylinder	151, 153, 155, 157, 159, 161, 163
3802353	Kit, Solenoid	75, 87
3802355	Valve, Intake	151, 153, 155, 157, 159, 161, 163
3802356	Valve, Exhaust	151, 153, 155, 157, 159, 161, 163
3802365	Injector	137
3803431	Clamp, V Band	175, 185, 191
3818823	Stud	166, 167, 168, 169, 170, 171, 172
3818824	Nut, Hexagon Flange	166, 167, 168, 169, 170, 171, 172
3900068	Dowel, Ring	11
3900216	Washer, Sealing	119, 218
3900227	Screw, Hexagon Head Cap	121, 211
3900242	Ring, Retaining	7
3900245	Washer, Plain	7
3900250	Collet, Valve	151, 153, 155, 157, 159, 161, 163
3900257	Dowel, Pin	11
3900267	Seal, Grommet	14, 99, 101, 103, 218
3900269	Washer, Plain	104, 105
3900276	Spring, Valve	151, 153, 155, 157, 159, 161, 163
3900299	Retainer, Valve Spring	151, 153, 155, 157, 159, 161, 163
3900589	Nut, Hexagon Flange	88, 89, 90, 91, 92, 93, 94
3900623	Screw, Hexagon Head Cap	213
3900629	Screw, Hex Flange Head Cap	5, 119
3900630	Screw, Hex Flange Head Cap	14, 23, 88, 89, 90, 91, 92
3900631	Screw, Hex Flange Head Cap	23, 24, 89, 95, 96, 199
3900632	Screw, Hex Flange Head Cap	111, 113, 201
3900633	Screw, Hex Flange Head Cap	5
3900677	Screw, Hexagon Head Cap	115
3900678	Screw, Hex Flange Head Cap	29
3900687	Plug, Expansion	11
3900706	Screw, Slotted Set	7
3900808	Seal, Injector	133, 140, 143, 145, 147, 149, 216
3900919	Screw, Connecting Rod Cap	123, 125, 126, 129, 131
3900955	Plug, Expansion	11, 114
3900956	Plug, Expansion	11
3900958	Plug, Expansion	11
3900965	Plug, Expansion	11
3900967	Cap, Main Bearing	11
3901020	Nozzle, Piston Cooling	218
3901097	Seal, Valve Stem	151, 153, 155, 157, 159, 161, 163
3901170	Bearing, Connecting Rod	123, 125, 126, 129, 131
3901171	Bearing, Connecting Rod	123, 125, 126, 129, 131
3901172	Bearing, Connecting Rod	123, 125, 126, 129, 131
3901173	Bearing, Connecting Rod	123, 125, 126, 129, 131

INDEX

Part No.	Description	Page No.
3901174	Bearing, Connecting Rod	123, 125, 126, 129, 131
3901221	Screw, Hexagon Head Cap	7
3901249	Screw, Hex Flange Head Cap	19, 108
3901306	Bushing	11
3901326	Manifold, Exhaust	212
3901356	Gasket, Turbocharger	175, 181, 191, 216, 217
3901395	Screw, Hexagon Head Cap	104, 105
3901446	Screw, Hex Flange Head Cap	5
3901448	Screw, Hex Flange Head Cap	197, 199, 212
3901569	Rod, Engine Connecting	123, 125, 126, 129, 131
3901683	Manifold, Exhaust	199
3901706	Ring, Retaining	123, 125, 126, 129, 131
3901757	Screw, Hex Flange Head Cap	208, 209
3901774	Gear, Flywheel Ring	104, 105
3901793	Pin, Piston	123, 125, 126, 129, 131
3901961	Nut, Hexagon Flange	177, 178
3902114	Screw, Hex Flange Head Cap	17
3902332	Key, Plain Woodruff	51, 75, 87, 121
3902338	Valve, Bypass	111, 113
3902343	Dowel, Ring	11
3902347	Manifold, Exhaust	197
3902363	Seal, Rectangular Ring	216, 217
3902425	Washer, Sealing	119, 216, 217, 218
3902501	Stud	88, 89, 90, 91, 92, 93, 94
3902595	Gear, Accessory Drive	17
3902604	Cover, Valve	206
3902606	Plug, Expansion	151, 153, 155, 157, 159, 161, 163
3902666	Gasket, Valve Cover	206, 216, 217
3902735	Screw, Self Tapping Metal	33, 34
3903035	Screw, Banjo Connector	95, 96
3903037	Washer, Plain	75, 87
3903089	Brace, Alternator	23
3903095	Screw, Flat Head Cap	25, 26
3903096	Screw, Hex Flange Head Cap	201
3903102	Connection, Water Inlet	208
3903103	Connection, Water Inlet	209
3903105	Screw, Hex Flange Head Cap	24
3903110	Nozzle, Injector	133
3903112	Screw, Hex Flange Head	185
3903200	Screw, Hex Flange Head Cap	117
3903210	Nut, Hexagon Flange	17, 24
3903242	Bushing	11
3903269	Nut, Hexagon Flange	17
3903282	Housing, Flywheel	34
3903287	Housing, Flywheel	33
3903293	Nut, Regular Hexagon Jam	30
3903313	Nozzle, Injector	143, 147
3903380	Seal, Banjo Connector	99, 101, 103, 133, 134, 137, 139
3903382	Adapter, Tube	75, 87
3903410	Filter, Fuel	30
3903463	Cover, Access Hole	27
3903475	Seal, Rectangular Ring	27, 218
3903486	Tube, Injector Fuel Supply	103
3903487	Tube, Injector Fuel Supply	103
3903488	Tube, Injector Fuel Supply	103
3903489	Tube, Injector Fuel Supply	103
3903490	Tube, Injector Fuel Supply	103
3903570	Gasket, Delivery Valve	75, 87
3903572	Screw, Vent	75, 87
3903573	Gasket, Vent Screw	75, 87
3903575	Kit, Solenoid	75, 87
3903576	Kit, Solenoid	75, 87
3903577	O-Ring, Solenoid	75, 87
3903640	Filter, Fuel	30
3903652	Clamp, V Band	214, 215
3903723	Washer, Plain	99, 101, 103
3903738	Nut, Regular Hexagon	75, 87
3903744	Tube, Tur Oil Drain	203, 205
3903745	Hose, Plain	203, 205
3903757	Bracket, Lifting	201
3903794	Cover, Gear	5
3903834	Screw, Twelve Point Cap	192
3903845	Adapter, Filter Head	30
3903857	Screw, Hex Flange Head Cap	18
3903924	Pin, Timing	5
3903938	Screw, Hex Flange Head Cap	165
3904054	Flange, Weld	213
3904105	Insert, Valve	151, 153, 155, 157, 159, 161, 163
3904166	Sleeve, Salvage	11
3904181	Plug, Threaded	33, 34
3904217	Screw, Hexagon Head Cap	11
3904230	Clamp, Spring Hose	14
3904353	Kit, Front Seal Service	5, 218
3904369	Bushing	11
3904374	Pump, Fuel Transfer	95
3904386	Plug, Threaded	119
3904408	Guide, Valve Stem	151, 153, 155, 157, 159, 161, 163
3904409	Guide, Valve Stem	151, 153, 155, 157, 159, 161, 163
3904446	Screw, Hex Flange Head Cap	25, 26
3904483	Dowel, Pin	13
3904519	Brace, Tube	99, 101, 103
3904550	Bracket, Belt Tensioner	25
3904554	Bracket, Belt Tensioner	26
3904630	Kit, Solenoid	51
3904632	Lever, Shut Off	51
3904633	Spring, Shut Off	51
3904634	Locknut	51
3904635	O-Ring, Solenoid	51
3904636	Washer	51
3904637	Screw, Idle Set	51
3904638	Washer, Flat	51
3904642	Washer, Copper Inlet	51
3904643	Fitting, Return	51
3904644	Washer, Sealing	51
3904645	Fitting, Banjo	51
3904646	Bolt, Banjo	51

INDEX

Part No.	Description	Page No.
3904648	Gasket, Cover	51
3904652	Filter, Inlet	51
3904653	Washer, Vent Screw	51
3904654	Washer, Copper	51
3904679	Rod, Push	7
3904777	Spring, Solenoid	51
3904780	Seal	51
3904784	Screw, Timing Lock	75, 87
3904785	O-Ring, Timing Lock	75, 87
3904786	Plate, Timing Lock	75, 87
3904849	Ring, Retaining	5
3904981	Fan, Alternator	22
3905124	Kit, Solenoid	51
3905125	Kit, Solenoid	51
3905152	Spring, Compression	133, 143, 145, 147
3905153	Spindle, Injector	133, 143, 145, 147
3905154	Disc, Intermediate	133, 143, 145, 147
3905155	Retainer, Injector Nozzle	133, 143, 145, 147
3905156	Shim	133, 143, 145, 147
3905157	Shim	133, 143, 145, 147
3905158	Shim	133, 143, 145, 147
3905159	Shim	133, 143, 145, 147
3905160	Shim	133, 143, 145, 147
3905161	Shim	133, 143, 145, 147
3905162	Shim	133, 143, 145, 147
3905163	Shim	133, 143, 145, 147
3905164	Shim	133, 143, 145, 147
3905165	Shim	133, 143, 145, 147
3905166	Shim	133, 143, 145, 147
3905167	Shim	133, 143, 145, 147
3905168	Shim	133, 143, 145, 147
3905169	Shim	133, 143, 145, 147
3905170	Shim	133, 143, 145, 147
3905171	Shim	133, 143, 145, 147
3905172	Shim	133, 143, 145, 147
3905173	Shim	133, 143, 145, 147
3905174	Shim	133, 143, 145, 147
3905175	Shim	133, 143, 145, 147
3905176	Shim	133, 143, 145, 147
3905177	Shim	133, 143, 145, 147
3905178	Shim	133, 143, 145, 147
3905179	Shim	133, 143, 145, 147
3905180	Shim	133, 143, 145, 147
3905181	Shim	133, 143, 145, 147
3905182	Shim	133, 143, 145, 147
3905183	Shim	133, 143, 145, 147
3905184	Shim	133, 143, 145, 147
3905185	Shim	133, 143, 145, 147
3905186	Shim	133, 143, 145, 147
3905307	Screw, Banjo Connector	99, 101, 103
3905313	Brace, Fuel Pump	91, 92
3905351	Seal, Grommet	31, 32
3905353	Tee, Male Union	31
3905363	Tube, Fuel Supply	31
3905364	Tube, Fuel Supply	31
3905375	Tube, Fuel Supply	31
3905387	Brace, Fuel Pump	93
3905388	Tee, Male Union	99, 101, 103
3905391	Seal, Grommet	99, 101, 103
3905403	Screw, Captive Washer Cap	30
3905425	Tube, Oil Gauge	114
3905432	Tube, Fuel Supply	31
3905440	Tube, Oil Filler	116
3905443	Gasket, Exhaust Manifold	197, 199, 212, 216, 217
3905465	Screw, Banjo Connector	75, 87
3905595	Gasket, Timing Pin Housing	218
3905639	Tube, Aftercooler	151, 153
3905692	Tube, Fuel Drain	99, 101, 103
3905705	Tube, Fuel Drain	103
3905709	Tube, Fuel Drain	99, 101
3905768	Kit, Throttle Lever	51
3905769	Kit, Throttle Lever	51
3905786	Dipstick	114
3905884	Brace, Fuel Pump	88, 94
3906080	Sleeve, Wear	13
3906081	Sleeve, Wear	13
3906206	Guide, Valve Stem	151, 153, 155, 157, 159, 161, 163
3906610	Dataplate	2
3906619	Plug, Pipe	11, 111, 113, 165, 199
3906694	Seal, Rectangular Ring	30, 216, 217
3906695	Seal, Rectangular Ring	30
3906696	Seal, Rectangular Ring	116, 218
3906697	Seal, Rectangular Ring	208, 209, 218
3906698	Seal, Rectangular Ring	211, 218
3906773	Washer, Sealing	216, 217
3906854	Insert, Valve	151, 153, 155, 157, 159, 161, 163
3906918	Connection, Air Crossover	199
3906972	Pipe, Air Inlet	197
3907049	Screw, Hex Flange Head Cap	206
3907167	Coupling, Plain Hose	207
3907240	Tappet, Valve	8

INDEX

Part No.	Description	Page No.
3907431	Gear, Camshaft	121
3907475	Nut	75
3907476	Spring	75
3907477	Shim	75
3907478	Lockwasher	75
3907480	Nut	75, 87
3907481	Nut	75, 87
3907482	Blade, Terminal	75, 87
3907486	Gasket	51
3907489	O-Ring	51
3907491	O-Ring	51
3907537	Washer, Spring	119
3907555	Plug, Expansion	7
3907582	Tube, Fuel Supply	95
3907586	Baffle, Breather	14
3907617	Gasket, Push Rod Cover	14, 218
3907860	Screw, Hex Flange Head Cap	119
3907978	Nut, Hexagon Flange	183
3907998	Screw, Round Head Cap	5
3908032	Crankshaft, Assembly	13
3908084	Cover, Intake Manifold	107
3908086	Cover, Intake Manifold	200
3908095	Plate, Cover	33, 34
3908096	Gasket, Cover Plate	218
3908118	Bracket, Lifting	108
3908221	Coupling, Elbow Hose	165
3908226	Screw, Hex Flange Head Cap	23
3908440	Pump, Fuel Injection	37, 45
3908560	Pulley, Alternator	23
3908563	Retainer, Pulley	23
3908612	Screw, Drive	2
3908615	Cartridge, Lub Oil Filter	113
3908648	Pump, Fuel Injection	43
3908649	Pump, Fuel Injection	43
3908650	Pump, Fuel Injection	41
3908661	Pump, Fuel Injection	43
3908663	Pump, Fuel Injection	45
3908664	Pump, Fuel Injection	43
3908665	Pump, Fuel Injection	43
3908666	Pump, Fuel Injection	43
3908673	Pump, Fuel Injection	45
3908683	Pump, Fuel Injection	45, 47
3908690	Pump, Fuel Injection	47
3908765	Lever, Control	75
3908971	Pump, Fuel Injection	47
3908973	Pump, Fuel Injection	47
3908974	Pump, Fuel Injection	45
3908975	Pump, Fuel Injection	45
3908985	Union, Male	32
3908988	Tube, Fuel Supply	32
3909355	Adapter, Filter Head	111, 113
3909356	Seal, Rectangular Ring	133, 134, 137, 139, 140, 143, 145
3909380	Hub, Acessory Drive	17
3909381	Gear & Hub	17
3909394	Draincock	199
3909397	Seal, O Ring	111, 113
3909410	Rear Crank Seal Serv. Kit	33, 34, 218
3909438	Tube, Injector Fuel Supply	103
3909548	Hose, Flexible	203
3909670	Clip	14
3909696	Manifold, Fuel	99, 101, 103
3909887	Retainer, Shaft	29
3909889	Support, Fan	29
3910248	Plug, O Ring	33, 34
3910260	Seal, O Ring	33
3910338	Nozzle, Injector	145
3910713	Support, Alternator	23
3910715	Spacer, Mounting	23
3910778	Decal	199
3910810	Lever, Rocker	7
3910811	Lever, Rocker	7
3910814	Support, Rocker Lever	7
3910824	Seal, O Ring	206, 216, 217
3910923	Support, Alternator	24
3910924	Brace, Alternator	24
3910990	Tube, Exhaust Outlet	214
3910993	Tube, Exhaust Outlet	215
3911223	Flywheel	104
3911343	Motor, Starting	193
3911446	Screw, Banjo Connector	30
3911536	Gasket, Oil Pan	119, 218
3911558	Belt, V Ribbed	25
3911563	Belt, V Ribbed	26
3911638	Plug, Threaded	119
3911822	Cover, Push Rod	14
3912113	Pump, Fuel Injection	77
3912114	Pump, Fuel Injection	77
3912129	Pump, Fuel Injection	52
3912135	Pump, Fuel Injection	37
3912136	Pump, Fuel Injection	37
3912220	Gasket, Exh Out Connection	213, 216, 217
3912473	Seal, Rectangular Ring	33, 34, 218
3912506	Brace, Air Compressor	17
3912532	Gasket, Filter Head	218
3912545	Pump, Fuel Injection	37
3912546	Pump, Fuel Injection	39
3912772	Retainer, Belt	5
3912914	Pump, Fuel Injection	39
3912915	Pump, Fuel Injection	39
3912916	Pump, Fuel Injection	39
3912917	Pump, Fuel Injection	39
3913370	Stud	17
3913561	Gasket, Turbocharger	191
3913638	Screw, Hex Flange Head Cap	33, 34
3913994	Seal, O Ring	5, 218
3914029	Gasket, Int Manifold Cover	106, 197, 199, 216, 217
3914043	Tube, Injector Fuel Supply	101
3914044	Tube, Injector Fuel Supply	101
3914045	Tube, Injector Fuel Supply	101
3914046	Tube, Injector Fuel Supply	101
3914086	Tensioner, Belt	25, 26
3914090	Tube, Injector Fuel Supply	101
3914091	Tube, Injector Fuel Supply	101
3914182	Pump, Fuel Injection	37
3914183	Pump, Fuel Injection	37
3914284	Spacer, Mounting	96
3914304	Gasket, Cover Plate	95, 96, 218
3914383	Gasket, Flange	119, 218
3914385	Gasket, Gear Cover	5, 218
3914386	Gasket, Rear Cover	33, 34, 218
3914388	Gasket, Oil Gasket	175, 181, 185, 191, 203, 205, 216
3914389	Gasket, Fuel Pump	88, 89, 90, 91, 92, 93, 94
3914409	Housing, Thermostat	201
3914432	Flywheel	105

INDEX

Part No.	Description	Page No.
3914463	Pulley, Fan	29
3914591	Tube, Lub Oil Drain	17
3914639	Camshaft	121
3914641	Support, Camshaft Thrust	121, 96
3914796	Tube, Injector Fuel Supply	99
3914798	Tube, Injector Fuel Supply	99
3914800	Tube, Injector Fuel Supply	99
3914802	Tube, Injector Fuel Supply	99
3914804	Tube, Injector Fuel Supply	99
3914806	Tube, Injector Fuel Supply	99
3914855	Tube, Aftercooler	207
3914856	Gasket, Connection	199
3914868	Plate, Cover	19
3914912	Gear, Fuel Pump	94
3915155	Pump, Fuel Injection	39
3915240	Head, Fuel Filter	30
3915703	Pan, Oil	119
3915724	Gasket, Cylinder Head	151, 153, 155, 157, 159, 161, 163,
3915772	Seal, Rectangular Ring	5, 218
3915787	Plug, Threaded	111, 113
3915800	Seal, Rectangular Ring	218
3916024	Brace, Fuel Pump	90
3916042	Gasket, Hydraulic Pump	218
3916131	Gasket, Gear Housing	5, 218
3916165	Hose, Plain	197
3916166	Hose, Plain	197, 199
3916300	Gasket, Turbocharger	183, 185
3916436	Damper, Vibration	18
3916665	Support, Front Engine	28
3916753	Pump, Fuel Injection	41
3916803	Pump, Fuel Injection	41
3916804	Pump, Fuel Injection	41
3916854	Motor, Starting	194
3916894	Pump, Fuel Injection	79
3916904	Pump, Fuel Injection	57
3916905	Pump, Fuel Injection	57
3916907	Pump, Fuel Injection	79
3916908	Pump, Fuel Injection	79
3916910	Pump, Fuel Injection	79
3916911	Pump, Fuel Injection	59
3916913	Pump, Fuel Injection	79
3916914	Pump, Fuel Injection	79
3916916	Pump, Fuel Injection	59
3916917	Pump, Fuel Injection	59
3916919	Pump, Fuel Injection	59
3916920	Pump, Fuel Injection	59
3916922	Pump, Fuel Injection	59
3916923	Pump, Fuel Injection	61
3916930	Pump, Fuel Injection	61
3916931	Pump, Fuel Injection	61
3916933	Pump, Fuel Injection	61
3916934	Pump, Fuel Injection	61
3916936	Pump, Fuel Injection	61
3916937	Pump, Fuel Injection	63
3916939	Pump, Fuel Injection	63
3916942	Pump, Fuel Injection	81
3916943	Pump, Fuel Injection	81
3916945	Pump, Fuel Injection	63
3916946	Pump, Fuel Injection	63
3916947	Pump, Fuel Injection	55
3916948	Pump, Fuel Injection	55, 57
3916949	Pump, Fuel Injection	55, 71
3916950	Pump, Fuel Injection	71
3916952	Pump, Fuel Injection	81
3916953	Pump, Fuel Injection	81
3916968	Pump, Fuel Injection	63
3916969	Pump, Fuel Injection	65
3916971	Pump, Fuel Injection	65
3916972	Pump, Fuel Injection	65
3916974	Pump, Fuel Injection	65
3916975	Pump, Fuel Injection	65
3916977	Pump, Fuel Injection	65
3916978	Pump, Fuel Injection	67
3916989	Pump, Fuel Injection	83
3916990	Pump, Fuel Injection	83
3916999	Pump, Fuel Injection	83
3917000	Pump, Fuel Injection	83
3917002	Pump, Fuel Injection	77
3917003	Pump, Fuel Injection	77
3917009	Pump, Fuel Injection	67
3917010	Pump, Fuel Injection	67
3917012	Pump, Fuel Injection	83
3917017	Pump, Fuel Injection	77
3917358	Gasket, Cylinder Head	151, 153, 155, 157, 159, 161, 163,
3917359	Gasket, Cylinder Head	151, 153, 155, 157, 159, 161, 163,
3917540	Pump, Fuel Injection	67
3917542	Pump, Fuel Injection	57
3917543	Pump, Fuel Injection	57
3917544	Pump, Fuel Injection	77
3917552	Pump, Fuel Injection	67
3917553	Pump, Fuel Injection	67
3917556	Pump, Fuel Injection	69
3917558	Pump, Fuel Injection	69
3917559	Pump, Fuel Injection	69
3917560	Pump, Fuel Injection	69
3917632	Pump, Fuel Injection	85
3917712	Screw, Hexagon Head Cap	99, 101, 103
3917747	Isolator, Vibration	99, 101, 103
3917777	Brace, Tube	99, 101, 103
3917778	Brace, Tube	99, 101, 103
3917816	Pump, Fuel Injection	57
3917935	Pump, Fuel Injection	69
3918076	Pump, Fuel Transfer	96
3918108	Screw, Hex Flange Head Cap	101, 199
3918109	Screw, Hex Flange Head Cap	99, 103, 106, 197
3918188	Washer, Sealing	216, 217
3918191	Washer, Sealing	30, 95, 96
3918212	Pump, Lubricating Oil	115
3918256	Gasket, Oil Cooler Core	111, 113, 218
3918257	Gasket, Filter Head	111, 113
3918268	Connection, Oil Suction	119
3918283	Pump, Fuel Injection	55
3918293	Core, Cooler	111, 113
3918305	Gasket, Cylinder Head	216
3918328	Head, Lub Oil Filter	111, 113
3918376	Motor, Starting	195
3918427	Spring, Compression	111, 113
3918428	Plunger, Prs Regulator	111, 113
3918536	Hose, Flexible	17
3918570	Screw, Hexagon Head Cap	17
3918579	Connection, Tur Oil Drain	203
3918583	Connection, Tur Oil Drain	205
3918607	Hose, Plain	207
3918608	Hose, Elbow	207
3918611	Hose, Elbow	207

INDEX

Part No.	Description	Page No.
3918614	Hose, Plain	14
3918641	Tube, Fuel Supply	32
3918954	Head, Lub Oil Filter	111, 113
3919002	Nozzle, Piston Cooling	11
3919004	Pump, Fuel Injection	85
3919343	Injector	139
3919358	Sleeve, Injector	216
3919457	Pump, Fuel Injection	71
3919458	Pump, Fuel Injection	71
3919601	Gasket, Acc Drive Cover	19
3919680	Gear, Crankshaft	13
3919683	Housing, Timing Pin	5
3919686	Plug, Threaded	111
3919687	Connector, Female	203, 205
3919725	Seal, Injector	216
3919806	Aftercooler	199
3920020	Gasket, Thm Housing Cover	201, 216, 217
3920085	Injector	137
3920085	Injector, Fuel	149
3920174	Seal, Injector	134, 137, 139, 149
3920174	Seal, Injector	216
3920393	Seal, Shaft	75, 87
3920447	Screw, Hex Flange Head Cap	33, 34
3920518	Housing, Gear	5
3920560	Pulley, Alternator	24
3920593	Gear, Fuel Pump	88, 90, 91, 92, 93
3920594	Gear, Fuel Pump	89
3920603	Hose, Flexible	205
3920679	Alternator	22
3920718	Pump, Fuel Injection	71
3920779	Screw, Hex Flange Head Cap	151, 153, 155, 157, 159, 161
3920780	Screw, Hex Flange Head Cap	151, 153, 155, 157, 159, 161
3920781	Screw, Hex Flange Head Cap	7
3920801	Connector, Female	203
3920802	Plug, Threaded	111
3920831	Harness, Wiring	22
3920938	Tube, Fuel Transfer	87
3921043	Cover, Rear	33, 34
3921244	Pump, Fuel Injection	85
3921322	Pump, Fuel Injection	73
3921323	Pump, Fuel Injection	73
3921501	Pump, Fuel Injection	73