Adq. con Eq. Radar
ITEM 27

Parts Catalog

6CT, 6CTA8.3

Generator Drive ANTENA RADAR

RUTHZIL TRATOR COMERCIAL DE PEÇAS LTDA 11 97083-6812 ROLANDO

DEZEMBRO 1986

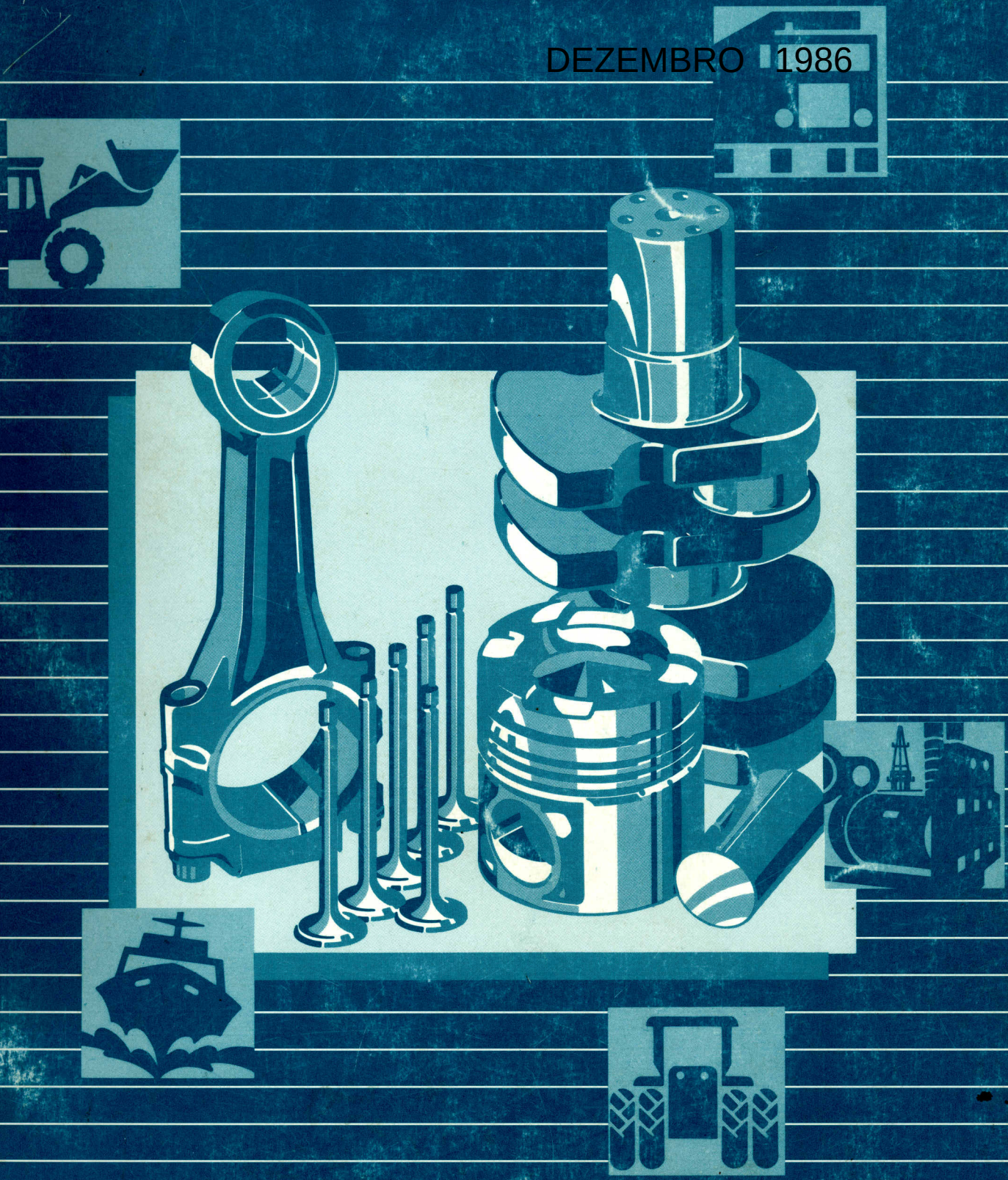

RUTHZIL TRATOR COMERCIAL DE PEÇAS LTDA 11 97083-6812 ROLANDO

Parts Catalog

6CT, 6CTA8.3

Generator Drive

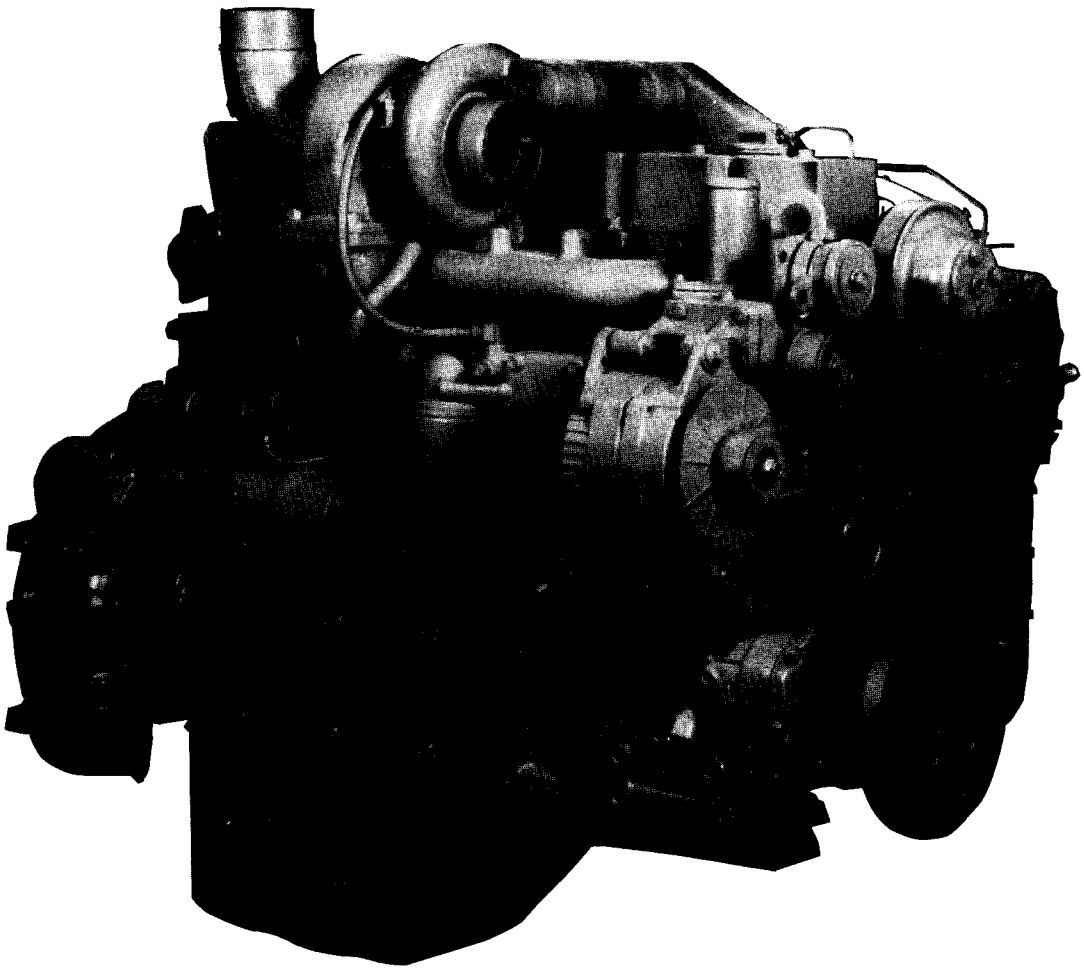

Cummins Engine Co., Inc.

New Parts Warranty
Midrange

COVERAGE

PRODUCTS WARRANTED

This warranty applies to New Parts marketed by Cummins for its A, B, and C Series engines. It applies anywhere in the world where service is available through a Cummins distributor or A, B, and C Series dealer.*

COVERAGE

This warranty covers any failures of parts on or after December 1, 1986, which result, under normal use and service, from defects in workmanship or material (Warrantable Failures). The coverage extends six months from the date of first installation.

This warranty continues to all subsequent Owners until the end of the period of coverage.

CUMMINS RESPONSIBILITIES

Cummins will pay for all parts and labor needed to repair the damage to the engine resulting from the Warrantable Failure. All labor costs will be paid in accordance with Cummins published Standard Repair Time guidelines.

Cummins will pay for the lubricating oil, antifreeze, filter elements, and other maintenance items that are not reusable due to the Warrantable Failure.

Cummins will pay reasonable labor costs for engine removal and reinstallation when necessary to make the warranty repair.

OWNER RESPONSIBILITIES

At the time when the parts are installed, Owner is responsible for the preparation of a written record containing the following: (1) the date of installation of the parts; (2) the engine serial number; (3) the engine miles, hours or kilometers of operation; (4) the parts installed, and (5) the location of the parts in the engine. The purpose of this record is to protect Owner's interests and support any claim for a Warrantable Failure.

Owner is responsible for the operation and maintenance of the engine as specified in Cummins Operation and Maintenance Manuals.

Before expiration of the warranty, Owner must give notice to a Cummins distributor or A, B, and C Series dealer* of a failure considered to be warrantable and deliver the engine to such facility for repair.

Owner is responsible for the cost of lubricating oil, antifreeze, filter elements and other maintenance items replaced during warranty repairs except where such items are not reusable due to a Warrantable Failure.

Owner is responsible for communication expenses, meals, lodging and similar costs incurred by Owner as a result of a Warrantable Failure. Owner is responsible for non-engine repairs and for "downtime" expenses, cargo damage and all business costs and losses resulting from a Warrantable Failure. **CUMMINS IS NOT RESPONSIBLE FOR INCIDENTAL OR CONSEQUENTIAL DAMAGES.**

(In the United States, some states do not allow the exclusion or limitation of incidental or consequential damages relating to Consumer Products, so the above limitation or exclusion may not apply to you.)

LIMITATIONS

Cummins is not responsible for failures resulting from Owner or Operator abuse or neglect, such as: operation without adequate coolant or lubricants; overfueling; overspeeding; lack of maintenance of lubricating, cooling or air intake systems; improper storage, starting, warm-up, run-in or shutdown practices. Cummins is also not responsible for failures caused by incorrect fuel, or by water, dirt or other contaminants in the fuel.

Except for fuel pumps, Cummins does not warrant parts supplied by Cummins which bear the name of another company. These parts are warranted by their manufacturers and not by Cummins. This category of parts includes, but is not limited to: hydraulic pumps, alternators, starters, fans, air conditioning compressors, clutches, filters, transmissions, torque converters, marine gears, air cleaners and non-Cummins air compressors, engine compression brakes, and steering pumps.

Parts used in warranty repairs may be new Cummins, Cummins approved rebuilt parts, or repaired parts. Cummins is not responsible for failures resulting from the use of parts not approved by Cummins.

Before a claim for excessive oil consumption will be considered, Owner must submit adequate documentation to show that consumption exceeds Cummins published standards.

This warranty does not apply to parts furnished by Cummins at no charge to the Owner.

THIS WARRANTY IS THE SOLE WARRANTY MADE BY CUMMINS IN REGARD TO THESE PARTS. CUMMINS MAKES NO OTHER WARRANTIES, EXPRESS OR IMPLIED, OR OF MERCHANTABILITY OR FITNESS FOR A PARTICULAR PURPOSE.

INVEST IN THE BEST

Product Identification Information

Data plates should be referred for parts identification.

1. ENGINE DATA PLATE

Cummins Engine Company, Inc. **Columbus, Indiana** **47202-3005** **Made in U.S.A. 3020701**	Engine Cert. I.D. Certificat d'identite'	C.I.D./L. Pouce Cube/L	Family Famille	CPL	Model Modele	FEL	EPA	CARB
					Injector P/N Injecteur P/N	NOX		
WARNING: Injury may result and warranty is voided if fuel rate rpm or altitudes exceed published maximum values for this model and application. **AVERTISSEMENT: Danger de blessures et d'annulation de la garantie si de'bit de combustible tr/min ou altitude de'passent les valeurs maximum annonce'es pour ce modele et son utilisation.**	Timing—T.D.C. Colage—P.M.H.				Engine No. Moteur No.	PM		
	Valve lash cold Jeux Soup. a Froid		Int. Adm.	Exh. Ech.	Ref. No.			
	Firing Order Order d'Allumage				Fuel rate at adv. HP De'bit combust. a puiss. indiquee			mm³/stroke
Date of Mfg. Date of Fabrication	Idle Speed (rpm) Vitesse Rolenti		E.C.S.		Advertised HP Puiss. Indiquee (ch)	at a		rpm

2. FUEL PUMP DATA PLATE



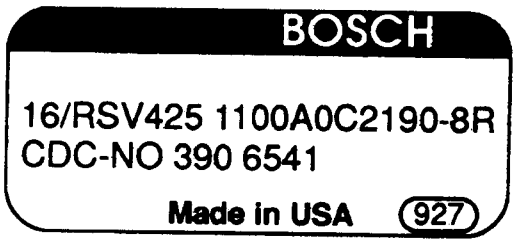

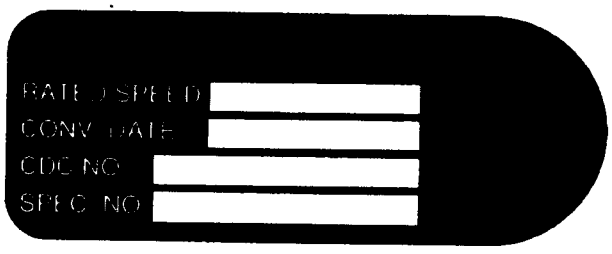

This catalog was compiled by Pam Short in Parts Communications.

Customer Service Information

This standard Parts Catalog contains parts information for the following Cummins Engine Model(s):

6CT8.3	D412004GX02	CPL 985
6CTA8.3	D413008GX02	CPL 831

Certain basic engine components have been matched to give optimum performance to your engine. The part numbers listed in this catalog for these components are for a standard engine configuration. When ordering any of the Control Parts List (CPL) components listed below, please order by part description and engine serial number. Reference to the CPL number stamped on the engine data (name) plate will also help identify the proper service parts for your engine.

Control Parts List (CPL) Components

Pump, Injection	Page 30-33, 36-39	**Piston**	Page 58, 63
Injector	*Page 60-62, 64-66*	***Cylinder Head***	*Page 73*
Camshaft	Page 59	**Exhaust, Manifold**	Page 76-79

USER INFORMATION

- **Parts numbers appearing in ( ) are for identification purposes only and should not be used when ordering service replacement parts.**
- **The reference numbers appearing on the art pages is for publication use only.**
- **Assembly content is shown by part number indentation.**
- **Options are engineered production part groupings, specifically used for compiling engine orders.**
- **Option numbers are for reference only and are not sold for service.**
- **Use assembly and not option content to determine service parts replacement.**

ALWAYS SPECIFY ENGINE MODEL AND SERIAL NUMBER WHEN ORDERING PARTS FROM THIS CATALOG

Engine Model _____ Engine Serial No. _____

MFG Make _____ Model _____ Chassis No. _____

Fuel Pump Assembly No. _____ Injector No. _____

Belt, Fan _____ Belt, Water Pump _____ Belt, Gen. _____

Element, Fuel Filter _____ Full Flow Lub. Filter _____

Air Cleaner _____ By-Pass Lub. Filter _____

Special Equipment

_____

_____

_____

Table of Contents

	Page No.
Aftercooler Plumbing	86
Alternator	18
Alternator Location	19, 20, 21
Block Vent Plumbing	88
Bosch "A" Pump With RSV Governor Without Boost	39
Bosch "MW' Pump With RSV Governor Without Boost	33
Camshaft	59
Corrosion Resistor	87
Crankcase Breather	13, 14
Crankshaft	11
Cylinder Block	9
Cylinder Block Cover	54
Cylinder Head	73
Dataplate	2
Engine Oil Cooler	51
Exhaust Connection	94
Fan Drive	25
Flywheel	47
Flywheel Housing	29
Front Gear Cover	5
Front Gear Train Accessory Drive	16
Fuel Filter	26
Fuel Injector	60, 61, 62, 64, 65, 66
Fuel Inlet Tube	27
Fuel Plumbing	43, 45
Fuel Pump	30, 36
Fuel Pump Coupling	34, 35
Fuel Shutoff Valve	46
Fuel System Accessories	40
Lifting Bracket	48
Lubricating Oil Pump	53
Mech Tach Drive	22
Oil Level Gauge	52
Oil Pan	57
Piston And Connecting Rod	58, 63
Rocker Lever	6
Service Gasket Set	95, 96, 97
Service Repair Kits	98
Starter Motor	75
Starting Motor Mounting	74
Thermostat	17
Thermostat Housing	83
Turbocharger	69, 71
Turbocharger Location	77, 79, 81
Valve Cover	84, 85
Valve Tappets	3
Vibration Damper	15
Water Inlet Connection	91
Water Outlet Connection	92
Water Pump	93
Option Number Index	A-1
Part Number Index	B-1

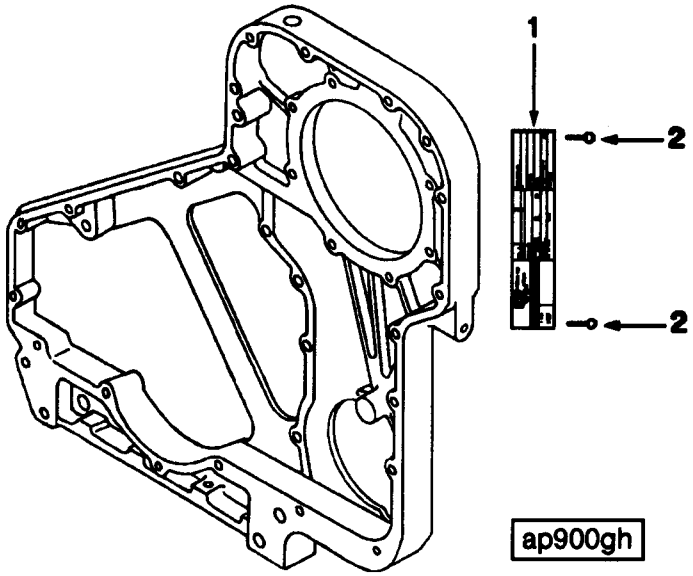

Ref No.	Part Number	Part Name	Req	Remarks
		DATAPLATE **OPTION AP9001**		Non-certified dataplate for use on engines manufactured for Cummins Engine Company. Located on fuel pump side of engine on the outboard edge of gear housing, oriented 90 degrees counter clockwise from horizontal.
1	3906610	Dataplate	1	
2	3908612	Screw, Drive	2	
	(3916103)	Tag, Instruction	1	

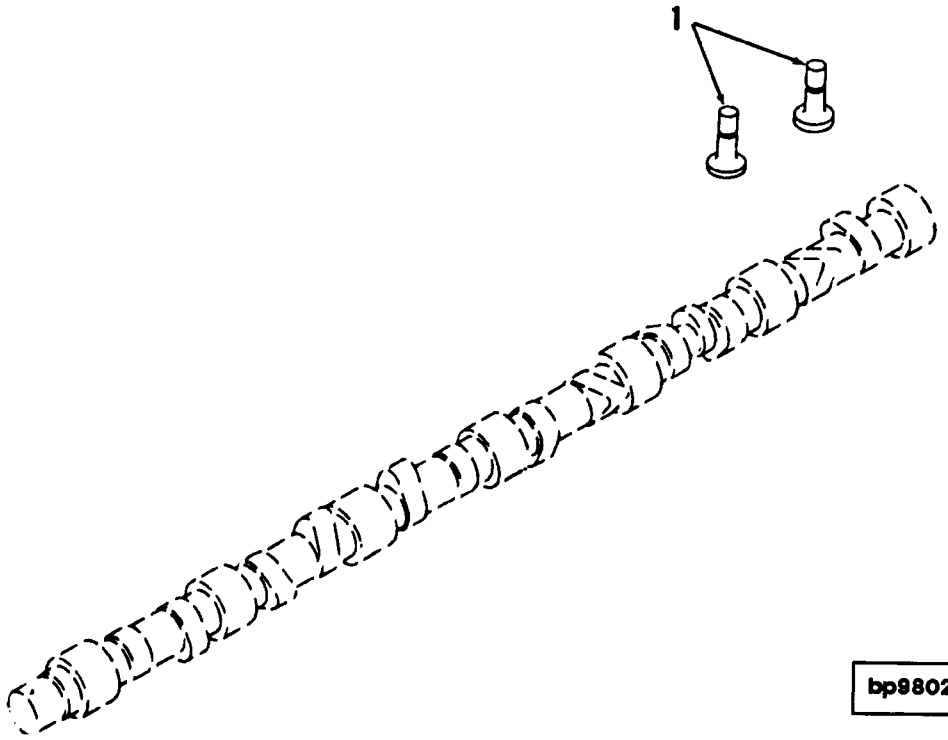

Ref No.	Part Number	Part Name	Req	Remarks
		VALVE TAPPETS		
		OPTION BP9717		Engine valve tappets for B & C Series engines.
1	3907240	Tappet, Valve	12	

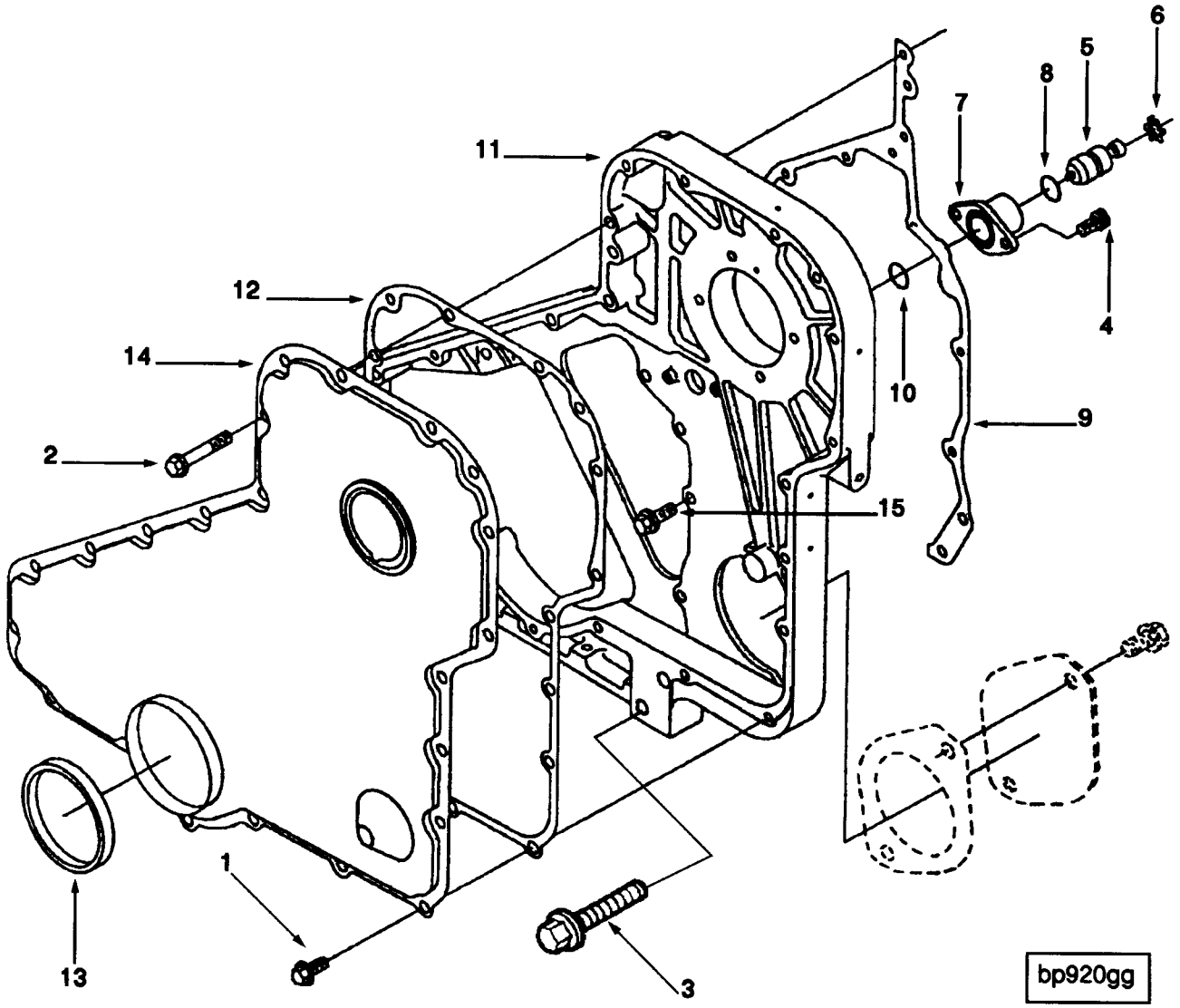
6
5
8
7
11
12
4
14
10
9
2
15
1
13
3
bp920gg

Ref No.	Part Number	Part Name	Req	Remarks
		FRONT GEAR COVER		
		OPTION BP9736		Front gear cover assembly with "low pto" drive, for use with Bosch "A" and "MW", and Nippondenso EP-9 fuel pumps, and without front engine support. Qty (3) 3906619 pipe plugs and qty (1) 3915074 gear housing may be substituted by BZL for qty (1) 3914945 gear housing.
1	3900629	Screw, Hex Flange Head Cap	16	M8 x 1.25 x 16
2	3900630	Screw, Hex Flange Head Cap	5	M8 x 1.25 x 20
3	3900633	Screw, Hex Flange Head Cap	6	M8 x 1.25 x 50
4	3902116	Screw, Hex Flange Head Cap	4	M12 x 1.75 x 50
5	3903924	Pin, Timing	1	
6	3904849	Ring, Retaining	1	
7	3919683	Housing, Timing Pin	1	
8	3913994	Seal, O Ring	1	
9	3281721	Gasket, Gear Housing	1	
10	3915772	Seal, Rectangular Ring	1	
11	3914945	Housing, Gear	1	
12	3917780	Gasket, Gear Cover	1	
	3908139	Front Seal Service Kit	1	Includes Installation Tools
13	(3921927)	Seal, Oil	1	
14	3916193	Cover, Gear	1	
15	3907998	Screw, Round Head Cap	2	M5 x 0.80 x 17

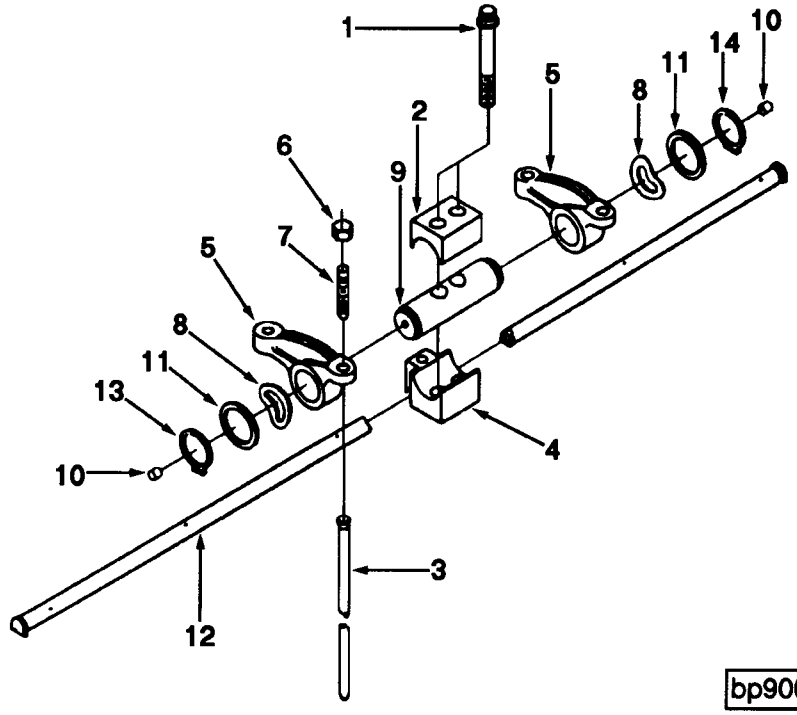

Ref No.	Part Number	Part Name	Req	Remarks
		ROCKER LEVER		
		OPTION BP9795		Engine rocker levers for C Series engines.
1	3901617	Screw, Twelve Point Cap	12	M10 x 1.50 x 65
2	3901693	Clamp, Retaining	6	
3	3905194	Rod, Push	12	
4	3905870	Support, Rocker Lever	6	
5	3901717	Lever, Rocker	12	
6	203131	Nut, Heavy Hexagon	1	3/8 - 24 UNF
7	3900706	Screw, Slotted Set	1	3/8 - 24 x 1 1/2 inch
8	3906100	Washer, Spring	12	
9	3912209	Shaft, Rocker Lever	6	
10	3907555	Plug, Expansion	2	
11	3907206	Washer, Plain	12	
12	3919677	Manifold, Oil	1	
13	3901764	Ring, Retaining	12	

NOTES

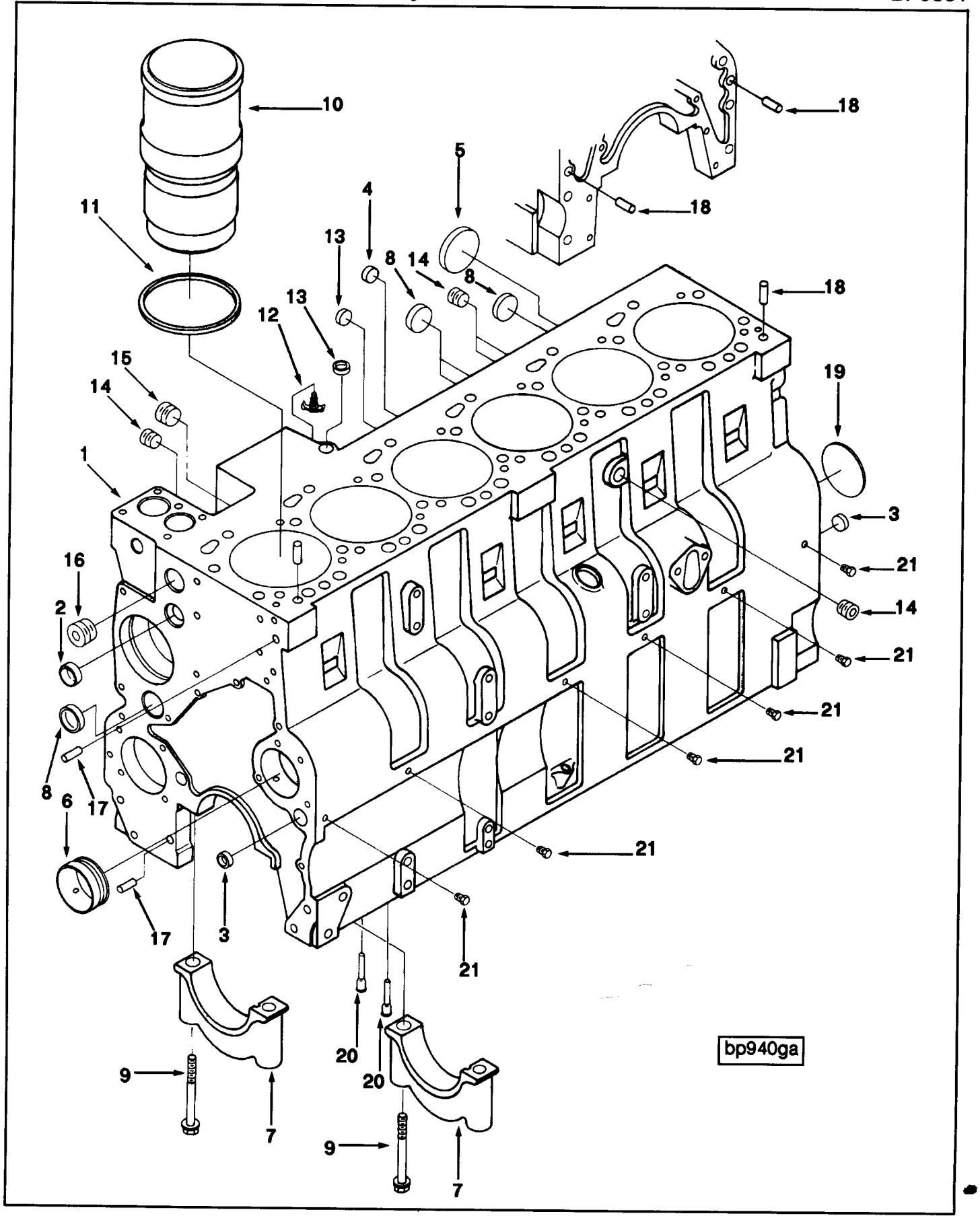
10
18
18
5
4
11
13
8
14
8
18
13
12
15
14
19
1
3
16
21
2
14
21
21
21
8
6
17
21
17
3
21
20
20
bp940ga
9
7
9
7

Ref No.	Part Number	Part Name	Req	Remarks
		CYLINDER BLOCK		
		OPTION BP9859		Engine block assembly for C series turbocharged/ aftercooled engines with dual piston cooling nozzles and high mount turbo.
		CYLINDER BLOCK		
		OPTION BP9861		Engine block assembly for C series turbocharged/after cooled engines with dual piston cooling nozzles and high mount turbo.
	3802408	Block, Cylinder	1	
1	(3919934)	Block, Cylinder	1	
2	143066	Plug, Expansion	1	1 1/8 inch
3	3004258	Plug, Expansion	4	13/16 inch
4	3027646	Plug, Expansion	1	Not used on turbocharged engines.
5	3900965	Plug, Expansion	1	
6	3901685	Bushing	7	
7	3901590	Cap, Main Bearing	7	
8	3905401	Plug, Expansion	4	
9	3916369	Screw, Hex Flange Head Cap	14	M14 x 2.00 x 128
	3909415	Kit, Cylinder Block	1	
4	3027646	Plug, Expansion	1	Not used on turbocharged engines.
12	S 923 E	Draincock	1	1/4 NPT
13	3004258	Plug, Pipe	4	1 1/8 inch
14	3008468	Plug, Pipe	1	1/2 NPT
15	3008469	Plug, Pipe	1	3/4 NPT
16	3008470	Plug, Pipe	1	1 NPT
17	3900257	Dowel, Pin	2	M10 x 16
18	3901846	Dowel, Pin	4	
19	3901969	Plug, Expansion	1	
20	3919003	Nozzle, Piston Cooling	12	
21	3906619	Plug, Pipe	6	1/8 NPT
	3802407	Kit, Liner	6	
10	(3919937)	Liner, Cylinder	1	
11	3907177	Seal, Rectangular Ring	1	
		COUNTERBORE		
		SERVICE SHIMS		
	3914653	Shim	A/R	.010 Inch Oversize
	3914654	Shim	A/R	.015 Inch Oversize
	3914655	Shim	A/R	.020 Inch Oversize
				"Service Parts Topic 92T1-5 details information concerning service parts for the standard and thick-walled cylinder blocks."

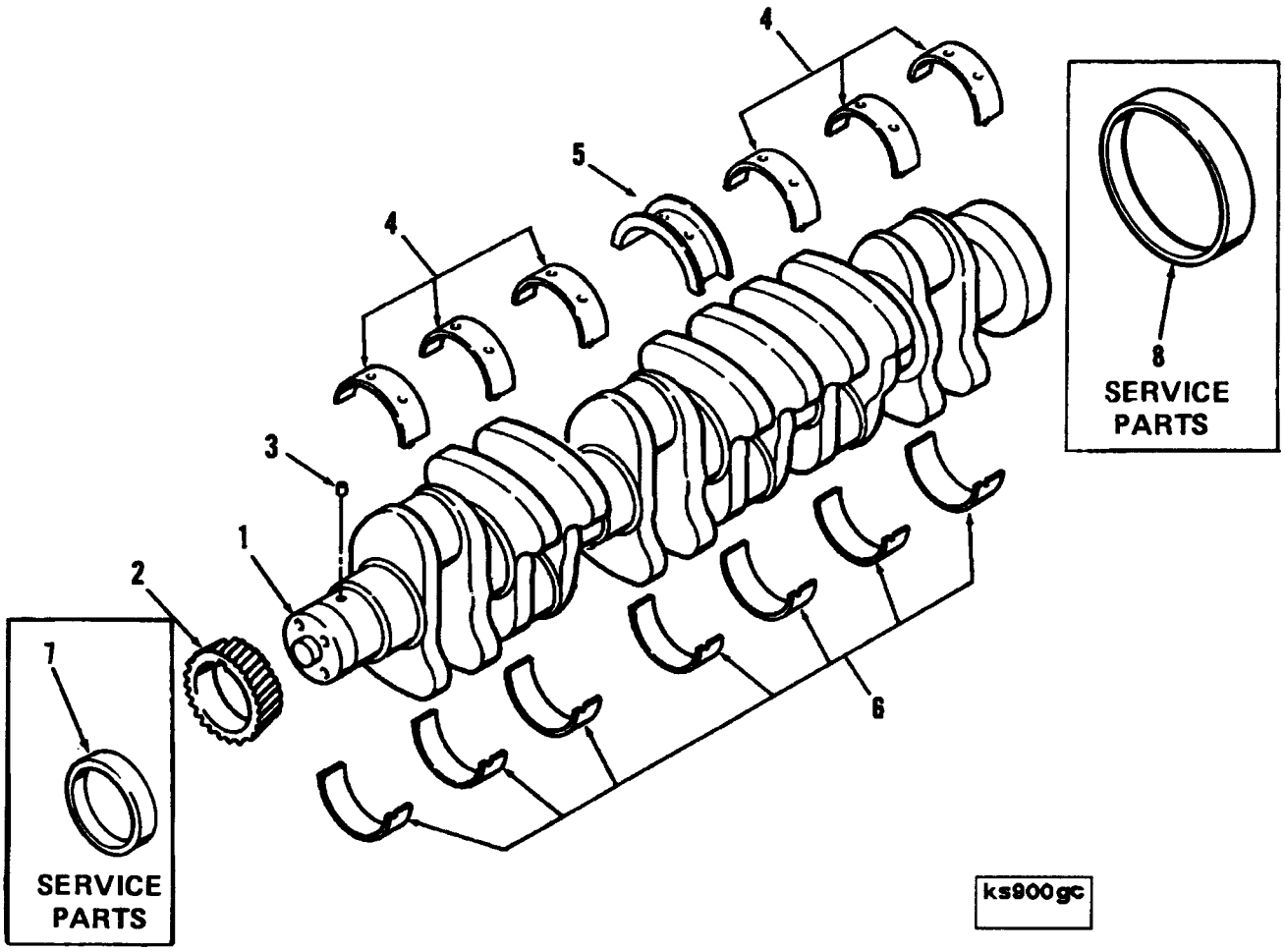
4
5
4
3
1
2
6
7
SERVICE PARTS
8
SERVICE PARTS
ks900gc

Ref No.	Part Number	Part Name	Req	Remarks
		CRANKSHAFT		
		OPTION BP9859		
		CRANKSHAFT		
		OPTION BP9861		
	3917443	Crankshaft, Assembly	1	
1	(3917320)	Crankshaft, Engine	1	
2	3918380	Gear, Crankshaft	1	
3	3904483	Dowel, Pin	1	
		MAIN BEARING SETS		
	3802210	Set, Main Bearing	1	Standard
4	(3916840)	Bearing, Main	6	
5	(3906830)	Bearing, Crankshaft Thrust	1	
6	(3901590)	Bearing, Main	7	
	3802211	Set, Main Bearing	1	0.25 mm Oversize
4	(3901631)	Bearing, Main	6	
5	(3901401)	Bearing, Crankshaft Thrust	1	
6	(3901591)	Bearing, Main	7	
	3802212	Set, Main Bearing	1	0.50 mm Oversize
4	(3901632)	Bearing, Main	6	
5	(3901402)	Bearing, Crankshaft Thrust	1	
6	(3901592)	Bearing, Main	7	
	3802213	Set, Main Bearing	1	0.75 mm Oversize
4	(3901633)	Bearing, Main	6	
5	(3901403)	Bearing, Crankshaft Thrust	1	
6	(3901593)	Bearing, Main	7	
	3802214	Set, Main Bearing	1	1.00 mm Oversize
4	(3901634)	Bearing, Main	6	
5	(3901404)	Bearing, Crankshaft Thrust	1	
6	(3901594)	Bearing, Main	7	
		SERVICE PARTS		
7	3920408	Sleeve, Wear	1	Front
8	3906081	Sleeve, Wear	1	Rear
		OVERSIZE THRUST BEARINGS		
	3921544	Bearing, Thrust	1	Std journal diameter, 0.25mm oversize thrust face.
	3921545	Bearing, Thrust	1	Std journal diameter, 0.50mm ovrsize thrust face.
	3921546	Bearing, Thrust	1	0.50mm oversize journal diameter. 0.50 oversize face.

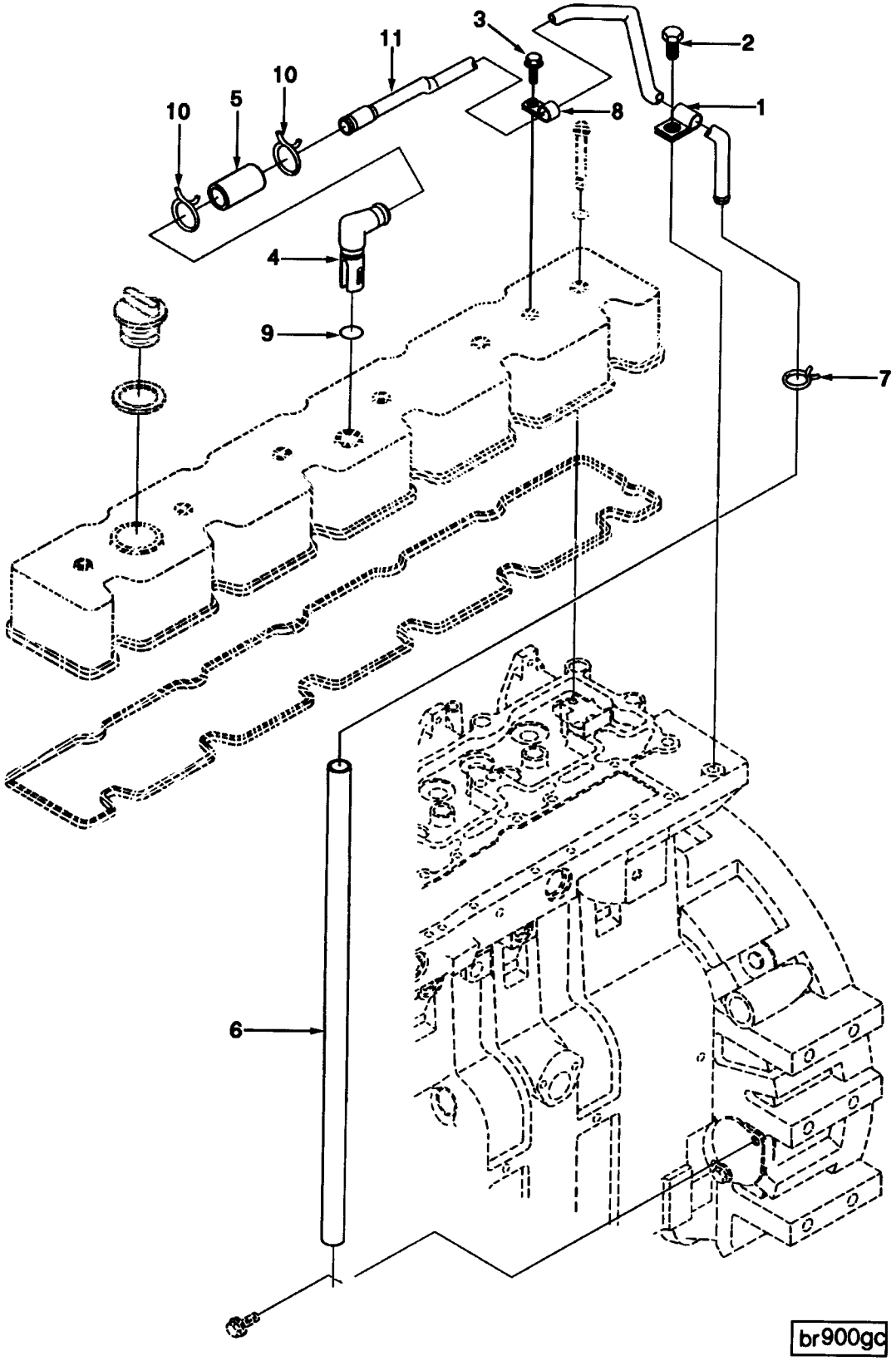
3
11
2
10
5
10
8
1
4
9
7
6
br900gc

Ref No.	Part Number	Part Name	Req	Remarks
		CRANKCASE BREATHER		
		OPTION BR9002		Breather vent tube for C series engines. Routes to rear of cylinder head. Flexible hose is extended below the oil pan rail. When starter is mounted on fuel pump side of engine, 3352133 hose should be retained behind starter.
1	70622	Clip	1	
2	3901249	Screw, Hex Flange Head Cap	1	M12 x 1.75 x 25
3	3912072	Screw, Self Tapping Metal	1	M8 x 1.25 x 15
4	3920497	Connection, Vent	1	
5	3918610	Hose, Plain	1	
6	3918616	Hose, Plain	1	
7	3907740	Clamp, Spring Hose	1	
8	3907741	Clip	1	
9	3909397	Seal, O Ring	1	
10	3918163	Clamp, Spring Hose	2	
11	3909669	Tube, Breather	1	

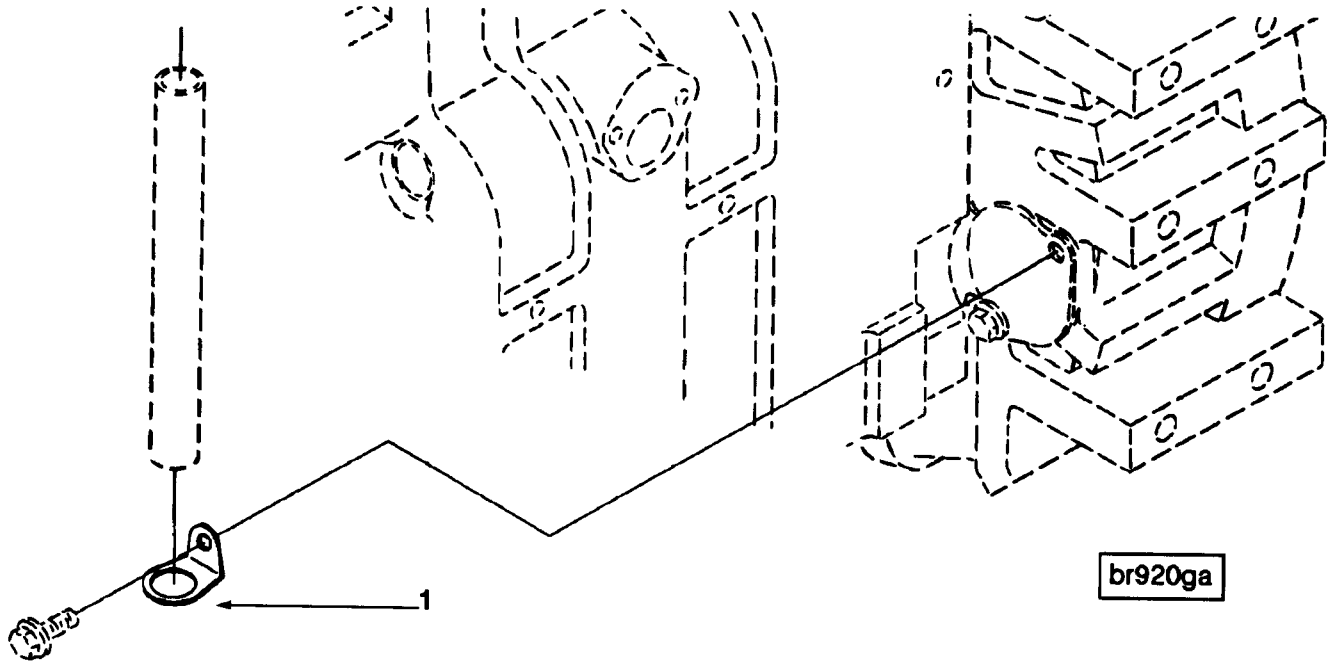

Ref No.	Part Number	Part Name	Req	Remarks
		CRANKCASE BREATHER		
		OPTION BR9701		Clip used to retain breather hose to flywheel housing when starter is mounted on exhaust side of engine.
1	3909670	Clip	1	

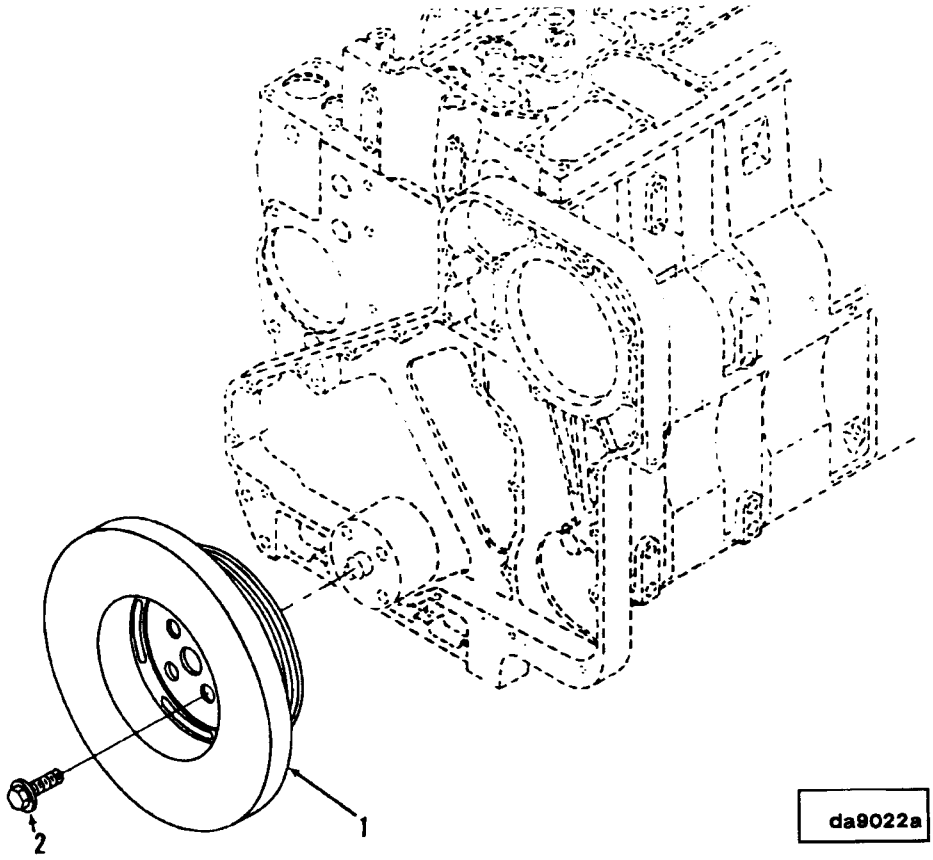

Ref No.	Part Number	Part Name	Req	Remarks
		VIBRATION DAMPER		
		OPTION DA9022		Vibration damper with 174mm diameter, 8-groove drive pulley cast on to damper. Mounted on front of crankshaft. For use only on engines with rated speeds of 2200 rpm and below.
1	3914456	Damper, Vibration	1	
2	3906733	Screw, Hex Flange Head Cap	4	M14 x 1.50 x 35

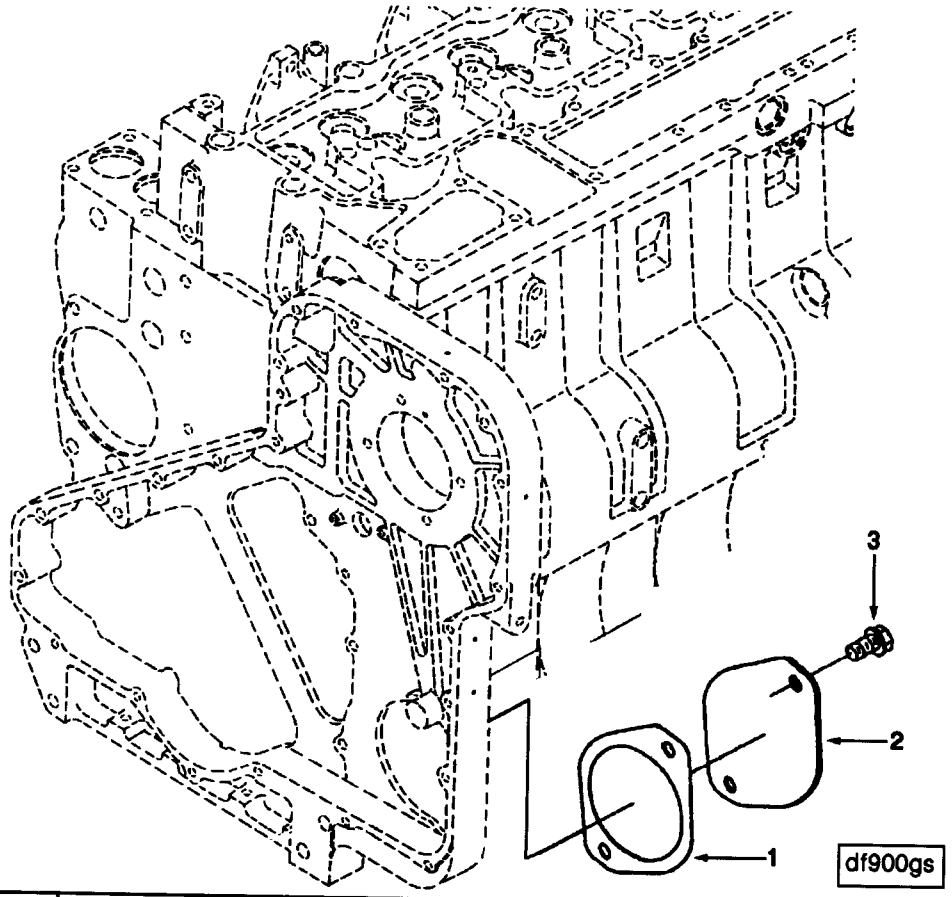

Ref No.	Part Number	Part Name	Req	Remarks
		FRONT GEAR TRAIN ACCESSORY DRIVE		
		OPTION DF9702		Gear train drive cover for use when no provision for hydraulic pump or air compressor is specified. For C series engines only.
1	3919601	Gasket, Hydraulic Pump	1	
2	3914868	Plate, Cover	1	.250 Inch thick
3	3901249	Screw, Hex Flange Head Cap	2	M12 x 1.75 x 25

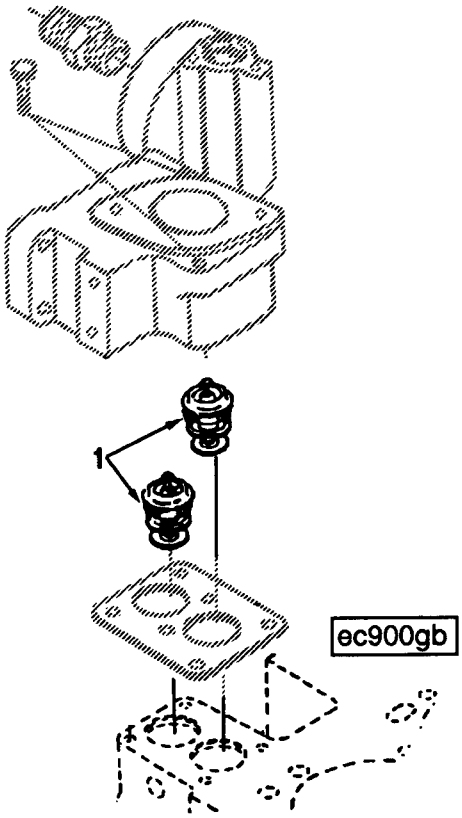

Ref No.	Part Number	Part Name	Req	Remarks
		THERMOSTAT		
		OPTION EC9002		Thermostat for C series engines which begins to open at 180 degree F (83 degree C)
1	3907242	Thermostat	2	

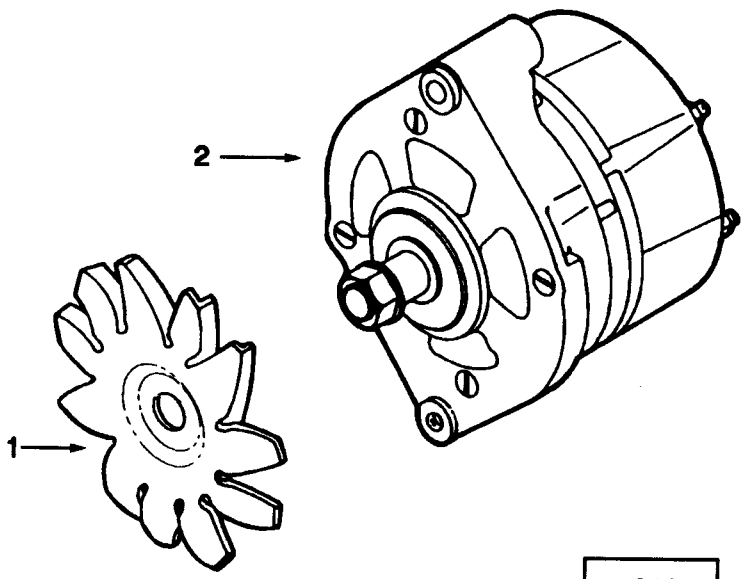

ee910ge

Ref No.	Part Number	Part Name	Req	Remarks
		ALTERNATOR		
		OPTION EE9051		12 Volt, 63 AMP, negative ground Bosch K1 alternator. Includes alternator and fan for clock wise rotation. Direct replacement for 83M2008NA Prestolite alternator.
1	3904981	Fan, Alternator	1	
2	3920679 ✓ 125 Kw	Alternator	1	

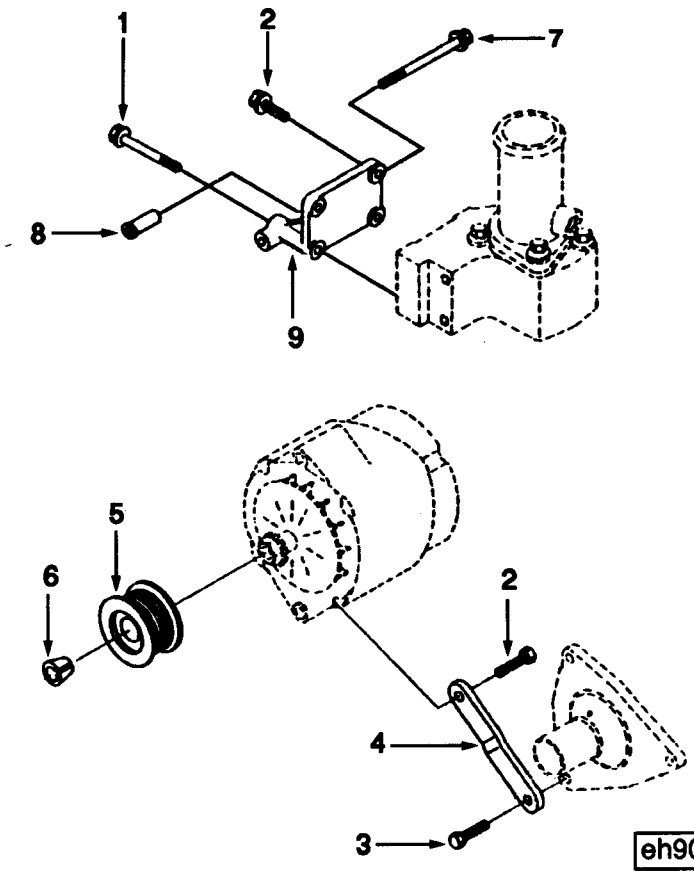

Ref No.	Part Number	Part Name	Req	Remarks
		ALTERNATOR LOCATION		
		OPTION EH9020		Alternator mounting and drive provisions for Motorola 10-747/10-749 or Bosch K1 alternators used on C series engines.
1	3916073	Screw, Hexagon Head Cap	2	M8 x 1.25 x 65
2	3900631	Screw, Hex Flange Head Cap	3	M8 x 1.25 x 25
3	3902114	Screw, Hex Flange Head Cap	1	M8 x 1.25 x 30
4	3907673	Brace, Alternator	1	
5	3908560	Pulley, Alternator	1	60 mm dia
6	3908563	Retainer, Pulley	1	
7	3916069	Screw, Hexagon Head Cap	1	
8	3910715	Spacer, Mounting	1	
9	3910716	Support, Alternator	1	

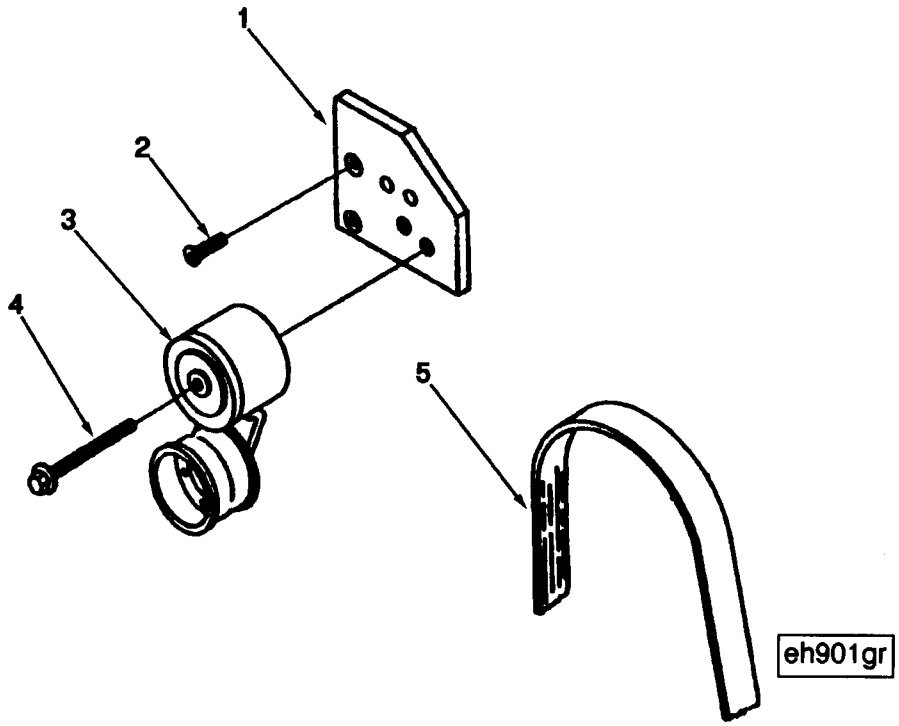

Ref No.	Part Number	Part Name	Req	Remarks
		ALTERNATOR LOCATION		
		OPTION EH9734		Alternator drive belt and items required to adjust the belt. Used with 10SI Delco Remy and Motorola 10-747 or 10-749 or Bosch K1 alternator and 1.1:1 fan drive ratio at 292.0mm fan center arrangement for C series engines.
1	3905935	Bracket, Belt Tensioner	1	
2	3903095	Screw, Flat Head Cap	2	M8 x 1.25 x 25
3	3914086	Tensioner, Belt	1	
4	3904446	Screw, Hex Flange Head Cap	1	M10 x 1.50 x 70
5	3911571	Belt, V Ribbed	1	

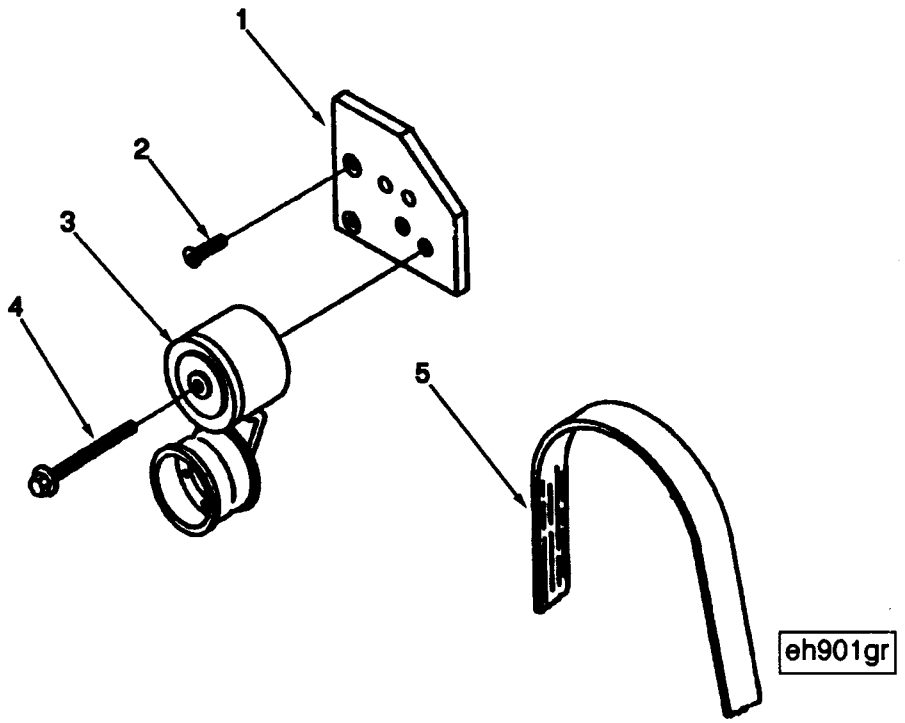

Ref No.	Part Number	Part Name	Req	Remarks
		ALTERNATOR LOCATION		
		OPTION EH9737		Alternator drive belt and items required to adjust belt used with 10SI Delco Remy and Motorola 10-747 or 10-749 or Bosch K1 alternator and .87:1 fan drive ratio at 292.0mm fan center arrangement for C series engines.
1	3905935	Bracket, Belt Tensioner	1	
2	3903095	Screw, Flat Head Cap	2	M8 x 1.25 x 25
3	3914086	Tensioner, Belt	1	
4	3904446	Screw, Hex Flange Head Cap	1	M10 x 1.50 x 70
5	3911573	Belt, V Ribbed	1	

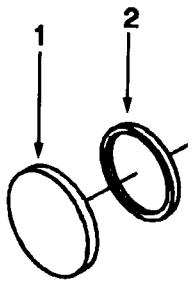

ei910gh

Ref No.	Part Number	Part Name	Req	Remarks
		MECH TACH DRIVE		
		OPTION EI9701		Accessory hole cover tube used when no mechanical tach or front oil fill is used.
1	3903463	Cover, Access Hole	1	
2	3903475	Seal, Rectangular Ring	1	

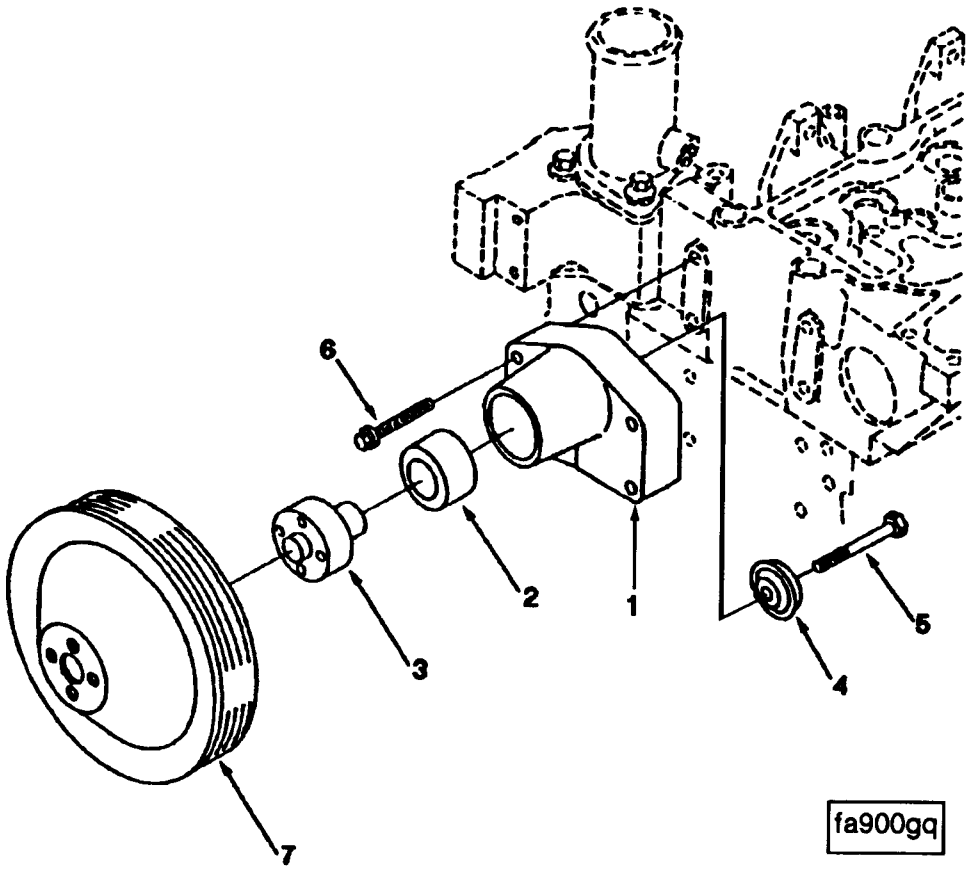
6
2
1
5
3
4
7
fa900gq

Ref No.	Part Number	Part Name	Req	Remarks
		FAN DRIVE		
		OPTION FA9053		1.1 to 1 drive ratio fan arrangement at 292.0mm above centerline of crank and on centerline of engine/crank. Has increased fan weight capability. C series engines.
	3910738	Support, Fan	1	
1	3908817	Support, Fan	1	
2	3910739	Bearing, Ball	1	
3	3911924	Hub, Fan	1	
4	3910410	Retainer, Fan Hub	1	
5	3907769	Screw, Hexagon Head Cap	1	M10 x 1.75 x 70
6	3900633	Screw, Hex Flange Head Cap	4	M8 x 1.25 x 50
7	3914462	Pulley, Fan	1	
		FAN DRIVE		
		OPTION FA9057		.87 to 1 drive ratio fan arrangement at 292.0mm above centerline of crank and on centerline of engine/crank. Has increased fan weight capability. C series engines.
	3910738	Support, Fan	1	
1	3908817	Support, Fan	1	
2	3910739	Bearing, Ball	1	
3	3911924	Hub, Fan	1	
4	3910410	Retainer, Fan Hub	1	
5	3907769	Screw, Hexagon Head Cap	1	M10 x 1.75 x 70
6	3900633	Screw, Hex Flange Head Cap	4	M8 x 1.25 x 50
7	3914461	Pulley, Fan	1	

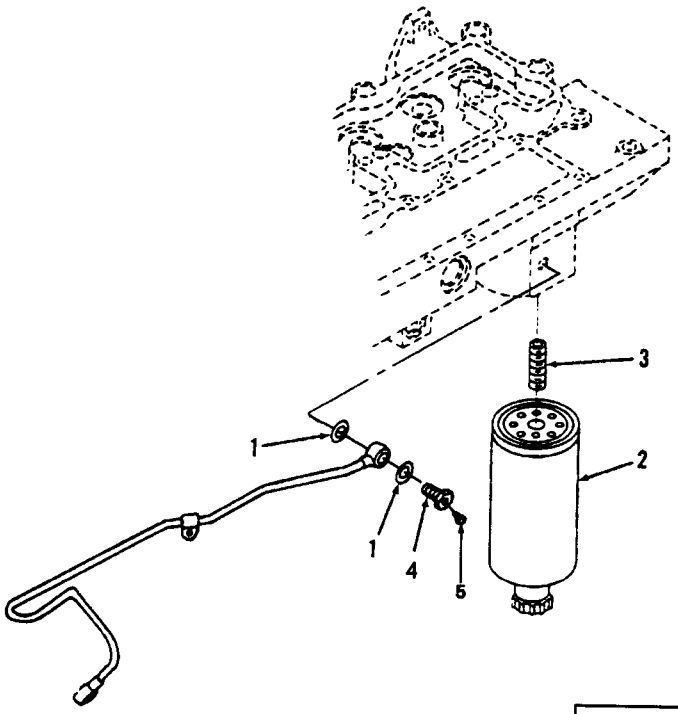

ff9011s

Ref No.	Part Number	Part Name	Req	Remarks
		FUEL FILTER		
		OPTION FF9011		Single element fuel filter arrangement having water separator and drain, C series.
1	3918191	Washer, Sealing	2	
2	3903202	Filter, Fuel	1	
3	3903845	Adapter, Filter Head	1	
	3905860	Screw, Banjo Connector	1	
4	3911446	Screw, Banjo Connector	1	M12 x 1.50 x 24
5	3905860	Screw, Captive Washer Cap	1	M6 x 1.00 x 10

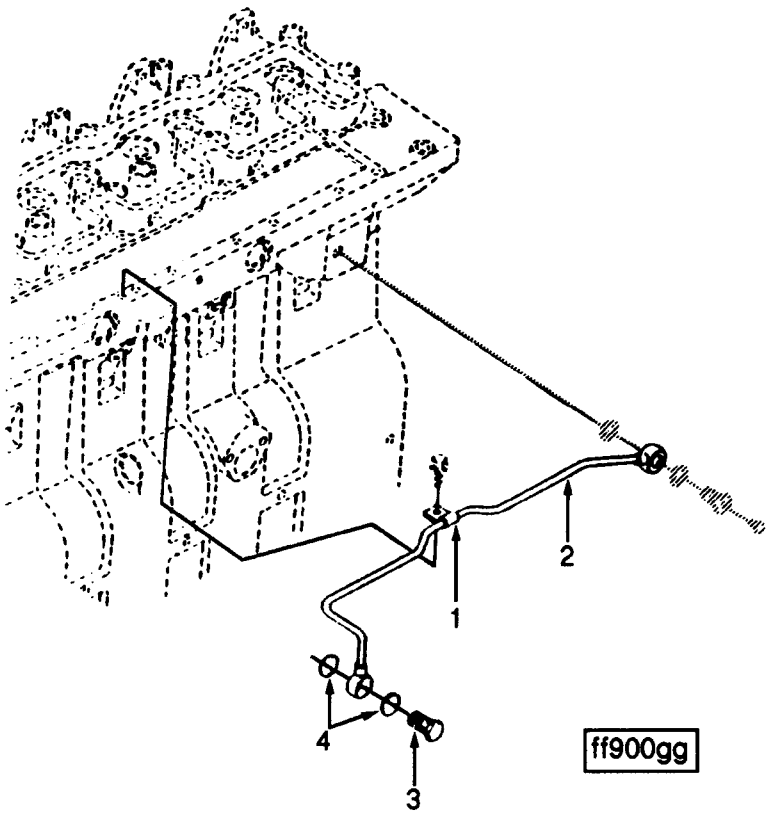

Ref No.	Part Number	Part Name	Req	Remarks
		FUEL INLET TUBE		
		OPTION FF9713		Fuel supply tube, from fuel filter head to Bosch's "A" type fuel injection pump, C series.
1	3914711	Clip	1	
2	3912923	Tube, Fuel Supply	1	
3	3907541	Screw, Banjo Connector	1	M14 x 1.50 x 26
4	3918192	Washer, Sealing	2	
		FUEL INLET TUBE		
		OPTION FF9714		Fuel supply tube, from fuel filter head to Bosch's "MW" type fuel injection pump, C series.
1	3914711	Clip	1	
2	3912925	Tube, Fuel Supply	1	
3	3907541	Screw, Banjo Connector	1	M14 x 1.50 x 26
4	3918192	Washer, Sealing	2	

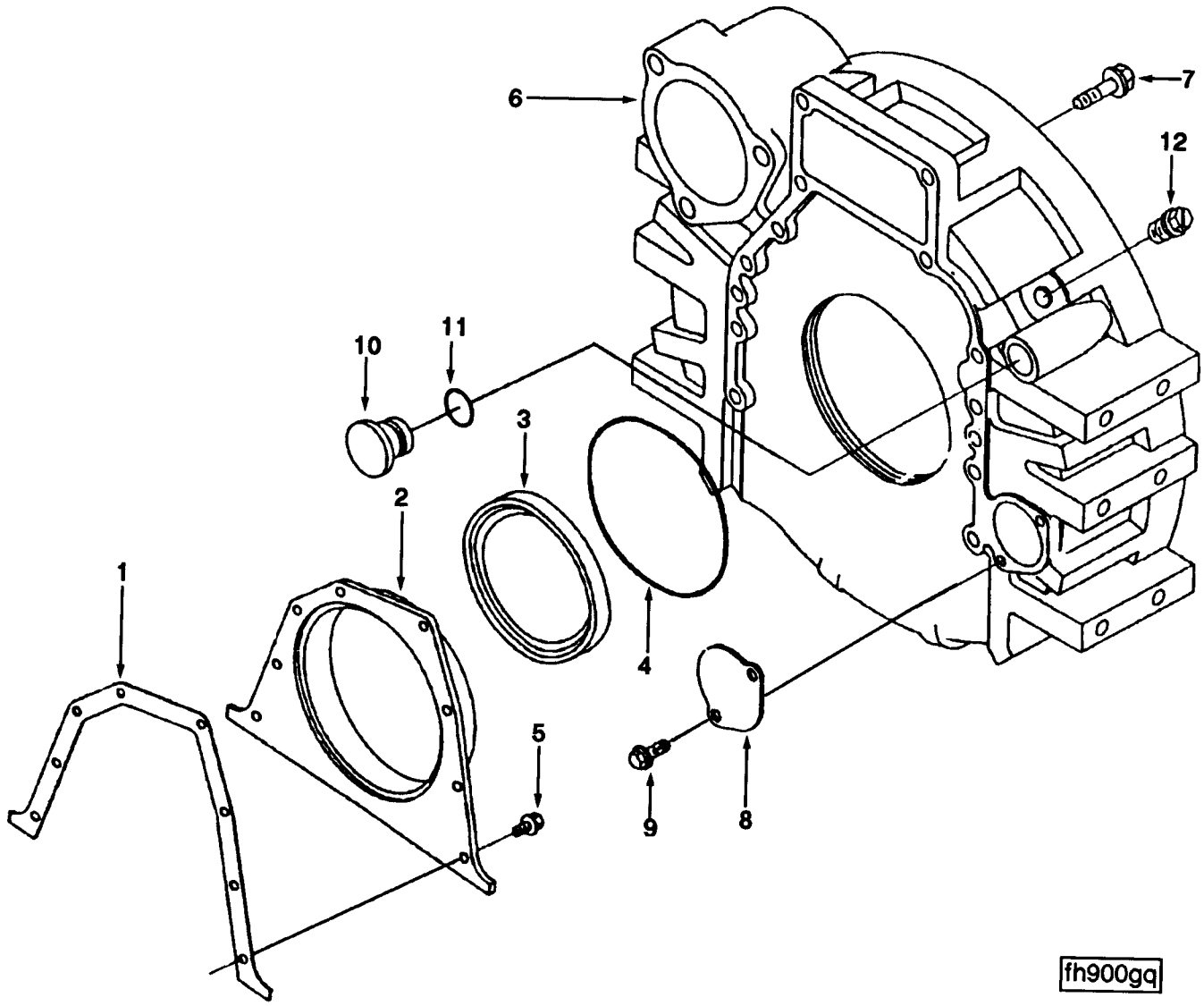
6
7
12
10
11
3
2
1
4
5
9
8
fh900gq

Ref No.	Part Number	Part Name	Req	Remarks
		FLYWHEEL HOUSING		
		OPTION FH9030		SAE #3 pad type aluminum flywheel housing for dry application. Starter location is in #1 quadrant.
1	3914301	Gasket, Rear Cover	1	
2	3921042	Cover, Rear	1	
3	3909410	Rear Crank Seal Serv. Kit	1	Seal for use with dry flywheel housing only.
	(3921265)	Seal, Oil	1	
4	3912473	Seal, Rectangular Ring	1	
5	3913638	Screw, Hex Flange Head Cap	8	M6 x 1.00 x 15
6	3908799	Housing, Flywheel	1	
7	3920447	Screw, Hex Flange Head Cap	12	M12 x 1.75 x 40
8	3908095	Plate, Cover	1	
9	3902735	Screw, Self Tapping Metal	2	
10	3910248	Plug, O Ring	1	
11	3910260	Seal, O Ring	1	
12	3904181	Plug, Threaded	1	3/4 - 16 UNF

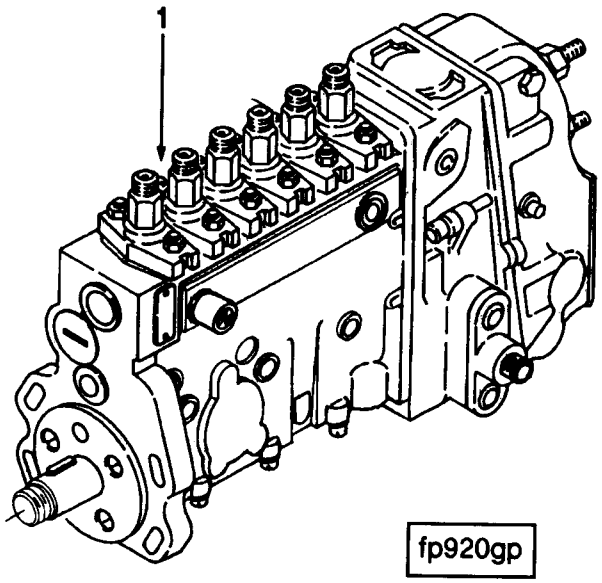

fp920gp

Ref No.	Part Number	Part Name	Req	Remarks
		FUEL PUMP		
		OPTION FP9100		Bosch's "MW" (non certified) fuel pump for 277 BHP turbocharged and aftercooled C series engine at 1800 RPM with continuous duty rating and 4% governing. Has manual actuate to run fuel solenoid and RSV governor. Ref. CPL #0831 with FR 9199.
1	3914871	Pump, Fuel Injection	1	

NOTES

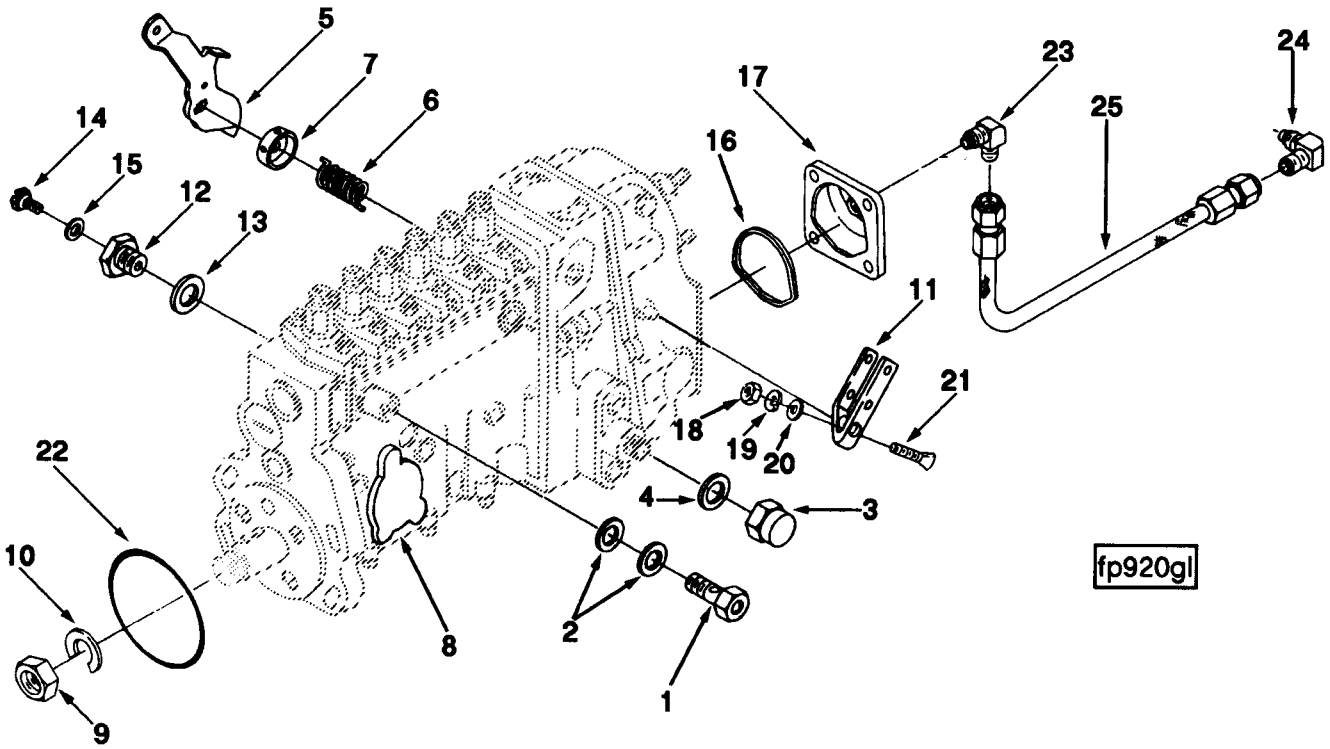
5
7
6
14
15
12
13
17
16
23
24
25
11
21
18
19
20
4
3
22
10
9
8
2
1
fp920gl

Ref No.	Part Number	Part Name	Req	Remarks
		BOSCH "MW' PUMP WITH RSV GOVERNOR WITHOUT BOOST		
		OPTION FP9100		
1	3912886	Valve, Overflow	1	
2	3912887	Washer, Sealing	2	
3	3912888	Plug, Timing	1	
4	3912889	Washer, Sealing	1	
5	3910979	Lever, Shutoff Valve	1	
6	3912890	Spring, Shutoff	1	
7	3912891	Housing, Return Spring	1	
8	3912892	Gasket, Feed Pump Cover	1	
9	3912894	Nut, Gear Retaining	1	
10	3912895	Washer, Lock	1	
11	3913327	Lever, Control	1	
12	3913320	Screw, Vent	1	
13	3913321	Washer, Sealing	1	
14	3913322	Screw, Vent	1	
15	3913323	*Washer, Sealing*	1	
16	3919286	Seal, Rectangular Ring	1	
17	3915169	Cover, Fuel Pump	1	
18	3920930	Nut, Hexagon	1	
19	3907478	Lockwasher	1	
20	3920931	Washer, Flat	1	
21	3920929	Bolt, Throttle Shaft	1	
22	3910503	Seal, O Ring	1	
23	68139	Elbow, Male Adapter	1	
24	3915172	Elbow, Male Adapter	1	
25	3906747	Hose, Flexible	1	

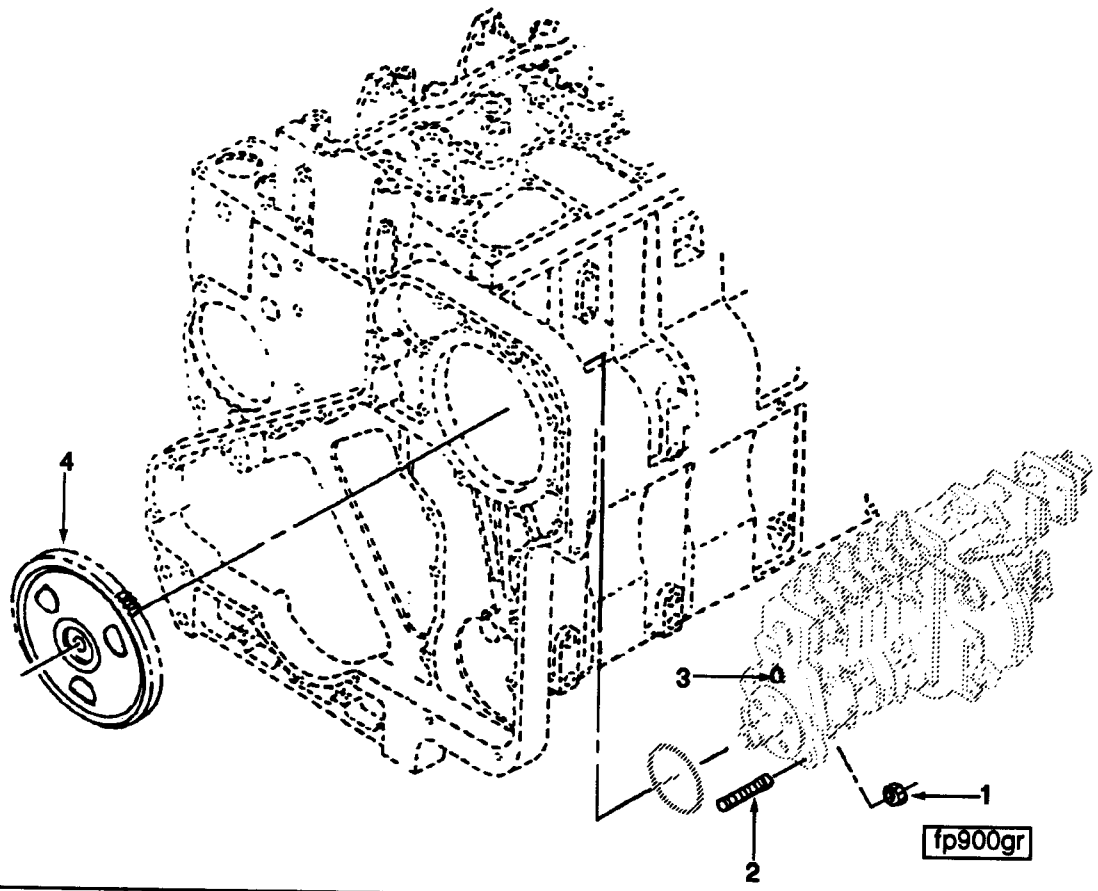

Ref No.	Part Number	Part Name	Req	Remarks
		FUEL PUMP COUPLING		
		OPTION FP9884		Fuel pump coupling assembly for C series engines with Bosch "A" fuel pump. Fuel pump gear less keyway. For engines with locktime pumps.
1	3902662	Nut, Hexagon Flange	4	M10 x 1.50
2	3915036	Stud	4	
3	3916284	Seal, O Ring	1	
4	3912614	Gear, Fuel Pump	1	

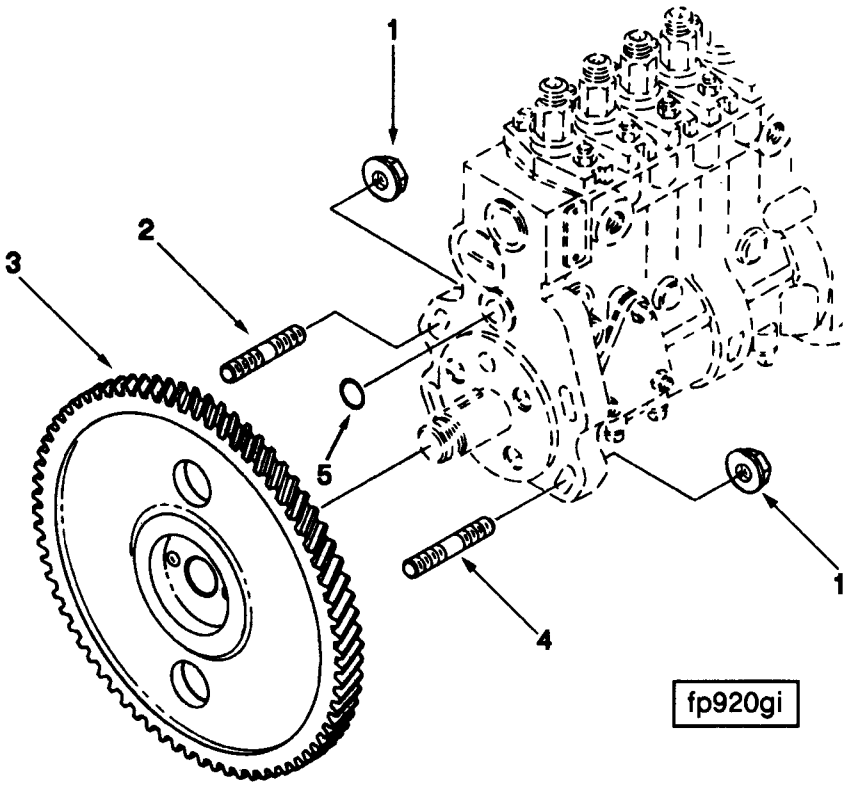

Ref No.	Part Number	Part Name	Req	Remarks
		FUEL PUMP COUPLING		
		OPTION FP9885		Fuel pump coupling assembly for C series turbo aftercooled engines with "MW" fuel pump. Fuel pump gear less keyway. For engines with locktime pumps. The (2) 3907978 studs (short) are to be used in the in-board mounting holes.
1	3902662	Nut, Hexagon Flange	4	M10 x 1.50
2	3907978	Stud	2	
3	3912615	Gear, Fuel Pump	1	
4	3915036	Stud	2	
5	3916284	Seal, O Ring	1	

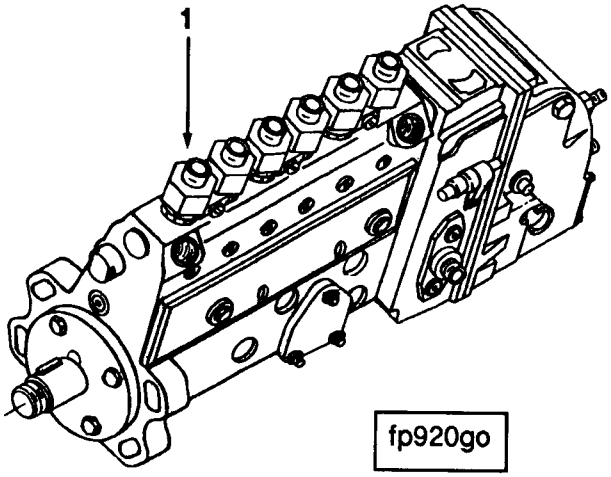

Ref No.	Part Number	Part Name	Req	Remarks
		FUEL PUMP **OPTION FP9993**		Bosch's "A" type (non certified) fuel pump for 207 BHP turbocharged C series engine at 1800 RPM with continuous duty rating and 4% governing. Has manual actuate to run fuel solenoid and RSV governor. Ref. CPL #0985 with FR 9196.
1	3914869	Pump, Fuel Injection	1	

NOTES

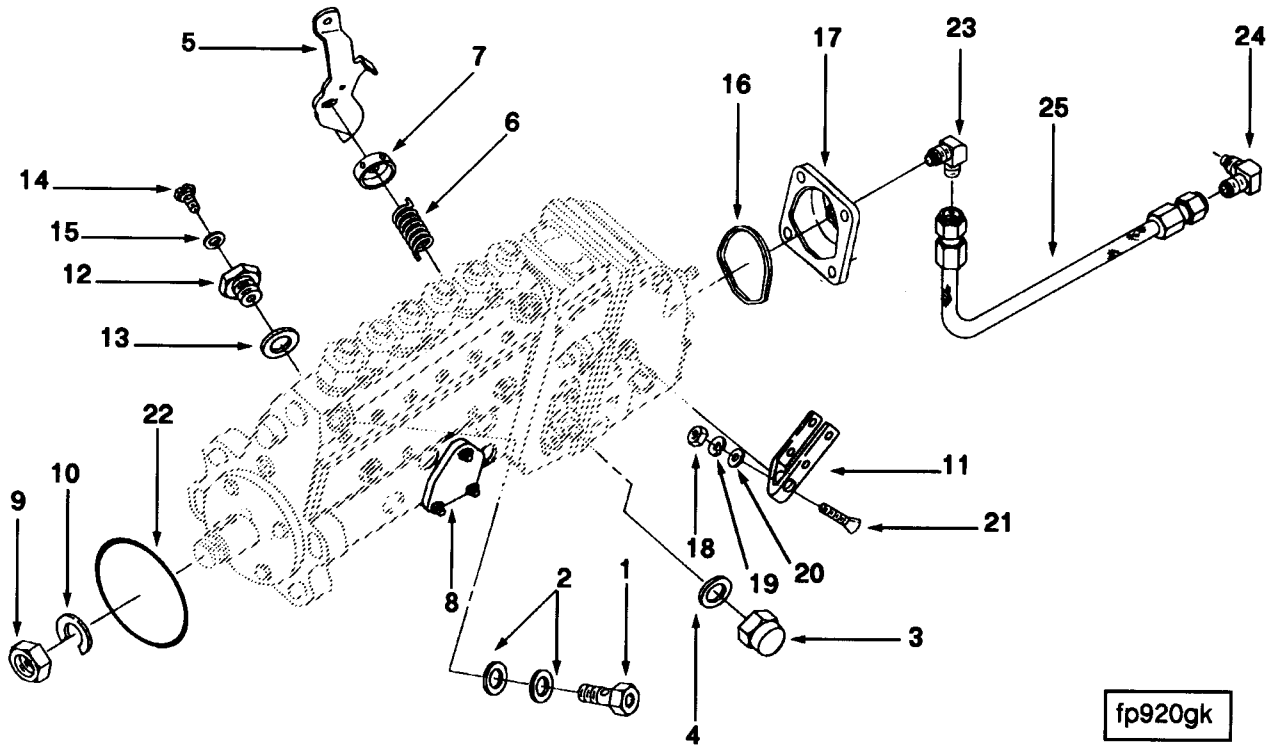
5
7
6
14
15
12
13
22
10
9
16
17
23
24
25
11
21
18
19
20
2
1
8
3
4
fp920gk

Ref No.	Part Number	Part Name	Req	Remarks
		BOSCH "A" PUMP WITH RSV GOVERNOR WITHOUT BOOST		
		OPTION FP9993		
1	3912886	Valve, Overflow	1	
2	3912887	Washer, Sealing	2	
3	3912888	Plug, Timing	1	
4	3912889	Washer, Sealing	1	
5	3910979	Lever, Shutoff Valve	1	
6	3912890	Spring, Shutoff	1	
7	3912891	Housing, Return Spring	1	
8	3912892	Gasket, Feed Pump Cover	1	
9	3912894	Nut, Gear Retaining	1	
10	3912895	Washer, Lock	1	
11	3913327	Lever, Control	1	
12	3913320	Screw, Vent	1	
13	3913321	Washer, Sealing	1	
14	3913322	Screw, Vent	1	
15	3913323	Washer, Sealing	1	
16	3919286	Seal, Rectangular Ring	1	
17	3915169	Cover, Fuel Pump	1	
18	3020930	Nut, Hexagon	1	
19	3907478	Lockwasher	1	
20	3920931	Washer, Flat	1	
22	3910503	Seal, O Ring	1	
23	68139	Elbow, Male Adapter	1	
24	3915172	Elbow, Male Adapter	1	
24	3906747	Hose, Flexible	1	

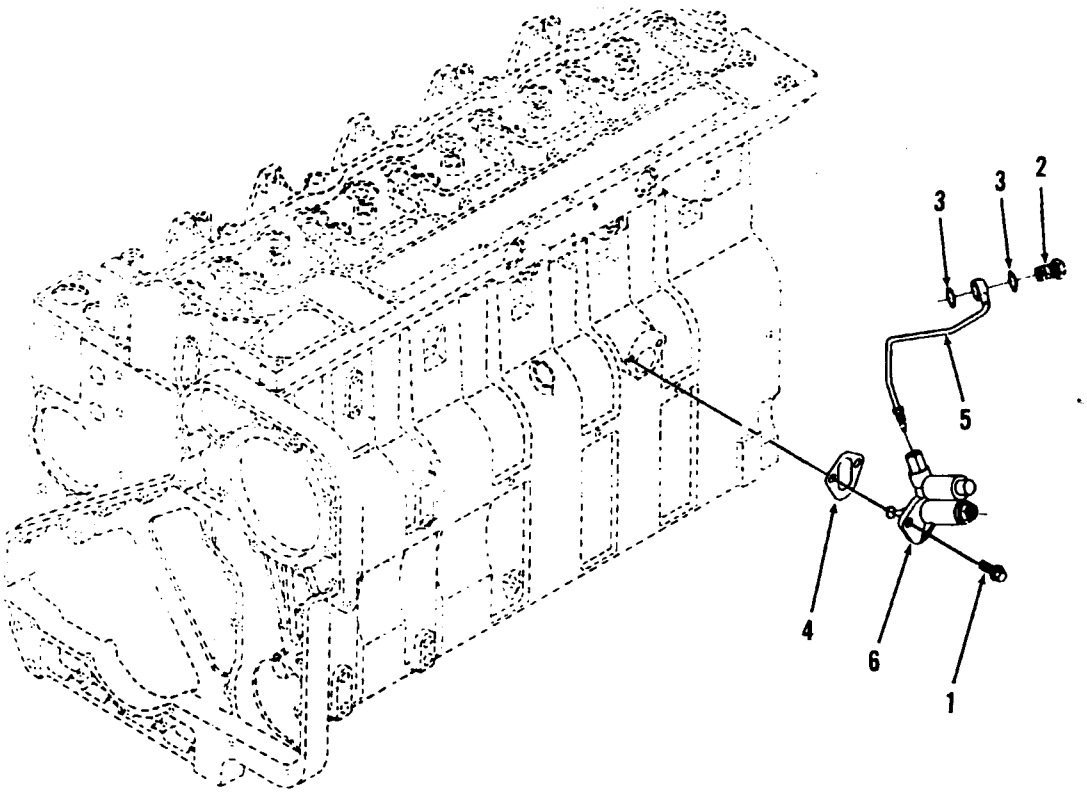

fs900gl

Ref No.	Part Number	Part Name	Req	Remarks
		FUEL SYSTEM ACCESSORIES		
		OPTION FS9006		Fuel lift pump for C series engines.
1	3900630	Screw, Hex Flange Head Cap	2	M8 x 1.25 x 20
2	3916361	Screw, Banjo Connector	1	
3	3918191	Washer, Sealing	2	12mm
4	3914304	Gasket, Cover Plate	1	
5	3906790	Tube, Fuel Supply	1	
6	3917998	Pump, Fuel Transfer	1	
		SERVICE PARTS		
	3920544	Kit, Lift Pump Service	1	Includes check valve,gaskets and o ring seals.

NOTES

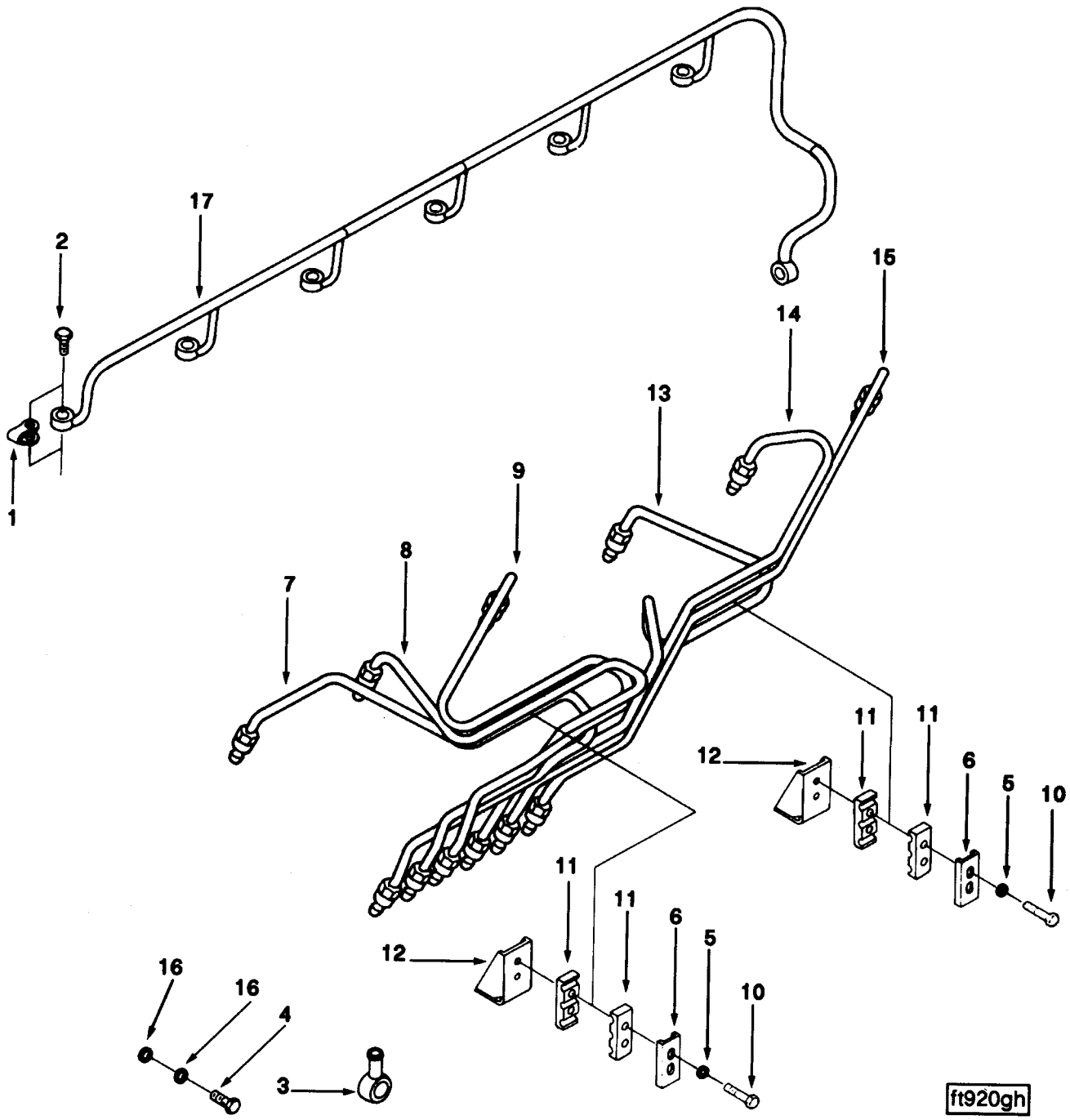
17
2
15
14
13
1
9
8
7
11
11
12
6
5
10
11
11
6
5
12
10
16
16
4
3
ft920gh

Ref No.	Part Number	Part Name	Req	Remarks
		FUEL PLUMBING		
		OPTION FT9724		Fuel manifold supply and drain tubing for C series naturally aspirated and turbocharged engines using Bosch "A" pump with 2.0mm fuel lines.
1	3903380	Seal, Banjo Connector	6	
2	3905307	Screw, Banjo Connector	6	M6 x 1.00 x 14
3	3911447	Connector, Banjo	1	
4	3916360	Valve, Check	1	
5	3903723	Washer, Plain	4	
6	3904519	Brace, Tube	2	
7	3906783	Tube, Injector Fuel Supply	1	No. 1 Cylinder
8	3906784	Tube, Injector Fuel Supply	1	No. 2 Cylinder
9	3906785	Tube, Injector Fuel Supply	1	No. 3 Cylinder
10	3917712	Screw, Hexagon Head Cap	4	M5 x 0.80 x 22
11	3917747	Isolator, Vibration	4	
12	3917776	Brace, Tube	2	
13	3910521	Tube, Injector Fuel Supply	1	No. 4 Cylinder
14	3906788	Tube, Injector Fuel Supply	1	No. 5 Cylinder
15	3906787	Tube, Injector Fuel Supply	1	No. 6 Cylinder
16	3918188	Washer, Sealing	2	
17	3915695	Manifold, Fuel	1	

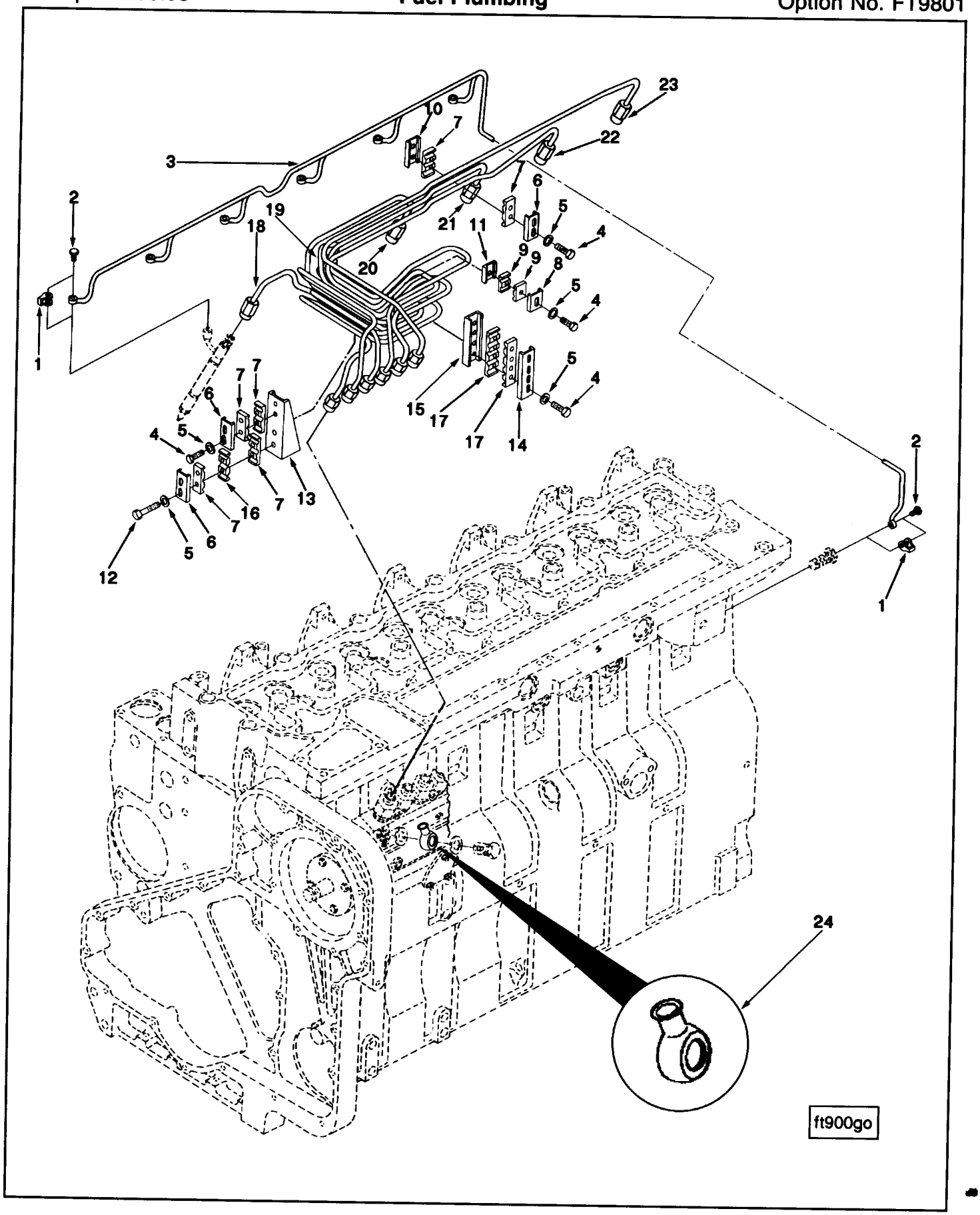
1
2
3
4
5
6
7
8
9
10
11
12
13
14
15
16
17
18
19
20
21
22
23
24
ft900go

Ref No.	Part Number	Part Name	Req	Remarks
		FUEL PLUMBING		
		OPTION FT9801		Fuel manifold supply and drain tubing for C series turbocharged aftercooled engines using Bosch "MW" pump with 2.0mm fuel lines. The 3911447 banjo connector is to be installed on the outboard side of the pump. Includes plastic fuel drain manifold.
1	3903380	Seal, Banjo Connector	7	
2	3905307	Screw, Banjo Connector	7	M6 x 1.00 x 14
3	3915695	Manifold, Fuel	1	
4	3903609	Screw, Hexagon Head Cap	9	M5 x 0.80 x 20
5	3903723	Washer, Plain	11	
6	3904519	Brace, Tube	3	
7	3914339	Isolator, Vibration	6	
8	3904711	Brace, Tube	1	
9	3914338	Isolator, Vibration	2	
10	3907505	Brace, Tube	1	
11	3907546	Brace, Tube	1	
12	3910037	Screw, Hexagon Head Cap	2	
13	3910685	Brace, Tube	1	
14	3910686	Brace, Tube	1	
15	3910687	Brace, Tube	1	
16	3914340	Isolator, Vibration	1	
17	3914341	Isolator, Vibration	2	
18	3910749	Tube, Injector Fuel Supply	1	No. 1 cylinder
19	3910750	Tube, Injector Fuel Supply	1	No. 2 cylinder
20	3910751	Tube, Injector Fuel Supply	1	No. 3 cylinder
21	3910752	Tube, Injector Fuel Supply	1	No. 4 cylinder
22	3910753	Tube, Injector Fuel Supply	1	No. 5 cylinder
23	3910754	Tube, Injector Fuel Supply	1	No. 6 cylinder
24	3911447	Connector, Banjo	1	

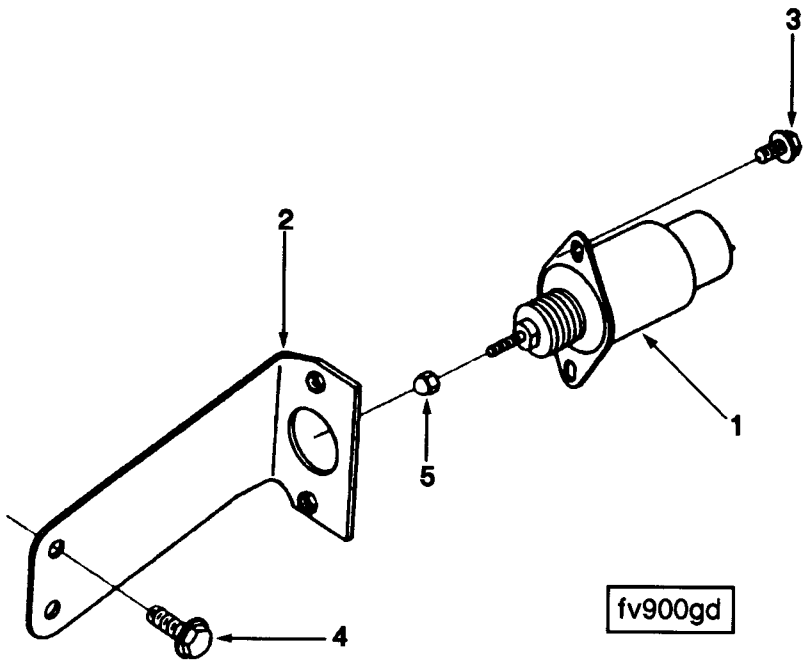

Ref No.	Part Number	Part Name	Req	Remarks
		FUEL SHUTOFF VALVE		
		OPTION FV9004		12 volt synchro-start fuel pump shutoff valve for C series engines. Includes bracket, actuator and mounting for Bosch "A" pump with RSV governor.
1	3906398	Solenoid	1	
2	3916142	Bracket, Solenoid	1	
3	3913638	Screw, Hex Flange Head Cap	2	M6 x 1.00 x 15
4	3903990	Screw, Hex Flange Head Cap	2	M10 x 1.50 x 20
5	3906649	Nut, Hexagon Acorn	1	
		FUEL SHUTOFF VALVE		
		OPTION FV9006		12 volt synchro-start fuel pump shutoff valve for C series engines - includes bracket, actuator and mounting - for Bosch "MW" pump with RSV governor.
1	3906398	Solenoid	1	
2	3916144	Bracket, Solenoid	1	
3	3913638	Screw, Hex Flange Head Cap	2	M6 x 1.00 x 15
4	3903990	Screw, Hex Flange Head Cap	2	M10 x 1.50 x 20
5	3906649	Nut, Hexagon Acorn	1	

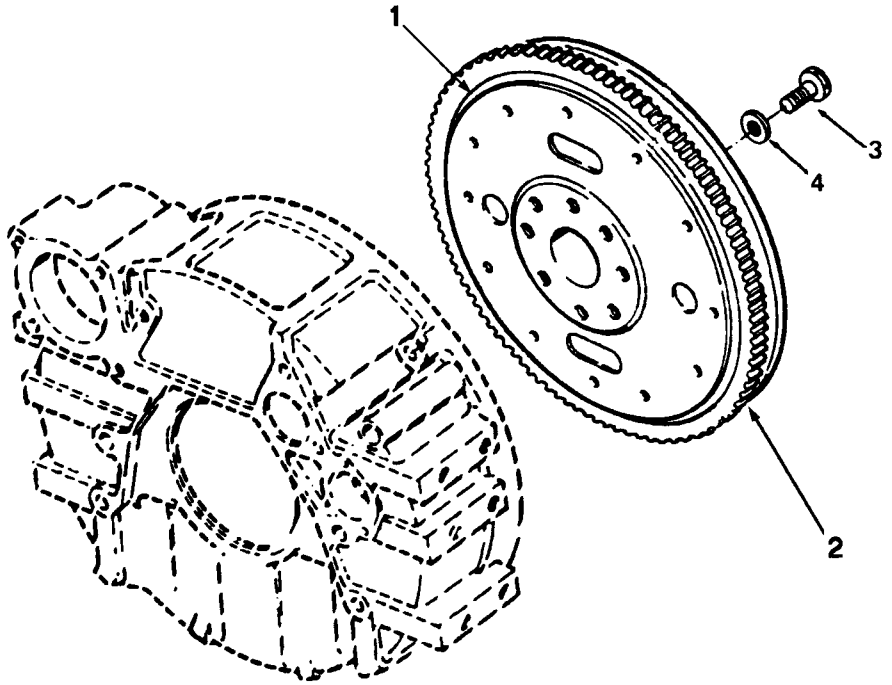

fw900gm

Ref No.	Part Number	Part Name	Req	Remarks
		FLYWHEEL		
		OPTION FW9024		FW option type: Flywheel For flywheel housing size: SAE #3 Ring gear pitch: 8/10 Ring gear to crank face offset: 15.25MM Mating drive hardware: modified SAE #80. Restricted FH compatibility: No
	3914433	Flywheel	1	
1	(3914431)	Flywheel	1	
2	3905427	Gear, Flywheel Ring	1	
3	3901395	Screw, Hexagon Head Cap	8	M12 x 1.25 x 32
4	3900269	Washer, Plain	8	

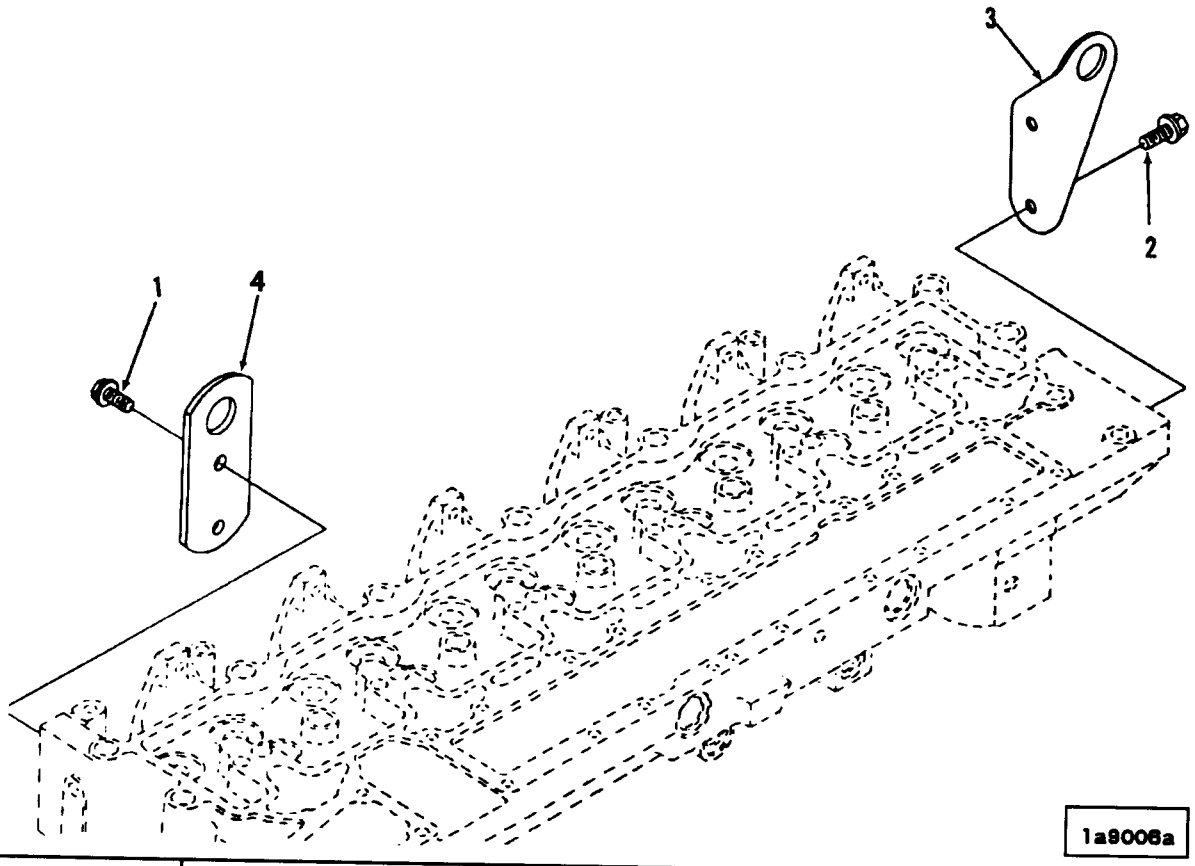

Ref No.	Part Number	Part Name	Req	Remarks
		LIFTING BRACKET		
		OPTION LA9006		Front and rear lifting bracket arrangement for the C series engines.
1	3901249	Screw, Hex Flange Head Cap	2	M12 x 1.75 x 25
2	3903200	Screw, Hexagon Head Cap	2	M12 x 1.75 x 25
3	3906440	Bracket, Lifting	1	
4	3907861	Bracket, Lifting	1	

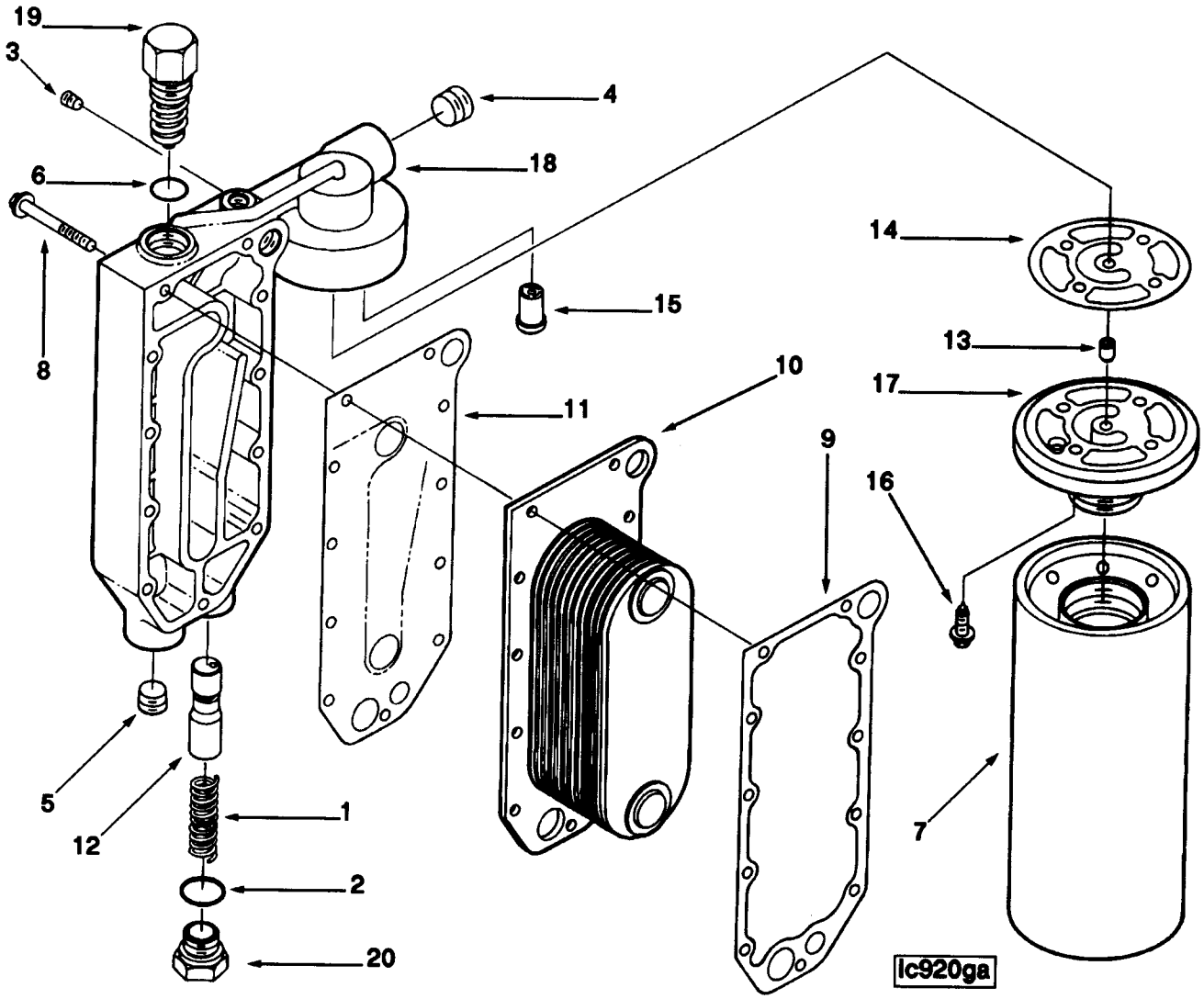
19
3
4
18
6
14
15
13
8
10
11
17
9
16
5
12
1
2
20
7
lc920ga

Ref No.	Part Number	Part Name	Req	Remarks
		ENGINE OIL COOLER		
		OPTION LC9028		Engine oil cooler assembly for use on C series. turbocharged, turbocharged aftercooled and charge air cooled engines. Includes combination full flow/bypass lube oil filter.
1	68274	Spring, Compression	1	
2	145508	Seal, O Ring	1	
3	3906619	Plug, Pipe	2	
4	3008469	Plug, Pipe	1	
5	3027232	Plug, Pipe	1	
6	3201562	Seal, O Ring	1	
7	3825970	Element, Lub Oil Filter	1	
8	3916073	Screw, Hex Flange Head Cap	11	M8 x 1.25 x 65
9	3918174	Gasket, Oil Cooler Core	1	
10	3918175	Core, Cooler	1	
11	3918332	Gasket, Lub Oil Clr Cover	1	
12	3918532	Plunger, Prs Regulator	1	
13	118227	Dowel, Ring	1	
14	3921605	Gasket, Filter Head	1	
15	3902338	Valve, Bypass	1	
16	3907860	Screw, Hex Flange Head Cap	4	M8 x 1.25 x 25
17	3918334	Head, Lub Oil Filter	1	
18	3918403	Cover, Lub Oil Cooler	1	
19	3920326	Thermostat	1	
20	3920327	Plug, Threaded	1	

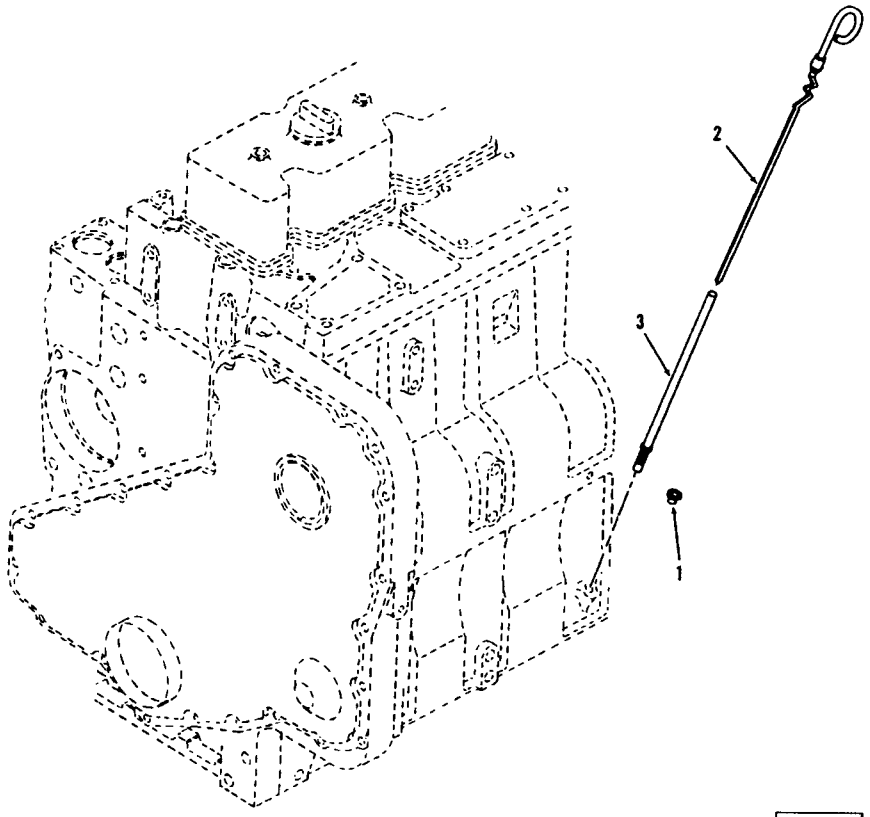

Ref No.	Part Number	Part Name	Req	Remarks
		OIL LEVEL GAUGE		
		OPTION LG9028		65mm straight tube for use with front or rear sump oil pan. Dipstick is located on the fuel pump side of the engine, and is calibrated at zero degrees power angle and zero degrees tilt. Cannot use in conjunction with hydraulic pump mounted on rear of air compressor. With this combination use dipstick on exhaust side of engine (LG9101).
1	3900955	Plug, Expansion	1	
2	3908772	Dipstick	1	
3	3905425	Tube, Oil Gauge	1	

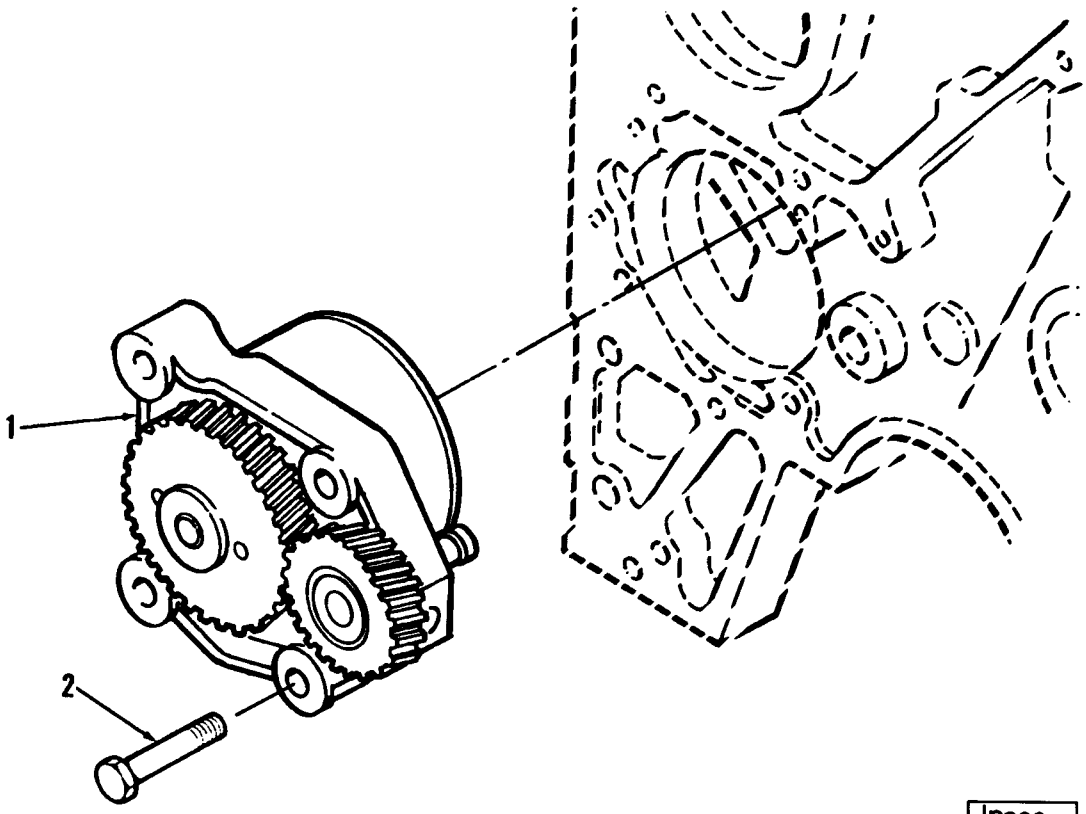

lp900ga

Ref No.	Part Number	Part Name	Req	Remarks
		LUBRICATING OIL PUMP		
		OPTION LP9004		High capacity lube pump for C series engines with two piston cooling nozzles per cylinder.
1	3802278	Kit, Lube Oil Pump	1	
	(3921067)	Pump, Lubricating Oil	1	
	3918532	Plunger, Prs Regulator	1	
2	3900677	Screw, Hexagon Head Cap	4	M8 x 1.25 x 30

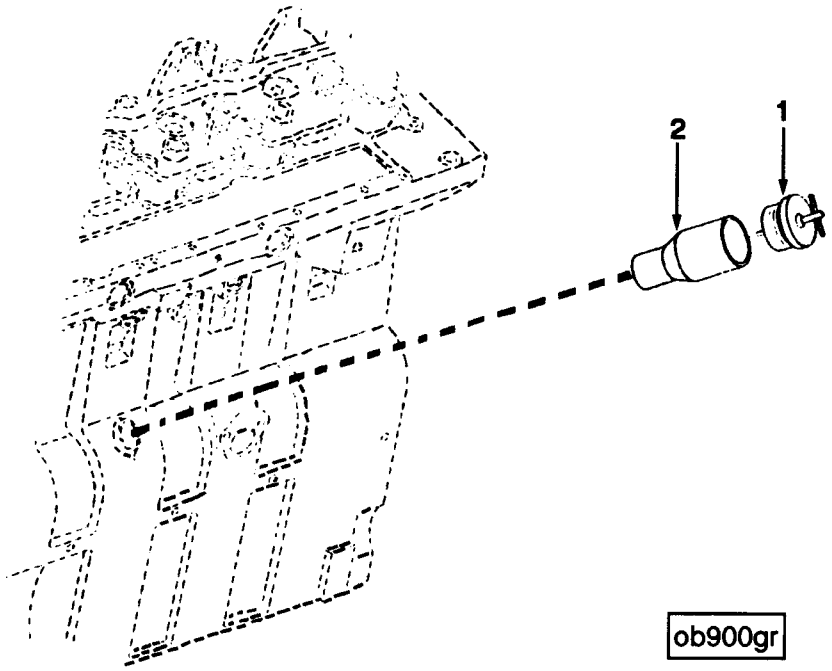

Ref No.	Part Number	Part Name	Req	Remarks
		CYLINDER BLOCK COVER		
		OPTION OB9006		Oil fill tube located on left hand side of block.
1	101322	Cap, Filler	1	
2	3905408	Tube, Oil Filler	1	

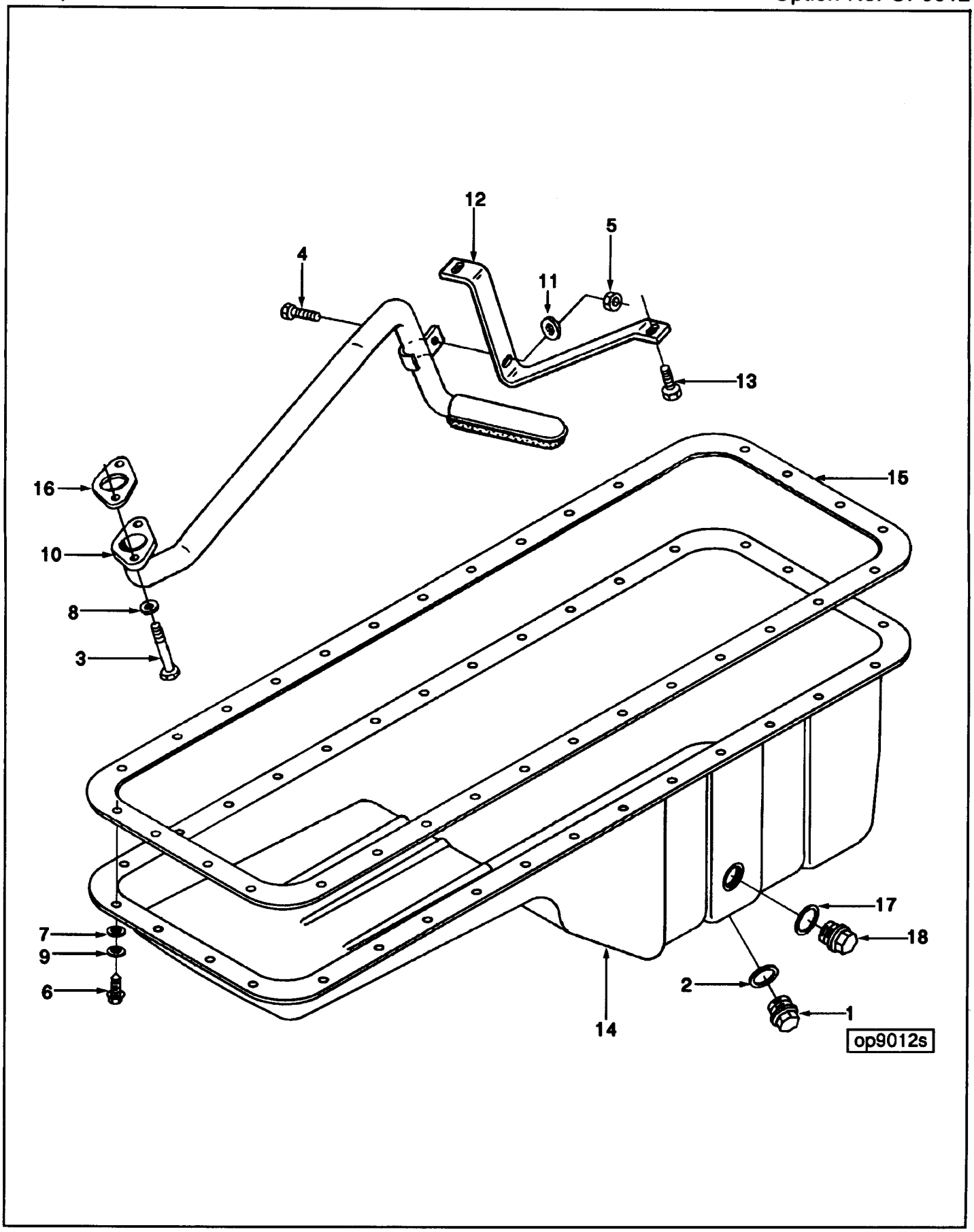
12
5
4
11
13
16
15
10
8
3
17
18
7
9
6
2
1
14
op9012s

Ref No.	Part Number	Part Name	Req	Remarks
		OIL PAN		
		OPTION OP9012		Rear sump oil pan for "C" series engines with 22mm hole for immersion type oil heater. Angularity limits are 45 degrees in all directions. Capacity is high level 20 quarts, low level 16 quarts. Washer 3910960 must be assembled between fastener bearing surface and brace 3913427.
1	3911638	Plug, Threaded	1	
2	3920773	Washer, Sealing	1	
3	3900628	Screw, Hex Flange Head Cap	2	M6 x 1.00 x 30
4	3901865	Screw, Hex Flange Head Cap	1	M6 x 1.00 x 20
5	3906216	Nut, Hexagon Flange	1	
6	3907860	Screw, Hex Flange Head Cap	32	M8 x 1.25 x 25
7	3908316	Washer, Plain	32	
8	3908738	Spacer, Mounting	2	
9	3910266	Washer, Spring	32	
10	3910788	Connection, Oil Suction	1	
11	3910960	Washer, Plain	1	
12	3913427	Brace, Tube	1	
13	3913638	Screw, Hex Flange Head Cap	3	M6 x 1.00 x 15
14	3914013	Pan, Oil	1	
15	3914017	Gasket, Oil Pan	1	
16	3914302	Gasket, Oil Suc Connection	1	
17	3902425	Washer, Sealing	1	
18	3904386	Plug, Threaded	1	

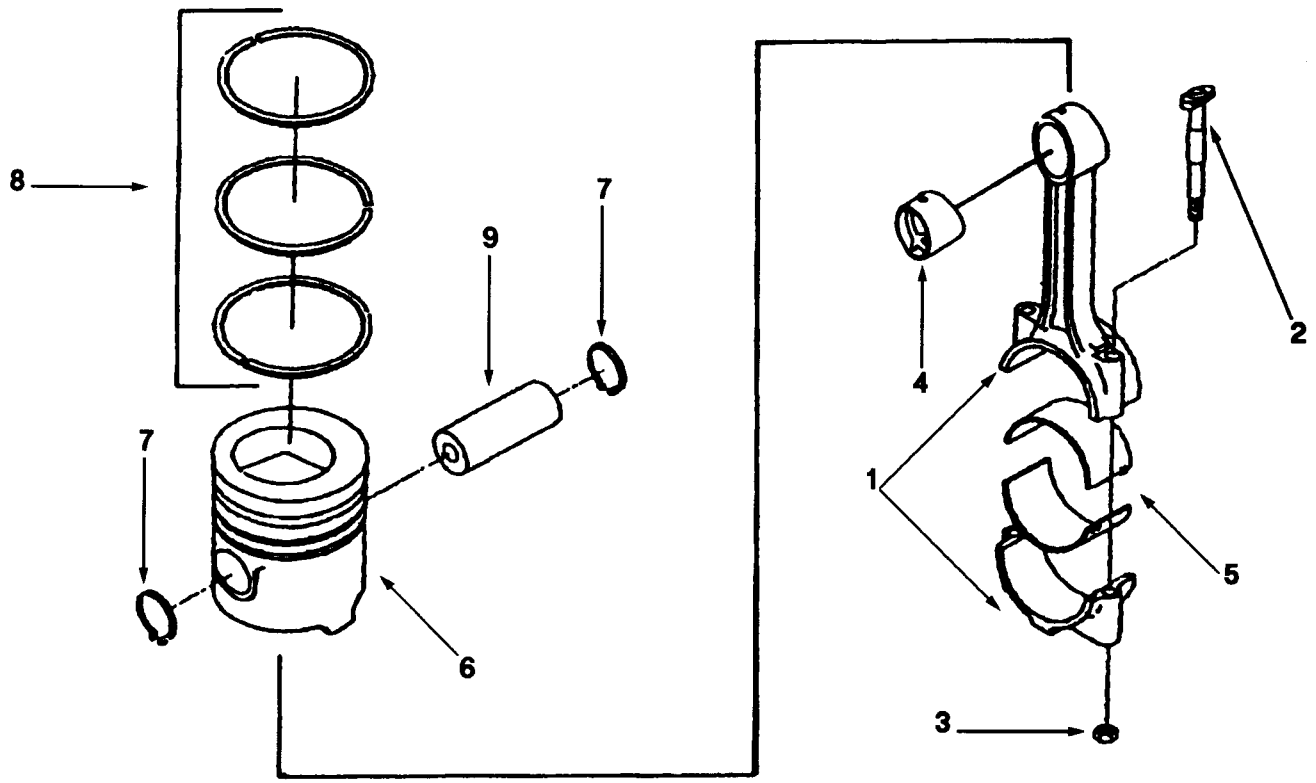

Ref No.	Part Number	Part Name	Req	Remarks
		PISTON AND CONNECTING ROD		
		OPTION PP831		CPL831
				C series turbocharged aftercooled.
	3901383	Rod, Engine Connecting	6	
1	(3901224)	Rod, Engine Connecting	1	
2	3901380	Bolt, Connecting Rod	2	
3	3901381	Nut, Regular Hexagon	2	
4	3913990	Bushing	1	
5	3901430	Bearing, Connecting Rod	12	Standard
	3802398	Kit, Engine Piston	6	Standard
6	(3923164)	Piston, Engine	1	
7	3901996	Ring, Retaining	2	
8	3802258	Set, Piston Ring	1	Standard
9	3901597	Pin, Piston	6	
5	3901431	Bearing, Connecting Rod	A/R	(0.010) Oversize
5	3901432	Bearing, Connecting Rod	A/R	(0.020) Oversize
5	3901433	Bearing, Connecting Rod	A/R	(0.030) Oversize
5	3901434	Bearing, Connecting Rod	A/R	(0.040) Oversize
		CYLINDER KIT		
	3802404	Kit, Cylinder	6	Standard
	3802407	Kit, Liner	1	
	3802398	Kit, Engine Piston	1	Standard

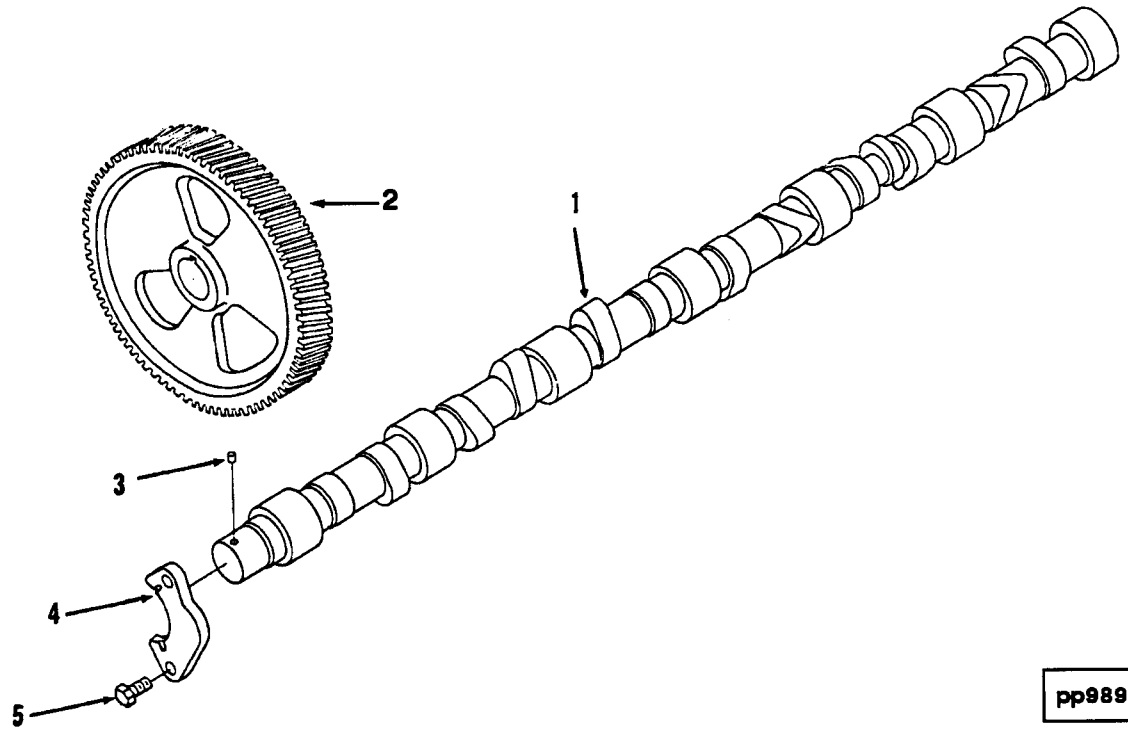

Ref No.	Part Number	Part Name	Req	Remarks
		CAMSHAFT		
		OPTION PP831		CPL 831
		OPTION PP985		CPL 985
1	3914640	Camshaft	1	
2	3917328	Gear, Camshaft	1	
3	3917883	Dowel, Pin	1	
4	3914641	Support, Camshaft Thrust	1	
5	3900227	Screw, Hexagon Head Cap	2	M8 x 1.25 x 22

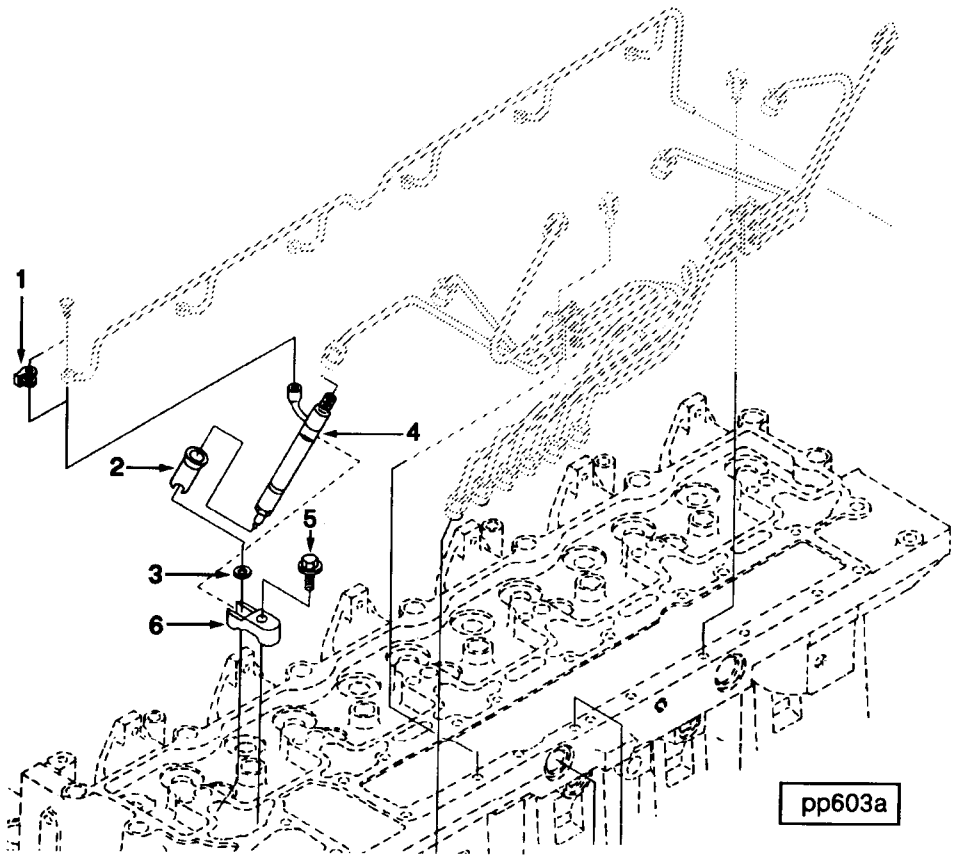

Ref No.	Part Number	Part Name	Req	Remarks
		FUEL INJECTOR		
		OPTION PP831		CPL831
	3802098	Injector	6	
4	(3908511)	Injector	1	Bosch
1	3903380	Seal, Banjo Connector	1	
2	3909886	Seal, Injector	1	
3	3906659	Seal, Injector	1	
5	3922018	Screw, Hex Flange Head Cap	6	M8 x 1.25 x 80
6	3910279	Clamp, Injector	6	

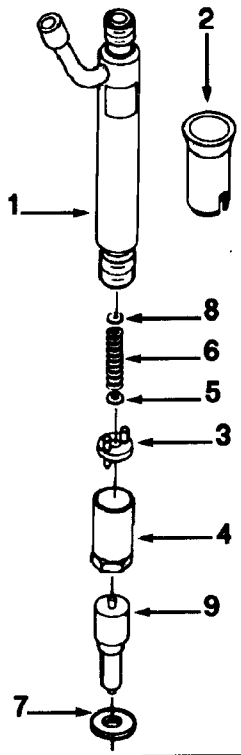

fi940ga

Ref No.	Part Number	Part Name	Req	Remarks
		FUEL INJECTOR		
		OPTION PP831		CPL831
		SERVICE ITEMS		
	3802098	Kit, Fuel Injector	6	
1	(3908511)	Injector	1	Bosch
2	3909886	Seal, Injector	1	
3	3905154	Disc, Intermediate	1	
4	3915155	Retainer, Injector Nozzle	1	
5	3915118	Spindle, Injector	1	
6	3815119	Spring, Compression	1	
7	3906659	Seal, Injector	1	
8		Shim	1	See following page
9	3908512	Nozzle, Injector	1	Bosch

Ref No.	Part Number	Part Name	Req	Remarks
		SERVICE ITEMS		
		FUEL INJECTOR		
		OPTION PP831		
8	3905156	Shim	A/R	1.00 mm Thick
8	3905157	Shim	A/R	1.04 mm Thick
8	3905158	Shim	A/R	1.08 mm Thick
8	3905159	Shim	A/R	1.10 mm Thick
8	3905160	Shim	A/R	1.14 mm Thick
8	3905161	Shim	A/R	1.18 mm Thick
8	3905162	Shim	A/R	1.20 mm Thick
8	3905163	Shim	A/R	1.24 mm Thick
8	3905164	Shim	A/R	1.28 mm Thick
8	3905165	Shim	A/R	1.30 mm Thick
8	3905166	Shim	A/R	1.34 mm Thick
8	3905167	Shim	A/R	1.38 mm Thick
8	3905168	Shim	A/R	1.40 mm Thick
8	3905169	Shim	A/R	1.44 mm Thick
8	3905170	Shim	A/R	1.48 mm Thick
8	3905171	Shim	A/R	1.50 mm Thick
8	3905172	Shim	A/R	1.54 mm Thick
8	3905173	Shim	A/R	1.58 mm Thick
8	3905174	Shim	A/R	1.60 mm Thick
8	3905175	Shim	A/R	1.64 mm Thick
8	3905176	Shim	A/R	1.68 mm Thick
8	3905177	Shim	A/R	1.70 mm Thick
8	3905178	Shim	A/R	1.74 mm Thick
8	3905180	Shim	A/R	1.78 mm Thick
8	3905181	Shim	A/R	1.80 mm Thick
8	3905182	Shim	A/R	1.84 mm Thick
8	3905183	Shim	A/R	1.88 mm Thick
8	3905184	Shim	A/R	1.90 mm Thick
8	3905185	Shim	A/R	1.94 mm Thick
8	3905186	Shim	A/R	1.98 mm Thick

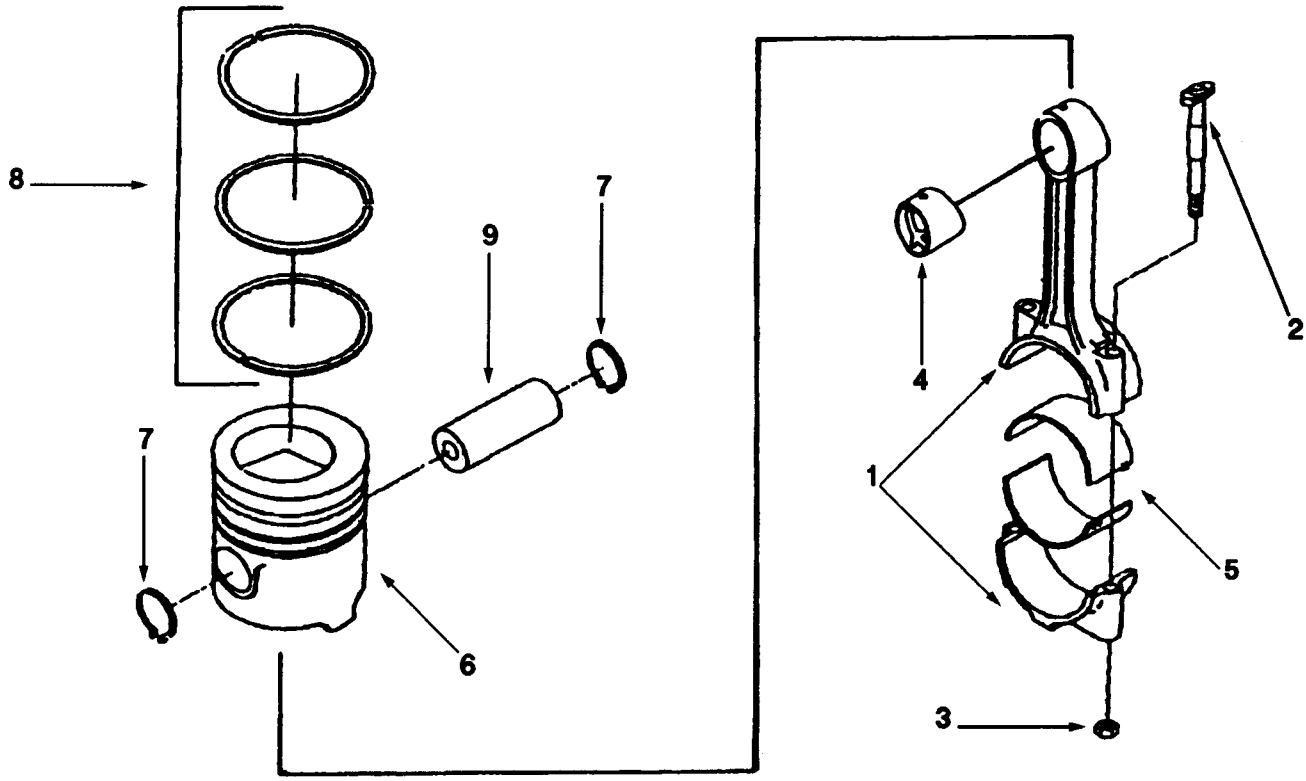

pp920gf

Ref No.	Part Number	Part Name	Req	Remarks
		PISTON AND CONNECTING ROD		
		OPTION PP985		CPL985
				C series turbocharged.
	3901383	Rod, Engine Connecting	6	
1	(3901224)	Rod, Engine Connecting	1	
2	3901380	Bolt, Connecting Rod	2	
3	3901381	Nut, Regular Hexagon	2	
4	3913990	Bushing	1	
5	3901430	Bearing, Connecting Rod	12	Standard
	3802397	Kit, Engine Piston	6	
6	(3923163)	Piston, Engine	1	
7	3901996	Ring, Retaining	2	
8	3802258	Set, Piston Ring	1	Standard
9	3901597	Pin, Piston	6	
5	3901431	Bearing, Connecting Rod	A/R	(0.010) Oversize
5	3901432	Bearing, Connecting Rod	A/R	(0.020) Oversize
5	3901433	Bearing, Connecting Rod	A/R	(0.030) Oversize
5	3901434	Bearing, Connecting Rod	A/R	(0.040) Oversize
		CYLINDER KIT		
	3802400	Kit, Cylinder	6	Standard
	3802407	Kit, Liner	1	
	3802397	Kit, Engine Piston	1	

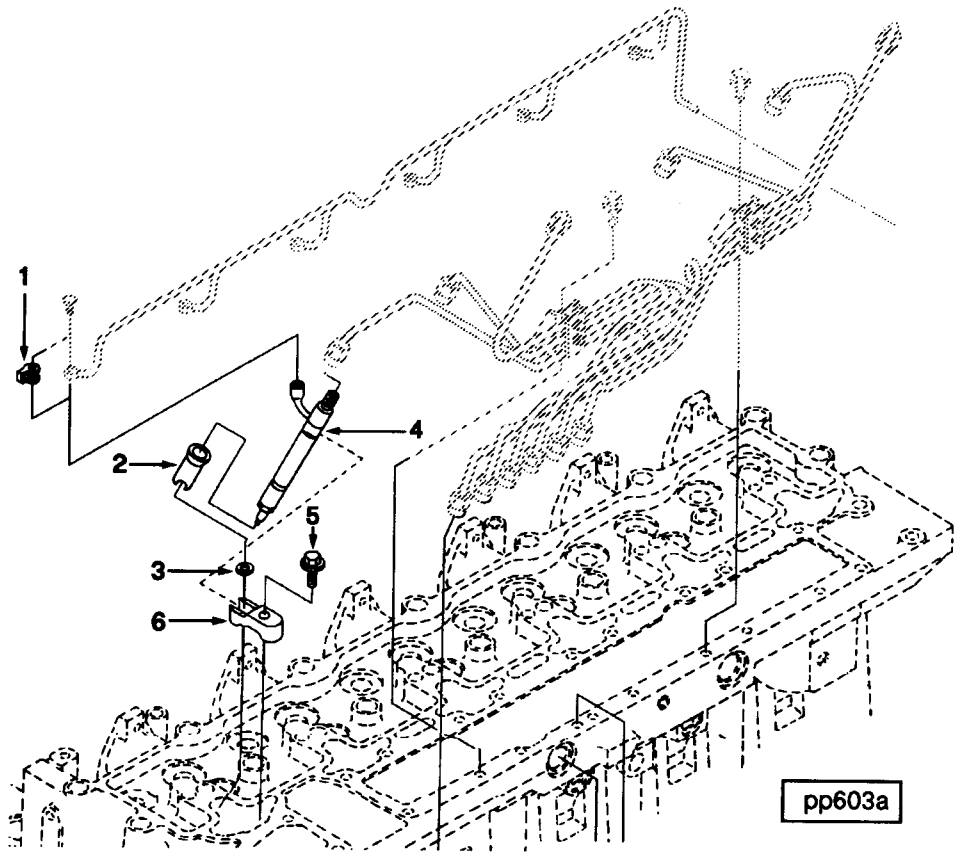

Ref No.	Part Number	Part Name	Req	Remarks
		FUEL INJECTOR		
		OPTION PP985		CPL985
	3802097	Injector	6	
4	(3908507)	Injector	1	Bosch
1	3903380	Seal, Banjo Connector	1	
2	3909886	Seal, Injector	1	
3	3906659	Seal, Injector	1	
5	3922018	Screw, Hex Flange Head Cap	6	M8 x 1.25 x 80
6	3910279	Clamp, Injector	6	

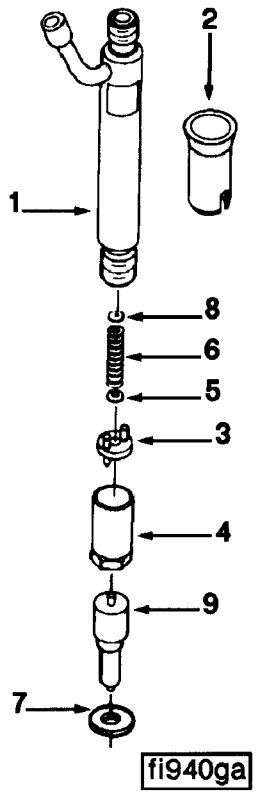

Ref No.	Part Number	Part Name	Req	Remarks
		FUEL INJECTOR		
		OPTION PP985		
		SERVICE ITEMS		
	3802097	Injector	6	
1	(3908507)	Injector	1	Bosch
2	3909886	Seal, Injector	1	
3	3905154	Disc, Intermediate	1	
4	3915155	Retainer, Injector Nozzle	1	
5	3915118	Spindle, Injector	1	
6	3915119	Spring, Compression	1	
7	3906659	Seal, Injector	1	
8		Shim		See following page
9	3908508	Nozzle, Injector	1	Bosch

Ref No.	Part Number	Part Name	Req	Remarks
		SERVICE ITEMS		
		FUEL INJECTOR		
		OPTION PP985		
8	3905156	Shim	A/R	1.00 mm Thick
8	3905157	Shim	A/R	1.04 mm Thick
8	3905158	Shim	A/R	1.08 mm Thick
8	3905159	Shim	A/R	1.10 mm Thick
8	3905160	Shim	A/R	1.14 mm Thick
8	3905161	Shim	A/R	1.18 mm Thick
8	3905162	Shim	A/R	1.20 mm Thick
8	3905163	Shim	A/R	1.24 mm Thick
8	3905164	Shim	A/R	1.28 mm Thick
8	3905165	Shim	A/R	1.30 mm Thick
8	3905166	Shim	A/R	1.34 mm Thick
8	3905167	Shim	A/R	1.38 mm Thick
8	3905168	Shim	A/R	1.40 mm Thick
8	3905169	Shim	A/R	1.44 mm Thick
8	3905170	Shim	A/R	1.48 mm Thick
8	3905171	Shim	A/R	1.50 mm Thick
8	3905172	Shim	A/R	1.54 mm Thick
8	3905173	Shim	A/R	1.58 mm Thick
8	3905174	Shim	A/R	1.60 mm Thick
8	3905175	Shim	A/R	1.64 mm Thick
8	3905176	Shim	A/R	1.68 mm Thick
8	3905177	Shim	A/R	1.70 mm Thick
8	3905178	Shim	A/R	1.74 mm Thick
8	3905180	Shim	A/R	1.78 mm Thick
8	3905181	Shim	A/R	1.80 mm Thick
8	3905182	Shim	A/R	1.84 mm Thick
8	3905183	Shim	A/R	1.88 mm Thick
8	3905184	Shim	A/R	1.90 mm Thick
8	3905185	Shim	A/R	1.94 mm Thick
8	3905186	Shim	A/R	1.98 mm Thick

NOTES

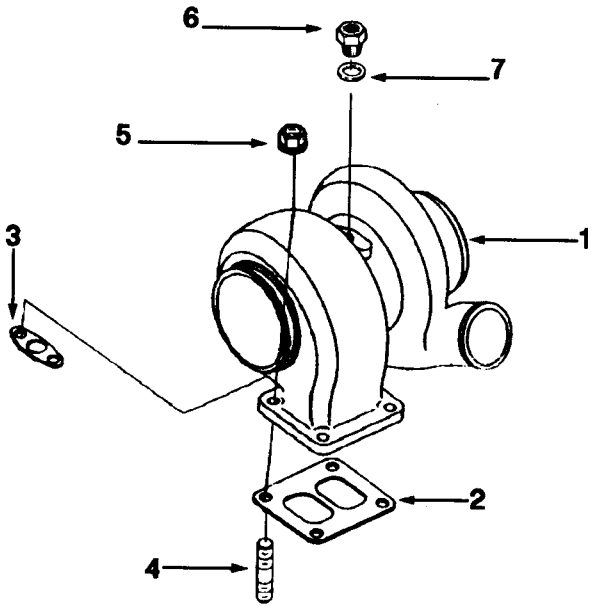

tb920gg

Ref No.	Part Number	Part Name	Req	Remarks
		TURBOCHARGER		
		OPTION PP9734		Turbocharger for C series turbocharged and turbocharged aftercooled engines with high front out exhaust arrangement
	3802303	Turbocharger	1	Service Kit.
1	(3528777)	Turbocharger	1	
2	3911941	Gasket, Turbocharger	1	Equivalent to 3755843
3	3914388	Gasket, Oil Drain	1	Equivalent to 3765575
4	3818823	Stud	4	
5	3818824	Nut, Hexagon Flange	4	M10 x 1.50
6	3919687	Connector, Female		
7	3037236	Seal, O Ring	1	

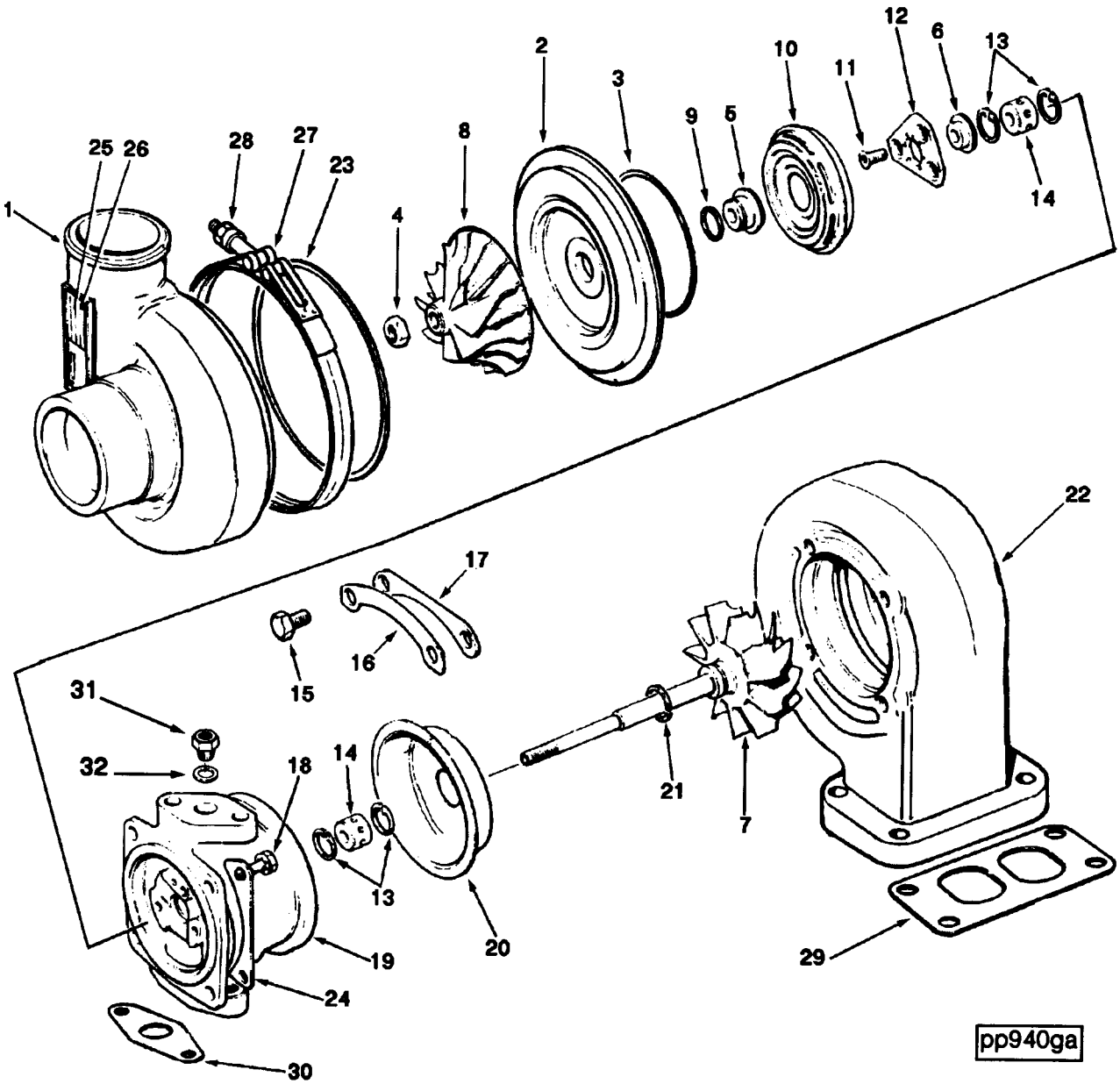
1
25 26
28
27
23
4
8
2
3
9
5
10
11
12
6
13
14
22
17
16
15
31
32
18
14
13
19
24
30
20
21
7
29
pp940ga

Ref No.	Part Number	Part Name	Req	Remarks
		TURBOCHARGER		
	3802303	Turbocharger	1	Service Kit.
	(3528777)	Turbocharger	1	
1	3525359	Housing, Compressor	1	
2	3522801	Diffuser, Turbocharger	1	
3	3502449	Seal, Rectangular Ring	1	
	3545528	Rotor Assembly	1	
4	3503562	Nut, Lock	1	
5	3503662	Slinger, Oil	1	
6	3518980	Collar, Thrust	1	
7	3522880	Shaft & Wheel	1	
8	3525358	Impeller, Tur Compressor	1	
9	3758848	Seal, Split Ring	1	
10	3503668	Baffle, Oil	1	
11	3503347	Screw, Flat Head Cap	3	M5 x 0.80 x 16
12	3525739	Bearing, Tur Thrust	1	
13	3762259	Ring, Retaining	4	
14	3503100	Bearing, Turbocharger	2	
15	3759917	Screw, Hexagon Head Set	4	M8 x 1.25 x 12
17	3501188	Plate, Clamping	2	
18	3527184	Screw, Hex Flange Head Cap	4	
19	3530591	Housing, Tur Bearing	1	
20	3519302	Shield, Turbocharger Heat	1	
21	3756754	Seal, Split Ring	1	
22	3522747	Housing, Turbine	1	
23	3523958	Seal, O Ring	1	
25	3525562	Dataplate	1	
26	3519163	Screw, Drive	2	
27	3803431	Clamp, V Band	1	
28	3529372	Nut, Regular Hexagon	1	
29	3911941	Gasket, Turbocharger	1	Equivalent to 3755843
30	3914388	Gasket, Oil Drain	1	Equivalent to 3765575
31	3919687	Connector, Female		
32	3037236	Seal, O Ring	1	
		TURBO REPAIR KIT		
	3802149	Kit, Turbo Repair	1	
	3545652	Kit, Turbo Repair H1C-H2A	1	
3	3502449	Seal, Rectangular Ring	1	
9	3758848	Seal, Split Ring	1	
11	3503347	Screw, Flat Head Cap	3	M5 x 0.80 x 16
12	3525739	Bearing, Tur Thrust	1	
13	3762259	Ring, Retaining	4	
14	3503100	Bearing, Turbocharger	2	
15	3759917	Screw, Hexagon Head Set	4	M8 x 1.25 x 12
16	3501102	Lockplate	2	
18	3527184	Screw, Hex Flange Head Cap	4	
21	3756754	Seal, Split Ring	1	
23	3523958	Seal, O Ring	1	
	3518004	Washer, Lock	1	
	3523176	Seal, Rectangular Ring	1	
	3545575	Kit, Turbocharger Gasket	1	
29	3911941	Gasket, Turbocharger	1	Equivalent to 3755843
30	3914388	Gasket, Oil Drain	1	Equivalent to 3765575
31	3919687	Connector, Female		
32	3037236	Seal, O Ring	1	

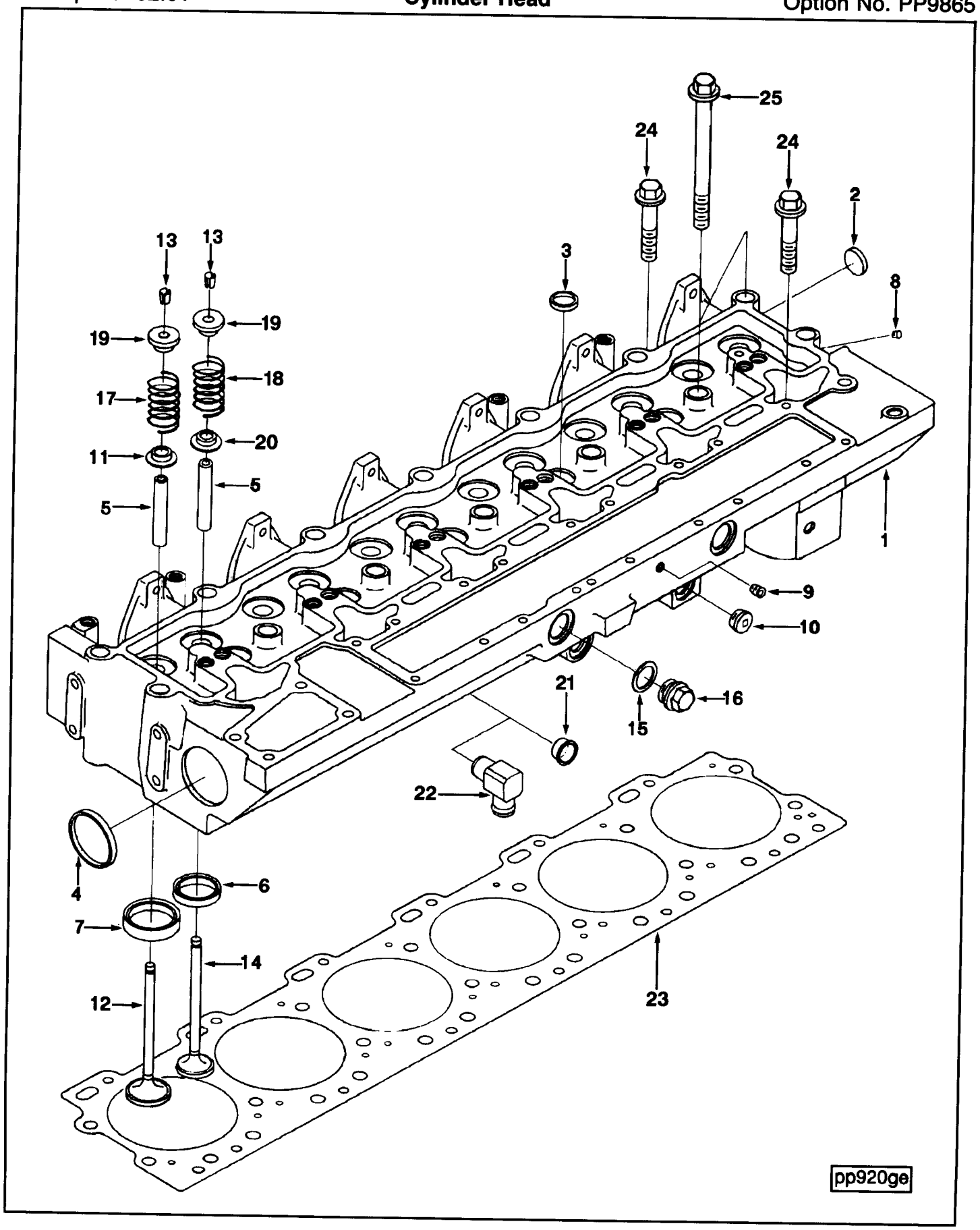
25
24
24
2
13
13
3
8
19
19
18
17
20
11
5
5
1
9
10
21
16
15
22
4
6
7
14
12
23
pp920ge

Ref No.	Part Number	Part Name	Req	Remarks
		CYLINDER HEAD		
		OPTION PP9865		High swirl cylinder head with single exhaust valve springs and without air compressor air inlet coupling.
	3802261	Head, Cylinder		
1	(3917768)	Head, Cylinder	1	
2	156075	Plug, Expansion	1	1.1875 inch
3	3032693	Plug, Expansion	5	1.198 inch
4	3900965	Plug, Expansion	2	58.06 mm
5	3901187	Guide, Valve Stem	12	
6	3904716	Insert, Valve	6	Exhaust
7	3908830	Insert, Valve	6	Intake
8	3008464	Plug, Pipe	1	1/16 NPT
9	3008466	Plug, Pipe	1	1/4 NPT
10	3008468	Plug, Pipe	2	1/2 NPT
11	3915707	Seal, Valve Stem	6	Intake
	3802083	Valve, Intake	6	
12	3915506	Valve, Intake	1	
13	3901177	Collet, Valve	12	
	3802085	Valve, Exhaust	6	
14	(3921444)	Valve, Exhaust	1	
13	3901177	Collet, Valve	12	
15	3902425	Washer, Sealing	2	
16	3904386	Plug, Threaded	2	M22 x 1.50 x 14
17	3906412	Spring, Valve	6	Intake
18	3906412	Spring, Valve	6	Exhaust
19	3912976	Retainer, Valve Spring	12	
20	3919038	Seal, Valve Stem	6	Exhaust
21	3912900	Plug, Expansion	1	
22	3912625	Coupling, Elbow Hose	1	Replaces 3912900 plug when air compressor is used.
23	3921216	Gasket, Cylinder Head	1	Standard
24	3917728	Screw, Hex Flange Head Cap	14	
25	3917729	Screw, Hex Flange Head Cap	12	

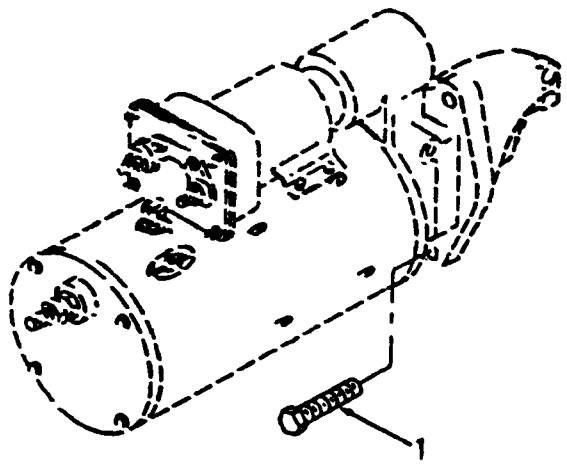

st900go

Ref No.	Part Number	Part Name	Req	Remarks
		STARTING MOTOR MOUNTING		
		OPTION SM9010		Mounting for engine cranking motor for C Series engines with SAE #1 and SAE #3 flywheel housing.
1	3908321	Screw, Twelve Point Cap	3	M12 - 1.75 x 50mm

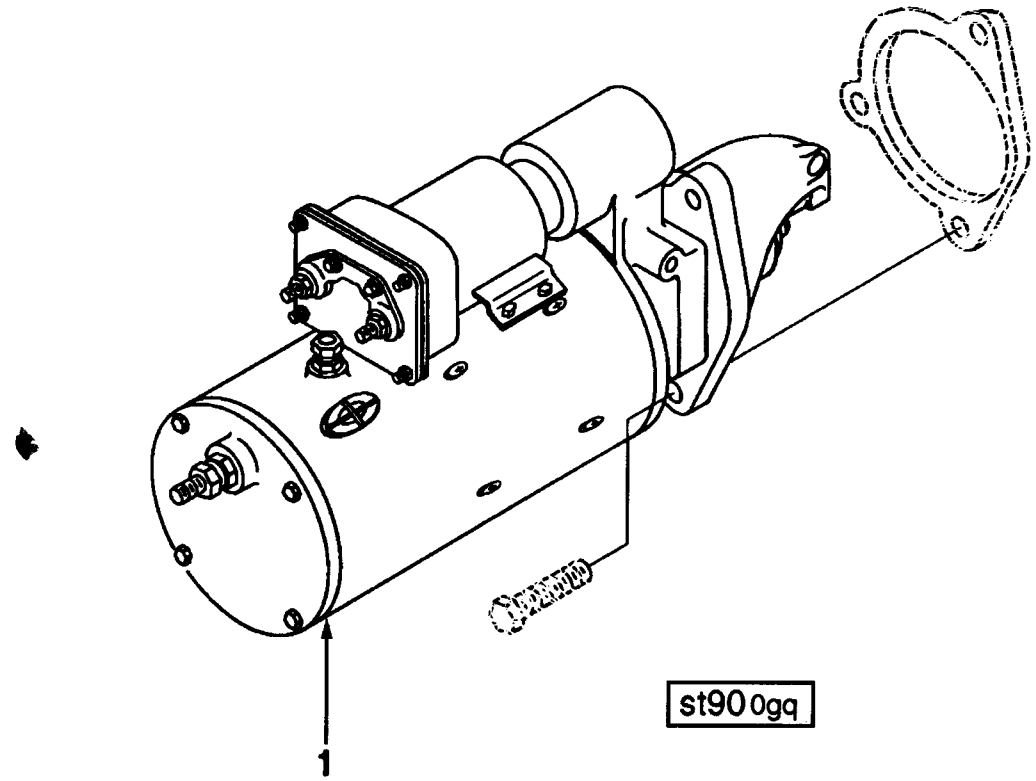

Ref No.	Part Number	Part Name	Req	Remarks
		STARTER MOTOR		
		OPTION ST9019		12 Volt Delco Remy 37MT type 300 starting motor.
1	3910643	Motor, Starting	1	
		STARTER MOTOR		
		OPTION ST9053		12 Volt, 4.0 KW Nippondenso F type starting motor for use with flywheel housings having the starter location in the #1 quadrant.
1	3920328	Motor, Starting	1	

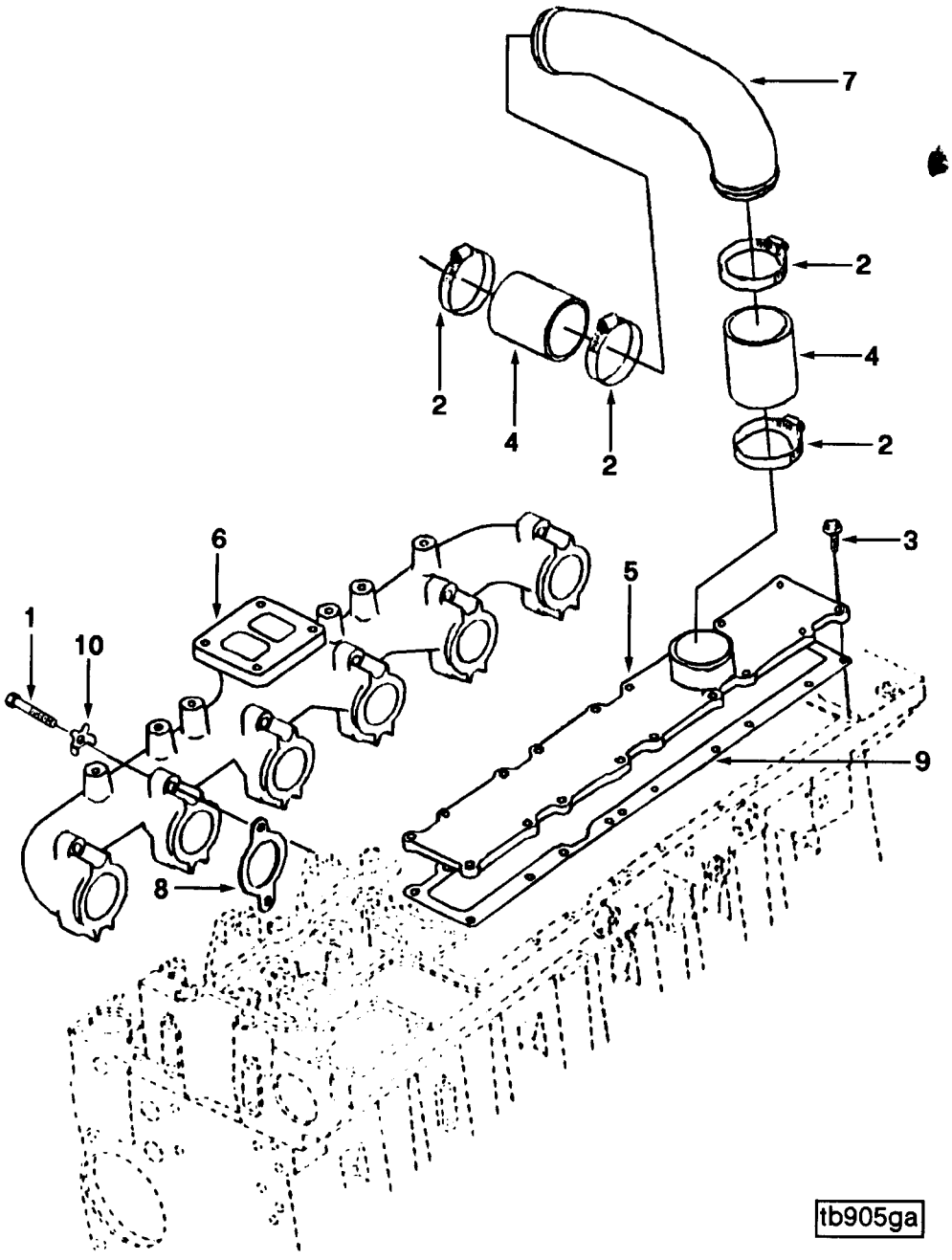
7
2
4
2
2
4
2
6
3
5
1
10
9
8
tb905ga

Ref No.	Part Number	Part Name	Req	Remarks
		TURBOCHARGER LOCATION		
		OPTION TB9018		High mount turbocharger with exhaust outlet to front. Intake manifold cover inlet connection oriented to rear. Turbine outlet is 417.4mm from FFOB, 602.9mm above crankshaft centerline, and 254.7mm out from centerline of engine.
1	3914956	Screw, Hexagon Head Cap	12	M10 x 1.50 x 70
2	3026396	Clamp, Hose	4	
3	3902114	Screw, Hex Flange Head Cap	18	M8 x 1.25 x 30
4	3916529	Hose, Plain	2	
5	3906737	Cover, Intake Manifold	1	
6	3906741	Manifold, Exhaust	1	
7	3906742	Tube, Air	1	
8	3911942	Gasket, Exhaust Manifold	6	
9	3914311	Gasket, Int Manifold Cover	1	
10	3914708	Lockplate	12	

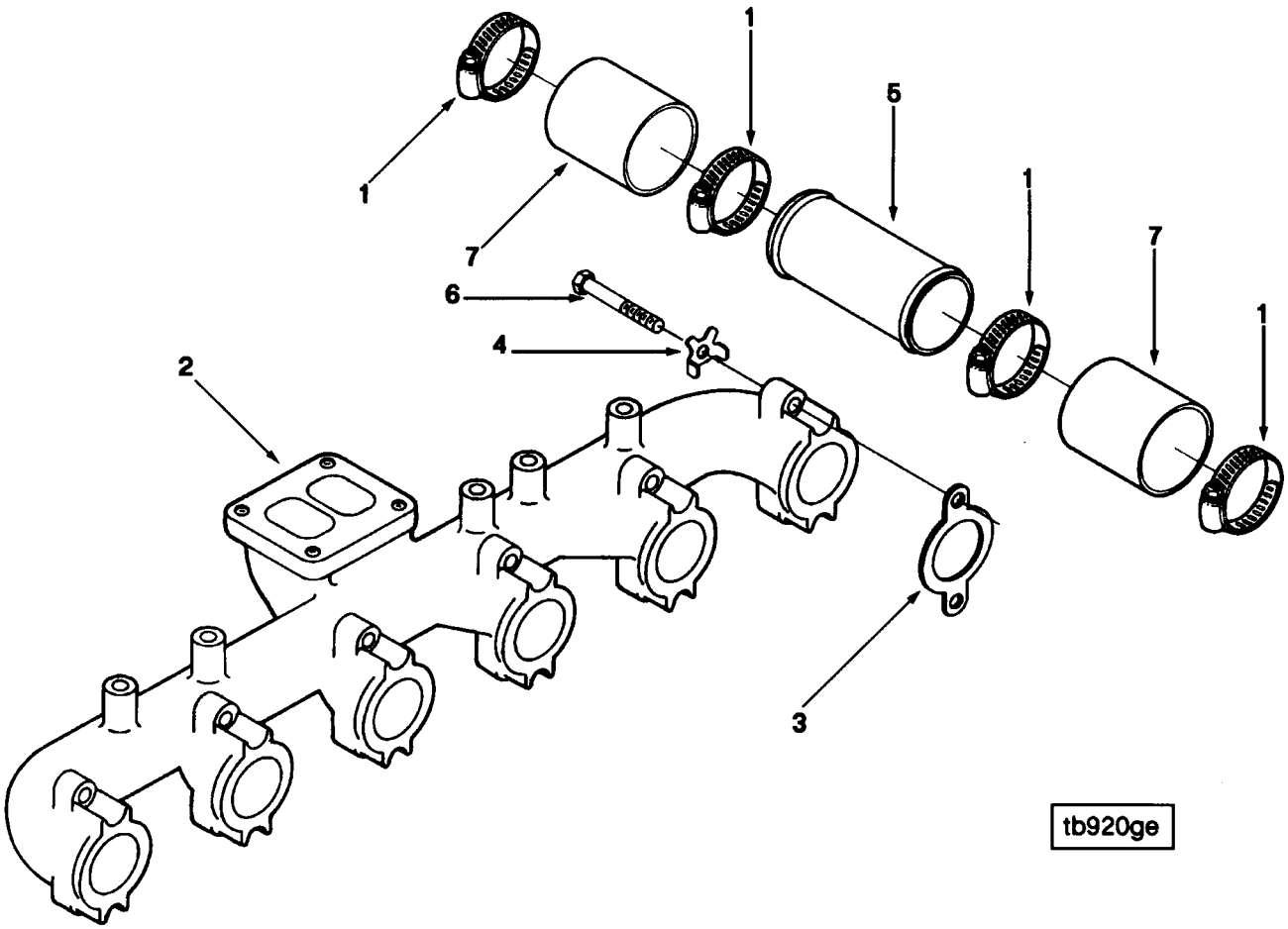
1
5
1
7
1
7
6
4
2
3
tb920ge

Ref No.	Part Number	Part Name	Req	Remarks
		TURBOCHARGER LOCATION		
		OPTION TB9026		For high mount turbocharged aftercooled with exhaust outlet to front. Turbine outlet is 417.42mm from FFOB and 602.90mm above crankshaft centerline to centerline of turbine.
1	3026396	Clamp, Hose	4	
2	3906741	Manifold, Exhaust	1	
3	3911942	Gasket, Exhaust Manifold	6	
4	3914708	Lockplate	12	
5	3914942	Tube, Air	1	
6	3914956	Screw, Hexagon Head Cap	12	M10 x 1.50 x 70
7	3916529	Hose, Plain	2	

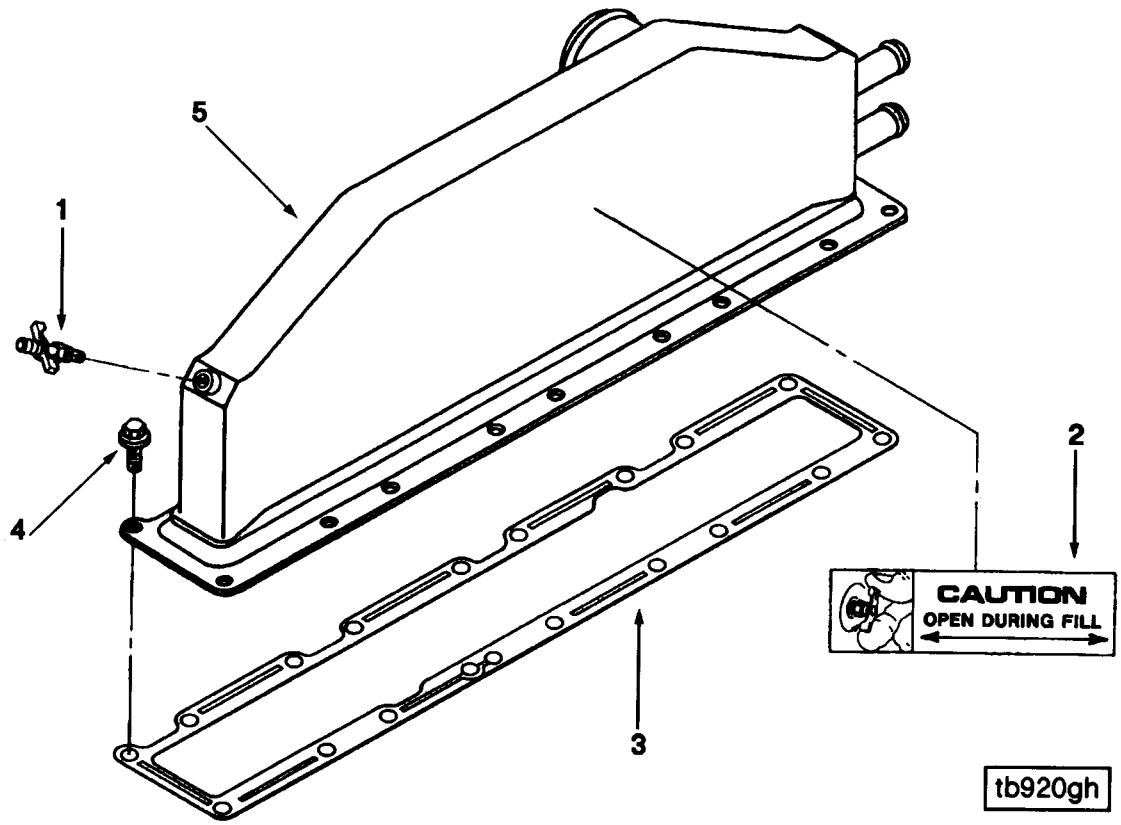
5
1
4
2
3
CAUTION
OPEN DURING FILL
tb920gh

Ref No.	Part Number	Part Name	Req	Remarks
		TURBOCHARGER LOCATION		
		OPTION TB9729		Hybrid aftercooler for C series engines rated above 235 BHP with exhaust outlet to front. Capscrews 3918108 may be substituted for 3918109.
1	3909394	Draincock	1	
2	3910778	Decal	1	
3	3914311	Gasket, Int Manifold Cov	1	
4	3918109	Screw, Hex Flange Head Cap	18	M8 x 1.25 x 25
5	3914502	Aftercooler	1	

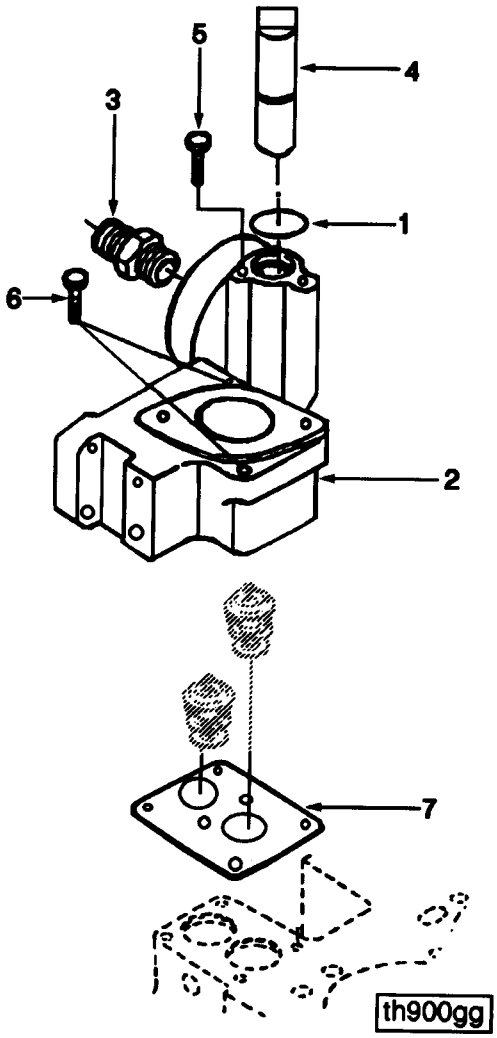
5
4
3
1
6
2
7
th900gg

Ref No.	Part Number	Part Name	Req	Remarks
		THERMOSTAT HOUSING		
		OPTION TH9007		Thermostat housing with flange to mount water outlet connection and integral corrosion resistor head.
1	3818885	Seal, O Ring	1	
2	3913708	Housing, Thermostat	1	
3	206963	Adapter, Filter Head	1	
4	3912837	Shaft, Shutoff Valve	1	
5	3900625	Screw, Hex Flange Head Cap	1	M6 x 1.00 x 10
6	3902112	Screw, Hex Flange Head Cap	2	M8 x 1.25 x 80
7	3914310	Gasket, Thermostat Housing	1	

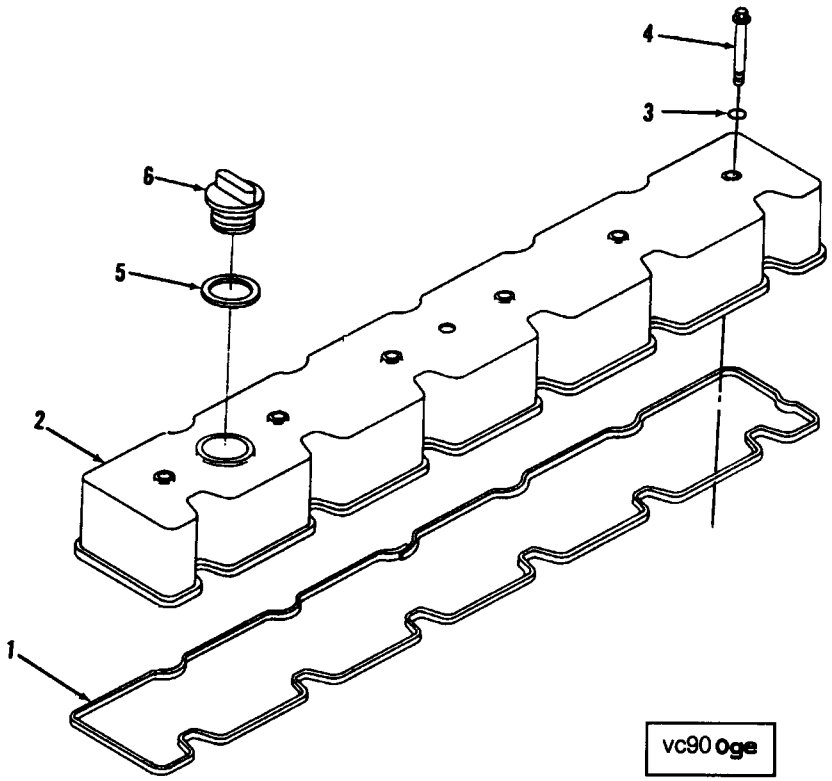

Ref No.	Part Number	Part Name	Req	Remarks
		VALVE COVER		
		OPTION VC9014		Valve cover for C series engines with breather vent tube located between #3 and #4 cylinders, oil fill located between #1 and #2 cylinders.
1	3905449	Seal, Rocker Lever Cover	1	
2	3907734	Cover, Valve	1	
3	3910824	Seal, O Ring	6	9.25 dia x 1.78 thick
4	3916585	Screw, Hexagon Head Cap	6	M8 x 1.25 x 56
5	3902466	Seal, Rectangular Ring	1	
6	3902468	Cap, Filler	1	

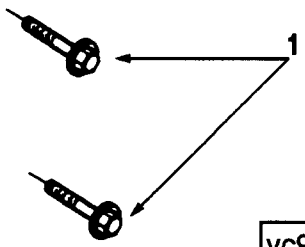

Ref No.	Part Number	Part Name	Req	Remarks
		VALVE COVER		
		OPTION VC9701		Standard valve cover capscrew for C series engines.
1	3916585	Screw, Hex Flange Head Cap	2	M8 x 1.25 x 56

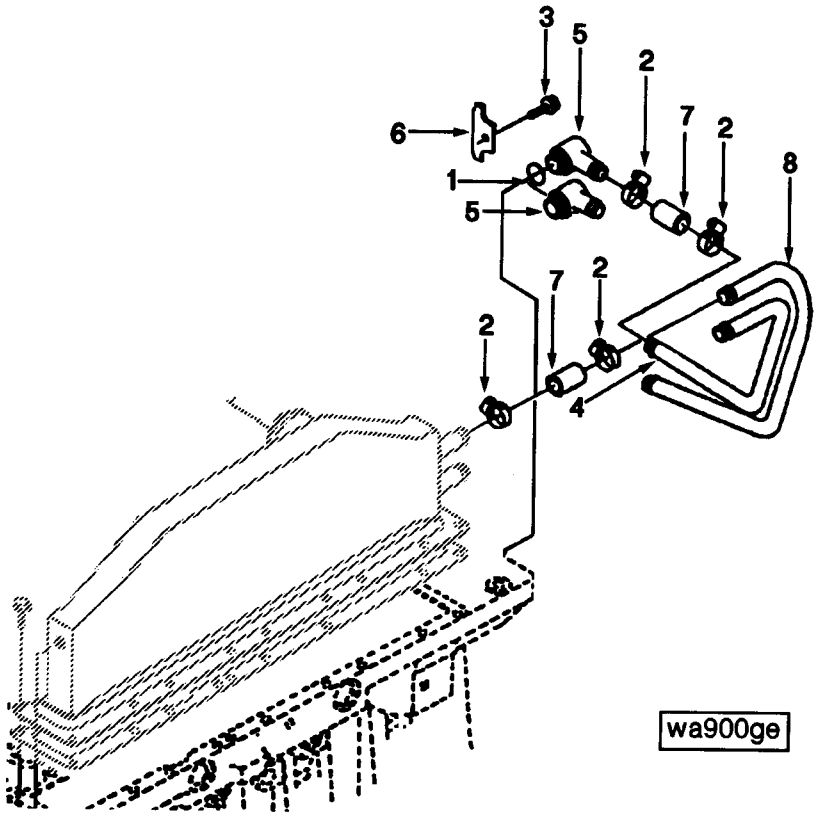

Ref No.	Part Number	Part Name	Req	Remarks
		AFTERCOOLER PLUMBING		
		OPTION WA9703		Aftercooler water plumbing.
1	145530	Seal, O Ring	2	
2	3918163	Clamp, Hose	8	
3	3900629	Screw, Hex Flange Head Cap	1	M8 x 1.25 x 16
4	3906436	Tube, Water Inlet	1	
5	3917394	Connection, Water Transfer	2	
6	3906439	Plate, Clamping	1	
7	3918611	Hose, Plain	4	
8	3908402	Tube, Water Outlet	1	

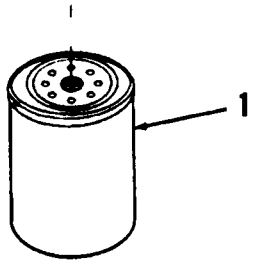

wf9004a

Ref No.	Part Number	Part Name	Req	Remarks
		CORROSION RESISTOR		
		OPTION WF9003		Eight unit DCA-4 corrosion resistor element direct mounted on thermostat housing. Can 3.67″ OD by 5.32″ long. Suitable for use with cooling systems with capabilities for 16 to 32 U.S. quarts.
1	3315115	Element, Crn Resistor	1	
		SERVICE ELEMENT		
1	3315116	Element, Crn Resistor	1	Four unit charge.

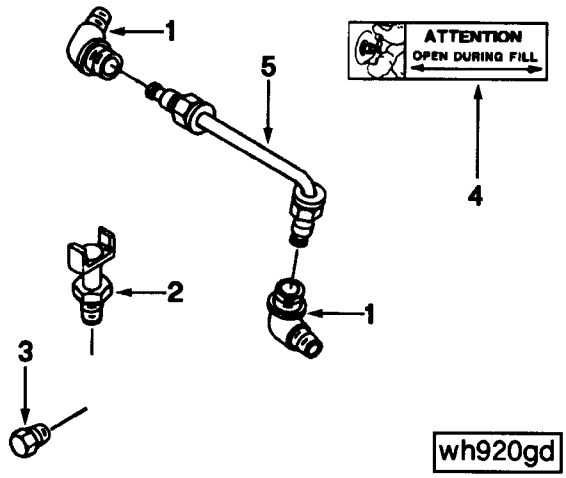

Ref No.	Part Number	Part Name	Req	Remarks
		BLOCK VENT PLUMBING		
		OPTION WH9004		Cooling system vent arrangement for use with thermostat housing mounted corrosion resistor on C series engines. Includes petcock for manually venting cooling system during fill.
1	S 1000 A	Elbow, Male Adapter	2	
2	214345	Draincock	1	
3	3906619	Plug, Pipe	1	1/8 NPT
4	3910778	Decal	1	
5	3918167	Tube, Vent	1	

NOTES

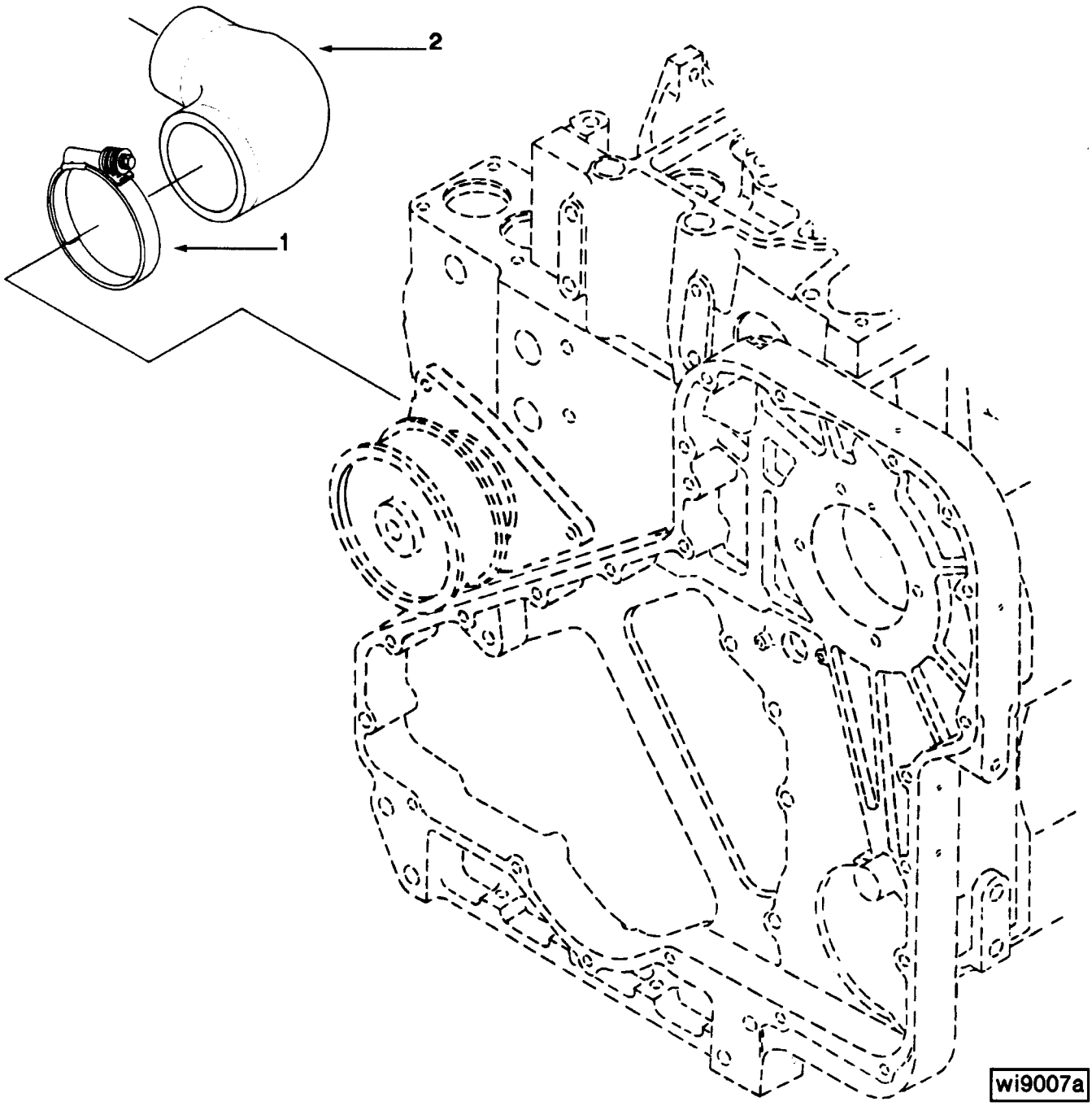
2
1
wi9007a

Ref No.	Part Number	Part Name	Req	Remarks
		WATER INLET CONNECTION		
		OPTION WI9007		90 degree water inlet hose oriented 50 degrees down from horizontal for C series engines.
1	3918521	Clamp, Hose	1	
2	3920762	Hose, Elbow	1	

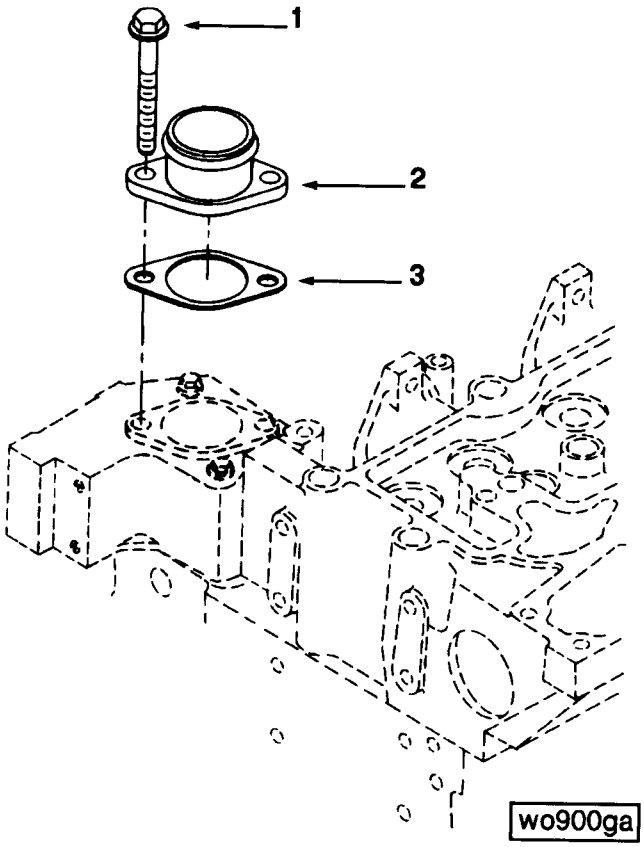

Ref No.	Part Number	Part Name	Req	Remarks
		WATER OUTLET CONNECTION		
		OPTION WO9004		Straight water outlet connection pointing up.
1	3906715	Screw, Hex Flange Head Cap	2	M8 x 1.25 x 95
2	3912800	Connection, Water Outlet	1	
3	3060912	Gasket, Connection	1	

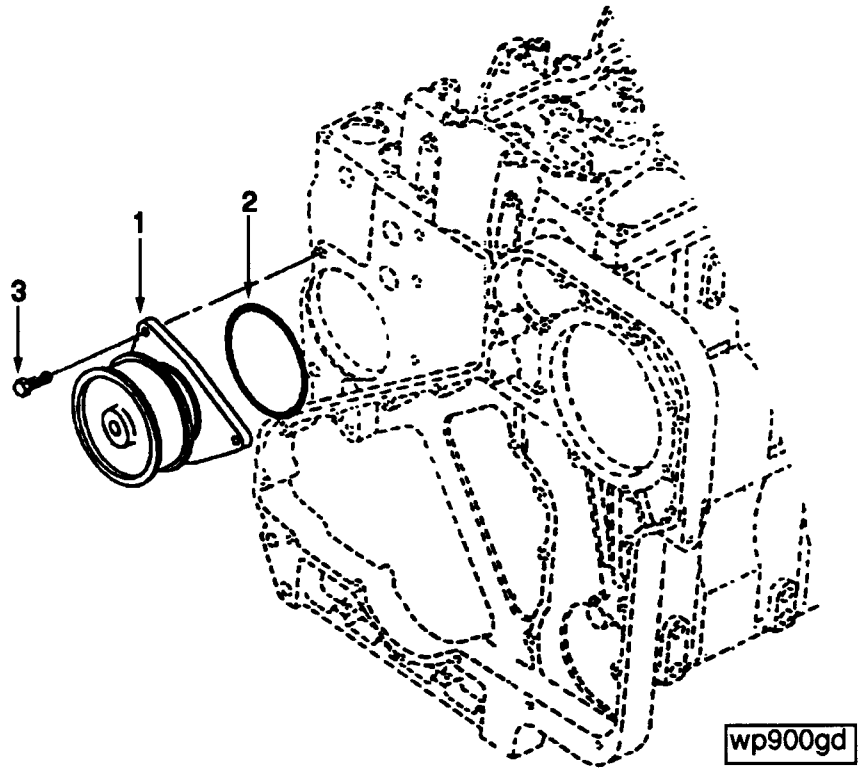

Ref No.	Part Number	Part Name	Req	Remarks
		WATER PUMP		
		OPTION WP9002		Water pump with standard pulleys for C series engines.
	3802081	Pump, Water	1	
1	(3913430)	Pump, Water	1	
2	3902089	Seal, O Ring	1	
3	3900227	Screw, Hexagon Head Cap	2	M8 x 1.25 x 22

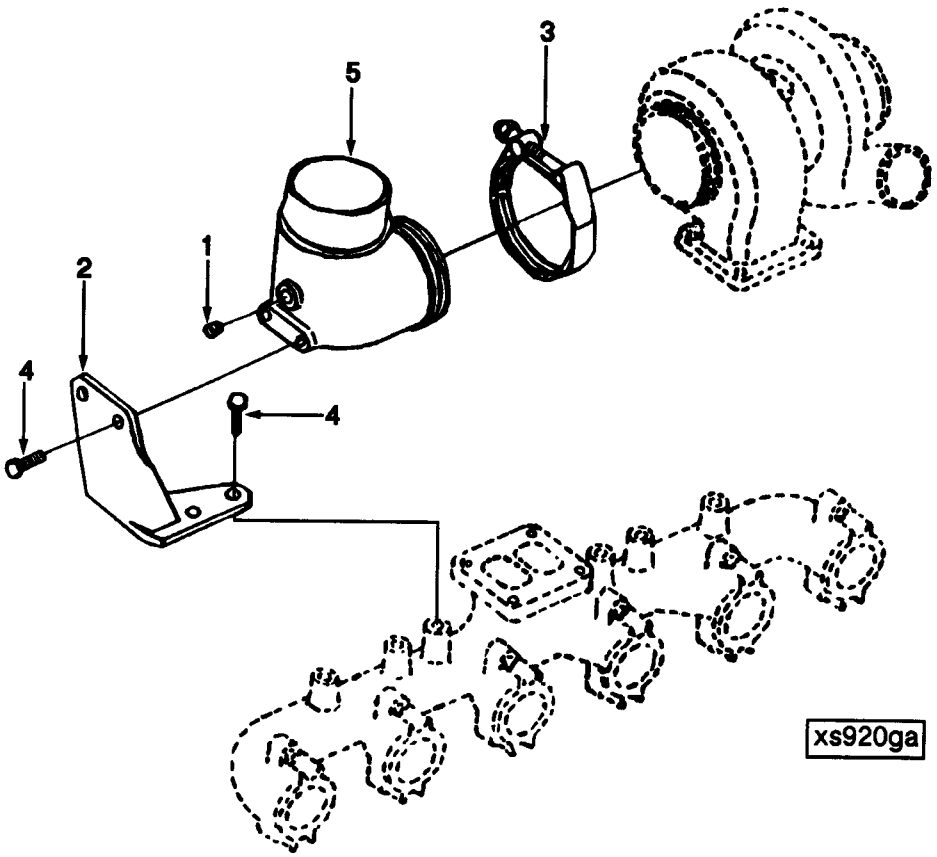

Ref No.	Part Number	Part Name	Req	Remarks
		EXHAUST CONNECTION		
		OPTION XS9021		90 degree supported exhaust elbow for adapting high mount front out exhaust turbocharger to 4 inch diameter pipe.
1	S 910 B	Plug, Pipe	1	
2	3907166	Brace, Exhaust Out Conn	1	
3	3905216	Clamp, V Band	1	
4	3902460	Screw, Hexagon Head Cap	4	M10 x 1.50 x 25mm
5	3910994	Connection, Exhaust	1	

Ref No.	Part Number	Part Name	Req	Remarks
		SERVICE GASKET SET		
		UPPER ENGINE SET STANDARD THICKNESS		
	3802360	Set, Upper Engine Gskt	1	
	145530	Seal, O Ring	2	
	3060912	Gasket, Connection	1	
	3902425	Washer, Sealing	2	
	3902466	Seal, Rectangular Ring	1	
	3906695	Seal, Rectangular Ring	1	
	3918191	Washer, Sealing	4	1/2 inch
	3918192	Washer, Sealing	2	
	3903380	Seal, Banjo Connector	7	
	3903546	Seal, O Ring	1	
	3905449	Seal, Rocker Lever Cover	1	
	3906659	Seal, Injector	6	
	3921216	Gasket, Cylinder Head	1	
	3909397	Seal, O Ring	1	
	3910824	Seal, O Ring	6	9.25 dia x 1.78 thick
	3911941	Gasket, Turbocharger	1	Equivalent to 3755843
	3911942	Gasket, Exhaust Manifold	6	
	3915707	Seal, Valve Stem	6	
	3919038	Seal, Valve Stem	6	
	3917892	Gasket, Connection	1	
	3914310	Gasket, Thermostat Housing	1	
	3914311	Gasket, Int Manifold Cover	1	
	3914388	Gasket, Oil Drain	1	Equivalent to 3765575
	3914708	Lockplate	12	

Ref No.	Part Number	Part Name	Req	Remarks
		SERVICE GASKET SET		
		UPPER ENGINE SET 0.25MM OVER THICKNESS		
	3802342	Set, Upper Eng Gasket	1	
	145530	Seal, O Ring	2	
	3902425	Washer, Sealing	2	
	3902466	Seal, Rectangular Ring	1	
	3906695	Seal, Rectangular Ring	1	
	3918191	Washer, Sealing	4	1/2 inch
	3903380	Seal, Banjo Connector	7	
	3903546	Seal, O Ring	1	
	3905449	Seal, Rocker Lever Cover	1	
	3906659	Seal, Injector	6	
	3914305	Gasket, Cylinder Head	1	
	3909397	Seal, O Ring	1	
	3910824	Seal, O Ring	6	9.25 dia x 1.78 thick
	3911941	Gasket, Turbocharger	1	Equivalent to 3755843
	3911942	Gasket, Exhaust Manifold	6	
	3915707	Seal, Valve Stem	6	
	3060912	Gasket, Connection	1	
	3914310	Gasket, Thermostat Housing	1	
	3914311	Gasket, Int Manifold Cover	1	
	3914388	Gasket, Oil Drain	1	Equivalent to 3765575
	3914708	Lockplate	12	
	3918192	Washer, Sealing	2	
	3917892	Gasket, Connection	1	
	3919038	Seal, Valve Stem	6	
		UPPER ENGINE SET 0.50MM OVER THICKNESS		
	3802343	Set, Upper Eng Gasket	1	
	145530	Seal, O Ring	2	
	3902425	Washer, Sealing	2	
	3902466	Seal, Rectangular Ring	1	
	3918191	Washer, Sealing	4	1/2 inch
	3903380	Seal, Banjo Connector	7	
	3903546	Seal, O Ring	1	
	3905449	Seal, Rocker Lever Cover	1	
	3906659	Seal, Injector	6	
	3906695	Seal, Rectangular Ring	1	
	3914306	Gasket, Cylinder Head	1	
	3909397	Seal, O Ring	1	
	3910824	Seal, O Ring	6	9.25 dia x 1.78 thick
	3911941	Gasket, Turbocharger	1	Equivalent to 3755843
	3911942	Gasket, Exhaust Manifold	6	
	3915707	Seal, Valve Stem	6	
	3060912	Gasket, Connection	1	
	3914310	Gasket, Thermostat Housing	1	
	3914311	Gasket, Int Manifold Cover	1	
	3914388	Gasket, Oil Drain	1	Equivalent to 3765575
	3914708	Lockplate	12	
	3918192	Washer, Sealing	2	
	3917892	Gasket, Connection	1	
	3919038	Seal, Valve Stem	6	

Ref No.	Part Number	Part Name	Req	Remarks
		SERVICE GASKET SET		
		LOWER ENGINE SET		
				NOTE: Gasket set contains 'ONLY' a dry flywheel housing seal. For wet flywheel housings use this gasket set plus 3909411 seal.
	3802389	Set, Lower Engine Gasket	1	
	3920773	Washer, Sealing	1	
	3901798	Washer, Sealing	1	
	3902089	Seal, O Ring	1	
	3902425	Washer, Sealing	1	
	3919003	Nozzle, Piston Cooling	12	
	3908139	Front Seal Service Kit	1	
	3909410	Rear Crank Seal Serv. Kit	1	
	3910503	Seal, O Ring	1	
	3912473	Seal, Rectangular Ring	1	
	3917779	Gasket, Gear Cover	1	
	3917780	Gasket, Gear Cover	1	
	3913994	Seal, O Ring	1	
	3914017	Gasket, Oil Pan	1	
	3915772	Seal, Rectangular Ring	1	
	3914095	Seal, Rectangular Ring	1	
	3914301	Gasket, Rear Cover	1	
	3914302	Gasket, Oil Suc Connection	1	
	3914303	Gasket, Gear Housing	1	
	3914304	Gasket, Cover Plate	1	
	3918174	Gasket, Oil Cooler Core	1	
	3918332	Gasket, Lub Oil Clr Cover	1	
	3916042	Gasket, Hydraulic Pump	1	
	3916284	Seal, O Ring	1	
	3914308	Gasket, Lub Oil Clr Cover	1	
	3918340	Gasket, Hydraulic Pump	1	
	3905928	Nozzle, Piston Cooling	6	

Ref No.	Part Number	Part Name	Req	Remarks
		SERVICE REPAIR KITS		
		TURBO REPAIR KIT		
	3802149	Kit, Turbo Repair	1	
		MAIN BEARING KITS		
	3802210	Set, Main Bearing	1	(STD)
	3802211	Set, Main Bearing	1	0.25 mm Oversize
	3802212	Set, Main Bearing	1	0.50 mm Oversize
	3802213	Set, Main Bearing	1	0.75 mm Oversize
	3802214	Set, Main Bearing	1	1.00 mm Oversize
		PISTON KIT		
	3802397	Kit, Engine Piston	6	
	3802398	Kit, Engine Piston	6	
		PISTON RING SET		
	3802258	Set, Piston Ring	6	Standard
		ENGINE CYLINDER KIT		
	3802400	Kit, Cylinder	6	Standard
	3802404	Kit, Cylinder	6	Standard
		LINER KIT		
	3802407	Kit, Liner	6	Standard
		LIFT PUMP SERVICE KIT		
	3920544	Kit, Lift Pump Service	1	
	3919441	Valve, Check	2	
	3919442	Gasket, Check	2	
	3919443	Seal, O Ring	1	
	3919444	Seal, O Ring	2	
	3920545	Seal, O Ring	1	

Option Index

Option No.	Description	Page No.
AP9001	Dataplate	2
BP9717	Valve Tappets	3
BP9736	Front Gear Cover	5
BP9795	Rocker Lever	6
BP9859	Crankshaft	11
	Cylinder Block	9
BP9861	Crankshaft	11
	Cylinder Block	9
BR9002	Crankcase Breather	13
BR9701	Crankcase Breather	14
DA9022	Vibration Damper	15
DF9702	Front Gear Train Accessory Drive	16
EC9002	Thermostat	17
EE9051	Alternator	18
EH9020	Alternator Location	19
EH9734	Alternator Location	20
EH9737	Alternator Location	21
EI9701	Mech Tach Drive	22
FA9053	Fan Drive	25
FA9057	Fan Drive	25
FF9011	Fuel Filter	26
FF9713	Fuel Inlet Tube	27
FF9714	Fuel Inlet Tube	27
FH9030	Flywheel Housing	29
FP9100	Bosch "MW' Pump With RSV Governor Without Boost	33
	Fuel Pump	30
FP9884	Fuel Pump Coupling	34
FP9885	Fuel Pump Coupling	35
FP9993	Bosch "A" Pump With RSV Governor Without Boost	39
	Fuel Pump	36
FS9006	Fuel System Accessories	40
FT9724	Fuel Plumbing	43
FT9801	Fuel Plumbing	45
FV9004	Fuel Shutoff Valve	46
FV9006	Fuel Shutoff Valve	46
FW9024	Flywheel	47
LA9006	Lifting Bracket	48
LC9028	Engine Oil Cooler	51
LG9028	Oil Level Gauge	52
LP9004	Lubricating Oil Pump	53
OB9006	Cylinder Block Cover	54
OP9012	Oil Pan	57
PP831	Camshaft	59
	Fuel Injector	60, 61, 62
	Piston And Connecting Rod	58
PP985	Camshaft	59
	Fuel Injector	64, 65, 66
	Piston And Connecting Rod	63
PP9734	Turbocharger	69
PP9865	Cylinder Head	73
SM9010	Starting Motor Mounting	74
ST9019	Starter Motor	75
ST9053	Starter Motor	75
TB9018	Turbocharger Location	77

Option No.	Description	Page No.
TB9026	Turbocharger Location	79
TB9729	Turbocharger Location	81
TH9007	Thermostat Housing	83
VC9014	Valve Cover	84
VC9701	Valve Cover	85
WA9703	Aftercooler Plumbing	86
WF9003	Corrosion Resistor	87
WH9004	Block Vent Plumbing	88
WI9007	Water Inlet Connection	91
WO9004	Water Outlet Connection	92
WP9002	Water Pump	93
XS9021	Exhaust Connection	94

INDEX

Part No.	Description	Page No.
S 910 B	Plug, Pipe	94
S 1000 A	Elbow, Male Adapter	88
68139	Elbow, Male Adapter	33, 39
68274	Spring, Compression	51
70622	Clip	13
101322	Cap, Filler	54
118227	Dowel, Ring	51
143066	Plug, Expansion	9
145508	Seal, O Ring	51
145530	Seal, O Ring	86, 95, 96
156075	Plug, Expansion	73
203131	Nut, Heavy Hexagon	6
206963	Adapter, Filter Head	83
214345	Draincock	88
3004258	Plug, Expansion	9, 9
3008464	Plug, Pipe	73
3008466	Plug, Pipe	73
3008468	Plug, Pipe	9, 73
3008469	Plug, Pipe	9, 51
3008470	Plug, Pipe	9
3020930	Nut, Hexagon	39
3026396	Clamp, Hose	77, 79
3027232	Plug, Pipe	51
3027646	Plug, Expansion	9
3032693	Plug, Expansion	73
3037236	Seal, O Ring	69, 71
3060912	Gasket, Connection	92, 95, 96
3201562	Seal, O Ring	51
3281721	Gasket, Gear Housing	5
3315115	Element, Crn Resistor	87
3315116	Element, Crn Resistor	87
3501102	Lockplate	71
3501188	Plate, Clamping	71
3502449	Seal, Rectangular Ring	71
3503100	Bearing, Turbocharger	71
3503347	Screw, Flat Head Cap	71
3503562	Nut, Lock	71
3503662	Slinger, Oil	71
3503668	Baffle, Oil	71
3518004	Washer, Lock	71
3518980	Collar, Thrust	71
3519163	Screw, Drive	71
3519302	Shield, Turbocharger Heat	71
3522747	Housing, Turbine	71
3522801	Diffuser, Turbocharger	71
3522880	Shaft & Wheel	71
3523176	Seal, Rectangular Ring	71
3523958	Seal, O Ring	71
3525358	Impeller, Tur Compressor	71
3525359	Housing, Compressor	71
3525562	Dataplate	71
3525739	Bearing, Tur Thrust	71
3527184	Screw, Hex Flange Head Cap	71
3529372	Nut, Regular Hexagon	71
3530591	Housing, Tur Bearing	71
3545528	Rotor Assembly	71
3545575	Kit, Turbocharger Gasket	71
3545652	Kit, Turbo Repair H1C-H2A	71
3756754	Seal, Split Ring	71
3758848	Seal, Split Ring	71
3759917	Screw, Hexagon Head Set	71
3762259	Ring, Retaining	71
3802081	Pump, Water	93
3802083	Valve, Intake	73
3802085	Valve, Exhaust	73
3802097	Injector	64, 65
3802098	Injector	60, 61
3802149	Kit, Turbo Repair	71, 98
3802210	Set, Main Bearing	11, 98
3802211	Set, Main Bearing	11, 98
3802212	Set, Main Bearing	11, 98
3802213	Set, Main Bearing	11, 98
3802214	Set, Main Bearing	11, 98
3802258	Set, Piston Ring	58, 63, 98
3802261	Head, Cylinder	73
3802278	Kit, Lube Oil Pump	53
3802303	Turbocharger	69, 71
3802342	Set, Upper Eng Gasket	96
3802343	Set, Upper Eng Gasket	96
3802360	Set, Upper Engine Gskt	95
3802389	Set, Lower Engine Gasket	97
3802397	Kit, Engine Piston	63, 98
3802398	Kit, Engine Piston	58, 98
3802400	Kit, Cylinder	63, 98
3802404	Kit, Cylinder	58, 98
3802407	Kit, Liner	9, 58, 63, 98
3802408	Block, Cylinder	9
3803431	Clamp, V Band	71
3815119	Spring, Compression	61
3818823	Stud	69
3818824	Nut, Hexagon Flange	69
3818885	Seal, O Ring	83
3825970	Element, Lub Oil Filter	51
3900227	Screw, Hexagon Head Cap	59, 93
3900257	Dowel, Pin	9
3900269	Washer, Plain	47
3900625	Screw, Hex Flange Head Cap	83
3900628	Screw, Hex Flange Head Cap	57
3900629	Screw, Hex Flange Head Cap	5, 86
3900630	Screw, Hex Flange Head Cap	5, 40
3900631	Screw, Hex Flange Head Cap	19
3900633	Screw, Hex Flange Head Cap	5, 25
3900677	Screw, Hexagon Head Cap	53
3900706	Screw, Slotted Set	6
3900955	Plug, Expansion	52
3900965	Plug, Expansion	9, 73
3901177	Collet, Valve	73
3901187	Guide, Valve Stem	73
3901249	Screw, Hex Flange Head Cap	13, 16, 48
3901380	Bolt, Connecting Rod	58, 63
3901381	Nut, Regular Hexagon	58, 63
3901383	Rod, Engine Connecting	58, 63
3901395	Screw, Hexagon Head Cap	47
3901430	Bearing, Connecting Rod	58, 63
3901431	Bearing, Connecting Rod	58, 63
3901432	Bearing, Connecting Rod	58, 63
3901433	Bearing, Connecting Rod	58, 63
3901434	Bearing, Connecting Rod	58, 63
3901590	Cap, Main Bearing	9
3901597	Pin, Piston	58, 63
3901617	Screw, Twelve Point Cap	6
3901685	Bushing	9
3901693	Clamp, Retaining	6
3901717	Lever, Rocker	6
3901764	Ring, Retaining	6
3901798	Washer, Sealing	97

INDEX

Part No.	Description	Page No.
3901846	Dowel, Pin	9
3901865	Screw, Hex Flange Head Cap	57
3901969	Plug, Expansion	9
3901996	Ring, Retaining	58, 63
3902089	Seal, O Ring	93, 97
3902112	Screw, Hex Flange Head Cap	83
3902114	Screw, Hex Flange Head Cap	19, 77
3902116	Screw, Hex Flange Head Cap	5
3902338	Valve, Bypass	51
3902425	Washer, Sealing	57, 73, 95, 96, 97
3902460	Screw, Hexagon Head Cap	94
3902466	Seal, Rectangular Ring	84, 95, 96
3902468	Cap, Filler	84
3902662	Nut, Hexagon Flange	34, 35
3902735	Screw, Self Tapping Metal	29
3903095	Screw, Flat Head Cap	20, 21
3903200	Screw, Hexagon Head Cap	48
3903202	Filter, Fuel	26
3903380	Seal, Banjo Connector	43, 45, 60, 64, 95, 96
3903463	Cover, Access Hole	22
3903475	Seal, Rectangular Ring	22
3903546	Seal, O Ring	95, 96
3903609	Screw, Hexagon Head Cap	45
3903723	Washer, Plain	43, 45
3903845	Adapter, Filter Head	26
3903924	Pin, Timing	5
3903990	Screw, Hex Flange Head Cap	46
3904181	Plug, Threaded	29
3904386	Plug, Threaded	57, 73
3904446	Screw, Hex Flange Head Cap	20, 21
3904483	Dowel, Pin	11
3904519	Brace, Tube	43, 45
3904711	Brace, Tube	45
3904716	Insert, Valve	73
3904849	Ring, Retaining	5
3904981	Fan, Alternator	18
3905154	Disc, Intermediate	61, 65
3905156	Shim	62, 66
3905157	Shim	62, 66
3905158	Shim	62, 66
3905159	Shim	62, 66
3905160	Shim	62, 66
3905161	Shim	62, 66
3905162	Shim	62, 66
3905163	Shim	62, 66
3905164	Shim	62, 66
3905165	Shim	62, 66
3905166	Shim	62, 66
3905167	Shim	62, 66
3905168	Shim	62, 66
3905169	Shim	62, 66
3905170	Shim	62, 66
3905171	Shim	62, 66
3905172	Shim	62, 66
3905173	Shim	62, 66
3905174	Shim	62, 66
3905175	Shim	62, 66
3905176	Shim	62, 66
3905177	Shim	62, 66
3905178	Shim	62, 66
3905180	Shim	62, 66
3905181	Shim	62, 66
3905182	Shim	62, 66
3905183	Shim	62, 66
3905184	Shim	62, 66
3905185	Shim	62, 66
3905186	Shim	62, 66
3905194	Rod, Push	6
3905216	Clamp, V Band	94
3905307	Screw, Banjo Connector	43, 45
3905401	Plug, Expansion	9
3905408	Tube, Oil Filler	54
3905425	Tube, Oil Gauge	52
3905427	Gear, Flywheel Ring	47
3905449	Seal, Rocker Lever Cover	84, 95, 96
3905860	Screw, Banjo Connector	26, 26
3905870	Support, Rocker Lever	6
3905928	Nozzle, Piston Cooling	97
3905935	Bracket, Belt Tensioner	20, 21
3906081	Sleeve, Wear	11
3906100	Washer, Spring	6
3906216	Nut, Hexagon Flange	57
3906398	Solenoid	46
3906412	Spring, Valve	73
3906436	Tube, Water Inlet	86
3906439	Plate, Clamping	86
3906440	Bracket, Lifting	48
3906610	Dataplate	2
3906619	Plug, Pipe	9, 51, 88
3906649	Nut, Hexagon Acorn	46
3906659	Seal, Injector	60, 61, 64, 65, 95, 96
3906695	Seal, Rectangular Ring	95, 96
3906715	Screw, Hex Flange Head Cap	92
3906733	Screw, Hex Flange Head Cap	15
3906737	Cover, Intake Manifold	77
3906741	Manifold, Exhaust	77, 79
3906742	Tube, Air	77
3906747	Hose, Flexible	33, 39
3906783	Tube, Injector Fuel Supply	43
3906784	Tube, Injector Fuel Supply	43
3906785	Tube, Injector Fuel Supply	43
3906787	Tube, Injector Fuel Supply	43
3906788	Tube, Injector Fuel Supply	43
3906790	Tube, Fuel Supply	40
3907166	Brace, Exhaust Out Conn	94
3907177	Seal, Rectangular Ring	9
3907206	Washer, Plain	6
3907240	Tappet, Valve	3
3907242	Thermostat	17
3907478	Lockwasher	33, 39
3907505	Brace, Tube	45
3907541	Screw, Banjo Connector	27
3907546	Brace, Tube	45
3907555	Plug, Expansion	6
3907673	Brace, Alternator	19
3907734	Cover, Valve	84
3907740	Clamp, Spring Hose	13
3907741	Clip	13
3907769	Screw, Hexagon Head Cap	25
3907860	Screw, Hex Flange Head Cap	51, 57
3907861	Bracket, Lifting	48
3907978	Stud	35

INDEX

Part No.	Description	Page No.
3907998	Screw, Round Head Cap	5
3908095	Plate, Cover	29
3908139	Front Seal Service Kit	5, 97
3908316	Washer, Plain	57
3908321	Screw, Twelve Point Cap	74
3908402	Tube, Water Outlet	86
3908508	Nozzle, Injector	65
3908512	Nozzle, Injector	61
3908560	Pulley, Alternator	19
3908563	Retainer, Pulley	19
3908612	Screw, Drive	2
3908738	Spacer, Mounting	57
3908772	Dipstick	52
3908799	Housing, Flywheel	29
3908817	Support, Fan	25
3908830	Insert, Valve	73
3909394	Draincock	81
3909397	Seal, O Ring	13, 95, 96
3909410	Rear Crank Seal Serv. Kit	29, 97
3909415	Kit, Cylinder Block	9
3909669	Tube, Breather	13
3909670	Clip	14
3909886	Seal, Injector	60, 61, 64, 65
3910037	Screw, Hexagon Head Cap	45
3910248	Plug, O Ring	29
3910260	Seal, O Ring	29
3910266	Washer, Spring	57
3910279	Clamp, Injector	60, 64
3910410	Retainer, Fan Hub	25
3910503	Seal, O Ring	33, 39, 97
3910521	Tube, Injector Fuel Supply	43
3910643	Motor, Starting	75
3910685	Brace, Tube	45
3910686	Brace, Tube	45
3910687	Brace, Tube	45
3910715	Spacer, Mounting	19
3910716	Support, Alternator	19
3910738	Support, Fan	25
3910739	Bearing, Ball	25
3910749	Tube, Injector Fuel Supply	45
3910750	Tube, Injector Fuel Supply	45
3910751	Tube, Injector Fuel Supply	45
3910752	Tube, Injector Fuel Supply	45
3910753	Tube, Injector Fuel Supply	45
3910754	Tube, Injector Fuel Supply	45
3910778	Decal	81, 88
3910788	Connection, Oil Suction	57
3910824	Seal, O Ring	84, 95, 96
3910960	Washer, Plain	57
3910979	Lever, Shutoff Valve	33, 39
3910994	Connection, Exhaust	94
3911446	Screw, Banjo Connector	26
3911447	Connector, Banjo	43, 45
3911571	Belt, V Ribbed	20
3911573	Belt, V Ribbed	21
3911638	Plug, Threaded	57
3911924	Hub, Fan	25
3911941	Gasket, Turbocharger	69, 71, 95, 96
3911942	Gasket, Exhaust Manifold	77, 79, 95, 96
3912072	Screw, Self Tapping Metal	13
3912209	Shaft, Rocker Lever	6
3912473	Seal, Rectangular Ring	29, 97
3912614	Gear, Fuel Pump	34
3912615	Gear, Fuel Pump	35
3912625	Coupling, Elbow Hose	73
3912800	Connection, Water Outlet	92
3912837	Shaft, Shutoff Valve	83
3912886	Valve, Overflow	33, 39
3912887	Washer, Sealing	33, 39
3912888	Plug, Timing	33, 39
3912889	Washer, Sealing	33, 39
3912890	Spring, Shutoff	33, 39
3912891	Housing, Return Spring	33, 39
3912892	Gasket, Feed Pump Cover	33, 39
3912894	Nut, Gear Retaining	33, 39
3912895	Washer, Lock	33, 39
3912900	Plug, Expansion	73
3912923	Tube, Fuel Supply	27
3912925	Tube, Fuel Supply	27
3912976	Retainer, Valve Spring	73
3913320	Screw, Vent	33, 39
3913321	Washer, Sealing	33, 39
3913322	Screw, Vent	33, 39
3913323	Washer, Sealing	33, 39
3913327	Lever, Control	33, 39
3913427	Brace, Tube	57
3913638	Screw, Hex Flange Head Cap	29, 46, 57
3913708	Housing, Thermostat	83
3913990	Bushing	58, 63
3913994	Seal, O Ring	5, 97
3914013	Pan, Oil	57
3914017	Gasket, Oil Pan	57, 97
3914086	Tensioner, Belt	20, 21
3914095	Seal, Rectangular Ring	97
3914301	Gasket, Rear Cover	29, 97
3914302	Gasket, Oil Suc Connection	57, 97
3914303	Gasket, Gear Housing	97
3914304	Gasket, Cover Plate	40, 97
3914305	Gasket, Cylinder Head	96
3914306	Gasket, Cylinder Head	96
3914308	Gasket, Lub Oil Clr Cover	97
3914310	Gasket, Thermostat Housing	83, 95, 96
3914311	Gasket, Int Manifold Cover	77, 81, 95, 96
3914338	Isolator, Vibration	45
3914339	Isolator, Vibration	45
3914340	Isolator, Vibration	45
3914341	Isolator, Vibration	45
3914388	Gasket, Oil Drain	69, 71, 95, 96
3914433	Flywheel	47
3914456	Damper, Vibration	15
3914461	Pulley, Fan	25
3914462	Pulley, Fan	25
3914502	Aftercooler	81
3914640	Camshaft	59
3914641	Support, Camshaft Thrust	59
3914653	Shim	9
3914654	Shim	9
3914655	Shim	9
3914708	Lockplate	77, 79, 95, 96
3914711	Clip	27
3914868	Plate, Cover	16
3914869	Pump, Fuel Injection	36
3914871	Pump, Fuel Injection	30
3914942	Tube, Air	79
3914945	Housing, Gear	5
3914956	Screw, Hexagon Head Cap	77, 79
3915036	Stud	34, 35
3915118	Spindle, Injector	61, 65
3915119	Spring, Compression	65
3915155	Retainer, Injector Nozzle	61, 65
3915169	Cover, Fuel Pump	33, 39
3915172	Elbow, Male Adapter	33, 39

INDEX

Part No.	Description	Page No.
3915506	Valve, Intake	73
3915695	Manifold, Fuel	43, 45
3915707	Seal, Valve Stem	73, 95, 96
3915772	Seal, Rectangular Ring	5, 97
3916042	Gasket, Hydraulic Pump	97
3916069	Screw, Hexagon Head Cap	19
3916073	Screw, Hexagon Head Cap	19, 51
3916142	Bracket, Solenoid	46
3916144	Bracket, Solenoid	46
3916193	Cover, Gear	5
3916284	Seal, O Ring	34, 35, 97
3916360	Valve, Check	43
3916361	Screw, Banjo Connector	40
3916369	Screw, Hex Flange Head Cap	9
3916529	Hose, Plain	77, 79
3916585	Screw, Hexagon Head Cap	84, 85
3917328	Gear, Camshaft	59
3917394	Connection, Water Transfer	86
3917443	Crankshaft, Assembly	11
3917712	Screw, Hexagon Head Cap	43
3917728	Screw, Hex Flange Head Cap	73
3917729	Screw, Hex Flange Head Cap	73
3917747	Isolator, Vibration	43
3917776	Brace, Tube	43
3917779	Gasket, Gear Cover	97
3917780	Gasket, Gear Cover	5, 97
3917883	Dowel, Pin	59
3917892	Gasket, Connection	95, 96
3917998	Pump, Fuel Transfer	40
3918109	Screw, Hex Flange Head Cap	81
3918163	Clamp, Spring Hose	13, 86
3918167	Tube, Vent	88
3918174	Gasket, Oil Cooler Core	51, 97
3918175	Core, Cooler	51
3918188	Washer, Sealing	43
3918191	Washer, Sealing	26, 40, 95, 96
3918192	Washer, Sealing	27, 95, 96
3918332	Gasket, Lub Oil Clr Cover	51, 97
3918334	Head, Lub Oil Filter	51
3918340	Gasket, Hydraulic Pump	97
3918380	Gear, Crankshaft	11
3918403	Cover, Lub Oil Cooler	51
3918521	Clamp, Hose	91
3918532	Plunger, Prs Regulator	51, 53
3918610	Hose, Plain	13
3918611	Hose, Plain	86
3918616	Hose, Plain	13
3919003	Nozzle, Piston Cooling	9, 97
3919038	Seal, Valve Stem	73, 95, 96
3919286	Seal, Rectangular Ring	33, 39
3919441	Valve, Check	98
3919442	Gasket, Check	98
3919443	Seal, O Ring	98
3919444	Seal, O Ring	98
3919601	Gasket, Hydraulic Pump	16
3919677	Manifold, Oil	6
3919683	Housing, Timing Pin	5
3919687	Connector, Female	69, 71
3920326	Thermostat	51
3920327	Plug, Threaded	51
3920328	Motor, Starting	75
3920408	Sleeve, Wear	11
3920447	Screw, Hex Flange Head Cap	29
3920497	Connection, Vent	13
3920544	Kit, Lift Pump Service	40, 98
3920545	Seal, O Ring	98
3920679	Alternator	18
3920762	Hose, Elbow	91
3920773	Washer, Sealing	57, 97
3920929	Bolt, Throttle Shaft	33
3920930	Nut, Hexagon	33
3920931	Washer, Flat	33, 39
3921042	Cover, Rear	29
3921216	Gasket, Cylinder Head	73, 95
3921544	Bearing, Thrust	11
3921545	Bearing, Thrust	11
3921546	Bearing, Thrust	11
3921605	Gasket, Filter Head	51
3922018	Screw, Hex Flange Head Cap	60, 64