MASSEY FERGUSON

7000 / 8000 Grain Headers Parts Catalog

Eff. S/N HM84101

RUTHZIL TRATOR COMERCIAL DE PEÇAS LTDA 11 97083-6812 ROLANDO CITRANGULO

Description

PUBLICATION FORM NUMBER: 651760M93
PUBLICATION DATE: DECEMBER 2006
LAST ILLUSTRATION PAGE: 180

Page Title	Page Number
PUBLICATION INFORMATION	0
HOUSING - HOUSING, FLEX 8000	12
HOUSING - SKID ASSEMBLIES, FLEX 8000	20
HOUSING - STABILIZER, FLEX 8000	24
HOUSING - TILT ARMS, FLEX 8000	26
HOUSING - HOUSING, RIGID 7000	28
DIVIDERS - DIVIDERS, FLEX 8000	36
DIVIDERS - STABILIZER & SPRING ASY., FLEX 8000	38
DIVIDERS - LONG WING DIVIDER, FLEX 8000	40
DIVIDERS - DIVIDER - SHORT, RIGID 7000	42
AUGER - CONVEYOR, PRIOR S/N HP84101	44
AUGER - CONVEYOR, EFFECTIVE S/N HP84101	48
AUGER - CONVEYOR, FULL FINGER	52
AUGER - FINGER SHAFT ASY, FULL FINGER	54
AUGER - CENTER EXTENSIONS, FULL FINGER	56
AUGER - AUGER WEIGHTS, FULL FINGER	58
DRIVES - SICKLE DRIVE, FLEX 8000	60
DRIVES - SPRING TENSIONER KIT, SICKLE DRIVE BELT, FLEX 8000	64
DRIVES - SICKLE DRIVE, RIGID 7000	66
DRIVES - CONVEYOR DRIVE, PRIOR S/N HP84101	70
DRIVES - IMPROVED GUDGEON SERVICE KIT, HEADERS PRIOR TO S/N HP84101	74
DRIVES - CONVEYOR DRIVE, EFFECTIVE S/N HP84101	76
DRIVES - MAIN DRIVE SHAFTS	80
DRIVES - DRIVESHAFT-PTO, COMPONENTS	84
REEL - REEL SUPPORTS, ELECTRIC REEL ADJUSTMENT, REEL FORE-AFT	86
REEL - STANDARD BAT REEL, REEL & HANGERS, RIGID 7000	88
REEL - PICKUP REEL (HCC), LEVEL ("2"), 6 INCH FINGER SPACING	92
REEL - PICKUP REEL (HCC), LEVEL ("2")	96
REEL - ORBIT REEL KITS, FLEX 8000	98
REEL - PICKUP REEL (UHC U-II)	100
CUTTER BAR - SICKLES & GUARDS, FLEX 8000	104
CUTTER BAR - SICKLES & GUARDS, RIGID 7000	108
CUTTER BAR - SICKLES & GUARDS, NARROW SPACED, CLEAN CUT, FLEX 8000	112
CUTTER BAR - SICKLES & GUARDS, SCHUMACHER, 20/25/30 FEET, FLEX 8000	116
CUTTER BAR - GUARD & SPACER LOCATION, SCHUMACHER, 20/25/30 FEET, FLEX 8000	120
CUTTER BAR - WOBBLE BOX	122
HEADER HEIGHT & LATERAL TILT - HEADER HEIGHT, CONTROLS, FLEX 8000	124
HEADER HEIGHT & LATERAL TILT - POSITION SENSORS & BRACKETS, RIGID 7000	128
HYDRAULICS - REEL LIFT, LINES & FITTINGS	130
HYDRAULICS - HYDRO REEL DRIVE, MOTOR	132
HYDRAULICS - HYDRO REEL MOTOR	134
HYDRAULICS - HYDRO REEL DRIVE, LINES & FITTINGS	136
HYDRAULICS - CYLINDER REEL LIFT, MASTER	138
HYDRAULICS - CYLINDER REEL LIFT, MASTER	140
HYDRAULICS - CYLINDER REEL LIFT, SLAVE	142
SHIELDS - SHIELDS, RH SIDE	144
SHIELDS - SHIELDS, LH SIDE & RH FEEDER OPENING	146
ELECTRICAL - WIRE HARNESS	148
ELECTRICAL - HARNESS ADAPTERS	150
ELECTRICAL - CLEARANCE LIGHTS	152
MOUNTING KITS - HEADER ADAPTOR PACKAGE, FOR HEADERS PRIOR S/N HM84101, 8570, 8780 (PRIOR S/N W55101)	154
MOUNTING KITS - HEADER ADAPTER PACKAGE, HEADERS PRIOR S/N HM84101,	158

8780 S/N W55101 & UP, 9690 COMBINE	
MOUNTING KITS - HEADER ADAPTER PACKAGE, HEADERS S/N HM84101 TO S/N HP84101, 9790 COMBINE	160
MOUNTING KITS - HEADER ADAPTER PACKAGE, HEADERS EFFECTIVE S/N HM84101, 9790 COMBINE	162
ACCESSORIES - HEADERS, RAISED FEATHER SHEETS, FLEX 8000	164
ACCESSORIES - HEADERS, RUBBER CURTAIN PACKAGE	166
ACCESSORIES - DUST DIVERTER III	168
ACCESSORIES - FAN HOUSING ASSEMBLY, DUST DIVERTER III, 71405886	172
ACCESSORIES - SINGLE POINT HOOK-UP, HYDRAULIC/ELECTRICAL, PERMANENT, 71411590	174
ACCESSORIES - SINGLE POINT HOOK-UP, HYDRAULIC/ELECTRICAL, TEMPORARY, 71411592	176
ACCESSORIES - MULTI COUPLER, 71412110	178
RECOMMENDED DEALER STOCK - RECOMMENDED DEALER STOCK	180

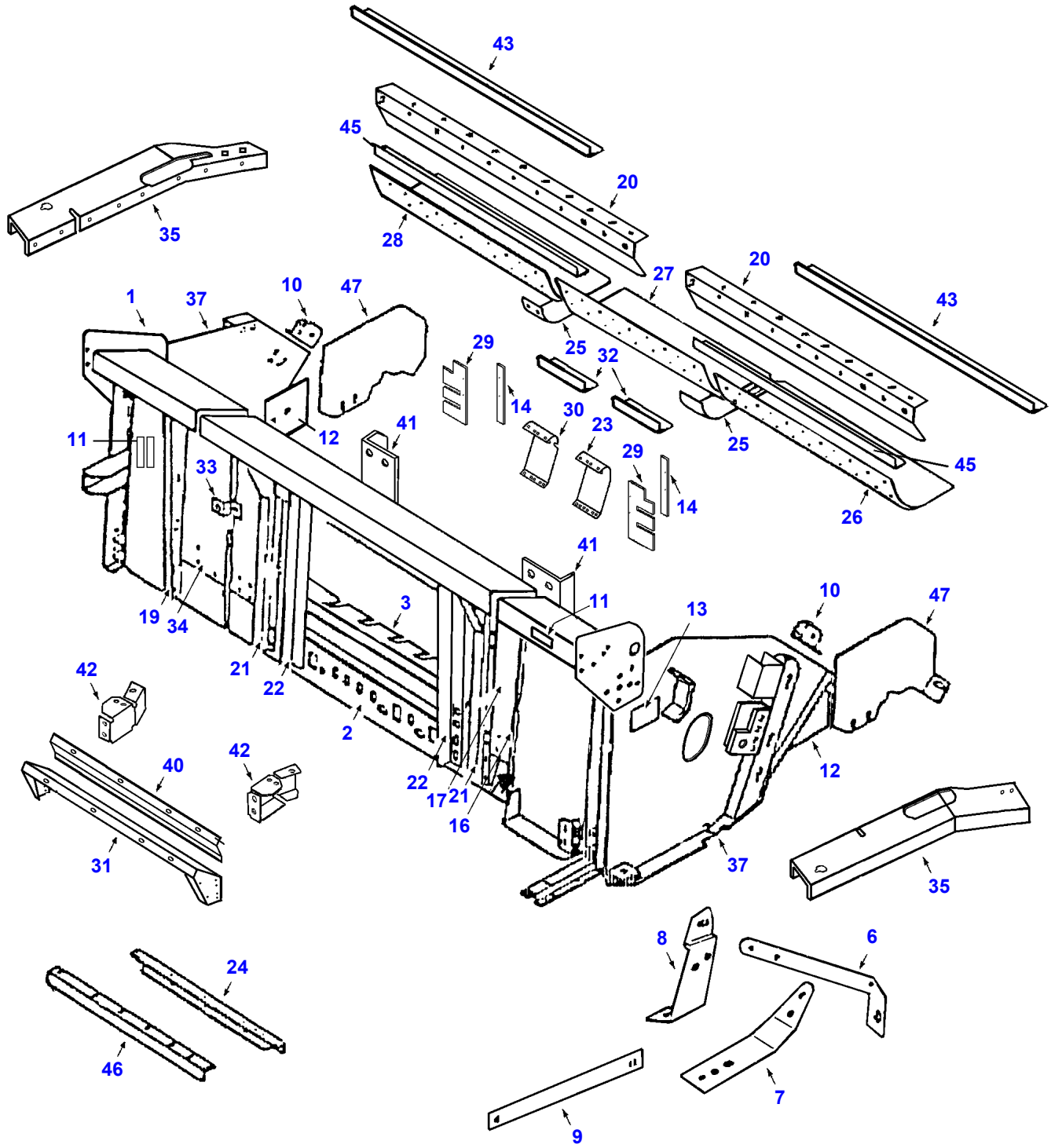
43
45
20
35
28
27
20
43
1
37
10
47
29
25
32
14
30
23
11
12
41
29
25
45
33
14
26
41
11
10
47
19
34
3
13
21
22
42
2
12
40
42
22
17
21
16
31
37
35
8
6
24
46
7
9
GGH0099

Item	Part Number	Qty	Description
1	71375585	1	TRUSS ASY. (18')
	71375584	1	TRUSS ASY. (20')
	71377600	1	TRUSS ASY. (25')
	71377597	1	TRUSS ASY. (30')
	71378613	1	DECAL, HEADER
	71385088	1	CHART, LUBRICATION
	71385145	1	CHART, LUBRICATION (FRENCH)
	7701592	AR	CAPSCREW, 1/2 X 1.0
	70931187	AR	NUT, SER. FLG., 1/2
	70921966	AR	LOCKWASHER, 1/2
	70931211	AR	NUT, SER. FLG., 3/8
	70918268	AR	WASHER 5/8 SAE
	70924744	AR	CAPSCREW, 5/8 X 1-1/2
	70917373	AR	LOCKWASHER, 5/8
	70923320	AR	CAPSCREW, 1/2 X 3
	704031	AR	NUT, 1/2
	7703424	AR	CAPSCREW, 3/8 X 1.0 SER. FLG.
	70931809	AR	BOLT, 1/2 X 1-1/4 RHSN
	70934656	AR	CAPSCREW, 1/2 X 1-1/2 SER. FLG.
	70937658	AR	GROMMET, 7/8" I.D. X 1-5/8" O.D.
2	71376749	1	FRAME ASY., LOWER (18')
	71376744	1	FRAME ASY., LOWER (20')
	71375396	1	FRAME ASY., LOWER (25')
	71375732	1	FRAME ASY., LOWER (30')
3	71399926	1	STRIP SEAL, 40.04" (9690)
	71390642	1	STRIP SEAL, 53.38" (9790)
	71375376	1	STRIP SEAL, LH (8680) [B]
	71370457	1	STRIP SEAL, RH (8680) [B]
	71335690	6	SCREW, TORX 5/16 X 3/4
6	71374394	1	BRACE, SKID, RH
	70927075	3	BOLT, 5/16NC X 1
	70931277	3	NUT, FLANGED, 5/16NC
7	71360687	1	SKID, RH
	71373852	1	SKID, PLASTIC, RH SHOE
	70927075	2	BOLT, 5/16NC X 1
	70917372	2	NUT, REG, 5/16-18
8	71374391	1	ARM, STABILIZER
9	71366199	1	BRACE, DIVIDER, RH
	71368404	1	BRACE, DIVIDER, LH
	70925704	AR	CAPSCREW, 5/8 X 4-1/2
	70924744	1	CAPSCREW, 5/8NC X 1-1/2
	70925148	AR	CAPSCREW, 5/8NC X 8.0
	70918268	AR	WASHER, 5/8
	7774458	AR	NUT, FLANGED, 5/8NC
	Y705046	AR	LOCKWASHER, 1/2
	7701592	AR	CAPSCREW, 1/2 X 1 SER FLG.
10	71369921	2	BRACKET, DIVIDER
	70931348	4	BOLT, 3/8NC X 3/4
	70931211	4	NUT, FLANGED, 3/8NC
11	700717402	2	REFLECTOR, RED (STICK ON)
	700717404	2	REFLECTOR, ORANGE (STICK ON) (QTY. 4 FOR 30')
12	71321283	2	FILLER, REAR ENDS
	70918268	AR	WASHER, 5/8
	70925704	AR	CAPSCREW, 5/8 X 4-1/2
	7774458	AR	NUT, SER. FLG., 5/8
13	71350360	2	DECAL, DANGER, RH & LH
	71359823	2	DECAL, DANGER, RH & LH(FRENCH)
14	71407206	2	PLATE, DEFLECTOR (EFF SN HP84101)
16	71380171	1	POST, REAR, RH
	70931348	AR	BOLT, RHSN 3/8 X 3/4
	70931211	AR	NUT, 3/8 SER. FLG.
17	71376750B	1	BACK, HEADER, RH, BLACK (18')
	71376736B	1	BACK, HEADER, RH, BLACK (20')
	71375400B	1	BACK, HEADER, RH, BLACK (25')
	71380139B	1	BACK, HEADER, RH, BLACK (30')
	70927075	AR	BOLT, RHSN, 5/16 X 1.0
	70931277	AR	NUT, SER. FLG., 5/16
	70931348	AR	BOLT, RHSN, 3/8 X 3/4
	70931211	AR	NUT, SER. FLG., 3/8
19	71380114	2	POST, INTERMEDIATE (18')(QTY. 3 FOR 20' & 25', QTY. 5 FOR 30')
	70918430	AR	WASHER, FLAT, 1/2 X 1-1/4 X 14GA

Item	Part Number	Qty	Description
	70927075	AR	BOLT, RHSN, 5/16 X 1
	70931277	AR	NUT, SER. FLG., 5/16
	70931348	AR	BOLT, RHSN, 3/8 X 3/4
	70931211	AR	NUT, FLANGE, 3/8
	70923683	AR	SCREW, TAPTITE, 3/8 X 3/4
20	71376624	1	RETARDER, UPPER, RH (18')
	71376734	1	RETARDER, UPPER, RH (20')
	71375512	1	RETARDER, UPPER, RH (25')
	71375269	1	RETARDER, UPPER, RH (30')
	71376623	1	RETARDER, UPPER, LH (18')
	71376735	1	RETARDER, UPPER, LH (20')
	71375514	1	RETARDER, UPPER, LH (25')
	71375378	1	RETARDER, UPPER, LH (30')
	79016594	AR	KIT, HUCKBOLT (INCL 1 EA HUCKBOLT & COLLAR)
	70923683	AR	SCREW, 3/8 X 3/4 TAPTITE
21	71377588	1	POST WLMT, MAIN, RH
	71377589	1	POST WLMT, MAIN, LH
	70918430	AR	WASHER, FLAT, 1/2 X 1-1/4 X 14GA
	70917373	AR	LOCKWASHER, 5/8
	70924744	8	CAPSCREW, 5/8 X 1-1/2
	79021665	AR	SEALANT, LOCTITE
	70927075	AR	BOLT, RHSN, 5/16 X 1.0
	70931277	AR	NUT, SER. FLG., 5/16
	70931809	AR	BOLT, RHSN, 1/2 X 1-1/4
	70931187	AR	NUT, SER. FLG., 1/2
22	71375354	1	POST WLMT, INNER, RH (LTM)
	71375353	1	POST WLMT, INNER, LH (LTM)
	71375272	1	POST WLMT, INNER, RH [A]
	71375273	1	POST WLMT, INNER, LH [A]
	70930228	10	SCREW, 5/16 X 3/4
	70927075	AR	BOLT, RHSN 5/16 X 1
	70931277	AR	NUT, SER. FLG. 5/16
	7703424	AR	CAPSCREW, 3/8 X 1 SER. FLG.
23	71375785	1	WEARPLATE, RETARDER, RH (9690)
	71390650	1	WEARPLATE, RETARDER, RH (9790)
	71375270	1	WEARPLATE, RETARDER, RH (8680) [B]
24	71360375	1	CHANNEL,CENTER,TILT ARM (REF. TILT ARMS)
	70923683	AR	SCREW, 3/8 X 3/4 TORX
25	71374362	2	SPLICE, BOTTOM
	70936495	AR	BOLT, MONO 1/4
26	71376728	1	BOTTOM, RH (18')
	71376726	1	BOTTOM, RH (20')
	71376262	1	BOTTOM, RH (25')
	71374262	1	BOTTOM, RH (30')
	70936495	AR	BOLT, MONO 1/4
27	71374275	1	BOTTOM, CENTER
	71335690	AR	SCREW, SELF TAP. 5/16 X 3/4 TORX
28	71376729	1	BOTTOM, LH (18')
	71376727	1	BOTTOM, LH (20')
	71376263	1	BOTTOM, LH (25')
	71374261	1	BOTTOM, LH (30')
	70936495	AR	BOLT, MONO 1/4
29	71377295	1	PANEL, FILLER, LH (9690)(PRI SN HP84101)
	71377294	1	PANEL, FILLER, RH (9690)(PRI SN HP84101)
	71407235	1	PANEL, FILLER, LH (9690)(EFF SN HP84101)
	71407236	1	PANEL, FILLER, RH (9690)(EFF SN HP84101)
	71391287	1	PANEL, FILLER, LH (9790)(PRI SN HP84101)
	71391288	1	PANEL, FILLER, RH (9790)(PRI SN HP84101)
	71407238	1	PANEL, FILLER, LH (9790)(EFF SN HP84101)
	71407239	1	PANEL, FILLER, RH (9790)(EFF SN HP84101)
	71375379	2	EXTENSION, FAIRING (8680) [B]
	700718807	6	SCR,HX SCKT FLAT HD,SPL, 5/16-18 X 1
	70931277	6	NUT, SER. FLG., 5/16
30	71377293	1	WEARPLATE, RETARDER, LH (9690)
	71390649	1	WEARPLATE, RETARDER, LH (9790)
	71375359	1	WEARPLATE, RETARDER (8680) [B]
31	71375266	1	HANGER WLMT.
32	71376070	2	EXTENSION, ANGLE, REAR RETARDER (9690)
	71390959	2	EXTENSION, ANGLE, REAR RETARDER (9790)
	71335690	3	SCREW, THRD FRMG, TORX, 5/16NC X 7/8
33	71354496	1	BRACKET, REEL HOSE

Item	Part Number	Qty	Description
34	71376625B	1	BACK, HEADER, LH, BLACK (18')
	71376737B	1	BACK, HEADER, LH, BLACK (20')
	71375501	1	BACK, HEADER, LH, BLACK (25')
	71380140B	1	BACK, HEADER, LH, BLACK (30')
	70927075	AR	BOLT, RHSN, 5/16 X 1.0
	70931277	AR	NUT, SER. FLG., 5/16
	70931348	AR	BOLT, RHSN, 3/8 X 3/4
	70931211	AR	NUT, SER. FLG., 3/8
35	71374371	1	REINFORCEMENT, HEADER END, LH
	71366166	1	REINFORCEMENT, HEADER END, RH
	7703424	AR	CAPSCREW, 3/8 X 1.0, SER. FLG.
	70931350	AR	BOLT, RHSN, 3/8 X 1.0
	70931211	AR	NUT, SER. FLG., 3/8
37	71394571	1	END, PAN WLMT LH
	71373636	1	END, PAN WLMT RH
	70925148	1	CAPSCREW, 5/8 X 8.0
	7774458	1	NUT, SER. FLG., 5/8
	70925704	1	CAPSCREW, 5/8 X 4-1/2
	Y705624	2	WASHER, PLAIN, 1/2
40	71375371	1	PLATE WLMT., FILLER TRUSS [A]
	7703424	4	CAPSCREW, 3/8 X 1
41	71375375	2	ANGLE, STIFFENER, INNER POST [A]
	70934656	4	CAPSCREW, 1/2 X 1/2
42	71375267	1	GUIDE, LH
	71375268	1	GUIDE, RH
	70934656	6	CAPSCREW, SER. FLG., 1/2 X 1.5
	70931187	2	NUT, SER. FLG., 1/2
	70931809	AR	BOLT, 1/2 X 1-1/4 RHSN
	7701592	AR	CAPSCREW, 1/2 X 1 SER. FLG.
43	71376731	2	ANGLE, RETARDER, REAR (18')
	71376730	2	ANGLE, RETARDER, REAR (20')
	71375510	2	ANGLE, RETARDER, REAR (25')
	71372968	2	ANGLE, RETARDER, REAR (30')
	71335690	AR	SCREW, SELF TAP, 5/16 X 3/4 TORX
45	71376621	1	RETARDER, FRONT, LH ANGLE (18')
	71376733	1	RETARDER, FRONT, LH ANGLE (20')
	71375509	1	RETARDER, FRONT, LH ANGLE (25')
	71375358	1	RETARDER, FRONT, LH ANGLE (30')
	71376622	1	RETARDER, FRONT, RH ANGLE (18')
	71376732	1	RETARDER, FRONT, RH ANGLE (20')
	71375508	1	RETARDER, FRONT, RH ANGLE (25')
	71372818	1	RETARDER, FRONT, RH ANGLE (30')
	71377296	2	RETARDER, FRONT, 7.87"
	71335690	AR	SCREW, SELF TAP, 5/16 X 3/4 TORX
46	71357716	2	ANGLE, TILT ARM, INTMD.(REF. TILT ARMS) (18', 25' & 30')
	71357715	2	ANGLE, TILT ARM, INTERMEDIATE (20')
	71357719	2	ANGLE, TILT ARM, INTERMEDIATE (25')
	71357717	2	ANGLE, TILT ARM, INTERMEDIATE (18') (QTY 4 FOR 30')
	71366153	2	ANGLE, TILT ARM, OUTER (25')
	71357714	4	ANGLE, TILT ARM, OUTER (20') (QTY. 2 FOR 30')
	71335689	AR	SCREW, SELF TAP, 3/8 X 3/4 TORX
	70922134	AR	NUT, LOCK 1/2
	70923502	AR	CAPSCREW, 1/2 X 4
47	71374395	1	FILLER, FRONT, (LH)
	71374396	1	FILLER, FRONT, (RH)
	71401071	AR	KIT, NON LTM
	71399071	AR	KIT, ADAPTER PACKAGE (MOUNT GRAIN HDRS EFF. S/N HM84101 ON 8680 COMBINE)
	71392043	AR	KIT, SMARTRAC PARTS (FLEX HEADERS S/N 83001 & UP)
	71402105	AR	KIT, HDR HOOKUP GRP (HIGH NON-LTM)
	71399829	1	RISER WLDMT, LH
	71399830	1	RISER WLDMT, RH
	70919089	14	CAPSCREW, 1/2-13 X 1-3/4
	Y705046	14	LOCKWASHER, 1/2
	71383783	4	SHIM, HEADER LEVELING

[A] INCLUDED IN KIT 71401071
[B] INCLUDED IN KIT 71399071

GGH0099
PR: t04d21j36a0001

30'	4	5	14	10	7	5	8	11	15	5	6
25'	13	5	10	7	5	8	11	5	12		
20'	4	5	8	7A	5	9	7	5	6		

18'	4	5A	7	5	8	5A	6

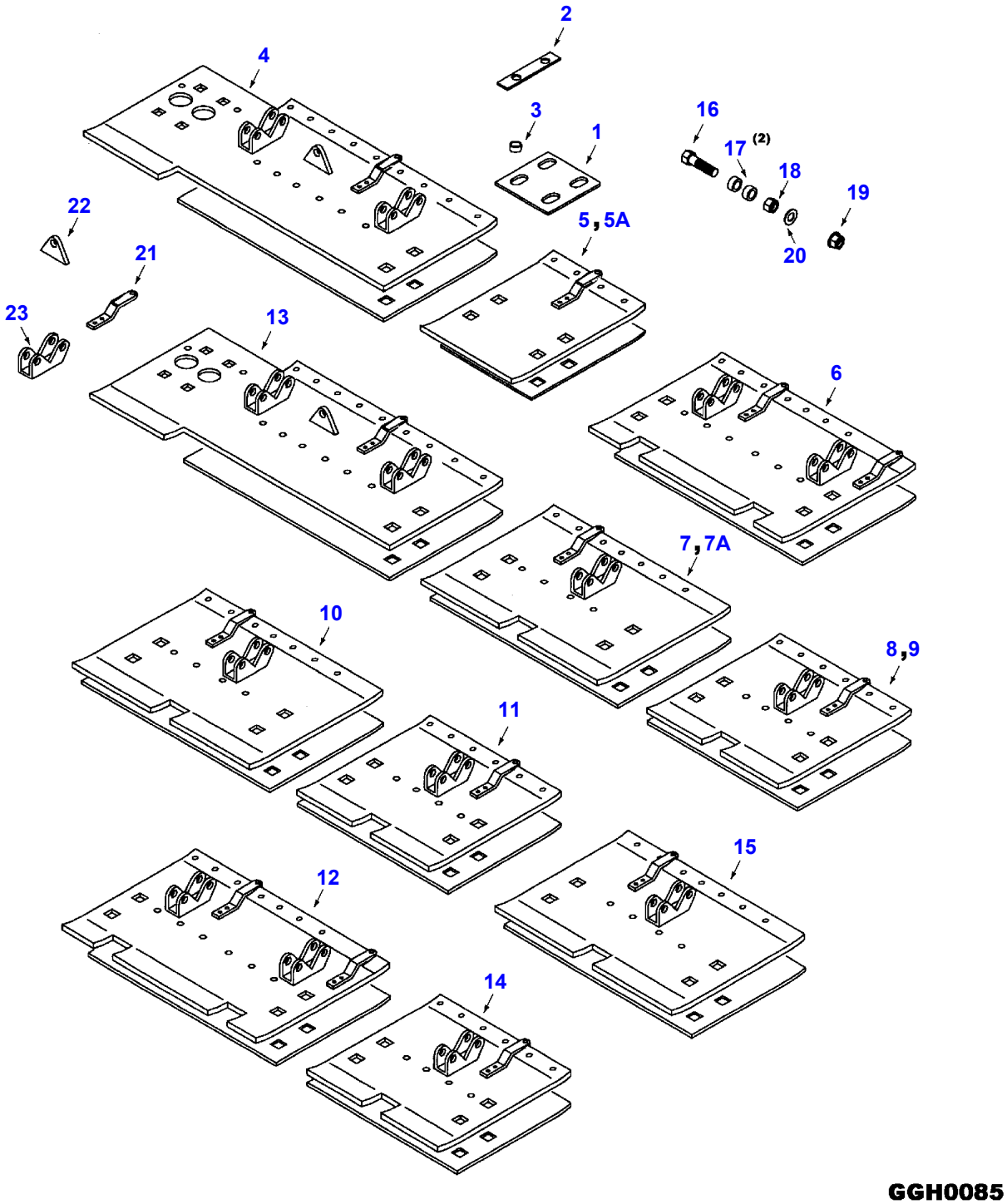

GGH0085

Item	Part Number	Qty	Description
1	71315613	AR	BRACKET, ATTACHING
2	71315614	AR	STRAP, ATTACHING
3	71315615	AR	SPACER, SKID PLATE
	70931350	AR	BOLT, 3/8X1 (TO ATTACH SKID PLATES)
	70931211	AR	NUT, FLANGED, 3/8 NC (TO ATTACH SKID PLATES)
4	71347757	1	PLATE, SKID (18')
	71373866	1	SKID, PLASTIC (LH)(18')
	71347389	1	PLATE, SKID (LH) (20' & 30') (USED WITH TYPE 1 STABILIZER ASY.)
	71399928	1	PLATE, SKID (LH) (20' & 30') (NOT SHOWN) (USED WITH TYPE 2 STABILIZER ASY.)
	71373860	1	SKID, PLASTIC (LH)(20' & 30')
	71398299	AR	INSTRUCTION SHEET, SKID SHOE [A]
5	71347397	3	PLATE, SKID (QTY. 1 FOR 18')
	71373861	3	SKID, PLASTIC (QTY. 1 FOR 18')
5A	71347763	2	PLATE, SKID (18')
	71373867	2	SKID, PLASTIC (18')
6	71360678	1	PLATE, SKID (20' & 30')(RH)
	71373868	1	SKID, PLASTIC (20' & 30')(RH)
	71361396	1	PLATE, SKID (18')(RH)
	71373874	1	SKID, PLASTIC (18')(RH)
7	71347403	1	PLATE, SKID (18', 25' & 30')
	71373854	1	SKID, PLASTIC (18', 25' & 30')
	71347409	1	PLATE, SKID (20')
	71373857	1	SKID, PLASTIC (20')
7A	71347399	1	PLATE, SKID (20')
	71373862	1	SKID, PLASTIC (20')
8	71347405	1	PLATE, SKID (18', 25' & 30')
	71373855	1	SKID, PLASTIC (18', 25' & 30')
	71347407	1	PLATE, SKID (20')
	71373856	1	SKID, PLASTIC (20')
9	71347401	1	PLATE, SKID (20')
	71373853	1	SKID, PLASTIC (20')
10	71347411	1	PLATE, SKID (25' & 30')
	71373858	1	SKID, PLASTIC (25' & 30')
11	71347413	1	PLATE, SKID (25' & 30')
	71373859	1	SKID, PLASTIC (25' & 30')
12	71366186	1	PLATE, SKID (25')(RH)
	71373871	1	SKID, PLASTIC (25')(RH)
13	71366189	1	PLATE, SKID (25')(LH) (USED WITH TYPE 1 STABILIZER ASY.)
	71399929	1	PLATE, SKID (25')(LH) (USED WITH TYPE 2 STABILIZER ASY.)(NOT ILLUSTRATED)
	71373872	1	SKID, PLASTIC (25')(LH)
	71398299	AR	INSTRUCTION SHEET, SKID SHOE [A]
14	71366683	1	PLATE, SKID (30')
	71373869	1	SKID, PLASTIC (30')
15	71366681	1	PLATE, SKID (30')
	71373870	1	SKID, PLASTIC (30')
16	7701659	AR	CAPSCREW, 5/8-11 X 2.5
	70923111	AR	CAPSCREW, 5/8-11 X 3
17	71322606	AR	SPACER, MAIN LINK
18	7774458	AR	NUT, HEX FLNG SER LK 5/8-11
19	7774458	AR	NUT, FLANGED, 5/8-11
20	70918268	AR	WASHER, 5/8
21	71328226	AR	STRAP, SKID PAD
22	71312736	1	BLOCK, SUPPORT
23	71328227	AR	ANCHOR
24	70923220	AR	BOLT, RHSN, LONG NECK, 3/8 X 1-1/4 (USE W/PLASTIC SKID)NOT ILLUSTRATED)
	70936495	AR	RIVET, MONOBOLT, 1/4 (USE W/PLASTIC SKID)
	79017113	AR	RIVET, HAMMER (USE W/PLASTIC SKID)
	71392035	AR	KIT, PLASTIC SKID PLATES (18')
	71392036	AR	KIT, PLASTIC SKID PLATES (20')
	71392037	AR	KIT, PLASTIC SKID PLATES (25')
	71392038	AR	KIT, PLASTIC SKID PLATES (30')

[A] NOTE: INSTRUCTIONS FOR UPDATING LH
FILLER PANEL WHEN REPLACING SKID PLATE/
STABILIZER ASY. FROM TYPE 1 TO TYPE 2

GGH0085
PR: t04d21j36a0002

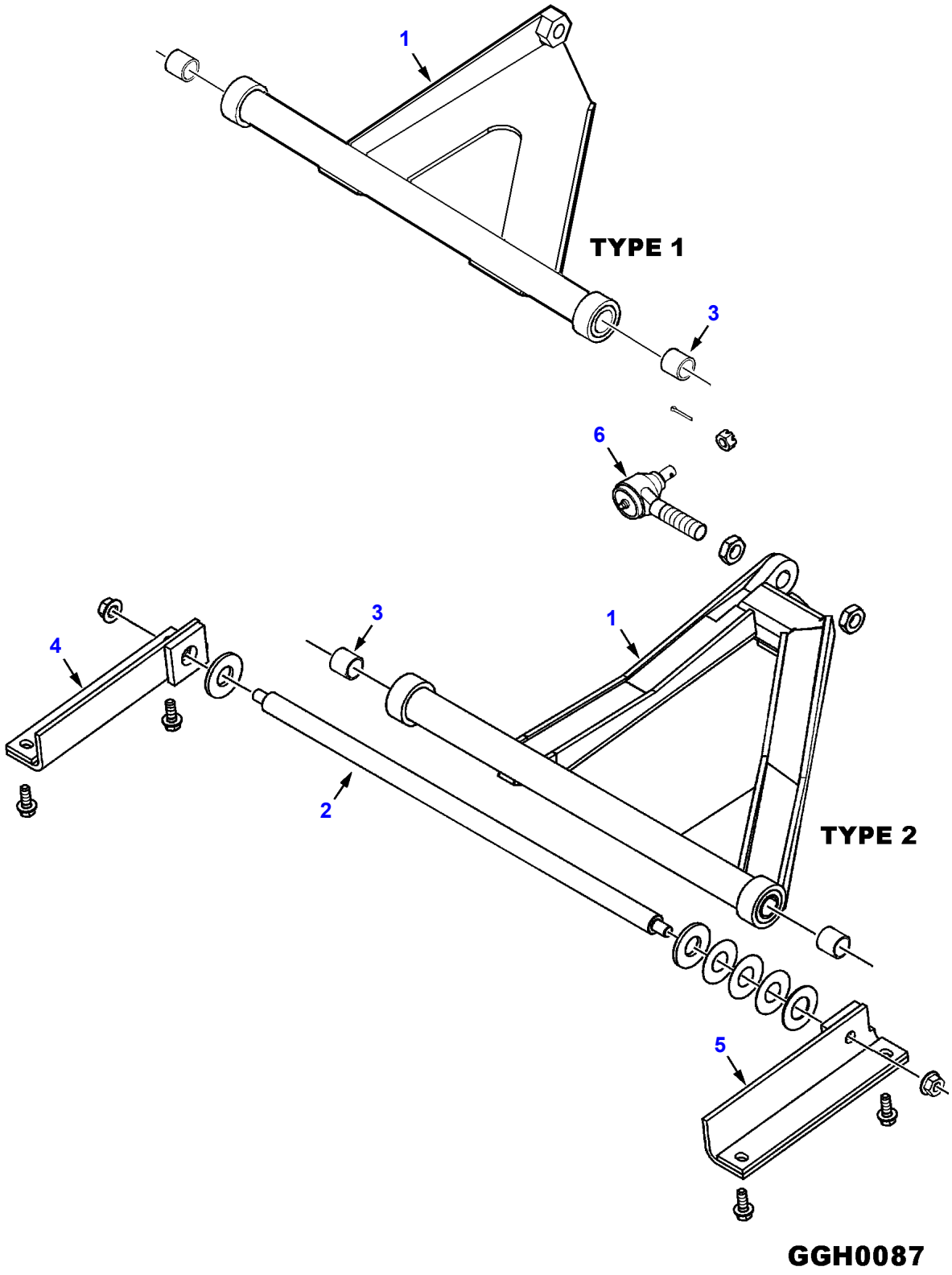
1
TYPE 1
3
6
4
3
1
2
TYPE 2
5
GGH0087

Item	Part Number	Qty	Description
1	71390978	1	STABILIZER ASY. (TYPE 1)(20' & 30') (INCL. ITEM 3) (REF. SKID PLATE)
	059362N1	1	STABILIZER ASY. (TYPE 2)(20' & 30') (INCL. ITEM 3) (REF. SKID PLATE)
	71390981	1	STABILIZER ASY. (TYPE 1) (18') (INCL. ITEM 3)
	71390979	1	STABILIZER ASY. (TYPE 1) (25') (INCL. ITEM 3) (REF. SKID PLATE)
	059496N1	1	STABILIZER ASY. (TYPE 2) (25') (INCL. ITEM 3) (REF. SKID PLATE)
	71398299	AR	INSTRUCTION SHEET, SKID SHOE [A]
2	71327867	1	SHAFT, STABILIZER (18')
	71327866	1	SHAFT, STABILIZER (20' & 30')
	71365972	1	SHAFT, STABILIZER (25')
	70931187	2	NUT,1/2 NC SER FLG
	70935086	2	WASHER, HARDENED, 9.3 ID X 2.0 OD X .18
	70919329	AR	WASHER, PLAIN, 1.03 X 2 X 16GA
	71391982	AR	WASHER, SHIM (.015")
3	71322827	2	BUSHING
4	71374355	1	BRACKET ASY., STABILIZER, LH
5	71374354	1	BRACKET ASY., STABILIZER, RH
	7703424	4	CAPSCREW, SER. FLG., 3/8-16 X 1
6	71127532	1	SOCKET ASY.
	71115607	2	NUT, JAM, 11/16NC
	70917422	1	NUT, SLOTTED, 1/2NC
	70918448	1	PIN, COTTER, .094 X 1

[A] NOTE: INSTRUCTIONS FOR UPDATING LH FILLER PANEL WHEN REPLACING SKID PLATE/ STABILIZER ASY. FROM TYPE 1 TO TYPE 2

GGH0087
PR: t04d21j36a0003

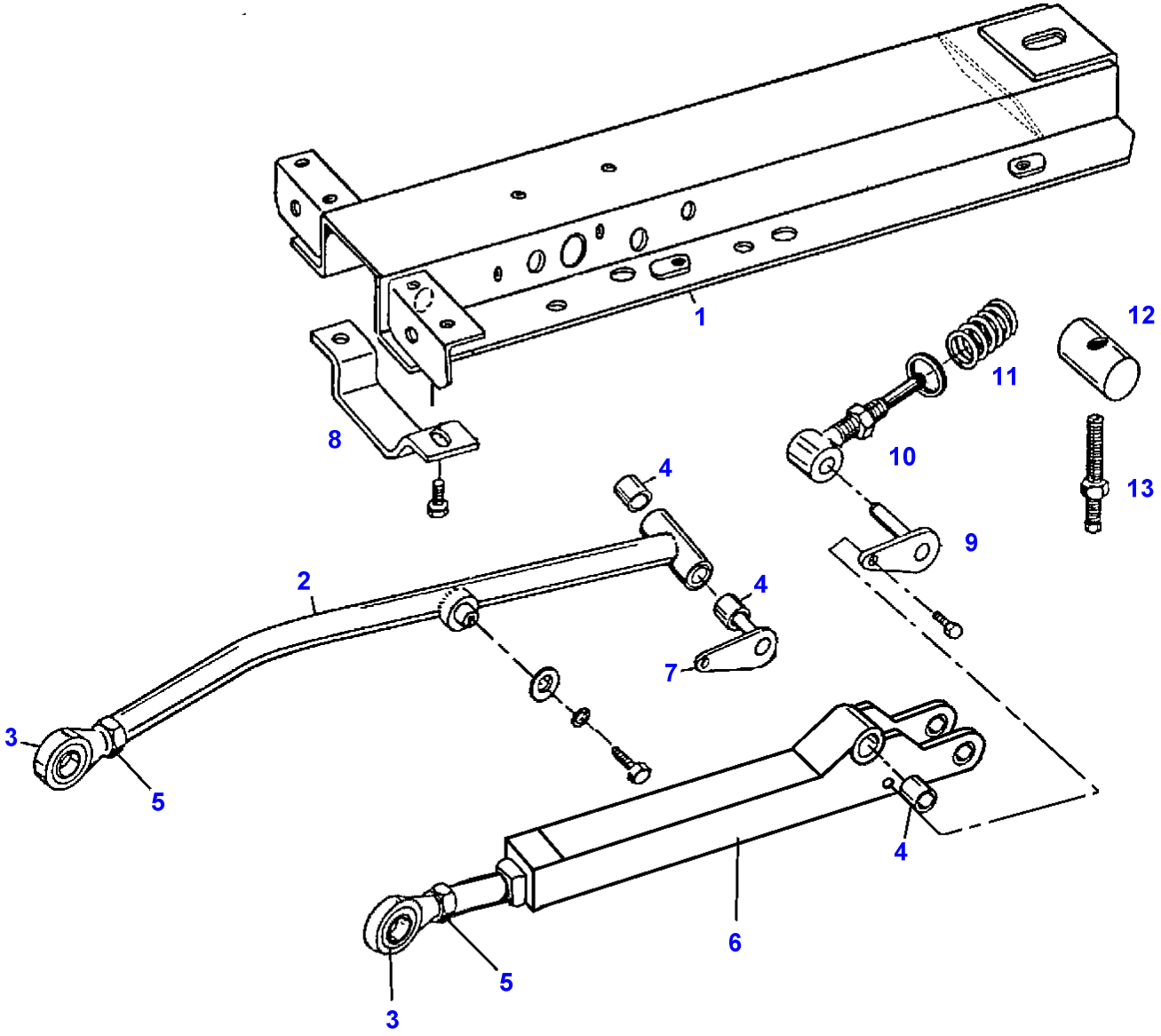

71374264

Item	Part Number	Qty	Description
1	71374267	1	ARM WLDMT., TILT, (RH OUTER)
	71374265	AR	ARM WLDMT., TILT, CENTER
		4	18'
		6	20' & 25'
		8	30'
	71374268	1	ARM WLDMT., TILT, (LH OUTER)
2	71340333	AR	STABILIZER ASY., UPPER (INCL. ITEMS 3-5)
3	71328149	AR	END, ROD
4	71340350	AR	BUSHING, 1.0 LG (2 PER STABILIZER ASY.)
5	70922014	AR	NUT, JAM 5/8
6	71377904	AR	STABILIZER ASY., LOWER (INCL. ITEMS 3-5)
7	71342621	AR	PIN WLDMT., UPPER STABILIZER
	365775X1	AR	SCREW, TAPTITE 1/4-20 X 50
8	71320312	AR	BAR, CUTTERBAR LOCK-UP
	70930598	AR	SCREW, TAPTITE 3/8-16 X 1-1/2
9	71342623	AR	PIN WLDMT.
	365775X1	AR	SCREW, TAPTITE 1/4-20 X 50
10	71338689	AR	GUIDE ASY., SPRING (INCL. BUSHING)
	71340350	AR	BUSHING
11	71311340	AR	SPRING
	70918268	AR	WASHER 5/8 SAE
	70923353	AR	NUT, LOCK 5/8
12	71309584	AR	BLOCK, ADJUSTING
13	71327861	AR	BOLT, DRAW, TILT ARM
	70923353	AR	NUT, LOCK, 5/8

71374264
PR: t04d21j36a0004

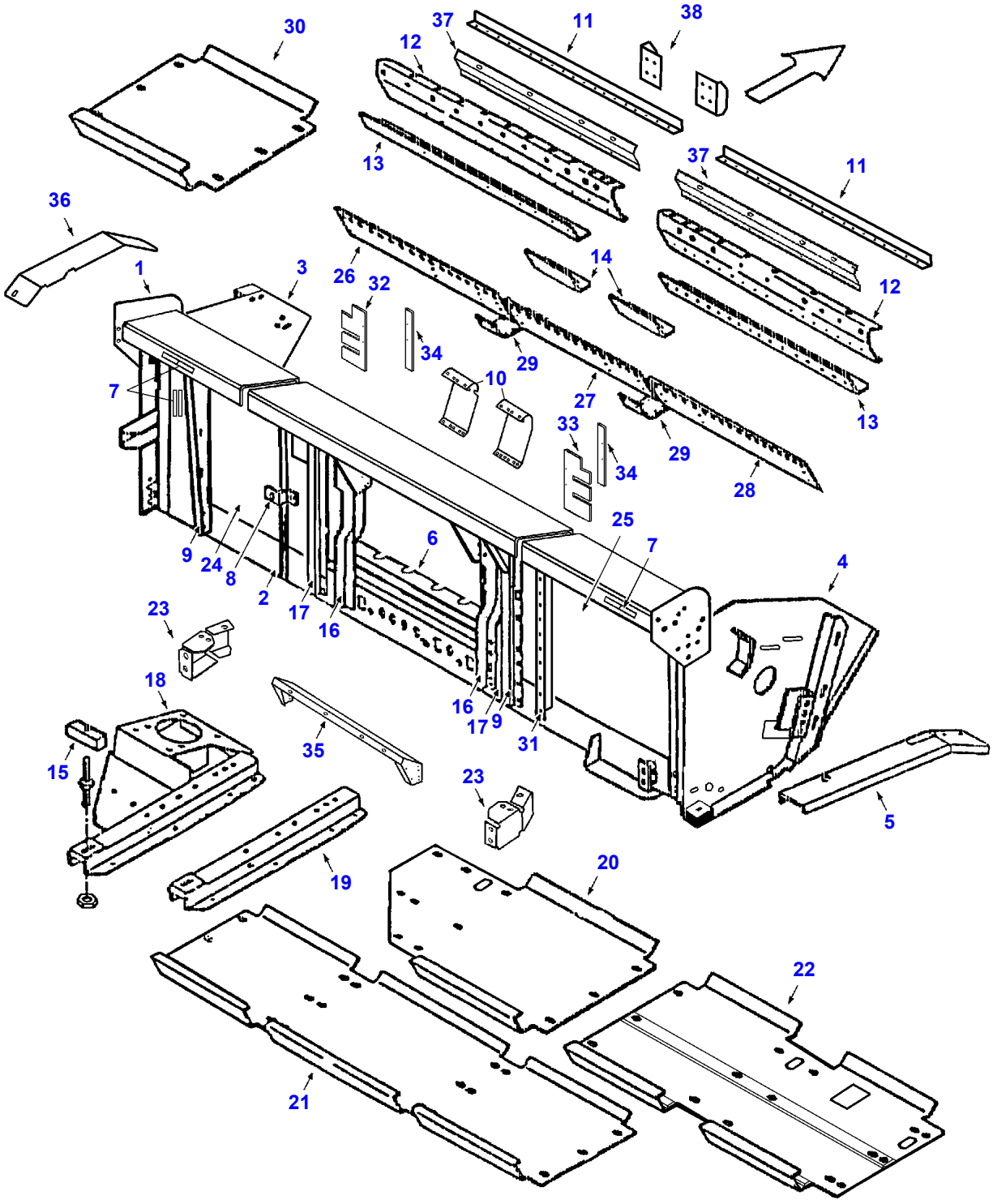
30
37
11
38
12
13
37
11
36
1
3
26
32
14
12
34
29
10
27
7
33
29
13
34
28
25
6
7
9
24
8
2
17
16
4
23
18
16
17
9
31
35
15
23
5
19
20
22
21

GGH0100

Item	Part Number	Qty	Description
1	71377600	1	TRUSS ASY. (25')
	71377597	1	TRUSS ASY. (30')
	71385088	1	CHART, LUBRICATION
	71378613	1	DECAL, HEADER
	70937658	AR	GROMMET, 7/8" I.D. X 1-5/8" O.D.
2	71375396	1	FRAME ASY., LOWER (25')
	71375732	1	FRAME ASY., LOWER (30')
3	71394589	1	END ASY. LH
	71324207	AR	REFLECTOR, AMBER
	70918147	2	SCREW, #10 X 1/2
	70910533	2	WASHER, LOCK, #10
	70917415	2	NUT, #10
	Y705624	1	WASHER, 1/2
	70924744	4	CAPSCREW, 5/8NC X 1-1/2
	70918268	4	WASHER, 5/8
	70917373	4	LOCKWASHER, 5/8
	70923502	AR	CAPSCREW, 1/2NC X 4
	70922134	AR	NUT, LOCK, 1/2NC
4	71373635	1	END ASY., RH
	70924744	4	CAPSCREW, 5/8NC X 1-1/2
	70918268	4	WASHER, 5/8
	70917373	4	LOCKWASHER, 5/8
	70923502	AR	CAPSCREW, 1/2NC X 4
	70922134	AR	NUT, LOCK, 1/2NC
	Y705624	1	WASHER, 1/2
5	71366166	1	REINFORCEMENT, END, RH
	71373374	1	REINFORCEMENT, END, LH
	70931350	AR	BOLT, RHSN, 3/8 X 1.0
	7703424	AR	CAPSCREW, 3/8 X 1.0
	70931211	AR	NUT, SER. FLG., 3/8
6	71399926	1	STRIP SEAL, 40.04" (9690)
	71390642	1	STRIP SEAL, 53.38" (9790)
	71375376	1	STRIP SEAL, LH (8680) [B]
	71370457	1	STRIP SEAL, RH (8680) [B]
	71335690	6	SCREW, TORX 5/16 X 3/4
7	700717402	2	REFLECTOR, RED (QTY. 4 FOR 30')
	700717404	2	REFLECTOR, ORANGE (QTY. 4 FOR 30')
8	71354496	1	BRACKET, REEL LIFT HOSE
	70927075	1	BOLT, RHSN 5/16 X 1
	70931277	1	NUT, FLANGED, 5/16NC
9	71380114	3	POST, INTERMEDIATE (QTY.5 FOR 30')
	70931348	AR	BOLT, 3/8NC X 3/4
	70931211	AR	NUT, FLANGED, 3/8NC
	70931350	AR	BOLT, 3/8 X 1
	70918430	AR	WASHER, FLAT, 1/2 X 1-1/4 X 14GA
	70927075	AR	BOLT, RHSN, 5/16 X 1.0
	70931277	AR	NUT, SER. FLG., 5/16
	70923683	AR	SCREW, TAPTITE, 3/8 X 3/4
10	71377293	1	WEARPLATE, RETARDER, LH (9690)
	71375785	1	WEARPLATE, RETARDER, RH (9690)
	71390649	1	WEARPLATE, RETARDER, LH (9790)
	71390650	1	WEARPLATE, RETARDER, RH (9790)
	71375359	1	WEARPLATE, RETARDER, LH (8680) [B]
	71375270	1	WEARPLATE, RETARDER, RH (8680) [B]
11	71375510	2	RETARDER, ANGLE, REAR (25')
	71372968	2	RETARDER, ANGLE, REAR (30')
	71335690	AR	SCREW, SELF TAP, 5/16 X 3/4
	70931209	AR	NUT, FLANGED, 1/4NC
12	71375514	1	RETARDER, STRAW, UPPER, LH (25')
	71375378	1	RETARDER, STRAW, UPPER, LH (30')
	71375512	1	RETARDER, STRAW, UPPER, RH (25')
	71375269	1	RETARDER, STRAW, UPPER, RH (30')
	71335690	AR	SCREW, TORX 5/16 X 3/4
	70927075	AR	BOLT, 5/16NC X 1
	70931277	AR	NUT, SER. FLG., 5/16
	70931348	AR	BOLT, RHSN, 3/8 X 3/4
	70931211	AR	NUT, SER. FLG., 3/8
	70936495	AR	RIVET, MONOBOLT, 1/4
13	71375509	1	RETARDER, ANGLE, FRONT, LH (25')
	71375358	1	RETARDER, ANGLE, FRONT, LH (30')
	71375508	1	RETARDER, ANGLE, FRONT, RH (25')

Item	Part Number	Qty	Description
	71372818	1	RETARDER, ANGLE, FRONT, RH (30')
	71377296	2	RETARDER, FRONT, 7.87"
	71335690	AR	SCREW, THRD. FORMING, 5/16 X 3/4
	70936495	AR	RIVET, MONOBOLT, 1/4
14	71376070	2	EXTENSION, ANGLE, REAR RETARDER (9690)
	71390959	2	EXTENSION, ANGLE, REAR RETARDER (9790)
	71335690	3	SCREW, THRD FRMG, TORX, 5/16NC X 7/8
15	71309584	8	BLOCK, ADJUSTING (QTY. 10 FOR 30')
	71327861	8	DRAWBOLT, TILT ARM (QTY. 10 FOR 30')
	70923353	AR	NUT, JAM, 5/8NC
16	71375353	1	POST ASY., INNER, LH (LTM)
	71375354	1	POST ASY., INNER. RH (LTM)
	71375273	1	POST ASY., INNER, LH [A]
	71375272	1	POST ASY., INNER. RH [A]
	70927075	4	BOLT, RHSN, 5/16 X 1.0
	70931277	4	NUT, SER FLANGE, 5/16
	70930228	AR	SCREW, FLAT HD, 5/16 X 3/4
	70923683	AR	SCREW, TAPTITE, 3/8 X 3/4
17	71377589	1	POST WLMT., MAIN (LH)
	71377588	1	POST WLMT., MAIN (RH)
	70931809	AR	BOLT, RHSN, 1/2 X 1-1/4
	70918430	AR	WASHER, FLAT, 1/2 X 1-1/4 X 14GA (BETWEEN POST AND TRUSS)
	70931187	AR	NUT, FLANGED, 1/2
	70924744	AR	CAPSCREW, 5/8 X 1-1/2
	70927075	AR	BOLT, RHSN, 5/16 X 1.0
	70931277	AR	NUT, SER. FLG., 5/16
18	71385135	1	SUPPORT ASY., WOBBLE BOX
19	71371917	7	ARM ASY., TILT (QTY. 9 FOR 30')
	71335689	57	SCREW, SELF TAP, 3/8 X 3/4
20	71375520	1	GUARD, ROCK, LH (25')
	71373388	1	GUARD, ROCK, LH (30')
	71335689	AR	SCREW, 3/8NC X 3/4 THRD FORMING, (TORX)
21	71373386	1	GUARD, ROCK, CENTER
	71335689	AR	SCREW, TORX 3/8-16 X 3/4
22	71375521	1	GUARD, ROCK, RH (25')
	71373387	1	GUARD, ROCK, RH (30')
	71335689	AR	SCREW, TORX 3/8-16 X 3/4
23	71375267	1	GUIDE, LH
	71375268	1	GUIDE, RH
	70934656	4	CAPSCREW, SER. FLG., 1/2 X 1.5
	70931187	4	NUT, SER. FLG., 1/2
24	71375501	1	BACK, HEADER, LH (25')(BLACK)
	71380140B	1	BACK, HEADER, LH (30')(BLACK)
	79016594	AR	KIT, HUCKBOLT (INCL 1 EA HUCKBOLT & COLLAR)
25	71375400B	1	BACK, HEADER, RH (25')(BLACK)
	71380139B	1	BACK, HEADER, RH (30')(BLACK)
	79016594	AR	KIT, HUCKBOLT (INCL 1 EA HUCKBOLT & COLLAR)
26	71375505	1	BOTTOM, PAN, LH (25')
	71372821	1	BOTTOM, PAN, LH (30')
27	71372815	1	BOTTOM, PAN, CENTER
28	71375506	1	BOTTOM, PAN, RH (25')
	71372822	1	BOTTOM, PAN, RH (30')
29	71372820	2	SPLICE, BOTTOM (CENTER TO RH & LH)
30	71375522	1	GUARD, ROCK, INTERMEDIATE (25')
	71373385	1	GUARD, ROCK, INTERMEDIATE (30')
31	71380171	1	POST, REAR, RH
	70918430	AR	WASHER, FLAT, 1/2 X 1-1/4 X 14GA
32	71377295	1	PANEL, FILLER, LH (9690)(PRI SN HP84101)
	71407235	1	PANEL, FILLER, LH (9690)(EFF SN HP84101)
	71391287	1	PANEL, FILLER, LH (9790)(PRI SN HP84101)
	71407238	1	PANEL, FILLER, LH (9790)(EFF SN HP84101)
	71375379	1	EXTENSION, FAIRING (8680) [B]
	700718807	6	SCR,HX SCKT FLAT HD,SPL, 5/16-18 X 1
	70931277	6	NUT, SER. FLG., 5/16
33	71377294	1	PANEL, FILLER, RH (9690)(PRI SN HP84101)
	71407236	1	PANEL, FILLER, RH (9690)(EFF SN HP84101)
	71391288	1	PANEL, FILLER, RH (9790)(PRI SN HP84101)
	71407239	1	PANEL, FILLER, RH (9790)(EFF SN HP84101)
	71375379	1	EXTENSION, FAIRING (8680) [B]
	700718807	6	SCR,HX SCKT FLAT HD,SPL, 5/16-18 X 1
	70931277	6	NUT, SER. FLG., 5/16

Item	Part Number	Qty	Description
34	71407206	2	PLATE, DEFLECTOR (EFF SN HP84101)
35	71375266	1	HANGER, WLMT
	70923320	6	CAPSCREW, 1/2 X 3.0
	7701592	2	CAPSCREW, SER. FLG., 1/2 X 1.0
	70931187	8	NUT, SER. FLG., 1/2
36	71373663	1	DEFLECTOR, WOBBLE BOX
	365775X1	AR	CAPSCREW, 1/4 X 1/2
37	71375371	1	PLATE WLMT, FILLER [A]
	70923683	4	SCREW, THRD FORMING, 3/8 X 3/4
	7703424	4	CAPSCREW, SER. FLG., 3/8 X 1.0
38	71375375	2	STIFFENER, ANGLE, INNER POST [A]
	70934656	4	CAPSCREW, 1/2 X 1-1/2
	71401071	AR	KIT, NON LTM
	71399071	AR	KIT, ADAPTER PACKAGE (MOUNT GRAIN HDRS EFF. S/N HM84101 ON 8680 COMBINE)
	71402105	AR	KIT, HDR HOOKUP GRP (HIGH NON-LTM)
	71399829	1	RISER WLDMT, LH
	71399830	1	RISER WLDMT, RH
	70919089	14	CAPSCREW, 1/2-13 X 1-3/4
	Y705046	14	LOCKWASHER, 1/2
	71383783	4	SHIM, HEADER LEVELING

[A] INCLUDED IN KIT 71401071
[B] INCLUDED IN KIT 71399071

GGH0100
PR: t04d21j36a0005

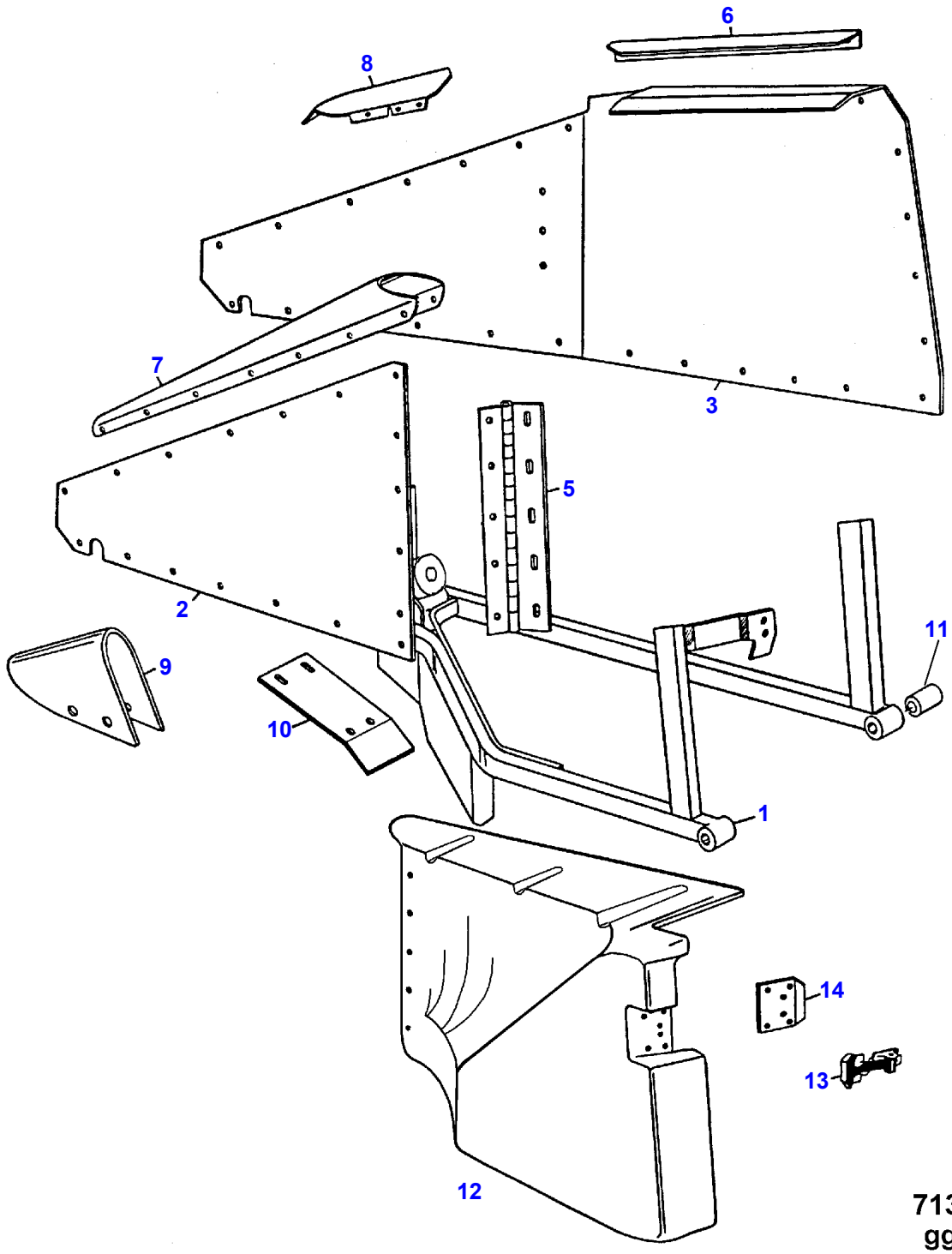

71366273.2
ggh0009

Item	Part Number	Qty	Description
1	71374434	1	DIVIDER ASY., LH (INCL. ITEMS 2-7)
	71374428	1	DIVIDER ASY., RH (INCL. ITEMS 2-4, 7 & 8)
	70925148	2	CAPSCREW, 5/8 X 8
	70925704	1	CAPSCREW, 5/8 X 4-1/2
	70918268	AR	WASHER, 5/8 SAE
2	71365746	1	SIDE, LH, OUTER
	71374427	1	SIDE, RH, OUTER
	70924837	AR	RIVET, POP .188 X .277
	70924280	AR	RIVET, POP .188 X .402
3	71367659	1	SIDE, LH, INNER
	71365748	1	SIDE, RH, INNER
	70924837	AR	RIVET, POP .188 X .277
	70924280	AR	RIVET, POP .188 X .402
5	71367356	1	HINGE, WOBBLE BOX SHIELD
	70924280	AR	RIVET, POP .188 X .402
6	71374430	1	GUIDE, WOBBLE BOX SHIELD, UPPER
7	71365749	1	CONE, DIVIDER
	70924837	AR	RIVET, POP .188 X .277
8	71368005	1	CAP, CONE, RH
9	71366258	2	POINT, DIVIDER
	71369903	4	SPACER, DIVIDER POINT
	70931804	4	BOLT, RHSN 5/16 X 3
	70931277	4	NUT, WHIZLOCK 5/16
10	71366229	2	DEFLECTOR
	71335690	8	SCREW, TORX 5/16 X 3/4
11	71318962	4	SPACER, DIVIDER PIVOT
12	71375108	1	SHIELD WOBBLE BOX
	70918157	5	SCREW, TRUSSHEAD 1/4 X 3/4
	70931209	5	NUT, WHIZLOCK 1/4
13	71348712	1	LATCH, T-HANDLE
	70925160	2	RIVET, POP .188 X .527
14	71367653	1	SUPPORT, LATCH KEEPER
	70924280	4	RIVET, POP .188 X .402

GGH0009
PR: t04d21j36a0006

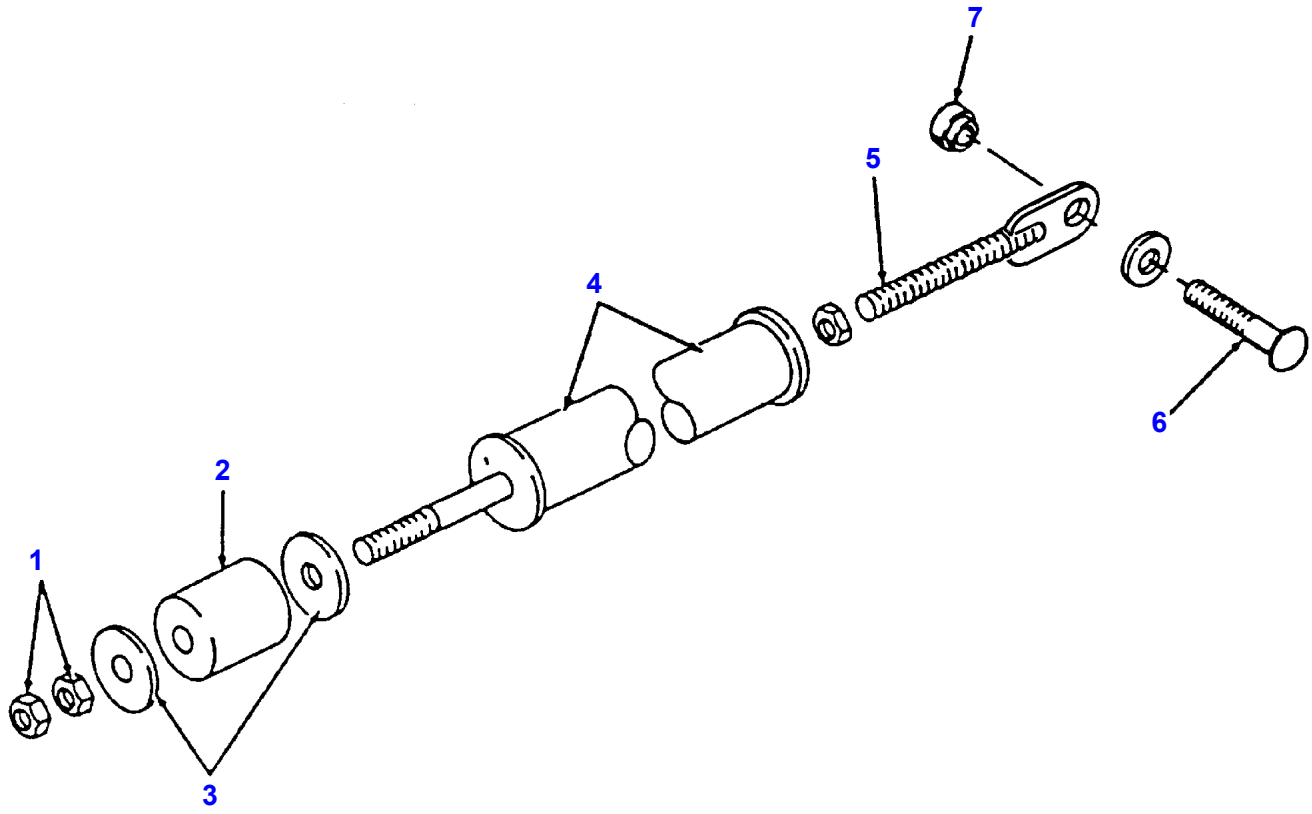

71366273 .1
ggh0008

Item	Part Number	Qty	Description
1	70918213	4	NUT, 7/16NC
2	71308201	3	DAMPER, RUBBER (BUSHING)
	71369922	AR	SPACER, STOP, 2 X .73 (RH)
3	70920309	2	WASHER, .513 X 1.75 X 11 GA.
4	71366270	2	SPRING ASY.
5	71374436	2	ROD, DIVIDER
	70915726	2	NUT, 5/8NC
6	70929094	2	BOLT, 1/2NC X 2
	70918431	2	WASHER, 1/2 NC
	70922134	2	NUT, LOCK, 1/2NC
7	71354834	2	SPACER

GGH0008
PR: t04d21j36a0007

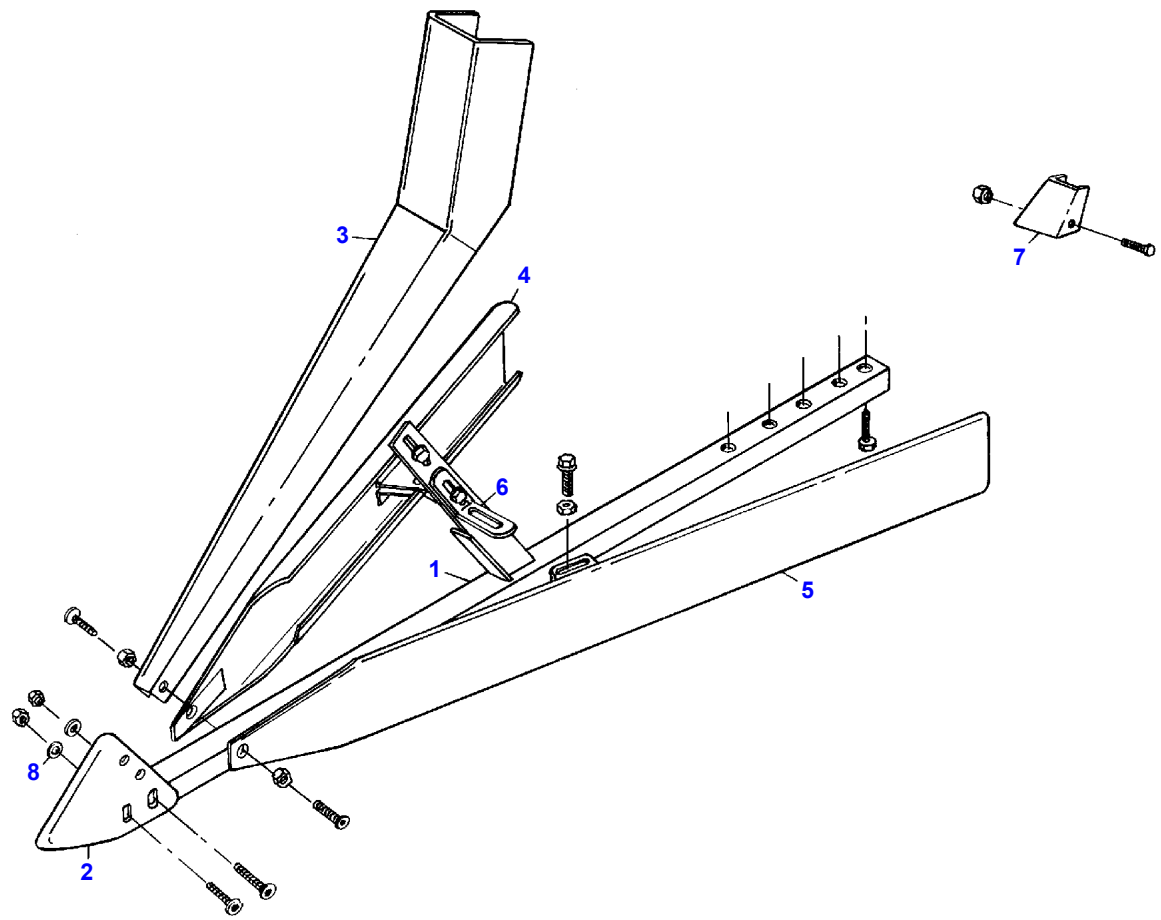

71366259

Item	Part Number	Qty	Description
1	71366243	2	SUPPORT ASY., DIVIDER
	70921972	4	CAPSCREW 3/8 X 2-1/2
	70922755	4	WASHER, .406 X 1 X 10 GA.
	70916965	4	WASHER, LOCK, 3/8
2	71366258	2	POINT, DIVIDER
	70931804	4	BOLT, RHSN. 5/16 X 3
	70931277	4	NUT, WHIZLOCK 5/16
3	71366256	2	WING ASY., UPPER
	70936460	AR	SCREW, TORX, 5/16 X 3/4
	70923362	AR	NUT, LOCK 3/8
4	71366251	2	WING ASY., INNER
5	71366252	2	WING ASY., OUTER
	7703424	4	CAPSCREW, 3/8-16 X 1.0
	70931211	4	NUT, WHIZ LOCK 3/8
6	71366245	4	BRACKET, ANCHOR
	7773104	2	CAPSCREW, WHIZ 3/8 X 1-1/2
7	71367357	2	DEFLECTOR, WING DIVIDER
	70921719	2	CAPSCREW 5/16 X 2-1/2
	70931277	2	NUT, WHIZ 5/16
8	71369903	4	SPACER, DIVIDER POINT
	71392030	1	KIT, LONG WING DIVIDER [A] (BOLTS TO STD. DIVIDER)

[A] ORDER THRU DEALER CENTRAL

71366259
PR: t04d21j36a0008

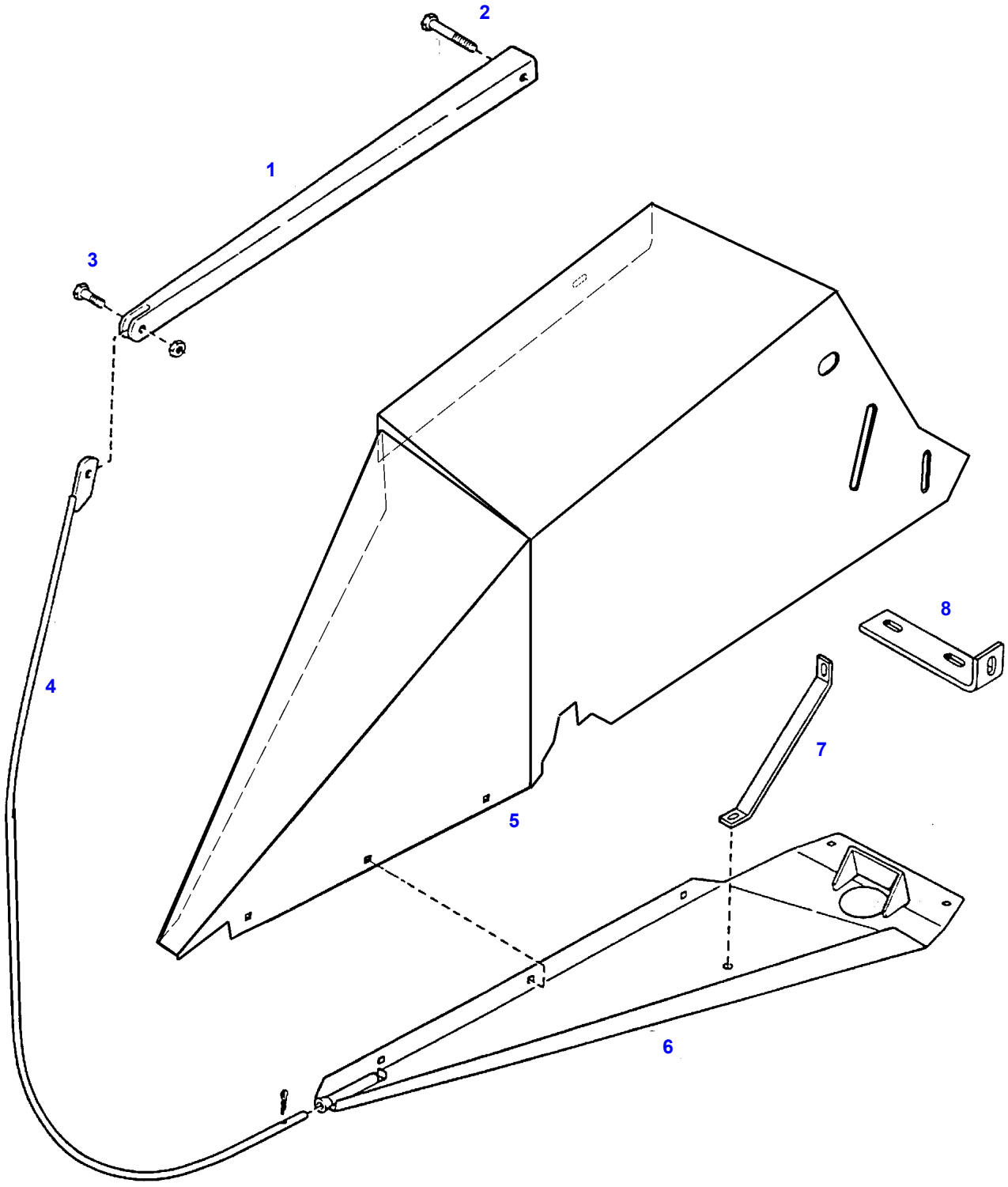

71370126

Item	Part Number	Qty	Description
1	71321555	2	LINK, DIVIDER ROD
2	70921972	2	CAPSCREW, 3/8NC X 2-1/2
	Y704635	2	NUT, LOCK, 3/8NC
3	70921210	2	CAPSCREW, 3/8NC X 1
	Y704635	2	NUT, LOCK, 3/8NC
4	71323765	2	EXTENSION DIVIDER
	70918452	2	PIN, COTTER, 1/8 X 1
5	71373397	1	SHEET, DIVIDER, LH
	71373398	1	SHEET, DIVIDER, RH
	70931348	4	BOLT 3/8-16 X 3/4
	70931211	2	NUT, WHIZLOCK, 3/8NC
	70917378	2	WASHER, 3/8
	70931333	3	BOLT, 5/16NC X 3/4
	70931277	3	NUT, WHIZLOCK, 5/16NC
6	71348641	1	SHOE ASY., LH
	71348643	1	SHOE ASY., RH
	70921210	2	CAPSCREW, 3/8NC X 1 (F/RH SHOE)
	70931211	2	NUT, FLANGED, 3/8NC (F/RH SHOE)
	70931809	2	BOLT, 1/2NC X 1-1/4 (F/LH SHOE)
	70931187	2	NUT, FLANGED, 1/2NC (F/LH SHOE)
7	71349436	1	BRACE, DIVIDER
	70931333	1	BOLT, 5/16NC X 3/4
	70931277	1	NUT, WHIZLOCK, 5/16NC
8	71369850	1	SUPPORT, LH DIVIDER
	70921210	3	CAPSCREW, 3/8NC X 1
	70931211	3	NUT, SER. FLG. 3/8NC
	70917378	3	WASHER, FLAT 3/8USS

71370126
PR: t04d21j36a0009

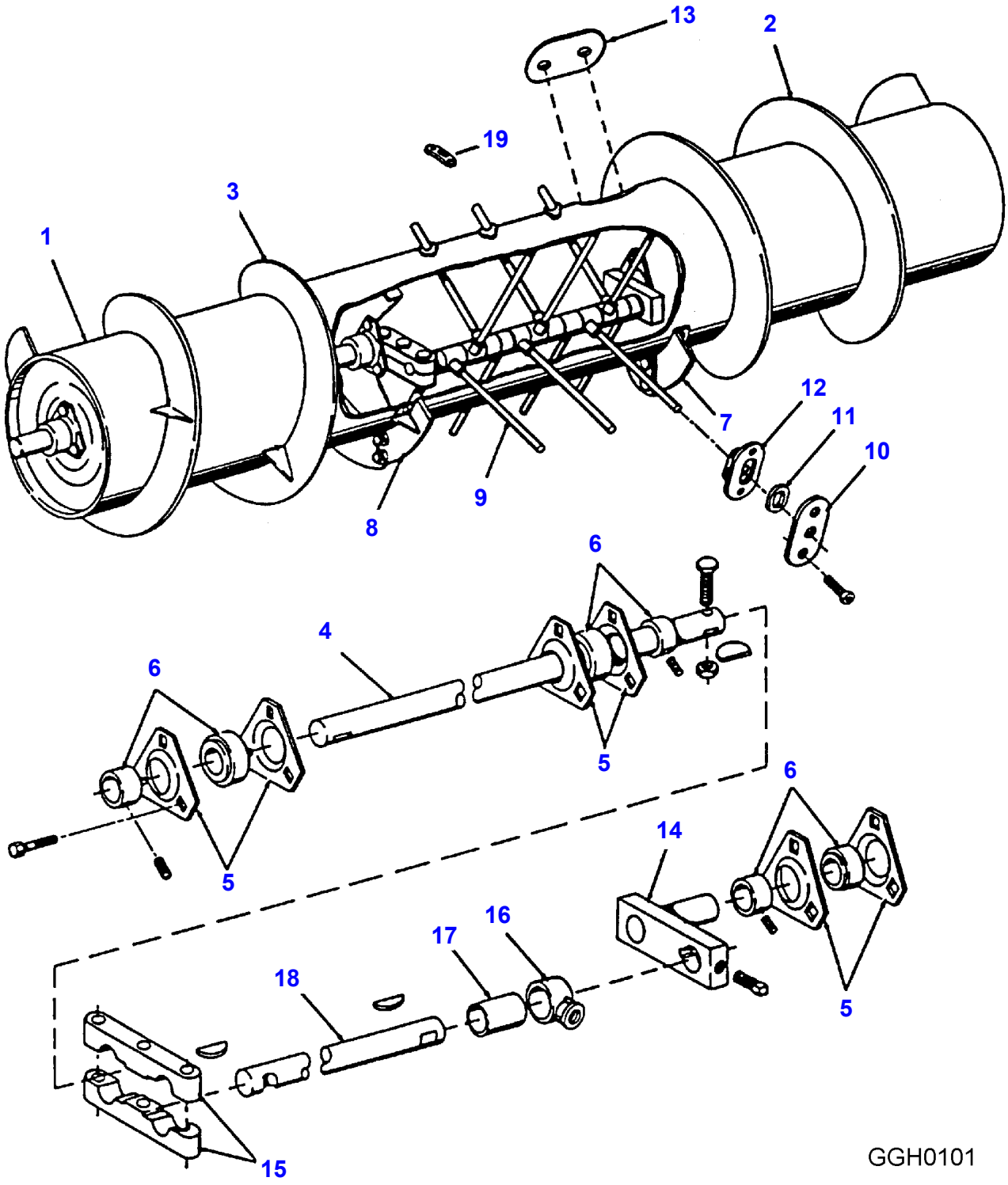
13
2
19
3
1
12
11
10
7
9
8
6
4
6
5
6
5
14
16
17
18
5
15
GGH0101

Item	Part Number	Qty	Description
	71378604G	1	CONVEYOR ASY., BOLTED - COMPLETE (18')
	71378603G	1	CONVEYOR ASY., BOLTED - COMPLETE (20')
	71378602G	1	CONVEYOR ASY., BOLTED - COMPLETE (25')
	71378601G	1	CONVEYOR ASY., BOLTED - COMPLETE (30')
1	71378325	1	CONVEYOR WLMT. (INCL. FLIGHTING)(18')
	71378324	1	CONVEYOR WLMT. (INCL. FLIGHTING)(20')
	71378323	1	CONVEYOR WLMT. (INCL. FLIGHTING)(25')
	71378322	1	CONVEYOR WLMT. (INCL. FLIGHTING)(30')
	71321556	1	FLANGE WLMT. (NOT ILLUSTRATED)
2	71378311	1	FLIGHTING, LH (CUT EXCESS) (18 & 20')
	71378310	1	FLIGHTING, LH (CUT EXCESS) (25')
	71378309	1	FLIGHTING, LH (30')
3	71378315	1	FLIGHTING, RH (CUT EXCESS) (18 & 20')
	71378314	1	FLIGHTING, RH (CUT EXCESS) (25')
	71378313	1	FLIGHTING, RH (30')
4	71376507	1	SHAFT, DIA. 1-1/4", RH (18')
	71376508	1	SHAFT, DIA. 1-1/4", RH (20')
	71371630	1	SHAFT, DIA. 1-1/4", RH (25')
	71371871	1	SHAFT, DIA. 1-1/4", RH (30')
5	71127313	6	FLANGE, BEARING
	7703432	6	CAPSCREW, 3/8NC X 3/4 (FLANGED)
6	71308984	3	BEARING, 2-7/16" O.D., 1-1/4" I.D. (INCL. COLLAR)
	70534438	2	COLLAR
7	71396876	1	EXTENSION ASY., FLIGHTING, LH (7")
	71375591G	1	EXTENSION ASY., FLIGHTING, LH (4")
	71377901G	1	EXTENSION ASY., FLIGHTING, LH 7/4"
	70931333	6	BOLT, 5/16NC X 3/4
	70931277	6	NUT, FLANGED, 5/16NC
8	71396877	1	EXTENSION ASY., FLIGHTING, RH (7")
	71375590G	1	EXTENSION ASY., FLIGHTING, RH (4")
	71377774G	1	EXTENSION ASY., FLIGHTING, RH 7/4"
	70931333	6	BOLT, 5/16NC X 3/4
	70931277	6	NUT, FLANGED, 5/16NC
9	71373376	21	FINGER
	70913160	21	NUT, 3/4
10	71320327	2	COVER, GUIDE
11	71320323	21	GUIDE, FINGER
12	71320326	21	SUPPORT, GUIDE
	71335690	42	SCREW, THRD. FRMNG, 5/16NCX3/4(TORX)
	71322875	1	WRENCH, TORX T40
13	71137123	2	COVER, HAND HOLE
	70918155	1	SCREW, TRUSS HD., 1/4NF X 1/2
	71139987	1	NUT, 1/4NF
	70921593	1	SCREW, SELF-TAP, NO. 8 X 3/4
	70909367	1	LOCKWASHER, INT. TOOTH, 1/4
14	71371925	1	CRANK ASY., LH
	29780X	1	KEY, WOODRUFF
	70920469	1	SETSCREW, 3/8NC X 3/4
15	71371417	2	CRANK, FINGER (RH)
	29780X	1	KEY, WOODRUFF
	70920990	4	CAPSCREW, 1/2NC X 3-1/2
	70931187	4	NUT, FLANGED, 1/2NC
16	71373363	21	RETAINER, FINGER
17	71176156	10	BEARING, PLASTIC
	71176360	1	BEARING, RETAINER
18	71332796	1	SHAFT, (39.685" O.L. x 1.125" O.D.)
19	71324692	4	COVER, FINGER HOLE
	70918265	4	PLATE WASHER 5/16

GGH0101
PR: t04d21j36a0010

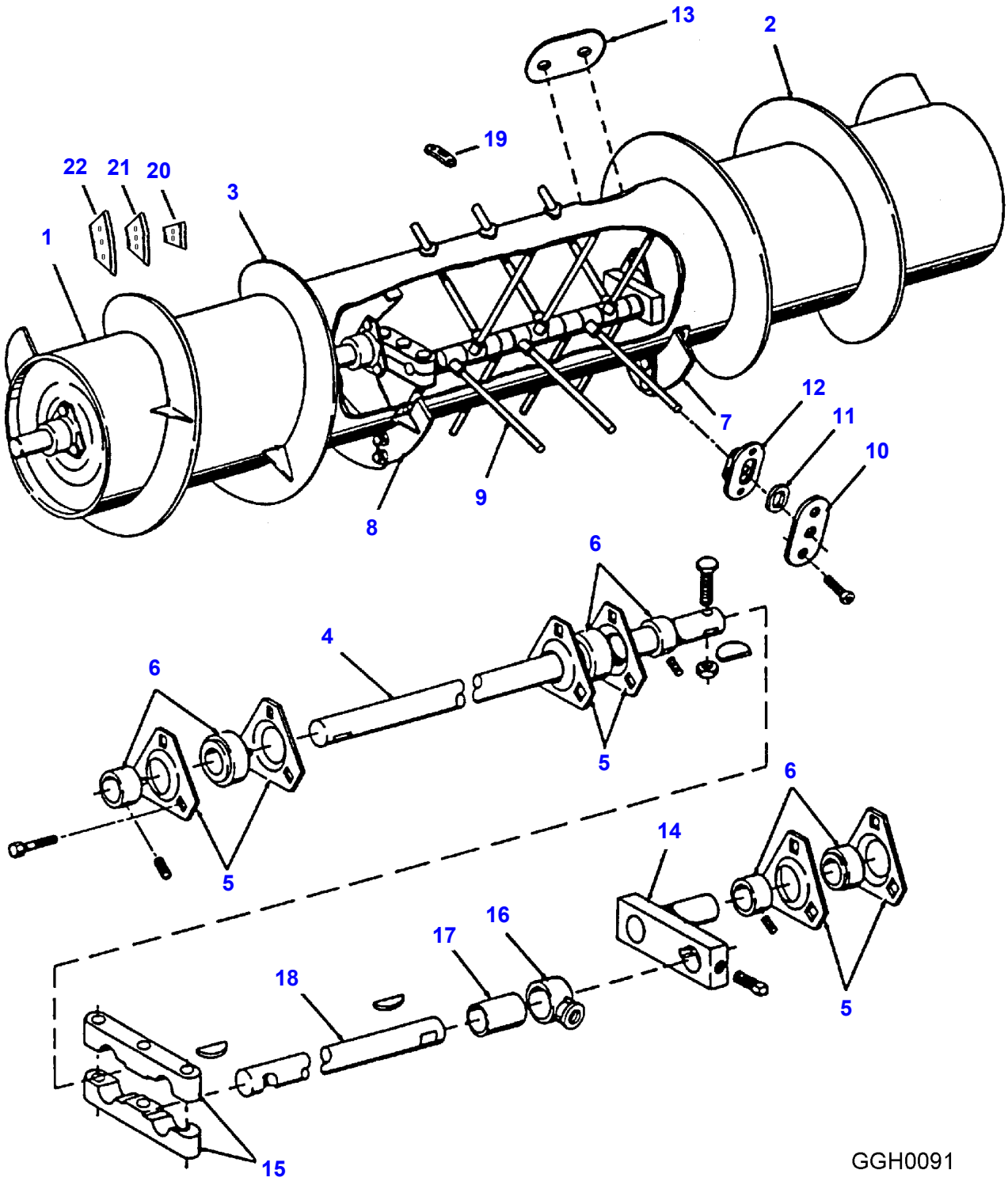
13
2
19
22
21
20
3
1
12
11
10
7
9
8
6
4
6
5
6
5
14
16
17
18
5
15
GGH0091

Item	Part Number	Qty	Description
	71407227	1	CONVEYOR ASY., BOLTED - COMPLETE (18')
	71407228	1	CONVEYOR ASY., BOLTED - COMPLETE (20')
	71407225	1	CONVEYOR ASY., BOLTED - COMPLETE (25')
	71407226	1	CONVEYOR ASY., BOLTED - COMPLETE (30')
1	71378325	1	CONVEYOR WLMT. (INCL. FLIGHTING)(18')
	71378324	1	CONVEYOR WLMT. (INCL. FLIGHTING)(20')
	71378323	1	CONVEYOR WLMT. (INCL. FLIGHTING)(25')
	71378322	1	CONVEYOR WLMT. (INCL. FLIGHTING)(30')
	71321556	1	FLANGE WLMT. (NOT ILLUSTRATED)
2	71378311	1	FLIGHTING, LH (CUT EXCESS) (18 & 20')
	71378310	1	FLIGHTING, LH (CUT EXCESS) (25')
	71378309	1	FLIGHTING, LH (30')
3	71378315	1	FLIGHTING, RH (CUT EXCESS) (18 & 20')
	71378314	1	FLIGHTING, RH (CUT EXCESS) (25')
	71378313	1	FLIGHTING, RH (30')
4	71376507	1	SHAFT, DIA. 1-1/4", RH (18')
	71376508	1	SHAFT, DIA. 1-1/4", RH (20')
	71371630	1	SHAFT, DIA. 1-1/4", RH (25')
	71371871	1	SHAFT, DIA. 1-1/4", RH (30')
	70920990	1	CAPSCREW, 1/2NC X 3-1/2
	704254	1	NUT, LOCKING, 1/2-13
5	71127313	6	FLANGE, BEARING
	7703432	9	CAPSCREW, 3/8NC X 3/4 (FLANGED)
6	71308984	3	BEARING, 2-7/16" O.D., 1-1/4" I.D. (INCL. COLLAR)
	70534438	3	COLLAR
7	71396876	1	EXTENSION ASY., FLIGHTING, LH (7")
	7700461	5	CARRIAGE BOLT, 5/16 X 3/4
	70931277	5	NUT, FLANGED, 5/16NC
8	71396877	1	EXTENSION ASY., FLIGHTING, RH (7")
	7700461	5	CARRIAGE BOLT, 5/16 X 3/4
	70931277	5	NUT, FLANGED, 5/16NC
9	71373376	17	FINGER
	70913160	17	NUT, 3/4
10	71320327	17	COVER, GUIDE
	71335690	34	SCREW, THRD. FRMNG, 5/16NCX3/4(TORX)
	71322875	1	WRENCH, TORX T40
11	71320323	17	GUIDE, FINGER
12	71320326	17	SUPPORT, GUIDE
13	71137123	2	COVER, HAND HOLE
	70918155	1	SCREW, TRUSS HD., 1/4NF X 1/2
	71139987	1	NUT, 1/4NF
	70921593	1	SCREW, SELF-TAP, NO. 8 X 3/4
	70909367	1	LOCKWASHER, INT. TOOTH, 1/4
14	71371925	1	CRANK ASY., LH
	29780X	1	KEY, WOODRUFF
	70920469	1	SETSCREW, 3/8NC X 3/4
15	71371417	2	CRANK, FINGER (RH)
	29780X	1	KEY, WOODRUFF
	70920990	4	CAPSCREW, 1/2NC X 3-1/2
	70931187	4	NUT, FLANGED, 1/2NC
16	71373363	21	RETAINER, FINGER
17	71176156	10	BEARING, PLASTIC
	71176360	1	BEARING, RETAINER
18	71332796	1	SHAFT, (39.685" O.L. x 1.125" O.D.)
	29780X	1	KEY, WOODRUFF
19	71324692	4	COVER, FINGER HOLE
	71335690	4	SCREW, THRD. FRMNG, 5/16NCX3/4(TORX)
20	71417010	1	WEIGHT, FLIGHT, RH, 1.4LB
	71417014	1	WEIGHT, FLIGHT, LH, 1.4LB
21	71417011	1	WEIGHT, FLIGHT, RH, 2.8LB
	71417013	1	WEIGHT, FLIGHT, LH, 2.8LB
22	71417004	1	WEIGHT, FLIGHT, RH, 4.3LB
	71417012	1	WEIGHT, FLIGHT, LH, 4.3LB
	70923220	AR	CARRIAGE BOLT, 3/8-16 X 1-1/4
	70922786	AR	CARRIAGE BOLT, 3/8-16 X 1
	Y704734	4	NUT, LOCK, 3/8-16

GGH0091
PR: t05b03i51b0001

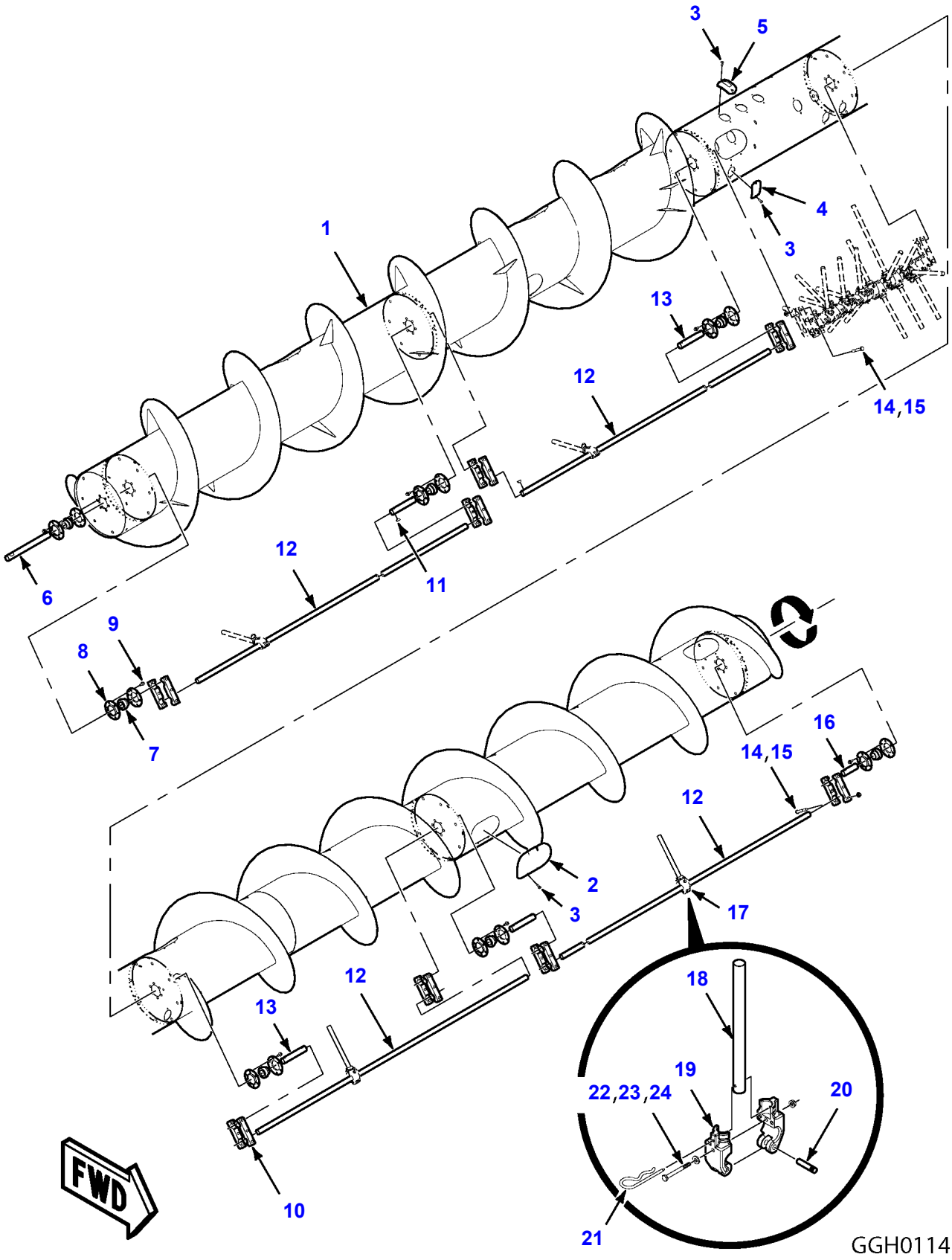
3
5
4
3
1
13
12
14,15
6
12
11
9
8
7
16
14,15
12
2
3
17
18
19
22,23,24
20
21
13
12
10
FWD
GGH0114

Item	Part Number	Qty	Description
1	71416239	1	AUGER WLDMT (20')
	71416217	1	AUGER WLDMT (25')
	71415722	1	AUGER WLDMT (30')
2	71404707	12	COVER, CONVEYOR (16 FOR 25'/18 FOR 30')
3	71335690	90	SCREW, SELF TAP, 5/16 X 3/4 TORX (106 FOR 25'/118 FOR 30')
4	71324692	4	COVER, FINGER HOLE
5	71404699	29	GUIDE, FINGER (33 FOR 25'/37 FOR 30')
6	71417005	1	SHAFT, AUGER CRANK, RH
7	71308984	7	BEARING, 2-7/16" O.D., 1-1/4" I.D.
8	71369864	14	FLANGE, BEARING
9	7703432	42	SCREW, HEX FLG SERR, 3/8-16 X 3/4
10	71402753	16	CRANK, FINGER, RH
11	29780X	18	KEY, 1/4 X 1
12	71416344	2	SHAFT, AUGER, OUTER (20')
	71416209	2	SHAFT, AUGER, INNER (20')
	71416210	2	SHAFT, AUGER, OUTER (25')
	71416209	2	SHAFT, AUGER, INNER (25')
	71415725	4	SHAFT, AUGER (30')
13	71417051	4	SHAFT, AUGER CRANK
14	70920990	26	CAPSCREW, 1/2NC X 3-1/2
15	Y704742	26	NUT, LOCK, 1/2-13
16	71415399	1	SHAFT, CONVEYOR CRANK, LH
17	71407264	12	FINGER ASY, AUGER (16 FOR 25'/20 FOR 30')
18	71417050	12	FINGER (16 FOR 25'/20 FOR 30')
19	71407263	24	RETAINER, FINGER (32 FOR 25'/40 FOR 30')
20	71407265	12	PIN (16 FOR 25'/20 FOR 30')
21	9650920W1	12	PIN, COTTER, .190 X 3.75 (16 FOR 25'/20 FOR 30')
22	70923282	12	CAPSCREW, 1/4-20 X 2-1/2 (16 FOR 25'/20 FOR 30')
23	353769X1	12	WASHER, 1/4 (16 FOR 25'/20 FOR 30')
24	1703354	12	NUT, HEX FLNG TOP LK, 1/4-20 (16 FOR 25'/20 FOR 30')

GGH0114
PR: t06l06m55c0001

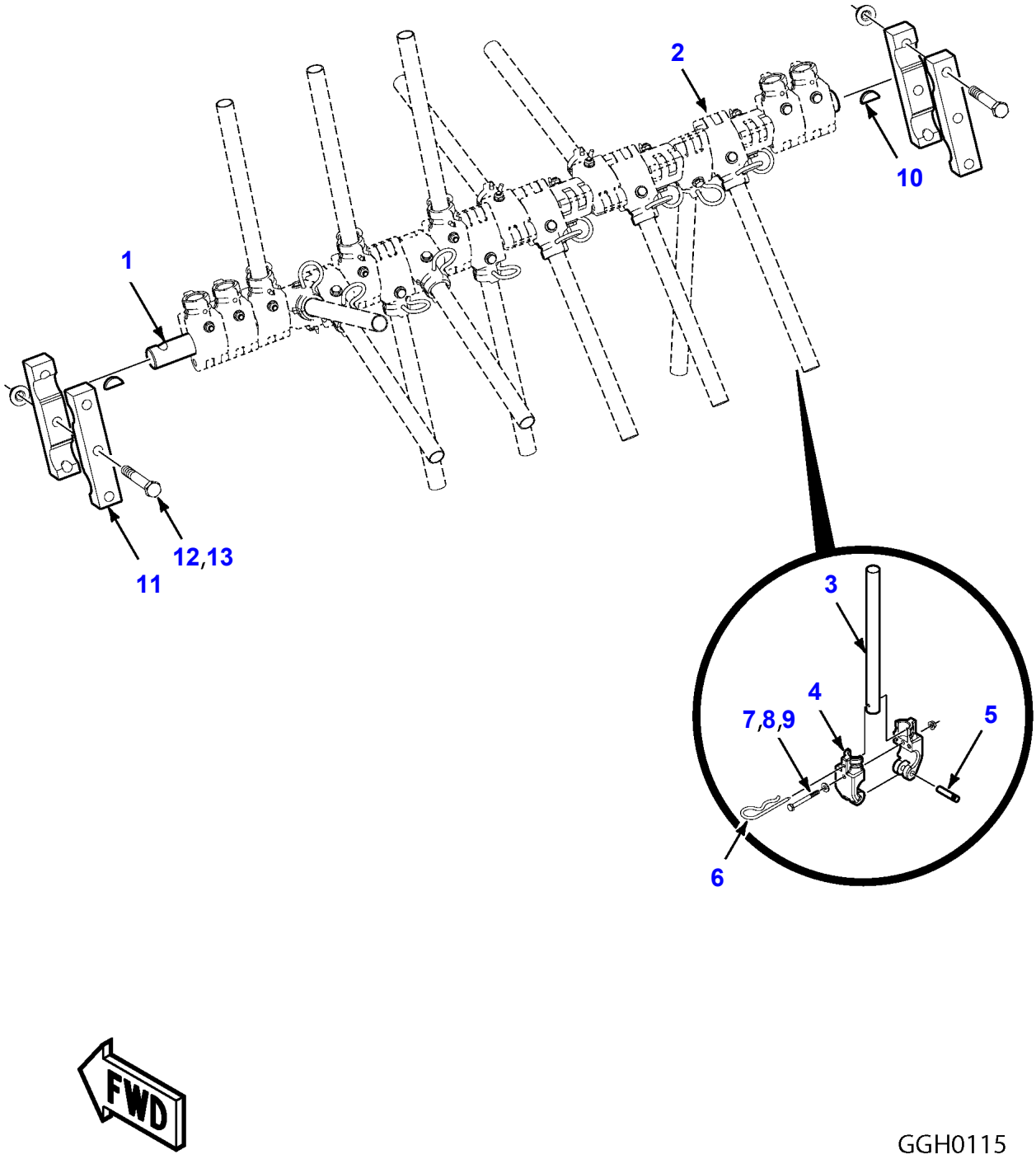

GGH0115

Item	Part Number	Qty	Description
	71416175		SHAFT ASY, FINGER (NOT SERVICED)
1	71415453	1	SHAFT, FINGER RETAINER
2	71407264	17	FINGER ASY, AUGER
3	71417050	17	FINGER
4	71407263	42	RETAINER, FINGER
5	71407265	17	PIN
6	9650920W1	17	PIN, COTTER, .190 X 3.75
7	70923282	21	CAPSCREW, 1/4-20 X 2-1/2
8	353769X1	21	WASHER, 1/4
9	1703354	21	NUT, HEX FLNG TOP LK, 1/4-20
10	29780X	2	KEY, 1/4 X 1
11	71402753	4	CRANK, FINGER, RH
12	70920990	4	CAPSCREW, 1/2NC X 3-1/2
13	Y704742	4	NUT, LOCK, 1/2-13

GGH0115
PR: t06l06m55c0002

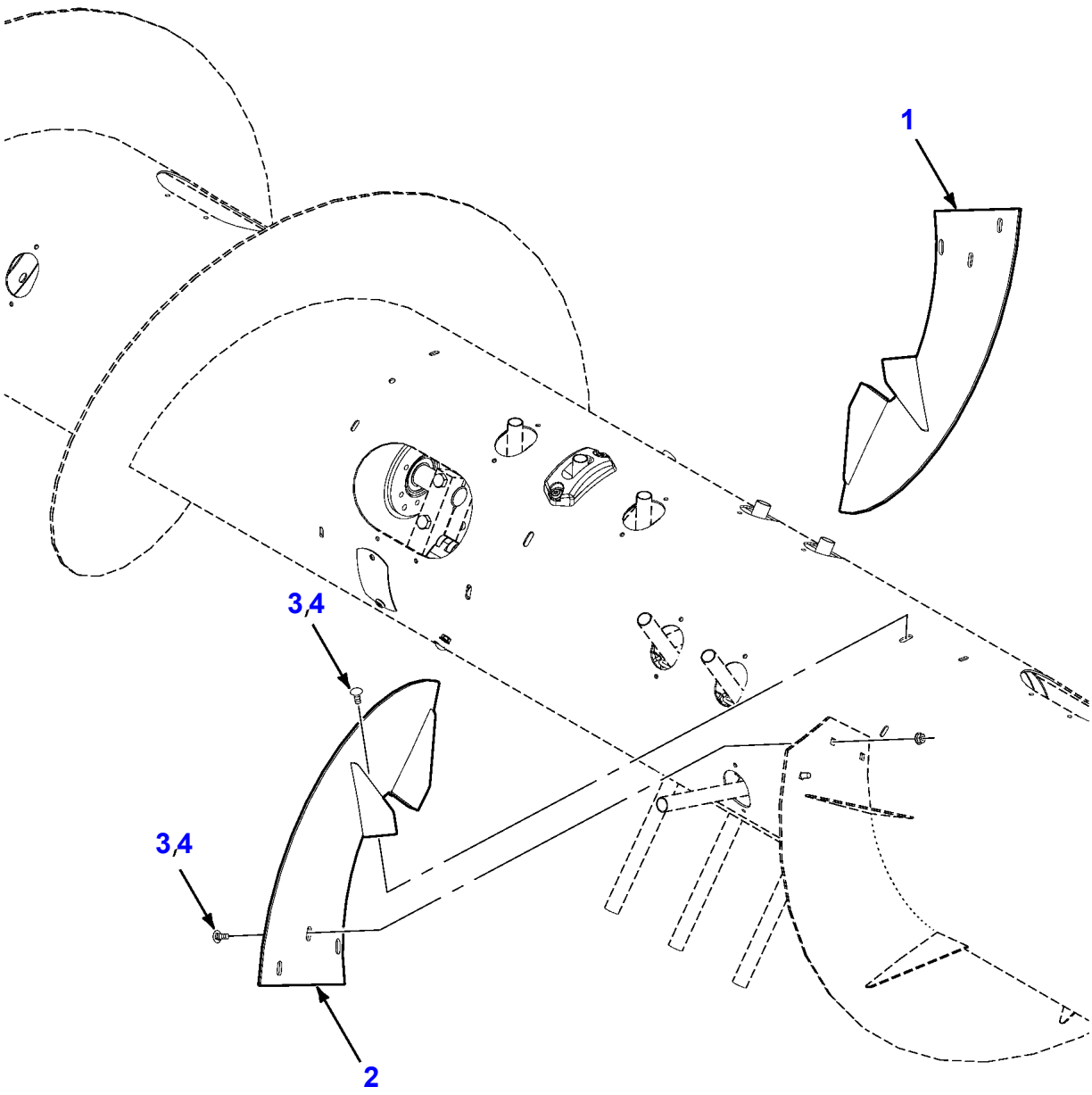

GGH0113

Item	Part Number	Qty	Description
1	71415699	1	EXTENSION, RH
2	71415697	1	EXTENSION, LH
3	7700461	10	CARRIAGE BOLT, 5/16 X 3/4
4	70931277	10	NUT, FLANGED, 5/16NC

GGH0113
PR: t06l06m55c0003

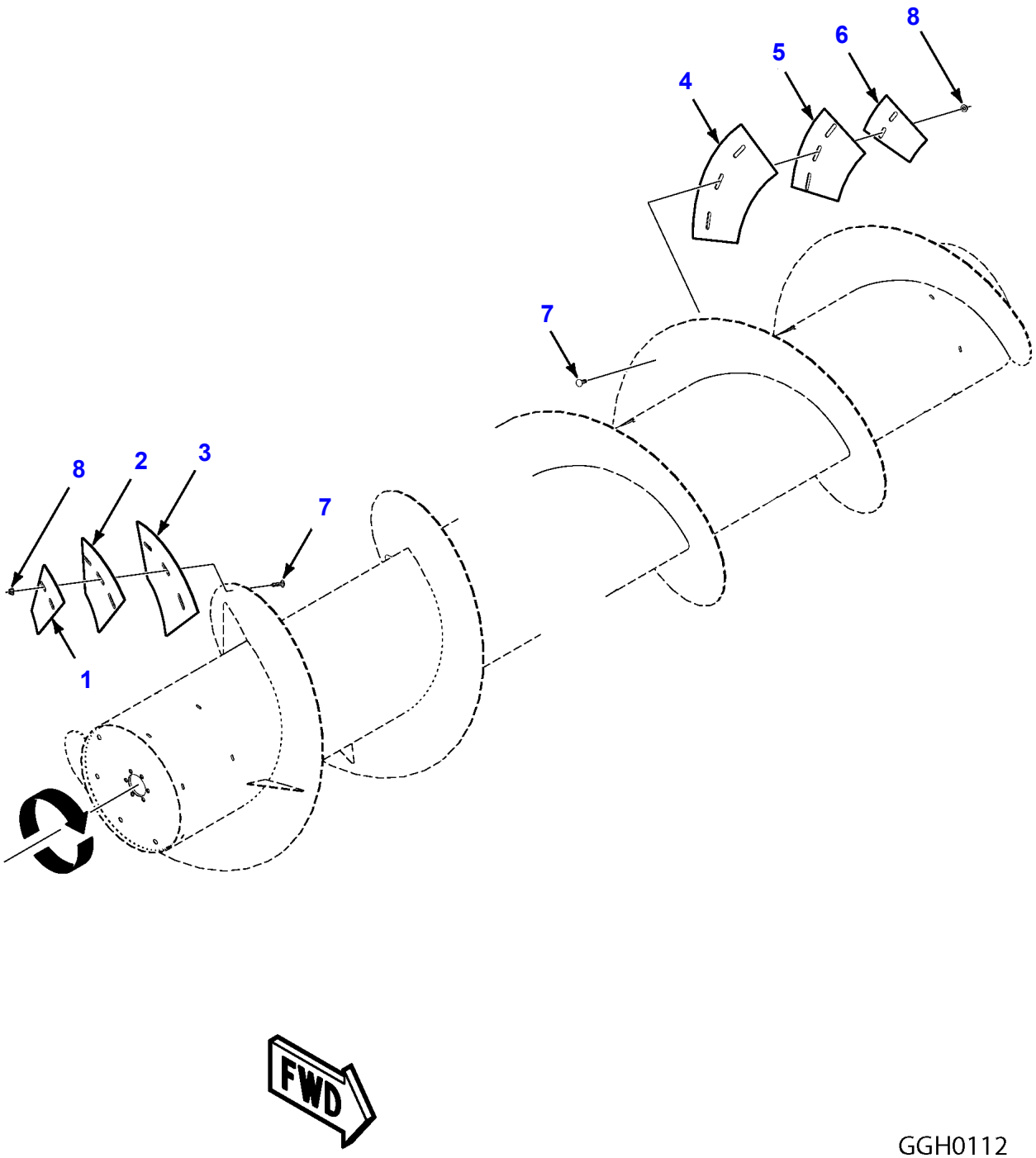

GGH0112

Item	Part Number	Qty	Description
1	71417010	1	WEIGHT, FLIGHT, RH, 1.4LB
2	71417011	1	WEIGHT, FLIGHT, RH, 2.8LB
3	71417004	1	WEIGHT, FLIGHT, RH, 4.3LB
4	71417012	1	WEIGHT, FLIGHT, LH, 4.3LB
5	71417013	1	WEIGHT, FLIGHT, LH, 2.8LB
6	71417014	1	WEIGHT, FLIGHT, LH, 1.4LB
7	70922786	4	CARRIAGE BOLT, 3/8-16 X 1
	70923220	4	CARRIAGE BOLT, 3/8-16 X 1-1/4
8	Y704734	4	NUT, LOCK, 3/8-16

GGH0112
PR: t06l06m55c0004

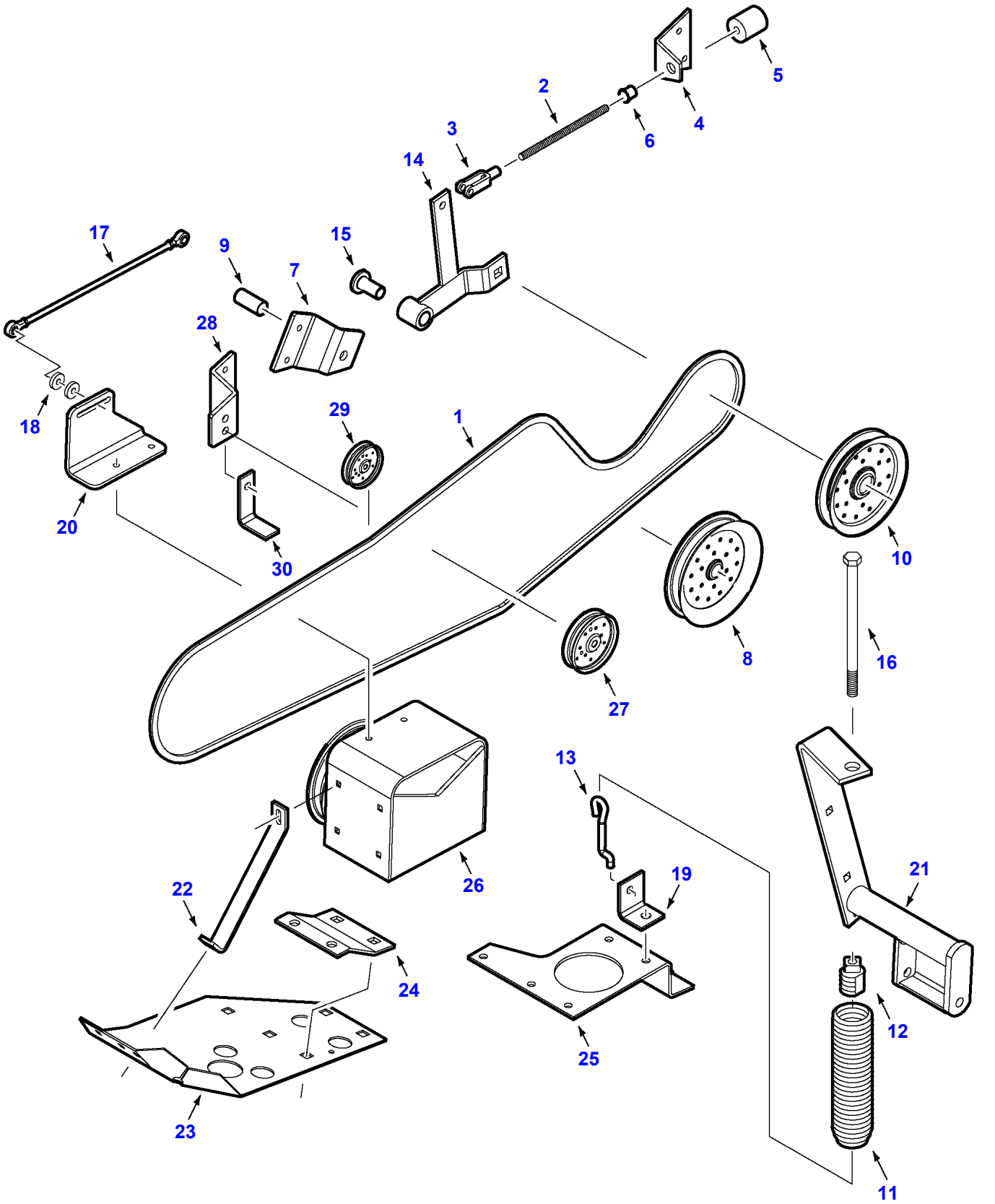
1
2
3
4
5
6
7
8
9
10
11
12
13
14
15
16
17
18
19
20
21
22
23
24
25
26
27
28
29
30

GGH0060

Item	Part Number	Qty	Description
1	71322834	1	BELT
2	71371598	1	ROD DAMPENER
	704031	2	NUT, 1/2-13
3	70937465	1	YOKE, CLEVIS 1/2 NC
	704247	1	NUT, 3/8-16, FLANGED
	70929593	1	PIN
	62083	1	COTTER PIN
4	71373379	1	ANCHOR, DAMPENER
	68759	2	CARRIAGE BOLT, 3/8-16 X 1
	704247	2	NUT, 3/8-16, FLANGED
5	71308201	1	BUSHING, IDLER
6	71304362	1	BUSHING
7	71394569	1	BRACKET, IDLER
	68759	2	CARRIAGE BOLT, 3/8-16 X 1
	704247	2	NUT, 3/8-16, FLANGED
8	71307305	1	IDLER, V-GROOVE, 7-5/16"
	70925705	1	CAPSCREW, 5/8NC X 5
	70929699	1	WASHER, 5/8 USS
	7774458	1	NUT, 5/8NC FLANGED
9	71394594	1	SPACER
10	71306443	1	IDLER, FLAT, 7-3/4"
	70926675	1	BOLT, CGE., 5/8-11 X 2-1/4
	70928738	2	WASHER, 5/8
	70929699	1	WASHER, 5/8 USS
	7774458	1	NUT, 5/8-11 FLANGED
11	71316800	1	SPRING ASY., WOBBLE BOX (INCL. ITEMS 12 & 13)
12	71350543	1	PLUG ASY., SPRING
13	71316174	1	ROD, SPRING
14	71394567	1	ARM ASY., IDLER (INCL. BUSHINGS, SPACER & FITTING)
	70935127	1	BOLT, 5/8NC X 3-1/4
	70929699	3	WASHER, 5/8
	7774458	1	NUT, FLANGED, 5/8-11
	71386846	2	BUSHING
	71369467	1	SPACER, SPLIT
	77057	1	FITTING, LUBE
15	71321850	1	SPUD, IDLER ARM
16	70935299	1	CAPSCREW, 1/2-13 X 12
	70301781	1	PIVOT WASHER
17	71343187	1	STABILIZER ASY. (INCL. BALL JOINTS & JAM NUTS)
	70922869	1	BOLT, 3/8NC X 1-3/4 CARR. (REAR OF LINK)
	70923701	1	CAPSCREW, 3/8NC X 2 (FRONT OF LINK)
	70931211	1	NUT, SER. FLG., 3/8-16 (REAR OF LINK)
	70922755	2	WASHER, 13/32 X 1.0 X 10GA
	Y704635	1	NUT, LOCK, 3/8NC
18	71341521	4	SPACER (ROUND), 1/4" THICK
19	71366200	1	ANCHOR SPRING
20	71374374	1	SUPPORT, STABILIZER
	70921966	2	CAPSCREW, 3/8NC X 7/8
	70931211	2	NUT, FLANGED, 3/8-16
21	71374372	1	SUPPORT, LH DIVIDER
	70931363	3	BOLT, 1/2NC X 1
	70931187	3	NUT, FLANGED, 1/2NC
22	71339439	1	BRACE, SKID, LH
	70927075	1	BOLT, CARR. 5/16NC X 1
	70931277	1	NUT, FLANGED, 5/16NC
23	71369326	1	SHOE, SKID, LH
	71373851	1	SHOE, SKID, LH PLASTIC
	70931377	4	BOLT, 5/8 X 1-1/4
	7774458	4	NUT, SER. FLG., 5/8
	70927075	1	BOLT, RHSN, 5/16 X 1.0, LONG NECK
	70917372	1	NUT, HEX, 5/16 (USE W/PLASTIC SHOE)
24	71328300	1	SUPPORT, SICKLE FRONT
25	71339424	1	SUPPORT, WOBBLE BOX
	70924744	2	CAPSCREW, 5/8NC X 1-1/2
	70917373	8	LOCKWASHER, 5/8
	70915726	4	NUT, 5/8NC
	70922664	2	CAPSCREW, 5/8-11 X 2
26	71344225	1	WOBBLE BOX ASY. (SHEAVE NOT INCLUDED)
27	71127502	1	IDLER, RECESSED FLAT GROOVE, 4-5/8"
	70921211	1	CAPSCREW, 1/2 X 2-1/2
	Y705624	5	WASHER, 1/2 SAE

Item	Part Number	Qty	Description
	70931187	1	NUT, 1/2 SER. FLG.
28	71375543	1	BRACKET, IDLER
	70931350	2	BOLT, RHSN, 3/8NC X 1
	70931211	2	NUT, FLANGED, 3/8-16
29	79008328	1	IDLER, FLAT
	70929095	1	BOLT, RHSN, 1/2 X 2-1/4
	70931187	1	NUT, FLANGE, 1/2
	Y705624	3	WASHER, 1/2
30	71375101	1	GUIDE, BELT

GGH0060
PR: t04d21j36a0011

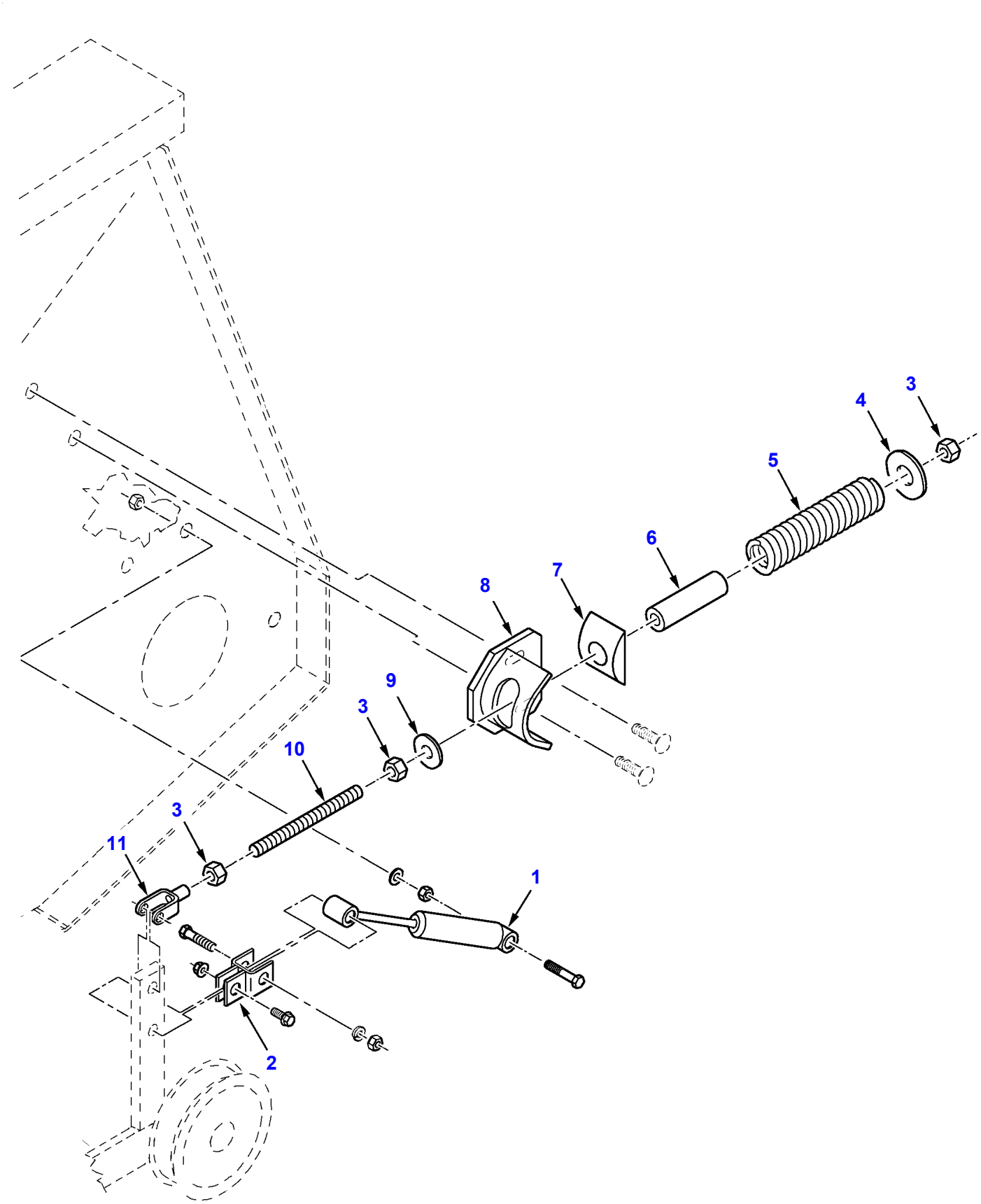

GGH00102

Item	Part Number	Qty	Description
	71407243	AR	KIT, SPRING TENSIONER (INCL. ITEMS 1-10)
1	71315999	1	ABSORBER, SHOCK
	70926109	1	CAPSCREW, 7/16-14 X 2-1/4
	Y705558	1	WASHER, 7/16
	Y704080	2	NUT, 7/16-14
2	71407246	1	SUPPORT, DAMPER
	7883382	1	SCREW, HX WAS HD, 3/8-16 X 1
	Y704734	1	NUT, HEX FLNG TOP LOCK, 3/8-16
	70925696	1	CAPSCREW, 7/16-14 X 2
	70918199	1	LOCKWASHER, 7/16
	Y704080	1	NUT, 7/16-14
3	704031	3	NUT, 1/2-13
4	70923094	1	WASHER, .531 X 2 X .180
5	71382716	1	SPRING, IDLER
6	71382868	1	SPACER, SPRING
7	71356058	1	BLOCK, PIVOT
8	71407240	1	ANCHOR, SPRING
9	70918431	1	WASHER, 1/2
10	71407242	1	ROD, ALL THREAD, 1/2-13 X 11-3/4
11	70937465	1	YOKE, CLEVIS 1/2-13

GGH0102
PR: t06l06m55c0005

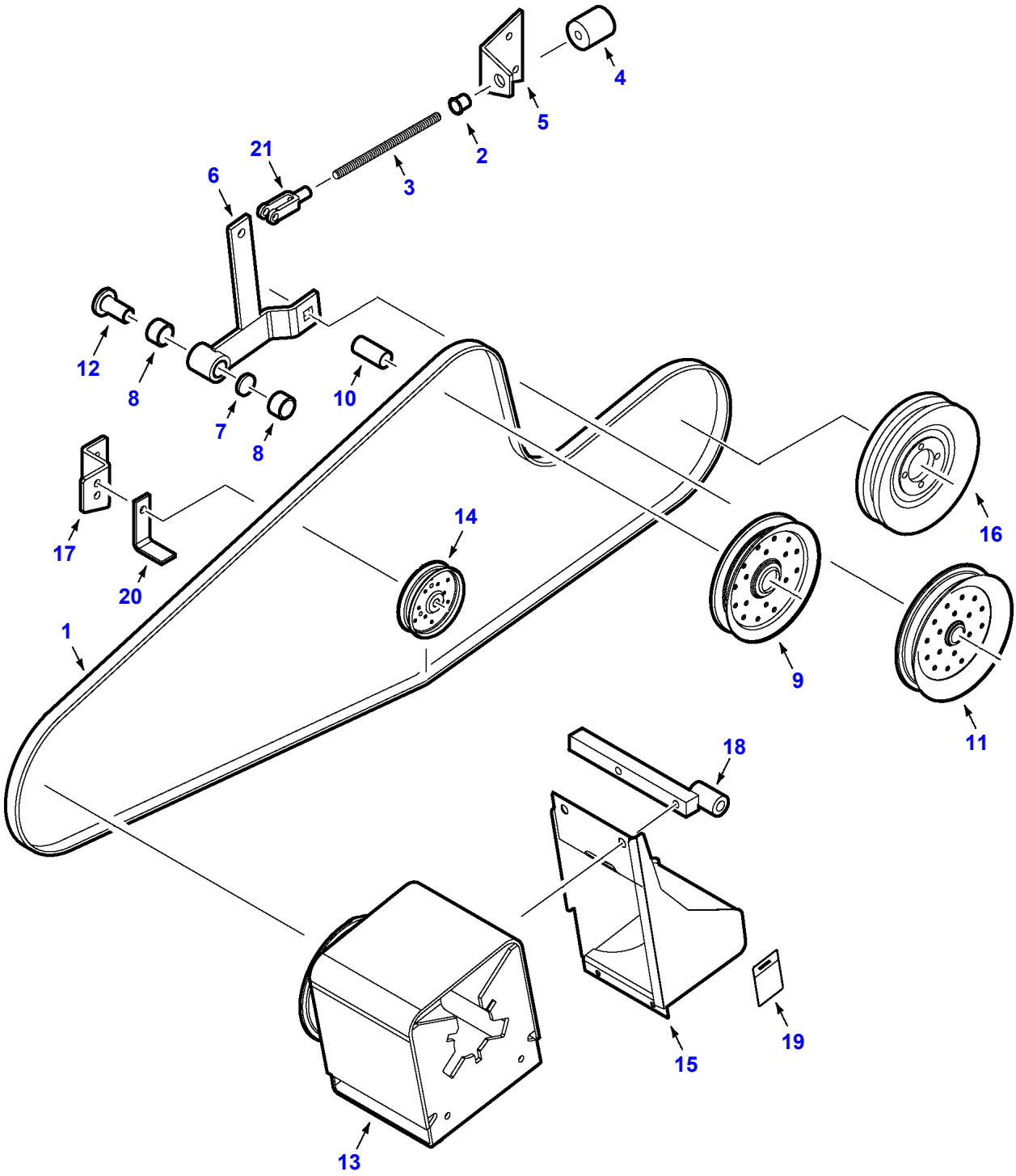

GGH0061

Item	Part Number	Qty	Description
1	71322828	1	BELT
2	71304362	1	BUSHING
3	71371598	1	ROD, DAMPENER, 1/2-13 THD.
	704031	3	NUT HEX 1/2-13
	70920309	1	WASHER
4	71308201	1	BUSHING, IDLER STOP
5	71373379	1	ANCHOR, DAMPENER
	70931350	2	BOLT, RHSN, 3/8 X 1.0
	70931211	2	NUT, SER. FLG., 3/8-16
6	71394567	1	ARM ASY., IDLER (INCL. ITEMS 7-8)
	70935127	1	BOLT, 5/8-11 X 3-1/4
	70918432	1	WASHER, 5/8
	7774458	1	NUT, HEX 5/8-11 FLANGED
	77057	1	FITTING, LUBE, 90 DEG
7	71369467	1	SPACER, SPLIT
8	71386846	2	BUSHING
9	71307305	1	IDLER, V-GROOVE, 7-5/16"
	70918432	1	WASHER 5/8 USS
	70925705	1	BOLT, RHSN 5/8-11 X 5
	7774458	1	NUT, 5/8-11 FLANGED
10	71394593B	1	SPACER
11	71306443	1	IDLER, FLAT, 7-3/4"
	70928738	2	WASHER, 5/8 USS
	70918432	1	WASHER 5/8 USS
	70926694	1	CAPSCREW, 5/8-11 X 2-1/2
	7774458	1	NUT, 5/8-11 FLANGED
12	71321850	1	SPUD, IDLER ARM
13	71389337	1	WOBBLE BOX ASY. (COUNTER WEIGHTED)
	70924744	4	CAPSCREW, 5/8 X 1-1/2
	70917373	8	WASHER, LOCK, 5/8
	70915726	4	NUT, 5/8
	70931809	2	CAPSCREW, RHSN, 1/2-13 X 1-1/4
	70918431	2	WASHER, 1/2 USS
	Y705046	2	WASHER, LOCK, 1/2
	704031	2	NUT, 1/2-13
14	71127502	1	IDLER, RECESSED FLAT GROOVE, 4-5/8"
	70921211	1	CAPSCREW 1/2 X 2-1/2
	70918431	4	WASHER, 1/2USS
	70931187	1	NUT, FLANGED 1/2NC
15	71368923	1	SHIELD ASY., WOBBLE BOX WEIGHT
	70921333	2	CAPSCREW, 5/16 X 1.0
	70917372	2	NUT, 5/16
	70917356	2	WASHER, LOCK, 5/16
16	71371580	1	SHEAVE (232MM O.D. = 9.13")
17	71375543	1	BRACKET, IDLER
	70931350	2	BOLT, RHSN 3/8 X 1
	70931211	2	NUT, SER. FLG. 3/8-16
18	71368906	1	BRACE WLMT.
	70931812	1	BOLT, RHSN 1/2-13 X 3
	70931187	1	NUT 1/2-13 SER. FLG.
	70923701	1	CAPSCREW, 3/8 X 2
	70931211	2	NUT, 3/8-16 SER. FLG.
	70931363	2	BOLT, RDHD, 1/2 X 1.0
	70918431	2	WASHER, 1/2
	70931187	2	NUT, FLANGE, 1/2 - 13
19	72503345	1	DECAL, WARNING
	72506771	1	DECAL, WARNING (FRENCH)
20	71375101	1	GUIDE, BELT
21	70937465	1	YOKE 1/2"-13 THD.
	70929593	1	PIN, YOKE
	70918452	1	PIN, COTTER 3/32" X 1"

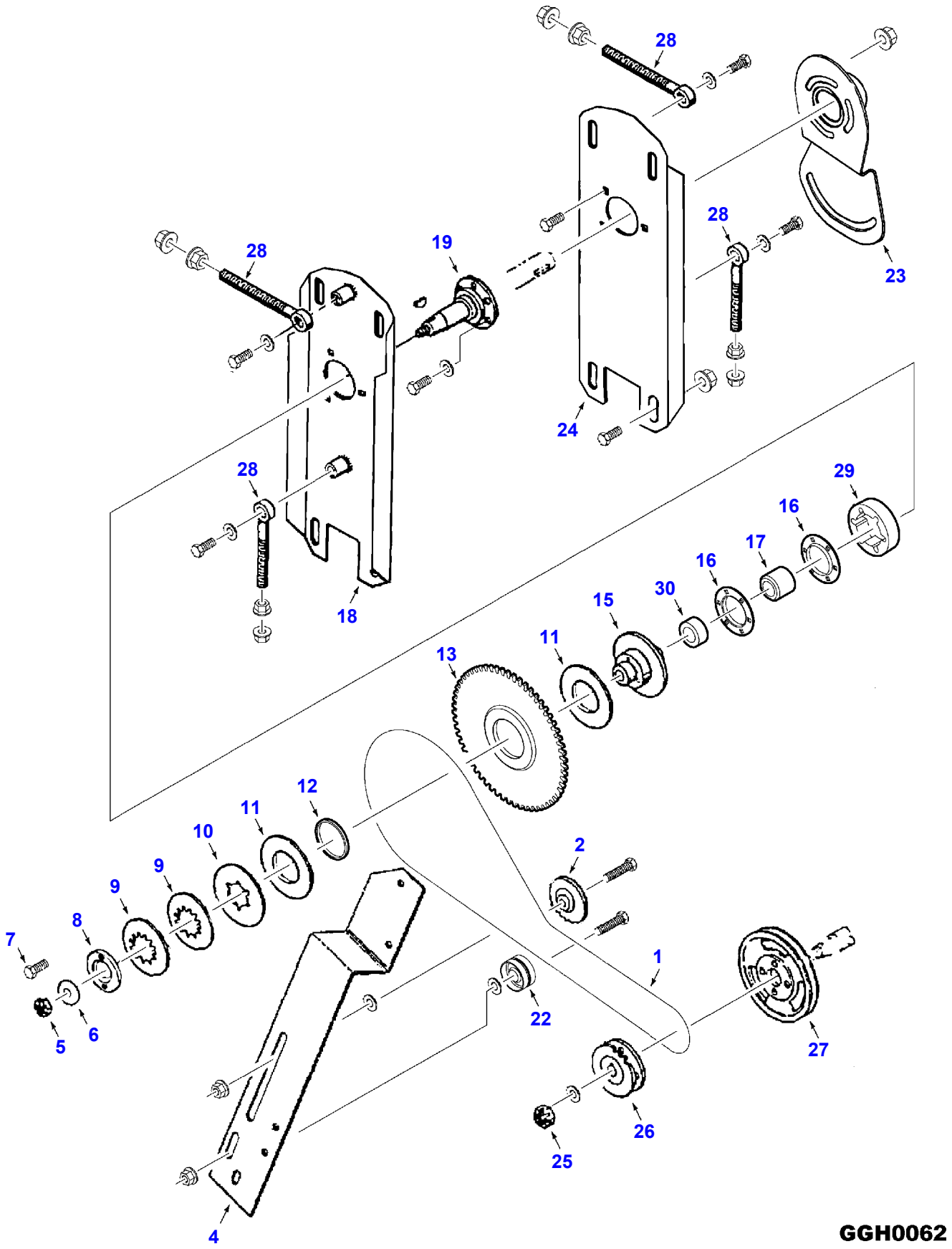
28
28
19
28
23
24
28
18
29
16
17
16
30
15
11
13
12
11
10
9
9
8
7
6
5
2
1
22
27
26
25
4
GGH0062

Item	Part Number	Qty	Description
1	71394244	1	CHAIN(114-LINKS/RC60 SEALED/LUBE)
2	71137120	1	SPROCKET ASY.IDLER (21T-60)(INCL.BRG.)
	71126056	1	BEARING
	70926164	1	CAPSCREW, 5/8 X 2-3/4
	70918432	8	WASHER, 5/8 USS
	7774458	1	NUT, FLANGED, 5/8NC
4	71373378	1	BRACKET, IDLER
	70931350	2	BOLT, RHSN 3/8 X 1
	70920415	2	CAPSCREW, 3/8-16 X 1-1/4
	70931211	4	NUT, FLANGED, 3/8-16
	70917378	3	WASHER, FLAT, 3/8
5	70922010	1	NUT, SLOTTED, 1"NF
	70918459	1	PIN, COTTER
6	705681	1	WASHER, SAE 1" X 2" O.D.
7	70921971	6	CAPSCREW, 3/8NC X 1-3/4
8	71370459	1	RING, LOAD
9	71323992	AR	SPRING, DISK
10	71323169	1	PLATE, THRUST
11	71323170	2	PLATE, FRICTION
12	71377768	1	RING, SPROCKET
13	71390982	1	SPROCKET (59T-60)
15	71370460	1	HUB, FLANGED [A]
16	71370634	2	FLANGE, BEARING (6-BOLT) [A]
	70931806	6	BOLT, RHSN, 3/8 X 2-1/2
	70918266	6	WASHER, PLATE, .38 SAE
	70919965	6	WASHER, LOCK, 3/8
	70916950	6	NUT, HEX, 3/8
	70931942	6	NUT, SPEED, 3/8
17	71309128	1	BEARING (1-3/8" I.D. W/COLLAR) [A]
18	71385143	1	SUPPORT ASY., CONVEYOR, LH [A]
	70931363	4	BOLT, RHSN, 1/2 X 1.0
	Y705624	4	WASHER, 1/2
	Y705046	4	LOCKWASHER, 1/2
	70936525	2	NUT, SPEED, 1/2
	70931187	4	NUT, SER. FLG., 1/2
19	71385137	1	GUDGEON ASY. [A]
	70905129	1	KEY, WOODRUFF, #D
	70920677	6	CAPSCREW, 7/16NC X 1-1/4
	70918199	6	LOCKWASHER, 7/16
22	79008328	1	IDLER, CHAIN, FLAT
	70923320	1	CAPSCREW, 1/2 X 3
	70918431	7	WASHER, 1/2 USS
	70931187	1	NUT, SER. FLG. 1/2
23	71377580	1	FLANGE ASY., ADJ. WLMT.
	375112X1	1	NUT, JAM 5/8
	70928352	3	NUT, FLANGED 3/8NC
	70920469	2	SETSCREW, 3/8NC X 3/4
	70931350	3	BOLT, RHSN, 3/8 X 1.0
	70910276	1	KEY, WOODRUFF, NO. 27
24	71373396	1	SUPPORT ASY., CONVEYOR, RH
	70931363	4	BOLT, RHSN, 1/2 X 1.0
	Y705624	4	WASHER, 1/2
	Y705046	4	LOCKWASHER, 1/2
	70936525	2	NUT, SPEED, 1/2
	70931187	4	NUT, SER. FLG., 1/2
25	70917423	1	NUT, SLOTTED, 5/8NC
	70922002	1	PIN, COTTER, 1/8 X 1
	70918432	1	WASHER, 5/8
26	71390984	1	SPROCKET ASY., 16T-60
	71395464	1	SPROCKET ASY., SLOW DOWN, 14T-60
	70910276	1	KEY, WOODRUFF #27
27	71358971	1	SHEAVE (7.677" O.D.)(FLEX HEADERS)
	71371580	1	SHEAVE, (9.134" O.D.)(RIGID HEADERS)
	71358711	1	SHEAVE (6.890" O.D.)(FOR CLEAN CUT SICKLE DRIVE)
28	71355699	4	EYEBOLT, ROD ADJUSTER
	70921176	3	CAPSCREW, 1/2NC X 1-1/4
	70918431	3	WASHER,(1/2 USS)
	70931187	8	NUT, FLANGED, 1/2NC
	70921024	1	CAPSCREW, 1/2 X 2.0
	70923858	2	WASHER, PLATE, .53 X 1-1/4 X 7GA
29	71385138	1	SPACER (6-HOLE) [A]

Item	Part Number	Qty	Description
30	70527219	1	COLLAR, LOCK [A]
31	71378613	1	DECAL, CLEARANCE WARNING (NOT SHOWN)
	71404263	AR	KIT, IMPROVED GUDGEON SHAFT

[A] REFERENCE IMPROVED GUDGEON SERVICE KIT FOR UPDATED SERVICE PARTS

GGH0062
PR: t04d21j36a0013

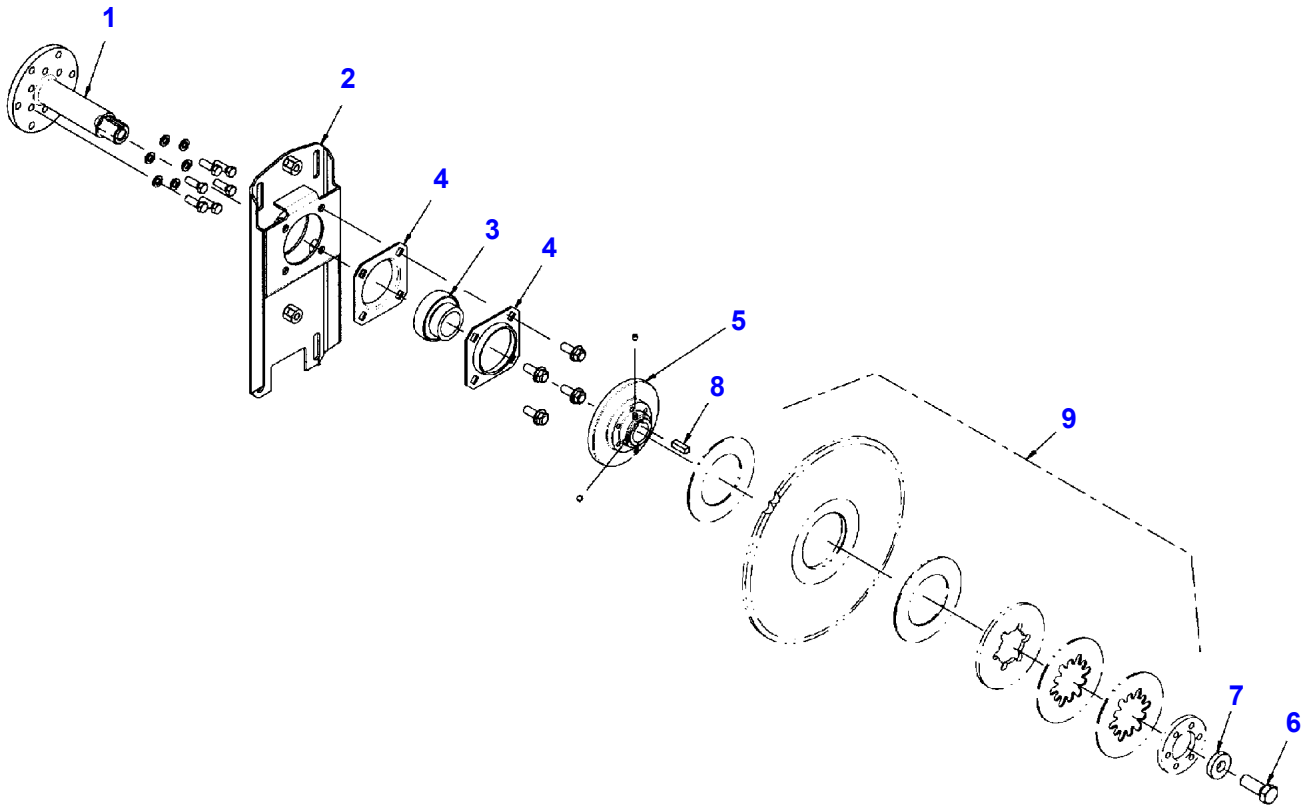

GGH0086

Item	Part Number	Qty	Description
	71404263	AR	KIT, GUDGEON SHAFT (INCL. ITEMS 1-8)
1	71404261	1	SHAFT, GUDGEON
	71412663	1	SHAFT, GUDGEON
	7702202	6	CAPSCREW, 7/16-14 X 1-1/4
	700702206	6	LOCKWASHER, 7/16
2	71404265B	1	SUPPORT WLDMT, LH AUGER
3	51318	1	BEARING, 1.75ID X 22MM OD X 22MM
4	71130258	2	FLANGE, BEARING
	700710984	4	SCREW, HEX FLANGE, 1/2-13 X 1-1/4
5	71404264	1	HUB, AUGER CLUTCH
	69773	2	SET SCREW, HX SKT HD, 5/16-18 X 5/16
6	700717362	1	CAPSCREW, 3/4-16 X 2 [A]
	700728702	1	CAPSCREW, 3/4-16 X 3 [B]
7	71404268	1	WASHER, SPECIAL .78ID X 1.81OD X .39 [A]
	71417065	1	WASHER, SPECIAL .78ID X 1.81OD X .78 [B]
8	700704744	1	KEY, 3/8 SQ. X 1.181 [A]
	700728703	1	KEY, 3/8 SQ. X 1.3 [B]
9	71406201	AR	KIT, CLUTCH ASY.

[A] USED WITH GUDGEON SHAFT 71404261
[B] USED WITH GUDGEON SHAFT 71412663

GGH0086
PR: t04d21j36a0014

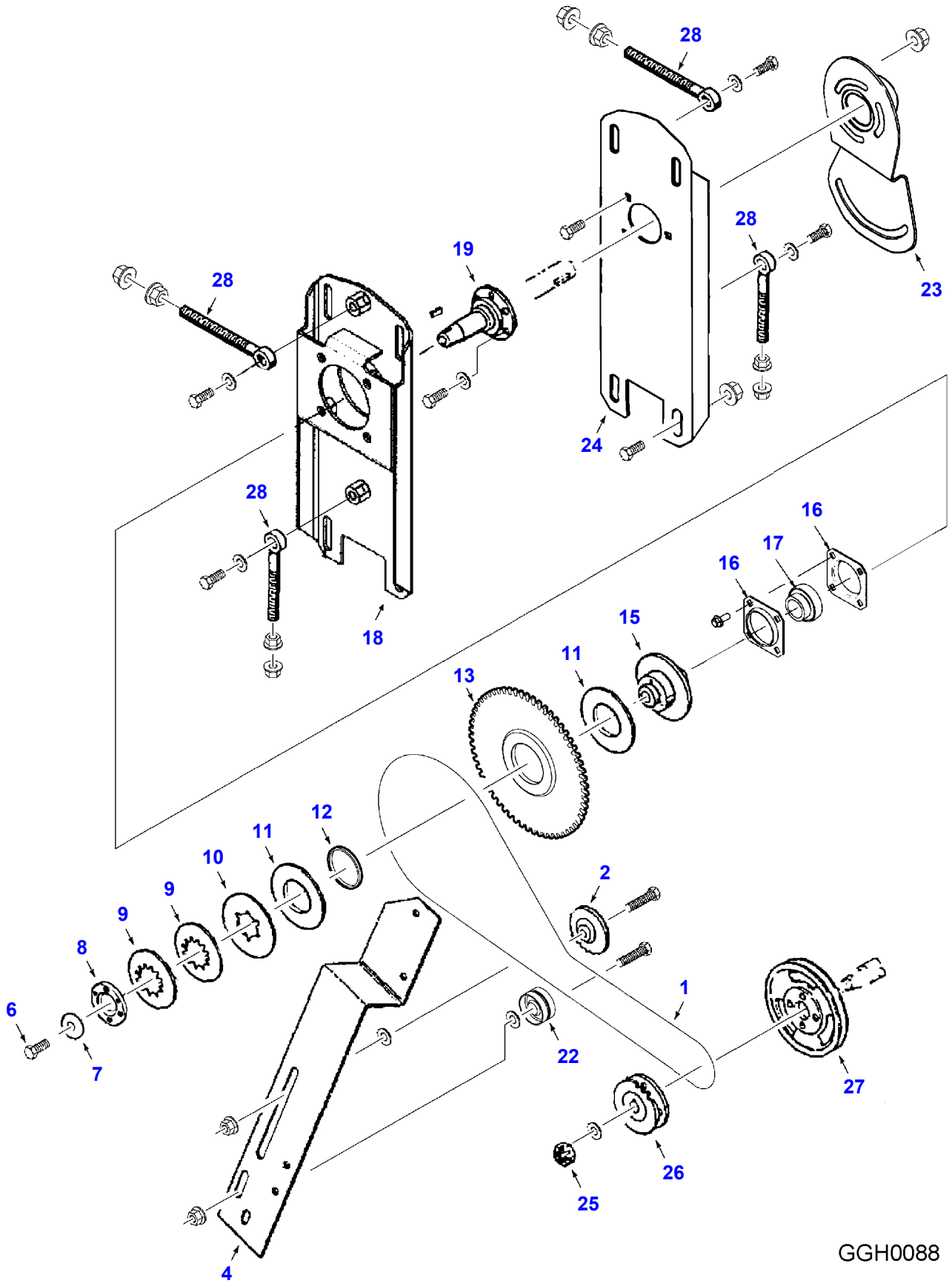
28
19
28
23
28
24
28
18
16
17
16
15
11
13
12
11
10
9
9
8
6
7
2
1
22
27
26
25
4
GGH0088

Item	Part Number	Qty	Description
1	71394244	1	CHAIN(114-LINKS/RC60 SEALED/LUBE)
2	71137120	1	SPROCKET ASY.IDLER (21T-60)(INCL.BRG.)
	71126056	1	BEARING
	70926164	1	CAPSCREW, 5/8 X 2-3/4
	70918432	8	WASHER, 5/8 USS
	7774458	1	NUT, FLANGED, 5/8NC
4	71373378	1	BRACKET, IDLER
	68759	2	CARRIAGE BOLT, 3/8 X 1
	70920415	2	CAPSCREW, 3/8-16 X 1-1/4
	704247	4	NUT, FLANGED, 3/8-16
	70917378	3	WASHER, 3/8 NOM X 14GA
6	700717362	1	CAPSCREW, 3/4-16 X 2 [A]
	700728702	1	CAPSCREW, 3/4-16 X 3 [B]
7	71404268	1	WASHER, SPECIAL .78ID X 1.81OD X .39 [A]
	71417065	1	WASHER, SPECIAL .78ID X 1.81OD X .78 [B]
	71406201	AR	KIT, CLUTCH ASY. (INCL. ITEMS 8-15)
8	71370459	1	RING, LOAD
	70921971	6	CAPSCREW, 3/8-16 X 1-1/4
9	71323992	2	SPRING, DISK
10	71323169	1	PLATE, THRUST
11	71323170	2	PLATE, FRICTION
12	71377768	1	RING, SPROCKET
13	71390982	1	SPROCKET (59T-60)
15	71404264	1	HUB, FLANGED
	69773	2	SETSCREW, 5/16-1/ X 5/16
16	71130258	2	FLANGE, BEARING
	700710984	4	SCREW, HEX FLANGE, 1/2-13 X 1-1/4
17	51318	1	BEARING, 1.75ID X 22MM OD X 22MM W/COLLAR
18	71404265B	1	SUPPORT ASY., CONVEYOR, LH
	70931363	4	CARRIAGE BOLT, 1/2-13 X 1
	704031	4	NUT, 1/2-13
	Y705046	4	LOCKWASHER, 1/2
	Y705624	4	WASHER, 1/2
	70936525	2	NUT, SPEED, 1/2
19	71404261	1	SHAFT, GUDGEON
	700704744	1	KEY, 3/8 SQ. X 1.181
	71412663	1	SHAFT, GUDGEON
	700728703	1	KEY, 3/8 SQ. X 1.3
	7702202	6	CAPSCREW, 7/16-14 X 1-1/4
	700702206	6	LOCKWASHER, 7/16
22	79008328	1	IDLER, CHAIN, FLAT
	70923320	1	CAPSCREW, 1/2 X 3
	70918431	8	WASHER, 1/2 USS
	704254	1	NUT, SER. FLG. 1/2
23	71377580	1	FLANGE ASY., ADJ. WLMT.
	70928352	3	NUT, FLANGED 3/8NC
	70920469	2	SETSCREW, 3/8NC X 3/4
	70931350	3	CARRIAGE BOLT, 3/8 X 1
	700707139	1	KEY, WOODRUFF, NO. 27, 1/4 X 2
24	71373396	1	SUPPORT ASY., CONVEYOR, RH
	70931363	4	CARRIAGE BOLT, 1/2-13 X 1
	704031	4	NUT, 1/2-13
	Y705046	4	LOCKWASHER, 1/2
	Y705624	4	WASHER, 1/2
	70936525	2	NUT, SPEED, 1/2
25	70917423	1	NUT, SLOTTED, 5/8NC
	70922002	1	PIN, COTTER, 1/8 X 1
	70918432	1	WASHER, 5/8
26	71390984	1	SPROCKET ASY., 16T-60
	71395464	1	SPROCKET ASY., SLOW DOWN, 14T-60
	70910276	1	KEY, WOODRUFF #27
27	71358971	1	SHEAVE (7.677" O.D.)(FLEX HEADERS)
	71371580	1	SHEAVE, (9.134" O.D.)(RIGID HEADERS)
	71358711	1	SHEAVE (6.890" O.D.)(FOR CLEAN CUT SICKLE DRIVE)
	70921176	3	CAPSCREW, 1/2NC X 1-1/4
	70918431	3	WASHER,(1/2 USS)
	70931187	8	NUT, FLANGED, 1/2NC
	70921024	1	CAPSCREW, 1/2 X 2.0
	70923858	2	WASHER, PLATE, .53 X 1-1/4 X 7GA
28	71355699	4	EYEBOLT, ROD ADJUSTER
	704254	8	NUT, FLANGE, 1/2-13

Item	Part Number	Qty	Description
	70921176	3	CAPSCREW, 1/2-13 X 1-1/4
	70918431	3	WASHER, 1/2 X 12GA
	70921024	1	CAPSCREW, 1/2-13 X 2
	70923858	2	WASHER, .531 ID X 1.25 OD X 7GA
29	71378613	1	DECAL, CLEARANCE WARNING (NOT SHOWN)

[A] USED WITH GUDGEON SHAFT 71404261
[B] USED WITH GUDGEON SHAFT 71412663

GGH0088
PR: t05b03i51b0002

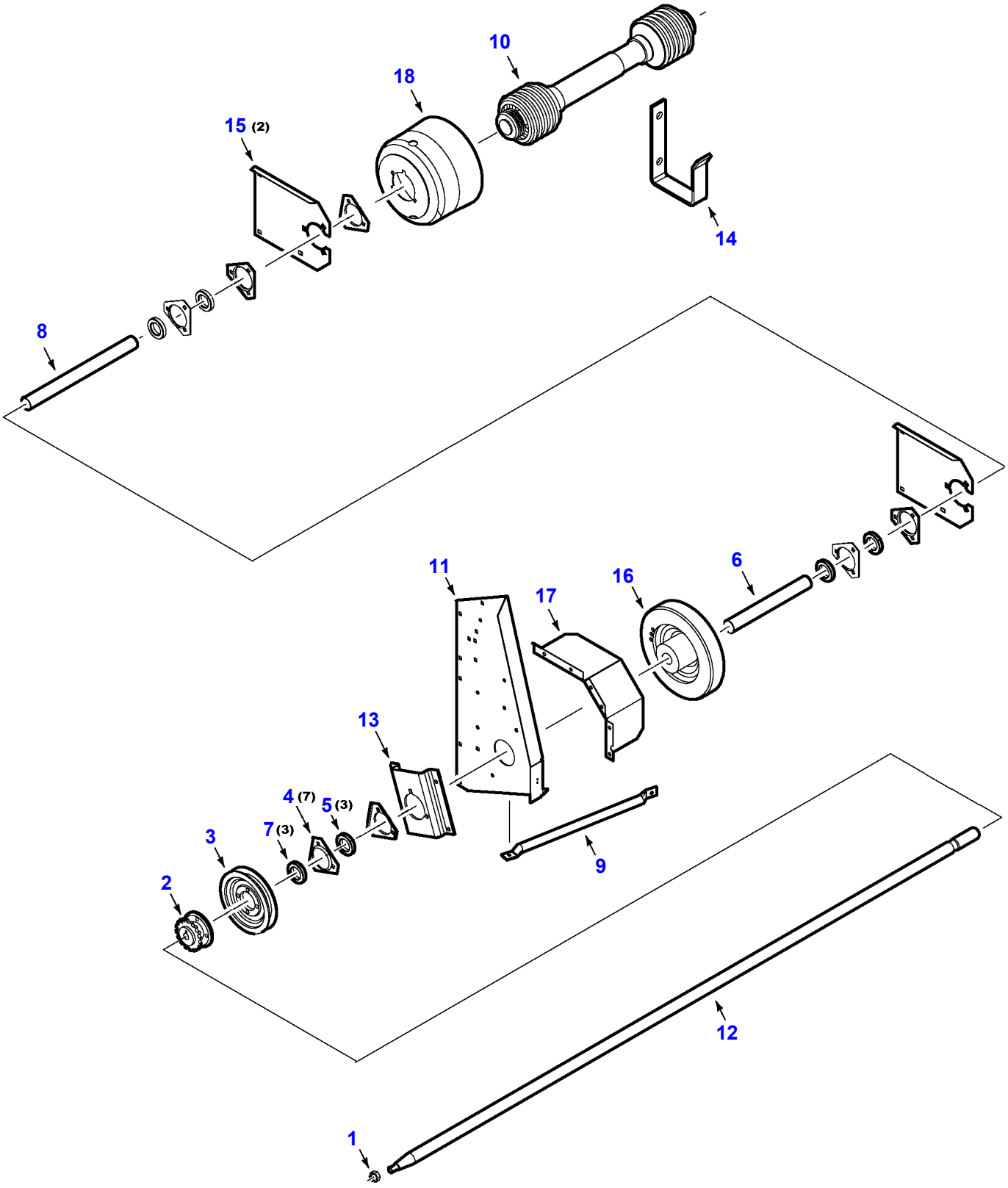

GGH0075

Item	Part Number	Qty	Description
1	70917423	1	NUT, SLOTTED, 5/8NC
	70918452	1	PIN, COTTER, 1/8 X 1
	70918432	1	WASHER, 5/8
2	71390984	1	SPROCKET ASY., (16T)
	71395464	1	SPROCKET ASY., SLOW DOWN, 14T-60
	70905126	1	KEY, WOODRUFF, NO. 15
	7771470	4	CAPSCREW, SER. FLG., 3/8NC X 1-1/4
	70931211	4	NUT, FLANGED, 3/8NC
3	71358971	1	SHEAVE, 7.677" O.D. (FLEX 8000)
	71371580	1	SHEAVE, 9.134 O.D. (RIGID 7000)
	71358711	1	SHEAVE, 6.890" O.D. (FOR USE WITH CLEAN CUT SICKLE OPTION)
4	71192243	7	FLANGE, BEARING (QTY. 5 FOR 18')
	70931348	9	BOLT, 3/8NC X 3/4
	70931211	9	NUT, FLANGED, 3/8NC
5	K4037	3	BEARING (1-3/8" I.D.) (QTY. 2 FOR 18')
6	71327838	AR	SHIELD, OUTER, 93" (FLEX 8000, CUT TO 18.31") (RIGID 7000, CUT TO 12.28")
7	K3999	3	COLLAR, LOCK (QTY. 2 FOR 18')
8	71327838	AR	SHIELD, MIDDLE, 93" (18' CUT TO 22.44") (20' CUT TO 13.94") (25' CUT TO 43.82") (30' CUT TO 73.82")
9	71371905	1	BRACE, DRIVE SHAFT PLATE (25' & 30')
	7771470	1	CAPSCREW, SER. FLG. HD, 3/8 X 1-1/4
	70931211	1	NUT, SER FLG., 3/8
10	71371914	1	PTO DRIVE ASY
11	71394573	1	PLATE WLDMT, DRIVE SHAFT
	7771470	1	CAPSCREW, SER. FLG. HD, 3/8 X 1-1/4
	70931350	AR	BOLT, RHSN, 3/8 X 1.0
	70931211	AR	NUT, SER. FLG., 3/8
12	71380133	1	SHAFT, HEADER DRIVE (18')
	71380137	1	SHAFT, HEADER DRIVE (20')
	71375582	1	SHAFT, HEADER DRIVE (25')
	71375579	1	SHAFT, HEADER DRIVE (30')
13	71374445	1	SUPPORT, BEARING (OUTER)
	70921965	4	CAPSCREW, 3/8 NC X 3/4
	70931211	4	NUT, FLANGED, 3/8 NC
14	71375790	1	BRACKET, STORAGE LH (PTO & LTM)
	70927075	2	BOLT, CARRIAGE, 5/16 X 1.0
	70917372	2	NUT, 5/16
15	71360772	2	SUPPORT, BEARING (QTY. 1 FOR 18')
	70931350	AR	BOLT, CARRIAGE, 3/8 X 1.0
	70931211	AR	NUT, SERR. FLG., 3/8
16	71369473	1	FLYWHEEL (RIGID 7000)
	70905126	1	KEY, WOODRUFF #15
	70920469	2	SETSCREW, SQ. HD. 3/8 X 3/4
	79021665	AR	LOCTITE
17	71369474	1	SHIELD, FLYWHEEL (RIGID 7000)
	70921965	5	CAPSCREW 3/8 X 3/4
	70931211	5	NUT, SER. FLG. 3/8
18	71354266	1	SHIELD, PTO SHAFT
	71192243	1	FLANGETTE
	70922787	AR	CAPSCREW, 3/8 - 16UNC X 1-1/2
	70916965	3	WASHER, LOCK, 3/8
	70931211	3	NUT, HEX, 3/8 - 16UNC
	70917378	3	WASHER, FLAT, 3/8
	71392031	AR	KIT, LTM SENSORS (18' FLEX) [P]
	71392032	AR	KIT, LTM SENSORS (20' FLEX) [P]
	71392033	AR	KIT, LTM SENSORS (25' FLEX) [P]
	71392034	AR	KIT, LTM SENSORS (30' FLEX) [P]
	71392039	AR	KIT, LTM SENSORS (20' RIGID) [P]
	71392040	AR	KIT, LTM SENSORS (25' RIGID) [P]
	71392041	AR	KIT, LTM SENSORS (30' RIGID) [P]

[P] HEADERS PRIOR S/N 83001

GGH0075
PR: t04d21j36a0015

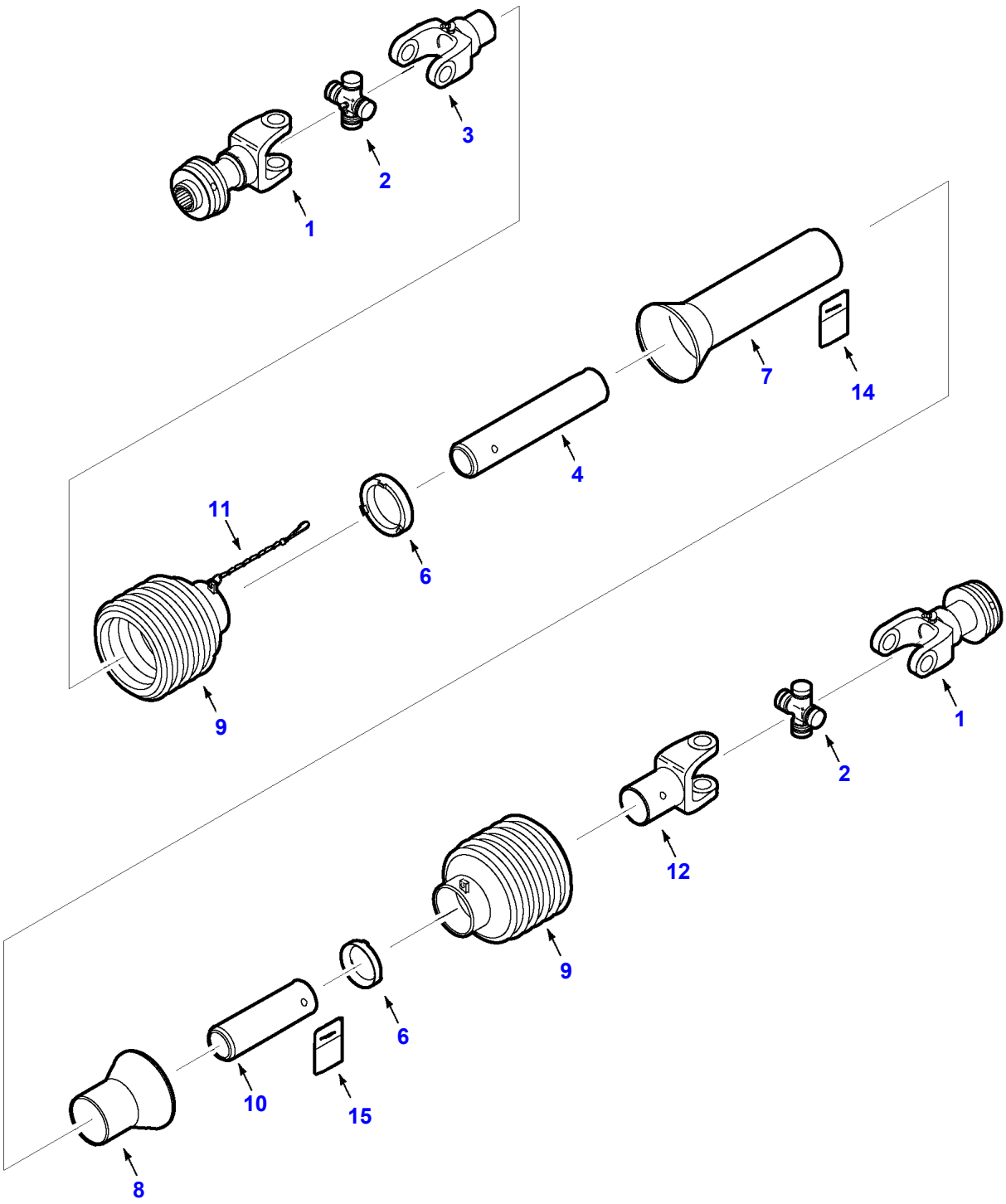

GGH0078

Item	Part Number	Qty	Description
	71371914	1	SHAFT, DRIVE
	71377868	1	SHAFT, DRIVE, (PTO W/FLANGED YOKE) [A]
1	71374218	2	YOKE, INNER (WITH SLIDE COLLAR)
	71374220	AR	KIT, SLIDE COLLAR
	112884W91	1	YOKE W/FLANGE(71377868 SHAFT)(NOT SHOWN)
2	71358188	2	KIT, CROSS & BEARING
	1120697	AR	FITTING, LUBE
3	71359627	1	YOKE, INNER PROFILE
	71359163	1	PIN, SPRING, 10 X 65MM
4	71359162	1	TUBE, PROFILE, INNER PTO (600MM)(CUT 120MM OFF)
6	71359168	2	BEARING, RING
7	71359165	1	SHIELD, TUBE, OUTER (INCL. ITEM 14)(CUT 120MM OFF)
8	71359164	1	SHIELD, TUBE, INNER (CUT 120MM OFF)
9	71374219	2	SHIELD (7-RIB)
	1077994M1	AR	SCREW
10	71359161	1	TUBE, PROFILE, OUTER PTO (595MM)(INCL. ITEM 15)(CUT 120MM OFF)
11	71382485	1	CHAIN, SAFETY
12	71359626	1	YOKE, OUTER PROFILE
	71359163	1	PIN, SPRING, 10 X 65MM
14	700707960	1	DECAL, DANGER
15	210371	1	DECAL, DANGER

[A] DRIVE SHAFT FOR 71377757 KIT
(HEADER ADAPTER PACKAGE)

GGH0078
PR: t04d21j36a0039

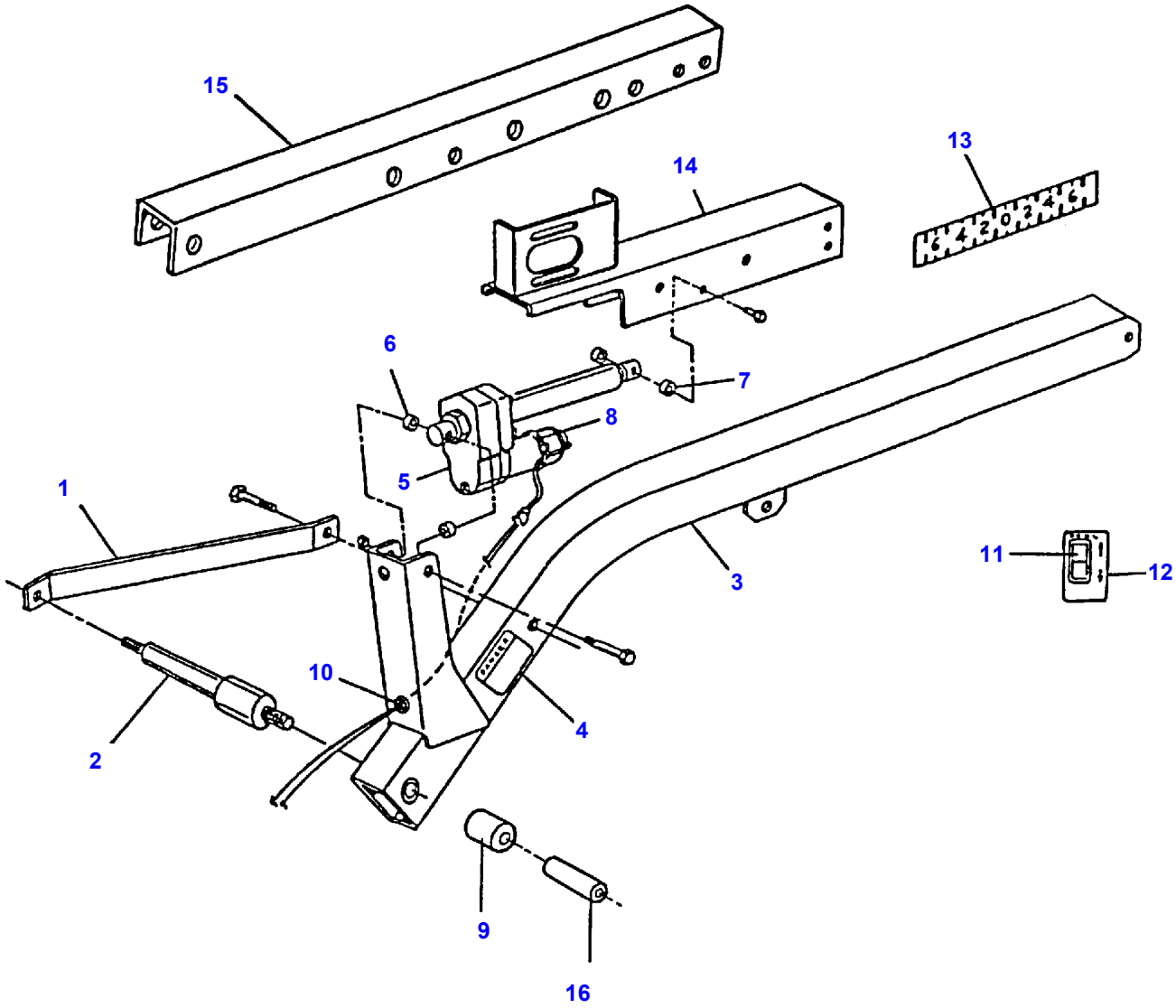

GGH0071

Item	Part Number	Qty	Description
1	71365957	2	BRACE, REEL SUPPORT
	70920990	4	CAPSCREW, 1/2NC X 3-1/2
	70922134	4	NUT, LOCK, 1/2NC
2	71355694	2	SHAFT, REEL SUPPORT
	70918432	4	WASHER, 5/8
	7774458	4	NUT, FLANGED, 5/8NC
3	71373662	2	SUPPORT, WLMT, REEL
	13811X	2	FITTING, LUBE
	70922918	4	CAPSCREW, 3/8 X 3-1/4
	70931211	6	NUT, FLANGE, 3/8
	70921972	2	CAPSCREW, 3/8 X 2-1/2
	Y704635	2	NUT, LOCK, 3/8
4	71306292	2	DECAL, REEL RAM STOP
	71359803	2	DECAL, REEL RAM STOP (FRENCH)
5	71385146	2	ACTUATOR (COMPLETE)
	71406229	AR	MOTOR, ACTUATOR
	70923320	2	CAPSCREW, 1/2 X 3
	70926116	2	CAPSCREW, 1/2 X 3-3/4
	70918431	4	WASHER, FLAT 1/2 USS
	70922134	4	NUT, LOCK 1/2
6	71365960	4	SPACER
7	71365954	4	SPACER
8	3619622M1	2	TIE, MOTOR
9	71354277	2	ROLLER
10	70925425	7	GROMMET
11	71364182	1	SWITCH, REEL POSITION (IN CAB)
	70937583	2	SCREW, #6-32 X 5/16
12	71366484	1	LABEL, SWITCH
13	71365741	2	DECAL, REEL POSITION
14	71373659	1	SUPPORT WLDMT., MOTOR
	70922918	3	CAPSCREW, 3/8 X 3-1/4
	Y704635	1	NUT, LOCK 3/8
	70931211	2	NUT, 3/8
15	71373658	1	SUPPORT REEL, ADJ. LH
	Y704635	2	NUT, LOCK 3/8
	70922918	2	CAPSCREW, 3/8 X 3-1/4
16	71354276	2	SPACER
17	71366485	1	LABEL, LADDER LIFT (NOT ILLUSTRATED)
	71392046	1	KIT, ELECTRIC REEL FORE & AFT

GGH0071
PR: t04d21j36a0016

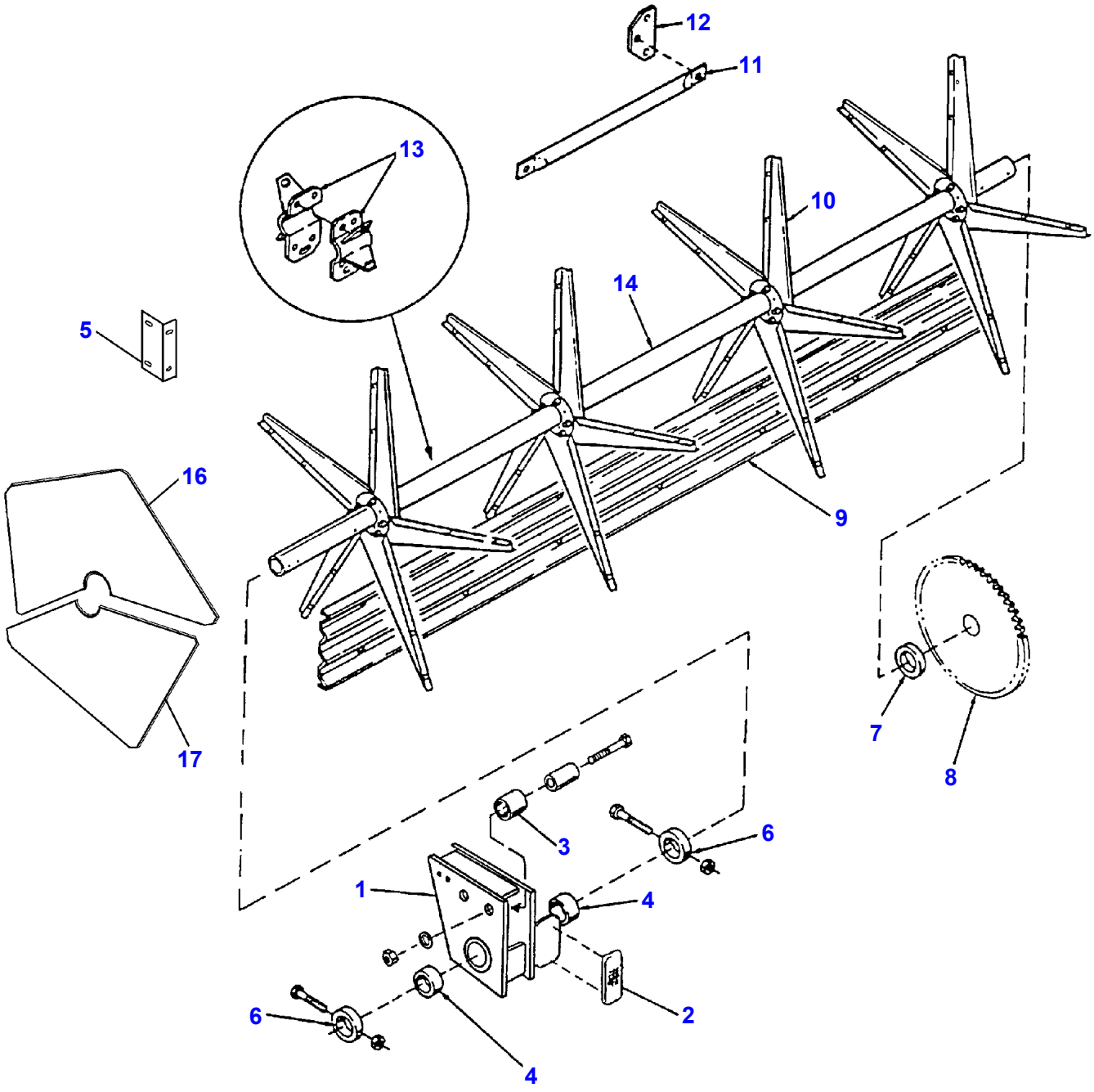

GGH0067

Item	Part Number	Qty	Description
1	71388781	1	HANGER ASY., LH (INCL ITEMS 2-4 & HRDWR)
	71378620	1	HANGER ASY., RH (INCL ITEMS 2-4 & HRDWR)
	70914687	1	FITTING, 1/4-28
	704254	2	NUT, HEX SER FLNG LOCK, 1/2-13
	71354276	2	SPACER
	70923320	2	CAPSCREW, 1/2-13 X 3
2	700717403	1	REFLECTOR, YELLOW (LH ONLY)
3	71354277	4	ROLLER, PLASTIC
4	71316764	4	BEARING, REEL SHAFT, 2-3/4" O.D. X 2-13/32" I.D.
5	71376067	5	BRACKET, REEL END RH (END SHIELDS)
	71376060	5	BRACKET, REEL END LH (END SHIELDS)
	70931317	20	BOLT, RHSSN, 1/4-20 X 3/4
	70917377	20	WASHER, 1/4
	70916964	20	WASHER, LOCK, 1/4
	70916622	20	NUT, 1/4-20
6	71328520	3	STOP, REEL
	70925690	3	CAPSCREW, 5/16NC X 3-1/2
	70923362	3	NUT, LOCK, 5/16NC
7	71328521	1	SPACER, REEL
8	71371903	1	SPROCKET, 72T
	70921333	2	CAPSCREW, 5/16NC X 1
	70923362	2	NUT, LOCK, 5/16NC
9	71366477	5	BAT, REEL (25')
	71316749	5	BAT, REEL (30')
	70921959	AR	CAPSCREW, 1/4 X 5/8
	70923341	AR	CAPSCREW, 1/4NC X 3/4
	70917377	AR	WASHER, 1/4
	70923358	AR	NUT, LOCK, 1/4NC
10	71386970	AR	ARM, REEL (TYPE 2)
		AR	(QTY.= 30 FOR 25' & 35 FOR 30')
	7703432	AR	CAPSCREW, FLANGED 3/8NC X 3/4
	70928352	AR	NUT, FLANGED, 3/8NC
11	71328519	1	BRACE, REEL (30')
	70921210	AR	CAPSCREW, 3/8 X 1.0
	Y704635	AR	NUT, LOCK, 3/8
	70918266	AR	WASHER 3/8 SAE
12	71328837	10	PLATE, REEL (30')
13	71328830	4	HUB, REEL BRACE (30')
	7703424	AR	CAPSCREW, FLANGED, 3/8NC X 1.0
	7771470	AR	CAPSCREW, FLANGED, 3/8NC X 1-1/4
	70928352	AR	NUT, FLANGED 3/8
14	71366478	1	SHAFT, REEL, 2-3/8" DIA. (25')
	71341423	1	SHAFT, REEL, 2-3/8" DIA. (30')
16	71376062	2	SHIELD, REEL END, LARGE
17	71376061	2	SHIELD, REEL END, SMALL
	71392025	1	KIT, END SHIELD (INCL. ITEMS 5, 16 & 17)

GGH0067
PR: t04d21j36a0017

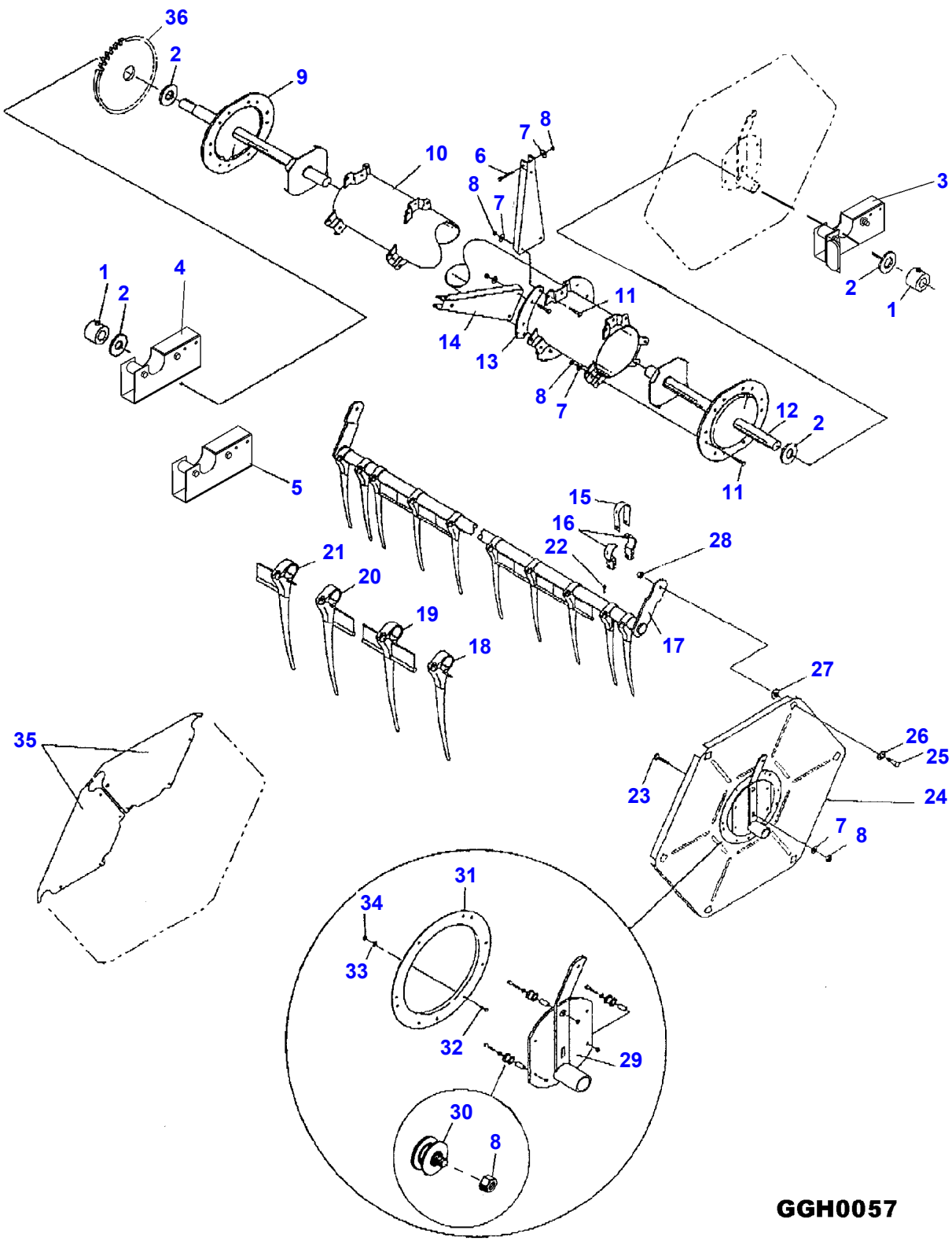
36
2
9
10
6
7
8
8
7
3
2
1
1
2
4
14
13
11
8
7
12
2
11
5
15
16
22
28
21
20
19
18
17
27
35
26
25
23
24
7
8
31
34
33
32
29
30
8
GGH0057

Item	Part Number	Qty	Description
1	71368521	2	COLLAR, LOCK
	70950880	4	SCREW, SET, M10 X 1.5 X 8
2	71136184	4	WASHER, SPECIAL 2-1/4" O.D.
3	71354435	1	BRACKET ASY., LH (INCL ROLLERS, SPACERS, & HARDWARE)
4	71370463	1	BRACKET ASY., RH (18 & 20')(INCL ITEMS 3, ROLLERS, SPACERS & HARDWARE)
5	71354437	1	BRACKET ASY., RH (25' & 30')(INCL ITEMS 3, ROLLERS, SPACERS & HARDWARE)
6	7703218	AR	CAPSCREW, M10 X 1.5 X 50
7	70950220	AR	WASHER, LOCK, M10
8	70950985	AR	NUT, LOCK, M10 X 1.5
9	71388800	1	SHAFT, DRIVING-END/SINGLE (18' & 20')
	71389101	1	SHAFT, DRIVING END/DOUBLE (25' & 30')
10	71389115	1	SHAFT, CENTER (18')(5-SPIDER)
	71389114	1	SHAFT, CENTER (20')(5-SPIDER)
	71389112	1	SHAFT, CENTER (25')(6-SPIDER)
	71389110	1	SHAFT, CENTER (30')(7-SPIDER)
11	70950037	AR	CAPSCREW, M10 X 1.5 X 30
12	71389102	1	SHAFT, DRIVEN END
13	71389103	AR	PLATE, ASY.,(ANCHOR) (QTY= 9 FOR 18' & 20',15 FOR 25' & 30')
14	71367257	AR	ARM, REEL (QTY= 30 FOR 18' & 20',42 FOR 25' & 30')
15	71367255	AR	STRAP, BEARING, REEL ARM (QTY= 30 FOR 18' & 20',42 FOR 25' & 30')
16	71367256	AR	BEARING, REEL ARM (QTY= 60 FOR 18' & 20',84 FOR 25' & 30')
17	71389123	6	TUBE, WELDMENT, FINGER (18')
	71389122	6	TUBE, WELDMENT, FINGER (20')
	71389120	6	TUBE, WELDMENT, FINGER (25')
	71389118	6	TUBE, WELDMENT, FINGER (30')
18	71389109	AR	FINGER, PLASTIC (NO BAT) (QTY= 21 FOR 18' & 20',24 FOR 25' & 30')
19	71389106	AR	FINGER, PLASTIC (FULL BAT) (QTY=171 FOR 18',195 FOR 20', 249 FOR 25' & 303 FOR 30')
20	71389108	AR	FINGER, PLASTIC (RH-BAT) (QTY= 15 FOR 18' - 25',18 FOR 30')
21	71389107	AR	FINGER, PLASTIC (LH-BAT) (QTY= 12 FOR 18' & 20',15 FOR 25', 18 FOR 30')
22	70951293	AR	SCREW, SLOTTED, 3.5 X 1.3 X 16 METRIC (QTY= 219 FOR 18',243 FOR 20', 303 FOR 25' & 363 FOR 30')
23	70950176	AR	BOLT, RHSN, M12 X 1.75 X 40
24	71389136	AR	SHIELD, ECCENTRIC END
25	71368520	AR	SCREW, SOC HD SHOULDER, M12 X 1.75 X 50
26	71368704	AR	BEARING, ECCENTRIC, (MALE)
27	71368703	AR	BEARING, ECCENTRIC, (FEMALE)
28	70950946	AR	NUT, M12 X 1.75
29	71368706	AR	FRAME, ROLLER, ECCENTRIC
	71391291	AR	DECAL LEVEL ("2")
	70914463	AR	FITTING, LUBE
30	71368702	AR	BEARING, ROLLER
31	71136185	AR	RING, ECCENTRIC CONTROL
32	70950018	AR	BOLT, M8 X 1.25 X 20
33	1177981	AR	WASHER, LOCK, M8
34	1122477	AR	NUT, M8 X 1.25
35	71368511	6	END SHIELD, RH END (18' & 20')
	700708349	AR	CAPSCREW, M10 X 1.5 X 25
	70950985	AR	NUT, LOCK, M10 X 1.5
36	71320310	1	SPROCKET ASY. (DRIVING-78T.)
	70905127	1	KEY, WOODRUFF #1008
	70923306	1	SETSCREW 1/2-13 X 1"
	71392017	AR	KIT, PICKUP REEL, (HCC) (18FT) [A]
	71392018	AR	KIT, PICKUP REEL, (HCC) (20FT) [A]
	71392019	AR	KIT, PICKUP REEL, (HCC) (25FT) [A]
	71392020	AR	KIT, PICKUP REEL, (HCC) (30FT) [A]

[A] ORDER THRU DEALER CENTRAL

GGH0057
PR: t04d21j36a0018

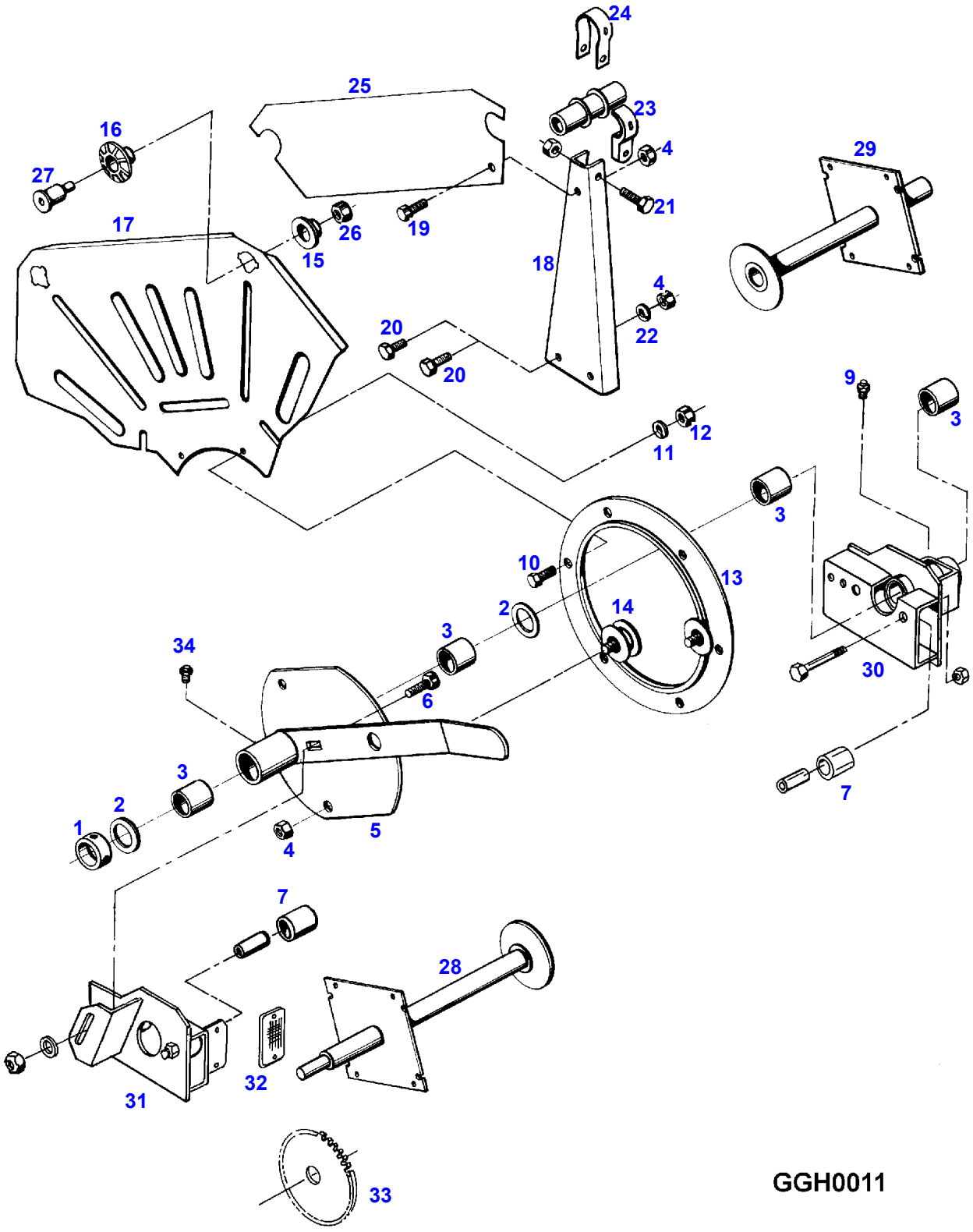
24
25
23
16
4
29
27
21
17
26
19
15
18
4
22
20
20
9
3
12
11
3
10
13
2
14
3
34
6
30
3
2
1
4
5
7
7
28
31
32
33

GGH0011

Item	Part Number	Qty	Description
1	71368521	2	COLLAR, LOCK
	70950880	4	SCREW, SET, M10 X 1.5 X 8
2	71136184	4	WASHER, SPECIAL 2-1/4" O.D.
3	71141320	4	BUSHING
4	70950985	AR	NUT, LOCK, M10 X 1.5
5	71368706	AR	FRAME, ROLLER, ECCENTRIC
	71391291	AR	DECAL LEVEL ("2")
6	70950176	AR	BOLT, RHSN, M12 X 1.75 X 40
7	71354277	4	ROLLER, PLASTIC
	71354276	4	SPACER, TUBING
	70950058	4	CAPSCREW, M12 X 1.75 X 80
8	71368522	AR	WASHER, BELLEVILLE, M12 (NOT SHOWN)
9	70922887	2	FITTING, LUBE, STR
10	70950018	AR	BOLT, M8 X 1.25 X 20
11	1177981	AR	WASHER, LOCK, M8
12	1122477	AR	NUT, M8 X 1.25
13	71136185	AR	RING, ECCENTRIC CONTROL
14	71368702	AR	BEARING, ROLLER
15	71368703	AR	BEARING, ECCENTRIC, (FEMALE)
16	71368704	AR	BEARING, ECCENTRIC, (MALE)
17	71389136	AR	SHIELD, ECCENTRIC END
18	71367257	AR	ARM, REEL
19	700708349	AR	CAPSCREW, M10 X 1.5 X 25
20	70950037	AR	CAPSCREW, M10 X 1.5 X 30
21	7703218	AR	CAPSCREW, M10 X 1.5 X 50
22	70950220	AR	WASHER, LOCK, M10
23	71367256	AR	BEARING, REEL ARM
24	71367255	AR	STRAP, BEARING, REEL ARM
25	71368511	6	END SHIELD, RH END (SINGLE ECCENTRIC)
26	70950946	AR	NUT, M12 X 1.75
27	71368520	AR	SCREW, SOC HD SHOULDER, M12 X 1.75 X 50
28	71388800	1	SHAFT,DRIVING-END/SINGLE (18' & 20')
	71389101	1	SHAFT,DRIVING-END/DOUBLE (25' & 30')
29	71389102	1	SHAFT, DRIVEN END
30	71370463	1	BRACKET ASY., RH (18' & 20')(INCL ITEMS 3, ROLLERS, SPACERS & HARDWARE)
	71354437	1	BRACKET ASY., RH (25' & 30')(INCL ITEMS 3, ROLLERS, SPACERS & HARDWARE)
31	71354435	1	BRACKET ASY., LH (INCL ROLLERS, SPACERS, & HARDWARE)
32	71324207	1	REFLECTOR, AMBER
	70918148	2	SCREW
	70910533	2	WASHER, LOCK
	70917415	2	NUT
33	71320310	1	SPROCKET ASY. (DRIVING-78T.)
	70905127	1	KEY, WOODRUFF #1008
	70923306	1	SETSCREW 1/2-13 X 1"
34	70914463	AR	FITTING, LUBE
	71392017	AR	KIT, PICKUP REEL, (HCC) (18FT) [A]
	71392018	AR	KIT, PICKUP REEL, (HCC) (20FT) [A]
	71392019	AR	KIT, PICKUP REEL, (HCC) (25FT) [A]
	71392020	AR	KIT, PICKUP REEL, (HCC) (30FT) [A]

[A] ORDER THRU DEALER CENTRAL

GGH0011
PR: t04d21j36a0019

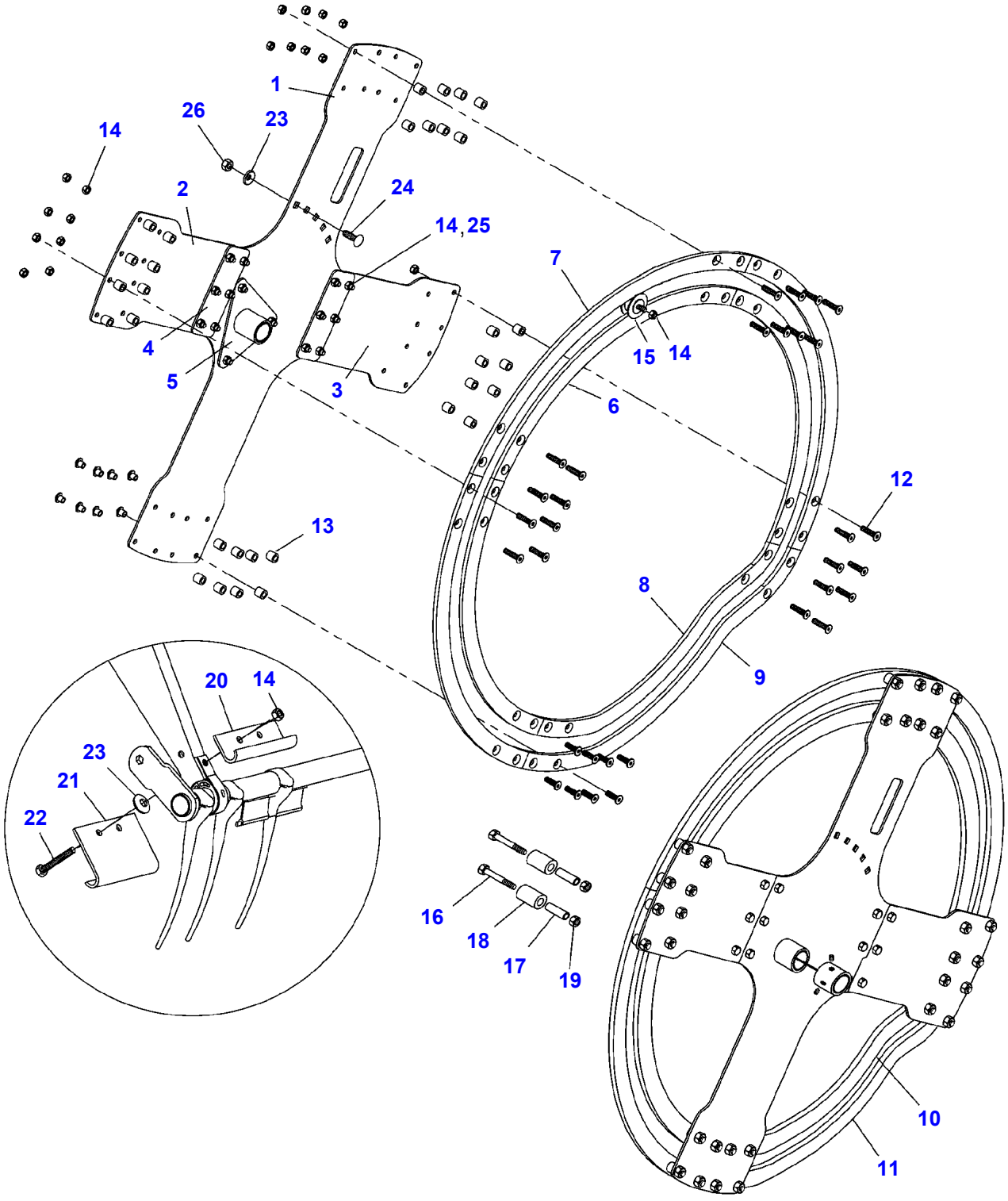
1
26
23
14
2
24
14, 25
7
4
5
3
15
14
6
12
13
8
9
20
14
23
21
22
16
18
17
19
10
11

GGH0108

Item	Part Number	Qty	Description
	71418722		KIT, ORBIT REEL (18'-20') [A]
	71418718		KIT, ORBIT REEL (25'-30') [A]
1	71412686	2	SUPPORT, ORBIT REEL W/DECALS [B]
2	71412687	2	SUPPORT, FRONT SECTION [B]
3	71412688	2	SUPPORT, REAR SECTION [B]
4	71412689	4	PLATE, CONNECTING [B]
5	71412672	1	HUB ASY., RH SUPPORT (25'-30')
	70914465	1	FITTING, GREASE, 1/8-27
	71141320	2	BUSHING
5	71412673	1	HUB ASY., LH SUPPORT
	70914465	1	FITTING, GREASE, 1/8-27
	71141320	2	BUSHING
6	71412680	6	SECTION, INNER CIRCLE [B]
7	71412681	6	SECTION, OUTER CIRCLE [B]
8	71412682	1	SECTION, INNER RH ACTION (25'-30')
9	71412683	1	SECTION, OUTER RH ACTION (25'-30')
10	71412684	1	SECTION, INNER LH ACTION
11	71412685	1	SECTION, OUTER LH ACTION
12	3009455X1	32	SCREW, HEX SKT FLT CTSK, M10X1.5X45
13	71412677	32	SPACER
14	PZND2084V	59	NUT, LOCKING, M10 X 1.50
15	71368702	6	BEARING, BALL, ROLLER
16	8701229	4	CAPSCREW, FULL THREAD, M12X1.75X80 [B]
17	71412691	4	SPACER, TUBING [B]
18	71412690	4	ROLLER, REEL SUPPORT, NYLON [B]
19	KG01072461	4	NUT, LOCKING, M12 X 1.75 [B]
20	71412678	6	STOP, TOP REVERSE
21	71412679	6	STOP, BOTTOM REVERSE
22	7702327	6	CAPSCREW, M10 X 1.5 X 70
23	71368522	8	WASHER, BELLEVILLE, METRIC [B]
24	385392X1	2	CARRIAGE BOLT, M12 X 1.75 X 40 [B]
25	700708349	15	CAPSCREW, FULL THREAD, M10 X 1.5 X 25
26	3009695X1	2	NUT, M12-1.75 [B]
27	71412674	1	BRACKET, LH END (NOT SHOWN)
28	71412675	1	BRACKET, RH END (25'-30') (NOT SHOWN)

[A] ORDER THRU DEALER CENTRAL
[B] QUANTITY LISTED FOR 25'-30' HEADERS.
LESS REQUIRED FOR 18'-20'.

GGH0108
PR: t06l06m55c0006

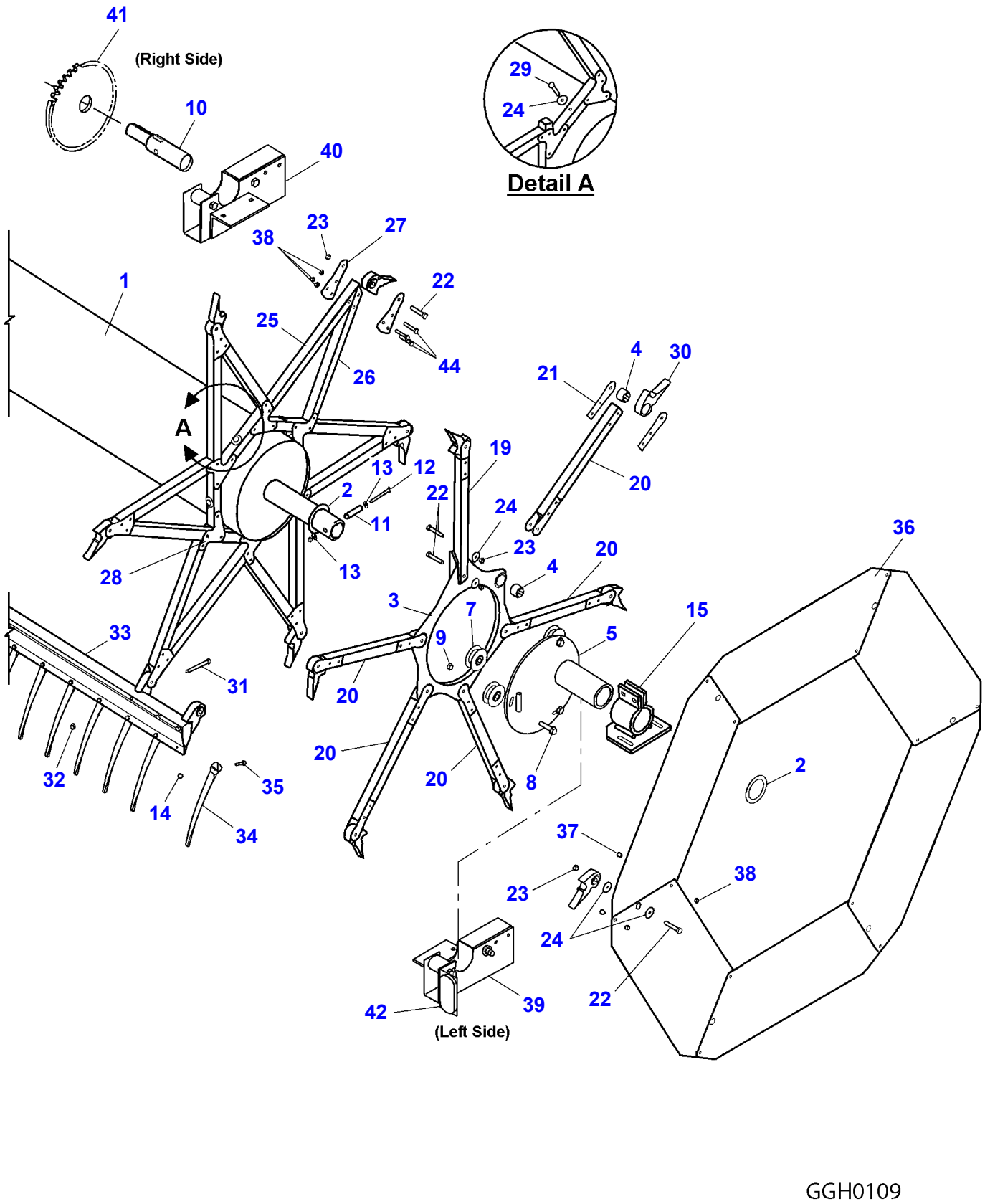
41
(Right Side)
10
40
29
24
Detail A
23
27
38
22
1
25
44
26
4
30
21
A
19
13
12
2
22
20
11
24
23
20
36
28
13
4
3
7
15
33
9
5
31
20
20
20
8
2
32
35
14
34
37
38
23
24
22
42
39
(Left Side)
GGH0109

Item	Part Number	Qty	Description
1	71386626	1	CENTERSHAFT (18 FT.)
	71386627	1	CENTERSHAFT (20 FT.)
	71386628	1	CENTERSHAFT (25 FT.)
	71386629	1	CENTERSHAFT (30 FT.)
2	700708889	4	WASHER, 2.031 X 2.750
3	700719073	2	RING, ECCENTRIC CONTROL (6-BAT)
4	700713276	10	BEARING, BALL
5	700708886	2	PLATE ASY., CONTROL
	700721666	2	BUSHING
	70914465	2	FITTING, LUBE, .125-27 PTF/SHORT
7	700708888	6	PLATE ASY., ROLLER CONTROL
8	368854X1	6	CAPSCREW, HFS, 3/8-16 X 1-3/4
9	Y704635	6	NUT, CTR-LOCK, HEX, 3/8-16
10	700708892	1	SHAFT, STUB
11	70917864	2	PIN, SPRING, 1/20X 2.00 SLTD
12	70923282	2	CAPSCREW, 1/4-20 X 2-1/2
	70923358	2	NUT, CTR-LOCK, HEX, 1/4-20
13	70918264	4	WASHER, 1/4 SAE
14	70923358	AR	NUT, CTR-LOCK, HEX, 1/4-20
15	3728605M1	2	MOUNTING ASY., CLAMP
	70922787	4	BOLT, CARRIAGE, RHSN, 3/8-16 X 1-1/2
	70918266	4	WASHER, FLAT, 3/8
	Y704635	4	NUT, CTR-LOCK, HEX, 1/4-20
19	700708872	2	ARM, FIXED CONTROL
20	700708873	10	ARM, REGULAR CONTROL
21	700708864	44	END PLATE
	70922837	AR	CAPSCREW, 1/4-20 X 1-1/2
	70928372	AR	NUT, 1/4-20 KEPS
22	70922127	AR	CAPSCREW, 5/16-18 X 1-3/4
23	832302M1	AR	NUT, NYLON-LOCK, HEX, 5/16-18
24	832035M1	AR	WASHER, 3/4 X 1.00
25	2763079M1	AR	ARM, LONG, (6 X 42-8")
26	2763080M1	AR	ARM, BRACE, (6 X 42-8")
27	700708863	AR	TIP PLATE
28	2763083M1	AR	INNER PLATE, (6 X42-8") (18 THRU 25')
	71386644	72	INNER PLATE, (6 X42-10") (30' ONLY)
	70922837	AR	CAPSCREW, 1/4-20 X 1-1/2
	70928372	AR	NUT, 1/4-20 KEPS
29	2763197M1	AR	CAPSCREW, 5/16-18 X 2.00 W/EXT LW
30	700716861	AR	HOLDER ASY., BEARING (INCLS. ITEM # 4)
	700713276	AR	BEARING, BALL
31	70923141	AR	CAPSCREW, 5/16-18 X 2-3/4
32	70923362	AR	NUT, CTR-LOCK, HEX, 5/16-18
33	71386633	6	BAT (18 FT.)
	71386634	6	BAT (20 FT.)
	71386635	6	BAT (25 FT.)
	71386636	6	BAT (30 FT.)
34	700714195	AR	PLASTIC TINE
35	70927401	AR	CAPSCREW, 1/4-20 X 1.00
36	1055913M1	12	SHIELD SECTION
37	373106X1	24	SCREW, TRUSS HD, 1/4-20 X .38
38	70928372	AR	NUT, 1/4-20 KEPS
39	71386646	1	MOUNTING BRACKET, (LH)
	71354277	2	ROLLER, MOUNTING BRACKET
	71354276	2	BUSHING, MOUNTING BRACKET ROLLER
	70923320	2	CAPSCREW, HEX, 1/2-13 X 3.00
	70931187	2	NUT, HEX, FLG., 1/2-13
40	71386647	1	MOUNTING BRACKET, (RH)
	71354277	2	ROLLER, MOUNTING BRACKET
	71354276	2	BUSHING, MOUNTING BRACKET ROLLER
	70923320	2	CAPSCREW, HEX, 1/2-13 X 3.00
	70931187	2	NUT, HEX, FLG., 1/2-13
41	71320310	1	SPROCKET ASY., (78T)
	11335	1	KEY, .31 X 1-1/2 SQ.
	70923306	1	SETSCREW, 1/2-13 X 1.00 SQ.HD.CUP PT
42	71386648	1	REFLECTOR ASY.
	71324207	1	LENS, REFLECTOR (AMBER)
	70918148	2	SCREW, #10-32 X 5/8
	70910533	2	WASHER, LOCK, #10
	70917415	2	NUT, 10-32
44	70922837	AR	CAPSCREW, 1/4-20 X 1-1/2

Item	Part Number	Qty	Description
	71392021	AR	KIT, PICKUP REEL, (UHC U-II) (18') [A]
	71392022	AR	KIT, PICKUP REEL, (UHC U-II) (20') [A]
	71392023	AR	KIT, PICKUP REEL, (UHC U-II) (25') [A]
	71392024	AR	KIT, PICKUP REEL, (UHC U-II) (30') [A]

[A] ORDER THRU DEALER CENTRAL

GGH0109
PR: t04d21j36a0020

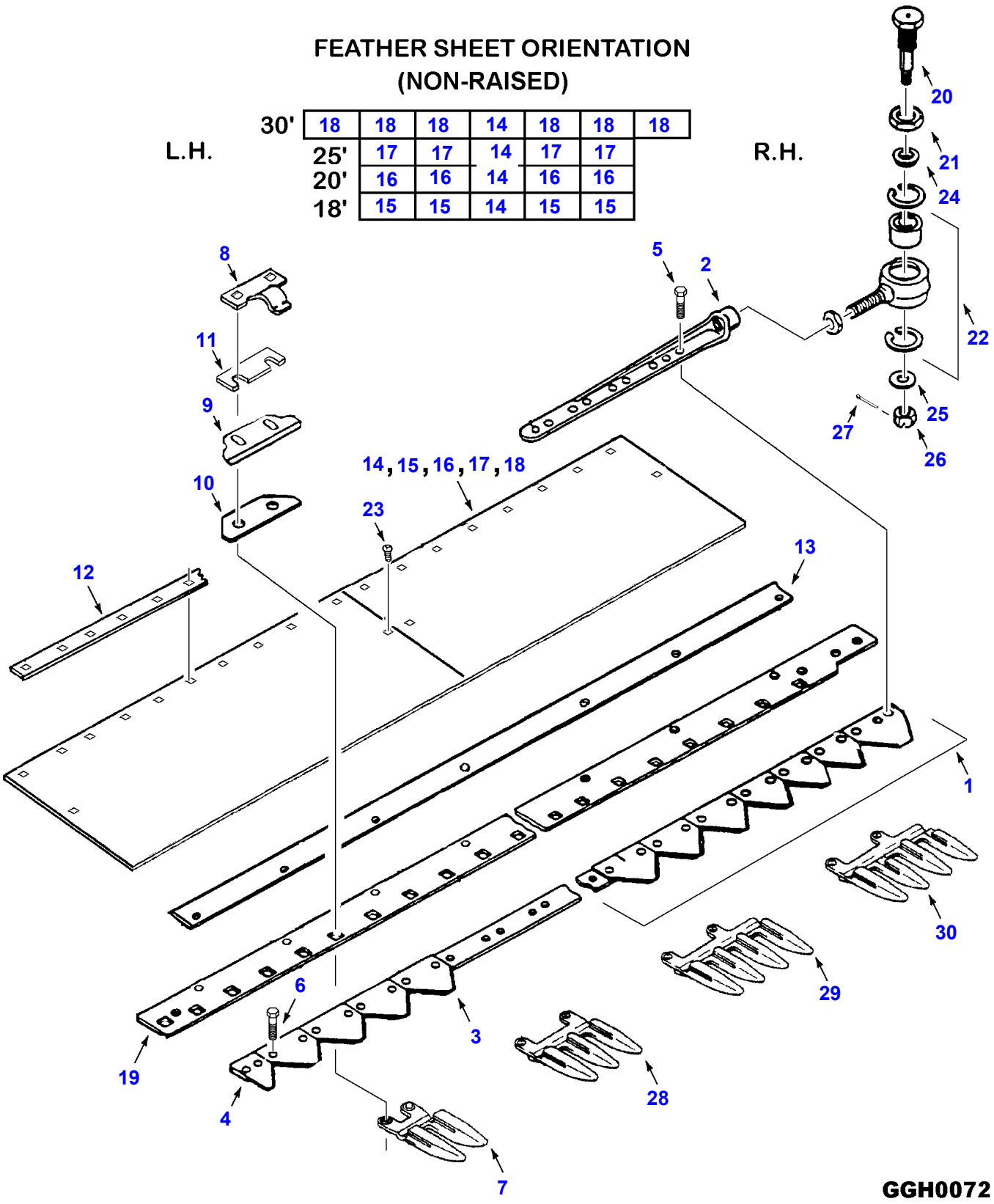
FEATHER SHEET ORIENTATION
(NON-RAISED)
L.H.
R.H.
30' 18 18 18 14 18 18 18
25' 17 17 14 17 17
20' 16 16 14 16 16
18' 15 15 14 15 15
20
21
24
22
25
26
27
8
11
9
10
5
2
14,15,16,17,18
23
13
12
1
30
29
28
6
3
19
4
7
GGH0072

Item	Part Number	Qty	Description
	71348718	AR	SICKLE ASY., W/O 3/4-16 HEAD, (18') (INCL. ITEMS 3-6)
	700722262	AR	SICKLE ASY., SPLIT (20') (INCL. ITEMS 1-6 & REINFORCEMENT BAR)
	71391979	1	BAR, REINFORCEMENT (NOT ILLUSTRATED)
	71394177	AR	SICKLE ASY., W/HEAD (HEAVY DUTY) (20')
	71394187	AR	SICKLE ASY., W/O HEAD (20')
	71391979	1	BAR, REINFORCEMENT (NOT ILLUSTRATED)
	700722263	AR	SICKLE ASY., SPLIT (25') (INCL. ITEMS 1-6 & REINFORCEMENT BAR)
	71391979	1	BAR, REINFORCEMENT (NOT ILLUSTRATED)
	71394180	AR	SICKLE ASY., W/HEAD (HEAVY DUTY) (25')
	71394190	AR	SICKLE ASY., W/O HEAD (25')
	71391979	1	BAR, REINFORCEMENT (NOT ILLUSTRATED)
	71389144	1	KNIFE BACK (25') (NOT ILLUSTRATED)
	700722260	AR	SICKLE ASY., SPLIT (30') (INCL. ITEMS 1-6 & REINFORCEMENT BAR)
	71391979	1	BAR, REINFORCEMENT (NOT ILLUSTRATED)
	71394184	AR	SICKLE ASY., W/HEAD (HEAVY DUTY) (30')
	71394194	AR	SICKLE ASY., W/O HEAD (30')
	71391979	1	BAR, REINFORCEMENT (NOT ILLUSTRATED)
	71389142	1	KNIFE BACK (30') (NOT ILLUSTRATED)
1	700722270	1	SICKLE, SPLIT, HEAD END (W/HEAD)
	700722271	AR	SICKLE, SPLIT, CTR (1 REQ. FOR 20', 25') (2 REQ. FOR 30')
	700722275	1	SICKLE, SPLIT, TAIL END (20')
	700722276	1	SICKLE, SPLIT, TAIL END (25')
	700722273	1	SICKLE, SPLIT, TAIL END (30')
	71399776	AR	SPLICE KIT, SPLIT SICKLE (INCL. TOP, BOTTOM SPLICE & HARDWARE) (2 REQ. FOR 20', 25') (3 REQ. FOR 30')
	71399777	1	SPLICE, BOTTOM, 2" 60 DEG. (NOT SHOWN)
	71399778	1	SPLICE, TOP, 2" 90 DEG. (NOT SHOWN)
	71399779	10	SCREW, SOCKET HD MACH
	71345596	10	NUT, LOCK M12-24
2	71389141	1	HEAD, SICKLE, 3/4-16 (10 HOLE)
	71391978	1	HEAD, SICKLE, 7/8-14 (10 HOLE)
3	71351135	AR	SECTION, SICKLE (BLACK)(HEAVY DUTY)
	71348175	AR	SECTION, SICKLE (CHROME)(HEAVY DUTY)
	71389145	1	SECTION, BLANK
4	71351139	1	SECTION, BLANK (HALF)
5	700705297	AR	BOLT, SICKLE HEAD #12-24 X 1
	373839X1	AR	NUT, CONE-LOCK
6	700705296	AR	BOLT, SECTION #12-24 X 5/8
	700715170	8	BOLT, SECTION #12-24 X 3/4
	373839X1	AR	NUT, CONE-LOCK #12
7	71386962	AR	GUARD, SICKLE(DOUBLE HEAT TREATED)
	70931350	AR	BOLT, 3/8NC X 1
	70922787	AR	BOLT, 3/8NC X 1-1/2
	70931211	AR	NUT, FLANGED, 3/8-16
8	71346158	AR	CLIP, SICKLE
9	71116532	AR	PLATE, WEAR
10	71134082	AR	SPACER
11	71148214	AR	SHIM
12	71357550	1	STRAP, HOLD-DOWN, REAR, CENTER, 1994MM
	71361379	2	STRAP, HOLD-DOWN, RR, OUTER 2760MM (18')
	71357549	2	STRAP, HOLD-DOWN, RR, OUTER 3525MM (20')
	71361377	2	STRAP, HOLD-DOWN, RR, OUTER 2760MM (25')
	71366190	2	STRAP, HOLD-DOWN, RR, OUTER 3525MM (30')
	71335690	AR	CAPSCREW, TRUSS HEAD 5/16 X 3/4 (TORX)(THREAD FORMING)
	70931277	AR	NUT, FLANGED, 5/16NC
13	71391992	AR	STRAP, HOLD-DOWN, FRONT-OUTER 1490MM (1 REQ'D. CENTER 18')
	71391990	AR	STRAP, HOLD-DOWN, FRONT-OUTER 1948MM (2 REQ'D. FRONT ENDS 18')
	71391989	AR	STRAP, HOLD-DOWN, FRONT-OUTER 1870MM (2 REQ'D. FRONT ENDS 20')
	71391987	AR	STRAP, HOLD-DOWN, FRONT-OUTER 2254MM (1 REQ'D. CENTER 20') (2 REQ'D. OUTER 25')
	71391986	AR	STRAP, HOLD-DOWN, FRONT-OUTER 3015MM (1 REQ'D. CENTER 25'.; 3 REQ'D. 30')
	71335689	AR	CAPSCREW, TRUSS HEAD 3/8-16 X 3/4 (TORX)(THREAD FORMING)
14	71365834	1	SHEET, FEATHER, CENTER, 1200MM
15	71361447	4	SHEET, FEATHER, (18')
16	71365832	4	SHEET, FEATHER, (20')
17	71361444	4	SHEET, FEATHER, (25')
18	71366193	6	SHEET, FEATHER, (30')
19	71361508	1	CUTTER BAR (18')
	71360498	1	CUTTER BAR (20')
	71361510	1	CUTTER BAR (25')
	71366194	1	CUTTER BAR (30')
20	71335423	1	PIN, 1/2NC THRD.

Item	Part Number	Qty	Description
21	71335424	1	NUT, JAM
22	71344240	1	HOUSING ASY., LONG SICKLE HEAD 3/4-16
	71391994	1	HOUSING ASY., LONG SICKLE HEAD 7/8-14 (INCL. BRG. & SNAP RINGS)
	71336974	1	BEARING
	526899	2	RING, SNAP
	353436X1	1	NUT, JAM, 3/4-16
	70920439	1	NUT, JAM, 7/8-14
23	70931331	AR	BOLT, RHSN 5/16 X 1/2 (USED AT LAP JOINTS ON FEATHER SHEET)
	70917378	AR	WASHER, FLAT 3/8 USS
	70923362	AR	NUT, LOCK 5/16
24	71335425	1	SPACER
25	70923858	1	WASHER
26	70917422	1	NUT, SLOTTED, 1/2NC
27	70918452	1	PIN, COTTER, 1/8 X 1
28	71324872	1	GUARD, 3-POINT (AUSTRALIA)
29	71315500	6	GUARD, 4-POINT (AUSTRALIA)
30	71324871	4	GUARD, 4-POINT (AUSTRALIA)(W/2 CLIPPED TOP PRONGS)

GGH0072
PR: t04d21j36a0021

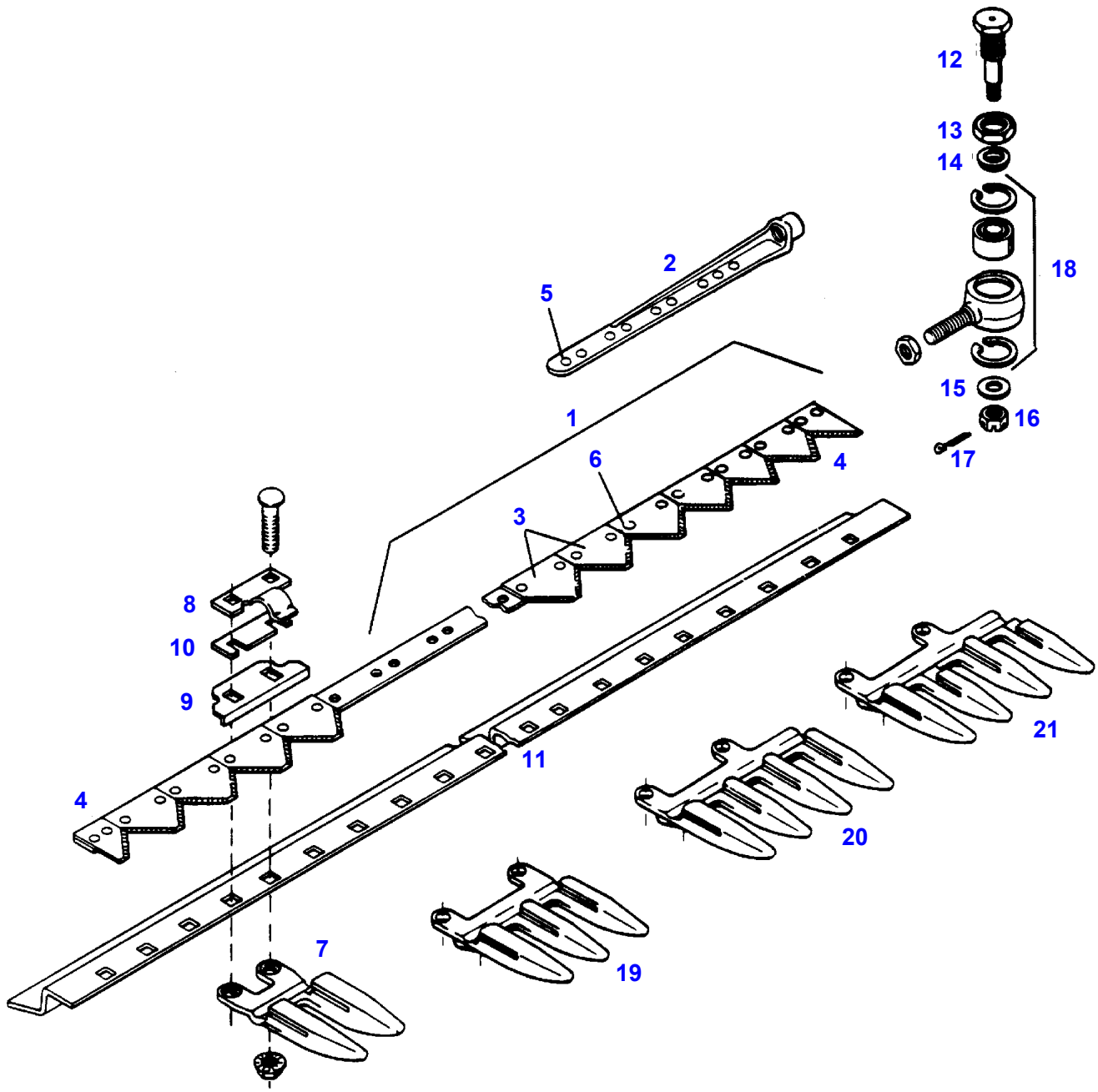

71376203

Item	Part Number	Qty	Description
	700722263	AR	SICKLE ASY., SPLIT (25') (INCL. ITEMS 1-6 & REINFORCEMENT BAR)
	71394180	AR	SICKLE ASY., W/HEAD (HEAVY DUTY) (25')
	71394190	AR	SICKLE ASY., W/O HEAD (25')
	71389144	1	KNIFE BACK (25') (NOT ILLUSTRATED)
	700722260	AR	SICKLE ASY., SPLIT (30') (INCL. ITEMS 1-6 & REINFORCEMENT BAR)
	71394184	AR	SICKLE ASY., W/HEAD (30')
	71394194	AR	SICKLE ASY., W/O HEAD (30')
	71389142	1	KNIFE BACK (30') (NOT ILLUSTRATED)
	71391979	1	BAR, REINFORCEMENT (NOT ILLUSTRATED)
1	700722270	1	SICKLE, SPLIT, HEAD END (W/HEAD)
	700722271	AR	SICKLE, SPLIT, CTR (1 REQ. FOR 25') (2 REQ. FOR 30')
	700722276	1	SICKLE, SPLIT, TAIL END (25')
	700722273	1	SICKLE, SPLIT, TAIL END (30')
	71399776	AR	SPLICE KIT, SPLIT SICKLE (INCL. TOP, BOTTOM SPLICE & HARDWARE) (2 REQ. FOR 25') (3 REQ. FOR 30')
	71399777	1	SPLICE, BOTTOM, 2" 60 DEG. (NOT SHOWN)
	71399778	1	SPLICE, TOP, 2" 90 DEG. (NOT SHOWN)
	71399779	10	SCREW, SOCKET HD MACH
	71345596	10	NUT, LOCK M12-24
2	71391978	1	HEAD, SICKLE, 7/8-14 (10 HOLE)
3	71351135	AR	SECTION, SICKLE (HEAVY DUTY)(BLACK)
	71348175	AR	SECTION, SICKLE (HEAVY DUTY)(CHROME)
	71389145	1	SECTION, BLANK
4	71351139	1	SECTION, BLANK (HALF)
5	700705297	AR	BOLT, SICKLE HEAD #12-24 X 1
	373839X1	AR	NUT, CONE-LOCK
6	700705296	AR	BOLT, SECTION #12-24 X 5/8
	700715170	8	BOLT, SECTION #12-24 X 3/4
	373839X1	AR	NUT, CONE-LOCK #12
7	71386962	AR	GUARD, SICKLE(DOUBLE HEAT TREATED)
	70923220	AR	BOLT, RHSN, 3/8NC X 1-1/4
	70922787	AR	BOLT, RHSN, 3/8NC X 1-1/2
	70931211	AR	NUT, FLANGED, 3/8-16
8	71346158	AR	CLIP, SICKLE
9	71116532	AR	PLATE, WEAR
10	71148214	AR	SHIM
11	71366274	1	CUTTER BAR (25')
	71324463	1	CUTTER BAR (30')
	70923114	2	CAPSCREW, 1/2NC X 1
	70931809	2	BOLT, 1/2NC X 1-1/4
	70931187	4	NUT, FLANGED, 1/2NC
	71335689	AR	SCREW, THRD. FORMING, 3/8 X 3/4 (TORX)
	70931350	AR	BOLT, RHSN, 3/8NC X 1
	70918266	AR	WASHER, 3/8
	70931211	AR	NUT, FLANGED, 3/8NC
12	71335423	1	PIN, SICKLE DRIVE
13	71335424	1	NUT, JAM
14	71335425	1	SPACER
15	70923858	1	WASHER, 1/2
16	70917422	1	NUT, SLOTTED, 1/2 20
17	70918452	1	PIN, COTTER, 1/8 X 1
18	71391994	1	HOUSING ASY., LONG SICKLE HEAD 7/8-14 (INCL. BRG. & SNAP RINGS)
	71336974	1	BEARING
	526899	2	RING, SNAP
	353436X1	1	NUT, JAM, 3/4-16
	70920439	1	NUT, JAM, 7/8-14
19	71324872	1	GUARD, 3-POINT (AUSTRALIA)
20	71315500	6	GUARD, 4-POINT (AUSTRALIA) [A]
21	71324871	4	GUARD, 4-POINT (AUSTRALIA) [A] (WITH/2 CLIPPED PRONGS)
	71334007	AR	KIT, NARROW SPACED GUARD (AUSTRALIAN)

[A] INCLUDED IN KIT 71334007

71376203
PR: t04d21j36a0022

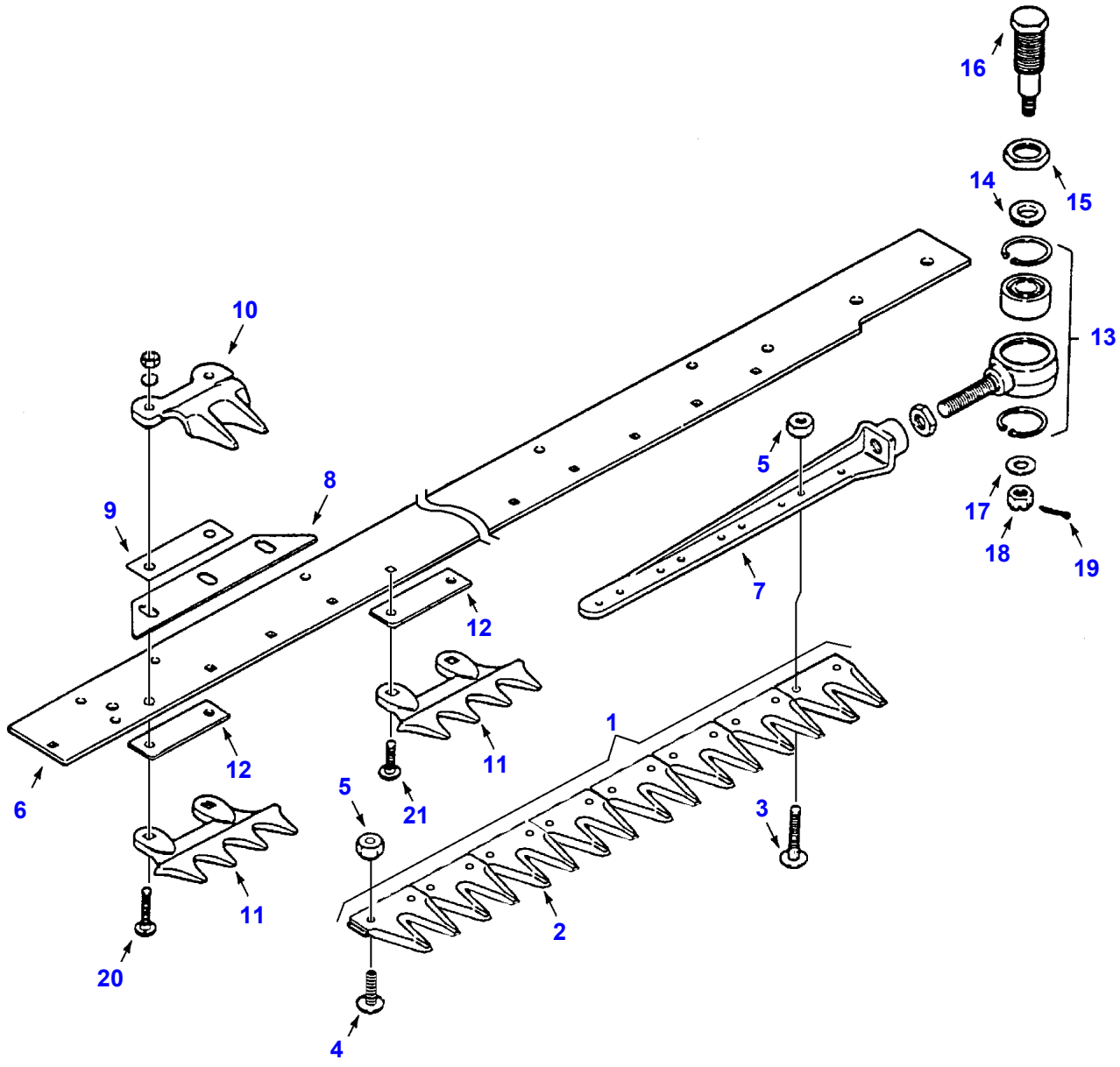

GGH0081

Item	Part Number	Qty	Description
	71371593	AR	SICKLE ASY. WITH 3/4-16 HEAD (18') (INCL. ITEMS 2 - 5 AND 7)
	71348218	AR	SICKLE ASY. W/O HEAD (18') (INCL. ITEMS 2 - 5)
	700722258	AR	SICKLE ASY. SPLIT, (20')(INCLUDE ITEMS 1-5, 7 & REINFORCEMENT BAR)
	71391979	1	BAR, REINFORCEMENT (NOT ILLUSTRATED)
	71394176	AR	SICKLE ASY., W/HEAD (HEAVY DUTY) (20')
	71394186	AR	SICKLE ASY., W/O HEAD (NARROW) (20')
	71391979	1	BAR, REINFORCEMENT (NOT ILLUSTRATED)
	700722259	AR	SICKLE ASY. SPLIT, (25') (INCLUDE ITEMS 1-5, 7 & REINFORCEMENT BAR)
	71391979	1	BAR, REINFORCEMENT (NOT ILLUSTRATED)
	71394179	AR	SICKLE ASY., W/HEAD (HEAVY DUTY) (25')
	71394189	AR	SICKLE ASY., W/O HEAD (NARROW) (25')
	71391979	1	BAR, REINFORCEMENT (NOT ILLUSTRATED)
	700722257	AR	SICKLE ASY. SPLIT, (30') (INCLUDE ITEMS 1-5, 7 & REINFORCEMENT BAR)
	71391979	1	BAR, REINFORCEMENT (NOT ILLUSTRATED)
	71394183	AR	SICKLE ASY., W/HEAD (HEAVY DUTY) (30')
	71394193	AR	SICKLE ASY., W/O HEAD (NARROW) (30')
	71391979	1	BAR, REINFORCEMENT (NOT ILLUSTRATED)
1	700722265	1	SICKLE, SPLIT, HEAD END (W/HEAD)
	700722266	AR	SICKLE, SPLIT, CTR (1 REQ. FOR 20', 25') (2 REQ. FOR 30')
	700722268	1	SICKLE, SPLIT, TAIL END (20')
	700722269	1	SICKLE, SPLIT, TAIL END (25')
	700722267	1	SICKLE, SPLIT, TAIL END (30')
	71399776	AR	SPLICE KIT, SPLIT SICKLE (INCL. TOP, BOTTOM SPLICE & HARDWARE) (2 REQ. FOR 20', 25') (3 REQ. FOR 30')
	71399777	1	SPLICE, BOTTOM, 2" 60 DEG. (NOT SHOWN)
	71399778	1	SPLICE, TOP, 2" 90 DEG. (NOT SHOWN)
	71399779	10	SCREW, SOCKET HD MACH SCREW
	71345596	10	NUT, LOCK M12-24
2	71353125	AR	SECTION, SICKLE
3	700705297	AR	BOLT, SICKLE HEAD #12-24 X 1
4	700705296	AR	BOLT, SECTION #12-24 X 5/8
	71399781	AR	BOLT, SECTION #12-24 X 3/4
5	373839X1	AR	NUT, CONE-LOCK #12
6	71361508	1	BAR, CUTTER (18')
	71360498	1	BAR, CUTTER (20')
	71361510	1	BAR, CUTTER (25')
	71366194	1	BAR, CUTTER (30')
7	71347775	1	HEAD, SICKLE, 3/4-16
	71391999	1	HEAD, SICKLE, 7/8-14
	71391978	1	HEAD, SPLIT SICKLE, 7/8-14 (10 HOLE)
8	71116532	AR	PLATE, WEAR
9	71148214	AR	SHIM
10	71345591	AR	CLIP, KNIFE
11	71370575	AR	GUARD, NARROW SPACED
12	71345599	AR	SPACER, GUARD (2-HOLE)
	71346159	AR	SPACER, GUARD (3-HOLE)
13	71344240	1	HOUSING ASY., LONG SICKLE HEAD 3/4-16
	71391994	1	HOUSING ASY., LONG SICKLE HEAD 7/8-14 (INCL. BRG. & SNAP RINGS)
	71336974	1	BEARING
	526899	2	RING, SNAP
	353436X1	1	NUT, JAM, 3/4-16
	70920439	1	NUT, JAM, 7/8-14
14	71335425	1	SPACER, SICKLE DRIVE PIN
15	71335424	1	NUT, JAM, SICKLE DRIVE PIN 1-1/8 - 12
16	71335423	1	PIN, SICKLE DRIVE
17	70923858	1	WASHER, 17/32 X 1-1/4 X 7GA
18	70917422	1	NUT, SLOTTED, 1/2
19	70918452	1	PIN, COTTER, 1/8 X 1
20	70922869	AR	BOLT, RHSN, 3/8 X 1-3/4
	70916965	AR	LOCKWASHER, 3/8
	70916950	AR	NUT, 3/8NC
21	70923220	AR	BOLT, RHSN 3/8 X 1-1/4
	70916965	AR	LOCKWASHER, 3/8
	70916950	AR	NUT, 3/8NC
	71397002	AR	KIT, SICKLE & GUARD (18' & 20') [A]
	71397004	AR	KIT, SICKLE & GUARD (25') [A]
	71397006	AR	KIT, SICKLE & GUARD (30') [A]

[A] TO CONVERT STANDARD TO CLEAN CUT SICKLE / ORDER THRU DEALER CENTRAL

Item	Part Number	Qty	Description
			GGH0081
			PR: t04d21j36a0023

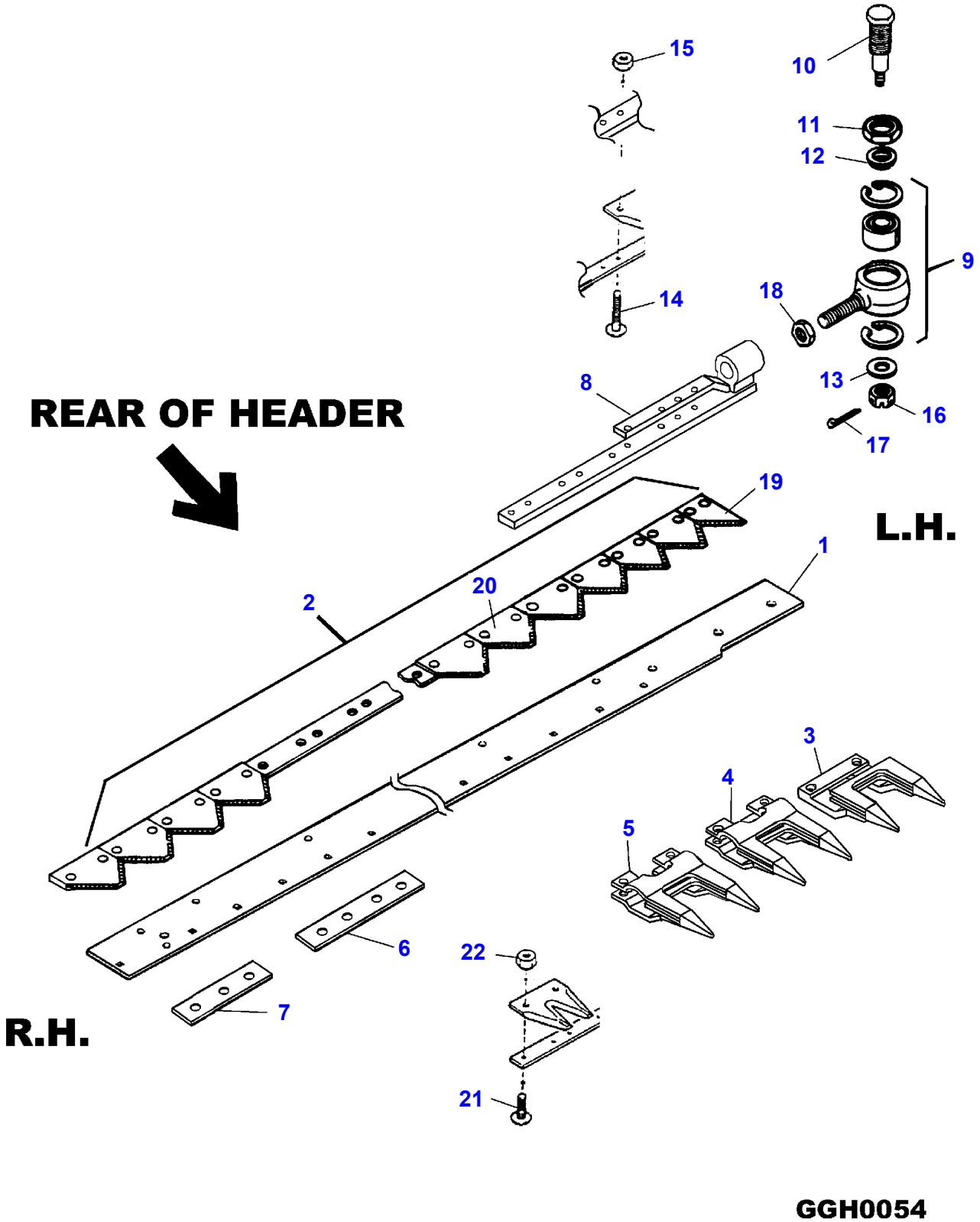
REAR OF HEADER
L.H.
R.H.
1
2
3
4
5
6
7
8
9
10
11
12
13
14
15
16
17
18
19
20
21
22
GGH0054

Item	Part Number	Qty	Description
1	71360498	1	BAR, CUTTER (20')
	71361510	1	BAR, CUTTER (25')
	71366194	1	BAR, CUTTER (30')
2	71394178	1	SICKLE ASY., W/7/8-14 HEAD (20') (INCL. ITEMS 8,14,15,19,20,21,22 & LH-MIDDLE-RH KNIFEBACKS & SPLICEBAR)
	71386919	1	KNIFEBACK (LH-END)
	71386920	1	KNIFEBACK (MIDDLE)
	71386921	1	KNIFEBACK (RH-END)
	71386922	2	SPLICEBAR W/INSERTS [A]
	71392173	AR	INSERT, BRASS [A]
	71386951	16	BOLT, 6M X 18 [A]
	71394181	1	SICKLE ASY., W/7/8-14 HEAD (25') (INCL. ITEMS 8,14,15,19,20,21,22 & LH-MIDDLE-RH KNIFEBACKS & SPLICEBAR)
	71386919	1	KNIFEBACK (LH-END)
	71386920	2	KNIFEBACK (MIDDLE)
	71386954	1	KNIFEBACK (RH-END)
	71386922	3	SPLICEBAR W/INSERTS [A]
	71392173	AR	INSERT, BRASS [A]
	71386951	24	BOLT, 6M X 18 [A]
	71394185	1	SICKLE ASY., W/7/8-14 HEAD (30') (INCL. ITEMS 8,14,15,19,20,21,22 & LH-MIDDLE-RH KNIFEBACKS & SPLICEBAR)
	71386919	1	KNIFEBACK (LH-END)
	71386920	2	KNIFEBACK (MIDDLE)
	71386971	1	KNIFEBACK (RH-END)
	71386922	3	SPLICEBAR W/INSERTS [A]
	71392173	AR	INSERT, BRASS [A]
	71386951	24	BOLT, 6M X 18 [A]
3	71386905	1	GUARD (LH-END)
	70920415	AR	CAPSCREW, 3/8-16 X 1-1/4 (GR. 5)
	70931211	AR	NUT, FLANGED, 3/8-16
4	71386906	AR	GUARD (STANDARD)(QTY. 20' = 37, 25' = 45 & 30' = 57)
	70920415	AR	CAPSCREW, 3/8-16 X 1-1/4 (GR. 5)
	70931211	AR	NUT, FLANGED, 3/8-16
5	71386907	AR	GUARD (W/BOTTOM CUTOUT)(QTY. 20' = 2, 25' = 4 & 30' = 2
	70920415	AR	CAPSCREW, 3/8-16 X 1-1/4 (GR. 5)
	70931211	AR	NUT, FLANGED, 3/8-16
6	71386908	AR	SPACER, GUARD (4-HOLE)(QTY. 20' = 12, 25' = 11 & 30' = 16)
7	71386909	AR	SPACER, GUARD (3-HOLE)(QTY. 20' = 10, 25' = 18 & 30' = 18)
8	71394217	1	HEAD, SICKLE, 7/8-14 (W/INSERTS)
	71392175	AR	INSERT, BRASS
9	71391994	1	HOUSING ASY., LONG SICKLE HEAD 7/8-14 (INCL. BRG. & SNAP RINGS)
	71336974	1	BEARING
	526899	2	RING, SNAP
10	71335423	1	PIN, SICKLE DRIVE
11	71335424	1	NUT, JAM, SICKLE DRIVE PIN 1-1/8-12
12	71335425	1	SPACER, SICKLE DRIVE PIN
13	70923858	1	WASHER, 17/32 X 1-1/4 X 7GA
14	71386925	4	BOLT, 6M X 28 (HEAD-SICKLE)
	71386951	5	BOLT, 6M X 18 (HEAD-SICKLE)
15	71386953	9	NUT, LOCK, 6M
16	70917422	1	NUT, SLOTTED, 1/2
17	70918452	1	PIN, COTTER, 1/8 X 1
18	70920439	1	NUT, JAM, 7/8-14
19	71386923	1	SECTION (HALF)
20	71386924	AR	SECTION (SICKLE)(QTY. 20' = 80, 25' = 100 & 30' = 120)
21	71386952	AR	BOLT, SECTION, 6M X 16
22	71386953	AR	NUT, LOCK, 6M
	71392174	AR	KIT, SPLICEBAR

[A] INCLUDED IN KIT 71392174

GGH0054
PR: t04d21j36a0024

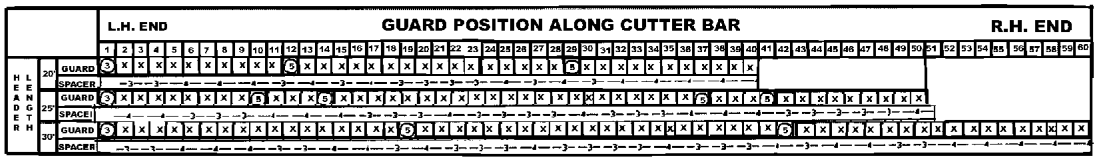

(REAR OF HEADER)

GUARD

③ = 71386905 (REFERENCE ITEM #3)

X = 71386906 (REFERENCE ITEM #4)

⑤ = 71386907 (REFERENCE ITEM #5)

SPACER

3 = 71386909 (REFERENCE ITEM #7)

4 = 71386908 (REFEERENCE ITEM #6)



TOP VIEW -- SICKLE GROUP
(20 ' SHOWN)

(REAR OF HEADER)

71386912

Description

NOTE:

THIS PAGE IS FOR REFERENCE WHEN SERVICE IS REQUIRED FOR CUTTER BAR. (REVIEW PREVIOUS ILLUSTRATION AND ITEM #'S FOR SCHUMACHER SICKLES & GUARDS 20 THRU 30 FEET.)

71386912
PR: t04d21j36a0025

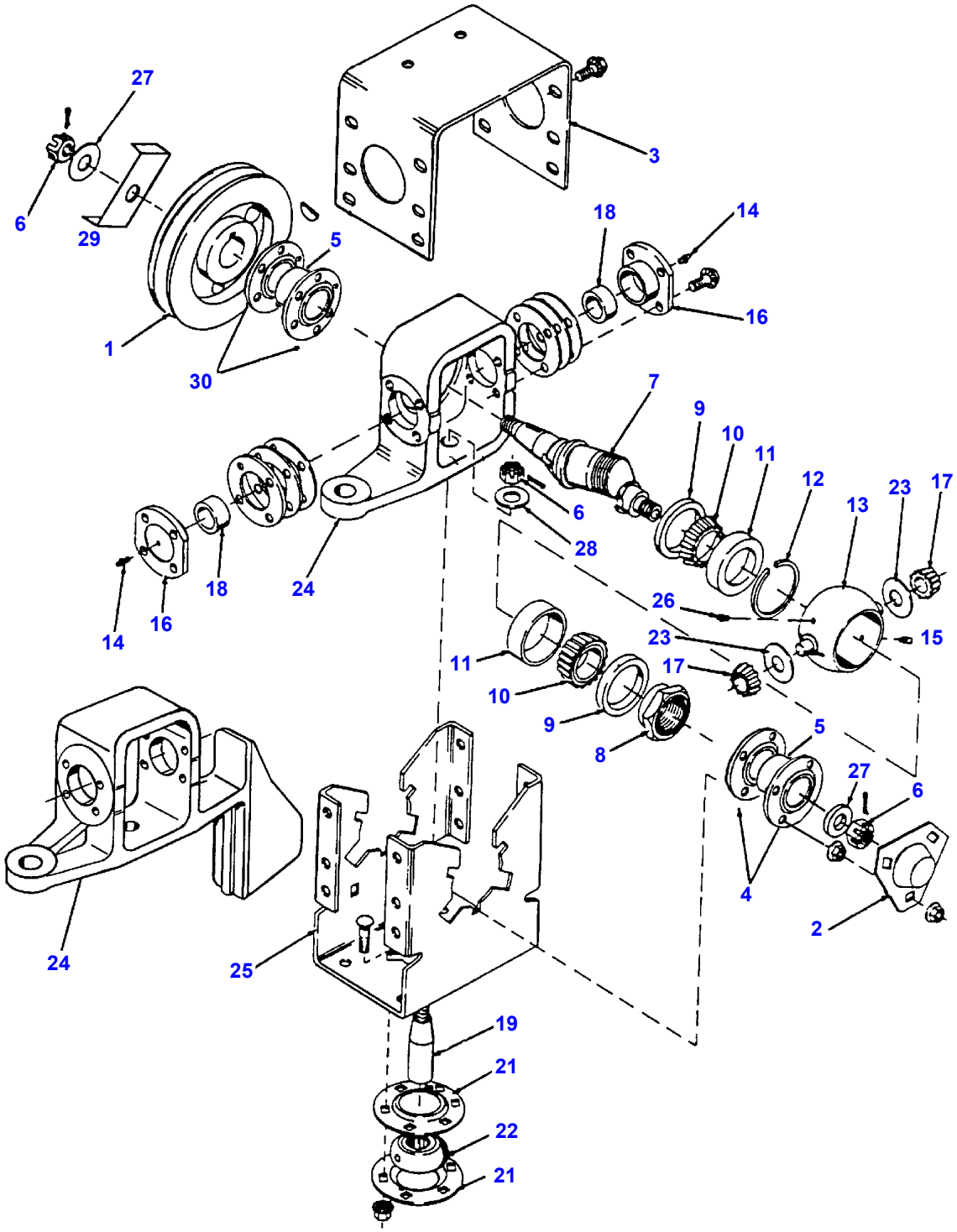
27
6
29
3
5
1
30
18
14
16
7
9
10
11
12
13
23
17
6
28
18
24
14
16
26
23
15
11
17
10
9
8
5
27
6
4
2
24
25
19
21
22
21

71320945

Item	Part Number	Qty	Description
	71389337	AR	WOBBLE BOX ASY. COUNTER WEIGHTED (RIGID 7000)
	71344225	AR	WOBBLE BOX ASY. (FLEX 8000) (DOES NOT INCLUDE ITEMS 1 & 27)
1	71320934	1	SHEAVE, 1-GROOVE, 9-27/32" O.D.
	29780X	1	KEY, WOODRUFF, NO. 15
2	71320929	1	SHIELD, CRANKSHAFT, NUT
	70931211	3	NUT, FLANGED, 3/8-16
3	71353693	1	COVER
	7771470	6	CAPSCREW, 3/8NC X 1-1/4 (GR. 5)
	70931211	6	NUT, FLANGED, 3/8-16
4	71370130	2	FLANGE, BEARING 72MM SPHERICAL DIAM (3- BOLT)(W/NOTCH FOR LUBE FITTING)
	70923220	3	BOLT, 3/8NC X 1-1/4
	70931211	6	NUT, FLANGED, 3/8-16
5	71333775	2	BEARING
6	70934976	3	NUT, JAM, 3/4NC
	70918454	3	PIN, COTTER, 1/8 X 1-1/2
7	71338588	1	CRANKSHAFT, WOBBLE BOX
8	71325325	1	NUT, LOCK, BEARING ADJ.
9	71307586	2	SEAL
10	833095M1	2	CONE, BEARING
11	833094M1	2	CUP, BEARING
12	71314218	1	SPACER, BEARING CUP
13	71315489	1	RING, TRUNNION
14	70922887	2	FITTING, LUBE
15	70915276	1	FITTING, LUBE
16	71317411	2	HOUSING, PIVOT BEARING
	7772049	8	CAPSCREW, FLANGED, 5/16NC X 1 (GR.5)
	71312130	AR	SHIM (.010)
	71312131	AR	SHIM (.005)
	71312132	AR	SHIM (.002)
17	70225608	2	CONE, BEARING
18	70241380	2	CUP, BEARING
19	71349959	1	PIN, PIVOT
20	70931942	1	NUT, PUSHON (NOT SHOWN)
21	71369864	2	FLANGE, BEARING, (RELUBE)(6-BOLT)
	70931350	3	BOLT, 3/8NC X 1
	70931211	3	NUT, FLANGED, 3/8-16
22	71349955	1	BEARING ASY. (INCL. PLUG, BRG., SEAL, & FITTING)
	71349954	1	PLUG, CAP
	832909M1	1	BEARING
	70934820	1	SEAL, OIL
	70915019	1	FITTING, LUBE
	70918264	1	WASHER SAE 1/4
23	71312133	2	SHIELD, BEARING, TRUNNION
24	71335420	1	FRAME, TRUNNION, (W/O COUNTER WEIGHT)
	71368918	1	FRAME, TRUNNION, (COUNTER WEIGHTED)
25	71385140	1	HOUSING, WOBBLE BOX
26	70916619	1	FITTING, PRESS, RELIEF
27	70927901	1	WASHER, 1-3/4" O.D X .781" I.D. X 7 GA.
28	70918269	1	WASHER, 1-1/2" O.D. X 3/4" I.D.
29	71362414	1	FAN
30	71370634	2	FLANGE, BEARING, 72MM SPHERICAL DIAM (6-BOLT)
	70931350	6	BOLT, RHSSN, 3/8-16 X 1
	70931211	6	NUT, FLANGED, 3/8-16

71320945
PR: t04d21j36a0026

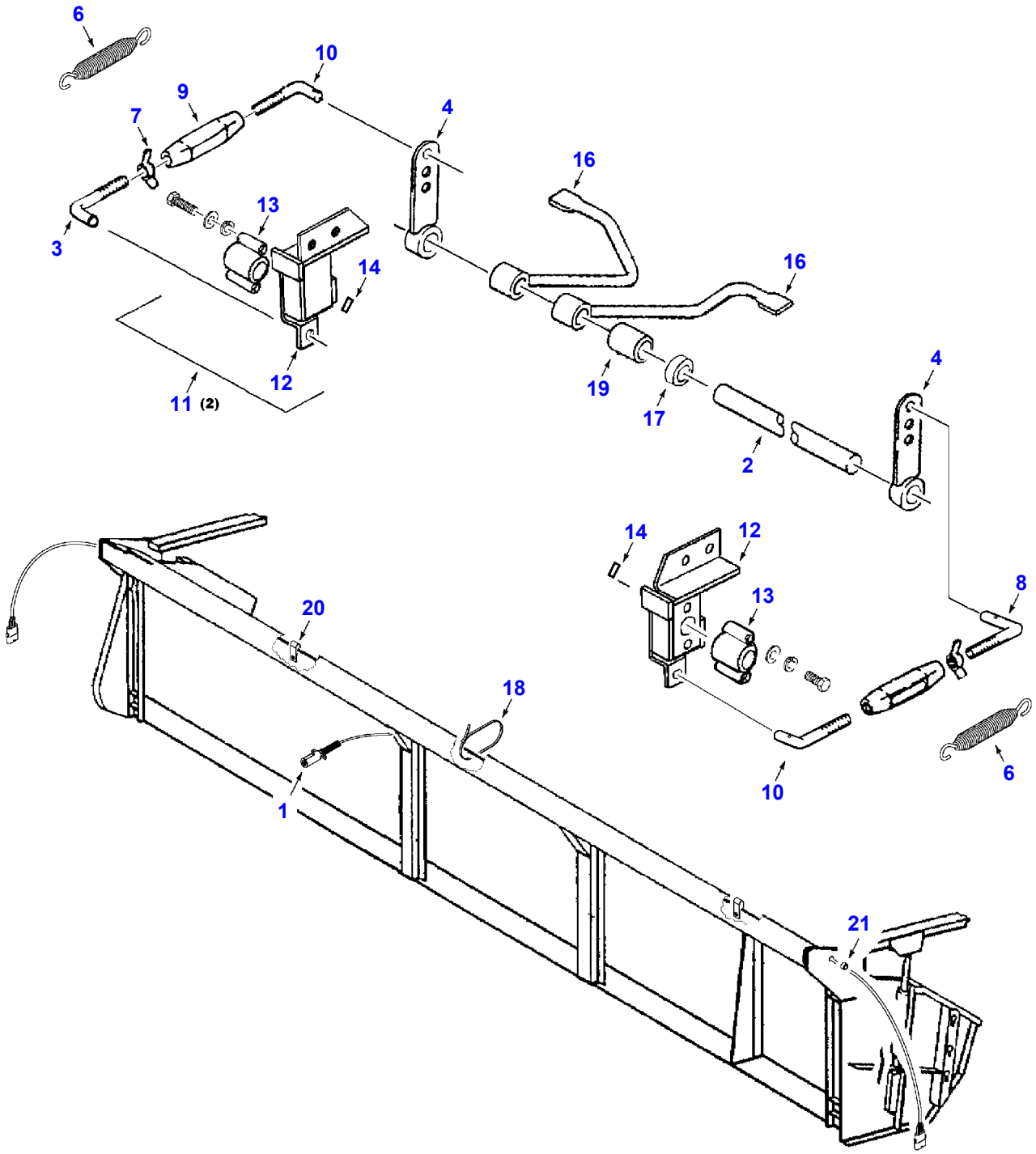

GGH0066

Item	Part Number	Qty	Description
	71397293	AR	KIT, ELECTRICAL ADAPTER [A] (FOR 2003 & LATER HEADS ON 2002 & PRI. COMBINES)
	71396964	AR	KIT, ELECTRICAL ADAPTER [A] (2002 & PRI. HEADS ON 2003 & LATER COMBINES)
1	71390302	1	HARNESS, HEADER MAIN WIRING (COMPLETE)
	700706922	AR	CAP, ELECTRICAL PLUG
	71397680	AR	CONNECTOR PLUG, 13 PIN
	71397722	AR	TERMINAL
	700709175	AR	CONNECTOR
	700706401	AR	TERMINAL
	504738M1	AR	CONNECTOR
	700718579	AR	CONNECTOR
	700708760	AR	TERMINAL
	700706400	AR	SEAL
2	71376607	2	SHAFT, ROCK (18')
	71366184	2	SHAFT, ROCK (20')
	71376268	2	SHAFT, ROCK (25')
	71322318	2	SHAFT, ROCK (30')
3	71374260	1	ROD, LINKAGE, LH
	70918265	1	WASHER, 5/16
	70925292	1	CLIP, HAIRPIN
4	71376178	2	LEVER ASY.
	70923326	4	SETSCREW, 3/8NC X 1
	70917421	4	NUT, JAM, 3/8NC
6	71172928	2	SPRING
7	70918468	2	NUT, WING
8	71172355	1	ROD, LH THREAD
9	70923041	2	TURNBUCKLE
10	71368515	2	ROD, LINKAGE, RH
	70918265	1	WASHER, 5/16
	70925292	1	CLIP, HAIRPIN
11		2	SWITCH ASY. WITH BRACKET (INCL. ITEMS 12, 13 & 14)
	70926917	2	CLAMP
	70928681	2	BOLT, RHSN, 5/16 X 1-1/4
	70917356	4	WASHER, LOCK, 5/16
	70917372	6	NUT, 5/16
	70933988	4	NUT, PUSH ON, 5/16
	70931333	2	BOLT, RHSN, 5/16 X 3/4
	71387662	1	SHIELD, SWITCH ASY.(RH)(NOT ILLUSTRATED)
12	71390628	2	BRACKET, SWITCH WLMT
	70919313	2	PIN, COTTER
	70918265	2	WASHER, 5/16
13	71376825	2	POTENTIOMETER (5K)
	70918151	4	SCREW, #10 - 32 X 1-1/4
14	71382607	1	TAB
15	71350360	1	DECAL, DANGER (NOT ILLUSTRATED)
	71359823	1	DECAL, DANGER (NOT ILL.)(FRENCH)
16	71340645	1	SENSOR ASY., RH
	71340335	AR	SENSOR ASY., LH
	70920469	AR	SETSCREW, 3/8NC X 3/4
	70917421	AR	NUT, JAM 3/8NC
17	71343540	2	COLLAR, SHAFT
	70921263	2	SETSCREW, 5/16-18 X 3/8
18	70925094	AR	TIE, PLASTIC
19	71374448	2	SPACER
20	70926917	2	CLAMP, WIRING HARNESS
	70931348	1	BOLT, RHSN 3/8 X 3/4
	70921965	1	CAPSCREW, 3/8 X 3/4
	70931211	2	NUT, SER. FLG. 3/8 - 16
21	70937658	2	GROMMET, RUBBER

[A] REFERENCE HARNESS ADAPTER PAGE
FOR SERVICE PARTS BREAKDOWN.

GGH0066
PR: t04d21j36a0027

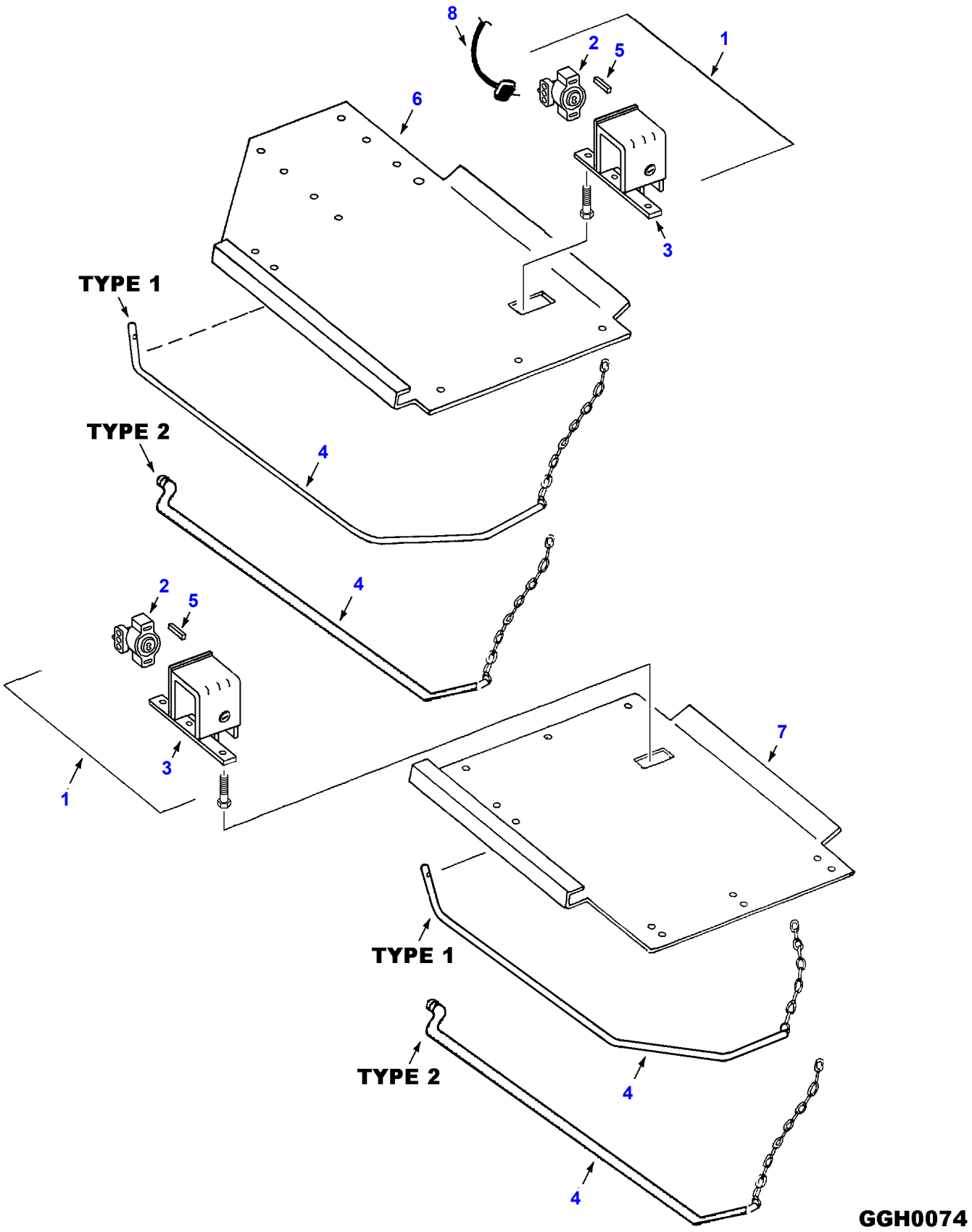
8
2
5
1
6
3
TYPE 1
TYPE 2
4
4
2
5
3
1
7
TYPE 1
TYPE 2
4
4
GGH0074

Item	Part Number	Qty	Description
1	71376259	2	BRACKET ASY., SENSOR (INCL. 1 EA ITEM 2, 3 & 5)
	700718807	2	CAPSCREW, 5/16-18 X 1
	70917356	2	LOCKWASHER, 5/16
2	71376825	2	SENSOR, POSITION (5K)
	70918151	4	SCREW, HX HD, TAPPING
	70917380	4	WASHER, FLAT, #10
	70917365	4	WASHER, HELICAL SPRING LOCK, #10
3	71376258	1	BRACKET WLMT., SWITCH
4	71375690	2	SENSOR, GROUND, LH, LONG (TYPE-I)
	71386844	2	SENSOR, GROUND, LH, LONG (TYPE-II)
	71375689	2	CHAIN
	70922127	1	BOLT, HX HD, 5/16 - 18UNC X 1-3/4
	70923362	1	NUT, LOCK, 5/16 - 18UNC
	70921333	4	CAPSCREW, 3/8 - 16UNC X 1.0
	70917378	1	WASHER, FLAT, 3/8
	70922127	1	BOLT, HEX HD, 5/16 - 18UNC X 1-3/4
	70923362	1	NUT, LOCK, 5/16 - 18UNC
	70930598	1	SCREW, SELF TAP, 3/8 - 16UNC X 1-1/2
	70917378	1	WASHER, FLAT, 3/8
5	71382607	2	ARM ACTIVATOR
6		1	GUARD, ROCK, LH (REF. RIGID HOUSING)
7		1	GUARD, ROCK, RH (REF. RIGID HOUSING)
8	71375738	2	HARNESS, WIRE
	72514695	AR	CONNECTOR, W/TERMINAL & SEAL
	700708760	AR	TERMINAL
	700709175	AR	CONNECTOR, W/TERMINAL & SEAL, FEMALE
	700706401	AR	TERMINAL
	700706400	AR	SEAL
	70937658	2	GROMMET
	70926917	1	CLAMP, 3/8 TUBE X .406 HOLE
	70925094	10	TIE, PLASTIC, 7-5/16"
	71398021	AR	KIT, SMARTRAC SENSOR [A] (S/N EFF. HM84101) (CONTAINS TYPE-II GROUND SENSORS WITHOUT WIRE HARNESS)
	71397014	AR	KIT, HDR HEIGHT SENSORS [A](S/N EFF. HM84101) (CONTAINS TYPE-I GROUND SENSORS)
	71392042	AR	KIT, HEADER HEIGHT SENSORS (PRIOR S/N HM84101 W/ AHHC RIGID) (CONTAINS TYPE-I GROUND SENSORS)
	71392051	AR	KIT, SMARTRAC SENSORS & PARTS (RIGID HEADERS S/N 83001-HM84100)(CONTAINS TYPE-II GROUND SENSORS)

[A] ORDER THRU DEALER CENTRAL

GGH0074
PR: t04d21j36a0040

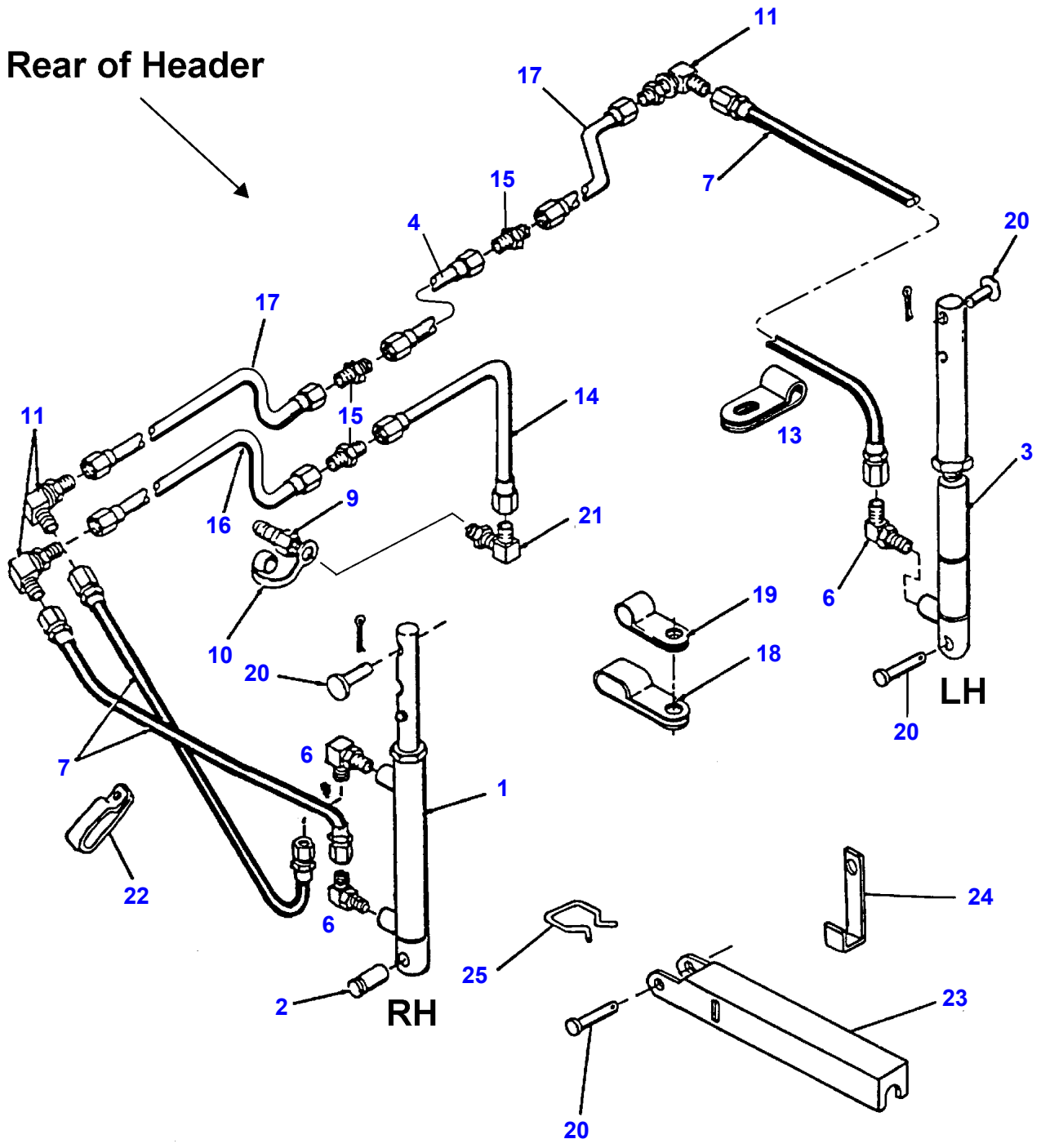

71354487.4
GGH0015

Item	Part Number	Qty	Description
1	71353766	1	CYLINDER ASY., MASTER, RH [A] (SEE BREAKDOWN FOR COMPONENTS)
	71415082	1	CYLINDER ASY., MASTER, RH (SEE BREAKDOWN FOR COMPONENTS)
2	71354497	1	PIN, CYLINDER, RH LOWER (LONG)
	70918454	1	PIN, COTTER
3	71353767	1	CYLINDER ASY., SLAVE, LH [A] (SEE BREAKDOWN FOR COMPONENTS)
	71415083	1	CYLINDER ASY., SLAVE, LH (SEE BREAKDOWN FOR COMPONENTS)
4	71376019	1	TUBE ASY., STRAIGHT
6	70922571	3	FITTING, ELBOW, 90 DEG.
7	71369199	3	HOSE ASY.
9	71328361	1	COUPLER ASY., MALE
	70923550	AR	WASHER, .56 X 1.0 X 12 GA.
10	71328365	1	CAP, DUST, FEMALE
11	70928917	3	FITTING, ELBOW, 90 DEG.
13	70925097	2	CLAMP, LH SIDE
14	71376020	1	TUBE ASY., SUPPLY, INNER
15	70919214	3	FITTING, UNION, 1/4
16	71375531	1	TUBE ASY., SUPPLY, RH (18')
	71375530	1	TUBE ASY., SUPPLY, RH (20')
	71375528	1	TUBE ASY., SUPPLY, RH (25')
	71375526	1	TUBE ASY., SUPPLY, RH (30')
17	71375539	2	TUBE ASY., CROSSOVER (18')
	71375538	2	TUBE ASY., CROSSOVER (20')
	71375536	2	TUBE ASY., CROSSOVER (25')
	71375534	2	TUBE ASY., CROSSOVER (30')
18	71312257	AR	CLIP, DOUBLE
	7703457	1	CAPSCREW, 1/4-20 X 3/4
	70931209	1	NUT, FLANGE, 1/4-20
19	71312256	AR	CLIP, SINGLE
	7703457	1	CAPSCREW, 1/4-20 X 3/4
	70931209	1	NUT, FLANGE, 1/4-20
20	71361274	4	PIN, SHORT
	70918454	4	PIN, COTTER, 1/8 X 1-1/2
21	70919546	1	ELBOW, 90 DEG. (1/4NPT TO 1/4 TUBE)
22	70936472	2	CLAMP, DOUBLE, RH SIDE
23	71358870	2	STOP ASY., CYLINDER
24	71354693	2	LATCH, RAM STOP
	70920990	2	CAPSCREW, 1/2 X 3-1/2
	70931187	2	NUT, SER. FLG., 1/2
	70922134	2	NUT, LOCK, 1/2
25	71353111	2	RETAINER, SPRING

[A] PART NUMBER STAMPED ON BARREL

GGH0015
PR: t04d21j36a0028

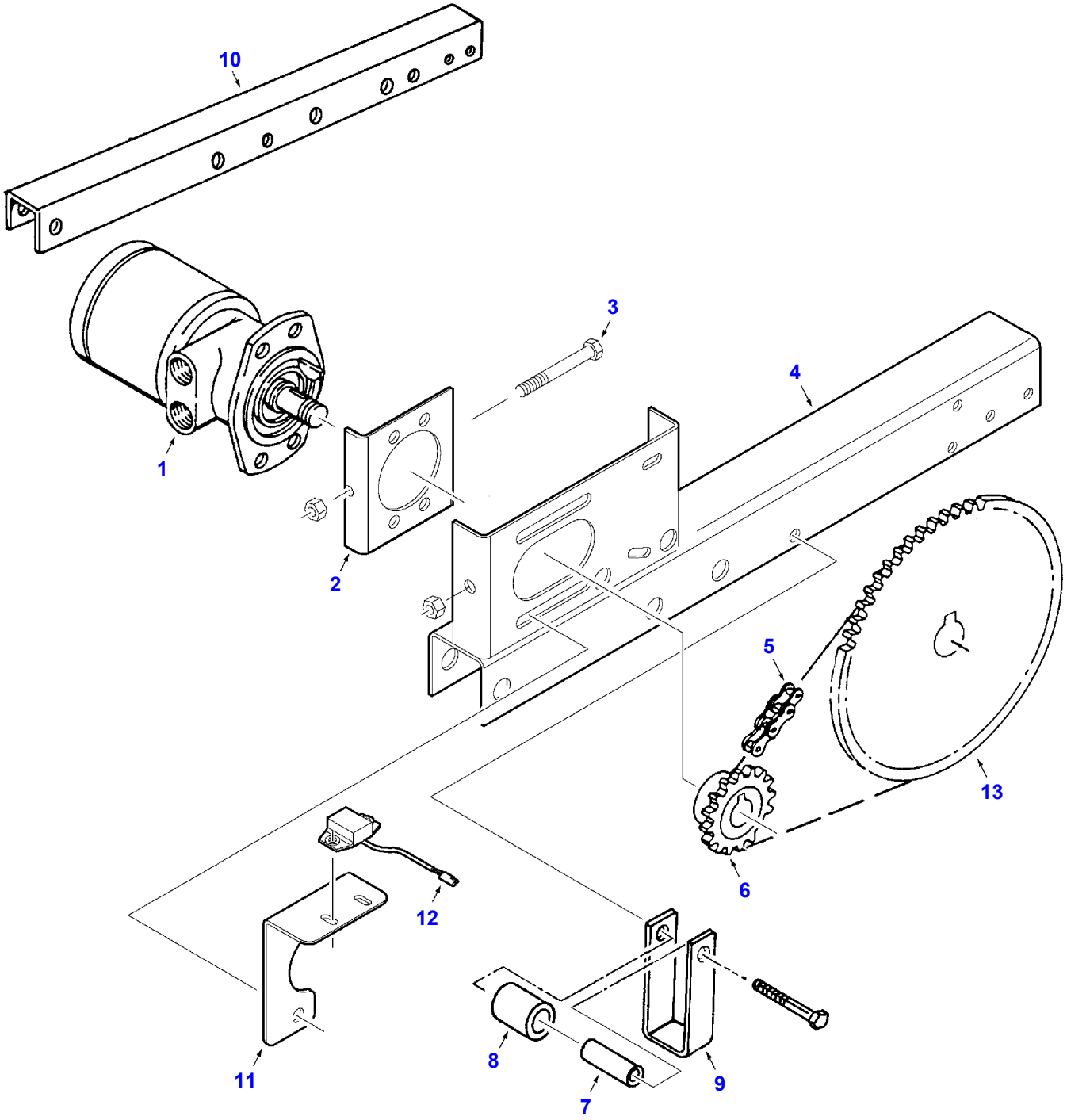

GGH0063

Item	Part Number	Qty	Description
1	71415523	1	MOTOR, HYDRO REEL (WHITE HYDRAULICS)
	71398130	AR	SEAL KIT (WHITE HYDS MOTOR) (INCL. ITEMS BELOW:)
		-	SEAL, DUST
		-	RING, SPLIT WIRE
		-	SHIM, METAL BACK-UP
		-	SEAL, HIGH PRESSURE
		-	SHIM, METAL BACK-UP
		-	SHIM, TEFLON BACKUP
		-	SEAL, SHAFT
		-	SEAL BODY
		-	CARRIER, SEAL
		-	WASHER, THRUST
	71359559	1	MOTOR, HYDRO REEL (EATON OR PARKER/ROSS)
	70919089	2	CAPSCREW, 1/2NC X 1-3/4
	70931187	2	NUT, FLANGED, 1/2NC
	70905126	1	KEY, WOODRUFF, NO. 15
2	71304625	1	BRACKET, REEL MOTOR ADJUSTMENT
3	70931643	1	BOLT, 3/8NC X 3
	70931211	2	NUT, 3/8NC
4	71373659	1	SUPPORT ASY., REEL MOTOR
	70922918	3	CAPSCREW, 3/8 X 3-1/4
	Y704635	1	NUT, LOCK 3/8
	70931211	2	NUT, 3/8
5	71149472	1	CHAIN ASY., #2050 (73 LINKS) (REMOVE 2 LINKS FOR RIGID HDR)
6	71389333	1	SPROCKET, 16T (WITH REEL SPEED SENSOR DISC WELDED-ON)
	70911255	2	SETSCREW, 1/2NC X 3/4
	70905126	1	KEY, WOODRUFF, NO. 15
7	71354276	2	SPACER
8	71354277	2	ROLLER
9	71365935	2	U-STRAP
	70920990	2	CAPSCREW, 1/2 X 3-1/2
	70922134	2	NUT, 1/2
10	71373658	1	SUPPORT, REEL, LH
	Y704635	2	NUT, LOCK 3/8
	70922918	2	CAPSCREW, 3/8 X 3-1/4
11	71389329	1	BRACKET, SENSOR
12	71391021	1	SENSOR
	700707343	2	CARRIAGE BOLT, 1/4-20 X 1/2
	1703354	2	NUT, HEX FLNG TOP LK, 1/4-20
13		AR	SPROCKET (NOTE: REFERENCE SPECIFIC FLEX & RIGID PICKUP/BAT REEL DRIVE SPROCKETS IN REEL SECTION)
	71397044	AR	KIT, REEL SPEED FOR 2002 AND PRIOR HEADERS ON 2003/LATER COMBINES (INCLUDE ITEMS 6,11,12 WITH WIRE HARNESS)

GGH0063
PR: t04d21j36a0029

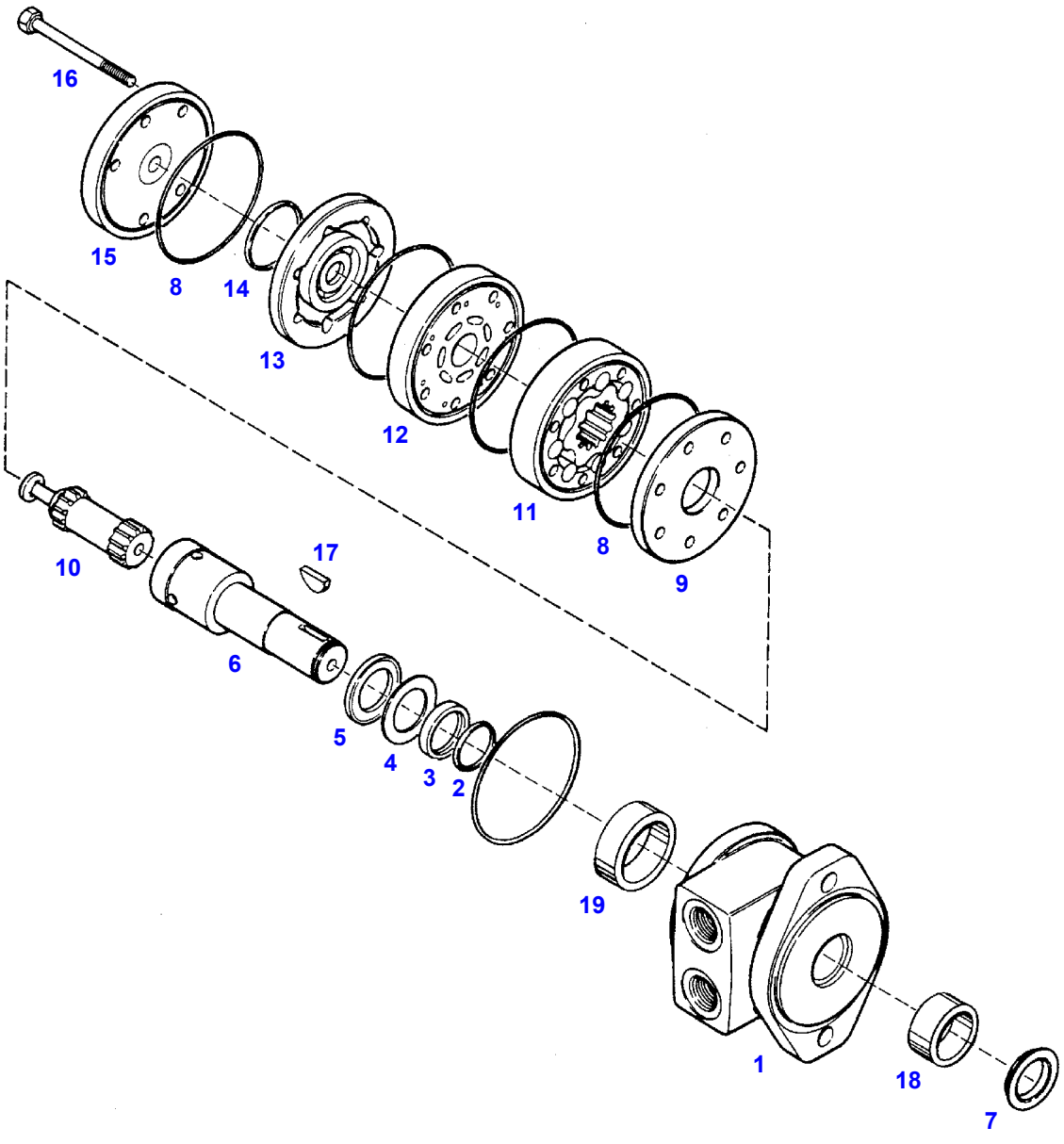

71359559

Item	Part Number	Qty	Description
	71359559	1	MOTOR ASY., (INCL. ITEMS 1-19)
1	71359560	1	HOUSING ASY., (INCL. ITEMS 18 & 19)
2	71359561	1	RING, BACK-UP
3	71339673	1	SEAL, CASE
4	71341640	1	WASHER, THRUST
5	71341644	1	BEARING, THRUST
6	71359562	1	SHAFT, COUPLING
7	71359563	1	SEAL
8	71359564	5	O-RING, 3.247 I.D. X .081 WIDE
9	71359565	1	PLATE, WEAR
10	71359566	1	LINK, DRIVE
11	71359567	1	ROTOR ASY.
12	71359568	1	MANIFOLD
13	71359569	1	COMMUTATOR ASY.
14	1042752M1	1	RING, SEAL
15	71359571	1	COVER, END
16	71359572	7	BOLT
17	70905126	1	KEY, WOODRUFF #15
18	71359602	1	BUSHING, SMALL, DRIVE END
19	71359601	1	BUSHING, LARGE
	71367527	AR	SEAL KIT (PARKER/ROSS) (INCL. ITEMS 2, 3, 7, 8 & 14)
	71371920	AR	SEAL KIT (EATON UNIT)
	71398130	AR	SEAL KIT (WHITE HYD. UNIT)

NOTE: (MOTOR ASY. COULD BE EITHER
PARKER/ROSS, EATON OR WHITE HYD.
ILLUSTRATED SERVICE PARTS
ARE FOR PARKER/ROSS UNIT ONLY!
NO SERVICE PARTS ARE AVAILABLE FOR
EATON & WHITE UNIT EXCEPT SEAL KIT)

71359559
PR: t04d21j36a0030

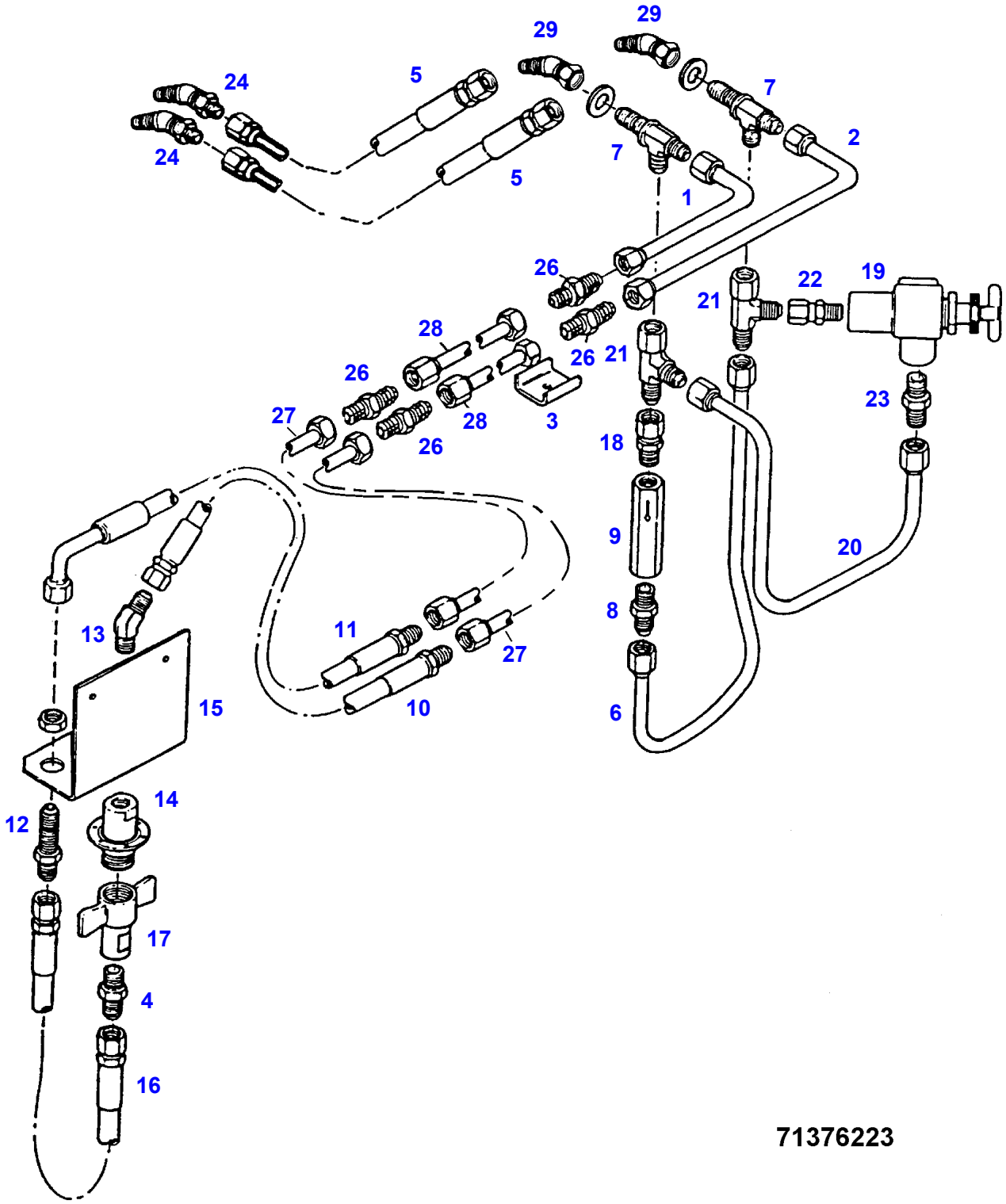
29
29
24
5
7
24
5
7
2
1
26
22
19
21
28
26
21
26
23
27
28
3
26
18
9
20
8
13
11
27
6
15
10
14
12
17
4
16
71376223

Item	Part Number	Qty	Description
1	71376198	1	TUBE ASY., RETURN (18')
	71376199	1	TUBE ASY., RETURN (20')
	71370574	1	TUBE ASY., RETURN (25 & 30')
2	71376194	1	TUBE ASY., PRESSURE (18')
	71376195	1	TUBE ASY., PRESSURE (20')
	71370573	1	TUBE ASY., PRESSURE (25' & 30')
3	71359026	AR	CLAMP, TUBE
	70922837	1	CAPSCREW, 1/4 X 1-1/2 (18' & 20')
	70931792	1	BOLT, 1/4-20 X 1-1/2 (25' & 30')
	70931209	1	NUT, FLANGED 1/4NC
4	70919472	1	CONNECTOR, STRAIGHT 1/2 NPT TO JIC
5	71358647	2	HOSE, REEL MOTOR
6	71358981	1	TUBE ASY.
7	70927247	2	TEE, BULKHEAD
	70918269	4	WASHER, 3/4 SAE
8	70919128	1	CONNECTOR
9	71358980	1	VALVE, CHECK
10	71358626	1	HOSE, PRESSURE
11	71358627	1	HOSE, RETURN
12	70927062	1	UNION, BULKHEAD
13	70921038	1	ELBOW 45 DEG
14	71365883	1	COUPLING, HYDRAULIC
	71365880	1	FLANGE, COUPLER
	70925160	6	RIVET, POP .188 X .527
15	71375789	1	PLATE, COUPLING
	70923341	2	CAPSCREW 1/4NC X 3/4
	70931209	2	NUT, FLANGED 1/4NC
16	71364835	1	HOSE, RETURN (70" LONG) [A]
17	71358564	1	COUPLER, FEMALE [A]
18	70937499	1	ADAPTER
19	71338550	1	VALVE, RELIEF, TORQUE LIMITER
	70923548	1	O-RING, STEM
	70921205	1	O-RING, BODY
20	71358984	1	TUBE, (W/TORQUE LIMITER)
21	70921298	2	TEE (W/TORQUE LIMITER)
22	70937499	1	CONNECTOR (W/TORQUE LIMITER)
23	70919128	1	CONNECTOR (W/TORQUE LIMITER)
24	70925943	2	CONNECTOR, HOSE TO MOTOR (INCL. O-RING)
	70921205	2	O-RING
26	70919066	AR	UNION
27	71380178	2	TUBE ASY., EXT., LH (2401MM)
28	71380181	2	TUBE ASY., EXTENSION (722MM LONG)(25')
	71380179	2	TUBE ASY., EXTENSION (1484MM LONG)(30')
29	70925018	2	FITTING, SWIVEL, 45 DEG.
30	70925094	1	TIE, PLASTIC (NOT ILLUSTRATED))
	71392029	AR	KIT, TORQUE LIMITER (INCL. ITEMS 19-23)

[A] SHOWN IN STORAGE POSITION

71376223
PR: t04d21j36a0031

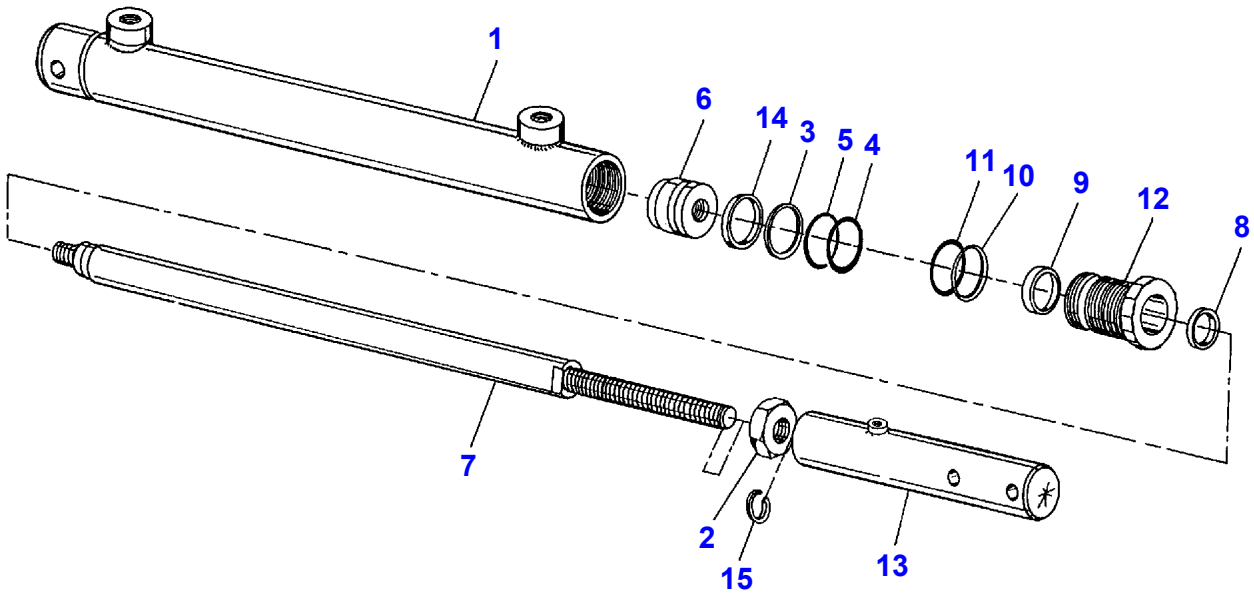

71353766

Item	Part Number	Qty	Description
	71353766	1	CYLINDER ASY., MASTER [A]
1	71370147	1	BARREL ASY.
2	70920439	1	NUT
3		-	RING, SLIPPER
4		-	O-RING
5		-	O-RING
6	71370143	1	PISTON
7	71370146	1	ROD, PISTON
8		-	SEAL, WIPER
9		-	SEAL
10		-	WASHER, BACKUP
11		-	O-RING
12	71370144	1	BEARING
13	71370145	1	END, ROD
14		-	RING, WEAR
15		-	RING, RETAINING
	71370137	1	SEAL KIT (INCL. ITEMS 3-5, 8-11 & 14-15)

[A] PART NUMBER STAMPED ON BARREL

71353766
PR: t04d21j36a0032

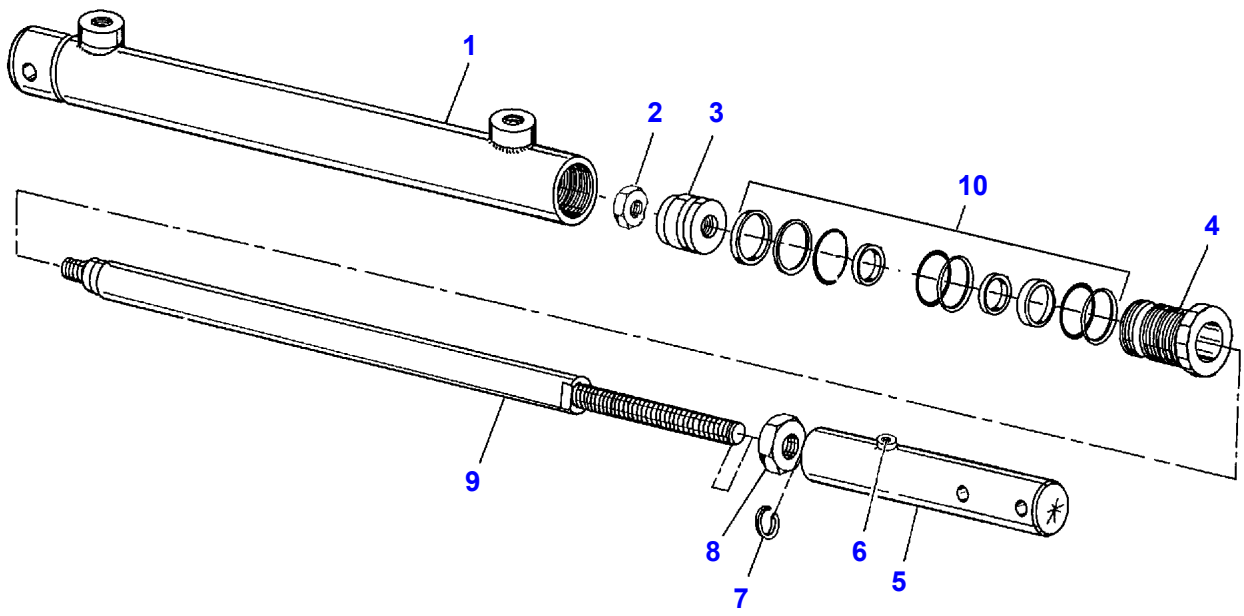

71415082

Item	Part Number	Qty	Description
	71415082	1	CYLINDER ASY., MASTER [A]
1	71417058	1	BARREL ASY.
2	71417056	1	NUT, LOCK, 9/16-18
3	71417057	1	PISTON
4	700714206	1	GUIDE
5	71417060	1	END, ROD
6	71417061	1	PLUG
7	71417062	1	RING, RETAINING
8	700707418	1	NUT, 7/8-14 UNF
9	71417059	1	ROD, PISTON
10	71417055	1	SEAL KIT

[A] 028671D STAMPED ON BARREL

71415082
PR: t06l06m55c0007

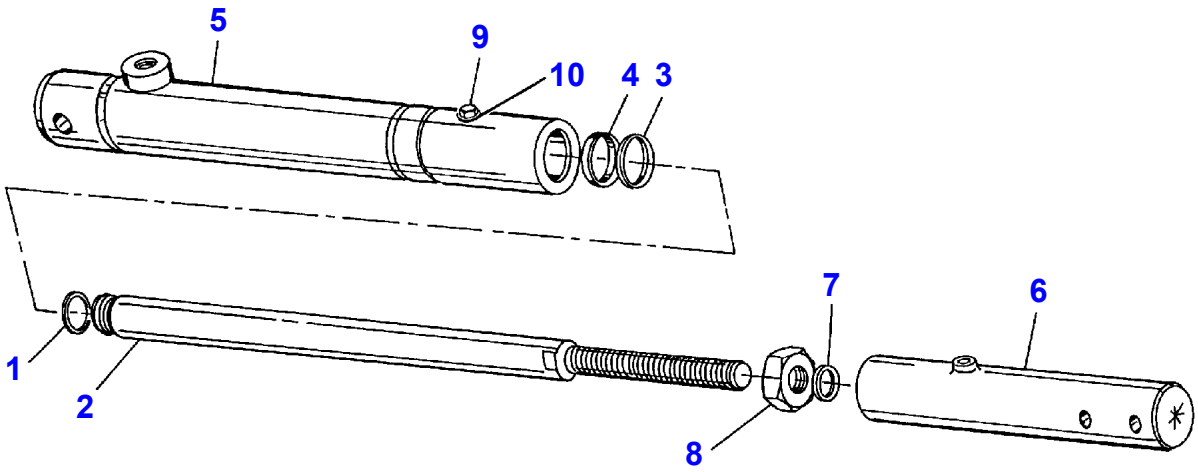

71353767

Item	Part Number	Qty	Description
	71353767	1	CYLINDER ASY., SLAVE [A][B]
	71415083	1	CYLINDER ASY., SLAVE [B]
1		-	RING, RETAINING
2	71370139	1	ROD, PISTON
3		-	SEAL, WIPER
4		-	SEAL
5	71370141	1	BARREL ASY.
6	71370145	1	END, ROD
7	71370142	1	RING, RETAINING
8	70920439	1	NUT
9		-	SCREW, BLEED
10	1020298M1	1	WASHER/SEAL
	836522M91	AR	SEAL KIT (INCL. ITEMS 1,3,4,7,9,& 10)

[A] PART NUMBER STAMPED ON BARREL
[B] CYLINDERS ARE IDENTICAL & USE SAME SERVICE PARTS

71353767
PR: t04d21j36a0033

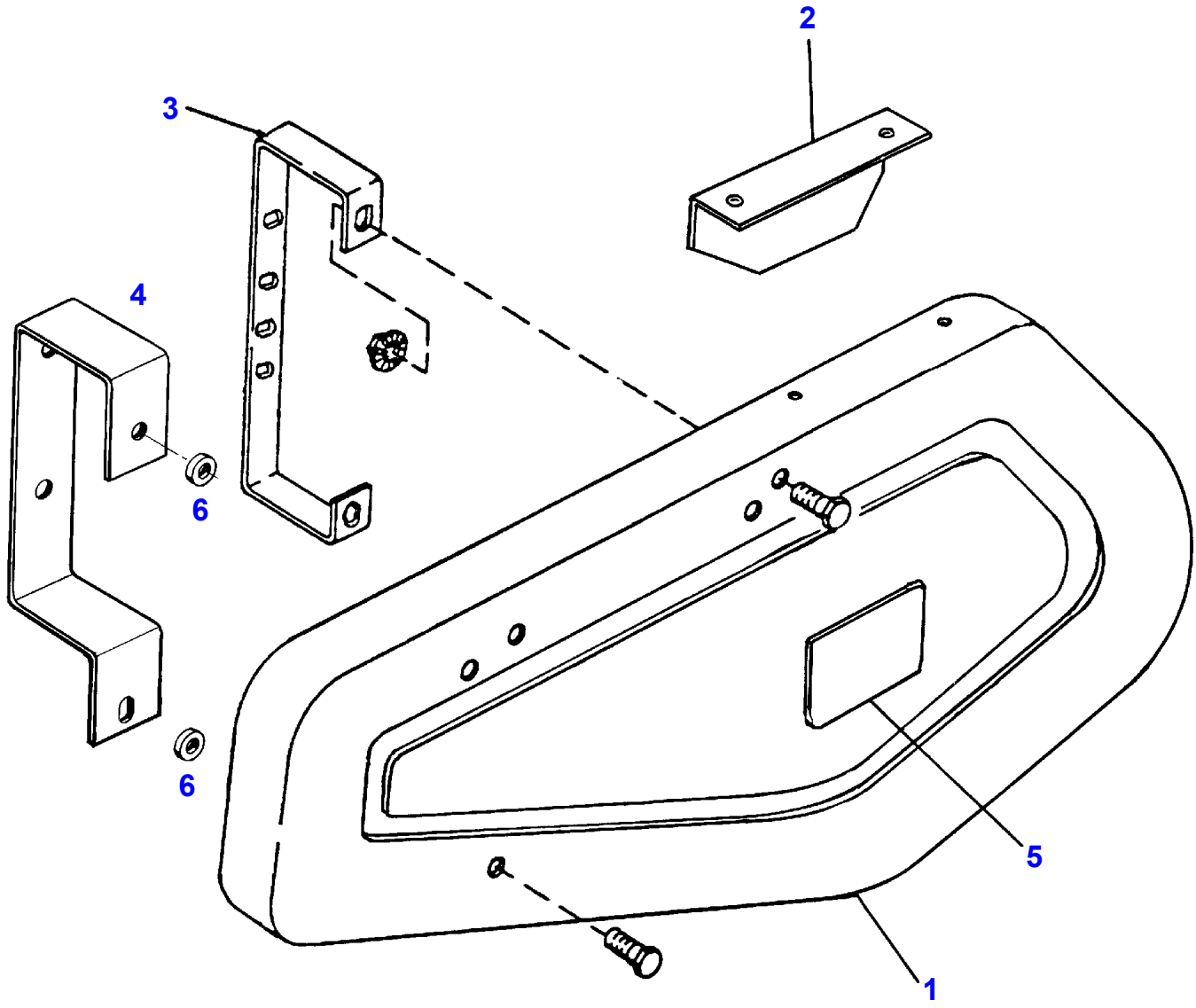

71354487.3
GGH0014

Item	Part Number	Qty	Description
1	71398521	1	SHIELD, REEL DRIVE (PLASTIC) (INCL. ITEMS 2 & 5)
	700717403	1	REFLECTOR, YELLOW
2	71370133	1	SHIELD, CHAIN
	70924280	2	RIVET, POP .188 X .40
3	71373656	1	BRACKET, FRONT
	7703432	6	CAPSCREW, 3/8 X 3/4, FLANGE HEAD
	70931211	6	NUT, 3/8 SERR. FLG.
4	71357529	1	BRACKET, REAR
	7771470	2	CAPSCREW, 3/8 X 1-1/4 FLANGE HEAD
	7703432	2	SCREW, 3/8 X 3/4
	70917378	2	WASHER, 3/8 USS
	70931211	2	NUT, 3/8 SERR. FLG.
5	700721848	1	DECAL, TRIPLE TRIANGLE LOGO
6	71312819	2	SPACER

GGH0014
PR: t04d21j36a0034

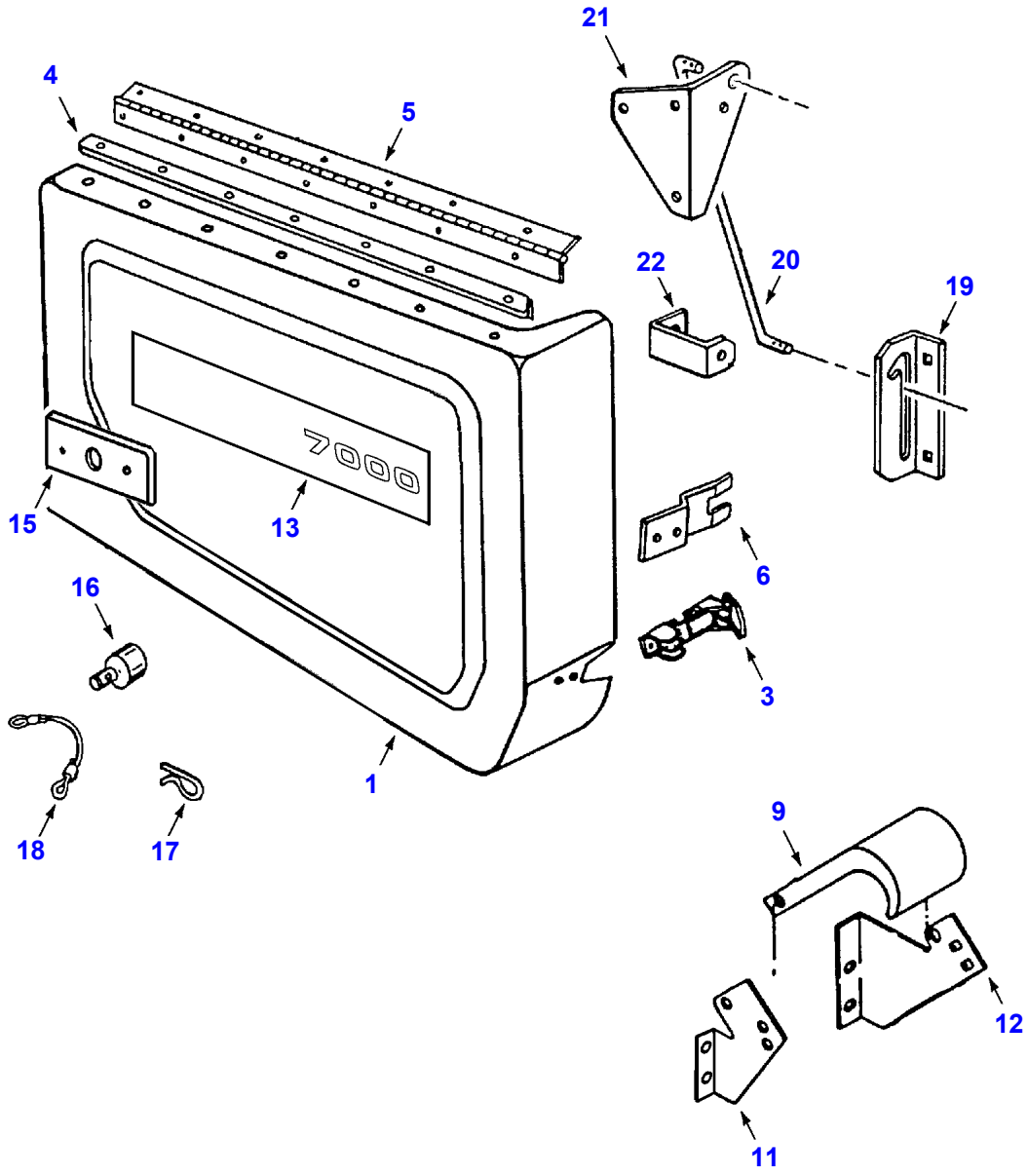

GGH0077

Item	Part Number	Qty	Description
1	71398524	1	SHIELD PLASTIC, LH
3	71348712	1	LATCH, T-HANDLE
	70925160	4	RIVET, .188 X .53
4	71368924	1	BRACKET
	70924280	AR	RIVET, BLIND, .188 X .402
	70417	7	CAPSCREW, 1/4-20 X 1/2
	70916964	7	WASHER, LOCK, 1/4
	70920435	7	NUT, 1/4
5	71361225	1	HINGE
6	71366973	1	RETAINER, LATCH
9	71329624	2	SHIELD, COUPLER
	70921332	4	CAPSCREW, 5/16-18 X 3/4
	70923362	4	NUT, LOCK, 5/16-18
11	71380106	2	SUPPORT, SHIELD, INNER
	70923683	2	SCREW, THRD. FORMING, 3/8-16 X 3/4
12	71320686	3	SUPPORT, SHIELD
	70923683	6	SCREW, THRD. FORMING, 3/8-16 X 3/4
	70918430	2	WASHER, PLATE, 1/2 X 1-1/4 X 14GA
13	700720985	AR	DECAL, HEADER (7000)
	700720986	AR	DECAL, HEADER (8000)
	71394558	AR	DECAL, LOGO, (MF)
15	71373666	2	PLATE, SHIELD, PLASTIC
	70925160	1	RIVET, .188 X .53
16	71387654	1	STOP, SHIELD (MALE)
	70918266	1	WASHER, PLATE, 3/8 SAE
	70931211	1	NUT, WHIZLOCK, 3/8-16
17	98-2107	1	PIN
18	71369629	1	CABLE
	70924283	1	RIVET, .188 X .652
19	71366961	1	GUIDE, PROP ROD
	70931348	2	BOLT, RH, SN, 3/8 X 3/4
	70931211	2	NUT, SER. FLG., 3/8
20	71367502	1	ROD, SHIELD PROP.
	70918266	4	WASHER, FLAT, 3/8 SAI
	70918452	4	PIN, COTTER, 1/8 X 1
21	71366963	1	ANCHOR, PROP ROD
	70918249	3	SCREW, TRUSS HEAD 5/16 X 3/4
	70917372	3	NUT, SER. FLG., 5/16
	70917356	3	WASHER, LOCK, 5/16
22	71367521	1	STIFFENER, SHIELD
	7703457	1	CAPSCREW, 1/4 X 3/4
	70916964	1	WASHER, LOCK 1/4
	70920435	1	NUT, 1/4
23	71372804	2	BRACKET, SHIELD STOP (USE W/ LAT. TILT) (NOT ILLUSTRATED)
	70931348	5	BOLT, CARRIAGE, 3/8-16UNC X 3/4
	70931211	5	NUT, HEX, 3/8-16UNC
	70916965	5	LOCKWASHER, 3/8

GGH0077
PR: t04d21j36a0035

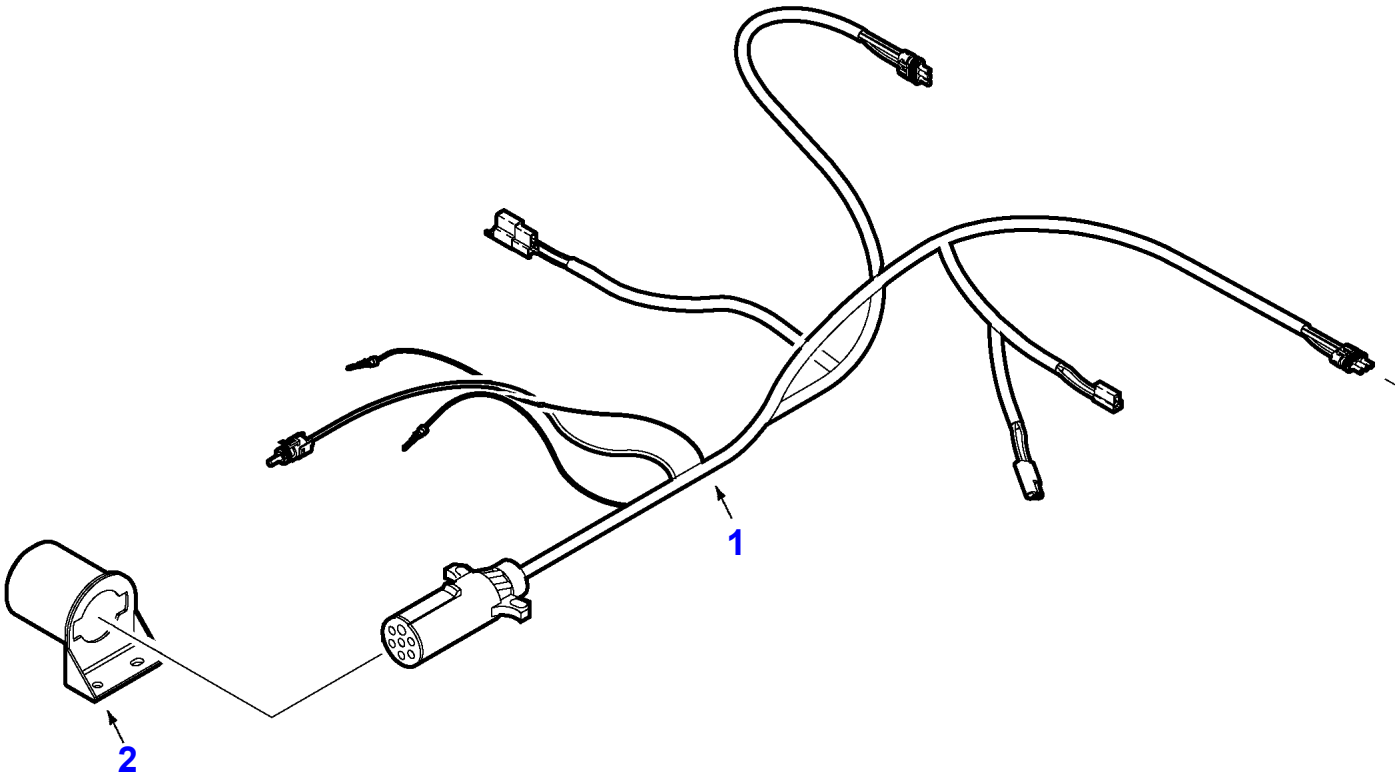

GGH0079

Item	Part Number	Qty	Description
1	71390302	1	HARNESS, HEADER MAIN WIRING (COMPLETE)
	71397680	AR	CONNECTOR PLUG, 13 PIN
	71397722	AR	TERMINAL
	700709175	AR	CONNECTOR
	700706401	AR	TERMINAL
	504738M1	AR	CONNECTOR
	700718579	AR	CONNECTOR
	700708760	AR	TERMINAL
	700706400	AR	SEAL
	70925094	AR	TIE, PLASTIC
	700707013	1	TOOL, CONNECTOR PIN REMOVAL
2	700706922	1	CAP, ELECTRICAL PLUG STORAGE
	71397293	AR	KIT, ELECTRICAL ADAPTER [A] (FOR 2003 & LATER HEADS ON 2002 & PRI. COMBINES)
	71396964	AR	KIT, ELECTRICAL ADAPTER [A] (2002 & PRI. HEADS ON 2003 & LATER COMBINES)

[A] REFERENCE HARNESS ADAPTER PAGE
FOR SERVICE PARTS BREAKDOWN.

GGH0079
PR: t04d21j36a0036

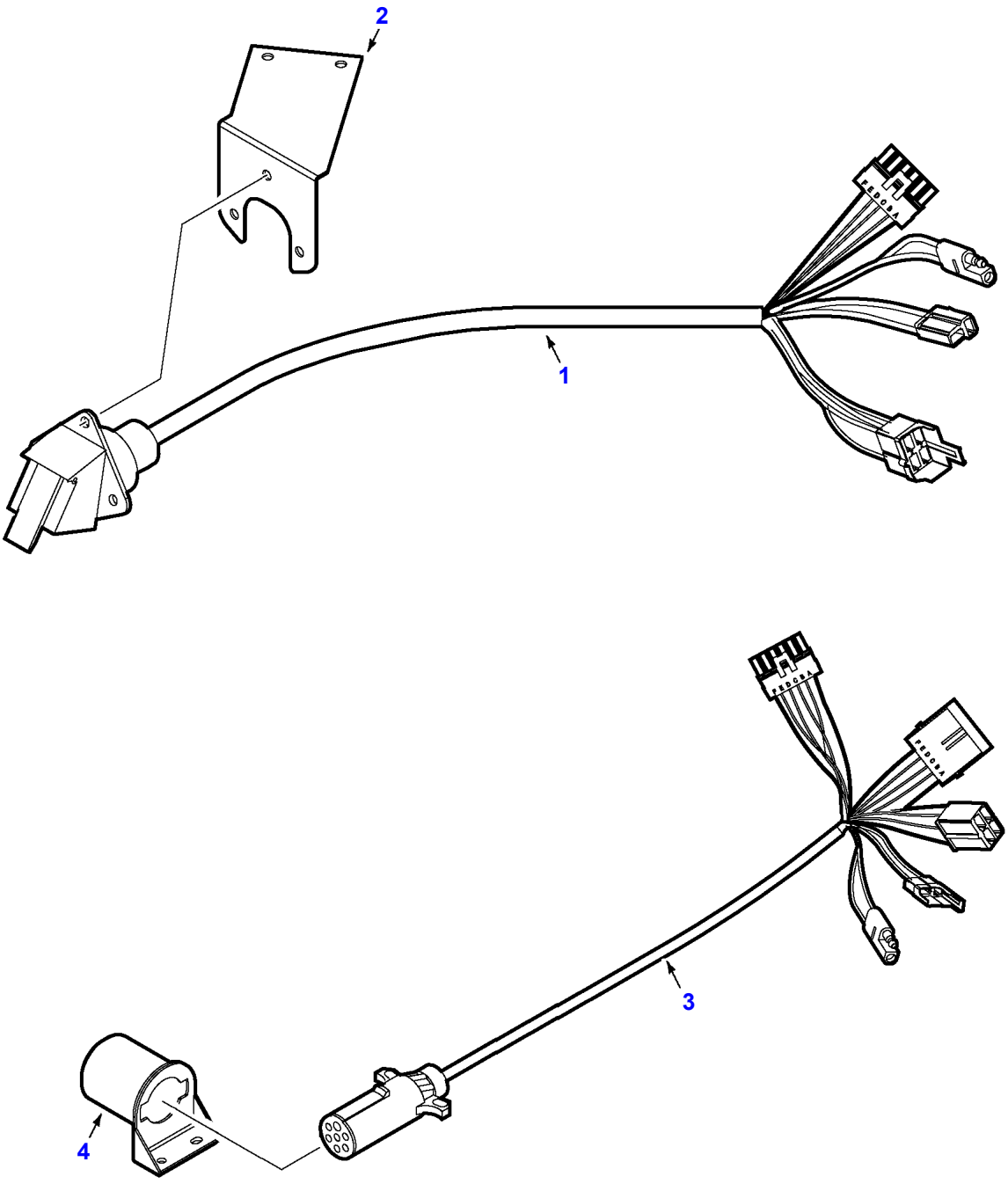

GGH0080

Item	Part Number	Qty	Description
	71397293	AR	KIT, ELECTRICAL ADAPTER (FOR 2003 & LATER HEADS ON 2002 & PRI. COMBINES) (INCLUDE ITEMS 1 & 2)
	71396964	AR	KIT, ELECTRICAL ADAPTER (FOR 2002 & PRI. HEADS ON 2003 & LATER COMBINES) (INCLUDE ITEMS 3 & 4)
1	71391725	1	HARNESS, ADAPTER (COMPLETE)
	71397687	AR	CONNECTOR, 13 PIN PLUG
	71397721	AR	BOOT, CONNECTOR
	71397722	AR	TERMINAL
	72516417	AR	CONNECTOR
	700708760	AR	TERMINAL
	700706400	AR	SEAL
	700708965	AR	PLUG
	504738M1	AR	CONNECTOR
	71339968	AR	TERMINAL
	70273984	AR	CONNECTOR
	71195398	AR	TERMINAL
2	71396959B	1	BRACKET, HEADER CONN. PRE 2003
	372729X1	2	SCREW, HEX WASH HD, 5/16-18 X 3/4
	70921332	3	CAPSCREW, 5/16-18 X 3/4
	70917356	3	LOCKWASHER, 5/16
	70917372	3	NUT, 5/16
3	71391708	1	HARNESS, ADAPTER (COMPLETE)
	71397680	AR	CONNECTOR PLUG, 13 PIN
	71397722	AR	TERMINAL
	72516418	AR	CONNECTOR
	700706401	AR	TERMINAL
	700706400	AR	SEAL
	700708965	AR	PLUG
	72516417	AR	CONNECTOR
	700708760	AR	TERMINAL
	71339968	AR	TERMINAL
	700707063	AR	CONNECTOR
	71339969	AR	TERMINAL
4	700706922	1	CAP, ELECTRICAL PLUG
	364941X1	2	CARRIAGE BOLT, 1/4-20 X 1/2
	70931209	2	NUT, HEX FLNG SER LOCK, 1/4-20

GGH0080
PR: t04d21j36a0037

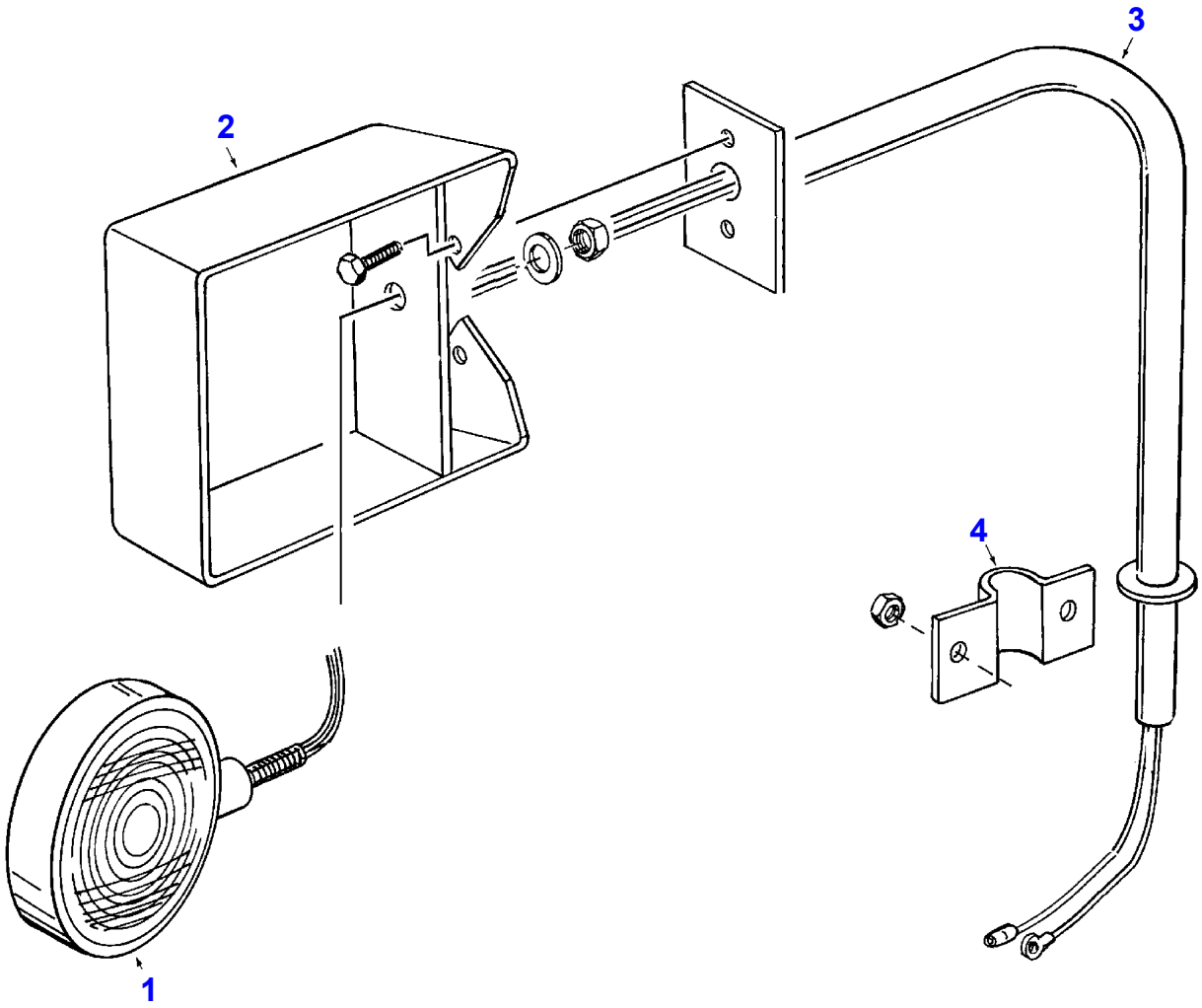

GGH0064

Item	Part Number	Qty	Description
1	71369914	2	LIGHT ASY. (INCL. LENS & BULB)
	71193862	4	LENS, AMBER
	1018729M1	2	BULB #1156
	71344765	4	TUBE, HEAT SHRINK
	70917378	2	WASHER, 3/8 USS
	70919312	2	WASHER, LOCK 3/8
	70923518	2	NUT, 3/8-16
	70937280	2	SCREW, SELF TAPPING, #8-32 X 3/4
	70917489	2	LOCKWASHER, #8
	704494	2	NUT, #8-32
2	71369911	2	BRACKET WLDMT., LIGHT
	70921210	4	CAPSCREW 3/8-16 X 1
	70931211	4	NUT 3/8-16 SER. FLG.
3	71369907	2	POST WLDMT, LIGHT
4	71369909	2	CLAMP, POST
	70921210	4	CAPSCREW, 3/8-16 X 1
	Y704635	4	NUT, LOCK 3/8-16

GGH0064
PR: t04d21j36a0038

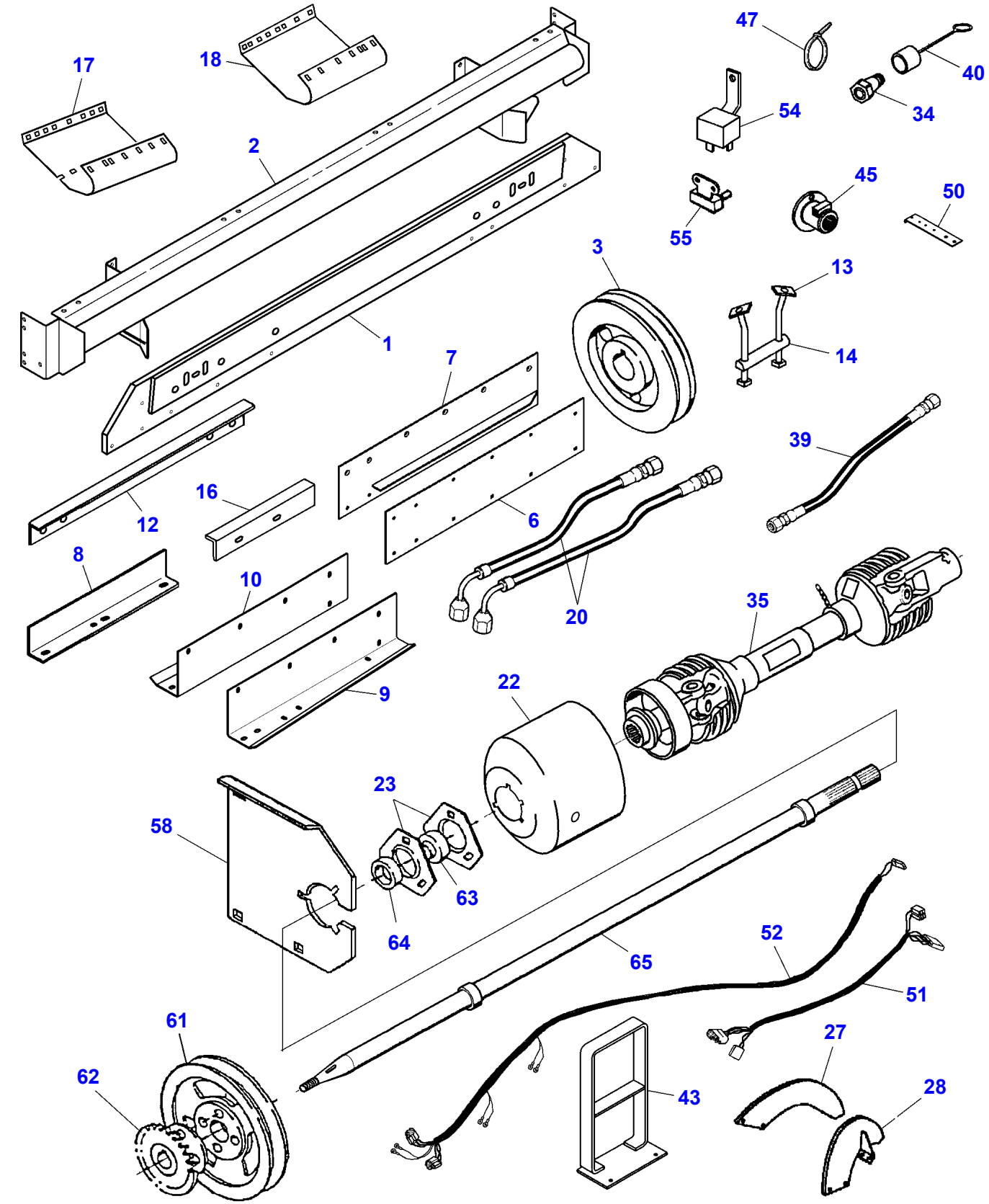
17
18
2
1
47
40
34
54
55
45
50
3
13
14
7
12
16
6
39
8
10
9
20
35
22
23
58
63
64
65
52
51
61
62
43
27
28

71377757

Item	Part Number	Qty	Description
	71377757	AR	KIT, MOUNTING
1	71374149	1	LOWER FRAME WLMT.
2	71377852	1	HANGER WLMT., ADAPTOR
3	71377763	1	SHEAVE, WOBBLE BOX, (8.740" O.D.)
6	71375353	1	POST WLMT., INNER, LH (LTM)
7	71375354	1	POST WLMT., INNER, RH (LTM)
8	71376070	2	ANGLE, RETARDER, REAR
9	71377290	1	FILLER, PANEL, RH FEED HOUSING
10	71377291	1	FILLER, PANEL, LH FEED HOUSING
12	71377299	2	ANGLE, FILLER ADJ.
13	2505410W1	4	TEE BOLT
14	2512590W2	2	PIVOT, TEE BOLT
16	71377296	2	RETARDER, FRONT, 7.87"
17	71375785	1	RETARDER EXT., RH WEAR
18	71377293	1	RETARDER EXT., LH WEAR
20	72509073	2	HOSE ASY., REEL DR. 1/2 X 33
	70923717	2	CONNECTOR, HYD., 5/8 TUBE X 3/4 ORB
22	71354266	1	SHIELD, PTO SHAFT
23	71192243	3	BEARING, FLANGETTE
27	71377774G	1	FLIGHTING EXT., RH (7'/4")
28	71377901G	1	FLIGHTING EXT., LH (7'/4")
34	700703886	3	COUPLER, HYD., QUICK 3/4 ORB
35	71377868	1	SHAFT ASY., PTO DRIVE
39	71369199	1	HOSE ASY., 1/4 ID X 34.5 LG
	70934923	1	REDUCER, 1/4 TUBE X 3/4 O-RING
40	3304008M1	3	CAP, DUST HYD. COUPLER
43	71377759	2	SHIELD WLMT., STEP
45	105447W91	1	COUPLER, FLANGED, PTO 1-1/4 HEX
47	70925094	20	TIE, PLASTIC 7.5"
50	71378109	1	BRACKET, SWITCH, RELAY MOUNT
51	71378110	1	HARNESS, ADAPTER EXT. LIGHTS
52	71378108	1	HARNESS, COMBINE REEL FORE/AFT
54	72160919	2	RELAY
55	70270902	1	BREAKER, CIRCUIT
58	71360772	1	SUPPORT, BEARING
61	71328453	1	SHEAVE, BELT (8.26" O.D.) (STD/FLEX)
	71358971	1	SHEAVE, BELT (7.68" O.D.) (CL-CUT/FLEX)
	71360877	1	SHEAVE,DRIVE SHAFT,(9.842" O.D.) (RIGID)
62	71314073	1	SPROCKET, HUB WLMT. 19T (FLEX)
63	K4037	1	BEARING (1-3/8" I.D.)
64	K3999	1	COLLAR
65	71378088	1	SHAFT, (18 FT. HEADER)
	71378087	1	SHAFT, (20 FT. HEADER)
	71378086	1	SHAFT, (25 FT. HEADER)
	71378085	1	SHAFT, (30 FT. HEADER)
		-	HARDWARE (SEE BELOW, NOT ILLUSTRATED)
	70928635	4	SCREW, SELF TH'DG 3/8 X 1-1/4
	70923353	4	NUT, LOCK 5/8
	71335690	10	SCREW, TORX HD 5/16 X 3/4
	70917378	3	WASHER, PLATE 3/8
	70921977	10	CAPSCREW, 5/16 X 1-1/4
	70918430	4	WASHER, PLATE 7/16
	70920415	8	CAPSCREW, 3/8 X 1-1/4
	70922787	2	BOLT, RHSN 3/8 X 1-1/2
	70931211	5	NUT, 3/8 SER. FLG.
	7772049	12	CAPSCREW, HFS 5/16 X 1.0
	70926917	3	CLAMP, WIRING SINGLE (REEL LIFT HOSE)
	70917356	10	LOCKWASHER, 5/16
	70916965	8	LOCKWASHER, 3/8
	70931333	6	BOLT, RHSN 5/16 X 3/4
	70931277	18	NUT, SER. FLG., 5/16
	70928681	4	BOLT, RHSN 5/16 X 1-1/4
	70917372	6	NUT, HEX 5/16
	2610260W1	3	OFFSET LINK, FEED CHAIN
	70930611	4	SCREW, TAPTITE #10-24 X 3/8
	70917415	2	NUT, #10-32
	70917365	2	LOCKWASHER #10
	70928630	2	SPLICE/TERMINAL
	70931348	2	BOLT, RHSN 3/8 X 3/4

Item	Part Number	Qty	Description
			71377757
			PR: t04d21j36a0041

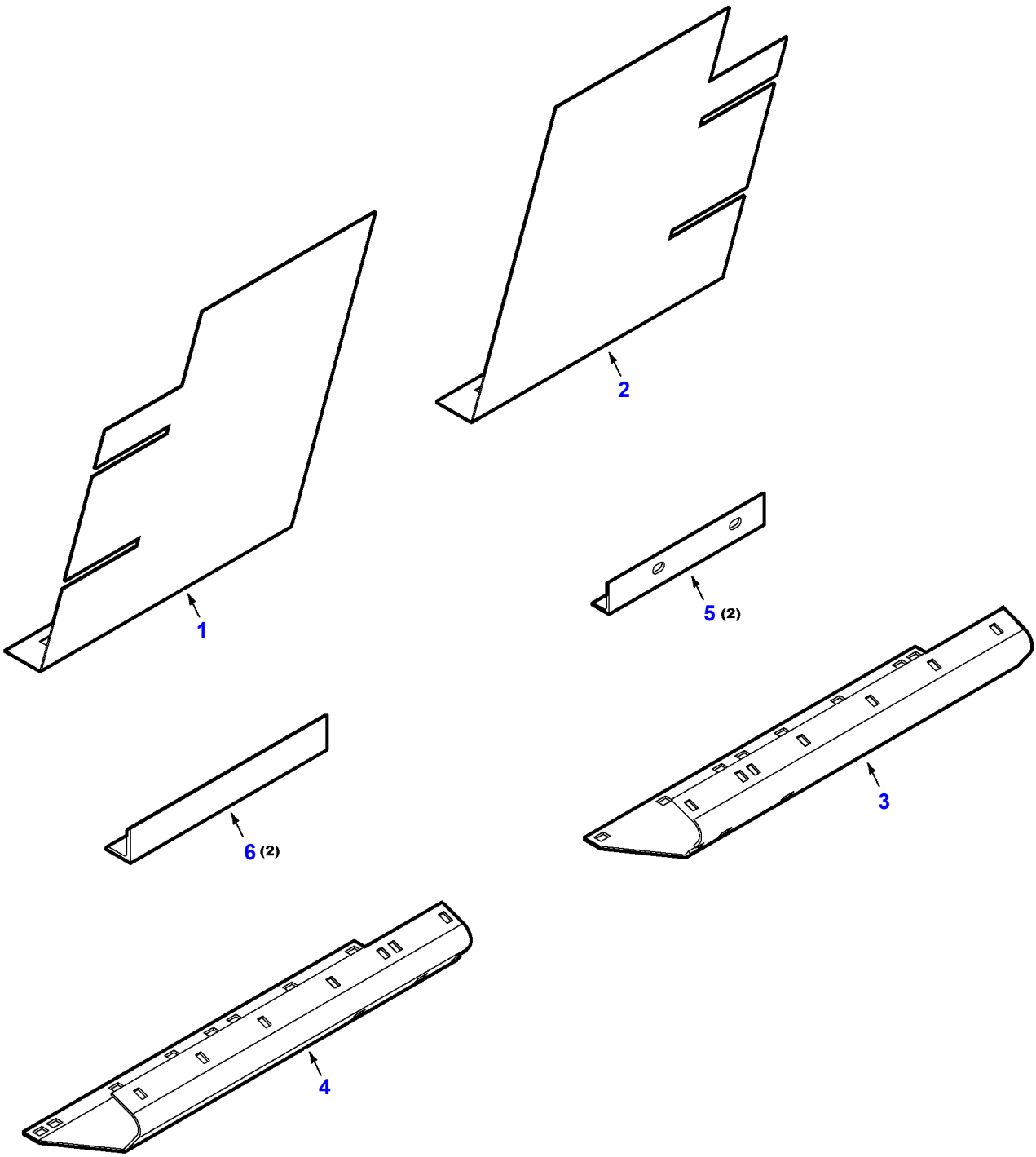

GGH0083

Item	Part Number	Qty	Description
1	71377295	1	FILLER PANEL, HOUSING (LH), 12-7/8" WIDE
2	71377294	1	FILLER PANEL, HOUSING (RH), 12-7/8" WIDE
3	71375785	1	WEAR PLATE (RH), 16-7/8" WIDE
4	71377293	1	WEAR PLATE (LH), 16-7/8" WIDE
5	71377296	2	ANGLE, EXTENSION FRONT, 7-7/8" WIDE
6	71376070	2	WEAR RETARDER, EXTENSION, 10" WIDE
		-	HARDWARE (SEE BELOW, NOT ILLUSTRATED)
	7700461	4	BOLT, RD HD SQ NK, 5/16-18 X 3/4
	70918265	4	WASHER, 5/16
	70931277	4	LOCKNUT, HEX FLNG SER, 5/16-18
	70931317	6	BOLT, RD HD SQ NK, 1/4-20 X 3/4
	70931209	4	LOCKNUT, HEX FLNG SER, 1/4-20
	71335690	10	SCREW, TORX 5/16 X 3/4
	71377297	AR	KIT, ADAPTER PACKAGE (FOR 9690 & 8780 S/N W55101 & UP COMBINES)

NOTE: REFERENCE THIS KIT WHEN CONVERTING GRAIN HEADER FROM 9790 COMBINE TO 9690 COMBINE

GGH0083
PR: t04d21j36a0042

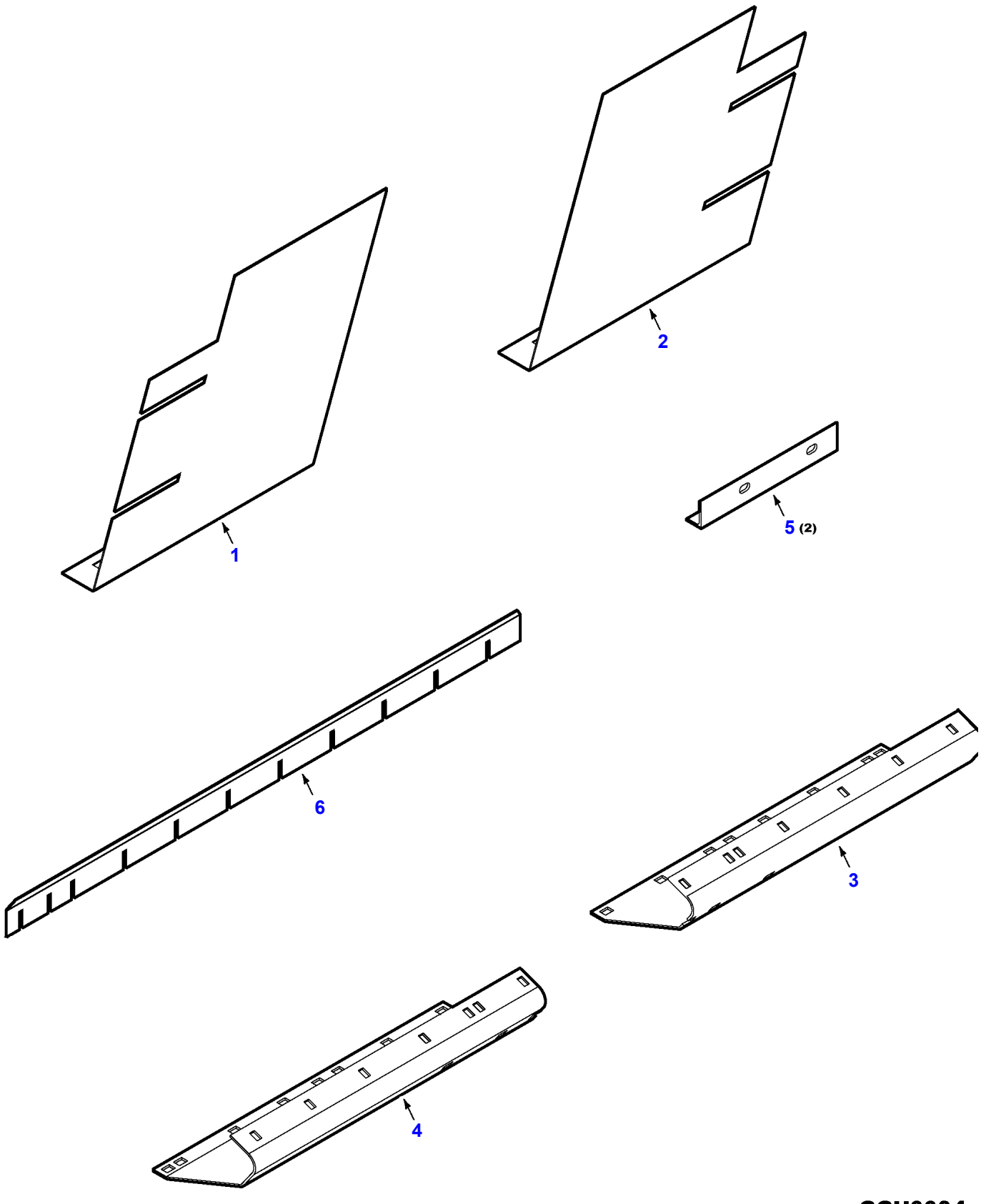

GGH0084

Item	Part Number	Qty	Description
1	71391287	1	FILLER PANEL, HOUSING (LH), 7-1/4" WIDE
2	71391288	1	FILLER PANEL, HOUSING (RH), 7-1/4" WIDE
3	71390650	1	WEAR PLATE (RH), 11" WIDE
4	71390649	1	WEAR PLATE (LH), 11-1/8" WIDE
5	71390959	2	ANGLE, EXTENSION REAR, 4-3/8"
6	71390642	1	STRIP SEAL, FDR HOUSING, 53-3/8" WIDE
		-	HARDWARE (SEE BELOW, NOT ILLUSTRATED)
	7700461	4	BOLT, RD HD SQ NK, 5/16-18 X 3/4
	70918265	4	WASHER, 5/16
	70931277	4	LOCKNUT, HEX FLNG SER, 5/16-18
	70931317	6	BOLT, RD HD SQ NK, 1/4-20 X 3/4
	70931209	4	LOCKNUT, HEX FLNG SER, 1/4-20
	71335690	10	SCREW, TORX 5/16 X 3/4
	71387017	AR	KIT, ADAPTER PACKAGE (FOR 9790 COMBINE)

NOTE: REFERENCE THIS KIT WHEN CONVERTING
GRAIN HEADER (S/N HM84101 TO HP84101)
FROM 9690 COMBINE TO 9790 COMBINE

GGH0084
PR: t04d21j36a0043

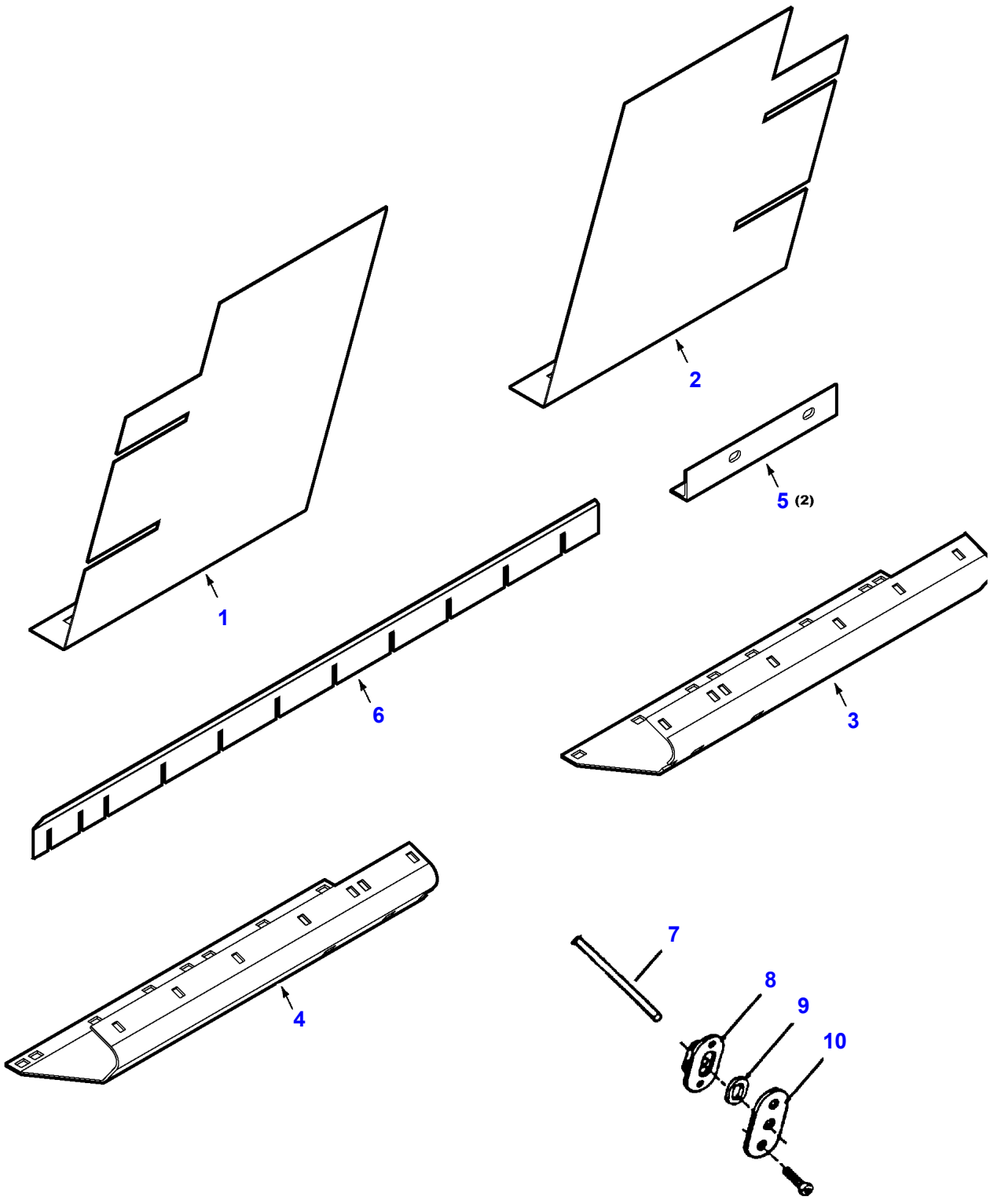

GGH0089

Item	Part Number	Qty	Description
1	71407238	1	FILLER PANEL, HOUSING (LH), 7-1/4" WIDE
2	71407239	1	FILLER PANEL, HOUSING (RH), 7-1/4" WIDE
3	71390650	1	WEAR PLATE (RH), 11" WIDE
4	71390649	1	WEAR PLATE (LH), 11-1/8" WIDE
5	71390959	2	ANGLE, EXTENSION REAR, 4-3/8"
6	71390642	1	STRIP SEAL, FDR HOUSING, 53-3/8" WIDE
7	71373376	4	FINGER
	70913160	4	NUT, 3/4-10
8	71320326	4	SUPPORT, FINGER GUIDE
9	71320323	4	GUIDE, FINGER
10	71320327	4	COVER, FINGER HOLE
		-	HARDWARE (SEE BELOW, NOT ILLUSTRATED)
	7700461	4	BOLT, RD HD SQ NK, 5/16-18 X 3/4
	70918265	4	WASHER, 5/16
	70931277	4	LOCKNUT, HEX FLNG SER, 5/16-18
	70931317	6	BOLT, RD HD SQ NK, 1/4-20 X 3/4
	70931209	6	LOCKNUT, HEX FLNG SER, 1/4-20
	71335690	18	SCREW, TORX 5/16 X 3/4
	71406175	AR	KIT, ADAPTER PACKAGE (FOR 9790 COMBINE) (ORDER THRU DEALER CENTRAL)

NOTE: REFERENCE THIS KIT WHEN CONVERTING
GRAIN HEADER (EFFECTIVE S/N HM84101)
FROM 9690 COMBINE TO 9790 COMBINE

GGH0089
PR: t05b03i51b0003

FEATHER SHEET ORIENTATION

(RAISED)

L.H.								R.H.
	30'	4	1	1	1	1	1	4
	25'	4	2	2	2	4		
	20'	3	1	1	1	3		
	18'	4	1	1	4			

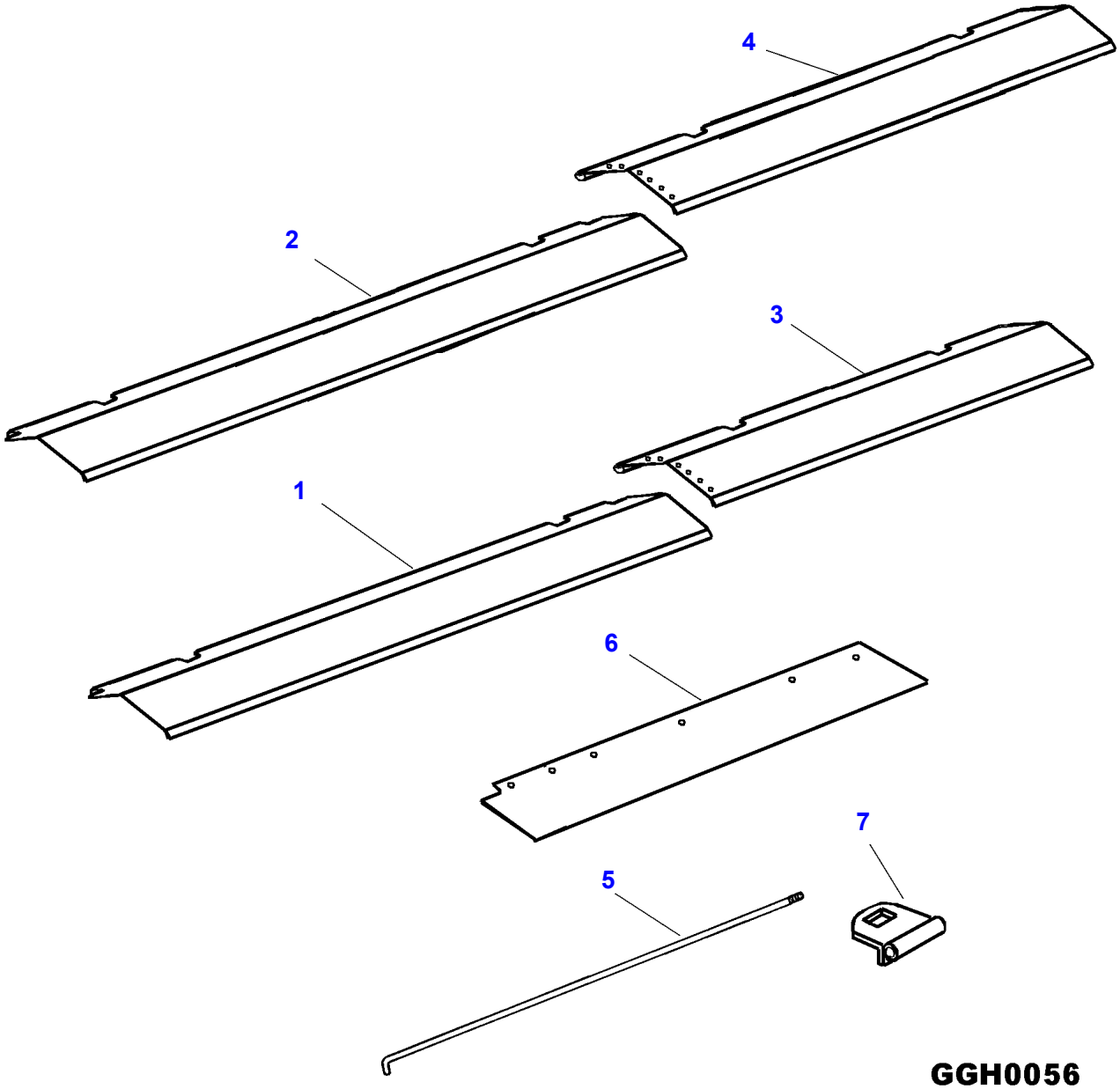

GGH0056

Item	Part Number	Qty	Description
1	71386776	AR	SHEET, FEATHER, (INTERMEDIATE-4') (QTY= 2 FOR 18',3 FOR 20',5 FOR 30')
2	71386777	AR	SHEET, FEATHER, (INTERMEDIATE-5') (QTY= 3 FOR 25')
3	71386778	AR	SHEET, FEATHER, (OUTER-LH/4') (QTY= 1 FOR 20')
	71386779	AR	SHEET, FEATHER, (OUTER-RH/4') (QTY= 1 FOR 20')
4	71386780	AR	SHEET, FEATHER, (OUTER-LH/5') (QTY= 1 FOR 18', 25' & 30')
	71386781	AR	SHEET, FEATHER, (OUTER-RH/5') (QTY= 1 FOR 18', 25' & 30')
5	71387496	AR	ROD, HINGE, (INTERMEDIATE-4')(47.68") (QTY= 2 FOR 18',3 FOR 20',5 FOR 30')
	71387498	AR	ROD, HINGE, (INTERMEDIATE-5')(59.69") (QTY= 3 FOR 25')
	71387495	AR	ROD, HINGE, (OUTER-4')(44.02") (QTY= 2 FOR 20')
	71387497	AR	ROD, HINGE, (OUTER-5')(56.02") (QTY= 2 FOR 18', 25' & 30')
	70923358	AR	NUT, LOCK, 1/4-20
6	71386782	2	SEAL, RUBBER
	70924280	12	RIVET, .188 X .402
	70917380	12	WASHER, FLAT, #10
7	71387491	AR	CLIP, (FEATHER-SHEET) (QTY= 8 FOR 18',10 FOR 20', 8 FOR 25',14 FOR 30')
	70918266	AR	WASHER, FLAT, 3/8
	Y705624	AR	WASHER, FLAT, 1/2
	71341521	AR	WASHER, SPACER, .406 X 1.18 X .250
	70922869	AR	BOLT, CARRIAGE, RHSN, 3/8-16 X 1-3/4
	71392053	AR	KIT, RAISED FEATHER SHEETS (18')
	71392054	AR	KIT, RAISED FEATHER SHEETS (20')
	71392055	AR	KIT, RAISED FEATHER SHEETS (25')
	71392058	AR	KIT, RAISED FEATHER SHEETS (30')

GGH0056
PR: t04d21j36a0044

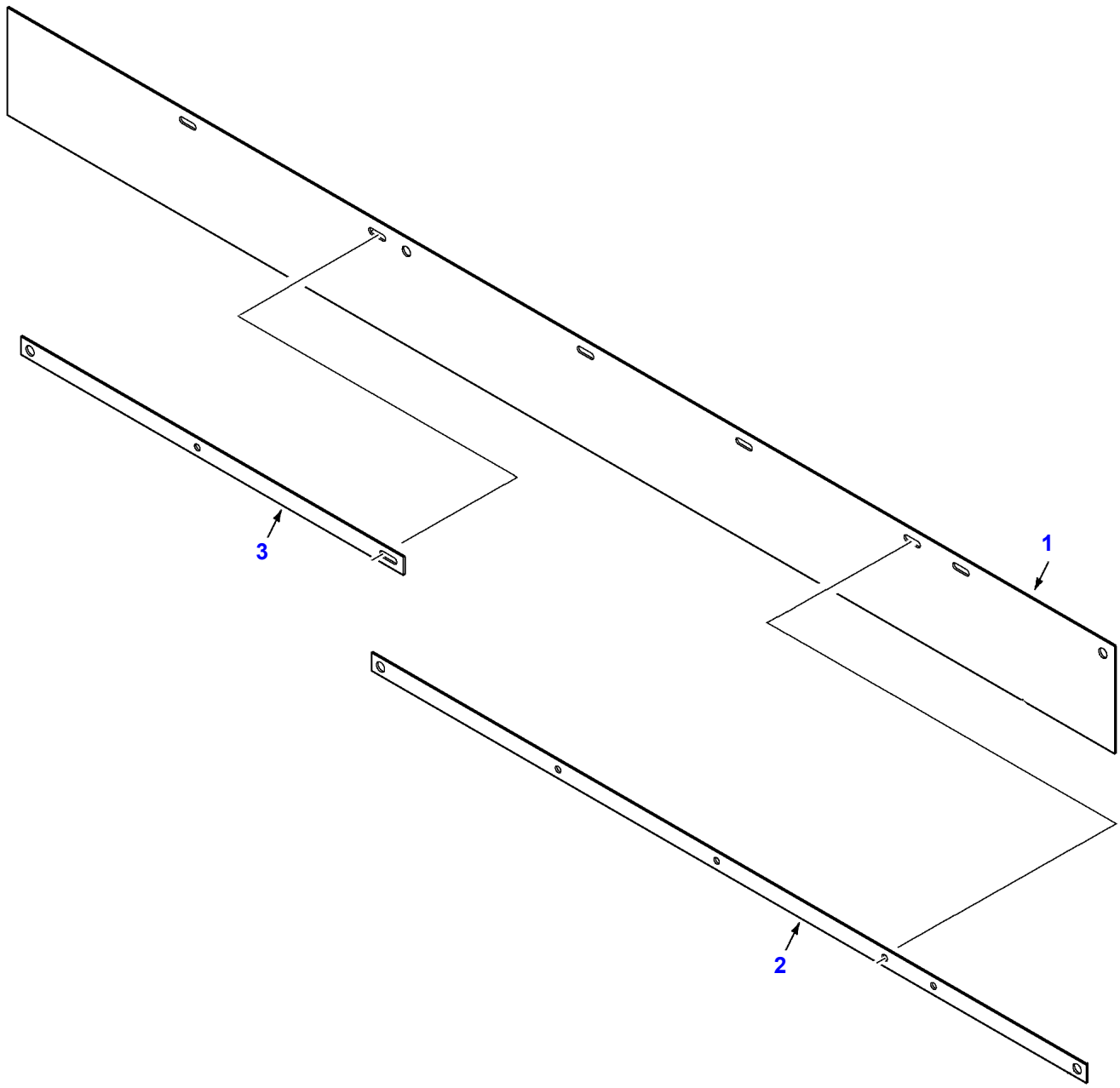

GGH0082

Item	Part Number	Qty	Description
	71392068	AR	KIT, RUBBER CURTAIN (REDUCE DUST/DEBRIS) (ORDER THRU DEALER CENTRAL)
1	71386848	1	CURTAIN, RUBBER
2	71386849	1	STRAP, CURTAIN, 44-1/4"
	71335690	5	SCREW, SELF TAP, 5/16 X 3/4 TORX
	70931277	5	NUT, SER. FLG., 5/16
	70935275	1	CAPSCREW, HEX-SOCKET, 5/16-18 X 1.0
3	71386850	1	STRAP, CURTAIN, 24-1/2"
	71335690	2	SCREW, SELF TAP, 5/16 X 3/4 TORX
	70931277	2	NUT, SER. FLG., 5/16
	70935275	1	CAPSCREW, HEX-SOCKET, 5/16-18 X 1.0

GGH0082
PR: t04d21j36a0045

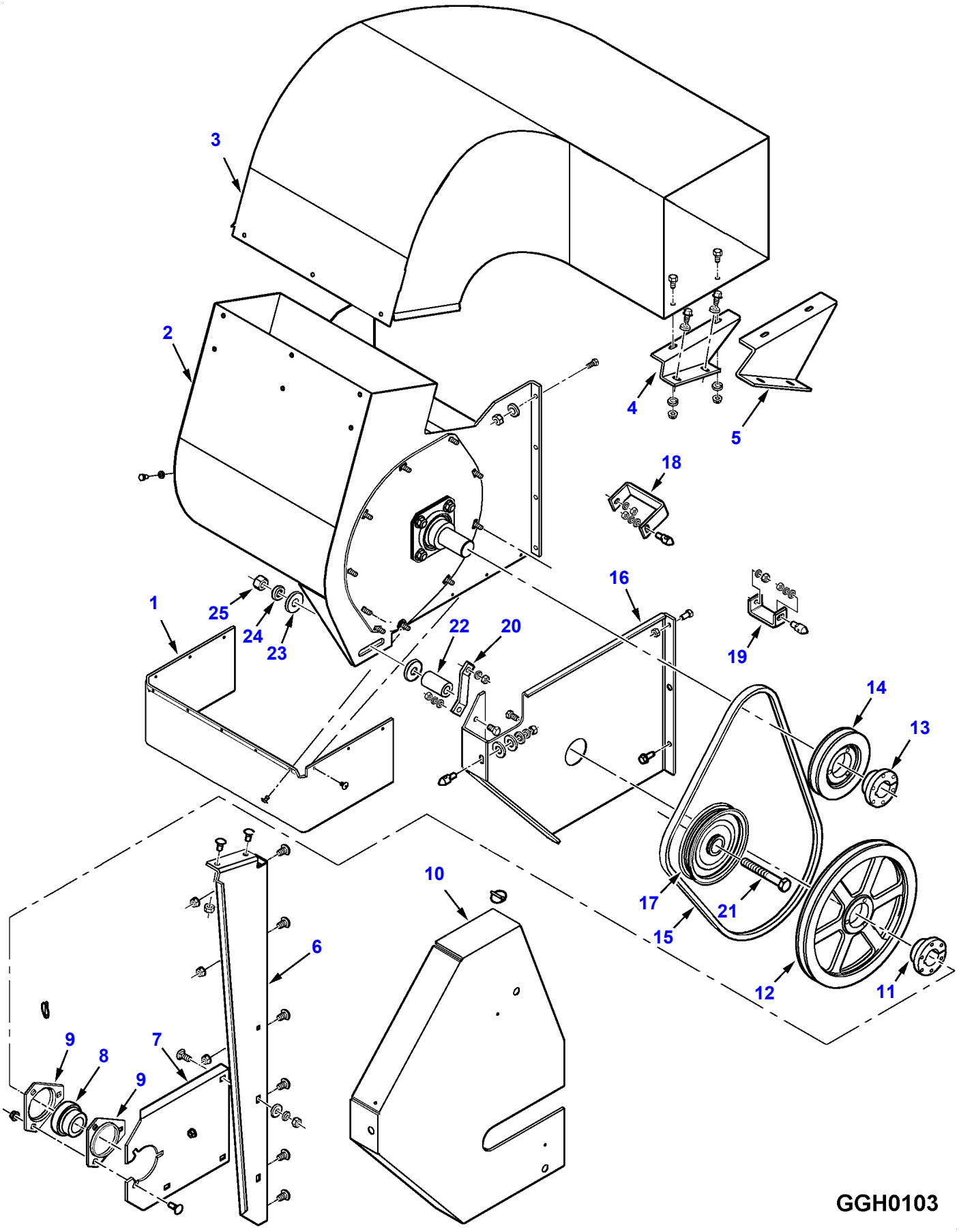
3
2
4
5
18
1
25
24
23
22
20
16
19
14
13
17
21
15
12
11
10
6
9
8
7
9
GGH0103

Item	Part Number	Qty	Description
1	71405905	1	CURTAIN, INLET
	70937253	11	RIVET, POP, .188 X .625
2	71405886	1	HOUSING ASY., FAN (NOT SERVICED) (SEE BREAKDOWN FOR COMPONENTS)
	70921332	8	CAPSCREW, FULL THRD, 5/16-18 X 3/4
	70917356	8	LOCKWASHER, 5/16
	Y704015	8	NUT, 5/16-18
	70920787	3	CAPSCREW, FULL THRD, 5/16-18 X 1/2
	70917356	3	LOCKWASHER, 5/16
3	71405887	1	DUCT, DISCHARGE
	701953	2	SCREW, HX WASH HD TAP, 5/16-18 X 3/4
	Y705525	2	WASHER, 5/16
	70931277	2	NUT, HEX FLNG LK, 5/16-18
4	71405903	1	SUPPORT, DUCT
	701953	2	SCREW, HX WASH HD TAP, 5/16-18 X 3/4
	Y705525	2	WASHER, 5/16
5	71408813	1	SUPPORT
6	71380114	1	POST, INTERMEDIATE
	7770456	6	CARRIAGE BOLT, FUL THRD,3/8-16 X 3/4
	704247	6	NUT, HEX FLNG LK, 3/8-16
	Y702951	2	SCREW, HX WASH HD TAP, 3/8-16 X 3/4
7	71360772	1	SUPPORT, BEARING
	70922786	2	CARRIAGE BOLT, 3/8-16 X 1
	70917378	2	WASHER, WIDE, 3/8
	70916965	2	LOCKWASHER, 3/8
	704247	2	NUT, HEX FLNG LK, 3/8-16
8	71309128	1	BEARING, W/LOCK COLLAR
	K3999	1	COLLAR, LOCK
9	71192243	2	FLANGE, 72MM
	70922786	3	CARRIAGE BOLT, 3/8-16 X 1
	704247	3	NUT, HEX FLNG LK, 3/8-16
10	71405899	1	SHIELD, DUST COVER
	1656110W2	3	PIN, SHIELD LOCK
	863415	3	PIN, KLIK, 3/16 X 1
	70918266	2	WASHER, 3/8
	70916965	3	LOCKWASHER, 3/8
	70916950	3	NUT, 3/8-16
	70918268	2	WASHER, 5/8
	70917378	1	WASHER, WIDE, 3/8
11	71405894	1	HUB, 1-3/8
12	71405892	1	SHEAVE, DRIVEN, DIA. 12-3/4"
13	71405893	1	HUB, 1-1/2
14	71406538	1	SHEAVE, DRIVEN, DIA. 6"
15	71405896	1	BELT, B62-50
16	71405906	1	SHIELD, DRIVE
	70927187	1	SCREW, SELF TAP, 3/8-16 X 1
	70921332	3	CAPSCREW, FULL THRD, 5/16-18 X 3/4
	70917356	3	LOCKWASHER, 5/16
	Y704015	3	NUT, 5/16-18
	70921965	1	CAPSCREW, FULL THRD, 3/8-16 X 3/4
	70916965	1	LOCKWASHER, 3/8
	70916950	1	NUT, 3/8-16
17	2447080W1	1	IDLER
18	71405901	1	BRACKET, SHIELD
	70917356	2	LOCKWASHER, 5/16
	Y704015	2	NUT, 5/16-18
19	71405902	1	BRACKET, SHIELD
20	71406526	1	BRACKET, Z
21	70926165	1	CAPSCREW, 5/8-11 X 4-1/2
22	71405898	1	SPACER, IDLER
23	70918432	2	WASHER, WIDE, 5/8
24	70917373	1	LOCKWASHER, 5/8
25	70932665	1	NUT, 5/8-11
	71407118	AR	KIT, DUST DIVERTER [A]

[A] ORDER THRU DEALER CENTRAL

GGH0103
PR: t06l06m55c0008

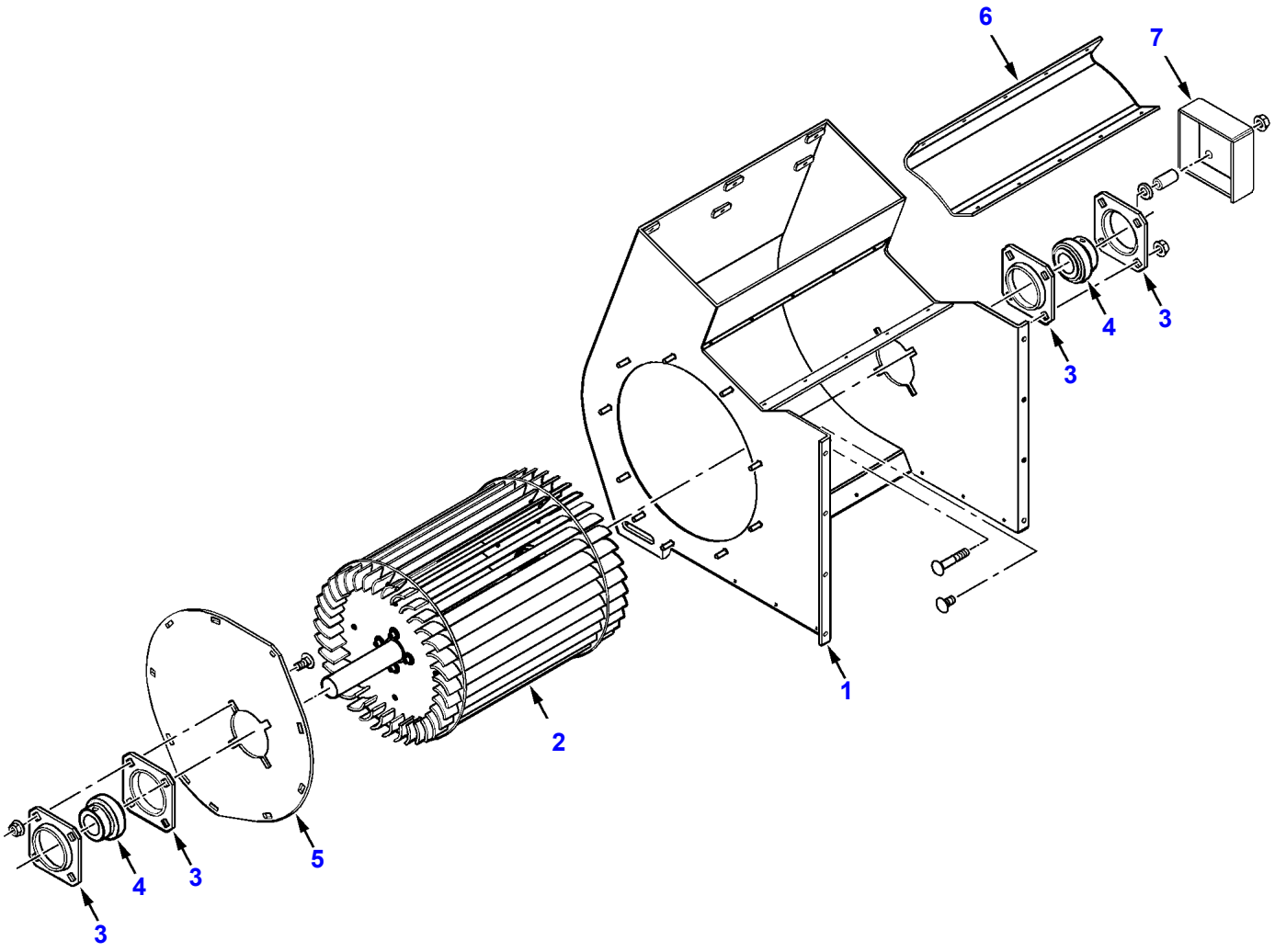

GGH0104

Item	Part Number	Qty	Description
1	71405881	1	HOUSING, TRANSVERSE FAN
2	71412138	1	FAN ASY., 13" X 18"
	71405877	1	SHAFT
	71412133	36	BLADE, FAN
	71398412	3	RING, RETAINING
	71400491	1	HEAD ASY., LH
	Y704015	2	NUT, 5/16-18
	70917356	2	LOCKWASHER, 5/16
	Y705608	2	WASHER, 5/16
	70922127	2	CAPSCREW, 5/16-18 X 1-3/4
	70937470	4	PIN, HUCK
	70937471	4	COLLAR, HUCK PIN
	71400492	1	HEAD ASY., RH
	Y704015	2	NUT, 5/16-18
	70917356	2	LOCKWASHER, 5/16
	Y705608	2	WASHER, 5/16
	70922127	2	CAPSCREW, 5/16-18 X 1-3/4
	70937470	4	PIN, HUCK
	70937471	4	COLLAR, HUCK PIN
3	17789	4	FLANGE, SQUARE
	70928367	6	CARRIAGE BOLT, 1/2-13 X 1
	70931811	2	CARRIAGE BOLT, 1/2-13 X 2-3/4
	705541	2	WASHER, 1/2
	71371297	2	SPACER, 3/4 OD X 1-17/32"
	704254	8	NUT, HEX FLNG LK, 1/2-13
4	71122510	2	BEARING, 1-1/2
5	71399470	1	PLATE, FAN HOUSING
	70917642	8	WASHER, WIDE, 5/16
	Y705020	8	LOCKWASHER, 5/16
	Y704015	8	NUT, 5/16-18
6	71405882	1	PLATE, CUTOFF
	700717635	10	RIVET, POP
7	71408816	1	COVER, BEARING

GGH0104
PR: t06l06m55c0009

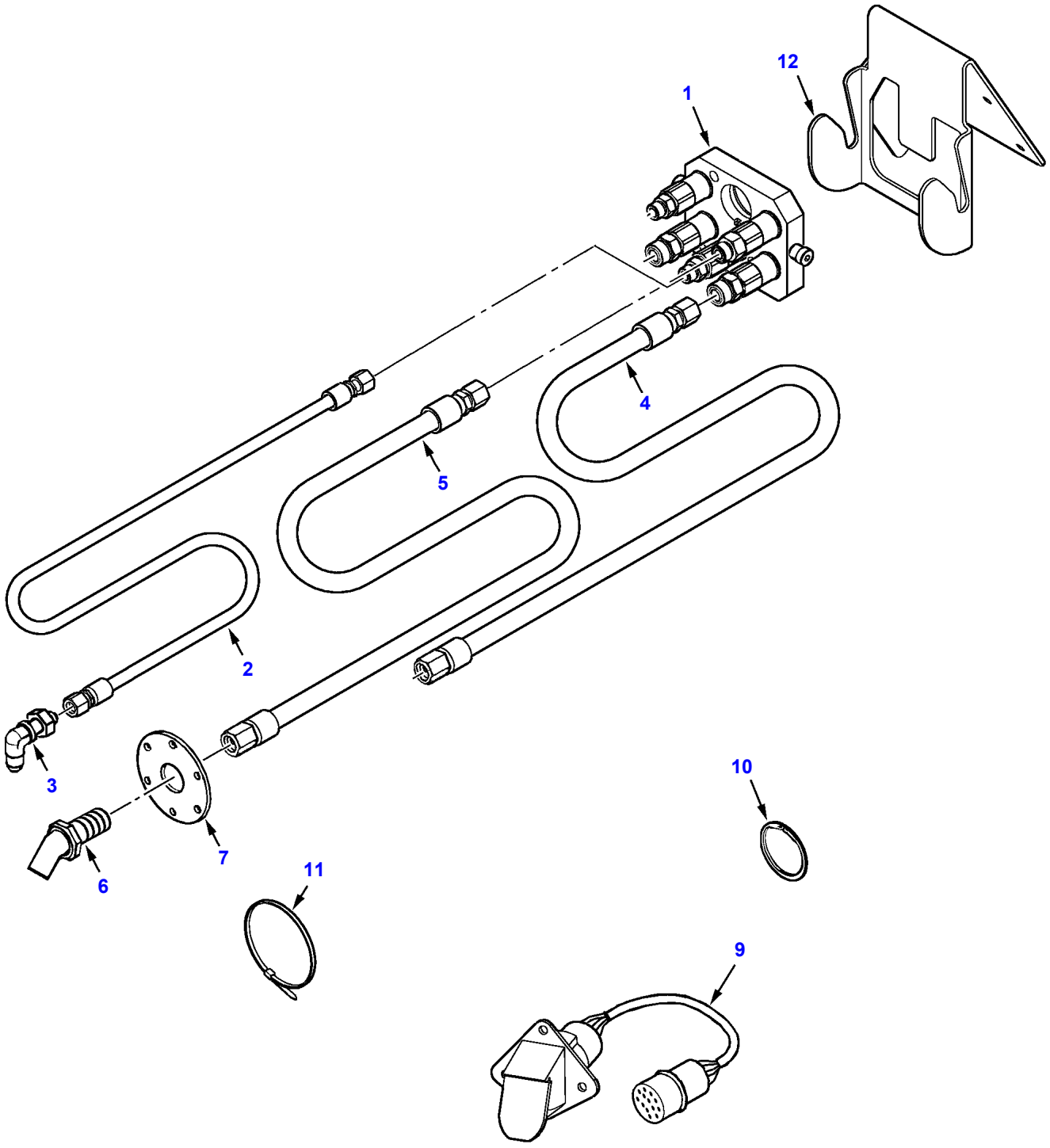

GGH0105

Item	Part Number	Qty	Description
	71411589	AR	KIT, SINGLE POINT HOOK-UP [A]
1	71412110	1	COUPLER ASY. (NOT SERVICED) (SEE BREAKDOWN FOR COMPONENTS)
2	700727632	1	HOSE, REEL LIFT
3	70928917	1	ELBOW, BULKHEAD
4	700727631	1	HOSE, REEL DRIVE, RETURN
5	700727630	1	HOSE, REEL DRIVE, PRESSURE
6	70927245	1	BULKHEAD, 3/4 JIC 45 DEG
7	700727624	1	ADAPTER, BULKHEAD
	70925160	6	RIVET, POP, 1/8
9	71410920	1	HARNESS, JUMPER (OLD HDR TO NEW COMBINE)
10	71410557	1	RING, SNAP, EXTERNAL
11	3619622M1	2	TIE, CABLE
12	71412032	1	SUPPORT, MULTI COUPLER

[A] ORDER THRU DEALER CENTRAL

GGH0105
PR: t06l06m55c0010

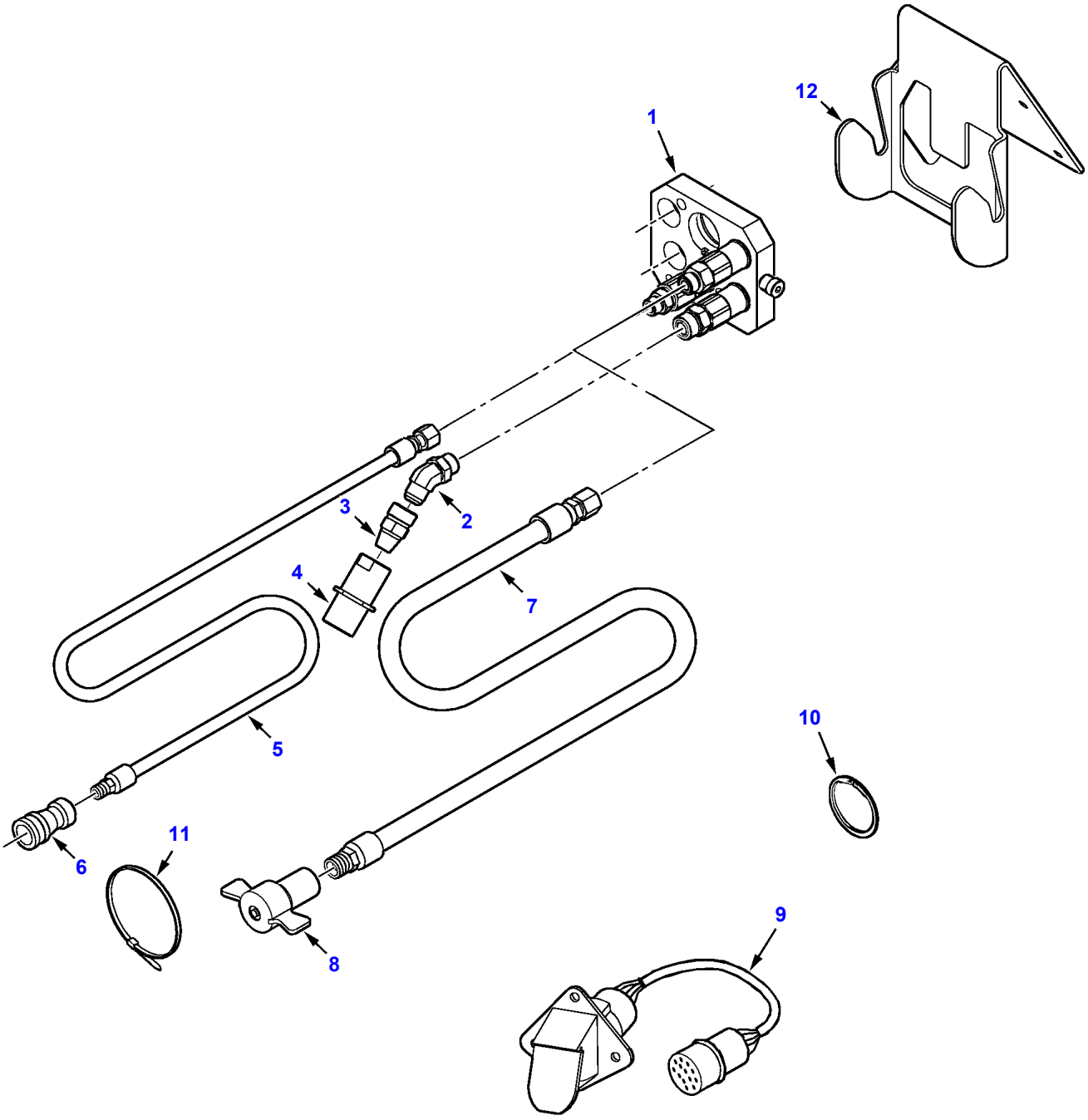

GGH0106

Item	Part Number	Qty	Description
	71411591	AR	KIT, SINGLE POINT HOOK-UP [A]
1	71412110	1	COUPLER ASY. (NOT SERVICED) (SEE BREAKDOWN FOR COMPONENTS)
2	70921328	1	FITTING, 7/8 JIC X 7/8 ORB
	70921205	1	O-RING, .097 X .755 ID
3	70937498	1	ADAPTER, 7/8 JIC FM TO 1/2 NPTF
4	71365883	1	COUPLER, HYD
5	700728242	1	HOSE, REEL LIFT
6	71328362	1	COUPLER, HALF
7	700727633	1	HOSE, REEL DRIVE, PRESSURE
8	71358564	1	COUPLER, HYD
9	71410920	1	HARNESS, JUMPER (OLD HDR TO NEW COMBINE)
10	71410557	1	RING, SNAP, EXTERNAL
11	3619622M1	2	TIE, CABLE
12	71412032	1	SUPPORT, MULTI COUPLER

[A] ORDER THRU DEALER CENTRAL

GGH0106
PR: t06l06m55c0011

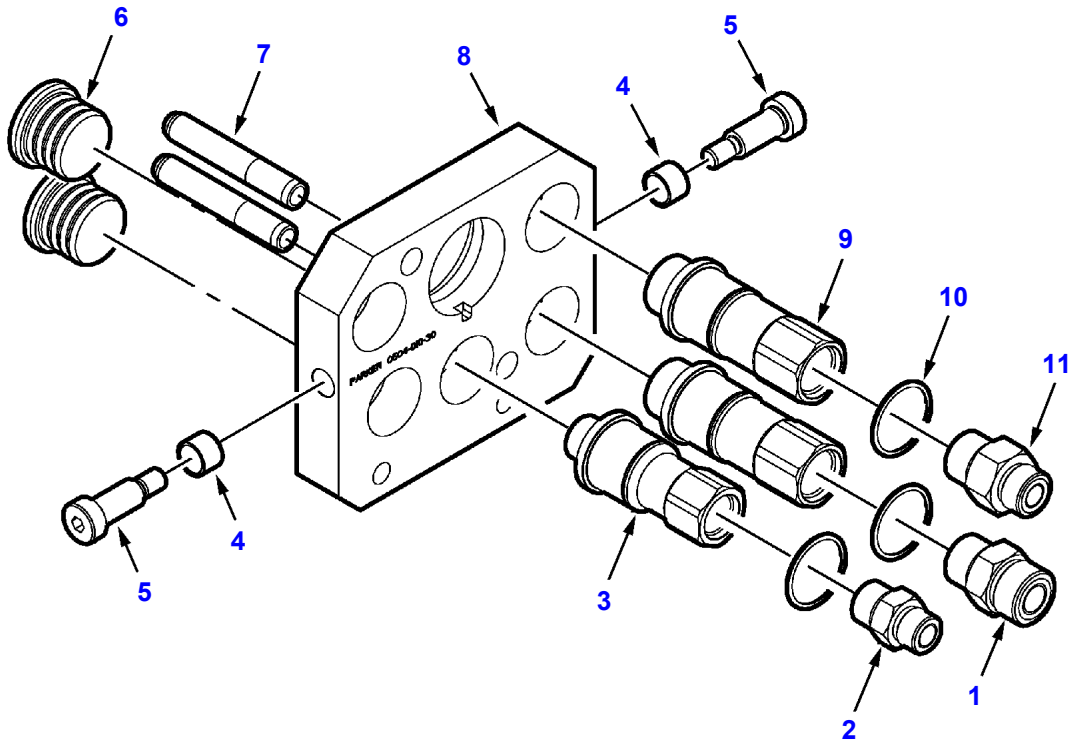

GGH0107

Item	Part Number	Qty	Description
1	71411295	1	FITTING, 1 OFS X 7/8 ORB
	70921205	1	O-RING, .097 X .755 ID
	70930357	1	O-RING, .070 X .614 ID
2	71411842	1	FITTING, HYD, 11/16 OFS X 3/4 ORB
	70921349	1	O-RING, .087 X .644 ID
	70924048	1	O-RING, .070 X .364 ID
3	71412273	1	COUPLER, 3/8
	71412802	1	KIT, SEAL
4	71412272	2	BUSHING
5	71411846	2	SCREW
6	71412275	2	PLUG, COUPLER
7	71412270	2	PIN, GUIDE
8	71412271	1	PLATE, COUPLER
9	71412274	2	COUPLER, 1/2
	71412803	1	KIT, SEAL
10	71412801	3	RING, RETAINING
11	71411843	1	FITTING, HYD, 13/16 OFS X 7/8 ORB
	70921205	1	O-RING, .097 X .755 ID
	70923841	1	O-RING, .070 X .489 ID

GGH0107
PR: t06l06m55c0012

RECOMMENDED DEALER STOCK

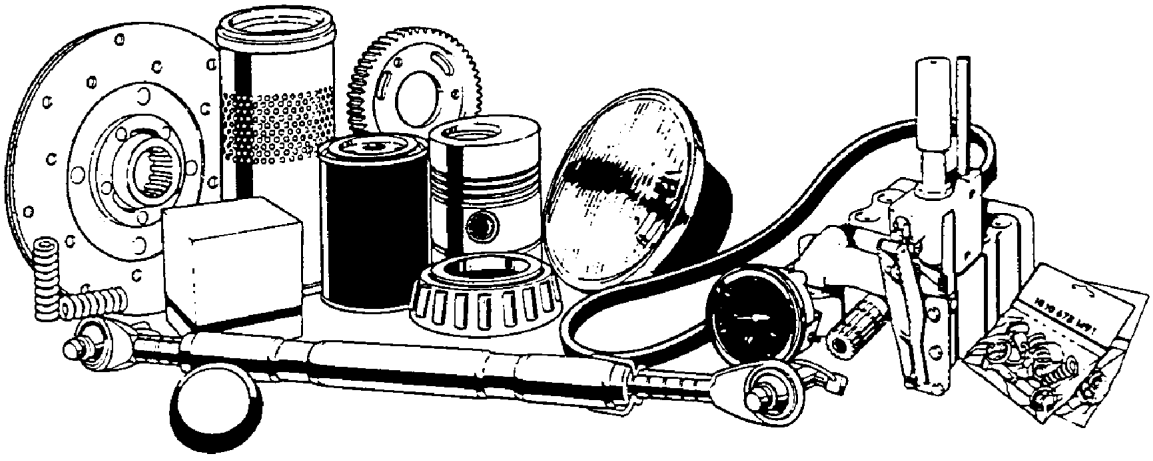

Part Number	Qty	Description
71368703	2	BEARING, ECCENTRIC, (FEMALE)
71368704	2	BEARING, ECCENTRIC, (MALE)
71336974	2	BEARING, HOUSING
71176156	5	BEARING, PLASTIC (AUGER FINGER RETAINER)
71367256	12	BEARING, REEL
71309128	1	BEARING (CONVEYOR/DUST DIVERTER)
71308984	1	BEARING (CONVEYOR SHAFT)
71122510	1	BEARING (DUST DIVERTER FAN)
K4037	1	BEARING (MAIN DRIVE SHAFT)
71322827	1	BUSHING (STABILIZER ASY)
71340350	2	BUSHING (TILT ARM STABILIZER)
71333775	1	BEARING (WOBBLE BOX)
71349955	1	BEARING (WOBBLE BOX)
71405896	1	BELT (DUST DIVERTER)
71322834	2	BELT, SICKLE DRIVE (FLEX)
71322828	2	BELT, SICKLE DRIVE (RIGID)
71386952	25	BOLT, M6 X 16 (SKL SECTION)(PKG QTY)
71386951	5	BOLT, M6 X 18 (SKL HEAD)
71386925	5	BOLT, M6 X 28 (SKL HEAD)
700705297	25	BOLT, SICKLE HEAD, #12-24 X 1
700715170	50	BOLT, SICKLE SECTION, #12-24 X 3/4
700705296	50	BOLT, SICKLE SECTION, #12-24 X 5/8
1018729M1	2	BULB
71386846	1	BUSHING, IDLER ARM
71149472	1	CHAIN ASY.
71394244	1	CHAIN (114-LINKS/RC60 SEALED/LUBE)
71345591	6	CLIP, KNIFE
71346158	25	CLIP, SICKLE (PKG QTY)
71320327	5	COVER, FINGER GUIDE
71328149	2	END, ROD
71373376	8	FINGER, AUGER
71417050	12	FINGER, AUGER (FULL FINGER AUGER)
71389106	50	FINGER, REEL (FULL BAT)
71389107	8	FINGER, REEL (LH-BAT)
71389108	8	FINGER, REEL (RH-BAT)
71389109	8	FINGER, REEL (NO BAT)
700714195	50	FINGER, REEL (U-II) (PKG QTY)
71370634	2	FLANGE, BEARING (CONVEYOR/WOBBLE BOX)
17789	2	FLANGE, BEARING (DUST DIVERTER FAN)
71192243	4	FLANGE, BEARING (MAIN DRIVE SHAFT)
71370130	2	FLANGE, BEARING (WOBBLE BOX)
71370575	10	GUARD, NARROW
71386962	25	GUARD, SICKLE (PKG QTY)
71386905	1	GUARD-LH SCHUMACHER
71386906	15	GUARD-STD SCHUMACHER
71386907	2	GUARD-W/BOTTOM CUTOUT SCHUMACHER
71320323	10	GUIDE, FINGER (PKG QTY)
71347775	1	HEAD, SICKLE, 3/4-16
71389141	1	HEAD, SICKLE, 3/4-16 (10 HOLE)
71391999	1	HEAD, SICKLE, 7/8-14
71391978	1	HEAD, SICKLE, 7/8-14 (10 HOLE)
71394217	1	HEAD, SICKLE, 7/8-14 (W/INSERTS)
71344240	1	HOUSING ASY, SICKLE HEAD, 3/4-16
71391994	1	HOUSING ASY, SICKLE HEAD, 7/8-14
79008328	2	IDLER, FLAT
71392175	3	INSERT (SCHUMACHER SICKLE HEAD)
71392173	7	INSERT (SCHUMACHER SPLICE BAR)
71371920	1	KIT, SEAL (REEL MOTOR-EATON)
71367527	1	KIT, SEAL (REEL MOTOR-PARKER/ROSS)
71398130	1	KIT, SEAL (REEL MOTOR-WHITE HYD.)
71370137	1	KIT, SEAL, HYD (REEL CYLINDER-MASTER)
836522M91	1	KIT, SEAL, HYD (REEL CYLINDER-SLAVE)
71386953	100	NUT, LOCK (CLN CUT SKL SECTION)(PKG QTY)
373839X1	100	NUT, SICKLE SECTION, #12-24
71335423	1	PIN (SICKLE HOUSING)
71323170	3	PLATE, FRICTION (CONVEYOR CLUTCH)
71116532	35	PLATE, WEAR (PKG QTY)
71373363	2	RETAINER (AUGER FINGER)
71377768	1	RING, SPROCKET
71307586	2	SEAL, OIL (WOBBLE BOX CRANKSHAFT)
70934820	1	SEAL, OIL (WOBBLE BOX)

Part Number	Qty	Description
71353125	50	SECTION, CLEAN CUT SICKLE (PKG QTY)
71386924	150	SECTION, SCHUMACHER SICKLE (PKG QTY)
71386923	2	SECTION, SCHUMACHER SICKLE, HALF
71351135	50	SECTION, SICKLE, BLACK (PKG QTY)
71389145	2	SECTION, SICKLE, BLANK
71348175	50	SECTION, SICKLE, CHROME (PKG QTY)
71351139	25	SECTION, SICKLE, HALF (PKG QTY)
71376825	1	SENSOR, POSITION
71412663	1	SHAFT, GUDGEON
71366258	1	SHOE (DIVIDER POINT)
700722271	2	SICKLE, SPLIT, CTR
700722266	2	SICKLE, SPLIT, CTR, CLEAN CUT
700722270	1	SICKLE, SPLIT, HEAD END
700722265	1	SICKLE, SPLIT, HEAD END, CLEAN CUT
700722275	1	SICKLE, SPLIT, TAIL END (20')
700722276	1	SICKLE, SPLIT, TAIL END (25')
700722273	1	SICKLE, SPLIT, TAIL END (30')
700722268	1	SICKLE, SPLIT, TAIL END, CLEAN CUT (20')
700722269	1	SICKLE, SPLIT, TAIL END, CLEAN CUT (25')
700722267	1	SICKLE, SPLIT, TAIL END, CLEAN CUT (30')
71386908	4	SPACER (GUARD-SCHUMACHER)
71386909	3	SPACER (GUARD-SCHUMACHER)
71315615	2	SPACER (SKID PLATE)
71322606	3	SPACER (STABILIZER MAIN LINK)
71399776	2	SPLICE KIT, SPLIT SICKLE
71395464	1	SPROCKET ASY, 14T-60
71390984	1	SPROCKET ASY, 16T-60
71137120	1	SPROCKET ASY.IDLER (13T-60)
71371903	1	SPROCKET, 72T
71320310	1	SPROCKET, 78T
71321850	1	SPUD (IDLER ARM)
71320326	15	SUPPORT, GUIDE (PKG QTY)
71358188	1	U-JOINT

NOTE: THIS PARTS STOCK LIST
INDICATES THOSE ITEMS RECOMMENDED
TO SERVICE FIVE UNITS.

RDL
PR: t04d21j36a0046

7000