INTRODUCTION AND CUSTOMER INFORMATION

JANEIRO 1994

TP42781 -UN-01JAN94

RUTHZIL TRATOR COMERCIAL DE PEÇAS LTDA 11 97083-6812 ROLANDO

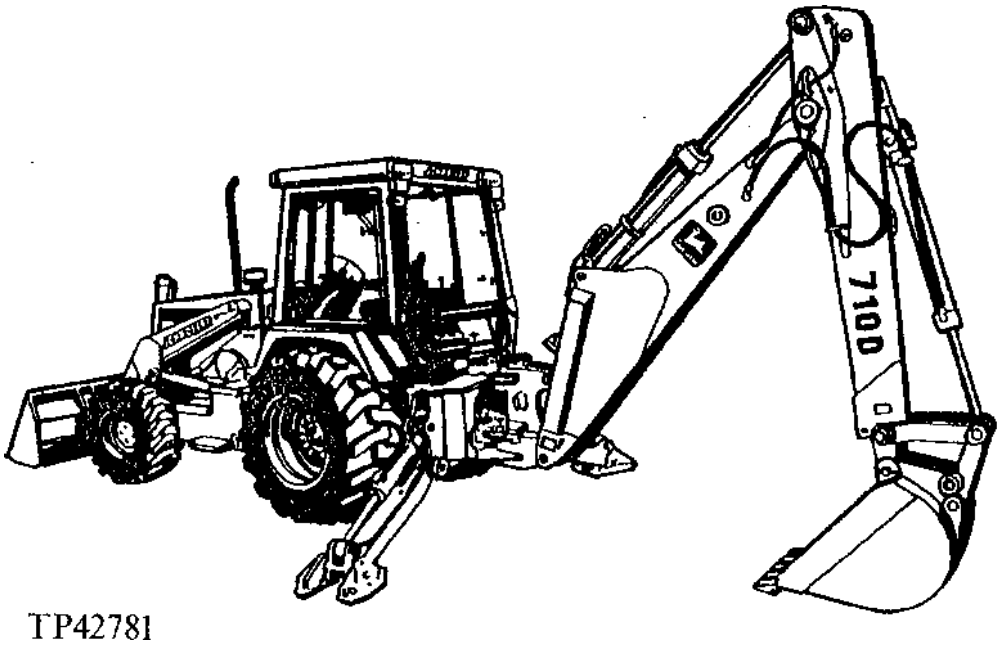

LEFT HAND SIDE VIEW OF JOHN DEERE 710D BACKHOE LOADER
(MANUFACTURED 1993)

TO THE CUSTOMER

THE PART NUMBERS IN THIS PARTS CATALOG WERE CORRECT AT THE TIME YOUR CATALOG WAS PUBLISHED. IT IS OUR POLICY TO CONSTANTLY IMPROVE OUR MACHINES AND, THEREFORE, PART NUMBERS MAY CHANGE. WHEN ORDERING PARTS, VERIFY PART NUMBERS THROUGH YOUR DEALER.

(SPECIFICATIONS AND DESIGN SUBJECT TO CHANGE WITHOUT NOTICE.)

SERIAL NUMBER LOCATIONS

EACH 710D BACKHOE LOADER MAY HAVE FOUR SERIAL NUMBERS: A PRODUCT IDENTIFICATION NUMBER PLATE, AN ENGINE SERIAL NUMBER PLATE, A HYDRAULIC PUMP SERIAL NUMBER PLATE AND AN EXTENDIBLE DIPPERSTICK SERIAL NUMBER.

THE PRODUCT IDENTIFICATION PLATE IS LOCATED ON THE RIGHT-HAND SIDE FRAME NEAR THE FRONT SUPPORT OR ON THE LEFT-HAND SIDE OF THE LOADER FRAME JUST BELOWTHE LIFT ARM PIVOT BOSS.

THE ENGINE SERIAL NUMBER PLATE IS LOCATED ON THE RIGHT-HAND SIDE OF THE CYLINDER BLOCK NEAR THE FRONT FUEL PUMP.

THE HYDRAULIC PUMP SERIAL NUMBER PLATE IS LOCATED ON THE UPPER RIGHT-HAND SIDE OF THE HYDRAULIC PUMP.

THE EXTENDIBLE DIPPERSTICK SERIAL NUMBER IS STAMPED ON THE TOP OF THE DIPPERSTICK NEAR THE BUCKET CYLINDER MOUNT.

LEFT-HAND SIDE, RIGHT-HAND SIDE, FRONT AND REAR OF THE BACKHOE LOADER ARE VIEWED BY FACING IN THE DIRECTION OF THE BACKHOE LOADER FORWARD TRAVEL.

LEFT-HAND SIDE, RIGHT-HAND SIDE, FRONT AND REAR OF THE BACKHOE AND BACKHOE COMPONENTS ARE DETERMINED WHEN SEATED IN THE BACKHOE OPERATING POSITION.

WHENEVER SERIAL NUMBERS ARE REQUIRED ON ALL WARRANTY CLAIMS OR CORRESPONDENCE PERTAINING TO THIS PRODUCT, IT IS EXTEMELY IMPORTANT THAT ALL CHARACTERS BE FURNISHED. THIS POINT CANNOT BE OVEREMPHASIZED.

PRODUCT IDENTIFICATION NUMBER

TP16004 -UN-01JAN94

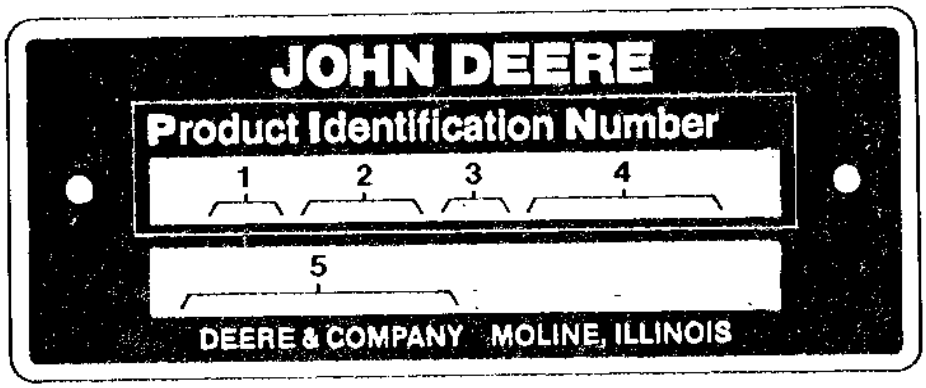

TP16004

1. DESIGNATES BACKHOE LOADER MANUFACTURERTO - JOHN DEERE DUBUQUE WORKS
2. DESIGNATES BACKHOE LOADER MODEL 710 D
3. DESIGNATES BACKHOE LOADER CONFIGURATIOND - POWERSHIFT
4. DESIGNATES BACKHOE LOADER SERIAL NUMBER123456
5. DESIGNATES UNIT TYPE BACKHOE LOADER

ENGINE SERIAL NUMBER PLATE

(ENGINE SERIAL NO. -713822)

TP8011 -UN-01JAN94

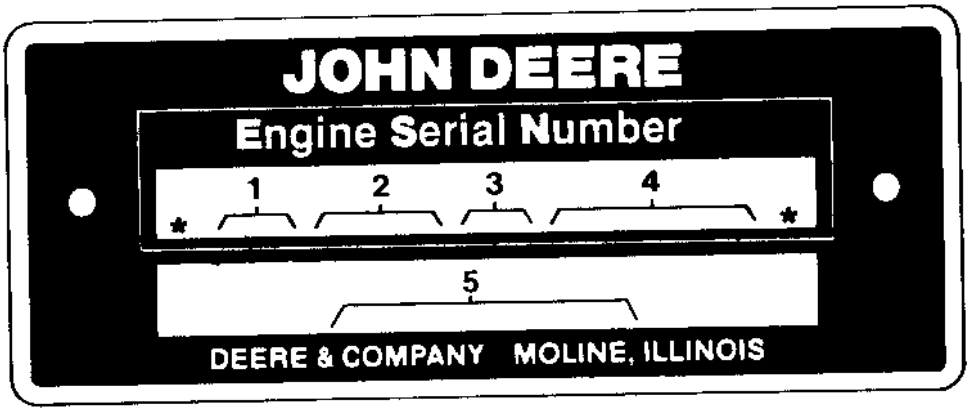

1. DESIGNATES ENGINE MANUFACTURER	T-JOHN DEERE DUBUQUE WORKS
2. DESIGNATES NUMBER OF CYLINDERS AND LITERS	6059 (5.9 LITER)
3. DESIGNATES FUEL TYPE OR SPECIAL CONDITION	T TURBOCHARGED DIESEL ENGINE
4. DESIGNATES ENGINE SERIAL NUMBER	123456
5. DESIGNATES THE ENGINE APPLICATION AND FACTORY USER.	6059TT002

ENGINE SERIAL NUMBER PLATE

(ENGINE SERIAL NO. 713823-)

TP58281 -UN-26JAN98

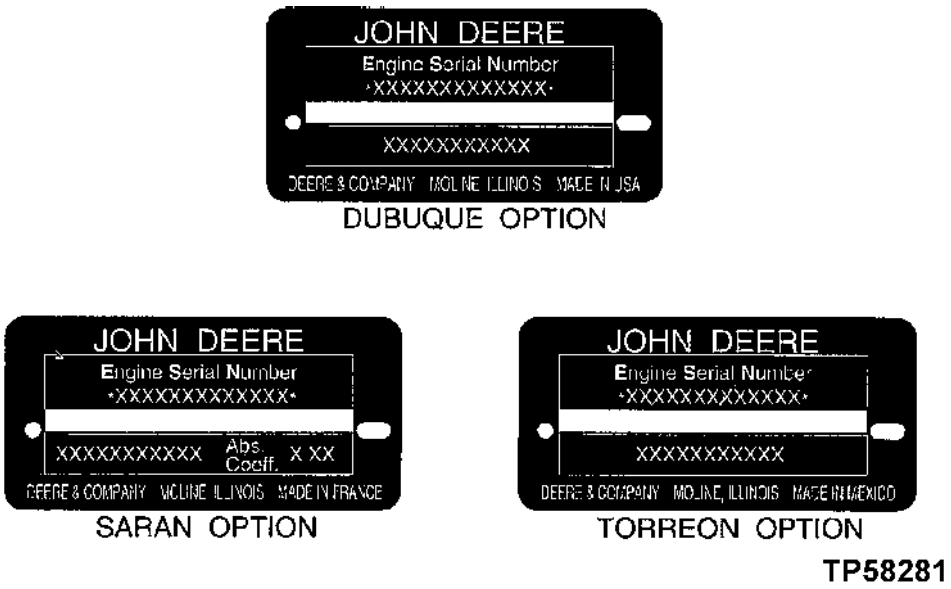

1. DESIGNATES ENGINE MANUFACTURER	T-JOHN DEERE DUBUQUE WORKS
2. DESIGNATES NUMBER OF CYLINDERS AND LITER'S.	6068 (6.8 LITER)
3. DESIGNATES FUEL TYPE OR SPECIAL COND.	TT TURBOCHARGED DIESEL ENGINE
4. DESIGNATES ENGINE SERIAL NUMBER	123456
5. DESIGNATES THE ENGINE APPLICATION AND FACTORY USER.	6068TT050

HYDRAULIC PUMP SERIAL NUMBER - 710D

RXP6951 -UN-01JAN94

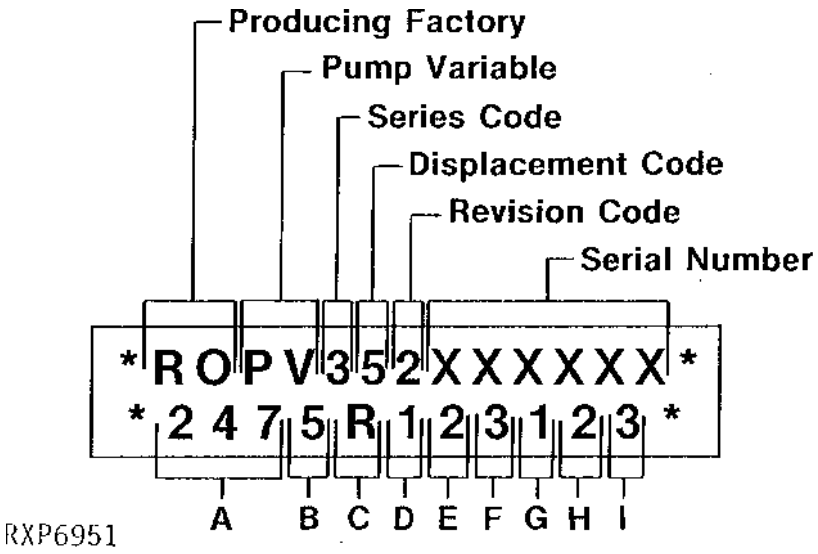

A - MASTER MACHINE CODE (247)

B - DISPLACEMENT
5 - 104 CM3 (6 IN.3)

C - MANUFACTURING UNIT (R)

D - OUTPUT DRIVE
1 - NONE

E - INLET PORT
2 - "O" RING PORT

F - PRESSURE SETTING
3 - 17,500 KPA (2550 PSI)

G - CONTROL TYPE
1 - PRESSURE COMPENSATED

H - INPUT DRIVE
2 - JOHN DEERE MOUNT

I - DESTROKE
3 - 6V ELECTRIC (NORMALLY CLOSED)

AXLE SERIAL NUMBER PLATE (TEAMMATE)

RXP6496 -UN-01JAN94

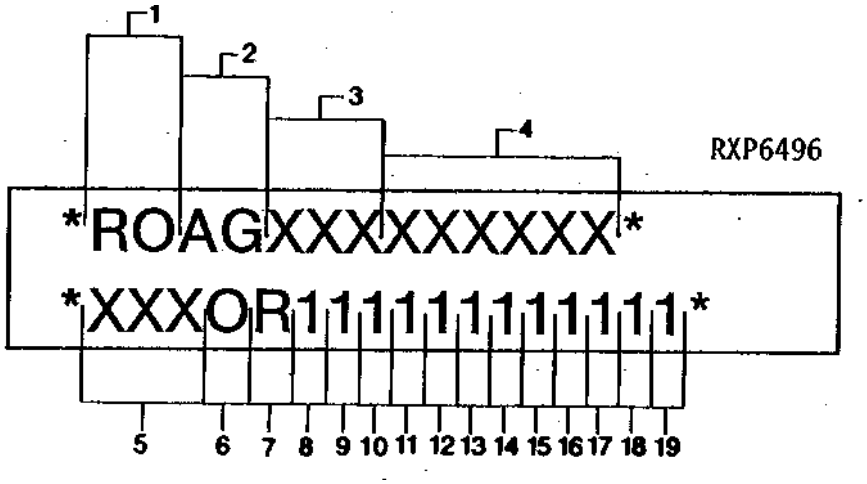

1. DESIGNATES MANUFACTURING UNIT	RO - JOHN DEERE WATERLOO WORKS
2. DESIGNATES COMPONENT IDENTIFICATION	AG - INBOARD AXLES
3. DESIGNATES CONFIGURATION IDENTITY	250 - 1200 SERIES
	251 - 1400 SERIES
4. DESIGNATES SERIAL NUMBER	
5. DESIGNATES MASTER MACHINE CODE	250
6. DESIGNATES FAMILY CODE	0 - TRANSITION AXLE
	1 - CONSOLIDATED AXLE
7. DESIGNATES MANUFACTURING UNIT	R - JOHN DEERE WATERLOO WORKS
8. DESIGNATES PRIMARY INPUT ROTATION AND AXLE TRAVEL	1 - CLOCKWISE; TOWARD INPUT
	2 - CLOCKWISE; AWAY FROM INPUT
	3 - COUNTERCLOCKWISE; TOWARD INPUT
	4 - COUNTERCLOCKWISE; AWAY FROM INPUT
9. DESIGNATES SPIRAL BEVEL REDUCTION	1 - 4.331:1
	2 - 4.778:1
	A - 4.333:1 SPECIAL, DISCONNECT
	3 - 5.571:1
10. DESIGNATES INPUT YOKE - SIZE AND STYLE	1 - 5C
	2 - 6C
	3 - 58WB
	A - SPECIAL, DISCONNECT YOKE
11. DESIGNATES FLANGE TO FLANGE WIDTH	1 - NONE
	2 - 1300MM (51.2")
	4 - 1700MM (66.9")

AXLE SERIAL NUMBER PLATE (TEAMMATE) - CONTINUED

13. DESIGNATES MOUNTING TYPE	1	- FIXED MOUNTING
	2	- OSCILLATION, CENTER PIVOT, FRONT BRACKET
	A	- SPECIAL, OFFSET SUPPORT MOUNTING
14. DESIGNATES BRAKE TYPE	1	- NO BRAKES
	2	- STANDARD CAPACITY - INDEPENDENT BRAKES
	3	- STANDARD CAPACITY - DUAL BRAKES
	4	- HIGH CAPACITY - INDEPENDENT BRAKES
	5	- HIGH CAPACITY - DUAL BRAKES
15. DESIGNATES DIFFERENTIAL TYPE	1	- STANDARD
	2	- NO-SPIN
	3	- HYDRAULIC LOCK-CAPTURE SYSTEM
16. DESIGNATES DIFFERENTIAL CASE	1	- STANDARD
	2	- LOW PROFILE
17. DESIGNATES FINAL DRIVE REDUCTION	1	- NONE
	2	- 3.714:1
	3	- 4.800:1
	4	- 5.500:1
	5	- 6.000:1
18. DESIGNATES TRIM	1	- NOTHING (INTERFACTORY)
	2	- VCI BAG
	3	- PRIMER
19. DESIGNATES MISCELLANEOUS PARTS	1	- MISCELLANEOUS PARTS (INTERFACTORY)
	2	- MISCELLANEOUS PARTS

AXLE IDENTIFICATION

RXP7616 -UN-01JAN94

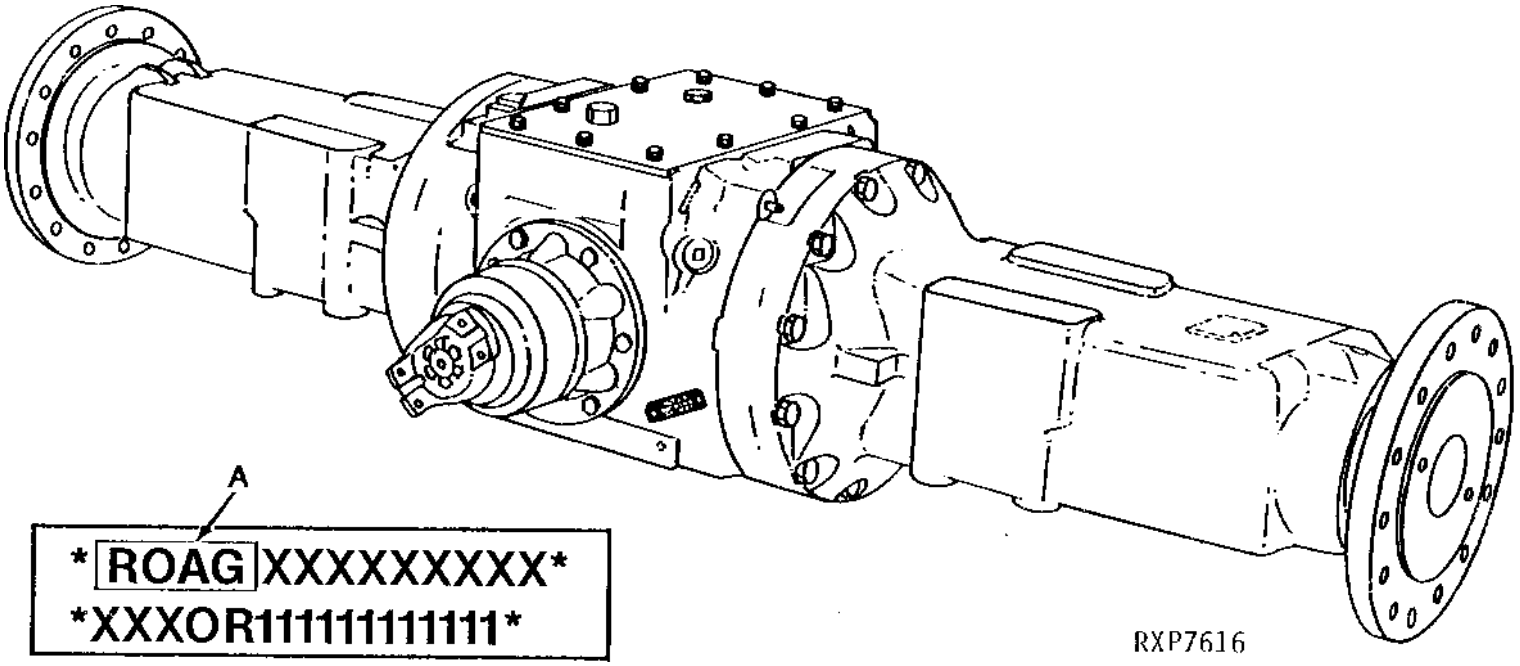

A - AXLE IDENTIFICATION AND APPLICATION ARE DETERMINED BY THE AXLE MODEL NUMBER (FIRST FOUR POSITIONS ON THE TOP LINE OF THE AXLE SERIAL PLATE. AXLE MODEL NUMBERS ARE REFERENCED AT THE TOP OF EACH AXLE PAGE. THIS NUMBER WILL ASSIST IN DETERMINING THE CORRECT PARTS TO ORDER.

SERIAL NUMBER LISTING INFORMATION

SERIAL NUMBER INFORMATION IS LISTED TO SHOW ON WHICH MACHINES EACH PART CAN BE USED; FOR EXAMPLE:

-	THE PART CAN BE USED ON ALL MACHINES.
000000-	THE PART CAN BE USED ON ALL MACHINES BEGINNING WITH THE SERIAL NUMBER LISTED.
-000000	THE PART CAN BE USED ON ALL MACHINES UP TO AND INCLUDING THE SERIAL NUMBER LISTED.
000000-000000	THE PART CAN BE USED ON ALL MACHINES BETWEEN AND INCLUDING THE SERIAL NUMBERS LISTED.

WHEN XXXXXX'S ARE LISTED IN PLACE OF A SERIAL NUMBER, A SERIAL NUMBER CHANGE WAS MADE BUT THE EXACT SERIAL NUMBER WAS NOT AVAILABLE WHEN THE CATALOG WAS PRODUCED.

DIRECTION ARROW

ARROWS ARE USED WITH ILLUSTRATIONS TO INDICATE THE FRONT OF THE UNIT. "RIGHT-HAND" AND "LEFT-HAND" SIDES OF THE LOADER OR TRACTOR PARTS ARE DETERMINED BY FACING IN THE DIRECTION OF MACHINE FORWARD TRAVEL

EXCEPTION: FOR ALL BACKHOE PARTS, "RIGHT-HAND" AND "LEFT-HAND" SIDES, "FRONT" AND "REAR" ARE DETERMINED WHEN SEATED FOR BACKHOE OPERATION.

BOX-ENCLOSED ILLUSTRATIONS

A KEY NUMBER, SHOWN IN THE PARTS LIST, IS ASSIGNED TO A BOX ENCLOSING ALL PARTS SOLD AS A SERVICE ASSEMBLY.

COMPLETE GOODS LISTINGS

COMPLETE GOODS ARE LISTED IN BOLD FACE TYPE. ORDER SEPARATELY. DO NOT INCLUDE ON REPLACEMENT PARTS ORDER.

SI UNITS OF MEASURE

METRIC DIMENSIONS ARE GIVEN, WHERE APPLICABLE, THROUGHOUT THIS PARTS CATALOG.

CHANGE INDICATOR LINE

CHANGES AFFECTING THE ORDERING OF PARTS ARE IDENTIFIED BY VERTICAL LINES MARKED IN THE LEFT-HAND MARGIN OF REVISED PARTS LISTING IMAGES. A LINE IS ALSO AT THE LEFT-HAND EDGE OF THE SAME PART NUMBER IN THE NUMERICAL INDEX TO SHOW THE LOCATION OF REVISED INFORMATION.

COMPLETE COMPONENTS

THIS CATALOG LISTS COMPLETE COMPONENTS IN A SPECIAL SECTION. THE PURPOSE OF THIS SECTION IS TO AID DEALERS IN PLANNING WHAT COMPONENTS TO STOCK FOR THEIR COMPONENT EXCHANGE PROGRAM. WHILE MOST OF THE ITEMS ARE NORMALLY STOCKED AT THE JOHN DEERE PARTS DISTRIBUTION WAREHOUSE (PDW), SOME COMPONENTS ARE ONLY AVAILABLE FROM FACTORIES. IT IS ESSENTIAL TO PLAN AHEAD IN DEVELOPING A COMPONENT EXCHANGE PROGRAM BECAUSE SOME OF THE FACTORY-SUPPLIED COMPONENTS HAVE AN EXTENDED LEAD TIME.

IN ADDITION TO CURRENTLY AVAILABLE COMPONENTS, THIS SECTION ALSO CONTAINS NUMBERS FOR COMPONENTS WHICH HAVE BEEN SUBSTITUTED AND/OR ARE NO LONGER AVAILABLE. PARTS NO LONGER AVAILABLE ARE CODED AND ARE INCLUDED FOR REFERENCE ONLY.

FOR ADDITIONAL INFORMATION ON SPECIAL ORDERING PROCEDURES FOR THESE PARTS, PLEASE CONSULT YOUR PARTS ADMINISTRATION MANUAL OR CONTACT YOUR JOHN DEERE INDUSTRIAL REGION PRODUCT SUPPORT DEVELOPMENT MANAGER.

ALPHABETICAL INDEX

GRID		PAGE
	A	
3F18	A/C COMPRESSOR HARDWARE KIT	1830 - 39
3F17	A/C COMPRESSOR SHAFT SEAL KIT	1830 - 38
3F18	A/C KIT, COMPRESSOR HARDWARE	1830 - 39
1G14	ACCESS COVER, INJECTION PUMP (ENGINE SERIAL NO. 713823-)	0402 - 2
2G20	ACCESSORY RELAY	1674 - 16
2G22	ACCESSORY RELAY	1674 - 18
2E14	ACCUMULATOR CHARGE SWITCH	1160 - 2
2D25	ACCUMULATOR, BRAKE	1063 - 4
2D23	ACCUMULATOR, HYDRAULIC OIL	1063 - 2
2E1	ACCUMULATOR, HYDRAULIC OIL	1063 - 6
4G23	ADAPTER, AUXILIARY DRIVE	4151 - 2
4H1	ADAPTER, AUXILIARY DRIVE	4151 - 4
4H3	ADAPTER, AUXILIARY DRIVE	4151 - 6
4H5	ADAPTER, AUXILIARY DRIVE	4151 - 8
1H25	ADAPTER, EXHAUST (ENGINE SERIAL NO. -713822)	0410 - 2
1J3	ADAPTER,ENGINE COOLANT (ENGINE SERIAL NO. 713823-)	0419 - 4
1H16	ADAPTER,ENGINE OIL FILTER (ENGINE SERIAL NO.713824-)	0407 - 10
1I1	ADAPTER,EXHAUST ELBOW (ENGINE SERIAL NO. 713823-)	0410 - 3
2F3	ADHESIVE, SILICONE RUBBER	1330 - 1
3D24	ADJUSTER HEIGHT KIT	1821 - 22
3D10	ADJUSTER LATCH KIT	1821 - 8
3D10	ADJUSTER PUCK KIT	1821 - 8
3D4	ADJUSTER, SEAT WITH SUSPENDED SEAT	1821 - 2
2C3	AIR CLEANER	0520 - 2
2C4	AIR CLEANER BRACKET	0520 - 3
2C3	AIR CLEANER ELEMENT	0520 - 2
2C4	AIR CLEANER HOSE	0520 - 3
2C5	AIR CLEANER VACUUM SENSOR	0520 - 4
2F3	AIR CONDITIONER O-RING REPAIR KIT	1330 - 1
3F7	AIR CONDITIONING	1830 - 28
3F9	AIR CONDITIONING	1830 - 30
3E13	AIR CONDITIONING BOX	1830 - 10
3E15	AIR CONDITIONING BOX	1830 - 12
3E17	AIR CONDITIONING BOX	1830 - 14
3E19	AIR CONDITIONING BOX	1830 - 16
3E21	AIR CONDITIONING BOX	1830 - 18
3E9	AIR CONDITIONING BRACKETS	1830 - 6
3F11	AIR CONDITIONING COMPRESSOR	1830 - 32
3F16	AIR CONDITIONING COMPRESSOR	1830 - 37
3F11	AIR CONDITIONING COMPRESSOR MOUNTING BRACKETS	1830 - 32
2B20	AIR CONDITIONING COMPRESSOR BRACKET	0510 - 2
3F11	AIR CONDITIONING COMPRESSOR HOSES	1830 - 32
3F16	AIR CONDITIONING COMPRESSOR MANIFOLD	1830 - 37
3F13	AIR CONDITIONING CONDENSER	1830 - 34
3F13	AIR CONDITIONING CONDENSER HOSES	1830 - 34
3F1	AIR CONDITIONING DUCTS	1830 - 22
3F3	AIR CONDITIONING DUCTS	1830 - 24
3F5	AIR CONDITIONING DUCTS	1830 - 26
3E13	AIR CONDITIONING EVAPORATOR COIL	1830 - 10
3E15	AIR CONDITIONING EVAPORATOR COIL	1830 - 12
3E17	AIR CONDITIONING EVAPORATOR COIL	1830 - 14
3E19	AIR CONDITIONING EVAPORATOR COIL	1830 - 16
3E21	AIR CONDITIONING EVAPORATOR COIL	1830 - 18
3E13	AIR CONDITIONING FILTERS	1830 - 10
3E15	AIR CONDITIONING FILTERS	1830 - 12
3E17	AIR CONDITIONING FILTERS	1830 - 14
3E19	AIR CONDITIONING FILTERS	1830 - 16
3E21	AIR CONDITIONING FILTERS	1830 - 18
3F1	AIR CONDITIONING FRESH AIR INTAKE	1830 - 22
3F3	AIR CONDITIONING FRESH AIR INTAKE	1830 - 24
3F5	AIR CONDITIONING FRESH AIR INTAKE	1830 - 26
2H17	AIR CONDITIONING HIGH PRESSURE SWITCH	1674 - 38
3E13	AIR CONDITIONING HOUSING	1830 - 10
3E15	AIR CONDITIONING HOUSING	1830 - 12
3E17	AIR CONDITIONING HOUSING	1830 - 14
3E19	AIR CONDITIONING HOUSING	1830 - 16
3E21	AIR CONDITIONING HOUSING	1830 - 18
2H17	AIR CONDITIONING LOW PRESSURE SWITCH	1674 - 38
2F5	AIR CONDITIONING LUBRICANT	1369 - 1
3E9	AIR CONDITIONING MOTOR	1830 - 6
3E11	AIR CONDITIONING MOTOR	1830 - 8
3F11	AIR CONDITIONING RECEIVER DRYER	1830 - 32
2I5	AIR CONDITIONING SWITCH	1676 - 6
2I1	AIR CONDITIONING TOGGLE SWITCH	1676 - 2
2H15	AIR CONDITIONING WIRING HARNESS	1674 - 36
2H17	AIR CONDITIONING WIRING HARNESS	1674 - 38
3E19	AIR CONDITIONING,HEATING,VENTILATION	1830 - 16
3E21	AIR CONDITIONING,HEATING,VENTILATION	1830 - 18
1I10	AIR INTAKE AND GASKET (ENGINE SERIAL NO. -713822)	0414 - 1
1I11	AIR INTAKE SYSTEM (ENGINE SERIAL NO. 713823-	0414 - 2
3E1	AIR SUSPENSION SEAT COMPRESSOR	1821 - 24
2G11	ALARM, BACKUP	1674 - 6
3G11	ALARM, BACKUP	2004 - 2
2G11	ALARM, REVERSE WARNING	1674 - 6
3G11	ALARM, REVERSE WARNING	2004 - 2
2F25	ALTERNATOR	1672 - 2
2G1	ALTERNATOR	1672 - 3
2G7	ALTERNATOR	1674 - 2
2G9	ALTERNATOR	1674 - 4
2G13	ALTERNATOR	1674 - 8
1J20	ALTERNATOR ATTACHING PARTS	0423 - 4
2G1	ALTERNATOR ATTACHING PARTS	1672 - 3
1J20	ALTERNATOR BRACKET	0423 - 4
2G1	ALTERNATOR CAPACITOR	1672 - 3
2G7	ALTERNATOR DIODE	1674 - 2
2G9	ALTERNATOR DIODE	1674 - 4
2G13	ALTERNATOR DIODE	1674 - 8
2F25	ALTERNATOR FAN	1672 - 2
2G1	ALTERNATOR FAN	1672 - 3
2F25	ALTERNATOR KIT	1672 - 2
1J18	ALTERNATOR MOUNTING BRACKETS	0423 - 2
2F25	ALTERNATOR PULLEY	1672 - 2
2G1	ALTERNATOR PULLEY	1672 - 3
2G22	ALTERNATOR RELAY,	1674 - 18
2G20	ALTERNATOR RELAY,12-VOLT	1674 - 16
2F25	ALTERNATOR SHIELD	1672 - 2
1J20	ALTERNATOR SUPPORTS	0423 - 4
2F25	ALTERNATOR WIRING HARNESS	1672 - 2
2G7	ALTERNATOR WIRING HARNESS	1674 - 2
2G9	ALTERNATOR WIRING HARNESS	1674 - 4
2G13	ALTERNATOR WIRING HARNESS	1674 - 8
2I1	AMBER WARNING LABEL	1676 - 2
4C21	ANCHOR	3340 - 1
3D16	ANGLE,BACKREST ADJUSTMENT	1821 - 14
2H9	ANTENNA, RADIO	1674 - 30
3G6	ANTENNA, RADIO	2001 - 2
3D16	ARM RESTS	1821 - 14
3D8	ARM RESTS WITH NON-SUSPENDED SEAT	1821 - 6
2D7	ARM, BRAKE PEDAL	1060 - 2
2D9	ARM, BRAKE PEDAL	1060 - 4
3C19	ARM, WIPER (FRONT RIGHT CAB WINDSHIELD, WITHOUT DOOR	1810 - 26
1J14	ARMATURE, STARTING MOTOR (ENGINE SERIAL NO. -814064)	0422 - 2

ALPHABETICAL INDEX - CONTINUED

GRID		PAGE
3J2	ARMS, LOADER LIFT	3140 - 2
1G18	ARMS, ROCKER (ENGINE SERIAL NO. -713822)	0402 - 6
1G19	ARMS, ROCKER (ENGINE SERIAL NO. 713823-)	0402 - 7
3E11	ASSEMBLY, BLOWER	1830 - 8
1J20	ATTACHING PARTS, ALTERNATOR	0423 - 4
2G1	ATTACHING PARTS, ALTERNATOR	1672 - 3
3I4	AUXILIARY CUTTING EDGE	3102 - 2
4G23	AUXILIARY DRIVE ADAPTER	4151 - 2
4H1	AUXILIARY DRIVE ADAPTER	4151 - 4
4H3	AUXILIARY DRIVE ADAPTER	4151 - 6
4H5	AUXILIARY DRIVE ADAPTER	4151 - 8
4G23	AUXILIARY DRIVE BEARING	4151 - 2
4H1	AUXILIARY DRIVE BEARING	4151 - 4
4H3	AUXILIARY DRIVE BEARING	4151 - 6
4H5	AUXILIARY DRIVE BEARING	4151 - 8
4G23	AUXILIARY DRIVE COVER	4151 - 2
4H1	AUXILIARY DRIVE COVER	4151 - 4
4H3	AUXILIARY DRIVE COVER	4151 - 6
4H5	AUXILIARY DRIVE COVER	4151 - 8
4G23	AUXILIARY DRIVE GEAR	4151 - 2
4H1	AUXILIARY DRIVE GEAR	4151 - 4
4H3	AUXILIARY DRIVE GEAR	4151 - 6
4H5	AUXILIARY DRIVE GEAR	4151 - 8
4G23	AUXILIARY DRIVE HOUSING	4151 - 2
4H1	AUXILIARY DRIVE HOUSING	4151 - 4
4H3	AUXILIARY DRIVE HOUSING	4151 - 6
4H5	AUXILIARY DRIVE HOUSING	4151 - 8
4G23	AUXILIARY DRIVE OIL LINE	4151 - 2
4H1	AUXILIARY DRIVE OIL LINE	4151 - 4
4H3	AUXILIARY DRIVE OIL LINE	4151 - 6
4H5	AUXILIARY DRIVE OIL LINE	4151 - 8
4G23	AUXILIARY DRIVE SHAFT	4151 - 2
4H1	AUXILIARY DRIVE SHAFT	4151 - 4
4H3	AUXILIARY DRIVE SHAFT	4151 - 6
4H5	AUXILIARY DRIVE SHAFT	4151 - 8
1J25	AUXILIARY DRIVE, HYD PUMP-FRONT	0429 - 5
2H11	AUXILIARY HYDRAULIC FOOT SWITCH	1674 - 32
2I5	AUXILIARY HYDRAULICS SWITCH	1676 - 6
4D20	AUXILIARY SECTION, BACKHOE CONTROL VALVE	3360 - 12
4D22	AUXILIARY SECTION, BACKHOE CONTROL VALVE	3360 - 14
4E24	AUXILIARY SECTION, BACKHOE CONTROL VALVE	3360 - 35
3J8	AUXILIARY SECTION, LOADER VALVE	3160 - 5
4D20	AUXILIARY SECTION, 5TH FUNCTION VALVE	3360 - 12
4D22	AUXILIARY SECTION, 6TH FUNCTION VALVE	3360 - 14
4E9	AUXILIARY VALVE	3360 - 25A
4E13	AUXILIARY VALVE	3360 - 25E
4E13	AUXILIARY VALVE SOLINOID	3360 - 25E
1H8	AUXILLARY DRIVE COVER (ENGINE SERIAL NO. 713823-)	0404 - 11
2I7	AUXILLIARY HYDRAULICS SWITCH	1676 - 8
1C1	AXLE HOUSING	0201 - 10
1C15	AXLE HOUSING	0210 - 12
1C23	AXLE HOUSING, FWD	0250 - 2
1C22	AXLE PIVOT PIN, FWD	0250 - 1
1C1	AXLE ROLLER BEARING	0201 - 10
1C15	AXLE ROLLER BEARING	0210 - 12
1C1	AXLE SHAFT	0201 - 10
1C15	AXLE SHAFT	0210 - 12
1C19	AXLE, FRONT	0230 - 2

B

1E14	B-1 BRAKE	0350 - 12
1E15	B-2 BRAKE	0350 - 13
1E16	B-3 BRAKE	0350 - 14
3D16	BACK PAD CUSHION	1821 - 14
4D8	BACKHOE BOOM	3340 - 14
4F4	BACKHOE BOOM CYLINDER	3360 - 40
4F16	BACKHOE BOOM CYLINDER HYDRAULICS	3360 - 52
4F4	BACKHOE BOOM CYLINDER KIT	3360 - 40
4F6	BACKHOE BUCKET CYLINDER	3360 - 42
4F18	BACKHOE BUCKET CYLINDER HYDRAULICS	3360 - 54
4F6	BACKHOE BUCKET CYLINDER KIT	3360 - 42
4B20	BACKHOE BUCKET DATA	3302 - 4
4C21	BACKHOE BUCKET DRIVE LINKS	3340 - 1
4C21	BACKHOE BUCKET GUIDE LINKS	3340 - 1
4C21	BACKHOE BUCKET PINS	3340 - 1
4B18	BACKHOE BUCKET TEETH	3302 - 2
4B19	BACKHOE BUCKET TEETH	3302 - 3
4B18	BACKHOE BUCKETS	3302 - 2
4B19	BACKHOE BUCKETS	3302 - 3
4C1	BACKHOE CONTROL LEVER LABEL	3315 - 6
4B23	BACKHOE CONTROL LEVER LINKAGE LABEL	3315 - 4
4B23	BACKHOE CONTROL LEVER LINKAGE, 2-LEVER	3315 - 4
4C1	BACKHOE CONTROL LEVER LINKAGE, 2-LEVER FOR EXTENDIBLE DIPPERSTICK	3315 - 6
4E23	BACKHOE CONTROL VAL., EXTENDIBLE SECTION	3360 - 34
4D10	BACKHOE CONTROL VALVE	3360 - 2
4E15	BACKHOE CONTROL VALVE	3360 - 26
4D20	BACKHOE CONTROL VALVE AUXILIARY SECTION	3360 - 12
4D22	BACKHOE CONTROL VALVE AUXILIARY SECTION	3360 - 14
4D12	BACKHOE CONTROL VALVE BOOM SECTION	3360 - 4
4D14	BACKHOE CONTROL VALVE BUCKET SECTION	3360 - 6
4D16	BACKHOE CONTROL VALVE CROWD SECTION WITH RIGHT END PLATE	3360 - 8
4D24	BACKHOE CONTROL VALVE SEAL KIT	3360 - 16
4D24	BACKHOE CONTROL VALVE SECTION SEAL KIT	3360 - 16
4E7	BACKHOE CONTROL VALVE SELECTIVE FLOW	3360 - 24
4E11	BACKHOE CONTROL VALVE SELECTIVE FLOW	3360 - 25C
4D24	BACKHOE CONTROL VALVE SPOOL SEAL KIT	3360 - 16
4D18	BACKHOE CONTROL VALVE SWING SECTION	3360 - 10
4E24	BACKHOE CONTROL VALVE, AUXILIARY SECTION	3360 - 35
4E19	BACKHOE CONTROL VALVE, BOOM SECTION	3360 - 30
4E20	BACKHOE CONTROL VALVE, BUCKET SECTION	3360 - 31
4E21	BACKHOE CONTROL VALVE, CROWD SECTION	3360 - 32
4E22	BACKHOE CONTROL VALVE, SWING SECTION	3360 - 33
4F20	BACKHOE CROWD CYLINDER HYDRAULICS	3360 - 56
4C24	BACKHOE DIPPERSTICK	3340 - 4
4G16	BACKHOE HYDRAULICS, SIX FUNCTION	3360 - 78
4C1	BACKHOE LINKAGE FIELD KIT, 2-LEVER FOR EXTENDIBLE DIPPERSTICK	3315 - 6
4C11	BACKHOE LINKAGE, FIFTH FN LEVER FOR THREE LEVER CONTROLS	3315 - 16
4D7	BACKHOE STREET PADS	3340 - 12
4F10	BACKHOE SWING CYLINDER	3360 - 46
4F12	BACKHOE SWING CYLINDER	3360 - 48
4F22	BACKHOE SWING CYLINDER HYDRAULICS	3360 - 58
4E17	BACKHOE VALVE INLET SECTION	3360 - 28
4E18	BACKHOE VALVE OUTLET SECTION	3360 - 29
4G1	BACKHOE VALVE PRESSURE AND RETURN HYDRAULICS	3360 - 62
4G3	BACKHOE VALVE PRESSURE AND RETURN HYDRAULICS	3360 - 64
4D20	BACKHOE VALVE 5TH FUNCTION, AUXILIARY SECTION	3360 - 12
4D22	BACKHOE VALVE 6TH FUNCTION, AUXILIARY SECTION	3360 - 14
4C13	BACKHOE, FOUR-LEVER CONTROLS, STANDARD	3315 - 18
4C19	BACKHOE, FOUR-LEVER CONTROLS, STANDARD	3315 - 24
4C9	BACKHOE, THREE LEVER CONTROL VALVE LINKAGE, EXTENDIBLE	3315 - 14

ALPHABETICAL INDEX - CONTINUED

GRID		PAGE
4C7	BACKHOE, THREE LEVER CONTROL VALVE LINKAGE, STANDARD	3315 - 12
3D16	BACKREST ADJUSTMENT ANGLE	1821 - 14
2G11	BACKUP ALARM	1674 - 6
3G11	BACKUP ALARM	2004 - 2
3G11	BACKUP ALARM WIRING HARNESS	2004 - 2
1C23	BALL JOINT, FWD	0250 - 2
2D7	BAR, BRAKE PEDAL	1060 - 2
2D9	BAR, BRAKE PEDAL	1060 - 4
2E20	BAR, CYLINDER SERVICE LOCK	1313 - 2
3G1	BAR, GRILLE FRAME	1921 - 2
3D10	BASE, SEAT WITH NON-SUSPENDED SEAT	1821 - 8
3D24	BASE, SEAT WITH NON-SUSPENDED SEAT	1821 - 22
3D6	BASE, SEAT WITH SUSPENDED SEAT	1821 - 4
2F23	BATTERY	1671 - 2
2G7	BATTERY	1674 - 2
2G9	BATTERY	1674 - 4
3F24	BATTERY BOX	1913 - 2
3F24	BATTERY BOX COVER	1913 - 2
3F24	BATTERY BOX LOCK	1913 - 2
3E3	BATTERY BOX MATTING	1822 - 2
3E3	BATTERY BOX STEP	1822 - 2
2F23	BATTERY CABLES	1671 - 2
2F23	BATTERY CLAMPS	1671 - 2
2F23	BATTERY COVERS	1671 - 2
3F24	BATTERY ENCLOSURE	1913 - 2
2F23	BATTERY INSTALLATION	1671 - 2
2G2	BEACON, ROTATING	1673 - 1
1D17	BEARING KIT	0325 - 1
4G23	BEARING, AUXILIARY DRIVE	4151 - 2
4H1	BEARING, AUXILIARY DRIVE	4151 - 4
4H3	BEARING, AUXILIARY DRIVE	4151 - 6
4H5	BEARING, AUXILIARY DRIVE	4151 - 8
1G12	BEARING,CRANKSHAFT THRUST (ENGINE SERIAL NO.713823-)	0401 - 6
1G10	BEARINGS CRANKSHAFT	0401 - 4
1G22	BEARINGS, CONNECTING ROD (ENGINE SERIAL NO. -713822)	0403 - 2
1G8	BEARINGS, MAIN (ENGINE SERIAL NO. -713822)	0401 - 2
1G12	BEARINGS, MAIN (ENGINE SERIAL NO.713823-)	0401 - 6
1C18	BEARINGS, WHEEL, FRONT	0230 - 1
1G23	BEARINGS,C0NNECTING ROD (ENGINE SERIAL NO. 713823-)	0403 - 3
1D24	BELL HOUSING	0341 - 6
1E20	BELLVILLEWASHER, FIRST GEAR, POWER SHIFT	0350 - 18
1F3	BELLVILLEWASHER, FORWARD, POWER SHIFT	0350 - 26
1F5	BELLVILLEWASHER, REVERSE, POWER SHIFT	0350 - 28
1E22	BELLVILLEWASHER, 2ND GEAR, POWER SHIFT	0350 - 20
1E24	BELLVILLEWASHER, 3RD GEAR, POWER SHIFT	0350 - 22
1F1	BELLVILLEWASHER, 4TH GEAR, POWER SHIFT	0350 - 24
1J22	BELT IDLER TENSIONER (ENGINE SERIAL NO. 713823-)	0429 - 2
3H2	BELT, CHARGE PUMP	2160 - 12
1J18	BELT, TENSIONER	0423 - 2
3D12	BELT, TETHER	1821 - 10
3D22	BELT, TETHER	1821 - 20
3E1	BELT, TETHER	1821 - 24
1J22	BELT,FAN (ENGINE SERIAL NO. 713823-)	0429 - 2
1J21	BELTS, FAN (ENGINE SERIAL NO. -713822)	0429 - 1
3D16	BELTS, SEAT	1821 - 14
3D8	BELTS, SEAT WITH NON-SUSPENDED SEAT	1821 - 6
3D4	BELTS, SEAT WITH SUSPENDED SEAT	1821 - 2
3D10	BELTS, TETHER WITH NON-SUSPENDED SEAT	1821 - 8
3D24	BELTS, TETHER WITH NON-SUSPENDED SEAT	1821 - 22
3C21	BLADE, WIPER, LEFT HAND CAB DOOR	1810 - 28
2B24	BLADE,FAN	0510 - 6
1G24	BLOCK, CYLINDER (ENGINE SERIAL NO. -713822)	0404 - 2
1H1	BLOCK, CYLINDER (ENGINE SERIAL NO. 713823-)	0404 - 4
1H3	BLOCK, SHORT ENGINE (ENGINE SERIAL NO. -713822)	0404 - 6
3E11	BLOWER ASSEMBLY	1830 - 8
3F7	BLOWER MOTOR, HEATER	1830 - 28
3F9	BLOWER MOTOR, HEATER	1830 - 30
2I1	BLOWER SWITCH, HEATER	1676 - 2
3F7	BLOWER WIRING HARNESS	1830 - 28
3F9	BLOWER WIRING HARNESS	1830 - 30
3J5	BOLTS, TIE, LOADER VALVE	3160 - 2
4G18	BOOM CYL.KIT, CONTROLLED LOWERING DEVICE	3360 - 80
4G18	BOOM CYL.KIT, LOWERING DEVICE,CONTROLLED	3360 - 80
4F16	BOOM CYLINDER HYDRAULICS, BACKHOE	3360 - 52
4F4	BOOM CYLINDER KIT, BACKHOE	3360 - 40
4F4	BOOM CYLINDER, BACKHOE	3360 - 40
4C15	BOOM LOCK CONTROL	3315 - 20
4C17	BOOM LOCK CONTROL	3315 - 22
4C17	BOOM LOCK CONTROL(WITH LINKAGE CONTROL)	3315 - 22
4C15	BOOM LOCK LINKAGE	3315 - 20
4C17	BOOM LOCK LINKAGE	3315 - 22
3J10	BOOM SECTION FLOAT POSITIONER	3160 - 7
3J7	BOOM SECTION LOADER CONTROL VALVE	3160 - 4
4D12	BOOM SECTION, BACKHOE CONTROL VALVE	3360 - 4
4E19	BOOM SECTION, BACKHOE CONTROL VALVE	3360 - 30
2E20	BOOM SERVICE LOCK BAR	1313 - 2
4D8	BOOM, BACKHOE	3340 - 14
3I20	BOOT, CLUTCH DISCONNECT SWITCH	3115 - 4
2C19	BOOT, TILT STEERING CYLINDER	0960 - 2
2I12	BOTTOM GUARD	1746 - 2
4D3	BOTTOM WEAR PAD	3340 - 8
3E13	BOX, AIR CONDITIONING	1830 - 10
3E15	BOX, AIR CONDITIONING	1830 - 12
3E17	BOX, AIR CONDITIONING	1830 - 14
3E19	BOX, AIR CONDITIONING	1830 - 16
3E21	BOX, AIR CONDITIONING	1830 - 18
3F24	BOX, BATTERY	1913 - 2
3E13	BOX, CAB HEATER	1830 - 10
3E15	BOX, CAB HEATER	1830 - 12
3E17	BOX, CAB HEATER	1830 - 14
3E19	BOX,CAB HEATER	1830 - 16
3E21	BOX,CAB HEATER	1830 - 18
2C4	BRACKET, AIR CLEANER	0520 - 3
1J20	BRACKET, ALTERNATOR	0423 - 4
3G6	BRACKET, ANTENNA	2001 - 2
2D7	BRACKET, BRAKE VALVE	1060 - 2
2D9	BRACKET, BRAKE VALVE	1060 - 4
3H2	BRACKET, CHARGE PUMP	2160 - 12
3G8	BRACKET, INTERIOR REAR VIEW MIRROR	2002 - 2
3I20	BRACKET, MOUNTING, CONTROL VALVE	3115 - 4
3I22	BRACKET, MOUNTING, CONTROL VALVE	3115 - 6
2I1	BRACKET, PARK BRAKE SWITCH	1676 - 2
2B20	BRACKET, RADIATOR	0510 - 2
2C19	BRACKET, STEERING COLUMN	0960 - 2
1J22	BRACKET, TENSIONER (ENGINE SERIAL NO. 713823-)	0429 - 2
3G12	BRACKET, TOOLBOX	2005 - 1
2C11	BRACKET,ENGINE MOUNTING	0540 - 3
2B22	BRACKET,RADIATOR SUPPORT	0510 - 4
3D16	BRACKETS ,SEAT	1821 - 14
3D8	BRACKETS WITH NON-SUSPENDED SEAT, SEAT	1821 - 6
3E9	BRACKETS, AIR CONDITIONING	1830 - 6

ALPHABETICAL INDEX - CONTINUED

GRID		PAGE
1J18	BRACKETS, ALTERNATOR MOUNTING	0423 - 2
3E9	BRACKETS, CAB HEATER	1830 - 6
2D25	BRAKE ACCUMULATOR	1063 - 4
2D5	BRAKE DISK	1011 - 4
2D17	BRAKE FILTER	1060 - 12
1E16	BRAKE HOUSING	0350 - 14
2D5	BRAKE HOUSING	1011 - 4
2G5	BRAKE LIGHT (ROPS)	1673 - 4
2G3	BRAKE LIGHT, CAB	1673 - 2
2D15	BRAKE MAKE-UP CHECK VALVE KIT	1060 - 10
2D7	BRAKE PEDAL ARM	1060 - 2
2D9	BRAKE PEDAL ARM	1060 - 4
2D7	BRAKE PEDAL BAR	1060 - 2
2D9	BRAKE PEDAL BAR	1060 - 4
2D7	BRAKE PEDALS	1060 - 2
2D9	BRAKE PEDALS	1060 - 4
2D5	BRAKE PISTON	1011 - 4
2D3	BRAKE PLATES	1011 - 1
2D18	BRAKE PRE-FILL PISTON KIT	1060 - 13
2D17	BRAKE PRESSURE INLET CHECK VALVE KIT	1060 - 12
2D7	BRAKE VALVE	1060 - 2
2D11	BRAKE VALVE	1060 - 6
2D21	BRAKE VALVE	1060 - 16
2D7	BRAKE VALVE BRACKET	1060 - 2
2D9	BRAKE VALVE BRACKET	1060 - 4
2D16	BRAKE VALVE COVER	1060 - 11
2D19	BRAKE VALVE HARDWARE KIT	1060 - 14
2D23	BRAKE VALVE HYDRAULIC HOSES	1063 - 2
2E1	BRAKE VALVE HYDRAULIC HOSES	1063 - 6
2E3	BRAKE VALVE HYDRAULIC HOSES	1063 - 8
2D20	BRAKE VALVE MOUNTING PARTS	1060 - 15
2D23	BRAKE VALVE OIL LINES	1063 - 2
2E1	BRAKE VALVE OIL LINES	1063 - 6
2E3	BRAKE VALVE OIL LINES	1063 - 8
2D13	BRAKE VALVE OVERHAUL KIT	1060 - 8
1E14	BRAKE, B-1	0350 - 12
1E15	BRAKE, B-2	0350 - 13
1E16	BRAKE, B-3	0350 - 14
2E12	BRAKE, PARK	1111 - 8
2D3	BRAKES	1011 - 1
2D5	BRAKES, SERVICE	1011 - 4
2D23	BREAK LINE PRESSURE SWITCH	1063 - 2
3H7	BREATHER FILTER, HYDRAULIC RESERVOIR	2160 - 18
1D24	BREATHER, TRANSMISSION	0341 - 6
3I6	BUCKET CUTTING EDGE, MULTI-PURPOSE	3102 - 4
3I10	BUCKET CUTTING EDGE, MULTI-PURPOSE	3102 - 8
3J19	BUCKET CYLINDER HYDRAULICS	3160 - 16
4F18	BUCKET CYLINDER HYDRAULICS, BACKHOE	3360 - 54
4G14	BUCKET CYLINDER HYDRAULICS, EXTENDIBLE DIPPERSTICK	3360 - 76
4F6	BUCKET CYLINDER, BACKHOE	3360 - 42
3J15	BUCKET CYLINDER, LOADER	3160 - 12
3J23	BUCKET CYLINDER, LOADER	3160 - 20
3I16	BUCKET CYLINDER, MULTI-PURPOSE	3102 - 12
3I17	BUCKET CYLINDER, MULTI-PURPOSE	3102 - 13
3J13	BUCKET CYLINDER, MULTI-PURPOSE	3160 - 10
3J19	BUCKET LIFT CYLINDER	3160 - 16
3I4	BUCKET LOADER	3102 - 2
4C21	BUCKET PINS, BACKHOE	3340 - 1
3I14	BUCKET PINS, LOADER	3102 - 10
3J6	BUCKET SECTION LOADER VALVE	3160 - 3
3J16	BUCKET SECTION SOLENOID	3160 - 13
4D14	BUCKET SECTION, BACKHOE CONTROL VALVE	3360 - 6
4E20	BUCKET SECTION, BACKHOE CONTROL VALVE	3360 - 31
3I6	BUCKET SHANK, MULTI-PURPOSE	3102 - 4
3I10	BUCKET SHANK, MULTI-PURPOSE	3102 - 8
3I6	BUCKET TOOTH, MULTI-PURPOSE	3102 - 4
3I10	BUCKET TOOTH, MULTI-PURPOSE	3102 - 8
4B20	BUCKET, BACKHOE DATA	3302 - 4
3I18	BUCKET, LEVELING LINKAGE	3115 - 2
3I19	BUCKET, LEVELING LINKAGE	3115 - 3
3I6	BUCKET, MULTI-PURPOSE	3102 - 4
3I10	BUCKET, MULTI-PURPOSE	3102 - 8
4B18	BUCKETS, BACKHOE	3302 - 2
4B19	BUCKETS, BACKHOE	3302 - 3
2G24	BULB, TURN SIGNAL	1674 - 20
2H1	BULB, TURN SIGNAL	1674 - 22
4D1	BUSHING, EXTENSION DIPPERSTICK	3340 - 6
2I1	BUZZER, WARNING	1676 - 2
2I5	BUZZER,WARNING	1676 - 6
2I7	BUZZER,WARNING	1676 - 8

C

3C1	CAB DOME LIGHT	1810 - 8
3D1	CAB DOOR CYLINDER	1810 - 32
3C21	CAB DOOR HANDLE, LEFT HAND	1810 - 28
3C23	CAB DOOR HANDLE, RIGHT HAND	1810 - 30
3C21	CAB DOOR HARDWARE, LEFT HAND	1810 - 28
3C23	CAB DOOR HARDWARE, RIGHT HAND	1810 - 30
3C21	CAB DOOR HINGE, LEFT HAND	1810 - 28
3C23	CAB DOOR HINGE, RIGHT HAND	1810 - 30
3D1	CAB DOOR LATCH	1810 - 32
3D1	CAB DOOR LATCH COVER	1810 - 32
3D1	CAB DOOR PULL HANDLE	1810 - 32
3C17	CAB DOOR WINDOWS	1810 - 24
3C21	CAB DOOR WIPER BLADE, LEFT HAND	1810 - 28
3C21	CAB DOOR WIPER, LEFT HAND	1810 - 28
3C23	CAB DOOR WIPER, RIGHT HAND	1810 - 30
3B21	CAB FENDER COVER	1810 - 4
3B21	CAB FENDER COVER LOUVERS	1810 - 4
3D3	CAB FLOOR FRONT COVER	1810 - 34
3B23	CAB FRAME	1810 - 6
3B23	CAB FRAME LABEL	1810 - 6
3B23	CAB FRONT ROOF SUPPORT	1810 - 6
3C1	CAB HEADLINERS	1810 - 8
3E13	CAB HEATER BOX	1830 - 10
3E15	CAB HEATER BOX	1830 - 12
3E17	CAB HEATER BOX	1830 - 14
3E19	CAB HEATER BOX	1830 - 16
3E21	CAB HEATER BOX	1830 - 18
3E9	CAB HEATER BRACKETS	1830 - 6
3E13	CAB HEATER CORE	1830 - 10
3E15	CAB HEATER CORE	1830 - 12
3E17	CAB HEATER CORE	1830 - 14
3E19	CAB HEATER CORE	1830 - 16
3E21	CAB HEATER CORE	1830 - 18
3F1	CAB HEATER DUCTS	1830 - 22
3F3	CAB HEATER DUCTS	1830 - 24
3F5	CAB HEATER DUCTS	1830 - 26
3E13	CAB HEATER FILTERS	1830 - 10
3E15	CAB HEATER FILTERS	1830 - 12
3E17	CAB HEATER FILTERS	1830 - 14
3E19	CAB HEATER FILTERS	1830 - 16
3E21	CAB HEATER FILTERS	1830 - 18
3F1	CAB HEATER FRESH AIR INTAKE	1830 - 22
3F3	CAB HEATER FRESH AIR INTAKE	1830 - 24
3F5	CAB HEATER FRESH AIR INTAKE	1830 - 26
3E5	CAB HEATER HOSE	1830 - 2
3E7	CAB HEATER HOSE	1830 - 4
3E9	CAB HEATER MOTOR	1830 - 6
3E11	CAB HEATER MOTOR	1830 - 8
3E13	CAB HEATER RESISTOR	1830 - 10

ALPHABETICAL INDEX - CONTINUED

GRID		PAGE
3E15	CAB HEATER RESISTOR	1830 - 12
3E17	CAB HEATER RESISTOR	1830 - 14
3E19	CAB HEATER RESISTOR	1830 - 16
3E21	CAB HEATER RESISTOR	1830 - 18
3E5	CAB HEATER SHUT-OFF VALVE	1830 - 2
3E7	CAB HEATER SHUT-OFF VALVE	1830 - 4
3C17	CAB LOWER REAR WINDOW	1810 - 24
3B23	CAB MOUNTING ISOLATORS	1810 - 6
3B23	CAB REAR MARKER REFLECTOR	1810 - 6
3C17	CAB REAR WINDOW LATCH	1810 - 24
3C19	CAB RIGHT HAND ONE PIECE FRONT WINDSHIELD GLASS & WIPER MOTOR	1810 - 26
3C3	CAB ROOF	1810 - 10
2H3	CAB ROOF WIRING HARNESS	1674 - 24
3C9	CAB SIDE WINDOW LATCH	1810 - 16
3C11	CAB SIDE WINDOW LATCH	1810 - 18
3C9	CAB SIDE WINDOWS	1810 - 16
3C11	CAB SIDE WINDOWS	1810 - 18
3C17	CAB WINDOW, LOWER REAR	1810 - 24
3C7	CAB WINDOW, UPPER REAR	1810 - 14
3C17	CAB, LOWER REAR SIDE WINDOW	1810 - 24
2C1	CABLE, ENGINE SPEED CONTROL	0515 - 2
3E5	CABLE, HEATER VALVE CONTROL	1830 - 2
3G6	CABLE, RADIO	2001 - 2
3E7	CABLE,HEATER VALVE CONTROL	1830 - 4
2F23	CABLES, BATTERY	1671 - 2
2E8	CALIPER ASSEMBLY AND PADS	1111 - 4
3I18	CAM, RETURN-TO-DIG	3115 - 2
3I19	CAM, RETURN-TO-DIG	3115 - 3
1G16	CAMSHAFT (ENGINE SERIAL NO. -713822)	0402 - 4
1G17	CAMSHAFT (ENGINE SERIAL NO. 713823-)	0402 - 5
1G16	CAMSHAFT GEAR (ENGINE SERIAL NO. -713822)	0402 - 4
1G17	CAMSHAFT GEAR (ENGINE SERIAL NO. 713823-)	0402 - 5
1G16	CAMSHAFT KEY (ENGINE SERIAL NO. -713822)	0402 - 4
2C12	CAP, FUEL TANK FILLER	0560 - 2
1C18	CAP, HUB, FRONT WHEEL	0230 - 1
2B20	CAP, RADIATOR	0510 - 2
2B22	CAP, RADIATOR	0510 - 4
1G24	CAP,MAIN BEARING (ENGINE SERIAL NO. -713822)	0404 - 2
1H1	CAP,MAIN BEARING (ENGINE SERIAL NO. 713823-)	0404 - 4
2G1	CAPACITOR, ALTERNATOR	1672 - 3
1D9	CARRIER ASSEMBLY, FWD	0250 - 12
1D9	CARRIER, FWD	0250 - 12
1C3	CARRIER, PLANETARY PINION	0201 - 12
1F9	CARTRIDGE VALVE AND COIL ASSEMBLY	0360 - 2
1F11	CARTRIDGE VALVE AND COIL ASSEMBLY	0360 - 4
1F9	CARTRIDGE, VALVE, TRANSMISSION	0360 - 2
1F11	CARTRIDGE, VALVE, TRANSMISSION	0360 - 4
3E23	CASE SEALS, HEATER AND HVAC MODULE	1830 - 20
1D19	CASE, TRANSMISSION AND PLUGS	0341 - 1
2F16	CENTRAL LUBRICATION SYSTEM, FRONT AXLE	1370 - 2
1F17	CHARGE PUMP	0360 - 11
3H2	CHARGE PUMP	2160 - 12
3H4	CHARGE PUMP	2160 - 14
3H5	CHARGE PUMP	2160 - 15
3H6	CHARGE PUMP	2160 - 16
3H9	CHARGE PUMP	2160 - 20
3H11	CHARGE PUMP	2160 - 22
3H13	CHARGE PUMP	2160 - 24
3H15	CHARGE PUMP	2160 - 26
3H17	CHARGE PUMP	2160 - 28
3H19	CHARGE PUMP	2160 - 30
3H2	CHARGE PUMP BELT	2160 - 12
3H2	CHARGE PUMP BRACKET	2160 - 12
1F17	CHARGE PUMP OIL FILTER	0360 - 11
3H2	CHARGE PUMP PULLEY	2160 - 12
3H4	CHARGE PUMP SEAL KIT	2160 - 14
3H5	CHARGE PUMP SEAL KIT	2160 - 15
3H6	CHARGE PUMP SEAL KIT	2160 - 16
1F17	CHARGE PUMP, AXIAL BEARING	0360 - 11
3J24	CHECK PLUG, LOAD, BUCKET SECTION	3160 - 21
2G16	CIRCUIT BREAKER, SIDE CONSOLE	1674 - 12
2G16	CIRCUIT BREAKERS	1674 - 12
2F23	CLAMPS, BATTERY	1671 - 2
4G9	CLAMPS, STABILIZER CYLINDER	3360 - 70
2C3	CLEANER, AIR	0520 - 2
4D1	CLEVIS, EXTENDIBLE DIPPERSTICK	3340 - 6
1E20	CLUTCH ASSEMBLY, FIRST GEAR, POWER SHIFT	0350 - 18
1F3	CLUTCH ASSEMBLY,FORWARD, POWER SHIFT	0350 - 26
1F1	CLUTCH ASSEMBLY,FOURTH GEAR, POWER SHIFT	0350 - 24
1F5	CLUTCH ASSEMBLY,REVERSE, POWER SHIFT	0350 - 28
1E22	CLUTCH ASSEMBLY,SECOND GEAR, POWER SHIFT	0350 - 20
1E24	CLUTCH ASSEMBLY,THIRD GEAR, POWER SHIFT	0350 - 22
1E24	CLUTCH BACKING PLATE, POWER SHIFT	0350 - 22
1F1	CLUTCH BACKING PLATE, POWER SHIFT	0350 - 24
1F3	CLUTCH BACKING PLATE, POWER SHIFT	0350 - 26
1F5	CLUTCH BACKING PLATE, POWER SHIFT	0350 - 28
1E20	CLUTCH CARRIER, FIRST GEAR, POWER SHIFT	0350 - 18
1F3	CLUTCH CARRIER, FORWARD, POWER SHIFT	0350 - 26
1F1	CLUTCH CARRIER, FOURTH GEAR, POWER SHIFT	0350 - 24
1F5	CLUTCH CARRIER, REVERSE, POWER SHIFT	0350 - 28
1E22	CLUTCH CARRIER, SENCOD GEAR, POWER SHIFT	0350 - 20
1E24	CLUTCH CARRIER, THIRD GEAR, POWER SHIFT	0350 - 22
2G20	CLUTCH DISCONNECT SWITCH	1674 - 16
2G22	CLUTCH DISCONNECT SWITCH	1674 - 18
3I20	CLUTCH DISCONNECT SWITCH BOOT	3115 - 4
2E12	CLUTCH DISK, PARK BRAKE	1111 - 8
1E10	CLUTCH PLATE, MFWD	0350 - 8
1E16	CLUTCH, PLANETARY	0350 - 14
1E6	CLUTCH, TRANSMISSION INPUT	0350 - 4
3C23	COAT HOOK	1810 - 30
1F9	COIL ASSEMBLY, TRANSMISSION	0360 - 2
1F11	COIL ASSEMBLY, TRANSMISSION	0360 - 4
3E13	COIL, AIR CONDITIONING EVAPORATOR	1830 - 10
3E15	COIL, AIR CONDITIONING EVAPORATOR	1830 - 12
3E17	COIL, AIR CONDITIONING EVAPORATOR	1830 - 14
3E19	COIL, AIR CONDITIONING EVAPORATOR	1830 - 16
3E21	COIL, AIR CONDITIONING EVAPORATOR	1830 - 18
1F11	COIL, ELECTRICAL	0360 - 4
1J14	COIL, STARTING MOTOR (ENGINE SERIAL NO. -814064)	0422 - 2
2B15	COLD WEATHER STARTING AID	0505 - 2
2B17	COLD WEATHER STARTING AID	0505 - 4
2B17	COLD WEATHER STARTING AID SOLENOID	0505 - 4
2C19	COLUMN BRACKET, STEERING	0960 - 2
2C19	COLUMN COVER, TILT STEERING	0960 - 2
2C19	COLUMN CYLINDER, TILT STEERING	0960 - 2
2C19	COLUMN KIT, TILT STEERING	0960 - 2
2C19	COLUMN OVERHAUL KIT, TILT STEERING	0960 - 2
2C19	COLUMN, STEERING	0960 - 2
2C19	COLUMN, TILT STEERING	0960 - 2
3F7	COMPRESSOR	1830 - 28
3F9	COMPRESSOR	1830 - 30
2B20	COMPRESSOR BRACKET, AIR CONDITIONING	0510 - 2
3F7	COMPRESSOR WIRING HARNESS	1830 - 28
3F9	COMPRESSOR WIRING HARNESS	1830 - 30
3F16	COMPRESSOR, AIR CONDITIONING	1830 - 37

ALPHABETICAL INDEX - CONTINUED

GRID		PAGE
3F15	COMPRESSOR, MANIFOLD AND DUST COVER	1830 - 36
3F11	COMPRESSOR,AIR CONDITIONING	1830 - 32
3E1	COMPRESSOR,AIR SUSPENSION SEAT	1821 - 24
3F7	CONDENSER	1830 - 28
3F9	CONDENSER	1830 - 30
3F13	CONDENSER,AIR CONDITIONING	1830 - 34
2F10	CONDITIONER, ENGINE COOLANT	1369 - 6
1G22	CONNECTING ROD (ENGINE SERIAL NO. -713822)	0403 - 2
1G23	CONNECTING ROD (ENGINE SERIAL NO. 713823-)	0403 - 3
1G22	CONNECTING ROD BEARINGS (ENGINE SERIAL NO. -713822)	0403 - 2
1G23	CONNECTING ROD BEARINGS (ENGINE SERIAL NO. 713823-)	0403 - 3
2G20	CONNECTOR, LOADER LEVER	1674 - 16
2G22	CONNECTOR, LOADER LEVER	1674 - 18
2H5	CONNECTOR, ROPS ROOF HARNESS	1674 - 26
2H23	CONNECTORS, WEATHERPACK	1674 - 44
2G16	CONSOLE CIRCUIT BREAKER, SIDE	1674 - 12
2G16	CONSOLE FUSES, SIDE	1674 - 12
2G16	CONSOLE RELAYS, SIDE	1674 - 12
2G24	CONSOLE WIRING HARNESS, FRONT	1674 - 20
2H1	CONSOLE WIRING HARNESS, FRONT	1674 - 22
2G16	CONSOLE WIRING HARNESS, SIDE	1674 - 12
2G18	CONSOLE WIRING HARNESS, SIDE	1674 - 14
2B15	CONTAINER, SOLENOID	0505 - 2
4C1	CONTROL LEVER LINKAGE, BACKHOE 2-LEVER FOR EXTENDIBLE DIPPERSTICK	3315 - 6
4B23	CONTROL LEVER LINKAGE, BACKHOE, 2-LEVER	3315 - 4
4C5	CONTROL LINKAGE AND VALVE, FOOT, FIFTH FUNCTION (TWO-LEVER)	3315 - 10
4C3	CONTROL LINKAGE, FOOT, FIFTH FUNCTION, (TWO-LEVER)	3315 - 8
4D20	CONTROL VALVE AUXILIARY SECTION, BACKHOE	3360 - 12
4D22	CONTROL VALVE AUXILIARY SECTION, BACKHOE	3360 - 14
4D16	CONTROL VALVE CROWD SECTION, BACKHOE	3360 - 8
4B21	CONTROL VALVE LINKAGE, STABILIZER	3315 - 2
4C9	CONTROL VALVE LINKAGE, THREE LEVER, EXTENDIBLE BACKHOE	3315 - 14
4C7	CONTROL VALVE LINKAGE, THREE LEVER, STANDARD BACKHOE	3315 - 12
3I20	CONTROL VALVE MOUNTING BRACKET	3115 - 4
3I22	CONTROL VALVE MOUNTING BRACKET	3115 - 6
1F18	CONTROL VALVE PISTON, POWER SHIFT	0360 - 12
4D24	CONTROL VALVE SECTION SEAL KIT, BACKHOE	3360 - 16
4E7	CONTROL VALVE SELECTIVE FLOW, BACKHOE	3360 - 24
4E11	CONTROL VALVE SELECTIVE FLOW, BACKHOE	3360 - 25C
4D24	CONTROL VALVE SPOOL SEAL KIT, BACKHOE	3360 - 16
4D20	CONTROL VALVE 5TH FUNCTION, AUXILIARY SECTION	3360 - 12
4D22	CONTROL VALVE 6TH FUNCTION, AUXILIARY SECTION	3360 - 14
4D10	CONTROL VALVE, BACKHOE	3360 - 2
4E15	CONTROL VALVE, BACKHOE	3360 - 26
4D12	CONTROL VALVE, BACKHOE BOOM SECTION	3360 - 4
4D14	CONTROL VALVE, BACKHOE BUCKET SECTION	3360 - 6
4D24	CONTROL VALVE, BACKHOE SEAL KIT	3360 - 16
4D18	CONTROL VALVE, BACKHOE SWING SECTION	3360 - 10
3J4	CONTROL VALVE, LOADER	3160 - 1
3I20	CONTROL VALVE, LOADER LINKAGE	3115 - 4
3I22	CONTROL VALVE, LOADER LINKAGE, THIRD FUNCTION	3115 - 6
1F9	CONTROL VALVE, TRANSMISSION	0360 - 2
1F18	CONTROL VALVE, TRANSMISSION, POWER SHIFT	0360 - 12
4C15	CONTROL, BOOM LOCK	3315 - 20
4C17	CONTROL, BOOM LOCK	3315 - 22
1D16	CONTROL, REVERSE WITH GUARD	0315 - 2
4C17	CONTROL,BOOM LOCK(WITH LINKAGE CONTROL)	3315 - 22
3E7	CONTROL,TEMPERATURE HEATER	1830 - 4
4G18	CONTROLLED LOWERING DEVICE, BOOM CYL.KIT	3360 - 80
4G20	CONTROLLED LOWERING DEVICE,CROWD CYL KIT	3360 - 82
2G24	CONTROLLER MOUNTING PLATE	1674 - 20
2H11	CONTROLLER, SELECTIVE FLOW	1674 - 32
2G24	CONTROLLER, SHIFT	1674 - 20
4C13	CONTROLS, FOUR-LEVER STANDARD BACKHOE	3315 - 18
4C19	CONTROLS, FOUR-LEVER STANDARD BACKHOE	3315 - 24
2C16	CONVERTER, TORQUE	0641 - 1
2C17	CONVERTER, TORQUE	0641 - 2
2B19	COOLANT HEATER, ENGINE	0505 - 6
1J1	COOLER, ENGINE OIL (ENGINE SERIAL NO. -713822)	0419 - 2
2B20	COOLER, HYDRAULIC OIL	0510 - 2
2B22	COOLER, HYDRAULIC OIL	0510 - 4
2B20	COOLER, TRANSMISSION OIL	0510 - 2
2B22	COOLER, TRANSMISSION OIL	0510 - 4
2F14	COOLSCAN PLUS TEST KIT, FLUID ANALYSIS PRODUCTS	1369 - 10
3E13	CORE, CAB HEATER	1830 - 10
3E15	CORE, CAB HEATER	1830 - 12
3E17	CORE, CAB HEATER	1830 - 14
3E19	CORE,CAB HEATER	1830 - 16
3E21	CORE,CAB HEATER	1830 - 18
4G18	COUNTER BALANCE VALVE,CLD	3360 - 80
4G20	COUNTER BALANCE VALVE,CLD	3360 - 82
2I13	COUNTERWEIGHT	1749 - 1
2I11	COUNTERWEIGHT FRAME	1740 - 3
4G23	COVER, AUXILIARY DRIVE	4151 - 2
4H1	COVER, AUXILIARY DRIVE	4151 - 4
4H3	COVER, AUXILIARY DRIVE	4151 - 6
4H5	COVER, AUXILIARY DRIVE	4151 - 8
3F24	COVER, BATTERY BOX	1913 - 2
2D16	COVER, BRAKE VALVE	1060 - 11
3D1	COVER, CAB DOOR LATCH	1810 - 32
3B21	COVER, CAB FENDER	1810 - 4
3F22	COVER, COWL	1910 - 4
3B21	COVER, DIPPERSTICK LEVER	1810 - 4
4E3	COVER, END, LEFT	3360 - 20
4D25	COVER, END, RIGHT	3360 - 17
3D1	COVER, FRONT WIPER MOTOR	1810 - 32
3H7	COVER, GASKET, HYDRAULIC RESERVOIR	2160 - 18
3B21	COVER, LOADER LINKAGE	1810 - 4
1H15	COVER, OIL FILLER OPENING	0407 - 9
4E3	COVER, RELIEF VALVE	3360 - 20
1G20	COVER, ROCKER ARM (ENGINE SERIAL NO. -713822)	0402 - 8
1G21	COVER, ROCKER ARM (ENGINE SERIAL NO. 713823-)	0402 - 9
3D16	COVER, SEAT BELT	1821 - 14
1J13	COVER, SOLENOID	0422 - 1
3B21	COVER, STABILIZER LINKAGE	1810 - 4
3B19	COVER, STEERING COLUMN	1810 - 2
2C19	COVER, TILT STEERING COLUMN	0960 - 2
1G13	COVER, TIMING GEAR (ENGINE SERIAL NO. -713822)	0402 - 1
1G14	COVER, TIMING GEAR (ENGINE SERIAL NO. 713823-)	0402 - 2
1D22	COVER, TRANSFER CASE, MFWD	0341 - 4
1D20	COVER, TRANSMISSION	0341 - 2
1H8	COVER,AUXILLARY DRIVE COVER (ENGINE SERIAL NO. 713823-)	0404 - 11
1I23	COVER,THERMOSTAT	0418 - 2
2F23	COVERS, BATTERY	1671 - 2
3F22	COWL COVER	1910 - 4

ALPHABETICAL INDEX - CONTINUED

GRID		PAGE
3F22	COWL COVER ISOLATOR	1910 - 4
3F22	COWL COVER SUPPORT	1910 - 4
3F22	COWL DOOR LATCH	1910 - 4
3F22	COWL DOOR SPRING CYLINDER	1910 - 4
3F22	COWL ISOLATOR	1910 - 4
1G8	CRANKSHAFT (ENGINE SERIAL NO. -713822)	0401 - 2
1G12	CRANKSHAFT (ENGINE SERIAL NO.713823-)	0401 - 6
1G10	CRANKSHAFT BEARINGS	0401 - 4
1J21	CRANKSHAFT BELT,KEY AND PULLEY (ENGINE SERIAL NO. -713822)	0429 - 1
1J24	CRANKSHAFT DAMPER (ENGINE SERIAL NO. 713823-)	0429 - 4
1G12	CRANKSHAFT GEAR (ENGINE SERIAL NO.713823-)	0401 - 6
1G11	CRANKSHAFT KIT, UNDERSIZE	0401 - 5
1J24	CRANKSHAFT PULLEY (ENGINE SERIAL NO. 713823-)	0429 - 4
1G12	CRANKSHAFT THRUST BEARING (ENGINE SERIAL NO.713823-)	0401 - 6
4G20	CROWD CYL.KIT,CONTROLLED LOWERING DEVICE	3360 - 82
4G20	CROWD CYL.KIT,LOWERING DEVICE,CONTROLLED	3360 - 82
4F8	CROWD CYLINDER	3360 - 44
4F20	CROWD CYLINDER HYDRAULICS, BACKHOE	3360 - 56
4F8	CROWD CYLINDER PINS	3360 - 44
4F8	CROWD CYLINDER REPAIR KIT	3360 - 44
4D16	CROWD SECTION, BACKHOE CONTROL VALVE	3360 - 8
4E21	CROWD SECTION, BACKHOE CONTROL VALVE	3360 - 32
3D16	CUSHION,BACK PAD	1821 - 14
3D16	CUSHIONS, SEAT	1821 - 14
3D8	CUSHIONS, SEAT WITH NON-SUSPENDED SEAT	1821 - 6
3I6	CUTTING EDGE, MULTI-PURPOSE BUCKET	3102 - 4
3I10	CUTTING EDGE, MULTI-PURPOSE BUCKET	3102 - 8
3I4	CUTTING, EDGE AUXILIARY	3102 - 2
1G24	CYLINDER BLOCK (ENGINE SERIAL NO. -713822)	0404 - 2
1H1	CYLINDER BLOCK (ENGINE SERIAL NO. 713823-)	0404 - 4
2C19	CYLINDER BOOT, TILT STEERING	0960 - 2
1H21	CYLINDER HEAD (ENGINE SERIAL NO. -713822)	0409 - 2
1H23	CYLINDER HEAD (ENGINE SERIAL NO. 713823-)	0409 - 4
1H21	CYLINDER HEAD GASKET (ENGINE SERIAL NO. -713822)	0409 - 2
1H23	CYLINDER HEAD GASKET (ENGINE SERIAL NO. 713823-)	0409 - 4
1K7	CYLINDER HEAD REMOVAL GASKET SET (ENGINE SERIAL NO. 713823-)	0452 - 2
4G9	CYLINDER HYDRAULICS, STABILIZER	3360 - 70
4F6	CYLINDER KIT, BACKHOE BUCKET	3360 - 42
3J14	CYLINDER KIT, LOADER BOOM	3160 - 11
3J21	CYLINDER KIT, LOADER BOOM	3160 - 18
1G22	CYLINDER LINER (ENGINE SERIAL NO. -713822)	0403 - 2
1G23	CYLINDER LINER (ENGINE SERIAL NO. 713823-)	0403 - 3
1G22	CYLINDER LINER O-RING KIT (ENGINE SERIAL NO. -713822)	0403 - 2
1G23	CYLINDER LINER O-RING KIT (ENGINE SERIAL NO. 713823-)	0403 - 3
2F10	CYLINDER LINER PACKING LUBRICANT	1369 - 6
2E20	CYLINDER LOCK BAR ROD	1313 - 2
3J15	CYLINDER REPAIR KIT, LOADER BUCKET	3160 - 12
3J23	CYLINDER REPAIR KIT, LOADER BUCKET	3160 - 20
2E20	CYLINDER SERVICE LOCK BAR	1313 - 2
4G13	CYLINDER STOP, EXTENDIBLE DIPPERSTICK	3360 - 75
4F4	CYLINDER, BACKHOE BOOM	3360 - 40
4F6	CYLINDER, BACKHOE BUCKET	3360 - 42
4F10	CYLINDER, BACKHOE SWING	3360 - 46
4F12	CYLINDER, BACKHOE SWING	3360 - 48
3J19	CYLINDER, BUCKET LIFT	3160 - 16
3J19	CYLINDER, BUCKET LIFT HYDRAULICS	3160 - 16
4G14	CYLINDER, BUCKET, EXTENDIBLE DIPPERSTICK HYDRAULICS	3360 - 76
3D1	CYLINDER, CAB DOOR	1810 - 32
3F22	CYLINDER, COWL DOOR SPRING	1910 - 4
4F8	CYLINDER, CROWD	3360 - 44
4G11	CYLINDER, EXTENDIBLE DIPPERSTICK	3360 - 72
4G12	CYLINDER, EXTENDIBLE DIPPERSTICK	3360 - 73
4G13	CYLINDER, EXTENDIBLE DIPPERSTICK	3360 - 75
3J14	CYLINDER, LOADER BOOM LIFT	3160 - 11
3J21	CYLINDER, LOADER BOOM LIFT	3160 - 18
3J15	CYLINDER, LOADER BUCKET	3160 - 12
3J23	CYLINDER, LOADER BUCKET	3160 - 20
3J17	CYLINDER, LOADER LIFT	3160 - 14
3I16	CYLINDER, MULTI-PURPOSE BUCKET	3102 - 12
3I17	CYLINDER, MULTI-PURPOSE BUCKET	3102 - 13
3J13	CYLINDER, MULTI-PURPOSE BUCKET	3160 - 10
2C21	CYLINDER, POWER STEERING (WITHOUT MFWD)	0960 - 4
2C22	CYLINDER, POWER STEERING (WITHOUT MFWD)	0960 - 5
3C7	CYLINDER, REAR CAB WINDOW	1810 - 14
4G5	CYLINDER, STABILIZER	3360 - 66
4G7	CYLINDER, STABILIZER	3360 - 68
2C23	CYLINDER, STEERING	0960 - 6
1D1	CYLINDER, STEERING, FWD	0250 - 4
2C19	CYLINDER, TILT STEERING COLUMN	0960 - 2

D

1J24	DAMPER,CRANKSHAFT (ENGINE SERIAL NO. 713823-)	0429 - 4
3B19	DASH HOUSING	1810 - 2
3E13	DECAL, FRESH AIR FILTER	1830 - 10
2I5	DECAL, INSTRUMENT PANEL	1676 - 6
2I7	DECAL, INSTRUMENT PANEL	1676 - 8
2E23	DECALS	1320 - 2
2F1	DECALS, FRENCH	1320 - 4
2F1	DECALS, SPANISH	1320 - 4
4G18	DEVICE,CONTROLLED LOWERING,BOOM CYL.KIT	3360 - 80
4G20	DEVICE,CONTROLLED LOWERING,CROWD CYL.KIT	3360 - 82
2F15	DIESELSCAN TEST KIT, FLUID ANALYSIS PRODUCTS	1369 - 11
2G11	DIFF LOCK SOLENOID DIODE	1674 - 6
1D5	DIFFERENTIAL AND GEARS, FWD	0250 - 8
1C1	DIFFERENTIAL HOUSING	0201 - 10
1C15	DIFFERENTIAL HOUSING	0210 - 12
1D5	DIFFERENTIAL HOUSING, FWD	0250 - 8
1C17	DIFFERENTIAL LOCK PLUMBING	0210 - 14
2E14	DIFFERENTIAL LOCK SOLENOID	1160 - 2
1D12	DIFFERENTIAL LOCK SWITCH	0260 - 1
2G18	DIFFERENTIAL LOCK SWITCH	1674 - 14
2E14	DIFFERENTIAL LOCK VALVE PARK BRAKE	1160 - 2
1D5	DIFFERENTIAL PINION, FWD	0250 - 8
1D5	DIFFERENTIAL, FWD	0250 - 8
2I1	DIGITAL DISPLAY	1676 - 2
2G7	DIODE, ALTERNATOR	1674 - 2
2G9	DIODE, ALTERNATOR	1674 - 4
2G13	DIODE, ALTERNATOR	1674 - 8
2G11	DIODE, DIFF LOCK SOLENOID	1674 - 6
2H1	DIODE, FLASHER	1674 - 22
2G11	DIODE, MFWD SOLENOID	1674 - 6

ALPHABETICAL INDEX - CONTINUED

GRID		PAGE
2G11	DIODE, PARK BRAKE SOLENOID	1674 - 6
4G13	DIPPERSTICK CYLINDER STOP, EXTENDIBLE	3360 - 75
4G11	DIPPERSTICK CYLINDER, EXTENDIBLE	3360 - 72
4G12	DIPPERSTICK CYLINDER, EXTENDIBLE	3360 - 73
4D3	DIPPERSTICK HOUSING, EXTENDIBLE	3340 - 8
4D1	DIPPERSTICK KIT, EXTENDIBLE	3340 - 6
4D3	DIPPERSTICK KIT, EXTENDIBLE	3340 - 8
3B21	DIPPERSTICK LEVER COVER	1810 - 4
4C24	DIPPERSTICK, BACKHOE	3340 - 4
4G13	DIPPERSTICK, CYLINDER EXTENDIBLE	3360 - 75
1H9	DIPSTICK TUBE, ENGINE OIL (ENGINE SERIAL NO. -713822)	0407 - 2
1E1	DIPSTICK TUBE, TRANSMISSION	0341 - 8
1H9	DIPSTICK, ENGINE OIL (ENGINE SERIAL NO. -713822)	0407 - 2
1H10	DIPSTICK, ENGINE OIL (ENGINE SERIAL NO. 713823-)	0407 - 3
3H7	DIPSTICK, HYDRAULIC RESERVOIR	2160 - 18
1D20	DIPSTICK, TRANSMISSION	0341 - 2
1E1	DIPSTICK,TRANSMISSION	0341 - 8
2D3	DISK, BRAKE	1011 - 1
2D5	DISK, BRAKE	1011 - 4
2I1	DISPLAY, DIGITAL	1676 - 2
3C1	DOME LIGHT, CAB	1810 - 8
3D1	DOOR CYLINDER, CAB	1810 - 32
3C21	DOOR HANDLE, LEFT HAND CAB	1810 - 28
3C23	DOOR HANDLE, RIGHT HAND CAB	1810 - 30
3C21	DOOR HARDWARE, LEFT HAND CAB	1810 - 28
3C23	DOOR HARDWARE, RIGHT HAND CAB	1810 - 30
3C21	DOOR HINGE, LEFT HAND CAB	1810 - 28
3C23	DOOR HINGE, RIGHT HAND CAB	1810 - 30
3D1	DOOR LATCH COVER, CAB	1810 - 32
3D1	DOOR LATCH, CAB	1810 - 32
3D1	DOOR PULL HANDLE, CAB	1810 - 32
3C17	DOOR SEALS	1810 - 24
3C21	DOOR WIPER BLAKE, LEFT HAND CAB	1810 - 28
3C21	DOOR WIPER, LEFT HAND CAB	1810 - 28
3C23	DOOR WIPER, RIGHT HAND CAB	1810 - 30
3C17	DOORS, CAB	1810 - 24
3H7	DRAIN COCK, HYDRAULIC RESERVOIR	2160 - 18
3H7	DRAIN HOSE, HYDRAULIC RESERVOIR	2160 - 18
1C23	DRIVE SHAFT	0250 - 2
1D11	DRIVE SHAFT (MFWD)	0250 - 14
2I12	DRIVE SHAFT GUARD, MFWD	1746 - 2
3G17	DRIVE SHAFT, HYDRAULIC PUMP	2160 - 2
1E10	DRIVE SHAFT, MFWD	0350 - 8
1D17	DRIVE SHAFT, TRANSMISSION	0325 - 1
1B14	DRIVE WHEEL	0110 - 1
1B15	DRIVE WHEEL	0110 - 2
1J25	DRIVE, AUXILIARY, HYD PUMP-FRONT	0429 - 5
1J22	DRIVE, FAN (ENGINE SERIAL NO. 713823-)	0429 - 2
1D18	DRIVESHAFT (REVERSER)	0325 - 2
1E10	DRUM, MFWD	0350 - 8
3F11	DRYER,RECEIVER, AIR CONDITIONING	1830 - 32
3F1	DUCTS, AIR CONDITIONING	1830 - 22
3F3	DUCTS, AIR CONDITIONING	1830 - 24
3F5	DUCTS, AIR CONDITIONING	1830 - 26
3F1	DUCTS, CAB HEATER	1830 - 22
3F3	DUCTS, CAB HEATER	1830 - 24
3F5	DUCTS, CAB HEATER	1830 - 26
3F15	DUST COVER	1830 - 36
3I20	DUST COVER, CLUTCH DISCONNECT SWITCH	3115 - 4

E

GRID		PAGE
3I4	EDGE, AUXILIARY CUTTING	3102 - 2
3I4	EDGE, BOLT-ON, LOADER BUCKET	3102 - 2
1H25	ELBOW, EXHAUST (ENGINE SERIAL NO. -713822)	0410 - 2
1I1	ELBOW, EXHAUST (ENGINE SERIAL NO. 713823-)	0410 - 3
4G9	ELBOWS, STABILIZER CYLINDER	3360 - 70
1F11	ELECTRICAL COIL	0360 - 4
2G20	ELECTRICAL FUSES	1674 - 16
2G22	ELECTRICAL FUSES	1674 - 18
2C3	ELEMENT, AIR CLEANER	0520 - 2
1J9	ELEMENT,FUEL FILTER (ENGINE SERIAL NO. 713823-)	0420 - 6
1J7	ELEMENT,FUEL FILTER (ENGINE SERIAL NO. -713822)	0420 - 4
3F24	ENCLOSURE, BATTERY	1913 - 2
4D25	END COVER, RIGHT	3360 - 17
4D25	END PLATE, RIGHT	3360 - 17
2B19	ENGINE COOLAN HEATER EXTENSION CORD	0505 - 6
1J3	ENGINE COOLANT ADAPTER (ENGINE SERIAL NO. 713823-)	0419 - 4
2F10	ENGINE COOLANT CONDITIONER	1369 - 6
2B19	ENGINE COOLANT HEATER	0505 - 6
2G7	ENGINE COOLANT TEMPERATURE SWITCH	1674 - 2
2G9	ENGINE COOLANT TEMPERATURE SWITCH	1674 - 4
2G13	ENGINE COOLANT TEMPERATURE SWITCH	1674 - 8
1K6	ENGINE CYLINDER HEAD REMOVAL GASKET SET (ENGINE SERIAL NO. -713822)	0452 - 1
1K2	ENGINE FLYWHEEL (ENGINE SERIAL NO. -713822)	0433 - 2
1K3	ENGINE FLYWHEEL (ENGINE SERIAL NO. 713823-)	0433 - 3
1K2	ENGINE FLYWHEEL HOUSING (ENGINE SERIAL NO. -713822)	0433 - 2
1K4	ENGINE FLYWHEEL HOUSING (ENGINE SERIAL NO. 713823-814064)	0433 - 4
1H7	ENGINE FRONT PLATE (ENGINE SERIAL NO. -713822)	0404 - 10
1H8	ENGINE FRONT PLATE (ENGINE SERIAL NO. 713823-)	0404 - 11
1K10	ENGINE MAJOR OVERHAUL GASKET SET (ENGINE SERIAL NO. 713823-)	0452 - 6
2C9	ENGINE MOUNT	0540 - 1
2C10	ENGINE MOUNT	0540 - 2
2C11	ENGINE MOUNT ISOLATOR	0540 - 3
2C9	ENGINE MOUNT SUPPORT	0540 - 1
2C10	ENGINE MOUNT SUPPORT	0540 - 2
2C11	ENGINE MOUNTING BRACKET	0540 - 3
2F5	ENGINE OIL	1369 - 1
1H1	ENGINE OIL BY-PASS VALVE (ENGINE SERIAL NO. 713823-)	0404 - 4
1J1	ENGINE OIL COOLER (ENGINE SERIAL NO. -713822)	0419 - 2
1J3	ENGINE OIL COOLER (ENGINE SERIAL NO. 713823-)	0419 - 4
1J1	ENGINE OIL COOLER OIL LINES (ENGINE SERIAL NO. -713822)	0419 - 2
1H9	ENGINE OIL DIPSTICK (ENGINE SERIAL NO. -713822)	0407 - 2
1H10	ENGINE OIL DIPSTICK (ENGINE SERIAL NO. 713823-)	0407 - 3
1H9	ENGINE OIL DIPSTICK TUBE (ENGINE SERIAL NO. -713822)	0407 - 2
1H10	ENGINE OIL DIPSTICK TUBE (ENGINE SERIAL NO. 713823-)	0407 - 3

ALPHABETICAL INDEX - CONTINUED

GRID		PAGE
1G21	ENGINE OIL FILL PLUG (ENGINE SERIAL NO. 713823-)	0402 - 9
1G20	ENGINE OIL FILLER PLUG (ENGINE SERIAL NO. -713822)	0402 - 8
1G24	ENGINE OIL FILTER (ENGINE SERIAL NO. -713822)	0404 - 2
1H16	ENGINE OIL FILTER AND ADAPTER (ENGINE SERIAL NO.713824-)	0407 - 10
1H13	ENGINE OIL PAN (ENGINE SERIAL NO. -713822)	0407 - 7
1H14	ENGINE OIL PAN (ENGINE SERIAL NO. 713823-)	0407 - 8
1G14	ENGINE OIL PRESSURE RELIEF VALVE (ENGINE SERIAL NO. 713823-)	0402 - 2
2G9	ENGINE OIL PRESSURE SENDING UNIT	1674 - 4
2G11	ENGINE OIL PRESSURE SENDING UNIT	1674 - 6
2G13	ENGINE OIL PRESSURE SENDING UNIT	1674 - 8
2G7	ENGINE OIL PRESSURE SWITCH	1674 - 2
2G9	ENGINE OIL PRESSURE SWITCH	1674 - 4
2G13	ENGINE OIL PRESSURE SWITCH	1674 - 8
1H12	ENGINE OIL PUMP (ENGINE SERIAL NO. 713824-)	0407 - 5
1H11	ENGINE OIL PUMP AND HOUSING (ENGINE SERIAL NO. -713823)	0407 - 4
1H12	ENGINE OIL PUMP GEAR (ENGINE SERIAL NO. 713824-)	0407 - 5
1H12	ENGINE OIL PUMP HOUSING (ENGINE SERIAL NO. 713824-)	0407 - 5
1H12	ENGINE OIL PUMP INTAKE (ENGINE SERIAL NO. 713824-)	0407 - 5
1K8	ENGINE OVERHAUL GASKET KIT (ENGINE SERIAL NO. -713822)	0452 - 4
1K8	ENGINE OVERHAUL GASKET SET (ENGINE SERIAL NO. -713822)	0452 - 4
1K10	ENGINE OVERHAUL KIT (ENGINE SERIAL NO. 713823-)	0452 - 6
1G22	ENGINE PISTON (ENGINE SERIAL NO. -713822)	0403 - 2
1G23	ENGINE PISTON (ENGINE SERIAL NO. 713823-)	0403 - 3
1H7	ENGINE PLATE GASKET (ENGINE SERIAL NO. -713822)	0404 - 10
1H3	ENGINE SHORT BLOCK (ENGINE SERIAL NO. -713822)	0404 - 6
1H5	ENGINE SHORT BLOCK (ENGINE SERIAL N0. 713823-)	0404 - 8
3F20	ENGINE SIDE SHIELDS	1910 - 2
2C1	ENGINE SPEED CONTROL	0515 - 2
2C1	ENGINE SPEED CONTROL CABLE	0515 - 2
2C1	ENGINE SPEED CONTROL LEVER	0515 - 2
2C1	ENGINE SPEED CONTROL LINKAGE	0515 - 2
2C1	ENGINE SPEED CONTROL PEDAL	0515 - 2
2C1	ENGINE SPEED CONTROL ROD	0515 - 2
2C1	ENGINE SPEED CONTROL SHAFT	0515 - 2
1G19	ENGINE TAPPET (ENGINE SERIAL NO. 713823-)	0402 - 7
1I22	ENGINE THERMOSTAT AND HOUSING	0418 - 1
2F10	ENGINE VALVE STEM LUBRICANT	1369 - 6
1H19	ENGINE VENTILATING SYSTEM (ENGINE SERIAL NO. 713823-)	0408 - 2
1H18	ENGINE VENTILATOR TUBE (ENGINE SERIAL NO. -713822)	0408 - 1
2G7	ENGINE WIRING HARNESS	1674 - 2
2G9	ENGINE WIRING HARNESS	1674 - 4
2G11	ENGINE WIRING HARNESS	1674 - 6
2G13	ENGINE WIRING HARNESS	1674 - 8
3F7	EVAPORATOR	1830 - 28
3F9	EVAPORATOR	1830 - 30
3E13	EVAPORATOR COIL, AIR CONDITIONING	1830 - 10
3E15	EVAPORATOR COIL, AIR CONDITIONING	1830 - 12
3E17	EVAPORATOR COIL, AIR CONDITIONING	1830 - 14
3E19	EVAPORATOR COIL, AIR CONDITIONING	1830 - 16
3E21	EVAPORATOR COIL, AIR CONDITIONING	1830 - 18
1I1	EXHAUST ELBOW (ENGINE SERIAL NO. 713823-)	0410 - 3
1I1	EXHAUST ELBOW ADAPTER (ENGINE SERIAL NO. 713823-)	0410 - 3
1H25	EXHAUST ELBOW AND ADAPTER (ENGINE SERIAL NO. -713822)	0410 - 2
2C7	EXHAUST EXTENSION	0530 - 2
2C8	EXHAUST EXTENSION	0530 - 3
1I2	EXHAUST MANIFOLD (ENGINE SERIAL NO. 713823-)	0410 - 4
1H25	EXHAUST MANIFOLD AND GASKET (ENGINE SERIAL NO. -713822)	0410 - 2
1H23	EXHAUST VALVE (ENGINE SERIAL NO. 713823-)	0409 - 4
1H21	EXHAUST VALVES AND INSERT (ENGINE SERIAL NO. -713822)	0409 - 2
3F7	EXPANSION VALVE	1830 - 28
3F9	EXPANSION VALVE	1830 - 30
4G14	EXTENDIBLE DIPPERSTICK BUCKET CYLINDER HYDRAULICS	3360 - 76
4D1	EXTENDIBLE DIPPERSTICK CLEVIS	3340 - 6
4G11	EXTENDIBLE DIPPERSTICK CYLINDER	3360 - 72
4G13	EXTENDIBLE DIPPERSTICK CYLINDER	3360 - 75
4G12	EXTENDIBLE DIPPERSTICK CYLINDER (REPLACEMENT)	3360 - 73
4G13	EXTENDIBLE DIPPERSTICK CYLINDER PINS	3360 - 75
4G13	EXTENDIBLE DIPPERSTICK CYLINDER STOP	3360 - 75
4D1	EXTENDIBLE DIPPERSTICK EXTENSION	3340 - 6
4D1	EXTENDIBLE DIPPERSTICK EXTENSION BUSHING	3340 - 6
4D1	EXTENDIBLE DIPPERSTICK EXTENSION LABEL	3340 - 6
4D3	EXTENDIBLE DIPPERSTICK HOUSING	3340 - 8
4G14	EXTENDIBLE DIPPERSTICK HYDRAULICS	3360 - 76
4D1	EXTENDIBLE DIPPERSTICK KIT	3340 - 6
4D3	EXTENDIBLE DIPPERSTICK KIT	3340 - 8
4D1	EXTENDIBLE DIPPERSTICK SHIM	3340 - 6
4D1	EXTENDIBLE DIPPERSTICK WEARSTRIPS	3340 - 6
4E23	EXTENDIBLE SECTION, BACKHOE CONTROL VAL.	3360 - 34
2B19	EXTENSION CORD, ENGINE COOLANT HEATER	0505 - 6
2C7	EXTENSION, EXHAUST	0530 - 2
2C8	EXTENSION, EXHAUST	0530 - 3
4D1	EXTENSION, EXTENDIBLE DIPPERSTICK	3340 - 6
3G4	EXTENTIONS, FENDER	1927 - 3
3G9	EXTERNAL MIRROR	2002 - 3

F

2I1	FACE PLATE, INSTRUMMENT PANEL	1676 - 2
1J21	FAN BELT (ENGINE SERIAL NO. -713822)	0429 - 1
2B24	FAN BLADE, GUARD AND SHROUD	0510 - 6
1J22	FAN DRIVE HOUSING SUPPORT (ENGINE SERIAL NO. 713823-)	0429 - 2
1J22	FAN DRIVE, HUB, PULLEY AND HOUSING (ENGINE SERIAL NO. 713823-)	0429 - 2
2F25	FAN, ALTERNATOR	1672 - 2
2G1	FAN, ALTERNATOR	1672 - 3
2I5	FAULT LAMP	1676 - 6
2I7	FAULT LAMP	1676 - 8
2I1	FAULT LAMP LABEL	1676 - 2
4D5	FEET, REVERSIBLE STABILIZER	3340 - 10

ALPHABETICAL INDEX - CONTINUED

GRID		PAGE
4D6	FEET, STABILIZER	3340 - 11
3B21	FENDER COVER LOUVERS, CAB	1810 - 4
3B21	FENDER COVER, CAB	1810 - 4
3G4	FENDER, EXTENTIONS	1927 - 3
3G2	FENDER, L.H.	1927 - 1
3G2	FENDER, R.H.	1927 - 1
3G3	FENDERS, LEFT	1927 - 2
3G3	FENDERS, RIGHT	1927 - 2
3G3	FENDERS, RIGHT AND LEFT	1927 - 2
4C11	FIFTH FN LEVER FOR THREE LEVER CONTROLS	3315 - 16
4C3	FIFTH FUNCTION CONTROL LEVER LABEL	3315 - 8
4C5	FIFTH FUNCTION CONTROL LEVER LABEL	3315 - 10
4C5	FIFTH FUNCTION FOOT CONTROL LINKAGE AND VALVE (TWO-LEVER)	3315 - 10
4C3	FIFTH FUNCTION FOOT CONTROL LINKAGE, (TWO-LEVER)	3315 - 8
4E25	FIFTH FUNCTION MANUAL VALVE KIT	3360 - 36
4D20	FIFTH FUNCTION VALVE, AUXILIARY SECTION	3360 - 12
1J5	FILTER ELEMENT, FUEL (ENGINE SERIAL NO. -713822)	0420 - 2
2D17	FILTER, BRAKE	1060 - 12
3H7	FILTER, BREATHER, HYDRAULIC RESERVOIR	2160 - 18
1F17	FILTER, CHARGE PUMP	0360 - 11
2F17	FILTER, FRESH AIR	1399 - 1
2F17	FILTER, FUEL	1399 - 1
1J9	FILTER, FUEL (ENGINE SERIAL NO. 713823-)	0420 - 6
1J7	FILTER, FUEL (ENGINE SERIAL NO. -713 822)	0420 - 4
3G25	FILTER, HYDRAULIC OIL	2160 - 10
3H9	FILTER, MAIN HYDRAULIC	2160 - 20
3H11	FILTER, MAIN HYDRAULIC	2160 - 22
3H13	FILTER, MAIN HYDRAULIC	2160 - 24
3H15	FILTER, MAIN HYDRAULIC	2160 - 26
3H17	FILTER, MAIN HYDRAULIC	2160 - 28
3H19	FILTER, MAIN HYDRAULIC	2160 - 30
1F14	FILTER, OIL, TRANSMISSION	0360 - 8
2F17	FILTER, RECIRCULATION	1399 - 1
1F17	FILTER, TRANSMISSION	0360 - 11
1G24	FILTER,ENGINE OIL (ENGINE SERIAL NO. -713822)	0404 - 2
1H16	FILTER,ENGINE OIL (ENGINE SERIAL NO.713824-)	0407 - 10
3E13	FILTERS, AIR CONDITIONING	1830 - 10
3E15	FILTERS, AIR CONDITIONING	1830 - 12
3E17	FILTERS, AIR CONDITIONING	1830 - 14
3E13	FILTERS, CAB HEATER	1830 - 10
3E15	FILTERS, CAB HEATER	1830 - 12
3E17	FILTERS, CAB HEATER	1830 - 14
2F17	FILTERS, MACHINE	1399 - 1
2F17	FILTERS, OIL	1399 - 1
3E19	FILTERS,AIR CONDITIONING	1830 - 16
3E21	FILTERS,AIR CONDITIONING	1830 - 18
3E19	FILTERS,CAB HEATER	1830 - 16
3E21	FILTERS,CAB HEATER	1830 - 18
1E20	FIRST GEAR CLUTCH ASSEMBLY, POWER SHIFT	0350 - 18
1E20	FIRST GEAR CLUTCH CARRIER, POWER SHIFT	0350 - 18
1E20	FIRST GEAR, BELLVILLEWASHER, POWER SHIFT	0350 - 18
2F11	FITTINGS, O-RING FLAT FACE SEAL	1369 - 7
3C19	FIXED WINDOW	1810 - 26
2G16	FLASHER	1674 - 12
2H1	FLASHER SWITCH,-4 WAY	1674 - 22
2H1	FLASHER, DIODE	1674 - 22
2G20	FLASHER, 12-VOLT	1674 - 16
2G22	FLASHER, 12-VOLT	1674 - 18
2F11	FLAT FACE O-RING SEAL FITTINGS	1369 - 7
2C17	FLEXPLATE, TORQUE CONVERTOR	0641 - 2
3D3	FLOOR MAT	1810 - 34
3D3	FLOOR RAMPS	1810 - 34
2F14	FLUID ANALYSIS PRODUCTS (COOLSCAN PLUS TEST KIT)	1369 - 10
2F15	FLUID ANALYSIS PRODUCTS (DIESELSCAN TEST KIT)	1369 - 11
2F12	FLUID ANALYSIS PRODUCTS (OILSCAN PLUS TEST KIT)	1369 - 8
2B15	FLUID, STARTING	0505 - 2
2B17	FLUID, STARTING	0505 - 4
1K5	FLYWHEEL HOUSING (ENGINE SERIAL NO. 814065-)	0433 - 5
1K2	FLYWHEEL HOUSING GASKET (ENGINE SERIAL NO. -713822)	0433 - 2
1K2	FLYWHEEL HOUSING, ENGINE (ENGINE SERIAL NO. -713822)	0433 - 2
1K3	FLYWHEEL RING GEAR (ENGINE SERIAL NO. 713823-)	0433 - 3
1K2	FLYWHEEL, ENGINE (ENGINE SERIAL NO. -713822)	0433 - 2
1K3	FLYWHEEL, ENGINE (ENGINE SERIAL NO. 713823-)	0433 - 3
1K4	FLYWHEEL,ENGINE HOUSING (ENGINE SERIAL NO. 713823-814064)	0433 - 4
1F9	FNR SPOOL	0360 - 2
4C5	FOOT CONTROL LINKAGE AND VALVE, FIFTH FUNCTION (TWO-LEVER)	3315 - 10
4C3	FOOT CONTROL LINKAGE, FIFTH FUNCTION, (TWO-LEVER)	3315 - 8
2H11	FOOT SWITCH, AUXILIARY HYDRAULIC	1674 - 32
1F3	FORWARD CLUTCH ASSEMBLY, POWER SHIFT	0350 - 26
1F3	FORWARD CLUTCH CARRIER, POWER SHIFT	0350 - 26
1D16	FORWARD/REVERSE CONTROL LABEL	0315 - 2
1F3	FORWARD, BELLVILLEWASHER, POWERSHIFT	0350 - 26
2G24	FOUR-WAY FLASHER SWITCH	1674 - 20
1F1	FOURTH GEAR CLUTCH ASSEMBLY, POWER SHIFT	0350 - 24
1F1	FOURTH GEAR CLUTCH CARRIER, POWER SHIFT	0350 - 24
1F1	FOURTH GEAR, BELLVILLEWASHER, POWERSHIFT	0350 - 24
3B23	FRAME, CAB	1810 - 6
2I11	FRAME, COUNTERWEIGHT	1740 - 3
2I11	FRAME, FRONT	1740 - 3
3G1	FRAME, GRILLE	1921 - 2
2I10	FRAME, MAIN	1740 - 2
3C5	FRAME, ROPS	1810 - 12
4C22	FRAME, SWING	3340 - 2
2I1	FRAME, SWITCH MOUNTING	1676 - 2
2F1	FRENCH LABEL KIT	1320 - 4
2F17	FRESH AIR FILTER	1399 - 1
3E13	FRESH AIR FILTER DECAL	1830 - 10
3F1	FRESH AIR INTAKE, AIR CONDITIONING	1830 - 22
3F3	FRESH AIR INTAKE, AIR CONDITIONING	1830 - 24
3F5	FRESH AIR INTAKE, AIR CONDITIONING	1830 - 26
3F1	FRESH AIR INTAKE, CAB HEATER	1830 - 22
3F3	FRESH AIR INTAKE, CAB HEATER	1830 - 24
3F5	FRESH AIR INTAKE, CAB HEATER	1830 - 26
1C19	FRONT AXLE	0230 - 2
2F16	FRONT AXLE GREASE BANK	1370 - 2
2G24	FRONT CONSOLE WIRING HARNESS	1674 - 20
3D3	FRONT COVER, CAB FLOOR	1810 - 34
3D3	FRONT COVER, ROPS FLOOR	1810 - 34
2I11	FRONT FRAME	1740 - 3
2G24	FRONT LIGHT SWITCH	1674 - 20
2H1	FRONT LIGHT SWITCH	1674 - 22
3B19	FRONT LIGHT SWITCH	1810 - 2
2G5	FRONT LIGHTS (ROPS)	1673 - 4
2G3	FRONT LIGHTS, CAB	1673 - 2

ALPHABETICAL INDEX - CONTINUED

GRID		PAGE
1H7	FRONT PLATE, ENGINE (ENGINE SERIAL NO. -713822)	0404 - 10
1H8	FRONT PLATE, ENGINE (ENGINE SERIAL NO. 713823-)	0404 - 11
1B16	FRONT WHEEL	0120 - 1
1C18	FRONT WHEEL BEARINGS	0230 - 1
1C18	FRONT WHEEL HUB	0230 - 1
1C18	FRONT WHEEL HUB CAP	0230 - 1
3C13	FRONT WINDOW WIPER MOTOR	1810 - 20
3B19	FRONT WINDSHIELD WASHER SWITCH	1810 - 2
3B19	FRONT WINDSHIELD WIPER SWITCH	1810 - 2
3C19	FRONT WINDSHIELD, RIGHT HAND ONE PIECE CAB GLASS AND WIPER MOTOR	1810 - 26
3D1	FRONT WIPER MOTOR COVER	1810 - 32
2G24	FRONT WIPER SWITCH	1674 - 20
2H1	FRONT WIPER SWITCH	1674 - 22
2F17	FUEL FILTER	1399 - 1
1J9	FUEL FILTER (ENGINE SERIAL NO. 713823-)	0420 - 6
1J5	FUEL FILTER ELEMENT (ENGINE SERIAL NO. -713822)	0420 - 2
1J9	FUEL FILTER HOSES, ELEMENT, AND HEATER (ENGINE SERIAL NO. 713823-)	0420 - 6
1J5	FUEL FILTER SUPPORT (ENGINE SERIAL NO. -713822)	0420 - 2
1J5	FUEL FILTER WATER SEPERATOR (ENGINE SERIAL NO. -713822)	0420 - 2
1J7	FUEL FILTER, HOUSING AND ELEMENT (ENGINE SERIAL NO. -713822)	0420 - 4
2I1	FUEL GAUGE	1676 - 2
2I5	FUEL GAUGE	1676 - 6
2I7	FUEL GAUGE	1676 - 8
2C12	FUEL GAUGE SENDER	0560 - 2
2C12	FUEL HOSES	0560 - 2
1J9	FUEL HOSES,FUEL FILTER (ENGINE SERIAL NO. 713823-)	0420 - 6
1I5	FUEL INJECTION LINES (ENGINE SERIAL NO. -713822)	0413 - 4
1I7	FUEL INJECTION LINES (ENGINE SERIAL NO. 713823-)	0413 - 6
1I3	FUEL INJECTION NOZZLE (ENGINE SERIAL NO. -713822)	0413 - 1
1I4	FUEL INJECTION NOZZLE (ENGINE SERIAL N0. 713823-)	0413 - 2
1I5	FUEL INJECTION PUMP (ENGINE SERIAL NO. -713822)	0413 - 4
1I7	FUEL INJECTION PUMP (ENGINE SERIAL NO. 713823-)	0413 - 6
1I7	FUEL INJECTION PUMP DRIVE GEAR (ENGINE SERIAL NO. 713823-)	0413 - 6
1I9	FUEL INJECTION PUMP ELECTRIC SHUT-OFF KIT (ENGINE SERIAL NO. -713822)	0413 - 8
1I5	FUEL INJECTION SYSTEM (ENGINE SERIAL NO. -713822)	0413 - 4
1I7	FUEL INJECTION SYSTEM (ENGINE SERIAL NO. 713823-)	0413 - 6
1J5	FUEL LINES,FUEL FILTER (ENGINE SERIAL NO. -713822)	0420 - 2
2G11	FUEL SENDER	1674 - 6
2C12	FUEL TANK	0560 - 2
2C12	FUEL TANK FILLER CAP	0560 - 2
2C14	FUEL TANK LOCK	0560 - 4
2C14	FUEL TANK PADLOCK AND KEY	0560 - 4
3E3	FUEL TANK STEP	1822 - 2
1J11	FUEL TRANSFER PUMP AND GASKET (ENGINE SERIAL NO. -713822)	0421 - 2
1J12	FUEL TRANSFER PUMP AND PUSH ROD (ENGINE SERIAL NO. 713823-)	0421 - 3
3B21	FUSE COVER	1810 - 4
2G20	FUSE PANEL	1674 - 16
2G22	FUSE PANEL	1674 - 18
2G20	FUSES, ELECTRICAL	1674 - 16
2G22	FUSES, ELECTRICAL	1674 - 18
2G16	FUSES, SIDE CONSOLE	1674 - 12
1D9	FWD CARRIER	0250 - 12
1D7	FWD PLANETARY	0250 - 10

G

3H7	GASKET COVER, HYDRAULIC RESERVOIR	2160 - 18
1K6	GASKET KIT, ENGINE CYLINDER HEAD REMOVAL (ENGINE SERIAL NO. -713822)	0452 - 1
1K8	GASKET KIT, ENGINE OVERHAUL (ENGINE SERIAL NO. -713822)	0452 - 4
1K7	GASKET SET, CYLINDER HEAD REMOVAL (ENGINE SERIAL NO. 713823-)	0452 - 2
1K10	GASKET SET, ENGINE MAJOR OVERHAUL	0452 - 6
1K7	GASKET SET,IN CHASSIS OVERHAUL (ENGINE SERIAL NO. 713823-)	0452 - 2
1I10	GASKET, AIR INTAKE (ENGINE SERIAL NO. -713822)	0414 - 1
1H21	GASKET, CYLINDER HEAD (ENGINE SERIAL NO. -713822)	0409 - 2
1H23	GASKET, CYLINDER HEAD (ENGINE SERIAL NO. 713823-)	0409 - 4
1H7	GASKET, ENGINE PLATE (ENGINE SERIAL NO. -713822)	0404 - 10
1H25	GASKET, EXHAUST MANIFOLD (ENGINE SERIAL NO. -713822)	0410 - 2
1K2	GASKET, FLYWHEEL HOUSING (ENGINE SERIAL NO. -713822)	0433 - 2
1J11	GASKET, FUEL TRANSFER PUMP (ENGINE SERIAL NO. -713822)	0421 - 2
3H7	GASKET, HYDRAULIC RESERVOIR	2160 - 18
1G20	GASKET, ROCKER ARM COVER (ENGINE SERIAL NO. -713822)	0402 - 8
1F9	GASKET, TRANSMISSION CONTROL VALVE	0360 - 2
1I2	GASKET,EXHAUST MANIFOLD (ENGINE SERIAL NO. 713823-)	0410 - 4
1G21	GASKET,ROCKER ARM COVER (ENGINE SERIAL NO. 713823-)	0402 - 9
1F22	GASKETS, INTERMEDIATE PLATE, POWER SHIFT	0360 - 16
2I1	GAUGE, FUEL	1676 - 2
2I5	GAUGE, FUEL	1676 - 6
2I7	GAUGE, FUEL	1676 - 8
4G23	GEAR, AUXILIARY DRIVE	4151 - 2
4H1	GEAR, AUXILIARY DRIVE	4151 - 4
4H3	GEAR, AUXILIARY DRIVE	4151 - 6
4H5	GEAR, AUXILIARY DRIVE	4151 - 8
1G16	GEAR, CAMSHAFT (ENGINE SERIAL NO. -713822)	0402 - 4
1G17	GEAR, CAMSHAFT (ENGINE SERIAL NO. 713823-)	0402 - 5
1G12	GEAR, CRANKSHAFT (ENGINE SERIAL NO.713823-)	0401 - 6
1E8	GEAR, DRIVE, TRANSMISSION TO TRANSFER CASE, MFWD	0350 - 6
1H12	GEAR, ENGINE OIL PUMP (ENGINE SERIAL NO. 713824-)	0407 - 5
1I7	GEAR, FUEL INJECTION PUMP DRIVE (ENGINE SERIAL NO. 713823-)	0413 - 6
1C3	GEAR, PLANETARY PINION	0201 - 12

ALPHABETICAL INDEX - CONTINUED

GRID		PAGE
1C3	GEAR, PLANETARY RING	0201 - 12
1D5	GEARS, DIFFERENTIAL, FWD	0250 - 8
1G8	GEARS, IDLER (ENGINE SERIAL NO. -713822)	0401 - 2
2F16	GREASE BANK, FRONT AXLE	1370 - 2
3G1	GRILLE FRAME	1921 - 2
3G1	GRILLE FRAME BAR	1921 - 2
3G1	GRILLE SCREEN	1921 - 2
2I12	GUARD, BOTTOM	1746 - 2
2B24	GUARD, FAN	0510 - 6
2I12	GUARD, MFWD DRIVE SHAFT	1746 - 2
1D16	GUARD, REVERSE CONTROL	0315 - 2
3B21	GUARD, VANDAL	1810 - 4
1D1	GUIDE, STEERING CYLINDER, FWD	0250 - 4

H

3D1	HANDLE, CAB DOOR PULL	1810 - 32
3C21	HANDLE, DOOR, LEFT HAND CAB	1810 - 28
3C23	HANDLE, RIGHT HAND CAB DOOR	1810 - 30
2D19	HARDWARE KIT, BRAKE VALVE	1060 - 14
3C21	HARDWARE, LEFT HAND CAB DOOR	1810 - 28
3C23	HARDWARE, RIGHT HAND CAB DOOR	1810 - 30
2H17	HARNESS, AIR CONDITIONING WIRING	1674 - 38
3G11	HARNESS, BACKUP ALARM WIRING	2004 - 2
2H3	HARNESS, CAB ROOF WIRING	1674 - 24
2G7	HARNESS, ENGINE WIRING	1674 - 2
2G9	HARNESS, ENGINE WIRING	1674 - 4
2G11	HARNESS, ENGINE WIRING	1674 - 6
2G13	HARNESS, ENGINE WIRING	1674 - 8
2H1	HARNESS, FRONT CONSOLE	1674 - 22
2H9	HARNESS, RADIO	1674 - 30
3G6	HARNESS, RADIO	2001 - 2
2H5	HARNESS, ROPS ROOF WIRING	1674 - 26
2H5	HARNESS, ROPS ROOF CONNECTOR	1674 - 26
2G20	HARNESS, SIDE CONSOLE	1674 - 16
2G22	HARNESS, SIDE CONSOLE	1674 - 18
2F25	HARNESS, WIRING, ALTERNATOR	1672 - 2
2G7	HARNESS, WIRING, ALTERNATOR	1674 - 2
2G9	HARNESS, WIRING, ALTERNATOR	1674 - 4
2G13	HARNESS, WIRING, ALTERNATOR	1674 - 8
3F7	HARNESS, WIRING, BLOWER	1830 - 28
3F9	HARNESS, WIRING, BLOWER	1830 - 30
3F7	HARNESS, WIRING, COMPRESSOR	1830 - 28
3F9	HARNESS, WIRING, COMPRESSOR	1830 - 30
2G24	HARNESS, WIRING, FRONT CONSOLE	1674 - 20
2H13	HARNESS, WIRING, HEATER BLOWER MOTOR	1674 - 34
2G11	HARNESS, WIRING, HYDRAULIC FILTER	1674 - 6
2H9	HARNESS, WIRING, RADIO	1674 - 30
2G16	HARNESS, WIRING, SIDE CONSOLE	1674 - 12
2G18	HARNESS, WIRING, SIDE CONSOLE	1674 - 14
2H7	HARNESS, WIRING, TRANMISSION SOLENOID	1674 - 28
2H15	HARNESS,WIRING,AIR CONDITIONING	1674 - 36
1H21	HEAD, CYLINDER (ENGINE SERIAL NO. -713822)	0409 - 2
1H23	HEAD, CYLINDER (ENGINE SERIAL NO. 713823-)	0409 - 4
3C5	HEADLINER, ROPS	1810 - 12
3C1	HEADLINERS, CAB	1810 - 8
2I1	HEAT BLOWER SWITCH	1676 - 2
2H13	HEAT TEMPERATURE SWITCH	1674 - 34
2I1	HEAT TEMPERATURE SWITCH	1676 - 2
3E23	HEATER AND HVAC MODULE CASE SEALS	1830 - 20
2H13	HEATER BLOWER MOTOR	1674 - 34
3F7	HEATER BLOWER MOTOR	1830 - 28
3F9	HEATER BLOWER MOTOR	1830 - 30
2H13	HEATER BLOWER MOTOR WIRING HARNESS	1674 - 34
2H13	HEATER BLOWER SWITCH	1674 - 34
2I5	HEATER BLOWER SWITCH	1676 - 6
3E5	HEATER HOSE, CAB	1830 - 2
3E7	HEATER HOSE, CAB	1830 - 4
3E13	HEATER HOUSING	1830 - 10
3E19	HEATER HOUSING	1830 - 16
3E21	HEATER HOUSING	1830 - 18
3E15	HEATER MODULE	1830 - 12
3E17	HEATER MODULE	1830 - 14
3E5	HEATER VALVE CONTROL	1830 - 2
3E7	HEATER VALVE CONTROL	1830 - 4
3E5	HEATER VALVE CONTROL CABLE	1830 - 2
3E7	HEATER VALVE CONTROL CABLE	1830 - 4
3E5	HEATER VALVE KNOB	1830 - 2
3E7	HEATER VALVE KNOB	1830 - 4
2B19	HEATER, ENGINE COOLANT	0505 - 6
1J9	HEATER,FUEL FILTER (ENGINE SERIAL NO. 713823-)	0420 - 6
3E7	HEATER,TEMERATURE CONTROL	1830 - 4
3E19	HEATING,VENTILATION,AIR CONDITIONING	1830 - 16
3E21	HEATING,VENTILATION,AIR CONDITIONING	1830 - 18
3C21	HINGE, DOOR, LEFT HAND CAB	1810 - 28
3C23	HINGE, RIGHT HAND CAB DOOR	1810 - 30
3G13	HOLDER, MANUAL	2005 - 2
3B21	HOLDER, SWING LOCK PIN	1810 - 4
3F20	HOOD	1910 - 2
3F20	HOOD LATCH	1910 - 2
3F20	HOOD SIDE SHIELDS	1910 - 2
3C23	HOOK, COAT	1810 - 30
2G7	HORN	1674 - 2
2G9	HORN	1674 - 4
3G10	HORN	2004 - 1
2I1	HORN SWITCH	1676 - 2
2I5	HORN SWITCH	1676 - 6
2I7	HORN SWITCH	1676 - 8
2C4	HOSE, AIR CLEANER	0520 - 3
1H19	HOSE, ENGINE VENTILATING (ENGINE SERIAL NO. 713823-)	0408 - 2
3C15	HOSE, WINDSHIELD WASHER	1810 - 22
2E16	HOSES HYDRAULIC, PARK BRAKE	1160 - 4
2C12	HOSES, FUEL	0560 - 2
3H9	HOSES, MAIN HYDRAULIC	2160 - 20
3H11	HOSES, MAIN HYDRAULIC	2160 - 22
3H13	HOSES, MAIN HYDRAULIC	2160 - 24
3H15	HOSES, MAIN HYDRAULIC	2160 - 26
3H17	HOSES, MAIN HYDRAULIC	2160 - 28
3H19	HOSES, MAIN HYDRAULIC	2160 - 30
2B20	HOSES, RADIATOR	0510 - 2
2B22	HOSES, RADIATOR	0510 - 4
4G9	HOSES, STABILIZER CYLINDER	3360 - 70
2C23	HOSES, STEERING	0960 - 6
3F11	HOSES,AIR CONDITIONING COMPRESSOR	1830 - 32
3F11	HOSES,AIR CONDITIONING COMPRESSOR, RECEIVER DRYER	1830 - 32
3F13	HOSES,AIR CONDITIONING HOSES	1830 - 34
3F11	HOSES,RECEIVER DRYER	1830 - 32
2I5	HOUR METER	1676 - 6
2I7	HOUR METER	1676 - 8
1C1	HOUSING AXLE	0201 - 10
1C15	HOUSING AXLE	0210 - 12
3E13	HOUSING, AIR CONDITIONING	1830 - 10
3E15	HOUSING, AIR CONDITIONING	1830 - 12
3E17	HOUSING, AIR CONDITIONING	1830 - 14
3E19	HOUSING, AIR CONDITIONING	1830 - 16
3E21	HOUSING, AIR CONDITIONING	1830 - 18
4G23	HOUSING, AUXILIARY DRIVE	4151 - 2

ALPHABETICAL INDEX - CONTINUED

GRID		PAGE
4H1	HOUSING, AUXILIARY DRIVE	4151 - 4
4H3	HOUSING, AUXILIARY DRIVE	4151 - 6
4H5	HOUSING, AUXILIARY DRIVE	4151 - 8
1C23	HOUSING, AXLE, FWD	0250 - 2
1D24	HOUSING, BELL	0341 - 6
1E16	HOUSING, BRAKE	0350 - 14
2D5	HOUSING, BRAKE	1011 - 4
3B19	HOUSING, DASH	1810 - 2
1C1	HOUSING, DIFFERENTIAL	0201 - 10
1C15	HOUSING, DIFFERENTIAL	0210 - 12
1D5	HOUSING, DIFFERENTIAL, FWD	0250 - 8
1K4	HOUSING, ENGINE FLYWHEEL (ENGINE SERIAL NO. 713823-814064)	0433 - 4
4D3	HOUSING, EXTENDIBLE DIPPERSTICK	3340 - 8
1J22	HOUSING, FAN DRIVE (ENGINE SERIAL NO. 713823-)	0429 - 2
1K5	HOUSING, FLYWHEEL (ENGINE SERIAL NO. 814065-)	0433 - 5
1J7	HOUSING, FUEL FILTER (ENGINE SERIAL NO. -713822)	0420 - 4
3E13	HOUSING, HEATER	1830 - 10
2E12	HOUSING, PARK BRAKE	1111 - 8
3B21	HOUSING, SIDE INSTRUMENT PANEL	1810 - 4
1D3	HOUSING, STEERING, FWD	0250 - 6
1D24	HOUSING, TRANSMISSION, POWER SHIFT	0341 - 6
1I12	HOUSING, TURBOCHARGER, CENTER (ENGINE SERIAL NO. -713822)	0416 - 1
1I18	HOUSING, WATER PUMP (ENGINE SERIAL NO. -713822)	0417 - 2
1H12	HOUSING,ENGINE OIL PUMP (ENGINE SERIAL NO. 713824-)	0407 - 5
1C18	HUB CAP, FRONT WHEEL	0230 - 1
1J22	HUB, FAN DRIVE (ENGINE SERIAL NO. 713823-)	0429 - 2
1C18	HUB, FRONT WHEEL	0230 - 1
3E19	HVAC MODULE	1830 - 16
3E21	HVAC MODULE	1830 - 18
3E23	HVAC MODULE CASE SEALS, HEATER	1830 - 20
3I8	HYDRAULIC CYLINDER, MULTI-PURPOSE BUCKET	3102 - 6
3I12	HYDRAULIC CYLINDER, MULTI-PURPOSE BUCKET	3102 - 9A
2G11	HYDRAULIC FILTER WIRING HARNESS	1674 - 6
2G11	HYDRAULIC FILTER WIRING LEAD	1674 - 6
2D23	HYDRAULIC HOSES, BRAKE VALVE	1063 - 2
2E1	HYDRAULIC HOSES, BRAKE VALVE	1063 - 6
2E3	HYDRAULIC HOSES, BRAKE VALVE	1063 - 8
3J17	HYDRAULIC HOSES, LOADER	3160 - 14
2E16	HYDRAULIC HOSES, PARK BRAKE	1160 - 4
3J17	HYDRAULIC LINES, LOADER	3160 - 14
2D23	HYDRAULIC OIL ACCUMULATOR	1063 - 2
2E1	HYDRAULIC OIL ACCUMULATOR	1063 - 6
2B20	HYDRAULIC OIL COOLER	0510 - 2
2B22	HYDRAULIC OIL COOLER	0510 - 4
3G25	HYDRAULIC OIL FILTER	2160 - 10
2E8	HYDRAULIC PARKING BRAKE	1111 - 4
1F12	HYDRAULIC PRESSURE REGULATING VALVE	0360 - 6
3G19	HYDRAULIC PUMP	2160 - 4
3G18	HYDRAULIC PUMP ASSEMBLY	2160 - 3
3G17	HYDRAULIC PUMP DRIVE SHAFT	2160 - 2
1J25	HYDRAULIC PUMP DRIVE, AUXILIARY	0429 - 5
3G23	HYDRAULIC PUMP OVERHAUL KIT	2160 - 8
3G16	HYDRAULIC PUMP SOLENOID VALVE	2160 - 1
3G21	HYDRAULIC PUMP STROKE CONTROL VALVE	2160 - 6
2B20	HYDRAULIC RESERVOIR	0510 - 2
3H7	HYDRAULIC RESERVOIR	2160 - 18
3H7	HYDRAULIC RESERVOIR BREATHER FILTER	2160 - 18
3H7	HYDRAULIC RESERVOIR DIPSTICK	2160 - 18
3H7	HYDRAULIC RESERVOIR DRAIN COCK	2160 - 18
3H7	HYDRAULIC RESERVOIR DRAIN HOSE	2160 - 18
3H7	HYDRAULIC RESERVOIR GASKET	2160 - 18
3H7	HYDRAULIC RESERVOIR GASKET COVER	2160 - 18
3H7	HYDRAULIC RESERVOIR SUCTION STRAINER	2160 - 18
4F2	HYDRAULIC VALVE, RELIEF	3360 - 38
4F16	HYDRAULICS, BACKHOE BOOM CYLINDER	3360 - 52
4F18	HYDRAULICS, BACKHOE BUCKET CYLINDER	3360 - 54
4F20	HYDRAULICS, BACKHOE CROWD CYLINDER	3360 - 56
4F22	HYDRAULICS, BACKHOE SWING CYLINDER	3360 - 58
4G1	HYDRAULICS, BACKHOE VALVE PRESSURE AND RETURN	3360 - 62
4G3	HYDRAULICS, BACKHOE VALVE PRESSURE AND RETURN	3360 - 64
3H9	HYDRAULICS, MAIN	2160 - 20
3H11	HYDRAULICS, MAIN	2160 - 22
3H13	HYDRAULICS, MAIN	2160 - 24
3H15	HYDRAULICS, MAIN	2160 - 26
3H17	HYDRAULICS, MAIN	2160 - 28
3H19	HYDRAULICS, MAIN	2160 - 30
4G16	HYDRAULICS, SIX FUNCTION BACKHOE	3360 - 78
4G9	HYDRAULICS, STABILIZER CYLINDER	3360 - 70
3I8	HYDRAULICS, THIRD FUNCTION	3102 - 6
3I12	HYDRAULICS, THIRD FUNCTION	3102 - 9A
3J11	HYDRAULICS, THIRD FUNCTION	3160 - 8
3J17	HYDRAULICS, TWO FUNCTION	3160 - 14

I

1G8	IDLER GEARS (ENGINE SERIAL NO. -713822)	0401 - 2
1K1	IDLER PULLEY, SPACER AND SLEEVE	0429 - 6
2I5	IGNITION KEY	1676 - 6
2I7	IGNITION KEY	1676 - 8
2I5	IGNITION SWITCH	1676 - 6
2I7	IGNITION SWITCH	1676 - 8
1I18	IMPELLER, WATER PUMP (ENGINE SERIAL NO. -713822)	0417 - 2
1I20	IMPELLER,WATER PUMP (ENGINE SERIAL NO. 713823-)	0417 - 5
2G11	INDICATOR SWITCH, MFWD	1674 - 6
2I5	INDICATOR, PARK BRAKE WARNING	1676 - 6
2I7	INDICATOR, PARK BRAKE WARNING	1676 - 8
3B19	INDICATOR, TURN SIGNAL	1810 - 2
1G14	INJECTION PUMP ACCESS COVER (ENGINE SERIAL NO. 713823-)	0402 - 2
2D17	INLET KIT, BRAKE PRESSURE CHECK VALVE	1060 - 12
4E3	INLET RELIEF VALVE	3360 - 20
4E17	INLET SECTION, BACKHOE VALVE	3360 - 28
3J5	INLET SECTION, LOADER VALVE	3160 - 2
1I21	INLET, WATER PUMP (ENGINE SERIAL NO. 713823-)	0417 - 6
1E6	INPUT CLUTCH, TRANSMISSION	0350 - 4
1C14	INPUT PINION, SPIRAL BEVEL	0210 - 11
1E18	INPUT SHAFT	0350 - 16
2E12	INPUT SHAFT SEAL	1111 - 8
1H21	INSERT, INTAKE AND EXHAUST VALVE (ENGINE SERIAL NO. -713822)	0409 - 2
2I3	INSTRUMENT PANEL	1676 - 4
2I5	INSTRUMENT PANEL DECAL	1676 - 6
2I7	INSTRUMENT PANEL DECAL	1676 - 8
2I1	INSTRUMENT PANEL FACE PLATE	1676 - 2
2I3	INSTRUMENT PANEL LABEL	1676 - 4
2I5	INSTRUMENT PANEL SIDE	1676 - 6
2I7	INSTRUMENT PANEL SIDE	1676 - 8
2I1	INSTRUMENT PANEL SWITCHES	1676 - 2
3B19	INSTRUMENT PANEL, FRONT	1810 - 2

ALPHABETICAL INDEX - CONTINUED

GRID		PAGE
1I11	INTAKE SYSTEM, AIR (ENGINE SERIAL NO. 713823-	0414 - 2
1H23	INTAKE VALVE (ENGINE SERIAL NO. 713823-)	0409 - 4
1H21	INTAKE VALVES AND INSERT (ENGINE SERIAL NO. -713822)	0409 - 2
1I10	INTAKE, AIR (ENGINE SERIAL NO. -713822)	0414 - 1
1H12	INTAKE, ENGINE OIL PUMP (ENGINE SERIAL NO. 713824-)	0407 - 5
3G8	INTERIOR REAR VIEW MIRROR	2002 - 2
1F22	INTERMEDIATE PLATE GASKETS, POWER SHIFT	0360 - 16
1F22	INTERMEDIATE PLATE, POWER SHIFT TRANSMIS SION	0360 - 16
3F22	ISOLATOR, COWL	1910 - 4
3F22	ISOLATOR, COWL COVER	1910 - 4
2C11	ISOLATOR,ENGINE MOUNT	0540 - 3
3B23	ISOLATORS, CAB MOUNTING	1810 - 6
3C5	ISOLATORS, ROPS FRAME	1810 - 12
1E2	ISOLATORS, TRANSMISSION RESILIENT MOUNT	0342 - 2

J

1D18	JOINT,UNIVERSAL (REVERSER)	0325 - 2

K

2I1	KEY SWITCH	1676 - 2
1G16	KEY, CAMSHAFT (ENGINE SERIAL NO. -713822)	0402 - 4
1J21	KEY, CRANKSHAFT (ENGINE SERIAL NO. -713822)	0429 - 1
2C14	KEY, FUEL TANK LOCK	0560 - 4
2I5	KEY, IGNITION	1676 - 6
2I7	KEY, IGNITION	1676 - 8
2I1	KEYS	1676 - 2
3D10	KIT, ADJUSTER LATCH	1821 - 8
3D10	KIT, ADJUSTER PUCK	1821 - 8
3D14	KIT, ADJUSTER PUCK	1821 - 12
3D24	KIT, ADJUSTER,HEIGHT	1821 - 22
2F3	KIT, AIR CONDITIONER O-RING REPAIR	1330 - 1
2F25	KIT, ALTERNATOR	1672 - 2
4F4	KIT, BACKHOE BOOM CYLINDER	3360 - 40
4F6	KIT, BACKHOE BUCKET CYLINDER	3360 - 42
4F2	KIT, BACKHOE RELIEF VALVE	3360 - 38
1D17	KIT, BEARING	0325 - 1
2D15	KIT, BRAKE MAKE-UP CHECK KIT VALVE	1060 - 10
2D18	KIT, BRAKE PRE-FILL PISTON KIT	1060 - 13
2D19	KIT, BRAKE VALVE HARDWARE	1060 - 14
2D13	KIT, BRAKE VALVE OVERHAUL	1060 - 8
4F8	KIT, CROWD CYLINDER REPAIR	3360 - 44
1G22	KIT, CYLINDER LINER O-RING (ENGINE SERIAL NO. -713822)	0403 - 2
1G23	KIT, CYLINDER LINER O-RING (ENGINE SERIAL NO. 713823-)	0403 - 3
1K10	KIT, ENGINE OVERHAUL (ENGINE SERIAL NO. 713823-)	0452 - 6
4D1	KIT, EXTENDIBLE DIPPERSTICK	3340 - 6
4D3	KIT, EXTENDIBLE DIPPERSTICK	3340 - 8
4C11	KIT, FIFTH FN LEVER FOR THREE LEVER BACKHOE LINKAGE CONTROLS	3315 - 16
4E25	KIT, FIFTH FUNCTION MANUAL VALVE	3360 - 36
2F10	KIT, FOR OFF-SEASON STORAGE	1369 - 6
2F1	KIT, FRENCH LABEL	1320 - 4
1J7	KIT, FUEL FILTER (SEAL)(ENGINE SERIAL NO. -713822)	0420 - 4
1I9	KIT, FUEL INJECTION PUMP ELECTRIC SHUT-OFF (ENGINE SERIAL NO. -713822)	0413 - 8
1K8	KIT, GASKET, ENGINE OVERHAUL (ENGINE SERIAL NO. -713822)	0452 - 4
1K6	KIT, GASKET,ENGINE CYLINDER HEAD REMOVAL (ENGINE SERIAL NO. -713822)	0452 - 1
1I12	KIT, HARDWARE, TURBOCHARGER (ENGINE SERIAL NO. -713822)	0416 - 1
3G23	KIT, HYDRAULIC PUMP OVERHAUL	2160 - 8
3D10	KIT, KNOB	1821 - 8
3D14	KIT, KNOB	1821 - 12
3J14	KIT, LOADER BOOM CYLINDER	3160 - 11
3J21	KIT, LOADER BOOM CYLINDER	3160 - 18
3J15	KIT, LOADER BUCKET CYLINDER REPAIR	3160 - 12
3J23	KIT, LOADER BUCKET CYLINDER REPAIR	3160 - 20
2F4	KIT, LOCTITE SERVICE	1330 - 2
3I16	KIT, MULTI-PURPOSE BUCKET CYLINDER REPAIR	3102 - 12
3J13	KIT, MULTI-PURPOSE BUCKET CYLINDER REPAIR	3160 - 10
2F6	KIT, O-RING	1369 - 2
2F8	KIT, O-RING	1369 - 4
2F11	KIT, O-RINGS, FLAT FACE SEAL	1369 - 7
2C19	KIT, OVERHAUL, TILT STEERING COLUMN	0960 - 2
2E7	KIT, PARK BRAKE	1111 - 3
2C21	KIT, POWER STEERING CYLINDER REPAIR (WITHOUT MFWD)	0960 - 4
2C22	KIT, POWER STEERING CYLINDER REPAIR (WITHOUT MFWD)	0960 - 5
3J5	KIT, SEAL	3160 - 2
4D24	KIT, SEAL, BACKHOE CONTROL VALVE	3360 - 16
4D24	KIT, SEAL, BACKHOE CONTROL VALVE SECTION	3360 - 16
4D24	KIT, SEAL, BACKHOE CONTROL VALVE SPOOL	3360 - 16
3H4	KIT, SEAL, CHARGE PUMP	2160 - 14
3H5	KIT, SEAL, CHARGE PUMP	2160 - 15
3H6	KIT, SEAL, CHARGE PUMP	2160 - 16
4E5	KIT, SEAL, RELIEF VALVE	3360 - 22
3J5	KIT, SECTION SEAL	3160 - 2
3J9	KIT, SECTION SEAL	3160 - 6
2H11	KIT, SELECTIVE FLOW SOLENOID VALVE	1674 - 32
1E9	KIT, SHIM, OUTPUT SHAFT	0350 - 7
4F1	KIT, SIXTH FUNCTION MANUAL VALVE	3360 - 37
2F1	KIT, SPANISH LABEL	1320 - 4
3J5	KIT, SPOOL SEAL	3160 - 2
3J6	KIT, SPOOL SEAL	3160 - 3
3J7	KIT, SPOOL SEAL	3160 - 4
3J8	KIT, SPOOL SEAL	3160 - 5
4G5	KIT, STABILIZER CYLINDER REPAIR	3360 - 66
4G7	KIT, STABILIZER CYLINDER REPAIR	3360 - 68
1J13	KIT, STARTING MOTOR	0422 - 1
1J14	KIT, STARTING MOTOR (ENGINE SERIAL NO. -814064)	0422 - 2
1J16	KIT, STARTING MOTOR SOLENOID (ENGINE SERIAL NO. 814065-)	0422 - 4
1D1	KIT, STEERING CYLINDER, FWD	0250 - 4
3D10	KIT, SWIVEL	1821 - 8
3D14	KIT, SWIVEL	1821 - 12
2C19	KIT, TILT STEERING COLUMN	0960 - 2
1G11	KIT, UNDERSIZE CRANKSHAFT	0401 - 5
4C1	KIT, 2-LEVER BACKHOE CONTROL LINKAGE FOR EXTENDIBLE DIPPERSTICK	3315 - 6
3I17	KIT,MULTI-PURPOSE BUCKET CYLINDER REPAIR	3102 - 13
1I15	KIT,TURBOCHARGER HARDWARE (ENGINE SERIAL NO. 713823-)	0416 - 4

ALPHABETICAL INDEX - CONTINUED

GRID		PAGE
1I20	KIT,WATER PUMP REPAIR (ENGINE SERIAL NO. 713823-)	0417 - 5
4F24	KITS, STABILIZER VALVE	3360 - 60
3E5	KNOB, HEATER VALVE	1830 - 2
3E7	KNOB, HEATER VALVE	1830 - 4
3D10	KNOB, KIT	1821 - 8
3D14	KNOB, KIT	1821 - 12
3D12	KNOB, SEAT ADJUSTING	1821 - 10
3D22	KNOB, SEAT ADJUSTING	1821 - 20
1C19	KNUCKLE AND SPINDLE ASSEMBLY	0230 - 2
1D3	KNUCKLE STEERING HOUSING, FWD	0250 - 6

L

3G2	L.H. FENDER	1927 - 1
3C21	L.H. WINDSHIELD WIPER MOTOR	1810 - 28
2I1	LABEL, AMBER WARNING	1676 - 2
4C1	LABEL, BACKHOE CONTROL LEVER	3315 - 6
4B23	LABEL, BACKHOE CONTROL LEVER LINKAGE	3315 - 4
3B23	LABEL, CAB FRAME	1810 - 6
4D1	LABEL, EXTENDIBLE DIPPERSTICK EXTENSION	3340 - 6
2I1	LABEL, FAULT LAMP	1676 - 2
4C3	LABEL, FIFTH FUNCTION CONTROL LEVER	3315 - 8
4C5	LABEL, FIFTH FUNCTION CONTROL LEVER	3315 - 10
1D16	LABEL, FORWARD/REVERSE CONTROL	0315 - 2
2I3	LABEL, INSTRUMENT PANEL	1676 - 4
2I1	LABEL, RED WARNING	1676 - 2
2H11	LABEL, SELECTIVE FLOW	1674 - 32
1J13	LABEL, STARTING MOTOR	0422 - 1
4C11	LABEL, THREE LEVER WITH EXTENDABLE	3315 - 16
2I5	LABEL,SIDE INSTRUMENT PANEL	1676 - 6
2I7	LABEL,SIDE INSTRUMENT PANEL	1676 - 8
2E23	LABELS	1320 - 2
2F1	LABELS, FRENCH	1320 - 4
2F1	LABELS, SPANISH	1320 - 4
2I5	LAMP, FAULT	1676 - 6
2I7	LAMP, FAULT	1676 - 8
2G2	LAMP, ROTATING BEACON	1673 - 1
3D1	LATCH COVER, DOOR, CAB	1810 - 32
3D10	LATCH KIT, ADJUSTER	1821 - 8
3D14	LATCH KIT, ADJUSTER	1821 - 12
3D1	LATCH, CAB DOOR	1810 - 32
3C17	LATCH, CAB REAR WINDOW	1810 - 24
3C7	LATCH, REAR CAB WINDOW	1810 - 14
3C9	LATCH, SIDE WINDOW LATCH	1810 - 16
3C11	LATCH, SIDE WINDOW LATCH	1810 - 18
3F22	LATCH,COWL DOOR	1910 - 4
3F20	LATCH,HOOD	1910 - 2
3D20	LATCH,SEAT SWIVEL	1821 - 18
2H19	LEAD, WIRE, KIT	1674 - 40
2H21	LEAD, WIRE, KIT	1674 - 42
3C21	LEFT HAND CAB DOOR HARDWARE	1810 - 28
3C21	LEFT HAND CAB DOOR HINGE	1810 - 28
3C21	LEFT HAND CAB DOOR WIPER	1810 - 28
3C21	LEFT HAND CAB DOOR WIPER BLADE	1810 - 28
3C21	LEFT-HAND CAB DOOR HANDLE	1810 - 28
2C1	LEVER, ENGINE SPEED CONTROL	0515 - 2
4C11	LEVER, FIFTH FN FOR THREE LEVER CONTROLS	3315 - 16
1D16	LEVER, FORWARD/REVERSE	0315 - 2
4C13	LEVER, FOUR-LEVER CONTROLS, STANDARD BACKHOE	3315 - 18
4C19	LEVER, FOUR-LEVER CONTROLS, STANDARD BACKHOE	3315 - 24
4B21	LEVER, STABILIZER	3315 - 2
4C9	LEVER, THREE, EXTENDIBLE BACKHOE CONTROL VALVE	3315 - 14
4C7	LEVER, THREE, STANDARD BACKHOE CONTROL VALVE	3315 - 12
3D18	LEVER,SEAT LUMBAR SUPPORT CONTROL	1821 - 16
3D18	LEVER,SEAT SLIDE CONTROL	1821 - 16
3D18	LEVER,SEAT SWIVEL CONTROL	1821 - 16
2E21	LIFT ARM, SERVICE LOCK	1313 - 4
1D24	LIFT BRACKET, TRANSMISSION	0341 - 6
3J19	LIFT CYLINDER HYDRAULICS	3160 - 16
3J14	LIFT CYLINDER, LOADER BOOM	3160 - 11
3J21	LIFT CYLINDER, LOADER BOOM	3160 - 18
4C21	LIFTING LOOP	3340 - 1
2I1	LIGHT SWITCH, REAR	1676 - 2
2G5	LIGHT, BRAKE (ROPS)	1673 - 4
2G3	LIGHT, BRAKE, CAB	1673 - 2
3C1	LIGHT, CAB DOME	1810 - 8
2G5	LIGHT, FRONT (ROPS)	1673 - 4
2G3	LIGHT, FRONT, CAB	1673 - 2
2G3	LIGHT, REAR, CAB	1673 - 2
2G3	LIGHT, STOP, CAB	1673 - 2
2G5	LIGHT, TAIL (ROPS)	1673 - 4
2G3	LIGHT, TAIL, CAB	1673 - 2
2G3	LIGHT, TURN SIGNAL, CAB	1673 - 2
2G5	LIGHTS, REAR (ROPS)	1673 - 4
2G5	LIGHTS, TURN SIGNAL (ROPS)	1673 - 4
4G23	LINE, AUXILIARY DRIVE OIL	4151 - 2
4H1	LINE, AUXILIARY DRIVE OIL	4151 - 4
4H3	LINE, AUXILIARY DRIVE OIL	4151 - 6
4H5	LINE, AUXILIARY DRIVE OIL	4151 - 8
3H9	LINE, LOADER VALVE	2160 - 20
3H11	LINE, LOADER VALVE	2160 - 22
3H13	LINE, LOADER VALVE	2160 - 24
3H15	LINE, LOADER VALVE	2160 - 26
3H17	LINE, LOADER VALVE	2160 - 28
3H19	LINE, LOADER VALVE	2160 - 30
1G22	LINER, CYLINDER (ENGINE SERIAL NO. -713822)	0403 - 2
1G23	LINER, CYLINDER (ENGINE SERIAL NO. 713823-)	0403 - 3
1J5	LINES, FUEL FILTER (ENGINE SERIAL NO. -713822)	0420 - 2
1I5	LINES, FUEL INJECTION (ENGINE SERIAL NO. -713822)	0413 - 4
1I7	LINES, FUEL INJECTION (ENGINE SERIAL NO. 713823-)	0413 - 6
2C23	LINES, STEERING	0960 - 6
1I16	LINES, TURBOCHARGER OIL (ENGINE SERIAL NO. 713823-)	0416 - 6
4C21	LINK LIFTING LOOP	3340 - 1
3I22	LINKAGE AND PLUMBING THIRD FUNCTION KIT	3115 - 6
4C5	LINKAGE AND VALVE, FOOT CONTROL, FIFTH FUNCTION (TWO-LEVER)	3315 - 10
4C11	LINKAGE BACKHOE, FIFTH FN LEVER FOR THREE LEVER CONTROLS	3315 - 16
4C1	LINKAGE FIELD KIT, 2-LEVER BACKHOE FOR EXTENDIBLE DIPPERSTICK	3315 - 6
3I24	LINKAGE SHIELDS	3115 - 8
4C9	LINKAGE THREE LEVER CONTROL VALVE EXTENDIBLE BACKHOE	3315 - 14
4C7	LINKAGE THREE LEVER CONTROL VALVE, STANDARD BACKHOE	3315 - 12
4C15	LINKAGE, BOOM LOCK	3315 - 20
4C17	LINKAGE, BOOM LOCK	3315 - 22
3I18	LINKAGE, BUCKET LEVELING	3115 - 2
3I19	LINKAGE, BUCKET LEVELING	3115 - 3
2C1	LINKAGE, ENGINE SPEED CONTROL	0515 - 2

ALPHABETICAL INDEX - CONTINUED

GRID		PAGE
4C3	LINKAGE, FOOT CONTROL, FIFTH FUNCTION, (TWO-LEVER)	3315 - 8
4C13	LINKAGE, FOUR-LEVER CONTROL VALVE, STANDARD BACKHOE	3315 - 18
4C19	LINKAGE, FOUR-LEVER CONTROL VALVE, STANDARD BACKHOE	3315 - 24
3J1	LINKAGE, LOADER BUCKET	3140 - 1
3I20	LINKAGE, LOADER CONTROL VALVE	3115 - 4
3I22	LINKAGE, LOADER CONTROL VALVE, THIRD FUNCTION	3115 - 6
4B21	LINKAGE, STABILIZER VALVE	3315 - 2
4B23	LINKAGE, 2-LEVER BACKHOE CONTROL LEVER	3315 - 4
4C1	LINKAGE, 2-LEVER BACKHOE CONTROL LEVER FOR EXTENDIBLE DIPPERSTICK	3315 - 6
4C21	LINKS, DRIVE, BACKHOE BUCKET	3340 - 1
4C21	LINKS, GUIDE, BACKHOE BUCKET	3340 - 1
3J24	LOAD CHECK PLUG, BUCKET SECTION	3160 - 21
3J14	LOADER BOOM CYLINDER KIT	3160 - 11
3J21	LOADER BOOM CYLINDER KIT	3160 - 18
3J14	LOADER BOOM LIFT CYLINDER	3160 - 11
3J21	LOADER BOOM LIFT CYLINDER (REPLACEMENT)	3160 - 18
2E20	LOADER BOOM SERVICE LOCK	1313 - 2
2E21	LOADER BOOM, SERVICE LOCK	1313 - 4
3I4	LOADER BUCKET	3102 - 2
3I4	LOADER BUCKET BOLT-ON EDGE	3102 - 2
3J15	LOADER BUCKET CYLINDER	3160 - 12
3J23	LOADER BUCKET CYLINDER (REPLACEMENT)	3160 - 20
3J15	LOADER BUCKET CYLINDER REPAIR KIT	3160 - 12
3J23	LOADER BUCKET CYLINDER REPAIR KIT	3160 - 20
3J19	LOADER BUCKET LIFT CYLINDER HYDRAULICS	3160 - 16
3J1	LOADER BUCKET LINKAGE	3140 - 1
3I4	LOADER BUCKET PINS	3102 - 2
3I14	LOADER BUCKET PINS	3102 - 10
3I4	LOADER BUCKET TEETH	3102 - 2
3J4	LOADER CONTROL VALVE	3160 - 1
3J19	LOADER CONTROL VALVE	3160 - 16
3I20	LOADER CONTROL VALVE LINKAGE	3115 - 4
3J17	LOADER HYDRAULIC HOSES	3160 - 14
3J17	LOADER HYDRAULIC LINES	3160 - 14
2G20	LOADER LEVER CONNECTOR	1674 - 16
2G22	LOADER LEVER CONNECTOR	1674 - 18
2G20	LOADER LEVER, SWITCH	1674 - 16
2G22	LOADER LEVER, SWITCH	1674 - 18
3J2	LOADER LIFT ARMS	3140 - 2
3J17	LOADER LIFT CYLINDER	3160 - 14
3B21	LOADER LINKAGE COVER	1810 - 4
3J17	LOADER VALVE	3160 - 14
3J8	LOADER VALVE AUXILIARY SECTION	3160 - 5
3J5	LOADER VALVE BETWEEN SECTION O-RINGS	3160 - 2
3J7	LOADER VALVE BOOM SECTION	3160 - 4
3J6	LOADER VALVE BUCKET SECTION	3160 - 3
3J5	LOADER VALVE INLET SECTION	3160 - 2
3H9	LOADER VALVE LINE	2160 - 20
3H11	LOADER VALVE LINE	2160 - 22
3H13	LOADER VALVE LINE	2160 - 24
3H15	LOADER VALVE LINE	2160 - 26
3H17	LOADER VALVE LINE	2160 - 28
3H19	LOADER VALVE LINE	2160 - 30
3J16	LOADER VALVE SOLENOID, BUCKET SECTION	3160 - 13
3J5	LOADER VALVE TIE BOLTS	3160 - 2
3J8	LOADER VALVE, THIRD FUNCTION	3160 - 5
2E20	LOCK BAR, BOOM SERVICE	1313 - 2
1B14	LOCK RING, WHEEL	0110 - 1
3F24	LOCK, BATTERY BOX	1913 - 2
2C14	LOCK, FUEL TANK	0560 - 4
2E21	LOCK, LIFT ARM SERVICE	1313 - 4
3B21	LOCK, VANDAL GUARD	1810 - 4
2F4	LOCTITE SERVICE KIT	1330 - 2
2G16	LOGIC MODULE	1674 - 12
2G20	LOGIC MODULE	1674 - 16
2G22	LOGIC MODULE	1674 - 18
4C21	LOOP, LIFT	3340 - 1
3B19	LOUVER ADAPTER	1810 - 2
3B19	LOUVER HOLDER	1810 - 2
3B21	LOUVERS, CAB FENDER COVER	1810 - 4
1B19	LOWER PLATE AND BARS, REAR AXLE	0201 - 2
3C17	LOWER REAR CAB WINDOW	1810 - 24
4G18	LOWERING DEVICE,CONTROLLED, BOOM CYL.KIT	3360 - 80
4G20	LOWERING DEVICE,CONTROLLED,CROWD CYL.KIT	3360 - 82
2F5	LUBRICANT, AIR CONDITIONING	1369 - 1
2F10	LUBRICANT, CYLINDER LINER PACKING	1369 - 6
2F10	LUBRICANT, ENGINE VALVE STEM	1369 - 6
2F16	LUBRICATION SYSTEM, FRONT AXLE	1370 - 2

M

2F17	MACHINE FILTERS	1399 - 1
1G24	MAIN BEARING CAP (ENGINE SERIAL NO. -713822)	0404 - 2
1H1	MAIN BEARING CAP (ENGINE SERIAL NO. 713823-)	0404 - 4
1G8	MAIN BEARINGS (ENGINE SERIAL NO. -713822)	0401 - 2
1G12	MAIN BEARINGS (ENGINE SERIAL NO.713823-)	0401 - 6
2I10	MAIN FRAME	1740 - 2
1B19	MAIN FRAME TIE BARS	0201 - 2
3H9	MAIN HYDRAULIC FILTER	2160 - 20
3H11	MAIN HYDRAULIC FILTER	2160 - 22
3H13	MAIN HYDRAULIC FILTER	2160 - 24
3H15	MAIN HYDRAULIC FILTER	2160 - 26
3H17	MAIN HYDRAULIC FILTER	2160 - 28
3H19	MAIN HYDRAULIC FILTER	2160 - 30
3H9	MAIN HYDRAULIC HOSES	2160 - 20
3H11	MAIN HYDRAULIC HOSES	2160 - 22
3H13	MAIN HYDRAULIC HOSES	2160 - 24
3H15	MAIN HYDRAULIC HOSES	2160 - 26
3H17	MAIN HYDRAULIC HOSES	2160 - 28
3H19	MAIN HYDRAULIC HOSES	2160 - 30
3H9	MAIN HYDRAULIC LINES	2160 - 20
3H11	MAIN HYDRAULIC LINES	2160 - 22
3H13	MAIN HYDRAULIC LINES	2160 - 24
3H15	MAIN HYDRAULIC LINES	2160 - 26
3H17	MAIN HYDRAULIC LINES	2160 - 28
3H19	MAIN HYDRAULIC LINES	2160 - 30
3H9	MAIN HYDRAULIC PUMP	2160 - 20
3H11	MAIN HYDRAULIC PUMP	2160 - 22
3H13	MAIN HYDRAULIC PUMP	2160 - 24
3H15	MAIN HYDRAULIC PUMP	2160 - 26
3H17	MAIN HYDRAULIC PUMP	2160 - 28
3H19	MAIN HYDRAULIC PUMP	2160 - 30
3H9	MAIN HYDRAULICS	2160 - 20
3H11	MAIN HYDRAULICS	2160 - 22
3H13	MAIN HYDRAULICS	2160 - 24
3H15	MAIN HYDRAULICS	2160 - 26
3H17	MAIN HYDRAULICS	2160 - 28
3H19	MAIN HYDRAULICS	2160 - 30
2D15	MAKE-UP CHECK VALVE KIT, BRAKE	1060 - 10
3F15	MANIFOLD AND DUST COVER	1830 - 36
3F16	MANIFOLD, AIR CONDITIONING COMPRESSOR	1830 - 37
1H25	MANIFOLD, EXHAUST (ENGINE SERIAL NO. -713822)	0410 - 2

ALPHABETICAL INDEX - CONTINUED

GRID		PAGE
1I2	MANIFOLD, EXHAUST (ENGINE SERIAL NO. 713823-)	0410 - 4
1F16	MANIFOLD, TRANSMISSION OIL PUMP	0360 - 10
3G13	MANUAL HOLDER	2005 - 2
3D3	MAT, FLOOR	1810 - 34
3E3	MATTING, BATTERY BOX	1822 - 2
3F24	MATTING, SAFETY	1913 - 2
2I5	METER, HOUR	1676 - 6
2I7	METER, HOUR	1676 - 8
1D11	MFWD SHAFT	0250 - 14
2G11	MFWD SOLENOID DIODE	1674 - 6
1F22	MFWD SOLINOID HOLE PLUG	0360 - 16
2I5	MFWD SWITCH	1676 - 6
2I7	MFWD SWITCH	1676 - 8
3G8	MIRROR BRACKET, INTERIOR REAR VIEW	2002 - 2
3G9	MIRROR, EXTERNAL	2002 - 3
3G8	MIRROR, INTERIOR REAR VIEW	2002 - 2
1C23	MODEL PLATE, FWD	0250 - 2
2G20	MODULE LOGIC	1674 - 16
2G22	MODULE LOGIC	1674 - 18
3E19	MODULE, HVAC	1830 - 16
3E21	MODULE, HVAC	1830 - 18
2G16	MODULE, LOGIC	1674 - 12
3E15	MODULE,HEATER	1830 - 12
3E17	MODULE,HEATER	1830 - 14
3D1	MOTOR COVER, WIPER, FRONT	1810 - 32
3E9	MOTOR, AIR CONDITIONING	1830 - 6
3E11	MOTOR, AIR CONDITIONING	1830 - 8
3F7	MOTOR, BLOWER, HEATER	1830 - 28
3F9	MOTOR, BLOWER, HEATER	1830 - 30
3E9	MOTOR, CAB HEATER	1830 - 6
3E11	MOTOR, CAB HEATER	1830 - 8
3C13	MOTOR, DOOR WIPER	1810 - 20
2H13	MOTOR, HEATER BLOWER	1674 - 34
2H13	MOTOR, HEATER BLOWER WIRING HARNESS	1674 - 34
1J14	MOTOR, STARTING (ENGINE SERIAL NO. -814064)	0422 - 2
1J16	MOTOR, STARTING (ENGINE SERIAL NO. 814065-)	0422 - 4
3C19	MOTOR, WIPER, CAB ONE PIECE WINDSHIELD, RIGHT CAB	1810 - 26
3C13	MOTOR, WIPER, FRONT WINDOW	1810 - 20
3C7	MOTOR, WIPER, REAR	1810 - 14
1J13	MOTOR,STARTING	0422 - 1
2C9	MOUNT, ENGINE	0540 - 1
2C10	MOUNT, ENGINE	0540 - 2
1E2	MOUNT, TRANSMISSION RESILIENT	0342 - 2
1J18	MOUNTING BRACKET, ALTERNATOR	0423 - 2
3I20	MOUNTING BRACKET, CONTROL VALVE	3115 - 4
3I22	MOUNTING BRACKET, CONTROL VALVE	3115 - 6
3F11	MOUNTING BRACKETS, COMPRESSOR, AIR CONDITIONING	1830 - 32
2D20	MOUNTING PARTS, BRAKE VALVE	1060 - 15
2G24	MOUNTING PLATE, CONTROLLER	1674 - 20
3G6	MOUNTING PLATE, RADIO/SPEAKER	2001 - 2
2C7	MUFFLER	0530 - 2
2C8	MUFFLER	0530 - 3
3I6	MULTI-PURPOSE BUCKET	3102 - 4
3I10	MULTI-PURPOSE BUCKET	3102 - 8
3I6	MULTI-PURPOSE BUCKET CUTTING EDGE	3102 - 4
3I10	MULTI-PURPOSE BUCKET CUTTING EDGE	3102 - 8
3I16	MULTI-PURPOSE BUCKET CYLINDER	3102 - 12
3I17	MULTI-PURPOSE BUCKET CYLINDER	3102 - 13
3J13	MULTI-PURPOSE BUCKET CYLINDER	3160 - 10
3I17	MULTI-PURPOSE BUCKET CYLINDER REPAIR KIT	3102 - 13
3I8	MULTI-PURPOSE BUCKET HYDRAULIC CYLINDER	3102 - 6
3I12	MULTI-PURPOSE BUCKET HYDRAULIC CYLINDER	3102 - 9A
3I6	MULTI-PURPOSE BUCKET SHANK	3102 - 4
3I10	MULTI-PURPOSE BUCKET SHANK	3102 - 8
3I6	MULTI-PURPOSE BUCKET TOOTH	3102 - 4
3I10	MULTI-PURPOSE BUCKET TOOTH	3102 - 8

N

1F17	NEEDLE BEARING, AXIAL	0360 - 11
4G18	NEEDLE VALVE,CLD	3360 - 80
4G20	NEEDLE VALVE,CLD	3360 - 82
1F9	NEUTRAL SPOOL	0360 - 2
2G20	NEUTRAL START RELAY	1674 - 16
2G22	NEUTRAL START RELAY	1674 - 18
1I3	NOZZLE, FUEL INJECTION (ENGINE SERIAL NO. -713822)	0413 - 1
1I4	NOZZLE, FUEL INJECTION (ENGINE SERIAL N0. 713823-)	0413 - 2

O

2F6	O-RING KIT	1369 - 2
2F8	O-RING KIT	1369 - 4
2F3	O-RING REPAIR KIT, AIR CONDITIONER	1330 - 1
2F11	O-RING, FLAT FACE SEAL FITTINGS	1369 - 7
3J5	O-RINGS, BETWEEN SECTION, LOADER VALVE	3160 - 2
2F11	O-RINGS, FLAT FACE SEAL KIT	1369 - 7
2F10	OFF-SCREEN STORAGE KIT	1369 - 6
1J1	OIL COOLER, ENGINE (ENGINE SERIAL NO. -713822)	0419 - 2
1J3	OIL COOLER, ENGINE (ENGINE SERIAL NO. 713823-)	0419 - 4
2B20	OIL COOLER, HYDRAULIC	0510 - 2
2B22	OIL COOLER, HYDRAULIC	0510 - 4
2B20	OIL COOLER, TRANMISSION	0510 - 2
2B22	OIL COOLER, TRANMISSION	0510 - 4
1H10	OIL DIPSTICK (ENGINE SERIAL NO. 713823-)	0407 - 3
1H15	OIL FILLER OPENING COVER	0407 - 9
1F17	OIL FILTER, CHARGE PUMP	0360 - 11
1H16	OIL FILTER, ENGINE (ENGINE SERIAL NO.713824-)	0407 - 10
3G25	OIL FILTER, HYDRAULIC	2160 - 10
1F14	OIL FILTER, TRANSMISSION	0360 - 8
1F17	OIL FILTER, TRANSMISSION	0360 - 11
1G24	OIL FILTER,ENGINE (ENGINE SERIAL NO. -713822)	0404 - 2
2F17	OIL FILTERS	1399 - 1
4G23	OIL LINE, AUXILIARY DRIVE	4151 - 2
4H1	OIL LINE, AUXILIARY DRIVE	4151 - 4
4H3	OIL LINE, AUXILIARY DRIVE	4151 - 6
4H5	OIL LINE, AUXILIARY DRIVE	4151 - 8
2D23	OIL LINES, BRAKE VALVE	1063 - 2
2E1	OIL LINES, BRAKE VALVE	1063 - 6
2E3	OIL LINES, BRAKE VALVE	1063 - 8
3H9	OIL LINES, MAIN HYDRAULIC	2160 - 20
3H11	OIL LINES, MAIN HYDRAULIC	2160 - 22
3H13	OIL LINES, MAIN HYDRAULIC	2160 - 24
3H15	OIL LINES, MAIN HYDRAULIC	2160 - 26
3H17	OIL LINES, MAIN HYDRAULIC	2160 - 28
3H19	OIL LINES, MAIN HYDRAULIC	2160 - 30
1I13	OIL LINES, TURBOCHARGER (ENGINE SERIAL NO. -713822)	0416 - 2
1I16	OIL LINES, TURBOCHARGER (ENGINE SERIAL NO. 713823-)	0416 - 6

ALPHABETICAL INDEX - CONTINUED

GRID		PAGE
1J1	OIL LINES,ENGINE OIL COOLER (ENGINE SERIAL NO. -713822)	0419 - 2
1H11	OIL PUMP AND HOUSING, ENGINE (ENGINE SERIAL NO. -713823)	0407 - 4
1F16	OIL PUMP, TRANSMISSION	0360 - 10
2F5	OIL, ENGINE	1369 - 1
2F12	OILSCAN PLUS TEST KIT, FLUID ANALYSIS	1369 - 8
4E18	OUTLET SECTION, BACKHOE VALVE	3360 - 29
1E13	OUTPUT SHAFT ASSEMBLY	0350 - 11
1E9	OUTPUT SHAFT SHIM KIT	0350 - 7
1E9	OUTPUT SHAFT, TRANSFER CASE, MFWD	0350 - 7
1F7	OUTPUT SHAFT, TRANSMISSION (MFWD)	0350 - 30
2B20	OVERFLOW TANK, RADIATOR	0510 - 2
2B22	OVERFLOW TANK, RADIATOR	0510 - 4
1K7	OVERHAUL GASKET SET,IN CHASSIS (ENGINE SERIAL NO. 713823-)	0452 - 2
2D13	OVERHAUL KIT, BRAKE VALVE	1060 - 8
3G23	OVERHAUL KIT, HYDRAULIC PUMP	2160 - 8
2C19	OVERHAUL KIT, TILT STEERING COLUMN	0960 - 2

P

4D3	PAD, BOTTOM WEAR	3340 - 8
4D3	PAD, SIDE WEAR	3340 - 8
4D7	PADS, BACKHOE STREET	3340 - 12
1H13	PAN, ENGINE OIL (ENGINE SERIAL NO. -713822)	0407 - 7
1H14	PAN, ENGINE OIL (ENGINE SERIAL NO. 713823-)	0407 - 8
2I3	PANEL LABEL, INSTRUMENT	1676 - 4
2I1	PANEL SWITCHES, INSTRUMENT	1676 - 2
4C11	PANEL, BACKHOE VALVE COVER (THREE LEVER WITH EXTENDIBLE)	3315 - 16
3B19	PANEL, FRONT INSTRUMENT	1810 - 2
2I3	PANEL, INSTRUMENT	1676 - 4
2I5	PANEL, INSTRUMENT SIDE	1676 - 6
2I7	PANEL, INSTRUMENT SIDE	1676 - 8
3G6	PANEL, RADIO TRIM	2001 - 2
2G20	PANEL,FUSE	1674 - 16
2G22	PANEL,FUSE	1674 - 18
2E12	PARK BRAKE	1111 - 8
2E6	PARK BRAKE CALIPER ASSEMBLY	1111 - 2
2E12	PARK BRAKE CLUTCH DISK	1111 - 8
2E12	PARK BRAKE HOUSING	1111 - 8
2E16	PARK BRAKE HYDRAULIC HOSES	1160 - 4
2E12	PARK BRAKE PISTON	1111 - 8
2G20	PARK BRAKE RELAY	1674 - 16
2G22	PARK BRAKE RELAY	1674 - 18
2E14	PARK BRAKE RELIEF VALVE	1160 - 2
2E7	PARK BRAKE REPAIR KIT	1111 - 3
2E14	PARK BRAKE SENSING SWITCH	1160 - 2
2G11	PARK BRAKE SENSING SWITCH	1674 - 6
2E12	PARK BRAKE SEPERATOR PLATE	1111 - 8
2E14	PARK BRAKE SOLENOID	1160 - 2
2G11	PARK BRAKE SOLENOID DIODE	1674 - 6
2I1	PARK BRAKE SWITCH	1676 - 2
2I1	PARK BRAKE SWITCH BRACKET	1676 - 2
2I5	PARK BRAKE WARNING INDICATOR	1676 - 6
2I7	PARK BRAKE WARNING INDICATOR	1676 - 8
2E14	PARK BRAKE, DIFFERENTIAL LOCK VALVE	1160 - 2
2G20	PARK LIGHT RELAY	1674 - 16
2G22	PARK LIGHT RELAY	1674 - 18
2I5	PARKING BRAKE SWITCH	1676 - 6
2E8	PARKING BRAKE, HYDRAULIC	1111 - 4
2C1	PEDAL, ENGINE SPEED CONTROL	0515 - 2
2D7	PEDALS, BRAKE	1060 - 2
2D9	PEDALS, BRAKE	1060 - 4
1C22	PIN, PIVOT AXLE, FWD	0250 - 1
4G11	PIN,EXTENDIBLE DIPPERSTICK CYLINDER	3360 - 72
4G12	PIN,EXTENDIBLE DIPPERSTICK CYLINDER	3360 - 73
1C3	PINION GEAR, PLANETARY	0201 - 12
1D5	PINION, DIFFERENTIAL, FWD	0250 - 8
4C21	PINS, BACKHOE BUCKET	3340 - 1
4C21	PINS, BACKHOE BUCKET LINKS	3340 - 1
3I14	PINS, BUCKET, LOADER	3102 - 10
4F8	PINS, CROWD CYLINDER	3360 - 44
4G13	PINS, EXTENDIBLE DIPPERSTICK CYLINDER	3360 - 75
3I4	PINS, LOADER BUCKET	3102 - 2
4G5	PINS, STABILIZER CYLINDER	3360 - 66
4G7	PINS, STABILIZER CYLINDER	3360 - 68
4F14	PINS, SWING CYLINDER	3360 - 50
4C22	PINS, SWING FRAME	3340 - 2
1G22	PISTON RINGS (ENGINE SERIAL NO. -713822)	0403 - 2
1G23	PISTON RINGS (ENGINE SERIAL NO. 713823-)	0403 - 3
2D3	PISTON, BRAKE	1011 - 1
2D5	PISTON, BRAKE	1011 - 4
2D18	PISTON, BRAKE PRE-FILL KIT	1060 - 13
1G22	PISTON, ENGINE (ENGINE SERIAL NO. -713822)	0403 - 2
1G23	PISTON, ENGINE (ENGINE SERIAL NO. 713823-)	0403 - 3
1E10	PISTON, MFWD	0350 - 8
2E12	PISTON, PARK BRAKE	1111 - 8
1F20	PISTON, RANGE SHIFT VALVE, POWER SHIFT	0360 - 14
1D1	PISTON, STEERING CYLINDER, FWD	0250 - 4
1F18	PISTON, TRANSMISSION CONTROL VALVE, PST	0360 - 12
1C22	PIVOT, AXLE PIN, FWD	0250 - 1
1E3	PLANETARY ASSEMBLY	0350 - 1
1E4	PLANETARY ASSEMBLY, TRANSMISSION	0350 - 2
1C3	PLANETARY CARRIER SHAFT	0201 - 12
1E16	PLANETARY CLUTCH	0350 - 14
1C3	PLANETARY PINION CARRIER	0201 - 12
1C3	PLANETARY PINION GEAR	0201 - 12
1C3	PLANETARY RING GEAR	0201 - 12
1D7	PLANETARY, FWD	0250 - 10
2G24	PLATE, CONTROLLER MOUNTING	1674 - 20
4D25	PLATE, END, RIGHT	3360 - 17
1H7	PLATE, ENGINE FRONT (ENGINE SERIAL NO. -713822)	0404 - 10
1C23	PLATE, MODEL, FWD	0250 - 2
1C1	PLATE,REAR AXLE HOUSING MOUNTING	0201 - 10
1C15	PLATE,REAR AXLE HOUSING MOUNTING	0210 - 12
2D3	PLATES, BRAKE	1011 - 1
1G20	PLUG, ENGINE OIL FILLER (ENGINE SERIAL NO. -713822)	0402 - 8
3J24	PLUG, LOAD CHECK, BUCKET SECTION	3160 - 21
1G21	PLUG,ENGINE OIL FILL (ENGINE SERIAL NO. 713823-)	0402 - 9
3I22	PLUMBING AND LINKAGE THIRD FUNCTION KIT	3115 - 6
1C17	PLUMBING, DIFFERENTIAL LOCK	0210 - 14
3J10	POSITIONER, BOOM SECTION FLOAT	3160 - 7
1E20	POWER SHIFT CLUTCH ASSEMBLY, FIRST GEAR	0350 - 18
1F3	POWER SHIFT CLUTCH ASSEMBLY, FORWARD	0350 - 26
1F1	POWER SHIFT CLUTCH ASSEMBLY, FOURTH GEAR	0350 - 24
1F5	POWER SHIFT CLUTCH ASSEMBLY, REVERSE	0350 - 28
1E22	POWER SHIFT CLUTCH ASSEMBLY, SECOND GEAR	0350 - 20
1E24	POWER SHIFT CLUTCH ASSEMBLY, THIRD GEAR	0350 - 22
2C21	POWER STEERING CYLINDER (WITHOUT MFWD)	0960 - 4
2C22	POWER STEERING CYLINDER (WITHOUT MFWD)	0960 - 5
2C21	POWER STEERING CYLINDER REPAIR KIT (WITHOUT MFWD)	0960 - 4

ALPHABETICAL INDEX - CONTINUED

GRID		PAGE
2C22	POWER STEERING CYLINDER REPAIR KIT (WITHOUT MFWD)	0960 - 5
2C6	PRE-CLEANER	0520 - 5
4G1	PRESSURE HYDRAULICS, BACKHOE VALVE	3360 - 62
4G3	PRESSURE HYDRAULICS, BACKHOE VALVE	3360 - 64
1F12	PRESSURE REGULATING VALVE, HYDRAULIC	0360 - 6
1D22	PRESSURE SWITCH	0341 - 4
3H1	PRIORITY VALVE	2160 - 11
1E18	PTO PUMP DRIVE SHAFT	0350 - 16
3D10	PUCK KIT, ADJUSTER	1821 - 8
3D14	PUCK KIT, ADJUSTER	1821 - 12
3D1	PULL HANDLE, DOOR, CAB	1810 - 32
2F25	PULLEY, ALTERNATOR	1672 - 2
2G1	PULLEY, ALTERNATOR	1672 - 3
3H2	PULLEY, CHARGE PUMP	2160 - 12
1J21	PULLEY, CRANKSHAFT (ENGINE SERIAL NO. -713822)	0429 - 1
1J22	PULLEY, FAN DRIVE (ENGINE SERIAL NO. 713823-)	0429 - 2
1K1	PULLEY, IDLER	0429 - 6
1J22	PULLEY, TENSIONER (ENGINE SERIAL NO. 713823-)	0429 - 2
1I18	PULLEY, WATER PUMP (ENGINE SERIAL NO. -713822)	0417 - 2
1I21	PULLEY, WATER PUMP (ENGINE SERIAL NO. 713823-)	0417 - 6
1J24	PULLEY,CRANKSHAFT (ENGINE SERIAL NO. 713823-)	0429 - 4
1H11	PUMP AND HOUSING, ENGINE OIL (ENGINE SERIAL NO. -713823)	0407 - 4
3G18	PUMP ASSEMBLY, HYDRAULIC	2160 - 3
3H2	PUMP, CHARGE	2160 - 12
3H4	PUMP, CHARGE	2160 - 14
3H5	PUMP, CHARGE	2160 - 15
3H6	PUMP, CHARGE	2160 - 16
3H9	PUMP, CHARGE	2160 - 20
3H11	PUMP, CHARGE	2160 - 22
3H13	PUMP, CHARGE	2160 - 24
3H15	PUMP, CHARGE	2160 - 26
3H17	PUMP, CHARGE	2160 - 28
3H19	PUMP, CHARGE	2160 - 30
3H4	PUMP, CHARGE, SEAL KIT	2160 - 14
3H5	PUMP, CHARGE, SEAL KIT	2160 - 15
3H6	PUMP, CHARGE, SEAL KIT	2160 - 16
1H12	PUMP, ENGINE OIL (ENGINE SERIAL NO. 713824-)	0407 - 5
1I5	PUMP, FUEL INJECTION (ENGINE SERIAL NO. -713822)	0413 - 4
1I7	PUMP, FUEL INJECTION (ENGINE SERIAL NO. 713823-)	0413 - 6
1J11	PUMP, FUEL TRANSFER (ENGINE SERIAL NO. -713822)	0421 - 2
1J12	PUMP, FUEL TRANSFER (ENGINE SERIAL NO. 713823-)	0421 - 3
3G19	PUMP, HYDRAULIC	2160 - 4
3H9	PUMP, MAIN HYDRAULIC	2160 - 20
3H11	PUMP, MAIN HYDRAULIC	2160 - 22
3H13	PUMP, MAIN HYDRAULIC	2160 - 24
3H15	PUMP, MAIN HYDRAULIC	2160 - 26
3H17	PUMP, MAIN HYDRAULIC	2160 - 28
3H19	PUMP, MAIN HYDRAULIC	2160 - 30
1F16	PUMP, TRANSMISSION OIL	0360 - 10
1I18	PUMP, WATER (ENGINE SERIAL NO. -713822)	0417 - 2
3C15	PUMP, WINDSHIELD WASHER	1810 - 22
1F17	PUMP,CHARGE	0360 - 11
1I20	PUMP,WATER (ENGINE SERIAL NO. 713823-)	0417 - 5
1J12	PUSH ROD,FUEL TRANSFER PUMP (ENGINE SERIAL NO. 713823-)	0421 - 3
1G18	PUSH RODS (ENGINE SERIAL NO. -713822)	0402 - 6
1G19	PUSH RODS (ENGINE SERIAL NO. 713823-)	0402 - 7

R

3G2	R.H. FENDER	1927 - 1
3C23	R.H. WINDSHIELD WIPER MOTOR	1810 - 30
2B20	RADIATOR	0510 - 2
2B22	RADIATOR	0510 - 4
2B20	RADIATOR BRACKET	0510 - 2
2B20	RADIATOR CAP	0510 - 2
2B22	RADIATOR CAP	0510 - 4
2B20	RADIATOR HOSES	0510 - 2
2B22	RADIATOR HOSES	0510 - 4
2B20	RADIATOR OVERFLOW TANK	0510 - 2
2B22	RADIATOR OVERFLOW TANK	0510 - 4
2B20	RADIATOR SUPPORT	0510 - 2
2B22	RADIATOR SUPPORT BRACKET	0510 - 4
2H9	RADIO	1674 - 30
3G6	RADIO	2001 - 2
2H9	RADIO ANTENNA	1674 - 30
2H9	RADIO SPEAKER	1674 - 30
2H9	RADIO WIRING HARNESS	1674 - 30
3D3	RAMPS, FLOOR	1810 - 34
1F20	RANGE SHIFT VALVE, POWER SHIFT	0360 - 14
1C1	REAR AXLE HOUSING MOUNTING PLATE	0201 - 10
1C15	REAR AXLE HOUSING MOUNTING PLATE	0210 - 12
1B19	REAR AXLE LOWER PLATE AND BARS	0201 - 2
1C14	REAR AXLE RING GEAR AND PINION	0210 - 11
1C14	REAR AXLE SPIRAL BEVEL INPUT PINION	0210 - 11
1C14	REAR AXLE YOKE	0210 - 11
3C7	REAR CAB WINDOW WIPER	1810 - 14
3C7	REAR CAB WINDOW WIPER MOTOR	1810 - 14
2I1	REAR LIGHT SWITCH	1676 - 2
2I5	REAR LIGHT SWITCH	1676 - 6
2I7	REAR LIGHT SWITCH	1676 - 8
2G5	REAR LIGHTS (ROPS)	1673 - 4
2G3	REAR LIGHTS, CAB	1673 - 2
3G8	REAR VIEW MIRROR, INTERIOR	2002 - 2
1B14	REAR WHEEL	0110 - 1
2I1	REAR WINDOW WIPER SWITCH	1676 - 2
2I5	REAR WIPER SWITCH	1676 - 6
3F11	RECEIVER DRYER HOSES	1830 - 32
3F11	RECEIVER DRYER, AIR CONDITIONING	1830 - 32
3F7	RECEIVER-DRYER	1830 - 28
3F9	RECEIVER-DRYER	1830 - 30
2F17	RECIRCULATION FILTER	1399 - 1
2I1	RED WARNING LABEL	1676 - 2
1E12	REDUCTION GEAR SHAFT (SERIAL NO. -872328)	0350 - 10
3B23	REFLECTOR, CAB REAR MARKER	1810 - 6
3C5	REFLECTOR, ROPS FRAME	1810 - 12
1F12	REGULATING VALVE, HYDRAULIC PRESSURE	0360 - 6
2G20	RELAY, ACCESSORY	1674 - 16
2G22	RELAY, ACCESSORY	1674 - 18
2G22	RELAY, ALTERNATOR	1674 - 18
2G20	RELAY, NEUTRAL START	1674 - 16
2G22	RELAY, NEUTRAL START	1674 - 18
2G20	RELAY, PARK BRAKE	1674 - 16
2G22	RELAY, PARK BRAKE	1674 - 18

ALPHABETICAL INDEX - CONTINUED

GRID		PAGE
2G20	RELAY, PARK LIGHT	1674 - 16
2G22	RELAY, PARK LIGHT	1674 - 18
2G20	RELAY, START AID	1674 - 16
2G22	RELAY, START AID	1674 - 18
2G7	RELAY, STARTER	1674 - 2
2G9	RELAY, STARTER	1674 - 4
2G13	RELAY, STARTER	1674 - 8
2G20	RELAY,12-VOLT ALTERNATOR	1674 - 16
2G16	RELAYS	1674 - 12
2G16	RELAYS, SIDE CONSOLE	1674 - 12
1F11	RELIEF VALVE	0360 - 4
4E1	RELIEF VALVE	3360 - 18
4E2	RELIEF VALVE	3360 - 19
3J22	RELIEF VALVE BUCKET SECTION	3160 - 19
4E3	RELIEF VALVE COVER	3360 - 20
4E5	RELIEF VALVE SEAL KIT	3360 - 22
4F2	RELIEF VALVE, HYDRAULIC	3360 - 38
4E3	RELIEF VALVE, INLET	3360 - 20
2E14	RELIEF VALVE, PARK BRAKE	1160 - 2
4F2	RELIEF VALVES, BACKHOE	3360 - 38
1G10	REPLACEMENT CRANKSHAFT KIT	0401 - 4
3H7	RESERVOIR BREATHER FILTER, HYDRAULIC	2160 - 18
3H7	RESERVOIR DIPSTICK, HYDRAULIC	2160 - 18
3H7	RESERVOIR GASKET COVER, HYDRAULIC	2160 - 18
3H7	RESERVOIR GASKET, HYDRAULIC	2160 - 18
3H7	RESERVOIR SUCTION STRAINER, HYDRAULIC	2160 - 18
2B20	RESERVOIR, HYDRAULIC	0510 - 2
3H7	RESERVOIR, HYDRAULIC	2160 - 18
3H7	RESERVOIR, HYDRAULIC DRAIN COCK	2160 - 18
3E13	RESISTOR, CAB HEATER	1830 - 10
3E15	RESISTOR, CAB HEATER	1830 - 12
3E17	RESISTOR, CAB HEATER	1830 - 14
3E19	RESISTOR,CAB HEATER	1830 - 16
3E21	RESISTOR,CAB HEATER	1830 - 18
3I18	RETURN-TO-DIG LINKAGE	3115 - 2
3I19	RETURN-TO-DIG LINKAGE	3115 - 3
2G15	RETURN-TO-DIG SWITCH	1674 - 10
1F5	REVERSE CLUTCH ASSEMBLY, POWER SHIFT	0350 - 28
1F5	REVERSE CLUTCH CARRIER, POWER SHIFT	0350 - 28
1D16	REVERSE CONTROL GUARD	0315 - 2
1D16	REVERSE CONTROL SWITCH	0315 - 2
1D16	REVERSE CONTROL WITH GUARD	0315 - 2
2G11	REVERSE WARNING ALARM	1674 - 6
3G11	REVERSE WARNING ALARM	2004 - 2
1F5	REVERSE, BELLVILLEWASHER, POWERSHIFT	0350 - 28
4D5	REVERSIBLE STABILIZER FEET	3340 - 10
2I5	RIDE CONTROL	1676 - 6
2I7	RIDE CONTROL	1676 - 8
3C23	RIGHT HAND CAB DOOR HANDLE	1810 - 30
3C23	RIGHT HAND CAB DOOR HARDWARE	1810 - 30
3C23	RIGHT HAND CAB DOOR HINGE	1810 - 30
3C23	RIGHT HAND CAB DOOR WIPER	1810 - 30
3C19	RIGHT HAND ONE PIECE FRONT CAB WINDSHIELD AND WIPER MOTOR	1810 - 26
1B15	RIM	0110 - 2
1B14	RIM VALVE	0110 - 1
1C14	RING GEAR AND PINION, REAR AXLE	0210 - 11
1K3	RING GEAR, FLYWHEEL (ENGINE SERIAL NO. 713823-)	0433 - 3
1C3	RING GEAR, PLANETARY	0201 - 12
1G22	RINGS, PISTON (ENGINE SERIAL NO. -713822)	0403 - 2
1G23	RINGS, PISTON (ENGINE SERIAL NO. 713823-)	0403 - 3
1G20	ROCKER ARM COVER (ENGINE SERIAL NO. -713822)	0402 - 8
1G21	ROCKER ARM COVER (ENGINE SERIAL NO. 713823-)	0402 - 9
1G20	ROCKER ARM COVER GASKET (ENGINE SERIAL NO. -713822)	0402 - 8
1G21	ROCKER ARM COVER GASKET (ENGINE SERIAL NO. 713823-)	0402 - 9
1G18	ROCKER ARMS AND SHAFT (ENGINE SERIAL NO. -713822)	0402 - 6
1G19	ROCKER ARMS AND SHAFT (ENGINE SERIAL NO. 713823-)	0402 - 7
3I18	ROD, BUCKET LEVELING	3115 - 2
3I19	ROD, BUCKET LEVELING	3115 - 3
1G22	ROD, CONNECTING (ENGINE SERIAL NO. -713822)	0403 - 2
1G23	ROD, CONNECTING (ENGINE SERIAL NO. 713823-)	0403 - 3
2E20	ROD, CYLINDER LOCK BAR	1313 - 2
2C1	ROD, ENGINE SPEED CONTROL	0515 - 2
1D1	ROD, STEERING CYLINDER, FWD	0250 - 4
1C21	ROD, TIE, ASSEMBLY	0230 - 4
1C23	ROD, TIE, FWD	0250 - 2
3I18	ROD, VALVE ACTUATOR BUCKET LEVEL	3115 - 2
3I19	ROD, VALVE ACTUATOR BUCKET LEVEL	3115 - 3
1G18	RODS, PUSH (ENGINE SERIAL NO. -713822)	0402 - 6
1G19	RODS, PUSH (ENGINE SERIAL NO. 713823-)	0402 - 7
1C1	ROLLER BEARING,AXLE	0201 - 10
1C15	ROLLER BEARING,AXLE	0210 - 12
3C3	ROOF, CAB	1810 - 10
3C5	ROOF, ROPS	1810 - 12
3D3	ROPS FLOOR FRONT COVER	1810 - 34
3C5	ROPS FRAME	1810 - 12
3C5	ROPS FRAME ISOLATORS	1810 - 12
3C5	ROPS FRAME REFLECTOR	1810 - 12
3C5	ROPS HEADLINER	1810 - 12
2H5	ROPS ROOF HARNESS CONNECTOR	1674 - 26
2H5	ROPS ROOF WIRING HARNESS	1674 - 26
2G2	ROTATING BEACON	1673 - 1
2G2	ROTATING BEACON SWITCH	1673 - 1
2I1	ROTATING BEACON SWITCH	1676 - 2

S

3F24	SAFETY MATTING	1913 - 2
3G1	SCREEN, GRILLE	1921 - 2
3J5	SEAL KIT	3160 - 2
3F17	SEAL KIT, A/C COMPRESSOR SHAFT	1830 - 38
4D24	SEAL KIT, BACKHOE CONTROL VALVE	3360 - 16
4D24	SEAL KIT, BACKHOE CONTROL VALVE SECTION	3360 - 16
4D24	SEAL KIT, BACKHOE CONTROL VALVE SPOOL	3360 - 16
3H4	SEAL KIT, CHARGE PUMP	2160 - 14
3H5	SEAL KIT, CHARGE PUMP	2160 - 15
3H6	SEAL KIT, CHARGE PUMP	2160 - 16
4E5	SEAL KIT, RELIEF VALVE	3360 - 22
3J9	SEAL KIT, SECTION	3160 - 6
3J6	SEAL KIT, SPOOL	3160 - 3
3J7	SEAL KIT, SPOOL	3160 - 4
3J8	SEAL KIT, SPOOL	3160 - 5
2E12	SEAL, SHAFT, INPUT	1111 - 8
3E23	SEALS, HEATER AND HVAC MODULE CASE	1830 - 20
3D4	SEAT ADJUSTER WITH SUSPENDED SEAT	1821 - 2
3D6	SEAT ADJUSTER, WITH SUSPENDED SEAT	1821 - 4
3D12	SEAT ADJUSTING KNOB	1821 - 10
3D22	SEAT ADJUSTING KNOB	1821 - 20
3E1	SEAT ADJUSTING SWITCH	1821 - 24

ALPHABETICAL INDEX - CONTINUED

GRID		PAGE
3D10	SEAT BASE WITH NON-SUSPENDED SEAT	1821 - 8
3D24	SEAT BASE WITH NON-SUSPENDED SEAT	1821 - 22
3D6	SEAT BASE WITH SUSPENDED SEAT	1821 - 4
3D16	SEAT BELT COVER	1821 - 14
3D16	SEAT BELTS	1821 - 14
3D8	SEAT BELTS WITH NON-SUSPENDED SEAT	1821 - 6
3D4	SEAT BELTS WITH SUSPENDED SEAT	1821 - 2
3D16	SEAT BRACKETS	1821 - 14
3D8	SEAT BRACKETS WITH NON-SUSPENDED SEAT	1821 - 6
3D16	SEAT CUSHIONS	1821 - 14
3D8	SEAT CUSHIONS WITH NON-SUSPENDED SEAT	1821 - 6
3D18	SEAT LUMBAR SUPPORT CONTROL LEVER	1821 - 16
3D14	SEAT SLIDE	1821 - 12
3D18	SEAT SLIDE CONTROL LEVER	1821 - 16
3D10	SEAT SUPPORT WITH NON-SUSPENDED SEAT	1821 - 8
3D24	SEAT SUPPORT WITH NON-SUSPENDED SEAT	1821 - 22
3D4	SEAT SUPPORT WITH SUSPENDED SEAT	1821 - 2
3D22	SEAT SUSPENSION,SUSPENDED SEAT	1821 - 20
3E1	SEAT SUSPENSION,SUSPENDED SEAT	1821 - 24
3D20	SEAT SWIVEL	1821 - 18
3D18	SEAT SWIVEL CONTROL LEVER	1821 - 16
3D20	SEAT SWIVEL LATCH	1821 - 18
3D6	SEAT TURNTABLE WITH SUSPENDED SEAT	1821 - 4
3D12	SEAT, SUSPENSION	1821 - 10
3D12	SEAT, SUSPENSION BEARING KIT	1821 - 10
3D12	SEAT, SUSPENSION SHOCK	1821 - 10
1E22	SECOND GEAR CLUTCH ASSEMBLY, POWER SHIFT	0350 - 20
1E22	SECOND GEAR CLUTCH CARRIER, POWER SHIFT	0350 - 20
1E22	SECOND GEAR, BELLVILLEWASHER, POWERSHIFT	0350 - 20
3J5	SECTION INLET, LOADER VALVE	3160 - 2
3J9	SECTION SEAL KIT	3160 - 6
4D24	SECTION SEAL KIT, BACKHOE CONTROL VALVE	3360 - 16
4E24	SECTION, AUXILIARY BACKHOE CONTROL VALVE	3360 - 35
4E19	SECTION, BOOM BACKHOE CONTROL VALVE	3360 - 30
3J7	SECTION, BOOM, LOADER CONTROL VALVE	3160 - 4
4E20	SECTION, BUCKET BACKHOE CONTROL VALVE	3360 - 31
4E21	SECTION, CROWD BACKHOE CONTROL VALVE	3360 - 32
4E23	SECTION, EXTENDIBLE BACKHOE CONTROL VAL.	3360 - 34
3J6	SECTION, LOADER CONTROL VALVE, BUCKET	3160 - 3
4E22	SECTION, SWING BACKHOE CONTROL VALVE	3360 - 33
4E7	SELECTIVE FLOW SOLENOID CONTROL VALVE	3360 - 24
4E11	SELECTIVE FLOW SOLENOID CONTROL VALVE	3360 - 25C
2H11	SELECTIVE FLOW SOLENOID VALVE KIT	1674 - 32
2H11	SELECTIVE FLOW SOLENOID WIRING HARNESS	1674 - 32
2G11	SENDER, FUEL	1674 - 6
2C12	SENDER, FUEL GAUGE	0560 - 2
2G9	SENDING UNIT, ENGINE OIL PRESSURE	1674 - 4
2G11	SENDING UNIT, ENGINE OIL PRESSURE	1674 - 6
2G13	SENDING UNIT, ENGINE OIL PRESSURE	1674 - 8
2E14	SENSING SWITCH, PARK BRAKE	1160 - 2
2C5	SENSOR, AIR CLEANER VACUUM	0520 - 4
3D22	SENSOR,SUSPENDED SEAT POSITION	1821 - 20
3D24	SENSOR,SUSPENDED SEAT POSITION	1821 - 22
3E1	SENSOR,SUSPENDED SEAT POSITION	1821 - 24
2E12	SEPERATOR PLATE, PARK BRAKE	1111 - 8
2D5	SERVICE BRAKES	1011 - 4
2E20	SERVICE LOCK BAR, BOOM	1313 - 2
2E21	SERVICE LOCK, LIFT ARM	1313 - 4
1D11	SHAFT (MFWD)	0250 - 14
2I12	SHAFT GUARD, DRIVE, MFWD	1746 - 2
4G23	SHAFT, AUXILIARY DRIVE	4151 - 2
4H1	SHAFT, AUXILIARY DRIVE	4151 - 4
4H3	SHAFT, AUXILIARY DRIVE	4151 - 6
4H5	SHAFT, AUXILIARY DRIVE	4151 - 8
1C1	SHAFT, AXLE	0201 - 10
1C15	SHAFT, AXLE	0210 - 12
2C1	SHAFT, ENGINE SPEED CONTROL	0515 - 2
3G17	SHAFT, HYDRAULIC PUMP DRIVE	2160 - 2
1E18	SHAFT, INPUT	0350 - 16
2E12	SHAFT, INPUT SEAL	1111 - 8
1E8	SHAFT, INPUT, TRANSFER CASE, MFWD	0350 - 6
1E13	SHAFT, OUTPUT	0350 - 11
1C3	SHAFT, PLANETARY SHAFT	0201 - 12
1E18	SHAFT, PTO PUMP DRIVE	0350 - 16
1E12	SHAFT, REDUCTION GEAR (SERIAL NO. -872328)	0350 - 10
1G18	SHAFT, ROCKER ARM (ENGINE SERIAL NO. -713822)	0402 - 6
1G19	SHAFT, ROCKER ARM (ENGINE SERIAL NO. 713823-)	0402 - 7
1E18	SHAFT, STATOR	0350 - 16
1E9	SHAFT, TRANSFER CASE OUTPUT, MFWD	0350 - 7
1E18	SHAFT, TURBINE	0350 - 16
3I6	SHANK, MULTI-PURPOSE BUCKET	3102 - 4
3I10	SHANK, MULTI-PURPOSE BUCKET	3102 - 8
2F25	SHIELD, ALTERNATOR	1672 - 2
2I12	SHIELD, TRANSMISSION SHIFT VALVE	1746 - 2
3F20	SHIELDS, ENGINE SIDE	1910 - 2
3F20	SHIELDS, HOOD SIDE	1910 - 2
3I24	SHIELDS, LINKAGE	3115 - 8
2G24	SHIFT CONTROLLER	1674 - 20
2I12	SHIFT VALVE SHIELD, TRANSMISSION	1746 - 2
1E9	SHIM KIT, OUTPUT SHAFT	0350 - 7
4D1	SHIM, EXTENDIBLE DIPPERSTICK	3340 - 6
3D6	SHOCK ABSORBER, SUSPENDED SEAT	1821 - 4
3D22	SHOCK ABSORBER,SUSPENDED SEAT	1821 - 20
3E1	SHOCK ABSORBER,SUSPENDED SEAT	1821 - 24
3D12	SHOCK, SUSPENSION SEAT	1821 - 10
1H3	SHORT BLOCK, ENGINE (ENGINE SERIAL NO. -713822)	0404 - 6
1H5	SHORT BLOCK,ENGINE (ENGINE SERIAL N0. 713823-)	0404 - 8
2B24	SHROUD, FAN	0510 - 6
2G16	SIDE CONSOLE CIRCUIT BREAKER	1674 - 12
2G16	SIDE CONSOLE FUSES	1674 - 12
2G16	SIDE CONSOLE RELAYS	1674 - 12
2G16	SIDE CONSOLE WIRING HARNESS	1674 - 12
2G18	SIDE CONSOLE WIRING HARNESS	1674 - 14
2G20	SIDE CONSOLE WIRING HARNESS	1674 - 16
2G22	SIDE CONSOLE WIRING HARNESS	1674 - 18
3B21	SIDE INSTRUMENT PANEL HOUSING	1810 - 4
2I5	SIDE INSTRUMENT PANEL LABEL	1676 - 6
2I7	SIDE INSTRUMENT PANEL LABEL	1676 - 8
1B14	SIDE RING, WHEEL	0110 - 1
4D3	SIDE WEAR PAD	3340 - 8
3C17	SIDE WINDOW, CAB LOWER REAR	1810 - 24
3C9	SIDE WINDOWS, CAB	1810 - 16
3C11	SIDE WINDOWS, CAB	1810 - 18
2F3	SILICONE RUBBER ADHESIVE	1330 - 1
4G16	SIX FUNCTION BACKHOE HYDRAULICS	3360 - 78
4F1	SIXTH FUNCTION MANUAL VALVE KIT	3360 - 37
4D22	SIXTH FUNCTION VALVE, AUXILIARY SECTION	3360 - 14
1K1	SLEEVE, IDLER PULLEY	0429 - 6
3D18	SLIDE CONTROL KIT	1821 - 16
3D18	SLIDE LATCH SPRING KIT	1821 - 16
3D20	SLIDE PUCK SERVICE KIT	1821 - 18
3D14	SLIDE, SEAT	1821 - 12
2B15	SOLENOID	0505 - 2
2B15	SOLENOID CONTAINER	0505 - 2
4E7	SOLENOID CONTROL VALVE, SELECTIVE FLOW	3360 - 24
4E11	SOLENOID CONTROL VALVE, SELECTIVE FLOW	3360 - 25C
1J13	SOLENOID COVER	0422 - 1
1J16	SOLENOID KIT, STARTING MOTOR (ENGINE SERIAL NO. 814065-)	0422 - 4

ALPHABETICAL INDEX - CONTINUED

GRID		PAGE
2H11	SOLENOID VALVE KIT, SELECTIVE FLOW	1674 - 32
3G16	SOLENOID VALVE, HYDRAULIC PUMP	2160 - 1
1F20	SOLENOID VALVE, RANGE SHIFT,POWER SHIFT	0360 - 14
1F18	SOLENOID VALVE, TRANSMISSION,POWER SHIFT	0360 - 12
2H7	SOLENOID WIRING HARNESS, TRANSMISSION	1674 - 28
2E14	SOLENOID, DIFFERENTIAL LOCK	1160 - 2
3J16	SOLENOID, LOADER CONTROL VALVE BUCKET SECTION	3160 - 13
1D22	SOLENOID, MFWD	0341 - 4
2G11	SOLENOID, MFWD	1674 - 6
2E14	SOLENOID, PARK BRAKE	1160 - 2
1F9	SOLENOID, TRANSMISSION VALVE CARTRIDGE	0360 - 2
1F11	SOLENOID, TRANSMISSION VALVE CARTRIDGE	0360 - 4
2B17	SOLENOID,COLD WEATHER STARTING AID	0505 - 4
4E13	SOLINOID, AUXILIARY VALVE	3360 - 25E
1K1	SPACER, IDLER PULLEY	0429 - 6
2F1	SPANISH LABEL KIT	1320 - 4
2H9	SPEAKER, RADIO	1674 - 30
3G6	SPEAKER, RADIO	2001 - 2
2C1	SPEED CONTROL, ENGINE	0515 - 2
1F9	SPEED SELECTOR SPOOL	0360 - 2
1C19	SPINDLE AND KNUCKLE ASSEMBLY	0230 - 2
1C14	SPIRAL BEVEL INPUT PINION	0210 - 11
3J6	SPOOL SEAL KIT	3160 - 3
3J7	SPOOL SEAL KIT	3160 - 4
3J8	SPOOL SEAL KIT	3160 - 5
4D24	SPOOL SEAL KIT, BACKHOE CONTROL VALVE	3360 - 16
1F9	SPOOL, FNR	0360 - 2
1F9	SPOOL, NEUTRAL	0360 - 2
1F9	SPOOL, SPEED SELECTOR	0360 - 2
1F9	SPOOL, TRANSMISSION VALVE	0360 - 2
3D12	SPRING, SUSPENSION	1821 - 10
3D12	SPRING, SUSPENSION SEAT	1821 - 10
3D22	SPRING, SUSPENSION SEAT	1821 - 20
3E1	SPRING, SUSPENSION SEAT	1821 - 24
4D6	STABILIZER	3340 - 11
4G5	STABILIZER CYLINDER	3360 - 66
4G7	STABILIZER CYLINDER	3360 - 68
4G9	STABILIZER CYLINDER CLAMPS	3360 - 70
4G9	STABILIZER CYLINDER ELBOWS	3360 - 70
4G9	STABILIZER CYLINDER HOSES	3360 - 70
4G9	STABILIZER CYLINDER HYDRAULICS	3360 - 70
4G5	STABILIZER CYLINDER PINS	3360 - 66
4G7	STABILIZER CYLINDER PINS	3360 - 68
4G5	STABILIZER CYLINDER REPAIR KIT	3360 - 66
4G7	STABILIZER CYLINDER REPAIR KIT	3360 - 68
4D6	STABILIZER FEET	3340 - 11
4D5	STABILIZER FEET, REVERSIBLE	3340 - 10
4B21	STABILIZER LEVER	3315 - 2
4B21	STABILIZER LINKAGE	3315 - 2
3B21	STABILIZER LINKAGE COVER	1810 - 4
4F24	STABILIZER VALVE	3360 - 60
4G1	STABILIZER VALVE HYDRAULICS	3360 - 62
4G3	STABILIZER VALVE HYDRAULICS	3360 - 64
4F24	STABILIZER VALVE KITS	3360 - 60
4B21	STABILIZER VALVE LINKAGE	3315 - 2
2G20	START AID RELAY	1674 - 16
2G22	START AID RELAY	1674 - 18
2I1	START AID SWITCH	1676 - 2
2G7	STARTER RELAY	1674 - 2
2G9	STARTER RELAY	1674 - 4
2G13	STARTER RELAY	1674 - 8
2I5	STARTING AID SWITCH	1676 - 6
2I7	STARTING AID SWITCH	1676 - 8
2B15	STARTING AID, COLD WEATHER	0505 - 2
2B17	STARTING AID, COLD WEATHER	0505 - 4
2B15	STARTING FLUID	0505 - 2
2B17	STARTING FLUID	0505 - 4
1J13	STARTING MOTOR	0422 - 1
1J14	STARTING MOTOR (ENGINE SERIAL NO. -814064)	0422 - 2
1J16	STARTING MOTOR (ENGINE SERIAL NO. 814065-)	0422 - 4
1J13	STARTING MOTOR KIT	0422 - 1
1J14	STARTING MOTOR KIT (ENGINE SERIAL NO. -814064)	0422 - 2
1J13	STARTING MOTOR LABEL	0422 - 1
1J16	STARTING MOTOR SOLENOID KIT (ENGINE SERIAL NO. 814065-)	0422 - 4
1J14	STARTING MOTOR SWITCH, ARMATURE AND COIL (ENGINE SERIAL NO. -814064)	0422 - 2
1E18	STATOR SHAFT	0350 - 16
2C19	STEERING COLUMN	0960 - 2
2C19	STEERING COLUMN BRACKET	0960 - 2
3B19	STEERING COLUMN COVER	1810 - 2
2C19	STEERING COLUMN COVER, TILT	0960 - 2
2C19	STEERING COLUMN CYLINDER, TILT	0960 - 2
2C19	STEERING COLUMN KIT, TILT	0960 - 2
2C19	STEERING COLUMN OVERHAUL KIT, TILT	0960 - 2
2C19	STEERING COLUMN, TILT	0960 - 2
2C23	STEERING CYLINDER	0960 - 6
2C19	STEERING CYLINDER BOOT, TILT	0960 - 2
1D1	STEERING CYLINDER GUIDE, FWD	0250 - 4
1D1	STEERING CYLINDER KIT, FWD	0250 - 4
1D1	STEERING CYLINDER PISTON, FWD	0250 - 4
1D1	STEERING CYLINDER ROD, FWD	0250 - 4
1D1	STEERING CYLINDER, FWD	0250 - 4
2C21	STEERING CYLINDER, POWER (WITHOUT MFWD)	0960 - 4
2C22	STEERING CYLINDER, POWER (WITHOUT MFWD)	0960 - 5
1D3	STEERING HOUSING, FWD	0250 - 6
1D3	STEERING KNUCKLE HOUSING, FWD	0250 - 6
2C23	STEERING LINES	0960 - 6
1D3	STEERING UNIVERSAL JOINT, FWD	0250 - 6
2C23	STEERING VALVE HYDRAULICS	0960 - 6
2C19	STEERING WHEEL	0960 - 2
1B15	STEM, VALVE	0110 - 2
1B16	STEM, VALVE	0120 - 1
3E3	STEP, BATTERY BOX	1822 - 2
3E3	STEP, FUEL TANK	1822 - 2
2G3	STOP LIGHT, CAB	1673 - 2
4G13	STOP, EXTENDIBLE DIPPERSTICK CYLINDER	3360 - 75
3H7	STRAINER, SUCTION, HYDRAULIC RESERVOIR	2160 - 18
4D7	STREET PADS, BACKHOE	3340 - 12
3G21	STROKE CONTROL VALVE, HYDRAULIC PUMP	2160 - 6
1D24	SUCTION PIPE, TRANSMISSION	0341 - 6
3H7	SUCTION STRAINER, HYDRAULIC RESERVOIR	2160 - 18
3B23	SUPPORT, CAB FRONT ROOF	1810 - 6
3F22	SUPPORT, COWL COVER	1910 - 4
2C9	SUPPORT, ENGINE MOUNT	0540 - 1
2C10	SUPPORT, ENGINE MOUNT	0540 - 2
3I20	SUPPORT, LOADER CONTROL VALVE	3115 - 4
3I22	SUPPORT, LOADER CONTROL VALVE, THIRD FUNCTION	3115 - 6
2B20	SUPPORT, RADIATOR	0510 - 2
3D10	SUPPORT, SEAT WITH NON-SUSPENDED SEAT	1821 - 8
3D24	SUPPORT, SEAT WITH NON-SUSPENDED SEAT	1821 - 22
3D4	SUPPORT, SEAT WITH SUSPENDED SEAT	1821 - 2
1J22	SUPPORT,FAN DRIVE HOUSING (ENGINE SERIAL NO. 713823-)	0429 - 2
1J5	SUPPORT,FUEL FILTER (ENGINE SERIAL NO. -713822)	0420 - 2
1J20	SUPPORTS, ALTERNATOR	0423 - 4
3D6	SUSPENDED SEAT ADJUSTER	1821 - 4
3D22	SUSPENDED SEAT POSITION SENSOR	1821 - 20

ALPHABETICAL INDEX - CONTINUED

GRID		PAGE
3D24	SUSPENDED SEAT POSITION SENSOR	1821 - 22
3E1	SUSPENDED SEAT POSITION SENSOR	1821 - 24
3D6	SUSPENDED SEAT SHOCK ABSORBER	1821 - 4
3D22	SUSPENDED SEAT SHOCK ABSORBER	1821 - 20
3E1	SUSPENDED SEAT SHOCK ABSORBER	1821 - 24
3D22	SUSPENDED SEAT SUSPENSION	1821 - 20
3E1	SUSPENDED SEAT SUSPENSION	1821 - 24
3D12	SUSPENSION SEAT	1821 - 10
3D12	SUSPENSION SPRING	1821 - 10
4F10	SWING CYLINDER	3360 - 46
4F12	SWING CYLINDER	3360 - 48
4F22	SWING CYLINDER BACKHOE HYDRAULICS	3360 - 58
4F14	SWING CYLINDER PINS	3360 - 50
4C22	SWING FRAME	3340 - 2
4C22	SWING FRAME, PINS	3340 - 2
3B21	SWING LOCK PIN HOLDER	1810 - 4
4D18	SWING SECTION, BACKHOE CONTROL VALVE	3360 - 10
4E22	SWING SECTION, BACKHOE CONTROL VALVE	3360 - 33
2I1	SWITCH MOUNTING FRAME	1676 - 2
2E14	SWITCH, ACCUMULATOR CHARGE	1160 - 2
2I5	SWITCH, AIR CONDITIONING	1676 - 6
2I1	SWITCH, AIR CONDITIONING TOGGLE	1676 - 2
3F7	SWITCH, AIR CONDITIONING TOGGLE	1830 - 28
3F9	SWITCH, AIR CONDITIONING TOGGLE	1830 - 30
3F7	SWITCH, BLOWER	1830 - 28
3F9	SWITCH, BLOWER	1830 - 30
2D23	SWITCH, BREAK LINE PRESSURE	1063 - 2
3F7	SWITCH, CLUTCH CYCLE	1830 - 28
3F9	SWITCH, CLUTCH CYCLE	1830 - 30
2G20	SWITCH, CLUTCH DISCONNECT	1674 - 16
2G22	SWITCH, CLUTCH DISCONNECT	1674 - 18
1D12	SWITCH, DIFFERENTIAL LOCK	0260 - 1
2G18	SWITCH, DIFFERENTIAL LOCK	1674 - 14
2G7	SWITCH, ENGINE COOLANT TEMPERATURE	1674 - 2
2G9	SWITCH, ENGINE COOLANT TEMPERATURE	1674 - 4
2G13	SWITCH, ENGINE COOLANT TEMPERATURE	1674 - 8
2G7	SWITCH, ENGINE OIL PRESSURE	1674 - 2
2G9	SWITCH, ENGINE OIL PRESSURE	1674 - 4
2G13	SWITCH, ENGINE OIL PRESSURE	1674 - 8
2H11	SWITCH, FOOT, AUXILIARY HYDRAULICS	1674 - 32
1D16	SWITCH, FORWARD/REVERSE	0315 - 2
3F7	SWITCH, FREEZE CONTROL	1830 - 28
3F9	SWITCH, FREEZE CONTROL	1830 - 30
2G24	SWITCH, FRONT LIGHT	1674 - 20
3B19	SWITCH, FRONT LIGHT	1810 - 2
2H1	SWITCH, FRONT LIGHTS	1674 - 22
3B19	SWITCH, FRONT WINDSHIELD WASHER	1810 - 2
3B19	SWITCH, FRONT WINDSHIELD WIPER	1810 - 2
2G24	SWITCH, FRONT WIPER	1674 - 20
2H1	SWITCH, FRONT WIPER	1674 - 22
2I1	SWITCH, HEAT BLOWER	1676 - 2
2H13	SWITCH, HEAT TEMPERATURE	1674 - 34
2I1	SWITCH, HEAT TEMPERATURE	1676 - 2
2H13	SWITCH, HEATER BLOWER	1674 - 34
2I5	SWITCH, HEATER BLOWER	1676 - 6
3F7	SWITCH, HIGH PRESSURE	1830 - 28
3F9	SWITCH, HIGH PRESSURE	1830 - 30
2I1	SWITCH, HORN	1676 - 2
2I5	SWITCH, HORN	1676 - 6
2I7	SWITCH, HORN	1676 - 8
2I5	SWITCH, IGNITION	1676 - 6
2I7	SWITCH, IGNITION	1676 - 8
2I1	SWITCH, KEY	1676 - 2
2G20	SWITCH, LOADER LEVER	1674 - 16
2G22	SWITCH, LOADER LEVER	1674 - 18
3F7	SWITCH, LOW PRESSURE	1830 - 28
3F9	SWITCH, LOW PRESSURE	1830 - 30
2I1	SWITCH, MFWD	1676 - 2
2I5	SWITCH, MFWD	1676 - 6
2I7	SWITCH, MFWD	1676 - 8
2G11	SWITCH, MFWD INDICATOR	1674 - 6
2I1	SWITCH, PARK BRAKE	1676 - 2
2E14	SWITCH, PARK BRAKE SENSING	1160 - 2
2G11	SWITCH, PARK BRAKE SENSING	1674 - 6
1D22	SWITCH, PRESSURE	0341 - 4
2I1	SWITCH, REAR LIGHT	1676 - 2
2I5	SWITCH, REAR LIGHT	1676 - 6
2I7	SWITCH, REAR LIGHT	1676 - 8
2I1	SWITCH, REAR WINDOW WIPER	1676 - 2
2I5	SWITCH, REAR WIPER	1676 - 6
2G15	SWITCH, RETURN-TO-DIG	1674 - 10
1D16	SWITCH, REVERSE CONTROL	0315 - 2
2G2	SWITCH, ROTATING BEACON	1673 - 1
2I1	SWITCH, ROTATING BEACON	1676 - 2
3E1	SWITCH, SEAT ADJUSTING	1821 - 24
2H11	SWITCH, SELECTIVE FLOW AUXILIARY	1674 - 32
2I1	SWITCH, START AID	1676 - 2
2I5	SWITCH, STARTING AID	1676 - 6
2I7	SWITCH, STARTING AID	1676 - 8
1J14	SWITCH, STARTING MOTOR (ENGINE SERIAL NO. -814064)	0422 - 2
1D20	SWITCH, TRANSMISSION TEMPERATURE	0341 - 2
2G7	SWITCH, TRANSMISSION TEMPERATURE	1674 - 2
2G9	SWITCH, TRANSMISSION TEMPERATURE	1674 - 4
2G13	SWITCH, TRANSMISSION TEMPERATURE	1674 - 8
2G24	SWITCH, TURN SIGNAL	1674 - 20
2H1	SWITCH, TURN SIGNAL	1674 - 22
3B19	SWITCH, TURN SIGNAL	1810 - 2
3B19	SWITCH, WARNING FLASHER	1810 - 2
2G24	SWITCH, WINDSHIELD WASHER	1674 - 20
2H1	SWITCH, WINDSHIELD WASHER	1674 - 22
2G24	SWITCH, 4-WAY FLASHER	1674 - 20
2H1	SWITCH, 4-WAY FLASHER	1674 - 22
2H17	SWITCH,AIR CONDITIONING HIGH PRESSURE	1674 - 38
2H17	SWITCH,AIR CONDITIONING LOW PRESSURE	1674 - 38
2I5	SWITCH,AUXILIARY HYDRAULICS	1676 - 6
2I7	SWITCH,AUXILLIARY HYDRAULICS	1676 - 8
2I5	SWITCH,PARKING BRAKE	1676 - 6
2I1	SWITCHES, INSTRUMENT PANEL	1676 - 2
3D10	SWIVEL KIT	1821 - 8
3D14	SWIVEL KIT	1821 - 12
3D20	SWIVEL LATCH KIT	1821 - 18
3D20	SWIVEL SERVICE KIT	1821 - 18
3D20	SWIVEL,SEAT	1821 - 18
1I5	SYSTEM, FUEL INJECTION (ENGINE SERIAL NO. -713822)	0413 - 4
1I7	SYSTEM, FUEL INJECTION (ENGINE SERIAL NO. 713823-)	0413 - 6

T

2G16	TACHOMETER	1674 - 12
2I1	TACHOMETER	1676 - 2
2I5	TACHOMETER	1676 - 6
2I7	TACHOMETER	1676 - 8
2G5	TAIL LIGHT (ROPS)	1673 - 4
2G3	TAIL LIGHT, CAB	1673 - 2
2C12	TANK, FUEL	0560 - 2
2B20	TANK, RADIATOR OVERFLOW	0510 - 2
2B22	TANK, RADIATOR OVERFLOW	0510 - 4
1G19	TAPPET, ENGINE (ENGINE SERIAL NO. 713823-)	0402 - 7
4B18	TEETH, BACKHOE BUCKET	3302 - 2

ALPHABETICAL INDEX - CONTINUED

GRID		PAGE
4B19	TEETH, BACKHOE BUCKET	3302 - 3
3I4	TEETH, LOADER BUCKET	3102 - 2
3E7	TEMPERATURE CONTROL,HEATER	1830 - 4
2H13	TEMPERATURE SWITCH, HEAT	1674 - 34
2I1	TEMPERATURE SWITCH, HEAT	1676 - 2
1D20	TEMPERATURE SWITCH, TRANSMISSION	0341 - 2
1J18	TENSIONER, BELT	0423 - 2
1J22	TENSIONER, BELT IDLER (ENGINE SERIAL NO. 713823-)	0429 - 2
2H23	TERMINALS, WEATHERPACK	1674 - 44
2F14	TEST KIT, FLUID ANALYSIS PRODUCTS (COOLSCAN)	1369 - 10
2F15	TEST KIT, FLUID ANALYSIS PRODUCTS (DIESELSCAN)	1369 - 11
2F12	TEST KIT, FLUID ANALYSIS PRODUCTS (OILSCAN)	1369 - 8
3D12	TETHER BELT	1821 - 10
3D22	TETHER BELT	1821 - 20
3E1	TETHER BELT	1821 - 24
3D10	TETHER BELTS WITH NON-SUSPENDED SEAT	1821 - 8
3D24	TETHER BELTS WITH NON-SUSPENDED SEAT	1821 - 22
1I23	THERMOSTAT	0418 - 2
1I23	THERMOSTAT COVER	0418 - 2
1I23	THERMOSTAT COVER TUBE	0418 - 2
1I22	THERMOSTAT HOUSING, ENGINE	0418 - 1
1I22	THERMOSTAT, ENGINE	0418 - 1
3I8	THIRD FUNCTION HYDRAULICS	3102 - 6
3I12	THIRD FUNCTION HYDRAULICS	3102 - 9A
3J11	THIRD FUNCTION HYDRAULICS	3160 - 8
3I22	THIRD FUNCTION LOADER CONTROL VALVE LINKAGE	3115 - 6
3J8	THIRD FUNCTION LOADER VALVE	3160 - 5
3I22	THIRD FUNCTION, PLUMBING AND LINKAGE KIT	3115 - 6
1E24	THIRD GEAR CLUTCH ASSEMBLY, POWER SHIFT	0350 - 22
1E24	THIRD GEAR CLUTCH CARRIER, POWER SHIFT	0350 - 22
1E24	THIRD GEAR, BELLVILLEWASHER, POWERSHIFT	0350 - 22
4C11	THREE LEVER CONTROLS, FIFTH FN LEVER FOR	3315 - 16
4C9	THREE LEVER EXTENDIBLE BACKHOE CONTROL VALVE LINKAGE	3315 - 14
4C7	THREE LEVER STANDARD BACKHOE CONTROL VALVE LINKAGE	3315 - 12
1B19	TIE BARS, MAIN FRAME	0201 - 2
3J5	TIE BOLTS, LOADER VALVE	3160 - 2
1C21	TIE ROD ASSEMBLY	0230 - 4
1C23	TIE ROD, FWD	0250 - 2
2C19	TILT STEERING COLUMN	0960 - 2
2C19	TILT STEERING COLUMN COVER	0960 - 2
2C19	TILT STEERING COLUMN CYLINDER	0960 - 2
2C19	TILT STEERING COLUMN KIT	0960 - 2
2C19	TILT STEERING COLUMN OVERHAUL KIT	0960 - 2
2C19	TILT STEERING CYLINDER BOOT	0960 - 2
1G13	TIMING GEAR COVER (ENGINE SERIAL NO. -713822)	0402 - 1
1G14	TIMING GEAR COVER (ENGINE SERIAL NO. 713823-)	0402 - 2
3G12	TOOLBOX	2005 - 1
3G12	TOOLBOX BRACKET	2005 - 1
3G12	TOOLBOX TRAY	2005 - 1
3I6	TOOTH, MULTI-PURPOSE BUCKET	3102 - 4
3I10	TOOTH, MULTI-PURPOSE BUCKET	3102 - 8
2C16	TORQUE CONVERTER	0641 - 1
2C17	TORQUE CONVERTER	0641 - 2
2C17	TORQUE CONVERTOR FLEXPLATE	0641 - 2
1D22	TRANSFER CASE AND COVER, MFWD	0341 - 4
1E9	TRANSFER CASE OUTPUT SHAFT, MFWD	0350 - 7
1E8	TRANSFER CASE, TRANSMISSION DRIVE GEAR, MFWD	0350 - 6
1E1	TRANSMISSION	0341 - 8
1D24	TRANSMISSION BREATHER	0341 - 6
1D19	TRANSMISSION CASE AND PLUGS	0341 - 1
1F9	TRANSMISSION CONTROL VALVE	0360 - 2
1F9	TRANSMISSION CONTROL VALVE GASKET	0360 - 2
1F22	TRANSMISSION CONTROL VALVE SOLENOID, POW ER SHIFT	0360 - 16
1F18	TRANSMISSION CONTROL VALVE, POWER SHIFT	0360 - 12
1D20	TRANSMISSION COVER, DIPSTICK AND SCREEN	0341 - 2
1E1	TRANSMISSION DIPSTICK	0341 - 8
1E1	TRANSMISSION DIPSTICK TUBE	0341 - 8
1D17	TRANSMISSION DRIVE SHAFT	0325 - 1
1D24	TRANSMISSION HOUSING, POWER SHIFT	0341 - 6
1E6	TRANSMISSION INPUT CLUTCH	0350 - 4
1F22	TRANSMISSION INTERMEDIATE PLATE, POWER S HIFT	0360 - 16
1D24	TRANSMISSION LIFT BRACKET	0341 - 6
2B20	TRANSMISSION OIL COOLER	0510 - 2
2B22	TRANSMISSION OIL COOLER	0510 - 4
1F14	TRANSMISSION OIL FILTER	0360 - 8
1F17	TRANSMISSION OIL FILTER	0360 - 11
1F16	TRANSMISSION OIL PUMP	0360 - 10
1F16	TRANSMISSION OIL PUMP MANIFOLD	0360 - 10
1F7	TRANSMISSION OUTPUT SHAFT (MFWD)	0350 - 30
1E3	TRANSMISSION PLANETARY	0350 - 1
1E4	TRANSMISSION PLANETARY ASSEMBLY, COMPLETE	0350 - 2
1E2	TRANSMISSION RESILIENT MOUNT	0342 - 2
1E2	TRANSMISSION RESILIENT MOUNT ISOLATORS	0342 - 2
2I12	TRANSMISSION SHIFT VALVE SHIELD	1746 - 2
1F18	TRANSMISSION SOLENOID VALVE, POWER SHIFT	0360 - 12
2H7	TRANSMISSION SOLENOID WIRING HARNESS	1674 - 28
1D24	TRANSMISSION SUCTION PIPE	0341 - 6
1D20	TRANSMISSION TEMPERATURE SWITCH	0341 - 2
2G7	TRANSMISSION TEMPERATURE SWITCH	1674 - 2
2G9	TRANSMISSION TEMPERATURE SWITCH	1674 - 4
2G13	TRANSMISSION TEMPERATURE SWITCH	1674 - 8
1E8	TRANSMISSION TRANSFER CASE DRIVE GEAR, MFWD	0350 - 6
1F9	TRANSMISSION VALVE CARTRIDGE SOLENOID	0360 - 2
1F9	TRANSMISSION VALVE SPOOL	0360 - 2
3G12	TRAY, TOOLBOX	2005 - 1
1H9	TUBE, DIPSTICK, ENGINE OIL (ENGINE SERIAL NO. -713822)	0407 - 2
1E1	TUBE, TRANSMISSION DIPSTICK	0341 - 8
1H18	TUBE, VENTILATOR, ENGINE (ENGINE SERIAL NO. -713822)	0408 - 1
1I23	TUBE,THERMOSTAT COVER	0418 - 2
1E18	TURBINE SHAFT	0350 - 16
1I12	TURBOCHARGER (ENGINE SERIAL NO. -713822)	0416 - 1
1I15	TURBOCHARGER (ENGINE SERIAL NO. 713823-)	0416 - 4
1I12	TURBOCHARGER CENTER HOUSING (ENGINE SERIAL NO. -713822)	0416 - 1
1I12	TURBOCHARGER HARDWARE KIT (ENGINE SERIAL NO. -713822)	0416 - 1
1I15	TURBOCHARGER HARDWARE KIT (ENGINE SERIAL NO. 713823-)	0416 - 4
1I13	TURBOCHARGER OIL LINES (ENGINE SERIAL NO. -713822)	0416 - 2
1I16	TURBOCHARGER OIL LINES (ENGINE SERIAL NO. 713823-)	0416 - 6
3B19	TURN SIGNAL INDICATOR	1810 - 2
2G24	TURN SIGNAL LIGHT BULB	1674 - 20

ALPHABETICAL INDEX - CONTINUED

GRID		PAGE
2H1	TURN SIGNAL LIGHT BULB	1674 - 22
2G3	TURN SIGNAL LIGHT, CAB	1673 - 2
2G5	TURN SIGNAL LIGHTS (ROPS)	1673 - 4
2G24	TURN SIGNAL SWITCH	1674 - 20
2H1	TURN SIGNAL SWITCH	1674 - 22
3B19	TURN SIGNAL SWITCH	1810 - 2
3D6	TURNTABLE, SEAT WITH SUSPENDED SEAT	1821 - 4
3J17	TWO FUNCTION HYDRAULICS	3160 - 14
4B23	TWO LEVER BACKHOE CONTROL LEVER LINKAGE	3315 - 4
4C1	TWO LEVER BACKHOE CONTROL LEVER LINKAGE FOR EXTENDIBLE DIPPERSTICK	3315 - 6
4C1	TWO LEVER BACKHOE CONTROL LINKAGE FIELD KIT FOR EXTENDIBLE DIPPERSTICK	3315 - 6

U

1G11	UNDERSIZE CRANKSHAFT KIT	0401 - 5
1D11	UNIVERSAL JOINT (MFWD)	0250 - 14
1D18	UNIVERSAL JOINT (REVERSER)	0325 - 2
2E12	UNIVERSAL JOINT YOKE	1111 - 8
1D3	UNIVERSAL JOINT, STEERING, FWD	0250 - 6
3C7	UPPER REAR CAB WINDOW	1810 - 14
3C7	UPPER REAR CAB WINDOW CYLINDER	1810 - 14
3C7	UPPER REAR CAB WINDOW LATCH	1810 - 14

V

2C5	VACUUM SENSOR, AIR CLEANER	0520 - 4
4C5	VALVE AND FOOT CONTROL LINKAGE, FIFTH FUNCTION (TWO-LEVER)	3315 - 10
2H11	VALVE KIT, SELECTIVE FLOW SOLENOID	1674 - 32
4B21	VALVE LINKAGE, STABILIZER	3315 - 2
4E5	VALVE SEAL KIT, RELIEF	3360 - 22
4D24	VALVE SECTION SEAL KIT, BACKHOE CONTROL	3360 - 16
2I12	VALVE SHIELD, TRANSMISSION SHIFT	1746 - 2
4D24	VALVE SPOOL SEAL KIT, BACKHOE CONTROL	3360 - 16
1B14	VALVE STEM	0110 - 1
1B15	VALVE STEM	0110 - 2
1B16	VALVE STEM	0120 - 1
4E9	VALVE, AUXILIARY	3360 - 25A
4E13	VALVE, AUXILIARY	3360 - 25E
4D12	VALVE, BACKHOE CONTROL BOOM SECTION	3360 - 4
4D14	VALVE, BACKHOE CONTROL BUCKET SECTION	3360 - 6
4D18	VALVE, BACKHOE CONTROL SWING SECTION	3360 - 10
4D24	VALVE, BACKHOE CONTROL, SEAL KIT	3360 - 16
4E17	VALVE, BACKHOE INLET SECTION	3360 - 28
4E18	VALVE, BACKHOE OUTLET SECTION	3360 - 29
4G1	VALVE, BACKHOE PRESSURE AND RETURN HYDRAULICS	3360 - 62
4G3	VALVE, BACKHOE PRESSURE AND RETURN HYDRAULICS	3360 - 64
4F2	VALVE, BACKHOE RELIEF KIT	3360 - 38
2D7	VALVE, BRAKE	1060 - 2
2D11	VALVE, BRAKE	1060 - 6
2D21	VALVE, BRAKE	1060 - 16
2D16	VALVE, BRAKE COVER	1060 - 11
2D19	VALVE, BRAKE HARDWARE KIT	1060 - 14
2D15	VALVE, BRAKE MAKE-UP CHECK KIT	1060 - 10
2D20	VALVE, BRAKE MOUNTING PARTS	1060 - 15
2D13	VALVE, BRAKE OVERHAUL KIT	1060 - 8
2D17	VALVE, BRAKE PRESSURE INLET KIT	1060 - 12
3E5	VALVE, CAB HEATER SHUT-OFF	1830 - 2
3E7	VALVE, CAB HEATER SHUT-OFF	1830 - 4
4D20	VALVE, CONTROL, AUXILIARY SECTION	3360 - 12
4D22	VALVE, CONTROL, AUXILIARY SECTION	3360 - 14
4D10	VALVE, CONTROL, BACKHOE	3360 - 2
4E15	VALVE, CONTROL, BACKHOE	3360 - 26
4E7	VALVE, CONTROL, SELECTIVE FLOW, BACKHOE	3360 - 24
4E11	VALVE, CONTROL, SELECTIVE FLOW, BACKHOE	3360 - 25C
4E3	VALVE, COVER, RELIEF	3360 - 20
1G14	VALVE, ENGINE OIL PRESSURE RELIEF (ENGINE SERIAL NO. 713823-)	0402 - 2
1H23	VALVE, EXHAUST (ENGINE SERIAL NO. 713823-)	0409 - 4
3F7	VALVE, EXPANSION	1830 - 28
3F9	VALVE, EXPANSION	1830 - 30
1F12	VALVE, HYDRAULIC PRESSURE REGULATING	0360 - 6
3G16	VALVE, HYDRAULIC PUMP SOLENOID	2160 - 1
1H23	VALVE, INTAKE (ENGINE SERIAL NO. 713823-)	0409 - 4
3J17	VALVE, LOADER	3160 - 14
3J4	VALVE, LOADER CONTROL	3160 - 1
3J19	VALVE, LOADER CONTROL	3160 - 16
3J6	VALVE, LOADER CONTROL BUCKET SECTION	3160 - 3
3I20	VALVE, LOADER CONTROL MOUNTING BRACKET	3115 - 4
3I22	VALVE, LOADER CONTROL MOUNTING BRACKET	3115 - 6
3J7	VALVE, LOADER CONTROL, BOOM SECTION	3160 - 4
3I20	VALVE, LOADER CONTROL, LINKAGE	3115 - 4
3I22	VALVE, LOADER CONTROL, LINKAGE, THIRD FUNCTION	3115 - 6
3J8	VALVE, LOADER, AUXILIARY SECTION	3160 - 5
3J5	VALVE, LOADER, INLET SECTION	3160 - 2
3H1	VALVE, PRIORITY	2160 - 11
1F20	VALVE, RANGE SHIFT, POWER SHIFT	0360 - 14
1F11	VALVE, RELIEF	0360 - 4
4E1	VALVE, RELIEF	3360 - 18
4E2	VALVE, RELIEF	3360 - 19
3J22	VALVE, RELIEF, BUCKET SECTION	3160 - 19
4E3	VALVE, RELIEF, INLET	3360 - 20
3J16	VALVE, SOLENOID LOADER VALVE BUCKET SECTION	3160 - 13
4F24	VALVE, STABILIZER	3360 - 60
1F9	VALVE, TRANSMISSION CONTROL	0360 - 2
1F18	VALVE, TRANSMISSION CONTROL, POWER SHIFT	0360 - 12
1F18	VALVE, TRANSMISSION SOLENOID,POER SHIFT	0360 - 12
4G18	VALVE,COUNTER BALANCE,CLD	3360 - 80
4G20	VALVE,COUNTER BALANCE,CLD	3360 - 82
1H1	VALVE,ENGINE OIL BY-PASS (ENGINE SERIAL NO. 713823-)	0404 - 4
4G18	VALVE,NEEDLE,CLD	3360 - 80
4G20	VALVE,NEEDLE,CLD	3360 - 82
1H21	VALVES, EXHAUST (ENGINE SERIAL NO. -713822)	0409 - 2
1H21	VALVES, INTAKE (ENGINE SERIAL NO. -713822)	0409 - 2
3B21	VANDAL GUARD	1810 - 4
3B21	VANDAL GUARD LOCK	1810 - 4
1H19	VENTILATING SYSTEM, ENGINE (ENGINE SERIAL NO. 713823-)	0408 - 2
3E19	VENTILATION,HEATING,AIR CONDITIONING	1830 - 16
3E21	VENTILATION,HEATING,AIR CONDITIONING	1830 - 18
1H18	VENTILATOR TUBE, ENGINE (ENGINE SERIAL NO. -713822)	0408 - 1
2G1	VOLTAGE REGULATOR	1672 - 3

W

2I5	WARING BUZZER	1676 - 6
2I1	WARNING BUZZER	1676 - 2
2I7	WARNING BUZZER	1676 - 8
3B19	WARNING FLASHER SWITCH	1810 - 2

ALPHABETICAL INDEX - CONTINUED

GRID		PAGE
1I20	WATER PUMP AND IMPELLER (ENGINE SERIAL NO. 713823-)	0417 - 5
1I21	WATER PUMP INLET (ENGINE SERIAL NO. 713823-)	0417 - 6
1I21	WATER PUMP PULLEY (ENGINE SERIAL NO. 713823-)	0417 - 6
1I20	WATER PUMP REPAIR KIT (ENGINE SERIAL NO. 713823-)	0417 - 5
1I18	WATER PUMP, PULLEY, IMPELLER AND HOUSING (ENGINE SERIAL NO. -713822)	0417 - 2
1J5	WATER SEPARATOR,FUEL FILTER (ENGINE SERIAL NO. -713822)	0420 - 2
4D1	WEARSTRIPS, EXTENDIBLE DIPPERSTICK	3340 - 6
2H23	WEATHERPACK CONNECTORS	1674 - 44
2H23	WEATHERPACK TERMINALS	1674 - 44
1B14	WHEEL SIDE RING	0110 - 1
1B14	WHEEL, DRIVE	0110 - 1
1B15	WHEEL, DRIVE	0110 - 2
1B16	WHEEL, FRONT	0120 - 1
1B14	WHEEL, LOCK RING	0110 - 1
2C19	WHEEL, STEERING	0960 - 2
2I1	WINDER WIPER SWITCH, REAR	1676 - 2
3C13	WINDOW WIPER MOTOR, FRONT	1810 - 20
3C17	WINDOW, CAB DOOR	1810 - 24
3C17	WINDOW, CAB LOWER REAR	1810 - 24
3C9	WINDOW, CAB SIDE	1810 - 16
3C11	WINDOW, CAB SIDE	1810 - 18
3C19	WINDOW, FIXED	1810 - 26
3C15	WINDSHIELD WASHER HOSE	1810 - 22
3C15	WINDSHIELD WASHER PUMP	1810 - 22
2G24	WINDSHIELD WASHER SWITCH	1674 - 20
2H1	WINDSHIELD WASHER SWITCH	1674 - 22
3C21	WINDSHIELD WIPER MOTOR, L.H.	1810 - 28
3C19	WINDSHIELD, RIGHT HAND ONE PIECE FRONT CAB GLASS AND WIPER MOTOR	1810 - 26
3C19	WIPER ARM, FRONT RIGHT CAB WINDSHIELD, WITHOUT DOOR	1810 - 26
3C21	WIPER BLADE, LEFT HAND CAB DOOR	1810 - 28
3D1	WIPER MOTOR COVER, FRONT	1810 - 32
3C13	WIPER MOTOR, DOOR	1810 - 20
3C13	WIPER MOTOR, FRONT WINDOW	1810 - 20
3C19	WIPER MOTOR, FRONT WINDSHIELD ONE PIECE GLASS	1810 - 26
3C23	WIPER MOTOR, R.H. WINDSHIELD	1810 - 30
3C7	WIPER MOTOR, REAR	1810 - 14
3C7	WIPER MOTOR, REAR CAB WINDOW	1810 - 14
2I1	WIPER SWITCH, REAR WINDOW	1676 - 2
2H1	WIPER, FRONT SWITCH	1674 - 22
3C21	WIPER, LEFT HAND CAB DOOR	1810 - 28
3C7	WIPER, REAR CAB WINDOW	1810 - 14
3C23	WIPER, RIGHT HAND CAB DOOR	1810 - 30
2H19	WIRE LEAD KIT	1674 - 40
2H21	WIRE LEAD KIT	1674 - 42
2H17	WIRING HARNESS, AIR CONDITIONING	1674 - 38
2F25	WIRING HARNESS, ALTERNATOR	1672 - 2
2G7	WIRING HARNESS, ALTERNATOR	1674 - 2
2G9	WIRING HARNESS, ALTERNATOR	1674 - 4
2G13	WIRING HARNESS, ALTERNATOR	1674 - 8
3G11	WIRING HARNESS, BACKUP ALARM	2004 - 2
3F7	WIRING HARNESS, BLOWER	1830 - 28
3F9	WIRING HARNESS, BLOWER	1830 - 30
2H3	WIRING HARNESS, CAB, ROOF	1674 - 24
3F7	WIRING HARNESS, COMPRESSOR	1830 - 28
3F9	WIRING HARNESS, COMPRESSOR	1830 - 30
2H1	WIRING HARNESS, CONSOLE, FRONT	1674 - 22
2G7	WIRING HARNESS, ENGINE	1674 - 2
2G9	WIRING HARNESS, ENGINE	1674 - 4
2G11	WIRING HARNESS, ENGINE	1674 - 6
2G13	WIRING HARNESS, ENGINE	1674 - 8
2G24	WIRING HARNESS, FRONT CONSOLE	1674 - 20
2H13	WIRING HARNESS, HEATER BLOWER MOTOR	1674 - 34
2G11	WIRING HARNESS, HYDRAULIC FILTER	1674 - 6
2H5	WIRING HARNESS, ROPS, ROOF	1674 - 26
2H11	WIRING HARNESS, SELECTIVE FLOW	1674 - 32
2G16	WIRING HARNESS, SIDE CONSOLE	1674 - 12
2G18	WIRING HARNESS, SIDE CONSOLE	1674 - 14
2H7	WIRING HARNESS, TRANSMISSION SOLENOID	1674 - 28
2H15	WIRING HARNESS,AIR CONDITIONING	1674 - 36
2G11	WIRING LEAD, HYDRAULIC FILTER	1674 - 6

Y

3I18	YOKE, BUCKET LEVELING	3115 - 2
3I19	YOKE, BUCKET LEVELING	3115 - 3
1C14	YOKE, REAR AXLE	0210 - 11
1C14	YOKE, UNIVERSAL JOINT	0210 - 11
2E12	YOKE, UNIVERSAL JOINT	1111 - 8

DRIVE WHEEL
(WITHOUT MFWD)

TP9883 -UN-29SEP94

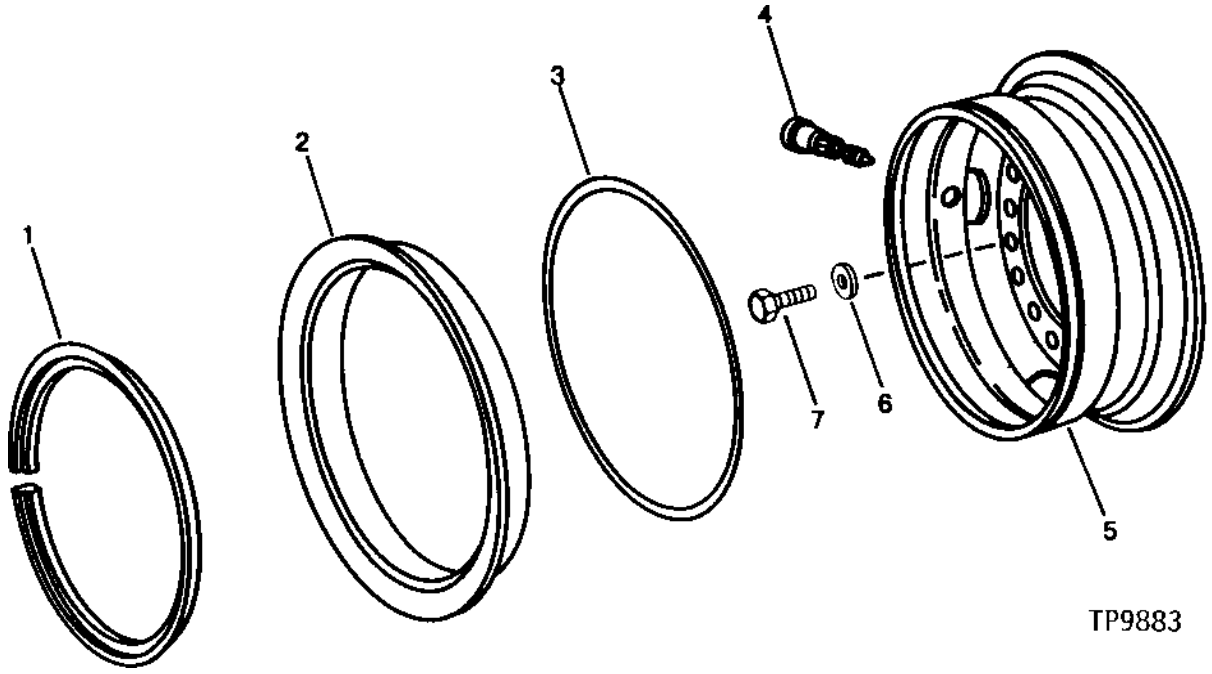

KEY	PART NO.	PART NAME	QTY	SERIAL NO.	REMARKS
1	T27194	WHEEL RING	2		USE WITH 20.5 X 25 TIRE
2	T27532	WHEEL RING	2		USE WITH 20.5 X 25 TIRE
3	T59933	O-RING	2		
4	AT25226	TIRE VALVE STEM	2		
5	AT76919	WHEEL	2		USE WITH 20.5-25 TIRE
6	R54124	WASHER	28		0.780" X 1-3/4" X 0.229"
7	19H2431	CAP SCREW	28		HS, SAE 8, 3/4" X 2-1/4"

DRIVE WHEEL

TP42326 -UN-01JAN94

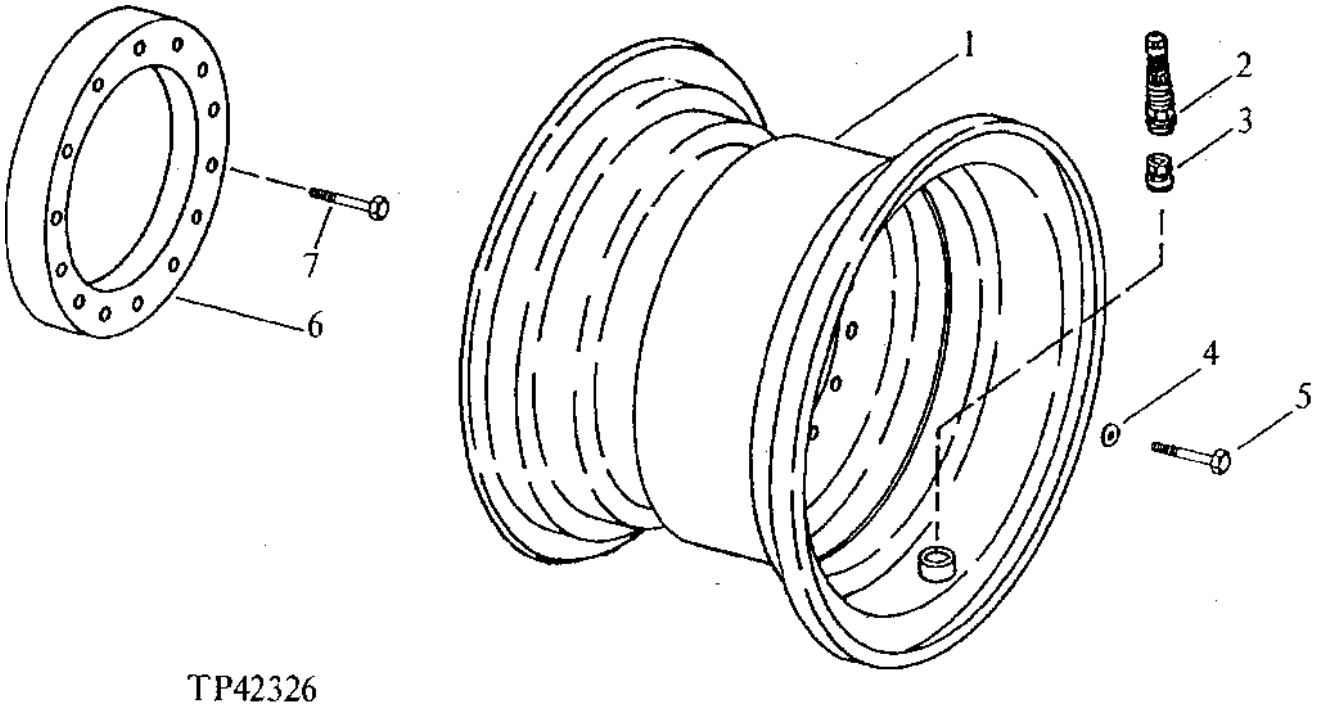

TP42326

KEY	PART NO.	PART NAME	QTY	SERIAL NO.	REMARKS
1	AT74801	WHEEL	2		USE WITH 21L-24 TIRE (WITH AND WITHOUT MFWD)
	AT114323	RIM	2		USE WITH 21L-28 TIRE (WITH AND WITHOUT MFWD)
2	AT25226	TIRE VALVE STEM	2		
3	AH86866	PLUG	2		RIM HOLE
4	R54124	WASHER	28		(USE WITH AT74801 OR AT114323)
5	19H2431	CAP SCREW	28		HS, SAE 8, 3/4" X 2-1/4"
6	T66862	WHEEL	2		(WITH CHAINS)
7	19H2825	CAP SCREW	28		HS, SAE 8, 3/4" X 4-1/4"

FRONT WHEEL

TP7534 -UN-29SEP94

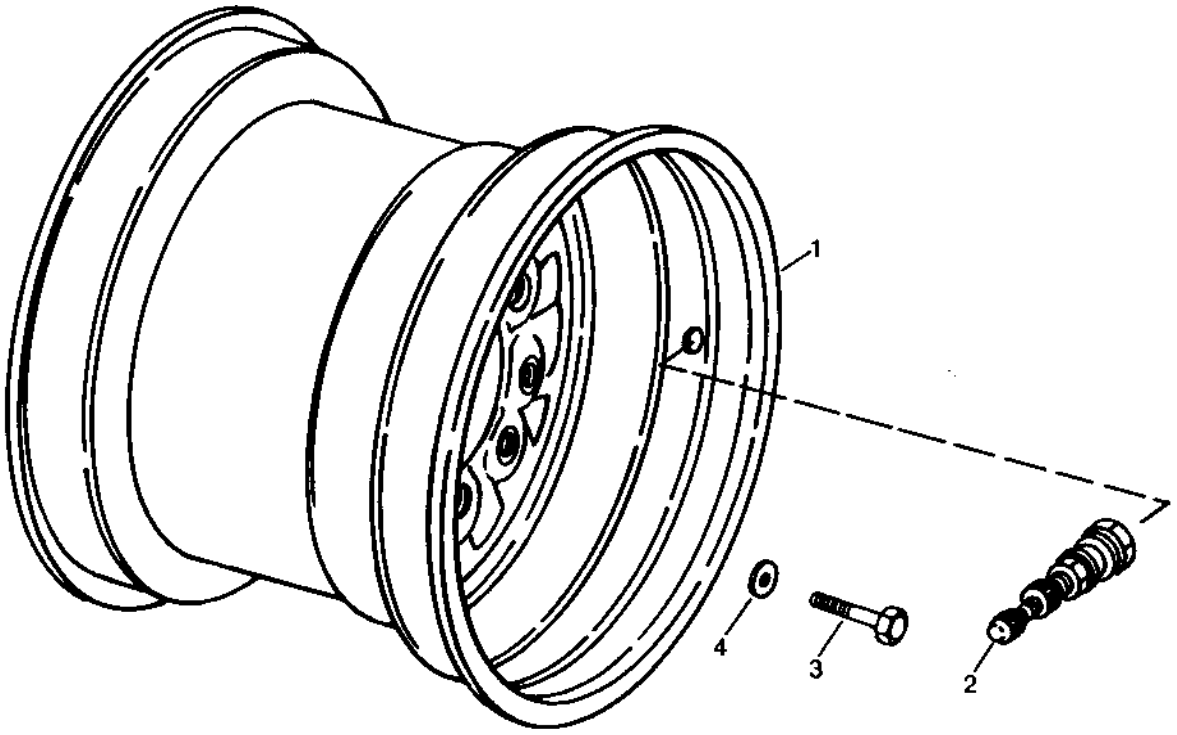

KEY	PART NO.	PART NAME	QTY	SERIAL NO.	REMARKS
1	JD3051	RIM	2		(USE WITH TIRE 14.5/75 X 16.1) (WITHOUT MFWD)
	AT114094	WHEEL	2		(WITH 14 X 17.5) (WITH VALVE STEM GUARD) (WITH MFWD)
	14M7499	FLANGE NUT	20		M20, (USE WITH AT114326)
	AT114326	WHEEL	2		USE WITH 15 X 19.5 TIRE (WITH MFWD)
	AT135688	WHEEL	2		(16.1 X W14C) (USE WITH TIRE 16.5L X 16.1) (WITHOUT MFWD)
2	AT25226	TIRE VALVE STEM	2		(USE WITH AT114326 OR JD3051)
	AN132749	TIRE VALVE STEM	2		(TUBELESS) (SUB FOR AT37037) (USE WITH AT135688)
3	19H2586	CAP SCREW	16		5/8" X 1-3/4", (WITHOUT MFWD)
4	24M7241	WASHER	16		17 X 34 X 4 MM, (WITHOUT MFWD)

REAR AXLE LOWER PLATE AND BARS

TP57993 -UN-25JAN99

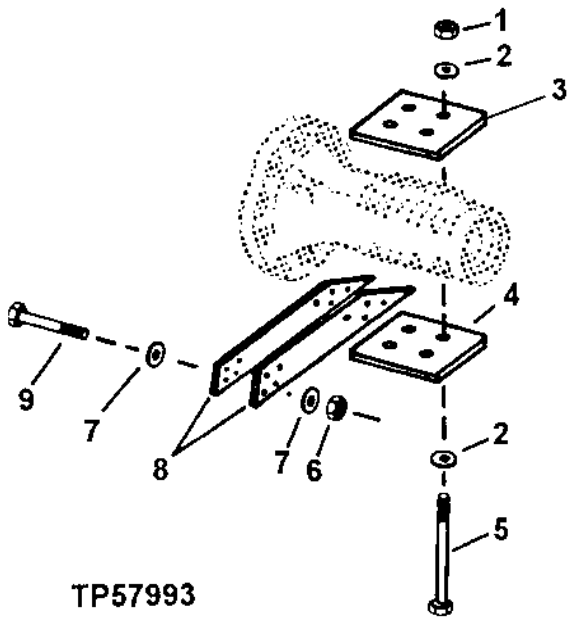

KEY	PART NO.	PART NAME	QTY	SERIAL NO.	REMARKS
1	14M7277	NUT	8	-872328	M20
	14H1044	NUT	8	872329-	7/8"
2	24M7242	WASHER	16	-872328	21.400 X 42 X 5 MM
	24M7243	WASHER	16	872329-	25.400 X 50 X 6 MM
3	T163288	PLATE	2	872329-	
4	T75505	PLATE	2	-872328	
	T162074	PLATE	2	872329-	
5	19M7953	CAP SCREW	8	-872328	M20 X 300
	19H3815	CAP SCREW	8	872329-	7/8"
6	14M7277	NUT	16		M20, M20
7	N231749	WASHER	32		13/16" X 1-1/2" X 1/4"
8	T76125	PLATE	4		
9	19M7963	CAP SCREW	16		M20 X 100

MEMORANDA

AXLE HOUSING AND SHAFT
(RE46283) (OC-4)
(SERIAL NO. -XXXXXX)

RXP020936 -UN-21SEP94

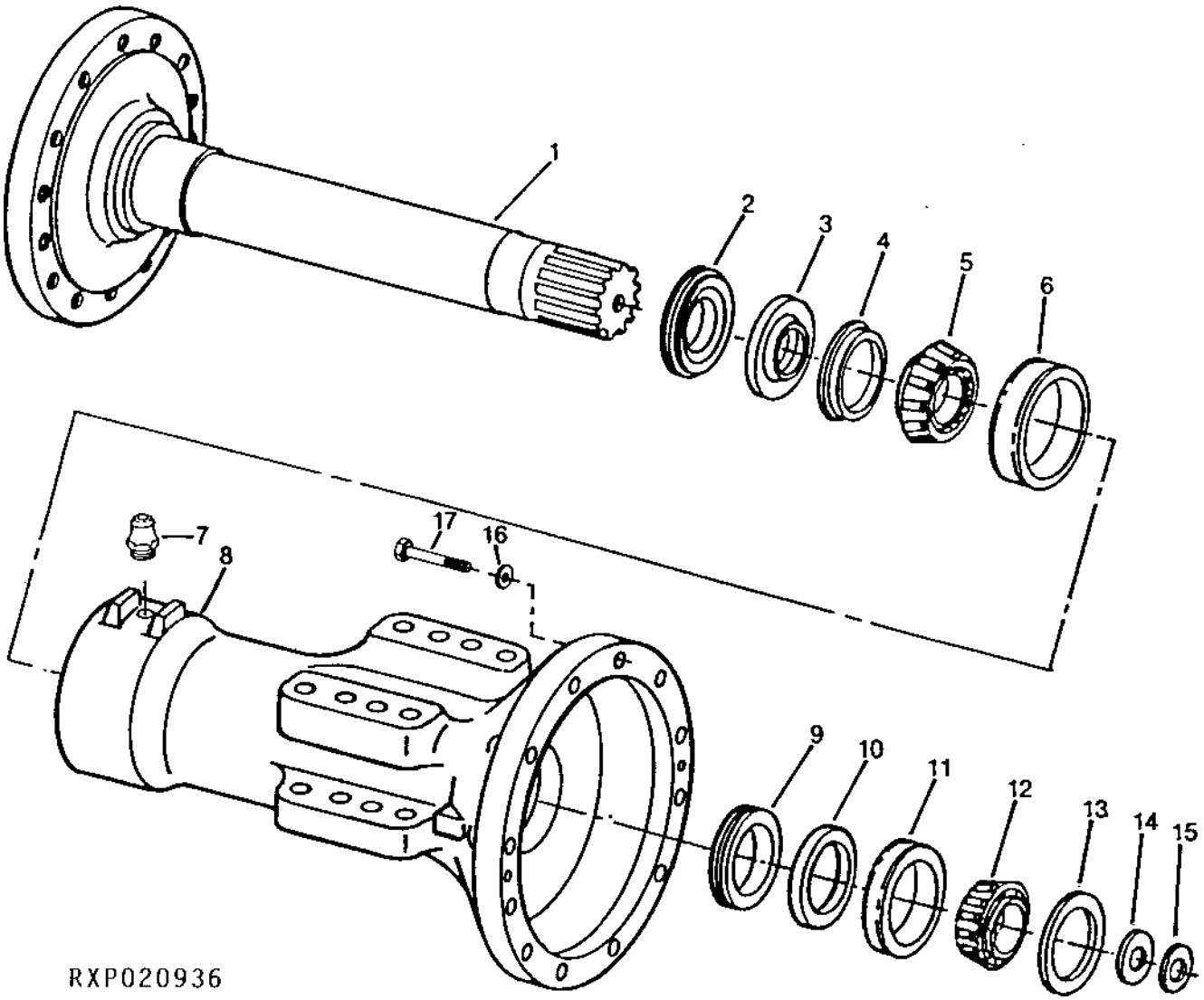

AXLE HOUSING AND SHAFT
(RE46283) (OC-4)
(SERIAL NO. -XXXXXX)

KEY	PART NO.	PART NAME	QTY	AXLE SERIAL NO.	REMARKS
1	R116542	SPINDLE	1		(SUB FOR R92693)
2	R115469	SPACER	1		
3	RE31702	SEAL	1		OUTER
4	R59074	OIL CUP	1		OUTER
5	JD9018	BEARING CONE	1		OUTER
6	JD8248	BEARING CUP	1		OUTER
7	JD7769	LUBRICATION FITTING	1		
8	R116156	HOUSING	1		(SUB FOR R107253)
9	R85653	SEAL	1		OUTER
10	AR98650	SEAL	1		INNER
11	JD9118	BEARING CUP	1		INNER
12	JD9055	BEARING CONE	1		INNER
13	R48437	SHIM	AR		
14	R59439	SHIM	AR		0.13 MM (.005")
	R59440	SHIM	AR		0.51 MM (.020")
	R61461	SHIM	AR		0.08 MM (.003")
	R79989	SHIM	AR		0.18 MM (.007")
15	F2380R	WASHER	1		
16	R73290	WASHER	12		
17	19M8620	CAP SCREW	12		M16 X 110

AXLE HOUSING AND SHAFT
(RE54123) (OC-J) (SERIAL NO. XXXXXX-872328)

RXP021052 -UN-12JAN95

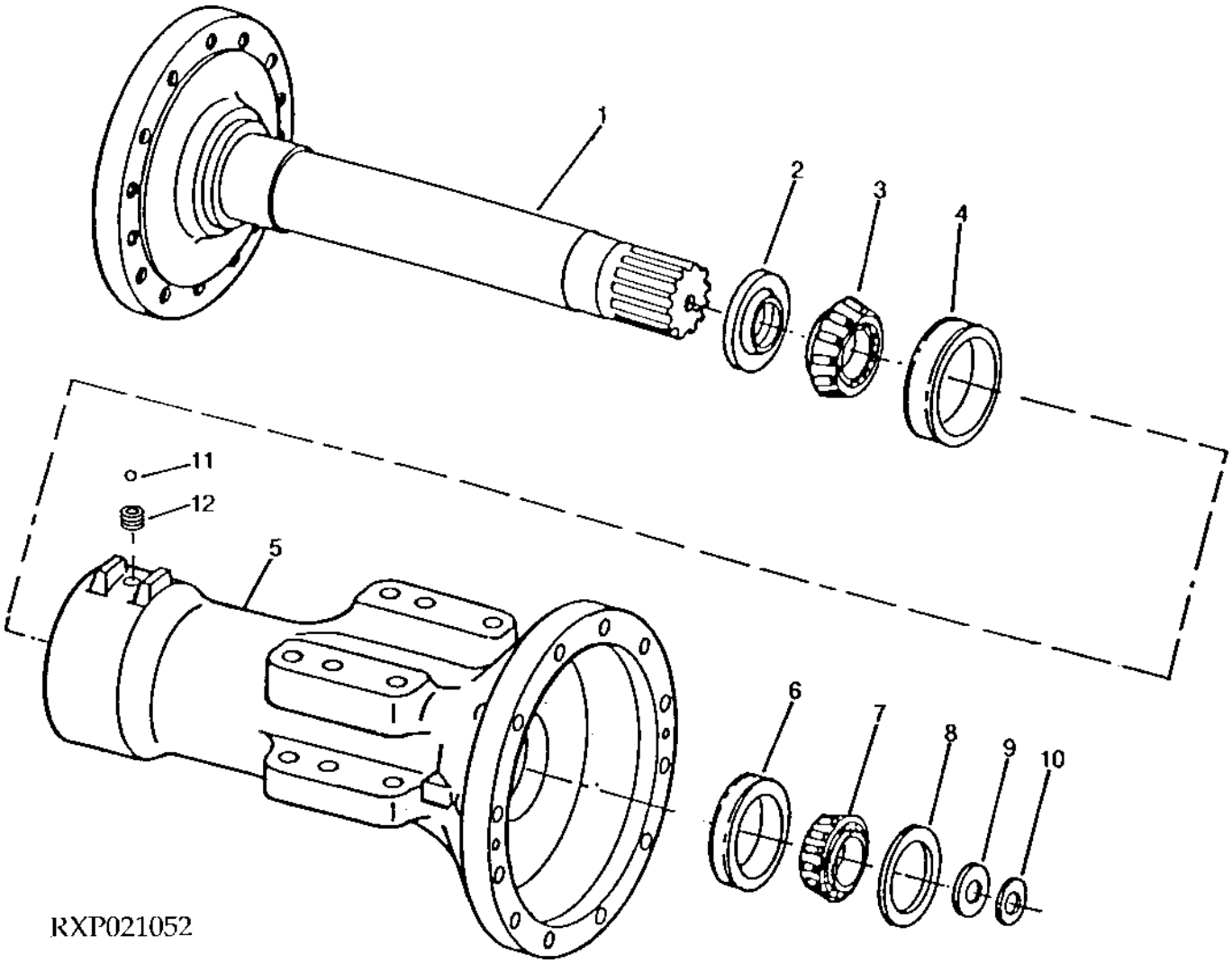

AXLE HOUSING AND SHAFT
(RE54123) (OC-J) (SERIAL NO. XXXXXX-872328)

KEY	PART NO.	PART NAME	QTY	AXLE SERIAL NO.	REMARKS
1	R116542	SPINDLE	1		
2	R127839	SEAL	1	-102775	OUTER, (SUB FOR R114346)
	R163304	SEAL	2	102776-	(SUB FOR R127839)
3	JD9018	BEARING CONE	1		OUTER
4	JD8248	BEARING CUP	1		OUTER
5	R116156	HOUSING	1		
6	JD9118	BEARING CUP	1		INNER
7	JD9055	BEARING CONE	1		INNER
8	R48437	SHIM	1		
9	R59439	SHIM	6		0.13 MM (.005")
	R59440	SHIM	2		0.51 MM (.020")
	R61461	SHIM	2		0.08 MM (.003")
	R79989	SHIM	2		0.18 MM (.007")
10	F2380R	WASHER	1		
11	T71988	BALL	1		
12	15H559	PIPE PLUG	1		

MEMORANDA

INBOARD PLANETARY FINAL DRIVE
(RE44196) (OC-5)
(SERIAL NO. -872328)

RXP8627 -UN-01JAN94

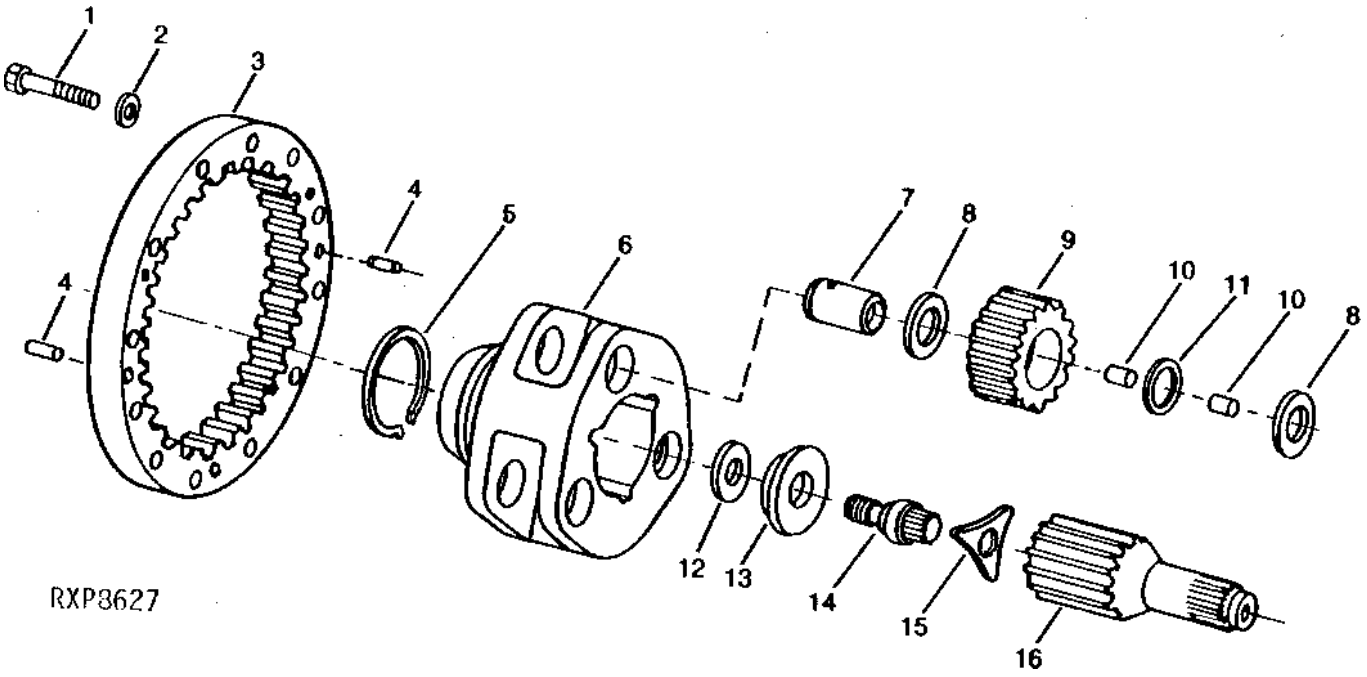

KEY	PART NO.	PART NAME	QTY	AXLE SERIAL NO.	REMARKS
1	19M8620	CAP SCREW	12		M16 X 110
2	R135543	WASHER	12		37/64" X 1-3/16" X 0.062"
3	R107005	GEAR	1		
4	T26565	DOWEL PIN	4		
5	T28832	SNAP RING	1		
6	R109128	PLANET PINION CARRIER	1		
7	R93364	PINION SHAFT	3		
8	R112078	THRUST WASHER	6		(SUB FOR R109125)
9	R109079	PLANET PINION	3		
10	R109123	NEEDLE ROLLER	186		
11	R109124	WASHER	3		
12	F2253R	SHIM	1		
13	R93173	SPACER	1		
14	R81162	BOLT	1		
15	R93172	LOCK PLATE	1		
16	R93158	DRIVE SHAFT	1		
..	T43514	GASKET	1		50CC

DIFFERENTIAL HOUSING, AXLE HOUSING AND SHAFT
(SERIAL NO. 872329-)

TP57989 -UN-03FEB99

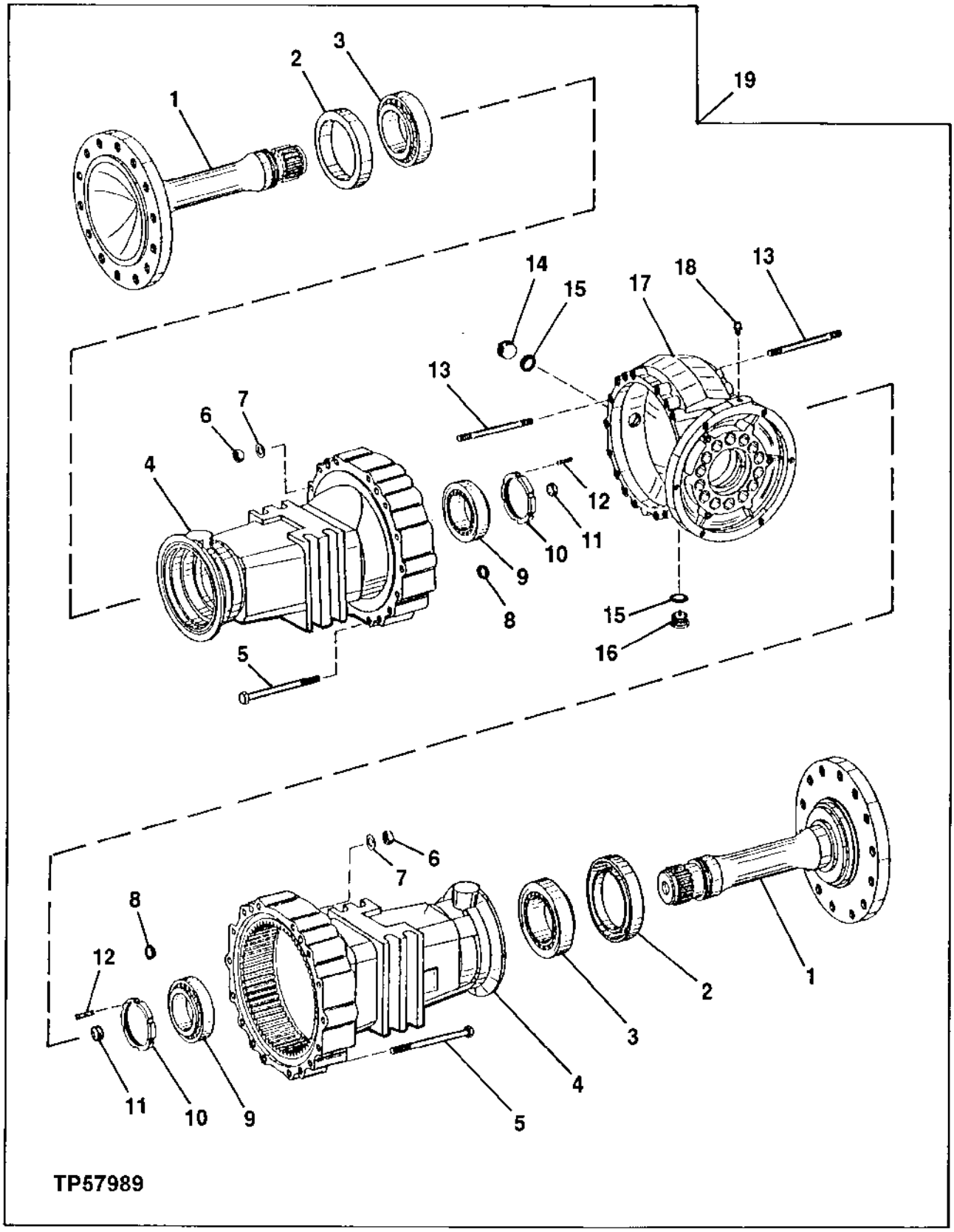

DIFFERENTIAL HOUSING, AXLE HOUSING AND SHAFT
(SERIAL NO. 872329-)

KEY	PART NO.	PART NAME	QTY	SERIAL NO.	REMARKS
1	T164841	AXLE	2		
2	AT184275	SEAL	2		
3	AT184272	ROLLER BEARING	2		
4	AT184269	HOUSING	2		
5	19M7677	CAP SCREW	28		M16 X 240
6	T159389	NUT	4		
7	T159386	WASHER	4		
8	T159373	O-RING	12		
9	AT184273	ROLLER BEARING	2		
10	T164843	NUT	2		
11	R79132	PIN	2		
12	AT186927	KIT	2		
13	T159388	STUD	4		
14	15M7030	PIPE PLUG	1		
15	L55580	O-RING	2		
16	L56822	PIPE PLUG	1		
17	T164836	HOUSING	1		
18	AL32877	VENT	1		BREATHER
19	AT182141	AXLE	1		CONVENIENCE ASSEMBLY, ALSO INCLUDES PLANETARY PINION CARRIER, RING GEAR ASSEMBLY, DIFFERENTIAL ASSEMBLY WITH LOCK, SERVICE BRAKE, PARK BRAKE AND INPUT YOKE

PLANETARY PINION CARRIER
(SERIAL NO. 872329-)

TP57992 -UN-03FEB99

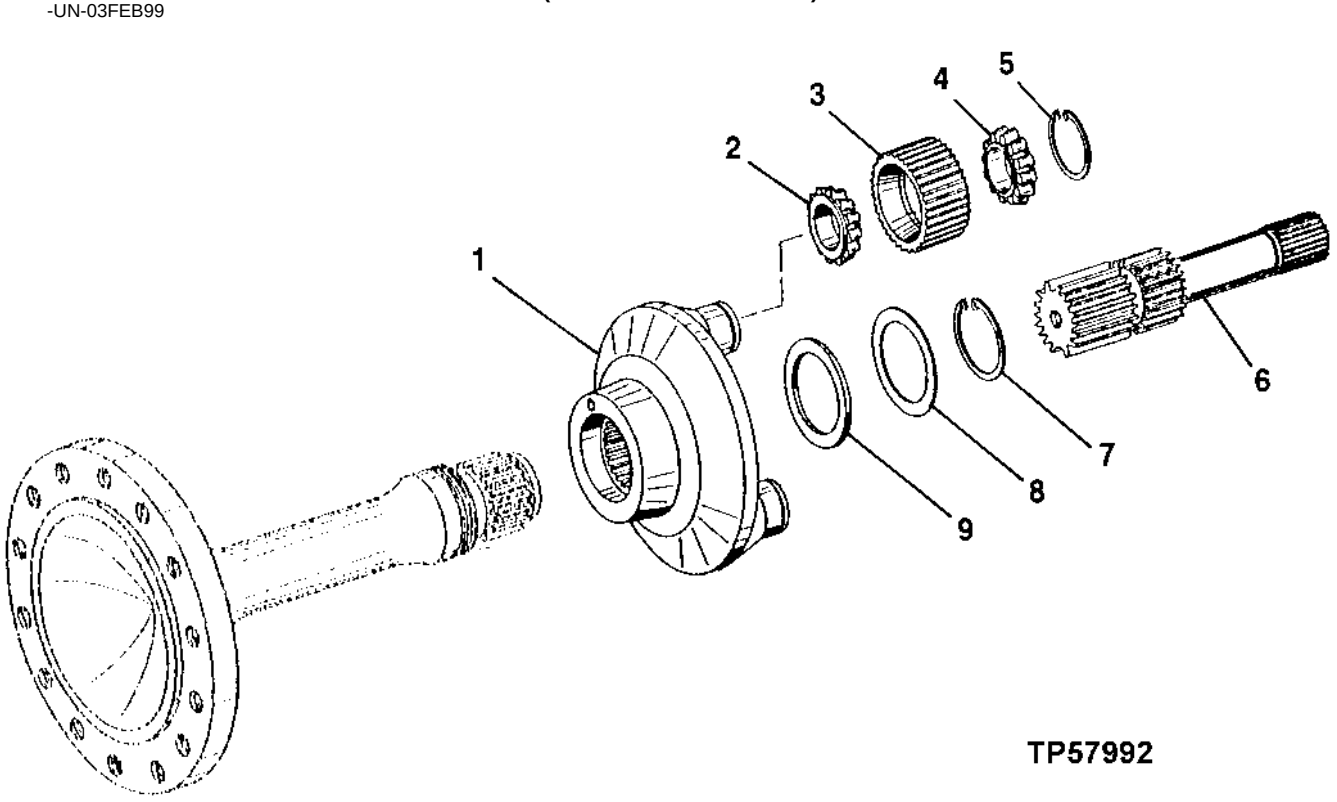

KEY	PART NO.	PART NAME	QTY	SERIAL NO.	REMARKS
1	T164902	PLANET PINION CARRIER	1		
2	AT184287	ROLLER BEARING	4		
3	T164903	PLANET PINION	4		
4	AT184286	ROLLER BEARING	4		
5	T164904	SNAP RING	4		
6	T164901	SHAFT	1		
7	T164906	SNAP RING	1		
8	T116929	WASHER	AR	1.4 MM	
	T116930	WASHER	AR	1.3 MM	
	T116931	WASHER	AR	1.2 MM	
	T116932	WASHER	AR	1.1 MM	
	T116933	WASHER	AR	1 MM	
	T116934	WASHER	AR	.9 MM	
	T116935	WASHER	AR	.8 MM	
	T116936	SHIM	AR	.7 MM	
	T116937	SHIM	AR	.6 MM	
	T116939	SHIM	AR	.5 MM	
	T116938	SHIM	AR	.3 MM	
	T123090	SHIM	AR	.15 MM	
	T164907	SHIM	AR	.1 MM	
9	T164905	WASHER	1		

SPIRAL BEVEL INPUT PINION AND RING GEAR SET
(RE33813) (OC-3)
(SERIAL NO. -872328)

RXP6492 -UN-01JAN94

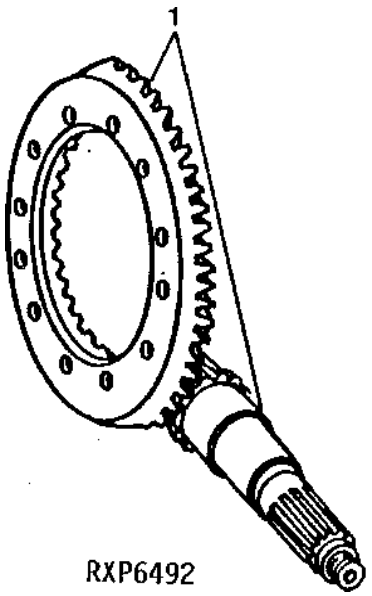

KEY	PART NO.	PART NAME	QTY	AXLE SERIAL NO.	REMARKS
1	RE32100	BEVEL GEAR DRIVE	1		R.H. ASSEMBLY, (MARKED R45203 AND R92533) (ALSO ORDER RE50113)

INPUT YOKE
(RE48449) (OC-9)
(SERIAL NO. -872328)

RXP021068 -UN-12JAN95

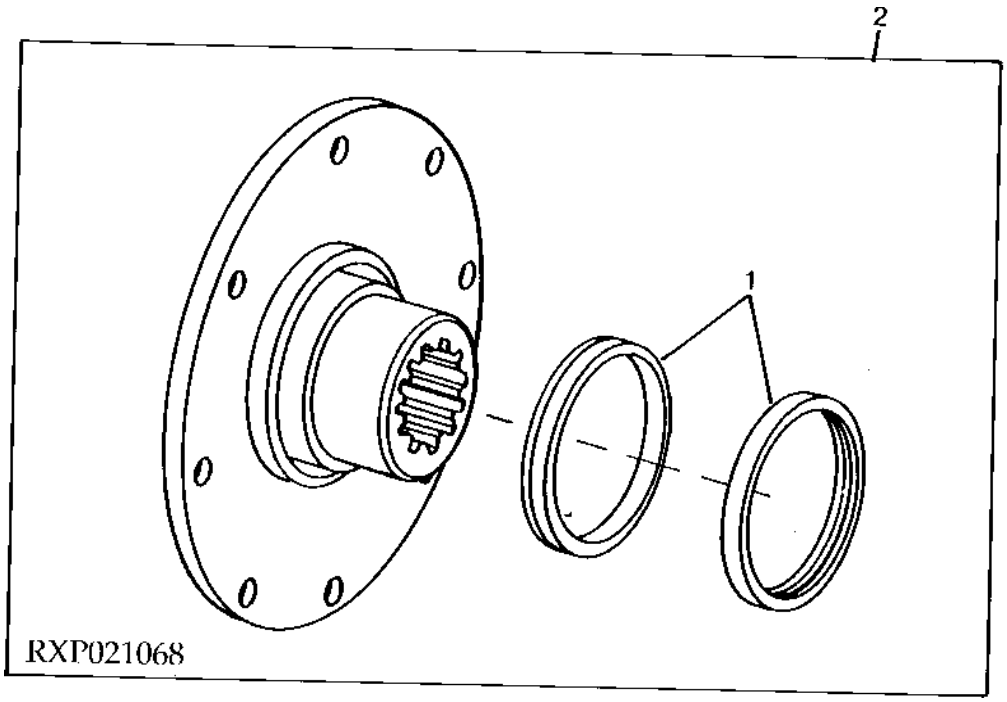

KEY	PART NO.	PART NAME	QTY	AXLE SERIAL NO.	REMARKS
1	RE45312	SEAL KIT	1		
2	RE48661	KIT	1		

DIFFERENTIAL BEARING QUILLS
(RE44191) (OC-3)
(SERIAL NO. -872328)

RXP6442 -UN-01JAN94

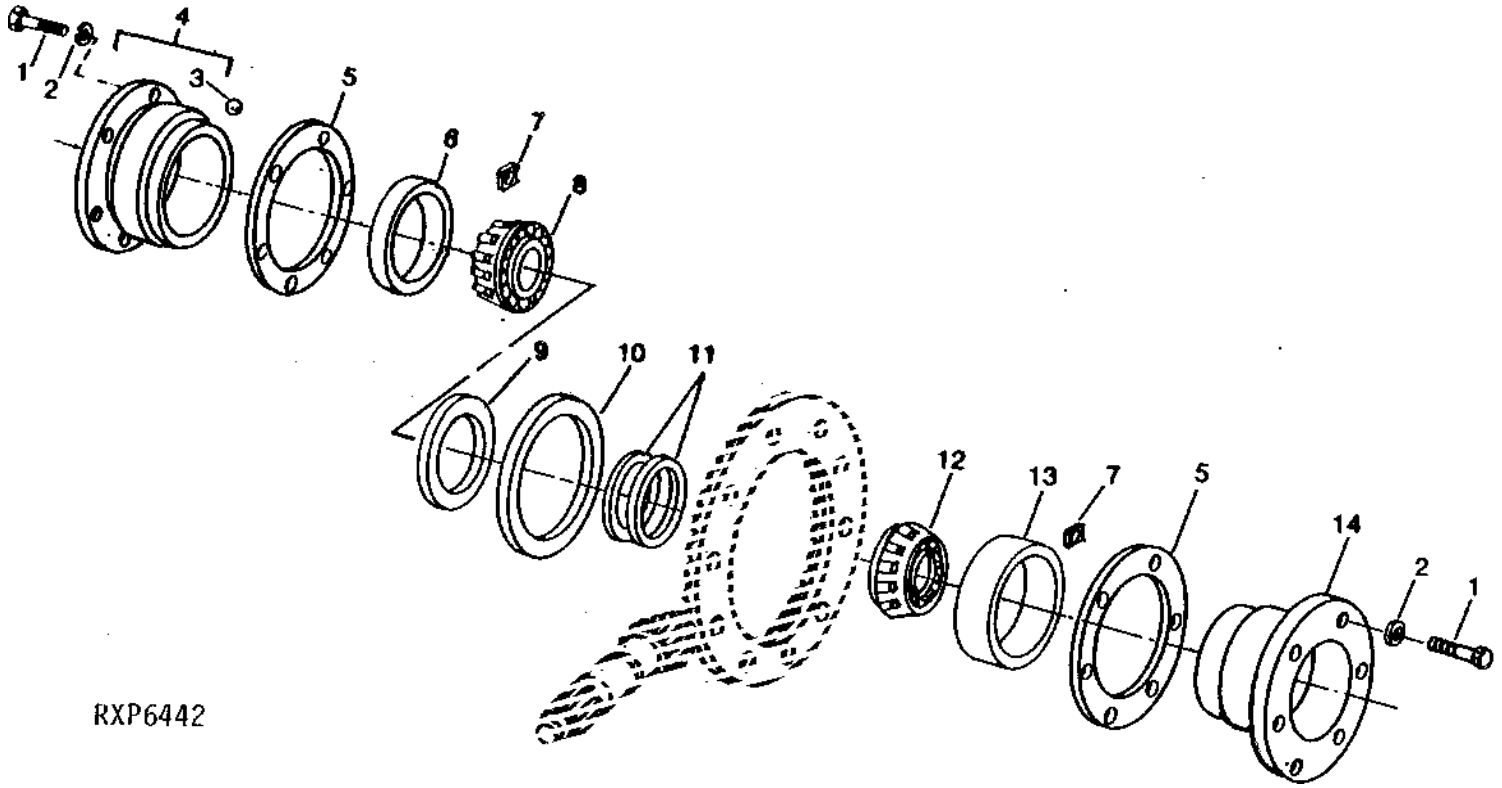

KEY	PART NO.	PART NAME	QTY	AXLE SERIAL NO.	REMARKS
1	R120194	BOLT	12		(SUB FOR R112887)
2	R47172	WASHER	NA	-039871	
3	400R	BALL	1		
4	RE19648	BEARING HOUSING W/O BEARING	1		(MARKED R81359)
5	R46323	SHIM	AR		
	R46324	SHIM	AR		
	R46325	SHIM	AR		
6	JD8210	BEARING CUP	1		OPP, RING GEAR SIDE
7	14M7275	NUT	2		
8	JD8159	BEARING CONE	1		OPP, RING GEAR SIDE
9	AR87786	SEAL	1		
10	AR69363	SEAL	1		
11	R34513	RING	2		
12	JD8954	BEARING CONE	1		
13	JD8259	BEARING CUP	1		
14	R33493	BEARING HOUSING W/O BEARING	1		

DIFFERENTIAL CASE
(RE38998) (OC-1)
(SERIAL NO. -872328)

RXP010638 -UN-01JAN94

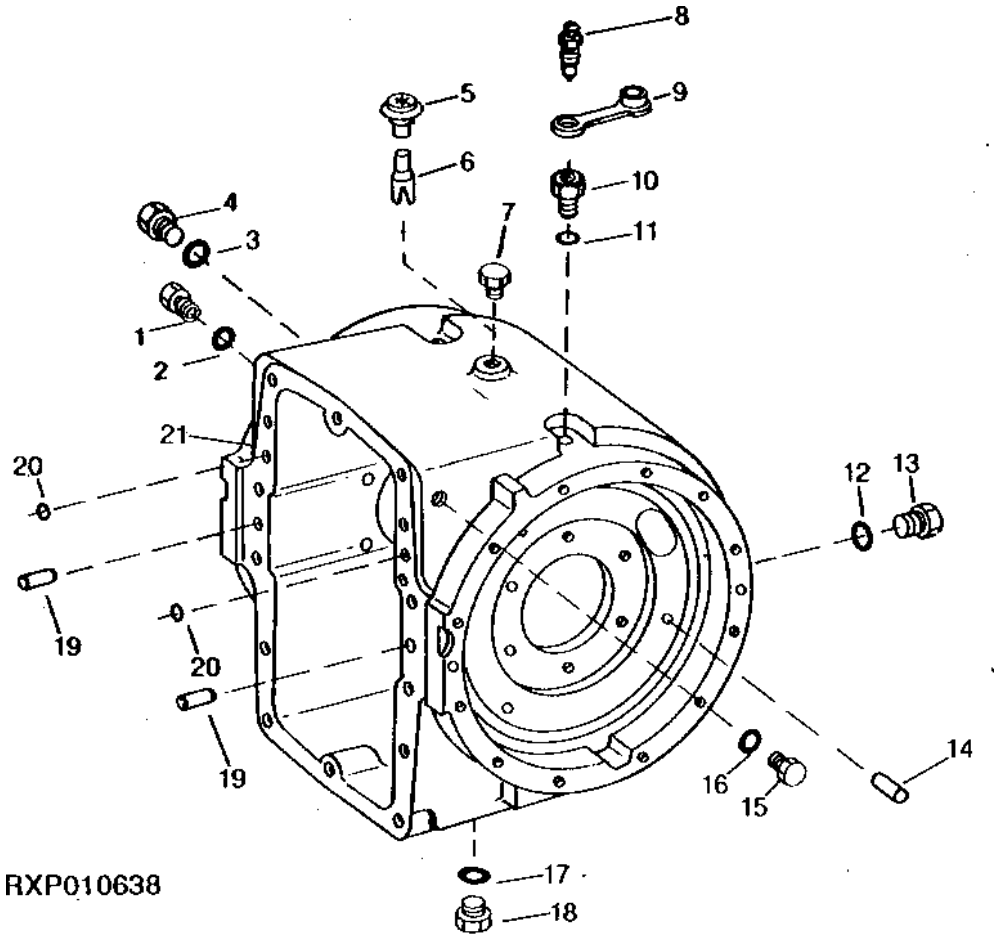

**DIFFERENTIAL CASE -
(RE38998) (OC-1) (OSCILLATING AND NON-OSCILLATING)
(SERIAL NO. -872328)**

KEY	PART NO.	PART NAME	QTY	AXLE SERIAL NO.	REMARKS
1	R39112	FITTING	1		
2	R26375	O-RING	1		
3	F3171R	O-RING	NA		
4	R27175	DRAIN PLUG	NA		
5	U43871	BREATHER	1		
6	R104777	TUBE	1		(SUB R132574 AND R112210)
7	15H666	PIPE PLUG	1		
8	R21612	BLEED VALVE	2		
9	R100122	PLUG	2		
10	R106789	BUSHING	2		
11	R26448	O-RING	2		
12	F3171R	O-RING	2		
13	R116801	PIPE PLUG	2		(SUB FOR R27175)
14	T26565	DOWEL PIN	4		
15	R27474	DRAIN PLUG	1		
16	R26906	O-RING	1		
17	F3171R	O-RING	1		
18	R84262	FITTING PLUG	1		
19	R54380	DOWEL PIN	2		
20	R375R	O-RING	2		
21	R100262	CASE	1	-038287	(SUB R150473, R27175, F3171R) (ALSO ORDER (2) R125124, (2) R125126, (4) 19M7409, (4) R135543, R112210, U17409, 15H666 AND R135052)
	R116256	CASE	1	038288-082258	(SUB R150473, R27175, F3171R, R112210, U17409 AND 15H666) (ALSO ORDER R135052, (4) 19M7409 AND (4) R135543)
	R132417	CASE	1	082259-	(SUB R150473, R27175 AND F3171R)

STANDARD DIFFERENTIAL
(RE44191)
(SERIAL NO. -872328)

RXP6445 -UN-01JAN94

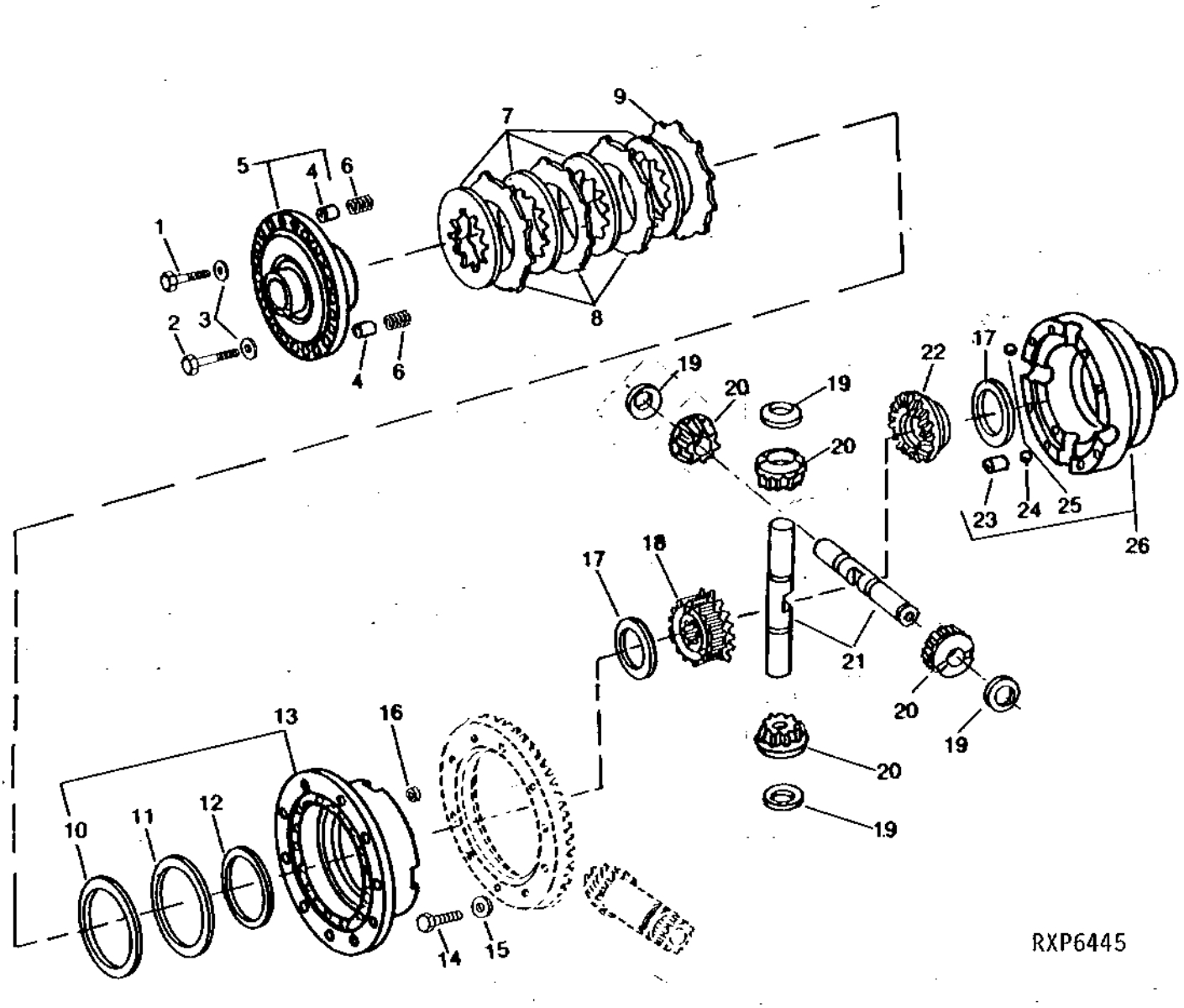

STANDARD DIFFERENTIAL
(RE44191)
(SERIAL NO. -872328)

KEY	PART NO.	PART NAME	QTY	AXLE SERIAL NO.	REMARKS
1	R64524	BOLT	2		
2	R112880	BOLT	8		
3	R64525	WASHER	10		
4	R56504	SPRING PIN	2		
5	RE31858	COVER	1		(MARKED R89946)
6	R41770	SPRING	2		
7	RE12518	DISK, WITH INNER SPLINE	4		
8	R78155	CLUTCH PLATE	3		SEPARATOR
9	R78156	CLUTCH PLATE	1		BACKING
10	R60122	PISTON	1		
11	R69011	WASHER	1		
12	R69012	WASHER	1		
13	RE29501	HOUSING	1		(MARKED R89590)
14	R85866	CAP SCREW	10		
15	R47172	WASHER	10		
16	R60038	PACKING	1		
17	R93623	THRUST WASHER	2		
18	R74869	BEVEL GEAR	1		
19	R67811	THRUST WASHER	4		
20	R80879	PINION	4		
21	R63788	SHAFT	2		
22	R74868	BEVEL GEAR	1		
23	34H348	SPRING PIN	1		3/8" X 1"
24	400R	BALL	2		
25	H871R	BALL	1		
26	AR96863	HOUSING	1		(MARKED R73002)

STANDARD INPUT HOUSING (NO OSCILLATION)
(RE44429)
(SERIAL NO. -872328)

RXP8532 -UN-01JAN94

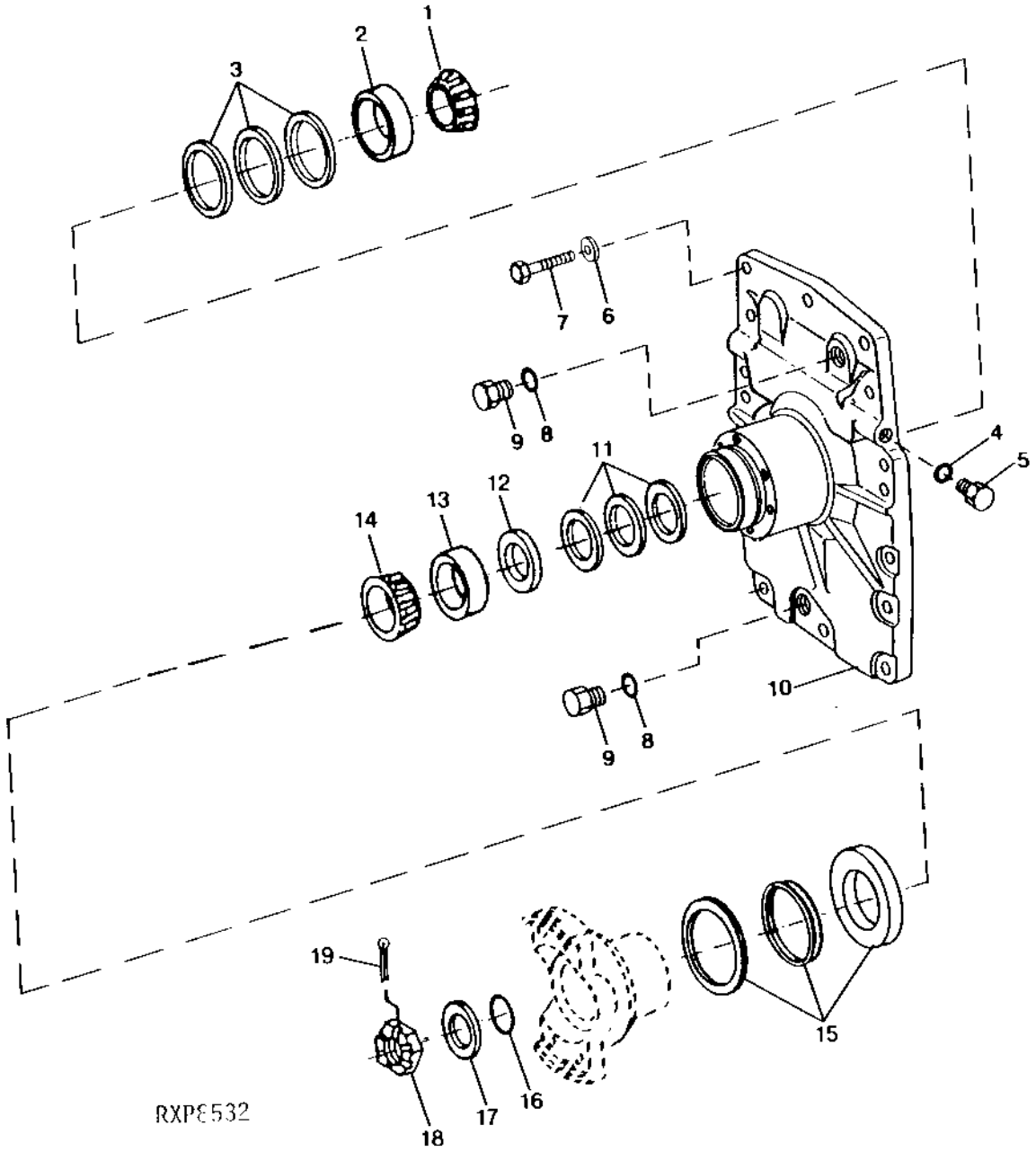

STANDARD INPUT HOUSING (NO OSCILLATION)
(RE44429)
(SERIAL NO. -872328)

KEY	PART NO.	PART NAME	QTY	AXLE SERIAL NO.	REMARKS
1	JD8970	BEARING CONE	1		
2	JD8264	BEARING CUP	1		
3	R26227	SHIM	AR		
	R26228	SHIM	AR		
	R26229	SHIM	AR		
4	R26448	O-RING	2		
5	R27218	FITTING PLUG	2		
6	R47172	WASHER	14	-082258	
	R47172	WASHER	10	082259-	
	R135543	WASHER	4	082259-	
7	19M8902	CAP SCREW	14	-082258	
	19M8902	CAP SCREW	10	082259-	
	19M7409	CAP SCREW	4	082259-	
8	F3171R	O-RING	2		
9	R27175	DRAIN PLUG	2		
10	R100610	COVER	1	-082258	(SUB R135052, (4) 19M7362, (4) R135579)
	R135052	COVER	1	082259-	
11	R45197	SHIM	AR		
	R45198	SHIM	AR		
	R45199	SHIM	AR		
	R45200	SHIM	AR		
12	R135535	WASHER	1		(SUB FOR R45201)
13	JD8240	BEARING CUP	1		
14	JD8974	BEARING CONE	1		
15	RE45312	SEAL KIT	1		
16	U10289	O-RING	1		
17	R48733	WASHER	AR		
	R48734	WASHER	AR		
	R48735	WASHER	AR		
18	R48776	NUT	1		
19	11M7032	COTTER PIN	1		5 X 50 MM

DIFFERENTIAL CASE TO QUILL OIL LINES
(RE44191)
(SERIAL NO. -872328)

RXP8638 -UN-01JAN94

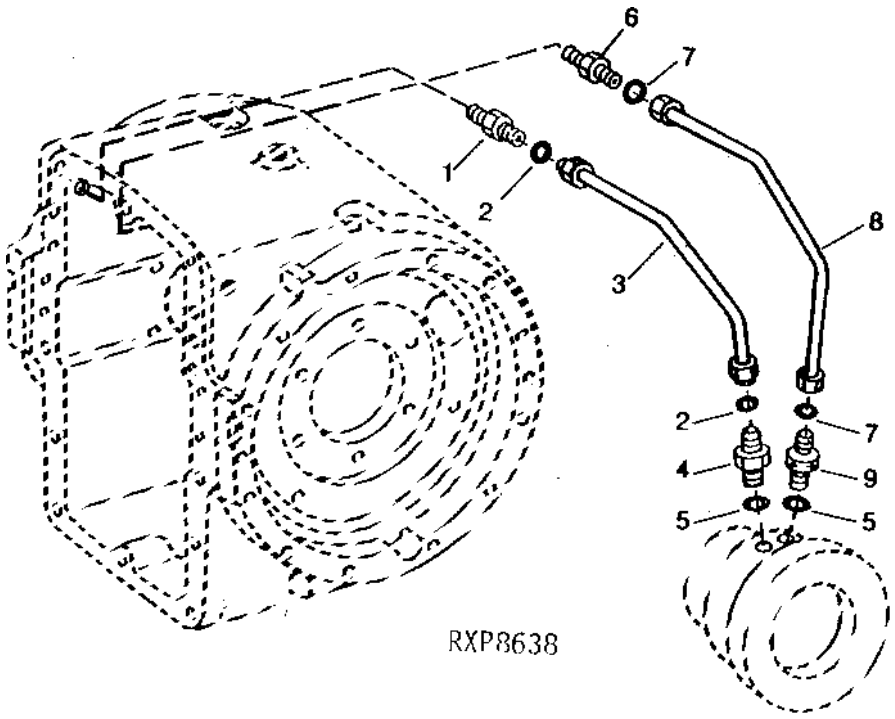

KEY	PART NO.	PART NAME	QTY	AXLE SERIAL NO.	REMARKS
1	T80938	ADAPTER	1		
2	T77814	O-RING	2		
3	RE44458	OIL LINE	1		
4	R115176	ADAPTER	1		(SUB FOR 38H1166)
5	R26287	O-RING	1		
6	T78644	ELBOW FITTING	1		
7	T77613	O-RING	2		
8	RE45575	OIL LINE	1		
9	R100314	FITTING	1		

SPIRAL BEVEL INPUT PINION AND RING GEAR SET
(SERIAL NO. 872329-)

TP58174 -UN-21FEB00

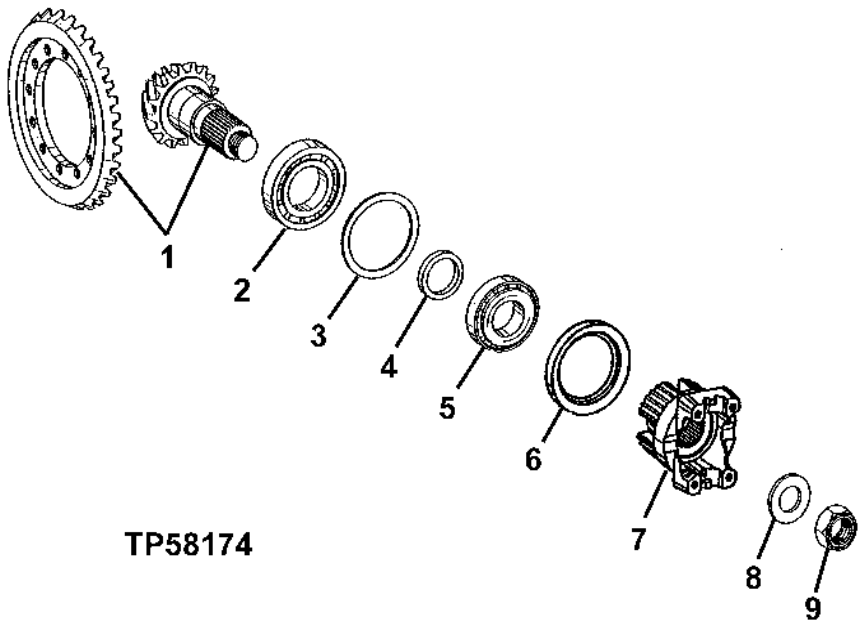

KEY	PART NO.	PART NAME	QTY	SERIAL NO.	REMARKS
1	AT184276	RING GEAR AND PINION	1		
2	AT184277	ROLLER BEARING	1		
3	T164847	SHIM	1	0.7 MM	
	T164848	SHIM	1	0.8 MM	
	T164849	SHIM	1	0.9 MM	
	T164850	SHIM	1	1.0 MM	
	T164860	SHIM	1	1.1 MM	
	T164851	SHIM	1	1.2 MM	
	T164852	SHIM	1	1.3 MM	
	T164853	SHIM	1	1.4 MM	
	T164854	SHIM	1	1.5 MM	
	T164855	SHIM	1	1.6 MM	
	T164856	SHIM	1	1.7 MM	
	T164857	SHIM	1	1.8 MM	
	T164858	SHIM	1	1.9 MM	
	T164859	SHIM	1	2.0 MM	
4	T164866	SHIM	1	8.3 MM	
	T164865	SHIM	1	8.4 MM	
	T164864	SHIM	1	8.5 MM	
	T164863	SHIM	1	8.6 MM	
	T164862	SHIM	1	8.7 MM	
	T164861	SHIM	1	8.8 MM	
	T164867	SHIM	1	8.9 MM	
	T164868	SHIM	1	9.1 MM	
	T164869	SHIM	1	9.2 MM	
	T164870	SHIM	1	9.3 MM	
	T164871	SHIM	1	9.4 MM	
5	AT184279	ROLLER BEARING	1		
6	AT179537	SEAL	1		
7	T163544	YOKE	1		
8	T164872	WASHER	1		
9	T164873	NUT	1		

DIFFERENTIAL ASSEMBLY, WITH LOCK
(SERIAL NO. 872329-)

TP57988 -UN-03FEB99

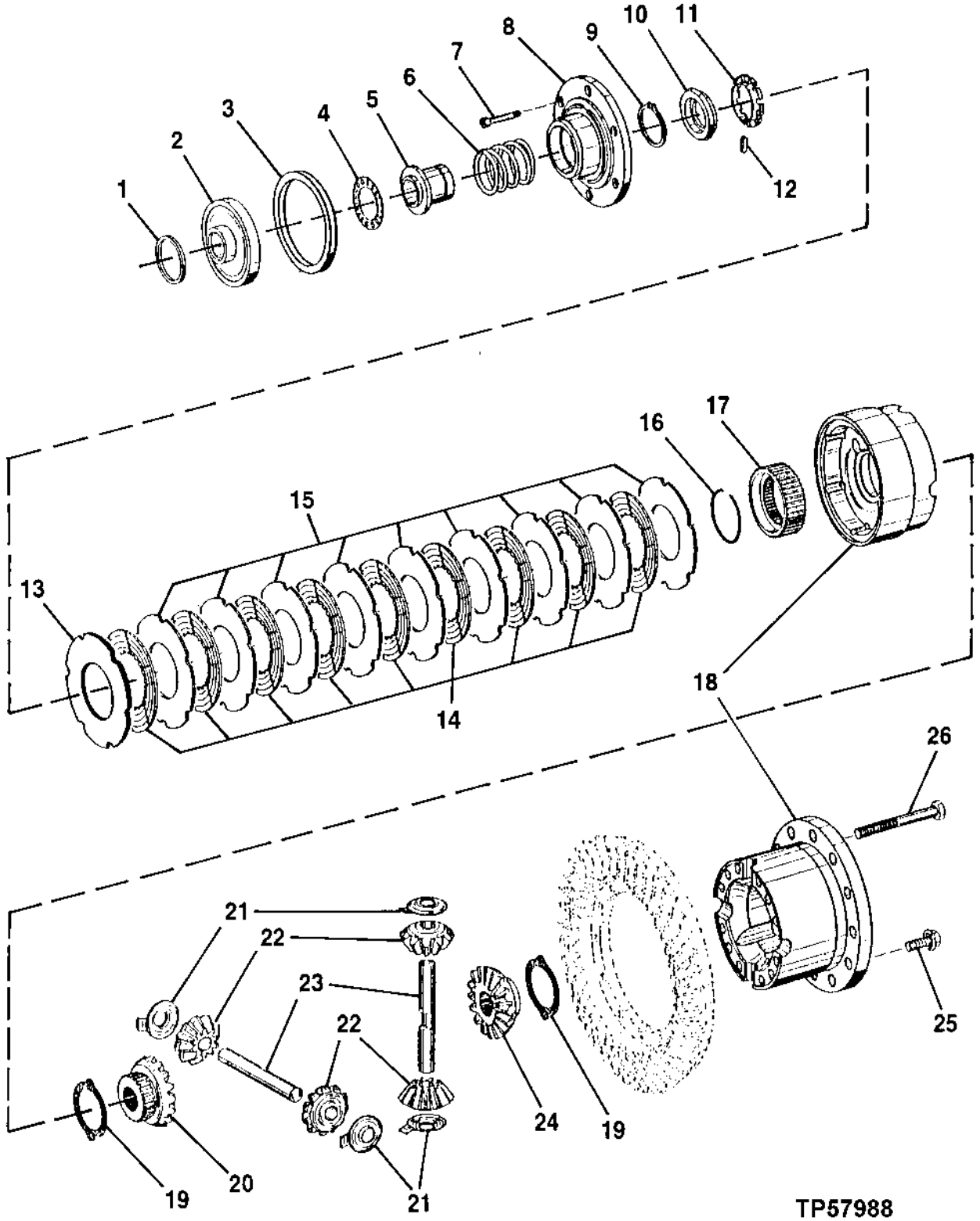

DIFFERENTIAL ASSEMBLY, WITH LOCK
(SERIAL NO. 872329-)

KEY	PART NO.	PART NAME	QTY	SERIAL NO.	REMARKS
1	T184688	O-RING	1		(SUB FOR T164936)
2	T164933	PISTON	1		
3	T184689	O-RING	1		(SUB FOR T164937)
4	AT184309	NEEDLE BEARING	1		
5	T164934	BUSHING	1		
6	T164980	COMPRESSION SPRING	1		
7	T164940	SCREW	6		
8	T164971	COVER	1		(12 BOLT COVER SUBS FOR 6 BOLT COVER) (ORDER (12) T164940)
9	T159519	SNAP RING	1		
10	T164972	PLATE	1		
11	T164970	RETAINER	1		
12	T164938	LEVER	12		
13	T164979	PLATE	1		
14	AT184334	DISK, WITH INNER SPLINE	9	-897857	
	AT184334	DISK, WITH INNER SPLINE	8	897858-	
15	T164966	CLUTCH PLATE	9	-897857	1.2 MM
	T164966	CLUTCH PLATE	8	897858-	1.2 MM
	T166238	CLUTCH PLATE	9	-897857	1.4 MM
	T166238	CLUTCH PLATE	8	897858-	1.4 MM
16	40M7106	SNAP RING	1		
17	.....	HUB	1	-897857	(T164973 NO LONGER AVAILABLE) (SUB T187819) (ALSO ORDER AT195152)
	T187819	HUB	1	897858-	
18	.....	HOUSING	1	-897857	(AT192255 NO LONGER AVAILABLE) (SUB AT195152) (ALSO ORDER T187819) (USE WITH (8) T164966 OR (8) T166238 AND (8) AT184334) (SUB FOR AT184333)
	AT195152	HOUSING	1	897858-	
19	T164959	WASHER	2		
20	T164960	GEAR	1		
21	T164963	THRUST WASHER	4		
22	T164962	GEAR	4		
23	T164964	SHAFT	2		
24	T164961	GEAR	1		
25	T164939	SCREW	12		
26	19M8057	CAP SCREW	12		

DIFFERENTIAL LOCK PLUMBING
(SERIAL NO. 872329-)

TP57723 -UN-06MAY97

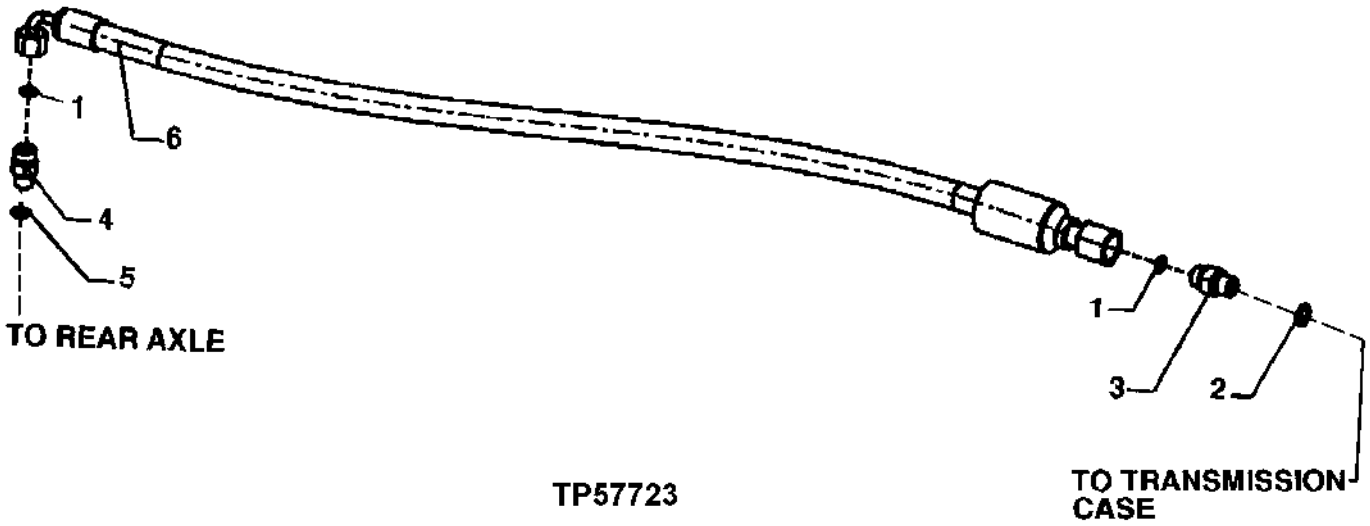

KEY	PART NO.	PART NAME	QTY	SERIAL NO.	REMARKS
1	T77814	O-RING	2		
2	R26448	O-RING	1		
3	38H1168	ADAPTER	1		
4	38H1159	ADAPTER	1		
5	R28782	O-RING	1		
6	AT171637	HYDRAULIC HOSE - FABRICATE	1		9/16" X 915 MM (36") X 9/16"

FRONT WHEEL HUB, CAP AND BEARINGS

TP42375 -UN-01JAN94

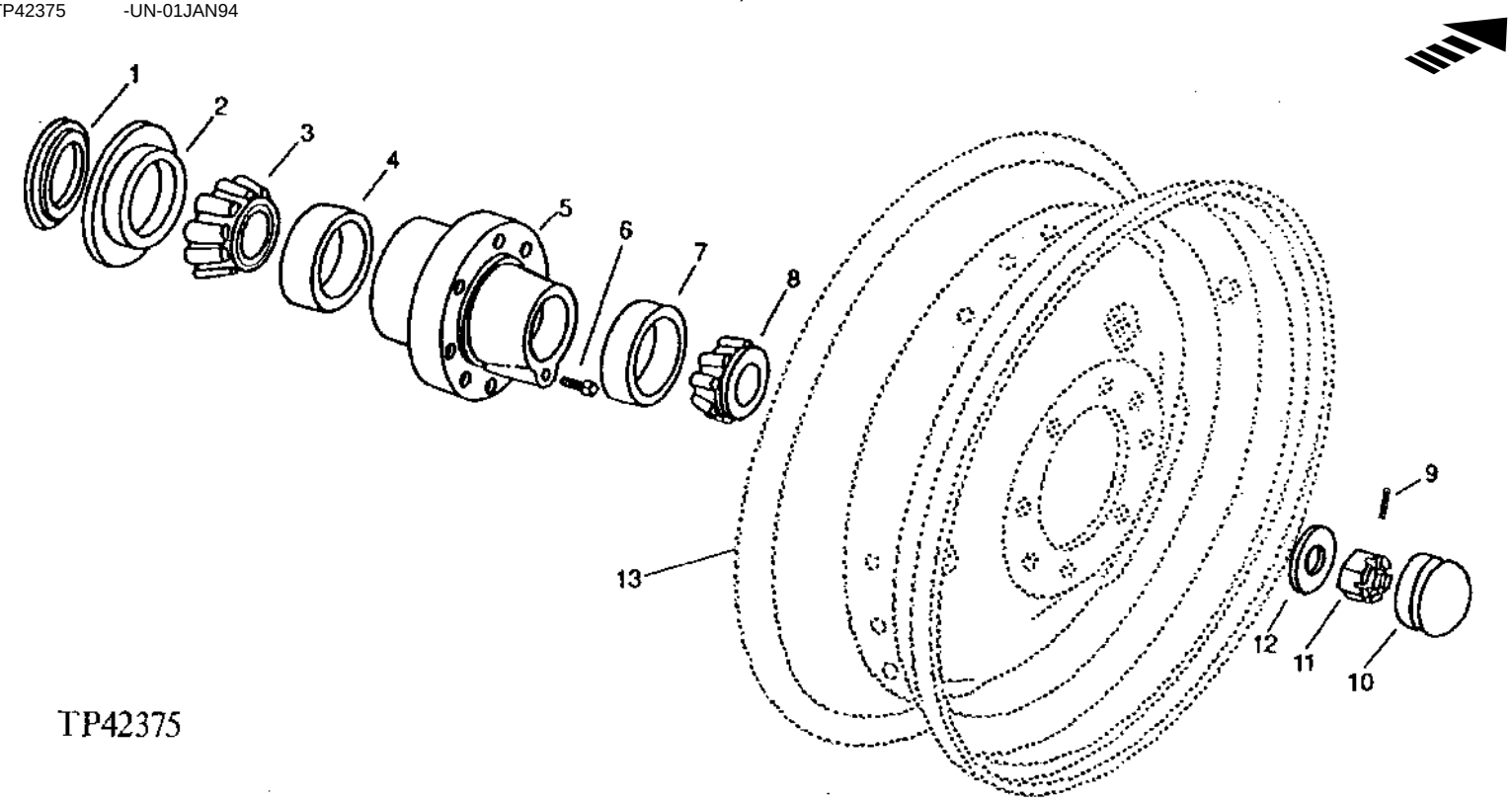

KEY	PART NO.	PART NAME	QTY	SERIAL NO.	REMARKS
1	AR27806	SEAL	1		
2	R28574	SEAL	1		
3	JD8961	BEARING CONE	1		
4	JD7444	BEARING CUP	1		
5	R63556	HUB	1		
6	22H841	SET SCREW	1		1/4" X 1/4"
7	JD7266	ROLLER BEARING	1		
8	JD10190	BEARING CONE	1		
9	11M7030	COTTER PIN	1		5 X 40 MM
10	DT2127W	CAP	1		
11	14M7213	NUT	1		M24
12	T75506	WASHER	1		1.004" X 2.067" X 0.180"
13	AT114094	WHEEL	2		(WITH 14 X 17.5) (WITH VALVE STEM GUARD) (WITH MFWD)
	AT114326	WHEEL	2		USE WITH 15 X 19.5 TIRE (WITH MFWD)
	AT135688	WHEEL	2		(16.1 X W14C) (USE WITH TIRE 16.5L X 16.1) (WITHOUT MFWD)

FRONT AXLE, SPINDLE AND KNUCKLE ASSEMBLY
(WITHOUT MECHANICAL FRONT WHEEL DRIVE)

TP42869 -UN-01JAN94

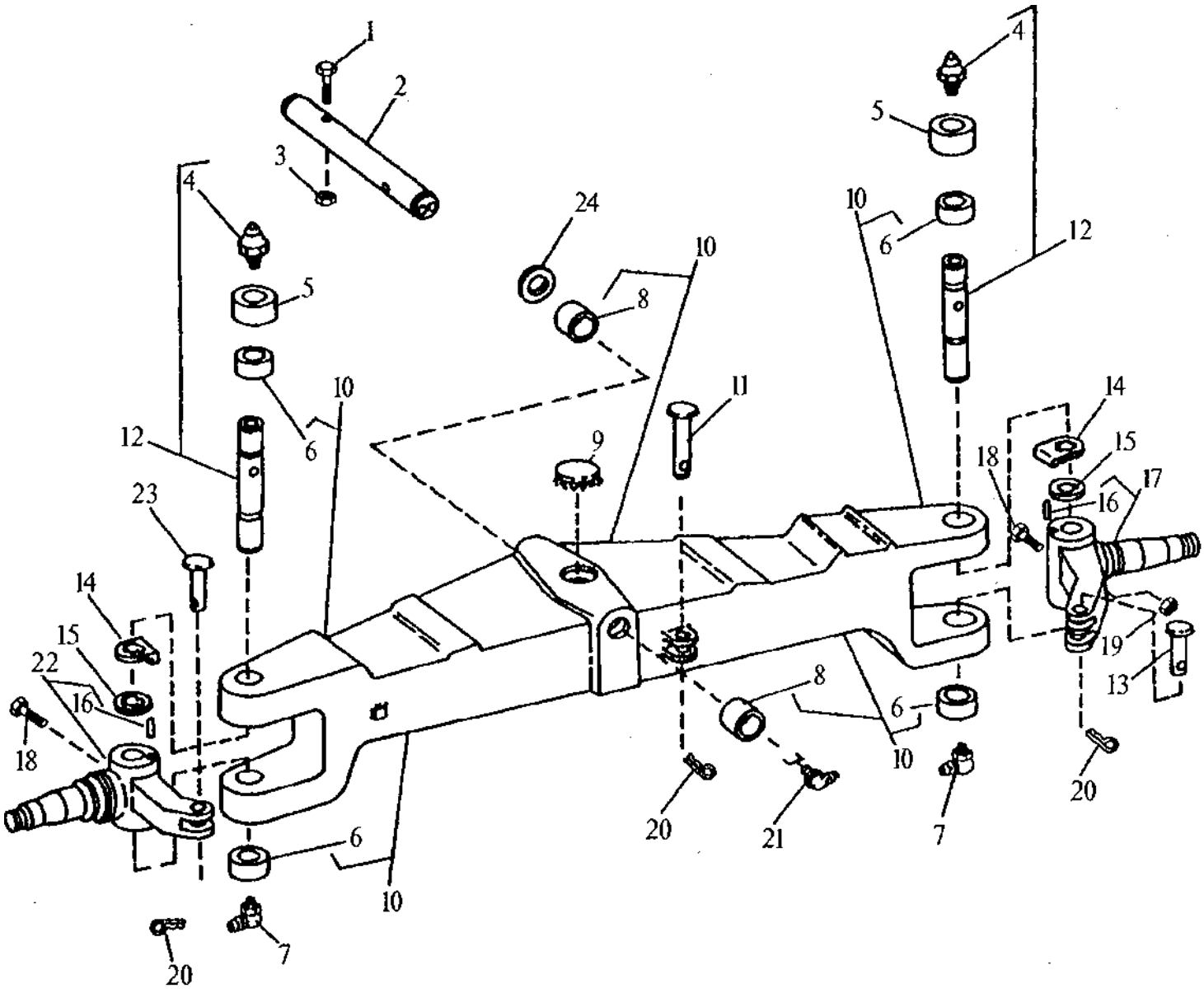

TP42869

FRONT AXLE, SPINDLE AND KNUCKLE ASSEMBLY
(WITHOUT MECHANICAL FRONT WHEEL DRIVE)

KEY	PART NO.	PART NAME	QTY	SERIAL NO.	REMARKS
1	19M7908	CAP SCREW	1		M12 X 110
2	T75383	PIN	1		
3	14M7319	LOCK NUT	1		M12
4	T162396	LUBRICATION FITTING	2		1/8", (SUB FOR JD7798)
5	T69027	SEAL	2		
6	T140207	BUSHING	4		
7	T162396	LUBRICATION FITTING	2		(SUB FOR JD7799, THIS APPLICATION)
8	T140211	BUSHING	2		
9	L2083C	PLUG	1		
10	AT66377	FRONT AXLE	1		(MARKED T69371)
11	T69356	PIN	1		
12	T184816	KINGPIN	2		(SUB FOR T69365)
13	T69355	PIN	1		
14	T69364	THRUST WASHER	2		
15	T69363	THRUST WASHER	2		
16	34M7117	SPRING PIN	2		5 X 10 MM
17	AT182387	KNUCKLE	1		R.H. (MARKED T82851) (SUB FOR AT66370) (MARKED T82851)
18	19H3445	CAP SCREW	2		3/8" X 3-3/4"
19	T11234	LOCK NUT	2		3/8"
20	11M7030	COTTER PIN	3		5 X 40 MM
21	JD7838	ADAPTER	2		90° X 1/8"
22	AT182388	KNUCKLE	1		L.H. (MARKED T82852) (SUB FOR AT66371) (MARKED T82852)
23	T69354	PIN	1		
24	R46973	THRUST WASHER	AR		

TIE ROD ASSEMBLY

TP42327 -UN-01JAN94

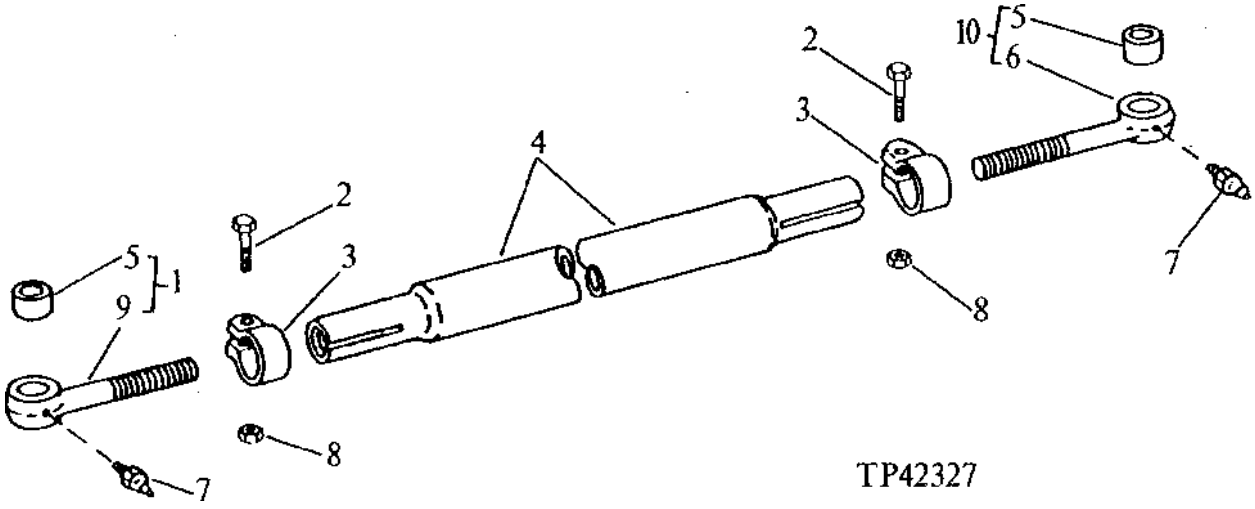

KEY	PART NO.	PART NAME	QTY	SERIAL NO.	REMARKS
1	AT79755	BOLT	1		R.H.
2	19H3208	CAP SCREW	2		5/8" X 3"
3	T69360	CLIP	2		
4	T69372	TURNBUCKLE	1		
5	T79786	BUSHING	2		
6	.....	BOLT	1		L.H. (LEFT-HAND THREAD)
7	JD7797	LUBRICATION FITTING	2		1/4"
8	U14555	LOCK NUT	2		
9	.....	BOLT	1		R.H.
10	AT79756	BOLT	1		L.H. (LEFT-HAND THREAD)

FRONT WHEEL DRIVE AXLE PIVOT PIN
(MECHANICAL FRONT WHEEL DRIVE)

TP57996 -UN-25JAN99

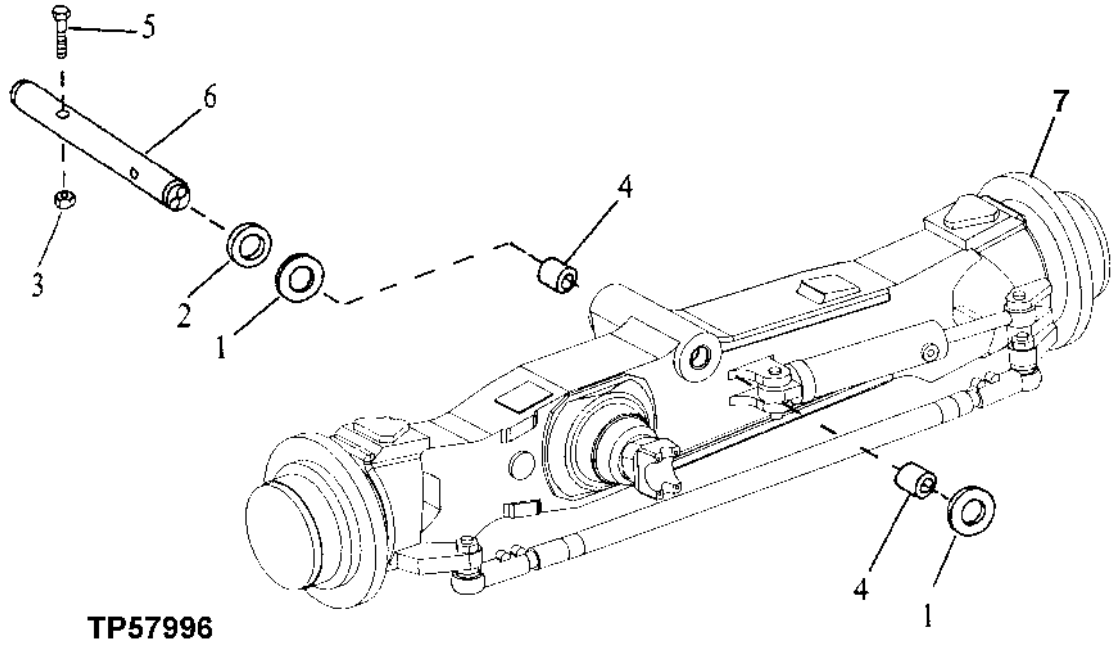

KEY	PART NO.	PART NAME	QTY	SERIAL NO.	REMARKS
1	T80027	THRUST WASHER	2		
2	R46973	THRUST WASHER	AR		
3	14M7319	LOCK NUT	1		M12
4	T140211	BUSHING	2		
5	19M7908	CAP SCREW	1		M12 X 110
6	T75383	PIN	1		
7	AT169897	AXLE	1	-872328	CONVENIENCE ASSEMBLY
	AT173568	FRONT AXLE	1	872329-	CONVENIENCE ASSEMBLY

FRONT WHEEL DRIVE AXLE HOUSING

TP44065 -UN-29SEP94

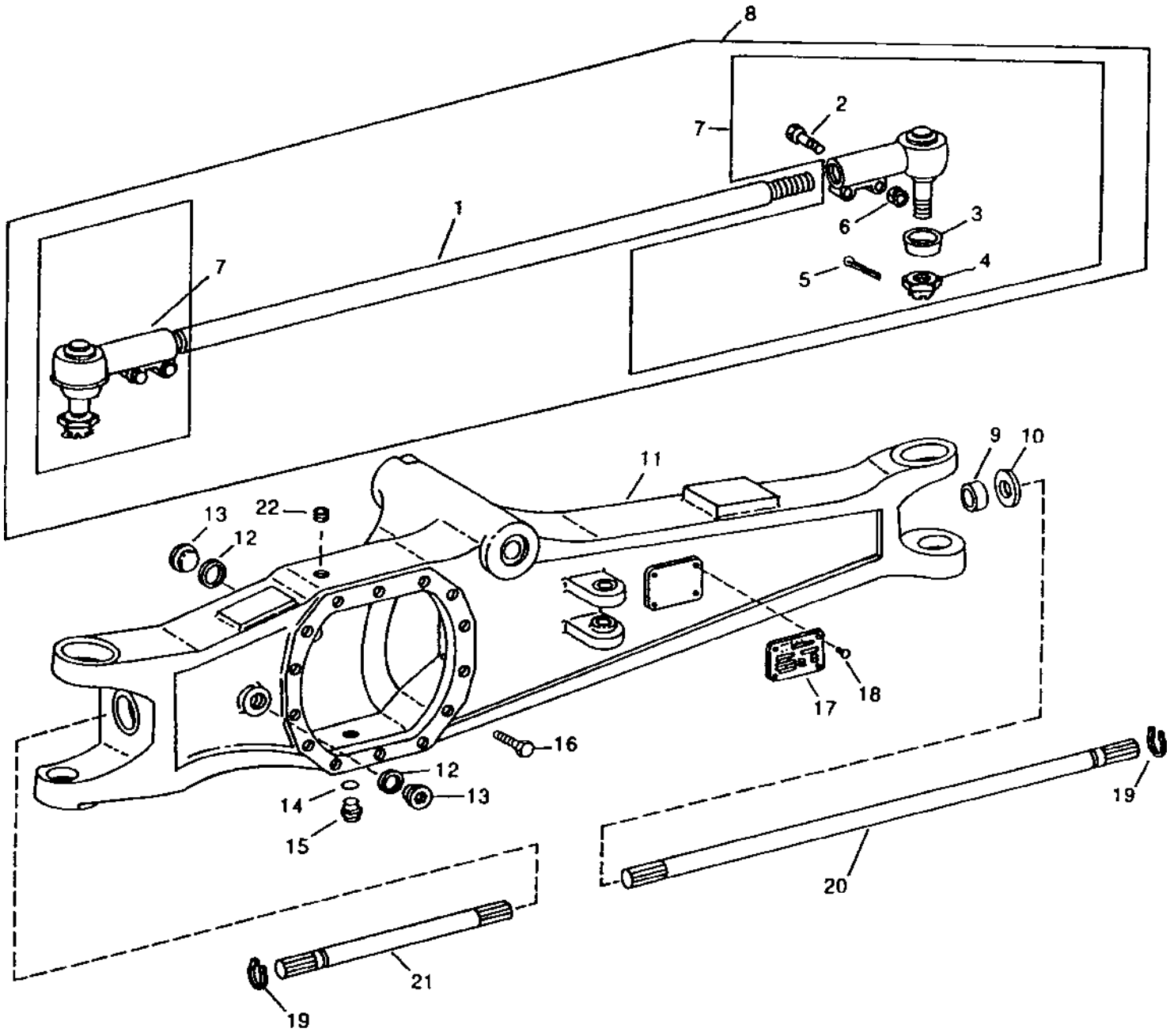

TP44065

FRONT WHEEL DRIVE AXLE HOUSING

KEY	PART NO.	PART NAME	QTY	SERIAL NO.	REMARKS
1	T82570	TIE ROD	1		
2	19M7918	CAP SCREW	4		M10 X 60
3	.....	BOOT	2		
	.....	SNAP RING	1		BOOT TO STUD, LOWER
	.....	SNAP RING	1		BOOT TO STUD, UPPER
4	14M7378	NUT	2		M27
5	11M7032	COTTER PIN	2		5 X 50 MM
6	14M7324	LOCK NUT	4		M10
7	AT84718	BALL JOINT	2		
8	.....	TIE ROD	1		
9	AT113926	SEAL	2		
10	T113254	BUSHING	2		
11	T164977	HOUSING	1		(SUB FOR T86225)
12	R82199	O-RING	2		
13	R73581	DRAIN PLUG	2		
14	R82198	O-RING	1		
15	R79496	DRAIN PLUG	1		
16	19M8031	CAP SCREW	14		M14 X 40
17	.....	SERIAL NUMBER PLATE	1		
18	25M7021	GROOVE PIN	4		3 X 5 MM
19	T82543	SNAP RING	2		
20	T82541	DRIVE SHAFT	1		
21	T82542	DRIVE SHAFT	1		
22	15M6457	DRAIN PLUG	1		

FRONT WHEEL DRIVE STEERING CYLINDER

TP26596 -UN-29SEP94

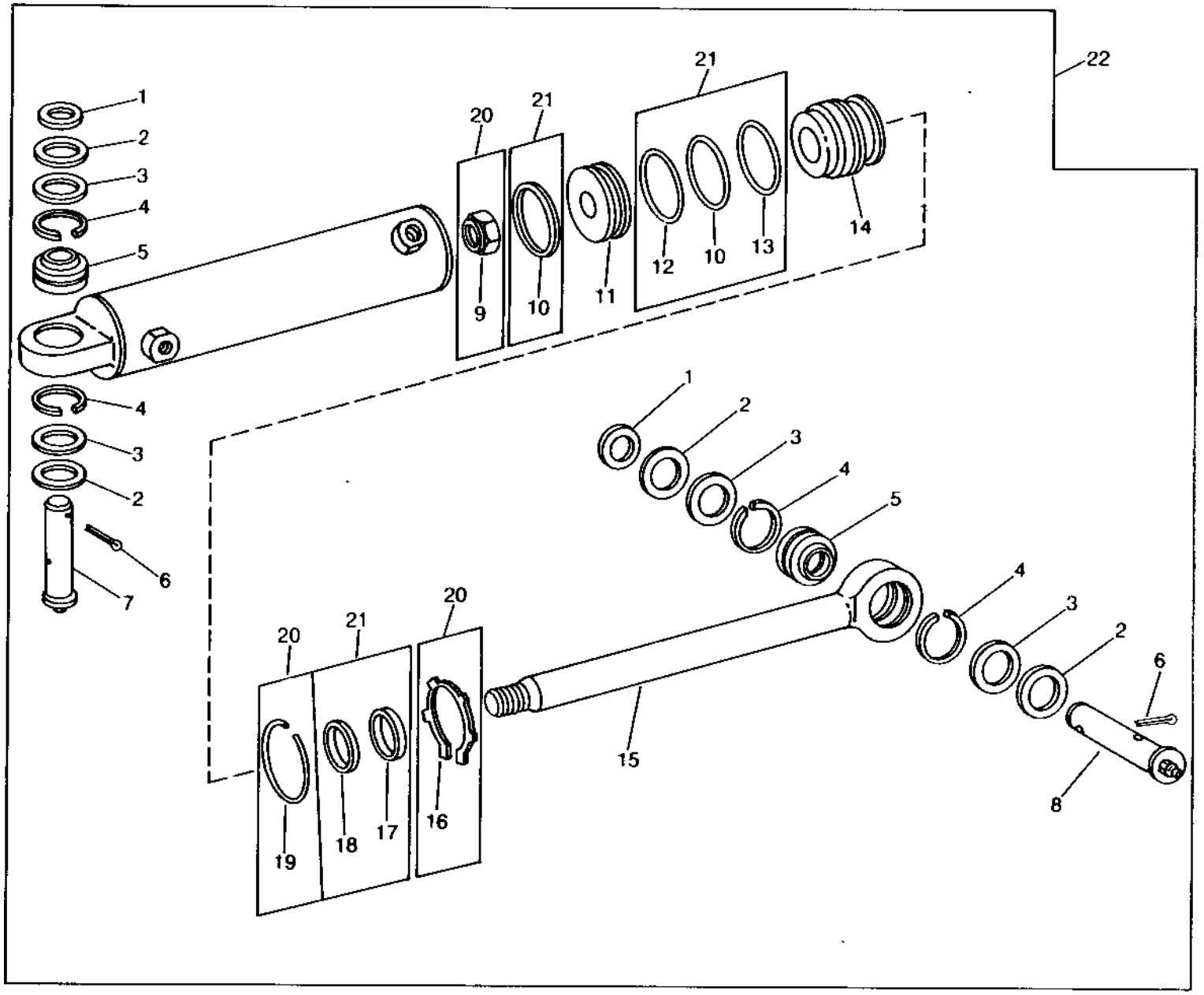

TP26596

FRONT WHEEL DRIVE STEERING CYLINDER

KEY	PART NO.	PART NAME	QTY	SERIAL NO.	REMARKS
1	24M7137	WASHER	2		25 X 40 X 4 MM
2	T82578	WASHER	4		
3	T82576	GASKET	4		
4	L29048	SNAP RING	4		
5	AT84719	BUSHING	2		
6	11M7038	COTTER PIN	2		6.300 X 40 MM
7	T82574	PIN	1		
	58M5574	LUBRICATION FITTING	1		(NOT ILLUSTRATED)
8	T82575	PIN	1		
	58M5574	LUBRICATION FITTING	1		(NOT ILLUSTRATED)
9	.....	NUT	1		
10	.....	RING	2		
11	T82581	PISTON	1		
12	.....	RING	1		
13	.....	PACKING	1		
14	T82582	HYDR. CYLINDER ROD GUIDE	1		
15	T82580	ROD	1		
16	.....	RING	1		
17	.....	SEAL	1		
18	.....	SEAL	1		
19	.....	RING	3		
20	AT84720	KIT	1		
21	AT84721	KIT	1		SEAL
22	AT84716	HYDRAULIC CYLINDER	1		

FRONT WHEEL DRIVE STEERING HOUSING

TP58159 -UN-03FEB00

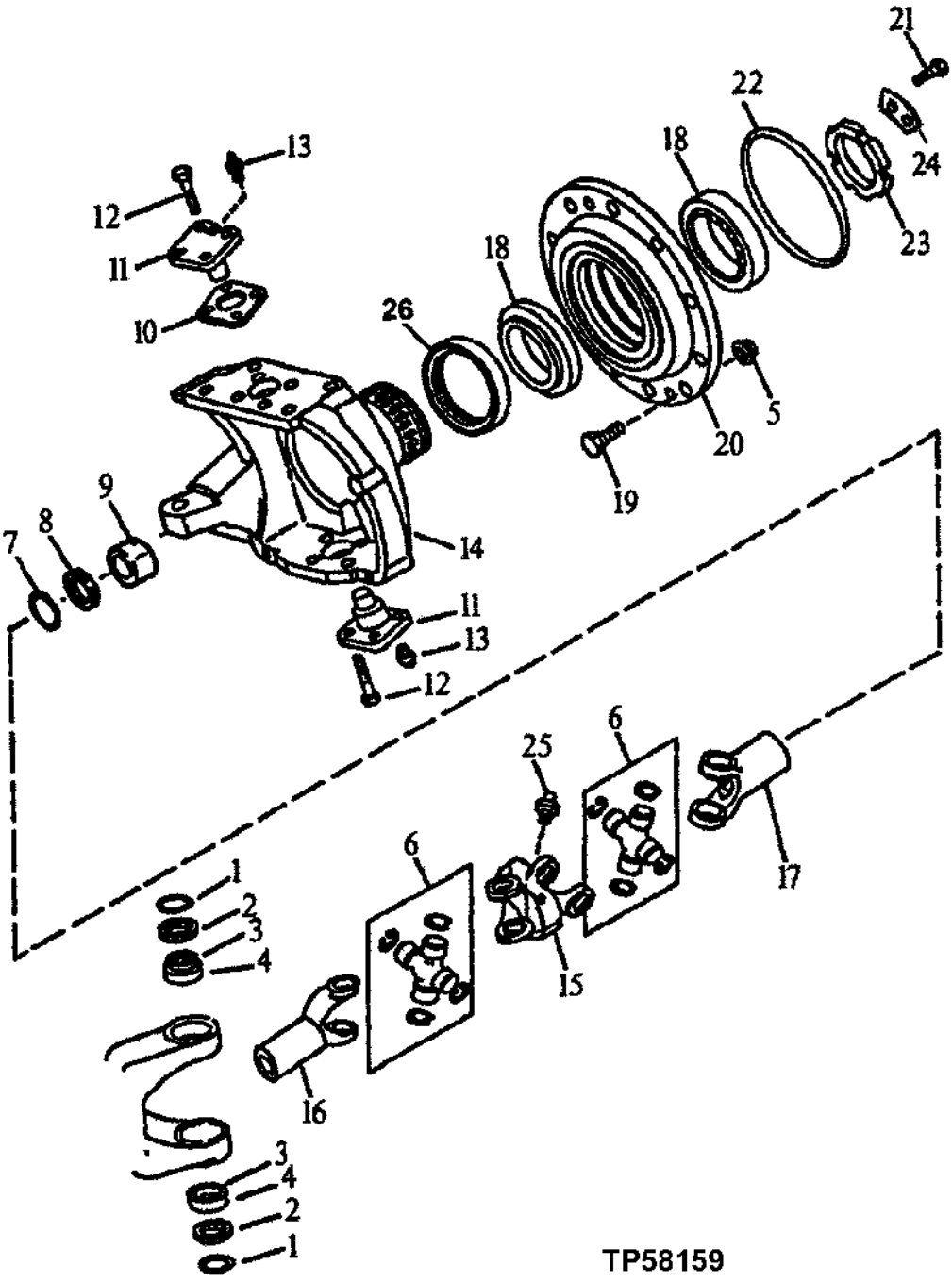

TP58159

FRONT WHEEL DRIVE STEERING HOUSING

KEY	PART NO.	PART NAME	QTY	SERIAL NO.	REMARKS
1	R78975	O-RING	4		
2	R75850	CAP	4		
3	JD8979	BEARING	4		
4	JD8267	BEARING CUP	4		
5	14M7499	FLANGE NUT	20		M20
6	AT191306	KIT	4		(SUB FOR AT114481)
7	T82543	SNAP RING	2		
8	AT113926	SEAL	2		
9	T113255	BUSHING	2		
10	T82547	SHIM	AR		0.4 MM
	T82548	SHIM	AR		0.6 MM
	T82549	SHIM	AR		0.8 MM
	T82550	SHIM	AR		1.00 MM
	T82554	SHIM	AR		2.0 MM
11	T82555	PIN	4		
12	19M7404	CAP SCREW	16		M14 X 40
13	L40552	LUBRICATION FITTING	4		
14	T187133	HOUSING	1		(SUB FOR T82545) R.H.
	T187134	HOUSING	1		(SUB FOR T82546) L.H.
15	T185048	UNIVERSAL JOINT	2		(SUB FOR T118638)
16	AT185215	YOKE	2		(SUB FOR T118639)
17	T148575	YOKE	2		(SUB FOR T118639)
18	JD10249	ROLLER BEARING	4		
19	T82562	STUD	20		
20	T82557	HUB	2		
21	T82619	CAP SCREW	4		
22	T82559	O-RING	2		
23	T82560	NUT	2		
24	T141487	LOCK PLATE	2		(SUB FOR T82561)
25	58M5574	LUBRICATION FITTING	2		
26	AL68616	SEAL	2		

FRONT WHEEL DRIVE DIFFERENTIAL AND GEARS

TP15397 -UN-29SEP94

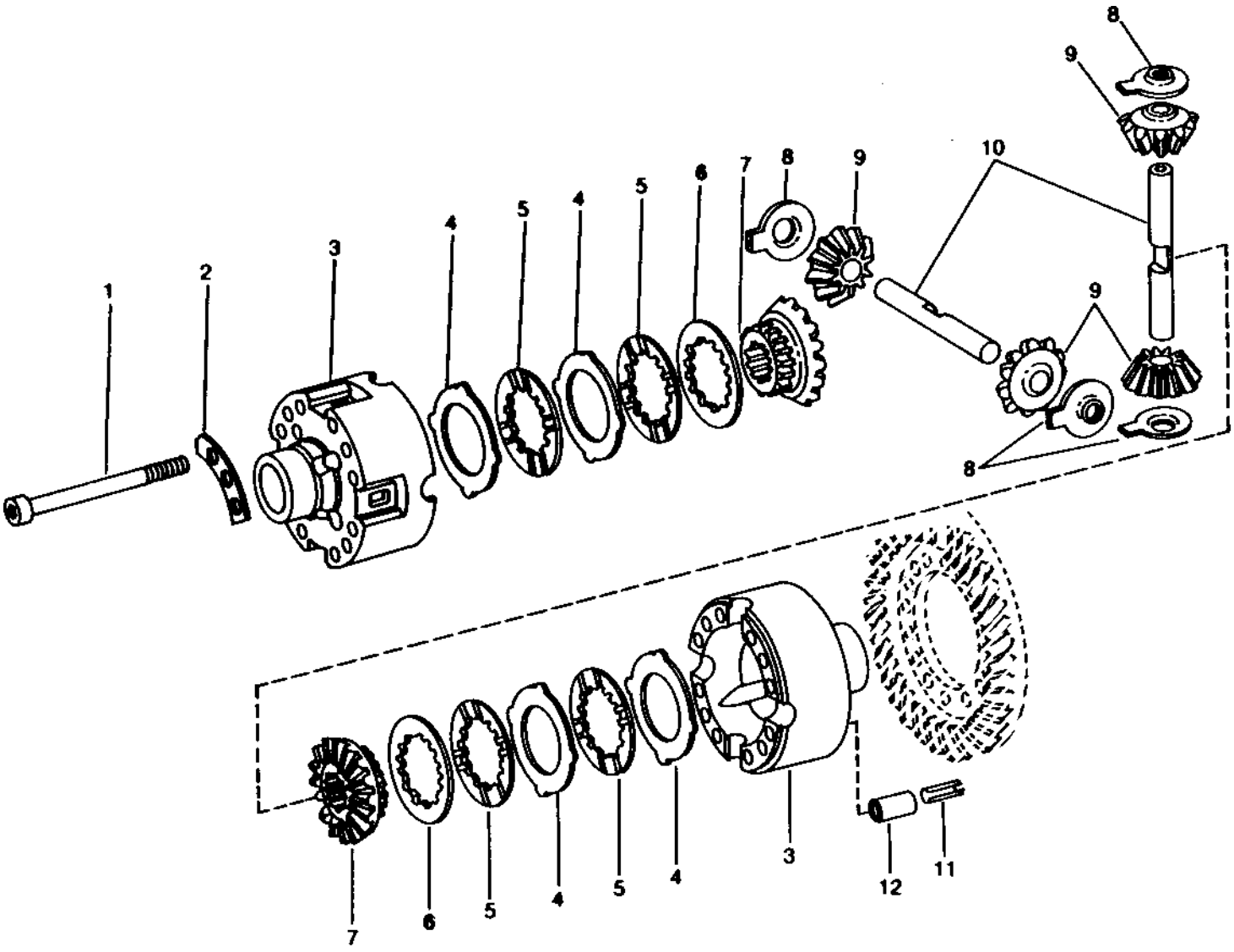

TP15397

FRONT WHEEL DRIVE DIFFERENTIAL AND GEARS

KEY	PART NO.	PART NAME	QTY	SERIAL NO.	REMARKS
1	19M8119	SCREW	12		M12 X 130
2	L40254	SECTOR	4		
3	AT84713	HOUSING	1		
4	L62419	DISK, WITH OUTER SPLINE	AR		(SUB FOR T82535) 1.2 MM (.047")
	L35577	PLATE	AR		1.3 MM (.051")
	L62420	DISK, WITH OUTER SPLINE	AR		1.4 MM (.055")
5	T82536	DISK	8		
6	L63828	DISK, WITH INNER SPLINE	AR		
7	T82538	GEAR	2		
8	L40253	THRUST WASHER	4		
9	L101698	BEVEL GEAR	4		(SUB FOR T82539)
10	L39983	SHAFT	2		
11	34M7047	SPRING PIN	4		8 X 40 MM
12	34M7135	SPRING PIN	4		14 X 40 MM

FRONT WHEEL DRIVE PLANETARY

TP42340 -UN-01JAN94

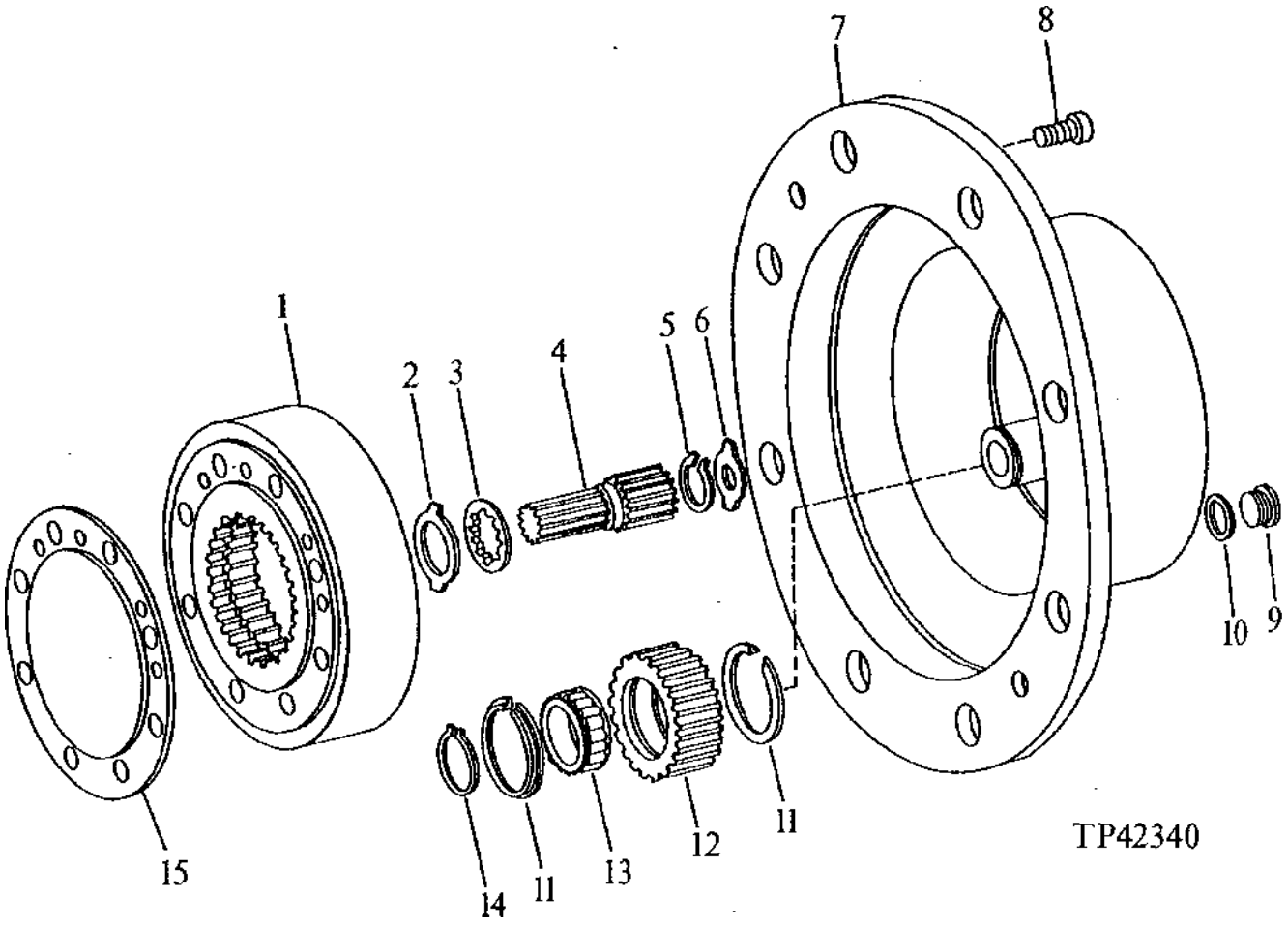

FRONT WHEEL DRIVE PLANETARY

KEY	PART NO.	PART NAME	QTY	SERIAL NO.	REMARKS
1	T141486	GEAR	2		
2	T82565	THRUST WASHER	2		
3	T82566	THRUST WASHER	2		
4	T82564	SHAFT	2		
5	T82620	SNAP RING	2		
6	L39997	WASHER	AR		1.5 MM
	L40121	WASHER	AR		2.0 MM
	L41008	WASHER	AR		2.5 MM
	L41170	WASHER	AR		3.0 MM
	L55602	WASHER	AR		1.7 MM
	L55603	WASHER	AR		2.2 MM
7	T82567	PLANET PINION CARRIER	2		
8	19M8316	SCREW	4		M12 X 20
9	15M7027	DRAIN PLUG	2		
10	L55601	O-RING	2		
11	L41159	SNAP RING	16		
12	L39994	PLANET PINION	8		(SUB FOR T82568)
13	JD10250	ROLLER BEARING	8		
14	40M4624	SNAP RING	8		
15	T82561	PLATE	2		(SUB FOR T141487)

FRONT WHEEL DRIVE CARRIER ASSEMBLY

TP44063 -UN-01JAN94

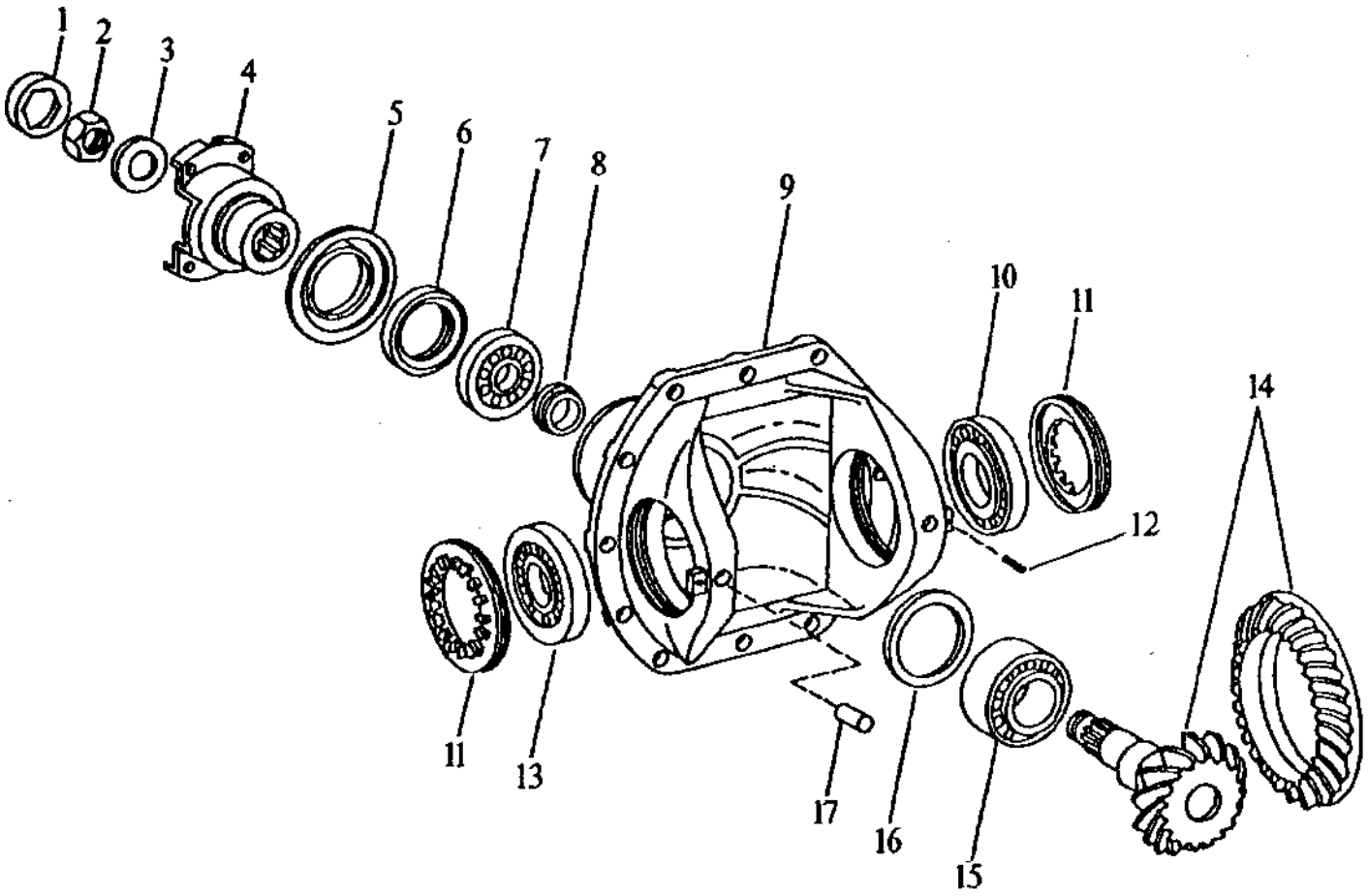

FRONT WHEEL DRIVE CARRIER ASSEMBLY

KEY	PART NO.	PART NAME	QTY	SERIAL NO.	REMARKS
1	T82530	PLATE	1		
2	14M7425	NUT	1		M27
3	R75837	WASHER	1		
4	T82531	FLANGE	1	-872328	
	T164976	FLANGE	1	872329-	
5	T82532	DUST SHIELD	1		
6	AT113925	SEAL	1		
7	JD10359	ROLLER BEARING	1		
8	R75835	BUSHING	1		
9	T82517	PLANET PINION CARRIER	1		
10	JD37219	ROLLER BEARING	1		
11	T82529	NUT	2		
12	34M7041	SPRING PIN	2		6 X 36 MM
13	JD37087	ROLLER BEARING	1		
14	AT84712	RING GEAR	1	-872328	
	AT184264	RING GEAR AND PINION	1	872329-	
15	AT148947	ROLLER BEARING	1		
16	T82527	SHIM	AR		1.5 MM
	T82518	SHIM	AR		0.9 MM
	T82519	SHIM	AR		0.95 MM
	T82520	SHIM	AR		1.00 MM
	T82521	SHIM	AR		1.05 MM
	T82522	SHIM	AR		1.1 MM
	T82523	SHIM	AR		1.15 MM
	T82524	SHIM	AR		1.2 MM
	T82525	SHIM	AR		1.25 MM
	T82526	SHIM	AR		1.33 MM
	T82549	SHIM	AR		0.8 MM
17	T82528	DOWEL PIN	2		

DRIVE SHAFT
(MECHANICAL FRONT WHEEL DRIVE)

TP57917 -UN-10SEP98

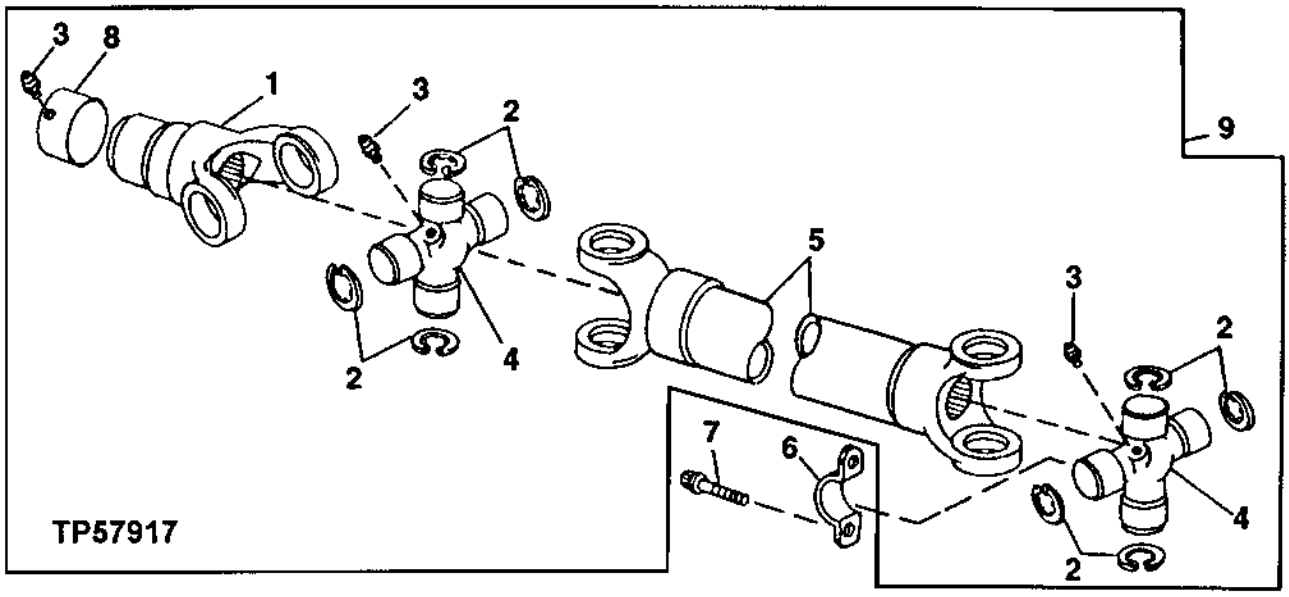

KEY	PART NO.	PART NAME	QTY	TRACTOR SERIAL NO.	REMARKS
1	AT76182	YOKE	1	-872328	
	AT182875	UNIVERSAL JOINT YOKE	1	872329-	
2	N119316	SNAP RING	6		
3	JD7797	LUBRICATION FITTING	3		
4	AT76183	KIT	2	-872328	JOURNAL AND BEARING
	AT178390	KIT	2	872329-	JOURNAL AND BEARING
5	.....	UNIVERSAL DRIVESHAFT	1		
6	T69938	HALF CLAMP	2		
7	T113128	CAP SCREW	4		(SUB FOR T113128 OR T152856)
8	AT179590	SEAL	1	872329-	
9	AT157672	UNIVERSAL DRIVESHAFT	1	-872328	
	AT182736	UNIVERSAL DRIVESHAFT	1	872329-	

DIFFERENTIAL LOCK SWITCH

TP48545 -UN-07NOV96

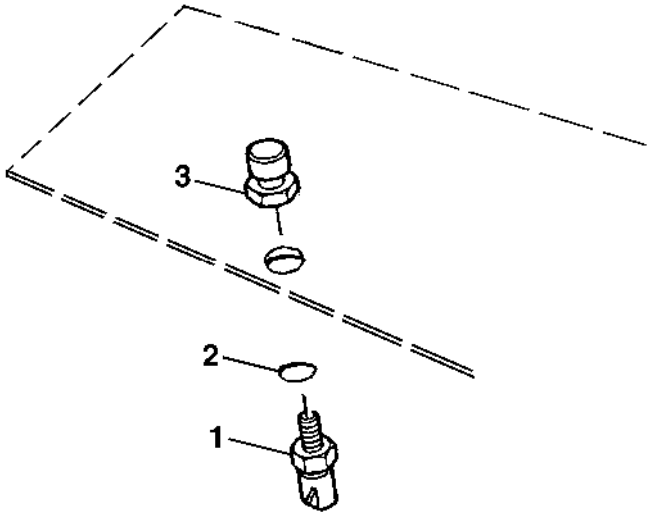

TP48545

KEY	PART NO.	PART NAME	QTY	SERIAL NO.	REMARKS
1	RE46534	SWITCH	1		
2	51M7042	O-RING	1	13.300 X 2.200 MM	
	T63817	GROMMET	1		
3	RE43637	PUSH BUTTON	1		

FORWARD/REVERSE CONTROL SWITCH AND LEVER

TP48809 -UN-26MAY95

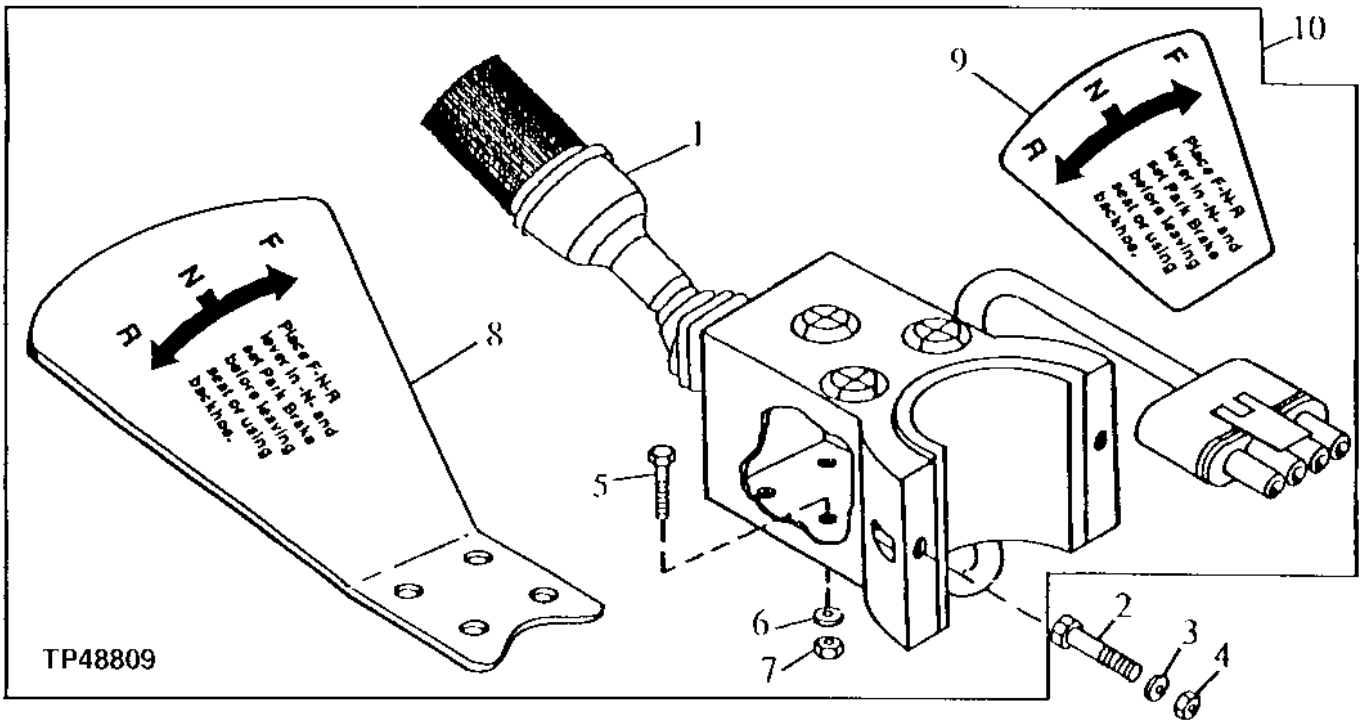

KEY	PART NO.	PART NAME	QTY	SERIAL NO.	REMARKS
1	.....	SWITCH	1		MOTION CONTROL
2	19M8581	SCREW	2		M5 X 20
3	24H1283	WASHER	2		7/32" X 1/2" X 0.049"
4	14M7297	NUT	2		M5
5	T131177	SCREW	4		3.505 X 19.050 MM (0.138" X 3/4")
6	R44255	WASHER	AR		5/32" X 0.300" X 0.048"
7	M90214	LOCK NUT	4		3.505 MM (0.138")
8	.....	GUARD	1		
9	T140923	LABEL	1		FNR
10	AT165444	SWITCH	1	-872328	(SUB FOR AT157375 AND AT180918)
	AT182520	SWITCH	1	872329-	

TRANSMISSION DRIVE SHAFT
(SERIAL NO. -872328)

TP8330 -UN-01JAN94

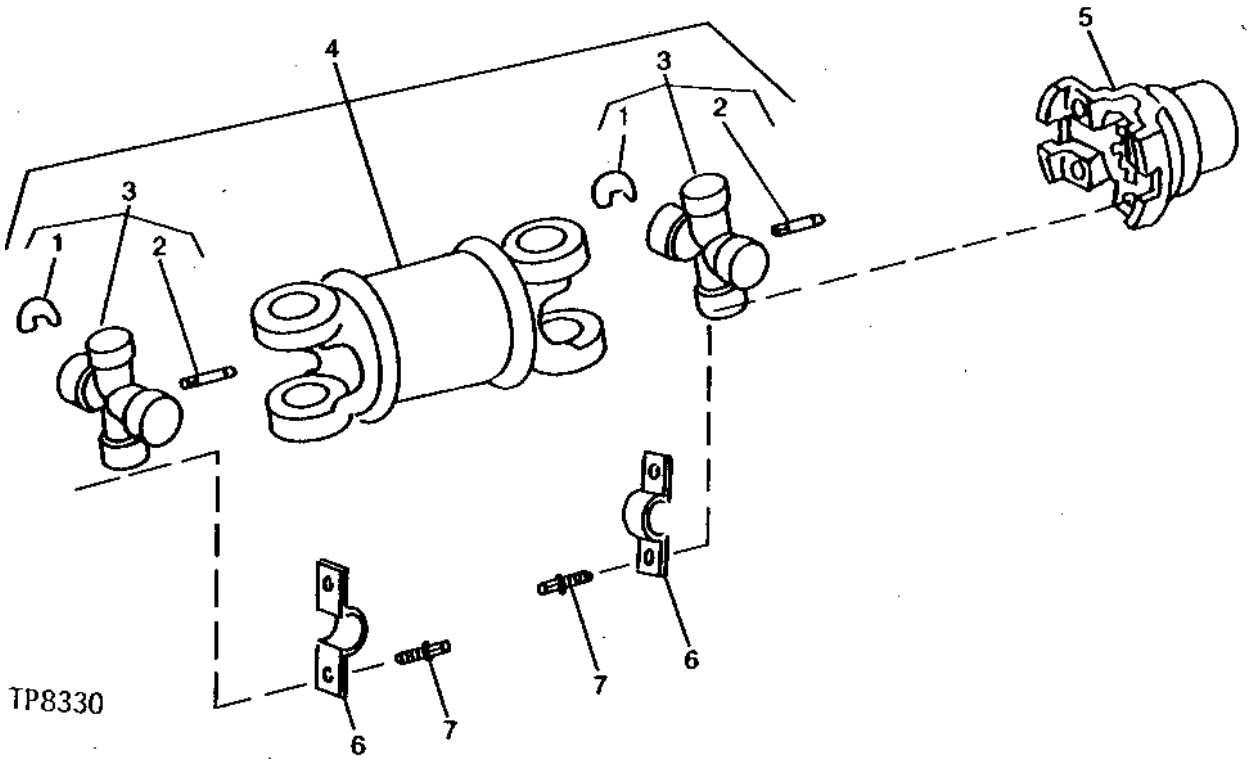

KEY	PART NO.	PART NAME	QTY	SERIAL NO.	REMARKS
1	N119316	SNAP RING	4		
2	JD7797	LUBRICATION FITTING	2		
3	AT141792	BEARING KIT	2		
4	AT129177	UNIVERSAL JOINT	1		
5	AT160436	YOKE	1		WITH PLUG
6	T69938	HALF CLAMP	4		
7	T113128	CAP SCREW	8		(SUB FOR T69937 AND T113128 OR T152856)

TRANSMISSION DRIVESHAFT
(SERIAL NO. 872329-)

TP50532 -UN-20NOV96

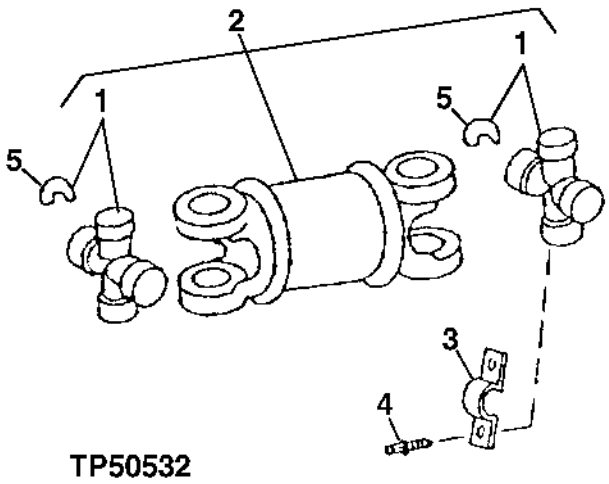

TP50532

KEY	PART NO.	PART NAME	QTY	SERIAL NO.	REMARKS
1	AT207990	UNIVERSAL JOINT CROSS	2		
2	AT175775	UNIVERSAL DRIVESHAFT	1		
3	R85168	CLAMP	4		
4	R85169	SELF-LOCKING SCREW	8		
5	N119316	SNAP RING	4		

TRANSMISSION CASE AND PLUGS
(SERIAL NO. -872328)

TP44092 -UN-01JAN94

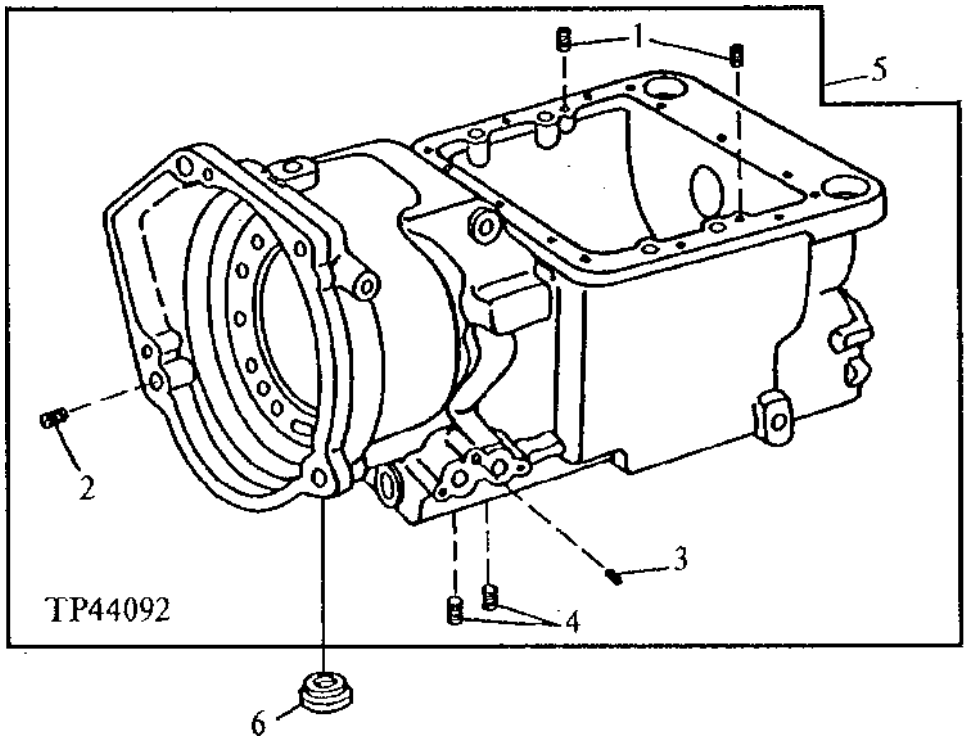

KEY	PART NO.	PART NAME	QTY	SERIAL NO.	REMARKS
1	T126842	BUSHING	2		
2	15H558	PIPE PLUG	1		1/8"
3	15H561	PIPE PLUG	1		1/2"
4	15H562	PIPE PLUG	2		1"
5	AT159049	TRANSMISSION CASE	1		(MARKED T126840) (WITHOUT MECHANICAL FRONT WHEEL DRIVE)
	AT157370	TRANSMISSION CASE	1		(MARKED T126845) (WITH MECHANICAL FRONT WHEEL DRIVE)
6	T72326	PLUG	1		

TRANSMISSION COVER, DIPSTICK AND SCREEN
SERIAL NO. -872328)

TP42937 -UN-01JAN94

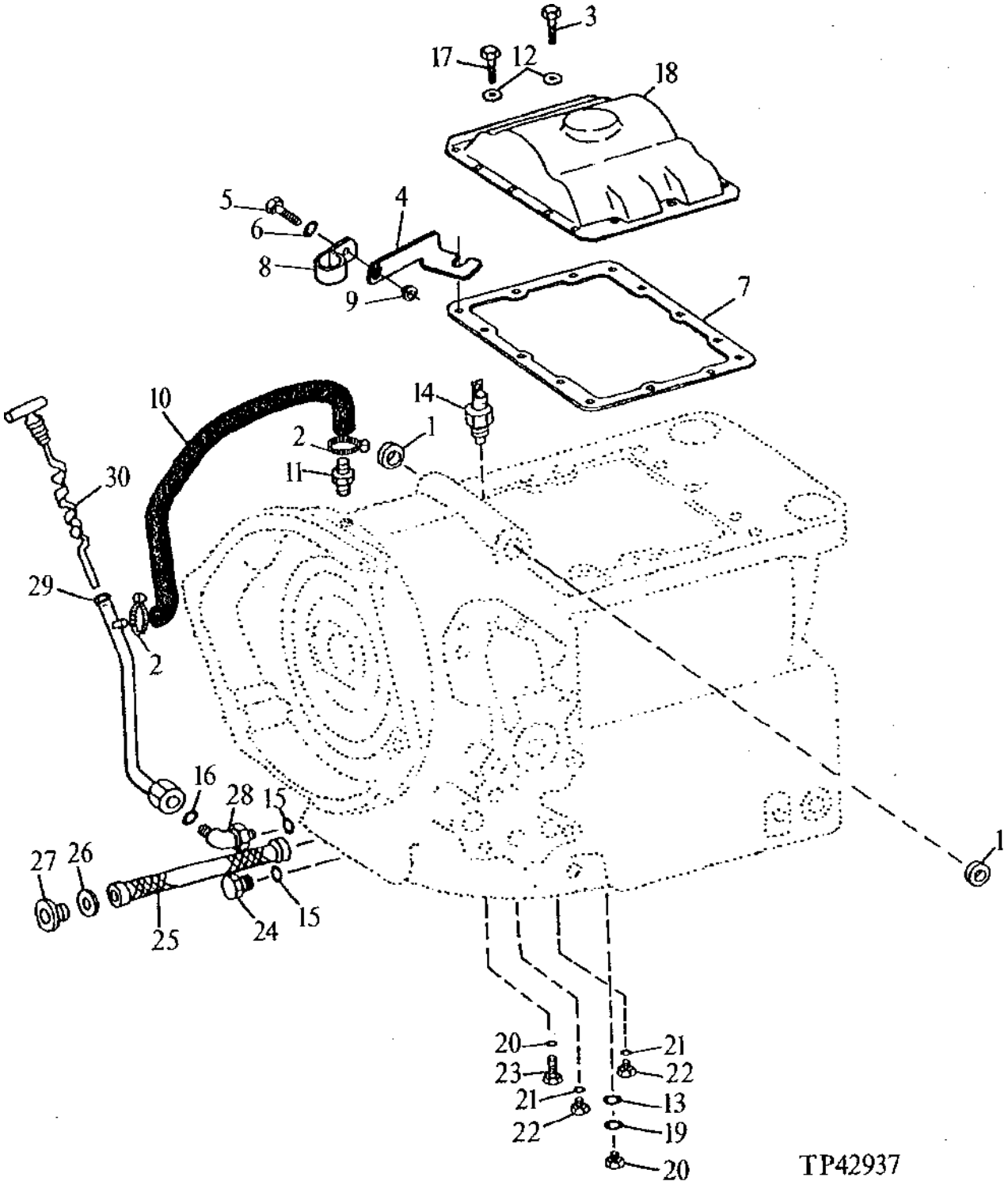

TRANSMISSION COVER, DIPSTICK AND SCREEN
(SERIAL NO. -872328)

KEY	PART NO.	PART NAME	QTY	SERIAL NO.	REMARKS
1	.....	SEAL	2		(AL20186 NO LONGER NEEDED)
2	TY22462	CLAMP	2		(SUB FOR AR48236)
3	36H49	SCREW	13		3/8" X 1"
4	T145622	BRACKET	1		
5	19M7881	SCREW	1		M8 X 20
6	24M7238	WASHER	1		8.700 X 17 X 2 MM
7	T27419	GASKET	1		
8	T26955	CLAMP	1		
9	14M7273	NUT	1		M8
10	M87571	BULK HOSE	AR		CUT TO LENGTH
11	R67293	FITTING	1		
12	24H1682	WASHER	15		13/32" X 7/8" X 0.120"
13	R26448	O-RING	1		WITHOUT MFWD
	R26448	O-RING	3		WITH MFWD
14	AT132806	SWITCH	1		TEMPERATURE
15	U13639	O-RING	2		
16	T78612	O-RING	1		
17	19H3239	CAP SCREW	1		3/8" X 1-1/4"
18	T125656	COVER	1		
19	U17409	O-RING	1		
20	T78662	DRAIN PLUG	1		OIL
21	R26287	O-RING	2		
22	R31631	DRAIN PLUG	2		
23	R27218	FITTING PLUG	1		
24	R39741	DRAIN PLUG	1		
25	R53169	SCREEN	1		
26	U15973	O-RING	1		
27	T77170	FITTING PLUG	1		
28	38H1008	ELBOW FITTING	1		
29	AT160143	OIL LINE	1		
30	AT163946	DIPSTICK	1		FOUR WHEEL DRIVE ONLY
	AT174243	DIPSTICK	1		TWO WHEEL DRIVE ONLY

TRANSFER CASE AND COVER
(MECHANICAL FRONT WHEEL DRIVE)
(SERIAL NO. -872328)

TP57726 -UN-01JUL97

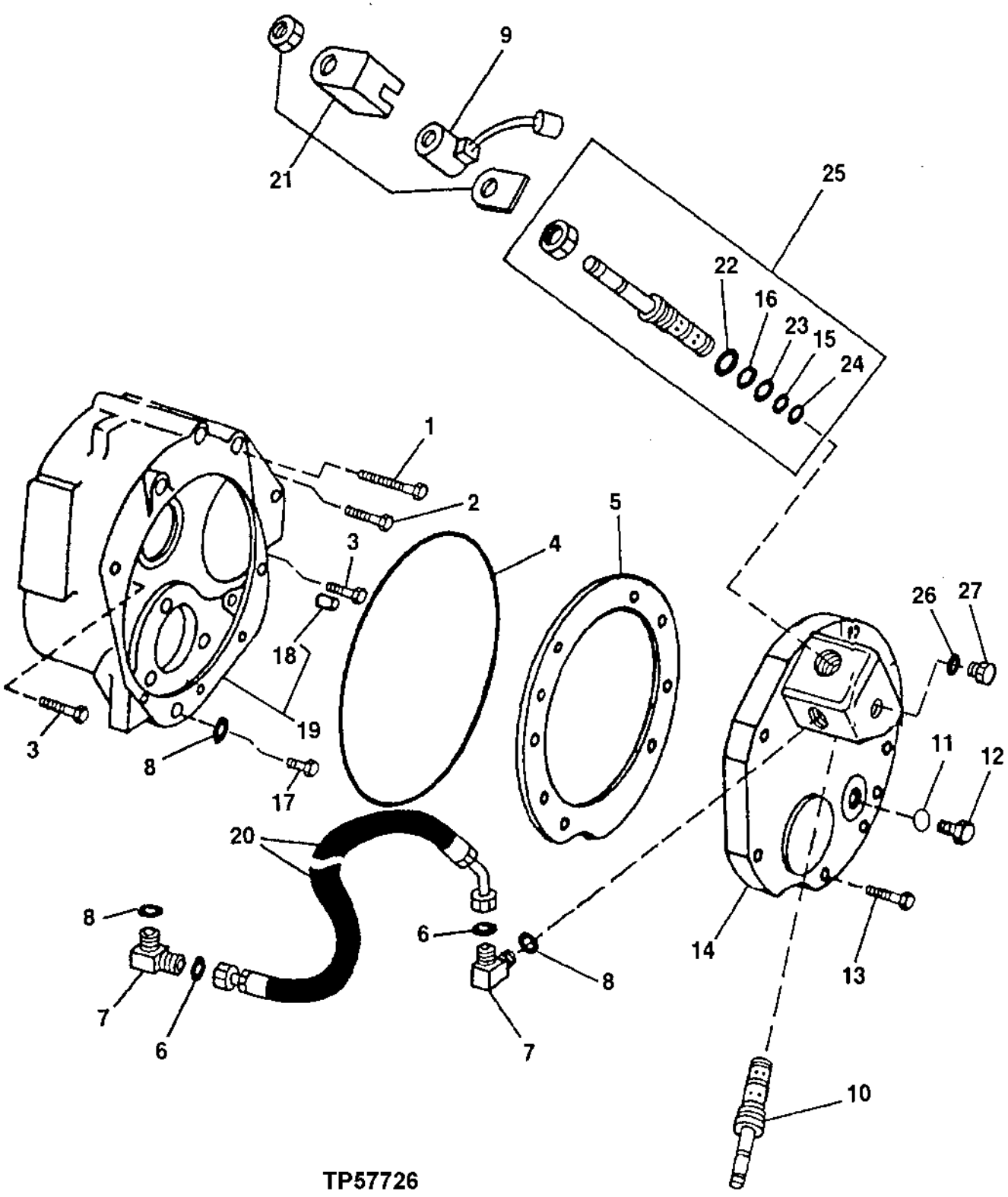

TP57726

TRANSFER CASE AND COVER
(MECHANICAL FRONT WHEEL DRIVE)
(SERIAL NO. -872328)

KEY	PART NO.	PART NAME	QTY	SERIAL NO.	REMARKS
1	19M7905	CAP SCREW	1		M12 X 200
2	19M7904	CAP SCREW	1		M12 X 160
3	19M7943	CAP SCREW	2		M12 X 90
4	T80037	O-RING	1		
5	.....	SHIM	AR		(A) 0.08MM (.003") (T80038 NO LONGER AVAILABLE)
	.....	SHIM	AR		(A) 0.13MM (.005") (T80039 NO LONGER AVAILABLE)
	.....	SHIM	AR		(A) 0.25MM (.010") (T80040 NO LONGER AVAILABLE)
6	T77613	O-RING	2		
7	38H1004	ELBOW FITTING	2		
8	R26448	O-RING	3		
9	AT147011	SOLENOID	1		
10	AT85174	SWITCH	1		PRESSURE
11	R29936	O-RING	1		
12	R36636	FITTING PLUG	1		
13	19M7402	CAP SCREW	6		M10 X 25
14	T143755	COVER	1		
15	R42926	BACK-UP RING	1		
16	R33259	O-RING	1		
17	R27218	FITTING PLUG	1		
18	R44742	DOWEL PIN	1		
19	AT80323	CASE	1		(MARKED T80028)
20	AT142560	HYDRAULIC HOSE - FABRICATE	1		11/16" X 762 MM (30") X 11/16"
21	AT139434	KIT	1		
22	R26906	O-RING	1		
23	T81247	BACK-UP RING	1		
24	R28776	O-RING	1		
25	AT139432	VALVE	1		
26	R26286	O-RING	1		
27	R27094	DRAIN PLUG	1		
..	AT146256	SHIM	1		INCLUDES ALL (A) PARTS

TRANSMISSION HOUSING
POWER SHIFT
(SERIAL NO. 872329-)

TP57979 -UN-15JAN99

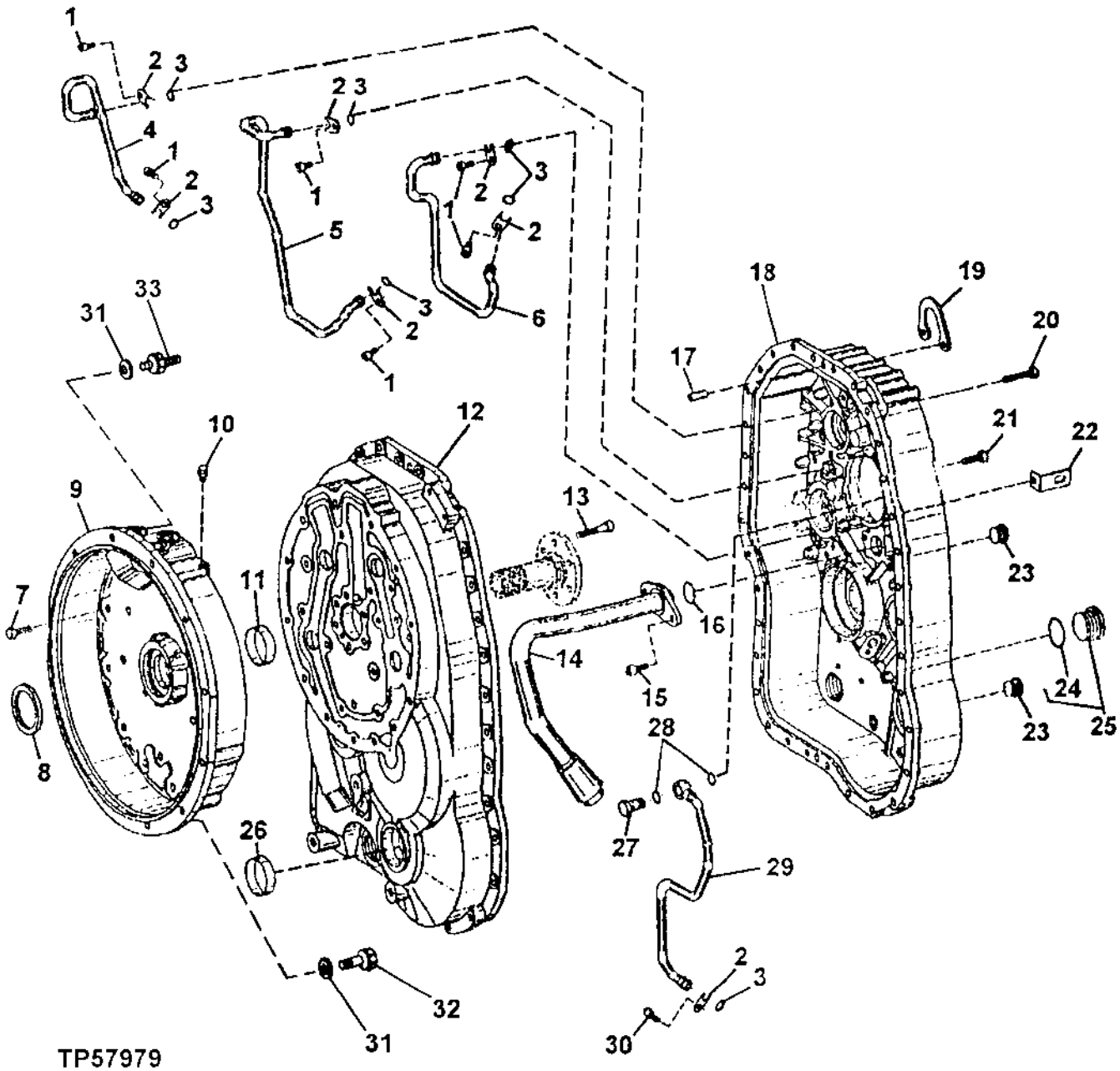

TRANSMISSION HOUSING
POWER SHIFT
(SERIAL NO. 872329-)

KEY	PART NO.	PART NAME	QTY	SERIAL NO.	REMARKS
1	T164648	CAP SCREW	6		
2	T164573	PLATE	7		
3	T161218	O-RING	7		
4	AT184060	OIL LINE	1		
5	AT184061	OIL LINE	1		
6	AT184062	OIL LINE	1		
7	T164660	SCREW	24		
8	AT179316	SEAL	1		
9	T164659	HOUSING	1		
10	T116918	BREATHER	1		
11	T164665	BUSHING	1		
12	T164657	HOUSING	1		FRONT, (ALSO ORDER T159683)
13	T164666	CAP SCREW	6		
14	AT184059	PIPE	1		
15	T161182	CAP SCREW	2		
16	T161181	O-RING	1		
17	T164662	PIN	2		
18	T164658	HOUSING	1		REAR
19	T159567	PLATE	1		
20	T164661	SCREW	6		
21	T164660	SCREW	28		
22	T164671	BRACKET	2		
23	T159565	PLUG	2		
24	U13639	O-RING	1		
25	AT185791	PLUG	1		
26	T159683	COVER	1		MFWD OUTPUT SHAFT HOLE PLUG
27	T164703	CAP SCREW	1		
28	T164704	O-RING	2		
29	AT184360	OIL LINE	1		
30	T164648	CAP SCREW	1		
31	24M7239	WASHER	12		10.700 X 21 X 2.500 MM
32	19M7662	CAP SCREW	11		M10 X 30
33	T161803	STUD	1		

TRANSMISSION, DIPSTICK AND TUBE
(SERIAL NO. 872329-)

TP57986 -UN-02FEB99

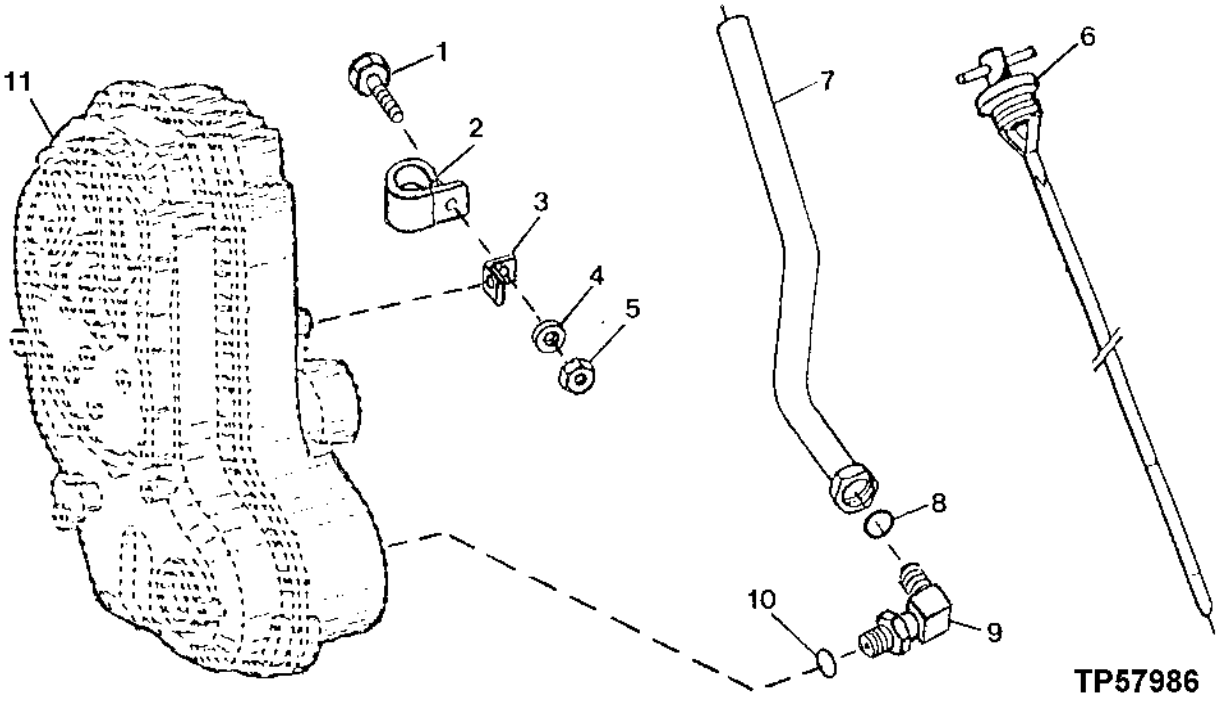

KEY	PART NO.	PART NAME	QTY	SERIAL NO.	REMARKS
1	19M7402	CAP SCREW	1		M10 X 25
2	T26955	CLAMP	1		
3	R73975	BRACKET	1		
4	24M7239	WASHER	1		
5	14M7274	NUT	1		
6	AT174898	DIPSTICK	1		
7	AT179066	DIPSTICK TUBE	1		
8	T78612	O-RING	1		
9	38H1008	ELBOW FITTING	1		
10	U13639	O-RING	1		
11	AT168401	TRANSMISSION	1		POWER SHIFT (CONVENIENCE ASSEMBLY) (WITH MFWD)(INCLUDES TORQUE CONVERTOR, BELL HOUSING,TRANSMISSION CONTROL VALVE, TRANSMISSION SOLENOIDS,CHARGE PUMP AND OIL FILTER)
	.....	TRANSMISSION	1		POWER SHIFT (CONVENIENCE ASSEMBLY) (WITHOUT MFWD)(ALSO INCLUDES TORQUE CONVERTOR ,BELL HOUSING,TRANSMISSION CONTROL VALVE, TRANSMISSION SOLENOIDS,CHARGE PUMP AND FILTER AND OUTPUT SHAFT)

MEMORANDA

TRANSMISSION RESILIENT MOUNT
(SERIAL NO. -872328)

TP42841 -UN-01JAN94

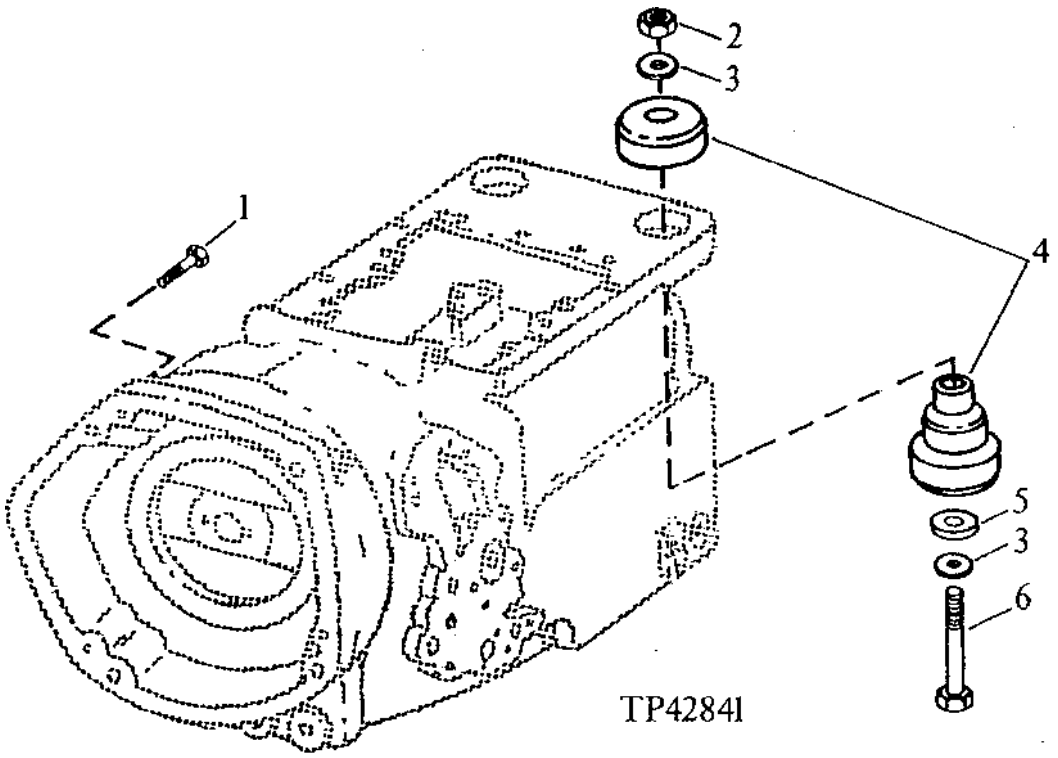

KEY	PART NO.	PART NAME	QTY	SERIAL NO.	REMARKS
1	19M7908	CAP SCREW	4		M12 X 110
2	14M7340	LOCK NUT	2		M20, (SUB FOR (2) A31870)
3	24M7242	WASHER	4		21.400 X 42 X 5 MM
4	AT102326	ISOLATOR	2		
5	T42977	WASHER	2		29/32" X 3-1/2" X 0.236"
6	19M7968	CAP SCREW	2		M20 X 130

PLANETARY ASSEMBLY
(SERIAL NO. -872328)

TP44516 -UN-01JAN94

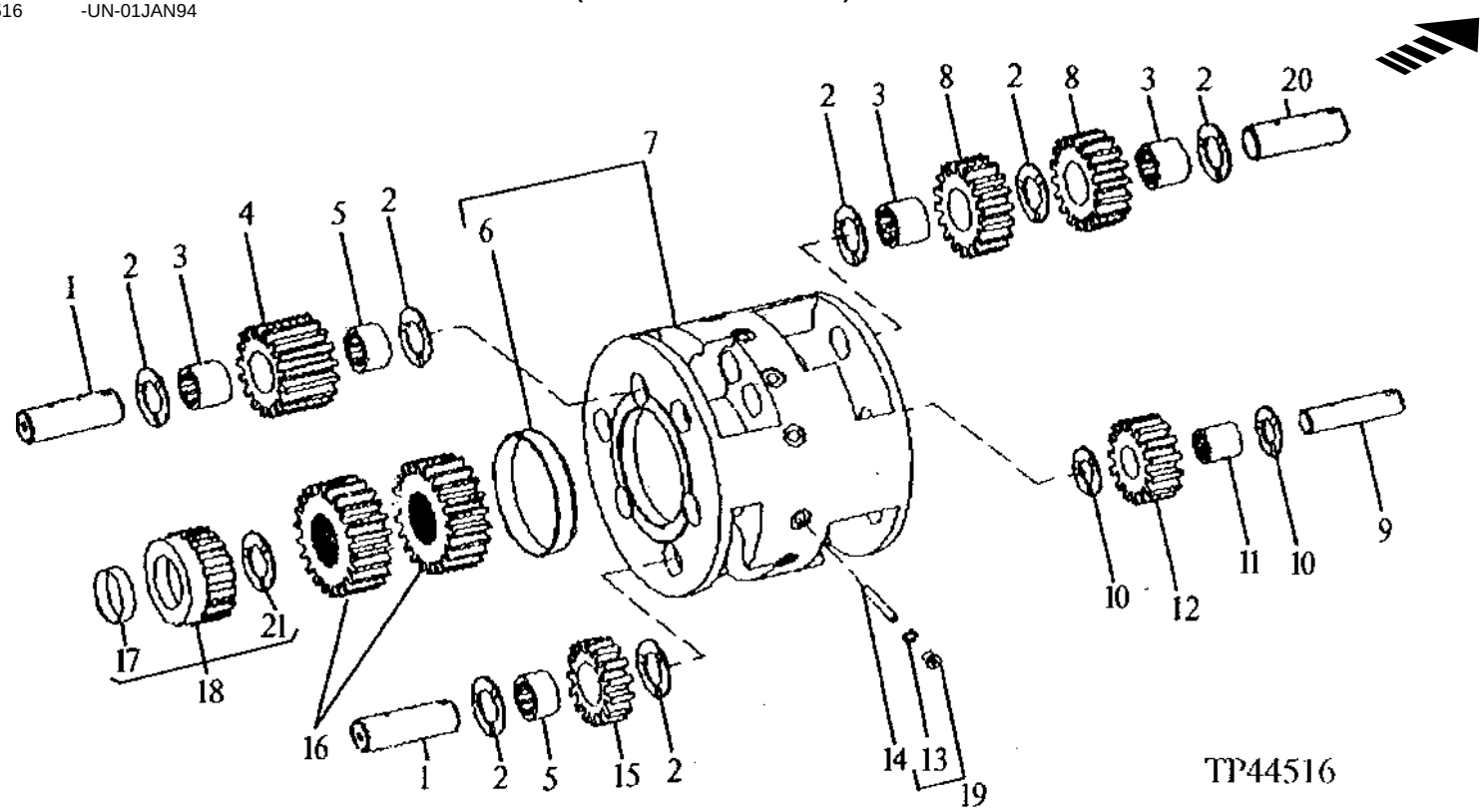

KEY	PART NO.	PART NAME	QTY	SERIAL NO.	REMARKS
1	AT114381	SHAFT	6		(WITH PLUGS)
2	T113622	THRUST WASHER	21		
3	JD9837	NEEDLE BEARING	9		
4	T113615	PLANET PINION	3		(17 TEETH)
5	JD9839	NEEDLE BEARING	6		
6	T126856	BUSHING	1		
7	AT135418	PLANET PINION CARRIER	1		(MARKED T126839)
8	T113614	PLANET PINION	6		(18 TEETH)
9	AT114380	SHAFT	3		
10	T113623	THRUST WASHER	6		
11	JD9955	BEARING CONE	3		
12	T113613	PLANET PINION	3		(15 TEETH)
13	T165535	O-RING	12		
14	34H106	SPRING PIN	12		1/4" X 1-5/8"
15	T113616	PLANET PINION	3		(15 TEETH)
16	T113619	SUN GEAR	2		(22 TEETH)
17	R45205	BUSHING	1		
18	AT132991	GEAR	1		(17 TEETH) (MARKED T113620)
19	AT184869	PLUG	12		
20	AT132943	SHAFT	3		(WITH PLUGS)
21	R71574	THRUST WASHER	1		40 X 54 X 1.570 MM (1.575" X 2.126" X 0.062")

TRANSMISSION PLANETARY ASSEMBLY
(SERIAL NO. -872328)

TP23518 -UN-29SEP94

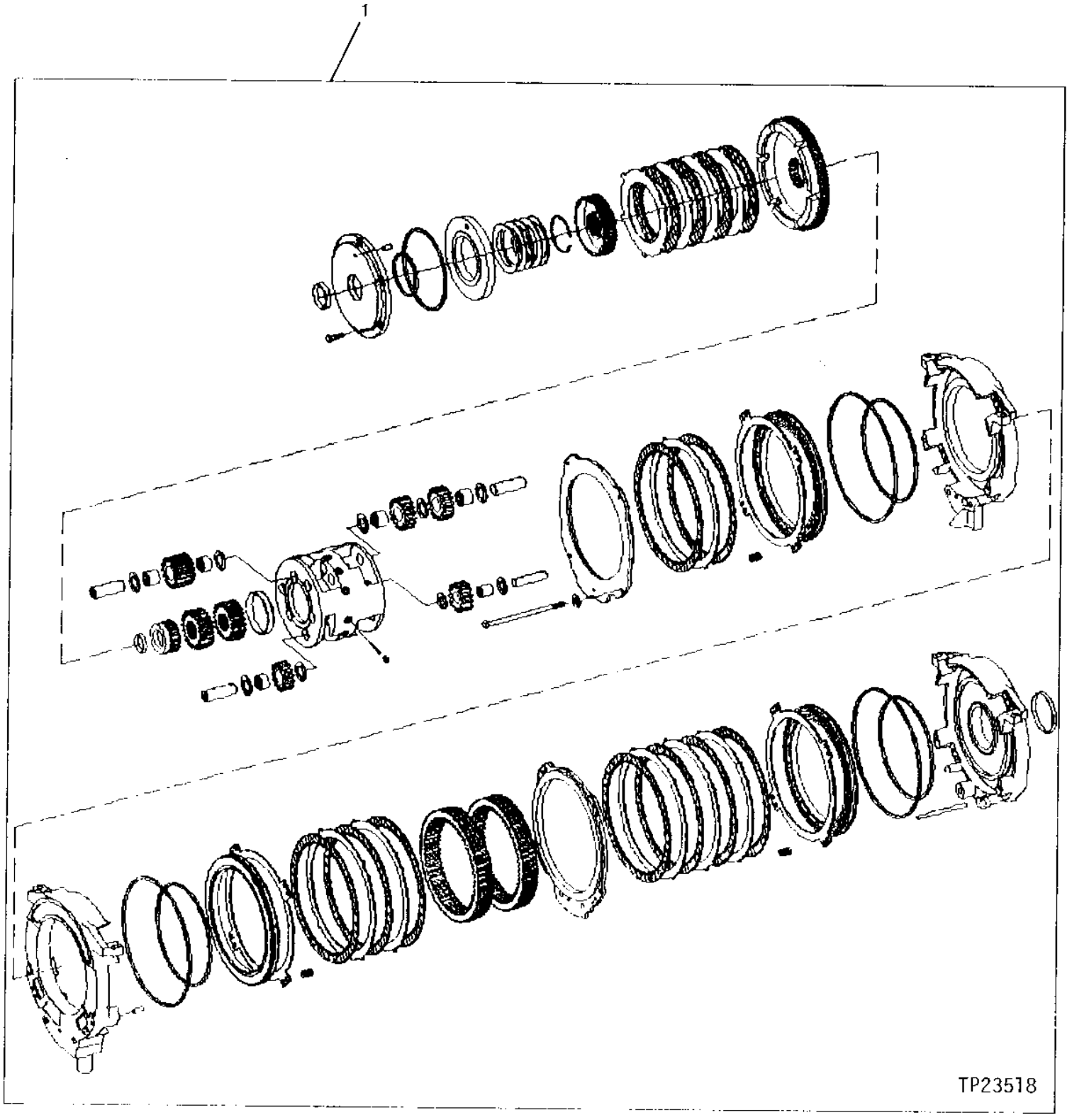

TRANSMISSION PLANETARY ASSEMBLY
(SERIAL NO. -872328)

KEY	PART NO.	PART NAME	QTY	SERIAL NO.	REMARKS
1	AT162765	TRANSMISSION	1		

TRANSMISSION INPUT CLUTCH
(SERIAL NO. -872328)

TP23458 -UN-29SEP94

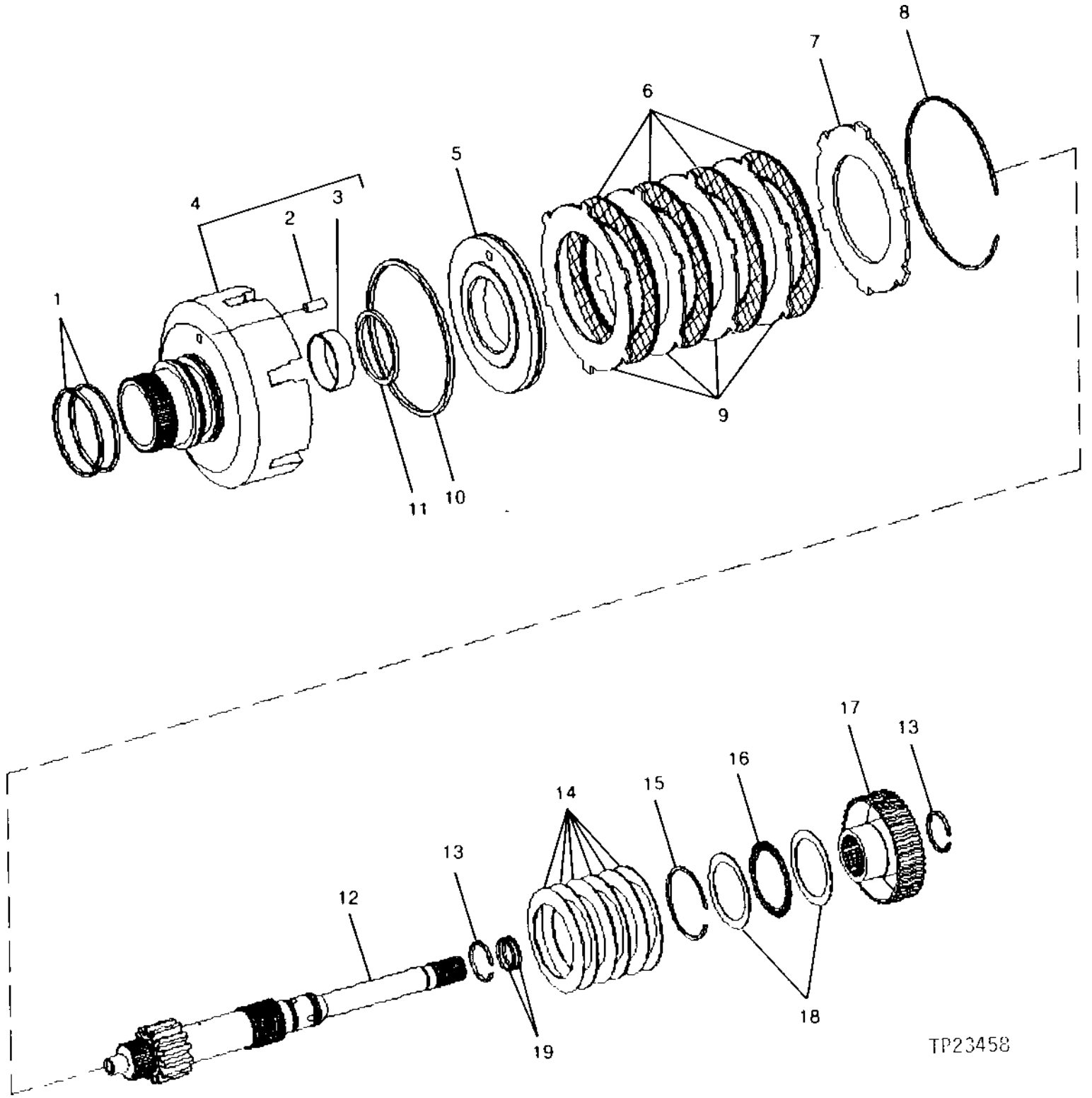

TRANSMISSION INPUT CLUTCH
(SERIAL NO. -872328)

KEY	PART NO.	PART NAME	QTY	SERIAL NO.	REMARKS
1	R76514	RING	2		
2	R44742	DOWEL PIN	1		
3	R50222	BUSHING	1		
4	AT114389	DRUM	1		(MARKED T113482)
5	T74666	PISTON	1		
6	AR94516	DISK, WITH INNER SPLINE	4		
7	R57621	CLUTCH PLATE	1		
8	T141680	SNAP RING	1		
9	R80813	CLUTCH PLATE	4		
10	R41166	SEAL	1		
11	R33246	SEAL	1		
12	T126969	SHAFT	1		(14 TEETH)
13	R33325	SNAP RING	2		
14	R67840	DISK SPRING	6		
15	R33247	SNAP RING	1		
16	JD9886	THRUST BEARING	1		
17	T126944	HUB	1		
18	JD9894	BEARING RACE	2		
19	R26753	RING	2		

TRANSMISSION TRANSFER CASE DRIVE GEAR ASSEMBLY
(WITH MECHANICAL FRONT WHEEL DRIVE)
(SERIAL NO. -872328)

TP15406 -UN-01JAN94

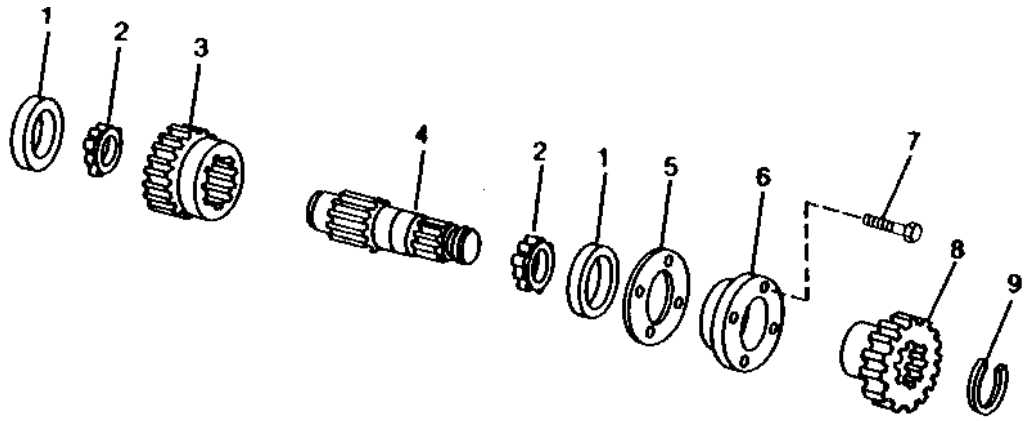

TP15406

KEY	PART NO.	PART NAME	QTY	SERIAL NO.	REMARKS
1	JD9113	BEARING CUP	2		
2	JD9048	BEARING CONE	2		
3	T113678	GEAR	1		(29 TEETH)
4	T80050	SHAFT	1		
5	.....	SHIM	AR		(A) 0.08MM (.003") (T80052 NO LONGER AVAILABLE)
	.....	SHIM	AR		(A) 0.13MM (.005") (T80053 NO LONGER AVAILABLE)
	.....	SHIM	AR		(A) 0.10MM (.010") (T80054 NO LONGER AVAILABLE)
6	T80055	BEARING HOUSING W/O BEARING	1		
7	19M7288	CAP SCREW	4		M8 X 30
8	T82183	GEAR	1		(24 TEETH)
9	T80057	SNAP RING	1		
..	AT146259	SHIM	1		INCLUDES ALL (A) PARTS

TRANSFER CASE OUTPUT SHAFT ASSEMBLY
(MECHANICAL FRONT WHEEL DRIVE)
(SERIAL NO. -872328)

TP42863 -UN-01JAN94

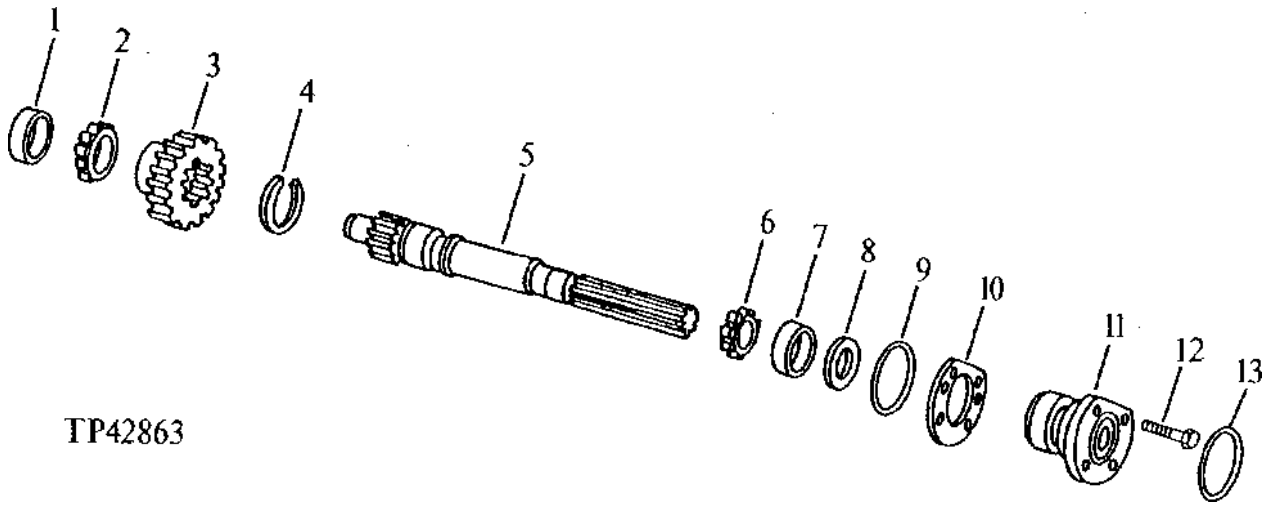

KEY	PART NO.	PART NAME	QTY	SERIAL NO.	REMARKS
1	JD8251	BEARING CUP	1		
2	JD8929	BEARING CONE	1		
3	T80033	GEAR	1		(24 TEETH)
4	F2197R	SNAP RING	1		
5	T145298	SHAFT	1		
6	JD8968	BEARING CONE	1		
7	JD7424	BEARING CUP	1		
8	AT157354	SEAL	1		
9	M4237T	O-RING	1		
10	.....	SHIM	AR		(K) 0.08MM (.003")
	.....	SHIM	AR		(K) 0.13MM (.005")
	.....	SHIM	AR		(K) 0.25MM (.010")
11	T145299	BEARING HOUSING W/O BEARING	1		
12	19M7662	CAP SCREW	4		M10 X 30
13	AT159830	SEAL	1		
..	AT146257	SHIM	1		INCLUDES ALL (K) PARTS

DRIVEN CLUTCH ASSEMBLY
(MECHANICAL FRONT WHEEL DRIVE)
(SERIAL NO. -872328)

TP44182 -UN-01JAN94

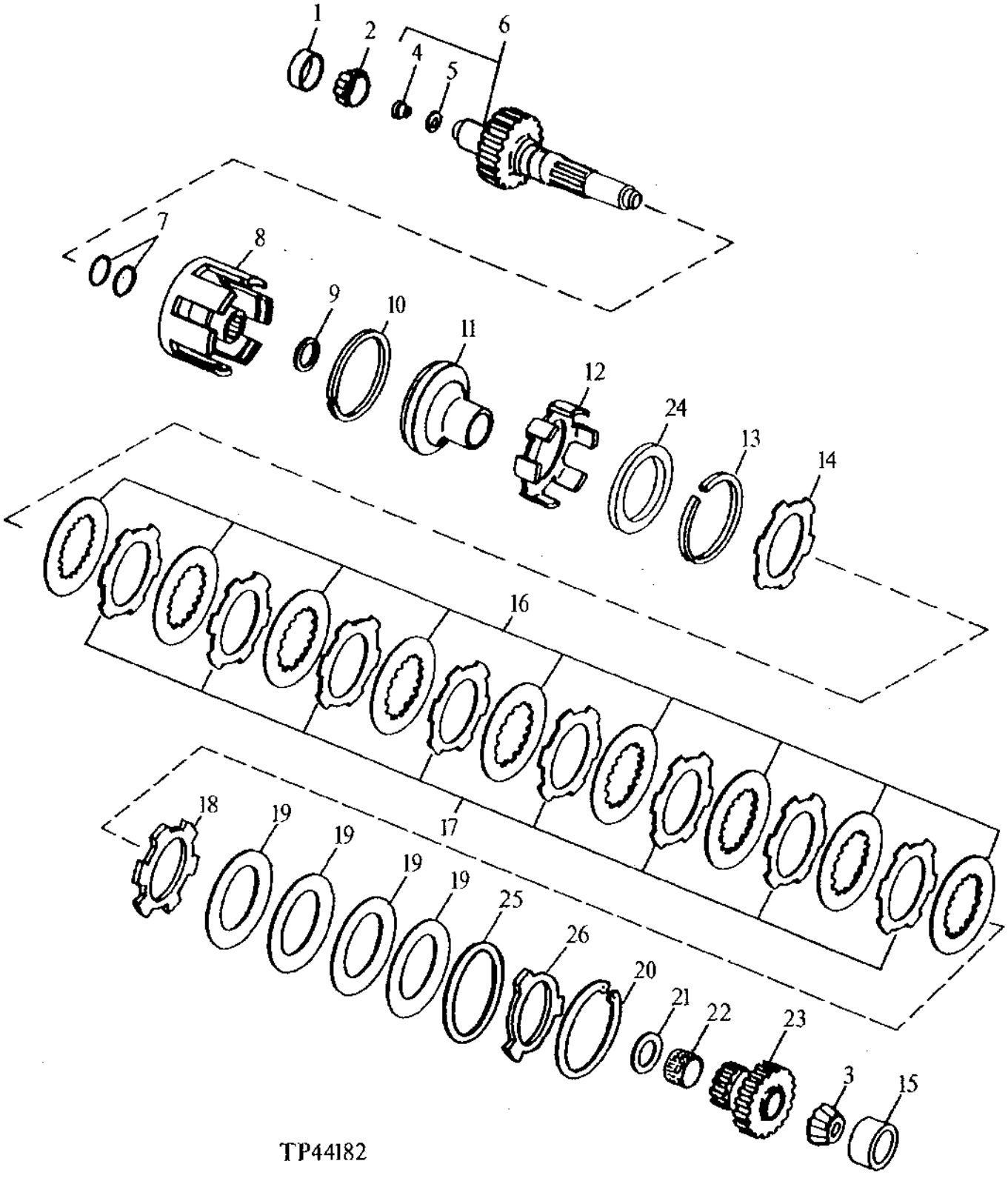

DRIVE CLUTCH ASSEMBLY
(MECHANICAL FRONT WHEEL DRIVE)
(SERIAL NO. -872328)

KEY	PART NO.	PART NAME	QTY	SERIAL NO.	REMARKS
1	JD8251	BEARING CUP	1		
2	JD8929	BEARING CONE	1		
3	JD8979	BEARING	1		
4	R39279	RETAINER	1		
5	R34140	RING	1		
6	AT80324	GEAR	1		(MARKED T80029) (23 TEETH)
7	H35244	RING	2		
8	L39840	DRUM	1	-795168	(ALSO ORDER T148812 AND T148813)
	L39840	DRUM	1	795169-	
9	R39304	WASHER	1		
10	L34060	PISTON RING	1		
11	L34059	PISTON	1		
12	L34061	DRUM	1		
13	L34067	SNAP RING	1		
14	L37025	PLATE	1		
15	JD8267	BEARING CUP	1		
16	L34064	DISK, WITH INNER SPLINE	10		
17	L34062	DISK, WITH OUTER SPLINE	9		
18	L38258	CLUTCH PLATE	1		
19	L34068	DISK SPRING	4		
20	40M7122	SNAP RING	1		
21	T76712	THRUST WASHER	1		
22	T80035	BUSHING	1		
23	T82182	GEAR	1		(23 TEETH)
24	T122887	WASHER	1		
25	T148812	RING	1	795169-	
26	T148813	PLATE	1	795169-	

REDUCTION GEAR SHAFT
(SERIAL NO. -872328)

TP27866 -UN-29SEP94

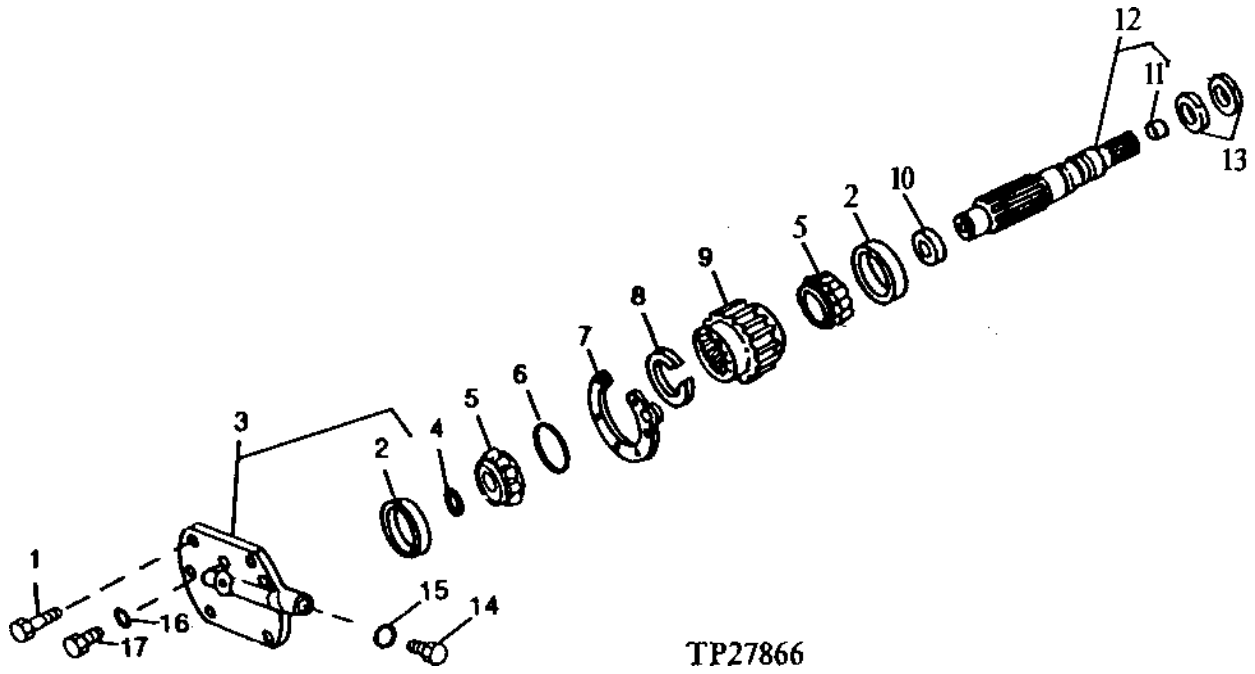

KEY	PART NO.	PART NAME	QTY	SERIAL NO.	REMARKS
1	19M7662	CAP SCREW	6		M10 X 30
2	JD7417	BEARING CUP	2		
3	AT117565	BEARING HOUSING W/O BEARING	1		(MARKED T120185)
4	R21722	O-RING	1		20.218 X 3.531 MM (0.796" X 0.139")
5	JD8158	BEARING CONE	2		
6	E52687	O-RING	1		139.294 X 3.531 MM (5-31/64" X 0.139")
7	.....	SHIM	AR		(A) 0.13MM (.005") (T68214 NO LONGER AVAILABLE)
	.....	SHIM	AR		(A) 0.25MM (.010") (T68215 NO LONGER AVAILABLE)
	.....	SHIM	AR		(A) 0.75MM (.030") (T68216 NO LONGER AVAILABLE)
8	U44147	SNAP RING	1		
9	T113673	GEAR	1		(29 TEETH) (WITHOUT MFWD)
	T113676	GEAR	1		(28 TEETH) (WITH MFWD)
10	R26753	RING	1		
11	AR101654	SEAL	1		
12	AT114398	SHAFT	1		(MARKED T113627)
13	R43659	RING	2		
14	R39112	FITTING	1		
15	R26375	O-RING	1		16.358 X 2.210 MM (0.644" X 0.087")
16	R26287	O-RING	1		7.645 X 1.626 MM (0.301" X 0.064")
17	R31631	DRAIN PLUG	1		
..	AT146255	SHIM	1		INCLUDES ALL (A) PARTS

OUTPUT SHAFT ASSEMBLY
(SERIAL NO. -872328)

TP42212 -UN-01JAN94

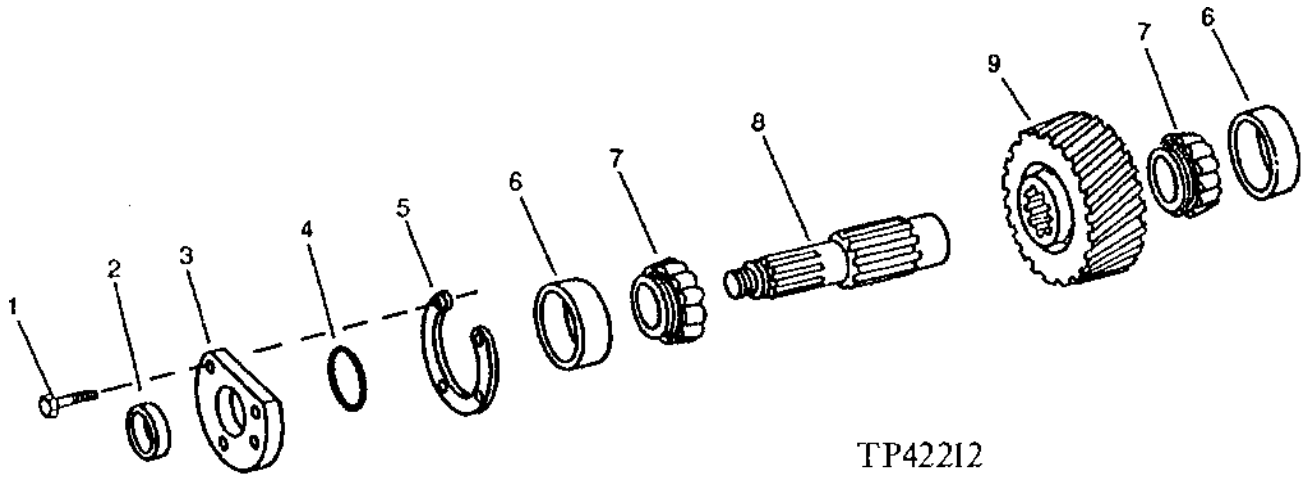

KEY	PART NO.	PART NAME	QTY	SERIAL NO.	REMARKS
1	19M7662	CAP SCREW	4		M10 X 30
2	AR67942	SEAL	1		
3	T80049	BEARING HOUSING W/O BEARING	1		
4	U10776	O-RING	1		
5	.....	SHIM	AR		(A) 0.05MM (.002") (T80046 NO LONGER AVAILABLE)
	.....	SHIM	AR		(A) 0.25MM (.010") (T80047 NO LONGER AVAILABLE)
	.....	SHIM	AR		(A) 0.75MM (.030") (T80048 NO LONGER AVAILABLE)
6	JD9113	BEARING CUP	2		
7	JD9048	BEARING CONE	2		
8	T157875	SHAFT	1		(37 TEETH) (SUB FOR T68208)
9	T113677	GEAR	1		(25 TEETH) (WITH MFWD)
	T113674	GEAR	1		(24 TEETH) (WITHOUT MFWD)
..	AT146258	SHIM	1		INCLUDES ALL (A) PARTS

B-1 BRAKE
(SERIAL NO. -872328)

TP42842 -UN-01JAN94

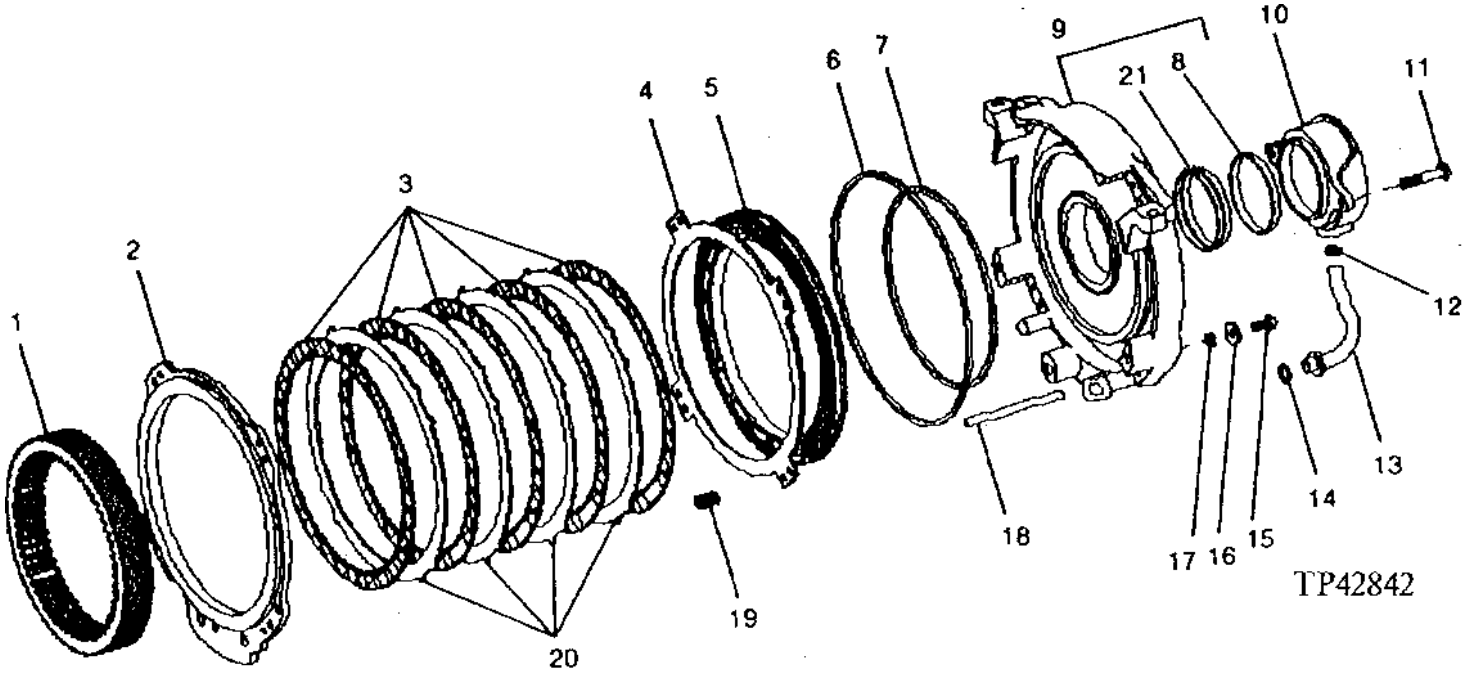

KEY	PART NO.	PART NAME	QTY	SERIAL NO.	REMARKS
1	T113617	RING GEAR	1		(59 TEETH)
2	T113554	PLATE	1		
3	RE19890	DISK, WITH INNER SPLINE	5		
4	R81500	PLATE	1		
5	R81494	PISTON	1		
6	R44817	SEAL	1		
7	R44816	SEAL	1		
8	T126841	BUSHING	1		
9	AT162763	HOUSING	1		(MARKED T113553)
10	T126838	RAIL	1		
11	19H3239	CAP SCREW	2		3/8" X 1-1/4"
12	R375R	O-RING	1		
13	AT114386	TUBE	1		
14	R375R	O-RING	1		
15	19H2127	CAP SCREW	1		5/16" X 7/8"
16	24H1621	WASHER	1		11/32" X 1" X 0.220"
17	R48808	WASHER	1		
18	T113741	PIN	4		
19	R51719	SPRING	8		
20	R81499	PLATE	4		
21	R76308	THRUST WASHER	1		3.820" X 4.450" X 1/16"

B-2 BRAKE
(SERIAL NO. -872328)

TP42613 -UN-21SEP94

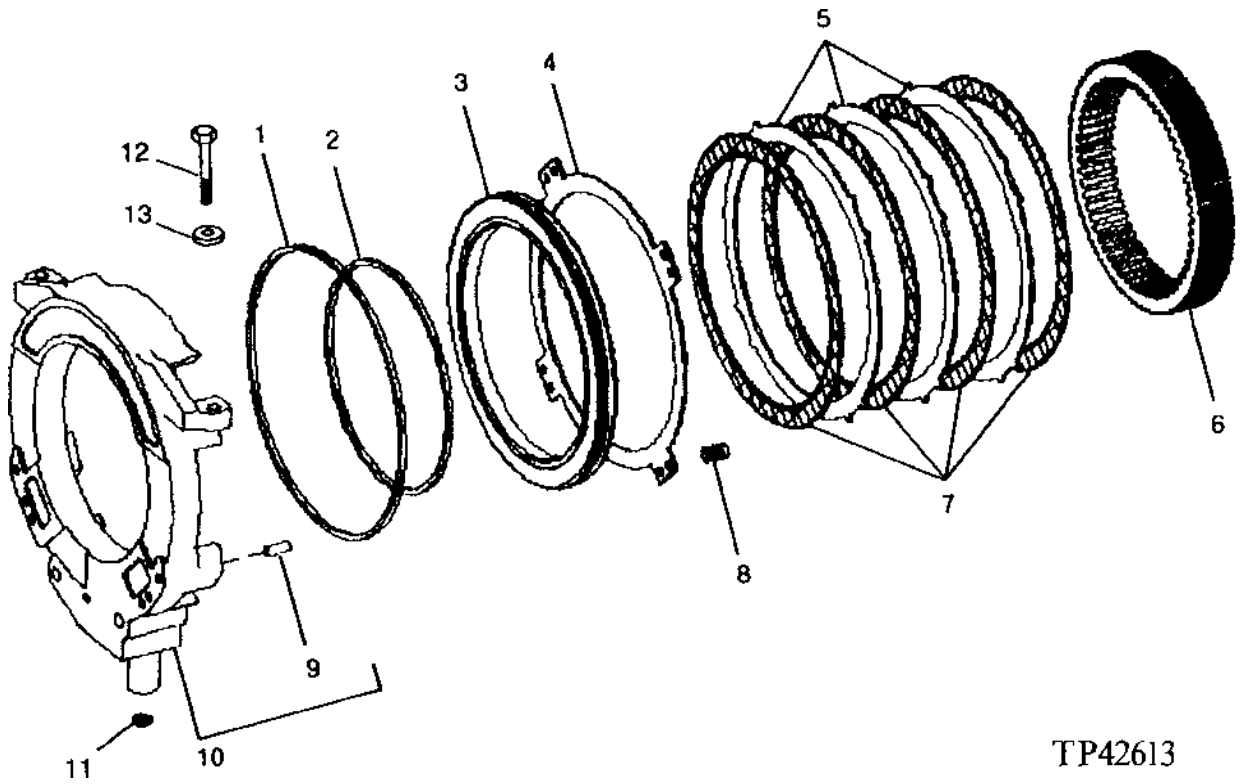

KEY	PART NO.	PART NAME	QTY	SERIAL NO.	REMARKS
1	R44817	SEAL	1		
2	R44816	SEAL	1		
3	R81494	PISTON	1		
4	R81500	PLATE	1		
5	R81499	PLATE	3		
6	T113617	RING GEAR	1		(59-TEETH)
7	RE19890	DISK, WITH INNER SPLINE	4		
8	R51719	SPRING	8		
9	R26198	DOWEL PIN	4		
10	AT162764	HOUSING	1		(MARKED T113555)
11	R56464	O-RING	1		
12	19H2719	CAP SCREW	4		7/16" X 1-7/8"
13	24M7234	WASHER	4		13 X 25 X 3 MM

B-3 BRAKE AND PLANETARY HUB
(SERIAL NO. -872328)

TP42342 -UN-01JAN94

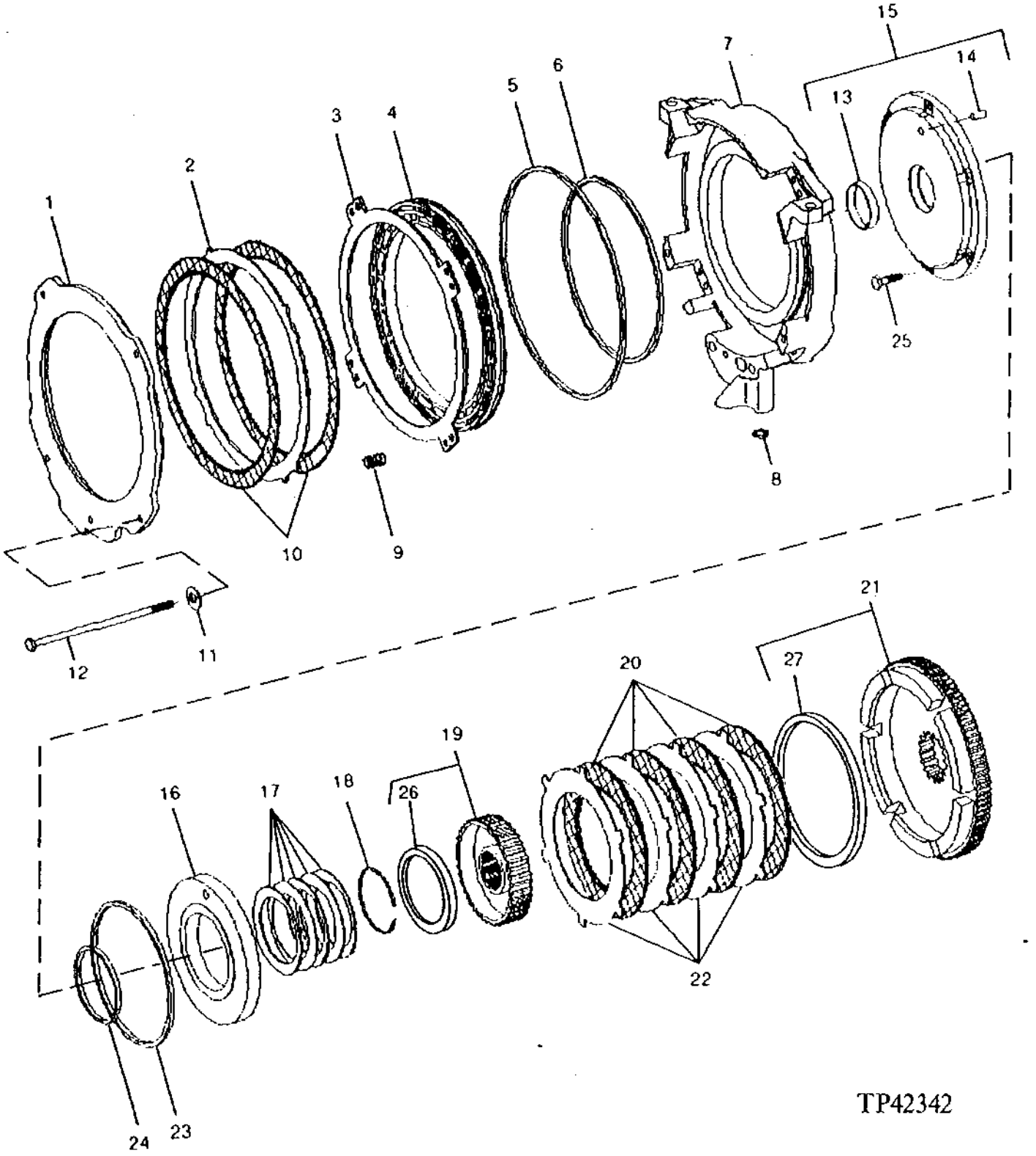

B-3 BRAKE AND PLANETARY HUB
(SERIAL NO. -872328)

KEY	PART NO.	PART NAME	QTY	SERIAL NO.	REMARKS
1	T113626	PLATE	1		
2	R81499	PLATE	1		
3	R81500	PLATE	1		
4	R81494	PISTON	1		
5	R44817	SEAL	1		
6	R44816	SEAL	1		
7	T113556	HOUSING	1		
8	R56464	O-RING	3		
9	R74852	SPRING	8		
10	RE19890	DISK, WITH INNER SPLINE	2		
11	24M7232	WASHER	5		8.700 X 17 X 2 MM
12	19H3514	CAP SCREW	5		5/16" X 7-7/8"
13	R51329	BUSHING	1		
14	R1612R	DOWEL PIN	1		
15	AT114402	HOUSING	1		(MARKED T113558) (WITH WASHER)
16	T120187	PISTON	1		
17	R70027	DISK SPRING	5		
18	R43383	SNAP RING	1		
19	AT114385	HUB	1		
20	RE27871	BRAKE DISK	1		
21	AT135420	DRUM	1		
22	R77663	CLUTCH PLATE	4		
23	R43380	WASHER	1		
24	R43381	WASHER	1		
25	R112873	CAP SCREW	6		
26	R76674	WASHER	1		2.810" X 3.350" X 1/16"
27	R76308	THRUST WASHER	1		3.820" X 4.450" X 1/16"

TRANSMISSION INPUT SHAFT
POWER SHIFT
(SERIAL NO. 872329-)

TP58038 -UN-18MAY99

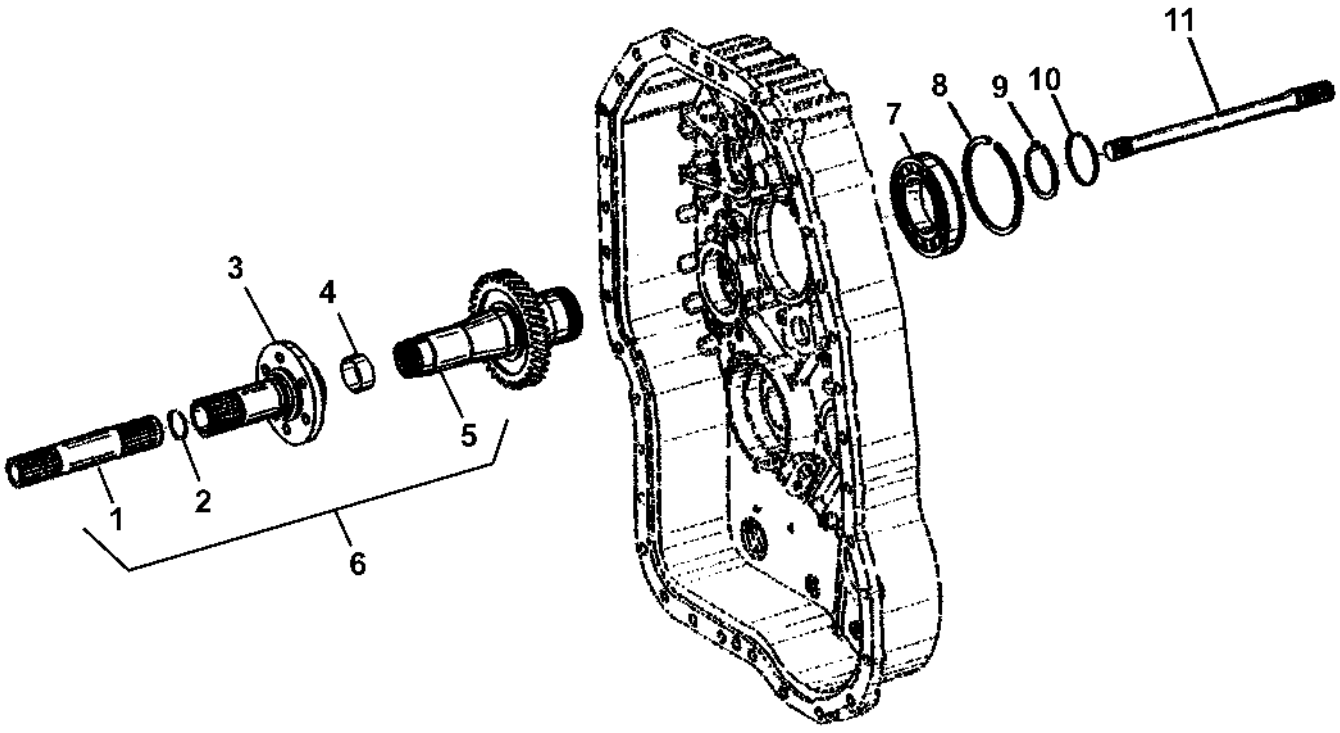

TP58038

TRANSMISSION INPUT SHAFT
POWER SHIFT
(SERIAL NO. 872329-)

KEY	PART NO.	PART NAME	QTY	SERIAL NO.	REMARKS
1	.....	SHAFT	1		
2	T158720	SNAP RING	1		
3	T164654	SHAFT	1		
4	T164655	BUSHING	1		
5	.....	SHAFT	1		
6	AT187711	SHAFT	1		
7	AT179314	BALL BEARING	1		
8	T158717	SNAP RING	1		
9	T158718	SNAP RING	1		
10	T158740	PACKING	1		
11	T155259	SHAFT	1		

FIRST GEAR CLUTCH ASSEMBLY
POWER SHIFT
(SERIAL NO. 872329-)

TP57927 -UN-16SEP98

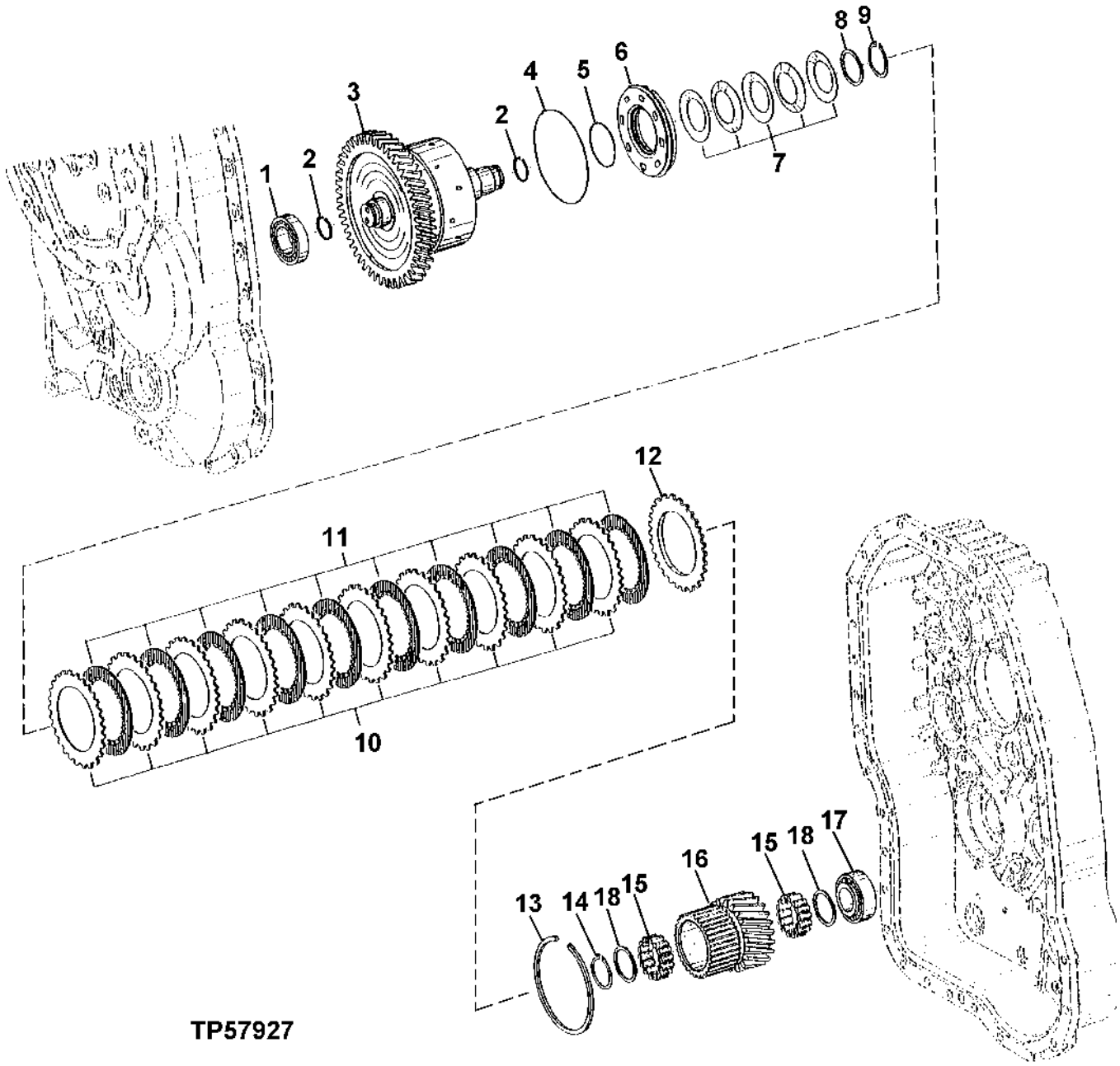

FIRST GEAR CLUTCH ASSEMBLY
POWER SHIFT
(SERIAL NO. 872329-)

KEY	PART NO.	PART NAME	QTY	SERIAL NO.	REMARKS
1	AT179472	ROLLER BEARING	1		
2	T158742	RING	2		
3	AT184048	DRUM	1		DISK CARRIER
4	.....	RING	1		(SUB AT193704) (T158739 NO LONGER AVAILABLE)
5	.....	RING	1		(SUB AT193704) (T158743 NO LONGER AVAILABLE)
6	AT193704	PISTON	1		(SUB FOR T158789)
7	T158775	DISK SPRING	5		
8	T164712	SHIM	1		2 MM
9	40M7058	SNAP RING	1		
10	T158801	CLUTCH PLATE	12		
11	T164626	DISK	12		
12	T161147	PLATE	1		
13	T161183	SNAP RING	1		4 MM
	T158778	SNAP RING	1		3.5 MM
	T159568	SNAP RING	1		3 MM
	T159569	SNAP RING	1		2.5 MM
	T159570	SNAP RING	1		2 MM
14	40M7058	SNAP RING	1		
15	AT185793	ROLLER	2		
16	T164640	GEAR	1		
17	AT184052	ROLLER	1		
18	T166062	THRUST WASHER	2		

SECOND GEAR CLUTCH ASSEMBLY
POWER SHIFT
(SERIAL NO. 872329-)

TP57928 -UN-16SEP98

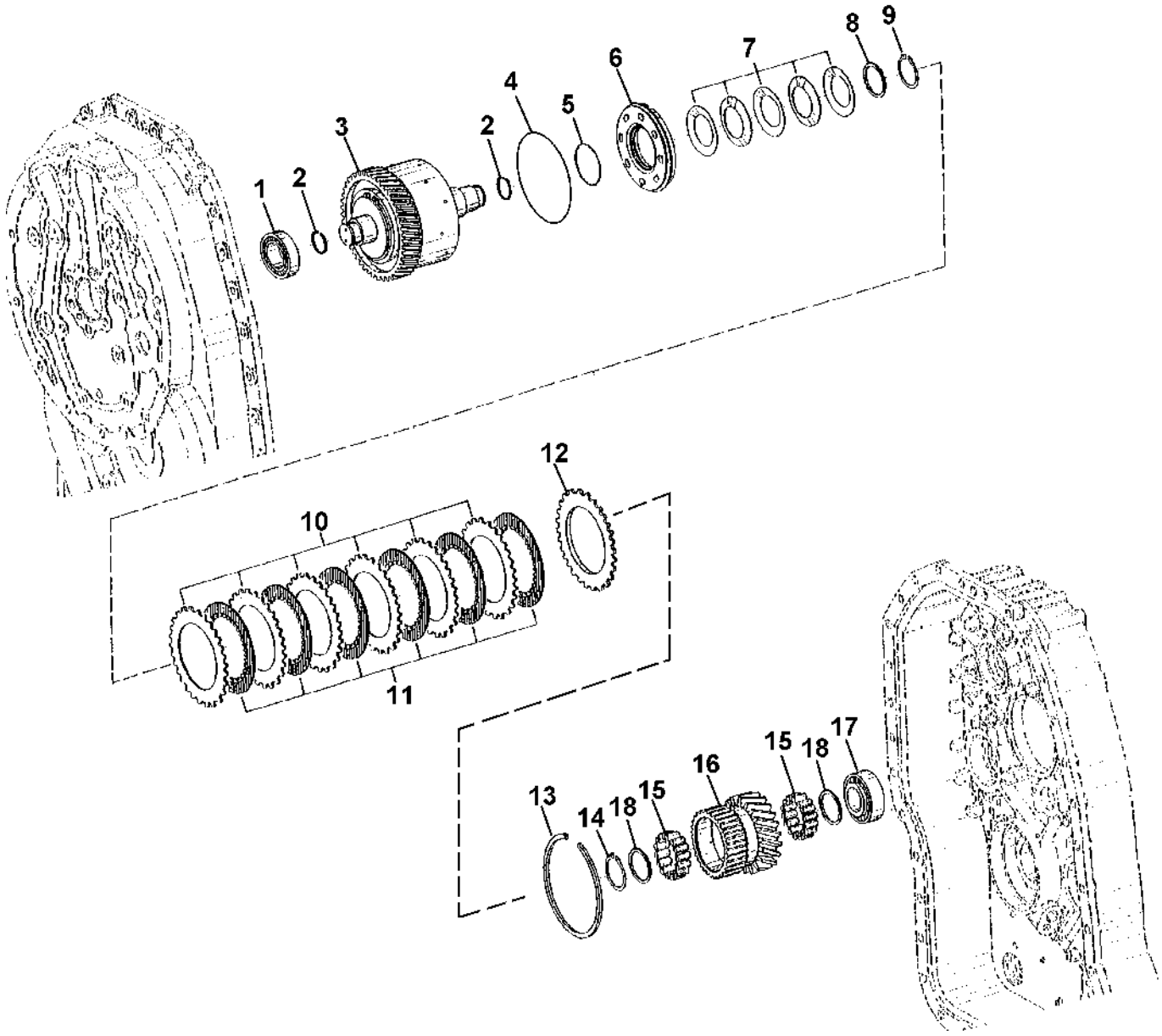

TP57928

SECOND GEAR CLUTCH ASSEMBLY
POWER SHIFT
(SERIAL NO. 872329-)

KEY	PART NO.	PART NAME	QTY	SERIAL NO.	REMARKS
1	AT179472	ROLLER BEARING	1		
2	T158742	RING	2		
3	AT184053	DRUM	1		DISK CARRIER
4	.....	RING	1		(SUB AT193704) (T158739 NO LONGER AVAILABLE)
5	.....	RING	1		(SUB AT193704) (T158743 NO LONGER AVAILABLE)
6	AT193704	PISTON	1		(SUB FOR T158789)
7	T158775	DISK SPRING	5		
8	T164712	SHIM	1		
9	40M7058	SNAP RING	1		
10	T158801	CLUTCH PLATE	8		
11	T164626	DISK	8		
12	T161147	PLATE	1		
13	T161183	SNAP RING	1		4 MM
	T158778	SNAP RING	1		3.5 MM
	T159568	SNAP RING	1		3 MM
	T159569	SNAP RING	1		2.5 MM
	T159570	SNAP RING	1		2 MM
14	40M7058	SNAP RING	1		
15	AT185793	ROLLER	2		
16	T164643	GEAR	1		
17	AT184052	ROLLER BEARING	1		
18	T158756	WASHER	2		

THIRD GEAR CLUTCH ASSEMBLY
POWER SHIFT
(SERIAL NO. 872329-)

TP57929 -UN-18SEP98

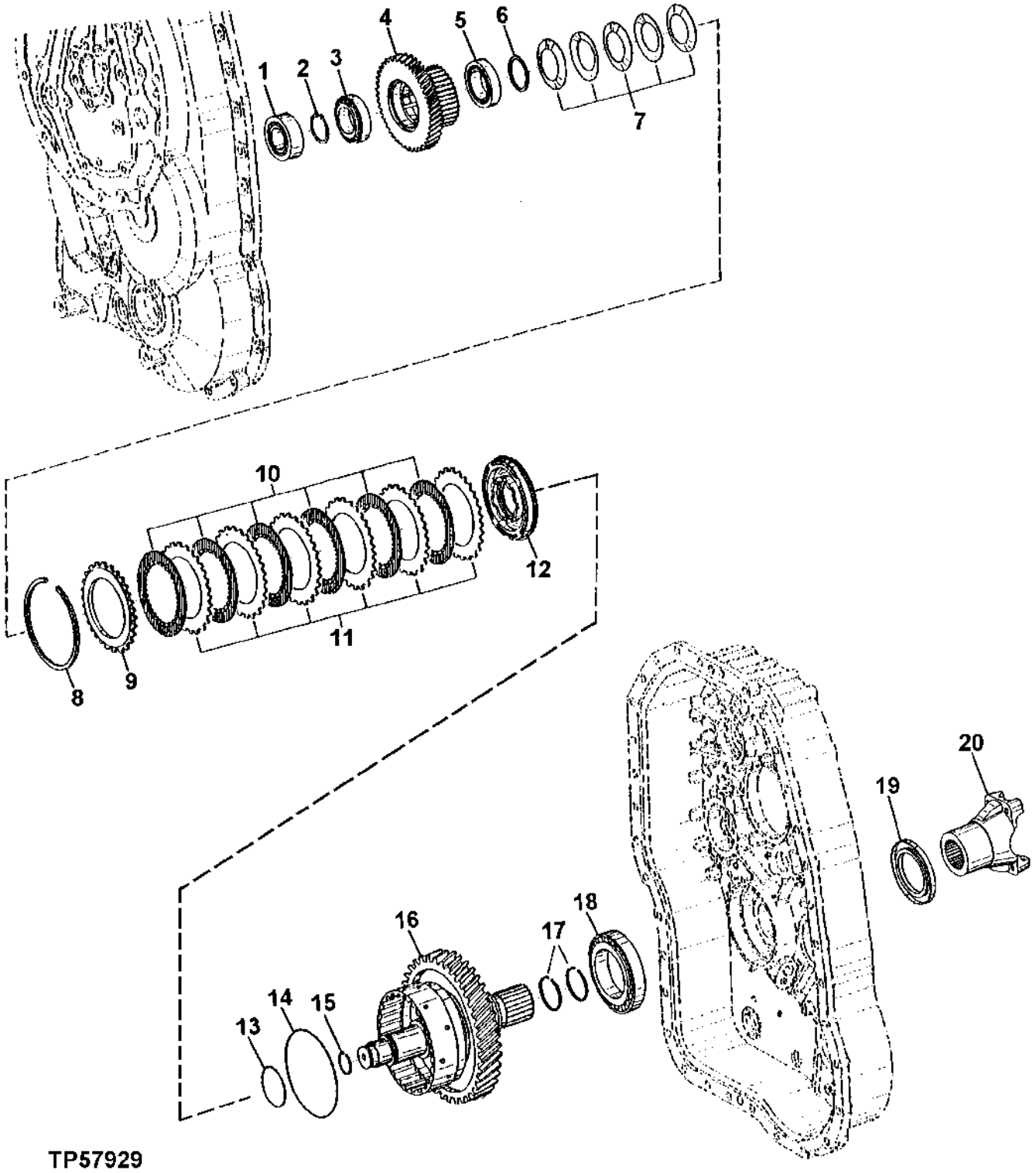

THIRD GEAR CLUTCH ASSEMBLY
POWER SHIFT
(SERIAL NO. 872329-)

KEY	PART NO.	PART NAME	QTY	SERIAL NO.	REMARKS
1	AT184052	ROLLER BEARING	1		
2	T161186	SNAP RING	1		3.2 MM
	T161187	SNAP RING	1		3.1 MM
	T161188	SNAP RING	1		3 MM
	T161189	SNAP RING	1		2.9 MM
	T161190	SNAP RING	1		2.8 MM
	T161191	SNAP RING	1		2.7 MM
	T161192	SNAP RING	1		2.6 MM
	T161193	SNAP RING	1		2.5 MM
	T164628	SNAP RING	1		2.4 MM, (SUB FOR T164627)
	T164628	SNAP RING	1		2.3 MM
	T164629	SNAP RING	1		2.2 MM
	T164630	SNAP RING	1		2.1 MM
3	AT179470	ROLLER BEARING	1		
4	T166065	GEAR	1		
5	AT179469	ROLLER BEARING	1		
6	T158756	WASHER	1		
7	T158775	DISK SPRING	5		
8	T161183	SNAP RING	1		4 MM
	T158778	SNAP RING	1		3.5 MM
	T159568	SNAP RING	1		3 MM
	T159569	SNAP RING	1		2.5 MM
	T159570	SNAP RING	1		2 MM
9	T161147	PLATE	1		2 MM
10	T164626	DISK	8		
11	T158801	CLUTCH PLATE	8		
12	AT193704	PISTON	1		(SUB FOR T158789)
13	.....	RING	1		(SUB AT193704) (T158743 NO LONGER AVAILABLE)
14	.....	RING	1		(SUB AT193704) (T158739 NO LONGER AVAILABLE)
15	T158742	RING	1		
16	AT184055	DRUM	1		DISK CARRIER
17	T164646	O-RING	2		
18	AT184056	ROLLER BEARING	1		
19	AT179481	SEAL	1		
20	AT181746	UNIVERSAL JOINT YOKE	1		

FOURTH GEAR CLUTCH ASSEMBLY
POWER SHIFT
(SERIAL NO. 872329-)

TP57932 -UN-16SEP98

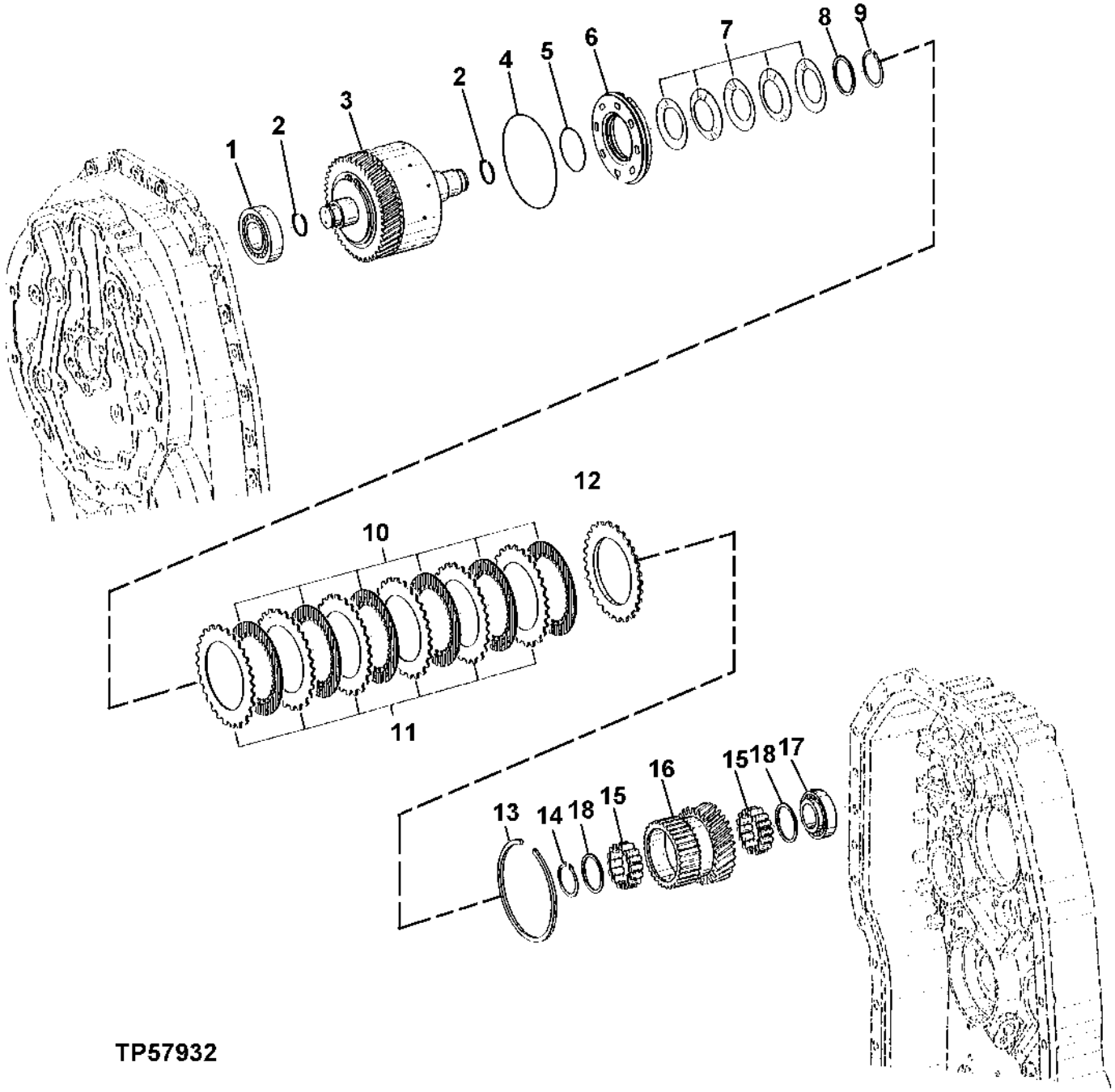

FOURTH GEAR CLUTCH ASSEMBLY
POWER SHIFT
(SERIAL NO. 872329-)

KEY	PART NO.	PART NAME	QTY	SERIAL NO.	REMARKS
1	AT184042	BEARING	1		
2	T158742	RING	2		
3	AT184057	DRUM	1		DISK CARRIER
4	.....	RING	1		(SUB AT193704) (T158739 NO LONGER AVAILABLE)
5	.....	RING	1		(SUB AT193704) (T158743 NO LONGER AVAILABLE)
6	AT193704	PISTON	1		(SUB FOR T158789)
7	T158775	DISK SPRING	5		
8	T164712	SHIM	1		
9	40M7058	SNAP RING	1		2 MM
10	T158801	CLUTCH PLATE	6		
11	T164626	DISK	6		
12	T161147	PLATE	1		
13	T161183	SNAP RING	1		4 MM
	T158778	SNAP RING	1		3.5 MM
	T159568	SNAP RING	1		3 MM
	T159569	SNAP RING	1		2.5 MM
	T159570	SNAP RING	1		2 MM
14	40M7058	SNAP RING	1		
15	AT185793	ROLLER	2		
16	T164647	GEAR	1		
17	AT179471	ROLLER BEARING	1		
18	T166062	THRUST WASHER	2		

FORWARD CLUTCH ASSEMBLY
POWER SHIFT
(SERIAL NO. 872329-)

TP57933 -UN-15SEP98

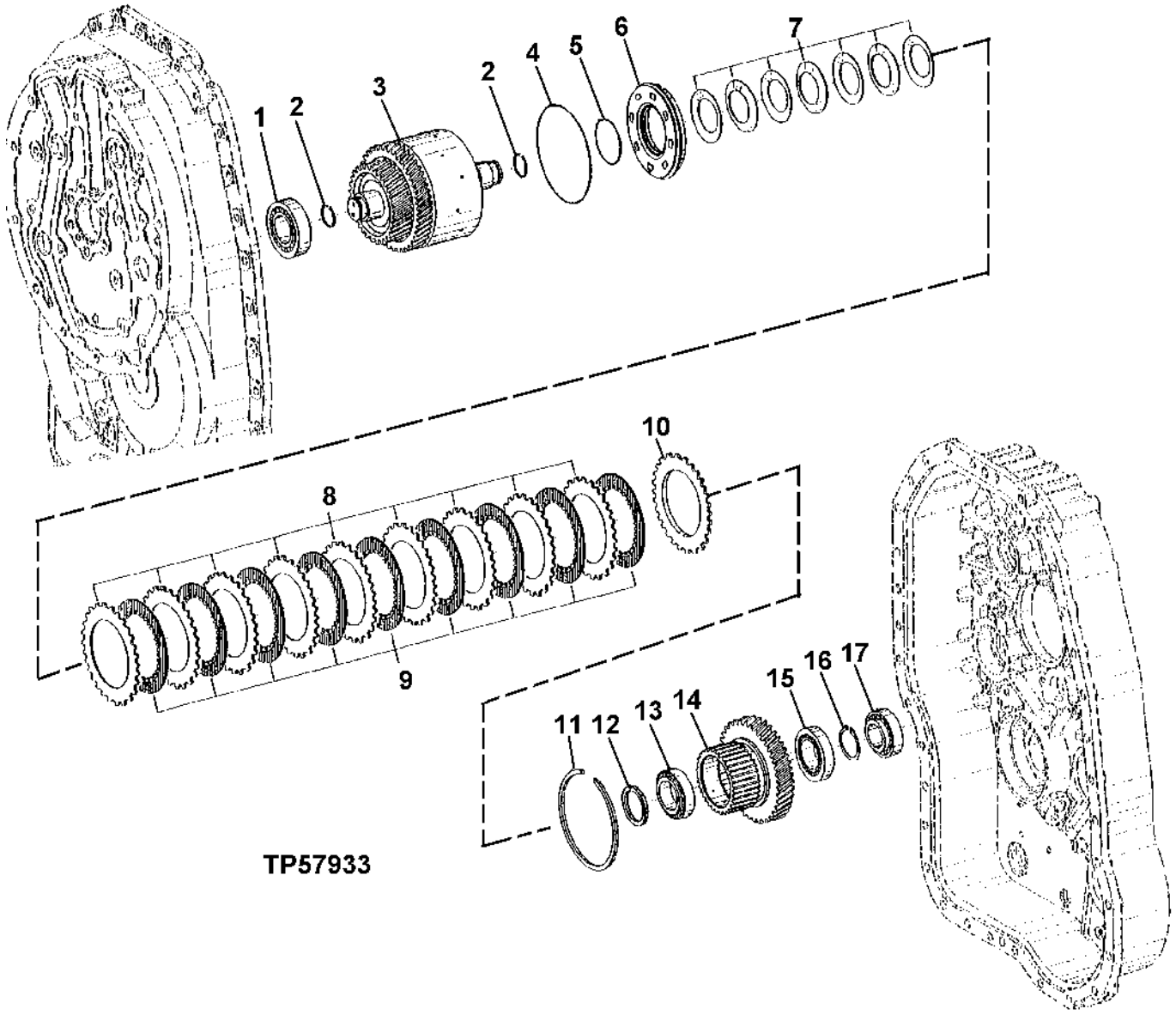

TP57933

FORWARD CLUTCH ASSEMBLY
POWER SHIFT
(SERIAL NO. 872329-)

KEY	PART NO.	PART NAME	QTY	SERIAL NO.	REMARKS
1	AT184042	BEARING	1		
2	T158742	RING	2		
3	AT184043	DRUM	1		DISK CARRIER
4	.....	RING	1		(SUB AT193704) (T158739 NO LONGER AVAILABLE)
5	.....	RING	1		(SUB AT193704) (T158743 NO LONGER AVAILABLE)
6	AT193704	PISTON	1		(SUB FOR T158789)
7	T158775	DISK SPRING	7		
8	T158801	CLUTCH PLATE	11		
9	T164626	DISK	11		
10	T161147	PLATE	1		
11	T161183	SNAP RING	1		4 MM
	T158778	SNAP RING	1		3.5 MM
	T159568	SNAP RING	1		3 MM
	T159569	SNAP RING	1		2.5 MM
	T159570	SNAP RING	1		2 MM
12	T158756	WASHER	1		
13	AT179469	ROLLER BEARING	1		
14	T164711	GEAR	1		
15	AT179470	ROLLER BEARING	1		
16	T161186	SNAP RING	1		3.2 MM
	T161187	SNAP RING	1		3.1 MM
	T161188	SNAP RING	1		3 MM
	T161189	SNAP RING	1		2.9 MM
	T161190	SNAP RING	1		2.8 MM
	T161191	SNAP RING	1		2.7 MM
	T161192	SNAP RING	1		2.6 MM
	T161193	SNAP RING	1		2.5 MM
	T164628	SNAP RING	1		2.4 MM, (SUB FOR T164627)
	T164628	SNAP RING	1		2.3 MM
	T164629	SNAP RING	1		2.2 MM
	T164630	SNAP RING	1		2.1 MM
17	AT179471	ROLLER BEARING	1		

REVERSE CLUTCH ASSEMBLY
POWER SHIFT
(SERIAL NO. 872329-)

TP57934 -UN-15SEP98

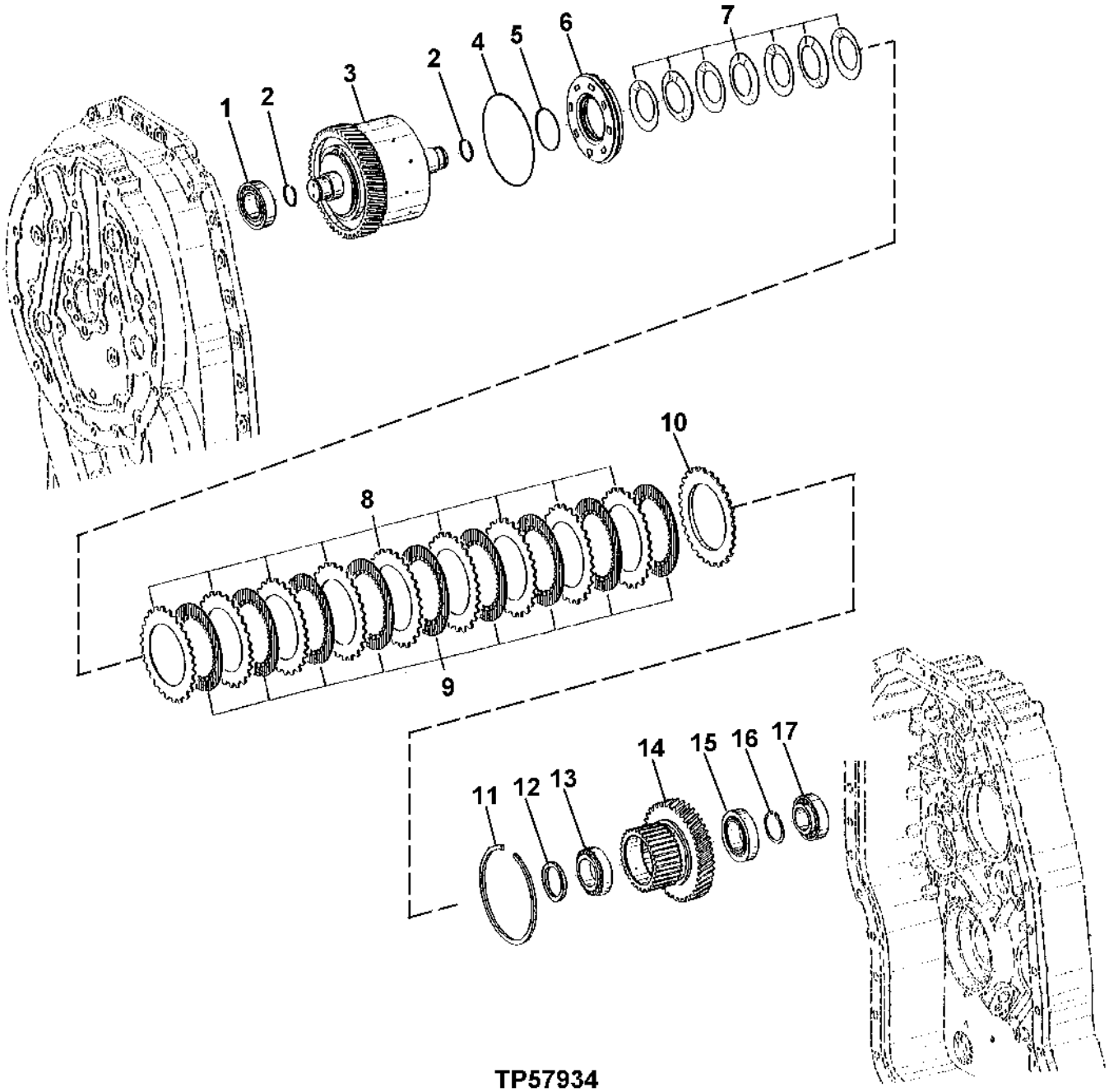

TP57934

REVERSE CLUTCH ASSEMBLY
POWER SHIFT
(SERIAL NO. 872329-)

KEY	PART NO.	PART NAME	QTY	SERIAL NO.	REMARKS
1	AT179472	ROLLER BEARING	1		
2	T158742	RING	2		
3	AT184045	DRUM	1		DISK CARRIER
4	.....	RING	1		(SUB AT193704) (T158739 NO LONGER AVAILABLE)
5	.....	RING	1		(SUB AT193704) (T158743 NO LONGER AVAILABLE)
6	AT193704	PISTON	1		(SUB FOR T158789)
7	T158775	DISK SPRING	7		
8	T158801	CLUTCH PLATE	11		
9	T164626	DISK	11		
10	T161147	PLATE	1		
11	T161183	SNAP RING	1		4 MM
	T158778	SNAP RING	1		3.5 MM
	T159568	SNAP RING	1		3 MM
	T159569	SNAP RING	1		2.5 MM
	T159570	SNAP RING	1		2 MM
12	T158756	WASHER	1		
13	AT179469	ROLLER BEARING	1		
14	T164711	GEAR	1		
15	AT179470	ROLLER BEARING	1		
16	T161186	SNAP RING	1		3.2 MM
	T161187	SNAP RING	1		3.1 MM
	T161188	SNAP RING	1		3 MM
	T161189	SNAP RING	1		2.9 MM
	T161190	SNAP RING	1		2.8 MM
	T161191	SNAP RING	1		2.7 MM
	T161192	SNAP RING	1		2.6 MM
	T161193	SNAP RING	1		2.5 MM
	T164628	SNAP RING	1		2.4 MM, (SUB FOR T164627)
	T164628	SNAP RING	1		2.3 MM
	T164629	SNAP RING	1		2.2 MM
	T164630	SNAP RING	1		2.1 MM
17	AT179471	ROLLER BEARING	1		

TRANSMISSION OUTPUT SHAFT
POWER SHIFT
MFWD CLUTCH ASSEMBLY
(SERIAL NO. 872329-)

T140971 -UN-06APR01

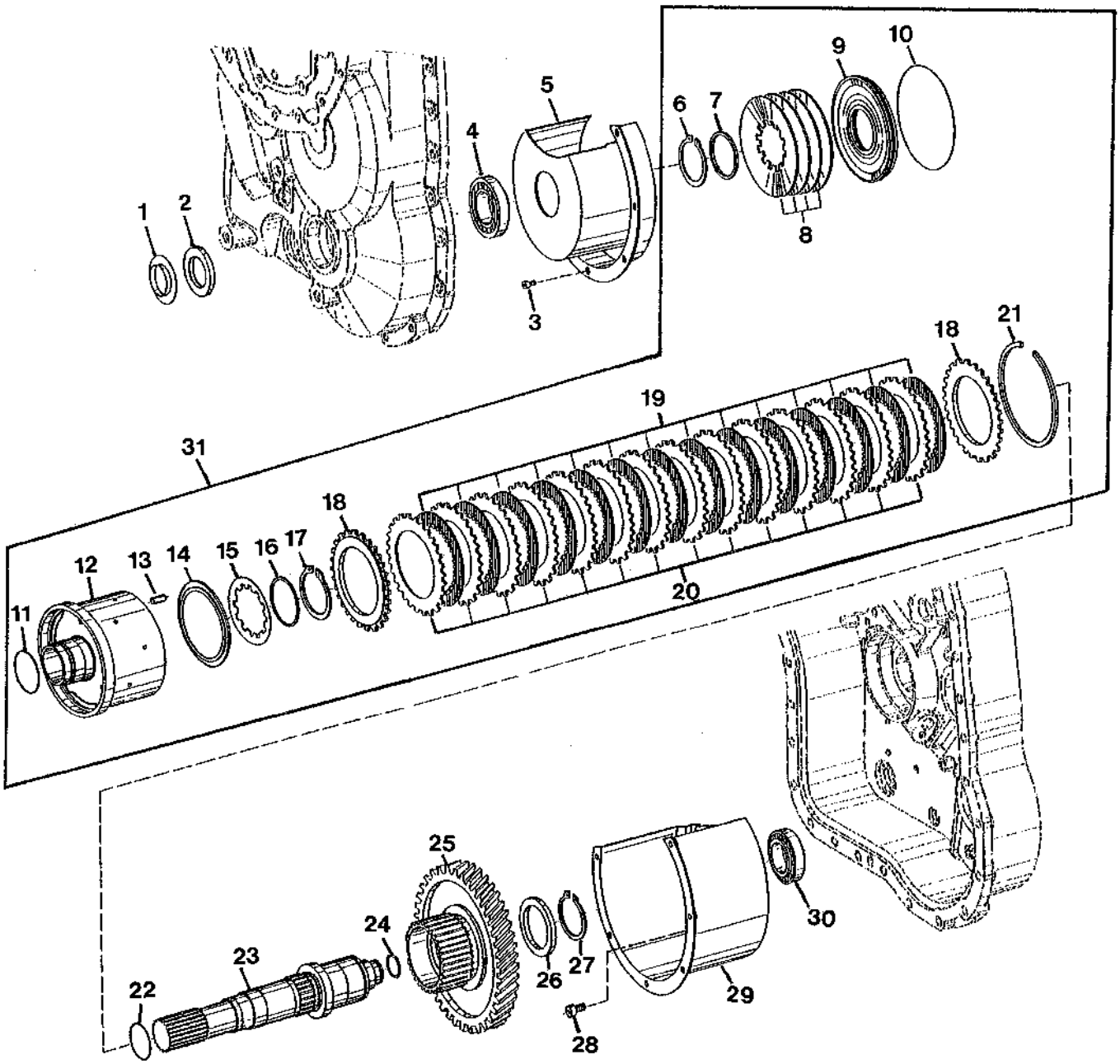

T140971

TRANSMISSION OUTPUT SHAFT
POWER SHIFT
MFWD CLUTCH ASSEMBLY
(SERIAL NO. 872329-)

KEY	PART NO.	PART NAME	QTY	SERIAL NO.	REMARKS
1	T159572	SEAL	1		
2	AT179466	SEAL	1		
3	T166078	SCREW	6		
4	AT179468	ROLLER BEARING	1		
5	T164576	SCREEN	1		
6	T165144	SNAP RING	1		
7	T165139	SPACER	1		
8	T165138	SPRING	4		
9	T165137	PISTON	1		
10	T165136	O-RING	1		
11	T165135	O-RING	1		
12	T165134	CLUTCH DISK	1		
13	T165140	ROLLER	3		
14	T165141	PLATE	1		
15	T165142	SPRING	1		
16	T165143	SHIM	1		
17	T159575	SNAP RING	1		
18	T161147	PLATE	2		
19	T164626	DISK	14		
20	T158801	CLUTCH PLATE	14		
21	T161183	SNAP RING	1		
	T158778	SNAP RING	1		
	T159568	SNAP RING	1		
	T159569	SNAP RING	1		
	T159570	SNAP RING	1		
22	T164989	O-RING	1		
23	T164988	SHAFT	1		
24	T158742	RING	1		
25	T164990	CLUTCH DISK	1		
26	T158760	THRUST WASHER	1		
27	L78069	SNAP RING	1		
28	T164648	CAP SCREW	5		
29	T184918	SCREEN	1		
30	AT179472	ROLLER BEARING	1		
31	AT184361	CLUTCH	1		

TRANSMISSION CONTROL VALVE
(SERIAL NO. -872328)

TP42826 -UN-01JAN94

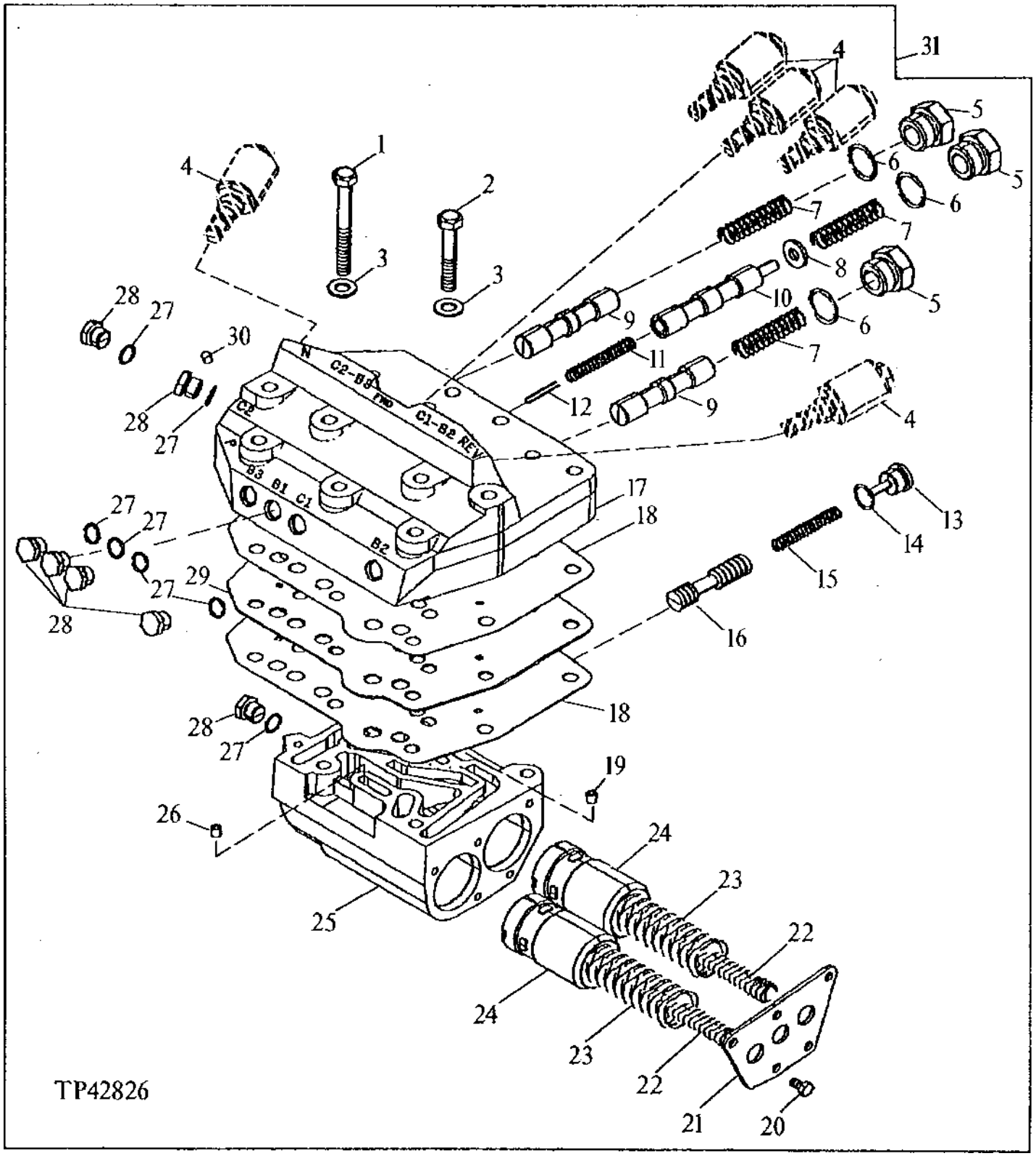

TRANSMISSION CONTROL VALVE
(SERIAL NO. -872328)

KEY	PART NO.	PART NAME	QTY	SERIAL NO.	REMARKS
1	19M8197	CAP SCREW	7		
2	19M8499	CAP SCREW	6		
3	24M7239	WASHER	13		
4	.....	SOLENOID VALVE	5		
5	T141983	PLUG	3		
6	U12547	O-RING	3		
7	T141978	SPRING	3		
8	24H1622	WASHER	1		
9	T141976	SPOOL	2		
10	T141975	SPOOL	1		
11	T141979	SPRING	1		
12	34M7040	SPRING PIN	1		6 X 30 MM
13	T149171	PLUG	1		(SUB FOR T142773)
14	R26375	O-RING	1		
15	T141980	SPRING	1		
16	T141977	SPOOL	1		
17	T141971	HOUSING	1		
18	T141974	GASKET	2		
19	T142418	ORIFICE	1		
20	19M7923	CAP SCREW	5		M6 X 12
21	T141984	PLATE	1		
22	T72401	COMPRESSION SPRING	2		
23	R47449	SPRING	2		
24	R47319	PISTON	2		
25	T141972	COMMUTATOR HOUSING	1		
26	T120229	ORIFICE	1		
27	R26448	O-RING	7		
28	R27218	FITTING PLUG	7		
29	T141973	PLATE	1		
30	AT107509	PLUG	1		
31	.....	VALVE	1		(AT156732 NO LONGER AVAILABLE)

CARTRIDGE VALVE AND COIL ASSEMBLY
(SERIAL NO. -872328)

TP42829 -UN-01JAN94

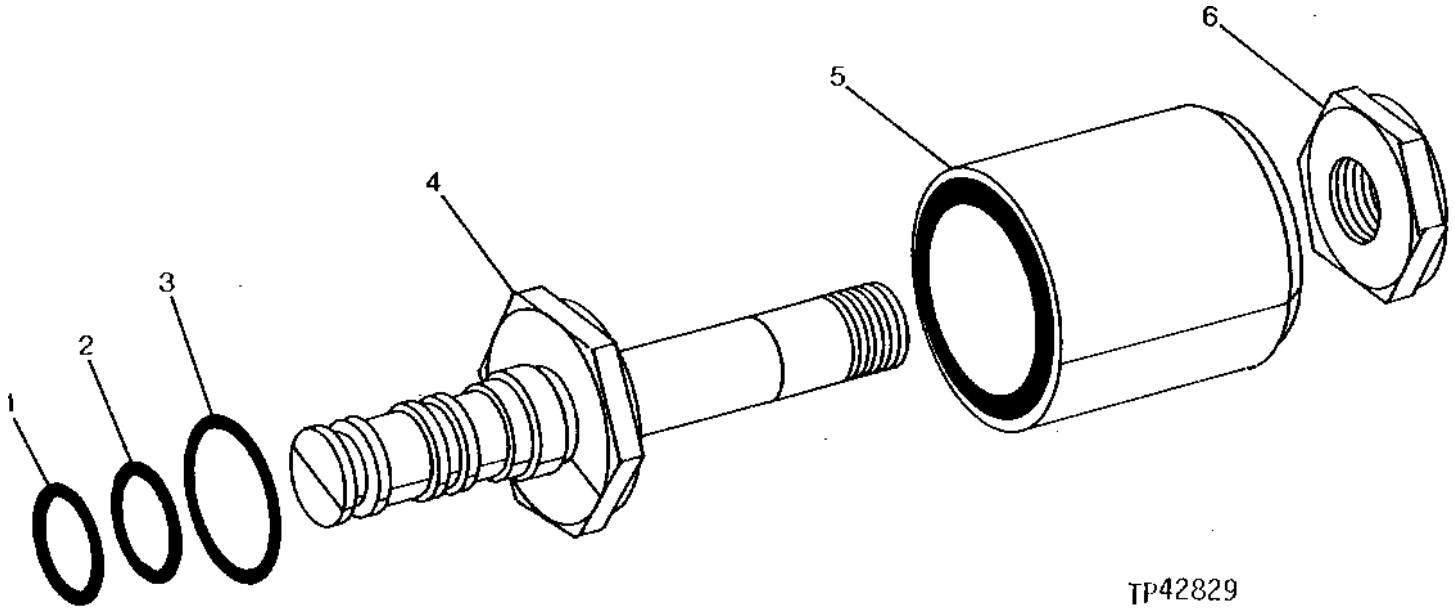

KEY	PART NO.	PART NAME	QTY	SERIAL NO.	REMARKS
1	A3917R	O-RING	1		
2	T26209	RING	1		
3	R26375	O-RING	1		
4	AT148524	SOLENOID VALVE	1		
5	AT162127	FIELD WINDING COIL	1		
6	14H856	NUT	1		

MEMORANDA

HYDRAULIC PRESSURE REGULATING VALVE
(SERIAL NO. -872328)

TP42938 -UN-01JAN94

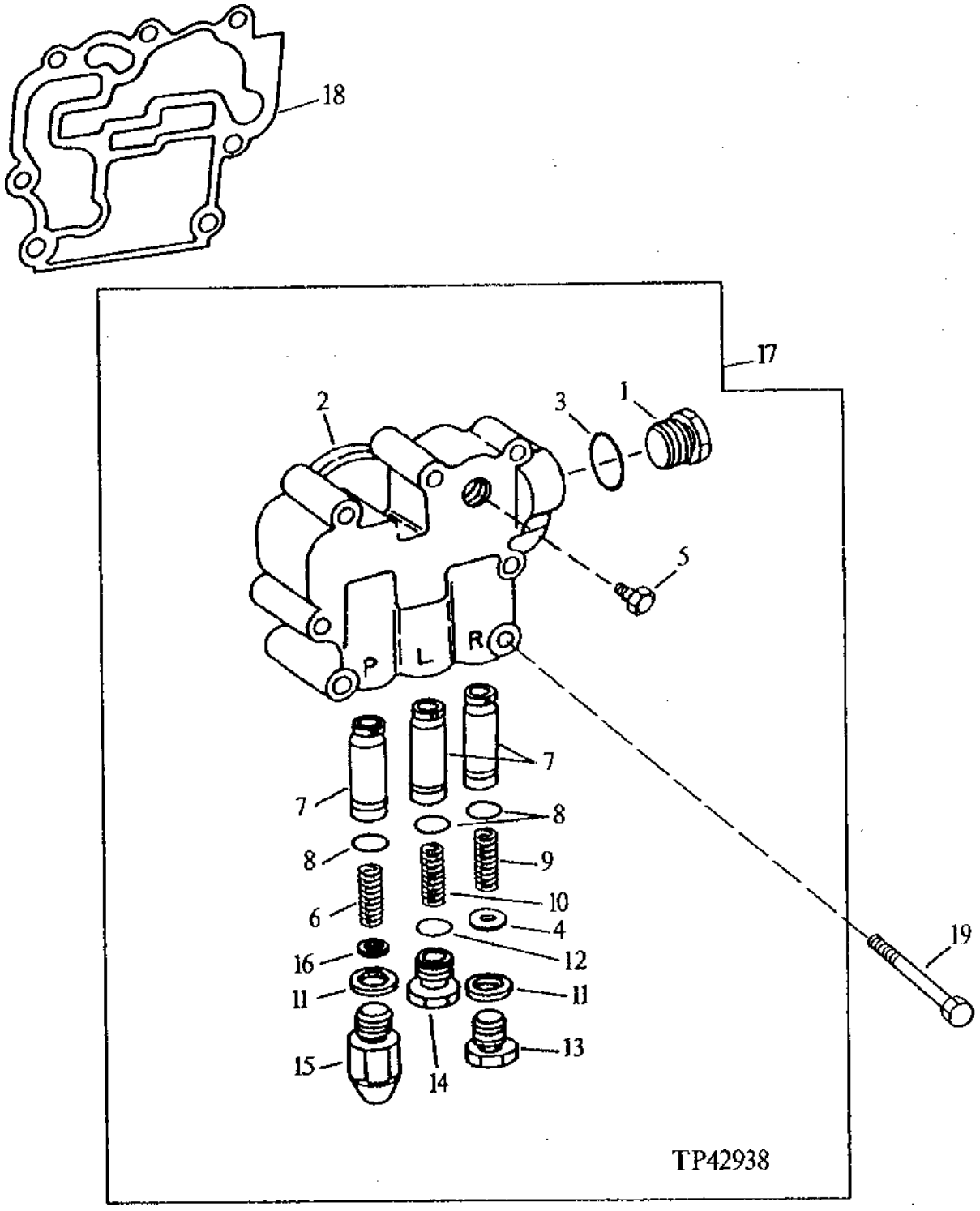

HYDRAULIC PRESSURE REGULATING VALVE
(SERIAL NO. -872328)

KEY	PART NO.	PART NAME	QTY	SERIAL NO.	REMARKS
1	R27175	DRAIN PLUG	1		
2	T66920	HOUSING	1		
3	U12547	O-RING	1		
4	R33521	SHIM	4		
5	15H624	PIPE PLUG	1		1/2"
6	T60314	SPRING	1		
7	R63980	VALVE	3		
8	R28776	O-RING	3		
9	T68150	SPRING	1		
10	T66921	SPRING	1		
11	R1742R	WASHER	2		
12	R26375	O-RING	1		
13	R52589	FITTING PLUG	1		
14	R39112	FITTING	1		
15	R51577	FITTING PLUG	1		
16	R33521	SHIM	5		
17	AT66892	VALVE	1		
18	T66919	GASKET	1		
19	19M7181	CAP SCREW	7		M10 X 55

TRANSMISSION OIL FILTER
(SERIAL NO. -872328)

TP42345 -UN-01JAN94

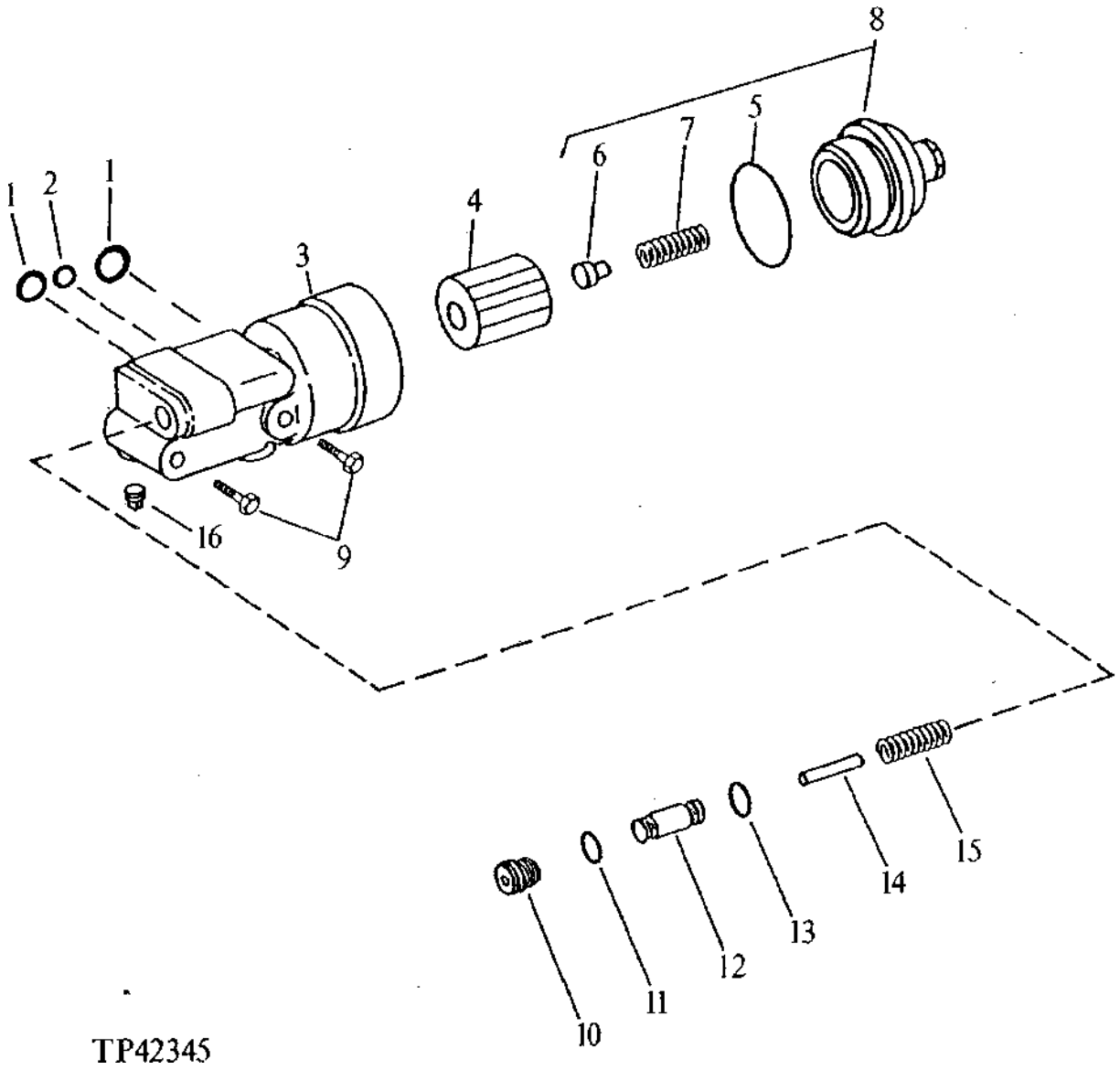

TRANSMISSION OIL FILTER
(SERIAL NO. -872328)

KEY	PART NO.	PART NAME	QTY	SERIAL NO.	REMARKS
1	A3606R	O-RING	2		
2	R394R	O-RING	1		
3	T81221	BASE	1		
4	AT67960	FILTER ELEMENT	1		
5	U43352	O-RING	1		
6	.....	RETAINER	1		
7	.....	SPRING	1		
8	AT67961	HOUSING	1		
9	19M8093	CAP SCREW	2		M10 X 100
10	R33138	FITTING	1		
11	R26375	O-RING	1		
12	R63980	VALVE	1		
13	R28776	O-RING	1		
14	34H305	SPRING PIN	1		7/32" X 2"
15	R26686	SPRING	1		
16	15H649	PIPE PLUG	2		3/4"

TRANSMISSION OIL PUMP AND MANIFOLD
(SERIAL NO. -872328)

TP42844 -UN-01JAN94

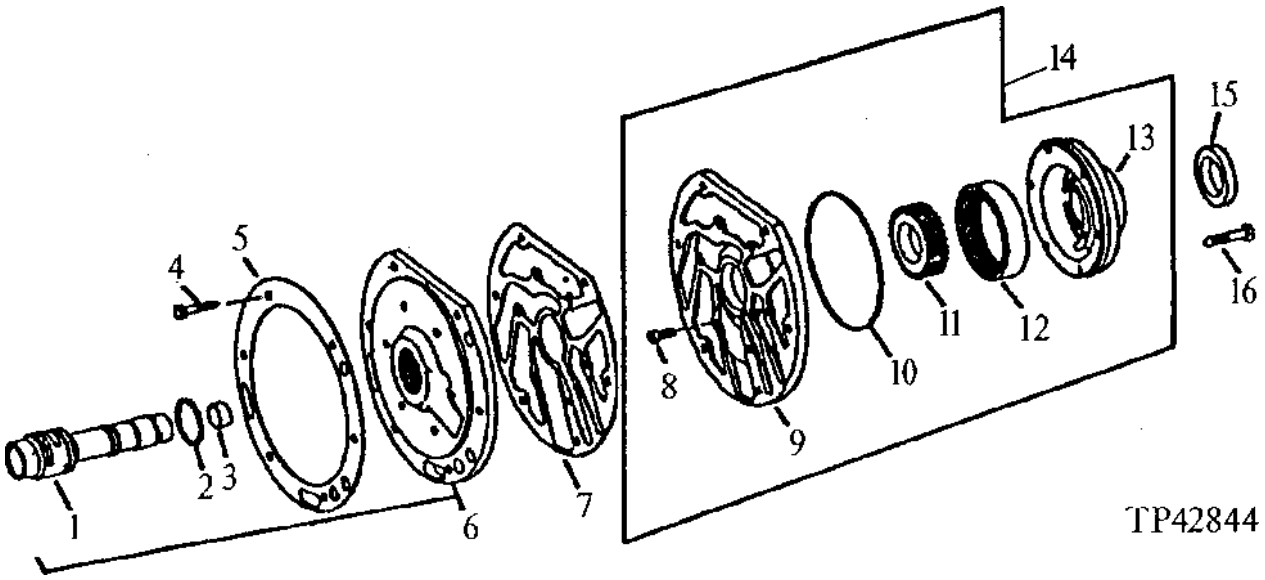

KEY	PART NO.	PART NAME	QTY	SERIAL NO.	REMARKS
1	.....	SLEEVE	1		
2	A5518R	SNAP RING	1		
3	F1747R	BUSHING	1		
4	19H3130	CAP SCREW	6		5/16" X 1-3/4"
5	T127142	GASKET	1		
6	AT161513	MANIFOLD	1		(MARKED T146466)
7	T127158	GASKET	1		
8	19H2927	SCREW	1		5/16" X 3/4"
9	.....	HOUSING	1		
10	R39876	PACKING	1		
11	AT114394	SPUR GEAR	1		(30 TEETH) (WITH PINS)
12	R46451	GEAR	1		(37 TEETH)
13	AT161512	HOUSING	1		(MARKED T146464) (WITH BUSHING)
14	AT161511	PUMP	1		
15	AT114396	SEAL	1		
16	19H3217	CAP SCREW	4		HS, SAE 8, 3/8" X 1-3/4"
	19H3065	CAP SCREW	2		HS, SAE 8, 3/8" X 2"

CHARGE PUMP
(SERIAL NO. 872329-)

TP57925 -UN-14SEP98

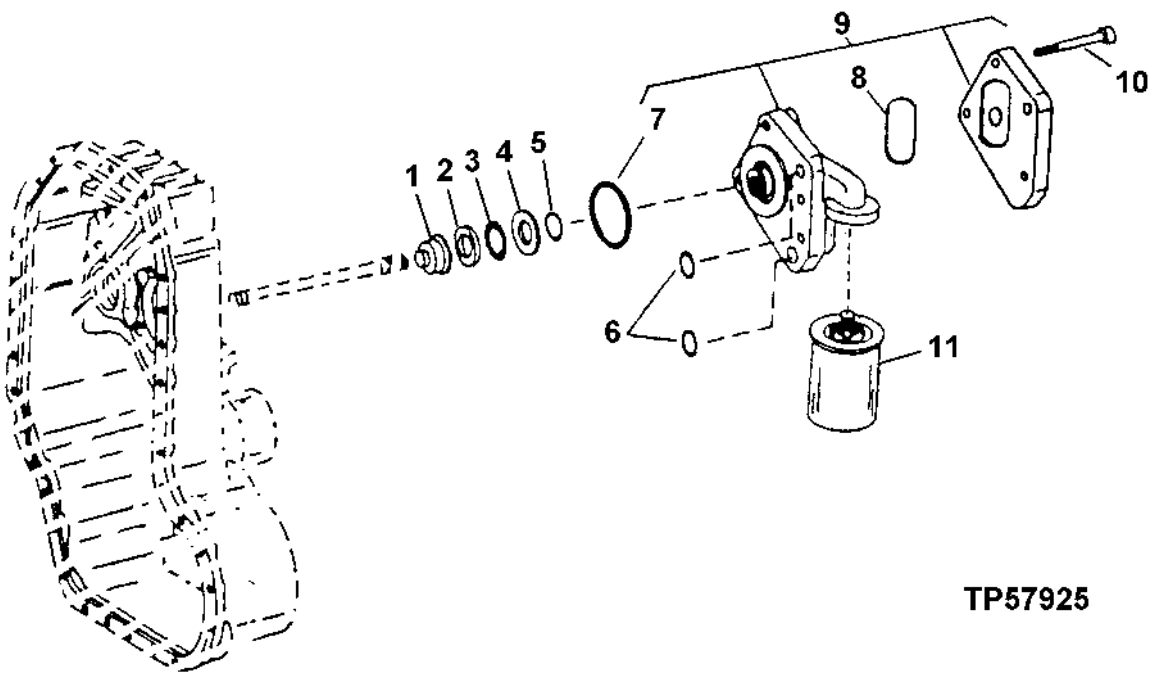

KEY	PART NO.	PART NAME	QTY	SERIAL NO.	REMARKS
1	T166077	STOP	1		
2	T158732	DISK	1		
3	AT179153	NEEDLE BEARING	1		
4	T158749	THRUST WASHER	1		
5	T141689	O-RING	1		(SUB FOR T158741)
6	T19854	O-RING	2		(SUB FOR T159615)
7	T162446	PACKING	1		
8	T162935	O-RING	1		
9	AT186167	HYDRAULIC PUMP	1		
10	T158754	CAP SCREW	4		
11	AT179323	OIL FILTER	1		

TRANSMISSION CONTROL VALVE GROUP
POWER SHIFT
(SERIAL NO. 872329-)

TP57937 -UN-17SEP98

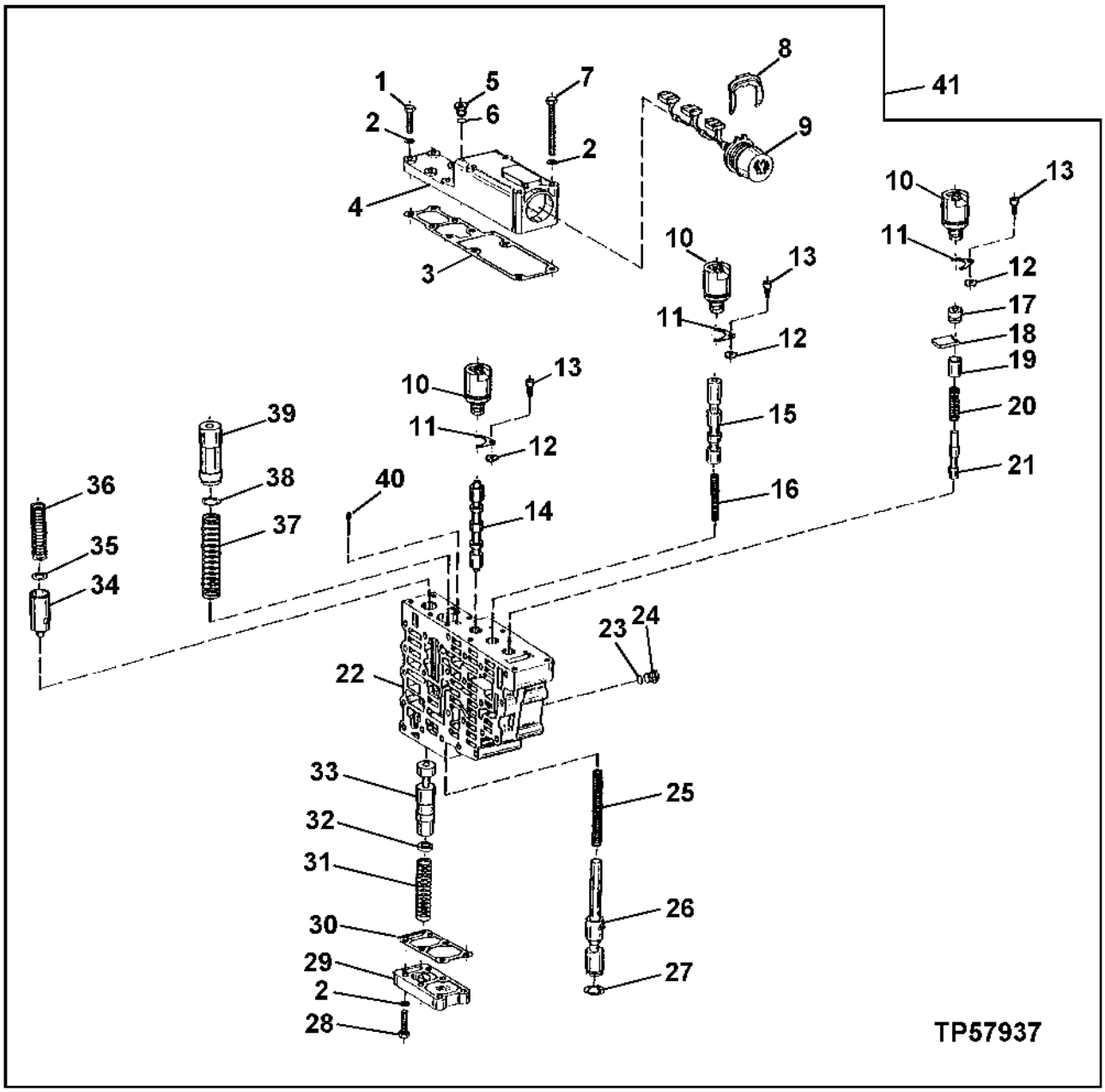

TRANSMISSION CONTROL VALVE GROUP
POWER SHIFT
(SERIAL NO. 872329-)

KEY	PART NO.	PART NAME	QTY	SERIAL NO.	REMARKS
1	T159593	CAP SCREW	6		
2	T161204	WASHER	16		
3	T159604	GASKET	1		
4	T185606	COVER	1		(SUB FOR T159605)
5	T161194	PLUG	3		(SUB FOR T164580)
6	L11698	O-RING	3		(SUB FOR T116416)
7	T159607	CAP SCREW	4		
8	T161207	CLAMP	1		
9	AT179492	WIRING HARNESS	1		
10	AT179491	SOLENOID VALVE	3		FORWARD, NEUTRAL, REVERSE
11	T144486	PLATE	3		
12	T144487	WASHER	3		
13	T164693	SPACER	3		
14	AT182947	PISTON	1		
15	T164578	PISTON	1		
16	T159596	SPRING	1		
17	T159599	PLUG	1		
18	T159600	PLATE	1		
19	T164585	SPACER	1		
20	T159598	SPRING	1		
21	T159597	PISTON	1		
22	T159582	HOUSING	1		
23	L11698	O-RING	5		(SUB FOR T116416)
24	T161194	PLUG	5		(SUB FOR T164580)
25	T159589	SPRING	1		
26	T159587	PISTON	1		
27	T159588	LOCK WASHER	1		
28	T159593	CAP SCREW	6		
29	T159592	COVER	1		
30	T159591	GASKET	1		
31	T159586	SPRING	1		
32	T161200	SPACER	1		2.4 MM
	T161199	SPACER	1		2.8 MM
	T161198	SPACER	1		3.2 MM
	T161197	SPACER	1		3.6 MM
33	T164579	PISTON	1		
34	T159583	PISTON	1		
35	T161196	SHIM	1		
36	T159584	SPRING	1		
37	T161202	SPRING	1		
38	T164584	SPACER	1		.2 MM
	T164583	SPACER	1		.3 MM
	T164582	SPACER	1		.5 MM
	T161203	SHIM	1		1 MM
	T164581	SPACER	1		2 MM
39	T162947	PISTON	1		
40	.....	ORIFICE	1		
41	AT183972	CONTROL VALVE	1		

RANGE SHIFT VALVE GROUP
POWER SHIFT
(SERIAL NO. 872329-)

TP57938 -UN-17SEP98

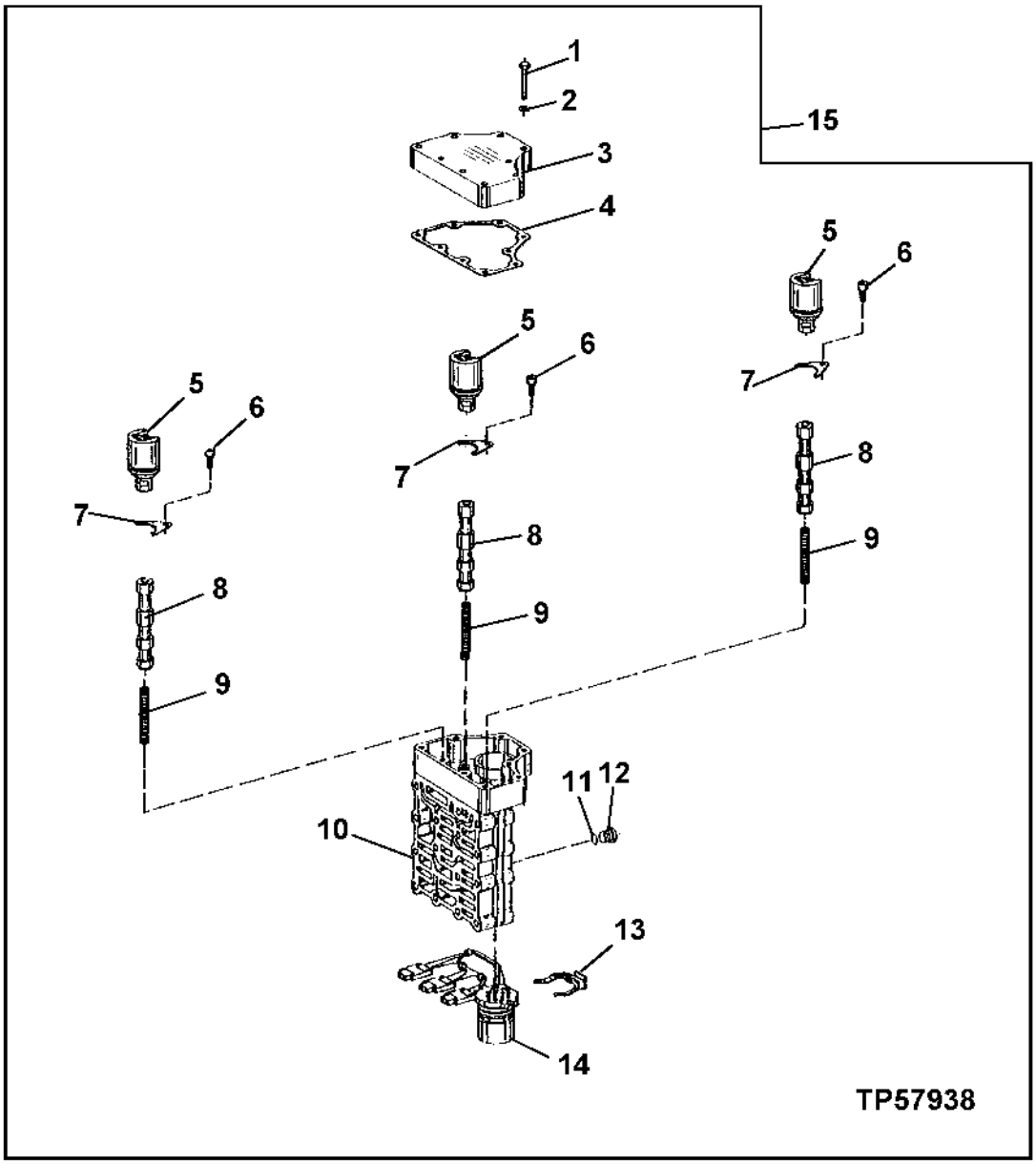

RANGE SHIFT VALVE GROUP
POWER SHIFT
(SERIAL NO. 872329-)

KEY	PART NO.	PART NAME	QTY	SERIAL NO.	REMARKS
1	.....	CAP SCREW	9		
2	T164702	WASHER	9		
3	T164611	COVER	1		
4	T164712	SHIM	1		
5	AT179491	SOLENOID VALVE	3		
6	T164693	SPACER	3		
7	T144486	PLATE	3		
8	T164610	PISTON	3		
9	T159596	SPRING	3		
10	T164609	HOUSING	1		
11	L11698	RING	4		(SUB FOR T116416)
12	T161194	PLUG	4		(SUB FOR T164580)
13	T161207	CLAMP	1		
14	AT184007	WIRING HARNESS	1		
15	AT183973	VALVE	1		

TRANSMISSION INTERMEDIATE PLATE AND GASKETS
POWER SHIFT
(SERIAL NO. 872329-)

T143501 -UN-29JUN01

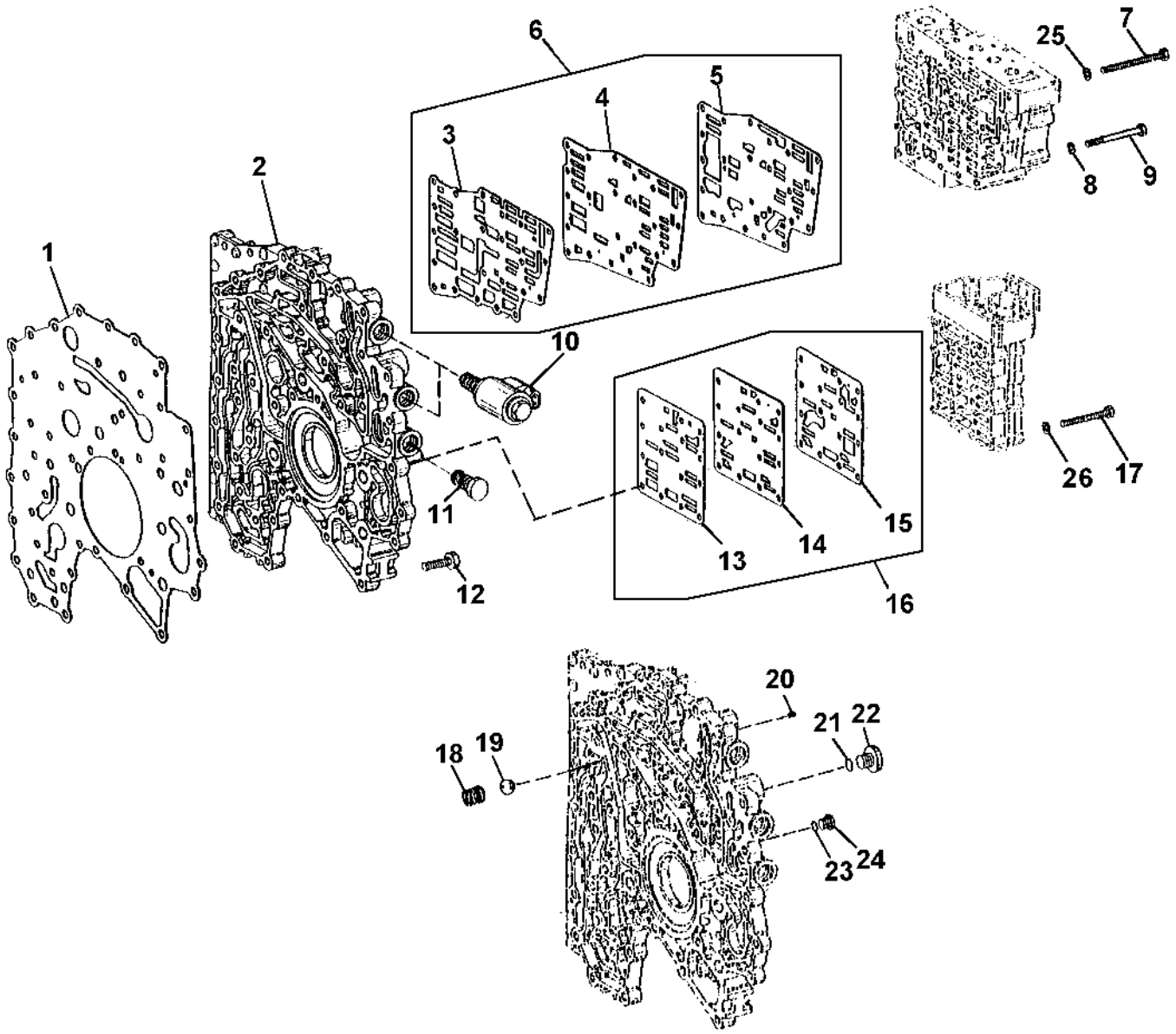

T143501

TRANSMISSION INTERMEDIATE PLATE AND GASKETS
POWER SHIFT
(SERIAL NO. 872329-)

KEY	PART NO.	PART NAME	QTY	SERIAL NO.	REMARKS
1	T164592	GASKET	1		
2	T186560	HOUSING	1		(SUB FOR T164591)
3	.....	GASKET	1		(SUB AT192552) (ALSO ORDER (19) T159607) (SUB FOR T159612)
4	.....	PLATE	1		(SUB AT192552) (ALSO ORDER (19) T159607) (SUB FOR T164595)
5	.....	GASKET	1		(SUB AT192552) (ALSO ORDER (19) T159607) (SUB FOR T164596)
6	AT192552	PLATE	1		(SUB FOR T159612, T164595 AND T164596) (ALSO ORDER (19) T159607)
7	T159613	CAP SCREW	4		
8	T161204	WASHER	19		
9	T159607	CAP SCREW	19		
10	AT177703	SOLENOID VALVE	3		DIFFERENTIAL LOCK, PARK BRAKE, MFWD
	.....	SOLENOID	3		AT179318 NO LONGER AVAILABLE
	AT179319	ELECTRICAL COIL	3		
	AT179320	O-RING KIT	3		
	T161144	NUT	3		
11	T159684	PLUG	1		MFWD SOLINOID HOLE PLUG
12	T161208	CAP SCREW	43		
13	.....	GASKET	1		(SUB AT192553) (ALSO ORDER (19) T159607) (SUB FOR T164597)
14	.....	PLATE	1		(SUB AT192553) (ALSO ORDER (19) T159607) (SUB FOR T164598)
15	.....	GASKET	1		(SUB AT192553) (ALSO ORDER (19) T159607) (SUB FOR T164599)
16	AT192553	PLATE	1		(SUB FOR T164597, T164598, T164599) (ALSO ORDER (19) T159607)
17	T164686	CAP SCREW	15		
18	T144494	COMPRESSION SPRING	1		
19	T144493	BALL	1		
20	.....	ORIFICE	1		
21	R26286	O-RING	1		
22	R27094	DRAIN PLUG	1		
23	L11698	O-RING	1		(SUB FOR T116416)
24	T161194	PLUG	1		(SUB FOR T164580)
25	T161204	WASHER	4		
26	T161204	WASHER	15		

CRANKSHAFT, IDLER GEAR AND MAIN BEARINGS
(ENGINE SERIAL NO. -713822)

TP42662 -UN-01JAN94

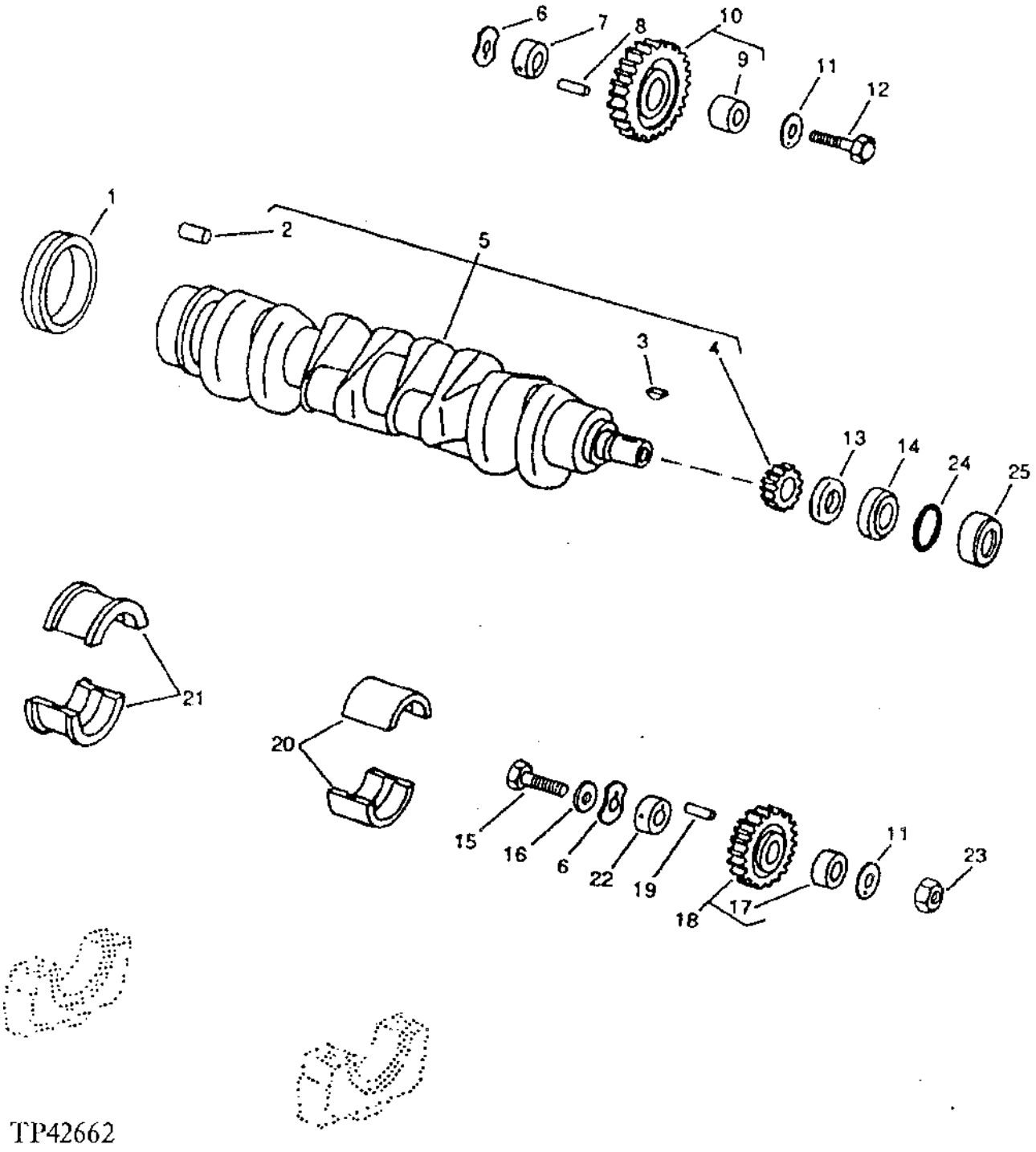

CRANKSHAFT, IDLER GEAR AND MAIN BEARINGS
(ENGINE SERIAL NO.- -713823)

KEY	PART NO.	PART NAME	QTY	ENGINE SERIAL NO.	REMARKS
1	RE44574	SEAL	1		
2	R48685	DOWEL PIN	1		(SUB FOR A120R)
3	26H72	SHAFT KEY	1		1/8" X 5/8"
4	T20094	HELICAL GEAR	1		(24 TEETH)
5	.....	CRANKSHAFT	1		RE45541,MARKED R108679 NO LONGER AVAILABLE (SUB FOR AT22562,MARKED T22562)(SUB FOR RE60489,MARKED R108679)SUB RE54130 KIT.
6	T26324	THRUST WASHER	2		
7	R109863	SHAFT	1		(SUB FOR R89824)
8	34H283	SPRING PIN	1		3/16" X 1-1/8"
9	T20034	BUSHING	1		
10	AR91660	GEAR	1		(55 TEETH) (MARKED R70182)
11	T26326	THRUST WASHER	2		
12	T26327	SCREW	1		
13	T20046	OIL SLINGER	1		
14	AR67942	SEAL	1		
15	19H3183	CAP SCREW	1		HS, SAE 8, 1/2" X 2-1/8"
16	R100105	WASHER	1		
17	T26321	BUSHING	1		
18	AT24252	GEAR	1		(45 TEETH) (MARKED T26322)
19	34H286	SPRING PIN	1		3/16" X 1-1/2"
20	AT21140	BEARING	6		STANDARD (SET OF (2) T23214)
	AT21110	BEARING	6		0.25 MM (0.10") UNDERSIZE (SET OF (2) T23554)
	AT21112	BEARING	6		0.51 MM (.020") UNDERSIZE (SET OF (2) T23556)
	AT21114	BEARING	6		0.76 MM (.030") UNDERSIZE (SET OF (2) T23558)
21	AT21139	BEARING	1		STANDARD (SET OF (2) T23215)
	AT21132	BEARING	1		0.25 MM (.010") (SET OF (2) T23576)
	AT21134	BEARING	1		0.51 MM (.020") UNDERSIZE (SET OF (2) T23578)
	AT21136	BEARING	1		0.76 MM (.030") UNDERSIZE (SET OF (2) T23580)
22	R109863	SHAFT	1		(SUB FOR R89824)
23	E69392	NUT	1		
24	H35244	RING	1		
25	R81989	SLEEVE	1		

REPLACEMENT CRANKSHAFT KIT
CRANKSHAFT ,BEARING KIT(SHORT NOSE)LONG STROKE

TP61788 -UN-20NOV98

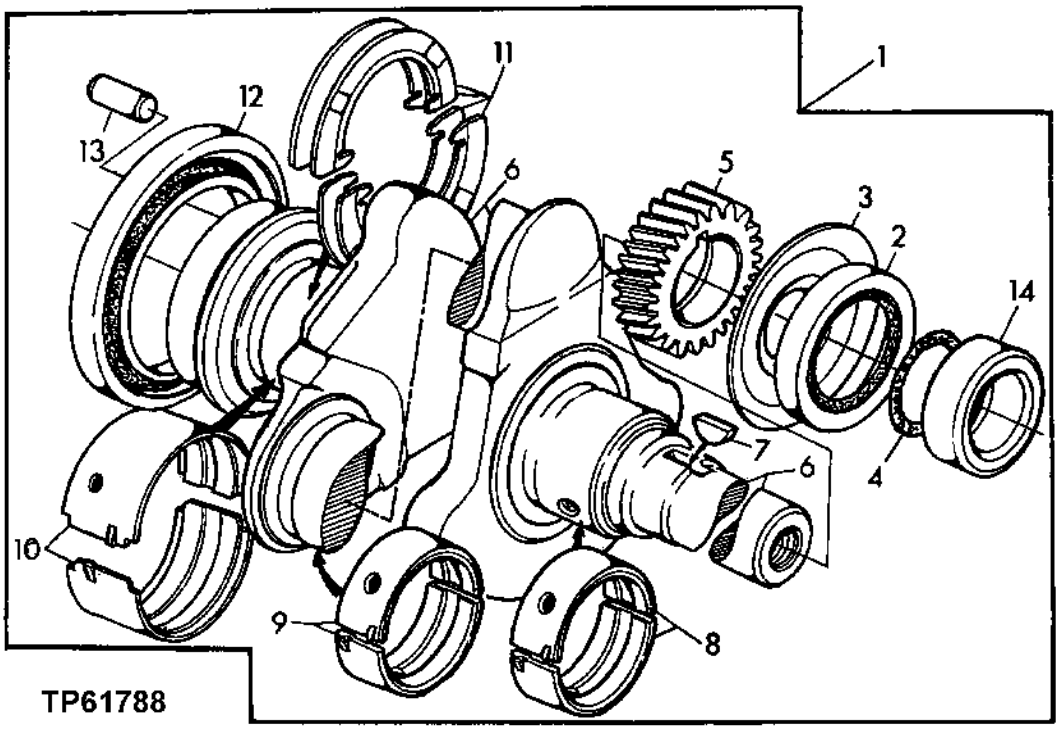

KEY	PART NO.	PART NAME	QTY	SERIAL NO.	REMARKS
1	RE54130	CRANKSHAFT	1		
2	AR67942	SEAL	1		
3	T20046	OIL SLINGER	1		
4	H35244	RING	1		
5	T20094	HELICAL GEAR	1		
6	.....	CRANKSHAFT	1		MARKED R108679
7	26H72	SHAFT KEY	1		1/8" X 5/8"
8	RE27352	BEARING KIT	6		
9	RE47867	BEARING	6		
10	AR81786	BEARING	1		
11	RE13571	KIT	1		
12	RE44574	SEAL	1		
13	R48685	DOWEL PIN	1		
14	R81989	SLEEVE	1		

THIS PARTS LISTING IS CONTINUED

UNDERSIZE CRANKSHAFT AND BEARING KIT
(ENGINE SERIAL NO. -713822)

TP18467 -UN-12SEP94

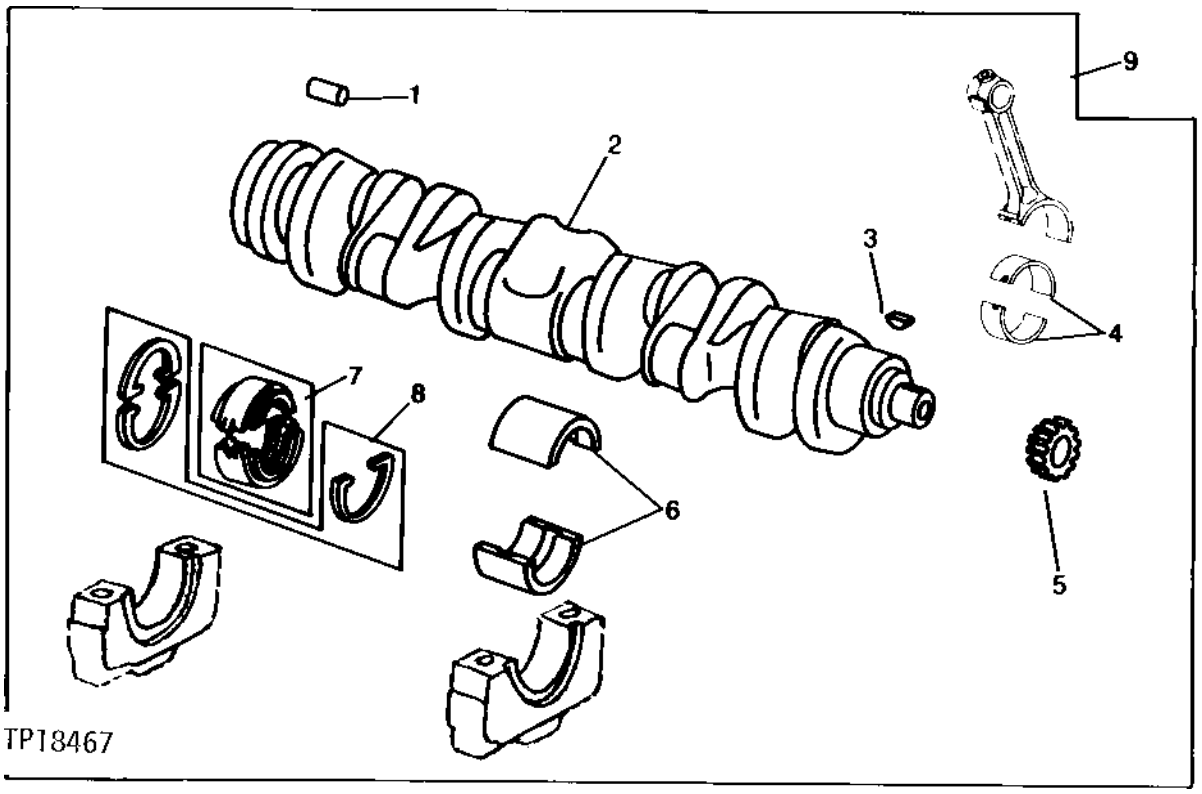

KEY	PART NO.	PART NAME	QTY	ENGINE SERIAL NO.	REMARKS
1	R48685	DOWEL PIN	1		
2	.....	CRANKSHAFT	1		0.25 MM (.010") UNDERSIZE, (MARKED T23266)
3	26H72	SHAFT KEY	1		1/8" X 5/8"
4	AR76129	BEARING	6		0.25 MM (.010") UNDERSIZE (SET OF (2) R62073)
5	T20094	HELICAL GEAR	1		(24 TEETH)
6	AT21110	BEARING	6		0.25 MM (.010") UNDERSIZE (SET OF (2) T23554)
7	AR81788	BEARING	1		0.25 MM (.010") UNDERSIZE (SET OF (2) R64848)
8	R78598	THRUST WASHER	3		THRUST WASHER
9	RE26205	KIT	1		CRANKSHAFT WITH UNDERSIZE BEARINGS

CRANKSHAFT, GEAR AND MAIN BEARINGS
(ENGINE SERIAL NO.713823-)

TP60709 -UN-09JUN98

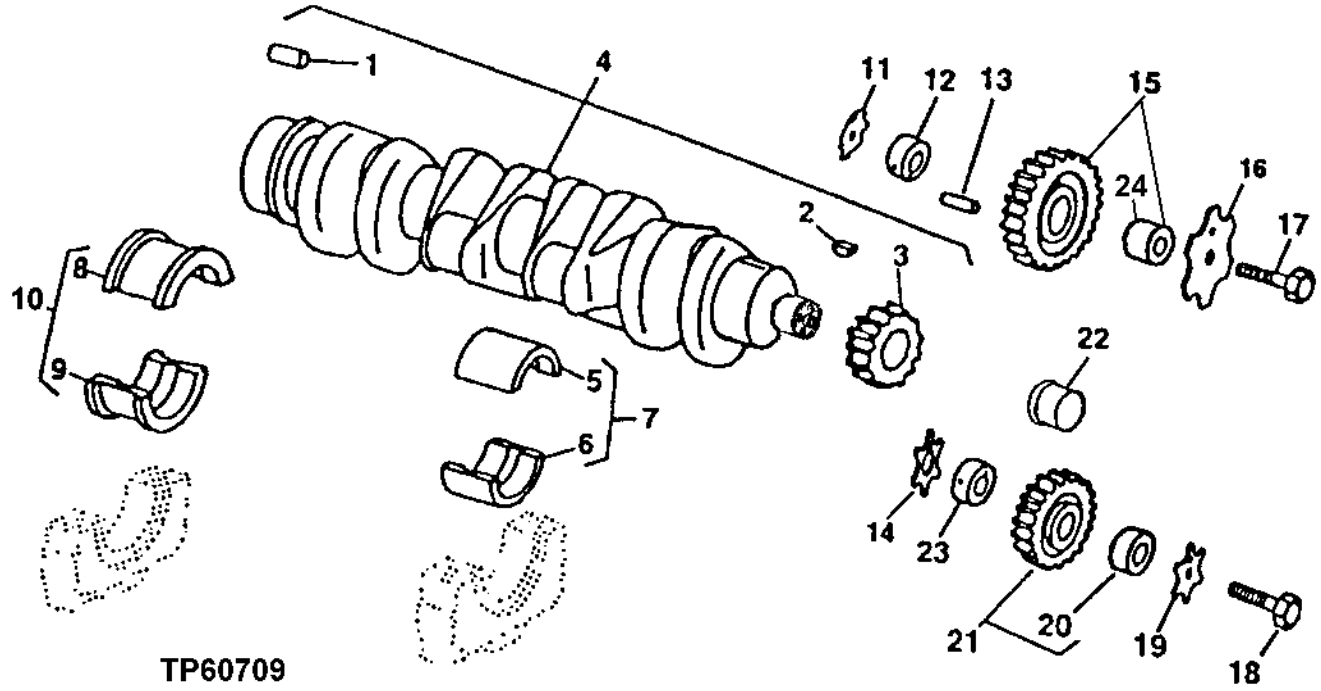

TP60709

KEY	PART NO.	PART NAME	QTY	ENGINE SERIAL NO.	REMARKS
1	R48685	DOWEL PIN	1		12.700 X 28.448 MM (1/2" X 1.120")
2	26M4224	SHAFT KEY	1		4 X 16 MM
3	R120631	GEAR	1		(30 TEETH)
4	RE52850	CRANKSHAFT	1		(MARKED R116076) (ALSO ORDER RE59811)
5	.....	BEARING	6		STANDARD UPPER, (MARKED R123561)
	.....	BEARING	6		UNDERSIZE UPPER .254 MM, (MARKED R130576)
6	.....	BEARING	6		STANDARD LOWER, (MARKED R123562)
	.....	BEARING	6		UNDERSIZE LOWER .254 MM, (MARKED R130577)
7	RE65165	BEARING KIT	6		STANDARD
	RE65911	BEARING	6		UNDERSIZE .254 MM
8	.....	BEARING	1		STANDARD UPPER, (MARKED R123563)
	.....	BEARING	1		UNDERSIZE UPPER .254 MM, (MARKED R130574)
9	.....	BEARING	1		(MARKED R123564)
	.....	BEARING	1		UNDERSIZE LOWER .254 MM, (MARKED R130575)
10	RE65168	BEARING KIT	1		
	RE65912	THRUST BEARING	1		UNDERSIZE .254 MM
11	R123174	LOCK WASHER	1	-814064	
	R101225	THRUST WASHER	1	814065-	
12	R120641	SHAFT	1	-814064	
	R109863	SHAFT	1	814065-	
13	34H288	SPRING PIN	1		4.775 X 44.450 MM (3/16" X 1-3/4")
14	R101225	THRUST WASHER	1		
15	RE56313	GEAR	1	-814064	
	RE500631	GEAR	1	814065-	
16	R131206	THRUST WASHER	1		
17	19M8997	SCREW	1		M10 X 65
18	19M8966	SCREW	1		M10 X 50
19	R131283	THRUST WASHER	1		
20	R114193	BUSHING	1		
21	RE56369	GEAR	1		
22	RE59811	SLEEVE	1		
23	R114194	SHAFT	1		
24	T20034	BUSHING	1	-814064	
	.....	BUSHING	1	814065-	

TIMING GEAR COVER
(ENGINE SERIAL NO. -713822)

TP43990 -UN-01JAN94

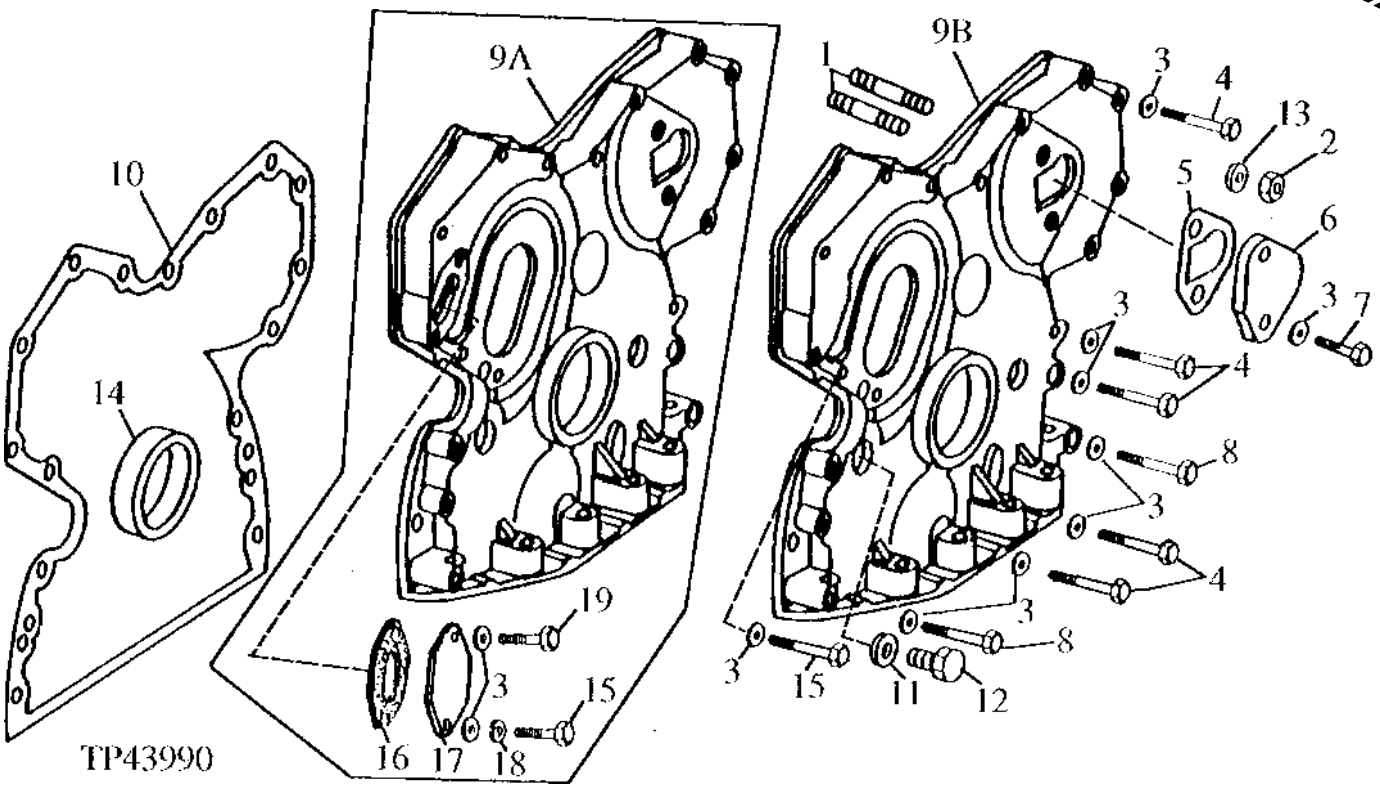

KEY	PART NO.	PART NAME	QTY	ENGINE SERIAL NO.	REMARKS
1	R122226	STUD	2		(SUB FOR R122226)
2	N10215	LOCK NUT	2		3/8"
3	24M7106	WASHER	AR		10 X 18 X 2.500 MM
4	19H3408	CAP SCREW	4		3/8" X 1-3/4"
	19H3693	CAP SCREW	5		3/8" X 1-1/4"
	19H3691	CAP SCREW	1		3/8" X 1-7/8"
5	R125066	GASKET	1		(SUB FOR R97773)
6	R126041	COVER	1		(SUB FOR T20362)
7	R122618	SCREW	2		(SUB FOR 19H2284, THIS APPLICATION)
8	19H3733	CAP SCREW	2		3/8" X 2-1/2"
9A	RE39252	COVER	1	-436683	WITH INSERTS
9B	RE56443	COVER	1	436684-	
10	R121314	GASKET	1		(SUB FOR R119269 OR R121314)
11	A4827R	WASHER	1		
12	T27657	FITTING PLUG	1		
13	12H304	LOCK WASHER	AR		3/8"
14	RE44574	SEAL	1		(REAR OIL SEAL)
15	19H1819	CAP SCREW	1	436684-	3/8" X 2-1/8"
16	R97352	GASKET	1	-436683	(SUB FOR T20336)
17	T23260	COVER	1	-436683	
18	12H304	LOCK WASHER	1	-436683	
19	19H2284	CAP SCREW	1	-436683	

TIMING GEAR COVER
(ENGINE SERIAL NO. 713823-)

TP59274 -UN-11MAY98

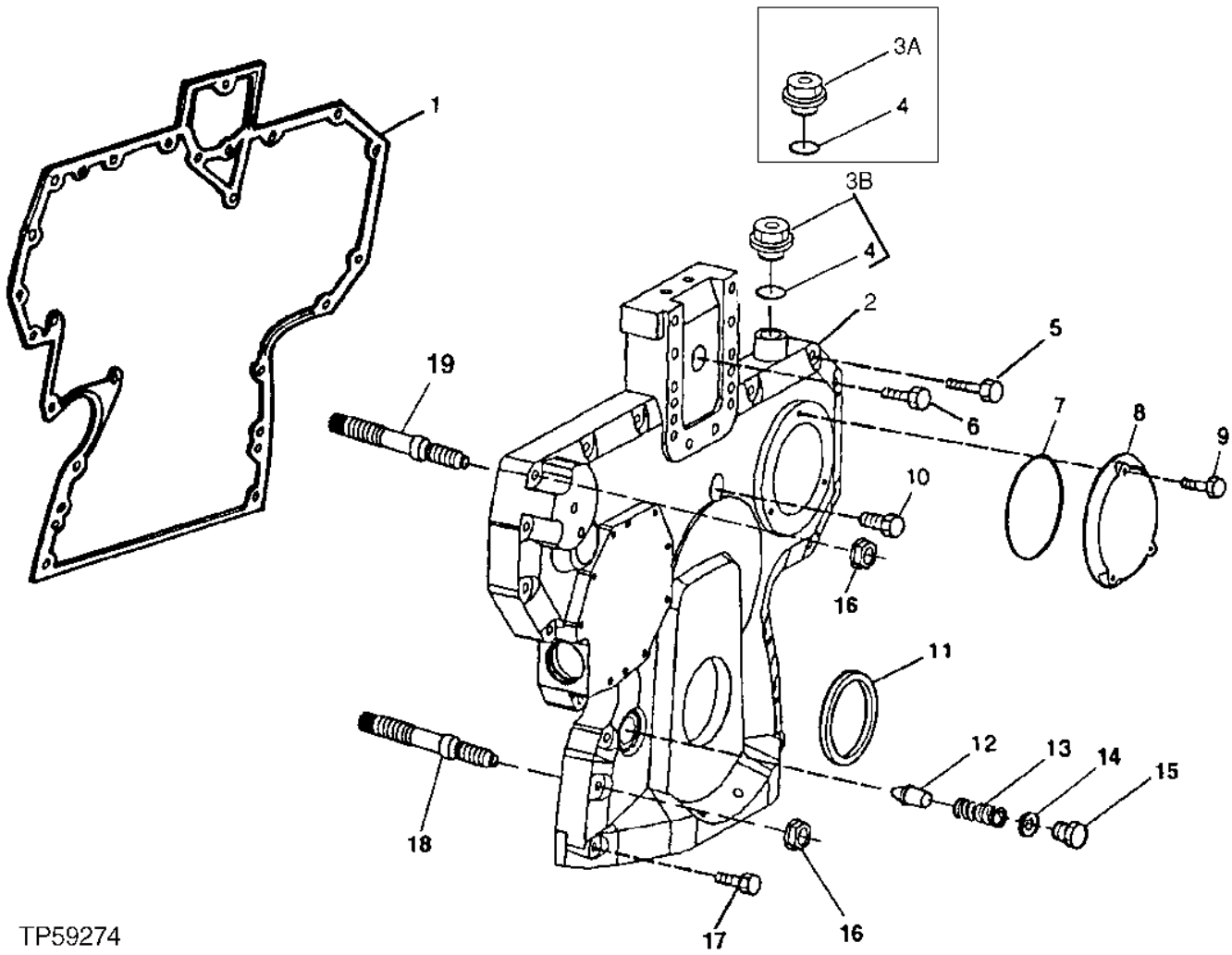

TP59274

TIMING GEAR COVER
(ENGINE SERIAL NO. 713823-)

KEY	PART NO.	PART NAME	QTY	ENGINE SERIAL NO.	REMARKS
1	R136515	GASKET	1	-814064	(SUB FOR R134533)
	R136516	GASKET	1	814065-	
2	R501297	COVER	1	-814064	(SUB FOR R134530)
	R134531	COVER	1		
3A	R101085	PLUG	1		(SUB RE501938, THIS APPLICATION)
3B	RE501938	PLUG	1		
4	51M7044	O-RING	1		17.300 X 2.200 MM
5	19M8317	SCREW	6		M8 X 40
	RE67239	SCREW	1	-814064	
	19M7867	SCREW	1	814065-	M8 X 25
6	19M8291	SCREW	1		M8 X 35
	19M7801	SCREW	1		M8 X 60
7	R121424	O-RING	1		
8	R121411	COVER	1		
9	19M7775	SCREW	3	-814064	M6 X 16
	19M7796	SCREW	3	814065-	M6 X 30
10	RE67239	SCREW	2		(SUB FOR RE67240)
11	RE59810	SEAL KIT	1		
12	R83169	VALVE	1		
13	T27658	SPRING	1		
14	A4827R	WASHER	1		1" X 1-1/4" X 0.064"
15	T27657	FITTING PLUG	1	-814064	
	R91692	PLUG	1	814065-	
16	14M7296	FLANGE NUT	6		M10
17	19M7979	SCREW	2		M8 X 55
18	R123584	STUD	4		
19	R134518	STUD	2		

CAMSHAFT
(ENGINE SERIAL NO. -713822)

TP15128 -UN-01JAN94

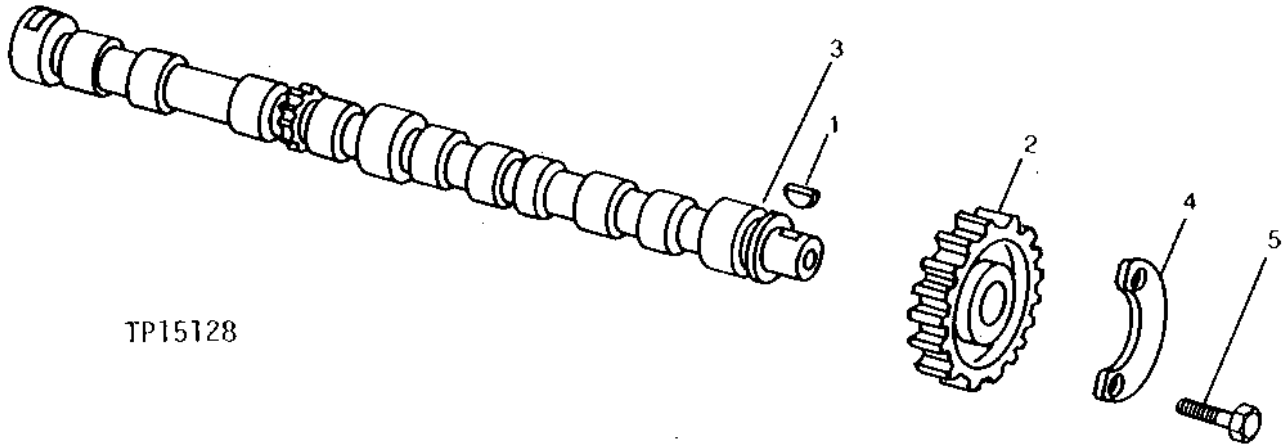

KEY	PART NO.	PART NAME	QTY	ENGINE SERIAL NO.	REMARKS
1	T28041	SHAFT KEY	1		
2	T20070	HELICAL GEAR	1		(48 TEETH)
3	R82821	CAMSHAFT	1		
4	T20072	PLATE	1		
5	19H2676	CAP SCREW	2		3/8" X 1"

CAMSHAFT
(ENGINE SERIAL NO. 713823-)

TP60711 -UN-17JUN98

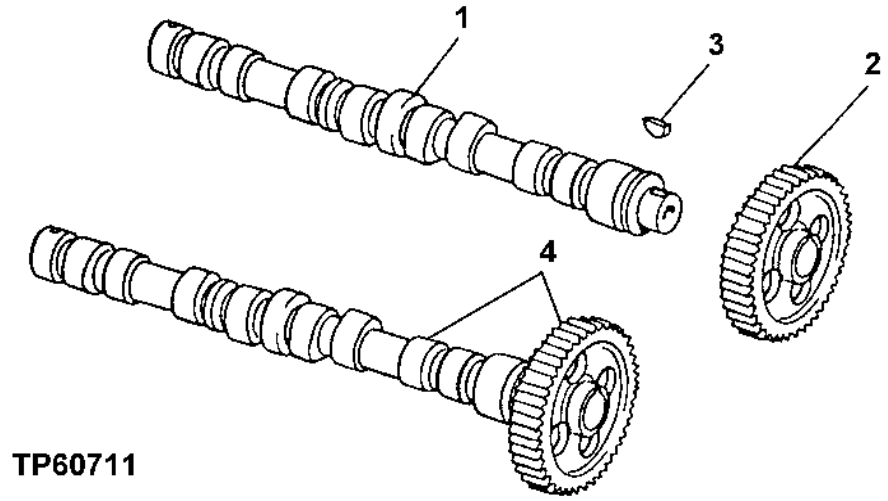

KEY	PART NO.	PART NAME	QTY	ENGINE SERIAL NO.	REMARKS
1	.....	CAMSHAFT	1		(R135440 NO LONGER AVAILABLE)
2	.....	GEAR	1		(60 TEETH) (R133812 NO LONGER AVAILABLE)
3	.....	SHAFT KEY	1		(R133303 NO LONGER AVAILABLE)
4	RE56578	CAMSHAFT	1		(WITH GEAR AND KEY) (MARKED R135440)

ROCKER ARM SHAFT, PUSH RODS AND ROCKER ARMS
(ENGINE SERIAL NO. -713822)

TP58473 -UN-27OCT99

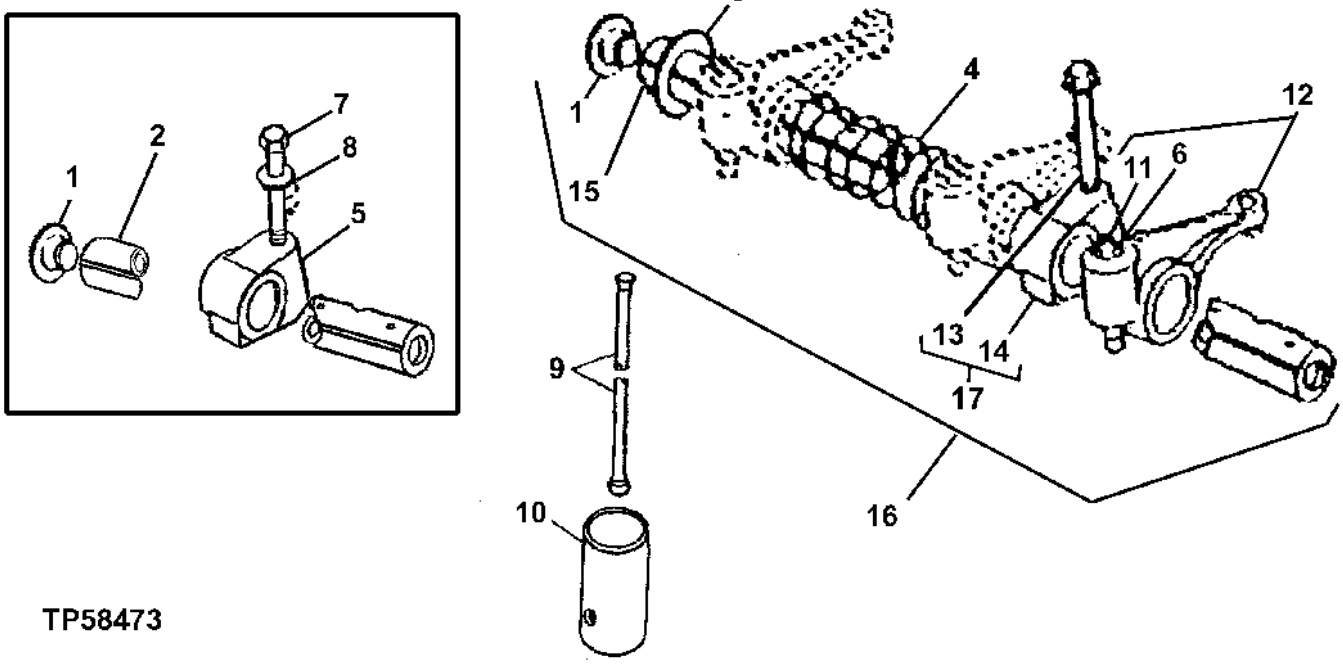

TP58473

KEY	PART NO.	PART NAME	QTY	ENGINE SERIAL NO.	REMARKS
1	R54565	PLUG	2		
2	R123514	ROCKER ARM SHAFT	1		(USE R54986 IF AVAILABLE,WITH 19H3031, R42729 AND T20315)
3	T20316	WASHER	2		
4	T20314	SPRING	5		
5	T20315	SUPPORT	6		(USE WITH 19H3031 AND R54986) (SUB RE502861)
6	R125881	LOCK NUT	12		(SUB FOR R119314)
7	19H3031	CAP SCREW	6		3/8" X 2-1/2"
8	R42729	WASHER	6		
9	R107731	PUSH ROD	12		
10	T20073	TAPPET	12		
11	R125880	SCREW	12		(SUB FOR R106116)
12	RE62148	ROCKER ARM	12		(SUB FOR RE43384)
13	R504813	SELF-LOCKING SCREW	AR		(SUB FOR R501529)
	19H3031	CAP SCREW	AR		3/8" X 2-1/2"
14	R123161	SUPPORT	6		
15	R123514	ROCKER ARM SHAFT	1		
16	RE502873	ROCKER ARM SHAFT	1		
17	RE502861	SUPPORT	1		

ROCKER ARM SHAFT,PUSHRODS AND ROCKER ARMS
(ENGINE SERIAL NO. 713823-)

TP49263 -UN-20JUN95

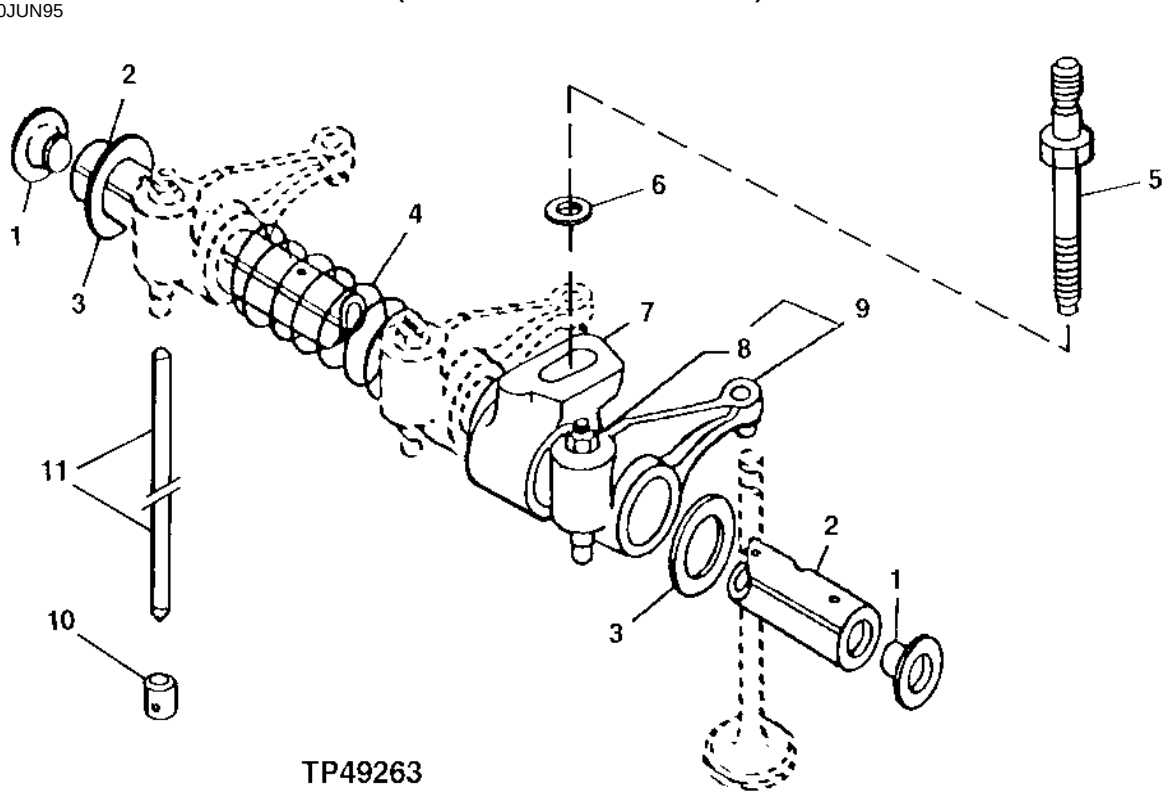

TP49263

KEY	PART NO.	PART NAME	QTY	ENGINE SERIAL NO.	REMARKS
1	R54565	PLUG	2		
2	R123514	ROCKER ARM SHAFT	1		
3	T20316	WASHER	2		
4	T20314	SPRING	5		
5	R123271	STUD	6		
6	R42729	WASHER	6		
7	R123161	SUPPORT	6		
8	14M7148	NUT	1		M10
9	RE68695	ROCKER ARM	12		
10	R123565	CAM FOLLOWER	12		
11	R107731	PUSH ROD	12		

ROCKER ARM COVER
(ENGINE SERIAL NO. -713822)

TP41224 -UN-01JAN94

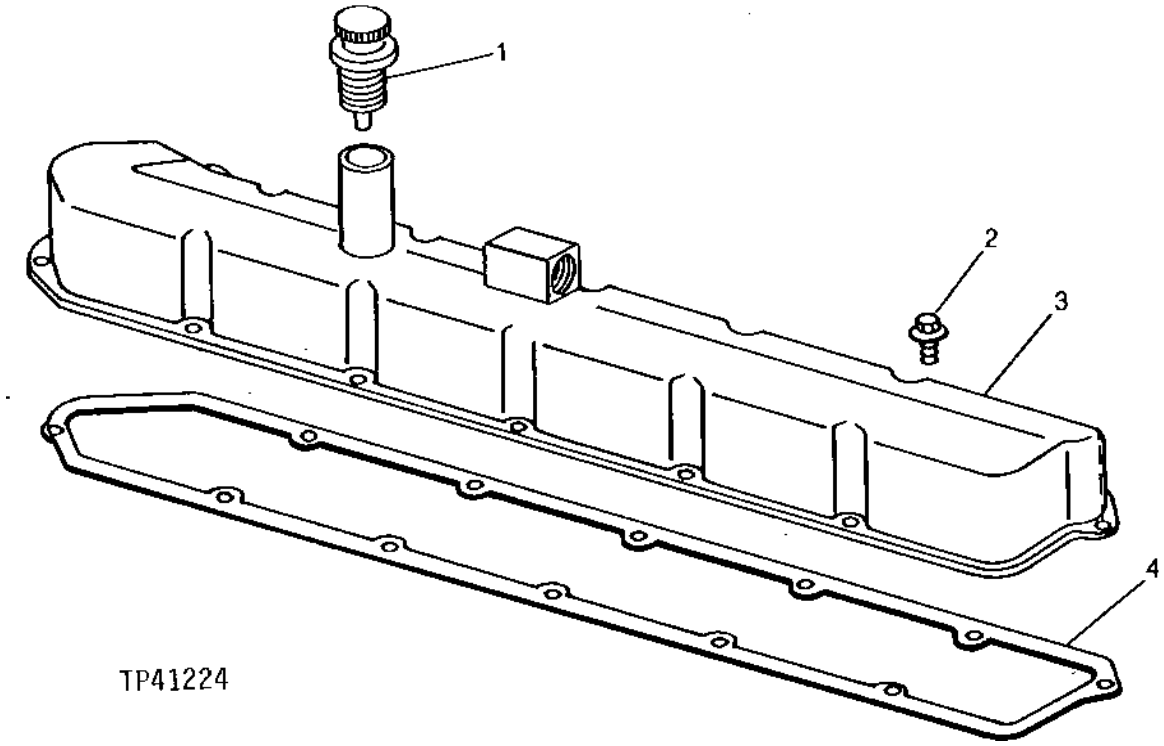

KEY	PART NO.	PART NAME	QTY	ENGINE SERIAL NO.	REMARKS
1	AR65864	FILLER CAP	1		
2	AR103811	SCREW, WITH WASHER	12		(SUB FOR AR100124)
3	RE54327	COVER	1		
4	R75728	GASKET	1		

ROCKER ARM COVER
(ENGINE SERIAL NO. 713823-)

TP55081 -UN-06MAY97

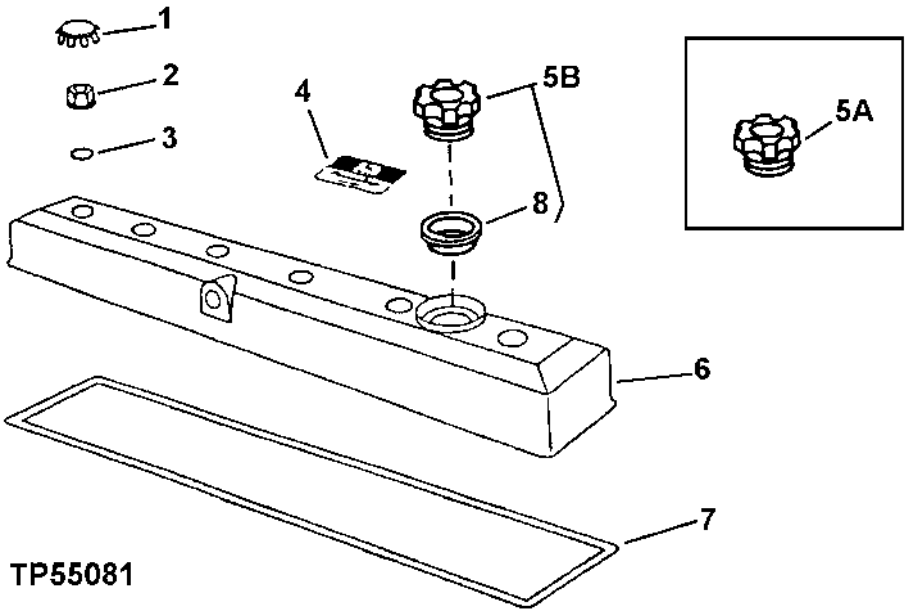

KEY	PART NO.	PART NAME	QTY	ENGINE SERIAL NO.	REMARKS
1	H23125	PLUG	6		
2	R123574	NUT	6		
3	R123575	O-RING	6		
4	R121674	MEDALLION	1		
5A	.....	CAP	1		(RE52326 NO LONGER AVAILABLE) (SUB RE500005)
5B	RE500005	FILLER CAP	1		
6	RE502987	COVER	1		(SUB FOR RE70400)
7	R123543	GASKET	1		
8	R502902	PACKING	1		(USE WITH RE500005) (SUB FOR R500001)

CONNECTING ROD, PISTON, RINGS AND LINER
(ENGINE SERIAL NO. -713822)

TP55094 -UN-18AUG97

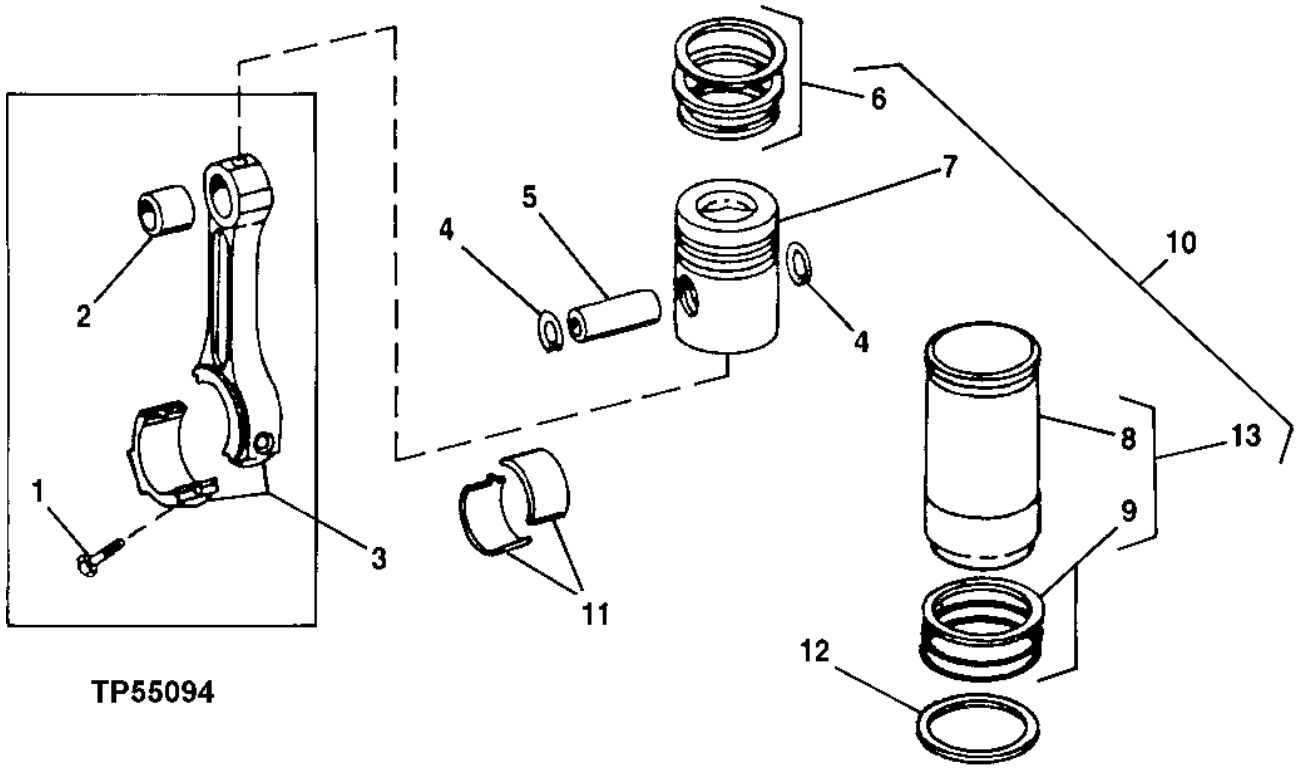

TP55094

KEY	PART NO.	PART NAME	QTY	ENGINE SERIAL NO.	REMARKS
1	R80033	CAP SCREW	12		
2	R57451	BUSHING	6		
3	RE42733	CONNECTING ROD	6		(MARKED R113612)
4	R54114	SNAP RING	12		
5	R56188	PISTON PIN	6		
6	RE66820	PISTON RING KIT	6		(SUB FOR RE48818)
7	.....	PISTON	6		(ORDER RE33115) WITH INSERT
8	.....	CYLINDER LINER	6		(ORDER RE500023) (ALSO USE AR54749 LUBRICANT FOR CYLINDER LINER PACKING INSTALLATION)
9	AR65507	O-RING KIT	6		
10	RE33115	KIT	6		PISTON WITH LINER
11	AR71080	BEARING	6		(SET OF (2) R58980)
	AR76129	BEARING	6		.25 MM (010") UNDERSIZE (SET OF (2) R62073)
	AR76130	BEARING	6		.51 MM (020") UNDERSIZE (SET OF (2) R62074)
	AR76131	BEARING	6		.76 MM (030") UNDERSIZE (SET OF (2) R62075)
12	CD15466	SHIM	AR		0.05MM (0.002)
	R65833	SHIM	AR		0.10 MM (0.004")
13	RE500023	KIT	6		

CONNECTING ROD,BEARINGS AND PISTON
(ENGINE SERIAL NO. 713823-)

TP49283 -UN-17JUL95

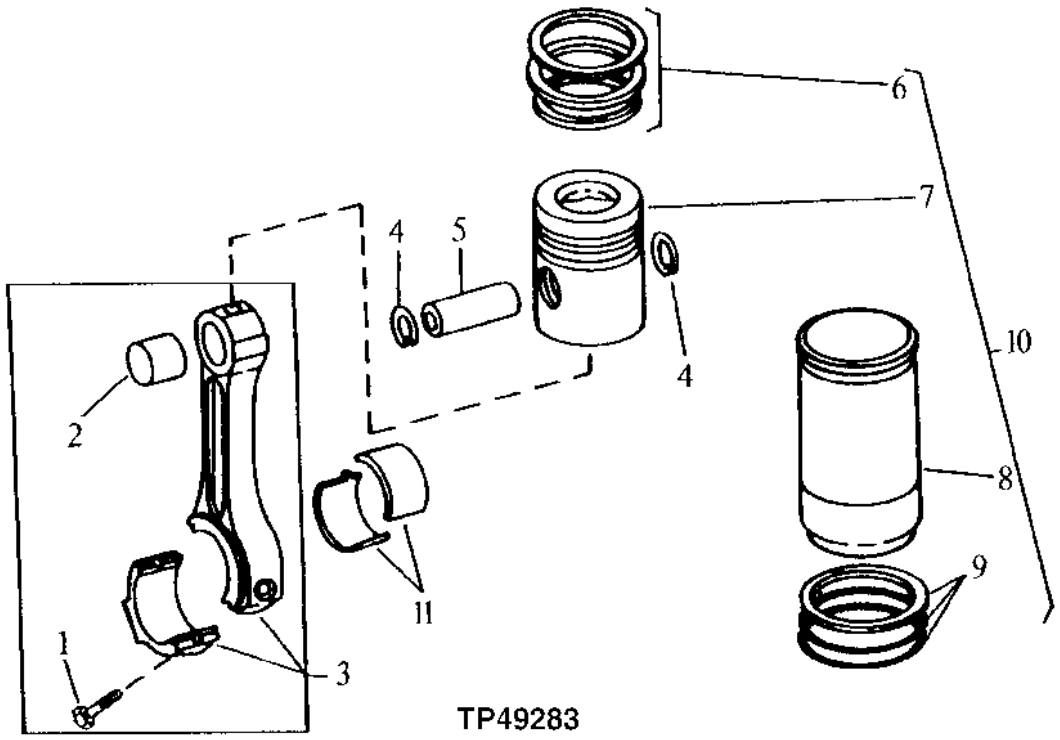

KEY	PART NO.	PART NAME	QTY	ENGINE SERIAL NO.	REMARKS
1	R114083	SCREW	12	-794054	(SUB FOR R500500) (USE WITH ROD MARKED R114081)
	R501124	SCREW	12	794055-	(USE WITH ROD MARKED R500335)
2	R114082	BUSHING	12		(SUB FOR R130602)
3	RE50770	CONNECTING ROD	6	-794054	(MARKED R114081) (SUB RE500608)
	RE500608	CONNECTING ROD	6		(MARKED R500335)
4	R54114	SNAP RING	12		
5	R123177	PISTON PIN	6		
6	RE66820	PISTON RING KIT	6		
7	.....	PISTON	6		
8	.....	CYLINDER LINER	6		
9	AR65507	O-RING KIT	6		CYLINDER LINER
10	RE65969	PISTON-LINER KIT	6		PISTON WITH LINER
11	RE65908	BEARING	6		STANDARD
	RE65909	BEARING	6		.010" UNDERSIZE

CYLINDER BLOCK
(ENGINE SERIAL NO. -713822)

TP48857 -UN-11OCT95

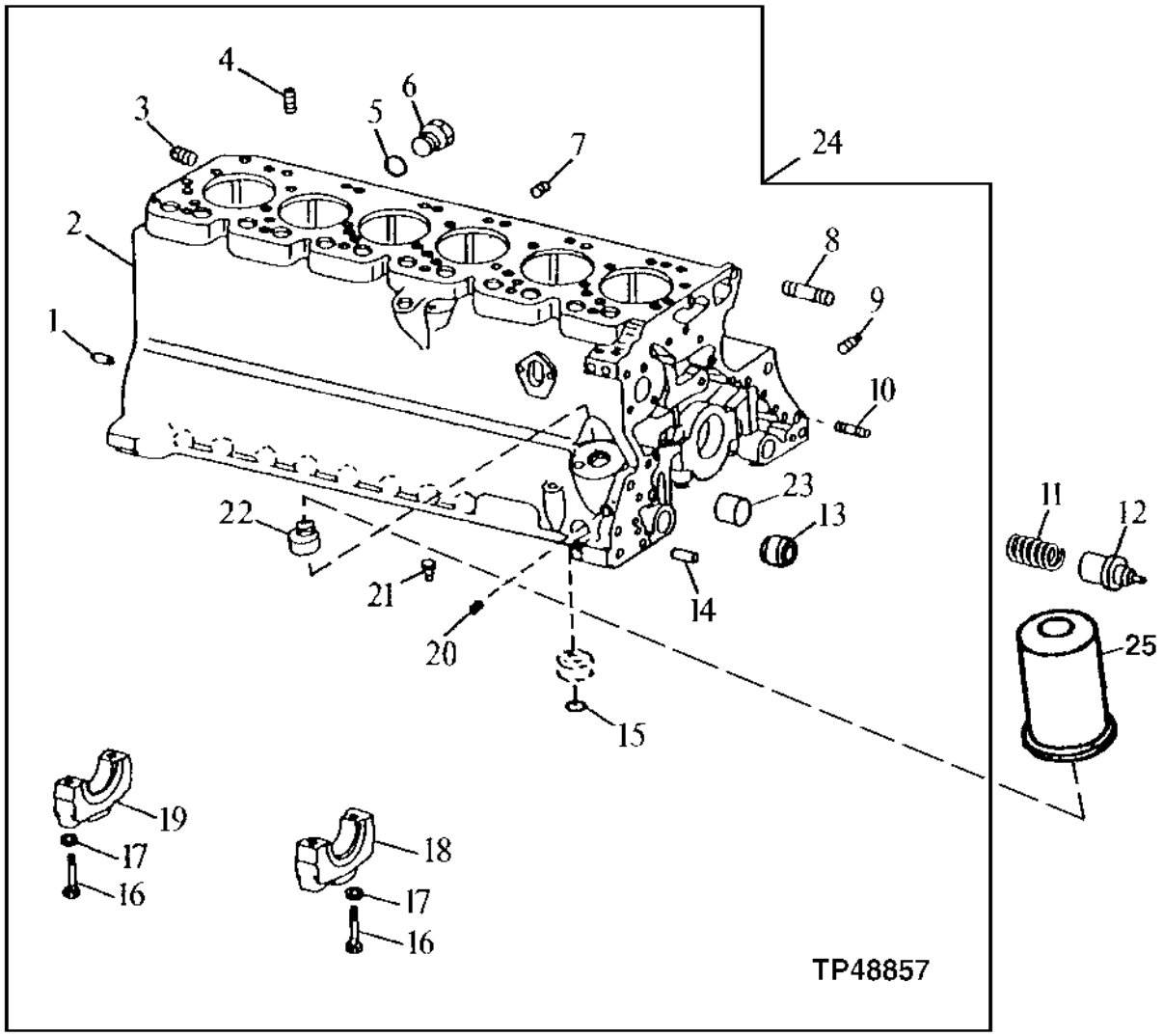

CYLINDER BLOCK
(ENGINE SERIAL NO. -713822)

KEY	PART NO.	PART NAME	QTY	ENGINE SERIAL NO.	REMARKS
1	R48685	DOWEL PIN	4		
2	.....	CYLINDER BLOCK	1		
3	15H562	PIPE PLUG	1		1"
4	15H690	PIPE PLUG	1		3/4"
5	U13639	O-RING	1		
6	R39741	DRAIN PLUG	1		WITHOUT COOLANT HEATER
	R55233	PIPE PLUG	1		
7	15H685	PIPE PLUG	1		1/4"
8	R122226	STUD	2		(SUB FOR R122226)
9	R104592	PIPE PLUG	7		
10	T25701	STUD	1		
11	R111137	SPRING	1		
12	R111135	VALVE	1		
13	R26493	BUSHING	1		
14	R26650	DOWEL PIN	2		
15	R75892	O-RING	1		(OIL PUMP TUBE)
16	T23474	CAP SCREW	14		
17	T20168	WASHER	14		
18	R65215	BEARING CAP	6		MAIN BEARING
19	R79089	CAP	1		REAR MAIN BEARING
20	15H623	PIPE PLUG	1		3/8"
21	R54802	ORIFICE	6		
22	T23435	THREADED NIPPLE	1		
23	T18891	CAP	2		
24	RE50657	CYLINDER BLOCK	1		(MARKED R111464 OR R124852) (ALSO ORDER R111135 AND R111137)
25	T19044	OIL FILTER	1		

CYLINDER BLOCK
(ENGINE SERIAL NO. 713823-)

TP55063 -UN-16JUN97

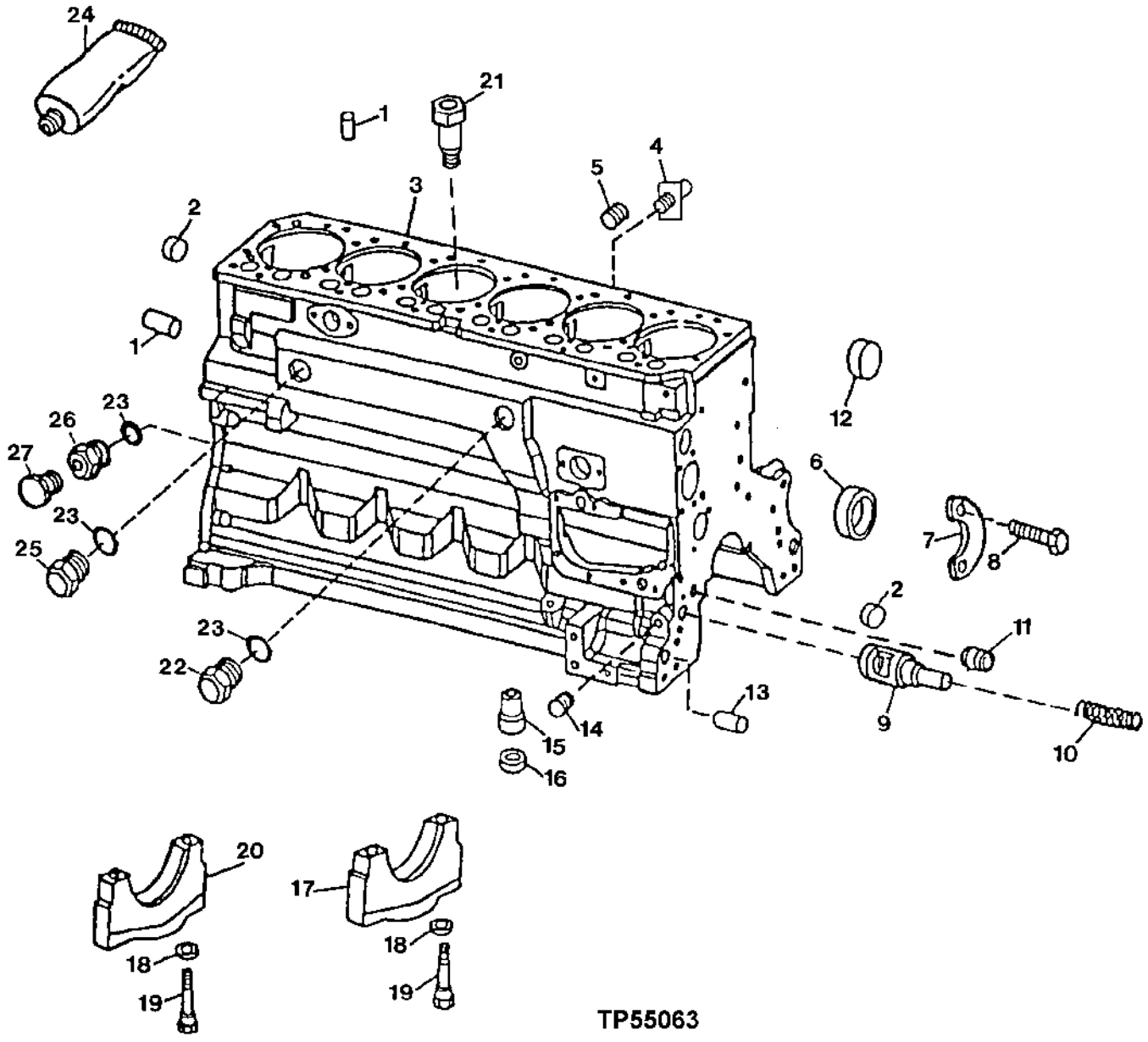

CYLINDER BLOCK-CONTINUED
(ENGINE SERIAL NO. 713823-)

KEY	PART NO.	PART NAME	QTY	ENGINE SERIAL NO.	REMARKS
1	R48685	DOWEL PIN	2		
2	T18891	CAP	2		
3	.....	CYLINDER BLOCK	1		(MARKED R119565) (ORDER RE65981)
4	AT13740	DRAIN VALVE	1	-814064	
	AT13740	DRAIN VALVE	1	814065-	
5	R104592	PIPE PLUG	7		
6	R119874	BUSHING	1		CAMSHAFT
7	R132518	PLATE	1		(SUB FOR R122845)
8	19M8999	SCREW	2		M8 X 25
9	R121043	VALVE	1		ENGINE OIL BY-PASS
10	R111137	SPRING	1		
11	R26493	BUSHING	1		OIL PRESSURE REGULATING
12	R116466	BUSHING	1		
13	R26650	DOWEL PIN	2		
14	15H623	PIPE PLUG	1		3/8"
15	R115390	BUSHING	1		
16	R75892	O-RING	1		
17	R114241	BEARING CAP	6		MAIN BEARING
18	T20168	WASHER	14		
19	T23474	CAP SCREW	14		
20	R132186	BEARING CAP	1		MAIN THRUST BEARING
21	R131182	ORIFICE	6		
22	R39741	DRAIN PLUG	1		
23	U13639	O-RING	2		
24	T43514	GASKET	1		(PLASTIC GASKET)
25	R39741	DRAIN PLUG	1		(WITHOUT CAB HEATER)
26	R123616	PLUG	1		(WITH CAB HEATER)
27	RE46685	PLUG	1		(WITHOUT CAB HEATER)
28	51M7043	O-RING	1		(WITH CAB HEATER)
29	AT174697	PIPE ELBOW	1		(WITH CAB HEATER)

ENGINE SHORT BLOCK
(ENGINE SERIAL NO. -713822)

T134656 -UN-18OCT00

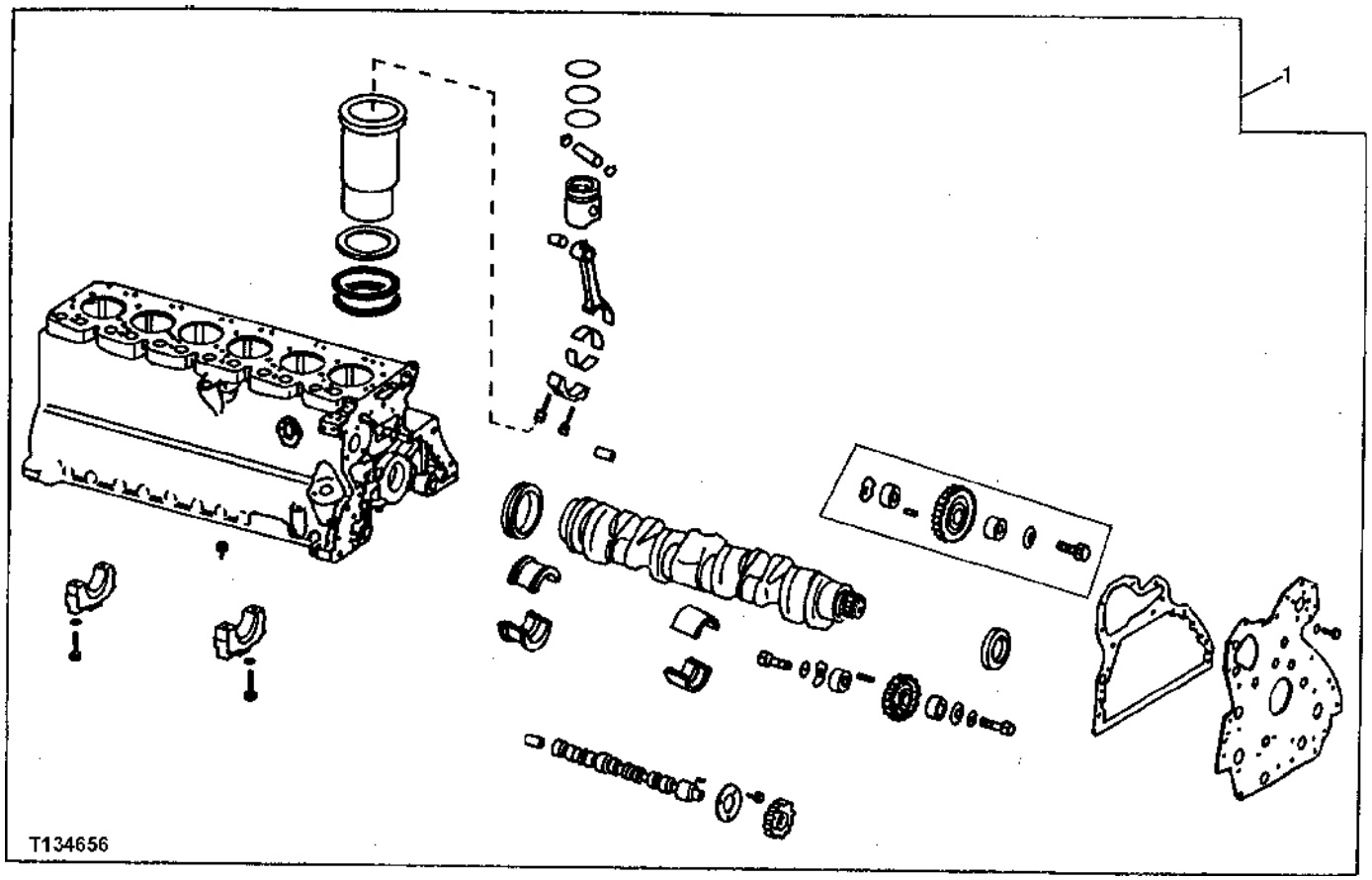

ENGINE SHORT BLOCK
(ENGINE SERIAL NO. -713822)

KEY	PART NO.	PART NAME	QTY	ENGINE SERIAL NO.	REMARKS
1	RE60841	SHORT BLOCK ASSEMBLY	1		(MARKED R111464 OR R124852) (SUB FOR RE25525) (MARKED R81948 OR R111081) (ALSO ORDER AR67942, RE44574 AND RE501580)

ENGINE SHORT BLOCK
(ENGINE SERIAL N0. 713823-)

TP55074 -UN-01MAY97

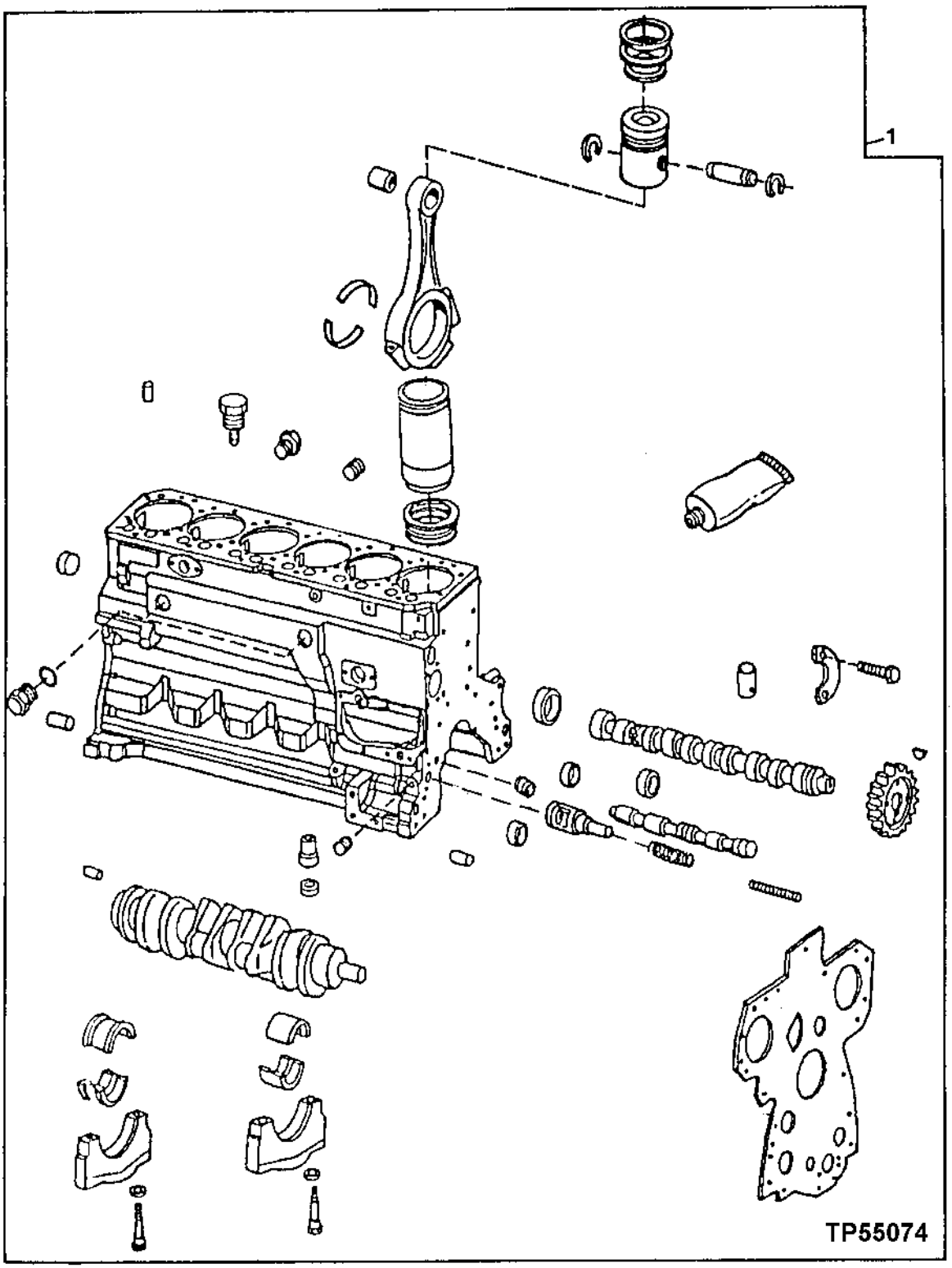

SHORT BLOCK
(ENGINE SERIAL NO. 713823-)

KEY	PART NO.	PART NAME	QTY	ENGINE SERIAL NO.	REMARKS
1	RE65981	SHORT ENGINE	1	(MARKED R119565)	

ENGINE FRONT PLATE
(ENGINE SERIAL NO. -713822)

TP1130 -UN-01JAN94

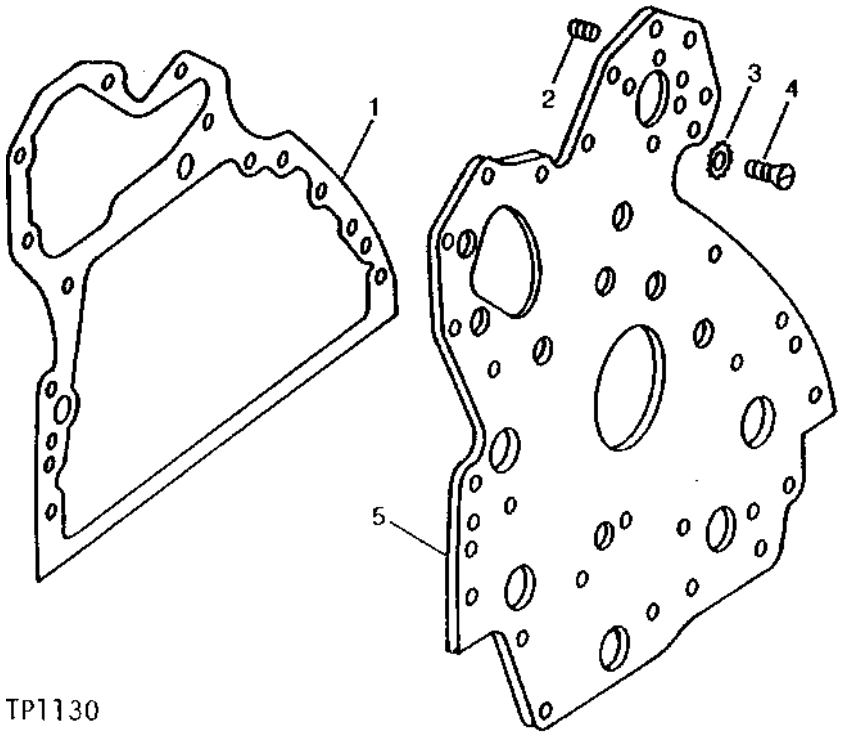

KEY	PART NO.	PART NAME	QTY	ENGINE SERIAL NO.	REMARKS
1	R131794	GASKET	1		(SUB FOR R90648)
2	AT21191	SET SCREW	8		
	AT22919	SET SCREW	2		
3	12H324	WASHER	5		3/8"
4	T20166	SCREW	5		
5	RE16149	PLATE	1		

ENGINE FRONT PLATE
(ENGINE SERIAL NO. 713823-)

TP58368 -UN-09OCT98

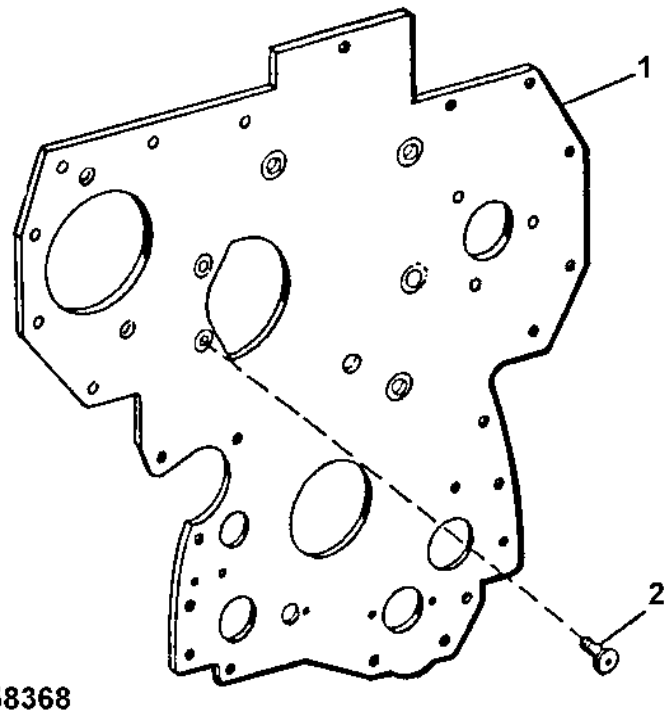

TP58368

KEY	PART NO.	PART NAME	QTY	ENGINE SERIAL NO.	REMARKS
1	R134526	PLATE	1	-814064	
	R134527	PLATE	1	814065-	
2	R136475	SCREW	4		

ENGINE OIL DIPSTICK
(ENGINE SERIAL NO. -713822)

TP42615 -UN-01JAN94

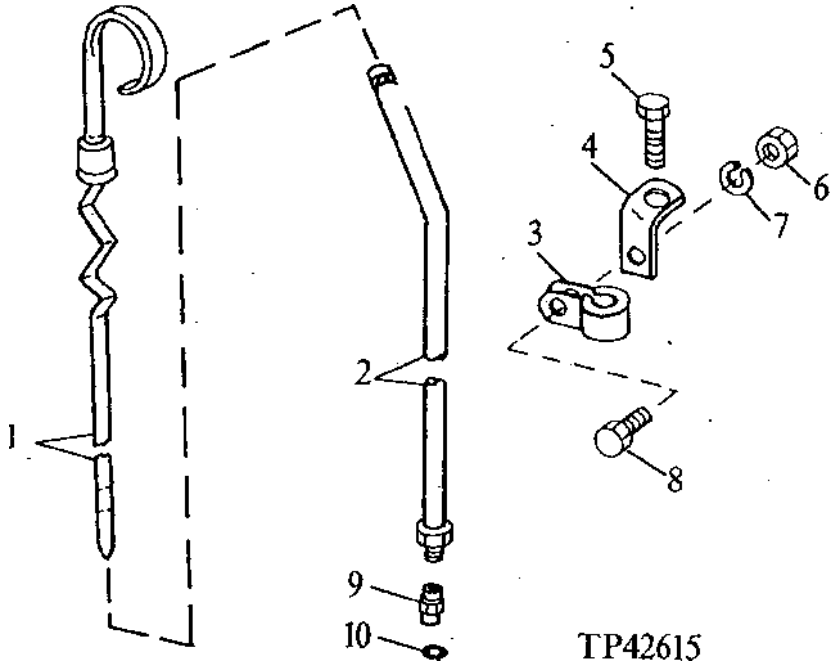

KEY	PART NO.	PART NAME	QTY	ENGINE SERIAL NO.	REMARKS
1	RE46787	DIPSTICK	1		
2	RE49566	DIPSTICK TUBE	1		
3	T28862	CLAMP	1		
4	R112706	ANGLE	1		
5	19H1895	CAP SCREW	1		1/2" X 3/4"
6	N10215	LOCK NUT	1		3/8"
7	24H1305	WASHER	AR		13/32" X 13/16" X 0.065"
8	R122618	SCREW	1		
9	R77016	ADAPTER	1		
10	R10093	O-RING	1		

ENGINE OIL DIPSTICK
(ENGINE SERIAL NO. 713823-)

TP69502 -UN-02MAY00

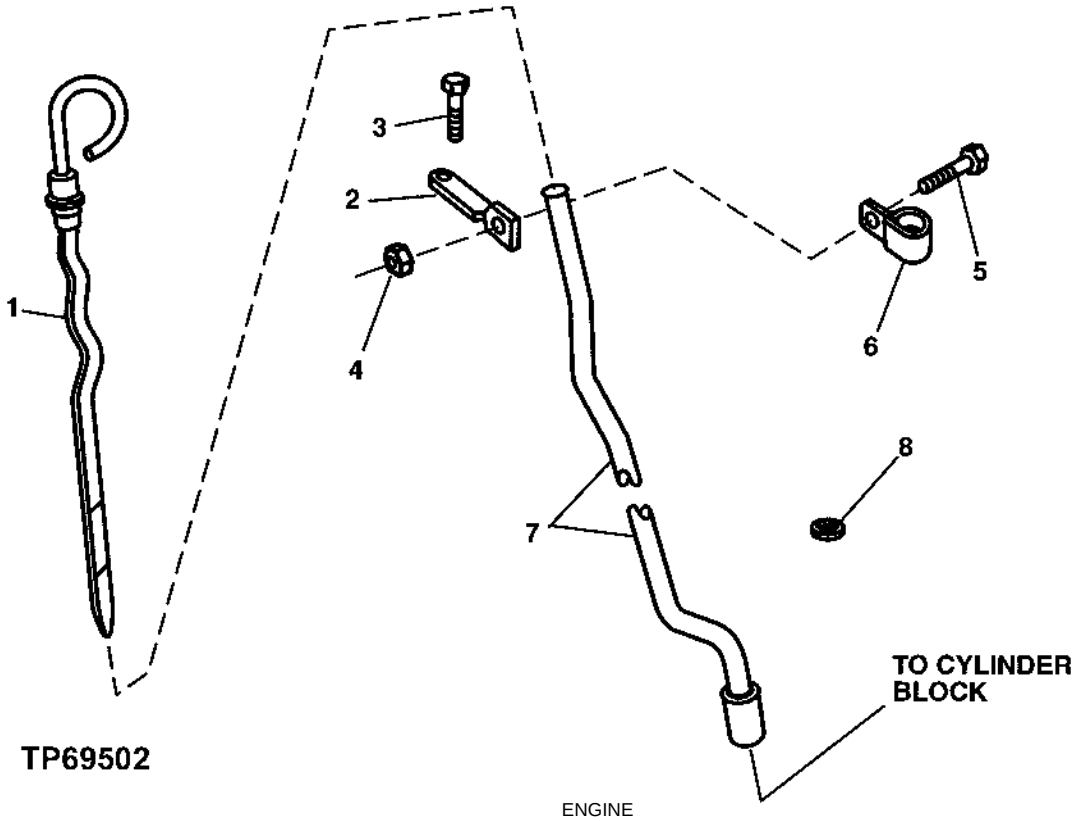

KEY	PART NO.	PART NAME	QTY	ENGINE SERIAL NO.	REMARKS
1	RE66178	DIPSTICK	1		
2	R134552	BRACKET	1		
3	19M7784	EYEBOLT	1		M10 X 20
4	14M7298	FLANGE NUT	1		M8
5	19M7866	SCREW	1		M8 X 20
6	T28862	CLAMP	1		
7	R502465	DIPSTICK TUBE	1		(SUB FOR R130886 AND R500453)
8	R502725	PLUG	1		(SUB FOR R134240)

ENGINE OIL PUMP
(ENGINE SERIAL NO. -713823)

TP12234 -UN-01JAN94

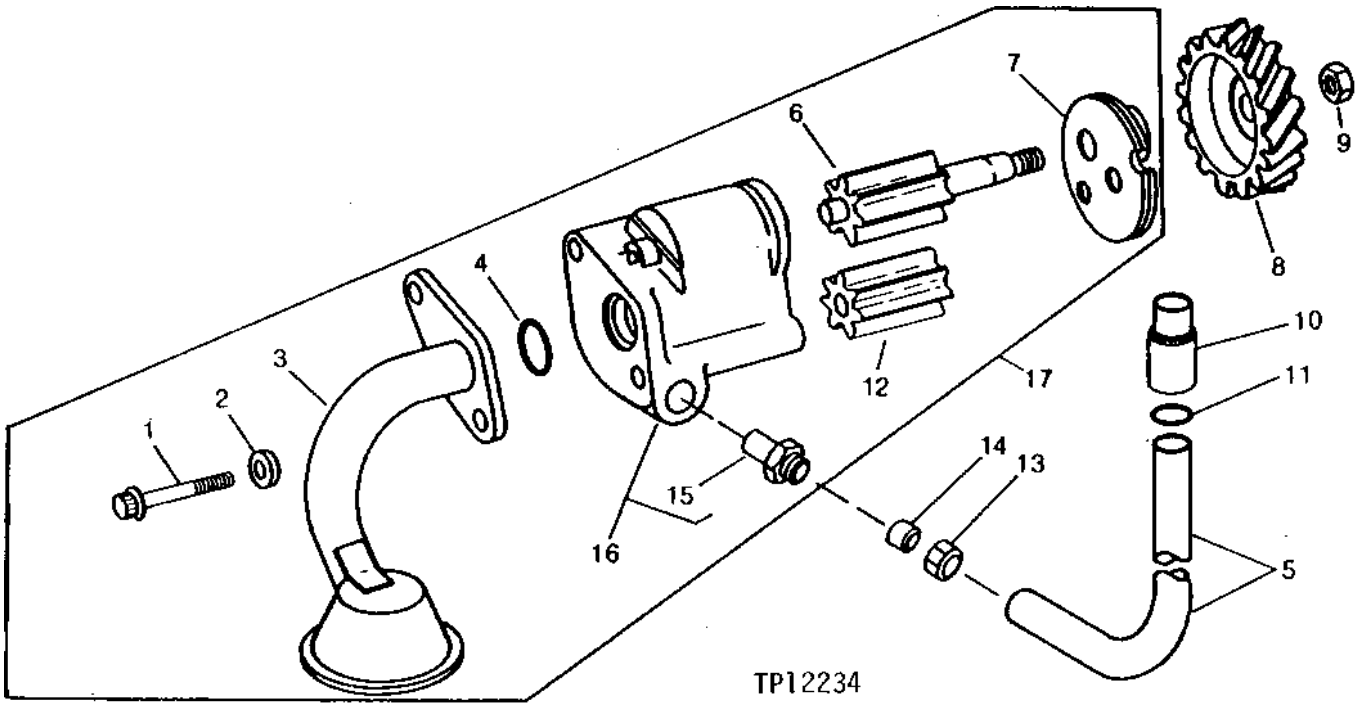

KEY	PART NO.	PART NAME	QTY	ENGINE SERIAL NO.	REMARKS
1	R116424	CAP SCREW	2		
2	R74553	WASHER	2		
3	RE56389	OIL PUMP INTAKE	1		(SUB FOR RE20853)
4	R61871	O-RING	1		
5	R79564	OIL TUBE	1		
6	AR85788	SHAFT	1		(7 TEETH) (ALSO ORDER R66177)
7	R54632	COVER	1		
8	T20298	GEAR	1		(33 TEETH)
9	14H826	NUT	1		1/2"
10	R115390	BUSHING	1		
11	R97185	O-RING	1		
12	R66177	GEAR	1		(7 TEETH) (ALSO ORDER AR85788)
13	R79562	FITTING	1		
14	R79563	SLEEVE	1		
15	R79560	ADAPTER	1		
16	RE15490	HOUSING	1		(MARKED R54629)
17	AR79466	OIL PUMP	1		

ENGINE OIL PUMP
(ENGINE SERIAL NO. 713824-)

TP50593 -UN-17FEB97

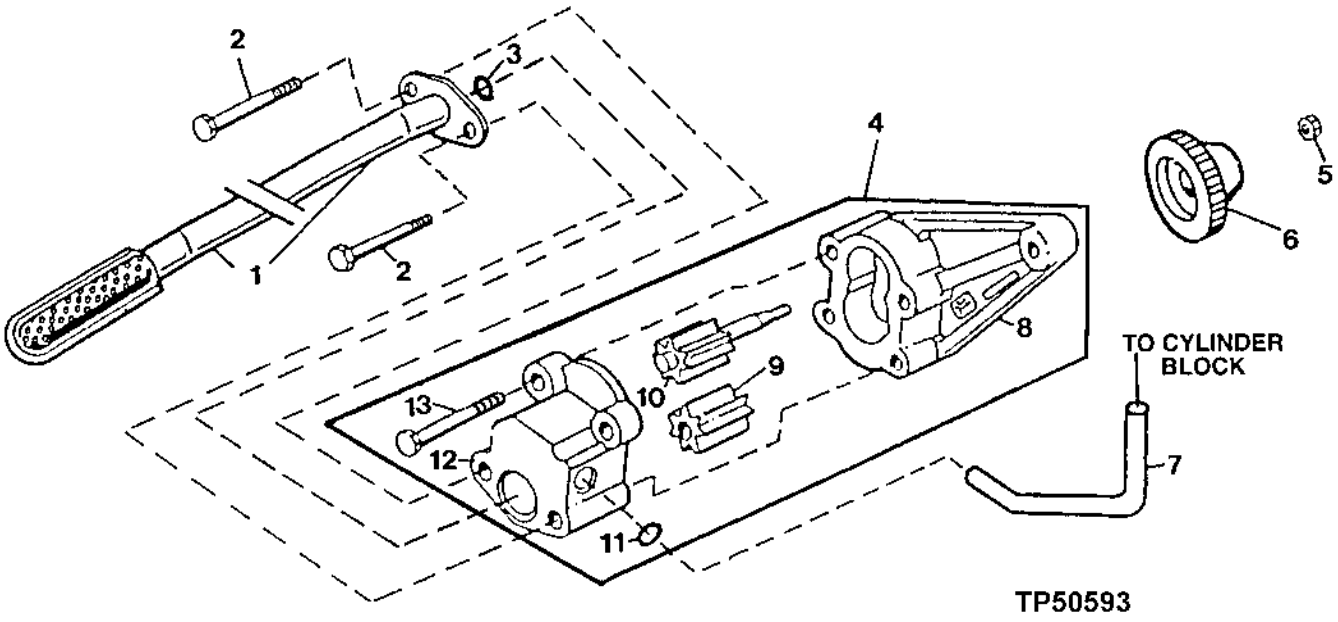

KEY	PART NO.	PART NAME	QTY	ENGINE SERIAL NO.	REMARKS
1	RE71143	OIL PUMP INTAKE	1		
2	19M8986	SCREW	2		M8 X 100
3	R61871	O-RING	1		
4	RE504914	OIL PUMP	1		(MARKED R502687) (SUB FOR RE502269) (MARKED R123179) (SUB FOR RE70153 MARKED R123179 AND RE59582 MARKED R123179)
5	14M7066	NUT	1		M12
6	R120638	GEAR	1		
7	R121376	TUBE	1		
8	.....	HOUSING	1		(ORDER RE504914)
9	.....	GEAR	1		(ORDER RE504914)
10	.....	GEAR	1		(ORDER RE504914)
11	R97185	O-RING	1		
12	.....	COVER	1		(ORDER RE504914)
13	19M7802	SCREW	2	-713822	M8 X 65, HS 10.9
	19M8987	SCREW	2	713823-	M8 X 65

MEMORANDA

ENGINE OIL PAN
(ENGINE SERIAL NO. -713822)

TP42768 -UN-01JAN94

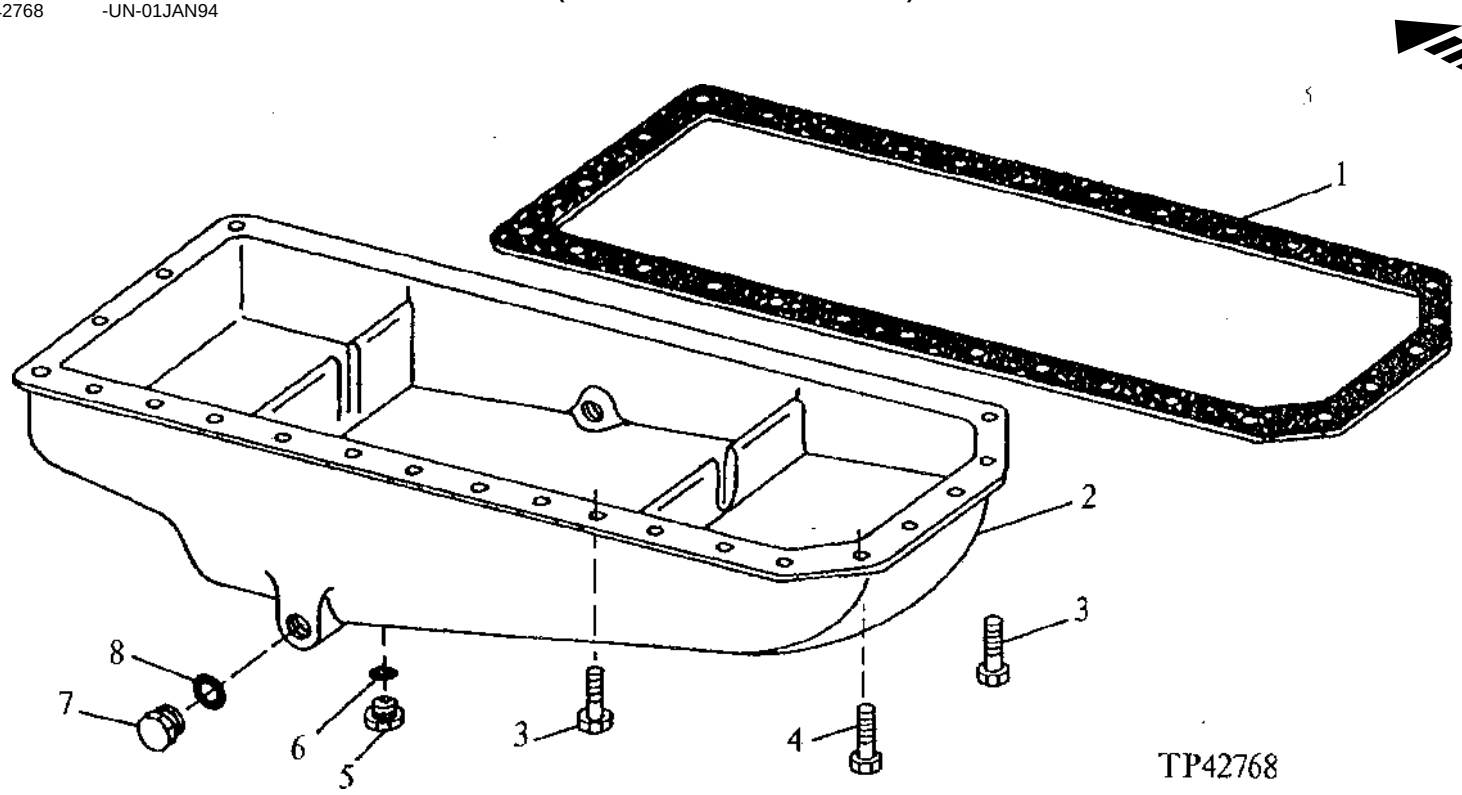

KEY	PART NO.	PART NAME	QTY	ENGINE SERIAL NO.	REMARKS
1	R97344	GASKET	1		
2	R132653	OIL PAN	1	529009-	(ALSO ORDER (2) 19H3727) (SUB FOR R108380)
3	19H3411	CAP SCREW	26		3/8" X 1-1/8"
	19H3727	CAP SCREW	4		3/8" X 2"
4	19H3065	CAP SCREW	6		3/8" X 2"
5	M1746T	DRAIN PLUG	1		
6	T13213	WASHER	1		57/64" X 1-3/16" X 0.064"
7	R27474	DRAIN PLUG	1		
8	R47151	O-RING	1		

ENGINE OIL PAN
(ENGINE SERIAL NO. 713823-)

TP50594 -UN-04FEB97

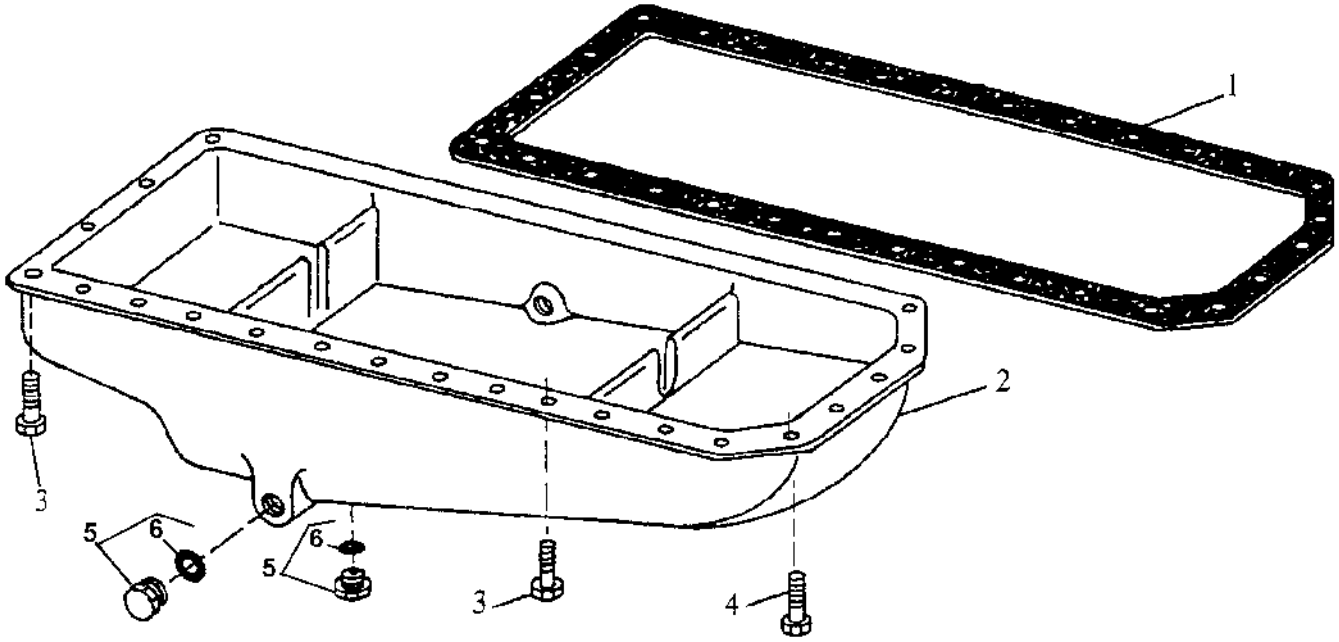

TP50594

KEY	PART NO.	PART NAME	QTY	ENGINE SERIAL NO.	REMARKS
1	R123354	GASKET	1		
2	R134725	OIL PAN	1		
3	19M7867	SCREW	22		M8 X 25
	19M7867	SCREW	4		M8 X 25
4	19M7868	SCREW	6		M8 X 30
5	RE46685	PLUG	2		
6	51M7043	O-RING	2		15.300 X 2.200 MM

ENGINE OIL FILLER INLET COVER
(ENGINE SERIAL NO. 713823-)

TP62061 -UN-30APR99

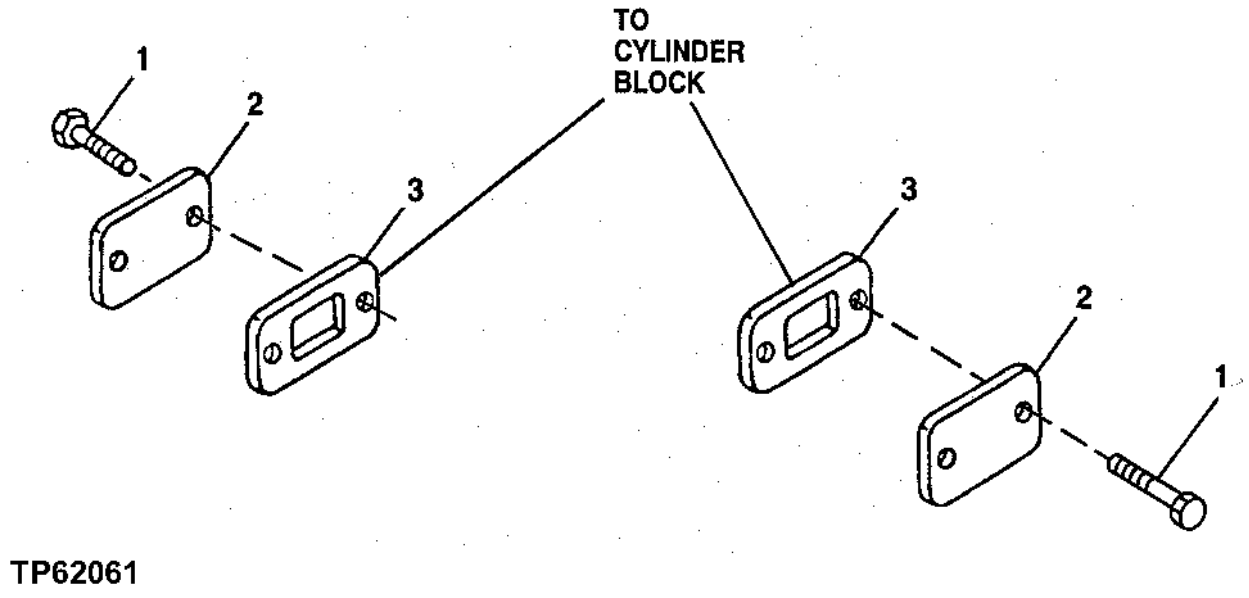

TP62061

KEY	PART NO.	PART NAME	QTY	ENGINE SERIAL NO.		REMARKS
1	RE66334	CAP SCREW	4	-814064	M8 X 16	
	RE67238	SCREW	4	814065-	M8 X 20	
2	R116296	COVER	2			
3	R136495	GASKET	2			

ENGINE OIL FILTER AND ADAPTER
(ENGINE SERIAL NO.713824-)

TP55368 -UN-04MAY98

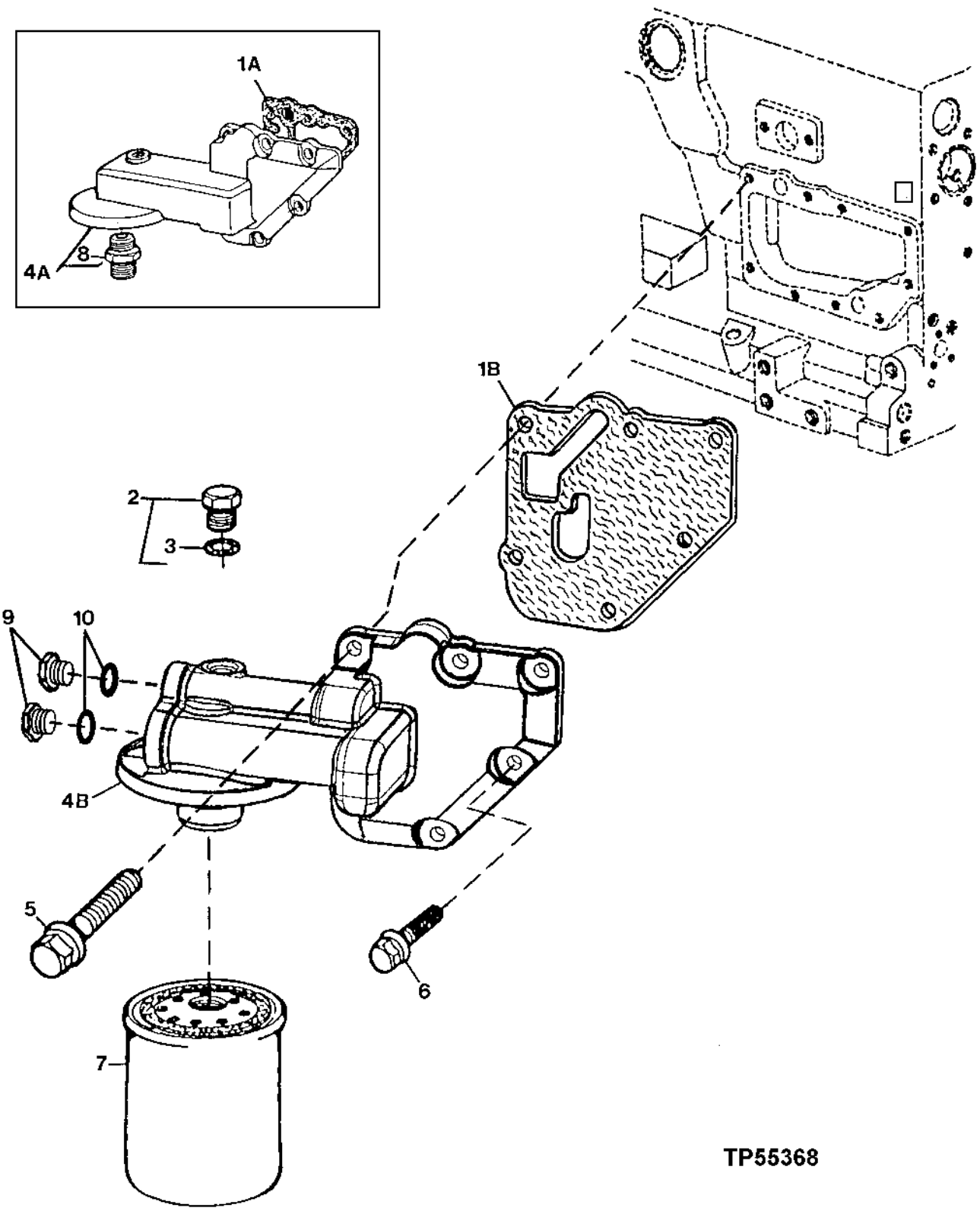

ENGINE OIL FILTER AND ADAPTER
(ENGINE SERIAL NO.713824-)

KEY	PART NO.	PART NAME	QTY	ENGINE SERIAL NO.	REMARKS
1A	R123525	GASKET	1	-766907	
1B	R500374	GASKET	1	766908-	
2	RE46716	PLUG	AR	-XXXXXX	WITHOUT TURBO
	RE52242	PLUG	AR	XXXXXX-	WITHOUT TURBO
3	51M7042	O-RING	1		13.300 X 2.200 MM
4A	RE59908	FILTER HEAD	1	-766907	(MARKED R123475) (SUB RE500133) (ALSO ORDER (2) R116115, (2) 51M7045 AND R500374)
4B	RE500133	FILTER HEAD	1	766908-	
5	19M7802	SCREW	5		M8 X 65
6	RE67238	SCREW	1		(WITH PRE-APPLIED SEALANT)
7	RE59754	OIL FILTER	1		
8	.....	ADAPTER	1	-766907	(R123591 NO LONGER AVAILABLE) (SUB RE59908)
9	R116115	FITTING	2	766908-	
10	51M7045	O-RING	2	766908-	

MEMORANDA

ENGINE VENTILATOR TUBE
(ENGINE SERIAL NO. -713822)

TP42771 -UN-01JAN94

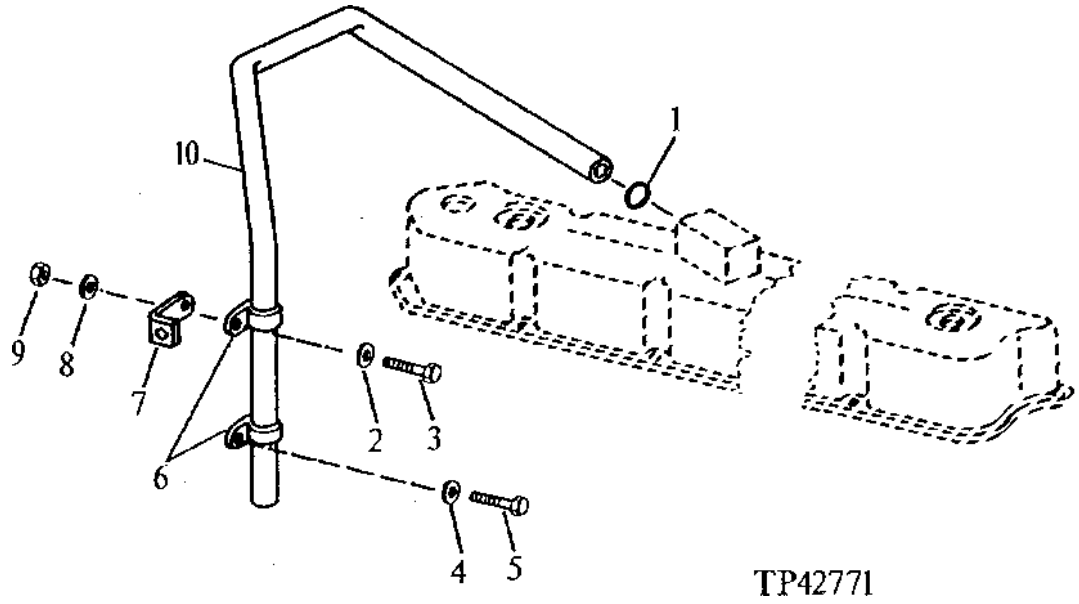

KEY	PART NO.	PART NAME	QTY	ENGINE SERIAL NO.	REMARKS
1	R56463	O-RING	1		
2	24M1754	WASHER	AR		10.500 X 18 X 1.600 MM
3	19H3411	CAP SCREW	1		3/8" X 1-1/8", (SUB FOR 19H3239, THIS APPLICATION)
4	24H1136	WASHER	1		11/32" X 11/16" X 0.065"
5	19H2664	CAP SCREW	1		5/16" X 3/4"
6	R40791	CLAMP	2		
7	R73975	BRACKET	1		
8	12H304	LOCK WASHER	AR		3/8"
9	N10215	LOCK NUT	1		3/8", (SUB FOR 14H812, THIS APPLICATION)
10	R59047	TUBE	1		

ENGINE VENTILATING SYSTEM
(ENGINE SERIAL NO. 713823-)

T141313 -UN-16APR01

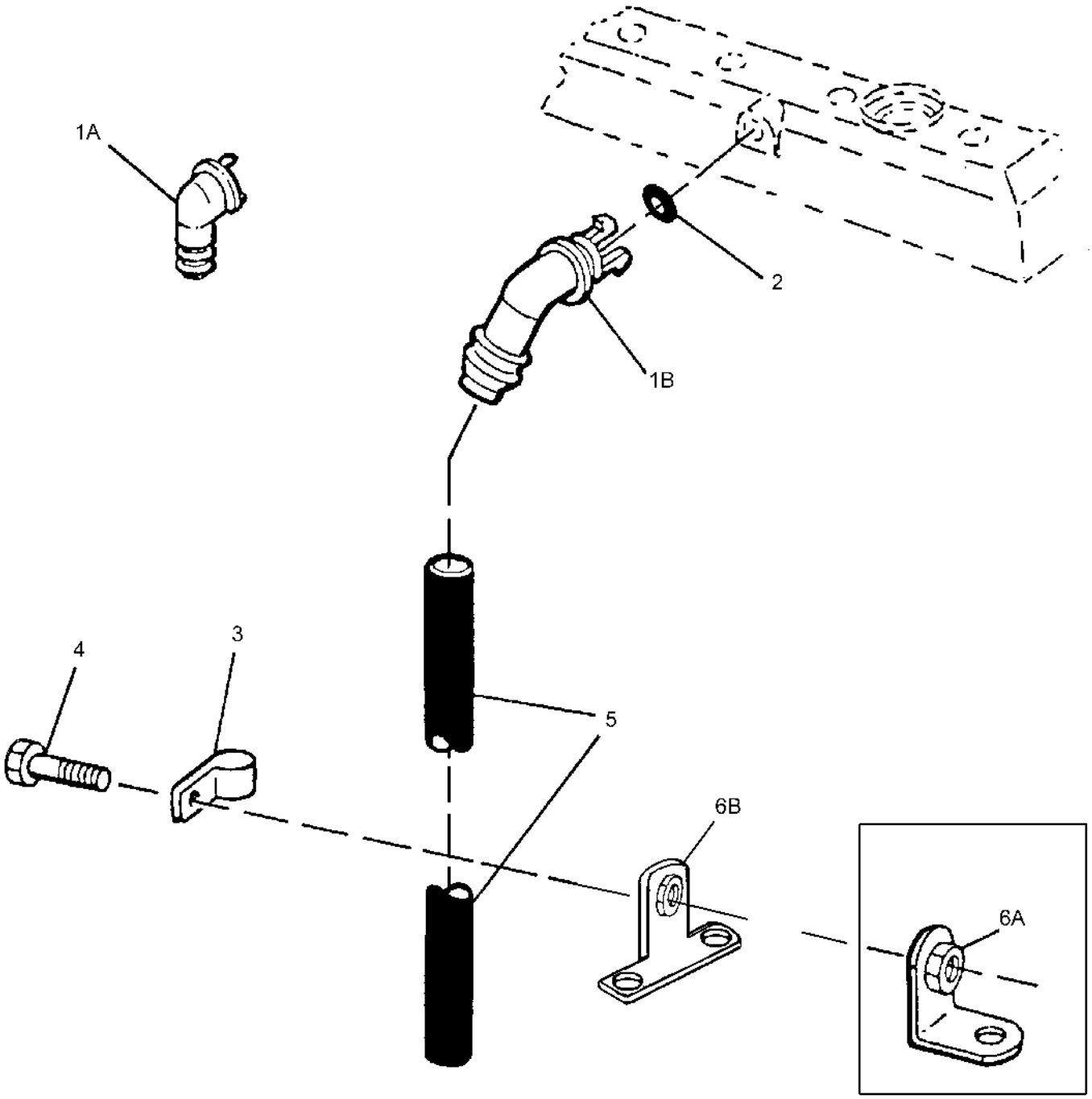

T141313

ENGINE VENTILATING SYSTEM
(ENGINE SERIAL NO. 713823-)

KEY	PART NO.	PART NAME	QTY	ENGINE SERIAL NO.	REMARKS
1A	R120467	ELBOW FITTING	1	-814874	
1B	R123586	ELBOW FITTING	1	814875-	
2	R72328	O-RING	1		18.720 X 2.616 MM (0.737" X 0.103")
3	R72659	CLAMP	1		
4	19M7866	SCREW	1	-814874	M8 X 20
	T56055	BOLT	1	-814874	3/8 INCH
	19M7783	SCREW	1	814875-	8 MM
5	H36031	HOSE	1		
6A	AT12875	BRACKET	1	-814874	
	RE504036	BRACKET	1	814875-873371	
6B	RE506871	BRACKET	1	873372-	

CYLINDER HEAD HEAD GASKET AND VALVES
(ENGINE SERIAL NO. -713822)

TP28576 -UN-01JAN94

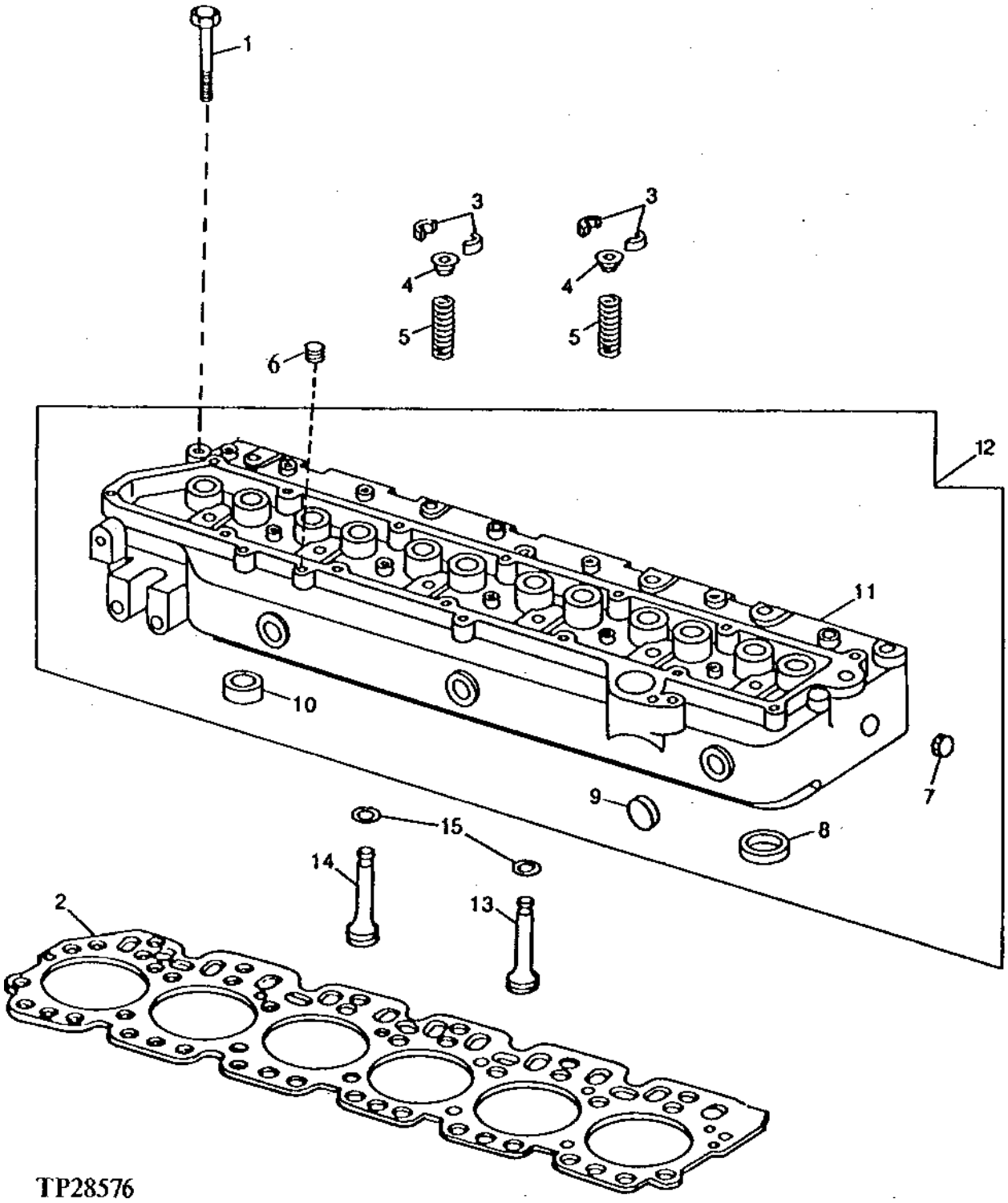

CYLINDER HEAD HEAD GASKET AND VALVES
(ENGINE SERIAL NO. -713822)

KEY	PART NO.	PART NAME	QTY	ENGINE SERIAL NO.	REMARKS
1	R85363	CAP SCREW	26		
2	R114157	ENGINE CYLINDER HEAD GASKET	1		(SUB FOR R92426)
3	R91889	RETAINER	24		
4	RE60005	ROTATOR	12		(SUB FOR RE31323)
5	R26125	SPRING	12		
6	R104592	PIPE PLUG	1		
7	A3910R	CAP	2		
8	R98063	VALVE SEAT INSERT	6		STANDARD SIZE INTAKE VALVE
	R98335	VALVE SEAT INSERT	6		OVERSIZE INTAKE VALVE
9	R43409	CAP	3		
10	R85687	VALVE SEAT INSERT	6		STANDARD SIZE EXHAUST VALVE
	R93910	VALVE SEAT INSERT	6		OVERSIZE EXHAUST VALVE
11	.....	CYLINDER HEAD	1		(MARKED R120052)
12	RE48618	CYLINDER HEAD	1		(MARKED R120052)
13	R90692	EXHAUST VALVE	6		STANDARD
	R97492	EXHAUST VALVE	6		0.38 MM (.015") OVERSIZE
	R97493	EXHAUST VALVE	6		0.76 MM (.030") OVERSIZE
14	R98062	INTAKE VALVE	6		STANDARD
	R97490	INTAKE VALVE	6		0.38 MM (.015") OVERSIZE
	R97491	INTAKE VALVE	6		0.76 MM (.030") OVERSIZE
15	RE31617	SEAL	12		

CYLINDER HEAD, HEAD GASKET AND VALVES
(ENGINE SERIAL NO. 713823-)

TP49463 -UN-05SEP96

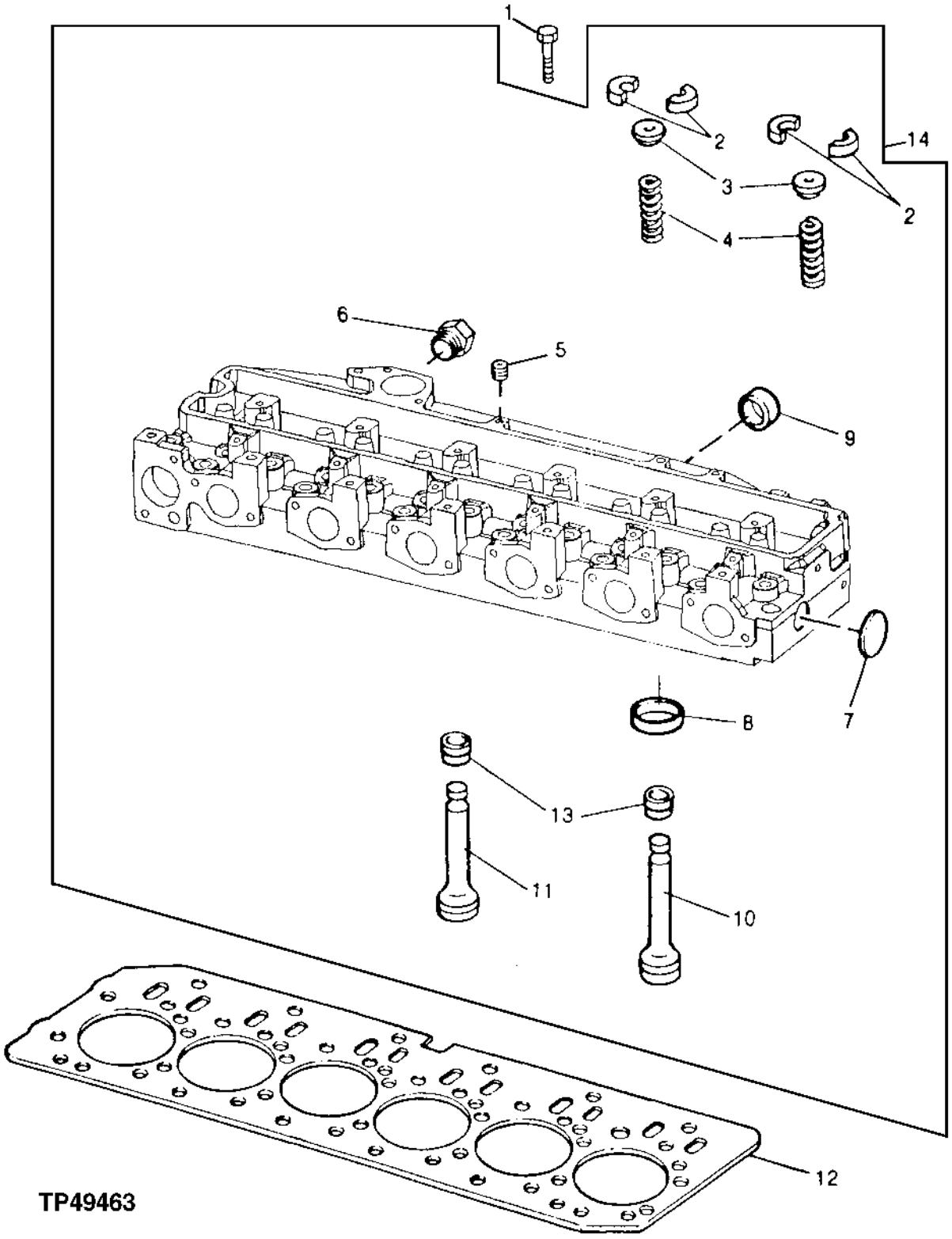

CYLINDER HEAD, HEAD GASKET AND VALVES
(ENGINE SERIAL NO. 713823-)

KEY	PART NO.	PART NAME	QTY	ENGINE SERIAL NO.	REMARKS
1	R85363	CAP SCREW	26		
2	R91889	RETAINER	24		
3	RE60005	ROTATOR	12		
4	R26125	SPRING	12		
5	R104592	PIPE PLUG	1		
6	T58477	FITTING	1		
7	CD16284	CAP	1		
8	R98063	VALVE SEAT INSERT	6		STANDARD SIZE INTAKE VALVE
	R98335	VALVE SEAT INSERT	6		OVERSIZE INTAKE VALVE
	R85687	VALVE SEAT INSERT	6		STANDARD SIZE EXHAUST VALVE
	R93910	VALVE SEAT INSERT	6		OVERSIZE EXHAUST VALVE
9	R43409	CAP	3		
10	R90692	EXHAUST VALVE	6		STANDARD
11	R98062	INTAKE VALVE	6		STANDARD
12	R116516	ENGINE CYLINDER HEAD GASKET	1		
13	RE31617	SEAL	12		
14	RE57489	CYLINDER HEAD	1		(MARKED R121608)

EXHAUST MANIFOLD AND ELBOW
(ENGINE SERIAL NO. -713822)

TP43936 -UN-01JAN94

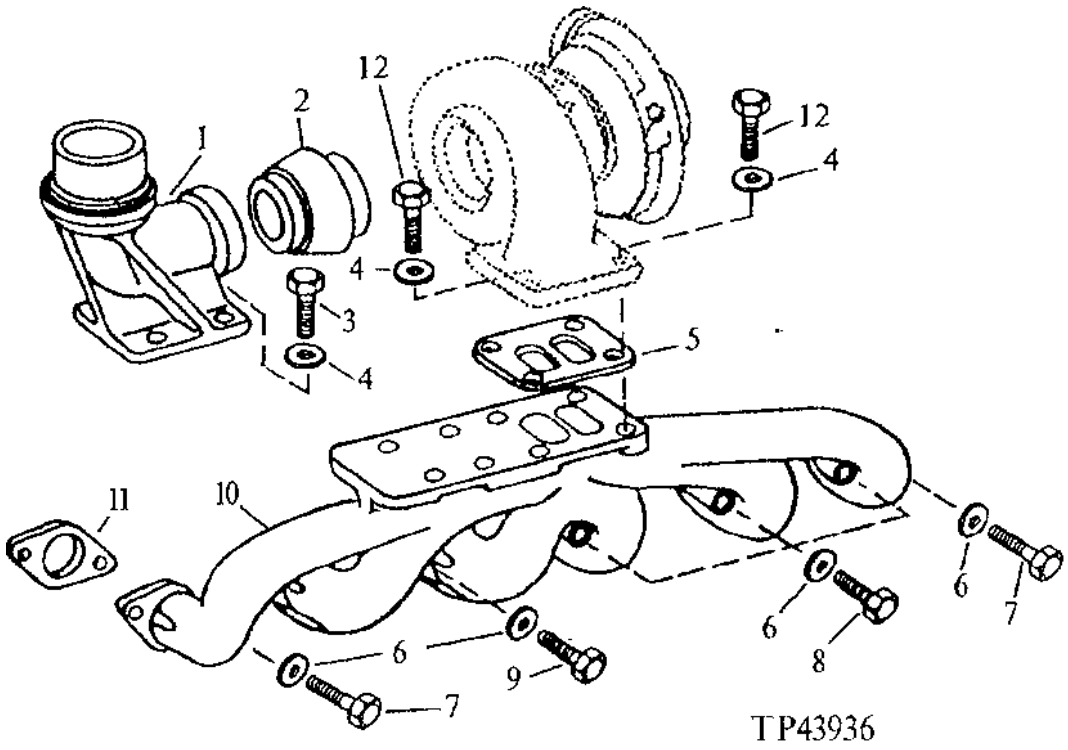

KEY	PART NO.	PART NAME	QTY	ENGINE SERIAL NO.	REMARKS
1	R66719	ELBOW FITTING	1		
2	R51736	ADAPTER	1		
3	19H3411	CAP SCREW	4		3/8" X 1-1/8"
4	24H1305	WASHER	AR		13/32" X 13/16" X 0.065"
5	R123572	GASKET	1		(SUB FOR R89879, THIS APPLICATION)
6	24M7106	WASHER	AR		10 X 18 X 2.500 MM
7	19H3411	CAP SCREW	9		3/8" X 1-1/8"
8	19H3710	CAP SCREW	3		3/8" X 3-3/8"
9	19H3229	CAP SCREW	9		7/16" X 2-3/8"
10	T30818	EXHAUST MANIFOLD	1		
11	R90658	GASKET	6		
12	R54500	SCREW	4		(SUB FOR R54500, THIS APPLICATION)

EXHAUST ELBOW
(ENGINE SERIAL NO. 713823-)

TP49256 -UN-15MAY95

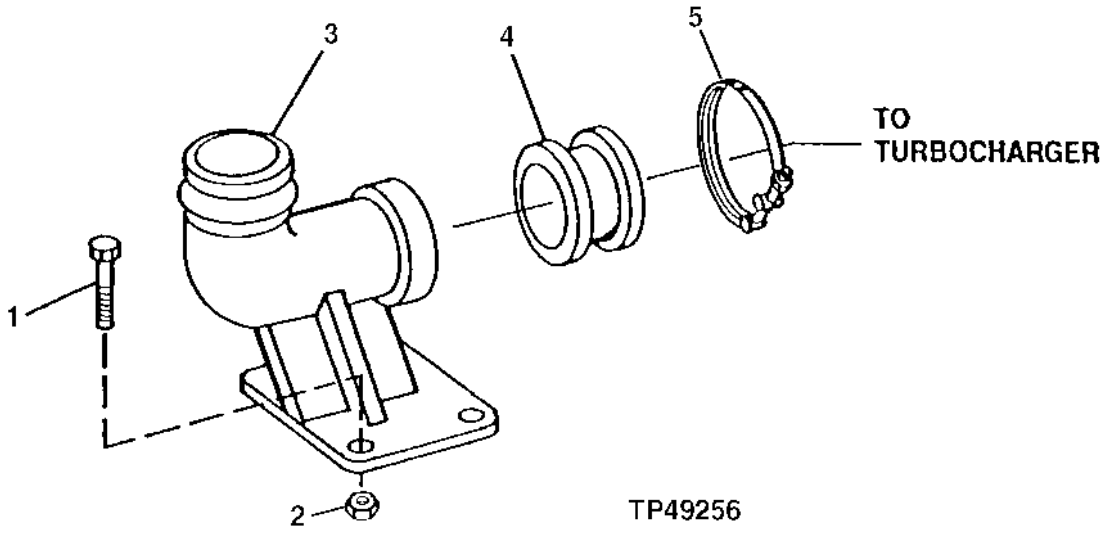

KEY	PART NO.	PART NAME	QTY	ENGINE SERIAL NO.	REMARKS
1	19M8162	CAP SCREW	3	-814064	M10 X 40
	19M8292	SCREW	1	-814064	M10 X 50
	19M8162	CAP SCREW	4	814065-	M10 X 40
2	14M7296	FLANGE NUT	4		M10
3	R123246	PIPE ELBOW	1		
4	R87732	ADAPTER	1		
5	RE166242	CLAMP	1	-814064	(SUB FOR RE40048 OR RE70212)
	RE40048	CLAMP	1	814065-	

EXHAUST MANIFOLD
(ENGINE SERIAL NO. 713823-)

TP49516 -UN-21NOV96

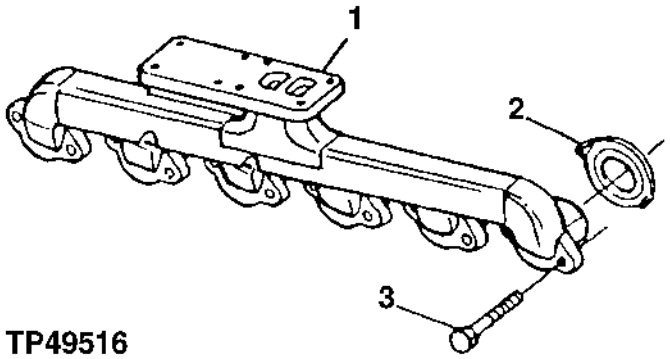

TP49516

KEY	PART NO.	PART NAME	QTY	ENGINE SERIAL NO.	REMARKS
1	R132262	EXHAUST MANIFOLD	1		
2	R90658	GASKET	6		
3	19M7810	SCREW	12		M10 X 80

FUEL INJECTION NOZZLE
(ENGINE SERIAL NO. -713822)

TP48976 -UN-26OCT96

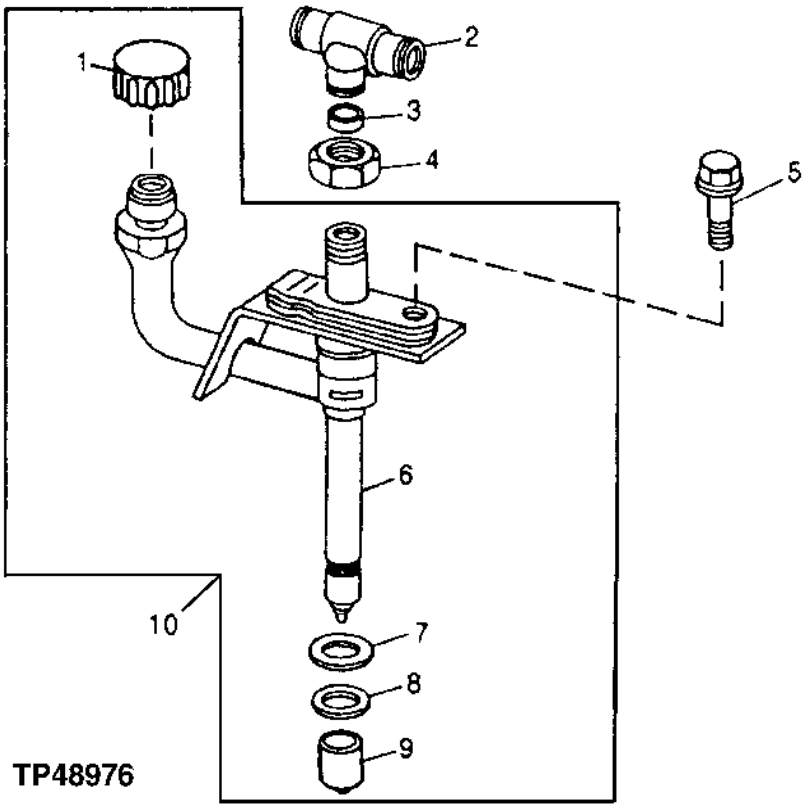

KEY	PART NO.	PART NAME	QTY	ENGINE SERIAL NO.	REMARKS
1	.....	CAP/HAT	1		
2	R71963	TEE FITTING	1		
3	R79605	SLEEVE	1		
4	R79604	TUBE NUT	1		
5	R101201	CAP SCREW	1		
6	.....	NOZZLE	1		
7	R92352	PACKING	1		
8	R48000	SEAL	1		(USE WITH OVERSIZE NOZZLE BORE)
	R500390	WASHER	1		
9	T24472	PLUG	1		(USE FOR SERVICING NOZZLE)
10	RE38087	INJECTION NOZZLE	1		

FUEL INJECTION NOZZLE
(ENGINE SERIAL N0. 713823-)

TP48976 -UN-26OCT96

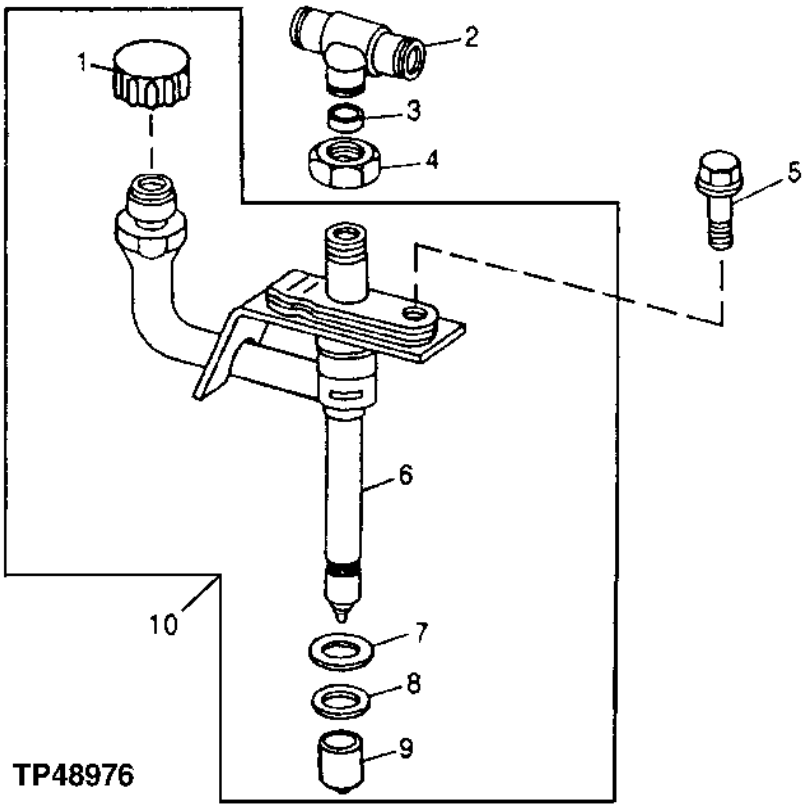

KEY	PART NO.	PART NAME	QTY	ENGINE SERIAL NO.	REMARKS
1	.....	CAP/HAT	1		
2	R71963	TEE FITTING	1		
3	R79605	SLEEVE	1		
4	R79604	TUBE NUT	1		
5	R116366	SCREW	1		
6	.....	NOZZLE	1		
7	R92352	PACKING	1		
8	R48000	SEAL	1		(USE WITH OVERSIZE NOZZLE BORE) (NOT INCLUDED WITH RE48786)
	R500390	WASHER	1		(USE WITH STANDARD NOZZLE BORE)
9	T24472	PLUG	1		
10	RE48786	INJECTION NOZZLE	1		

MEMORANDA

FUEL INJECTION SYSTEM
(ENGINE SERIAL NO. -713822)

TP28343 -UN-13SEP94

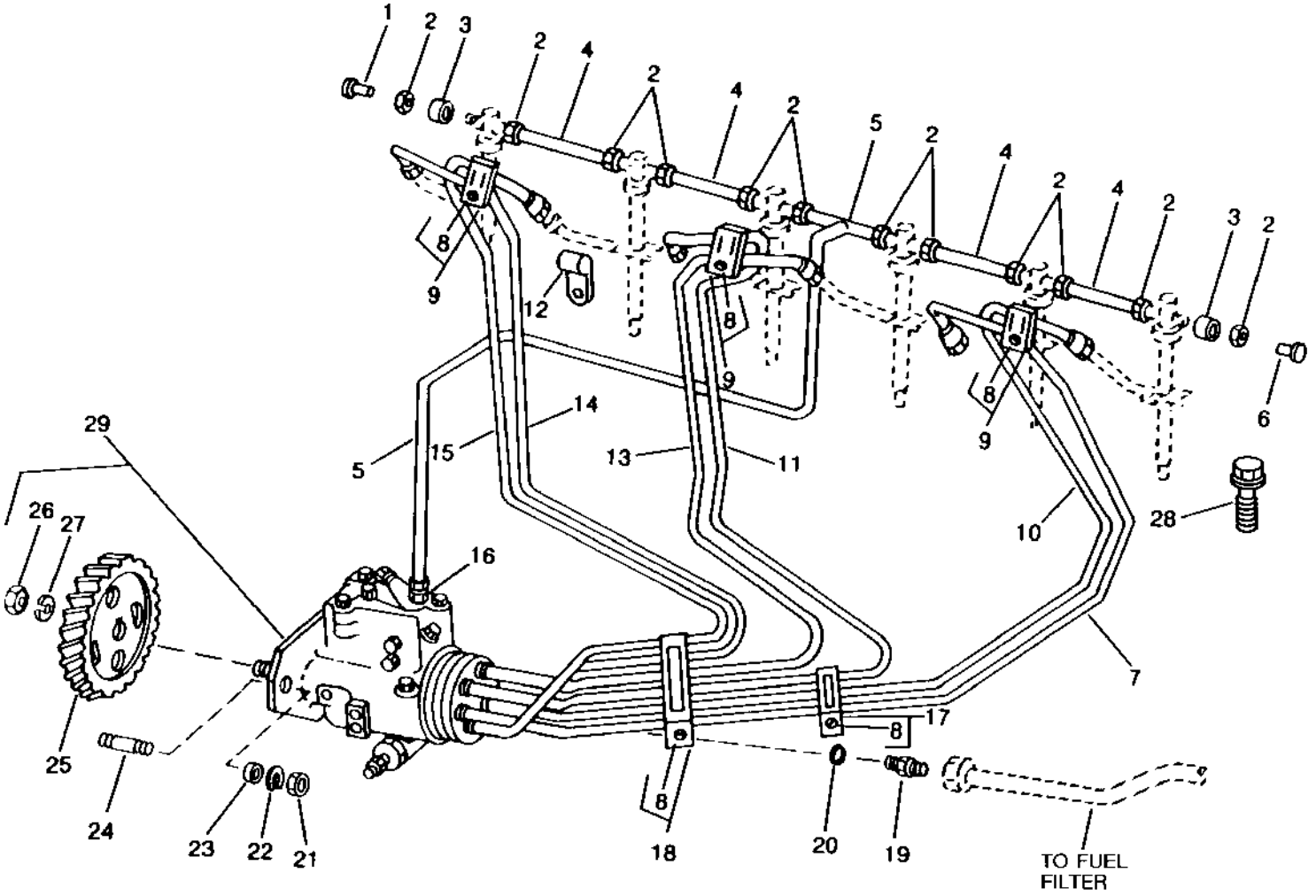

TP28343

FUEL INJECTION SYSTEM
(ENGINE SERIAL NO. -713822)

KEY	PART NO.	PART NAME	QTY	ENGINE SERIAL NO.	REMARKS
1	16H658	RIVET	1		1/4" X 5/8"
2	R51937	TUBE NUT	10		
	R123593	NUT	2		LEAK-OFF
3	R51936	WASHER	12		
4	RE68748	TUBE	4		LEAK-OFF, (SUB FOR R66090)
5	AR89852	FUEL LINE	1		LEAK-OFF
6	16H658	RIVET	1		1/4" X 5/8"
7	RE53866	FUEL LINE	1		NO. 5
8	19M7300	CAP SCREW	5		M6 X 10
9	RE19797	CLAMP	3		
10	RE53867	FUEL LINE	1		NO. 6
11	RE53864	FUEL LINE	1		NO. 3
12	T29969	CLAMP	1		
13	RE53865	FUEL LINE	1		NO. 4
14	RE53862	FUEL LINE	1		NO. 1
15	RE53865	FUEL LINE	1		NO. 2
16	R35352	FITTING	1		
17	RE20901	CLAMP	1		LINES 3, 5 AND 6
18	RE19800	CLAMP	1		LINES 1 AND 2
19	R27272	FITTING	1		STRAIGHT
20	R26286	O-RING	1		
21	14H785	NUT	3		5/16"
22	12M7065	LOCK WASHER	3		8 MM
23	T27860	WASHER	3		11/32" X 11/16" X 0.065"
24	T23442	STUD	3		
25	R84663	GEAR	1	-467996	(48 TEETH)
	R116339	GEAR	1	467997-	(48 TEETH)
26	R48599	NUT	1		
27	R132874	WASHER	1		(SUB FOR R48600)
28	R101201	CAP SCREW	6		
29	RE42916	FUEL INJECTION PUMP	1	-467996	(A) (ALSO ORDER R48599 AND R132874) (STANADYNE NO.)
	RE57112	FUEL INJECTION PUMP	1	467997-	(A)(ALSO ORDER R48599 AND R48600) (STANADYNE NO.)

(A) SEE YOUR AUTHORIZED PUMP REPAIR STATION FOR INTERNAL PARTS

FUEL INJECTION SYSTEM
(ENGINE SERIAL NO. 713823-)

TP68275 -UN-24AUG00

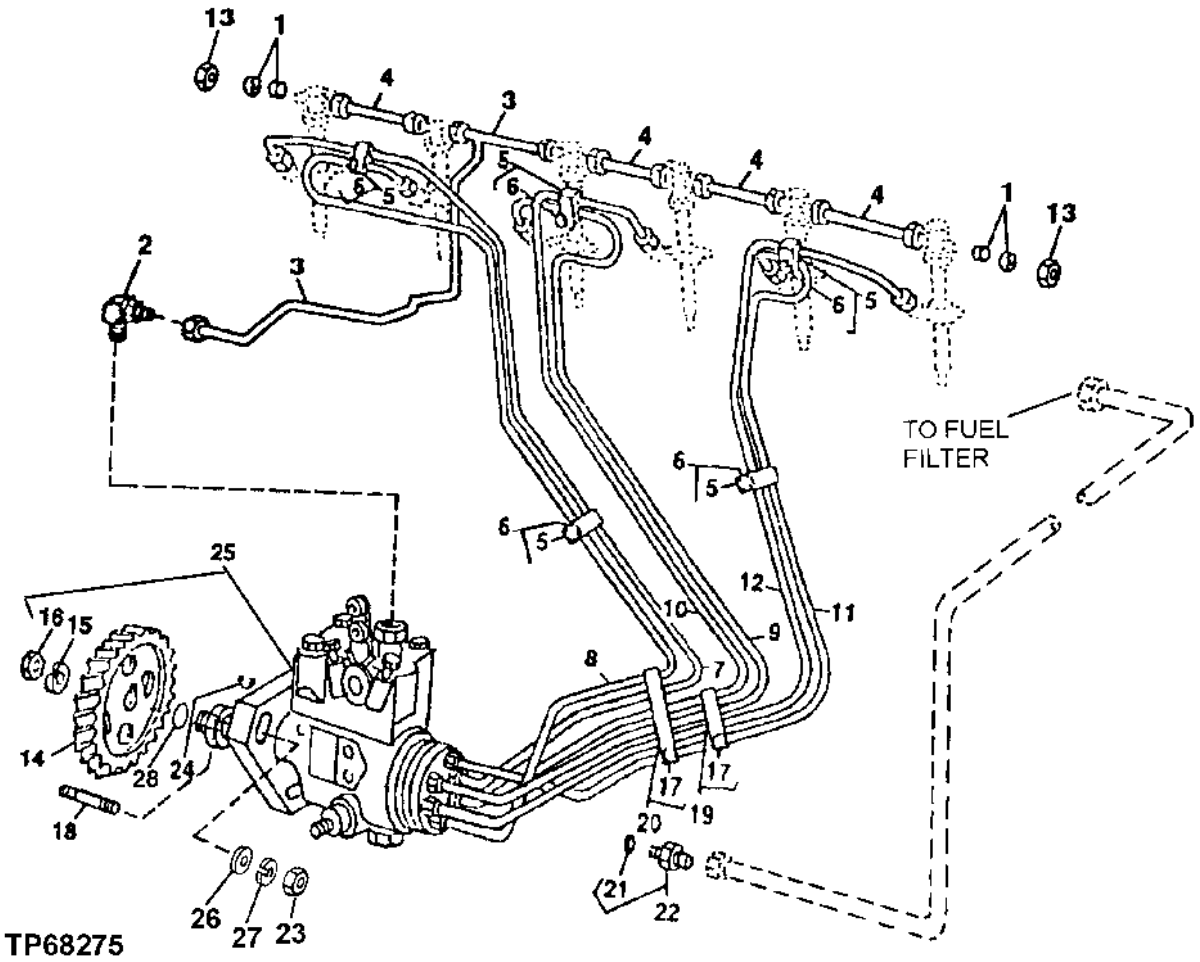

FUEL INJECTION SYSTEM (STANADYNE)
(ENGINE SERIAL NO. 713823-)

KEY	PART NO.	PART NAME	QTY	SERIAL NO.	REMARKS
1	AR85519	PLUG	2		
2	R67364	ELBOW FITTING	1		
3	RE70848	FUEL LINE	1		LEAK OFF
4	RE68748	TUBE	4		
	R123593	NUT	8		
	R51936	WASHER	8		
5	19M7300	CAP SCREW	5	-788825	M6 X 10
	19M7923	CAP SCREW	5	788826-	M6 X 12
6	RE19797	CLAMP	5		GREEN
7	RE60055	FUEL LINE	1		NO. 1
8	RE60056	FUEL LINE	1		NO. 2
9	RE60057	FUEL LINE	1		NO. 3
10	RE60058	FUEL LINE	1		NO. 4
11	RE60059	FUEL LINE	1		NO. 5
12	RE60060	FUEL LINE	1		NO. 6
13	R123593	NUT	2		LEAK OFF
14	R132267	GEAR	1		(60 TEETH)
15	R132874	WASHER	1		
16	R91360	NUT	1		
17	19M7300	CAP SCREW	3	-788825	M6 X 10
	19M7923	CAP SCREW	3	788826-	M6 X 12
18	R116386	STUD	3		
19	RE19799	CLAMP	1		
20	RE19800	CLAMP	1		
21	51M7040	O-RING	1		9.300 X 2.200 MM
22	RE60029	FITTING	1		
23	14M7273	NUT	3		M8
24	26H10	SHAFT KEY	1		
25	RE67597	FUEL INJECTION PUMP	1	-788825	12 VOLT STANADYNE DB4 (COLD ADVANCE READY)
	RE502379	FUEL INJECTION PUMP	1	788826-	12 VOLT, STANADYNE DB4
26	T27860	WASHER	3		
27	12M7065	LOCK WASHER	3		8 MM
28	R502076	O-RING	1		(SUB FOR R89944)

(A) SEE YOUR AUTHORIZED PUMP REPAIR STATION FOR INTERNAL PARTS

FUEL INJECTION PUMP ELECTRIC SHUT-OFF KIT
(ENGINE SERIAL NO. -713822)

TP42705 -UN-01JAN94

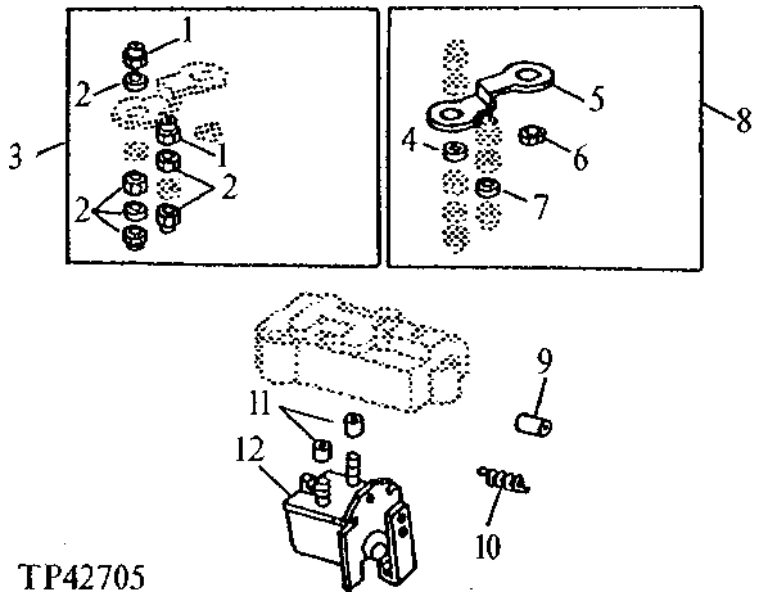

KEY	PART NO.	PART NAME	QTY	ENGINE SERIAL NO.	REMARKS
1	M63431	LOCK NUT	2		
2	.....	KIT	1		
3	RE37091	KIT	1		NUT AND WASHER
4	12M7084	LOCK WASHER	1		4.300 MM, (SUB FOR R47077)
5	.....	STRAP	1		
6	12M7060	WASHER	1		5.300 MM
7	.....	WASHER	1		
8	AR50874	KIT	1		GROUNDING STRAP
9	R48795	SLEEVE	1		
10	T11935	SPRING	1		
11	T11937	INSULATOR	2		
12	RE62240	SOLENOID	1		(SUB FOR RE37089)

AIR INTAKE SYSTEM
(ENGINE SERIAL NO. -713822)

TP44476 -UN-01JAN94

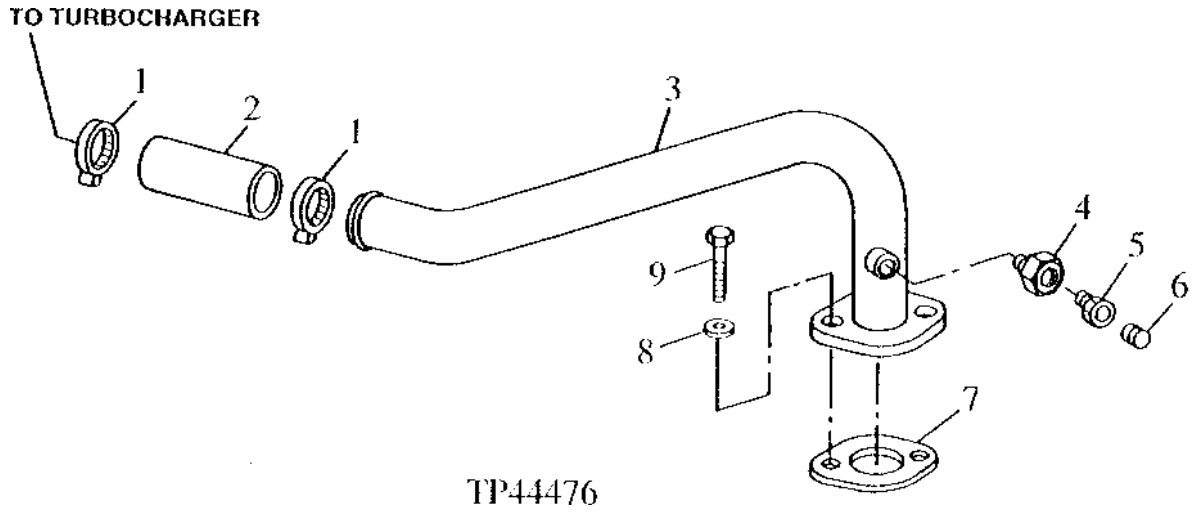

KEY	PART NO.	PART NAME	QTY	ENGINE SERIAL NO.	REMARKS
1	R110531	CLAMP	1		
2	R56551	HOSE	1		
3	RE31771	AIR INTAKE	1		
4	T27986	FITTING	1		
5	R47160	NOZZLE HOLDER	1		
6	15H623	PIPE PLUG	1		3/8"
7	R81275	GASKET	1		
8	12H304	LOCK WASHER	2		3/8"
9	19H3239	CAP SCREW	2		3/8" X 1-1/4"

AIR INTAKE SYSTEM
(ENGINE SERIAL NO. 713823-)

TP53323 -UN-11SEP96

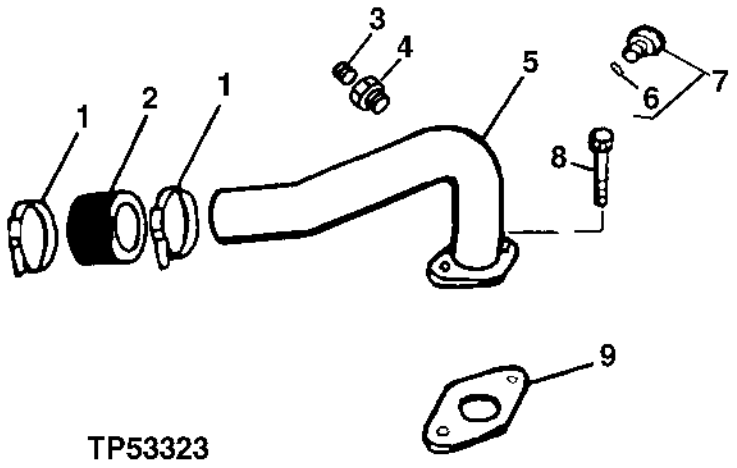

TP53323

KEY	PART NO.	PART NAME	QTY	ENGINE SERIAL NO.	REMARKS
1	AR21840	CLAMP	2		(SUB FOR R110531 OR AR65294)
2	R56551	HOSE	1		
3	15H623	PIPE PLUG	1		3/8"
4	T27986	FITTING	1		
5	RE59469	INTAKE MANIFOLD	1		
6	51M7039	O-RING	1		8.100 X 1.600 MM
7	RE60071	FITTING	1		(SUB FOR RE502903)
8	19M7785	SCREW	2		M10 X 25
9	R81275	GASKET	1		

TURBOCHARGER
(ENGINE SERIAL NO. -713822)

TP16914 -UN-01JAN94

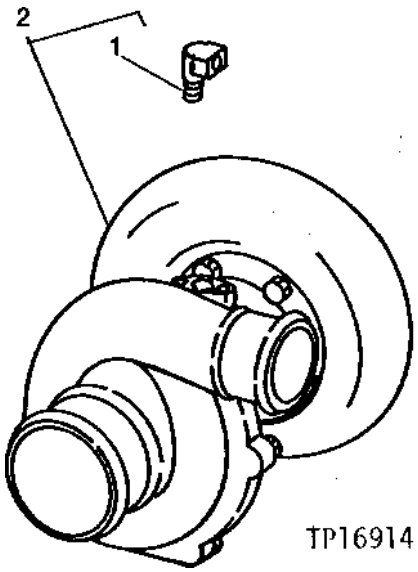

KEY	PART NO.	PART NAME	QTY	ENGINE SERIAL NO.	REMARKS
1	T11180	ELBOW FITTING	1	-546897	(K)
2	.....	TURBOCHARGER	1	-546897	(RE26123 AND RE26344 NO LONGER AVAILABLE) (EXCHANGE CREDIT) (ORDER RE62773)
	RE62773	TURBOCHARGER	1	546898-	(K) REMANUFACTURED
..	RE26409	KIT	1		INCLUDES (K) (HARDWARE KIT)

TURBOCHARGER OIL LINES
(ENGINE SERIAL NO. -713822)

TP53258 -UN-23APR96

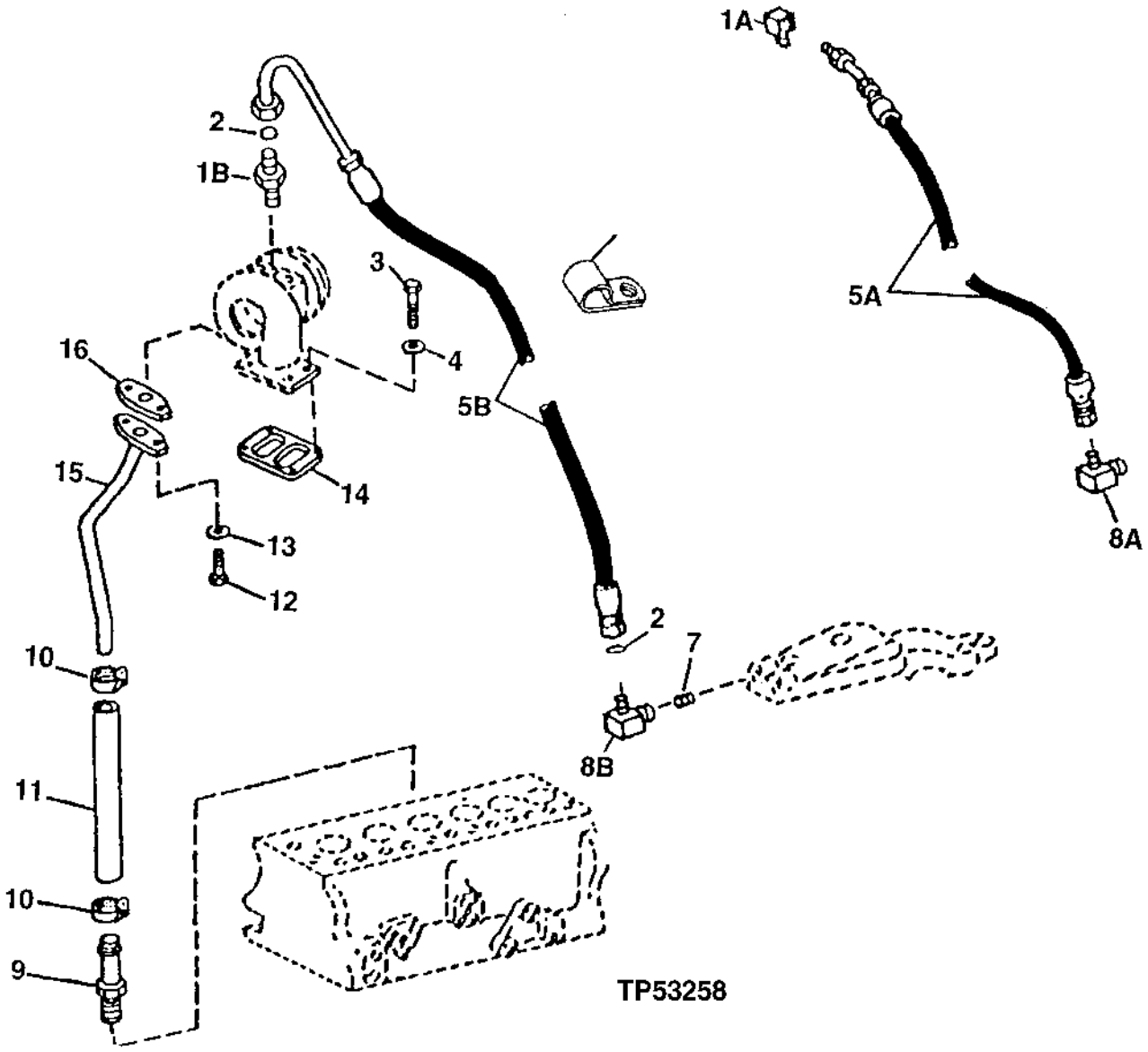

TURBOCHARGER OIL LINES
(ENGINE SERIAL NO. -713822)

KEY	PART NO.	PART NAME	QTY	ENGINE SERIAL NO.	REMARKS
1A	T11180	ELBOW FITTING	1	-546897	
1B	M87733	ADAPTER	1	546898-	
2	R63548	O-RING	2	546898-	
3	RE57724	EYEBOLT	4		(SUB FOR 19H3483 AND R54500, THIS APPLICATION)
4	24H1305	WASHER	4		13/32" X 13/16" X 0.065"
5A	RE45420	OIL LINE	1	-546897	
5B	RE503210	OIL LINE	1	546898-	(SUB FOR RE66124)
6	T27523	CLAMP	1		(SUB FOR T74416)
7	15H586	ADAPTER	1		3/8"
8A	AR26708	FITTING	1	-546897	
8B	R87907	ELBOW FITTING	1	546898-	
9	R39503	FITTING	1		
10	TY22467	CLAMP	2		(SUB FOR AR21839)
11	.....	HOSE	1		(CUT TO LENGTH) (MAKE FROM R120013)
12	19H2284	CAP SCREW	2		3/8" X 7/8", (SUB R124277, THIS APPLICATION)
	R124277	CAP SCREW	2		
13	12H304	LOCK WASHER	AR		3/8"
14	R123572	GASKET	1		(SUB FOR R89879, THIS APPLICATION)
15	RE62101	OIL LINE	1		(SUB FOR RE33058) (ALSO ORDER (2) R124277)
16	R105346	GASKET	1		

TURBOCHARGER
(ENGINE SERIAL NO. 713823-)

TP50587 -UN-22FEB97

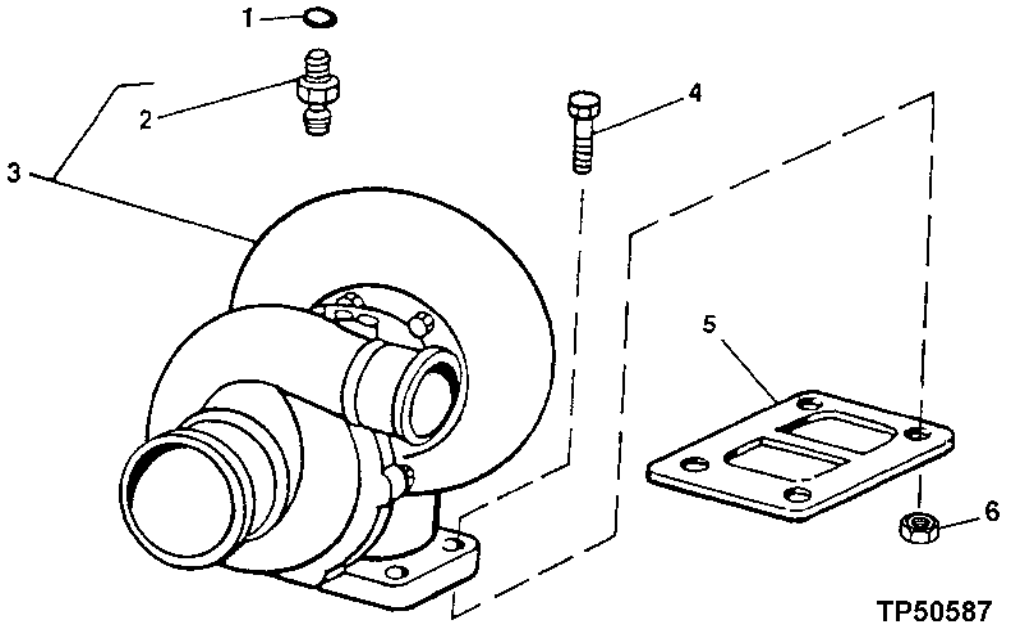

KEY	PART NO.	PART NAME	QTY	ENGINE SERIAL NO.	REMARKS
1	R63548	O-RING	1		
2	M87733	ADAPTER	1		
3	RE60074	TURBOCHARGER	1		REMANUFACTURED
	RE26409	KIT	1		HARDWARE
4	19M8162	CAP SCREW	3		M10 X 40
	19M8292	SCREW	1		M10 X 50
5	R123572	GASKET	1		
6	14M7296	FLANGE NUT	4		M10

MEMORANDA

TURBOCHARGER OIL LINES
(ENGINE SERIAL NO. 713823-)

TP57793 -UN-04NOV97

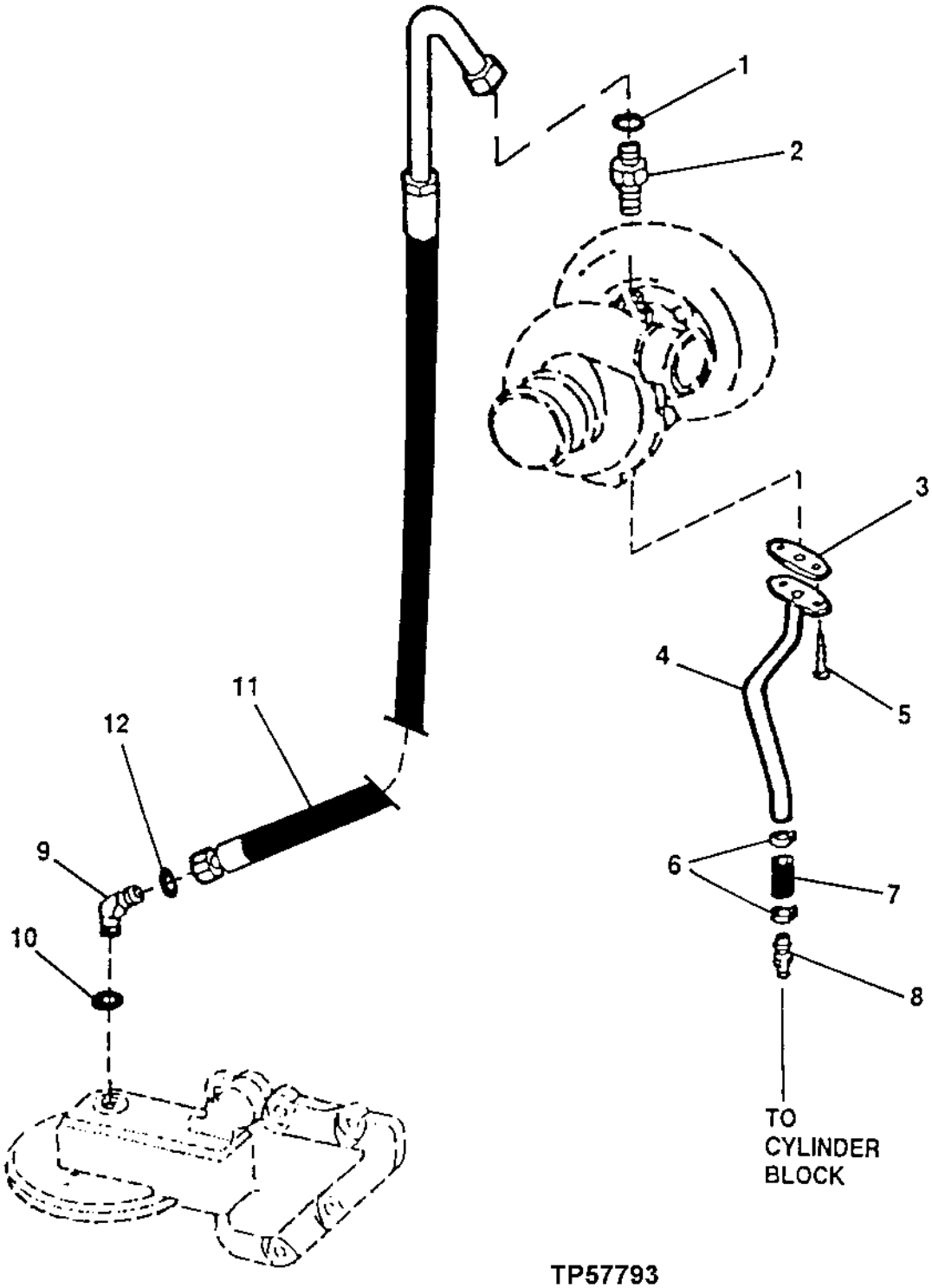

TP57793

TURBOCHARGER OIL LINES
(ENGINE SERIAL NO. 713823-)

KEY	PART NO.	PART NAME	QTY	ENGINE SERIAL NO.	REMARKS
1	R63548	O-RING	1		
2	M87733	ADAPTER	1		
3	R123570	GASKET	1		
4	RE59438	OIL LINE	1		
5	19M7866	SCREW	2		M8 X 20
6	RE65978	CLAMP	1		
7	.....	HOSE	1		(MAKE FROM R120013,CUT TO LENGTH)
8	RE54885	HOSE FITTING	1		
9	38H5154	ELBOW FITTING	1		45°
10	51M7042	O-RING	1		13.300 X 2.200 MM
11	RE503210	OIL LINE	1		(SUB FOR RE66124)
12	T77613	O-RING	1		

WATER PUMP AND PULLEY
(ENGINE SERIAL NO. -713822)

TP42769 -UN-01JAN94

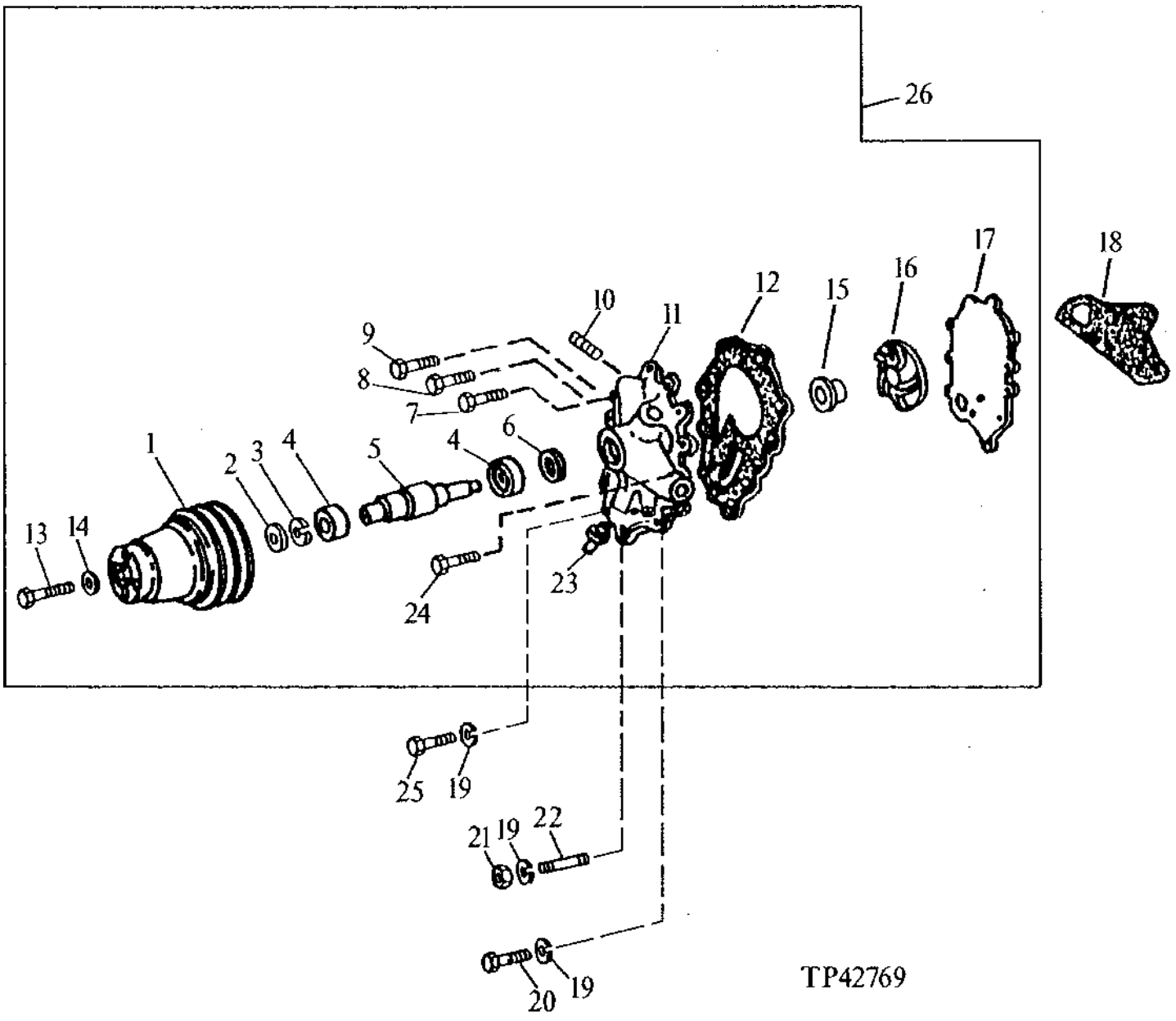

WATER PUMP AND PULLEY
(ENGINE SERIAL NO. -713822)

KEY	PART NO.	PART NAME	QTY	ENGINE SERIAL NO.	REMARKS
1	T148209	PULLEY	1		
2	RE20768	SEAL	1		(SUB FOR AR90861)
3	R62191	SNAP RING	AR		(067")
	R62192	SNAP RING	AR		(077")
	R62193	SNAP RING	AR		(087")
	R62194	SNAP RING	AR		(097")
4	JD10329	BALL BEARING	2		(SUB FOR JD7686)
5	R82052	SHAFT	1		
6	AR90860	SEAL	1		
7	19H1800	CAP SCREW	4		3/8" X 1-1/2"
	19H3219	CAP SCREW	1		3/8" X 1-3/8"
8	19H2467	CAP SCREW	2		3/8" X 2-1/2"
	19H2993	CAP SCREW	1		1/2" X 1-1/2"
9	19H2676	CAP SCREW	1		3/8" X 1"
10	15H584	PIPE PLUG	1		1/2"
11	R120137	HOUSING	1		
12	R98472	GASKET	1		
13	19H2993	CAP SCREW	1		1/2" X 1-1/2"
14	T18407	WASHER	1		37/64" X 1-7/16" X 1/4"
15	AR101549	SEAL KIT	1		
16	R56812	IMPELLER	1		
17	R72645	COVER	1		
18	T20243	GASKET	1		
19	12H304	LOCK WASHER	AR		3/8"
20	19H2472	CAP SCREW	1		1/2" X 1"
21	N10215	LOCK NUT	1		3/8"
22	T25701	STUD	1		
23	R48993	TUBE	2		
24	19H1819	CAP SCREW	1		3/8" X 2-1/8"
25	19H3742	CAP SCREW	1		3/8" X 1-5/8"
	19H3031	CAP SCREW	1		3/8" X 2-1/2"
26	RE56449	WATER PUMP	1		(MARKED R120137)

MEMORANDA

WATER PUMP ASSEMBLY
(ENGINE SERIAL NO. 713823-)

TP49584 -UN-13MAR97

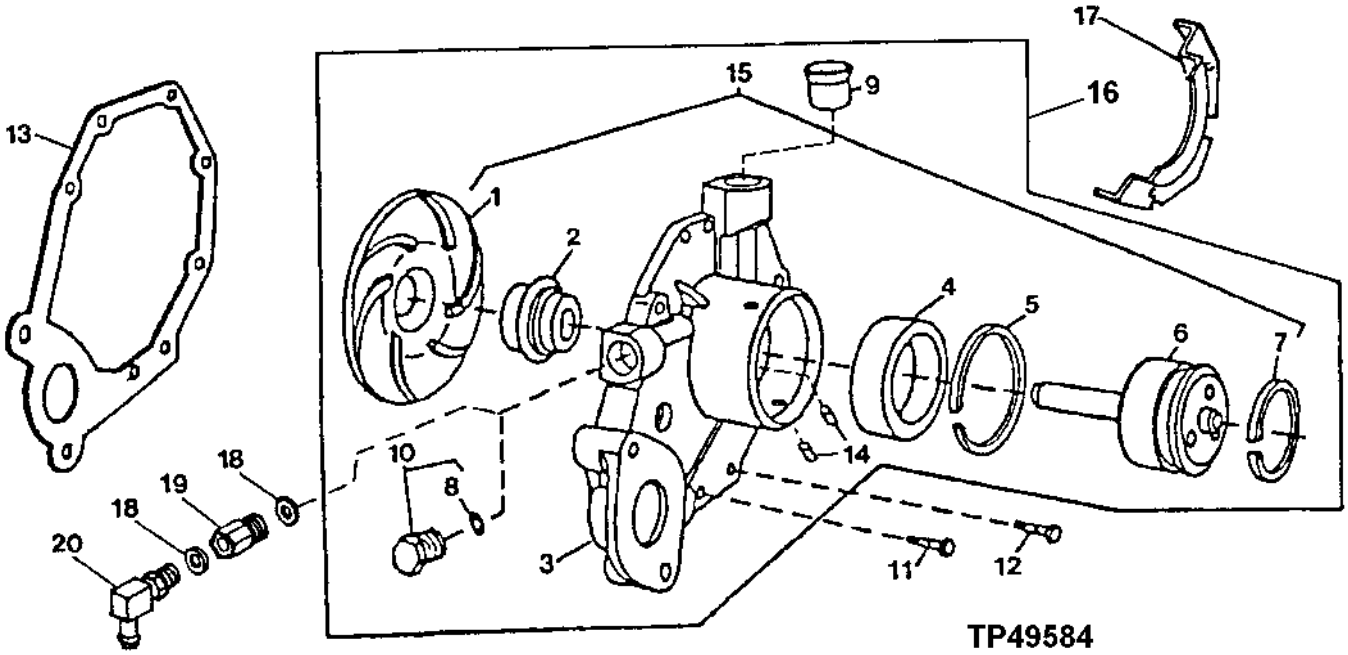

KEY	PART NO.	PART NAME	QTY	ENGINE SERIAL NO.	REMARKS
1	.....	IMPELLER	1		
2	.....	SEAL	1		
3	.....	HOUSING	1		
4	.....	BALL BEARING	1		
5	.....	RING	1		
6	.....	SHAFT	1		
7	A364R	SNAP RING	1		
8	51M7043	O-RING	1		15.300 X 2.200 MM
9	R123226	GASKET	1		
10	RE46685	PLUG	1		
11	19M7796	SCREW	3		M6 X 30
12	19M7863	SCREW	5		M6 X 25
13	R123417	GASKET	1		
14	R98527	FILTER	2		(USE WITH RE70683)
	R100369	FILTER	2		(USE WITH RE500737)
15	RE71240	KIT	1		
16	.....	WATER PUMP	1		(MARKED R121035) (ORDER RE500737) (RE70683 NO LONGER AVAILABLE)
	RE500737	WATER PUMP	1		(MARKED R500401)
17	R135841	SHROUD	1		
18	51M7043	O-RING	2		(WITH CAB HEATER)
19	RE68908	CONNECTOR	1	-872328	(WITH CAB HEATER)
20	AT174697	PIPE ELBOW	1		(WITH CAB HEATER)

WATER PUMP INLET AND PULLEY
(ENGINE SERIAL NO. 713823-)

TP49372 -UN-18JAN96

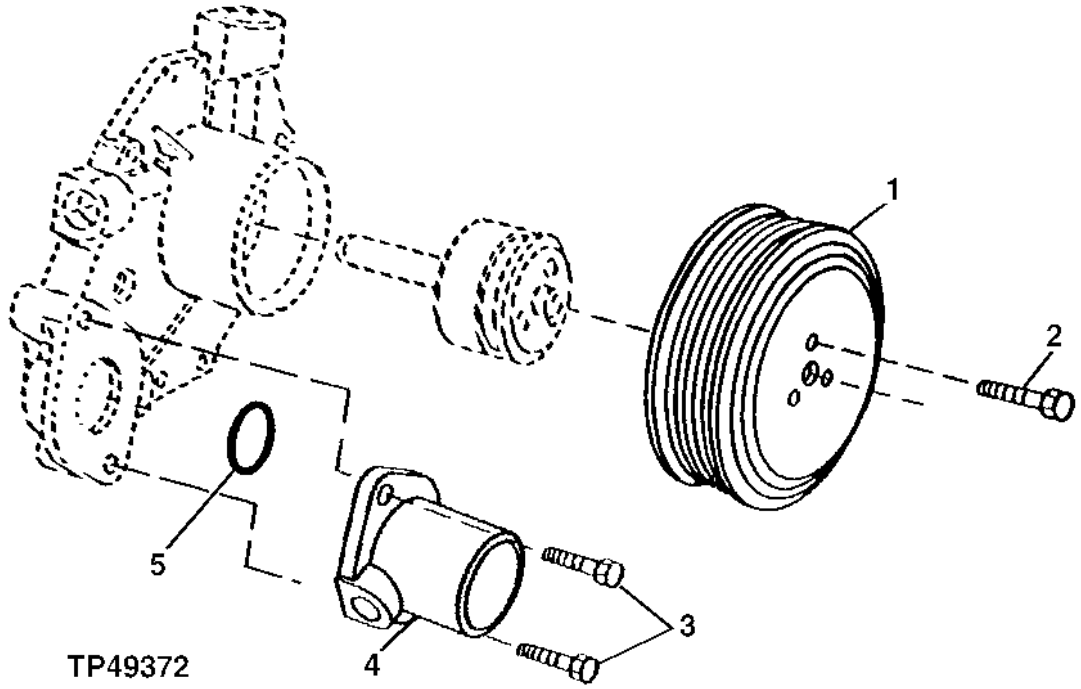

KEY	PART NO.	PART NAME	QTY	ENGINE SERIAL NO.	REMARKS
1	R115250	SHEAVE	1		
2	19M7774	SCREW	3		M6 X 12
3	19M7867	SCREW	2		M8 X 25
4	R121634	HOUSING	1		
5	R89944	O-RING	1		

ENGINE THERMOSTAT AND THERMOSTAT HOUSING
(ENGINE SERIAL NO. -713822)

TP4398 -UN-01JAN94

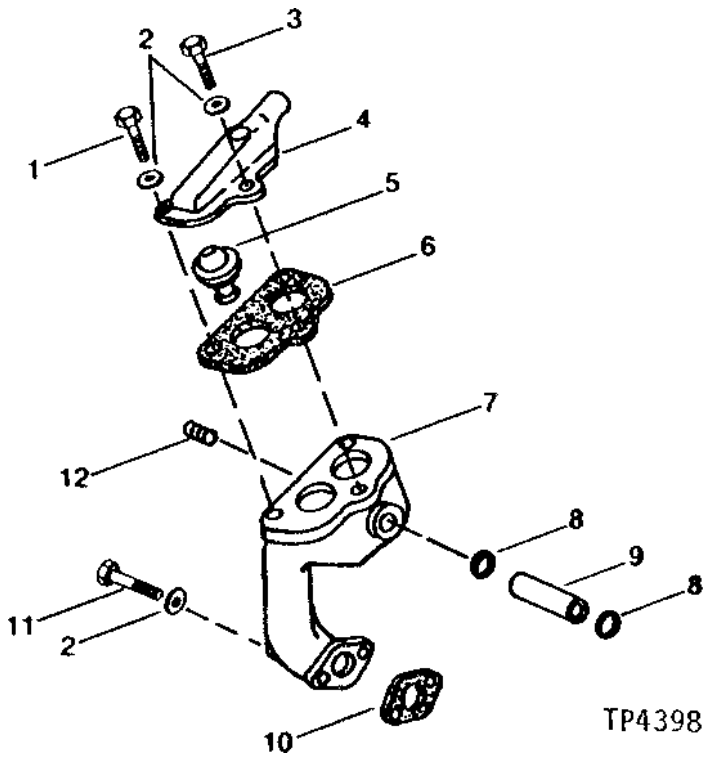

KEY	PART NO.	PART NAME	QTY	ENGINE SERIAL NO.	REMARKS
1	19H3065	CAP SCREW	2		3/8" X 2"
2	12H304	LOCK WASHER	AR		3/8"
3	19H2676	CAP SCREW	1		3/8" X 1"
4	R54639	COVER	1		
5	AR48675	THERMOSTAT	2		83°C (180°F)
6	R501373	GASKET	1		(SUB FOR R54638)
7	R72696	HOUSING	1		
8	R56461	O-RING	2		
9	R55967	TUBE	1		
10	R54641	GASKET	1		
11	19H3710	CAP SCREW	2		3/8" X 3-3/8"
12	15H561	PIPE PLUG	1		1/2", (WITHOUT HEATER)

THERMOSTAT AND COVER
(ENGINE SERIAL NO. 713823-)

TP49469 -UN-12SEP96

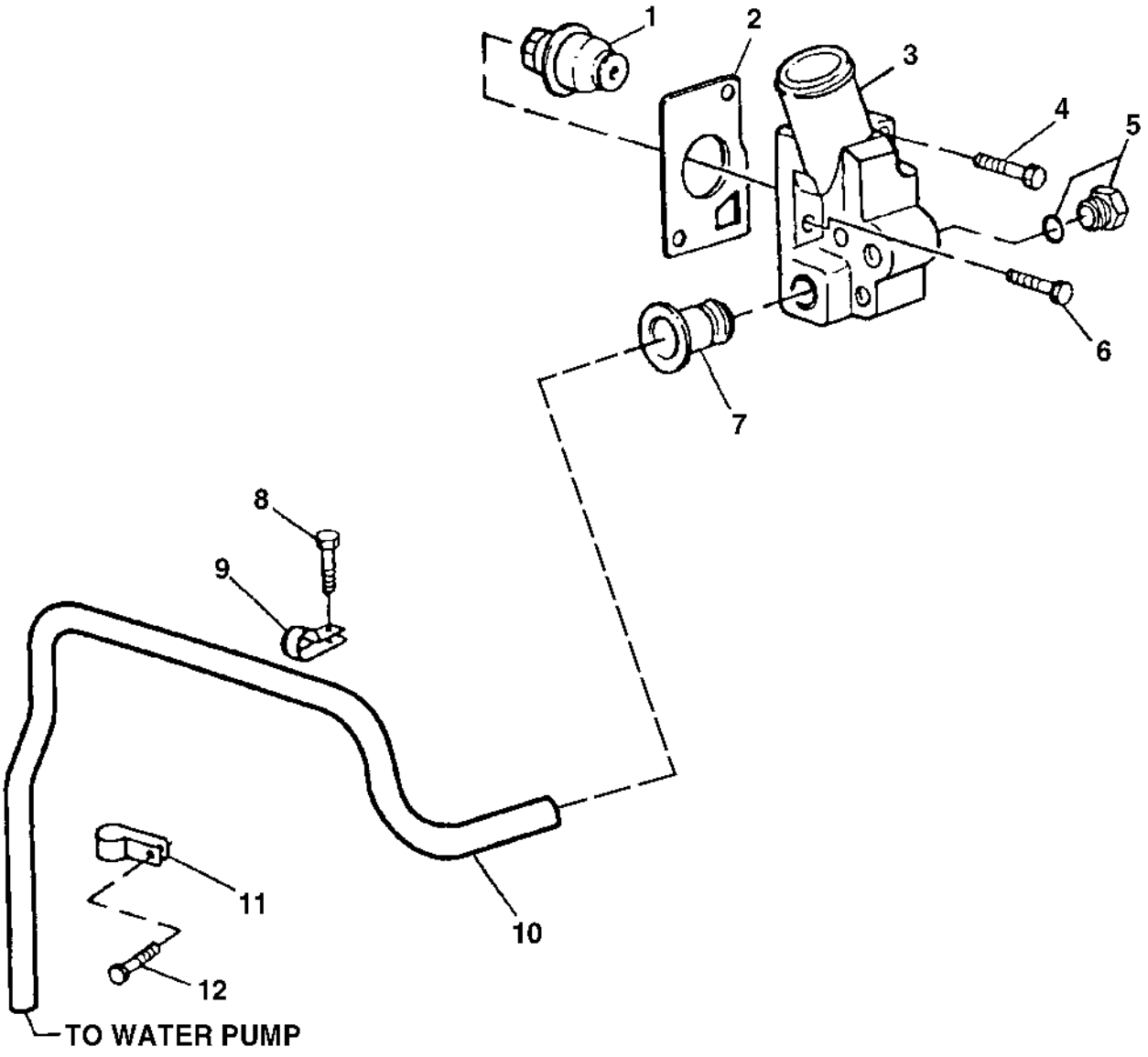

TP49469

THERMOSTAT AND COVER
(ENGINE SERIAL NO. 713823-)

KEY	PART NO.	PART NAME	QTY	ENGINE SERIAL NO.	REMARKS
1	AR48675	THERMOSTAT	1	-XXXXXX	180
	RE506300	THERMOSTAT	1	XXXXXX-	
2	R502814	GASKET	1		(SUB FOR R135896)
3	R131016	COVER	1		
4	19M8292	SCREW	1		M10 X 50
5	RE46684	PLUG	2		
6	19M7786	SCREW	2		M10 X 30
7	R123226	GASKET	1		
8	19M7788	SCREW	1		M12 X 25
9	R123323	CLAMP	1		
10	R501144	TUBE	1		(SUB FOR R123588)
11	R123324	CLAMP	1		
12	19M7801	SCREW	1		M8 X 60

ENGINE OIL COOLER
(ENGINE SERIAL NO. -713822)

TP42767 -UN-01JAN94

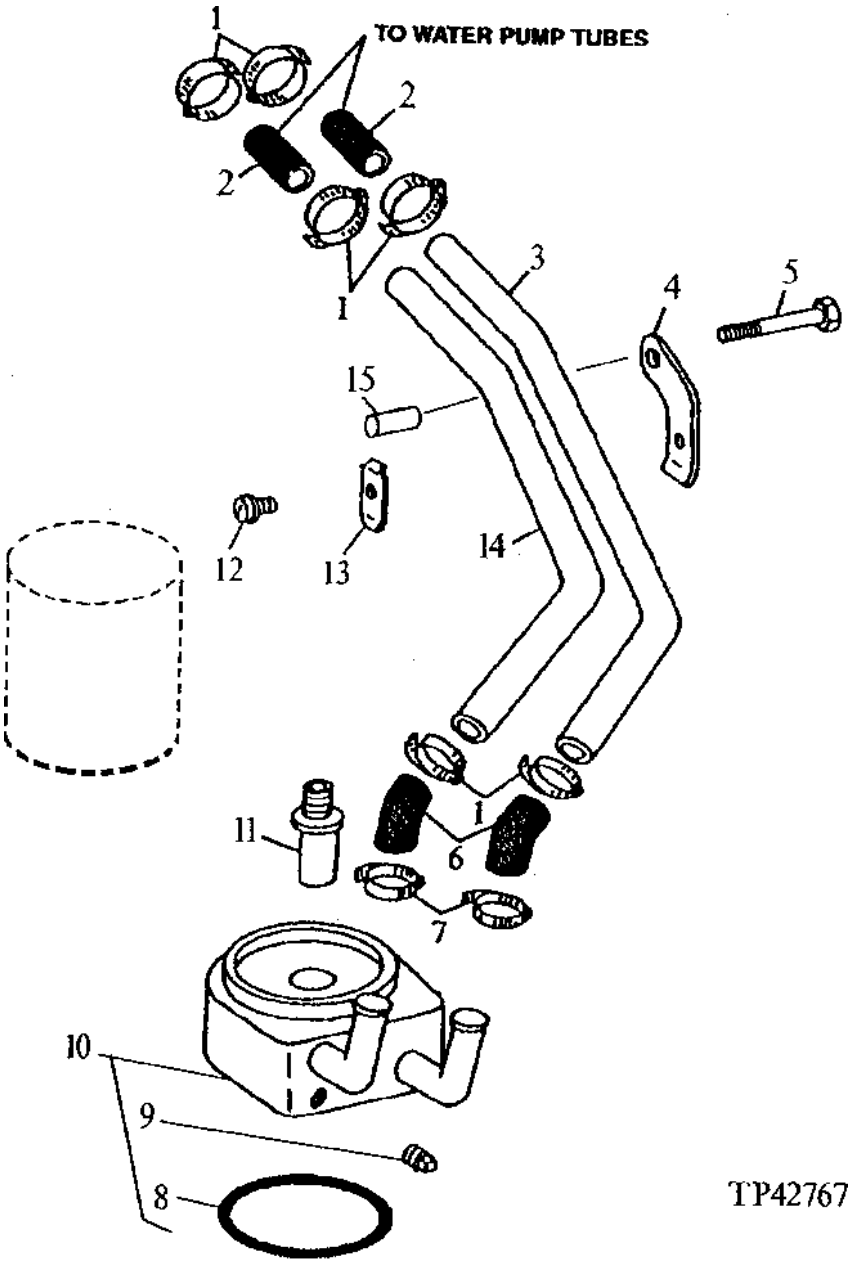

ENGINE OIL COOLER
(ENGINE SERIAL NO. -713822)

KEY	PART NO.	PART NAME	QTY	ENGINE SERIAL NO.	REMARKS
1	RE32361	HOSE CLAMP	6		
2	.....	HOSE	2		(MAKE FROM T60811 BULK MATERIAL, CUT TO LENGTH)
3	R67746	TUBE	1		LOWER
4	R55128	FLANGE	1		
5	19H3744	CAP SCREW	1		3/8" X 3-1/8"
6	R99802	HOSE	2		
7	TY22467	CLAMP	2		(SUB FOR AR21839)
8	R105714	WASHER	1		
9	R56947	DRAIN PLUG	1		
10	RE31929	OIL COOLER	1		
11	T31306	THREADED NIPPLE	1		
12	AR76704	SCREW	1		
13	R55129	HALF CLAMP	1		
14	R67745	TUBE	1		UPPER
15	28H1720	BUSHING	1		0.423" X 0.675" X 27/32"

ENGINE OIL COOLER
(ENGINE SERIAL NO. 713823-)

T137076 -UN-15JAN01

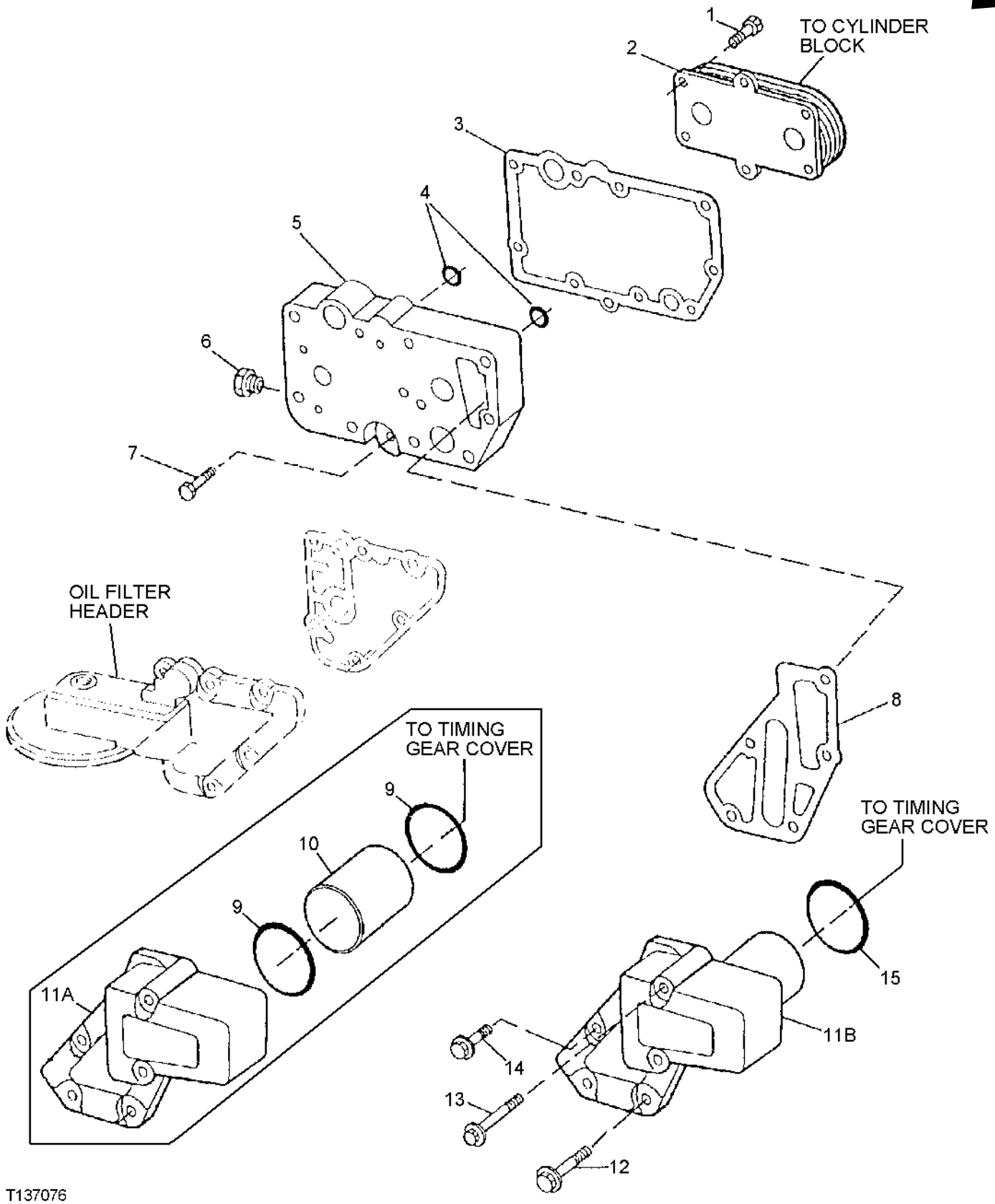

ENGINE OIL COOLER
(ENGINE SERIAL NO. 713823-)

KEY	PART NO.	PART NAME	QTY	ENGINE SERIAL NO.	REMARKS
1	RE67231	SCREW	6		
2	RE56690	OIL COOLER	1		
3	R123501	GASKET	1		
4	T122075	O-RING	2		
5	R123471	HOUSING	1		
6	RE46686	PLUG	1		
7	RE46685	PLUG	1		
8	R501428	GASKET	1		(SUB FOR R123502)
9	R61105	O-RING	2	-873088	
10	R115252	TUBE	1	-873088	
11A	R135177	ADAPTER	1	-873088	(SUB R502811)
11B	R502811	ADAPTER	1	873089-	
12	19M7802	SCREW	2		M8 X 65
13	19M7970	SCREW	2		M8 X 100
14	RE67238	SCREW	1		(WITH PRE-APPLIED SEALANT)
15	R504734	O-RING	1	873089-	

FUEL FILTER WITH WATER SEPARATOR AND FUEL LINES
(ENGINE SERIAL NO. -713822)

TP58272 -UN-18DEC97

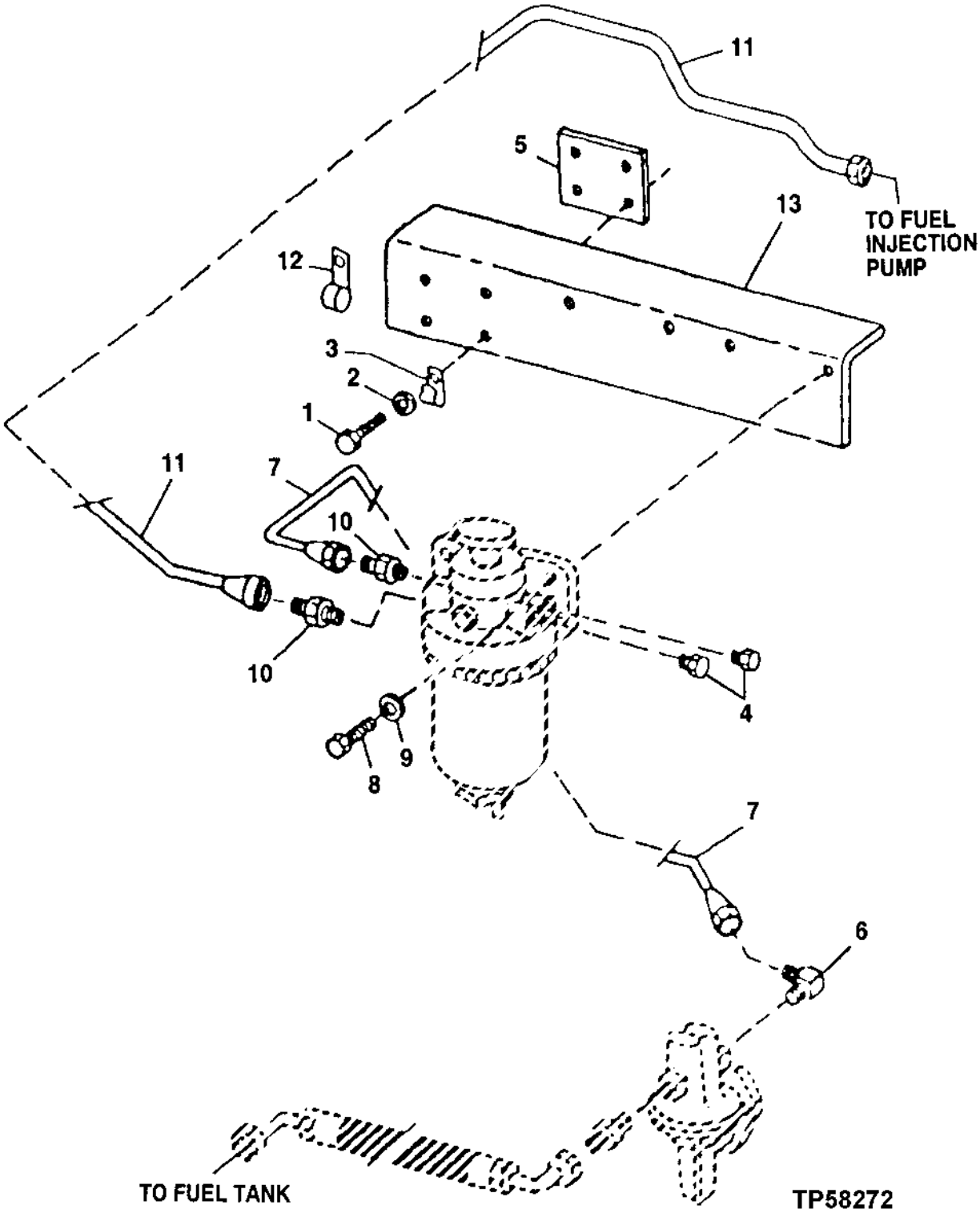

FUEL FILTER WITH WATER SEPARATOR AND FUEL LINES
(ENGINE SERIAL NO. -713822)

KEY	PART NO.	PART NAME	QTY	ENGINE SERIAL NO.	REMARKS
1	19H3219	CAP SCREW	4		
2	12H304	LOCK WASHER	4		
3	AH89557	CLIP	1		
4	15H685	PIPE PLUG	2		1/4", 90°
5	.....	FILTER ELEMENT	1		SECONDARY FILTER
6	R82131	ELBOW FITTING	1		
7	RE54945	FUEL LINE	1		
8	19H3483	CAP SCREW	2		3/8" X 1-1/8"
9	24M7239	WASHER	2		10.700 X 21 X 2.500 MM
10	R32136	FITTING	2		
11	RE54946	FUEL LINE	1		
12	R109872	CLAMP	1		
13	R116632	SUPPORT	1		
14	R116904	SPACER	1		

FUEL FILTER ELEMENTS AND KITS
(ENGINE SERIAL NO. -713822)

TP55298 -UN-24APR98

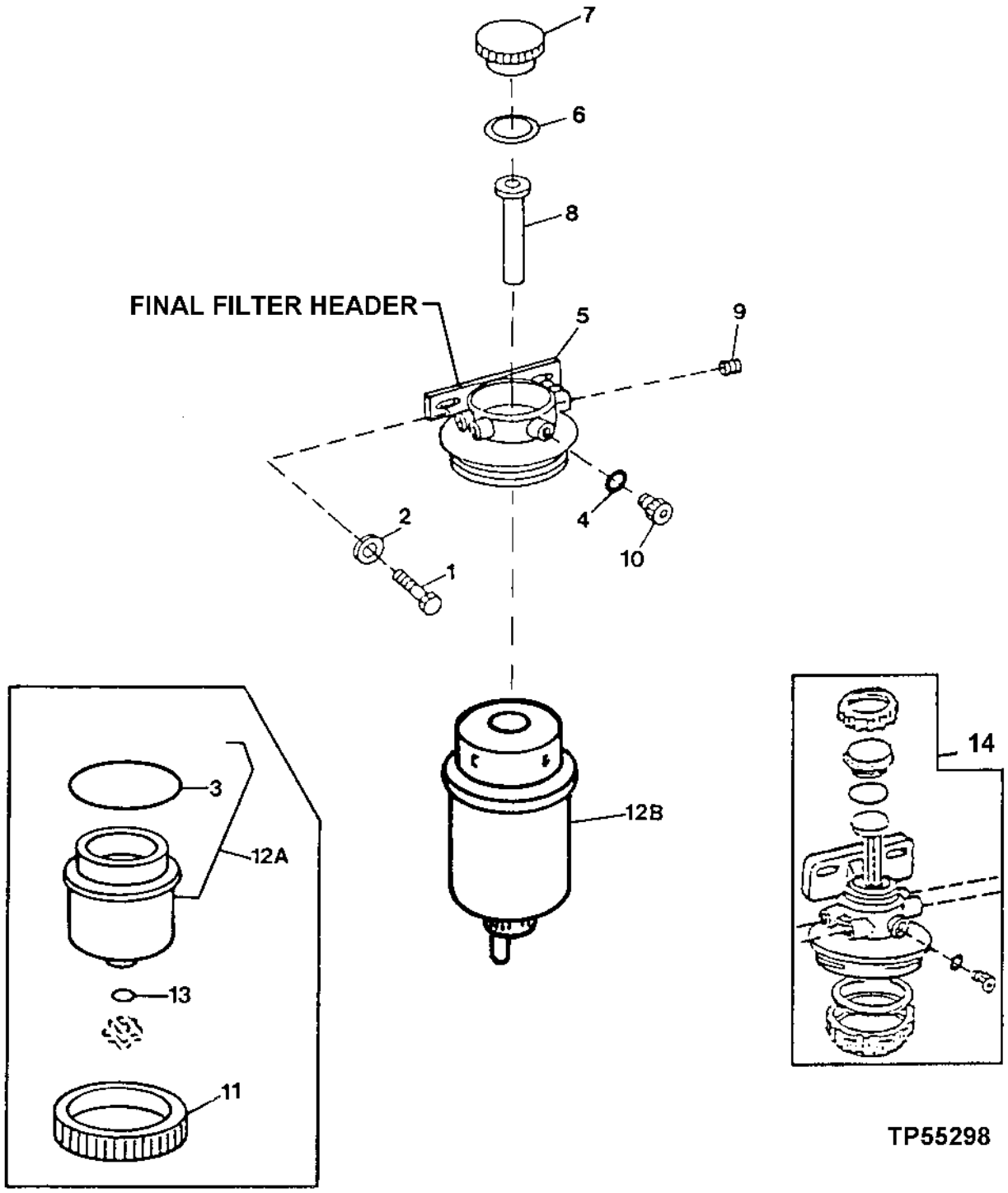

FUEL FILTER ELEMENTS AND KITS
(ENGINE SERIAL NO. -713822)

KEY	PART NO.	PART NAME	QTY	ENGINE SERIAL NO.	REMARKS
1	19H3483	CAP SCREW	2		3/8" X 1-1/8"
2	24M7239	WASHER	2		10.700 X 21 X 2.500 MM
3	.....	SEAL	1	-483408	(K1)
4	R113562	O-RING	1		(K1)
5	.....	FILTER HEAD	1	-483408	(RE50466 NO LONGER AVAILABLE) (SUB RE500159)
	RE63180	FILTER HEAD	1	483409-	(USE IF AVAILABLE) (SUB RE500159)
6	.....	SEAL	1		(K1)
7	.....	CAP	1		(K2)
8	.....	PLUNGER	1		(K2)
9	15H685	PIPE PLUG	1		1/4", (K1)
10	R113563	DRAIN PLUG	1		(K2)
11	.....	RING	1	-483408	(K2)
12A	.....	FUEL FILTER	1	-483408	(RE53400 NO LONGER AVAILABLE) (ORDER RE62419)
12B	RE62419	FUEL FILTER	1	483409-	
13	.....	DRAIN VALVE	1	-483408	(K1)
14	RE500159	KIT	1		PRIMARY FILTER
..	RE50752	SEAL KIT	1		INCLUDES ALL (K1) PARTS (SEAL)
..	RE51649	SEAL KIT	1		INCLUDES ALL (K2) PARTS (MECHANICAL)

FUEL FILTER AND FUEL LINES
(ENGINE SERIAL NO. 713823-)

T137047 -UN-08JAN01

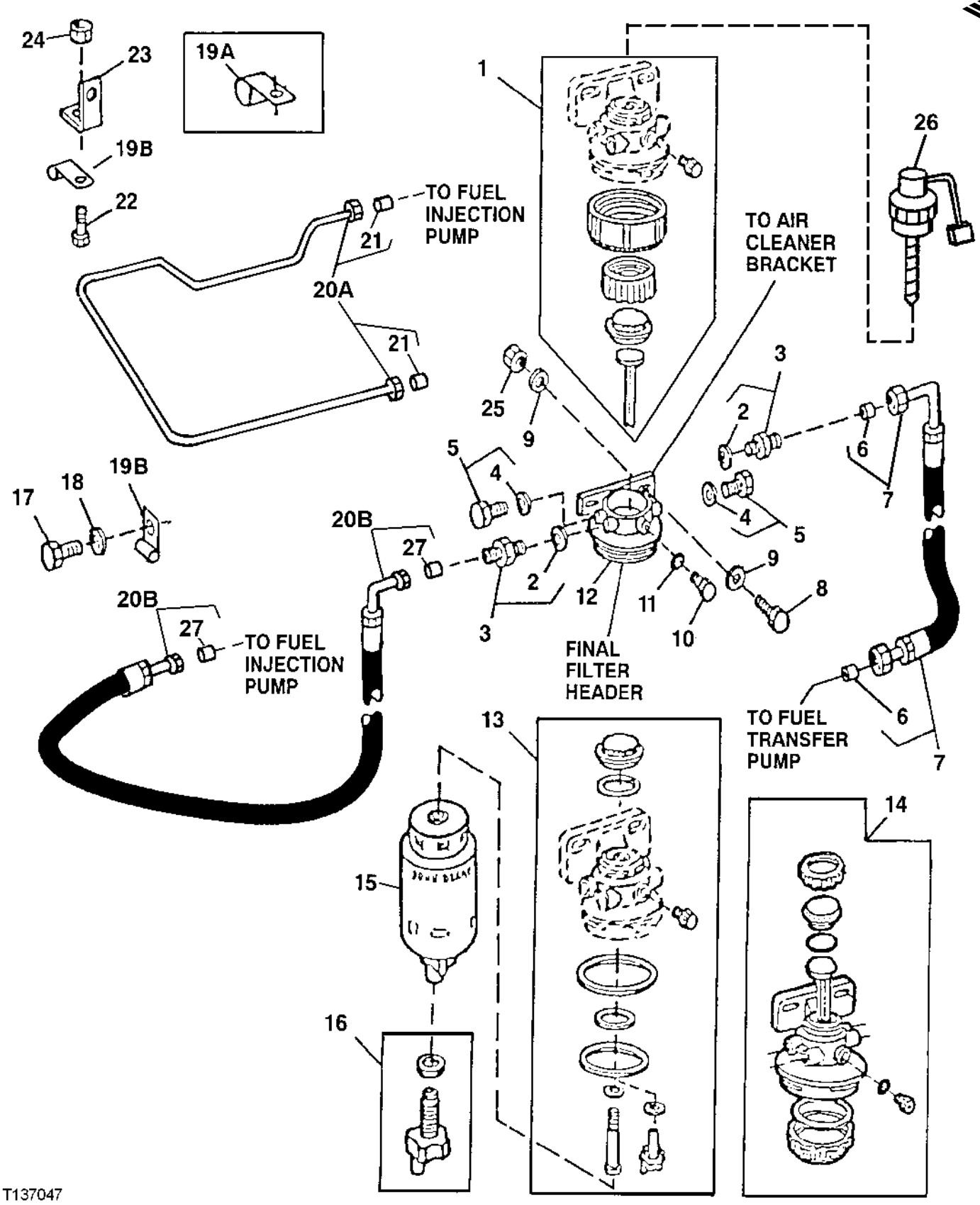

FUEL FILTER AND FUEL LINES
(ENGINE SERIAL NO. 713823-)

KEY	PART NO.	PART NAME	QTY	ENGINE SERIAL NO.	REMARKS
1	RE51649	SEAL KIT	1		FUEL FILTER
2	51M7040	O-RING	2		
3	RE60029	FITTING	2		
4	51M7040	O-RING	1		9.300 X 2.200 MM
5	RE46686	PLUG	2		
6	R74012	SEALING WASHER	2		
7	AT180989	HOSE	1		
8	19M8008	CAP SCREW	2		
9	24M7207	WASHER	4		8.400 X 24 X 2 MM
10	.....	PLUG	1		
11	51M7040	O-RING	1		9.300 X 2.200 MM
12	.....	FILTER HEAD	1		(RE60022 NO LONGER AVAILABLE) (ORDER RE70358)
13	RE50752	SEAL KIT	1		FUEL FILTER
14	RE70358	KIT	1		FINAL FILTER
15	RE62419	FUEL FILTER	1		
16	RE60854	KIT	1		
17	19M8324	CAP SCREW	1		M10 X 16
18	24M7239	WASHER	1		10.700 X 21 X 2.500 MM
19A	T76252	CLAMP	2	-877429	
19B	T29527	CLAMP	2	877430-	
20A	AT182386	FUEL LINE	1	-877429	(SUB AT180991) (ALSO ORDER (2) T76252)
20B	AT180991	HOSE	1	877430-	
21	R74012	SEALING WASHER	2		
22	19M7865	SCREW	1		M8 X 16
23	R116116	BRACKET	1		
24	14M7298	FLANGE NUT	1		M8
25	14M7273	NUT	2		M8
26	RE51648	KIT	1		FUEL FILTER HEATER (12-VOLT)

FUEL TRANSFER PUMP
(ENGINE SERIAL NO. -713822)

TP26493 -UN-01JAN94

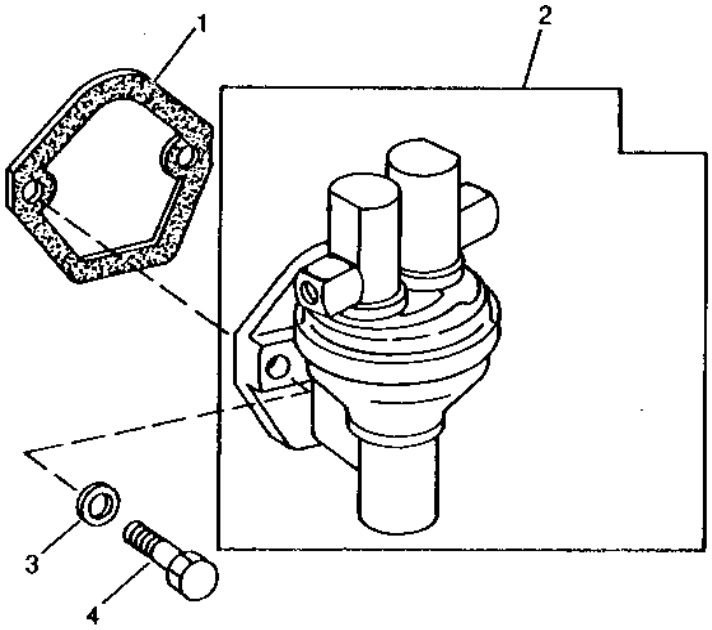

TP26493

KEY	PART NO.	PART NAME	QTY	ENGINE SERIAL NO.	REMARKS
1	R97350	GASKET	1		
2	RE42211	FUEL PUMP	1		(ALSO ORDER R97350)
3	T27860	WASHER	2		
4	19H1849	CAP SCREW	2		5/16" X 1-1/4"

FUEL TRANSFER PUMP
(ENGINE SERIAL NO. 713823-)

TP61907 -UN-24FEB00

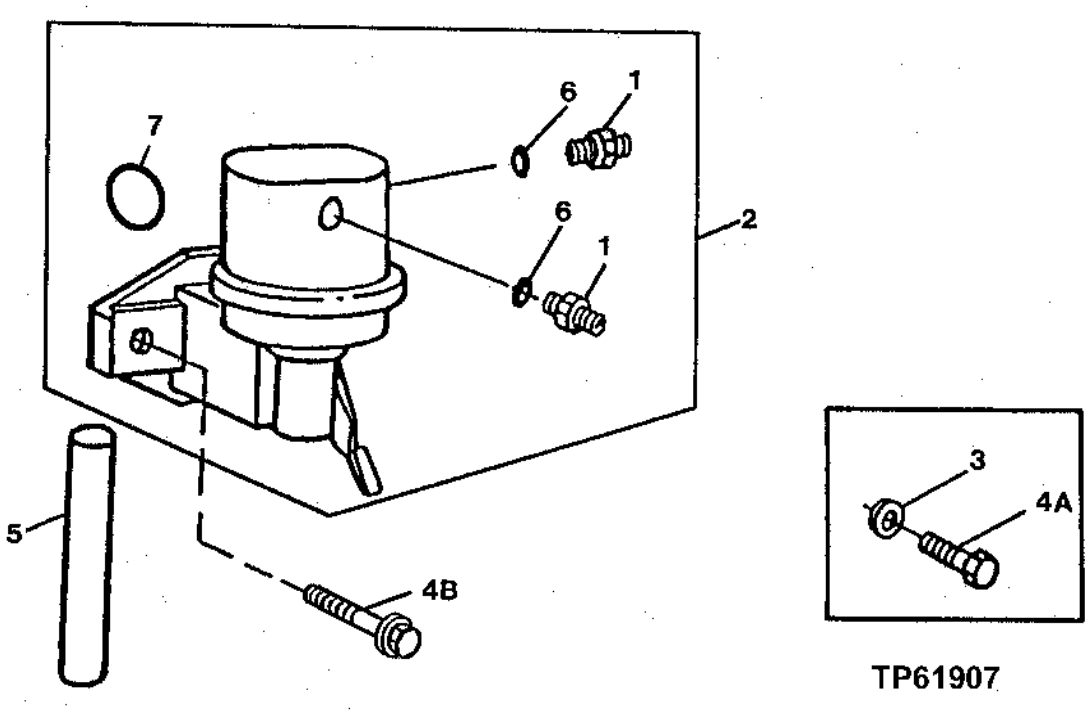

KEY	PART NO.	PART NAME	QTY	ENGINE SERIAL NO.	REMARKS
1	R500270	FITTING	2		
2	RE66153	FUEL PUMP	1		
3	24M7055	WASHER	2	-XXXXXX	8.400 X 16 X 1.600 MM
4A	RE66298	CAP SCREW	2	-XXXXXX	
4B	RE504233	CAP SCREW	2	XXXXXX-	
5	R133405	PUSH ROD	1		
6	R500271	O-RING	2		
7	R123273	O-RING	1		

MEMORANDA

STARTING MOTOR AND SOLENOID COVER

TP50826 -UN-11MAY98

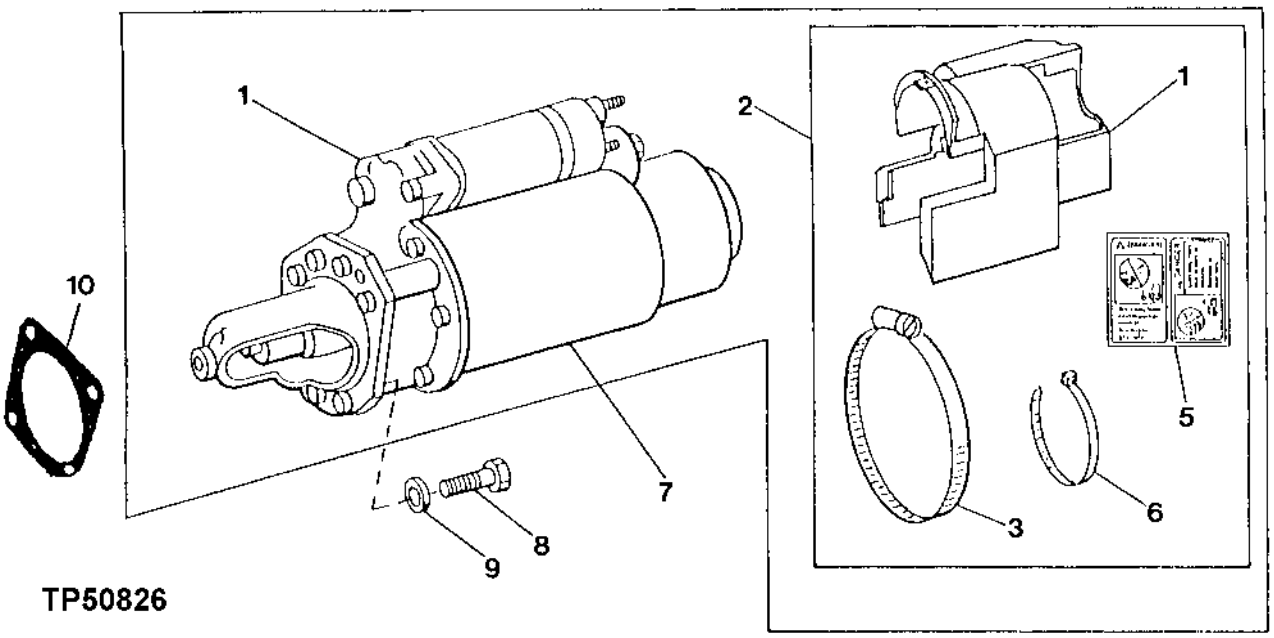

KEY	PART NO.	PART NAME	QTY	ENGINE SERIAL NO.	REMARKS
1	.....	STARTER MOTOR	1		
2	RE45329	COVER	1		(SUB FOR RE42760)
3	TY22471	CLAMP	1		
4	.....	COVER	1		
5	T146102	LABEL	1		
6	R76477	TIE BAND	1		
7	.....	KIT	1	-417316	(STARTER AND SOLENOID KIT) (RE43421 NO LONGER AVAILABLE) (SUB TY6787)
	.....	KIT	1	417317-526885	(STARTER AND SOLENOID KIT) (RE55378 NO LONGER AVAILABLE) (SUB TY6787)
	.....	KIT	1	526886-709213	(STARTER AND SOLENOID KIT) (RE65188 NO LONGER AVAILABLE) (SUB TY6787)
	TY6787	KIT	1	709214-	REMANUFACTURED STARTER AND SOLENOID KIT, (SUB FOR RE501351)
8	19H3239	CAP SCREW	3	-417316	3/8" X 1-1/4"
	19H3411	CAP SCREW	3	417317-709213	3/8" X 1-1/8"
	19M7786	SCREW	3	709214-	M10 X 30
9	12H304	LOCK WASHER	3		3/8"
10	R53108	GASKET	1	709214-	

STARTING MOTOR SWITCH COIL AND ARMATURE
(ENGINE SERIAL NO. -814064)

TP42777 -UN-01JAN94

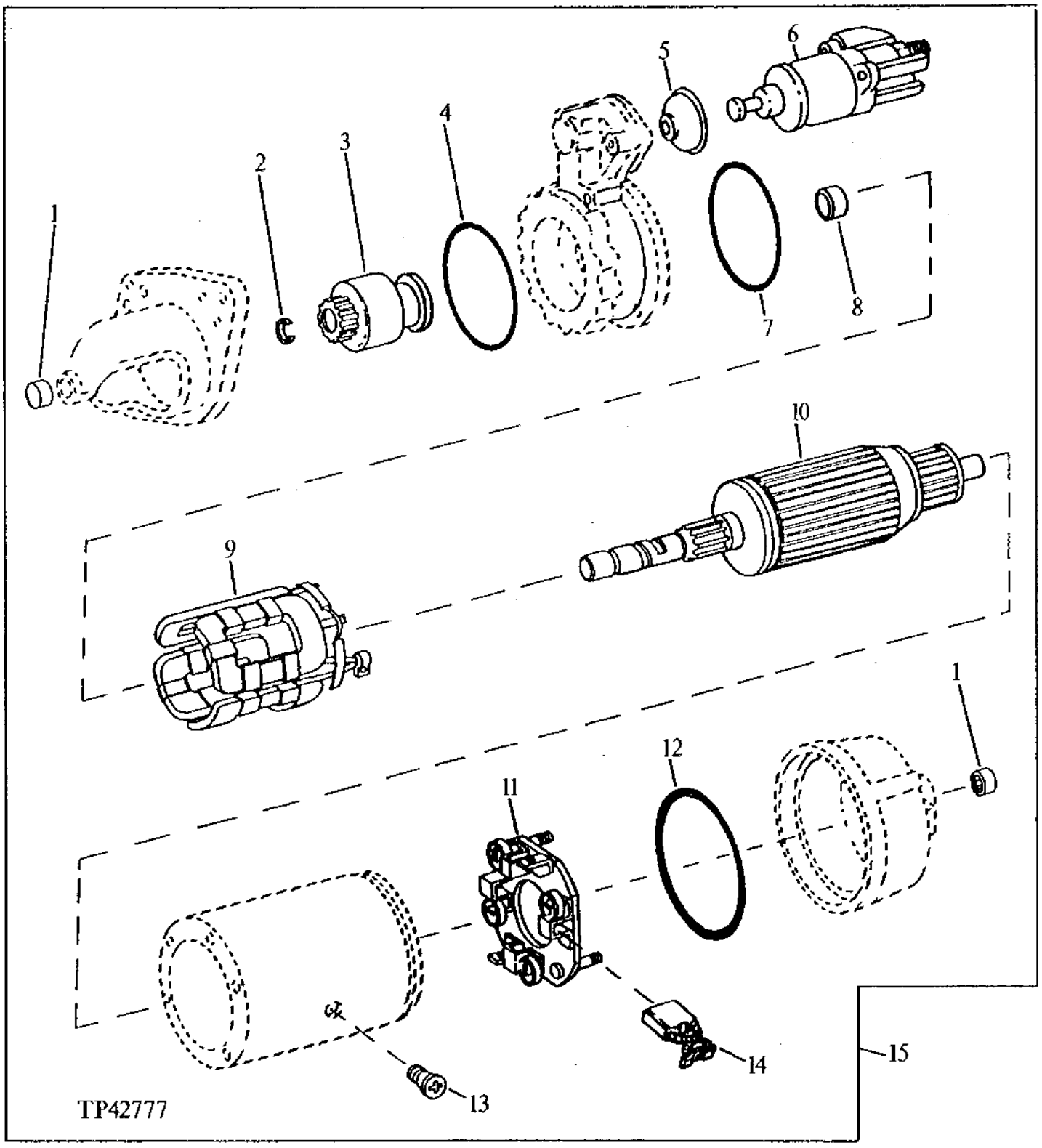

STARTING MOTOR SWITCH COIL AND ARMATURE
(ENGINE SERIAL NO. -814064)

KEY	PART NO.	PART NAME	QTY	ENGINE SERIAL NO.	REMARKS
1	RE39251	NEEDLE BEARING	2		
2	R50902	SNAP RING	1		
3	RE39249	CLUTCH	1		
4	R50901	WASHER	1		
5	R100513	COVER	1		
6	RE42777	SWITCH	1		
7	R100511	O-RING	1		
8	R100509	BUSHING	1		
9	RE39243	FIELD WINDING COIL	1	-417316	
	.....	FIELD WINDING COIL	1	417317-	
10	RE39245	ARMATURE	1	-417316	
	.....	ARMATURE	1	417317-	
11	RE39250	CARBON BRUSH HOLDER	1	-417316	
	RE55087	HOLDER	1	417317-	
12	R100512	O-RING	1		
13	R100508	SCREW	4		
14	RE39247	BRUSH	4		
15	.....	STARTER MOTOR	1		(FURNISH TY6787 REMANUFACTURED)

STARTING MOTOR AND SOLENOID KIT
(12-VOLT L.H. DENSO)
(ENGINE SERIAL NO. 814065-)

T134292 -UN-07OCT00

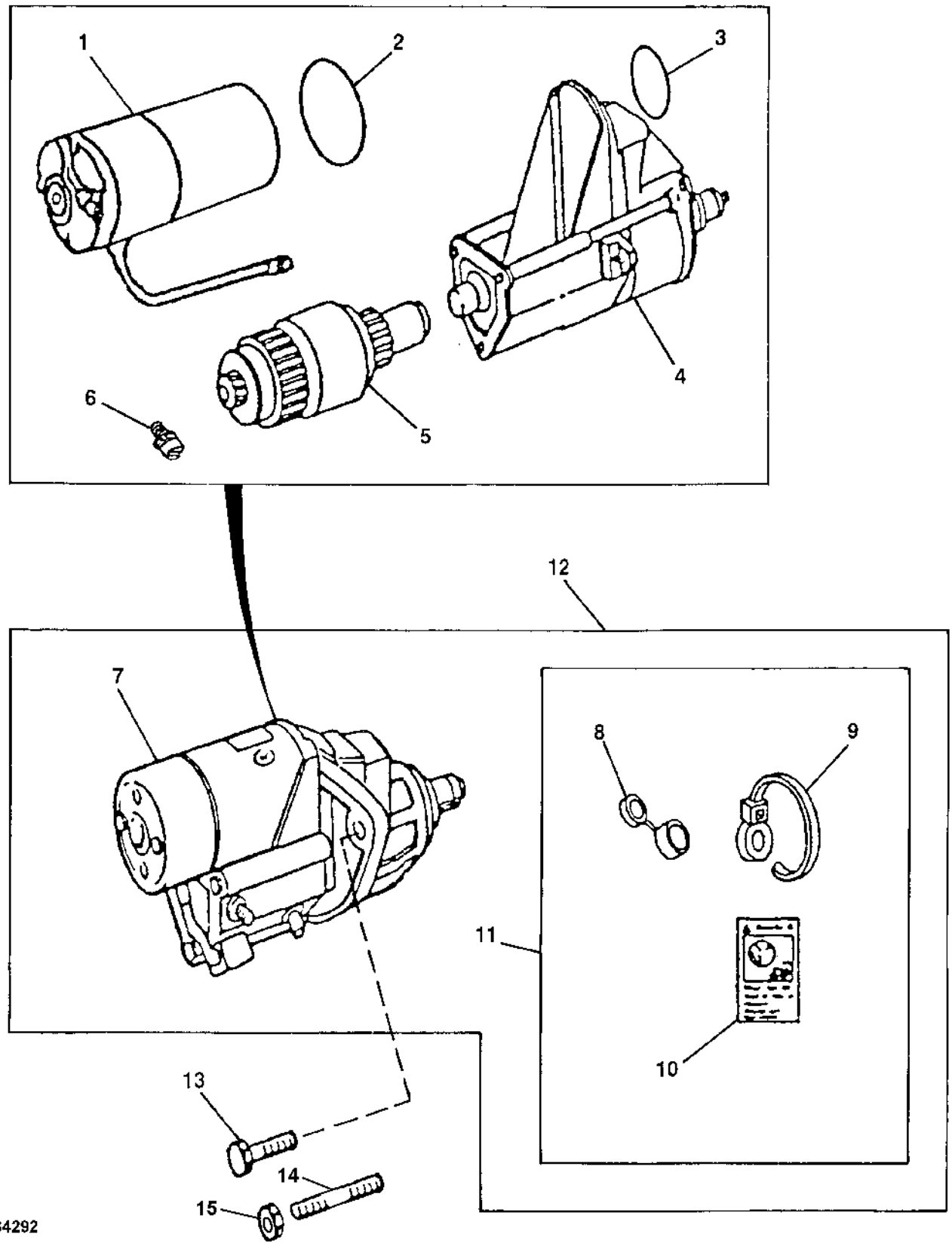

STARTING MOTOR AND SOLENOID KIT
(12-VOLT L.H. DENSO)
(ENGINE SERIAL NO. 814065-)

KEY	PART NO.	PART NAME	QTY	ENGINE SERIAL NO.	REMARKS
1	.....	MOTOR	1		
2	R135509	SEAL	1		
3	R135510	O-RING	1		
4	RE70486	SWITCH	1		
5	RE70487	CLUTCH	1		
6	RE71256	SCREW, WITH WASHER	1		M5 X .8
7	.....	STARTER MOTOR	1		(12-VOLT L.H. DENSO)
8	.....	COVER	1		
9	R96703	TIE BAND	1		
10	T146102	LABEL	1		(BYPASS START)
11	RE70756	KIT	1		(SOLENOID KIT)
12	RE501298	STARTER MOTOR	1		(STARTER AND SOLENOID KIT)
13	19M7786	SCREW	2		M10 X 30
14	R503419	STUD	1		(LOWER RIGHT HAND)
15	14M7299	FLANGE NUT	1		(LOWER RH)

ALTERNATOR MOUNTING BRACKETS
(ENGINE SERIAL NO. -713822)

TP53266 -UN-15MAY96

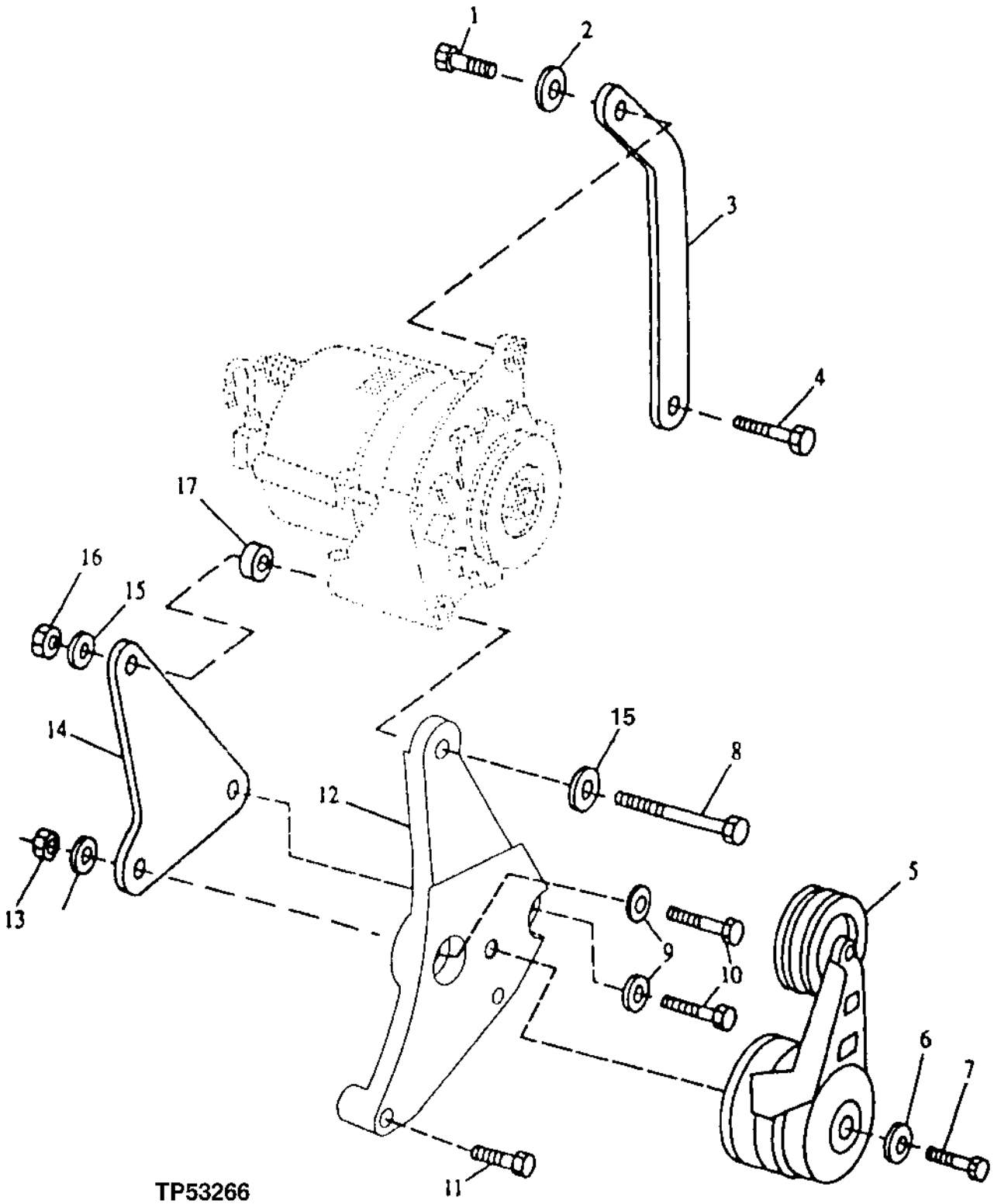

ALTERNATOR MOUNTING BRACKETS
(ENGINE SERIAL NO. -713822)

KEY	PART NO.	PART NAME	QTY	SERIAL NO.	REMARKS
1	19M7513	CAP SCREW	1		M8 X 30
2	T148220	STRAP	1		
3	12H304	LOCK WASHER	AR		3/8"
4	R122618	SCREW	1		
5	RE68715	TIGHTENER	1		(SUB FOR RE37981)
6	24M7239	WASHER	1		10.700 X 21 X 2.500 MM
7	19M8081	CAP SCREW	1		M10 X 80
8	19M8093	CAP SCREW	1		M10 X 100
9	24M7106	WASHER	AR		10 X 18 X 2.500 MM
10	19H3744	CAP SCREW	2		3/8" X 3-1/8"
11	19H3744	CAP SCREW	1		3/8" X 3-1/8"
12	T148230	PLATE	1		(SUB FOR AT164192)
13	N10215	LOCK NUT	2		3/8", (SUB FOR 14H1076, THIS APPLICATION)
14	T123889	PLATE	1		
15	24M7238	WASHER	AR		8.700 X 17 X 2 MM
16	14M7274	NUT	1		M10
17	T148307	SPACER	1		

ALTERNATOR MOUNTING BRACKETS
(ENGINE SERIAL NO. 713823-)

TP57959 -UN-16NOV98

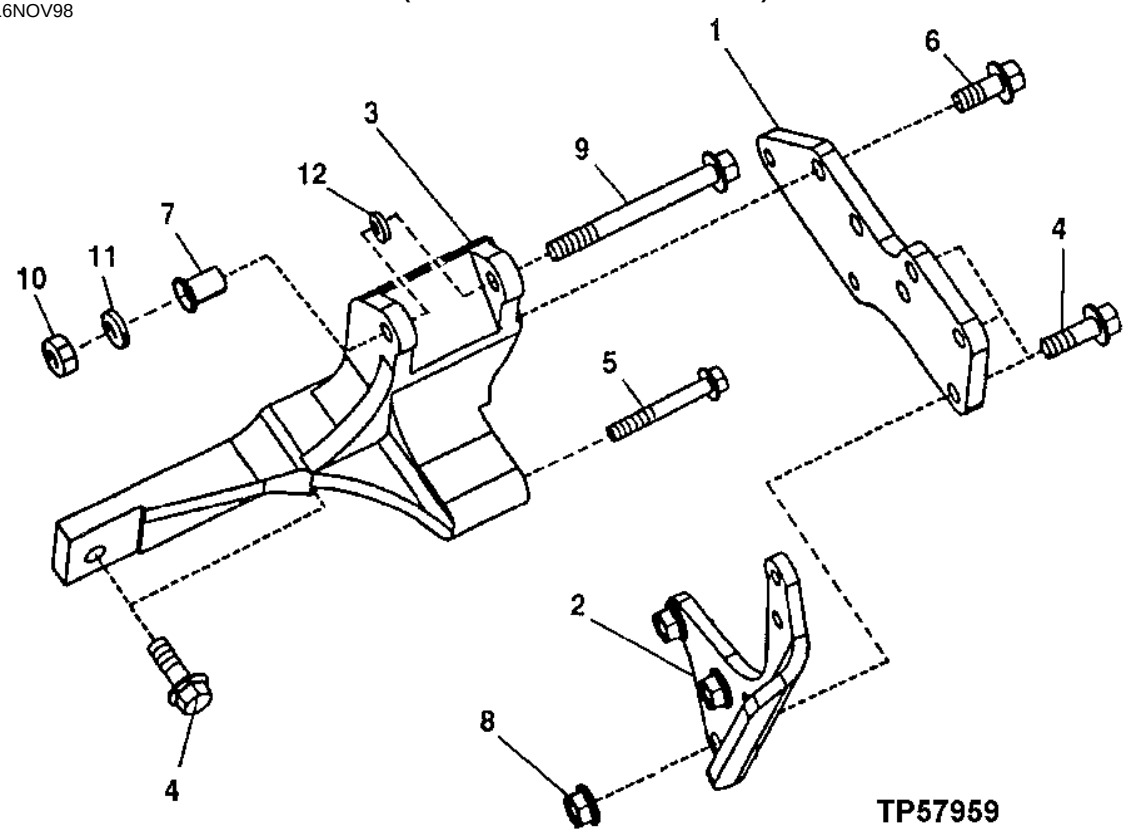

KEY	PART NO.	PART NAME	QTY	ENGINE SERIAL NO.	REMARKS
1	R132913	SUPPORT	1		
2	R132167	STRAP	1		
3	R132166	BRACKET	1		
4	19M7786	SCREW	5		M10 X 30
5	19M7801	SCREW	1		M8 X 60
6	19M7785	SCREW	2		M10 X 25
7	R100377	BUSHING	1		
8	14M7296	FLANGE NUT	3		M10
9	19M8093	CAP SCREW	1		M10 X 100
10	14M7274	NUT	1		
11	24M7239	WASHER	1		
12	R64525	WASHER	1		

FAN BELTS AND CRANKSHAFT PULLEY
(ENGINE SERIAL NO. -713822)

TP29584 -UN-01JAN94

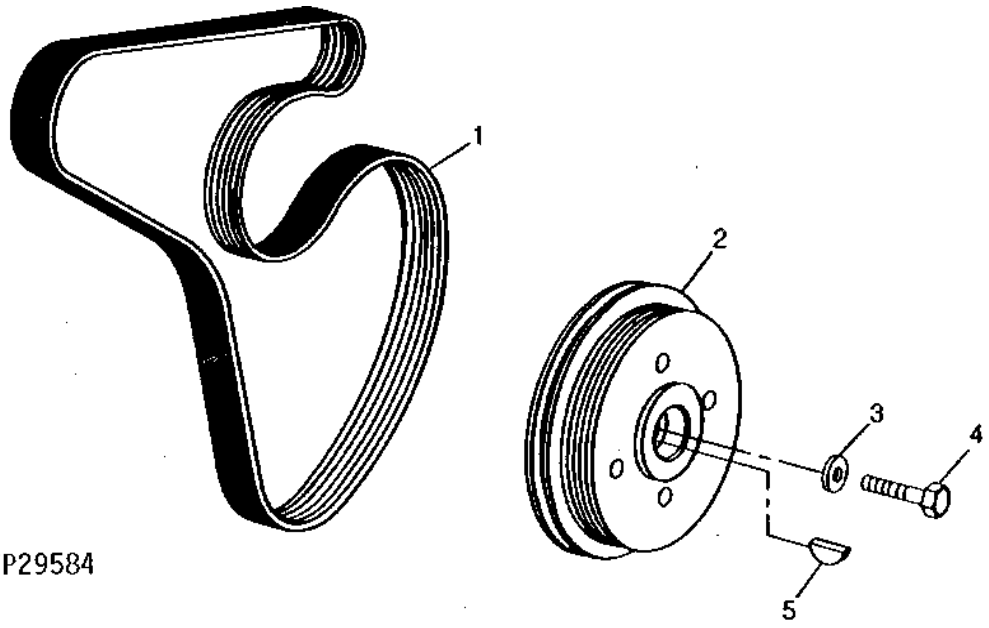

KEY	PART NO.	PART NAME	QTY	ENGINE SERIAL NO.	REMARKS
1	T148208	BELT	1		
2	RE56450	PULLEY, WITH DAMPENER	1		
3	R109086	SPACER	1		
4	R84978	CAP SCREW	1		1/2" X 1-3/4"
5	26H90	SHAFT KEY	1		5/16" X 1-1/8"

FAN DRIVE PULLEYS ,FAN BELT AND TENSIONERS
(ENGINE SERIAL NO. 713823-)

TP58358 -UN-17DEC98

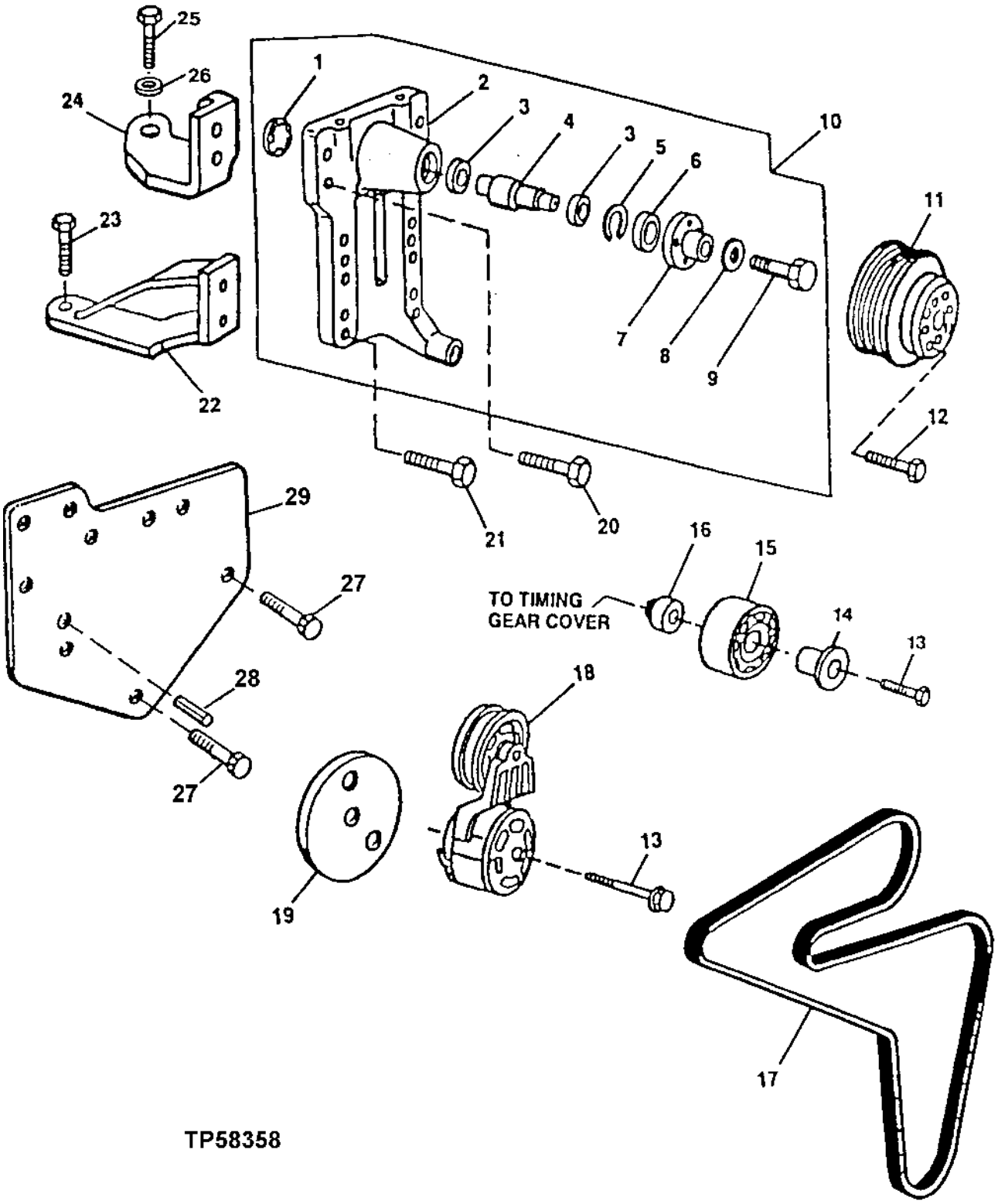

FAN DRIVE PULLEYS,FAN BELT AND TENSIONERS
(ENGINE SERIAL NO. 713823-)

KEY	PART NO.	PART NAME	QTY	ENGINE SERIAL NO.	REMARKS
1	R133848	PLUG	1		
2	R132528	SUPPORT	1		
3	R133808	BALL BEARING	2		
4	R133061	SHAFT	1		
5	R62194	SNAP RING	1		
6	RE20768	SEAL	1		(SUB FOR AR90861, THIS APPLICATION)
7	R134030	HUB	1		
8	T29342	WASHER	1		
9	19M7816	SCREW	1		M12 X 65
10	RE68998	MOUNTING PARTS	1		
11	R128660	SHEAVE	1		
12	19M8081	CAP SCREW	4		M10 X 80
13	19M7808	SCREW	1	-814064	M10 X 65, (WITH AIR CONDITIONING)
	19M7811	SCREW	1	814065-	
14	R502079	SLEEVE	1		(SUB FOR R500352 AND R107749) (WITH AIR CONDITIONING)
15	RE505264	PULLEY	1		(SUB FOR RE51281 AND RE68722) (WITH AIR CONDITIONING)
16	R500320	SPACER	1		(SUB FOR R107654) (WITH AIR CONDITIONING)
17	R135198	BELT	1	-872328	(WITH AIR CONDITIONING)
	R135200	BELT	1	-872328	(WITHOUT AIR CONDITIONING)
	R135612	BELT	1	872329-	(WITH AIR CONDITIONING)
	R500089	BELT	1	872329-	(WITHOUT AIR CONDITIONING)
18	RE70535	TIGHTENER	1		
19	R500322	SPACER	1	-814064	(SUB FOR R135531) TO TIMING GEAR COVER
	R500322	SPACER	1	814065-	TO SUPPORT PLATE
20	19M8114	SCREW	4		M10 X 70
21	19M7805	SCREW	4		M10 X 45
22	R133060	BRACKET	1		R.H.
23	19M7788	SCREW	1		M12 X 25
24	R133059	BRACKET	1		L.H.
25	19M8169	SCREW	1	-814064	M12 X 30
	19M7790	SCREW	1	814065-	M12 X 35
26	T151858	WASHER	1	814065-	
27	19M7801	SCREW	2	814065-	M8 X 60
28	34M7061	SPRING PIN	1	814065-	8 X 20 MM
29	R133978	SUPPORT	1	814065-	

CRANKSHAFT PULLEY AND DAMPER
(ENGINE SERIAL NO. 713823-)

TP53318 -UN-21AUG96

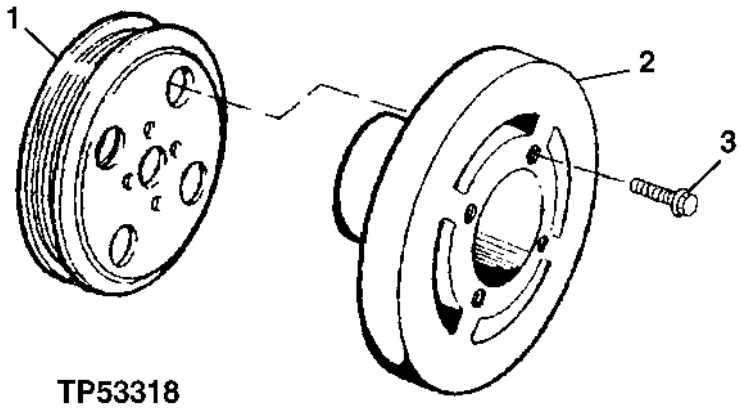

TP53318

KEY	PART NO.	PART NAME	QTY	ENGINE SERIAL NO.	REMARKS
1	R133295	PULLEY	1		
2	RE59355	TORSIONAL DAMPENER	1		
3	R121897	CAP SCREW	4		

AUXILIARY DRIVE FOR HYD. PUMP FRONT
(ENGINE SERIAL NO. 713823-)

TP50602 -UN-20FEB97

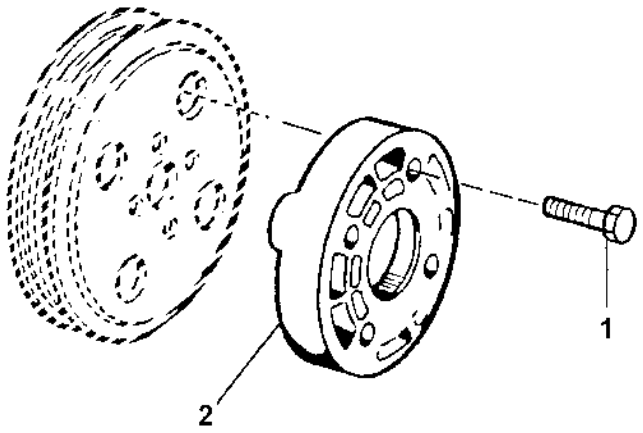

TP50602

KEY	PART NO.	PART NAME	QTY	ENGINE SERIAL NO.	REMARKS
1	L34575	SCREW	4		
2	L34569	COUPLING	1		

IDLER PULLEY WITH SPACER AND SLEEVE

TP58226 -UN-13AUG97

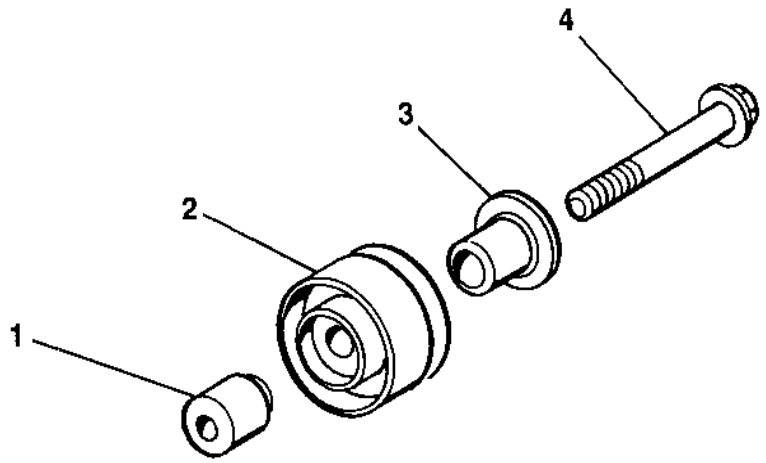

TP58226

KEY	PART NO.	PART NAME	QTY	SERIAL NO.	REMARKS
1	R500320	SPACER	1		(SUB FOR RE155577) (WITH AIR CONDITIONING)
	R123523	SPACER	1		(WITHOUT AIR CINDITIONING)
2	RE505265	PULLEY	1		(SUB FOR RE38503)
3	R502079	SLEEVE	1		(SUB FOR R107749)
4	19M7807	SCREW	1		M10 X 60, (WITH AIR CONDITIONING)
	19M7811	SCREW	1		M10 X 90, (WITHOUT AIR CONDITIONING)
	19M7805	SCREW	1	814065-	M10 X 45

MEMORANDA

ENGINE FLYWHEEL AND FLYWHEEL HOUSING
(ENGINE SERIAL NO. -713822)

TP54954 -UN-13MAR97

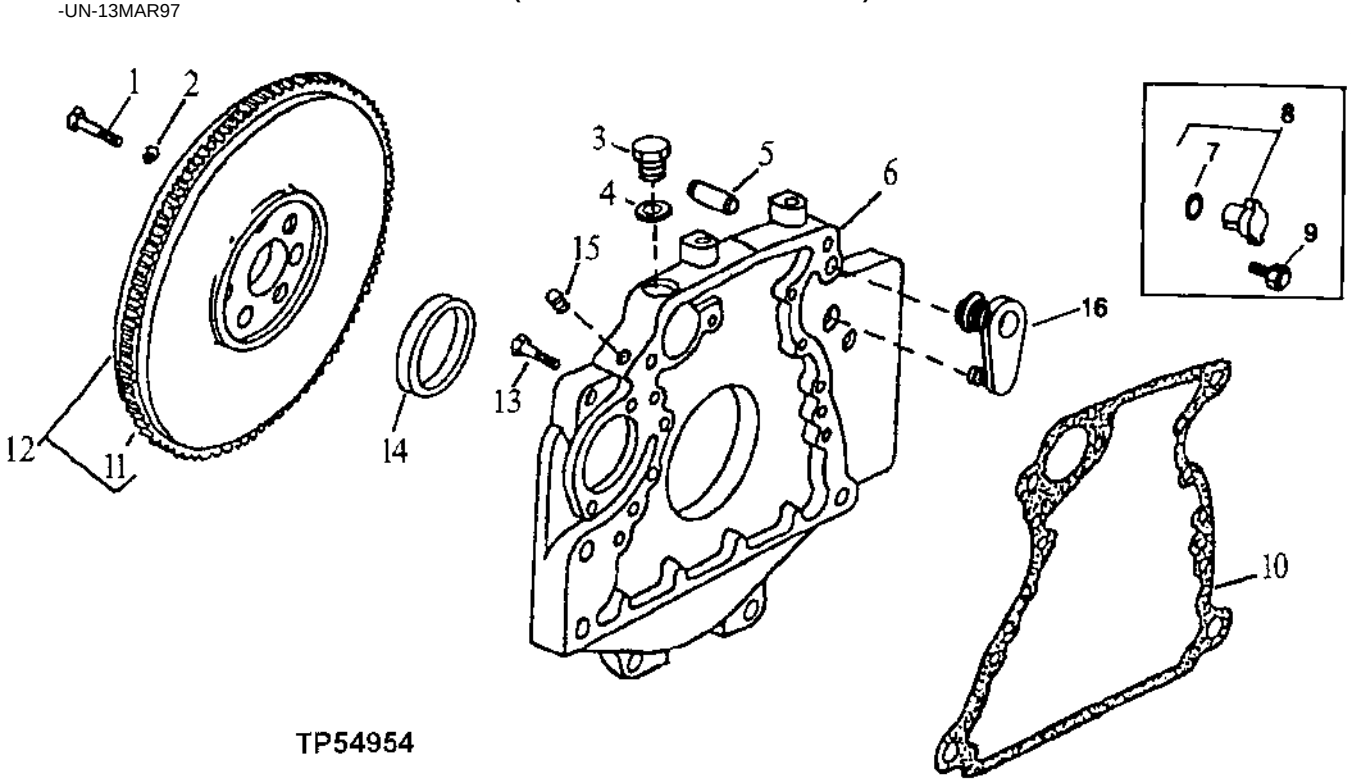

TP54954

KEY	PART NO.	PART NAME	QTY	ENGINE SERIAL NO.	REMARKS
1	19H2993	CAP SCREW	4		HS, SAE 8, 1/2" X 1-1/2"
2	T23891	WASHER	4		
3	M1746T	DRAIN PLUG	1		
4	T13213	WASHER	1		
5	T26565	DOWEL PIN	2		
6	R54621	HOUSING	1		
7	R27149	O-RING	AR		
8	AR61533	PLUG	AR		
9	19H2351	CAP SCREW	AR		1/2" X 1/2"
10	R97351	GASKET	1		
11	R54503	GEAR	1		(115 TEETH)
12	AR96222	FLYWHEEL	1		(MARKED 72651)
13	19H3219	CAP SCREW	8		3/8" X 1-3/8"
14	RE44574	SEAL	1		REAR OIL SEAL
15	15H638	PIPE PLUG	1		1/8"
16	R131769	PLUG	1		

ENGINE FLYWHEEL
(ENGINE SERIAL NO. 713823-)

TP58366 -UN-24NOV98

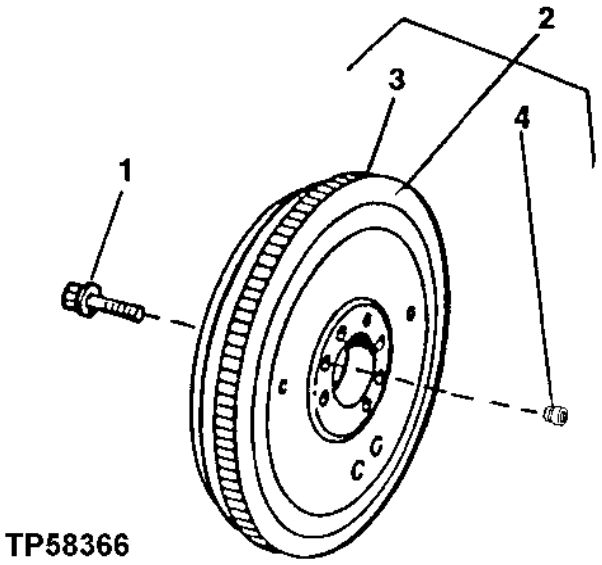

KEY	PART NO.	PART NAME	QTY	ENGINE SERIAL NO.	REMARKS
1	R135918	SCREW	6		
2	R54503	GEAR	1	-814064	(115 TEETH)
	R28811	RING GEAR	1	814065-	(129 TEETH)
3	RE70387	FLYWHEEL	1	-814064	(115 TEETH) (MARKED R135369)
	RE500137	FLYWHEEL	1	814065-	
4	R123521	SLEEVE	1	814065-	

ENGINE FLYWHEEL HOUSING
(ENGINE SERIAL NO. 713823-814064)

TP50606 -UN-14MAR97

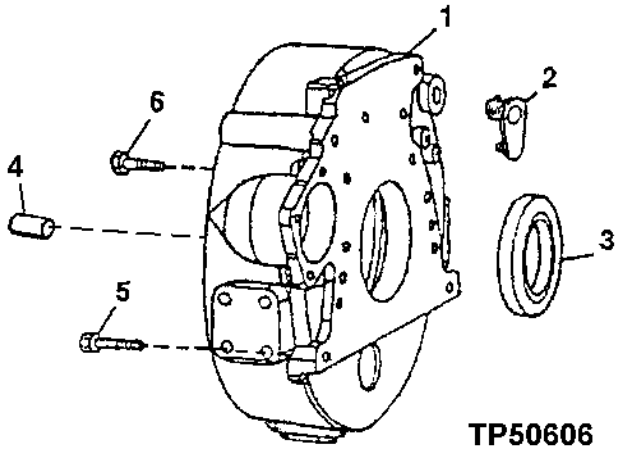

KEY	PART NO.	PART NAME	QTY	ENGINE SERIAL NO.	REMARKS
1	R134226	HOUSING	1		
2	R131768	PLUG	1		
3	RE44574	SEAL	1		
4	T26565	DOWEL PIN	2		
5	19M7818	SCREW	4		M12 X 80
6	R135918	SCREW	8		

FLYWHEEL HOUSING
(ENGINE SERIAL NO. 814065-)

T137688 -UN-13FEB01

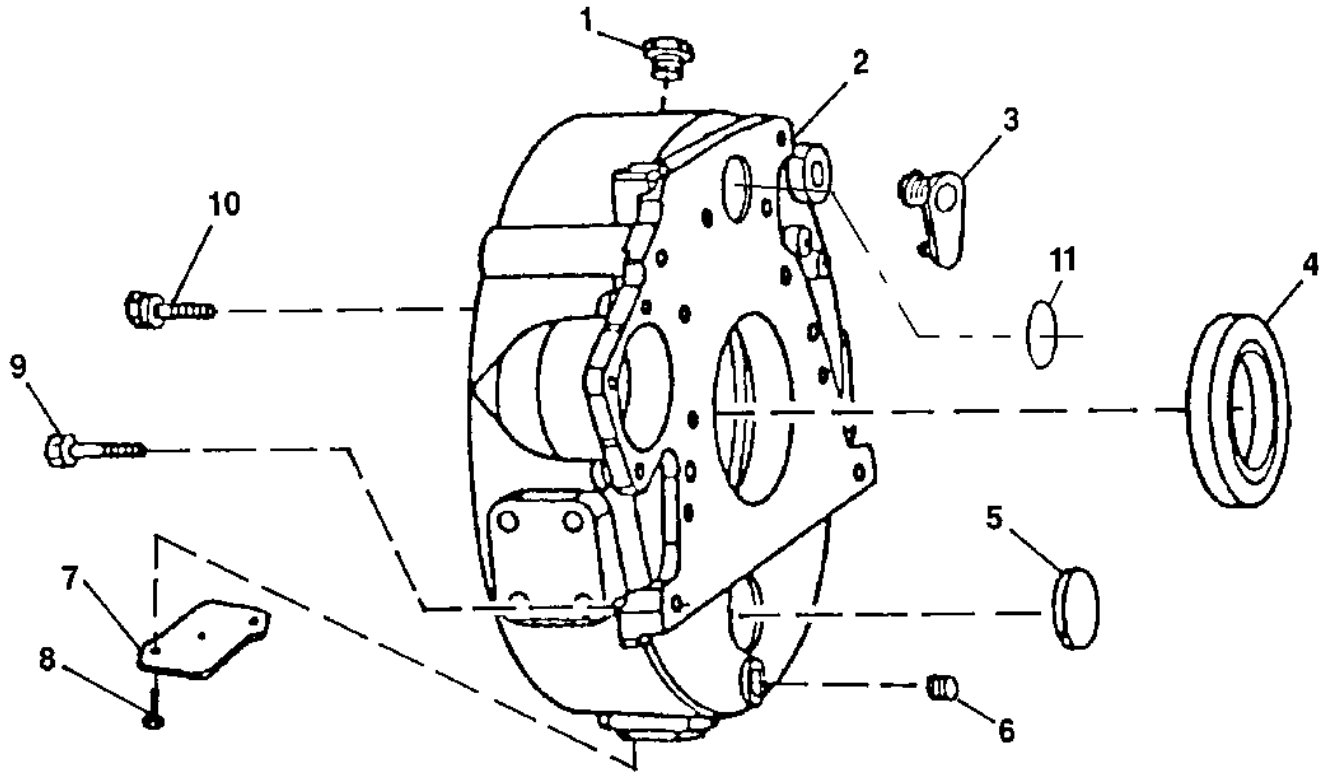

T137688

KEY	PART NO.	PART NAME	QTY	ENGINE SERIAL NO.	REMARKS
1	R39112	FITTING	1		
2	R132006	HOUSING	1	-867794	(SUB R503451 AND R61467)
	R503451	HOUSING	1	867795-	(ALSO ORDER R61467)
3	R131769	PLUG	1		
4	RE44574	SEAL	1		
5	T13518	CAP	1		
6	15H624	PIPE PLUG	1		1/2"
7	R121039	PLATE	2		
8	19M7923	CAP SCREW	2		M6 X 12
9	19M8306	SCREW	4		M12 X 50
10	R135918	BOLT	8		
11	T61467	BUSHING	1	867795-	

MEMORANDA

ENGINE CYLINDER HEAD REMOVAL GASKET SET
(ENGINE SERIAL NO. -713822)

TP26428 -UN-01JAN94

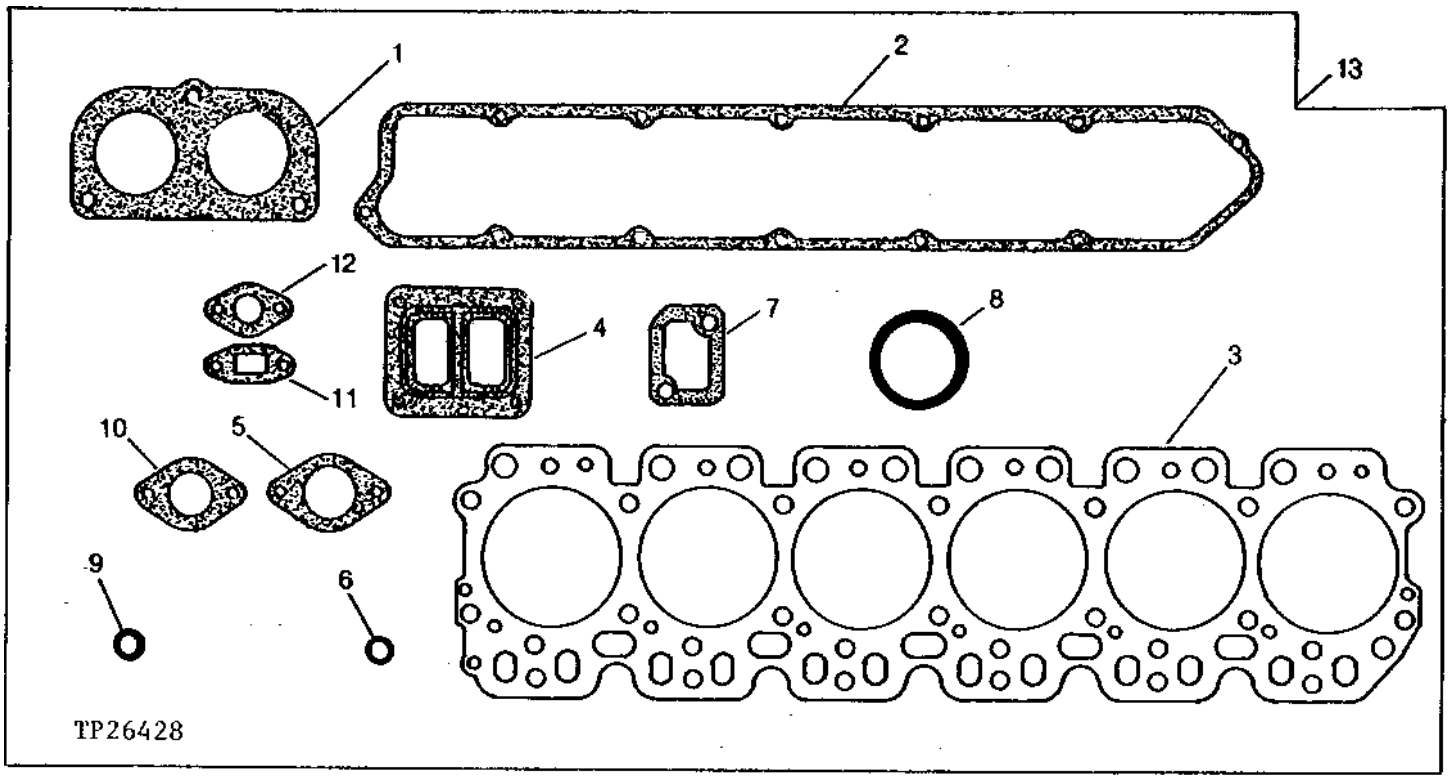

KEY	PART NO.	PART NAME	QTY	ENGINE SERIAL NO.	REMARKS
1	R501373	GASKET	1		(SUB FOR R54638) THERMOSTAT COVER
2	R75728	GASKET	1		ROCKER ARM COVER
3	R114157	ENGINE CYLINDER HEAD GASKET	1		(SUB FOR R92426) HEAD
4	R123572	GASKET	1		TURBOCHARGER, (SUB FOR R89879, THIS APPLICATION)
5	R81275	GASKET	2		AIR INLET
6	R56461	O-RING	2		WATER BYPASS TUBE
7	R54641	GASKET	1		THERMOSTAT HOUSING WATER OUTLET
8	R87627	O-RING	12		VALVE STEM
9	R56463	O-RING	1		VENT TUBE
10	R90658	GASKET	6		EXHAUST MANIFOLD
11	R105346	GASKET	1		TURBO OIL OUTLET
12	R97348	GASKET	1		TURBOCHARGER OIL INLET
13	RE38852	GASKET KIT	1		

ENGINE GASKET SETS-IN CHASSIS AND CYLINDER HEAD OVERHAUL
(ENGINE SERIAL NO. 713823-)

TP49294 -UN-28SEP95

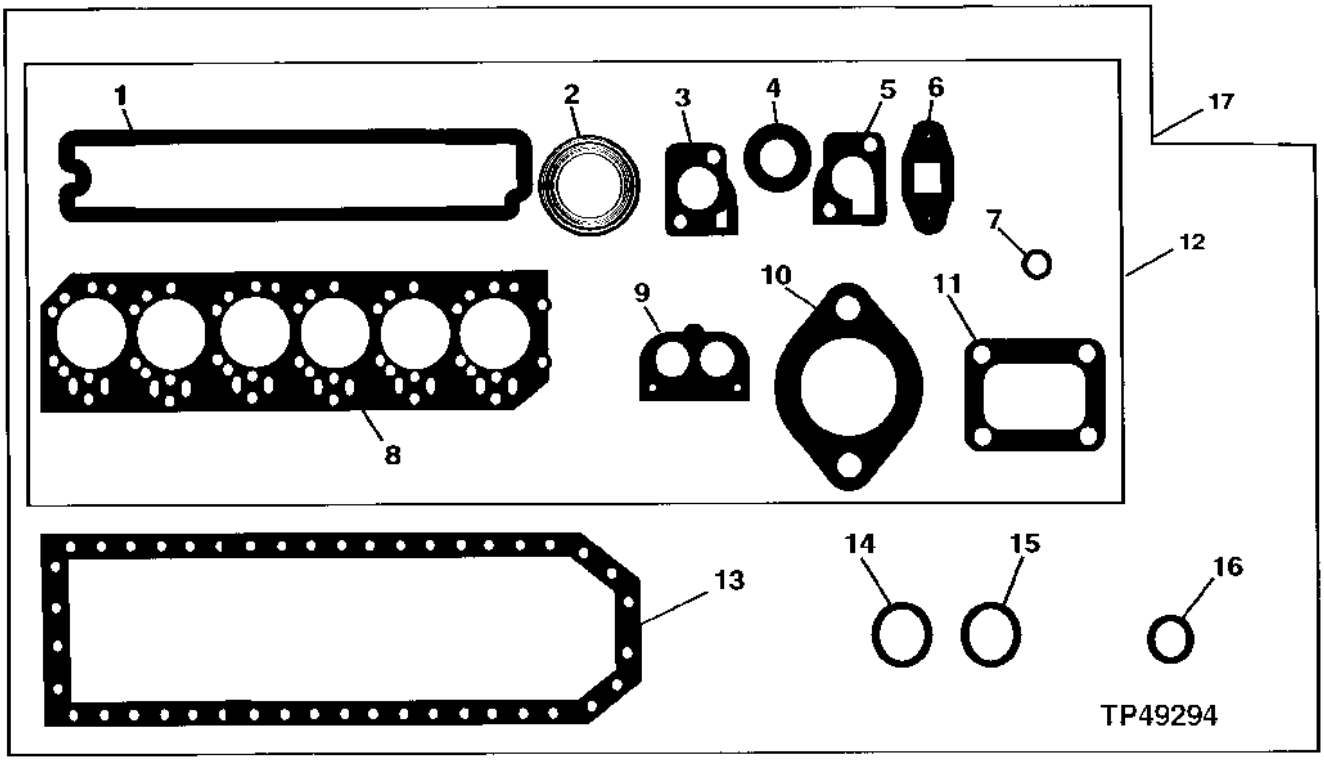

KEY	PART NO.	PART NAME	QTY	ENGINE SERIAL NO.	REMARKS
1	R123543	GASKET	1		ROCKER ARM COVER
2	R90658	GASKET	6		EXHAUST MANIFOLD
3	R502814	GASKET	1		(SUB FOR R135896) THERMOSTAT COVER
4	R123226	GASKET	2		WATER BY-PASS TUBE
5	R123345	GASKET	1		THERMOSTAT HOUSING
6	R123570	GASKET	1		TURBOCHARGER OIL OUTLET LINE
7	R123575	O-RING	6		ROCKER ARM COVER HOLD DOWN STUD
8	R116516	ENGINE CYLINDER HEAD GASKET	1		CYLINDER HEAD
9	R501373	GASKET	1		THERMOSTAT COVER, (SUB FOR R54638)
10	R81275	GASKET	1		AIR INLET
11	R123572	GASKET	1		TURBOCHARGER TO EXHAUST MANIFOLD
12	RE66083	CYLINDER HEAD	1		CYLINDER HEAD REMOVAL
13	R123354	GASKET	1		ENGINE OIL PAN
14	R75892	O-RING	1		OIL PUMP TUBE CONNECTOR
15	R97185	O-RING	1		OIL PUMP OUTLET TUBE TO COVER
16	R61871	O-RING	1		OIL PUMP INTAKE TUBE TO COVER
17	RE66085	KIT	1		IN CHASSIS OVERHAUL

MEMORANDA

ENGINE OVERHAUL GASKET SET
(ENGINE SERIAL NO. -713822)

TP26715 -UN-01JAN94

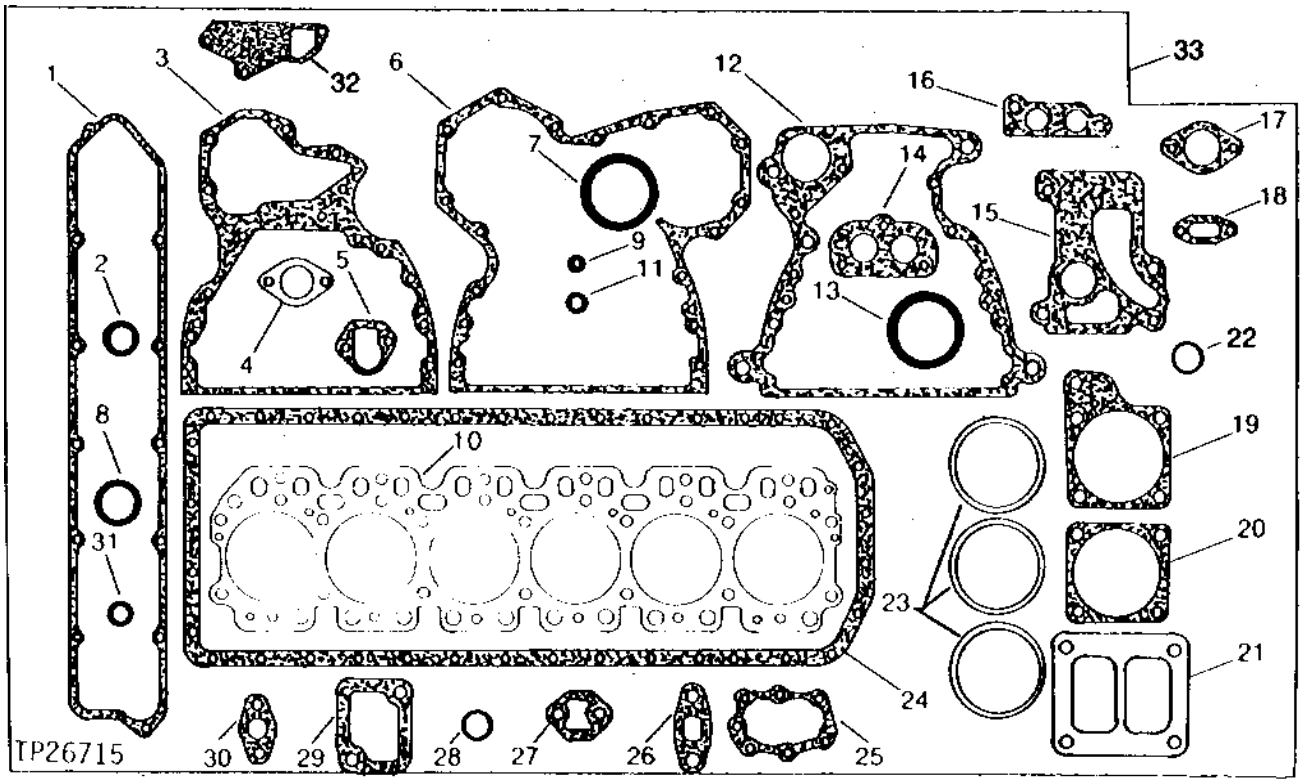

ENGINE OVERHAUL GASKET SET
(ENGINE SERIAL NO. -713822)

KEY	PART NO.	PART NAME	QTY	ENGINE SERIAL NO.	REMARKS
1	R75728	GASKET	1		ROCKER ARM COVER
2	R80632	O-RING	2		OIL PUMP CONNECTOR AND OIL PUMP OUTLET TUBE
3	R131794	GASKET	1		CYLINDER BLOCK PLATE, (SUB FOR R90648)
4	R90658	GASKET	6		EXHAUST MANIFOLD
5	R125066	GASKET	1		(SUB FOR R97773) INJECTION PUMP GEAR COVER
6	R126513	GASKET	1		(SUB FOR R119269 OR R121314) TIMING GEAR COVER
7	R56193	O-RING	1		OIL COOLER HOUSING, OUTER
8	U13639	O-RING	1		COOLANT HEATER PLUG
9	R26286	O-RING	1		TO INJECTION PUMP
10	R114157	ENGINE CYLINDER HEAD GASKET	1		(SUB FOR R92426) CYLINDER HEAD
11	R56463	O-RING	1		VENT TUBE
12	R97351	GASKET	1		FLYWHEEL HOUSING
13	R56192	O-RING	1		OIL COOLER HOUSING INNER
14	R501373	GASKET	1		(SUB FOR R54638) THERMOSTAT COVER
15	R98489	GASKET	1		OIL COOLER TO CYLINDER BLOCK
16	R98488	GASKET	1		OIL COOLER
17	R81275	GASKET	3		AIR INLET
18	R97352	GASKET	1		OIL FILLER INLET COVER
19	R98485	GASKET	1		OIL COOLER LOWER COVER
20	R98484	GASKET	1		OIL COOLER
	R98471	GASKET	1		OIL COOLER UPPER COVER
21	R123572	GASKET	1		TURBOCHARGER, (SUB FOR R89879, THIS APPLICATION)
22	T20328	GASKET	1		OIL FILLER CAP
23	AR65507	O-RING KIT	6		CYLINDER LINER PACKING
24	R97344	GASKET	1		OIL PAN
25	T20273	GASKET	1		TIMING GEAR COVER, OPENING COVER
26	R105346	GASKET	1		TURBO OIL OUTLET
27	R97350	GASKET	1		FUEL PUMP
28	R61871	O-RING	1		OIL PUMP INTAKE
29	R54641	GASKET	1		WATER OUTLET HOUSING
30	R97348	GASKET	1		TURBOCHARGER TO OIL INLET ADAPTER
31	R56461	O-RING	2		WATER BYPASS TUBE
32	T20243	GASKET	1		WATER PUMP
33	RE501580	GASKET KIT	1		(ALSO ORDER (4) RE32011 AND (4) R48000) (SUB FOR RE38858)

ENGINE MAJOR OVERHAUL GASKET SET AND ENGINE OVERHAUL KIT
(ENGINE SERIAL NO. 713823-)

TP58369 -UN-08FEB99

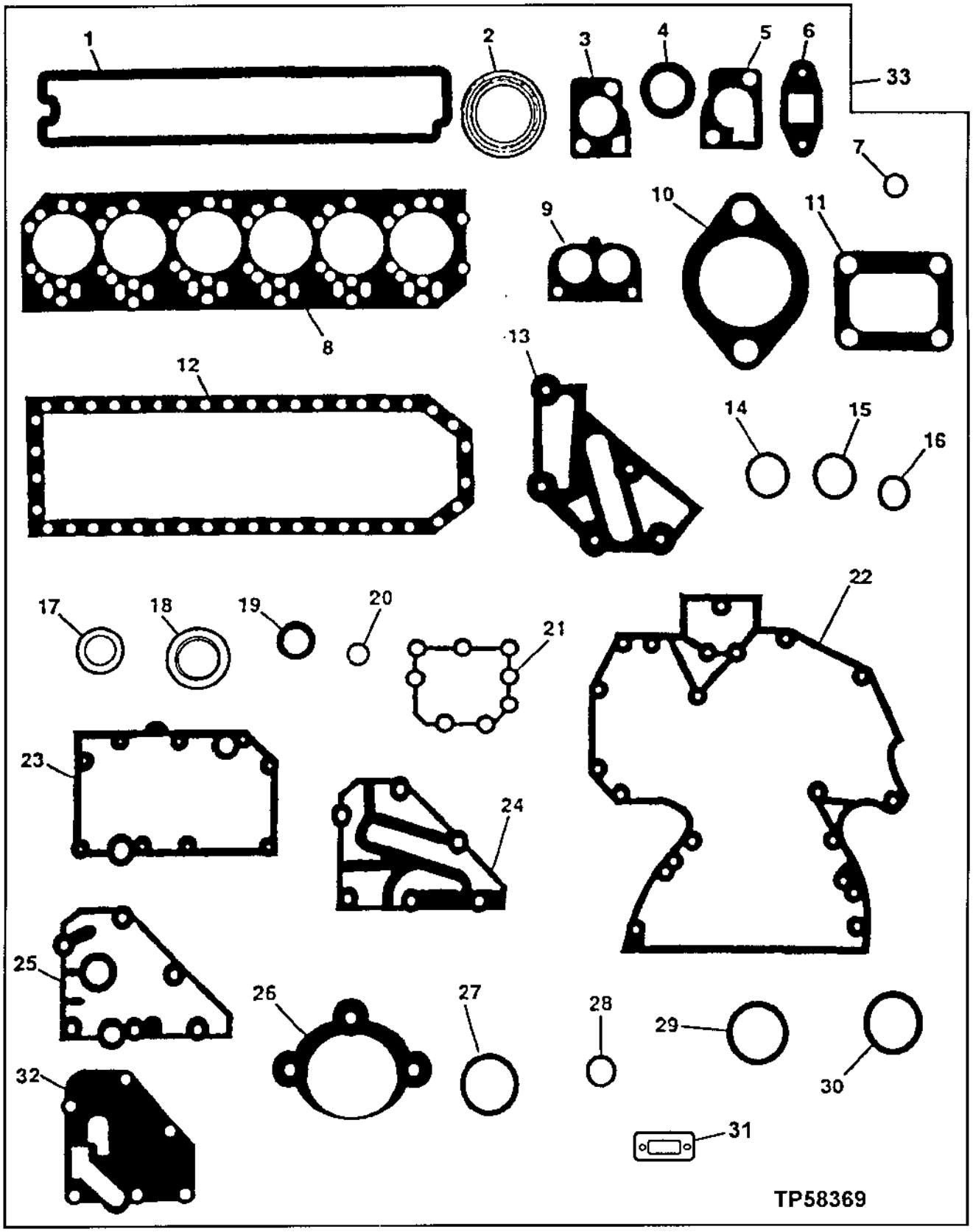

ENGINE MAJOR OVERHAUL GASKET SET AND ENGINE OVERHAUL KIT
(ENGINE SERIAL NO. 713823-)

KEY	PART NO.	PART NAME	QTY	ENGINE SERIAL NO.	REMARKS
1	R123543	GASKET	1		ROCKER ARM COVER
2	R90658	GASKET	6		EXHAUST MANIFOLD
3	R502814	GASKET	1		(SUB FOR R135896) THERMOSTAT COVER
4	R123226	GASKET	2		WATER BY-PASS TUBE
5	R123345	GASKET	1		THERMOSTAT HOUSING
6	R123570	GASKET	1		TURBOCHARGER OIL OUTLET TUBE
7	R123575	O-RING	4		ROCKER ARM COVER HOLD DOWN STUD
8	R116516	ENGINE CYLINDER HEAD GASKET	1		CYLINDER HEAD
9	R501373	GASKET	1		(SUB FOR R54638) THERMOSTAT COVER
10	R81275	GASKET	1		AIR INLET
11	R123572	GASKET	1		TURBOCHARGER TO EXHAUST MANIFOLD
12	R123354	GASKET	1		ENGINE OIL PAN
13	R501428	GASKET	1		COOLANT PASSAGE ADAPTER
14	R75892	O-RING	1		OIL PUMP TUBE CONNECTOR
15	R97185	O-RING	2		OIL PUMP OUTLET TUBE TO COVER
16	R61871	O-RING	1		OIL PUMP INTAKE TUBE
17	A4827R	WASHER	1		OIL PRESSURE REGULATOR PLUG
18	RE44574	SEAL	1		REAR OIL SEAL
19	RE59810	SEAL KIT	1		FRONT OIL SEAL
20	R123273	O-RING	1		(SUB FOR R123502) FUEL TRANSFER PUMP
21	R123417	GASKET	1		WATER PUMP
22	R136516	GASKET	1		TIMING GEAR COVER, (SUB FOR R123421 AND R134534)
	R136515	GASKET	1		(SUB FOR R123425 AND R134533) TIMING GEAR COVER FOR AUXILIARY DRIVE (NOT ILLUSTRATED)
23	R123501	GASKET	1		OIL COOLER HOUSING
24	R502864	GASKET	1		REMOTE OIL FILTER ADAPTER, (SUB FOR R123504)
25	R123525	GASKET	1	-766852	OIL FILTER HEADER
26	R53108	GASKET	1		STARTING MOTOR
27	R72328	O-RING	4		REMOTE OIL FILTER TUBES
28	R89944	O-RING	1		WATER PUMP INLET
29	R61105	O-RING	2		CONNECTOR TUBE TO TIMING GEAR COVER
30	T122075	O-RING	2		OIL COOLER TO HOUSING
31	R136495	GASKET	2		OIL FILL COVER
32	R500374	GASKET	1	766853-	OIL FILTER HEADER
33	RE501456	GASKET KIT	1		(SUB FOR RE66087) ENGINE MAJOR OVERHAUL
	RE66097	ENGINE OVERHAUL KIT	1		(NOT ILLUSTRATED) (INCLUDES ENGINE MAJOR OVERHAUL GASKET SET,ENGINE CONNECTING ROD BEARINGS,ENGINE MAIN BEARINGS,AND PISTON AND CYLINDER LINER KITS)(ORDER ONE KIT PER ENGINE)

COLD WEATHER STARTING AID
(SERIAL NO. -872328)

TP46943 -UN-15MAR95

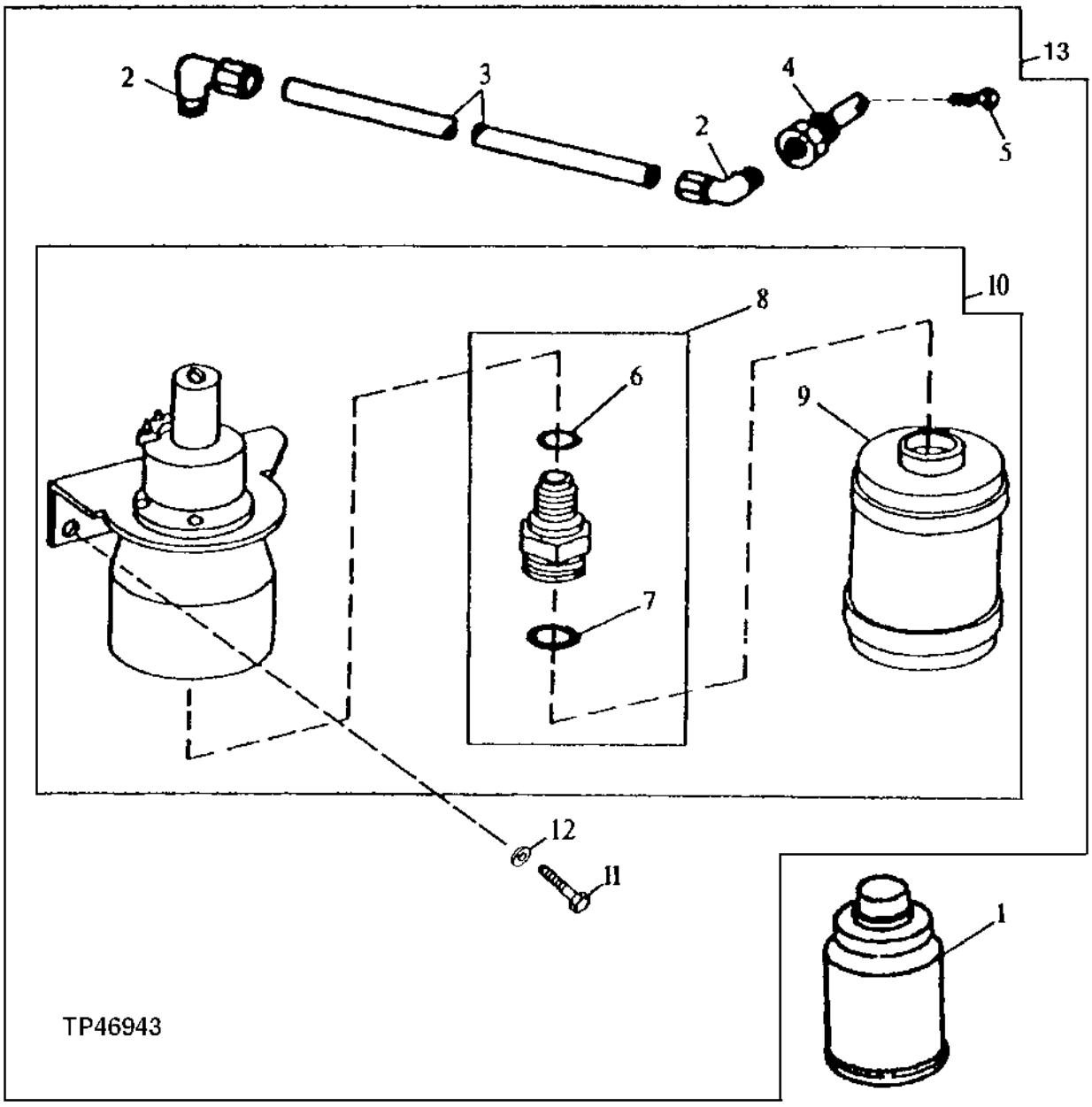

COLD WEATHER STARTING AID
(SERIAL NO. -872328)

KEY	PART NO.	PART NAME	QTY	SERIAL NO.	REMARKS
1	RE33636	STARTING FLUID	1		
2	RE21790	ELBOW FITTING	2		
3	.....	TUBE	1		(MAKE FROM T78593 BULK MATERIAL, CUT TO LENGTH)
4	R47160	NOZZLE HOLDER	1		
5	T155858	NOZZLE	1		SPRAY, (SUB FOR R28583, THIS APPLICATION)
6	T15712	O-RING	1		
7	T13119	O-RING	1		
8	RE48321	ADAPTER	1		
9	R73498	CONTAINER	1		
10	RE48310	STARTING AID SOLENOID	1		
11	37H116	SCREW	2		
	19M7923	CAP SCREW	2		M6 X 12
12	24H1287	WASHER	2		9/32" X 5/8" X 0.065"
13	**AT168225**	**STARTING AID**	**1**		**(INCLUDES T55585 AND R39554) (SUB FOR AT145603)**

COLD WEATHER STARTING AID
(SERIAL NO. 872329-)

TP56207 -UN-25AUG00

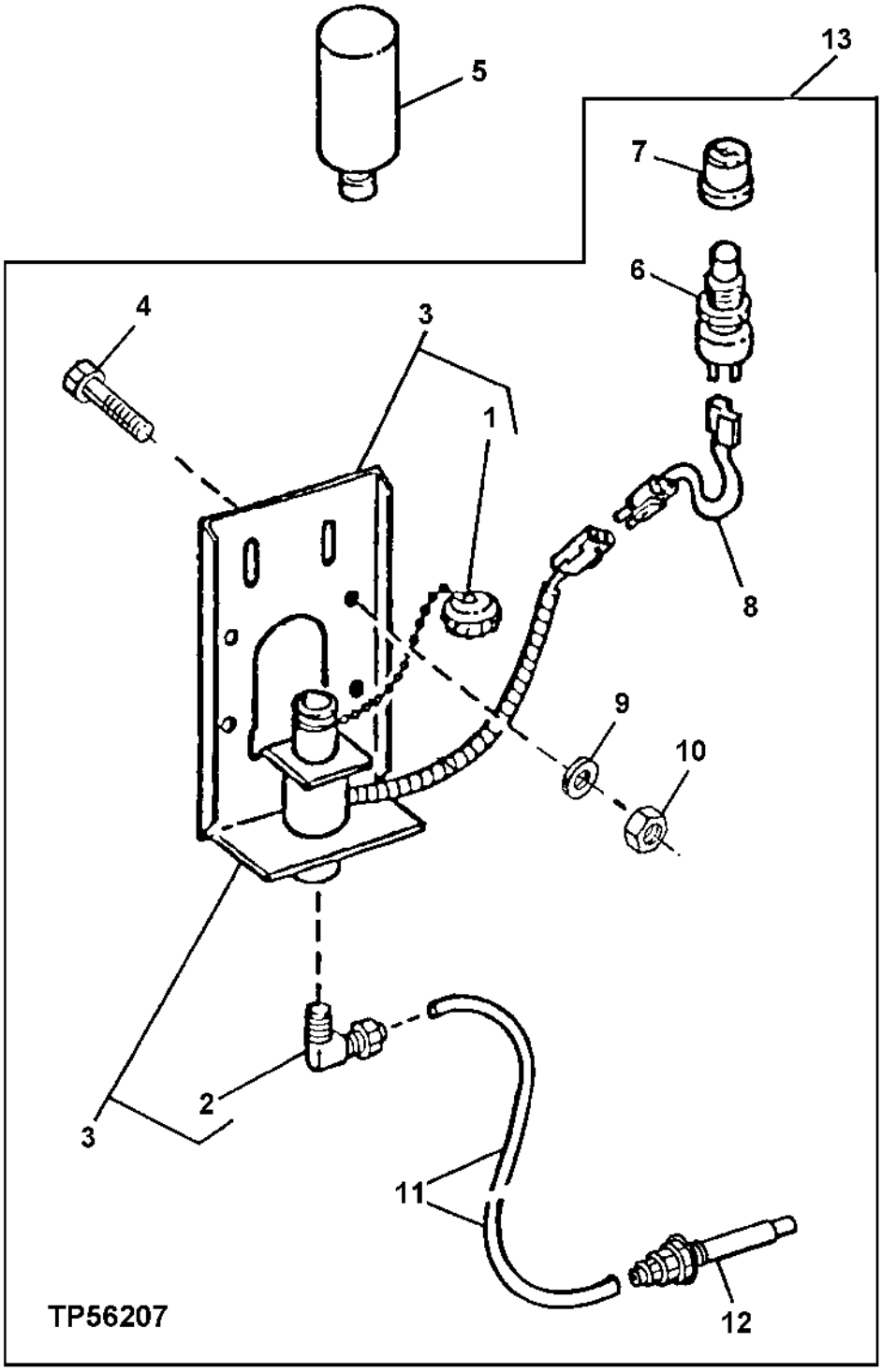

COLD WEATHER STARTING AID
(SERIAL NO. 872329-)

KEY	PART NO.	PART NAME	QTY	SERIAL NO.	REMARKS
1	AT171539	CAP/HAT	1		
2	AT181582	ELBOW FITTING	1		
3	AT173385	STARTING AID SOLENOID	1		
4	03M7221	BOLT	3		
5	AT171162	STARTING FLUID	1		
6	R39554	SWITCH	1		
7	T55585	CAP	1		
8	AT182257	WIRING HARNESS	1		
9	24M7139	WASHER	3		
10	14M7272	NUT	3		M6
11	.....	TUBE	1		(MAKE FROM T78593 BULK MATERIAL CUT TO 1.5 FT. (457MM) LENGTH)
12	AT183222	NOZZLE	1		
13	**AT182234**	**STARTING AID**	**1**		**(ALSO ORDER AT171162)**

ENGINE COOLANT HEATER

TP42864 -UN-01JAN94

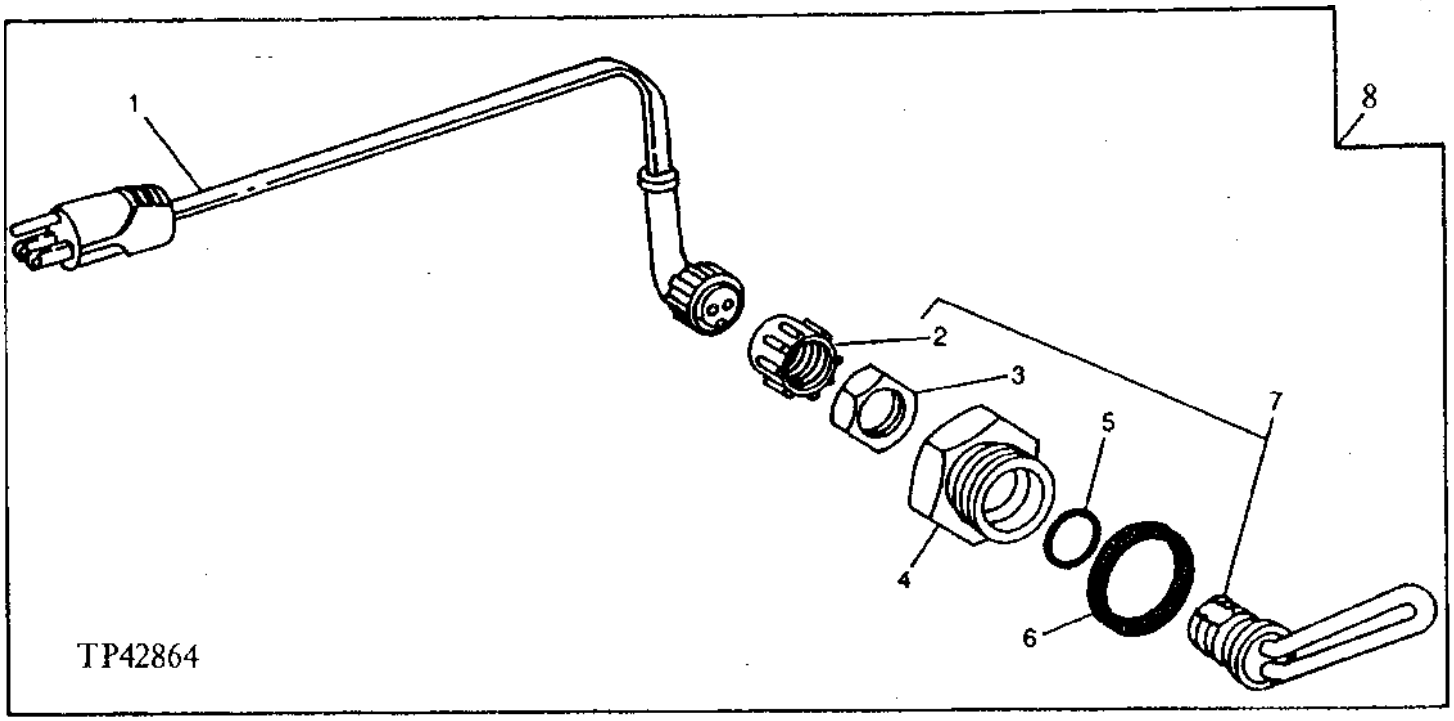

KEY	PART NO.	PART NAME	QTY	SERIAL NO.	REMARKS
1	AT73296	POWER CORD	1		
2	R54510	CAP	1		
3	.....	NUT	1		
4	R54123	ADAPTER	1		
5	R47693	GASKET	1		
6	U13639	O-RING	1		
7	RE504122	COOLANT HEATER	1		(SUB FOR AR62399, THIS APPLICATION)
8	**AT159688**	**COOLANT HEATER**	**1**		

MEMORANDA

RADIATOR AND OIL COOLER
(SERIAL NO. -830204)

TP57969 -UN-03DEC98

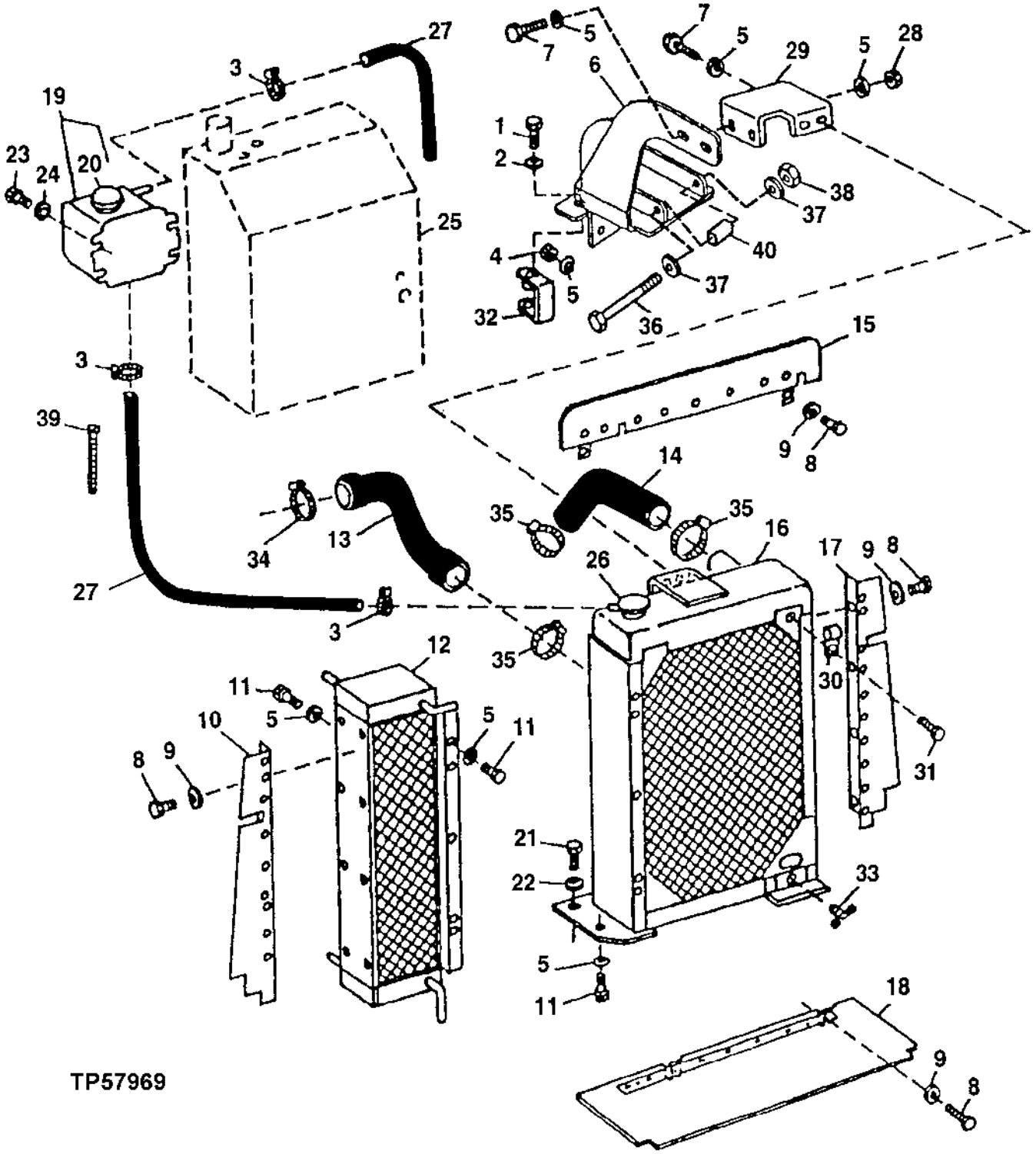

RADIATOR AND OIL COOLER
(SERIAL NO. -830204)

KEY	PART NO.	PART NAME	QTY	SERIAL NO.	REMARKS
1	19H2898	CAP SCREW	1		1/2" X 1-1/4"
2	24M7047	WASHER	1		13 X 24 X 2.500 MM
3	R56101	CLIP	3		WITHOUT AIR CONDITIONING, (SUB FOR T13254, THIS APPLICATION)
4	U13184	LOCK NUT	2		
5	24M7239	WASHER	16		10.700 X 21 X 2.500 MM
6	AT174448	BRACKET	1		(SUB FOR T142951, T143122 AND AT161327)
7	19M7662	CAP SCREW	4		M10 X 30
8	37H116	SCREW	11		
9	24M7139	WASHER	12		6.400 X 18 X 1.600 MM
10	AT159701	ISOLATOR	1		R.H.
11	19M7938	CAP SCREW	7		M10 X 20
12	AT163655	OIL COOLER	1		HYDRAULIC AND TRANSMISSION
13	T120198	RADIATOR HOSE	1		LOWER
14	T68579	RADIATOR HOSE	1		UPPER
15	AT159699	ISOLATOR	1		
16	AT174939	RADIATOR	1		AT164324 NO LONGER AVAILABLE SUB AT174939, (SUB FOR AT164324)
17	AT159700	ISOLATOR	1		L.H.
18	AT174931	ISOLATOR	1		(SUB FOR AT159702)
19	AN205068	TANK	1		OVERFLOW, (INCLUDES AT186925) (SUB FOR AT104021, AT166459 AND AT174403, THIS APPLICATION) (SUB FOR AT162597)
20	AT186925	FILLER CAP	1		(SUB FOR AT106413, THIS APPLICATION)
21	19M8011	CAP SCREW	2		M12 X 30
22	24M7240	WASHER	2		13 X 25 X 3 MM
23	19M8324	CAP SCREW	3		M10 X 16
24	24M7096	WASHER	3		10.500 X 18 X 1.600 MM
25	AT167711	RESERVOIR	1		(SUB FOR AT160419)
26	AT165587	FILLER CAP	1	-816662	(SUB FOR AT151979)
	AT172281	FILLER CAP	1	816663-	
27	TY22324	BULK HOSE	AR		.50 OD X .312 ID X 25 FT (CUT TO LENGTH)
28	14M7274	NUT	2		M10
29	T148553	BRACKET	1		
30	.....	CLAMP	1		
31	37H84	SCREW	1		
32	AT107856	BRACKET	1		
33	AT13740	DRAIN VALVE	1		
34	TY22472	CLAMP	1		(SUB FOR AT145651 OR AR21999)
35	TY22472	CLAMP	3		(SUB FOR AT145651 OR AR40418)
36	19M8456	CAP SCREW	2		M8 X 100
37	24M7238	WASHER	4		8.700 X 17 X 2 MM
38	14M7166	LOCK NUT	2		M8
39	H77698	TIE BAND	AR		
40	M78771	SPACER	2		

RADIATOR AND OIL COOLER
(SERIAL NO.830205-)

TP57970 -UN-03DEC98

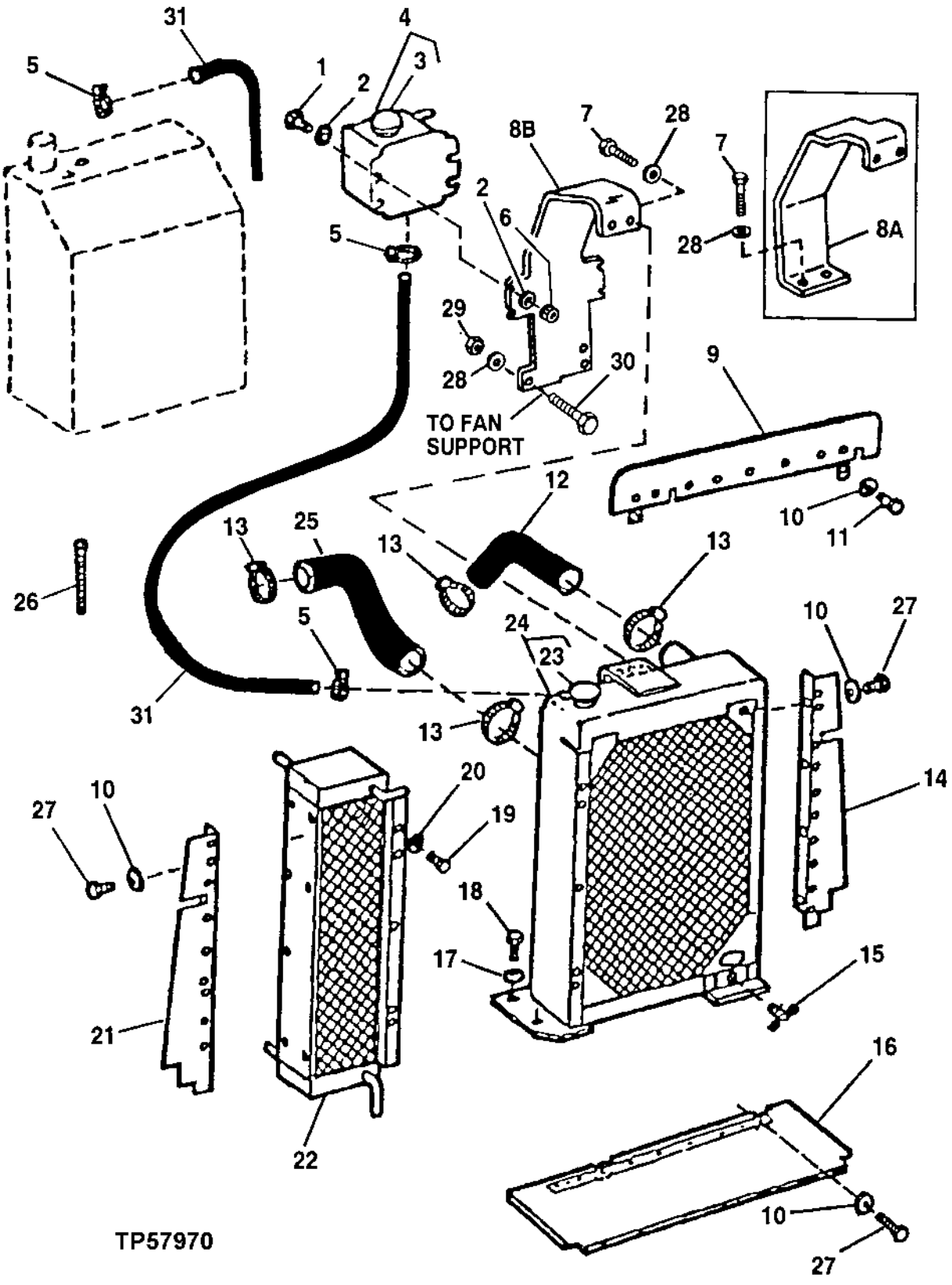

RADIATOR AND OIL COOLER
(SERIAL NO.830205-)

KEY	PART NO.	PART NAME	QTY	SERIAL NO.	REMARKS
1	19M7513	CAP SCREW	4		M8 X 30, (SUB FOR 19M8324, THIS APPLICATION)
2	24M7238	WASHER	8		8.700 X 17 X 2 MM, (SUB FOR 24M7096 AND 24M7239, THIS APPLICATION)
3	AT186925	FILLER CAP	1		(SUB FOR AT106413, THIS APPLICATION)
4	AT174403	TANK	1		OVERFLOW, (SUB FOR AT166459, THIS APPLICATION)
5	R56101	CLIP	3		
6	14M7273	NUT	4		M8
7	19M7662	CAP SCREW	AR		M10 X 30
8A	T163320	BRACKET	1	-838459	(SUB FOR T161159) (ALSO ORDER 24M7239, (3) 14M7274 AND (4) 19M7807)
8B	T163320	BRACKET	1	838460-	
9	AT159699	ISOLATOR	1		
10	24M7139	WASHER	12		6.400 X 18 X 1.600 MM, R.H.
11	19M7938	CAP SCREW	7		M10 X 20
12	T159257	RADIATOR HOSE	1		UPPER
13	AT65294	CLAMP	4		
14	AT159700	ISOLATOR	1		
15	AT13740	DRAIN VALVE	1		
16	AT174931	ISOLATOR	1		
17	24M7240	WASHER	2		13 X 25 X 3 MM
18	19M8011	CAP SCREW	2		M12 X 30
19	19M7938	CAP SCREW	7		M10 X 20
20	24M7239	WASHER	7		10.700 X 21 X 2.500 MM
21	AT159701	ISOLATOR	1		
22	AT163655	OIL COOLER	1		
23	AT183451	CAP	1	-841758	
	AT173610	FILLER CAP	1	841759-	
24	AT176425	RADIATOR	1		
25	T159252	HOSE	1		LOWER
26	H77698	TIE BAND	1		
27	37H116	SCREW	12		
28	24M7239	WASHER	AR		10.700 X 21 X 2.500 MM
29	14M7274	NUT	3	838460-	M10
30	19M8114	SCREW	AR		M10 X 70
31	.....	HOSE	1		MAKE FROM T79477 BULK MATERIAL, CUT TO LENGTH

FAN, FAN GUARD, AND SHROUD

TP49580 -UN-05MAR97

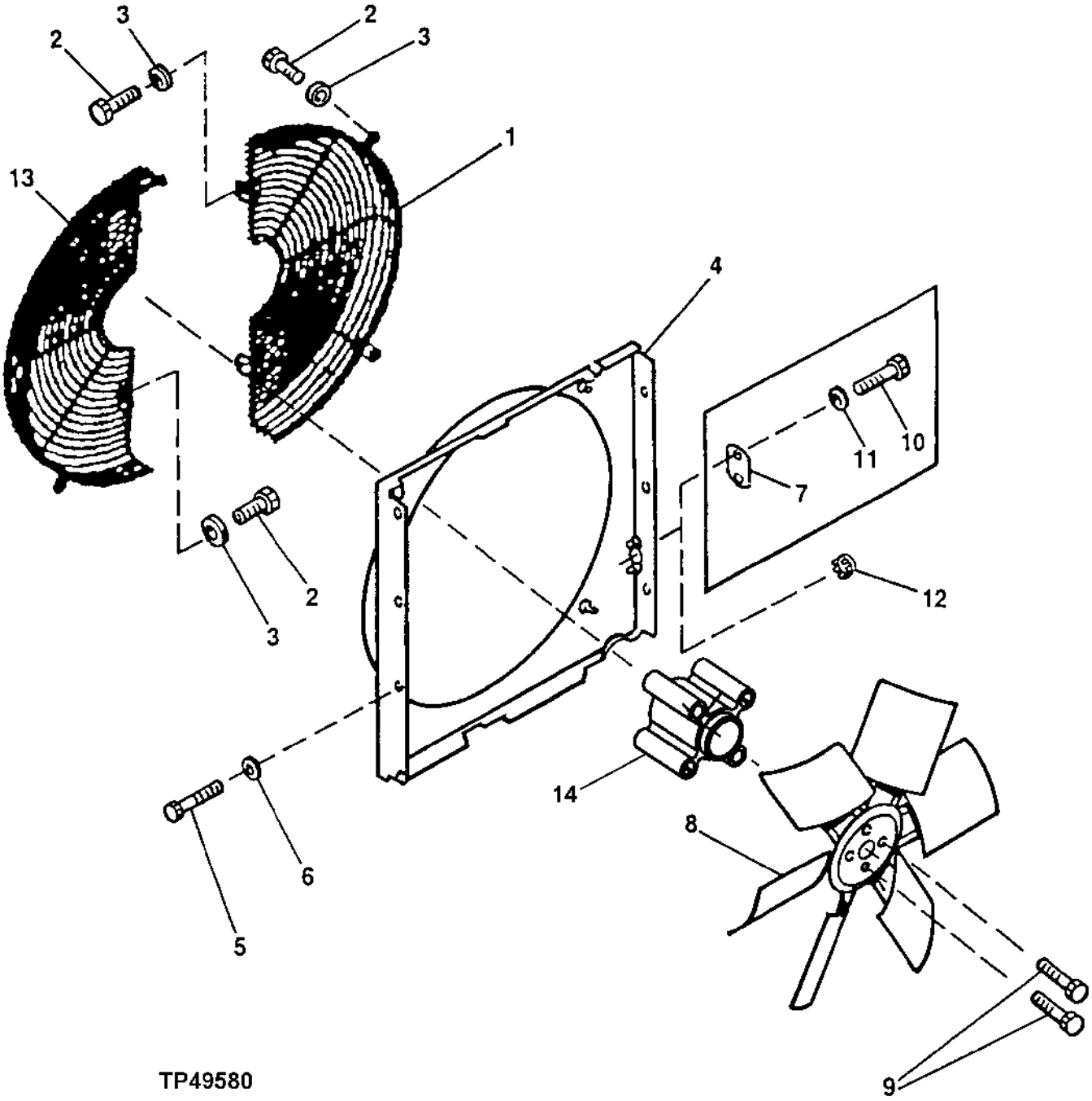

FAN, FAN GUARD, AND SHROUD

KEY	PART NO.	PART NAME	QTY	SERIAL NO.	REMARKS
1	AT157624	GUARD	1		L.H.(WITHOUT AIR CONDITIONING)
	AT160620	GUARD	1		L.H. (WITH AIR CONDITIONING)
2	19M7407	CAP SCREW	6		M8 X 25
3	24M7238	WASHER	6		8.700 X 17 X 2 MM
4	.....	SHROUD	1	-803990	(T142953 NO LONGER AVAILABLE) (SUB T151896) (ALSO ORDER AT167782 OR M61266)
	T151896	SHROUD	1	803991-	
5	37H116	SCREW	7		
6	24M7139	WASHER	7		6.400 X 18 X 1.600 MM
7	B32585	STRAP	1	-803990	(USE WITH T142953)
8	AT139650	FAN	1		
9	19H2284	CAP SCREW	4	-830204	3/8" X 7/8"
	19M8081	CAP SCREW	4	830205-	M10 X 80
10	19M7881	SCREW	2	-803990	M8 X 20, (USE WITH T142953)
11	24M7238	WASHER	2	-803990	8.700 X 17 X 2 MM, (USE WITH T142953)
12	M61266	PLUG	1	803991-	(USE WITH T151896)
13	AT157624	GUARD	1	-830204	R.H.(WITHOUT AIR CONDITIONING)
	AT180191	GUARD	1	830205-	R.H.(WITHOUT AIR CONDITIONING)
	AT160621	GUARD	1		R.H.(WITH AIR CONDITIONING)
14	T160508	SPACER	1	830205-	

ENGINE SPEED CONTROL LINKAGE

TP44466 -UN-01JAN94

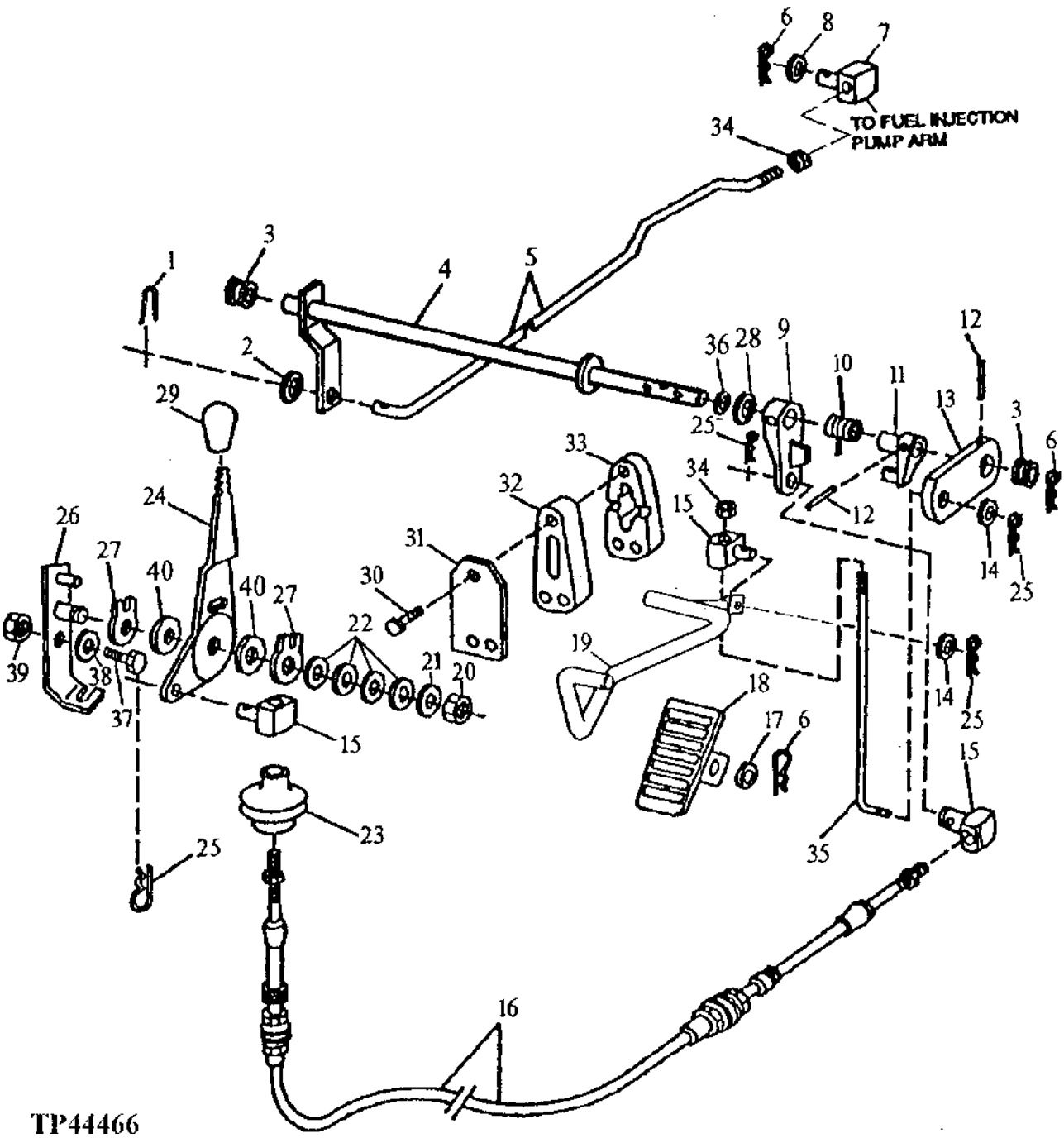

ENGINE SPEED CONTROL LINKAGE

KEY	PART NO.	PART NAME	QTY	SERIAL NO.	REMARKS
1	11M7077	COTTER PIN	1		1.600 X 25 MM, (SUB FOR 11M7076, THIS APPLICATION)
2	24H1286	WASHER	2		9/32" X 1/2" X 1/16"
3	T22241	GROMMET	2		
4	AT157429	SHAFT	1	-872328	SPEED CONTROL
	AT171889	SHAFT	1	872329-	SPEED CONTROL
5	T144688	ROD	1	-872328	SPEED CONTROL
	T164481	ROD	1	872329-	SPEED CONTROL
6	11M7082	COTTER PIN	3		2.500 X 25 MM
7	T142748	SWIVEL	1		
8	24H1287	WASHER	1		9/32" X 5/8" X 0.065"
9	T22240	ARM	1		SPEED CONTROL
10	T77165	SPRING	1		
11	T22150	ARM	1		SPEED CONTROL SHAFT
12	34H264	SPRING PIN	2		5/32" X 7/8"
13	T135342	LEVER	1		
14	24H1287	WASHER	2		9/32" X 5/8" X 0.065"
15	T35887	SWIVEL	3		
16	AT148127	PUSH PULL CABLE	1		
17	24M7240	WASHER	1		13 X 25 X 3 MM
18	T137318	PEDAL	1		FOOT SPEED CONTROL
19	AT162005	ROD	1		FOOT SPEED CONTROL
20	U13184	LOCK NUT	1		
21	24M7028	WASHER	1		10.500 X 20 X 2 MM
22	12M7117	DISK SPRING	4		10.200 X 20 X 1.100 MM
23	T130086	BOOT	1		
24	T133065	LEVER	1		SPEED CONTROL
25	11M7079	COTTER PIN	4		2.500 X 12 MM
26	AT157422	BRACKET	1		
27	R33976	PLATE	2		
28	24H1302	WASHER	1		13/32" X 11/16" X 0.035"
29	T133487	KNOB	1		
30	19M8397	CAP SCREW	3		M8 X 50
31	T129732	PLATE	1		
32	T137321	SUPPORT	1		OUTER
33	T137322	SUPPORT	1		INNER
34	14H649	NUT	2		1/4"
35	T135343	HOOK BOLT	1		VERTICAL ACCELERATOR ROD
36	24H1305	WASHER	1		13/32" X 13/16" X 0.065"
37	19H2676	CAP SCREW	1		3/8" X 1"
38	24M7028	WASHER	1		10.500 X 20 X 2 MM
39	U13184	LOCK NUT	1		3/8"
40	R105812	WASHER	2		

AIR CLEANER AND ELEMENTS

TP42875 -UN-01JAN94

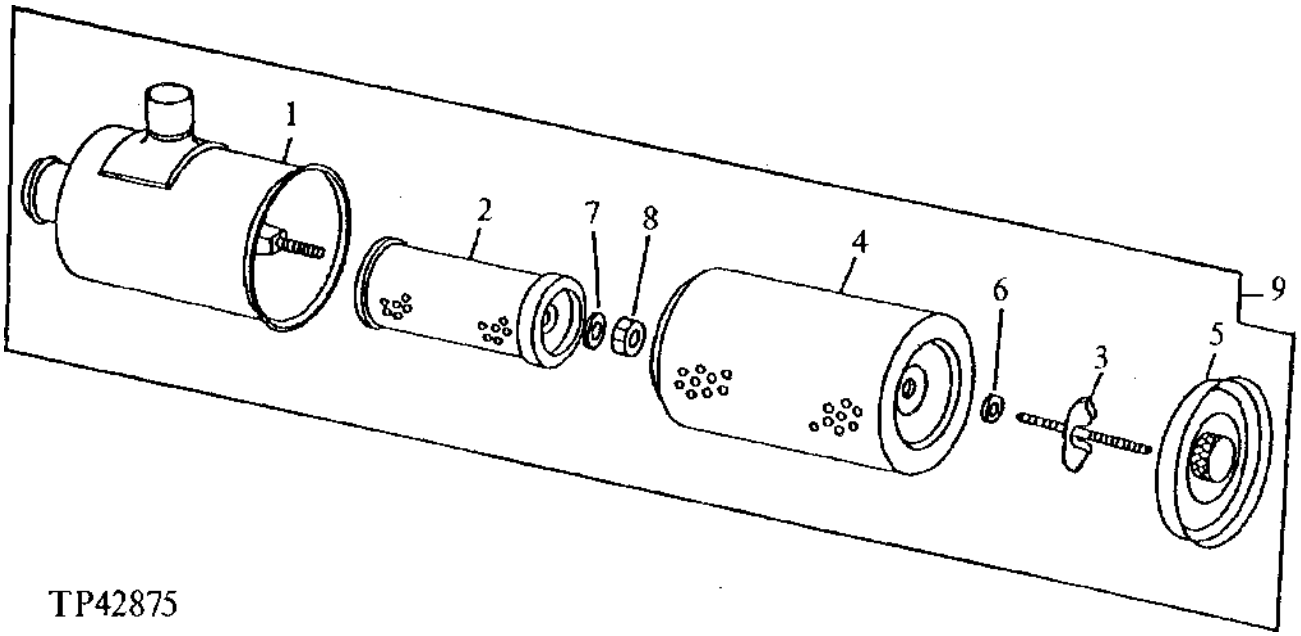

KEY	PART NO.	PART NAME	QTY	SERIAL NO.	REMARKS
1	.....	HOUSING	1		
2	AT31227	FILTER ELEMENT	1		SECONDARY
3	AT159355	WING SCREW	1		
4	AT39124	FILTER ELEMENT	1		PRIMARY
5	AT71475	COVER	1		
6	AR52065	PACKING	1		
7	AR52066	PACKING	1		
8	E17421	LOCK NUT	1		
9	AT135946	AIR CLEANER	1		

AIR CLEANER BRACKET AND HOSE

TP57807 -UN-10DEC97

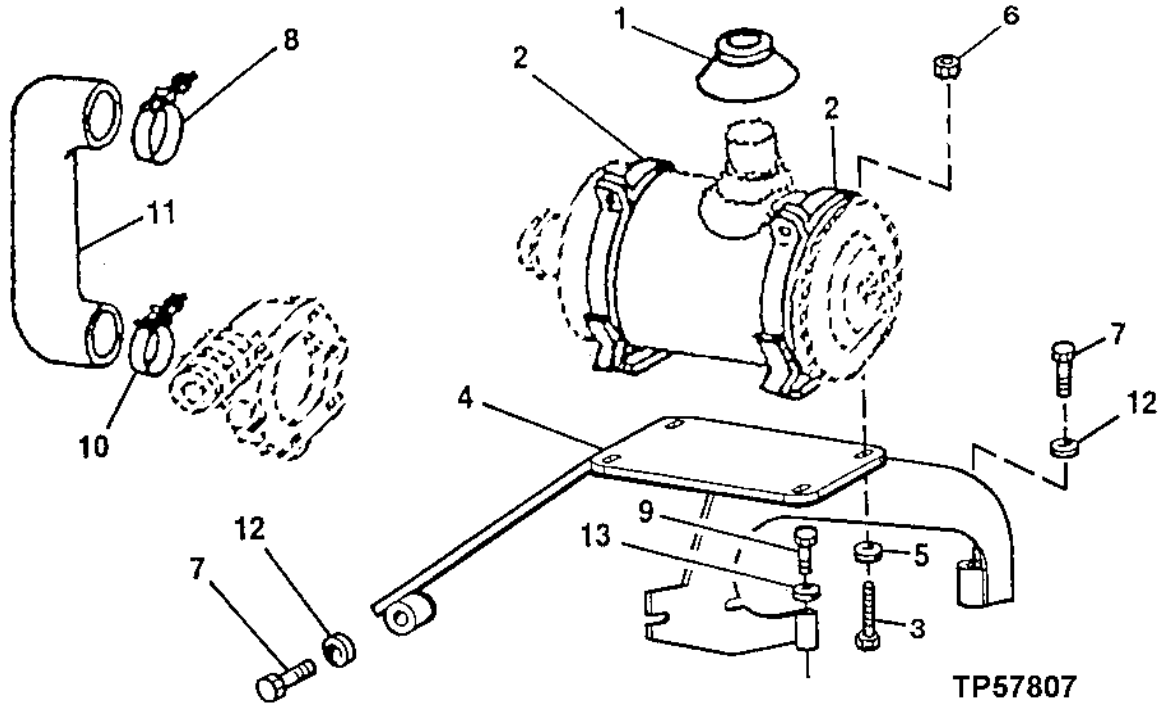

KEY	PART NO.	PART NAME	QTY	SERIAL NO.	REMARKS
1	T41442	SEAL	1		
2	AT182946	BAND	2		(SUB FOR AR35435, THIS APPLICATION)
3	19H2284	CAP SCREW	4		3/8" X 7/8"
4	AT156909	SUPPORT	1		
5	24H1305	WASHER	4		13/32" X 13/16" X 0.065"
6	14H1076	NUT	4	-838459	3/8"
7	19H1990	CAP SCREW	2	-830204	1/2" X 2-1/4"
	19M7363	CAP SCREW	2	830205-	M12 X 60
8	AT50924	HOSE CLAMP	1		
9	19H1726	CAP SCREW	1	-830204	3/8" X 2-1/4"
	19M7935	CAP SCREW	1	830205-	M10 X 55
10	AT50923	HOSE CLAMP	1		
11	T106131	HOSE	1		
12	24M7240	WASHER	2		13 X 25 X 3 MM
13	24M7239	WASHER	1		10.700 X 21 X 2.500 MM

AIR CLEANER VACUUM SENSOR

TP27894 -UN-01JAN94

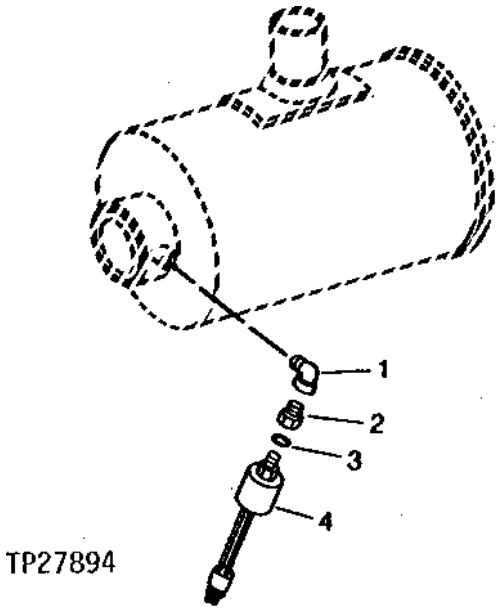

KEY	PART NO.	PART NAME	QTY	SERIAL NO.	REMARKS
1	M45937	ELBOW FITTING	1		
2	T82907	ADAPTER	1		
3	R26286	O-RING	1		
4	RE12176	AIR FILTER RSTR SENSOR	1		

PRE-CLEANER

TP48879 -UN-19JAN96

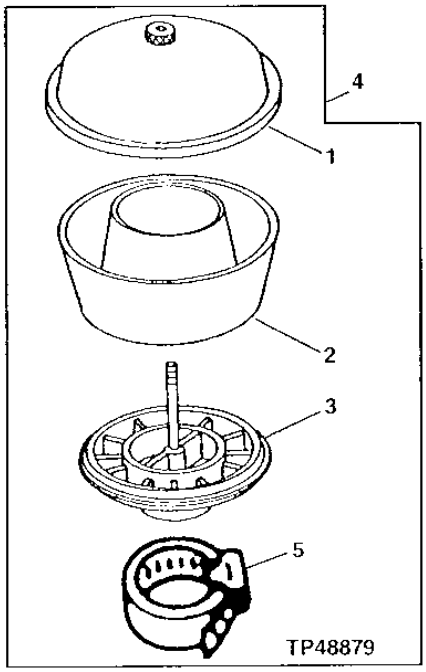

KEY	PART NO.	PART NAME	QTY	SERIAL NO.	REMARKS
1	AR1729R	COVER	1		
2	R28795	DUST BOWL	1		
3	.....	BASE	1		
4	AT170942	PRECLEANER	1		(SUB FOR AT39122)
5	AU12450	HOSE CLAMP	1		

EXHAUST EXTENSION AND MUFFLER)
(ENGINE SERIAL NO. -830204)

TP42853 -UN-01JAN94

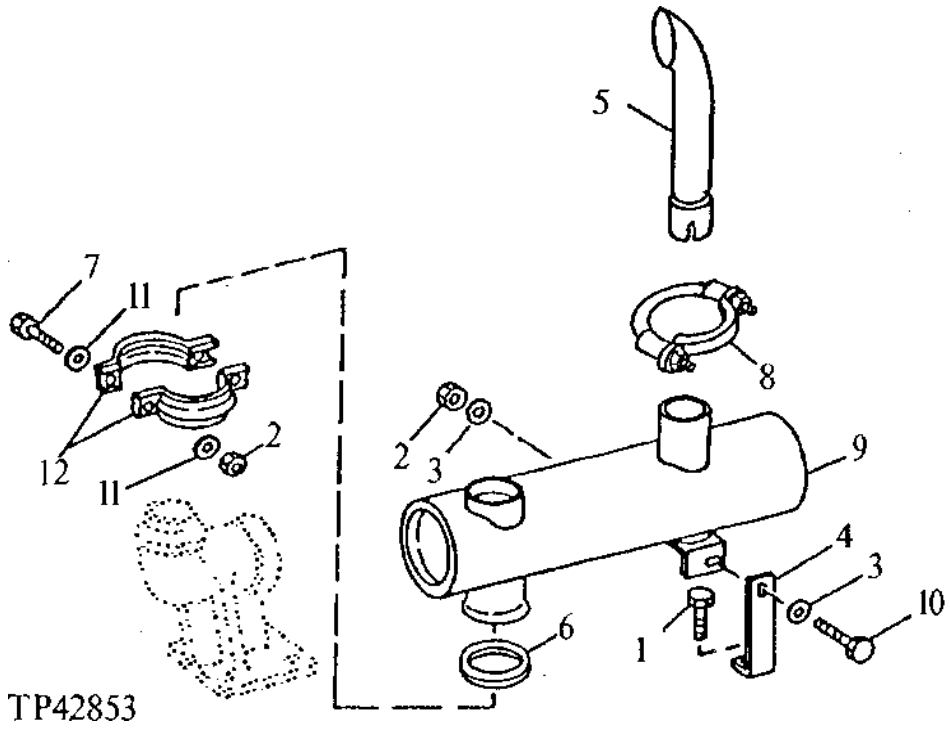

KEY	PART NO.	PART NAME	QTY	SERIAL NO.	REMARKS
1	19H3239	CAP SCREW	1		3/8" X 1-1/4"
2	U13184	LOCK NUT	3		
3	24M7239	WASHER	2		10.700 X 21 X 2.500 MM
4	T68098	ANGLE	1		
5	T118750	MUFFLER EXTENSION	1		
	AT158004	EXTENSION	1		CHROME
6	T30260	GASKET	1		
7	19H3034	CAP SCREW	2		3/8" X 3"
8	AT167754	CLAMP	1		(SUB FOR AT74173 AND AT167360)
9	AT65473	MUFFLER	1		
10	19H3239	CAP SCREW	1		3/8" X 1-1/4"
11	24M7239	WASHER	4		10.700 X 21 X 2.500 MM
12	AT29268	CLAMP	2		

EXHAUST EXTENSION AND MUFFLER
(ENGINE SERIAL NO.830205-)

TP57724 -UN-01JUL97

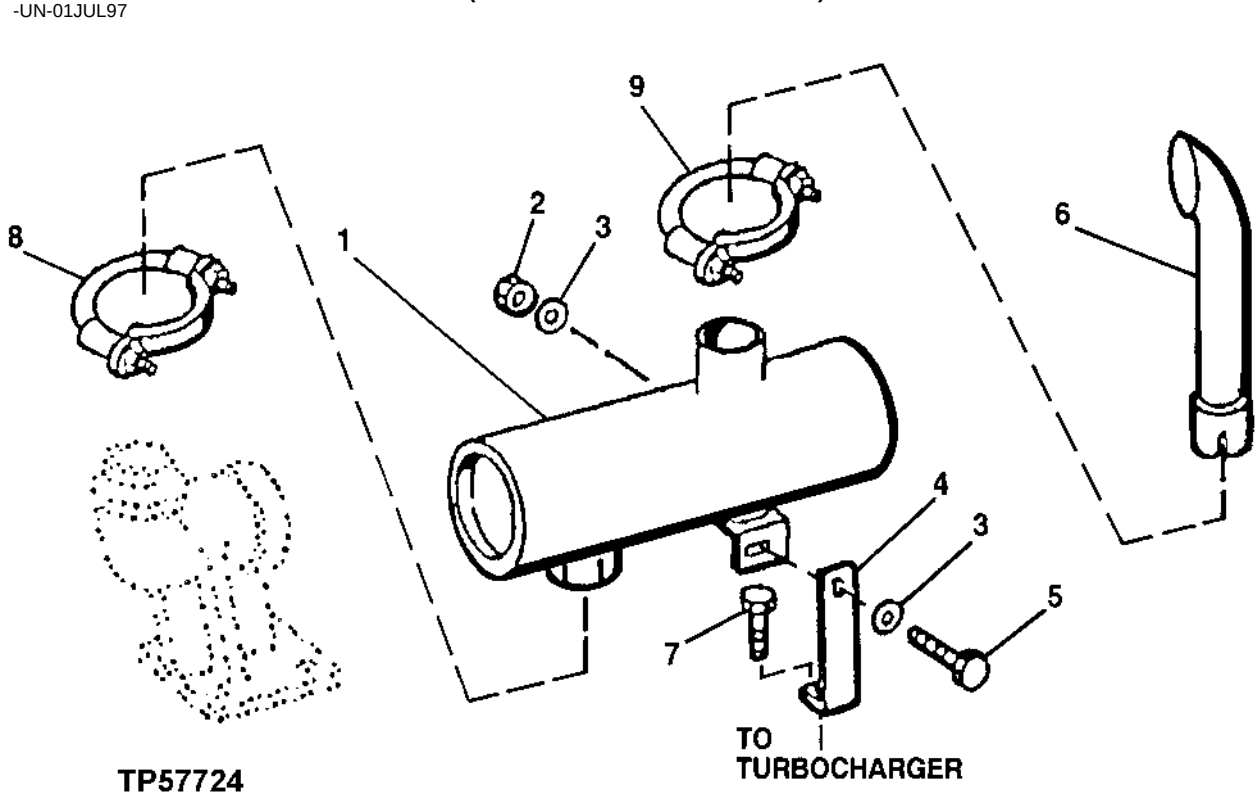

KEY	PART NO.	PART NAME	QTY	SERIAL NO.	REMARKS
1	AT174988	MUFFLER	1		
2	U13184	LOCK NUT	1		
3	24M7239	WASHER	2		10.700 X 21 X 2.500 MM
4	T68098	ANGLE	1		
5	19H1732	CAP SCREW	1		3/8" X 1-1/4"
6	T118750	MUFFLER EXTENSION	1		
7	19M8292	SCREW	1		M10 X 50
8	AT180264	CLAMP	1		
9	AT167754	CLAMP	1		

MEMORANDA

ENGINE MOUNT
(ENGINE SERIAL NO. -830204)

TP5656 -UN-29SEP94

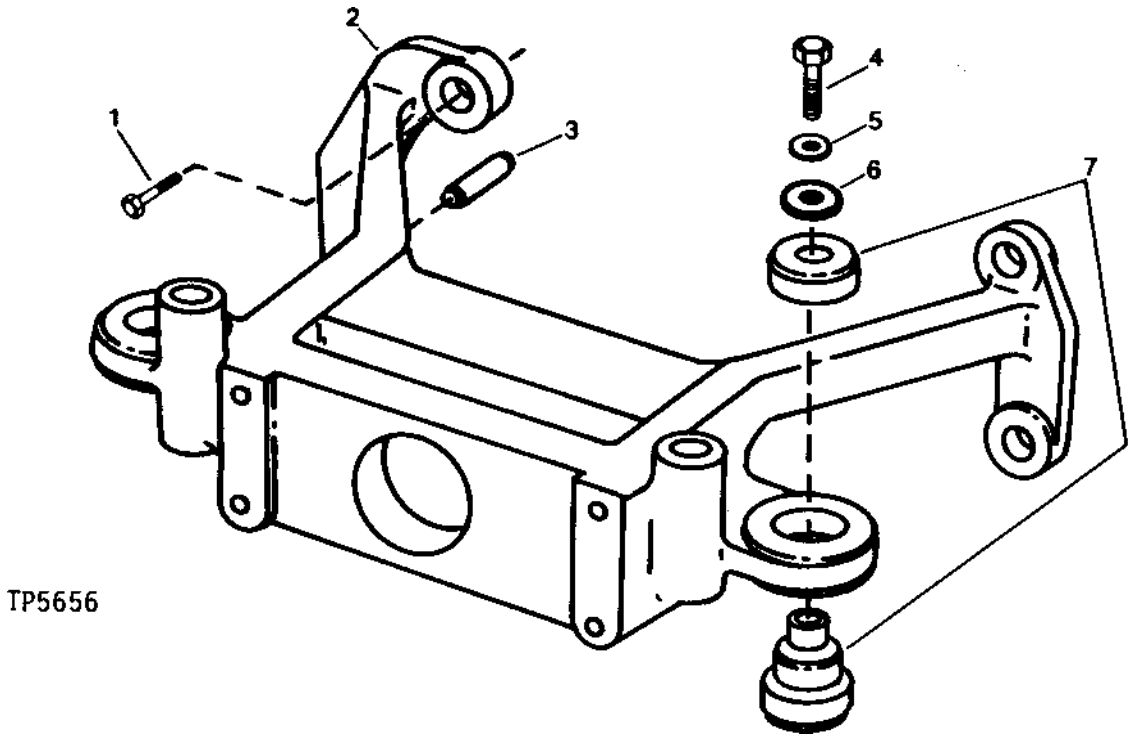

KEY	PART NO.	PART NAME	QTY	ENGINE SERIAL NO.	REMARKS
1	19H2599	CAP SCREW	4		5/8" X 2-1/2"
2	T142954	SUPPORT	1		
3	R54380	DOWEL PIN	2		
4	19M7969	CAP SCREW	2		M20 X 110
5	24M7242	WASHER	2		21.400 X 42 X 5 MM
6	T42977	WASHER	2		29/32" X 3-1/2" X 0.236"
7	AT102326	ISOLATOR	2		

ENGINE MOUNT
(ENGINE SERIAL NO.830205-)

TP49577 -UN-19FEB97

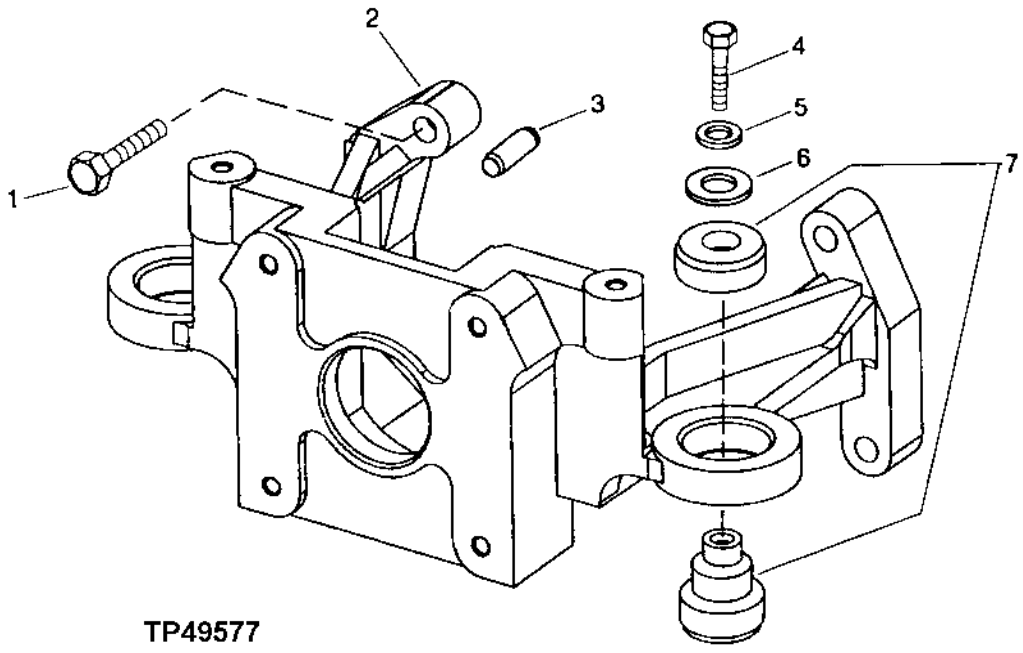

KEY	PART NO.	PART NAME	QTY	ENGINE SERIAL NO.	REMARKS
1	19M7719	CAP SCREW	4		M16 X 70
2	T159253	SUPPORT	1		
3	R54380	DOWEL PIN	2		
4	19M7969	CAP SCREW	2		M20 X 110
5	24M7242	WASHER	2		21.400 X 42 X 5 MM
6	T42977	WASHER	2		29/32" X 3-1/2" X 0.236"
7	AT102326	ISOLATOR	2		

ENGINE MOUNTS AND ISOLATORS
(SERIAL NO. 872329-)

TP57994 -UN-25JAN99

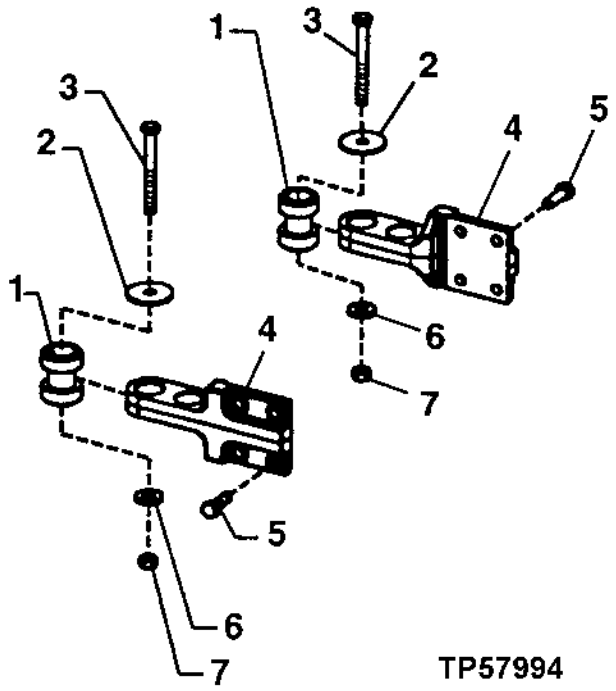

KEY	PART NO.	PART NAME	QTY	SERIAL NO.	REMARKS
1	AT175374	ISOLATOR	4		
2	T158648	WASHER	4		
3	19M7908	CAP SCREW	4		M12 X 110
4	T154449	PLATE	2		
5	19M7403	CAP SCREW	8		M12 X 35
6	T29342	WASHER	4		
7	14M7275	NUT	4		M12

FUEL TANK, FUEL HOSES AND FUEL GAUGE SENDER

TP57856 -UN-09APR98

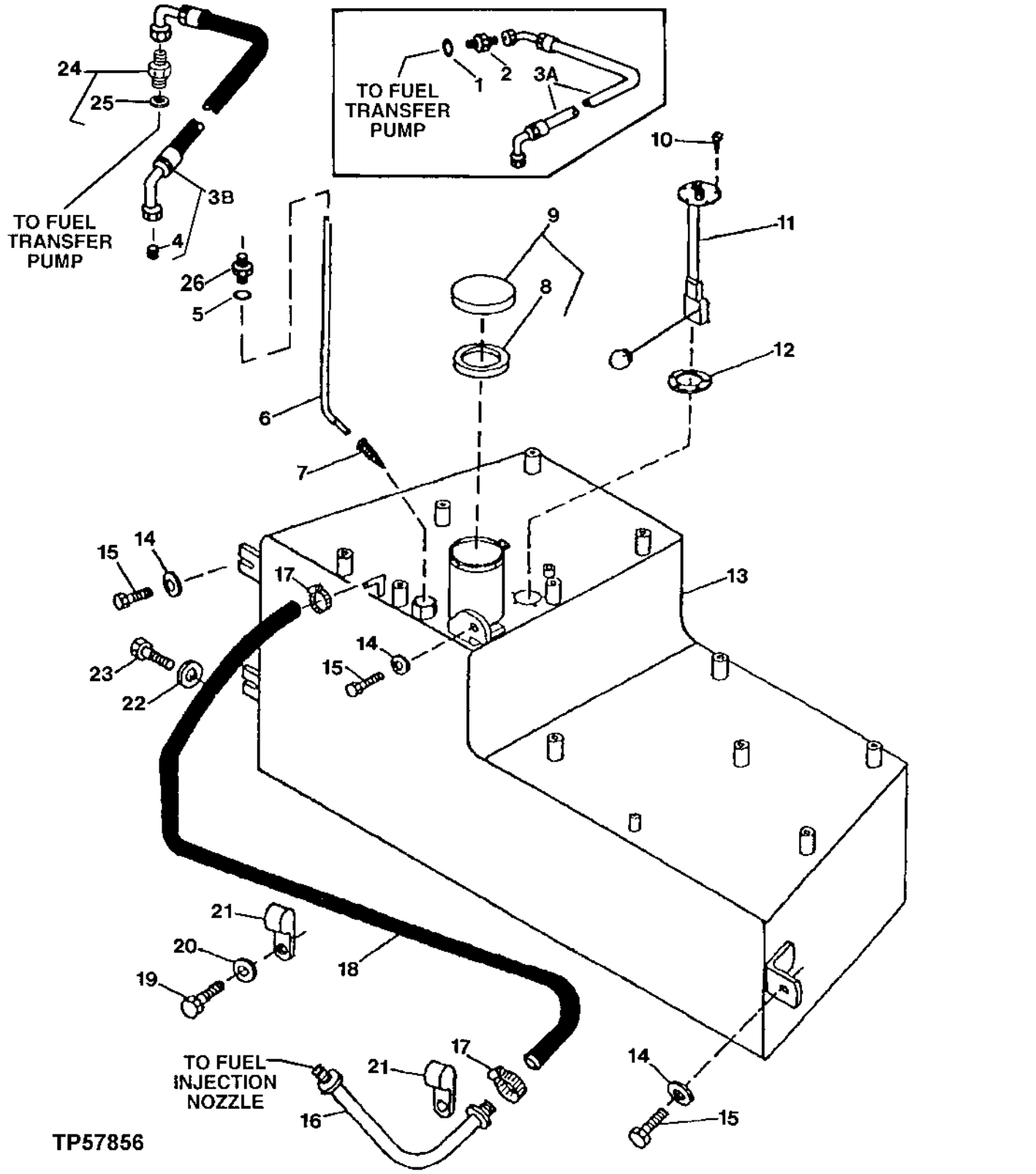

FUEL TANK, FUEL HOSES AND FUEL GAUGE SENDER

KEY	PART NO.	PART NAME	QTY	SERIAL NO.	REMARKS
1	T77814	O-RING	1	-830204	
2	T80937	ADAPTER	1	-830204	
3A	AT117547	HOSE	1	-830204	
3B	AT180987	HOSE	1	830205-	
4	E87197	PACKING	1		
5	T77858	O-RING	1		
6	AT165394	TUBE	1		(SUB FOR AT160016)
7	AT65241	STRAINER	1		
8	T103461	GASKET	1		
9	AT156445	FILLER CAP	1		
10	37H129	SCREW	5		
11	AT168614	SENDER	1		
12	R27181	GASKET	1		
13	AT165581	FUEL TANK	1		(SUB FOR AT156752)
14	24H1657	WASHER	4		8.331 X 31.750 X 2.769 MM
15	19M7550	CAP SCREW	4		M10 X 35
16	T66701	LINE	1		LEAK-OFF
17	TY22462	CLAMP	2		(SUB FOR AR48236)
18	.....	HOSE	AR		(MAKE FROM N112006 BULK MATERIAL, CUT TO LENGTH) (.44 OD X .24 ID X 25 FT)
19	19M7938	CAP SCREW	1		M10 X 20
20	24M7239	WASHER	1		10.700 X 21 X 2.500 MM
21	T76252	CLAMP	2		(SUB FOR T75197, THIS APPLICATION)
22	R463R	WASHER	1		0.335" X 11/16" X 0.072", DRAIN PORT
23	19H2020	CAP SCREW	1		5/16" X 1/2", DRAIN PORT
24	RE60029	FITTING	1		
25	51M7040	O-RING	1		
26	38H1408	UNION FITTING	1		

FUEL TANK LOCK

TP24035 -UN-01JAN94

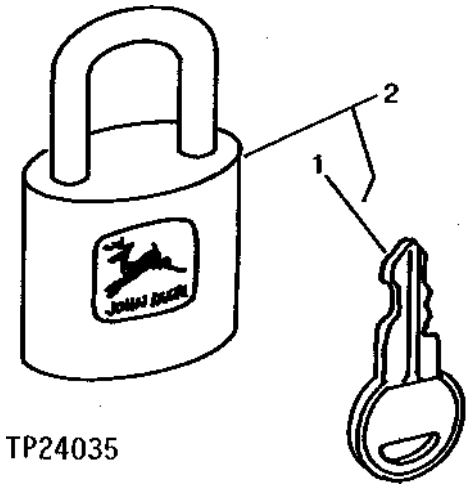

KEY	PART NO.	PART NAME	QTY	SERIAL NO.	REMARKS
1	T108235	KEY	1		
2	AT116192	LOCK	1		

TORQUE CONVERTER
(SERIAL NO. -872328)

TP23457 -UN-29SEP94

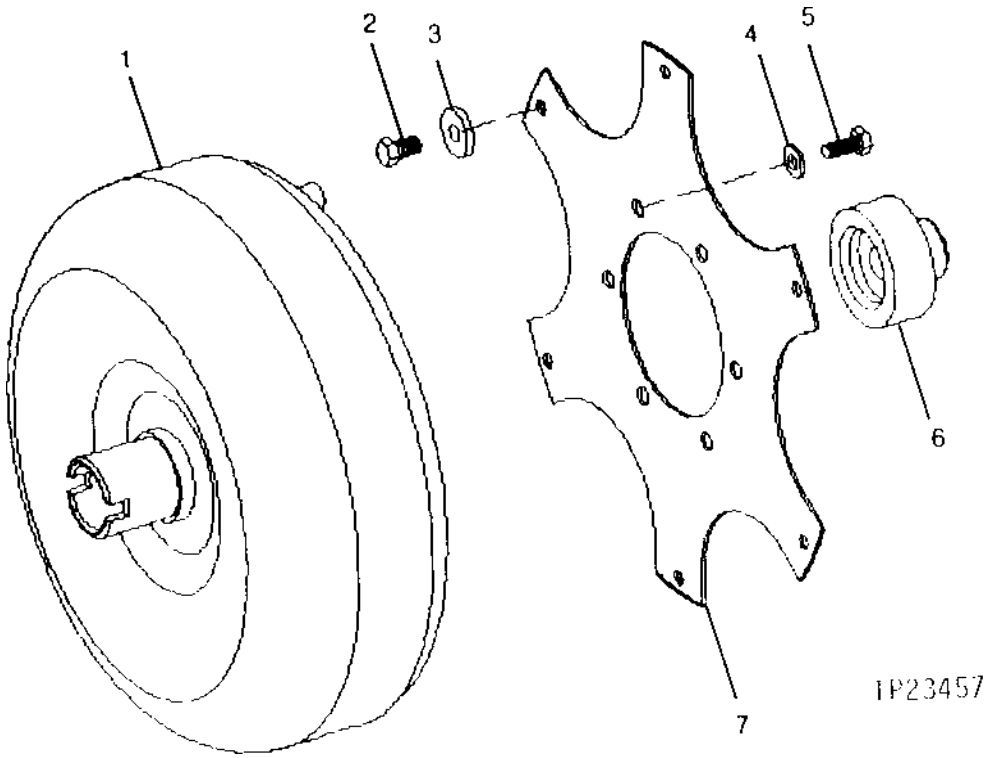

KEY	PART NO.	PART NAME	QTY	SERIAL NO.	REMARKS
1	AT142077	TORQUE CONVERTER	1		
2	19M7139	CAP SCREW	6		M8 X 20
3	24H1685	WASHER	6		11/32" X 47/64" X 0.083"
4	R43696	WASHER	6		13/32" X 1.120" X 3/16"
5	19H1894	CAP SCREW	6		3/8" X 3/4"
6	T113738	SLEEVE	1		
7	T113737	PLATE	1		

TORQUE CONVERTOR
(SERIAL NO. 872329-)

TP52781 -UN-21OCT96

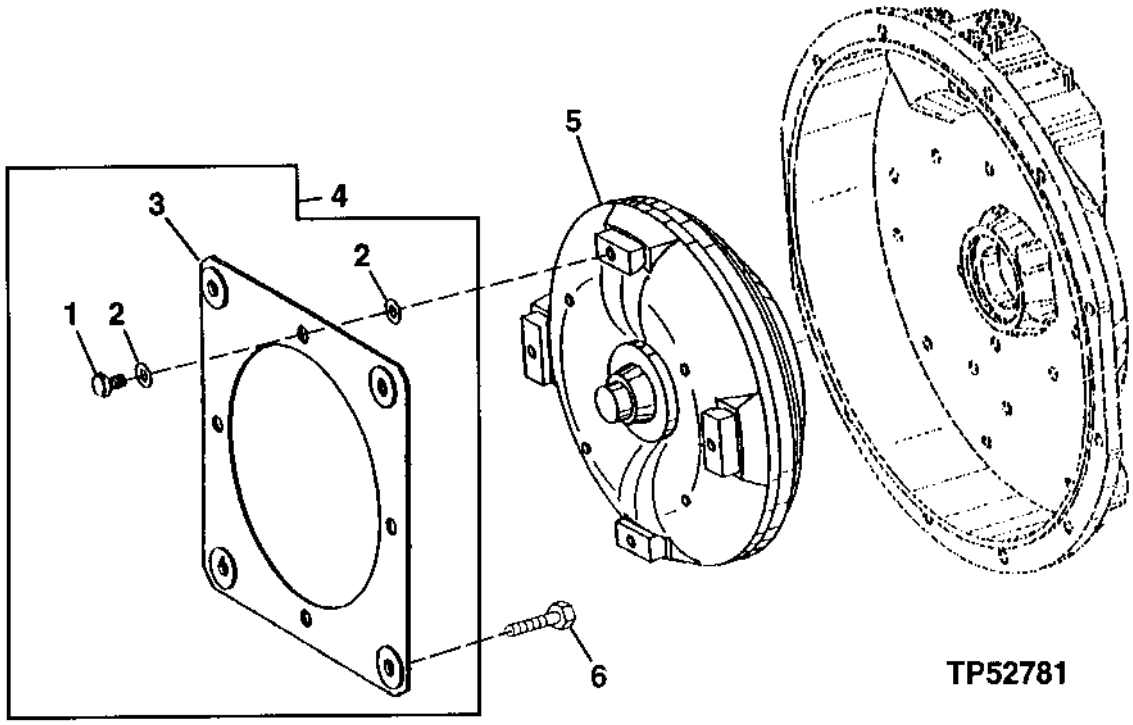

KEY	PART NO.	PART NAME	QTY	SERIAL NO.	REMARKS
1	19M8289	CAP SCREW	4		M10 X 16
2	T155324	WASHER	8		
3	AT179312	PLATE	2		
4	.....	PLATE	1		
5	AT175066	TORQUE CONVERTER	1		
6	19M7402	CAP SCREW	4		M10 X 25

MEMORANDA

STEERING WHEEL, VALVE, AND COLUMN

TP58205 -UN-23MAY00

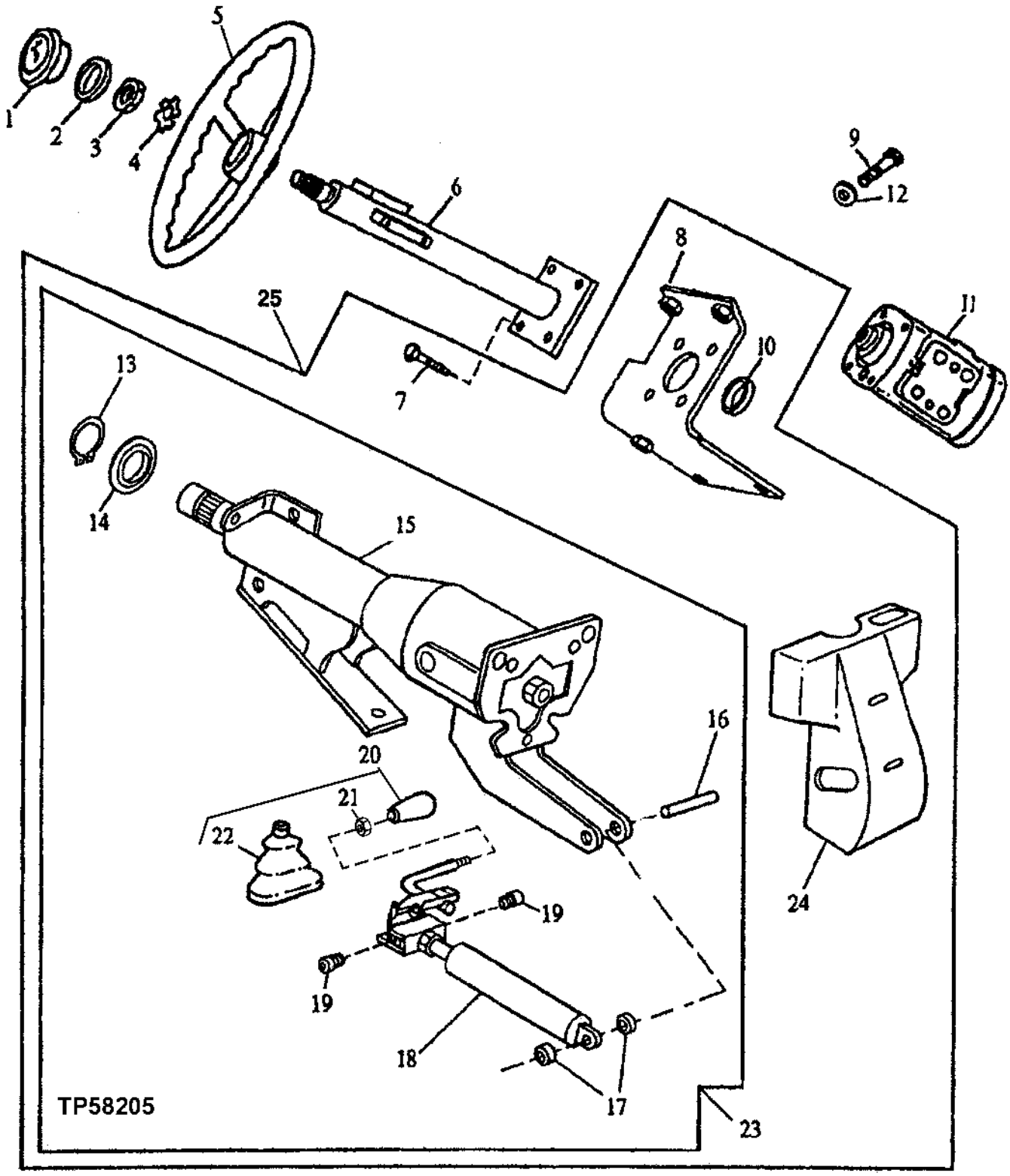

STEERING WHEEL, VALVE, AND COLUMN

KEY	PART NO.	PART NAME	QTY	SERIAL NO.	REMARKS
1	R47998	CAP	1		
2	P50631	O-RING	1		
3	T13630	NUT	1		
4	T17148	LOCK WASHER	1		
5	AT139694	STEERING WHEEL	1		
6	AT166242	STEERING COLUMN	1		(SUB FOR AT160572)
7	19H2676	CAP SCREW	4		3/8" X 1"
	19H2923	SCREW	4		3/8" X 1", SOCKET HEAD (WITH TILT STEERING)
8	AT159104	BRACKET	1		
9	19M7402	CAP SCREW	4		M10 X 25
10	T134635	WASHER	1		WITHOUT TILT STEERING
	T142887	WASHER	1		WITH TILT STEERING
11	AT173412	VALVE	1		(K1) (SUB FOR AT158814)
12	24M7239	WASHER	4		10.700 X 21 X 2.500 MM
13	.....	SNAP RING	1		(K)
14	.....	SEAL	1		(K)
15	.....	STEERING COLUMN	1		(AT160661 NO LONGER AVAILABLE) (SUB AT140971)
16	.....	DOWEL PIN	1		(K)
17	.....	BUSHING	1		
18	AT160662	KIT	1		
19	.....	SCREW	1		(K)
20	AT191487	KIT	1		KNOB
21	.....	NUT	1		(ORDER AT191487)
22	.....	BOOT	1		(ORDER AT191487)
23	AT140971	STEERING COLUMN	1		TILT
24	T132995	COVER	1		LOWER COLUMN (TILT STEERING)
25	**AT161014**	**KIT**	**1**		**TILT STEERING**
..	RE56109	KIT	1		INCLUDES ALL (K) PARTS (TILT STEERING WHEEL OVERHAUL) (SUB RE50306)
..	AT167183	SEAL KIT	1		INCLUDES ALL (K1) PARTS

POWER STEERING CYLINDER
(WITHOUT MECHANICAL FRONT WHEEL DRIVE)

TP23620 -UN-29SEP94

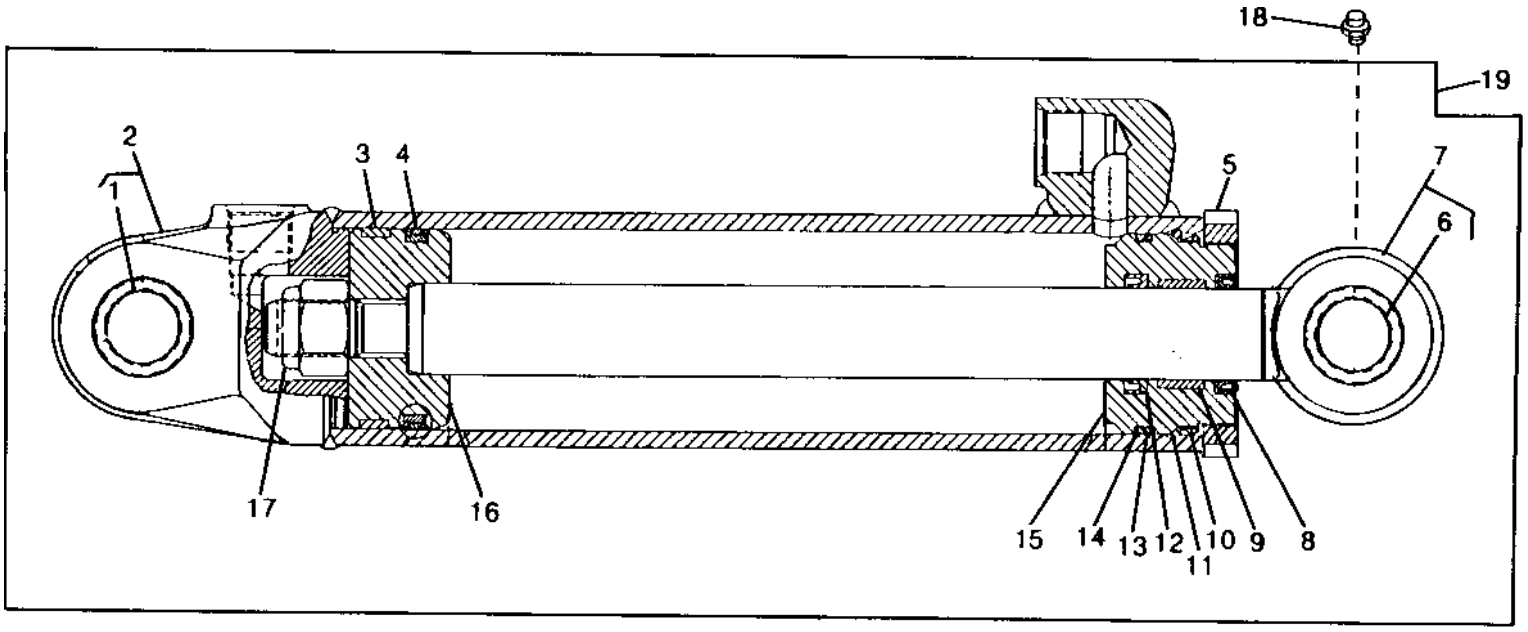

TP23620

KEY	PART NO.	PART NAME	QTY	SERIAL NO.	REMARKS
1	R72952	BUSHING	1		
2	RE38531	HYDRAULIC CYLINDER BARREL	1		
3	R81774	WEAR RING	1		(BK)
4	RE20342	SEAL	1		(BK)
5	R81792	NUT	1		
6	R72700	BUSHING	1		
7	RE37014	ROD	1		
8	RE24533	SEAL	1		(RK)
9	R82557	WEAR RING	1		(RK)
10	R91728	BACK-UP RING	AR		(BK)
11	R81786	RING	1		
12	R82556	SEAL	1		(RK)
13	R81195	BACK-UP RING	1		(BK)
14	U12198	O-RING	1		(BK)
15	.....	HYDR. CYLINDER ROD GUIDE	1		(R99614 NO LONGER USED) (SUB H161331) (ALSO ORDER AH148823)
16	R82558	PISTON	1		
17	R81860	NUT	1		
18	JD7844	LUBRICATION FITTING	1		
19	.....	HYDRAULIC CYLINDER	1		(RE38529 NO LONGER AVAILABLE) (SUB AH154794)
..	RE20428	HYDRAULIC CYLINDER KIT	1		INCLUDES ALL (BK) PARTS (CYLINDER BORE)
..	RE21873	HYDRAULIC CYLINDER KIT	1		INCLUDES ALL (RK) PARTS (CYLINDER ROD)

POWER STEERING CYLINDER
(WITHOUT MECHANICAL FRONT WHEEL DRIVE)
(REPLACEMENT CYLINDER)

TP23620 -UN-29SEP94

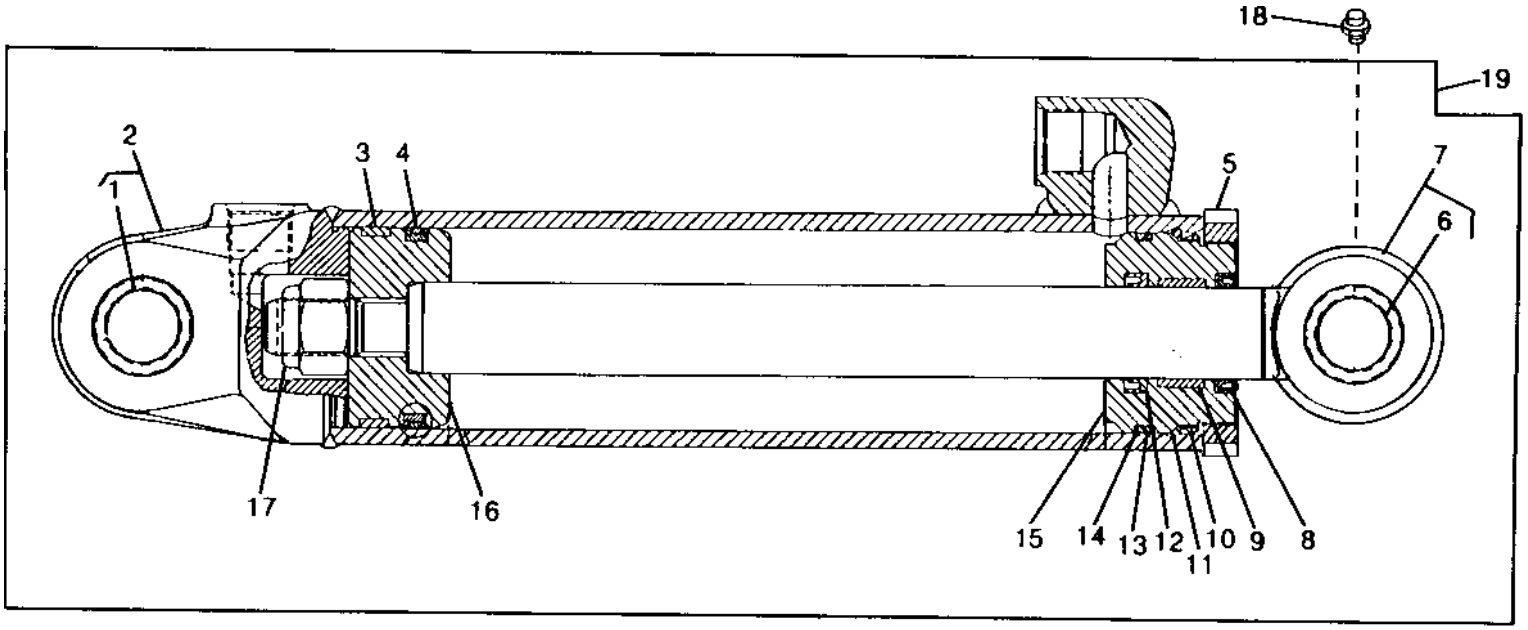

TP23620

KEY	PART NO.	PART NAME	QTY	SERIAL NO.	REMARKS
1	R72952	BUSHING	1		
2	RE38531	HYDRAULIC CYLINDER BARREL	1		
3	R81774	WEAR RING	1		(BK)
4	RE20342	SEAL	1		(BK)
5	R81792	NUT	1		
6	R72700	BUSHING	1		
7	RE37014	ROD	1		
8	AH150452	SEAL	1		(RK)
9	H161390	WEAR RING	1		(RK)
10	R91728	BACK-UP RING	AR		(BK)
11	R81786	RING	1		
12	H154514	SEAL	1		(RK)
13	R81195	BACK-UP RING	1		(BK)
14	H161157	WEAR RING	1		(BK)
15	H161331	HYDR. CYLINDER ROD GUIDE	1		
16	R82558	PISTON	1		
17	R81860	NUT	1		
18	JD7844	LUBRICATION FITTING	1		
19	AH154794	HYDRAULIC CYLINDER	1		
..	RE20428	HYDRAULIC CYLINDER KIT	1		INCLUDES ALL (BK) PARTS (CYLINDER BORE)
..	AH169647	HYDRAULIC CYLINDER KIT	1		INCLUDES ALL (RK) PARTS (CYLINDER ROD)

STEERING VALVE AND STEERING CYLINDER HYDRAULICS

TP57999 -UN-09FEB99

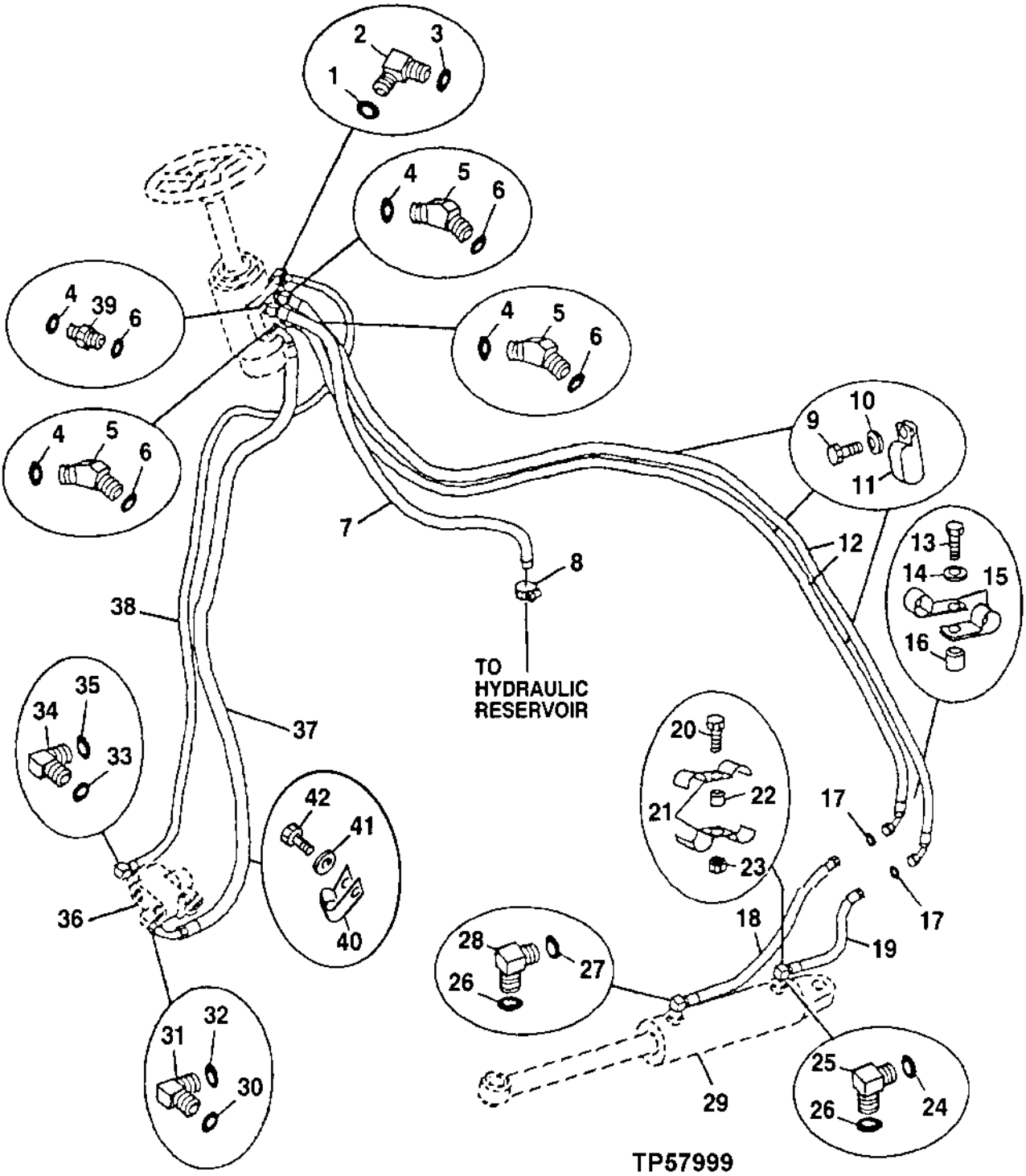

STEERING VALVE AND STEERING CYLINDER HYDRAULICS

KEY	PART NO.	PART NAME	QTY	SERIAL NO.	REMARKS
1	R28782	O-RING	1		
2	38H1003	ELBOW FITTING	1		
3	T77814	O-RING	1		
4	T77857	O-RING	4		
5	38H1046	ELBOW FITTING	3		
6	R26375	O-RING	4		
7	AT145273	HOSE	1		
8	AR21836	CLAMP	1		
9	19M7938	CAP SCREW	3		M10 X 20
10	24M7239	WASHER	3		10.700 X 21 X 2.500 MM
11	R49921	CLAMP	3		
12	AT160496	HYDRAULIC HOSE - FABRICATE	2		13/16" X 2 260 MM (89") X 11/16"
13	19M7938	CAP SCREW	1		M10 X 20
14	24M7239	WASHER	1		10.700 X 21 X 2.500 MM
15	T24959	CLAMP	2		
16	28H1521	SPACER	1		0.493" X 0.675" X 9/16"
17	T77613	O-RING	2		
18	AT124494	HYDRAULIC HOSE - FABRICATE	1		7/8" X 815 MM (32") X 11/16" (WITHOUT MFWD)
	AT83477	HYDRAULIC HOSE - FABRICATE	1		11/16" X 830 MM (32-3/4") X 11/16" (WITH MFWD)
19	AT83451	HYDRAULIC HOSE - FABRICATE	1		11/16" X 550 MM (21-3/4") X 11/16" (WITHOUT MFWD)
	AT83478	HYDRAULIC HOSE - FABRICATE	1		11/16" X 610 MM (24") X 11/16" (WITH MFWD)
20	19M7550	CAP SCREW	1		M10 X 35
21	R46919	HALF CLAMP	2		
22	28H1697	SPACER	1		0.493" X 0.675" X 3/4"
23	14M7274	NUT	1		M10
24	T77613	O-RING	1		
25	38H1011	ELBOW FITTING	1		(WITHOUT MFWD)
	38H1004	ELBOW FITTING	1		(WITH MFWD)
26	R26906	O-RING	2		(WITHOUT MFWD)
	R26448	O-RING	2		(WITH MFWD)
27	T77613	O-RING	1		(WITH MFWD)
28	38H1004	ELBOW FITTING	1		(WITH MFWD)
29	AH154794	HYDRAULIC CYLINDER	1		(WITHOUT MFWD)
	AT84716	HYDRAULIC CYLINDER	1		(WITH MFWD)
30	T77857	O-RING	1		
31	38H1013	ELBOW FITTING	1		
32	U12547	O-RING	1		
33	R28782	O-RING	1		
34	38H1003	ELBOW FITTING	1		
35	T77814	O-RING	1		
36	AT160110	VALVE	1		(PRIORITY)
37	AT160498	HYDRAULIC HOSE - FABRICATE	1		13/16" X 1 295 MM (51") X 13/16"
38	AT160499	HYDRAULIC HOSE - FABRICATE	1		9/16" X 1 130 MM (44-1/2") X 9/16"
39	38H1161	ADAPTER	1		
40	19M7938	CAP SCREW	1	872329-	M10 X 20
41	24M7239	WASHER	1	872329-	
42	T74416	CLAMP	1	872329-	

MEMORANDA

BRAKES
(RE39161)
AXLE SERIAL NO. (-038287)

RXP9831 -UN-01JAN94

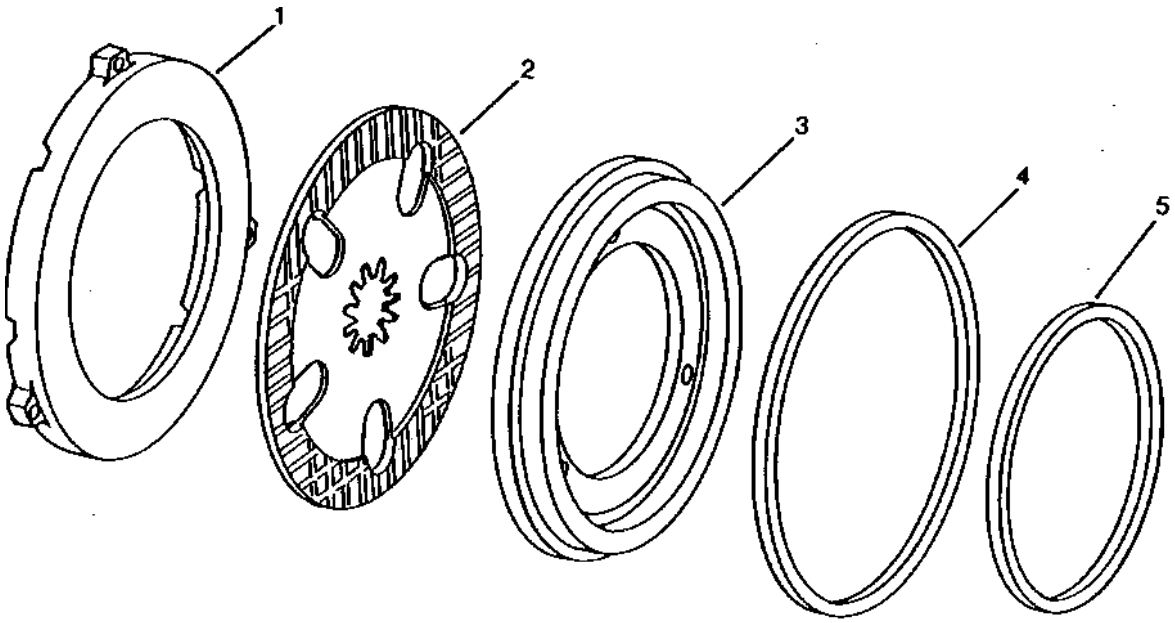

RXP9831

KEY	PART NO.	PART NAME	QTY	AXLE SERIAL NO.	REMARKS
1	R125123	PLATE	1		(SUB FOR R100424, R113664 OR R116868)
2	RE39167	BRAKE DISK	1		(SUB RE51688) (SUB FOR RE50612)
3	R125122	PISTON	1		(SUB FOR R106975)
4	R132615	SEAL	1		(SUB FOR R106743 OR R122850)
5	R122849	SEAL	1		(SUB FOR R106744)
..	R28782	O-RING	2		BRAKE PRESSURE PORT IN COVER
..	R51031	FITTING	2		BRAKE PRESSURE PORT IN COVER

BRAKES
(RE39161)
AXLE SERIAL NO. (038288-001629)

RXP020938 -UN-21SEP94

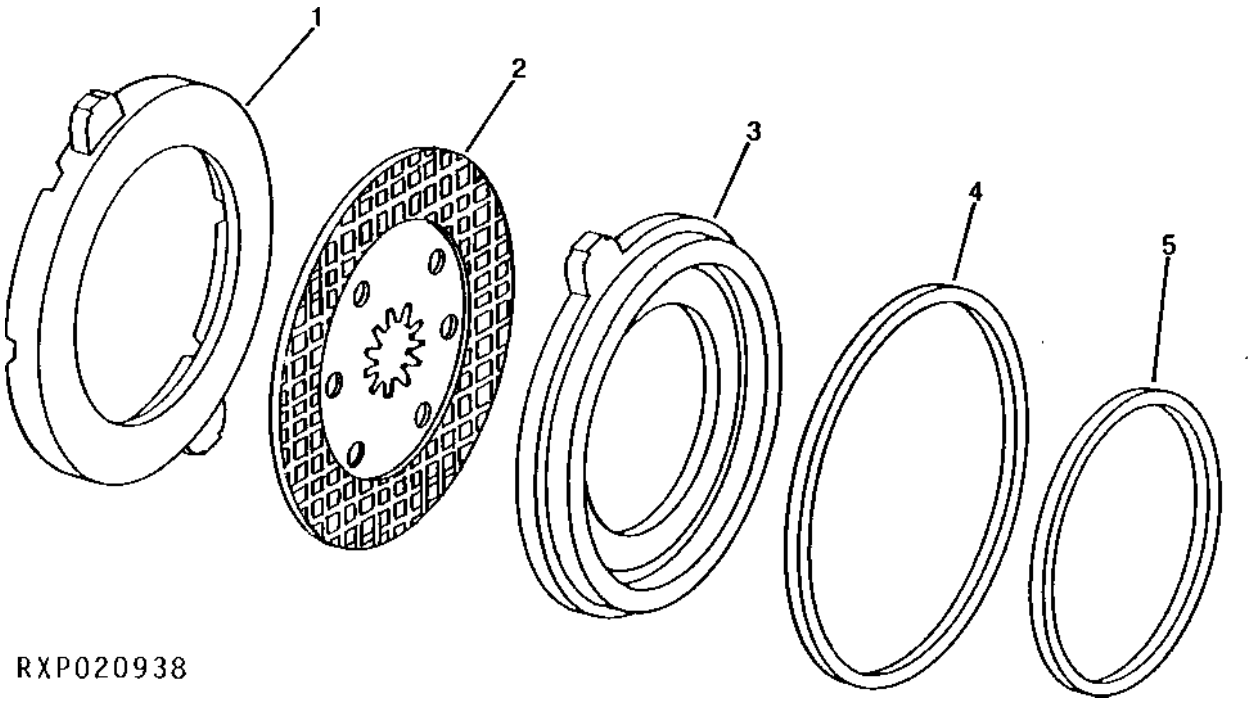

KEY	PART NO.	PART NAME	QTY	AXLE SERIAL NO.	REMARKS
1	R125126	PLATE	1		(SUB FOR R116182)
2	RE51688	BRAKE DISK	1		(SUB FOR RE39167)
3	R125124	PISTON	1		(SUB FOR R116181)
4	R106743	SEAL	1	-050337	(SUB R132615)
	R132615	SEAL	1	050338-	(SUB FOR R122850, THIS APPLICATION)
5	R106744	SEAL	1	-050337	(SUB R122849)
	R122849	SEAL	1	050338-	
..	R28782	O-RING	2		BRAKE PRESSURE PORT IN COVER
..	R51031	FITTING	2		BRAKE PRESSURE PORT IN COVER

MEMORANDA

SERVICE BRAKE ASSEMBLY
(SERIAL NO. 872329-)

TP57990 -UN-03FEB99

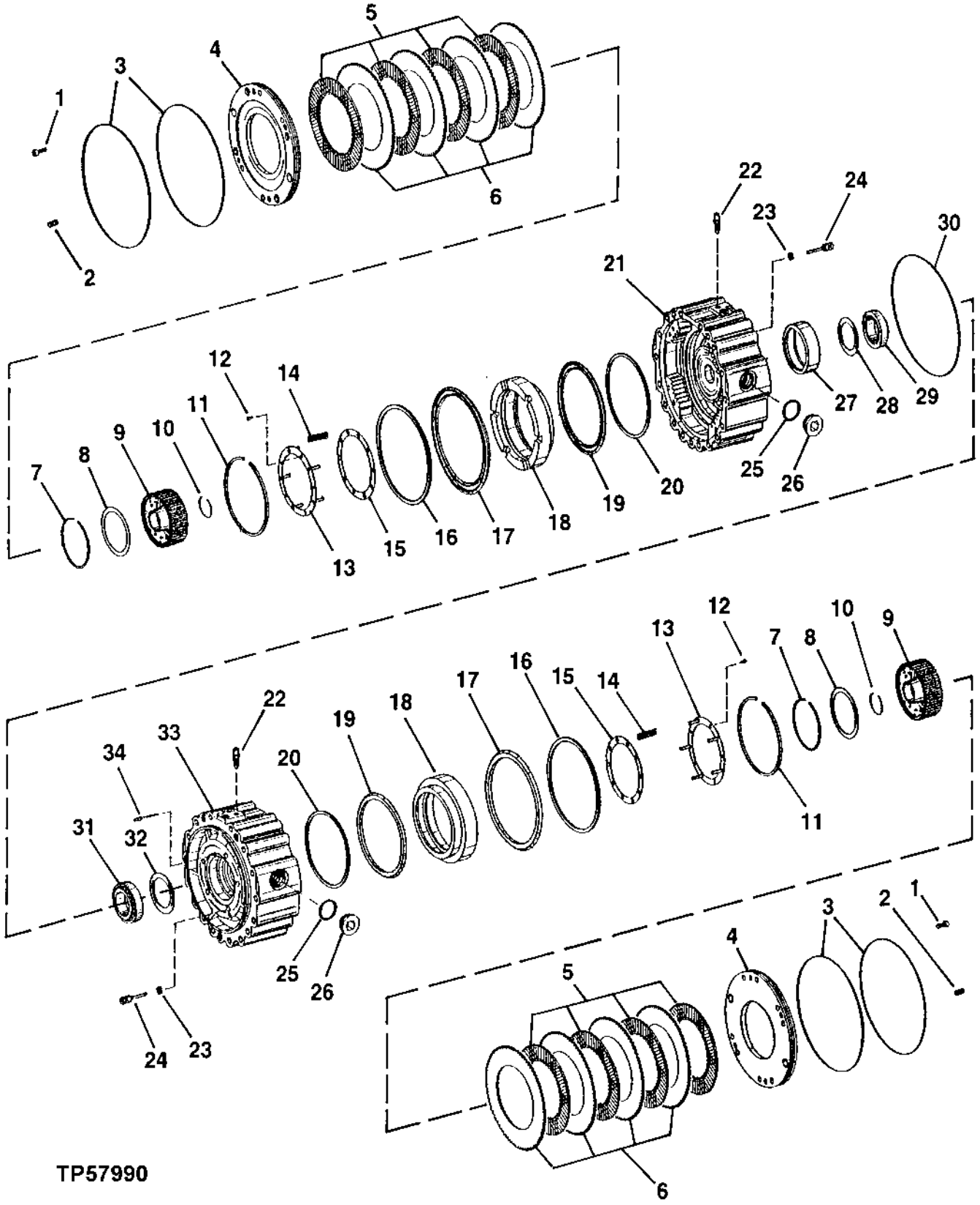

SERVICE BRAKE ASSEMBLY
(SERIAL NO. 872329-)

KEY	PART NO.	PART NAME	QTY	SERIAL NO.	REMARKS
1	T164898	SCREW	8		
2	T164894	PIN	8		
3	T159362	O-RING	4		
4	T164899	PLATE	2		
5	AT184281	BRAKE DISK	8		
6	T164885	CLUTCH PLATE	8		
7	T164888	SNAP RING	2		
8	T164887	WASHER	2		
9	T165101	GEAR	2		
10	T164893	SNAP RING	2		
11	T164884	SNAP RING	2		
12	19M7600	SCREW	10		M5 X 12
13	AT184280	ADJUSTER	2		
14	T164880	COMPRESSION SPRING	20		
15	T164883	WASHER	2		
16	T164878	BACK-UP RING	2		
17	T164877	SEAL	2		
18	T164879	PISTON	2		
19	T159400	SEAL	2		
20	T159401	BACK-UP RING	2		
21	T164875	HOUSING	1		LEFT
22	T162517	BRAKE	2		
23	T159407	RING	10		
24	T164881	PIN	10		
25	L55580	O-RING	2		
26	15M7030	PIPE PLUG	2		
27	T164892	BUSHING	1		
28	T159425	SHIM	1		1.5 MM
	T159427	SHIM	1		1.4 MM
	T159429	SHIM	1		1.3 MM
	T159431	SHIM	1		1.2 MM
	T159435	SHIM	1		1 MM
	T161238	SHIM	1		.95 MM
	T161239	SHIM	1		.9 MM
	T161240	SHIM	1		.85 MM
	T161241	SHIM	1		.8 MM
	T161242	SHIM	1		.75 MM
	T161243	SHIM	1		.7 MM
	T161244	SHIM	1		.5 MM
	T161245	SHIM	1		.4 MM
	T161246	SHIM	1		.3 MM
	T161247	SHIM	1		.2 MM
29	T168910	ROLLER BEARING	1		(SUB FOR AT184285)
30	T159362	O-RING	2		
31	AT184284	ROLLER BEARING	1		
32	T159444	SHIM	1		.1 MM
	T159445	SHIM	1		.15 MM
	T159443	SHIM	1		.2 MM
	T159440	SHIM	1		.3 MM
	T159441	SHIM	1		.5 MM
	T159479	SHIM	1		.6 MM
	T159480	SHIM	1		.7 MM
	T159481	SHIM	1		.8 MM
	T159482	SHIM	1		.9 MM
	T159442	SHIM	1		1 MM
	T159446	SHIM	1		1.1 MM
	T159447	SHIM	1		1.2 MM
	T159448	SHIM	1		1.3 MM
	T159449	SHIM	1		1.4 MM
	T159450	SHIM	1		1.5 MM
	T159451	SHIM	1		1.6 MM
	T159452	SHIM	1		1.7 MM
	T159453	SHIM	1		1.8 MM
	T159483	SHIM	1		2.0 MM
33	T164874	HOUSING	1		RIGHT
34	.....	PLUG	1		

BRAKE VALVE AND PEDALS
(SERIAL NO. -872328)

TP45512 -UN-05OCT94

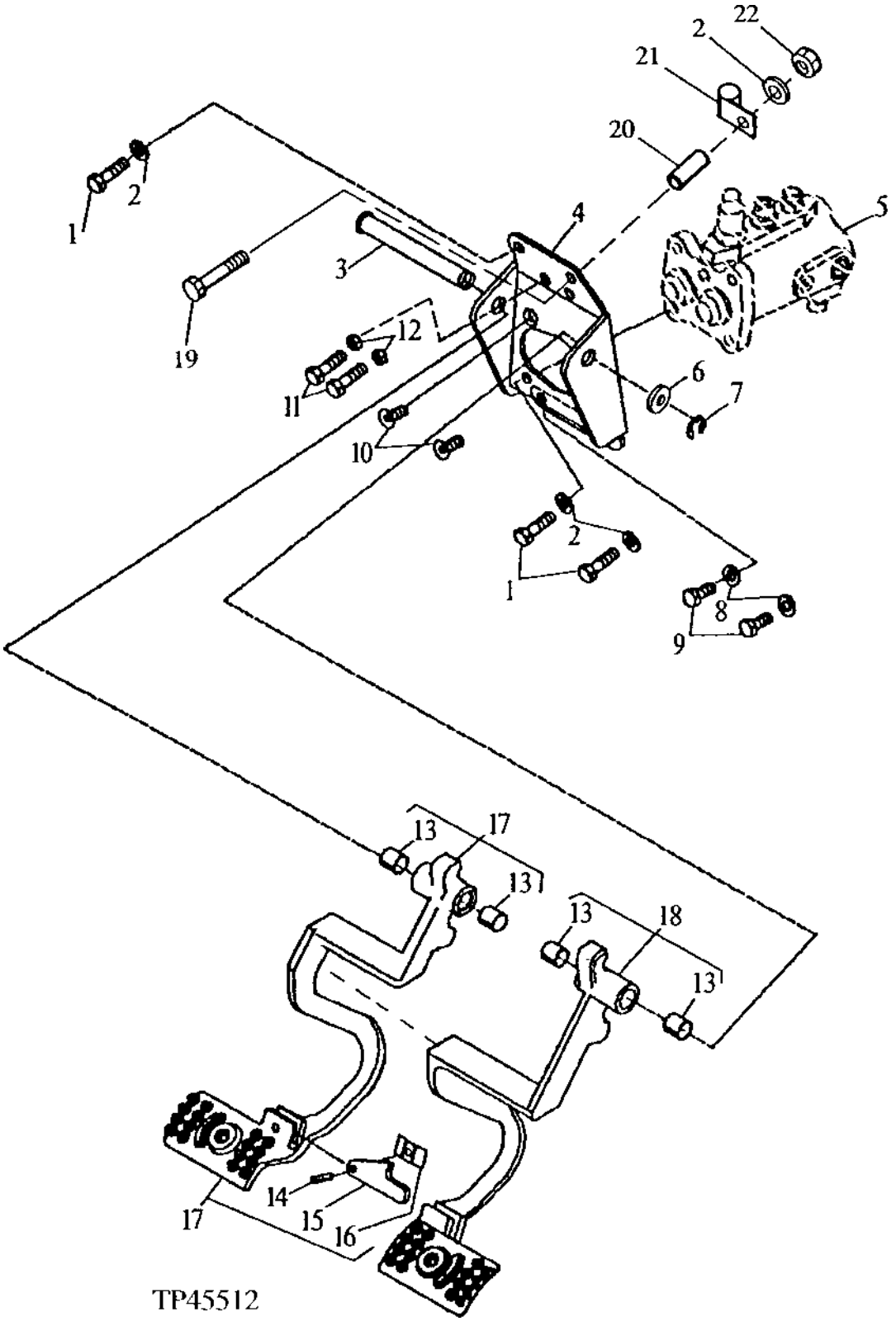

BRAKE VALVE AND PEDALS
(SERIAL NO. -872328)

KEY	PART NO.	PART NAME	QTY	SERIAL NO.	REMARKS
1	19M7550	CAP SCREW	4	-802550	M10 X 35
	19M7550	CAP SCREW	3	802551-	
2	24M7239	WASHER	4		10.700 X 21 X 2.500 MM
3	T145216	PIN	1		
4	AT159709	BRACKET	1		
5	RE62084	VALVE	1	-825419	
	RE159288	VALVE	1	825420-	(SUB FOR RE67321)
6	24H1381	WASHER	AR		23/32" X 1-1/4" X 0.060"
7	F2863R	SNAP RING	1		
8	24M7028	WASHER	2		10.500 X 20 X 2 MM
9	19M7402	CAP SCREW	2		M10 X 25
10	19M5055	SCREW	2		M10 X 25
11	19M8008	CAP SCREW	2		M8 X 35
12	14M7273	NUT	2		M8
13	R28035	BUSHING	4		
14	34H312	SPRING PIN	1		1/4" X 1"
15	R50879	ARM	1		
16	R50034	LEAF SPRING	1		
17	AT159690	PEDAL	1		LEFT
18	AT160463	PEDAL	1		RIGHT
19	19M8600	CAP SCREW	1	802551-	
20	28H3381	SPACER	1	802551-	
21	T14787	CLAMP	1	802551-	
22	14M7274	NUT	1	802551-	

BRAKE PEDALS
(SERIAL NO. 872329-)

TP58020 -UN-08JUN99

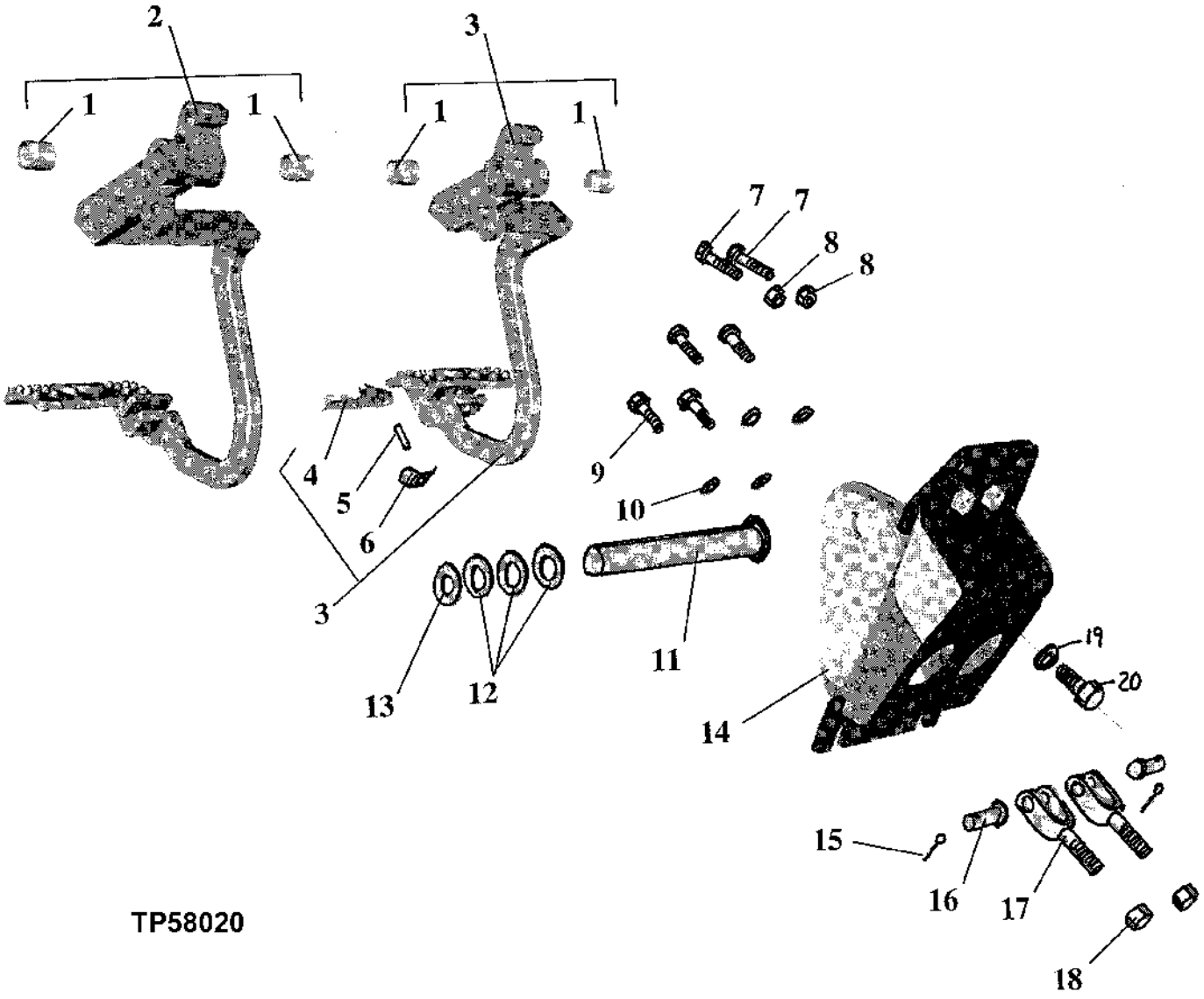

TP58020

BRAKE PEDALS
(SERIAL NO. 872329-)

KEY	PART NO.	PART NAME	QTY	SERIAL NO.	REMARKS
1	R28035	BUSHING	AR		
2	AT184214	PEDAL	1		RIGHT
3	AT184213	PEDAL	1		LEFT
4	R50879	ARM	1		
5	34H312	SPRING PIN	1		
6	R50034	LEAF SPRING	1		
7	19M8008	CAP SCREW	2		M8 X 35
8	14M7273	NUT	2		M8
9	19M7407	CAP SCREW	4		M8 X 25
10	24M7238	WASHER	4		8.700 X 17 X 2 MM
11	T145216	PIN	1		17.424 X 141 MM
12	24H1381	WASHER	6		23/32" X 1-1/4" X 0.060"
13	F2863R	SNAP RING	1		
14	AT184553	BRACKET	1		
15	11M7012	COTTER PIN	2		
16	R65563	PIN	2		
17	T164482	YOKE	2		
18	14H1080	NUT	2		3/8"
19	19M7550	CAP SCREW	4		M10 X 35
20	24M7239	WASHER	4		

BRAKE VALVE
(SERIAL NO. -872328)

TP57950 -UN-15DEC98

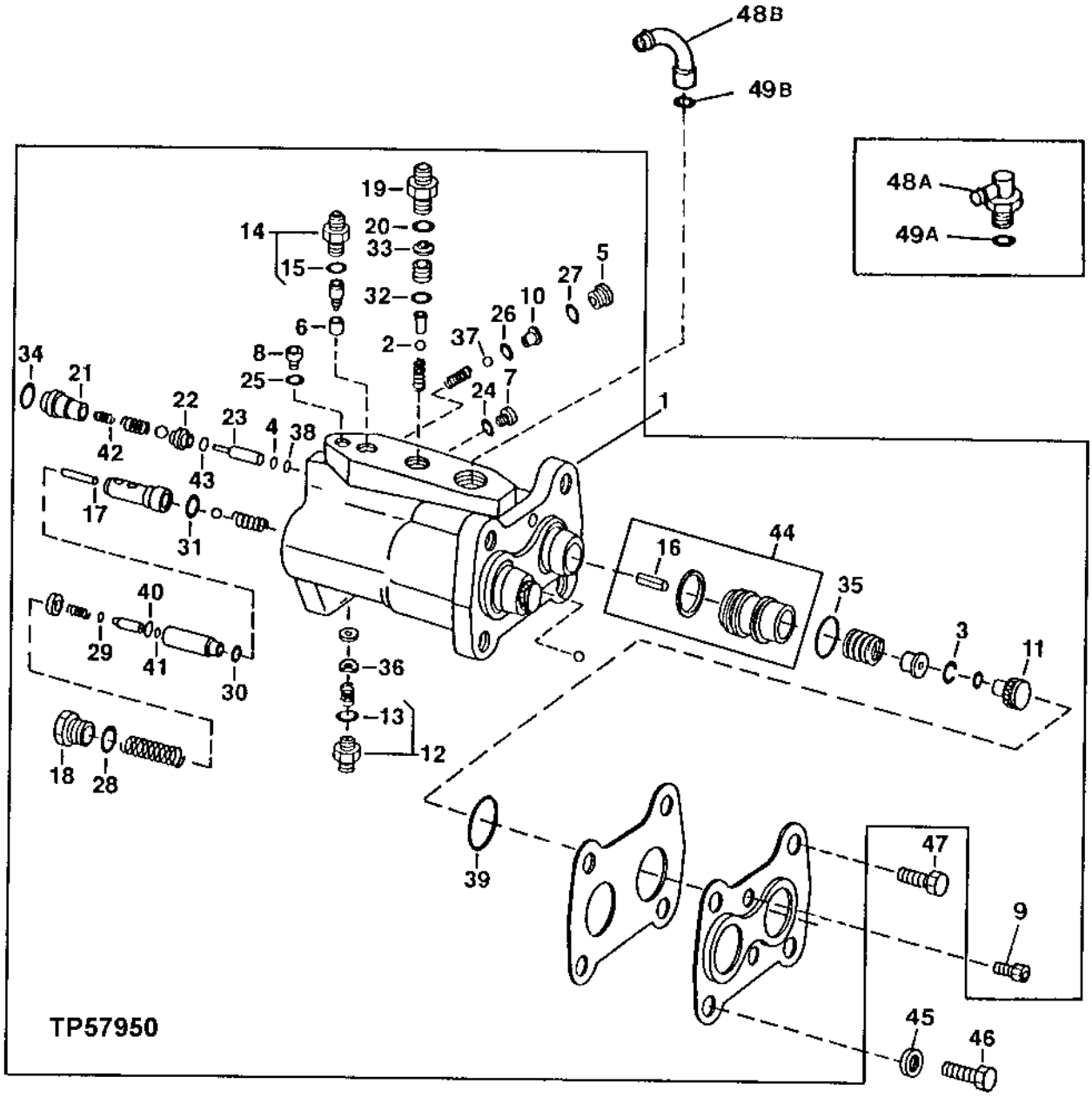

BRAKE VALVE
(SERIAL NO. -872328)

KEY	PART NO.	PART NAME	QTY	SERIAL NO.	REMARKS
1	RE62084	VALVE	1	-802550	(ALSO ORDER RE56946 AND T57246) (SUB FOR RE29826)
	RE62084	VALVE	1	802551-825419	(ALSO ORDER T152604 AND T57246) (SUB FOR RE56958)
	RE159288	VALVE	1	825420-	(ALSO ORDER T152604 AND T57246) (SUB FOR RE56958 AND RE67321)
2	R26552	BALL	3		
3	R52876	SNAP RING	2		
4	T42571	BACK-UP RING	1		
5	R108037	PLUG	1		
6	N191770	ORIFICE	1		
7	R108038	PLUG	1		
8	R108038	PLUG	1		
9	19M8493	SCREW	1		M8 X 12, HS 10.9
10	R108045	VALVE SEAT INSERT	1		
11	R108052	PLUNGER	2		
12	38H5002	ADAPTER	2		
13	51M7041	O-RING	2		
14	38H5002	ADAPTER	1		
15	51M7041	O-RING	1		
16	24M7038	WASHER	2		13.500 X 24 X 2.500 MM
17	R60755	NEEDLE ROLLER	2		
18	R108062	PLUG	2		
19	38H5003	ADAPTER	1		
20	51M7043	O-RING	1		15.300 X 2.200 MM
21	R132840	PLUG	1		
22	R132841	VALVE SEAT INSERT	1		
23	R108051	PISTON	1		
24	R30903	O-RING	1		
25	R30903	O-RING	1		
26	R26287	O-RING	1		
27	R26448	O-RING	1		
28	U17409	O-RING	2		
29	A4365R	O-RING	2		
30	R10093	O-RING	2		
31	T13119	O-RING	2		
32	R28776	O-RING	1		
33	R113058	FILTER	1		
34	T77932	O-RING	1		
35	R118205	PACKING	2		
36	R127771	SPRING	2		
37	R113061	BALL	1		
38	R108066	O-RING	1		
39	R132845	SEAL	2		
40	R108042	BACK-UP RING	2		
41	R108067	SEAL	2		
42	R132843	SPRING	1		
43	R113057	PACKING	1		
44	RE159292	KIT	2		
45	24M7028	WASHER	2		
46	19M7402	CAP SCREW	2		M10 X 25
47	19M5055	SCREW	2		M10 X 25, HS 10.9
48A	RE49717	ELBOW FITTING	1	-802550	
48B	T152604	TUBE	1	802551-	
49A	51M7045	O-RING	1	-802550	
49B	T57246	O-RING	1	802551-	

BRAKE VALVE OVERHAUL KIT
(SERIAL NO. -872328)

TP45565 -UN-31OCT94

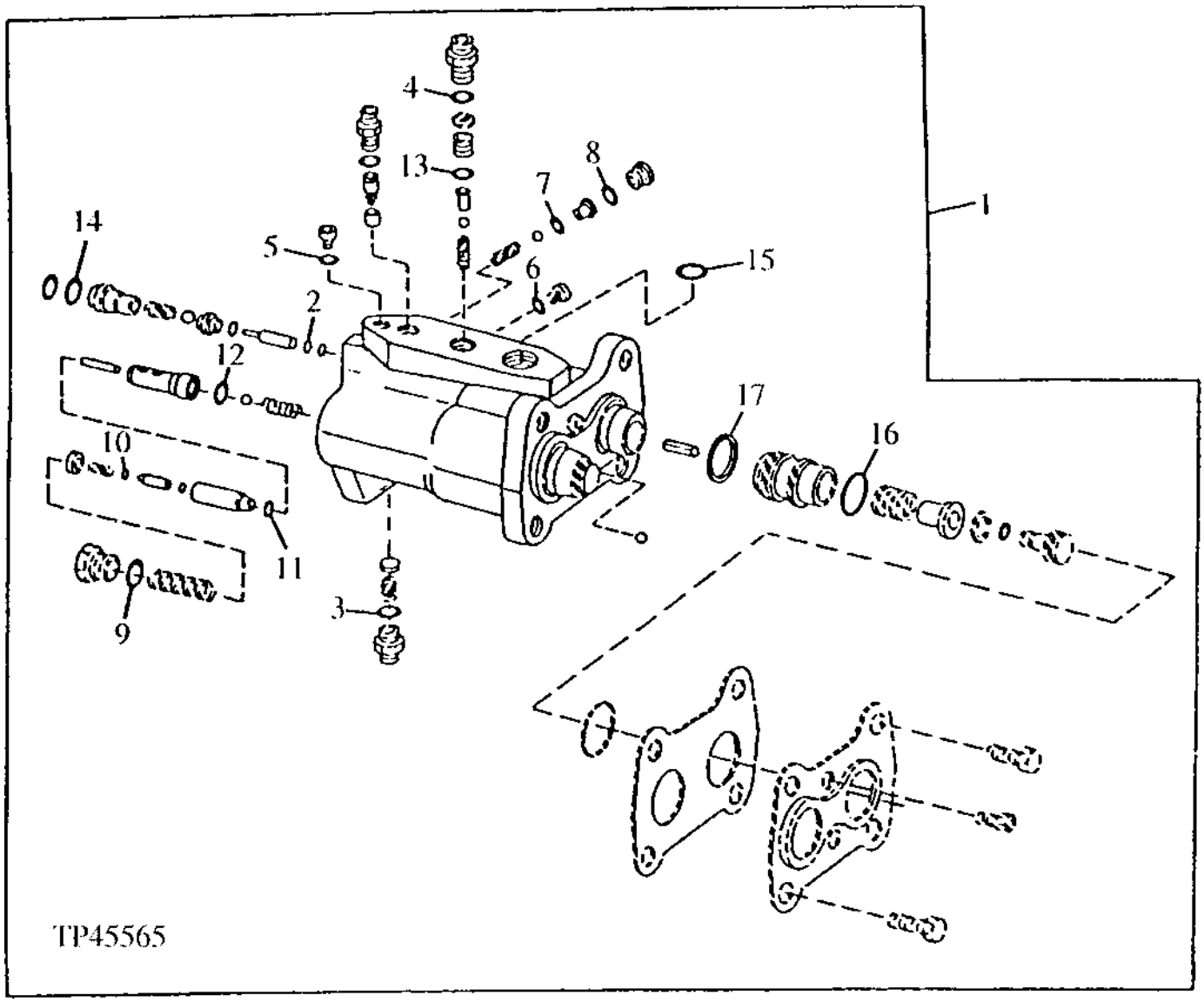

BRAKE VALVE OVERHAUL KIT
(SERIAL NO. -872328)

KEY	PART NO.	PART NAME	QTY	CAB SERIAL NO.	REMARKS
1	.....	KIT	1	-802550	(RE46512 NO LONGER AVAILABLE) (SUB RE60707)
	RE60707	KIT	1	802551-	
2	T42571	BACK-UP RING	1		
3	51M7041	O-RING	3		
4	51M7043	O-RING	1		
5	R30903	O-RING	1		
6	R30903	O-RING	1		
7	R26287	O-RING	1		
8	R26448	O-RING	1		
9	U17409	O-RING	2		
10	A4365	O-RING	2		
11	R10093	O-RING	2		
12	T13119	O-RING	2		
13	R28776	O-RING	1		
14	T77932	O-RING	1		
15	51M7045	O-RING	1	-802550	
	B2762R	O-RING	1	802551-	
16	R118205	PACKING	2	802551-	
17	.....	SEAL	2		

BRAKE MAKE-UP CHECK VALVE KIT
(SERIAL NO. -872328)

TP44481 -UN-01JAN94

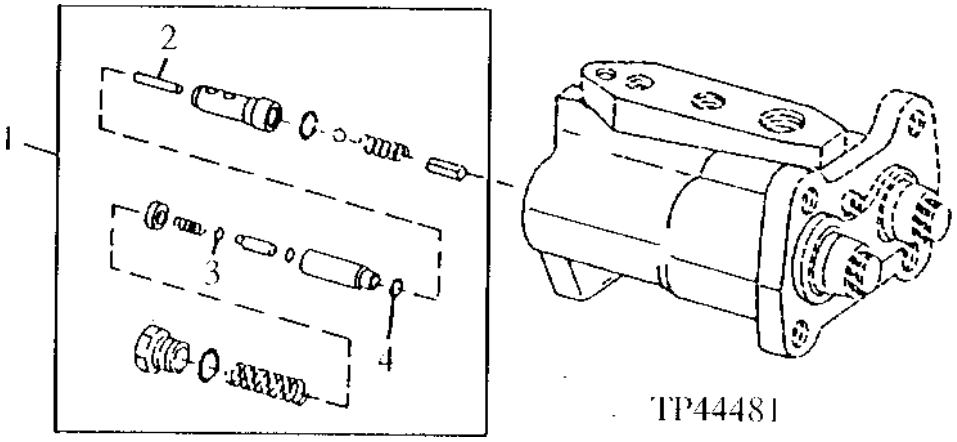

KEY	PART NO.	PART NAME	QTY	CAB SERIAL NO.	REMARKS
1	.....	KIT	1	-802550	(RE46597 NO LONGER AVAILABLE) (SUB RE60708)
	RE60708	KIT	1	802551-	
2	R60755	NEEDLE ROLLER	1		
3	A4365	O-RING	1		
4	R10093	O-RING	1		

BRAKE VALVE COVER
(SERIAL NO. -872328)

TP44482 -UN-01JAN94

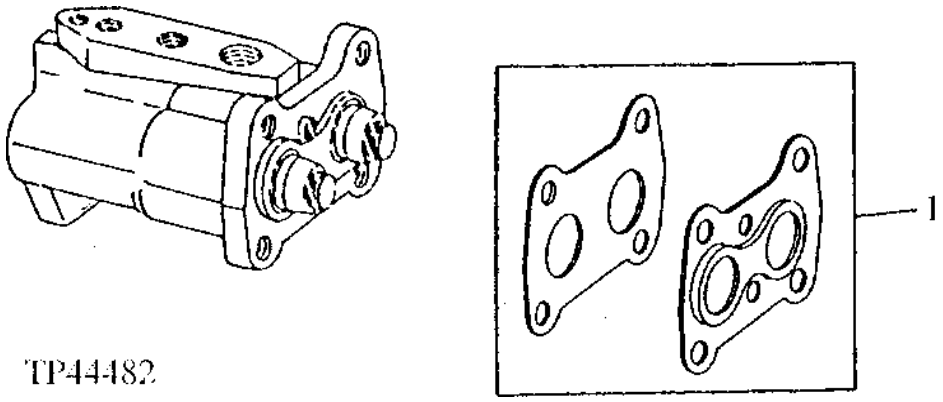

KEY	PART NO.	PART NAME	QTY	CAB SERIAL NO.	REMARKS
1	RE46598	KIT	1		

BRAKE PRESSURE INLET CHECK VALVE KIT
(SERIAL NO. -872328)

TP44483 -UN-01JAN94

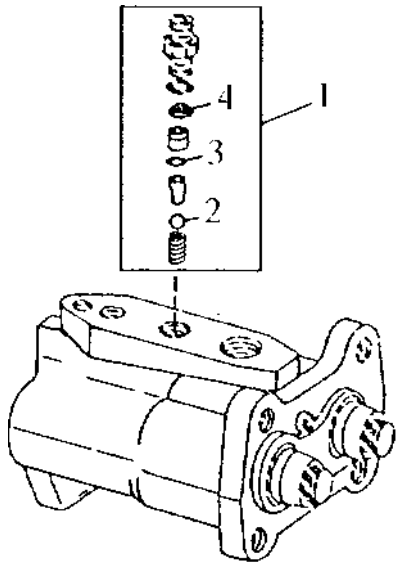

TP44483

KEY	PART NO.	PART NAME	QTY	CAB SERIAL NO.	REMARKS
1	RE68000	KIT	1		(SUB FOR RE46599)
2	R26552	BALL	1		
3	R28776	O-RING	1		
4	R113058	FILTER	1		

BRAKE PRE-FILL PISTON KIT
(SERIAL NO. -872328)

TP44484 -UN-01JAN94

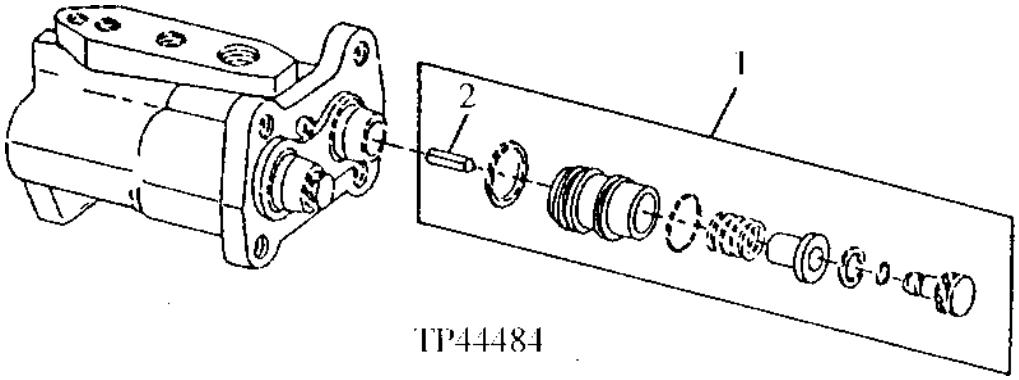

KEY	PART NO.	PART NAME	QTY	CAB SERIAL NO.	REMARKS
1	.....	KIT	1	-802550	(RE46600 NO LONGER AVAILABLE) (SUB RE60706)
	RE60706	KIT	1	802551-	
2	34H294	SPRING PIN	1		

BRAKE VALVE HARDWARE KIT
(SERIAL NO. -872328)

TP44485 -UN-01JAN94

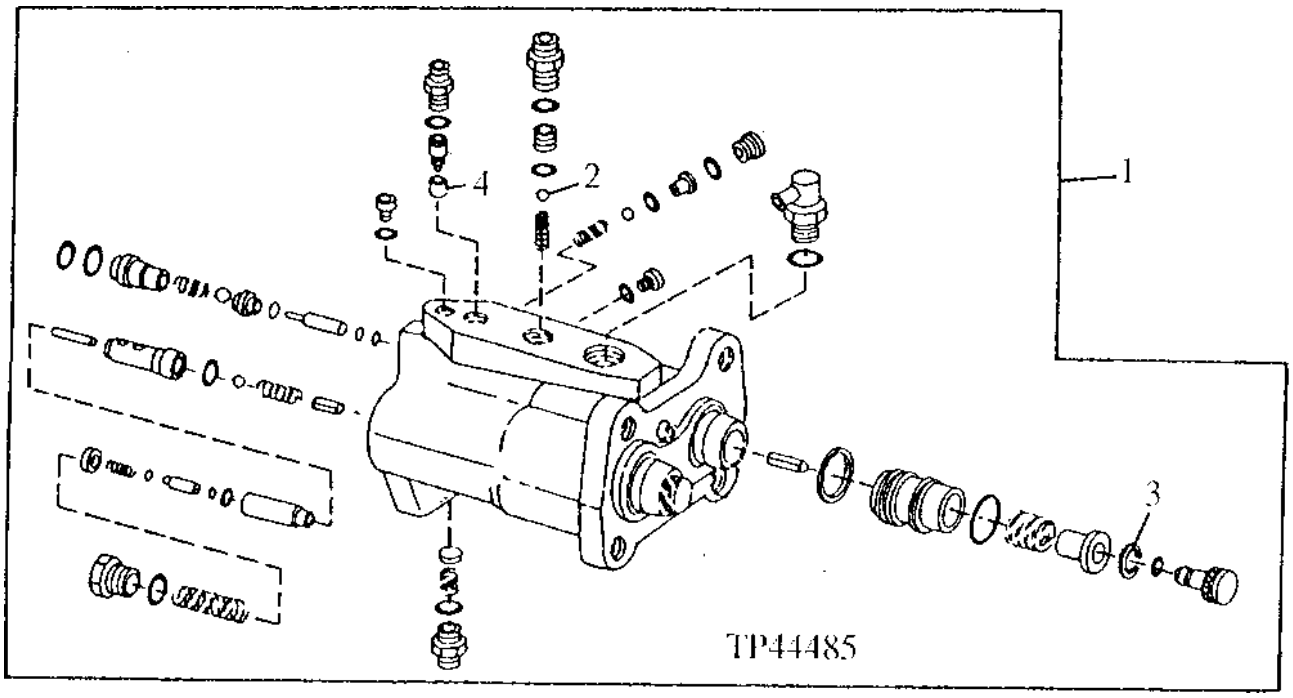

KEY	PART NO.	PART NAME	QTY	CAB SERIAL NO.	REMARKS
1	RE63587	KIT	1		(SUB FOR RE46601 AND RE60709) (SUB RE67861)
	RE67861	KIT	1		
2	R26552	BALL	1		
3	R52876	SNAP RING	2		
4	N191770	ORIFICE	1		

BRAKE VALVE MOUNTING PARTS
(SERIAL NO. -872328)

TP44486 -UN-01JAN94

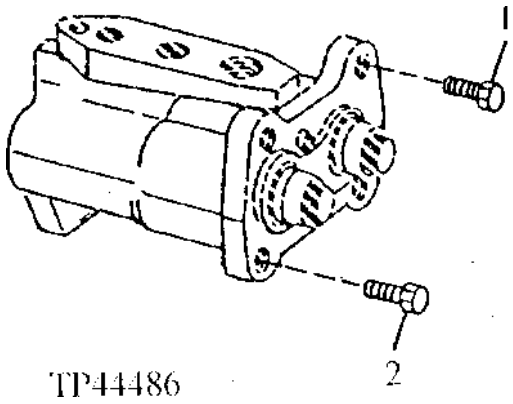

KEY	PART NO.	PART NAME	QTY	CAB SERIAL NO.	REMARKS
1	19M5055	SCREW	2	M10 X 25	
2	19M7167	CAP SCREW	2	M10 X 25	

BRAKE VALVE
(SERIAL NO. 872329-)

TP58005 -UN-18FEB99

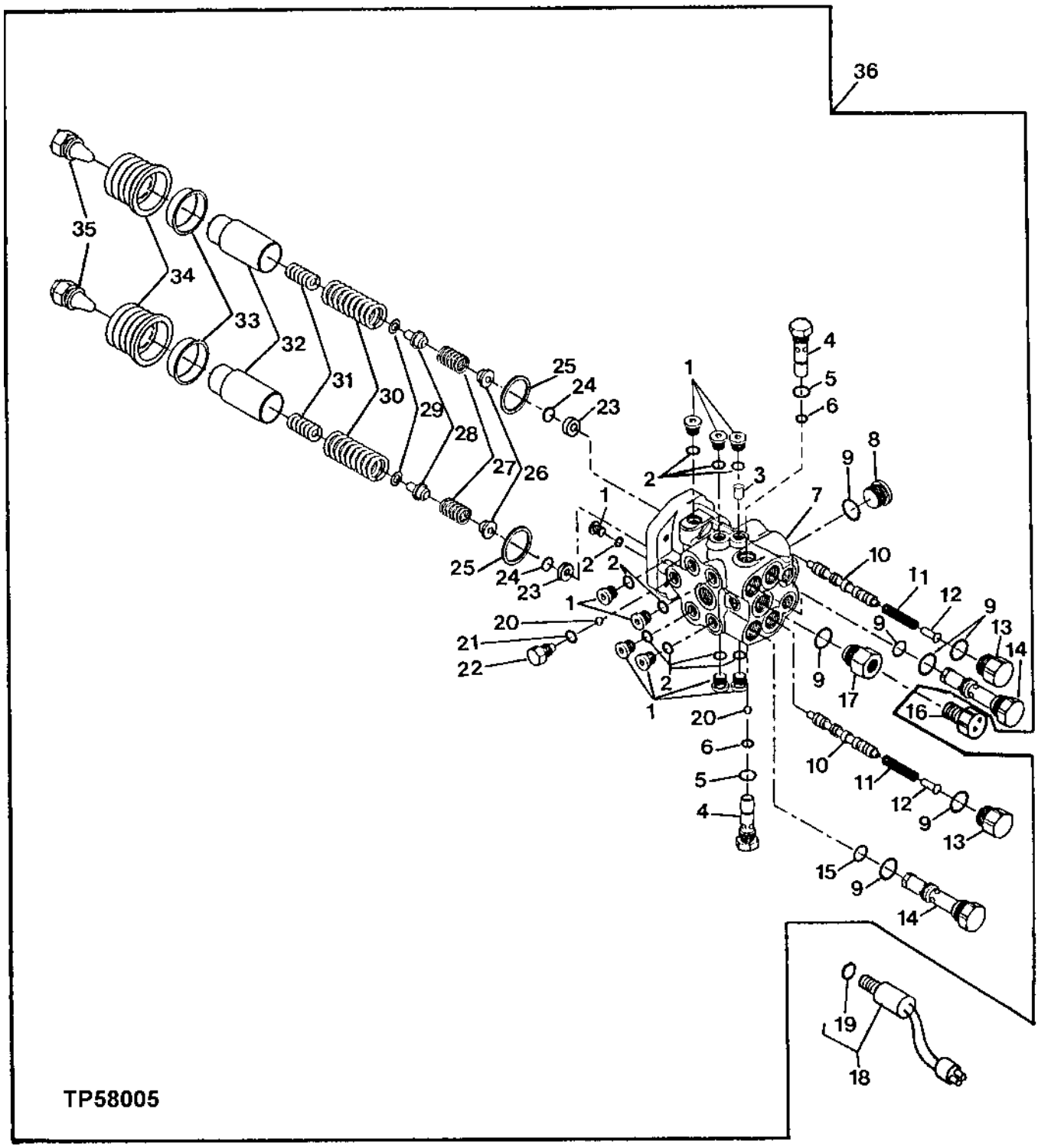

BRAKE VALVE
(SERIAL NO. 872329-)

KEY	PART NO.	PART NAME	QTY	SERIAL NO.	REMARKS
1	T165819	PLUG	10		
2	R28782	O-RING	10		
3	T165818	ORIFICE	1		
4	T165820	PLUG	2		
5	R26448	O-RING	2		
6	T77814	O-RING	2		(A)
7	.....	HOUSING	1		(ORDER AT183755)
8	T165824	SHIM	1		
9	R26375	O-RING	6		
10	.....	SPOOL	2		(ORDER AT183755)
11	T165815	SPRING	2		
12	T165816	RETAINER	2		
13	T165817	PLUG	2		
14	AT185405	CHECK VALVE	2		
15	T77857	O-RING	2		(A)
16	R32548	TOUCH SWITCH	1		
17	T165821	ADAPTER	1		
18	AT184695	PRESSURE SWITCH	2		LOW PRESSURE
19	R26448	O-RING	2		
20	T165938	BALL	2		
21	R28782	O-RING	1		
22	T165823	PLUG	1		
23	T165813	RETAINER	2		
24	T165812	SNAP RING	2		
25	.....	O-RING	2		(A)
26	AT185398	RETAINER	2		
27	T165810	SPRING	2		LOW RATE
28	T165862	RETAINER	2		
29	T165859	SHIM	2		.005 INCH
	T165858	SHIM	2		.010 INCH
	T166023	SHIM	2		.0179 INCH
	T165860	SHIM	2		.020 INCH
30	T165809	SPRING	2		RETURN
31	T165861	SPRING	2		
32	T165822	PISTON	2		
33	T165811	RETAINER	2		
34	T164804	BOOT	2		
35	T164331	ADAPTER	2		
36	AT183755	VALVE	1		
..	AT184696	SEAL KIT	1		INCLUDES ALL (A) PARTS

ACCUMULATOR AND SERVICE BREAK HYDRAULICS
(SERIAL NO. -872328)

TP49961 -UN-22JAN99

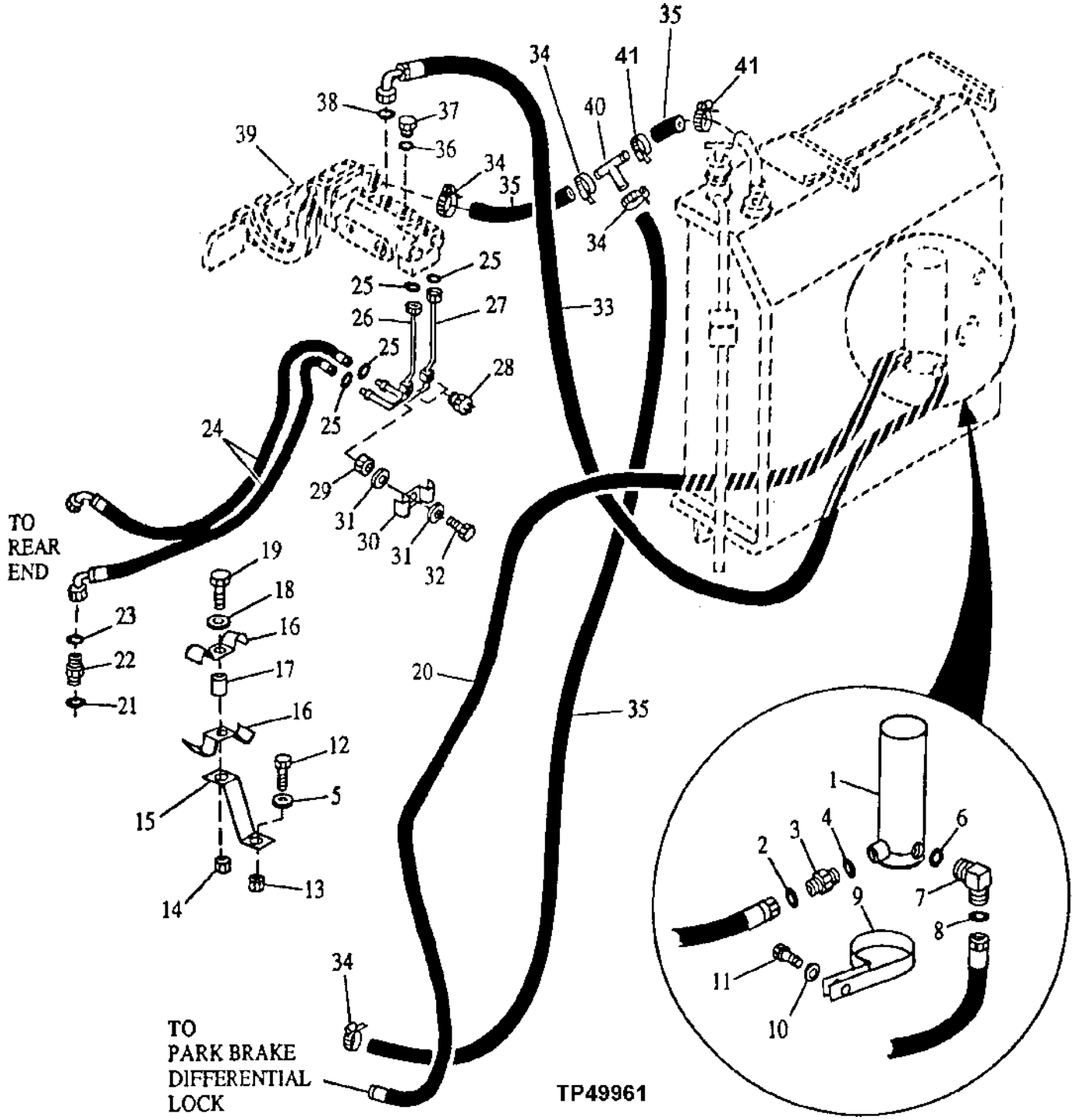

ACCUMULATOR AND SERVICE BREAK HYDRAULICS
(SERIAL NO. -872328)

KEY	PART NO.	PART NAME	QTY	SERIAL NO.	REMARKS
1	RE29336	ACCUMULATOR	1		
2	T77613	O-RING	1		
3	38H1169	ADAPTER	1		
4	R26287	O-RING	1		
5	24M7239	WASHER	1		10.700 X 21 X 2.500 MM
6	R26286	O-RING	1		
7	38H1430	ELBOW FITTING	1		
8	T77613	O-RING	1		
9	R35794	CLAMP	2		
10	24M7239	WASHER	2		
11	19M7938	CAP SCREW	2		M10 X 20
12	19M7402	CAP SCREW	1		M10 X 25
13	14M7337	NUT	1		M10
14	14M7273	NUT	1		M8
15	T128064	BRACKET	1		
16	R46919	HALF CLAMP	2		
17	28H1521	SPACER	1		0.493" X 0.675" X 9/16"
18	24M7238	WASHER	1		8.700 X 17 X 2 MM
19	19M7922	CAP SCREW	1		M8 X 40
20	AT168164	HYDRAULIC HOSE - FABRICATE	1		(SUB FOR AT80192 AND AT165592)
21	R26448	O-RING	2		
22	38H1160	ADAPTER	2		
23	T77613	O-RING	2		
24	AT160510	HYDRAULIC HOSE - FABRICATE	2		
25	T77613	O-RING	4		
26	AT179546	LINE	1		RIGHT, (SUB FOR AT160850)
27	AT179547	LINE	1		LEFT, (SUB FOR AT160851)
28	AL67715	SWITCH	2		BRAKE
29	14M7273	NUT	2	-825589	
30	R46919	HALF CLAMP	1		(SUB FOR (2) T29527, THIS APPLICATION)
31	24M7238	WASHER	AR		8.700 X 17 X 2 MM
32	19M7513	CAP SCREW	2		M8 X 30
33	AT81907	HYDRAULIC HOSE - FABRICATE	1		11/16" X 1 000 MM (39-1/4") X 13/16"
34	AR21837	CLAMP	4		
35	.....	HYDRAULIC HOSE	1		(MAKE FROM T100526 BULK MATERIAL, CUT TO LENGTH)
36	T77613	O-RING	1		
37	38H1415	FITTING PLUG	1		
38	T77857	O-RING	1		1/16"
39	RE62084	VALVE	1	-825419	
	RE67321	VALVE	1	825420-	
40	T62804	FITTING	1		
41	AR21836	CLAMP	2		

BRAKE ACCUMULATOR
(SERIAL NO. -872328)

TP24323 -UN-01JAN94

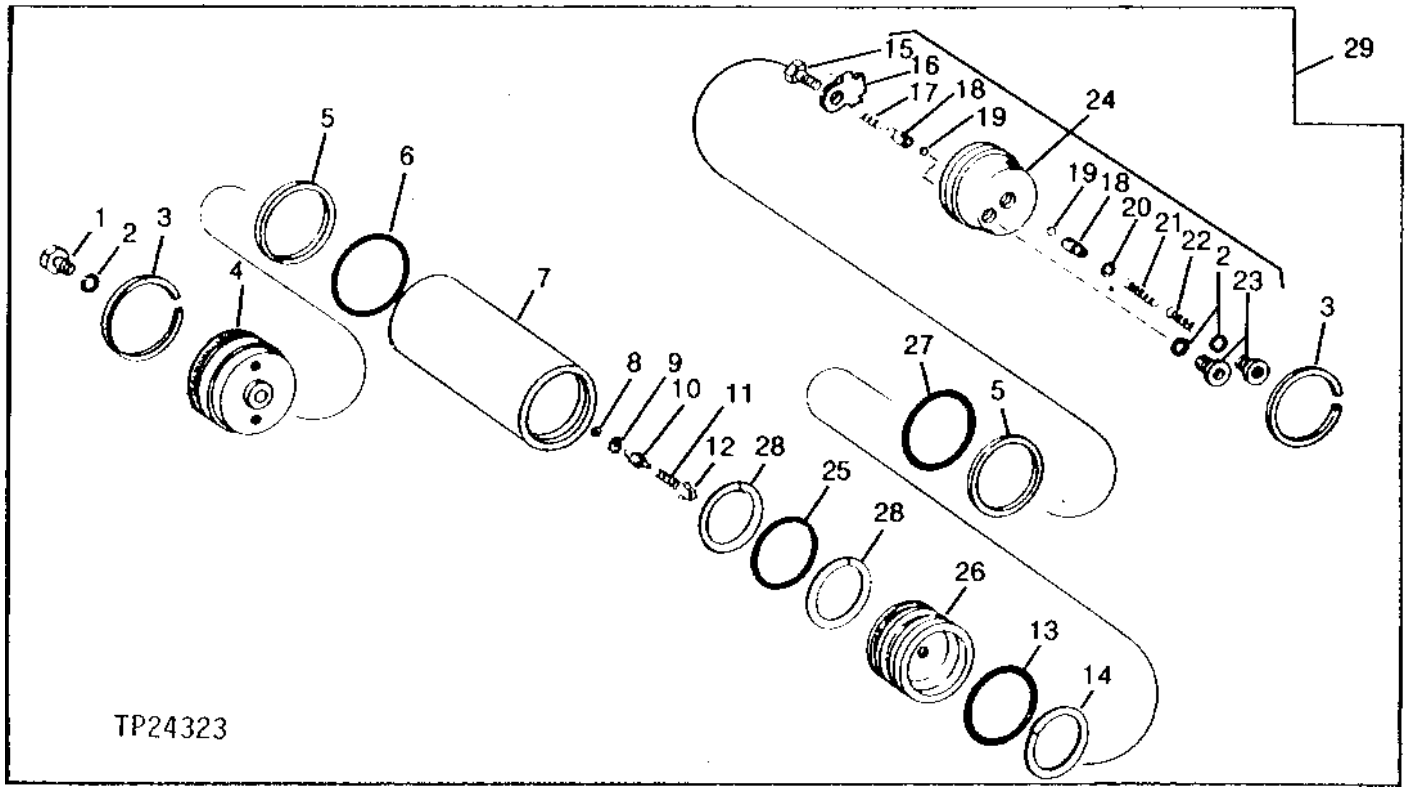

KEY	PART NO.	PART NAME	QTY	SERIAL NO.	REMARKS
1	R27094	DRAIN PLUG	1		
2	R26286	O-RING	3		
3	R78101	SNAP RING	2		
4	R48957	END	1		
5	R35684	BACK-UP RING	2		
6	U12331	O-RING	1		(GAS END)
7	R77866	HYDRAULIC CYLINDER BARREL	1		
8	R60038	PACKING	1		
9	R47087	WASHER	1		
10	R47085	VALVE	1		
11	R47086	SPRING	1		
12	R41877	GUIDE	1		
13	A4728R	O-RING	1		
14	R27649	BACK-UP RING	1		
15	R74022	RETAINER	1		
16	R75866	LOCK PLATE	1		
17	R44256	SPRING	1		
18	R44254	GUIDE	2		
19	R69281	BALL	2		
20	R31632	SHIM	2		
21	R47606	SPRING	1		
22	R47605	SPRING	1		
23	R47607	PIPE PLUG	2		
24	AR93259	CAP	1		
25	R86874	SEAL	1		(ALSO ORDER (2) R86873)
26	R57103	PISTON	1		
27	U12331	O-RING	1		
28	R86873	PISTON RING	2		
29	RE29336	ACCUMULATOR	1		(ALSO ORDER R80752 ENGLISH LABEL, R80753 SPANISH LABEL, R80754 FRENCH LABEL AND R82337 GERMAL LABEL AS REQUIRED)

MEMORANDA

ACCUMULATOR AND SERVICE BREAK HYDRAULICS
(SERIAL NO. 872329-)

TP58002 -UN-18FEB99

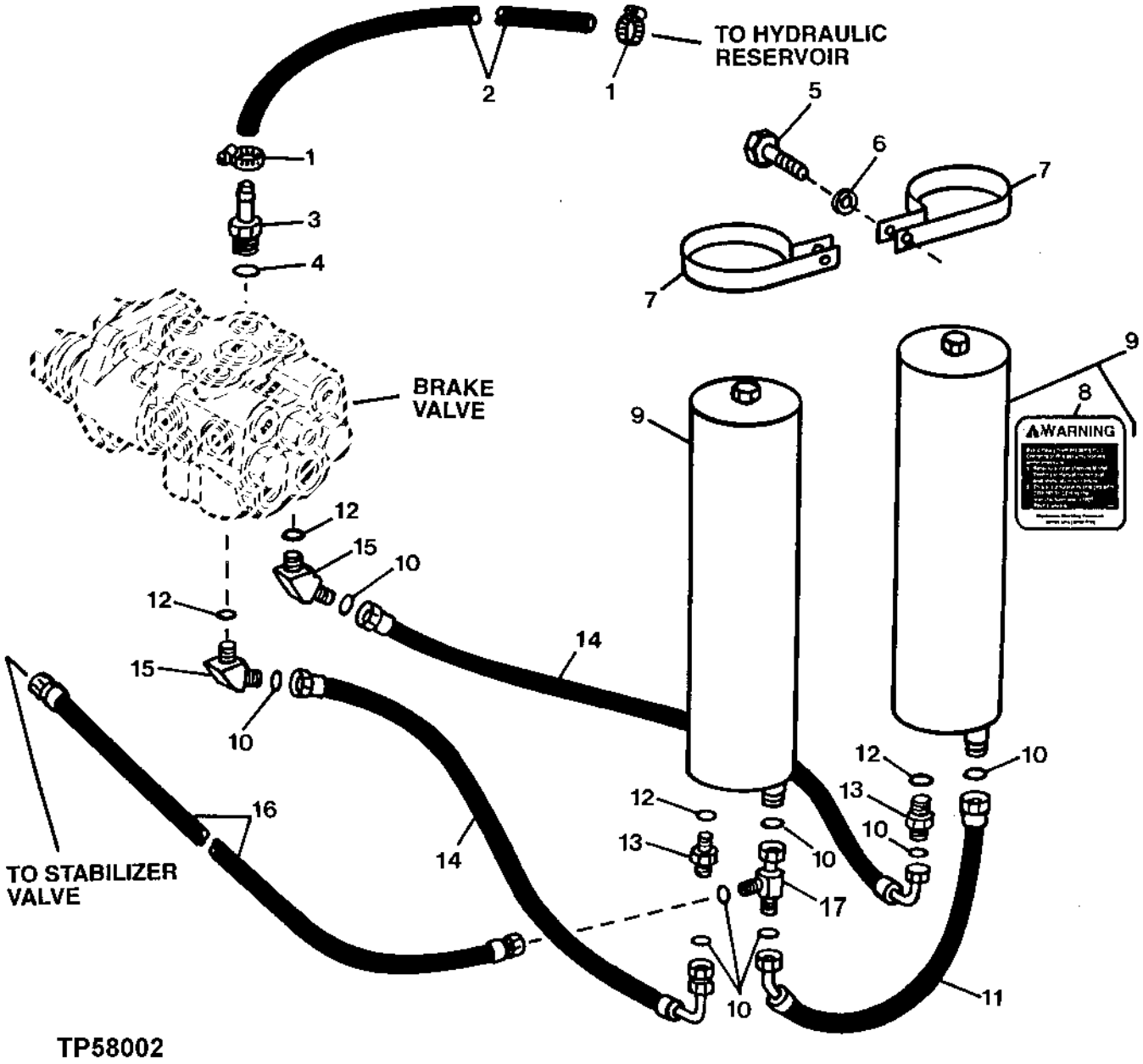

ACCUMULATOR AND SERVICE BREAK HYDRAULICS
(SERIAL NO. 872329-)

KEY	PART NO.	PART NAME	QTY	SERIAL NO.	REMARKS
1	AR21836	CLAMP	2		
2	.....	HOSE	1		
3	T38282	HOSE FITTING	1		
4	R26375	O-RING	1		
5	19M7402	CAP SCREW	2		M10 X 25
6	24M7239	WASHER	2		
7	T164326	CLAMP	4		
8	T155572	SAFETY SIGN	2		
9	AT171108	ACCUMULATOR	2		REQUIRES T155581 FOR FRENCH APPLICATIONS, T155579 FOR SPANISH APPLICATIONS, AND T155580 FOR GERMAN APPLICATIONS.
10	T77613	O-RING	AR		
11	AT183669	HYDRAULIC HOSE - FABRICATE	1		11/16" X 285 MM (11-1/4") X 11/16"
12	R26448	O-RING	AR		
13	38H1160	ADAPTER	2		
14	AT184500	HYDRAULIC HOSE - FABRICATE	2		11/16" X 520 MM (20-1/2") X 11/16"
15	38H1045	ELBOW FITTING	2		
16	AT180649	HYDRAULIC HOSE - FABRICATE	1		11/16" X 1 905 MM (75") X 11/16"
17	38H1030	TEE FITTING	1		

SERVICE BREAK HYDRAULICS
(SERIAL NO. 872329-)

TP58003 -UN-04MAY99

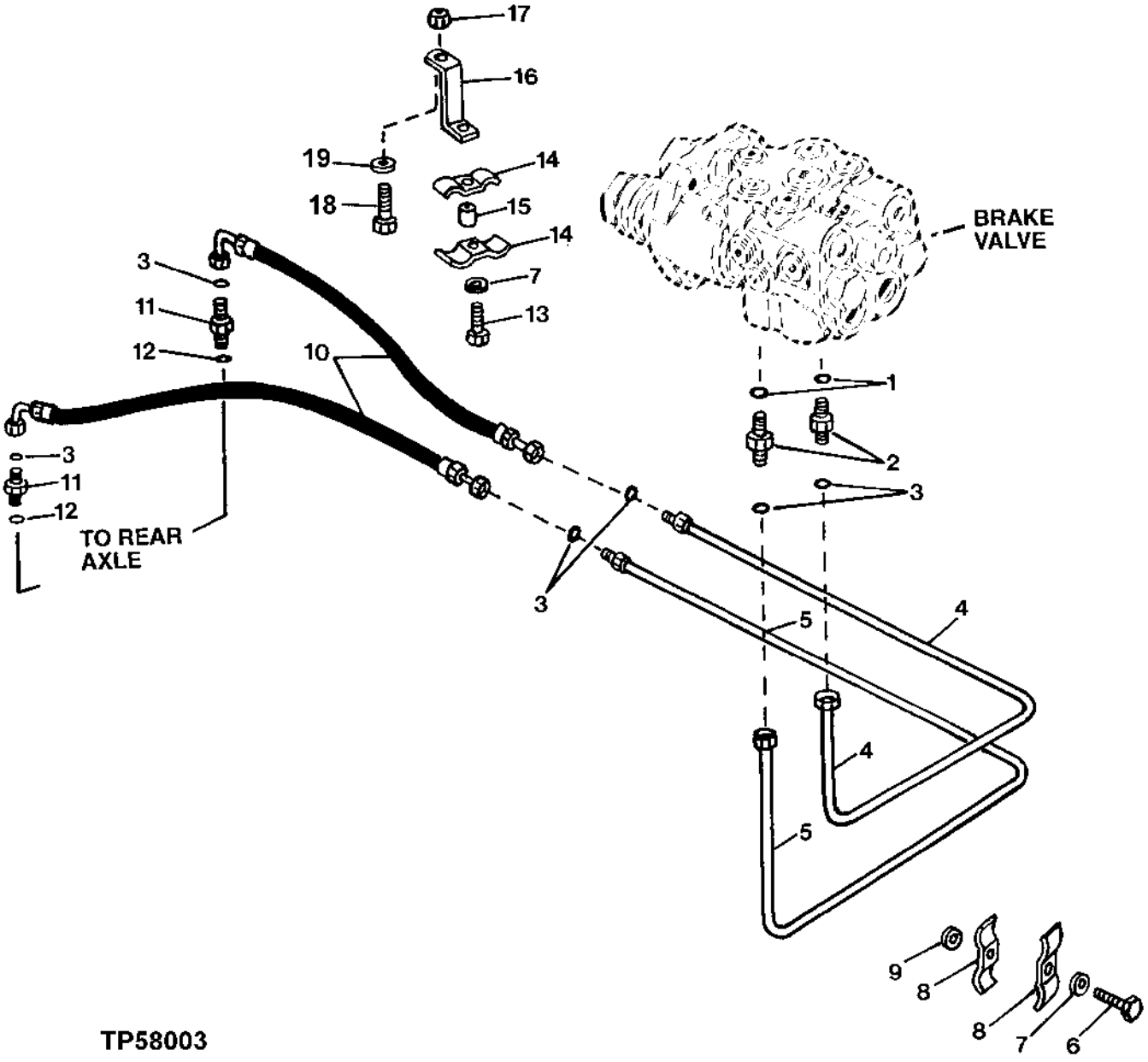

ACCUMULATOR AND SERVICE BREAK HYDRAULICS
(SERIAL NO. 872329-)

KEY	PART NO.	PART NAME	QTY	SERIAL NO.	REMARKS
1	R26448	O-RING	2		
2	38H1160	ADAPTER	2		
3	T77613	O-RING	AR		
4	AT184231	LINE	1		LEFT
5	AT184230	LINE	1		RIGHT
6	19M7513	CAP SCREW	1		M8 X 30
7	24M7238	WASHER	2		
8	R46919	HALF CLAMP	2		
9	24M7238	WASHER	AR		
10	AT181350	HYDRAULIC HOSE - FABRICATE	2		11/16" X 790 MM (31") X 11/16"
11	38H1160	ADAPTER	2		
12	R46448	BEARING HOUSING W/O BEARING	2		
13	19M7922	CAP SCREW	1		M8 X 40
14	R46919	HALF CLAMP	2		
15	T126052	SPACER	1		
16	T158245	STRAP	1		
17	14M7273	NUT	1		M8
18	19M7938	CAP SCREW	1		M10 X 20
19	24M7239	WASHER	1		

PARK BRAKE CALIPER ASSEMBLY
(SERIAL NO. -872328)

TP33951 -UN-01JAN94

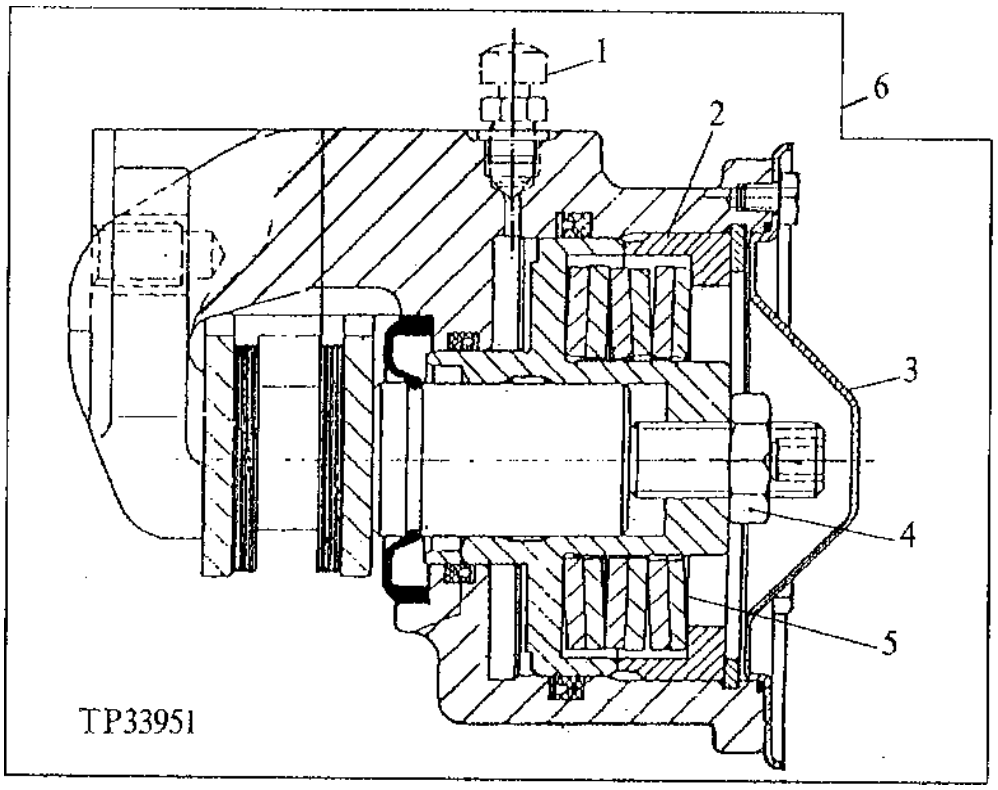

KEY	PART NO.	PART NAME	QTY	SERIAL NO.	REMARKS
1	T143573	VALVE	1		
2	T143571	RING	1		
3	T143569	COVER	1		
4	14M7260	NUT	1		M16
5	T143566	DISK SPRING	1		
6	AT135528	DISK BRAKE CALIPER ASSY	1		

*SEE FOLLOWING PAGES FOR MORE COMPONENTS

PARK BRAKE REPAIR KIT
(SERIAL NO. -872328)

TP33952 -UN-01JAN94

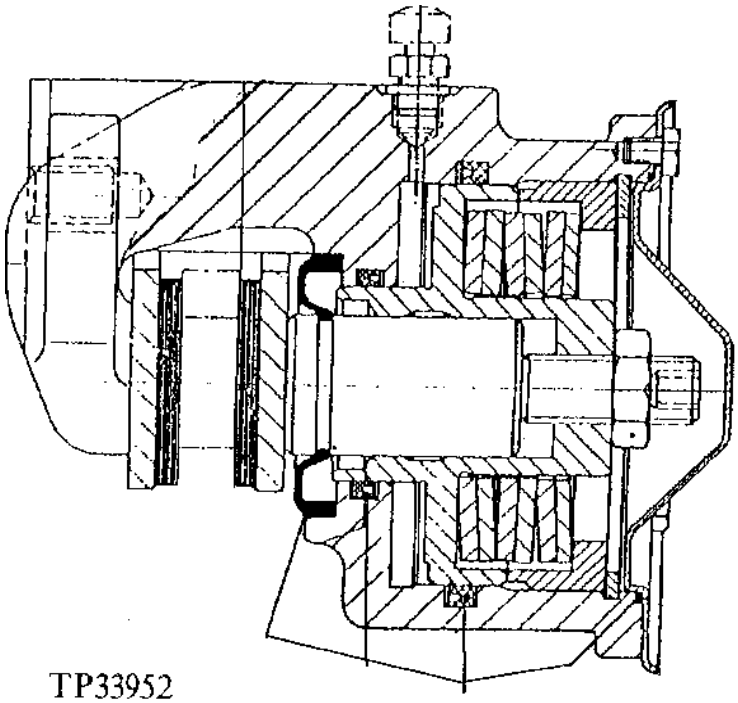

KEY	PART NO.	PART NAME	QTY	SERIAL NO.	REMARKS
1	AT151904	KIT	1		(INCLUDES T162244)
	T162244	O-RING	1		(FOR COVER-NOT SHOWN)

PARK BRAKE CALIPER ASSEMBLY AND PADS
(SERIAL NO. -872328)

TP45335 -UN-01JAN94

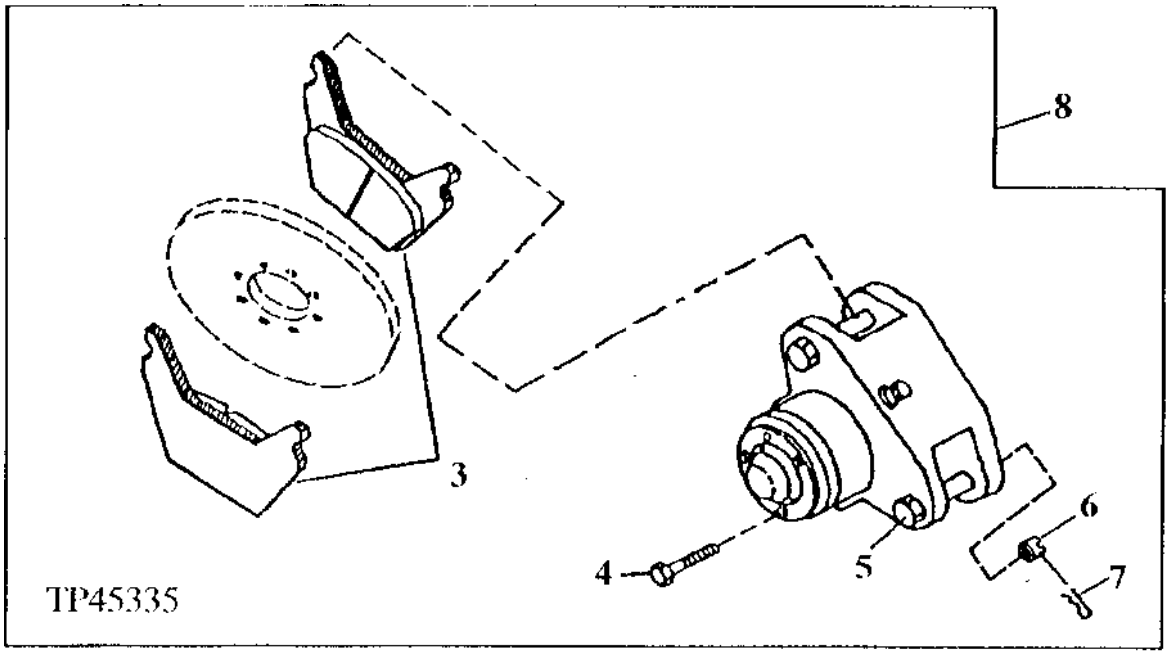

PARK BRAKE CALIPER ASSEMBLY AND PADS
(SERIAL NO. -872328)

KEY	PART NO.	PART NAME	QTY	SERIAL NO.	REMARKS
3	AT143311	BRAKE DISK	2		
4	19M7302	CAP SCREW	3		M6 X 8
5	T141698	CAP SCREW	2		
6	14M7179	NUT	2		M16
7	11M7092	COTTER PIN	2		
8	AT135528	DISK BRAKE CALIPER ASSY	1		
	14M7158	NUT	1		M16, (NOT ILLUSTRATED) (USED AS A LOCK FOR ADJUSTMENT SCREW)

*SEE PREVIOUS PAGES FOR MORE COMPONENTS

PARKING BRAKE
(RE44429) (OC-5)
(SERIAL NO. -872328)

RXP021766 -UN-01NOV96

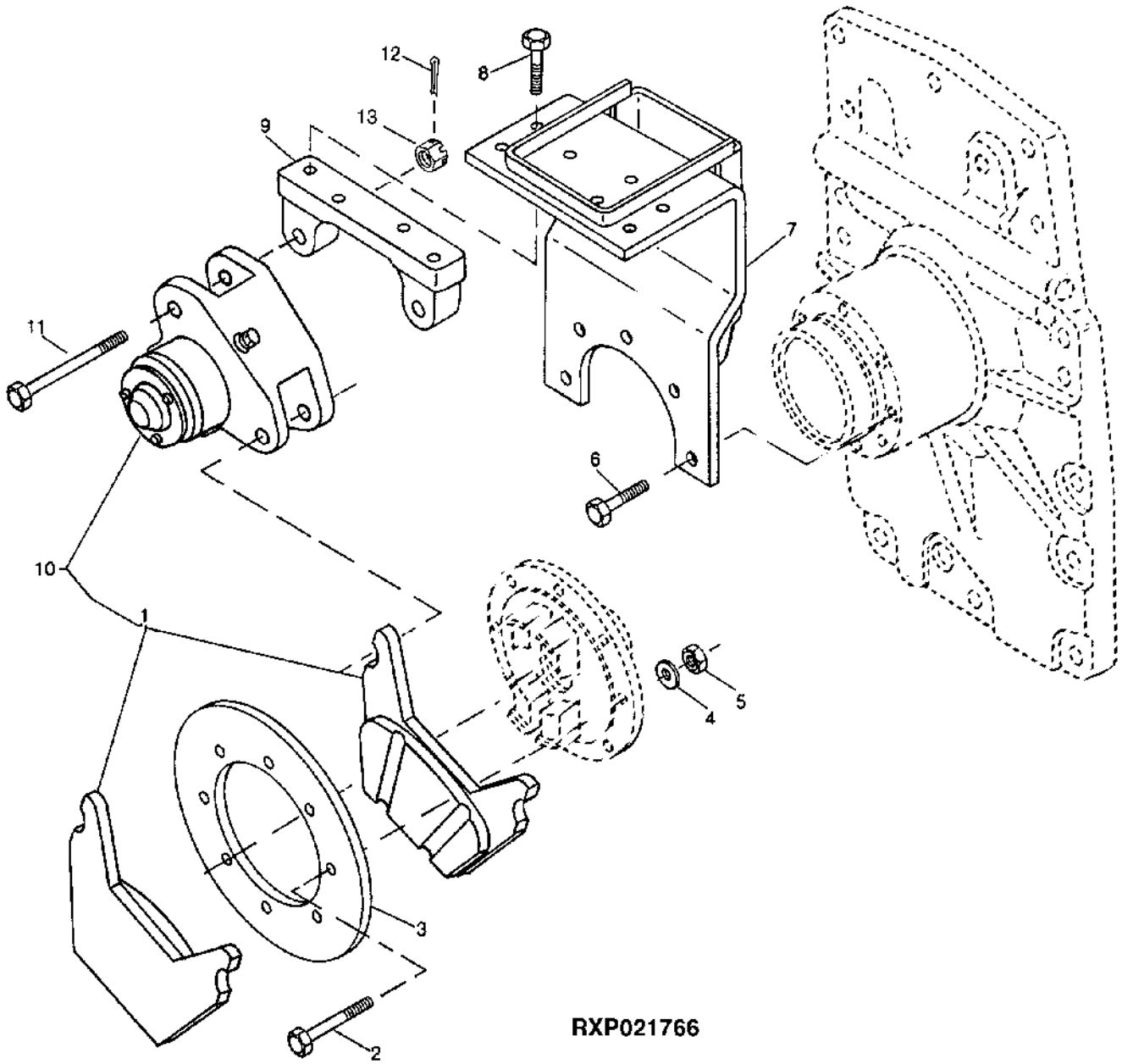

PARKING BRAKE
(RE44429) (OC-5)
(SERIAL NO. -872328)

KEY	PART NO.	PART NAME	QTY	AXLE SERIAL NO.	REMARKS
1	AT143311	BRAKE DISK	2		
2	19M8162	CAP SCREW	8		M10 X 40
3	T127001	BRAKE DISK	1		
4	24M7233	WASHER	8		10.700 X 21 X 2.500 MM
5	14M7296	FLANGE NUT	8		M10
6	19M7786	SCREW	5		M10 X 30
7	RE46356	BRACKET	1		
8	19M7785	SCREW	4		M10 X 25
9	R100583	BRACKET	1		
10	AT135528	DISK BRAKE CALIPER ASSY	1		
11	T141698	CAP SCREW	2		
12	11M7087	COTTER PIN	2		4 X 40 MM
13	14M7179	NUT	2		

PARKING BRAKE
(SERIAL NO. 872329-)

TP57991 -UN-09FEB99

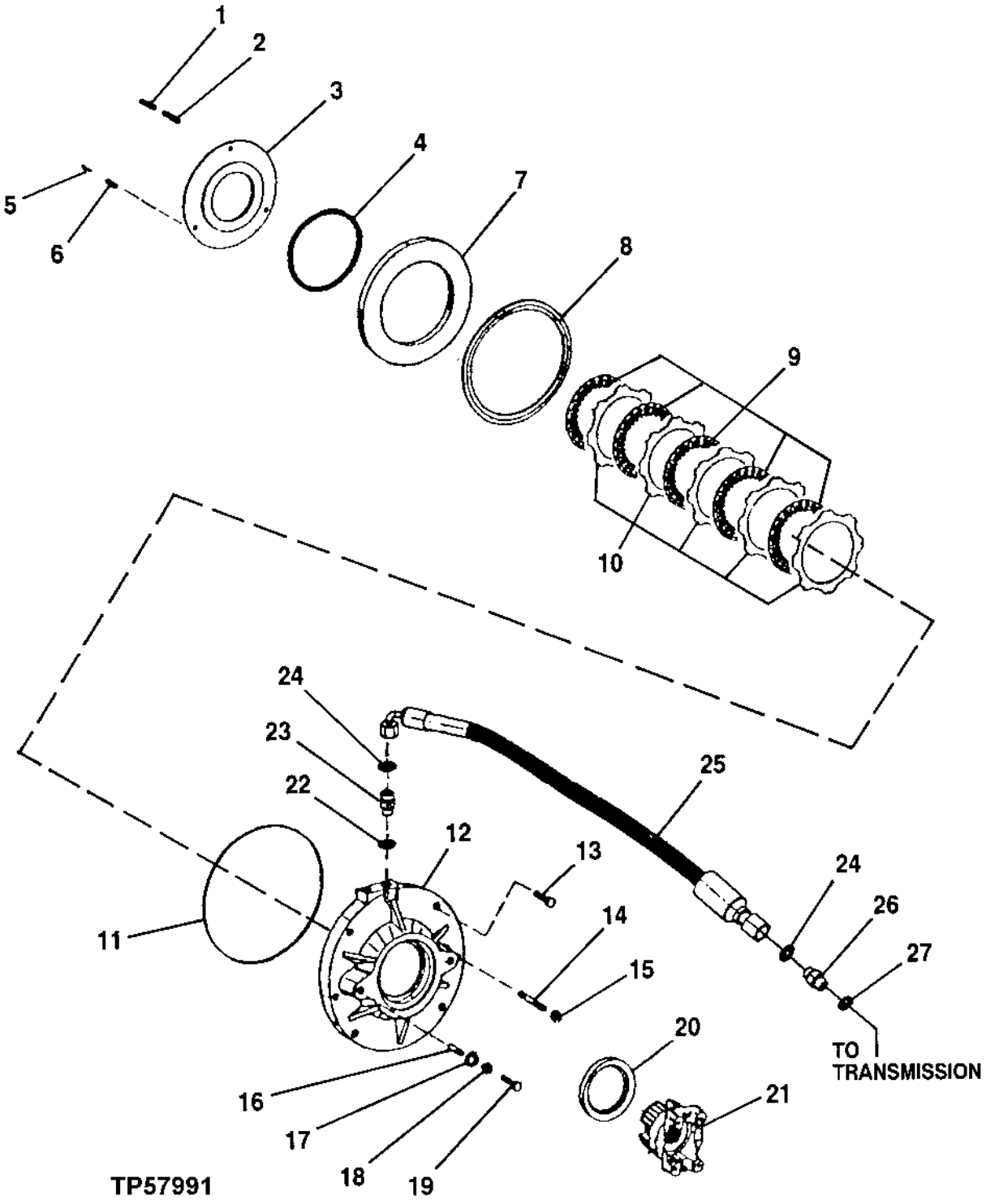

PARKING BRAKE
(SERIAL NO. 872329-)

KEY	PART NO.	PART NAME	QTY	SERIAL NO.	REMARKS
1	T164917	COMPRESSION SPRING	14		
2	T164916	COMPRESSION SPRING	14		
3	T164915	PLATE	1		
4	T159477	SEAL	1		
5	T164911	PIN	3		
6	T159359	SPRING PIN	2		
7	T164914	PISTON	1		
8	T159478	SEAL	1		
9	T159475	CLUTCH DISK	5		
10	T159474	PLATE	4		
11	T164909	O-RING	1		
12	T164908	HOUSING	1		
13	19M7179	CAP SCREW	4		M10 X 50
14	T164912	STUD	2		
15	T164913	NUT	2		
16	T164918	PIN	2		
17	T159487	O-RING	2		
18	T159502	LOCK NUT	2		
19	T164922	SCREW	2		
20	AT179537	SEAL	1		
21	T163544	YOKE	1		
22	R26906	O-RING	1		
23	38H1162	ADAPTER	1		
24	T77932	O-RING	2		
25	AT180746	HYDRAULIC HOSE - FABRICATE	1		
26	38H1317	FITTING	1		
27	R26375	O-RING	1		

PARK BRAKE, DIFFERENTIAL LOCK VALVE
(SERIAL NO. -872328)

TP58021 -UN-14APR99

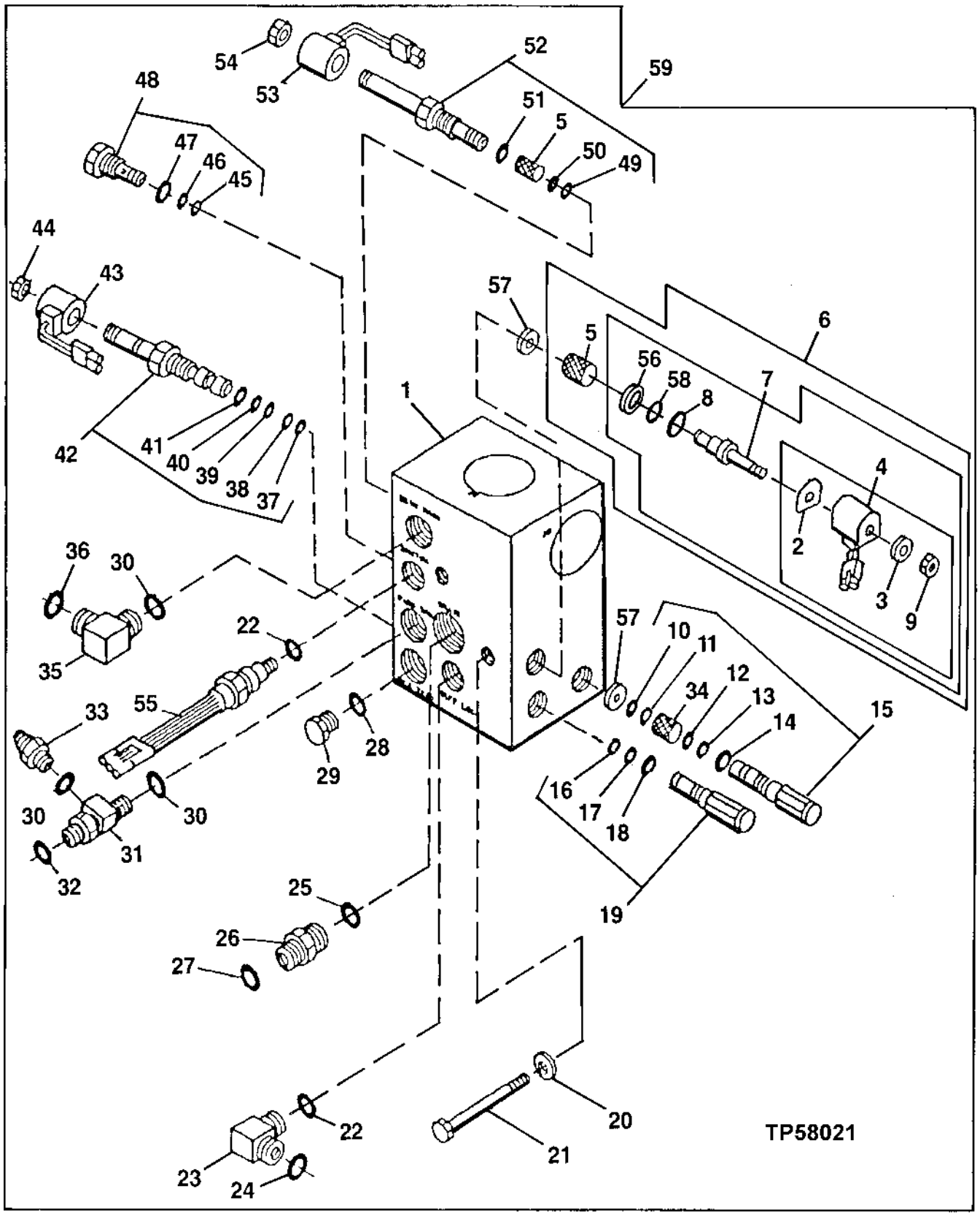

PARK BRAKE, DIFFERENTIAL LOCK VALVE
(SERIAL NO. -872328)

KEY	PART NO.	PART NAME	QTY	SERIAL NO.	REMARKS
1	.....	HOUSING	1		
2	.....	PLATE	1		(ORDER AT139434)
3	.....	WASHER	1		(ORDER AT139434)
4	AT147011	SOLENOID	1		
	AT139434	KIT	1		COVER
5	T147956	SCREEN	2		
6	AT164451	SOLENOID VALVE	1		(PARK BRAKE)
7	RE32530	SOLENOID VALVE	1		
8	R26375	O-RING	1		
9	.....	NUT	1		(ORDER AT139434)
10	R28776	O-RING	1		
11	R42926	BACK-UP RING	1		
12	R33259	O-RING	1		
13	T81247	BACK-UP RING	1		
14	R47151	O-RING	1		
15	AT162873	RELIEF VALVE	1		
16	R28776	O-RING	1		
17	R42926	BACK-UP RING	1		
18	R47151	O-RING	1		
19	AT162748	RELIEF VALVE	1		
20	24M7239	WASHER	2		10.700 X 21 X 2.500 MM
21	19M8166	CAP SCREW	2		M10 X 110
22	R28782	O-RING	2		
23	38H1003	ELBOW FITTING	1		
24	T77814	O-RING	1		
25	R26375	O-RING	1		
26	38H1161	ADAPTER	1		
27	T77857	O-RING	1		
28	R26448	O-RING	2		
29	R27218	FITTING PLUG	2		
30	R26448	O-RING	3		
31	AT171587	TEE FITTING	1		
32	T77814	O-RING	1		
33	AT171890	VALVE	1		
34	T148791	SCREEN	1		
35	38H1004	ELBOW FITTING	1		
36	T77613	O-RING	1		
37	T40308	O-RING	1		
38	T57374	BACK-UP RING	1		
39	T81247	BACK-UP RING	1		
40	R33259	O-RING	1		
41	R47151	O-RING	1		
42	AT139432	VALVE	1		
43	AT147011	SOLENOID	1		(ALSO ORDER R78054 AND R78064) (DIFFERENTIAL LOCK)
44	AT139434	KIT	1		
45	T148802	BACK-UP RING	1		
46	T148801	O-RING	1		
47	R26375	O-RING	1		
48	AT162749	CHECK VALVE	1		
49	R28776	O-RING	1		
50	R42926	BACK-UP RING	1		
51	R47151	O-RING	1		
52	AT162750	SOLENOID VALVE	1		
53	AT147011	SOLENOID	1		(PARK BRAKE)
54	AT139434	KIT	1		
55	AT150024	SWITCH	1		PARK BRAKE LIGHT SWITCH
56	T40308	O-RING	1		
57	T147761	ORIFICE	2		
58	T57374	BACK-UP RING	1		
59	AT157251	VALVE	1		

DIFFERENTIAL LOCK HYDRAULIC LINES
(SERIAL NO. -872328)

TP44079 -UN-01JAN94

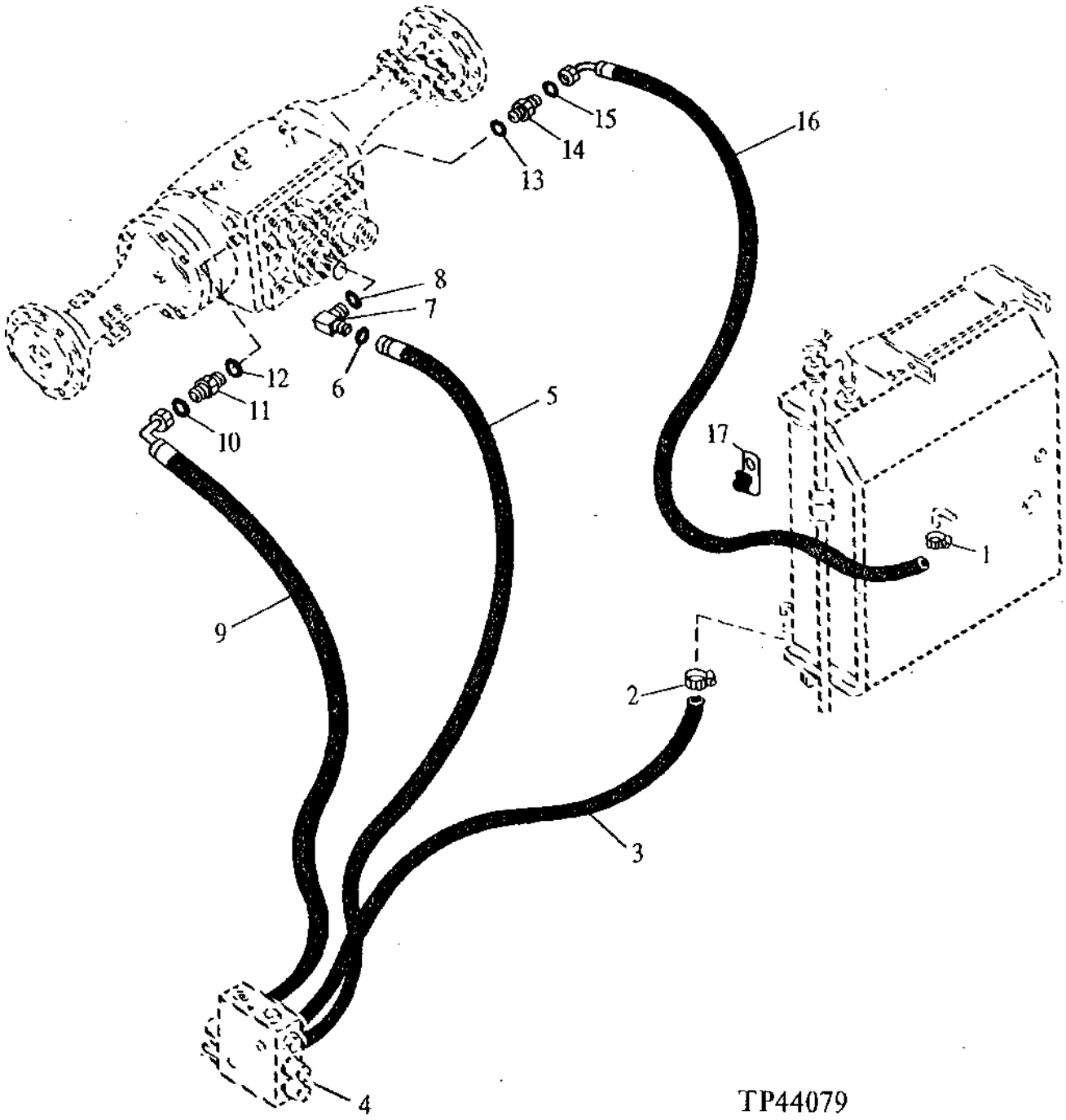

DIFFERENTIAL LOCK HYDRAULIC LINES
(SERIAL NO. -872328)

KEY	PART NO.	PART NAME	QTY	SERIAL NO.	REMARKS
1	TY22462	CLAMP	1		(SUB FOR AR48236)
2	AR21836	CLAMP	1		
3	AT160569	HYDRAULIC HOSE - FABRICATE	1		
4	AT157251	VALVE	1		
5	AT173544	HYDRAULIC HOSE - FABRICATE	1		9/16" X 330 MM (13") X 9/16", (SUB FOR AT160566)
6	T77814	O-RING	1		
7	38H1003	ELBOW FITTING	1		
8	R28782	O-RING	1		
9	AT161221	HYDRAULIC HOSE - FABRICATE	1		9/16" X 400 MM (15-3/4") X 9/16"
10	T77814	O-RING	1		
11	38H1445	ADAPTER	1		
12	R26375	O-RING	1		
13	R26906	O-RING	1		
14	38H1172	ADAPTER	1		
15	T77613	O-RING	1		
16	AT160568	HYDRAULIC HOSE - FABRICATE	1		
17	AH89557	CLIP	1		

BOOM SERCICE LOCK BAR
(SERIAL NO. -807902)

TP50363 -UN-12SEP95

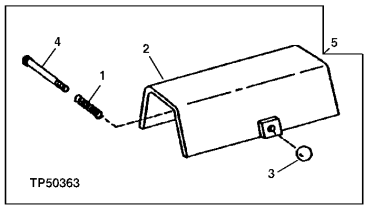

KEY	PART NO.	PART NAME	QTY	SERIAL NO.	REMARKS
1	T41597	SPRING	1		
2	.....	BAR	1		(SUB AT40571)
3	M526T	KNOB	1		
4	T41596	BOLT	1		
5	AT40571	BAR	1		

MEMORANDA

LIFT ARM SERVICE LOCK
(SERIAL NO. 807903-)

TP50590 -UN-13MAR97

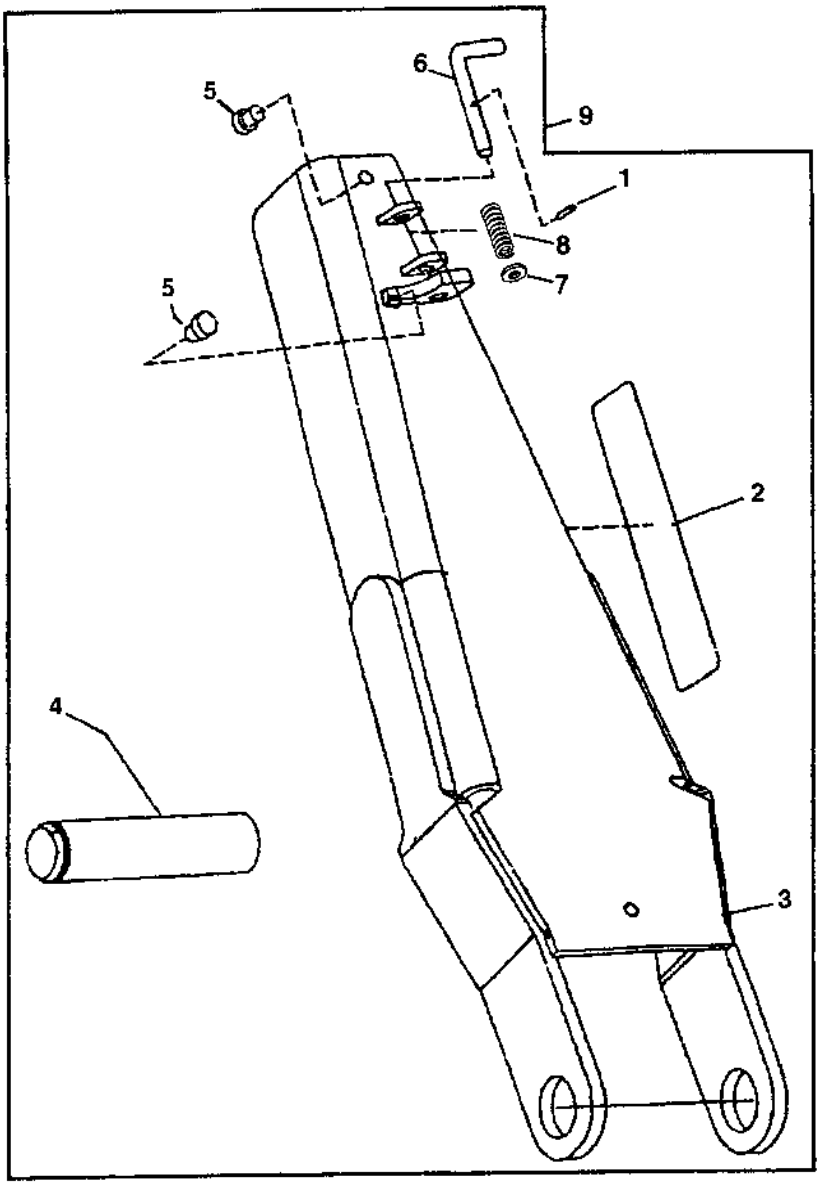

TP50590

LIFT ARM SERVICE LOCK
(SERIAL NO. 807903-)

KEY	PART NO.	PART NAME	QTY	SERIAL NO.	REMARKS
1	34H264	SPRING PIN	1		
2	T152442	LABEL	1		
3	AT171213	ARM	1		
4	T153866	PIN	1		
5	T154364	BUMPER	1		(SUB FOR T14083, THIS APPLICATION)
6	T152392	PIN	1		
7	24M7240	WASHER	1		13 X 25 X 3 MM
8	R26908	SPRING	1		
9	**AT169626**	**ARM**	**1**		**LOADER ARM SERVICE LOCK KIT**

DECALS AND LABELS

TP58004 -UN-09FEB99

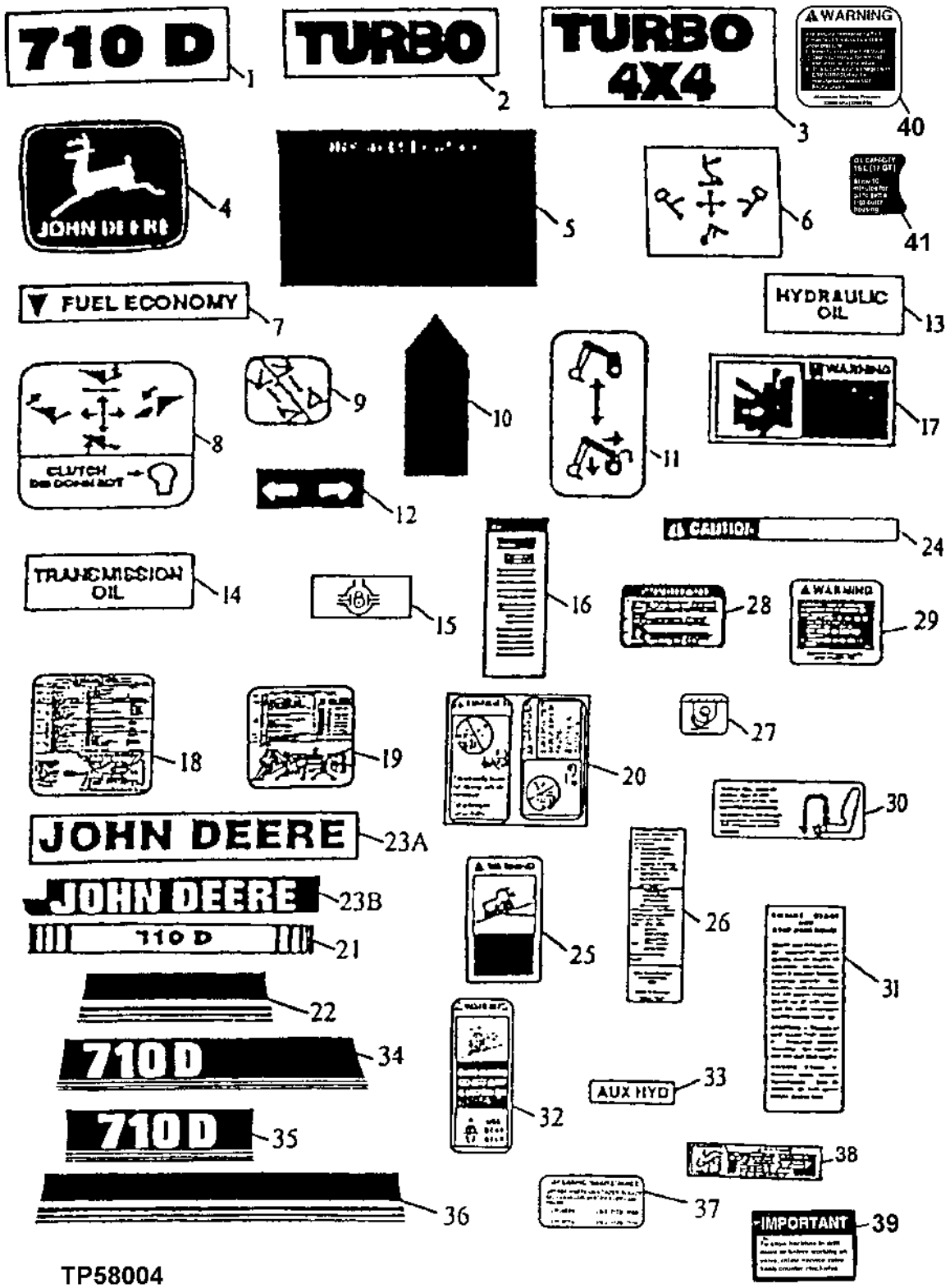

DECALS AND LABELS

KEY	PART NO.	PART NAME	QTY	SERIAL NO.	REMARKS
1	T146397	LABEL	1		MODEL DESIGNATION
2	T146414	LABEL	1		TURBO
3	T146415	LABEL	1		TURBO MFWD
4	JD5626	LABEL	1		LEAPING DEER, BACKHOE BOOM
	T160538	LABEL	1		LEAPING DEER, SIDE WINDOW
	JD5621	LABEL	1		LEAPING DEER, KICK PANEL
5	R56902	LABEL	AR		DRY AIR CLEANER
6	T100195	LABEL	1		BACKHOE CONTROL
	T100196	LABEL	1		BACKHOE CONTROL
7	T120259	LABEL	1		FUEL ECONOMY
8	T134782	LABEL	1		LOADER CONTROL
	T134785	LABEL	1		LOADER CONTROL - 3 FUNCTION
9	T134805	LABEL	1		STABILIZER CONTROL
10	T139806	LABEL	1		BUCKET LEVEL INDICATOR
11	T139810	LABEL	1		BOOM LOCK
12	T140133	LABEL	1		TURN SIGNAL
13	T140283	LABEL	1		HYDRAULIC OIL
14	T140311	LABEL	1		TRANSMISSION OIL
15	T145975	LABEL	1		DIFFERENTIAL LOCK
16	T146080	LABEL	1		CAUTION, SAFETY
17	T146081	SERVICE SCHOOL APPVL SEAL	1		WARNING
18	T164839	LABEL	1	-872328	PERIODIC MAINTENANCE (USE WITH T163576) (SUB FOR T158377 AND T163573)
	T185080	LABEL	1	872329-	(SUB FOR T166333)
19	T184479	LABEL	1		GREASING MAINTENANCE, (SUB FOR T148150, T163576 AND T164840)
20	T146102	LABEL	1		BYPASS START
21	T146394	LABEL	2	-796854	HOOD STRIPE
22	T146394	LABEL	1	-796854	HOOD DOOR
23A	T146398	LABEL	2	-796854	JOHN DEERE
23B	T150339	LABEL	2	796855-	JOHN DEERE
24	T146715	SAFETY SIGN	1		BUCKET LINKAGE STRAPPING CAUTION (WITHOUT BUCKET)
25	T159028	LABEL	1		PARK BRAKE, (SUB FOR T146435)
26	T135572	LABEL	1		ROPS
27	T153680	LABEL	4		LIFT ON TUBE, (SUB FOR T32270, THIS APPLICATION)
28	T145560	LABEL	1		RECEIVER/DRYER
29	T146431	SAFETY SIGN	1	-872328	ACCUMULATOR
	T155572	SAFETY SIGN	1	872329-	ACCUMULATOR
30	T135642	LABEL	1	-815114	SEAT ADJUSTING
31	T131938	LABEL	1		ENGINE START AND STOP
32	T146097	LABEL	1		WARNING, SEAT BELT
33	T149199	LABEL	1		AUXILIARY HYDRAULICS
34	T150341	LABEL	1	796855-	HOOD STRIPE L.H.
35	T150340	LABEL	1	796855-	HOOD DOOR
36	T146394	LABEL	1	796855-	HOOD STRIPE R.H.
37	T152845	LABEL	1	799380-	
38	T152442	LABEL	1		BOOM LOCK
39	T157549	LABEL	1		SERVICE VALVE
40	T155572	SAFETY SIGN	1		ACCUMULATOR WARNING
41	T164999	LABEL	1		AXLE OIL LEVEL

DECALS AND LABEL, FRENCH AND SPANISH

TP69504 -UN-19MAY00

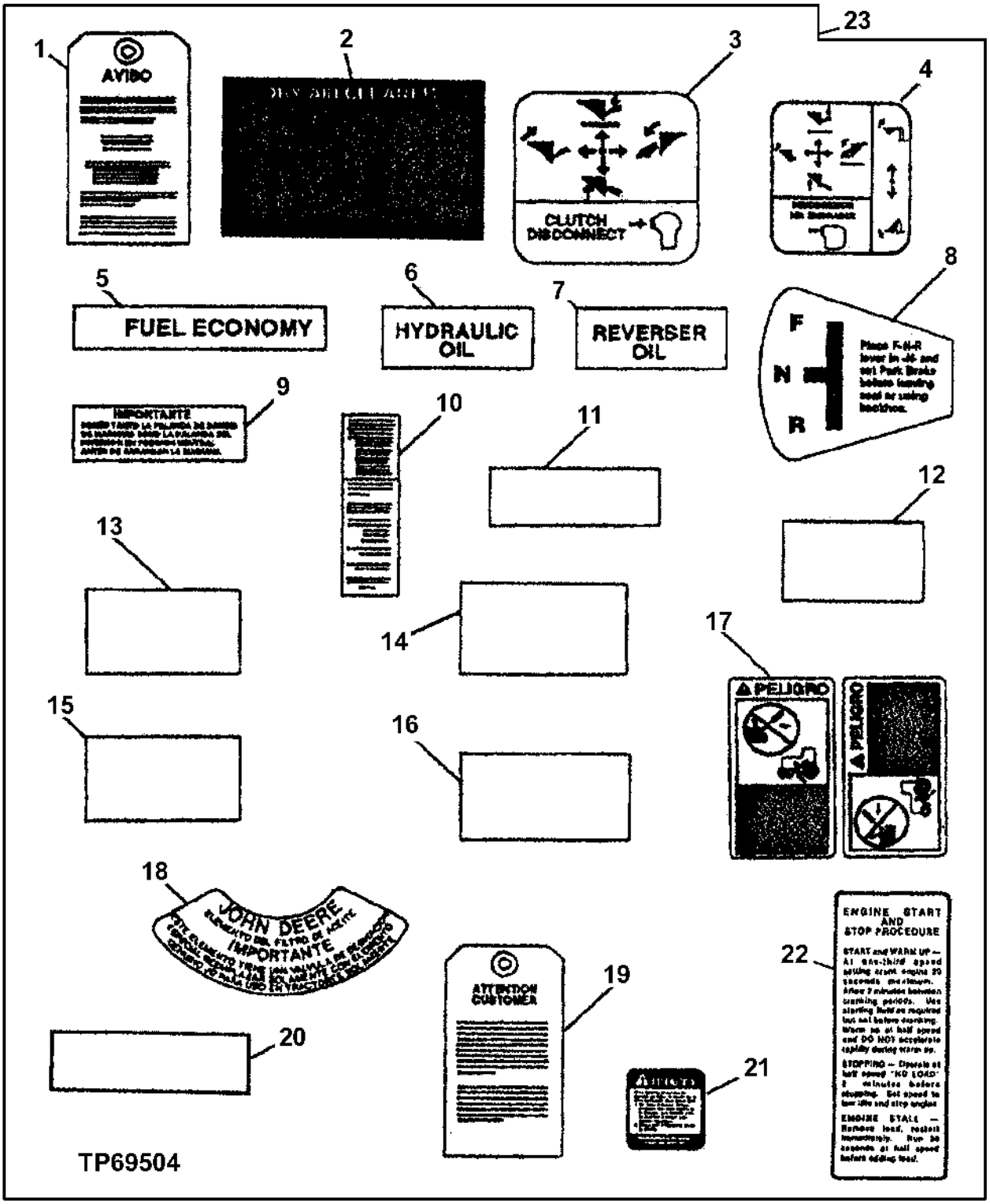

DECALS AND LABEL, FRENCH AND SPANISH

KEY	PART NO.	PART NAME	QTY	SERIAL NO.	REMARKS
1	.....	TAG	1		(A) (B) INSTRUCTION
2	R56903	LABEL	AR		(A) DRY AIR CLEANER
	CD14148	LABEL	AR		(B) DRY AIR CLEANER
3	.....	LABEL	1		(A) (B) LOADER CONTROL AND CLUTCH DISCONNECT
4	.....	LABEL	1		(A) (B) LOADER CONTROL AND CLUTCH DISCONNECT
5	.....	LABEL	1		(A) (B) FUEL ECONOMY
6	.....	LABEL	1		(A) (B) HYDRAULIC OIL
7	.....	LABEL	1		(A) (B) REVERSER OIL
8	.....	LABEL	1		(A) (B) DIRECTION CONTROL SWITCH
9	.....	LABEL	1		(A) (B) IMPORTANT
10	.....	LABEL	1		(A) (B) ROPS
11	T145975	LABEL	1		(A) (B)
12	.....	LABEL	1		(A) WARNING
	T146497	SAFETY SIGN	1		(B) WARNING
13	.....	LABEL	1		(A) CAUTION SAFETY
14	T155579	SAFETY SIGN	1		(A) ACCUMULATOR WARNING
15	.....	LABEL	1		(A) PERIODIC MAINTENANCE (T147140 - USE IF AVAILABLE)
	.....	LABEL	1		(B) PERIODIC MAINTENANCE (T147136 - USE IF AVAILABLE)
	.....	LABEL	1		(A) PERIODIC MAINTENANCE
	.....	LABEL	1		(B) PERIODIC MAINTENANCE
	.....	LABEL	1		(A) PERIODIC GREASING
	.....	LABEL	1		(B) PERIODIC GREASING
	T158376	LABEL	1		(A) PERIODIC MAINTENANCE, (SUB FOR AT151356, THIS APPLICATION)
	T158380	LABEL	1		(B) PERIODIC MAINTENANCE, (SUB FOR AT151362, THIS APPLICATION)
16	T146098	SAFETY SIGN	1		(A) WARNING SEAT BELT
	T146099	SAFETY SIGN	1		(B) WARNING SEAT BELT
17	T146106	SAFETY SIGN	1		(A) BY-PASS
	T146104	SAFETY SIGN	1		(B) BY-PASS
18	.....	DECAL	1		(A) OIL FILTER ELEMENT
	CD12569	DECAL	1		(B) OIL FILTER ELEMENT
19	.....	TAG	1		(A) (B) FACTORY FILL ENGINE OIL FILL
20	T160769	SAFETY SIGN	1		(A) PARK BRAKE, (SUB FOR T146101)
	T160762	LABEL	1		(B) PARK BRAKE
21	T146507	SAFETY SIGN	1		(A) ACCUMULATOR
	T146500	SAFETY SIGN	1		(B) ACCUMULATOR
22	T139167	LABEL	1		(A) ENGINE START AND STOP
	T139165	LABEL	1		(B) ENGINE START AND STOP
23	AT191912	KIT	1	-872328	(SPANISH LANGUAGE KIT) IMPORTANT: MUST ALSO ORDER TRANSLATED OPERATOR'S MANUAL THROUGH YOUR AUTHORIZED DEALER. (INCLUDES ALL (A) PARTS) (SUB FOR AT184282)
	AT191320	KIT	1	872329-	(SPANISH LANGUAGE KIT) IMPORTANT: MUST ALSO ORDER TRANSLATED OPERATOR'S MANUAL THROUGH YOUR AUTHORIZED DEALER. (INCLUDES ALL (A) PARTS) (SUB FOR AT186310)
	AT191914	KIT	1	-872328	(FRENCH LANGUAGE KIT) IMPORTANT: MUST ALSO ORDER TRANSLATED OPERATOR'S MANUAL THROUGH YOUR AUTHORIZED DEALER. (INCLUDES ALL (B) PARTS) (SUB FOR AT184283)
	AT191321	KIT	1	872329-	(FRENCH LANGUAGE KIT) IMPORTANT: MUST ALSO ORDER TRANSLATED OPERATOR'S MANUAL THROUGH YOUR AUTHORIZED DEALER. (INCLUDES ALL (B) PARTS) (SUB FOR AT186311)

MEMORANDA

AIR CONDITIONER O-RING REPAIR KIT
(PARTS LISTED BELOW ARE NOT ILLUSTRATED)

KEY	PART NO.	PART NAME	QTY	SERIAL NO.	REMARKS
..	32240	O-RING	5		21.895 X 2.616 MM (0.862" X 0.103")
..	B15646	O-RING	10		26.695 X 1.778 MM (1.051" X 0.070")
..	P50883	RING	10		17.170 X 1.778 MM (0.676" X 0.070")
..	P51212	O-RING	10		10.820 X 1.778 MM (0.426" X 0.070")
..	R10093	O-RING	15		7.645 X 1.778 MM (0.301" X 0.070")
..	R33259	O-RING	10		13.995 X 1.778 MM (0.551" X 0.070")
..	R34812	O-RING	10		3.683 X 1.778 MM (0.145" X 0.070")
..	R47235	O-RING	10		20.218 X 3.531 MM (0.796" X 0.139")
..	.....	O-RING KIT	1		AT66632 NO LONGER AVAILABLE SUB TY15939

REPLACEMENT AIR CONDITIONER O-RING REPAIR KIT
(PART LISTED BELOW IS NOT ILLUSTRATED)

KEY	PART NO.	PART NAME	QTY	SERIAL NO.	REMARKS
..	A3917R	O-RING	20		9.246 X 1.778 MM (0.364" X 0.070")
..	A4365R	O-RING	20		6.071 X 1.778 MM (0.239" X 0.070")
..	R10093	O-RING	30		7.645 X 1.778 MM (0.301" X 0.070")
..	R27166	O-RING	20		15.596 X 1.778 MM (0.614" X 0.070")
..	R28776	O-RING	10		12.421 X 1.778 MM (0.489" X 0.070")
..	R33259	O-RING	20		13.995 X 1.778 MM (0.551" X 0.070")
..	R394R	O-RING	20		12.370 X 2.616 MM (0.487" X 0.103")
..	R74210	O-RING	20		20.218 X 3.531 MM (0.796" X 0.139")
..	R113050	O-RING	20		10.820 X 1.778 MM (0.426" X 0.070")
..	T143166	O-RING	20		26.695 X 1.778 MM (1.051" X 0.070")
..	T143167	O-RING	20		3.683 X 1.778 MM (0.145" X 0.070")
..	T143169	O-RING	20		17.170 X 1.778 MM (0.676" X 0.070")
..	T57247	O-RING	10		21.895 X 2.616 MM (0.862" X 0.103")
..	TY15939	O-RING KIT	1		

SILICONE RUBBER ADHESIVE

KEY	PART NO.	PART NAME	QTY	SERIAL NO.	REMARKS
..	TY15130	SEALANT	1		

LOCTITE SERVICE KIT
(PARTS LISTED BELOW ARE NOT ILLUSTRATED)

KEY	PART NO.	PART NAME	QTY	SERIAL NO.	REMARKS
..	TY16285	PRIMER	1		(SUB FOR TY6305)
..	T43512	SEALANT	1		LOCTITE
..	T43513	SEALANT	1		
..	T43514	GASKET	1		
..	T43515	ANTI-SEIZE COMPOUND	1		
..	AT42386	KIT	1		LOCTITE SERVICE (INCLUDES ALL PARTS ABOVE)

TORQ-GUARD SUPREME ENGINE OIL
(PARTS LISTED BELOW ARE NOT ILLUSTRATED)

KEY	PART NO.	PART NAME	QTY	SERIAL NO.	REMARKS
..	AR63980	OIL	1		237 ML (8 OZ.) CAN (SAE 5W/20)
..	AR63979	OIL	1		237 ML (8 OZ.) CAN (SAE 30)
..	AR63228	OIL	1		946 ML (QT.) CAN (SAE 5W/20)
..	AR63223	OIL	1		946 ML (QT.) CAN (SAE 10W/20)
..	AR63218	OIL	1		946 ML (QT.) CAN (SAE 30)
..	AR63229	OIL	1		18.9 L (5 GAL.) CAN (SAE 5W/20)
..	AR63224	OIL	1		18.9 L (5 GAL.) CAN (SAE 10W/20)
..	AR63219	OIL	1		18.9 L (5 GAL.) CAN (SAE 30)
..	AR63230	OIL	1		208.5 L (55 GAL.) DRUM (SAE 5W/20)
..	AR63227	OIL	1		208.5 L (55 GAL.) DRUM (SAE 10W/20)
..	AR63222	OIL	1		208.5 L (55 GAL.) DRUM (SAE 30)

AIR CONDITIONING COMPRESSOR LUBRICANT
(PART LISTED BELOW IS NOT ILLUSTRATED)

KEY	PART NO.	PART NAME	QTY	SERIAL NO.	REMARKS
..	TY22025	OIL	1		

O-RING KIT

TP1406 -UN-09NOV99

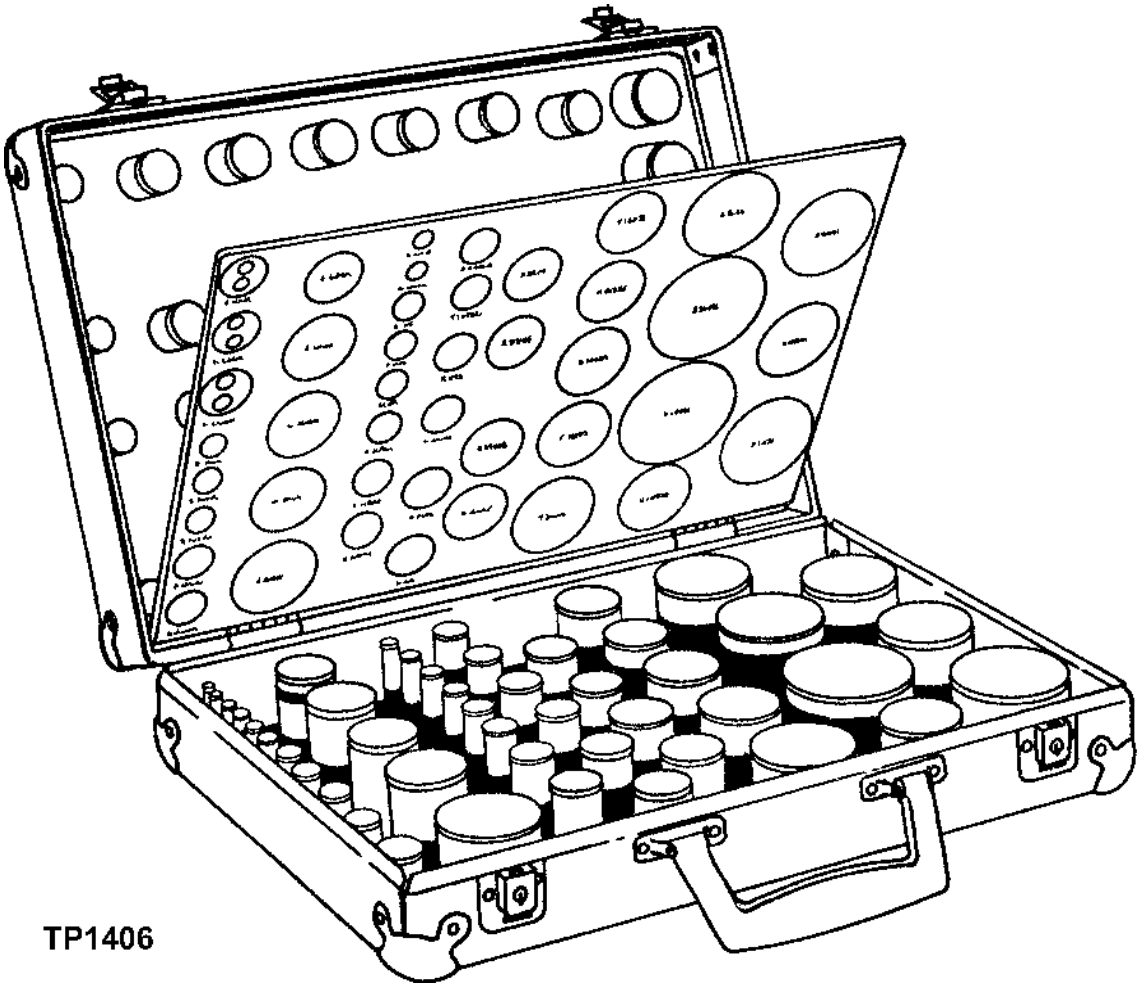

TP1406

O-RING KIT

KEY	PART NO.	PART NAME	QTY	SERIAL NO.	REMARKS
..	A3606R	O-RING	1		
..	A3917R	O-RING	1		
..	A4365R	O-RING	1		
..	A4730R	O-RING	1		
..	B2762R	O-RING	1		
..	B3690R	O-RING	1		
..	F1056R	O-RING	1		
..	F1870R	O-RING	1		
..	U12547	O-RING	1		
..	F3353R	O-RING	1		
..	H35244	RING	1		
..	T78313	O-RING	1		
..	M4237T	O-RING	1		
..	N131838	O-RING	1		
..	P46051	O-RING	1		
..	P48403	O-RING	1		
..	P50631	O-RING	1		
..	R375R	O-RING	1		
..	R394R	O-RING	1		
..	R459R	O-RING	1		
..	R460R	O-RING	1		
..	R495R	O-RING	1		
..	R10093	O-RING	1		
..	R26286	O-RING	1		
..	R26287	O-RING	1		
..	R26375	O-RING	1		
..	R26448	O-RING	1		
..	R26773	O-RING	1		
..	R26863	O-RING	1		
..	R26906	O-RING	1		
..	R27166	O-RING	1		
..	R27928	O-RING	1		
..	R28776	O-RING	1		
..	R28782	O-RING	1		
..	R29463	O-RING	1		
..	R29936	O-RING	1		
..	R30903	O-RING	1		
..	R33259	O-RING	1		
..	R56461	O-RING	1		
..	R48638	O-RING	1		
..	R71732	O-RING	1		

O-RING KIT

TP1406 -UN-09NOV99

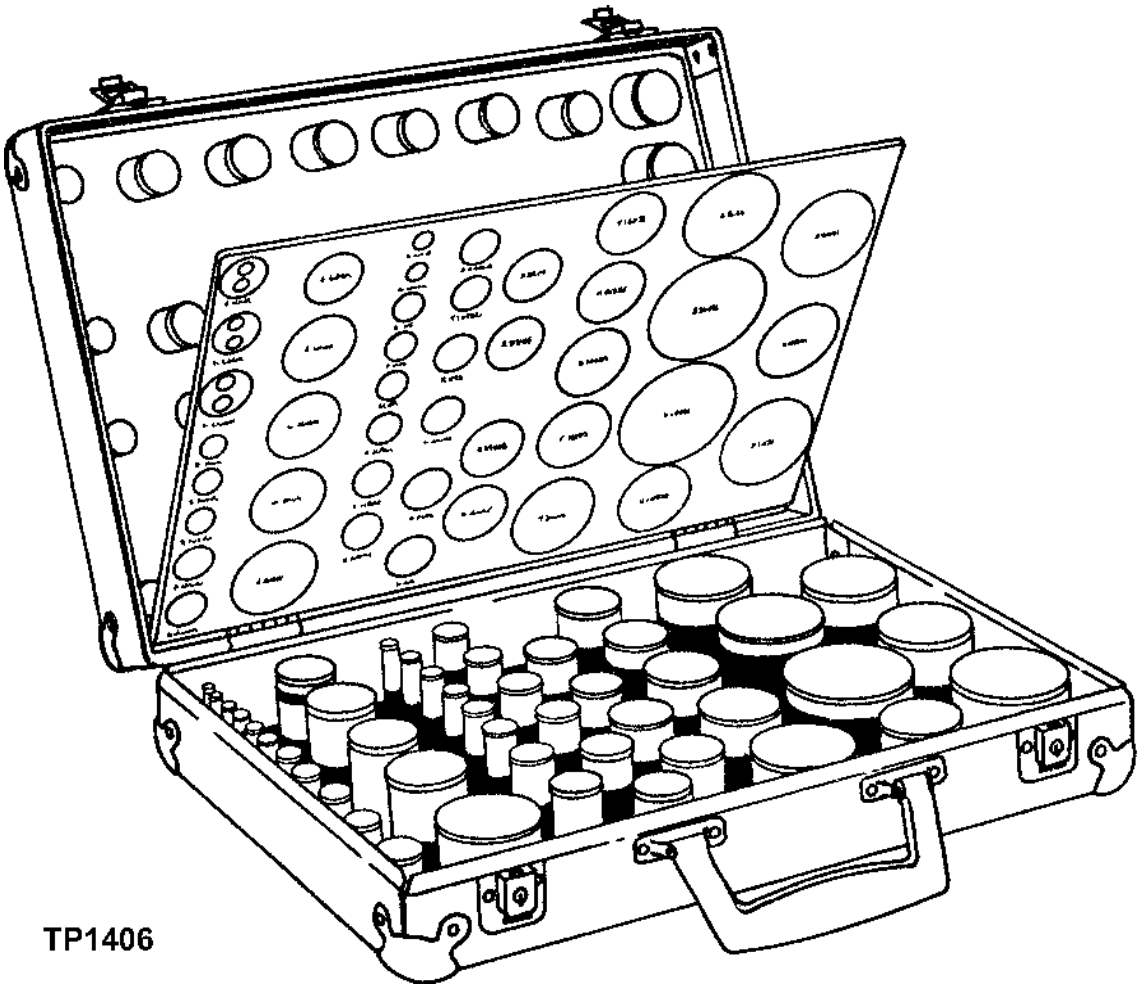

TP1406

O-RING KIT

KEY	PART NO.	PART NAME	QTY	SERIAL NO.	REMARKS
..	R53543	O-RING	1		
..	R56463	O-RING	1		
..	R56751	O-RING	1		
..	R60332	O-RING	1		
..	R80632	O-RING	1		
..	E52687	O-RING	1		
..	T13119	O-RING	1		
..	T16752	O-RING	1		
..	T19687	O-RING	1		
..	R112857	O-RING	1		
..	T25335	O-RING	1		
..	T34248	O-RING	1		
..	U10289	O-RING	1		
..	U10746	O-RING	1		
..	U10776	O-RING	1		
..	U11326	O-RING	1		
..	U11343	O-RING	1		
..	U12037	O-RING	1		
..	U12198	O-RING	1		
..	R86192	O-RING	1		
..	U12547	O-RING	1		
..	U13639	O-RING	1		
..	U15415	O-RING	1		
..	U15973	O-RING	1		
..	U17409	O-RING	1		
..	U42111	O-RING	1		
..	AT130208	O-RING KIT	1		(CONTAINS CARRYING CASE AND FIVE OF EACH O-RING LISTED ABOVE)

ENGINE VALVE STEM LUBRICANT
(NOT ILLUSTRATED)

KEY	PART NO.	PART NAME	QTY	SERIAL NO.	REMARKS
..	AR44402	OIL	1		ENGINE VALVE STEM 0.95 L (1 QT.) CAN

KIT FOR OFF-SEASON STORAGE
(NOT ILLUSTRATED)

KEY	PART NO.	PART NAME	QTY	SERIAL NO.	REMARKS
..	AR41785	KIT	1		FOR ENGINE POWERED EQUIPMENT. THIS KIT CONTAINS 0.95 L (1 QT.) CAN OF INTERNAL CORROSION INHIBITOR, 1 ROLL OF TAPE AND 6 PLASTIC BAGS.

COOLANT CONDITIONER
(NOT ILLUSTRATED)

KEY	PART NO.	PART NAME	QTY	SERIAL NO.	REMARKS
..	RE12842	COOLANT	1		.91 KG (42 OZ.)
..	TY16004	ENGINE COOLANT CONDITIONER	1		16 OZ. (NOT ILLUSTRATED)
..	TY16005	ENGINE COOLANT CONDITIONER	1		1/2 GAL. (NOT ILLUSTRATED)

CYLINDER LINER PACKING LUBRICANT
(NOT ILLUSTRATED)

KEY	PART NO.	PART NAME	QTY	SERIAL NO.	REMARKS
..	AR54749	LUBRICANT	1		0.95 L (1 QT.) CAN

SPECIAL DIGMOR DIPPERSTICK LUBRICANT
(NOT ILLUSTRATED)

KEY	PART NO.	PART NAME	QTY	SERIAL NO.	REMARKS
..	AT56125	LUBRICANT	1		.454 KG (1 LB.) SPRAY CAN
..	AT56125	LUBRICANT	1		(USE IF AVAILABLE) .946 ML (1 QT) CAN (BRUSH ON)

FLAT FACE O-RING SEAL FITTINGS
(NOT ILLUSTRATED)

KEY	PART NO.	PART NAME	QTY	SERIAL NO.	REMARKS
1	38H1414	FITTING PLUG	1		(F) (SIZE -4) O-RING REQUIRED T77814
2	38H1145	FITTING PLUG	1		(M) (SIZE -4) O-RING REQUIRED T77814
3	38H1415	FITTING PLUG	1		(F) (SIZE -6) O-RING REQUIRED T77613
4	38H1146	FITTING PLUG	1		(M) (SIZE -6) O-RING REQUIRED T77613
5	38H1416	FITTING PLUG	1		(F) (SIZE -8) O-RING REQUIRED T77857
6	38H1147	FITTING PLUG	1		(M) (SIZE -8) O-RING REQUIRED T77857
7	38H1417	FITTING PLUG	1		(F) (SIZE -10) O-RING REQUIRED T77932
8	38H1148	FITTING PLUG	1		(M) (SIZE -10) O-RING REQUIRED T77932
10	38H1149	FITTING PLUG	1		(M) (SIZE -12) O-RING REQUIRED T77858
12	38H1150	FITTING PLUG	1		(M) (SIZE -16) O-RING REQUIRED T76938
13	38H1420	FITTING PLUG	1		(F) (SIZE -20) O-RING REQUIRED T78612
14	38H1151	FITTING PLUG	1		(M) (SIZE -20) O-RING REQUIRED T78612
15	38H1421	FITTING PLUG	1		(F) (SIZE -24) O-RING REQUIRED T78784
16	38H1186	FITTING PLUG	1		(M) (SIZE -24) O-RING REQUIRED T78784

(F) - FEMALE

(M) - MALE

FLAT FACE O-RING SEAL KIT
(NOT ILLUSTRATED)

KEY	PART NO.	PART NAME	QTY	SERIAL NO.	REMARKS
1	T77814	O-RING	1		(SIZE -4) KIT O-RING QUANTITY 10
2	T77613	O-RING	1		(SIZE -6) KIT O-RING QUANTITY 12
3	T77857	O-RING	1		(SIZE -8) KIT O-RING QUANTITY 12
4	T77932	O-RING	1		(SIZE -10) KIT O-RING QUANTITY 12
5	T77858	O-RING	1		(SIZE -12) KIT O-RING QUANTITY 12
6	T76938	O-RING	1		(SIZE -16) KIT O-RING QUANTITY 12
7	T78612	O-RING	1		(SIZE -20) KIT O-RING QUANTITY 5
8	T78784	O-RING	1		(SIZE -24) KIT O-RING QUANTITY 5
9	AT85197	O-RING KIT	1		INCLUDES ALL O-RINGS LISTED 1-8

FLUID ANALYSIS PRODUCTS (OILSCAN PLUS TEST KIT)

T135474 -UN-15NOV00



T135474

FLUID ANALYSIS PRODUCTS (OILSCAN PLUS TEST KIT)

KEY	PART NO.	PART NAME	QTY	SERIAL NO.	REMARKS
1	AT178840	KIT	1		STANDARD ENGINE, SELF EXTRACTION (12 PER PACKAGE)(INCLUDES SPECTROCHEMICAL ANALYSIS, VISCOSITY, ° WATER, FUEL DILUTION, GLYCOL, FUEL SOOT) (SUB FOR AT178843)
	AT180333	KIT	1		STANDARD ENGINE, 4 OZ BOTTLE (10 PER PACKAGE) (SAME AS AT178840) (SUB FOR AT180335)
	AT178842	KIT	1		COMPREHENSIVE ENGINE W/TBN (EXTENDED DRAIN) (12 PER PACKAGE)(SAME AS AT178840 PLUS TBN)
	AT180334	KIT	1		COMPREHENSIVE ENGINE W/TBN (EXTENDED DRAIN) 4 OZ BOTTLE (10 PRT PACKAGE) (SAME AS AT178842)
	AT178844	KIT	1		COMPREHENSIVE HYDRAULIC & HYDROSTATIC SYSTEMS, 4 OZ BOTTLE (10 PER PACKAGE) (REQUIRES USE OF A SAMPLING VALVE FOR ACCURATE RESULTS)
	ISPKIT3	PUMP	1		OIL EXTRACTION (1 PER PACKAGE)(CAN BE USED WITH AT180333, AT180334, AND AT180335 KITS TO EXTRACT OIL SAMPLE)
	DSO345	TUBE	1		500'ROLL (USED WITH IPSKIT3 PUMP TO EXTRACT SAMPLE)
	DSO346	TUBE	1		100' ROLL (USED WITH IPSKIT3 PUMP TO EXTRACT SAMPLE)

FLUID ANALYSIS PRODUCTS (COOLSCAN PLUS TEST KIT)

T135475 -UN-15NOV00

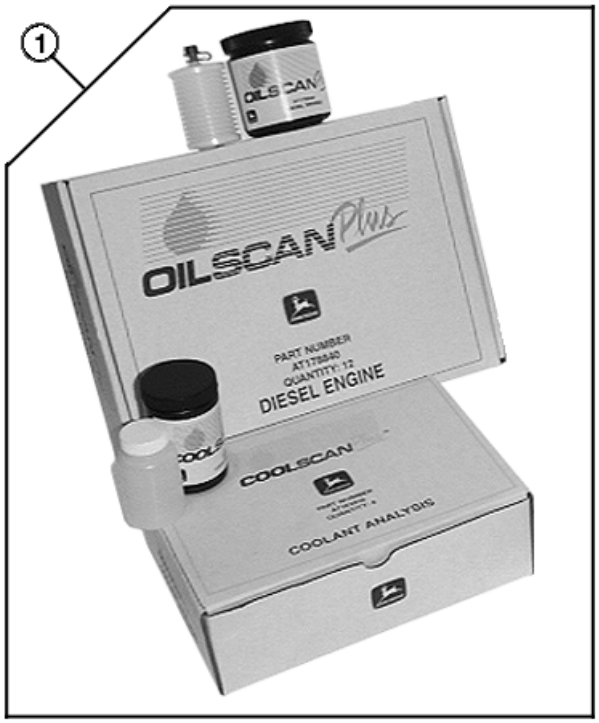

T135475

KEY	PART NO.	PART NAME	QTY	SERIAL NO.	REMARKS
1	AT183016	KIT	1		COOLANT ANALYSIS (6 PER PACKAGE)(TESTS FREEZE POINT, ° ANTIFREEZE, PH, RESERVE ALKALINITY, NITRITE, MOLYBDATE, SILICATE, VISUAL ASSESSMENT & CORROSION METALS (IRON, COPPER, ALUMINUM & LEAD))

FLUID ANALYSIS PRODUCTS (DIESELSCAN TEST KIT)

T135476 -UN-15NOV00



T135476

KEY	PART NO.	PART NAME	QTY	SERIAL NO.	REMARKS
1	AT180344	KIT	1		DIESEL ANALYSIS (6 PER PACKAGE)(USED TO VERIFY TYPE, SUITABILITY FOR COLD TEMPERATURE OPERATIONS, CLEANLINESS, WATER CONTENT AND IF FUEL IS WITHIN ASTM SPECIFICATIONS. CHECKS API GRAVITY, VISCOSITY AT 40C, SULFUR, CETANE INDEX, DISTILLATION, CLOUD POINT, POUR POINT AND COLD FILTER PLUGGING POINT.

FRONT AXLE AND STEERING CYLINDER LUBRICATION SYSTEM

TP50353 -UN-14JUN95

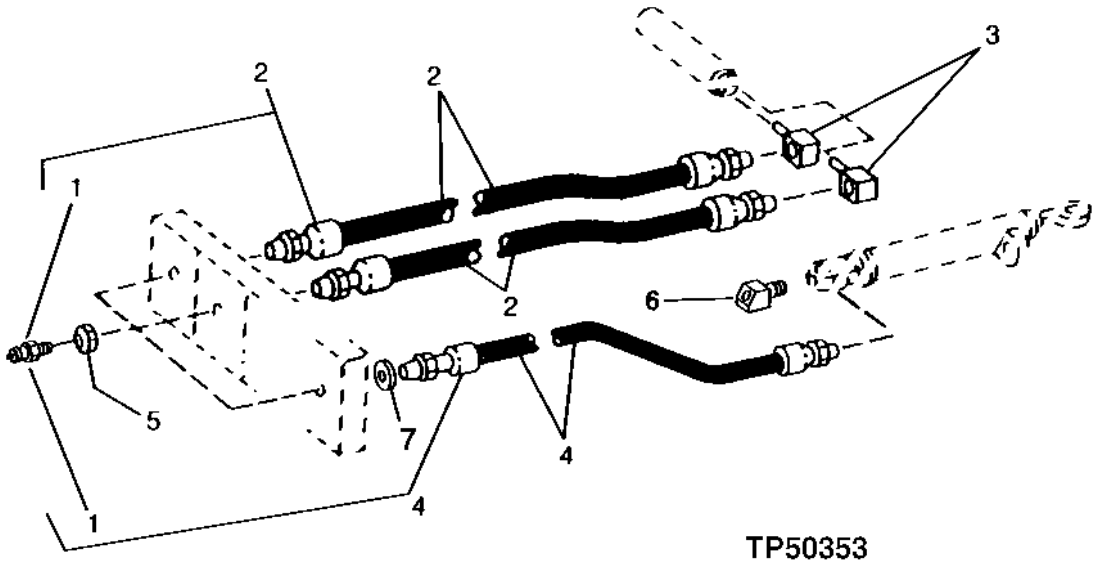

KEY	PART NO.	PART NAME	QTY	SERIAL NO.	REMARKS
1	JD7797	LUBRICATION FITTING	2		(WITHOUT MFWD)
	JD7797	LUBRICATION FITTING	3		(WITH MFWD)
2	AT173254	HYDRAULIC HOSE	2		1/8" X 454 MM (18") X 1/8", (SUB FOR AT114018) (ALSO ORDER 24H1302)
3	JD7838	ADAPTER	2		
4	AT114019	HYDRAULIC HOSE	1		1/8" X 572 MM (22-1/2") X 1/8", (WITHOUT MFWD)
5	E12379	NUT	3		3.175 MM (1/8") (WITHOUT MFWD)
	E12379	NUT	2		(WITH MFWD)
6	JD7801	LUBRICATION FITTING	1		(WITHOUT MFWD)
7	24H1302	WASHER	AR	810972-	13/32" X 11/16" X 0.035"

MACHINE FILTERS

TP48860 -UN-16OCT95

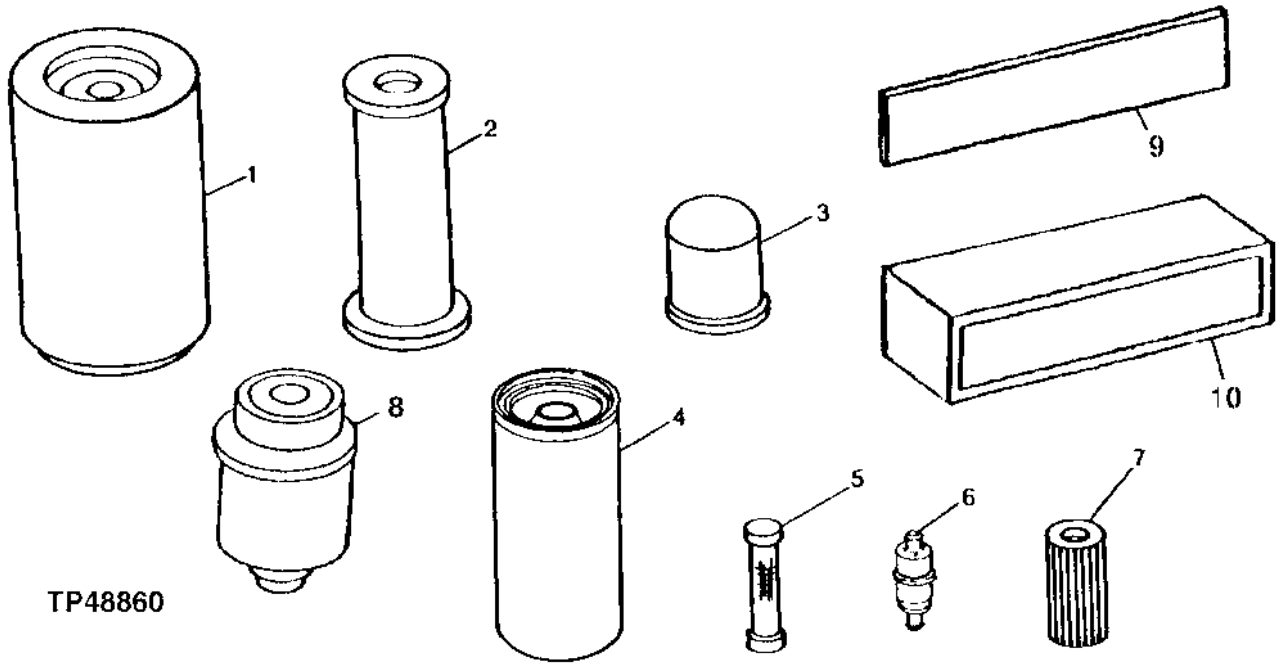

KEY	PART NO.	PART NAME	QTY	SERIAL NO.	REMARKS
1	AT39124	FILTER ELEMENT	1		PRIMARY AIR
2	AT31227	FILTER ELEMENT	1		SECONDARY AIR
3	T19044	OIL FILTER	1	-830204	ENGINE
	RE59754	OIL FILTER	1	830205-	ENGINE
	AT179323	OIL FILTER	1	872329-	TRANSMISSION
4	AT140315	FILTER ELEMENT	1		HYDRAULIC OIL
5	AR26375	SCREEN	1	-872328	TRANSMISSION CASE
6	AT101565	AIR FILTER	1		HYDRAULIC RESERVOIR
7	AT67960	FILTER ELEMENT	1	-872328	TRANSMISSION REVERSER
8	RE62419	FUEL FILTER	1		FUEL FILTER
9	T133239	AIR FILTER	1	-816286	RECIRCULATION
	T158848	AIR FILTER	1	816287-	RECIRCULATION
10	AT141209	AIR FILTER	1		FRESH AIR

DUAL BATTERY INSTALLATION

TP44457 -UN-01JAN94

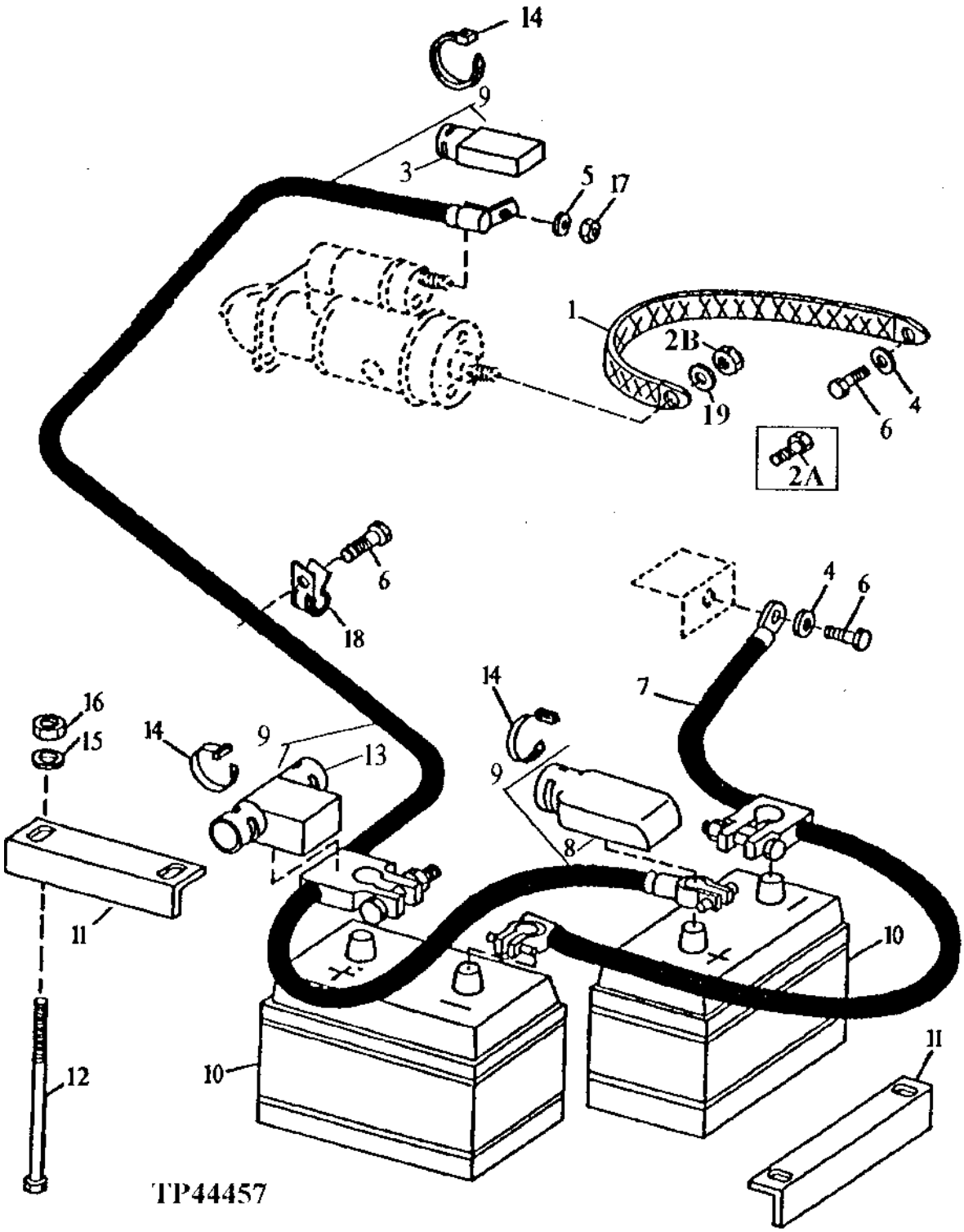

DUAL BATTERY INSTALLATION

KEY	PART NO.	PART NAME	QTY	SERIAL NO.	REMARKS
1	AT167399	GROUND CABLE	1		(ENGINE TO FRAME) (SUB FOR AT100506)
2A	19H3649	CAP SCREW	1	-792958	
2B	14M7275	NUT	1	792959-	(SUB FOR 14H809 AND 14H1040)
3	T129165	BOOT	1		
4	24M7239	WASHER	2		10.700 X 21 X 2.500 MM
5	24M7047	WASHER	1		13 X 24 X 2.500 MM
6	19M7938	CAP SCREW	3		M10 X 20
7	AT174833	CABLE	1		NEGATIVE, (SUB FOR AT160999)
8	T107117	COVER	1		
9	AT161000	CABLE	1	-872328	POSITIVE
	AT184018	CABLE	1	872329-	POSITIVE
10	TY6127	DRY CHARGED BATTERY	2	-813880	320-MINUTE
	TY21766	DRY CHARGED BATTERY	2	813881-872328	300-MINUTE, (SUB FOR TY6127, THIS APPLICATION)
	TY6128	WET CHARGED BATTERY	2	872329-	
11	T121288	ANGLE	2		
12	03H2208	BOLT	4		1/4" X 9-1/4"
13	T107116	COVER	1		
14	R44302	TIE BAND	AR		
15	24H1288	WASHER	4		9/32" X 1" X 1/16"
16	M40333	LOCK NUT	4		1/4"
17	14M7275	NUT	1		
18	R46667	CLAMP	1	-872328	(SUB FOR T102934, THIS APPLICATION)
	T26955	CLAMP	1	872329-	
19	24M7047	WASHER	1	792959-	13 X 24 X 2.500 MM

ALTERNATOR AND ATTACHING PARTS
(SERIAL NO. -817881)

TP55171 -UN-08DEC98

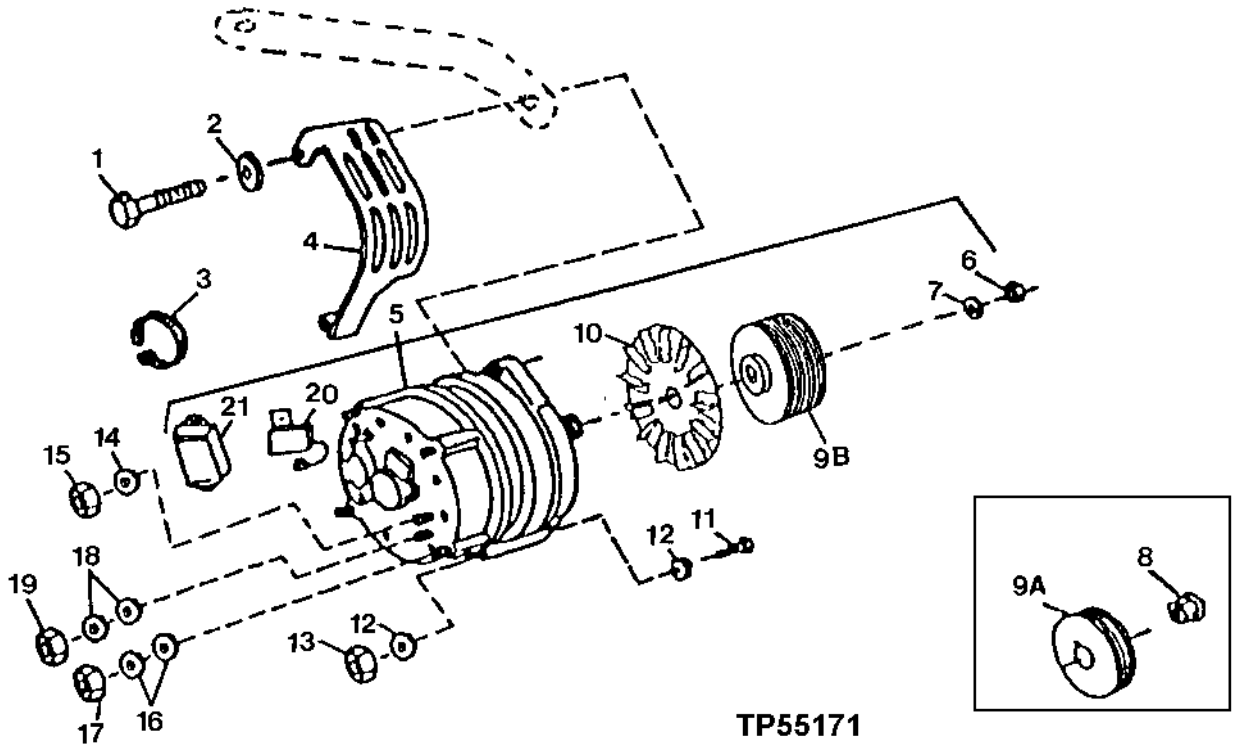

KEY	PART NO.	PART NAME	QTY	SERIAL NO.	REMARKS
1	19M7513	CAP SCREW	1		M8 X 30
2	24H1621	WASHER	1		11/32" X 1" X 0.220"
3	R44302	TIE BAND	1		
4	R122848	SHIELD	1		
5	AT220394	ALTERNATOR	1		12V/95A (CONVENIENCE ASSEMBLY) (BOSCH) (SUB FOR AT175194)
	TY24485	ALTERNATOR	1		12V/95A (REMANUFACTURED) (BOSCH) (SUB FOR TY6750)
6	14M7158	NUT	1		M16
7	T10745	WASHER	1		0.675" X 1.015" X 5/64"
8	R94351	BUSHING	1	-879092	
9A	R94350	SHEAVE	1	-879092	
9B	R501486	SHEAVE	1	879093-	
10	L33993	FAN	1		
11	19M8093	CAP SCREW	1		M10 X 100
12	24M7239	WASHER	1		10.700 X 21 X 2.500 MM
13	14M7274	NUT	1		M10
14	12H295	LOCK WASHER	1		0.190", (CONNECT TO D+ STUD)
	12H246	LOCK WASHER	1		0.190"
15	14M7297	NUT	1		M5, (CONNECT TO D+ STUD)
16	24H1283	WASHER	2		7/32" X 1/2" X 0.049"
17	14M7297	NUT	1		M5
18	24M7036	WASHER	2		9 X 16 X 1.600 MM, (CONNECT TO B+ STUD)
19	14M7273	NUT	1		M8, (CONNECT TO B+ STUD)
20	H144095	CAPACITOR	1		
21	H144094	VOLTAGE REGULATOR	1		

ALTERNATOR AND ATTACHING PARTS
(SERIAL NO. 817882-)

TP58074 -UN-02SEP99

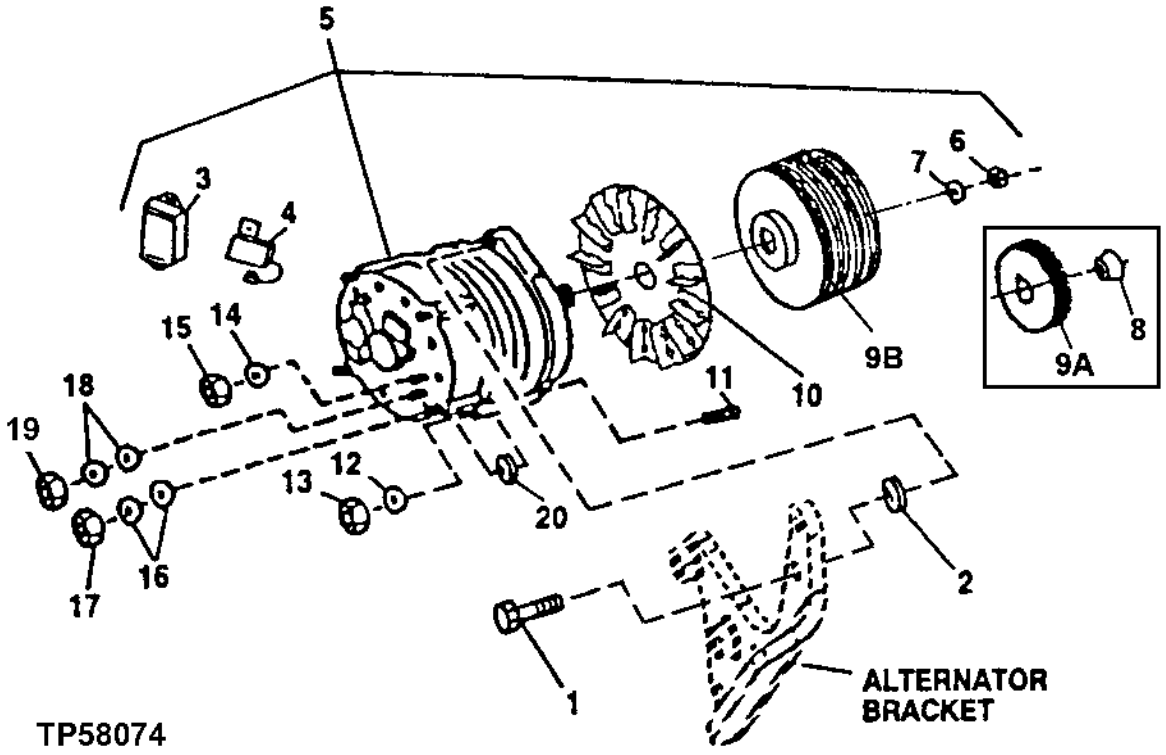

KEY	PART NO.	PART NAME	QTY	SERIAL NO.	REMARKS
1	19M7513	CAP SCREW	1		M8 X 30 65 AMP
2	R48808	WASHER	1		0.320" X 0.620" X 0.155", (SUB FOR 24H1621, THIS APPLICATION)
3	H144094	VOLTAGE REGULATOR	1		
4	H144095	CAPACITOR	1		
5	AT220393	ALTERNATOR	1		(NEW) (CONVENIENCE ASSEMBLY) (12V/65A) (BOSCH) (SUB FOR AT173624) (SUB TY6799)
	TY6799	ALTERNATOR	1		(12V/65A) (REMANUFACTURED) (BOSCH) (SUB FOR AT220393)
	AT220394	ALTERNATOR	1		(NEW) (12V/95A) (CONVENIENCE ASSEMBLY) (BOSCH) (SUB FOR AT175194) (SUB TY6750)
	TY24485	ALTERNATOR	1		(12V/95A) (REMANUFACTURED) (BOSCH) (SUB FOR AT220394)
6	14M7158	NUT	1		M16
7	T10745	WASHER	1		17.145 X 25.781 X 1.981 MM (0.675" X 1.015" X 5/64")
8	R94351	BUSHING	1	-879092	
9A	R94350	SHEAVE	1	-879092	
9B	R501486	SHEAVE	1	879093-	
10	T158584	FAN	1		
11	19M8093	CAP SCREW	1		M10 X 100
12	24M7239	WASHER	1		10.700 X 21 X 2.500 MM
13	14M7274	NUT	1		M10
14	12H295	LOCK WASHER	1		0.190"
15	14M7297	NUT	1		M5
16	24H1283	WASHER	2		7/32" X 1/2" X 0.049"
17	14M7297	NUT	1		M5
18	24M7036	WASHER	2		9 X 16 X 1.600 MM
19	14M7273	NUT	1		M8
20	R64525	WASHER	1		

MEMORANDA

ROTATING BEACON

TP58185 -UN-21MAR00

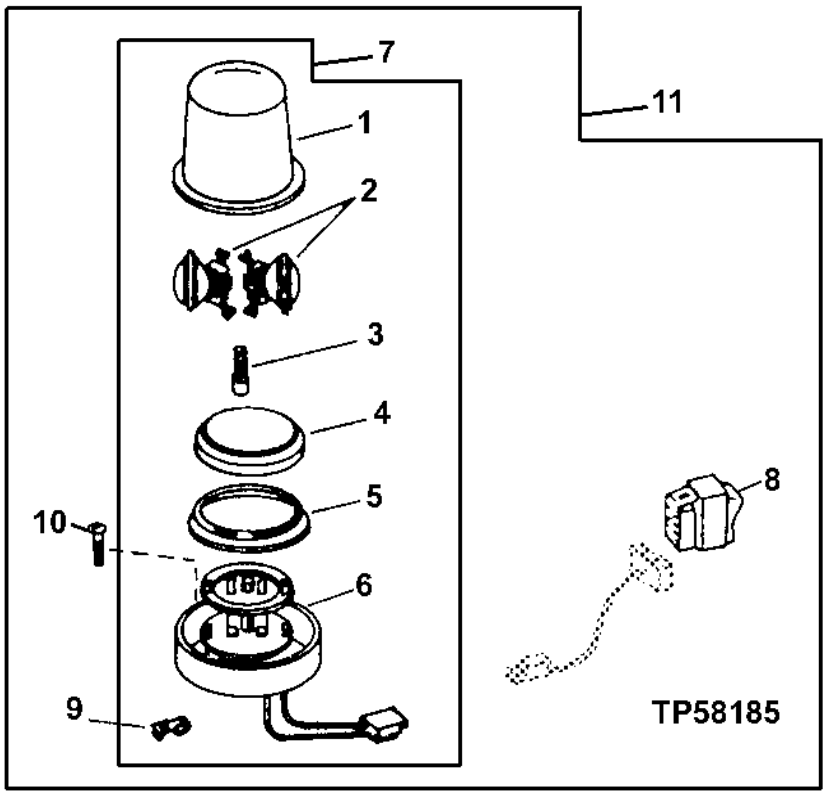

KEY	PART NO.	PART NAME	QTY	SERIAL NO.	REMARKS
1	T76607	LENS	1		
2	AH91124	LAMP	2		
3	T76609	BRUSH	1		
4	AT74938	RETAINER	1		
5	T76608	GASKET	1		
6	.....	MOTOR	1		
	.....	ISOLATOR	AR		(MAKE FROM T59937 BULK MATERIAL, CUT TO LENGTH)
7	AT74936	LAMP	1		
8	AT140957	ROCKER SWITCH	1	-872328	
	AT175603	ROCKER SWITCH	1	872329-	
	57M7102	BULB	1		
9	T76610	NUT	3		
10	19H1914	CAP SCREW	3		1/4" X 1"
11	**AT176827**	**LAMP**	**1**		**(SUB FOR AT141489) (USE WITH CAB OR ROPS)**

**FRONT AND REAR LIGHTS
(WITH CAB)**

TP44467 -UN-01JAN94

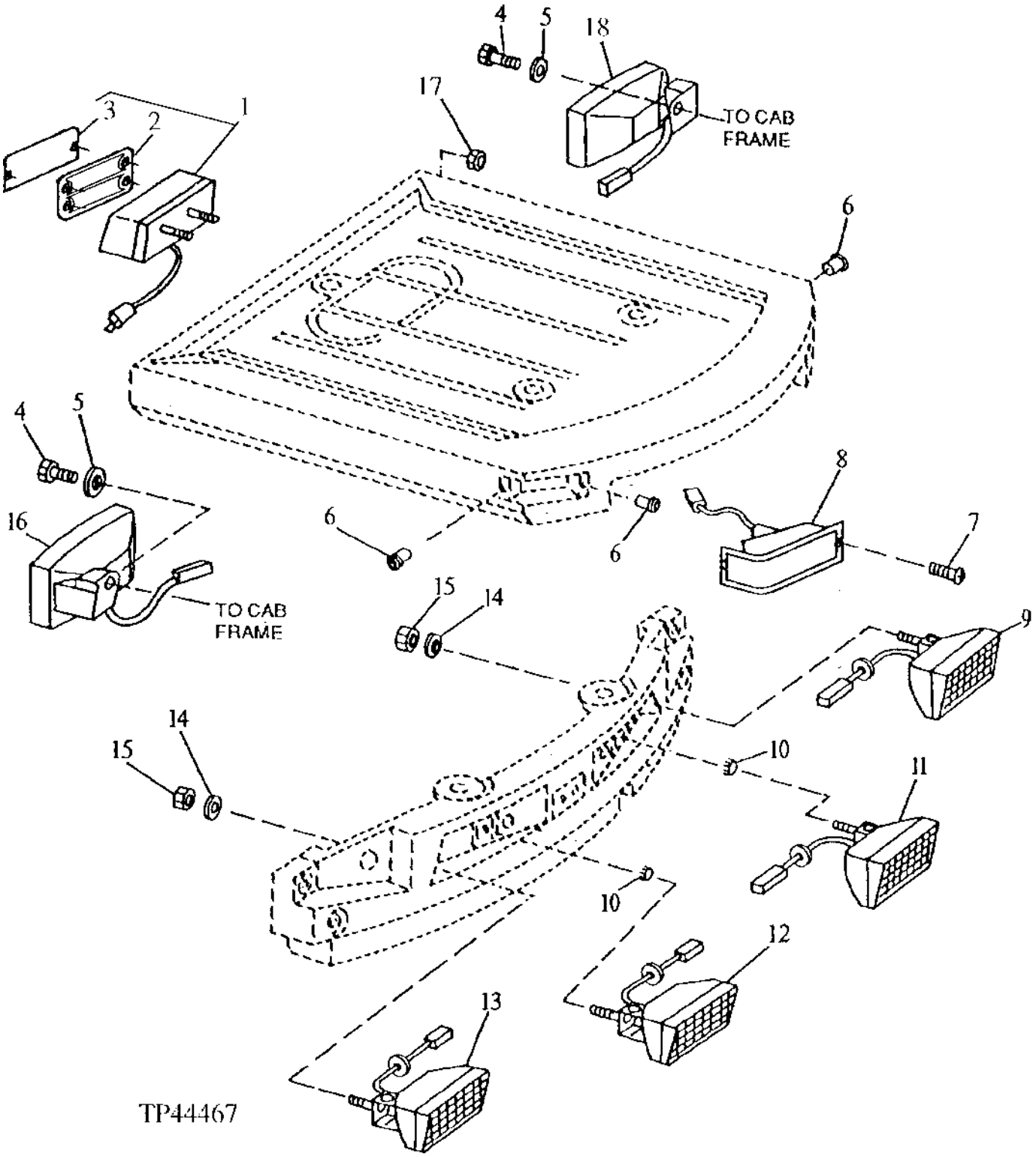

FRONT AND REAR LIGHTS
(WITH CAB)

KEY	PART NO.	PART NAME	QTY	SERIAL NO.	REMARKS
1	.....	LAMP	2	-795311	TURN SIGNAL, BRAKE AND TAIL LIGHT (AT140914 USE IF AVAILABLE)
	AT159359	STOP LIGHT	2	795312-	
	AD2062R	BULB	2		TURN SIGNAL
	AR48041	BULB	2		BRAKE AND TAIL LIGHT
2	T150355	GASKET	1		
3	T145896	LENS	1		RED
	T145897	LENS	1		AMBER
4	19M7938	CAP SCREW	2		M10 X 20, (SUB FOR 19M8324, THIS APPLICATION)
5	24M7040	WASHER	2		11 X 20 X 2 MM
6	T82792	NUT	4		
7	T82791	SCREW	4		
8	AT87556	TAIL LAMP	2		FRONT TURN LIGHT
	AD2062R	BULB	2		WARNING
9	AT163950	FLOODLAMP	1		L.H. FRONT DRIVE LIGHT
	AT130104	BULB	1		HALOGEN
10	H91792	PLUG	2		WITHOUT ADDITIONAL LIGHTING
	T152230	PLUG	2		WITHOUT ADDITIONAL LIGHTING
11	AT163950	FLOODLAMP	1		L.H. FRONT WORK LIGHT
	AT130104	BULB	1		HALOGEN
	T140780	ANGLE	1		(NOT ILLUSTRATED)
12	AT163948	FLOODLAMP	1		R.H. FRONT WORK LIGHT
	AT130104	BULB	1		HALOGEN
	T140780	ANGLE	1		(NOT ILLUSTRATED)
13	AT163948	FLOODLAMP	1		R.H. FRONT DRIVE LIGHT
	AT130104	BULB	1		HALOGEN
14	24H1219	WASHER	2		7/16" X 1" X 0.083", WITH STANDARD LIGHTING
	24H1219	WASHER	6		7/16" X 1" X 0.083", WITH ADDITIONAL LIGHTING
15	14M7167	LOCK NUT	2		M10, WITH STANDARD LIGHTING
	14M7167	LOCK NUT	4		M10, WITH ADDITIONAL LIGHTING
16	AT145797	FLOODLAMP	1		R.H. REAR WORK LIGHT
	AT130104	BULB	1		HALOGEN
17	14M7375	FLANGE NUT	4		M5
18	AT145798	FLOODLAMP	1		L.H. REAR WORK
	AT130104	BULB	1		HALOGEN

DELUXE FRONT LIGHTS, REAR LIGHTS AND TURN SIGNAL LIGHTS (WITH ROPS)

TP44472 -UN-01JAN94

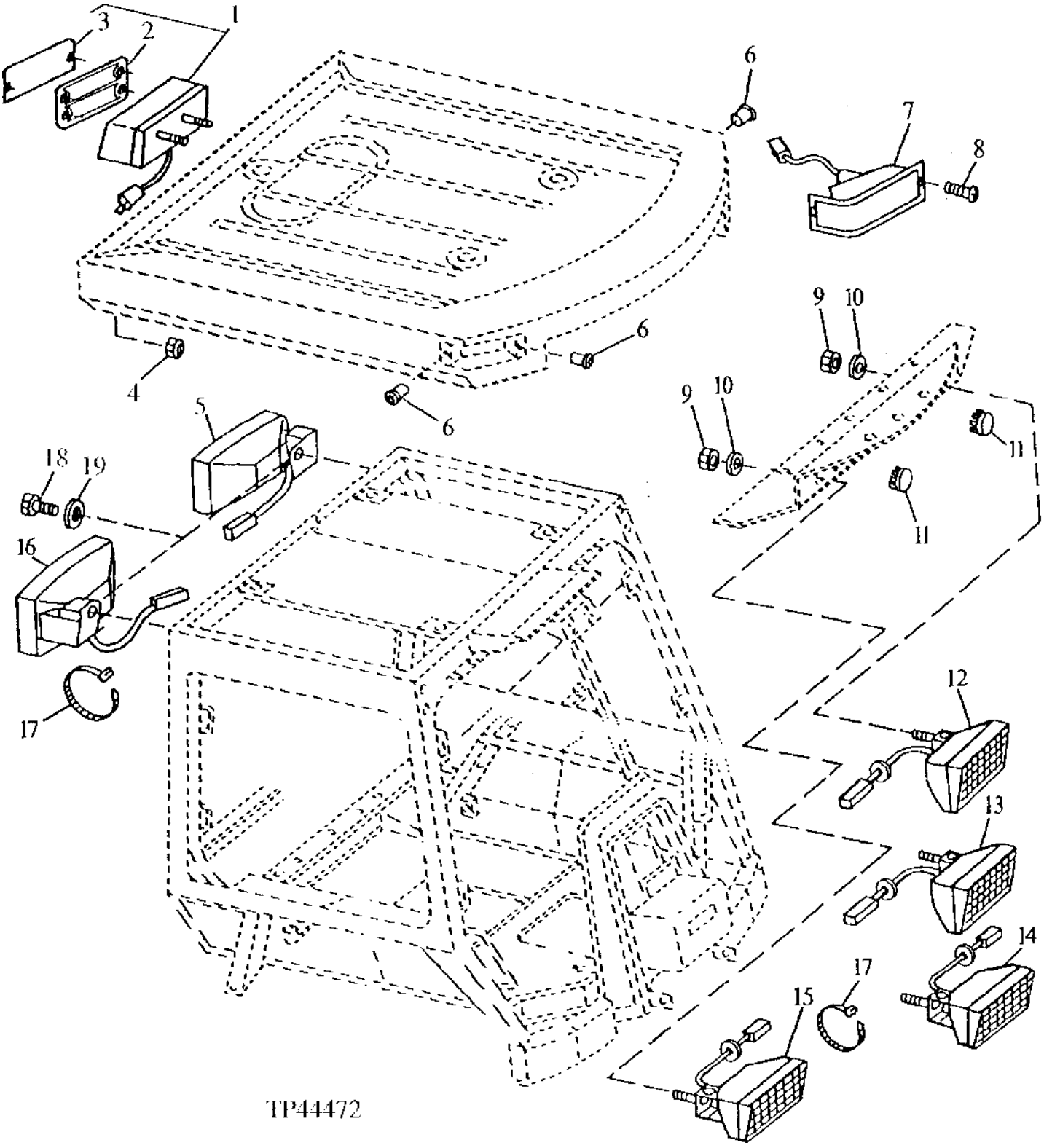

DELUXE FRONT LIGHTS, REAR LIGHTS AND TURN SIGNAL LIGHTS (WITH ROPS)

KEY	PART NO.	PART NAME	QTY	SERIAL NO.	REMARKS
1	.....	LAMP	2	-795311	TURN SIGNAL,BRAKE AND TAIL LIGHT (AT140914 USE IF AVAILABLE)
	AT159359	STOP LIGHT	2	795312-	
	AD2062R	BULB	2		TURN SIGNAL
	AR48041	BULB	2		BRAKE AND TAIL LIGHT
2	T150355	GASKET	1		
3	T145896	LENS	1		RED
	T145897	LENS	1		AMBER
4	14M7375	FLANGE NUT	4		M5
5	AT145798	FLOODLAMP	1		L.H. REAR WORK LIGHT
	AT130104	BULB	1		HALOGEN
6	T82792	NUT	4		
7	AT87556	TAIL LAMP	2		FRONT TURN LIGHT
8	T82791	SCREW	4		
	AD2062R	BULB	2		
9	14M7167	LOCK NUT	2		M10, (WITH DRIVE LIGHTS)
	14M7167	LOCK NUT	4		M10, (WITH DRIVE AND WORK LIGHTS)
10	24H1219	WASHER	2		7/16" X 1" X 0.083", (WITH DRIVE LIGHTS)
	24H1219	WASHER	4		7/16" X 1" X 0.083", (WITH DRIVE AND WORK LIGHTS)
11	H91792	PLUG	2		(WITH WORK LIGHTS)
12	AT163950	FLOODLAMP	1		L.H. FRONT DRIVE LIGHT
	AT130104	BULB	1		HALOGEN
13	AT163950	FLOODLAMP	1		L.H. FRONT WORK LIGHT
	AT130104	BULB	1		HALOGEN
14	AT163948	FLOODLAMP	1		R.H. FRONT WORK LIGHT
	AT130104	BULB	1		HALOGEN
15	AT163948	FLOODLAMP	1		R.H. FRONT DRIVE LIGHT
	AT130104	BULB	1		HALOGEN
16	AT145797	FLOODLAMP	1		R.H. REAR WORK LIGHT
	AT130104	BULB	1		HALOGEN
17	R44302	TIE BAND	AR		
18	19M7938	CAP SCREW	2		M10 X 20, (SUB FOR 19M8324, THIS APPLICATION)
19	24M7040	WASHER	2		11 X 20 X 2 MM

ENGINE WIRING HARNESS
(SERIAL NO. -872328)

TP57891 -UN-20JUL98

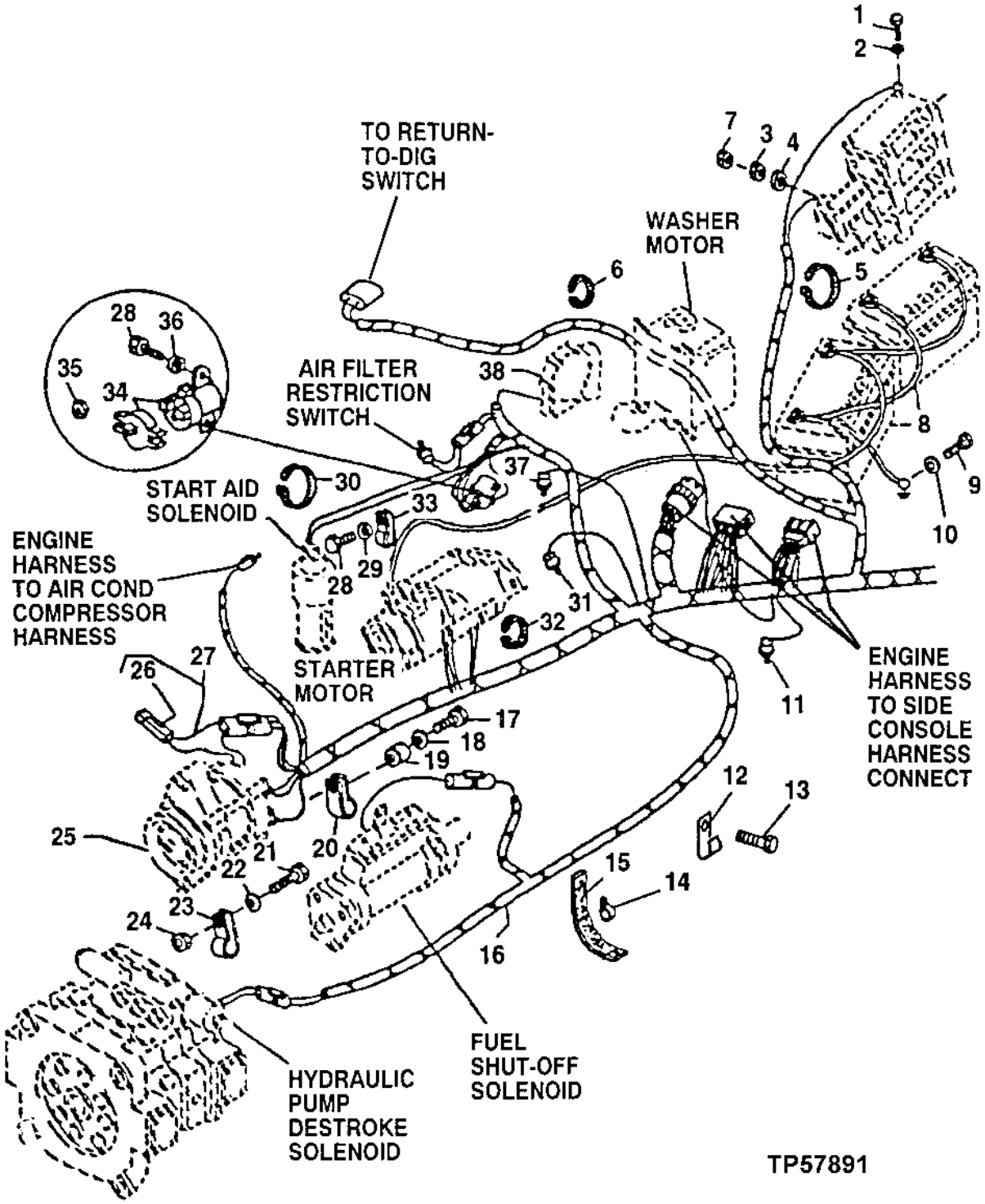

ENGINE WIRING HARNESS
(SERIAL NO. -872328)

KEY	PART NO.	PART NAME	QTY	SERIAL NO.	REMARKS
1	19M7923	CAP SCREW	1		M6 X 12
2	24H1286	WASHER	1		9/32" X 1/2" X 1/16"
3	14H631	NUT	1		0.190"
4	12H295	LOCK WASHER	1		0.190"
5	H77698	TIE BAND	1		
6	R44302	TIE BAND	1		
7	14H1076	NUT	1		3/8"
8	TY21766	DRY CHARGED BATTERY	2		300-MINUTE
9	19M7938	CAP SCREW	1		M10 X 20
10	24M7239	WASHER	1		10.700 X 21 X 2.500 MM
11	AT132806	SWITCH	1		TRANSMISSION TEMPERATURE
	12H295	LOCK WASHER	1		0.190"
	24H1283	WASHER	1		7/32" X 1/2" X 0.049"
	14H631	NUT	1		0.190"
12	T13744	CLAMP	1	830205-	
13	19M8672	SCREW	1	830205-	M14 X 25
14	.....	CLAMP	1		
15	.....	STRAP	1		
16	AT170083	WIRING HARNESS	1	-828220	ENGINE, (SUB FOR AT159859) (SUB AT180488) (ALSO ORDER AT180293)
	AT180488	WIRING HARNESS	1	828221-830204	(SUB FOR AT170083)
	AT179528	WIRING HARNESS	1	830205-851649	
	AT183251	WIRING HARNESS	1	851650-	
	19H2038	CAP SCREW	1		3/8" X 1/2", (TO L.H. BOSS ON FLYWHEEL HOUSING CLAMP)
	24H1305	WASHER	1		13/32" X 13/16" X 0.065", (TO L.H. BOSS ON FLYWHEEL HOUSING SCREW)
	T74416	CLAMP	1		(TO R.H. BOSS ON FLYWHEEL HOUSING)
	19H2038	CAP SCREW	1		(TO R.H. BOSS ON FLYWHEEL HOUSING)
	24H1305	WASHER	1		13/32" X 13/16" X 0.065", (TO R.H. BOSS ON FLYWHEEL HOUSING)
	T74416	CLAMP	2		(TO REAR SIDE OF POWER TRAIN CROSSMEMBER)
	19M7550	CAP SCREW	2		M10 X 35, (TO REAR SIDE OF POWER TRAIN CROSSMEMBER)
	24M7296	WASHER	2		10.500 X 30 X 2.500 MM, (TO REAR SIDE OF POWER TRAIN CROSSMEMBER)
	24M7239	WASHER	2		10.700 X 21 X 2.500 MM, (TO REAR SIDE OF POWER TRAIN CROSSMEMBER)
	14M7274	NUT	2		M10, (TO REAR SIDE OF POWER TRAIN CROSSMEMBER)
	14M7273	NUT	1		(TO AIR COMPRESSOR MOUNTING CAP SCREW)
	AH89557	CLIP	1		(TO L.H. BOSS ON FLYWHEEL HOUSING)
17	19H2633	CAP SCREW	1		3/8" X 1-1/2", (SUB FOR 19H1726, THIS APPLICATION) 3/8" X 2-1/4"
	19H1800	CAP SCREW	1		3/8" X 1-1/2"
18	24H1305	WASHER	1		13/32" X 13/16" X 0.065"
19	28H1720	BUSHING	1		0.423" X 0.675" X 27/32", (SUB FOR 28H2581)
20	AH89557	CLIP	1		
21	19M7881	SCREW	1		M8 X 20
22	24M7238	WASHER	1		8.700 X 17 X 2 MM
23	T19935	CLAMP	1		
24	14M7273	NUT	1		M8
25	.....	ALTERNATOR	1		12V-100AMP, REMANUFACTURED (BOSCH) (TY6750 NO LONGER AVAILABLE) (SUB TY24485)
	TY24485	ALTERNATOR	1		12V-95AMP, REMANUFACTURED (BOSCH)

THIS PARTS LISTING IS CONTINUED

ENGINE WIRING HARNESS
(SERIAL NO. -872328)

TP57891 -UN-20JUL98

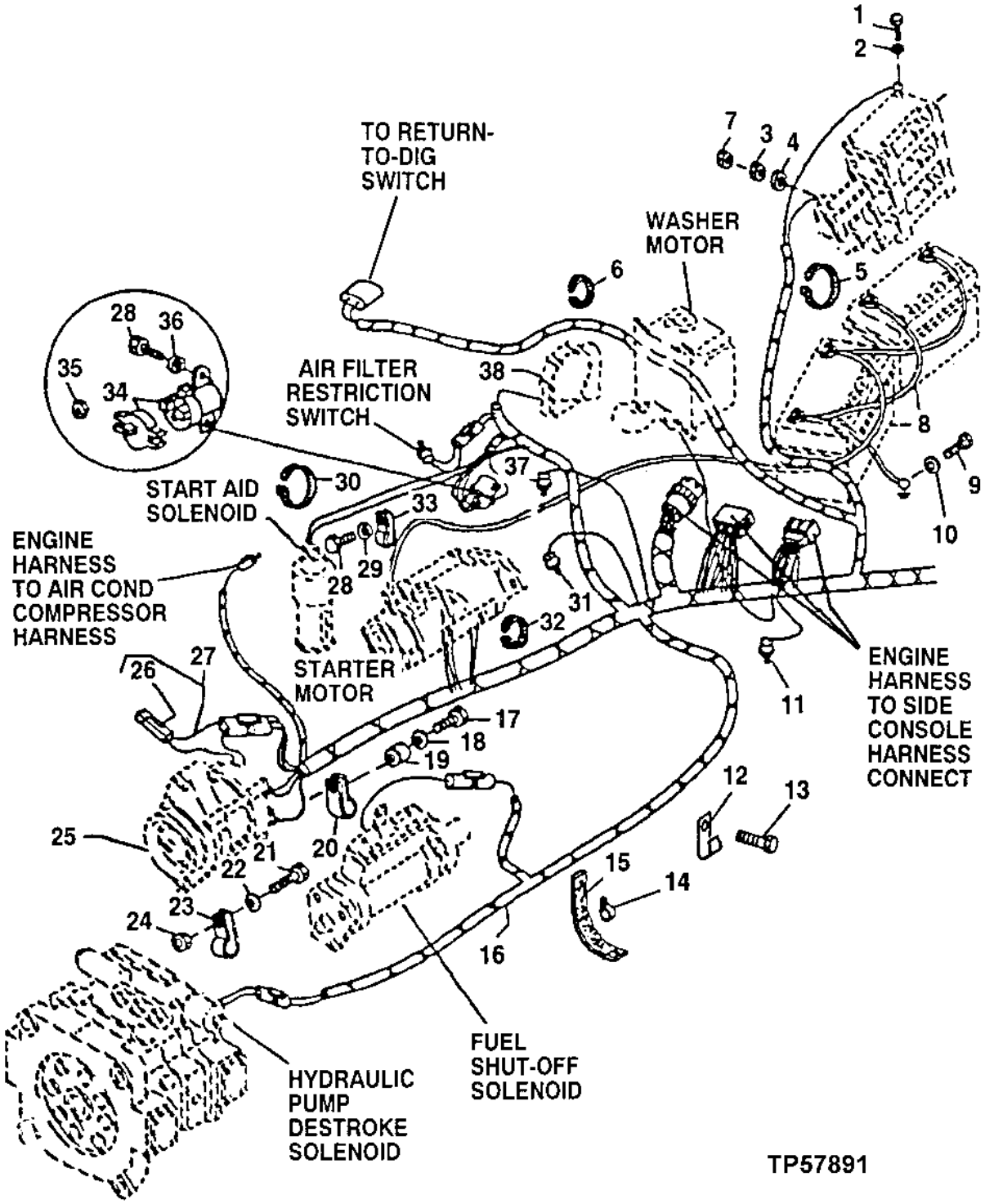

ENGINE WIRING HARNESS
(SERIAL NO. -872328)

KEY	PART NO.	PART NAME	QTY	SERIAL NO.	REMARKS
26	AT103399	DIODE	1		ALTERNATOR
27	AT160820	WIRING HARNESS	1	-809127	ALTERNATOR
28	37H116	SCREW	3		
29	24H1287	WASHER	1		9/32" X 5/8" X 0.065"
30	R44302	TIE BAND	1		
31	AT162868	SWITCH	1	-830204	ENGINE COOLANT TEMPERATURE
	AH139059	TOUCH SWITCH	1	830205-	
32	H77698	TIE BAND	2		
33	AH89557	CLIP	1		
34	AT141011	RELAY	1		STARTER - 12 VOLT
35	14M7272	NUT	2		M6
36	24M7100	WASHER	2		0.260" X 0.866" X 0.079", (SUB FOR 24H1287, THIS APPLICATION)
37	AT85174	SWITCH	1		ENGINE OIL PRESSURE
38	AT180293	HORN	1		(SUB FOR R64700, THIS APPLICATION)

ENGINE WIRING HARNESS
(SERIAL NO. -872328)

TP44188 -UN-01JAN94

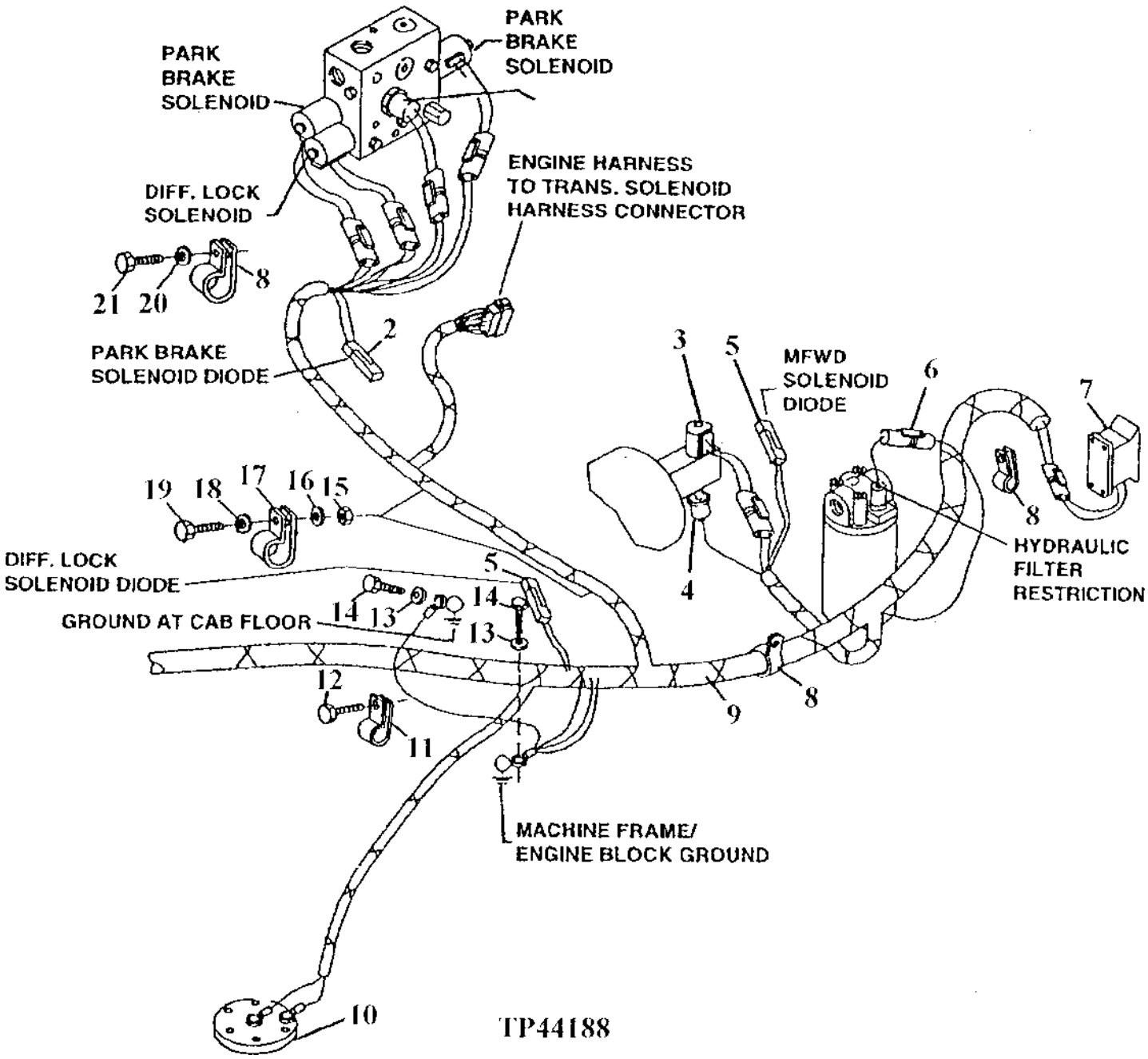

ENGINE WIRING HARNESS
(SERIAL NO. -872328)

KEY	PART NO.	PART NAME	QTY	SERIAL NO.	REMARKS
1	AT150024	SWITCH	1		PARK BRAKE SENSING
2	AR94101	DIODE	1		
3	AT147011	SOLENOID	1		MFWD
4	AT85174	SWITCH	1		MFWD INDICATOR
5	AR94101	DIODE	2		
6	AT113759	WIRING LEAD	1		HYDRAULIC FILTER
7	AT120461	TRAVEL WARNING ALARM	1		REVERSE WARNING
8	T74412	CLAMP	3		
9	AT170083	WIRING HARNESS	1	-828220	ENGINE, (SUB FOR AT159859) (SUB AT180488) (ALSO ORDER AT180293)
	AT180488	WIRING HARNESS	1	828221-830204	(SUB FOR AT170083)
	AT179528	WIRING HARNESS	1	830205-852967	
	AT183251	WIRING HARNESS	1	852968-	
	19H2038	CAP SCREW	1		3/8" X 1/2", (TO L.H. BOSS ON FLYWHEEL HOUSING CLAMP)
	24H1305	WASHER	1		13/32" X 13/16" X 0.065", (TO L.H. BOSS ON FLYWHEEL HOUSING SCREW)
	T74416	CLAMP	1		(TO R.H. BOSS ON FLYWHEEL HOUSING)
	19H2038	CAP SCREW	1		(TO R.H. BOSS ON FLYWHEEL HOUSING)
	24H1305	WASHER	1		13/32" X 13/16" X 0.065", (TO R.H. BOSS ON FLYWHEEL HOUSING)
	AH89557	CLIP	1		(TO L.H. BOSS ON FLYWHEEL HOUSING)
10	AT168614	SENDER	1		FUEL
11	T13744	CLAMP	1		
12	19H2353	CAP SCREW	1		9/16" X 1"
13	24M7239	WASHER	2		10.700 X 21 X 2.500 MM
14	19M7938	CAP SCREW	2		M10 X 20
15	14M7274	NUT	2		M10, (TO REAR SIDE OF POWER TRAIN CROSSMEMBER)
16	24M7239	WASHER	2		10.700 X 21 X 2.500 MM, (TO REAR SIDE OF POWER TRAIN CROSSMEMBER)
17	T74412	CLAMP	2		(TO REAR SIDE OF POWER TRAIN CROSSMEMBER)
18	24M7296	WASHER	2		10.5 X 30 X 2.500 MM
19	19M7550	CAP SCREW	2		M10 X 35, (TO REAR SIDE OF POWER TRAIN CROSSMEMBER)
20	24M7239	WASHER	1		10.700 X 21 X 2.500 MM
21	19M7938	CAP SCREW	1		M10 X 20

ENGINE WIRING HARNESS
(SERIAL NO. 872329-)

TP58007 -UN-18FEB99

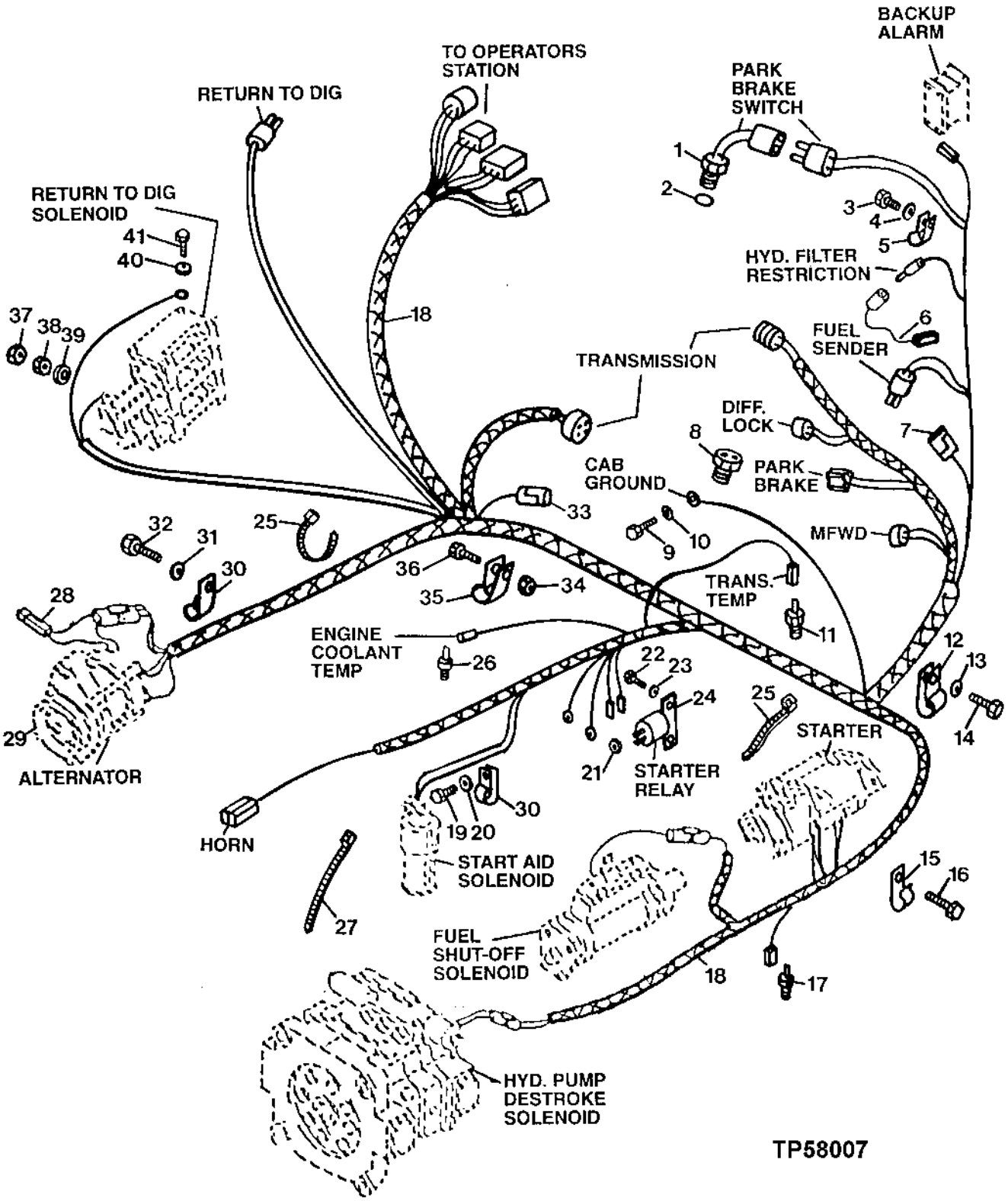

ENGINE WIRING HARNESS
(SERIAL NO. 872329-)

KEY	PART NO.	PART NAME	QTY	SERIAL NO.	REMARKS
1	AT159811	SWITCH	1		PARK BRAKE OIL PRESSURE
2	51M7039	O-RING	1		
3	19M7938	CAP SCREW	2		M10 X 20
4	24M7239	WASHER	2		
5	T19935	CLAMP	2		
6	AT113759	WIRING HARNESS	1		
7	AR94101	DIODE	6		FNR, PARK BRAKE, DIFF. LOCK, MFWD
8	R32548	TOUCH SWITCH	1		BRAKE PRESSURE
9	19M7923	CAP SCREW	1		M6 X 12
10	24M7100	WASHER	1		
11	AT174893	SWITCH	1		TRANSMISSION TEMPERATURE
12	T76252	CLAMP	1		
13	24M7239	WASHER	1		
14	19M7938	CAP SCREW	1		M10 X 20
15	T13744	CLAMP	1		
16	19M8672	SCREW	1		M14 X 25
17	AT85174	SWITCH	1		ENGINE OIL PRESSURE
18	AT181333	WIRING HARNESS	1		ENGINE
19	37H116	SCREW	1		
20	24H1287	WASHER	1		
21	14M7272	NUT	1		M6
22	37H116	SCREW	2		
23	24H1287	WASHER	2		
24	AT141011	RELAY	1		STARTER
25	H77698	TIE BAND	1		
26	AH139059	TOUCH SWITCH	1		ENGINE COOLANT TEMPERATURE
27	R44302	TIE BAND	1		
28	AT103399	DIODE	1		ALTERNATOR
29	TY24485	ALTERNATOR	1		95 AMP (BOSCH)
30	AH89557	CLIP	1		
31	24H1305	WASHER	1		
32	19H2633	CAP SCREW	1		3/8" X 1-1/2"
33	AR94101	DIODE	3		
34	14M7274	NUT	1		M10
35	T102934	CLAMP	1		
36	19M7557	CAP SCREW	1		M10 X 16
37	14H1076	NUT	1		3/8"
38	14H631	NUT	1		0.190"
39	12H295	LOCK WASHER	1		0.190"
40	24H1286	WASHER	1		
41	19M7923	CAP SCREW	1		M6 X 12

RETURN-TO-DIG SWITCH

TP57975 -UN-18FEB99

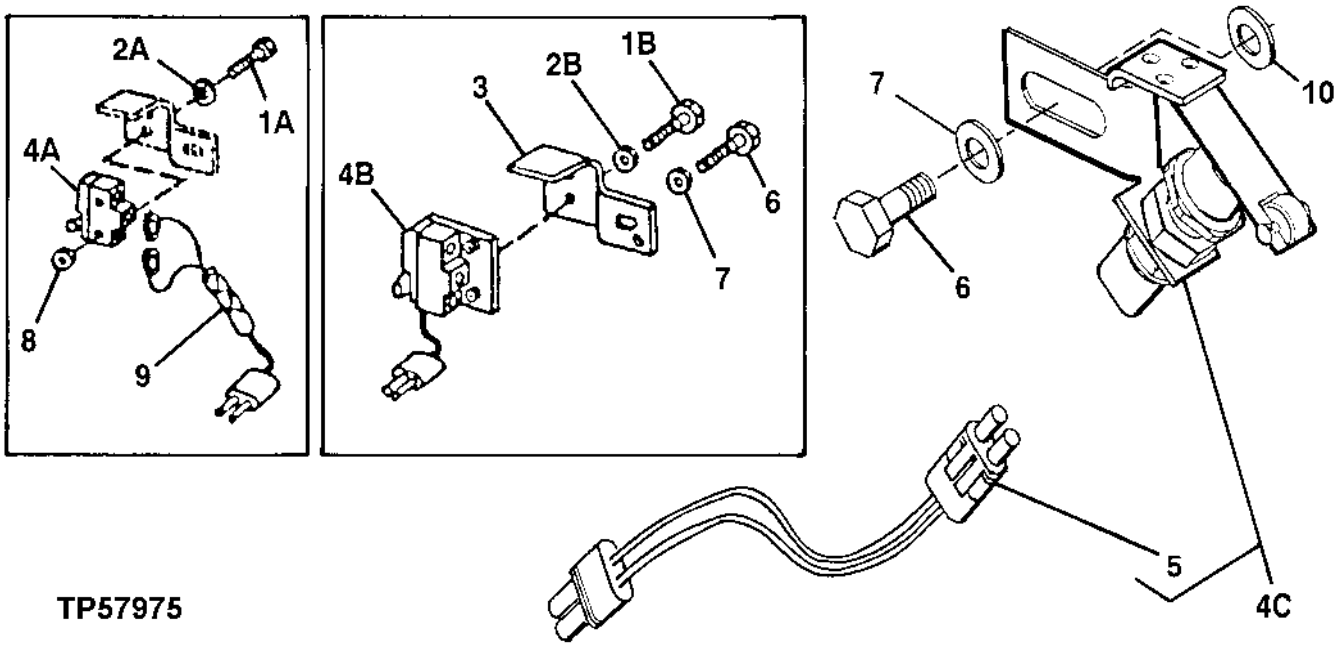

KEY	PART NO.	PART NAME	QTY	SERIAL NO.	REMARKS
1A	19M8072	CAP SCREW	2	-792531	M3 X 25
1B	21H1290	SCREW	2	792532-852966	0.138" X 1/2"
2A	R52119	WASHER	2	-792531	
2B	R44255	WASHER	2	792532-852966	
3	T134340	BRACKET	1	-852966	RETURN-TO-DIG SWITCH
4A	AT182389	SWITCH	1	-792531	RETURN-TO-DIG, (SUB FOR AT69969, THIS APPLICATION) (ALSO ORDER R78053, (2) R78061, (2) R78063 AND (2) 21H1290)
4B	AT182389	SWITCH	1	792532-852966	(SUB FOR AT158604)
4C	AT183246	SWITCH	1	852967-	
5	RE12363	CONNECTOR	1	852967-	
6	19M8017	CAP SCREW	1	852967-	M12 X 20
7	24M7047	WASHER	1	852967-	13 X 24 X 2.500 MM
8	14M7030	NUT	2	-792531	M3
9	AT156689	WIRING HARNESS	1	-792531	RETURN-TO-DIG
10	T29342	WASHER	1	852967-	13.487 X 31.750 X 4.572 MM

MEMORANDA

SIDE CONSOLE WIRING HARNESS
(SERIAL NO. -872328)

TP57881 -UN-07JUL98

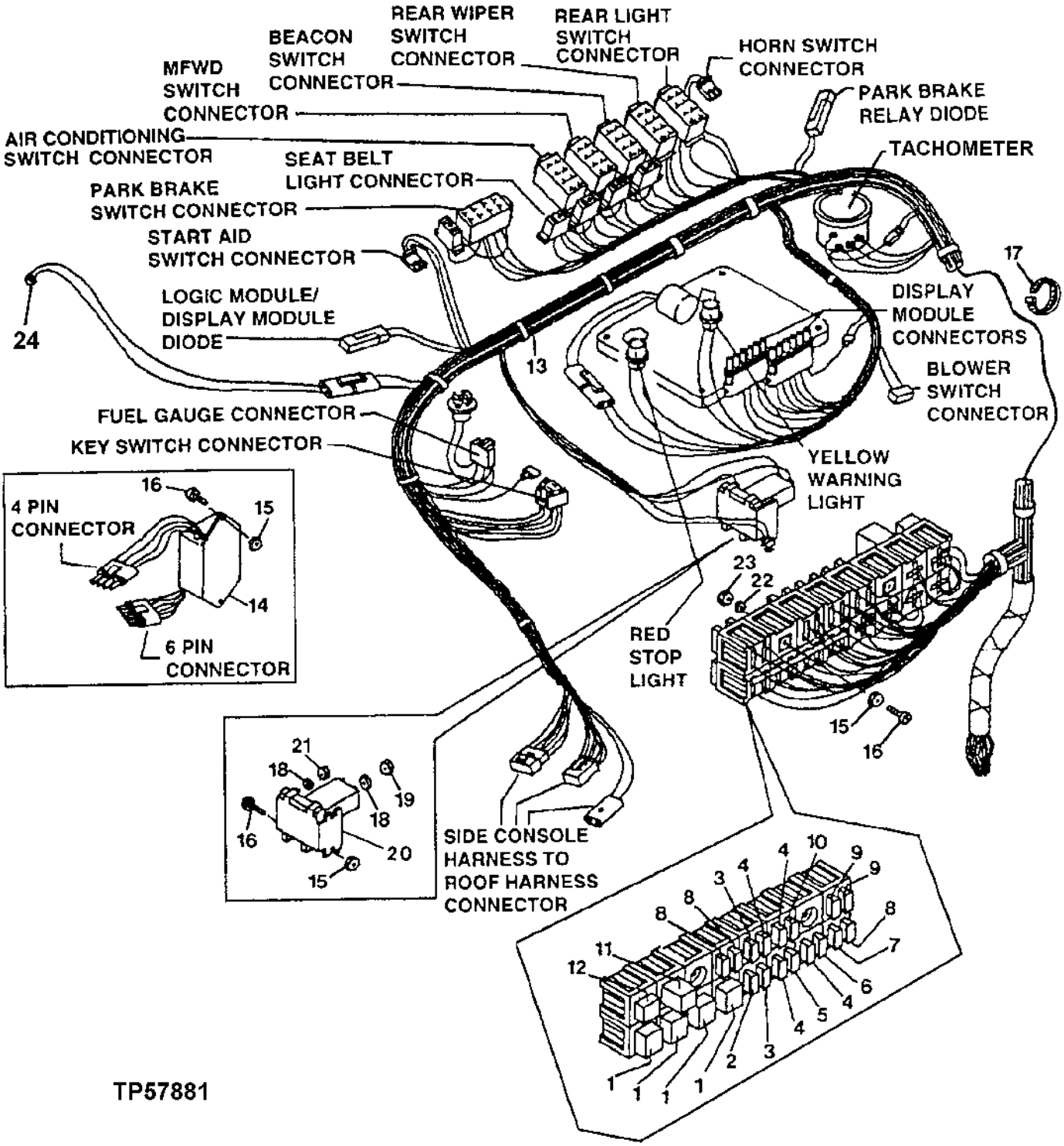

SIDE CONSOLE WIRING HARNESS
(SERIAL NO. -872328)

KEY	PART NO.	PART NAME	QTY	SERIAL NO.	REMARKS
1	RE68327	RELAY	3		MINI RELAY WITH RESISTOR (BACKUP ALARM, NEUTRAL, PARK BRAKE) (SUB FOR AL77324 AND RE48876, THIS APPLICATION)
2	99M7064	FUSE	1		7.5 AMP (MFWD/ALT DIFF LOCK)
3	57M7125	FUSE	3		5 AMP (DOME/RADIO, RADIO, MONITOR/GAUGES)
4	99M7065	FUSE	4		15 AMP (WIPER, REAR LIGHTS, HAZARD/MONITOR, FUEL/ETHER/BACKUP ALARM)
5	T102781	CIRCUIT BREAKER	1		30 AMP (HEATER/A/C) (CAB)
6	99M7069	FUSE	1		25 AMP (FRONT LIGHTS/TAIL LIGHTS)
7	57M7120	FUSE	1		20 AMP (TURN/STOP/HORN)
8	57M7121	FUSE	3		10 AMP (RTD/BEACON, FNR/PARK, START)
9	99M7064	FUSE	2		7.5 AMP (RIGHT AND LEFT TURN)
10	57M7125	FUSE	1		5 AMP (MONITOR/GAUGES)
11	AT163088	FLASHER	1		12 VOLT
12	AR91168	RELAY	1		6 VOLT
13	.....	WIRING HARNESS	1	-807308	CAB (AT159774-USE IF AVAILABLE) (SUB AT171219)
	.....	WIRING HARNESS	1	-807514	ROPS (AT159775-USE IF AVAILABLE) (SUB AT171221)
	AT171219	WIRING HARNESS	1	807309-815415	CAB, (SUB FOR AT159774) (ALSO FURNISH (2) 37H132)
	AT171221	WIRING HARNESS	1	807515-815427	ROPS, (SUB FOR AT159775) (ALSO FURNISH (2) 37H132)
	AT179623	WIRING HARNESS	1	815416-851804	CAB, (SUB FOR AT173864)
	AT183111	WIRING HARNESS	1	851805-	CAB
	AT179622	WIRING HARNESS	1	815428-849688	ROPS, (SUB FOR AT173863)
	AT184122	WIRING HARNESS	1	849689-851804	
	AT183110	WIRING HARNESS	1	851805-	ROPS
	24M7238	WASHER	1		8.700 X 17 X 2 MM, (HARNESS CLAMP SCREW TO LOWER FRONT COWL ON FRONT OF CAB)
	T120536	CLAMP	1		(HARNESS TO LOWER FRONT COWL ON FRONT OF CAB)
	19M7932	CAP SCREW	1		M8 X 16, (HARNESS CLAMP TO LOWER FRONT COWL ON FRONT OF CAB)
14	AT107670	MODULE	1	-815415	LOGIC (12 VOLT)
15	M40333	LOCK NUT	6	-815415	1/4"
	M40333	LOCK NUT	4	815416-	1/4"
16	T83060	SCREW	6	-815415	1/4" X 3/4"
	T83060	SCREW	4	815416-	
17	R44302	TIE BAND	AR		
18	12M7065	LOCK WASHER	2		8 MM
19	14H785	NUT	2		5/16"
20	AR73144	RELAY	1		ACCESSORY
21	14H631	NUT	1		0.190"
22	24H1288	WASHER	2		9/32" X 1" X 1/16"
23	14H850	NUT	2		1/4"
24	AT162180	SWITCH	1		NEUTRAL DISCONNECT SWITCH

SIDE CONSOLE WIRING HARNESS
(SERIAL NO. -872328)

TP57964 -UN-16NOV98

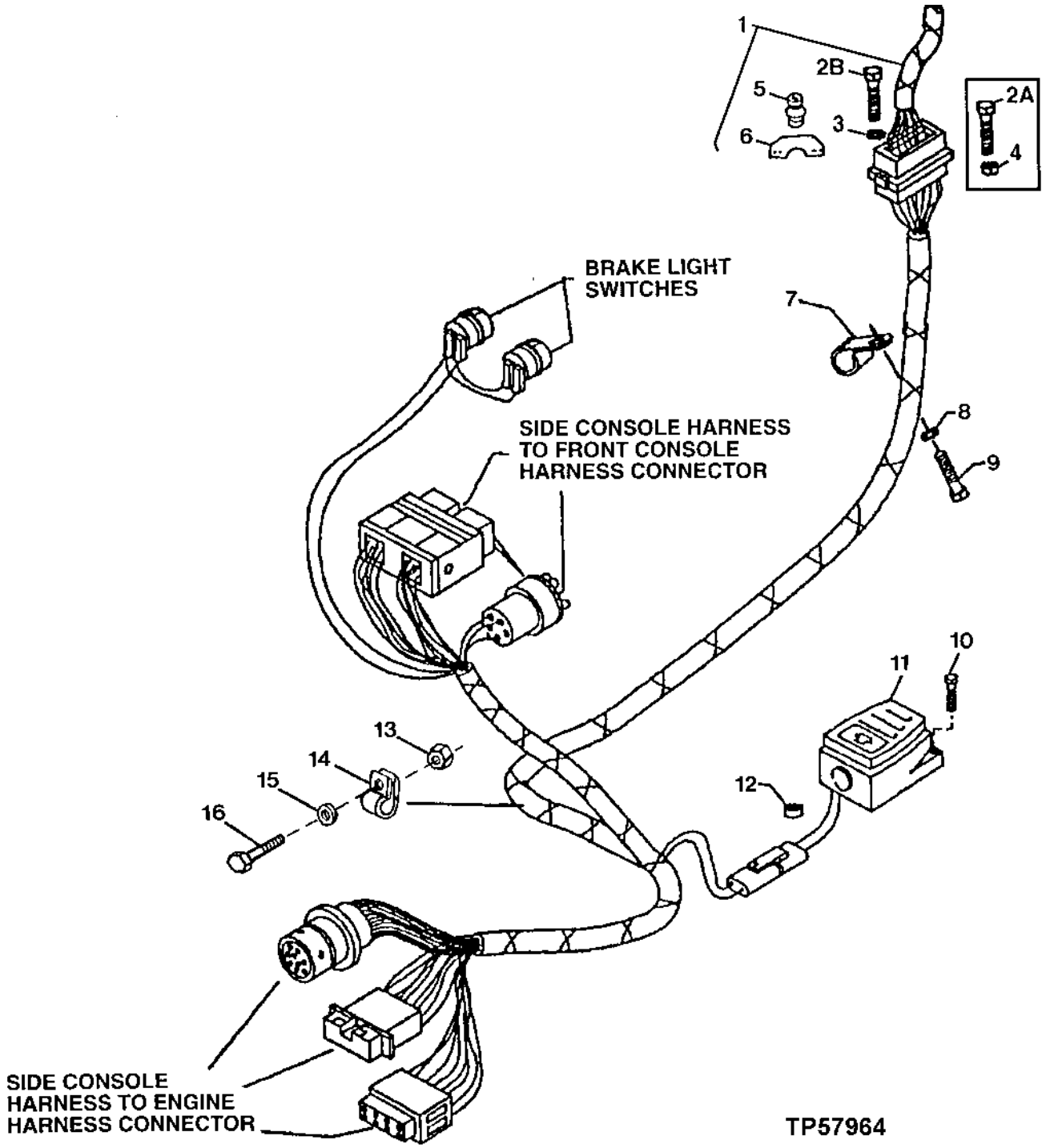

SIDE CONSOLE WIRING HARNESS
(SERIAL NO. -872328)

KEY	PART NO.	PART NAME	QTY	SERIAL NO.	REMARKS
1	.....	WIRING HARNESS	1	-807308	CAB (AT159774-USE IF AVAILABLE) (SUB AT171219)
	.....	WIRING HARNESS	1	-807514	ROPS (AT159775-USE IF AVAILABLE) (SUB AT171221)
	AT171219	WIRING HARNESS	1	807309-815415	CAB, (SUB FOR AT159774) (ALSO ORDER (2) 37H132)
	AT171221	WIRING HARNESS	1	807515-815427	ROPS, (SUB FOR AT159775) (ALSO ORDER (2) 37H132)
	AT173864	WIRING HARNESS	1	815416-	CAB
	AT173863	WIRING HARNESS	1	815428-	ROPS
2A	37H142	SCREW	1	-807308	
2B	37H132	SCREW	1	807309-	
3	24M7138	WASHER	AR	-807308	5.300 X 15 X 1.200 MM
4	14M7100	NUT	1	-807308	M4
5	.....	GROMMET	1	807309-	
6	.....	PLATE	1	807309-	
7	T102934	CLAMP	2		CAB
	T102934	CLAMP	3		ROPS
8	24M7238	WASHER	2		8.700 X 17 X 2 MM, CAB
	24M7238	WASHER	4		8.700 X 17 X 2 MM, ROPS
9	19M7932	CAP SCREW	2		M8 X 16, CAB
	19M7932	CAP SCREW	4		M8 X 16, ROPS
10	21H1406	SCREW	2		0.190" X 3/4"
11	AT160116	SWITCH	1		DIFFERENTIAL LOCK
12	T63817	GROMMET	1		
13	14M7274	NUT	1		
14	T76252	CLAMP	1		(SUB FOR T75197, THIS APPLICATION)
15	24M7239	WASHER	1		
16	19M7938	CAP SCREW	1		

FLOOR AND SIDE CONSOLE WIRING HARNESS AND COMPONENTS
(WITH CAB)
(SERIAL NO. 872329-)

T138009 -UN-16FEB01

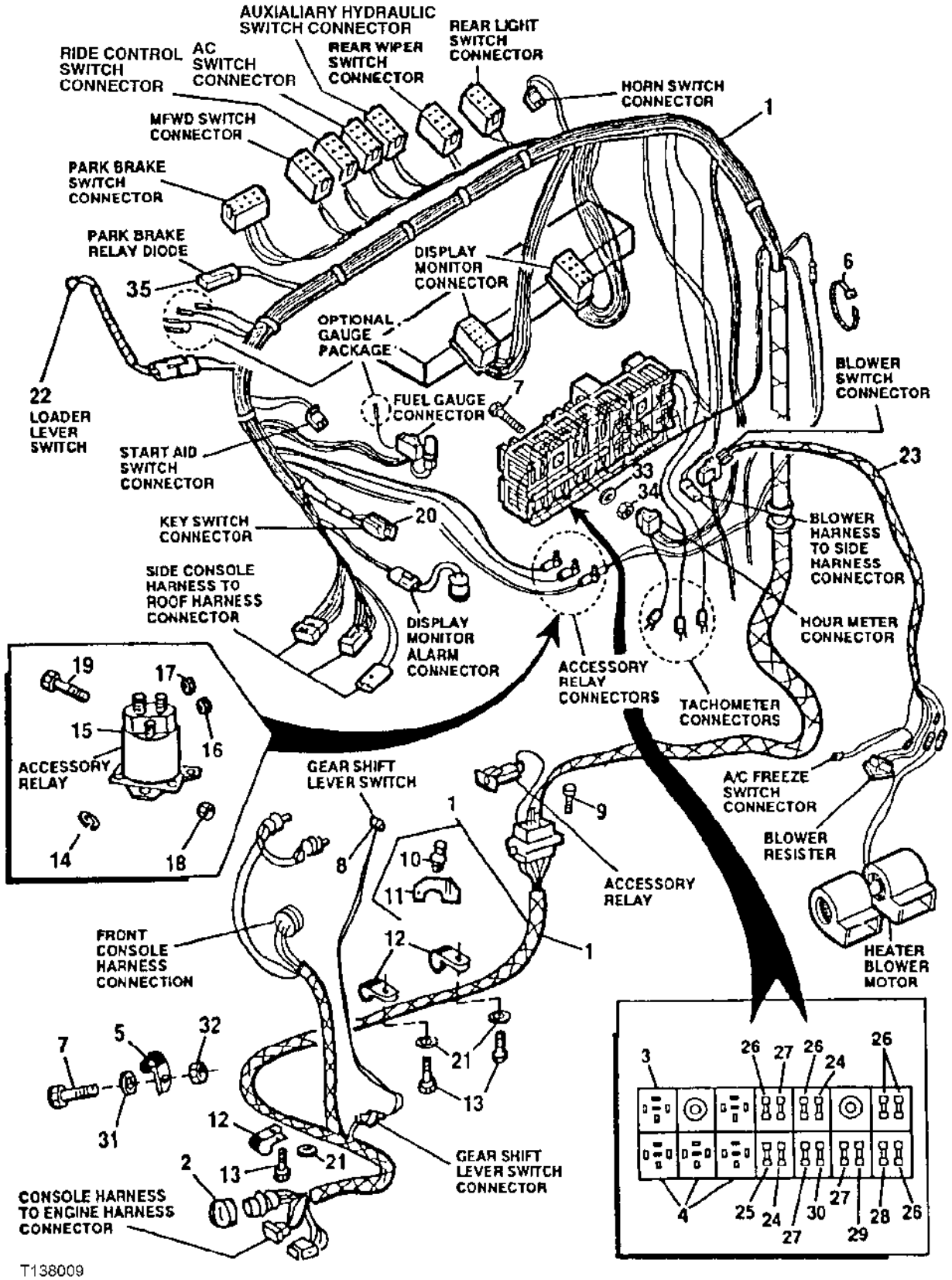

FLOOR AND SIDE CONSOLE WIRING HARNESS AND COMPONENTS
(WITH CAB)
(SERIAL NO. 872329-)

KEY	PART NO.	PART NAME	QTY	SERIAL NO.	REMARKS
1	AT180580	WIRING HARNESS	1		
	AT44188	RIVET	2		
2	E73240	NUT	1		
3	AT163088	FLASHER	1		12-VOLT
4	RE68327	RELAY	3		(BACKUP ALARM,NUETRAL,PARK BRAKE)
5	T74416	CLAMP	1		
6	R44302	TIE BAND	4		
7	T83060	SCREW	4		
8	AT162180	SWITCH	1		(MOMENTARY) (NUETRAL DISCONNECT)
9	37H132	SCREW	2		0.216" X 3/4"
10	.....	GROMMET	1		
11	.....	PLATE	1		
12	T102934	CLAMP	3		
13	19M7932	CAP SCREW	3		M8 X 16
14	12M7065	LOCK WASHER	2		8 MM
15	AR73144	RELAY	1		
16	14H785	NUT	2		5/16"
17	14H631	NUT	1		0.190"
18	M40333	LOCK NUT	4		6.350 MM
19	T83060	SCREW	4		
20	L38138	RECEPTACLE CONNECTOR BODY	1		(KEY SWITCH)
21	24M7238	WASHER	3		8.700 X 17 X 2 MM
22	AT162180	SWITCH	1		(MOMENTARY) (LOAD LEVER)
23	AT183701	WIRING HARNESS	1		(HVAC BOX)
24	57M7125	FUSE	2		5 AMP, (RADIO, DOME/RADIO)
25	99M7064	FUSE	1		7-1/2 AMP, MFWD/ALT, DIFF LOCK
26	57M7121	FUSE	5		10 AMP, MONITOR/GAUGES,AUX,START,FNR/PARK, RTD/BEACON,PUMP
27	99M7065	FUSE	3		15 AMP, FUEL/ETHER/BACKUP ALARM,WIPERS,REAR LIGHTS
28	57M7120	FUSE	1		20 AMP, TURN/STOP,FLASHER/HORN
29	99M7069	FUSE	1		25 AMP, FRONT LIGHTS/TAIL LIGHTS
30	57M7146	FUSE	1		30 AMP, , HEATER - A/C
31	24M7239	WASHER	1		10.700 X 21 X 2.500 MM
32	14M7274	NUT	1		M10
33	24H1288	WASHER	2		9/32" X 1" X 1/16"
34	14H850	NUT	2		1/4"
35	AR94101	DIODE	1		

FLOOR AND SIDE CONSOLE WIRING HARNESS AND COMPONENTS
(WITH ROPS)
(SERIAL NO. 872329-)

T138010 -UN-16FEB01

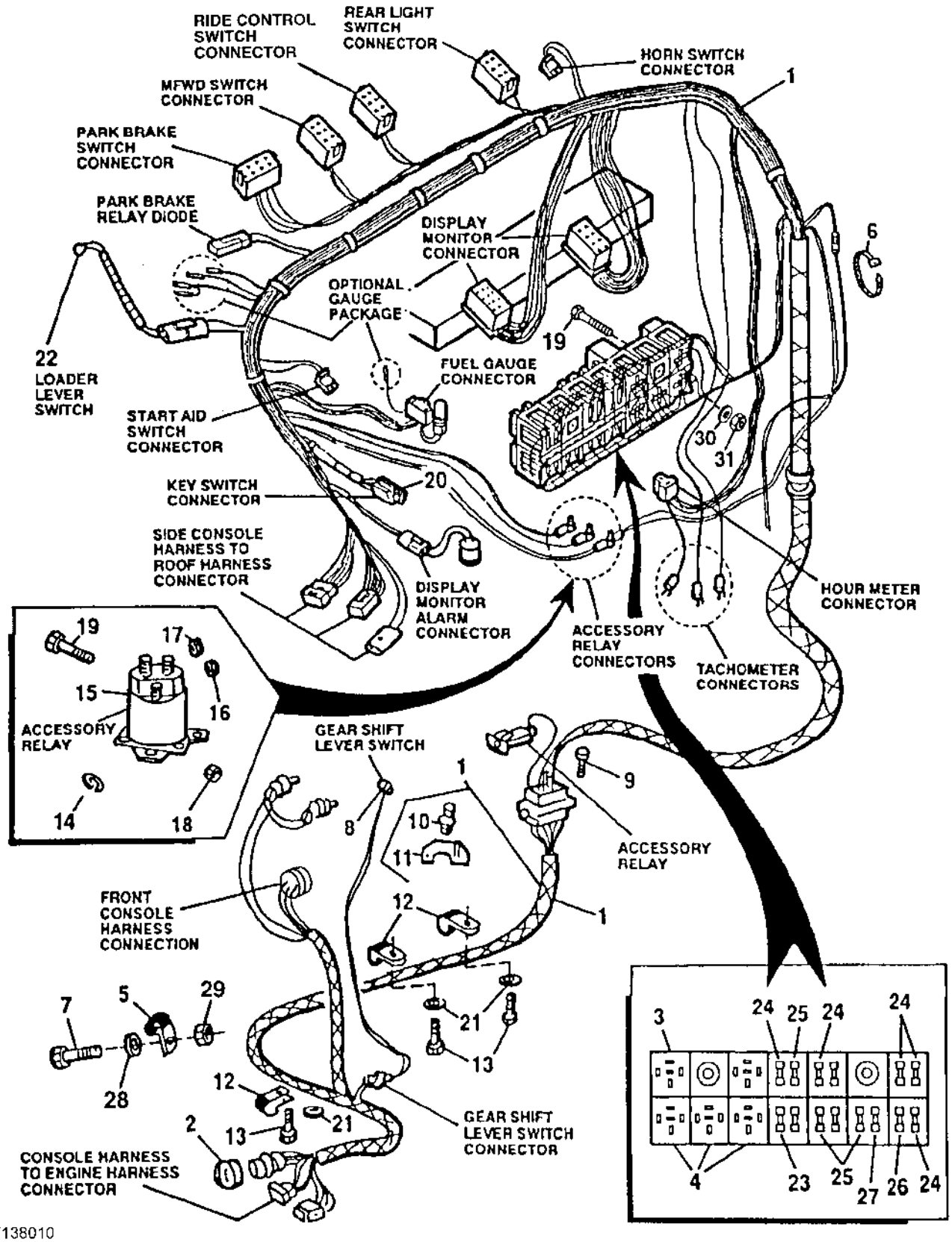

T138010

FLOOR AND SIDE CONSOLE WIRING HARNESS AND COMPONETS
(WITH ROPS)
(SERIAL NO. 872329-)

KEY	PART NO.	PART NAME	QTY	SERIAL NO.	REMARKS
1	AT180581	CONSOLE LAMP WIRING HARNESS	1		
	AT44188	RIVET	2		
2	E73240	NUT	1		
3	AT163088	FLASHER	1		(12 VOLT)
4	RE68327	RELAY	3		(BACKUP ALARM, NUETRAL, PARK BRAKE)
5	T76252	CLAMP	1		
6	R44302	TIE BAND	2		
7	19M7938	CAP SCREW	1		M10 X 20
8	AT162180	SWITCH	1		(MOMENTARY) (NUETRAL DISCONNECT)
9	37H132	SCREW	2		0.216" X 3/4"
10	.....	GROMMET	1		
11	.....	PLATE	1		
12	T102934	CLAMP	2		
13	19M7932	CAP SCREW	3		M8 X 16
14	12M7065	LOCK WASHER	2		8 MM
15	AR73144	RELAY	1		
16	14H785	NUT	2		5/16"
17	14H631	NUT	1		0.190"
18	M40333	LOCK NUT	4		6.350 MM, (CLUTCH DISCONNECT)
19	T83060	SCREW	4		6.350 X 19.050 MM (1/4" X 3/4")
20	L38138	RECEPTACLE CONNECTOR BODY	1		(KEY SWITCH)
21	24M7238	WASHER	3		8.700 X 17 X 2 MM
22	AT162180	SWITCH	1		(MOMENTARY) (LOAD LEVER)
23	99M7064	FUSE	3		7-1/2 AMP, (MFWD/ALT, DIFF LOCK)
24	57M7121	FUSE	5		10 AMP, (MONITOR/GAUGES, AUX, START, FNR/PARK, RTD/BEACON, PUMP)
25	99M7065	FUSE	3		15 AMP, (FUEL/ETHER/BACKUP ALARM, WIPERS,REAR LIGHTS)
26	57M7120	FUSE	1		20 AMP, (TURN/STOP, FLASHER/HORN)
27	99M7069	FUSE	1		25 AMP, (FRONT LIGHTS/ TAIL LIGHTS)
28	24M7239	WASHER	1		10.700 X 21 X 2.500 MM
29	14M7274	NUT	1		M10
30	24H1288	WASHER	1		9/32" X 1" X 1/16"
31	14H850	NUT	1		1/4"

FRONT CONSOLE HARNESS
(SERIAL NO. -872328)

TP48863 -UN-21DEC95

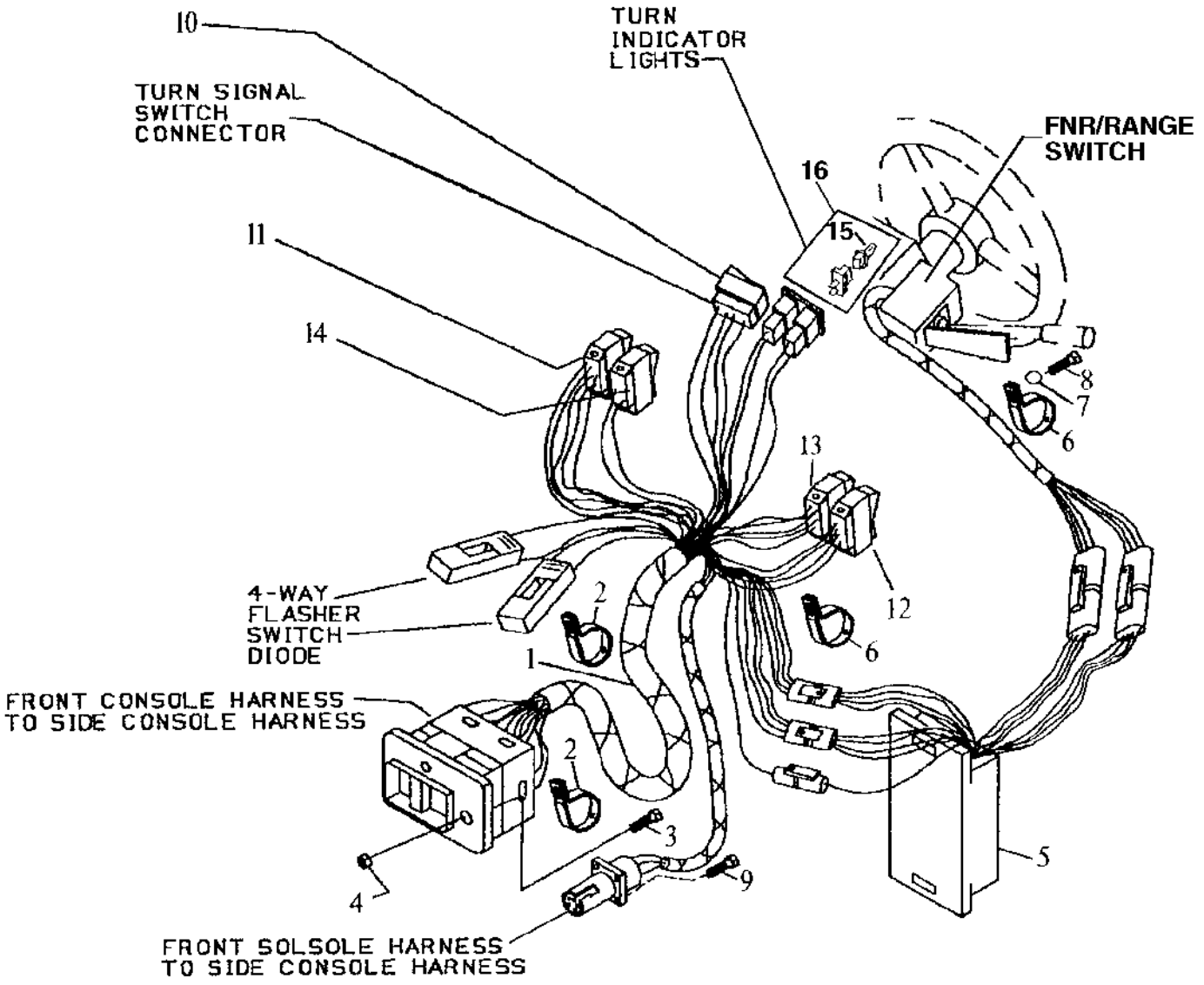

TP48863

FRONT CONSOLE HARNESS
(SERIAL NO. -872328)

KEY	PART NO.	PART NAME	QTY	SERIAL NO.	REMARKS
1	AT159773	WIRING HARNESS	1		
2	AH89557	CLIP	2		
3	R54388	SCREW	2		0.138" X 3/4"
4	14H1026	NUT	2		0.138"
5	AT164408	ELECTRONIC CONTROL UNIT	1		SHIFT (INCLUDES HARDWARE USED TO MOUNT TO PLATE) (SUB FOR AT160015)
	T145277	PLATE	1		CONTROLLER MOUNTING
	19M7932	CAP SCREW	2		M8 X 16, (MOUNTS PLATE TO COWL)
	24M7238	WASHER	2		8.700 X 17 X 2 MM, (MOUNTS PLATE TO COWL)
6	T74416	CLAMP	2		
7	24H1305	WASHER	1		13/32" X 13/16" X 0.065"
8	19M7557	CAP SCREW	1		M10 X 16
9	37M7066	SCREW	2		
10	AT150089	SWITCH	1		TURN SIGNAL
11	AT140962	SWITCH	1		FRONT WIPER (WITH CAB)
12	AT149830	SWITCH	1		FRONT LIGHT
13	AT140966	SWITCH	1		(WARNING FLASHER)
14	AT140963	SWITCH	1		WINDSHIELD WASHER
15	57M7102	BULB	1		
16	AL36535	SOCKET	1		

FRONT CONSOLE HARNESS
(SERIAL NO. 872329-)

TP57931 -UN-15SEP98

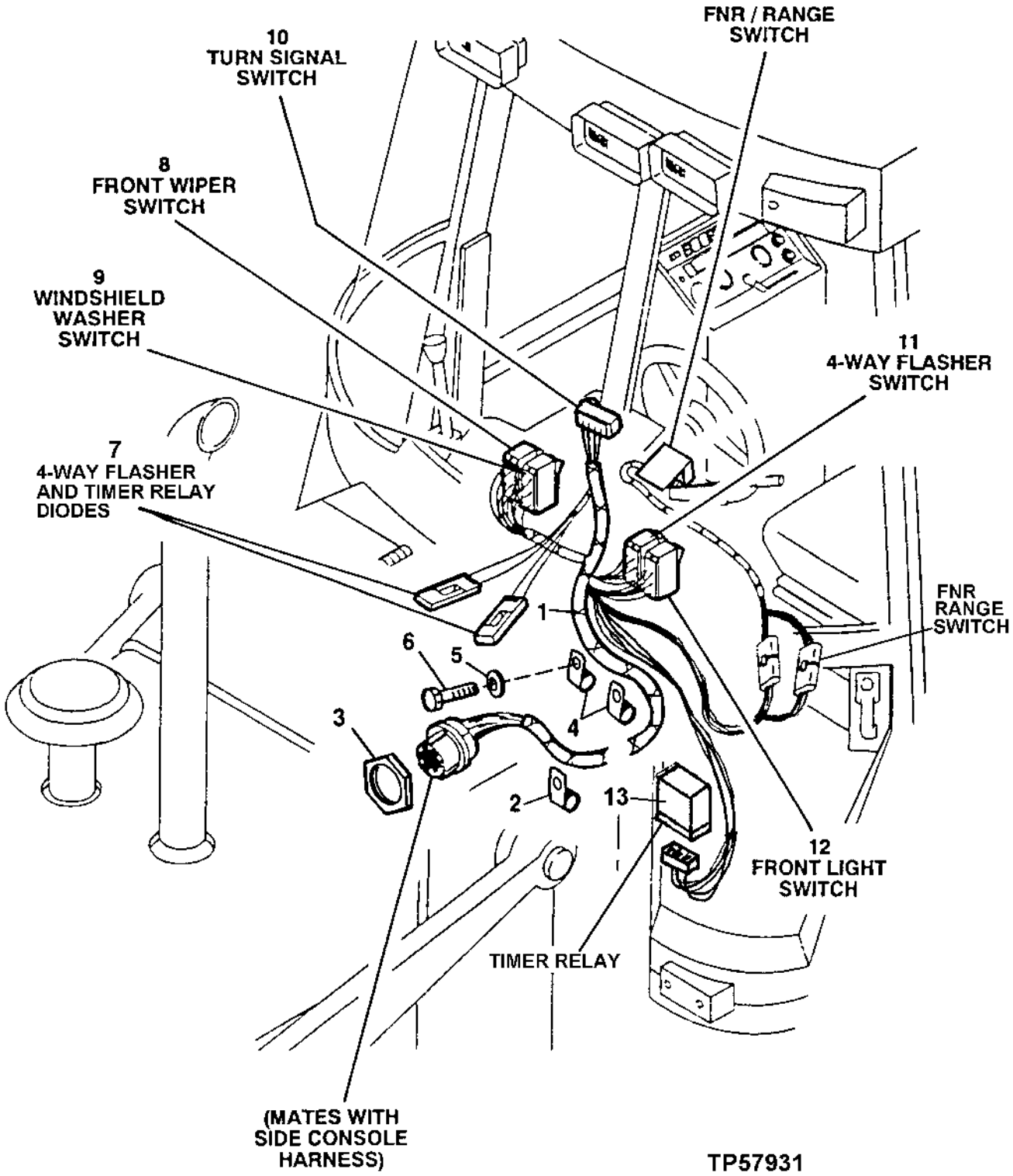

FRONT CONSOLE HARNESS
(SERIAL NO. 872329-)

KEY	PART NO.	PART NAME	QTY	SERIAL NO.	REMARKS
1	AT184860	CONSOLE LAMP WIRING HARNESS	1		
2	T74416	CLAMP	1		
3	E73240	NUT	1		1-11/16"
4	AH89557	CLIP	2		
5	24H1305	WASHER	3		13/32" X 13/16" X 0.065"
6	19M7557	CAP SCREW	3		M10 X 16
7	AT103399	DIODE	2		
8	AT175071	WIPER SWITCH	1		FRONT WIPER
9	AT175072	WIPER SWITCH	1		WINDSHIELD WASHER
10	AT175300	SWITCH	1		TURN SIGNAL
	T162380	BULB	1		
11	AT175070	SWITCH	1		4-WAY FLASHER
	T162380	BULB	1		
12	AT175069	SWITCH	1		FRONT LIGHT
13	AT180485	RELAY MODULE	1		

CAB ROOF WIRING HARNESS

TP50451 -UN-07SEP96

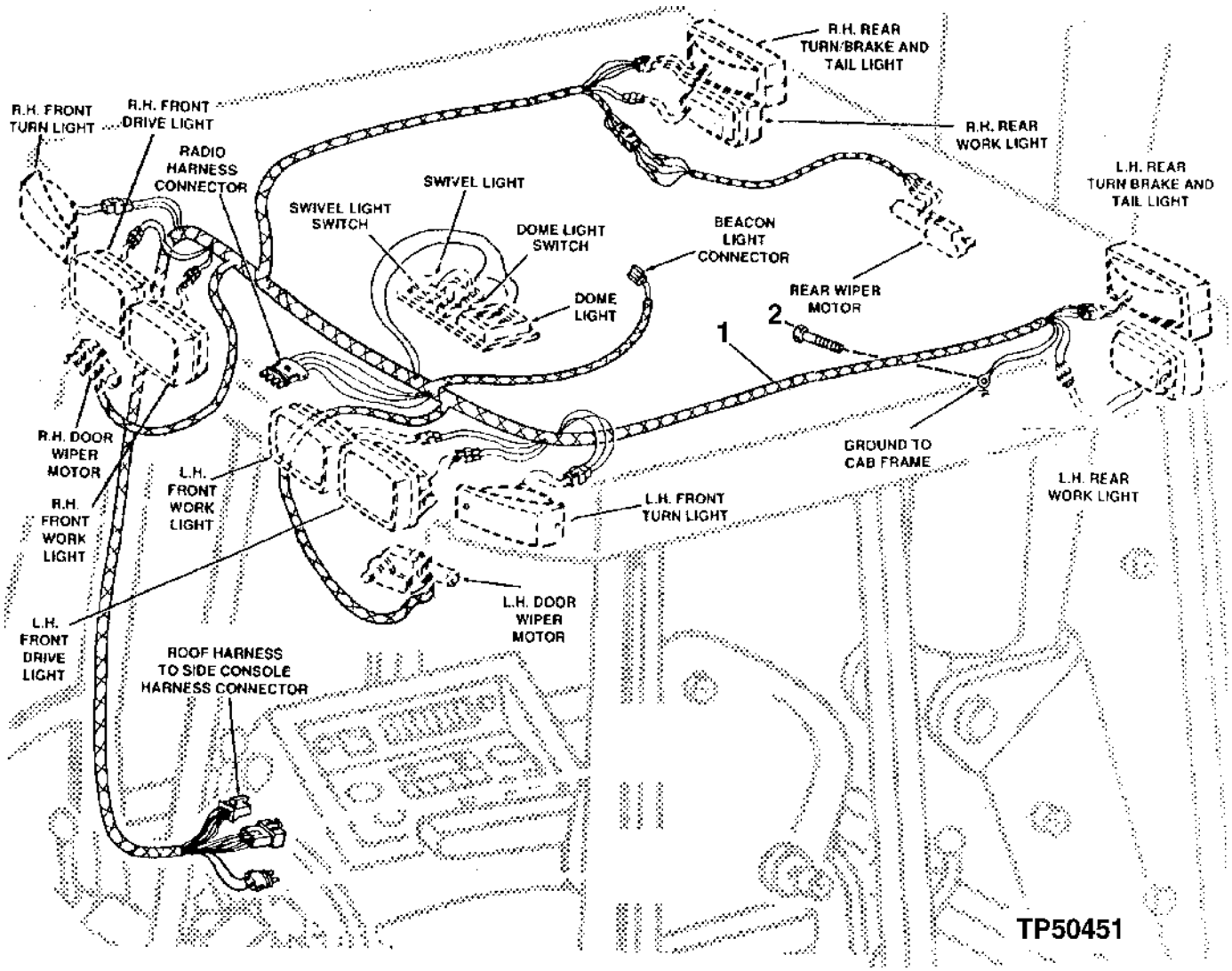

CAB ROOF WIRING HARNESS

KEY	PART NO.	PART NAME	QTY	SERIAL NO.	REMARKS
1	AT157311	WIRING HARNESS	1	-830204	
	AT176553	CAB WIRING HARNESS	1	830205-	
2	37H29	SCREW	1		5/16" X 5/8"

ROPS ROOF WIRING HARNESS

TP50480 -UN-02OCT96

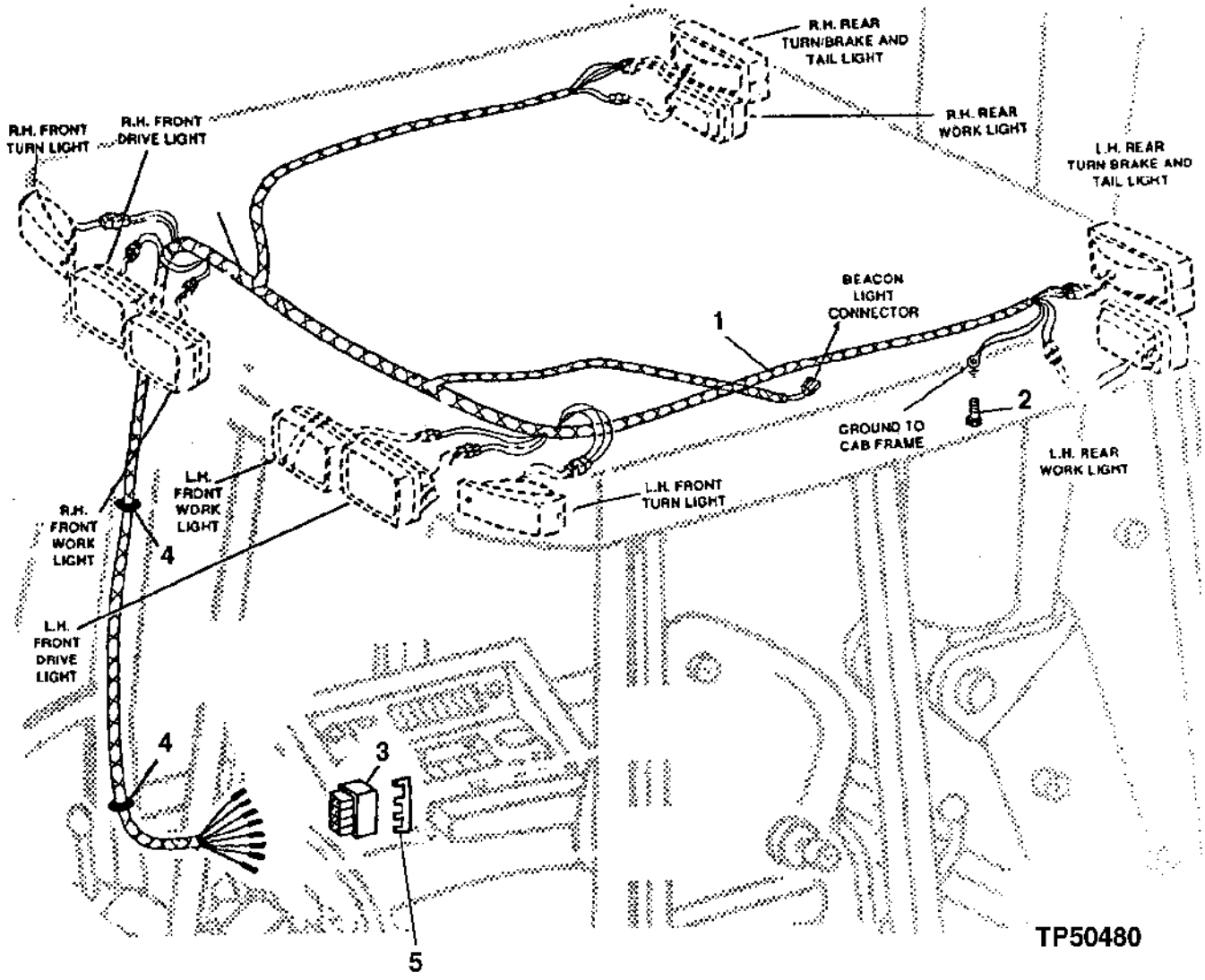

ROPS WIRING HARNESS

KEY	PART NO.	PART NAME	QTY	SERIAL NO.	REMARKS
1	AT157312	WIRING HARNESS	1	-872328	
	AT175056	ROOF WIRING HARNESS	1	872329-	
2	T80176	SELF-LOCKING SCREW	1	-797640	5/16" X 1-1/4"
	37H29	SCREW	1	797641-	5/16" X 5/8"
3	T23851	HOUSING	1	-872328	
	T160715	CONNECTOR	1	872329-	
4	T70502	GROMMET	2		
5	T160716	LOCK	1	872329-	CONNECTOR

TRANSMISSION SOLENOID HARNESS
(SERIAL NO. -872328)

TP42950 -UN-01JAN94

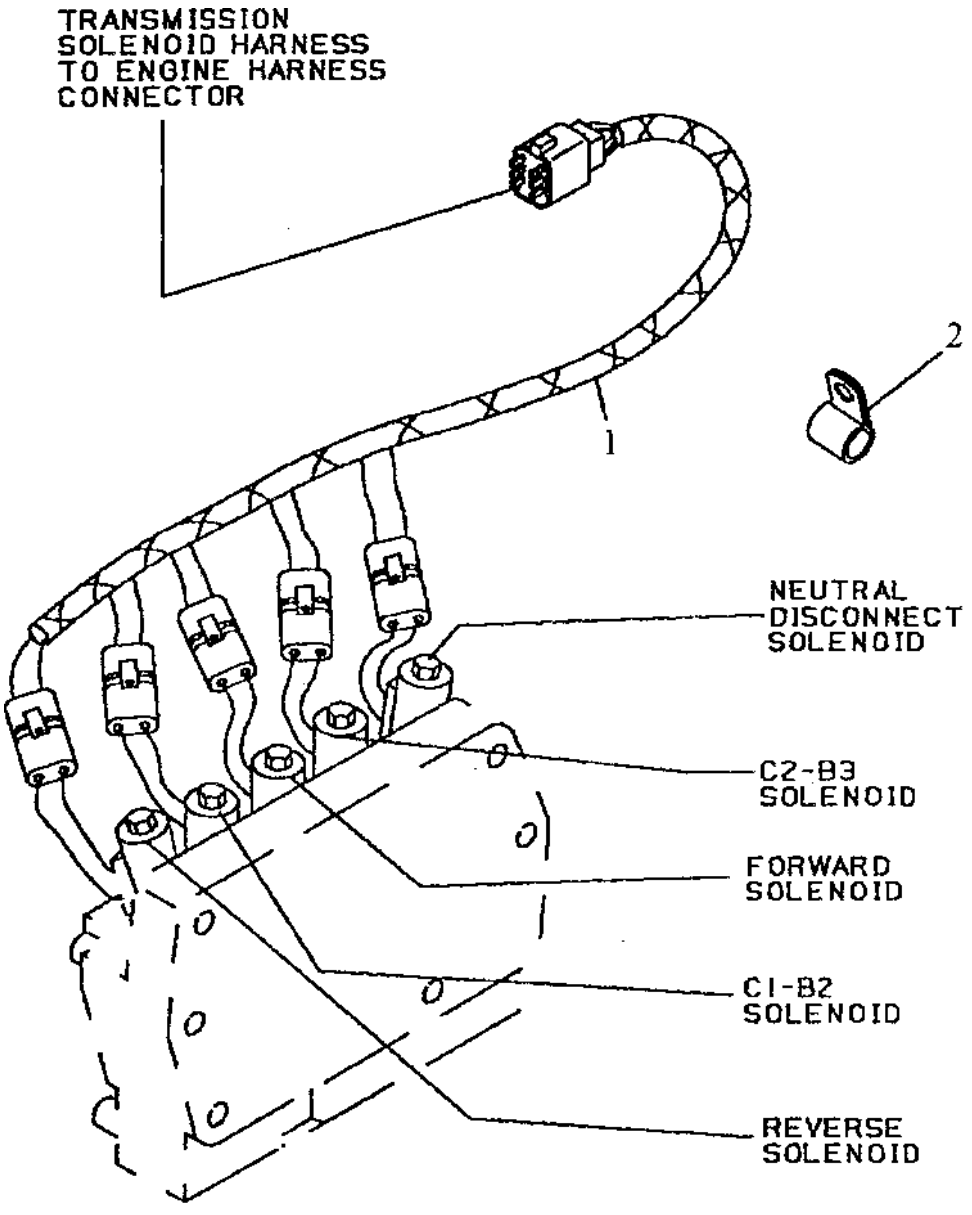

TP42950

TRANSMISSION SOLENOID HARNESS
(SERIAL NO. -872328)

KEY	PART NO.	PART NAME	QTY	SERIAL NO.	REMARKS
1	AT160686	WIRING HARNESS	1		
2	AH89557	CLIP	2		

RADIO WIRING HARNESS

TP42949 -UN-01JAN94

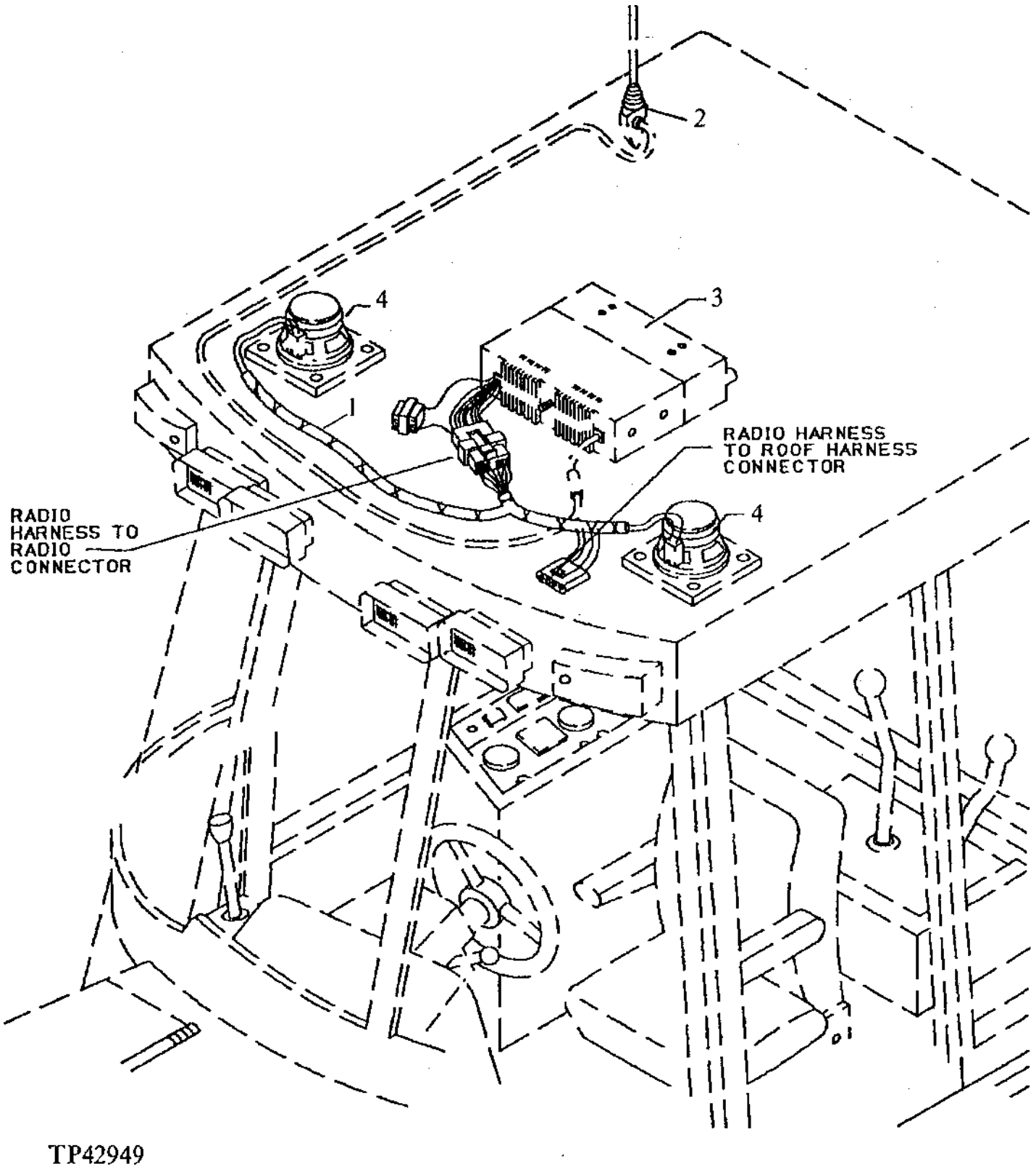

RADIO WIRING HARNESS

KEY	PART NO.	PART NAME	QTY	SERIAL NO.	REMARKS
1	AT150707	WIRING HARNESS	1		
2	AR104516	ANTENNA	1		
3	.....	RADIO	1		AM/FM STEREO (AT148348 NO LONGER AVAILABLE) (SUB AT192754) (ALSO ORDER T184860 AND AT191243)
	AT192754	RADIO	1		(SUB FOR AH167570, THIS APPLICATION)
4	R99016	SPEAKER	2		

SELECTIVE FLOW SOLENOID VALVE KIT
(ELECTRICAL COMPONENTS)

TP58053 -UN-23JUL99

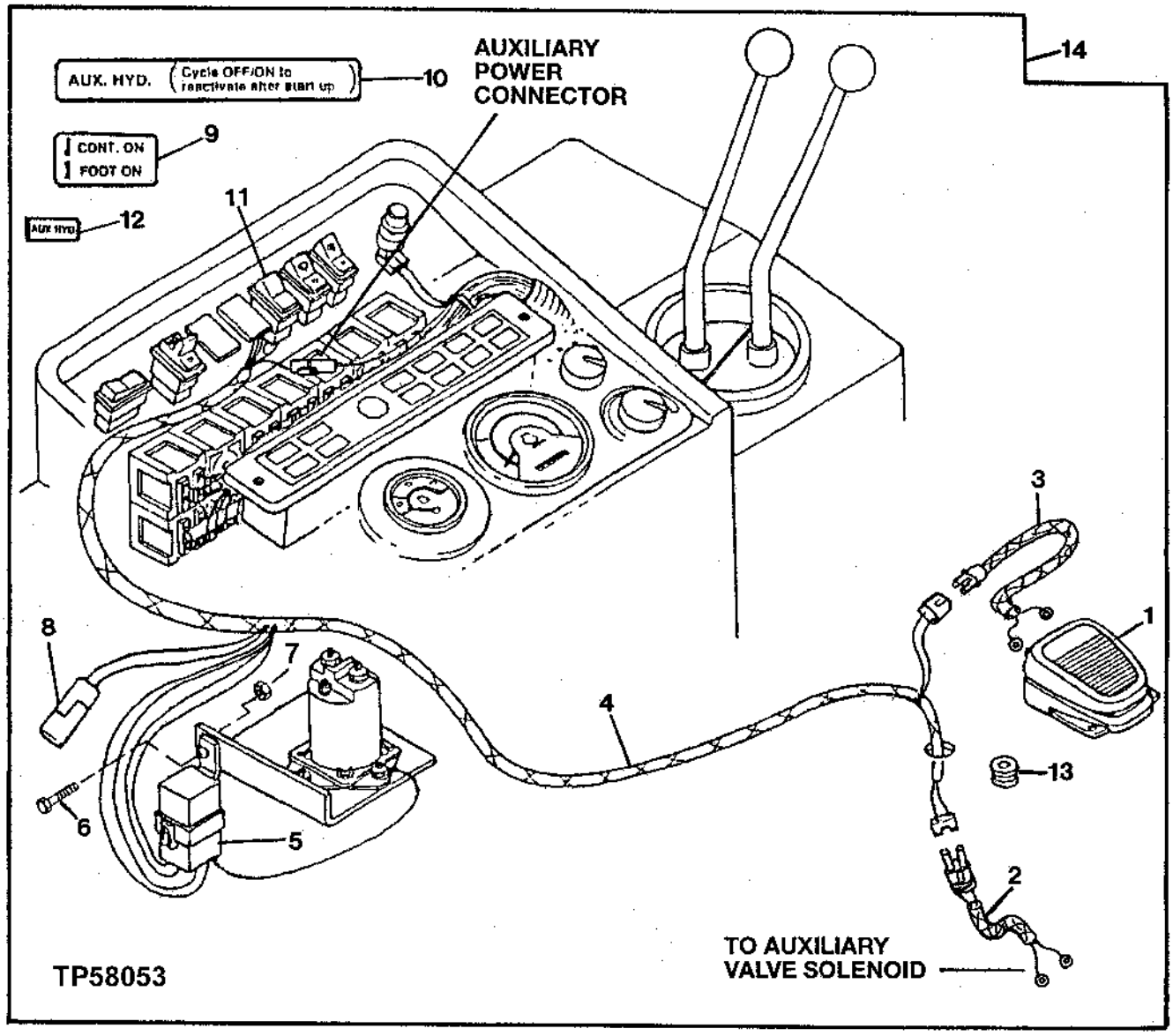

SELECTIVE FLOW SOLENOID VALVE KIT
(ELECTRICAL COMPONENTS)

KEY	PART NO.	PART NAME	QTY	SERIAL NO.	REMARKS
1	AT82210	SWITCH	1		
2	AT156432	WIRING HARNESS	1	-872328	
	R78053	PIN CONTACT CONNECTOR BODY	1	-872328	
	AT184158	WIRING HARNESS	1	872329-	
3	AT156431	WIRING HARNESS	1		
4	AT156430	WIRING HARNESS	1	-872328	
	AT190316	WIRING HARNESS	1	872329-	(SUB FOR AT185889, THIS APPLICATION)
5	AT75769	RELAY	1		
6	19M7560	CAP SCREW	1		M6 X 16
7	14M7272	NUT	1		M6
8	AR94101	DIODE	1		
9	T142093	LABEL	1		
	T160729	LABEL	1		
10	T142096	LABEL	1		
11	T142081	SWITCH	1	-872328	
	AT175604	SWITCH	1	872329-	
	T162380	BULB	1	872329-	
12	T149199	LABEL	1		AUX.HYD. - FOOT CONTROL
13	N30256	GROMMET	1		
	T164567	GROMMET	1		
14	**AT184655**	**KIT**	**1**	**-872328**	**KIT ALSO INCLUDES AUXILIARY VALVE AND SOLENOID, HYDRAULIC HOSES AND ATTACHING HARDWARE. (SUB FOR AT159495)**
	AT184362	**KIT**	**1**	**872329-**	**KIT ALSO INCLUDES AUXILIARY VALVE AND SOLENOID, HYDRAULIC HOSES AND ATTACHING HARDWARE.**

HEATER BLOWER MOTOR WIRING HARNESS
(SERIAL NO. -816286)

TP42968 -UN-01JAN94

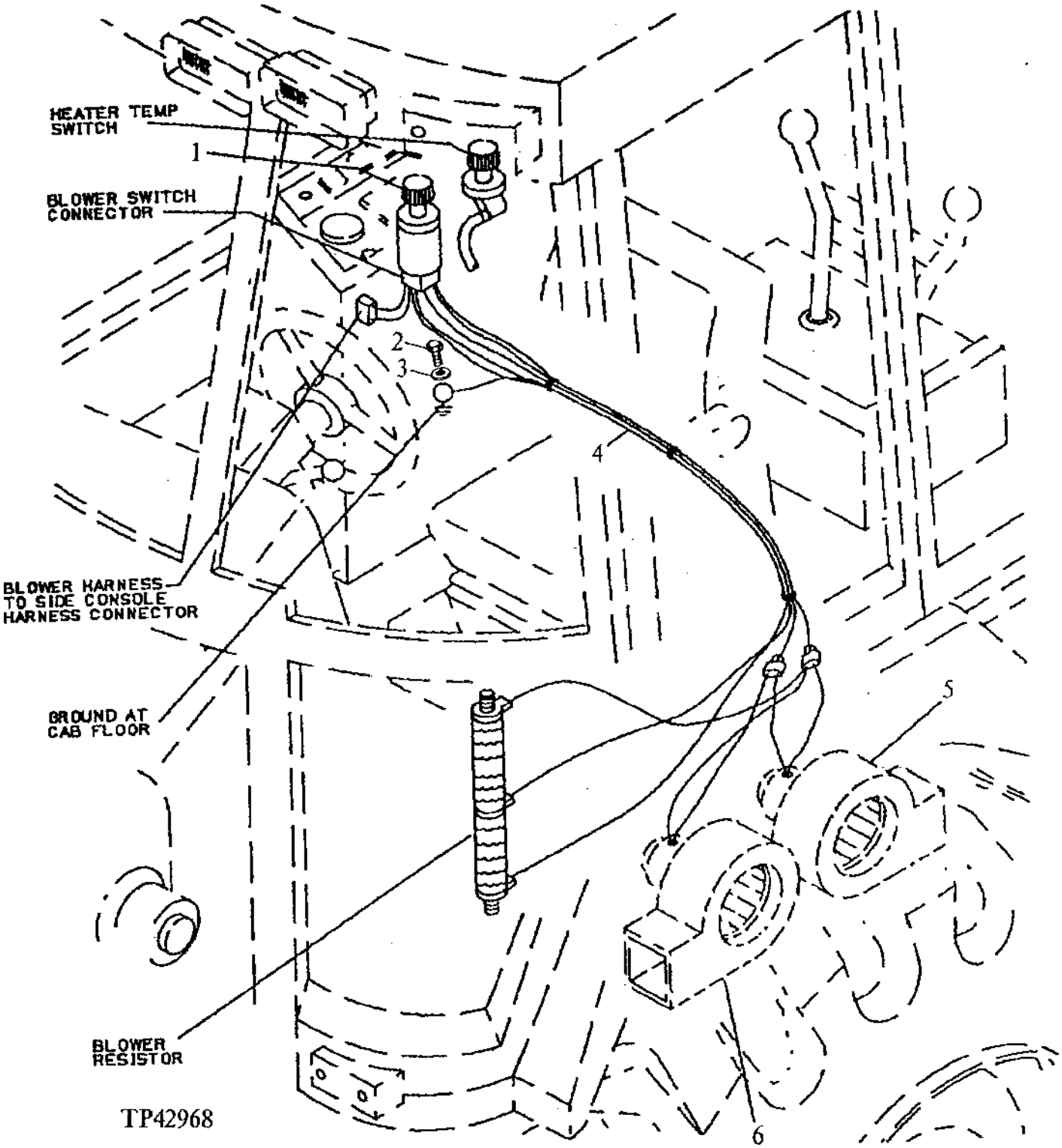

HEATER BLOWER MOTOR WIRING HARNESS
(SERIAL NO. -816286)

KEY	PART NO.	PART NAME	QTY	SERIAL NO.	REMARKS
1	AL36529	SWITCH	1		BLOWER (WITH CAB)
	E46066	NUT	2		7/16"
	AT145907	KNOB	1		
2	19M8425	CAP SCREW	1		M6 X 16
3	24M7293	WASHER	1		6.500 X 13 X 1.600 MM
4	AT141449	WIRING HARNESS	1		BLOWER
5	AT145593	ELECTRIC MOTOR	1		HEATER BLOWER (CW ROTATION - OPPOSITE SHAFT END)
6	AT141208	ELECTRIC MOTOR	1		HEATER BLOWER (CCW ROTATION - OPPOSITE SHAFT END)

AIR CONDITIONING WIRING HARNESS & SWITCHES
(SERIAL NO.816287-830204)

TP52758 -UN-14MAR96

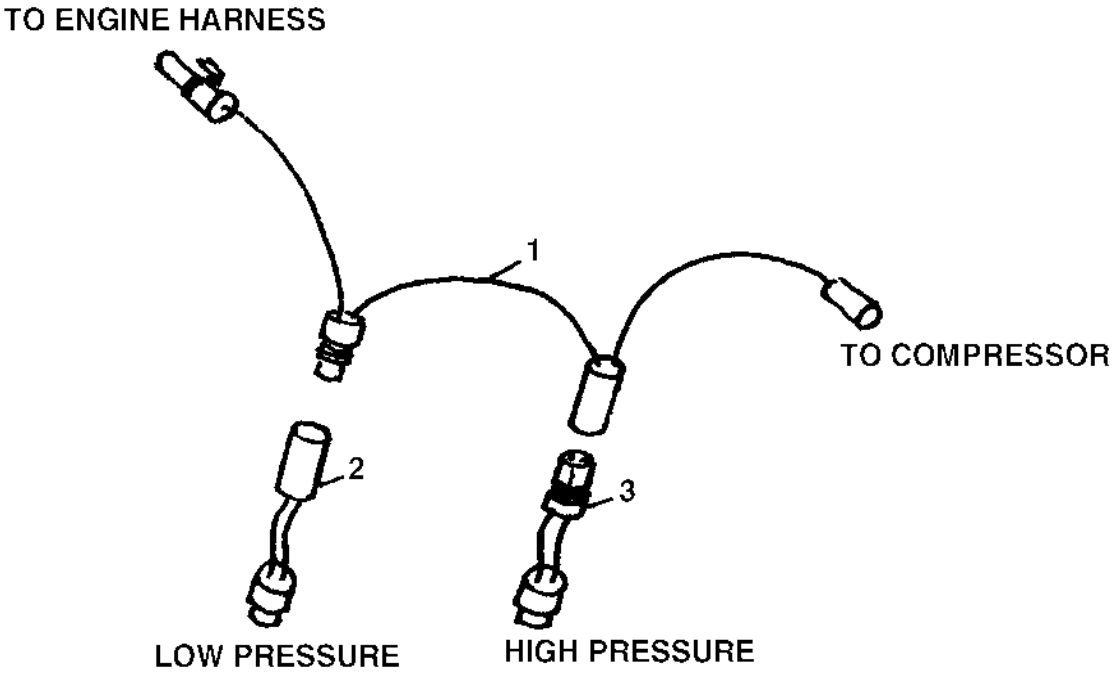

TP52758

AIR CONDITIONING WIRING HARNESS AND SWITCHES
(SERIAL NO.816287-830204)

KEY	PART NO.	PART NAME	QTY	SERIAL NO.	REMARKS
1	AT174783	WIRING HARNESS	1		BLOWER (WITH CAB)
2	RE60887	LOW PRESSURE SWITCH	1		
3	RE60888	HIGH PRESSURE SWITCH	1		

AIR CONDITIONING WIRING HARNESS AND SWITCHES
(SERIAL NO.830205-)

TP52758 -UN-14MAR96

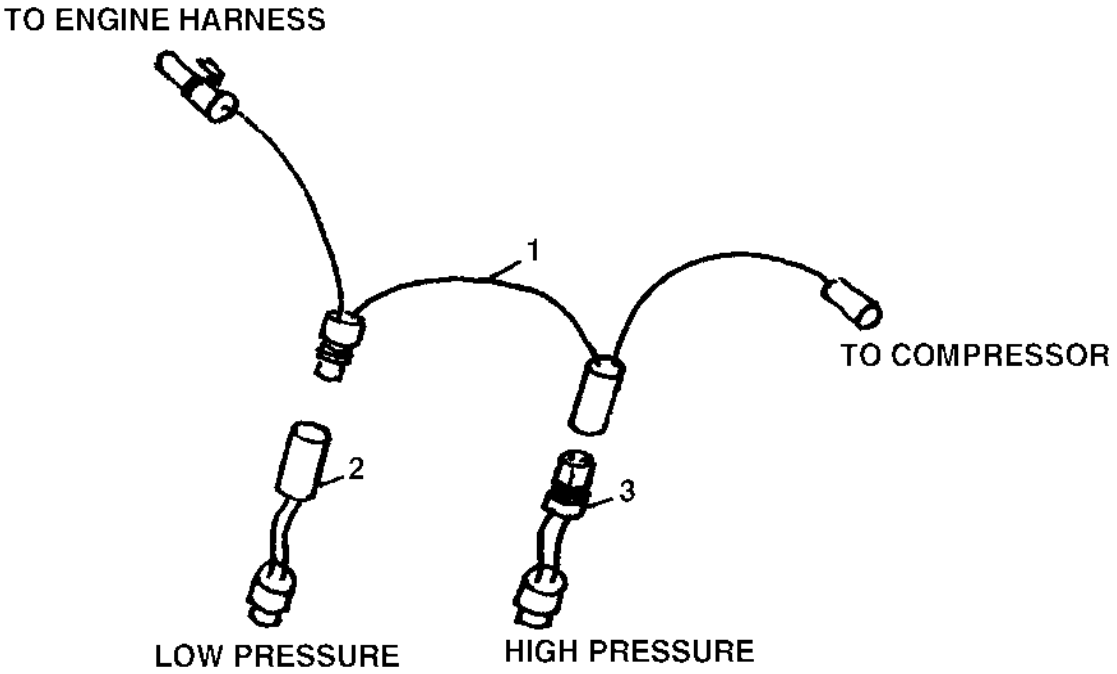

TP52758

AIR CONDITIONING WIRING HARNESS AND SWITCHES
(SERIAL NO.830205-)

KEY	PART NO.	PART NAME	QTY	SERIAL NO.	REMARKS
1	AT178047	WIRING HARNESS	1		A/C COMPRESSOR
2	RE60887	LOW PRESSURE SWITCH	1		LOW PRESSURE
3	RE60888	HIGH PRESSURE SWITCH	1		HIGH PRESSURE

WIRE LEAD KIT

TP24072 -UN-01JAN94

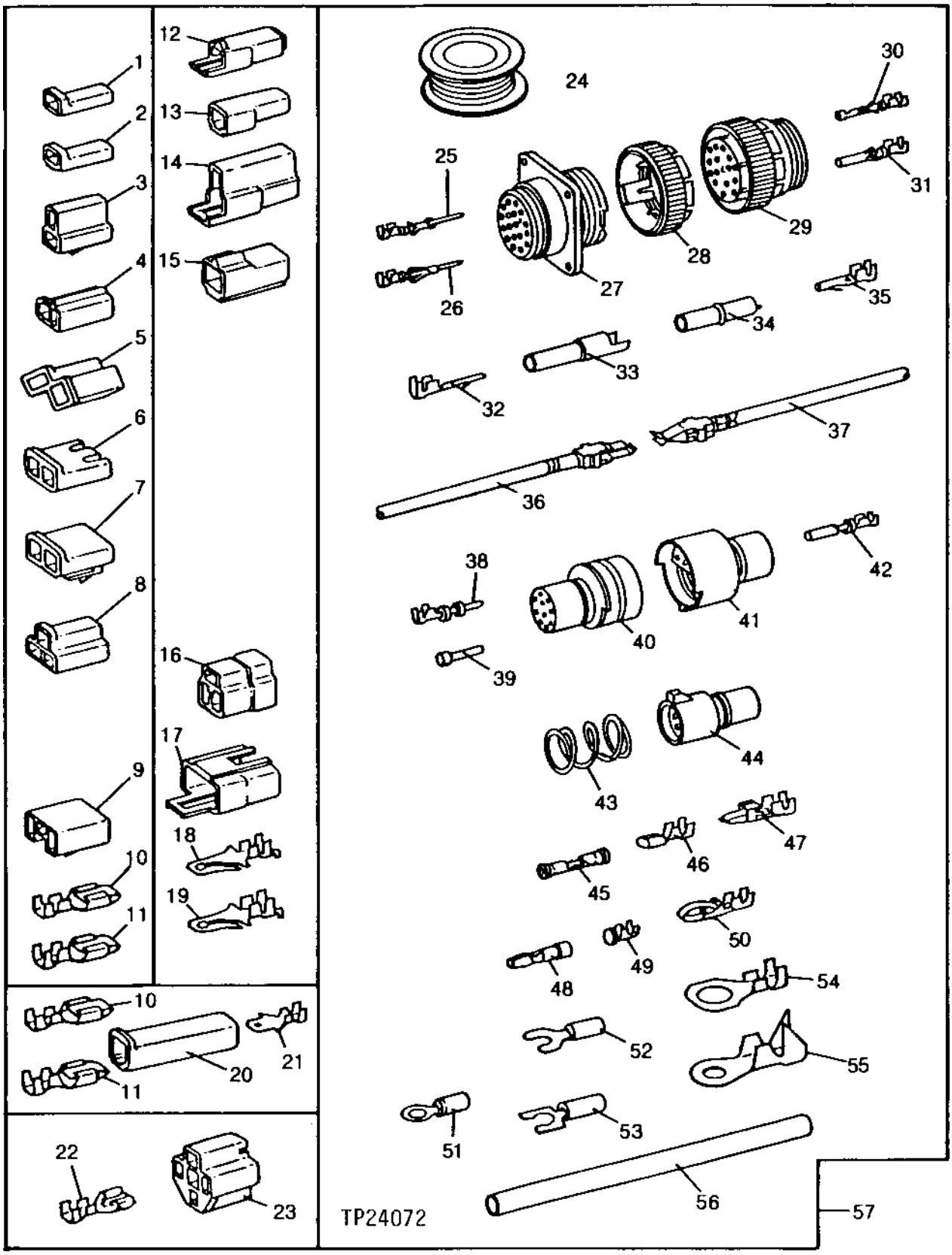

WIRE LEAD KIT

KEY	PART NO.	PART NAME	QTY	SERIAL NO.	REMARKS
1	T28583	RECEPTACLE CONNECTOR BODY	1		(B)
2	M43835	FLAT CONNECTOR	1		(B)
3	R77476	CONNECTOR	1		(A)
4	R77477	RECEPTACLE CONNECTOR BODY	1		(A)
5	R77479	CONNECTOR	1		(A)
6	R77480	RECEPTACLE CONNECTOR BODY	1		(A)
7	R77481	CONNECTOR	1		(A)
8	R77482	CONNECTOR	1		
9	H104855	RECEPTACLE CONNECTOR BODY	1		
10	U46662	TERMINAL	1		(E) (F)
11	N115096	TERMINAL	1		(G) (PKG. OF 15)
12	T28585	TAB CONNECTOR BODY	1		(B)
13	R77475	CONNECTOR	1		(B)
14	T28586	CONNECTOR	1		(A)
15	R77478	CONNECTOR	1		(A)
16	R77483	CONNECTOR	1		
17	R48887	TAB CONNECTOR BODY	1		
18	T34067	TERMINAL	1		(E) (F)
19	R77484	TERMINAL	1		(G) (PKG. OF 15)
20	U46370	CONNECTOR	1		(B)
21	R77485	TAB	1		(C) (F)
22	R77486	TERMINAL	1		(E) (F)
23	R77487	CONNECTOR	1		(B)
24	R66321	WIRING LEAD	1		15M (50 FT.) 10 GA.
	R66320	WIRING LEAD	1		30.5M (100 FT.) 12 GA.
	R77501	WIRE	1		30.5M (100 FT.) 14 GA.
	R77500	WIRE	1		30.5M (100 FT.) 16 GA.
	R77499	WIRE	1		30.5M (100 FT.) 18 GA.
	R77498	WIRE	1		30.5M (100 FT.) 20 GA.
25	R77462	PIN CONTACT	1		(PKG. OF 40) (20-22 OR 24 GA. WIRE)
26	R77464	PIN CONTACT	1		(H) (PKG. OF 50)
27	R77456	RECEPTACLE	1		(37 WAY)
28	R77458	CONNECTOR	1		(A) (SIZE 23)
	R77459	CONNECTOR	1		(A) (SIZE 17)
	R77460	CONNECTOR	1		(A) (SIZE 13)
	R77461	CONNECTOR	1		(A) (SIZE 11)
29	R77457	ELECTRICAL PLUG	1		(37 WAY)
30	R77463	SOCKET CONTACT	1		(PKG. OF 40) (20-22 OR 24 GA. WIRE)
31	R77465	SOCKET CONTACT	1		(H) (PKG. OF 50)
32	R77468	TERMINAL	1		(PKG. OF 5)
33	R77466	CONNECTOR	1		(A)
34	R77467	CONNECTOR	1		(A)

(A) PKG. OF 2
(B) PKG. OF 3
(C) PKG. OF 10
(D) PKG. OF 20
(E) PKG. OF 25
(F) 14 OR 16 GA. WIRE
(G) 10 OR 12 GA. WIRE
(H) 14-16 OR 18 GA. WIRE

WIRE LEAD KIT

TP24072 -UN-01JAN94

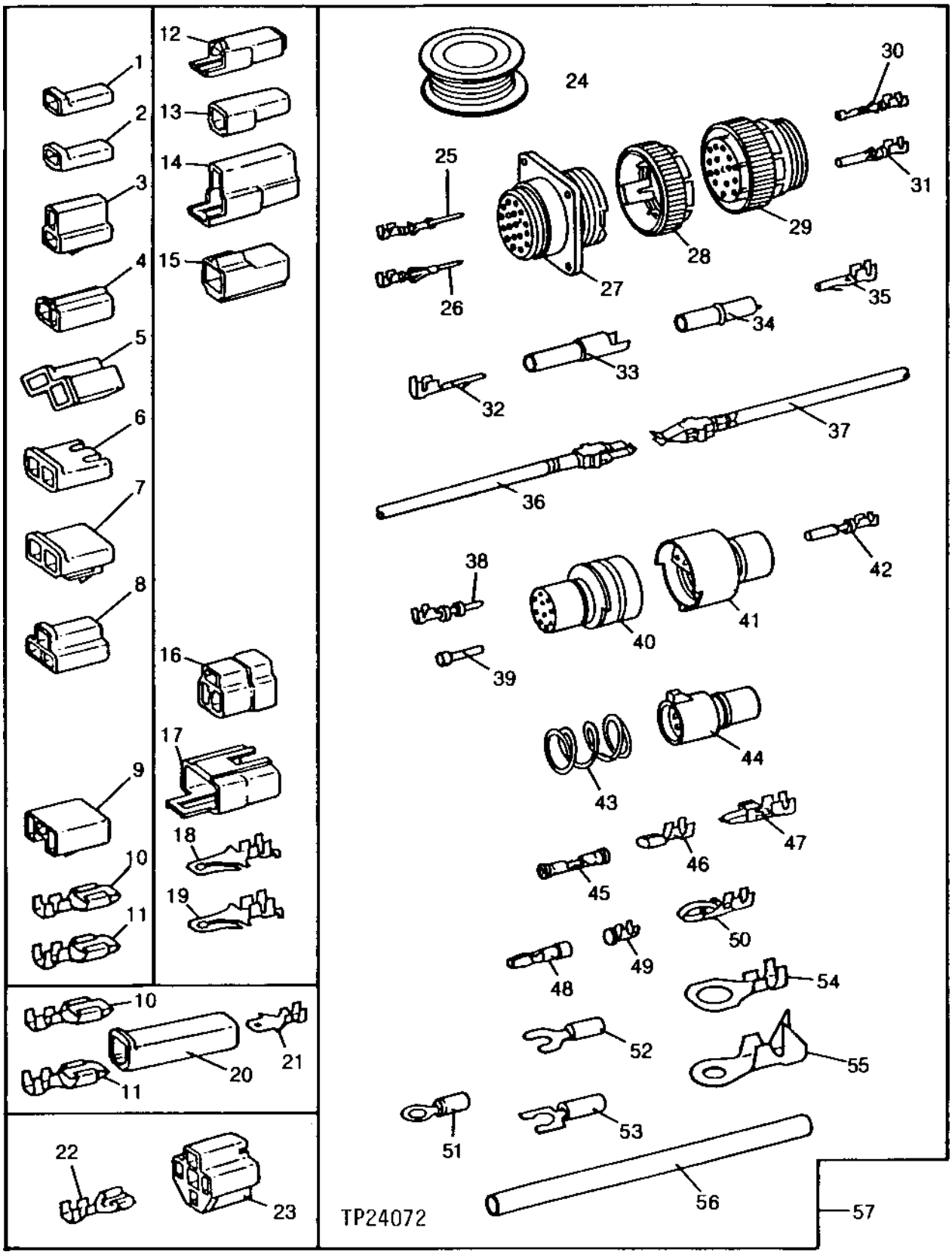

WIRE LEAD KIT

KEY	PART NO.	PART NAME	QTY	SERIAL NO.	REMARKS
35	R77469	TERMINAL	1		(PKG. OF 5)
36	RE11156	TERMINAL	1		(B) (MALE)
37	RE11157	TERMINAL	1		(B) (FEMALE)
38	R70222	PIN CONTACT	1		(D) (H)
39	R70221	ELECTRICAL PLUG	1		(E)
40	R70219	PLUG	1		(A) (10 WAY)
	R70217	PLUG	1		(A) (7 WAY)
	R70215	PLUG	1		(A) (4 WAY)
	R70213	PIN CONTACT CONNECTOR BODY	1		(A) (3 WAY)
	R70211	CONNECTOR	1		(A) (2 WAY)
41	R70218	RECEPTACLE	1		(A) (10 WAY)
	R70216	RECEPTACLE	1		(A) (7 WAY)
	R70214	RECEPTACLE	1		(A) (4 WAY)
	R70212	RECEPTACLE	1		(A) (3 WAY)
	R70210	RECEPTACLE	1		(A) (2 WAY)
42	AR91793	SOCKET CONTACT	1		(D)
43	R30378	SPRING	1		(C)
44	R77474	CONNECTOR	1		(A) (6 WAY)
45	R77470	TERMINAL	1		SPLICE (PKG. OF 15) (16-18-20 OR 22 GA. WIRE)
	R77471	TERMINAL	1		(C) (G) SPLICE
	R77472	TERMINAL	1		(A) SPLICE (8 GA. WIRE)
	R77473	TERMINAL	1		(A) SPLICE (6 GA. WIRE)
46	R65607	TERMINAL	1		(C) (18 OR 20 GA. WIRE)
47	U46664	TERMINAL	1		(C) (F)
48	R32026	TERMINAL	1		(D) (F)
49	R65602	SOCKET CONTACT	1		(C) (16 OR 18 GA. WIRE)
50	R70220	TERMINAL	1		(C) (18 OR 20 GA. WIRE)
51	R77489	TERMINAL	1		(D) (14-16-18 OR 20 GA. WIRE) (NO. 10 EYELET)
	R77493	TERMINAL	1		(D) (G) (NO. 10 EYELET)
	R77488	TERMINAL	1		(D) (14-16-18 OR 20 GA. WIRE) (3/8" EYELET)
	R77490	TERMINAL	1		(D) (G) (1/2" EYELET)
52	R77496	TERMINAL	1		(D) (F) (NO. 8 SPADE)
	R77495	TERMINAL	1		(D) (18 GA. WIRE) (NO. 10 SPADE)
53	R77497	TERMINAL	1		(D) (F) (NO. 6 SPADE)
54	R77491	TERMINAL	1		(D) (G) (3/8" EYELET)
	R77492	TERMINAL	1		(D) (G) (1/4" EYELET)
55	R77494	TERMINAL	1		(D) (6 OR 8 GA. WIRE) (1/4" EYELET)
56	R77502	TUBE	1		(PKG. OF 8) 3/8" (HEAT SHRINK)
	R77503	TUBE	1		(PKG. OF 8) 3/16" (HEAT SHRINK)
57	PM797NA	KIT	1		(SUB FOR RE11154)

(A) PKG. OF 2
(B) PKG. OF 3
(C) PKG. OF 10
(D) PKG. OF 20
(E) PKG. OF 25
(F) 14 OR 16 GA. WIRE
(G) 10 OR 12 GA. WIRE
(H) 14-16 OR 18 GA. WIRE

WEATHERPACK TERMINALS AND CONNECTORS

TP17921 -UN-01JAN94

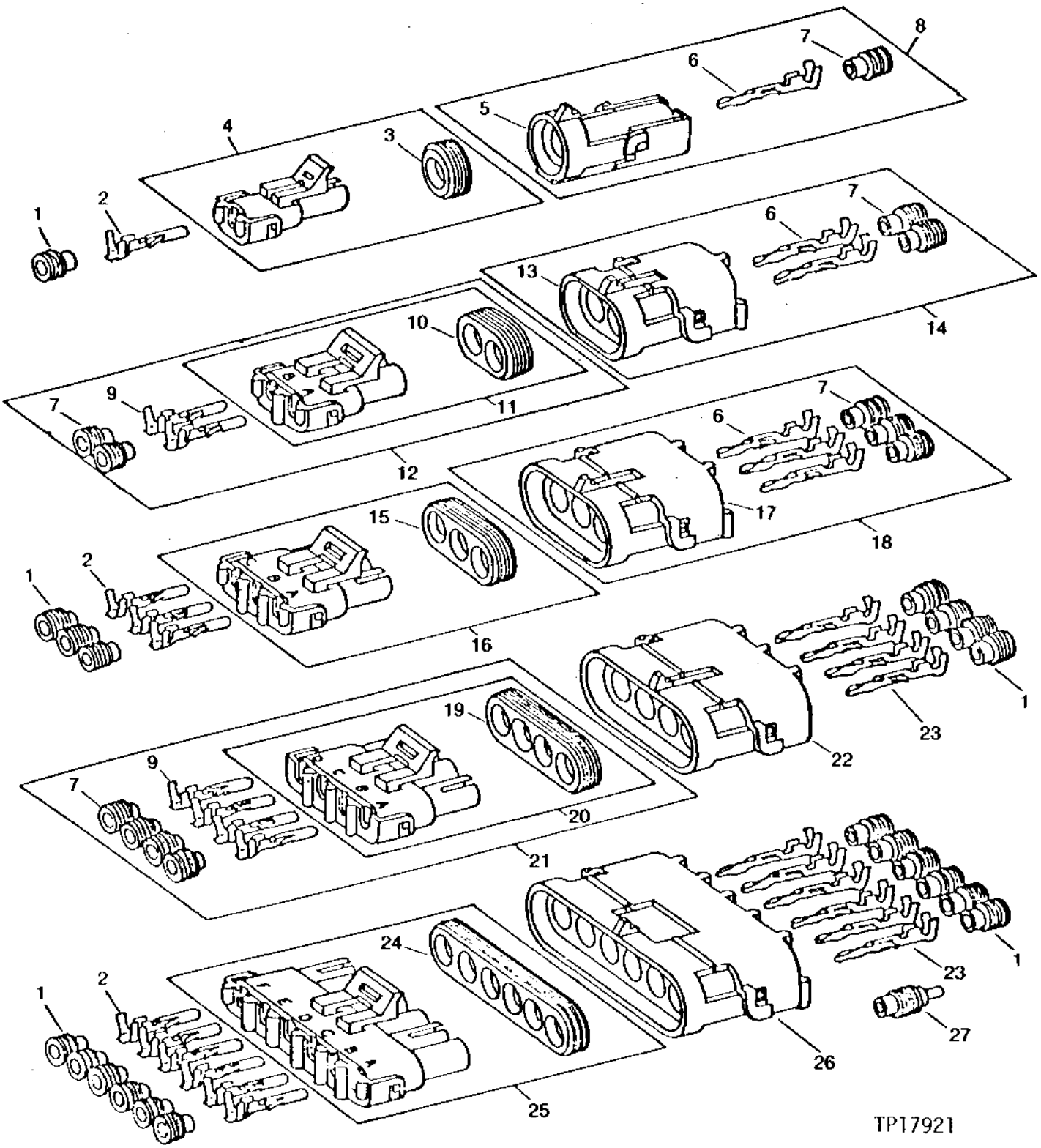

WEATHERPACK TERMINALS AND CONNECTORS

KEY	PART NO.	PART NAME	QTY	SERIAL NO.	REMARKS
1	R78063	TERMINAL NIPPLE	1		(PKG. OF 40) (16 GA. WIRE) (GRAY)
	R78059	ELECTRICAL PLUG	1		(PKG. OF 40) (18 OR 20 GA. WIRE) (GREEN)
	R78062	TERMINAL NIPPLE	1		(PKG. OF 40) (14 GA. WIRE) (BLUE)
2	R78057	SOCKET CONTACT	1		(PKG. OF 40) (18 OR 20 GA. WIRE) (NO. 19)
	R78060	SOCKET CONTACT	1		(PKG. OF 40) (14 OR 16 GA. WIRE) (NO. 15)
3	R78047	SEAL	1		(PKG. OF 5)
4	RE12362	CONNECTOR	1		(PKG. OF 3)
5	R78052	PIN CONTACT CONNECTOR BODY	1		(PKG. OF 3)
6	R78061	PIN CONTACT	1		(PKG. OF 40) (14 OR 16 GA. WIRE) (NO. 15)
7	R78063	TERMINAL NIPPLE	1		(PKG. OF 40) (16 GA. WIRE) (GRAY)
8	RE12334	CONNECTOR	1		
9	R78060	SOCKET CONTACT	1		(PKG. OF 40) (14 OR 16 GA. WIRE) (NO. 15)
10	R78048	TERMINAL NIPPLE	1		(PKG. OF 5)
11	RE12363	CONNECTOR	1		(PKG. OF 3)
12	RE12331	CONNECTOR	1		
13	R78053	PIN CONTACT CONNECTOR BODY	1		(PKG. OF 3)
14	RE12330	CONNECTOR	1		
15	R78049	SEAL	1		(PKG. OF 5)
16	RE12364	SOCKET CONT.CONNECTOR BODY	1		(PKG. OF 3)
17	R78054	PIN CONTACT CONNECTOR BODY	1		(PKG. OF 3)
18	RE12332	CONNECTOR	1		
19	R78050	SEAL	1		(PKG. OF 5)
20	RE12365	CONNECTOR	1		(PKG. OF 2)
21	RE12333	CONNECTOR	1		
22	R78055	PIN CONTACT CONNECTOR BODY	1		(PKG. OF 2)
23	R78061	PIN CONTACT	1		(PKG. OF 40) (14 OR 16 GA. WIRE) (NO. 15)
	R78058	PIN CONTACT	1		(PKG. OF 40) (18 OR 20 GA. WIRE) (NO. 19)
24	R78051	SEAL	1		(PKG. OF 5)
25	RE12366	CONNECTOR	1		(PKG. OF 2)
26	R78056	PIN CONTACT CONNECTOR BODY	1		(PKG. OF 2)
27	R78064	ELECTRICAL PLUG	1		(PKG. OF 40)

INSTRUMENT PANEL SWITCHES
(SERIAL NO. -872328)

TP57882 -UN-09JUL98

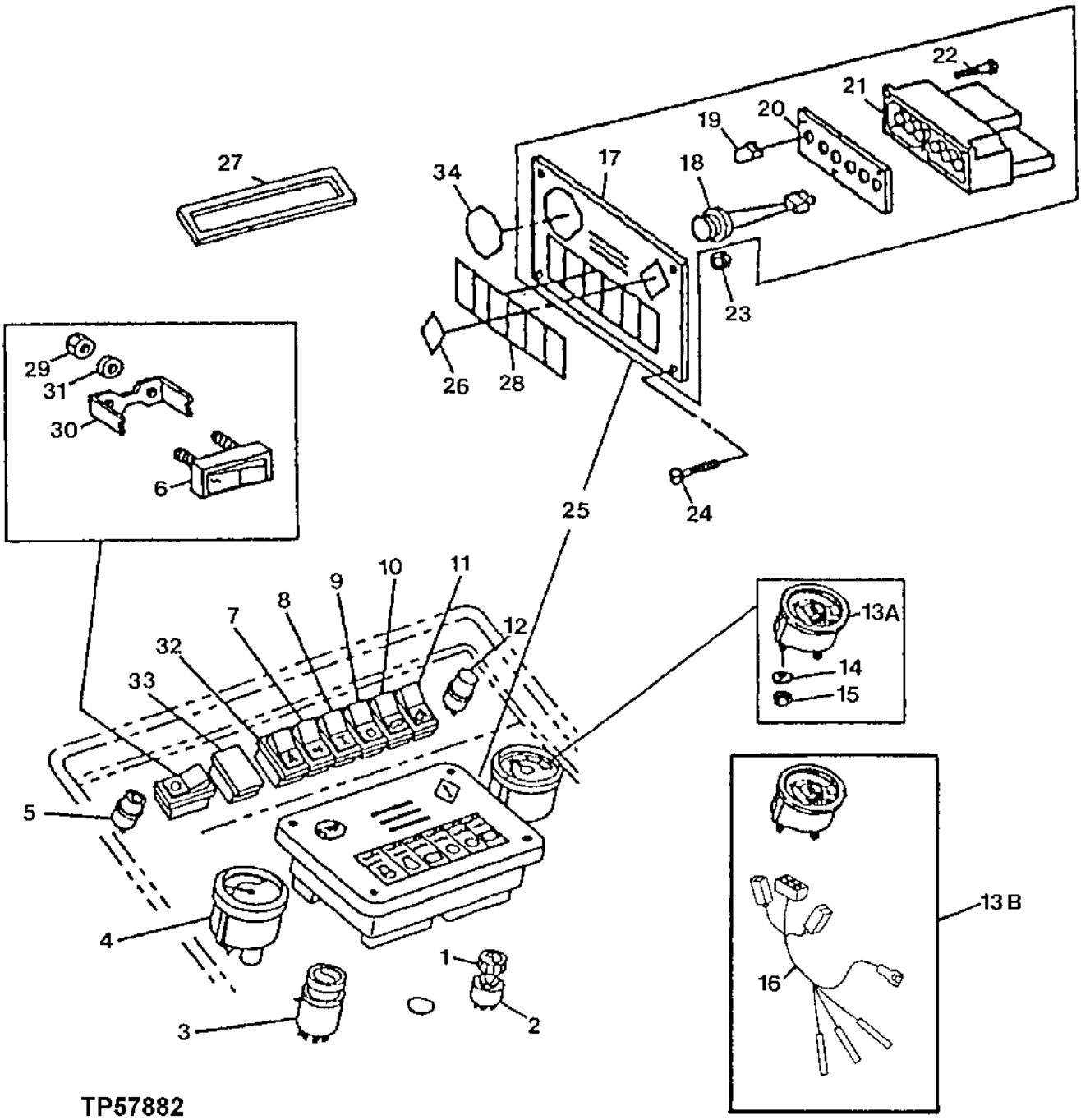

INSTRUMENT PANEL SWITCHES
(SERIAL NO. -872328)

KEY	PART NO.	PART NAME	QTY	SERIAL NO.	REMARKS
1	AT145907	KNOB	1	-816286	(WITH CAB)
	R111632	KNOB	1	816287-	(WITH CAB)
2	AL36529	SWITCH	1	-816286	HEATER BLOWER (WITH CAB)
	E46066	NUT	2		(WITH CAB)
	RE43497	AC/HEAT TEMPERATURE SWITCH	1	816287-	(WITH CAB)
3	AT145929	KEY	1		(SET OF 2) (SUB FOR AR51481)
	AT145931	SWITCH	1		KEY
	R52725	CONNECTOR	2		GROUND
	R44342	NUT	1		
4	AT104809	GAUGE	1		FUEL
	AR62407	BULB	1		
5	R39554	SWITCH	1		START AID
	T55585	CAP	1		(WITH STARTING AID)
	T154361	PLUG	1		(WITHOUT STARTING AID) (SUB FOR R56264)
6	AT165472	SWITCH	1		(SUB FOR AT141152) PARK BRAKE
	AT167214	INDICATOR LIGHT	1		(BEHIND COVER IN SWITCH) (SUB FOR 57M7102, THIS APPLICATION)
	T151169	LENS	1	-798297	(USE WITH AT167214)
7	AT151499	TOGGLE SWITCH	1		AIR CONDITIONING
	Z45833	COVER	1		
8	AT165473	SWITCH	1		(SUB FOR AT150134) (MFWD)
	AT167215	INDICATOR LIGHT	1		(BEHIND COVER IN SWITCH) (SUB FOR 57M7102, THIS APPLICATION)
	Z45833	COVER	1		
9	AT140957	SWITCH	1		(ROTATING BEACON)
	57M7102	BULB	1		
	Z45833	COVER	1		
10	AT140956	SWITCH	1		(REAR WINDOW WIPER)
11	AT149829	SWITCH	1		(REAR LIGHTS)
12	R39554	SWITCH	1		HORN
	T55501	CAP	1		HORN
13A	AT162517	TACHOMETER	1	-851804	
	RE12926	BULB	1	-851804	
13B	AT185386	KIT	1	851805-	(SUB FOR AT183105)
14	12M7060	WASHER	2	-851804	5.300 MM
15	14H631	NUT	2	-851804	0.190"
16	AT185388	WIRING HARNESS	1	851805-	(SUB FOR AT183581)
17	AT100484	INSTRUMENT PANEL	1		FACE PLATE
18	AT101132	AUDIBLE WARNING ALARM	1		
19	AR62407	BULB	6		
20	T100812	GASKET	1		
21	AT101131	MODULE	1		
22	21H1308	SCREW	3		0.138" X 3/8"
23	T82792	NUT	4		
24	T82791	SCREW	4		
25	AT100073	MONITOR CONSOLE	1	-825589	
	AR62407	BULB	2		
	AT173866	MONITOR CONSOLE	1	825590-	
26	T100475	LABEL	1		AMBER WARNING
27	Z45961	FRAME	1		SIX SWITCH MOUNTING
28	T129938	LABEL	1		FAULT LAMP
29	14M7100	NUT	2		M4
30	T118593	BRACKET	1		
31	12M7084	LOCK WASHER	2		4.300 MM
32	AT163734	INDICATOR LIGHT	1		SEAT BELT LIGHT, (SUB FOR AT160717)
33	Z45833	COVER	1		AUXILIARY SWITCH OPENING
34	T100474	SAFETY SIGN	1		RED WARNING

INSTRUMENT PANEL AND LABEL
(SERIAL NO. -872328)

TP50420 -UN-06MAY96

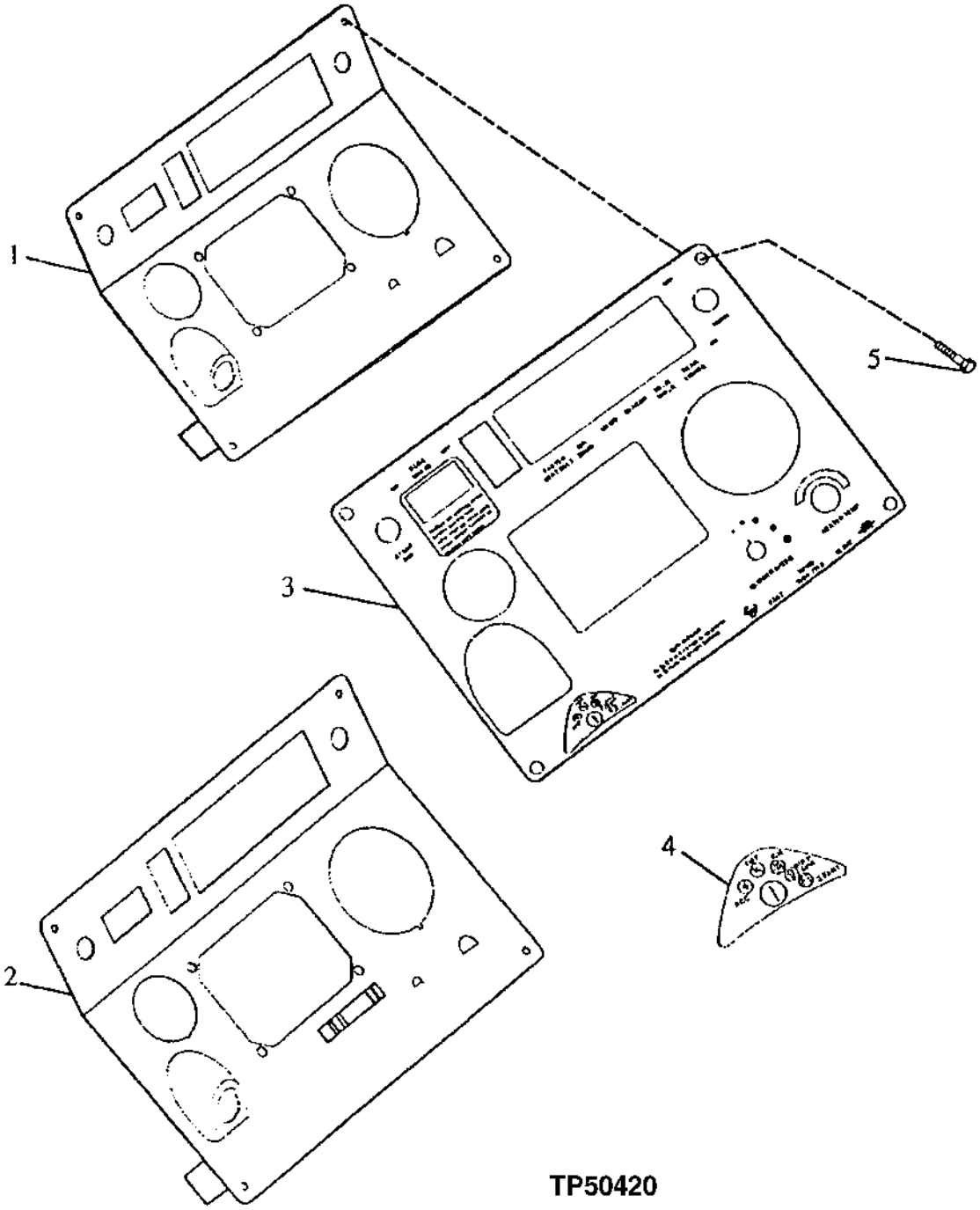

TP50420

INSTRUMENT PANEL AND LABEL
(SERIAL NO. -872328)

KEY	PART NO.	PART NAME	QTY	SERIAL NO.	REMARKS
1	.....	INSTRUMENT PANEL	1	-794465	CAB (AT162074 NO LONGER AVAILABLE) (SUB AT165397 AND T153055)
	AT165469	INSTRUMENT PANEL	1	794466-816286	CAB
	AT175380	INSTRUMENT PANEL	1	816287-	
2	.....	INSTRUMENT PANEL	1	-794521	ROPS (AT162073 NO LONGER AVAILABLE) (SUB AT165397 AND T153056)
	AT165397	INSTRUMENT PANEL	1	794522-816286	ROPS
	AT175381	INSTRUMENT PANEL	1	816287-	
3	T147119	LABEL	1	-794465	(CAB)
	T153055	LABEL	1	794466-816286	(CAB) (SUB FOR T149516)
	T147113	LABEL	1	-794521	(ROPS)
	T153056	LABEL	1	794522-	(ROPS) (SUB FOR T149517)
	T158507	LABEL	1	816287-	
4	.....	LABEL	1	-802672	(T149829 NO LONGER AVAILABLE) SWITCH POSITION, (SUB T153055 OR T153056)
5	21H1406	SCREW	4		0.190" X 3/4"

SIDE INSTRUMENT PANEL WITH GAUGES AND SWITCHES
(WITH CAB)
(SERIAL NO. 872329-)

TP58152 -UN-11JAN00

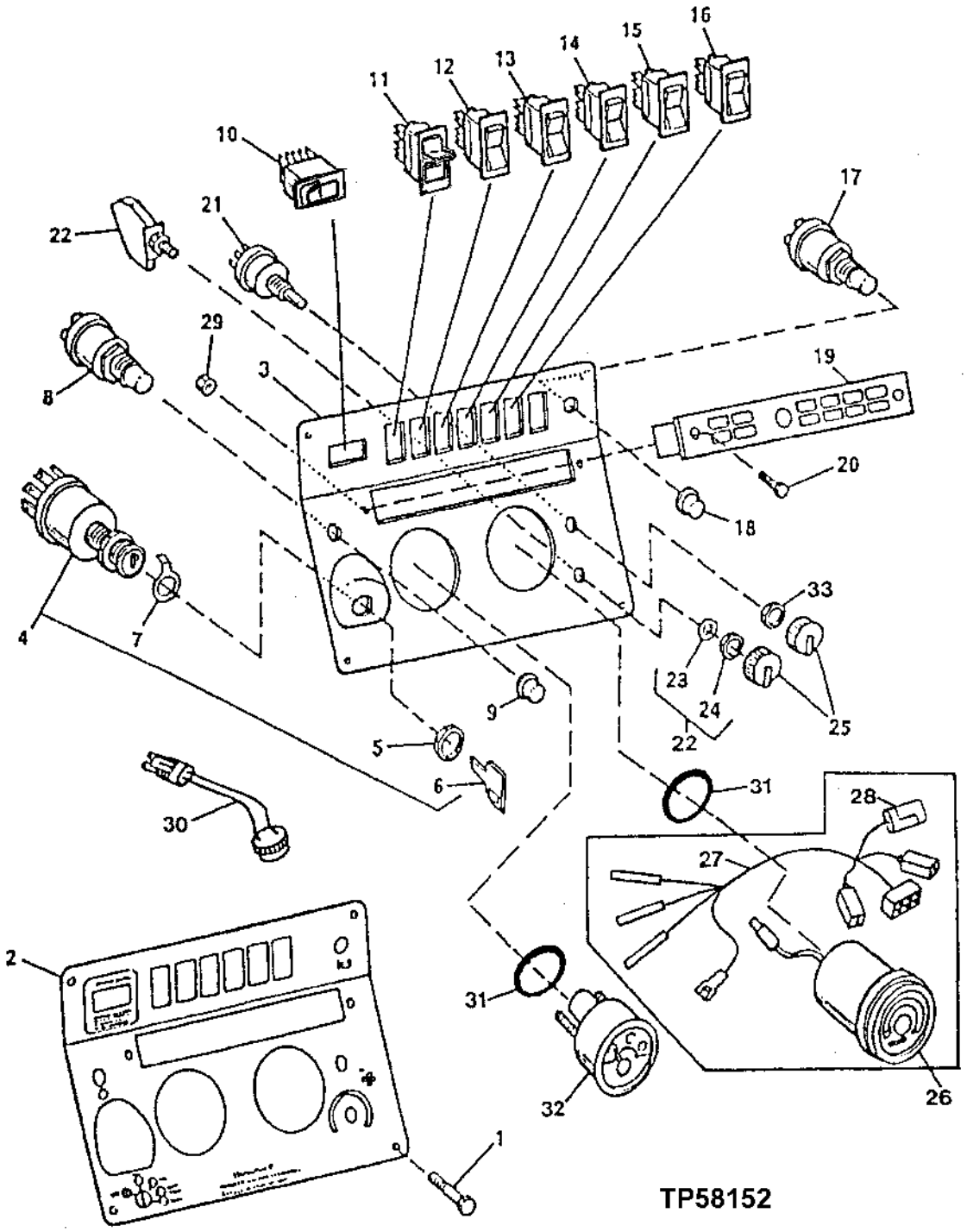

SIDE INSTRUMENT PANEL WITH GAUGES AND SWITCHES
(WITH CAB)
(SERIAL NO. 872329-)

KEY	PART NO.	PART NAME	QTY	SERIAL NO.	REMARKS
1	21H1406	SCREW	4		0.190" X 3/4"
2	T160219	LABEL	1		(INSTRUMENT PANEL)
3	AT175010	INSTRUMENT PANEL	1		
4	AT145931	SWITCH	1		IGNITION WITH KEY
5	R44342	NUT	1		
6	AT145929	KEY	1		(SET OF 2)
7	R52725	CONNECTOR	1		(GROUND)
8	R39554	SWITCH	1		(STARTING AID)
9	T55585	CAP	1		(WITH STARTING AID)
	T154361	PLUG	1		(WITHOUT STARTING AID)
10	AT189088	SWITCH	1		(PARK BRAKE) (SUB FOR AT174889, THIS APPLICATION)
11	AT175297	SWITCH	1		(MFWD)
	T163309	PLUG	1		(USE WITHOUT MFWD)
12	AT175603	ROCKER SWITCH	1		(ROTATING BEACON)
13	AT178087	ROCKER SWITCH	1		(AIR CONDITIONING)
	T163309	PLUG	1		
14	AT175604	SWITCH	1		(AUXILIARY HYDRAULICS)
	T162380	BULB	1		
	T163309	PLUG	1		
15	AT174903	WIPER SWITCH	1		(REAR WINDOW WIPER)
16	AT174891	SWITCH	1		(REAR LIGHTS)
17	R39554	SWITCH	1		(HORN)
18	T55501	CAP	1		(HORN)
19	AT184591	MONITOR	1		(FAULT/DISPLAY)
	57M7102	BULB	2		
20	T82791	SCREW	2		
21	RE43497	AC/HEAT TEMPERATURE SWITCH	1		BLOWER FAN
22	RE46742	CONTROL	1		(TEMPERATURE)
23	12H292	LOCK WASHER	2		
24	14H934	NUT	2		
25	R111632	KNOB	2		(BLOWER AND TEMPERATURE CONTROL)
26	AT185386	KIT	1		
27	AT185388	WIRING HARNESS	1		
28	AR94101	DIODE	1		TACHOMETER
29	T82792	NUT	2		
30	AT171958	AUDIBLE WARNING ALARM	1		ALARM
31	T100659	GROMMET	2		
32	AT104809	GAUGE	1		(FUEL)
	AR62407	BULB	1		
33	R44165	LOCK NUT	2		(SUB FOR E46066, THIS APPLICATION)

THIS PARTS LISTING IS CONTINUED

SIDE INSTRUMENT PANEL WITH GAUGES AND SWITCHES
(WITH ROPS)
(SERIAL NO. 872329-)

TP58153 -UN-11JAN00

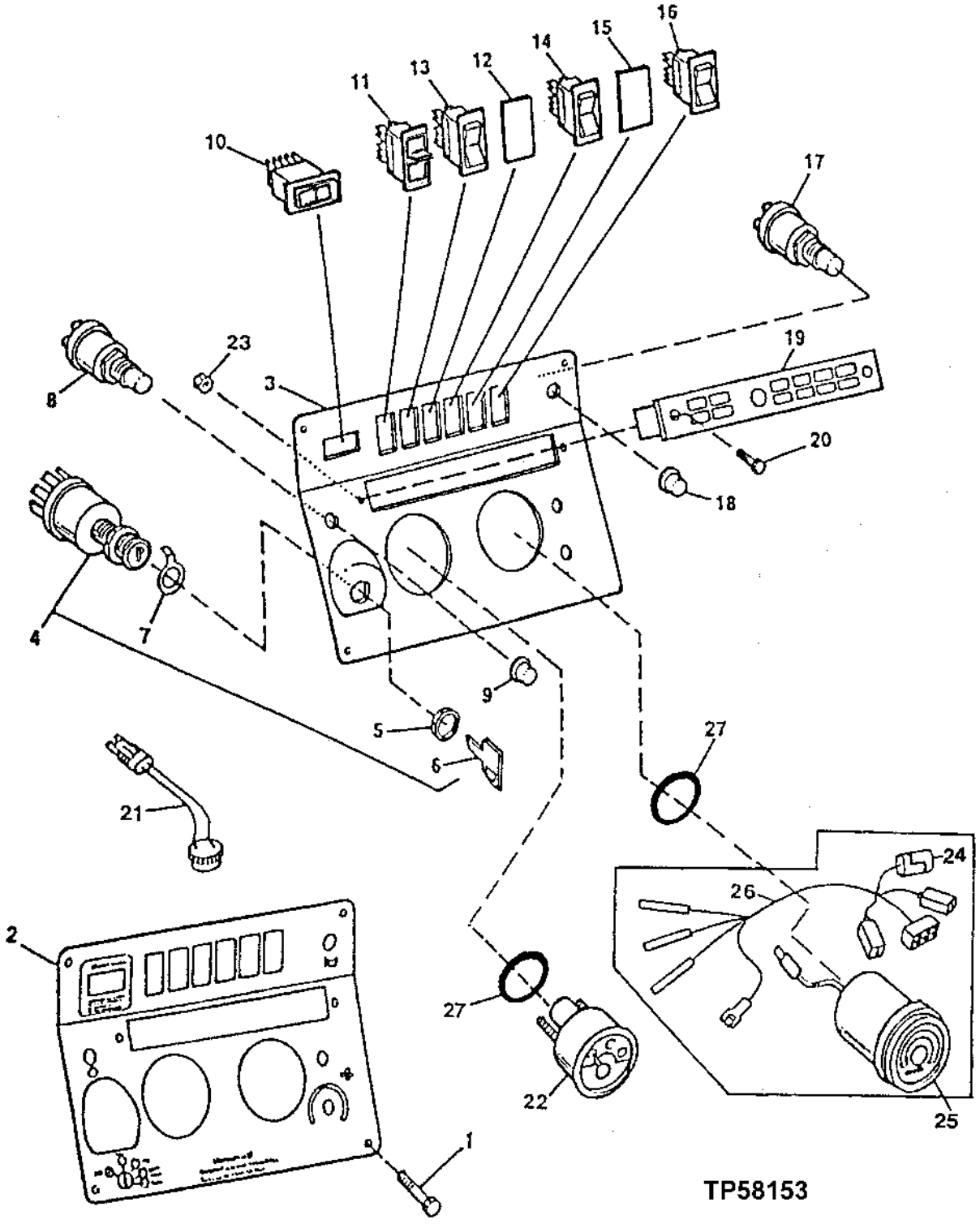

SIDE INSTRUMENT PANEL WITH GAUGES AND SWITCHES
(WITH ROPS)
(SERIAL NO. 872329-)

KEY	PART NO.	PART NAME	QTY	SERIAL NO.	REMARKS
1	21H1406	SCREW	4		0.190" X 3/4"
2	T166684	LABEL	1		(INSTRUMENT PANEL) (SUB FOR T160220)
3	AT175055	INSTRUMENT PANEL	1		
4	AT145931	SWITCH	1		(KEY)
5	R44342	NUT	1		
6	AT145929	KEY	1		(SET OF 2)
7	R52725	CONNECTOR	1		(GROUND)
8	R39554	SWITCH	1		(STARTING AID)
9	T55585	CAP	1		(WITH STARTING AID)
	T154361	PLUG	1		(WITHOUT STARTING AID)
10	AT189088	SWITCH	1		(PARK BRAKE) (SUB FOR AT174889, THIS APPLICATION)
11	AT175297	SWITCH	1		(MFWD)
	T163309	PLUG	1		
12	T163309	PLUG	1		
13	AT175603	ROCKER SWITCH	1		(ROTATING BEACON)
	T163309	PLUG	1		
14	AT175604	SWITCH	1		(AUXILIARY HYDRAULICS)
	T162380	BULB	1		
	T163309	PLUG	1		
15	T163309	PLUG	1		
16	AT174891	SWITCH	1		(REAR LIGHTS)
17	R39554	SWITCH	1		(HORN)
18	T55501	CAP	1		(HORN)
19	AT184591	MONITOR	1		(FAULT/DISPLAY)
	57M7102	BULB	2		
20	T82791	SCREW	2		
21	AT171958	AUDIBLE WARNING ALARM	1		
22	AT104809	GAUGE	1		(FUEL)
	AR62407	BULB	1		
23	T82792	NUT	2		
24	AR94101	DIODE	1		TACHOMETER
25	AT185386	KIT	1		
26	AT185388	WIRING HARNESS	1		
27	T100659	GROMMET	2		

THIS PARTS LISTING IS CONTINUED

MAIN FRAME

TP42943 -UN-01JAN94

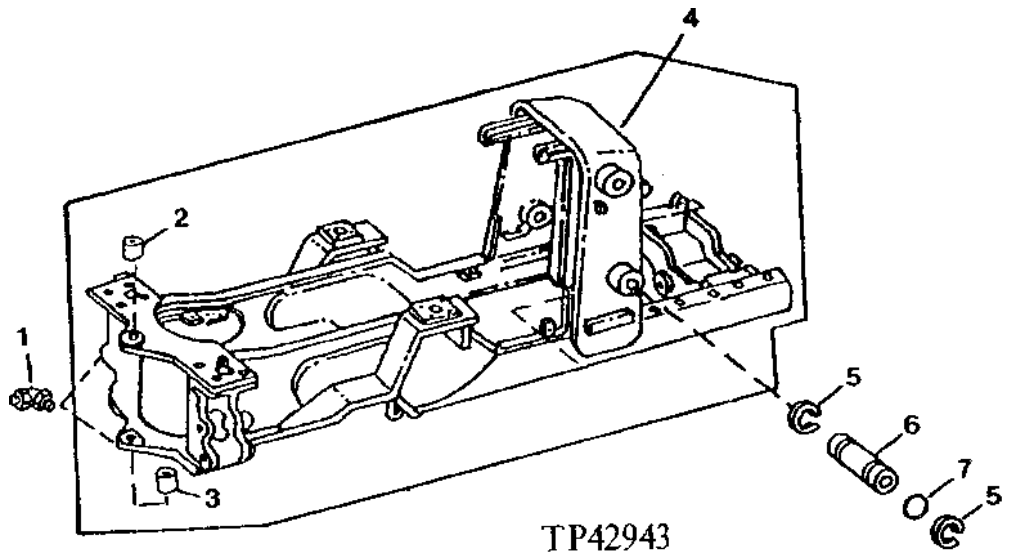

KEY	PART NO.	PART NAME	QTY	SERIAL NO.	REMARKS
1	JD7799	LUBRICATION FITTING	1		
2	T72790	BUSHING	1		
3	T70566	BUSHING	1		
4	.....	MAIN FRAME	1	-802240	(AT156879 NO LONGER AVAILABLE)
	.....	MAIN FRAME	1	802241-830204	(AT169012 NO LONGER AVAILABLE)
	.....	MAIN FRAME	1	830205-872328	(AT179942 NO LONGER AVAILABLE)
	AT179260	MAIN FRAME	1	872329-	CONVENIENCE ASSEMBLY
5	40M7066	SNAP RING	4		
6	T119156	PIN	2		
7	T161036	WASHER	AR		(SUB FOR T148178)

THIS PARTS LISTING IS CONTINUED

FRONT FRAME AND COUNTERWEIGHT

TP44424 -UN-01JAN94

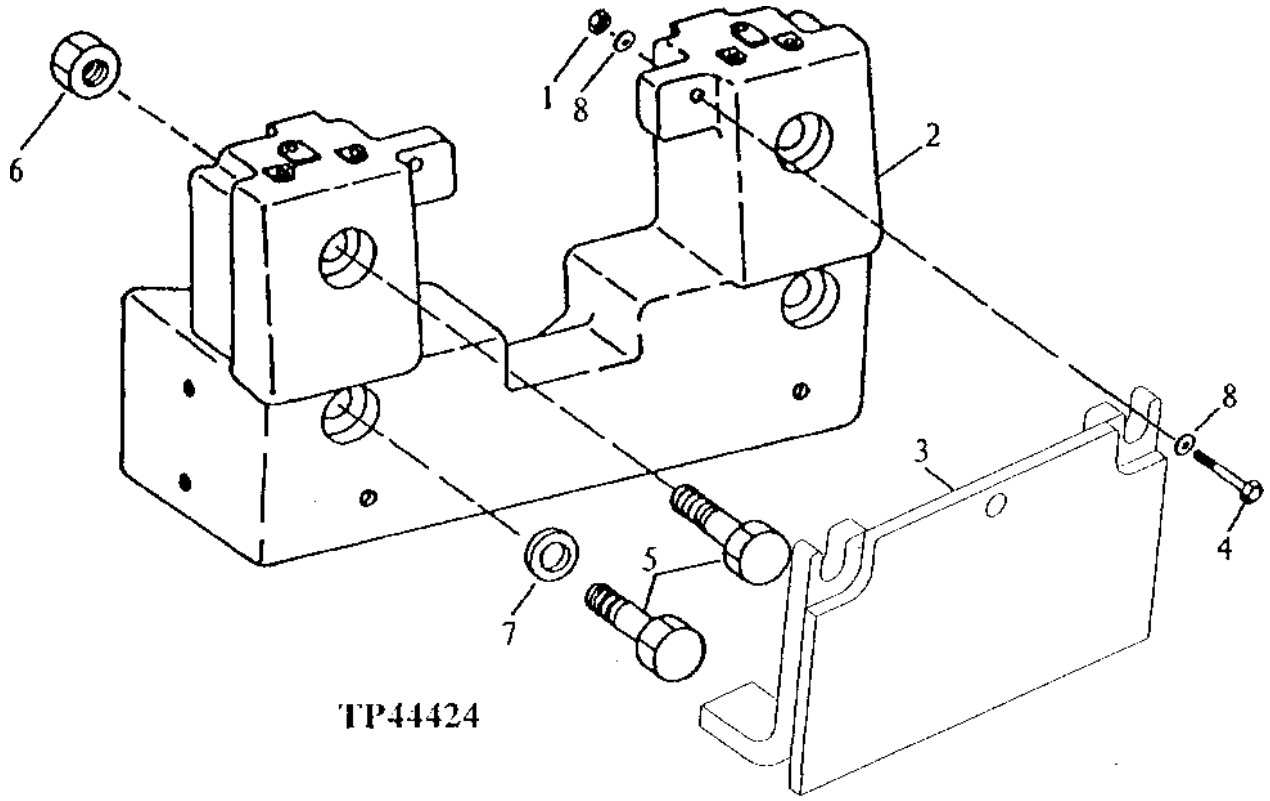

KEY	PART NO.	PART NAME	QTY	SERIAL NO.	REMARKS
1	14M7277	NUT	2		M20
2	T145037	COUNTERWEIGHT	1		
3	AT159480	COVER	1		
4	19M8147	CAP SCREW	2		M20 X 90
5	19M7782	CAP SCREW	4		M24 X 180
6	14M7278	NUT	2		M24
7	24M7243	WASHER	AR		25.400 X 50 X 6 MM
8	T29049	WASHER	4		13/16" X 2.240" X 1/4"

BOTTOM GUARD

TP57813 -UN-09DEC97

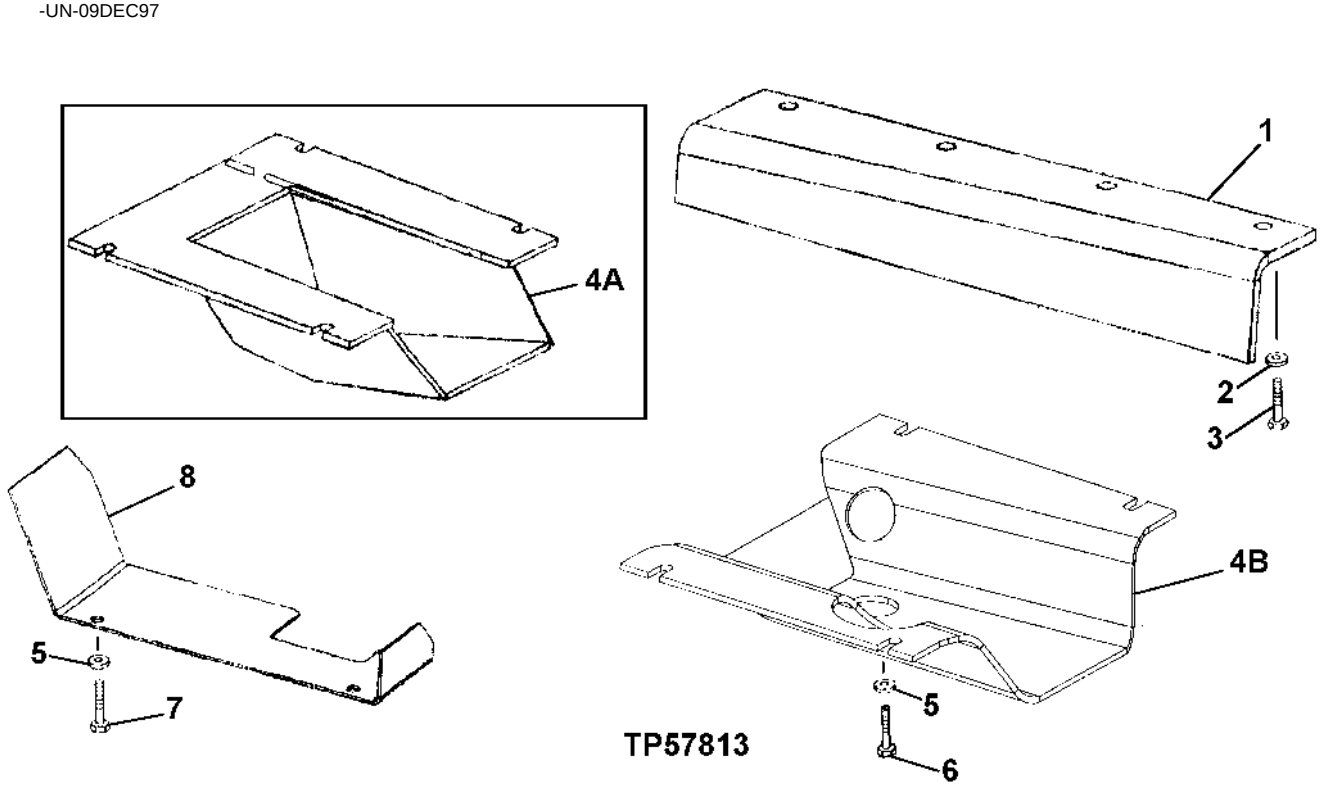

KEY	PART NO.	PART NAME	QTY	SERIAL NO.	REMARKS
1	AT158013	GUARD	1		DRIVE SHAFT
2	24M7053	WASHER	4		17 X 30 X 3 MM
3	19M8029	CAP SCREW	4		M16 X 30
4A	AT158012	GUARD	1	-830204	BOTTOM
4B	AT182942	GUARD	1	830205-	BOTTOM, (SUB FOR AT178461)
5	24H1698	WASHER	6		21/32" X 1-5/8" X 1/4"
6	19M8035	CAP SCREW	4		M16 X 35
7	19M8029	CAP SCREW	2		M16 X 30
8	T147247	PLATE	1		TRANSMISSION SHIFT VALVE SHIELD

COUNTERWEIGHT

TP42372 -UN-01JAN94

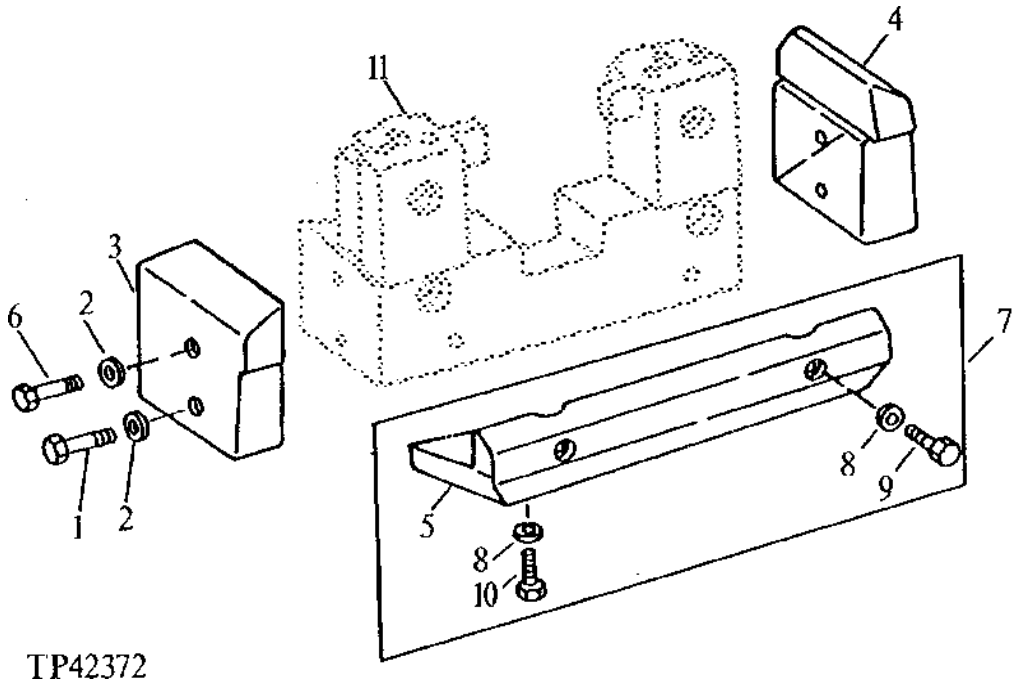

KEY	PART NO.	PART NAME	QTY	SERIAL NO.	REMARKS
1	19M7941	CAP SCREW	2		M16 X 120
2	24M7053	WASHER	4		17 X 30 X 3 MM
3	T76204	COUNTERWEIGHT	1		RIGHT (WHOLE GOODS)
4	T76205	COUNTERWEIGHT	1		LEFT (WHOLE GOODS)
5	T76779	COUNTERWEIGHT	1		FRONT (WHOLE GOODS)
6	19M7884	CAP SCREW	2		M16 X 110
7	AT74239	COUNTERWEIGHT	1		(WHOLE GOODS)
8	R26333	WASHER	4		(USE WITH T76779)
9	19M8043	CAP SCREW	2		M16 X 140, (USE WITH T76779)
10	19M8043	CAP SCREW	2		M16 X 140, (USE WITH T76779)
11	T145037	COUNTERWEIGHT	1		

FRONT INSTRUMENT PANEL HOUSING, SWITCHES, AND STEERING COLUMN COVERS

TP50405 -UN-18JAN96

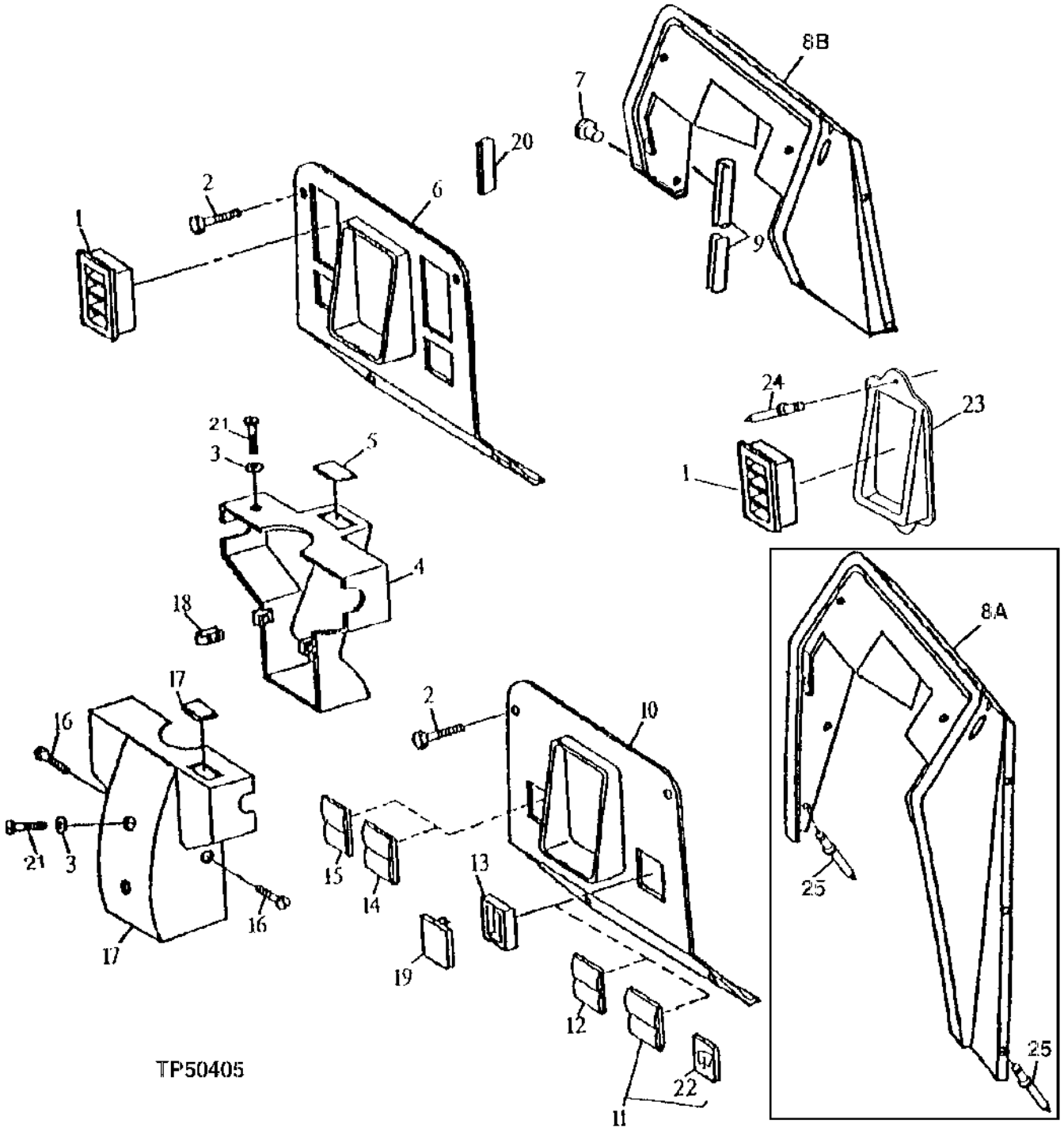

FRONT INSTRUMENT PANEL HOUSING, SWITCHES, AND STEERING COLUMN COVERS

KEY	PART NO.	PART NAME	QTY	SERIAL NO.	REMARKS
1	AT140978	LOUVER	3	-816286	(WITH CAB)
2	21H1406	SCREW	4		0.190" X 3/4"
3	24M7087	WASHER	3		5.500 X 10 X 1 MM
4	T132994	COVER	1		TOP COLUMN
5	AT140968	INDICATOR LIGHT	1	-872328	(WITH TURN SIGNALS)
	57M7102	BULB	2	-872328	(TURN SIGNALS)
	Z45833	COVER	1	-872328	(WITHOUT TURN SIGNALS)
6	T132993	PANEL	1	-816286	DASH (WITH CAB)
	T133010	PANEL	1	816287-	(WITH CAB)
7	T133009	PLUG	8	-798426	
	T133009	PLUG	4	798427-	
8A	.....	HOUSING	1	-816286	AT167625 NO LONGER AVAILABLE, (SUB AT175938) (SUB FOR AT160489) (WITH CAB)
	.....	HOUSING	1	-816286	AT167783 NO LONGER AVAILABLE, (SUB AT175934) (SUB FOR AT160488) (WITHOUT CAB)
8B	AT175938	HOUSING	1	816287-	(WITH CAB)
	AT175934	HOUSING	1	816287-	(WITHOUT CAB)
9	.....	ISOLATOR	AR		MAKE FROM T119593 OR T63019 (CUT TO LENGTH) (WITH CAB)
10	T133010	PANEL	1		DASH (WITHOUT CAB)
11	AT140962	SWITCH	1		FRONT WIPER (WITH CAB)
12	AT140963	SWITCH	1	-872328	(FRONT WASHER)
	AT175072	WIPER SWITCH	1	872329-	(FRONT WASHER)
13	Z46941	FRAME	4		
14	AT140966	SWITCH	1	-872328	(WARNING FLASHER)
	AT175070	SWITCH	1	872329-	(WARNING FLASHER)
	57M7102	BULB	1	-872328	
	T162380	BULB	1	872329-	
15	AT149830	SWITCH	1	-872328	(FRONT LIGHTS)
	AT175069	SWITCH	1	872329-	(FRONT LIGHTS)
16	37M7072	SCREW	2		
17	T133108	COVER	1		LOWER COLUMN (WITHOUT TILT STEERING)
	T132995	COVER	1		LOWER COLUMN (WITH TILT STEERING)
	AT150089	SWITCH	1	-872328	(TURN SIGNAL)
	AT175300	SWITCH	1	872329-	(TURN SIGNAL)
	T162380	BULB	2	872329-	
	Z45833	COVER	1		(WITHOUT TURN SIGNALS)
18	R50279	NUT	2		0.190", SPRING
19	Z45833	COVER	AR	-872328	
	T163309	COVER	1	872329-	
20	.....	ISOLATOR	AR		(WITH CAB) MAKE FROM T71733 - CUT TO LENGTH
21	21H1316	SCREW	3		0.190" X 1/2"
22	L39638	INSERT	1		
23	T147894	ADAPTER	1	-816286	
24	R55326	RIVET	2	-816286	
25	R55326	RIVET	2	798427-816286	

SIDE INSTRUMENT PANEL HOUSING, LOADER LINKAGE COVER AND STABILIZER LINKAGE COVER

TP49588 -UN-15MAR97

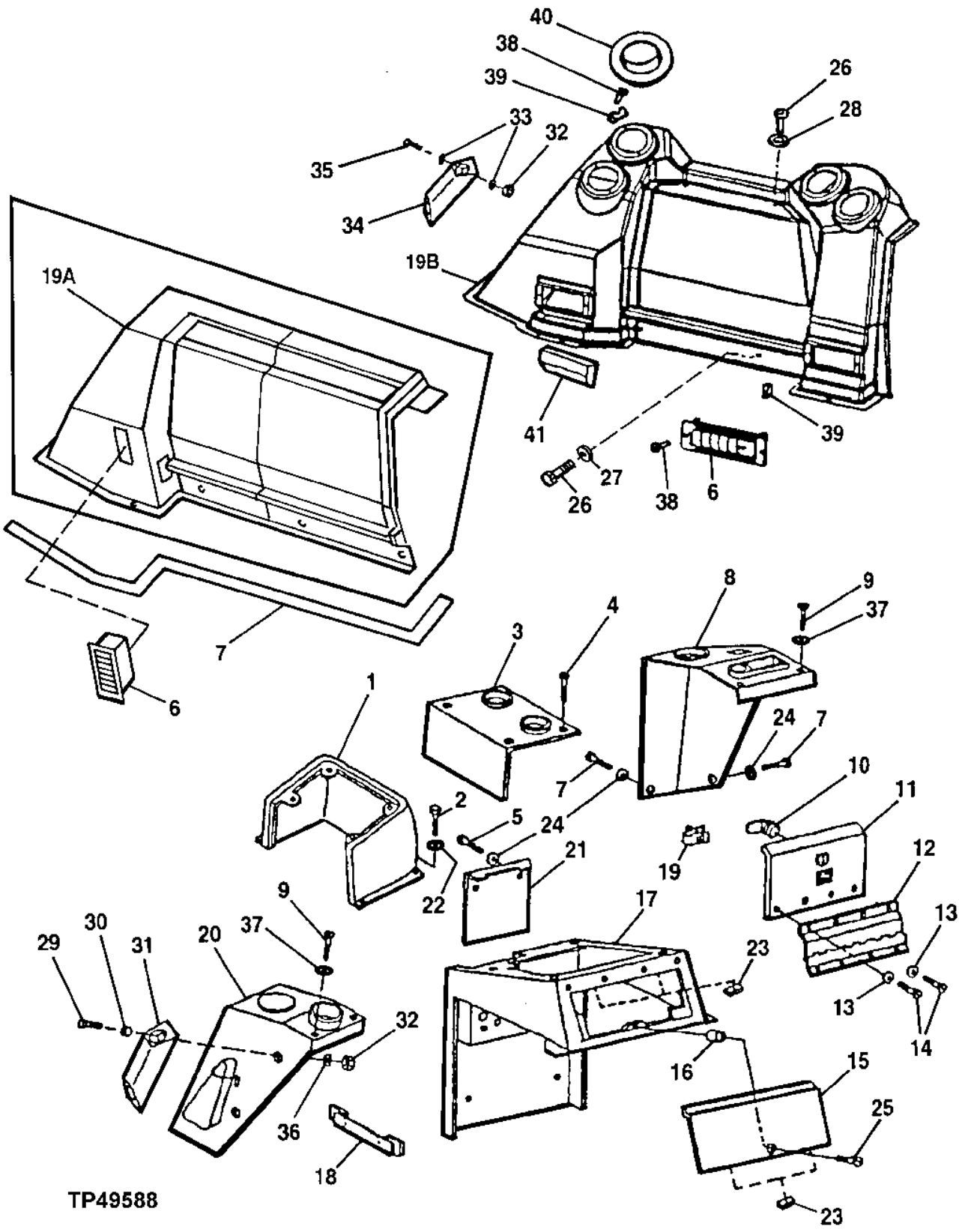

SIDE INSTRUMENT PANEL HOUSING, LOADER LINKAGE COVER AND STABILIZER LINKAGE COVER

KEY	PART NO.	PART NAME	QTY	SERIAL NO.	REMARKS
1	T133357	COVER	1		(WITH TWO CONTROL LEVER REGULAR DIPPERSTICK)
	T134876	COVER	1		(WITH THREE CONTROL LEVER REGULAR DIPPERSTICK)
	T134850	COVER	1		(WITH TWO CONTROL LEVER EXTENDIBLE DIPPERSTICK)
	T134876	COVER	1		(WITH THREE CONTROL LEVER EXTENDIBLE DIPPERSTICK)
2	19M7077	CAP SCREW	5		M6 X 20
3	T134383	PANEL	1		(WITH TWO CONTROL LEVERS)
	T134877	PANEL	1		(WITH THREE CONTROL LEVERS)
	T134878	PANEL	1		(WITH THREE CONTROL LEVERS WITH EXTENDIBLE DIPPERSTICK)
4	T151178	SELF-LOCKING SCREW	4		0.190" X 3/4", (SUB FOR T134791)
5	T133674	SELF-LOCKING SCREW	2		
6	AT177227	LOUVER	2		
7	T119593	TAPE	1	-816286	(CUT TO LENGTH) (MAKE FROM T63019)
8	T132978	COVER	1		LOADER LINKAGE
9	T134874	SELF-LOCKING SCREW	4		
10	AT141724	LOCK	1		(WITHOUT CAB)
11	T134594	COVER	1		VANDAL PROTECTION (WITHOUT CAB)
12	AT181562	HINGE	1		VANDAL PROTECTION (WITHOUT CAB) (SUB FOR AT141319)
13	24M7087	WASHER	8		5.500 X 10 X 1 MM, (WITHOUT CAB)
14	H111706	SCREW	8		(WITHOUT CAB)
15	T133328	PANEL	1		FUSE ACCESS
16	T134896	BUMPER	1		(WITHOUT CAB)
	24M7293	WASHER	1		6.500 X 13 X 1.600 MM, (WITH CAB)
17	T141242	HOUSING	1		(WITHOUT CAB)
	T141244	HOUSING	1	-816286	(WITH CAB)
	T158639	HOUSING	1	816287-	(WITH CAB)
18	AT145938	STRAP	1		
19A	T141257	COVER	1	-816286	LEFT HAND FENDER
19B	AT174337	COVER	1	816287-825657	LEFT HAND COVER
	AT177064	COVER	1	825658-	LEFT HAND COVER
20	T148875	COVER	1		STABILIZER LINKAGE, (SUB FOR T132979)
	T148903	COVER	1		STABILIZER LINKAGE (USE WITH EXTENDIBLE DIPPERSTICK) (SUB FOR T147015)
21	T133327	PANEL	1		SPEED CONTROL
22	24H1287	WASHER	5		9/32" X 5/8" X 0.065"
23	.....	FOAM PAD	AR		(MAKE FROM T141322 BULK MATERIAL, CUT TO LENGTH)
24	24M7293	WASHER	3		6.500 X 13 X 1.600 MM
25	T134895	SELF-LOCKING SCREW	1		M6 X 25, (WITHOUT CAB)
	T133674	SELF-LOCKING SCREW	1		(WITH CAB)
26	T133674	SELF-LOCKING SCREW	6		
27	24H1646	WASHER	4		17/64" X 3/4" X 0.060", (LEFT FENDER COVER TO FENDER AND FLOOR SCREWS 3-LOWER SIDE 1-FLOOR)
28	24M7100	WASHER	2		6.600 X 22 X 2 MM
29	19M7874	CAP SCREW	2		M6 X 30
30	24H1287	WASHER	2		9/32" X 5/8" X 0.065"
31	T141234	HOLDER	1		SWING LOCK PIN (FOR USE WITH EXTENDIBLE DIPPERSTICK)
32	14M7165	LOCK NUT	4		M6
33	24H1287	WASHER	4		9/32" X 5/8" X 0.065", SWING LOCK PIN
34	T141235	HOLDER	1		
35	19M7874	CAP SCREW	2		M6 X 30
36	24M7139	WASHER	2		6.400 X 18 X 1.600 MM
37	24H1646	WASHER	3		17/64" X 3/4" X 0.060"
38	T159945	SCREW	20		
39	T159946	NUT	20		
40	AT140978	LOUVER	4	-816286	
	AT151036	LOUVER	4	816287-	
41	T158840	SEAL	2	816287-	

CAB FRAME AND CAB MOUNTING ISOLATORS

TP57749 -UN-05SEP97

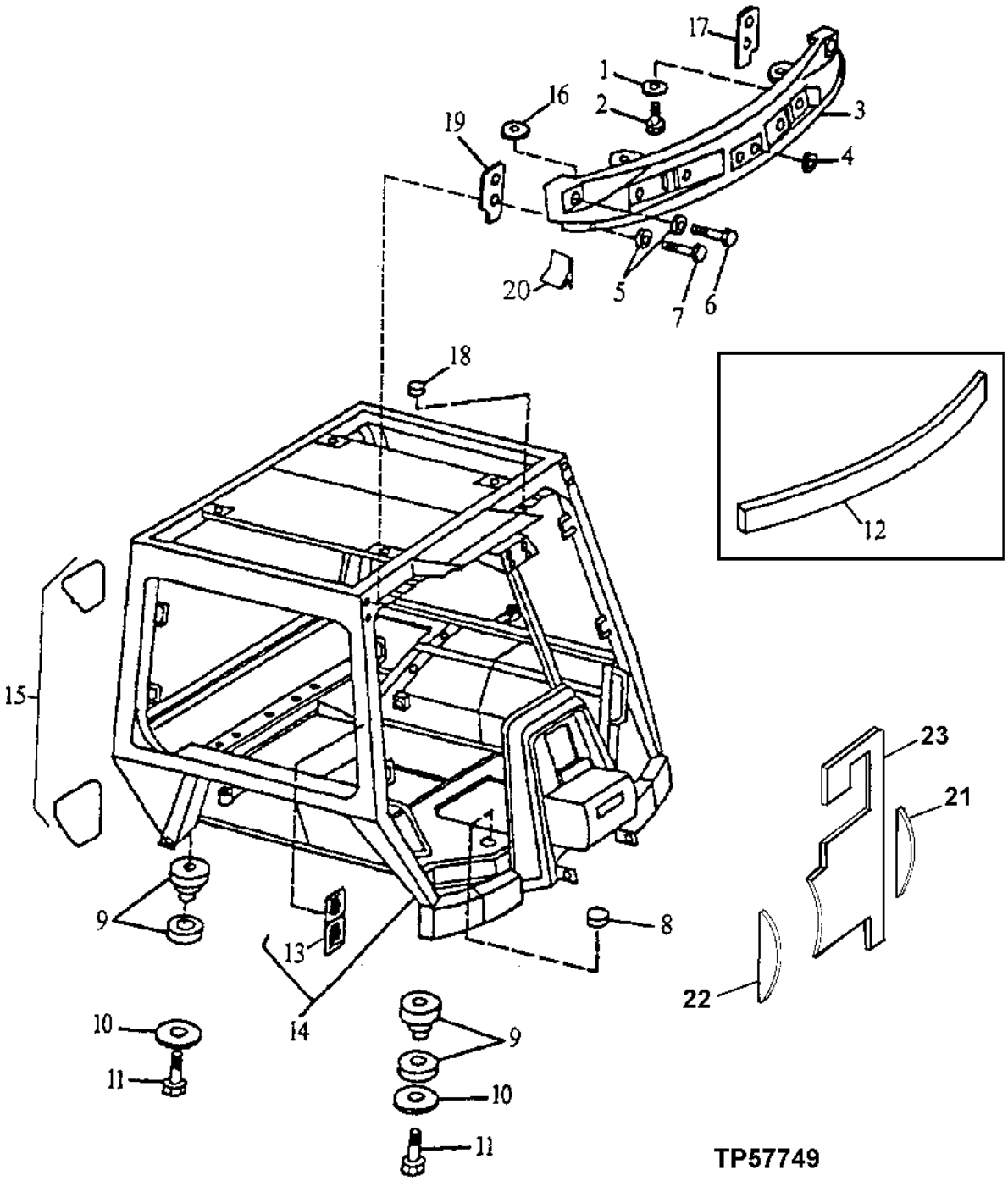

CAB FRAME AND CAB MOUNTING ISOLATORS

KEY	PART NO.	PART NAME	QTY	SERIAL NO.	REMARKS
1	24H1224	WASHER	4		11/32" X 1" X 1/16"
2	T80176	SELF-LOCKING SCREW	2		
3	T141500	SUPPORT	1		ROOF AND FRONT WORK LIGHTS, (REQUIRES T142464 AND T142465)
4	T130425	GROMMET	AR		
5	24H1685	WASHER	6		11/32" X 47/64" X 0.083"
6	19M8008	CAP SCREW	2		M8 X 35
7	19M8504	CAP SCREW	2		M8 X 80
8	N30256	GROMMET	1		(WITH WINDSHIELD WIPER)
	T154361	PLUG	1		(SUB FOR R56264) (WITHOUT WINDSHIELD WASHER)
9	AT164785	ISOLATOR	4		(SUB FOR AT102326, THIS APPLICATION)
10	T101807	WASHER	4		(SUB FOR T145162)
11	19M7968	CAP SCREW	4		M20 X 130
12	T119593	TAPE	AR	-793403	CUT TO LENGTH
13	T135572	LABEL	1		(CAB FRAME)
14	AT169308	CAB FRAME	1	-816286	(WITH LABEL) (SUB FOR AT159884)
	AT175331	CAB FRAME	1	816287-825657	(WITH LABEL)
	AT179236	CAB FRAME	1	825658-872328	
	AT183950	CAB FRAME	1	872329-	
15	T148168	REFLECTOR	1		RIGHT, (SUB FOR T142094)
	T148167	REFLECTOR	1		LEFT, (SUB FOR T142094)
16	R36235	GROMMET	1		
17	T142464	GASKET	1		LEFT
18	BP13712	NUT	6		WITHOUT RADIO
	M84972	NUT	7		WITH RADIO
19	T142465	GASKET	1		RIGHT
20	T148469	SEAL	1		(150 MM) (ALSO ORDER T145402)
21	T161468	ISOLATOR	1		(L.H.)
22	T161467	ISOLATOR	1		(R.H.)
23	T162586	ISOLATOR	1	-872328	(CENTER)
	T161165	ISOLATOR	1	872329-	(CENTER)

CAB HEADLINERS AND CAB DOME LIGHT

TP50585 -UN-22FEB97

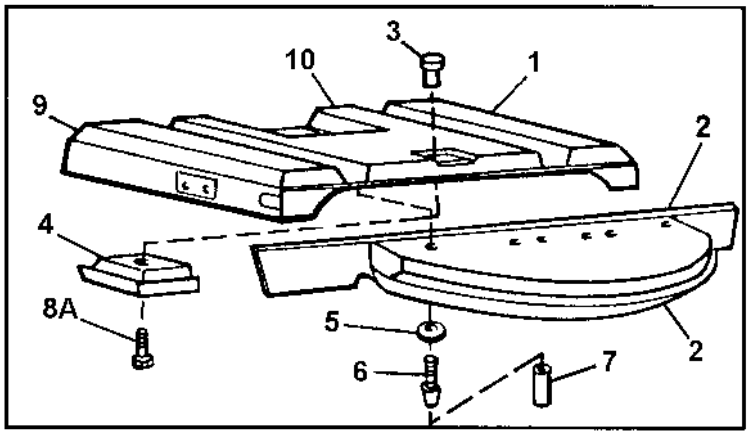

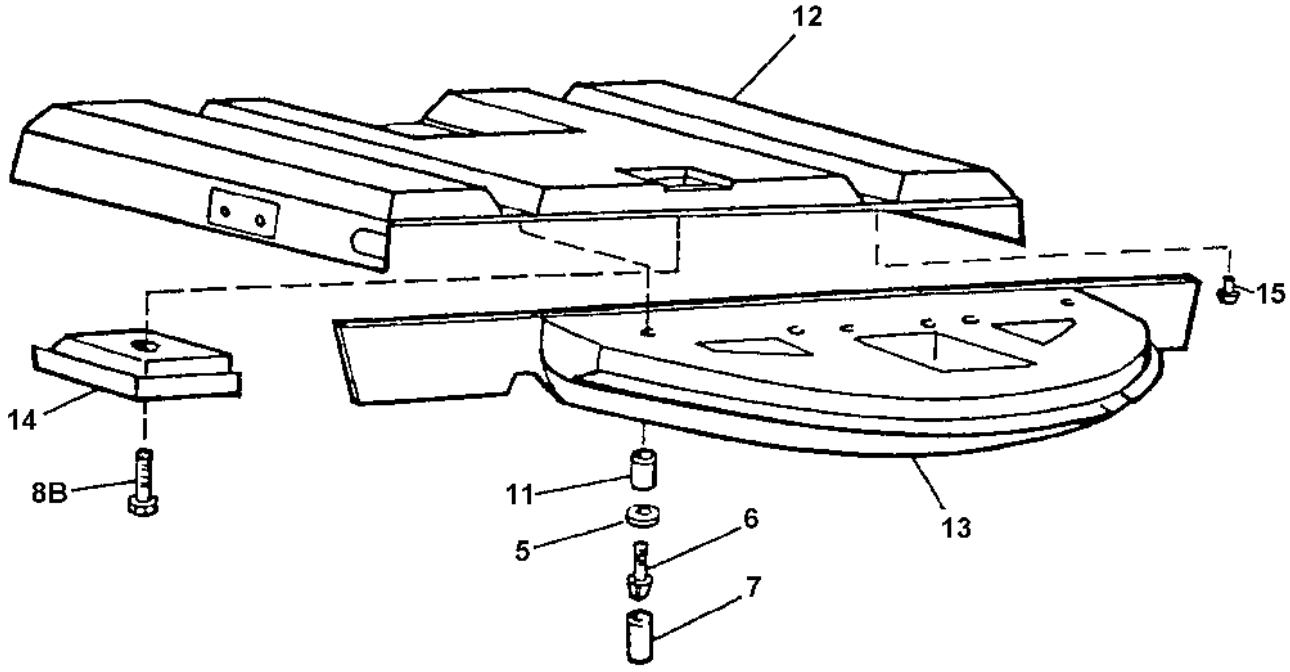

TP50585

CAB HEADLINERS AND CAB DOME LIGHT

KEY	PART NO.	PART NAME	QTY	SERIAL NO.	REMARKS
1	T133353	HEADLINER	1	-823355	L.H. (SUB T161427) (ALSO ORDER AT173908, T135736, T157811 AND (2) T161294)
2	T133350	HEADLINER	1	-823355	FRONT (USE WITHOUT RADIO) (SUB T157811) (ALSO ORDER AT173908, T135736, T161427 AND (2) T161294)
	T140363	HEADLINER	1	-823355	FRONT (USE WITH RADIO) (NOT ILLUSTRATED) (SUB T158351) (ALSO ORDER AT173908, T161427 AND (2) T161294)
	T158351	HEADLINER	1	823356-	(FRONT) USE WITH RADIO (NOT ILLUSTRATED) (SUB FOR T140363)
3	T82792	NUT	2	-823355	
4	AT151231	LAMP	1	-823355	(WITH LIGHT BULBS)
	AR48015	BULB	1		(DOME LIGHT EYE BALL)
	AT151255	BULB	1		(DOME LIGHT)
5	T134962	RETAINER	4		(USE WIHTOUT RADIO)
6	T83060	SCREW	6	-823355	WITHOUT RADIO
	T134895	SELF-LOCKING SCREW	7		(USE WITH RADIO)
7	T134961	CAP	4		(USE WITHOUT RADIO)
8A	T82791	SCREW	2	-823355	
8B	T83060	SCREW	2	823356-	
9	T133352	HEADLINER	1	-823355	R.H. (SUB T161427) (ALSO ORDER AT173908, T135736, T157811 AND (2) T161294)
10	T141043	HEADLINER	1	-823355	CENTER (SUB T161427) (ALSO ORDER AT173908, T135736, T157811 AND (2) T161294) (SUB FOR T133351)
11	28H1611	WASHER	2	-823355	0.269" X 0.405" X 5/16", (HEADLINER)
	28H1611	WASHER	4	823356-	(HEADLINER)
12	T161427	HEADLINER	1	823356-	REAR, (SUB FOR T155431) (ALSO ORDER (2) T161294)
13	T157811	HEADLINER	1	823356-	FRONT (WITHOUT RADIO)
14	AT173908	LAMP	1	823356-	(INCLUDES SWITCH AND BULB)
	L41333	BULB	1	823356-	(DOME LIGHT)
15	T161294	PLUG	2	823356-	REAR HEADLINER

CAB ROOF

TP42928 -UN-01JAN94

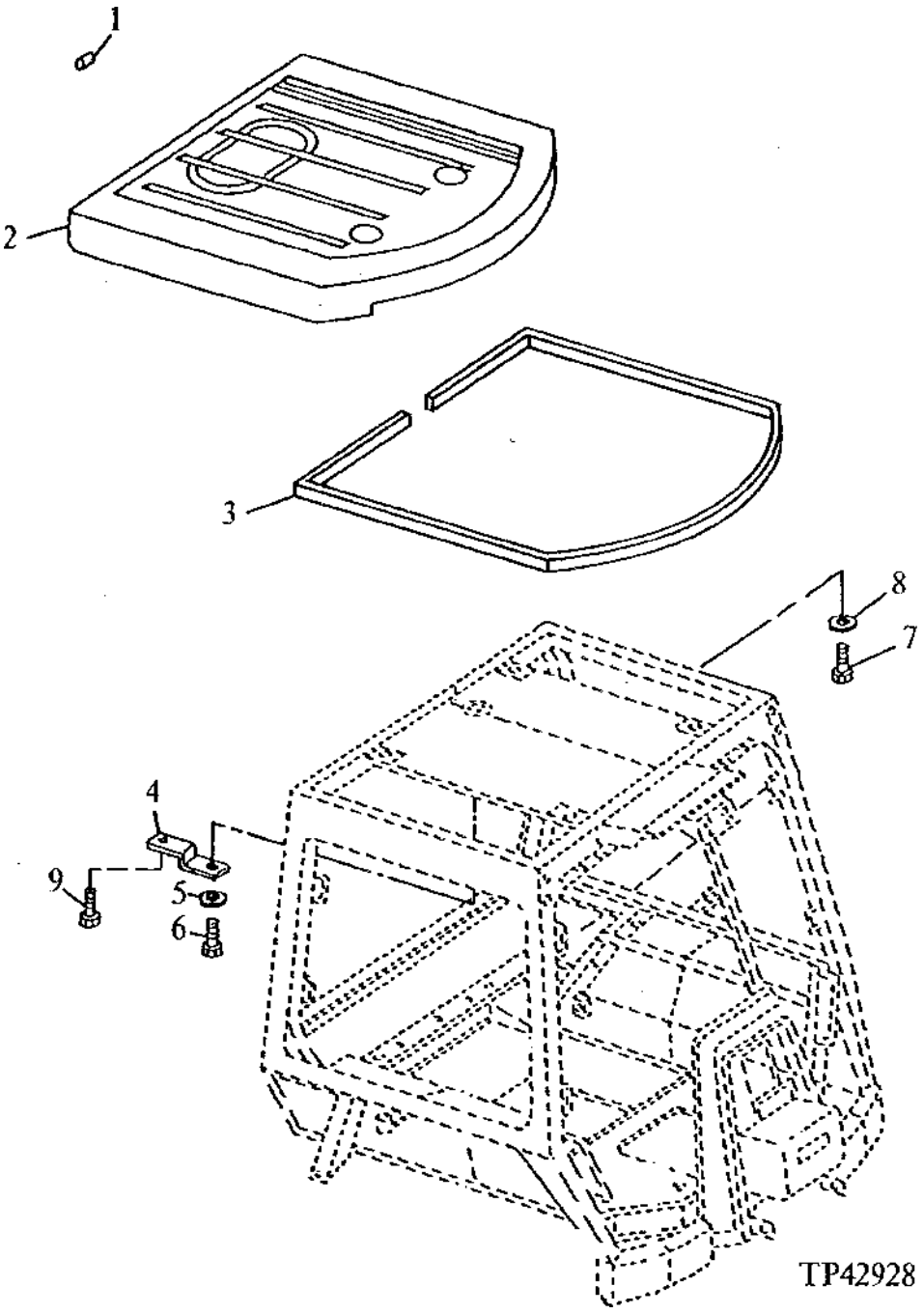

CAB ROOF

KEY	PART NO.	PART NAME	QTY	SERIAL NO.	REMARKS
1	T142447	PLUG	1		
2	T160728	ROOF	1		(SUB FOR T145993)
3	T144073	ISOLATOR	1		
4	AT151970	BRACKET	1		
5	24H1287	WASHER	1		9/32" X 5/8" X 0.065"
6	T133674	SELF-LOCKING SCREW	1		
7	T80176	SELF-LOCKING SCREW	10		5/16" X 1-1/4"
8	24H1136	WASHER	10		11/32" X 11/16" X 0.065"
9	19H3552	CAP SCREW	1		5/16" X 1-1/2"

ROPS FRAME, ROPS MOUNTING ISOLATORS AND ROPS ROOF

TP50629 -UN-08APR97

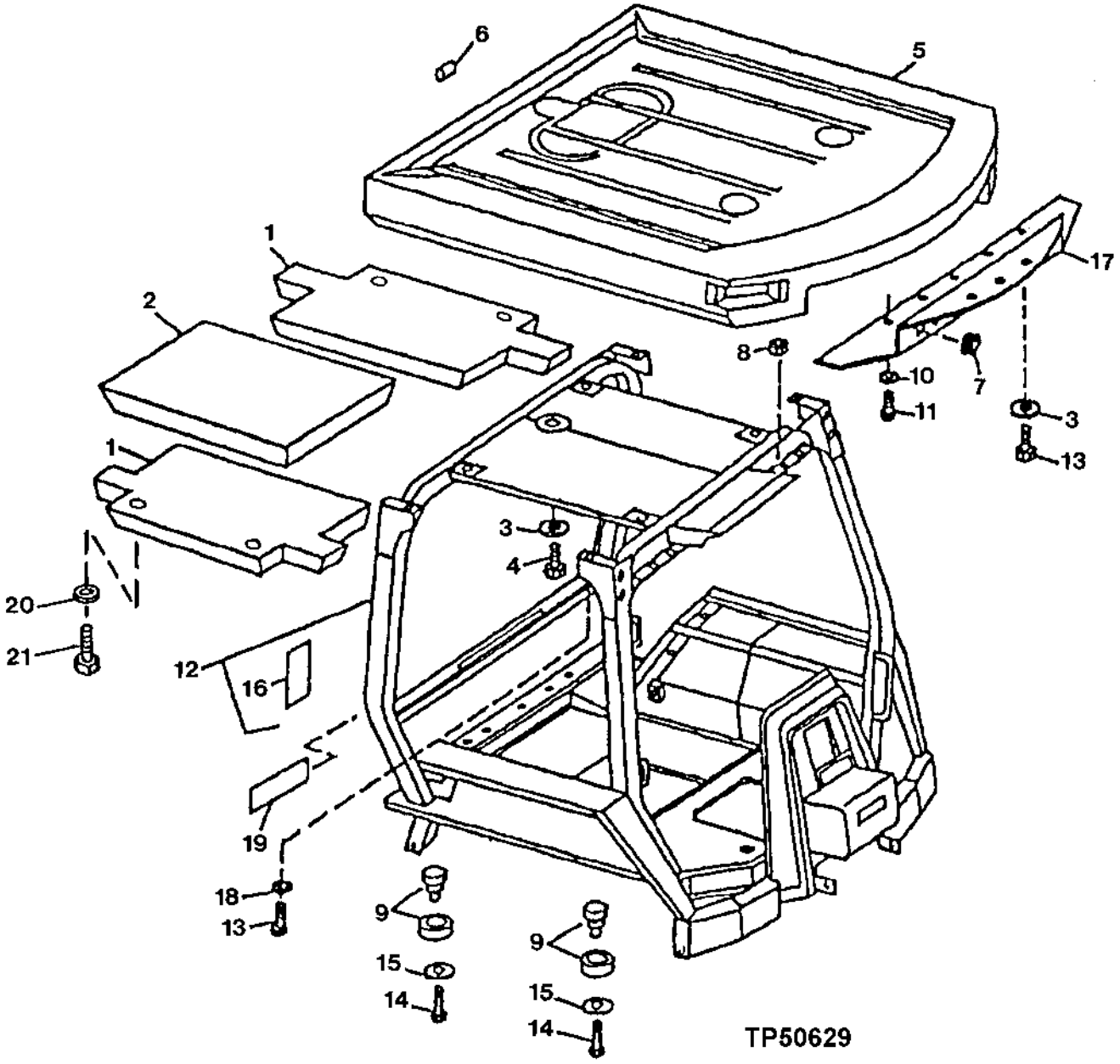

ROPS FRAME, ROPS MOUNTING ISOLATORS AND ROPS ROOF

KEY	PART NO.	PART NAME	QTY	SERIAL NO.	REMARKS
1	T161720	PAD	2		HEADLINER, (SUB FOR T133116) (ALSO ORDER (4) 24M7293 AND (4) 37M7183)
2	T161721	PAD	1		CENTER HEADLINER, (SUB FOR T133594)
3	24M7207	WASHER	3		8.400 X 24 X 2 MM
4	19H3552	CAP SCREW	2		5/16" X 1-1/2"
5	T160728	ROOF	1		(SUB FOR T145993)
6	T142447	PLUG	1	-825657	
	T154361	PLUG	1	825658-	
7	T130426	GROMMET	2		
8	BP13712	NUT	6		
9	AT164785	ISOLATOR	4		(SUB FOR AT102326, THIS APPLICATION)
10	24H1685	WASHER	6		11/32" X 47/64" X 0.083"
11	T83060	SCREW	6		
12	AT168903	ROPS	1	-802240	(WITH LABEL)
	AT175332	ROPS	1	802241-825657	(WITH LABEL) (SUB FOR AT169307)
	AT179237	ROPS	1	825658-872328	
	AT183951	ROPS	1	872329-	
13	T80176	SELF-LOCKING SCREW	6		
14	19M7968	CAP SCREW	4		M20 X 130
15	T101807	WASHER	4		0.866" X 3-1/2" X 5/16", (SUB FOR T145162)
16	T135572	LABEL	1		ROPS
17	AT151889	PANEL	1		FRONT HEADLINER
18	24H1136	WASHER	4		
19	T148168	REFLECTOR	1		RIGHT, (SUB FOR T142094)
	T148167	REFLECTOR	1		LEFT, (SUB FOR T142094)
20	24M7293	WASHER	4		6.500 X 13 X 1.600 MM, (HEADLINER)
21	37M7183	SCREW	4		HEADLINER

UPPER REAR CAB WINDOW AND REAR WINDOW WIPER MOTOR

TP57968 -UN-11NOV98

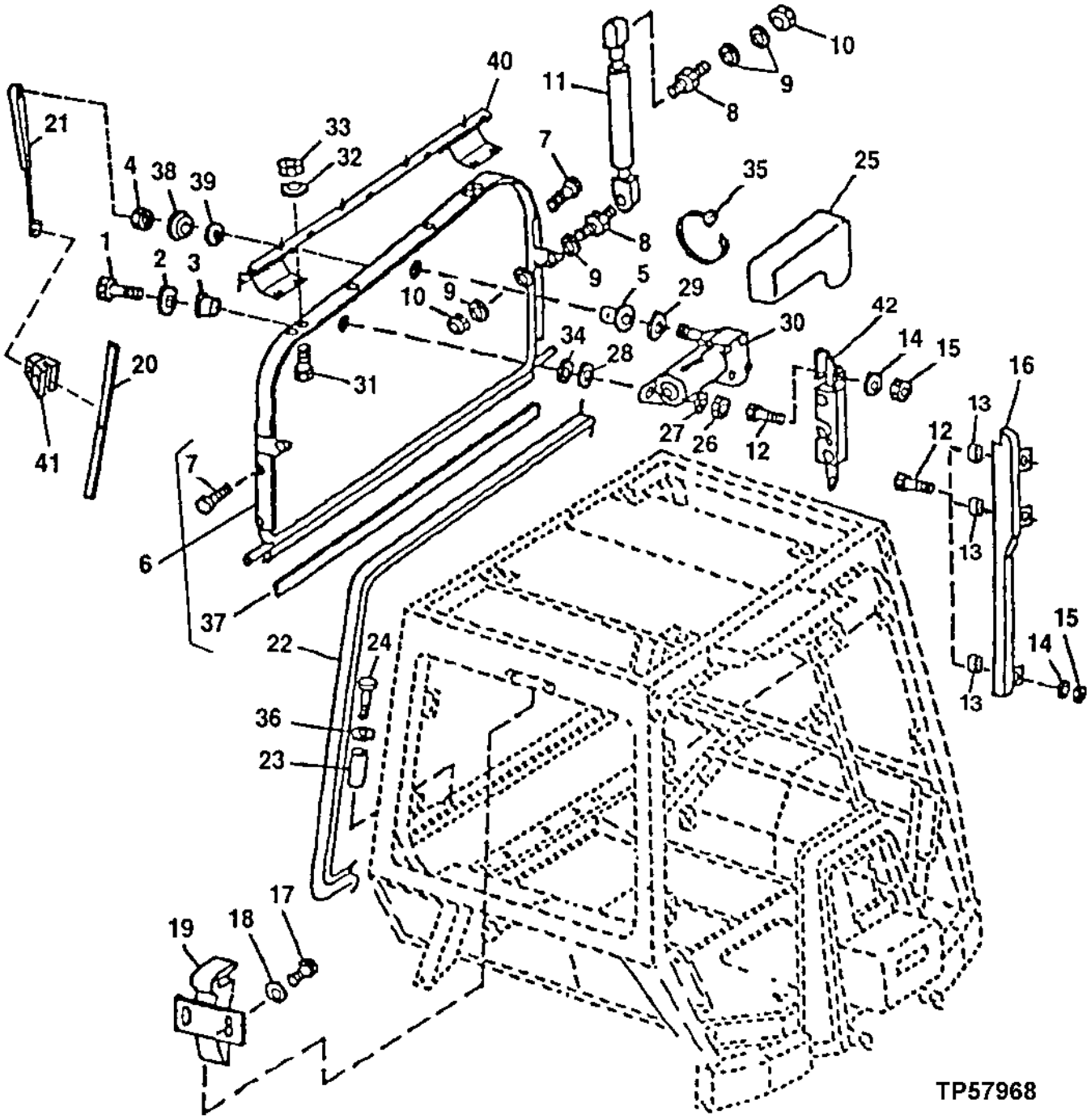

UPPER REAR CAB WINDOW AND REAR WINDOW WIPER MOTOR

KEY	PART NO.	PART NAME	QTY	SERIAL NO.	REMARKS
1	21M7251	SCREW	1		M5 X 25
2	24H1287	WASHER	1		9/32" X 5/8" X 0.065"
3	R50642	WASHER	1		
4	U46519	NUT	1		15.875 MM
5	T78315	WASHER	1		
6	AT151104	WINDOW	1		FRAME AND PANE, REAR
7	37M7024	SCREW	13		
8	T142651	BALL STUD	4		
9	24M7238	WASHER	10		8.700 X 17 X 2 MM
10	14H785	NUT	4		5/16"
11	AT164828	CYLINDER	2		(SUB FOR AT145132)
12	T145057	CAP SCREW	10		1/4" X 1-1/8"
13	T165567	BUSHING	3		
14	24M7100	WASHER	4		
15	M40333	LOCK NUT	10		
16	T165760	GUIDE	1		(R.H.) (SUB FOR T84944)
	T165761	GUIDE	1		(L.H.) (SUB FOR T133463)
17	T142992	SCREW	4		
18	24M7238	WASHER	4		8.700 X 17 X 2 MM
19	AT151705	LATCH	2		
20	TY16302	WIPER BLADE	1		(SUB FOR TY16302) (ALSO ORDER TY16312) (FOR FIRST TIME INSTALLATION)
21	AT145249	WIPER ARM	1		
22	AT140912	ISOLATOR	1		
23	T129928	BUMPER	2		
24	19M8439	SCREW	2		M8 X 25
25	T133446	COVER	1		
26	14M7297	NUT	1		M5
27	24H1283	WASHER	1		7/32" X 1/2" X 0.049"
28	24H1284	WASHER	1		7/32" X 7/8" X 0.065"
29	24H1375	WASHER	1		11/16" X 1-1/8" X 0.060"
30	AT149518	WIPER MOTOR	1		REAR WIPER (WIRING HARNESS IS INCLUDED WITH MOTOR) (INCLUDES U46518, U46519 AND U46520)
31	19M7833	SCREW	4		M6 X 35
32	24M7293	WASHER	4		6.500 X 13 X 1.600 MM
33	14M7272	NUT	4		M6
34	R52921	WASHER	1		
35	H77698	TIE BAND	1		
36	24M7238	WASHER	2		8.700 X 17 X 2 MM
37	T132816	SEAL	1		
38	U46518	SPACER	1		
39	U46520	GASKET	1		
40	.....	HINGE	1		(AT139631 NO LONGER AVAILABLE)
41	TY16312	KIT	1		
42	AT151752	LATCH	1		R.H.
	AT151753	LATCH	1		L.H.

CAB SIDE WINDOWS
(SERIAL NO. -825643)

TP42925 -UN-01JAN94

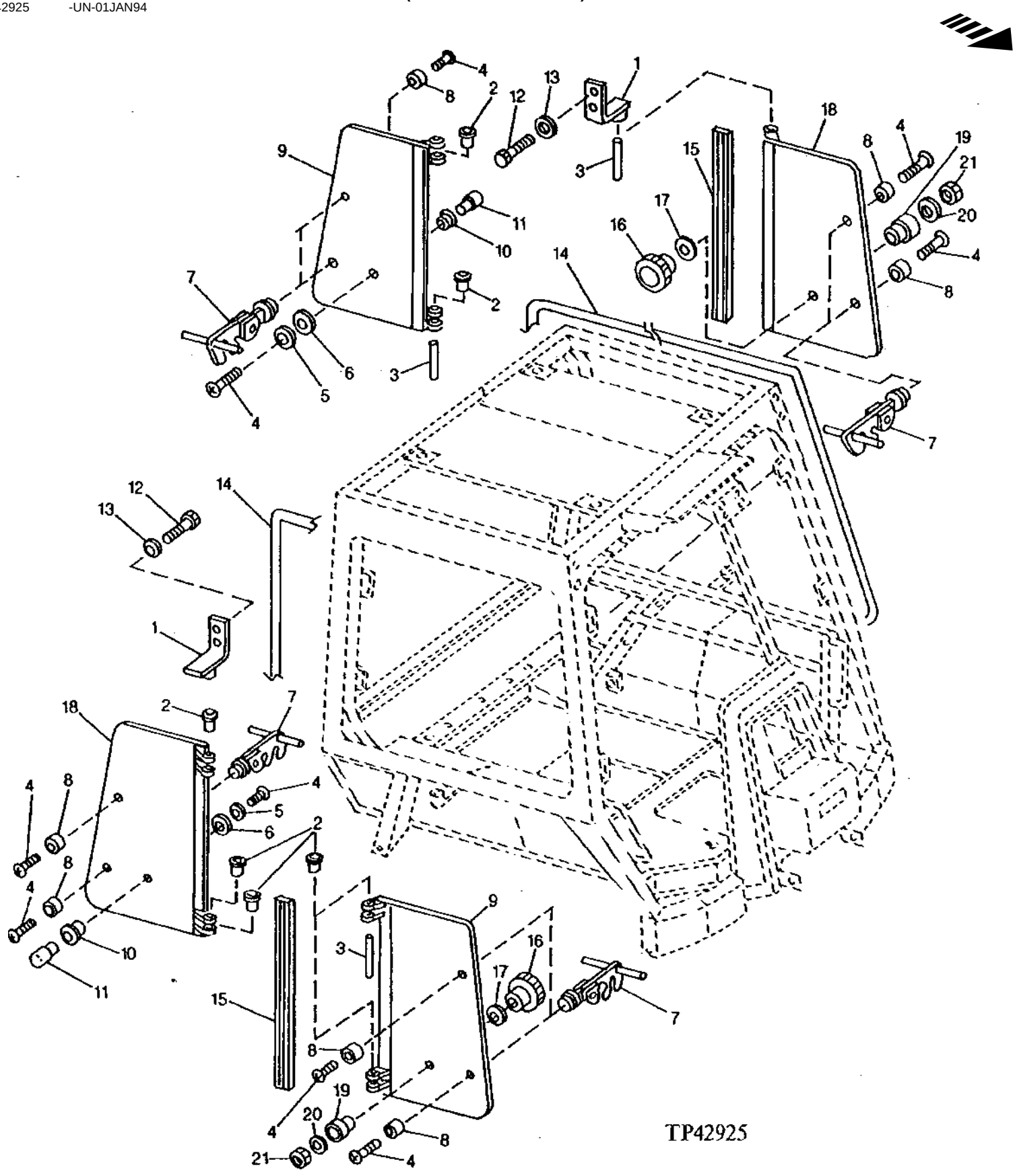

CAB SIDE WINDOWS
(SERIAL NO. -825643)

KEY	PART NO.	PART NAME	QTY	SERIAL NO.	REMARKS
1	AT139782	BRACKET	2		
2	R65570	BUSHING	16		
3	T131564	PIN	4		
4	T133674	SELF-LOCKING SCREW	10		
5	24H1288	WASHER	2		9/32" X 1" X 1/16"
6	T76833	WASHER	2		
7	AT118766	LATCH	8		
8	T184135	BUMPER	8		(SUB FOR T101090)
9	AT171898	WINDOWPANE	2		(RIGHT SIDE FRONT WINDOW, LEFT SIDE REAR WINDOW) (SUB FOR AT151482)
10	T76832	WASHER	2		
11	T76831	BUSHING	2		
12	19M7932	CAP SCREW	4		M8 X 16
13	24M7238	WASHER	4		8.700 X 17 X 2 MM
14	T132817	ISOLATOR	2		
15	T132984	ISOLATOR	2		
16	AT75311	KNOB	2		
17	R52921	WASHER	2		
18	AT171897	WINDOWPANE	2		(LEFT SIDE FRONT WINDOW, RIGHT SIDE REAR WINDOW) (SUB FOR AT151481)
19	T76830	GUARD	2		
20	24H1305	WASHER	2		13/32" X 13/16" X 0.065"
21	14M7167	LOCK NUT	2		M10

CAB SIDE WINDOWS
(SERIAL NO.825644-)

TP50295 -UN-12JAN00

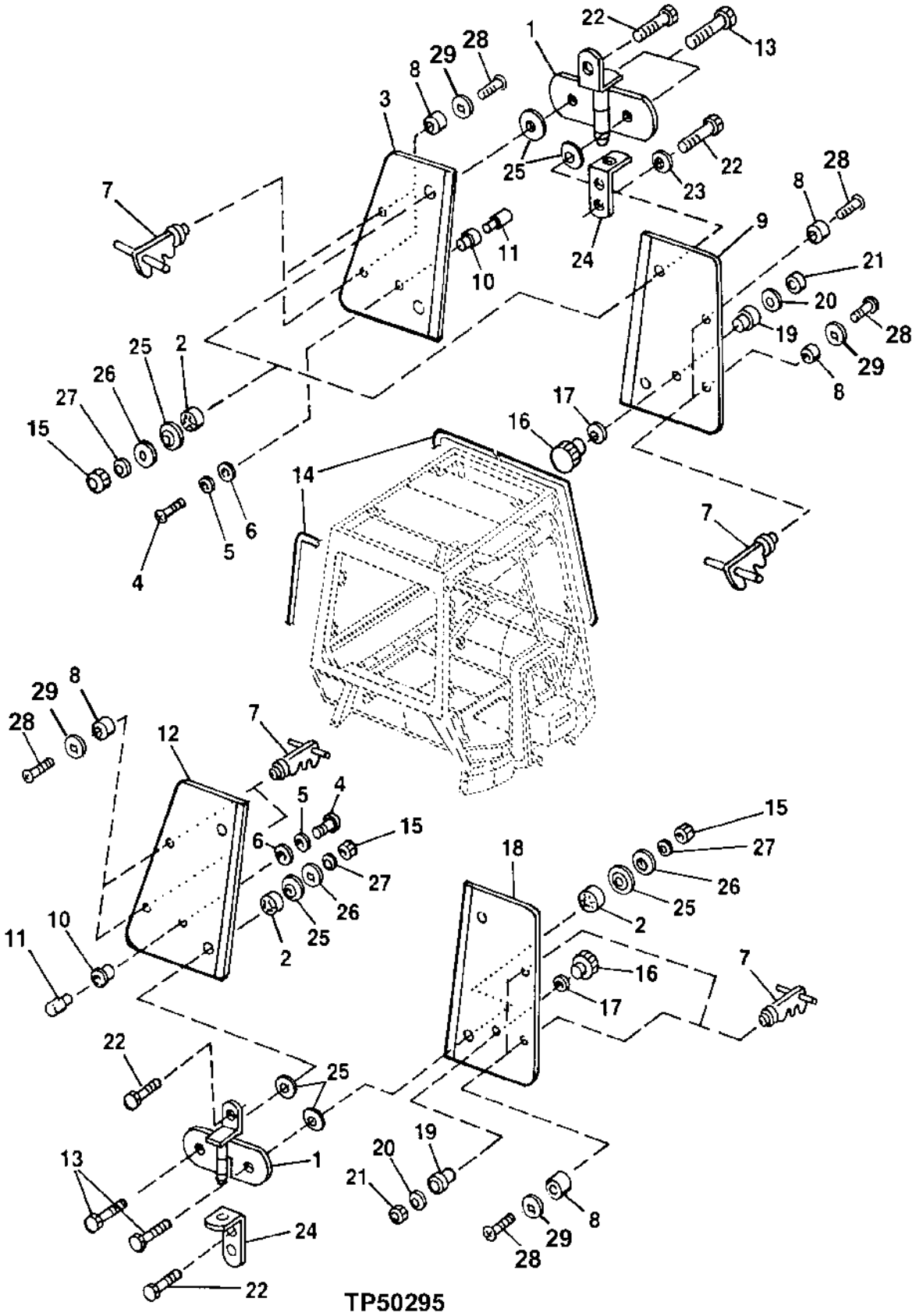

CAB SIDE WINDOWS
(SERIAL NO.825644-)

KEY	PART NO.	PART NAME	QTY	SERIAL NO.	REMARKS
1	AT176400	HINGE	4		
2	T158358	BUSHING	8		
3	T155815	WINDOWPANE	1		(L.H.REAR)
4	T133674	SELF-LOCKING SCREW	10		M6 X 16
5	24H1288	WASHER	2		9/32" X 1" X 1/16"
6	T76833	WASHER	2		13 X 25 X 1.500 MM (0.512" X 0.984" X 0.059")
7	AT118766	LATCH	8		
8	T184135	BUMPER	8		(SUB FOR T101090)
9	T155815	WINDOWPANE	1		(L.H.FRONT)
10	T76832	WASHER	2		
11	T76831	BUSHING	2		
12	T155815	WINDOWPANE	1		(R.H.REAR)
13	19M7322	CAP SCREW	8		M8 X 35
14	T185855	ISOLATOR	2		(SUB FOR T163163)
15	14M7166	LOCK NUT	8		M8
16	AT75311	KNOB	2		
17	R52921	WASHER	2		
18	T155815	WINDOWPANE	1		(R.H.FRONT)
19	T76830	GUARD	2		
20	24H1305	WASHER	2		13/32" X 13/16" X 0.065"
21	14M7167	LOCK NUT	2		M10
22	19M7881	SCREW	12		M8 X 20
23	24M7036	WASHER	12		9 X 16 X 1.600 MM
24	T155906	ANGLE	4		
25	T158081	WASHER	16		
26	T185678	WASHER	8		(SUB FOR T158080, THIS APPLICATION)
27	24M7024	WASHER	8		9 X 28 X 3 MM

FRONT WINDOW WIPER MOTOR

TP50361 -UN-15SEP95

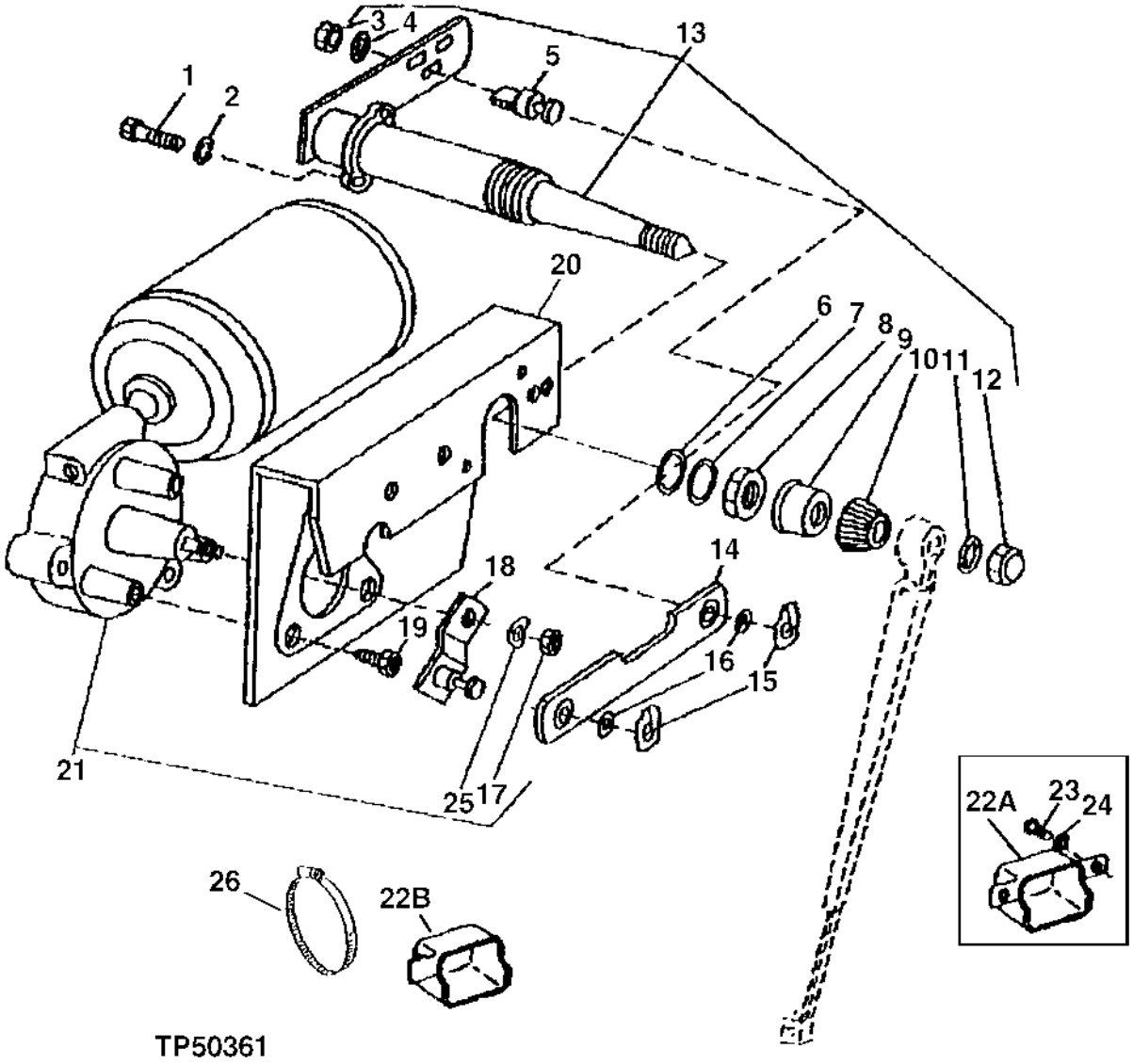

FRONT WINDOW WIPER MOTOR

KEY	PART NO.	PART NAME	QTY	SERIAL NO.	REMARKS
1	21H1127	SCREW	2		0.190" X 7/16"
2	12H295	LOCK WASHER	2		0.190"
3	14H649	NUT	1		1/4"
4	12H297	LOCK WASHER	1		1/4"
5	U46507	PIN	1		
6	R63666	WASHER	1		
7	R63667	WASHER	1		
8	R63668	NUT	1		
9	R63669	CAP	1		
10	R63670	WELD NUT	1		
11	T142520	LOCK WASHER	1		
12	T142519	NUT	1		
13	AT58147	SHAFT	1		
14	AU43853	LINK	1		
15	U46506	CLIP	2		
16	T32255	SHIM	2		
17	T142517	LOCK NUT	1		
18	AT157435	ARM	1		L.H.
	AT141987	ARM	1		(SUB FOR AT156885) R.H.
19	AT156886	CAP SCREW	3		
20	R112049	BRACKET	1		(SUB FOR T142518)
21	AT66481	WIPER MOTOR	1		L.H. DOOR WIPER MOTOR (ALSO ORDER AT135811 IF MOTOR IS MARKED "WC" (3 TERMINAL) (SUB FOR AT157434, THIS APPLICATION)
	AT66481	WIPER MOTOR	1		R.H. DOOR WIPER MOTOR (ALSO ORDER AT135811 IF MOTOR IS MARKED "WC" (3 TERMINAL) (SUB FOR AT146064, THIS APPLICATION)
22A	.....	CUSHION COVER	2		(SUB T142875 AND M86436)
22B	T142875	CUSHION COVER	2		(ALSO ORDER M86436)
23	T134895	SELF-LOCKING SCREW	4		M6 X 25
24	24H1287	WASHER	4		9/32" X 5/8" X 0.065"
25	U46508	WASHER	1		
26	M86436	TIE BAND	1		

CAB WINDSHIELD WASHER PUMP AND HOSES

TP58012 -UN-15FEB99

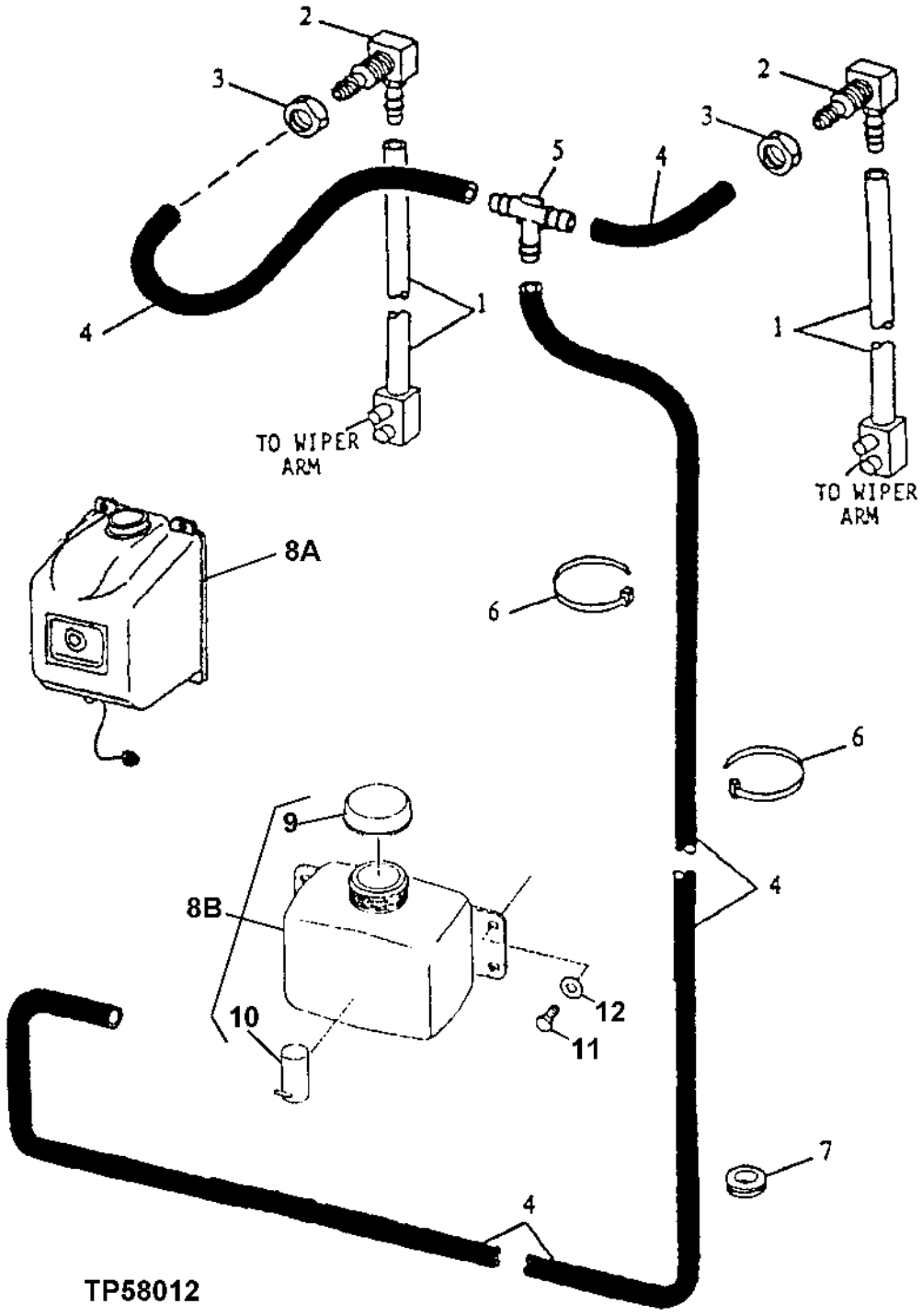

CAB WINDSHIELD WASHER PUMP AND HOSES

KEY	PART NO.	PART NAME	QTY	SERIAL NO.	REMARKS
1	AT151147	KIT	2		WIPER ARM HOSE
2	AT116970	ELBOW FITTING	2		
3	.....	NUT	2		
4	.....	HOSE	AR		(MAKE FROM R120653 BULK MATERIAL, CUT TO LENGTH) (SUB FOR R54445 AND R104595)
5	T135764	TEE FITTING	1		
6	R44302	TIE BAND	AR		
7	N30256	GROMMET	1		
8A	AT48387	WINDSHIELD WASHER	1	-872328	INCLUDES CAP AND PUMP
8B	AT169058	RESERVOIR	1	872329-	INCLUDES CAP AND PUMP
9	AT106413	CAP	1		
10	AT174348	PUMP	1		
11	19M7923	CAP SCREW	3		M6 X 12
12	24H1287	WASHER	3		

CAB DOORS AND WINDOWS

TP45579 -UN-01DEC94

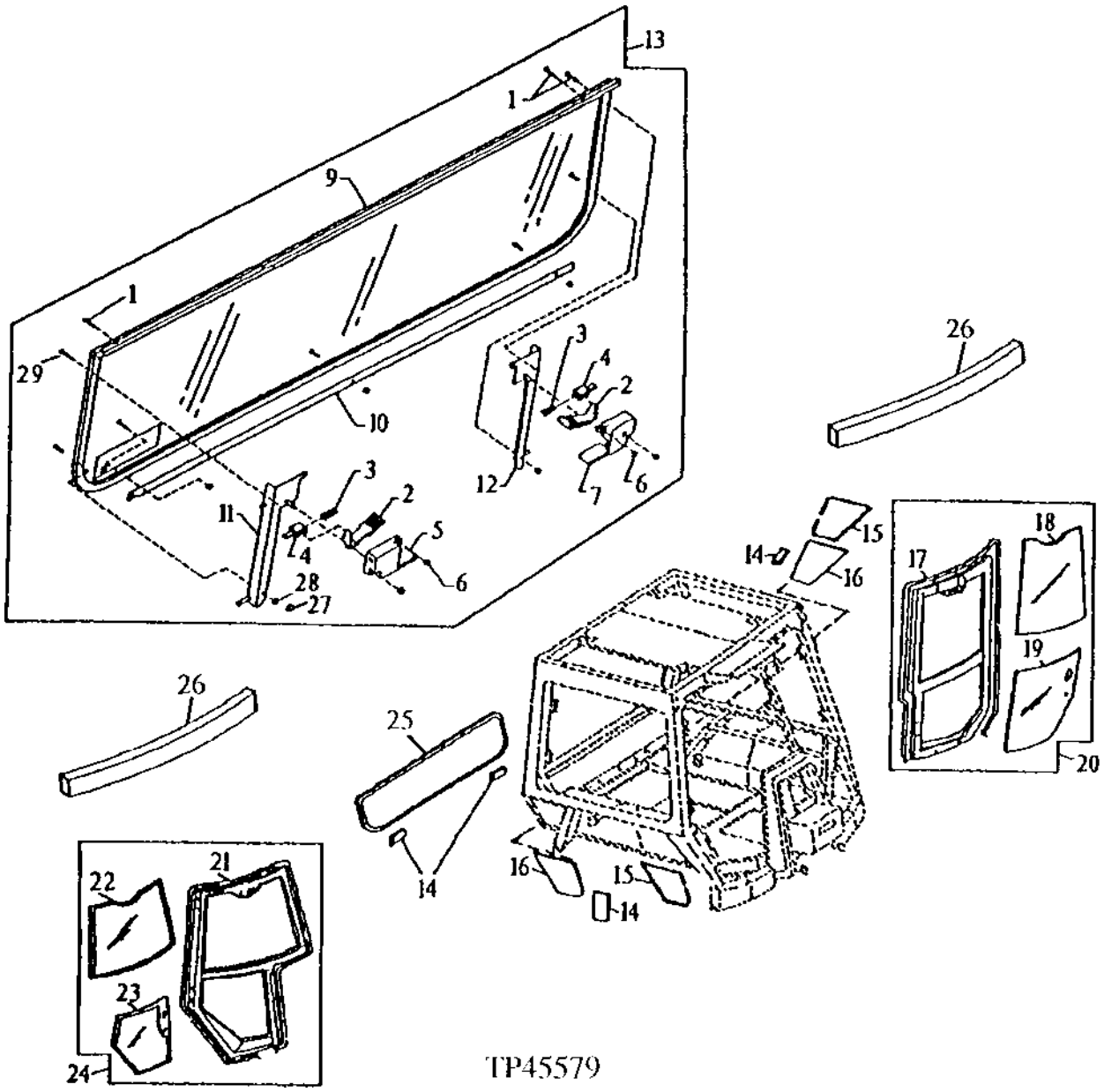

CAB DOORS AND WINDOWS

KEY	PART NO.	PART NAME	QTY	SERIAL NO.	REMARKS
1	21H1478	SCREW	4		0.164" X 1"
2	T133493	LEVER	2		
3	R28009	SPRING	2		
4	T133495	PIN	2		
5	T133491	LATCH	1		(R.H.)
6	M63431	LOCK NUT	9		
7	T133492	LATCH	1		(L.H.)
8	21H1470	SCREW	5		0.164" X 3/4"
9	AT87527	WINDOW	1		
10	T132889	SUPPORT	1		
11	AT87558	GUIDE	1		
12	AT87559	GUIDE	1		
13	AT140907	WINDOW	1		
14	T135675	STAND-OFF	12		
15	.....	SEALANT	AR		FOR ADHESIVE REPAIR USE COMMERCIAL AUTO GLASS URETHANE.
16	T147876	WINDOWPANE	1		RIGHT
	T147877	WINDOWPANE	1		LEFT
17	AT145688	SEAL	1		L.H. (USE WITH AR31790 JD MULTI-SEALANT ADHESIVE)
18	T133335	WINDOWPANE	1		L. H. UPPER CAB DOOR
19	T133336	WINDOWPANE	1		L. H. LOWER CAB DOOR
20	AT173690	DOOR	1		(SUB FOR AT156894) L.H.
21	AT169385	SEAL	1		R.H. (USE WITH AR31790 JD MULTI-SEALANT ADHESIVE) (SUB FOR AT151319 AND AT164124)
22	T133333	WINDOWPANE	1		R.H. UPPER
23	T133334	WINDOWPANE	1		R.H. LOWER DOOR
24	AT173689	DOOR	1		(SUB FOR AT156893) R.H.
25	T132952	WINDOWPANE	1		(BOTTOM LOWER)
26	T145402	SEAL	1		(1676 MM) (ALSO ORDER T148469)
27	24M7100	WASHER	6		6.600 X 22 X 2 MM
28	M40333	LOCK NUT	6		6.350 MM
29	T145057	CAP SCREW	6		6.350 X 28.575 MM
..	AR31790	ADHESIVE	1		

CAB ONE PIECE FRONT WINDSHIELD GLASS AND WIPER MOTOR (WITHOUT RIGHT CAB DOOR)

TP57845 -UN-17MAR98

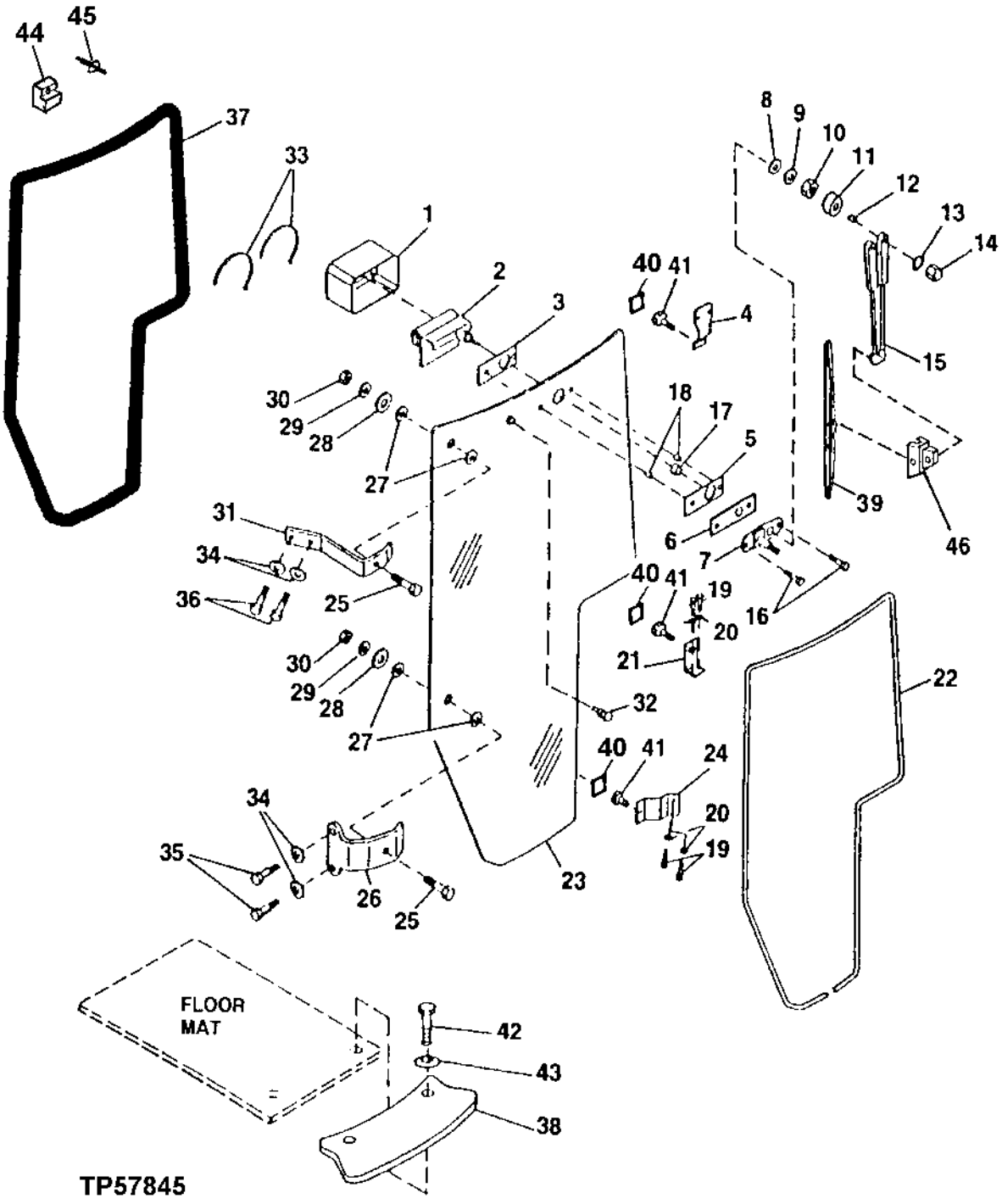

CAB, RIGHT ONE PIECE FRONT WINDSHIELD GLASS AND WIPER (WITHOUT RIGHT CAB DOOR)

KEY	PART NO.	PART NAME	QTY	SERIAL NO.	REMARKS
1	T151513	COVER	1		
2	.....	MOTOR	1		
3	T148472	ISOLATOR	1		
4	T148478	PLATE	1		
5	T148471	ISOLATOR	1		
6	T148470	PLATE	1		
7	RE36215	PLATE	1		
8	R63666	WASHER	1		
9	R63667	WASHER	1		
10	R63668	NUT	1		
11	R63669	CAP	1		
12	R63670	WELD NUT	1		
13	T142520	LOCK WASHER	1		
14	T142519	NUT	1		
15	AT151124	WIPER ARM	1		
16	T135584	SCREW	1		
17	T148473	BUSHING	1		
18	T148474	BUSHING	1		
19	19M7881	SCREW	1		
20	24M7238	WASHER	4		
21	T148482	PLATE	1		
22	T152648	ISOLATOR	1		
23	T149843	WINDOWPANE	1		
24	T148485	PLATE	1		
25	19M7922	CAP SCREW	2		
26	T148454	HINGE	1		
27	T158081	WASHER	4		0.945" X 1.575" X 0.276", (SUB FOR L77652, THIS APPLICATION)
28	T185678	WASHER	2		(SUB FOR L77651 AND T158080, THIS APPLICATION)
29	24M7024	WASHER	1		
30	14M7273	NUT	2		
31	T148453	HINGE	1		
32	T153138	PLUG	1		(USE WITH NO WINDSHIELD WASHER)
	T153734	GROMMET	1		(USE WITH WINDSHIELD WASHER OPTION)
33	M86436	TIE BAND	2		
34	24M7239	WASHER	1		
35	19M7358	CAP SCREW	2		
36	19M7662	CAP SCREW	2		
37	AT164148	ISOLATOR	1		
38	T153271	GUARD	1		
39	TY16304	WIPER BLADE	1		(ALSO ORDER TY16312) (FOR FIRST TIME INSTALLATION)
40	T157709	PAD	3		
41	T153733	BUMPER	3		
42	T134895	SELF-LOCKING SCREW	2		
43	24M7100	WASHER	2		
44	T161902	SUPPORT	1		(SUB FOR T153981) (ALSO ORDER T163002)
45	T163002	RIVET	1		
46	TY16312	KIT	1		WIPER BLADE ADAPTER

LEFT HAND CAB DOOR HARDWARE AND WINDSHIELD WIPER

TP58057 -UN-07OCT99

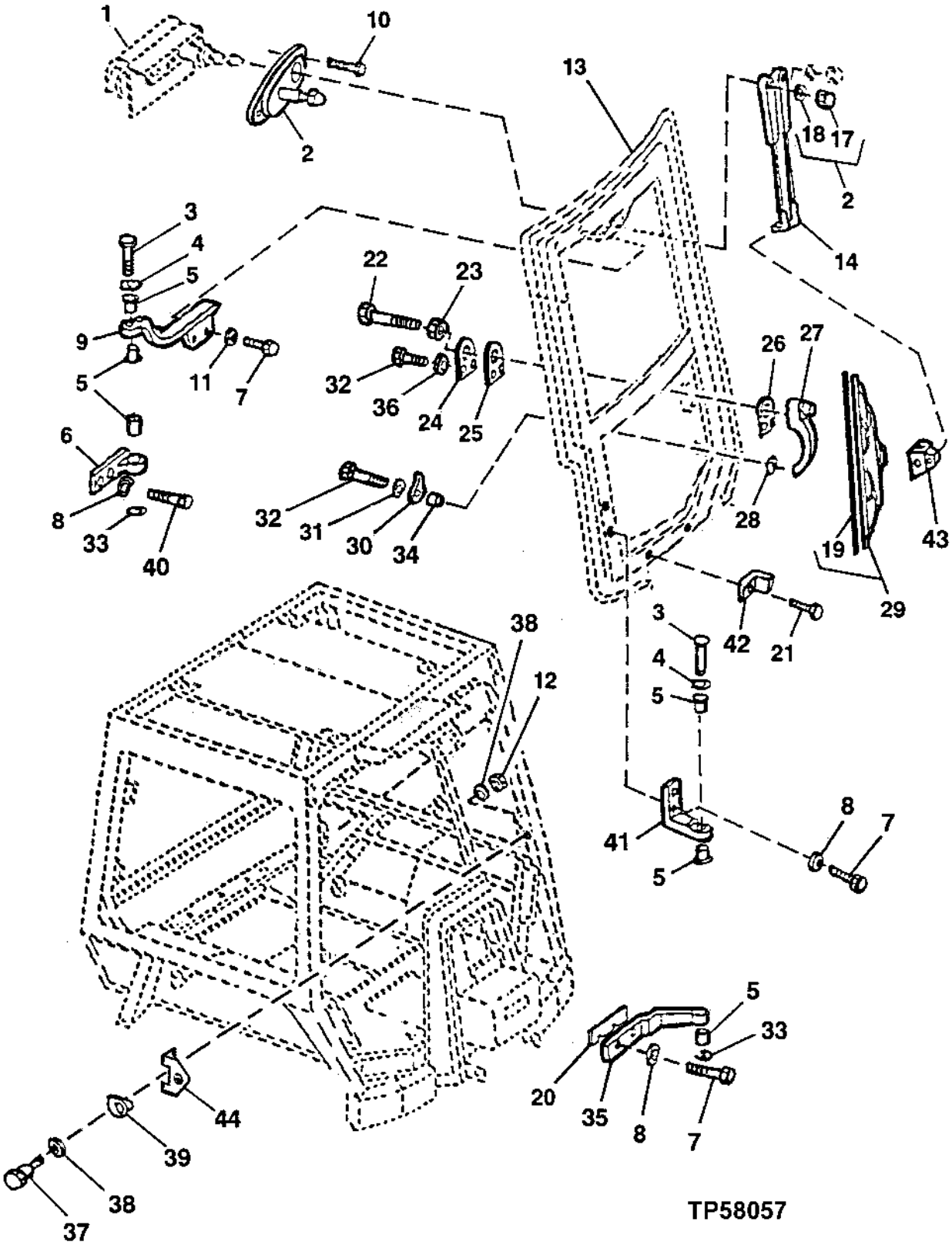

LEFT HAND CAB DOOR HARDWARE AND WINDSHIELD WIPER

KEY	PART NO.	PART NAME	QTY	SERIAL NO.	REMARKS
1	.....	MOTOR	1		
2	RE36215	PLATE	1		(SUB FOR AT115596)
3	T135625	PIN	2		
4	24H1111	WASHER	2		17/32" X 1-1/16" X 0.090"
5	T141285	BUSHING	6		
6	T135405	HINGE	1		L. H. UPPER CAB FRAME
7	19M7402	CAP SCREW	4		M10 X 25
8	24M7239	WASHER	6		10.700 X 21 X 2.500 MM
9	T147945	HINGE	1		L. H. UPPER CAB DOOR, (SUB FOR T135406)
10	T141151	BOLT	2		
11	24M7296	WASHER	2		10.500 X 30 X 2.500 MM
12	14H1047	NUT	1		7/16"
13	AT173690	DOOR	1		L.H. (SUB FOR AT156894)
14	AT151124	WIPER ARM	1		
15	T142520	LOCK WASHER	1		
16	T142519	NUT	1		
17	T142539	NUT	1		
18	T142540	WASHER	1		
19	T122979	WIPER BLADE	1		(SUB FOR T141529)
20	T140911	SHIM	AR		(2 MM)
21	19M7662	CAP SCREW	2		M10 X 30
22	T140751	SCREW	1		
23	14H786	NUT	1		1/4"
24	T134584	PLATE	1		
25	T134582	GROMMET	1		
26	T134755	GROMMET	1		
27	AT148303	HANDLE	1		
28	T134754	GROMMET	1		
29	TY16304	WIPER BLADE	1		(ALSO ORDER TY16312) (FOR FIRST TIME INSTALLATION)
30	T134583	GROMMET	1		
31	24H1821	WASHER	1		9/32" X 47/64" X 1/16"
32	19M7933	CAP SCREW	3		M6 X 25
33	R26871	SNAP RING	2		
34	T134586	SPACER	3		
35	T135404	HINGE	1		L. H. LOWER CAB FRAME
36	24H1287	WASHER	2		9/32" X 5/8" X 0.065"
37	AR91896	STRIKER	1		
38	T105740	WASHER	1		0.449" X 1" X 0.090"
39	T135583	GUARD	1		
40	19M7658	CAP SCREW	2		M10 X 50
41	T135403	HINGE	1		L. H. LOWER CAB DOOR
42	T146123	BRACKET	1		
43	TY16312	KIT	1		
44	AT188465	KIT	1		STRIKER BRACKET

RIGHT HAND CAB DOOR HARDWARE AND WINDSHIELD WIPER

TP55056 -UN-16JUN97

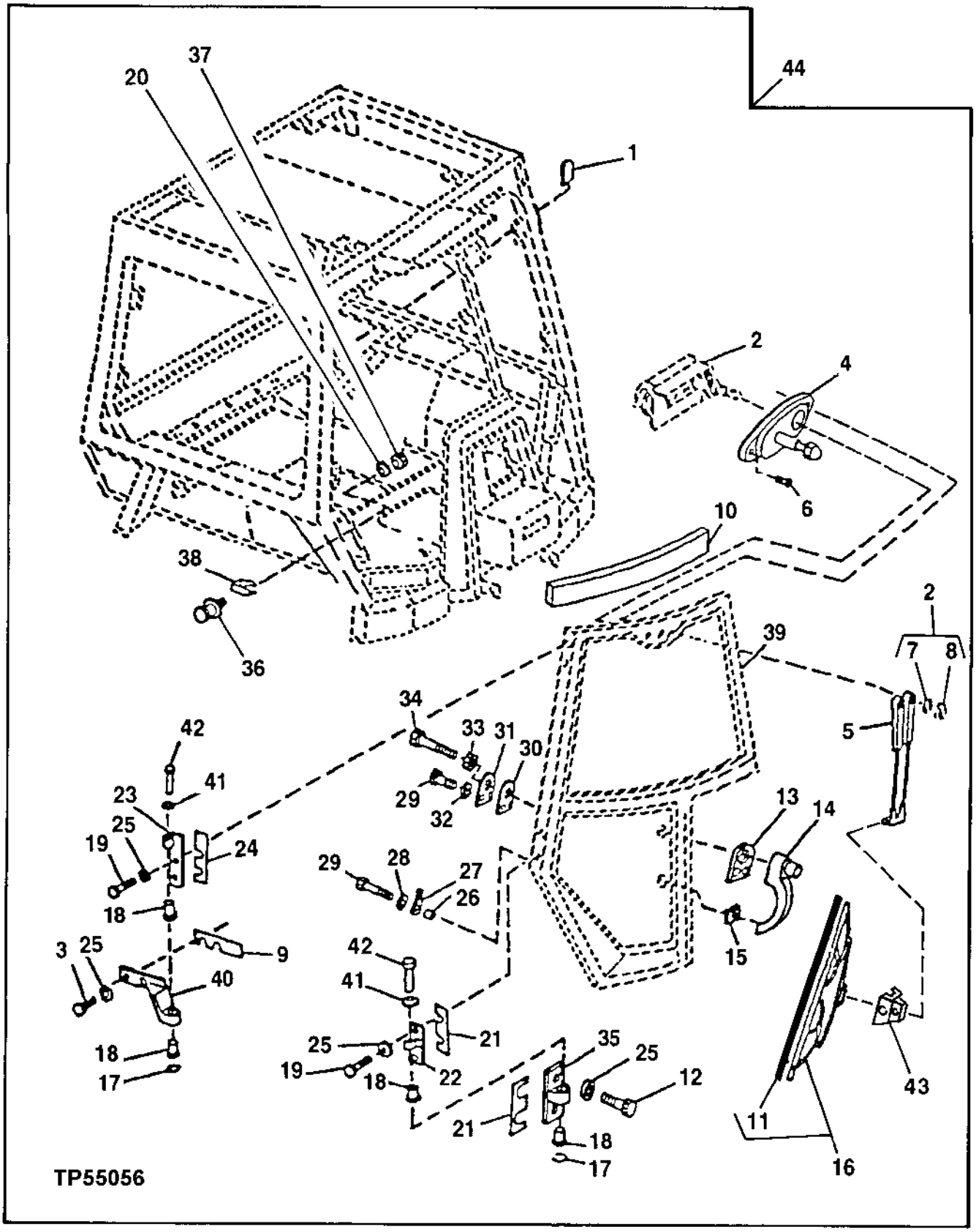

RIGHT HAND CAB DOOR HARDWARE AND WINDSHIELD WIPER

KEY	PART NO.	PART NAME	QTY	SERIAL NO.	REMARKS
1	T135748	COVER	1		COAT HOOK
2	.....	MOTOR	1		(AT66481)
3	19M7402	CAP SCREW	2		M10 X 25
4	RE36215	PLATE	1		(SUB FOR AT115596)
5	AT151124	WIPER ARM	1		
6	T141151	BOLT	2		
7	T142520	LOCK WASHER	1		
8	T142519	NUT	1		
9	T140912	SHIM	AR		(2 MM)
10	T145402	SEAL	1		(1676 MM) (ALSO ORDER T148469)
11	T122979	WIPER BLADE	1		(SUB FOR T141529)
12	19M7662	CAP SCREW	2		M10 X 30
13	T134755	GROMMET	1		UPPER
14	AT148303	HANDLE	1		
15	T134754	GROMMET	1		LOWER
16	TY16304	WIPER BLADE	1		(ALSO ORDER TY16312) (FOR FIRST TIME INSTALLATION)
17	R26871	SNAP RING	2		
18	T141285	BUSHING	4		
19	19M7358	CAP SCREW	4		M10 X 40
20	T105740	WASHER	1		0.449" X 1" X 0.090"
21	T140790	SHIM	AR		(2 MM)
22	T141380	HINGE	1		R.H. CAB LOWER
23	T135387	HINGE	1		R.H. CAB DOOR, UPPER
24	T140791	SHIM	AR		(2 MM)
25	24M7239	WASHER	8		10.700 X 21 X 2.500 MM
26	T134586	SPACER	3		
27	T134583	GROMMET	1		
28	24H1821	WASHER	1		9/32" X 47/64" X 1/16"
29	19M7933	CAP SCREW	3		M6 X 25
30	T134582	GROMMET	1		
31	T134584	PLATE	1		
32	24H1287	WASHER	2		9/32" X 5/8" X 0.065"
33	14H786	NUT	1		1/4"
34	T141152	SCREW	1		
35	T141379	HINGE	1		R.H. LOWER CAB FRAME
36	AR91896	STRIKER	1		
37	14H1047	NUT	1		7/16"
38	T135583	GUARD	1		
39	AT178080	DOOR	1		WITH GLASS, WIPER MOTOR, DOOR PULL AND LATCH
	AT173689	DOOR	1		WITH GLASS, (SUB FOR AT156893)
40	T135386	HINGE	1		R.H. UPPER CAB FRAME
41	24H1111	WASHER	2		17/32" X 1-1/16" X 0.090"
42	T135625	PIN	2		
43	TY16312	KIT	1		
44	.....	DOOR	1		(AT178734 NO LONGER AVAILABLE) ORDER COMPONENTS, (CONVERSION) SINGLE DOOR TO 2-DOOR CAB.

CAB DOOR LATCHES AND PULL HANDLES

TP55033 -UN-16JUN97

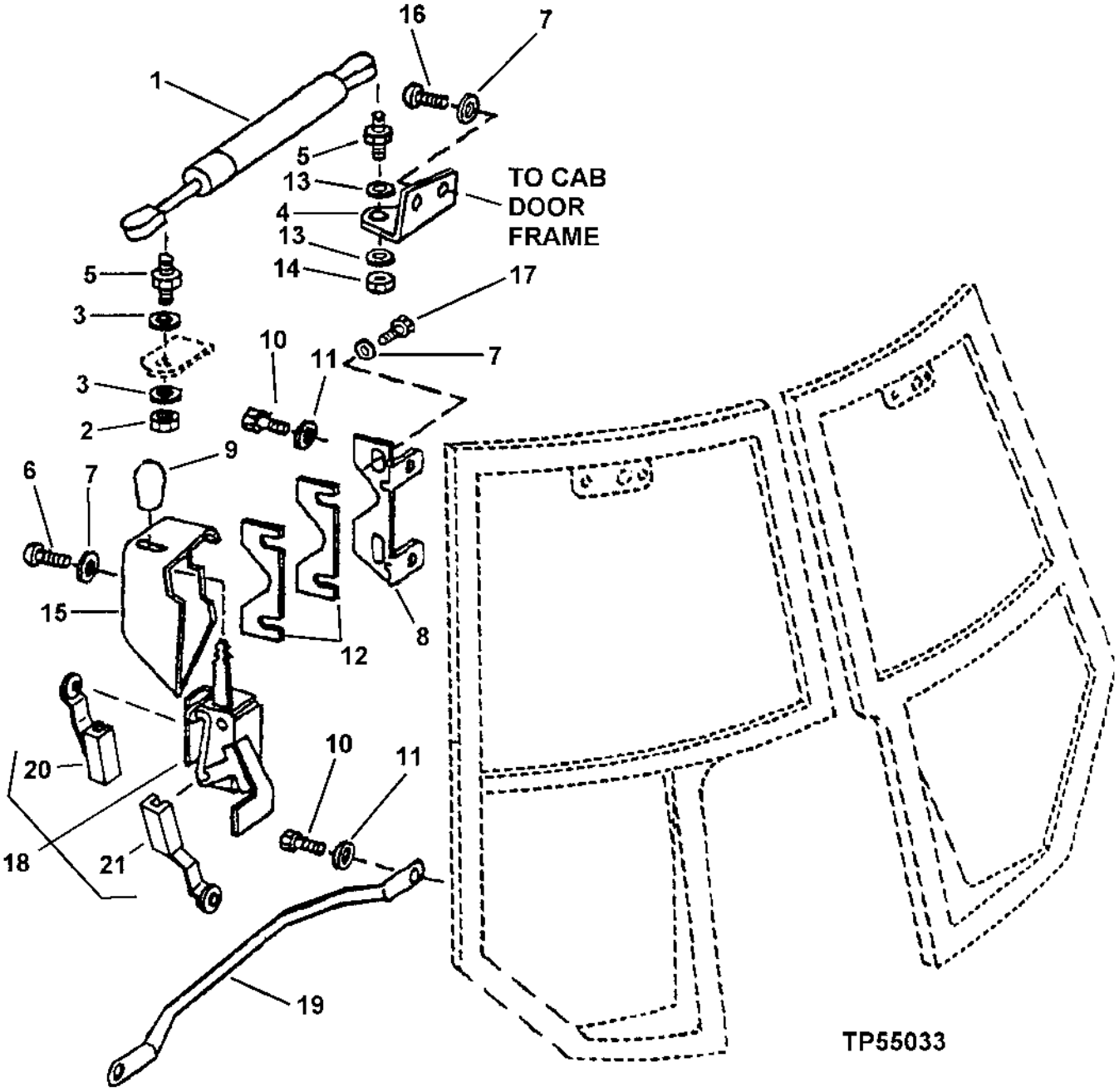

CAB DOOR LATCHES AND PULL HANDLES

KEY	PART NO.	PART NAME	QTY	SERIAL NO.	REMARKS
1	AT146294	CYLINDER	1		
2	14H785	NUT	1		5/16"
3	24M7238	WASHER	2		8.700 X 17 X 2 MM
4	T134592	ANGLE	1		LEFT DOOR
5	T142651	BALL STUD	2		
6	T133674	SELF-LOCKING SCREW	4		
7	24H1287	WASHER	10		9/32" X 5/8" X 0.065"
8	T134590	BRACKET	1		R.H. DOOR
	T134579	BRACKET	1		L.H. DOOR
9	T133487	KNOB	2		
10	19M8324	CAP SCREW	8		M10 X 16
11	24H1323	WASHER	8		15/32" X 13/16" X 0.090"
12	T134580	STRAP	4		
13	24H1136	WASHER	2		11/32" X 11/16" X 0.065"
14	14H785	NUT	1		5/16"
15	T133344	COVER	1		R.H. DOOR LATCH
	T133345	COVER	1		L.H. DOOR LATCH
16	19M8425	CAP SCREW	2		M6 X 16
17	19H1914	CAP SCREW	4		1/4" X 1"
18	AT145792	LATCH	2		
19	T134591	HANDLE	1		R.H. DOOR
	T133347	HANDLE	1		L.H. DOOR
20	T161373	CLIP	1		
21	R26491	CLIP	1		

FLOOR RAMPS AND FLOOR MATS

TP42376 -UN-01JAN94

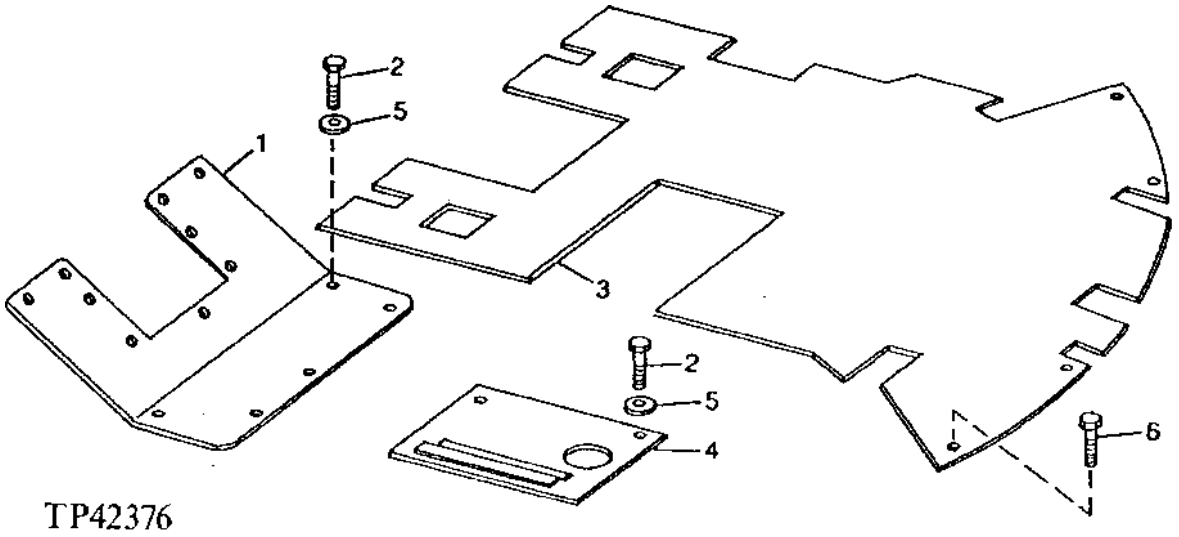

KEY	PART NO.	PART NAME	QTY	SERIAL NO.	REMARKS
1	AT151428	RAMP	1		(WITH CAB)
	AT151429	RAMP	1		(WITH ROPS)
2	19M7932	CAP SCREW	11		M8 X 16
3	T158187	MAT	1		(SUB FOR T149325 AND T148228)
4	T155065	COVER	1	-816286	(SUB FOR AT150249)
	T158068	COVER	1	816287-	
5	24M7238	WASHER	11		8.700 X 17 X 2 MM
6	T133674	SELF-LOCKING SCREW	4		

MEMORANDA

SEAT ADJUSTER
(WITH SUSPENDED SEAT)
(SERIAL NO. -815114)

TP44700 -UN-01JAN94

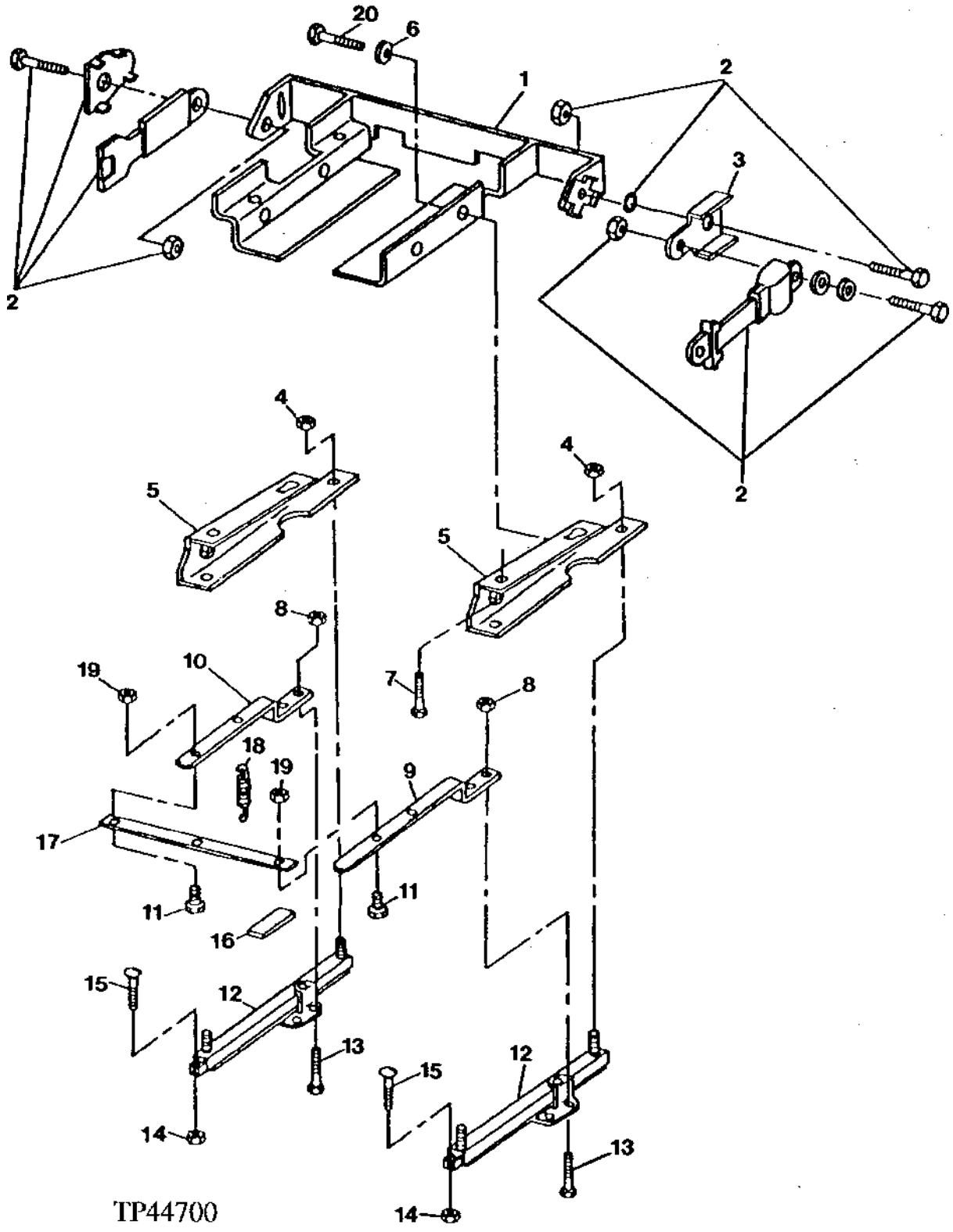

SEAT ADJUSTER
(WITH SUSPENDED SEAT)
(SERIAL NO. -815114)

KEY	PART NO.	PART NAME	QTY	SERIAL NO.	REMARKS
1	AT146301	SUPPORT	1		
2	AT172910	SEAT BELT	1		(2 INCH) (ALSO ORDER AT172779) (SUB FOR AT145740)
	AT172903	SEAT BELT	1		(SUB FOR AT148422) (3 INCH)
3	T140401	BRACKET	1		(USE WITH 3 INCH SEAT BELT)
4	14H785	NUT	4		5/16"
5	AT151136	BRACKET	2		
6	24H1305	WASHER	2		
7	T77833	SELF-LOCKING SCREW	4		
8	E45229	LOCK NUT	4		(SUB K40001)
	K40001	LOCK NUT	4		
9	T137302	LEVER	1		LEFT
10	T140858	LEVER	1		RIGHT
11	T25803	CAP SCREW	2		
12	AT75874	ADJUSTER	2		
13	19H1919	CAP SCREW	4		1/4" X 5/8"
14	14M7273	NUT	4		M8
15	19M7513	CAP SCREW	4		M8 X 30
16	T135211	GRIP	1		
17	T140857	STRAP	1		
18	R43538	SPRING	1		
19	T32688	LOCK NUT	2		
20	19H2676	CAP SCREW	2		3/8" X 1"

SEAT BASE WITH TURNTABLE
(WITH SUSPENDED SEAT)
(SERIAL NO. -815114)

TP44141 -UN-01JAN94

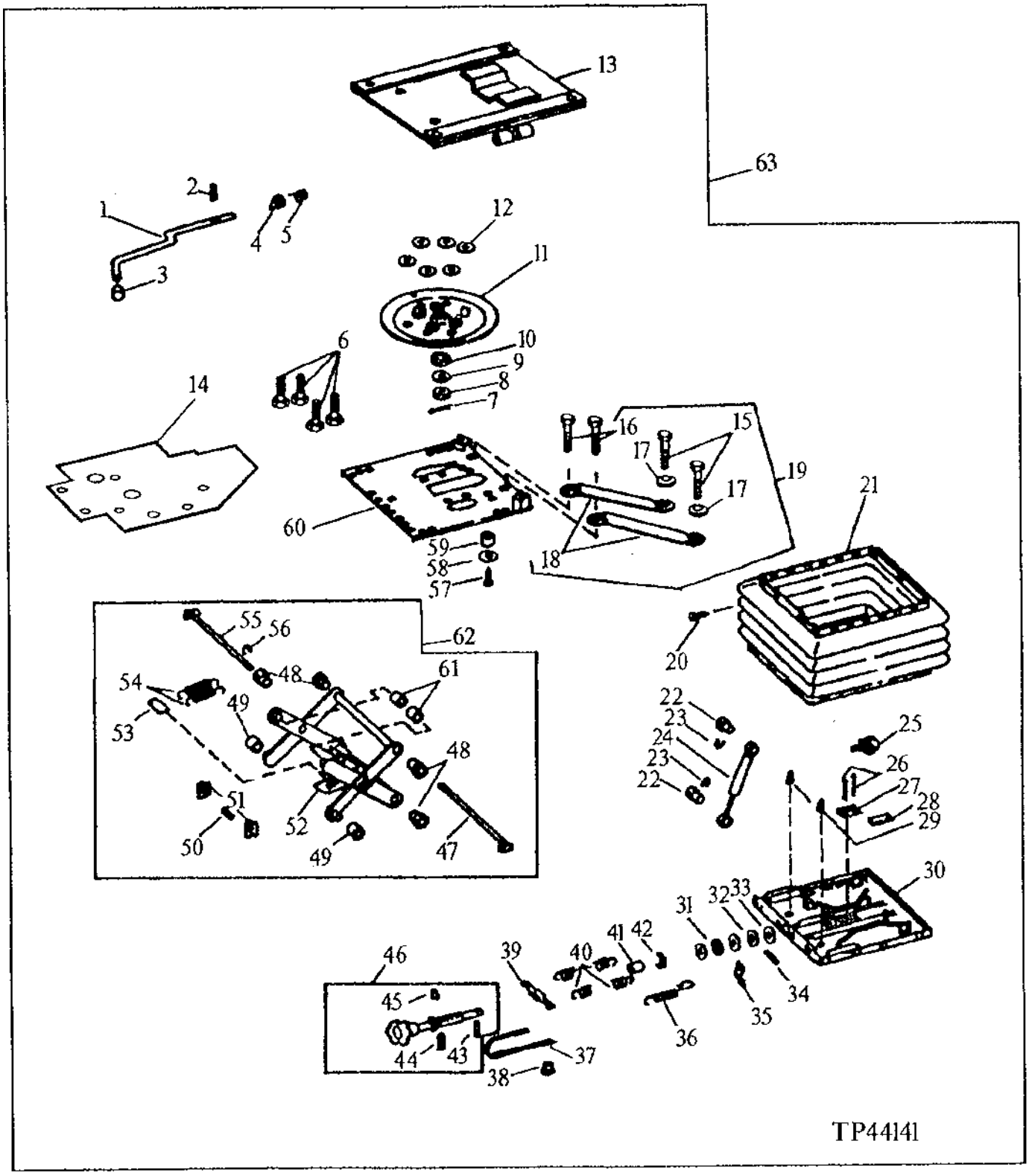

SEAT BASE WITH TURNTABLE
(WITH SUSPENDED SEAT)
(SERIAL NO. -815114)

KEY	PART NO.	PART NAME	QTY	SERIAL NO.	REMARKS
1	T141397	ROD	1		
2	34M7094	SPRING PIN	1		4 X 16 MM
3	T82217	KNOB	1		
4	T82218	PAWL	1		
5	T82219	EXTENSION SPRING	1		
6	T146652	SCREW	4		
7	11M7017	COTTER PIN	1		3.200 X 32 MM
8	14M7179	NUT	1		M16
9	R39129	THRUST WASHER	1		
10	T82221	WASHER	1		
11	AT84216	PLATE	1		
12	AT107543	BUSHING	6		
13	AT161481	PLATE	1		(UPPER TURNTABLE)
14	T146639	PLATE	1		
15	19M7402	CAP SCREW	2		M10 X 25
16	19H3150	CAP SCREW	2		7/16" X 3/4"
17	24M7239	WASHER	2		10.700 X 21 X 2.500 MM
18	.....	STRAP	1		TETHER BELT
19	AT160627	KIT	1		
20	L38892	PLUG	36		
21	AL36686	BOOT	1		
22	L38889	BOLT	2		
23	40M7041	SNAP RING	2		
24	AT84224	ABSORBER	1		
25	AL38526	FORK	1		
26	AT44188	RIVET	2		
27	L38891	RAIL	1		
28	L38890	PLATE	1		
29	L25678	BUMPER	2		
30	AT145191	PLATE	1		(LOWER)
31	JD10212	BALL BEARING	2		
32	24H1657	WASHER	1		21/64" X 1-1/4" X 7/64"
33	B28163	WASHER	1		
34	L38851	ROLLER	1		
35	L38847	GUIDE	1		
36	L38866	SPRING	1		
37	T82231	TIE BAND	1		
38	L38857	PLUG	2		
39	AL36643	RETAINER	1		
40	T82227	EXTENSION SPRING	2		
41	L42038	BUSHING	1		
42	L38861	NUT	1		
43	34M7129	SPRING PIN	1		3 X 16 MM
44	34M7130	SPRING PIN	1		4 X 20 MM
45	40M7051	SNAP RING	1		
46	AL38524	ADJUSTER	1		
47	AT84228	PIN	1		
48	L42041	BEARING	4		
49	L42042	ROLLER	2		
50	L38862	BAR	1		
51	L38852	PLATE	2		
52	AL64580	ARM	1		
53	L38853	PLATE	1		
54	L38854	SPRING	2		
55	AT84226	PIN	1		
56	40M7030	SNAP RING	1		
57	L42039	RIVET	1		
58	24M7146	WASHER	1		4.300 X 12 X 1 MM
59	L42040	BUMPER	1		
60	AT161675	PLATE	1		(UPPER BASE)
61	L38855	ROLLER	2		
62	AT84225	ROCKER	1		
63	AT161479	BASE	1		

SEAT CUSHIONS AND ARM RESTS
(SERIAL NO. -825589)

TP50433 -UN-10JUL96

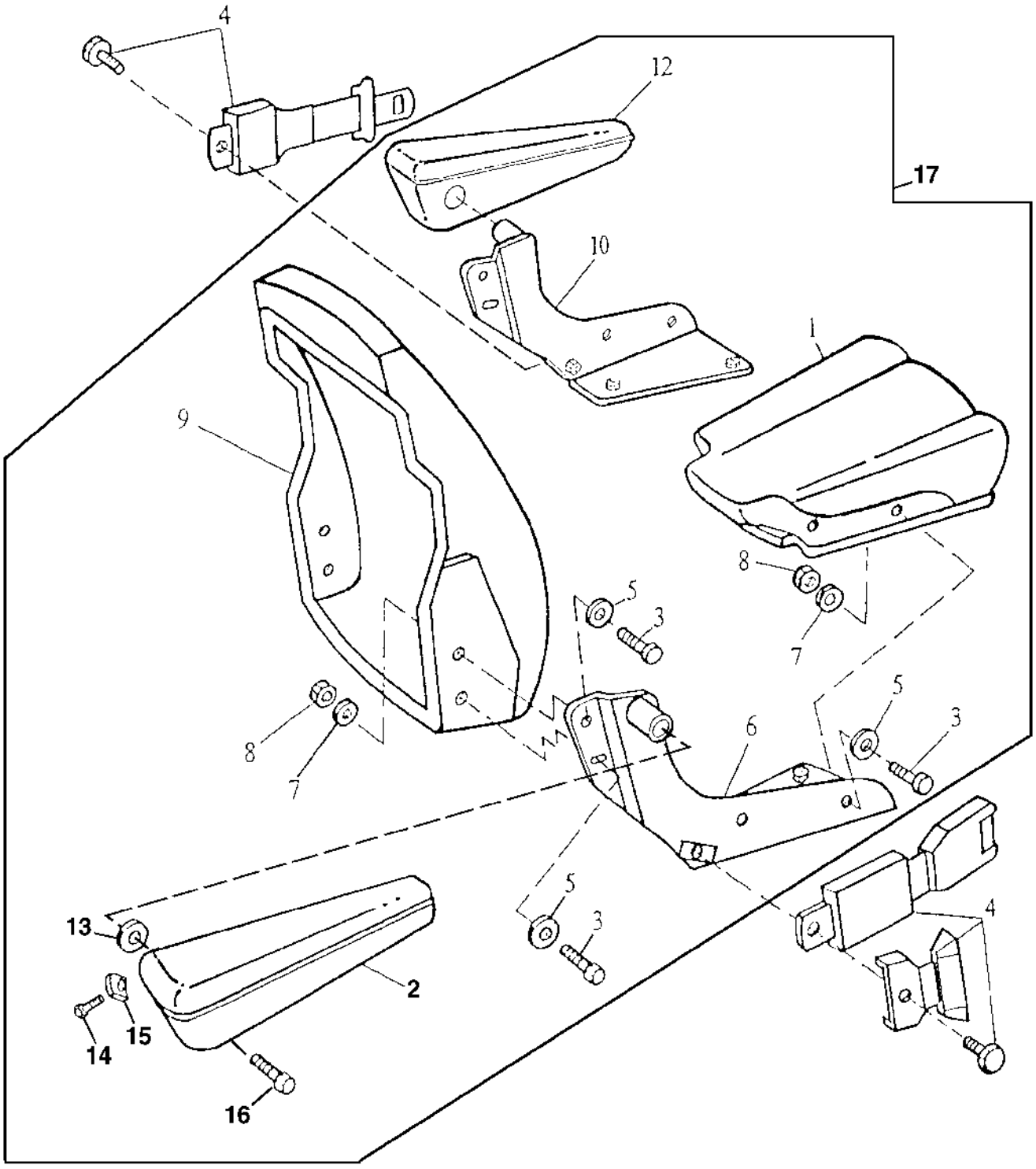

TP50433

SEAT CUSHIONS AND ARM RESTS
(SERIAL NO. -825589)

KEY	PART NO.	PART NAME	QTY	SERIAL NO.	REMARKS
1	AT139858	CUSHION	1		(CLOTH)
	AT141286	CUSHION	1		(VINYL)
2	AT146058	ARMREST	1		(RH) (BLACK)
	AT183637	KIT	1		(RH) (BROWN) INCLUDES ATTACHING HARDWARE, (SUB AT186152)
3	19H2676	CAP SCREW	8		HS, SAE 8, 3/8" X 1"
4	AT172910	SEAT BELT	1		(2 INCH) (ALSO ORDER AT172779) (SUB FOR AT145740)
	AT172903	SEAT BELT	1		(SUB FOR AT148422) (3 INCH)
5	24H1305	WASHER	8		13/32" X 13/16" X 0.065"
6	AT175955	BRACKET	1	-815114	RH. SUSPENSION SEAT, (SUB FOR AT146060)
	AT175349	BRACKET	1	815115-	RH. SUSPENSION SEAT,
	AT175349	BRACKET	1		RH. NON-SUSPENSION, (SUB FOR AT151939)
7	12H304	LOCK WASHER	8	-815114	3/8"
8	14H812	NUT	8	-815114	3/8"
	N10215	LOCK NUT	8	815115-	3/8"
9	AT141283	SEAT BACK	1		(VINYL) NON-SUSPENSION AND SUSPENSION, WITHOUT ADJUSTING LUMBAR
	AT158425	SEAT BACK	1		(CLOTH) (WITH ADJUSTING LUMBAR)
	AT175443	SEAT BACK	1		(VINYL) SUSPENSION, (WITH ADJUSTING LUMBAR)
10	AT175954	BRACKET	1	-815114	LH. SUSPENSION SEAT, (SUB FOR AT146059)
	AT175348	BRACKET	1	815115-	LH. SUSPENSION SEAT,
	AT175348	BRACKET	1		LH. NON-SUSPENSION, (SUB FOR AT151940)
11	T140401	BRACKET	AR		(USE WITH 3 INCH SEAT BELT) (NOT ILLUSTRATED)
12	AT146057	ARMREST	1		(LH) (BLACK)
	AT183638	KIT	1		(LH) (BROWN) INCLUDES ATTACHING HARDWARE, (SUB AT186156)
13	T120545	WASHER	2		
14	T120543	SCREW	2		
15	T120540	COVER	1		(RIGHT SEAT)
	T120541	COVER	1		(LEFT SEAT)
16	T120544	SCREW	2		
17	AT173704	SEAT	1		(VINYL NON-SUSPENSION) (BROWN) INCLUDES SEAT BASE, SWIVEL AND SLIDE
	AT173705	SEAT SUSPENSION	1		(VINYL) (BROWN) INCLUDES SEAT SUSPENSION, SWIVEL AND SLIDE
	AT173706	SEAT SUSPENSION	1		(CLOTH) (BROWN) INCLUDES SEAT SUSPENSION, SWIVEL AND SLIDE

SEAT BASE AND SEAT SUPPORT
(WITH NON-SUSPENDED SEAT)
(SERIAL NO. -825589)

TP57808 -UN-10DEC97

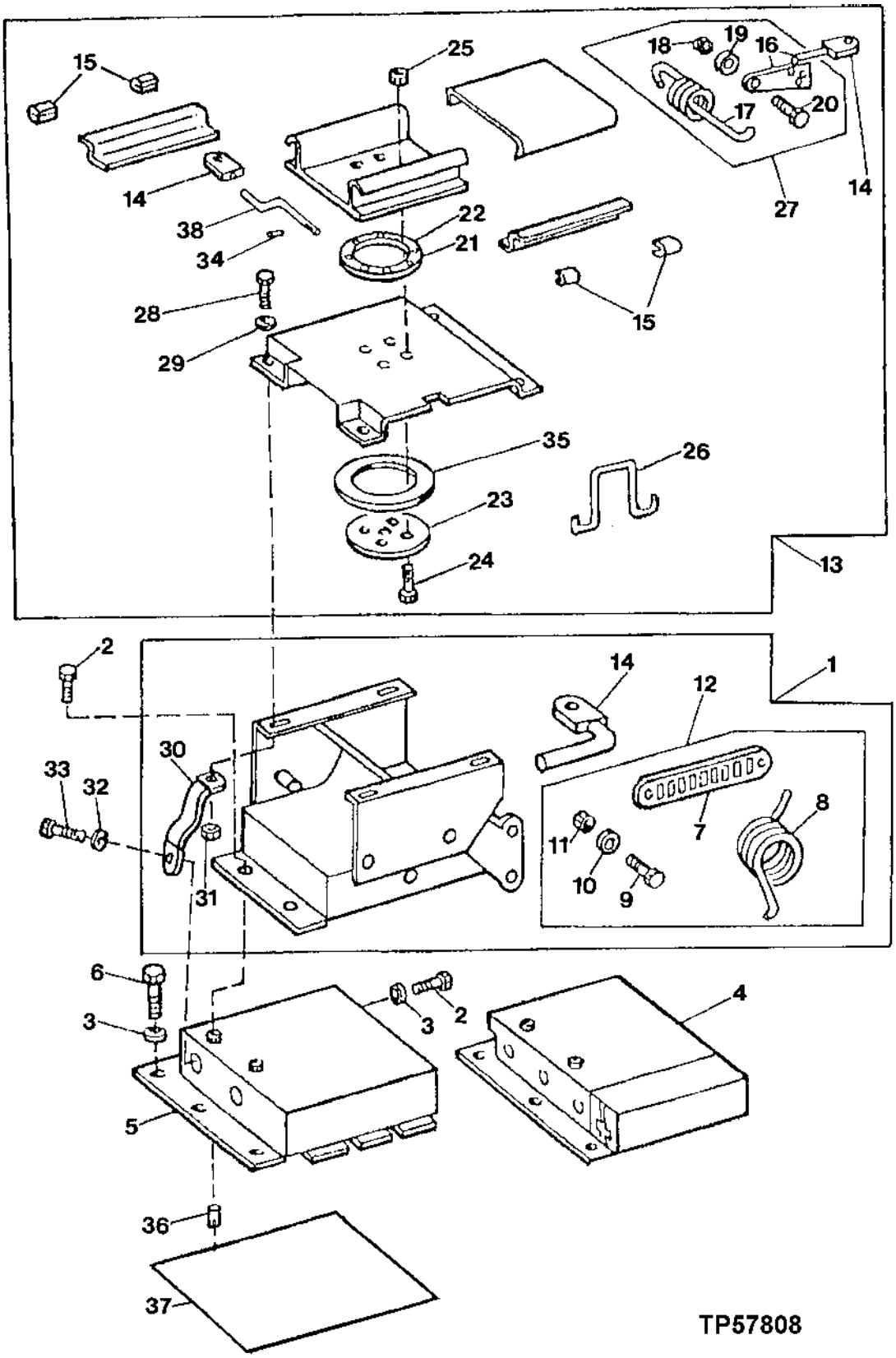

SEAT BASE AND SEAT SUPPORT
(WITH NON-SUSPENDED SEAT)
(SERIAL NO. -825589)

KEY	PART NO.	PART NAME	QTY	SERIAL NO.	REMARKS
1	AT141500	BASE	1		(ASSEMBLED)
2	19M7402	CAP SCREW	4		M10 X 25
3	24M7239	WASHER	11		10.700 X 21 X 2.500 MM
4	AT141214	COVER	1		(WITH CAB HEATER OR AIR CONDITIONING)
5	.....	BASE	1		(W/O CAB HEATER OR AIR CONDITIONING) (AT145508 NO LONGER AVAILABLE) (SUB AT174711) (ALSO ORDER T164567 AND T157803)
6	19M7938	CAP SCREW	9		M10 X 20
7	.....	LINK	2		
8	.....	SPRING	2		HEIGHT ADJUST
	.....	SPRING	1		LATCH RETURN
9	.....	BOLT	4		
10	.....	WASHER	4		
11	.....	NUT	4		
12	AT156921	KIT	1		HEIGHT ADJUSTER
13	.....	KIT	1	-815114	SWIVEL AND ADJUSTER (AT156936 NO LONGER AVAILABLE) (SUB AT175350)
14	.....	KNOB	1		(K1) SWIVEL ADJUST
	.....	KNOB	1		(K1) SLIDE ADJUST
	.....	KNOB	1		(K1) HEIGHT ADJUST
15	.....	STOP	4		(K2) SLIDER BLOCK
16	.....	LATCH	1		SLIDE RELEASE WELDMENT
17	.....	SPRING	1		EXTENSION
18	.....	NUT	2		
19	.....	WASHER	2		
20	.....	BOLT	2		
21	.....	RETAINER	1		(K3)
22	.....	BALL BEARING	8		(K3)
23	.....	PLATE	1		(K3) SWIVEL BEARING
24	.....	BOLT	4		(K3)
25	.....	NUT	4		(K3)
26	.....	SPRING	1		(K3)
27	AT156929	KIT	1		ADJUSTER LATCH
28	19H2676	CAP SCREW	2		3/8" X 1"
29	24M7239	WASHER	2		10.700 X 21 X 2.500 MM
30	AT173022	KIT	2		(INCLUDES (2) H99923, (2) 19H2676, (2) 19M7402, (2) 24M7239, (2) 24M7346)
31	H99923	LOCK NUT	2		3/8"
32	24M7239	WASHER	2		10.700 X 21 X 2.500 MM
33	19M7402	CAP SCREW	2		M10 X 25
34	34H266	SPRING PIN	1		5/32" X 1", (K3)
35	.....	PLATE	1		(K3)
36	T164567	GROMMET	1		(SUB FOR R26936)
37	T157803	PLATE	1		(UNDER SEATBASE)
38	.....	ROD	1		(K3) SWIVEL
..	AT151697	KIT	1		INCLUDES ALL (K1) PARTS (KNOB)
..	AT156920	KIT	1		INCLUDES ALL (K2) PARTS (ADJUSTER PUCK)
..	AT156928	KIT	1		INCLUDES ALL (K3) PARTS (SWIVEL)

SEAT SUSPENSION
(SERIAL NO. 815115-825589)

TP48867 -UN-16NOV95

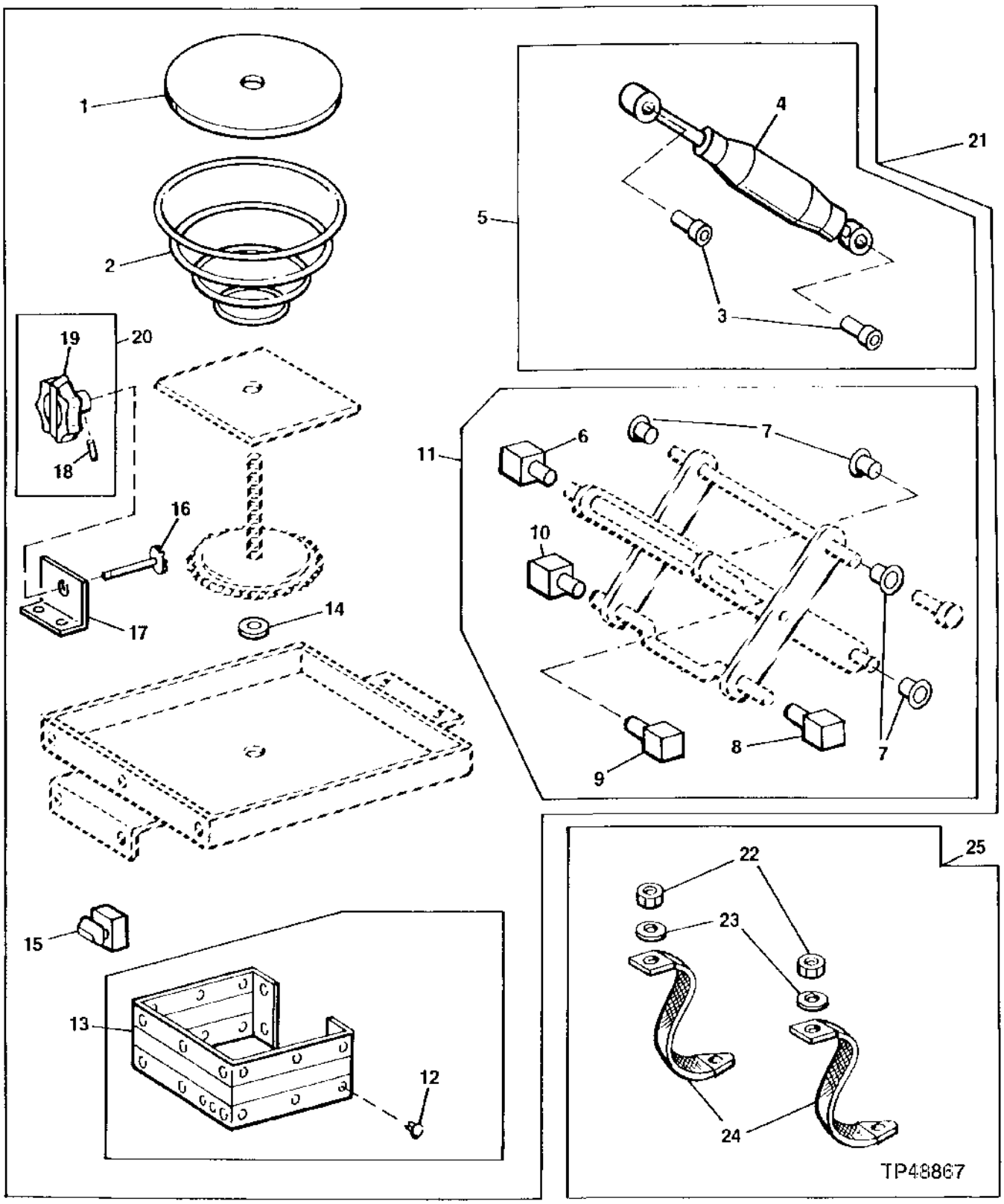

SEAT SUSPENSION
(SERIAL NO. 815115-825589)

KEY	PART NO.	PART NAME	QTY	SERIAL NO.	REMARKS
1	T55208	PAD	1		
2	T55210	SPRING	1		
3	.....	BUSHING	2		
4	.....	ABSORBER	1		
5	AT175436	KIT	1		
6	.....	BAR	1		
7	.....	BUSHING	4		
8	.....	BAR	1		
9	.....	END	1		
10	.....	BAR	1		
11	AT106397	KIT	1		BUSHING
12	T63798	PLUG	25		
13	AT175438	KIT	1		
14	T158481	WASHER	1		16.130 X 51 X 0.760 MM (0.635" X 2.008" X 0.030")
15	T55224	ISOLATOR	2		
16	AT175353	GEAR	1		
17	T55214	ANGLE	1		
18	34H266	SPRING PIN	1		
19	AT125829	KNOB	1		
20	AT125805	KIT	1		
21	AT175352	SEAT SUSPENSION	1		
22	H99923	LOCK NUT	2		
23	.....	WASHER	2		
24	.....	BELT	2		
25	.....	BELT SET	1		

SEAT SWIVEL AND SLIDE
(SERIAL NO. 815115-825589)

TP57809 -UN-10DEC97

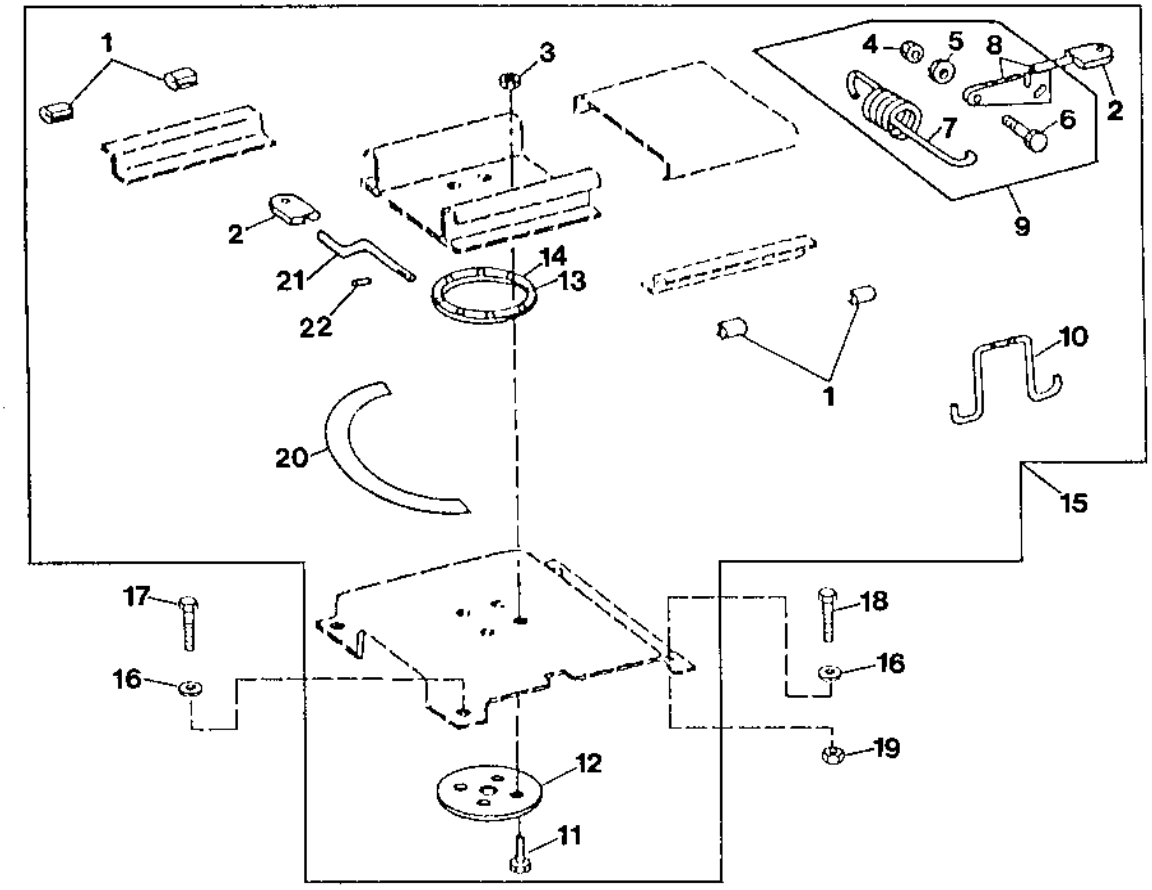

TP57809

SEAT SWIVEL AND SLIDE
(SERIAL NO. 815115-825589)

KEY	PART NO.	PART NAME	QTY	SERIAL NO.	REMARKS
1	.....	STOP	4		(K2) SLIDER BLOCK
2	.....	KNOB	1		(K1) SWIVEL ADJUST
3	.....	NUT	4		(K3)
4	.....	NUT	2		
5	.....	WASHER	2		
6	.....	BOLT	2		
7	.....	SPRING	1		EXTENSION
8	.....	LATCH	1		SLIDE RELEASE WELDMENT
9	AT156929	KIT	1		ADJUSTER LATCH
10	.....	SPRING	1		(K3)
11	.....	BOLT	4		(K3)
12	.....	PLATE	1		(K3) SWIVEL BEARING
13	.....	RETAINER	1		(K3)
14	.....	BALL BEARING	8		(K3)
15	AT175350	SWIVEL	1		SWIVEL AND ADJUSTER (ASSEMBLED)
16	24H1305	WASHER	4		13/32" X 13/16" X 0.065"
17	19H2676	CAP SCREW	2		3/8" X 1"
18	19H2284	CAP SCREW	2		3/8" X 7/8"
19	N10215	LOCK NUT	2		3/8"
20	T159158	STRIP	1		
21	.....	LEVER	1		(K3)
22	.....	SPRING PIN	1		(K3)
..	AT151697	KIT	1		INCLUDES ALL (K1) PARTS (KNOB)
..	AT156920	KIT	1		INCLUDES ALL (K2) PARTS (ADJUSTER PUCK)
..	AT156928	KIT	1		INCLUDES ALL (K3) PARTS (SWIVEL)

SEATS,SEAT BELTS,AND ARM REST
(SERIAL NO. 825590-)

TP58183 -UN-20MAR00

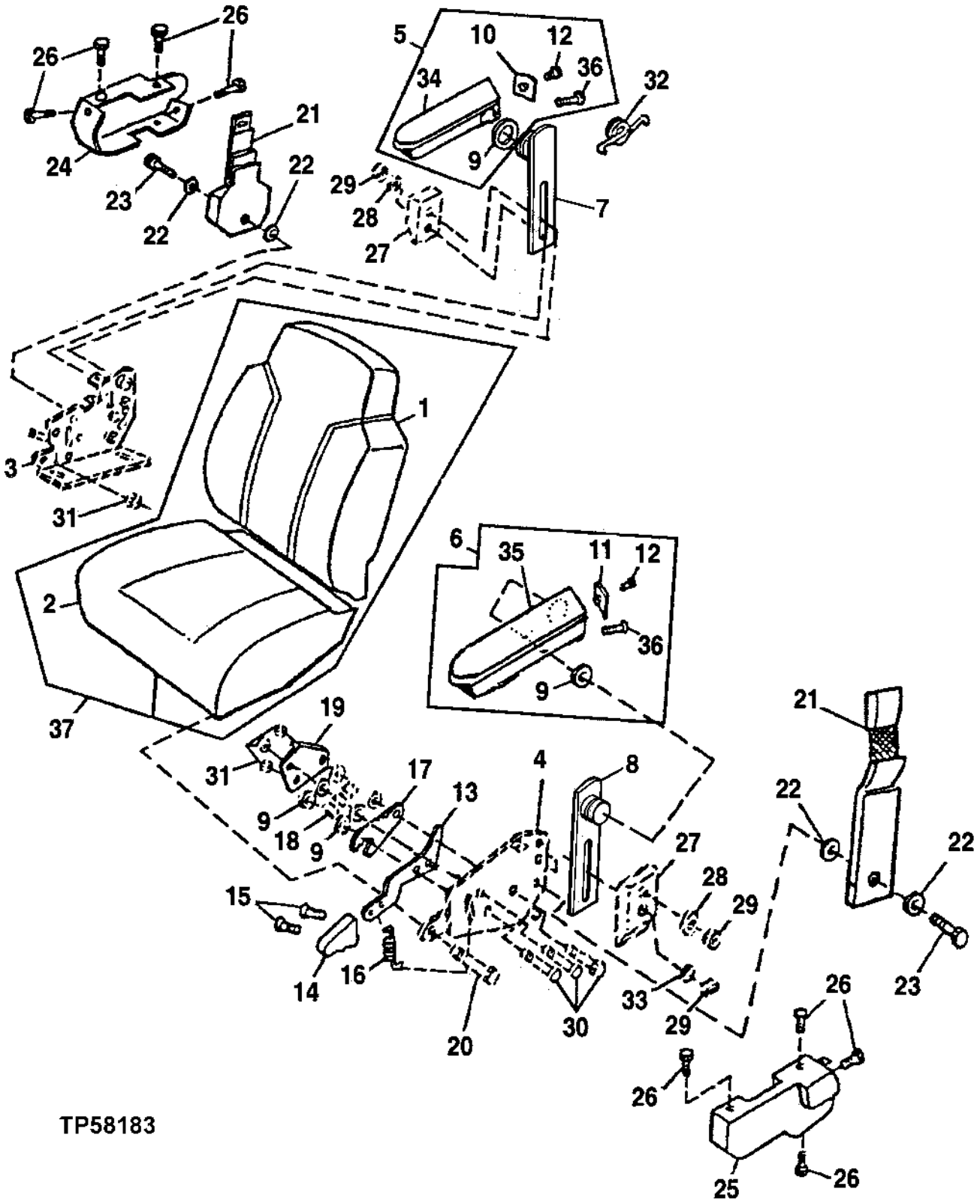

SEATS, SEATBELTS, AND ARM REST
(SERIAL NO. 825590-)

KEY	PART NO.	PART NAME	QTY	SERIAL NO.	REMARKS
1	AT209015	CUSHION	1		(BACK PAD,CLOTH)
	AT209028	CUSHION	1		(BACK PAD,VINYL)
2	AT209014	CUSHION	1		(SEAT PAD, CLOTH)
	AT209027	CUSHION	1		(SEAT PAD, VINYL)
3	.....	PLATE	1		(RIGHT BACKREST ANGLE ADJUSTMENT)
4	.....	PLATE	1		(LEFT BACKREST ANGLE ADJUSTMENT)
5	AT183637	ARMREST	1		(SUB FOR AT179682) (RIGHT HAND)
6	AT183638	ARMREST	1		(SUB FOR AT179684) (LEFT HAND)
7	AT190901	BRACKET	1		(R.H. ARM REST ASSEMBLY)
8	AT190902	BRACKET	1		(L.H. ARM REST ASSEMBLY)
9	T120545	WASHER	2		(WAVE)
10	T166226	COVER	1		(R.H. COVER PLATE)
11	T166227	PLATE	1		(L.H. COVER PLATE)
12	T120543	SCREW	2		(SET SCREW)
13	AT209225	KIT	1		(RECLINER KIT) INCLUDES EXTENSION SPRING, TORSION SPRING, BACKING PLATE, LATCH, SPACERS AND HARDWARE.
	.....	LEVER	1		
14	AT209025	KIT	1		(KNOB AND SCREW) (RECLINER)
15	37H121	SCREW	2		(RECLINER KNOB)
16	.....	SPRING	1		(TILT LEVER)
17	.....	LATCH	1		(RECLINER-SAW TOOTH)
18	.....	SPACER	3		(BETWEEN SMALL AND LARGE PLATE) (TILT LEVER)
19	.....	PLATE	1		(SMALL 3 -HOLE INSIDE PLATE)
20	.....	BOLT	2		(TILT LEVER)
21	AT179423	SEAT BELT	1		(ALSO ORDER (4) T105740 AND (2) 19H2109) (2 INCH)
	AT179425	SEAT BELT	1		(ALSO ORDER (4) T105740 AND (2) 19H2109) (3 INCH)
22	T105740	WASHER	4		11.400 X 25.400 X 2.286 MM, (SEAT BELT)
23	19H2109	CAP SCREW	2		7/16" X 1-1/4", (SEAT BELT)
24	T163634	COVER	1	-834133	(SEAT BELT - RIGHT) REQUIRES SCREWS
	T160896	COVER	1	834134-	(SEAT BELT - RIGHT) SNAPS ON
25	T163633	COVER	1	-834133	(SEAT BELT - LEFT) REQUIRES SCREWS
	T160895	COVER	1	834134-	(SEAT BELTS - LEFT) SNAPS ON
26	19M7402	CAP SCREW	8		M10 X 25, (COVERS)
27	.....	SPACER	2		
28	.....	WASHER	4		
29	.....	NUT	4		
30	.....	CAP SCREW	4		
31	.....	LOCK NUT	3		(RECLINER)
32	.....	SPRING	1		
33	.....	WASHER	2		
34	.....	ARMREST	1		(RIGHT HAND)
35	.....	ARMREST	1		(LEFT HAND)
36	T120544	SCREW	2		
37	AT175383	SEAT SUSPENSION	1		(DELUXE VINYL) ALSO INCLUDES SEAT SWIVEL CONTROL, HEIGHT ADJUSTER, FORE AND AFT CONTROL AND SEAT SUSPENSION. (WHEN SUSPENDED SEAT ASSEMBLY IS REPLACING A NON-SUSPENDED SEAT, ALSO ORDER AT179693 TETHER BELT ASSEMBLY.
	AT175384	SEAT SUSPENSION	1		(DELUXE CLOTH) ALSO INCLUDES SEAT SWIVEL CONTROL,HEIGHT ADJUSTER, FORE AND AFT CONTROL AND SEAT SUSPENSION. (WHEN SUSPENDED SEAT ASSEMBLY IS REPLACING A NON SUSPENDED SEAT, (ALSO ORDER AT179693 TETHER BELT ASSEMBLY)
	AT175532	SEAT	1		-NON SUSPENSION (VINYL) ALSO INCLUDES SEAT SWIVEL CONTROL, HEIGHT ADJUSTER, FORE AND AFT CONTROL. (WITHOUT SEAT SUSPENSION)
	AT183588	SEAT	1		(DELUXE VINYL),AIR SUSPENSION SEAT
	AT182471	SEAT	1		(DELUXE CLOTH),AIR SUSPENSION SEAT

SEAT SLIDE,SEAT SWIVEL AND LUMBAR ADJUSTER CONTROL LEVERS
(SERIAL NO. 825590-)

TP50656 -UN-08MAY97

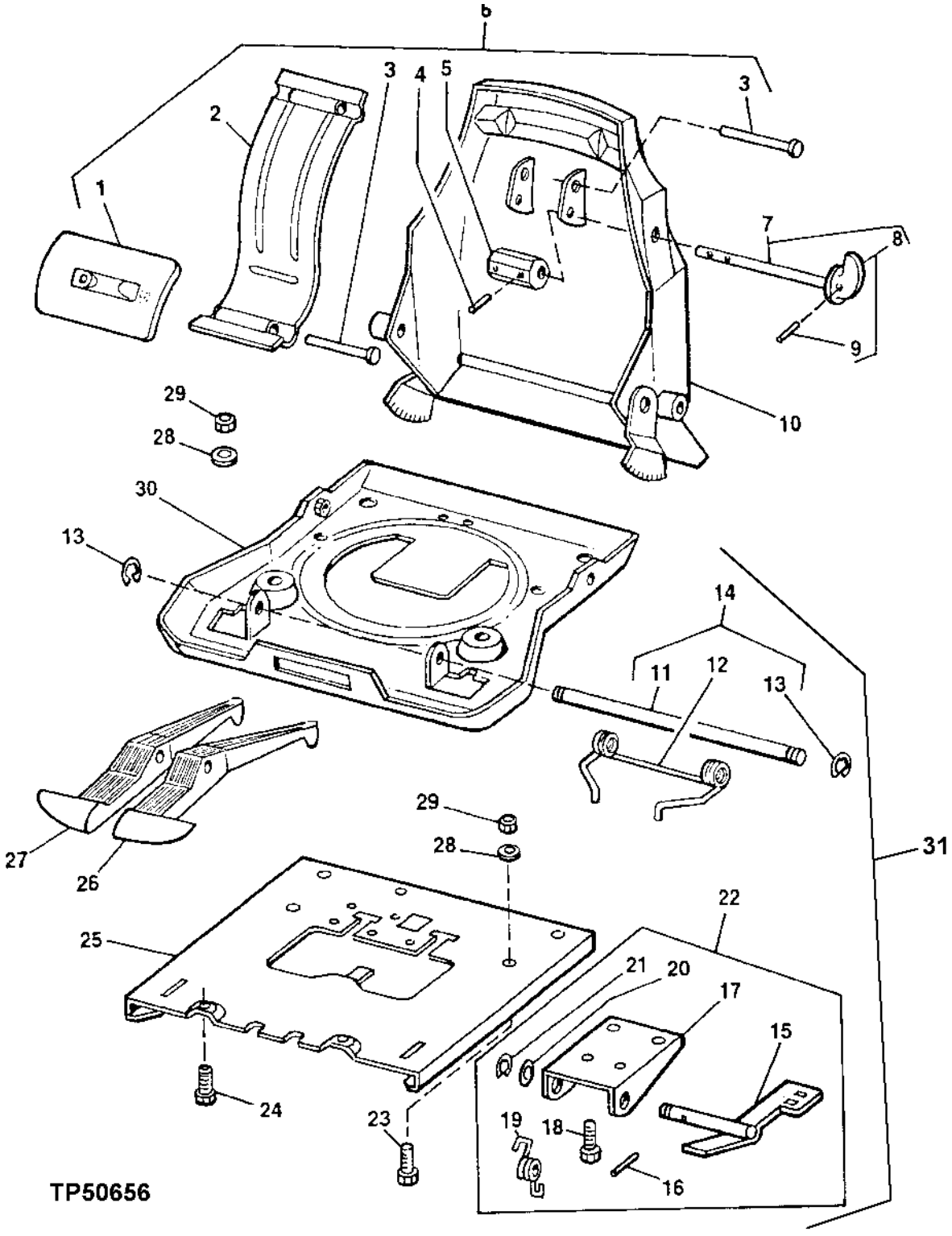

SEAT SLIDE,SEAT SWIVEL AND LUMBAR ADJUSTER CONTROL LEVERS
(SERIAL NO. 825590-)

KEY	PART NO.	PART NAME	QTY	SERIAL NO.	REMARKS
1	.....	ISOLATOR	1		
2	.....	SUPPORT	1		
3	.....	NAIL	2		
4	34H387	SPRING PIN	1		3/16" X 3/4"
5	.....	CAM	1		
6	AT209026	KIT	1		(LUMBAR)
7	.....	KNOB	1		AND SHAFT
8	AT209024	KIT	1		(LUMBAR KNOB)
9	34H262	SPRING PIN	1		5/32" X 3/4"
10	.....	SEAT BACK	1		
11	.....	SHAFT	1		
12	.....	SPRING	1		(DOUBLE TORSION)
13	T23529	SNAP RING	2		
	R72655	SNAP RING	2		
14	AT179688	KIT	1		(SLIDE LATCH SPRING)
15	.....	LATCH	1		
16	34H262	SPRING PIN	1		5/32" X 3/4"
17	.....	BRACKET	1		
18	19H1227	CAP SCREW	4		1/4" X 1/2"
19	.....	SPRING	1		
20	24H1305	WASHER	2		13/32" X 13/16" X 0.065"
21	R72655	SNAP RING	1		
22	AT179691	KIT	1		(SLIDE CONTROL)
23	.....	BOLT	3		
24	.....	CAP SCREW	2		
25	.....	PLATE	1		
26	.....	CONTROL LEVER	1		(SWIVEL) (ORDER AT179692)
27	.....	CONTROL LEVER	1		(FORE-AFT) (ORDER AT179691)
28	.....	WASHER	2		
29	.....	NUT	2		
30	.....	PAN	1		
31	**AT179686**	**KIT**	**1**		**ALSO INCLUDES SWIVEL SERVICE KIT, SWIVEL LATCH KIT AND SLIDE PUCK SERVICE KIT**

SEAT SWIVEL AND SWIVEL LATCH
(WITH OR WITHOUT SUSPENDED SEAT)
(SERIAL NO. 825590-)

T138328 -UN-20FEB01

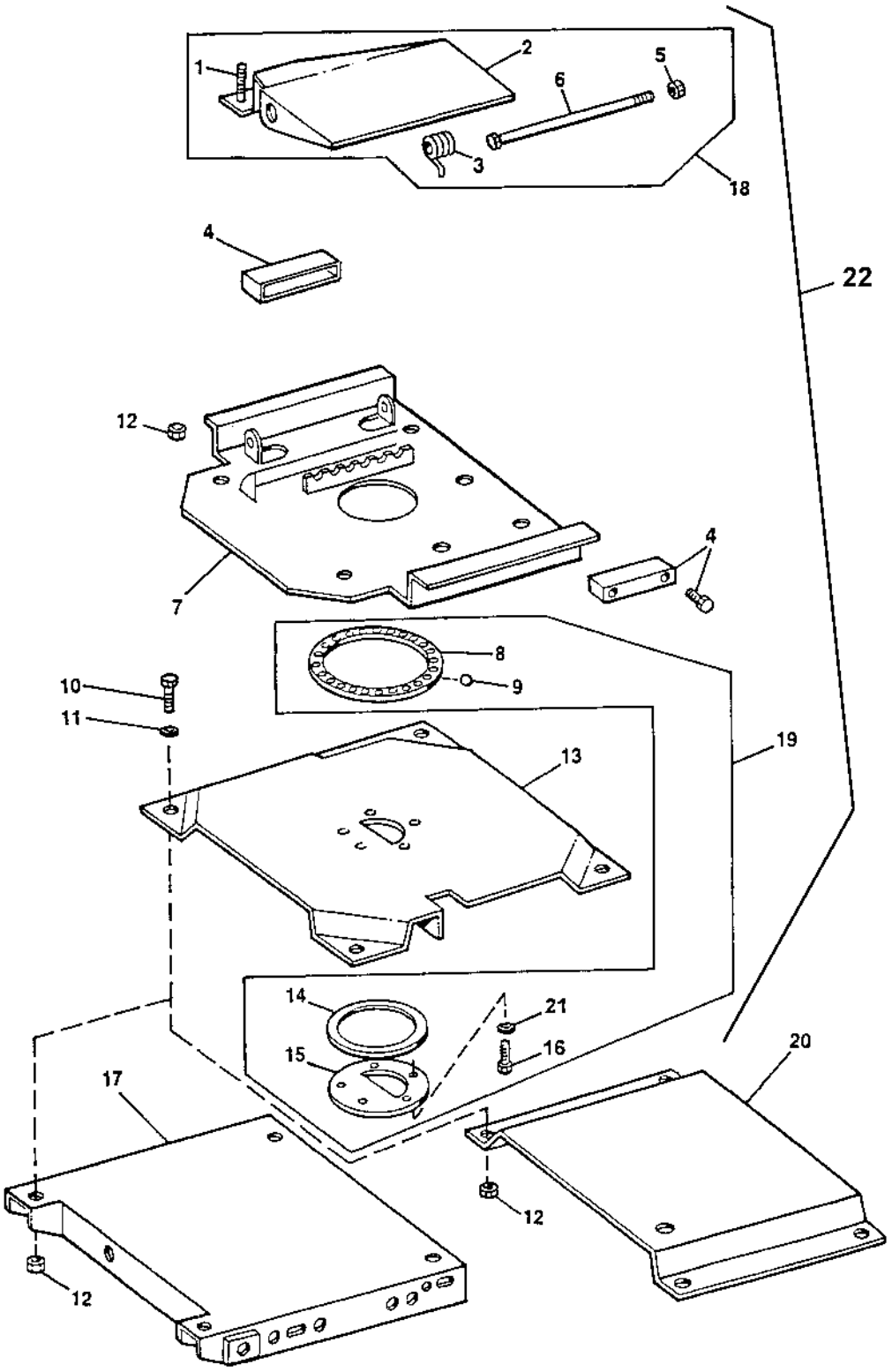

SEAT SWIVEL AND SWIVEL LATCH
(WITH OR WITHOUT SUSPENDED SEAT)
(SERIAL NO. 825590-)

KEY	PART NO.	PART NAME	QTY	SERIAL NO.	REMARKS
1	.....	CLIP	1		
2	.....	LOCK PLATE	1		
3	.....	SPRING	1		
4	AT209020	KIT	1		(SLIDE PUCK)
5	M47031	LOCK NUT	2		(SUB FOR (2) R72655, THIS APPLICATION)
6	.....	SHAFT	1		(SWIVEL LATCH)
7	.....	PLATE	1		(TOP SWIVEL)
8	.....	RETAINER	1		(BALL BEARING)
9	M87261	BALL	24		BEARING
10	19M7402	CAP SCREW	4		M10 X 25
11	24M7239	WASHER	4		10.700 X 21 X 2.500 MM
12	M47031	LOCK NUT	4		9.525 MM
13	.....	PLATE	1		(BOTTOM SWIVEL)
14	.....	PLATE	1		(BEARING)
15	.....	PLATE	1		(RETAINING)
16	.....	BOLT	5		(SHOULDER)
17	.....	TRAY	1		(UPPER)(WITH SUSPENDED SEAT)
18	**AT179692**	**KIT**	**1**		**(SWIVEL LATCH)**
19	**AT179687**	**KIT**	**1**		**(SWIVEL)**
20	.....	PLATFORM	1		(WITH NON-SUSPENDED SEAT)
21	24M6504	WASHER	5		10 X 16 X 1.500 MM
22	**AT179686**	**KIT**	**1**		**ALSO INCLUDES SLIDE LATCH SPRING KIT AND SLIDE CONTROL KIT**

SEAT SUSPENSION AND SHOCK ABSORBER
(WITH SUSPENDED SEAT)
(SERIAL NO. 825590-)

TP50540 -UN-02JAN97

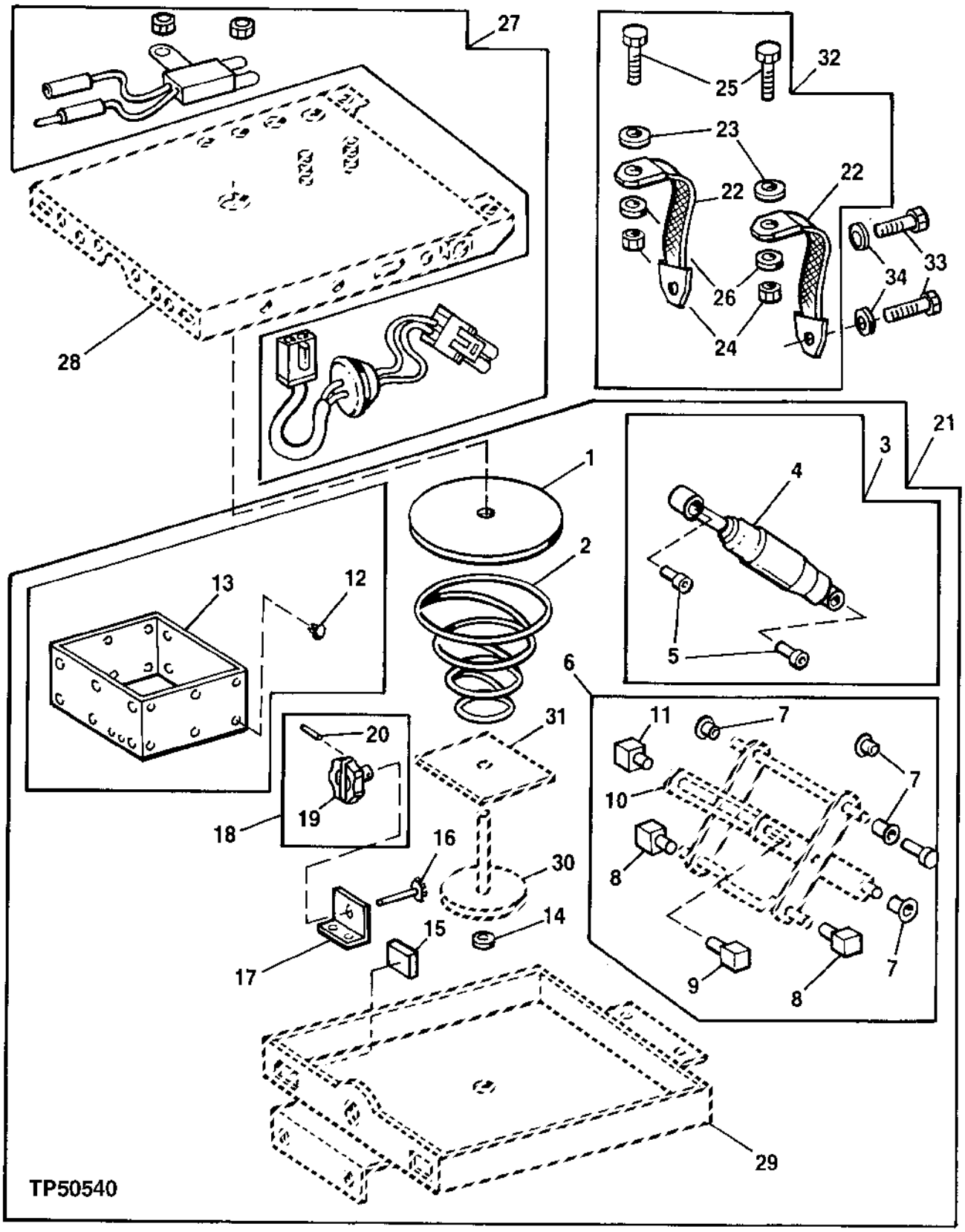

SEAT SUSPENSION AND SHOCK ABSORBER
(WITH SUSPENDED SEAT)
(SERIAL NO. 825590-)

KEY	PART NO.	PART NAME	QTY	SERIAL NO.	REMARKS
1	T55208	PAD	1		
2	AT125801	SPRING	1		(REGULAR)
	T160315	SPRING	1		(HEAVY DUTY)
3	AT175436	KIT	1		(SHOCK ABSORBER)
4	.....	ABSORBER	1		(SHOCK)
5	T55222	BUSHING	2		(SHOCK ABSORBER)
6	AT106397	KIT	1		(BEARING/BUSHING)
7	.....	BUSHING	4		
8	.....	BAR	1		
9	.....	END	1		
10	.....	FRAME	1		(SCISSOR)
11	.....	BAR	1		
12	T63798	PLUG	25		(FASTENER)
13	AT179699	BOOT	1		(VINYL)
14	T158481	WASHER	1		16.130 X 51 X 0.760 MM (0.635" X 2.008" X 0.030")
15	T55224	ISOLATOR	2		
16	AT175353	GEAR	1		(SMALL)
17	T55214	ANGLE	1		
18	AT125805	KIT	1		(ADJUSTING KNOB)
19	AT125829	KNOB	1		
20	34H266	SPRING PIN	1		(ADJUSTING KNOB)
21	AT179697	KIT	1		(GUARDIAN SUSPENSION)
22	.....	BELT	2		(TETHER)
23	M1340T	WASHER	2		9.931 X 31.750 X 3.048 MM, (TETHER)
24	M47031	LOCK NUT	2		9.525 MM, (TETHER)
25	19H2676	CAP SCREW	2		3/8" X 1", (TETHER)
26	24H1305	WASHER	2		13/32" X 13/16" X 0.065", (TETHER)
27	AT179694	KIT	1		(SWIVEL SENSOR)
	.....	SENSOR	1		
	.....	WIRE	1		
	M453T	LOCK NUT	2		6.350 MM
	.....	TIE BAND	2		(PLASTIC)
28	.....	TRAY	1		(UPPER)
29	.....	TRAY	1		(LOWER)
30	.....	GEAR	1		(LARGE BASE)
31	.....	PLATE	1		(SPRING SUPPORT)
32	AT179693	KIT	1		(TETHER BELT SET) (SUSPENDED SEAT)
33	19M7402	CAP SCREW	2		M10 X 25
34	24M7239	WASHER	2		

SEAT BASE AND SEAT SUPPORT
(WITH NON-SUSPENDED SEAT)
(SERIAL NO. 825590-)

TP50586 -UN-13FEB97

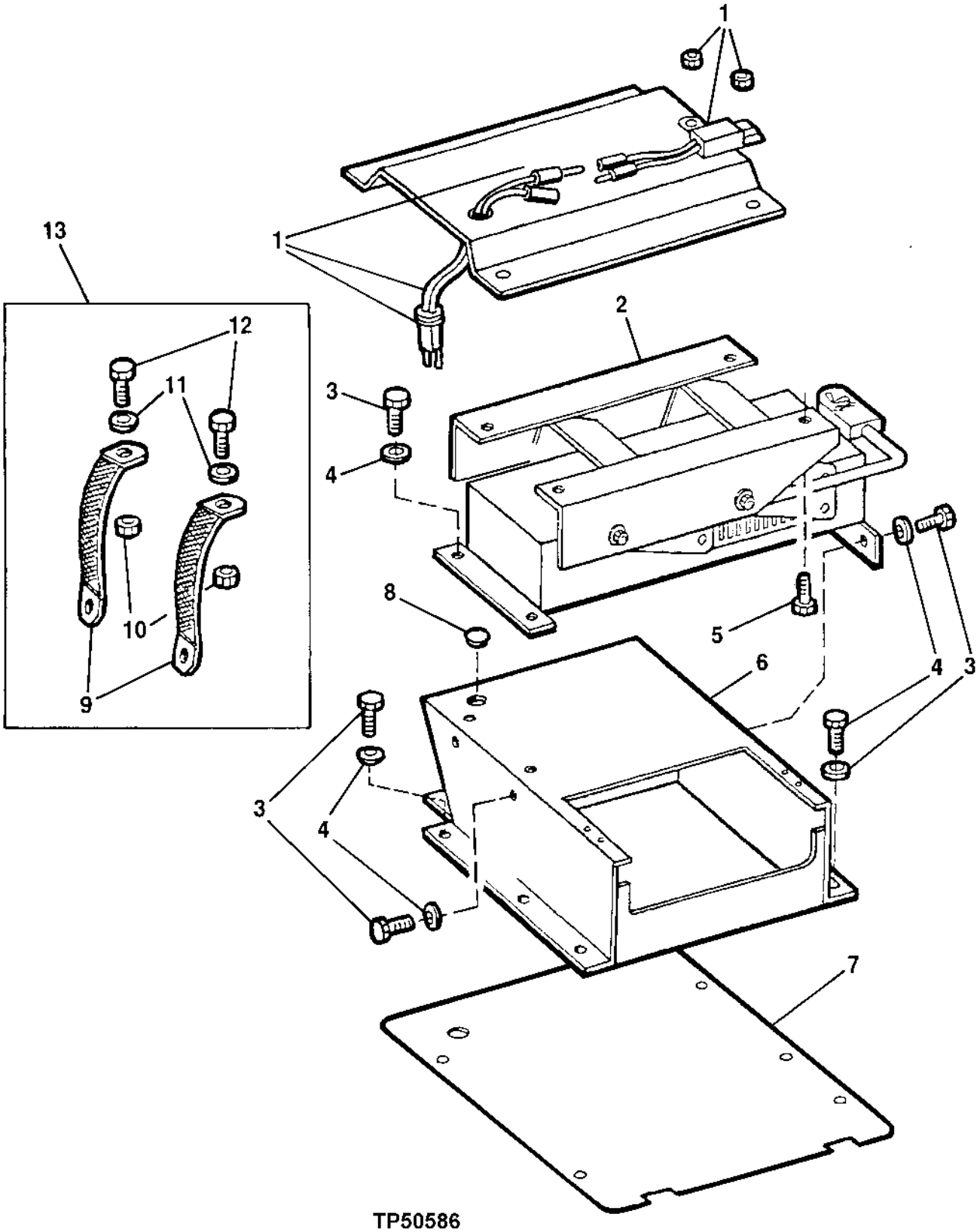

TP50586

SEAT BASE AND SEAT SUPPORT
(WITH NON-SUSPENDED SEAT)
(SERIAL NO. 825590-)

KEY	PART NO.	PART NAME	QTY	SERIAL NO.	REMARKS
1	AT179694	KIT	1		SEAT POSITION SENSOR
2	AT179704	ADJUSTER	1		SEAT HEIGHT
3	19M7402	KIT	11		
4	24M7239	WASHER	11		
5	.....	CAP SCREW	4		
6	AT174711	BASE	1		(ALSO ORDER T157803 AND T164567)
7	T157803	PLATE	1		
8	T164567	GROMMET	1		(SUB FOR R26936)
9	.....	BELT	2		
10	M47031	LOCK NUT	2		
11	24H1305	WASHER	2		13/32" X 13/16" X 0.065"
12	19H2676	CAP SCREW	2		3/8" X 1"
13	AT179714	KIT	1		TETHER BELT

AIR SUSPENSION SEAT AND SHOCK ABSORBER
(SERIAL NO. 849689-)

TP57915 -UN-31AUG98

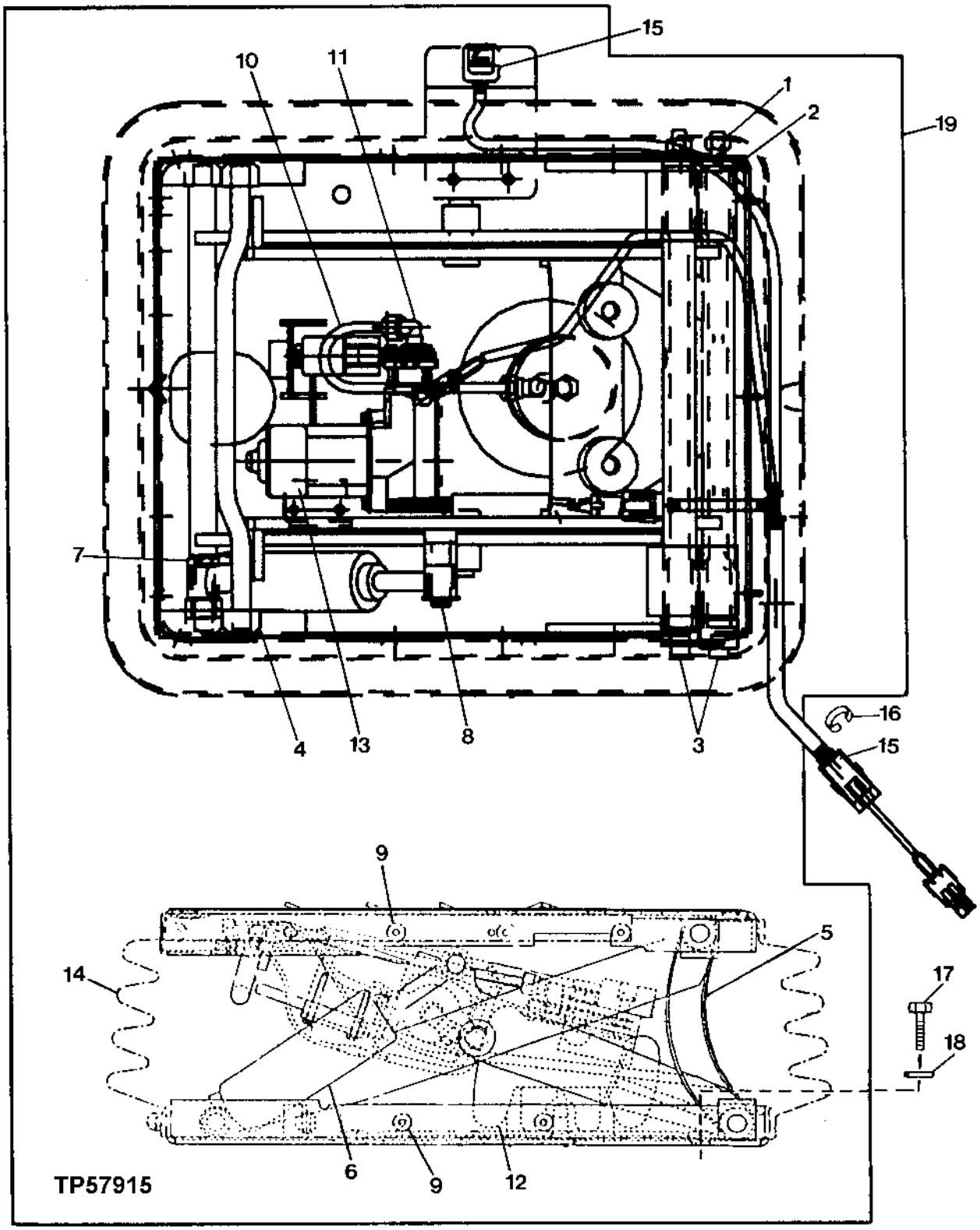

AIR SUSPENSION SEAT AND SHOCK ABSORBER
(SERIAL NO. 849689-)

KEY	PART NO.	PART NAME	QTY	SERIAL NO.	REMARKS
1	.....	LOCK NUT	2		(A)
2	.....	TUBE	4		(A)
3	.....	BEARING	2		(A)
4	AT173314	ROLLER	1		SUSPENSION ROLLER KIT
5	AT173315	KIT	1		TETHER BELT SERVICE KIT
6	.....	ABSORBER	1		(B)
7	.....	BEARING	2		(B)
8	.....	BOLT	1		(B)
9	AT173321	CLIP	1		BOOT CLIP SERVICE KIT
10	.....	LINE	1		(C)
11	.....	FITTING	2		(C)
12	AT208486	AIR SPRING SEAT KIT	1		
13	AT183813	KIT	1		COMPRESSOR KIT
14	AT208491	KIT	1		BOOT SERVICE KIT
15	AT183810	KIT	1		SUSPENSION SWITCH KIT
16	T164714	GROMMET	1		
17	19M7402	CAP SCREW	4		
18	24M7239	WASHER	4		
19	AT183811	SEAT SUSPENSION	1		AIR
..	AT173313	UNIVERSAL DRIVESHAFT	1		INCLUDES ALL (A) PARTS (SUSPENSION SHAFT SERVICE)
..	AT182954	KIT	1		INCLUDES ALL (B) PARTS (SUSPENSION SHOCK SERVICE)
..	AT208493	FITTING	1		INCLUDES ALL (C) PARTS (AIRLINE/FITTING SERVICE)

STEPS

TP45584 -UN-03DEC94

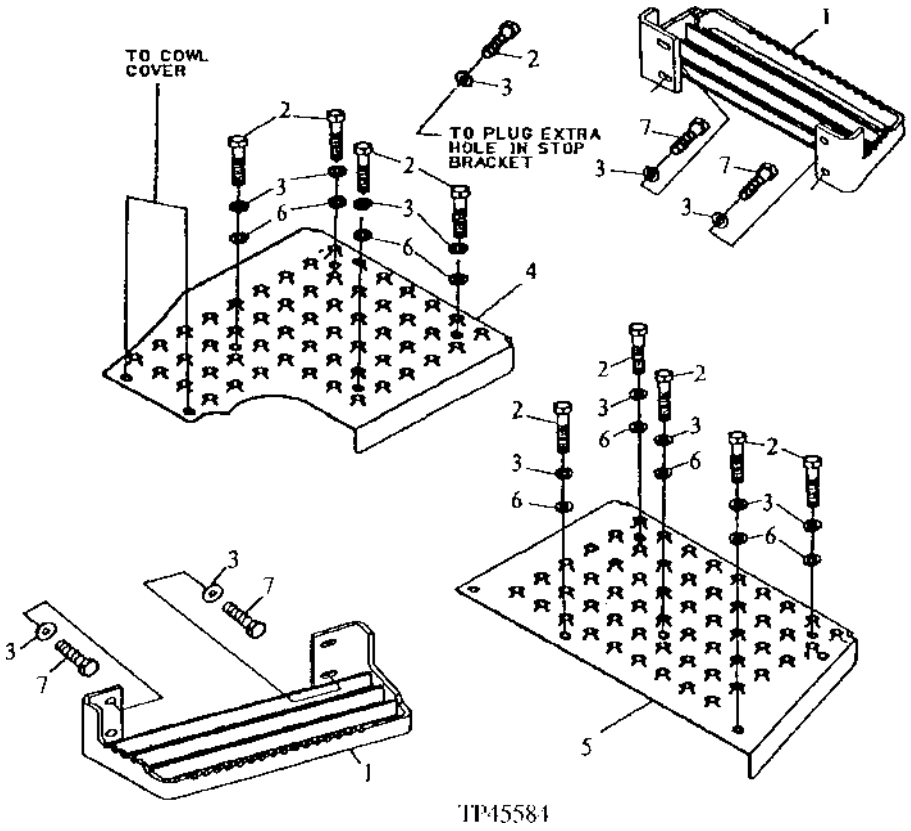

STEPS

KEY	PART NO.	PART NAME	QTY	SERIAL NO.	REMARKS
1	AT165642	STEP	2	-814975	FUEL TANK AND BATTERY BOX, (SUB FOR AT162205)
	AT173387	STEP	2	814976-	
2	19M7402	CAP SCREW	10		M10 X 25, (SUB FOR 19M7938, THIS APPLICATION)
3	24M7296	WASHER	18		10.500 X 30 X 2.500 MM
4	T142274	MAT	1		
5	T145102	MAT	1		
6	T145936	WASHER	10		0.390" X 1.260" X 0.062", NYLON
7	19M7402	CAP SCREW	8		M10 X 25

CAB HEATER HOSES AND SHUT-OFF VALVE
(ENGINE SERIAL NO. 830204)

TP55006 -UN-13MAR97

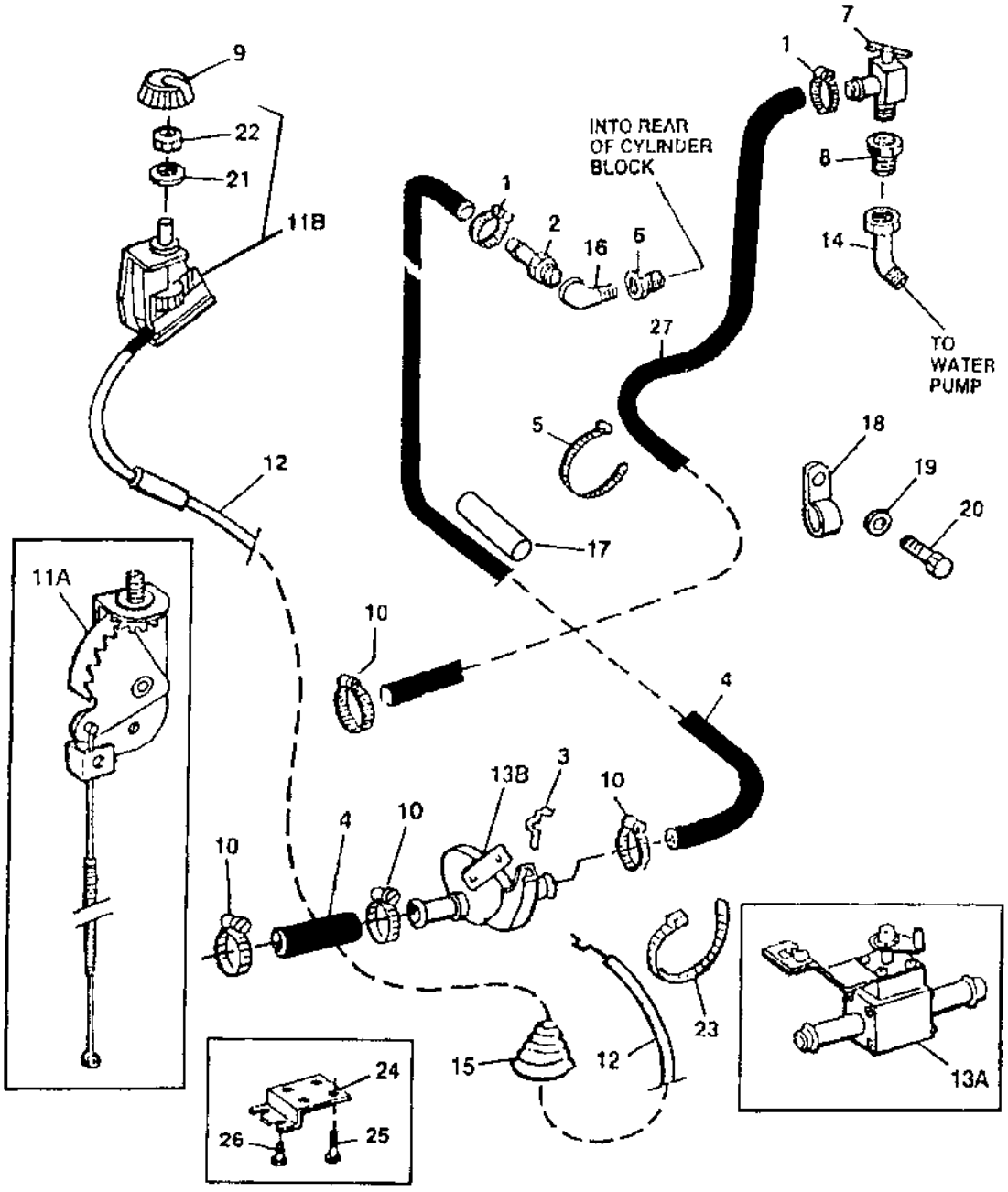

TP55006

CAB HEATER HOSES AND SHUT-OFF VALVE
(ENGINE SERIAL NO. -830204)

KEY	PART NO.	PART NAME	QTY	SERIAL NO.	REMARKS
1	AR21837	CLAMP	6	-816286	
	AR21837	CLAMP	2	816287-	
2	R41985	FITTING	1		
3	L57881	CLIP	1		
4	.....	HOSE	2		(MAKE FROM T60811 BULK MATERIAL, CUT TO 5.90 INCHES)
5	R44302	TIE BAND	AR		
6	15H590	PIPE BUSHING	1		1/2"
7	AT169553	DRAIN VALVE	1	-818708	(SUB FOR AT35831, THIS APPLICATION) (SUB FOR AH12614)
	T27077	HOSE FITTING	1	818709-	
8	15H586	ADAPTER	1	-818708	3/8"
9	AT145907	KNOB	1	-816286	
	R111632	KNOB	1	816287-	
10	R44165	LOCK NUT	1	-816286	
	R117721	CLAMP	4	816287-	
11A	AT145596	CABLE	1	-816286	
11B	RE46742	CONTROL	1	816287-	(TEMP)
12	AT174777	CABLE	1	816287-	(TEMP)
13A	AT141210	VALVE	1	-816286	
13B	RE47070	VALVE	1	816287-	(WATER)
14	15H627	ELBOW FITTING	1		
15	T66413	GROMMET	1	816287-	
16	T37041	ELBOW FITTING	1	816287-	12.700 MM
17	.....	HOSE	1	802200-	HEATER HOSE PROTECTION(MAKE FROM T145959)
18	T102934	CLAMP	1	816287-	
19	24M7239	WASHER	1	816287-	
20	19H1732	CAP SCREW	1	816287-	
21	12H292	LOCK WASHER	1	816287-	
22	14H934	NUT	1	816287-	
23	H77698	TIE BAND	1	816287-	
24	T134492	BRACKET	1	-816286	
25	19M7775	SCREW	2	-816286	
26	37M7110	SCREW	4	-816286	
27	.....	HOSE	1	816287-	(MAKE FROM T60811 BULK MATERIAL, CUT TO 10 INCHES)

CAB HEATER HOSES AND HEATER CONTROL
(SERIAL NO.830205-)

TP49585 -UN-03MAR97

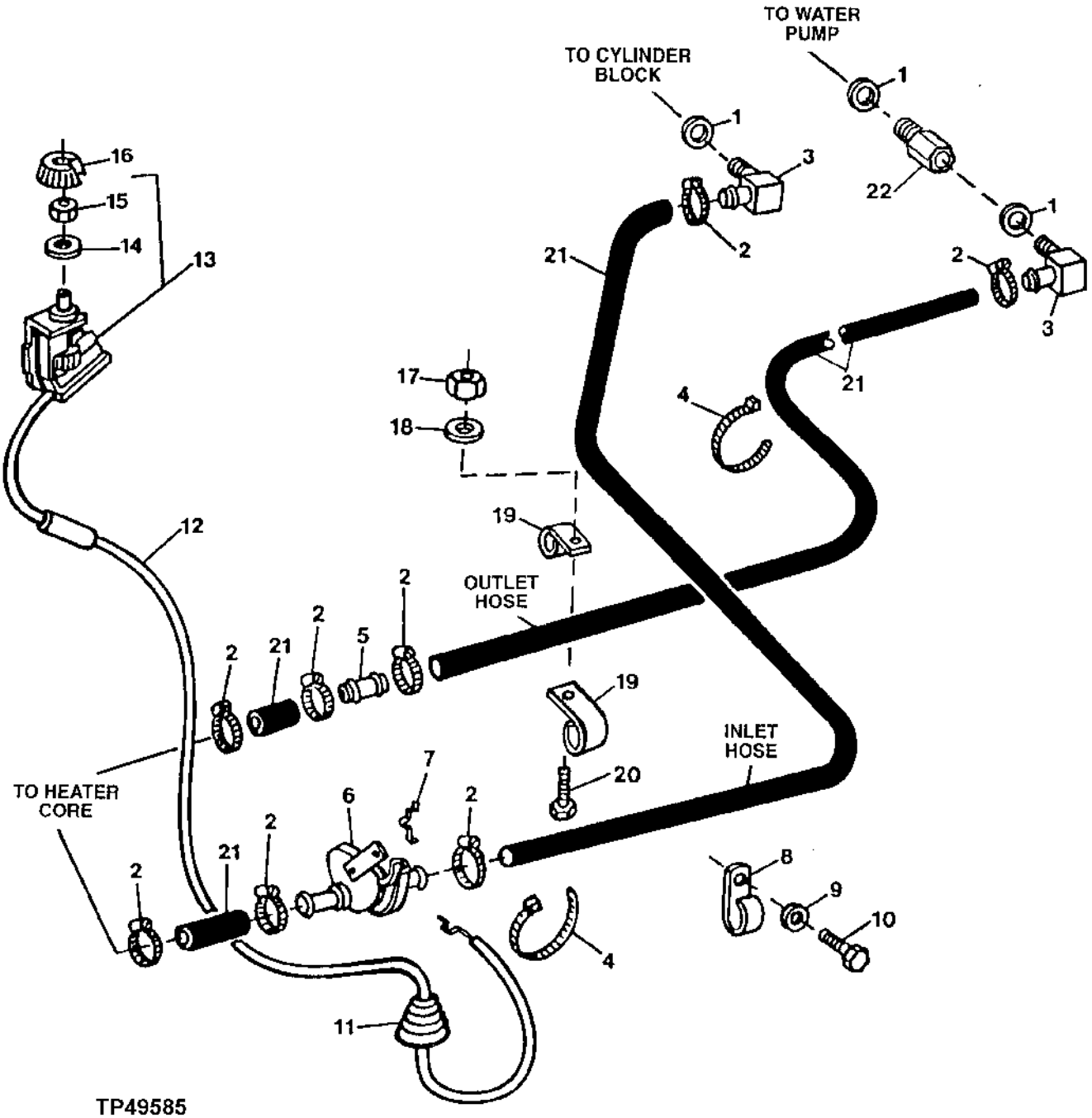

CAB HEATER HOSES AND HEATER CONTROL
(SERIAL NO.830205-)

KEY	PART NO.	PART NAME	QTY	SERIAL NO.	REMARKS
1	51M7043	O-RING	3		15.300 X 2.200 MM
2	R117721	CLAMP	4		
3	AT174697	PIPE ELBOW	2		
4	R44302	TIE BAND	AR		
5	T160492	TERMINAL NIPPLE	1		(END OF HEATER OUTLET HOSE)
6	RE47070	VALVE	1		(HEATER INLET HOSE)
7	L57881	CLIP	1		
8	T102934	CLAMP	1		
9	24M7239	WASHER	1		10.700 X 21 X 2.500 MM
10	19H1732	CAP SCREW	1		3/8" X 1-1/4"
11	T66413	GROMMET	1		
12	AT174777	CABLE	1		
13	RE46742	CONTROL	1		(TEMPERATURE/HEATER)
14	12H292	LOCK WASHER	1		1/2"
15	14H934	NUT	1		7/16"
16	R111632	KNOB	1		
17	14M7274	NUT	1		M10
18	24M7239	WASHER	1		10.700 X 21 X 2.500 MM
19	R46667	CLAMP	2		
20	19M7662	CAP SCREW	1		M10 X 30
21	.....	HOSE	1		(MAKE FROM T60811 BULK MATERIAL, CUT TO 6.70 FT. LENGTH)
22	RE68908	CONNECTOR	1		

CAB HEATER AND AIR CONDITIONING MOTORS AND MOUNTING BRACKETS
(SERIAL NO. -816286)

TP41685 -UN-01JAN94

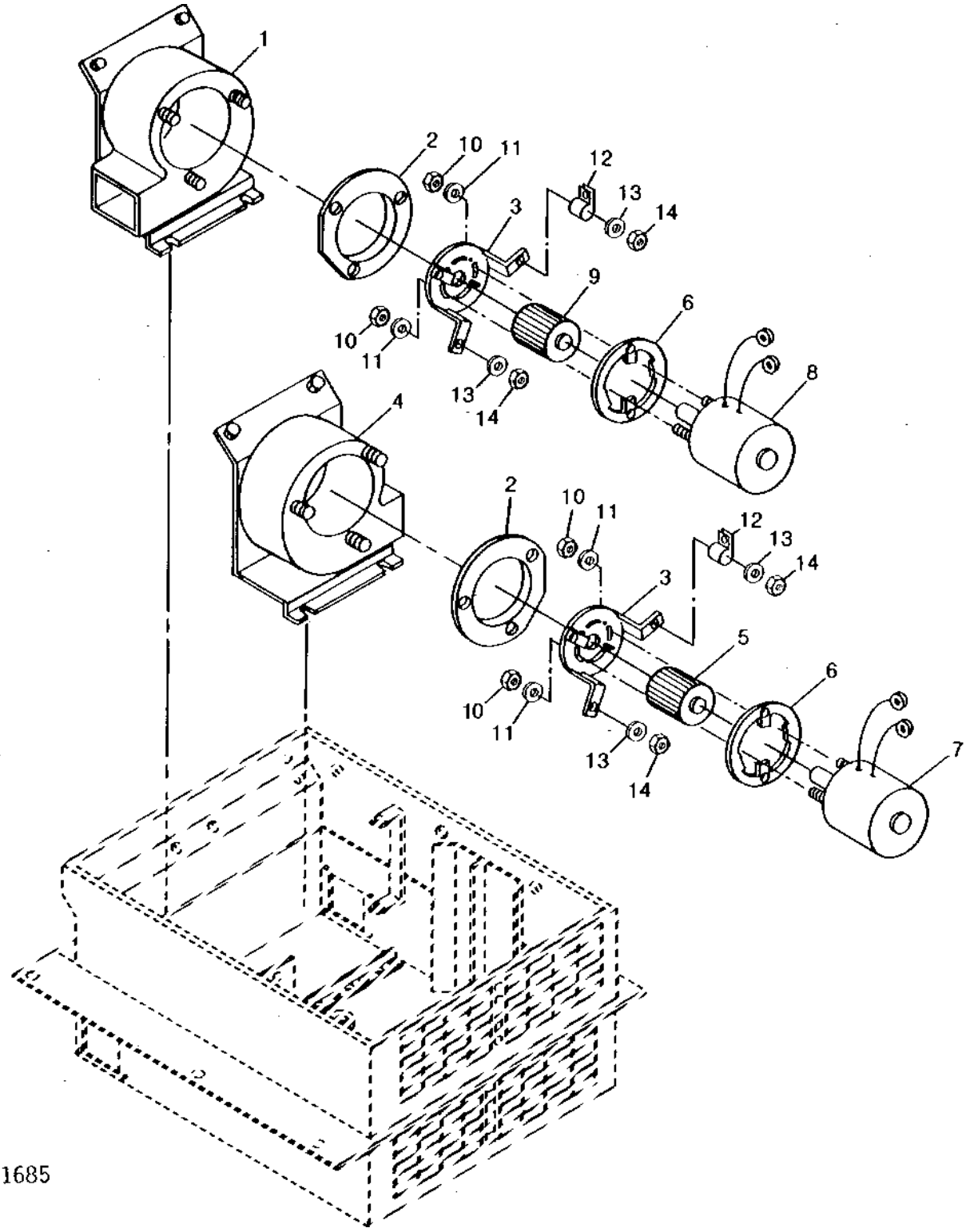

CAB HEATER AND AIR CONDITIONING MOTORS AND MOUNTING BRACKETS
(SERIAL NO. -816286)

KEY	PART NO.	PART NAME	QTY	SERIAL NO.	REMARKS
1	AT145591	HOUSING	1		
2	.....	RING	2	-790701	(T134493 NO LONGER AVAILABLE)
3	AT145595	BRACKET	2		
4	AT141372	HOUSING	1		
5	AT171808	FAN	1		(SUB FOR AT145592)
6	T134489	GASKET	2		
7	AT141208	ELECTRIC MOTOR	1		(CCW ROTATION - OPPOSITE SHAFT END)
8	AT145593	ELECTRIC MOTOR	1		(CW ROTATION - OPPOSITE SHAFT END)
9	AT171807	FAN	1		(SUB FOR AT141371)
10	N125411	LOCK NUT	4		0.190"
11	24H1283	WASHER	4		7/32" X 1/2" X 0.049"
12	TH104034	CLAMP	2		
13	24H1287	WASHER	6		9/32" X 5/8" X 0.065"
14	14M7165	LOCK NUT	6		M6

BLOWER ASSEMBLY
(SERIAL NO.816287-)

TP50426 -UN-31OCT96

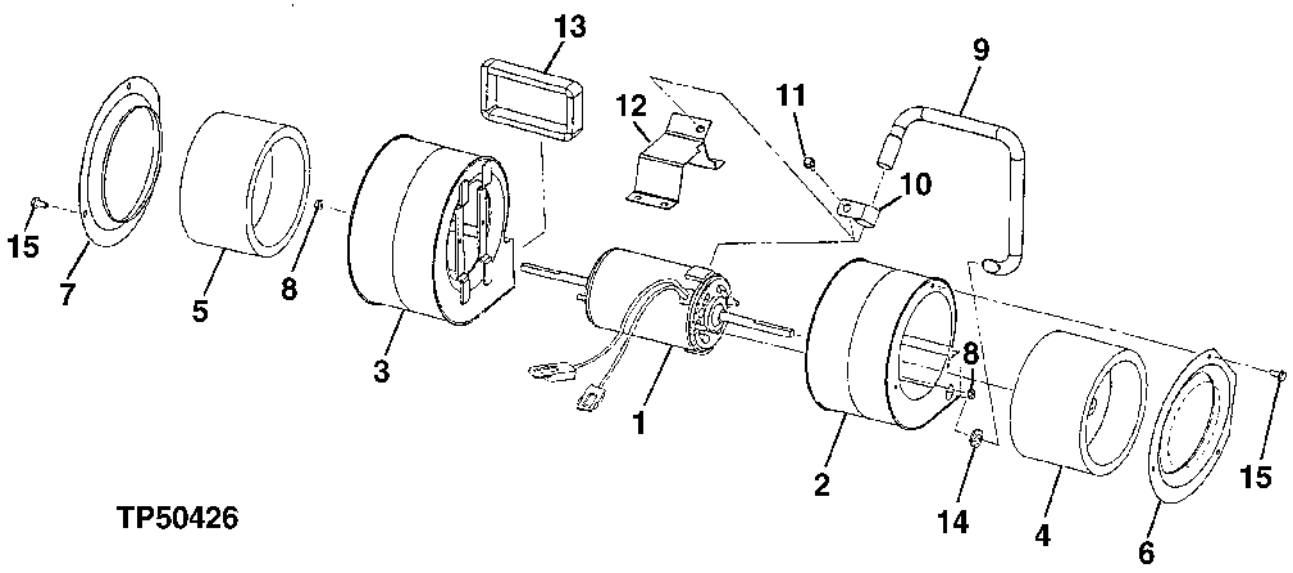

BLOWER ASSEMBLY
(SERIAL NO.816287-)

KEY	PART NO.	PART NAME	QTY	SERIAL NO.	REMARKS
1	AT173906	ELECTRIC MOTOR	1		
2	AT175766	HOUSING	1		(FRONT)
3	AT175765	HOUSING	1		(REAR)
4	AT175764	BLOWER	1		(FRONT)
5	AT175763	BLOWER	1		(REAR)
6	T158846	RING	1		(FRONT)
7	T158845	RING	1		(REAR)
8	N125411	LOCK NUT	4		0.190"
9	T158867	TUBE	1		
10	T158875	CLAMP	1		
11	19M7774	SCREW	1		M6 X 12
12	AT175771	RETAINER	1		
13	T158856	GASKET	2		
14	P41858	GROMMET	1		
15	M83123	CAP SCREW	6		4.826 X 9.525 MM

CAB HEATER AND AIR CONDITIONING FILTERS, HEATER CORE, EVAPORATOR COIL, AND HOUSING
(SERIAL NO. -816286)

TP42978 -UN-01JAN94

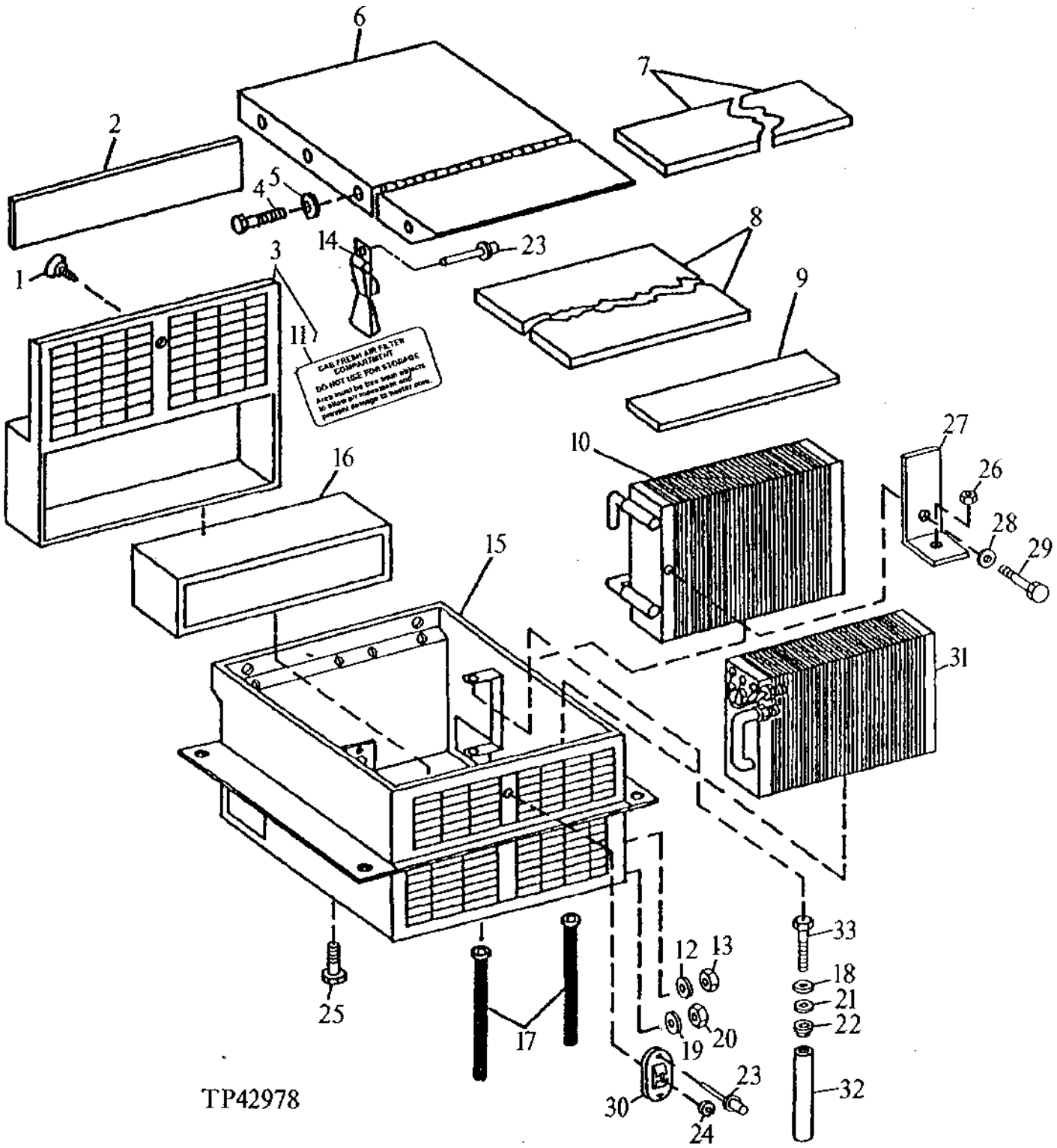

CAB HEATER AND AIR CONDITIONING FILTERS, HEATER CORE, EVAPORATOR COIL, AND HOUSING (SERIAL NO. -816286)

KEY	PART NO.	PART NAME	QTY	SERIAL NO.	REMARKS
1	T133399	WING SCREW	1		
2	T133239	AIR FILTER	1		
3	AT145599	FRAME	1		
4	19M7938	CAP SCREW	4		M10 X 20
5	24M7028	WASHER	4		10.500 X 20 X 2 MM
6	AT141214	COVER	1		
7	T134495	SEAL	1		SMALL
8	T134494	SEAL	1		LARGE
9	T134490	SEAL	1		
10	AT141207	CORE	1		
11	T141484	DECAL	1		FRESH AIR FILTER
12	12H247	LOCK WASHER	1		5/8", (WITH AIR CONDITIONING)
13	14H866	NUT	1		5/8", (WITH AIR CONDITIONING)
14	AT145602	RETAINER	2		
15	AT145590	HOUSING	1		
16	AT141209	AIR FILTER	1		
17	AT168138	TUBE	2		DRAIN (WITH AIR CONDITIONING) (SUB FOR AT145600)
	H99452	PLUG	2		WITHOUT AIR CONDITIONING, (SUB FOR (2) M2655T)
18	24H1287	WASHER	2		9/32" X 5/8" X 0.065"
19	12H328	LOCK WASHER	1		7/8", (WITH AIR CONDITIONING)
20	C985R	NUT	1		7/8", (WITH AIR CONDITIONING)
21	M74794	WASHER	2		0.283" X 0.949" X 0.126"
22	T142704	BUSHING	2		
23	M86758	RIVET	6		
24	T142718	WASHER	1		
25	19M7865	SCREW	8		M8 X 16
26	14M7272	NUT	1		M6
27	T142703	ANGLE	1		
28	24H1287	WASHER	1		9/32" X 5/8" X 0.065"
29	19M8332	CAP SCREW	1		M6 X 90
30	T142706	NUT	1		
31	AT164840	EVAPORATOR	1		(WITH AIR CONDITIONING) (SUB FOR AT141206)
32	AT145601	RESISTOR	1		
33	T142714	STUD	1		

HEATER MODULE
(SERIAL NO.816287-825657)

TP50427 -UN-08MAY96

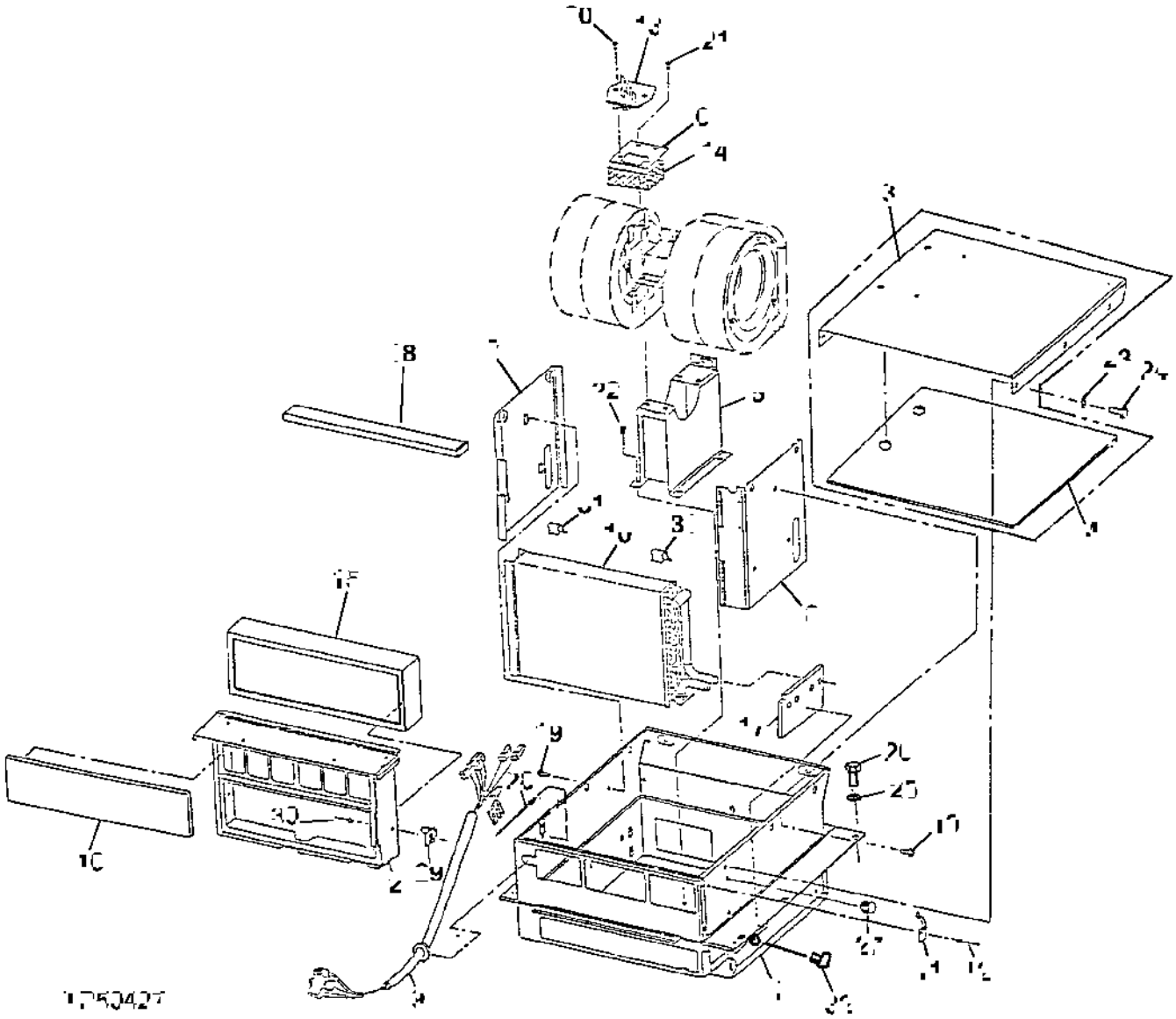

HEATER MODULE
(SERIAL NO.816287-825657)

KEY	PART NO.	PART NAME	QTY	SERIAL NO.	REMARKS
1	AT175759	CASE	1		
2	AT174772	FRAME	1	-817418	
	AT177786	FILTER	1	817419-	
3	AT175760	COVER	1		
4	T158842	GASKET	1		
5	AT175770	SUPPORT	1		(MOUNT)
6	AT178892	BRACKET	1		(SUB FOR AT175773)
7	AT175782	PLATE	1		(FRONT)
8	AT175783	PLATE	1		(REAR)
9	AT174775	AC TIMER WIRING HARNESS	1		(MODULE)
10	AT174774	HEATER	1		
11	AT175769	LATCH	2		
12	H85233	RIVET	2		
13	AT182200	RESISTOR	1		(SUB FOR RE49636)
14	.....	GUARD	1		NO LONGER AVAILABLE, (SUB AT178892)
15	AT141209	AIR FILTER	1		
16	T158848	AIR FILTER	1		(RECIRCULATION)
17	T158862	SEAL	1		
18	T158871	SEAL	1		
19	19M7774	SCREW	6		M6 X 12
20	19M7640	CAP SCREW	2		M5 X 12
21	19M7774	SCREW	4		M6 X 12
22	19M7774	SCREW	6		M6 X 12
23	24M7239	WASHER	4		10.700 X 21 X 2.500 MM
24	19M7402	CAP SCREW	4		M10 X 25
25	24M7239	WASHER	7		10.700 X 21 X 2.500 MM
26	19M7402	CAP SCREW	7		M10 X 25
27	T155525	CLIP	4		
28	Z57041	TIE BAND	2		(SUB R44302)
	R44302	TIE BAND	2		
29	AT177787	BOLT	2		
30	H85233	RIVET	2		
31	T160275	CLIP	2		
32	19M7775	SCREW	3		M6 X 16

HEATER MODULE
(SERIAL NO.825658-)

TP50566 -UN-08JAN97

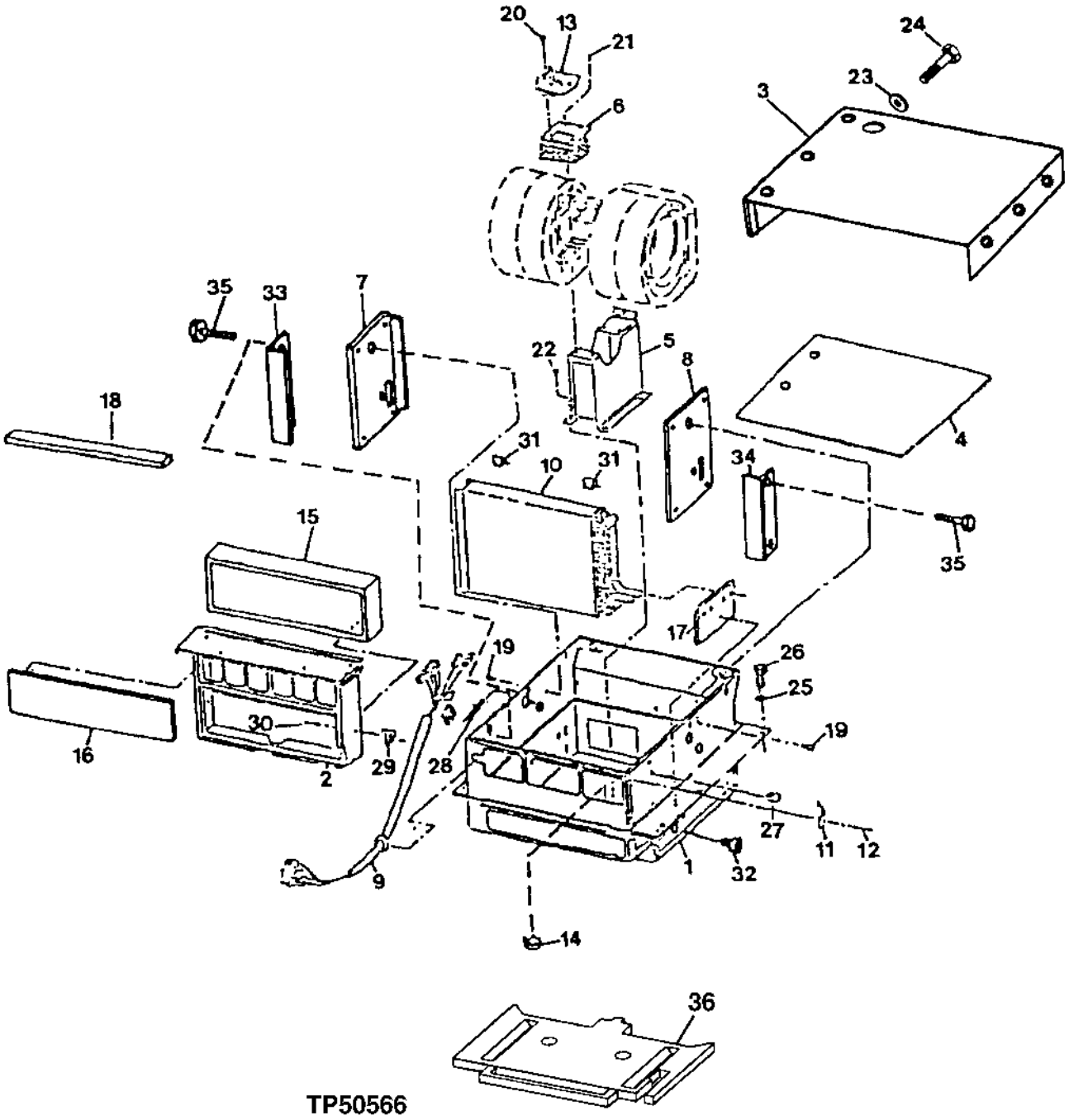

TP50566

HEATER MODULE
(SERIAL NO.825658-)

KEY	PART NO.	PART NAME	QTY	SERIAL NO.	REMARKS
1	AT178660	CASE	1		(MODULE)
2	AT177786	HOUSING	1		
3	AT177968	COVER	1		
4	T158842	GASKET	1		
5	AT175770	SUPPORT	1		
6	AT178892	BRACKET	1		
7	AT178661	PLATE	1		(REAR)
8	AT178662	PLATE	1		(FRONT)
9	AT177967	AC TIMER WIRING HARNESS	1	-849017	(MODULE)
	AT183701	WIRING HARNESS	1	849018-	
	19M7560	CAP SCREW	1		M6 X 16, (GROUND WIRE TO CAB)
10	AT174774	HEATER	1		CORE
11	AT175769	LATCH	2		
12	H85233	RIVET	2		
13	AT182200	RESISTOR	1		(SUB FOR RE49636)
14	.....	PLUG	1		(CAP)
15	AT141209	AIR FILTER	1		
16	T158848	AIR FILTER	1		(RECIRCULATION)
17	T158862	SEAL	1		
18	T158871	SEAL	1		
19	19M7774	SCREW	6		M6 X 12
20	19M7640	CAP SCREW	2		M5 X 12
21	19M7774	SCREW	4		M6 X 12
22	19M7774	SCREW	6		M6 X 12
23	24M7239	WASHER	4		10.700 X 21 X 2.500 MM
24	19M7402	CAP SCREW	4		M10 X 25
25	24M7239	WASHER	7		10.700 X 21 X 2.500 MM
26	19M7402	CAP SCREW	7		M10 X 25
27	T155525	PLUG	4		
28	Z57041	TIE BAND	2		(SUB R44302)
	R44302	TIE BAND	2		
29	AT177787	BOLT	2		
30	H85233	RIVET	2		
31	T160275	CLIP	2		
32	19M7775	SCREW	3		M6 X 16
33	AT178663	RETAINER	1		HEATER (REAR)
34	AT178664	RETAINER	1		HEATER (FRONT)
35	19M7774	SCREW	4		
36	T161297	ISOLATOR	1		(MODULE CASE)

HEATING,VENTILATION,AIR CONDITIONING (HVAC MODULE)
(SERIAL NO.816287-825657)

TP50428 -UN-07MAY96

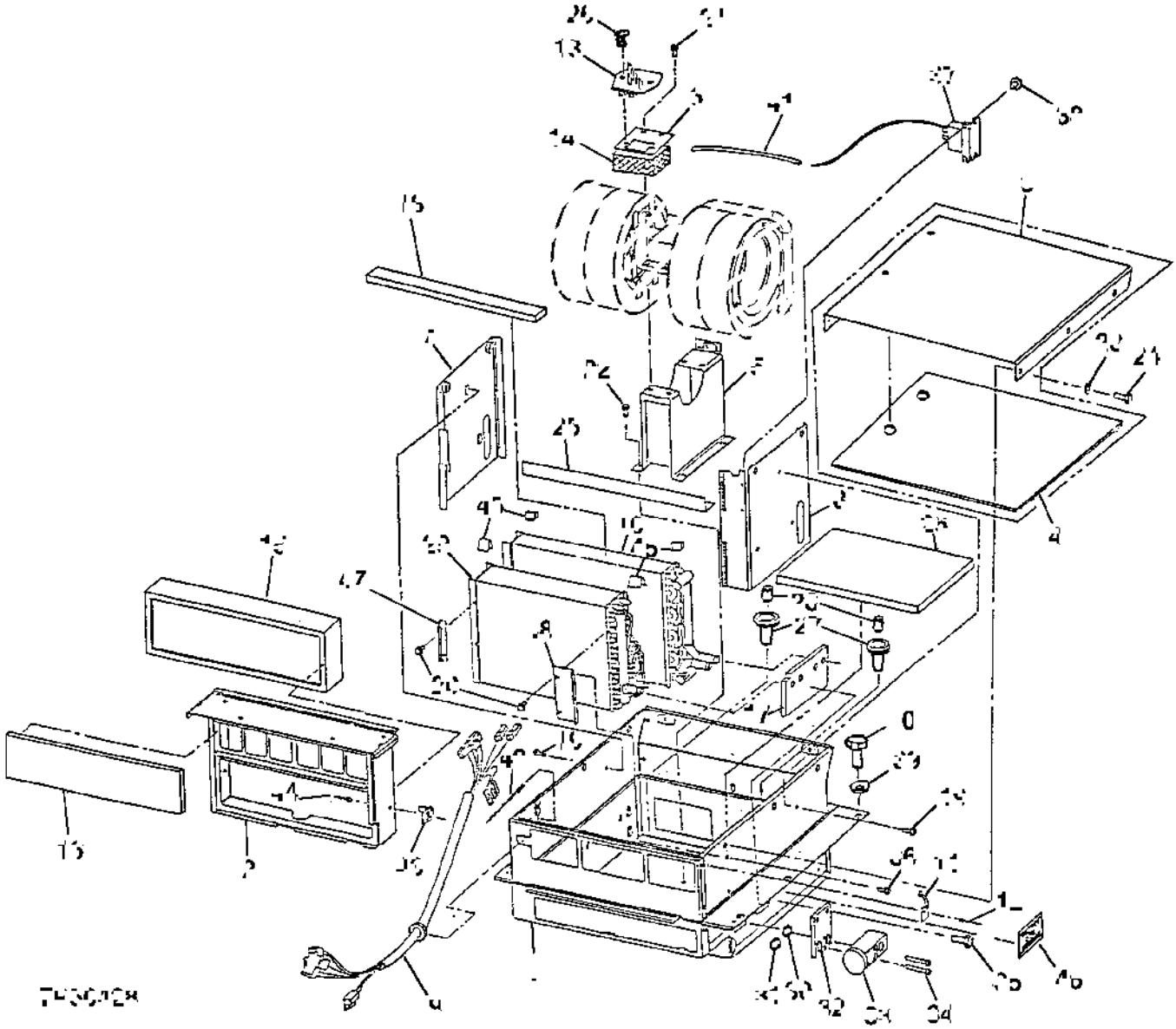

HEATING,VENTILATION,AIR CONDITIONING (HVAC MODULE)
(SERIAL NO.816287-825657)

KEY	PART NO.	PART NAME	QTY	SERIAL NO.	REMARKS
1	AT175759	CASE	1		
2	AT174772	FRAME	1	-817143	(FILTER)
	AT177786	FRAME	1	817144-	(FILTER)
3	AT175760	COVER	1		
4	T158842	GASKET	1		
5	AT175770	SUPPORT	1		(MOUNT)
6	AT178892	BRACKET	1		(SUB FOR AT175773)
7	AT175782	PLATE	1		(FRONT)
8	AT175783	PLATE	1		(REAR)
9	AT174775	AC TIMER WIRING HARNESS	1		(MODULE)
10	AT174774	HEATER	1		
11	AT175769	LATCH	2		
12	H85233	RIVET	2		
13	AT182200	RESISTOR	1		
14	.....	GUARD	1		NO LONGER AVAILABLE, (SUB AT178892)
15	AT141209	AIR FILTER	1		
16	T158848	AIR FILTER	1		(RECIRCULATION)
17	T158862	SEAL	1		
18	T158871	SEAL	1		
19	19M7774	SCREW	6		M6 X 12
20	19M7640	CAP SCREW	6		M5 X 12
21	19M7774	SCREW	4		M6 X 12
22	19M7774	SCREW	5		M6 X 12
23	24M7239	WASHER	4		10.700 X 21 X 2.500 MM
24	19M7402	CAP SCREW	4		M10 X 25
25	T158873	ANGLE	1		
26	T158866	GASKET	1		
27	T164738	FITTING	2		(SUB FOR T158865)
28	.....	VALVE	2		(AT175768 NO LONGER AVAILABLE) (SUB T164738)
29	AT174773	EVAPORATOR	1		
30	R113050	O-RING	1		
31	R33259	O-RING	1		
32	T158127	PLATE	1		
33	RE57575	VALVE	1		
34	19M8669	SCREW	2		M5 X 35
35	19M7775	SCREW	3		M6 X 16
36	19M7774	SCREW	4		M6 X 12
37	AH144020	THERMOSTAT	1		
38	37H147	SCREW	1		
39	24M7239	WASHER	7		10.700 X 21 X 2.500 MM
40	19M7402	CAP SCREW	7		M10 X 25
41	T160136	TUBE	1		
42	Z57041	TIE BAND	2		(SUB R44302)
	R44302	TIE BAND	2		
43	AT177787	BOLT	2		
44	H85233	RIVET	2		
45	T160275	CLIP	4		
46	T160276	LABEL	1		
47	AT175789	RETAINER	1		
48	AT175790	RETAINER	1		

HEATING,VENTILATION,AIR CONDITIONING (HVAC MODULE)
(SERIAL NO.825658-)

TP57888 -UN-10JUL98

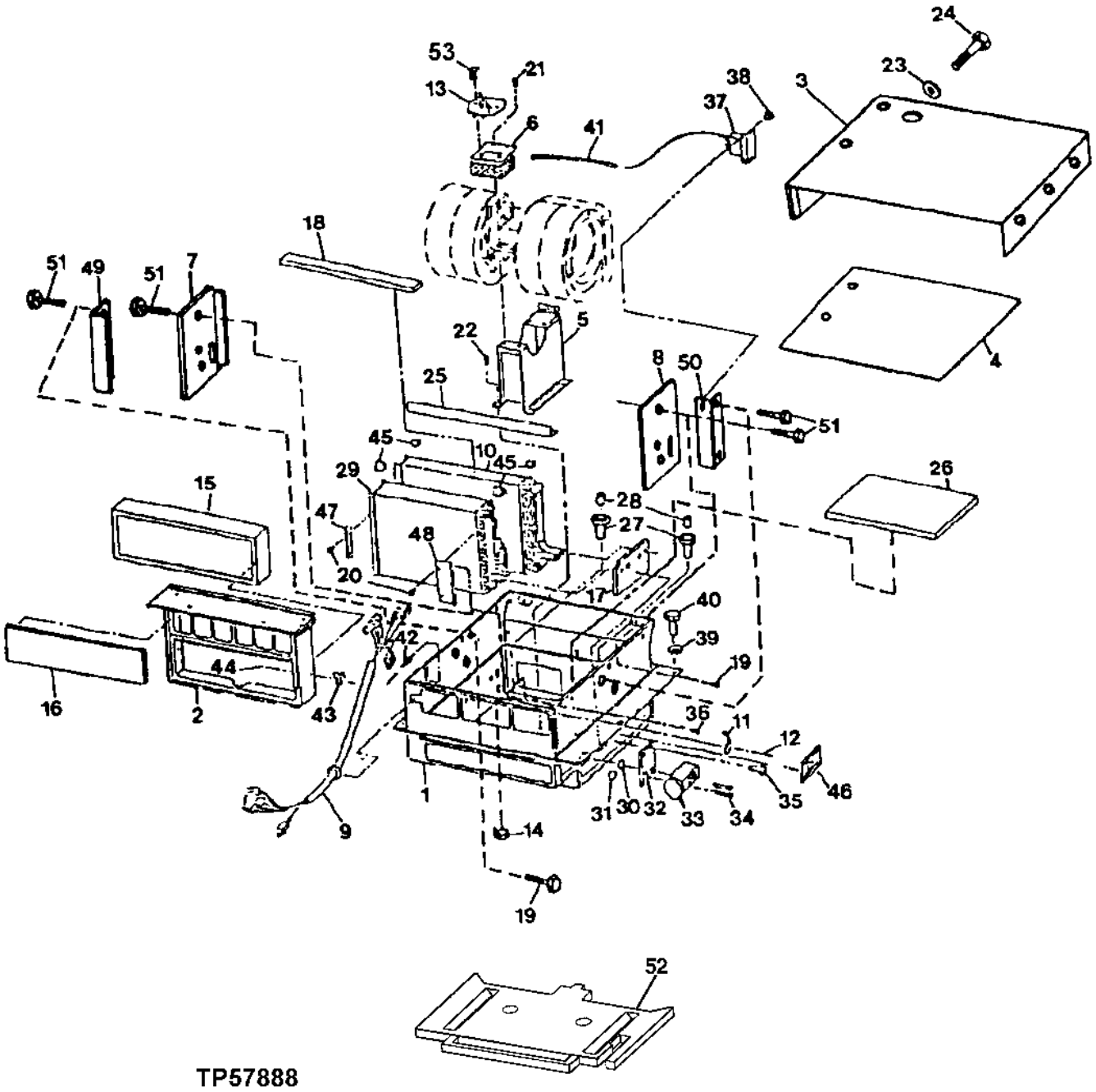

HEATING, VENTILATION, AIR CONDITIONING (HVAC MODULE)
(SERIAL NO.825658-)

KEY	PART NO.	PART NAME	QTY	SERIAL NO.	REMARKS
1	AT178660	CASE	1		(MODULE)
2	AT177786	HOUSING	1		(FILTER)
3	AT177968	COVER	1		
4	T158842	GASKET	1		
5	AT175770	SUPPORT	1		
6	AT178892	BRACKET	1		
7	AT178661	PLATE	1		REAR5
8	AT178662	PLATE	1		FRONT
9	AT177967	AC TIMER WIRING HARNESS	1	-849017	MODULE
	AT183701	WIRING HARNESS	1	849018-	
	19M7560	CAP SCREW	1		M6 X 16, (GROUND WIRE TO CAB)
10	AT174774	HEATER	1		CORE
11	AT175769	LATCH	2		
12	H85233	RIVET	2		
13	AT182200	RESISTOR	1		(SUB FOR RE49636)
14	T160794	PLUG	2		WITHOUT AIR CONDITIONING
15	AT141209	AIR FILTER	1		
16	T158848	AIR FILTER	1		RECIRCULATION
17	T158862	SEAL	1		
18	T158871	SEAL	1		
19	19M7774	SCREW	6		M6 X 12
20	19M7640	CAP SCREW	6		M5 X 12
21	19M7774	SCREW	4		M6 X 12
22	19M7774	SCREW	5		M6 X 12
23	24M7239	WASHER	4		10.700 X 21 X 2.500 MM
24	19M7402	CAP SCREW	4		M10 X 25
25	T158873	ANGLE	1		
26	T158866	GASKET	1		
27	T158865	BOOT	2		
28	AT175768	VALVE	1		CONDENSATE CHECK
29	AT174773	EVAPORATOR	1		AIR CONDITIONING
30	R113050	O-RING	1		
31	R33259	O-RING	1		
32	T158127	PLATE	1		
33	RE57575	VALVE	1		EXPANSION
34	19M8669	SCREW	2		M5 X 35
35	19M7775	SCREW	3		M6 X 16
36	19M7774	SCREW	4		M6 X 12
37	AH144020	THERMOSTAT	1		FREEZE CONTROL SWITCH
38	37H147	SCREW	1		
39	24M7239	WASHER	7		10.700 X 21 X 2.500 MM
40	19M7402	CAP SCREW	7		M10 X 25
41	T160136	TUBE	1		INSULATION
42	Z57041	TIE BAND	2		
43	AT177787	BOLT	2		
44	H85233	RIVET	2		
45	T160275	CLIP	4		
46	T160276	LABEL	1		
47	AT175789	RETAINER	1		EVAPORATOR (REAR)
48	AT175790	RETAINER	1		EVAPORATOR (FRONT)
49	AT178663	RETAINER	1		HEATER (REAR)
50	AT178664	RETAINER	1		HEATER (FRONT)
51	37M7059	SCREW	4		M5 X 12
52	T161297	ISOLATOR	1		(MODULE CASE)
53	19M7640	CAP SCREW	4		M5 X 12

HEATER AND HVAC MODULE
(SERIAL NO.816287)

TP50429 -UN-06MAY96

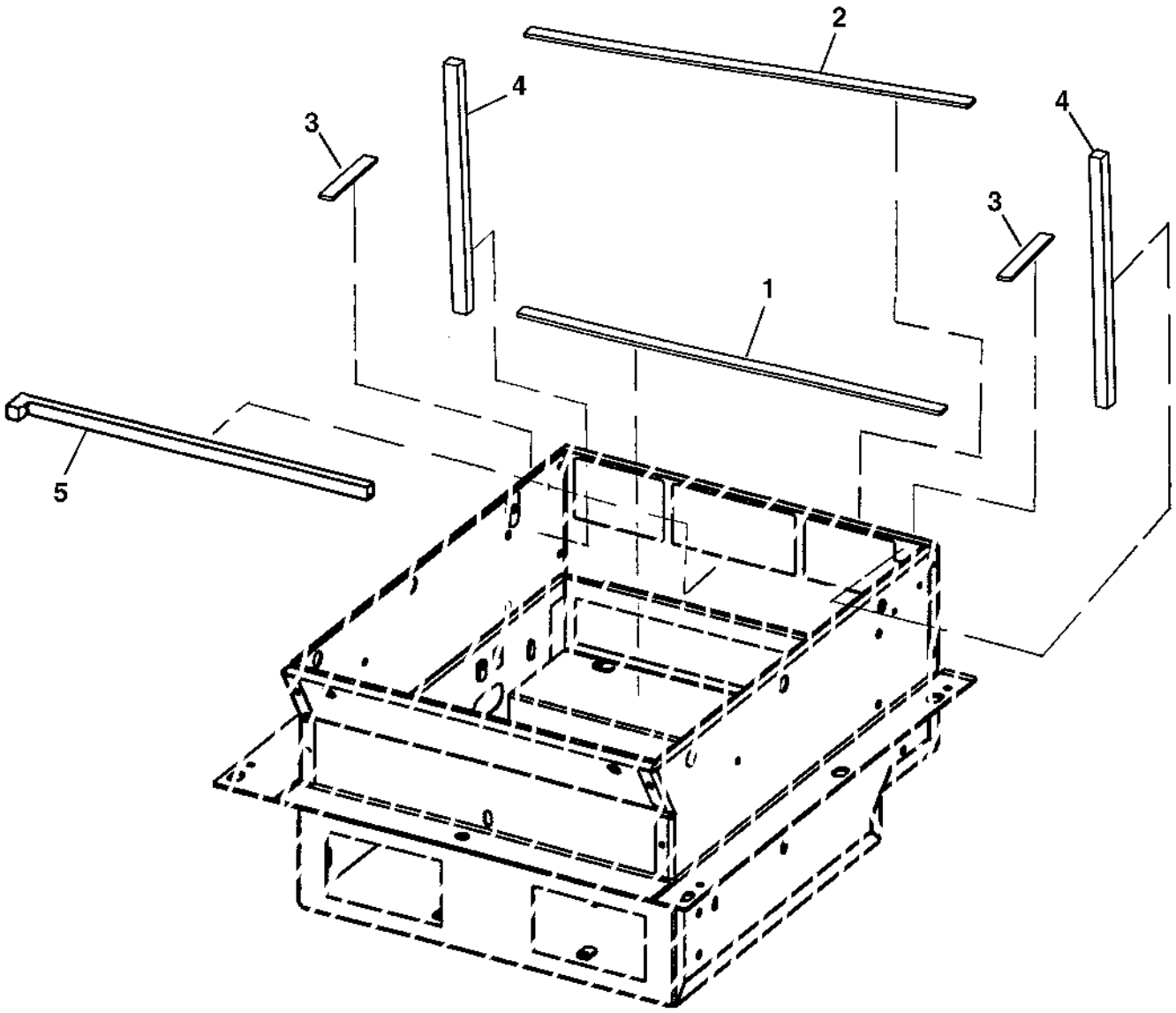

HEATER AND HVAC MODULE
(SERIAL NO.816287)

KEY	PART NO.	PART NAME	QTY	SERIAL NO.	REMARKS
1	.....	ISOLATOR	1		MAKE FROM T59938 BULK MATERIAL CUT TO 15.0 INCHES
2	.....	ISOLATOR	1		MAKE FROM T59938 BULK MATERIAL CUT TO 16.5 INCHES
3	.....	ISOLATOR	1		MAKE FROM T59938 BULK MATERIAL CUT TO 3.1 INCHES
4	.....	ISOLATOR	1		MAKE FROM T71733 BULK MATERIAL CUT TO 8.6 INCHES
5	.....	ISOLATOR	1		MAKE FROM T71733 BULK MATERIAL CUT TO 15.5 INCHES

CAB HEATER AND AIR CONDITIONING FRESH AIR INTAKE AND DUCTING
(SERIAL NO. -816286)

TP45525 -UN-02SEP93

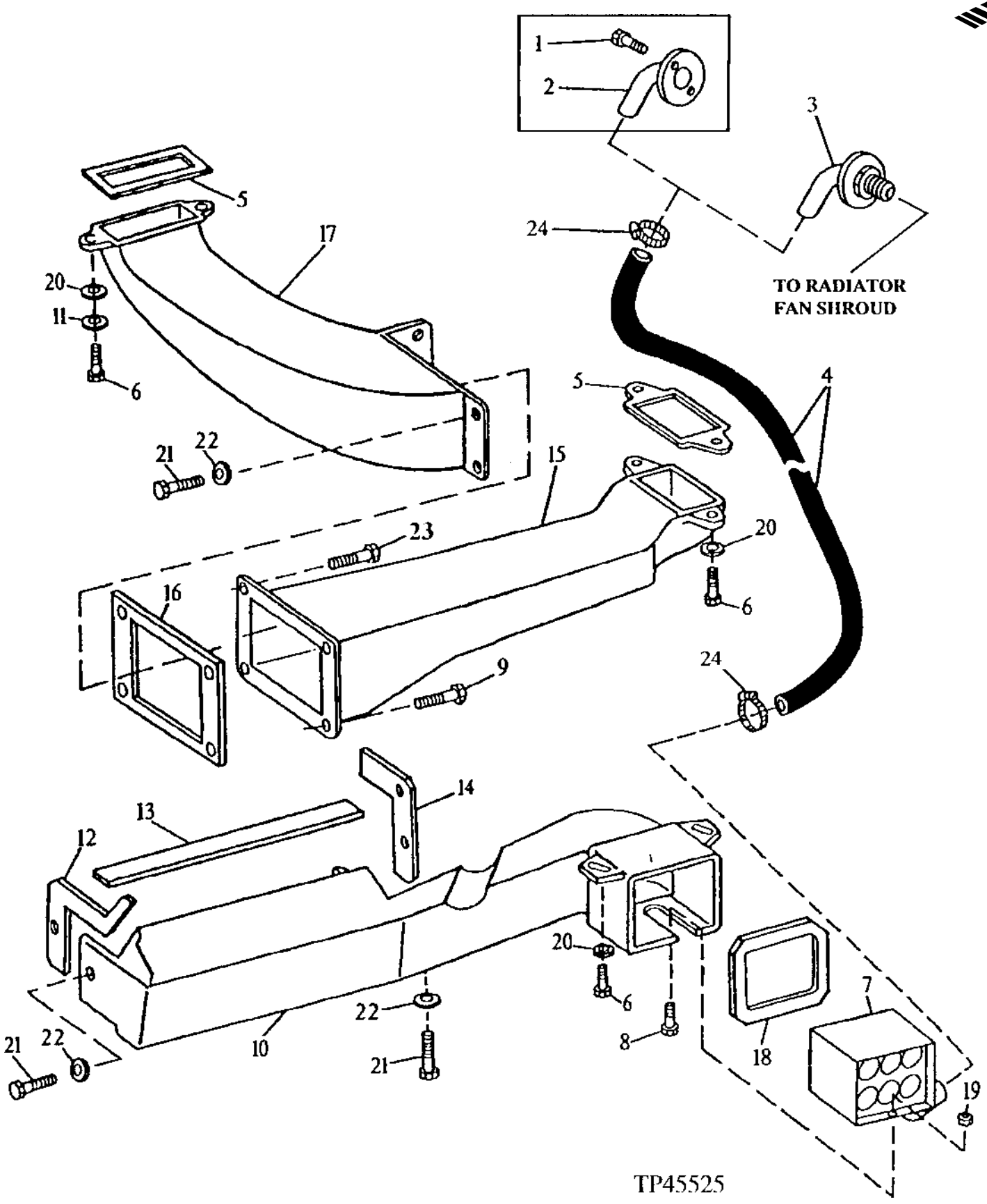

CAB HEATER AND AIR CONDITIONING FRESH AIR INTAKE AND DUCTING
(SERIAL NO. -816286)

KEY	PART NO.	PART NAME	QTY	SERIAL NO.	REMARKS
1	19M7881	SCREW	2	-803990	M8 X 20
2	AT142995	FLANGE	1	-803990	HEATER SHUT-OFF
3	AT167782	FLANGE	1	803991-	
4	T145959	HOSE	1		
5	.....	SEAL	1		(MAKE FROM T70307 BULK MATERIAL, CUT TO LENGTH)
6	19M7077	CAP SCREW	6		M6 X 20
7	AT163390	PRECLEANER	1		
8	21H1301	SCREW	1		0.190" X 1/2"
9	19M7077	CAP SCREW	4		M6 X 20
	24M7139	WASHER	4		6.400 X 18 X 1.600 MM, (SUB FOR 24M7293, THIS APPLICATION)
10	T145547	AIR DUCT	1		
11	24M7293	WASHER	2		6.500 X 13 X 1.600 MM
12	T130112	GASKET	1		
13	.....	STRIP	1		(MAKE FROM T119593 OR T630169 BULK MATERIAL, CUT TO LENGTH)
14	T130111	GASKET	1		
15	T133191	AIR DUCT	1		L.H. FRONT
16	T130110	GASKET	1		
17	T133190	AIR DUCT	1		L.H. REAR
18	T145143	GASKET	1		
19	R52130	LOCK NUT	1		
20	24M7139	WASHER	2		6.400 X 18 X 1.600 MM
21	19M7077	CAP SCREW	7		M6 X 20
22	24M7139	WASHER	9		6.400 X 18 X 1.600 MM, (SUB FOR 24M7293, THIS APPLICATION)
23	19M7077	CAP SCREW	2		M6 X 20
24	AR21839	CLAMP	2		

CAB HEATER AND AIR CONDITIONING FRESH AIR INTAKE AND DUCTING
(SERIAL NO.816287-825657)

TP49586 -UN-08MAR97

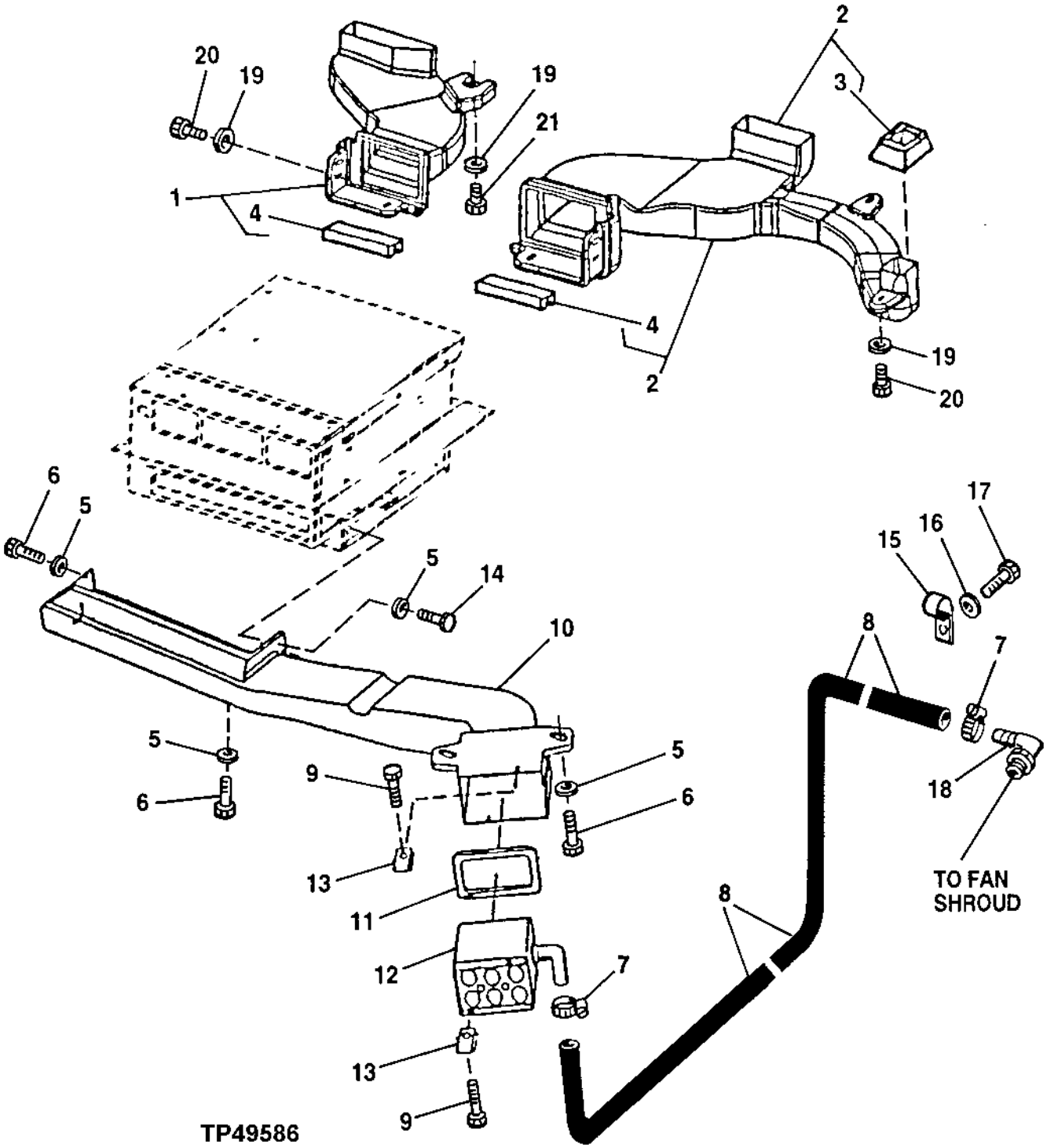

CAB HEATER AND AIR CONDITIONING FRESH AIR INTAKE AND DUCTING
(SERIAL NO.816287-825657)

KEY	PART NO.	PART NAME	QTY	SERIAL NO.	REMARKS
1	AT174632	AIR DUCT	1		(LEFT REAR) WITHOUT INSULATION - HEATER ONLY
	AT179666	AIR DUCT	1		(LEFT REAR) WITH INSULATION - AIR CONDITIONING ONLY
2	AT173978	AIR DUCT	1		(LEFT FRONT/DEFROST) WITHOUT INSULATION - HEATER ONLY
	AT179665	AIR DUCT	1		(LEFT FRONT/DEFROST) WITH INSULATION - AIR CONDITIONING ONLY
3	T165521	SEAL	1		(SUB FOR T158825)
4	T165520	SEAL	2		(SUB FOR T157836)
5	24M7139	WASHER	14		6.400 X 18 X 1.600 MM
6	19M7933	CAP SCREW	6		M6 X 25
7	AR54815	CLAMP	20		
8	T145959	HOSE	1		
9	37M7072	SCREW	2		
10	T152207	AIR DUCT	1		(FRESH AIR)
11	T145143	GASKET	1		
12	AT168604	PRECLEANER	1		
13	R52130	LOCK NUT	2		0.190"
14	14M7297	NUT	1		M5
15	AH77714	CLIP	1		
16	24M7239	WASHER	1		10.700 X 21 X 2.500 MM
17	19M7550	CAP SCREW	1		M10 X 35
18	AT167782	FLANGE	1		
19	24M7139	WASHER	6		6.400 X 18 X 1.600 MM
20	19M7874	CAP SCREW	6		M6 X 30
21	19M7833	SCREW	1		M6 X 35

CAB HEATER AND AIR CONDITIONING FRESH AIR INTAKE AND DUCTING
(SERIAL N0.825658-)

TP49587 -UN-08MAR97

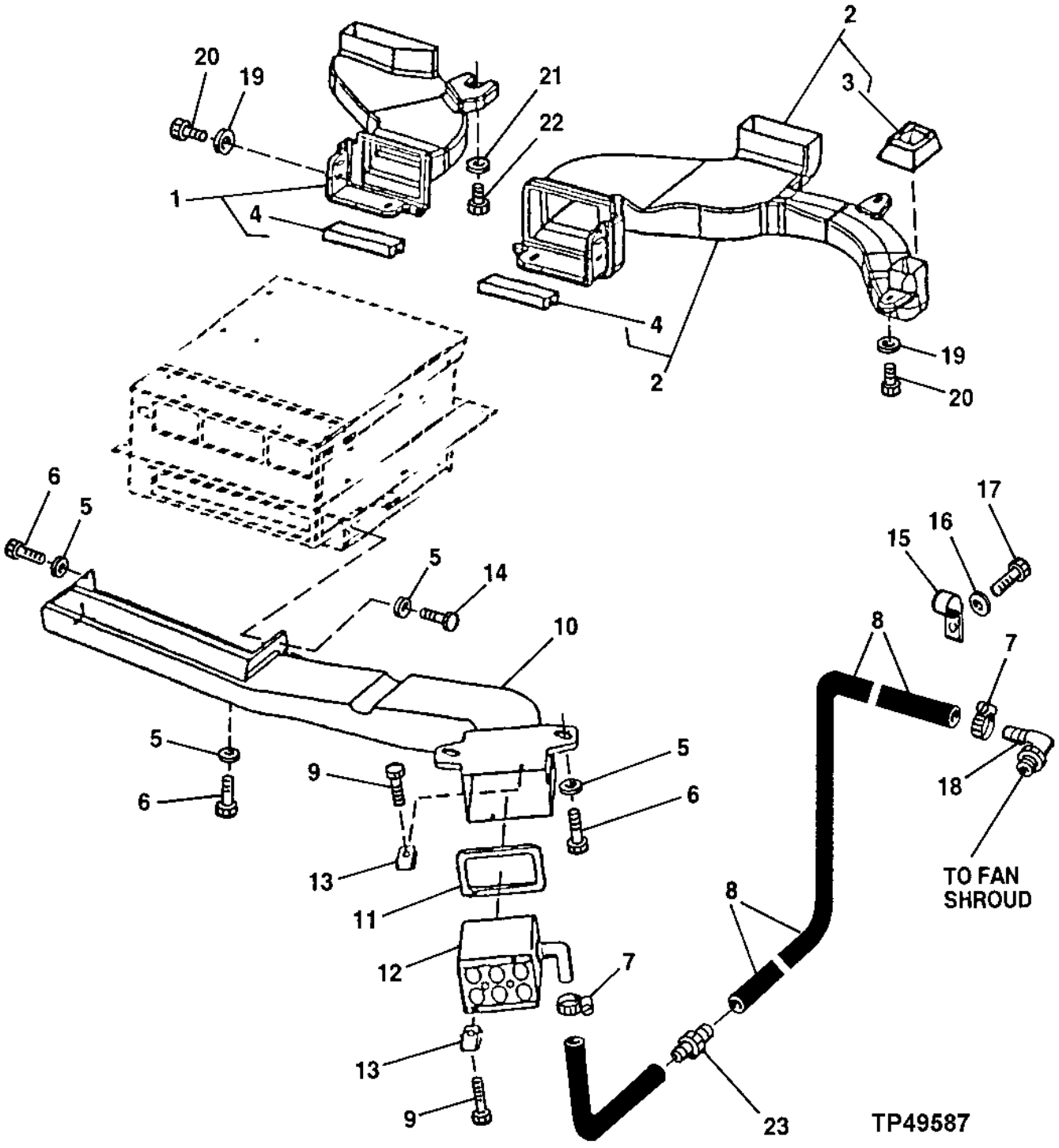

CAB HEATER AND AIR CONDITIONING FRESH AIR INTAKE AND DUCTING
(SERIAL NO.825658-)

KEY	PART NO.	PART NAME	QTY	SERIAL NO.	REMARKS
1	AT174632	AIR DUCT	1		(LEFT REAR) WITHOUT INSULATION - HEATER ONLY
	AT179666	AIR DUCT	1		(LEFT REAR) WITH INSULATION - AIR CONDITIONING ONLY
2	AT173978	AIR DUCT	1		(LEFT FRONT/DEFROST) WITHOUT INSULATION - HEATER ONLY
	AT179665	AIR DUCT	1		(LEFT FRONT/DEFROST) WITH INSULATION - AIR CONDITIONING ONLY
3	T165521	SEAL	1		(SUB FOR T158825)
4	T165520	SEAL	2		(SUB FOR T157836)
5	24M7139	WASHER	14		6.400 X 18 X 1.600 MM
6	19M7933	CAP SCREW	6		M6 X 25
7	AR21839	CLAMP	2		
8	T145959	HOSE	1		
9	37M7072	SCREW	2		
10	T152207	AIR DUCT	1		(FRESH AIR)
11	T145143	GASKET	1		
12	AT168604	PRECLEANER	1		
13	R52130	LOCK NUT	2		0.190"
14	14M7272	NUT	1		M6
15	AH77714	CLIP	1		
16	24M7239	WASHER	1		10.700 X 21 X 2.500 MM
17	19M7662	CAP SCREW	1		M10 X 30
18	AT167782	FLANGE	1		
19	24M7100	WASHER	6		6.600 X 22 X 2 MM
20	19M7874	CAP SCREW	6		M6 X 30
21	19M7933	CAP SCREW	1		M6 X 25
22	19M7833	SCREW	1		M6 X 35
23	T161366	COUPLING	1		(NIPPLE BARBED)

AIR CONDITIONING
(SERIAL NO. -816286)

TP44194 -UN-01JAN94

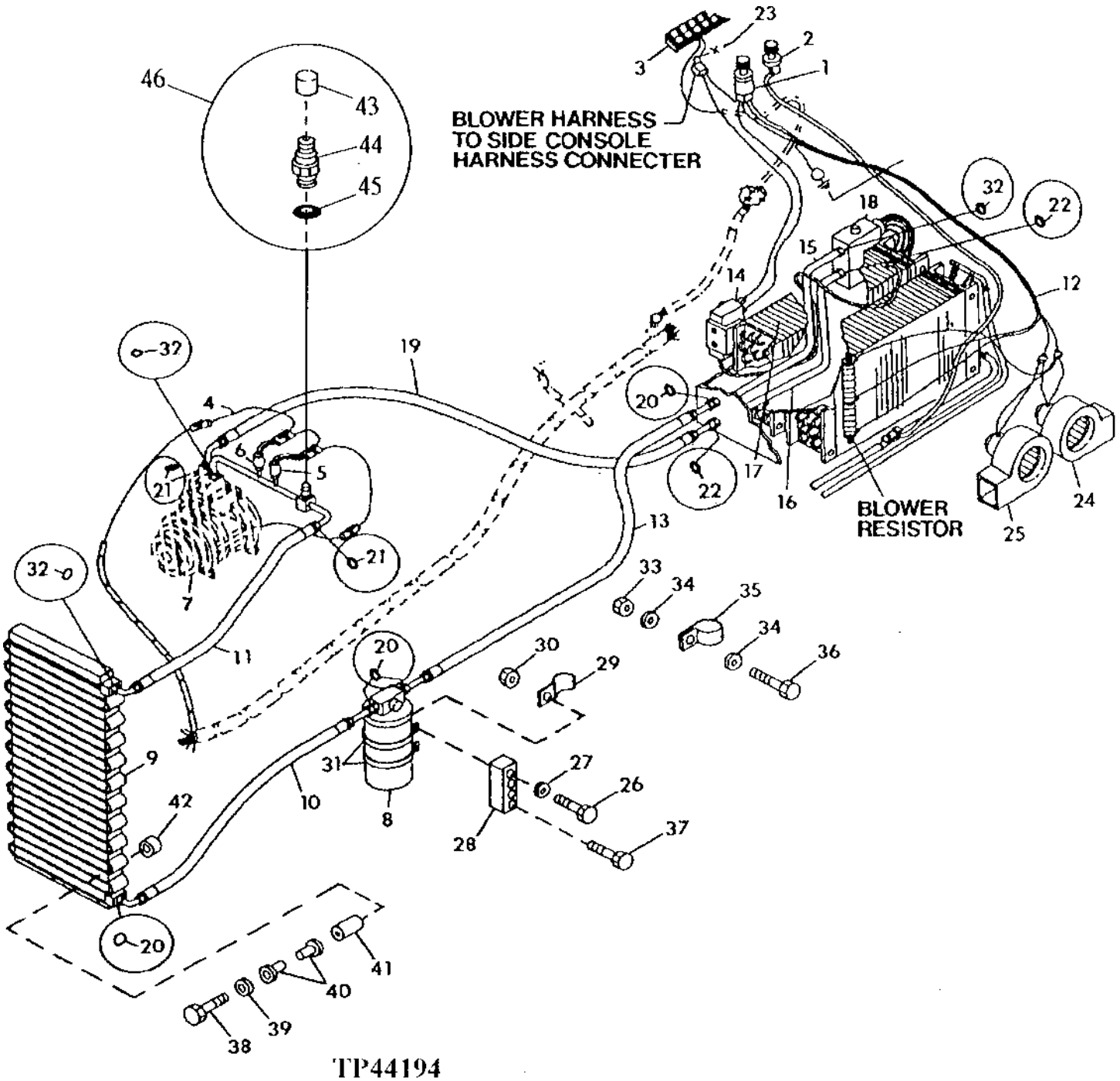

AIR CONDITIONING
(SERIAL NO. -816286)

KEY	PART NO.	PART NAME	QTY	SERIAL NO.	REMARKS
1	AL36529	SWITCH	1		BLOWER
2	AT145907	KNOB	1		HEATER TEMPERATURE
3	AT151499	TOGGLE SWITCH	1		AIR CONDITIONING
4	AT161863	WIRING HARNESS	1	-816286	COMPRESSOR
	AT174783	WIRING HARNESS	1	816287-	
5	AT63265	SWITCH	1	-816286	HIGH PRESSURE
	RE60888	HIGH PRESSURE SWITCH	1	816287-	
6	AT63266	SWITCH	1	-816286	LOW PRESSURE
	RE60887	LOW PRESSURE SWITCH	1	816287-	
7	RE52454	COMPRESSOR	1		
8	AT162848	RECEIVER-DRYER	1		
9	AT157396	VAPOR CONDENSER	1		
10	AT161094	REFRIGERANT HOSE	1		
11	AT161095	REFRIGERANT HOSE	1		(CONTAINS AT164892 CHARGE PORT ASSY)
12	AT141449	WIRING HARNESS	1		BLOWER
13	AT161098	REFRIGERANT HOSE	1		
14	AH144020	THERMOSTAT	1		CLUTCH CYCLE (FREEZE CONTROL) (SUB FOR AT145598,THIS APPLICATION)
	14M7229	NUT	2		M5
15	AT151555	LINE	1		
16	AT151556	ADAPTER	1		
17	AT164840	EVAPORATOR	1		(SUB FOR AT141206)
18	AH137702	VALVE	1		EXPANSION
19	AT161099	REFRIGERANT HOSE	1		
20	R10093	O-RING	5		
21	R33259	O-RING	1		
22	R28776	O-RING	2		
23	T102781	CIRCUIT BREAKER	1		30 AMP HEATER/A.C.
24	AT145593	ELECTRIC MOTOR	1		HEATER BLOWER (CW ROTATION - OPPOSITE SHAFT END)
25	AT141208	ELECTRIC MOTOR	1		HEATER BLOWER (CCW ROTATION - OPPOSITE SHAFT END)
26	19M7935	CAP SCREW	2		M10 X 55
27	24M7239	WASHER	2		10.700 X 21 X 2.500 MM
28	T79844	STRAP	1		
29	AH77714	CLIP	1		
30	14M7274	NUT	2		M10
31	R53422	CLAMP	2		
32	R113050	O-RING	3		
33	14M7274	NUT	1		M10
34	24M7239	WASHER	2		10.700 X 21 X 2.500 MM
35	R46667	CLAMP	1		
36	19M7662	CAP SCREW	1		M10 X 30
37	19M7550	CAP SCREW	2		M10 X 35
38	19M8539	CAP SCREW	4		M8 X 90
39	24M7296	WASHER	4		10.500 X 30 X 2.500 MM
40	AT76998	RUBBER MOUNT	8		
41	28H1941	BUSHING	4		0.364" X 0.540" X 1-1/4"
42	T149003	SPACER	2		(SUB FOR T25384) (RIGHT)
	T149004	SPACER	2		(SUB FOR R48792) (LEFT)
43	T148917	CAP	1		
44	.....	HYDRAULIC CYLINDER PORT	1		
45	R28776	O-RING	1		
46	AT164892	HYDRAULIC CYLINDER PORT	1		
47	**AT158956**	**AIR CONDITIONER**	**1**		

AIR CONDITIONING CONDENSER AND HOSES
(SERIAL NO.816287-830204)

TP50583 -UN-13MAR97

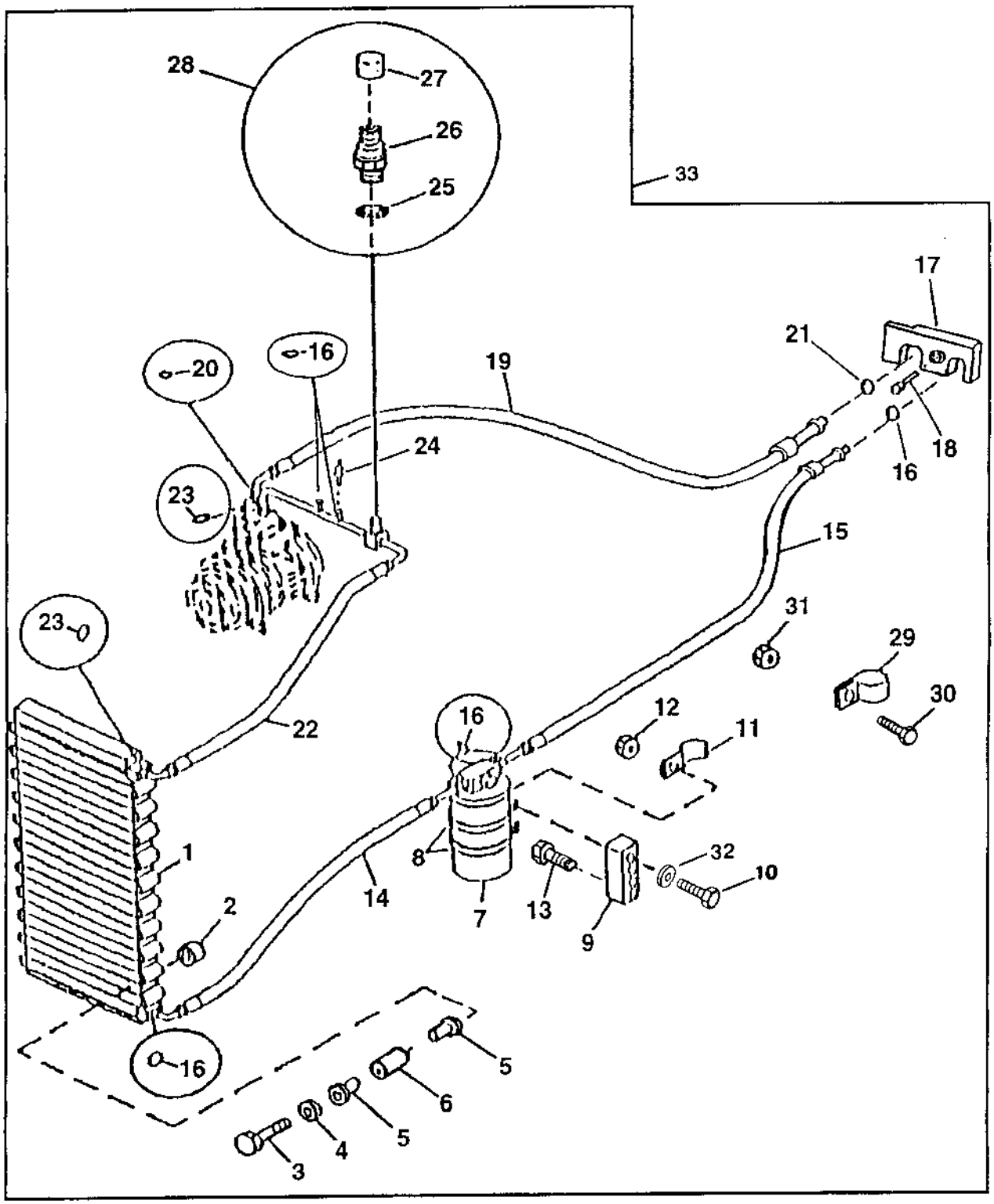

TP50583

AIR CONDITIONING CONDENSER AND HOSES
(SERIAL NO.816287-830204)

KEY	PART NO.	PART NAME	QTY	SERIAL NO.	REMARKS
1	AT157396	VAPOR CONDENSER	1		
2	T149003	SPACER	2		
	T149004	WASHER	2		
3	19M8539	CAP SCREW	4		
4	24M7296	WASHER	4		
5	AT76998	RUBBER MOUNT	8		
6	28H1941	BUSHING	4		
7	AT162848	RECEIVER-DRYER	1		
8	R53422	CLAMP	2		
9	T79844	STRAP	1		
10	19M7935	CAP SCREW	2		
11	AH77714	CLIP	1		
12	14M7274	NUT	2		
13	19M7550	CAP SCREW	1		
14	AT161094	REFRIGERANT HOSE	1		
15	AT175271	REFRIGERANT HOSE	1		
16	R10093	O-RING	6		
17	R125223	PLATE	1		
18	19M8553	SCREW	1		
19	AT175272	REFRIGERANT HOSE	1		
20	R33259	O-RING	1		
21	T143169	O-RING	1		
22	AT175273	REFRIGERANT HOSE	1		
23	R113050	O-RING	2		
24	R60170	VALVE	2		
25	R28776	O-RING	1		
26	.....	HYDRAULIC CYLINDER PORT	1		
27	T148917	CAP	1		
28	AT164892	HYDRAULIC CYLINDER PORT	1		
29	R46667	CLAMP	1		
30	19M7662	CAP SCREW	1		
31	14M7274	NUT	1		
32	24H1781	WASHER	2		13/32" X 7/8" X 1/4", (RECEIVER /DRYER MOUNTING BAR SCREW)
33	**AT177435**	**AIR CONDITIONER**	**1**		**(ALSO INCLUDES EVAPORATOR KIT,COMPRESSOR, BELT,SWITCHES,WIRE HARNESS,FAN GUARD,LABEL, AND MISCELLANEOUS HARDWARE)**

AIR CONDITIONING COMPRESSOR, MOUNTING BRACKETS, RECEIVER DRYER AND HOSES
(SERIAL NO.830205-)

TP57854 -UN-08APR98

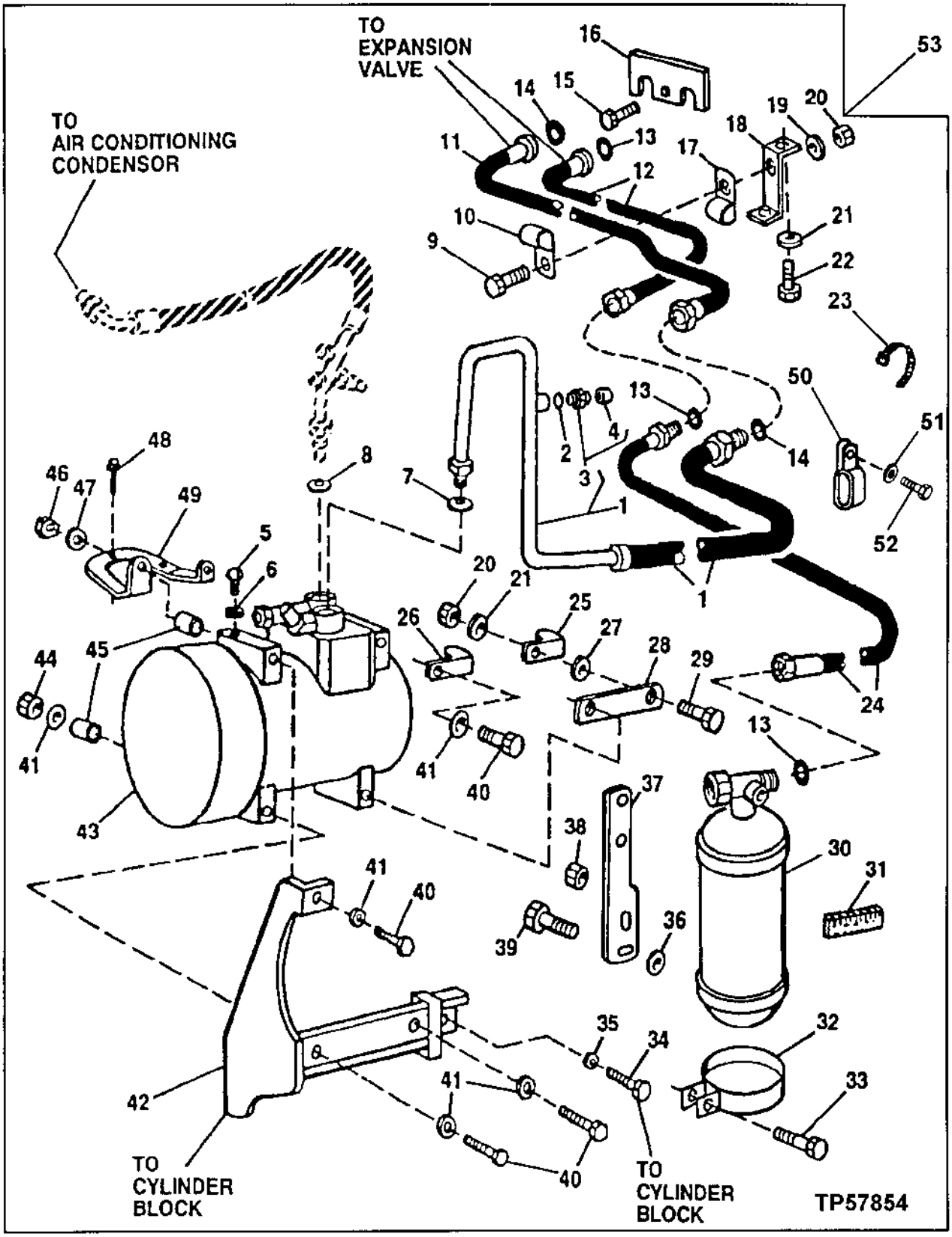

AIR CONDITIONING COMPRESSOR, MOUNTING BRACKETS, RECEIVER DRYER AND HOSES
(SERIAL NO.830205-)

KEY	PART NO.	PART NAME	QTY	SERIAL NO.	REMARKS
1	AT178129	REFRIGERANT HOSE	1		
2	R10093	O-RING	1		
3	AT181530	VALVE	1		
4	T162557	CAP	1		
5	21M7283	SCREW	1		M5 X 8
6	12H316	LOCK WASHER	1		0.216"
7	R33259	O-RING	1		
8	R113050	O-RING	1		
9	19M7513	CAP SCREW	1		M8 X 30
10	T102934	CLAMP	1		
11	AT175962	LINE	1		
12	AT175961	LINE	1		
13	R10093	O-RING	2		
14	T143169	O-RING	2		
15	19M8553	SCREW	1		M6 X 16
16	R125223	PLATE	1		
17	T13814	CLAMP	1		
18	T158245	STRAP	1	-872328	
19	24M7238	WASHER	1		8.700 X 17 X 2 MM
20	14M7273	NUT	1		M8
21	24M7239	WASHER	1	-872328	10.700 X 21 X 2.500 MM
22	19M7938	CAP SCREW	1	-872328	M10 X 20
23	R44302	TIE BAND	1		
24	AT178271	HOSE	1		
25	T78787	CLAMP	1		
26	T19935	CLAMP	1		
27	24H1621	WASHER	AR		11/32" X 1" X 0.220"
28	M86533	STRAP	1		
29	19M7513	CAP SCREW	1		M8 X 30
30	AT162848	RECEIVER-DRYER	1		
31	T145560	LABEL	1		
32	R53422	CLAMP	2		
33	19M7550	CAP SCREW	2		M10 X 35
34	19M7402	CAP SCREW	2		M10 X 25
35	24M7239	WASHER	2		10.700 X 21 X 2.500 MM
36	24M7239	WASHER	2		10.700 X 21 X 2.500 MM
37	T162642	STRAP	1		
38	14M7274	NUT	2		M10
39	19M7402	CAP SCREW	2		M10 X 25
40	19M8456	CAP SCREW	4		M8 X 100
41	24M7238	WASHER	7		8.700 X 17 X 2 MM
42	AT180350	BRACKET	1		(SUB FOR R123500, THIS APPLICATION)
43	TY6764	COMPRESSOR	1		REMANUFACTURED
44	14M7273	NUT	3		M8
45	28H1941	BUSHING	4		0.364" X 0.540" X 1-1/4"
46	14M7273	NUT	4		M8
47	24M7238	WASHER	8		8.700 X 17 X 2 MM
48	.....	CAP SCREW	1		
49	AT180351	BRACKET	1		(SUB FOR R132690, THIS APPLICATION)
50	T149597	CLAMP	1		
51	24M7100	WASHER	1		
52	19M7077	CAP SCREW	1		
53	**AT180331**	**AIR CONDITIONER**	**1**	**-872328**	
	AT184329	**AIR CONDITIONER**	**1**	**872329-**	

THIS PARTS LISTING IS CONTINUED

AIR CONDITIONING CONDENSER AND HOSES
(SERIAL NO.830205-)

TP49581 -UN-17MAR97

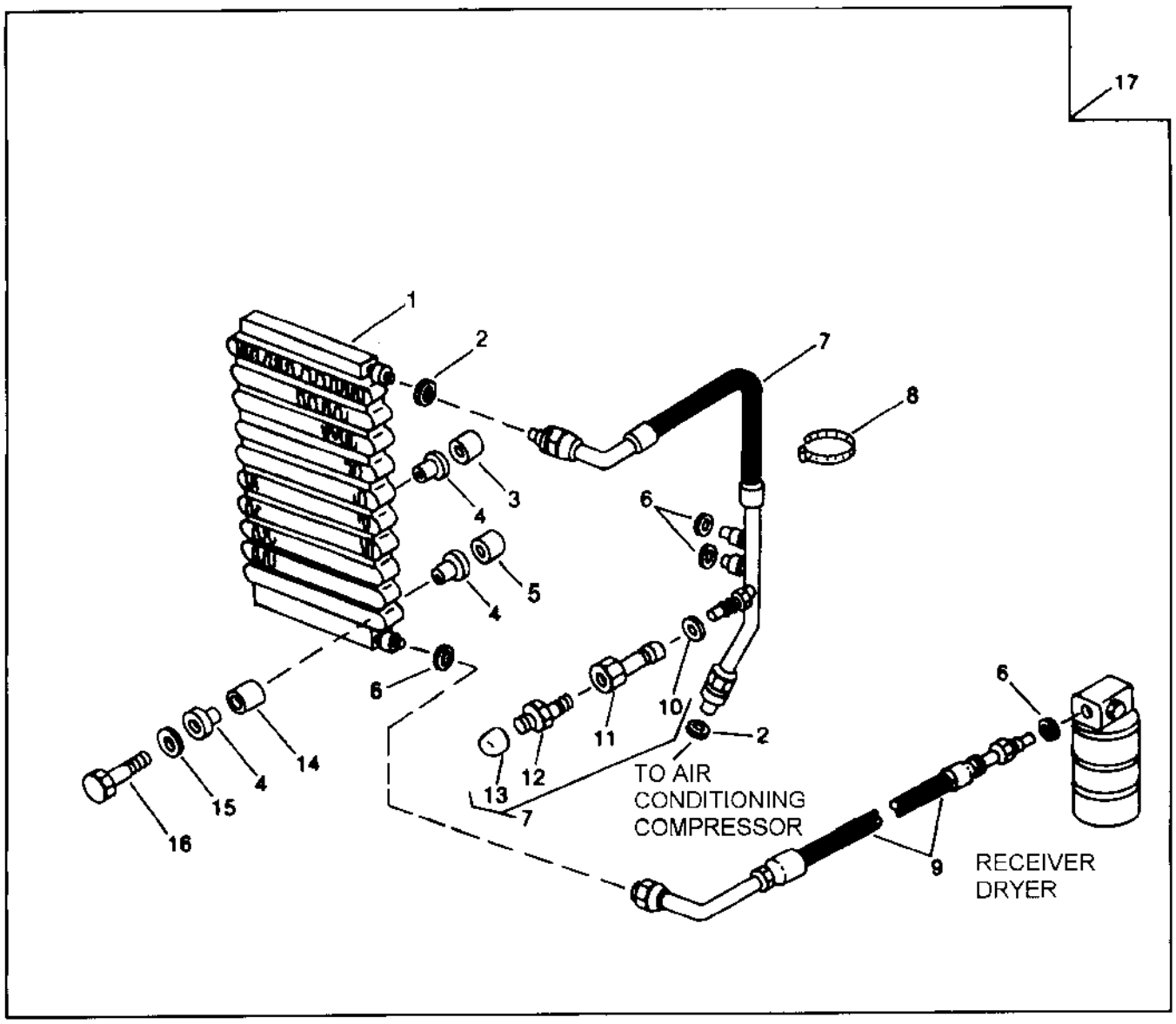

TP49581

AIR CONDITIONING CONDENSER AND HOSES
(SERIAL NO.830205_)

KEY	PART NO.	PART NAME	QTY	SERIAL NO.	REMARKS
1	AT157396	VAPOR CONDENSER	1		
2	R113050	O-RING	2		
3	T149004	WASHER	1		
4	AT76998	RUBBER MOUNT	8		
5	R149003	BUSHING	1		
6	R10093	O-RING	4		
7	AT178128	HOSE	1		
8	R44302	TIE BAND	1		
9	AT161094	REFRIGERANT HOSE	1		
10	R28776	O-RING	1		12.421 X 1.778 MM
11	AT164892	HYDRAULIC CYLINDER PORT	1		
12	T148919	HYDRAULIC CYLINDER PORT	1		
13	T148917	CAP	1		
14	28H1941	BUSHING	4		0.364" X 0.540" X 1-1/4"
15	24M7296	WASHER	4		10.500 X 30 X 2.500 MM
16	19M8539	CAP SCREW	4		M8 X 90
17	**AT180331**	**AIR CONDITIONER**	**1**	**-872328**	
	AT184329	**AIR CONDITIONER**	**1**	**872329-**	

COMPRESSOR, MANIFOLD AND DUST COVER
(R134A REFRIGERANT)
(SERIAL NO. -830204)

TP45951 -UN-20SEP94

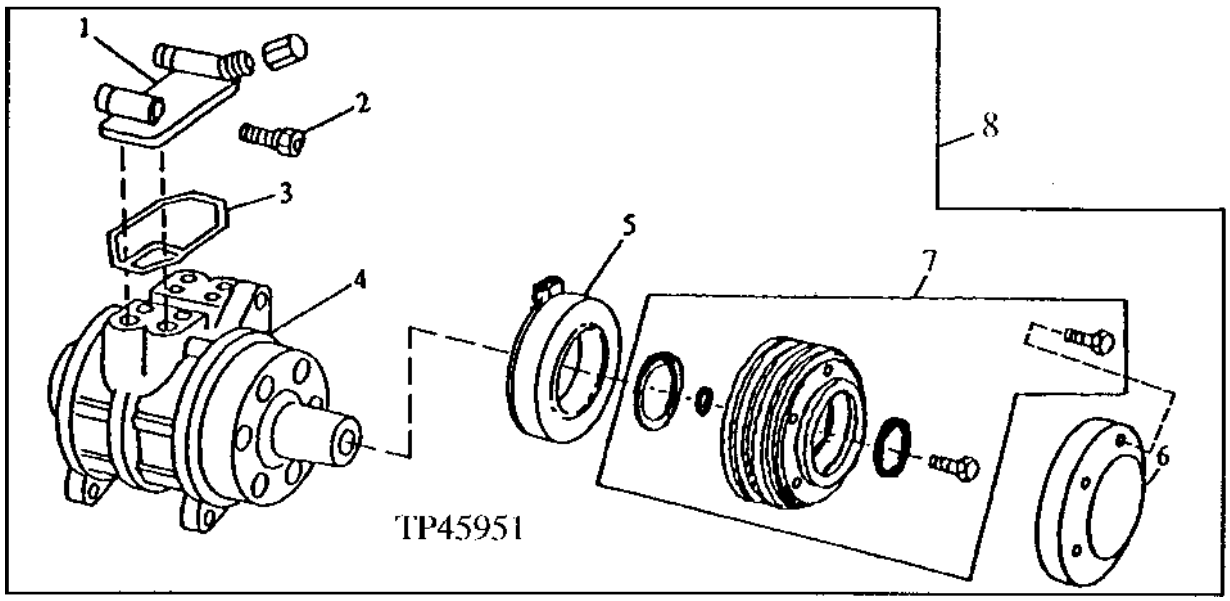

KEY	PART NO.	PART NAME	QTY	SERIAL NO.	REMARKS
1	RE51052	MANIFOLD	1		
2	RE52506	VALVE	1		
3	R115742	SEAL	1		
4	RE52454	COMPRESSOR	1	-816286	
5	RE52510	STATOR	1		
6	R115743	COVER	1		(USE WITH RE53408)
	R122351	COVER	1		(USE WITH RE58348)
7	.....	KIT	1		COMPRESSOR CLUTCH AND PULLEY, (SUB RE58348 AND R122351)
	RE58348	KIT	1		COMPRESSOR CLUTCH AND PULLEY, (SUB FOR RE53408) (ALSO ORDER R122351)
8	TY6784	COMPRESSOR	1	-816286	
	TY6765	COMPRESSOR	1	816287-	

AIR CONDITIONING COMPRESSOR MANIFOLD AND DUST COVER
(SERIAL NO.830205-)

TP54000 -UN-13DEC96

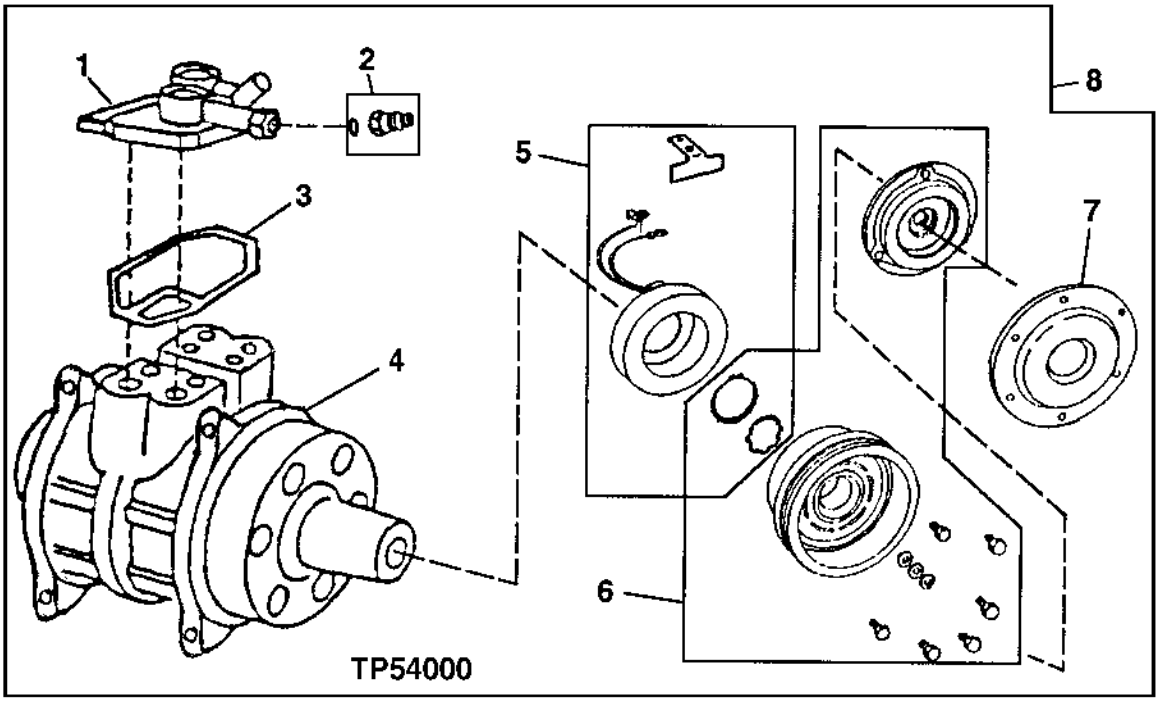

KEY	PART NO.	PART NAME	QTY	SERIAL NO.	REMARKS
1	RE51052	MANIFOLD	1		(INCLUDES RE52506 AND R115742)
2	RE52506	VALVE	1		
3	R115742	SEAL	1		
4	RE52454	COMPRESSOR	1		
5	RE52510	STATOR	1		
6	RE52508	KIT	1		COMPRESSOR CLUTCH AND PULLEY
7	R115743	COVER	1		
8	TY6764	COMPRESSOR	1		

AIR CONDITIONER COMPRESSOR SHAFT SEAL KIT
(R134A REFRIGERANT)
(SERIAL NO.830205-)

TP34246 -UN-01JAN94

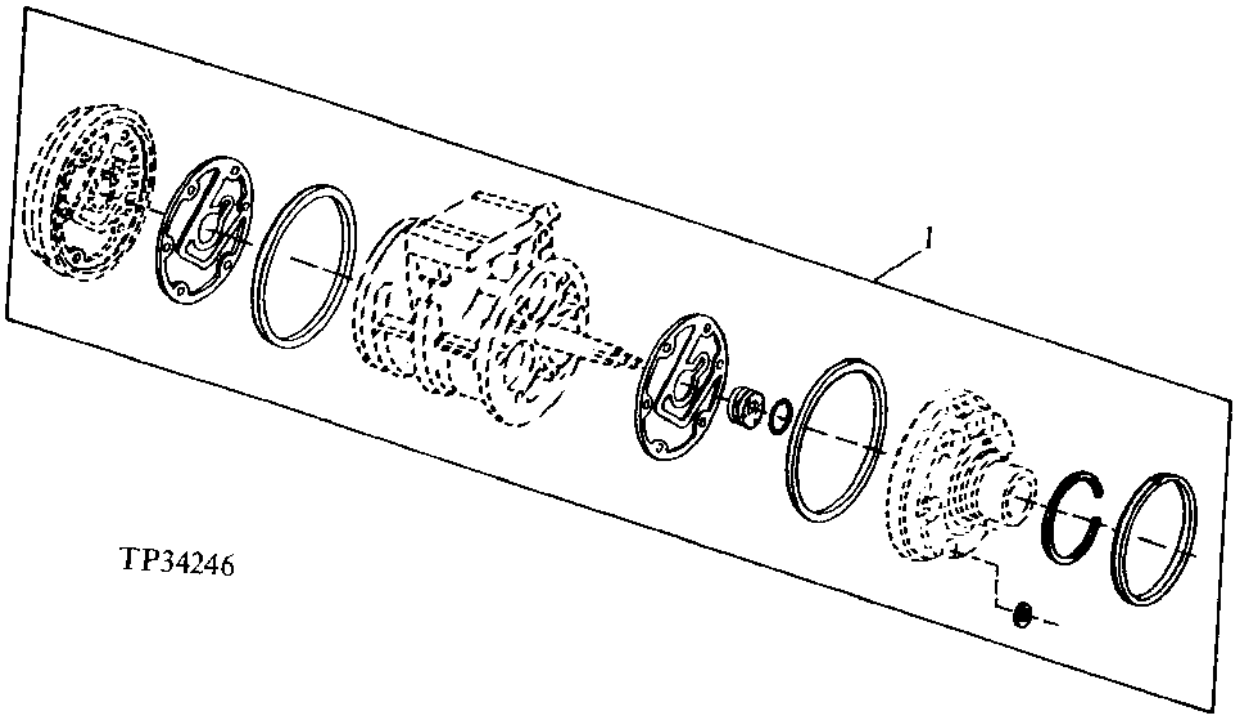

KEY	PART NO.	PART NAME	QTY	SERIAL NO.	REMARKS
1	RE52509	SEAL KIT	1		

COMPRESSOR HARDWARE KIT
(R134A REFRIGERANT)
(SERIAL NO. 830205-)

TP53974 -UN-12OCT96

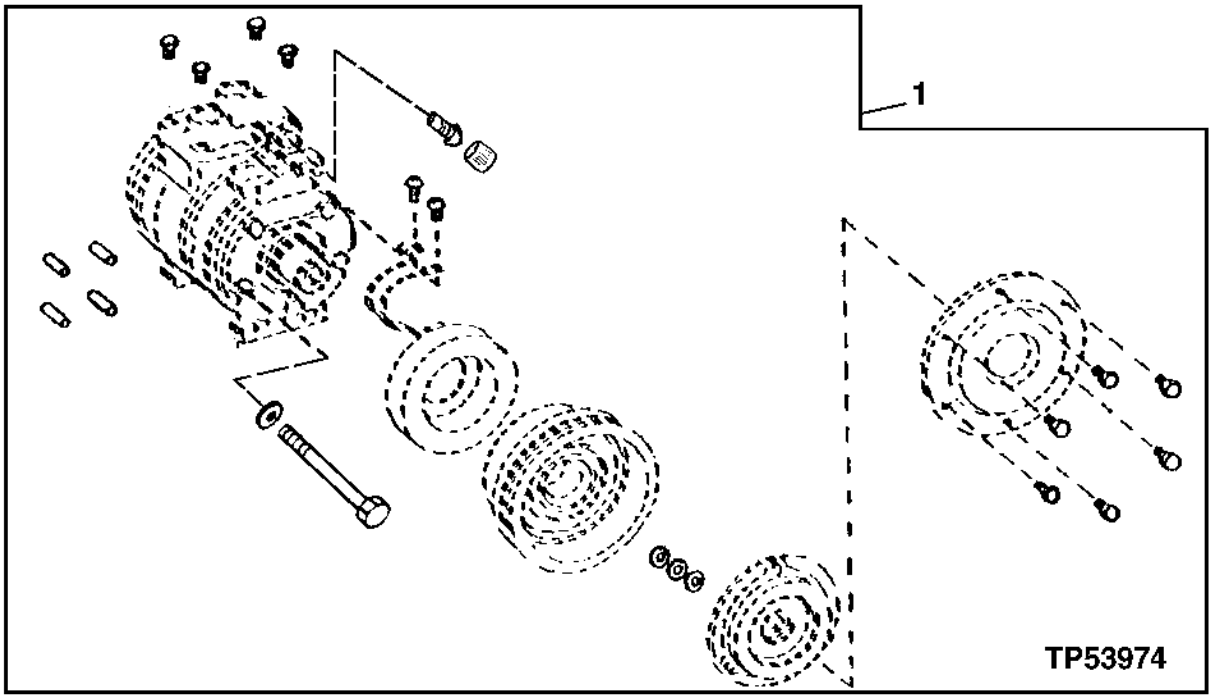

KEY	PART NO.	PART NAME	QTY	SERIAL NO.	REMARKS
1	RE52507	KIT	1		

HOOD AND ENGINE SIDE SHIELDS

TP52915 -UN-13MAR97

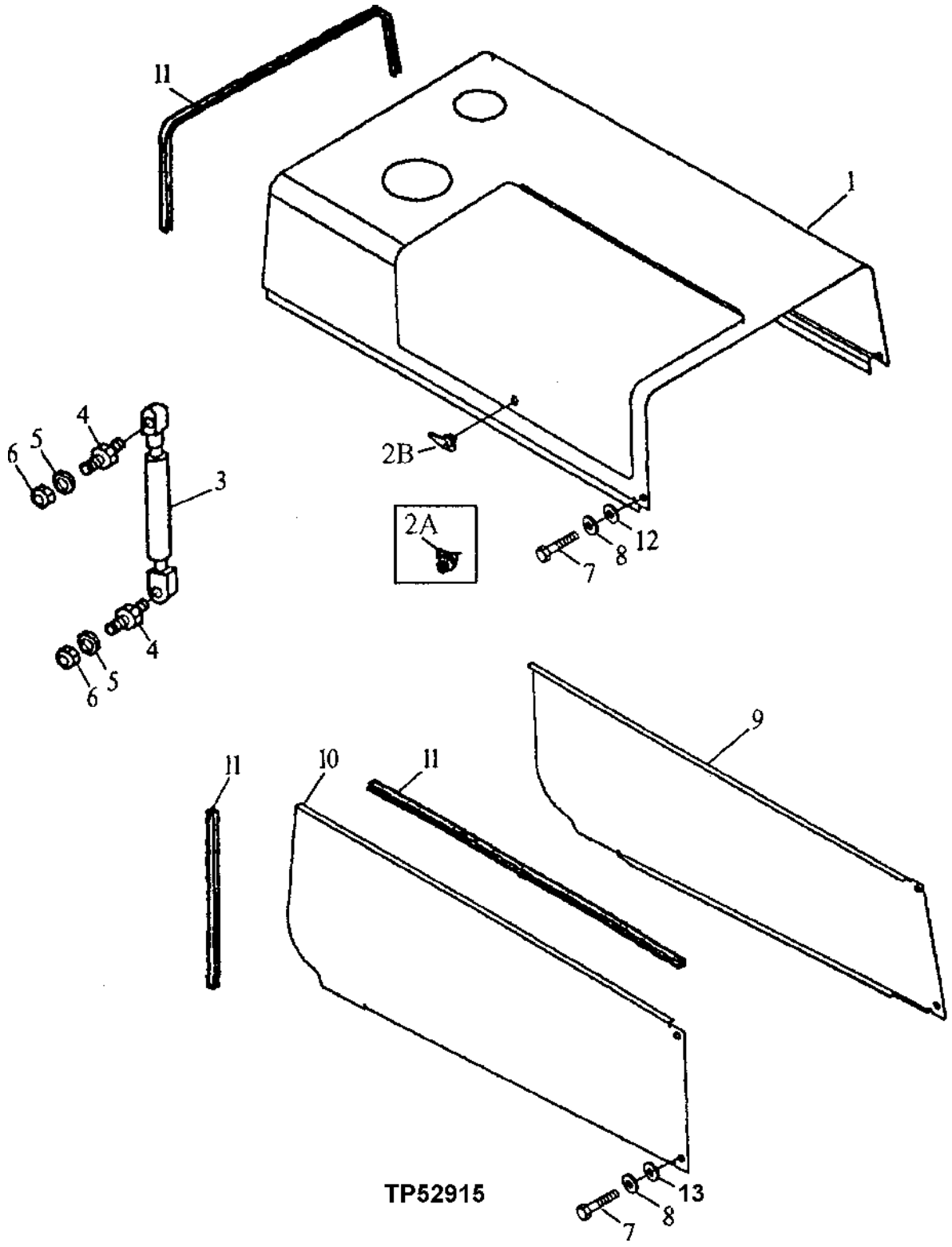

HOOD AND ENGINE SIDE SHIELDS

KEY	PART NO.	PART NAME	QTY	SERIAL NO.	REMARKS
1	AT151776	HOOD	1	-796896	(SUB AT166443 AND AT171397)
	AT166443	HOOD	1	796897-	
2A	AT151812	LOCK	1	-796896	CAM CYLINDER
	AT145929	KEY	1		(SET OF TWO KEYS)
2B	AT171397	LATCH	1	796897-	(SUB FOR AT166408)
	AT145929	KEY	1		(SET OF TWO KEYS)
3	AT151991	GAS OPERATED CYLINDER	1		GAS SPRING
4	T142651	BALL STUD	2		
5	24H1136	WASHER	2		11/32" X 11/16" X 0.065"
6	14H785	NUT	2		5/16"
7	19M7938	CAP SCREW	6		M10 X 20
8	24M7296	WASHER	6		10.500 X 30 X 2.500 MM
9	T141527	SHIELD	1		LEFT SIDE
10	T141526	SHIELD	1		RIGHT SIDE
11	T61798	ISOLATOR	AR		(50 FT) (CUT TO LENGTH)
12	T145936	WASHER	2		0.390" X 1.260" X 0.062", NYLON
13	T154240	WASHER	4		

COWL COVER

TP46417 -UN-02DEC94

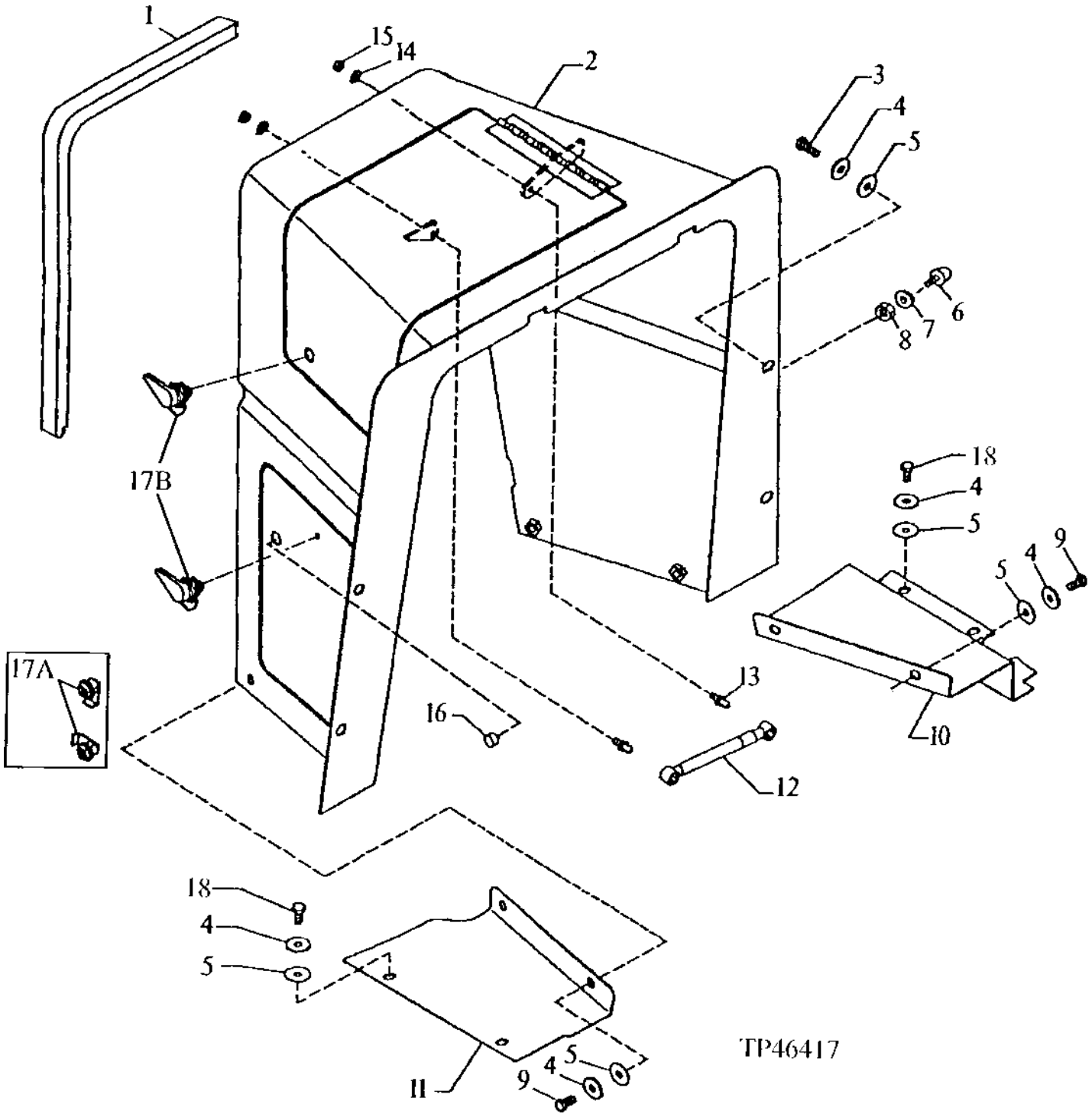

COWL COVER

KEY	PART NO.	PART NAME	QTY	SERIAL NO.	REMARKS
1	T142819	ISOLATOR	AR		
2	AT148507	COVER	1	-796896	(SUB AT166403 AND AT171397)
	AT166403	COVER	1	796897-	
3	19M7402	CAP SCREW	4		M10 X 25
4	24M7296	WASHER	12		10.500 X 30 X 2.500 MM
5	T145936	WASHER	12		0.390" X 1.260" X 0.062"
6	AT36635	BUMPER	1		
7	24H1136	WASHER	1		11/32" X 11/16" X 0.065"
8	14H650	NUT	1		5/16"
9	19M7938	CAP SCREW	4		M10 X 20, (SUB FOR 19M7938)
10	T142633	PLATE	1		LEFT
11	T142635	PLATE	1		RIGHT
12	AT159756	CYLINDER	1		GAS SPRING
13	T142651	BALL STUD	2		
14	24H1136	WASHER	2		11/32" X 11/16" X 0.065"
15	14H785	NUT	2		5/16"
16	M68997	GROMMET	1		
17A	AT151812	LOCK	2	-796896	CAM CYLINDER
	AT145929	KEY	1		(SET OF TWO KEYS)
17B	AT171397	LATCH	2	796897-	(SUB FOR AT166408)
	AT145929	KEY	1		(SET OF TWO KEYS)
18	19M7402	CAP SCREW	4		M10 X 25

BATTERY ENCLOSURE

TP42377 -UN-01JAN94

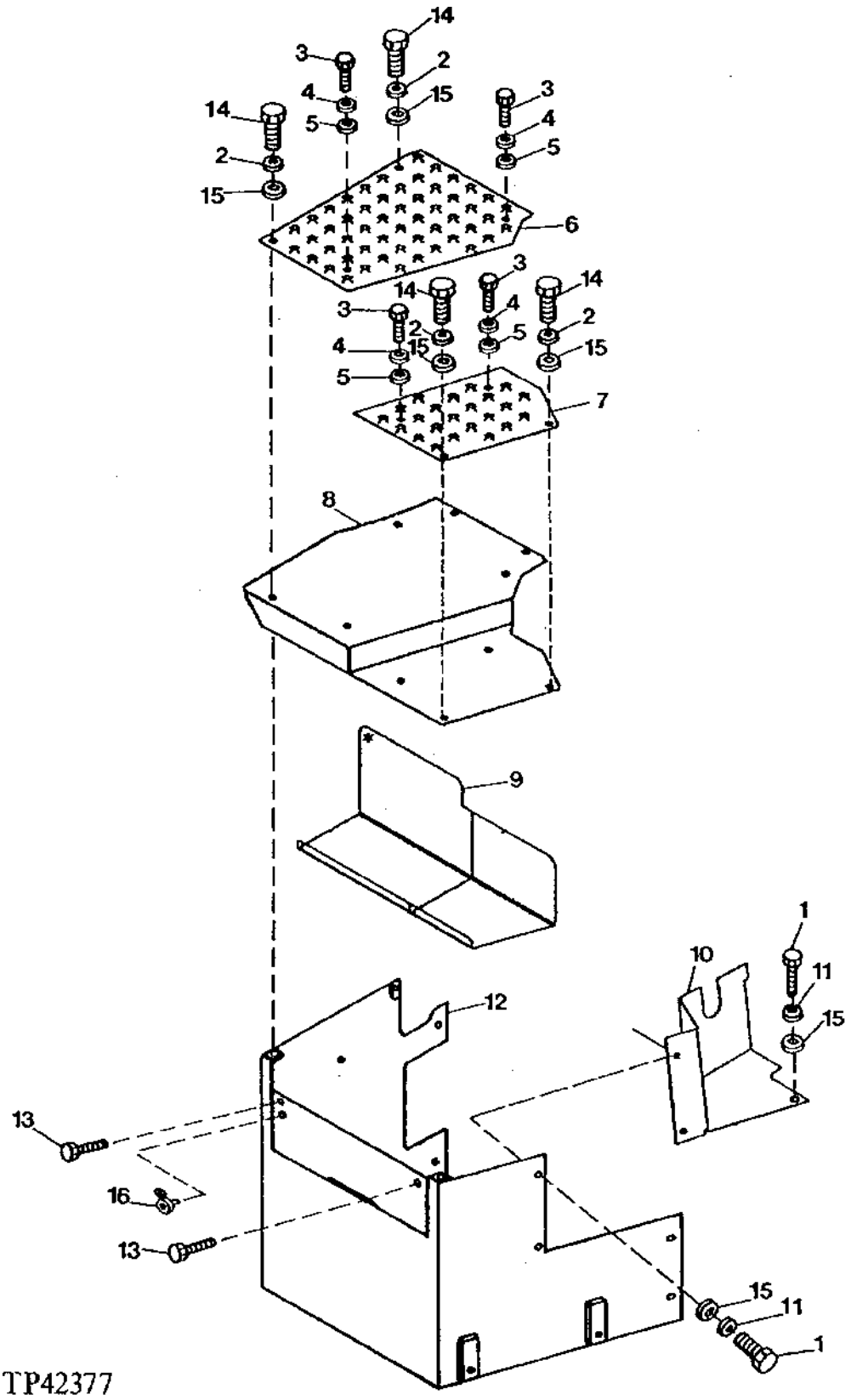

BATTERY ENCLOSURE

KEY	PART NO.	PART NAME	QTY	SERIAL NO.	REMARKS
1	19M7938	CAP SCREW	5		M10 X 20
2	24M7296	WASHER	2		10.500 X 30 X 2.500 MM
3	03M7183	BOLT	4		M8 X 16
4	24M7207	WASHER	4		8.400 X 24 X 2 MM
5	14M7273	NUT	4		M8
6	T145798	MAT	1		
7	T145289	MAT	1		
8	AT157169	COVER	1		
9	T145406	TRAY	1		
10	AT159819	SHIELD	1		
11	24M7296	WASHER	7		10.500 X 30 X 2.500 MM
12	AT157165	BATTERY BOX	1		
13	M68997	GROMMET	2		
14	19M7938	CAP SCREW	4		M10 X 20
15	T145936	WASHER	5		0.390" X 1.260" X 0.062"
16	AT151812	LOCK	1		

GRILLE AND GRILLE FRAME

TP42840 -UN-01JAN94

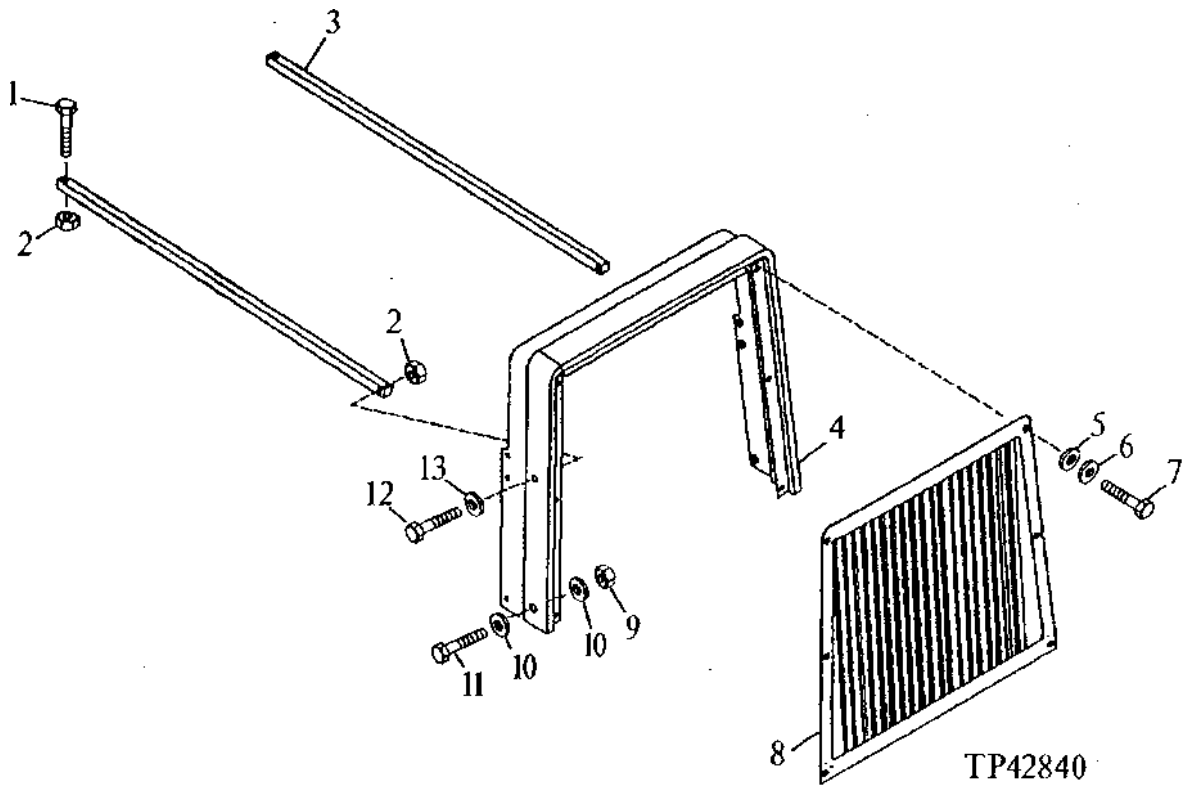

KEY	PART NO.	PART NAME	QTY	SERIAL NO.	REMARKS
1	19M7361	CAP SCREW	2		M12 X 50
2	14M7275	NUT	4		M12
3	T141384	BAR	2		
4	AT151660	FRAME	1		
5	T145936	WASHER	6		0.390" X 1.260" X 0.062"
6	24M7296	WASHER	6		10.500 X 30 X 2.500 MM
7	19M7402	CAP SCREW	6		M10 X 25
8	AT160652	SCREEN	1		
9	14M7276	NUT	2		M16
10	24M7241	WASHER	4		17 X 34 X 4 MM
11	19M7409	CAP SCREW	2		M16 X 50
12	19M7363	CAP SCREW	2		M12 X 60
13	T29342	WASHER	2		17/32" X 1-1/4" X 0.180"

FENDERS

TP44055 -UN-01JAN94

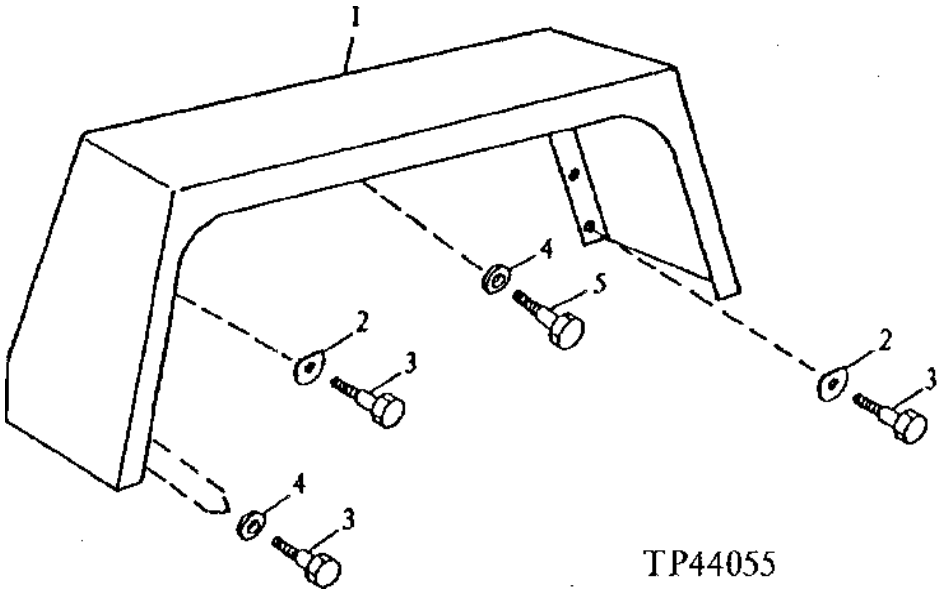

KEY	PART NO.	PART NAME	QTY	SERIAL NO.	REMARKS
1	.....	FENDER	1		RIGHT OUTER T146009 NO LONGER AVAILABLE, (SUB T158623, T158624, (24) 24M7100 AND (24) 19M7933)
	.....	FENDER	1		LEFT OUTER T146010 NO LONGER AVAILABLE, (SUB T158623, T158624, (24) 24M7100, (24) 19M7933)
2	24M7178	WASHER	6		10.500 X 30 X 2.500 MM, (SUB FOR T141798, THIS APPLICATION)
3	T151864	SCREW	8		(SUB FOR T133289)
4	24H1122	WASHER	6		3/8" X 7/8" X 0.083"
5	T151863	BOLT	4		(SUB FOR T151863)

REPLACEMENT FENDERS

TP50487 -UN-21SEP96

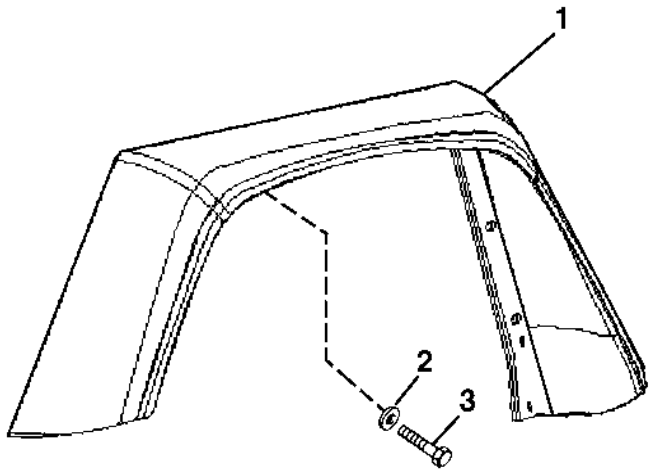

TP50487

KEY	PART NO.	PART NAME	QTY	SERIAL NO.	REMARKS
1	T158623	FENDER	1		RIGHT OUTER
	T158624	FENDER	1		LEFT OUTER
2	24M7100	WASHER	24		6.600 X 22 X 2 MM
3	19M7933	CAP SCREW	24		M6 X 25

FENDERS EXTENSION

TP46362 -UN-25OCT94

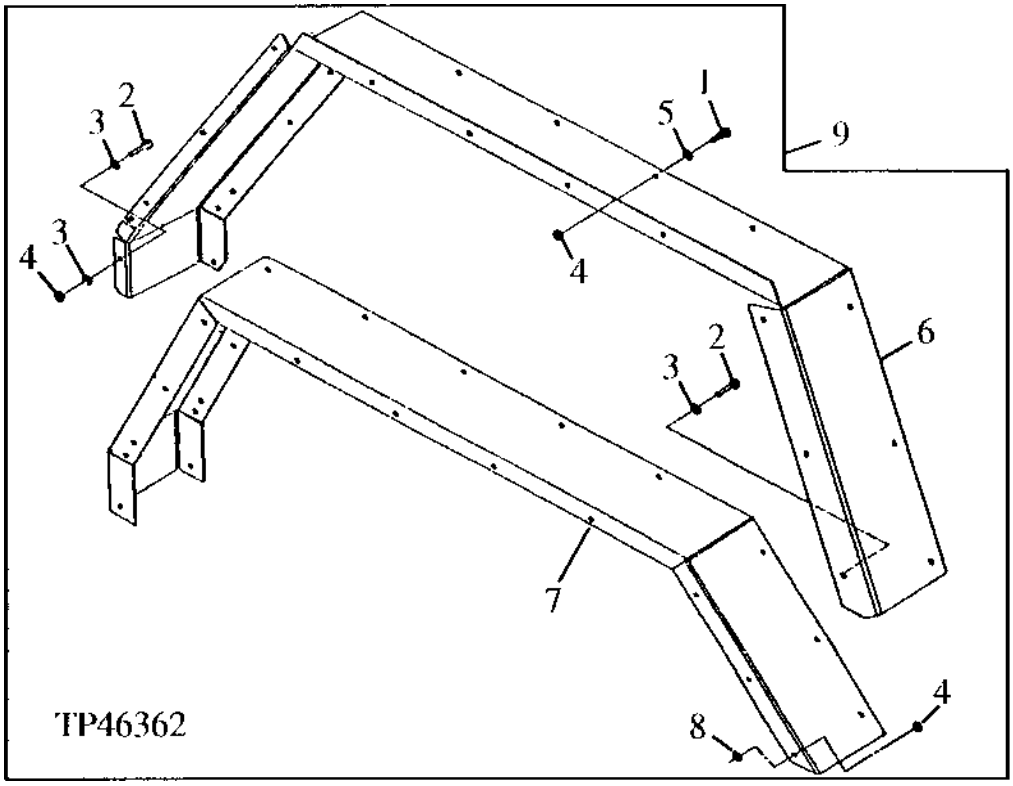

KEY	PART NO.	PART NAME	QTY	SERIAL NO.	REMARKS
1	T151864	SCREW	AR		(SUB FOR T133289)
	24H1682	WASHER	AR		13/32" X 7/8" X 0.120"
2	19M7933	CAP SCREW	24		
3	24H1287	WASHER	25		
4	14M7165	LOCK NUT	25		
5	24H1305	WASHER	8		
6	.....	EXTENSION	1		
7	.....	EXTENSION	1		
8	24H1305	WASHER	16	803549-	
9	**AT161376**	**FENDER**	**1**		**FENDER EXTENSIONS ARE NOT RECOMMENDED FOR USE WITH THE 20.5 X 25 L2 OR 21 L X 28 R4 SIZE TIRES DUE TO INTERFERENCE:**

**RADIO, HARNESS, AND SPEAKERS
(WITH CAB)**

TP58176 -UN-25FEB00

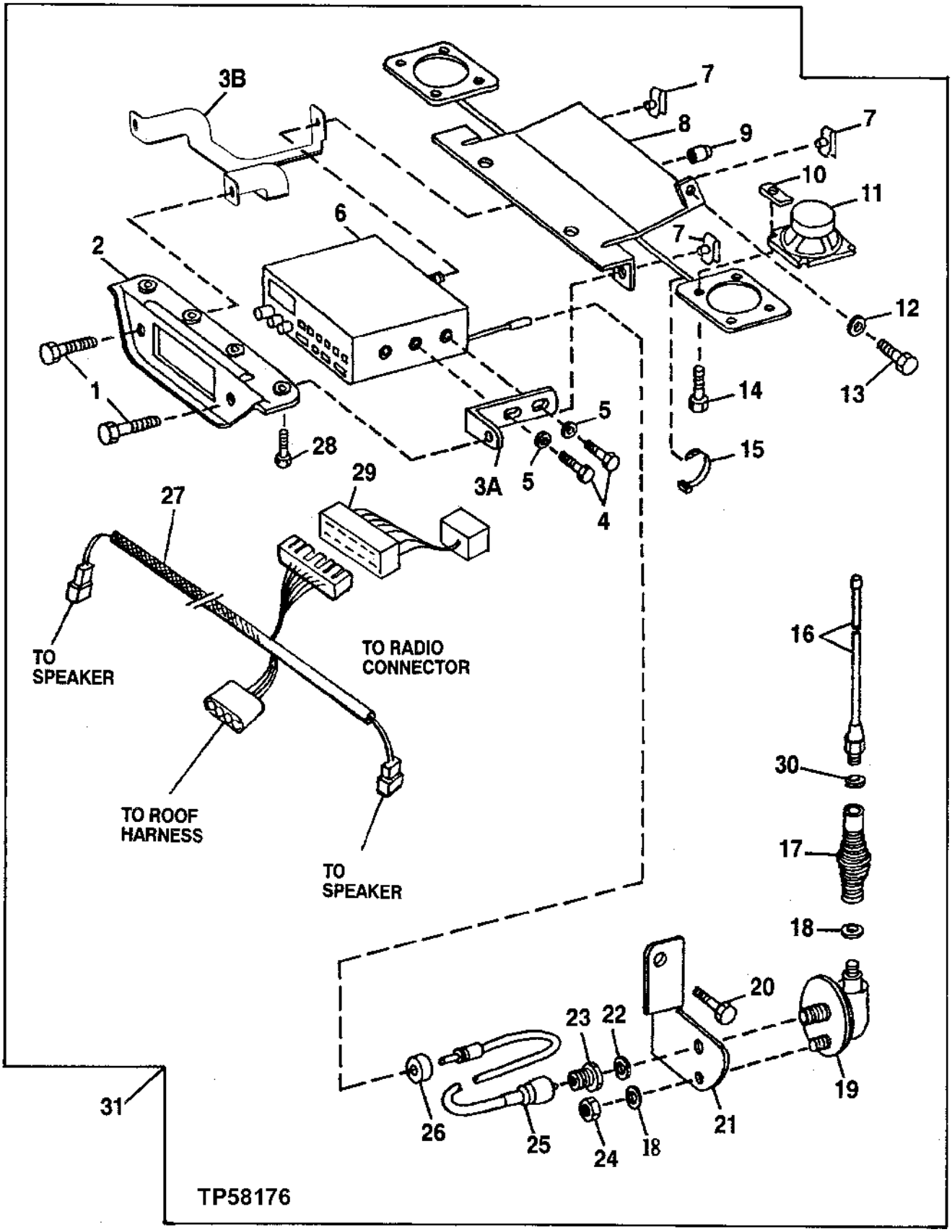

RADIO, HARNESS, AND SPEAKERS
(WITH CAB)

KEY	PART NO.	PART NAME	QTY	SERIAL NO.	REMARKS
1	T133674	SELF-LOCKING SCREW	2		
2	T142250	PANEL	1		
3A	T142249	ANGLE	2	-884161	
3B	T184860	BRACKET	1	884162-	
4	21M7265	SCREW	4	-884161	M5 X 12
5	24H1283	WASHER	4	-884161	7/32" X 1/2" X 0.049"
6	.....	RADIO	1	-884161	(AT148348 NO LONGER AVAILABLE) (SUB AT192754) (ALSO ORDER T184860 AND AT191243)
	AT192754	RADIO	1	884162-	AM/FM STEREO, (SUB FOR AH167570, THIS APPLICATION)
7	M84972	NUT	10		
8	AT151112	PLATE	1		RADIO/SPEAKER MOUNTING
9	T142434	BUSHING	1		
10	BP13712	NUT	8		1/4"
11	R99016	SPEAKER	2		RADIO
12	24M7100	WASHER	1		6.600 X 22 X 2 MM, (SUB FOR 24M7139)
13	19M7933	CAP SCREW	1		M6 X 25
14	19H1227	CAP SCREW	8		1/4" X 1/2"
15	R44302	TIE BAND	4		
16	AR104516	ANTENNA	1		
17	AR104518	SPRING	1		
18	12H302	LOCK WASHER	2		1/4"
19	RE61648	BASE	1		(SUB FOR AR104517)
20	19M7938	CAP SCREW	1		M10 X 20
21	T140598	BRACKET	1		
22	12H292	LOCK WASHER	1		1/2"
23	R76695	NUT	1		
24	14H786	NUT	1		1/4"
25	AT151111	ANTENNA CABLE	1		
26	T74952	GROMMET	1		
27	AT150707	WIRING HARNESS	1		
28	T134895	SELF-LOCKING SCREW	7		
29	AT191243	RADIO SPEAKER WRG HARNESS	1	884162-	
30	12H310	LOCK WASHER	1		
31	**AT178643**	**RADIO**	**1**		**FOR USE WITH CAB ONLY, (SUB FOR AT157285)**

INTERIOR REAR VIEW MIRROR

TP57824 -UN-08JAN98

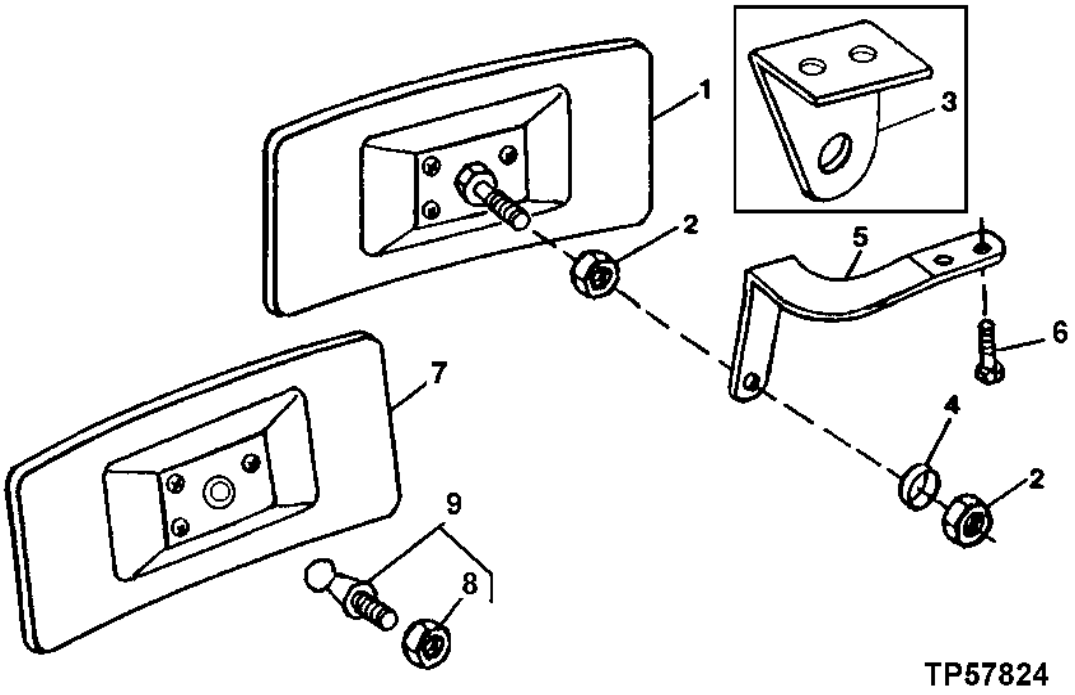

KEY	PART NO.	PART NAME	QTY	SERIAL NO.	REMARKS
1	AT186760	REAR VIEW MIRROR	1		(SUB FOR RE52660)
2	14H785	NUT	2		5/16"
3	T135000	BRACKET	1	-826474	CAB
	T135000	BRACKET	1	-826425	ROPS
4	24H1136	WASHER	1		11/32" X 11/16" X 0.065"
5	T135736	BRACKET	1		
6	T134895	SELF-LOCKING SCREW	1		M6 X 25, WITH RADIO
7	AT137925	REAR VIEW MIRROR	1		CORROSION RESISTANT
8	AT137926	BALL STUD	1		
9	.....	NUT	1		M8

OUTSIDE MIRROR FOR CAB OR CANOPY

TP50511 -UN-24OCT96

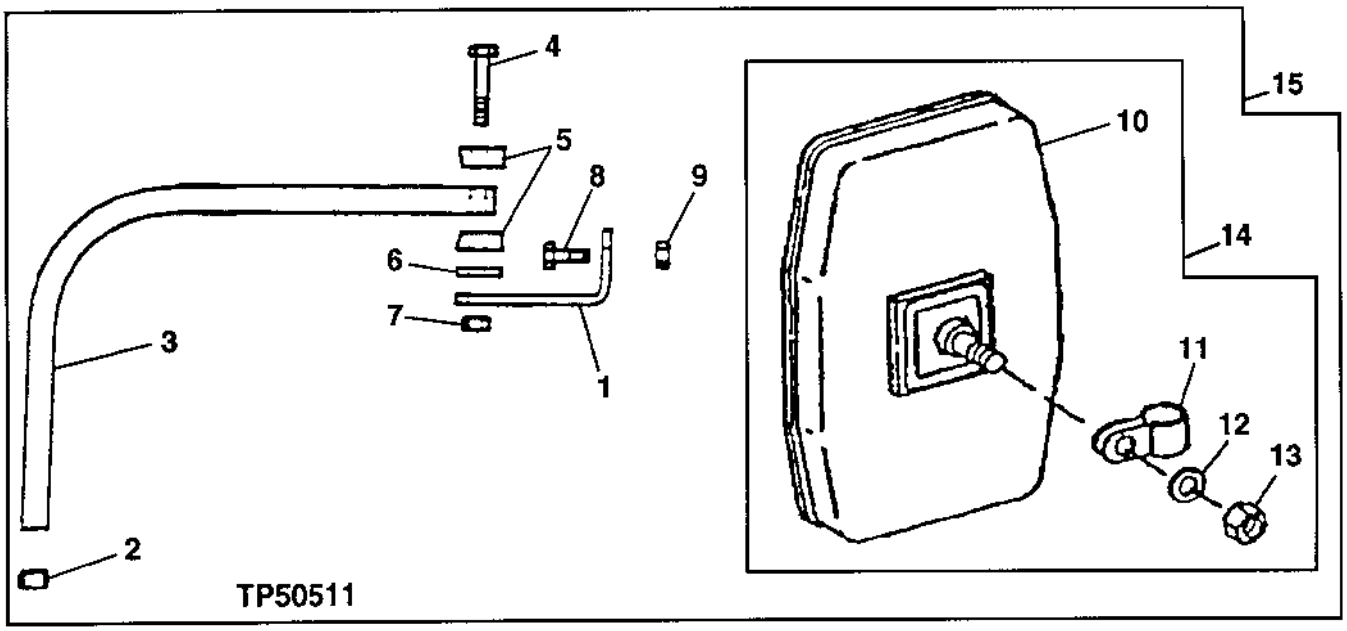

KEY	PART NO.	PART NAME	QTY	SERIAL NO.	REMARKS
1	T148818	BRACKET	2		
2	T128437	CAP	2		
3	T148817	TUBE	2		
4	T125724	CAP SCREW	2		
5	T115030	CLAMP	4		
6	T60920	WASHER	2		
7	14H732	NUT	2		3/8"
8	19M7662	CAP SCREW	2		M10 X 30, (RIGHT SIDE ONLY)
	19M7938	CAP SCREW	2		M10 X 20, (LEFT SIDE ONLY)
9	14M7274	NUT	2		M10
10	AT157226	REAR VIEW MIRROR	1		
11	T119564	CLAMP	1		
12	24M7243	WASHER	2		25.400 X 50 X 6 MM
13	T11234	LOCK NUT	1		
14	AT103919	REAR VIEW MIRROR	2		
15	AT164701	REAR VIEW MIRROR	1		

MEMORANDA

HORN

TP27909 -UN-01JAN94

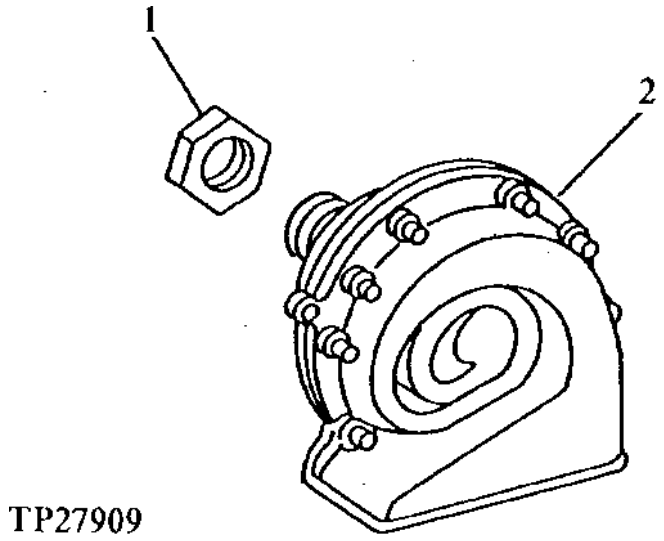

KEY	PART NO.	PART NAME	QTY	SERIAL NO.	REMARKS
1	14M7272	NUT	1		(SUB FOR R11278, THIS APPLICATION)
2	AT180293	KIT	1		INCLUDES HORN, BRACKET AND HARDWARE, (SUB FOR R64700, THIS APPLICATION)

BACK-UP ALARM SYSTEM

TP42854 -UN-01JAN94

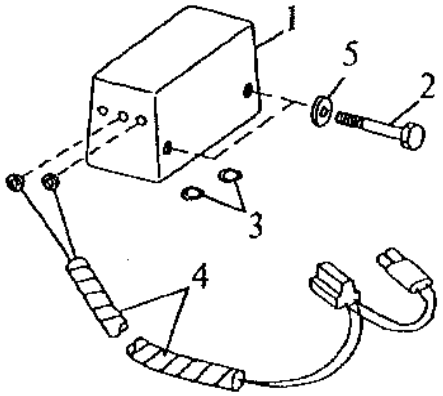

TP42854

KEY	PART NO.	PART NAME	QTY	SERIAL NO.	REMARKS
1	AT120461	TRAVEL WARNING ALARM	1		REVERSE WARNING
2	37H116	SCREW	2		
3	12M7084	LOCK WASHER	2		4.300 MM
4	AT156689	WIRING HARNESS	1		
5	24H1287	WASHER	2		9/32" X 5/8" X 0.065"

TOOLBOX WITH TRAY AND BRACKET

TP29707 -UN-01JAN94

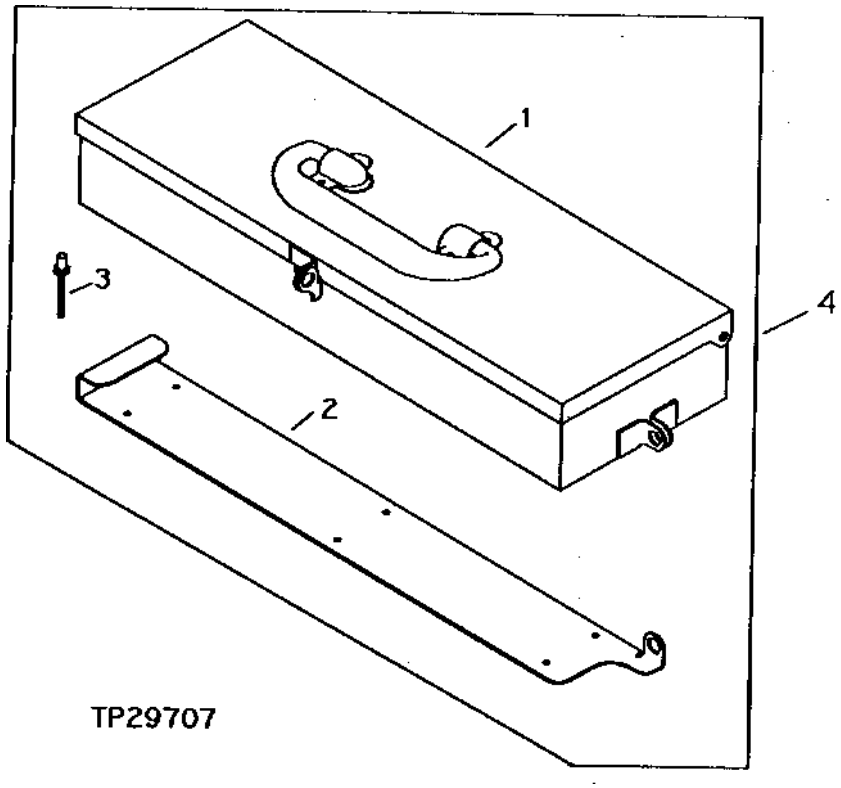

KEY	PART NO.	PART NAME	QTY	SERIAL NO.	REMARKS
1	AT145589	TOOLBOX	1		
2	AT145554	BRACKET	1		
3	M86758	RIVET	6		
4	**AT141401**	**TOOLBOX**	**1**		

**MANUAL HOLDER
(WITH ROPS)**

TP20189 -UN-01JAN94

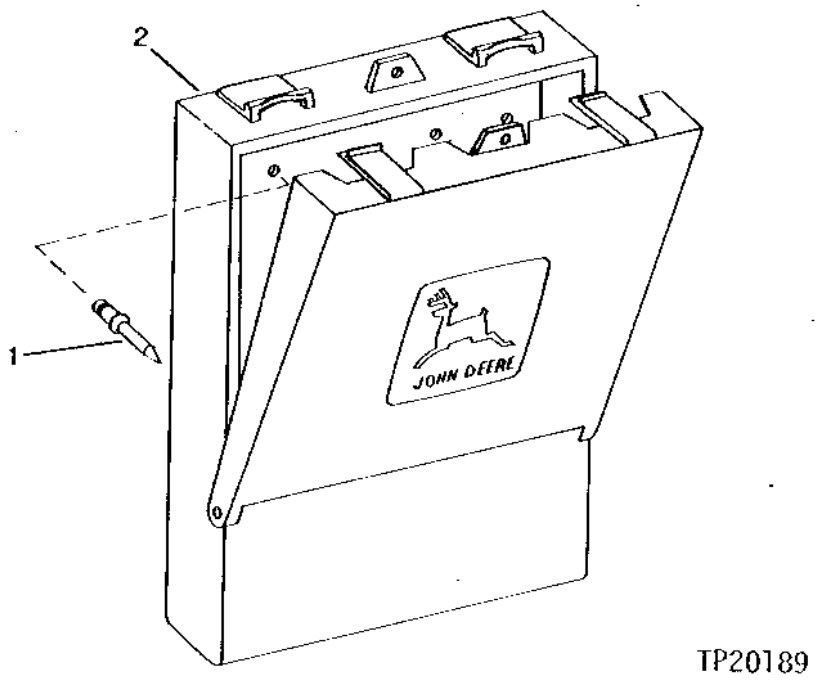

KEY	PART NO.	PART NAME	QTY	SERIAL NO.	REMARKS
1	R55326	RIVET	4		
2	RE14246	HOLDER	1		

HYDRAULIC PUMP SOLENOID VALVE

TP7669 -UN-29SEP94

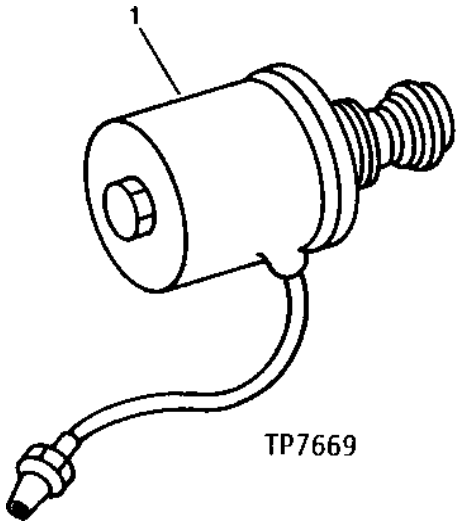

KEY	PART NO.	PART NAME	QTY	SERIAL NO.	REMARKS
1	RE32529	SOLENOID VALVE	1		

HYDRAULIC PUMP DRIVE

TP4926 -UN-29SEP94

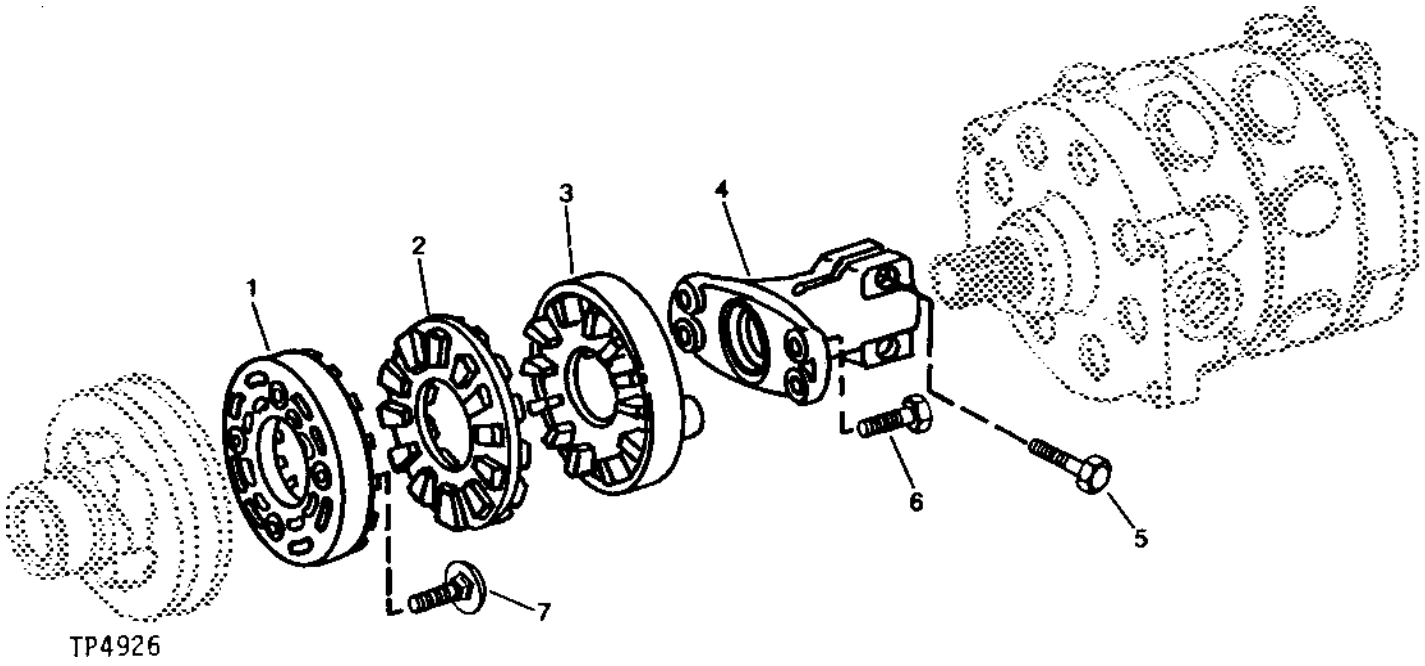

KEY	PART NO.	PART NAME	QTY	SERIAL NO.	REMARKS
1	L34569	COUPLING	1		
2	R78202	CUSHION	1		
3	L34432	COUPLING	1	-830204	
	T159987	COUPLING	1	830205-	
4	T69408	DRIVE SHAFT	1	-830204	
	T158547	SHAFT	1	830205-	
5	19M7493	CAP SCREW	2		M12 X 40
6	19H3239	CAP SCREW	4		3/8" X 1-1/4"
7	L34575	SCREW	4		3/8" X 1.142"

HYDRAULIC PUMP ASSEMBLY

RXP021069 -UN-12JAN95

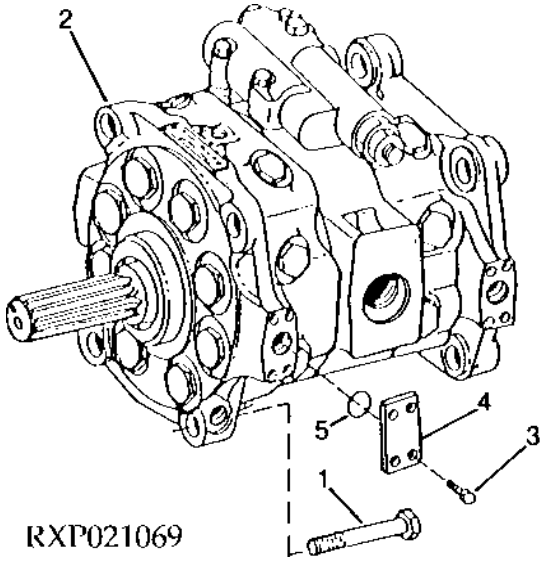

KEY	PART NO.	PART NAME	QTY	SERIAL NO.	REMARKS
1	19M7496	CAP SCREW	2		M12 X 45
2	RE36288	HYDRAULIC PUMP	1		104 CM3 (6 IN.3) (3000 SERIES PUMP)
3	19H3483	CAP SCREW	8		3/8" X 1-1/8"
4	R82192	COVER	2		
5	U12037	O-RING	2		

HYDRAULIC PUMP
104 CM3 (6 IN.3)

RXP6950 -UN-01JAN94

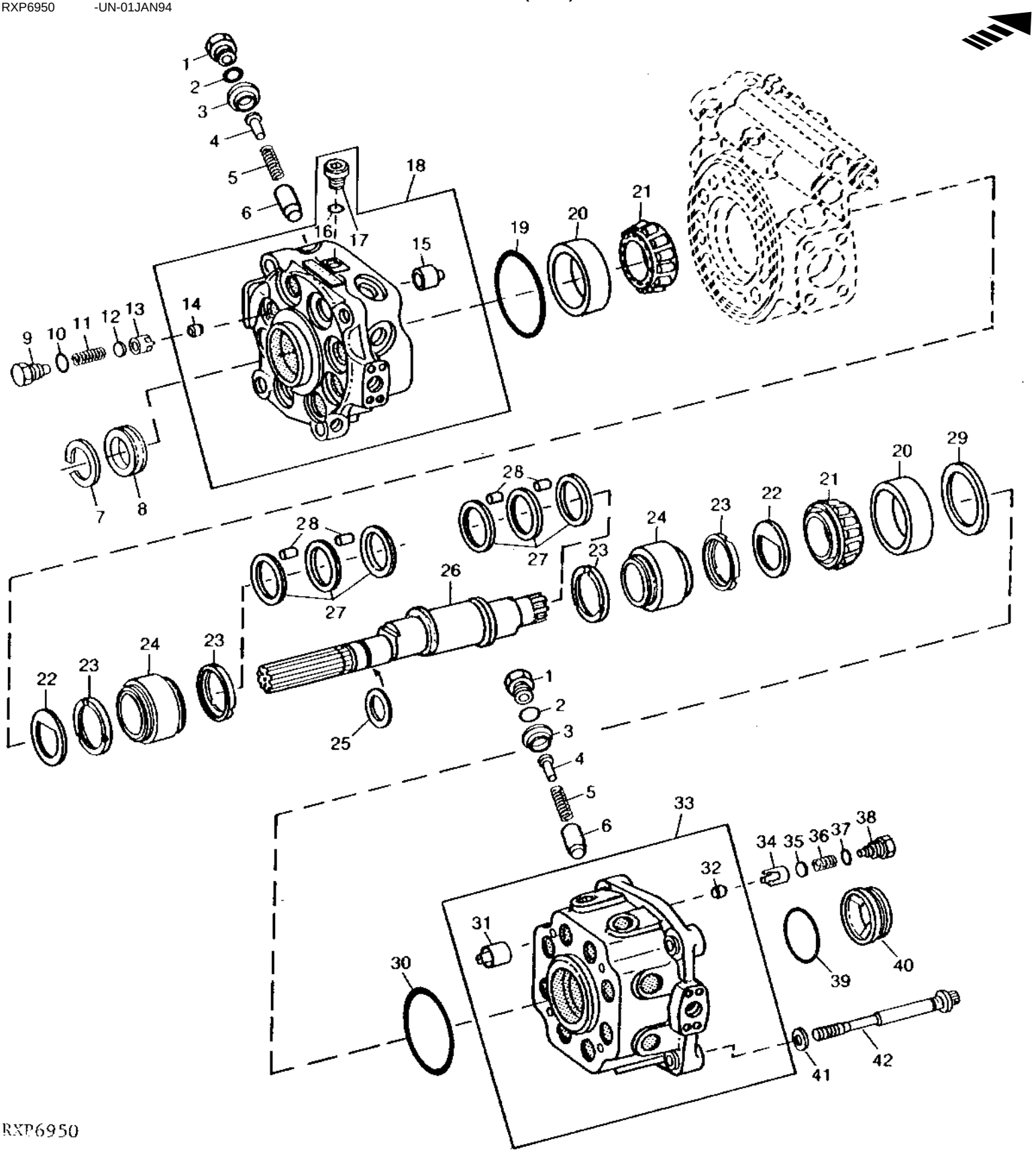

RXP6950

HYDRAULIC PUMP
104 CM3 (6 IN.3)

KEY	PART NO.	PART NAME	QTY	SERIAL NO.	REMARKS
1	R89563	FITTING PLUG	16		
2	R47154	O-RING	16		
3	RE17525	RETAINER	2		(SET OF 8)
4	R81804	PIN	16		
5	RE17524	SPRING	2		(SET OF 8)
6	R80661	PISTON	16		
7	R26137	SNAP RING	1		
8	RE28790	SEAL	1		
9	R75683	FITTING	16		
10	R56751	O-RING	16		
11	R81811	SPRING	16		
12	R49297	DISK	16		
13	R48738	GUIDE	16		
14	R105584	SEAT	8		
15	RE16600	VALVE	8		(INLET)
16	R26375	O-RING	1		
17	R33138	FITTING	1		
18	RE14740	HOUSING	1		(MARKED R75645)
19	U10746	O-RING	1		
20	JD8223	BEARING CUP	2		
21	JD8192	BEARING CONE	2		
22	R79151	LOCK WASHER	2		
23	R72507	THRUST WASHER	4		
24	R80558	BEARING RACE	2		
25	R77611	RING	1		(SEALING)
26	R99941	SHAFT	1		(SUB FOR R86505) (SUB R100146)
27	R85557	WASHER	6		
28	R116713	NEEDLE ROLLER	100		
29	R27478	SHIM	AR		0.15MM (.006")
	R27479	SHIM	AR		0.25MM (.010")
30	U10746	O-RING	1		
31	RE16600	VALVE	8		
32	R105584	SEAT	8		
33	RE26264	HOUSING	1		(MARKED R86201)
34	R48738	GUIDE	8		
35	R49297	DISK	8		
36	R81811	SPRING	8		
37	R56751	O-RING	8		
38	R75683	FITTING	8		
39	R112857	O-RING	1		
40	R82115	PLUG	1		
41	R33259	O-RING	4		
42	R77378	CAP SCREW	4		
..	RE36288	HYDRAULIC PUMP	2		

HYDRAULIC PUMP STROKE CONTROL VALVE
104 CM3 (6 IN.3)

RXP6949 -UN-01JAN94

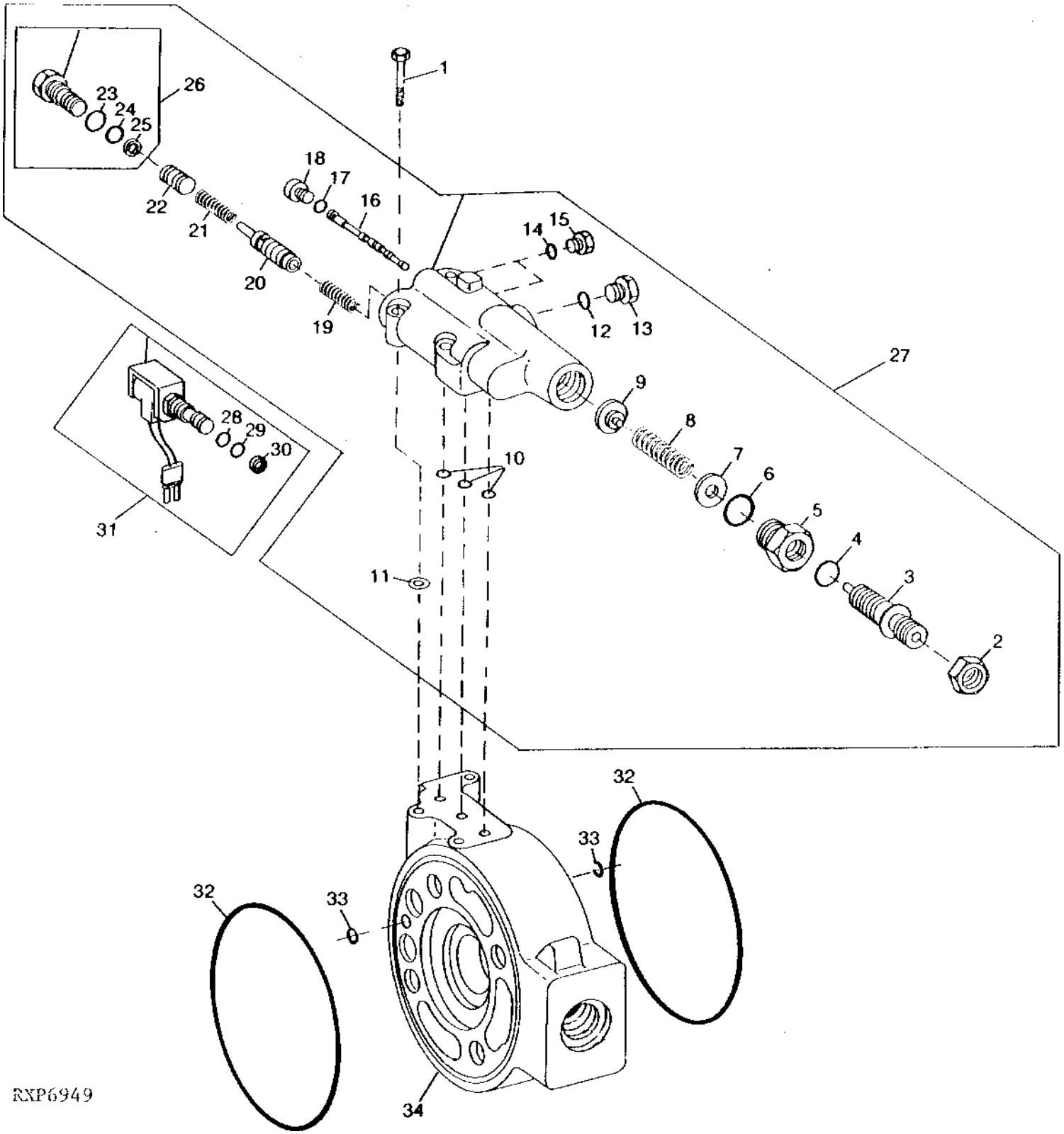

HYDRAULIC PUMP STROKE CONTROL VALVE
104 CM3 (6 IN.3)

KEY	PART NO.	PART NAME	QTY	SERIAL NO.	REMARKS
1	19M8477	CAP SCREW	3		M6 X 40
2	14H888	NUT	1		9/16"
3	RE27711	SCREW	1		
4	R26448	O-RING	1		
5	R105547	ADAPTER	1		
6	R56751	O-RING	1		
7	24M7100	WASHER	1		6.600 X 22 X 2 MM
8	R90548	SPRING	1		(BLUE)
9	R90591	GUIDE	1		
10	32246	O-RING	3		
11	R1115R	SHIM	3		
12	R26375	O-RING	1		
13	R39112	FITTING	1		
14	R26448	O-RING	2		
15	R75376	DRAIN PLUG	2		
16	.....	VALVE	1		(STROKE CONTROL) (SUB RE33525)
17	R26448	O-RING	1		
18	R90584	FITTING PLUG	1		
19	R57374	SPRING	1		
20	R109114	VALVE	1		
21	R65694	SPRING	1		
22	R106697	VALVE	1		
23	R26375	O-RING	1		
24	T40308	O-RING	1		
25	T57374	BACK-UP RING	1		
26	AR90378	PLUG	1		
27	RE33525	VALVE	1		
28	R26375	O-RING	1		
29	T40308	O-RING	1		
30	T57374	BACK-UP RING	1		
31	RE32529	SOLENOID VALVE	1		(ELECTRIC DESTROKE SOLENOID)
32	R89332	O-RING	2	-028830	
	R80612	PACKING	2	028831-	
33	32246	O-RING	2		
34	R89158	MANIFOLD	1	-028830	
	R121751	MANIFOLD	1	028831-	

HYDRAULIC PUMP AND STROKE CONTROL VALVE OVERHAUL KIT
104 CM3 (6 IN.3)

RXP6587 -UN-01JAN94

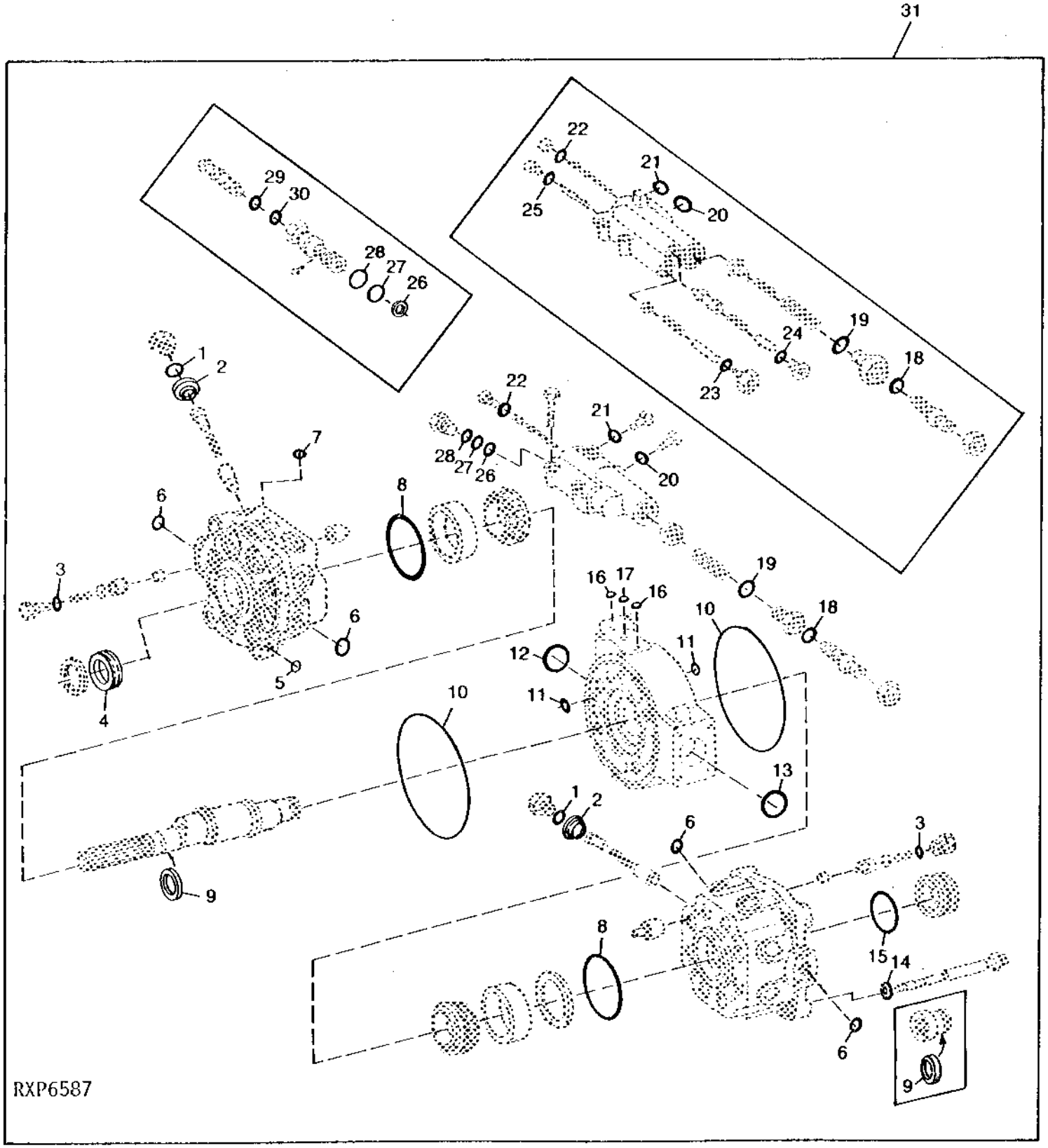

HYDRAULIC PUMP AND STROKE CONTROL VALVE OVERHAUL KIT
104 CM3 (6 IN.3)

KEY	PART NO.	PART NAME	QTY	PUMP SERIAL NO.	REMARKS
1	R47154	O-RING	16		
2	RE17525	RETAINER	2		
3	R56751	O-RING	16		
4	RE28790	SEAL	1		
5	R28782	O-RING	1		
6	U12037	O-RING	4		(OUTLET PORTS)
7	R26375	O-RING	1		
8	U10746	O-RING	2		
9	R77611	RING	2		(A) (SEALING)
10	R89332	O-RING	2	-028830	
	R80612	PACKING	2	028831-	
11	32246	O-RING	2		
12	R29936	O-RING	1		
13	R29936	O-RING	1		(A) (THREADED O-RING PORT)
	U12331	O-RING	1		(A) (FOUR BOLT FLAT-FACE PORT)
14	R33259	O-RING	4		
15	R112857	O-RING	1		
16	32246	O-RING	2		
17	32246	O-RING	1		(A) (PRESSURE COMPENSATED)
	T57247	O-RING	1		(A) (LOAD SENSE)
18	R26448	O-RING	1		
19	R56751	O-RING	1		
20	R26375	O-RING	1		
21	R26448	O-RING	2		
22	R26448	O-RING	1		
23	R26375	O-RING	1		(A) (LOAD SENSE)
24	R26448	O-RING	1		(A) (LOAD SENSE)
25	R26448	O-RING	1		(A) (LOAD SENSE)
26	T57374	BACK-UP RING	1		(A) (PRESSURE COMPENSATED)
27	T40308	O-RING	1		(A) (PRESSURE COMPENSATED)
28	R26375	O-RING	1		(A) (PRESSURE COMPENSATED)
29	R36358	BACK-UP RING	1		(A) (PRESSURE COMPENSATED)
30	T17951	O-RING	1		(A) (PRESSURE COMPENSATED)
31	RE33540	KIT	1	-028830	
	RE58304	KIT	1	028831-	

(A) UNIVERSAL KIT - APPLICATIONS WILL VARY

HYDRAULIC OIL FILTER

TP45410 -UN-01JAN94

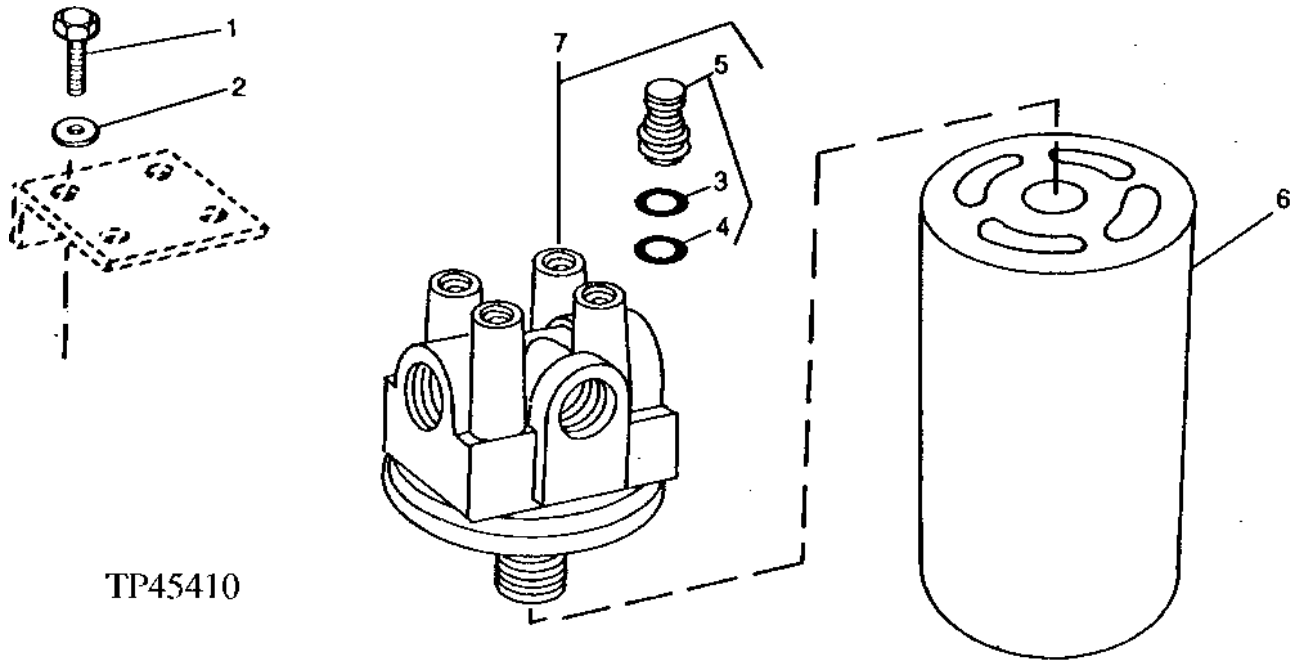

KEY	PART NO.	PART NAME	QTY	SERIAL NO.	REMARKS
1	19M7402	CAP SCREW	4		M10 X 25
2	24M7239	WASHER	4		10.700 X 21 X 2.500 MM
3	R26375	O-RING	1		
4	P46051	O-RING	1		
5	AT129419	SWITCH	1		
6	AT140315	FILTER ELEMENT	1		
7	AT144994	FILTER HEAD	1		

PRIORITY VALVE

TP42915 -UN-01JAN94

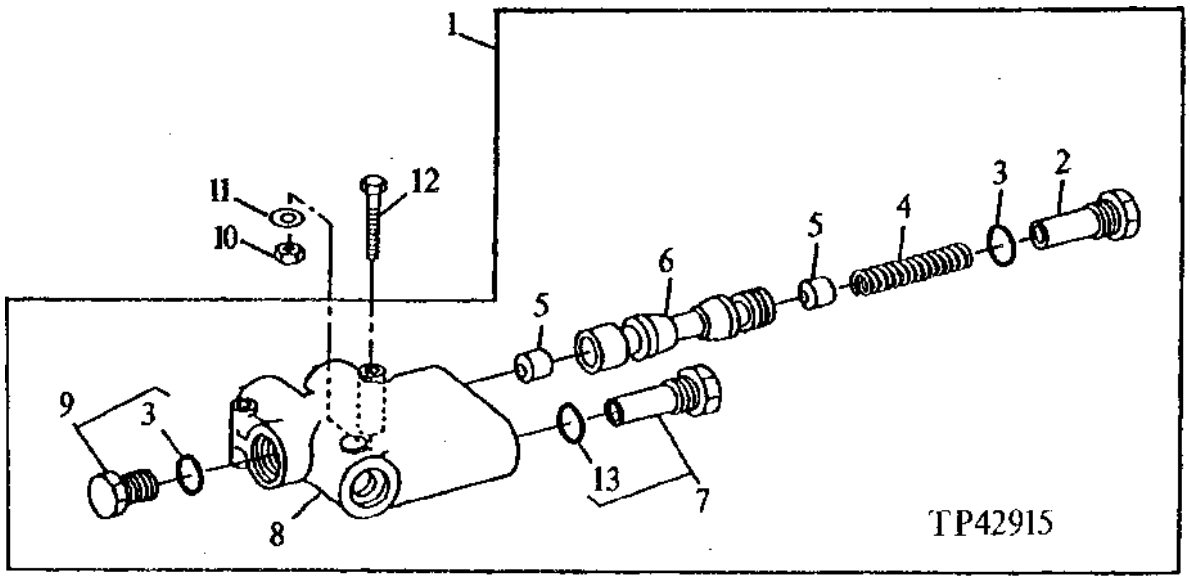

KEY	PART NO.	PART NAME	QTY	SERIAL NO.	REMARKS
1	AT160110	VALVE	1		
2	.....	FITTING	1		
3	R26906	O-RING	3		
4	T114738	COMPRESSION SPRING	1		
5	T101571	ORIFICE	2		
6	.....	SPOOL	1		
7	T101569	FITTING PLUG	1		
8	.....	HOUSING	1		
9	R39112	FITTING	1		
10	14M7273	NUT	2		
11	24M7238	WASHER	2		
12	19M8539	CAP SCREW	2		
13	R26375	O-RING	1		

CHARGE PUMP
(SERIAL NO. -830204)

TP44539 -UN-01JAN94

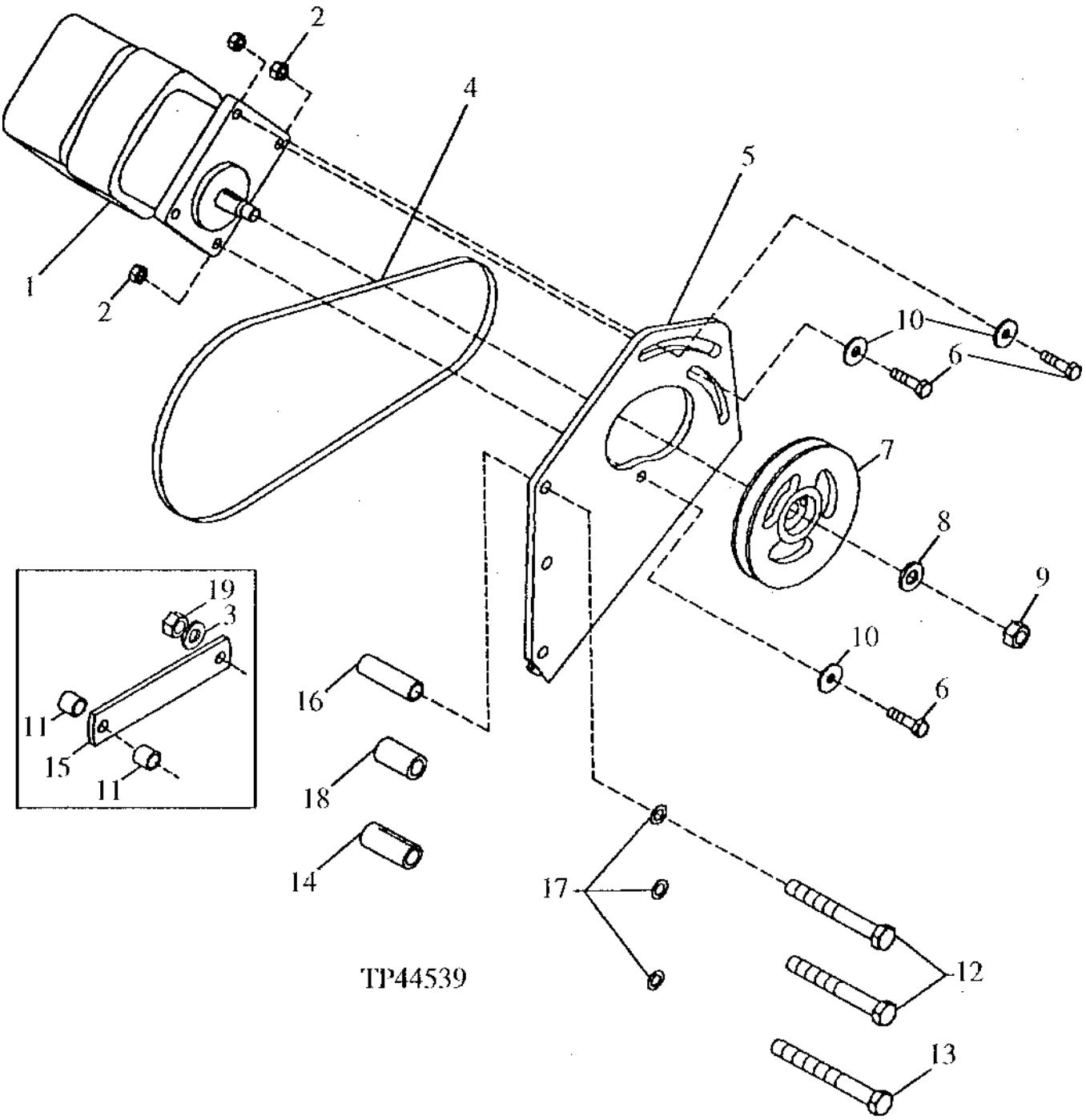

CHARGE PUMP
(SERIAL NO. -830204)

KEY	PART NO.	PART NAME	QTY	SERIAL NO.	REMARKS
1	AT161243	PUMP	1		
2	14H785	NUT	3		5/16"
3	24M7298	WASHER	1		8.400 X 25 X 2 MM
4	R82437	BELT	1		WITHOUT AIR CONDITIONING
	T148207	BELT	1		WITH AIR CONDITIONING
5	T149366	BRACKET	1		(SUB FOR T146176)
6	19H1849	CAP SCREW	2		5/16" X 1-1/4"
7	T146164	PULLEY	1		
8	24M7240	WASHER	1		13 X 25 X 3 MM
9	14M7149	NUT	1		M12
10	19H1849	CAP SCREW	3		5/16" X 1-1/4"
11	.....	BUSHING	3		(T147359 NO LONGER USED)
12	19H2228	CAP SCREW	2		3/8" X 4"
13	19H2700	CAP SCREW	1		3/8" X 4-1/2"
14	T146193	BUSHING	1		
15	.....	ADJUSTING STRAP	1		(T147360 NO LONGER USED)
16	T146194	BUSHING	1		
17	24H1306	WASHER	3		10.312 X 25.400 X 0.889 MM
18	T149377	BUSHING	1		
19	14M7274	NUT	1		M10

CHARGE PUMP
(SERIAL NO. -830204)

TP44425 -UN-01JAN94

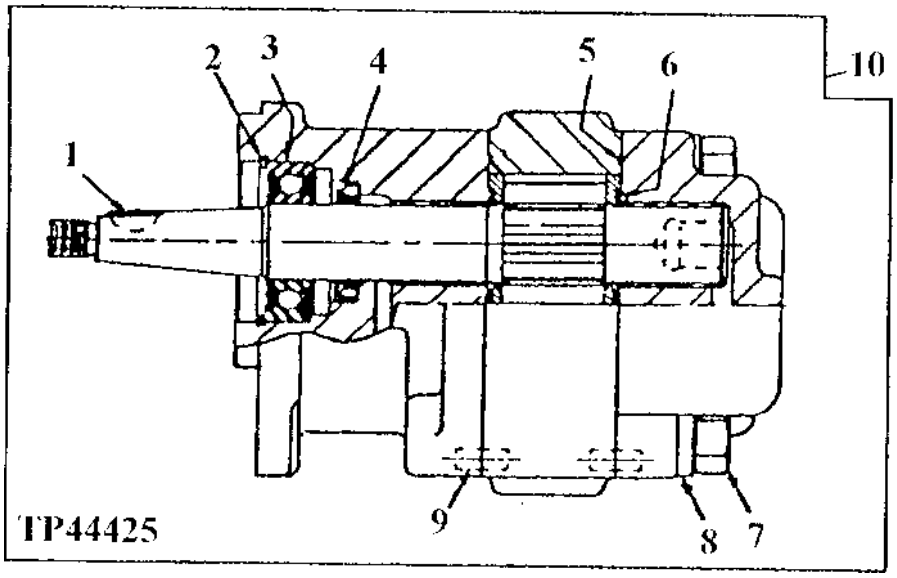

KEY	PART NO.	PART NAME	QTY	SERIAL NO.	REMARKS
1	26H72	SHAFT KEY	1		
2	R36575	SNAP RING	1		
3	AT164084	BALL BEARING	1		
4	.....	SEAL	1		(K) LIP
5	.....	SEAL	2		(K) GASKET
6	.....	SEAL	2		(K) CHANNEL
7	19H3586	CAP SCREW	4		1/2" X 4-1/4"
8	T21242	WASHER	4		17/32" X 1" X 0.120"
9	44M1072	DOWEL PIN	4		
10	AT161243	PUMP	1		
..	AT157193	SEAL KIT	1		INCLUDES ALL (K) PARTS

CHARGE PUMP
(SERIAL NO.830205-872328)

TP52927 -UN-03MAR97

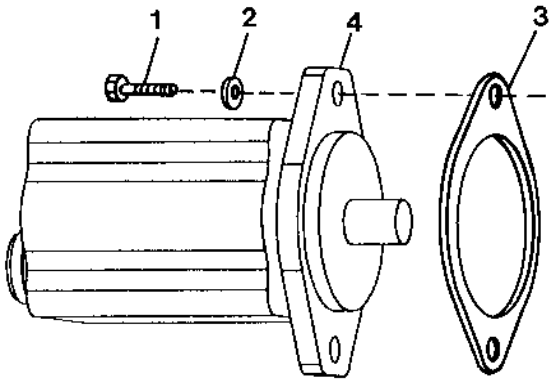

TP52927

KEY	PART NO.	PART NAME	QTY	SERIAL NO.	REMARKS
1	19M7403	CAP SCREW	2		M12 X 35
2	24M7240	WASHER	2		13 X 25 X 3 MM
3	R134465	GASKET	1		
4	AT177588	HYDRAULIC PUMP	1		
	AT180298	KIT	1		SEAL

CHARGE PUMP
(SERIAL NO.872329-)

TP57995 -UN-22JAN99

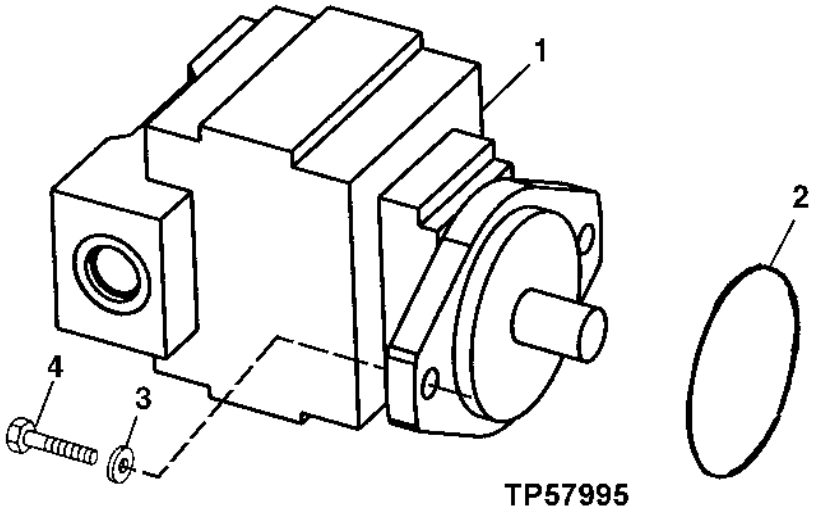

KEY	PART NO.	PART NAME	QTY	SERIAL NO.	REMARKS
1	AT179792	HYDRAULIC PUMP	1		
	AT170052	SEAL KIT	1		(P330)
2	F37030242	O-RING	1		
3	24M7240	WASHER	2		13 X 25 X 3 MM
4	19M7403	CAP SCREW	2		M12 X 35

MEMORANDA

HYDRAULIC RESERVOIR

TP57997 -UN-10FEB99

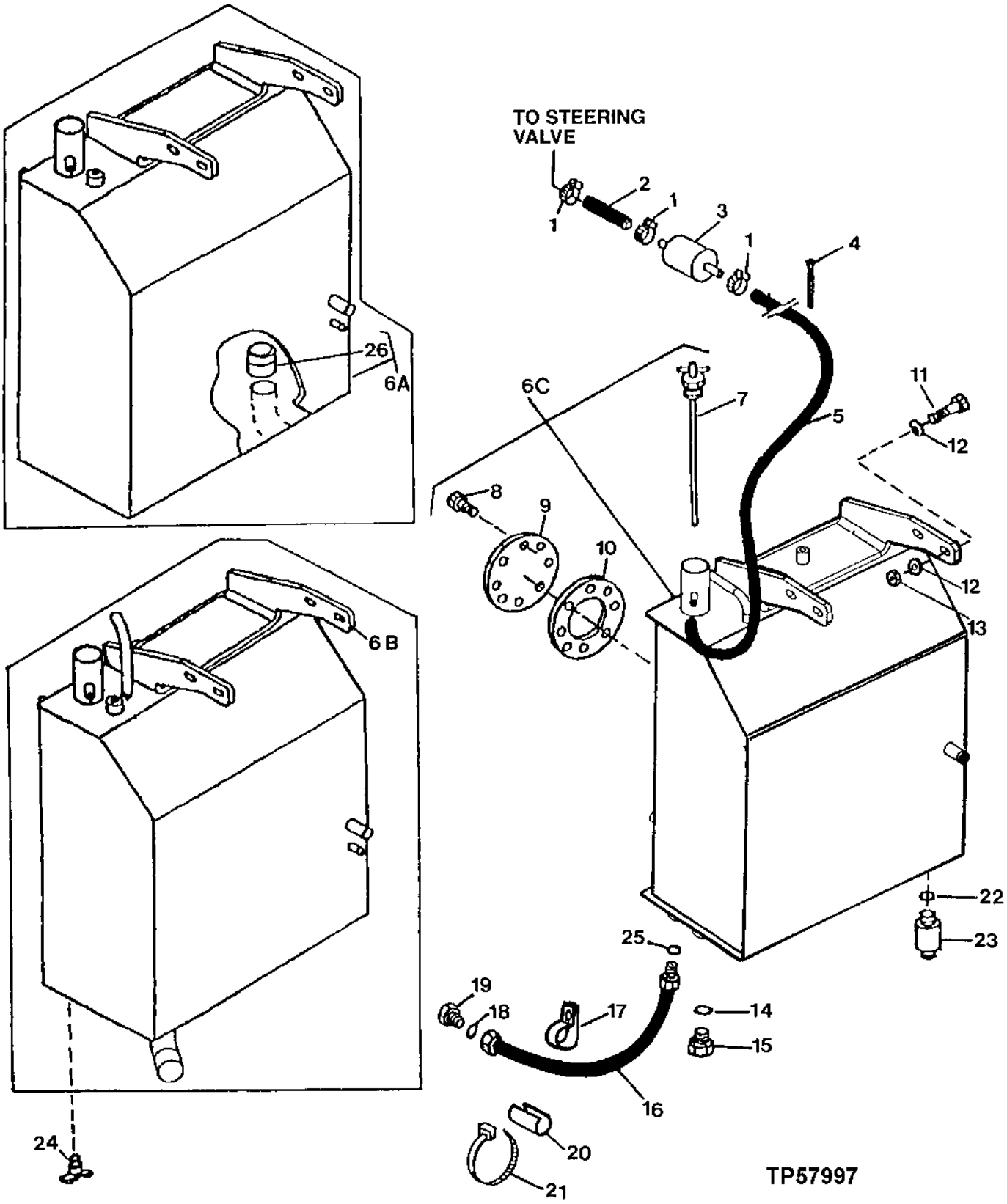

HYDRAULIC RESERVOIR

KEY	PART NO.	PART NAME	QTY	SERIAL NO.	REMARKS
1	TY22462	CLAMP	AR		(SUB FOR AR48236)
2	M87571	BULK HOSE	AR		BULK MATERIAL - CUT TO LENGTH - 800 MM
3	AT101565	AIR FILTER	1		
4	H77698	TIE BAND	AR		
5	M87571	BULK HOSE	AR		BULK MATERIAL - CUT TO LENGTH - 380 MM
6A	AT167711	RESERVOIR	1	-830204	(SUB FOR AT160419)
6B	AT180248	HYDRAULIC RESERVOIR	1	830205-872328	
6C	AT183728	HYDRAULIC RESERVOIR	1	872329-	
7	AT145932	DIPSTICK	1		
8	19M7865	SCREW	8		M8 X 16
9	T106594	COVER	1		
10	T106595	GASKET	1		
11	19M7550	CAP SCREW	4		M10 X 35
12	24M7296	WASHER	8		10.500 X 30 X 2.500 MM
13	14M7274	NUT	4		M10
14	R29936	O-RING	1	872329-	
15	R36636	FITTING PLUG	1	872329-	
16	AT81605	HYDRAULIC HOSE - FABRICATE	1		1-1/16" X 670 MM (26-1/2") X 1-3/16"
17	N205415	CLAMP	1	872329-	
18	T77858	O-RING	1		
19	38H1149	FITTING PLUG	1		
20	T60996	ISOLATOR	1	-872328	
21	R76477	TIE BAND	1	-872328	
22	U13639	O-RING	1		
23	AT148125	VALVE	1		
24	AT169553	DRAIN VALVE	1	-830204	(SUB FOR AT35831, THIS APPLICATION) (SUB FOR AH12614)
25	U12547	O-RING	1		
26	AT104846	STRAINER	1	-830204	

MAIN HYDRAULIC SYSTEM
(SERIAL NO. -830204)

TP58202 -UN-19APR00

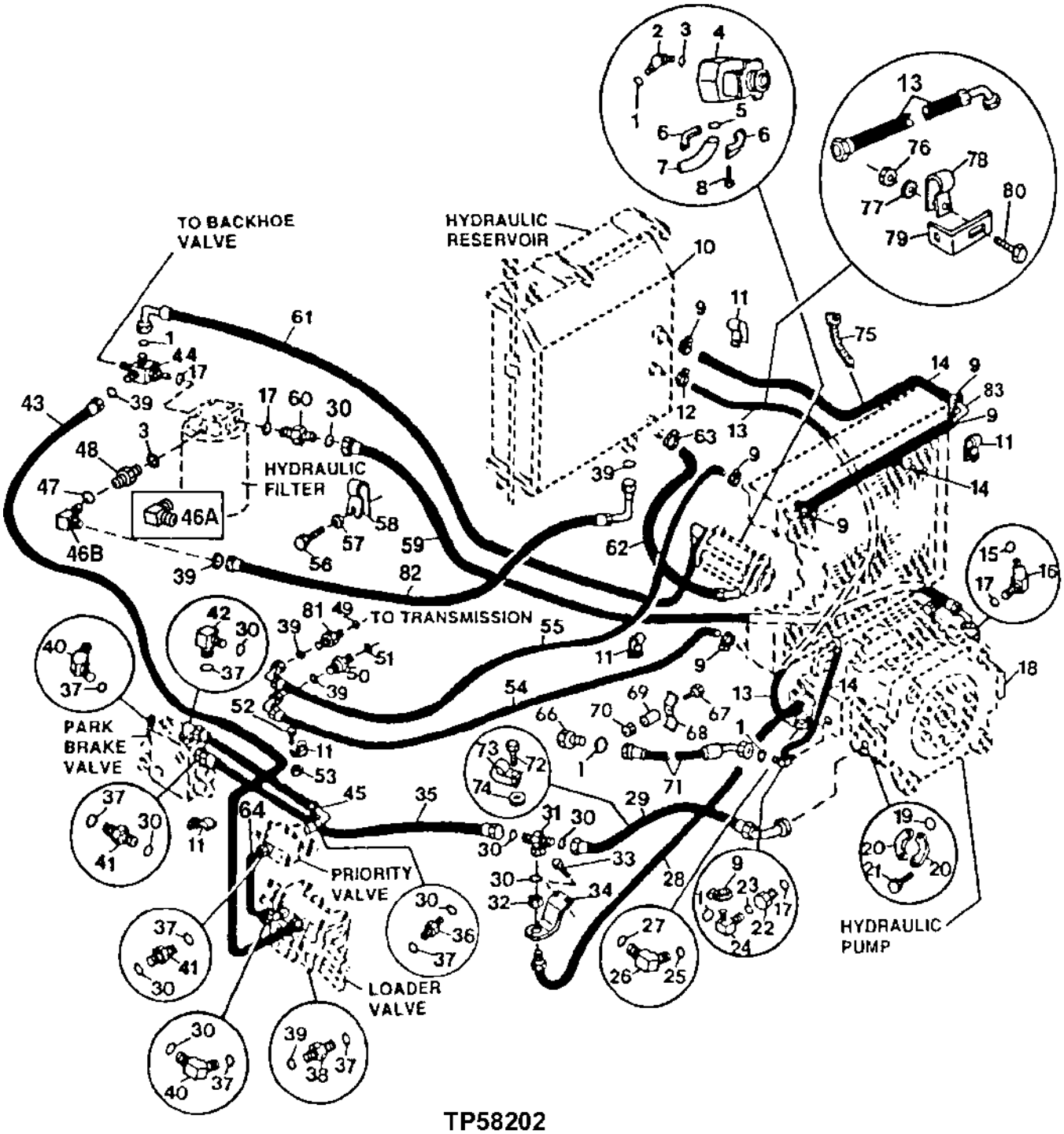

TP58202

MAIN HYDRAULIC SYSTEM
(SERIAL NO. -830204)

KEY	PART NO.	PART NAME	QTY	SERIAL NO.	REMARKS
1	T77858	O-RING	4		
2	38H1048	ELBOW FITTING	1		
3	U12547	O-RING	2		
4	AT161243	PUMP	1		CHARGE
5	B3690R	O-RING	1		
6	X51H-24	FLANGE FITTING	2		(SUB FOR T47649)
7	AU43656	HOSE FITTING	1		
8	19H2898	CAP SCREW	4		1/2" X 1-1/4"
9	AR21839	CLAMP	8		
10	AT167711	RESERVOIR	1		(SUB FOR AT160419)
11	R46667	CLAMP	5		
12	TY22462	CLAMP	1		(SUB FOR AR48236)
13	AT132706	HYDRAULIC HOSE - FABRICATE	1		
14	T78497	HYDRAULIC HOSE - FABRICATE	3		
15	T78612	O-RING	1		
16	38H1050	ELBOW FITTING	1		
17	U13639	O-RING	4		
18	RE36288	HYDRAULIC PUMP	1		MAIN
19	T78313	O-RING	2		
20	H61354	FLANGE FITTING	4		
21	19H3239	CAP SCREW	8		3/8" X 1-1/4"
22	T27517	ADAPTER	1		
23	U12547	O-RING	1		
24	AT164073	ELBOW FITTING	1		(SUB FOR AT21574, THIS APPLICATION)
25	R28782	O-RING	1		
26	38H1435	ELBOW FITTING	1		(SUB FOR 38H1309, THIS APPLICATION)
27	T77613	O-RING	1		
28	AT159960	LINE	1		
29	AT160014	HYDRAULIC HOSE - FABRICATE	1		
30	T76938	O-RING	8		
31	AT172877	TEE FITTING	1		(SUB FOR 38H1042, THIS APPLICATION)
32	T78715	NUT	1		
33	19H1648	CAP SCREW	2		3/8" X 3/4"
34	T146064	BRACKET	1		
35	AT160571	HYDRAULIC HOSE - FABRICATE	1		
36	38H1216	ADAPTER	1		
37	R29936	O-RING	7		
38	38H1194	ADAPTER	1		
39	T77858	O-RING	6		
40	38H1049	ELBOW FITTING	2		
41	38H1164	ADAPTER	2		
42	38H1037	ELBOW FITTING	1		
43	AT160560	HYDRAULIC HOSE - FABRICATE	1		1-3/16" X 1 694 MM (66-3/4") X 1-3/16"
44	AT132701	ADAPTER	1		
45	AT160565	HYDRAULIC HOSE - FABRICATE	1		1-7/16" X 585 MM (23") X 1-7/16"
46A	38H1007	ELBOW FITTING	1	-817888	
46B	38H1097	ELBOW FITTING	1	817889-	
47	T77858	O-RING	1	817889-	
48	38H1163	ADAPTER	1	817889-	
49	U12547	O-RING	1		

THIS PARTS LISTING IS CONTINUED

MAIN HYDRAULIC SYSTEM
(SERIAL NO. -830204)

TP58202 -UN-19APR00

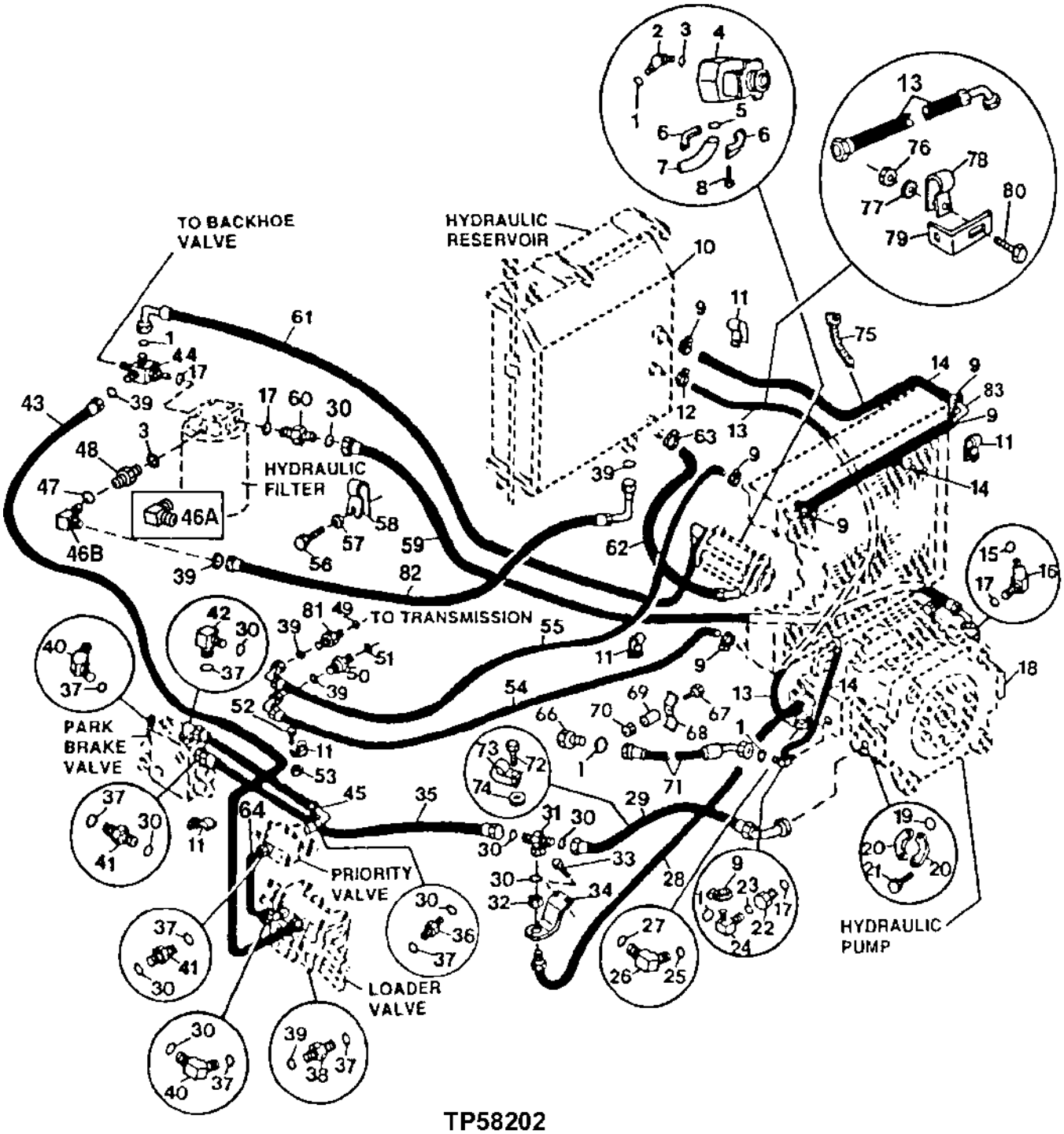

TP58202

MAIN HYDRAULIC SYSTEM
(SERIAL NO. -830204)

KEY	PART NO.	PART NAME	QTY	SERIAL NO.	REMARKS
50	T135250	FITTING	1		
51	U17409	O-RING	1		
52	19M7550	CAP SCREW	1		
53	14M7274	NUT	1		
54	AT117527	HYDRAULIC HOSE	1		
55	AT160504	HYDRAULIC HOSE - FABRICATE	1		
56	19M7938	CAP SCREW	2		M10 X 20
57	24M7239	WASHER	2		10.700 X 21 X 2.500 MM
58	E69975	CLAMP	1		
59	AT160563	HYDRAULIC HOSE - FABRICATE	1		1-11/16" X 2 280 MM (89-3/4") X 1-11/16"
60	38H1165	ADAPTER	1		
61	AT160559	HYDRAULIC HOSE - FABRICATE	1		1-3/16" X 2 030 MM (80") X 1-3/16"
62	T145739	HYDRAULIC HOSE	1		
63	AE43629	HOSE CLAMP	2		
64	AT159631	OIL LINE	1		
65	U43641	CLAMP	1		
66	38H1149	FITTING PLUG	1		
67	19M7658	CAP SCREW	1		M10 X 50
68	U46753	HOSE CLAMP	2		
69	28H1697	SPACER	1		
70	14M7337	NUT	1		M10
71	AT164413	HYDRAULIC HOSE - FABRICATE	1		1-3/16" X 620 MM (24-1/2") X 1-3/16"
72	19H1833	CAP SCREW	1		5/8" X 1-1/4"
73	T150753	CLAMP	1		
74	24M7241	WASHER	2		17 X 34 X 4 MM
75	H77698	TIE BAND	1	796776-	
76	14M7274	NUT	1	796776-	M10
77	24M7028	WASHER	1	796776-	10.500 X 20 X 2 MM
78	R46667	CLAMP	1	796776-	
79	T151136	BRACKET	1	796776-	
80	19M7938	CAP SCREW	1	796776-	M10 X 20
81	38H1163	ADAPTER	1		
82	AT160564	HYDRAULIC HOSE - FABRICATE	1		
83	T145669	TUBE	1		37° FLARE

MAIN HYDRAULIC SYSTEM
(SERIAL NO.830205-872328)

TP57974 -UN-08DEC98

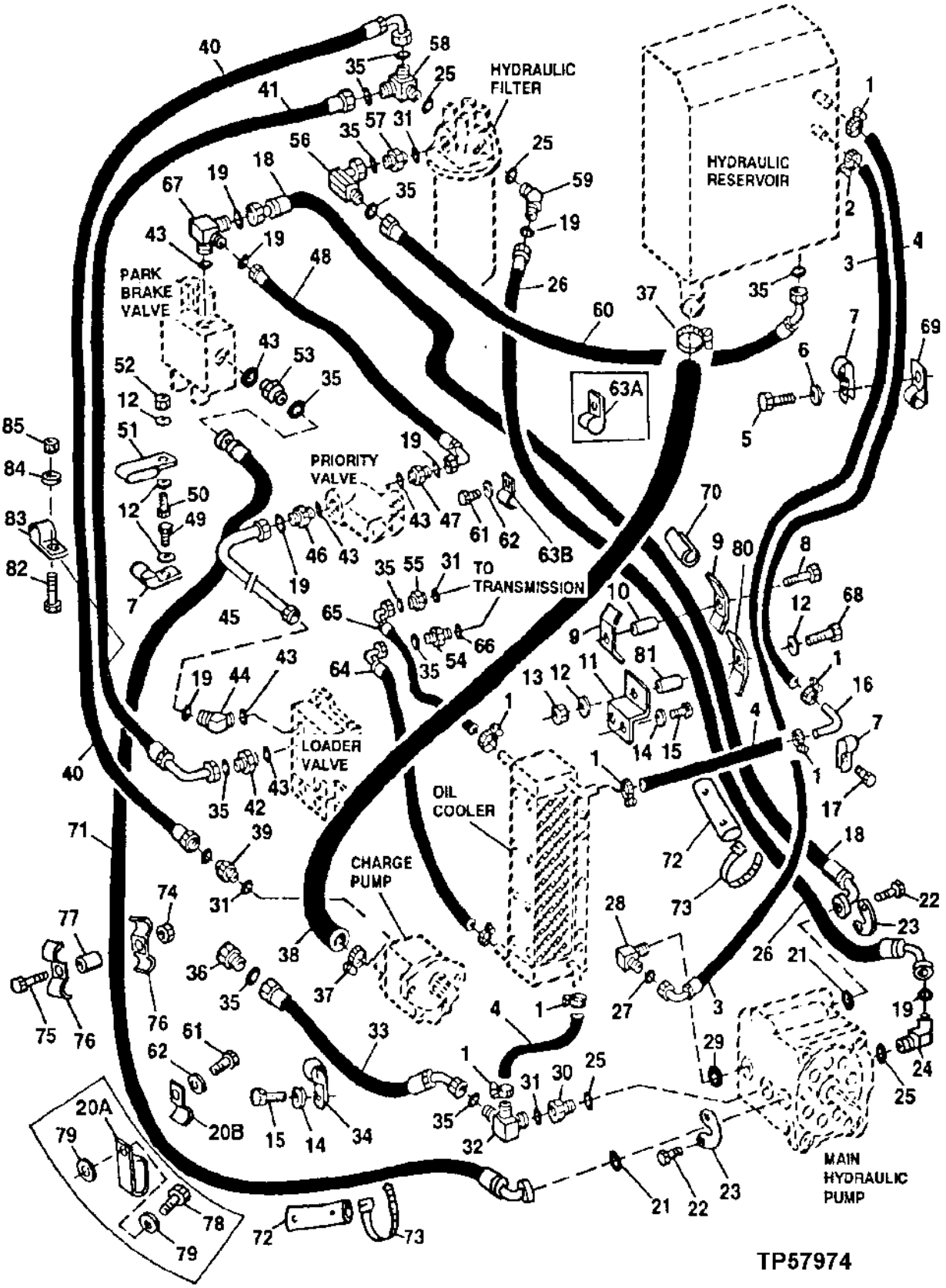

MAIN HYDRAULIC SYSTEM
(SERIAL NO.830205-872328)

KEY	PART NO.	PART NAME	QTY	SERIAL NO.	REMARKS
1	AR21839	CLAMP	8		
2	TY22462	CLAMP	1		(SUB FOR AR48236)
3	AT132706	HYDRAULIC HOSE - FABRICATE	1		
4	.....	HOSE	AR		(T78497 BULK MATERIAL,CUT TO LENGTH)
5	19M7402	CAP SCREW	1		M10 X 25
6	24M7239	WASHER	1		10.700 X 21 X 2.500 MM
7	R46667	CLAMP	3		
8	19H3107	CAP SCREW	1		5/8" X 2-3/4"
9	T118329	CLAMP	2		
10	28H2562	BUSHING	1		
11	T160292	BRACKET	1		
12	24M7296	WASHER	AR		10.500 X 30 X 2.500 MM
13	14M7274	NUT	1		M10
14	24M7240	WASHER	3		13 X 25 X 3 MM
15	19M7872	CAP SCREW	3		M12 X 25
16	T145669	TUBE	1		
17	37H84	SCREW	1		
18	AT183066	HYDRAULIC HOSE - FABRICATE	1		
19	T76938	O-RING	AR		
20A	T149597	CLAMP	1	-839667	
20B	U15939	CLAMP	1	839668-	
21	T78313	O-RING	2		
22	19H3239	CAP SCREW	8		3/8" X 1-1/4"
23	H61354	FLANGE FITTING	4		
24	38H1489	ELBOW FITTING	1		
25	U13639	O-RING	4		
26	AT178624	HYDRAULIC HOSE - FABRICATE	1		1-7/16" X 2 310 MM (91") X 1-7/16"
27	T77613	O-RING	1		
28	38H1435	ELBOW FITTING	1		
29	R28782	O-RING	1		
30	T27517	ADAPTER	1		
31	U12547	O-RING	4		
32	AT164073	ELBOW FITTING	1		
33	AT164413	HYDRAULIC HOSE - FABRICATE	1		1-3/16" X 620 MM (24-1/2") X 1-3/16"
34	T43361	CLIP	1		
35	T77858	O-RING	AR		
36	38H1149	FITTING PLUG	1		
37	AE43629	HOSE CLAMP	2		
38	T159905	HOSE	1		
39	38H1163	ADAPTER	1		
40	AT177808	HYDRAULIC HOSE - FABRICATE	1		1-3/16" X 2 121 MM (83-1/2") X 1-3/16"
41	AT160560	HYDRAULIC HOSE - FABRICATE	1		1-3/16" X 1 694 MM (66-3/4") X 1-3/16"
42	38H1194	ADAPTER	1		
43	R29936	O-RING	AR		
44	38H1049	ELBOW FITTING	1		
45	AT159631	OIL LINE	1		
46	38H1164	ADAPTER	1		
47	38H1216	ADAPTER	1		
48	AT160565	HYDRAULIC HOSE - FABRICATE	1		1-7/16" X 585 MM (23") X 1-7/16"
49	19M7402	CAP SCREW	1		M10 X 25
50	19M7550	CAP SCREW	1		M10 X 35

THIS PARTS LISTING IS CONTINUED

MAIN HYDRAULIC SYSTEM
(SERIAL NO.830205-872328)

TP57974 -UN-08DEC98

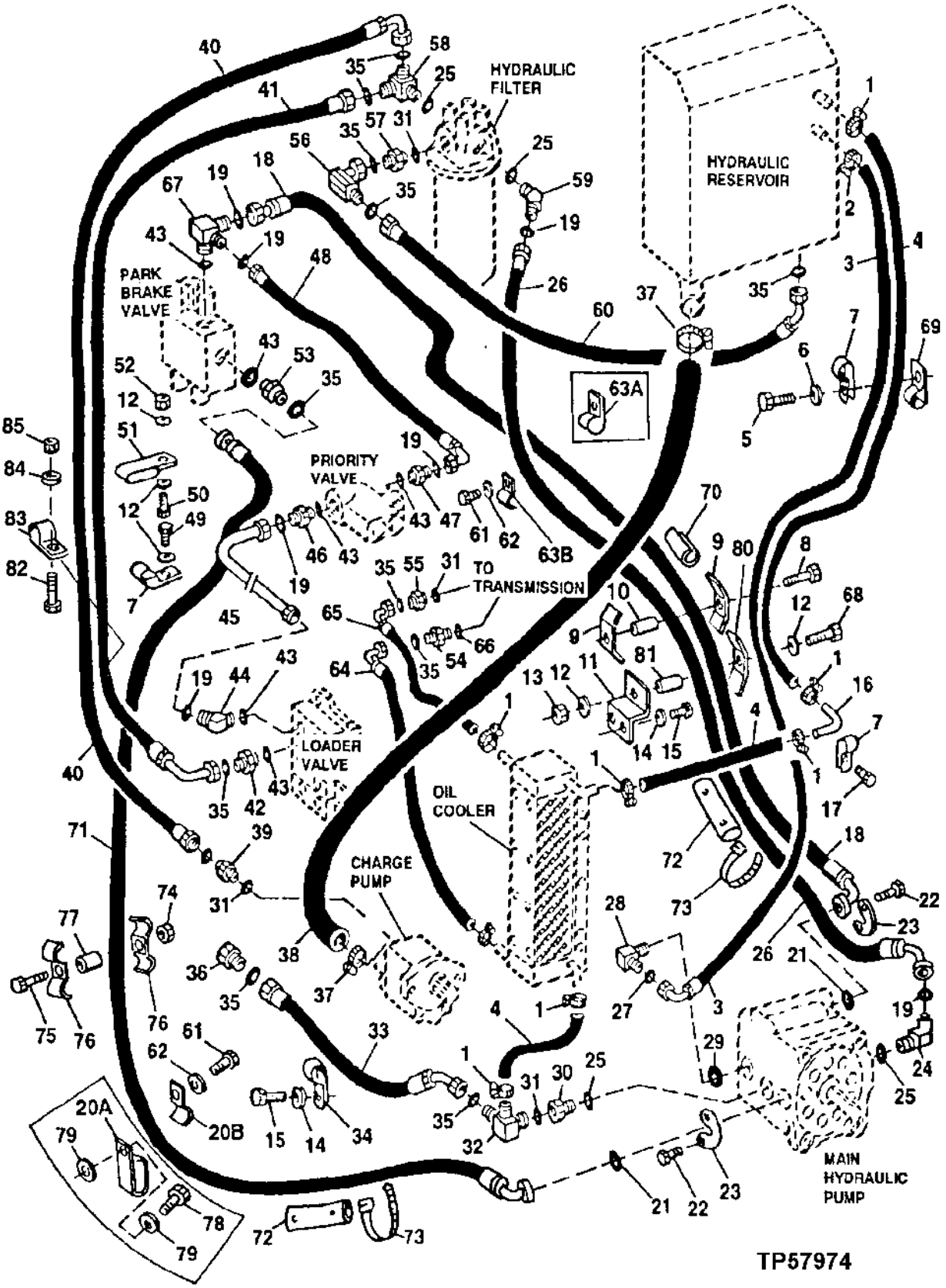

MAIN HYDRAULIC SYSTEM
(SERIAL NO.830205-872328)

KEY	PART NO.	PART NAME	QTY	SERIAL NO.	REMARKS
51	T149597	CLAMP	1		
52	14M7274	NUT	1		M10
53	38H1194	ADAPTER	1		
54	T135250	FITTING	1		
55	38H1163	ADAPTER	1		
56	38H1097	ELBOW FITTING	1		
57	38H1163	ADAPTER	1		
58	AT132701	ADAPTER	1		
59	38H1489	ELBOW FITTING	1		
60	AT160564	HYDRAULIC HOSE - FABRICATE	1		1-3/16" X 900 MM (35-1/2") X 1-3/16"
61	19M7938	CAP SCREW	2		M10 X 20
62	24M7239	WASHER	2		10.700 X 21 X 2.500 MM
63A	T150753	CLAMP	1	-839667	
63B	U15939	CLAMP	1	839668-	
64	AT117527	HYDRAULIC HOSE	1		
65	AT160504	HYDRAULIC HOSE - FABRICATE	1		
66	U17409	O-RING	1		
67	AT183063	TEE FITTING	1		
68	19M7875	CAP SCREW	1		M10 X 70
69	T74416	CLAMP	1		
70	T60996	ISOLATOR	AR		
71	AT183067	HYDRAULIC HOSE - FABRICATE	1		
72	T161464	SLEEVE	AR		
73	R44302	TIE BAND	AR		
74	14M7274	NUT	1		M10
75	19M7358	CAP SCREW	1		M10 X 40
76	U46753	HOSE CLAMP	2		
77	28H3383	BUSHING	1		
78	19M7662	CAP SCREW	1	-839667	M10 X 30
79	24M7296	WASHER	2	-839667	10.500 X 30 X 2.500 MM
80	T163188	CLAMP	1		
81	H140466	BUSHING	1		
82	19M7658	CAP SCREW	1		M10 X 50, TWO FUNCTION
	19M8081	CAP SCREW	1		M10 X 80, THREE FUNCTION
83	R46667	CLAMP	1		(SUB FOR U43641, THIS APPLICATION)
84	24M7239	WASHER	1		
85	14M7274	NUT	AR		M10

MAIN HYDRAULIC SYSTEM
(SERIAL NO. 872329-)

TP57998 -UN-09FEB99

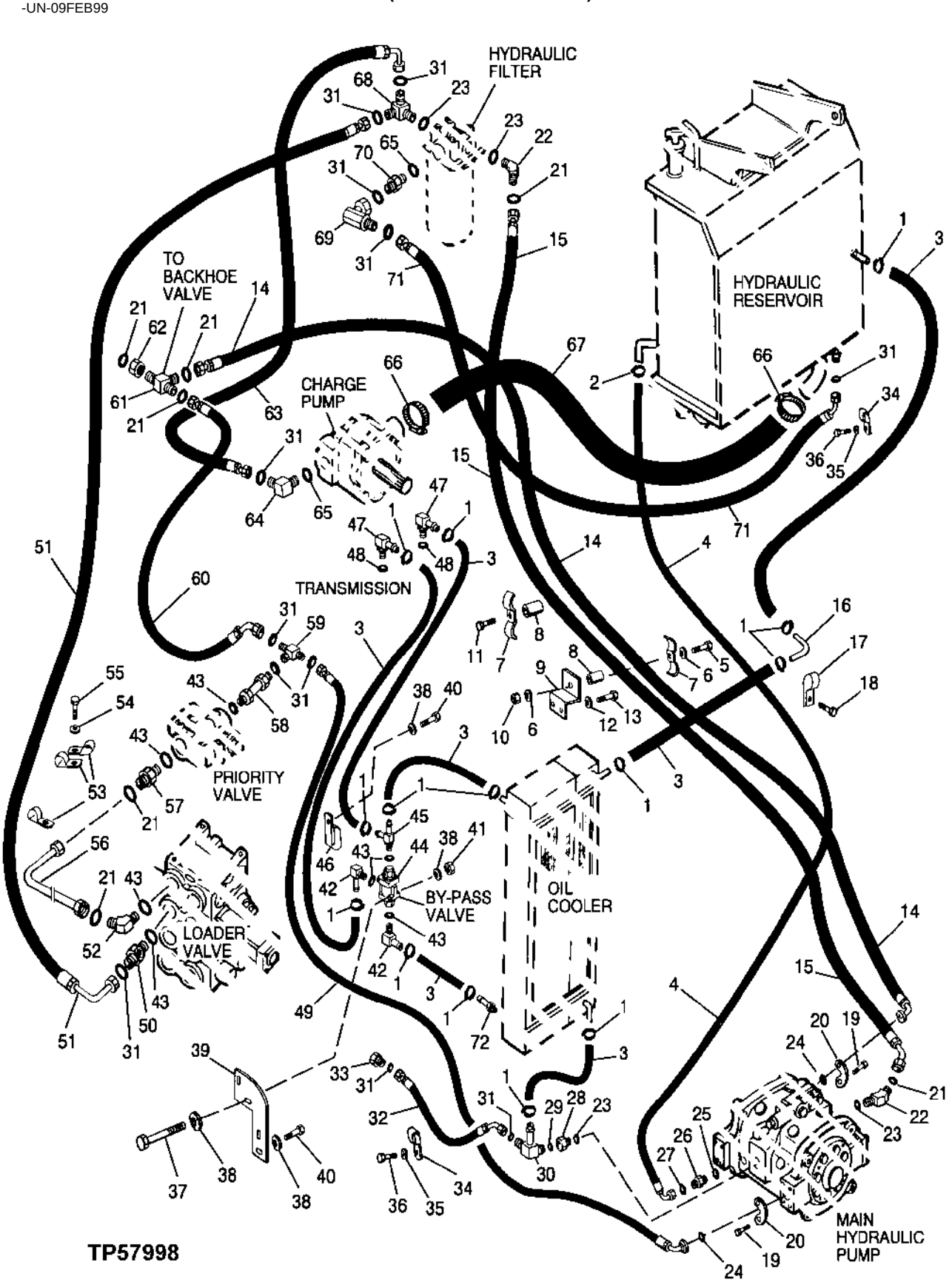

MAIN HYDRAULIC SYSTEM
(SERIAL NO. 872329-)

KEY	PART NO.	PART NAME	QTY	SERIAL NO.	REMARKS
1	AR21839	CLAMP	8		
2	TY22462	CLAMP	1		(SUB FOR AR48236)
3	.....	HOSE	AR		(T78497 BULK MATERIAL,CUT TO LENGTH)
4	AT132706	HYDRAULIC HOSE - FABRICATE	1		
5	19M8499	CAP SCREW	1		M10 X 60
6	24M7296	WASHER	1		10.500 X 30 X 2.500 MM
7	T163188	CLAMP	2		
8	H140466	BUSHING	2		0.546" X 0.840" X 7/8"
9	T160292	BRACKET	1		
10	14M7274	NUT	1		M10
11	19M7572	CAP SCREW	1		M10 X 45
12	24M7240	WASHER	2		13 X 25 X 3 MM
13	19M7872	CAP SCREW	2		M12 X 25
14	AT183066	HYDRAULIC HOSE - FABRICATE	1		1-7/16" X 2 565 MM (101") X 1-7/16"
15	AT178624	HYDRAULIC HOSE - FABRICATE	1		1-7/16" X 2 310 MM (91") X 1-7/16"
16	T145669	TUBE	1		
17	R46667	CLAMP	1		
18	37H84	SCREW	1		
19	19H3239	CAP SCREW	8		3/8" X 1-1/4"
20	H61354	FLANGE FITTING	4		
21	T76938	O-RING	AR		
22	38H1489	ELBOW FITTING	2		
23	U13639	O-RING	4		
24	T78313	O-RING	2		
25	R28782	O-RING	1		
26	38H1435	ELBOW FITTING	1		(SUB FOR 38H1309, THIS APPLICATION)
27	T77613	O-RING	1		
28	T27517	ADAPTER	1		
29	U12547	O-RING	1		
30	AT164073	ELBOW FITTING	1		
31	T77858	O-RING	AR		
32	AT164413	HYDRAULIC HOSE - FABRICATE	1		
33	38H1149	FITTING PLUG	1		
34	T43361	CLIP	1		
35	24M7240	WASHER	1		
36	19M7872	CAP SCREW	1		M12 X 25
37	19M8183	CAP SCREW	2		M10 X 90
38	24M7239	WASHER	AR		10.700 X 21 X 2.500 MM
39	T164006	PLATE	1		
40	19M7402	CAP SCREW	3		M10 X 25
41	14M7274	NUT	2		M10
42	AT43223	ELBOW FITTING	2		
43	R29936	O-RING	AR		
44	AT175707	VALVE	1		
45	AT183373	FITTING	1		
46	T149597	CLAMP	1		
47	AH64349	HOSE FITTING	2		
48	R26906	O-RING	2		
49	AT181958	HYDRAULIC HOSE - FABRICATE	1		1-7/16" X 1 829 MM (72") X 1-3/16"
50	38H1194	ADAPTER	1		

THIS PARTS LISTING IS CONTINUED

MAIN HYDRAULIC SYSTEM
(SERIAL NO. 872329-)

TP57998 -UN-09FEB99

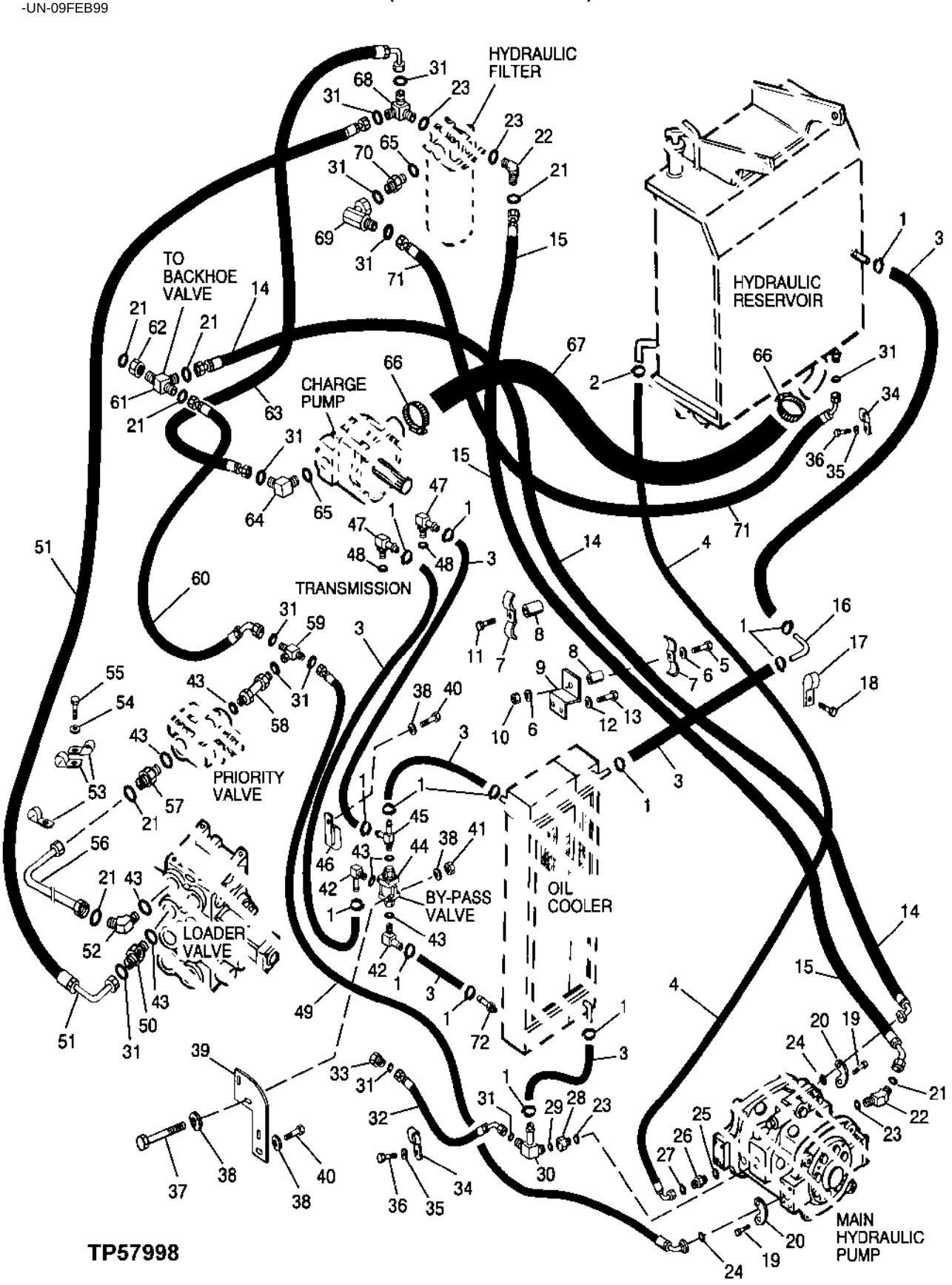

MAIN HYDRAULIC SYSTEM
(SERIAL NO.872329-)

KEY	PART NO.	PART NAME	QTY	SERIAL NO.	REMARKS
51	AT160560	HYDRAULIC HOSE - FABRICATE	1		1-3/16" X 1 694 MM (66-3/4") X 1-3/16"
52	38H1049	ELBOW FITTING	1		
53	R46667	CLAMP	3		
54	24M7239	WASHER	1		10.700 X 21 X 2.500 MM
55	19M7938	CAP SCREW	1		M10 X 20
56	AT159631	OIL LINE	1		
57	38H1164	ADAPTER	1		
58	AT172316	OIL LINE	1		
59	38H1041	TEE FITTING	1		
60	AT181959	HYDRAULIC HOSE - FABRICATE	1		1-7/16" X 485 MM (19") X 1-3/16"
61	38H1464	TEE FITTING	1		
62	T78715	NUT	1		
63	AT181365	HYDRAULIC HOSE - FABRICATE	1		1-3/16" X 710 MM (28") X 1-3/16"
64	38H1007	ELBOW FITTING	1		
65	U12547	O-RING	2		
66	AT105289	CLAMP	2		(SUB FOR AR65294, THIS APPLICATION)
67	AT186170	SUCTION HOSE	1		(SUB FOR AT184113)
68	AT132701	ADAPTER	1		
69	38H1097	ELBOW FITTING	1		
70	38H1163	ADAPTER	1		
71	AT181468	HYDRAULIC HOSE - FABRICATE	1		1-3/16" X 1 045 MM (41-1/4") X 1-3/16"
72	T135250	FITTING	1		

LOADER BUCKET 1.15 CUBIC METER (1-1/2 CUBIC YARD)
LOADER BUCKET 1.3 CUBIC METER (1.7 CUBIC YARD)

T138385 -UN-21FEB01

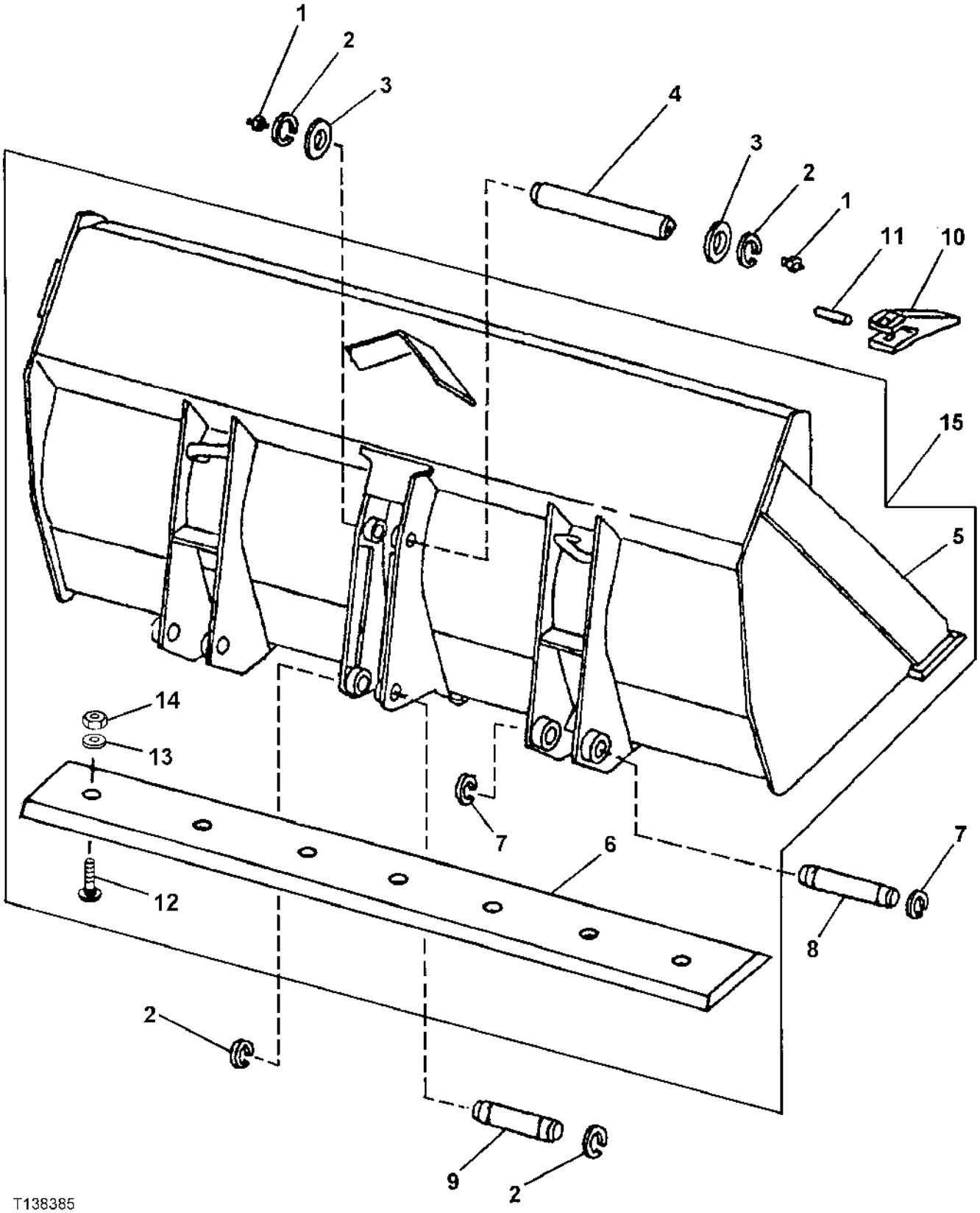

LOADER BUCKET 1.15 CUBIC METER (1-1/2 CUBIC YARD)
LOADER BUCKET 1.3 CUBIC METER (1.7 CUBIC YARD)

KEY	PART NO.	PART NAME	QTY	SERIAL NO.	REMARKS
1	JD7759	LUBRICATION FITTING	2		WITH BUCKET
	JD7759	LUBRICATION FITTING	4		WITHOUT BUCKET
2	40M7166	SNAP RING	4		50 X 2 MM
3	24H1594	WASHER	2		2-1/16" X 2-3/4" X 0.134"
4	T120356	PIN	1		
5	T142888	CUTTING EDGE	1		(USE WITH BUCKET MARKED AT151325 AND AT117665)
	T143074	CUTTING EDGE	1		WITH HOLES (USE WITH BUCKET MARKED AT118781 AND AT151731)
6	T84194	CUTTING EDGE	1		AUXILIARY 3/4 THICK X 8 INCH DBF X 92 3/8 INCH (USE WITH BUCKET MARKED AT117665 AND AT151325) (USE WITH (8) 19H1757, (8) 24M7241 AND (8) U44915)
	T126774	CUTTING EDGE	1		AUXILIARY 5/8 THICK X 8 INCH DBF X 97 INCH (USE WITH BUCKET MARKED AT117665, AT151325, AT118781, AND AT151731) (USE WITH (8) 09H1764, (8) 24M7241 AND (8) U44915)
7	40M7180	SNAP RING	4		45 X 2.5 MM
8	T127747	PIN	2		
9	T127437	PIN	1		
10	U13449	TOOTH	7		
11	34M7070	SPRING PIN	7		10 X 45 MM
12	09H1764	BOLT	8		5/8" X 2-1/2"
	09H1757	BOLT	8		5/8" X 2-3/4"
13	24M7241	WASHER	8		17 X 34 X 4 MM
14	U44915	LOCK NUT	8		5/8"
15	**AT164524**	**LOADER BUCKET**	**1**		**(MARKED AT117665, AT151325 OR AT164524) (SUB FOR AT117678) 1.15 CUBIC METER (1-1/2 CUBIC YARD)**
	AT164531	**LOADER BUCKET**	**1**		**(MARKED AT118781, AT151731 OR AT164531) (SUB FOR AT117576) 1.3 CUBIC METER (1.7 CUBIC YARD)**

MULTI-PURPOSE BUCKET
(GANNON)
2137 MM (96")
(SERIAL NO. -889259)

TP45540 -UN-27SEP94

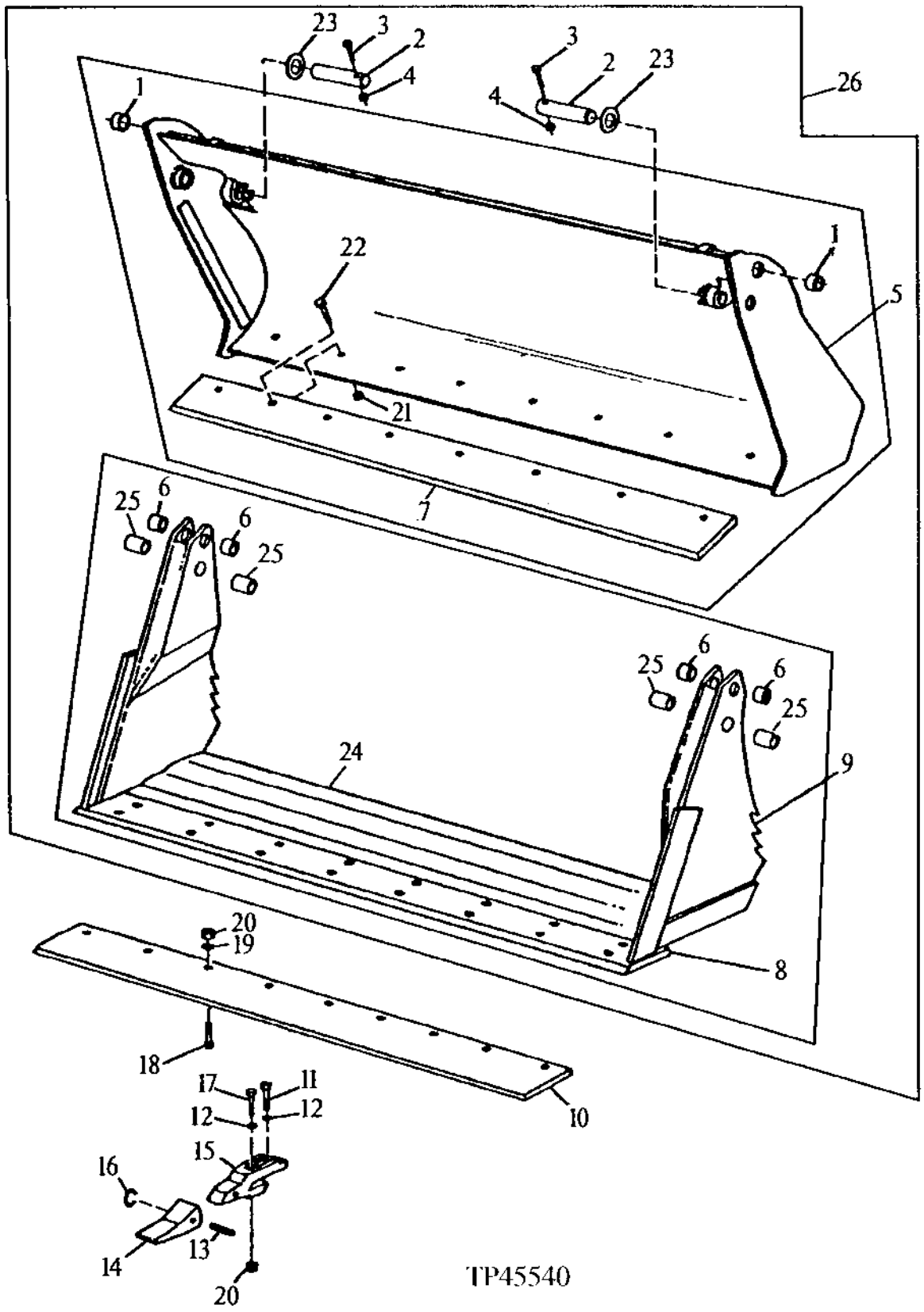

MULTI-PURPOSE BUCKET
(GANNON)
2137 MM (96")
(SERIAL NO. -889259)

KEY	PART NO.	PART NAME	QTY	SERIAL NO.	REMARKS
1	T128534	BUSHING	2		
2	T167059	PIN	2		(SUB FOR T128535)
3	19H2106	CAP SCREW	2		7/16" X 2-3/4"
4	K40006	LOCK NUT	2		
5	.....	MOLDBOARD	1		(AT150833 NO LONGER AVAILABLE)
6	T128532	BUSHING	4		
7	T143804	CUTTING EDGE	1		
8	T128539	KNIFE	1		
	T143690	CUTTING EDGE	1		
9	.....	HINGE	1		(AT142608 NO LONGER AVAILABLE)
10	T126774	CUTTING EDGE	1		(AUXILIARY) 5/8 THICK X 8 INCH DBF X 97 INCH, (ALSO ORDER (8) U44915, (8) 24M7241 AND (8) 09H1764)
	T84194	CUTTING EDGE	1		(AUXILIARY) 3/4 THICK X 8 INCH DBF X 92 3/8 INCH, (ALSO ORDER (8) U44915, (8) 24M7241 AND (8) 09H1757)
11	19M8638	CAP SCREW	8		M20 X 65
12	24M7242	WASHER	32		21.400 X 42 X 5 MM
13	TF10P	PIN	8		
14	TF10L	TOOTH	8		
15	T105692	BUCKET TOOTH ADAPTER	8		
16	T112196	RETAINING WASHER	8		
17	19M8102	CAP SCREW	8		M20 X 65
18	09H1764	BOLT	AR		5/8" X 2-1/2"
	09H1757	BOLT	AR		5/8" X 2-3/4"
19	24M7241	WASHER	AR		17 X 34 X 4 MM
20	U44915	LOCK NUT	16		15.875 MM
21	K40015	LOCK NUT	8		
22	10H1039	BOLT	8		5/8" X 1-3/4"
23	24H1554	WASHER	2		1-5/8" X 3-1/2" X 0.180"
24	T143690	CUTTING EDGE	1		
25	T128533	BUSHING	4		1.528" X 1.877" X 1-1/2"
26	AT161911	MULTI-PURPOSE BUCKET	1		(WHOLE GOODS) INCLUDES HYDRAULICS, (SUB AT195324)

THIRD FUNCTION HYDRAULICS
(MULTI-PURPOSE BUCKET)
(GANNON)
(SERIAL NO. -889259)

TP42987 -UN-01JAN94

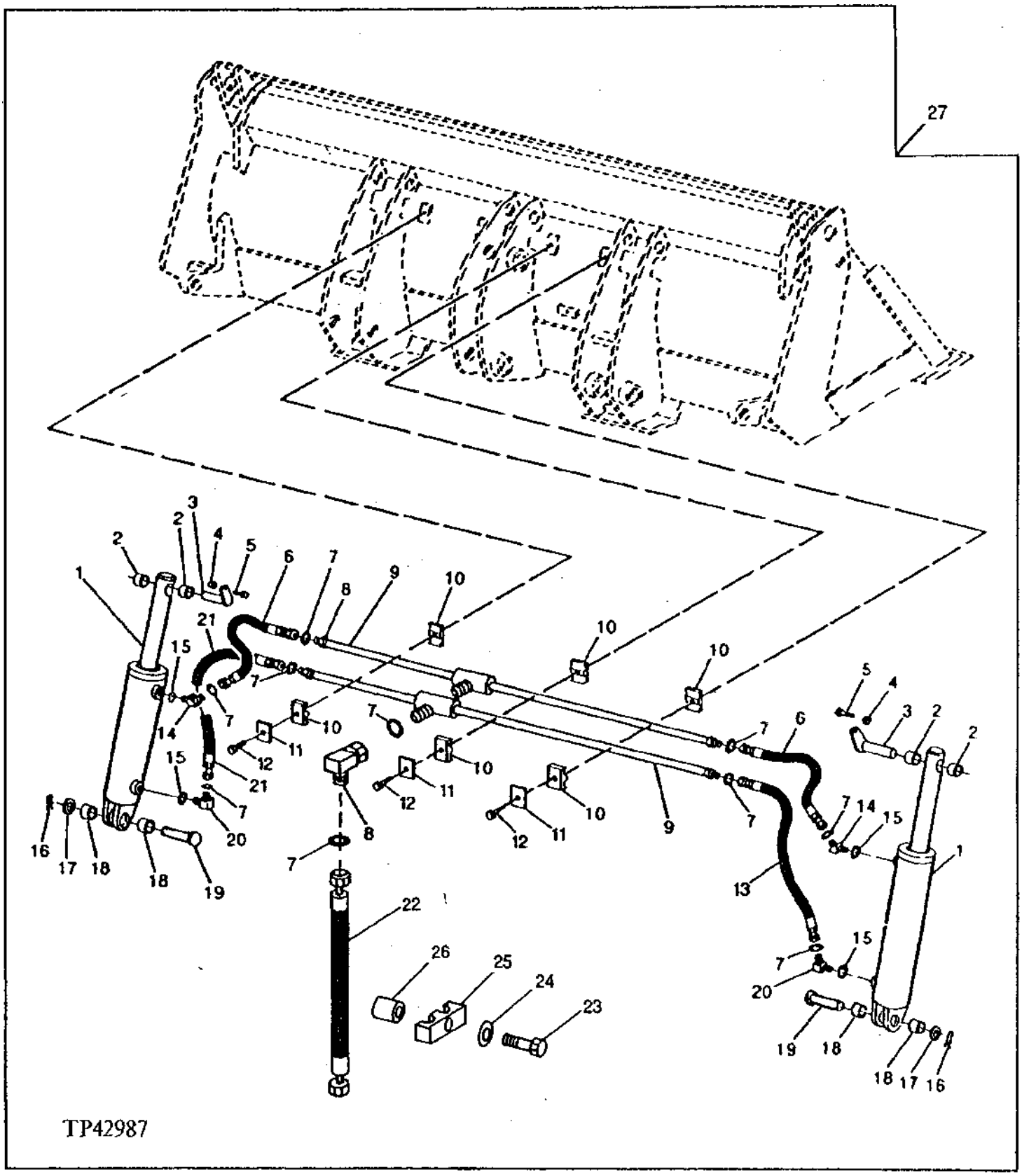

THIRD FUNCTION HYDRAULICS
(MULTI-PURPOSE BUCKET)
(GANNON)
(SERIAL NO. -889259)

KEY	PART NO.	PART NAME	QTY	SERIAL NO.	REMARKS
1	AT142578	CYLINDER	2		
2	T128532	BUSHING	4		
3	AT190900	U-JOINT LOCK PIN	2		(SUB FOR AT142584 AND AT188305)
4	T54568	LOCK NUT	2		
5	19H2676	CAP SCREW	2		3/8" X 1"
6	AT150831	HYDRAULIC HOSE	2		13/16" X 521 MM (20-1/2") X 13/16"
7	T77857	O-RING	12		
8	38H1095	ELBOW FITTING	2		
9	AT150755	OIL LINE	2		
10	H135156	CLAMP	6		
11	H121168	PLATE	3		
12	19H2661	CAP SCREW	3		5/16" X 1-3/8"
13	AT150830	HYDRAULIC HOSE	1		13/16" X 699 MM (27-1/2") X 13/16", RIGHT
14	38H1521	ELBOW FITTING	2		
15	R26448	O-RING	4		
16	11M7030	COTTER PIN	2		5 X 40 MM
17	24H1138	WASHER	2		1-1/16" X 2" X 0.134"
18	T128531	BUSHING	4		
19	T185041	PIN	2		(SUB FOR T128536)
20	38H1314	ELBOW FITTING	2		
21	AT142604	HYDRAULIC HOSE - FABRICATE	1		13/16" X 483 MM (19") X 13/16", LEFT
22	AT142403	HYDRAULIC HOSE - FABRICATE	2		
23	19H2633	CAP SCREW	1		3/8" X 1-1/2"
24	24M7106	WASHER	1		10 X 18 X 2.500 MM
25	U40398	CLAMP	1		
26	28H1697	SPACER	1		
27	**AT161911**	**MULTI-PURPOSE BUCKET**	**1**		**INCLUDES BUCKET, (SUB AT195324)**

MULTI-PURPOSE BUCKET
2137 MM (96")
(SERIAL NO. 889260-)

TP62442 -UN-08AUG00

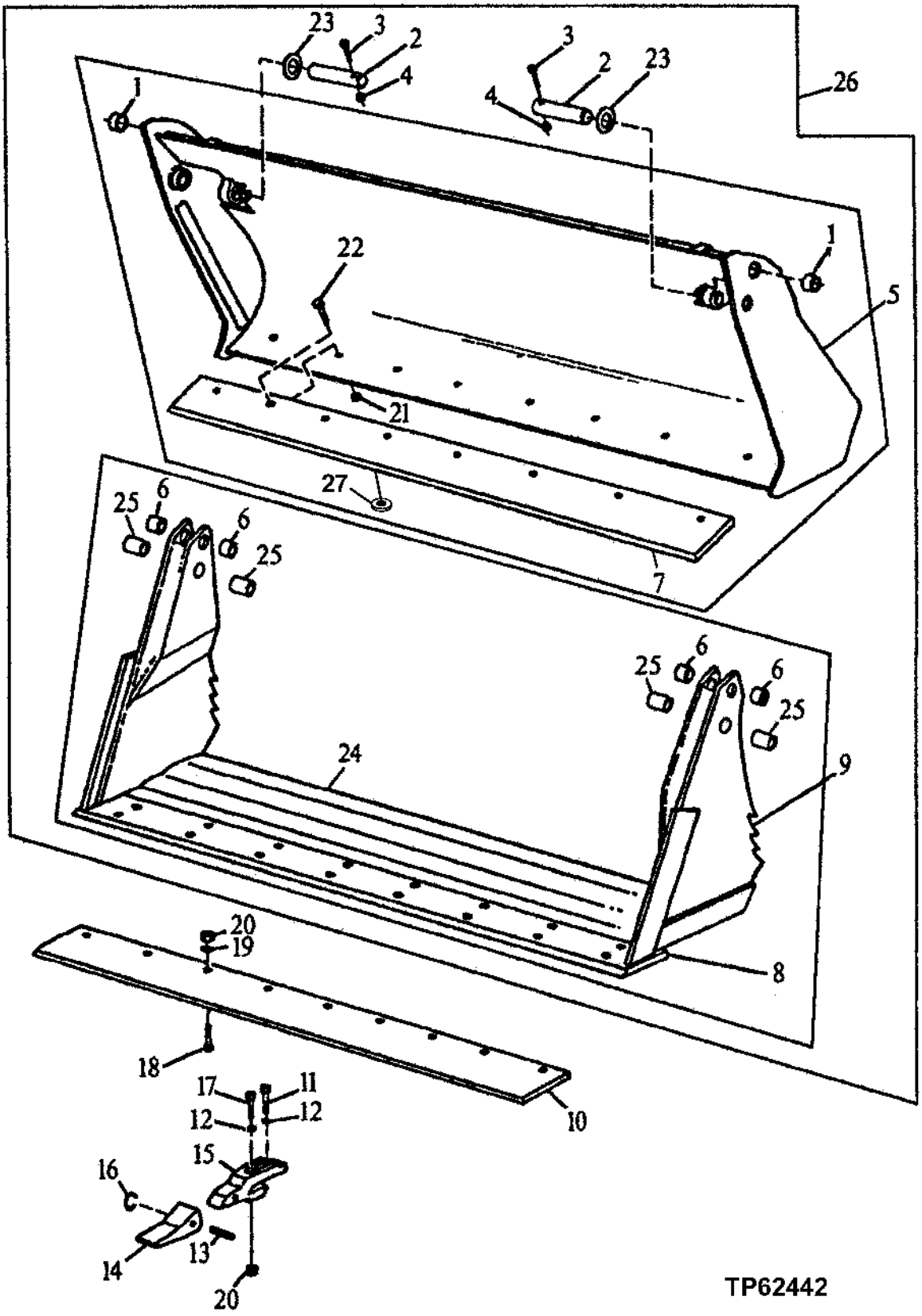

MULTI-PURPOSE BUCKET
2137 MM (96")
(SERIAL NO. 889260-)

KEY	PART NO.	PART NAME	QTY	SERIAL NO.	REMARKS
1	T166433	BUSHING	2		
2	T167059	PIN	2		
3	19H2106	CAP SCREW	2		7/16" X 2-3/4"
4	K40006	LOCK NUT	2		
5	.....	MOLDBOARD	1		
6	T166433	BUSHING	4		
7	T143804	CUTTING EDGE	1		
8	T128539	KNIFE	1		1 X 8
	T143690	CUTTING EDGE	1		3/4 X 4
9	.....	HINGE	1		
10	T126774	CUTTING EDGE	1		(AUXILIARY) 5/8 THICK X 8 INCH DBF X 97 INCH, (ALSO ORDER (8) U44915, (8) 24M7241 AND (8) 09H1764)
	T84194	CUTTING EDGE	1		(AUXILIARY) 3/4 THICK X 8 INCH DBF X 92 3/8 INCH, (ALSO ORDER (8) U44915, (8) 24M7241 AND (8) 09H1757)
11	19M8638	CAP SCREW	8		M20 X 65
12	24M7242	WASHER	32		21.400 X 42 X 5 MM
13	TF10P	PIN	8		
14	TF10L	TOOTH	8		
15	T105692	BUCKET TOOTH ADAPTER	8		
16	T112196	RETAINING WASHER	8		
17	19M8102	CAP SCREW	8		M20 X 65
18	09H1764	BOLT	AR		5/8" X 2-1/2"
	09H1757	BOLT	AR		5/8" X 2-3/4"
19	24M7241	WASHER	AR		17 X 34 X 4 MM
20	14M7277	NUT	16		M20
21	24M7241	WASHER	8		17 X 34 X 4 MM
22	09H1776	BOLT	8		5/8" X 1-3/4"
23	24H1554	WASHER	2		1-5/8" X 3-1/2" X 0.180"
24	T128539	KNIFE	1		
25	T128533	BUSHING	4		1.528" X 1.877" X 1-1/2"
26	AT195324	MULTI-PURPOSE BUCKET	1		(WHOLE GOODS) INCLUDES HYDRAULICS, (SUB FOR AT189522)
27	24M7241	WASHER	8		17 X 34 X 4 MM

THIRD FUNCTION HYDRAULICS
(MULTI-PURPOSE BUCKET)
(SERIAL NO. 889260-)

TP62443 -UN-08AUG00

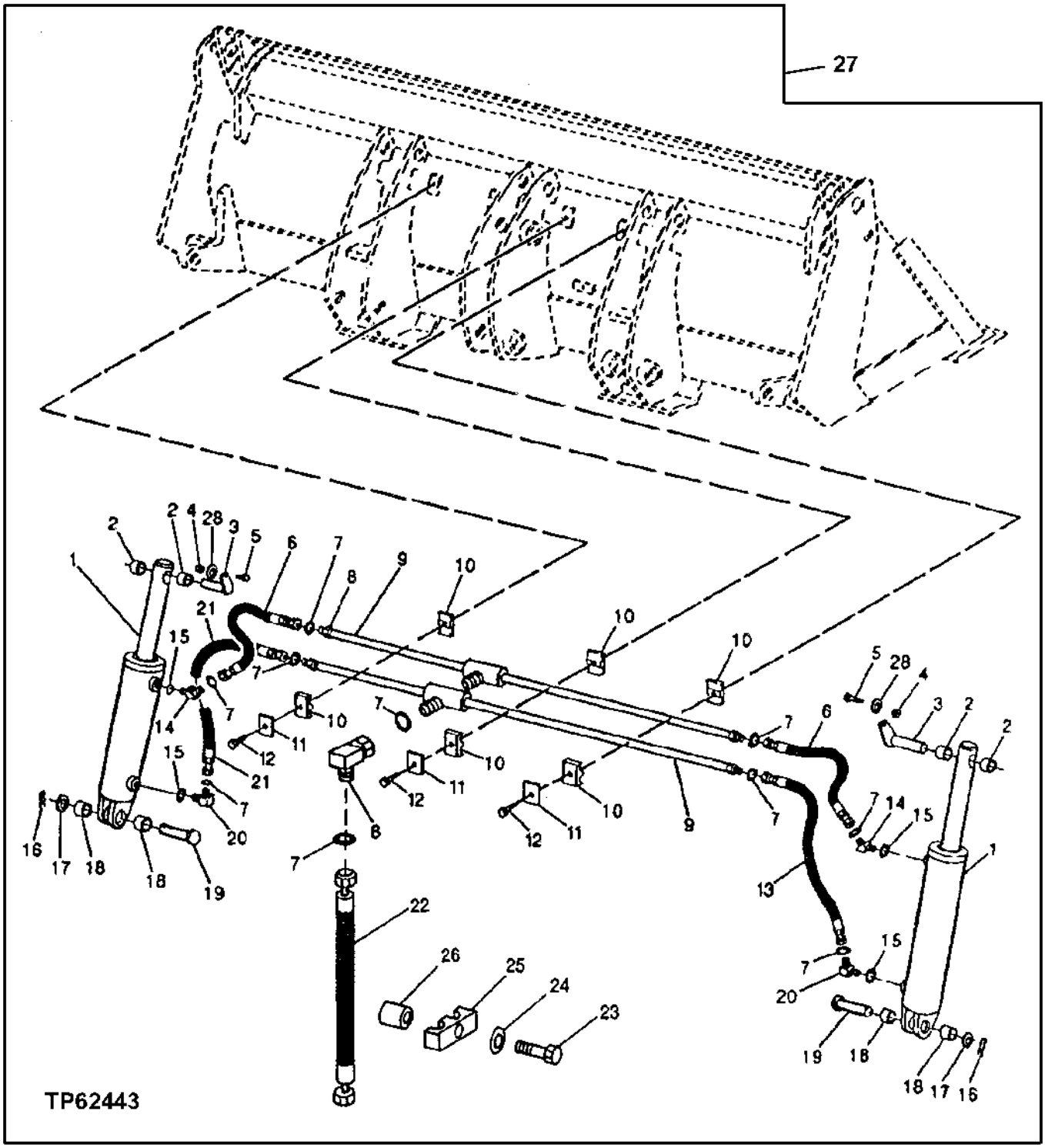

THIRD FUNCTION HYDRAULICS
(MULTI-PURPOSE BUCKET)
(SERIAL NO. 889260-)

KEY	PART NO.	PART NAME	QTY	SERIAL NO.	REMARKS
1	AT190880	CYLINDER	2		
2	T128532	BUSHING	4		
3	AT190900	U-JOINT LOCK PIN	2		
4	T54568	LOCK NUT	2		
5	19H3239	CAP SCREW	2		3/8" X 1-1/4"
6	AT189822	HYDRAULIC HOSE - FABRICATE	2		
7	T77857	O-RING	12		
8	38H1095	ELBOW FITTING	2		
9	AT189694	TUBE	2		
10	H135156	CLAMP	6		
11	H121168	PLATE	3		
12	19H3552	CAP SCREW	3		5/16" X 1-1/2"
13	AT190701	HYDRAULIC HOSE - FABRICATE	1		13/16" X 470 MM (18-1/2") X 13/16", RIGHT
14	38H1521	ELBOW FITTING	2		
15	R26448	O-RING	4		
16	11M7030	COTTER PIN	2		5 X 40 MM
17	24H1138	WASHER	2		1-1/16" X 2" X 0.134"
18	T128531	BUSHING	4		
19	T185041	PIN	2		
20	38H1314	ELBOW FITTING	2		
21	AT190701	HYDRAULIC HOSE - FABRICATE	1		13/16" X 470 MM (18-1/2") X 13/16", LEFT
22	AT142403	HYDRAULIC HOSE - FABRICATE	2		
23	19H2633	CAP SCREW	1		3/8" X 1-1/2"
24	24M7106	WASHER	1		10 X 18 X 2.500 MM
25	U40398	CLAMP	1		
26	28H1697	SPACER	1		
27	AT195324	MULTI-PURPOSE BUCKET	1		(WHOLE GOODS) INCLUDES BUCKET, (SUB FOR AT189522)
28	24M7239	WASHER	2		10.700 X 21 X 2.500 MM

LOADER BUCKET PINS

TP42988 -UN-01JAN94

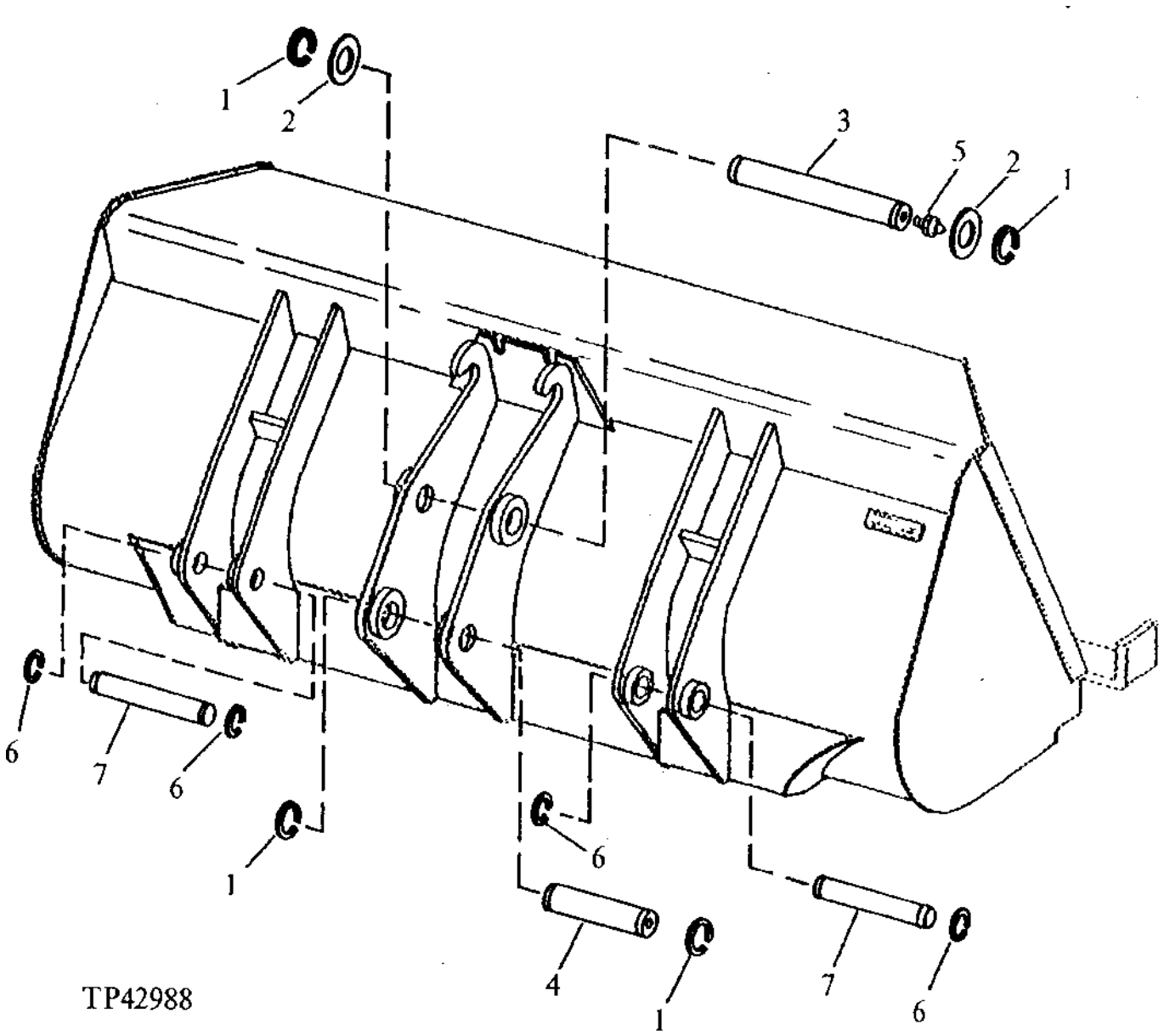

LOADER BUCKET PINS

KEY	PART NO.	PART NAME	QTY	SERIAL NO.	REMARKS
1	40M7166	SNAP RING	4		45 X 2.5 MM
2	24H1594	WASHER	2		2-1/16" X 2-3/4" X 0.134"
3	T120356	PIN	1		
4	T127437	PIN	1		(SUB FOR T120355)
5	JD7759	LUBRICATION FITTING	2		1/8"
6	40M7180	SNAP RING	4		40 X 2.5 MM
7	T127747	PIN	2		

MULTI-PURPOSE BUCKET CYLINDER
(GANNON)
(SERIAL NO. -889259)

TP27926 -UN-01JAN94

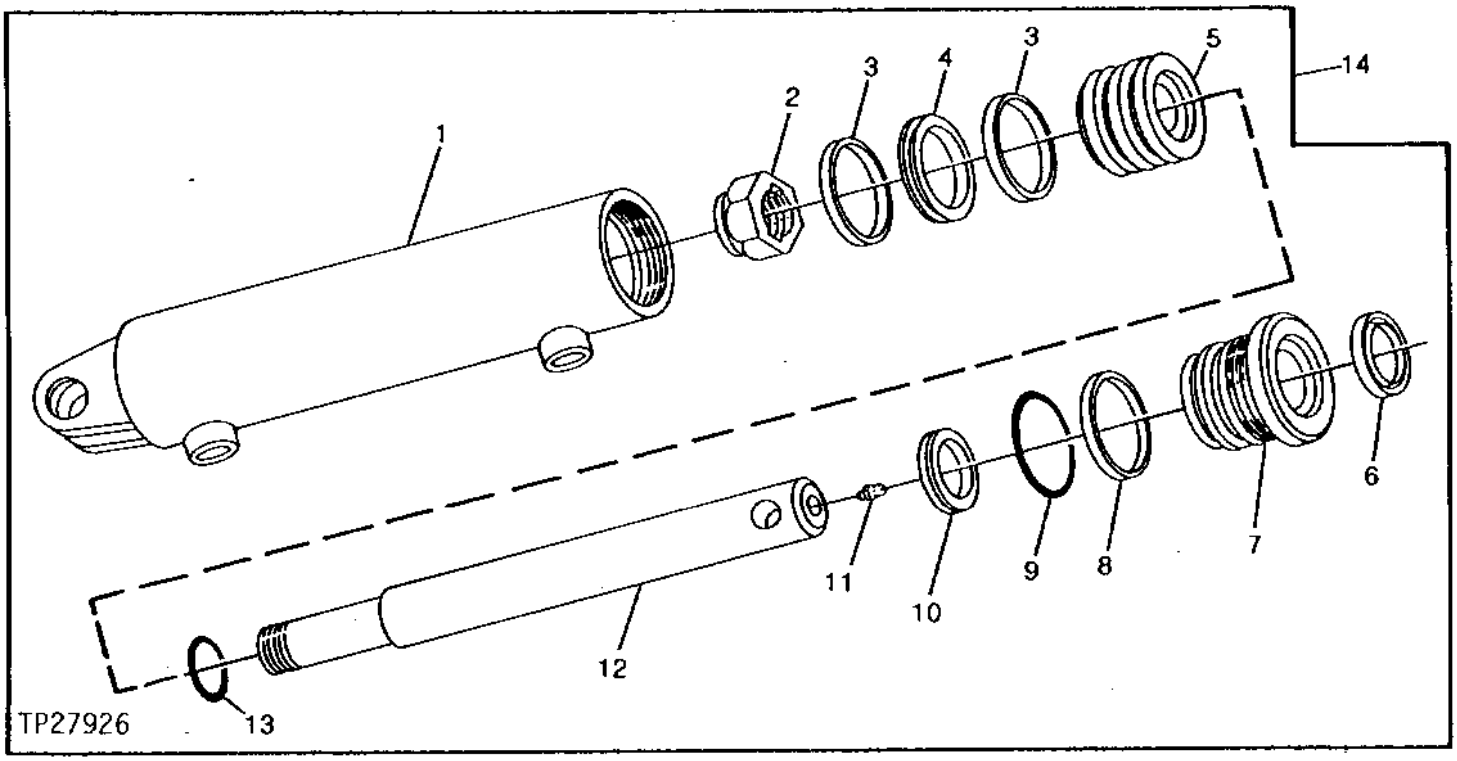

KEY	PART NO.	PART NAME	QTY	SERIAL NO.	REMARKS
1	AT142583	BARREL	1		
2	T24715	NUT	1		
3	.....	WEAR RING	2		(K)
4	.....	SEAL	1		(K)
5	T128529	PISTON	1		
6	.....	SEAL	1		(K)
7	T128528	HYDR. CYLINDER ROD GUIDE	1		
8	.....	BACK-UP RING	1		(K)
9	.....	O-RING	1		(K)
10	.....	SEAL	1		(K)
11	JD7797	LUBRICATION FITTING	1		
12	T128530	ROD	1		
13	.....	O-RING	1		(K)
14	AT142578	CYLINDER	1		
..	AT142582	KIT	1		INCLUDES ALL (K) PARTS (MULTI-PURPOSE BUCKET CYLINDER REPAIR)

MULTI-PURPOSE BUCKET CYLINDER
(SERIAL NO. 889260-)

TP62438 -UN-06JUL00

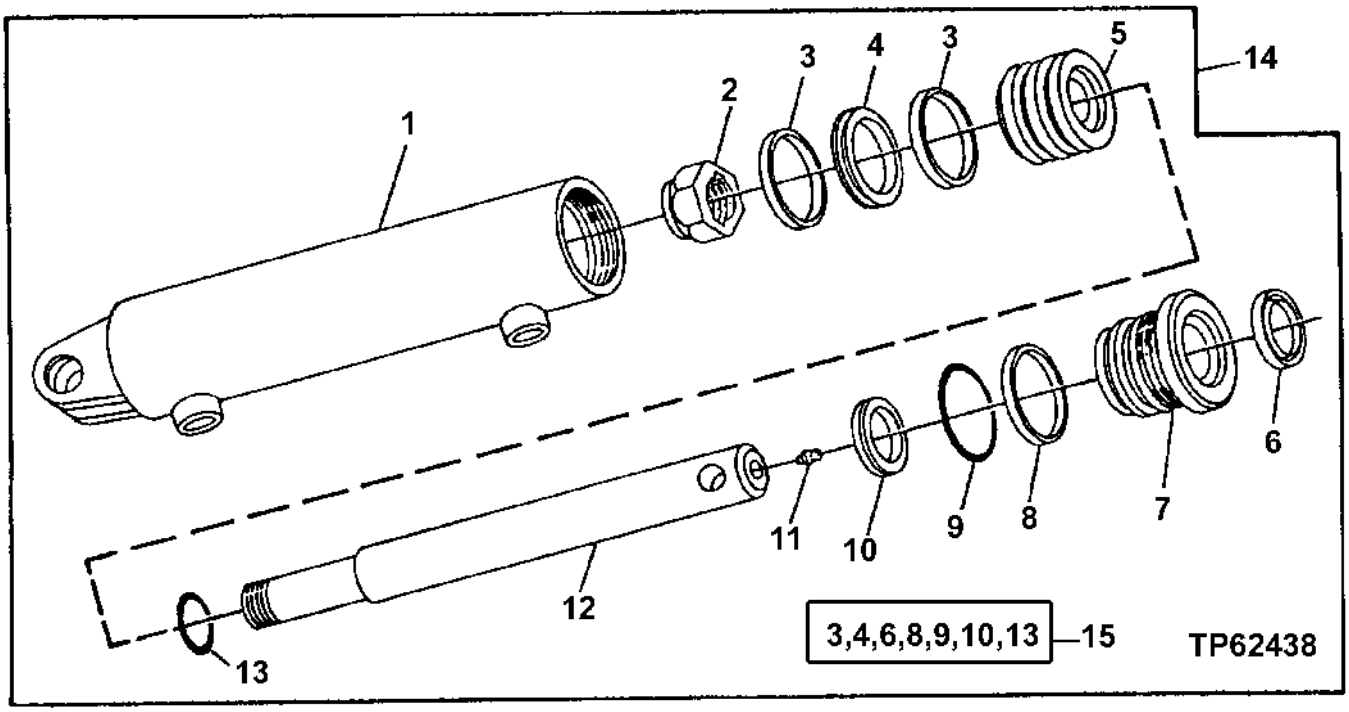

KEY	PART NO.	PART NAME	QTY	SERIAL NO.	REMARKS
1	AT190881	BARREL	1		
2	H29619	LOCK NUT	1		
3	.....	WEAR RING	2		
4	.....	SEAL	1		
5	T163117	PISTON	1		
6	.....	SEAL	1		
7	T163116	HYDR. CYLINDER ROD GUIDE	1		
8	.....	BACK-UP RING	1		
9	.....	O-RING	1		
10	.....	SEAL	1		
11	JD7797	LUBRICATION FITTING	1		
12	T163118	ROD	1		
13	.....	O-RING	1		
14	AT190880	CYLINDER	1		
15	AT190898	KIT	1		

BUCKET LEVELING AND RETURN-TO-DIG LINKAGE

T136653 -UN-03JAN01

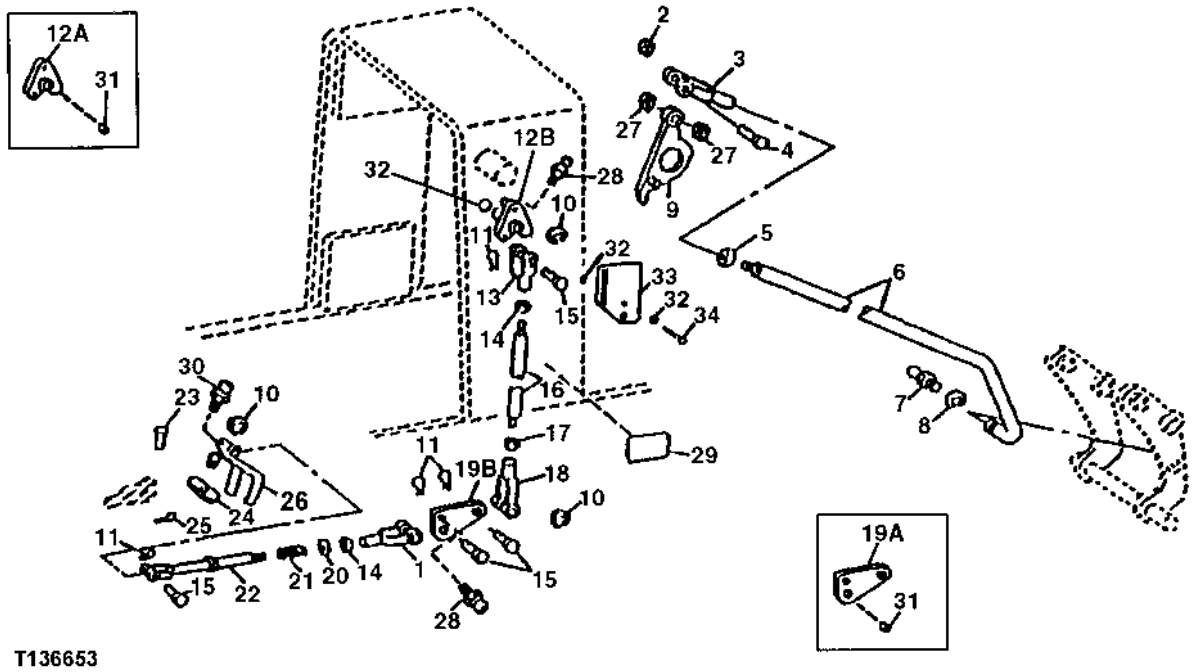

T136653

KEY	PART NO.	PART NAME	QTY	SERIAL NO.	REMARKS
1	T141964	YOKE	1		
2	T148182	RING	1		
3	T21158	YOKE	1		
4	R72855	PIN	1		0.492" X 1.420"
5	14H856	NUT	1		1/2"
6	AT159677	TUBE	1		
7	T162396	LUBRICATION FITTING	1		(SUB FOR JD7798)
8	R73380	SNAP RING	1		
9	AT167016	ACTUATOR	1		ON MAST PIN, (SUB FOR AT159678)
10	F2863R	SNAP RING	3	-802240	

BUCKET LEVELING AND RETURN-TO-DIG LINKAGE

KEY	PART NO.	PART NAME	QTY	SERIAL NO.	REMARKS
11	R46528	SPRING LOCKING PIN	4		
12	AT156333	BELLCRANK	1	-799379	(SUB AT169344) (ALSO ORDER JD7844 AND T152845)
	AT169344	BELLCRANK	1	799380-802240	
12A	.....	BELLCRANK	1	802241-817187	AT164455 NO LONGER AVAILABLE, (SUB AT169870)
12B	AT169870	BELLCRANK	1	817188-	
13	M80373	YOKE	1		
14	14H774	NUT	2		3/8"
15	R65563	PIN	4		0.370" X 1.122"
16	T140355	STUD	1		
17	14H913	NUT	1		3/8", (L.H.)
18	T140328	YOKE	1		(L.H.)
19	AT141108	BELLCRANK	1	-799379	(SUB AT169343) (ALSO ORDER JD7844, JD7846 AND T152845)
	AT169343	BELLCRANK	1	799380-802240	
19A	.....	BELLCRANK	1	802241-817187	AT164452 NO LONGER AVAILABLE, (SUB AT169869)
19B	AT169869	BELLCRANK	1	817188-	
20	24H1308	WASHER	1		13/32" X 1" X 0.134"
21	U12595	SPRING	1		
22	AT151906	YOKE	1		
23	45M7036	PIN	1		6 X 30 MM
24	T132842	STRAP	1		
25	11M7077	COTTER PIN	1		1.600 X 25 MM
26	AT160289	BELLCRANK	1	-799379	(SUB AT169346) (ALSO ORDER JD7806 AND T152845)
	AT169346	BELLCRANK	1	799380-802240	
	AT169635	BELLCRANK	1	802241-	
27	T146757	WASHER	2		0.518" X 0.869" X 0.025"
28	JD7846	LUBRICATION FITTING	2	799380-802240	
29	T152845	LABEL	1	799380-802240	
30	JD7844	LUBRICATION FITTING	1	799380-802240	
31	T148641	BUSHING	2	802241-817187	
32	24M7239	WASHER	3		0.421" X 0.827" X 0.098"
33	T148642	PLATE	1	802241-	
34	19M7742	CAP SCREW	1	802241-817187	
	19M8499	CAP SCREW	1	817188-	

LOADER CONTROL VALVE LINKAGE
(2-FUNCTION)

TP50378 -UN-18JAN96

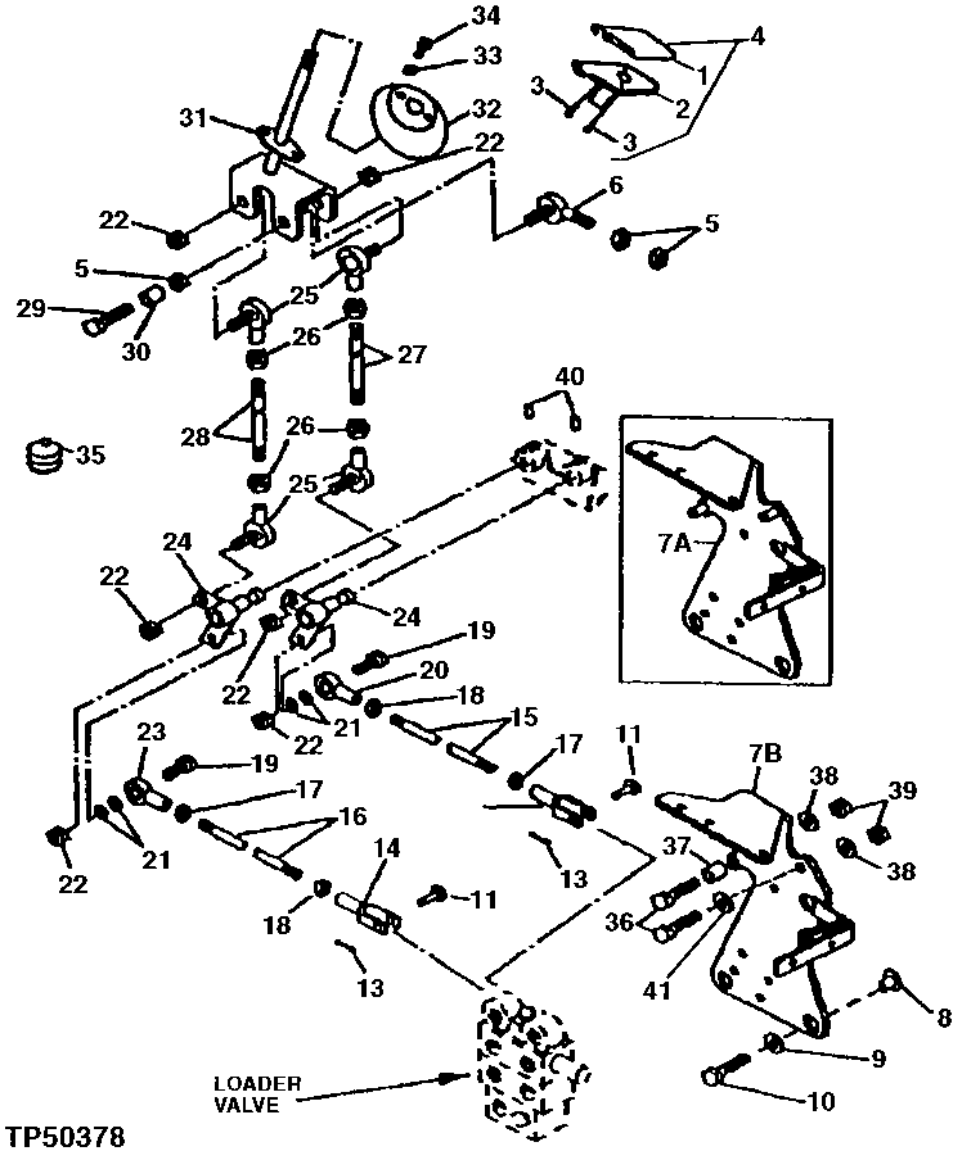

LOADER CONTROL VALVE LINKAGE
(2-FUNCTION)

KEY	PART NO.	PART NAME	QTY	SERIAL NO.	REMARKS
1	.....	HANDLE	1		
2	.....	HANDLE	1		
3	37H95	SCREW	2		
4	AT171550	KNOB	1		(SUB FOR T126974 AND T126975) (INCLUDES (2) 37H95)
5	14H1083	NUT	3		5/8"
6	AT75688	BALL JOINT	1		
7A	AT160156	SUPPORT	1	-802240	
7B	AT169540	SUPPORT	1	802241-	
8	AT139776	ISOLATOR	3		
9	24H1314	WASHER	3		13/32" X 1-3/4" X 7/64"
10	19M7572	CAP SCREW	3		M10 X 45
11	R65563	PIN	2		
12	T76772	YOKE	1		
13	11M7012	COTTER PIN	2		3.200 X 16 MM
14	T140328	YOKE	1		(L.H.)
15	T145284	ROD	1		
16	T140357	STUD	1		
17	14H774	NUT	2		3/8"
18	14H913	NUT	2		3/8", (L.H.)
19	19H3663	CAP SCREW	2		3/8" X 1-1/2"
20	AE37859	TIE ROD END	1		(L.H.)
21	24M7239	WASHER	4		10.700 X 21 X 2.500 MM
22	M68954	LOCK NUT	6		
23	AE37072	TIE ROD END	1		
24	AT141346	BELLCRANK	2		
25	AT169087	BALL JOINT	4		(SUB FOR AT49300)
26	14H774	NUT	4		3/8"
27	T140321	STUD	1		
28	T140323	STUD	1		
29	19H2527	CAP SCREW	1		5/16" X 1-3/4"
30	T141171	BUSHING	1		
31	AT139741	LEVER	1		
32	T133022	BASE	1		
33	24H1646	WASHER	2		17/64" X 3/4" X 0.060"
34	21H1406	SCREW	2		0.190" X 3/4"
35	AT145629	BOOT	2		(WITH CAB)
36	19M7658	CAP SCREW	2	802241-	
37	T148641	BUSHING	2	802241-817187	
	T148641	BUSHING	1	817188-	
38	24H1308	WASHER	2	802241-	
39	24M7296	WASHER	2	802241-	
40	22M7070	SET SCREW	2		M8 X 20
41	24M7096	WASHER	2	817188-	10.500 X 18 X 1.600 MM

THIRD FUNCTION LOADER CONTROL VALVE LINKAGE

TP44156 -UN-01JAN94

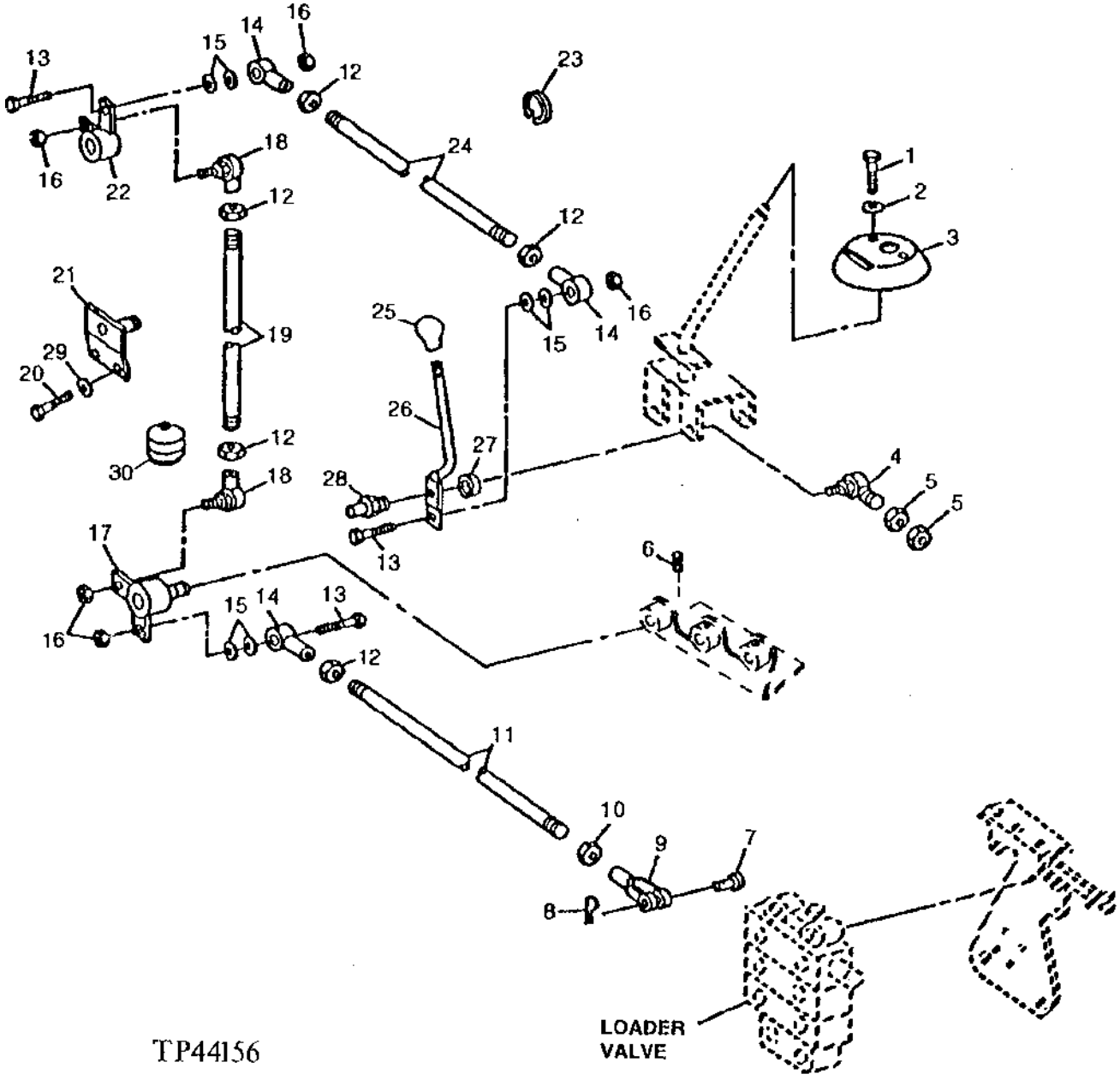

THIRD FUNCTION LOADER CONTROL VALVE LINKAGE

KEY	PART NO.	PART NAME	QTY	SERIAL NO.	REMARKS
1	21H1406	SCREW	2		0.190" X 3/4"
2	24H1646	WASHER	2		17/64" X 3/4" X 0.060"
3	T134363	BASE	1		
4	AT75688	BALL JOINT	1		
5	14H1083	NUT	2		5/8"
6	22M7070	SET SCREW	1		M8 X 20
7	R65563	PIN	1		
8	11M7012	COTTER PIN	1		3.200 X 16 MM
9	T140328	YOKE	1		(L.H.)
10	14H913	NUT	1		3/8", (L.H.)
11	T145285	ROD	1		
12	14H774	NUT	5		3/8"
13	19H3663	CAP SCREW	3		3/8" X 1-1/2"
14	AE37072	TIE ROD END	3		
15	24M7239	WASHER	6		10.700 X 21 X 2.500 MM
16	M68954	LOCK NUT	5		
17	AT141346	BELLCRANK	1		
18	AT169087	BALL JOINT	2		(SUB FOR AT49300)
19	T140324	STUD	1		
20	19M7932	CAP SCREW	2		M8 X 16
21	AT143426	SUPPORT	1		
22	AT140964	BELLCRANK	1		
23	F2863R	SNAP RING	1		
24	T140325	STUD	1		
25	T133291	KNOB	1		
26	AT164534	LEVER	1		(SUB FOR AT150758)
27	24M7053	WASHER	1		17 X 30 X 3 MM
28	T141170	SPACER	1		PIVOT
29	24M7238	WASHER	2		8.700 X 17 X 2 MM
30	AT145629	BOOT	1		(WITH CAB)
..	**AT158958**	**KIT**	**1**		**(THIRD FUNCTION LOADER HYDRAULICS, LINKAGE & PLUMBING) (NOT ILLUSTRATED)**

LINKAGE SHIELDS

TP42837 -UN-01JAN94

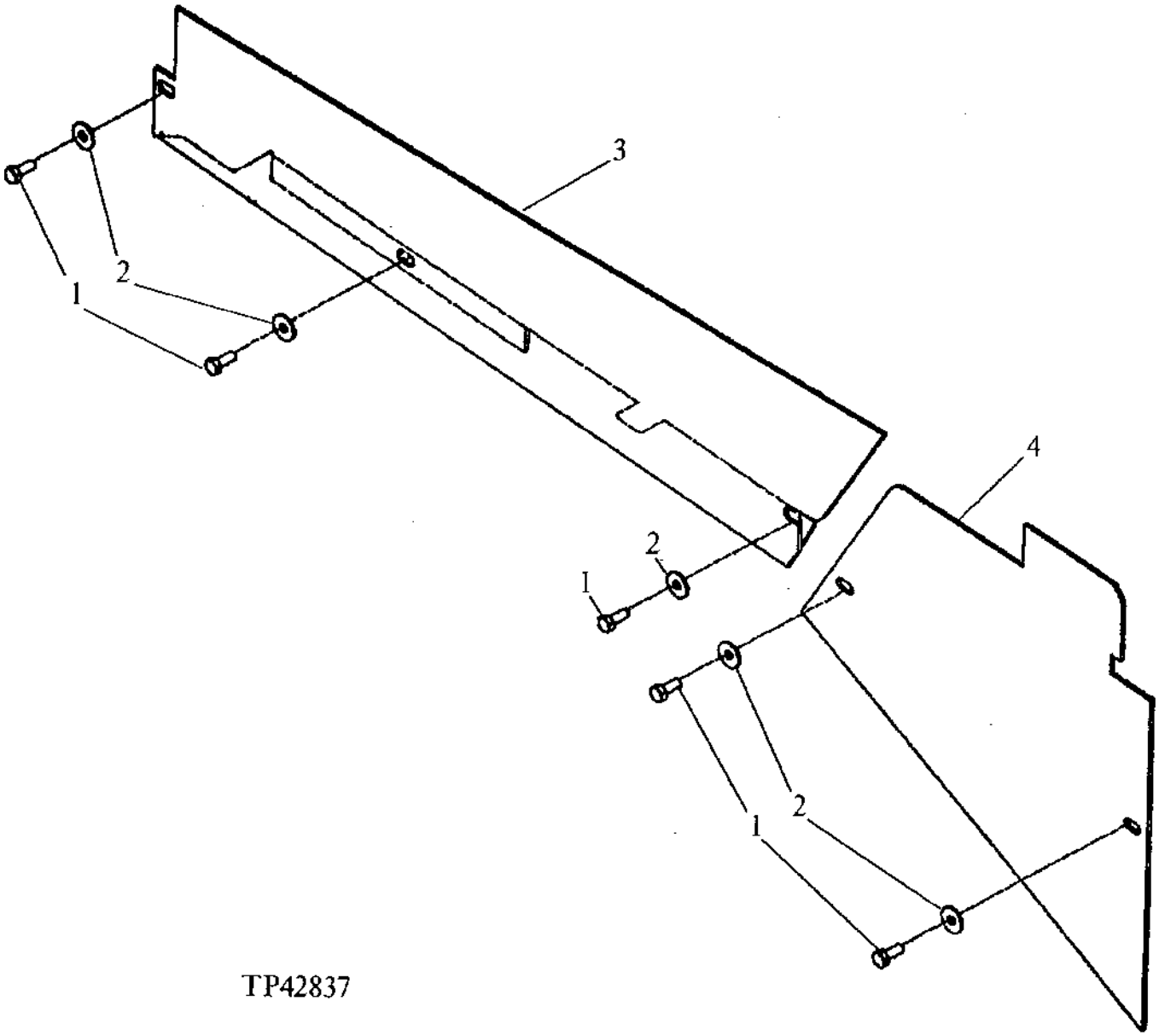

LINKAGE SHIELDS

KEY	PART NO.	PART NAME	QTY	SERIAL NO.	REMARKS
1	19M7402	CAP SCREW	5		M10 X 25
2	24M7296	WASHER	5		10.500 X 30 X 2.500 MM
3A	T144346	SHIELD	1	-798805	
3B	T152594	SHIELD	1	798806-	
4A	T144697	SHIELD	1	-798805	
4B	T152595	SHIELD	1	798806-	

MEMORANDA

LOADER BUCKET LINKAGE

TP24212 -UN-29SEP94

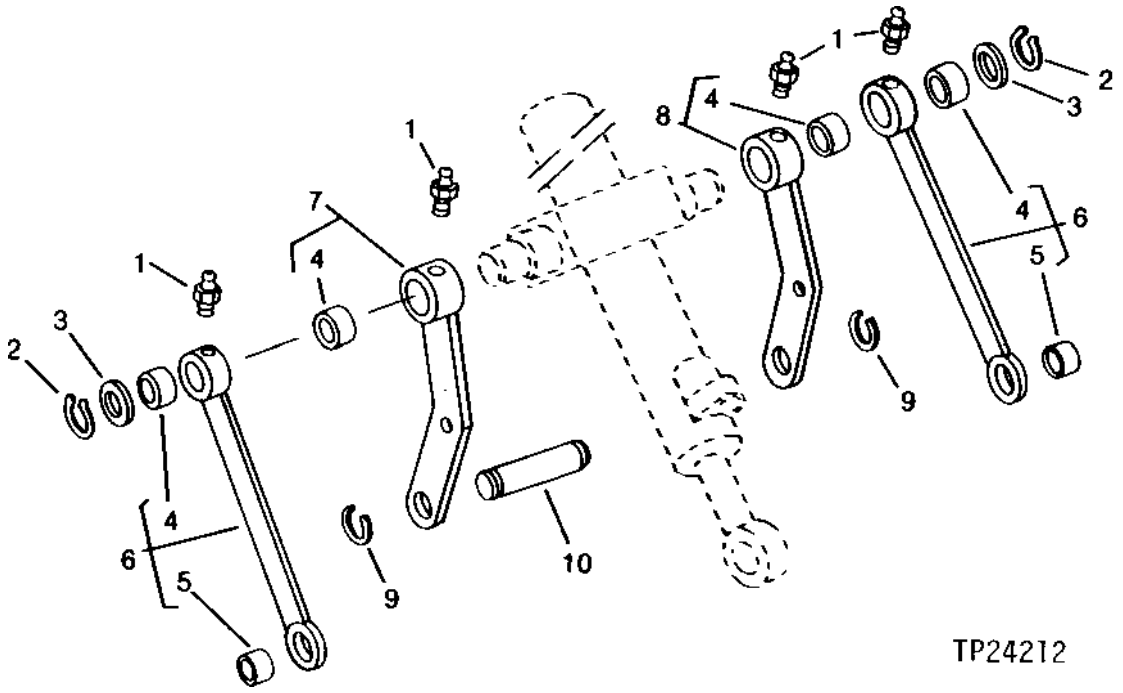

KEY	PART NO.	PART NAME	QTY	SERIAL NO.	REMARKS
1	T162396	LUBRICATION FITTING	4		(SUB FOR JD7798)
2	U42392	SNAP RING	2		
3	24M7174	WASHER	2		70 X 90 X 3.500 MM
4	T75184	BUSHING	4		
5	T76641	BUSHING	2		
6	AT117632	LINK	2		
7	AT117633	LINK	1		
8	AT117634	LINK	1		
9	40M7166	SNAP RING	2		
10	T120287	PIN	1		

LOADER LIFT ARMS

TP46493 -UN-23FEB95

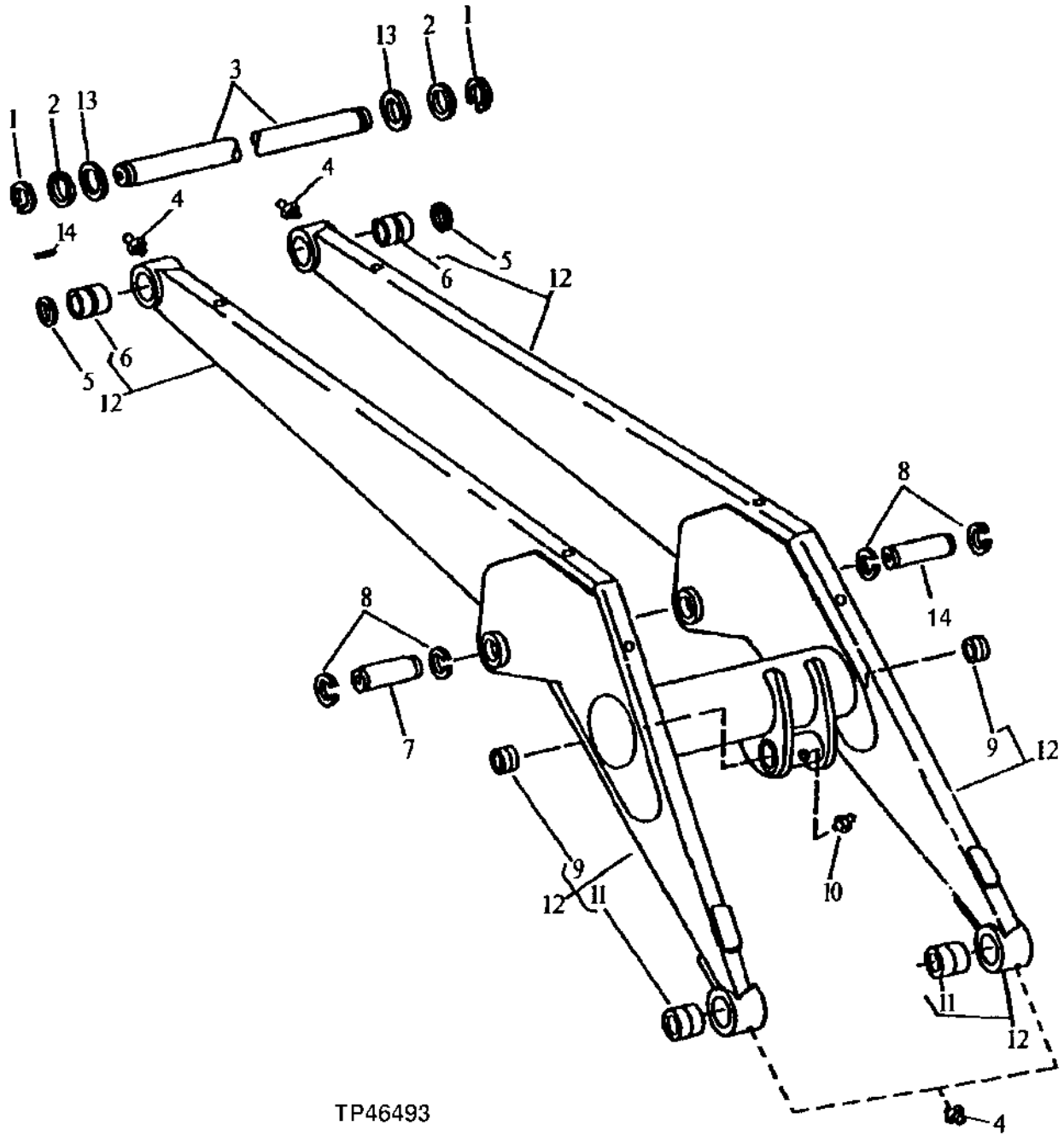

LOADER LIFT ARMS

KEY	PART NO.	PART NAME	QTY	SERIAL NO.	REMARKS
1	T41471	SNAP RING	2		
2	T67205	THRUST WASHER	2		
3	T126834	PIN	1		
4	T162396	LUBRICATION FITTING	4		(SUB FOR JD7798)
5	U45230	SEAL	2		
6	T128306	BUSHING	2		
7	T140086	PIN	2	-807902	
	T140086	PIN	1	807903-	
8	40M7180	SNAP RING	4		
9	T76641	BUSHING	2		
10	T162396	LUBRICATION FITTING	1		(SUB FOR JD7798) 1/8"
11	T127748	BUSHING	2		
12	AT168992	ARM	1		(SUB FOR AT161088)
13	T125956	WASHER	4		2.560" X 4.530" X 0.098"
14	T153866	PIN	1	807903-	

MEMORANDA

LOADER CONTROL VALVE (WITH RETURN-TO-DIG)

TP18893 -UN-01JAN94

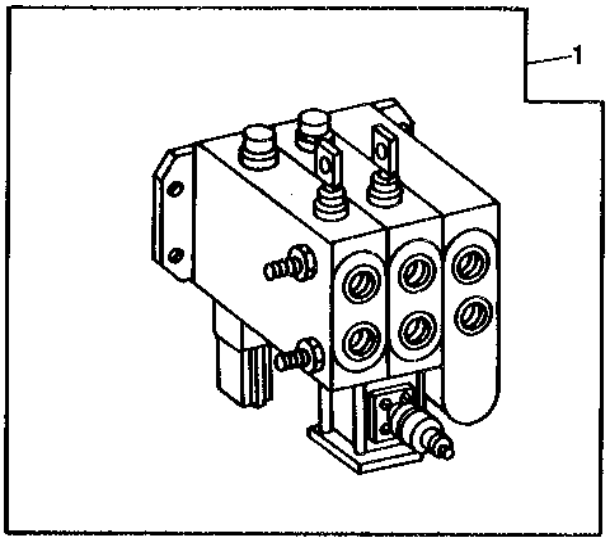

TP18893

KEY	PART NO.	PART NAME	QTY	SERIAL NO.	REMARKS
1	AT159001	VALVE	1		GRESEN V30 (2-FUNCTION)
	AT159004	VALVE	1		GRESEN V30 (3-FUNCTION)

INLET SECTION, VALVE SECTION SEALS AND TIE BOLTS

TP42871 -UN-01JAN94

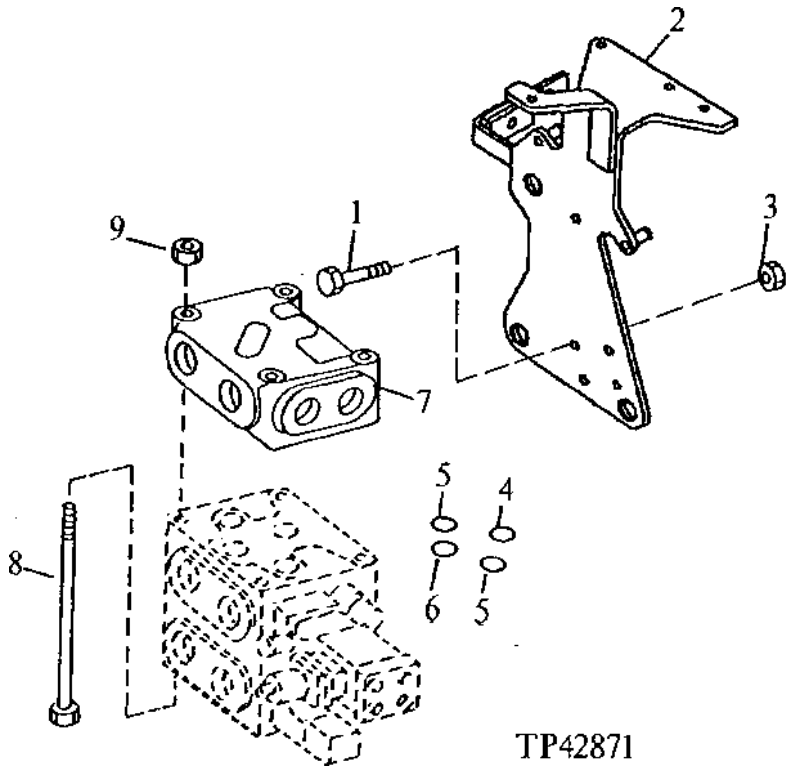

KEY	PART NO.	PART NAME	QTY	SERIAL NO.	REMARKS
1	19M8011	CAP SCREW	3		M12 X 30
2	AT160156	SUPPORT	1		
3	14M7275	NUT	3		M12
4	.....	O-RING	2		(K) (2-FUNCTION)
	.....	O-RING	3		(K) (3-FUNCTION)
5	.....	O-RING	2		(K) (2-FUNCTION)
	.....	O-RING	3		(K) (3-FUNCTION)
6	.....	O-RING	4		(K) (2-FUNCTION)
	.....	O-RING	6		(K) (3-FUNCTION)
7	T145253	VALVE	1		
8	19H3274	CAP SCREW	4		3/8" X 7", (2-FUNCTION)
	T135377	STUD	4		(3-FUNCTION)
9	14H1076	NUT	4		3/8", (2-FUNCTION)
	14H1076	NUT	8		3/8", (3-FUNCTION)
..	AT159848	KIT	1		INCLUDES ALL (K) PARTS (SECTION SEAL)

BUCKET SECTION

TP42916 -UN-01JAN94

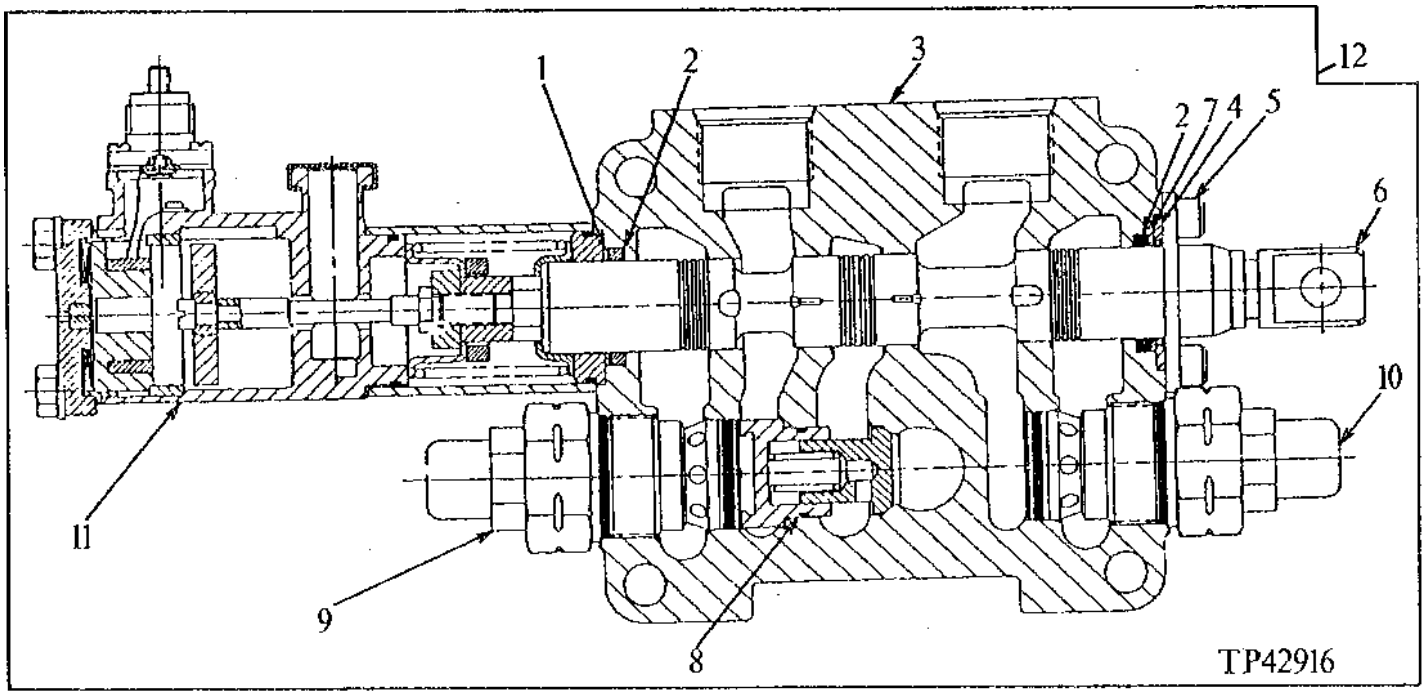

KEY	PART NO.	PART NAME	QTY	SERIAL NO.	REMARKS
1	T75982	BACK-UP RING	1		(K)
2	T122063	O-RING	2		(K)
3	.....	HOUSING	1		
4	T118737	THRUST WASHER	1		
5	19H2701	SCREW	2		1/4" X 5/8"
	T106147	PLATE	1		
6	.....	SPOOL	1		
7	T118736	SEAL	1		(K)
8	AT106602	PLUG	1		
9	AT106600	RELIEF VALVE	1		
10	AT106601	RELIEF VALVE	1		
11	AT168948	VALVE	1		SOLENOID, (SUB FOR AT106607)
12	.....	VALVE	1	-795661	(AT159002 NO LONGER AVAILABLE) (ALSO ORDER AT159848) (SUB AT168947)
	AT168947	VALVE	1	795662-	(ALSO ORDER AT15848)
..	AT159849	KIT	1		INCLUDES ALL (K) PARTS (SPOOL SEAL)

BOOM SECTION

TP50368 -UN-14SEP95

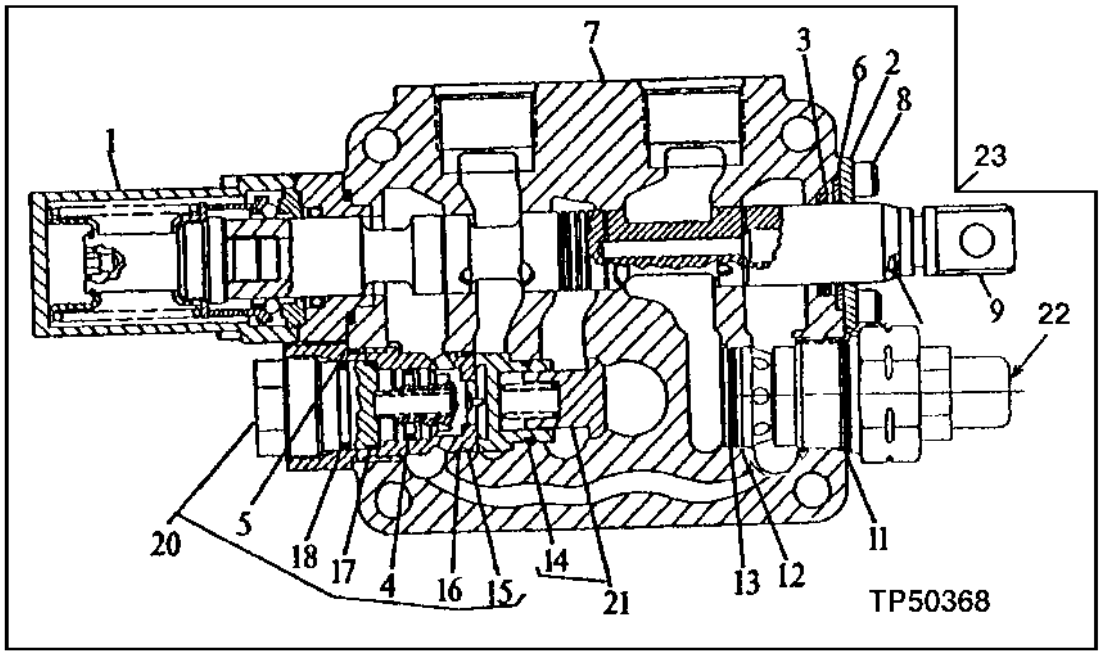

KEY	PART NO.	PART NAME	QTY	SERIAL NO.	REMARKS
1	AT114566	RETAINER	1		
2	T106147	PLATE	1		
3	T118736	SEAL	1		(K)
4	R56464	O-RING	1		
5	U15242	O-RING	1		
6	T118737	THRUST WASHER	1		
7	.....	HOUSING	1		
8	19H2701	SCREW	2		1/4" X 5/8"
9	.....	SPOOL	1		
10	L34378	O-RING	1		
11	U15242	O-RING	1		
12	T75996	BACK-UP RING	1		
13	R27928	O-RING	1		
14	N31772	O-RING	1		
15	T106298	BACK-UP RING	1		(SUB FOR R27928, THIS APPLICATION)
16	T49819	O-RING	1		(SUB FOR T75996, THIS APPLICATION)
17	T75984	O-RING	1		
18	U15980	O-RING	1		
20	AT106609	CHECK VALVE	1		
21	AT106602	PLUG	1		
22	AT106601	RELIEF VALVE	1		WITH 2-FUNCTION, (ALSO ORDER AT159848)
23	AT160512	VALVE	1		(2-FUNCTION)
	AT160515	VALVE	1		(3-FUNCTION)
..	AT159849	KIT	1		INCLUDES ALL (K) PARTS (SPOOL SEAL)

AUXILIARY SECTION
(THIRD FUNCTION)

TP42918 -UN-01JAN94

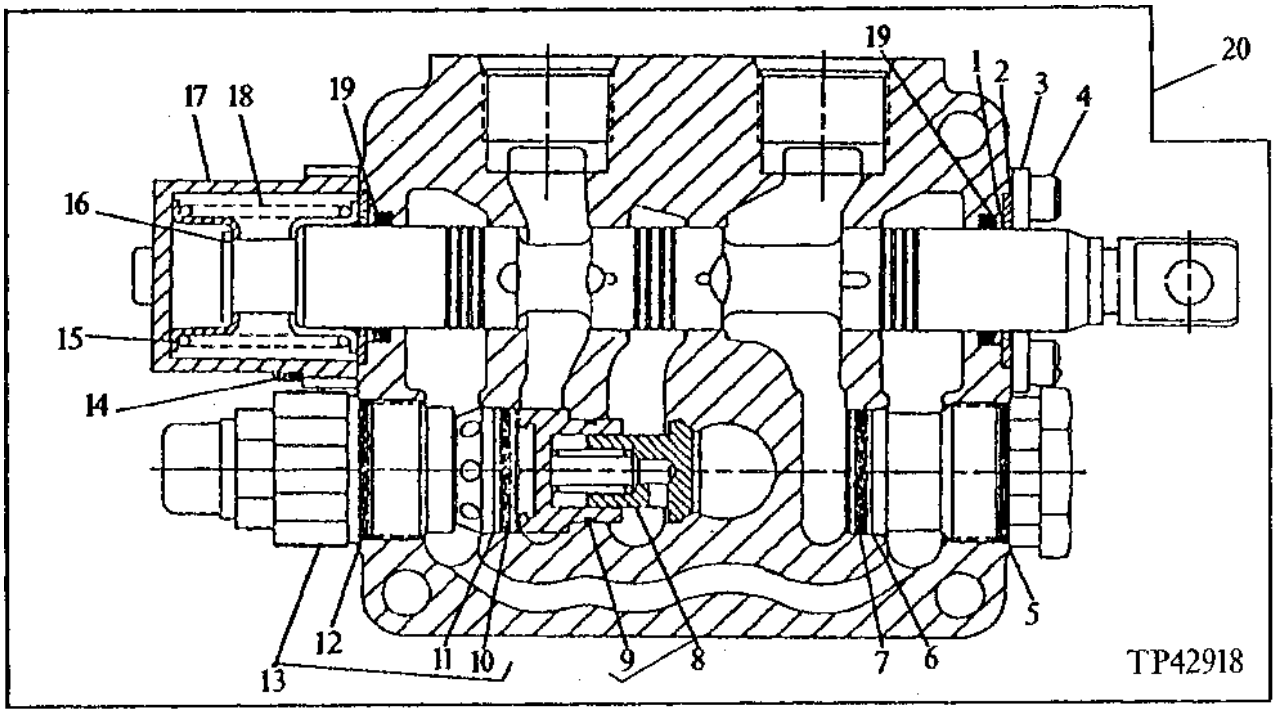

KEY	PART NO.	PART NAME	QTY	SERIAL NO.	REMARKS
1	T118736	SEAL	1		(K)
2	T118737	THRUST WASHER	1		
3	T106147	PLATE	1		
4	19H2701	SCREW	2		1/4" X 5/8"
5	U15242	O-RING	1		
6	T75996	BACK-UP RING	1		
7	R27928	O-RING	1		
8	AT106602	PLUG	1		
9	N31772	O-RING	1		
10	R27928	O-RING	1		
11	T75996	BACK-UP RING	1		
12	U15242	O-RING	1		
13	AT148194	RELIEF VALVE	1		
14	T106306	SCREW	2		
15	T106183	LOCKING COLLAR	2		
16	T135398	BUSHING	1		
17	AT148195	CAP	1		
18	.....	SPRING	1		
19	T122063	O-RING	2		(K)
20	AT160516	VALVE	1		(ALSO ORDER AT159848)
..	AT159849	KIT	1		INCLUDES ALL (K) PARTS (SPOOL SEAL)

BETWEEN SECTION SEAL KIT

TP44012 -UN-01JAN94

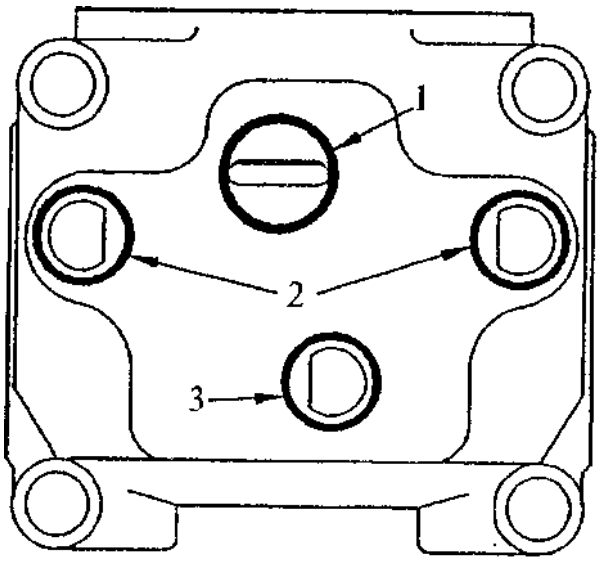

TP44012

KEY	PART NO.	PART NAME	QTY	SERIAL NO.	REMARKS
1	.....	O-RING	1		(K) 1.11"
2	.....	O-RING	2		(K) .924"
3	.....	O-RING	1		(K) .987"
..	AT159848	KIT	1		INCLUDES ALL (K) PARTS (SECTION SEAL)

BOOM SECTION FLOAT POSITIONER

TP21291 -UN-01JAN94

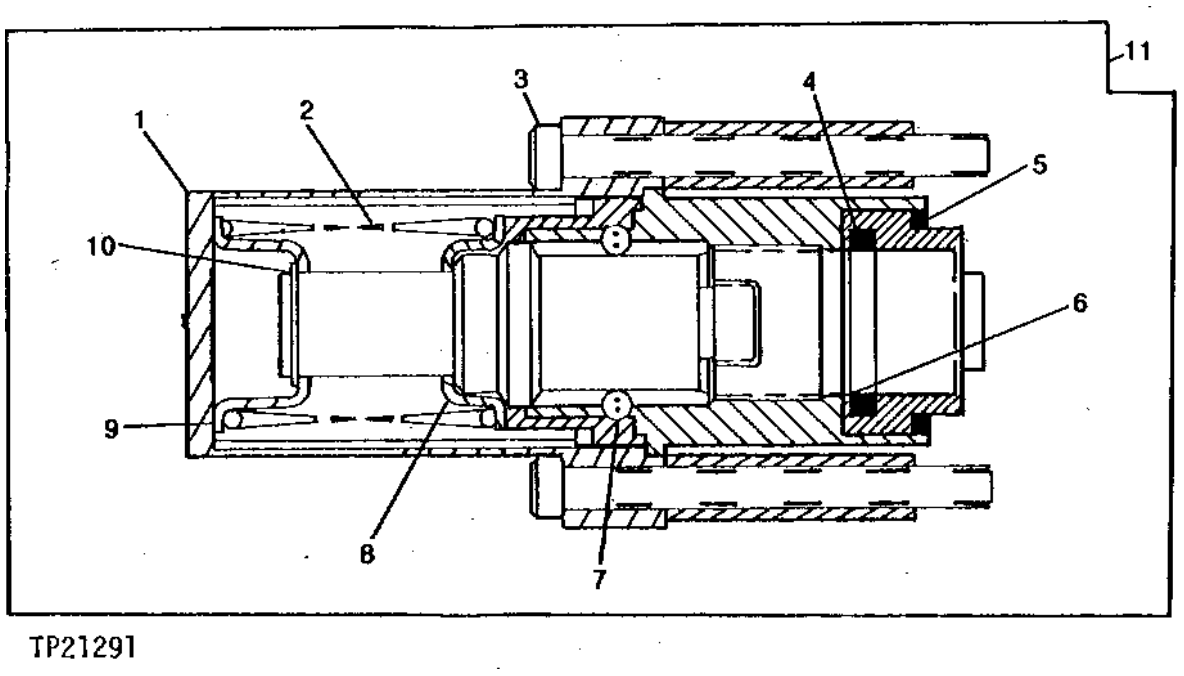

KEY	PART NO.	PART NAME	QTY	SERIAL NO.	REMARKS
1	AT117657	CAP	1		
2	T118853	SPRING	1		
3	19H3220	CAP SCREW	2		1/4" X 2-1/2"
4	T122063	O-RING	1		(K)
5	R69670	O-RING	1		(K) (SUB FOR H35238, THIS APPLICATION)
6	T75982	BACK-UP RING	1		(K)
7	H60816	BALL	4		
8	T106184	LOCKING COLLAR	1		
9	T106183	LOCKING COLLAR	1		
10	T106194	SNAP RING	1		
11	AT114566	RETAINER	1		
..	AT159849	KIT	1		INCLUDES ALL (K) PARTS (SPOOL SEAL)

THIRD FUNCTION HYDRAULICS

TP44085 -UN-01JAN94

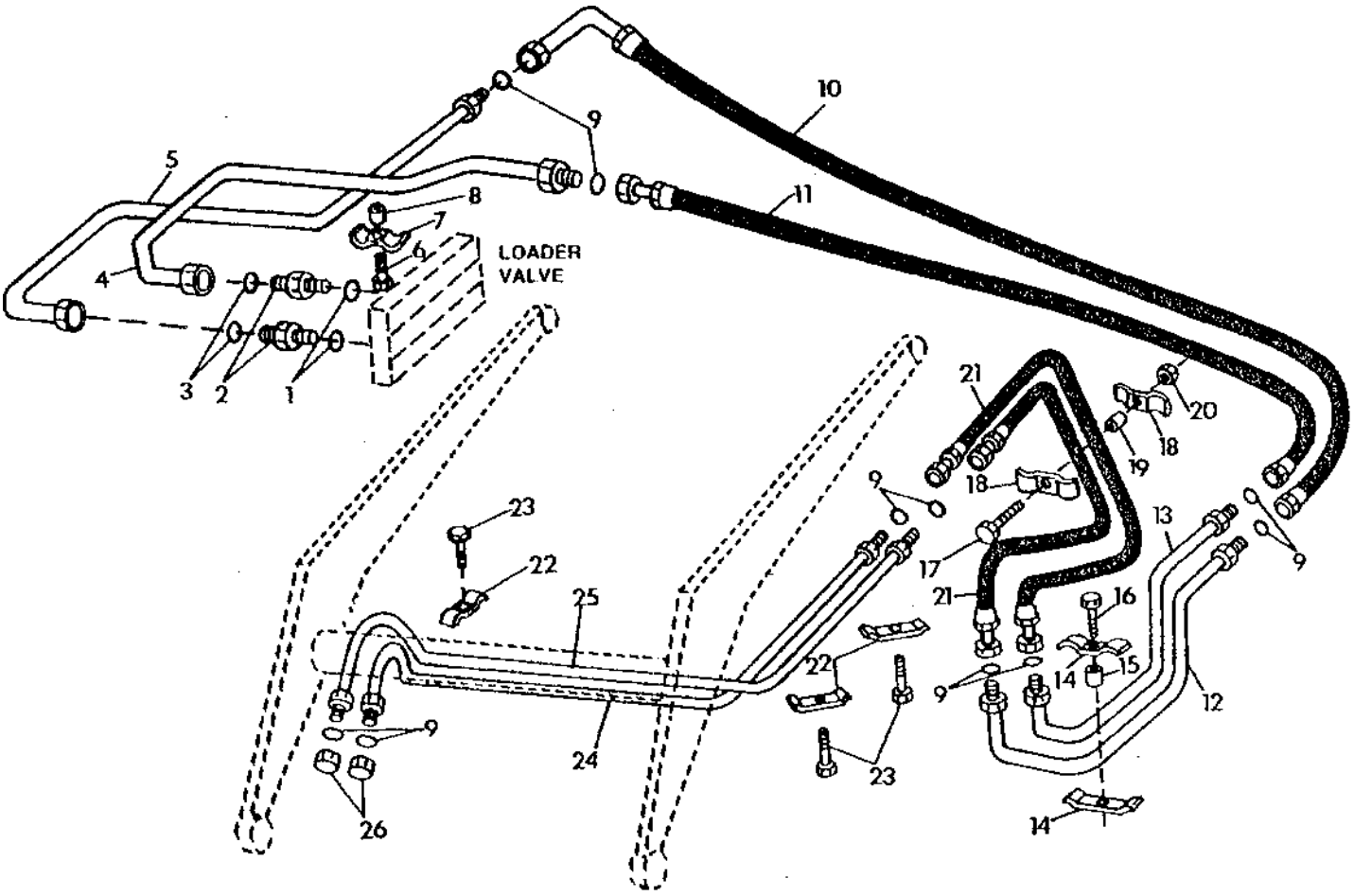

TP44085

THIRD FUNCTION HYDRAULICS

KEY	PART NO.	PART NAME	QTY	SERIAL NO.	REMARKS
1	U12547	O-RING	2		
2	38H1163	ADAPTER	2		
3	T77858	O-RING	2		
4	AT160187	LINE	1		
5	AT160186	LINE	1		
6	19M7875	CAP SCREW	1		M10 X 70
7	R46919	HALF CLAMP	1		
8	28H3381	SPACER	1		0.493" X 0.675" X 5/8", (SUB FOR 28H1689, THIS APPLICATION)
9	T77857	O-RING	10		
10	AT135719	HYDRAULIC HOSE	1		13/16" X 1 015 MM (40") X 13/16"
11	AT145091	HYDRAULIC HOSE - FABRICATE	1		13/16" X 933 MM (36-3/4") X 13/16"
12	AT160814	LINE	1		
13	AT160815	LINE	1		
14	R46919	HALF CLAMP	6		
15	28H3412	WASHER	3		(SUB FOR 28H1519, THIS APPLICATION)
16	19M7403	CAP SCREW	3		M12 X 35
	24M7238	WASHER	2		8.700 X 17 X 2 MM
17	19M7550	CAP SCREW	1		M10 X 35
18	R46919	HALF CLAMP	2		
19	28H3381	SPACER	1		
20	14M7274	NUT	1		M10
21	AT145154	HYDRAULIC HOSE - FABRICATE	2		13/16" X 1 270 MM (50") X 13/16", (SUB FOR AT135721)
22	U10516	HOSE CLAMP	3		
23	19M8324	CAP SCREW	3		M10 X 16
24	AT160185	LINE	1		
25	AT160184	LINE	1		
26	38H1416	FITTING PLUG	2		

MULTI-PURPOSE BUCKET CYLINDER (GANNON)

TP27926 -UN-01JAN94

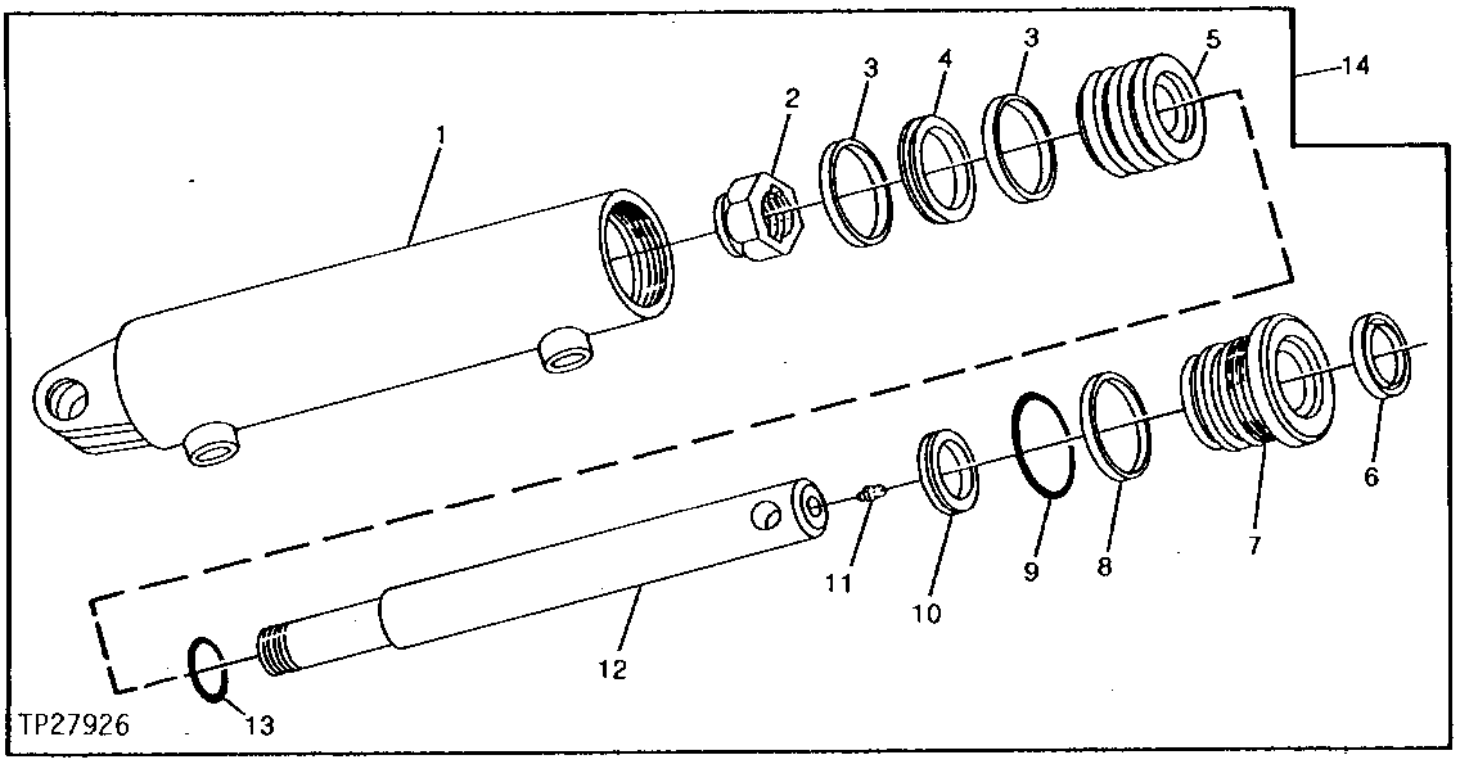

KEY	PART NO.	PART NAME	QTY	SERIAL NO.	REMARKS
1	AT142583	BARREL	1		
2	T24715	NUT	1		
3	.....	WEAR RING	2		(K)
4	.....	SEAL	1		(K)
5	T128529	PISTON	1		
6	.....	SEAL	1		(K)
7	T128528	HYDR. CYLINDER ROD GUIDE	1		
8	.....	BACK-UP RING	1		(K)
9	.....	O-RING	1		(K)
10	.....	SEAL	1		(K)
11	JD7797	LUBRICATION FITTING	1		
12	T128530	ROD	1		
13	.....	O-RING	1		(K)
14	AT142578	CYLINDER	1		
..	AT142582	KIT	1		INCLUDES ALL (K) PARTS (MULTI-PURPOSE BUCKET CYLINDER REPAIR)

LOADER BOOM LIFT CYLINDER

TP27862 -UN-29SEP94

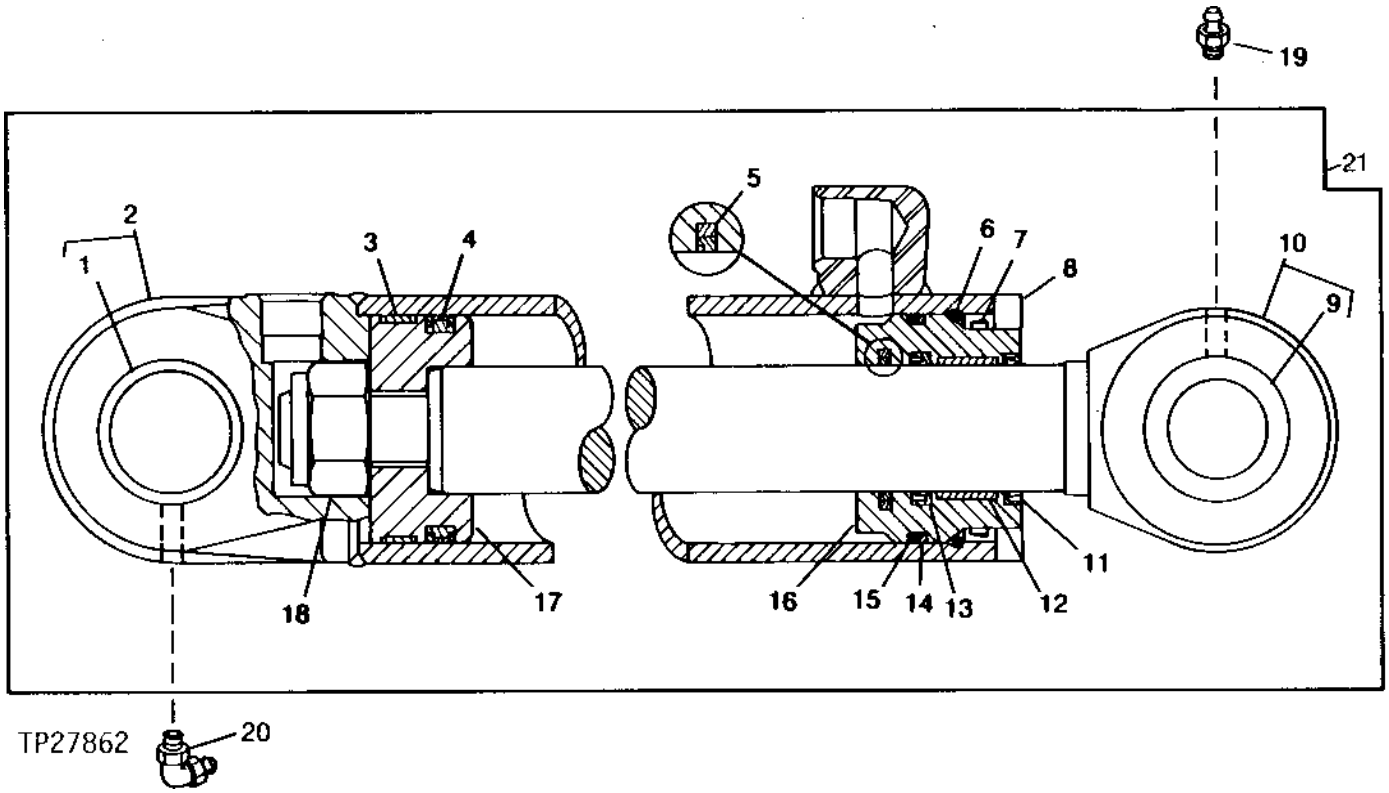

KEY	PART NO.	PART NAME	QTY	SERIAL NO.	REMARKS
1	R82076	BUSHING	1		
2	RE32558	HYDRAULIC CYLINDER BARREL	1		
3	R81775	WEAR RING	1		(BK)
4	RE20343	SEAL	1		(BK)
5	RE31717	SEAL	1		(RK)
6	R81787	RING	1		
7	R91731	RING	AR		(BK)
8	R81793	NUT	1		
9	R82960	BUSHING	1		
10	RE32560	ROD	1		
11	RE31718	SEAL	1		(RK)
12	R92310	WEAR RING	1		(RK)
13	R92309	SEAL	1		(RK)
14	R81862	BACK-UP RING	1		(BK)
15	F950R	O-RING	1		
16	.....	HYDR. CYLINDER ROD GUIDE	1		(R92314 NO LONGER USED) (SUB H157427) (ALSO ORDER AH149814)
17	R93028	PISTON	1		
18	H170540	LOCK NUT	1		(SUB FOR H147771)
19	T162396	LUBRICATION FITTING	1		(SUB FOR JD7798)
20	JD7799	LUBRICATION FITTING	1		
21	RE32557	HYDRAULIC CYLINDER	1		(USE IF AVAILABLE)
..	AH149844	KIT	1		INCLUDES ALL (BK)PARTS (CYLINDER BORE REPAIR)
..	RE31716	HYDRAULIC CYLINDER KIT	1		INCLUDES ALL (RK) PARTS (CYLINDER ROD REPAIR)

LOADER BUCKET CYLINDER

TP42322 -UN-29SEP94

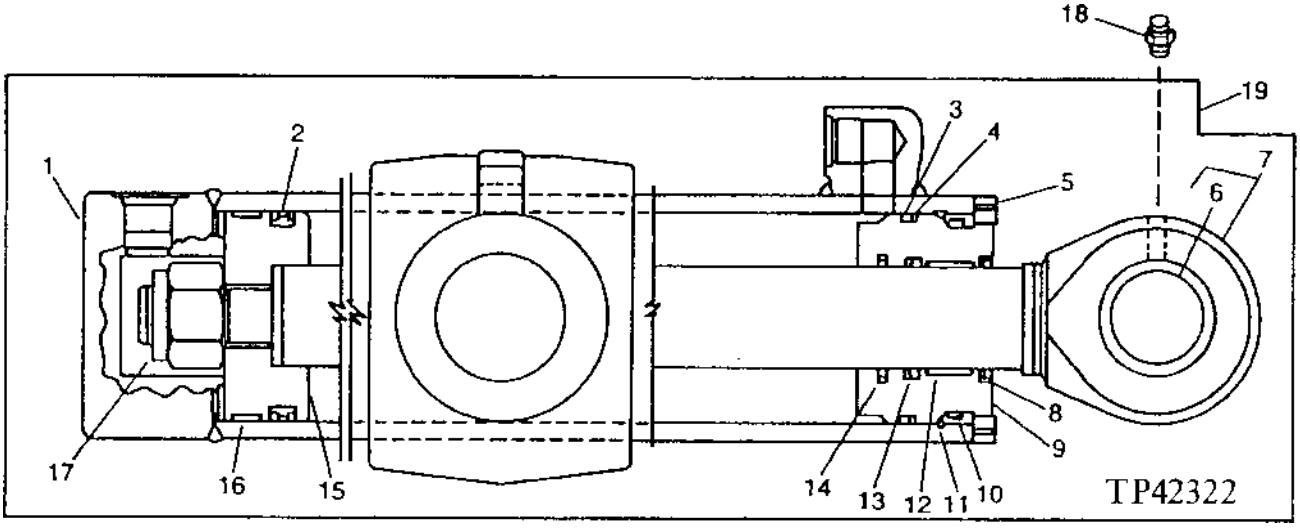

KEY	PART NO.	PART NAME	QTY	SERIAL NO.	REMARKS
1	RE37774	HYDRAULIC CYLINDER BARREL	1		
2	RE20809	SEAL	1		(BK)
3	R83578	O-RING	1		(BK)
4	R79001	BACK-UP RING	1		(BK)
5	R82086	NUT	1		
6	R81971	BUSHING	1		
7	RE37776	ROD	1		
8	RE31718	SEAL	1		(RK)
9	.....	HYDR. CYLINDER ROD GUIDE	1		(R92321 NO LONGER USED) (SUB H157428) (ALSO ORDER AH149814)
10	R91624	BACK-UP RING	1		(BK)
11	R82093	SNAP RING	1		
12	R92310	WEAR RING	1		(RK)
13	R92309	SEAL	1		(RK)
14	RE31717	SEAL	1		(RK)
15	R99104	PISTON	1		
16	R82095	WEAR RING	1		(BK)
17	H170540	LOCK NUT	1		(SUB FOR H147771)
18	JD7784	LUBRICATION FITTING	1	-823001	
	T162396	LUBRICATION FITTING	1	823002-	(SUB FOR JD7798)
19	.....	HYDRAULIC CYLINDER	1		(RE37702 NO LONGER AVAILABLE) (SUB AH154792)
..	AH149846	KIT	1		INCLUDES ALL (BK) PARTS (CYLINDER BORE)
..	RE31716	HYDRAULIC CYLINDER KIT	1		INCLUDES ALL (BK) PARTS (CYLINDER ROD)

LOADER CONTROL VALVE SOLENOID

TP45421 -UN-01JAN94

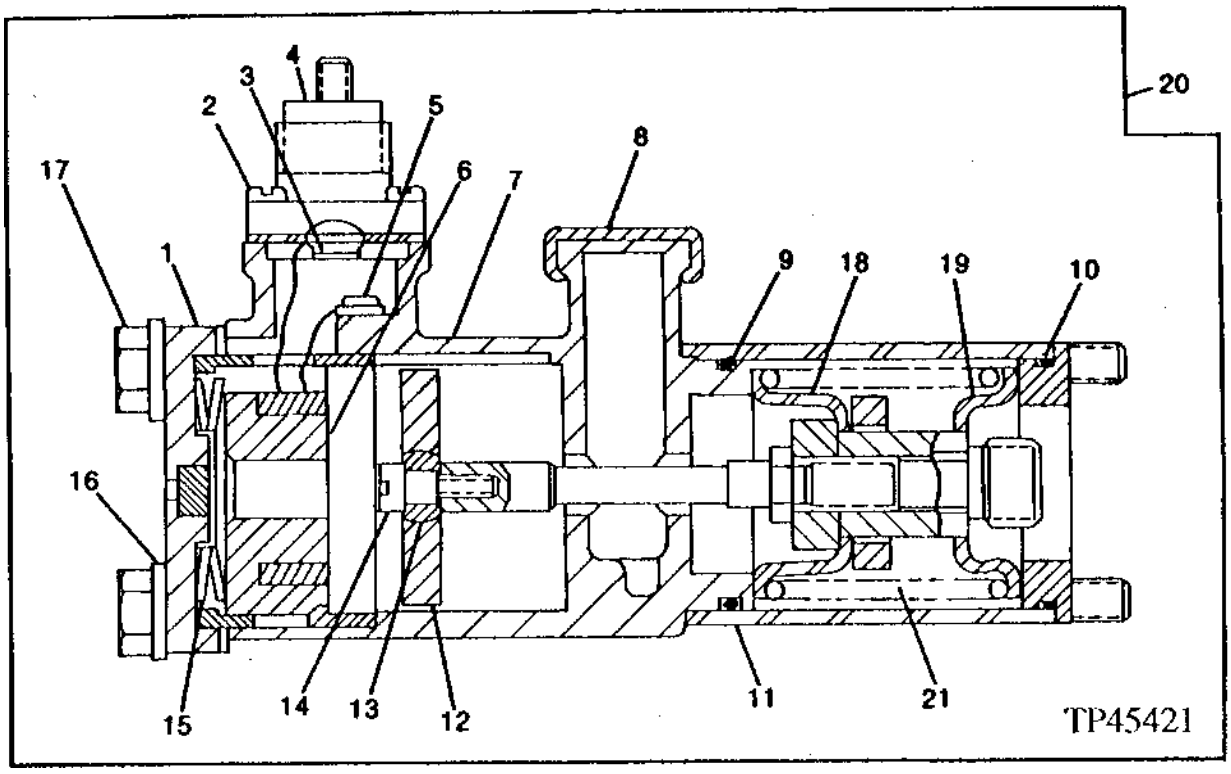

KEY	PART NO.	PART NAME	QTY	SERIAL NO.	REMARKS
1	.....	CAP	1		
2	T78192	SCREW	4		
3	T61157	GASKET	1		
4	AT78371	TERMINAL	1		
5	21H1284	SCREW	1		0.112" X 3/16"
6	AT168950	MAGNET	1		(SUB FOR AT58741)
7	.....	COVER	1		
8	T61158	COVER	1		
9	T22827	O-RING	1		(K)
10	T22827	O-RING	1		(K)
11	.....	SLEEVE	1		
12	T151328	ARMATURE	1		(SUB FOR T61148)
13	T61149	WASHER	1		
14	T61150	SCREW	1		
15	T61152	WASHER	2		
16	24H1286	WASHER	4		9/32" X 1/2" X 1/16"
17	19H2340	CAP SCREW	4		1/4" X 5-1/2"
18	T106183	LOCKING COLLAR	1		
19	T106184	LOCKING COLLAR	1		
20	AT168948	VALVE	1		(SUB FOR AT106607)
21	T118853	SPRING	1		
..	AT159849	KIT	1		INCLUDES ALL (K) PARTS (SPOOL SEAL KIT)

LOADER CONTROL VALVE TO BOOM CYLINDER HYDRAULICS

TP44062 -UN-01JAN94

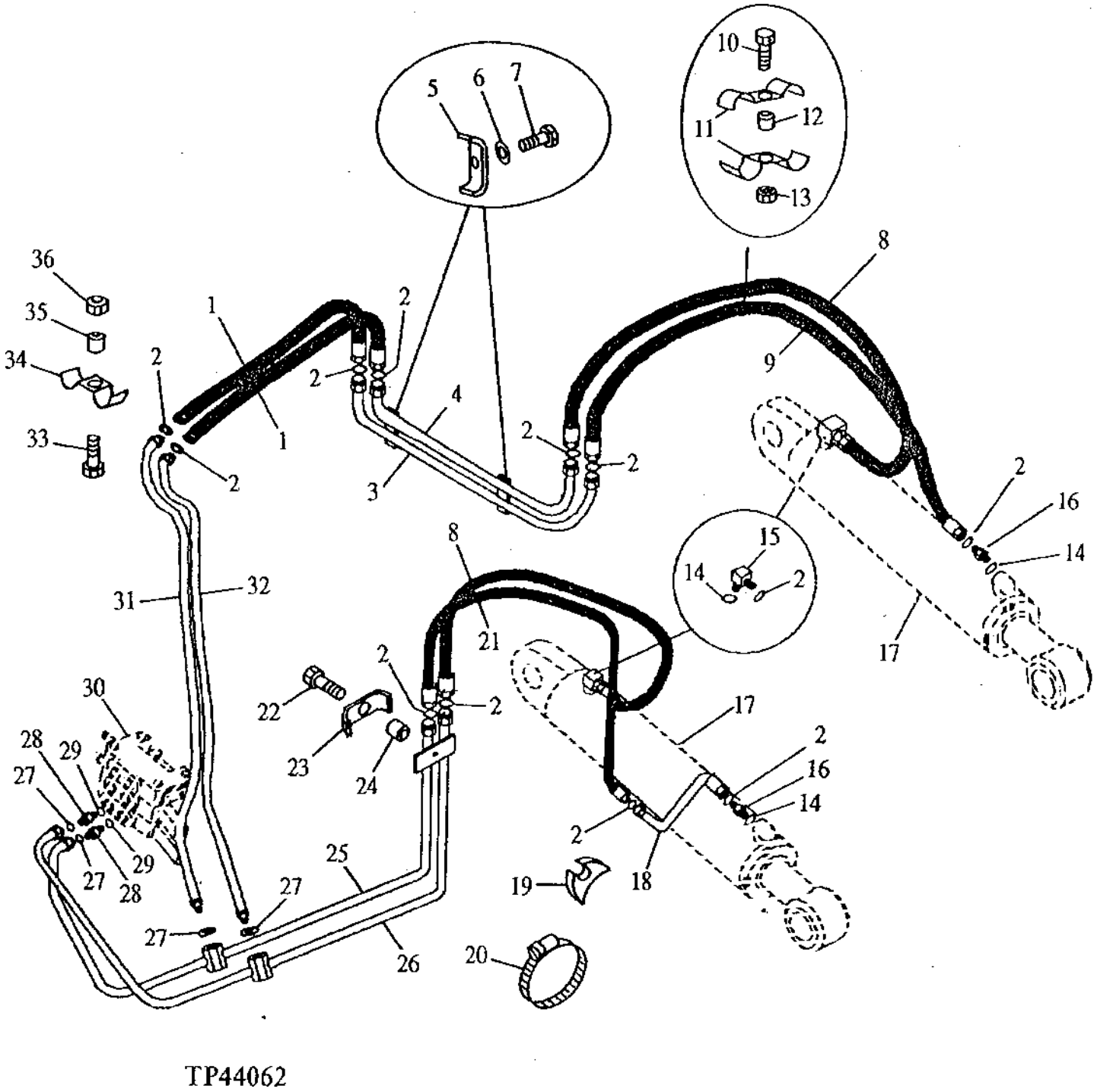

LOADER CONTROL VALVE TO BOOM CYLINDER HYDRAULICS

KEY	PART NO.	PART NAME	QTY	SERIAL NO.	REMARKS
1	AT160848	HYDRAULIC HOSE - FABRICATE	2		1" X 914 MM (36") X 1"
2	T77932	O-RING	13		
3	AT160812	LINE	1		
4	AT160813	LINE	1		
5	U40398	CLAMP	3		
6	24M7239	WASHER	3		10.700 X 21 X 2.500 MM
7	19M7938	CAP SCREW	3		M10 X 20
8	AT160590	HYDRAULIC HOSE - FABRICATE	2		1" X 1 110 MM (43-3/4") X 1"
9	AT148131	HYDRAULIC HOSE - FABRICATE	1		1" X 1 380 MM (54-1/4") X 1"
10	19M7550	CAP SCREW	2		M10 X 35
11	R46919	HALF CLAMP	4		
12	28H1697	SPACER	2		0.493" X 0.675" X 3/4"
13	14M7274	NUT	2		M10
14	U12547	O-RING	4		
15	38H1404	ELBOW FITTING	2		
16	38H1329	ADAPTER	2		
17	RE32557	HYDRAULIC CYLINDER	2		LOADER LIFT
18	AT132717	OIL LINE	1		
19	T105773	GUIDE	2		
20	AR85327	CLAMP	2		
21	AT163376	HYDRAULIC HOSE - FABRICATE	1		1" X 1 499 MM (59") X 1"
22	19M7572	CAP SCREW	1		M10 X 45
23	T27022	CLAMP	1		
24	28H1523	BUSHING	1		
25	AT159820	LINE	1		
26	AT159821	LINE	1		
27	T77858	O-RING	4		
28	38H1163	ADAPTER	2		
29	U12547	O-RING	2		
30	AT159001	VALVE	1		
31	AT159826	LINE	1		
32	AT159827	LINE	1		
33	19M8499	CAP SCREW	1		M10 X 60
34	R46919	HALF CLAMP	1		
35	28H3381	SPACER	1		0.493" X 0.675" X 5/8"
36	14M7274	NUT	1		M10

LOADER CONTROL VALVE TO BUCKET CYLINDER HYDRAULICS

TP44135 -UN-01JAN94

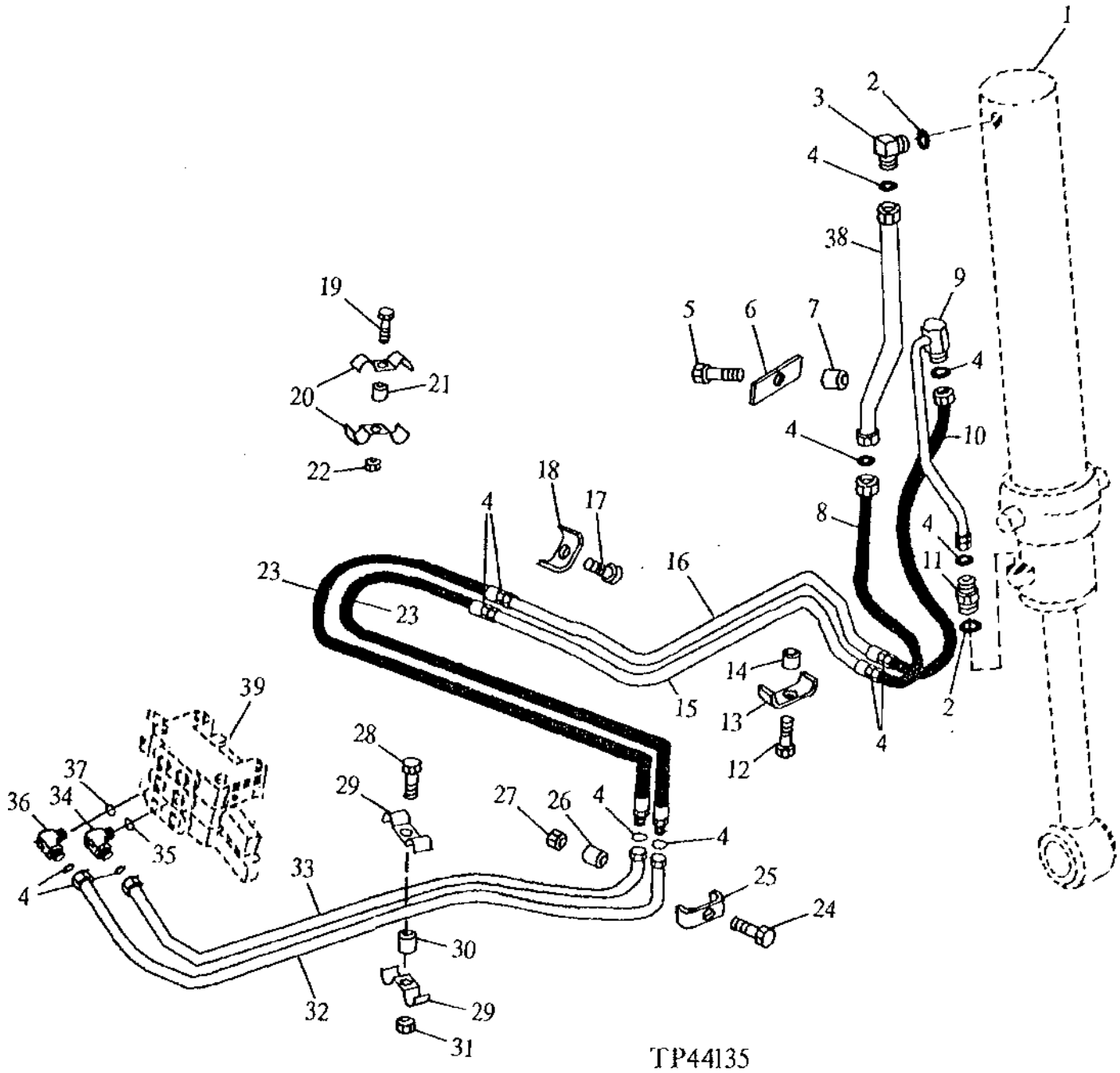

LOADER CONTROL VALVE TO BUCKET CYLINDER HYDRAULICS

KEY	PART NO.	PART NAME	QTY	SERIAL NO.	REMARKS
1	AH154792	HYDRAULIC CYLINDER	1		BUCKET LIFT, (SUB FOR RE37702)
2	U12547	O-RING	2		
3	AT181300	ELBOW FITTING	1		(SUB FOR AT164364) (SUB FOR 38H1007, THIS APPLICATION)
4	T77858	O-RING	12		
5	19M7358	CAP SCREW	1		M10 X 40
6	T125519	STRAP	1		
7	28H1523	BUSHING	1		0.493" X 0.675" X 13/16"
8	AT117688	HYDRAULIC HOSE - FABRICATE	1		1-13/16" X 1 118 MM (44") X 1-13/16", (SUB FOR AT117687, THIS APPLICATION)
9	AT132717	OIL LINE	1		
10	AT117688	HYDRAULIC HOSE - FABRICATE	1		1-13/16" X 1 118 MM (44") X 1-13/16"
11	38H1163	ADAPTER	1		
12	19M7358	CAP SCREW	1		M10 X 40
13	T27022	CLAMP	1		
14	28H1523	BUSHING	1		0.493" X 0.675" X 13/16"
15	AT159822	LINE	1		
16	AT159823	LINE	1		
17	19M7938	CAP SCREW	3		M10 X 20
18	T27022	CLAMP	3		
19	19M7358	CAP SCREW	1		M10 X 40
20	U46753	HOSE CLAMP	2		
21	28H1697	SPACER	1		0.493" X 0.675" X 3/4"
22	14M7274	NUT	1		M10
23	AT160586	HYDRAULIC HOSE - FABRICATE	2		1-3/16" X 1 207 MM (47-1/2") X 1-3/16"
24	19M7572	CAP SCREW	1		M10 X 45
25	T27022	CLAMP	1		
26	28H1523	BUSHING	1		0.493" X 0.675" X 13/16"
27	14M7274	NUT	1		M10
28	19M7550	CAP SCREW	1		M10 X 35
29	R46919	HALF CLAMP	2		
30	28H1697	SPACER	1		0.493" X 0.675" X 3/4"
31	14M7274	NUT	1		M10
32	AT160072	LINE	1		
33	AT160073	LINE	1		
34	38H1007	ELBOW FITTING	1		
35	U12547	O-RING	1		
36	38H1163	ADAPTER	1		
37	U12547	O-RING	1		
38	AT164709	OIL LINE	1		
39	AT159001	VALVE	1		LOADER CONTROL

LOADER BOOM LIFT CYLINDER
(REPLACEMENT CYLINDER)

TP27862 -UN-29SEP94

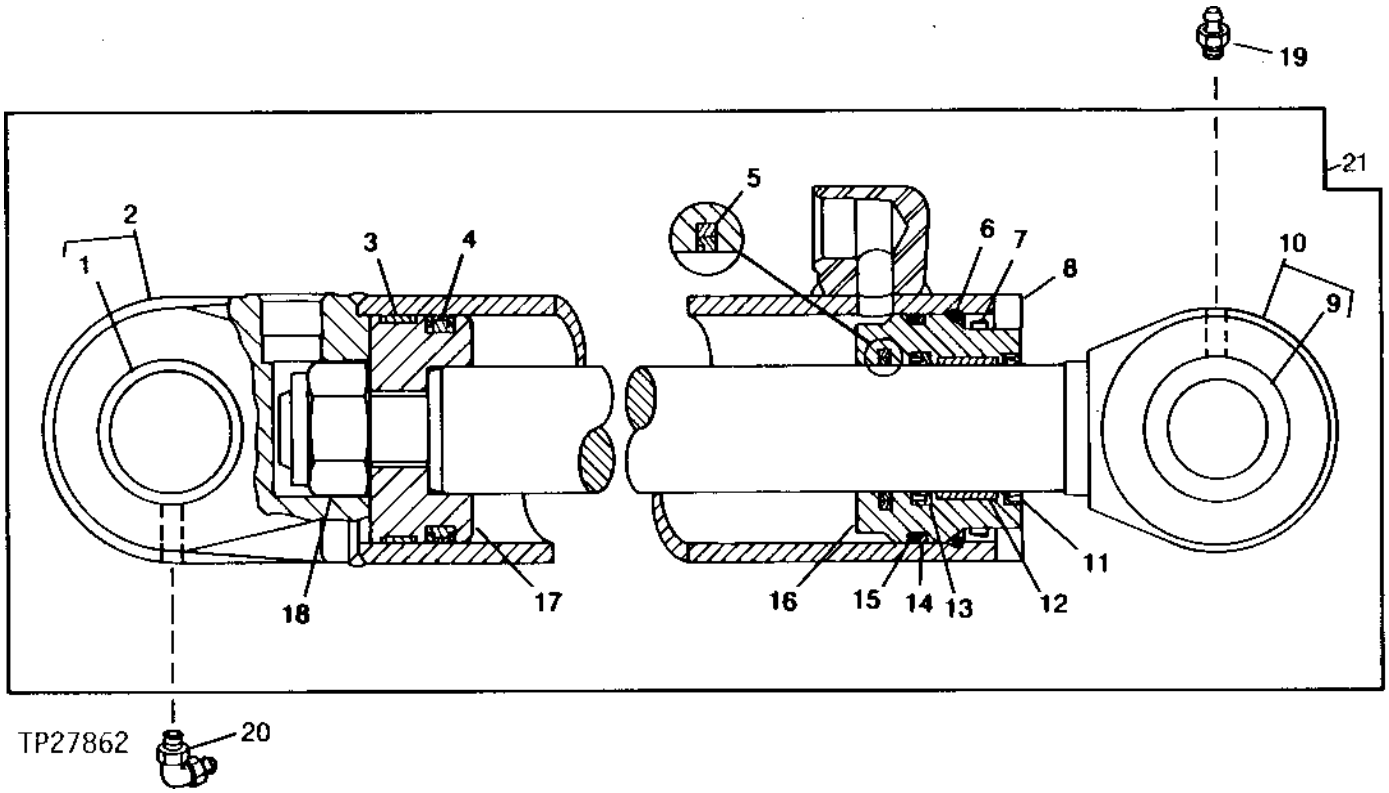

KEY	PART NO.	PART NAME	QTY	SERIAL NO.	REMARKS
1	R82076	BUSHING	1		
2	RE32558	HYDRAULIC CYLINDER BARREL	1		
3	R81775	WEAR RING	1		(BK)
4	RE20343	SEAL	1		(BK)
5	AH146562	SEAL	1		(RK)
6	R81787	RING	1		
7	R91731	RING	AR		(BK)
8	R81793	NUT	1		
9	R82960	BUSHING	1		
10	RE32560	ROD	1		
11	AH146558	SEAL	1		(RK)
12	H152795	WEAR RING	1		(RK)
13	H152204	SEAL	1		(RK)
14	R81862	BACK-UP RING	1		(BK)
15	F950R	O-RING	1		
16	H157427	HYDR. CYLINDER ROD GUIDE	1		
17	R93028	PISTON	1		
18	H170540	LOCK NUT	1		(SUB FOR H147771)
19	T162396	LUBRICATION FITTING	1		
20	JD7799	LUBRICATION FITTING	1		
21	AH154789	HYDRAULIC CYLINDER	1		
..	AH149844	KIT	1		INCLUDES ALL (BK) PARTS (CYLINDER BORE)
..	AH149814	HYDRAULIC CYLINDER KIT	1		INCLUDES ALL (RK) PARTS (CYLINDER ROD)

RELIEF VALVE
(GRESEN V30)
(BUCKET SECTION)

TP44088 -UN-01JAN94

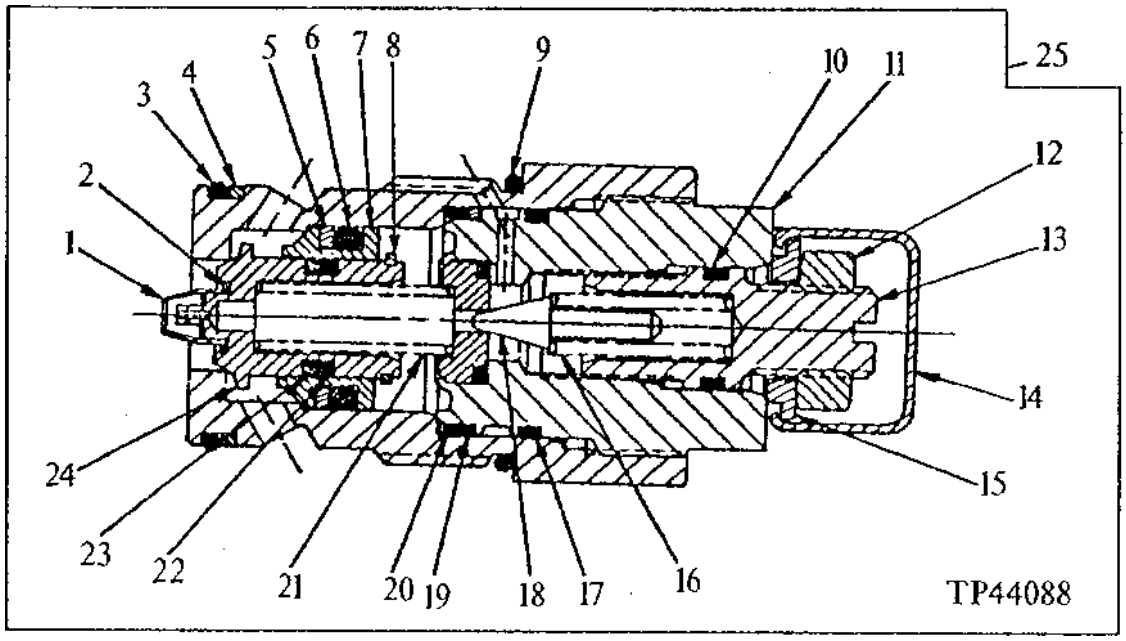

KEY	PART NO.	PART NAME	QTY	SERIAL NO.	REMARKS
1	.....	FILTER	1		
2	.....	SNAP RING	1		
3	T106368	O-RING	1		(K)
4	T106298	BACK-UP RING	1		(K)
5	T121258	BACK-UP RING	1		(K)
6	R28782	O-RING	1		(K)
7	.....	PISTON	1		
8	.....	SNAP RING	1		
9	R56464	O-RING	1		(K) (SUB FOR U15242, THIS APPLICATION)
10	A3917R	O-RING	1		(K)
11	.....	HOUSING	1		
12	.....	NUT	1		
13	.....	SCREW	1		
14	.....	COVER	1		
15	.....	WASHER	1		
16	.....	SPRING	1		
17	T113021	PACKING	1		
18	.....	POPPET	1		
19	U15981	BACK-UP RING	1		(K)
20	T75984	O-RING	1		(K)
21	.....	SPRING	1		
22	R459R	O-RING	1		(K)
23	.....	BACK-UP RING	1		(K)
24	.....	POPPET	1		
25	AT106600	RELIEF VALVE	1		RP30-NAC
	AT106601	RELIEF VALVE	1		RP30-N
..	AT160465	KIT	1		INCLUDES ALL (K) PARTS (RELIEF VALVE SEAL)

LOADER BUCKET CYLINDER
(REPLACEMENT CYLINDER)

TP42322 -UN-29SEP94

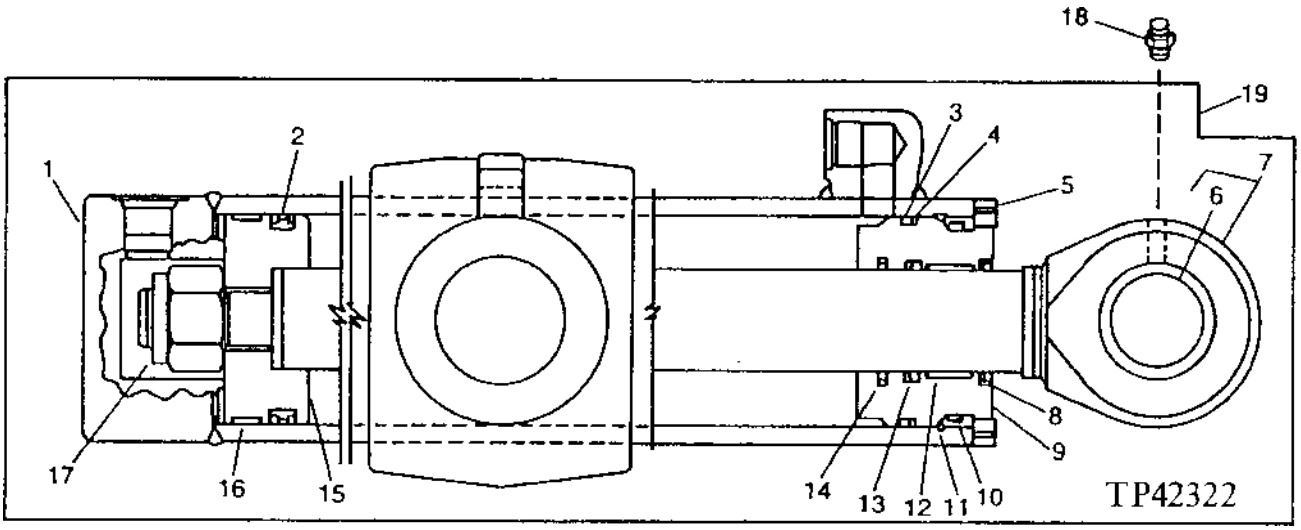

KEY	PART NO.	PART NAME	QTY	SERIAL NO.	REMARKS
1	RE37774	HYDRAULIC CYLINDER BARREL	1		
2	RE20809	SEAL	1		(BK)
3	R83578	O-RING	1		(BK)
4	R79001	BACK-UP RING	1		(BK)
5	R82086	NUT	1		
6	R81971	BUSHING	1		
7	RE37776	ROD	1		
8	AH146558	SEAL	1		(RK)
9	H157428	HYDR. CYLINDER ROD GUIDE	1		
10	R91624	BACK-UP RING	1		(BK)
11	R82093	SNAP RING	1		
12	H152795	WEAR RING	1		(RK)
13	H152204	SEAL	1		(RK)
14	AH146562	SEAL	1		(RK)
15	R99104	PISTON	1		
16	R82095	WEAR RING	1		(BK)
17	H170540	LOCK NUT	1		(SUB FOR H147771)
18	T162396	LUBRICATION FITTING	1		
19	AH154792	HYDRAULIC CYLINDER	1		
..	AH149846	KIT	1		INCLUDES ALL (BK) PARTS (CYLINDER BORE)
..	AH149814	HYDRAULIC CYLINDER KIT	1		INCLUDES ALL (RK) PARTS (CYLINDER ROD)

LOAD CHECK PLUG
(BUCKET SECTION)

TP44089 -UN-01JAN94

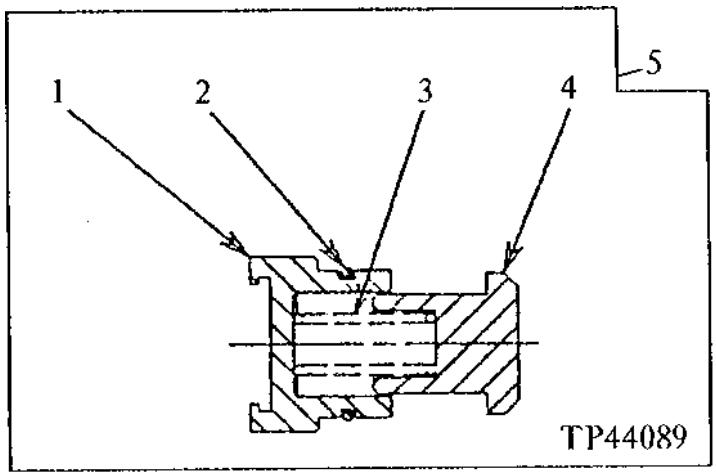

KEY	PART NO.	PART NAME	QTY	SERIAL NO.	REMARKS
1	.....	PLUG	1		
2	N31772	O-RING	1		
3	.....	SPRING	1		
4	.....	POPPET	1		
5	AT106602	PLUG	1		

BACKHOE BUCKETS
(HEAVY DUTY)
457 MM, 609 MM, 762 MM, 914 MM (18, 24, 30 AND 36 INCH)

TP44427 -UN-01JAN94

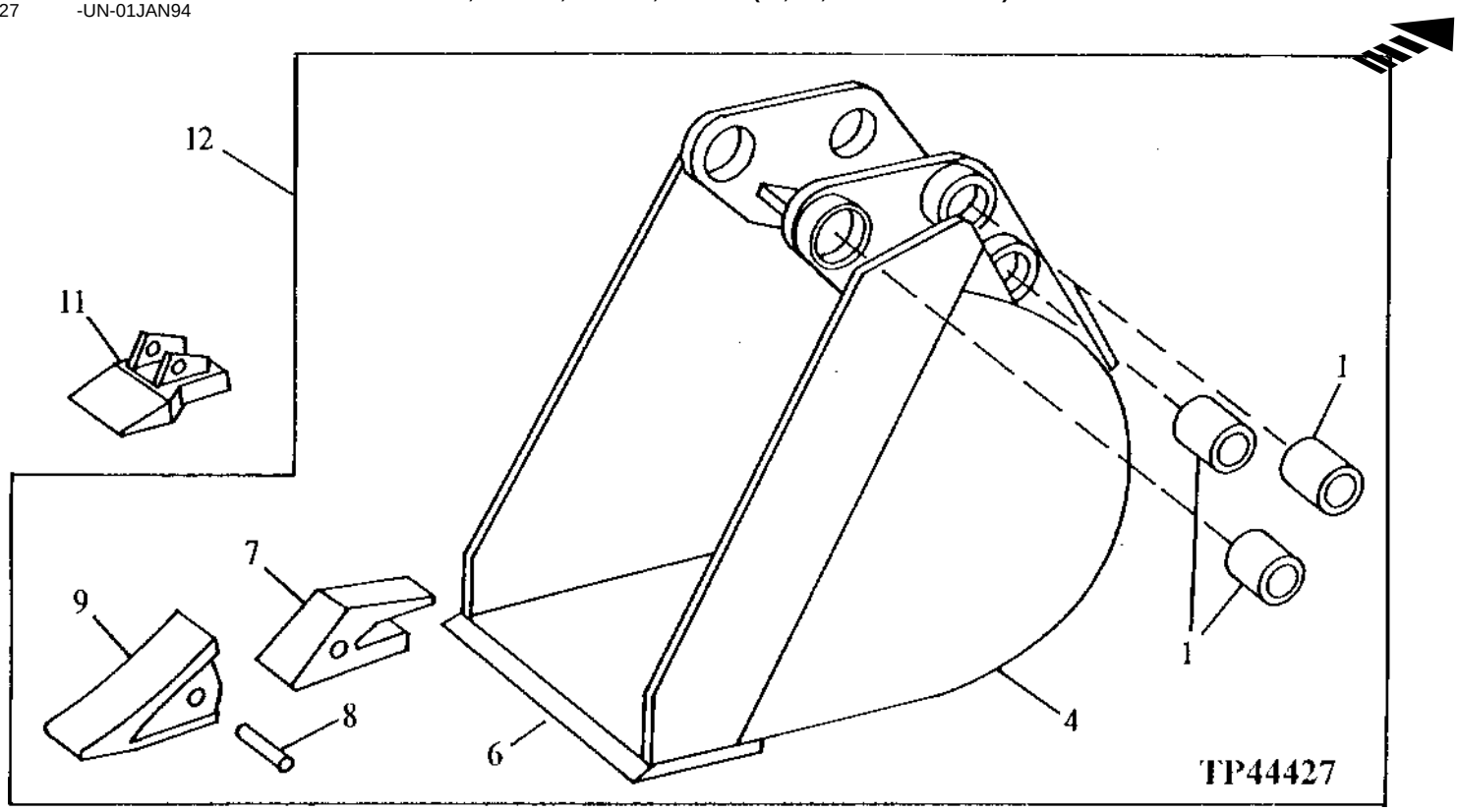

KEY	PART NO.	PART NAME	QTY	SERIAL NO.	REMARKS
1	U45351	BUSHING	6		
4	.....	BACKHOE BUCKET	1		
6	T148602	CUTTING EDGE	1		
7	U43792	BUCKET TOOTH ADAPTER	AR		(4 USED WITH 18", 5 USED WITH 24", 5 USED WITH 30", 6 USED WITH 36" BUCKETS)
	T658X160	BUCKET TOOTH ADAPTER	AR		SEVERE DUTY (3 USED WITH 18", 5 USED WITH 24", 5 USED WITH 30", 6 USED WITH 36")
8	TF23P	PIN	AR		(4 USED WITH 18", 5 USED WITH 24", 5 USED 30", AND 6 USED WITH 36" BUCKETS)
	TP160	PIN	AR		SEVERE DUTY (3 USED WITH 18", 5 USED WITH 24", 5 USED WITH 30", 6 USED WITH 36")
9	TF23	TOOTH	AR		(4 USED WITH 18", 5 USED WITH 24", 5 USED WITH 30", AND 6 USED WITH 36" BUCKETS)
	TF160	TOOTH	AR		SEVERE DUTY (3 USED WITH 18", 5 USED WITH 24", 5 USED WITH 30", 6 USED WITH 36")
11	T72548	TOOTH	AR		
12	**AT163235**	**BACKHOE BUCKET**	**1**		**457 MM (18") HEAVY DUTY**
	AT163236	**BACKHOE BUCKET**	**1**		**609 MM (24") HEAVY DUTY**
	AT163237	**BACKHOE BUCKET**	**1**		**762 MM (30") HEAVY DUTY**
	AT163238	**BACKHOE BUCKET**	**1**		**914 MM (36") HEAVY DUTY**

BACKHOE BUCKETS
(SEVERE DUTY)
457 MM, 609 MM, 762 MM, 914 MM (18, 24, 30 AND 36 INCH)

TP44428 -UN-01JAN94

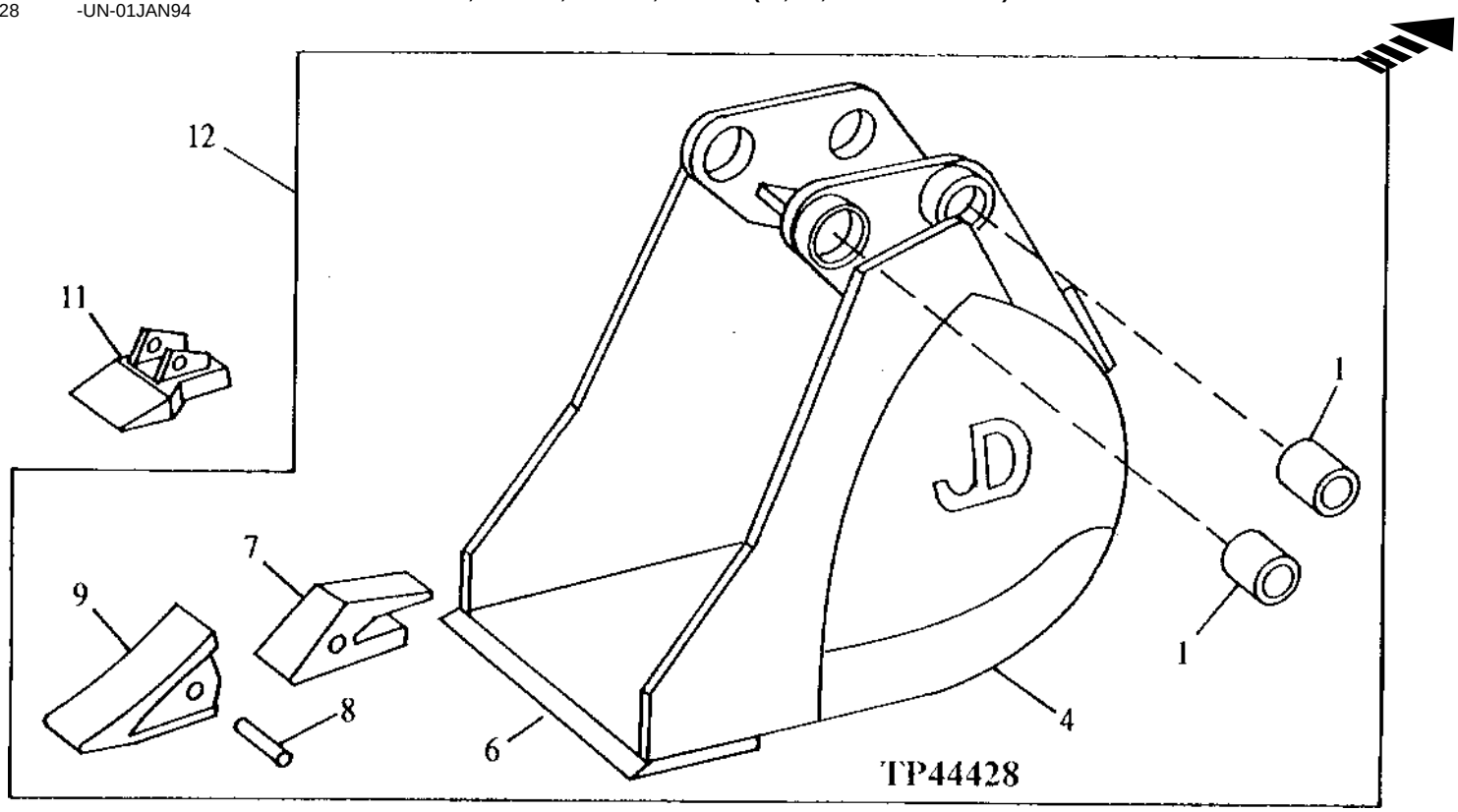

KEY	PART NO.	PART NAME	QTY	SERIAL NO.	REMARKS
1	U45351	BUSHING	4		
4	.....	BACKHOE BUCKET	1		
6	T148753	CUTTING EDGE	1		
7	U43792	BUCKET TOOTH ADAPTER	AR		(4 USED WITH 18", 5 USED WITH 24", 5 USED WITH 30", 6 USED WITH 36" BUCKETS)
	T109X220	BUCKET TOOTH ADAPTER	AR		SEVERE DUTY (3 USED WITH 18", 5 USED WITH 24", 5 USED WITH 30", 6 USED WITH 36")
8	TF23P	PIN	AR		(4 USED WITH 18", 5 USED WITH 24", 5 USED 30", AND 6 USED WITH 36" BUCKETS)
	TP160	PIN	AR		SEVERE DUTY (3 USED WITH 18", 5 USED WITH 24", 5 USED WITH 30", 6 USED WITH 36")
9	TF23	TOOTH	AR		(4 USED WITH 18", 5 USED WITH 24", 5 USED WITH 30", AND 6 USED WITH 36" BUCKETS)
	TF220	TOOTH	AR		SEVERE DUTY (3 USED WITH 18", 5 USED WITH 24", 5 USED WITH 30", 6 USED WITH 36")
10	.....	CUTTING EDGE	1		(T35490 NO LONGER AVAILABLE) SIDE
11	T72548	TOOTH	AR		
12	**AT171005**	**BACKHOE BUCKET**	**1**		**457 MM (18") SEVERE DUTY, (SUB FOR AT162450 AND AT162448)**
	AT171011	**BACKHOE BUCKET**	**1**		**609 MM (24") SEVERE DUTY, (SUB FOR AT162453 AND AT162452)**
	AT172012	**BACKHOE BUCKET**	**1**		**762 MM (30") SEVERE DUTY, (SUB FOR AT162457, AT162456)**
	AT171015	**BACKHOE BUCKET**	**1**		**914 MM (36") SEVERE DUTY, (SUB FOR AT162460 AND AT162459)**

BACKHOE BUCKET DATA

TP45593 -UN-16DEC94

BACKHOE BUCKET DATA

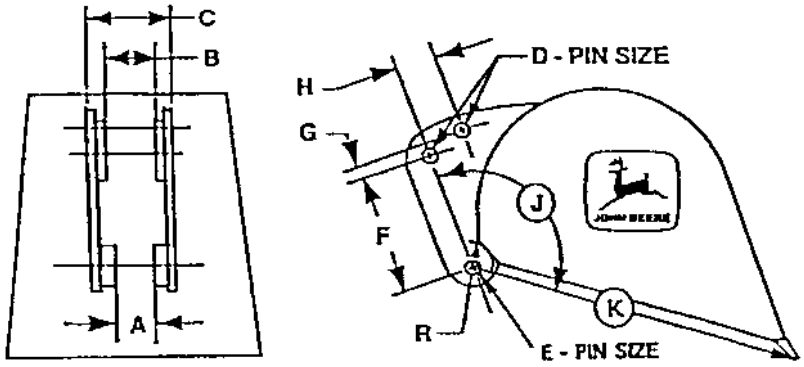

	510 710B 710C 710D	710D SEVERE DUTY
A	[225.5 ± 1.5] 8.88 ± .06	[225.5 ± 1.5] 8.88 ± .06
B	[225.5 ± 1.5] 8.88 ± .06	[225.5 ± 1.5] 8.88 ± .06
C	[354.3 ± 5.3] 13.95 ± .21	[353 ± 6.6] 13.90 ± .26
D	[62.99 ± 0.05] 2.480 ± .002	[62.99 ± 0.05] 2.480 ± .002
E	[62.99 ± 0.05] 2.480 ± .002	[62.99 ± 0.05] 2.480 ± .002
F	[368 ± 0.25] 14.49 ± .010	[339.5 ± 0.25] 15.73 ± .010
G	[45 ± 0.25] 1.77 ± .01	N.A.
H	[121.9 ± 0.25] 4.800 ± .010	NA
J	125.5°	123°
K	[1043] 41.06	[1038] 40.87
R	[89.9] 3.50	[91.2] 3.59

Company policy limits the use of the enclosed drawings and information to your company and any other usage is expressly prohibited without the written consent of Deere & Company. We regret we cannot keep you informed of subsequent changes in the specifications furnished. You are, therefore, responsible for the risks involved in their use.

It is to be understood that furnishing you with the requested material does not automatically constitute a Deere & Company endorsement of your products on or with any John Deere product.

TP45593 Rev. 02DEC94

MEMORANDA

STABILIZER VALVE LINKAGE

TP58147 -UN-12JAN00

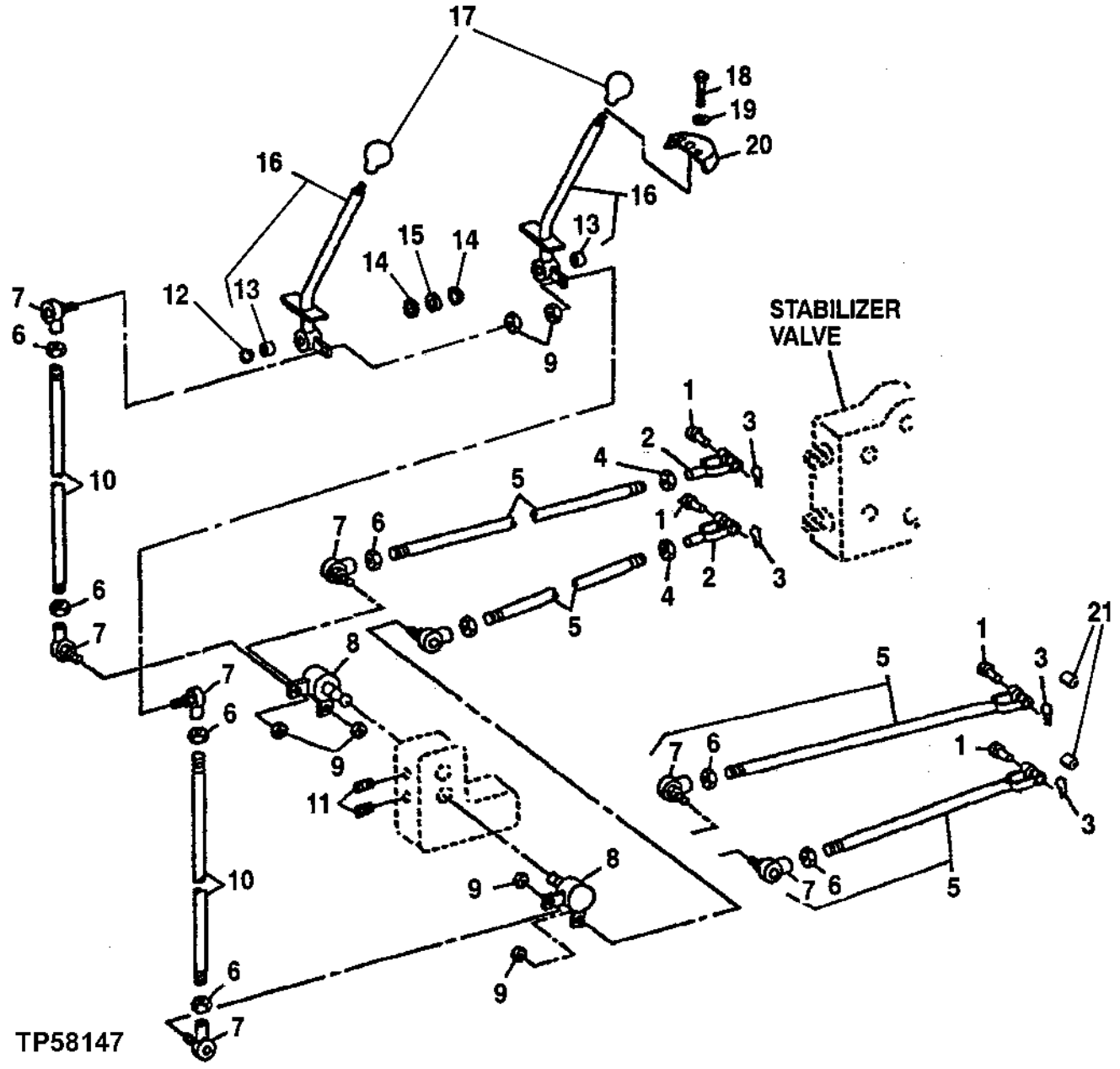

STABILIZER VALVE LINAKGE

KEY	PART NO.	PART NAME	QTY	SERIAL NO.	REMARKS
1	R52107	PIN	2	-878497	7.836 X 34.036 MM (0.309" X 1.340")
	R65563	PIN	2	878498-	9.398 X 28.499 MM (0.370" X 1.122")
2	T165920	YOKE	2	-878497	
	T140328	YOKE	2	878498-	
3	11M7078	COTTER PIN	2	-878497	2 X 20 MM
	R46528	SPRING LOCKING PIN	2	878498-	
4	14H1063	NUT	2		3/8"
5	T165222	STUD	2	-784539	(SUB FOR T140329)
	.....	ROD	2	784540-878497	(AT157618 NO LONGER AVAILABLE) (SUB AT169087, T165920, T165222, 14H1063 AND 14H1080)
	T165222	STUD	2	878498-	
6	14H774	NUT	6		3/8"
7	AT169087	BALL JOINT	6		(SUB FOR AT49300)
8	AT141464	BELLCRANK	2		
9	M68954	LOCK NUT	6		9.525 MM (3/8")
10	T140331	STUD	2		
11	22M7070	SET SCREW	2		M8 X 20
12	R27434	SNAP RING	1		
13	B28042	BUSHING	2	784540-	
14	R26081	WASHER	2		
15	J20570	BUSHING	1		(SUB FOR 28H1948)
16	AT185250	LEVER	2		
17	T133292	KNOB	2		
18	21H1406	SCREW	4		0.190" X 3/4"
19	24H1821	WASHER	4		
20	T133023	COVER	2		
21	M137181	BUSHING	2	-878497	

TWO LEVER BACKHOE CONTROL LEVER LINKAGE

TP57872 -UN-08SEP98

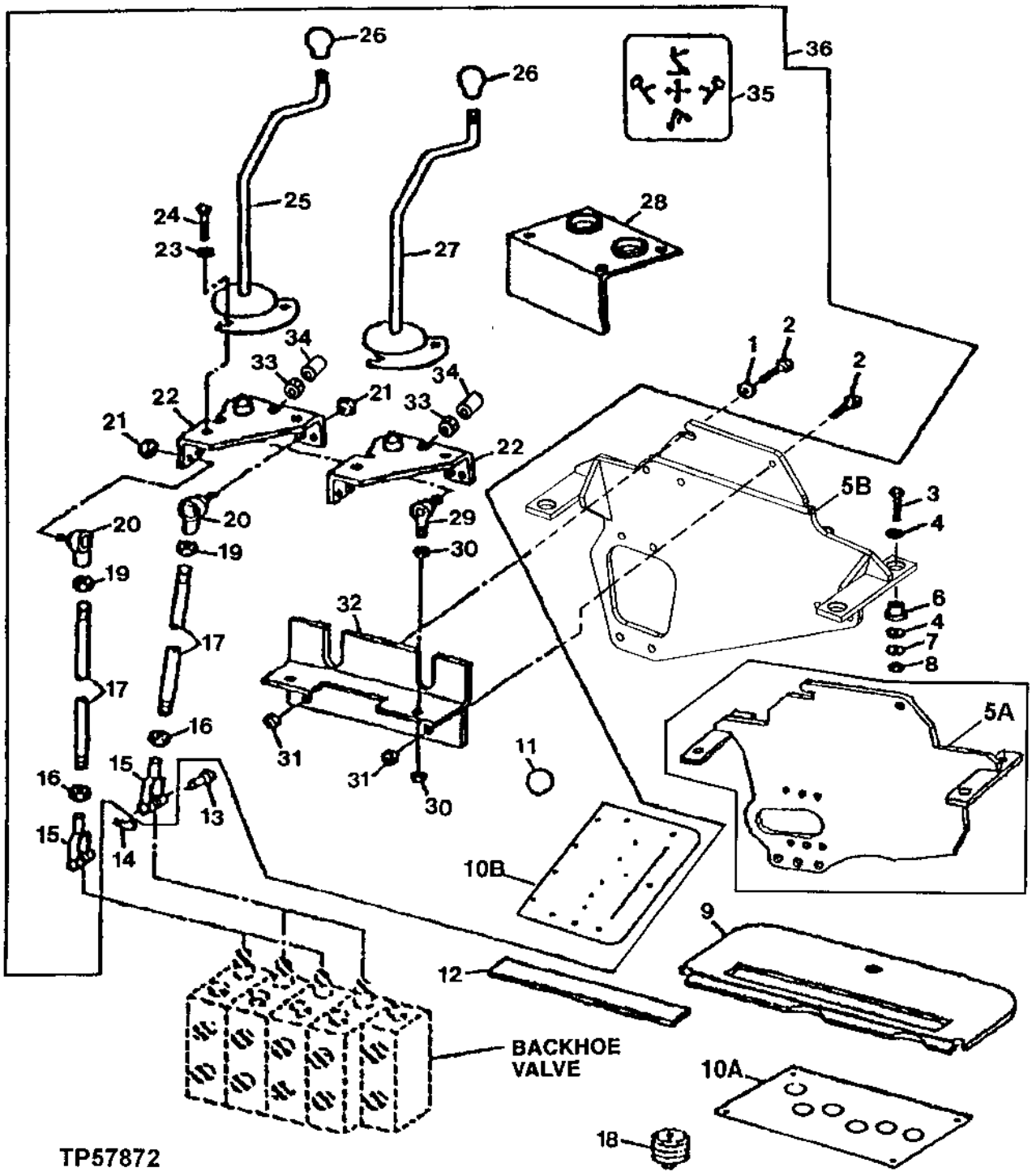

TWO-LEVER BACKHOE CONTROL VALVE LINKAGE

KEY	PART NO.	PART NAME	QTY	SERIAL NO.	REMARKS
1	24M7239	WASHER	1		10.700 X 21 X 2.500 MM
2	19M7572	CAP SCREW	2		M10 X 45, (SUB FOR 19M7550)
3	19M7935	CAP SCREW	4		M10 X 55
4	24H1314	WASHER	8		13/32" X 1-3/4" X 7/64"
5A	AT165783	SUPPORT	1	-850352	(SUB FOR AT151567)
5B	AT183911	SUPPORT	1	850353-	
6	AT139776	ISOLATOR	4		
7	24M7296	WASHER	4		(SUB FOR T75904)
8	14M7274	NUT	4		M10
9	T141316	GROMMET	1	-850352	(WITHOUT HUSCO VALVE)
10A	T148844	SUPPORT	1	-818280	(WITH CAB) (USE WITH AT166955) (SUB FOR T133509, THIS APPLICATION)
10B	T151794	GASKET	1	818281-850352	(USE WITH AT168918) (WITH CAB)
	T164570	GASKET	1	850353-	
11	T135241	PLUG	1		
12	.....	STRIP	1		(MAKE FROM T59938 BULK MATERIAL,CUT TO LENGTH
13	R65563	PIN	4		
14	R46528	SPRING LOCKING PIN	4		
15	T140328	YOKE	4		(L.H.)
16	14H913	NUT	4		3/8", (L.H.)
17	T140288	STUD	4	-850352	
	T165222	STUD	4	850353-	
18	AT145629	BOOT	4		
19	14H774	NUT	4		3/8"
20	AT169087	BALL JOINT	4		(SUB FOR AT49300)
21	M68954	LOCK NUT	4		
22	AT178686	BASE	2		REPLACE IN PAIRS, (SUB FOR AT151699)
23	24M7238	WASHER	4		8.700 X 17 X 2 MM
24	19M7881	SCREW	4		M8 X 20
25	AT148213	LEVER	1		RIGHT WITH BASE
26	T133291	KNOB	2		
27	AT148214	LEVER	1		LEFT WITH COVER
28	T134383	PANEL	1		
29	AT124107	BALL JOINT	2		
30	14H865	NUT	4		1/2"
31	14M7274	NUT	2		M10
32	AT164934	SUPPORT	1		(SUB FOR AT149549)
33	14H865	NUT	2		
34	T161379	SPACER	2		(ALSO ORDER 14H865) (SUB FOR T141126, THIS APPLICATION)
35	T100195	LABEL	1		SWING AND BOOM LEVER
	T100196	LABEL	1		BUCKET AND DIPPERSTICK LEVER
36	**AT183938**	**LINKAGE**	**1**		**(SUB FOR AT166955, AT168918 AND AT178770) (ALSO ORDER AT184192)**

**TWO LEVER BACKHOE CONTROL LEVER LINKAGE
FOR EXTENDIBLE DIPPERSTICK**

TP57873 -UN-03JUN98

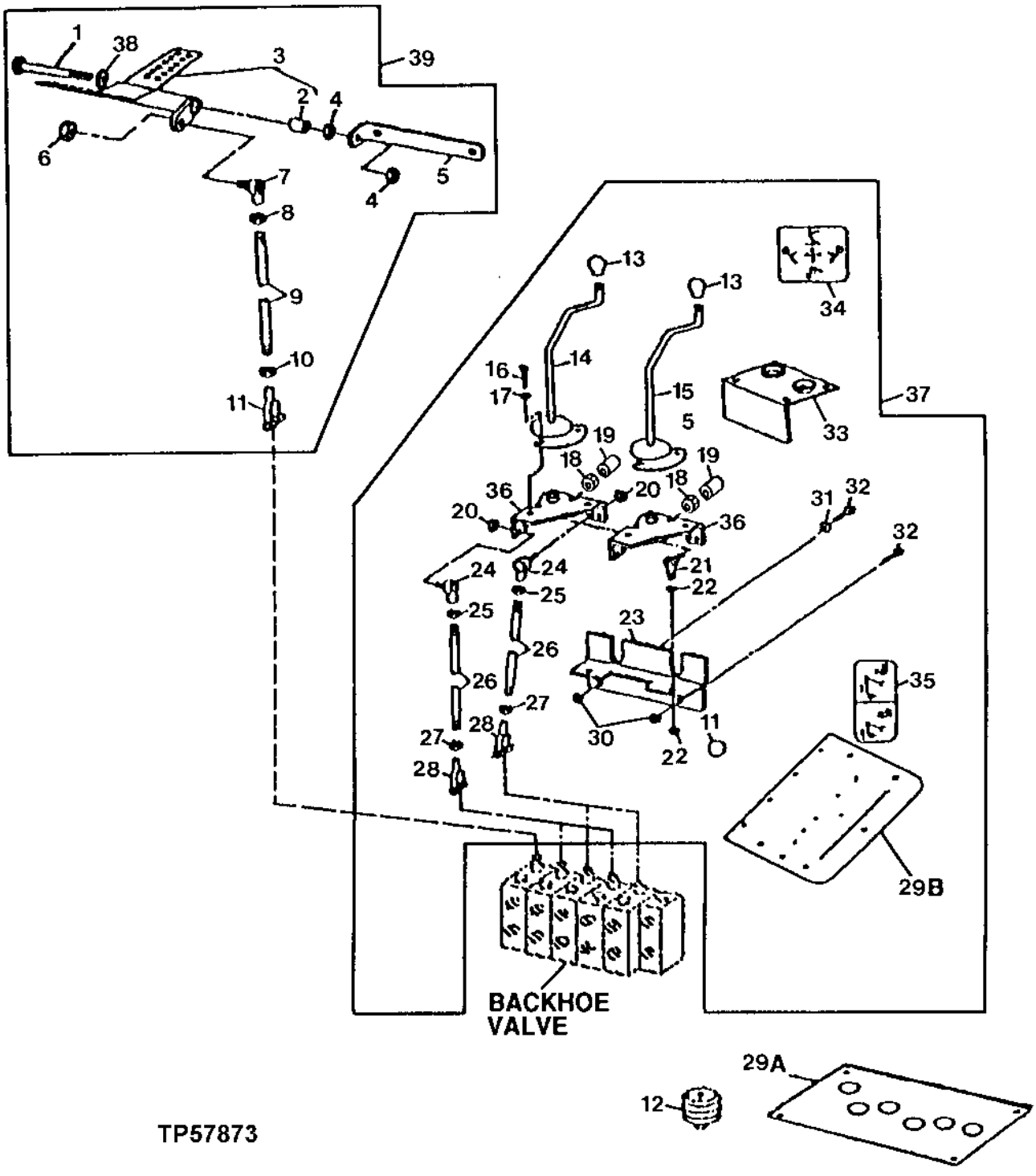

**TWO LEVER BACKHOE CONTROL LEVEL LINKAGE
FOR EXTENDIBLE DIPPERSTICK**

KEY	PART NO.	PART NAME	QTY	SERIAL NO.	REMARKS
1	19H3450	CAP SCREW	1		5/8" X 6-3/4"
2	T58109	BUSHING	2		
3	AT161682	CONTROL	1		
4	14H1039	NUT	2		5/8"
	M87534	SPRING WASHER	2		
5	T134907	ANGLE	1		
6	M68954	LOCK NUT	1		
7	AT169087	BALL JOINT	1		(SUB FOR AT49300)
8	14H774	NUT	1		3/8"
9	T148848	STUD	1		(USE WITH AT168919)
	T165214	STUD	1		(USE WITH AT183939)
10	14H913	NUT	1		3/8"
11	T140328	YOKE	1		
12	AT145629	BOOT	5		
13	T133291	KNOB	2		
14	AT148213	LEVER	1		RIGHT
15	AT148214	LEVER	1		LEFT
16	19M7881	SCREW	4		M8 X 20
17	24M7238	WASHER	4		8.700 X 17 X 2 MM
18	14H865	NUT	2		1/2"
19	T161379	SPACER	2		(ALSO ORDER 14H865) (SUB FOR T141126, THIS APPLICATION)
20	M68954	LOCK NUT	4		
21	AT124107	BALL JOINT	2		
22	14H865	NUT	4		1/2"
23	AT164934	SUPPORT	1		(SUB FOR AT149549)
24	AT169087	BALL JOINT	4		(SUB FOR AT49300)
25	14H774	NUT	4		3/8"
26	T158810	STUD	4	-850352	
	T165222	STUD	4	850353-	
27	14H913	NUT	4		3/8"
28	T140328	YOKE	4		
29A	T148844	SUPPORT	1	-818280	(USE WITH AT166957) (WITH CAB) (SUB FOR T133509, THIS APPLICATION)
29B	T151794	GASKET	1	818281-850352	(USE WITH AT168918) (WITH CAB)
	T164570	GASKET	1	850353-	
30	14M7274	NUT	2		M10
31	24M7239	WASHER	1		10.700 X 21 X 2.500 MM
32	19M7550	CAP SCREW	2		M10 X 35
33	T134383	PANEL	1		
34	T100195	LABEL	1		SWING AND BOOM
	T100196	LABEL	1		BUCKET AND DIPPERSTICK
35	T147012	LABEL	1		FOOT PEDAL
36	AT178686	BASE	2		REPLACE IN PAIRS, (SUB FOR AT151699)
37	**AT183938**	**KIT**	**1**		**(SUB FOR AT166957, AT168918 AND AT178770) (ALSO ORDER AT183939 AND AT184192)**
38	R64059	WASHER	1		
39	AT183939	LINKAGE	1		(SUB FOR AT168919)

FIFTH FUNCTION FOOT CONTROL LINKAGE
(TWO-LEVER)

TP57913 -UN-10SEP98

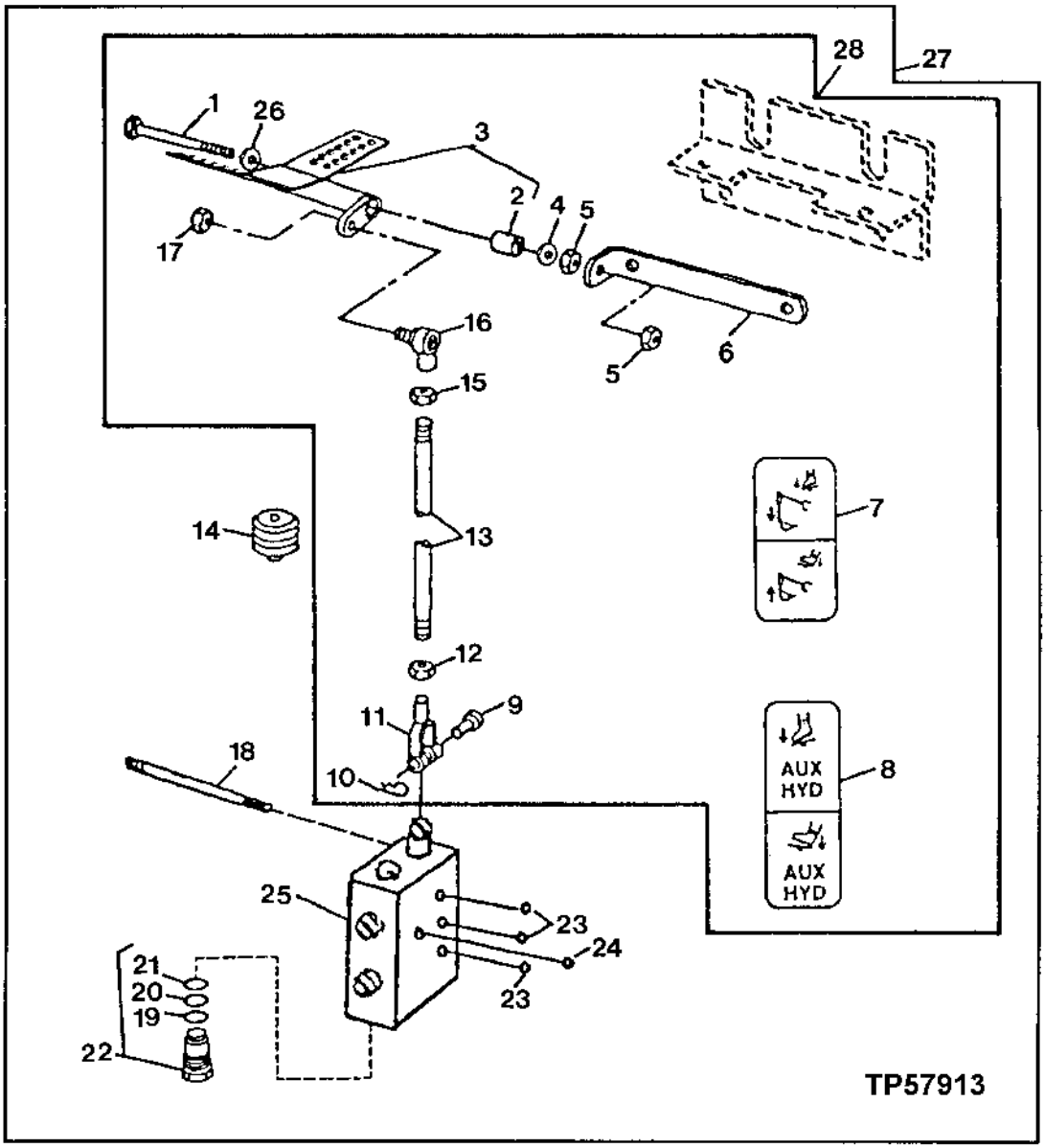

FIFTH FUNCTION FOOT CONTROL LINKAGE
(TWO-LEVER)

KEY	PART NO.	PART NAME	QTY	SERIAL NO.	REMARKS
1	19H3450	CAP SCREW	1		5/8" X 6-3/4"
2	T58109	BUSHING	2		
3	AT161682	CONTROL	1		
4	M87534	SPRING WASHER	2		
5	14H1039	NUT	2		5/8"
6	T134907	ANGLE	1		
7	T147012	LABEL	1		FOOT PEDAL
8	T149173	LABEL	1		FOOT PEDAL, AUXILIARY
9	R65563	PIN	1		
10	R46528	SPRING LOCKING PIN	1		
11	T140328	YOKE	1		
12	14H913	NUT	1		3/8"
13	T140299	STUD	1		WITH EXTENDIBLE DIPPERSTICK
	T140300	STUD	1		WITHOUT EXTENDIBLE DIPPERSTICK
	T165214	STUD	1		(USE WITH AT183939)
14	AT145629	BOOT	1		(FOR USE WITH CAB)
15	14H774	NUT	1		3/8"
16	AT169087	BALL JOINT	1		(SUB FOR AT49300)
17	M68954	LOCK NUT	1		
18	T135395	STUD	4		
19	U17409	O-RING	1		
20	T106298	BACK-UP RING	1		
21	T49819	O-RING	1		
22	AT160482	PLUG	1		
23	.....	O-RING	3		(SUB AT159816)
24	.....	O-RING	1		(SUB AT159816)
25	AT163865	VALVE	1		BUCKET SECTION, (ALSO ORDER AT159816) (SUB FOR AT151899) (USE WITH AT151135)
	AT166182	VALVE	1		BUCKET SECTION, (USE WITH AT175963) (ALSO ORDER AT159816)
26	R64059	WASHER	1		
27	.....	VALVE	1		(AT175963 NO LONGER AVAILABLE) (SUB FOR AT151135, THIS APPLICATION) REQUIRES AT159816
28	**AT183939**	**LINKAGE**	**1**		

SIXTH FUNCTION FOOT CONTROL LINKAGE
(TWO-LEVER)

TP57909 -UN-10SEP98

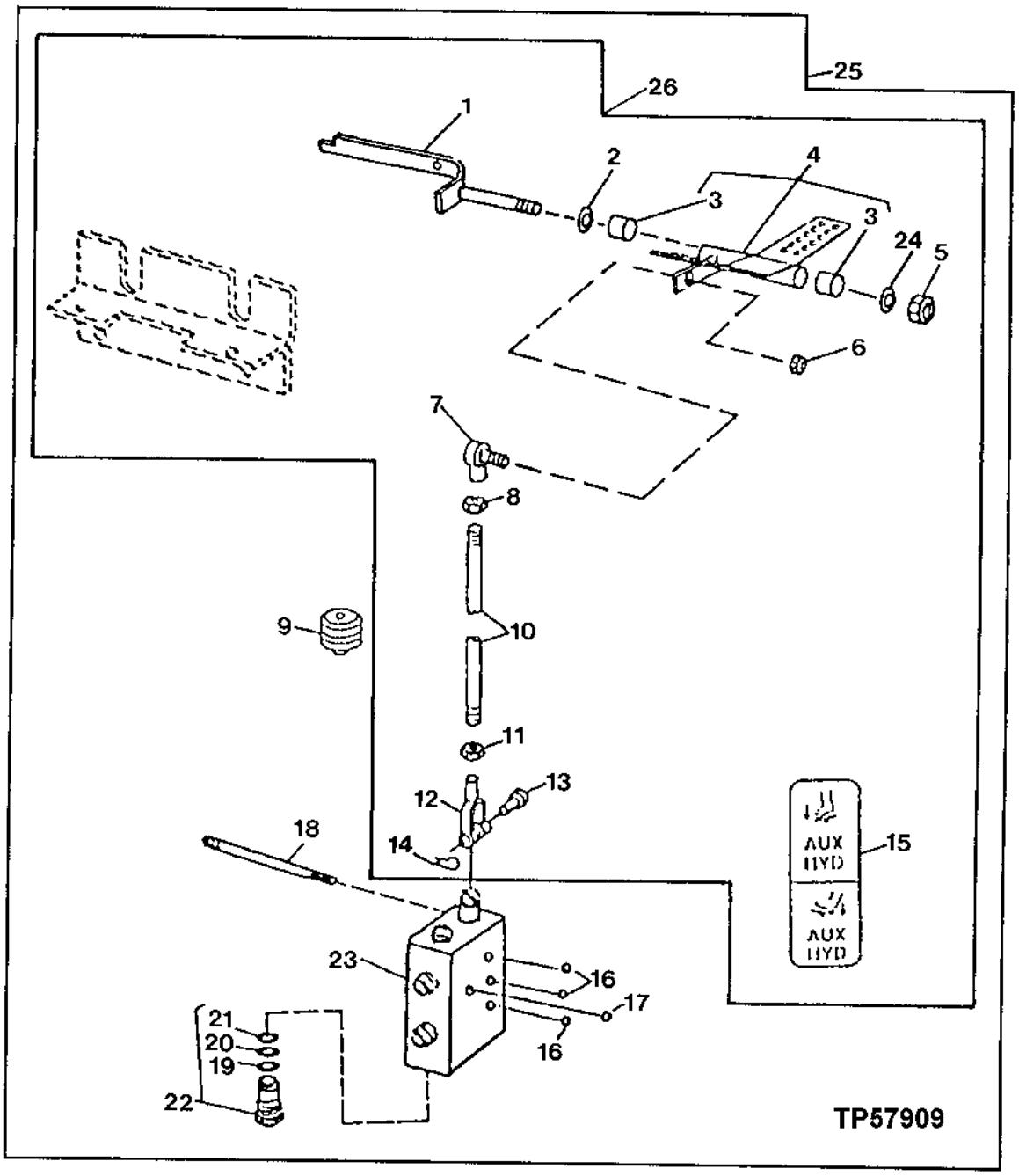

SIXTH FUNCTION FOOT CONTROL LINKAGE
(TWO-LEVER)

KEY	PART NO.	PART NAME	QTY	SERIAL NO.	REMARKS
1	AT163685	SUPPORT	1		
2	M87534	SPRING WASHER	2		
3	T58109	BUSHING	2		
4	AT161973	CONTROL	1		
5	U14555	LOCK NUT	1		15.875 MM (5/8")
6	M68954	LOCK NUT	1		
7	AT169087	BALL JOINT	1		(SUB FOR AT49300)
8	14H1080	NUT	1		3/8"
9	AT145629	BOOT	1		(FOR USE WITH CAB)
10	T140299	STUD	1		(USE WITH AT162061)
	T165214	STUD	1		(USE WITH AT183952)
11	14H1063	NUT	1		3/8"
12	T140328	YOKE	1		
13	R65563	PIN	1		
14	R46528	SPRING LOCKING PIN	1		
15	T149173	LABEL	1		FOOT PEDAL, AUXILIARY
16	.....	O-RING	3		(SUB AT159816)
17	.....	O-RING	1		(SUB AT159816)
18	T147107	STUD	4		
19	U17409	O-RING	1		
20	T106298	BACK-UP RING	1		
21	T49819	O-RING	1		
22	AT160482	PLUG	2		
23	AT166182	VALVE	1		(ALSO ORDER AT159816) (SUB FOR AT161053)
24	R64059	WASHER	1		
25	.....	VALVE	1		(AT162061 NO LONGER AVAILABLE) (REQUIRES AT159816) (SUB AT183952)
26	**AT183952**	**LINKAGE**	**1**		

THREE LEVER CONTROL VALVE LINKAGE
(STANDARD BACKHOE)

TP58061 -UN-13SEP99

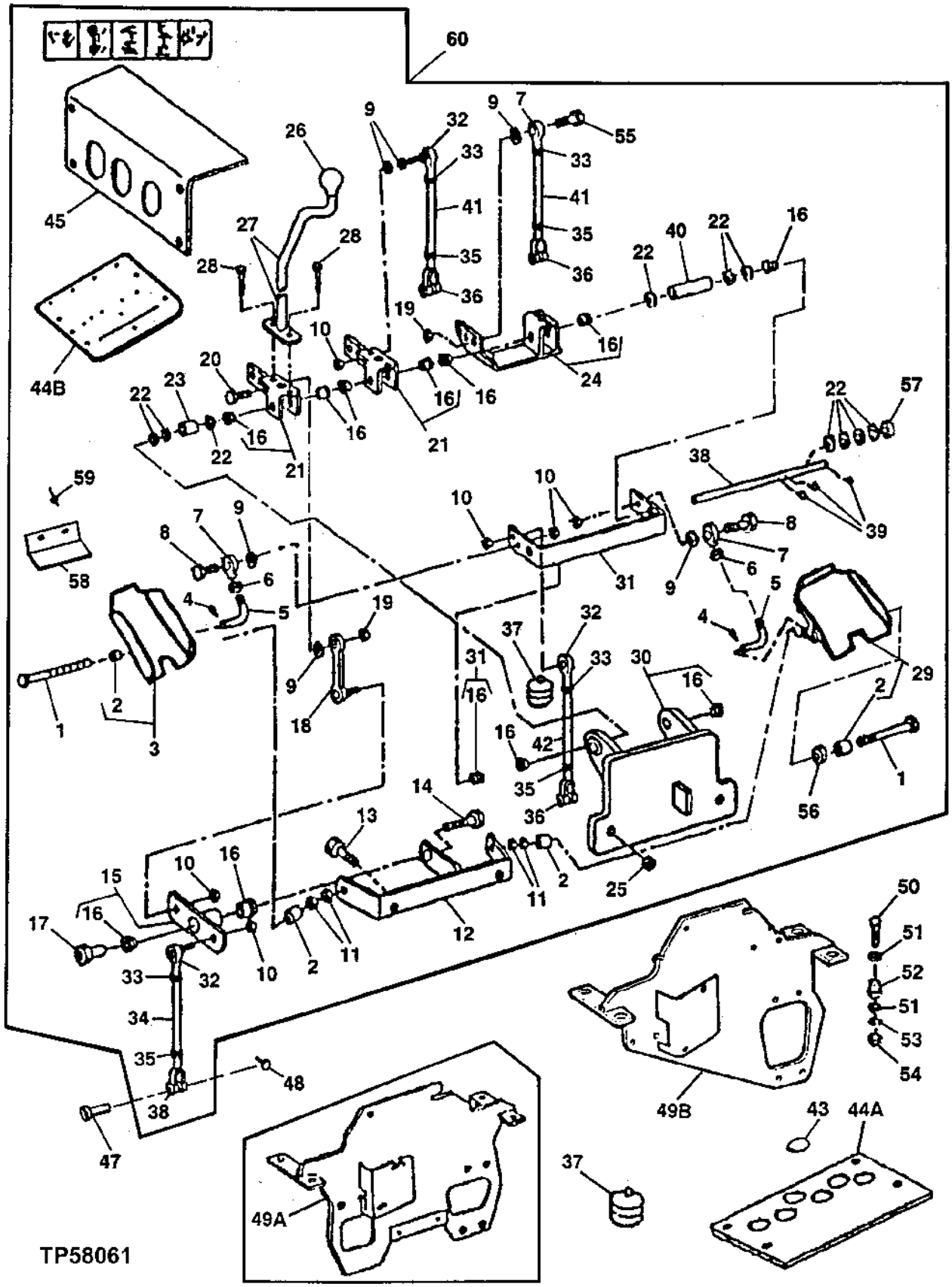

THIS PARTS LISTING IS CONTINUED

THREE-LEVER CONTROL VALVE LINKAGE
(STANDARD BACKHOE)

KEY	PART NO.	PART NAME	QTY	SERIAL NO.	REMARKS
1	19H3323	CAP SCREW	2		5/8" X 8"
2	T58109	BUSHING	4		
3	AT186908	PEDAL	1		(SUB FOR AT151371 AND AT174416)
	T162396	LUBRICATION FITTING	1		(NOT ILLUSTRATED)
4	R46528	SPRING LOCKING PIN	2		
5	T141108	HOOK BOLT	2		
6	14H1080	NUT	2		3/8", (SUB FOR 14H774, THIS APPLICATION)
7	AE37072	TIE ROD END	3		
8	19H3663	CAP SCREW	2		3/8" X 1-1/2"
9	M359T	WASHER	4		
10	M68954	LOCK NUT	6		
11	14H1039	NUT	2		5/8"
12	AT179513	SUPPORT	1		(SUB FOR AT175356 AND AT151368)
13	19M7358	CAP SCREW	2		M10 X 40
14	19H3030	CAP SCREW	1		1/2" X 1-1/4"
15	AT158197	BELLCRANK	1		
16	T125808	BUSHING	12		
17	T141126	SPACER	1		
18	AT158198	LINK	1		
19	H129201	LOCK NUT	2		(SUB FOR T32552)
20	19H3239	CAP SCREW	1		3/8" X 1-1/4"
21	AT151364	BASE	2		
22	24H1746	WASHER	10		25/32" X 1-1/8" X 0.120"
23	28H1576	BUSHING	1		0.824" X 1.050" X 7/8"
24	AT151365	BASE	1		
25	14M7274	NUT	2		M10
26	39M1709	KNOB	3		(SUB FOR T35233, THIS APPLICATION)
27	AT169512	LEVER	3		(SUB FOR AT150324)
28	19M7402	CAP SCREW	6		M10 X 25
29	AT186909	PEDAL	1		(SUB FOR AT151370 AND AT174417)
	T162396	LUBRICATION FITTING	1		(NOT ILLUSTRATED)
30	AT151366	SUPPORT	1		
31	AT151367	STRAP	1		
32	AT169087	BALL JOINT	3		(SUB FOR AT49300)
33	14H774	NUT	4		3/8"
34	T158812	STUD	1		
35	14H913	NUT	4		3/8"
36	T140328	YOKE	4		
37	AT145629	BOOT	4		WITH CAB
38	T158026	SHAFT	1		(SUB FOR T141109)
39	11M7087	COTTER PIN	4		4 X 40 MM
40	28H1669	BUSHING	1		0.824" X 1.050" X 1-1/2"
41	T158810	STUD	2		
42	T161213	ROD	1		
43	T135241	PLUG	1		WITH CAB
44A	T149702	SUPPORT	1	-818280	(USE WITH AT166959) (SUB FOR T140261, THIS APPLICATION) (WITH CAB)
44B	T160999	GASKET	1	818281-850352	(USE WITH AT175958) (WITH CAB)
	T164602	GASKET	1	850353-	
45	T134877	PANEL	1		
46	T140411	LABEL	1		
47	R65563	PIN	4		
48	R46528	SPRING LOCKING PIN	4		
49A	AT165783	SUPPORT	1	-850352	(SUB FOR AT151567)
49B	AT183911	SUPPORT	1	850353-	
50	19M7935	CAP SCREW	4		M10 X 55
51	24H1314	WASHER	8		13/32" X 1-3/4" X 7/64"
52	AT139776	ISOLATOR	4		
53	24M7296	WASHER	4		(SUB FOR T75904)
54	14M7274	NUT	4		M10
55	19H3239	CAP SCREW	1		3/8" X 1-1/4"
56	24M7053	WASHER	AR		17 X 30 X 3 MM
57	24H1391	WASHER	1		25/32" X 1-5/16" X 0.060"
58	T167259	GUARD	2		ROPS APPLICATION ONLY, (SUB FOR (2) AT177780)
59	T69627	RIVET	4		
60	**AT183941**	**CONTROL LEVER**	**1**		**(ALSO ORDER AT184192) (SUB FOR AT166959, AT175958 AND AT178773)**

THREE LEVER CONTROL VALVE LINKAGE
(EXTENDIBLE BACKHOE)

TP58062 -UN-13SEP99

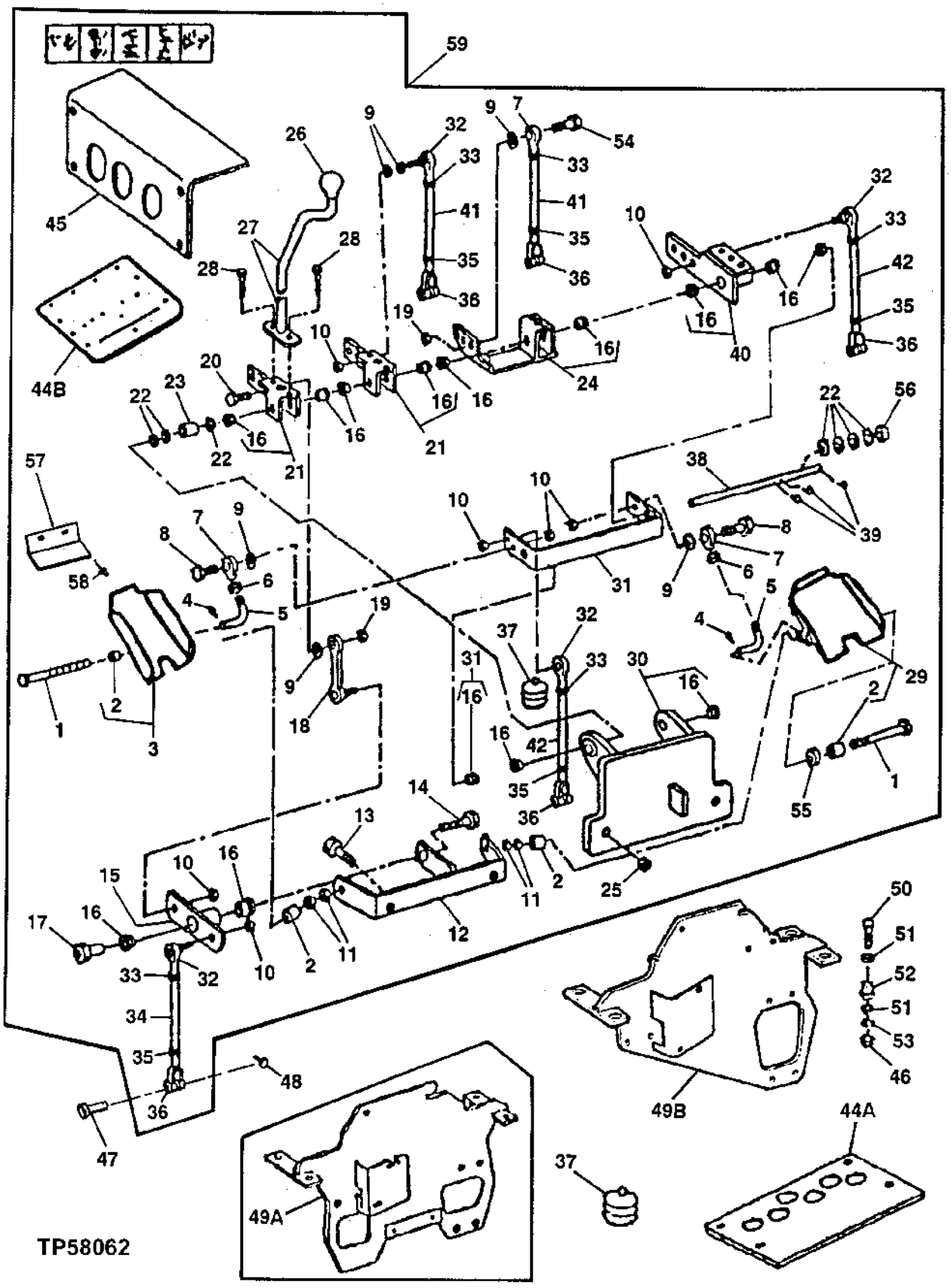

THREE-LEVER CONTROL VALVE LINKAGE
(EXTENDIBLE BACKHOE)

KEY	PART NO.	PART NAME	QTY	SERIAL NO.	REMARKS
1	19H3323	CAP SCREW	2		5/8" X 8"
2	T58109	BUSHING	4		
3	ATA86908	PEDAL	1		(SUB FOR AT151371 AND AT174416)
4	R46528	SPRING LOCKING PIN	2		
5	T141108	HOOK BOLT	2		
6	14H1080	NUT	2		3/8", (SUB FOR 14H774, THIS APPLICATION)
7	AE37072	TIE ROD END	3		
8	19H3663	CAP SCREW	2		3/8" X 1-1/2"
9	M359T	WASHER	AR		
10	M68954	LOCK NUT	7		
11	14H1039	NUT	2		5/8"
12	AT179513	SUPPORT	1		(SUB FOR AT175356 AND AT151368)
13	19M7358	CAP SCREW	2		M10 X 40
14	19H3030	CAP SCREW	1		1/2" X 1-1/4"
15	AT158197	BELLCRANK	1		
16	T125808	BUSHING	14		
17	T141126	SPACER	1		
18	AT158198	LINK	1		
19	H129201	LOCK NUT	2		(SUB FOR T32552)
20	19H3239	CAP SCREW	1		3/8" X 1-1/4"
21	AT151364	BASE	2		
22	24H1746	WASHER	7		25/32" X 1-1/8" X 0.120"
23	28H1576	BUSHING	1		0.824" X 1.050" X 7/8"
24	AT151365	BASE	1		
25	14M7274	NUT	2		M10
26	39M1709	KNOB	4		(SUB FOR T35233, THIS APPLICATION)
27	AT169512	LEVER	4		
28	19M7402	CAP SCREW	8		M10 X 25
29	AT174417	PEDAL	1		(SUB FOR AT151370)
30	AT151366	SUPPORT	1		
31	AT151367	STRAP	1		
32	AT169087	BALL JOINT	4		(SUB FOR AT49300)
33	14H774	NUT	5		3/8"
34	T158812	STUD	1		
35	14H913	NUT	5		3/8"
36	T140328	YOKE	5		
37	AT145629	BOOT	5		WITH CAB
38	T158026	SHAFT	1		(SUB FOR T141109)
39	11M7087	COTTER PIN	4		4 X 40 MM
40	AT151372	BASE	1		
41	T158810	STUD	3	-850352	
	T165222	STUD	3	850353-	
42	T161213	ROD	1	-850352	
	T165222	STUD	1	850353-	
43	T145283	LABEL	1		WITH CAB
44A	T149702	SUPPORT	1	-818280	(USE WITH AT166962) (SUB FOR T140261, THIS APPLICATION) (WITH CAB)
44B	T152399	GASKET	1	818281-850352	(USE WITH AT175958) (WITH CAB)
	T164602	GASKET	1	850353-	
45	T134878	PANEL	1		
46	14M7274	NUT	4		M10
47	R65563	PIN	5		
48	R46528	SPRING LOCKING PIN	5		
49A	AT165783	SUPPORT	1	-850352	(SUB FOR AT151567)
49B	AT183911	SUPPORT	1	850353-	
50	19M7935	CAP SCREW	4		M10 X 55
51	24H1314	WASHER	8		13/32" X 1-3/4" X 7/64"
52	AT139776	ISOLATOR	4		
53	24M7296	WASHER	4		(SUB FOR T75904)
54	19H3239	CAP SCREW	1		3/8" X 1-1/4"
55	24M7053	WASHER	AR		17 X 30 X 3 MM
56	24H1391	WASHER	1		25/32" X 1-5/16" X 0.060"
57	T167259	GUARD	2		ROPS APPLICATION ONLY, (SUB FOR AT177780)
58	T69627	RIVET	4		
59	**AT183941**	**CONTROL LEVER**	**1**		**(ALSO ORDER AT183942 AND AT184192) (SUB FOR AT166962, AT175958 AND AT178773)**

FIFTH FN LEVER FOR THREE LEVER CONTROLS

TP45072 -UN-01JAN94

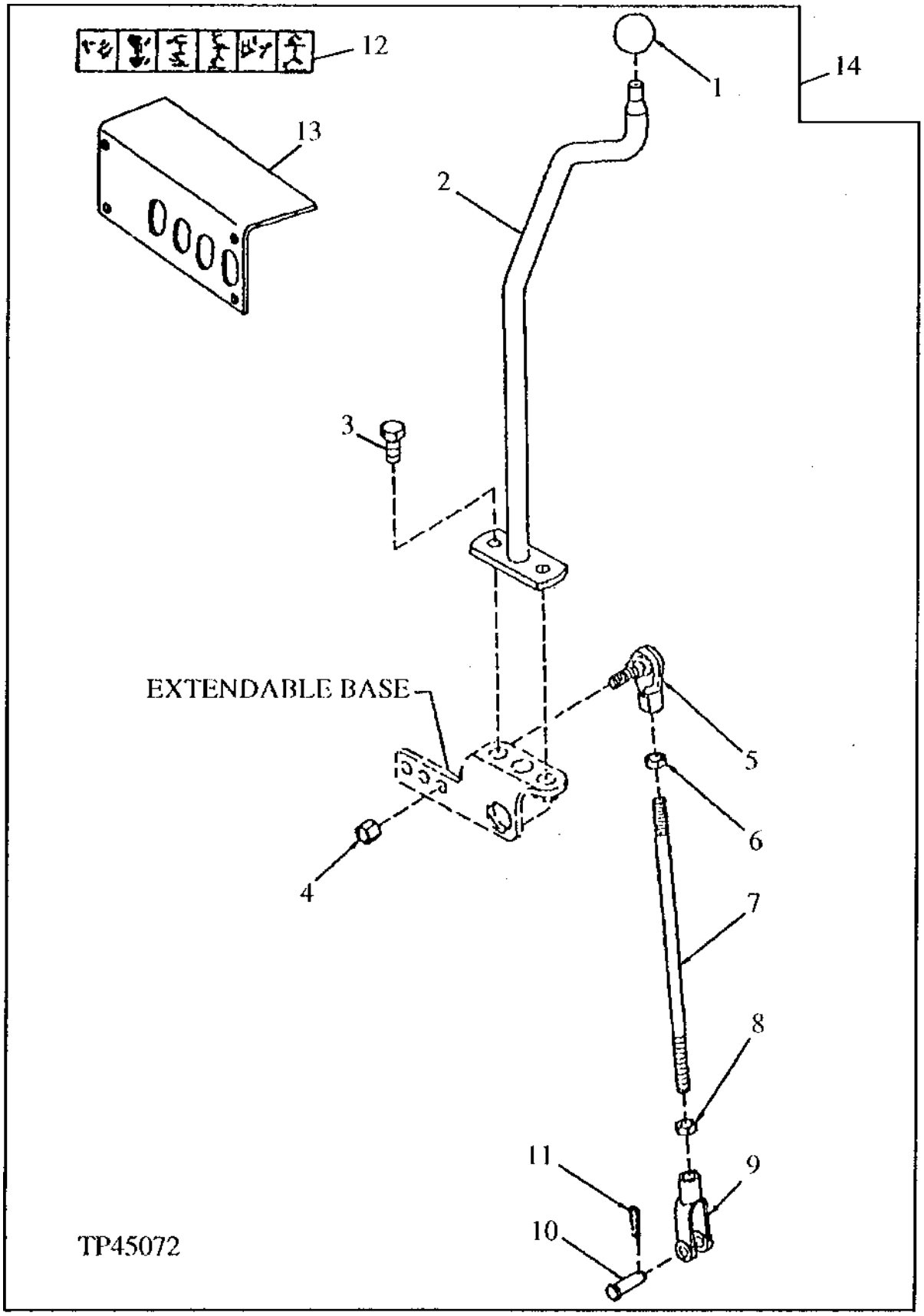

FIFTH FN LEVER FOR THREE LEVER CONTROLS

KEY	PART NO.	PART NAME	QTY	SERIAL NO.	REMARKS
1	39M1709	KNOB	1		(SUB FOR T35233, THIS APPLICATION)
2	AT169512	LEVER	1		
3	19M7402	CAP SCREW	2		M10 X 25
4	M68954	LOCK NUT	1		
5	AT169087	BALL JOINT	1		
6	14H774	NUT	1		3/8"
7	T148741	STUD	1		(USE WITH AT168913)
	T158810	STUD	1		(USE WITH AT178774)
	T165222	STUD	1		(USE WITH AT183942)
8	14H913	NUT	1		3/8"
9	T140328	YOKE	1		
10	R65563	PIN	1		(VALVE SPOOLS TO LINKAGE YOKES)
11	R46528	SPRING LOCKING PIN	1		
12	T145283	LABEL	1		
13	T134878	PANEL	1		
14	**AT183942**	**CONTROL LEVER**	**1**		**(SUB FOR AT168913 AND AT178774)**

FOUR-LEVER CONTROL VALVE LINKAGE
(STANDARD BACKHOE)

TP50413 -UN-28OCT96

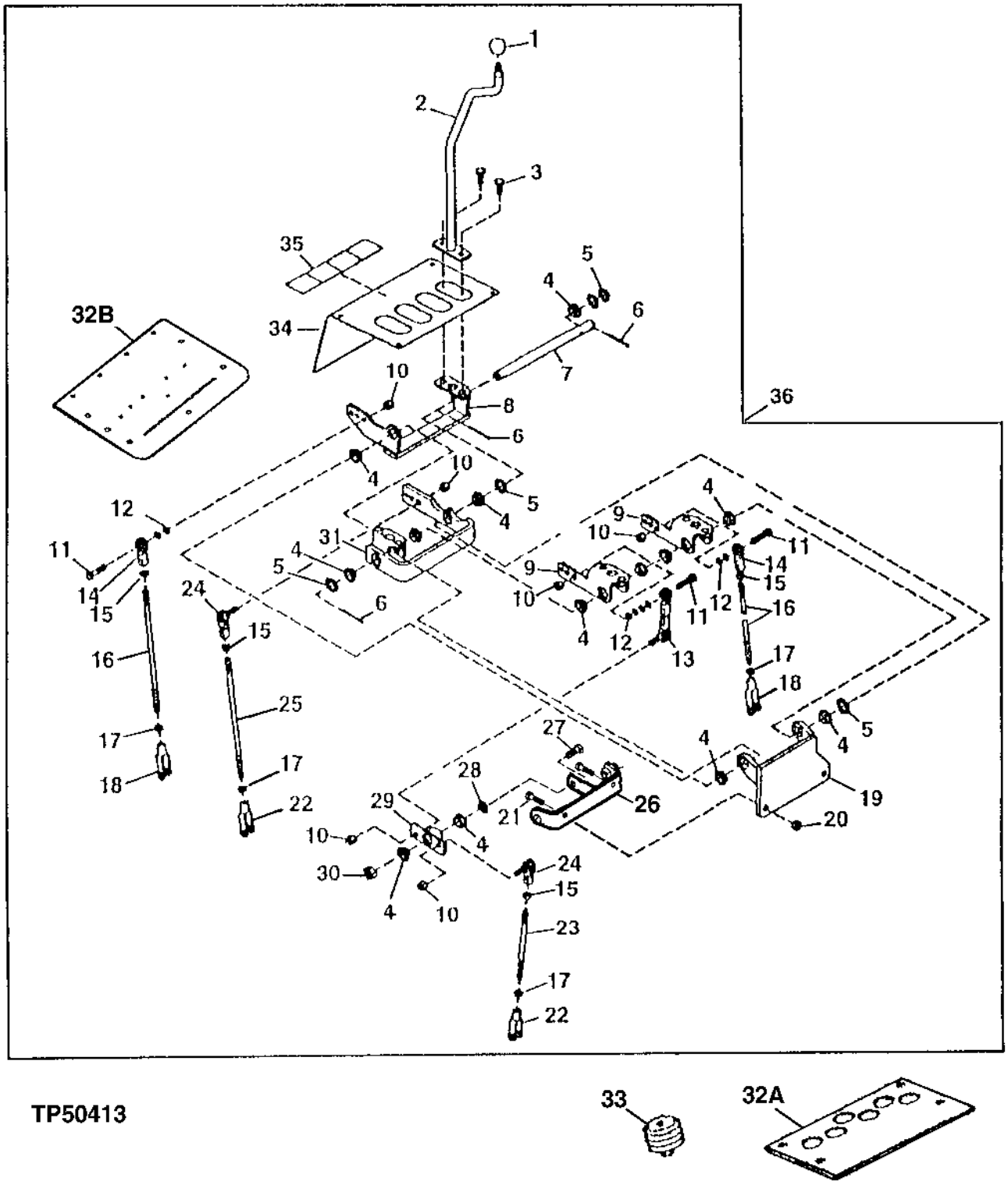

FOUR-LEVER CONTROL VALVE LINKAGE
(STANDARD BACKHOE)

KEY	PART NO.	PART NAME	QTY	SERIAL NO.	REMARKS
1	T35233	GRIP	1		
2	AT169512	LEVER	1		
3	19M7402	CAP SCREW	2		M10 X 25
4	T125808	BUSHING	11		
5	24H1746	WASHER	5		
6	11M7087	COTTER PIN	3		4 X 40 MM
7	T140650	SHAFT	1		
8	AT150763	BASE	1		
9	AT150762	BASE	2		
10	M68954	LOCK NUT	6		3/8"
11	19H3663	CAP SCREW	3		3/8" X 1-1/2"
12	M359T	WASHER	7		9.703 X 14.275 X 1.600 MM
13	AT158198	LINK	1		
14	AE37072	TIE ROD END	2		
15	14H1080	NUT	2		3/8", (SUB FOR 14H774, THIS APPLICATION)
16	T140300	STUD	2	-818280	(USE WITH AT156573)
	T148741	STUD	2	818281-	(USE WITH AT168916)
	T161213	ROD	2		(USE WITH AT178775)
	T165222	STUD	2		(USE WITH AT183943)
17	14H913	NUT	4		3/8"
18	T140328	YOKE	2		
19	AT169557	SUPPORT	1		
20	14M7274	NUT	2		M10
21	19M7550	CAP SCREW	2		M10 X 35
22	T140328	YOKE	2		
23	T140289	STUD	1		(USE WITH AT156573)
	T148848	STUD	1		(USE WITH AT168916)
	T158812	STUD	1		(USE WITH AT178775)
	T165214	STUD	1		(USE WITH AT183943)
24	AT169087	BALL JOINT	2		
25	T140300	STUD	1	-818280	(USE WITH AT156573)
	T148741	STUD	1	818281-	(USE WITH AT168916)
	T158810	STUD	1		(USE WITH AT178775)
	T165222	STUD	1		(USE WITH AT183943)
26	AT179513	SUPPORT	1		(SUB FOR AT175356 AND AT151368)
27	19H3030	CAP SCREW	1		1/2" X 1-1/4"
28	24M7047	WASHER	1		13 X 24 X 2.500 MM
29	AT158197	BELLCRANK	1		
30	T141126	SPACER	1		
31	AT150764	BASE	1		
32A	T140571	SUPPORT	1	-818280	(USE WITH AT156573) (WITH CAB)
32B	T151794	GASKET	1	818281-	(USE WITH AT168916) (WITH CAB)
	T153058	GASKET	1		(USE WITH AT178775) (WITH CAB)
33	AT145629	BOOT	4		
34	T140229	PANEL	1		
35	T140649	LABEL	1		
36	**AT183943**	**LEVER**	**1**		**(ALSO ORDER AT184192) (SUB FOR AT156573, AT168916 AND AT178775)**

BOOM LOCK LEVER
(WITH CABLE CONTROL)
(SERIAL NO. -825589)

TP44058 -UN-01JAN94

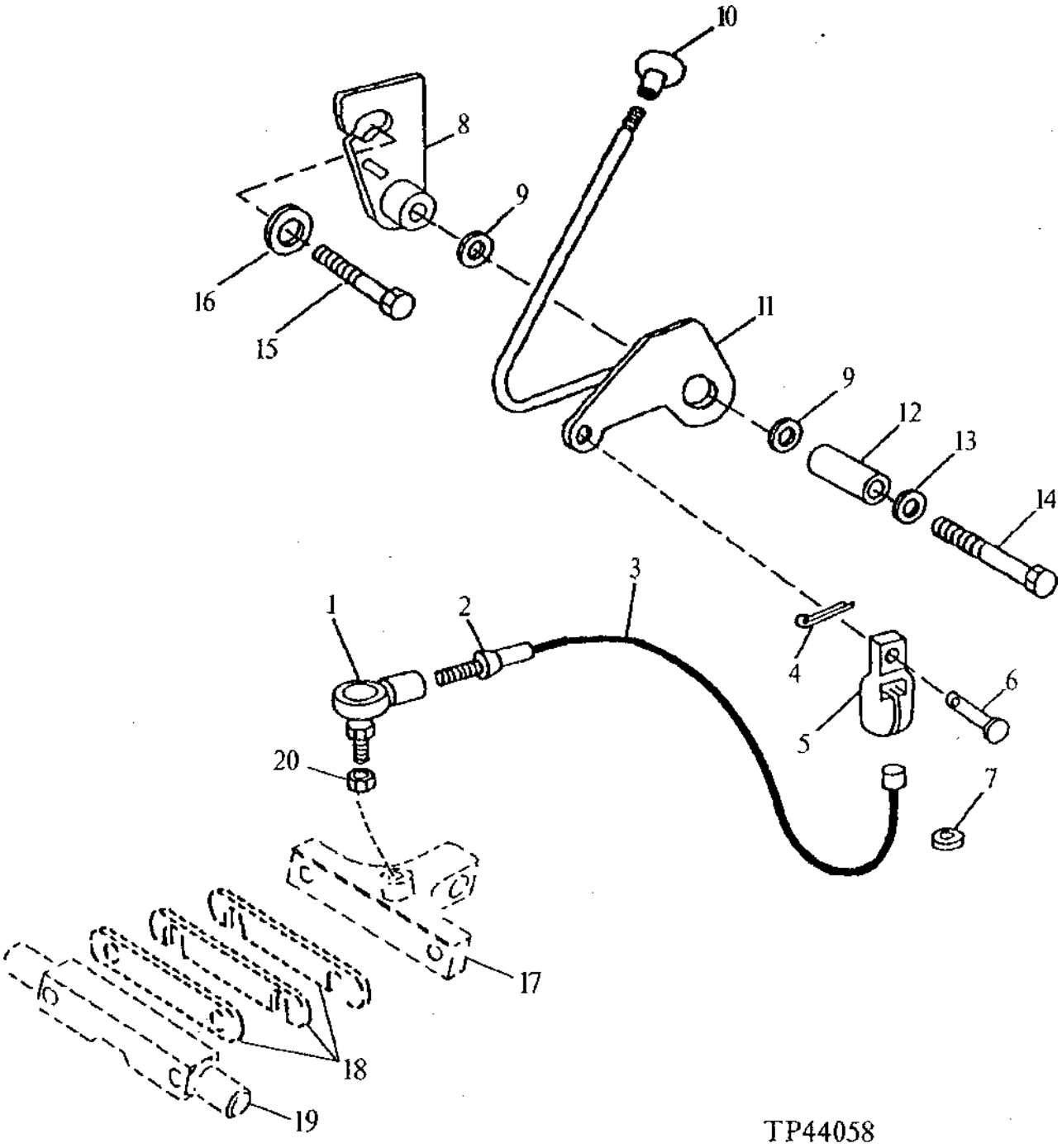

BOOM LOCK LEVER
(WITH CABLE CONTROL)
(SERIAL NO. -825589)

KEY	PART NO.	PART NAME	QTY	SERIAL NO.	REMARKS
1	AT169087	BALL JOINT	1		(SUB FOR AT49300)
2	14H774	NUT	1		3/8"
3	AT160372	CABLE	1		
4	11M7009	COTTER PIN	1		2 X 16 MM
5	T133666	GRIP	1		
6	45M7044	PIN	1		8 X 16 MM
7	T133665	GROMMET	1		
8	AT150562	BRACKET	1		
9	24M7047	WASHER	2		13 X 24 X 2.500 MM
10	T133292	KNOB	1		
11	.....	LEVER	1	-816286	AT151994 NO LONGER AVAILABLE, (SUB AT176686)
	AT176686	LEVER	1	816287-	
12	T44730	BUSHING	1		
13	T18786	WASHER	1		
14	19M7364	CAP SCREW	1		M12 X 80
15	19M8011	CAP SCREW	1		M12 X 30
16	T29342	WASHER	1		17/32" X 1-1/4" X 0.180"
17	AT179424	BACKHOE BOOM	1		(SUB FOR AT160044)
18	T70657	STRAP	AR		
	T160431	STRAP	AR		
19	T77845	LOCK	1		
20	14H774	NUT	1		3/8"

BOOM LOCK LEVER
(WITH LINKAGE AND ROD CONTROL)
(SERIAL NO.825590-)

TP54989 -UN-20FEB97

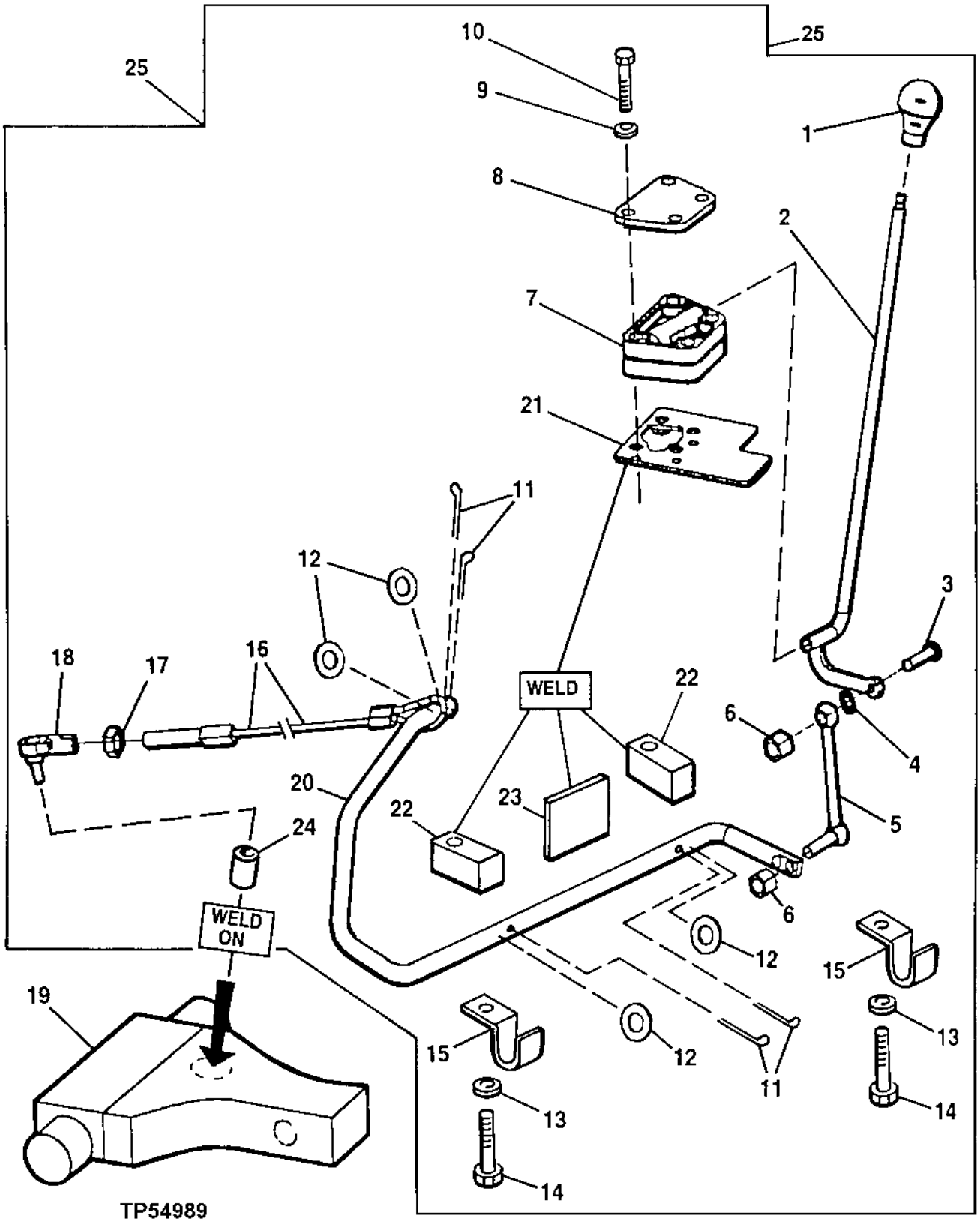

BOOM LOCK LEVER
(WITH LINKAGE AND ROD CONTROL)
(SERIAL NO.825590-)

KEY	PART NO.	PART NAME	QTY	SERIAL NO.	REMARKS
1	T133292	KNOB	1		
2	AT178240	LEVER	1		
3	19H2544	CAP SCREW	1		
4	24H1301	WASHER	1		
5	AT158198	LINK	1		
6	M68954	LOCK NUT	2		
7	AT178820	PIVOT	1		
8	T160449	PLATE	1		
9	24M7055	WASHER	4		
10	19M7922	CAP SCREW	4		
11	11M7082	COTTER PIN	4		
12	24H1362	WASHER	4		
13	24M7239	WASHER	2		
14	19M7938	CAP SCREW	2		
15	T160905	CLAMP	2		
16	AT178896	CABLE	1		
17	14H774	NUT	1		
18	AT169087	BALL JOINT	1		
19	AT179424	LOCK	1		
20	T160891	ROD	1		
21	AT179572	PLATE	1		
22	T157694	STRAP	2		
23	T27293	REINFORCEMENT	1		
24	T161172	BOSS	1		
25	**AT180071**	**KIT**	**1**		

LINK ADAPTER KIT
(SERIAL NO. -802199)

TP50417 -UN-28OCT96

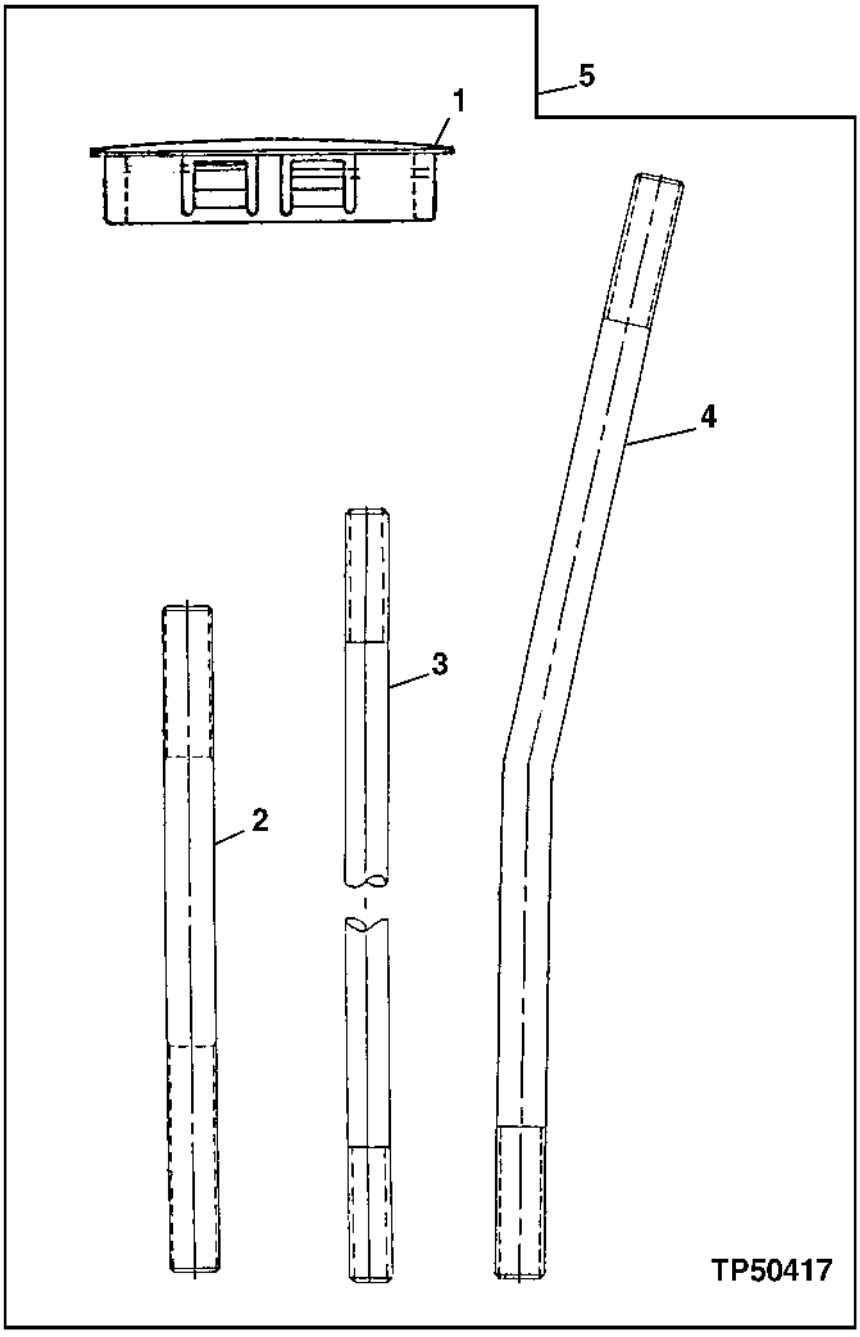

LINK ADAPTER KIT
(SERIAL NO. -802199)

KEY	PART NO.	PART NAME	QTY	SERIAL NO.	REMARKS
1	T135241	PLUG	2		
2	T140299	STUD	2		113 MM
	T140289	STUD	2		130 MM
	T148848	STUD	2		177 MM
3	T140288	STUD	4		216 MM
	T148741	STUD	4		266 MM
4	T141298	LEVER	2		220 MM
5	AT184192	ADAPTER	1		(KIT) (SUB FOR AT175965 AND AT182127)

MEMORANDA

BACKHOE BUCKET LINKS AND PINS

TP58026 -UN-27APR99

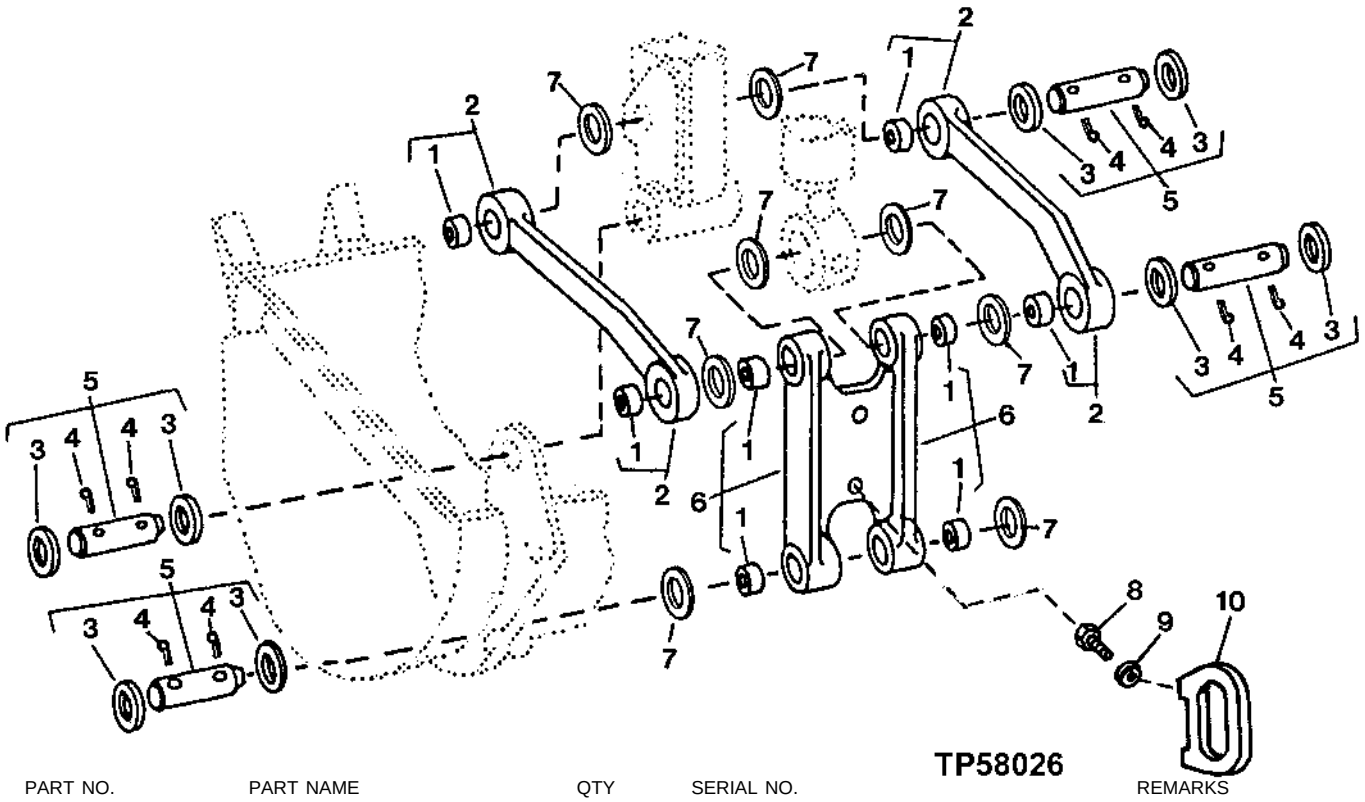

KEY	PART NO.	PART NAME	QTY	SERIAL NO.	REMARKS
1	U45351	BUSHING	8		
2	AT37507	LINK	2		
3	U43779	WASHER	8		
4	11H277	COTTER PIN	8		1/2" X 4"
5	T126041	PIN	4		(DOES NOT INCLUDE WASHERS OR COTTER PINS)
6	AU42450	LINK	1		
7	T125956	WASHER	AR		
8	19H2717	CAP SCREW	2		3/4" X 1-3/4"
9	12H236	LOCK WASHER	2		
10	T36245	ANCHOR	1		LIFT

SWING FRAME LOCK PIN
SWING FRAME
PIN, SWING FRAME LOCK
BOOM LOCK

TP46901 -UN-26JAN95

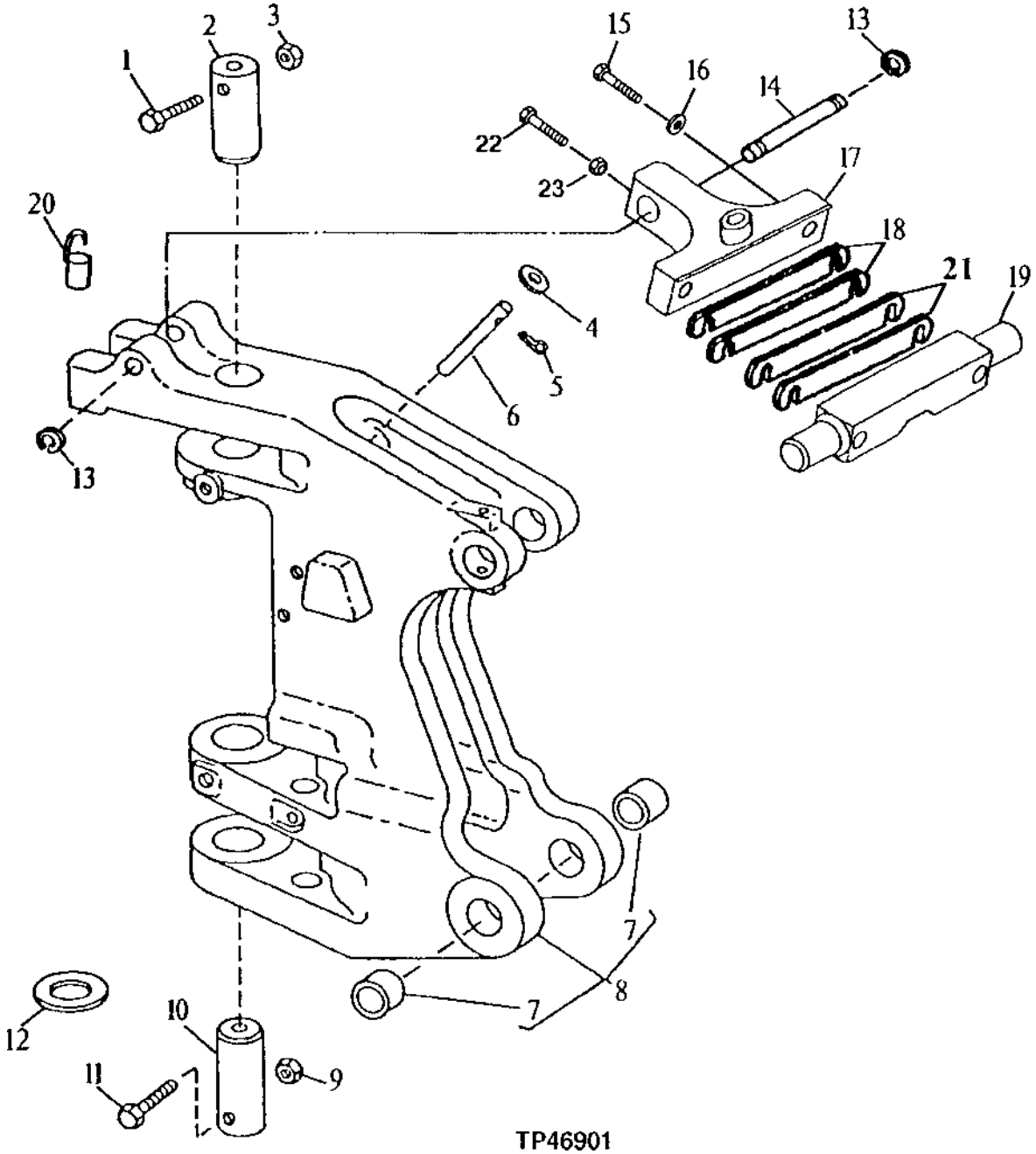

TP46901

SWING FRAME

KEY	PART NO.	PART NAME	QTY	SERIAL NO.	REMARKS
1	19M8044	CAP SCREW	1		M16 X 210
2	T149851	PIN	1		(SUB FOR T130456)
3	14M7328	LOCK NUT	2		M16
4	24M7106	WASHER	2		10 X 18 X 2.500 MM, (ROD FROM SWING FRAME TO RECESSED HOLE)
5	11M7081	COTTER PIN	1		2.500 X 20 MM
6	T77497	PIN	1		
7	T77347	BUSHING	2		
8	AT167396	FRAME	1		(MARKED T151299) (SUB FOR AT156348) (MARKED T141915)
9	14M7328	LOCK NUT	2		M16
10	T130455	PIN	1	-798154	2.944" X 7.362"
	T149851	PIN	1	798155-	2.944" X 7.087"
11	19M8021	CAP SCREW	1		M16 X 200
12	T67209	THRUST WASHER	1		3.031" X 6.299" X 0.177"
13	W33880	SNAP RING	2		
14	T126703	PIN	1		
15	19M7963	CAP SCREW	2		M20 X 100
16	N231749	WASHER	2		13/16" X 1-1/2" X 1/4", (SUB FOR T33089)
17	AT179424	BACKHOE BOOM	1		(SUB FOR AT160044)
18	T70657	STRAP	AR		
19	T77845	LOCK	1		
20	AT150726	PIN	1		
21	T160431	STRAP	AR		(SUB FOR T149668)
22	19M7662	CAP SCREW	1		M10 X 30
23	14M7274	NUT	1		M10

BACKHOE DIPPERSTICK

T142295 -UN-25MAY01

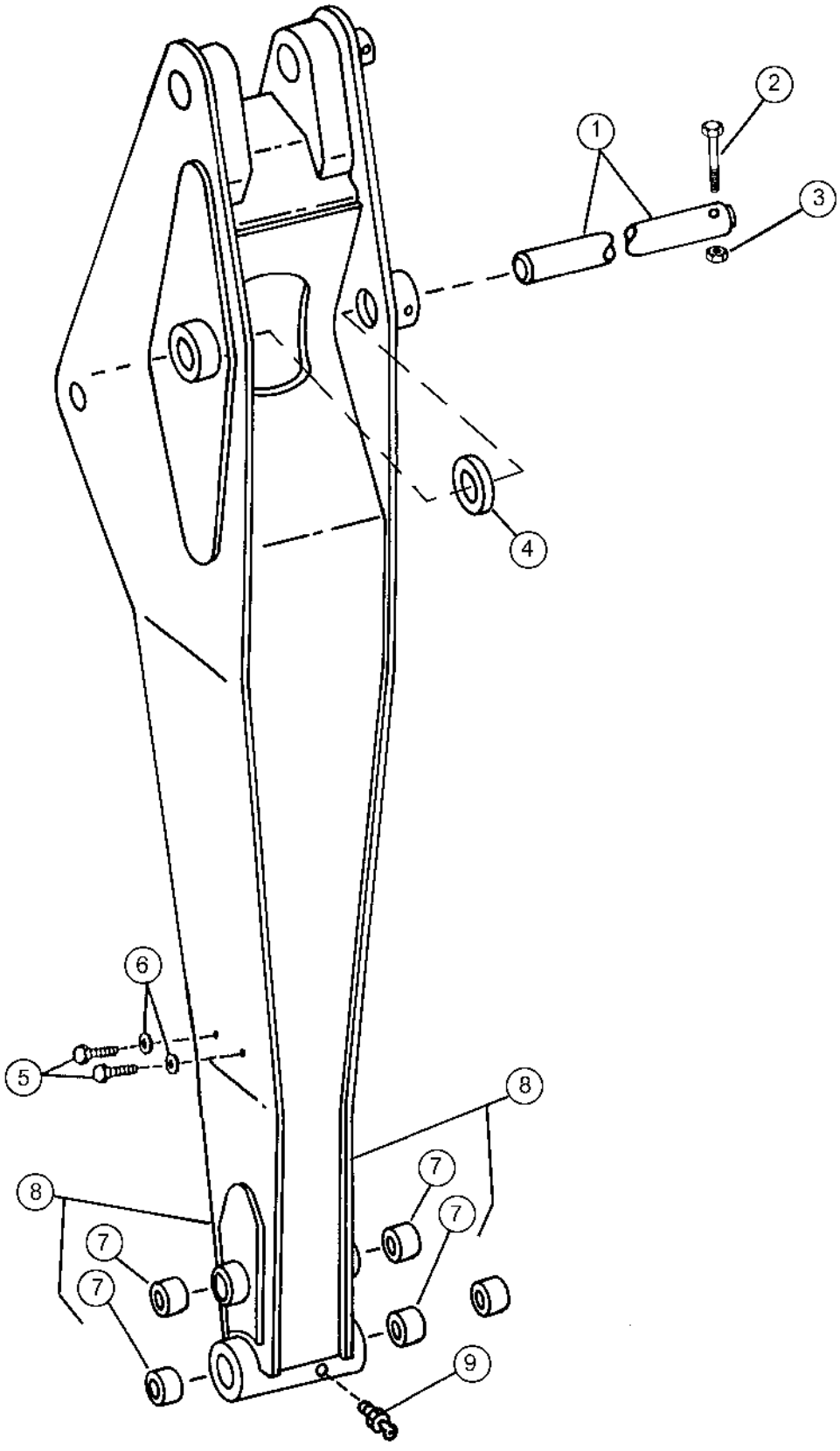

T142295

BACKHOE DIPPERSTICK

KEY	PART NO.	PART NAME	QTY	SERIAL NO.	REMARKS
1	T125952	PIN	1		
2	19M8486	CAP SCREW	1		M16 X 180, STANDARD, (SUB FOR 14M7294)
	19M7882	SCREW	1		M16 X 170, EXTENDIBLE
3	14M7328	LOCK NUT	1		M16
4	T186841	WASHER	AR		
5	19M8324	CAP SCREW	4		M10 X 16
6	24M7239	WASHER	4		
7	U45351	BUSHING	4		
8	AT164585	DIPPERSTICK	1		(SUB FOR AT156505)
9	T162396	LUBRICATION FITTING	1		(SUB FOR JD7798)

EXTENDIBLE DIPPERSTICK EXTENSION

TP57840 -UN-04MAR98

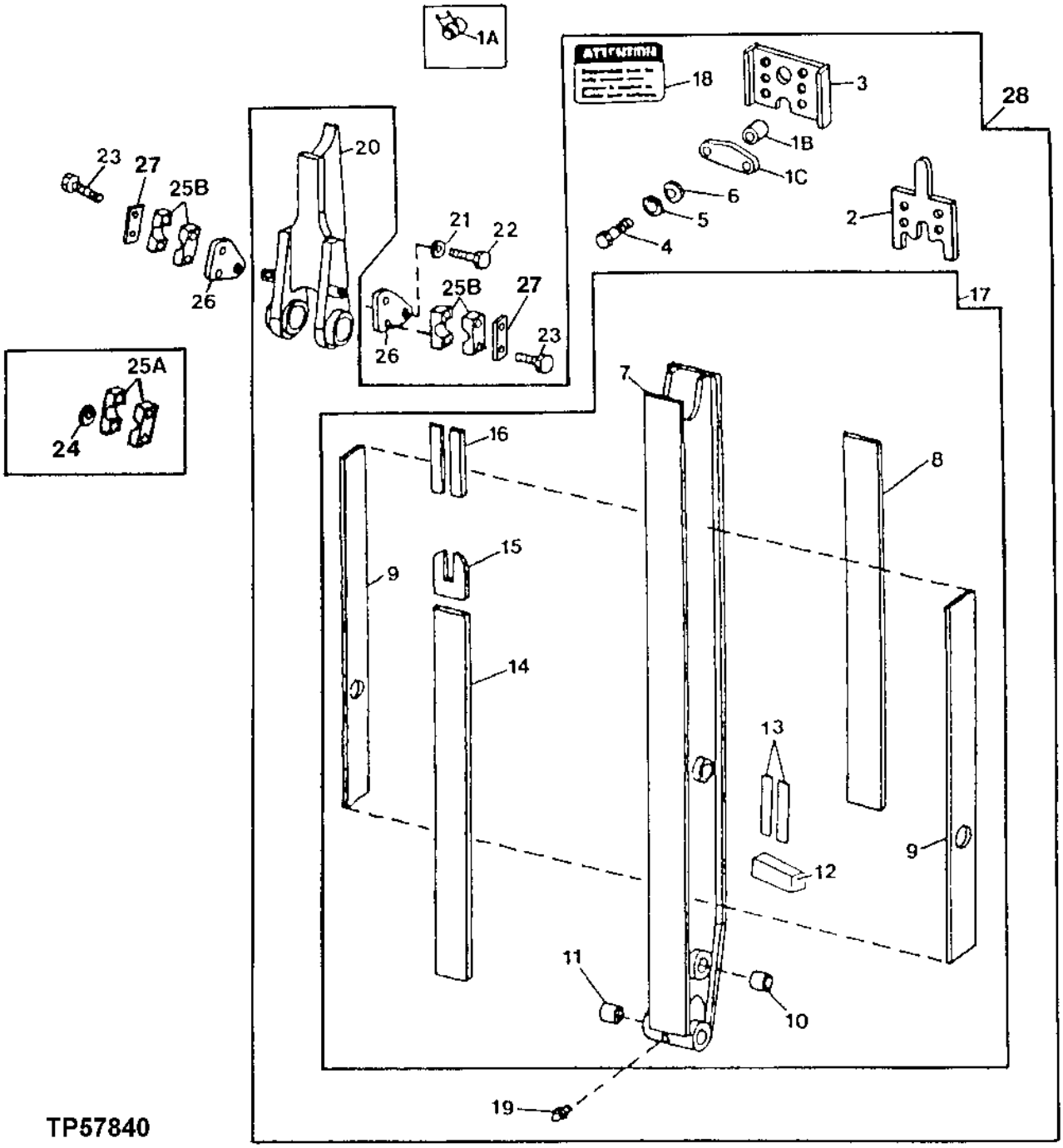

EXTENDIBLE DIPPERSTICK EXTENSION

KEY	PART NO.	PART NAME	QTY	SERIAL NO.	REMARKS
1A	.....	RETAINER	2	-806265	(AT161328 NO LONGER AVAILABLE) (SUB (2) T154092 AND (2) T154271)
1B	T154271	RETAINER	2	806266-	
1C	T154092	PLATE	2	806266-	
2	T143209	SHIM	AR		
3	AT162072	PAD	1		
4	19M7403	CAP SCREW	6		M12 X 35
5	24M7240	WASHER	AR		
6	T146635	WASHER	2	-806265	
7	.....	EXTENSION	1		
8	T143973	PLATE	1		(ALSO ORDER (2) T148940, (2) T148941 AND (2) T148942)
9	T145079	STRIP	2		
10	T143929	BUSHING	2		
11	T143929	BUSHING	2		
12	T144129	STOP	1		
13	T148940	STRAP	2		.005
	T148941	STRAP	2		.010
	T148942	STRAP	2		.030
14	T143931	STRIP	1		
15	T143933	PLATE	1		
16	T143937	PAD	2		
17	AT158500	EXTENSION	1		(ALSO ORDER (2) T148940, (2) T148941, (2) T148942, T144129)
18	T146687	LABEL	1		ATTENTION
19	T162396	LUBRICATION FITTING	1		(SUB FOR JD7798)
20	AT158501	CLEVIS	1		
21	24M7239	WASHER	2		10.700 X 21 X 2.500 MM
22	19M7402	CAP SCREW	2		M10 X 25
23	19M7663	CAP SCREW	4		M8 X 70
24	24M7238	WASHER	4	-847838	8.700 X 17 X 2 MM
25A	T163635	CLAMP	4	-847838	(SUB FOR (4) T147866) (ALSO ORDER (2) T164017)
25B	T163635	CLAMP	4	847839-	
26	T147787	PLATE	2		
27	T164017	PLATE	2	847839-	
28	AT159932	DIPPERSTICK	1		(CONVENIENCE ASSEMBLY) (INCLUDES DIPPERSTICK HOUSING, WEAR PADS, 5 FT. EXTENSION CYLINDER WITH LINK, LUBRICATION FITTINGS, BUCKET AND CROWD PIN, LABEL, AND LOCK PIN)
	AT164712	**KIT**	**1**		**INCLUDES AT159932 DIPPERSTICK ,SWING LOCK PIN AND HOLDER. ALSO REQUIRES AT164715 PLUMBING KIT, AT162061 VALVE FOR TRACTOR WITH 5 FUNCTION; AT151135 VALVE FOR TRACTORS WITH 4 FUNCTION; T76779 FRONT COUNTERWEIGHT OR MULTI-PURPOSE BUCKET.**

EXTENDIBLE DIPPERSTICK HOUSING

TP57838 -UN-04MAR98

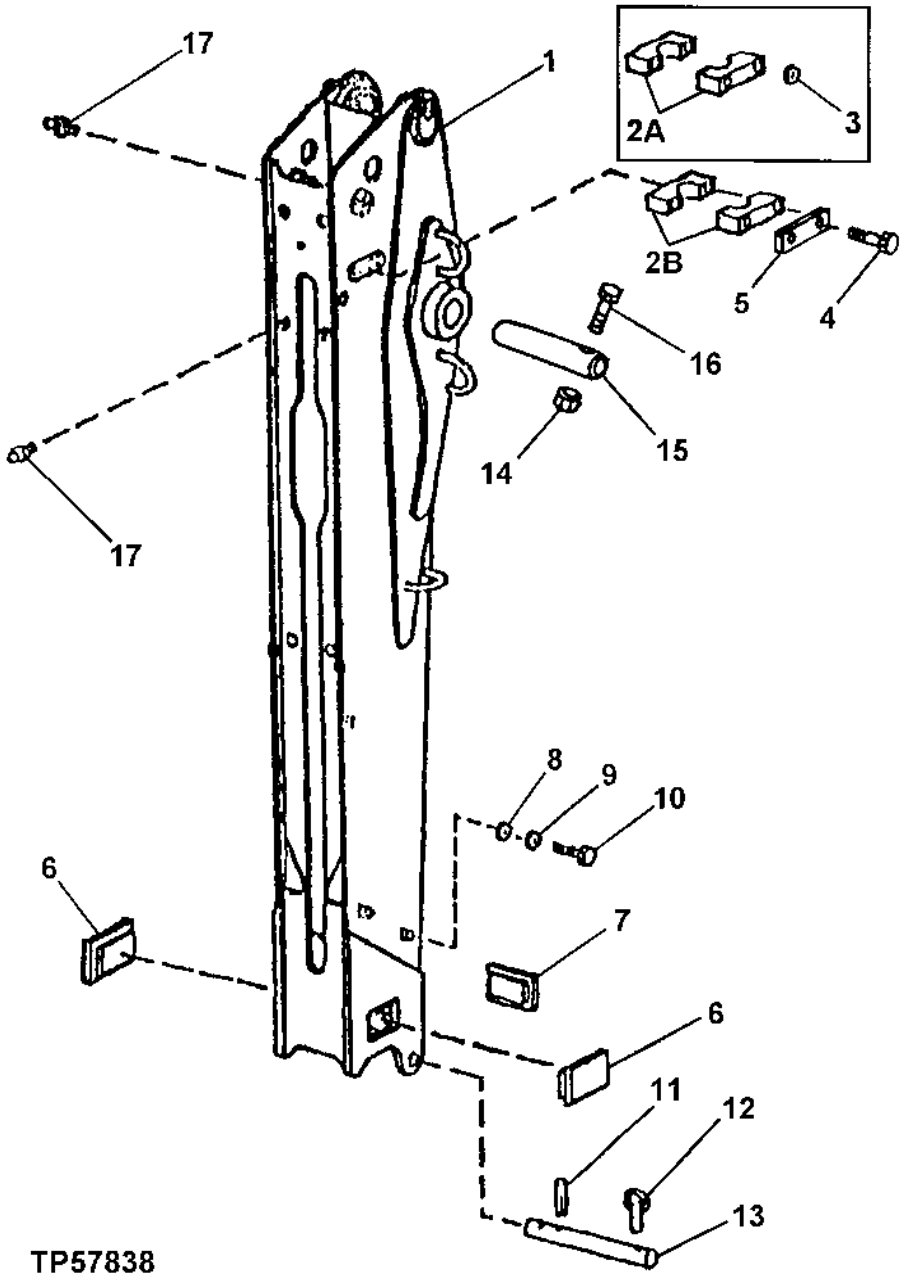

EXTENDIBLE DIPPERSTICK HOUSING

KEY	PART NO.	PART NAME	QTY	SERIAL NO.	REMARKS
1	AT158502	HOUSING	1		(K) (K1)
2A	T162004	CLAMP	4	-847838	(SUB FOR (4) T147187) (ALSO ORDER (2) T162005)
2B	T162004	CLAMP	4	847839-	
3	24M7238	WASHER	8		8.700 X 17 X 2 MM
4	19M7981	CAP SCREW	4		M8 X 55, (WITHOUT AUX. HYDS)
5	T162005	STRAP	2	847839-	
6	AT158521	PAD	2		(K) (K1)
7	AT158522	PAD	1		(K) (K1)
8	24H1781	WASHER	4		(WITHOUT AUXILIARY BACKHOE PLUMBING)
9	24M7239	WASHER	4		10.700 X 21 X 2.500 MM
10	19M8324	CAP SCREW	4		M10 X 16
11	34M7054	SPRING PIN	1		(K1)
12	AR83396	QUICK LOCK PIN	1		(K1)
13	T147005	PIN	1		(K1)
14	14M7328	LOCK NUT	1		M16
15	T125952	PIN	1		70 X 360 MM (2.756" X 14.173")
16	19M8486	CAP SCREW	1		M16 X 180
17	T162396	LUBRICATION FITTING	4		(K) (SUB FOR JD7798) (K1)
..	AT159932	DIPPERSTICK	1		INCLUDES ALL (K) PARTS (DIPPERSTICK AND EXTENSIONS)
..	**AT164712**	**KIT**	**1**		**INCLUDES ALL (K1) PARTS (DIPPERSTICK AND EXTENSION, WITH SWING LOCK PIN)**

REVERSIBLE STABILIZER FEET

TP42994 -UN-01JAN94

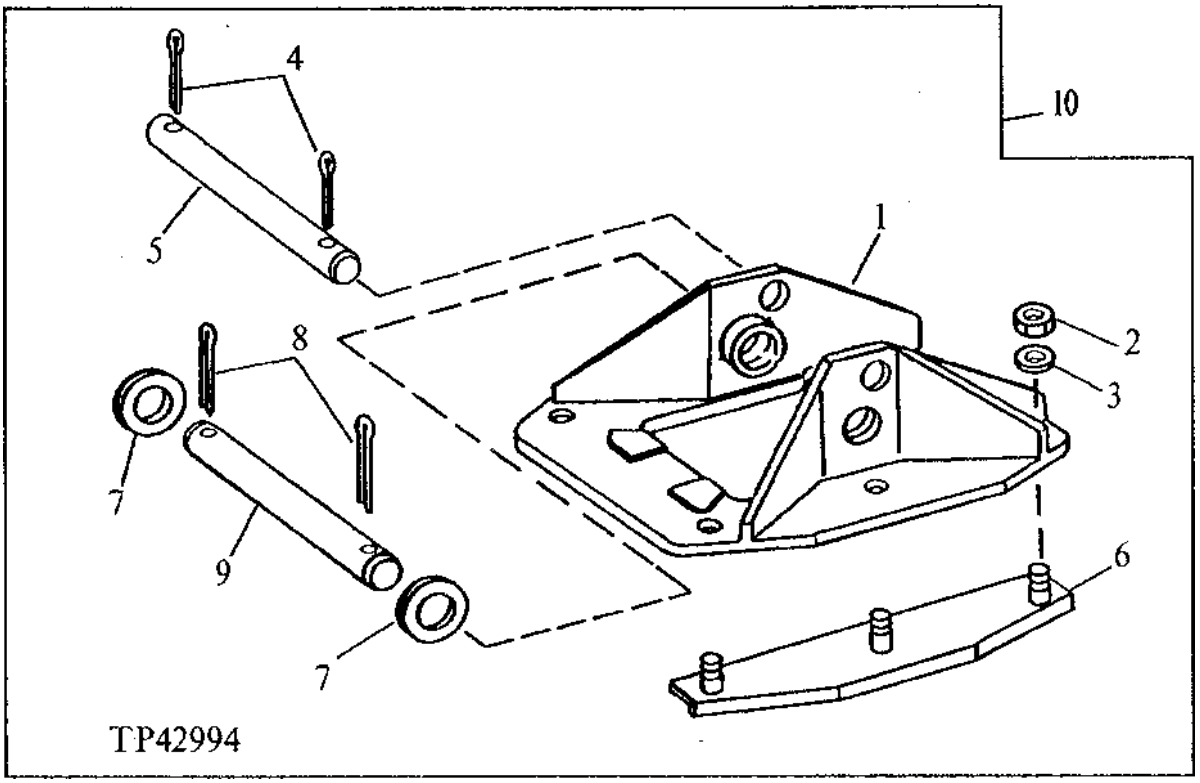

KEY	PART NO.	PART NAME	QTY	SERIAL NO.	REMARKS
1	T106434	STABILIZER FOOT	2		REVERSIBLE
2	14H1040	NUT	12		1/2"
3	T29342	WASHER	12		17/32" X 1-1/4" X 0.180"
4	11M7085	COTTER PIN	4		6.300 X 63 MM
5	U44055	PIN	2		
6	AT192120	STREET PAD	4		(SUB FOR AT114691)
7	24H1595	WASHER	AR		2-1/16" X 3" X 0.075"
	24H1595	WASHER	AR		2-1/16" X 3" X 0.075", (BETWEEN LEG AND FOOT)
8	11H270	COTTER PIN	4		1/2" X 3"
9	T75649	PIN	2		
10	**AT53960**	**STABILIZER**	**1**		**(CONTAINS SET OF TWO)**

STABILIZER AND STABILIZER FEET

TP42823 -UN-01JAN94

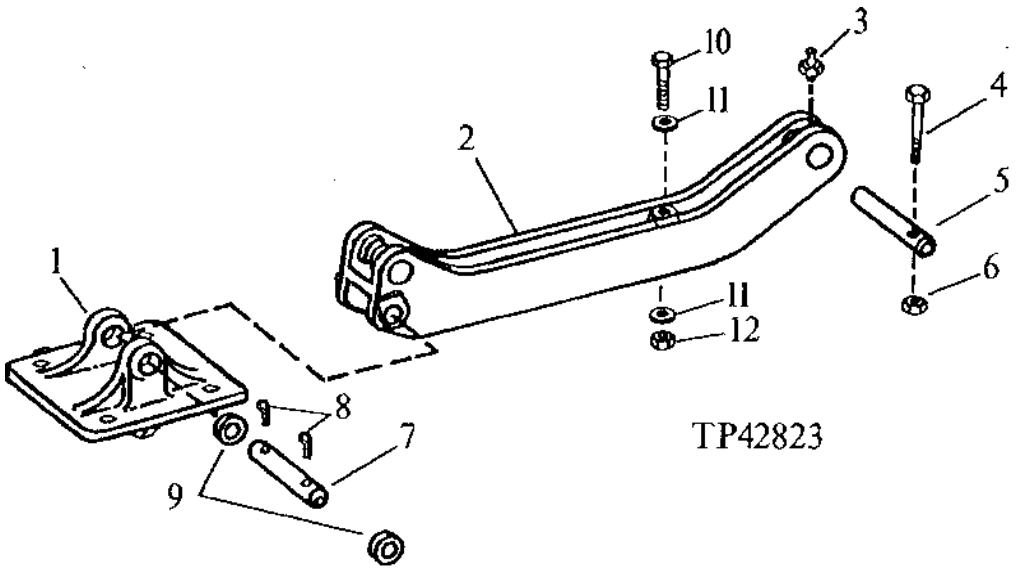

KEY	PART NO.	PART NAME	QTY	SERIAL NO.	REMARKS
1	T81245	STABILIZER FOOT	1		
2	T146053	STABILIZER	1		
3	T162396	LUBRICATION FITTING	1		(SUB FOR JD7798)
4	19M7732	CAP SCREW	1		M16 X 130
5	T80616	PIN	1		
6	14M7328	LOCK NUT	1		M16
7	T69472	PIN	1		
8	11H277	COTTER PIN	2		1/2" X 4"
9	24H1595	WASHER	AR		2-1/16" X 3" X 0.075"
10	19M7417	CAP SCREW	1		M16 X 65
11	24M7241	WASHER	3		17 X 34 X 4 MM
12	14M7328	LOCK NUT	1		M16

BACKHOE STREET PADS

TP42983 -UN-01JAN94

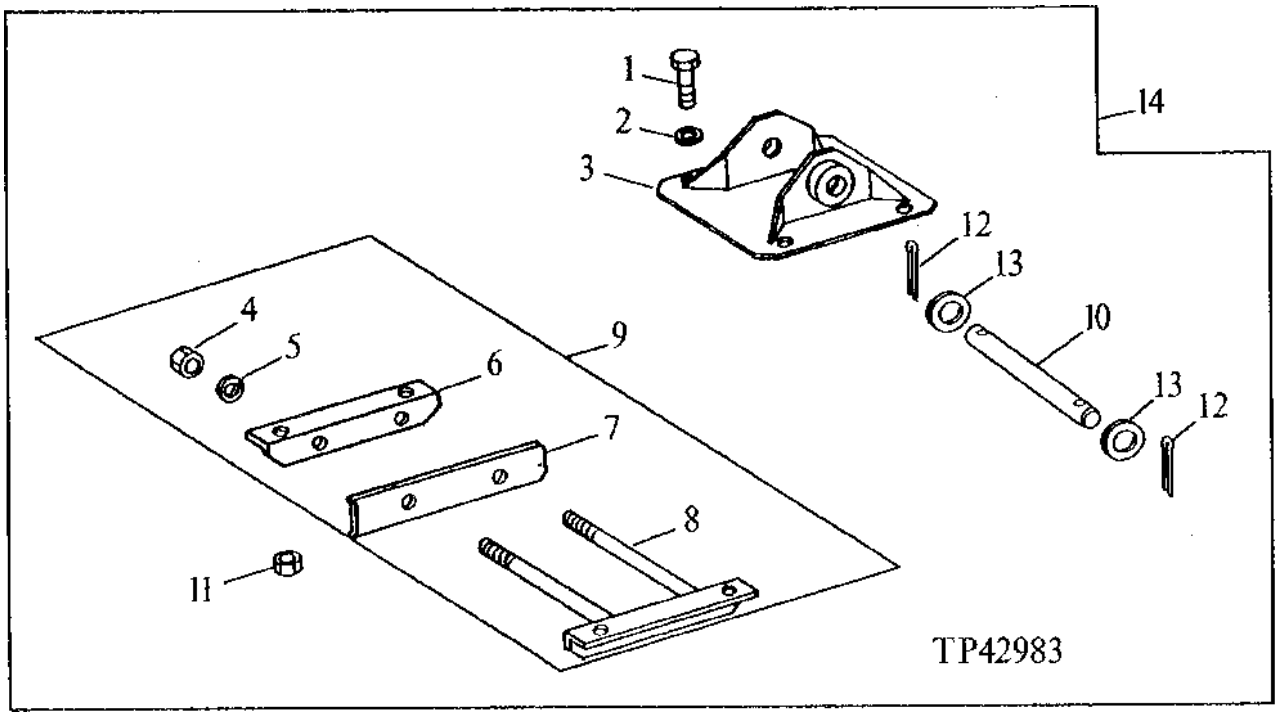

KEY	PART NO.	PART NAME	QTY	SERIAL NO.	REMARKS
1	19H3158	CAP SCREW	8		3/4" X 2"
2	R54124	WASHER	8		0.780" X 1-3/4" X 0.229"
3	AT33335	STABILIZER FOOT	2		
4	14H1077	NUT	4		7/8"
5	12H245	LOCK WASHER	4		7/8"
6	.....	ANGLE	2		
7	T33644	STREET PAD	36		
8	.....	ANGLE	2		
9	AT33333	STREET PAD	2		
10	T75649	PIN	2		
11	14H1058	NUT	8		3/4"
12	11H270	COTTER PIN	4		
13	24H1679	WASHER	AR		2-17/64" X 3-1/4" X 0.060"
14	**AT160754**	**STREET PAD**	**1**		

MEMORANDA

BACKHOE BOOM

TP57839 -UN-13MAR98

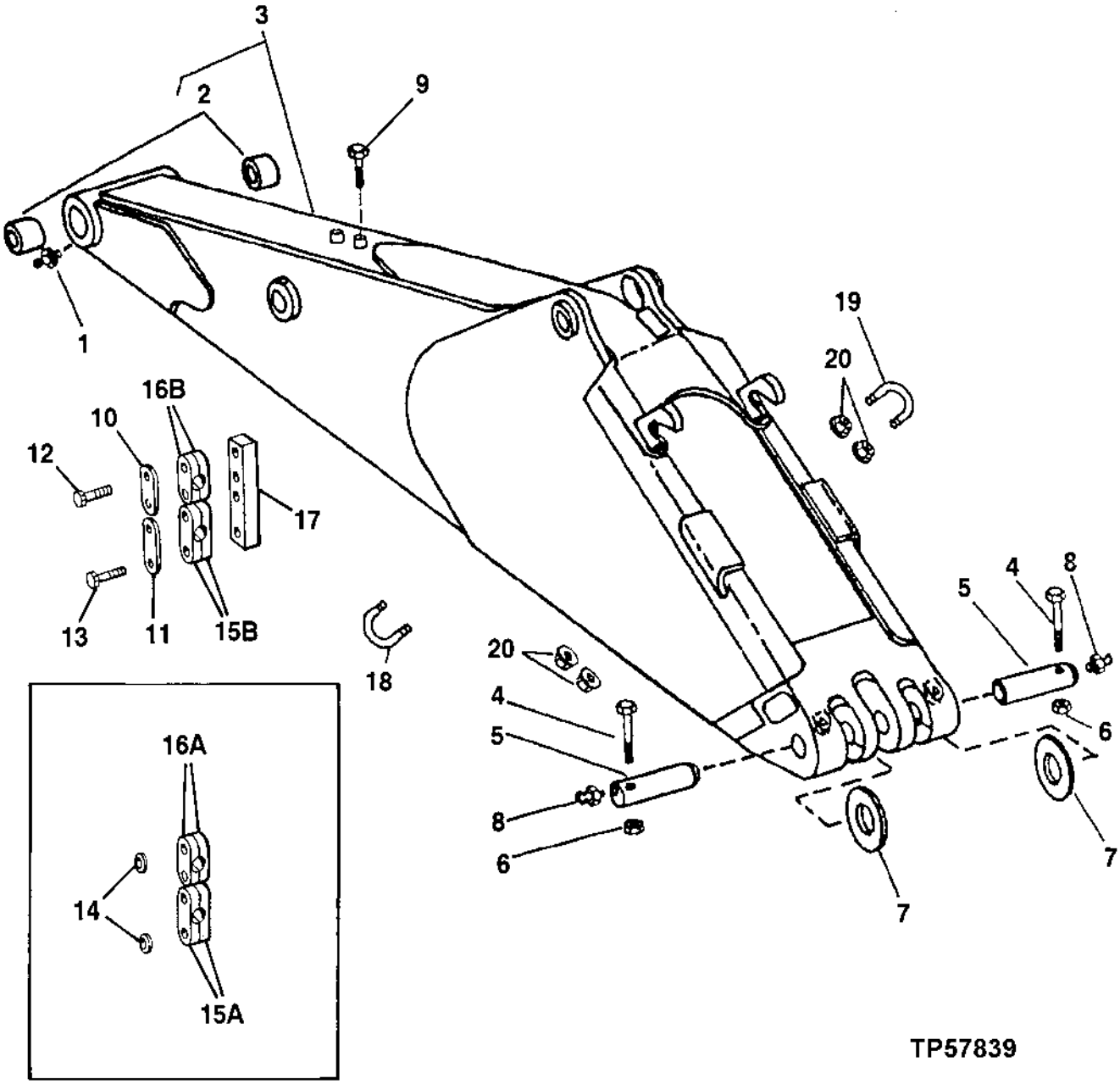

BACKHOE BOOM

KEY	PART NO.	PART NAME	QTY	SERIAL NO.	REMARKS
1	JD7771	LUBRICATION FITTING	1		1/8"
2	T67856	BUSHING	2		
3	AT164389	BACKHOE BOOM	1		REGULAR DIPPERSTICK
	AT164390	BACKHOE BOOM	1		EXTENDIBLE DIPPERSTICK
4	19M8044	CAP SCREW	2		M16 X 210
5	T160952	PIN	2		(SUB FOR T125947)
6	14M7328	LOCK NUT	2		M16
7	T126038	WASHER	2		
8	T162396	LUBRICATION FITTING	2		(SUB FOR JD7798)
9	19M7881	SCREW	2		M8 X 20
10	T162005	STRAP	2	847839-	
11	T164017	PLATE	2	847839-	
12	19M7981	CAP SCREW	4		(WITH EXTENDIBLE DIPPERSTICK)
13	19M7663	CAP SCREW	4		
14	24M7238	WASHER	8	-847838	
15A	T163635	CLAMP	4	-847838	(SUB FOR (4) T147866) (ALSO ORDER (2) T164017) (WITH EXTENDIBLE DIPPERSTICK)
15B	T163635	CLAMP	4	847839-	
16A	T162004	CLAMP	4	-847838	(SUB FOR (4) T147187) (ALSO ORDER (2) T162005) (WITH EXTENDIBLE DIPPERSTICK)
16B	T162004	CLAMP	4	847839-	
17	.....	STRAP	2		(WITH EXTENDIBLE DIPPERSTICK)
18	.....	PIN	2		(WITH EXTENDIBLE DIPPERSTICK)
19	B14164	U-BOLT	1		
20	T126701	FLANGE NUT	4		

BACKHOE CONTROL VALVE
(SERIAL NO. -850352)

TP45035 -UN-01JAN94

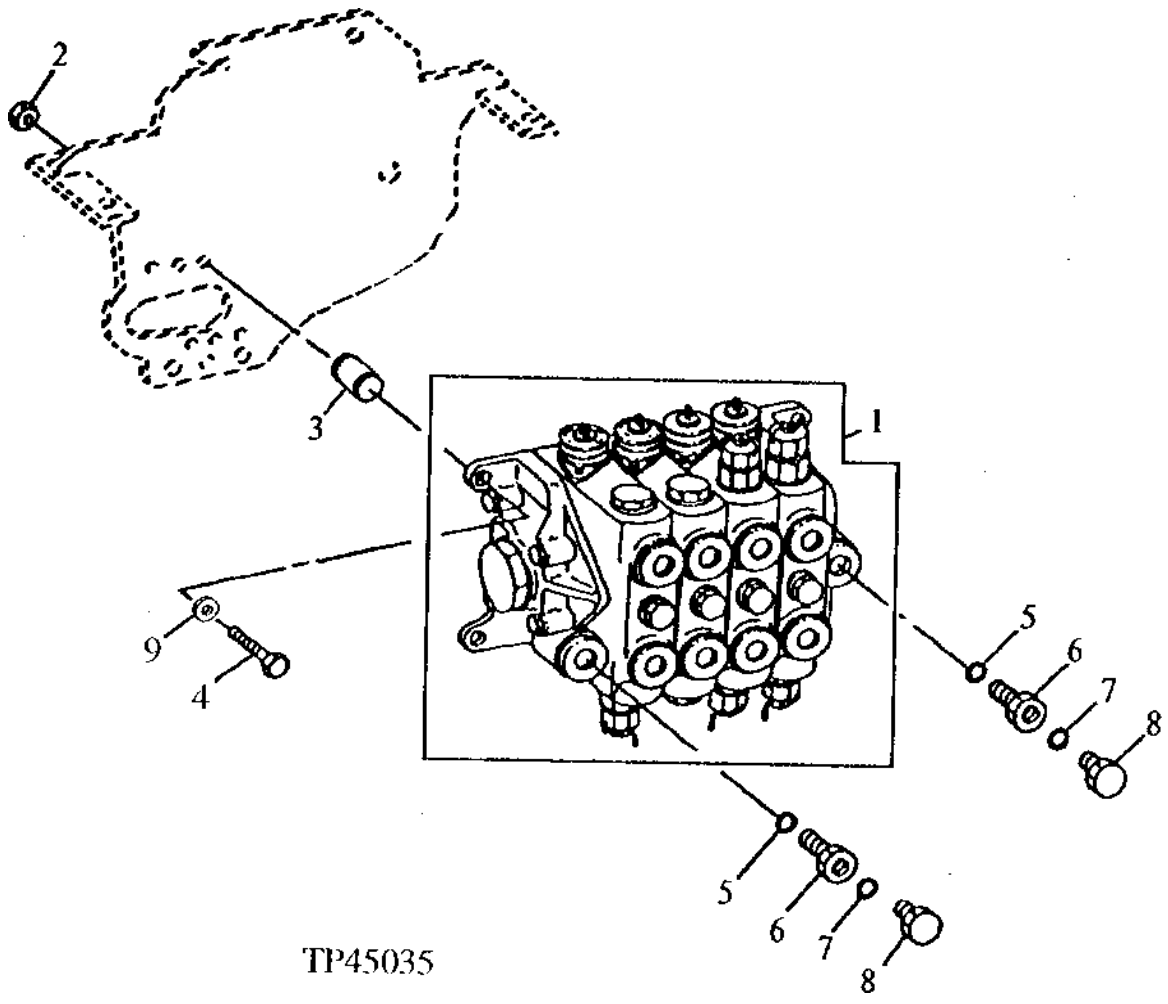

BACKHOE CONTROL VALVE
(SERIAL NO. -850352)

KEY	PART NO.	PART NAME	QTY	SERIAL NO.	REMARKS
1	.....	VALVE	1		4-FUNCTION (AT158232 NO LONGER AVAILABLE) (SUB AT184580)
	.....	VALVE	1		5-FUNCTION (AT158234 NO LONGER AVAILABLE) (NOT ILLUSTRATED) (SUB AT184581)
	.....	VALVE	1		6-FUNCTION (AT159784 NO LONGER AVAILABLE) (NOT ILLUSTRATED) (SUB AT184582)
2	14M7275	NUT	3		M12
3	28H2514	BUSHING	3		
4	19M7753	CAP SCREW	3		M12 X 70
5	R29936	O-RING	2		
6	T30929	PIPE PLUG	2		
7	R26287	O-RING	2		
8	R31631	DRAIN PLUG	2		
9	T29342	WASHER	2		(ON VALVE TO VALVE SUPPORT MOUNTING BOLT AT SLOT LOCATION)

BACKHOE CONTROL VALVE BOOM SECTION
(SERIAL NO. -850352)

TP54975 -UN-13MAR97

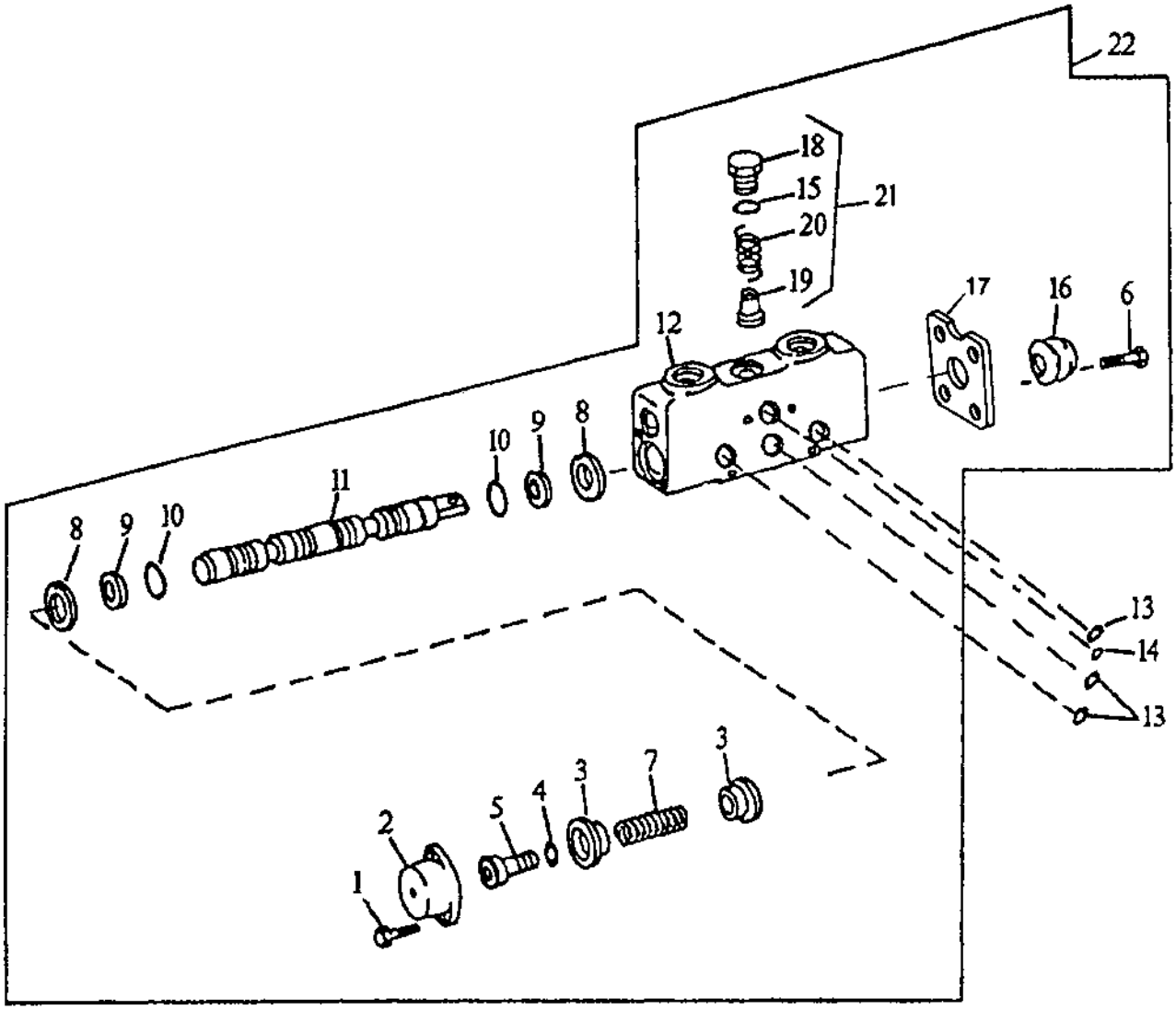

TP54975

BACKHOE CONTROL VALVE BOOM SECTION
(SERIAL NO. -850352)

KEY	PART NO.	PART NAME	QTY	SERIAL NO.	REMARKS
1	T106306	SCREW	2		
2	AT117656	CAP	1		
3	T75991	BUSHING	2		
4	R26287	O-RING	1		(A)
5	T106305	BUSHING	1		
6	T104773	CAP SCREW	2		
7	T75992	SPRING	1		(A)
8	T148357	RETAINER	2		(A)
9	T148356	SEAL	2		(A) WIPER
10	T148355	SEAL	2		(A) LIP
11	.....	SPOOL	1		
12	.....	HOUSING	1		
13	.....	O-RING	3		(SUB AT159816)
14	.....	O-RING	1		(SUB AT159816)
15	U17409	O-RING	1		
16	T149740	BOOT	1		(A) (SUB FOR T113029)
17	T160996	FLANGE	1		(SUB FOR T75998) (ALSO ORDER (2) T104773)
18	.....	FITTING PLUG	1		
19	.....	POPPET	1		
20	.....	SPRING	1		
21	AT74127	FITTING PLUG	1		
22	AT166181	VALVE	1		BOOM SECTION, (ALSO ORDER AT159816) (SUB FOR AT161052)
..	AT165991	SEAL KIT	1		INCLUDES ALL (A) PARTS (SPOOL SEAL REPAIR KIT)

BACKHOE CONTROL VALVE BUCKET SECTION
(SERIAL NO. -850352)

TP54975 -UN-13MAR97

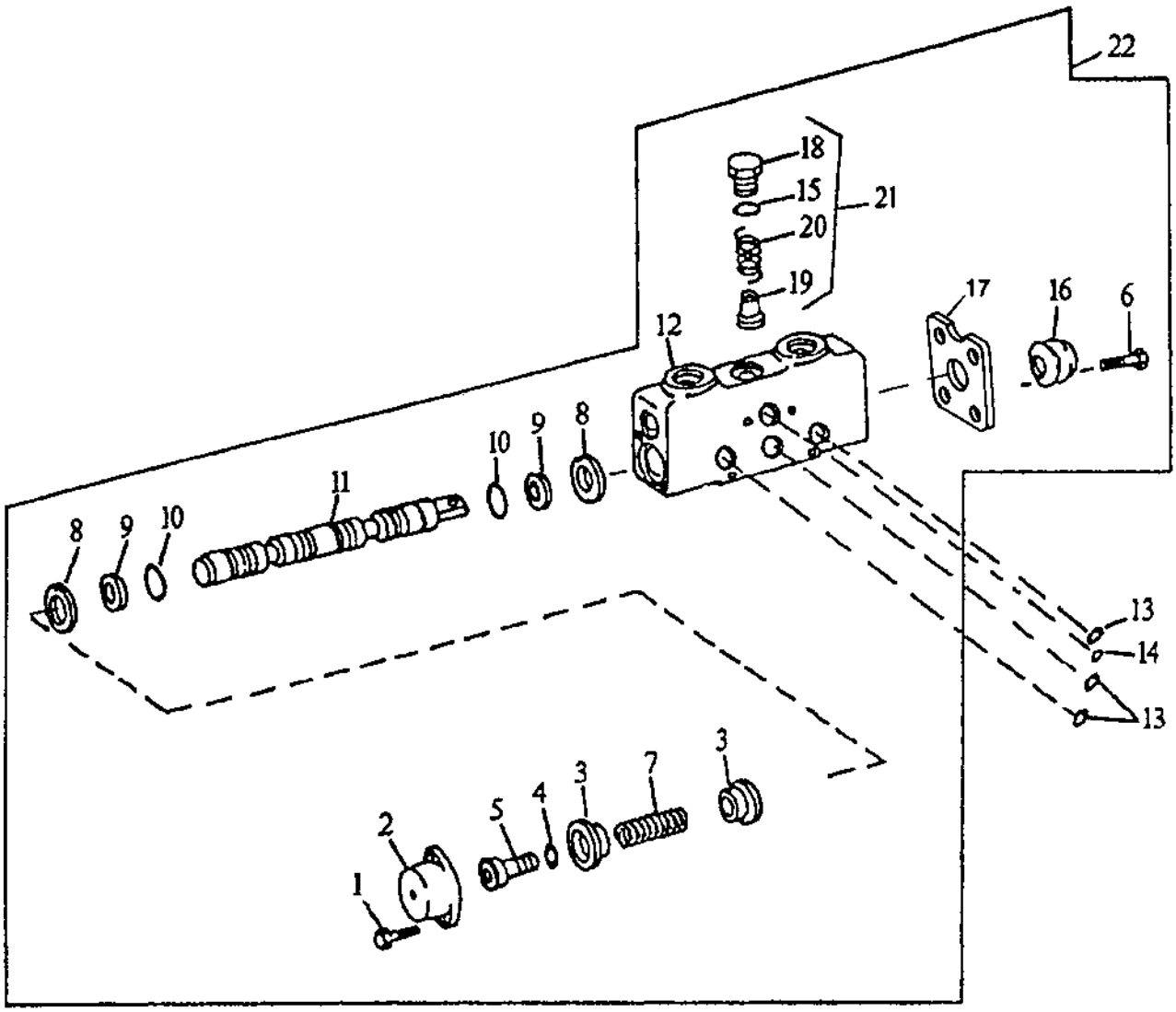

TP54975

BACKHOE CONTROL VALVE BUCKET SECTION
(SERIAL NO. -850352)

KEY	PART NO.	PART NAME	QTY	SERIAL NO.	REMARKS
1	T106306	SCREW	2		
2	AT117656	CAP	1		
3	T75991	BUSHING	2		
4	R26287	O-RING	1		(A)
5	T106305	BUSHING	1		
6	T104773	CAP SCREW	2		
7	T75992	SPRING	1		(A)
8	T148357	RETAINER	2		(A) (SUB AT165991)
9	T148356	SEAL	2		(A) WIPER, (SUB AT165991)
10	T148355	SEAL	2		(A) LIP, (SUB AT165991)
11	.....	SPOOL	1		
12	.....	HOUSING	1		
13	.....	O-RING	3		(SUB AT159816)
14	.....	O-RING	1		(SUB AT159816)
15	U17409	O-RING	1		
16	T149740	BOOT	1		(A) (SUB FOR T113029)
17	T160996	FLANGE	1		(SUB FOR T75998) (ALSO ORDER (2) T104773)
18	.....	FITTING PLUG	1		
19	.....	POPPET	1		
20	.....	SPRING	1		
21	AT74127	FITTING PLUG	1		
22	AT166182	VALVE	1		(ALSO ORDER AT159816) (SUB FOR AT161053)
..	AT165991	SEAL KIT	1		INCLUDES ALL (A) PARTS (SPOOL SEAL REPAIR)

BACKHOE CONTROL VALVE CROWD SECTION
(SERIAL NO. -850352)

TP54977 -UN-13MAR97

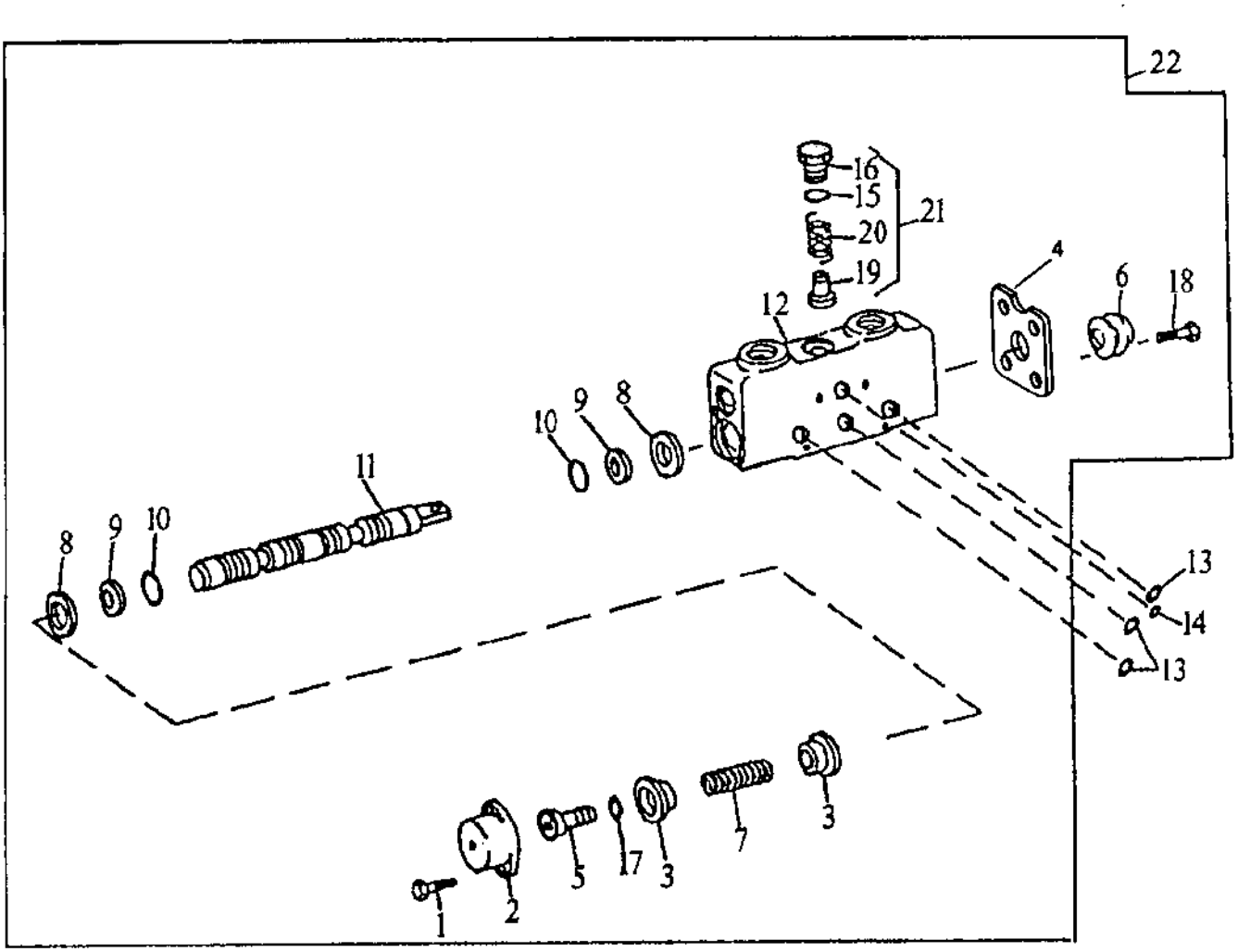

TP54977

BACKHOE CONTROL VALVE CROWD SECTION
(SERIAL NO. -850352)

KEY	PART NO.	PART NAME	QTY	SERIAL NO.	REMARKS
1	T106306	SCREW	2		
2	AT117656	CAP	1		
3	T75991	BUSHING	2		
4	T160996	FLANGE	1		(SUB FOR T75998) (ALSO ORDER (2) T104773)
5	T106306	SCREW	1		
6	T149740	BOOT	1		(A) (SUB FOR T113029)
7	T75992	SPRING	1		(A)
8	T148357	RETAINER	2		(A) (SUB AT165991)
9	T148356	SEAL	2		(A) WIPER, (SUB AT165991)
10	T148355	SEAL	2		(A) LIP, (SUB AT165991)
11	.....	SPOOL	1		
12	.....	HOUSING	1		
13	.....	O-RING	6		(SUB AT159816)
14	.....	O-RING	2		(SUB AT159816)
15	U17409	O-RING	1		
16	.....	FITTING PLUG	1		
17	R26287	O-RING	1		(A)
18	T104773	CAP SCREW	2		
19	.....	POPPET	1		
20	.....	SPRING	1		
21	AT74127	FITTING PLUG	1		
22	AT166183	VALVE	1		CROWD SECTION, (ALSO ORDER AT159816) (SUB FOR AT161054)
..	AT165991	SEAL KIT	1		INCLUDES ALL (A) PARTS (SPOOL SEAL REPAIR)

BACKHOE CONTROL VALVE SWING SECTION
(SERIAL NO. -850352)

TP54976 -UN-13MAR97

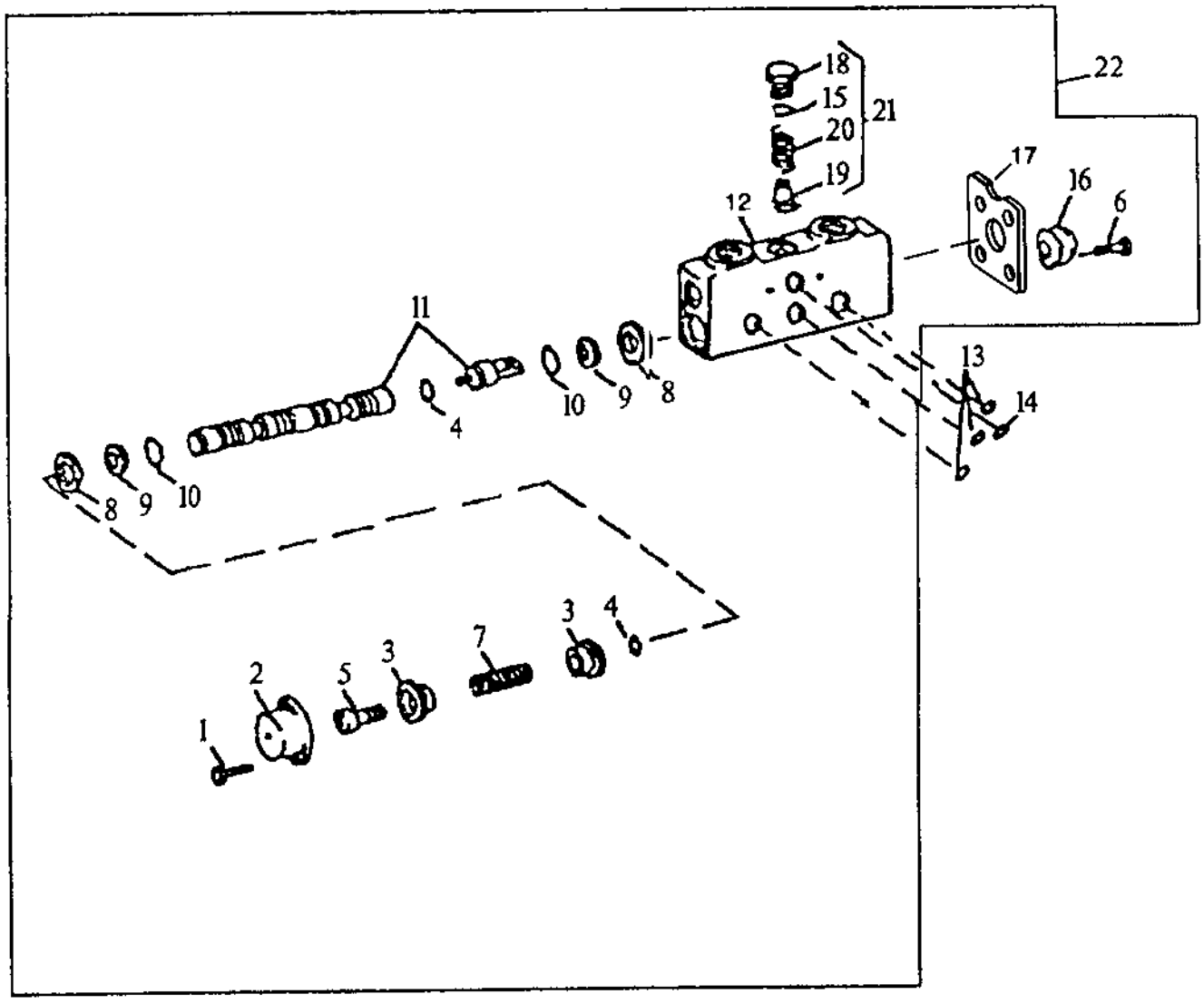

TP54976

BACKHOE CONTROL VALVE SWING SECTION
(SERIAL NO. -850352)

KEY	PART NO.	PART NAME	QTY	SERIAL NO.	REMARKS
1	T106306	SCREW	2		
2	AT117656	CAP	1		
3	T75991	BUSHING	2		
4	R26287	O-RING	2		(A)
5	T106305	BUSHING	1		
6	T104773	CAP SCREW	2		
7	T75992	SPRING	1		(A)
8	T148357	RETAINER	2		(A) (SUB AT165991)
9	T148356	SEAL	2		(A) WIPER, (SUB AT165991)
10	T148355	SEAL	2		(A) LIP, (SUB AT165991)
11	.....	SPOOL	1		
12	.....	HOUSING	1		
13	.....	O-RING	3		(SUB AT159816)
14	.....	O-RING	1		(SUB AT159816)
15	U17409	O-RING	1		
16	T149740	BOOT	1		(A) (SUB FOR T113029)
17	T160996	FLANGE	1		(SUB FOR T75998) (ALSO ORDER (2) T104773)
18	.....	FITTING PLUG	1		
19	.....	POPPET	1		
20	.....	SPRING	1		
21	AT74127	FITTING PLUG	1		
22	AT166180	VALVE	1		SWING SECTION, (ALSO ORDER AT159816) (SUB FOR AT161051)
..	AT165991	SEAL KIT	1		INCLUDES ALL (A) PARTS (SPOOL SEAL REPAIR)

BACKHOE CONTROL VALVE AUXILIARY SECTION
(WITH 5-FUNCTION VALVE)
(SERIAL NO. -850352)

TP54978 -UN-13MAR97

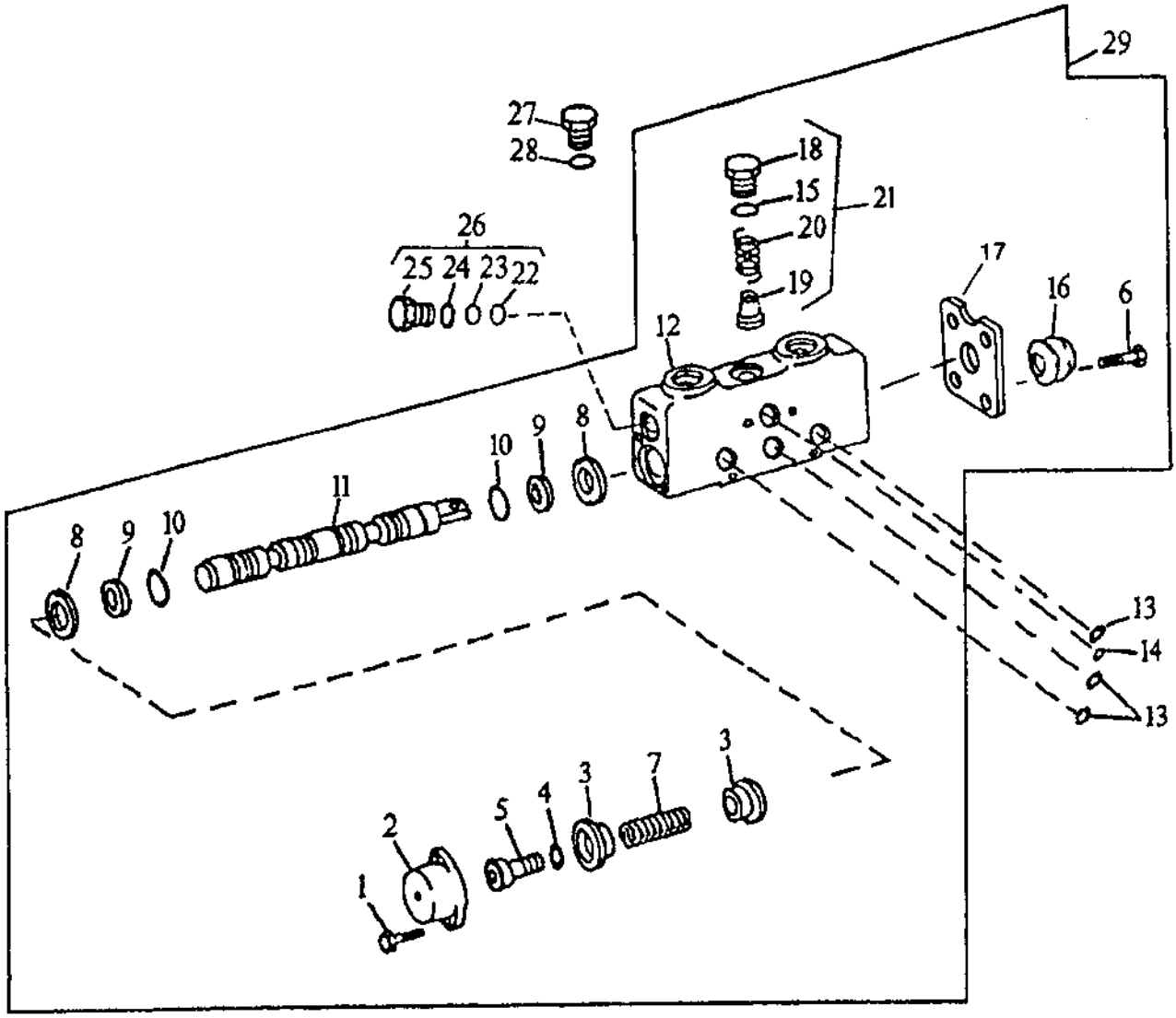

TP54978

BACKHOE CONTROL VALVE AUXILIARY SECTION
(WITH 5-FUNCTION VALVE)
(SERIAL NO. -850352)

KEY	PART NO.	PART NAME	QTY	SERIAL NO.	REMARKS
1	T106306	SCREW	2		
2	AT117656	CAP	1		
3	T75991	BUSHING	2		
4	R26287	O-RING	1		(A)
5	T106305	BUSHING	1		
6	T104773	CAP SCREW	2		
7	T75992	SPRING	1		(A)
8	T148357	RETAINER	2		(A) (SUB AT165991)
9	T148356	SEAL	2		(A) WIPER, (SUB AT165991)
10	T148355	SEAL	2		(A) LIP, (SUB AT165991)
11	.....	SPOOL	1		
12	.....	HOUSING	1		
13	.....	O-RING	3		(SUB AT159816)
14	.....	O-RING	1		(SUB AT159816)
15	U17409	O-RING	1		
16	T149740	BOOT	1		(A) (SUB FOR T113029)
17	T160996	FLANGE	1		(SUB FOR T75998) (ALSO ORDER (2) T104773)
18	.....	FITTING PLUG	1		
19	.....	POPPET	1		
20	.....	SPRING	1		
21	AT74127	FITTING PLUG	1		
22	T49819	O-RING	1		
23	T106298	BACK-UP RING	1		
24	U17409	O-RING	1		
25	.....	PLUG	1		
26	AT160482	PLUG	2		
27	R36636	FITTING PLUG	2		
28	R29936	O-RING	2		
29	AT166182	VALVE	1		(ALSO ORDER AT159816) (SUB FOR AT161053)
..	AT165991	SEAL KIT	1		INCLUDES ALL (A) PARTS (SPOOL SEAL REPAIR)

BACKHOE CONTROL VALVE AUXILIARY SECTION
(WITH SIX FUNCTION VALVE)
(SERIAL NO. -850352)

TP54978 -UN-13MAR97

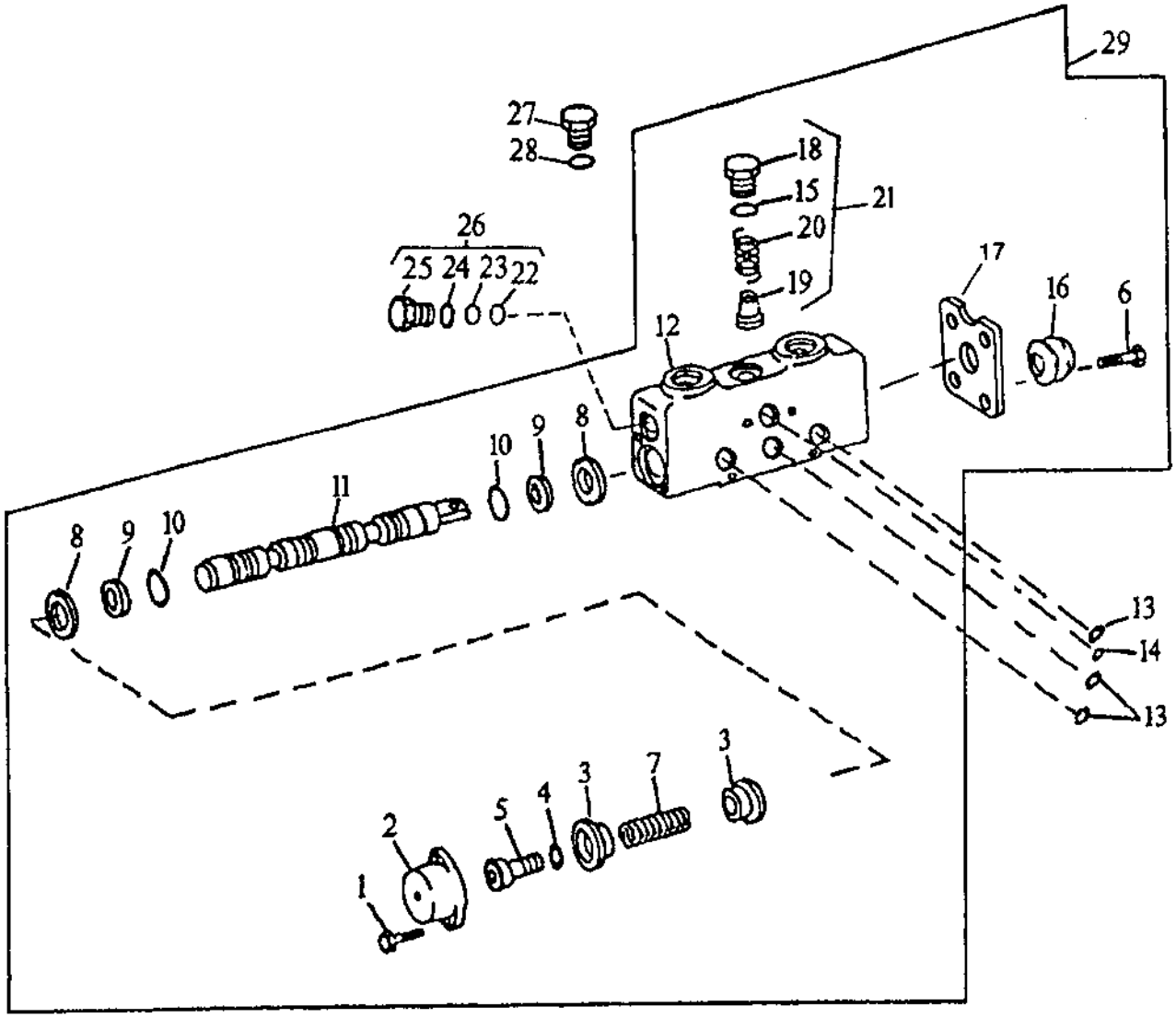

TP54978

BACKHOE CONTROL VALVE AUXILIARY SECTION
(WITH SIX FUNCTION VALVE)
(SERIAL NO. -850352)

KEY	PART NO.	PART NAME	QTY	SERIAL NO.	REMARKS
1	T106306	SCREW	2		
2	AT117656	CAP	1		
3	T75991	BUSHING	2		
4	R26287	O-RING	1		(A)
5	T106305	BUSHING	1		
6	T104773	CAP SCREW	2		
7	T75992	SPRING	1		(A)
8	T148357	RETAINER	2		(A) RETAINER, (SUB AT165991)
9	T148356	SEAL	2		(A) WIPER, (SUB AT165991)
10	T148355	SEAL	2		(A) LIP, (SUB AT165991)
11	.....	SPOOL	1		
12	.....	HOUSING	1		
13	.....	O-RING	3		(SUB AT159816)
14	.....	O-RING	1		(SUB AT159816)
15	U17409	O-RING	1		
16	T149740	BOOT	1		(A) (SUB FOR T113029)
17	T160996	FLANGE	1		(SUB FOR T75998) (ALSO ORDER (2) T104773)
18	.....	FITTING PLUG	1		
19	.....	POPPET	1		
20	.....	SPRING	1		
21	AT74127	FITTING PLUG	1		
22	T49819	O-RING	1		
23	T106298	BACK-UP RING	1		
24	U17409	O-RING	1		
25	.....	PLUG	1		
26	AT160482	PLUG	2		
27	R36636	FITTING PLUG	1		
28	R29936	O-RING	1		
29	AT166182	VALVE	1		(ALSO ORDER AT159816) (SUB FOR AT161053)
..	AT165991	SEAL KIT	1		INCLUDES ALL (A) PARTS (SPOOL SEAL REPAIR)

BACKHOE CONTROL VALVE SEAL KIT
(BOOM, BUCKET, CROWD, SWING, AND AUXILIARY SECTIONS)
(SERIAL NO. -850352)

TP54974 -UN-20FEB97

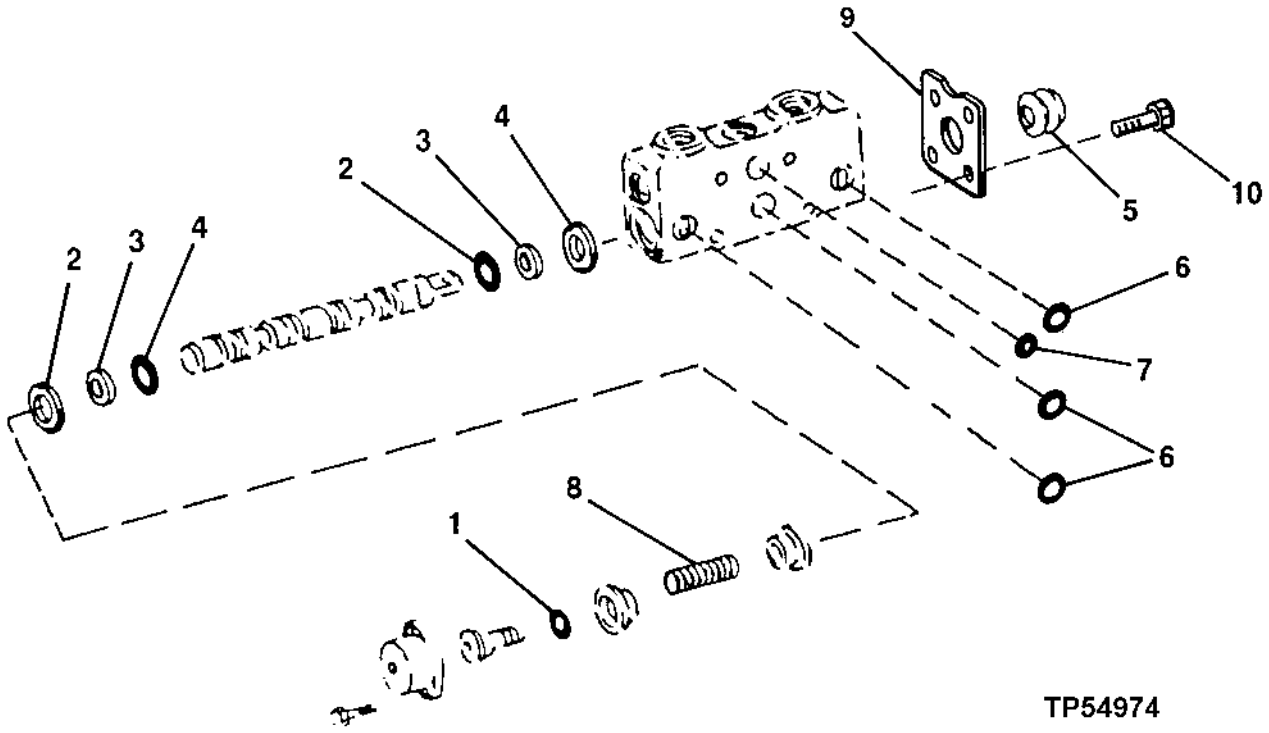

KEY	PART NO.	PART NAME	QTY	SERIAL NO.	REMARKS
1	R26287	O-RING	2		(A)
2	T148357	RETAINER	2		(A)
3	T148356	SEAL	2		(A) WIPER
4	T148355	SEAL	2		(A) LIP
5	T149740	BOOT	1		(A) (SUB FOR T113029)
6	.....	O-RING	6		(B)
7	.....	O-RING	2		(B)
8	T75992	SPRING	1		(A)
9	T160996	FLANGE	1		
10	T104773	CAP SCREW	4		

(A) AT165991 KIT, SPOOL SEAL (SUB FOR AT163914)

(B) AT159816 KIT, SECTION SEAL

END COVER
(SERIAL NO. -850352)

TP44010 -UN-01JAN94

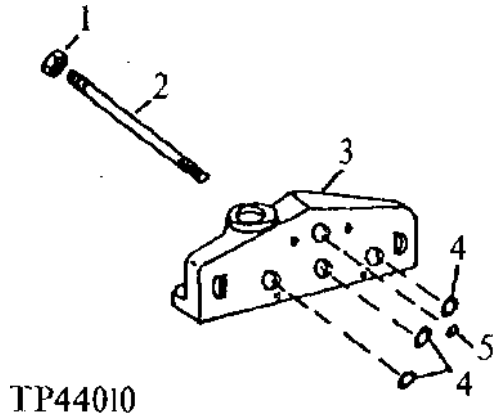

KEY	PART NO.	PART NAME	QTY	SERIAL NO.	REMARKS
1	14H1047	NUT	4		7/16"
2	T147000	STUD	4		4-FUNCTION VALVE
	T147001	STUD	4		5-FUNCTION VALVE
	T147107	STUD	4		6-FUNCTION VALVE
3	T146906	COVER	1		"R.H.", (ALSO ORDER AT159816)
4	.....	O-RING	15		(SUB AT159816)
5	.....	O-RING	5		(SUB AT159816)

RELIEF VALVE
(WITHOUT CAVITATION)
(SERIAL NO. -850352)

TP20171 -UN-01JAN94

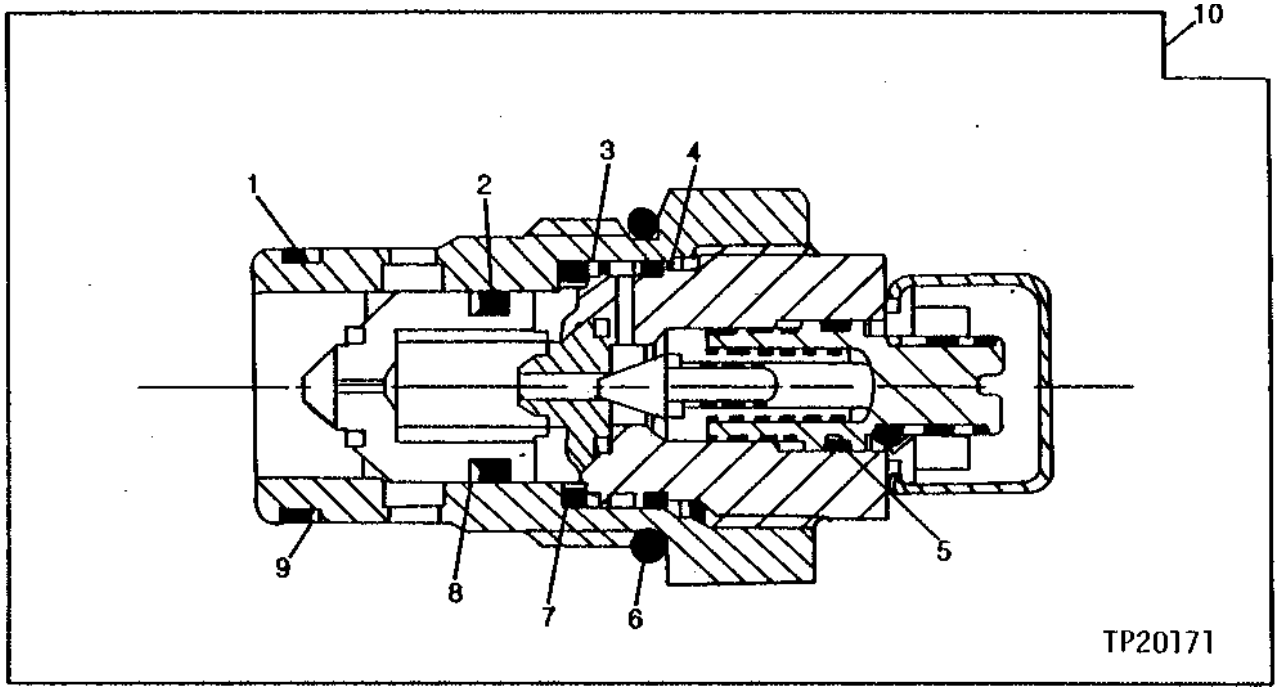

KEY	PART NO.	PART NAME	QTY	SERIAL NO.	REMARKS
1	T49819	O-RING	1		
2	R56464	O-RING	1		
3	U15981	BACK-UP RING	1		
4	U15980	O-RING	1		
5	A3917R	O-RING	1		
6	U17409	O-RING	1		
7	T75984	O-RING	1		
8	.....	O-RING	1		
9	T106298	BACK-UP RING	1		
10	AT159226	RELIEF VALVE	1		24,000 KPA (BUCKET AND CROWD SECTION)
	AT151814	RELIEF VALVE	1		31,034 KPA (BOOM SECTION)

RELIEF VALVE
(WITH CAVITATION)
(SERIAL NO. -850352)

TP42881 -UN-01JAN94

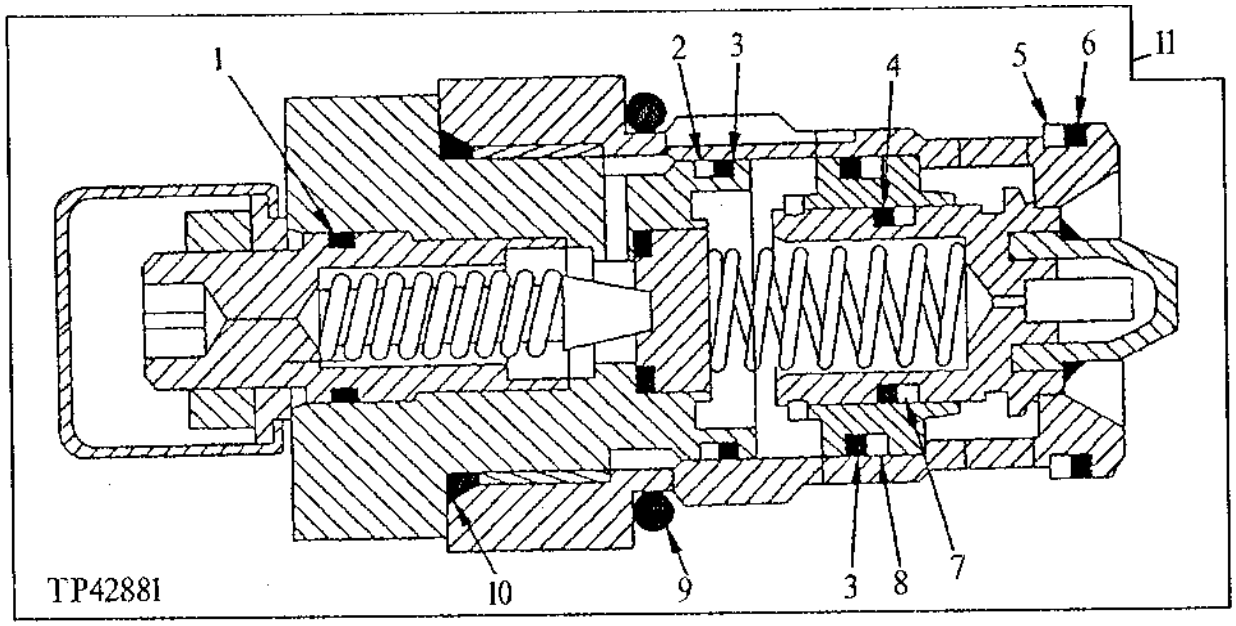

KEY	PART NO.	PART NAME	QTY	SERIAL NO.	REMARKS
1	A3917R	O-RING	1		
2	.....	WASHER	1		BACKUP
3	U15980	O-RING	2		
4	T49819	O-RING	1		
5	.....	WASHER	1		BACKUP
6	H81608	O-RING	1		
7	T106298	BACK-UP RING	1		
8	.....	WASHER	1		BACKUP
9	U17409	O-RING	1		
10	U12547	O-RING	1		(K)
11	AT161046	RELIEF VALVE	1		19,000 KPA (SWING SECTION)
	AT161058	RELIEF VALVE	1		20,500 KPA (CROWD SECTION)
	AT161047	RELIEF VALVE	1		13,800 KPA (BOOM SECTION)
	AT161048	RELIEF VALVE	1		22,000 KPA (BUCKET SECTION)

RELIEF VALVE AND COVER
(SERIAL NO. -850352)

TP44011 -UN-01JAN94

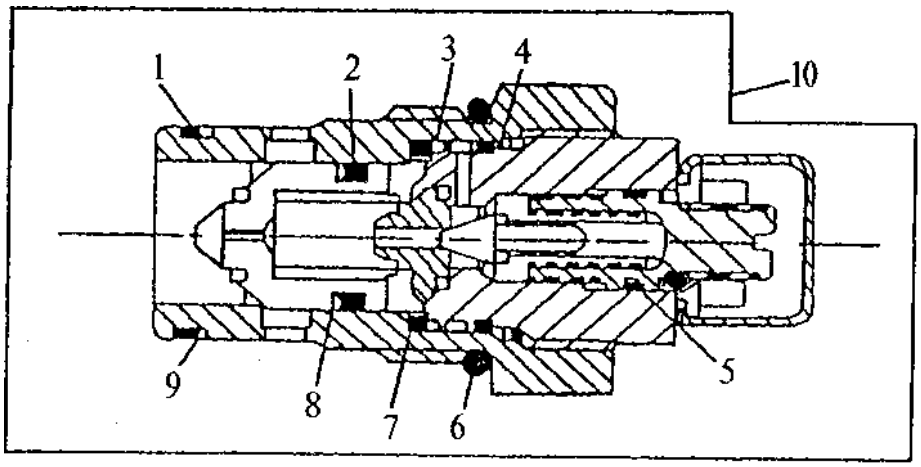

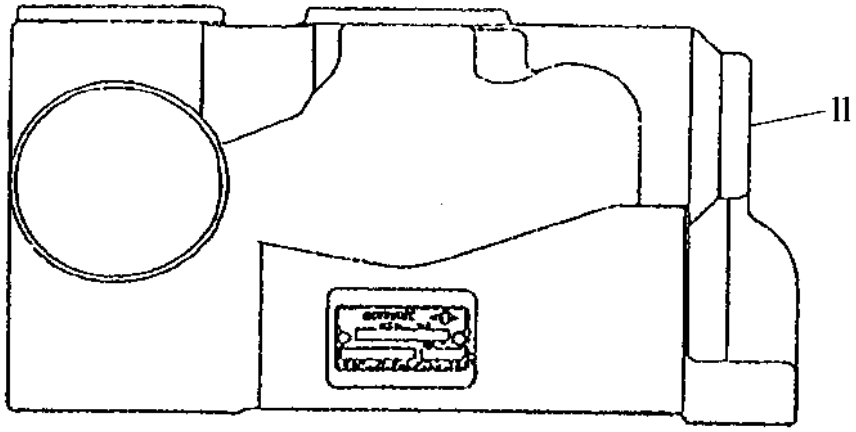

TP44011

RELIEF VALVE AND COVER
(SERIAL NO. -850352)

KEY	PART NO.	PART NAME	QTY	SERIAL NO.	REMARKS
1	T49819	O-RING	1		
2	R56464	O-RING	1		
3	U15981	BACK-UP RING	1		
4	U15980	O-RING	1		
5	A3917R	O-RING	1		
6	U17409	O-RING	1		
7	T75984	O-RING	1		
8	.....	O-RING	1		
9	T106298	BACK-UP RING	1		
10	AT161057	RELIEF VALVE	1		
11	T147004	COVER	1		LEFT, (ALSO ORDER AT159816)

RELIEF VALVE SEAL KIT
(SERIAL NO. -850352)

TP44051 -UN-01JAN94

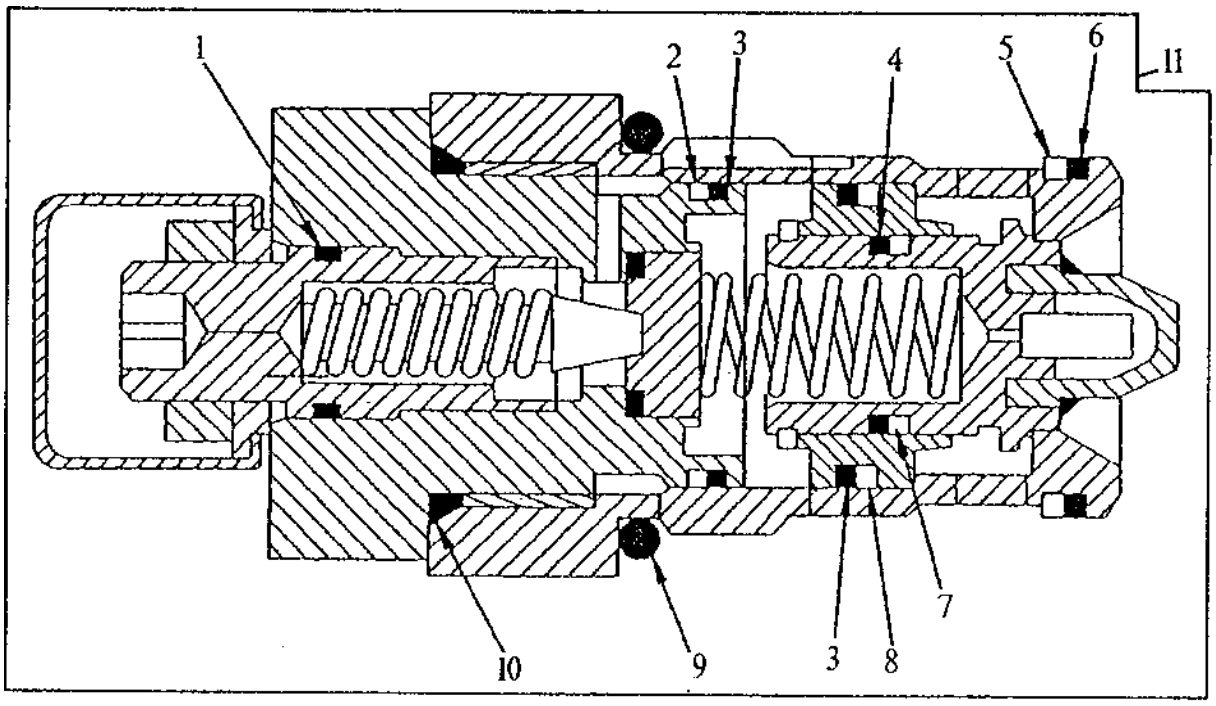

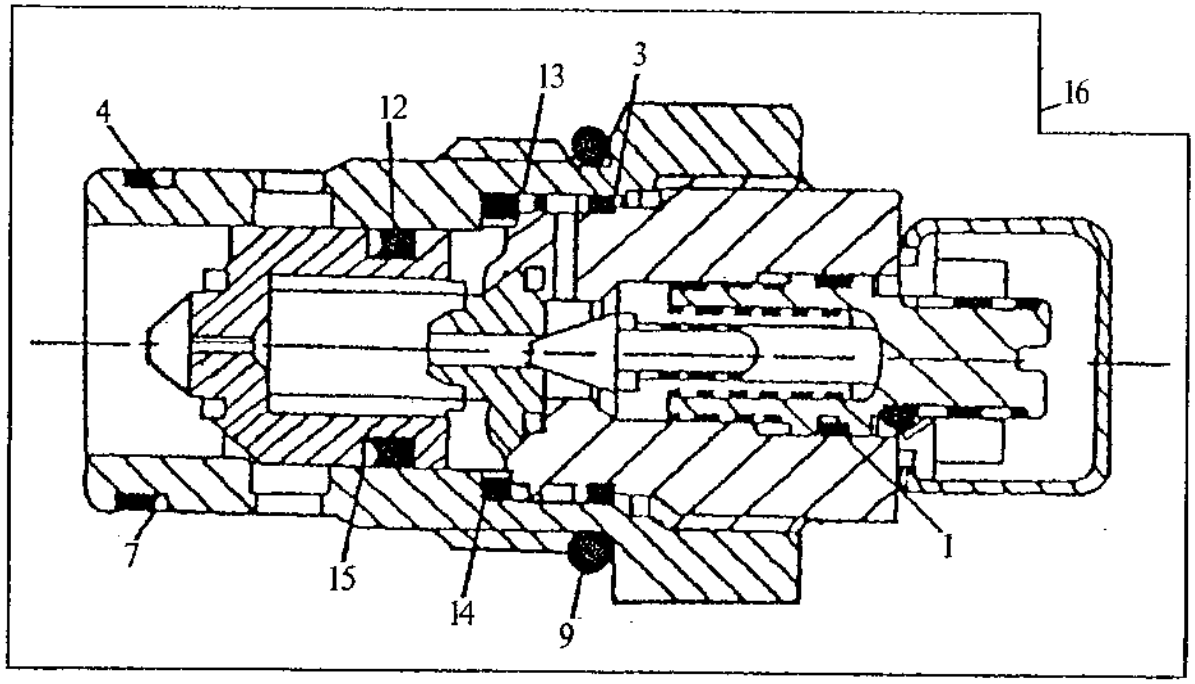

TP44051

RELIEF VALVE SEAL KIT
(SERIAL NO. -850352)

KEY	PART NO.	PART NAME	QTY	SERIAL NO.	REMARKS
1	A3917R	O-RING	1		
2	.....	WASHER	1		BACKUP
3	U15980	O-RING	2		
4	T49819	O-RING	1		
5	.....	WASHER	1		BACKUP
6	H81608	O-RING	1		
7	T106298	BACK-UP RING	1		
8	.....	WASHER	1		BACKUP
9	U17409	O-RING	1		
10	U12547	O-RING	1		
11	AT160390	KIT	1		WITH ANTI-CAVITATION
12	R459R	O-RING	1		
13	U15981	BACK-UP RING	1		
14	T75984	O-RING	1		
15	.....	WASHER	1		BACKUP
16	AT160390	KIT	1		WITHOUT ANTI-CAVITATION

SIX FUNCTION SELECTIVE FLOW SOLENOID CONTROL VALVE
(SERIAL NO. -881777)

TP49963 -UN-29JAN99

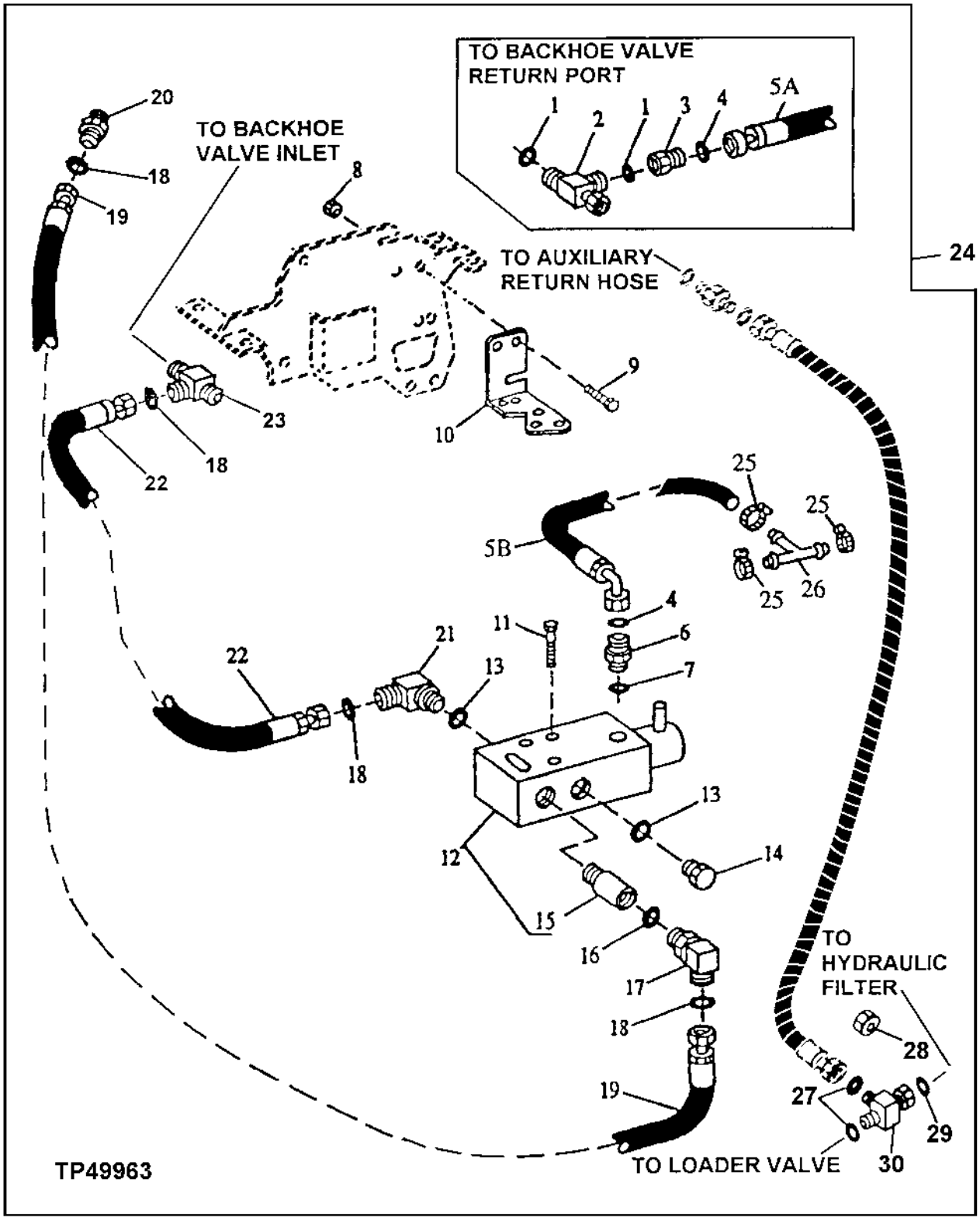

SIX FUNCTION SELECTIVE FLOW SOLENOID CONTROL VALVE
(SERIAL NO. -881777

KEY	PART NO.	PART NAME	QTY	SERIAL NO.	REMARKS
1	T77857	O-RING	2	-799034	
2	38H1031	TEE FITTING	1	-799034	
3	38H1481	REDUCER	1	-799034	
4	T77613	O-RING	2	-799034	
5A	.....	HYDRAULIC HOSE	1	-799034	(SUB AT167884) (ALSO ORDER (3) TY22462 AND M86863)
5B	AT167884	HYDRAULIC HOSE - FABRICATE	1	799035-	
	R49921	CLAMP	1	872329-	(NOT ILLUSTRATED)
6	38H1309	ADAPTER	1		
7	R28782	O-RING	1		
8	14M7275	NUT	2		M12
9	19M8011	CAP SCREW	2		M12 X 30
10	AT167606	BRACKET	1		(SUB FOR AT156935)
11	19M7663	CAP SCREW	3		M8 X 70
12	.....	VALVE	1		(SUB AT189035) (ALSO ORDER T183454, 19M7403, 19M7364, (2) 19M8081, (2) 14M7274, AT189078, AT117631, 38H1431, (2) T76938, U12547, R29936, L102678)
13	R29936	O-RING	2		
14	R36636	FITTING PLUG	1		
15	AT117631	CHECK VALVE	1		
16	U12547	O-RING	1		
17	38H1305	ELBOW FITTING	1		
18	T76938	O-RING	4		
19	AT164988	HYDRAULIC HOSE - FABRICATE	1		
20	38H1281	UNION FITTING	1		
21	38H1037	ELBOW FITTING	1		
22	AT164989	HYDRAULIC HOSE - FABRICATE	1		
23	38H1027	TEE FITTING	1		
24	.....	KIT	1	-872328	(AT184655 NO LONGER AVAILABLE) (SUB AT189178) (SUB FOR AT159495) KIT ALSO INCLUDES WIRING HARNESSES, SWITCHES, RELAY AND LABELS.
	.....	KIT	1	872329-	(AT184362 NO LONGER AVAILABLE) (SUB AT189178) KIT ALSO INCLUDES WIRING HARNESSES, SWITCHES, RELAY AND LABELS.
25	TY22462	CLAMP	3	799035-	(SUB FOR AR48236)
26	M86863	TEE FITTING	1	799035-	
27	T77858	O-RING	2	850353-	
28	38H1418	FITTING PLUG	1	872329-	
29	T77858	O-RING	1		
30	38H1033	TEE FITTING	1	850353-	

SIX FUNCTION SELECTIVE FLOW SOLENOID CONTROL VALVE
(SERIAL NO. -881777)

TP24016 -UN-01JAN94

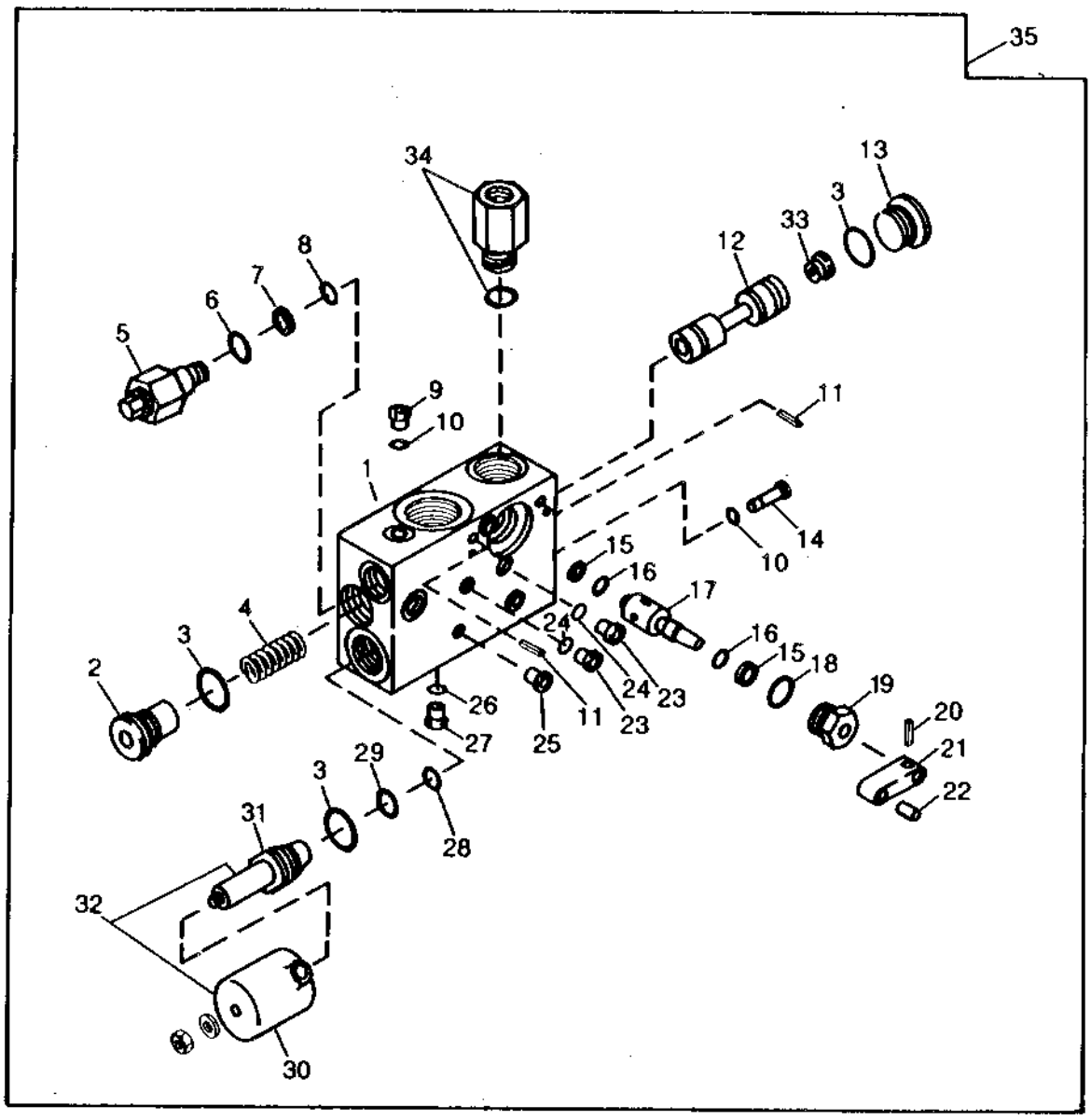

TP24016

SIX FUNCTION SELECTIVE FLOW SOLENOID CONTROL VALVE
(SERIAL NO. -881777)

KEY	PART NO.	PART NAME	QTY	SERIAL NO.	REMARKS
1	.....	HOUSING	1		(SUB AT164683)
2	.....	CAP	1		(SUB AT164683)
3	U12547	O-RING	3		
4	.....	SPRING	1		(SUB AT164683)
5	AT106655	RELIEF VALVE	1		
6	R26375	O-RING	1		
7	T106208	BACK-UP RING	1		
8	T77613	O-RING	1		(SUB FOR R64613)
9	.....	PLUG	1		(SUB AT164683)
10	R30903	O-RING	2		
11	34H69	SPRING PIN	2		3/16" X 1/2"
12	.....	SPOOL VALVE	1		(SUB AT164683)
13	.....	PLUG	1		(SUB AT164683)
14	.....	ORIFICE	1		(SUB AT164683)
15	W37172	BACK-UP RING	2		
16	T77814	O-RING	2		(SUB FOR T19963)
17	.....	CONTROL VALVE	1		(SUB AT164683)
18	R26906	O-RING	1		
19	T106206	NUT	1		
20	34H227	SPRING PIN	1		3/32" X 1/2"
21	T106207	HANDLE	1		
22	AT106657	SCREW	1		
23	.....	PLUG	2		(SUB AT164683)
24	R26287	O-RING	2		
25	.....	BUSHING	6		(SUB AT164683)
26	R28782	O-RING	1		
27	.....	PLUG	1		(SUB AT164683)
28	H81608	O-RING	1		
29	Z29304	O-RING	1		
30	.....	ELECTRICAL COIL	1		(SUB AT164683)
31	.....	CORE	1		(SUB AT164683)
32	AT106656	SOLENOID VALVE	1		
33	.....	ORIFICE	1		(SUB AT164683)
34	AT117631	CHECK VALVE	1		CHECK VALVE WITH O-RING
35	.....	VALVE	1		(AT164683 NO LONGER AVAILABLE) (SUB AT189035) (ALSO ORDER T183454, 19M7403, 19M7364, (2) 19M8081, (2) 14M7274, AT189078, AT117631, 38H1431, (2) T76938, U12547, R29936 AND L102678)

SIX FUNCTION SELECTIVE FLOW SOLENOID CONTROL VALVE
(SERIAL NO. 881778-)

TP58108 -UN-19NOV99

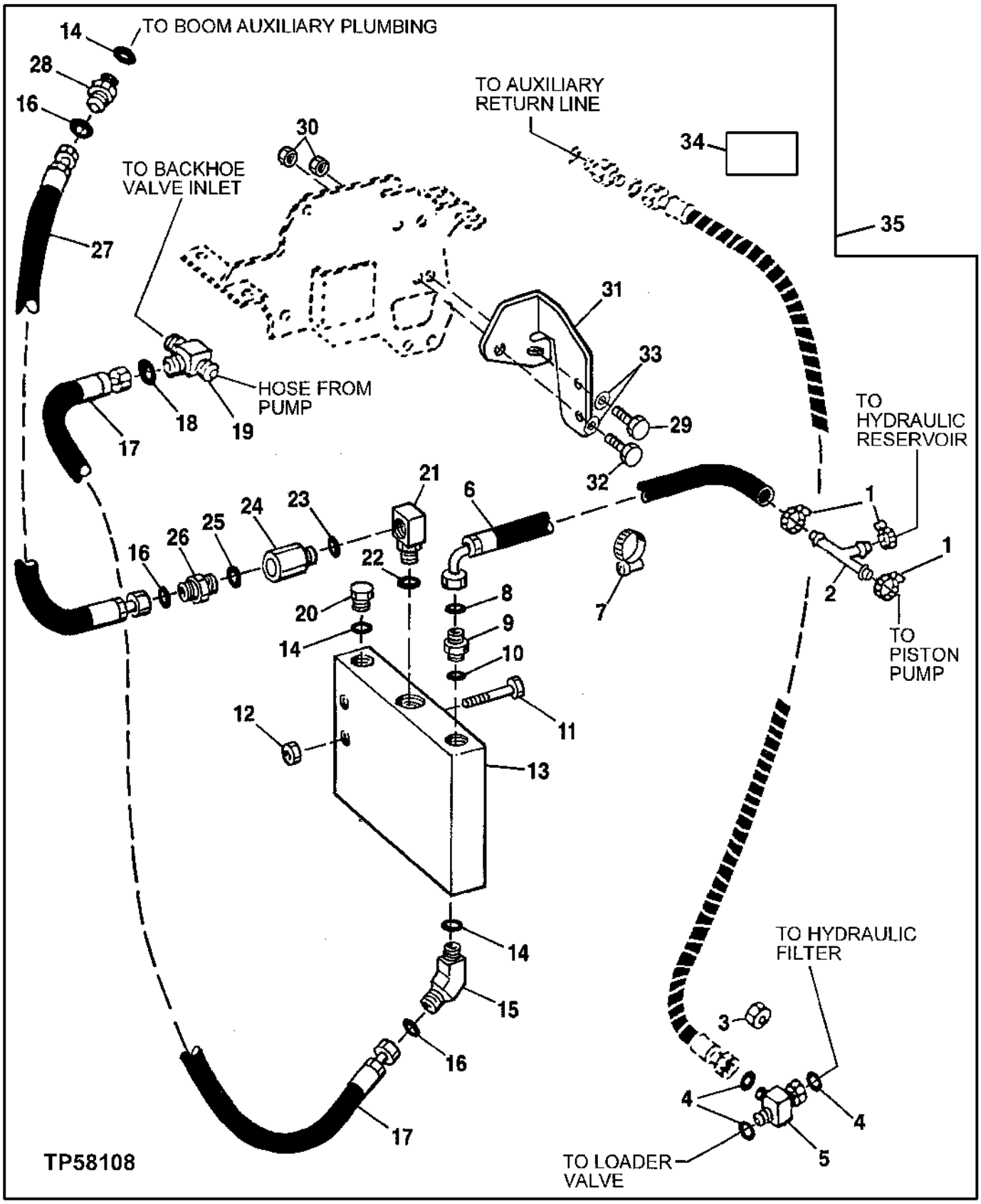

SIX FUNCTION SELECTIVE FLOW SOLENOID CONTROL VALVE
(SERIAL NO. 881778-)

KEY	PART NO.	PART NAME	QTY	SERIAL NO.	REMARKS
1	TY22462	CLAMP	3		(SUB FOR AR48236)
2	M86863	TEE FITTING	1		
3	38H1418	FITTING PLUG	1		
4	T77858	O-RING	3		
5	38H1033	TEE FITTING	1		
6	AT167884	HYDRAULIC HOSE - FABRICATE	1		
7	R49921	CLAMP	1		
8	T77613	O-RING	1		9.246 X 1.778 MM
9	38H1435	ELBOW FITTING	1		
10	R28782	O-RING	1		(SUB FOR AT156935)
11	19M8081	CAP SCREW	2		M10 X 80
12	14M7274	NUT	2		M10
13	AT189035	VALVE	1		
14	R29936	O-RING	3		
15	38H1049	ELBOW FITTING	1		
16	T76938	O-RING	3		
17	AT164989	HYDRAULIC HOSE - FABRICATE	1		1-7/16" X 650 MM (25-1/2") X 1-7/16"
18	T76938	O-RING	1		
19	38H1027	TEE FITTING	1		
20	R36636	FITTING PLUG	1		
21	AT189078	ELBOW FITTING	1		
22	U12547	O-RING	1		
23	U12547	O-RING	1		
24	AT117631	CHECK VALVE	1		KIT ALSO INCLUDES WIRING HARNESSES, SWITCHES, RELAY AND LABELS. (SUB FOR AT159495)
25	U12547	O-RING	1		
26	38H1431	ELBOW FITTING	1		
27	AT164988	HYDRAULIC HOSE - FABRICATE	1		1-7/16" X 1 250 MM (49-1/4") X 1-7/16"
28	38H1281	UNION FITTING	1		
29	19M7403	CAP SCREW	1		M12 X 35
30	14M7415	NUT	2		M12
31	T183454	BRACKET	1		
32	19M7364	CAP SCREW	1		M12 X 80
33	24M7240	WASHER	2		
34	T184402	LABEL	1		
35	**AT189178**	**KIT**	**1**		**KIT ALSO INCLUDES WIRING HARNESSES, SWITCHES, RELAY AND LABELS**

SIX FUNCTION SELECTIVE FLOW SOLENOID CONTROL VALVE
(SERIAL NO. 881778-)

TP58109 -UN-28OCT99

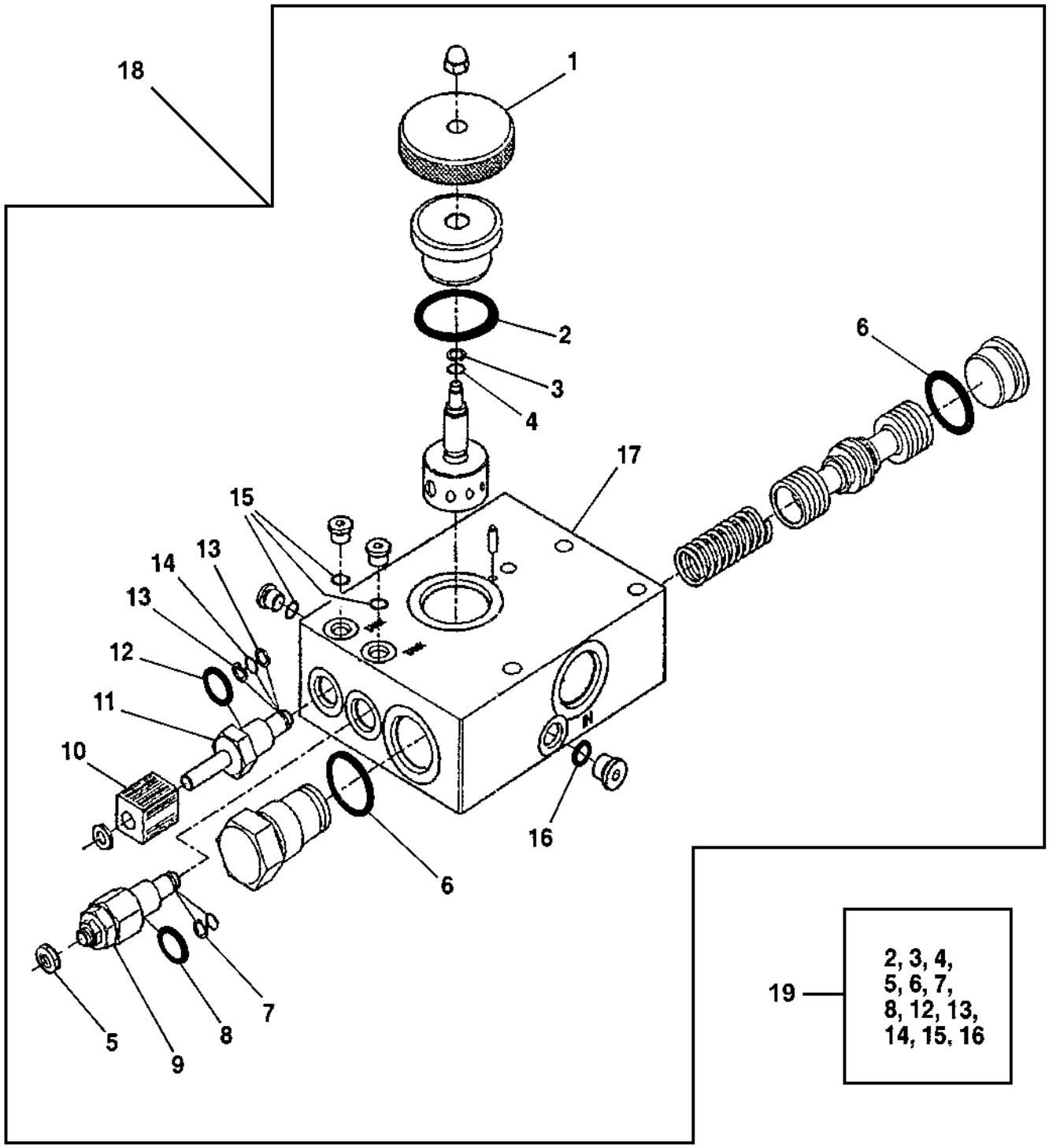

TP58109

SIX FUNCTION SELECTIVE FLOW SOLENOID CONTROL VALVE
(SERIAL NO. 881778-)

KEY	PART NO.	PART NAME	QTY	SERIAL NO.	REMARKS
1	T183561	KNOB	1		
2	.....	O-RING	1		
3	.....	BACK-UP RING	1		
4	.....	O-RING	1		
5	L102678	NUT	1		
6	.....	O-RING	2		
7	.....	BACK-UP RING	1		
8	.....	O-RING	1		
9	AT106655	RELIEF VALVE	1		
10	AT189037	ELECTRICAL COIL	1		
11	AT189036	SOLENOID	1		
12	.....	O-RING	1		
13	.....	BACK-UP RING	2		
14	.....	O-RING	1		
15	.....	O-RING	3		
16	.....	O-RING	1		
17	.....	HOUSING	1		
18	AT189035	VALVE	1		
19	AT189038	SEAL KIT	1		

BACKHOE CONTROL VALVE
(SERIAL NO. 850353-)

TP57957 -UN-15DEC98

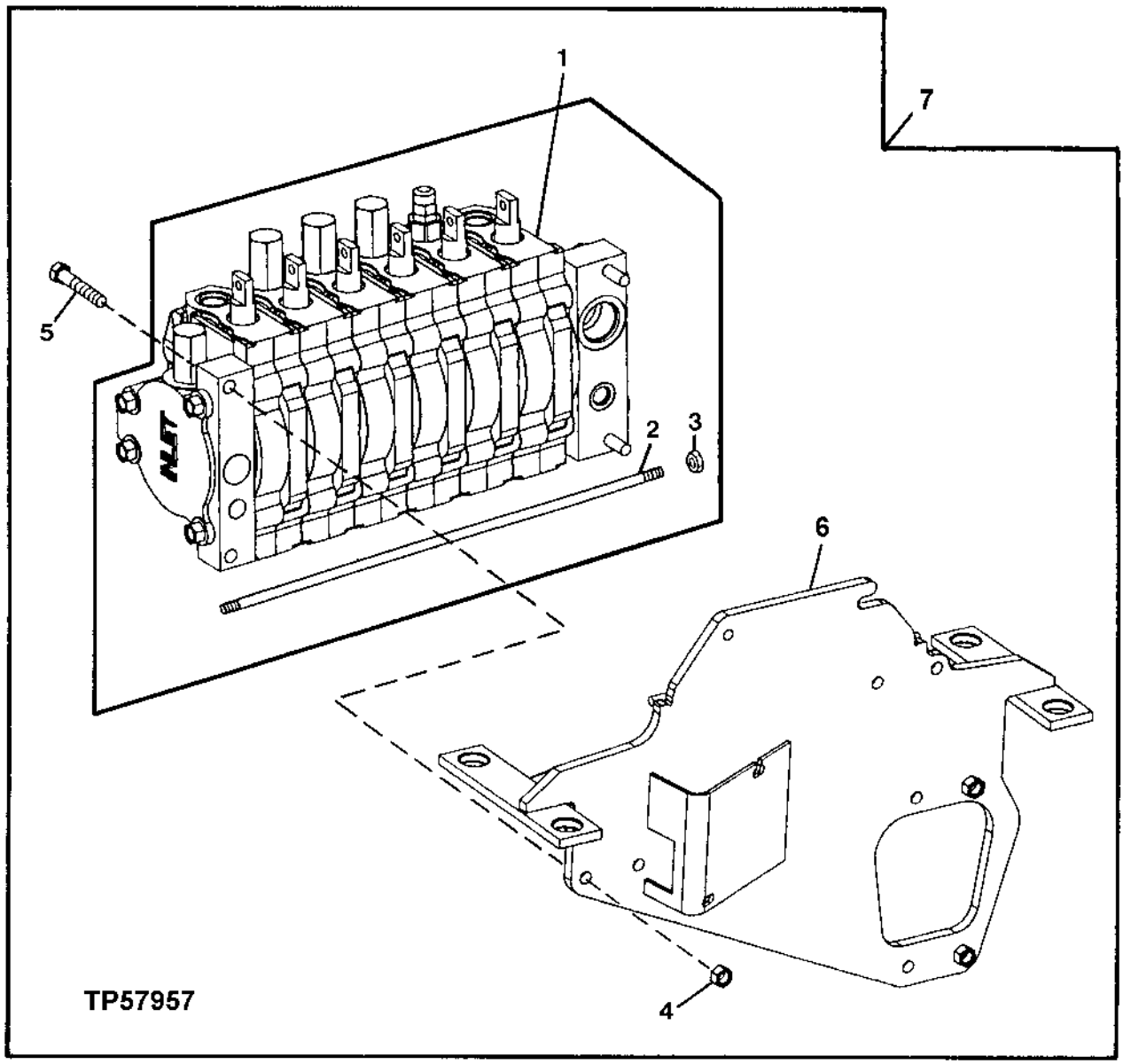

BACKHOE CONTROL VALVE
(SERIAL NO. 850353-)

KEY	PART NO.	PART NAME	QTY	SERIAL NO.	REMARKS
1	AT182771	VALVE	1		CONVENIENCE ASSEMBLY (4-FUNCTION) NOT ILLUSTRATED
	AT178024	VALVE	1		CONVENIENCE ASSEMBLY (5-FUNCTION) NOT ILLUSTRATED
	AT182675	VALVE	1		CONVENIENCE ASSEMBLY (6-FUNCTION)
2	T163999	TIE ROD	4		(4-FUNCTION)
	T163998	TIE ROD	4		(5-FUNCTION)
	T163960	TIE ROD	4		(6-FUNCTION)
3	14H865	NUT	8		1/2"
4	14M7275	NUT	3		M12
5	19M7753	CAP SCREW	3		M12 X 70
6	AT183911	SUPPORT	1		
7	**AT184580**	**KIT**	**1**		**(4-FUNCTION) INCLUDES O-RINGS,GASKET AND ROD LINKAGE**
	AT184581	**KIT**	**1**		**(5-FUNCTION) INCLUDES O-RINGS, GASKET AND ROD LINKAGE**
	AT184582	**KIT**	**1**		**(6-FUNCTION) INCLUDES O-RINGS,GASKET AND ROD LINKAGE**

**BACKHOE CONTROL VALVE
INLET SECTION
(SERIAL NO. 850353-)**

TP57897 -UN-08SEP98

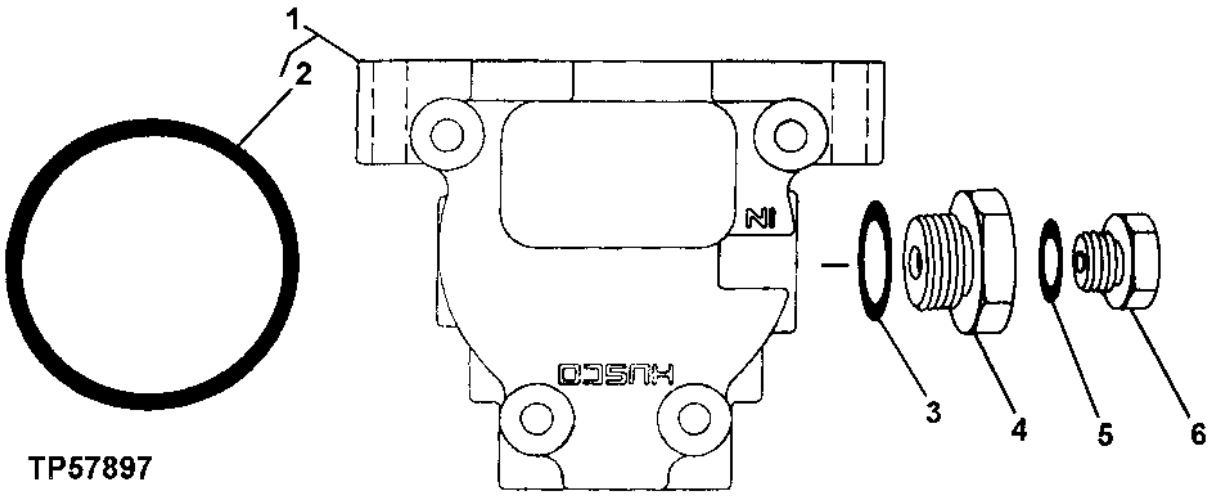

KEY	PART NO.	PART NAME	QTY	SERIAL NO.	REMARKS
1	AT176662	COVER	1		
2	T163954	SEAL	1		(BETWEEN VALVE SECTION)
3	R29936	O-RING	1		
4	L32705	THREADED NIPPLE	1		
5	R26448	O-RING	1		
6	R27218	FITTING PLUG	1		

BACKHOE CONTROL VALVE
OUTLET SECTION
(SERIAL NO. 850353-)

TP57898 -UN-08SEP98

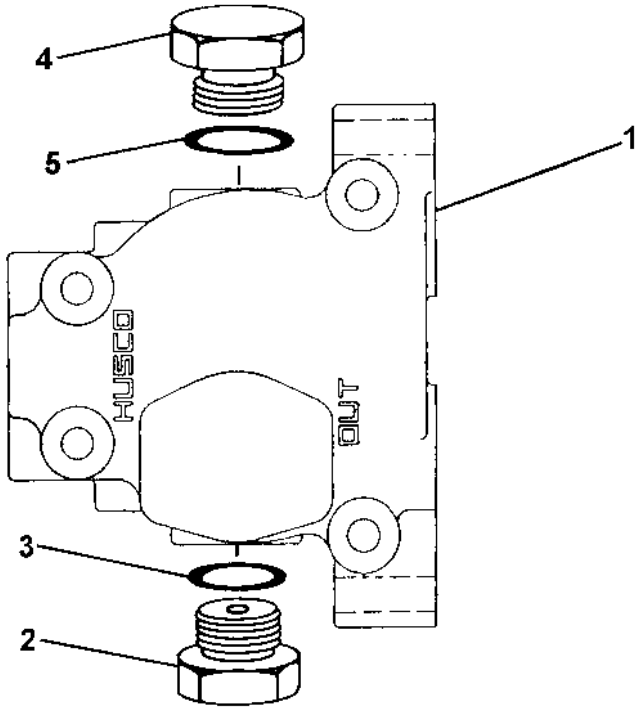

KEY	PART NO.	PART NAME	QTY	SERIAL NO.	REMARKS
1	T159650	COVER	1		
2	R27175	DRAIN PLUG	1		
3	U12547	O-RING	1		
4	R36636	FITTING PLUG	1		
5	R29936	O-RING	1		

BACKHOE CONTROL VALVE
(BOOM SECTION)
(SERIAL NO. 850353-)

TP57899 -UN-10SEP98

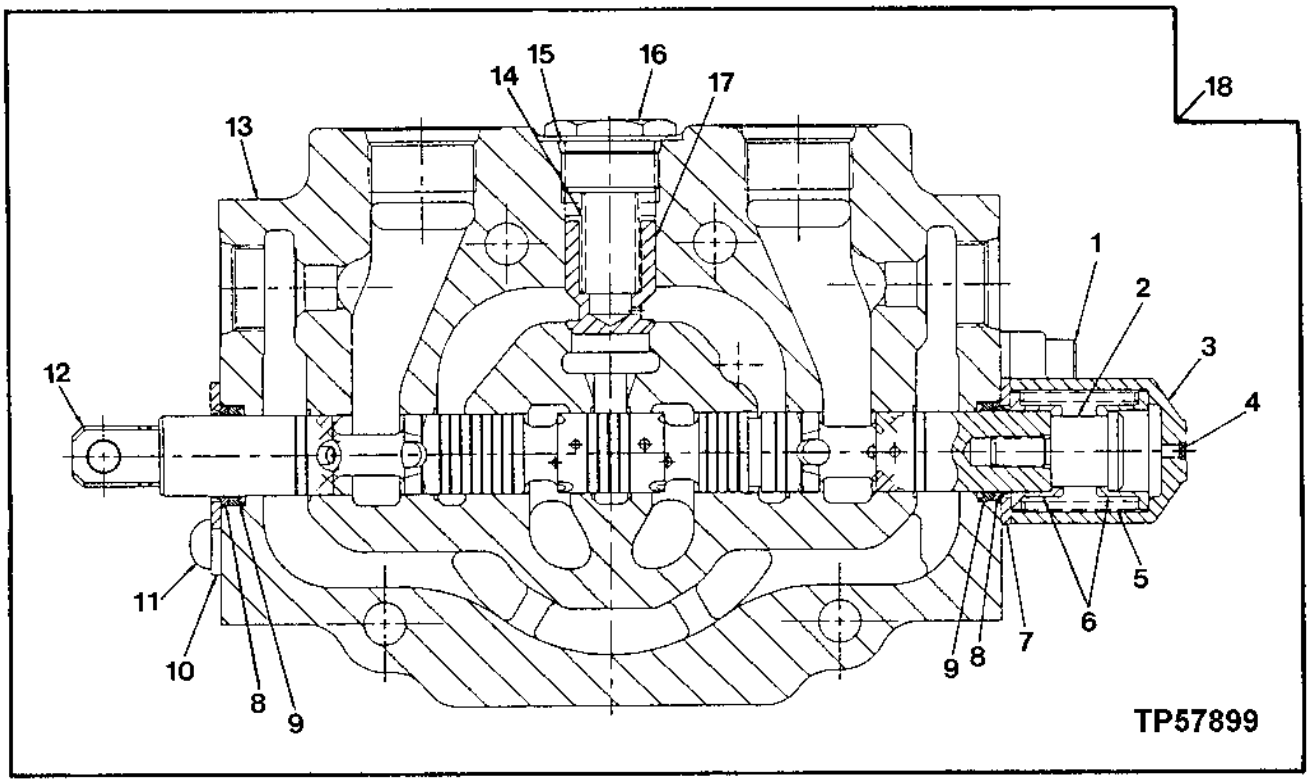

KEY	PART NO.	PART NAME	QTY	SERIAL NO.	REMARKS
1	19H2923	SCREW	2		3/8" X 1"
2	T163995	SCREW	1		
3	T164016	CAP	1		
4	T118799	FILTER	1		
5	T163955	SPRING	1		
6	T163959	SEAT	2		
7	T163956	PLATE	1		
8	.....	SEAL	2		(A)
9	.....	SEAL	2		(A)
10	T163956	PLATE	1		
11	21H1334	SCREW	2		3/8" X 1/2"
12	.....	SPOOL	1		
13	.....	HOUSING	1		
14	T163958	SPRING	1		
15	U17409	O-RING	1		
16	.....	PLUG	1		
17	T163957	POPPET	1		
18	AT176658	VALVE	1		
	T163954	SEAL	1		(BETWEEN THE SECTION)
..	AT185959	KIT	1		INCLUDES ALL (A) PARTS (SPOOL SEAL)

BACKHOE CONTROL VALVE
(BUCKET SECTION)
(SERIAL NO. 850353-)

TP57900 -UN-04SEP98

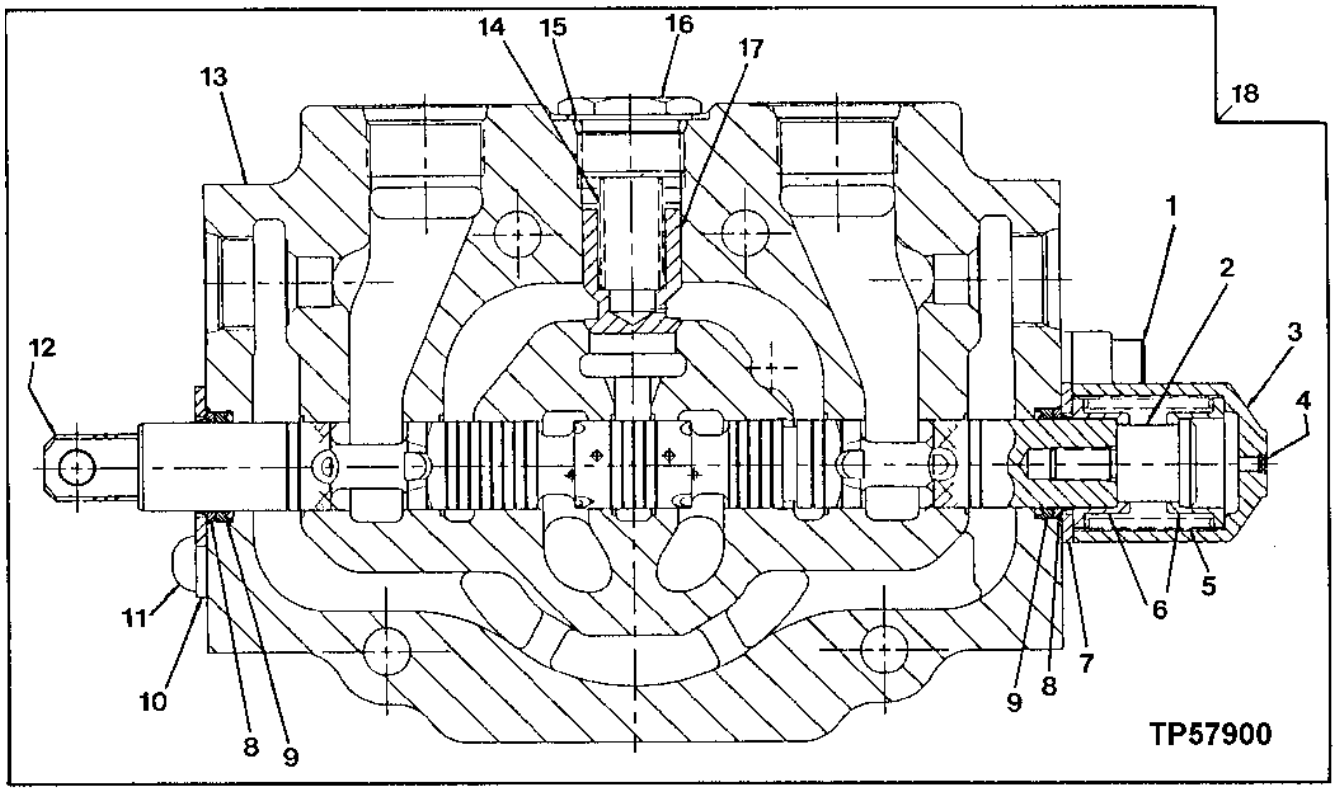

KEY	PART NO.	PART NAME	QTY	SERIAL NO.	REMARKS
1	19H2923	SCREW	2		3/8" X 1"
2	T163995	SCREW	1		
3	T164016	CAP	1		
4	T118799	FILTER	1		
5	T163955	SPRING	1		
6	T163959	SEAT	2		
7	T163956	PLATE	1		
8	.....	SEAL	2		(A)
9	.....	SEAL	2		(A)
10	T163956	PLATE	1		
11	21H1334	SCREW	2		3/8" X 1/2"
12	.....	SPOOL	1		
13	.....	HOUSING	1		
14	T163958	SPRING	1		
15	U17409	O-RING	1		
16	.....	PLUG	1		
17	T163957	POPPET	1		
18	AT176659	VALVE	1		
	T163954	SEAL	1		(BETWEEN THE SECTION)
..	AT185959	KIT	1		INCLUDES ALL (A) PARTS (SPOOL SEAL)

BACKHOE CONTROL VALVE
(CROWD SECTION)
(SERIAL NO. 850353-)

TP57901 -UN-10SEP98

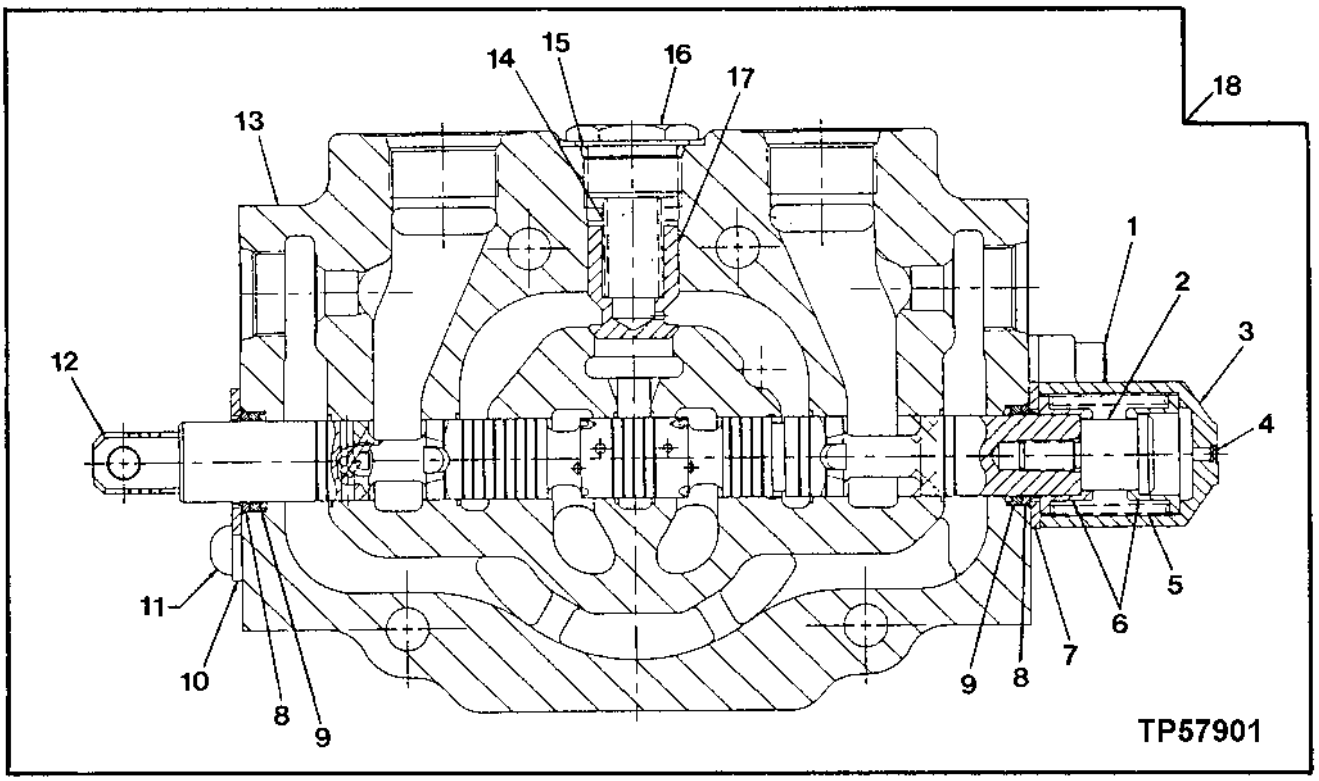

KEY	PART NO.	PART NAME	QTY	SERIAL NO.	REMARKS
1	19H2923	SCREW	2		3/8" X 1"
2	T163995	SCREW	1		
3	T164016	CAP	1		
4	T118799	FILTER	1		
5	T163955	SPRING	1		
6	T163959	SEAT	2		
7	T163956	PLATE	1		
8	.....	SEAL	2		(A)
9	.....	SEAL	2		(A)
10	T163956	PLATE	1		
11	21H1334	SCREW	2		3/8" X 1/2"
12	.....	SPOOL	1		
13	.....	HOUSING	1		
14	T163958	SPRING	1		
15	U17409	O-RING	1		
16	.....	PLUG	1		
17	T163957	POPPET	1		
18	AT176660	VALVE	1		
	T163954	SEAL	1		(BETWEEN THE SECTION)
..	AT185959	KIT	1		INCLUDES ALL (A) PARTS (SPOOL SEAL)

BACKHOE CONTROL VALVE
(SWING SECTION)
(SERIAL NO. 850353-)

TP57902 -UN-10SEP98

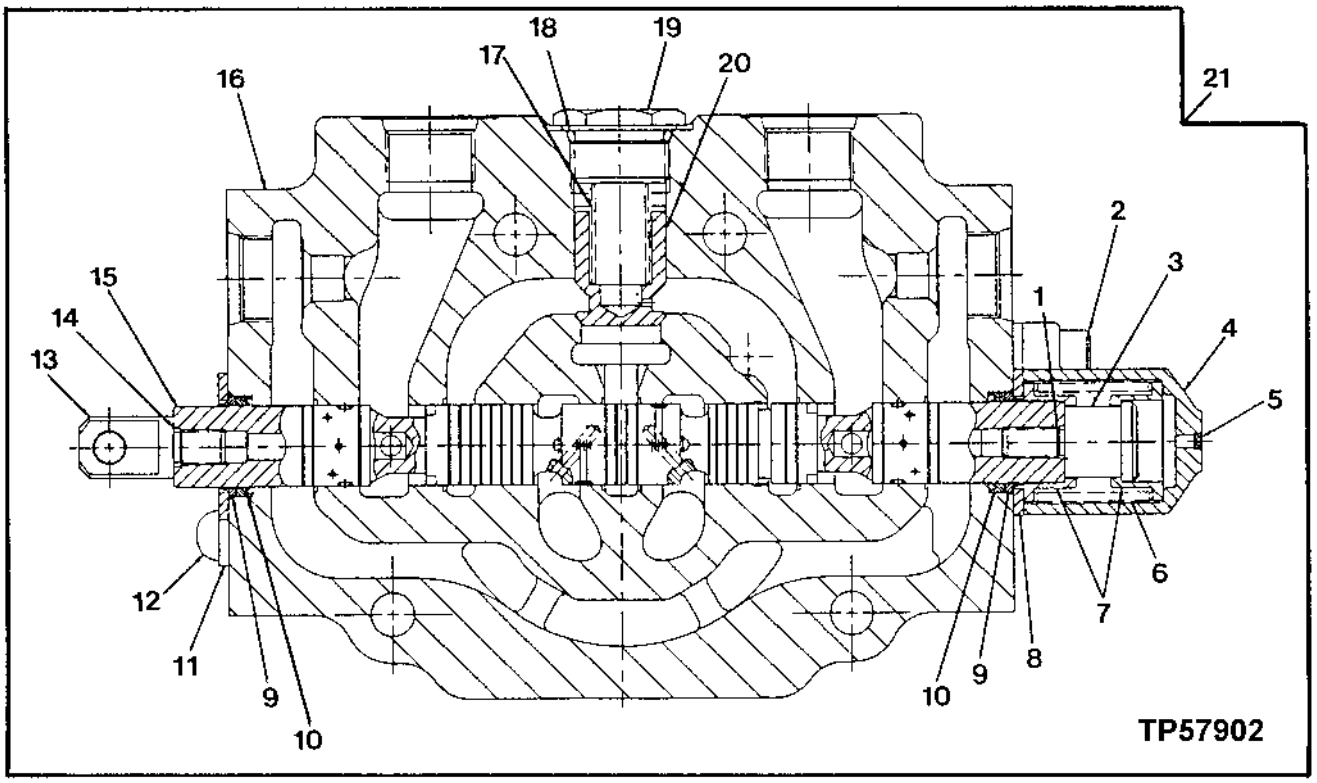

KEY	PART NO.	PART NAME	QTY	SERIAL NO.	REMARKS
1	R26287	O-RING	1		
2	19H2923	SCREW	2		3/8" X 1"
3	T163995	SCREW	1		
4	T164016	CAP	1		
5	T118799	FILTER	1		
6	T163955	SPRING	1		
7	T163959	SEAT	2		
8	T163956	PLATE	1		
9	.....	SEAL	2		(A)
10	.....	SEAL	2		(A)
11	T163956	PLATE	1		
12	21H1334	SCREW	2		3/8" X 1/2"
13	T163994	SCREW	1		TANG END
14	R28782	O-RING	1		
15	.....	SPOOL	1		
16	.....	HOUSING	1		
17	T163958	SPRING	1		
18	U17409	O-RING	1		
19	.....	PLUG	1		
20	T163957	POPPET	1		
21	AT176657	VALVE	1		
	T163954	SEAL	1		(BETWEEN THE SECTION)
..	AT185959	KIT	1		INCLUDES ALL (A) PARTS (SPOOL SEAL)

BACKHOE CONTROL VALVE
(EXTENDIBLE DIPPERSTICK SECTION)
(SERIAL NO. 850353-)

TP57903 -UN-04SEP98

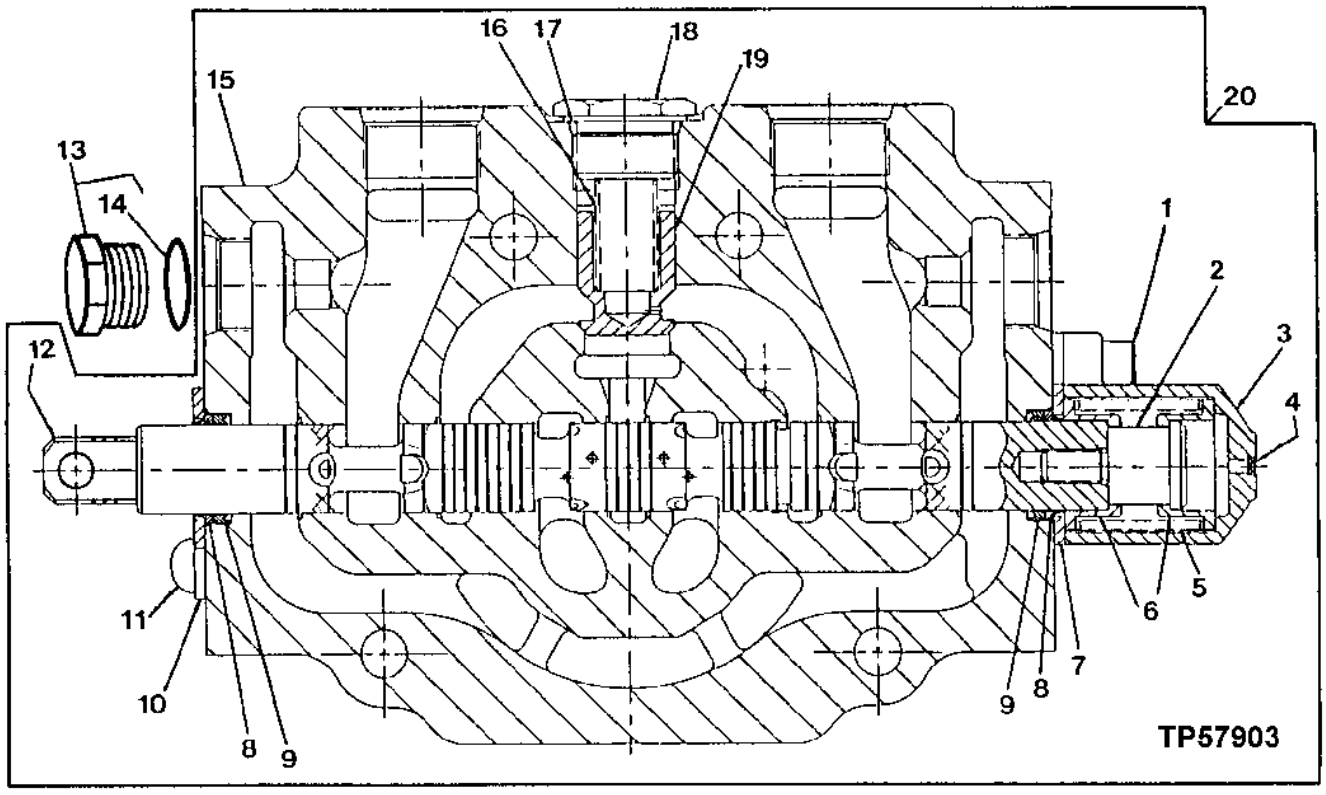

KEY	PART NO.	PART NAME	QTY	SERIAL NO.	REMARKS
1	19H2923	SCREW	2		3/8" X 1"
2	T163995	SCREW	1		
3	T164016	CAP	1		
4	T118799	FILTER	1		
5	T163955	SPRING	1		
6	T163959	SEAT	2		
7	T163956	PLATE	1		
8	.....	SEAL	2		(A)
9	.....	SEAL	2		(A)
10	T163956	PLATE	1		
11	21H1334	SCREW	2		3/8" X 1/2"
12	.....	SPOOL	1		
13	AT83174	PLUG	2		
14	T183757	SEAL	2		(SUB FOR T141872)
15	.....	HOUSING	1		
16	T163958	SPRING	1		
17	U17409	O-RING	1		
18	.....	PLUG	1		
19	T163957	POPPET	1		
20	AT176659	VALVE	1		
	T163954	SEAL	1		(BETWEEN THE SECTION)
..	AT185959	KIT	1		INCLUDES ALL (A) PARTS (SPOOL SEAL)

BACKHOE CONTROL VALVE
(AUXILIARY SECTION)
(SERIAL NO. 850353-)

TP57903 -UN-04SEP98

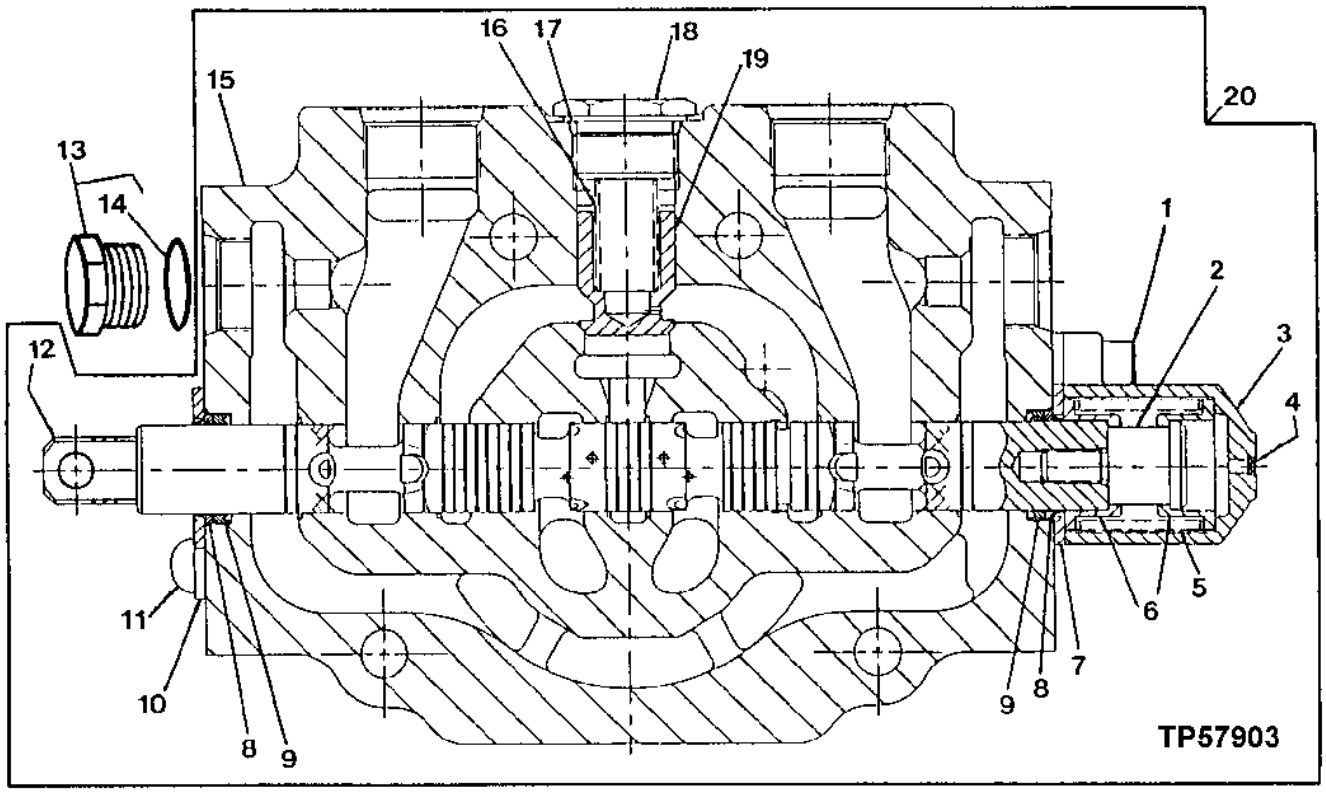

KEY	PART NO.	PART NAME	QTY	SERIAL NO.	REMARKS
1	19H2923	SCREW	2		3/8" X 1"
2	T163995	SCREW	1		
3	T164016	CAP	1		
4	T118799	FILTER	1		
5	T163955	SPRING	1		
6	T163959	SEAT	2		
7	T163956	PLATE	1		
8	.....	SEAL	2		(A)
9	.....	SEAL	2		(A)
10	T163956	PLATE	1		
11	21H1334	SCREW	2		3/8" X 1/2"
12	.....	SPOOL	1		
13	AT83174	PLUG	2		
14	T183757	SEAL	2		(SUB FOR T141872)
15	.....	HOUSING	1		
16	T163958	SPRING	1		
17	U17409	O-RING	1		
18	.....	PLUG	1		
19	T163957	POPPET	1		
20	AT176659	VALVE	1		
	T163954	SEAL	1		(BETWEEN THE SECTION)
..	AT185959	KIT	1		INCLUDES ALL (A) PARTS (SPOOL SEAL)

FIFTH FUNCTION MANUAL VALVE KIT
(SERIAL NO. 850353-)

TP57911 -UN-04SEP98

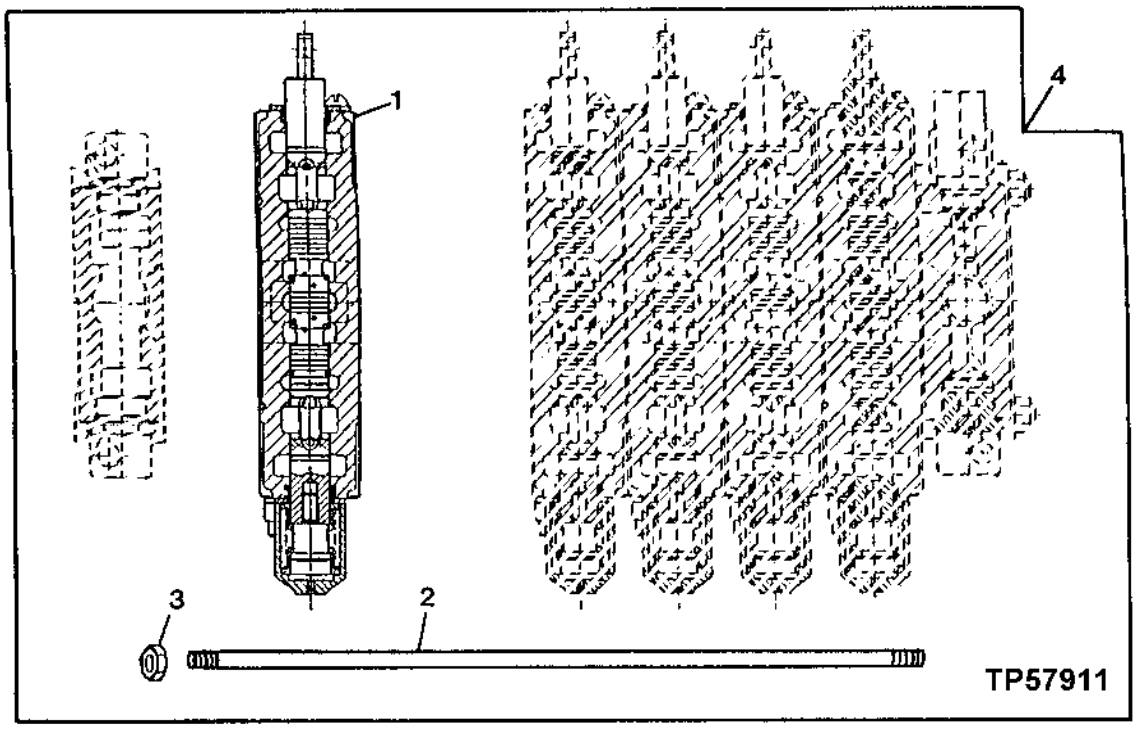

KEY	PART NO.	PART NAME	QTY	SERIAL NO.	REMARKS
1	AT176659	VALVE	1		
2	T163998	TIE ROD	4		
3	14H865	NUT	8		
4	AT183355	VALVE	1		

SIXTH FUNCTION MANUAL VALVE KIT
(SERIAL NO. 850353-)

TP57912 -UN-04SEP98

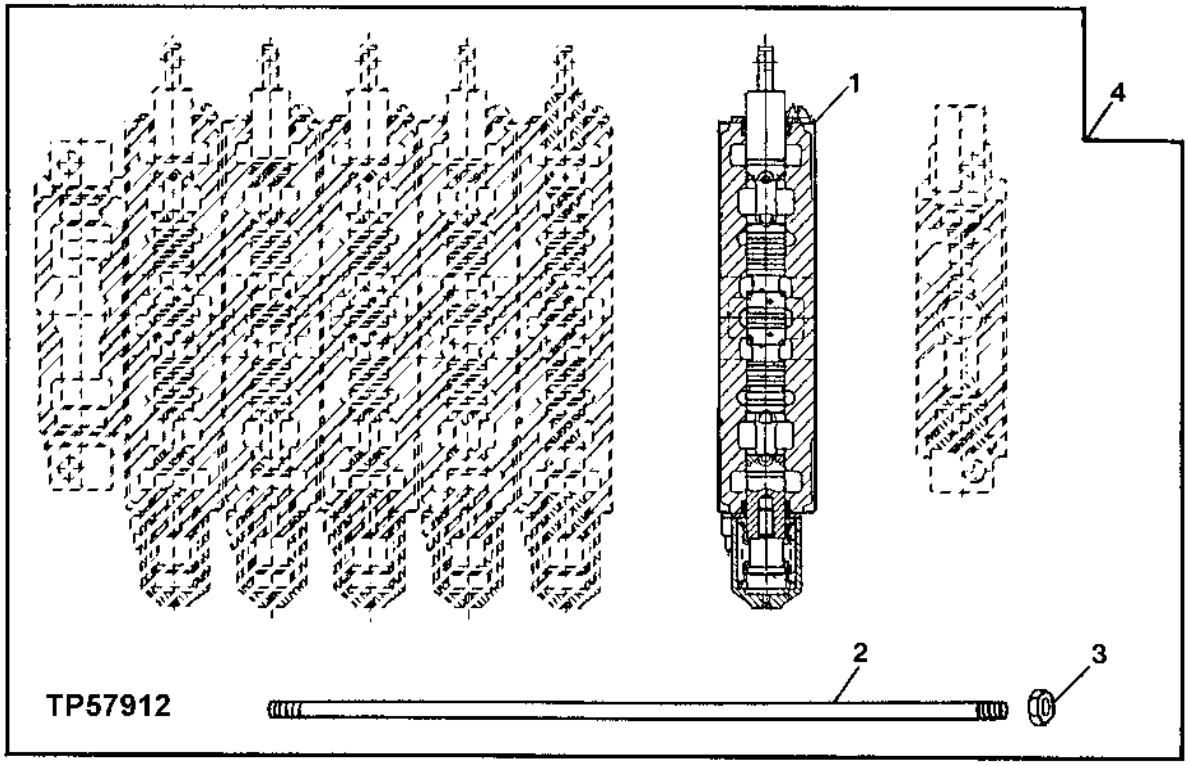

KEY	PART NO.	PART NAME	QTY	SERIAL NO.	REMARKS
1	AT176659	VALVE	1		
2	T163960	TIE ROD	4		
3	14H865	NUT	8		
4	AT183356	VALVE	1		

RELIEF VALVES AND KITS
(SERIAL NO. 850353-)

TP57905 -UN-10SEP98

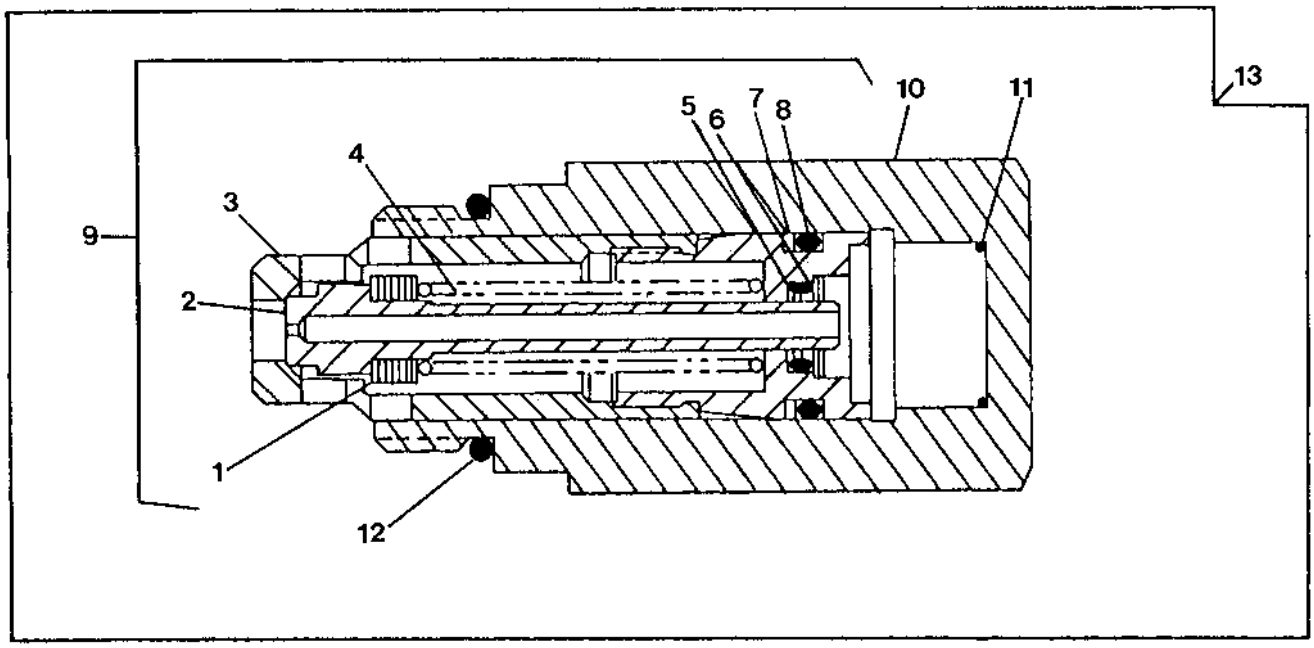

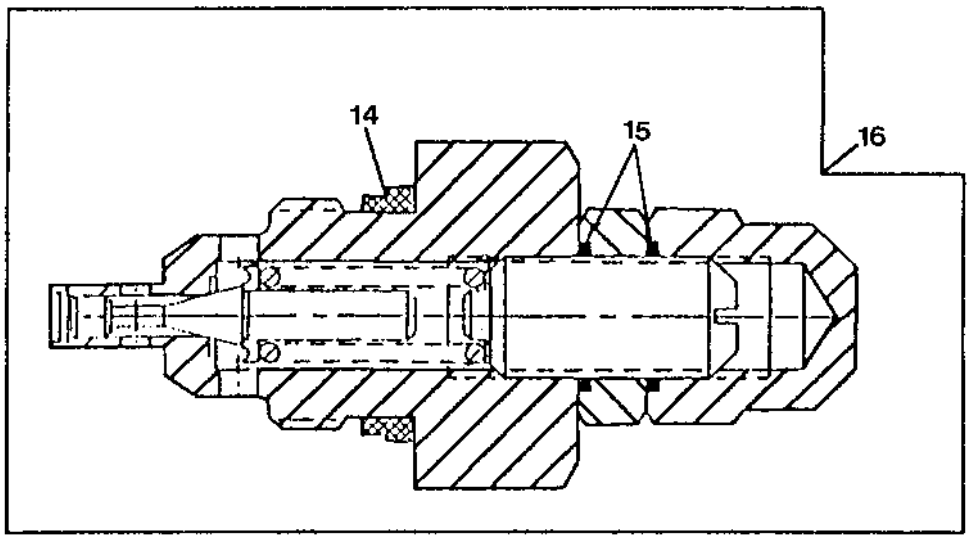

TP57905

RELIEF VALVES AND KITS
(SERIAL NO. 850353-)

KEY	PART NO.	PART NAME	QTY	SERIAL NO.	REMARKS
1	.....	SHIM	AR		
2	.....	POPPET	1		
3	.....	RELIEF VALVE	1		
4	.....	COMPRESSION SPRING	1		
5	.....	BACK-UP RING	2		
6	.....	O-RING	1		
7	.....	BACK-UP RING	1		(A)
8	.....	O-RING	1		(A)
9	AT135715	KIT	1		RELIEF CARTRIDGE, INLET SECTION (3000 PSI)
	AT114682	KIT	1		RELIEF CARTRIDGE, SWING AND CROWD SECTIONS (2750 PSI)
	AT114683	KIT	1		RELIEF CARTRIDGE, BUCKET SECTION (3200 PSI)
	AT178363	KIT	1		RELIEF CARTRIDGE, BOOM SECTION (2150 PSI)
10	T118866	HOUSING	1		
11	T118867	SPRING	1		
12	T118681	O-RING	1		(A)
13	AT135714	RELIEF VALVE	1		INLET COVER (3000 PSI)
	.....	RELIEF VALVE	2		SWING SECTION, (TOP AND BOTTOM PORTS) (2750 PSI)
	.....	RELIEF VALVE	1		CROWD SECTION, (BOTTOM PORT-HEAD) (2750 PSI)
	.....	RELIEF VALVE	1		BUCKET SECTION, (TOP PORT-HEAD) (3200 PSI)
	.....	RELIEF VALVE	1		BOOM SECTION, (TOP PORT-HEAD) (2150 PSI)
14	T183757	SEAL	1		(A) (SUB FOR T141872)
15	.....	O-RING	2		(A)
16	AT165735	RELIEF VALVE	1		(4500 PSI) BOOM SECTION, (BOTTOM PORT-ROD)
	AT165737	VALVE	1		(3500 PSI) BUCKET SECTION, (BOTTOM PORT-ROD)
	AT165737	VALVE	1		(3500 PSI) CROWD SECTION, (UPPER PORT-ROD)
..	AT189413	SEAL KIT	1		INCLUDES ALL (A) PARTS

BACKHOE BOOM CYLINDER

TP44072 -UN-29SEP94

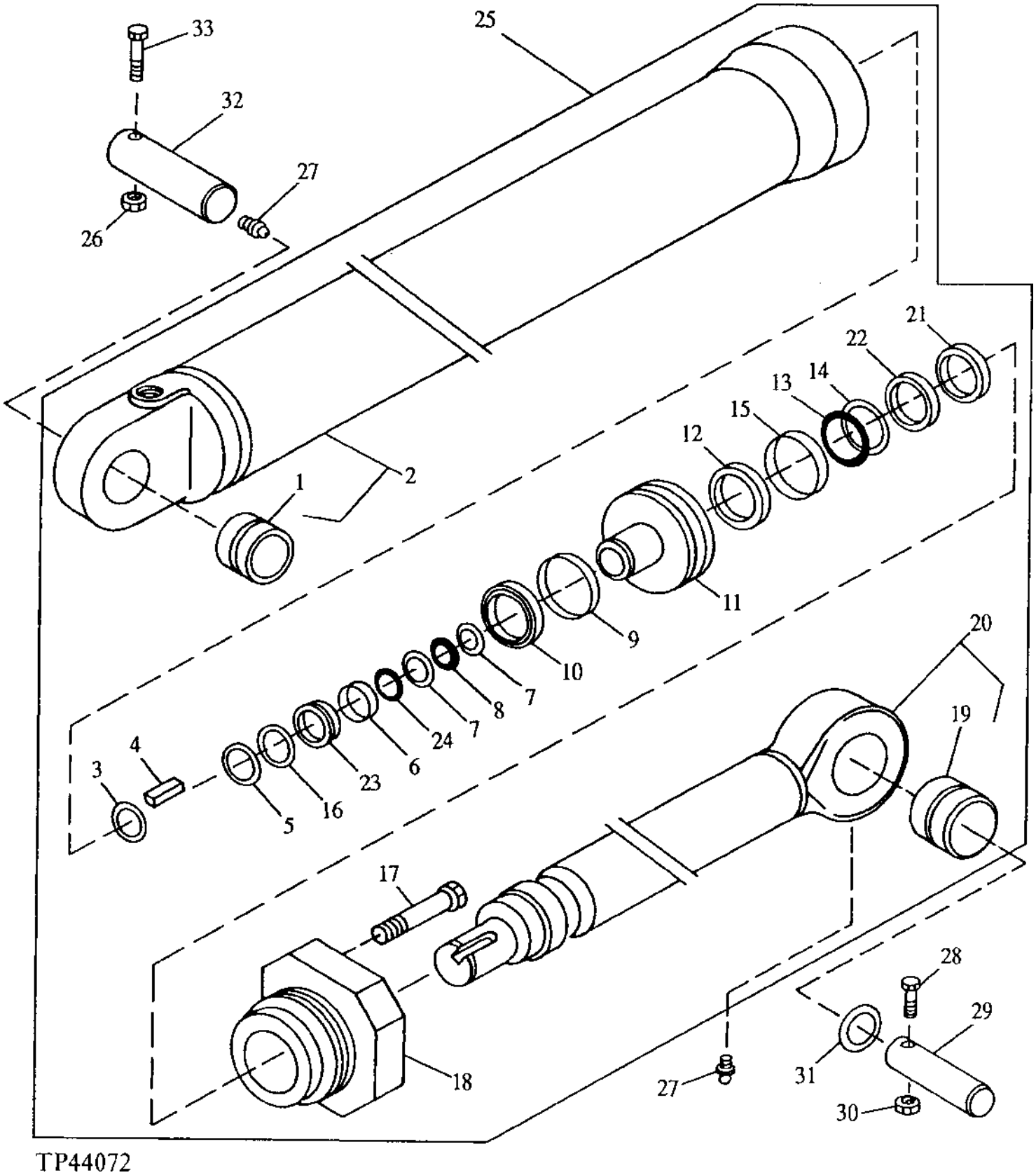

BACKHOE BOOM CYLINDER

KEY	PART NO.	PART NAME	QTY	SERIAL NO.	REMARKS
1	R98721	BUSHING	1		
2	AH142943	HYDRAULIC CYLINDER BARREL	1		(A)
3	R98396	SNAP RING	1		
4	R98389	KEY	1		
5	R98394	SNAP RING	1		
6	R98395	BACK-UP RING	1		
7	R80521	BACK-UP RING	2		(RK)
8	U12331	O-RING	1		(RK)
9	R85228	WEAR RING	2		(BK)
10	RE25146	SEAL	1		(BK)
11	R98390	PISTON	1		
12	RE25150	SEAL	1		(RK)
13	H88900	O-RING	1		(BK)
14	R98669	BACK-UP RING	1		(BK)
15	R85230	BACK-UP RING	1		(RK)
16	R98392	SPRING	1		
17	19M8629	SCREW	8		(A) M20 X 70
18	H145439	HYDR. CYLINDER ROD GUIDE	1		(A)
19	R72030	BUSHING	1		
20	RE37083	ROD	1		
21	RE25148	SEAL	1		(RK)
22	RE25149	SEAL	1		(RK)
23	R98393	VALVE	1		
24	R98391	COMPRESSION SPRING	1		
25	AH142928	HYDRAULIC CYLINDER	1		
26	14M7319	LOCK NUT	1		M12
27	T162396	LUBRICATION FITTING	2		(SUB FOR JD7798)
28	19M7882	SCREW	1		M16 X 170
29	T125948	PIN	1		
30	14M7328	LOCK NUT	1		M16
31	T126037	WASHER	AR		
32	T125949	PIN	1		
33	19M7758	CAP SCREW	1		M12 X 130
..	AH137210	HYDRAULIC CYLINDER KIT	1		INCLUDES ALL (BK) PARTS (CYLINDER BORE)
..	RE25152	HYDRAULIC CYLINDER KIT	1		INCLUDES ALL (RK) PARTS (CYLINDER ROD)
..	AH143602	HYDRAULIC CYLINDER KIT	1		INCLUDES ALL (A) PARTS (BARREL)

BACKHOE BUCKET CYLINDER

TP42868 -UN-29SEP94

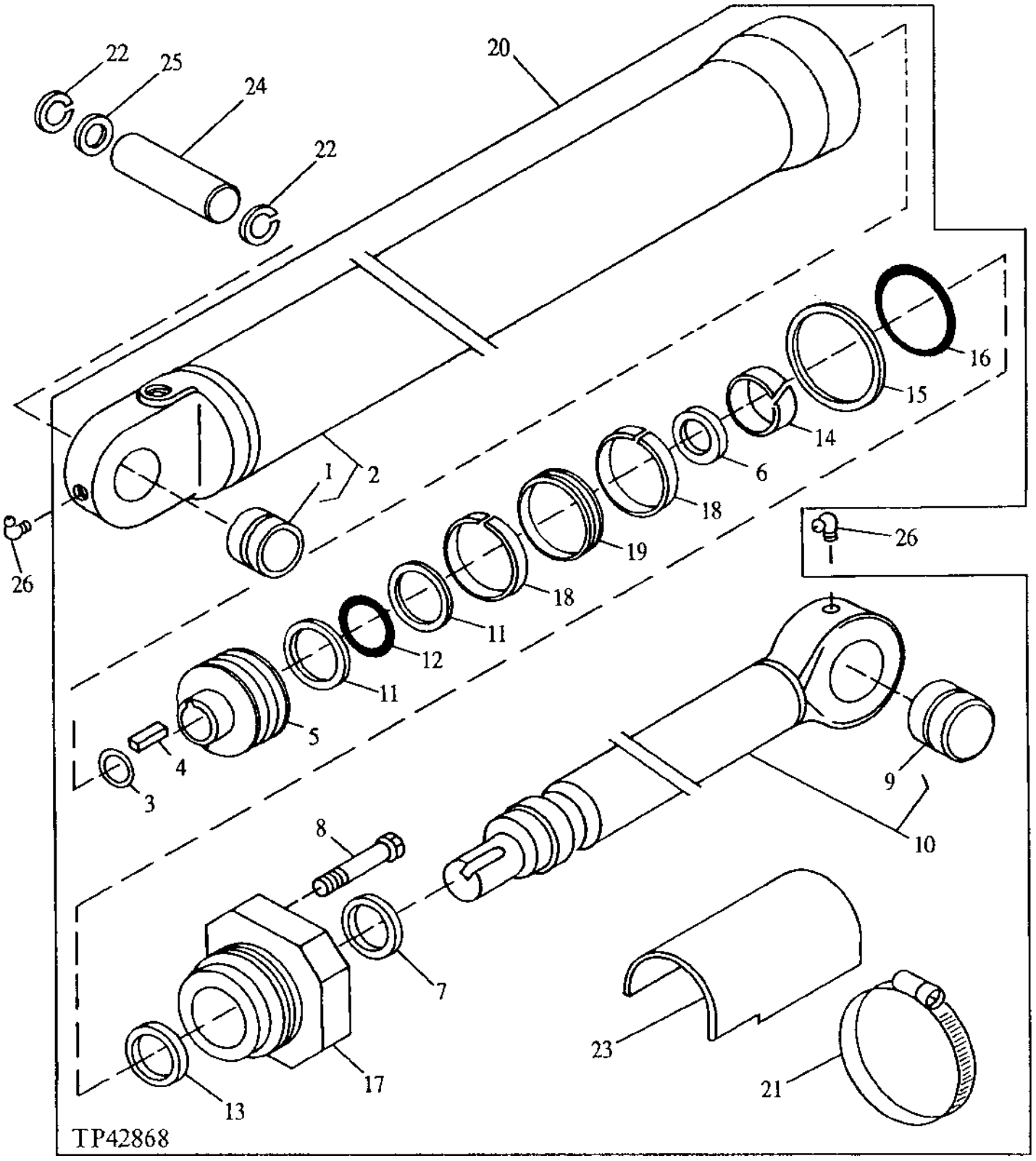

BACKHOE BUCKET CYLINDER

KEY	PART NO.	PART NAME	QTY	SERIAL NO.	REMARKS
1	R82076	BUSHING	1		
2	AH142942	HYDRAULIC CYLINDER BARREL	1		(A)
3	R83142	SNAP RING	1		
4	.....	SHAFT KEY	1		
5	R98385	PISTON	1		
6	RE22776	SEAL	1		(RK)
7	RE22777	SEAL	1		
8	19M8789	SCREW	8		(A) M12 X 50
9	H146931	BUSHING	1		
10	AH140863	ROD	1		
11	R86290	BACK-UP RING	2		(RK)
12	R26282	O-RING	1		
13	RE30121	SEAL	1		(RK)
14	R83213	WEAR RING	1		(RK)
15	R81862	BACK-UP RING	1		(BK)
16	F950R	O-RING	1		
17	H149340	HYDR. CYLINDER ROD GUIDE	1		(A)
18	R81775	WEAR RING	2		(BK)
19	RE20343	SEAL	1		(BK)
20	AH142927	HYDRAULIC CYLINDER	1		
21	AT133185	CLAMP	2		USE WITH EXTENDIBLE DIPPERSTICK
22	40M7066	SNAP RING	2		
23	T147178	GUARD	1		USE WITH EXTENDIBLE DIPPERSTICK
24	T142472	PIN	1		STANDARD DIPPERSTICK
	T142485	PIN	1		EXTENDIBLE DIPPERSTICK
25	24H1679	WASHER	AR		2-17/64" X 3-1/4" X 0.060"
26	JD7799	LUBRICATION FITTING	2		
..	AH149844	KIT	1		INCLUDES ALL (BK) PARTS (CYLINDER BORE)
..	RE25151	HYDRAULIC CYLINDER KIT	1		INCLUDES ALL (RK) PARTS (CYLINDER ROD)
..	AH143323	HYDRAULIC CYLINDER KIT	1		INCLUDES ALL (A) PARTS (BARREL)

BACKHOE CROWD CYLINDER

TP44130 -UN-01JAN94

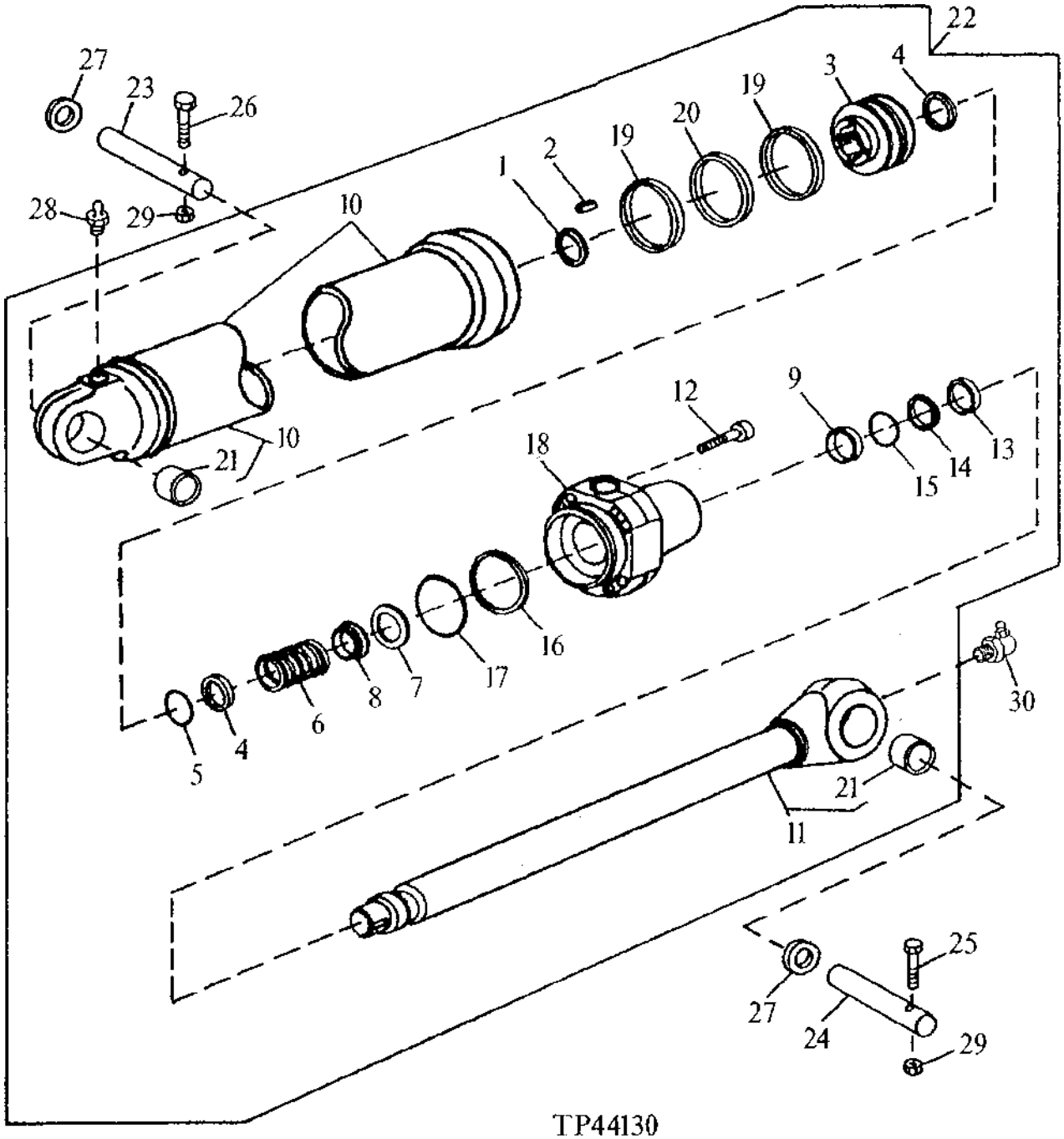

BACKHOE CROWD CYLINDER

KEY	PART NO.	PART NAME	QTY	SERIAL NO.	REMARKS
1	R90646	SNAP RING	1		
2	R83215	SHAFT KEY	1		
3	R98375	PISTON	1		
4	R98696	BACK-UP RING	2		(RK)
5	F1649R	O-RING	1		(RK)
6	H139506	COMPRESSION SPRING	1		
7	H139508	VALVE	1		
8	H139507	BACK-UP RING	1		
9	RE30967	BACK-UP RING	1		(RK)
10	AH142941	HYDRAULIC CYLINDER BARREL	1		(A)
11	RE37076	ROD	1		
12	19M8730	SCREW	8		(A) M16 X 80
13	RE36519	SEAL	1		(RK)
14	RE36534	BACK-UP RING	1		(RK)
15	H148247	WEAR RING	1		(RK) (SUB FOR R97795, THIS APPLICATION)
16	R78818	BACK-UP RING	1		(BK)
17	T38485	O-RING	1		(BK)
18	H148246	DRAWER SLIDE	1		(A)
19	R85192	WEAR RING	2		(BK)
20	RE25102	SEAL	1		(BK)
21	R98722	BUSHING	2		
22	AH142926	HYDRAULIC CYLINDER	1		
23	T125950	PIN	1		
24	T125951	PIN	1		
25	19M7914	CAP SCREW	1		M12 X 120
26	19M7758	CAP SCREW	1		M12 X 130
27	T126037	WASHER	AR		2.870" X 5" X 0.098"
28	T162396	LUBRICATION FITTING	1		(SUB FOR JD7798)
29	14M7319	LOCK NUT	2		M12
30	JD7799	LUBRICATION FITTING	1		
..	AH137209	HYDRAULIC CYLINDER KIT	1		INCLUDES ALL (BK) PARTS (CYLINDER BORE)
..	AH142089	HYDRAULIC CYLINDER KIT	1		INCLUDES ALL (RK) PARTS (CYLINDER ROD)
..	AH143601	HYDRAULIC CYLINDER KIT	1		INCLUDES ALL (A) PARTS (BARREL)

BACKHOE SWING CYLINDER
(SERIAL NO. -831989)

TP42935 -UN-29SEP94

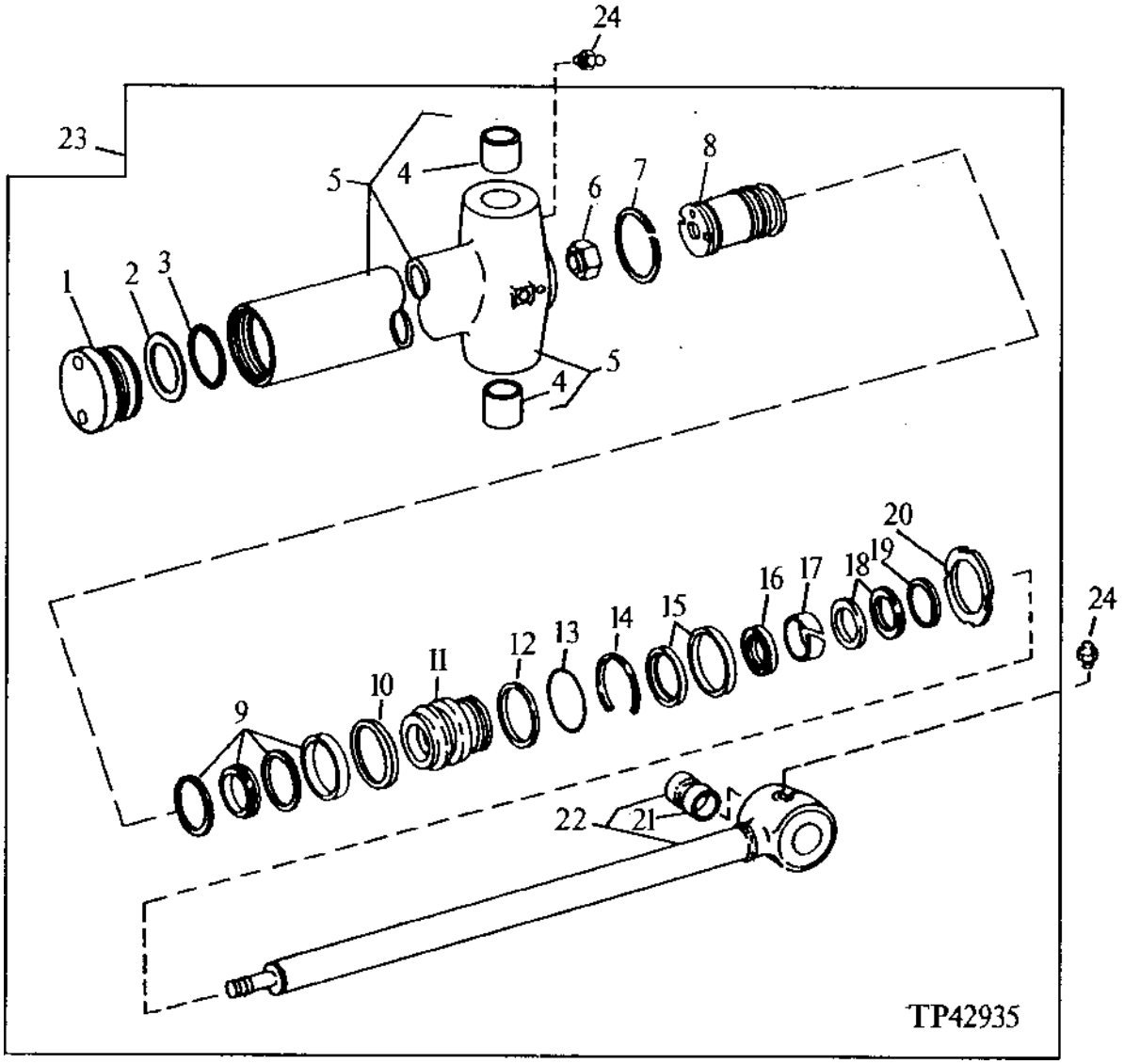

BACKHOE SWING CYLINDER
(SERIAL NO. -831989)

KEY	PART NO.	PART NAME	QTY	SERIAL NO.	REMARKS
1	H151369	HYDRAULIC CYLINDER CAP	1		(SUB FOR H148236)
2	H148237	BACK-UP RING	1		
3	U43360	O-RING	1		
4	R81489	BUSHING	2		
5	AH142294	HYDRAULIC CYLINDER BARREL	1		
6	H170540	LOCK NUT	1		(SUB FOR H147771)
7	R82095	WEAR RING	1		(A)
8	H148235	PISTON	1		
9	RE20809	SEAL	1		(A)
10	R82092	PISTON RING	1		
11	.....	HYDR. CYLINDER ROD GUIDE	1		(R92321 NO LONGER USED) (SUB H157428) (ALSO ORDER AH149814)
12	R83578	O-RING	1		(A)
13	R79001	BACK-UP RING	1		(A)
14	R82093	SNAP RING	1		
15	RE31717	SEAL	1		(B)
16	R92309	SEAL	1		(B)
17	R92310	WEAR RING	1		(B)
18	RE31718	SEAL	1		(B)
19	R91624	BACK-UP RING	1		(A)
20	R82086	NUT	1		
21	R81490	BUSHING	1		
22	AH141921	ROD	1		
23	.....	HYDRAULIC CYLINDER	1		(AH141405 NO LONGER AVAILABLE) (SUB AH154781)
24	T162396	LUBRICATION FITTING	3		(SUB FOR JD7798)
..	AH149846	KIT	1		INCLUDES ALL (A) PARTS (CYLINDER BORE)
..	RE31716	HYDRAULIC CYLINDER KIT	1		INCLUDES ALL (B) PARTS (CYLINDER ROD)

BACKHOE SWING CYLINDER
(SERIAL NO. 831990-)
(REPLACEMENT CYLINDER)

TP42935 -UN-29SEP94

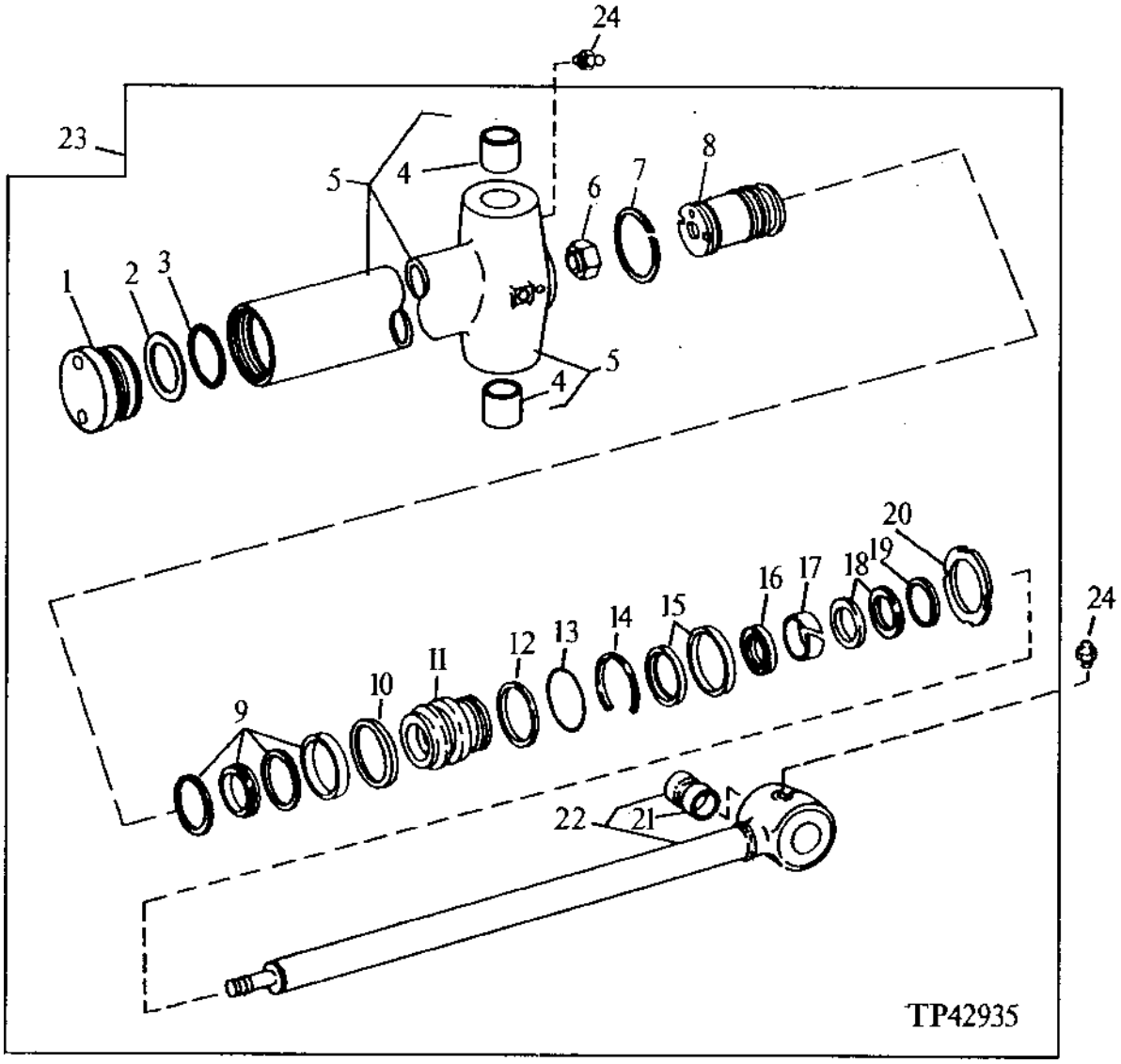

BACKHOE SWING CYLINDER
(SERIAL NO. 831990-)
(REPLACEMENT CYLINDER)

KEY	PART NO.	PART NAME	QTY	SERIAL NO.	REMARKS
1	H151369	HYDRAULIC CYLINDER CAP	1		
2	H148237	BACK-UP RING	1		
3	U43360	O-RING	1		
4	R81489	BUSHING	2		
5	AH142294	HYDRAULIC CYLINDER BARREL	1		
6	H170540	LOCK NUT	1		(SUB FOR H147771)
7	R82095	WEAR RING	1		(A)
8	H148235	PISTON	1		
9	RE20809	SEAL	1		(A)
10	R82092	PISTON RING	1		
11	H157428	HYDR. CYLINDER ROD GUIDE	1		
12	R83578	O-RING	1		(A)
13	R79001	BACK-UP RING	1		(A)
14	R82093	SNAP RING	1		
15	AH146562	SEAL	1		(B)
16	H152204	SEAL	1		(B)
17	H152795	WEAR RING	1		(B)
18	AH146558	SEAL	1		(B)
19	R91624	BACK-UP RING	1		(A)
20	R82086	NUT	1		
21	R81490	BUSHING	1		
22	AH141921	ROD	1		
23	AH154781	HYDRAULIC CYLINDER	1		
24	T162396	LUBRICATION FITTING	3		(SUB FOR JD7798)
..	AH149846	KIT	1		INCLUDES ALL (A) PARTS (CYLINDER BORE)
..	AH149814	HYDRAULIC CYLINDER KIT	1		INCLUDES ALL (B) PARTS (CYLINDER ROD)

SWING CYLINDER PINS

TP42936 -UN-01JAN94

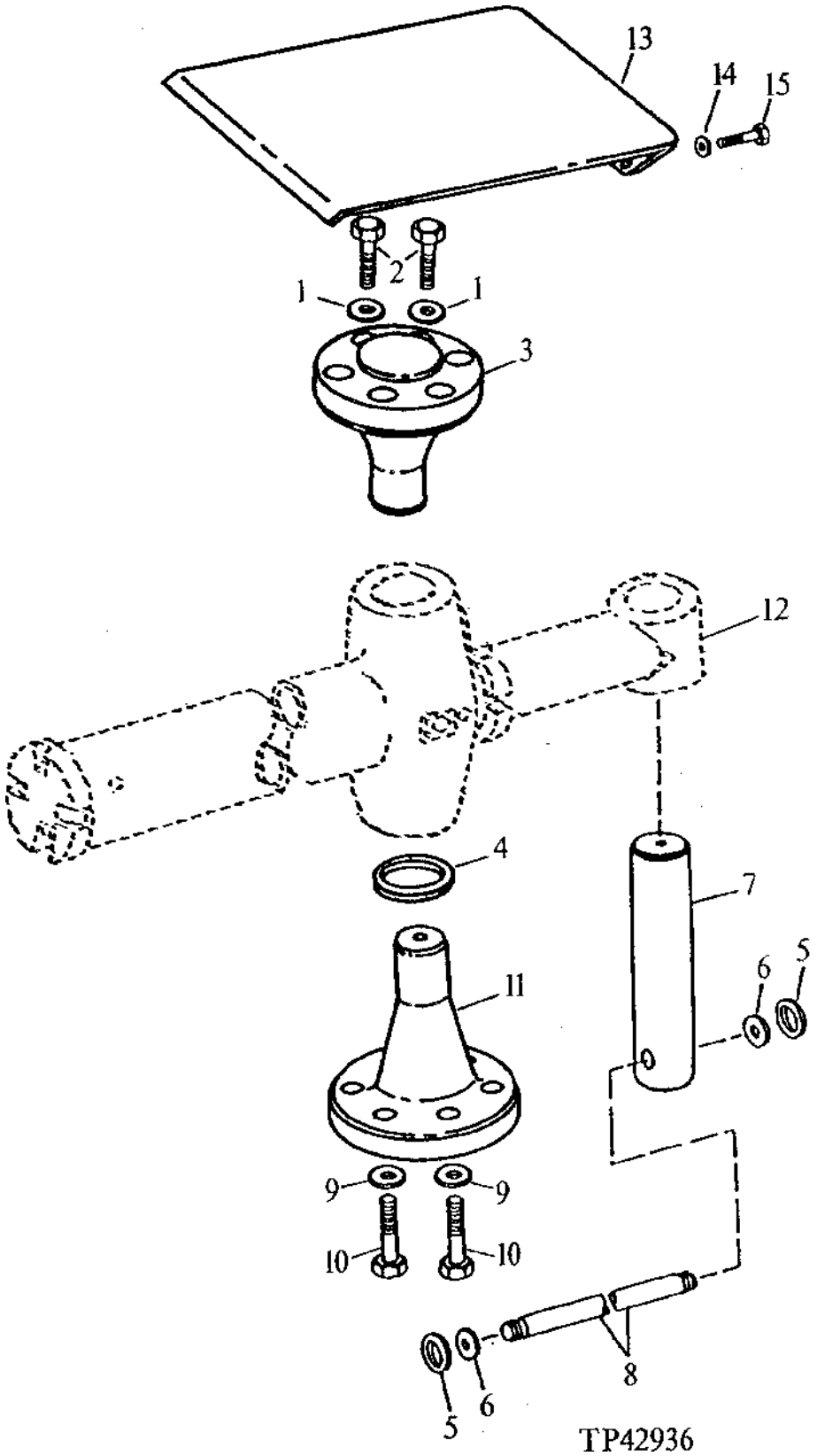

SWING CYLINDER PINS

KEY	PART NO.	PART NAME	QTY	SERIAL NO.	REMARKS
1	24M7243	WASHER	6		25.400 X 50 X 6 MM
2	19M7888	CAP SCREW	6		M24 X 60
3	T68987	HUB	1		
4	T75537	WASHER	1		
5	N105572	SNAP RING	2		
6	24H1364	WASHER	2		21/32" X 15/16" X 0.036"
7	T68986	PIN	1		
8	T71399	PIN	1		
9	T76090	WASHER	6		
10	19M8345	CAP SCREW	6		M30 X 90
11	T146636	HUB	1		
12	AH154781	HYDRAULIC CYLINDER	1		(SUB FOR AH141405)
13	T73148	GUARD	1		
14	24M7239	WASHER	2		10.700 X 21 X 2.500 MM
15	19M7557	CAP SCREW	2		M10 X 16

BACKHOE BOOM CYLINDER HYDRAULICS

TP44044 -UN-01JAN94

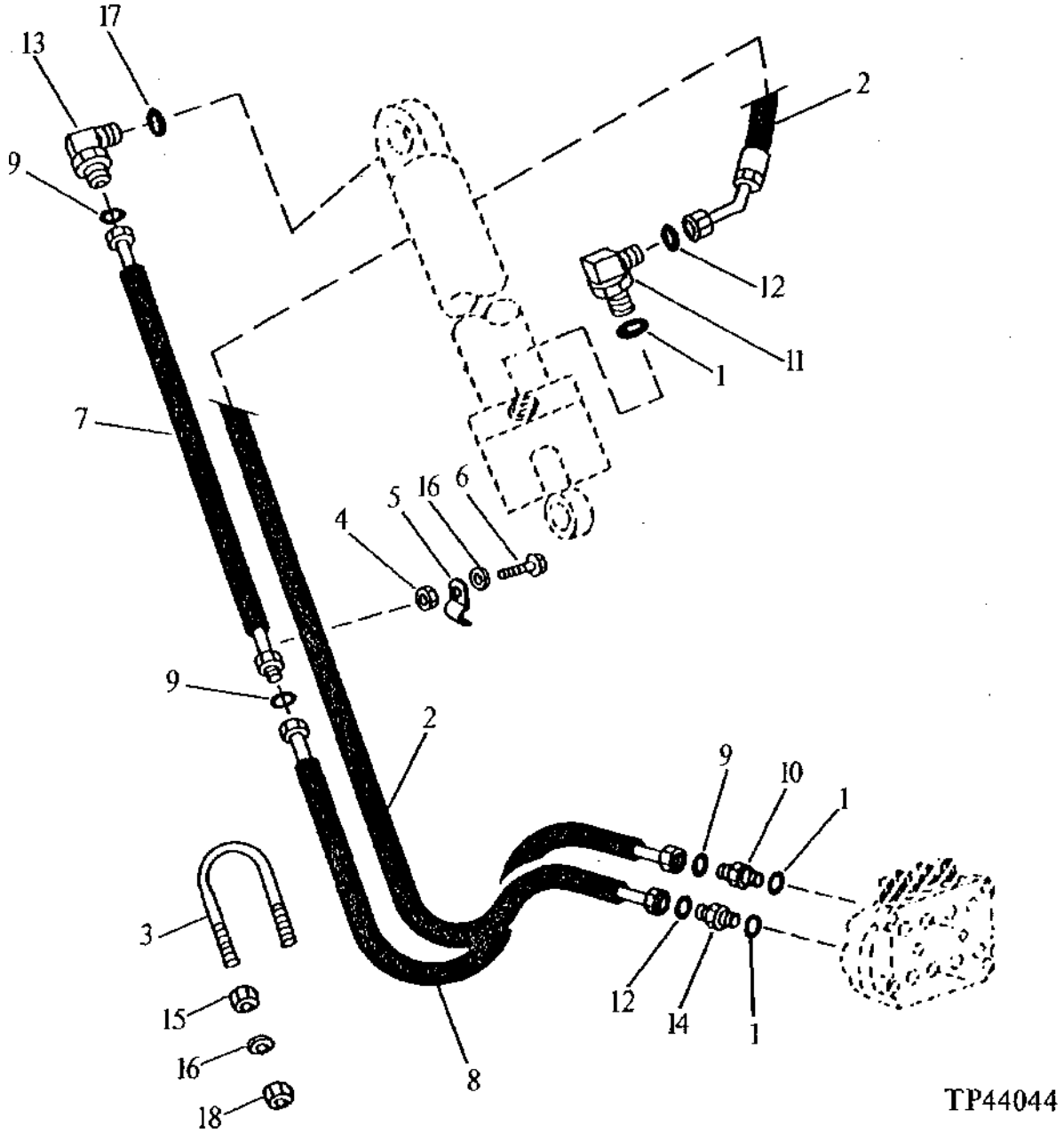

BACKHOE BOOM CYLINDER HYDRAULICS

KEY	PART NO.	PART NAME	QTY	SERIAL NO.	REMARKS
1	R29936	O-RING	3		
2	AT133161	HYDRAULIC HOSE - FABRICATE	1		1-3/16" X 3 160 MM (124-1/2") X 1-3/16"
3	B14164	U-BOLT	1		
4	14M7274	NUT	1		M10
5	U15939	CLAMP	1		
6	19M7662	CAP SCREW	1		M10 X 30
7	AT133197	HYDRAULIC HOSE - FABRICATE	1		1-7/16" X 1 550 MM (61") X 1-7/16"
8	AT133160	HYDRAULIC HOSE - FABRICATE	1		1-7/16" X 1 685 MM (66-1/4") X 1-7/16"
9	T76938	O-RING	3		
10	38H1164	ADAPTER	1		
11	38H1052	ELBOW FITTING	1		
12	T77858	O-RING	2		
13	38H1325	ELBOW FITTING	1		
14	38H1194	ADAPTER	1		
15	T126701	FLANGE NUT	2		3/8"
16	24M7239	WASHER	3		10.700 X 21 X 2.500 MM
17	U13639	O-RING	1		
18	14M7337	NUT	2		M10

BACKHOE BUCKET CYLINDER HYDRAULICS

TP44042 -UN-01JAN94

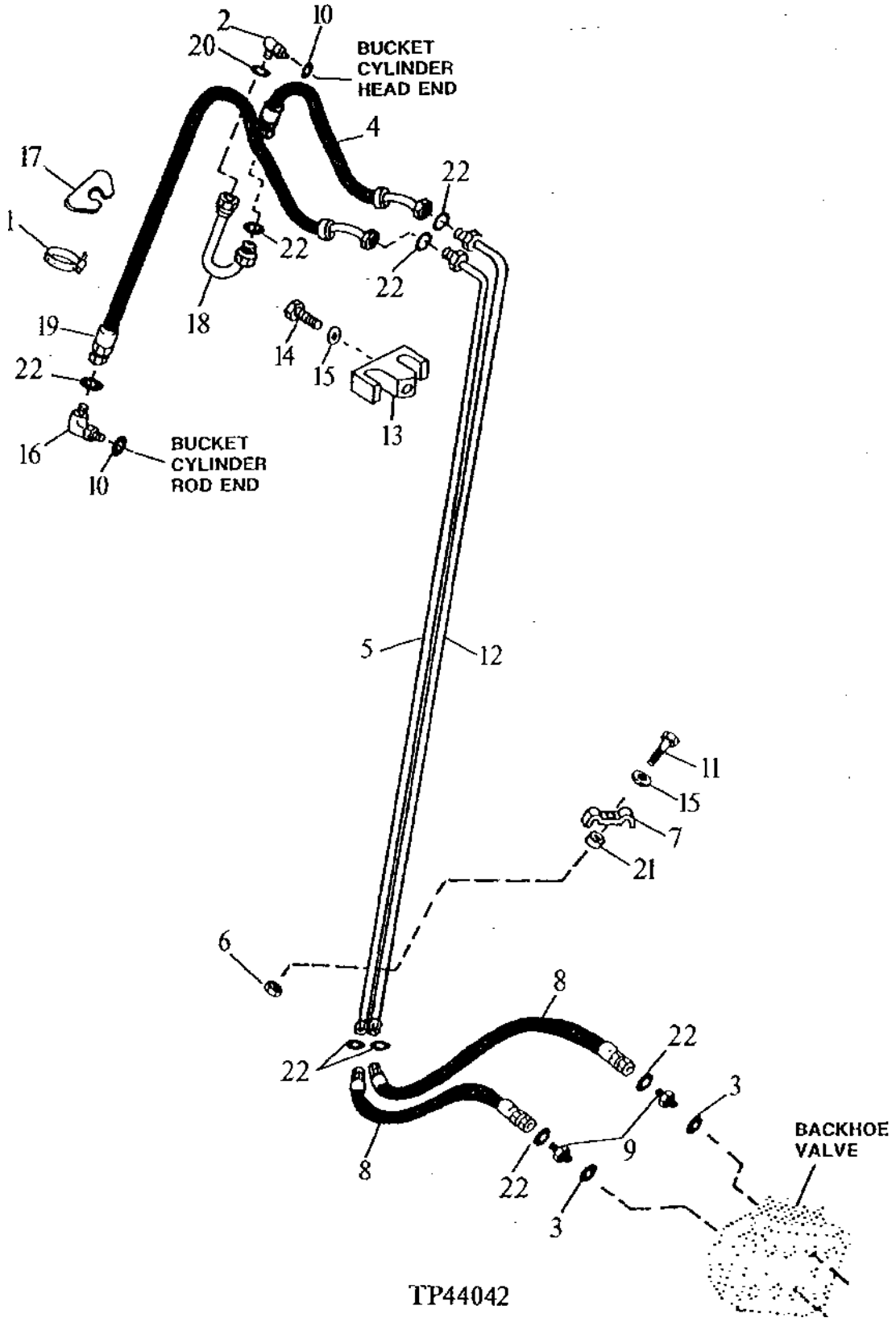

BACKHOE BUCKET CYLINDER HYDRAULICS

KEY	PART NO.	PART NAME	QTY	SERIAL NO.	REMARKS
1	AR85327	CLAMP	1		
2	38H1305	ELBOW FITTING	1		
3	R29936	O-RING	2		
4	AT114589	HYDRAULIC HOSE - FABRICATE	1		1-3/16" X 945 MM (37-1/4") X 1-3/16"
5	AT142021	OIL LINE	1		L.H.
6	14M7337	NUT	1		M10
7	T40705	CLAMP	1		
8	AT133158	HYDRAULIC HOSE - FABRICATE	2		1-3/16" X 1 620 MM (63-3/4") X 1-3/16"
9	38H1194	ADAPTER	2		
10	U12547	O-RING	2		
11	19M7658	CAP SCREW	1		M10 X 50, FLANGE HEAD
12	AT142020	OIL LINE	1		R.H.
13	T52978	CLAMP	1		
14	19M7658	CAP SCREW	1		M10 X 50
15	24M7239	WASHER	2		10.700 X 21 X 2.500 MM
16	38H1007	ELBOW FITTING	1		
17	T102005	GUIDE	1		
18	AT84181	OIL LINE	1		
19	AT114590	HYDRAULIC HOSE - FABRICATE	1		1-3/16" X 1 800 MM (70-3/4") X 1-3/16"
20	T76938	O-RING	1		
21	28H1697	SPACER	1		
22	T77858	O-RING	8		

BACKHOE CROWD CYLINDER HYDRAULICS

TP44043 -UN-01JAN94

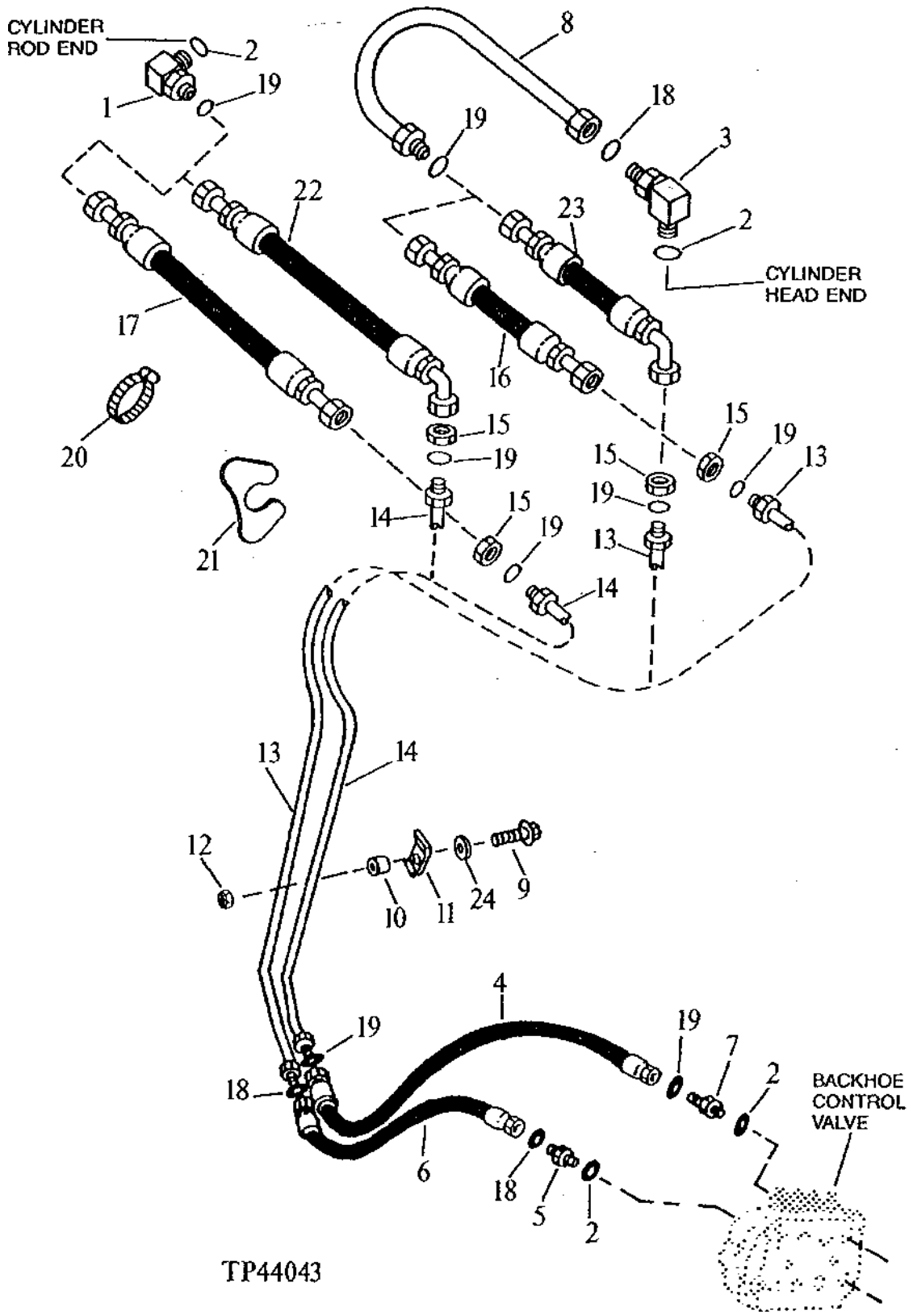

BACKHOE CROWD CYLINDER HYDRAULICS

KEY	PART NO.	PART NAME	QTY	SERIAL NO.	REMARKS
1	38H1052	ELBOW FITTING	1		
2	R29936	O-RING	4		
3	38H1037	ELBOW FITTING	1		
4	AT133158	HYDRAULIC HOSE - FABRICATE	1		1-3/16" X 1 620 MM (63-3/4") X 1-3/16"
5	38H1164	ADAPTER	1		
6	AT133196	HYDRAULIC HOSE - FABRICATE	1		1-7/16" X 1 590 MM (62-1/2") X 1-7/16"
7	38H1194	ADAPTER	1		
8	AT84181	OIL LINE	1		
9	19M7658	CAP SCREW	1		M10 X 50
10	28H1522	SPACER	1		
11	T40705	CLAMP	1		
12	14M7337	NUT	1		M10
13	AT132749	OIL LINE	1		
14	AT132750	OIL LINE	1		
15	T78707	NUT	2		BULKHEAD
16	AT83454	HYDRAULIC HOSE - FABRICATE	1	-784873	1-3/16" X 605 MM (23-3/4") X 1-3/16"
17	AT83467	HYDRAULIC HOSE - FABRICATE	1	-784873	1-3/16" X 1 510 MM (59-1/2") X 1-3/16"
18	T76938	O-RING	3		
19	T77858	O-RING	6		
20	AT84191	HOSE CLAMP	1		
21	T102005	GUIDE	1		
22	AT132761	HYDRAULIC HOSE - FABRICATE	1	784874-	1-3/16" X 1 455 MM (57-1/4") X 1-3/16"
23	AT132759	HYDRAULIC HOSE - FABRICATE	1	784874-	1-3/16" X 585 MM (23") X 1-3/16"
24	24M7239	WASHER	1		10.700 X 21 X 2.500 MM

BACKHOE SWING CYLINDER HYDRAULICS

TP57914 -UN-08SEP98

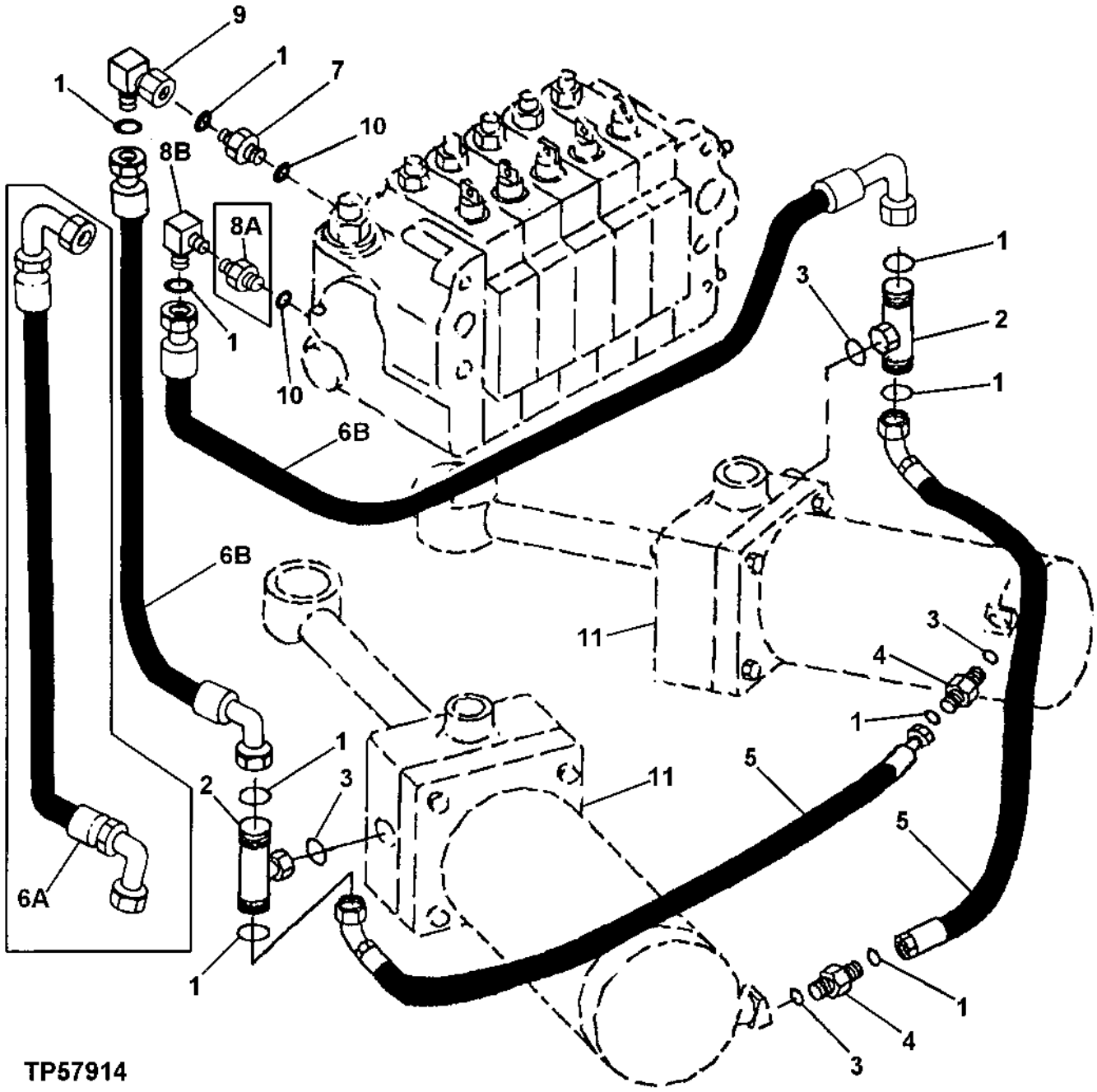

BACKHOE SWING CYLINDER HYDRAULICS

KEY	PART NO.	PART NAME	QTY	SERIAL NO.	REMARKS
1	T77857	O-RING	8		
2	38H1017	TEE FITTING	2		
3	R26375	O-RING	4		
4	38H1046	ELBOW FITTING	2		45°
5	AT113849	HYDRAULIC HOSE - FABRICATE	2		13/16" X 790 MM (31") X 13/16"
6A	AT113850	HYDRAULIC HOSE - FABRICATE	2	-851686	13/16" X 585 MM (23") X 13/16"
6B	AT184431	HYDRAULIC HOSE - FABRICATE	2	851687-	13/16" X 540 MM (21-1/4") X 13/16"
7	38H1175	ADAPTER	1		
8A	38H1175	ADAPTER	1	-851686	
8B	38H1013	ELBOW FITTING	1	851687-	
9	38H1095	ELBOW FITTING	1	851687-	
10	U12547	O-RING	2		
11	AH154781	HYDRAULIC CYLINDER	2		

STABILIZER VALVE
(EATON)

TP26651 -UN-01JAN94

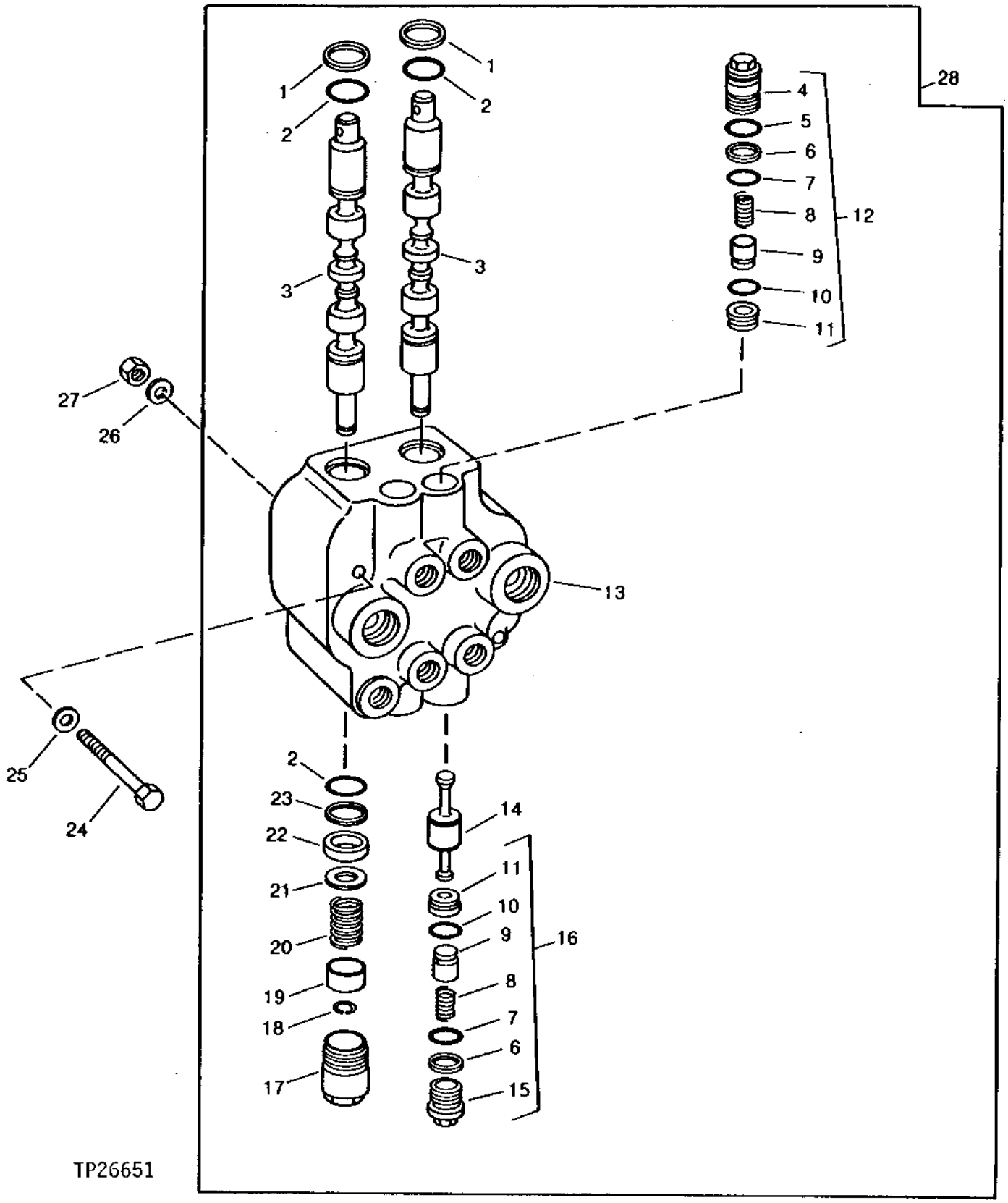

STABILIZER VALVE
(EATON)

KEY	PART NO.	PART NAME	QTY	SERIAL NO.	REMARKS
1	T127265	SEAL	2		(A)
2	T127268	O-RING	4		(A)
3	.....	VALVE SPOOL	2		(SUB AT190330)
4	.....	RETAINER	2		(SUB AT190334)
5	R116031	O-RING	2		(A) (SUB FOR U15192, THIS APPLICATION)
6	T154187	BACK-UP RING	4		(A) (SUB FOR T127258, THIS APPLICATION)
7	R72328	O-RING	4		(A) (SUB FOR U46731, THIS APPLICATION)
8	.....	SPRING	4		(SUB AT190333 OR AT190334)
9	.....	POPPET	4		(SUB AT190333 OR AT190334)
10	R56464	O-RING	4		(A) (SUB FOR 32246, THIS APPLICATION)
11	.....	SEAT	4		(SUB AT190333 OR AT190334)
12	AT190334	KIT	2		(THERMAL RELIEF) (SUB FOR AT135769)
13	.....	HOUSING	1		(SUB AT190330)
14	T127257	PLUNGER	2		
15	.....	RETAINER	2		(SUB AT190333)
16	AT190333	KIT	2		(STANDARD) (SUB FOR AT135768)
17	AT135767	CAP	2		
18	T127263	SNAP RING	2		(A)
19	T127261	RETAINER	2		
20	MG272321	SPRING	2		
21	T127264	WASHER	2		
22	T127260	SPACER	2		
23	R73530	BACK-UP RING	2		(A)
24	19M7663	CAP SCREW	2		HS, 10.9, M8 X 70
25	24M7207	WASHER	2		8.400 X 24 X 2 MM
26	24M7207	WASHER	2		8.400 X 24 X 2 MM
27	14M7273	NUT	2		M8
28	.....	CONTROL VALVE	1	-878497	(AT186400 NO LONGER AVAILABLE) (WITH TWO WAY LOCK OUTS) (SUB AT190330) (ALSO ORDER (2) M137181) (SUB FOR AT149981 AND AT148272)
	AT190330	CONTROL VALVE	1	878498-	(SUB FOR AT188549)
..	AT190741	SEAL KIT	1		INCLUDES ALL (A) PARTS

BACKHOE AND STABILIZER VALVE PRESSURE AND RETURN HYDRAULICS
(SERIAL NO. -872328)

TP44087 -UN-01JAN94

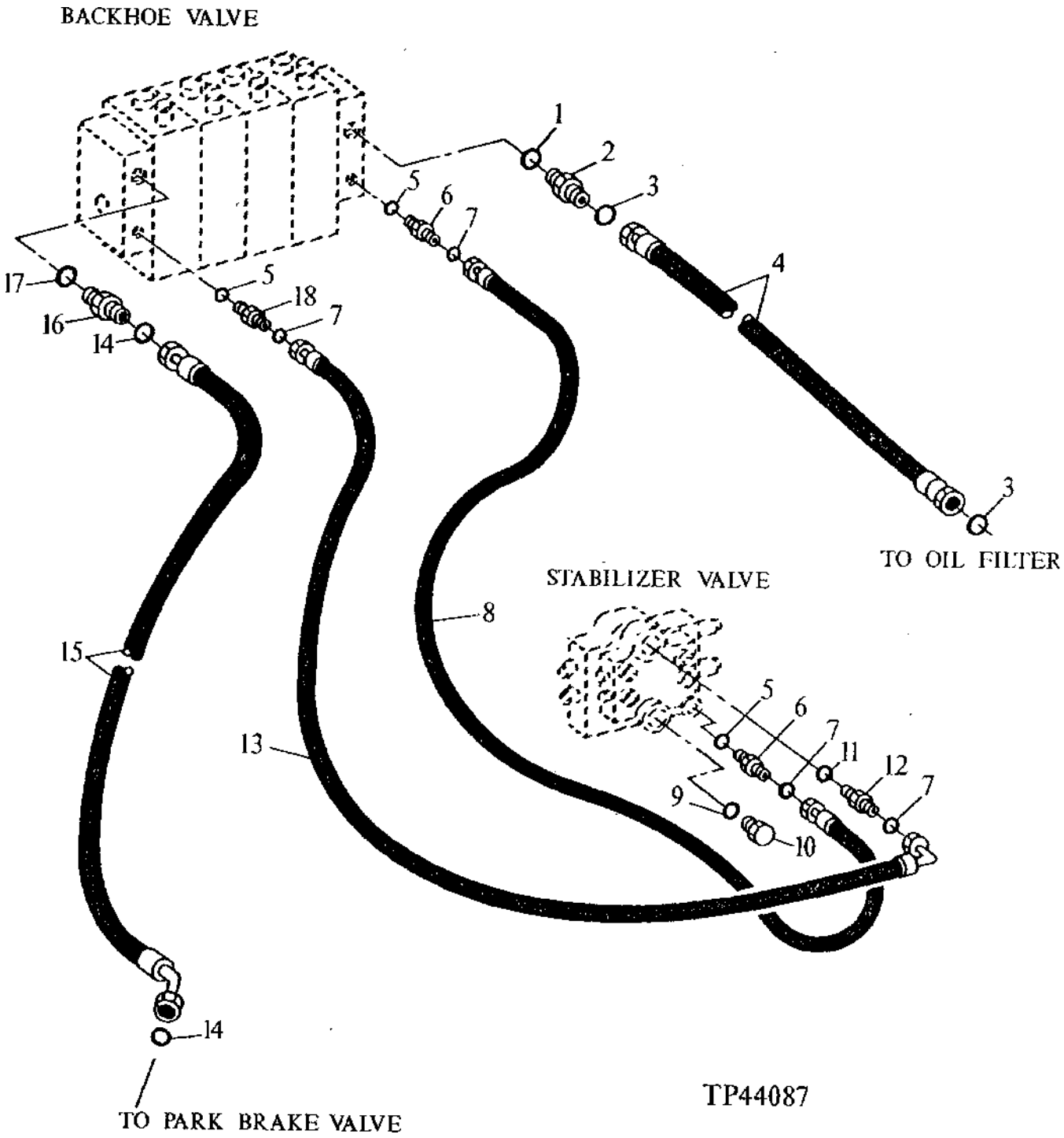

BACKHOE AND STABILIZER VALVE PRESSURE AND RETURN HYDRAULICS
(SERIAL NO. -872328)

KEY	PART NO.	PART NAME	QTY	SERIAL NO.	REMARKS
1	U13639	O-RING	1		
2	38H1165	ADAPTER	1		
3	T78612	O-RING	2		
4	AT160561	HYDRAULIC HOSE - FABRICATE	1		1-11/16" X 810 MM (32") X 1-11/16", (SUB FOR AT184412, THIS APPLICATION)
5	R26375	O-RING	3		
6	38H1161	ADAPTER	2		
7	T77857	O-RING	4		
8	AT149428	HYDRAULIC HOSE - FABRICATE	1		
9	R29936	O-RING	1		
10	R36636	FITTING PLUG	1		
11	R29936	O-RING	1		
12	38H1176	ADAPTER	1		
13	AT167044	HYDRAULIC HOSE	1		13/16" X 600 MM (23-1/2") X 13/16", (SUB FOR AH136277)
14	T76938	O-RING	2		
15	AT145139	HYDRAULIC HOSE - FABRICATE	1		1-7/16" X 1 054 MM (41-1/2") X 1-7/16", (SUB FOR AT160562, THIS APPLICATION)
16	38H1164	ADAPTER	1		
17	R29936	O-RING	1		
18	38H1161	ADAPTER	1		

BACKHOE AND STABILIZER VALVE PRESSURE AND RETURN HYDRAULICS
(SERIAL NO. 872329-)

TP58000 -UN-09FEB99

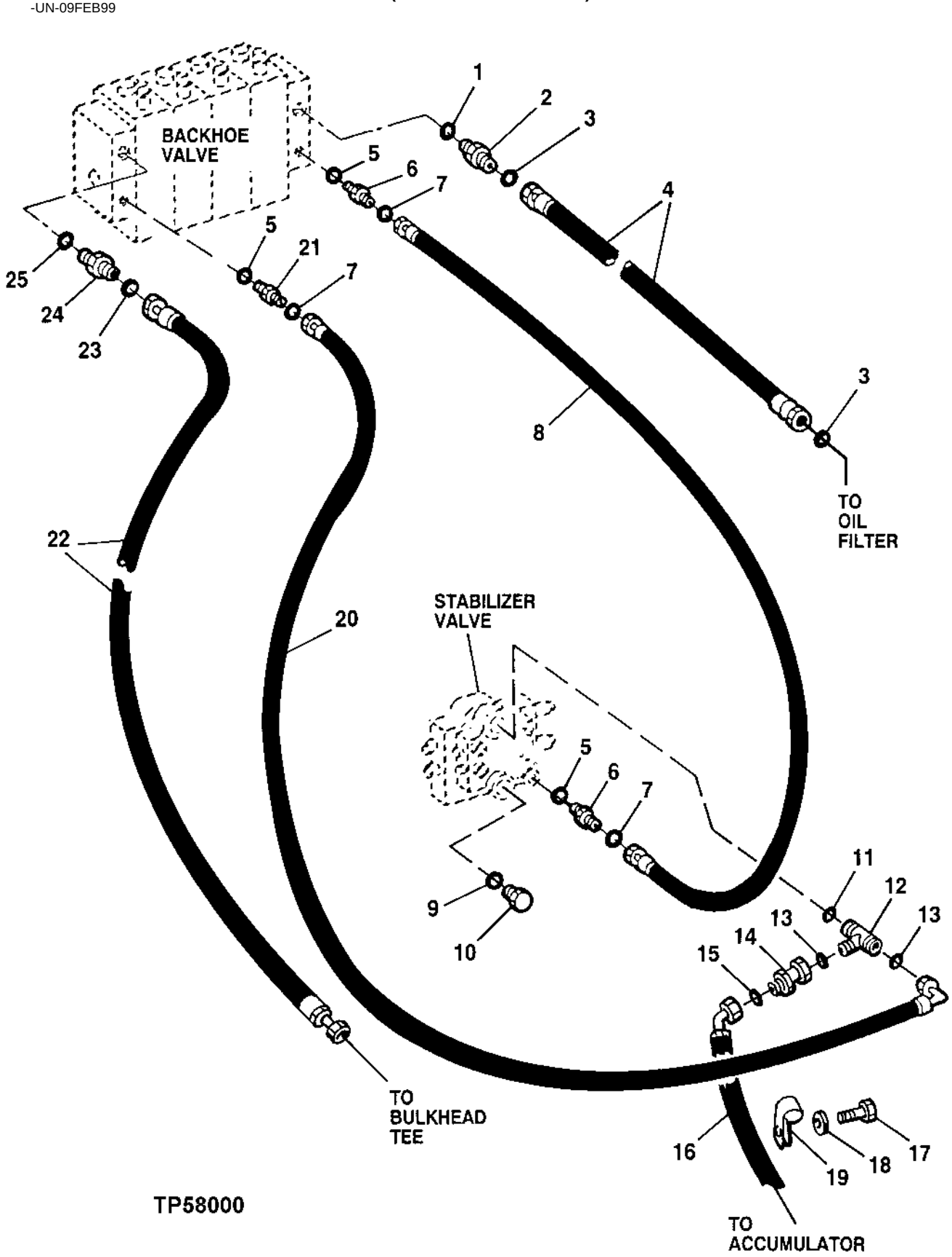

BACKHOE AND STABILIZER VALVE PRESSURE AND RETURN HYDRAULICS
(SERIAL NO. 872329-)

KEY	PART NO.	PART NAME	QTY	SERIAL NO.	REMARKS
1	U13639	O-RING	1		
2	38H1165	ADAPTER	1		
3	T78612	O-RING	2		
4	AT160561	HYDRAULIC HOSE - FABRICATE	1		1-11/16" X 810 MM (32") X 1-11/16"
5	R26375	O-RING	3		
6	38H1161	ADAPTER	2		
7	T77857	O-RING	3		
8	AT149428	HYDRAULIC HOSE - FABRICATE	1		
9	R29936	O-RING	1		
10	R36636	FITTING PLUG	1		
11	R29936	O-RING	1		
12	38H1176	ADAPTER	1		
13	T77857	O-RING	2		
14	AT183869	FILTER ELEMENT	1		
15	T77857	O-RING	1		
16	AT180649	HYDRAULIC HOSE - FABRICATE	1		11/16" X 1 905 MM (75") X 11/16"
17	19M7938	CAP SCREW	1		M10 X 20
18	24M7239	WASHER	1		
19	T76252	CLAMP	1		
20	AT180648	HYDRAULIC HOSE - FABRICATE	1		13/16" X 515 MM (20-1/4") X 13/16"
21	38H1161	ADAPTER	1		
22	AT160562	HYDRAULIC HOSE - FABRICATE	1		1-7/16" X 1 100 MM (43-1/4") X 1-7/16"
23	T76938	O-RING	2		
24	38H1164	ADAPTER	1		
25	R29936	O-RING	1		

STABILIZER CYLINDER
(SERIAL NO. -831989)

TP42867 -UN-01JAN94

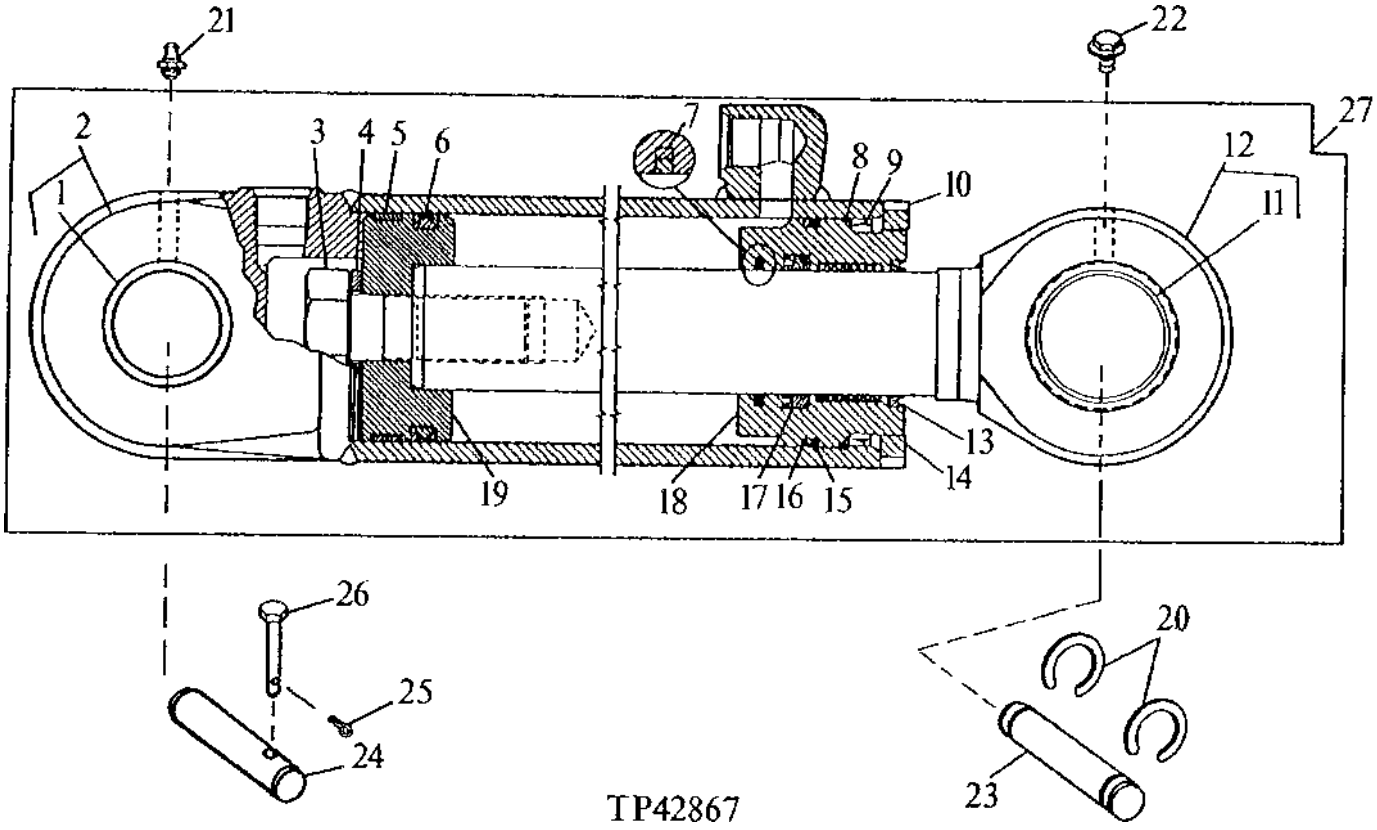

STABILIZER CYLINDER
(SERIAL NO. -831989)

KEY	PART NO.	PART NAME	QTY	SERIAL NO.	REMARKS
1	R82075	BUSHING	1		
2	RE37006	HYDRAULIC CYLINDER BARREL	1		
3	H145161	CAP SCREW	1		
4	H145139	WASHER	1		
5	R82095	WEAR RING	1		(BK)
6	RE20809	SEAL	1		(BK)
7	RE22776	SEAL	1		(RK)
8	R82093	SNAP RING	1		
9	R91624	BACK-UP RING	1		(BK)
10	R82086	NUT	1		
11	R98334	BUSHING	1		
12	RE37008	ROD	1		
13	RE24537	SEAL	1		(RK)
14	R83213	WEAR RING	1		(RK)
15	R79001	BACK-UP RING	1		(BK)
16	R83578	O-RING	1		(BK)
17	R89531	SEAL	1		(RK)
18	.....	HYDR. CYLINDER ROD GUIDE	1		(R88047 NO LONGER AVAILABLE) (SUB H157429) (ALSO ORDER AH149815)
19	R98329	PISTON	1		
20	T41471	SNAP RING	2		
21	T162396	LUBRICATION FITTING	1		(SUB FOR JD7798)
22	37M7078	SCREW	1		M10 X 16
23	T143350	PIN	1		
24	T122069	PIN	1		
25	11H210	COTTER PIN	1		3/16" X 1-1/4"
26	T75212	PIN	1		
27	.....	HYDRAULIC CYLINDER	1		(RE36942 NO LONGER AVAILABLE) (SUB AH154791)
..	AH149846	KIT	1		INCLUDES ALL (BK) PARTS (CYLINDER BORE)
..	RE28899	HYDRAULIC CYLINDER KIT	1		INCLUDES ALL (RK) PARTS (CYLINDER ROD)

STABILIZER CYLINDER
(SERIAL NO.831990-)
(REPLACEMENT CYLINDER)

T137669 -UN-02FEB01

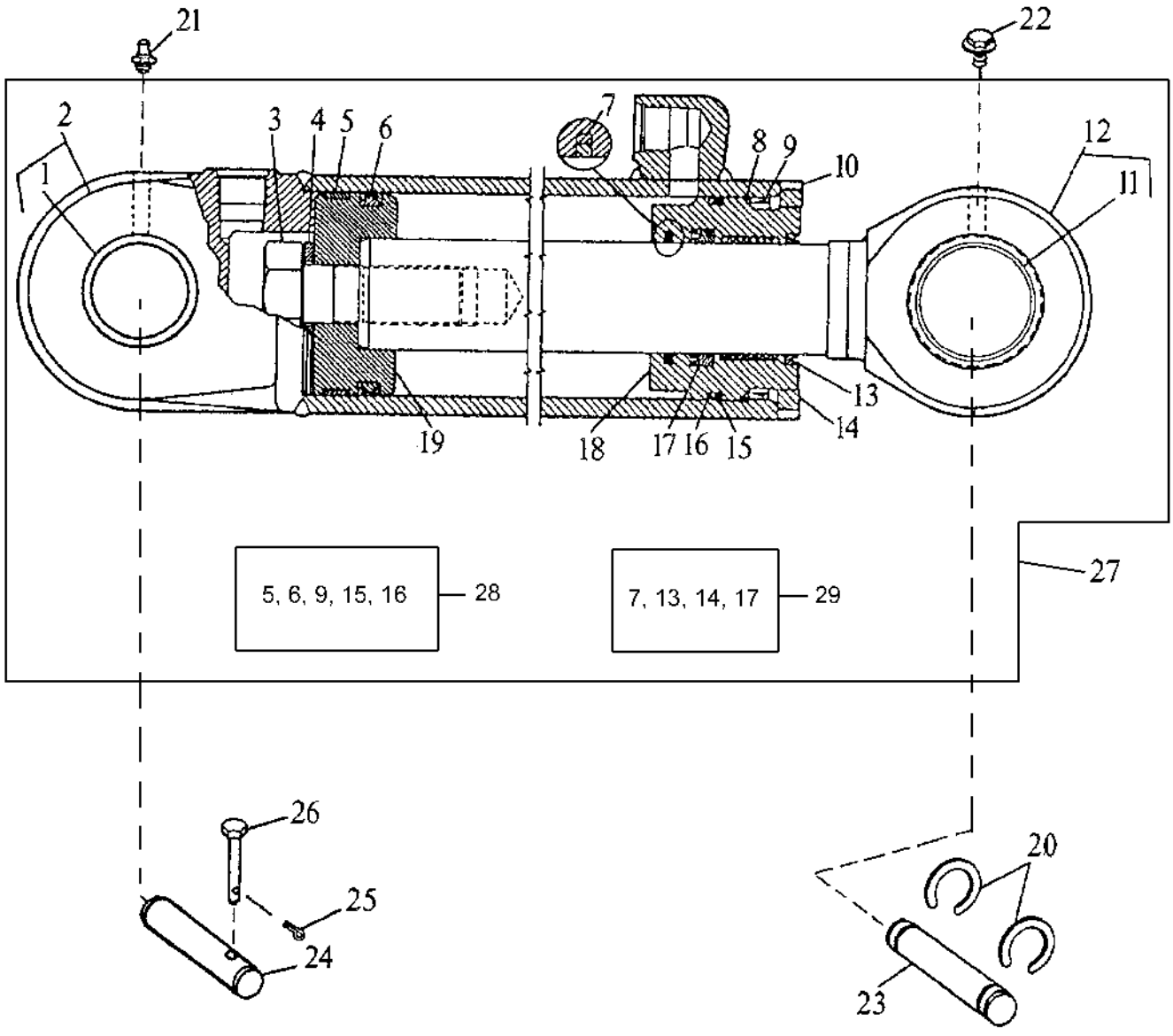

T137669

STABILIZER CYLINDER
(SERIAL NO.831990-)
(REPLACEMENT CYLINDER)

KEY	PART NO.	PART NAME	QTY	SERIAL NO.	REMARKS
1	R82075	BUSHING	1		
2	RE37006	HYDRAULIC CYLINDER BARREL	1		
3	H145161	CAP SCREW	1		
4	H145139	WASHER	1		
5	R82095	WEAR RING	1		(BK)
6	RE20809	SEAL	1		(BK)
7	AH146563	SEAL	1		(RK)
8	R82093	SNAP RING	1		
9	R91624	BACK-UP RING	1		(BK)
10	R82086	NUT	1		
11	R98334	BUSHING	1		
12	RE37008	ROD	1		
13	AH146559	SEAL	1		(RK)
14	H152796	WEAR RING	1		(RK)
15	R79001	BACK-UP RING	1		(BK)
16	R83578	O-RING	1		(BK)
17	H152205	SEAL	1		(RK)
18	H157429	HYDR. CYLINDER ROD GUIDE	1		
19	R98329	PISTON	1		
20	T41471	SNAP RING	2		
21	T162396	LUBRICATION FITTING	1		
22	37M7078	SCREW	1		M10 X 16
23	T143350	PIN	1		
24	T122069	PIN	1		
25	11H210	COTTER PIN	1		3/16" X 1-1/4"
26	T75212	PIN	1		
27	AH154791	HYDRAULIC CYLINDER	1		
28	AH149846	KIT	1		(BK)CYLINDER BORE REPAIR KIT
29	AH149815	HYDRAULIC CYLINDER KIT	1		(RK)CYLINDER ROD REPAIR KIT

STABILIZER CYLINDER HYDRAULICS

TP44066 -UN-01JAN94

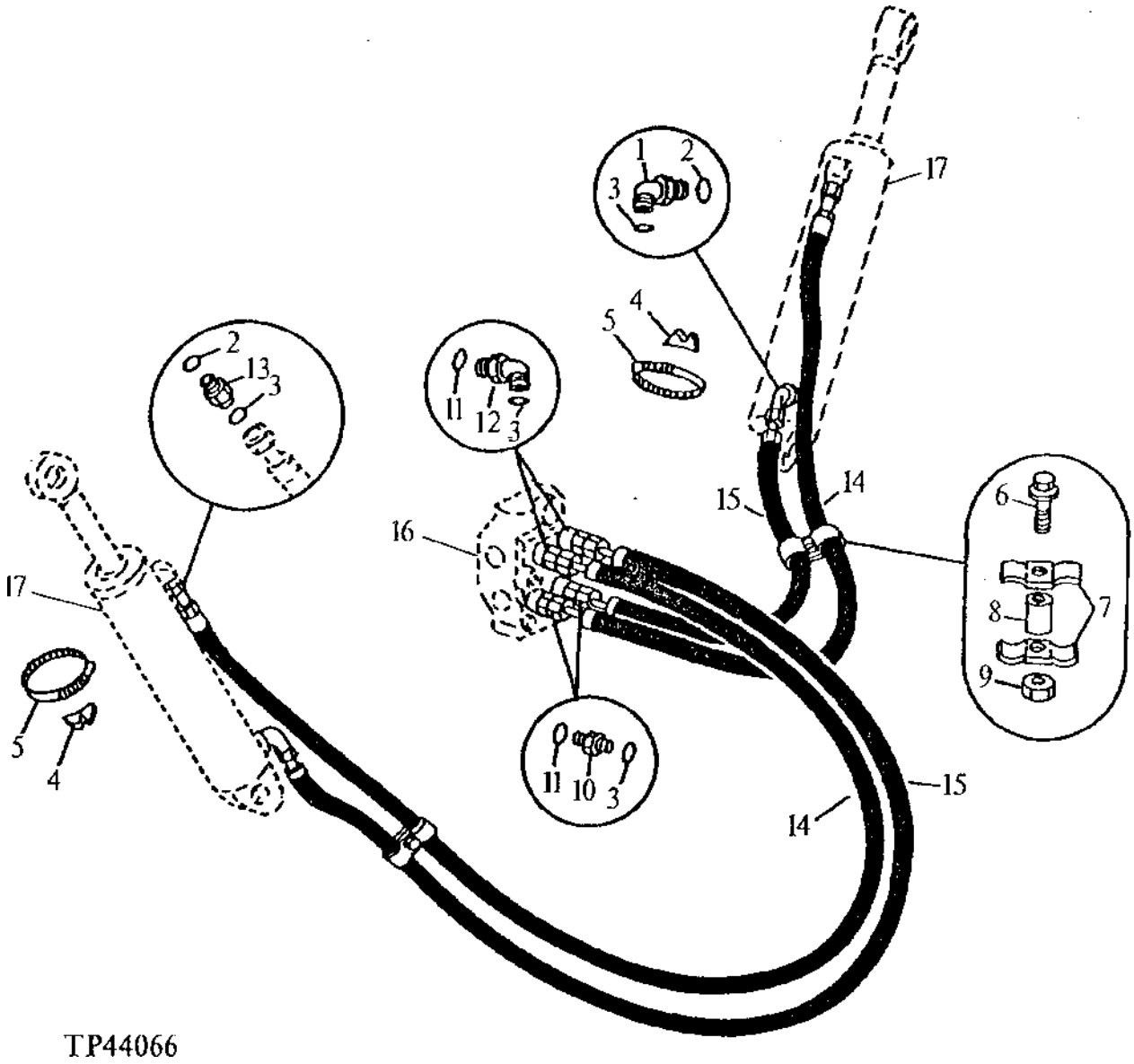

STABILIZER CYLINDER HYDRAULICS

KEY	PART NO.	PART NAME	QTY	SERIAL NO.	REMARKS
1	38H1013	ELBOW FITTING	2		90 DEGREE
2	U12547	O-RING	4		
3	T77857	O-RING	8		
4	T105774	GUIDE	2		
5	AR85327	CLAMP	2		
6	19M7550	CAP SCREW	2		M10 X 35
7	R46919	HALF CLAMP	4		
8	28H1521	SPACER	2		
9	14M7274	NUT	2		M10
10	38H1161	ADAPTER	2		STRAIGHT
11	R26375	O-RING	4		
12	38H1161	ADAPTER	2		45 DEGREE, (SUB FOR 38H1046, THIS APPLICATION)
13	38H1175	ADAPTER	2		STRAIGHT
14	AT159882	HYDRAULIC HOSE - FABRICATE	2		13/16" X 1 917 MM (75-1/2") X 13/16"
15	AT159883	HYDRAULIC HOSE - FABRICATE	2		13/16" X 1 427 MM (56-1/4") X 13/16"
16	.....	CONTROL VALVE	1	-878497	(AT186400 NO LONGER AVAILABLE) (SUB AT190330) (ALSO ORDER (2) M137181)
	AT190330	CONTROL VALVE	1	878498-	(SUB FOR AT188549)
17	AH154791	HYDRAULIC CYLINDER	2		

EXTENDIBLE DIPPERSTICK CYLINDER
(SERIAL NO. -831989)

TP44500 -UN-01JAN94

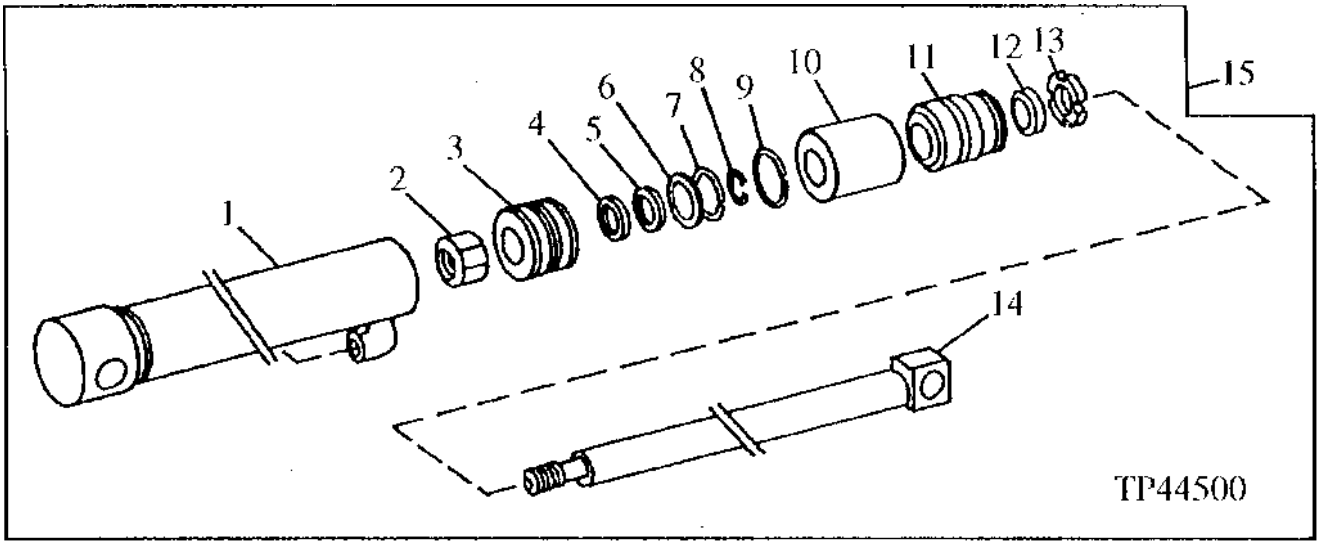

KEY	PART NO.	PART NAME	QTY	SERIAL NO.	REMARKS
1	.....	HYDRAULIC CYLINDER BARREL	1	-795276	(AH142917 NO LONGER AVAILABLE) (SUB AH144120 AND H150292)
	AH144120	HYDRAULIC CYLINDER BARREL	1	795277-	
2	R81866	NUT	1		
3	RE33968	PISTON	1		(INCLUDES WEAR RINGS AND SEALS)
	R98322	SEAL	1		FACE
	R98323	SEAL	1		INTERNAL
4	RE20491	SEAL	1		(RK)
5	R81856	SEAL	1		(RK)
6	R81864	BACK-UP RING	1		(BK)
7	R81779	WEAR RING	1		(RK)
8	R81789	RING	1		
9	R91729	RING	AR		(BK)
10	.....	SPACER	1	-795276	(H148844 NO LONGER AVAILABLE) (SUB H150292 AND AH144120)
	H150292	BUSHING	1	795277-	
11	.....	HYDR. CYLINDER ROD GUIDE	1		(R96445 NO LONGER AVAILABLE) (SUB H157510) (ALSO ORDER AH149813)
12	RE24535	SEAL	1		(RK)
13	R81795	NUT	1		
14	AH141803	ROD	1		
15	.....	HYDRAULIC CYLINDER	1		(AH146325 NO LONGER AVAILABLE) (SUB AH155668) (SUB FOR AH141378 AND AH144392)
..	RE37003	HYDRAULIC CYLINDER KIT	1		INCLUDES ALL (BK) PARTS (CYLINDER BORE)
..	RE20434	HYDRAULIC CYLINDER KIT	1		INCLUDES ALL (RK) PARTS (CYLINDER ROD)

EXTENDIBLE DIPPERSTICK CYLINDER
(SERIAL NO. 831990-)
(REPLACEMENT CYLINDER)

TP44500 -UN-01JAN94

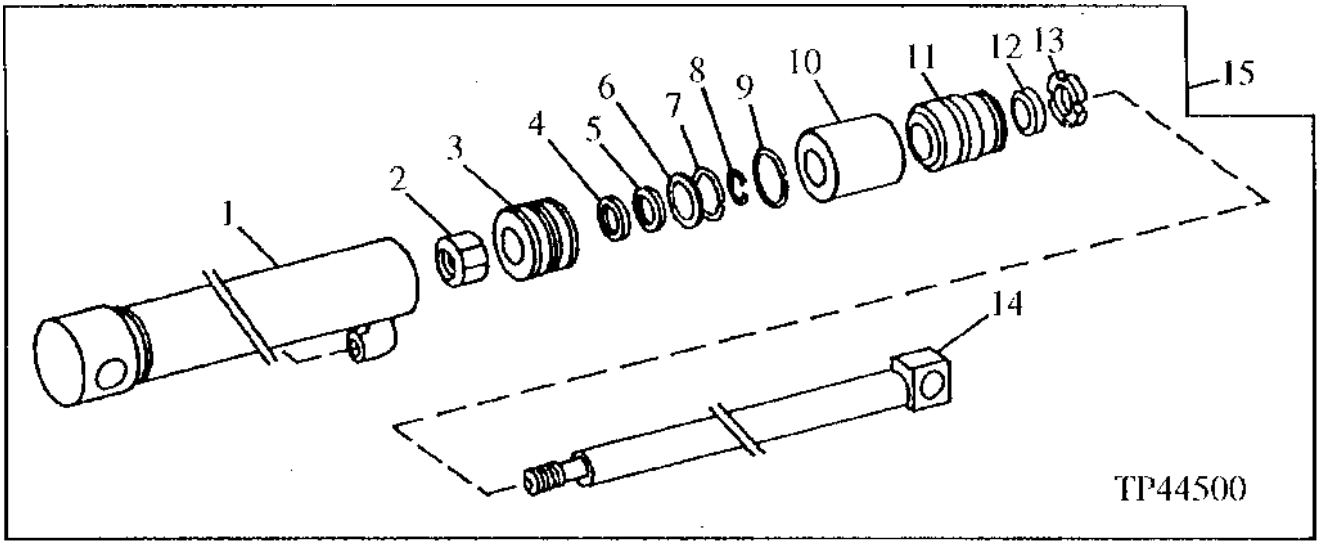

KEY	PART NO.	PART NAME	QTY	SERIAL NO.	REMARKS
1	AH144120	HYDRAULIC CYLINDER BARREL	1		
2	R81866	NUT	1		
3	RE33968	PISTON	1		(INCLUDES WEAR RINGS AND SEALS)
	.....	WEAR RING	1		
	.....	SEAL	1		FACE
	.....	SEAL	1		INTERNAL
4	AH146560	SEAL	1		(RK)
5	H152202	SEAL	1		(RK)
6	R81864	BACK-UP RING	1		(BK)
7	H152793	BACK-UP RING	1		(RK)
8	R81789	RING	1		
9	R91729	RING	AR		(BK)
10	H150292	BUSHING	1		
11	H157510	HYDR. CYLINDER ROD GUIDE	1		
12	RE24535	SEAL	1		(RK)
13	R81795	NUT	1		
14	AH141803	ROD	1		
15	AH155668	HYDRAULIC CYLINDER	1		
..	RE37003	HYDRAULIC CYLINDER KIT	1		INCLUDES ALL (BK) PARTS (CYLINDER BORE)
..	AH149813	HYDRAULIC CYLINDER KIT	1		INCLUDES ALL (RK) PARTS (CYLINDER ROD)

MEMORANDA

EXTENDIBLE DIPPERSTICK CYLINDER HYDRAULIC LINE, PINS, AND STOP

TP44404 -UN-01JAN94

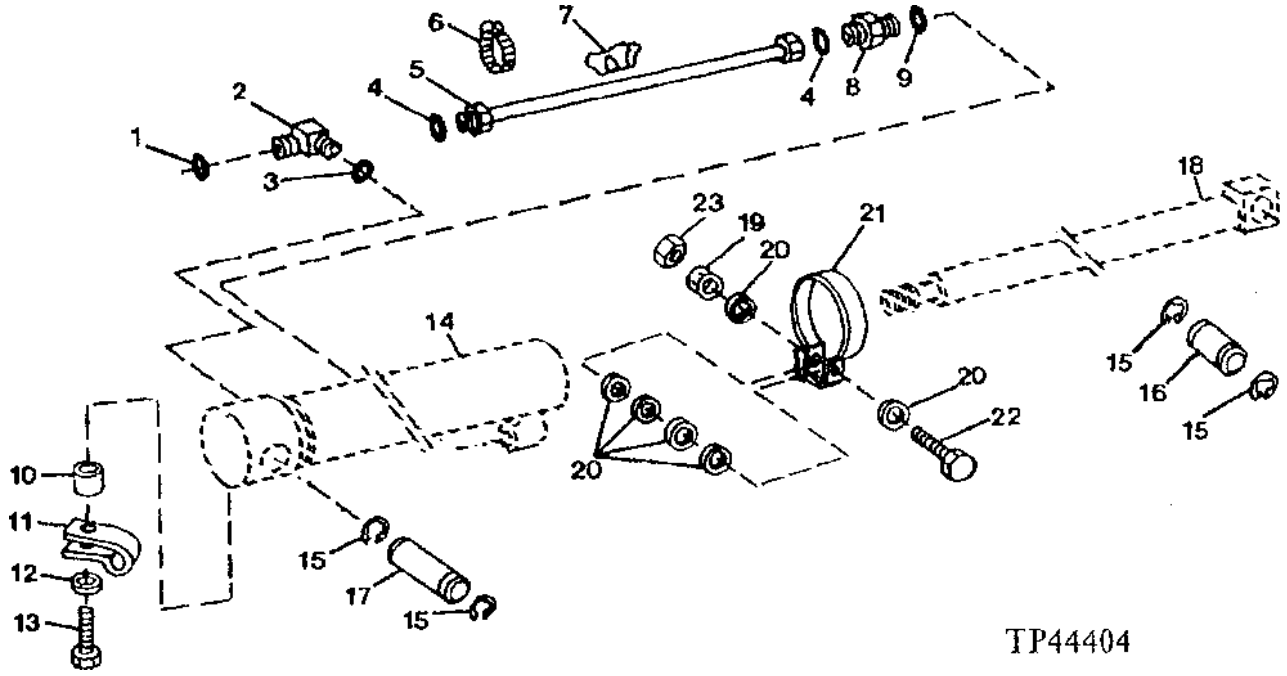

KEY	PART NO.	PART NAME	QTY	SERIAL NO.	REMARKS
1	T77857	O-RING	1		
2	AT161678	ELBOW FITTING	1		
3	R26375	O-RING	1		
4	T77857	O-RING	2		
5	AT159058	TUBE	1		
6	AR21842	CLAMP	1		
7	T101624	SUPPORT	2		
8	38H1173	ADAPTER	1		
9	R26448	O-RING	1		
10	28H1883	SPACER	1		
11	T24958	CLIP	1		
12	24M7238	WASHER	1	-795276	8.700 X 17 X 2 MM
13	19M7513	CAP SCREW	1		M8 X 30
14	.....	HYDRAULIC CYLINDER BARREL	1		
15	L1610N	SNAP RING	4		
16	T143262	PIN	1		
17	T145377	PIN	1		
18	AH141803	ROD	1		
19	14M7273	NUT	1	-795276	M8
20	24M7238	WASHER	6	-795276	8.700 X 17 X 2 MM
21	T151248	STOP	1	-795276	(SUB FOR AT161938)
22	19M7922	CAP SCREW	1	-795276	M8 X 40
23	14M7166	LOCK NUT	1	-795276	M8

EXTENDIBLE DIPPERSTICK AND BUCKET CYLINDER HYDRAULICS

TP69620 -UN-14JUN00

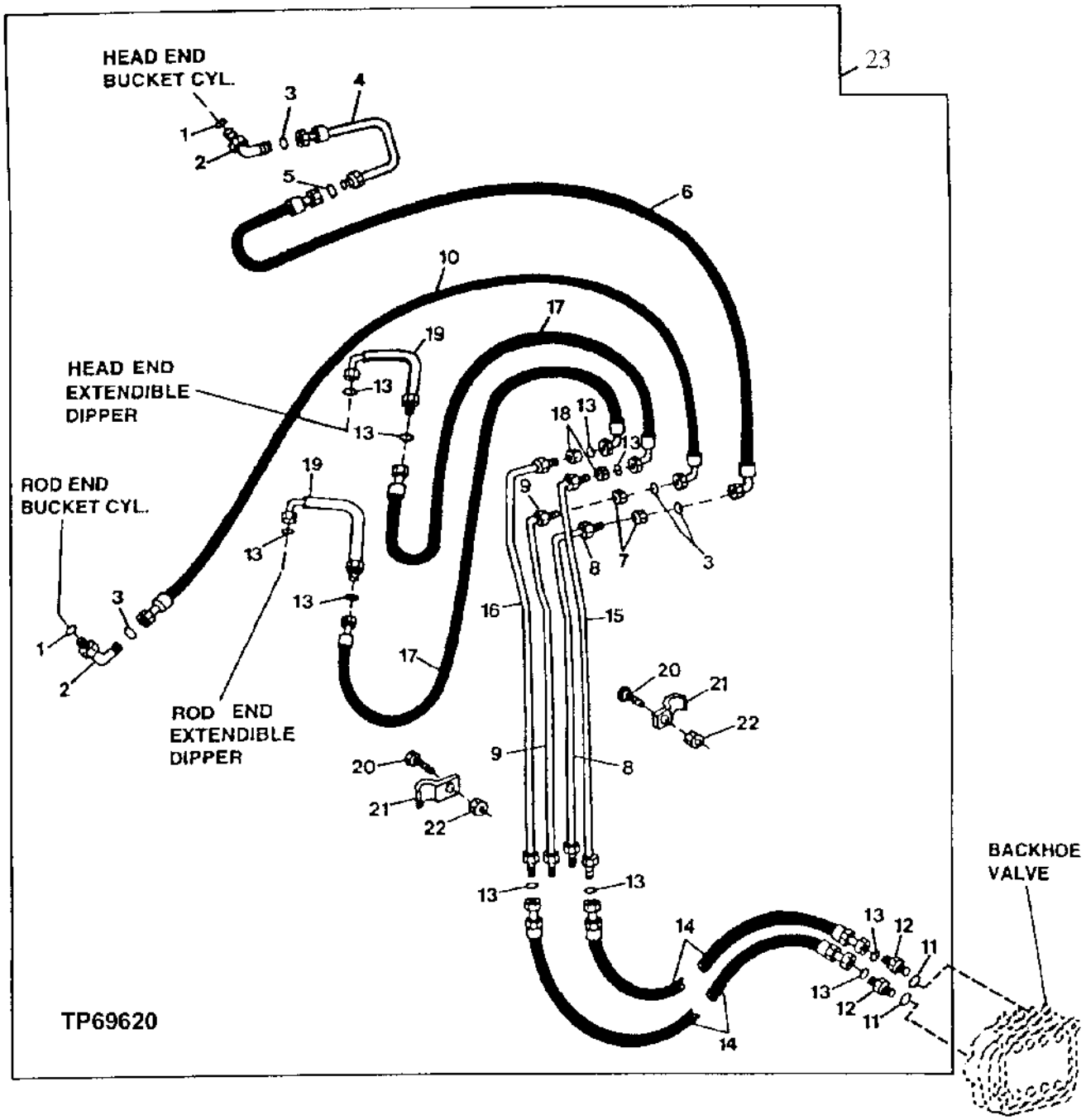

EXTENDIBLE DIPPERSTICK AND BUCKET CYLINDER HYDRAULICS

KEY	PART NO.	PART NAME	QTY	SERIAL NO.	REMARKS
1	U12547	O-RING	2		
2	38H1007	ELBOW FITTING	2		
3	T77858	O-RING	4		
4	AT162888	OIL LINE	1		
5	T77932	O-RING	1		
6	AT162963	HYDRAULIC HOSE - FABRICATE	1		1" X 2 776 MM (109-1/4") X 1-3/16"
7	T78707	NUT	2		1-3/16"
8	AT142022	OIL LINE	1		
9	AT142023	OIL LINE	1		
10	AT134847	HYDRAULIC HOSE - FABRICATE	1		1-3/16" X 3 642 MM (143-1/2") X 1-3/16"
11	R29936	O-RING	2		
12	38H1176	ADAPTER	2		
13	T77857	O-RING	10		
14	AT165614	HYDRAULIC HOSE - FABRICATE	2		13/16" X 1 849 MM (72-3/4") X 13/16", (SUB FOR AT84177, THIS APPLICATION)
15	AT162230	OIL LINE	1		
16	AT162231	OIL LINE	1		
17	AT161424	HYDRAULIC HOSE	2		13/16" X 1 400 MM (55") X 13/16"
18	T78716	NUT	2		13/16"
19	AT161434	LINE	2		
20	19M7550	CAP SCREW	2		M10 X 35
21	U12288	CLAMP	2		
22	14M7274	NUT	2		M10
23	**AT164715**	**MOUNTING PARTS**	**1**		**(INCLUDES AT133185, T147178, T162004, T147787 AND T163635)**

SIX FUNCTION BACKHOE HYDRAULICS

TP57976 -UN-28JAN99

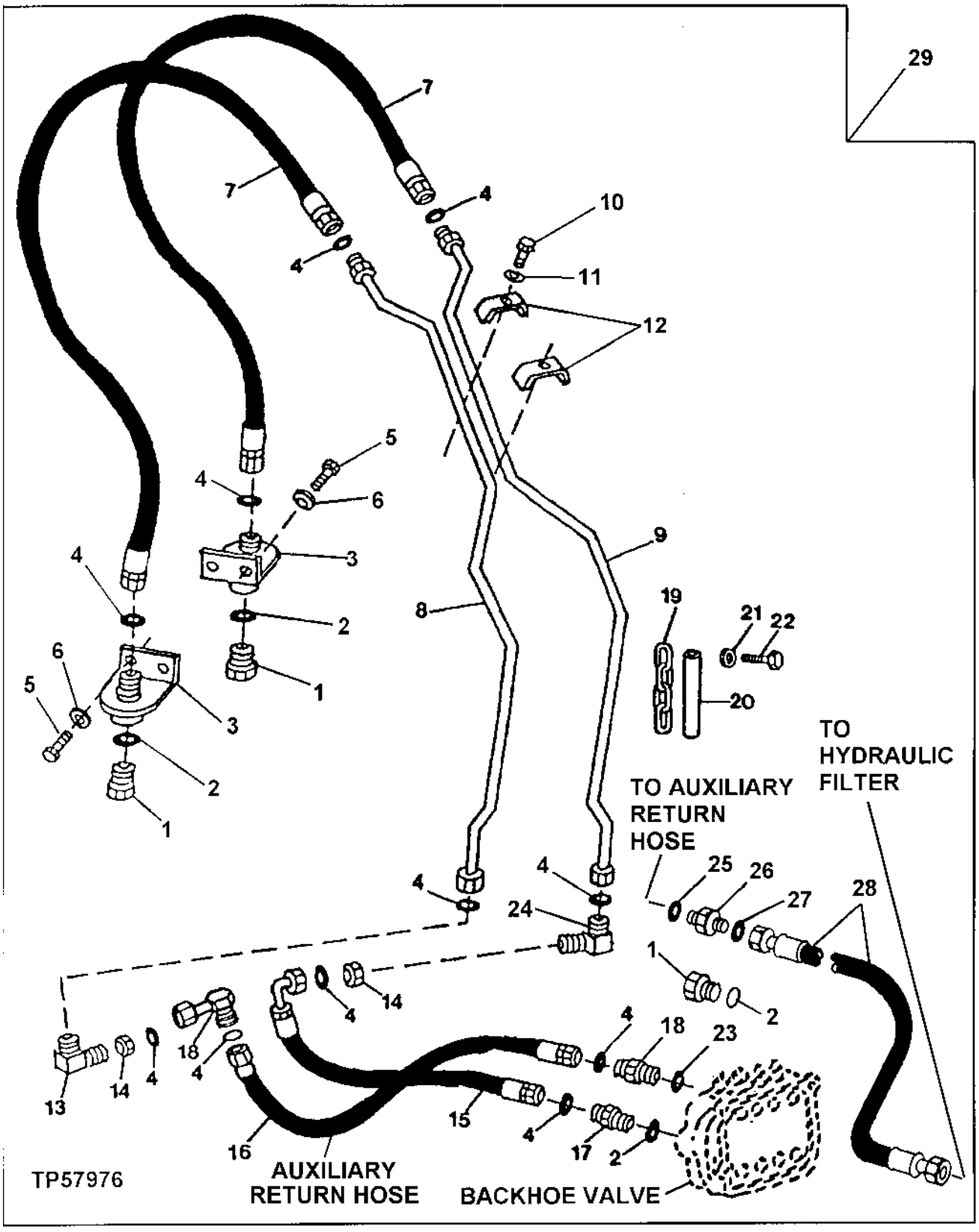

SIX FUNCTION BACKHOE HYDRAULICS

KEY	PART NO.	PART NAME	QTY	SERIAL NO.	REMARKS
1	R36636	FITTING PLUG	3		
2	R29936	O-RING	5		
3	AT164807	ADAPTER	2		
4	T76938	O-RING	11		
5	19M7662	CAP SCREW	4		M10 X 30
6	24M7239	WASHER	4		10.700 X 21 X 2.500 MM
7	AT164990	HYDRAULIC HOSE - FABRICATE	2		
8	AT161673	OIL LINE	1		LEFT
9	AT161674	OIL LINE	1		RIGHT
10	19M7881	SCREW	2		M8 X 20
11	24M7238	WASHER	2		8.700 X 17 X 2 MM
12	T27022	CLAMP	2		
13	38H1456	ELBOW FITTING	2		
14	T78715	NUT	2		
15	AT164986	HYDRAULIC HOSE - FABRICATE	1		
16	.....	HOSE	1	-792996	(AT164987 NO LONGER AVAILABLE) (SUB AT165650, T76938 AND 38H1098)
	AT165650	HYDRAULIC HOSE - FABRICATE	1	792997-	
17	38H1164	ADAPTER	1		
18	38H1164	ADAPTER	1	-850352	
19	T38231	LINK CHAIN	1		
20	.....	HOSE	AR		(MAKE FROM T139131 BULK MATERIAL, CUT TO LENGTH)
21	24H1781	WASHER	2		13/32" X 7/8" X 1/4"
22	19M7402	CAP SCREW	2		M10 X 25
23	R29936	O-RING	1	-850352	
24	38H1098	ELBOW FITTING	1		
25	T76938	O-RING	1		
26	38H1281	UNION FITTING	1		
27	R29936	O-RING	1		
28	AT184408	HYDRAULIC HOSE - FABRICATE	1		1-3/16" X 1 092 MM (43") X 1-7/16"
29	**AT184654**	**MOUNTING PARTS**	**1**		**(SUB FOR AT164670)**

CONTROLLED LOWERING DEVISE (BOOM KIT)

TP50592 -UN-18FEB97

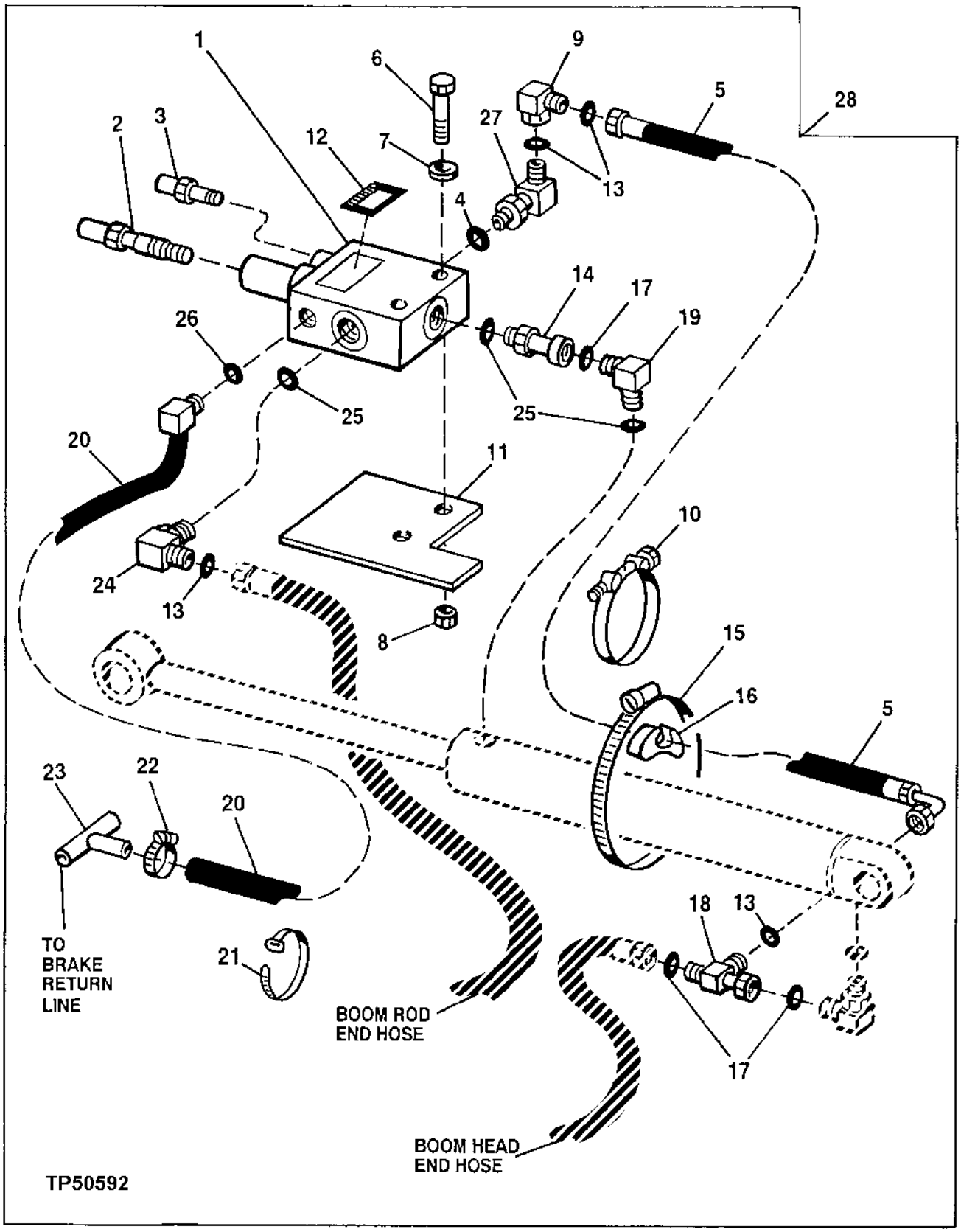

CONTROLLED LOWERING DEVICE
(BOOM KIT)

KEY	PART NO.	PART NAME	QTY	SERIAL NO.	REMARKS
1	AT176330	VALVE	1		CONTROLLED LOWERING DEVISE
2	AT176331	VALVE	1		(A) COUNTERBALANCE
3	AT173884	VALVE	1		(B) NEEDLE
4	R26906	O-RING	1		19.177 X 2.464 MM (0.755" X 0.097") (PORT 3)
5	AT100594	HYDRAULIC HOSE - FABRICATE	1		1-3/16" X 1 400 MM (55") X 1-3/16", "PILOT"-(SPECIAL TEE TO ELBOW IN PORT 3)
6	19M8081	CAP SCREW	2		M10 X 80, CLD VALVE
7	24M7239	WASHER	2		10.700 X 21 X 2.500 MM, CLD VALVE
8	14M7274	NUT	2		M10, CLD VALVE
9	38H1097	ELBOW FITTING	1		(CONNECTS TO PORT 3 ORFS FITTING)
10	AT176433	CLAMP	2		(BOOM CYLINDER)
11	T158236	STRAP	1		(SUPPORT CLD VALVE)
12	T157549	LABEL	1		SERVICE VALVE
13	T77858	O-RING	6		18.771 X 1.778 MM (0.739" X 0.070")
14	38H1071	ADAPTER	1		(PORT 1 TO CYLINDER)
15	TY22497	HOSE CLAMP	1		(PILOT HOSE TO BOOM CYLINDER)
16	T102005	GUIDE	1		(BOOM)
17	T76938	O-RING	3		23.520 X 1.778 MM (0.926" X 0.070") (BOOM CYLINDER TEE)
18	AT176228	TEE FITTING	1		(SPECIAL TEE) (BOOM CYLINDER)
19	38H1037	ELBOW FITTING	1		(HEAD END PORT)
20	AT173909	HOSE	3		DRAIN (PORT 4)
21	R44302	TIE BAND	4		(DRAIN HOSE-AS REQUIRED)
22	TY22462	CLAMP	3		(SUB FOR AR48236) (RESERVOIR -TEE)
23	M87795	TEE FITTING	1		DRAIN/BRAKE LINES
24	38H1052	ELBOW FITTING	1		(PORT 2)
25	R29936	O-RING	3		29.743 X 2.946 MM (1.171" X 0.116") (PORT 1 AND PORT 2)
26	R26448	O-RING	1		11.887 X 1.981 MM (0.468" X 5/64") DRAIN HOSE
27	38H1014	ELBOW FITTING	1		(PORT 3)
28	**AT170494**	**KIT**	**1**		**BOOM OR CROWD CONTROLLED LOWERING DEVICE KIT**
..	AT176332	KIT	1		INCLUDES ALL (A) PARTS (COUNTERBALANCE SEAL)
..	AT173888	KIT	1		INCLUDES ALL (B) PARTS (NEEDLE SEAL)

CONTROLLED LOWERING DEVISE
(CROWD KIT)

TP50598 -UN-18FEB97

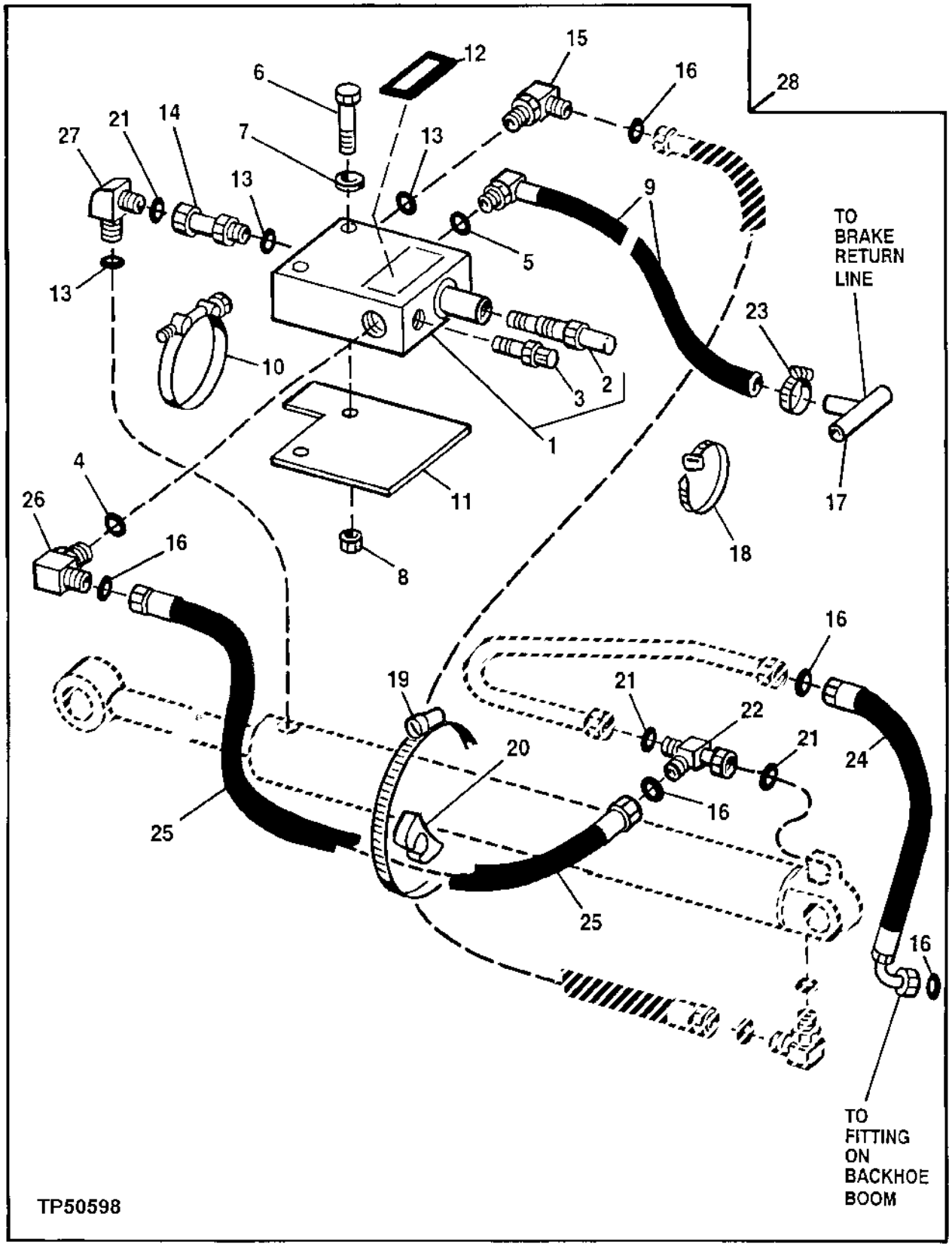

CONTROLLED LOWERING DEVICE
(CROWD KIT)

KEY	PART NO.	PART NAME	QTY	SERIAL NO.	REMARKS
1	AT176330	VALVE	1		CONTROLLED LOWERING DEVISE
2	AT176331	VALVE	1		(A) COUNTERBALANCE
3	AT173884	VALVE	1		(B) NEEDLE
4	R26906	O-RING	1		19.177 X 2.464 MM (0.755" X 0.097") (PORT 2)
5	R26448	O-RING	1		11.887 X 1.981 MM (0.468" X 5/64") (DRAIN HOSE) (PORT 4)
6	19M8081	CAP SCREW	2		M10 X 80, CLD VALVE
7	24M7239	WASHER	2		10.700 X 21 X 2.500 MM, CLD VALVE
8	14M7274	NUT	2		M10, CLD VALVE
9	AT173909	HOSE	1		DRAIN HOSE (PORT 4)
10	AT176434	CLAMP	3		(BOOM CYLINDER)
11	T158236	STRAP	1		(SUPPORT CLD VALVE)
12	T157549	LABEL	1		SERVICE VALVE
13	R29936	O-RING	3		29.743 X 2.946 MM (1.171" X 0.116") (PORT 1 AND PORT 3)
14	38H1071	ADAPTER	1		(PORT 1)
15	38H1052	ELBOW FITTING	1		(CROWD ROD END HOSE)
16	T77858	O-RING	6		(PORT 2 - FITTING)
17	M87795	TEE FITTING	1		(DRAIN/BRAKE LINES)
18	R44302	TIE BAND	4		(DRAIN HOSE AS RQUIRED)
19	TY22497	HOSE CLAMP	1		(PILOT HOSE TO BOOM CYLINDER)
20	T102005	GUIDE	2		(PILOT HOSE/CROWD HOSE)
21	T76938	O-RING	3		(BOOM CYLINDER TEE)
22	AT176228	TEE FITTING	1		(SPECIAL TEE) (BOOM CYLINDER)
23	TY22462	CLAMP	3		(SUB FOR AR48236) (RESERVOIR - TEE)
24	AT143859	HYDRAULIC HOSE - FABRICATE	1		(TO "U"SHAPED TUBE)
25	AT79841	HYDRAULIC HOSE - FABRICATE	1		1-3/16" X 803 MM (31-1/2") X 1-3/16", "PILOT" PORT 2
26	38H1014	ELBOW FITTING	1		(PORT 2)
27	38H1037	ELBOW FITTING	1		(PORT 1 - TO CYLINDER)
28	**AT170494**	**KIT**	**1**		**CROWD OR BOOM CONTROLLED LOWERING DEVICE KIT**
..	AT176332	KIT	1		INCLUDES ALL (A) PARTS (COUNTERBALANCE SEAL)
..	AT173888	KIT	1		INCLUDES ALL (B) PARTS (NEEDLE SEAL)

AUXILIARY DRIVE GEAR
(ENGINE SERIAL NO.713823-720811)

TP50737 -UN-27FEB98

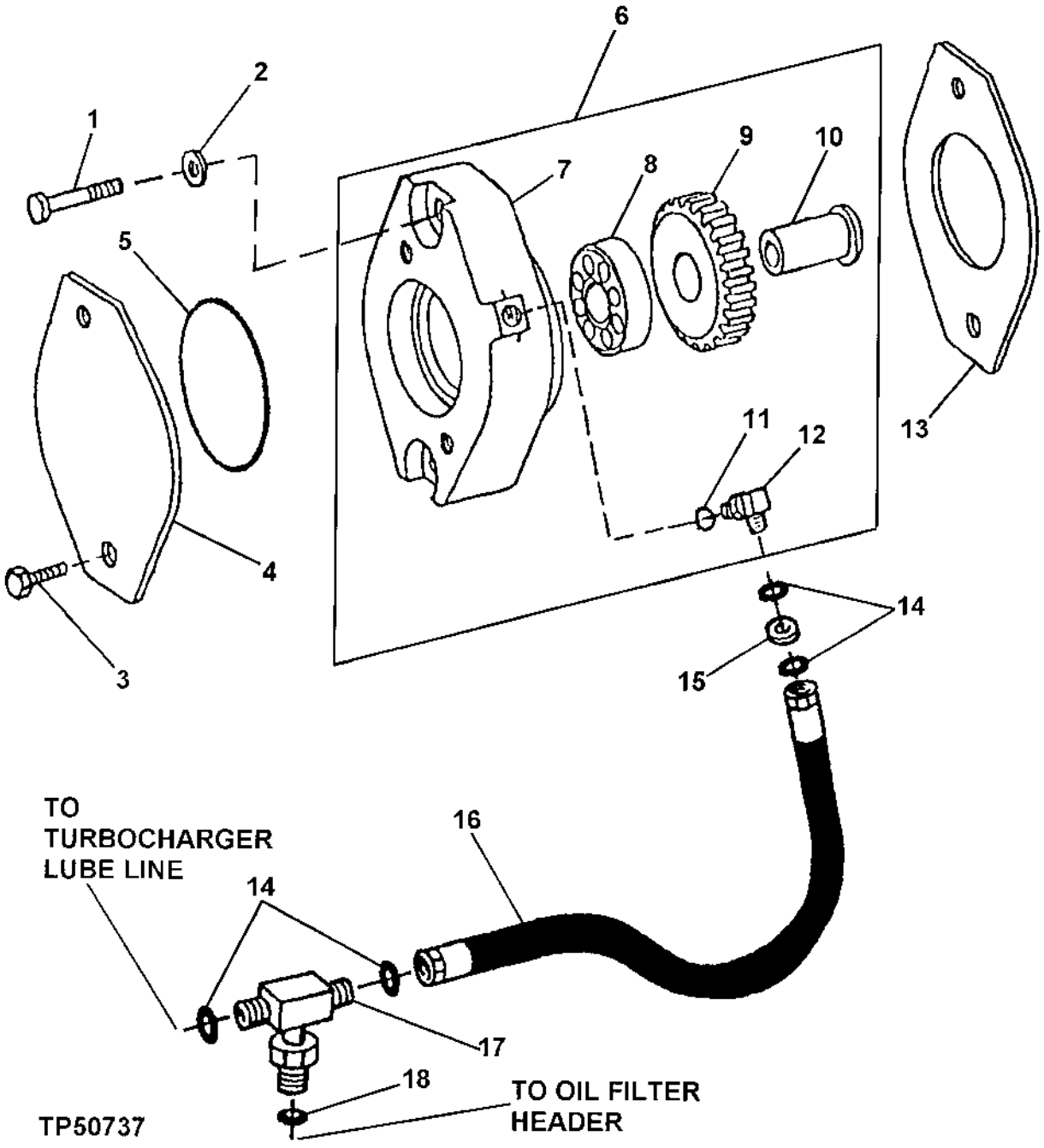

AUXILIARY DRIVE GEAR
(ENGINE SERIAL NO.713823-720811)

KEY	PART NO.	PART NAME	QTY	ENGINE SERIAL NO.	REMARKS
1	19M7753	CAP SCREW	2		M12 X 70
2	24M7047	WASHER	2		13 X 24 X 2.500 MM
3	19M7789	SCREW	2		M12 X 30
4	R135757	COVER	1		
5	T20758	O-RING	1		
6	RE69561	ADAPTER	1		(SUB RE500824, 38H5022, 51M7040, T77613 AND (2) 14M7199)
7	.....	HOUSING	1		
8	.....	BEARING	1		
9	.....	GEAR	1		
10	.....	SHAFT	1		
11	51M7040	O-RING	1		9.300 X 2.200 MM
12	38H5022	ELBOW FITTING	1		
13	R134465	GASKET	1		
14	T77613	O-RING	4		0.364" X 0.070"
15	N275799	ORIFICE	1		
16	RE60017	HYDRAULIC HOSE - FABRICATE	1		
17	38H5061	TEE FITTING	1		(SUB FOR 38H5165, THIS APPLICATION)
18	51M7042	O-RING	1		13.300 X 2.200 MM

AUXILIARY DRIVE GEAR
(ENGINE SERIAL NO.720812-742889)

TP50738 -UN-27FEB98

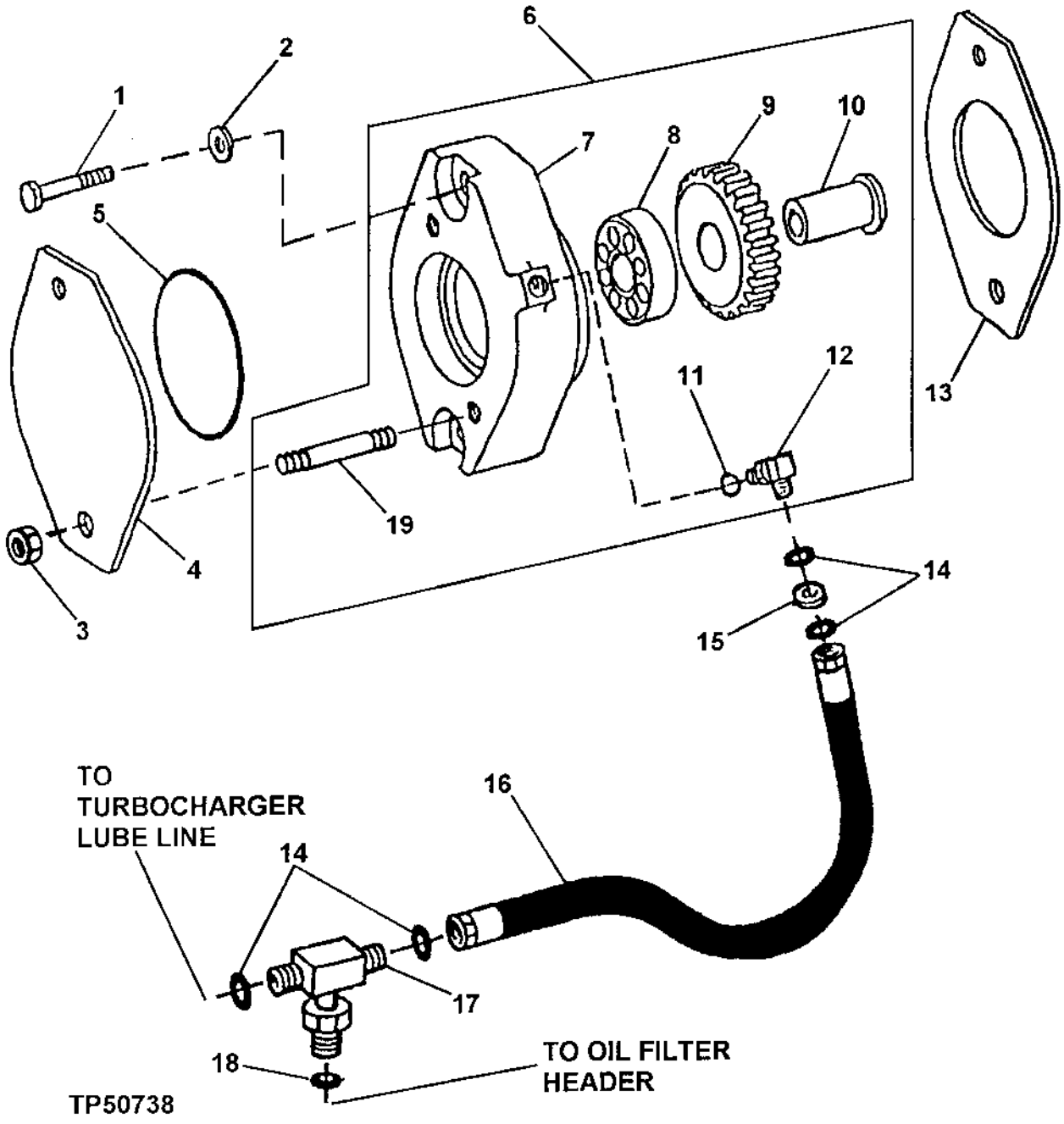

AUXILIARY DRIVE GEAR
(ENGINE SERIAL NO.720812-742889)

KEY	PART NO.	PART NAME	QTY	ENGINE SERIAL NO.	REMARKS
1	19M7753	CAP SCREW	2		M12 X 70
2	24M7047	WASHER	2		13 X 24 X 2.500 MM
3	14M7299	FLANGE NUT	2		M12
4	R135757	COVER	1		
5	T20758	O-RING	1		
6	RE500038	ADAPTER	1		(SUB RE500824, 38H5022, 51M7040 AND T77613)
7	.....	HOUSING	1		
8	.....	BEARING	1		
9	.....	GEAR	1		
10	.....	SHAFT	1		
11	51M7040	O-RING	1		9.300 X 2.200 MM
12	38H5022	ELBOW FITTING	1		
13	R134465	GASKET	1		
14	T77613	O-RING	4		0.364" X 0.070"
15	N275799	ORIFICE	1		
16	RE60017	HYDRAULIC HOSE - FABRICATE	1		
17	38H5061	TEE FITTING	1		
18	51M7042	O-RING	1		13.300 X 2.200 MM
19	42M7071	STUD	2		

AUXILIARY DRIVE GEAR ADAPTER
(ENGINE SERIAL NO.742890-742797)

TP60769 -UN-04DEC98

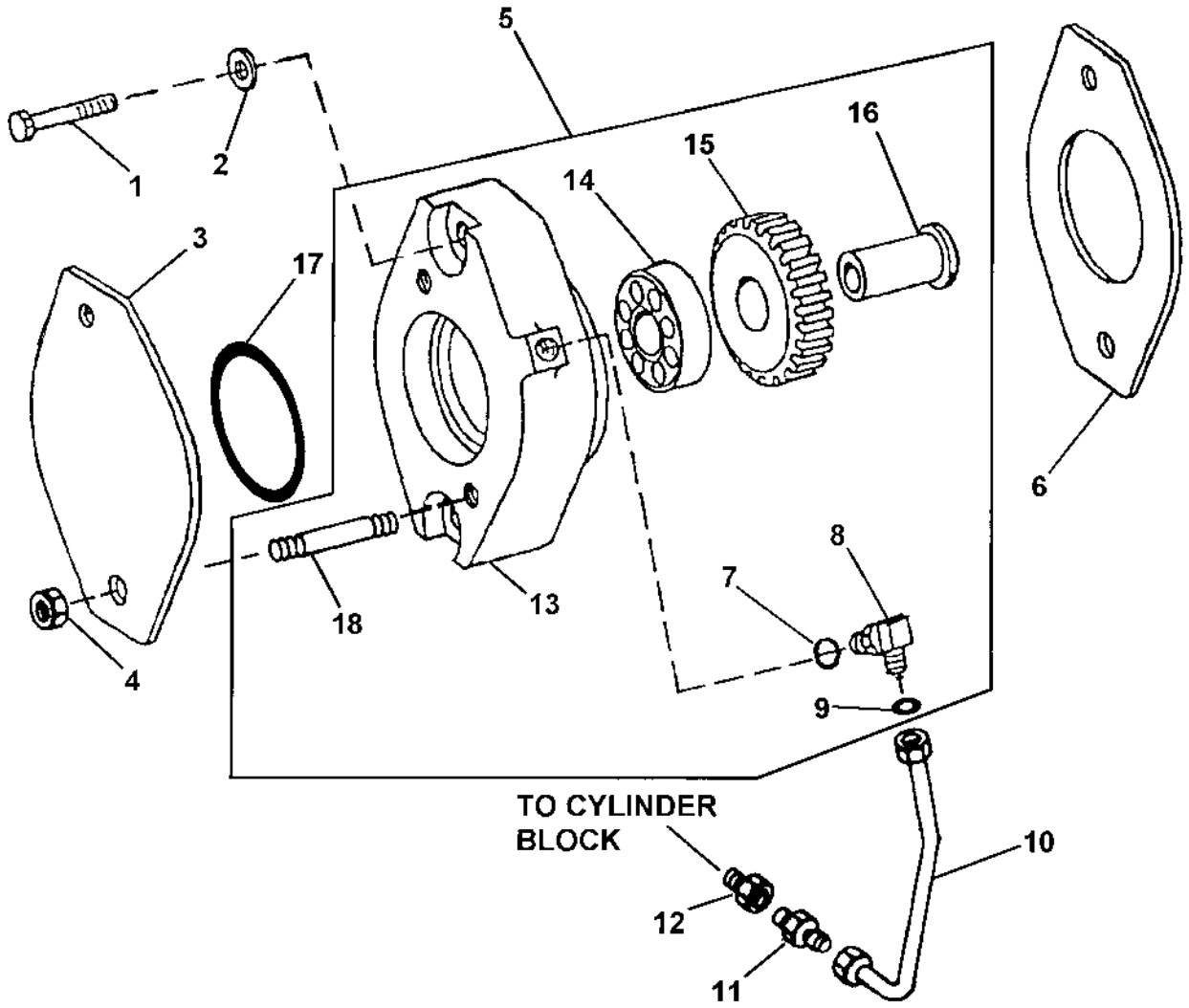

TP60769

AUXILIARY DRIVE GEAR ADAPTER
(ENGINE SERIAL NO.742890-742797)

KEY	PART NO.	PART NAME	QTY	ENGINE SERIAL NO.	REMARKS
1	19M7753	CAP SCREW	2		M12 X 70
2	24M7047	WASHER	2		13 X 24 X 2.500 MM
3	R135757	COVER	1		
4	14M7299	FLANGE NUT	2		M12
5	RE500824	ADAPTER	1		AUXILIARY DRIVE
6	R134465	GASKET	1		
7	51M7040	O-RING	1		9.300 X 2.200 MM
8	38H5015	ELBOW FITTING	1		
9	T77814	O-RING	1		
10	RE500718	OIL LINE	1		
11	R110664	COUPLING	1		
12	15H642	PIPE BUSHING	1		1/4"
13	.....	HOUSING	1		
14	.....	BEARING	1		
15	.....	GEAR	1		
16	.....	SHAFT	1		
17	T20758	O-RING	1		
18	42M7071	STUD	2		

AUXLILIARY DRIVE GEAR ADAPTER
(ENGINE SERIAL NO.742798-)

TP60775 -UN-04DEC98

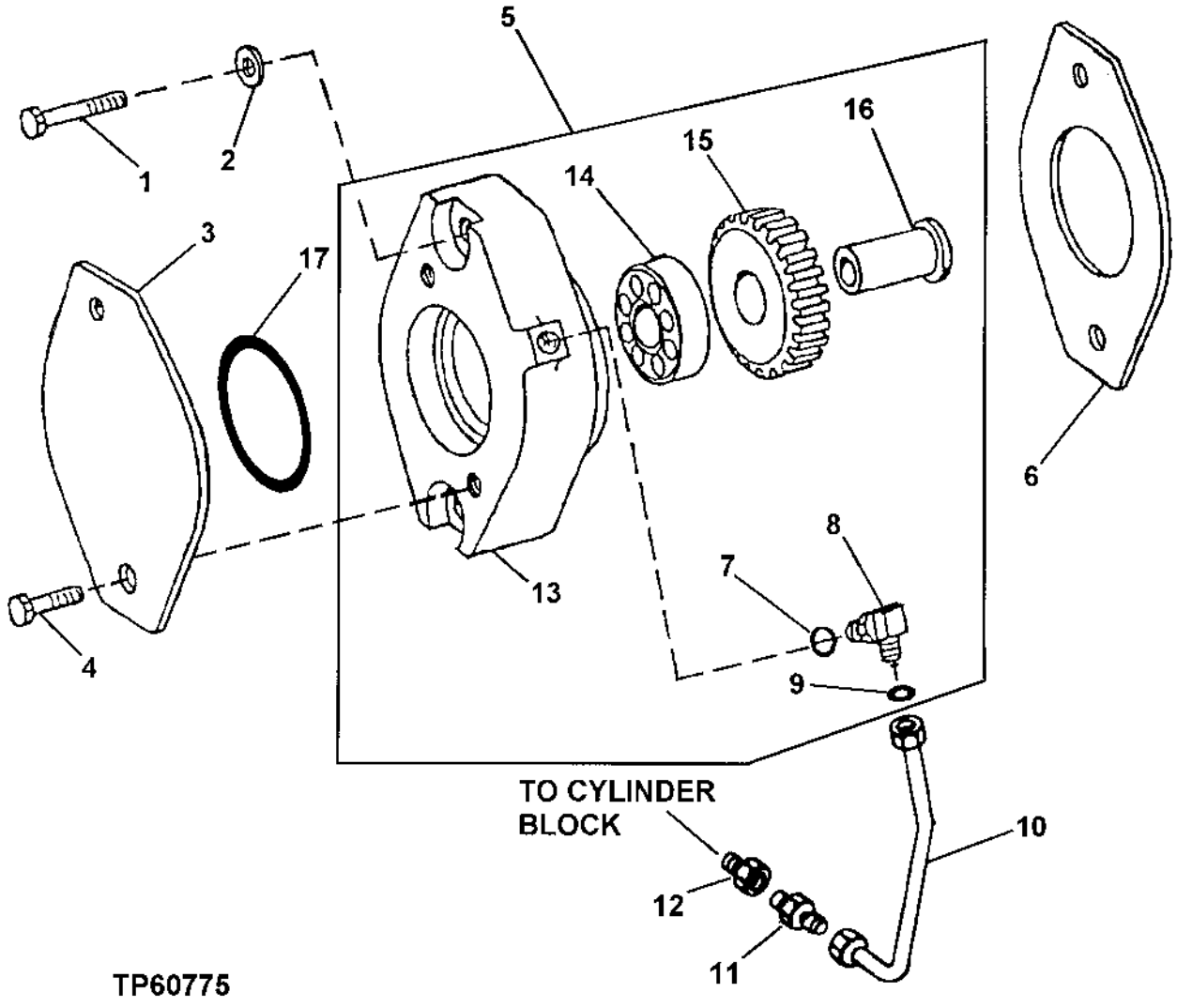

TP60775

AUXILIARY DRIVE GEAR ADAPTER
(ENGINE SERIAL NO.742798-)

KEY	PART NO.	PART NAME	QTY	ENGINE SERIAL NO.	REMARKS
1	19M7753	CAP SCREW	2		M12 X 70
2	24M7047	WASHER	2		13 X 24 X 2.500 MM
3	R135757	COVER	1		
4	19M7790	SCREW	2		M12 X 35
5	RE501540	ADAPTER	1		AUXILIARY DRIVE
6	R134465	GASKET	1		
7	51M7040	O-RING	1		9.300 X 2.200 MM
8	38H5015	ELBOW FITTING	1		
9	T77814	O-RING	1		
10	RE500718	OIL LINE	1		
11	R110664	COUPLING	1		
12	15H642	PIPE BUSHING	1		1/4"
13	.....	HOUSING	1		
14	.....	BEARING	1		
15	.....	GEAR	1		
16	.....	SHAFT	1		
17	T20758	O-RING	1		

MEMORANDA

NUMERICAL INDEX

PART NO.	GRID	KEY	PAGE
AD2062R	2G4	1	1673 - 3
AD2062R	2G4	8	1673 - 3
AD2062R	2G6	1	1673 - 5
AD2062R	2G6	8	1673 - 5
AE37072	3I21	23	3115 - 5
AE37072	3I23	14	3115 - 7
AE37072	4C8	7	3315 - 13
AE37072	4C10	7	3315 - 15
AE37072	4C14	14	3315 - 19
AE37859	3I21	20	3115 - 5
AE43629	3H12	63	2160 - 23
AE43629	3H14	37	2160 - 25
AH12614	3E6	7	1830 - 3
AH12614	3H8	24	2160 - 19
AH136277	4G2	13	3360 - 63
AH137209	4F9	..	3360 - 45
AH137210	4F5	..	3360 - 41
AH137702	3F8	18	1830 - 29
AH139059	2G10	31	1674 - 5
AH139059	2G14	26	1674 - 9
AH140863	4F7	10	3360 - 43
AH141378	4G11	15	3360 - 72
AH141405	4F11	23	3360 - 47
AH141405	4F15	12	3360 - 51
AH141803	4G11	14	3360 - 72
AH141803	4G12	14	3360 - 73
AH141803	4G13	18	3360 - 75
AH141921	4F11	22	3360 - 47
AH141921	4F13	22	3360 - 49
AH142089	4F9	..	3360 - 45
AH142294	4F11	5	3360 - 47
AH142294	4F13	5	3360 - 49
AH142917	4G11	1	3360 - 72
AH142926	4F9	22	3360 - 45
AH142927	4F7	20	3360 - 43
AH142928	4F5	25	3360 - 41
AH142941	4F9	10	3360 - 45
AH142942	4F7	2	3360 - 43
AH142943	4F5	2	3360 - 41
AH143323	4F7	..	3360 - 43
AH143601	4F9	..	3360 - 45
AH143602	4F5	..	3360 - 41
AH144020	3E20	37	1830 - 17
AH144020	3E22	37	1830 - 19
AH144020	3F8	14	1830 - 29
AH144120	4G11	1	3360 - 72
AH144120	4G11	10	3360 - 72
AH144120	4G12	1	3360 - 73
AH144392	4G11	15	3360 - 72
AH146325	4G11	15	3360 - 72
AH146558	3J21	11	3160 - 18
AH146558	3J23	8	3160 - 20
AH146558	4F13	18	3360 - 49
AH146559	4G8	13	3360 - 69
AH146560	4G12	4	3360 - 73
AH146562	3J21	5	3160 - 18
AH146562	3J23	14	3160 - 20
AH146562	4F13	15	3360 - 49
AH146563	4G8	7	3360 - 69
AH148823	2C21	15	0960 - 4
AH149813	4G11	11	3360 - 72
AH149813	4G12	..	3360 - 73
AH149814	3J14	16	3160 - 11
AH149814	3J15	9	3160 - 12
AH149814	3J21	..	3160 - 18
AH149814	3J23	..	3160 - 20
AH149814	4F11	11	3360 - 47
AH149814	4F13	..	3360 - 49
AH149815	4G6	18	3360 - 67
AH149815	4G8	29	3360 - 69
AH149844	3J14	..	3160 - 11
AH149844	3J21	..	3160 - 18
AH149844	4F7	..	3360 - 43
AH149846	3J15	..	3160 - 12
AH149846	3J23	..	3160 - 20
AH149846	4F11	..	3360 - 47
AH149846	4F13	..	3360 - 49
AH149846	4G6	..	3360 - 67
AH149846	4G8	28	3360 - 69
AH150452	2C22	8	0960 - 5
AH154781	4F11	23	3360 - 47
AH154781	4F13	23	3360 - 49
AH154781	4F15	12	3360 - 51
AH154781	4F23	11	3360 - 59
AH154789	3J21	21	3160 - 18
AH154791	4G6	27	3360 - 67
AH154791	4G8	27	3360 - 69
AH154791	4G10	17	3360 - 71
AH154792	3J15	19	3160 - 12
AH154792	3J20	1	3160 - 17
AH154792	3J23	19	3160 - 20
AH154794	2C21	19	0960 - 4
AH154794	2C22	19	0960 - 5
AH154794	2C24	29	0960 - 7
AH155668	4G11	15	3360 - 72
AH155668	4G12	15	3360 - 73
AH167570	2H10	3	1674 - 31
AH167570	3G7	6	2001 - 3
AH169647	2C22	..	0960 - 5
AH64349	3H18	47	2160 - 29
AH77714	3F4	15	1830 - 25
AH77714	3F6	15	1830 - 27
AH77714	3F8	29	1830 - 29
AH77714	3F10	11	1830 - 31
AH86866	1B15	3	0110 - 2
AH89557	1J6	3	0420 - 3
AH89557	2E17	17	1160 - 5
AH89557	2G8	16	1674 - 3
AH89557	2G8	20	1674 - 3
AH89557	2G10	33	1674 - 5
AH89557	2G12	9	1674 - 7
AH89557	2G14	30	1674 - 9
AH89557	2G25	2	1674 - 21
AH89557	2H2	4	1674 - 23
AH89557	2H8	2	1674 - 29
AH91124	2G2	2	1673 - 1
AL20186	1D21	1	0341 - 3
AL32877	1C2	18	0201 - 11
AL36529	2H14	1	1674 - 35
AL36529	2I2	2	1676 - 3
AL36529	3F8	1	1830 - 29
AL36535	2G25	16	1674 - 21
AL36643	3D7	39	1821 - 5
AL36686	3D7	21	1821 - 5
AL38524	3D7	46	1821 - 5
AL38526	3D7	25	1821 - 5
AL64580	3D7	52	1821 - 5
AL67715	2D24	28	1063 - 3
AL68616	1D4	26	0250 - 7
AL77324	2G17	1	1674 - 13
AN132749	1B16	2	0120 - 1
AN205068	2B21	19	0510 - 3
AR100124	1G20	2	0402 - 8
AR101549	1I19	15	0417 - 3
AR101654	1E12	11	0350 - 10
AR103811	1G20	2	0402 - 8
AR104516	2H10	2	1674 - 31
AR104516	3G7	16	2001 - 3
AR104517	3G7	19	2001 - 3
AR104518	3G7	17	2001 - 3
AR1729R	2C6	1	0520 - 5
AR21836	2C24	8	0960 - 7
AR21836	2D24	41	1063 - 3
AR21836	2E2	1	1063 - 7
AR21836	2E17	2	1160 - 5
AR21837	2D24	34	1063 - 3
AR21837	3E6	1	1830 - 3
AR21839	1I14	10	0416 - 3
AR21839	1J2	7	0419 - 3
AR21839	3F2	24	1830 - 23
AR21839	3F6	7	1830 - 27
AR21839	3H10	9	2160 - 21
AR21839	3H14	1	2160 - 25
AR21839	3H18	1	2160 - 29
AR21840	1I11	1	0414 - 2
AR21842	4G13	6	3360 - 75
AR21999	2B21	34	0510 - 3
AR26375	2F17	5	1399 - 1
AR26708	1I14	8A	0416 - 3
AR27806	1C18	1	0230 - 1
AR31790	3C18	17	1810 - 25
AR31790	3C18	21	1810 - 25
AR31790	3C18	..	1810 - 25
AR35435	2C4	2	0520 - 3
AR40418	2B21	35	0510 - 3
AR41785	2F10	..	1369 - 6
AR44402	2F10	..	1369 - 6
AR48015	3C2	4	1810 - 9
AR48041	2G4	1	1673 - 3
AR48041	2G6	1	1673 - 5
AR48236	1D21	2	0341 - 3
AR48236	2C13	17	0560 - 3
AR48236	2E17	1	1160 - 5
AR48236	3H8	1	2160 - 19
AR48236	3H10	12	2160 - 21
AR48236	3H14	2	2160 - 25
AR48236	3H18	2	2160 - 29
AR48236	4E8	25	3360 - 25
AR48236	4E12	1	3360 - 25D
AR48236	4G19	22	3360 - 81
AR48236	4G21	23	3360 - 83
AR48675	1I22	5	0418 - 1
AR48675	1I24	1	0418 - 3
AR50874	1I9	8	0413 - 8
AR51481	2I2	3	1676 - 3
AR52065	2C3	6	0520 - 2
AR52066	2C3	7	0520 - 2
AR54749	1G22	8	0403 - 2
AR54749	2F10	..	1369 - 6
AR54815	3F4	7	1830 - 25
AR61533	1K2	8	0433 - 2
AR62399	2B19	7	0505 - 6
AR62407	2I2	4	1676 - 3
AR62407	2I2	19	1676 - 3
AR62407	2I2	25	1676 - 3
AR62407	2I6	32	1676 - 7
AR62407	2I8	22	1676 - 9
AR63218	2F5	..	1369 - 1
AR63219	2F5	..	1369 - 1
AR63222	2F5	..	1369 - 1
AR63223	2F5	..	1369 - 1

NUMERICAL INDEX - CONTINUED

PART NO.	GRID	KEY	PAGE
AR63224	2F5	..	1369 - 1
AR63227	2F5	..	1369 - 1
AR63228	2F5	..	1369 - 1
AR63229	2F5	..	1369 - 1
AR63230	2F5	..	1369 - 1
AR63979	2F5	..	1369 - 1
AR63980	2F5	..	1369 - 1
AR65294	1I11	1	0414 - 2
AR65294	3H20	66	2160 - 31
AR65507	1G22	9	0403 - 2
AR65507	1G23	9	0403 - 3
AR65507	1K9	23	0452 - 5
AR65864	1G20	1	0402 - 8
AR67942	1E13	2	0350 - 11
AR67942	1G9	14	0401 - 3
AR67942	1G10	2	0401 - 4
AR67942	1H4	1	0404 - 7
AR69363	1C6	10	0210 - 3
AR71080	1G22	11	0403 - 2
AR73144	2G17	20	1674 - 13
AR73144	2G21	15	1674 - 17
AR73144	2G23	15	1674 - 19
AR76129	1G11	4	0401 - 5
AR76129	1G22	11	0403 - 2
AR76130	1G22	11	0403 - 2
AR76131	1G22	11	0403 - 2
AR76704	1J2	12	0419 - 3
AR79466	1H11	17	0407 - 4
AR81786	1G10	10	0401 - 4
AR81788	1G11	7	0401 - 5
AR83396	4D4	12	3340 - 9
AR85327	3J18	20	3160 - 15
AR85327	4F19	1	3360 - 55
AR85327	4G10	5	3360 - 71
AR85519	1I8	1	0413 - 7
AR85788	1H11	6	0407 - 4
AR85788	1H11	12	0407 - 4
AR87786	1C6	9	0210 - 3
AR89852	1I6	5	0413 - 5
AR90378	3G22	26	2160 - 7
AR90860	1I19	6	0417 - 3
AR90861	1I19	2	0417 - 3
AR90861	1J23	6	0429 - 3
AR91168	2G17	12	1674 - 13
AR91660	1G9	10	0401 - 3
AR91793	2H22	42	1674 - 43
AR91896	3C22	37	1810 - 29
AR91896	3C24	36	1810 - 31
AR93259	2D25	24	1063 - 4
AR94101	2G12	2	1674 - 7
AR94101	2G12	5	1674 - 7
AR94101	2G14	7	1674 - 9
AR94101	2G14	33	1674 - 9
AR94101	2G21	35	1674 - 17
AR94101	2H12	8	1674 - 33
AR94101	2I6	28	1676 - 7
AR94101	2I8	24	1676 - 9
AR94516	1E7	6	0350 - 5
AR96222	1K2	12	0433 - 2
AR96863	1C10	26	0210 - 7
AR98650	1B21	10	0201 - 5
ATA86908	4C10	3	3315 - 15
AT100073	2I2	25	1676 - 3
AT100484	2I2	17	1676 - 3
AT100506	2F24	1	1671 - 3
AT100594	4G19	5	3360 - 81
AT101131	2I2	21	1676 - 3
AT101132	2I2	18	1676 - 3
AT101565	2F17	6	1399 - 1
AT101565	3H8	3	2160 - 19
AT102326	1E2	4	0342 - 2
AT102326	2C9	7	0540 - 1
AT102326	2C10	7	0540 - 2
AT102326	3B24	9	1810 - 7
AT102326	3C6	9	1810 - 13
AT103399	2G10	26	1674 - 5
AT103399	2G14	28	1674 - 9
AT103399	2H2	7	1674 - 23
AT103919	3G9	14	2002 - 3
AT104021	2B21	19	0510 - 3
AT104809	2I2	4	1676 - 3
AT104809	2I6	32	1676 - 7
AT104809	2I8	22	1676 - 9
AT104846	3H8	26	2160 - 19
AT105289	3H20	66	2160 - 31
AT106397	3D13	11	1821 - 11
AT106397	3D23	6	1821 - 21
AT106413	2B21	20	0510 - 3
AT106413	2B23	3	0510 - 5
AT106413	3C16	9	1810 - 23
AT106600	3J6	9	3160 - 3
AT106600	3J22	25	3160 - 19
AT106601	3J6	10	3160 - 3
AT106601	3J7	22	3160 - 4
AT106601	3J22	25	3160 - 19
AT106602	3J6	8	3160 - 3
AT106602	3J7	21	3160 - 4
AT106602	3J8	8	3160 - 5
AT106602	3J24	5	3160 - 21
AT106607	3J6	11	3160 - 3
AT106607	3J16	20	3160 - 13
AT106609	3J7	20	3160 - 4
AT106655	4E10	5	3360 - 25B
AT106655	4E14	9	3360 - 25F
AT106656	4E10	32	3360 - 25B
AT106657	4E10	22	3360 - 25B
AT107509	1F10	30	0360 - 3
AT107543	3D7	12	1821 - 5
AT107670	2G17	14	1674 - 13
AT107856	2B21	32	0510 - 3
AT113759	2G12	6	1674 - 7
AT113759	2G14	6	1674 - 9
AT113849	4F23	5	3360 - 59
AT113850	4F23	6A	3360 - 59
AT113925	1D10	6	0250 - 13
AT113926	1C24	9	0250 - 3
AT113926	1D4	8	0250 - 7
AT114018	2F16	2	1370 - 2
AT114019	2F16	4	1370 - 2
AT114094	1B16	1	0120 - 1
AT114094	1C18	13	0230 - 1
AT114323	1B15	1	0110 - 2
AT114323	1B15	4	0110 - 2
AT114326	1B16	1	0120 - 1
AT114326	1B16	2	0120 - 1
AT114326	1C18	13	0230 - 1
AT114380	1E3	9	0350 - 1
AT114381	1E3	1	0350 - 1
AT114385	1E17	19	0350 - 15
AT114386	1E14	13	0350 - 12
AT114389	1E7	4	0350 - 5
AT114394	1F16	11	0360 - 10
AT114396	1F16	15	0360 - 10
AT114398	1E12	12	0350 - 10
AT114402	1E17	15	0350 - 15
AT114481	1D4	6	0250 - 7
AT114566	3J7	1	3160 - 4
AT114566	3J10	11	3160 - 7
AT114589	4F19	4	3360 - 55
AT114590	4F19	19	3360 - 55
AT114682	4F3	9	3360 - 39
AT114683	4F3	9	3360 - 39
AT114691	4D5	6	3340 - 10
AT115596	3C22	2	1810 - 29
AT115596	3C24	4	1810 - 31
AT116192	2C14	2	0560 - 4
AT116970	3C16	2	1810 - 23
AT117527	3H12	54	2160 - 23
AT117527	3H16	64	2160 - 27
AT117547	2C13	3A	0560 - 3
AT117565	1E12	3	0350 - 10
AT117576	3I5	15	3102 - 3
AT117631	4E8	12	3360 - 25
AT117631	4E8	15	3360 - 25
AT117631	4E10	34	3360 - 25B
AT117631	4E10	35	3360 - 25B
AT117631	4E12	24	3360 - 25D
AT117632	3J1	6	3140 - 1
AT117633	3J1	7	3140 - 1
AT117634	3J1	8	3140 - 1
AT117656	4D13	2	3360 - 5
AT117656	4D15	2	3360 - 7
AT117656	4D17	2	3360 - 9
AT117656	4D19	2	3360 - 11
AT117656	4D21	2	3360 - 13
AT117656	4D23	2	3360 - 15
AT117657	3J10	1	3160 - 7
AT117665	3I5	5	3102 - 3
AT117665	3I5	6	3102 - 3
AT117665	3I5	15	3102 - 3
AT117678	3I5	15	3102 - 3
AT117687	3J20	8	3160 - 17
AT117688	3J20	8	3160 - 17
AT117688	3J20	10	3160 - 17
AT118766	3C10	7	1810 - 17
AT118766	3C12	7	1810 - 19
AT118781	3I5	5	3102 - 3
AT118781	3I5	6	3102 - 3
AT118781	3I5	15	3102 - 3
AT120461	2G12	7	1674 - 7
AT120461	3G11	1	2004 - 2
AT124107	4B24	29	3315 - 5
AT124107	4C2	21	3315 - 7
AT124494	2C24	18	0960 - 7
AT125801	3D23	2	1821 - 21
AT125805	3D13	20	1821 - 11
AT125805	3D23	18	1821 - 21
AT125829	3D13	19	1821 - 11
AT125829	3D23	19	1821 - 21
AT12875	1H20	6A	0408 - 3
AT129177	1D17	4	0325 - 1
AT129419	3G25	5	2160 - 10
AT130104	2G4	9	1673 - 3
AT130104	2G4	11	1673 - 3
AT130104	2G4	12	1673 - 3
AT130104	2G4	13	1673 - 3
AT130104	2G4	16	1673 - 3
AT130104	2G4	18	1673 - 3
AT130104	2G6	5	1673 - 5
AT130104	2G6	12	1673 - 5
AT130104	2G6	13	1673 - 5

NUMERICAL INDEX - CONTINUED

PART NO.	GRID	KEY	PAGE
AT130104	2G6	14	1673 - 5
AT130104	2G6	15	1673 - 5
AT130104	2G6	16	1673 - 5
AT130208	2F9	..	1369 - 5
AT132701	3H10	44	2160 - 21
AT132701	3H16	58	2160 - 27
AT132701	3H20	68	2160 - 31
AT132706	3H10	13	2160 - 21
AT132706	3H14	3	2160 - 25
AT132706	3H18	4	2160 - 29
AT132717	3J18	18	3160 - 15
AT132717	3J20	9	3160 - 17
AT132749	4F21	13	3360 - 57
AT132750	4F21	14	3360 - 57
AT132759	4F21	23	3360 - 57
AT132761	4F21	22	3360 - 57
AT132806	1D21	14	0341 - 3
AT132806	2G8	11	1674 - 3
AT132943	1E3	20	0350 - 1
AT132991	1E3	18	0350 - 1
AT133158	4F19	8	3360 - 55
AT133158	4F21	4	3360 - 57
AT133160	4F17	8	3360 - 53
AT133161	4F17	2	3360 - 53
AT133185	4F7	21	3360 - 43
AT133185	4G15	23	3360 - 77
AT133196	4F21	6	3360 - 57
AT133197	4F17	7	3360 - 53
AT134847	4G15	10	3360 - 77
AT135418	1E3	7	0350 - 1
AT135420	1E17	21	0350 - 15
AT135528	2E6	6	1111 - 2
AT135528	2E9	8	1111 - 5
AT135528	2E11	10	1111 - 7
AT135688	1B16	1	0120 - 1
AT135688	1B16	2	0120 - 1
AT135688	1C18	13	0230 - 1
AT135714	4F3	13	3360 - 39
AT135715	4F3	9	3360 - 39
AT135719	3J12	10	3160 - 9
AT135721	3J12	21	3160 - 9
AT135767	4F25	17	3360 - 61
AT135768	4F25	16	3360 - 61
AT135769	4F25	12	3360 - 61
AT135811	3C14	21	1810 - 21
AT135946	2C3	9	0520 - 2
AT13740	1H2	4	0404 - 5
AT13740	2B21	33	0510 - 3
AT13740	2B23	15	0510 - 5
AT137925	3G8	7	2002 - 2
AT137926	3G8	8	2002 - 2
AT139432	1D23	25	0341 - 5
AT139432	2E15	42	1160 - 3
AT139434	1D23	21	0341 - 5
AT139434	2E15	2	1160 - 3
AT139434	2E15	3	1160 - 3
AT139434	2E15	4	1160 - 3
AT139434	2E15	9	1160 - 3
AT139434	2E15	44	1160 - 3
AT139434	2E15	54	1160 - 3
AT139631	3C8	40	1810 - 15
AT139650	2B25	8	0510 - 7
AT139694	2C20	5	0960 - 3
AT139741	3I21	31	3115 - 5
AT139776	3I21	8	3115 - 5
AT139776	4B24	6	3315 - 5
AT139776	4C8	52	3315 - 13
AT139776	4C10	52	3315 - 15
AT139782	3C10	1	1810 - 17
AT139858	3D9	1	1821 - 7
AT140315	2F17	4	1399 - 1
AT140315	3G25	6	2160 - 10
AT140907	3C18	13	1810 - 25
AT140912	3C8	22	1810 - 15
AT140914	2G4	1	1673 - 3
AT140914	2G6	1	1673 - 5
AT140956	2I2	10	1676 - 3
AT140957	2G2	8	1673 - 1
AT140957	2I2	9	1676 - 3
AT140962	2G25	11	1674 - 21
AT140962	3B20	11	1810 - 3
AT140963	2G25	14	1674 - 21
AT140963	3B20	12	1810 - 3
AT140964	3I23	22	3115 - 7
AT140966	2G25	13	1674 - 21
AT140966	3B20	14	1810 - 3
AT140968	3B20	5	1810 - 3
AT140971	2C20	15	0960 - 3
AT140971	2C20	23	0960 - 3
AT140978	3B20	1	1810 - 3
AT140978	3B22	40	1810 - 5
AT141011	2G10	34	1674 - 5
AT141011	2G14	24	1674 - 9
AT141108	3I19	19	3115 - 3
AT141152	2I2	6	1676 - 3
AT141206	3E14	31	1830 - 11
AT141206	3F8	17	1830 - 29
AT141207	3E14	10	1830 - 11
AT141208	2H14	6	1674 - 35
AT141208	3E10	7	1830 - 7
AT141208	3F8	25	1830 - 29
AT141209	2F17	10	1399 - 1
AT141209	3E14	16	1830 - 11
AT141209	3E16	15	1830 - 13
AT141209	3E18	15	1830 - 15
AT141209	3E20	15	1830 - 17
AT141209	3E22	15	1830 - 19
AT141210	3E6	13A	1830 - 3
AT141214	3D11	4	1821 - 9
AT141214	3E14	6	1830 - 11
AT141283	3D9	9	1821 - 7
AT141286	3D9	1	1821 - 7
AT141319	3B22	12	1810 - 5
AT141346	3I21	24	3115 - 5
AT141346	3I23	17	3115 - 7
AT141371	3E10	9	1830 - 7
AT141372	3E10	4	1830 - 7
AT141401	3G12	4	2005 - 1
AT141449	2H14	4	1674 - 35
AT141449	3F8	12	1830 - 29
AT141464	4B22	8	3315 - 3
AT141489	2G2	11	1673 - 1
AT141500	3D11	1	1821 - 9
AT141724	3B22	10	1810 - 5
AT141792	1D17	3	0325 - 1
AT141987	3C14	18	1810 - 21
AT142020	4F19	12	3360 - 55
AT142021	4F19	5	3360 - 55
AT142022	4G15	8	3360 - 77
AT142023	4G15	9	3360 - 77
AT142077	2C16	1	0641 - 1
AT142403	3I9	22	3102 - 7
AT142403	3I13	22	3102 - 9B
AT142560	1D23	20	0341 - 5
AT142578	3I9	1	3102 - 7
AT142578	3I16	14	3102 - 12
AT142578	3J13	14	3160 - 10
AT142582	3I16	..	3102 - 12
AT142582	3J13	..	3160 - 10
AT142583	3I16	1	3102 - 12
AT142583	3J13	1	3160 - 10
AT142584	3I9	3	3102 - 7
AT142604	3I9	21	3102 - 7
AT142608	3I7	9	3102 - 5
AT142995	3F2	2	1830 - 23
AT143311	2E9	3	1111 - 5
AT143311	2E11	1	1111 - 7
AT143426	3I23	21	3115 - 7
AT143859	4G21	24	3360 - 83
AT144994	3G25	7	2160 - 10
AT145091	3J12	11	3160 - 9
AT145132	3C8	11	1810 - 15
AT145139	4G2	15	3360 - 63
AT145154	3J12	21	3160 - 9
AT145191	3D7	30	1821 - 5
AT145249	3C8	21	1810 - 15
AT145273	2C24	7	0960 - 7
AT145508	3D11	5	1821 - 9
AT145554	3G12	2	2005 - 1
AT145589	3G12	1	2005 - 1
AT145590	3E14	15	1830 - 11
AT145591	3E10	1	1830 - 7
AT145592	3E10	5	1830 - 7
AT145593	2H14	5	1674 - 35
AT145593	3E10	8	1830 - 7
AT145593	3F8	24	1830 - 29
AT145595	3E10	3	1830 - 7
AT145596	3E6	11A	1830 - 3
AT145599	3E14	3	1830 - 11
AT145600	3E14	17	1830 - 11
AT145601	3E14	32	1830 - 11
AT145602	3E14	14	1830 - 11
AT145603	2B16	13	0505 - 3
AT145629	3I21	35	3115 - 5
AT145629	3I23	30	3115 - 7
AT145629	4B24	18	3315 - 5
AT145629	4C2	12	3315 - 7
AT145629	4C4	14	3315 - 9
AT145629	4C6	9	3315 - 11
AT145629	4C8	37	3315 - 13
AT145629	4C10	37	3315 - 15
AT145629	4C14	33	3315 - 19
AT145651	2B21	34	0510 - 3
AT145651	2B21	35	0510 - 3
AT145688	3C18	17	1810 - 25
AT145740	3D5	2	1821 - 3
AT145740	3D9	4	1821 - 7
AT145792	3D2	18	1810 - 33
AT145797	2G4	16	1673 - 3
AT145797	2G6	16	1673 - 5
AT145798	2G4	18	1673 - 3
AT145798	2G6	5	1673 - 5
AT145907	2H14	1	1674 - 35
AT145907	2I2	1	1676 - 3
AT145907	3E6	9	1830 - 3
AT145907	3F8	2	1830 - 29
AT145929	2I2	3	1676 - 3
AT145929	2I6	6	1676 - 7
AT145929	2I8	6	1676 - 9
AT145929	3F21	2A	1910 - 3
AT145929	3F21	2B	1910 - 3

NUMERICAL INDEX - CONTINUED

PART NO.	GRID	KEY	PAGE
AT145929	3F23	17A	1910 - 5
AT145929	3F23	17B	1910 - 5
AT145931	2I2	3	1676 - 3
AT145931	2I6	4	1676 - 7
AT145931	2I8	4	1676 - 9
AT145932	3H8	7	2160 - 19
AT145938	3B22	18	1810 - 5
AT146057	3D9	12	1821 - 7
AT146058	3D9	2	1821 - 7
AT146059	3D9	10	1821 - 7
AT146060	3D9	6	1821 - 7
AT146064	3C14	21	1810 - 21
AT146255	1E12	..	0350 - 10
AT146256	1D23	..	0341 - 5
AT146257	1E9	..	0350 - 7
AT146258	1E13	..	0350 - 11
AT146259	1E8	..	0350 - 6
AT146294	3D2	1	1810 - 33
AT146301	3D5	1	1821 - 3
AT147011	1D23	9	0341 - 5
AT147011	2E15	4	1160 - 3
AT147011	2E15	43	1160 - 3
AT147011	2E15	53	1160 - 3
AT147011	2G12	3	1674 - 7
AT148125	3H8	23	2160 - 19
AT148127	2C2	16	0515 - 3
AT148131	3J18	9	3160 - 15
AT148194	3J8	13	3160 - 5
AT148195	3J8	17	3160 - 5
AT148213	4B24	25	3315 - 5
AT148213	4C2	14	3315 - 7
AT148214	4B24	27	3315 - 5
AT148214	4C2	15	3315 - 7
AT148272	4F25	28	3360 - 61
AT148303	3C22	27	1810 - 29
AT148303	3C24	14	1810 - 31
AT148348	3G7	6	2001 - 3
AT148422	3D5	2	1821 - 3
AT148422	3D9	4	1821 - 7
AT148507	3F23	2	1910 - 5
AT148524	1F11	4	0360 - 4
AT148947	1D10	15	0250 - 13
AT149428	4G2	8	3360 - 63
AT149428	4G4	8	3360 - 65
AT149518	3C8	30	1810 - 15
AT149549	4B24	32	3315 - 5
AT149549	4C2	23	3315 - 7
AT149829	2I2	11	1676 - 3
AT149830	2G25	12	1674 - 21
AT149830	3B20	15	1810 - 3
AT149981	4F25	28	3360 - 61
AT150024	2E15	55	1160 - 3
AT150024	2G12	1	1674 - 7
AT150089	2G25	10	1674 - 21
AT150089	3B20	17	1810 - 3
AT150134	2I2	8	1676 - 3
AT150249	3D3	4	1810 - 34
AT150324	4C8	27	3315 - 13
AT150562	4C16	8	3315 - 21
AT150707	2H10	1	1674 - 31
AT150707	3G7	27	2001 - 3
AT150726	4C23	20	3340 - 3
AT150755	3I9	9	3102 - 7
AT150758	3I23	26	3115 - 7
AT150762	4C14	9	3315 - 19
AT150763	4C14	8	3315 - 19
AT150764	4C14	31	3315 - 19
AT150830	3I9	13	3102 - 7
AT150831	3I9	6	3102 - 7
AT150833	3I7	5	3102 - 5
AT151036	3B22	40	1810 - 5
AT151104	3C8	6	1810 - 15
AT151111	3G7	25	2001 - 3
AT151112	3G7	8	2001 - 3
AT151124	3C20	15	1810 - 27
AT151124	3C22	14	1810 - 29
AT151124	3C24	5	1810 - 31
AT151135	4C4	25	3315 - 9
AT151135	4C4	27	3315 - 9
AT151135	4D2	28	3340 - 7
AT151136	3D5	5	1821 - 3
AT151147	3C16	1	1810 - 23
AT151231	3C2	4	1810 - 9
AT151255	3C2	4	1810 - 9
AT151319	3C18	21	1810 - 25
AT151325	3I5	5	3102 - 3
AT151325	3I5	6	3102 - 3
AT151325	3I5	15	3102 - 3
AT151356	2F2	15	1320 - 5
AT151362	2F2	15	1320 - 5
AT151364	4C8	21	3315 - 13
AT151364	4C10	21	3315 - 15
AT151365	4C8	24	3315 - 13
AT151365	4C10	24	3315 - 15
AT151366	4C8	30	3315 - 13
AT151366	4C10	30	3315 - 15
AT151367	4C8	31	3315 - 13
AT151367	4C10	31	3315 - 15
AT151368	4C8	12	3315 - 13
AT151368	4C10	12	3315 - 15
AT151368	4C14	26	3315 - 19
AT151370	4C8	29	3315 - 13
AT151370	4C10	29	3315 - 15
AT151371	4C8	3	3315 - 13
AT151371	4C10	3	3315 - 15
AT151372	4C10	40	3315 - 15
AT151428	3D3	1	1810 - 34
AT151429	3D3	1	1810 - 34
AT151481	3C10	18	1810 - 17
AT151482	3C10	9	1810 - 17
AT151499	2I2	7	1676 - 3
AT151499	3F8	3	1830 - 29
AT151555	3F8	15	1830 - 29
AT151556	3F8	16	1830 - 29
AT151567	4B24	5A	3315 - 5
AT151567	4C8	49A	3315 - 13
AT151567	4C10	49A	3315 - 15
AT151660	3G1	4	1921 - 2
AT151697	3D11	..	1821 - 9
AT151697	3D15	..	1821 - 13
AT151699	4B24	22	3315 - 5
AT151699	4C2	36	3315 - 7
AT151705	3C8	19	1810 - 15
AT151731	3I5	5	3102 - 3
AT151731	3I5	6	3102 - 3
AT151731	3I5	15	3102 - 3
AT151752	3C8	42	1810 - 15
AT151753	3C8	42	1810 - 15
AT151776	3F21	1	1910 - 3
AT151812	3F21	2A	1910 - 3
AT151812	3F23	17A	1910 - 5
AT151812	3F25	16	1913 - 3
AT151814	4E1	10	3360 - 18
AT151889	3C6	17	1810 - 13
AT151899	4C4	25	3315 - 9
AT151904	2E7	1	1111 - 3
AT151906	3I19	22	3115 - 3
AT151939	3D9	6	1821 - 7
AT151940	3D9	10	1821 - 7
AT151970	3C4	4	1810 - 11
AT151979	2B21	26	0510 - 3
AT151991	3F21	3	1910 - 3
AT151994	4C16	11	3315 - 21
AT156333	3I19	12	3115 - 3
AT156348	4C23	8	3340 - 3
AT156430	2H12	4	1674 - 33
AT156431	2H12	3	1674 - 33
AT156432	2H12	2	1674 - 33
AT156445	2C13	9	0560 - 3
AT156505	4C25	8	3340 - 5
AT156573	4C14	16	3315 - 19
AT156573	4C14	23	3315 - 19
AT156573	4C14	25	3315 - 19
AT156573	4C14	32A	3315 - 19
AT156573	4C14	36	3315 - 19
AT156689	2G15	9	1674 - 10
AT156689	3G11	4	2004 - 2
AT156732	1F10	31	0360 - 3
AT156752	2C13	13	0560 - 3
AT156879	2I10	4	1740 - 2
AT156885	3C14	18	1810 - 21
AT156886	3C14	19	1810 - 21
AT156893	3C18	24	1810 - 25
AT156893	3C24	39	1810 - 31
AT156894	3C18	20	1810 - 25
AT156894	3C22	13	1810 - 29
AT156909	2C4	4	0520 - 3
AT156920	3D11	..	1821 - 9
AT156920	3D15	..	1821 - 13
AT156921	3D11	12	1821 - 9
AT156928	3D11	..	1821 - 9
AT156928	3D15	..	1821 - 13
AT156929	3D11	27	1821 - 9
AT156929	3D15	9	1821 - 13
AT156935	4E8	10	3360 - 25
AT156935	4E12	10	3360 - 25D
AT156936	3D11	13	1821 - 9
AT157165	3F25	12	1913 - 3
AT157169	3F25	8	1913 - 3
AT157193	3H4	..	2160 - 14
AT157226	3G9	10	2002 - 3
AT157251	2E15	59	1160 - 3
AT157251	2E17	4	1160 - 5
AT157285	3G7	31	2001 - 3
AT157311	2H4	1	1674 - 25
AT157312	2H6	1	1674 - 27
AT157354	1E9	8	0350 - 7
AT157370	1D19	5	0341 - 1
AT157375	1D16	10	0315 - 2
AT157396	3F8	9	1830 - 29
AT157396	3F10	1	1830 - 31
AT157396	3F14	1	1830 - 35
AT157422	2C2	26	0515 - 3
AT157429	2C2	4	0515 - 3
AT157434	3C14	21	1810 - 21
AT157435	3C14	18	1810 - 21
AT157618	4B22	5	3315 - 3
AT157624	2B25	1	0510 - 7
AT157624	2B25	13	0510 - 7
AT157672	1D11	9	0250 - 14
AT158004	2C7	5	0530 - 2

NUMERICAL INDEX - CONTINUED

PART NO.	GRID	KEY	PAGE
AT158012	2I12	4A	1746 - 2
AT158013	2I12	1	1746 - 2
AT158197	4C8	15	3315 - 13
AT158197	4C10	15	3315 - 15
AT158197	4C14	29	3315 - 19
AT158198	4C8	18	3315 - 13
AT158198	4C10	18	3315 - 15
AT158198	4C14	13	3315 - 19
AT158198	4C18	5	3315 - 23
AT158232	4D11	1	3360 - 3
AT158234	4D11	1	3360 - 3
AT158425	3D9	9	1821 - 7
AT15848	3J6	12	3160 - 3
AT158500	4D2	17	3340 - 7
AT158501	4D2	20	3340 - 7
AT158502	4D4	1	3340 - 9
AT158521	4D4	6	3340 - 9
AT158522	4D4	7	3340 - 9
AT158604	2G15	4B	1674 - 10
AT158814	2C20	11	0960 - 3
AT158956	3F8	47	1830 - 29
AT158958	3I23	..	3115 - 7
AT159001	3J4	1	3160 - 1
AT159001	3J18	30	3160 - 15
AT159001	3J20	39	3160 - 17
AT159002	3J6	12	3160 - 3
AT159004	3J4	1	3160 - 1
AT159049	1D19	5	0341 - 1
AT159058	4G13	5	3360 - 75
AT159104	2C20	8	0960 - 3
AT159226	4E1	10	3360 - 18
AT159355	2C3	3	0520 - 2
AT159359	2G4	1	1673 - 3
AT159359	2G6	1	1673 - 5
AT159480	2I11	3	1740 - 3
AT159495	2H12	14	1674 - 33
AT159495	4E8	24	3360 - 25
AT159495	4E12	24	3360 - 25D
AT159631	3H12	64	2160 - 23
AT159631	3H14	45	2160 - 25
AT159631	3H20	56	2160 - 31
AT159677	3I18	6	3115 - 2
AT159678	3I18	9	3115 - 2
AT159688	2B19	8	0505 - 6
AT159690	2D8	17	1060 - 3
AT159699	2B21	15	0510 - 3
AT159699	2B23	9	0510 - 5
AT159700	2B21	17	0510 - 3
AT159700	2B23	14	0510 - 5
AT159701	2B21	10	0510 - 3
AT159701	2B23	21	0510 - 5
AT159702	2B21	18	0510 - 3
AT159709	2D8	4	1060 - 3
AT159756	3F23	12	1910 - 5
AT159773	2G25	1	1674 - 21
AT159774	2G17	13	1674 - 13
AT159774	2G19	1	1674 - 15
AT159774-USE	2G17	13	1674 - 13
AT159774-USE	2G19	1	1674 - 15
AT159775	2G17	13	1674 - 13
AT159775	2G19	1	1674 - 15
AT159775-USE	2G17	13	1674 - 13
AT159775-USE	2G19	1	1674 - 15
AT159784	4D11	1	3360 - 3
AT159811	2G14	1	1674 - 9
AT159816	4C4	23	3315 - 9
AT159816	4C4	24	3315 - 9
AT159816	4C4	25	3315 - 9
AT159816	4C6	16	3315 - 11
AT159816	4C6	17	3315 - 11
AT159816	4C6	23	3315 - 11
AT159816	4D13	13	3360 - 5
AT159816	4D13	14	3360 - 5
AT159816	4D13	22	3360 - 5
AT159816	4D15	13	3360 - 7
AT159816	4D15	14	3360 - 7
AT159816	4D15	22	3360 - 7
AT159816	4D17	13	3360 - 9
AT159816	4D17	14	3360 - 9
AT159816	4D17	22	3360 - 9
AT159816	4D19	13	3360 - 11
AT159816	4D19	14	3360 - 11
AT159816	4D19	22	3360 - 11
AT159816	4D21	13	3360 - 13
AT159816	4D21	14	3360 - 13
AT159816	4D21	29	3360 - 13
AT159816	4D23	13	3360 - 15
AT159816	4D23	14	3360 - 15
AT159816	4D23	29	3360 - 15
AT159816	4D24	..	3360 - 16
AT159816	4D25	3	3360 - 17
AT159816	4D25	4	3360 - 17
AT159816	4D25	5	3360 - 17
AT159816	4E4	11	3360 - 21
AT159819	3F25	10	1913 - 3
AT159820	3J18	25	3160 - 15
AT159821	3J18	26	3160 - 15
AT159822	3J20	15	3160 - 17
AT159823	3J20	16	3160 - 17
AT159826	3J18	31	3160 - 15
AT159827	3J18	32	3160 - 15
AT159830	1E9	13	0350 - 7
AT159848	3J5	..	3160 - 2
AT159848	3J6	12	3160 - 3
AT159848	3J7	22	3160 - 4
AT159848	3J8	20	3160 - 5
AT159848	3J9	..	3160 - 6
AT159849	3J6	..	3160 - 3
AT159849	3J7	..	3160 - 4
AT159849	3J8	..	3160 - 5
AT159849	3J10	..	3160 - 7
AT159849	3J16	..	3160 - 13
AT159859	2G8	16	1674 - 3
AT159859	2G12	9	1674 - 7
AT159882	4G10	14	3360 - 71
AT159883	4G10	15	3360 - 71
AT159884	3B24	14	1810 - 7
AT159932	4D2	28	3340 - 7
AT159932	4D4	..	3340 - 9
AT159960	3H10	28	2160 - 21
AT160014	3H10	29	2160 - 21
AT160015	2G25	5	1674 - 21
AT160016	2C13	6	0560 - 3
AT160044	4C16	17	3315 - 21
AT160044	4C23	17	3340 - 3
AT160072	3J20	32	3160 - 17
AT160073	3J20	33	3160 - 17
AT160110	2C24	36	0960 - 7
AT160110	3H1	1	2160 - 11
AT160116	2G19	11	1674 - 15
AT160143	1D21	29	0341 - 3
AT160156	3I21	7A	3115 - 5
AT160156	3J5	2	3160 - 2
AT160184	3J12	25	3160 - 9
AT160185	3J12	24	3160 - 9
AT160186	3J12	5	3160 - 9
AT160187	3J12	4	3160 - 9
AT160289	3I19	26	3115 - 3
AT160372	4C16	3	3315 - 21
AT160390	4E6	11	3360 - 23
AT160390	4E6	16	3360 - 23
AT160419	2B21	25	0510 - 3
AT160419	3H8	6A	2160 - 19
AT160419	3H10	10	2160 - 21
AT160436	1D17	5	0325 - 1
AT160463	2D8	18	1060 - 3
AT160465	3J22	..	3160 - 19
AT160482	4C4	22	3315 - 9
AT160482	4C6	22	3315 - 11
AT160482	4D21	26	3360 - 13
AT160482	4D23	26	3360 - 15
AT160488	3B20	8A	1810 - 3
AT160489	3B20	8A	1810 - 3
AT160496	2C24	12	0960 - 7
AT160498	2C24	37	0960 - 7
AT160499	2C24	38	0960 - 7
AT160504	3H12	55	2160 - 23
AT160504	3H16	65	2160 - 27
AT160510	2D24	24	1063 - 3
AT160512	3J7	23	3160 - 4
AT160515	3J7	23	3160 - 4
AT160516	3J8	20	3160 - 5
AT160559	3H12	61	2160 - 23
AT160560	3H10	43	2160 - 21
AT160560	3H14	41	2160 - 25
AT160560	3H20	51	2160 - 31
AT160561	4G2	4	3360 - 63
AT160561	4G4	4	3360 - 65
AT160562	4G2	15	3360 - 63
AT160562	4G4	22	3360 - 65
AT160563	3H12	59	2160 - 23
AT160564	3H12	82	2160 - 23
AT160564	3H16	60	2160 - 27
AT160565	3H10	45	2160 - 21
AT160565	3H14	48	2160 - 25
AT160566	2E17	5	1160 - 5
AT160568	2E17	16	1160 - 5
AT160569	2E17	3	1160 - 5
AT160571	3H10	35	2160 - 21
AT160572	2C20	6	0960 - 3
AT160586	3J20	23	3160 - 17
AT160590	3J18	8	3160 - 15
AT160620	2B25	1	0510 - 7
AT160621	2B25	13	0510 - 7
AT160627	3D7	19	1821 - 5
AT160652	3G1	8	1921 - 2
AT160661	2C20	15	0960 - 3
AT160662	2C20	18	0960 - 3
AT160686	2H8	1	1674 - 29
AT160717	2I2	32	1676 - 3
AT160754	4D7	14	3340 - 12
AT160812	3J18	3	3160 - 15
AT160813	3J18	4	3160 - 15
AT160814	3J12	12	3160 - 9
AT160815	3J12	13	3160 - 9
AT160820	2G10	27	1674 - 5
AT160848	3J18	1	3160 - 15
AT160850	2D24	26	1063 - 3
AT160851	2D24	27	1063 - 3
AT160999	2F24	7	1671 - 3
AT161000	2F24	9	1671 - 3

NUMERICAL INDEX - CONTINUED

PART NO.	GRID	KEY	PAGE
AT161014	2C20	25	0960 - 3
AT161046	4E2	11	3360 - 19
AT161047	4E2	11	3360 - 19
AT161048	4E2	11	3360 - 19
AT161051	4D19	22	3360 - 11
AT161052	4D13	22	3360 - 5
AT161053	4C6	23	3315 - 11
AT161053	4D15	22	3360 - 7
AT161053	4D21	29	3360 - 13
AT161053	4D23	29	3360 - 15
AT161054	4D17	22	3360 - 9
AT161057	4E4	10	3360 - 21
AT161058	4E2	11	3360 - 19
AT161088	3J3	12	3140 - 3
AT161094	3F8	10	1830 - 29
AT161094	3F10	14	1830 - 31
AT161094	3F14	9	1830 - 35
AT161095	3F8	11	1830 - 29
AT161098	3F8	13	1830 - 29
AT161099	3F8	19	1830 - 29
AT161221	2E17	9	1160 - 5
AT161243	3H3	1	2160 - 13
AT161243	3H4	10	2160 - 14
AT161243	3H10	4	2160 - 21
AT161327	2B21	6	0510 - 3
AT161328	4D2	1A	3340 - 7
AT161376	3G4	9	1927 - 3
AT161424	4G15	17	3360 - 77
AT161434	4G15	19	3360 - 77
AT161479	3D7	63	1821 - 5
AT161481	3D7	13	1821 - 5
AT161511	1F16	14	0360 - 10
AT161512	1F16	13	0360 - 10
AT161513	1F16	6	0360 - 10
AT161673	4G17	8	3360 - 79
AT161674	4G17	9	3360 - 79
AT161675	3D7	60	1821 - 5
AT161678	4G13	2	3360 - 75
AT161682	4C2	3	3315 - 7
AT161682	4C4	3	3315 - 9
AT161863	3F8	4	1830 - 29
AT161911	3I7	26	3102 - 5
AT161911	3I9	27	3102 - 7
AT161938	4G13	21	3360 - 75
AT161973	4C6	4	3315 - 11
AT162005	2C2	19	0515 - 3
AT162061	4C6	10	3315 - 11
AT162061	4C6	25	3315 - 11
AT162061	4D2	28	3340 - 7
AT162072	4D2	3	3340 - 7
AT162073	2I4	2	1676 - 5
AT162074	2I4	1	1676 - 5
AT162127	1F11	5	0360 - 4
AT162180	2G17	24	1674 - 13
AT162180	2G21	8	1674 - 17
AT162180	2G21	22	1674 - 17
AT162180	2G23	8	1674 - 19
AT162180	2G23	22	1674 - 19
AT162205	3E4	1	1822 - 3
AT162230	4G15	15	3360 - 77
AT162231	4G15	16	3360 - 77
AT162448	4B19	12	3302 - 3
AT162450	4B19	12	3302 - 3
AT162452	4B19	12	3302 - 3
AT162453	4B19	12	3302 - 3
AT162456	4B19	12	3302 - 3
AT162457	4B19	12	3302 - 3
AT162459	4B19	12	3302 - 3
AT162460	4B19	12	3302 - 3
AT162517	2I2	13A	1676 - 3
AT162597	2B21	19	0510 - 3
AT162748	2E15	19	1160 - 3
AT162749	2E15	48	1160 - 3
AT162750	2E15	52	1160 - 3
AT162763	1E14	9	0350 - 12
AT162764	1E15	10	0350 - 13
AT162765	1E5	1	0350 - 3
AT162848	3F8	8	1830 - 29
AT162848	3F10	7	1830 - 31
AT162848	3F12	30	1830 - 33
AT162868	2G10	31	1674 - 5
AT162873	2E15	15	1160 - 3
AT162888	4G15	4	3360 - 77
AT162963	4G15	6	3360 - 77
AT163088	2G17	11	1674 - 13
AT163088	2G21	3	1674 - 17
AT163088	2G23	3	1674 - 19
AT163235	4B18	12	3302 - 2
AT163236	4B18	12	3302 - 2
AT163237	4B18	12	3302 - 2
AT163238	4B18	12	3302 - 2
AT163376	3J18	21	3160 - 15
AT163390	3F2	7	1830 - 23
AT163655	2B21	12	0510 - 3
AT163655	2B23	22	0510 - 5
AT163685	4C6	1	3315 - 11
AT163734	2I2	32	1676 - 3
AT163865	4C4	25	3315 - 9
AT163914	4D24	..	3360 - 16
AT163946	1D21	30	0341 - 3
AT163948	2G4	12	1673 - 3
AT163948	2G4	13	1673 - 3
AT163948	2G6	14	1673 - 5
AT163948	2G6	15	1673 - 5
AT163950	2G4	9	1673 - 3
AT163950	2G4	11	1673 - 3
AT163950	2G6	12	1673 - 5
AT163950	2G6	13	1673 - 5
AT164073	3H10	24	2160 - 21
AT164073	3H14	32	2160 - 25
AT164073	3H18	30	2160 - 29
AT164084	3H4	3	2160 - 14
AT164124	3C18	21	1810 - 25
AT164148	3C20	37	1810 - 27
AT164192	1J19	12	0423 - 3
AT164324	2B21	16	0510 - 3
AT164364	3J20	3	3160 - 17
AT164389	4D9	3	3340 - 15
AT164390	4D9	3	3340 - 15
AT164408	2G25	5	1674 - 21
AT164413	3H12	71	2160 - 23
AT164413	3H14	33	2160 - 25
AT164413	3H18	32	2160 - 29
AT164451	2E15	6	1160 - 3
AT164452	3I19	19A	3115 - 3
AT164455	3I19	12A	3115 - 3
AT164524	3I5	15	3102 - 3
AT164531	3I5	15	3102 - 3
AT164534	3I23	26	3115 - 7
AT164585	4C25	8	3340 - 5
AT164670	4G17	29	3360 - 79
AT164683	4E10	1	3360 - 25B
AT164683	4E10	2	3360 - 25B
AT164683	4E10	4	3360 - 25B
AT164683	4E10	9	3360 - 25B
AT164683	4E10	12	3360 - 25B
AT164683	4E10	13	3360 - 25B
AT164683	4E10	14	3360 - 25B
AT164683	4E10	17	3360 - 25B
AT164683	4E10	23	3360 - 25B
AT164683	4E10	25	3360 - 25B
AT164683	4E10	27	3360 - 25B
AT164683	4E10	30	3360 - 25B
AT164683	4E10	31	3360 - 25B
AT164683	4E10	33	3360 - 25B
AT164683	4E10	35	3360 - 25B
AT164701	3G9	15	2002 - 3
AT164709	3J20	38	3160 - 17
AT164712	4D2	28	3340 - 7
AT164712	4D4	..	3340 - 9
AT164715	4D2	28	3340 - 7
AT164715	4G15	23	3360 - 77
AT164785	3B24	9	1810 - 7
AT164785	3C6	9	1810 - 13
AT164807	4G17	3	3360 - 79
AT164828	3C8	11	1810 - 15
AT164840	3E14	31	1830 - 11
AT164840	3F8	17	1830 - 29
AT164892	3F8	11	1830 - 29
AT164892	3F8	46	1830 - 29
AT164892	3F10	28	1830 - 31
AT164892	3F14	11	1830 - 35
AT164934	4B24	32	3315 - 5
AT164934	4C2	23	3315 - 7
AT164986	4G17	15	3360 - 79
AT164987	4G17	16	3360 - 79
AT164988	4E8	19	3360 - 25
AT164988	4E12	27	3360 - 25D
AT164989	4E8	22	3360 - 25
AT164989	4E12	17	3360 - 25D
AT164990	4G17	7	3360 - 79
AT165394	2C13	6	0560 - 3
AT165397	2I4	1	1676 - 5
AT165397	2I4	2	1676 - 5
AT165444	1D16	10	0315 - 2
AT165469	2I4	1	1676 - 5
AT165472	2I2	6	1676 - 3
AT165473	2I2	8	1676 - 3
AT165581	2C13	13	0560 - 3
AT165587	2B21	26	0510 - 3
AT165592	2D24	20	1063 - 3
AT165614	4G15	14	3360 - 77
AT165642	3E4	1	1822 - 3
AT165650	4G17	16	3360 - 79
AT165735	4F3	16	3360 - 39
AT165737	4F3	16	3360 - 39
AT165783	4B24	5A	3315 - 5
AT165783	4C8	49A	3315 - 13
AT165783	4C10	49A	3315 - 15
AT165991	4D13	..	3360 - 5
AT165991	4D15	8	3360 - 7
AT165991	4D15	9	3360 - 7
AT165991	4D15	10	3360 - 7
AT165991	4D15	..	3360 - 7
AT165991	4D17	8	3360 - 9
AT165991	4D17	9	3360 - 9
AT165991	4D17	10	3360 - 9
AT165991	4D17	..	3360 - 9
AT165991	4D19	8	3360 - 11
AT165991	4D19	9	3360 - 11
AT165991	4D19	10	3360 - 11

NUMERICAL INDEX - CONTINUED

PART NO.	GRID	KEY	PAGE
AT165991	4D19	..	3360 - 11
AT165991	4D21	8	3360 - 13
AT165991	4D21	9	3360 - 13
AT165991	4D21	10	3360 - 13
AT165991	4D21	..	3360 - 13
AT165991	4D23	8	3360 - 15
AT165991	4D23	9	3360 - 15
AT165991	4D23	10	3360 - 15
AT165991	4D23	..	3360 - 15
AT165991	4D24	..	3360 - 16
AT166180	4D19	22	3360 - 11
AT166181	4D13	22	3360 - 5
AT166182	4C4	25	3315 - 9
AT166182	4C6	23	3315 - 11
AT166182	4D15	22	3360 - 7
AT166182	4D21	29	3360 - 13
AT166182	4D23	29	3360 - 15
AT166183	4D17	22	3360 - 9
AT166242	2C20	6	0960 - 3
AT166403	3F23	2	1910 - 5
AT166408	3F21	2B	1910 - 3
AT166408	3F23	17B	1910 - 5
AT166443	3F21	1	1910 - 3
AT166459	2B21	19	0510 - 3
AT166459	2B23	4	0510 - 5
AT166955	4B24	10A	3315 - 5
AT166955	4B24	36	3315 - 5
AT166957	4C2	29A	3315 - 7
AT166957	4C2	37	3315 - 7
AT166959	4C8	44A	3315 - 13
AT166959	4C8	60	3315 - 13
AT166962	4C10	44A	3315 - 15
AT166962	4C10	59	3315 - 15
AT167016	3I18	9	3115 - 2
AT167044	4G2	13	3360 - 63
AT167183	2C20	..	0960 - 3
AT167214	2I2	6	1676 - 3
AT167215	2I2	8	1676 - 3
AT167360	2C7	8	0530 - 2
AT167396	4C23	8	3340 - 3
AT167399	2F24	1	1671 - 3
AT167606	4E8	10	3360 - 25
AT167625	3B20	8A	1810 - 3
AT167711	2B21	25	0510 - 3
AT167711	3H8	6A	2160 - 19
AT167711	3H10	10	2160 - 21
AT167754	2C7	8	0530 - 2
AT167754	2C8	9	0530 - 3
AT167782	2B25	4	0510 - 7
AT167782	3F2	3	1830 - 23
AT167782	3F4	18	1830 - 25
AT167782	3F6	18	1830 - 27
AT167783	3B20	8A	1810 - 3
AT167884	4E8	5A	3360 - 25
AT167884	4E8	5B	3360 - 25
AT167884	4E12	6	3360 - 25D
AT168138	3E14	17	1830 - 11
AT168164	2D24	20	1063 - 3
AT168225	2B16	13	0505 - 3
AT168401	1E1	11	0341 - 8
AT168604	3F4	12	1830 - 25
AT168604	3F6	12	1830 - 27
AT168614	2C13	11	0560 - 3
AT168614	2G12	10	1674 - 7
AT168903	3C6	12	1810 - 13
AT168913	4C12	7	3315 - 17
AT168913	4C12	14	3315 - 17
AT168916	4C14	16	3315 - 19
AT168916	4C14	23	3315 - 19
AT168916	4C14	25	3315 - 19
AT168916	4C14	32B	3315 - 19
AT168916	4C14	36	3315 - 19
AT168918	4B24	10B	3315 - 5
AT168918	4B24	36	3315 - 5
AT168918	4C2	29B	3315 - 7
AT168918	4C2	37	3315 - 7
AT168919	4C2	9	3315 - 7
AT168919	4C2	39	3315 - 7
AT168947	3J6	12	3160 - 3
AT168948	3J6	11	3160 - 3
AT168948	3J16	20	3160 - 13
AT168950	3J16	6	3160 - 13
AT168992	3J3	12	3140 - 3
AT169012	2I10	4	1740 - 2
AT169058	3C16	8B	1810 - 23
AT169087	3I21	25	3115 - 5
AT169087	3I23	18	3115 - 7
AT169087	4B22	5	3315 - 3
AT169087	4B22	7	3315 - 3
AT169087	4B24	20	3315 - 5
AT169087	4C2	7	3315 - 7
AT169087	4C2	24	3315 - 7
AT169087	4C4	16	3315 - 9
AT169087	4C6	7	3315 - 11
AT169087	4C8	32	3315 - 13
AT169087	4C10	32	3315 - 15
AT169087	4C12	5	3315 - 17
AT169087	4C14	24	3315 - 19
AT169087	4C16	1	3315 - 21
AT169087	4C18	18	3315 - 23
AT169307	3C6	12	1810 - 13
AT169308	3B24	14	1810 - 7
AT169343	3I19	19	3115 - 3
AT169344	3I19	12	3115 - 3
AT169346	3I19	26	3115 - 3
AT169385	3C18	21	1810 - 25
AT169512	4C8	27	3315 - 13
AT169512	4C10	27	3315 - 15
AT169512	4C12	2	3315 - 17
AT169512	4C14	2	3315 - 19
AT169540	3I21	7B	3115 - 5
AT169553	3E6	7	1830 - 3
AT169553	3H8	24	2160 - 19
AT169557	4C14	19	3315 - 19
AT169626	2E22	9	1313 - 5
AT169635	3I19	26	3115 - 3
AT169869	3I19	19A	3115 - 3
AT169869	3I19	19B	3115 - 3
AT169870	3I19	12A	3115 - 3
AT169870	3I19	12B	3115 - 3
AT169897	1C22	7	0250 - 1
AT170052	3H6	1	2160 - 16
AT170083	2G8	16	1674 - 3
AT170083	2G12	9	1674 - 7
AT170494	4G19	28	3360 - 81
AT170494	4G21	28	3360 - 83
AT170942	2C6	4	0520 - 5
AT171005	4B19	12	3302 - 3
AT171011	4B19	12	3302 - 3
AT171015	4B19	12	3302 - 3
AT171108	2E2	9	1063 - 7
AT171162	2B18	5	0505 - 5
AT171162	2B18	13	0505 - 5
AT171213	2E22	3	1313 - 5
AT171219	2G17	13	1674 - 13
AT171219	2G19	1	1674 - 15
AT171221	2G17	13	1674 - 13
AT171221	2G19	1	1674 - 15
AT171397	3F21	1	1910 - 3
AT171397	3F21	2B	1910 - 3
AT171397	3F23	2	1910 - 5
AT171397	3F23	17B	1910 - 5
AT171539	2B18	1	0505 - 5
AT171550	3I21	4	3115 - 5
AT171587	2E15	31	1160 - 3
AT171637	1C17	6	0210 - 14
AT171807	3E10	9	1830 - 7
AT171808	3E10	5	1830 - 7
AT171889	2C2	4	0515 - 3
AT171890	2E15	33	1160 - 3
AT171897	3C10	18	1810 - 17
AT171898	3C10	9	1810 - 17
AT171958	2I6	30	1676 - 7
AT171958	2I8	21	1676 - 9
AT172012	4B19	12	3302 - 3
AT172281	2B21	26	0510 - 3
AT172316	3H20	58	2160 - 31
AT172779	3D5	2	1821 - 3
AT172779	3D9	4	1821 - 7
AT172877	3H10	31	2160 - 21
AT172903	3D5	2	1821 - 3
AT172903	3D9	4	1821 - 7
AT172910	3D5	2	1821 - 3
AT172910	3D9	4	1821 - 7
AT173022	3D11	30	1821 - 9
AT173254	2F16	2	1370 - 2
AT173313	3E2	..	1821 - 25
AT173314	3E2	4	1821 - 25
AT173315	3E2	5	1821 - 25
AT173321	3E2	9	1821 - 25
AT173385	2B18	3	0505 - 5
AT173387	3E4	1	1822 - 3
AT173412	2C20	11	0960 - 3
AT173544	2E17	5	1160 - 5
AT173568	1C22	7	0250 - 1
AT173610	2B23	23	0510 - 5
AT173624	2G1	5	1672 - 3
AT173689	3C18	24	1810 - 25
AT173689	3C24	39	1810 - 31
AT173690	3C18	20	1810 - 25
AT173690	3C22	13	1810 - 29
AT173704	3D9	17	1821 - 7
AT173705	3D9	17	1821 - 7
AT173706	3D9	17	1821 - 7
AT173863	2G17	13	1674 - 13
AT173863	2G19	1	1674 - 15
AT173864	2G17	13	1674 - 13
AT173864	2G19	1	1674 - 15
AT173866	2I2	25	1676 - 3
AT173884	4G19	3	3360 - 81
AT173884	4G21	3	3360 - 83
AT173888	4G19	..	3360 - 81
AT173888	4G21	..	3360 - 83
AT173906	3E12	1	1830 - 9
AT173908	3C2	1	1810 - 9
AT173908	3C2	2	1810 - 9
AT173908	3C2	9	1810 - 9
AT173908	3C2	10	1810 - 9
AT173908	3C2	14	1810 - 9
AT173909	4G19	20	3360 - 81
AT173909	4G21	9	3360 - 83

NUMERICAL INDEX - CONTINUED

PART NO.	GRID	KEY	PAGE
AT173978	3F4	2	1830 - 25
AT173978	3F6	2	1830 - 27
AT174243	1D21	30	0341 - 3
AT174337	3B22	19B	1810 - 5
AT174348	3C16	10	1810 - 23
AT174403	2B21	19	0510 - 3
AT174403	2B23	4	0510 - 5
AT174416	4C8	3	3315 - 13
AT174416	4C10	3	3315 - 15
AT174417	4C8	29	3315 - 13
AT174417	4C10	29	3315 - 15
AT174448	2B21	6	0510 - 3
AT174632	3F4	1	1830 - 25
AT174632	3F6	1	1830 - 27
AT174697	1H2	29	0404 - 5
AT174697	1I20	20	0417 - 5
AT174697	3E8	3	1830 - 5
AT174711	3D11	5	1821 - 9
AT174711	3D25	6	1821 - 23
AT174772	3E16	2	1830 - 13
AT174772	3E20	2	1830 - 17
AT174773	3E20	29	1830 - 17
AT174773	3E22	29	1830 - 19
AT174774	3E16	10	1830 - 13
AT174774	3E18	10	1830 - 15
AT174774	3E20	10	1830 - 17
AT174774	3E22	10	1830 - 19
AT174775	3E16	9	1830 - 13
AT174775	3E20	9	1830 - 17
AT174777	3E6	12	1830 - 3
AT174777	3E8	12	1830 - 5
AT174783	2H16	1	1674 - 37
AT174783	3F8	4	1830 - 29
AT174833	2F24	7	1671 - 3
AT174889	2I6	10	1676 - 7
AT174889	2I8	10	1676 - 9
AT174891	2I6	16	1676 - 7
AT174891	2I8	16	1676 - 9
AT174893	2G14	11	1674 - 9
AT174898	1E1	6	0341 - 8
AT174903	2I6	15	1676 - 7
AT174931	2B21	18	0510 - 3
AT174931	2B23	16	0510 - 5
AT174939	2B21	16	0510 - 3
AT174988	2C8	1	0530 - 3
AT175010	2I6	3	1676 - 7
AT175055	2I8	3	1676 - 9
AT175056	2H6	1	1674 - 27
AT175066	2C17	5	0641 - 2
AT175069	2H2	12	1674 - 23
AT175069	3B20	15	1810 - 3
AT175070	2H2	11	1674 - 23
AT175070	3B20	14	1810 - 3
AT175071	2H2	8	1674 - 23
AT175072	2H2	9	1674 - 23
AT175072	3B20	12	1810 - 3
AT175194	2F25	5	1672 - 2
AT175194	2G1	5	1672 - 3
AT175271	3F10	15	1830 - 31
AT175272	3F10	19	1830 - 31
AT175273	3F10	22	1830 - 31
AT175297	2I6	11	1676 - 7
AT175297	2I8	11	1676 - 9
AT175300	2H2	10	1674 - 23
AT175300	3B20	17	1810 - 3
AT175331	3B24	14	1810 - 7
AT175332	3C6	12	1810 - 13
AT175348	3D9	10	1821 - 7
AT175349	3D9	6	1821 - 7
AT175350	3D11	13	1821 - 9
AT175350	3D15	15	1821 - 13
AT175352	3D13	21	1821 - 11
AT175353	3D13	16	1821 - 11
AT175353	3D23	16	1821 - 21
AT175356	4C8	12	3315 - 13
AT175356	4C10	12	3315 - 15
AT175356	4C14	26	3315 - 19
AT175374	2C11	1	0540 - 3
AT175380	2I4	1	1676 - 5
AT175381	2I4	2	1676 - 5
AT175383	3D17	37	1821 - 15
AT175384	3D17	37	1821 - 15
AT175436	3D13	5	1821 - 11
AT175436	3D23	3	1821 - 21
AT175438	3D13	13	1821 - 11
AT175443	3D9	9	1821 - 7
AT175532	3D17	37	1821 - 15
AT175603	2G2	8	1673 - 1
AT175603	2I6	12	1676 - 7
AT175603	2I8	13	1676 - 9
AT175604	2H12	11	1674 - 33
AT175604	2I6	14	1676 - 7
AT175604	2I8	14	1676 - 9
AT175707	3H18	44	2160 - 29
AT175759	3E16	1	1830 - 13
AT175759	3E20	1	1830 - 17
AT175760	3E16	3	1830 - 13
AT175760	3E20	3	1830 - 17
AT175763	3E12	5	1830 - 9
AT175764	3E12	4	1830 - 9
AT175765	3E12	3	1830 - 9
AT175766	3E12	2	1830 - 9
AT175768	3E20	28	1830 - 17
AT175768	3E22	28	1830 - 19
AT175769	3E16	11	1830 - 13
AT175769	3E18	11	1830 - 15
AT175769	3E20	11	1830 - 17
AT175769	3E22	11	1830 - 19
AT175770	3E16	5	1830 - 13
AT175770	3E18	5	1830 - 15
AT175770	3E20	5	1830 - 17
AT175770	3E22	5	1830 - 19
AT175771	3E12	12	1830 - 9
AT175773	3E16	6	1830 - 13
AT175773	3E20	6	1830 - 17
AT175775	1D18	2	0325 - 2
AT175782	3E16	7	1830 - 13
AT175782	3E20	7	1830 - 17
AT175783	3E16	8	1830 - 13
AT175783	3E20	8	1830 - 17
AT175789	3E20	47	1830 - 17
AT175789	3E22	47	1830 - 19
AT175790	3E20	48	1830 - 17
AT175790	3E22	48	1830 - 19
AT175934	3B20	8A	1810 - 3
AT175934	3B20	8B	1810 - 3
AT175938	3B20	8A	1810 - 3
AT175938	3B20	8B	1810 - 3
AT175954	3D9	10	1821 - 7
AT175955	3D9	6	1821 - 7
AT175958	4C8	44B	3315 - 13
AT175958	4C8	60	3315 - 13
AT175958	4C10	44B	3315 - 15
AT175958	4C10	59	3315 - 15
AT175961	3F12	12	1830 - 33
AT175962	3F12	11	1830 - 33
AT175963	4C4	25	3315 - 9
AT175963	4C4	27	3315 - 9
AT175965	4C20	5	3315 - 25
AT176228	4G19	18	3360 - 81
AT176228	4G21	22	3360 - 83
AT176330	4G19	1	3360 - 81
AT176330	4G21	1	3360 - 83
AT176331	4G19	2	3360 - 81
AT176331	4G21	2	3360 - 83
AT176332	4G19	..	3360 - 81
AT176332	4G21	..	3360 - 83
AT176400	3C12	1	1810 - 19
AT176425	2B23	24	0510 - 5
AT176433	4G19	10	3360 - 81
AT176434	4G21	10	3360 - 83
AT176553	2H4	1	1674 - 25
AT176657	4E22	21	3360 - 33
AT176658	4E19	18	3360 - 30
AT176659	4E20	18	3360 - 31
AT176659	4E23	20	3360 - 34
AT176659	4E24	20	3360 - 35
AT176659	4E25	1	3360 - 36
AT176659	4F1	1	3360 - 37
AT176660	4E21	18	3360 - 32
AT176662	4E17	1	3360 - 28
AT176686	4C16	11	3315 - 21
AT176827	2G2	11	1673 - 1
AT177064	3B22	19B	1810 - 5
AT177227	3B22	6	1810 - 5
AT177435	3F10	33	1830 - 31
AT177588	3H5	4	2160 - 15
AT177703	1F23	10	0360 - 17
AT177780	4C8	58	3315 - 13
AT177780	4C10	57	3315 - 15
AT177786	3E16	2	1830 - 13
AT177786	3E18	2	1830 - 15
AT177786	3E20	2	1830 - 17
AT177786	3E22	2	1830 - 19
AT177787	3E16	29	1830 - 13
AT177787	3E18	29	1830 - 15
AT177787	3E20	43	1830 - 17
AT177787	3E22	43	1830 - 19
AT177808	3H14	40	2160 - 25
AT177967	3E18	9	1830 - 15
AT177967	3E22	9	1830 - 19
AT177968	3E18	3	1830 - 15
AT177968	3E22	3	1830 - 19
AT178024	4E16	1	3360 - 27
AT178047	2H18	1	1674 - 39
AT178080	3C24	39	1810 - 31
AT178087	2I6	13	1676 - 7
AT178128	3F14	7	1830 - 35
AT178129	3F12	1	1830 - 33
AT178240	4C18	2	3315 - 23
AT178271	3F12	24	1830 - 33
AT178363	4F3	9	3360 - 39
AT178390	1D11	4	0250 - 14
AT178461	2I12	4B	1746 - 2
AT178624	3H14	26	2160 - 25
AT178624	3H18	15	2160 - 29
AT178643	3G7	31	2001 - 3
AT178660	3E18	1	1830 - 15
AT178660	3E22	1	1830 - 19
AT178661	3E18	7	1830 - 15
AT178661	3E22	7	1830 - 19

NUMERICAL INDEX - CONTINUED

PART NO.	GRID	KEY	PAGE
AT178662	3E18	8	1830 - 15
AT178662	3E22	8	1830 - 19
AT178663	3E18	33	1830 - 15
AT178663	3E22	49	1830 - 19
AT178664	3E18	34	1830 - 15
AT178664	3E22	50	1830 - 19
AT178686	4B24	22	3315 - 5
AT178686	4C2	36	3315 - 7
AT178734	3C24	44	1810 - 31
AT178770	4B24	36	3315 - 5
AT178770	4C2	37	3315 - 7
AT178773	4C8	60	3315 - 13
AT178773	4C10	59	3315 - 15
AT178774	4C12	7	3315 - 17
AT178774	4C12	14	3315 - 17
AT178775	4C14	16	3315 - 19
AT178775	4C14	23	3315 - 19
AT178775	4C14	25	3315 - 19
AT178775	4C14	32B	3315 - 19
AT178775	4C14	36	3315 - 19
AT178820	4C18	7	3315 - 23
AT178840	2F13	1	1369 - 9
AT178842	2F13	1	1369 - 9
AT178843	2F13	1	1369 - 9
AT178844	2F13	1	1369 - 9
AT178892	3E16	6	1830 - 13
AT178892	3E16	14	1830 - 13
AT178892	3E18	6	1830 - 15
AT178892	3E20	6	1830 - 17
AT178892	3E20	14	1830 - 17
AT178892	3E22	6	1830 - 19
AT178896	4C18	16	3315 - 23
AT179066	1E1	7	0341 - 8
AT179153	1F17	3	0360 - 11
AT179236	3B24	14	1810 - 7
AT179237	3C6	12	1810 - 13
AT179260	2I10	4	1740 - 2
AT179312	2C17	3	0641 - 2
AT179314	1E19	7	0350 - 17
AT179316	1D25	8	0341 - 7
AT179319	1F23	10	0360 - 17
AT179320	1F23	10	0360 - 17
AT179323	1F17	11	0360 - 11
AT179323	2F17	3	1399 - 1
AT179423	3D17	21	1821 - 15
AT179424	4C16	17	3315 - 21
AT179424	4C18	19	3315 - 23
AT179424	4C23	17	3340 - 3
AT179425	3D17	21	1821 - 15
AT179466	1F8	2	0350 - 31
AT179468	1F8	4	0350 - 31
AT179469	1E25	5	0350 - 23
AT179469	1F4	13	0350 - 27
AT179469	1F6	13	0350 - 29
AT179470	1E25	3	0350 - 23
AT179470	1F4	15	0350 - 27
AT179470	1F6	15	0350 - 29
AT179471	1F2	17	0350 - 25
AT179471	1F4	17	0350 - 27
AT179471	1F6	17	0350 - 29
AT179472	1E21	1	0350 - 19
AT179472	1E23	1	0350 - 21
AT179472	1F6	1	0350 - 29
AT179472	1F8	30	0350 - 31
AT179481	1E25	19	0350 - 23
AT179491	1F19	10	0360 - 13
AT179491	1F21	5	0360 - 15
AT179492	1F19	9	0360 - 13
AT179513	4C8	12	3315 - 13
AT179513	4C10	12	3315 - 15
AT179513	4C14	26	3315 - 19
AT179528	2G8	16	1674 - 3
AT179528	2G12	9	1674 - 7
AT179537	1C14	6	0210 - 11
AT179537	2E13	20	1111 - 9
AT179546	2D24	26	1063 - 3
AT179547	2D24	27	1063 - 3
AT179572	4C18	21	3315 - 23
AT179590	1D11	8	0250 - 14
AT179622	2G17	13	1674 - 13
AT179623	2G17	13	1674 - 13
AT179665	3F4	2	1830 - 25
AT179665	3F6	2	1830 - 27
AT179666	3F4	1	1830 - 25
AT179666	3F6	1	1830 - 27
AT179682	3D17	5	1821 - 15
AT179684	3D17	6	1821 - 15
AT179686	3D19	31	1821 - 17
AT179686	3D21	22	1821 - 19
AT179687	3D21	19	1821 - 19
AT179688	3D19	14	1821 - 17
AT179691	3D19	22	1821 - 17
AT179691	3D19	27	1821 - 17
AT179692	3D19	26	1821 - 17
AT179692	3D21	18	1821 - 19
AT179693	3D23	32	1821 - 21
AT179694	3D23	27	1821 - 21
AT179694	3D25	1	1821 - 23
AT179697	3D23	21	1821 - 21
AT179699	3D23	13	1821 - 21
AT179704	3D25	2	1821 - 23
AT179714	3D25	13	1821 - 23
AT179792	3H6	1	2160 - 16
AT179942	2I10	4	1740 - 2
AT180071	4C18	25	3315 - 23
AT180191	2B25	13	0510 - 7
AT180248	3H8	6B	2160 - 19
AT180264	2C8	8	0530 - 3
AT180293	2G8	16	1674 - 3
AT180293	2G10	38	1674 - 5
AT180293	2G12	9	1674 - 7
AT180293	3G10	2	2004 - 1
AT180298	3H5	4	2160 - 15
AT180331	3F12	53	1830 - 33
AT180331	3F14	17	1830 - 35
AT180333	2F13	1	1369 - 9
AT180334	2F13	1	1369 - 9
AT180335	2F13	1	1369 - 9
AT180344	2F15	1	1369 - 11
AT180350	3F12	42	1830 - 33
AT180351	3F12	49	1830 - 33
AT180485	2H2	13	1674 - 23
AT180488	2G8	16	1674 - 3
AT180488	2G12	9	1674 - 7
AT180580	2G21	1	1674 - 17
AT180581	2G23	1	1674 - 19
AT180648	4G4	20	3360 - 65
AT180649	2E2	16	1063 - 7
AT180649	4G4	16	3360 - 65
AT180746	2E13	25	1111 - 9
AT180918	1D16	10	0315 - 2
AT180987	2C13	3B	0560 - 3
AT180989	1J10	7	0420 - 7
AT180991	1J10	20A	0420 - 7
AT180991	1J10	20B	0420 - 7
AT181300	3J20	3	3160 - 17
AT181333	2G14	18	1674 - 9
AT181350	2E4	10	1063 - 9
AT181365	3H20	63	2160 - 31
AT181468	3H20	71	2160 - 31
AT181530	3F12	3	1830 - 33
AT181562	3B22	12	1810 - 5
AT181582	2B18	2	0505 - 5
AT181746	1E25	20	0350 - 23
AT181958	3H18	49	2160 - 29
AT181959	3H20	60	2160 - 31
AT182127	4C20	5	3315 - 25
AT182141	1C2	19	0201 - 11
AT182200	3E16	13	1830 - 13
AT182200	3E18	13	1830 - 15
AT182200	3E20	13	1830 - 17
AT182200	3E22	13	1830 - 19
AT182234	2B18	13	0505 - 5
AT182257	2B18	8	0505 - 5
AT182386	1J10	20A	0420 - 7
AT182387	1C20	17	0230 - 3
AT182388	1C20	22	0230 - 3
AT182389	2G15	4A	1674 - 10
AT182389	2G15	4B	1674 - 10
AT182471	3D17	37	1821 - 15
AT182520	1D16	10	0315 - 2
AT182675	4E16	1	3360 - 27
AT182736	1D11	9	0250 - 14
AT182771	4E16	1	3360 - 27
AT182875	1D11	1	0250 - 14
AT182942	2I12	4B	1746 - 2
AT182946	2C4	2	0520 - 3
AT182947	1F19	14	0360 - 13
AT182954	3E2	..	1821 - 25
AT183016	2F14	1	1369 - 10
AT183063	3H16	67	2160 - 27
AT183066	3H14	18	2160 - 25
AT183066	3H18	14	2160 - 29
AT183067	3H16	71	2160 - 27
AT183105	2I2	13B	1676 - 3
AT183110	2G17	13	1674 - 13
AT183111	2G17	13	1674 - 13
AT183222	2B18	12	0505 - 5
AT183246	2G15	4C	1674 - 10
AT183251	2G8	16	1674 - 3
AT183251	2G12	9	1674 - 7
AT183355	4E25	4	3360 - 36
AT183356	4F1	4	3360 - 37
AT183373	3H18	45	2160 - 29
AT183451	2B23	23	0510 - 5
AT183581	2I2	16	1676 - 3
AT183588	3D17	37	1821 - 15
AT183637	3D9	2	1821 - 7
AT183637	3D17	5	1821 - 15
AT183638	3D9	12	1821 - 7
AT183638	3D17	6	1821 - 15
AT183669	2E2	11	1063 - 7
AT183701	2G21	23	1674 - 17
AT183701	3E18	9	1830 - 15
AT183701	3E22	9	1830 - 19
AT183728	3H8	6C	2160 - 19
AT183755	2D22	7	1060 - 17
AT183755	2D22	10	1060 - 17
AT183755	2D22	36	1060 - 17
AT183810	3E2	15	1821 - 25
AT183811	3E2	19	1821 - 25

NUMERICAL INDEX - CONTINUED

PART NO.	GRID	KEY	PAGE
AT183813	3E2	13	1821 - 25
AT183869	4G4	14	3360 - 65
AT183911	4B24	5B	3315 - 5
AT183911	4C8	49B	3315 - 13
AT183911	4C10	49B	3315 - 15
AT183911	4E16	6	3360 - 27
AT183938	4B24	36	3315 - 5
AT183938	4C2	37	3315 - 7
AT183939	4C2	9	3315 - 7
AT183939	4C2	37	3315 - 7
AT183939	4C2	39	3315 - 7
AT183939	4C4	13	3315 - 9
AT183939	4C4	28	3315 - 9
AT183941	4C8	60	3315 - 13
AT183941	4C10	59	3315 - 15
AT183942	4C10	59	3315 - 15
AT183942	4C12	7	3315 - 17
AT183942	4C12	14	3315 - 17
AT183943	4C14	16	3315 - 19
AT183943	4C14	23	3315 - 19
AT183943	4C14	25	3315 - 19
AT183943	4C14	36	3315 - 19
AT183950	3B24	14	1810 - 7
AT183951	3C6	12	1810 - 13
AT183952	4C6	10	3315 - 11
AT183952	4C6	25	3315 - 11
AT183952	4C6	26	3315 - 11
AT183972	1F19	41	0360 - 13
AT183973	1F21	15	0360 - 15
AT184007	1F21	14	0360 - 15
AT184018	2F24	9	1671 - 3
AT184042	1F2	1	0350 - 25
AT184042	1F4	1	0350 - 27
AT184043	1F4	3	0350 - 27
AT184045	1F6	3	0350 - 29
AT184048	1E21	3	0350 - 19
AT184052	1E21	17	0350 - 19
AT184052	1E23	17	0350 - 21
AT184052	1E25	1	0350 - 23
AT184053	1E23	3	0350 - 21
AT184055	1E25	16	0350 - 23
AT184056	1E25	18	0350 - 23
AT184057	1F2	3	0350 - 25
AT184059	1D25	14	0341 - 7
AT184060	1D25	4	0341 - 7
AT184061	1D25	5	0341 - 7
AT184062	1D25	6	0341 - 7
AT184113	3H20	67	2160 - 31
AT184122	2G17	13	1674 - 13
AT184158	2H12	2	1674 - 33
AT184192	4B24	36	3315 - 5
AT184192	4C2	37	3315 - 7
AT184192	4C8	60	3315 - 13
AT184192	4C10	59	3315 - 15
AT184192	4C14	36	3315 - 19
AT184192	4C20	5	3315 - 25
AT184213	2D10	3	1060 - 5
AT184214	2D10	2	1060 - 5
AT184230	2E4	5	1063 - 9
AT184231	2E4	4	1063 - 9
AT184264	1D10	14	0250 - 13
AT184269	1C2	4	0201 - 11
AT184272	1C2	3	0201 - 11
AT184273	1C2	9	0201 - 11
AT184275	1C2	2	0201 - 11
AT184276	1C14	1	0210 - 11
AT184277	1C14	2	0210 - 11
AT184279	1C14	5	0210 - 11
AT184280	2D6	13	1011 - 5
AT184281	2D6	5	1011 - 5
AT184282	2F2	23	1320 - 5
AT184283	2F2	23	1320 - 5
AT184284	2D6	31	1011 - 5
AT184285	2D6	29	1011 - 5
AT184286	1C3	4	0201 - 12
AT184287	1C3	2	0201 - 12
AT184309	1C16	4	0210 - 13
AT184329	3F12	53	1830 - 33
AT184329	3F14	17	1830 - 35
AT184333	1C16	18	0210 - 13
AT184334	1C16	14	0210 - 13
AT184334	1C16	18	0210 - 13
AT184360	1D25	29	0341 - 7
AT184361	1F8	31	0350 - 31
AT184362	2H12	14	1674 - 33
AT184362	4E8	24	3360 - 25
AT184408	4G17	28	3360 - 79
AT184412	4G2	4	3360 - 63
AT184431	4F23	6B	3360 - 59
AT184500	2E2	14	1063 - 7
AT184553	2D10	14	1060 - 5
AT184580	4D11	1	3360 - 3
AT184580	4E16	7	3360 - 27
AT184581	4D11	1	3360 - 3
AT184581	4E16	7	3360 - 27
AT184582	4D11	1	3360 - 3
AT184582	4E16	7	3360 - 27
AT184591	2I6	19	1676 - 7
AT184591	2I8	19	1676 - 9
AT184654	4G17	29	3360 - 79
AT184655	2H12	14	1674 - 33
AT184655	4E8	24	3360 - 25
AT184695	2D22	18	1060 - 17
AT184696	2D22	..	1060 - 17
AT184860	2H2	1	1674 - 23
AT184869	1E3	19	0350 - 1
AT185215	1D4	16	0250 - 7
AT185250	4B22	16	3315 - 3
AT185386	2I2	13B	1676 - 3
AT185386	2I6	26	1676 - 7
AT185386	2I8	25	1676 - 9
AT185388	2I2	16	1676 - 3
AT185388	2I6	27	1676 - 7
AT185388	2I8	26	1676 - 9
AT185398	2D22	26	1060 - 17
AT185405	2D22	14	1060 - 17
AT185791	1D25	25	0341 - 7
AT185793	1E21	15	0350 - 19
AT185793	1E23	15	0350 - 21
AT185793	1F2	15	0350 - 25
AT185889	2H12	4	1674 - 33
AT185959	4E19	..	3360 - 30
AT185959	4E20	..	3360 - 31
AT185959	4E21	..	3360 - 32
AT185959	4E22	..	3360 - 33
AT185959	4E23	..	3360 - 34
AT185959	4E24	..	3360 - 35
AT186152	3D9	2	1821 - 7
AT186156	3D9	12	1821 - 7
AT186167	1F17	9	0360 - 11
AT186170	3H20	67	2160 - 31
AT186310	2F2	23	1320 - 5
AT186311	2F2	23	1320 - 5
AT186400	4F25	28	3360 - 61
AT186400	4G10	16	3360 - 71
AT186760	3G8	1	2002 - 2
AT186908	4C8	3	3315 - 13
AT186909	4C8	29	3315 - 13
AT186925	2B21	19	0510 - 3
AT186925	2B21	20	0510 - 3
AT186925	2B23	3	0510 - 5
AT186927	1C2	12	0201 - 11
AT187711	1E19	6	0350 - 17
AT188305	3I9	3	3102 - 7
AT188465	3C22	44	1810 - 29
AT188549	4F25	28	3360 - 61
AT188549	4G10	16	3360 - 71
AT189035	4E8	12	3360 - 25
AT189035	4E10	35	3360 - 25B
AT189035	4E12	13	3360 - 25D
AT189035	4E14	18	3360 - 25F
AT189036	4E14	11	3360 - 25F
AT189037	4E14	10	3360 - 25F
AT189038	4E14	19	3360 - 25F
AT189078	4E8	12	3360 - 25
AT189078	4E10	35	3360 - 25B
AT189078	4E12	21	3360 - 25D
AT189088	2I6	10	1676 - 7
AT189088	2I8	10	1676 - 9
AT189178	4E8	24	3360 - 25
AT189178	4E12	35	3360 - 25D
AT189413	4F3	..	3360 - 39
AT189522	3I11	26	3102 - 9
AT189522	3I13	27	3102 - 9B
AT189694	3I13	9	3102 - 9B
AT189822	3I13	6	3102 - 9B
AT190316	2H12	4	1674 - 33
AT190330	4F25	3	3360 - 61
AT190330	4F25	13	3360 - 61
AT190330	4F25	28	3360 - 61
AT190330	4G10	16	3360 - 71
AT190333	4F25	8	3360 - 61
AT190333	4F25	9	3360 - 61
AT190333	4F25	11	3360 - 61
AT190333	4F25	15	3360 - 61
AT190333	4F25	16	3360 - 61
AT190334	4F25	4	3360 - 61
AT190334	4F25	8	3360 - 61
AT190334	4F25	9	3360 - 61
AT190334	4F25	11	3360 - 61
AT190334	4F25	12	3360 - 61
AT190701	3I13	13	3102 - 9B
AT190701	3I13	21	3102 - 9B
AT190741	4F25	..	3360 - 61
AT190880	3I13	1	3102 - 9B
AT190880	3I17	14	3102 - 13
AT190881	3I17	1	3102 - 13
AT190898	3I17	15	3102 - 13
AT190900	3I9	3	3102 - 7
AT190900	3I13	3	3102 - 9B
AT190901	3D17	7	1821 - 15
AT190902	3D17	8	1821 - 15
AT191243	2H10	3	1674 - 31
AT191243	3G7	6	2001 - 3
AT191243	3G7	29	2001 - 3
AT191306	1D4	6	0250 - 7
AT191320	2F2	23	1320 - 5
AT191321	2F2	23	1320 - 5
AT191487	2C20	20	0960 - 3
AT191487	2C20	21	0960 - 3
AT191487	2C20	22	0960 - 3

NUMERICAL INDEX - CONTINUED

PART NO.	GRID	KEY	PAGE
AT191912	2F2	23	1320 - 5
AT191914	2F2	23	1320 - 5
AT192120	4D5	6	3340 - 10
AT192255	1C16	18	0210 - 13
AT192552	1F23	3	0360 - 17
AT192552	1F23	4	0360 - 17
AT192552	1F23	5	0360 - 17
AT192552	1F23	6	0360 - 17
AT192553	1F23	13	0360 - 17
AT192553	1F23	14	0360 - 17
AT192553	1F23	15	0360 - 17
AT192553	1F23	16	0360 - 17
AT192754	2H10	3	1674 - 31
AT192754	3G7	6	2001 - 3
AT193704	1E21	4	0350 - 19
AT193704	1E21	5	0350 - 19
AT193704	1E21	6	0350 - 19
AT193704	1E23	4	0350 - 21
AT193704	1E23	5	0350 - 21
AT193704	1E23	6	0350 - 21
AT193704	1E25	12	0350 - 23
AT193704	1E25	13	0350 - 23
AT193704	1E25	14	0350 - 23
AT193704	1F2	4	0350 - 25
AT193704	1F2	5	0350 - 25
AT193704	1F2	6	0350 - 25
AT193704	1F4	4	0350 - 27
AT193704	1F4	5	0350 - 27
AT193704	1F4	6	0350 - 27
AT193704	1F6	4	0350 - 29
AT193704	1F6	5	0350 - 29
AT193704	1F6	6	0350 - 29
AT195152	1C16	17	0210 - 13
AT195152	1C16	18	0210 - 13
AT195324	3I7	26	3102 - 5
AT195324	3I9	27	3102 - 7
AT195324	3I11	26	3102 - 9
AT195324	3I13	27	3102 - 9B
AT207990	1D18	1	0325 - 2
AT208486	3E2	12	1821 - 25
AT208491	3E2	14	1821 - 25
AT208493	3E2	..	1821 - 25
AT209014	3D17	2	1821 - 15
AT209015	3D17	1	1821 - 15
AT209020	3D21	4	1821 - 19
AT209024	3D19	8	1821 - 17
AT209025	3D17	14	1821 - 15
AT209026	3D19	6	1821 - 17
AT209027	3D17	2	1821 - 15
AT209028	3D17	1	1821 - 15
AT209225	3D17	13	1821 - 15
AT21110	1G9	20	0401 - 3
AT21110	1G11	6	0401 - 5
AT21112	1G9	20	0401 - 3
AT21114	1G9	20	0401 - 3
AT21132	1G9	21	0401 - 3
AT21134	1G9	21	0401 - 3
AT21136	1G9	21	0401 - 3
AT21139	1G9	21	0401 - 3
AT21140	1G9	20	0401 - 3
AT21191	1H7	2	0404 - 10
AT21574	3H10	24	2160 - 21
AT220393	2G1	5	1672 - 3
AT220394	2F25	5	1672 - 2
AT220394	2G1	5	1672 - 3
AT22919	1H7	2	0404 - 10
AT24252	1G9	18	0401 - 3
AT25226	1B14	4	0110 - 1
AT25226	1B15	2	0110 - 2
AT25226	1B16	2	0120 - 1
AT29268	2C7	12	0530 - 2
AT31227	2C3	2	0520 - 2
AT31227	2F17	2	1399 - 1
AT33333	4D7	9	3340 - 12
AT33335	4D7	3	3340 - 12
AT35831	3E6	7	1830 - 3
AT35831	3H8	24	2160 - 19
AT36635	3F23	6	1910 - 5
AT37037	1B16	2	0120 - 1
AT37507	4C21	2	3340 - 1
AT39122	2C6	4	0520 - 5
AT39124	2C3	4	0520 - 2
AT39124	2F17	1	1399 - 1
AT40571	2E20	2	1313 - 2
AT40571	2E20	5	1313 - 2
AT42386	2F4	..	1330 - 2
AT43223	3H18	42	2160 - 29
AT44188	2G21	1	1674 - 17
AT44188	2G23	1	1674 - 19
AT44188	3D7	26	1821 - 5
AT48387	3C16	8A	1810 - 23
AT49300	3I21	25	3115 - 5
AT49300	3I23	18	3115 - 7
AT49300	4B22	7	3315 - 3
AT49300	4B24	20	3315 - 5
AT49300	4C2	7	3315 - 7
AT49300	4C2	24	3315 - 7
AT49300	4C4	16	3315 - 9
AT49300	4C6	7	3315 - 11
AT49300	4C8	32	3315 - 13
AT49300	4C10	32	3315 - 15
AT49300	4C16	1	3315 - 21
AT50923	2C4	10	0520 - 3
AT50924	2C4	8	0520 - 3
AT53960	4D5	10	3340 - 10
AT56125	2F10	..	1369 - 6
AT58147	3C14	13	1810 - 21
AT58741	3J16	6	3160 - 13
AT63265	3F8	5	1830 - 29
AT63266	3F8	6	1830 - 29
AT65241	2C13	7	0560 - 3
AT65294	2B23	13	0510 - 5
AT65473	2C7	9	0530 - 2
AT66370	1C20	17	0230 - 3
AT66371	1C20	22	0230 - 3
AT66377	1C20	10	0230 - 3
AT66481	3C14	21	1810 - 21
AT66892	1F13	17	0360 - 7
AT67960	1F15	4	0360 - 9
AT67960	2F17	7	1399 - 1
AT67961	1F15	8	0360 - 9
AT69969	2G15	4A	1674 - 10
AT71475	2C3	5	0520 - 2
AT73296	2B19	1	0505 - 6
AT74127	4D13	21	3360 - 5
AT74127	4D15	21	3360 - 7
AT74127	4D17	21	3360 - 9
AT74127	4D19	21	3360 - 11
AT74127	4D21	21	3360 - 13
AT74127	4D23	21	3360 - 15
AT74173	2C7	8	0530 - 2
AT74239	2I13	7	1749 - 1
AT74801	1B15	1	0110 - 2
AT74801	1B15	4	0110 - 2
AT74936	2G2	7	1673 - 1
AT74938	2G2	4	1673 - 1
AT75311	3C10	16	1810 - 17
AT75311	3C12	16	1810 - 19
AT75688	3I21	6	3115 - 5
AT75688	3I23	4	3115 - 7
AT75769	2H12	5	1674 - 33
AT75874	3D5	12	1821 - 3
AT76182	1D11	1	0250 - 14
AT76183	1D11	4	0250 - 14
AT76919	1B14	5	0110 - 1
AT76998	3F8	40	1830 - 29
AT76998	3F10	5	1830 - 31
AT76998	3F14	4	1830 - 35
AT78371	3J16	4	3160 - 13
AT79755	1C21	1	0230 - 4
AT79756	1C21	10	0230 - 4
AT79841	4G21	25	3360 - 83
AT80192	2D24	20	1063 - 3
AT80323	1D23	19	0341 - 5
AT80324	1E11	6	0350 - 9
AT81605	3H8	16	2160 - 19
AT81907	2D24	33	1063 - 3
AT82210	2H12	1	1674 - 33
AT83174	4E23	13	3360 - 34
AT83174	4E24	13	3360 - 35
AT83451	2C24	19	0960 - 7
AT83454	4F21	16	3360 - 57
AT83467	4F21	17	3360 - 57
AT83477	2C24	18	0960 - 7
AT83478	2C24	19	0960 - 7
AT84177	4G15	14	3360 - 77
AT84181	4F19	18	3360 - 55
AT84181	4F21	8	3360 - 57
AT84191	4F21	20	3360 - 57
AT84216	3D7	11	1821 - 5
AT84224	3D7	24	1821 - 5
AT84225	3D7	62	1821 - 5
AT84226	3D7	55	1821 - 5
AT84228	3D7	47	1821 - 5
AT84712	1D10	14	0250 - 13
AT84713	1D6	3	0250 - 9
AT84716	1D2	22	0250 - 5
AT84716	2C24	29	0960 - 7
AT84718	1C24	7	0250 - 3
AT84719	1D2	5	0250 - 5
AT84720	1D2	20	0250 - 5
AT84721	1D2	21	0250 - 5
AT85174	1D23	10	0341 - 5
AT85174	2G10	37	1674 - 5
AT85174	2G12	4	1674 - 7
AT85174	2G14	17	1674 - 9
AT85197	2F11	9	1369 - 7
AT87527	3C18	9	1810 - 25
AT87556	2G4	8	1673 - 3
AT87556	2G6	7	1673 - 5
AT87558	3C18	11	1810 - 25
AT87559	3C18	12	1810 - 25
AU12450	2C6	5	0520 - 5
AU42450	4C21	6	3340 - 1
AU43656	3H10	7	2160 - 21
AU43853	3C14	14	1810 - 21
A120R	1G9	2	0401 - 3
A31870	1E2	2	0342 - 2
A3606R	1F15	1	0360 - 9
A3606R	2F7	..	1369 - 3
A364R	1I20	7	0417 - 5

NUMERICAL INDEX - CONTINUED

PART NO.	GRID	KEY	PAGE
A3910R	1H22	7	0409 - 3
A3917R	1F11	1	0360 - 4
A3917R	2F3	..	1330 - 1
A3917R	2F7	..	1369 - 3
A3917R	3J22	10	3160 - 19
A3917R	4E1	5	3360 - 18
A3917R	4E2	1	3360 - 19
A3917R	4E4	5	3360 - 21
A3917R	4E6	1	3360 - 23
A4365	2D14	10	1060 - 9
A4365	2D15	3	1060 - 10
A4365R	2D12	29	1060 - 7
A4365R	2F3	..	1330 - 1
A4365R	2F7	..	1369 - 3
A4728R	2D25	13	1063 - 4
A4730R	2F7	..	1369 - 3
A4827R	1G13	11	0402 - 1
A4827R	1G15	14	0402 - 3
A4827R	1K11	17	0452 - 7
A5518R	1F16	2	0360 - 10
BP13712	3B24	18	1810 - 7
BP13712	3C6	8	1810 - 13
BP13712	3G7	10	2001 - 3
B14164	4D9	19	3340 - 15
B14164	4F17	3	3360 - 53
B15646	2F3	..	1330 - 1
B2762R	2D14	15	1060 - 9
B2762R	2F7	..	1369 - 3
B28042	4B22	13	3315 - 3
B28163	3D7	33	1821 - 5
B32585	2B25	7	0510 - 7
B3690R	2F7	..	1369 - 3
B3690R	3H10	5	2160 - 21
CD12569	2F2	18	1320 - 5
CD14148	2F2	2	1320 - 5
CD15466	1G22	12	0403 - 2
CD16284	1H24	7	0409 - 5
C985R	3E14	20	1830 - 11
DSO345	2F13	1	1369 - 9
DSO346	2F13	1	1369 - 9
DT2127W	1C18	10	0230 - 1
E12379	2F16	5	1370 - 2
E17421	2C3	8	0520 - 2
E45229	3D5	8	1821 - 3
E46066	2H14	1	1674 - 35
E46066	2I2	2	1676 - 3
E46066	2I6	33	1676 - 7
E52687	1E12	6	0350 - 10
E52687	2F9	..	1369 - 5
E69392	1G9	23	0401 - 3
E69975	3H12	58	2160 - 23
E73240	2G21	2	1674 - 17
E73240	2G23	2	1674 - 19
E73240	2H2	3	1674 - 23
E87197	2C13	4	0560 - 3
F1056R	2F7	..	1369 - 3
F1649R	4F9	5	3360 - 45
F1747R	1F16	3	0360 - 10
F1870R	2F7	..	1369 - 3
F2197R	1E9	4	0350 - 7
F2253R	1B24	12	0201 - 9
F2380R	1B21	15	0201 - 5
F2380R	1B23	10	0201 - 7
F2863R	2D8	7	1060 - 3
F2863R	2D10	13	1060 - 5
F2863R	3I18	10	3115 - 2
F2863R	3I23	23	3115 - 7
F3171R	1C8	3	0210 - 5
F3171R	1C8	12	0210 - 5
F3171R	1C8	17	0210 - 5
F3171R	1C8	21	0210 - 5
F3171R	1C12	8	0210 - 9
F3353R	2F7	..	1369 - 3
F37030242	3H6	2	2160 - 16
F950R	3J14	15	3160 - 11
F950R	3J21	15	3160 - 18
F950R	4F7	16	3360 - 43
H104855	2H20	9	1674 - 41
H111706	3B22	14	1810 - 5
H121168	3I9	11	3102 - 7
H121168	3I13	11	3102 - 9B
H129201	4C8	19	3315 - 13
H129201	4C10	19	3315 - 15
H135156	3I9	10	3102 - 7
H135156	3I13	10	3102 - 9B
H139506	4F9	6	3360 - 45
H139507	4F9	8	3360 - 45
H139508	4F9	7	3360 - 45
H140466	3H16	81	2160 - 27
H140466	3H18	8	2160 - 29
H144094	2F25	21	1672 - 2
H144094	2G1	3	1672 - 3
H144095	2F25	20	1672 - 2
H144095	2G1	4	1672 - 3
H145139	4G6	4	3360 - 67
H145139	4G8	4	3360 - 69
H145161	4G6	3	3360 - 67
H145161	4G8	3	3360 - 69
H145439	4F5	18	3360 - 41
H146931	4F7	9	3360 - 43
H147771	3J14	18	3160 - 11
H147771	3J15	17	3160 - 12
H147771	3J21	18	3160 - 18
H147771	3J23	17	3160 - 20
H147771	4F11	6	3360 - 47
H147771	4F13	6	3360 - 49
H148235	4F11	8	3360 - 47
H148235	4F13	8	3360 - 49
H148236	4F11	1	3360 - 47
H148237	4F11	2	3360 - 47
H148237	4F13	2	3360 - 49
H148246	4F9	18	3360 - 45
H148247	4F9	15	3360 - 45
H148844	4G11	10	3360 - 72
H149340	4F7	17	3360 - 43
H150292	4G11	1	3360 - 72
H150292	4G11	10	3360 - 72
H150292	4G12	10	3360 - 73
H151369	4F11	1	3360 - 47
H151369	4F13	1	3360 - 49
H152202	4G12	5	3360 - 73
H152204	3J21	13	3160 - 18
H152204	3J23	13	3160 - 20
H152204	4F13	16	3360 - 49
H152205	4G8	17	3360 - 69
H152793	4G12	7	3360 - 73
H152795	3J21	12	3160 - 18
H152795	3J23	12	3160 - 20
H152795	4F13	17	3360 - 49
H152796	4G8	14	3360 - 69
H154514	2C22	12	0960 - 5
H157427	3J14	16	3160 - 11
H157427	3J21	16	3160 - 18
H157428	3J15	9	3160 - 12
H157428	3J23	9	3160 - 20
H157428	4F11	11	3360 - 47
H157428	4F13	11	3360 - 49
H157429	4G6	18	3360 - 67
H157429	4G8	18	3360 - 69
H157510	4G11	11	3360 - 72
H157510	4G12	11	3360 - 73
H161157	2C22	14	0960 - 5
H161331	2C21	15	0960 - 4
H161331	2C22	15	0960 - 5
H161390	2C22	9	0960 - 5
H170540	3J14	18	3160 - 11
H170540	3J15	17	3160 - 12
H170540	3J21	18	3160 - 18
H170540	3J23	17	3160 - 20
H170540	4F11	6	3360 - 47
H170540	4F13	6	3360 - 49
H23125	1G21	1	0402 - 9
H29619	3I17	2	3102 - 13
H35238	3J10	5	3160 - 7
H35244	1E11	7	0350 - 9
H35244	1G9	24	0401 - 3
H35244	1G10	4	0401 - 4
H35244	2F7	..	1369 - 3
H36031	1H20	5	0408 - 3
H60816	3J10	7	3160 - 7
H61354	3H10	20	2160 - 21
H61354	3H14	23	2160 - 25
H61354	3H18	20	2160 - 29
H77698	2B21	39	0510 - 3
H77698	2B23	26	0510 - 5
H77698	2G8	5	1674 - 3
H77698	2G10	32	1674 - 5
H77698	2G14	25	1674 - 9
H77698	3C8	35	1810 - 15
H77698	3E6	23	1830 - 3
H77698	3H8	4	2160 - 19
H77698	3H12	75	2160 - 23
H81608	4E2	6	3360 - 19
H81608	4E6	6	3360 - 23
H81608	4E10	28	3360 - 25B
H85233	3E16	12	1830 - 13
H85233	3E16	30	1830 - 13
H85233	3E18	12	1830 - 15
H85233	3E18	30	1830 - 15
H85233	3E20	12	1830 - 17
H85233	3E20	44	1830 - 17
H85233	3E22	12	1830 - 19
H85233	3E22	44	1830 - 19
H871R	1C10	25	0210 - 7
H88900	4F5	13	3360 - 41
H91792	2G4	10	1673 - 3
H91792	2G6	11	1673 - 5
H99452	3E14	17	1830 - 11
H99923	3D11	30	1821 - 9
H99923	3D11	31	1821 - 9
H99923	3D13	22	1821 - 11
IPSKIT3	2F13	1	1369 - 9
ISPKIT3	2F13	1	1369 - 9
JD10190	1C18	8	0230 - 1
JD10212	3D7	31	1821 - 5
JD10249	1D4	18	0250 - 7
JD10250	1D8	13	0250 - 11
JD10329	1I19	4	0417 - 3
JD10359	1D10	7	0250 - 13
JD3051	1B16	1	0120 - 1
JD3051	1B16	2	0120 - 1

NUMERICAL INDEX - CONTINUED

PART NO.	GRID	KEY	PAGE
JD37087	1D10	13	0250 - 13
JD37219	1D10	10	0250 - 13
JD5621	2E24	4	1320 - 3
JD5626	2E24	4	1320 - 3
JD7266	1C18	7	0230 - 1
JD7417	1E12	2	0350 - 10
JD7424	1E9	7	0350 - 7
JD7444	1C18	4	0230 - 1
JD7686	1I19	4	0417 - 3
JD7759	3I5	1	3102 - 3
JD7759	3I15	5	3102 - 11
JD7769	1B21	7	0201 - 5
JD7771	4D9	1	3340 - 15
JD7784	3J15	18	3160 - 12
JD7797	1C21	7	0230 - 4
JD7797	1D11	3	0250 - 14
JD7797	1D17	2	0325 - 1
JD7797	2F16	1	1370 - 2
JD7797	3I16	11	3102 - 12
JD7797	3I17	11	3102 - 13
JD7797	3J13	11	3160 - 10
JD7798	1C20	4	0230 - 3
JD7798	3I18	7	3115 - 2
JD7798	3J1	1	3140 - 1
JD7798	3J3	4	3140 - 3
JD7798	3J3	10	3140 - 3
JD7798	3J14	19	3160 - 11
JD7798	3J15	18	3160 - 12
JD7798	4C25	9	3340 - 5
JD7798	4D2	19	3340 - 7
JD7798	4D4	17	3340 - 9
JD7798	4D6	3	3340 - 11
JD7798	4D9	8	3340 - 15
JD7798	4F5	27	3360 - 41
JD7798	4F9	28	3360 - 45
JD7798	4F11	24	3360 - 47
JD7798	4F13	24	3360 - 49
JD7798	4G6	21	3360 - 67
JD7799	1C20	7	0230 - 3
JD7799	2I10	1	1740 - 2
JD7799	3J14	20	3160 - 11
JD7799	3J21	20	3160 - 18
JD7799	4F7	26	3360 - 43
JD7799	4F9	30	3360 - 45
JD7801	2F16	6	1370 - 2
JD7806	3I19	26	3115 - 3
JD7838	1C20	21	0230 - 3
JD7838	2F16	3	1370 - 2
JD7844	2C21	18	0960 - 4
JD7844	2C22	18	0960 - 5
JD7844	3I19	12	3115 - 3
JD7844	3I19	19	3115 - 3
JD7844	3I19	30	3115 - 3
JD7846	3I19	19	3115 - 3
JD7846	3I19	28	3115 - 3
JD8158	1E12	5	0350 - 10
JD8159	1C6	8	0210 - 3
JD8192	3G20	21	2160 - 5
JD8210	1C6	6	0210 - 3
JD8223	3G20	20	2160 - 5
JD8240	1C12	13	0210 - 9
JD8248	1B21	6	0201 - 5
JD8248	1B23	4	0201 - 7
JD8251	1E9	1	0350 - 7
JD8251	1E11	1	0350 - 9
JD8259	1C6	13	0210 - 3
JD8264	1C12	2	0210 - 9
JD8267	1D4	4	0250 - 7
JD8267	1E11	15	0350 - 9
JD8929	1E9	2	0350 - 7
JD8929	1E11	2	0350 - 9
JD8954	1C6	12	0210 - 3
JD8961	1C18	3	0230 - 1
JD8968	1E9	6	0350 - 7
JD8970	1C12	1	0210 - 9
JD8974	1C12	14	0210 - 9
JD8979	1D4	3	0250 - 7
JD8979	1E11	3	0350 - 9
JD9018	1B21	5	0201 - 5
JD9018	1B23	3	0201 - 7
JD9048	1E8	2	0350 - 6
JD9048	1E13	7	0350 - 11
JD9055	1B21	12	0201 - 5
JD9055	1B23	7	0201 - 7
JD9113	1E8	1	0350 - 6
JD9113	1E13	6	0350 - 11
JD9118	1B21	11	0201 - 5
JD9118	1B23	6	0201 - 7
JD9837	1E3	3	0350 - 1
JD9839	1E3	5	0350 - 1
JD9886	1E7	16	0350 - 5
JD9894	1E7	18	0350 - 5
JD9955	1E3	11	0350 - 1
J20570	4B22	15	3315 - 3
K40001	3D5	8	1821 - 3
K40006	3I7	4	3102 - 5
K40006	3I11	4	3102 - 9
K40015	3I7	21	3102 - 5
L101698	1D6	9	0250 - 9
L102678	4E8	12	3360 - 25
L102678	4E10	35	3360 - 25B
L102678	4E14	5	3360 - 25F
L11698	1F19	6	0360 - 13
L11698	1F19	23	0360 - 13
L11698	1F21	11	0360 - 15
L11698	1F23	23	0360 - 17
L1610N	4G13	15	3360 - 75
L2083C	1C20	9	0230 - 3
L25678	3D7	29	1821 - 5
L29048	1D2	4	0250 - 5
L32705	4E17	4	3360 - 28
L33993	2F25	10	1672 - 2
L34059	1E11	11	0350 - 9
L34060	1E11	10	0350 - 9
L34061	1E11	12	0350 - 9
L34062	1E11	17	0350 - 9
L34064	1E11	16	0350 - 9
L34067	1E11	13	0350 - 9
L34068	1E11	19	0350 - 9
L34378	3J7	10	3160 - 4
L34432	3G17	3	2160 - 2
L34569	1J25	2	0429 - 5
L34569	3G17	1	2160 - 2
L34575	1J25	1	0429 - 5
L34575	3G17	7	2160 - 2
L35577	1D6	4	0250 - 9
L37025	1E11	14	0350 - 9
L38138	2G21	20	1674 - 17
L38138	2G23	20	1674 - 19
L38258	1E11	18	0350 - 9
L38847	3D7	35	1821 - 5
L38851	3D7	34	1821 - 5
L38852	3D7	51	1821 - 5
L38853	3D7	53	1821 - 5
L38854	3D7	54	1821 - 5
L38855	3D7	61	1821 - 5
L38857	3D7	38	1821 - 5
L38861	3D7	42	1821 - 5
L38862	3D7	50	1821 - 5
L38866	3D7	36	1821 - 5
L38889	3D7	22	1821 - 5
L38890	3D7	28	1821 - 5
L38891	3D7	27	1821 - 5
L38892	3D7	20	1821 - 5
L39638	3B20	22	1810 - 3
L39840	1E11	8	0350 - 9
L39983	1D6	10	0250 - 9
L39994	1D8	12	0250 - 11
L39997	1D8	6	0250 - 11
L40121	1D8	6	0250 - 11
L40253	1D6	8	0250 - 9
L40254	1D6	2	0250 - 9
L40552	1D4	13	0250 - 7
L41008	1D8	6	0250 - 11
L41159	1D8	11	0250 - 11
L41170	1D8	6	0250 - 11
L41333	3C2	14	1810 - 9
L42038	3D7	41	1821 - 5
L42039	3D7	57	1821 - 5
L42040	3D7	59	1821 - 5
L42041	3D7	48	1821 - 5
L42042	3D7	49	1821 - 5
L55580	1C2	15	0201 - 11
L55580	2D6	25	1011 - 5
L55601	1D8	10	0250 - 11
L55602	1D8	6	0250 - 11
L55603	1D8	6	0250 - 11
L56822	1C2	16	0201 - 11
L57881	3E6	3	1830 - 3
L57881	3E8	7	1830 - 5
L62419	1D6	4	0250 - 9
L62420	1D6	4	0250 - 9
L63828	1D6	6	0250 - 9
L77651	3C20	28	1810 - 27
L77652	3C20	27	1810 - 27
L78069	1F8	27	0350 - 31
MG272321	4F25	20	3360 - 61
M1340T	3D23	23	1821 - 21
M137181	4B22	21	3315 - 3
M137181	4F25	28	3360 - 61
M137181	4G10	16	3360 - 71
M1746T	1H13	5	0407 - 7
M1746T	1K2	3	0433 - 2
M2655T	3E14	17	1830 - 11
M359T	4C8	9	3315 - 13
M359T	4C10	9	3315 - 15
M359T	4C14	12	3315 - 19
M40333	2F24	16	1671 - 3
M40333	2G17	15	1674 - 13
M40333	2G21	18	1674 - 17
M40333	2G23	18	1674 - 19
M40333	3C8	15	1810 - 15
M40333	3C18	28	1810 - 25
M4237T	1E9	9	0350 - 7
M4237T	2F7	..	1369 - 3
M43835	2H20	2	1674 - 41
M453T	3D23	27	1821 - 21
M45937	2C5	1	0520 - 4
M47031	3D21	5	1821 - 19
M47031	3D21	12	1821 - 19
M47031	3D23	24	1821 - 21

NUMERICAL INDEX - CONTINUED

PART NO.	GRID	KEY	PAGE
M47031	3D25	10	1821 - 23
M526T	2E20	3	1313 - 2
M61266	2B25	4	0510 - 7
M61266	2B25	12	0510 - 7
M63431	1I9	1	0413 - 8
M63431	3C18	6	1810 - 25
M68954	3I21	22	3115 - 5
M68954	3I23	16	3115 - 7
M68954	4B22	9	3315 - 3
M68954	4B24	21	3315 - 5
M68954	4C2	6	3315 - 7
M68954	4C2	20	3315 - 7
M68954	4C4	17	3315 - 9
M68954	4C6	6	3315 - 11
M68954	4C8	10	3315 - 13
M68954	4C10	10	3315 - 15
M68954	4C12	4	3315 - 17
M68954	4C14	10	3315 - 19
M68954	4C18	6	3315 - 23
M68997	3F23	16	1910 - 5
M68997	3F25	13	1913 - 3
M74794	3E14	21	1830 - 11
M78771	2B21	40	0510 - 3
M80373	3I19	13	3115 - 3
M83123	3E12	15	1830 - 9
M84972	3B24	18	1810 - 7
M84972	3G7	7	2001 - 3
M86436	3C14	22A	1810 - 21
M86436	3C14	22B	1810 - 21
M86436	3C14	26	1810 - 21
M86436	3C20	33	1810 - 27
M86533	3F12	28	1830 - 33
M86758	3E14	23	1830 - 11
M86758	3G12	3	2005 - 1
M86863	4E8	5A	3360 - 25
M86863	4E8	26	3360 - 25
M86863	4E12	2	3360 - 25D
M87261	3D21	9	1821 - 19
M87534	4C2	4	3315 - 7
M87534	4C4	4	3315 - 9
M87534	4C6	2	3315 - 11
M87571	1D21	10	0341 - 3
M87571	3H8	2	2160 - 19
M87571	3H8	5	2160 - 19
M87733	1I14	1B	0416 - 3
M87733	1I15	2	0416 - 4
M87733	1I17	2	0416 - 7
M87795	4G19	23	3360 - 81
M87795	4G21	17	3360 - 83
M90214	1D16	7	0315 - 2
N10215	1G13	2	0402 - 1
N10215	1H9	6	0407 - 2
N10215	1H18	9	0408 - 1
N10215	1I19	21	0417 - 3
N10215	1J19	13	0423 - 3
N10215	3D9	8	1821 - 7
N10215	3D15	19	1821 - 13
N105572	4F15	5	3360 - 51
N112006	2C13	18	0560 - 3
N115096	2H20	11	1674 - 41
N119316	1D11	2	0250 - 14
N119316	1D17	1	0325 - 1
N119316	1D18	5	0325 - 2
N125411	3E10	10	1830 - 7
N125411	3E12	8	1830 - 9
N131838	2F7	..	1369 - 3
N191770	2D12	6	1060 - 7
N191770	2D19	4	1060 - 14
N205415	3H8	17	2160 - 19
N231749	1B19	7	0201 - 2
N231749	4C23	16	3340 - 3
N275799	4G24	15	4151 - 3
N275799	4H2	15	4151 - 5
N30256	2H12	13	1674 - 33
N30256	3B24	8	1810 - 7
N30256	3C16	7	1810 - 23
N31772	3J7	14	3160 - 4
N31772	3J8	9	3160 - 5
N31772	3J24	2	3160 - 21
PM797NA	2H22	57	1674 - 43
P41858	3E12	14	1830 - 9
P46051	2F7	..	1369 - 3
P46051	3G25	4	2160 - 10
P48403	2F7	..	1369 - 3
P50631	2C20	2	0960 - 3
P50631	2F7	..	1369 - 3
P50883	2F3	..	1330 - 1
P51212	2F3	..	1330 - 1
RE11154	2H22	57	1674 - 43
RE11156	2H22	36	1674 - 43
RE11157	2H22	37	1674 - 43
RE12176	2C5	4	0520 - 4
RE12330	2H24	14	1674 - 45
RE12331	2H24	12	1674 - 45
RE12332	2H24	18	1674 - 45
RE12333	2H24	21	1674 - 45
RE12334	2H24	8	1674 - 45
RE12362	2H24	4	1674 - 45
RE12363	2G15	5	1674 - 10
RE12363	2H24	11	1674 - 45
RE12364	2H24	16	1674 - 45
RE12365	2H24	20	1674 - 45
RE12366	2H24	25	1674 - 45
RE12518	1C10	7	0210 - 7
RE12842	2F10	..	1369 - 6
RE12926	2I2	13A	1676 - 3
RE13571	1G10	11	0401 - 4
RE14246	3G13	2	2005 - 2
RE14740	3G20	18	2160 - 5
RE15490	1H11	16	0407 - 4
RE155577	1K1	1	0429 - 6
RE159288	2D8	5	1060 - 3
RE159288	2D12	1	1060 - 7
RE159292	2D12	44	1060 - 7
RE16149	1H7	5	0404 - 10
RE16600	3G20	15	2160 - 5
RE16600	3G20	31	2160 - 5
RE166242	1I1	5	0410 - 3
RE17524	3G20	5	2160 - 5
RE17525	3G20	3	2160 - 5
RE17525	3G24	2	2160 - 9
RE19648	1C6	4	0210 - 3
RE19797	1I6	9	0413 - 5
RE19797	1I8	6	0413 - 7
RE19799	1I8	19	0413 - 7
RE19800	1I6	18	0413 - 5
RE19800	1I8	20	0413 - 7
RE19890	1E14	3	0350 - 12
RE19890	1E15	7	0350 - 13
RE19890	1E17	10	0350 - 15
RE20342	2C21	4	0960 - 4
RE20342	2C22	4	0960 - 5
RE20343	3J14	4	3160 - 11
RE20343	3J21	4	3160 - 18
RE20343	4F7	19	3360 - 43
RE20428	2C21	..	0960 - 4
RE20428	2C22	..	0960 - 5
RE20434	4G11	..	3360 - 72
RE20491	4G11	4	3360 - 72
RE20768	1I19	2	0417 - 3
RE20768	1J23	6	0429 - 3
RE20809	3J15	2	3160 - 12
RE20809	3J23	2	3160 - 20
RE20809	4F11	9	3360 - 47
RE20809	4F13	9	3360 - 49
RE20809	4G6	6	3360 - 67
RE20809	4G8	6	3360 - 69
RE20853	1H11	3	0407 - 4
RE20901	1I6	17	0413 - 5
RE21790	2B16	2	0505 - 3
RE21873	2C21	..	0960 - 4
RE22776	4F7	6	3360 - 43
RE22776	4G6	7	3360 - 67
RE22777	4F7	7	3360 - 43
RE24533	2C21	8	0960 - 4
RE24535	4G11	12	3360 - 72
RE24535	4G12	12	3360 - 73
RE24537	4G6	13	3360 - 67
RE25102	4F9	20	3360 - 45
RE25146	4F5	10	3360 - 41
RE25148	4F5	21	3360 - 41
RE25149	4F5	22	3360 - 41
RE25150	4F5	12	3360 - 41
RE25151	4F7	..	3360 - 43
RE25152	4F5	..	3360 - 41
RE25525	1H4	1	0404 - 7
RE26123	1I12	2	0416 - 1
RE26205	1G11	9	0401 - 5
RE26264	3G20	33	2160 - 5
RE26409	1I12	..	0416 - 1
RE26409	1I15	3	0416 - 4
RE27352	1G10	8	0401 - 4
RE27711	3G22	3	2160 - 7
RE27871	1E17	20	0350 - 15
RE28790	3G20	8	2160 - 5
RE28790	3G24	4	2160 - 9
RE28899	4G6	..	3360 - 67
RE29336	2D24	1	1063 - 3
RE29336	2D25	29	1063 - 4
RE29501	1C10	13	0210 - 7
RE29826	2D12	1	1060 - 7
RE30121	4F7	13	3360 - 43
RE30967	4F9	9	3360 - 45
RE31323	1H22	4	0409 - 3
RE31617	1H22	15	0409 - 3
RE31617	1H24	13	0409 - 5
RE31702	1B21	3	0201 - 5
RE31716	3J14	..	3160 - 11
RE31716	3J15	..	3160 - 12
RE31716	4F11	..	3360 - 47
RE31717	3J14	5	3160 - 11
RE31717	3J15	14	3160 - 12
RE31717	4F11	15	3360 - 47
RE31718	3J14	11	3160 - 11
RE31718	3J15	8	3160 - 12
RE31718	4F11	18	3360 - 47
RE31771	1I10	3	0414 - 1
RE31858	1C10	5	0210 - 7
RE31929	1J2	10	0419 - 3
RE32011	1K9	33	0452 - 5
RE32100	1C4	1	0210 - 1

NUMERICAL INDEX - CONTINUED

PART NO.	GRID	KEY	PAGE
RE32361	1J2	1	0419 - 3
RE32529	3G16	1	2160 - 1
RE32529	3G22	31	2160 - 7
RE32530	2E15	7	1160 - 3
RE32557	3J14	21	3160 - 11
RE32557	3J18	17	3160 - 15
RE32558	3J14	2	3160 - 11
RE32558	3J21	2	3160 - 18
RE32560	3J14	10	3160 - 11
RE32560	3J21	10	3160 - 18
RE33058	1I14	15	0416 - 3
RE33115	1G22	7	0403 - 2
RE33115	1G22	10	0403 - 2
RE33525	3G22	16	2160 - 7
RE33525	3G22	27	2160 - 7
RE33540	3G24	31	2160 - 9
RE33636	2B16	1	0505 - 3
RE33968	4G11	3	3360 - 72
RE33968	4G12	3	3360 - 73
RE36215	3C20	7	1810 - 27
RE36215	3C22	2	1810 - 29
RE36215	3C24	4	1810 - 31
RE36288	3G18	2	2160 - 3
RE36288	3G20	..	2160 - 5
RE36288	3H10	18	2160 - 21
RE36519	4F9	13	3360 - 45
RE36534	4F9	14	3360 - 45
RE36942	4G6	27	3360 - 67
RE37003	4G11	..	3360 - 72
RE37003	4G12	..	3360 - 73
RE37006	4G6	2	3360 - 67
RE37006	4G8	2	3360 - 69
RE37008	4G6	12	3360 - 67
RE37008	4G8	12	3360 - 69
RE37014	2C21	7	0960 - 4
RE37014	2C22	7	0960 - 5
RE37076	4F9	11	3360 - 45
RE37083	4F5	20	3360 - 41
RE37089	1I9	12	0413 - 8
RE37091	1I9	3	0413 - 8
RE37702	3J15	19	3160 - 12
RE37702	3J20	1	3160 - 17
RE37774	3J15	1	3160 - 12
RE37774	3J23	1	3160 - 20
RE37776	3J15	7	3160 - 12
RE37776	3J23	7	3160 - 20
RE37981	1J19	5	0423 - 3
RE38087	1I3	10	0413 - 1
RE38503	1K1	2	0429 - 6
RE38529	2C21	19	0960 - 4
RE38531	2C21	2	0960 - 4
RE38531	2C22	2	0960 - 5
RE38852	1K6	13	0452 - 1
RE38858	1K9	33	0452 - 5
RE39167	2D3	2	1011 - 1
RE39167	2D4	2	1011 - 2
RE39243	1J15	9	0422 - 3
RE39245	1J15	10	0422 - 3
RE39247	1J15	14	0422 - 3
RE39249	1J15	3	0422 - 3
RE39250	1J15	11	0422 - 3
RE39251	1J15	1	0422 - 3
RE39252	1G13	9A	0402 - 1
RE40048	1I1	5	0410 - 3
RE42211	1J11	2	0421 - 2
RE42733	1G22	3	0403 - 2
RE42760	1J13	2	0422 - 1
RE42777	1J15	6	0422 - 3
RE42916	1I6	29	0413 - 5
RE43384	1G18	12	0402 - 6
RE43421	1J13	7	0422 - 1
RE43497	2I2	2	1676 - 3
RE43497	2I6	21	1676 - 7
RE43637	1D12	3	0260 - 1
RE44458	1C13	3	0210 - 10
RE44574	1G9	1	0401 - 3
RE44574	1G10	12	0401 - 4
RE44574	1G13	14	0402 - 1
RE44574	1H4	1	0404 - 7
RE44574	1K2	14	0433 - 2
RE44574	1K4	3	0433 - 4
RE44574	1K5	4	0433 - 5
RE44574	1K11	18	0452 - 7
RE45312	1C5	1	0210 - 2
RE45312	1C12	15	0210 - 9
RE45329	1J13	2	0422 - 1
RE45420	1I14	5A	0416 - 3
RE45575	1C13	8	0210 - 10
RE46356	2E11	7	1111 - 7
RE46512	2D14	1	1060 - 9
RE46534	1D12	1	0260 - 1
RE46597	2D15	1	1060 - 10
RE46598	2D16	1	1060 - 11
RE46599	2D17	1	1060 - 12
RE46600	2D18	1	1060 - 13
RE46601	2D19	1	1060 - 14
RE46684	1I24	5	0418 - 3
RE46685	1H2	27	0404 - 5
RE46685	1H14	5	0407 - 8
RE46685	1I20	10	0417 - 5
RE46685	1J4	7	0419 - 5
RE46686	1J4	6	0419 - 5
RE46686	1J10	5	0420 - 7
RE46716	1H17	2	0407 - 11
RE46742	2I6	22	1676 - 7
RE46742	3E6	11B	1830 - 3
RE46742	3E8	13	1830 - 5
RE46787	1H9	1	0407 - 2
RE47070	3E6	13B	1830 - 3
RE47070	3E8	6	1830 - 5
RE47867	1G10	9	0401 - 4
RE48310	2B16	10	0505 - 3
RE48321	2B16	8	0505 - 3
RE48618	1H22	12	0409 - 3
RE48661	1C5	2	0210 - 2
RE48786	1I4	8	0413 - 2
RE48786	1I4	10	0413 - 2
RE48818	1G22	6	0403 - 2
RE48876	2G17	1	1674 - 13
RE49566	1H9	2	0407 - 2
RE49636	3E16	13	1830 - 13
RE49636	3E18	13	1830 - 15
RE49636	3E22	13	1830 - 19
RE49717	2D12	48A	1060 - 7
RE500005	1G21	5A	0402 - 9
RE500005	1G21	5B	0402 - 9
RE500005	1G21	8	0402 - 9
RE500023	1G22	8	0403 - 2
RE500023	1G22	13	0403 - 2
RE500038	4H2	6	4151 - 5
RE500133	1H17	4A	0407 - 11
RE500133	1H17	4B	0407 - 11
RE500137	1K3	3	0433 - 3
RE500159	1J8	5	0420 - 5
RE500159	1J8	14	0420 - 5
RE500608	1G23	3	0403 - 3
RE500631	1G12	15	0401 - 6
RE500718	4H4	10	4151 - 7
RE500718	4H6	10	4151 - 9
RE500737	1I20	14	0417 - 5
RE500737	1I20	16	0417 - 5
RE500824	4G24	6	4151 - 3
RE500824	4H2	6	4151 - 5
RE500824	4H4	5	4151 - 7
RE50113	1C4	1	0210 - 1
RE501298	1J17	12	0422 - 5
RE501351	1J13	7	0422 - 1
RE501456	1K11	33	0452 - 7
RE501540	4H6	5	4151 - 9
RE501580	1H4	1	0404 - 7
RE501580	1K9	33	0452 - 5
RE501938	1G15	3A	0402 - 3
RE501938	1G15	3B	0402 - 3
RE502269	1H12	4	0407 - 5
RE502379	1I8	25	0413 - 7
RE502861	1G18	5	0402 - 6
RE502861	1G18	17	0402 - 6
RE502873	1G18	16	0402 - 6
RE502903	1I11	7	0414 - 2
RE502987	1G21	6	0402 - 9
RE50306	2C20	..	0960 - 3
RE503210	1I14	5B	0416 - 3
RE503210	1I17	11	0416 - 7
RE504036	1H20	6A	0408 - 3
RE504122	2B19	7	0505 - 6
RE504233	1J12	4B	0421 - 3
RE50466	1J8	5	0420 - 5
RE504914	1H12	4	0407 - 5
RE504914	1H12	8	0407 - 5
RE504914	1H12	9	0407 - 5
RE504914	1H12	10	0407 - 5
RE504914	1H12	12	0407 - 5
RE505264	1J23	15	0429 - 3
RE505265	1K1	2	0429 - 6
RE50612	2D3	2	1011 - 1
RE506300	1I24	1	0418 - 3
RE50657	1G25	24	0404 - 3
RE506871	1H20	6B	0408 - 3
RE50752	1J8	..	0420 - 5
RE50752	1J10	13	0420 - 7
RE50770	1G23	3	0403 - 3
RE51052	3F15	1	1830 - 36
RE51052	3F16	1	1830 - 37
RE51281	1J23	15	0429 - 3
RE51648	1J10	26	0420 - 7
RE51649	1J8	..	0420 - 5
RE51649	1J10	1	0420 - 7
RE51688	2D3	2	1011 - 1
RE51688	2D4	2	1011 - 2
RE52242	1H17	2	0407 - 11
RE52326	1G21	5A	0402 - 9
RE52454	3F8	7	1830 - 29
RE52454	3F15	4	1830 - 36
RE52454	3F16	4	1830 - 37
RE52506	3F15	2	1830 - 36
RE52506	3F16	1	1830 - 37
RE52506	3F16	2	1830 - 37
RE52507	3F18	1	1830 - 39
RE52508	3F16	6	1830 - 37
RE52509	3F17	1	1830 - 38
RE52510	3F15	5	1830 - 36

NUMERICAL INDEX - CONTINUED

PART NO.	GRID	KEY	PAGE
RE52510	3F16	5	1830 - 37
RE52660	3G8	1	2002 - 2
RE52850	1G12	4	0401 - 6
RE53400	1J8	12A	0420 - 5
RE53408	3F15	6	1830 - 36
RE53408	3F15	7	1830 - 36
RE53862	1I6	14	0413 - 5
RE53864	1I6	11	0413 - 5
RE53865	1I6	13	0413 - 5
RE53865	1I6	15	0413 - 5
RE53866	1I6	7	0413 - 5
RE53867	1I6	10	0413 - 5
RE54130	1G10	1	0401 - 4
RE54327	1G20	3	0402 - 8
RE54885	1I17	8	0416 - 7
RE54945	1J6	7	0420 - 3
RE54946	1J6	11	0420 - 3
RE55087	1J15	11	0422 - 3
RE55378	1J13	7	0422 - 1
RE56109	2C20	..	0960 - 3
RE56313	1G12	15	0401 - 6
RE56369	1G12	21	0401 - 6
RE56389	1H11	3	0407 - 4
RE56443	1G13	9B	0402 - 1
RE56449	1I19	26	0417 - 3
RE56450	1J21	2	0429 - 1
RE56578	1G17	4	0402 - 5
RE56690	1J4	2	0419 - 5
RE56946	2D12	1	1060 - 7
RE56958	2D12	1	1060 - 7
RE57112	1I6	29	0413 - 5
RE57489	1H24	14	0409 - 5
RE57575	3E20	33	1830 - 17
RE57575	3E22	33	1830 - 19
RE57724	1I14	3	0416 - 3
RE58304	3G24	31	2160 - 9
RE58348	3F15	6	1830 - 36
RE58348	3F15	7	1830 - 36
RE59355	1J24	2	0429 - 4
RE59438	1I17	4	0416 - 7
RE59469	1I11	5	0414 - 2
RE59582	1H12	4	0407 - 5
RE59754	1H17	7	0407 - 11
RE59754	2F17	3	1399 - 1
RE59810	1G15	11	0402 - 3
RE59810	1K11	19	0452 - 7
RE59811	1G12	4	0401 - 6
RE59811	1G12	22	0401 - 6
RE59908	1H17	4A	0407 - 11
RE59908	1H17	8	0407 - 11
RE60005	1H22	4	0409 - 3
RE60005	1H24	3	0409 - 5
RE60017	4G24	16	4151 - 3
RE60017	4H2	16	4151 - 5
RE60022	1J10	12	0420 - 7
RE60029	1I8	22	0413 - 7
RE60029	1J10	3	0420 - 7
RE60029	2C13	24	0560 - 3
RE60055	1I8	7	0413 - 7
RE60056	1I8	8	0413 - 7
RE60057	1I8	9	0413 - 7
RE60058	1I8	10	0413 - 7
RE60059	1I8	11	0413 - 7
RE60060	1I8	12	0413 - 7
RE60071	1I11	7	0414 - 2
RE60074	1I15	3	0416 - 4
RE60706	2D18	1	1060 - 13
RE60707	2D14	1	1060 - 9
RE60708	2D15	1	1060 - 10
RE60709	2D19	1	1060 - 14
RE60841	1H4	1	0404 - 7
RE60854	1J10	16	0420 - 7
RE60887	2H16	2	1674 - 37
RE60887	2H18	2	1674 - 39
RE60887	3F8	6	1830 - 29
RE60888	2H16	3	1674 - 37
RE60888	2H18	3	1674 - 39
RE60888	3F8	5	1830 - 29
RE61648	3G7	19	2001 - 3
RE62084	2D8	5	1060 - 3
RE62084	2D12	1	1060 - 7
RE62084	2D24	39	1063 - 3
RE62101	1I14	15	0416 - 3
RE62148	1G18	12	0402 - 6
RE62240	1I9	12	0413 - 8
RE62419	1J8	12A	0420 - 5
RE62419	1J8	12B	0420 - 5
RE62419	1J10	15	0420 - 7
RE62419	2F17	8	1399 - 1
RE62773	1I12	2	0416 - 1
RE63180	1J8	5	0420 - 5
RE63587	2D19	1	1060 - 14
RE65165	1G12	7	0401 - 6
RE65168	1G12	10	0401 - 6
RE65188	1J13	7	0422 - 1
RE65908	1G23	11	0403 - 3
RE65909	1G23	11	0403 - 3
RE65911	1G12	7	0401 - 6
RE65912	1G12	10	0401 - 6
RE65969	1G23	10	0403 - 3
RE65978	1I17	6	0416 - 7
RE65981	1H2	3	0404 - 5
RE65981	1H6	1	0404 - 9
RE66083	1K7	12	0452 - 2
RE66085	1K7	17	0452 - 2
RE66087	1K11	33	0452 - 7
RE66097	1K11	33	0452 - 7
RE66124	1I14	5B	0416 - 3
RE66124	1I17	11	0416 - 7
RE66153	1J12	2	0421 - 3
RE66178	1H10	1	0407 - 3
RE66298	1J12	4A	0421 - 3
RE66334	1H15	1	0407 - 9
RE66820	1G22	6	0403 - 2
RE66820	1G23	6	0403 - 3
RE67231	1J4	1	0419 - 5
RE67238	1H15	1	0407 - 9
RE67238	1H17	6	0407 - 11
RE67238	1J4	14	0419 - 5
RE67239	1G15	5	0402 - 3
RE67239	1G15	10	0402 - 3
RE67240	1G15	10	0402 - 3
RE67321	2D8	5	1060 - 3
RE67321	2D12	1	1060 - 7
RE67321	2D24	39	1063 - 3
RE67597	1I8	25	0413 - 7
RE67861	2D19	1	1060 - 14
RE68000	2D17	1	1060 - 12
RE68327	2G17	1	1674 - 13
RE68327	2G21	4	1674 - 17
RE68327	2G23	4	1674 - 19
RE68695	1G19	9	0402 - 7
RE68715	1J19	5	0423 - 3
RE68722	1J23	15	0429 - 3
RE68748	1I6	4	0413 - 5
RE68748	1I8	4	0413 - 7
RE68908	1I20	19	0417 - 5
RE68908	3E8	22	1830 - 5
RE68998	1J23	10	0429 - 3
RE69561	4G24	6	4151 - 3
RE70153	1H12	4	0407 - 5
RE70212	1I1	5	0410 - 3
RE70358	1J10	12	0420 - 7
RE70358	1J10	14	0420 - 7
RE70387	1K3	3	0433 - 3
RE70400	1G21	6	0402 - 9
RE70486	1J17	4	0422 - 5
RE70487	1J17	5	0422 - 5
RE70535	1J23	18	0429 - 3
RE70683	1I20	14	0417 - 5
RE70683	1I20	16	0417 - 5
RE70756	1J17	11	0422 - 5
RE70848	1I8	3	0413 - 7
RE71143	1H12	1	0407 - 5
RE71240	1I20	15	0417 - 5
RE71256	1J17	6	0422 - 5
R100105	1G9	16	0401 - 3
R100122	1C8	9	0210 - 5
R100146	3G20	26	2160 - 5
R100262	1C8	21	0210 - 5
R100314	1C13	9	0210 - 10
R100369	1I20	14	0417 - 5
R100377	1J20	7	0423 - 4
R100424	2D3	1	1011 - 1
R100508	1J15	13	0422 - 3
R100509	1J15	8	0422 - 3
R100511	1J15	7	0422 - 3
R100512	1J15	12	0422 - 3
R100513	1J15	5	0422 - 3
R100583	2E11	9	1111 - 7
R100610	1C12	10	0210 - 9
R10093	1H9	10	0407 - 2
R10093	2D12	30	1060 - 7
R10093	2D14	11	1060 - 9
R10093	2D15	4	1060 - 10
R10093	2F3	..	1330 - 1
R10093	2F3	..	1330 - 1
R10093	2F7	..	1369 - 3
R10093	3F8	20	1830 - 29
R10093	3F10	16	1830 - 31
R10093	3F12	2	1830 - 33
R10093	3F12	13	1830 - 33
R10093	3F14	6	1830 - 35
R101085	1G15	3A	0402 - 3
R101201	1I3	5	0413 - 1
R101201	1I6	28	0413 - 5
R101225	1G12	11	0401 - 6
R101225	1G12	14	0401 - 6
R104592	1G25	9	0404 - 3
R104592	1H2	5	0404 - 5
R104592	1H22	6	0409 - 3
R104592	1H24	5	0409 - 5
R104595	3C16	4	1810 - 23
R104777	1C8	6	0210 - 5
R105346	1I14	16	0416 - 3
R105346	1K6	11	0452 - 1
R105346	1K9	26	0452 - 5
R105547	3G22	5	2160 - 7
R105584	3G20	14	2160 - 5
R105584	3G20	32	2160 - 5
R105714	1J2	8	0419 - 3

NUMERICAL INDEX - CONTINUED

PART NO.	GRID	KEY	PAGE
R105812	2C2	40	0515 - 3
R106116	1G18	11	0402 - 6
R106697	3G22	22	2160 - 7
R106743	2D3	4	1011 - 1
R106743	2D4	4	1011 - 2
R106744	2D3	5	1011 - 1
R106744	2D4	5	1011 - 2
R106789	1C8	10	0210 - 5
R106975	2D3	3	1011 - 1
R107005	1B24	3	0201 - 9
R107253	1B21	8	0201 - 5
R107654	1J23	16	0429 - 3
R107731	1G18	9	0402 - 6
R107731	1G19	11	0402 - 7
R107749	1J23	14	0429 - 3
R107749	1K1	3	0429 - 6
R108037	2D12	5	1060 - 7
R108038	2D12	7	1060 - 7
R108038	2D12	8	1060 - 7
R108042	2D12	40	1060 - 7
R108045	2D12	10	1060 - 7
R108051	2D12	23	1060 - 7
R108052	2D12	11	1060 - 7
R108062	2D12	18	1060 - 7
R108066	2D12	38	1060 - 7
R108067	2D12	41	1060 - 7
R108380	1H13	2	0407 - 7
R109079	1B24	9	0201 - 9
R109086	1J21	3	0429 - 1
R109114	3G22	20	2160 - 7
R109123	1B24	10	0201 - 9
R109124	1B24	11	0201 - 9
R109125	1B24	8	0201 - 9
R109128	1B24	6	0201 - 9
R109863	1G9	7	0401 - 3
R109863	1G9	22	0401 - 3
R109863	1G12	12	0401 - 6
R109872	1J6	12	0420 - 3
R110531	1I10	1	0414 - 1
R110531	1I11	1	0414 - 2
R110664	4H4	11	4151 - 7
R110664	4H6	11	4151 - 9
R111081	1H4	1	0404 - 7
R111135	1G25	12	0404 - 3
R111135	1G25	24	0404 - 3
R111137	1G25	11	0404 - 3
R111137	1G25	24	0404 - 3
R111137	1H2	10	0404 - 5
R111464	1G25	24	0404 - 3
R111464	1H4	1	0404 - 7
R1115R	3G22	11	2160 - 7
R111632	2I2	1	1676 - 3
R111632	2I6	25	1676 - 7
R111632	3E6	9	1830 - 3
R111632	3E8	16	1830 - 5
R112049	3C14	20	1810 - 21
R112078	1B24	8	0201 - 9
R112210	1C8	6	0210 - 5
R112210	1C8	21	0210 - 5
R112706	1H9	4	0407 - 2
R11278	3G10	1	2004 - 1
R112857	2F9	..	1369 - 5
R112857	3G20	39	2160 - 5
R112857	3G24	15	2160 - 9
R112873	1E17	25	0350 - 15
R112880	1C10	2	0210 - 7
R112887	1C6	1	0210 - 3
R113050	2F3	..	1330 - 1
R113050	3E20	30	1830 - 17
R113050	3E22	30	1830 - 19
R113050	3F8	32	1830 - 29
R113050	3F10	23	1830 - 31
R113050	3F12	8	1830 - 33
R113050	3F14	2	1830 - 35
R113057	2D12	43	1060 - 7
R113058	2D12	33	1060 - 7
R113058	2D17	4	1060 - 12
R113061	2D12	37	1060 - 7
R113562	1J8	4	0420 - 5
R113563	1J8	10	0420 - 5
R113612	1G22	3	0403 - 2
R113664	2D3	1	1011 - 1
R114081	1G23	3	0403 - 3
R114082	1G23	2	0403 - 3
R114083	1G23	1	0403 - 3
R114157	1H22	2	0409 - 3
R114157	1K6	3	0452 - 1
R114157	1K9	10	0452 - 5
R114193	1G12	20	0401 - 6
R114194	1G12	23	0401 - 6
R114241	1H2	17	0404 - 5
R114346	1B23	2	0201 - 7
R115176	1C13	4	0210 - 10
R115250	1I21	1	0417 - 6
R115252	1J4	10	0419 - 5
R115390	1H2	15	0404 - 5
R115390	1H11	10	0407 - 4
R115469	1B21	2	0201 - 5
R115742	3F15	3	1830 - 36
R115742	3F16	1	1830 - 37
R115742	3F16	3	1830 - 37
R115743	3F15	6	1830 - 36
R115743	3F16	7	1830 - 37
R116031	4F25	5	3360 - 61
R116076	1G12	4	0401 - 6
R116115	1H17	4A	0407 - 11
R116115	1H17	9	0407 - 11
R116116	1J10	23	0420 - 7
R116156	1B21	8	0201 - 5
R116156	1B23	5	0201 - 7
R116181	2D4	3	1011 - 2
R116182	2D4	1	1011 - 2
R116256	1C8	21	0210 - 5
R116296	1H15	2	0407 - 9
R116339	1I6	25	0413 - 5
R116366	1I4	5	0413 - 2
R116386	1I8	18	0413 - 7
R116424	1H11	1	0407 - 4
R116466	1H2	12	0404 - 5
R116516	1H24	12	0409 - 5
R116516	1K7	8	0452 - 2
R116516	1K11	8	0452 - 7
R116542	1B21	1	0201 - 5
R116542	1B23	1	0201 - 7
R116632	1J6	13	0420 - 3
R116713	3G20	28	2160 - 5
R116801	1C8	13	0210 - 5
R116868	2D3	1	1011 - 1
R116904	1J6	14	0420 - 3
R117721	3E6	10	1830 - 3
R117721	3E8	2	1830 - 5
R118205	2D12	35	1060 - 7
R118205	2D14	16	1060 - 9
R119269	1G13	10	0402 - 1
R119269	1K9	6	0452 - 5
R119314	1G18	6	0402 - 6
R119565	1H2	3	0404 - 5
R119565	1H6	1	0404 - 9
R119874	1H2	6	0404 - 5
R120013	1I14	11	0416 - 3
R120052	1H22	11	0409 - 3
R120052	1H22	12	0409 - 3
R120137	1I19	11	0417 - 3
R120137	1I19	26	0417 - 3
R120194	1C6	1	0210 - 3
R120467	1H20	1A	0408 - 3
R120631	1G12	3	0401 - 6
R120638	1H12	6	0407 - 5
R120641	1G12	12	0401 - 6
R120653	3C16	4	1810 - 23
R121035	1I20	16	0417 - 5
R121039	1K5	7	0433 - 5
R121043	1H2	9	0404 - 5
R121314	1G13	10	0402 - 1
R121314	1K9	6	0452 - 5
R121376	1H12	7	0407 - 5
R121411	1G15	8	0402 - 3
R121424	1G15	7	0402 - 3
R121608	1H24	14	0409 - 5
R121634	1I21	4	0417 - 6
R121674	1G21	4	0402 - 9
R121751	3G22	34	2160 - 7
R121897	1J24	3	0429 - 4
R122226	1G13	1	0402 - 1
R122226	1G25	8	0404 - 3
R122351	3F15	6	1830 - 36
R122351	3F15	7	1830 - 36
R122618	1G13	7	0402 - 1
R122618	1H9	8	0407 - 2
R122618	1J19	4	0423 - 3
R122845	1H2	7	0404 - 5
R122848	2F25	4	1672 - 2
R122849	2D3	5	1011 - 1
R122849	2D4	5	1011 - 2
R122850	2D3	4	1011 - 1
R122850	2D4	4	1011 - 2
R123161	1G18	14	0402 - 6
R123161	1G19	7	0402 - 7
R123174	1G12	11	0401 - 6
R123177	1G23	5	0403 - 3
R123179	1H12	4	0407 - 5
R123226	1I20	9	0417 - 5
R123226	1I24	7	0418 - 3
R123226	1K7	4	0452 - 2
R123226	1K11	4	0452 - 7
R123246	1I1	3	0410 - 3
R123271	1G19	5	0402 - 7
R123273	1J12	7	0421 - 3
R123273	1K11	20	0452 - 7
R123323	1I24	9	0418 - 3
R123324	1I24	11	0418 - 3
R123345	1K7	5	0452 - 2
R123345	1K11	5	0452 - 7
R123354	1H14	1	0407 - 8
R123354	1K7	13	0452 - 2
R123354	1K11	12	0452 - 7
R123417	1I20	13	0417 - 5
R123417	1K11	21	0452 - 7
R123421	1K11	22	0452 - 7
R123425	1K11	22	0452 - 7
R123471	1J4	5	0419 - 5

NUMERICAL INDEX - CONTINUED

PART NO.	GRID	KEY	PAGE
R123475	1H17	4A	0407 - 11
R123500	3F12	42	1830 - 33
R123501	1J4	3	0419 - 5
R123501	1K11	23	0452 - 7
R123502	1J4	8	0419 - 5
R123502	1K11	20	0452 - 7
R123504	1K11	24	0452 - 7
R123514	1G18	2	0402 - 6
R123514	1G18	15	0402 - 6
R123514	1G19	2	0402 - 7
R123521	1K3	4	0433 - 3
R123523	1K1	1	0429 - 6
R123525	1H17	1A	0407 - 11
R123525	1K11	25	0452 - 7
R123543	1G21	7	0402 - 9
R123543	1K7	1	0452 - 2
R123543	1K11	1	0452 - 7
R123561	1G12	5	0401 - 6
R123562	1G12	6	0401 - 6
R123563	1G12	8	0401 - 6
R123564	1G12	9	0401 - 6
R123565	1G19	10	0402 - 7
R123570	1I17	3	0416 - 7
R123570	1K7	6	0452 - 2
R123570	1K11	6	0452 - 7
R123572	1H25	5	0410 - 2
R123572	1I14	14	0416 - 3
R123572	1I15	5	0416 - 4
R123572	1K6	4	0452 - 1
R123572	1K7	11	0452 - 2
R123572	1K9	21	0452 - 5
R123572	1K11	11	0452 - 7
R123574	1G21	2	0402 - 9
R123575	1G21	3	0402 - 9
R123575	1K7	7	0452 - 2
R123575	1K11	7	0452 - 7
R123584	1G15	18	0402 - 3
R123586	1H20	1B	0408 - 3
R123588	1I24	10	0418 - 3
R123591	1H17	8	0407 - 11
R123593	1I6	2	0413 - 5
R123593	1I8	4	0413 - 7
R123593	1I8	13	0413 - 7
R123616	1H2	26	0404 - 5
R124277	1I14	12	0416 - 3
R124277	1I14	15	0416 - 3
R124852	1G25	24	0404 - 3
R124852	1H4	1	0404 - 7
R125066	1G13	5	0402 - 1
R125066	1K9	5	0452 - 5
R125122	2D3	3	1011 - 1
R125123	2D3	1	1011 - 1
R125124	1C8	21	0210 - 5
R125124	2D4	3	1011 - 2
R125126	1C8	21	0210 - 5
R125126	2D4	1	1011 - 2
R125223	3F10	17	1830 - 31
R125223	3F12	16	1830 - 33
R125880	1G18	11	0402 - 6
R125881	1G18	6	0402 - 6
R126041	1G13	6	0402 - 1
R126513	1K9	6	0452 - 5
R127771	2D12	36	1060 - 7
R127839	1B23	2	0201 - 7
R128660	1J23	11	0429 - 3
R130574	1G12	8	0401 - 6
R130575	1G12	9	0401 - 6
R130576	1G12	5	0401 - 6
R130577	1G12	6	0401 - 6
R130602	1G23	2	0403 - 3
R130886	1H10	7	0407 - 3
R131016	1I24	3	0418 - 3
R131182	1H2	21	0404 - 5
R131206	1G12	16	0401 - 6
R131283	1G12	19	0401 - 6
R131768	1K4	2	0433 - 4
R131769	1K2	16	0433 - 2
R131769	1K5	3	0433 - 5
R131794	1H7	1	0404 - 10
R131794	1K9	3	0452 - 5
R132006	1K5	2	0433 - 5
R132166	1J20	3	0423 - 4
R132167	1J20	2	0423 - 4
R132186	1H2	20	0404 - 5
R132262	1I2	1	0410 - 4
R132267	1I8	14	0413 - 7
R132417	1C8	21	0210 - 5
R132518	1H2	7	0404 - 5
R132528	1J23	2	0429 - 3
R132574	1C8	6	0210 - 5
R132615	2D3	4	1011 - 1
R132615	2D4	4	1011 - 2
R132653	1H13	2	0407 - 7
R132690	3F12	49	1830 - 33
R132840	2D12	21	1060 - 7
R132841	2D12	22	1060 - 7
R132843	2D12	42	1060 - 7
R132845	2D12	39	1060 - 7
R132874	1I6	27	0413 - 5
R132874	1I6	29	0413 - 5
R132874	1I8	15	0413 - 7
R132913	1J20	1	0423 - 4
R133059	1J23	24	0429 - 3
R133060	1J23	22	0429 - 3
R133061	1J23	4	0429 - 3
R133295	1J24	1	0429 - 4
R133303	1G17	3	0402 - 5
R133405	1J12	5	0421 - 3
R133808	1J23	3	0429 - 3
R133812	1G17	2	0402 - 5
R133848	1J23	1	0429 - 3
R133978	1J23	29	0429 - 3
R134030	1J23	7	0429 - 3
R134226	1K4	1	0433 - 4
R134240	1H10	8	0407 - 3
R134465	3H5	3	2160 - 15
R134465	4G24	13	4151 - 3
R134465	4H2	13	4151 - 5
R134465	4H4	6	4151 - 7
R134465	4H6	6	4151 - 9
R134518	1G15	19	0402 - 3
R134526	1H8	1	0404 - 11
R134527	1H8	1	0404 - 11
R134530	1G15	2	0402 - 3
R134531	1G15	2	0402 - 3
R134533	1G15	1	0402 - 3
R134533	1K11	22	0452 - 7
R134534	1K11	22	0452 - 7
R134552	1H10	2	0407 - 3
R134725	1H14	2	0407 - 8
R135052	1C8	21	0210 - 5
R135052	1C12	10	0210 - 9
R135177	1J4	11A	0419 - 5
R135198	1J23	17	0429 - 3
R135200	1J23	17	0429 - 3
R135440	1G17	1	0402 - 5
R135440	1G17	4	0402 - 5
R135509	1J17	2	0422 - 5
R135510	1J17	3	0422 - 5
R135531	1J23	19	0429 - 3
R135535	1C12	12	0210 - 9
R135543	1B24	2	0201 - 9
R135543	1C8	21	0210 - 5
R135543	1C12	6	0210 - 9
R135579	1C12	10	0210 - 9
R135612	1J23	17	0429 - 3
R135757	4G24	4	4151 - 3
R135757	4H2	4	4151 - 5
R135757	4H4	3	4151 - 7
R135757	4H6	3	4151 - 9
R135841	1I20	17	0417 - 5
R135896	1I24	2	0418 - 3
R135896	1K7	3	0452 - 2
R135896	1K11	3	0452 - 7
R135918	1K3	1	0433 - 3
R135918	1K4	6	0433 - 4
R135918	1K5	10	0433 - 5
R136475	1H8	2	0404 - 11
R136495	1H15	3	0407 - 9
R136495	1K11	31	0452 - 7
R136515	1G15	1	0402 - 3
R136515	1K11	22	0452 - 7
R136516	1G15	1	0402 - 3
R136516	1K11	22	0452 - 7
R149003	3F14	5	1830 - 35
R150473	1C8	21	0210 - 5
R1612R	1E17	14	0350 - 15
R163304	1B23	2	0201 - 7
R1742R	1F13	11	0360 - 7
R21612	1C8	8	0210 - 5
R21722	1E12	4	0350 - 10
R26081	4B22	14	3315 - 3
R26125	1H22	5	0409 - 3
R26125	1H24	4	0409 - 5
R26137	3G20	7	2160 - 5
R26198	1E15	9	0350 - 13
R26227	1C12	3	0210 - 9
R26228	1C12	3	0210 - 9
R26229	1C12	3	0210 - 9
R26282	4F7	12	3360 - 43
R26286	1D23	26	0341 - 5
R26286	1F23	21	0360 - 17
R26286	1I6	20	0413 - 5
R26286	1K9	9	0452 - 5
R26286	2C5	3	0520 - 4
R26286	2D24	6	1063 - 3
R26286	2D25	2	1063 - 4
R26286	2F7	..	1369 - 3
R26287	1C13	5	0210 - 10
R26287	1D21	21	0341 - 3
R26287	1E12	16	0350 - 10
R26287	2D12	26	1060 - 7
R26287	2D14	7	1060 - 9
R26287	2D24	4	1063 - 3
R26287	2F7	..	1369 - 3
R26287	4D11	7	3360 - 3
R26287	4D13	4	3360 - 5
R26287	4D15	4	3360 - 7
R26287	4D17	17	3360 - 9
R26287	4D19	4	3360 - 11
R26287	4D21	4	3360 - 13

NUMERICAL INDEX - CONTINUED

PART NO.	GRID	KEY	PAGE
R26287	4D23	4	3360 - 15
R26287	4D24	1	3360 - 16
R26287	4E10	24	3360 - 25B
R26287	4E22	1	3360 - 33
R26333	2I13	8	1749 - 1
R26375	1C8	2	0210 - 5
R26375	1E12	15	0350 - 10
R26375	1F10	14	0360 - 3
R26375	1F11	3	0360 - 4
R26375	1F13	12	0360 - 7
R26375	1F15	11	0360 - 9
R26375	2C24	6	0960 - 7
R26375	2D22	9	1060 - 17
R26375	2E2	4	1063 - 7
R26375	2E13	27	1111 - 9
R26375	2E15	8	1160 - 3
R26375	2E15	25	1160 - 3
R26375	2E15	47	1160 - 3
R26375	2E17	12	1160 - 5
R26375	2F7	..	1369 - 3
R26375	3G20	16	2160 - 5
R26375	3G22	12	2160 - 7
R26375	3G22	23	2160 - 7
R26375	3G22	28	2160 - 7
R26375	3G24	7	2160 - 9
R26375	3G24	20	2160 - 9
R26375	3G24	23	2160 - 9
R26375	3G24	28	2160 - 9
R26375	3G25	3	2160 - 10
R26375	3H1	13	2160 - 11
R26375	4E10	6	3360 - 25B
R26375	4F23	3	3360 - 59
R26375	4G2	5	3360 - 63
R26375	4G4	5	3360 - 65
R26375	4G10	11	3360 - 71
R26375	4G13	3	3360 - 75
R26448	1C8	11	0210 - 5
R26448	1C12	4	0210 - 9
R26448	1C17	2	0210 - 14
R26448	1D21	13	0341 - 3
R26448	1D23	8	0341 - 5
R26448	1F10	27	0360 - 3
R26448	2C24	26	0960 - 7
R26448	2D12	27	1060 - 7
R26448	2D14	8	1060 - 9
R26448	2D22	5	1060 - 17
R26448	2D22	19	1060 - 17
R26448	2D24	21	1063 - 3
R26448	2E2	12	1063 - 7
R26448	2E4	1	1063 - 9
R26448	2E15	28	1160 - 3
R26448	2E15	30	1160 - 3
R26448	2F7	..	1369 - 3
R26448	3G22	4	2160 - 7
R26448	3G22	14	2160 - 7
R26448	3G22	17	2160 - 7
R26448	3G24	18	2160 - 9
R26448	3G24	21	2160 - 9
R26448	3G24	22	2160 - 9
R26448	3G24	24	2160 - 9
R26448	3G24	25	2160 - 9
R26448	3I9	15	3102 - 7
R26448	3I13	15	3102 - 9B
R26448	4E17	5	3360 - 28
R26448	4G13	9	3360 - 75
R26448	4G19	26	3360 - 81
R26448	4G21	5	3360 - 83
R26491	3D2	21	1810 - 33
R26493	1G25	13	0404 - 3
R26493	1H2	11	0404 - 5
R26552	2D12	2	1060 - 7
R26552	2D17	2	1060 - 12
R26552	2D19	2	1060 - 14
R26650	1G25	14	0404 - 3
R26650	1H2	13	0404 - 5
R26686	1F15	15	0360 - 9
R26753	1E7	19	0350 - 5
R26753	1E12	10	0350 - 10
R26773	2F7	..	1369 - 3
R26863	2F7	..	1369 - 3
R26871	3C22	33	1810 - 29
R26871	3C24	17	1810 - 31
R26906	1C8	16	0210 - 5
R26906	1D23	22	0341 - 5
R26906	2C24	26	0960 - 7
R26906	2E13	22	1111 - 9
R26906	2E17	13	1160 - 5
R26906	2F7	..	1369 - 3
R26906	3H1	3	2160 - 11
R26906	3H18	48	2160 - 29
R26906	4E10	18	3360 - 25B
R26906	4G19	4	3360 - 81
R26906	4G21	4	3360 - 83
R26908	2E22	8	1313 - 5
R26936	3D11	36	1821 - 9
R26936	3D25	8	1821 - 23
R27094	1D23	27	0341 - 5
R27094	1F23	22	0360 - 17
R27094	2D25	1	1063 - 4
R27149	1K2	7	0433 - 2
R27166	2F3	..	1330 - 1
R27166	2F7	..	1369 - 3
R27175	1C8	4	0210 - 5
R27175	1C8	13	0210 - 5
R27175	1C8	21	0210 - 5
R27175	1C12	9	0210 - 9
R27175	1F13	1	0360 - 7
R27175	4E18	2	3360 - 29
R27181	2C13	12	0560 - 3
R27218	1C12	5	0210 - 9
R27218	1D21	23	0341 - 3
R27218	1D23	17	0341 - 5
R27218	1F10	28	0360 - 3
R27218	2E15	29	1160 - 3
R27218	4E17	6	3360 - 28
R27272	1I6	19	0413 - 5
R27434	4B22	12	3315 - 3
R27474	1C8	15	0210 - 5
R27474	1H13	7	0407 - 7
R27478	3G20	29	2160 - 5
R27479	3G20	29	2160 - 5
R27649	2D25	14	1063 - 4
R27928	2F7	..	1369 - 3
R27928	3J7	13	3160 - 4
R27928	3J7	15	3160 - 4
R27928	3J8	7	3160 - 5
R27928	3J8	10	3160 - 5
R28009	3C18	3	1810 - 25
R28035	2D8	13	1060 - 3
R28035	2D10	1	1060 - 5
R28574	1C18	2	0230 - 1
R28583	2B16	5	0505 - 3
R28776	1D23	24	0341 - 5
R28776	1F13	8	0360 - 7
R28776	1F15	13	0360 - 9
R28776	2D12	32	1060 - 7
R28776	2D14	13	1060 - 9
R28776	2D17	3	1060 - 12
R28776	2E15	10	1160 - 3
R28776	2E15	16	1160 - 3
R28776	2E15	49	1160 - 3
R28776	2F3	..	1330 - 1
R28776	2F7	..	1369 - 3
R28776	3F8	22	1830 - 29
R28776	3F8	45	1830 - 29
R28776	3F10	25	1830 - 31
R28776	3F14	10	1830 - 35
R28782	1C17	5	0210 - 14
R28782	2C24	1	0960 - 7
R28782	2C24	33	0960 - 7
R28782	2D3	..	1011 - 1
R28782	2D4	..	1011 - 2
R28782	2D22	2	1060 - 17
R28782	2D22	21	1060 - 17
R28782	2E15	22	1160 - 3
R28782	2E17	8	1160 - 5
R28782	2F7	..	1369 - 3
R28782	3G24	5	2160 - 9
R28782	3H10	25	2160 - 21
R28782	3H14	29	2160 - 25
R28782	3H18	25	2160 - 29
R28782	3J22	6	3160 - 19
R28782	4E8	7	3360 - 25
R28782	4E10	26	3360 - 25B
R28782	4E12	10	3360 - 25D
R28782	4E22	14	3360 - 33
R28795	2C6	2	0520 - 5
R28811	1K3	2	0433 - 3
R29463	2F7	..	1369 - 3
R29936	1D23	11	0341 - 5
R29936	2F7	..	1369 - 3
R29936	3G24	12	2160 - 9
R29936	3G24	13	2160 - 9
R29936	3H8	14	2160 - 19
R29936	3H10	37	2160 - 21
R29936	3H14	43	2160 - 25
R29936	3H18	43	2160 - 29
R29936	4D11	5	3360 - 3
R29936	4D21	28	3360 - 13
R29936	4D23	28	3360 - 15
R29936	4E8	12	3360 - 25
R29936	4E8	13	3360 - 25
R29936	4E10	35	3360 - 25B
R29936	4E12	14	3360 - 25D
R29936	4E17	3	3360 - 28
R29936	4E18	5	3360 - 29
R29936	4F17	1	3360 - 53
R29936	4F19	3	3360 - 55
R29936	4F21	2	3360 - 57
R29936	4G2	9	3360 - 63
R29936	4G2	11	3360 - 63
R29936	4G2	17	3360 - 63
R29936	4G4	9	3360 - 65
R29936	4G4	11	3360 - 65
R29936	4G4	25	3360 - 65
R29936	4G15	11	3360 - 77
R29936	4G17	2	3360 - 79
R29936	4G17	23	3360 - 79
R29936	4G17	27	3360 - 79
R29936	4G19	25	3360 - 81
R29936	4G21	13	3360 - 83

NUMERICAL INDEX - CONTINUED

PART NO.	GRID	KEY	PAGE
R30378	2H22	43	1674 - 43
R30903	2D12	24	1060 - 7
R30903	2D12	25	1060 - 7
R30903	2D14	5	1060 - 9
R30903	2D14	6	1060 - 9
R30903	2F7	..	1369 - 3
R30903	4E10	10	3360 - 25B
R31631	1D21	22	0341 - 3
R31631	1E12	17	0350 - 10
R31631	4D11	8	3360 - 3
R31632	2D25	20	1063 - 4
R32026	2H22	48	1674 - 43
R32136	1J6	10	0420 - 3
R32548	2D22	16	1060 - 17
R32548	2G14	8	1674 - 9
R33138	1F15	10	0360 - 9
R33138	3G20	17	2160 - 5
R33246	1E7	11	0350 - 5
R33247	1E7	15	0350 - 5
R33259	1D23	16	0341 - 5
R33259	2E15	12	1160 - 3
R33259	2E15	40	1160 - 3
R33259	2F3	..	1330 - 1
R33259	2F3	..	1330 - 1
R33259	2F7	..	1369 - 3
R33259	3E20	31	1830 - 17
R33259	3E22	31	1830 - 19
R33259	3F8	21	1830 - 29
R33259	3F10	20	1830 - 31
R33259	3F12	7	1830 - 33
R33259	3G20	41	2160 - 5
R33259	3G24	14	2160 - 9
R33325	1E7	13	0350 - 5
R33493	1C6	14	0210 - 3
R33521	1F13	4	0360 - 7
R33521	1F13	16	0360 - 7
R33976	2C2	27	0515 - 3
R34140	1E11	5	0350 - 9
R34513	1C6	11	0210 - 3
R34812	2F3	..	1330 - 1
R35352	1I6	16	0413 - 5
R35684	2D25	5	1063 - 4
R35794	2D24	9	1063 - 3
R36235	3B24	16	1810 - 7
R36358	3G24	29	2160 - 9
R36575	3H4	2	2160 - 14
R36636	1D23	12	0341 - 5
R36636	3H8	15	2160 - 19
R36636	4D21	27	3360 - 13
R36636	4D23	27	3360 - 15
R36636	4E8	14	3360 - 25
R36636	4E12	20	3360 - 25D
R36636	4E18	4	3360 - 29
R36636	4G2	10	3360 - 63
R36636	4G4	10	3360 - 65
R36636	4G17	1	3360 - 79
R375R	1C8	20	0210 - 5
R375R	1E14	12	0350 - 12
R375R	1E14	14	0350 - 12
R375R	2F7	..	1369 - 3
R39112	1C8	1	0210 - 5
R39112	1E12	14	0350 - 10
R39112	1F13	14	0360 - 7
R39112	1K5	1	0433 - 5
R39112	3G22	13	2160 - 7
R39112	3H1	9	2160 - 11
R39129	3D7	9	1821 - 5
R39279	1E11	4	0350 - 9
R39304	1E11	9	0350 - 9
R394R	1F15	2	0360 - 9
R394R	2F3	..	1330 - 1
R394R	2F7	..	1369 - 3
R39503	1I14	9	0416 - 3
R39554	2B16	13	0505 - 3
R39554	2B18	6	0505 - 5
R39554	2I2	5	1676 - 3
R39554	2I2	12	1676 - 3
R39554	2I6	8	1676 - 7
R39554	2I6	17	1676 - 7
R39554	2I8	8	1676 - 9
R39554	2I8	17	1676 - 9
R39741	1D21	24	0341 - 3
R39741	1G25	6	0404 - 3
R39741	1H2	22	0404 - 5
R39741	1H2	25	0404 - 5
R39876	1F16	10	0360 - 10
R40791	1H18	6	0408 - 1
R41166	1E7	10	0350 - 5
R41770	1C10	6	0210 - 7
R41877	2D25	12	1063 - 4
R41985	3E6	2	1830 - 3
R42729	1G18	8	0402 - 6
R42729	1G19	6	0402 - 7
R42926	1D23	15	0341 - 5
R42926	2E15	11	1160 - 3
R42926	2E15	17	1160 - 3
R42926	2E15	50	1160 - 3
R43380	1E17	23	0350 - 15
R43381	1E17	24	0350 - 15
R43383	1E17	18	0350 - 15
R43409	1H22	9	0409 - 3
R43409	1H24	9	0409 - 5
R43538	3D5	18	1821 - 3
R43659	1E12	13	0350 - 10
R43696	2C16	4	0641 - 1
R44165	2I6	33	1676 - 7
R44165	3E6	10	1830 - 3
R44254	2D25	18	1063 - 4
R44255	1D16	6	0315 - 2
R44255	2G15	2B	1674 - 10
R44256	2D25	17	1063 - 4
R44302	2F24	14	1671 - 3
R44302	2F25	3	1672 - 2
R44302	2G6	17	1673 - 5
R44302	2G8	6	1674 - 3
R44302	2G10	30	1674 - 5
R44302	2G14	27	1674 - 9
R44302	2G17	17	1674 - 13
R44302	2G21	6	1674 - 17
R44302	2G23	6	1674 - 19
R44302	3C16	6	1810 - 23
R44302	3E6	5	1830 - 3
R44302	3E8	4	1830 - 5
R44302	3E16	28	1830 - 13
R44302	3E18	28	1830 - 15
R44302	3E20	42	1830 - 17
R44302	3F12	23	1830 - 33
R44302	3F14	8	1830 - 35
R44302	3G7	15	2001 - 3
R44302	3H16	73	2160 - 27
R44302	4G19	21	3360 - 81
R44302	4G21	18	3360 - 83
R44342	2I2	3	1676 - 3
R44342	2I6	5	1676 - 7
R44342	2I8	5	1676 - 9
R44742	1D23	18	0341 - 5
R44742	1E7	2	0350 - 5
R44816	1E14	7	0350 - 12
R44816	1E15	2	0350 - 13
R44816	1E17	6	0350 - 15
R44817	1E14	6	0350 - 12
R44817	1E15	1	0350 - 13
R44817	1E17	5	0350 - 15
R45197	1C12	11	0210 - 9
R45198	1C12	11	0210 - 9
R45199	1C12	11	0210 - 9
R45200	1C12	11	0210 - 9
R45201	1C12	12	0210 - 9
R45203	1C4	1	0210 - 1
R45205	1E3	17	0350 - 1
R459R	2F7	..	1369 - 3
R459R	3J22	22	3160 - 19
R459R	4E6	12	3360 - 23
R460R	2F7	..	1369 - 3
R463R	2C13	22	0560 - 3
R46323	1C6	5	0210 - 3
R46324	1C6	5	0210 - 3
R46325	1C6	5	0210 - 3
R46448	2E4	12	1063 - 9
R46451	1F16	12	0360 - 10
R46528	3I19	11	3115 - 3
R46528	4B22	3	3315 - 3
R46528	4B24	14	3315 - 5
R46528	4C4	10	3315 - 9
R46528	4C6	14	3315 - 11
R46528	4C8	4	3315 - 13
R46528	4C8	48	3315 - 13
R46528	4C10	4	3315 - 15
R46528	4C10	48	3315 - 15
R46528	4C12	11	3315 - 17
R46667	2F24	18	1671 - 3
R46667	3E8	19	1830 - 5
R46667	3F8	35	1830 - 29
R46667	3F10	29	1830 - 31
R46667	3H10	11	2160 - 21
R46667	3H12	78	2160 - 23
R46667	3H14	7	2160 - 25
R46667	3H16	83	2160 - 27
R46667	3H18	17	2160 - 29
R46667	3H20	53	2160 - 31
R46919	2C24	21	0960 - 7
R46919	2D24	16	1063 - 3
R46919	2D24	30	1063 - 3
R46919	2E4	8	1063 - 9
R46919	2E4	14	1063 - 9
R46919	3J12	7	3160 - 9
R46919	3J12	14	3160 - 9
R46919	3J12	18	3160 - 9
R46919	3J18	11	3160 - 15
R46919	3J18	34	3160 - 15
R46919	3J20	29	3160 - 17
R46919	4G10	7	3360 - 71
R46973	1C20	24	0230 - 3
R46973	1C22	2	0250 - 1
R47077	1I9	4	0413 - 8
R47085	2D25	10	1063 - 4
R47086	2D25	11	1063 - 4
R47087	2D25	9	1063 - 4
R47151	1H13	8	0407 - 7
R47151	2E15	14	1160 - 3
R47151	2E15	18	1160 - 3

NUMERICAL INDEX - CONTINUED

PART NO.	GRID	KEY	PAGE
R47151	2E15	41	1160 - 3
R47151	2E15	51	1160 - 3
R47154	3G20	2	2160 - 5
R47154	3G24	1	2160 - 9
R47160	1I10	5	0414 - 1
R47160	2B16	4	0505 - 3
R47172	1C6	2	0210 - 3
R47172	1C10	15	0210 - 7
R47172	1C12	6	0210 - 9
R47235	2F3	..	1330 - 1
R47319	1F10	24	0360 - 3
R47449	1F10	23	0360 - 3
R47605	2D25	22	1063 - 4
R47606	2D25	21	1063 - 4
R47607	2D25	23	1063 - 4
R47693	2B19	5	0505 - 6
R47998	2C20	1	0960 - 3
R48000	1I3	8	0413 - 1
R48000	1I4	8	0413 - 2
R48000	1K9	33	0452 - 5
R48437	1B21	13	0201 - 5
R48437	1B23	8	0201 - 7
R48599	1I6	26	0413 - 5
R48599	1I6	29	0413 - 5
R48600	1I6	27	0413 - 5
R48638	2F7	..	1369 - 3
R48685	1G9	2	0401 - 3
R48685	1G10	13	0401 - 4
R48685	1G11	1	0401 - 5
R48685	1G12	1	0401 - 6
R48685	1G25	1	0404 - 3
R48685	1H2	1	0404 - 5
R48733	1C12	17	0210 - 9
R48734	1C12	17	0210 - 9
R48735	1C12	17	0210 - 9
R48738	3G20	13	2160 - 5
R48738	3G20	34	2160 - 5
R48776	1C12	18	0210 - 9
R48792	3F8	42	1830 - 29
R48795	1I9	9	0413 - 8
R48808	1E14	17	0350 - 12
R48808	2G1	2	1672 - 3
R48887	2H20	17	1674 - 41
R48957	2D25	4	1063 - 4
R48993	1I19	23	0417 - 3
R49297	3G20	12	2160 - 5
R49297	3G20	35	2160 - 5
R495R	2F7	..	1369 - 3
R49921	2C24	11	0960 - 7
R49921	4E8	5B	3360 - 25
R49921	4E12	7	3360 - 25D
R500001	1G21	8	0402 - 9
R500089	1J23	17	0429 - 3
R500270	1J12	1	0421 - 3
R500271	1J12	6	0421 - 3
R500320	1J23	16	0429 - 3
R500320	1K1	1	0429 - 6
R500322	1J23	19	0429 - 3
R500335	1G23	3	0403 - 3
R50034	2D8	16	1060 - 3
R50034	2D10	6	1060 - 5
R500352	1J23	14	0429 - 3
R500374	1H17	1B	0407 - 11
R500374	1H17	4A	0407 - 11
R500374	1K11	32	0452 - 7
R500390	1I3	8	0413 - 1
R500390	1I4	8	0413 - 2
R500401	1I20	16	0417 - 5
R500453	1H10	7	0407 - 3
R500500	1G23	1	0403 - 3
R501124	1G23	1	0403 - 3
R501144	1I24	10	0418 - 3
R501297	1G15	2	0402 - 3
R501373	1I22	6	0418 - 1
R501373	1K6	1	0452 - 1
R501373	1K7	9	0452 - 2
R501373	1K9	14	0452 - 5
R501373	1K11	9	0452 - 7
R501428	1J4	8	0419 - 5
R501428	1K11	13	0452 - 7
R501486	2F25	9B	1672 - 2
R501486	2G1	9B	1672 - 3
R501529	1G18	13	0402 - 6
R502076	1I8	28	0413 - 7
R502079	1J23	14	0429 - 3
R502079	1K1	3	0429 - 6
R50222	1E7	3	0350 - 5
R502465	1H10	7	0407 - 3
R502687	1H12	4	0407 - 5
R502725	1H10	8	0407 - 3
R50279	3B20	18	1810 - 3
R502811	1J4	11A	0419 - 5
R502811	1J4	11B	0419 - 5
R502814	1I24	2	0418 - 3
R502814	1K7	3	0452 - 2
R502814	1K11	3	0452 - 7
R502864	1K11	24	0452 - 7
R502902	1G21	8	0402 - 9
R503419	1J17	14	0422 - 5
R503451	1K5	2	0433 - 5
R504734	1J4	15	0419 - 5
R504813	1G18	13	0402 - 6
R50642	3C8	3	1810 - 15
R50879	2D8	15	1060 - 3
R50879	2D10	4	1060 - 5
R50901	1J15	4	0422 - 3
R50902	1J15	2	0422 - 3
R51031	2D3	..	1011 - 1
R51031	2D4	..	1011 - 2
R51329	1E17	13	0350 - 15
R51577	1F13	15	0360 - 7
R51719	1E14	19	0350 - 12
R51719	1E15	8	0350 - 13
R51736	1H25	2	0410 - 2
R51936	1I6	3	0413 - 5
R51936	1I8	4	0413 - 7
R51937	1I6	2	0413 - 5
R52107	4B22	1	3315 - 3
R52119	2G15	2A	1674 - 10
R52130	3F2	19	1830 - 23
R52130	3F4	13	1830 - 25
R52130	3F6	13	1830 - 27
R52589	1F13	13	0360 - 7
R52725	2I2	3	1676 - 3
R52725	2I6	7	1676 - 7
R52725	2I8	7	1676 - 9
R52876	2D12	3	1060 - 7
R52876	2D19	3	1060 - 14
R52921	3C8	34	1810 - 15
R52921	3C10	17	1810 - 17
R52921	3C12	17	1810 - 19
R53108	1J13	10	0422 - 1
R53108	1K11	26	0452 - 7
R53169	1D21	25	0341 - 3
R53422	3F8	31	1830 - 29
R53422	3F10	8	1830 - 31
R53422	3F12	32	1830 - 33
R53543	2F9	..	1369 - 5
R54114	1G22	4	0403 - 2
R54114	1G23	4	0403 - 3
R54123	2B19	4	0505 - 6
R54124	1B14	6	0110 - 1
R54124	1B15	4	0110 - 2
R54124	4D7	2	3340 - 12
R54380	1C8	19	0210 - 5
R54380	2C9	3	0540 - 1
R54380	2C10	3	0540 - 2
R54388	2G25	3	1674 - 21
R54445	3C16	4	1810 - 23
R54500	1H25	12	0410 - 2
R54500	1I14	3	0416 - 3
R54503	1K2	11	0433 - 2
R54503	1K3	2	0433 - 3
R54510	2B19	2	0505 - 6
R54565	1G18	1	0402 - 6
R54565	1G19	1	0402 - 7
R54621	1K2	6	0433 - 2
R54629	1H11	16	0407 - 4
R54632	1H11	7	0407 - 4
R54638	1I22	6	0418 - 1
R54638	1K6	1	0452 - 1
R54638	1K7	9	0452 - 2
R54638	1K9	14	0452 - 5
R54638	1K11	9	0452 - 7
R54639	1I22	4	0418 - 1
R54641	1I22	10	0418 - 1
R54641	1K6	7	0452 - 1
R54641	1K9	29	0452 - 5
R54802	1G25	21	0404 - 3
R54986	1G18	2	0402 - 6
R54986	1G18	5	0402 - 6
R55128	1J2	4	0419 - 3
R55129	1J2	13	0419 - 3
R55233	1G25	6	0404 - 3
R55326	3B20	24	1810 - 3
R55326	3B20	25	1810 - 3
R55326	3G13	1	2005 - 2
R55967	1I22	9	0418 - 1
R56101	2B21	3	0510 - 3
R56101	2B23	5	0510 - 5
R56188	1G22	5	0403 - 2
R56192	1K9	13	0452 - 5
R56193	1K9	7	0452 - 5
R56264	2I2	5	1676 - 3
R56264	3B24	8	1810 - 7
R56461	1I22	8	0418 - 1
R56461	1K6	6	0452 - 1
R56461	1K9	31	0452 - 5
R56461	2F7	..	1369 - 3
R56463	1H18	1	0408 - 1
R56463	1K6	9	0452 - 1
R56463	1K9	11	0452 - 5
R56463	2F9	..	1369 - 5
R56464	1E15	11	0350 - 13
R56464	1E17	8	0350 - 15
R56464	3J7	4	3160 - 4
R56464	3J22	9	3160 - 19
R56464	4E1	2	3360 - 18
R56464	4E4	2	3360 - 21
R56464	4F25	10	3360 - 61
R56504	1C10	4	0210 - 7

NUMERICAL INDEX - CONTINUED

PART NO.	GRID	KEY	PAGE
R56551	1I10	2	0414 - 1
R56551	1I11	2	0414 - 2
R56751	2F9	..	1369 - 5
R56751	3G20	10	2160 - 5
R56751	3G20	37	2160 - 5
R56751	3G22	6	2160 - 7
R56751	3G24	3	2160 - 9
R56751	3G24	19	2160 - 9
R56812	1I19	16	0417 - 3
R56902	2E24	5	1320 - 3
R56903	2F2	2	1320 - 5
R56947	1J2	9	0419 - 3
R57103	2D25	26	1063 - 4
R57374	3G22	19	2160 - 7
R57451	1G22	2	0403 - 2
R57621	1E7	7	0350 - 5
R58980	1G22	11	0403 - 2
R59047	1H18	10	0408 - 1
R59074	1B21	4	0201 - 5
R59439	1B21	14	0201 - 5
R59439	1B23	9	0201 - 7
R59440	1B21	14	0201 - 5
R59440	1B23	9	0201 - 7
R60038	1C10	16	0210 - 7
R60038	2D25	8	1063 - 4
R60122	1C10	10	0210 - 7
R60170	3F10	24	1830 - 31
R60332	2F9	..	1369 - 5
R60755	2D12	17	1060 - 7
R60755	2D15	2	1060 - 10
R61105	1J4	9	0419 - 5
R61105	1K11	29	0452 - 7
R61461	1B21	14	0201 - 5
R61461	1B23	9	0201 - 7
R61467	1K5	2	0433 - 5
R61871	1H11	4	0407 - 4
R61871	1H12	3	0407 - 5
R61871	1K7	16	0452 - 2
R61871	1K9	28	0452 - 5
R61871	1K11	16	0452 - 7
R62073	1G11	4	0401 - 5
R62073	1G22	11	0403 - 2
R62074	1G22	11	0403 - 2
R62075	1G22	11	0403 - 2
R62191	1I19	3	0417 - 3
R62192	1I19	3	0417 - 3
R62193	1I19	3	0417 - 3
R62194	1I19	3	0417 - 3
R62194	1J23	5	0429 - 3
R63548	1I14	2	0416 - 3
R63548	1I15	1	0416 - 4
R63548	1I17	1	0416 - 7
R63556	1C18	5	0230 - 1
R63666	3C14	6	1810 - 21
R63666	3C20	8	1810 - 27
R63667	3C14	7	1810 - 21
R63667	3C20	9	1810 - 27
R63668	3C14	8	1810 - 21
R63668	3C20	10	1810 - 27
R63669	3C14	9	1810 - 21
R63669	3C20	11	1810 - 27
R63670	3C14	10	1810 - 21
R63670	3C20	12	1810 - 27
R63788	1C10	21	0210 - 7
R63980	1F13	7	0360 - 7
R63980	1F15	12	0360 - 9
R64059	4C2	38	3315 - 7
R64059	4C4	26	3315 - 9
R64059	4C6	24	3315 - 11
R64524	1C10	1	0210 - 7
R64525	1C10	3	0210 - 7
R64525	1J20	12	0423 - 4
R64525	2G1	20	1672 - 3
R64613	4E10	8	3360 - 25B
R64700	2G10	38	1674 - 5
R64700	3G10	2	2004 - 1
R64848	1G11	7	0401 - 5
R65215	1G25	18	0404 - 3
R65563	2D10	16	1060 - 5
R65563	3I19	15	3115 - 3
R65563	3I21	11	3115 - 5
R65563	3I23	7	3115 - 7
R65563	4B22	1	3315 - 3
R65563	4B24	13	3315 - 5
R65563	4C4	9	3315 - 9
R65563	4C6	13	3315 - 11
R65563	4C8	47	3315 - 13
R65563	4C10	47	3315 - 15
R65563	4C12	10	3315 - 17
R65570	3C10	2	1810 - 17
R65602	2H22	49	1674 - 43
R65607	2H22	46	1674 - 43
R65694	3G22	21	2160 - 7
R65833	1G22	12	0403 - 2
R66090	1I6	4	0413 - 5
R66177	1H11	6	0407 - 4
R66177	1H11	12	0407 - 4
R66320	2H20	24	1674 - 41
R66321	2H20	24	1674 - 41
R66719	1H25	1	0410 - 2
R67293	1D21	11	0341 - 3
R67364	1I8	2	0413 - 7
R67745	1J2	14	0419 - 3
R67746	1J2	3	0419 - 3
R67811	1C10	19	0210 - 7
R67840	1E7	14	0350 - 5
R69011	1C10	11	0210 - 7
R69012	1C10	12	0210 - 7
R69281	2D25	19	1063 - 4
R69670	3J10	5	3160 - 7
R70027	1E17	17	0350 - 15
R70182	1G9	10	0401 - 3
R70210	2H22	41	1674 - 43
R70211	2H22	40	1674 - 43
R70212	2H22	41	1674 - 43
R70213	2H22	40	1674 - 43
R70214	2H22	41	1674 - 43
R70215	2H22	40	1674 - 43
R70216	2H22	41	1674 - 43
R70217	2H22	40	1674 - 43
R70218	2H22	41	1674 - 43
R70219	2H22	40	1674 - 43
R70220	2H22	50	1674 - 43
R70221	2H22	39	1674 - 43
R70222	2H22	38	1674 - 43
R71574	1E3	21	0350 - 1
R71732	2F7	..	1369 - 3
R71963	1I3	2	0413 - 1
R71963	1I4	2	0413 - 2
R72030	4F5	19	3360 - 41
R72328	1H20	2	0408 - 3
R72328	1K11	27	0452 - 7
R72328	4F25	7	3360 - 61
R72507	3G20	23	2160 - 5
R72645	1I19	17	0417 - 3
R72655	3D19	13	1821 - 17
R72655	3D19	21	1821 - 17
R72655	3D21	5	1821 - 19
R72659	1H20	3	0408 - 3
R72696	1I22	7	0418 - 1
R72700	2C21	6	0960 - 4
R72700	2C22	6	0960 - 5
R72855	3I18	4	3115 - 2
R72952	2C21	1	0960 - 4
R72952	2C22	1	0960 - 5
R73002	1C10	26	0210 - 7
R73290	1B21	16	0201 - 5
R73380	3I18	8	3115 - 2
R73498	2B16	9	0505 - 3
R73530	4F25	23	3360 - 61
R73581	1C24	13	0250 - 3
R73975	1E1	3	0341 - 8
R73975	1H18	7	0408 - 1
R74012	1J10	6	0420 - 7
R74012	1J10	21	0420 - 7
R74022	2D25	15	1063 - 4
R74210	2F3	..	1330 - 1
R74553	1H11	2	0407 - 4
R74852	1E17	9	0350 - 15
R74868	1C10	22	0210 - 7
R74869	1C10	18	0210 - 7
R75376	3G22	15	2160 - 7
R75645	3G20	18	2160 - 5
R75683	3G20	9	2160 - 5
R75683	3G20	38	2160 - 5
R75728	1G20	4	0402 - 8
R75728	1K6	2	0452 - 1
R75728	1K9	1	0452 - 5
R75835	1D10	8	0250 - 13
R75837	1D10	3	0250 - 13
R75850	1D4	2	0250 - 7
R75866	2D25	16	1063 - 4
R75892	1G25	15	0404 - 3
R75892	1H2	16	0404 - 5
R75892	1K7	14	0452 - 2
R75892	1K11	14	0452 - 7
R76308	1E14	21	0350 - 12
R76308	1E17	27	0350 - 15
R76477	1J13	6	0422 - 1
R76477	3H8	21	2160 - 19
R76514	1E7	1	0350 - 5
R76674	1E17	26	0350 - 15
R76695	3G7	23	2001 - 3
R77016	1H9	9	0407 - 2
R77378	3G20	42	2160 - 5
R77456	2H20	27	1674 - 41
R77457	2H20	29	1674 - 41
R77458	2H20	28	1674 - 41
R77459	2H20	28	1674 - 41
R77460	2H20	28	1674 - 41
R77461	2H20	28	1674 - 41
R77462	2H20	25	1674 - 41
R77463	2H20	30	1674 - 41
R77464	2H20	26	1674 - 41
R77465	2H20	31	1674 - 41
R77466	2H20	33	1674 - 41
R77467	2H20	34	1674 - 41
R77468	2H20	32	1674 - 41
R77469	2H22	35	1674 - 43
R77470	2H22	45	1674 - 43
R77471	2H22	45	1674 - 43

NUMERICAL INDEX - CONTINUED

PART NO.	GRID	KEY	PAGE
R77472	2H22	45	1674 - 43
R77473	2H22	45	1674 - 43
R77474	2H22	44	1674 - 43
R77475	2H20	13	1674 - 41
R77476	2H20	3	1674 - 41
R77477	2H20	4	1674 - 41
R77478	2H20	15	1674 - 41
R77479	2H20	5	1674 - 41
R77480	2H20	6	1674 - 41
R77481	2H20	7	1674 - 41
R77482	2H20	8	1674 - 41
R77483	2H20	16	1674 - 41
R77484	2H20	19	1674 - 41
R77485	2H20	21	1674 - 41
R77486	2H20	22	1674 - 41
R77487	2H20	23	1674 - 41
R77488	2H22	51	1674 - 43
R77489	2H22	51	1674 - 43
R77490	2H22	51	1674 - 43
R77491	2H22	54	1674 - 43
R77492	2H22	54	1674 - 43
R77493	2H22	51	1674 - 43
R77494	2H22	55	1674 - 43
R77495	2H22	52	1674 - 43
R77496	2H22	52	1674 - 43
R77497	2H22	53	1674 - 43
R77498	2H20	24	1674 - 41
R77499	2H20	24	1674 - 41
R77500	2H20	24	1674 - 41
R77501	2H20	24	1674 - 41
R77502	2H22	56	1674 - 43
R77503	2H22	56	1674 - 43
R77611	3G20	25	2160 - 5
R77611	3G24	9	2160 - 9
R77663	1E17	22	0350 - 15
R77866	2D25	7	1063 - 4
R78047	2H24	3	1674 - 45
R78048	2H24	10	1674 - 45
R78049	2H24	15	1674 - 45
R78050	2H24	19	1674 - 45
R78051	2H24	24	1674 - 45
R78052	2H24	5	1674 - 45
R78053	2G15	4A	1674 - 10
R78053	2H12	2	1674 - 33
R78053	2H24	13	1674 - 45
R78054	2E15	43	1160 - 3
R78054	2H24	17	1674 - 45
R78055	2H24	22	1674 - 45
R78056	2H24	26	1674 - 45
R78057	2H24	2	1674 - 45
R78058	2H24	23	1674 - 45
R78059	2H24	1	1674 - 45
R78060	2H24	2	1674 - 45
R78060	2H24	9	1674 - 45
R78061	2G15	4A	1674 - 10
R78061	2H24	6	1674 - 45
R78061	2H24	23	1674 - 45
R78062	2H24	1	1674 - 45
R78063	2G15	4A	1674 - 10
R78063	2H24	1	1674 - 45
R78063	2H24	7	1674 - 45
R78064	2E15	43	1160 - 3
R78064	2H24	27	1674 - 45
R78101	2D25	3	1063 - 4
R78155	1C10	8	0210 - 7
R78156	1C10	9	0210 - 7
R78202	3G17	2	2160 - 2
R78598	1G11	8	0401 - 5
R78818	4F9	16	3360 - 45
R78975	1D4	1	0250 - 7
R79001	3J15	4	3160 - 12
R79001	3J23	4	3160 - 20
R79001	4F11	13	3360 - 47
R79001	4F13	13	3360 - 49
R79001	4G6	15	3360 - 67
R79001	4G8	15	3360 - 69
R79089	1G25	19	0404 - 3
R79132	1C2	11	0201 - 11
R79151	3G20	22	2160 - 5
R79496	1C24	15	0250 - 3
R79560	1H11	15	0407 - 4
R79562	1H11	13	0407 - 4
R79563	1H11	14	0407 - 4
R79564	1H11	5	0407 - 4
R79604	1I3	4	0413 - 1
R79604	1I4	4	0413 - 2
R79605	1I3	3	0413 - 1
R79605	1I4	3	0413 - 2
R79989	1B21	14	0201 - 5
R79989	1B23	9	0201 - 7
R80033	1G22	1	0403 - 2
R80521	4F5	7	3360 - 41
R80558	3G20	24	2160 - 5
R80612	3G22	32	2160 - 7
R80612	3G24	10	2160 - 9
R80632	1K9	2	0452 - 5
R80632	2F9	..	1369 - 5
R80661	3G20	6	2160 - 5
R80752	2D25	29	1063 - 4
R80753	2D25	29	1063 - 4
R80754	2D25	29	1063 - 4
R80813	1E7	9	0350 - 5
R80879	1C10	20	0210 - 7
R81162	1B24	14	0201 - 9
R81195	2C21	13	0960 - 4
R81195	2C22	13	0960 - 5
R81275	1I10	7	0414 - 1
R81275	1I11	9	0414 - 2
R81275	1K6	5	0452 - 1
R81275	1K7	10	0452 - 2
R81275	1K9	17	0452 - 5
R81275	1K11	10	0452 - 7
R81359	1C6	4	0210 - 3
R81489	4F11	4	3360 - 47
R81489	4F13	4	3360 - 49
R81490	4F11	21	3360 - 47
R81490	4F13	21	3360 - 49
R81494	1E14	5	0350 - 12
R81494	1E15	3	0350 - 13
R81494	1E17	4	0350 - 15
R81499	1E14	20	0350 - 12
R81499	1E15	5	0350 - 13
R81499	1E17	2	0350 - 15
R81500	1E14	4	0350 - 12
R81500	1E15	4	0350 - 13
R81500	1E17	3	0350 - 15
R81774	2C21	3	0960 - 4
R81774	2C22	3	0960 - 5
R81775	3J14	3	3160 - 11
R81775	3J21	3	3160 - 18
R81775	4F7	18	3360 - 43
R81779	4G11	7	3360 - 72
R81786	2C21	11	0960 - 4
R81786	2C22	11	0960 - 5
R81787	3J14	6	3160 - 11
R81787	3J21	6	3160 - 18
R81789	4G11	8	3360 - 72
R81789	4G12	8	3360 - 73
R81792	2C21	5	0960 - 4
R81792	2C22	5	0960 - 5
R81793	3J14	8	3160 - 11
R81793	3J21	8	3160 - 18
R81795	4G11	13	3360 - 72
R81795	4G12	13	3360 - 73
R81804	3G20	4	2160 - 5
R81811	3G20	11	2160 - 5
R81811	3G20	36	2160 - 5
R81856	4G11	5	3360 - 72
R81860	2C21	17	0960 - 4
R81860	2C22	17	0960 - 5
R81862	3J14	14	3160 - 11
R81862	3J21	14	3160 - 18
R81862	4F7	15	3360 - 43
R81864	4G11	6	3360 - 72
R81864	4G12	6	3360 - 73
R81866	4G11	2	3360 - 72
R81866	4G12	2	3360 - 73
R81948	1H4	1	0404 - 7
R81971	3J15	6	3160 - 12
R81971	3J23	6	3160 - 20
R81989	1G9	25	0401 - 3
R81989	1G10	14	0401 - 4
R82052	1I19	5	0417 - 3
R82075	4G6	1	3360 - 67
R82075	4G8	1	3360 - 69
R82076	3J14	1	3160 - 11
R82076	3J21	1	3160 - 18
R82076	4F7	1	3360 - 43
R82086	3J15	5	3160 - 12
R82086	3J23	5	3160 - 20
R82086	4F11	20	3360 - 47
R82086	4F13	20	3360 - 49
R82086	4G6	10	3360 - 67
R82086	4G8	10	3360 - 69
R82092	4F11	10	3360 - 47
R82092	4F13	10	3360 - 49
R82093	3J15	11	3160 - 12
R82093	3J23	11	3160 - 20
R82093	4F11	14	3360 - 47
R82093	4F13	14	3360 - 49
R82093	4G6	8	3360 - 67
R82093	4G8	8	3360 - 69
R82095	3J15	16	3160 - 12
R82095	3J23	16	3160 - 20
R82095	4F11	7	3360 - 47
R82095	4F13	7	3360 - 49
R82095	4G6	5	3360 - 67
R82095	4G8	5	3360 - 69
R82115	3G20	40	2160 - 5
R82131	1J6	6	0420 - 3
R82192	3G18	4	2160 - 3
R82198	1C24	14	0250 - 3
R82199	1C24	12	0250 - 3
R82337	2D25	29	1063 - 4
R82437	3H3	4	2160 - 13
R82556	2C21	12	0960 - 4
R82557	2C21	9	0960 - 4
R82558	2C21	16	0960 - 4
R82558	2C22	16	0960 - 5
R82821	1G16	3	0402 - 4
R82960	3J14	9	3160 - 11

NUMERICAL INDEX - CONTINUED

PART NO.	GRID	KEY	PAGE
R82960	3J21	9	3160 - 18
R83142	4F7	3	3360 - 43
R83169	1G15	12	0402 - 3
R83213	4F7	14	3360 - 43
R83213	4G6	14	3360 - 67
R83215	4F9	2	3360 - 45
R83578	3J15	3	3160 - 12
R83578	3J23	3	3160 - 20
R83578	4F11	12	3360 - 47
R83578	4F13	12	3360 - 49
R83578	4G6	16	3360 - 67
R83578	4G8	16	3360 - 69
R84262	1C8	18	0210 - 5
R84663	1I6	25	0413 - 5
R84978	1J21	4	0429 - 1
R85168	1D18	3	0325 - 2
R85169	1D18	4	0325 - 2
R85192	4F9	19	3360 - 45
R85228	4F5	9	3360 - 41
R85230	4F5	15	3360 - 41
R85363	1H22	1	0409 - 3
R85363	1H24	1	0409 - 5
R85557	3G20	27	2160 - 5
R85653	1B21	9	0201 - 5
R85687	1H22	10	0409 - 3
R85687	1H24	8	0409 - 5
R85866	1C10	14	0210 - 7
R86192	2F9	..	1369 - 5
R86201	3G20	33	2160 - 5
R86290	4F7	11	3360 - 43
R86505	3G20	26	2160 - 5
R86873	2D25	25	1063 - 4
R86873	2D25	28	1063 - 4
R86874	2D25	25	1063 - 4
R87627	1K6	8	0452 - 1
R87732	1I1	4	0410 - 3
R87907	1I14	8B	0416 - 3
R88047	4G6	18	3360 - 67
R89158	3G22	34	2160 - 7
R89332	3G22	32	2160 - 7
R89332	3G24	10	2160 - 9
R89531	4G6	17	3360 - 67
R89563	3G20	1	2160 - 5
R89590	1C10	13	0210 - 7
R89824	1G9	7	0401 - 3
R89824	1G9	22	0401 - 3
R89879	1H25	5	0410 - 2
R89879	1I14	14	0416 - 3
R89879	1K6	4	0452 - 1
R89879	1K9	21	0452 - 5
R89944	1I8	28	0413 - 7
R89944	1I21	5	0417 - 6
R89944	1K11	28	0452 - 7
R89946	1C10	5	0210 - 7
R90548	3G22	8	2160 - 7
R90584	3G22	18	2160 - 7
R90591	3G22	9	2160 - 7
R90646	4F9	1	3360 - 45
R90648	1H7	1	0404 - 10
R90648	1K9	3	0452 - 5
R90658	1H25	11	0410 - 2
R90658	1I2	2	0410 - 4
R90658	1K6	10	0452 - 1
R90658	1K7	2	0452 - 2
R90658	1K9	4	0452 - 5
R90658	1K11	2	0452 - 7
R90692	1H22	13	0409 - 3
R90692	1H24	10	0409 - 5
R91360	1I8	16	0413 - 7
R91624	3J15	10	3160 - 12
R91624	3J23	10	3160 - 20
R91624	4F11	19	3360 - 47
R91624	4F13	19	3360 - 49
R91624	4G6	9	3360 - 67
R91624	4G8	9	3360 - 69
R91692	1G15	15	0402 - 3
R91728	2C21	10	0960 - 4
R91728	2C22	10	0960 - 5
R91729	4G11	9	3360 - 72
R91729	4G12	9	3360 - 73
R91731	3J14	7	3160 - 11
R91731	3J21	7	3160 - 18
R91889	1H22	3	0409 - 3
R91889	1H24	2	0409 - 5
R92309	3J14	13	3160 - 11
R92309	3J15	13	3160 - 12
R92309	4F11	16	3360 - 47
R92310	3J14	12	3160 - 11
R92310	3J15	12	3160 - 12
R92310	4F11	17	3360 - 47
R92314	3J14	16	3160 - 11
R92321	3J15	9	3160 - 12
R92321	4F11	11	3360 - 47
R92352	1I3	7	0413 - 1
R92352	1I4	7	0413 - 2
R92426	1H22	2	0409 - 3
R92426	1K6	3	0452 - 1
R92426	1K9	10	0452 - 5
R92533	1C4	1	0210 - 1
R92693	1B21	1	0201 - 5
R93028	3J14	17	3160 - 11
R93028	3J21	17	3160 - 18
R93158	1B24	16	0201 - 9
R93172	1B24	15	0201 - 9
R93173	1B24	13	0201 - 9
R93364	1B24	7	0201 - 9
R93623	1C10	17	0210 - 7
R93910	1H22	10	0409 - 3
R93910	1H24	8	0409 - 5
R94350	2F25	9A	1672 - 2
R94350	2G1	9A	1672 - 3
R94351	2F25	8	1672 - 2
R94351	2G1	8	1672 - 3
R96445	4G11	11	3360 - 72
R96703	1J17	9	0422 - 5
R97185	1H11	11	0407 - 4
R97185	1H12	11	0407 - 5
R97185	1K7	15	0452 - 2
R97185	1K11	15	0452 - 7
R97344	1H13	1	0407 - 7
R97344	1K9	24	0452 - 5
R97348	1K6	12	0452 - 1
R97348	1K9	30	0452 - 5
R97350	1J11	1	0421 - 2
R97350	1J11	2	0421 - 2
R97350	1K9	27	0452 - 5
R97351	1K2	10	0433 - 2
R97351	1K9	12	0452 - 5
R97352	1G13	16	0402 - 1
R97352	1K9	18	0452 - 5
R97490	1H22	14	0409 - 3
R97491	1H22	14	0409 - 3
R97492	1H22	13	0409 - 3
R97493	1H22	13	0409 - 3
R97773	1G13	5	0402 - 1
R97773	1K9	5	0452 - 5
R97795	4F9	15	3360 - 45
R98062	1H22	14	0409 - 3
R98062	1H24	11	0409 - 5
R98063	1H22	8	0409 - 3
R98063	1H24	8	0409 - 5
R98322	4G11	3	3360 - 72
R98323	4G11	3	3360 - 72
R98329	4G6	19	3360 - 67
R98329	4G8	19	3360 - 69
R98334	4G6	11	3360 - 67
R98334	4G8	11	3360 - 69
R98335	1H22	8	0409 - 3
R98335	1H24	8	0409 - 5
R98375	4F9	3	3360 - 45
R98385	4F7	5	3360 - 43
R98389	4F5	4	3360 - 41
R98390	4F5	11	3360 - 41
R98391	4F5	24	3360 - 41
R98392	4F5	16	3360 - 41
R98393	4F5	23	3360 - 41
R98394	4F5	5	3360 - 41
R98395	4F5	6	3360 - 41
R98396	4F5	3	3360 - 41
R98471	1K9	20	0452 - 5
R98472	1I19	12	0417 - 3
R98484	1K9	20	0452 - 5
R98485	1K9	19	0452 - 5
R98488	1K9	16	0452 - 5
R98489	1K9	15	0452 - 5
R98527	1I20	14	0417 - 5
R98669	4F5	14	3360 - 41
R98696	4F9	4	3360 - 45
R98721	4F5	1	3360 - 41
R98722	4F9	21	3360 - 45
R99016	2H10	4	1674 - 31
R99016	3G7	11	2001 - 3
R99104	3J15	15	3160 - 12
R99104	3J23	15	3160 - 20
R99614	2C21	15	0960 - 4
R99802	1J2	6	0419 - 3
R99941	3G20	26	2160 - 5
TF10L	3I7	14	3102 - 5
TF10L	3I11	14	3102 - 9
TF10P	3I7	13	3102 - 5
TF10P	3I11	13	3102 - 9
TF160	4B18	9	3302 - 2
TF220	4B19	9	3302 - 3
TF23	4B18	9	3302 - 2
TF23	4B19	9	3302 - 3
TF23P	4B18	8	3302 - 2
TF23P	4B19	8	3302 - 3
TH104034	3E10	12	1830 - 7
TP160	4B18	8	3302 - 2
TP160	4B19	8	3302 - 3
TY15130	2F3	..	1330 - 1
TY15939	2F3	..	1330 - 1
TY16004	2F10	..	1369 - 6
TY16005	2F10	..	1369 - 6
TY16285	2F4	..	1330 - 2
TY16302	3C8	20	1810 - 15
TY16304	3C20	39	1810 - 27
TY16304	3C22	29	1810 - 29
TY16304	3C24	16	1810 - 31
TY16312	3C8	20	1810 - 15
TY16312	3C8	41	1810 - 15

NUMERICAL INDEX - CONTINUED

PART NO.	GRID	KEY	PAGE
TY16312	3C20	39	1810 - 27
TY16312	3C20	46	1810 - 27
TY16312	3C22	29	1810 - 29
TY16312	3C22	43	1810 - 29
TY16312	3C24	16	1810 - 31
TY16312	3C24	43	1810 - 31
TY21766	2F24	10	1671 - 3
TY21766	2G8	8	1674 - 3
TY22025	2F5	..	1369 - 1
TY22324	2B21	27	0510 - 3
TY22462	1D21	2	0341 - 3
TY22462	2C13	17	0560 - 3
TY22462	2E17	1	1160 - 5
TY22462	3H8	1	2160 - 19
TY22462	3H10	12	2160 - 21
TY22462	3H14	2	2160 - 25
TY22462	3H18	2	2160 - 29
TY22462	4E8	5A	3360 - 25
TY22462	4E8	25	3360 - 25
TY22462	4E12	1	3360 - 25D
TY22462	4G19	22	3360 - 81
TY22462	4G21	23	3360 - 83
TY22467	1I14	10	0416 - 3
TY22467	1J2	7	0419 - 3
TY22471	1J13	3	0422 - 1
TY22472	2B21	34	0510 - 3
TY22472	2B21	35	0510 - 3
TY22497	4G19	15	3360 - 81
TY22497	4G21	19	3360 - 83
TY24485	2F25	5	1672 - 2
TY24485	2G1	5	1672 - 3
TY24485	2G8	25	1674 - 3
TY24485	2G14	29	1674 - 9
TY6127	2F24	10	1671 - 3
TY6128	2F24	10	1671 - 3
TY6305	2F4	..	1330 - 2
TY6750	2F25	5	1672 - 2
TY6750	2G1	5	1672 - 3
TY6750	2G8	25	1674 - 3
TY6764	3F12	43	1830 - 33
TY6764	3F16	8	1830 - 37
TY6765	3F15	8	1830 - 36
TY6784	3F15	8	1830 - 36
TY6787	1J13	7	0422 - 1
TY6787	1J15	15	0422 - 3
TY6799	2G1	5	1672 - 3
T100195	2E24	6	1320 - 3
T100195	4B24	35	3315 - 5
T100195	4C2	34	3315 - 7
T100196	2E24	6	1320 - 3
T100196	4B24	35	3315 - 5
T100196	4C2	34	3315 - 7
T100474	2I2	34	1676 - 3
T100475	2I2	26	1676 - 3
T100526	2D24	35	1063 - 3
T100659	2I6	31	1676 - 7
T100659	2I8	27	1676 - 9
T100812	2I2	20	1676 - 3
T101090	3C10	8	1810 - 17
T101090	3C12	8	1810 - 19
T101569	3H1	7	2160 - 11
T101571	3H1	5	2160 - 11
T101624	4G13	7	3360 - 75
T101807	3B24	10	1810 - 7
T101807	3C6	15	1810 - 13
T102005	4F19	17	3360 - 55
T102005	4F21	21	3360 - 57
T102005	4G19	16	3360 - 81
T102005	4G21	20	3360 - 83
T102781	2G17	5	1674 - 13
T102781	3F8	23	1830 - 29
T102934	2F24	18	1671 - 3
T102934	2G14	35	1674 - 9
T102934	2G19	7	1674 - 15
T102934	2G21	12	1674 - 17
T102934	2G23	12	1674 - 19
T102934	3E6	18	1830 - 3
T102934	3E8	8	1830 - 5
T102934	3F12	10	1830 - 33
T103461	2C13	8	0560 - 3
T104773	4D13	6	3360 - 5
T104773	4D13	17	3360 - 5
T104773	4D15	6	3360 - 7
T104773	4D15	17	3360 - 7
T104773	4D17	4	3360 - 9
T104773	4D17	18	3360 - 9
T104773	4D19	6	3360 - 11
T104773	4D19	17	3360 - 11
T104773	4D21	6	3360 - 13
T104773	4D21	17	3360 - 13
T104773	4D23	6	3360 - 15
T104773	4D23	17	3360 - 15
T104773	4D24	10	3360 - 16
T105692	3I7	15	3102 - 5
T105692	3I11	15	3102 - 9
T105740	3C22	38	1810 - 29
T105740	3C24	20	1810 - 31
T105740	3D17	21	1821 - 15
T105740	3D17	22	1821 - 15
T105773	3J18	19	3160 - 15
T105774	4G10	4	3360 - 71
T106131	2C4	11	0520 - 3
T106147	3J6	5	3160 - 3
T106147	3J7	2	3160 - 4
T106147	3J8	3	3160 - 5
T106183	3J8	15	3160 - 5
T106183	3J10	9	3160 - 7
T106183	3J16	18	3160 - 13
T106184	3J10	8	3160 - 7
T106184	3J16	19	3160 - 13
T106194	3J10	10	3160 - 7
T106206	4E10	19	3360 - 25B
T106207	4E10	21	3360 - 25B
T106208	4E10	7	3360 - 25B
T106298	3J7	15	3160 - 4
T106298	3J22	4	3160 - 19
T106298	4C4	20	3315 - 9
T106298	4C6	20	3315 - 11
T106298	4D21	23	3360 - 13
T106298	4D23	23	3360 - 15
T106298	4E1	9	3360 - 18
T106298	4E2	7	3360 - 19
T106298	4E4	9	3360 - 21
T106298	4E6	7	3360 - 23
T106305	4D13	5	3360 - 5
T106305	4D15	5	3360 - 7
T106305	4D19	5	3360 - 11
T106305	4D21	5	3360 - 13
T106305	4D23	5	3360 - 15
T106306	3J8	14	3160 - 5
T106306	4D13	1	3360 - 5
T106306	4D15	1	3360 - 7
T106306	4D17	1	3360 - 9
T106306	4D17	5	3360 - 9
T106306	4D19	1	3360 - 11
T106306	4D21	1	3360 - 13
T106306	4D23	1	3360 - 15
T106368	3J22	3	3160 - 19
T106434	4D5	1	3340 - 10
T106594	3H8	9	2160 - 19
T106595	3H8	10	2160 - 19
T107116	2F24	13	1671 - 3
T107117	2F24	8	1671 - 3
T10745	2F25	7	1672 - 2
T10745	2G1	7	1672 - 3
T108235	2C14	1	0560 - 4
T109X220	4B19	7	3302 - 3
T11180	1I12	1	0416 - 1
T11180	1I14	1A	0416 - 3
T112196	3I7	16	3102 - 5
T112196	3I11	16	3102 - 9
T11234	1C20	19	0230 - 3
T11234	3G9	13	2002 - 3
T113021	3J22	17	3160 - 19
T113029	4D13	16	3360 - 5
T113029	4D15	16	3360 - 7
T113029	4D17	6	3360 - 9
T113029	4D19	16	3360 - 11
T113029	4D21	16	3360 - 13
T113029	4D23	16	3360 - 15
T113029	4D24	5	3360 - 16
T113128	1D11	7	0250 - 14
T113128	1D17	7	0325 - 1
T113254	1C24	10	0250 - 3
T113255	1D4	9	0250 - 7
T113482	1E7	4	0350 - 5
T113553	1E14	9	0350 - 12
T113554	1E14	2	0350 - 12
T113555	1E15	10	0350 - 13
T113556	1E17	7	0350 - 15
T113558	1E17	15	0350 - 15
T113613	1E3	12	0350 - 1
T113614	1E3	8	0350 - 1
T113615	1E3	4	0350 - 1
T113616	1E3	15	0350 - 1
T113617	1E14	1	0350 - 12
T113617	1E15	6	0350 - 13
T113619	1E3	16	0350 - 1
T113620	1E3	18	0350 - 1
T113622	1E3	2	0350 - 1
T113623	1E3	10	0350 - 1
T113626	1E17	1	0350 - 15
T113627	1E12	12	0350 - 10
T113673	1E12	9	0350 - 10
T113674	1E13	9	0350 - 11
T113676	1E12	9	0350 - 10
T113677	1E13	9	0350 - 11
T113678	1E8	3	0350 - 6
T113737	2C16	7	0641 - 1
T113738	2C16	6	0641 - 1
T113741	1E14	18	0350 - 12
T114738	3H1	4	2160 - 11
T115030	3G9	5	2002 - 3
T116416	1F19	6	0360 - 13
T116416	1F19	23	0360 - 13
T116416	1F21	11	0360 - 15
T116416	1F23	23	0360 - 17
T116918	1D25	10	0341 - 7
T116929	1C3	8	0201 - 12
T116930	1C3	8	0201 - 12
T116931	1C3	8	0201 - 12

NUMERICAL INDEX - CONTINUED

PART NO.	GRID	KEY	PAGE
T116932	1C3	8	0201 - 12
T116933	1C3	8	0201 - 12
T116934	1C3	8	0201 - 12
T116935	1C3	8	0201 - 12
T116936	1C3	8	0201 - 12
T116937	1C3	8	0201 - 12
T116938	1C3	8	0201 - 12
T116939	1C3	8	0201 - 12
T118329	3H14	9	2160 - 25
T118593	2I2	30	1676 - 3
T118638	1D4	15	0250 - 7
T118639	1D4	16	0250 - 7
T118639	1D4	17	0250 - 7
T118681	4F3	12	3360 - 39
T118736	3J6	7	3160 - 3
T118736	3J7	3	3160 - 4
T118736	3J8	1	3160 - 5
T118737	3J6	4	3160 - 3
T118737	3J7	6	3160 - 4
T118737	3J8	2	3160 - 5
T118750	2C7	5	0530 - 2
T118750	2C8	6	0530 - 3
T118799	4E19	4	3360 - 30
T118799	4E20	4	3360 - 31
T118799	4E21	4	3360 - 32
T118799	4E22	5	3360 - 33
T118799	4E23	4	3360 - 34
T118799	4E24	4	3360 - 35
T118853	3J10	2	3160 - 7
T118853	3J16	21	3160 - 13
T118866	4F3	10	3360 - 39
T118867	4F3	11	3360 - 39
T119156	2I10	6	1740 - 2
T11935	1I9	10	0413 - 8
T11937	1I9	11	0413 - 8
T119564	3G9	11	2002 - 3
T119593	3B20	9	1810 - 3
T119593	3B22	7	1810 - 5
T119593	3B24	12	1810 - 7
T119593	3F2	13	1830 - 23
T120185	1E12	3	0350 - 10
T120187	1E17	16	0350 - 15
T120198	2B21	13	0510 - 3
T120229	1F10	26	0360 - 3
T120259	2E24	7	1320 - 3
T120287	3J1	10	3140 - 1
T120355	3I15	4	3102 - 11
T120356	3I5	4	3102 - 3
T120356	3I15	3	3102 - 11
T120536	2G17	13	1674 - 13
T120540	3D9	15	1821 - 7
T120541	3D9	15	1821 - 7
T120543	3D9	14	1821 - 7
T120543	3D17	12	1821 - 15
T120544	3D9	16	1821 - 7
T120544	3D17	36	1821 - 15
T120545	3D9	13	1821 - 7
T120545	3D17	9	1821 - 15
T121258	3J22	5	3160 - 19
T121288	2F24	11	1671 - 3
T122063	3J6	2	3160 - 3
T122063	3J8	19	3160 - 5
T122063	3J10	4	3160 - 7
T122069	4G6	24	3360 - 67
T122069	4G8	24	3360 - 69
T122075	1J4	4	0419 - 5
T122075	1K11	30	0452 - 7
T122887	1E11	24	0350 - 9
T122979	3C22	19	1810 - 29
T122979	3C24	11	1810 - 31
T123090	1C3	8	0201 - 12
T123889	1J19	14	0423 - 3
T125519	3J20	6	3160 - 17
T125656	1D21	18	0341 - 3
T125724	3G9	4	2002 - 3
T125808	4C8	16	3315 - 13
T125808	4C10	16	3315 - 15
T125808	4C14	4	3315 - 19
T125947	4D9	5	3340 - 15
T125948	4F5	29	3360 - 41
T125949	4F5	32	3360 - 41
T125950	4F9	23	3360 - 45
T125951	4F9	24	3360 - 45
T125952	4C25	1	3340 - 5
T125952	4D4	15	3340 - 9
T125956	3J3	13	3140 - 3
T125956	4C21	7	3340 - 1
T126037	4F5	31	3360 - 41
T126037	4F9	27	3360 - 45
T126038	4D9	7	3340 - 15
T126041	4C21	5	3340 - 1
T126052	2E4	15	1063 - 9
T126701	4D9	20	3340 - 15
T126701	4F17	15	3360 - 53
T126703	4C23	14	3340 - 3
T126774	3I5	6	3102 - 3
T126774	3I7	10	3102 - 5
T126774	3I11	10	3102 - 9
T126834	3J3	3	3140 - 3
T126838	1E14	10	0350 - 12
T126839	1E3	7	0350 - 1
T126840	1D19	5	0341 - 1
T126841	1E14	8	0350 - 12
T126842	1D19	1	0341 - 1
T126845	1D19	5	0341 - 1
T126856	1E3	6	0350 - 1
T126944	1E7	17	0350 - 5
T126969	1E7	12	0350 - 5
T126974	3I21	4	3115 - 5
T126975	3I21	4	3115 - 5
T127001	2E11	3	1111 - 7
T127142	1F16	5	0360 - 10
T127158	1F16	7	0360 - 10
T127257	4F25	14	3360 - 61
T127258	4F25	6	3360 - 61
T127260	4F25	22	3360 - 61
T127261	4F25	19	3360 - 61
T127263	4F25	18	3360 - 61
T127264	4F25	21	3360 - 61
T127265	4F25	1	3360 - 61
T127268	4F25	2	3360 - 61
T127437	3I5	9	3102 - 3
T127437	3I15	4	3102 - 11
T127747	3I5	8	3102 - 3
T127747	3I15	7	3102 - 11
T127748	3J3	11	3140 - 3
T128064	2D24	15	1063 - 3
T128306	3J3	6	3140 - 3
T128437	3G9	2	2002 - 3
T128528	3I16	7	3102 - 12
T128528	3J13	7	3160 - 10
T128529	3I16	5	3102 - 12
T128529	3J13	5	3160 - 10
T128530	3I16	12	3102 - 12
T128530	3J13	12	3160 - 10
T128531	3I9	18	3102 - 7
T128531	3I13	18	3102 - 9B
T128532	3I7	6	3102 - 5
T128532	3I9	2	3102 - 7
T128532	3I13	2	3102 - 9B
T128533	3I7	25	3102 - 5
T128533	3I11	25	3102 - 9
T128534	3I7	1	3102 - 5
T128535	3I7	2	3102 - 5
T128536	3I9	19	3102 - 7
T128539	3I7	8	3102 - 5
T128539	3I11	8	3102 - 9
T128539	3I11	24	3102 - 9
T129165	2F24	3	1671 - 3
T129732	2C2	31	0515 - 3
T129928	3C8	23	1810 - 15
T129938	2I2	28	1676 - 3
T130086	2C2	23	0515 - 3
T130110	3F2	16	1830 - 23
T130111	3F2	14	1830 - 23
T130112	3F2	12	1830 - 23
T130425	3B24	4	1810 - 7
T130426	3C6	7	1810 - 13
T130455	4C23	10	3340 - 3
T130456	4C23	2	3340 - 3
T131177	1D16	5	0315 - 2
T13119	2B16	7	0505 - 3
T13119	2D12	31	1060 - 7
T13119	2D14	12	1060 - 9
T13119	2F9	..	1369 - 5
T131564	3C10	3	1810 - 17
T131938	2E24	31	1320 - 3
T13213	1H13	6	0407 - 7
T13213	1K2	4	0433 - 2
T13254	2B21	3	0510 - 3
T132816	3C8	37	1810 - 15
T132817	3C10	14	1810 - 17
T132842	3I19	24	3115 - 3
T132889	3C18	10	1810 - 25
T132952	3C18	25	1810 - 25
T132978	3B22	8	1810 - 5
T132979	3B22	20	1810 - 5
T132984	3C10	15	1810 - 17
T132993	3B20	6	1810 - 3
T132994	3B20	4	1810 - 3
T132995	2C20	24	0960 - 3
T132995	3B20	17	1810 - 3
T133009	3B20	7	1810 - 3
T133010	3B20	6	1810 - 3
T133010	3B20	10	1810 - 3
T133022	3I21	32	3115 - 5
T133023	4B22	20	3315 - 3
T133065	2C2	24	0515 - 3
T133108	3B20	17	1810 - 3
T133116	3C6	1	1810 - 13
T133190	3F2	17	1830 - 23
T133191	3F2	15	1830 - 23
T133239	2F17	9	1399 - 1
T133239	3E14	2	1830 - 11
T133289	3G2	3	1927 - 1
T133289	3G4	1	1927 - 3
T133291	3I23	25	3115 - 7
T133291	4B24	26	3315 - 5
T133291	4C2	13	3315 - 7
T133292	4B22	17	3315 - 3
T133292	4C16	10	3315 - 21

NUMERICAL INDEX - CONTINUED

PART NO.	GRID	KEY	PAGE
T133292	4C18	1	3315 - 23
T133327	3B22	21	1810 - 5
T133328	3B22	15	1810 - 5
T133333	3C18	22	1810 - 25
T133334	3C18	23	1810 - 25
T133335	3C18	18	1810 - 25
T133336	3C18	19	1810 - 25
T133344	3D2	15	1810 - 33
T133345	3D2	15	1810 - 33
T133347	3D2	19	1810 - 33
T133350	3C2	2	1810 - 9
T133351	3C2	10	1810 - 9
T133352	3C2	9	1810 - 9
T133353	3C2	1	1810 - 9
T133357	3B22	1	1810 - 5
T133399	3E14	1	1830 - 11
T133446	3C8	25	1810 - 15
T133463	3C8	16	1810 - 15
T133487	2C2	29	0515 - 3
T133487	3D2	9	1810 - 33
T133491	3C18	5	1810 - 25
T133492	3C18	7	1810 - 25
T133493	3C18	2	1810 - 25
T133495	3C18	4	1810 - 25
T133509	4B24	10A	3315 - 5
T133594	3C6	2	1810 - 13
T133665	4C16	7	3315 - 21
T133666	4C16	5	3315 - 21
T133674	3B22	5	1810 - 5
T133674	3B22	25	1810 - 5
T133674	3B22	26	1810 - 5
T133674	3C4	6	1810 - 11
T133674	3C10	4	1810 - 17
T133674	3C12	4	1810 - 19
T133674	3D2	6	1810 - 33
T133674	3D3	6	1810 - 34
T133674	3G7	1	2001 - 3
T134340	2G15	3	1674 - 10
T134363	3I23	3	3115 - 7
T134383	3B22	3	1810 - 5
T134383	4B24	28	3315 - 5
T134383	4C2	33	3315 - 7
T134489	3E10	6	1830 - 7
T134490	3E14	9	1830 - 11
T134492	3E6	24	1830 - 3
T134493	3E10	2	1830 - 7
T134494	3E14	8	1830 - 11
T134495	3E14	7	1830 - 11
T134579	3D2	8	1810 - 33
T134580	3D2	12	1810 - 33
T134582	3C22	25	1810 - 29
T134582	3C24	30	1810 - 31
T134583	3C22	30	1810 - 29
T134583	3C24	27	1810 - 31
T134584	3C22	24	1810 - 29
T134584	3C24	31	1810 - 31
T134586	3C22	34	1810 - 29
T134586	3C24	26	1810 - 31
T134590	3D2	8	1810 - 33
T134591	3D2	19	1810 - 33
T134592	3D2	4	1810 - 33
T134594	3B22	11	1810 - 5
T134635	2C20	10	0960 - 3
T134754	3C22	28	1810 - 29
T134754	3C24	15	1810 - 31
T134755	3C22	26	1810 - 29
T134755	3C24	13	1810 - 31
T134782	2E24	8	1320 - 3
T134785	2E24	8	1320 - 3
T134791	3B22	4	1810 - 5
T134805	2E24	9	1320 - 3
T134850	3B22	1	1810 - 5
T134874	3B22	9	1810 - 5
T134876	3B22	1	1810 - 5
T134877	3B22	3	1810 - 5
T134877	4C8	45	3315 - 13
T134878	3B22	3	1810 - 5
T134878	4C10	45	3315 - 15
T134878	4C12	13	3315 - 17
T134895	3B22	25	1810 - 5
T134895	3C2	6	1810 - 9
T134895	3C14	23	1810 - 21
T134895	3C20	42	1810 - 27
T134895	3G7	28	2001 - 3
T134895	3G8	6	2002 - 2
T134896	3B22	16	1810 - 5
T134907	4C2	5	3315 - 7
T134907	4C4	6	3315 - 9
T134961	3C2	7	1810 - 9
T134962	3C2	5	1810 - 9
T135000	3G8	3	2002 - 2
T13518	1K5	5	0433 - 5
T135211	3D5	16	1821 - 3
T135241	4B24	11	3315 - 5
T135241	4C8	43	3315 - 13
T135241	4C20	1	3315 - 25
T135250	3H12	50	2160 - 23
T135250	3H16	54	2160 - 27
T135250	3H20	72	2160 - 31
T135342	2C2	13	0515 - 3
T135343	2C2	35	0515 - 3
T135377	3J5	8	3160 - 2
T135386	3C24	40	1810 - 31
T135387	3C24	23	1810 - 31
T135395	4C4	18	3315 - 9
T135398	3J8	16	3160 - 5
T135403	3C22	41	1810 - 29
T135404	3C22	35	1810 - 29
T135405	3C22	6	1810 - 29
T135406	3C22	9	1810 - 29
T135572	2E24	26	1320 - 3
T135572	3B24	13	1810 - 7
T135572	3C6	16	1810 - 13
T135583	3C22	39	1810 - 29
T135583	3C24	38	1810 - 31
T135584	3C20	16	1810 - 27
T135625	3C22	3	1810 - 29
T135625	3C24	42	1810 - 31
T135642	2E24	30	1320 - 3
T135675	3C18	14	1810 - 25
T135736	3C2	1	1810 - 9
T135736	3C2	2	1810 - 9
T135736	3C2	9	1810 - 9
T135736	3C2	10	1810 - 9
T135736	3G8	5	2002 - 2
T135748	3C24	1	1810 - 31
T135764	3C16	5	1810 - 23
T13630	2C20	3	0960 - 3
T137302	3D5	9	1821 - 3
T137318	2C2	18	0515 - 3
T137321	2C2	32	0515 - 3
T137322	2C2	33	0515 - 3
T13744	2G8	12	1674 - 3
T13744	2G12	11	1674 - 7
T13744	2G14	15	1674 - 9
T13814	3F12	17	1830 - 33
T139165	2F2	22	1320 - 5
T139167	2F2	22	1320 - 5
T139806	2E24	10	1320 - 3
T139810	2E24	11	1320 - 3
T140086	3J3	7	3140 - 3
T140133	2E24	12	1320 - 3
T140207	1C20	6	0230 - 3
T140211	1C20	8	0230 - 3
T140211	1C22	4	0250 - 1
T140229	4C14	34	3315 - 19
T140261	4C8	44A	3315 - 13
T140261	4C10	44A	3315 - 15
T140283	2E24	13	1320 - 3
T140288	4B24	17	3315 - 5
T140288	4C20	3	3315 - 25
T140289	4C14	23	3315 - 19
T140289	4C20	2	3315 - 25
T140299	4C4	13	3315 - 9
T140299	4C6	10	3315 - 11
T140299	4C20	2	3315 - 25
T140300	4C4	13	3315 - 9
T140300	4C14	16	3315 - 19
T140300	4C14	25	3315 - 19
T140311	2E24	14	1320 - 3
T140321	3I21	27	3115 - 5
T140323	3I21	28	3115 - 5
T140324	3I23	19	3115 - 7
T140325	3I23	24	3115 - 7
T140328	3I19	18	3115 - 3
T140328	3I21	14	3115 - 5
T140328	3I23	9	3115 - 7
T140328	4B22	2	3315 - 3
T140328	4B24	15	3315 - 5
T140328	4C2	11	3315 - 7
T140328	4C2	28	3315 - 7
T140328	4C4	11	3315 - 9
T140328	4C6	12	3315 - 11
T140328	4C8	36	3315 - 13
T140328	4C10	36	3315 - 15
T140328	4C12	9	3315 - 17
T140328	4C14	18	3315 - 19
T140328	4C14	22	3315 - 19
T140329	4B22	5	3315 - 3
T140331	4B22	10	3315 - 3
T140355	3I19	16	3115 - 3
T140357	3I21	16	3115 - 5
T140363	3C2	2	1810 - 9
T140401	3D5	3	1821 - 3
T140401	3D9	11	1821 - 7
T140411	4C8	46	3315 - 13
T140571	4C14	32A	3315 - 19
T140598	3G7	21	2001 - 3
T140649	4C14	35	3315 - 19
T140650	4C14	7	3315 - 19
T140751	3C22	22	1810 - 29
T140780	2G4	11	1673 - 3
T140780	2G4	12	1673 - 3
T140790	3C24	21	1810 - 31
T140791	3C24	24	1810 - 31
T14083	2E22	5	1313 - 5
T140857	3D5	17	1821 - 3
T140858	3D5	10	1821 - 3
T140911	3C22	20	1810 - 29
T140912	3C24	9	1810 - 31
T140923	1D16	9	0315 - 2

NUMERICAL INDEX - CONTINUED

PART NO.	GRID	KEY	PAGE
T141043	3C2	10	1810 - 9
T141108	4C8	5	3315 - 13
T141108	4C10	5	3315 - 15
T141109	4C8	38	3315 - 13
T141109	4C10	38	3315 - 15
T141126	4B24	34	3315 - 5
T141126	4C2	19	3315 - 7
T141126	4C8	17	3315 - 13
T141126	4C10	17	3315 - 15
T141126	4C14	30	3315 - 19
T141151	3C22	10	1810 - 29
T141151	3C24	6	1810 - 31
T141152	3C24	34	1810 - 31
T141170	3I23	28	3115 - 7
T141171	3I21	30	3115 - 5
T141234	3B22	31	1810 - 5
T141235	3B22	34	1810 - 5
T141242	3B22	17	1810 - 5
T141244	3B22	17	1810 - 5
T141257	3B22	19A	1810 - 5
T141285	3C22	5	1810 - 29
T141285	3C24	18	1810 - 31
T141298	4C20	4	3315 - 25
T141316	4B24	9	3315 - 5
T141322	3B22	23	1810 - 5
T141379	3C24	35	1810 - 31
T141380	3C24	22	1810 - 31
T141384	3G1	3	1921 - 2
T141397	3D7	1	1821 - 5
T141484	3E14	11	1830 - 11
T141486	1D8	1	0250 - 11
T141487	1D4	24	0250 - 7
T141487	1D8	15	0250 - 11
T141500	3B24	3	1810 - 7
T141526	3F21	10	1910 - 3
T141527	3F21	9	1910 - 3
T141529	3C22	19	1810 - 29
T141529	3C24	11	1810 - 31
T141680	1E7	8	0350 - 5
T141689	1F17	5	0360 - 11
T141698	2E9	5	1111 - 5
T141698	2E11	11	1111 - 7
T141798	3G2	2	1927 - 1
T141872	4E23	14	3360 - 34
T141872	4E24	14	3360 - 35
T141872	4F3	14	3360 - 39
T141915	4C23	8	3340 - 3
T141964	3I18	1	3115 - 2
T141971	1F10	17	0360 - 3
T141972	1F10	25	0360 - 3
T141973	1F10	29	0360 - 3
T141974	1F10	18	0360 - 3
T141975	1F10	10	0360 - 3
T141976	1F10	9	0360 - 3
T141977	1F10	16	0360 - 3
T141978	1F10	7	0360 - 3
T141979	1F10	11	0360 - 3
T141980	1F10	15	0360 - 3
T141983	1F10	5	0360 - 3
T141984	1F10	21	0360 - 3
T142081	2H12	11	1674 - 33
T142093	2H12	9	1674 - 33
T142094	3B24	15	1810 - 7
T142094	3C6	19	1810 - 13
T142096	2H12	10	1674 - 33
T142249	3G7	3A	2001 - 3
T142250	3G7	2	2001 - 3
T142274	3E4	4	1822 - 3
T142418	1F10	19	0360 - 3
T142434	3G7	9	2001 - 3
T142447	3C4	1	1810 - 11
T142447	3C6	6	1810 - 13
T142464	3B24	3	1810 - 7
T142464	3B24	17	1810 - 7
T142465	3B24	3	1810 - 7
T142465	3B24	19	1810 - 7
T142472	4F7	24	3360 - 43
T142485	4F7	24	3360 - 43
T142517	3C14	17	1810 - 21
T142518	3C14	20	1810 - 21
T142519	3C14	12	1810 - 21
T142519	3C20	14	1810 - 27
T142519	3C22	16	1810 - 29
T142519	3C24	8	1810 - 31
T142520	3C14	11	1810 - 21
T142520	3C20	13	1810 - 27
T142520	3C22	15	1810 - 29
T142520	3C24	7	1810 - 31
T142539	3C22	17	1810 - 29
T142540	3C22	18	1810 - 29
T142633	3F23	10	1910 - 5
T142635	3F23	11	1910 - 5
T142651	3C8	8	1810 - 15
T142651	3D2	5	1810 - 33
T142651	3F21	4	1910 - 3
T142651	3F23	13	1910 - 5
T142703	3E14	27	1830 - 11
T142704	3E14	22	1830 - 11
T142706	3E14	30	1830 - 11
T142714	3E14	33	1830 - 11
T142718	3E14	24	1830 - 11
T142748	2C2	7	0515 - 3
T142773	1F10	13	0360 - 3
T142819	3F23	1	1910 - 5
T142875	3C14	22A	1810 - 21
T142875	3C14	22B	1810 - 21
T142887	2C20	10	0960 - 3
T142888	3I5	5	3102 - 3
T142951	2B21	6	0510 - 3
T142953	2B25	4	0510 - 7
T142953	2B25	7	0510 - 7
T142953	2B25	10	0510 - 7
T142953	2B25	11	0510 - 7
T142954	2C9	2	0540 - 1
T142992	3C8	17	1810 - 15
T143074	3I5	5	3102 - 3
T143122	2B21	6	0510 - 3
T143166	2F3	..	1330 - 1
T143167	2F3	..	1330 - 1
T143169	2F3	..	1330 - 1
T143169	3F10	21	1830 - 31
T143169	3F12	14	1830 - 33
T143209	4D2	2	3340 - 7
T143262	4G13	16	3360 - 75
T143350	4G6	23	3360 - 67
T143350	4G8	23	3360 - 69
T143566	2E6	5	1111 - 2
T143569	2E6	3	1111 - 2
T143571	2E6	2	1111 - 2
T143573	2E6	1	1111 - 2
T143690	3I7	8	3102 - 5
T143690	3I7	24	3102 - 5
T143690	3I11	8	3102 - 9
T143755	1D23	14	0341 - 5
T143804	3I7	7	3102 - 5
T143804	3I11	7	3102 - 9
T143929	4D2	10	3340 - 7
T143929	4D2	11	3340 - 7
T143931	4D2	14	3340 - 7
T143933	4D2	15	3340 - 7
T143937	4D2	16	3340 - 7
T143973	4D2	8	3340 - 7
T144073	3C4	3	1810 - 11
T144129	4D2	12	3340 - 7
T144129	4D2	17	3340 - 7
T144346	3I25	3A	3115 - 9
T144486	1F19	11	0360 - 13
T144486	1F21	7	0360 - 15
T144487	1F19	12	0360 - 13
T144493	1F23	19	0360 - 17
T144494	1F23	18	0360 - 17
T144688	2C2	5	0515 - 3
T144697	3I25	4A	3115 - 9
T145037	2I11	2	1740 - 3
T145037	2I13	11	1749 - 1
T145057	3C8	12	1810 - 15
T145057	3C18	29	1810 - 25
T145079	4D2	9	3340 - 7
T145102	3E4	5	1822 - 3
T145143	3F2	18	1830 - 23
T145143	3F4	11	1830 - 25
T145143	3F6	11	1830 - 27
T145162	3B24	10	1810 - 7
T145162	3C6	15	1810 - 13
T145216	2D8	3	1060 - 3
T145216	2D10	11	1060 - 5
T145253	3J5	7	3160 - 2
T145277	2G25	5	1674 - 21
T145283	4C10	43	3315 - 15
T145283	4C12	12	3315 - 17
T145284	3I21	15	3115 - 5
T145285	3I23	11	3115 - 7
T145289	3F25	7	1913 - 3
T145298	1E9	5	0350 - 7
T145299	1E9	11	0350 - 7
T145377	4G13	17	3360 - 75
T145402	3B24	20	1810 - 7
T145402	3C18	26	1810 - 25
T145402	3C24	10	1810 - 31
T145406	3F25	9	1913 - 3
T145547	3F2	10	1830 - 23
T145560	2E24	28	1320 - 3
T145560	3F12	31	1830 - 33
T145622	1D21	4	0341 - 3
T145669	3H12	83	2160 - 23
T145669	3H14	16	2160 - 25
T145669	3H18	16	2160 - 29
T145739	3H12	62	2160 - 23
T145798	3F25	6	1913 - 3
T145896	2G4	3	1673 - 3
T145896	2G6	3	1673 - 5
T145897	2G4	3	1673 - 3
T145897	2G6	3	1673 - 5
T145936	3E4	6	1822 - 3
T145936	3F21	12	1910 - 3
T145936	3F23	5	1910 - 5
T145936	3F25	15	1913 - 3
T145936	3G1	5	1921 - 2
T145959	3E6	17	1830 - 3
T145959	3F2	4	1830 - 23
T145959	3F4	8	1830 - 25

NUMERICAL INDEX - CONTINUED

PART NO.	GRID	KEY	PAGE
T145959	3F6	8	1830 - 27
T145975	2E24	15	1320 - 3
T145975	2F2	11	1320 - 5
T145993	3C4	2	1810 - 11
T145993	3C6	5	1810 - 13
T146009	3G2	1	1927 - 1
T146010	3G2	1	1927 - 1
T146053	4D6	2	3340 - 11
T146064	3H10	34	2160 - 21
T146080	2E24	16	1320 - 3
T146081	2E24	17	1320 - 3
T146097	2E24	32	1320 - 3
T146098	2F2	16	1320 - 5
T146099	2F2	16	1320 - 5
T146101	2F2	20	1320 - 5
T146102	1J13	5	0422 - 1
T146102	1J17	10	0422 - 5
T146102	2E24	20	1320 - 3
T146104	2F2	17	1320 - 5
T146106	2F2	17	1320 - 5
T146123	3C22	42	1810 - 29
T146164	3H3	7	2160 - 13
T146176	3H3	5	2160 - 13
T146193	3H3	14	2160 - 13
T146194	3H3	16	2160 - 13
T146394	2E24	21	1320 - 3
T146394	2E24	22	1320 - 3
T146394	2E24	36	1320 - 3
T146397	2E24	1	1320 - 3
T146398	2E24	23A	1320 - 3
T146414	2E24	2	1320 - 3
T146415	2E24	3	1320 - 3
T146431	2E24	29	1320 - 3
T146435	2E24	25	1320 - 3
T146464	1F16	13	0360 - 10
T146466	1F16	6	0360 - 10
T146497	2F2	12	1320 - 5
T146500	2F2	21	1320 - 5
T146507	2F2	21	1320 - 5
T146635	4D2	6	3340 - 7
T146636	4F15	11	3360 - 51
T146639	3D7	14	1821 - 5
T146652	3D7	6	1821 - 5
T146687	4D2	18	3340 - 7
T146715	2E24	24	1320 - 3
T146757	3I19	27	3115 - 3
T146906	4D25	3	3360 - 17
T147000	4D25	2	3360 - 17
T147001	4D25	2	3360 - 17
T147004	4E4	11	3360 - 21
T147005	4D4	13	3340 - 9
T147012	4C2	35	3315 - 7
T147012	4C4	7	3315 - 9
T147015	3B22	20	1810 - 5
T147107	4C6	18	3315 - 11
T147107	4D25	2	3360 - 17
T147113	2I4	3	1676 - 5
T147119	2I4	3	1676 - 5
T147136	2F2	15	1320 - 5
T147140	2F2	15	1320 - 5
T147178	4F7	23	3360 - 43
T147178	4G15	23	3360 - 77
T147187	4D4	2A	3340 - 9
T147187	4D9	16A	3340 - 15
T147247	2I12	8	1746 - 2
T147359	3H3	11	2160 - 13
T147360	3H3	15	2160 - 13
T147761	2E15	57	1160 - 3
T147787	4D2	26	3340 - 7
T147787	4G15	23	3360 - 77
T147866	4D2	25A	3340 - 7
T147866	4D9	15A	3340 - 15
T14787	2D8	21	1060 - 3
T147876	3C18	16	1810 - 25
T147877	3C18	16	1810 - 25
T147894	3B20	23	1810 - 3
T147945	3C22	9	1810 - 29
T147956	2E15	5	1160 - 3
T148150	2E24	19	1320 - 3
T148167	3B24	15	1810 - 7
T148167	3C6	19	1810 - 13
T148168	3B24	15	1810 - 7
T148168	3C6	19	1810 - 13
T148178	2I10	7	1740 - 2
T148182	3I18	2	3115 - 2
T148207	3H3	4	2160 - 13
T148208	1J21	1	0429 - 1
T148209	1I19	1	0417 - 3
T148220	1J19	2	0423 - 3
T148228	3D3	3	1810 - 34
T148230	1J19	12	0423 - 3
T148307	1J19	17	0423 - 3
T148355	4D13	10	3360 - 5
T148355	4D15	10	3360 - 7
T148355	4D17	10	3360 - 9
T148355	4D19	10	3360 - 11
T148355	4D21	10	3360 - 13
T148355	4D23	10	3360 - 15
T148355	4D24	4	3360 - 16
T148356	4D13	9	3360 - 5
T148356	4D15	9	3360 - 7
T148356	4D17	9	3360 - 9
T148356	4D19	9	3360 - 11
T148356	4D21	9	3360 - 13
T148356	4D23	9	3360 - 15
T148356	4D24	3	3360 - 16
T148357	4D13	8	3360 - 5
T148357	4D15	8	3360 - 7
T148357	4D17	8	3360 - 9
T148357	4D19	8	3360 - 11
T148357	4D21	8	3360 - 13
T148357	4D23	8	3360 - 15
T148357	4D24	2	3360 - 16
T148453	3C20	31	1810 - 27
T148454	3C20	26	1810 - 27
T148469	3B24	20	1810 - 7
T148469	3C18	26	1810 - 25
T148469	3C24	10	1810 - 31
T148470	3C20	6	1810 - 27
T148471	3C20	5	1810 - 27
T148472	3C20	3	1810 - 27
T148473	3C20	17	1810 - 27
T148474	3C20	18	1810 - 27
T148478	3C20	4	1810 - 27
T148482	3C20	21	1810 - 27
T148485	3C20	24	1810 - 27
T148553	2B21	29	0510 - 3
T148575	1D4	17	0250 - 7
T148602	4B18	6	3302 - 2
T148641	3I19	31	3115 - 3
T148641	3I21	37	3115 - 5
T148642	3I19	33	3115 - 3
T148741	4C12	7	3315 - 17
T148741	4C14	16	3315 - 19
T148741	4C14	25	3315 - 19
T148741	4C20	3	3315 - 25
T148753	4B19	6	3302 - 3
T148791	2E15	34	1160 - 3
T148801	2E15	46	1160 - 3
T148802	2E15	45	1160 - 3
T148812	1E11	8	0350 - 9
T148812	1E11	25	0350 - 9
T148813	1E11	8	0350 - 9
T148813	1E11	26	0350 - 9
T148817	3G9	3	2002 - 3
T148818	3G9	1	2002 - 3
T148844	4B24	10A	3315 - 5
T148844	4C2	29A	3315 - 7
T148848	4C2	9	3315 - 7
T148848	4C14	23	3315 - 19
T148848	4C20	2	3315 - 25
T148875	3B22	20	1810 - 5
T148903	3B22	20	1810 - 5
T148917	3F8	43	1830 - 29
T148917	3F10	27	1830 - 31
T148917	3F14	13	1830 - 35
T148919	3F14	12	1830 - 35
T148940	4D2	8	3340 - 7
T148940	4D2	13	3340 - 7
T148940	4D2	17	3340 - 7
T148941	4D2	8	3340 - 7
T148941	4D2	13	3340 - 7
T148941	4D2	17	3340 - 7
T148942	4D2	8	3340 - 7
T148942	4D2	13	3340 - 7
T148942	4D2	17	3340 - 7
T149003	3F8	42	1830 - 29
T149003	3F10	2	1830 - 31
T149004	3F8	42	1830 - 29
T149004	3F10	2	1830 - 31
T149004	3F14	3	1830 - 35
T149171	1F10	13	0360 - 3
T149173	4C4	8	3315 - 9
T149173	4C6	15	3315 - 11
T149199	2E24	33	1320 - 3
T149199	2H12	12	1674 - 33
T149325	3D3	3	1810 - 34
T149366	3H3	5	2160 - 13
T149377	3H3	18	2160 - 13
T149516	2I4	3	1676 - 5
T149517	2I4	3	1676 - 5
T149597	3F12	50	1830 - 33
T149597	3H14	20A	2160 - 25
T149597	3H16	51	2160 - 27
T149597	3H18	46	2160 - 29
T149668	4C23	21	3340 - 3
T149702	4C8	44A	3315 - 13
T149702	4C10	44A	3315 - 15
T149740	4D13	16	3360 - 5
T149740	4D15	16	3360 - 7
T149740	4D17	6	3360 - 9
T149740	4D19	16	3360 - 11
T149740	4D21	16	3360 - 13
T149740	4D23	16	3360 - 15
T149740	4D24	5	3360 - 16
T149829	2I4	4	1676 - 5
T149843	3C20	23	1810 - 27
T149851	4C23	2	3340 - 3
T149851	4C23	10	3340 - 3
T150339	2E24	23B	1320 - 3
T150340	2E24	35	1320 - 3

NUMERICAL INDEX - CONTINUED

PART NO.	GRID	KEY	PAGE
T150341	2E24	34	1320 - 3
T150355	2G4	2	1673 - 3
T150355	2G6	2	1673 - 5
T150753	3H12	73	2160 - 23
T150753	3H16	63A	2160 - 27
T151136	3H12	79	2160 - 23
T151169	2I2	6	1676 - 3
T151178	3B22	4	1810 - 5
T151248	4G13	21	3360 - 75
T151299	4C23	8	3340 - 3
T151328	3J16	12	3160 - 13
T151513	3C20	1	1810 - 27
T151794	4B24	10B	3315 - 5
T151794	4C2	29B	3315 - 7
T151794	4C14	32B	3315 - 19
T151858	1J23	26	0429 - 3
T151863	3G2	5	1927 - 1
T151864	3G2	3	1927 - 1
T151864	3G4	1	1927 - 3
T151896	2B25	4	0510 - 7
T151896	2B25	12	0510 - 7
T152207	3F4	10	1830 - 25
T152207	3F6	10	1830 - 27
T152230	2G4	10	1673 - 3
T152392	2E22	6	1313 - 5
T152399	4C10	44B	3315 - 15
T152442	2E22	2	1313 - 5
T152442	2E24	38	1320 - 3
T152594	3I25	3B	3115 - 9
T152595	3I25	4B	3115 - 9
T152604	2D12	1	1060 - 7
T152604	2D12	48B	1060 - 7
T152648	3C20	22	1810 - 27
T152845	2E24	37	1320 - 3
T152845	3I19	12	3115 - 3
T152845	3I19	19	3115 - 3
T152845	3I19	26	3115 - 3
T152845	3I19	29	3115 - 3
T152856	1D11	7	0250 - 14
T152856	1D17	7	0325 - 1
T153055	2I4	1	1676 - 5
T153055	2I4	3	1676 - 5
T153055	2I4	4	1676 - 5
T153056	2I4	2	1676 - 5
T153056	2I4	3	1676 - 5
T153056	2I4	4	1676 - 5
T153058	4C14	32B	3315 - 19
T153138	3C20	32	1810 - 27
T153271	3C20	38	1810 - 27
T153680	2E24	27	1320 - 3
T153733	3C20	41	1810 - 27
T153734	3C20	32	1810 - 27
T153866	2E22	4	1313 - 5
T153866	3J3	14	3140 - 3
T153981	3C20	44	1810 - 27
T154092	4D2	1A	3340 - 7
T154092	4D2	1C	3340 - 7
T154187	4F25	6	3360 - 61
T154240	3F21	13	1910 - 3
T154271	4D2	1A	3340 - 7
T154271	4D2	1B	3340 - 7
T154361	2I2	5	1676 - 3
T154361	2I6	9	1676 - 7
T154361	2I8	9	1676 - 9
T154361	3B24	8	1810 - 7
T154361	3C6	6	1810 - 13
T154364	2E22	5	1313 - 5
T154449	2C11	4	0540 - 3
T155065	3D3	4	1810 - 34
T155259	1E19	11	0350 - 17
T155324	2C17	2	0641 - 2
T155431	3C2	12	1810 - 9
T155525	3E16	27	1830 - 13
T155525	3E18	27	1830 - 15
T155572	2E2	8	1063 - 7
T155572	2E24	29	1320 - 3
T155572	2E24	40	1320 - 3
T155579	2E2	9	1063 - 7
T155579	2F2	14	1320 - 5
T155580	2E2	9	1063 - 7
T155581	2E2	9	1063 - 7
T155815	3C12	3	1810 - 19
T155815	3C12	9	1810 - 19
T155815	3C12	12	1810 - 19
T155815	3C12	18	1810 - 19
T155858	2B16	5	0505 - 3
T155906	3C12	24	1810 - 19
T15712	2B16	6	0505 - 3
T157549	2E24	39	1320 - 3
T157549	4G19	12	3360 - 81
T157549	4G21	12	3360 - 83
T157694	4C18	22	3315 - 23
T157709	3C20	40	1810 - 27
T157803	3D11	5	1821 - 9
T157803	3D11	37	1821 - 9
T157803	3D25	6	1821 - 23
T157803	3D25	7	1821 - 23
T157811	3C2	1	1810 - 9
T157811	3C2	9	1810 - 9
T157811	3C2	10	1810 - 9
T157811	3C2	13	1810 - 9
T157836	3F4	4	1830 - 25
T157836	3F6	4	1830 - 27
T157875	1E13	8	0350 - 11
T158026	4C8	38	3315 - 13
T158026	4C10	38	3315 - 15
T158068	3D3	4	1810 - 34
T158080	3C12	26	1810 - 19
T158080	3C20	28	1810 - 27
T158081	3C12	25	1810 - 19
T158081	3C20	27	1810 - 27
T158127	3E20	32	1830 - 17
T158127	3E22	32	1830 - 19
T158187	3D3	3	1810 - 34
T158236	4G19	11	3360 - 81
T158236	4G21	11	3360 - 83
T158245	2E4	16	1063 - 9
T158245	3F12	18	1830 - 33
T158351	3C2	2	1810 - 9
T158358	3C12	2	1810 - 19
T158376	2F2	15	1320 - 5
T158377	2E24	18	1320 - 3
T158380	2F2	15	1320 - 5
T158481	3D13	14	1821 - 11
T158481	3D23	14	1821 - 21
T158507	2I4	3	1676 - 5
T158547	3G17	4	2160 - 2
T158584	2G1	10	1672 - 3
T158623	3G2	1	1927 - 1
T158623	3G3	1	1927 - 2
T158624	3G2	1	1927 - 1
T158624	3G3	1	1927 - 2
T158639	3B22	17	1810 - 5
T158648	2C11	2	0540 - 3
T158717	1E19	8	0350 - 17
T158718	1E19	9	0350 - 17
T158720	1E19	2	0350 - 17
T158732	1F17	2	0360 - 11
T158739	1E21	4	0350 - 19
T158739	1E23	4	0350 - 21
T158739	1E25	14	0350 - 23
T158739	1F2	4	0350 - 25
T158739	1F4	4	0350 - 27
T158739	1F6	4	0350 - 29
T158740	1E19	10	0350 - 17
T158741	1F17	5	0360 - 11
T158742	1E21	2	0350 - 19
T158742	1E23	2	0350 - 21
T158742	1E25	15	0350 - 23
T158742	1F2	2	0350 - 25
T158742	1F4	2	0350 - 27
T158742	1F6	2	0350 - 29
T158742	1F8	24	0350 - 31
T158743	1E21	5	0350 - 19
T158743	1E23	5	0350 - 21
T158743	1E25	13	0350 - 23
T158743	1F2	5	0350 - 25
T158743	1F4	5	0350 - 27
T158743	1F6	5	0350 - 29
T158749	1F17	4	0360 - 11
T158754	1F17	10	0360 - 11
T158756	1E23	18	0350 - 21
T158756	1E25	6	0350 - 23
T158756	1F4	12	0350 - 27
T158756	1F6	12	0350 - 29
T158760	1F8	26	0350 - 31
T158775	1E21	7	0350 - 19
T158775	1E23	7	0350 - 21
T158775	1E25	7	0350 - 23
T158775	1F2	7	0350 - 25
T158775	1F4	7	0350 - 27
T158775	1F6	7	0350 - 29
T158778	1E21	13	0350 - 19
T158778	1E23	13	0350 - 21
T158778	1E25	8	0350 - 23
T158778	1F2	13	0350 - 25
T158778	1F4	11	0350 - 27
T158778	1F6	11	0350 - 29
T158778	1F8	21	0350 - 31
T158789	1E21	6	0350 - 19
T158789	1E23	6	0350 - 21
T158789	1E25	12	0350 - 23
T158789	1F2	6	0350 - 25
T158789	1F4	6	0350 - 27
T158789	1F6	6	0350 - 29
T158801	1E21	10	0350 - 19
T158801	1E23	10	0350 - 21
T158801	1E25	11	0350 - 23
T158801	1F2	10	0350 - 25
T158801	1F4	8	0350 - 27
T158801	1F6	8	0350 - 29
T158801	1F8	20	0350 - 31
T158810	4C2	26	3315 - 7
T158810	4C8	41	3315 - 13
T158810	4C10	41	3315 - 15
T158810	4C12	7	3315 - 17
T158810	4C14	25	3315 - 19
T158812	4C8	34	3315 - 13
T158812	4C10	34	3315 - 15
T158812	4C14	23	3315 - 19
T158825	3F4	3	1830 - 25

NUMERICAL INDEX - CONTINUED

PART NO.	GRID	KEY	PAGE
T158825	3F6	3	1830 - 27
T158840	3B22	41	1810 - 5
T158842	3E16	4	1830 - 13
T158842	3E18	4	1830 - 15
T158842	3E20	4	1830 - 17
T158842	3E22	4	1830 - 19
T158845	3E12	7	1830 - 9
T158846	3E12	6	1830 - 9
T158848	2F17	9	1399 - 1
T158848	3E16	16	1830 - 13
T158848	3E18	16	1830 - 15
T158848	3E20	16	1830 - 17
T158848	3E22	16	1830 - 19
T158856	3E12	13	1830 - 9
T158862	3E16	17	1830 - 13
T158862	3E18	17	1830 - 15
T158862	3E20	17	1830 - 17
T158862	3E22	17	1830 - 19
T158865	3E20	27	1830 - 17
T158865	3E22	27	1830 - 19
T158866	3E20	26	1830 - 17
T158866	3E22	26	1830 - 19
T158867	3E12	9	1830 - 9
T158871	3E16	18	1830 - 13
T158871	3E18	18	1830 - 15
T158871	3E20	18	1830 - 17
T158871	3E22	18	1830 - 19
T158873	3E20	25	1830 - 17
T158873	3E22	25	1830 - 19
T158875	3E12	10	1830 - 9
T159028	2E24	25	1320 - 3
T159158	3D15	20	1821 - 13
T159252	2B23	25	0510 - 5
T159253	2C10	2	0540 - 2
T159257	2B23	12	0510 - 5
T159359	2E13	6	1111 - 9
T159362	2D6	3	1011 - 5
T159362	2D6	30	1011 - 5
T159373	1C2	8	0201 - 11
T159386	1C2	7	0201 - 11
T159388	1C2	13	0201 - 11
T159389	1C2	6	0201 - 11
T159400	2D6	19	1011 - 5
T159401	2D6	20	1011 - 5
T159407	2D6	23	1011 - 5
T159425	2D6	28	1011 - 5
T159427	2D6	28	1011 - 5
T159429	2D6	28	1011 - 5
T159431	2D6	28	1011 - 5
T159435	2D6	28	1011 - 5
T159440	2D6	32	1011 - 5
T159441	2D6	32	1011 - 5
T159442	2D6	32	1011 - 5
T159443	2D6	32	1011 - 5
T159444	2D6	32	1011 - 5
T159445	2D6	32	1011 - 5
T159446	2D6	32	1011 - 5
T159447	2D6	32	1011 - 5
T159448	2D6	32	1011 - 5
T159449	2D6	32	1011 - 5
T159450	2D6	32	1011 - 5
T159451	2D6	32	1011 - 5
T159452	2D6	32	1011 - 5
T159453	2D6	32	1011 - 5
T159474	2E13	10	1111 - 9
T159475	2E13	9	1111 - 9
T159477	2E13	4	1111 - 9
T159478	2E13	8	1111 - 9
T159479	2D6	32	1011 - 5
T159480	2D6	32	1011 - 5
T159481	2D6	32	1011 - 5
T159482	2D6	32	1011 - 5
T159483	2D6	32	1011 - 5
T159487	2E13	17	1111 - 9
T159502	2E13	18	1111 - 9
T159519	1C16	9	0210 - 13
T159565	1D25	23	0341 - 7
T159567	1D25	19	0341 - 7
T159568	1E21	13	0350 - 19
T159568	1E23	13	0350 - 21
T159568	1E25	8	0350 - 23
T159568	1F2	13	0350 - 25
T159568	1F4	11	0350 - 27
T159568	1F6	11	0350 - 29
T159568	1F8	21	0350 - 31
T159569	1E21	13	0350 - 19
T159569	1E23	13	0350 - 21
T159569	1E25	8	0350 - 23
T159569	1F2	13	0350 - 25
T159569	1F4	11	0350 - 27
T159569	1F6	11	0350 - 29
T159569	1F8	21	0350 - 31
T159570	1E21	13	0350 - 19
T159570	1E23	13	0350 - 21
T159570	1E25	8	0350 - 23
T159570	1F2	13	0350 - 25
T159570	1F4	11	0350 - 27
T159570	1F6	11	0350 - 29
T159570	1F8	21	0350 - 31
T159572	1F8	1	0350 - 31
T159575	1F8	17	0350 - 31
T159582	1F19	22	0360 - 13
T159583	1F19	34	0360 - 13
T159584	1F19	36	0360 - 13
T159586	1F19	31	0360 - 13
T159587	1F19	26	0360 - 13
T159588	1F19	27	0360 - 13
T159589	1F19	25	0360 - 13
T159591	1F19	30	0360 - 13
T159592	1F19	29	0360 - 13
T159593	1F19	1	0360 - 13
T159593	1F19	28	0360 - 13
T159596	1F19	16	0360 - 13
T159596	1F21	9	0360 - 15
T159597	1F19	21	0360 - 13
T159598	1F19	20	0360 - 13
T159599	1F19	17	0360 - 13
T159600	1F19	18	0360 - 13
T159604	1F19	3	0360 - 13
T159605	1F19	4	0360 - 13
T159607	1F19	7	0360 - 13
T159607	1F23	3	0360 - 17
T159607	1F23	4	0360 - 17
T159607	1F23	5	0360 - 17
T159607	1F23	6	0360 - 17
T159607	1F23	9	0360 - 17
T159607	1F23	13	0360 - 17
T159607	1F23	14	0360 - 17
T159607	1F23	15	0360 - 17
T159607	1F23	16	0360 - 17
T159612	1F23	3	0360 - 17
T159612	1F23	6	0360 - 17
T159613	1F23	7	0360 - 17
T159615	1F17	6	0360 - 11
T159650	4E18	1	3360 - 29
T159683	1D25	12	0341 - 7
T159683	1D25	26	0341 - 7
T159684	1F23	11	0360 - 17
T159905	3H14	38	2160 - 25
T159945	3B22	38	1810 - 5
T159946	3B22	39	1810 - 5
T159987	3G17	3	2160 - 2
T160136	3E20	41	1830 - 17
T160136	3E22	41	1830 - 19
T160219	2I6	2	1676 - 7
T160220	2I8	2	1676 - 9
T160275	3E16	31	1830 - 13
T160275	3E18	31	1830 - 15
T160275	3E20	45	1830 - 17
T160275	3E22	45	1830 - 19
T160276	3E20	46	1830 - 17
T160276	3E22	46	1830 - 19
T160292	3H14	11	2160 - 25
T160292	3H18	9	2160 - 29
T160315	3D23	2	1821 - 21
T160431	4C16	18	3315 - 21
T160431	4C23	21	3340 - 3
T160449	4C18	8	3315 - 23
T160492	3E8	5	1830 - 5
T160508	2B25	14	0510 - 7
T160538	2E24	4	1320 - 3
T160715	2H6	3	1674 - 27
T160716	2H6	5	1674 - 27
T160728	3C4	2	1810 - 11
T160728	3C6	5	1810 - 13
T160729	2H12	9	1674 - 33
T160762	2F2	20	1320 - 5
T160769	2F2	20	1320 - 5
T160794	3E22	14	1830 - 19
T160891	4C18	20	3315 - 23
T160895	3D17	25	1821 - 15
T160896	3D17	24	1821 - 15
T160905	4C18	15	3315 - 23
T160952	4D9	5	3340 - 15
T160996	4D13	17	3360 - 5
T160996	4D15	17	3360 - 7
T160996	4D17	4	3360 - 9
T160996	4D19	17	3360 - 11
T160996	4D21	17	3360 - 13
T160996	4D23	17	3360 - 15
T160996	4D24	9	3360 - 16
T160999	4C8	44B	3315 - 13
T161036	2I10	7	1740 - 2
T161144	1F23	10	0360 - 17
T161147	1E21	12	0350 - 19
T161147	1E23	12	0350 - 21
T161147	1E25	9	0350 - 23
T161147	1F2	12	0350 - 25
T161147	1F4	10	0350 - 27
T161147	1F6	10	0350 - 29
T161147	1F8	18	0350 - 31
T161159	2B23	8A	0510 - 5
T161165	3B24	23	1810 - 7
T161172	4C18	24	3315 - 23
T161181	1D25	16	0341 - 7
T161182	1D25	15	0341 - 7
T161183	1E21	13	0350 - 19
T161183	1E23	13	0350 - 21
T161183	1E25	8	0350 - 23
T161183	1F2	13	0350 - 25
T161183	1F4	11	0350 - 27

NUMERICAL INDEX - CONTINUED

PART NO.	GRID	KEY	PAGE
T161183	1F6	11	0350 - 29
T161183	1F8	21	0350 - 31
T161186	1E25	2	0350 - 23
T161186	1F4	16	0350 - 27
T161186	1F6	16	0350 - 29
T161187	1E25	2	0350 - 23
T161187	1F4	16	0350 - 27
T161187	1F6	16	0350 - 29
T161188	1E25	2	0350 - 23
T161188	1F4	16	0350 - 27
T161188	1F6	16	0350 - 29
T161189	1E25	2	0350 - 23
T161189	1F4	16	0350 - 27
T161189	1F6	16	0350 - 29
T161190	1E25	2	0350 - 23
T161190	1F4	16	0350 - 27
T161190	1F6	16	0350 - 29
T161191	1E25	2	0350 - 23
T161191	1F4	16	0350 - 27
T161191	1F6	16	0350 - 29
T161192	1E25	2	0350 - 23
T161192	1F4	16	0350 - 27
T161192	1F6	16	0350 - 29
T161193	1E25	2	0350 - 23
T161193	1F4	16	0350 - 27
T161193	1F6	16	0350 - 29
T161194	1F19	5	0360 - 13
T161194	1F19	24	0360 - 13
T161194	1F21	12	0360 - 15
T161194	1F23	24	0360 - 17
T161196	1F19	35	0360 - 13
T161197	1F19	32	0360 - 13
T161198	1F19	32	0360 - 13
T161199	1F19	32	0360 - 13
T161200	1F19	32	0360 - 13
T161202	1F19	37	0360 - 13
T161203	1F19	38	0360 - 13
T161204	1F19	2	0360 - 13
T161204	1F23	8	0360 - 17
T161204	1F23	25	0360 - 17
T161204	1F23	26	0360 - 17
T161207	1F19	8	0360 - 13
T161207	1F21	13	0360 - 15
T161208	1F23	12	0360 - 17
T161213	4C8	42	3315 - 13
T161213	4C10	42	3315 - 15
T161213	4C14	16	3315 - 19
T161218	1D25	3	0341 - 7
T161238	2D6	28	1011 - 5
T161239	2D6	28	1011 - 5
T161240	2D6	28	1011 - 5
T161241	2D6	28	1011 - 5
T161242	2D6	28	1011 - 5
T161243	2D6	28	1011 - 5
T161244	2D6	28	1011 - 5
T161245	2D6	28	1011 - 5
T161246	2D6	28	1011 - 5
T161247	2D6	28	1011 - 5
T161294	3C2	1	1810 - 9
T161294	3C2	2	1810 - 9
T161294	3C2	9	1810 - 9
T161294	3C2	10	1810 - 9
T161294	3C2	12	1810 - 9
T161294	3C2	15	1810 - 9
T161297	3E18	36	1830 - 15
T161297	3E22	52	1830 - 19
T161366	3F6	23	1830 - 27
T161373	3D2	20	1810 - 33
T161379	4B24	34	3315 - 5
T161379	4C2	19	3315 - 7
T161427	3C2	2	1810 - 9
T161427	3C2	12	1810 - 9
T161464	3H16	72	2160 - 27
T161467	3B24	22	1810 - 7
T161468	3B24	21	1810 - 7
T161720	3C6	1	1810 - 13
T161721	3C6	2	1810 - 13
T161803	1D25	33	0341 - 7
T161902	3C20	44	1810 - 27
T162004	4D4	2A	3340 - 9
T162004	4D4	2B	3340 - 9
T162004	4D9	16A	3340 - 15
T162004	4D9	16B	3340 - 15
T162004	4G15	23	3360 - 77
T162005	4D4	2A	3340 - 9
T162005	4D4	5	3340 - 9
T162005	4D9	10	3340 - 15
T162005	4D9	16A	3340 - 15
T162074	1B19	4	0201 - 2
T162244	2E7	1	1111 - 3
T162380	2H2	10	1674 - 23
T162380	2H2	11	1674 - 23
T162380	2H12	11	1674 - 33
T162380	2I6	14	1676 - 7
T162380	2I8	14	1676 - 9
T162380	3B20	14	1810 - 3
T162380	3B20	17	1810 - 3
T162396	1C20	4	0230 - 3
T162396	1C20	7	0230 - 3
T162396	3I18	7	3115 - 2
T162396	3J1	1	3140 - 1
T162396	3J3	4	3140 - 3
T162396	3J3	10	3140 - 3
T162396	3J14	19	3160 - 11
T162396	3J15	18	3160 - 12
T162396	3J21	19	3160 - 18
T162396	3J23	18	3160 - 20
T162396	4C8	3	3315 - 13
T162396	4C8	29	3315 - 13
T162396	4C25	9	3340 - 5
T162396	4D2	19	3340 - 7
T162396	4D4	17	3340 - 9
T162396	4D6	3	3340 - 11
T162396	4D9	8	3340 - 15
T162396	4F5	27	3360 - 41
T162396	4F9	28	3360 - 45
T162396	4F11	24	3360 - 47
T162396	4F13	24	3360 - 49
T162396	4G6	21	3360 - 67
T162396	4G8	21	3360 - 69
T162446	1F17	7	0360 - 11
T162517	2D6	22	1011 - 5
T162557	3F12	4	1830 - 33
T162586	3B24	23	1810 - 7
T162642	3F12	37	1830 - 33
T162935	1F17	8	0360 - 11
T162947	1F19	39	0360 - 13
T163002	3C20	44	1810 - 27
T163002	3C20	45	1810 - 27
T163116	3I17	7	3102 - 13
T163117	3I17	5	3102 - 13
T163118	3I17	12	3102 - 13
T163163	3C12	14	1810 - 19
T163188	3H16	80	2160 - 27
T163188	3H18	7	2160 - 29
T163288	1B19	3	0201 - 2
T163309	2I6	11	1676 - 7
T163309	2I6	13	1676 - 7
T163309	2I6	14	1676 - 7
T163309	2I8	11	1676 - 9
T163309	2I8	12	1676 - 9
T163309	2I8	13	1676 - 9
T163309	2I8	14	1676 - 9
T163309	2I8	15	1676 - 9
T163309	3B20	19	1810 - 3
T163320	2B23	8A	0510 - 5
T163320	2B23	8B	0510 - 5
T163544	1C14	7	0210 - 11
T163544	2E13	21	1111 - 9
T163573	2E24	18	1320 - 3
T163576	2E24	18	1320 - 3
T163576	2E24	19	1320 - 3
T163633	3D17	25	1821 - 15
T163634	3D17	24	1821 - 15
T163635	4D2	25A	3340 - 7
T163635	4D2	25B	3340 - 7
T163635	4D9	15A	3340 - 15
T163635	4D9	15B	3340 - 15
T163635	4G15	23	3360 - 77
T163954	4E17	2	3360 - 28
T163954	4E19	18	3360 - 30
T163954	4E20	18	3360 - 31
T163954	4E21	18	3360 - 32
T163954	4E22	21	3360 - 33
T163954	4E23	20	3360 - 34
T163954	4E24	20	3360 - 35
T163955	4E19	5	3360 - 30
T163955	4E20	5	3360 - 31
T163955	4E21	5	3360 - 32
T163955	4E22	6	3360 - 33
T163955	4E23	5	3360 - 34
T163955	4E24	5	3360 - 35
T163956	4E19	7	3360 - 30
T163956	4E19	10	3360 - 30
T163956	4E20	7	3360 - 31
T163956	4E20	10	3360 - 31
T163956	4E21	7	3360 - 32
T163956	4E21	10	3360 - 32
T163956	4E22	8	3360 - 33
T163956	4E22	11	3360 - 33
T163956	4E23	7	3360 - 34
T163956	4E23	10	3360 - 34
T163956	4E24	7	3360 - 35
T163956	4E24	10	3360 - 35
T163957	4E19	17	3360 - 30
T163957	4E20	17	3360 - 31
T163957	4E21	17	3360 - 32
T163957	4E22	20	3360 - 33
T163957	4E23	19	3360 - 34
T163957	4E24	19	3360 - 35
T163958	4E19	14	3360 - 30
T163958	4E20	14	3360 - 31
T163958	4E21	14	3360 - 32
T163958	4E22	17	3360 - 33
T163958	4E23	16	3360 - 34
T163958	4E24	16	3360 - 35
T163959	4E19	6	3360 - 30
T163959	4E20	6	3360 - 31
T163959	4E21	6	3360 - 32
T163959	4E22	7	3360 - 33
T163959	4E23	6	3360 - 34

NUMERICAL INDEX - CONTINUED

PART NO.	GRID	KEY	PAGE
T163959	4E24	6	3360 - 35
T163960	4E16	2	3360 - 27
T163960	4F1	2	3360 - 37
T163994	4E22	13	3360 - 33
T163995	4E19	2	3360 - 30
T163995	4E20	2	3360 - 31
T163995	4E21	2	3360 - 32
T163995	4E22	3	3360 - 33
T163995	4E23	2	3360 - 34
T163995	4E24	2	3360 - 35
T163998	4E16	2	3360 - 27
T163998	4E25	2	3360 - 36
T163999	4E16	2	3360 - 27
T164006	3H18	39	2160 - 29
T164016	4E19	3	3360 - 30
T164016	4E20	3	3360 - 31
T164016	4E21	3	3360 - 32
T164016	4E22	4	3360 - 33
T164016	4E23	3	3360 - 34
T164016	4E24	3	3360 - 35
T164017	4D2	25A	3340 - 7
T164017	4D2	27	3340 - 7
T164017	4D9	11	3340 - 15
T164017	4D9	15A	3340 - 15
T164326	2E2	7	1063 - 7
T164331	2D22	35	1060 - 17
T164481	2C2	5	0515 - 3
T164482	2D10	17	1060 - 5
T164567	2H12	13	1674 - 33
T164567	3D11	5	1821 - 9
T164567	3D11	36	1821 - 9
T164567	3D25	6	1821 - 23
T164567	3D25	8	1821 - 23
T164570	4B24	10B	3315 - 5
T164570	4C2	29B	3315 - 7
T164573	1D25	2	0341 - 7
T164576	1F8	5	0350 - 31
T164578	1F19	15	0360 - 13
T164579	1F19	33	0360 - 13
T164580	1F19	5	0360 - 13
T164580	1F19	24	0360 - 13
T164580	1F21	12	0360 - 15
T164580	1F23	24	0360 - 17
T164581	1F19	38	0360 - 13
T164582	1F19	38	0360 - 13
T164583	1F19	38	0360 - 13
T164584	1F19	38	0360 - 13
T164585	1F19	19	0360 - 13
T164591	1F23	2	0360 - 17
T164592	1F23	1	0360 - 17
T164595	1F23	4	0360 - 17
T164595	1F23	6	0360 - 17
T164596	1F23	5	0360 - 17
T164596	1F23	6	0360 - 17
T164597	1F23	13	0360 - 17
T164597	1F23	16	0360 - 17
T164598	1F23	14	0360 - 17
T164598	1F23	16	0360 - 17
T164599	1F23	15	0360 - 17
T164599	1F23	16	0360 - 17
T164602	4C8	44B	3315 - 13
T164602	4C10	44B	3315 - 15
T164609	1F21	10	0360 - 15
T164610	1F21	8	0360 - 15
T164611	1F21	3	0360 - 15
T164626	1E21	11	0350 - 19
T164626	1E23	11	0350 - 21
T164626	1E25	10	0350 - 23
T164626	1F2	11	0350 - 25
T164626	1F4	9	0350 - 27
T164626	1F6	9	0350 - 29
T164626	1F8	19	0350 - 31
T164627	1E25	2	0350 - 23
T164627	1F4	16	0350 - 27
T164627	1F6	16	0350 - 29
T164628	1E25	2	0350 - 23
T164628	1F4	16	0350 - 27
T164628	1F6	16	0350 - 29
T164629	1E25	2	0350 - 23
T164629	1F4	16	0350 - 27
T164629	1F6	16	0350 - 29
T164630	1E25	2	0350 - 23
T164630	1F4	16	0350 - 27
T164630	1F6	16	0350 - 29
T164640	1E21	16	0350 - 19
T164643	1E23	16	0350 - 21
T164646	1E25	17	0350 - 23
T164647	1F2	16	0350 - 25
T164648	1D25	1	0341 - 7
T164648	1D25	30	0341 - 7
T164648	1F8	28	0350 - 31
T164654	1E19	3	0350 - 17
T164655	1E19	4	0350 - 17
T164657	1D25	12	0341 - 7
T164658	1D25	18	0341 - 7
T164659	1D25	9	0341 - 7
T164660	1D25	7	0341 - 7
T164660	1D25	21	0341 - 7
T164661	1D25	20	0341 - 7
T164662	1D25	17	0341 - 7
T164665	1D25	11	0341 - 7
T164666	1D25	13	0341 - 7
T164671	1D25	22	0341 - 7
T164686	1F23	17	0360 - 17
T164693	1F19	13	0360 - 13
T164693	1F21	6	0360 - 15
T164702	1F21	2	0360 - 15
T164703	1D25	27	0341 - 7
T164704	1D25	28	0341 - 7
T164711	1F4	14	0350 - 27
T164711	1F6	14	0350 - 29
T164712	1E21	8	0350 - 19
T164712	1E23	8	0350 - 21
T164712	1F2	8	0350 - 25
T164712	1F21	4	0360 - 15
T164714	3E2	16	1821 - 25
T164738	3E20	27	1830 - 17
T164738	3E20	28	1830 - 17
T164804	2D22	34	1060 - 17
T164836	1C2	17	0201 - 11
T164839	2E24	18	1320 - 3
T164840	2E24	19	1320 - 3
T164841	1C2	1	0201 - 11
T164843	1C2	10	0201 - 11
T164847	1C14	3	0210 - 11
T164848	1C14	3	0210 - 11
T164849	1C14	3	0210 - 11
T164850	1C14	3	0210 - 11
T164851	1C14	3	0210 - 11
T164852	1C14	3	0210 - 11
T164853	1C14	3	0210 - 11
T164854	1C14	3	0210 - 11
T164855	1C14	3	0210 - 11
T164856	1C14	3	0210 - 11
T164857	1C14	3	0210 - 11
T164858	1C14	3	0210 - 11
T164859	1C14	3	0210 - 11
T164860	1C14	3	0210 - 11
T164861	1C14	4	0210 - 11
T164862	1C14	4	0210 - 11
T164863	1C14	4	0210 - 11
T164864	1C14	4	0210 - 11
T164865	1C14	4	0210 - 11
T164866	1C14	4	0210 - 11
T164867	1C14	4	0210 - 11
T164868	1C14	4	0210 - 11
T164869	1C14	4	0210 - 11
T164870	1C14	4	0210 - 11
T164871	1C14	4	0210 - 11
T164872	1C14	8	0210 - 11
T164873	1C14	9	0210 - 11
T164874	2D6	33	1011 - 5
T164875	2D6	21	1011 - 5
T164877	2D6	17	1011 - 5
T164878	2D6	16	1011 - 5
T164879	2D6	18	1011 - 5
T164880	2D6	14	1011 - 5
T164881	2D6	24	1011 - 5
T164883	2D6	15	1011 - 5
T164884	2D6	11	1011 - 5
T164885	2D6	6	1011 - 5
T164887	2D6	8	1011 - 5
T164888	2D6	7	1011 - 5
T164892	2D6	27	1011 - 5
T164893	2D6	10	1011 - 5
T164894	2D6	2	1011 - 5
T164898	2D6	1	1011 - 5
T164899	2D6	4	1011 - 5
T164901	1C3	6	0201 - 12
T164902	1C3	1	0201 - 12
T164903	1C3	3	0201 - 12
T164904	1C3	5	0201 - 12
T164905	1C3	9	0201 - 12
T164906	1C3	7	0201 - 12
T164907	1C3	8	0201 - 12
T164908	2E13	12	1111 - 9
T164909	2E13	11	1111 - 9
T164911	2E13	5	1111 - 9
T164912	2E13	14	1111 - 9
T164913	2E13	15	1111 - 9
T164914	2E13	7	1111 - 9
T164915	2E13	3	1111 - 9
T164916	2E13	2	1111 - 9
T164917	2E13	1	1111 - 9
T164918	2E13	16	1111 - 9
T164922	2E13	19	1111 - 9
T164933	1C16	2	0210 - 13
T164934	1C16	5	0210 - 13
T164936	1C16	1	0210 - 13
T164937	1C16	3	0210 - 13
T164938	1C16	12	0210 - 13
T164939	1C16	25	0210 - 13
T164940	1C16	7	0210 - 13
T164940	1C16	8	0210 - 13
T164959	1C16	19	0210 - 13
T164960	1C16	20	0210 - 13
T164961	1C16	24	0210 - 13
T164962	1C16	22	0210 - 13
T164963	1C16	21	0210 - 13
T164964	1C16	23	0210 - 13
T164966	1C16	15	0210 - 13

NUMERICAL INDEX - CONTINUED

PART NO.	GRID	KEY	PAGE
T164966	1C16	18	0210 - 13
T164970	1C16	11	0210 - 13
T164971	1C16	8	0210 - 13
T164972	1C16	10	0210 - 13
T164973	1C16	17	0210 - 13
T164976	1D10	4	0250 - 13
T164977	1C24	11	0250 - 3
T164979	1C16	13	0210 - 13
T164980	1C16	6	0210 - 13
T164988	1F8	23	0350 - 31
T164989	1F8	22	0350 - 31
T164990	1F8	25	0350 - 31
T164999	2E24	41	1320 - 3
T165101	2D6	9	1011 - 5
T165134	1F8	12	0350 - 31
T165135	1F8	11	0350 - 31
T165136	1F8	10	0350 - 31
T165137	1F8	9	0350 - 31
T165138	1F8	8	0350 - 31
T165139	1F8	7	0350 - 31
T165140	1F8	13	0350 - 31
T165141	1F8	14	0350 - 31
T165142	1F8	15	0350 - 31
T165143	1F8	16	0350 - 31
T165144	1F8	6	0350 - 31
T165214	4C2	9	3315 - 7
T165214	4C4	13	3315 - 9
T165214	4C6	10	3315 - 11
T165214	4C14	23	3315 - 19
T165222	4B22	5	3315 - 3
T165222	4B24	17	3315 - 5
T165222	4C2	26	3315 - 7
T165222	4C10	41	3315 - 15
T165222	4C10	42	3315 - 15
T165222	4C12	7	3315 - 17
T165222	4C14	16	3315 - 19
T165222	4C14	25	3315 - 19
T165520	3F4	4	1830 - 25
T165520	3F6	4	1830 - 27
T165521	3F4	3	1830 - 25
T165521	3F6	3	1830 - 27
T165535	1E3	13	0350 - 1
T165567	3C8	13	1810 - 15
T165760	3C8	16	1810 - 15
T165761	3C8	16	1810 - 15
T165809	2D22	30	1060 - 17
T165810	2D22	27	1060 - 17
T165811	2D22	33	1060 - 17
T165812	2D22	24	1060 - 17
T165813	2D22	23	1060 - 17
T165815	2D22	11	1060 - 17
T165816	2D22	12	1060 - 17
T165817	2D22	13	1060 - 17
T165818	2D22	3	1060 - 17
T165819	2D22	1	1060 - 17
T165820	2D22	4	1060 - 17
T165821	2D22	17	1060 - 17
T165822	2D22	32	1060 - 17
T165823	2D22	22	1060 - 17
T165824	2D22	8	1060 - 17
T165858	2D22	29	1060 - 17
T165859	2D22	29	1060 - 17
T165860	2D22	29	1060 - 17
T165861	2D22	31	1060 - 17
T165862	2D22	28	1060 - 17
T165920	4B22	2	3315 - 3
T165920	4B22	5	3315 - 3
T165938	2D22	20	1060 - 17
T166023	2D22	29	1060 - 17
T166062	1E21	18	0350 - 19
T166062	1F2	18	0350 - 25
T166065	1E25	4	0350 - 23
T166077	1F17	1	0360 - 11
T166078	1F8	3	0350 - 31
T166226	3D17	10	1821 - 15
T166227	3D17	11	1821 - 15
T166238	1C16	15	0210 - 13
T166238	1C16	18	0210 - 13
T166333	2E24	18	1320 - 3
T166433	3I11	1	3102 - 9
T166433	3I11	6	3102 - 9
T166684	2I8	2	1676 - 9
T167059	3I7	2	3102 - 5
T167059	3I11	2	3102 - 9
T167259	4C8	58	3315 - 13
T167259	4C10	57	3315 - 15
T16752	2F9	..	1369 - 5
T168910	2D6	29	1011 - 5
T17148	2C20	4	0960 - 3
T17951	3G24	30	2160 - 9
T183454	4E8	12	3360 - 25
T183454	4E10	35	3360 - 25B
T183454	4E12	31	3360 - 25D
T183561	4E14	1	3360 - 25F
T183757	4E23	14	3360 - 34
T183757	4E24	14	3360 - 35
T183757	4F3	14	3360 - 39
T18407	1I19	14	0417 - 3
T184135	3C10	8	1810 - 17
T184135	3C12	8	1810 - 19
T184402	4E12	34	3360 - 25D
T184479	2E24	19	1320 - 3
T184688	1C16	1	0210 - 13
T184689	1C16	3	0210 - 13
T184816	1C20	12	0230 - 3
T184860	2H10	3	1674 - 31
T184860	3G7	3B	2001 - 3
T184860	3G7	6	2001 - 3
T184918	1F8	29	0350 - 31
T185041	3I9	19	3102 - 7
T185041	3I13	19	3102 - 9B
T185048	1D4	15	0250 - 7
T185080	2E24	18	1320 - 3
T185606	1F19	4	0360 - 13
T185678	3C12	26	1810 - 19
T185678	3C20	28	1810 - 27
T185855	3C12	14	1810 - 19
T186560	1F23	2	0360 - 17
T186841	4C25	4	3340 - 5
T187133	1D4	14	0250 - 7
T187134	1D4	14	0250 - 7
T187819	1C16	17	0210 - 13
T187819	1C16	18	0210 - 13
T18786	4C16	13	3315 - 21
T18891	1G25	23	0404 - 3
T18891	1H2	2	0404 - 5
T19044	1G25	25	0404 - 3
T19044	2F17	3	1399 - 1
T19687	2F9	..	1369 - 5
T19854	1F17	6	0360 - 11
T19935	2G8	23	1674 - 3
T19935	2G14	5	1674 - 9
T19935	3F12	26	1830 - 33
T19963	4E10	16	3360 - 25B
T20034	1G9	9	0401 - 3
T20034	1G12	24	0401 - 6
T20046	1G9	13	0401 - 3
T20046	1G10	3	0401 - 4
T20070	1G16	2	0402 - 4
T20072	1G16	4	0402 - 4
T20073	1G18	10	0402 - 6
T20094	1G9	4	0401 - 3
T20094	1G10	5	0401 - 4
T20094	1G11	5	0401 - 5
T20166	1H7	4	0404 - 10
T20168	1G25	17	0404 - 3
T20168	1H2	18	0404 - 5
T20243	1I19	18	0417 - 3
T20243	1K9	32	0452 - 5
T20273	1K9	25	0452 - 5
T20298	1H11	8	0407 - 4
T20314	1G18	4	0402 - 6
T20314	1G19	4	0402 - 7
T20315	1G18	2	0402 - 6
T20315	1G18	5	0402 - 6
T20316	1G18	3	0402 - 6
T20316	1G19	3	0402 - 7
T20328	1K9	22	0452 - 5
T20336	1G13	16	0402 - 1
T20362	1G13	6	0402 - 1
T20758	4G24	5	4151 - 3
T20758	4H2	5	4151 - 5
T20758	4H4	17	4151 - 7
T20758	4H6	17	4151 - 9
T21158	3I18	3	3115 - 2
T21242	3H4	8	2160 - 14
T22150	2C2	11	0515 - 3
T22240	2C2	9	0515 - 3
T22241	2C2	3	0515 - 3
T22827	3J16	9	3160 - 13
T22827	3J16	10	3160 - 13
T23214	1G9	20	0401 - 3
T23215	1G9	21	0401 - 3
T23260	1G13	17	0402 - 1
T23266	1G11	2	0401 - 5
T23435	1G25	22	0404 - 3
T23442	1I6	24	0413 - 5
T23474	1G25	16	0404 - 3
T23474	1H2	19	0404 - 5
T23529	3D19	13	1821 - 17
T23554	1G9	20	0401 - 3
T23554	1G11	6	0401 - 5
T23556	1G9	20	0401 - 3
T23558	1G9	20	0401 - 3
T23576	1G9	21	0401 - 3
T23578	1G9	21	0401 - 3
T23580	1G9	21	0401 - 3
T23851	2H6	3	1674 - 27
T23891	1K2	2	0433 - 2
T24472	1I3	9	0413 - 1
T24472	1I4	9	0413 - 2
T24715	3I16	2	3102 - 12
T24715	3J13	2	3160 - 10
T24958	4G13	11	3360 - 75
T24959	2C24	15	0960 - 7
T25335	2F9	..	1369 - 5
T25384	3F8	42	1830 - 29
T25701	1G25	10	0404 - 3
T25701	1I19	22	0417 - 3
T25803	3D5	11	1821 - 3
T26209	1F11	2	0360 - 4

NUMERICAL INDEX - CONTINUED

PART NO.	GRID	KEY	PAGE
T26321	1G9	17	0401 - 3
T26322	1G9	18	0401 - 3
T26324	1G9	6	0401 - 3
T26326	1G9	11	0401 - 3
T26327	1G9	12	0401 - 3
T26565	1B24	4	0201 - 9
T26565	1C8	14	0210 - 5
T26565	1K2	5	0433 - 2
T26565	1K4	4	0433 - 4
T26955	1D21	8	0341 - 3
T26955	1E1	2	0341 - 8
T26955	2F24	18	1671 - 3
T27022	3J18	23	3160 - 15
T27022	3J20	13	3160 - 17
T27022	3J20	18	3160 - 17
T27022	3J20	25	3160 - 17
T27022	4G17	12	3360 - 79
T27077	3E6	7	1830 - 3
T27194	1B14	1	0110 - 1
T27293	4C18	23	3315 - 23
T27419	1D21	7	0341 - 3
T27517	3H10	22	2160 - 21
T27517	3H14	30	2160 - 25
T27517	3H18	28	2160 - 29
T27523	1I14	6	0416 - 3
T27532	1B14	2	0110 - 1
T27657	1G13	12	0402 - 1
T27657	1G15	15	0402 - 3
T27658	1G15	13	0402 - 3
T27860	1I6	23	0413 - 5
T27860	1I8	26	0413 - 7
T27860	1J11	3	0421 - 2
T27986	1I10	4	0414 - 1
T27986	1I11	4	0414 - 2
T28041	1G16	1	0402 - 4
T28583	2H20	1	1674 - 41
T28585	2H20	12	1674 - 41
T28586	2H20	14	1674 - 41
T28832	1B24	5	0201 - 9
T28862	1H9	3	0407 - 2
T28862	1H10	6	0407 - 3
T29049	2I11	8	1740 - 3
T29342	1J23	8	0429 - 3
T29342	2C11	6	0540 - 3
T29342	2G15	10	1674 - 10
T29342	3G1	13	1921 - 2
T29342	4C16	16	3315 - 21
T29342	4D5	3	3340 - 10
T29342	4D11	9	3360 - 3
T29527	1J10	19B	0420 - 7
T29527	2D24	30	1063 - 3
T29969	1I6	12	0413 - 5
T30260	2C7	6	0530 - 2
T30818	1H25	10	0410 - 2
T30929	4D11	6	3360 - 3
T31306	1J2	11	0419 - 3
T32255	3C14	16	1810 - 21
T32270	2E24	27	1320 - 3
T32552	4C8	19	3315 - 13
T32552	4C10	19	3315 - 15
T32688	3D5	19	1821 - 3
T33089	4C23	16	3340 - 3
T33644	4D7	7	3340 - 12
T34067	2H20	18	1674 - 41
T34248	2F9	..	1369 - 5
T35233	4C8	26	3315 - 13
T35233	4C10	26	3315 - 15
T35233	4C12	1	3315 - 17
T35233	4C14	1	3315 - 19
T35490	4B19	10	3302 - 3
T35887	2C2	15	0515 - 3
T36245	4C21	10	3340 - 1
T37041	3E6	16	1830 - 3
T38231	4G17	19	3360 - 79
T38282	2E2	3	1063 - 7
T38485	4F9	17	3360 - 45
T40308	2E15	37	1160 - 3
T40308	2E15	56	1160 - 3
T40308	3G22	24	2160 - 7
T40308	3G22	29	2160 - 7
T40308	3G24	27	2160 - 9
T40705	4F19	7	3360 - 55
T40705	4F21	11	3360 - 57
T41442	2C4	1	0520 - 3
T41471	3J3	1	3140 - 3
T41471	4G6	20	3360 - 67
T41471	4G8	20	3360 - 69
T41596	2E20	4	1313 - 2
T41597	2E20	1	1313 - 2
T42571	2D12	4	1060 - 7
T42571	2D14	2	1060 - 9
T42977	1E2	5	0342 - 2
T42977	2C9	6	0540 - 1
T42977	2C10	6	0540 - 2
T43361	3H14	34	2160 - 25
T43361	3H18	34	2160 - 29
T43512	2F4	..	1330 - 2
T43513	2F4	..	1330 - 2
T43514	1B24	..	0201 - 9
T43514	1H2	24	0404 - 5
T43514	2F4	..	1330 - 2
T43515	2F4	..	1330 - 2
T44730	4C16	12	3315 - 21
T47649	3H10	6	2160 - 21
T49819	3J7	16	3160 - 4
T49819	4C4	21	3315 - 9
T49819	4C6	21	3315 - 11
T49819	4D21	22	3360 - 13
T49819	4D23	22	3360 - 15
T49819	4E1	1	3360 - 18
T49819	4E2	4	3360 - 19
T49819	4E4	1	3360 - 21
T49819	4E6	4	3360 - 23
T52978	4F19	13	3360 - 55
T54568	3I9	4	3102 - 7
T54568	3I13	4	3102 - 9B
T55208	3D13	1	1821 - 11
T55208	3D23	1	1821 - 21
T55210	3D13	2	1821 - 11
T55214	3D13	17	1821 - 11
T55214	3D23	17	1821 - 21
T55222	3D23	5	1821 - 21
T55224	3D13	15	1821 - 11
T55224	3D23	15	1821 - 21
T55501	2I2	12	1676 - 3
T55501	2I6	18	1676 - 7
T55501	2I8	18	1676 - 9
T55585	2B16	13	0505 - 3
T55585	2B18	7	0505 - 5
T55585	2I2	5	1676 - 3
T55585	2I6	9	1676 - 7
T55585	2I8	9	1676 - 9
T56055	1H20	4	0408 - 3
T57246	2D12	1	1060 - 7
T57246	2D12	49B	1060 - 7
T57247	2F3	..	1330 - 1
T57247	3G24	17	2160 - 9
T57374	2E15	38	1160 - 3
T57374	2E15	58	1160 - 3
T57374	3G22	25	2160 - 7
T57374	3G22	30	2160 - 7
T57374	3G24	26	2160 - 9
T58109	4C2	2	3315 - 7
T58109	4C4	2	3315 - 9
T58109	4C6	3	3315 - 11
T58109	4C8	2	3315 - 13
T58109	4C10	2	3315 - 15
T58477	1H24	6	0409 - 5
T59933	1B14	3	0110 - 1
T59937	2G2	6	1673 - 1
T60314	1F13	6	0360 - 7
T60811	1J2	2	0419 - 3
T60811	3E8	21	1830 - 5
T60920	3G9	6	2002 - 3
T60996	3H8	20	2160 - 19
T60996	3H16	70	2160 - 27
T61148	3J16	12	3160 - 13
T61149	3J16	13	3160 - 13
T61150	3J16	14	3160 - 13
T61152	3J16	15	3160 - 13
T61157	3J16	3	3160 - 13
T61158	3J16	8	3160 - 13
T61467	1K5	11	0433 - 5
T61798	3F21	11	1910 - 3
T62804	2D24	40	1063 - 3
T63019	3B22	7	1810 - 5
T63798	3D13	12	1821 - 11
T63798	3D23	12	1821 - 21
T63817	1D12	2	0260 - 1
T63817	2G19	12	1674 - 15
T658X160	4B18	7	3302 - 2
T66413	3E6	15	1830 - 3
T66413	3E8	11	1830 - 5
T66701	2C13	16	0560 - 3
T66862	1B15	6	0110 - 2
T66919	1F13	18	0360 - 7
T66920	1F13	2	0360 - 7
T66921	1F13	10	0360 - 7
T67205	3J3	2	3140 - 3
T67209	4C23	12	3340 - 3
T67856	4D9	2	3340 - 15
T68098	2C7	4	0530 - 2
T68098	2C8	4	0530 - 3
T68150	1F13	9	0360 - 7
T68208	1E13	8	0350 - 11
T68214	1E12	7	0350 - 10
T68215	1E12	7	0350 - 10
T68216	1E12	7	0350 - 10
T68579	2B21	14	0510 - 3
T68986	4F15	7	3360 - 51
T68987	4F15	3	3360 - 51
T69027	1C20	5	0230 - 3
T69354	1C20	23	0230 - 3
T69355	1C20	13	0230 - 3
T69356	1C20	11	0230 - 3
T69360	1C21	3	0230 - 4
T69363	1C20	15	0230 - 3
T69364	1C20	14	0230 - 3
T69365	1C20	12	0230 - 3
T69371	1C20	10	0230 - 3
T69372	1C21	4	0230 - 4

NUMERICAL INDEX - CONTINUED

PART NO.	GRID	KEY	PAGE
T69408	3G17	4	2160 - 2
T69472	4D6	7	3340 - 11
T69627	4C8	59	3315 - 13
T69627	4C10	58	3315 - 15
T69937	1D17	7	0325 - 1
T69938	1D11	6	0250 - 14
T69938	1D17	6	0325 - 1
T70307	3F2	5	1830 - 23
T70502	2H6	4	1674 - 27
T70566	2I10	3	1740 - 2
T70657	4C16	18	3315 - 21
T70657	4C23	18	3340 - 3
T71399	4F15	8	3360 - 51
T71733	3B20	20	1810 - 3
T71988	1B23	11	0201 - 7
T72326	1D19	6	0341 - 1
T72401	1F10	22	0360 - 3
T72548	4B18	11	3302 - 2
T72548	4B19	11	3302 - 3
T72790	2I10	2	1740 - 2
T73148	4F15	13	3360 - 51
T74412	2G12	8	1674 - 7
T74412	2G12	17	1674 - 7
T74416	1I14	6	0416 - 3
T74416	2C24	42	0960 - 7
T74416	2G8	16	1674 - 3
T74416	2G12	9	1674 - 7
T74416	2G21	5	1674 - 17
T74416	2G25	6	1674 - 21
T74416	2H2	2	1674 - 23
T74416	3H16	69	2160 - 27
T74666	1E7	5	0350 - 5
T74952	3G7	26	2001 - 3
T75184	3J1	4	3140 - 1
T75197	2C13	21	0560 - 3
T75197	2G19	14	1674 - 15
T75212	4G6	26	3360 - 67
T75212	4G8	26	3360 - 69
T75383	1C20	2	0230 - 3
T75383	1C22	6	0250 - 1
T75505	1B19	4	0201 - 2
T75506	1C18	12	0230 - 1
T75537	4F15	4	3360 - 51
T75649	4D5	9	3340 - 10
T75649	4D7	10	3340 - 12
T75904	4B24	7	3315 - 5
T75904	4C8	53	3315 - 13
T75904	4C10	53	3315 - 15
T75982	3J6	1	3160 - 3
T75982	3J10	6	3160 - 7
T75984	3J7	17	3160 - 4
T75984	3J22	20	3160 - 19
T75984	4E1	7	3360 - 18
T75984	4E4	7	3360 - 21
T75984	4E6	14	3360 - 23
T75991	4D13	3	3360 - 5
T75991	4D15	3	3360 - 7
T75991	4D17	3	3360 - 9
T75991	4D19	3	3360 - 11
T75991	4D21	3	3360 - 13
T75991	4D23	3	3360 - 15
T75992	4D13	7	3360 - 5
T75992	4D15	7	3360 - 7
T75992	4D17	7	3360 - 9
T75992	4D19	7	3360 - 11
T75992	4D21	7	3360 - 13
T75992	4D23	7	3360 - 15
T75992	4D24	8	3360 - 16
T75996	3J7	12	3160 - 4
T75996	3J7	16	3160 - 4
T75996	3J8	6	3160 - 5
T75996	3J8	11	3160 - 5
T75998	4D13	17	3360 - 5
T75998	4D15	17	3360 - 7
T75998	4D17	4	3360 - 9
T75998	4D19	17	3360 - 11
T75998	4D21	17	3360 - 13
T75998	4D23	17	3360 - 15
T76090	4F15	9	3360 - 51
T76125	1B19	8	0201 - 2
T76204	2I13	3	1749 - 1
T76205	2I13	4	1749 - 1
T76252	1J10	19A	0420 - 7
T76252	1J10	20A	0420 - 7
T76252	2C13	21	0560 - 3
T76252	2G14	12	1674 - 9
T76252	2G19	14	1674 - 15
T76252	2G23	5	1674 - 19
T76252	4G4	19	3360 - 65
T76607	2G2	1	1673 - 1
T76608	2G2	5	1673 - 1
T76609	2G2	3	1673 - 1
T76610	2G2	9	1673 - 1
T76641	3J1	5	3140 - 1
T76641	3J3	9	3140 - 3
T76712	1E11	21	0350 - 9
T76772	3I21	12	3115 - 5
T76779	2I13	5	1749 - 1
T76779	2I13	8	1749 - 1
T76779	2I13	9	1749 - 1
T76779	2I13	10	1749 - 1
T76779	4D2	28	3340 - 7
T76830	3C10	19	1810 - 17
T76830	3C12	19	1810 - 19
T76831	3C10	11	1810 - 17
T76831	3C12	11	1810 - 19
T76832	3C10	10	1810 - 17
T76832	3C12	10	1810 - 19
T76833	3C10	6	1810 - 17
T76833	3C12	6	1810 - 19
T76938	2F11	12	1369 - 7
T76938	2F11	6	1369 - 7
T76938	3H10	30	2160 - 21
T76938	3H14	19	2160 - 25
T76938	3H18	21	2160 - 29
T76938	4E8	12	3360 - 25
T76938	4E8	18	3360 - 25
T76938	4E10	35	3360 - 25B
T76938	4E12	16	3360 - 25D
T76938	4E12	18	3360 - 25D
T76938	4F17	9	3360 - 53
T76938	4F19	20	3360 - 55
T76938	4F21	18	3360 - 57
T76938	4G2	14	3360 - 63
T76938	4G4	23	3360 - 65
T76938	4G17	4	3360 - 79
T76938	4G17	16	3360 - 79
T76938	4G17	25	3360 - 79
T76938	4G19	17	3360 - 81
T76938	4G21	21	3360 - 83
T77165	2C2	10	0515 - 3
T77170	1D21	27	0341 - 3
T77347	4C23	7	3340 - 3
T77497	4C23	6	3340 - 3
T77613	1C13	7	0210 - 10
T77613	1D23	6	0341 - 5
T77613	1I17	12	0416 - 7
T77613	2C24	17	0960 - 7
T77613	2C24	24	0960 - 7
T77613	2C24	27	0960 - 7
T77613	2D24	2	1063 - 3
T77613	2D24	8	1063 - 3
T77613	2D24	23	1063 - 3
T77613	2D24	25	1063 - 3
T77613	2D24	36	1063 - 3
T77613	2E2	10	1063 - 7
T77613	2E4	3	1063 - 9
T77613	2E15	36	1160 - 3
T77613	2E17	15	1160 - 5
T77613	2F11	3	1369 - 7
T77613	2F11	4	1369 - 7
T77613	2F11	2	1369 - 7
T77613	3H10	27	2160 - 21
T77613	3H14	27	2160 - 25
T77613	3H18	27	2160 - 29
T77613	4E8	4	3360 - 25
T77613	4E10	8	3360 - 25B
T77613	4E12	8	3360 - 25D
T77613	4G24	6	4151 - 3
T77613	4G24	14	4151 - 3
T77613	4H2	6	4151 - 5
T77613	4H2	14	4151 - 5
T77814	1C13	2	0210 - 10
T77814	1C17	1	0210 - 14
T77814	2C13	1	0560 - 3
T77814	2C24	3	0960 - 7
T77814	2C24	35	0960 - 7
T77814	2D22	6	1060 - 17
T77814	2E15	24	1160 - 3
T77814	2E15	32	1160 - 3
T77814	2E17	6	1160 - 5
T77814	2E17	10	1160 - 5
T77814	2F11	1	1369 - 7
T77814	2F11	2	1369 - 7
T77814	2F11	1	1369 - 7
T77814	4E10	16	3360 - 25B
T77814	4H4	9	4151 - 7
T77814	4H6	9	4151 - 9
T77833	3D5	7	1821 - 3
T77845	4C16	19	3315 - 21
T77845	4C23	19	3340 - 3
T77857	2C24	4	0960 - 7
T77857	2C24	30	0960 - 7
T77857	2D22	15	1060 - 17
T77857	2D24	38	1063 - 3
T77857	2E15	27	1160 - 3
T77857	2F11	5	1369 - 7
T77857	2F11	6	1369 - 7
T77857	2F11	3	1369 - 7
T77857	3I9	7	3102 - 7
T77857	3I13	7	3102 - 9B
T77857	3J12	9	3160 - 9
T77857	4E8	1	3360 - 25
T77857	4F23	1	3360 - 59
T77857	4G2	7	3360 - 63
T77857	4G4	7	3360 - 65
T77857	4G4	13	3360 - 65
T77857	4G4	15	3360 - 65
T77857	4G10	3	3360 - 71
T77857	4G13	1	3360 - 75
T77857	4G13	4	3360 - 75

NUMERICAL INDEX - CONTINUED

PART NO.	GRID	KEY	PAGE
T77857	4G15	13	3360 - 77
T77858	2C13	5	0560 - 3
T77858	2F11	10	1369 - 7
T77858	2F11	5	1369 - 7
T77858	3H8	18	2160 - 19
T77858	3H10	1	2160 - 21
T77858	3H10	39	2160 - 21
T77858	3H10	47	2160 - 21
T77858	3H14	35	2160 - 25
T77858	3H18	31	2160 - 29
T77858	3J12	3	3160 - 9
T77858	3J18	27	3160 - 15
T77858	3J20	4	3160 - 17
T77858	4E8	27	3360 - 25
T77858	4E8	29	3360 - 25
T77858	4E12	4	3360 - 25D
T77858	4F17	12	3360 - 53
T77858	4F19	22	3360 - 55
T77858	4F21	19	3360 - 57
T77858	4G15	3	3360 - 77
T77858	4G19	13	3360 - 81
T77858	4G21	16	3360 - 83
T77932	2D12	34	1060 - 7
T77932	2D14	14	1060 - 9
T77932	2E13	24	1111 - 9
T77932	2F11	7	1369 - 7
T77932	2F11	8	1369 - 7
T77932	2F11	4	1369 - 7
T77932	3J18	2	3160 - 15
T77932	4G15	5	3360 - 77
T78192	3J16	2	3160 - 13
T78313	2F7	..	1369 - 3
T78313	3H10	19	2160 - 21
T78313	3H14	21	2160 - 25
T78313	3H18	24	2160 - 29
T78315	3C8	5	1810 - 15
T78497	3H10	14	2160 - 21
T78497	3H14	4	2160 - 25
T78497	3H18	3	2160 - 29
T78612	1D21	16	0341 - 3
T78612	1E1	8	0341 - 8
T78612	2F11	13	1369 - 7
T78612	2F11	14	1369 - 7
T78612	2F11	7	1369 - 7
T78612	3H10	15	2160 - 21
T78612	4G2	3	3360 - 63
T78612	4G4	3	3360 - 65
T78644	1C13	6	0210 - 10
T78662	1D21	20	0341 - 3
T78707	4F21	15	3360 - 57
T78707	4G15	7	3360 - 77
T78715	3H10	32	2160 - 21
T78715	3H20	62	2160 - 31
T78715	4G17	14	3360 - 79
T78716	4G15	18	3360 - 77
T78784	2F11	15	1369 - 7
T78784	2F11	16	1369 - 7
T78784	2F11	8	1369 - 7
T78787	3F12	25	1830 - 33
T79477	2B23	31	0510 - 5
T79786	1C21	5	0230 - 4
T79844	3F8	28	1830 - 29
T79844	3F10	9	1830 - 31
T80027	1C22	1	0250 - 1
T80028	1D23	19	0341 - 5
T80029	1E11	6	0350 - 9
T80033	1E9	3	0350 - 7
T80035	1E11	22	0350 - 9
T80037	1D23	4	0341 - 5
T80038	1D23	5	0341 - 5
T80039	1D23	5	0341 - 5
T80040	1D23	5	0341 - 5
T80046	1E13	5	0350 - 11
T80047	1E13	5	0350 - 11
T80048	1E13	5	0350 - 11
T80049	1E13	3	0350 - 11
T80050	1E8	4	0350 - 6
T80052	1E8	5	0350 - 6
T80053	1E8	5	0350 - 6
T80054	1E8	5	0350 - 6
T80055	1E8	6	0350 - 6
T80057	1E8	9	0350 - 6
T80176	2H6	2	1674 - 27
T80176	3B24	2	1810 - 7
T80176	3C4	7	1810 - 11
T80176	3C6	13	1810 - 13
T80616	4D6	5	3340 - 11
T80937	2C13	2	0560 - 3
T80938	1C13	1	0210 - 10
T81221	1F15	3	0360 - 9
T81245	4D6	1	3340 - 11
T81247	1D23	23	0341 - 5
T81247	2E15	13	1160 - 3
T81247	2E15	39	1160 - 3
T82182	1E11	23	0350 - 9
T82183	1E8	8	0350 - 6
T82217	3D7	3	1821 - 5
T82218	3D7	4	1821 - 5
T82219	3D7	5	1821 - 5
T82221	3D7	10	1821 - 5
T82227	3D7	40	1821 - 5
T82231	3D7	37	1821 - 5
T82517	1D10	9	0250 - 13
T82518	1D10	16	0250 - 13
T82519	1D10	16	0250 - 13
T82520	1D10	16	0250 - 13
T82521	1D10	16	0250 - 13
T82522	1D10	16	0250 - 13
T82523	1D10	16	0250 - 13
T82524	1D10	16	0250 - 13
T82525	1D10	16	0250 - 13
T82526	1D10	16	0250 - 13
T82527	1D10	16	0250 - 13
T82528	1D10	17	0250 - 13
T82529	1D10	11	0250 - 13
T82530	1D10	1	0250 - 13
T82531	1D10	4	0250 - 13
T82532	1D10	5	0250 - 13
T82535	1D6	4	0250 - 9
T82536	1D6	5	0250 - 9
T82538	1D6	7	0250 - 9
T82539	1D6	9	0250 - 9
T82541	1C24	20	0250 - 3
T82542	1C24	21	0250 - 3
T82543	1C24	19	0250 - 3
T82543	1D4	7	0250 - 7
T82545	1D4	14	0250 - 7
T82546	1D4	14	0250 - 7
T82547	1D4	10	0250 - 7
T82548	1D4	10	0250 - 7
T82549	1D4	10	0250 - 7
T82549	1D10	16	0250 - 13
T82550	1D4	10	0250 - 7
T82554	1D4	10	0250 - 7
T82555	1D4	11	0250 - 7
T82557	1D4	20	0250 - 7
T82559	1D4	22	0250 - 7
T82560	1D4	23	0250 - 7
T82561	1D4	24	0250 - 7
T82561	1D8	15	0250 - 11
T82562	1D4	19	0250 - 7
T82564	1D8	4	0250 - 11
T82565	1D8	2	0250 - 11
T82566	1D8	3	0250 - 11
T82567	1D8	7	0250 - 11
T82568	1D8	12	0250 - 11
T82570	1C24	1	0250 - 3
T82574	1D2	7	0250 - 5
T82575	1D2	8	0250 - 5
T82576	1D2	3	0250 - 5
T82578	1D2	2	0250 - 5
T82580	1D2	15	0250 - 5
T82581	1D2	11	0250 - 5
T82582	1D2	14	0250 - 5
T82619	1D4	21	0250 - 7
T82620	1D8	5	0250 - 11
T82791	2G4	7	1673 - 3
T82791	2G6	8	1673 - 5
T82791	2I2	24	1676 - 3
T82791	2I6	20	1676 - 7
T82791	2I8	20	1676 - 9
T82791	3C2	8A	1810 - 9
T82792	2G4	6	1673 - 3
T82792	2G6	6	1673 - 5
T82792	2I2	23	1676 - 3
T82792	2I6	29	1676 - 7
T82792	2I8	23	1676 - 9
T82792	3C2	3	1810 - 9
T82851	1C20	17	0230 - 3
T82852	1C20	22	0230 - 3
T82907	2C5	2	0520 - 4
T83060	2G17	16	1674 - 13
T83060	2G21	7	1674 - 17
T83060	2G21	19	1674 - 17
T83060	2G23	19	1674 - 19
T83060	3C2	6	1810 - 9
T83060	3C2	8B	1810 - 9
T83060	3C6	11	1810 - 13
T84194	3I5	6	3102 - 3
T84194	3I7	10	3102 - 5
T84194	3I11	10	3102 - 9
T84944	3C8	16	1810 - 15
T86225	1C24	11	0250 - 3
U10289	1C12	16	0210 - 9
U10289	2F9	..	1369 - 5
U10516	3J12	22	3160 - 9
U10746	2F9	..	1369 - 5
U10746	3G20	19	2160 - 5
U10746	3G20	30	2160 - 5
U10746	3G24	8	2160 - 9
U10776	1E13	4	0350 - 11
U10776	2F9	..	1369 - 5
U11326	2F9	..	1369 - 5
U11343	2F9	..	1369 - 5
U12037	2F9	..	1369 - 5
U12037	3G18	5	2160 - 3
U12037	3G24	6	2160 - 9
U12198	2C21	14	0960 - 4
U12198	2F9	..	1369 - 5
U12288	4G15	21	3360 - 77
U12331	2D25	6	1063 - 4

NUMERICAL INDEX - CONTINUED

PART NO.	GRID	KEY	PAGE
U12331	2D25	27	1063 - 4
U12331	3G24	13	2160 - 9
U12331	4F5	8	3360 - 41
U12547	1F10	6	0360 - 3
U12547	1F13	3	0360 - 7
U12547	2C24	32	0960 - 7
U12547	2F7	..	1369 - 3
U12547	2F9	..	1369 - 5
U12547	3H8	25	2160 - 19
U12547	3H10	3	2160 - 21
U12547	3H10	23	2160 - 21
U12547	3H10	49	2160 - 21
U12547	3H14	31	2160 - 25
U12547	3H18	29	2160 - 29
U12547	3H20	65	2160 - 31
U12547	3J12	1	3160 - 9
U12547	3J18	14	3160 - 15
U12547	3J18	29	3160 - 15
U12547	3J20	2	3160 - 17
U12547	3J20	35	3160 - 17
U12547	3J20	37	3160 - 17
U12547	4E2	10	3360 - 19
U12547	4E6	10	3360 - 23
U12547	4E8	12	3360 - 25
U12547	4E8	16	3360 - 25
U12547	4E10	3	3360 - 25B
U12547	4E10	35	3360 - 25B
U12547	4E12	22	3360 - 25D
U12547	4E12	23	3360 - 25D
U12547	4E12	25	3360 - 25D
U12547	4E18	3	3360 - 29
U12547	4F19	10	3360 - 55
U12547	4F23	10	3360 - 59
U12547	4G10	2	3360 - 71
U12547	4G15	1	3360 - 77
U12595	3I19	21	3115 - 3
U13184	2B21	4	0510 - 3
U13184	2C2	20	0515 - 3
U13184	2C2	39	0515 - 3
U13184	2C7	2	0530 - 2
U13184	2C8	2	0530 - 3
U13449	3I5	10	3102 - 3
U13639	1D21	15	0341 - 3
U13639	1D25	24	0341 - 7
U13639	1E1	10	0341 - 8
U13639	1G25	5	0404 - 3
U13639	1H2	23	0404 - 5
U13639	1K9	8	0452 - 5
U13639	2B19	6	0505 - 6
U13639	2F9	..	1369 - 5
U13639	3H8	22	2160 - 19
U13639	3H10	17	2160 - 21
U13639	3H14	25	2160 - 25
U13639	3H18	23	2160 - 29
U13639	4F17	17	3360 - 53
U13639	4G2	1	3360 - 63
U13639	4G4	1	3360 - 65
U14555	1C21	8	0230 - 4
U14555	4C6	5	3315 - 11
U15192	4F25	5	3360 - 61
U15242	3J7	5	3160 - 4
U15242	3J7	11	3160 - 4
U15242	3J8	5	3160 - 5
U15242	3J8	12	3160 - 5
U15242	3J22	9	3160 - 19
U15415	2F9	..	1369 - 5
U15939	3H14	20B	2160 - 25
U15939	3H16	63B	2160 - 27
U15939	4F17	5	3360 - 53
U15973	1D21	26	0341 - 3
U15973	2F9	..	1369 - 5
U15980	3J7	18	3160 - 4
U15980	4E1	4	3360 - 18
U15980	4E2	3	3360 - 19
U15980	4E4	4	3360 - 21
U15980	4E6	3	3360 - 23
U15981	3J22	19	3160 - 19
U15981	4E1	3	3360 - 18
U15981	4E4	3	3360 - 21
U15981	4E6	13	3360 - 23
U17409	1C8	21	0210 - 5
U17409	1D21	19	0341 - 3
U17409	2D12	28	1060 - 7
U17409	2D14	9	1060 - 9
U17409	2F9	..	1369 - 5
U17409	3H12	51	2160 - 23
U17409	3H16	66	2160 - 27
U17409	4C4	19	3315 - 9
U17409	4C6	19	3315 - 11
U17409	4D13	15	3360 - 5
U17409	4D15	15	3360 - 7
U17409	4D17	15	3360 - 9
U17409	4D19	15	3360 - 11
U17409	4D21	15	3360 - 13
U17409	4D21	24	3360 - 13
U17409	4D23	15	3360 - 15
U17409	4D23	24	3360 - 15
U17409	4E1	6	3360 - 18
U17409	4E2	9	3360 - 19
U17409	4E4	6	3360 - 21
U17409	4E6	9	3360 - 23
U17409	4E19	15	3360 - 30
U17409	4E20	15	3360 - 31
U17409	4E21	15	3360 - 32
U17409	4E22	18	3360 - 33
U17409	4E23	17	3360 - 34
U17409	4E24	17	3360 - 35
U40398	3I9	25	3102 - 7
U40398	3I13	25	3102 - 9B
U40398	3J18	5	3160 - 15
U42111	2F9	..	1369 - 5
U42392	3J1	2	3140 - 1
U43352	1F15	5	0360 - 9
U43360	4F11	3	3360 - 47
U43360	4F13	3	3360 - 49
U43641	3H12	65	2160 - 23
U43641	3H16	83	2160 - 27
U43779	4C21	3	3340 - 1
U43792	4B18	7	3302 - 2
U43792	4B19	7	3302 - 3
U43871	1C8	5	0210 - 5
U44055	4D5	5	3340 - 10
U44147	1E12	8	0350 - 10
U44915	3I5	6	3102 - 3
U44915	3I5	14	3102 - 3
U44915	3I7	10	3102 - 5
U44915	3I7	20	3102 - 5
U44915	3I11	10	3102 - 9
U45230	3J3	5	3140 - 3
U45351	4B18	1	3302 - 2
U45351	4B19	1	3302 - 3
U45351	4C21	1	3340 - 1
U45351	4C25	7	3340 - 5
U46370	2H20	20	1674 - 41
U46506	3C14	15	1810 - 21
U46507	3C14	5	1810 - 21
U46508	3C14	25	1810 - 21
U46518	3C8	30	1810 - 15
U46518	3C8	38	1810 - 15
U46519	3C8	4	1810 - 15
U46519	3C8	30	1810 - 15
U46520	3C8	30	1810 - 15
U46520	3C8	39	1810 - 15
U46662	2H20	10	1674 - 41
U46664	2H22	47	1674 - 43
U46731	4F25	7	3360 - 61
U46753	3H12	68	2160 - 23
U46753	3H16	76	2160 - 27
U46753	3J20	20	3160 - 17
W33880	4C23	13	3340 - 3
W37172	4E10	15	3360 - 25B
X51H-24	3H10	6	2160 - 21
Z29304	4E10	29	3360 - 25B
Z45833	2I2	7	1676 - 3
Z45833	2I2	8	1676 - 3
Z45833	2I2	9	1676 - 3
Z45833	2I2	33	1676 - 3
Z45833	3B20	5	1810 - 3
Z45833	3B20	17	1810 - 3
Z45833	3B20	19	1810 - 3
Z45961	2I2	27	1676 - 3
Z46941	3B20	13	1810 - 3
Z57041	3E16	28	1830 - 13
Z57041	3E18	28	1830 - 15
Z57041	3E20	42	1830 - 17
Z57041	3E22	42	1830 - 19
32240	2F3	..	1330 - 1
32246	3G22	10	2160 - 7
32246	3G22	33	2160 - 7
32246	3G24	11	2160 - 9
32246	3G24	16	2160 - 9
32246	3G24	17	2160 - 9
32246	4F25	10	3360 - 61
400R	1C6	3	0210 - 3
400R	1C10	24	0210 - 7