INTRODUCTION AND CUSTOMER INFORMATION

OUTUBRO 2002

T161038 -UN-28OCT02

RUTHZIL TRATOR COMERCIAL DE PEÇAS LTDA 11 97083-6812 ROLANDO

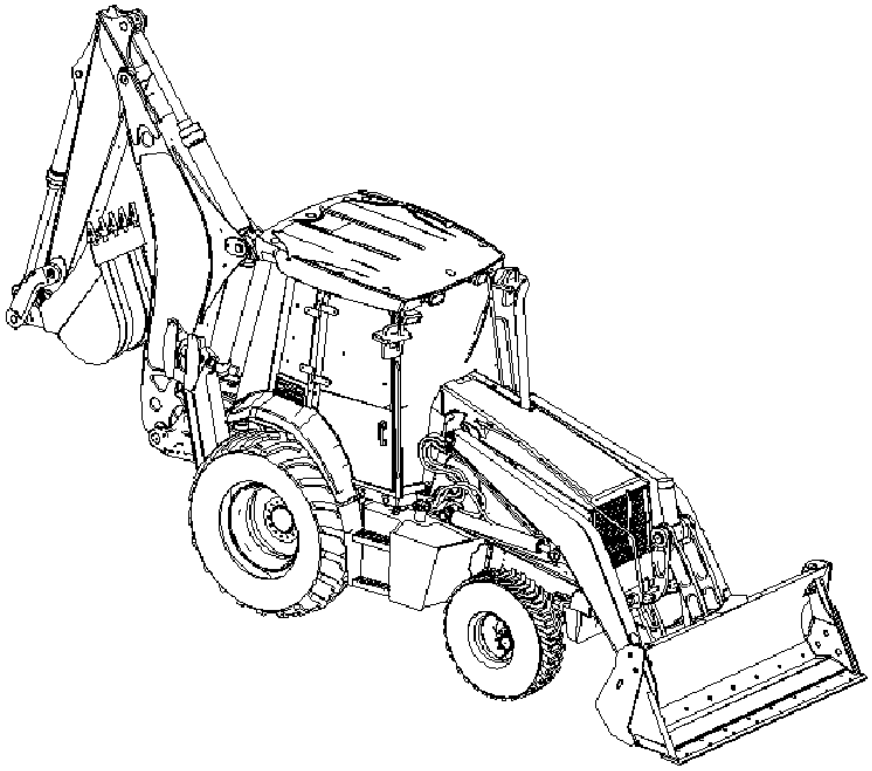

T161038

SIDE VIEW OF JOHN DEERE BACKHOE LOADER
(MANUFACTURED 2002-)

TO THE CUSTOMER

THE PART NUMBERS IN THIS PARTS CATALOG WERE CORRECT AT THE TIME YOUR CATALOG WAS PUBLISHED. IT IS OUR POLICY TO CONSTANTLY IMPROVE OUR MACHINES AND, THEREFORE, PART NUMBERS MAY CHANGE. WHEN ORDERING PARTS, VERIFY PART NUMBERS THROUGH YOUR DEALER.

(SPECIFICATIONS AND DESIGN SUBJECT TO CHANGE WITHOUT NOTICE.)

COPYRIGHT © 2005 DEERE & COMPANY Moline, Illinois All rights reserved

SERIAL NUMBER LOCATIONS

EACH 710G BACKHOE LOADER HAS SIX SERIAL NUMBERS, A PRODUCT IDENTIFICATION NUMBER PLATE, AN ENGINE SERIAL NUMBER PLATE, A HYDRAULIC PUMP SERIAL NUMBER PLATE, A MFWD AXLE SERIAL NUMBER PLATE, A TRANSMISSION SERIAL NUMBER PLATE, AND A REAR AXLE SERIAL NUMBER PLATE.

THE PRODUCT IDENTIFICATION NUMBER IS ON THE LEFT-HAND SIDE OF THE LOADER FRAME JUST ABOVE THE LIFT CYLINDER PIVOT BOSS.

THE ENGINE SERIAL NUMBER PLATE IS LOCATED ON THE RIGHT-HAND SIDE OF THE CYLINDER BLOCK NEAR THE FUEL PUMP.

THE MFWD AXLE SERIAL NUMBER PLATE IS LOCATED ON THE RIGHT-HAND (REAR) SIDE OF THE MFWD AXLE HOUSING.

THE REAR AXLE SERIAL NUMBER PLATE IS LOCATED ON THE RIGHT-HAND (FRONT) SIDE OF THE AXLE HOUSING.

THE TRANSMISSION SERIAL NUMBER PLATE IS LOCATED ON THE BOTTOM-REAR FACE OF THE HOUSING.

THE HYDRAULIC PUMP SERIAL NUMBER IS LOCATED ON THE BOTTOM FACE OF THE PUMP.

LEFT-HAND SIDE, RIGHT-HAND SIDE, FRONT AND REAR OF THE BACKHOE LOADER ARE VIEWED BY FACING IN THE DIRECTION OF THE BACKHOE LOADER FORWARD TRAVEL.

LEFT-HAND SIDE, RIGHT-HAND SIDE, FRONT AND REAR OF THE BACKHOE COMPONENTS ARE DETERMINED WHEN SEATED IN THE BACKHOE OPERATING POSITION.

IF PRODUCT IDENTIFICATION NUMBERS OR SERIAL NUMBERS ARE REQUIRED FOR WARRANTY CLAIMS OR CORRESPONDENCE PERTAINING TO THIS PRODUCT. IT IS EXTREMELY IMPORTANT THAT ALL CHARACTERS BE FURNISHED. THIS POINT CANNOT BE OVEREMPHASIZED.

ENGINE SERIAL NUMBER PLATE

T134833 -UN-23OCT00



T134833

1. DESIGNATES ENGINE MANUFACTURER — P-JOHN DEERE MOTORES
2. DESIGNATES NUMBER OF CYL. AND LITERS — 6068 (6.8 LITER)
3. DESIGNATES FUEL TYPE OR SPECIAL CONDITIONS — T TURBOCHARGED DIESEL ENGINE
4. DESIGNATES ENGINE SERIAL NUMBER — 123456
5. DESIGNATES THE ENGINE APPLICATION AND FACTORY USER. — PE6068TT057

SERIAL NUMBER LISTING INFORMATION

SERIAL NUMBER INFORMATION IS LISTED TO SHOW ON WHICH MACHINES EACH PART CAN BE USED; FOR EXAMPLE:

- THE PART CAN BE USED ON ALL MACHINES.
000000- THE PART CAN BE USED ON ALL MACHINES BEGINNING WITH THE SERIAL NUMBER LISTED.
-000000 THE PART CAN BE USED ON ALL MACHINES UP TO AND INCLUDING THE SERIAL NUMBER LISTED.
000000-000000 THE PART CAN BE USED ON ALL MACHINES BETWEEN AND INCLUDING THE SERIAL NUMBERS LISTED.

WHEN XXXXXX'S ARE LISTED IN PLACE OF A SERIAL NUMBER, A SERIAL NUMBER CHANGE WAS MADE BUT THE EXACT SERIAL NUMBER WAS NOT AVAILABLE WHEN THE CATALOG WAS PRODUCED.

DIRECTION ARROW

ARROWS ARE USED WITH ILLUSTRATIONS TO INDICATE THE FRONT OF THE UNIT. "RIGHT-HAND" AND "LEFT-HAND" SIDES OF THE LOADER OR TRACTOR PARTS ARE DETERMINED BY FACING IN THE DIRECTION OF MACHINE FORWARD TRAVEL

EXCEPTION: FOR ALL BACKHOE PARTS, "RIGHT-HAND" AND "LEFT-HAND" SIDES, "FRONT" AND "REAR" ARE DETERMINED WHEN SEATED FOR BACKHOE OPERATION.

BOX-ENCLOSED ILLUSTRATIONS

A KEY NUMBER, SHOWN IN THE PARTS LIST, IS ASSIGNED TO A BOX ENCLOSING ALL PARTS SOLD AS A SERVICE ASSEMBLY.

COMPLETE GOODS LISTINGS

COMPLETE GOODS ARE LISTED IN THE REMARKS COLUMN. ORDER SEPARATELY.
DO NOT INCLUDE ON REPLACEMENT PARTS ORDER.

SI UNITS OF MEASURE

METRIC DIMENSIONS ARE GIVEN, WHERE APPLICABLE, THROUGHOUT THIS PARTS CATALOG.

CHANGE INDICATOR LINE

CHANGES AFFECTING THE ORDERING OF PARTS ARE IDENTIFIED BY VERTICAL LINES MARKED IN THE LEFT-HAND MARGIN OF REVISED PARTS LISTING IMAGES. A LINE IS ALSO AT THE LEFT-HAND EDGE OF THE SAME PART NUMBER IN THE NUMERICAL INDEX TO SHOW THE LOCATION OF REVISED INFORMATION.

MFWD AXLE SERIAL NUMBER PLATE

TP19438 -UN-01JAN94

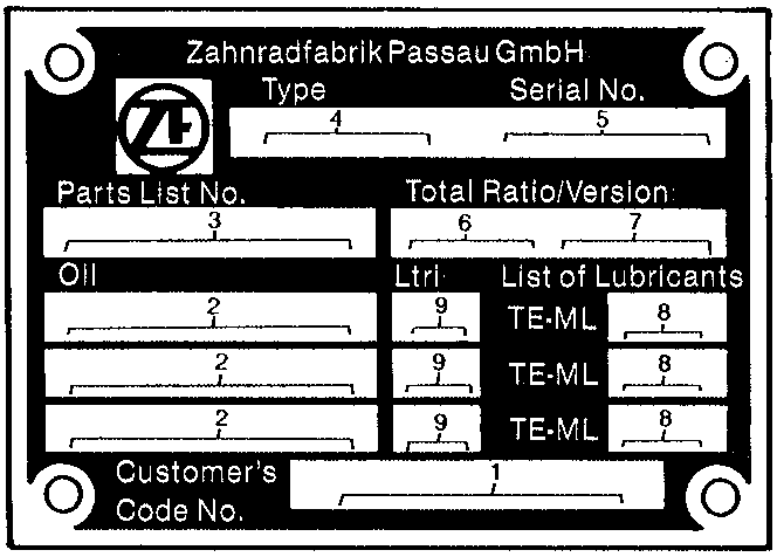

TP19438

1. DESIGNATES CUSTOMER'S CODE NUMBER	JOHN DEERE PART NUMBER
2. DESIGNATES TYPE OF LUBRICANT	M1L-L-2105B, SAE90
3. DESIGNATES ZF-PARTS-LIST NUMBER	4464 006 101
4. DESIGNATES AXLE TYPE	AP-11H
5. DESIGNATES AXLE SERIAL NUMBER	12345
6. DESIGNATES TOTAL - RATIO OF THE AXLE	20.28
7. DESIGNATES VERSION	SP. DIFF. (WITH OR WITHOUT SELF-LOCKING DIFFERENTIAL)
8. DESIGNATES LUBRICANT SPECIFICATION	05
9. DESIGNATES CAPACITY	LTR (DIFFERENTIAL CARRIER AND PLANETARY GEAR ASSEMBLY

MEMORANDA

ALPHABETICAL INDEX

GRID		PAGE
	A	
1J3	A/C PRESSURE SWITCH HARNESS	1674 - 4
1J9	A/C SWITCH	1674 - 6
3E1	ACCU-SWING VALVE KIT	3362 - 29A
1H12	ACCUMULATOR	1060 - 6
2F19	ACCUMULATOR SEAL KIT	2160 - 22
2F19	ACCUMULATOR VALVE	2160 - 22
3E3	ACCUMULATOR, MANIFOLD (PILOT CONTROL)	3362 - 30
3F23	ACCUMULATOR, MANIFOLD (PILOT CONTROL)	3363 - 30
2F19	ACCUMULATOR, RIDE CONTROL	2160 - 22
1J3	ACUTATOR DOOR RELAY	1674 - 4
1G23	ADAPTER STC	0960 - 6
1F3	ADAPTER,ENGINE OIL COOLER	0419 - 2
1E16	ADAPTER,EXHAUST	0410 - 2
1H1	ADAPTERS STC	0960 - 8
1F12	ADJUSTING STRAP, ALTERNATOR	0423 - 2
1G6	AIR CLEANER	0520 - 2
1G6	AIR CLEANER ELEMENT	0520 - 2
1G6	AIR CLEANER HOSE	0520 - 2
1G6	AIR CLEANER RESTRICTION INDICATOR SWITCH	0520 - 2
2D15	AIR CONDITIONING	1830 - 6
2D17	AIR CONDITIONING	1830 - 7A
2D17	AIR CONDITIONING (FREEZE/COMPRESSOR) SWITCH	1830 - 7A
2D22	AIR CONDITIONING COMPRESSOR	1830 - 12
2D22	AIR CONDITIONING COMPRESSOR MOUNTING BRACKETS	1830 - 12
1J11	AIR CONDITIONING COMPRESSOR DIODE	1674 - 8
2D22	AIR CONDITIONING COMPRESSOR DRIVE BELT	1830 - 12
2D22	AIR CONDITIONING COMPRESSOR HOSES	1830 - 12
2D22	AIR CONDITIONING CONDENSER	1830 - 12
1J3	AIR CONDITIONING DOOR RELAY	1674 - 4
2D11	AIR CONDITIONING DUCTS	1830 - 2
2D13	AIR CONDITIONING DUCTS	1830 - 4
2D22	AIR CONDITIONING RECEIVER DRYER	1830 - 12
2C15	AIR CONDITIONING THERMOSTAT SWITCH	1816 - 12
1E22	AIR HEATER SPACER	0414 - 2
1E22	AIR INTAKE	0414 - 2
1G8	AIR PRE-CLEANER	0520 - 4
2D9	AIR SUSPENSION SEAT COMPRESSOR	1821 - 14
1J9	AIR SUSPENSION SEAT SWITCH	1674 - 6
1F19	AIR TEMPERATURE SENSOR, ENGINE	0433 - 4
2E16	ALARM, BACK-UP	2004 - 3
2E16	ALARM, TRAVEL WARNING	2004 - 3
1I20	ALTERNATOR	1672 - 2
1F12	ALTERNATOR ADJUSTING STRAP	0423 - 2
1I20	ALTERNATOR FAN	1672 - 2
1F12	ALTERNATOR MOUNTING BRACKETS	0423 - 2
1I20	ALTERNATOR PULLEY	1672 - 2
1I24	ANCHOR, TIE BAND MOUNT, HARNESS	1673 - 4
2C21	ANGLE,BACKREST ADJUSTMENT	1821 - 2
2E11	ANTENNA, RADIO	2001 - 2
1K3	ANTI-STALL CONTROL (SERIAL NO.-XXXXXX)	1675 - 1
1K4	ANTI-STALL CONTROL (SERIAL NO.XXXXXX-)	1675 - 2
2C21	ARM RESTS	1821 - 2
2H5	ARM, LOADER LIFT	3140 - 2
2C17	ARM, PILOT CONTROLLER (LEFT SIDE)	1816 - 14
2C19	ARM, PILOT CONTROLLER (RIGHT SIDE)	1816 - 16
3C13	ARM, STANDARD	3346 - 2
3C17	ARM,STABLIZER	3348 - 2
1D23	ARMS, ROCKER	0402 - 4
1J7	AUDIBLE ALARM, QUICK COUPLER	1674 - 5C
2G4	AUXILIARY CUTTING EDGE	3102 - 4
2G14	AUXILIARY CUTTING EDGE 2.0 CUBIC YARD	3102 - 14
2G8	AUXILIARY CUTTING EDGE,MULTI-PURPOSE BUCKET	3102 - 8
3F15	AUXILIARY EQUIPMENT HYDRAULICS, EXTENDIB LE DIPPERSTICK	3363 - 18
3F13	AUXILIARY EQUIPMENT HYDRAULICS, STANDARD DIPPERSTICK	3363 - 16
3B20	AUXILIARY FUNCTION PEDAL (PILOT CONTROL)	3315 - 13A
2H20	AUXILIARY SECTION RELIEF VALVE	3162 - 12
3D15	AUXILIARY SECTION, BACKHOE VALVE	3362 - 22
2H20	AUXILIARY SECTION, LOADER VALVE	3162 - 12
3D23	AUXILIARY VALVE	3362 - 28
3D23	AUXILIARY VALVE SOLINOID	3362 - 28
3F21	AUXILIARY, LOW PRESSURE RETURN KIT	3363 - 28
1B10	AXLE HOUSING	0201 - 2
1C1	AXLE HOUSING ASSEMBLY (MFWD)	0250 - 4
1B20	AXLE HOUSING, FRONT (WITHOUT MFWD)	0230 - 2
1B13	AXLE MOUNTING HARDWARE, REAR	0201 - 6
1B10	AXLE ROLLER BEARING	0201 - 2
1B10	AXLE SHAFT	0201 - 2
1B21	AXLE SWIVEL HOUSING, FRONT (WITHOUT MFWD)	0230 - 3
1B23	AXLE, FRONT (MFWD)	0250 - 2
1B19	AXLE, FRONT (WITHOUT MFWD)	0230 - 1
	B	
2E16	BACK-UP ALARM	2004 - 3
3C7	BACKHOE BOOM	3344 - 2
3F24	BACKHOE BOOM CYLINDER	3365 - 2
3F24	BACKHOE BOOM CYLINDER REPAIR KIT	3365 - 2
3B24	BACKHOE BOOM LOCK	3315 - 20
3B22	BACKHOE BOOM LOCK CONTROL LEVER	3315 - 16
3C7	BACKHOE BOOM PINS	3344 - 2
3C9	BACKHOE BOOM PROTECTION KIT	3344 - 4
3B6	BACKHOE BUCKET	3302 - 2
3B6	BACKHOE BUCKET CUTTING EDGE	3302 - 2
3F25	BACKHOE BUCKET CYLINDER	3365 - 3
3F3	BACKHOE BUCKET CYLINDER HYDRAULICS	3363 - 6
3C11	BACKHOE BUCKET CYLINDER PIN	3345 - 2
3F25	BACKHOE BUCKET CYLINDER REPAIR KIT	3365 - 3
3B6	BACKHOE BUCKET PINS	3302 - 2
2C7	BACKHOE CONSOLE (PILOT CONTROL)	1816 - 4
3C3	BACKHOE CONTROL LEVER CONVERSION LINKAGE (SAE PATTERN)	3315 - 24
3C24	BACKHOE CONTROL VALVE	3362 - 6
3D1	BACKHOE CONTROL VALVE	3362 - 8
3B12	BACKHOE CONTROL VALVE LINKAGE, TWO LEVER	3315 - 4
3D1	BACKHOE CONTROL VALVE SECTIONS	3362 - 8
2C5	BACKHOE CONTROLS COVER	1816 - 2
2C17	BACKHOE CONTROLS, PILOT CONTROLLER ARM (LEFT SIDE)	1816 - 14
2C19	BACKHOE CONTROLS, PILOT CONTROLLER ARM (RIGHT SIDE)	1816 - 16
3G1	BACKHOE CROWD CYLINDER	3365 - 4
3G1	BACKHOE CROWD CYLINDER REPAIR KIT	3365 - 4
2I11	BACKHOE EXTENSION CYLINDER	3165 - 8
3G6	BACKHOE EXTENSION CYLINDER	3365 - 9
2I11	BACKHOE EXTENSION CYLINDER REPAIR KIT	3165 - 8
3G6	BACKHOE EXTENSION CYLINDER REPAIR KIT	3365 - 9

ALPHABETICAL INDEX - CONTINUED

GRID		PAGE
2C5	BACKHOE LEVERS COVER	1816 - 2
3G3	BACKHOE STABILIZER CYLINDER (SER.NO. -932172)	3365 - 6
3G4	BACKHOE STABILIZER CYLINDER (SER.NO. -932172)	3365 - 7
3G5	BACKHOE STABILIZER CYLINDER (SER.NO. 932173-)	3365 - 8
3E24	BACKHOE STABILIZER CYLINDER HYDRAULICS	3363 - 2
3G3	BACKHOE STABILIZER CYLINDER REPAIR KIT (SER.NO. -932172)	3365 - 6
3G4	BACKHOE STABILIZER CYLINDER REPAIR KIT (SER.NO. -932172)	3365 - 7
3G5	BACKHOE STABILIZER CYLINDER REPAIR KIT (SER.NO. 932173-)	3365 - 8
3G2	BACKHOE SWING CYLINDER	3365 - 5
3G2	BACKHOE SWING CYLINDER REPAIR KIT	3365 - 5
3B22	BACKHOE SWING LOCK CONTROL LEVER	3315 - 16
3D15	BACKHOE VALVE AUXILIARY SECTION	3362 - 22
3D5	BACKHOE VALVE BOOM SECTION	3362 - 12
3E12	BACKHOE VALVE BOOM,PILOT SECTION	3362 - 40
3D7	BACKHOE VALVE BUCKET SECTION	3362 - 14
3E14	BACKHOE VALVE BUCKET, PILOT SECTION	3362 - 42
3D9	BACKHOE VALVE CROWD SECTION	3362 - 16
3E16	BACKHOE VALVE CROWD, PILOT SECTION	3362 - 44
3D13	BACKHOE VALVE EXTENDIBLE SECTION	3362 - 20
3D3	BACKHOE VALVE INLET SECTION	3362 - 10
3B8	BACKHOE VALVE MOUNTING PLATE	3315 - 2
3B10	BACKHOE VALVE MOUNTING PLATE (PILOT CONTROL)	3315 - 3A
3D17	BACKHOE VALVE OUTLET SECTION	3362 - 24
3D11	BACKHOE VALVE SWING SECTION	3362 - 18
3E18	BACKHOE VALVE SWING, PILOT SECTION	3362 - 46
3B12	BACKHOE VALVE TWO LEVER CONTROL LINKAGE	3315 - 4
2C21	BACKREST ADJUSTMENT ANGLE	1821 - 2
2D24	BAFFLE, HEAT AND NOISE	1834 - 2
1G3	BAFFLES, RADIATOR	0510 - 4
1H20	BAR, CYLINDER SERVICE LOCK	1313 - 2
2D24	BARRIER, HEAT AND NOISE	1834 - 2
2D5	BASE, NON-SUSPENDED SEAT	1821 - 10
2D7	BASE, SEAT FOR NON-SUSPENDED SEAT	1821 - 12
1I15	BATTERIES,DUAL	1671 - 4
2E4	BATTERY BOX	1913 - 2
2E4	BATTERY COVER	1913 - 2
1I17	BATTERY DISCONNECT SWITCH	1671 - 6
1I22	BEACON, ROTATING	1673 - 2
1I22	BEACON, STROBE	1673 - 2
1C14	BEARING KIT	0325 - 1
1H6	BEARING, DIFFERENTIAL QUILL	1011 - 2
1D21	BEARING,CRANKSHAFT THRUST	0401 - 2
1B20	BEARING,FRONT AXLE HOUSING (WITHOUT MFWD)	0230 - 2
1D21	BEARINGS, MAIN	0401 - 2
1E1	BEARINGS,C0NNECTING ROD	0403 - 2
1C17	BELL HOUSING	0341 - 4
1C22	BELLVILLEWASHER, FIRST GEAR	0350 - 4
1D5	BELLVILLEWASHER, FORWARD	0350 - 12
1D7	BELLVILLEWASHER, REVERSE	0350 - 14
1C24	BELLVILLEWASHER, 2ND GEAR	0350 - 6
1D1	BELLVILLEWASHER, 3RD GEAR	0350 - 8
1D3	BELLVILLEWASHER, 4TH GEAR	0350 - 10
2D9	BELT, TETHER	1821 - 14
2D22	BELT,AIR CONDITIONING COMPRESSOR DRIVE	1830 - 12
1G1	BELT,FAN DRIVE	0510 - 2
2C21	BELTS, SEAT	1821 - 2
2D5	BELTS, TETHER WITH NON-SUSPENDED SEAT	1821 - 10
1C6	BEVEL DRIVE GEAR (MFWD)	0250 - 10
1E3	BLOCK,CYLINDER	0404 - 2
2D15	BLOWER MOTOR PRESSURIZER	1830 - 6
2D17	BLOWER MOTOR PRESSURIZER	1830 - 7A
2E2	BOLT, STRIKER, HOOD	1910 - 2
1B13	BOLTS, REAR AXLE MOUNTING	0201 - 6
3F17	BOOM CYL.KIT, LOWERING DEVICE,CONTOLLED	3363 - 20
3F17	BOOM CYL.KIT,CONTROLLED LOWERING DEVICE	3363 - 20
3F1	BOOM CYLINDER HYDRAULIC HOSES	3363 - 4
3F1	BOOM CYLINDER HYDRAULIC OIL LINES	3363 - 4
2I1	BOOM CYLINDER HYDRAULICS, LOADER	3163 - 2
2H7	BOOM CYLINDER PINS, LOADER	3140 - 4
3F24	BOOM CYLINDER REPAIR KIT, BACKHOE	3365 - 2
3F24	BOOM CYLINDER, BACKHOE	3365 - 2
2I7	BOOM CYLINDER, LOADER	3165 - 1
2C13	BOOM LEVER LOCK COVER	1816 - 10
2C15	BOOM LEVER LOCK COVER	1816 - 12
2I8	BOOM LIFT CYLINDER	3165 - 2
3B24	BOOM LOCK, BACKHOE	3315 - 20
2H18	BOOM SECTION RELIEF VALVE	3162 - 10
3D5	BOOM SECTION RELIEF VALVE	3362 - 12
3D5	BOOM SECTION, BACKHOE VALVE	3362 - 12
2H18	BOOM SECTION, LOADER VALVE	3162 - 10
1H20	BOOM SERVICE LOCK BAR	1313 - 2
3C7	BOOM, BACKHOE	3344 - 2
3C7	BOOM, BACKHOE, PINS	3344 - 2
3C9	BOOM, BACKHOE, PROTECTION KIT	3344 - 4
2H5	BOOM, LOADER	3140 - 2
3E12	BOOM, PILOT SECTION RELIEF VALVE	3362 - 40
3E12	BOOM,PILOT SECTION, BACKHOE VALVE	3362 - 40
2C7	BOOT, WINCH CONTROL (PILOT CONTROL)	1816 - 4
2E4	BOX, BATTERY	1913 - 2
2E4	BOX, TOOL	1913 - 2
1G6	BRACKET, AIR CLEANER MOUNTING	0520 - 2
1G12	BRACKET, ENGINE MOUNTING	0540 - 2
2E14	BRACKET, EXTERNAL REAR VIEW MIRROR	2002 - 3
2E13	BRACKET, INTERIOR REAR VIEW MIRROR	2002 - 2
1H22	BRACKET, LICENCE PLATE	1314 - 2
3D19	BRACKET, SELECTIVE FLOW MOUNTING	3362 - 26
3D21	BRACKET, SELECTIVE FLOW MOUNTING	3362 - 27A
2E2	BRACKET, STRIKER BOLT	1910 - 2
3B8	BRACKET,BACKHOE VALVE MOUNTING	3315 - 2
3B10	BRACKET,BACKHOE VALVE MOUNTING (PILOT CONTROL)	3315 - 3A
2E11	BRACKET,RADIO ANTENA	2001 - 2
3B8	BRACKET,STABLIZER VALVE MOUNTING	3315 - 2
3B10	BRACKET,STABLIZER VALVE MOUNTING (PILOT CONTROL)	3315 - 3A
2C21	BRACKETS ,SEAT	1821 - 2
1F12	BRACKETS, ALTERNATOR MOUNTING	0423 - 2
1H12	BRAKE CHARGE VALVE SUPPLY	1060 - 6
1H6	BRAKE DISK	1011 - 2
1H6	BRAKE HOUSING	1011 - 2
1H8	BRAKE LIGHT PRESSURE SWITCH	1060 - 2
1H8	BRAKE PEDAL	1060 - 2
1H6	BRAKE PISTON	1011 - 2
1H14	BRAKE SERVICE, HYDRAULICS	1060 - 8
1H8	BRAKE VALVE	1060 - 2
1H10	BRAKE VALVE	1060 - 4
1H8	BRAKE VALVE HOUSING	1060 - 2
1H8	BRAKE VALVE MOUNTING PLATE	1060 - 2
1H17	BRAKE, PARK	1111 - 2
1H6	BRAKES, SERVICE	1011 - 2
2F15	BREATHER FILTER, HYDRAULIC RESERVOIR	2160 - 18
1C17	BREATHER, TRANSMISSION	0341 - 4
3F5	BUCKET CYLINDER HYDRAULIC HOSES, EXTENDIBLE DIPPERSTICK	3363 - 8
3F3	BUCKET CYLINDER HYDRAULICS, BACKHOE	3363 - 6

ALPHABETICAL INDEX - CONTINUED

GRID		PAGE
3F3	BUCKET CYLINDER LINES, BACKHOE	3363 - 6
3C13	BUCKET CYLINDER PIN	3346 - 2
3C11	BUCKET CYLINDER PIN, BACKHOE	3345 - 2
3F25	BUCKET CYLINDER REPAIR KIT, BACKHOE	3365 - 3
3C13	BUCKET CYLINDER SPACER, METALLIC	3346 - 2
3F25	BUCKET CYLINDER, BACKHOE	3365 - 3
2I10	BUCKET CYLINDER, LOADER	3165 - 4
2G12	BUCKET CYLINDER, MULTI-PURPOSE (SERIAL NO.-925076)	3102 - 12
2G13	BUCKET CYLINDER, MULTI-PURPOSE (SERIAL NO.925977-)	3102 - 13
2G24	BUCKET LEVELING LINKAGE	3115 - 2
2G24	BUCKET LEVELING ROD	3115 - 2
2G24	BUCKET LEVELING YOKE	3115 - 2
3C13	BUCKET LINK PIN	3346 - 2
2H8	BUCKET LINKAGE, LOADER	3140 - 6
3C11	BUCKET LINKS AND PINS,BACKHOE	3345 - 2
2G6	BUCKET PINS, LOADER	3102 - 6
2H16	BUCKET SECTION RELIEF VALVE	3162 - 8
3D7	BUCKET SECTION RELIEF VALVE	3362 - 14
3D7	BUCKET SECTION, BACKHOE VALVE	3362 - 14
2H16	BUCKET SECTION, LOADER VALVE	3162 - 8
2G24	BUCKET SENSOR TUBE	3115 - 2
2G8	BUCKET, MULTI-PURPOSE	3102 - 8
3E14	BUCKET, PILOT SECTION RELIEF VALVE	3362 - 42
3E14	BUCKET, PILOT SECTION, BACKHOE VALVE	3362 - 42
3B6	BUCKET,BACKHOE	3302 - 2
2G4	BUCKET,LOADER 1.24 CUBIC METER	3102 - 4
2G4	BUCKET,LOADER 1.43 CUBIC METER	3102 - 4
2G14	BUCKET,LOADER,COUPLER 2.0 CUBIC YARD	3102 - 14
2G10	BUCKET,MULTI-PURPOSE	3102 - 10
2G16	BUCKET,MULTI-PURPOSE	3102 - 16
3C15	BUSHING, EXTENDIBLE ARM	3346 - 4
2G8	BUSHING, MULTI-PURPOSE BUCKET	3102 - 8
2G10	BUSHING, MULTI-PURPOSE BUCKET CYLINDER	3102 - 10
2G16	BUSHING, MULTI-PURPOSE BUCKET CYLINDER	3102 - 16
1K7	BUSHING, SWING CYLINDER	1740 - 2
1K7	BUSHING, SWING FRAME	1740 - 2
1B20	BUSHING,FRONT AXLE HOUSING (WITHOUT MFWD)	0230 - 2
2H5	BUSHINGS,LOADER LIFT ARM	3140 - 2
2F9	BYPASS VALVE, THERMAL	2160 - 14

C

2E11	CAB DOME LIGHT	2001 - 2
2B14	CAB DOOR CYLINDER	1814 - 2
2B16	CAB DOOR CYLINDER	1814 - 4
2B14	CAB DOOR HINGES	1814 - 2
2B16	CAB DOOR HINGES	1814 - 4
2B14	CAB DOORS	1814 - 2
2B16	CAB DOORS	1814 - 4
2B8	CAB FRAME	1811 - 4
2B8	CAB HEADLINER	1811 - 4
2D15	CAB HEATER	1830 - 6
2D17	CAB HEATER	1830 - 7A
2D21	CAB HEATER (20,000 BTU)	1830 - 10
2D11	CAB HEATER DUCTS	1830 - 2
2D13	CAB HEATER DUCTS	1830 - 4
2D21	CAB HEATER MOTOR (20,000 BTU)	1830 - 10
1J1	CAB MAIN WIRE HARNESS	1674 - 2
1J3	CAB MAIN WIRE HARNESS	1674 - 4
2B8	CAB MOUNTING ISOLATORS	1811 - 4
2B20	CAB REAR WINDOWS (SER.NO. -920856)	1814 - 8
2B22	CAB REAR WINDOWS (SER.NO. 920857-)	1814 - 9A
2B10	CAB ROOF	1811 - 6
2B14	CAB SIDE WINDOW LATCH	1814 - 2
2B16	CAB SIDE WINDOW LATCH	1814 - 4
2B14	CAB SIDE WINDOWS	1814 - 2
2B16	CAB SIDE WINDOWS	1814 - 4
2E8	CAB SKIRT	1927 - 2
2B18	CAB WINDSHIELD	1814 - 6
1G4	CABLE, ENGINE SPEED CONTROL	0515 - 2
2D15	CABLE, HEATER VALVE CONTROL	1830 - 6
2E11	CABLE, RADIO	2001 - 2
2G24	CABLE, RETURN-TO-DIG	3115 - 2
2G24	CABLE, SELF-LEVELING	3115 - 2
2D19	CABLE,HEATER VALVE CONTROL,CANOPY	1830 - 8
3C1	CABLES, STABILIZER CONTROL	3315 - 22
1I15	CABLES,DUAL BATTERY	1671 - 4
1J13	CAM/CRANKSHAFT SWITCH (FRONT WIRE HARNESS) (SN XXXXXX-)	1674 - 9A
1J11	CAN TERMINATION RESISTOR	1674 - 8
1J3	CAN TERMINATION RESISTORS	1674 - 4
2B6	CANOPY	1811 - 2
2D19	CANOPY HEATER	1830 - 8
2D19	CANOPY HEATER HOSE	1830 - 8
2D19	CANOPY HEATER SHUT-OFF VALVE	1830 - 8
2D19	CANOPY HEATER VALVE CONTROL CABLE	1830 - 8
1G14	CAP, FUEL TANK	0560 - 2
1G1	CAP, RADIATOR	0510 - 2
1E5	CAP,ENGINE OIL FILL INLET	0407 - 2
1E3	CAP,MAIN BEARING	0404 - 2
1B12	CARRIER, PLANETARY PINION	0201 - 4
1E23	CENTER HOUSING,TURBOCHARGER	0416 - 2
2B12	CENTER KICK PANEL, REAR	1812 - 2
1D11	CHARGE PUMP OIL FILTER	0360 - 1
1D11	CHARGE PUMP, AXIAL BEARING	0360 - 1
1D11	CHARGE PUMP,TRANSMISSION	0360 - 1
1H12	CHARGE VALVE, BRAKE	1060 - 6
1J1	CIRCUIT BREAKERS	1674 - 2
1C22	CLUTCH ASSEMBLY, FIRST GEAR	0350 - 4
1D5	CLUTCH ASSEMBLY,FORWARD	0350 - 12
1D3	CLUTCH ASSEMBLY,FOURTH GEAR	0350 - 10
1D7	CLUTCH ASSEMBLY,REVERSE	0350 - 14
1C24	CLUTCH ASSEMBLY,SECOND GEAR	0350 - 6
1D1	CLUTCH ASSEMBLY,THIRD GEAR	0350 - 8
1C22	CLUTCH BACKING PLATE	0350 - 4
1C24	CLUTCH BACKING PLATE	0350 - 6
1D1	CLUTCH BACKING PLATE	0350 - 8
1D3	CLUTCH BACKING PLATE	0350 - 10
1D5	CLUTCH BACKING PLATE	0350 - 12
1D7	CLUTCH BACKING PLATE	0350 - 14
1C22	CLUTCH CARRIER, FIRST GEAR	0350 - 4
1D5	CLUTCH CARRIER, FORWARD	0350 - 12
1D3	CLUTCH CARRIER, FOURTH GEAR	0350 - 10
1D7	CLUTCH CARRIER, REVERSE	0350 - 14
1C24	CLUTCH CARRIER, SECOND GEAR	0350 - 6
1D1	CLUTCH CARRIER, THIRD GEAR	0350 - 8
1H17	CLUTCH DISK, PARK BRAKE	1111 - 2
1F22	COLD WEATHER STARTING AID	0505 - 2
1F22	COLD WEATHER STARTING AID SOLENOID	0505 - 2
1G19	COLUMN, STEERING	0960 - 2
1G21	COLUMN, STEERING	0960 - 4
1G21	COLUMN, TILT STEERING	0960 - 4
1J11	COMPRESSOR DIODE, A/C	1674 - 8
2D22	COMPRESSOR MOUNTING BRACKETS, AIR CONDITIONING	1830 - 12

ALPHABETICAL INDEX - CONTINUED

GRID		PAGE
2D22	COMPRESSOR,AIR CONDITIONING	1830 - 12
2D9	COMPRESSOR,AIR SUSPENSION SEAT	1821 - 14
2D22	CONDENSER,AIR CONDITIONING	1830 - 12
1E1	CONNECTING ROD	0403 - 2
1E1	CONNECTING ROD BEARINGS	0403 - 2
1J24	CONNECTORS, WEATHERPACK	1674 - 22
1J1	CONSOLE WIRING HARNESS, FRONT	1674 - 2
1J3	CONSOLE WIRING HARNESS,SIDE	1674 - 4
2C7	CONSOLE, BACKHOE (PILOT CONTROL)	1816 - 4
2C11	CONSOLE, FRONT	1816 - 8
3F17	CONTOLLED LOWERING DEVICE, BOOM CYL.KIT	3363 - 20
2D15	CONTROL CABLE, HEATER VALVE	1830 - 6
2D19	CONTROL CABLE, HEATER VALVE	1830 - 8
2C5	CONTROL COVER, BACKHOE, TWO LEVER	1816 - 2
3E10	CONTROL HANDLE, PILOT,BUTTON FUNTION KIT	3362 - 38
1C12	CONTROL LEVER, TRANSMISSION	0315 - 4
3B22	CONTROL LEVER,BACKHOE BOOM LOCK	3315 - 16
3B22	CONTROL LEVER,BACKHOE SWING LOCK	3315 - 16
3C1	CONTROL VALVE LINKAGE, STABILIZER	3315 - 22
3B12	CONTROL VALVE LINKAGE,BACKHOE, TWO LEVER	3315 - 4
1D12	CONTROL VALVE PISTON	0360 - 2
3D1	CONTROL VALVE SECTIONS, BACKHOE	3362 - 8
3C24	CONTROL VALVE, BACKHOE	3362 - 6
3D1	CONTROL VALVE, BACKHOE	3362 - 8
2H12	CONTROL VALVE, LOADER	3162 - 4
3E6	CONTROL VALVE, PILOT, LEFT	3362 - 34
3E8	CONTROL VALVE, PILOT, RIGHT	3362 - 36
3D19	CONTROL VALVE, SELECTIVE FLOW SOLENOID	3362 - 26
3D21	CONTROL VALVE, SELECTIVE FLOW SOLENOID	3362 - 27A
3D23	CONTROL VALVE, SELECTIVE FLOW SOLENOID	3362 - 28
1D12	CONTROL VALVE, TRANSMISSION	0360 - 2
1K3	CONTROL, ANTI-STALL (SERIAL NO.-XXXXXX)	1675 - 1
1K4	CONTROL, ANTI-STALL (SERIAL NO.XXXXXX-)	1675 - 2
2F19	CONTROL, RIDE	2160 - 22
2D19	CONTROL,TEMPERATURE HEATER	1830 - 8
3F19	CONTROLLED LOWERING DEVICE,CROWD CYL.KIT	3363 - 22
2C17	CONTROLLER ARM, PILOT (LEFT SIDE)	1816 - 14
2C19	CONTROLLER ARM, PILOT (RIGHT SIDE)	1816 - 16
1E18	CONTROLLER, ENGINE	0413 - 2
1K4	CONTROLLER, FLEX (SERIAL NO.XXXXXX-)	1675 - 2
3E6	CONTROLLER, LEFT HAND VALVE	3362 - 34
3E8	CONTROLLER, RIGHT HAND VALVE	3362 - 36
3C3	CONVERSION, BACKHOE CONTROL LEVER LINKAGE (SAE PATTERN)	3315 - 24
1C19	CONVERTER, TORQUE	0350 - 1
1G1	COOLANT RECOVERY TANK	0510 - 2
1F19	COOLANT TEMPERATURE SENSOR, ENGINE	0433 - 4
1F24	COOLANT, ENGINE HEATER	0505 - 4
2F9	COOLER LINES	2160 - 14
1G16	COOLER, FUEL	0560 - 4
1G1	COOLER, HYDRAULIC OIL	0510 - 2
1G1	COOLER, TRANSMISSION OIL	0510 - 2
2B6	CORD, MANUAL HOLDER ATTACHMENT	1811 - 2
2D21	CORE, HEATER (20,000 BTU)	1830 - 10
2B20	CORNER WINDOWPANE, REAR (SER.NO. -920856)	1814 - 8
2B22	CORNER WINDOWPANE, REAR (SER.NO. 920857-)	1814 - 9A
1K11	COUNTERWEIGHT FRAME	1749 - 3
1K10	COUNTERWEIGHT, FRONT	1749 - 2
2G18	COUPLER FRAME, FORKLIFT	3103 - 2
2G22	COUPLER, CYLINDER, FRONT	3104 - 4
2I5	COUPLER, HYDRAULIC HOSES	3163 - 6
2I5	COUPLER, HYDRAULIC LINES	3163 - 6
2G20	COUPLER, HYDRAULIC, FRONT	3104 - 2
2H24	COUPLER, LOADER BUCKET VALVE	3162 - 16
2F7	COUPLER, QUICK CONNECT	2160 - 12
2C5	COVER, BACKHOE CONTROLS	1816 - 2
2C5	COVER, BACKHOE LEVERS	1816 - 2
2E4	COVER, BATTERY	1913 - 2
2C13	COVER, BOOM LEVER LOCK	1816 - 10
2C15	COVER, BOOM LEVER LOCK	1816 - 12
2B12	COVER, FLOOR TO FRONT CONSOLE	1812 - 2
2C11	COVER, FUSE PANEL	1816 - 8
1J11	COVER, JUMP START PROTECTION	1674 - 8
2B12	COVER, LINKAGE	1812 - 2
2C15	COVER, LOADER CONTROL	1816 - 12
2B12	COVER, MIDDLE FLOOR	1812 - 2
2B6	COVER, NO SHIFTER	1811 - 2
1E5	COVER, OIL FILLER OPENING	0407 - 2
2E8	COVER, OPERATOR STATION	1927 - 2
2B12	COVER, REAR FLOOR	1812 - 2
1D22	COVER, ROCKER ARM	0402 - 3
2C13	COVER, STABILIZER CONTROL	1816 - 10
2C15	COVER, STABILIZER CONTROL	1816 - 12
2C9	COVER, STEERING COLUMN	1816 - 6
1F1	COVER, THERMOSTAT	0418 - 2
1D24	COVER, TIMING GEAR	0402 - 6
1B22	COVER, WHEEL HUB (WITHOUT MFWD)	0230 - 4
1I19	COVER,REMOTE START POST	1671 - 8
2C21	COVER,SEAT BELT	1821 - 2
1D21	CRANKSHAFT	0401 - 2
1F14	CRANKSHAFT DAMPENER	0429 - 2
1D21	CRANKSHAFT GEAR	0401 - 2
1F19	CRANKSHAFT POSITION SENSOR	0433 - 4
1D21	CRANKSHAFT THRUST BEARING	0401 - 2
1F19	CRANKSHAFT TIMING WHEEL SENSOR, ENGINE	0433 - 4
1J13	CRANKSHAFT/CAM SWITCH (FRONT WIRE HARNESS) (SN XXXXXX-)	1674 - 9A
3F19	CROWD CYL.KIT, CONTROLLED LOWERING	3363 - 22
3F19	CROWD CYL.KIT,LOWERING DEVICE,CONTROLLED	3363 - 22
3F7	CROWD CYLINDER HYDRAULIC HOSES	3363 - 10
3F7	CROWD CYLINDER HYDRAULIC OIL LINES	3363 - 10
3F7	CROWD CYLINDER HYDRAULICS	3363 - 10
3C13	CROWD CYLINDER PIN	3346 - 2
3G1	CROWD CYLINDER REPAIR KIT, BACKHOE	3365 - 4
3G1	CROWD CYLINDER, BACKHOE	3365 - 4
3D9	CROWD SECTION RELIEF VALVE	3362 - 16
3D9	CROWD SECTION, BACKHOE VALVE	3362 - 16
3C13	CROWD SPACER, SYNTHETIC	3346 - 2
3E16	CROWD, PILOT SECTION RELIEF VALVE	3362 - 44
3E16	CROWD, PILOT SECTION, BACKHOE VALVE	3362 - 44
2C21	CUSHIONS,SEAT	1821 - 2
3B6	CUTTING EDGE,BACKHOE BUCKET	3302 - 2
2G4	CUTTING EDGE,LOADER BUCKET	3102 - 4
2G14	CUTTING EDGE,LOADER COUPLER BUCKET 2.0 CUBIC YARD	3102 - 14
2G8	CUTTING EDGE,MULTI-PURPOSE BUCKET	3102 - 8
1E3	CYLINDER BLOCK	0404 - 2
2B14	CYLINDER CAB DOOR	1814 - 2
2B16	CYLINDER CAB DOOR	1814 - 4
1E14	CYLINDER HEAD	0409 - 2
1E14	CYLINDER HEAD GASKET	0409 - 2
1E1	CYLINDER LINER	0403 - 2
1E1	CYLINDER LINER O-RING KIT	0403 - 2
3C11	CYLINDER PIN, BACKHOE BUCKET	3345 - 2
2H7	CYLINDER PINS, LOADER BOOM	3140 - 4
3F24	CYLINDER REPAIR KIT, BACKHOE BOOM	3365 - 2

ALPHABETICAL INDEX - CONTINUED

GRID		PAGE
3F25	CYLINDER REPAIR KIT, BACKHOE BUCKET	3365 - 3
3G1	CYLINDER REPAIR KIT, BACKHOE CROWD	3365 - 4
2I11	CYLINDER REPAIR KIT, BACKHOE EXTENSION	3165 - 8
3G6	CYLINDER REPAIR KIT, BACKHOE EXTENSION	3365 - 9
3G3	CYLINDER REPAIR KIT, BACKHOE STABILIZER (SER.NO. -932172)	3365 - 6
3G4	CYLINDER REPAIR KIT, BACKHOE STABILIZER (SER.NO. -932172)	3365 - 7
3G5	CYLINDER REPAIR KIT, BACKHOE STABILIZER (SER.NO. 932173-)	3365 - 8
3G2	CYLINDER REPAIR KIT, BACKHOE SWING	3365 - 5
1H20	CYLINDER ROD LOCK BAR	1313 - 2
3F24	CYLINDER, BACKHOE BOOM	3365 - 2
3F25	CYLINDER, BACKHOE BUCKET	3365 - 3
3F3	CYLINDER, BACKHOE BUCKET HYDRAULICS	3363 - 6
3G1	CYLINDER, BACKHOE CROWD	3365 - 4
2I11	CYLINDER, BACKHOE EXTENSION	3165 - 8
3G6	CYLINDER, BACKHOE EXTENSION	3365 - 9
3G3	CYLINDER, BACKHOE STABILIZER (SER.NO. -932172)	3365 - 6
3G4	CYLINDER, BACKHOE STABILIZER (SER.NO. -932172)	3365 - 7
3G5	CYLINDER, BACKHOE STABILIZER (SER.NO. 932173-)	3365 - 8
3E24	CYLINDER, BACKHOE STABILIZER HYDRAULICS	3363 - 2
3G2	CYLINDER, BACKHOE SWING	3365 - 5
2I8	CYLINDER, BOOM LIFT	3165 - 2
3G7	CYLINDER, EXTENSION	3365 - 10
2G22	CYLINDER, FRONT COUPLER	3104 - 4
2G20	CYLINDER, HYDRAULIC FRONT COUPLER	3104 - 2
2I7	CYLINDER, LOADER BOOM LIFT	3165 - 1
2I10	CYLINDER, LOADER BUCKET	3165 - 4
2G12	CYLINDER, MULTI-PURPOSE BUCKET (SERIAL NO.-925076)	3102 - 12
2G13	CYLINDER, MULTI-PURPOSE BUCKET (SERIAL NO.925977-	3102 - 13
3C19	CYLINDER, STABILIZER PINS	3348 - 4
1H3	CYLINDER, STEERING, (WITH MFWD)	0960 - 10
3C15	CYLINDER,EXTENDIBLE DIPPERSTICK	3346 - 4
1B21	CYLINDER,FRONT AXLE STEERING (WITHOUT MFWD)	0230 - 3

D

1F14	DAMPENER,CRANKSHAFT	0429 - 2
1H24	DECALS	1320 - 2
1I3	DECALS, SPANISH	1320 - 6
1I1	DECALS,FRENCH	1320 - 4
1G3	DEFLECTOR KIT, RADIATOR	0510 - 4
2D24	DEFLECTOR, HEAT AND NOISE	1834 - 2
1I24	DELUXE LIGHTS	1673 - 4
1K2	DEUTSCH TERMINALS	1674 - 25
3F17	DEVICE,CONTROLLED LOWERING,BOOM CYL.KIT	3363 - 20
3F19	DEVICE,CONTROLLED LOWERING,CROWD CYL.KIT	3363 - 22
2F11	DIAGNOSTIC RECEPTACLE, LOAD SENSE	2160 - 16
2F13	DIAGNOSTIC RECEPTACLE, LOAD SENSE	2160 - 17A
1B16	DIFFERENTIAL ASSEMBLY WITH LOCK	0210 - 2
1B10	DIFFERENTIAL HOUSING	0201 - 2
1B16	DIFFERENTIAL HOUSING WITH LOCK	0210 - 2
1B18	DIFFERENTIAL LOCK PLUMBING	0210 - 4
1J15	DIFFERENTIAL LOCK PUSH BUTTON	1674 - 12
1J15	DIFFERENTIAL LOCK SWITCH	1674 - 12
1H6	DIFFERENTIAL QUILL	1011 - 2
1C8	DIFFERENTIAL SPIRAL BEVEL GEAR (MFWD)	0250 - 12
1B16	DIFFERENTIAL WITH LOCK	0210 - 2
1C6	DIFFERENTIAL,LIMITED SLIP (MFWD)	0250 - 10
1J11	DIODE, A/C COMPRESSOR	1674 - 8
1J11	DIODES	1674 - 8
3C15	DIPPERSTICK EXTENDIBLE	3346 - 4
3C15	DIPPERSTICK EXTENDIBLE ARM CYLINDER	3346 - 4
3C13	DIPPERSTICK,STANDARD	3346 - 2
1E6	DIPSTICK TUBE, ENGINE OIL	0407 - 3
1C15	DIPSTICK TUBE, TRANSMISSION	0341 - 2
1E6	DIPSTICK, ENGINE OIL	0407 - 3
1C15	DIPSTICK, TRANSMISSION	0341 - 2
1H6	DISK, BRAKE	1011 - 2
2B8	DOME LIGHT	1811 - 4
1J3	DOOR FLAP RELAY, A/C	1674 - 4
2B16	DOOR STRAP	1814 - 4
2B16	DOOR TETHER	1814 - 4
2B14	DOORS,CAB	1814 - 2
2B16	DOORS,CAB	1814 - 4
2F17	DP SWITCH KIT	2160 - 20
1I10	DRAIN PACKAGE, ENVIRONMENTAL	1369 - 6
1G1	DRAIN VALVE,RADIATOR	0510 - 2
1B24	DRIVE SHAFT YOKE (MFWD)	0250 - 3
1B24	DRIVE SHAFT, UNIVERSAL (MFWD)	0250 - 3
1C14	DRIVE SHAFT,REAR, TRANSMISSION	0325 - 1
1B4	DRIVE WHEEL (SERIAL NO. 943698-)	0110 - 4
1B6	DRIVE WHEEL (SERIAL NO. 943698-)	0110 - 5A
1B3	DRIVE WHEEL,FRONT(MFWD)	0110 - 3
1B2	DRIVE WHEEL,REAR	0110 - 2
1C5	DRIVE,PLANETARY (MFWD)	0250 - 8
3C11	DRIVER LINK	3345 - 2
2D22	DRYER,RECEIVER, AIR CONDITIONING	1830 - 12
1I15	DUAL BATTERIES	1671 - 4
1I15	DUAL BATTERY CABLES	1671 - 4
2D11	DUCTS, AIR CONDITIONING	1830 - 2
2D13	DUCTS, AIR CONDITIONING	1830 - 4
2D11	DUCTS, CAB HEATER	1830 - 2
2D13	DUCTS, CAB HEATER	1830 - 4

E

1G1	EDGING, ISOLATOR	0510 - 2
1E16	ELBOW,EXHAUST	0410 - 2
1J7	ELECTRICAL, FRONT COUPLER HARNESS	1674 - 5C
1J5	ELECTRICAL, PILOT ENABLE	1674 - 5A
1F22	ELECTRONIC ETHER STARTING AID	0505 - 2
1G6	ELEMENT, AIR CLEANER	0520 - 2
2F17	ELEMENT, FILTER	2160 - 20
1F7	ELEMENT,FINAL FUEL FILTER	0420 - 4
1F5	ELEMENT,PRIMARY FUEL FILTER	0420 - 2
2E19	EMBLEM, SMV	2008 - 2
2C3	ENABLE SWITCH, REAR WIPER	1814 - 14
1E18	ENGINE CONTROLLER	0413 - 2
1F24	ENGINE COOLANT HEATER	0505 - 4
1J13	ENGINE COOLANT TEMPERATURE SWITCH (FRONT WIRE HARNESS) (SN XXXXXX-)	1674 - 9A
1F17	ENGINE FLYWHEEL	0433 - 2
1E2	ENGINE FRONT PLATE	0404 - 1
1J13	ENGINE FRONT WIRE HARNESS (SN XXXXXX-)	1674 - 9A
1G12	ENGINE MOUNT ISOLATOR	0540 - 2
1G12	ENGINE MOUNTING BRACKET	0540 - 2
1F3	ENGINE OIL COOLER	0419 - 2
1F3	ENGINE OIL COOLER ADAPTER	0419 - 2
1E6	ENGINE OIL DIPSTICK	0407 - 3
1E6	ENGINE OIL DIPSTICK TUBE	0407 - 3
1E5	ENGINE OIL FILL INLET CAP	0407 - 2
1D22	ENGINE OIL FILL PLUG	0402 - 3
1E9	ENGINE OIL FILTER	0407 - 6
1E9	ENGINE OIL FILTER HEADER	0407 - 6

ALPHABETICAL INDEX - CONTINUED

GRID		PAGE
1E7	ENGINE OIL PAN	0407 - 4
1E3	ENGINE OIL PRESSURE REGULATING VALVE	0404 - 2
1J11	ENGINE OIL PRESSURE SWITCH	1674 - 8
1E11	ENGINE OIL PUMP	0407 - 8
1E11	ENGINE OIL PUMP GEAR	0407 - 8
1E11	ENGINE OIL PUMP HOUSING	0407 - 8
1E11	ENGINE OIL PUMP INTAKE	0407 - 8
1E1	ENGINE PISTON	0403 - 2
2E2	ENGINE SIDE PANELS	1910 - 2
2E2	ENGINE SIDE SHIELDS	1910 - 2
1G4	ENGINE SPEED CONTROL	0515 - 2
1G4	ENGINE SPEED CONTROL CABLE	0515 - 2
1G4	ENGINE SPEED CONTROL LEVER	0515 - 2
1G4	ENGINE SPEED CONTROL POTENTIOMETER	0515 - 2
1G4	ENGINE SPEED SENSOR	0515 - 2
1G12	ENGINE SUPPORT	0540 - 2
1F1	ENGINE THERMOSTAT	0418 - 2
1E12	ENGINE VENTILATING HOSE	0408 - 2
1E12	ENGINE VENTILATING SYSTEM	0408 - 2
1J11	ENGINE WIRING HARNESS	1674 - 8
1I10	ENVIRONMENTAL DRAIN PACKAGE	1369 - 6
1J9	ETHER SWITCH	1674 - 6
2D15	EVAPORATOR	1830 - 6
2D17	EVAPORATOR	1830 - 7A
2D17	EVAPORATOR TEMPERATURE SWITCH	1830 - 7A
1E16	EXHAUST ADAPTER	0410 - 2
1E16	EXHAUST ELBOW	0410 - 2
1G10	EXHAUST EXTENSION	0530 - 2
1E17	EXHAUST MANIFOLD	0410 - 3
1E14	EXHAUST VALVE	0409 - 2
2D15	EXPANSION VALVE	1830 - 6
2D17	EXPANSION VALVE	1830 - 7A
3C15	EXTENDIBLE ARM LOCKING PIN	3346 - 4
3C15	EXTENDIBLE ARM PAD	3346 - 4
3C15	EXTENDIBLE ARM WEARSTRIPS	3346 - 4
3B16	EXTENDIBLE DIPPER PEDAL (PILOT CONTROL)	3315 - 11A
3C15	EXTENDIBLE DIPPERSTICK	3346 - 4
3F15	EXTENDIBLE DIPPERSTICK AUXILIARY HYDRAULICS	3363 - 18
3F5	EXTENDIBLE DIPPERSTICK BUCKET, CYLINDER HYDRAULIC HOSES	3363 - 8
3D13	EXTENDIBLE SECTION SHUT-OFF PLUG	3362 - 20
3D13	EXTENDIBLE SECTION, BACKHOE VALVE	3362 - 20
3G7	EXTENSION CYLINDER	3365 - 10
3F11	EXTENSION CYLINDER HYDRAULICS HOSES (WITH EXTENDIBLE DIPPERSTICK)	3363 - 14
2I11	EXTENSION CYLINDER REPAIR KIT, BACKHOE	3165 - 8
3G6	EXTENSION CYLINDER REPAIR KIT, BACKHOE	3365 - 9
2I11	EXTENSION CYLINDER, BACKHOE	3165 - 8
3G6	EXTENSION CYLINDER, BACKHOE	3365 - 9
1G10	EXTENSION, EXHAUST	0530 - 2
2E14	EXTERNAL REAR VIEW MIRROR	2002 - 3

F

1G1	FAN DRIVE BELT	0510 - 2
1F15	FAN DRIVE BELT TENSIONER	0429 - 4
1F15	FAN DRIVE HOUSING	0429 - 4
1F15	FAN DRIVE HUB	0429 - 4
1F15	FAN DRIVE PULLEY	0429 - 4
1G1	FAN SHROUD	0510 - 2
1G1	FAN SHROUD, RADIATOR	0510 - 2
1I20	FAN, ALTERNATOR	1672 - 2
2D21	FAN, CAB HEATER (20,000 BTU)	1830 - 10
2E8	FENDERS	1927 - 2
3B14	FIFTH FUNCTION FOOT CONTROL	3315 - 10
3B14	FIFTH FUNCTION PEDAL	3315 - 10
3B16	FIFTH FUNCTION PEDAL (PILOT CONTROL)	3315 - 11A
2F17	FILTER ELEMENT	2160 - 20
3E20	FILTER ELEMENT, PILOT CONTROL	3363 - 1A
2F15	FILTER, BREATHER, HYDRAULIC RESERVOIR	2160 - 18
1D11	FILTER, CHARGE PUMP	0360 - 1
1E9	FILTER, ENGINE OIL	0407 - 6
2C15	FILTER, FRESH AIR	1816 - 12
2F17	FILTER, HYDRAULIC OIL	2160 - 20
1D11	FILTER, TRANSMISSION	0360 - 1
3F21	FILTER,LOW PRESSURE AUXILIARY KIT	3363 - 28
1G6	FILTERS, AIR CLEANER	0520 - 2
1F7	FINAL FUEL FILTER ELEMENT	0420 - 4
1C22	FIRST GEAR CLUTCH ASSEMBLY	0350 - 4
1C22	FIRST GEAR CLUTCH CARRIER	0350 - 4
1C22	FIRST GEAR, BELLVILLEWASHER	0350 - 4
3F9	FITTINGS, SWING CYLINDER	3363 - 12
1J1	FLASHER, 12 VOLT	1674 - 2
1J1	FLASHER, 4-WAY	1674 - 2
1K4	FLEX CONTROLLER (SERIAL NO.XXXXXX-)	1675 - 2
1C19	FLEXPLATE, TORQUE CONVERTOR	0350 - 1
2B12	FLOOR COVER, REAR	1812 - 2
2B12	FLOOR MATS	1812 - 2
3E20	FLOW CONTROL VALVE	3363 - 1A
1I6	FLUID ANALYSIS PRODUCTS (OILSCAN PLUS TEST KIT)	1369 - 2
1F22	FLUID, STARTING	0505 - 2
1F18	FLYWHEEL HOUSING	0433 - 3
1F17	FLYWHEEL RING GEAR	0433 - 2
1F17	FLYWHEEL, ENGINE	0433 - 2
1C12	FNR, RANGE SWITCH	0315 - 4
3B14	FOOT CONTROL, FIFTH FUNCTION	3315 - 10
3B18	FOOT CONTROL, SIXTH FUNCTION	3315 - 12
2G18	FORKLIFT FORKS	3103 - 2
2G18	FORKS, PALLET	3103 - 2
2G18	FORKS,LOADER FORKLIFT	3103 - 2
1D5	FORWARD CLUTCH ASSEMBLY	0350 - 12
1D5	FORWARD CLUTCH CARRIER	0350 - 12
1D5	FORWARD, BELLVILLEWASHER	0350 - 12
1C12	FORWARD, NEUTRAL, REVERSE CONTROL	0315 - 4
1D3	FOURTH GEAR CLUTCH ASSEMBLY	0350 - 10
1D3	FOURTH GEAR CLUTCH CARRIER	0350 - 10
1D3	FOURTH GEAR, BELLVILLEWASHER	0350 - 10
2B8	FRAME, CAB	1811 - 4
1K11	FRAME, COUNTERWEIGHT	1749 - 3
2G18	FRAME, FORKLIFT COUPLER	3103 - 2
1K7	FRAME, MAIN FRAME	1740 - 2
2B6	FRAME, ROPS	1811 - 2
3C5	FRAME, SWING	3343 - 2
2D17	FREEZE/COMPRESSOR SWITCH, AIR CONDITIONING	1830 - 7A
1I1	FRENCH LABELS	1320 - 4
2C15	FRESH AIR FILTER	1816 - 12
1B23	FRONT AXLE (MFWD)	0250 - 2
1B19	FRONT AXLE (WITHOUT MFWD)	0230 - 1
1C1	FRONT AXLE HOUSING (MFWD)	0250 - 4
1C3	FRONT AXLE HOUSING (MFWD)	0250 - 6
1C1	FRONT AXLE HOUSING (MWFD)	0250 - 4
1B20	FRONT AXLE HOUSING (WITHOUT MFWD)	0230 - 2
1C3	FRONT AXLE HUB (MFWD)	0250 - 6
1B23	FRONT AXLE PIVOT PIN (MFWD)	0250 - 2
1B19	FRONT AXLE PIVOT PIN (WITHOUT MFWD)	0230 - 1
1B21	FRONT AXLE SWIVEL HOUSING (WITHOUT MFWD)	0230 - 3
1C3	FRONT AXLE UNIVERSAL DRIVE SHAFT (MFWD)	0250 - 6

ALPHABETICAL INDEX - CONTINUED

GRID		PAGE
1B22	FRONT AXLE WHEEL HUB(WITHOUT MFWD)	0230 - 4
2C11	FRONT CONSOLE	1816 - 8
2B12	FRONT CONSOLE COVER,FLOOR	1812 - 2
2B6	FRONT CONSOLE SEAL	1811 - 2
1J1	FRONT CONSOLE SWITCHES	1674 - 2
1J1	FRONT CONSOLE WIRING HARNESS WITH CAB	1674 - 2
1K10	FRONT COUNTERWEIGHT	1749 - 2
2G22	FRONT COUPLER CYLINDER	3104 - 4
2H24	FRONT COUPLER VALVE	3162 - 16
2G20	FRONT COUPLER, HYDRAULIC	3104 - 2
1B3	FRONT DRIVE WHEEL (MFWD)	0110 - 3
1B3	FRONT DRIVE WHEEL VALVE STEM (MFWD)	0110 - 3
2B12	FRONT FLOOR MAT	1812 - 2
1J1	FRONT LIGHTS SWITCH	1674 - 2
1E2	FRONT PLATE, ENGINE	0404 - 1
1B7	FRONT WHEEL (WITHOUT MFWD)	0120 - 1
2B24	FRONT WINDSHIELD WIPER MOTOR	1814 - 10
1J1	FRONT WINDSHILD WIPER SWITCH	1674 - 2
1G16	FUEL COOLER	0560 - 4
1F7	FUEL FILTER SERVICE KIT	0420 - 4
1G14	FUEL GAUGE SENDER	0560 - 2
1G14	FUEL HOSES	0560 - 2
1E18	FUEL INJECTION LINES	0413 - 2
1E18	FUEL INJECTION PUMP	0413 - 2
1E18	FUEL INJECTION PUMP DRIVE GEAR	0413 - 2
1E18	FUEL INJECTION SYSTEM	0413 - 2
1E20	FUEL LINES, FUEL FILTER-INJECTION PUMP	0413 - 4
1F5	FUEL PREFILTER	0420 - 2
1G14	FUEL TANK	0560 - 2
1G14	FUEL TANK CAP	0560 - 2
1G14	FUEL TANK STRAINER	0560 - 2
1J13	FUEL TEMPERATURE SENSOR (FRONT WIRE HARNESS) (SN XXXXXX-)	1674 - 9A
1F9	FUEL TRANSFER PUMP	0421 - 2
1F9	FUEL TRANSFER PUMP PUSH ROD	0421 - 2
1J1	FUSE PANEL	1674 - 2
2C11	FUSE PANEL COVER	1816 - 8
1J1	FUSES	1674 - 2

G

1G4	GAS PEDAL	0515 - 2
1E22	GASKET, AIR INLET	0414 - 2
1E14	GASKET, CYLINDER HEAD	0409 - 2
1E17	GASKET, EXHAUST MANIFOLD	0410 - 3
2B6	GASKET, FRONT CONSOLE	1811 - 2
1E23	GASKET, TURBOCHARGER	0416 - 2
1E7	GASKET,OIL PAN	0407 - 4
1D22	GASKET,ROCKER ARM COVER	0402 - 3
1D16	GASKETS, INTERMEDIATE PLATE	0360 - 6
1D21	GEAR, CRANKSHAFT	0401 - 2
1E11	GEAR, ENGINE OIL PUMP	0407 - 8
1E18	GEAR, FUEL INJECTION PUMP DRIVE	0413 - 2
1C5	GEAR, PLANET (MFWD)	0250 - 8
1B12	GEAR, PLANETARY PINION	0201 - 4
1B12	GEAR, PLANETARY RING	0201 - 4
1C5	GEAR, RING (MFWD)	0250 - 8
1B16	GEAR, SPIRAL BEVEL WITH LOCK	0210 - 2
1C6	GEAR,BEVEL DRIVE (MFWD)	0250 - 10
1C8	GEAR,DIFFERENTIAL SPIRAL BEVEL (MFWD)	0250 - 12
2E6	GRILLE	1921 - 2
2E6	GRILLE HOUSING	1921 - 2
2E6	GRILLE SCREEN	1921 - 2
2D21	GRILLE, CAB HEATER (20,000 BTU)	1830 - 10
1J11	GROUND CABLE	1674 - 8
1J11	GROUND STRAP	1674 - 8
1G1	GUARD, RADIATOR FAN	0510 - 2
1C12	GUARD, TRANSMISSION CONTROL LEVER	0315 - 4
1K9	GUARD,STABILIZER KIT	1746 - 2

H

1J11	HARNESS CONNECTOR KIT	1674 - 8
1I24	HARNESS, ANCHOR, TIE BAND MOUNT	1673 - 4
1J13	HARNESS, ENGINE FRONT (SN XXXXXX-)	1674 - 9A
1J11	HARNESS, ENGINE WIRING	1674 - 8
1J7	HARNESS, LOAD COUPLER CONTROL CHASSIS	1674 - 5C
1J7	HARNESS, LOADER COUPLER, CAB	1674 - 5C
3E4	HARNESS, PATTERN SELECTOR	3362 - 32
1J5	HARNESS, PILOT ENABLE WIRING	1674 - 5A
1J18	HARNESS, PUMP CONTROL AND RELAY	1674 - 16
1J7	HARNESS, QUICK COUPLER	1674 - 5C
2E11	HARNESS, RADIO	2001 - 2
2F19	HARNESS, RIDE CONTROL	2160 - 22
1I24	HARNESS, ROOF WIRING	1673 - 4
1J3	HARNESS, SIDE CONSOLE WIRING, WITH CAB	1674 - 4
1J3	HARNESS,A/C PRESSURE SWITCH	1674 - 4
1E14	HEAD, CYLINDER	0409 - 2
1E9	HEADER, ENGINE OIL FILTER	0407 - 6
1F5	HEADER,PRIMARY FUEL FILTER	0420 - 2
2B8	HEADLINER LAMP	1811 - 4
2B8	HEADLINER, CAB	1811 - 4
2B6	HEADLINER, ROPS	1811 - 2
2C22	HEADREST, SEAT	1821 - 3
2D24	HEAT AND NOISE BARRIER	1834 - 2
2D21	HEATER CORE (20,000 BTU)	1830 - 10
2D19	HEATER HOSE, CANOPY	1830 - 8
2D19	HEATER VALVE CONTROL	1830 - 8
2D15	HEATER VALVE CONTROL CABLE	1830 - 6
2D19	HEATER VALVE CONTROL CABLE,CANOPY	1830 - 8
2D19	HEATER VALVE KNOB	1830 - 8
2D21	HEATER, CAB (20,000 BTU)	1830 - 10
2D19	HEATER, CANOPY	1830 - 8
1F24	HEATER, ENGINE COOLANT	0505 - 4
2D19	HEATER,TEMERATURE CONTROL	1830 - 8
2D7	HEIGHT ADJUSTER FOR NON-SUSPENDED SEAT	1821 - 12
1G3	HIGH AMBIENT BAFFLE	0510 - 4
2D15	HIGH PRESSURE SWITCH	1830 - 6
2D17	HIGH PRESSURE SWITCH	1830 - 7A
2G8	HINGE PINS, MULTI-PURPOSE BUCKET	3102 - 8
2B14	HINGES, CAB DOORS	1814 - 2
2B16	HINGES, CAB DOORS	1814 - 4
2B6	HOLDER, SWING LOCK PIN	1811 - 2
2E2	HOOD	1910 - 2
2E2	HOOD LATCH	1910 - 2
2E2	HOOD SUPPORT	1910 - 2
2E15	HORN	2004 - 2
1J13	HORN (FRONT WIRE HARNESS) (SN XXXXXX-)	1674 - 9A
1J9	HORN SWITCH	1674 - 6
3C19	HOSE SEGMENT	3348 - 4
1G6	HOSE, AIR CLEANER	0520 - 2
1E12	HOSE, ENGINE VENTILATING	0408 - 2
2F19	HOSE, HYDRAULIC, RIDE CONTROL	2160 - 22
2C1	HOSE, WINDSHIELD WASHER	1814 - 12
1G14	HOSES, FUEL	0560 - 2
3F21	HOSES, HYDRAULIC	3363 - 28
2I1	HOSES, LOADER BOOM LIFT CYLINDER HOSES	3163 - 2
2I3	HOSES, LOADER BUCKET CYLINDER HOSES	3163 - 4
2F7	HOSES, MAIN HYDRAULIC	2160 - 12
2F9	HOSES, MAIN HYDRAULIC	2160 - 14

ALPHABETICAL INDEX - CONTINUED

GRID		PAGE
2F11	HOSES, MAIN HYDRAULIC, LOAD SENSE	2160 - 16
2F13	HOSES, MAIN HYDRAULIC, LOAD SENSE	2160 - 17A
2G10	HOSES, MULTI-PURPOSE BUCKET	3102 - 10
2G16	HOSES, MULTI-PURPOSE BUCKET	3102 - 16
1G1	HOSES, RADIATOR	0510 - 2
1H1	HOSES, STEERING (WITHOUT MFWD)	0960 - 8
1G23	HOSES, STEERING FOR MECHANICAL FRONT WHEEL DRIVE	0960 - 6
3F9	HOSES, SWING CYLINDER	3363 - 12
2I3	HOSES, THIRD FUNCTION HYDRAULIC HOSES	3163 - 4
2D22	HOSES,AIR CONDITIONING COMPRESSOR	1830 - 12
2D22	HOSES,AIR CONDITIONING COMPRESSOR, RECEIVER DRYER	1830 - 12
2D22	HOSES,RECEIVER DRYER, AIR CONDITIONING COMPRESSOR	1830 - 12
1B10	HOUSING AXLE	0201 - 2
1C17	HOUSING, BELL	0341 - 4
1H6	HOUSING, BRAKE	1011 - 2
1H8	HOUSING, BRAKE VALVE	1060 - 2
1B10	HOUSING, DIFFERENTIAL	0201 - 2
1B16	HOUSING, DIFFERENTIAL WITH LOCK	0210 - 2
1F15	HOUSING, FAN DRIVE	0429 - 4
1F18	HOUSING, FLYWHEEL	0433 - 3
2C11	HOUSING, FRONT INSTRUMENT PANEL	1816 - 8
2E6	HOUSING, GRILLE	1921 - 2
1H17	HOUSING, PARK BRAKE	1111 - 2
2C13	HOUSING, SIDE INSTRUMENT PANEL	1816 - 10
2C15	HOUSING, SIDE INSTRUMENT PANEL	1816 - 12
1B21	HOUSING, SWIVEL, FRONT AXLE (WITHOUT MFWD)	0230 - 3
1C17	HOUSING, TRANSMISSION	0341 - 4
1E11	HOUSING,ENGINE OIL PUMP	0407 - 8
1C3	HOUSING,FRONT AXLE (MFWD)	0250 - 6
1C1	HOUSING,FRONT AXLE (MWFD)	0250 - 4
1B20	HOUSING,FRONT AXLE (WITHOUT MFWD)	0230 - 2
1F15	HUB, FAN DRIVE	0429 - 4
1B22	HUB, FRONT AXLE WHEEL (WITHOUT MFWD)	0230 - 4
1C3	HUB,FRONT AXLE (MFWD)	0250 - 6
2F9	HYDRAULIC COOLER LINES	2160 - 14
2G10	HYDRAULIC CYLINDER,MULTI-PURPOSE BUCKET	3102 - 10
2G16	HYDRAULIC CYLINDER,MULTI-PURPOSE BUCKET	3102 - 16
3F21	HYDRAULIC FILTER, LOW PRESSURE AUX. KIT	3363 - 28
2G20	HYDRAULIC FRONT COUPLER	3104 - 2
2G22	HYDRAULIC FRONT COUPLER CYLINDER	3104 - 4
1J7	HYDRAULIC FRONT COUPLER HARNESS	1674 - 5C
2H24	HYDRAULIC FRONT COUPLER VALVE	3162 - 16
2I5	HYDRAULIC FRONT COUPLER,HOSES	3163 - 6
2I5	HYDRAULIC FRONT COUPLER,LINES	3163 - 6
2F19	HYDRAULIC HOSE, RIDE CONTROL	2160 - 22
3F21	HYDRAULIC HOSES	3363 - 28
3F1	HYDRAULIC HOSES,BOOM CYLINDER	3363 - 4
3F7	HYDRAULIC HOSES,CROWD CYLINDER	3363 - 10
3F5	HYDRAULIC HOSES,EXTENDIBLE DIPPERSTICK BUCKET CYLINDER	3363 - 8
3F11	HYDRAULIC HOSES,EXTENSION CYLINDER (WITH EXTENDIBLE DIPPERSTICK)	3363 - 14
2F9	HYDRAULIC LINES	2160 - 14
2H24	HYDRAULIC LOADER COUPLER VALVE	3162 - 16
1G1	HYDRAULIC OIL COOLER	0510 - 2
2F17	HYDRAULIC OIL FILTER	2160 - 20
2I3	HYDRAULIC OIL LINES LOADER BUCKET CYLINDER	3163 - 4
3F1	HYDRAULIC OIL LINES,BOOM CYLINDER	3363 - 4
3F7	HYDRAULIC OIL LINES,CROWD CYLINDER	3363 - 10
2G10	HYDRAULIC OIL LINES,MULTI-PURPOSE BUCKET	3102 - 10
2G16	HYDRAULIC OIL LINES,MULTI-PURPOSE BUCKET	3102 - 16
2I3	HYDRAULIC OIL LINES,THIRD FUNCTION	3163 - 4
2E22	HYDRAULIC PUMP, MAIN	2160 - 2
2E24	HYDRAULIC PUMP, MAIN	2160 - 3A
2F1	HYDRAULIC PUMP, MAIN SERVICE REPAIR KITS	2160 - 4
2F3	HYDRAULIC PUMP, MAIN SERVICE REPAIR KITS	2160 - 6
2F5	HYDRAULIC PUMP, MAIN SERVICE REPAIR KITS	2160 - 8
2F15	HYDRAULIC RESERVOIR	2160 - 18
2F15	HYDRAULIC RESERVOIR BREATHER FILTER	2160 - 18
2F19	HYDRAULIC RIDE CONTROL	2160 - 22
1J11	HYDRAULIC TEMPERATURE SENDER	1674 - 8
2H10	HYDRAULIC VALVE, LOADER	3162 - 2
3F15	HYDRAULICS, AUXILIARY EQUIPMENT, EXTENDI BLE DIPPERSTICK	3363 - 18
3F13	HYDRAULICS, AUXILIARY EQUIPMENT, STANDAR D DIPPERSTICK	3363 - 16
3F3	HYDRAULICS, BACKHOE BUCKET CYLINDER	3363 - 6
3E24	HYDRAULICS, BACKHOE STABILIZER CYLINDER	3363 - 2
3F7	HYDRAULICS, CROWD CYLINDER	3363 - 10
2I1	HYDRAULICS, LOADER BOOM CYLINDER	3163 - 2
2F7	HYDRAULICS, MAIN	2160 - 12
2F9	HYDRAULICS, MAIN	2160 - 14
3E22	HYDRAULICS, PILOT CONTROL	3363 - 1C
3E22	HYDRAULICS, PILOT SELECTOR VALVE	3363 - 1C
3E20	HYDRAULICS, SELECTOR VALVE (PILOT CONTROL)	3363 - 1A
1H14	HYDRAULICS, SERVICE BRAKE	1060 - 8
1H1	HYDRAULICS, STEERING (WITHOUT MFWD)	0960 - 8
1G23	HYDRAULICS, STEERING VALVE WITH MECHANICAL FRONT WHEEL DRIVE	0960 - 6
3F9	HYDRAULICS, SWING CYLINDER	3363 - 12

I

1J9	IGNITION SWITCH	1674 - 6
1J9	IGNITION SWITCH KEY	1674 - 6
1E5	INLET OIL FILL	0407 - 2
3D3	INLET SECTION RELIEF VALVE	3362 - 10
3D3	INLET SECTION, BACKHOE VALVE	3362 - 10
2H14	INLET SECTION, LOADER VALVE	3162 - 6
1E25	INLET, WATER PUMP	0417 - 2
1C8	INPUT FLANGE,(MFWD)	0250 - 12
1B15	INPUT PINION, SPIRAL BEVEL	0210 - 1
1C20	INPUT SHAFT	0350 - 2
1H17	INPUT SHAFT SEAL	1111 - 2
2E13	INSIDE MIRROR	2002 - 2
2C13	INSTRUMENT PANEL VANDAL GUARD	1816 - 10
2C13	INSTRUMENT PANEL, SIDE	1816 - 10
2C15	INSTRUMENT PANEL, SIDE	1816 - 12
1E22	INTAKE MANIFOLD	0414 - 2
1E14	INTAKE VALVE	0409 - 2
1E11	INTAKE, ENGINE OIL PUMP	0407 - 8
2E13	INTERIOR REAR VIEW MIRROR	2002 - 2
1D16	INTERMEDIATE PLATE	0360 - 6
1D16	INTERMEDIATE PLATE GASKETS	0360 - 6
1G1	ISOLATOR EDGING	0510 - 2
1G1	ISOLATOR SEAL	0510 - 2
1G12	ISOLATOR, ENGINE MOUNT	0540 - 2
2B8	ISOLATORS, CAB MOUNTING	1811 - 4
2B6	ISOLATORS, ROPS FRAME	1811 - 2

ALPHABETICAL INDEX - CONTINUED

GRID		PAGE
	J	
3E10	JOY STICK, CONTROL VALVE, BUTTON FUNCION KIT	3362 - 38
3E6	JOY STICK, CONTROL VALVE, LEFT	3362 - 34
3E8	JOY STICK, CONTROL VALVE, RIGHT	3362 - 36
1J11	JUMP START PROTECTION COVER	1674 - 8
	K	
1J9	KEY,IGNITION SWITCH	1674 - 6
1B21	KINGPIN, FRONT AXLE (WITHOUT MFWD)	0230 - 3
3E1	KIT, ACCU-SWING VALVE	3362 - 29A
1G8	KIT, AIR PRE-CLEANER	0520 - 4
3F24	KIT, BACKHOE BOOM CYLINDER REPAIR	3365 - 2
3F25	KIT, BACKHOE BUCKET CYLINDER REPAIR	3365 - 3
3G1	KIT, BACKHOE CROWD CYLINDER REPAIR	3365 - 4
2I11	KIT, BACKHOE EXTENSION CYLINDER REPAIR	3165 - 8
3G6	KIT, BACKHOE EXTENSION CYLINDER REPAIR	3365 - 9
3G3	KIT, BACKHOE STABILIZER CYLINDER REPAIR (SER.NO. -932172)	3365 - 6
3G4	KIT, BACKHOE STABILIZER CYLINDER REPAIR (SER.NO. -932172)	3365 - 7
3G5	KIT, BACKHOE STABILIZER CYLINDER REPAIR (SER.NO. 932173-)	3365 - 8
3G2	KIT, BACKHOE SWING CYLINDER REPAIR	3365 - 5
1C14	KIT, BEARING	0325 - 1
1E1	KIT, CYLINDER LINER O-RING	0403 - 2
2F17	KIT, DP SWITCH	2160 - 20
2G22	KIT, FRONT COUPLER CYLINDER REPAIR	3104 - 4
1J11	KIT, HARNESS CONNECTOR	1674 - 8
2I7	KIT, LOADER BOOM LIFT CYLINDER	3165 - 1
2I10	KIT, LOADER BUCKET CYLINDER REPAIR	3165 - 4
1I5	KIT, LOCTITE SERVICE	1330 - 2
3F21	KIT, LOW PRESSURE AUXILIARY	3363 - 28
1I8	KIT, O-RING	1369 - 4
3E4	KIT, PATTERN SELECTOR VALVE	3362 - 32
3C9	KIT, PROTECTION, BACKHOE BOOM	3344 - 4
1G3	KIT, RADIATOR BAFFLES	0510 - 4
2B20	KIT, REAR WINDOW LATCH (SER.NO. -920856)	1814 - 8
2B22	KIT, REAR WINDOW LATCH (SER.NO. 920857-)	1814 - 9A
1J18	KIT, SELECTIVE FLOW CONTROL	1674 - 16
1K9	KIT, STABILIZER GUARD	1746 - 2
2D3	KIT, SUSPENDED SEAT POSITION SENSOR	1821 - 8
1B24	KIT, UNIVERSAL DRIVE SHAFT (MFWD)	0250 - 3
2B20	KIT, WINDOW SEAL (SER.NO. -920856)	1814 - 8
2B22	KIT, WINDOW SEAL (SER.NO. 920857-)	1814 - 9A
1F7	KIT,FUEL FILTER SERVICE	0420 - 4
2F19	KIT,HYDRAULIC RIDE CONTROL	2160 - 22
2G12	KIT,MULTI-PURPOSE BUCKET CYLINDER REPAIR (SERIAL NO.-925076)	3102 - 12
2G13	KIT,MULTI-PURPOSE BUCKET CYLINDER REPAIR (SERIAL NO.925977-	3102 - 13
3E10	KIT,PILOT CONTROL HANDLE,BUTTON FUNCTION	3362 - 38
1F5	KIT,PRIMARY FUEL FILTER SERVICE	0420 - 2
1B2	KIT,REAR DRIVE WHEEL SPACER	0110 - 2
3C3	KIT,SAE BACKHOE CONTROL VALVE LINKAGE PATTERN KIT	3315 - 24
2C23	KIT,SEAT SLIDE LATCH	1821 - 4
2D1	KIT,SLIDE PUCK SERVICE	1821 - 6
1G23	KIT,STC ADAPTER REPAIR	0960 - 6
1H1	KIT,STC ADAPTER REPAIR	0960 - 8
2D1	KIT,SWIVEL LATCH	1821 - 6
2I8	KITS, BOOM LIFT CYLINDER	3165 - 2
3G7	KITS, EXTENSION CYLINDER	3365 - 10
2F3	KITS, MAIN HYDRAULIC PUMP REPAIR	2160 - 6
2F5	KITS, MAIN HYDRAULIC PUMP REPAIR	2160 - 8
2F1	KITS, MAIN HYDRAULIC PUMP, REPAIR	2160 - 4
3C22	KITS, STABILIZER VALVE	3362 - 4
2D19	KNOB, HEATER VALVE	1830 - 8
	L	
1H24	LABELS	1320 - 2
1I3	LABELS, SPANISH	1320 - 6
1I1	LABELS,FRENCH	1320 - 4
2B8	LAMP, HEADLINER	1811 - 4
2E2	LATCH, HOOD	1910 - 2
2B20	LATCH, REAR WINDOW (SER.NO. -920856)	1814 - 8
2B22	LATCH, REAR WINDOW (SER.NO. 920857-)	1814 - 9A
2B14	LATCH, SIDE WINDOW LATCH	1814 - 2
2B16	LATCH, SIDE WINDOW LATCH	1814 - 4
2D1	LATCH,SEAT SWIVEL	1821 - 6
1J20	LEAD, WIRE, KIT	1674 - 18
1J22	LEAD, WIRE, KIT	1674 - 20
3C3	LEVER CONVERSION LINKAGE, BACKHOE (SAE PATTERN)	3315 - 24
3C1	LEVER, STABILIZER	3315 - 22
2H3	LEVER, THIRD FUNCTION LOADER CONTROL	3115 - 6
1G4	LEVER, THROTTLE	0515 - 2
1C12	LEVER, TRANSMISSION CONTROL	0315 - 4
3B22	LEVER,BACKHOE BOOM LOCK CONTROL	3315 - 16
3B22	LEVER,BACKHOE SWING LOCK CONTROL	3315 - 16
1G4	LEVER,ENGINE SPEED CONTROL	0515 - 2
2H1	LEVER,LOADER CONTROL VALVE	3115 - 4
2C23	LEVER,SEAT LUMBAR SUPPORT CONTROL	1821 - 4
2C23	LEVER,SEAT SLIDE CONTROL	1821 - 4
2C23	LEVER,SEAT SWIVEL CONTROL	1821 - 4
2C5	LEVERS, BACKHOE COVER	1816 - 2
1H22	LICENCE PLATE BRACKET	1314 - 2
1H22	LICENCE PLATE LIGHT	1314 - 2
2I8	LIFT ARM CYLINDER	3165 - 2
2H5	LIFT ARM, LOADER	3140 - 2
2I1	LIFT ARM, LOADER	3163 - 2
1C17	LIFT BRACKET, TRANSMISSION	0341 - 4
2I7	LIFT CYLINDER, LOADER BOOM	3165 - 1
1J1	LIGHT SWITCH, FRONT	1674 - 2
2B8	LIGHT, DOME	1811 - 4
1H22	LIGHT, LICENCE PLATE	1314 - 2
2E11	LIGHT,CAB DOME	2001 - 2
1I24	LIGHTS,STANDARD AND DELUXE	1673 - 4
1C6	LIMITED SLIP DIFFERENTIAL (MFWD)	0250 - 10
1E1	LINER, CYLINDER	0403 - 2
3F15	LINES, AUXILIARY EQUIPMENT, EXTENDIBLE D IPPERSTICK	3363 - 18
3F13	LINES, AUXILIARY EQUIPMENT, STANDARD DIP PERSITCK	3363 - 16
3F5	LINES, BUCKET CYLINDER BOOM, EXTENDIBLE	3363 - 8
3F3	LINES, BUCKET CYLINDER, BACKHOE	3363 - 6
1E20	LINES, FUEL FILTER-INJECTION PUMP	0413 - 4
1E18	LINES, FUEL INJECTION	0413 - 2
2F9	LINES, HYDRAULIC	2160 - 14
2F9	LINES, HYDRAULIC COOLER	2160 - 14
2I5	LINES, QUICK COUPLER HYDRAULIC	3163 - 6
1H14	LINES, SERVICE BRAKE	1060 - 8
3C13	LINK, BUCKET PIN	3346 - 2

ALPHABETICAL INDEX - CONTINUED

GRID		PAGE
3C3	LINKAGE, BACKHOE CONTROL (SAE PATTERN)	3315 - 24
2G24	LINKAGE, BUCKET LEVELING	3115 - 2
2B12	LINKAGE, FLOOR COVER	1812 - 2
3B12	LINKAGE, TWO LEVER BACKHOE CONTROL VALVE	3315 - 4
2H8	LINKAGE,LOADER BUCKET	3140 - 6
2H1	LINKAGE,LOADER CONTROL VALVE	3115 - 4
2G24	LINKAGE,RETURN-TO-DIG	3115 - 2
3C1	LINKAGE,STABLIZER VALVE	3315 - 22
2H3	LINKAGE,THIRD FUNCTION LOADER CONTROL VALVE	3115 - 6
2F11	LOAD SENSE DIAGNOSTIC RECEPTACLE	2160 - 16
2F13	LOAD SENSE DIAGNOSTIC RECEPTACLE	2160 - 17A
1H20	LOADER ARM SERVICE LOCK	1313 - 2
2H5	LOADER BOOM	3140 - 2
2I1	LOADER BOOM CYLINDER HYDRAULICS	3163 - 2
2H7	LOADER BOOM CYLINDER PINS	3140 - 4
2I7	LOADER BOOM LIFT CYLINDER	3165 - 1
2I7	LOADER BOOM LIFT CYLINDER REPAIR KIT	3165 - 1
2I1	LOADER BOOM OIL LINES	3163 - 2
1H20	LOADER BOOM SERVICE LOCK	1313 - 2
2G4	LOADER BUCKET 1.24 CUBIC METER	3102 - 4
2G4	LOADER BUCKET 1.43 CUBIC METER	3102 - 4
2G4	LOADER BUCKET CUTTING EDGE	3102 - 4
2I10	LOADER BUCKET CYLINDER	3165 - 4
2G6	LOADER BUCKET CYLINDER PINS	3102 - 6
2I10	LOADER BUCKET CYLINDER REPAIR KIT	3165 - 4
2I10	LOADER BUCKET HYDRAULIC CYLINDER	3165 - 4
2I3	LOADER BUCKET LIFT CYLINDER HYDRAULICS	3163 - 4
2G6	LOADER BUCKET LINK PINS	3102 - 6
2H8	LOADER BUCKET LINKAGE	3140 - 6
2H8	LOADER BUCKET LINKAGE PINS	3140 - 6
2G6	LOADER BUCKET PINS	3102 - 6
2C15	LOADER CONTROL COVER	1816 - 12
2H10	LOADER CONTROL VALVE	3162 - 2
2H12	LOADER CONTROL VALVE	3162 - 4
2H1	LOADER CONTROL VALVE LEVER	3115 - 4
2H1	LOADER CONTROL VALVE LINKAGE	3115 - 4
2G14	LOADER COUPLER BUCKET 2.0 CUBIC YARD	3102 - 14
2H24	LOADER COUPLER, VALVE	3162 - 16
2G18	LOADER FORKLIFT FORKS	3103 - 2
2H5	LOADER LIFT ARM	3140 - 2
2I1	LOADER LIFT ARM	3163 - 2
2I8	LOADER LIFT ARM CYLINDER	3165 - 2
2H5	LOADER LIFT ARM PIN	3140 - 2
2H20	LOADER VALVE AUXILIARY SECTION	3162 - 12
2H18	LOADER VALVE BOOM SECTION	3162 - 10
2H16	LOADER VALVE BUCKET SECTION	3162 - 8
2H14	LOADER VALVE INLET SECTION	3162 - 6
2H22	LOADER VALVE OUTLET SECTION	3162 - 14
1H20	LOCK BAR, BOOM SERVICE	1313 - 2
2G20	LOCK PIN, HYDRAULIC FRONT COUPLER	3104 - 2
2B6	LOCK PIN, SWING	1811 - 2
1B4	LOCK RING, WHEEL (SERIAL NO. 943698-)	0110 - 4
1B6	LOCK RING, WHEEL (SERIAL NO. 943698-)	0110 - 5A
1J15	LOCK SWITCH, DIFFERENTIAL	1674 - 12
3B24	LOCK, BACHOE BOOM	3315 - 20
1B16	LOCK, DIFFERENTIAL ASSEMBLY	0210 - 2
2C13	LOCK,VANDAL GUARD	1816 - 10
3C15	LOCKING PIN, EXTENDIBLE ARM	3346 - 4
1I5	LOCTITE SERVICE KIT	1330 - 2
2D13	LOUVER, AIR CONDITIONING	1830 - 4
3F21	LOW PRESSURE AUXILIARY RETURN KIT	3363 - 28
2D15	LOW PRESSURE SWITCH	1830 - 6
2D17	LOW PRESSURE SWITCH	1830 - 7A
3F17	LOWERING DEVICE,CONTOLLED, BOOM CYL.KIT	3363 - 20
3F19	LOWERING DEVICE,CONTROLLED CROWD CYL.KIT	3363 - 22

M

2H16	MAGNET, RETURN-TO-DIG	3162 - 8
1E3	MAIN BEARING CAP	0404 - 2
1D21	MAIN BEARINGS	0401 - 2
1K7	MAIN FRAME	1740 - 2
2F7	MAIN HYDRAULIC HOSES	2160 - 12
2F9	MAIN HYDRAULIC HOSES	2160 - 14
2E22	MAIN HYDRAULIC PUMP	2160 - 2
2E24	MAIN HYDRAULIC PUMP	2160 - 3A
2F1	MAIN HYDRAULIC PUMP SERVICE REPAIR KITS	2160 - 4
2F3	MAIN HYDRAULIC PUMP SERVICE REPAIR KITS	2160 - 6
2F5	MAIN HYDRAULIC PUMP SERVICE REPAIR KITS	2160 - 8
2F15	MAIN HYDRAULIC RESERVOIR	2160 - 18
2F7	MAIN HYDRAULICS	2160 - 12
2F9	MAIN HYDRAULICS	2160 - 14
2F11	MAIN HYDRAULICS, LOAD SENSE	2160 - 16
2F13	MAIN HYDRAULICS, LOAD SENSE	2160 - 17A
1J1	MAIN WIRE HARNESS,CAB	1674 - 2
1J3	MAIN WIRE HARNESS,CAB	1674 - 4
1F19	MANIFOLD AIR TEMPERATURE SENSOR	0433 - 4
1E17	MANIFOLD, EXHAUST	0410 - 3
1E22	MANIFOLD, INTAKE	0414 - 2
3E20	MANIFOLD, PILOT ACTIVATING	3363 - 1A
3E3	MANIFOLD, PILOT CONTROL	3362 - 30
3F23	MANIFOLD, PILOT CONTROL	3363 - 30
3D15	MANUAL AUXILIARY BACKHOE VALVE	3362 - 22
2B6	MANUAL HOLDER CORD	1811 - 2
2B6	MANUAL HOLDER, OPERATOR	1811 - 2
1I17	MASTER DISCONNECT BATTERY SWITCH	1671 - 6
1I17	MASTER SWITCH MOUNTING PLATE	1671 - 6
1F19	MAT - MANIFOLD AIR TEMPERATURE SENSOR	0433 - 4
2B12	MATS, FLOOR	1812 - 2
1D9	MFWD OUTPUT SHAFT, TRANSMISSION	0350 - 16
1C5	MFWD PLANETARY DRIVE	0250 - 8
1D16	MFWD SOLINOID HOLE PLUG	0360 - 6
1J9	MFWD SWITCH	1674 - 6
2B12	MIDDLE FLOOR COVER	1812 - 2
2E13	MIRROR BRACKET, INTERIOR REAR VIEW	2002 - 2
2E14	MIRROR, EXTERNAL REAR VIEW	2002 - 3
2E13	MIRROR, INTERIOR REAR VIEW	2002 - 2
2E14	MIRROR, OUTSIDE	2002 - 3
2C11	MODE DOOR	1816 - 8
2C11	MODE DOOR WIRING HARNESS	1816 - 8
2G8	MOLDBOARD,MULTI-PURPOSE BUCKET	3102 - 8
1J9	MONITOR	1674 - 6
1J9	MONITOR PANEL	1674 - 6
1J9	MONITOR PANEL SWITCHES	1674 - 6
1G12	MOTOR MOUNTS	0540 - 2
2D21	MOTOR, CAB HEATER (20,000 BTU)	1830 - 10
2B24	MOTOR, FRONT WINDSHIELD WIPER	1814 - 10
2C3	MOTOR, REAR WINDSHIELD WIPER	1814 - 14
1F10	MOTOR, STARTING	0422 - 2
3D19	MOUNTING BRACKET, SELECTIVE FLOW	3362 - 26
3D21	MOUNTING BRACKET, SELECTIVE FLOW	3362 - 27A
2D22	MOUNTING BRACKETS, COMPRESSOR, AIR CONDITIONING	1830 - 12
1B13	MOUNTING HARDWARE, REAR AXLE	0201 - 6
3B8	MOUNTING PLATE, BACKHOE VALVE	3315 - 2
3B10	MOUNTING PLATE, BACKHOE VALVE (PILOT CONTROL)	3315 - 3A
1H8	MOUNTING PLATE, BRAKE VALVE	1060 - 2
2E11	MOUNTING PLATE, RADIO/SPEAKER	2001 - 2

ALPHABETICAL INDEX - CONTINUED

GRID		PAGE
1B13	MOUNTING PLATE, REAR AXLE	0201 - 6
3B8	MOUNTING PLATE, STABILIZER VALVE	3315 - 2
3B10	MOUNTING PLATE, STABILIZER VALVE (PILOT CONTROL)	3315 - 3A
1I17	MOUNTING PLATE,MASTER DISCONNECT SWITCH	1671 - 6
1G10	MUFFLER	0530 - 2
2G8	MULTI-PURPOSE BUCKET	3102 - 8
2G10	MULTI-PURPOSE BUCKET	3102 - 10
2G16	MULTI-PURPOSE BUCKET	3102 - 16
2G8	MULTI-PURPOSE BUCKET AUXILIARY CUTTING EDGE	3102 - 8
2G8	MULTI-PURPOSE BUCKET CUTTING EDGE	3102 - 8
2G12	MULTI-PURPOSE BUCKET CYLINDER (SERIAL NO.-925076)	3102 - 12
2G13	MULTI-PURPOSE BUCKET CYLINDER (SERIAL NO.925077-)	3102 - 13
2G12	MULTI-PURPOSE BUCKET CYLINDER REPAIR KIT (SERIAL NO.-925076)	3102 - 12
2G13	MULTI-PURPOSE BUCKET CYLINDER REPAIR KIT (SERIAL NO.925977-	3102 - 13
2G10	MULTI-PURPOSE BUCKET CYLINDER PINS	3102 - 10
2G16	MULTI-PURPOSE BUCKET CYLINDER PINS	3102 - 16
2G10	MULTI-PURPOSE BUCKET HYDRAULIC OIL LINES	3102 - 10
2G16	MULTI-PURPOSE BUCKET HYDRAULIC OIL LINES	3102 - 16
2G10	MULTI-PURPOSE BUCKET HYDRAULIC CYLINDER	3102 - 10
2G16	MULTI-PURPOSE BUCKET HYDRAULIC CYLINDER	3102 - 16
2G8	MULTI-PURPOSE BUCKET MOLDBOARD	3102 - 8

N

1D11	NEEDLE BEARING, AXIAL	0360 - 1
2D24	NOISE AND HEAT BARRIER	1834 - 2
2D5	NON-SUSPENDED SEAT BASE	1821 - 10
2D7	NON-SUSPENDED SEAT HEIGHT ADJUSTER	1821 - 12

O

1I8	O-RING KIT	1369 - 4
1F3	OIL COOLER, ENGINE	0419 - 2
1G1	OIL COOLER, HYDRAULIC	0510 - 2
1G1	OIL COOLER, TRANSMISSION	0510 - 2
1E5	OIL FILL INLET	0407 - 2
1E5	OIL FILLER OPENING COVER	0407 - 2
1E9	OIL FILTER, ENGINE	0407 - 6
1D11	OIL FILTER, TRANSMISSION	0360 - 1
2I1	OIL LINES, LOADER BOOM	3163 - 2
1E7	OIL PAN GASKET	0407 - 4
1E7	OIL PAN,ENGINE	0407 - 4
1I6	OILSCAN PLUS TEST KIT, FLUID ANALYSIS	1369 - 2
2B6	OPERATOR MANUAL HOLDER	1811 - 2
2E8	OPERATOR STATION SKIRTS	1927 - 2
1E22	OPTION AIR INLET	0414 - 2
2H22	OUTLET SECTION RELIEF VALVE	3162 - 14
3D17	OUTLET SECTION, BACKHOE VALVE	3362 - 24
2H22	OUTLET SECTION, LOADER VALVE	3162 - 14
1D9	OUTPUT SHAFT, TRANSMISSION (MFWD)	0350 - 16
2E14	OUTSIDE MIRROR	2002 - 3

P

1I10	PACKAGE, ENVIRONMENTAL DRAIN	1369 - 6
2C21	PAD SEAT BACK	1821 - 2
3C15	PAD, EXTENDIBLE ARM	3346 - 4
2G18	PALLET FORKS	3103 - 2
1E7	PAN,ENGINE OIL	0407 - 4
2C11	PANEL, FRONT INSTRUMENT	1816 - 8
2E11	PANEL, RADIO TRIM	2001 - 2
2B12	PANEL, REAR KICK	1812 - 2
1J1	PANEL,FUSE	1674 - 2
1J9	PANEL,MONITOR	1674 - 6
2E2	PANELS, ENGINE SIDE	1910 - 2
1H17	PARK BRAKE	1111 - 2
1H17	PARK BRAKE CLUTCH DISK	1111 - 2
1H17	PARK BRAKE HOUSING	1111 - 2
1J11	PARK BRAKE OIL PRESSURE SWITCH	1674 - 8
1H17	PARK BRAKE PISTON	1111 - 2
1H17	PARK BRAKE SEPERATOR PLATE	1111 - 2
3E4	PATTERN SELECTOR HARNESS	3362 - 32
3E4	PATTERN SELECTOR VALVE	3362 - 32
3E4	PATTERN SELECTOR, SWITCH	3362 - 32
3B20	PEDAL, AUXILIARY FUNCTION (PILOT CONTROL)	3315 - 13A
1H8	PEDAL, BRAKE	1060 - 2
3B16	PEDAL, EXTENDIBLE DIPPER (PILOT CONTROL)	3315 - 11A
3B14	PEDAL, FIFTH FUNCTION	3315 - 10
3B16	PEDAL, FIFTH FUNCTION (PILOT CONTROL)	3315 - 11A
3B18	PEDAL, SIXTH FUNCTION	3315 - 12
3B20	PEDAL, SIXTH FUNCTION (PILOT CONTROL)	3315 - 13A
1G4	PEDAL, SPEED CONTROL	0515 - 2
3E20	PILOT ACTIVATING MANIFOLD	3363 - 1A
3E12	PILOT BACKHOE BOOM SECTION VALVE	3362 - 40
3E14	PILOT BACKHOE BUCKET SECTION VALVE	3362 - 42
3E16	PILOT BACKHOE CROWD SECTION VALVE	3362 - 44
3E18	PILOT BACKHOE SWING SECTION VALVE	3362 - 46
3E10	PILOT CONTROL HANDLE BUTTON FUNCTION KIT	3362 - 38
3E22	PILOT CONTROL HYDRAULICS	3363 - 1C
3E3	PILOT CONTROL MANIFOLD	3362 - 30
3F23	PILOT CONTROL MANIFOLD	3363 - 30
3E6	PILOT CONTROL VALVE, LEFT	3362 - 34
3E8	PILOT CONTROL VALVE, RIGHT	3362 - 36
2C17	PILOT CONTROLLER ARM (LEFT SIDE)	1816 - 14
2C19	PILOT CONTROLLER ARM (RIGHT SIDE)	1816 - 16
1J5	PILOT ENABLE	1674 - 5A
1J5	PILOT ENABLE SWITCH	1674 - 5A
3E22	PILOT SELECTOR VALVE HYDRAULICS	3363 - 1C
3C13	PIN, BUCKET CYLINDER	3346 - 2
3C13	PIN, BUCKET LINK	3346 - 2
3C13	PIN,CROWD CYLINDER	3346 - 2
1B23	PIN,FRONT AXLE PIVOT (MFWD)	0250 - 2
1B19	PIN,FRONT AXLE PIVOT (WITHOUT MFWD)	0230 - 1
2H5	PIN,LOADER LIFT ARM	3140 - 2
3C13	PIN,STANDARD DIPPERSTICK	3346 - 2
1B12	PINION GEAR, PLANETARY	0201 - 4
1B16	PINION, BEVEL WITH LOCK	0210 - 2
3C11	PINS AND BUCKET LINKS,BACKHOE	3345 - 2
3C7	PINS, BACKHOE BOOM	3344 - 2
3C11	PINS, BACKHOE BUCKET AND LINKS	3345 - 2
2H7	PINS, LOADER BOOM CYLINDER	3140 - 4
2G6	PINS, LOADER BUCKET CYLINDER	3102 - 6
2G6	PINS, LOADER BUCKET LINK	3102 - 6
2G10	PINS, MULTI-PURPOSE BUCKET CYLINDER	3102 - 10
2G16	PINS, MULTI-PURPOSE BUCKET CYLINDER	3102 - 16
2G8	PINS, MULTI-PURPOSE BUCKET HINGE	3102 - 8
3C19	PINS, STABILIZER CYLINDER	3348 - 4

ALPHABETICAL INDEX - CONTINUED

GRID		PAGE
3C5	PINS, SWING FRAME	3343 - 2
3B6	PINS,BACKHOE BUCKET	3302 - 2
2G6	PINS,LOADER BUCKET	3102 - 6
2H8	PINS,LOADER BUCKET LINKAGE	3140 - 6
3C17	PINS,STABLIZER ARM	3348 - 2
1G10	PIPE, EXHAUST PIPE	0530 - 2
1E1	PISTON RINGS	0403 - 2
1H6	PISTON, BRAKE	1011 - 2
1E1	PISTON, ENGINE	0403 - 2
1H17	PISTON, PARK BRAKE	1111 - 2
1D14	PISTON, RANGE SHIFT VALVE	0360 - 4
1D12	PISTON, TRANSMISSION CONTROL VALVE	0360 - 2
1C5	PLANET GEAR (MFWD)	0250 - 8
1B12	PLANETARY CARRIER SHAFT	0201 - 4
1C5	PLANETARY DRIVE (MFWD)	0250 - 8
1B12	PLANETARY PINION CARRIER	0201 - 4
1B12	PLANETARY PINION GEAR	0201 - 4
1B12	PLANETARY RING GEAR	0201 - 4
2B6	PLATE, FLOOR, NO SHIFTER	1811 - 2
1H8	PLATE,BRAKE VALVE MOUNTING	1060 - 2
1B13	PLATE,REAR AXLE HOUSING MOUNTING	0201 - 6
1D22	PLUG,ENGINE OIL FILL	0402 - 3
1B18	PLUMBING, DIFFERENTIAL LOCK	0210 - 4
2D3	POSITION SWITCH, SEAT	1821 - 8
1I19	POST,REMOTE START	1671 - 8
1G4	POTENTIOMETER, ENGINE SPEED CONTROL	0515 - 2
3C11	POWER LINK	3345 - 2
1G8	PRE-CLEANER, AIR	0520 - 4
1F5	PREFILTER, FUEL	0420 - 2
3E3	PRESSURE REDUCING VALVE, MANIFOLD (PILOT CONTROL)	3362 - 30
3F23	PRESSURE REDUCING VALVE, MANIFOLD (PILOT CONTROL)	3363 - 30
1J13	PRESSURE SWITCH (ENGINE OIL) (SN XXXXXX-)	1674 - 9A
1J3	PRESSURE SWITCH HARNESS, A/C	1674 - 4
1H8	PRESSURE SWITCH, BRAKE LIGHT	1060 - 2
1J11	PRESSURE, ENGINE OIL SWITCH	1674 - 8
1F5	PRIMARY FUEL FILTER ELEMENT	0420 - 2
1F5	PRIMARY FUEL FILTER HEADER	0420 - 2
1F5	PRIMARY FUEL FILTER SERVICE KIT	0420 - 2
3C9	PROTECTION KIT, BACKHOE BOOM	3344 - 4
1C20	PTO PUMP DRIVE SHAFT	0350 - 2
1I20	PULLEY ALTERNATOR	1672 - 2
1F15	PULLEY, FAN DRIVE	0429 - 4
1E25	PULLEY, WATER PUMP	0417 - 2
1J18	PUMP CONTROL RELAY AND HARNESS	1674 - 16
1E11	PUMP, ENGINE OIL	0407 - 8
1E18	PUMP, FUEL INJECTION	0413 - 2
1F9	PUMP, FUEL TRANSFER	0421 - 2
2E22	PUMP, MAIN HYDRAULIC	2160 - 2
2E24	PUMP, MAIN HYDRAULIC	2160 - 3A
2F1	PUMP, MAIN HYDRAULIC SERVICE REPAIR KITS	2160 - 4
2F3	PUMP, MAIN HYDRAULIC SERVICE REPAIR KITS	2160 - 6
2F5	PUMP, MAIN HYDRAULIC SERVICE REPAIR KITS	2160 - 8
1D24	PUMP, WATER	0402 - 6
2C1	PUMP, WINDSHIELD WASHER	1814 - 12
1J15	PUSH BUTTON, DIFFERENTIAL LOCK	1674 - 12
1F9	PUSH ROD,FUEL TRANSFER PUMP	0421 - 2
1D23	PUSH RODS	0402 - 4

Q

2F7	QUICK CONNECT COUPLER	2160 - 12
2G18	QUICK COUPLER FORKS AND FRAME	3103 - 2
2G16	QUICK COUPLER MULTI-PURPOSE BUCKET	3102 - 16
1J7	QUICK COUPLER PIN, DISCONNECT SWITCH	1674 - 5C
1J7	QUICK COUPLER WIRING HARNESS	1674 - 5C
2I5	QUICK COUPLER, HYDRAULICS	3163 - 6
2I5	QUICK COUPLER, HYDRAULICS LINES	3163 - 6
2H24	QUICK COUPLER, LOADER BUCKET VALVE	3162 - 16
1H6	QUILL, DIFFERENTIAL	1011 - 2

R

1G1	RADIATOR	0510 - 2
1G3	RADIATOR BAFFLES	0510 - 4
1G1	RADIATOR CAP	0510 - 2
1G1	RADIATOR DRAIN VALVE	0510 - 2
1G1	RADIATOR FAN GUARD	0510 - 2
1G1	RADIATOR FAN SHROUD	0510 - 2
1G1	RADIATOR HOSES	0510 - 2
2E11	RADIO	2001 - 2
2E11	RADIO ANTENA	2001 - 2
2E11	RADIO SPEAKER	2001 - 2
1D14	RANGE SHIFT VALVE	0360 - 4
1D14	RANGE SHIFT VALVE, POWER SHIFT	0360 - 4
1B13	REAR AXLE HOUSING MOUNTING PLATE	0201 - 6
1B13	REAR AXLE MOUNTING HARDWARE	0201 - 6
1B15	REAR AXLE RING GEAR AND PINION	0210 - 1
1B15	REAR AXLE SPIRAL BEVEL INPUT PINION	0210 - 1
1B15	REAR AXLE YOKE	0210 - 1
2B20	REAR CORNER WINDOWPANE (SER.NO. -920856)	1814 - 8
2B22	REAR CORNER WINDOWPANE (SER.NO. 920857-)	1814 - 9A
1C14	REAR DRIVE SHAFT	0325 - 1
1B2	REAR DRIVE WHEEL	0110 - 2
1B2	REAR DRIVE WHEEL SPACER KIT	0110 - 2
1B2	REAR DRIVE WHEEL VALVE STEM	0110 - 2
2B12	REAR FLOOR COVER	1812 - 2
2B12	REAR FLOOR MAT	1812 - 2
2B12	REAR KICK PANEL	1812 - 2
2E14	REAR VIEW MIRROR, EXTERNAL	2002 - 3
2E13	REAR VIEW MIRROR, INTERIOR	2002 - 2
1B4	REAR WHEEL (SERIAL NO. 943698-	0110 - 4
1B6	REAR WHEEL (SERIAL NO. 943698-)	0110 - 5A
2B20	REAR WINDOW LATCH (SER.NO. -920856)	1814 - 8
2B22	REAR WINDOW LATCH (SER.NO. 920857-)	1814 - 9A
2B20	REAR WINDOW WEATHERSTRIP (SER.NO. -920856)	1814 - 8
2B22	REAR WINDOW WEATHERSTRIP (SER.NO. 920857-)	1814 - 9A
2B20	REAR WINDOWS (SER.NO. -920856)	1814 - 8
2B22	REAR WINDOWS (SER.NO. 920857-)	1814 - 9A
2C3	REAR WINDSHIELD WIPER MOTOR	1814 - 14
2C3	REAR WIPER ENABLE SWITCH	1814 - 14
2D22	RECEIVER DRYER HOSES	1830 - 12
2D22	RECEIVER DRYER, AIR CONDITIONING	1830 - 12
2D15	REFRIGERANT HOSE	1830 - 6
2D17	REFRIGERANT HOSE	1830 - 7A
2D15	REFRIGERANT LINE	1830 - 6
2D17	REFRIGERANT LINE	1830 - 7A
1J3	RELAY TIMER	1674 - 4
1J3	RELAY, ACTUATOR DOOR	1674 - 4
1J18	RELAY, PUMP CONTROL AND HARNESS	1674 - 16
1J11	RELAY, STARTER	1674 - 8
2H20	RELIEF VALVE, AUXILIARY SECTION	3162 - 12

ALPHABETICAL INDEX - CONTINUED

GRID		PAGE
3E12	RELIEF VALVE, BOOM PILOT SECTION	3362 - 40
2H18	RELIEF VALVE, BOOM SECTION	3162 - 10
3D5	RELIEF VALVE, BOOM SECTION	3362 - 12
3E14	RELIEF VALVE, BUCKET PILOT SECTION	3362 - 42
2H16	RELIEF VALVE, BUCKET SECTION	3162 - 8
3D7	RELIEF VALVE, BUCKET SECTION	3362 - 14
3E16	RELIEF VALVE, CROWD PILOT SECTION	3362 - 44
3D9	RELIEF VALVE, CROWD SECTION	3362 - 16
3D3	RELIEF VALVE, INLET SECTION	3362 - 10
2H22	RELIEF VALVE, OUTLET SECTION	3162 - 14
3E18	RELIEF VALVE, SWING PILOT SECTION	3362 - 46
3D11	RELIEF VALVE, SWING SECTION	3362 - 18
2H12	RELIEFS, LOADER VALVE	3162 - 4
1I19	REMOTE START POST	1671 - 8
1I19	REMOTE START POST COVER	1671 - 8
3F24	REPAIR KIT, BACKHOE BOOM CYLINDER	3365 - 2
3F25	REPAIR KIT, BACKHOE BUCKET CYLINDER	3365 - 3
3G1	REPAIR KIT, BACKHOE CROWD CYLINDER	3365 - 4
2I11	REPAIR KIT, BACKHOE EXTENSION CYLINDER	3165 - 8
3G6	REPAIR KIT, BACKHOE EXTENSION CYLINDER	3365 - 9
3G3	REPAIR KIT, BACKHOE STABILIZER CYLINDER (SER.NO. -932172)	3365 - 6
3G4	REPAIR KIT, BACKHOE STABILIZER CYLINDER (SER.NO. -932172)	3365 - 7
3G5	REPAIR KIT, BACKHOE STABILIZER CYLINDER (SER.NO. 932173-)	3365 - 8
3G2	REPAIR KIT, BACKHOE SWING CYLINDER	3365 - 5
2I7	REPAIR KIT, LOADER BOOM LIFT CYLINDER	3165 - 1
2I10	REPAIR KIT, LOADER BUCKET CYLINDER	3165 - 4
2F3	REPAIR KITS, MAIN HYDRAULIC PUMP	2160 - 6
2F5	REPAIR KITS, MAIN HYDRAULIC PUMP	2160 - 8
2F15	RESERVOIR BREATHER FILTER, HYDRAULIC	2160 - 18
2F15	RESERVOIR, MAIN HYDRAULIC SCREEN	2160 - 18
2F15	RESERVOIR, MAIN HYDRAULICS	2160 - 18
2C1	RESERVOIR, WINDSHIELD WASHER	1814 - 12
1J13	RESISTOR (FRONT WIRE HARNESS) (SN XXXXXX-)	1674 - 9A
1J11	RESISTOR, CAN TERMINATION	1674 - 8
1J3	RESISTORS, CAN TERMINATION	1674 - 4
1G6	RESTRICTION INDICATOR SWITCH,AIR CLEANER	0520 - 2
2G24	RETURN-TO-DIG CABLE	3115 - 2
2G24	RETURN-TO-DIG LINKAGE	3115 - 2
2H16	RETURN-TO-DIG MAGNET	3162 - 8
1J17	RETURN-TO-DIG SWITCH	1674 - 14
1D7	REVERSE CLUTCH ASSEMBLY	0350 - 14
1D7	REVERSE CLUTCH CARRIER	0350 - 14
1D7	REVERSE, BELLVILLEWASHER	0350 - 14
2F19	RIDE CONTROL	2160 - 22
2F19	RIDE CONTROL HYDRAULIC HOSE	2160 - 22
1J9	RIDE CONTROL SWITCH	1674 - 6
1B4	RIM VALVE (SERIAL NO. 943698-)	0110 - 4
1B6	RIM VALVE (SERIAL NO. 943698-)	0110 - 5A
1B7	RIM, FRONT WHEEL (WITHOUT MFWD)	0120 - 1
1C5	RING GEAR (MFWD)	0250 - 8
1B15	RING GEAR AND PINION, REAR AXLE	0210 - 1
1F17	RING GEAR, FLYWHEEL	0433 - 2
1B12	RING GEAR, PLANETARY	0201 - 4
1E1	RINGS, PISTON	0403 - 2
1D22	ROCKER ARM COVER	0402 - 3
1D22	ROCKER ARM COVER GASKET	0402 - 3
1D23	ROCKER ARM SHAFT	0402 - 4
1D23	ROCKER ARMS	0402 - 4
1C1	ROD ASSEMBLY,TIE (MFWD)	0250 - 4
2G24	ROD, BUCKET LEVELING	3115 - 2
1E1	ROD, CONNECTING	0403 - 2
1H20	ROD, CYLINDER LOCK BAR	1313 - 2
1D23	RODS, PUSH	0402 - 4
1B10	ROLLER BEARING,AXLE	0201 - 2
1I24	ROOF WIRING HARNESS	1673 - 4
1I24	ROOF WIRING HARNESS	1673 - 4
2B10	ROOF,CAB	1811 - 6
2B10	ROOF,ROPS	1811 - 6
2B6	ROPS FRAME	1811 - 2
2B6	ROPS FRAME ISOLATORS	1811 - 2
2B6	ROPS HEADLINER	1811 - 2
2B10	ROPS ROOF	1811 - 6
2E8	ROPS SKIRT	1927 - 2
1I22	ROTATING BEACON	1673 - 2
1I22	ROTATING BEACON SWITCH	1673 - 2

S

3C3	SAE BACKHOE CONTROL VALVE LINKAGE PATTERN KIT	3315 - 24
3C3	SAE PATTERN, BACKHOE CONTROL LEVER LINKAGE (SAE PATTERN)	3315 - 24
2D21	SCREEN, CAB HEATER FAN (20,000 BTU)	1830 - 10
2E6	SCREEN, GRILLE	1921 - 2
2F15	SCREEN, MAIN HYDRAULIC RESERVOIR	2160 - 18
2B6	SEAL, FRONT CONSOLE	1811 - 2
1G1	SEAL, ISOLATOR	0510 - 2
1H17	SEAL, SHAFT, INPUT	1111 - 2
1B24	SEAL,SLIDING YOKE (MFWD)	0250 - 3
2D9	SEAT ADJUSTING SWITCH	1821 - 14
2C21	SEAT BACK PAD	1821 - 2
2D7	SEAT BASE FOR NON-SUSPENDED SEAT	1821 - 12
2D5	SEAT BASE, NON-SUSPENDED	1821 - 10
2C21	SEAT BELT COVER	1821 - 2
2C21	SEAT BELTS	1821 - 2
2C21	SEAT BRACKETS	1821 - 2
2C21	SEAT CUSHIONS	1821 - 2
2C23	SEAT LUMBAR SUPPORT CONTROL LEVER	1821 - 4
2C23	SEAT SLIDE CONTROL LEVER	1821 - 4
2C23	SEAT SLIDE LATCH KIT	1821 - 4
2D3	SEAT SPRING, MECHANICAL SUSPENDED	1821 - 8
2D9	SEAT SUSPENSION,SUSPENDED SEAT	1821 - 14
2D1	SEAT SWIVEL	1821 - 6
2C23	SEAT SWIVEL CONTROL LEVER	1821 - 4
2D1	SEAT SWIVEL LATCH	1821 - 6
2C22	SEAT, HEADREST	1821 - 3
1C24	SECOND GEAR CLUTCH ASSEMBLY	0350 - 6
1C24	SECOND GEAR CLUTCH CARRIER	0350 - 6
1C24	SECOND GEAR, BELLVILLEWASHER	0350 - 6
3D1	SECTIONS, BACKHOE VALVE	3362 - 8
2H12	SECTIONS, LOADER VALVE	3162 - 4
1J18	SELECTIVE FLOW CONTROL KIT	1674 - 16
1J18	SELECTIVE FLOW CONTROL SWITCH	1674 - 16
1J18	SELECTIVE FLOW CONTROL WIRE HARNESS	1674 - 16
3D19	SELECTIVE FLOW SOLENOID CONTROL VALVE	3362 - 26
3D21	SELECTIVE FLOW SOLENOID CONTROL VALVE	3362 - 27A
3D23	SELECTIVE FLOW SOLENOID CONTROL VALVE	3362 - 28
3E20	SELECTOR VALVE (PILOT CONTROL)	3363 - 1A
3E22	SELECTOR VALVE HYDRAULICS	3363 - 1C
3E20	SELECTOR VALVE HYDRAULICS (PILOT CONTROL)	3363 - 1A
3E4	SELECTOR VALVE, PATTERN	3362 - 32
2G24	SELF-LEVELING CABLE	3115 - 2
1G14	SENDER, FUEL GAUGE	0560 - 2
1J13	SENDER, FUEL, ENGINE OIL, AIR FILTER (FRONT WIRE HARNESS) (SN XXXXXX-)	1674 - 9A
1J11	SENDER, HYDRAULIC TEMPERATURE	1674 - 8

ALPHABETICAL INDEX - CONTINUED

GRID		PAGE
2G24	SENSOR, BUCKET TUBE	3115 - 2
1F19	SENSOR, CRANKSHAFT SPEED	0433 - 4
1F19	SENSOR, CRANKSHAFT TIMING WHEEL, ENGINE	0433 - 4
1F19	SENSOR, ENGINE AIR TEMPERATURE	0433 - 4
1F19	SENSOR, ENGINE COOLANT TEMPERATURE	0433 - 4
1F19	SENSOR, ENGINE WATER TEMPERATURE	0433 - 4
1F19	SENSOR, ENGINE WHEEL SPEED	0433 - 4
1J13	SENSOR, FUEL TEMPERATURE (FRONT WIRE HARNESS) (SN XXXXXX-)	1674 - 9A
1G4	SENSOR, THROTTLE POSITION	0515 - 2
2D3	SENSOR,SUSPENDED SEAT POSITION	1821 - 8
2D9	SENSOR,SUSPENDED SEAT POSITION	1821 - 14
1J11	SENS0R, HYDRAULIC TEMPERATURE	1674 - 8
1H17	SEPERATOR PLATE, PARK BRAKE	1111 - 2
1H14	SERVICE BRAKE HYDRAULICS	1060 - 8
1H14	SERVICE BRAKE LINES	1060 - 8
1H6	SERVICE BRAKES	1011 - 2
1H20	SERVICE LOCK BAR, BOOM	1313 - 2
1H20	SERVICE LOCK, LOADER ARM	1313 - 2
1B10	SHAFT, AXLE	0201 - 2
1C20	SHAFT, INPUT	0350 - 2
1H17	SHAFT, INPUT SEAL	1111 - 2
1B12	SHAFT, PLANETARY SHAFT	0201 - 4
1C20	SHAFT, PTO PUMP DRIVE	0350 - 2
1D23	SHAFT, ROCKER ARM	0402 - 4
1C20	SHAFT, STATOR	0350 - 2
1C5	SHAFT, SUN GEAR (MFWD)	0250 - 8
1D9	SHAFT, TRANSMISSION OUTPUT SHAFT	0350 - 16
1C20	SHAFT, TURBINE	0350 - 2
1B24	SHAFT, UNIVERSAL DRIVE (MFWD)	0250 - 3
2E2	SHIELDS, ENGINE SIDE	1910 - 2
3C13	SHIM, METALLIC BUCKET CYLINDER	3346 - 2
2D3	SHOCK ABSORBER, SUSPENDED SEAT	1821 - 8
2D9	SHOCK ABSORBER,SUSPENDED SEAT	1821 - 14
2G4	SHOES, SKID	3102 - 4
2G14	SHOES, SKID	3102 - 14
1G1	SHROUD,FAN	0510 - 2
3D13	SHUT-OFF PLUG, EXTENDIBLE SECTION	3362 - 20
1J3	SIDE CONSOLE WIRING HARNESS WITH CAB	1674 - 4
3B6	SIDE CUTTER PLATE	3302 - 2
2C13	SIDE INSTRUMENT PANEL HOUSING	1816 - 10
2C15	SIDE INSTRUMENT PANEL HOUSING	1816 - 12
2E2	SIDE PANELS, ENGINE	1910 - 2
1B4	SIDE RING, WHEEL (SERIAL NO. 943698-)	0110 - 4
1B6	SIDE RING, WHEEL (SERIAL NO. 943698-)	0110 - 5A
2E2	SIDE SHIELDS, ENGINE	1910 - 2
2B14	SIDE WINDOWS,CAB	1814 - 2
2B16	SIDE WINDOWS,CAB	1814 - 4
3B18	SIXTH FUNCTION FOOT CONTROL	3315 - 12
3B18	SIXTH FUNCTION PEDAL	3315 - 12
3B20	SIXTH FUNCTION PEDAL (PILOT CONTROL)	3315 - 13A
2G4	SKID SHOES	3102 - 4
2G14	SKID SHOES	3102 - 14
2E8	SKIRTS, OPERATOR STATION	1927 - 2
2C23	SLIDE LATCH KIT,SEAT	1821 - 4
2D1	SLIDE PUCK SERVICE KIT	1821 - 6
2B20	SLIDING REAR WINDOWS (SER.NO. -920856)	1814 - 8
2B22	SLIDING REAR WINDOWS (SER.NO. 920857-)	1814 - 9A
1B24	SLIDING YOKE, SEAL (MFWD)	0250 - 3
2E19	SMV EMBLEM	2008 - 2
3D19	SOLENOID CONTROL VALVE, SELECTIVE FLOW	3362 - 26
3D21	SOLENOID CONTROL VALVE, SELECTIVE FLOW	3362 - 27A
3D23	SOLENOID CONTROL VALVE, SELECTIVE FLOW	3362 - 28
1F10	SOLENOID KIT, STARTING MOTOR	0422 - 2
2E22	SOLENOID VALVE, MAIN HYDRAULIC PUMP	2160 - 2
2E24	SOLENOID VALVE, MAIN HYDRAULIC PUMP	2160 - 3A
3E3	SOLENOID VALVE, MANIFOLD (PILOT CONTROL)	3362 - 30
3F23	SOLENOID VALVE, MANIFOLD (PILOT CONTROL)	3363 - 30
1D14	SOLENOID VALVE, RANGE SHIFT	0360 - 4
1D12	SOLENOID VALVE, TRANSMISSION	0360 - 2
2H16	SOLENOID, RETURN-TO-DIG	3162 - 8
1F22	SOLENOID,COLD WEATHER STARTING AID	0505 - 2
3D23	SOLINOID, AUXILIARY VALVE	3362 - 28
1E22	SPACER, AIR HEATER	0414 - 2
3C13	SPACER, METALLIC BUCKET CYLINDER	3346 - 2
3C13	SPACER, SYNTHETIC CROWD	3346 - 2
3C19	SPACERS, STABILIZER CYLINDER	3348 - 4
1I3	SPANISH, LABELS	1320 - 6
2E11	SPEAKER, RADIO	2001 - 2
1G4	SPEED CONTROL ENGINE	0515 - 2
1G4	SPEED CONTROL PEDAL	0515 - 2
1G4	SPEED SENSOR	0515 - 2
1C8	SPIRAL BEVEL GEAR,DIFFGERENTIAL (MFWD)	0250 - 12
1B15	SPIRAL BEVEL INPUT PINION	0210 - 1
2D3	SPRING, MECHANICAL SUSPENDED SEAT	1821 - 8
2D9	SPRING, SUSPENSION SEAT	1821 - 14
3C17	STABILIZER ARM	3348 - 2
3C17	STABILIZER ARM PINS	3348 - 2
3C17	STABILIZER ARM STREET PAD	3348 - 2
3C1	STABILIZER CONTROL CABLES	3315 - 22
2C13	STABILIZER CONTROL COVER	1816 - 10
2C15	STABILIZER CONTROL COVER	1816 - 12
3E24	STABILIZER CYLINDER HYDRAULICS, BACKHOE	3363 - 2
3C19	STABILIZER CYLINDER PINS	3348 - 4
3G3	STABILIZER CYLINDER REPAIR KIT, BACKHOE (SER.NO. -932172)	3365 - 6
3G4	STABILIZER CYLINDER REPAIR KIT, BACKHOE (SER.NO. -932172)	3365 - 7
3G5	STABILIZER CYLINDER REPAIR KIT, BACKHOE (SER.NO. 932173-)	3365 - 8
3G3	STABILIZER CYLINDER, BACKHOE (SER.NO. -932172)	3365 - 6
3G4	STABILIZER CYLINDER, BACKHOE (SER.NO. -932172)	3365 - 7
3G5	STABILIZER CYLINDER, BACKHOE (SER.NO. 932173-)	3365 - 8
1K9	STABILIZER GUARD KIT	1746 - 2
3C1	STABILIZER LEVER	3315 - 22
3C1	STABILIZER LINKAGE	3315 - 22
3C20	STABILIZER VALVE	3362 - 2
3C22	STABILIZER VALVE	3362 - 4
3C22	STABILIZER VALVE KITS	3362 - 4
3C1	STABILIZER VALVE LINKAGE	3315 - 22
3B8	STABILIZER VALVE MOUNTING PLATE	3315 - 2
3B10	STABILIZER VALVE MOUNTING PLATE (PILOT CONTROL)	3315 - 3A
3C13	STANDARD ARM	3346 - 2
3C13	STANDARD DIPPERSTICK	3346 - 2
3F13	STANDARD DIPPERSTICK, AUXILIARY HYDRAULICS	3363 - 16
1I24	STANDARD LIGHTS	1673 - 4
1J11	STARTER RELAY	1674 - 8
1J11	STARTER,JUMP START PROTECTION COVER	1674 - 8
1F22	STARTING AID, COLD WEATHER	0505 - 2
1F22	STARTING FLUID	0505 - 2
1F10	STARTING MOTOR	0422 - 2
1F10	STARTING MOTOR SOLENOID KIT	0422 - 2
1F10	STARTING MOTOR SWITCH	0422 - 2

ALPHABETICAL INDEX - CONTINUED

GRID		PAGE
1C20	STATOR SHAFT	0350 - 2
1G23	STC ADAPTER	0960 - 6
1H1	STC ADAPTERS	0960 - 8
1G19	STEERING COLUMN	0960 - 2
1G21	STEERING COLUMN	0960 - 4
2C9	STEERING COLUMN COVER	1816 - 6
1G21	STEERING COLUMN, TILT	0960 - 4
1H3	STEERING CYLINDER (WITH MFWD)	0960 - 10
1B21	STEERING CYLINDER, FRONT AXLE (WITHOUT MFWD)	0230 - 3
1G23	STEERING HOSES FOR MECHANICAL FRONT WHEE L DRIVE	0960 - 6
1H1	STEERING HYDRAULICS (WITHOUT MFWD)	0960 - 8
1G23	STEERING VALVE HYDRAULICS FOR MECHANICAL FRONT WHEEL DRIVE	0960 - 6
1G19	STEERING WHEEL	0960 - 2
1G21	STEERING WHEEL	0960 - 4
1B7	STEM, VALVE (WITHOUT MFWD)	0120 - 1
1H8	STOP LIGHT SWITCH	1060 - 2
1G14	STRAINER, FUEL TANK	0560 - 2
2B16	STRAP, DOOR	1814 - 4
3C17	STREET PAD,STABILIZER ARM	3348 - 2
2E2	STRIKER BOLT, HOOD	1910 - 2
1I22	STROBE BEACON	1673 - 2
1C3	STUDS, WHEEL (MFWD)	0250 - 6
1C17	SUCTION PIPE, TRANSMISSION	0341 - 4
1C5	SUN GEAR SHAFT (MFWD)	0250 - 8
2E17	SUN VISOR	2007 - 2
1K1	SUPPLEMENTARY TERMINALS, CONNECTORS AND REPAIR CONDUIT	1674 - 24
1H12	SUPPLY, BRAKE CHARGE VALVE	1060 - 6
1G12	SUPPORT, ENGINE	0540 - 2
2E2	SUPPORT, HOOD	1910 - 2
2D3	SUSPENDED SEAT POSITION SENSOR	1821 - 8
2D9	SUSPENDED SEAT POSITION SENSOR	1821 - 14
2D3	SUSPENDED SEAT POSITION SWITCH	1821 - 8
2D3	SUSPENDED SEAT SHOCK ABSORBER	1821 - 8
2D9	SUSPENDED SEAT SHOCK ABSORBER	1821 - 14
2D3	SUSPENDED SEAT SUSPENSION	1821 - 8
2D9	SUSPENDED SEAT SUSPENSION	1821 - 14
2D3	SUSPENDED SEAT TETHER BELT	1821 - 8
2D3	SUSPENSION,SUSPENDED SEAT	1821 - 8
3F9	SWING CYLINDER FITTINGS	3363 - 12
3F9	SWING CYLINDER HOSES	3363 - 12
3F9	SWING CYLINDER HYDRAULICS	3363 - 12
3G2	SWING CYLINDER REPAIR KIT, BACKHOE	3365 - 5
3G2	SWING CYLINDER, BACKHOE	3365 - 5
3C5	SWING FRAME	3343 - 2
3C5	SWING FRAME PINS	3343 - 2
3B22	SWING LOCK CONTROL LEVER AND LINKAGE	3315 - 16
2B6	SWING LOCK PIN AND HOLDER	1811 - 2
3D11	SWING SECTION RELIEF VALVE	3362 - 18
3D11	SWING SECTION, BACKHOE VALVE	3362 - 18
3E1	SWING VALVE ACCU-SWING KIT	3362 - 29A
3E18	SWING, PILOT SECTION RELIEF VALVE	3362 - 46
3E18	SWING, PILOT SECTION, BACKHOE VALVE	3362 - 46
1J9	SWITCH, A/C	1674 - 6
1J3	SWITCH, A/C PRESSURE HARNESS	1674 - 4
2D17	SWITCH, AIR CONDITIONING (FREEZE/COMPRESSOR)	1830 - 7A
2C15	SWITCH, AIR CONDITIONING THERMOSTAT	1816 - 12
1J9	SWITCH, AIR SUSPENSION SEAT	1674 - 6
1H8	SWITCH, BRAKE LIGHT, PRESSURE	1060 - 2
1J13	SWITCH, CAM/CRANKSHAFT (FRONT WIRE HARNESS) (SN XXXXXX-)	1674 - 9A
1J15	SWITCH, DIFFERENTIAL LOCK	1674 - 12
1J13	SWITCH, ENGINE COOLANT TEMPERATURE (FRONT WIRE HARNESS) (SN XXXXXX-)	1674 - 9A
1J11	SWITCH, ENGINE OIL PRESSURE	1674 - 8
1J9	SWITCH, ETHER	1674 - 6
1C12	SWITCH, FORWARD, NEUTRAL, REVERSE	0315 - 4
1J1	SWITCH, FRONT LIGHTS	1674 - 2
2D15	SWITCH, HIGH PRESSURE	1830 - 6
2D17	SWITCH, HIGH PRESSURE	1830 - 7A
1J9	SWITCH, HORN	1674 - 6
2D15	SWITCH, LOW PRESSURE	1830 - 6
2D17	SWITCH, LOW PRESSURE	1830 - 7A
1J9	SWITCH, MFWD	1674 - 6
1J11	SWITCH, PARK BRAKE OIL PRESSURE	1674 - 8
3E4	SWITCH, PATTERN SELECTOR	3362 - 32
1J5	SWITCH, PILOT ENABLE	1674 - 5A
1J7	SWITCH, PIN DISCONNECT, QUICK COUPLER	1674 - 5C
1J13	SWITCH, PRESSURE (ENGINE OIL) (SN XXXXXX-)	1674 - 9A
2C3	SWITCH, REAR WIPER ENABLE	1814 - 14
1J17	SWITCH, RETURN-TO-DIG	1674 - 14
1J9	SWITCH, RIDE CONTROL	1674 - 6
1I22	SWITCH, ROTATING BEACON	1673 - 2
2D9	SWITCH, SEAT ADJUSTING	1821 - 14
1H8	SWITCH, STOP LIGHT	1060 - 2
2D3	SWITCH, SUSPENDED SEAT POSITION KIT	1821 - 8
1J9	SWITCH, TEMPERATURE CONTROL	1674 - 6
1C12	SWITCH, TRANSMISSION CONTROL LEVER	0315 - 4
1J1	SWITCH, TURN SIGNAL	1674 - 2
1J1	SWITCH, WARNING LIGHTS	1674 - 2
2C1	SWITCH, WINDSHIELD WASHER	1814 - 12
1I17	SWITCH,BATTERY DISCONNECT	1671 - 6
1J1	SWITCH,FRONT WINDSHIELD WIPER	1674 - 2
1J9	SWITCH,IGNITION	1674 - 6
1J18	SWITCH,SELECTIVE FLOW CONTROL	1674 - 16
1F10	SWITCH,STARTING MOTOR	0422 - 2
1J1	SWITCHES, FRONT CONSOLE	1674 - 2
1J13	SWITCHES, FRONT WIRING HARNESS (SN XXXXXX-)	1674 - 9A
1J9	SWITCHES,MONITOR PANEL	1674 - 6
1B21	SWIVEL HOUSING,FRONT AXLE (WITHOUT MFWD)	0230 - 3
2D1	SWIVEL SERVICE KIT	1821 - 6
2D1	SWIVEL,SEAT	1821 - 6
3C13	SYNTHETIC CROWD SPACER	3346 - 2
1E18	SYSTEM, FUEL INJECTION	0413 - 2

T

1F19	TACHOMETER DRIVE	0433 - 4
1G14	TANK, FUEL	0560 - 2
1G1	TANK,COOLANT RECOVERY	0510 - 2
1J9	TEMPERATURE CONTROL SWITCH	1674 - 6
2D19	TEMPERATURE CONTROL,HEATER	1830 - 8
1J13	TEMPERATURE SENSOR, FUEL (FRONT WIRE HARNESS) (SN XXXXXX-)	1674 - 9A
1J11	TEMPERATURE, TORQUE CONVERTER	1674 - 8
1F15	TENSIONER, FAN DRIVE BELT	0429 - 4
1K2	TERMINALS, DEUTSCH	1674 - 25
1K1	TERMINALS, SUPPLEMENTARY	1674 - 24
1J24	TERMINALS, WEATHERPACK	1674 - 22
1J11	TERMINATION RESISTOR CAN	1674 - 8
1J3	TERMINATION RESISTORS, CAN	1674 - 4
1I6	TEST KIT, FLUID ANALYSIS PRODUCTS (OILSCAN)	1369 - 2
2D9	TETHER BELT	1821 - 14
2D3	TETHER BELT,SUSPENDED SEAT	1821 - 8

ALPHABETICAL INDEX - CONTINUED

GRID		PAGE
2D5	TETHER BELTS WITH NON-SUSPENDED SEAT	1821 - 10
2B6	TETHER KIT, OPERATOR MANUAL	1811 - 2
2B16	TETHER, DOOR	1814 - 4
2F9	THERMAL BYPASS VALVE	2160 - 14
1F1	THERMOSTAT COVER	0418 - 2
1F1	THERMOSTAT COVER TUBE	0418 - 2
2C15	THERMOSTAT SWITCH, A/C	1816 - 12
1F1	THERMOSTAT, ENGINE	0418 - 2
2I3	THIRD FUCTION HYDRAULIC OIL LINES	3163 - 4
2H3	THIRD FUNCTION LOADER CONTROL VALVE LINKAGE	3115 - 6
1D1	THIRD GEAR CLUTCH ASSEMBLY	0350 - 8
1D1	THIRD GEAR CLUTCH CARRIER	0350 - 8
1D1	THIRD GEAR, BELLVILLEWASHER	0350 - 8
1G4	THROTTLE LEVER	0515 - 2
1G4	THROTTLE SENSOR	0515 - 2
1I24	TIE BAND MOUNT ANCHOR, HARNESS	1673 - 4
3D1	TIE BOLTS, BACKHOE VALVE	3362 - 8
2H12	TIE BOLTS, LOADER VALVE	3162 - 4
1C1	TIE ROD ASSEMBLY (MFWD)	0250 - 4
1G21	TILT STEERING COLUMN	0960 - 4
1J3	TIMER RELAY	1674 - 4
1D24	TIMING GEAR COVER, WATER PUMP	0402 - 6
2E4	TOOL BOX	1913 - 2
1C19	TORQUE CONVERTER	0350 - 1
1J11	TORQUE CONVERTER TEMPERATURE	1674 - 8
1C19	TORQUE CONVERTOR FLEXPLATE	0350 - 1
1H24	TRADEMARKS	1320 - 2
1I3	TRADEMARKS, SPANISH	1320 - 6
1I1	TRADEMARKS,FRENCH	1320 - 4
1C15	TRANSMISSION	0341 - 2
1C17	TRANSMISSION BREATHER	0341 - 4
1D11	TRANSMISSION CHARGE PUMP	0360 - 1
1C12	TRANSMISSION CONTROL LEVER	0315 - 4
1C12	TRANSMISSION CONTROL LEVER SWITCH	0315 - 4
1D12	TRANSMISSION CONTROL VALVE	0360 - 2
1D16	TRANSMISSION CONTROL VALVE SOLENOID	0360 - 6
1C15	TRANSMISSION DIPSTICK TUBE	0341 - 2
1C14	TRANSMISSION DRIVE SHAFT, REAR	0325 - 1
1C17	TRANSMISSION HOUSING	0341 - 4
1D16	TRANSMISSION INTERMEDIATE PLATE	0360 - 6
1C17	TRANSMISSION LIFT BRACKET	0341 - 4
1G1	TRANSMISSION OIL COOLER	0510 - 2
1D11	TRANSMISSION OIL FILTER	0360 - 1
1D9	TRANSMISSION OUTPUT SHAFT (MFWD)	0350 - 16
1D12	TRANSMISSION SOLENOID VALVE	0360 - 2
1C17	TRANSMISSION SUCTION PIPE	0341 - 4
1C15	TRANSMISSSION DIPSTICK	0341 - 2
2E16	TRAVEL WARNING ALARM	2004 - 3
1K7	TRUNNION BLOCK	1740 - 2
2G24	TUBE, BUCKET SENSOR	3115 - 2
1C15	TUBE, TRANSMISSION DIPSTICK	0341 - 2
1F1	TUBE,THERMOSTAT COVER	0418 - 2
1C20	TURBINE SHAFT	0350 - 2
1E23	TURBOCHARGER	0416 - 2
1E23	TURBOCHARGER CENTER HOUSING	0416 - 2
1E23	TURBOCHARGER GASKET	0416 - 2
1J1	TURN SIGNAL SWITCH	1674 - 2
2C5	TWO LEVER BACKHOE CONTROL COVER	1816 - 2
3B12	TWO LEVER BACKHOE CONTROL VALVE LINKAGE	3315 - 4

U

1B24	UNIVERSAL DRIVE SHAFT (MFWD)	0250 - 3
1B24	UNIVERSAL DRIVE SHAFT KIT (MFWD)	0250 - 3
1C3	UNIVERSAL DRIVE SHAFT,FRONT AXLE (MFWD)	0250 - 6
1H17	UNIVERSAL JOINT YOKE	1111 - 2

V

3D3	VALVE INLET SECTION, BACKHOE	3362 - 10
3C1	VALVE LINKAGE, STABILIZER	3315 - 22
3B8	VALVE MOUNTING PLATE, BACKHOE	3315 - 2
3B10	VALVE MOUNTING PLATE, BACKHOE (PILOT CONTROL)	3315 - 3A
3B8	VALVE MOUNTING PLATE, STABILIZER	3315 - 2
3B10	VALVE MOUNTING PLATE, STABILIZER (PILOT CONTROL)	3315 - 3A
3D1	VALVE SECTIONS, BACKHOE CONTROL	3362 - 8
1B4	VALVE STEM (SERIAL NO. 943698-)	0110 - 4
1B6	VALVE STEM (SERIAL NO. 943698-)	0110 - 5A
1B7	VALVE STEM (WITHOUT MFWD)	0120 - 1
1B3	VALVE STEM,FRONT DRIVE WHEEL (MFWD)	0110 - 3
1B2	VALVE STEM,REAR DRIVE WHEEL	0110 - 2
3E1	VALVE, ACCU-SWING KIT	3362 - 29A
3D23	VALVE, AUXILIARY	3362 - 28
3D15	VALVE, BACKHOE AUXILIARY SECTION	3362 - 22
3D5	VALVE, BACKHOE BOOM SECTION	3362 - 12
3E12	VALVE, BACKHOE BOOM, PILOT SECTION	3362 - 40
3D7	VALVE, BACKHOE BUCKET SECTION	3362 - 14
3E14	VALVE, BACKHOE BUCKET, PILOT SECTION	3362 - 42
3C24	VALVE, BACKHOE CONTROL	3362 - 6
3D1	VALVE, BACKHOE CONTROL	3362 - 8
3D9	VALVE, BACKHOE CROWD SECTION	3362 - 16
3E16	VALVE, BACKHOE CROWD, PILOT SECTION	3362 - 44
3D13	VALVE, BACKHOE EXTENDIBLE SECTION	3362 - 20
3D11	VALVE, BACKHOE SWING SECTION	3362 - 18
3E18	VALVE, BACKHOE SWING, PILOT SECTION	3362 - 46
1H8	VALVE, BRAKE	1060 - 2
1H10	VALVE, BRAKE	1060 - 4
1H12	VALVE, BRAKE, SUPPLY	1060 - 6
2D19	VALVE, CANOPY HEATER SHUT-OFF	1830 - 8
1E14	VALVE, EXHAUST	0409 - 2
3E20	VALVE, FLOW CONTROL	3363 - 1A
1E14	VALVE, INTAKE	0409 - 2
2H20	VALVE, LOADER AUXILIARY SECTION	3162 - 12
2H18	VALVE, LOADER BOOM SECTION	3162 - 10
2H16	VALVE, LOADER BUCKET SECTION	3162 - 8
2H10	VALVE, LOADER CONTROL	3162 - 2
2H12	VALVE, LOADER CONTROL	3162 - 4
3E4	VALVE, PATTERN SELECTOR	3362 - 32
3E10	VALVE, PILOT CONTROL HANDLE BUTTON KIT	3362 - 38
3E6	VALVE, PILOT CONTROLLER, LEFT	3362 - 34
3E8	VALVE, PILOT CONTROLLER, RIGHT	3362 - 36
3E3	VALVE, PRESSURE REDUCING, MANIFOLD (PILOT CONTROL)	3362 - 30
3F23	VALVE, PRESSURE REDUCING, MANIFOLD (PILOT CONTROL)	3363 - 30
2H24	VALVE, QUICK COUPLER BUCKET	3162 - 16
1D14	VALVE, RANGE SHIFT	0360 - 4
3D19	VALVE, SELECTIVE FLOW SOLENOID CONTROL	3362 - 26
3D21	VALVE, SELECTIVE FLOW SOLENOID CONTROL	3362 - 27A
3E20	VALVE, SELECTOR (PILOT CONTROL)	3363 - 1A
3E3	VALVE, SOLENOID (MANIFOLD) (PILOT CONTROL)	3362 - 30
3F23	VALVE, SOLENOID (MANIFOLD) (PILOT CONTROL)	3363 - 30
2H24	VALVE, SOLINOID FRONT COUPLER	3162 - 16
3C20	VALVE, STABILIZER	3362 - 2
3C22	VALVE, STABILIZER	3362 - 4

ALPHABETICAL INDEX - CONTINUED

GRID		PAGE
2F9	VALVE, THERMAL BYPASS	2160 - 14
1D12	VALVE, TRANSMISSION CONTROL	0360 - 2
1D12	VALVE, TRANSMISSION SOLENOID	0360 - 2
1E3	VALVE,ENGINE OIL PRESSURE REGULATING	0404 - 2
2C13	VANDAL GUARD LOCK	1816 - 10
2C13	VANDAL GUARD,INSTRUMENT PANEL	1816 - 10
1J11	VEHICLE WIRING HARNESS	1674 - 8
1E12	VENTILATING SYSTEM, ENGINE	0408 - 2
2E17	VISOR, SUN	2007 - 2

W

2E16	WARNING ALARM, TRAVEL	2004 - 3
1J1	WARNING LIGHTS SWITCH	1674 - 2
2C1	WASHER, WINDSHIELD RESERVOIR	1814 - 12
1D24	WATER PUMP	0402 - 6
1E25	WATER PUMP INLET	0417 - 2
1E25	WATER PUMP PULLEY	0417 - 2
1F19	WATER TEMPERATURE SENSOR, ENGINE	0433 - 4
3C15	WEARSTRIPS, EXTENDIBLE ARM	3346 - 4
1J24	WEATHERPACK CONNECTORS	1674 - 22
1J24	WEATHERPACK TERMINALS	1674 - 22
2B20	WEATHERSTRIP, REAR WINDOW (SER.NO. -920856)	1814 - 8
2B22	WEATHERSTRIP, REAR WINDOW (SER.NO. 920857-)	1814 - 9A
1B22	WHEEL HUB, FRONT AXLE (WITHOUT MFWD)	0230 - 4
1B4	WHEEL SIDE RING (SERIAL NO. 943698-)	0110 - 4
1B6	WHEEL SIDE RING (SERIAL NO. 943698-)	0110 - 5A
1F19	WHEEL SPEED SENSOR, ENGINE	0433 - 4
1C3	WHEEL STUDS (MFWD)	0250 - 6
1B4	WHEEL, DRIVE (SERIAL NO. 943698-)	0110 - 4
1B6	WHEEL, DRIVE (SERIAL NO. 943698-)	0110 - 5A
1B7	WHEEL, FRONT (WITHOUT MFWD)	0120 - 1
1B4	WHEEL, LOCK RING (SERIAL NO. 943698-)	0110 - 4
1B6	WHEEL, LOCK RING (SERIAL NO. 943698-)	0110 - 5A
1G19	WHEEL, STEERING	0960 - 2
1G21	WHEEL, STEERING	0960 - 4
1B3	WHEEL,FRONT DRIVE(MFWD)	0110 - 3
2C7	WINCH CONTROL BOOT (PILOT CONTROL)	1816 - 4
2B14	WINDOW, CAB SIDE	1814 - 2
2B16	WINDOW, CAB SIDE	1814 - 4
2B20	WINDOWPANE, REAR CORNER (SER.NO. -920856)	1814 - 8
2B22	WINDOWPANE, REAR CORNER (SER.NO. 920857-)	1814 - 9A
2B20	WINDOWS, REAR (SER.NO. -920856)	1814 - 8
2B22	WINDOWS, REAR (SER.NO. 920857-)	1814 - 9A
2C1	WINDSHIELD WASHER HOSE	1814 - 12
2C1	WINDSHIELD WASHER PUMP	1814 - 12
2C1	WINDSHIELD WASHER SWITCH	1814 - 12
2B24	WINDSHIELD WIPER MOTOR, FRONT	1814 - 10
2C3	WINDSHIELD WIPER MOTOR, REAR	1814 - 14
1J1	WINDSHIELD WIPER SWITCH, FRONT	1674 - 2
2B18	WINDSHIELD, CAB	1814 - 6
2C1	WINDSHIELD, WASHER RESERVOIR	1814 - 12
2B24	WINDSHILD WIPER BLADE, FRONT	1814 - 10
2C3	WINDSHILD WIPER BLADE, REAR	1814 - 14
2B24	WIPER BLADE, FRONT	1814 - 10
2C3	WIPER BLADE, REAR	1814 - 14
2B24	WIPER MOTOR, FRONT WINDSHIELD	1814 - 10
2C3	WIPER MOTOR, REAR WINDSHIELD	1814 - 14
1J1	WIPER SWITCH, FRONT WINDSHIELD	1674 - 2
1J18	WIRE HARNESS,SELECTIVE FLOW CONTROL	1674 - 16
1J20	WIRE LEAD KIT	1674 - 18
1J22	WIRE LEAD KIT	1674 - 20
1J1	WIRING HARNESS FRONT CONSOLE WITH CAB	1674 - 2
1J11	WIRING HARNESS, ENGINE	1674 - 8
1J13	WIRING HARNESS, ENGINE FRONT (SN XXXXXX-)	1674 - 9A
2C11	WIRING HARNESS, MODE DOOR	1816 - 8
1I24	WIRING HARNESS, ROOF	1673 - 4
1J11	WIRING HARNESS, VEHICLE	1674 - 8
1J7	WIRING HARNESS,FRONT COUPLER	1674 - 5C
1J5	WIRING HARNESS,PILOT ENABLE	1674 - 5A
1J3	WIRING HARNESS,SIDE CONSOLE WITH CAB	1674 - 4

Y

2G24	YOKE, BUCKET LEVELING	3115 - 2
1B24	YOKE, DRIVE SHAFT (MFWD)	0250 - 3
1B15	YOKE, REAR AXLE	0210 - 1
1B15	YOKE, UNIVERSAL JOINT	0210 - 1
1H17	YOKE, UNIVERSAL JOINT	1111 - 2
1B24	YOKE,SEAL,SLIDING (MFWD)	0250 - 3

REAR DRIVE WHEEL

T155756 -UN-05JUN02

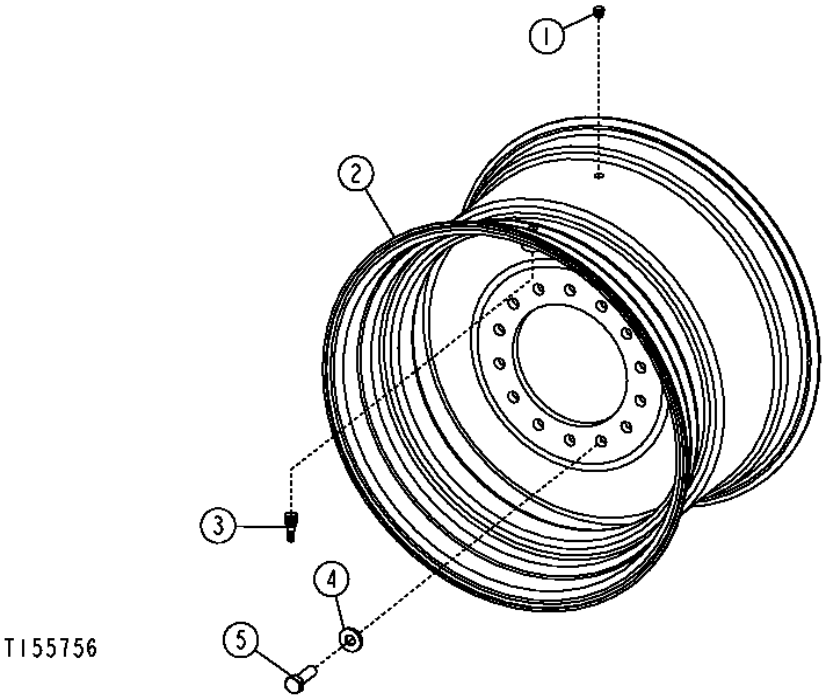

KEY	PART NO.	PART NAME	QTY	SERIAL NO.	REMARKS
1	AH86866	PLUG	1		RIM HOLE, (USE WITH AT309108 AND AT197026)
2	AT309108	WHEEL	1		(USE WITH TIRE F/21L X 28) (SUB FOR AT197025)
	AT197026	RIM	1		(USE WITH TIRE F/21L X 24)
3	AT25226	TIRE VALVE STEM	1		
4	R54124	WASHER	28		
5	19H2431	CAP SCREW	28		3/4" X 2-1/4"

FRONT DRIVE WHEEL
(WITH MECHANICAL FRONT WHEEL DRIVE)

T196509 -UN-20NOV03

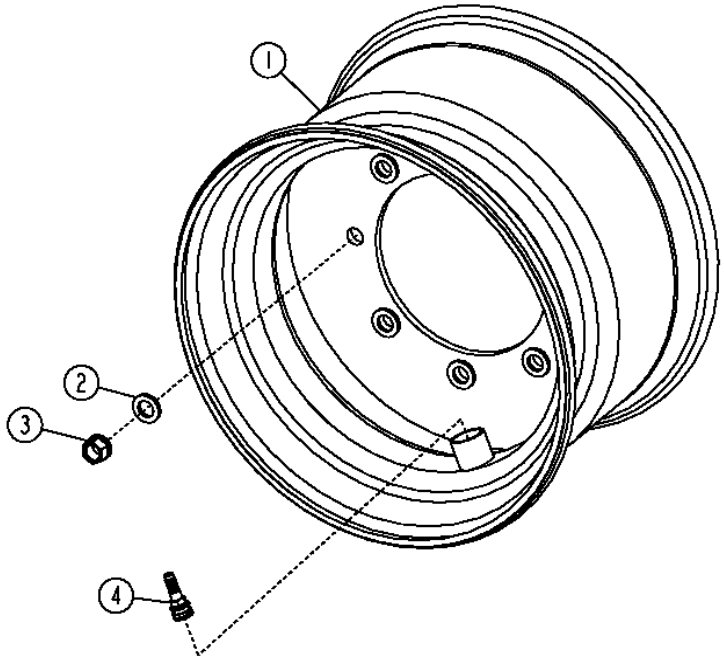

KEY	PART NO. T196509	PART NAME	QTY	SERIAL NO.	REMARKS
1	AT192625	WHEEL	1		(FOR F/15X19.5 TIRE)
2	R78019	WASHER	8		
3	14M7332	FLANGE NUT	8		M18
4	AT25226	TIRE VALVE STEM	1		

WHEEL RIM ASSEMBLY
(SERIAL NO. -943697)

T207705 -UN-02FEB05

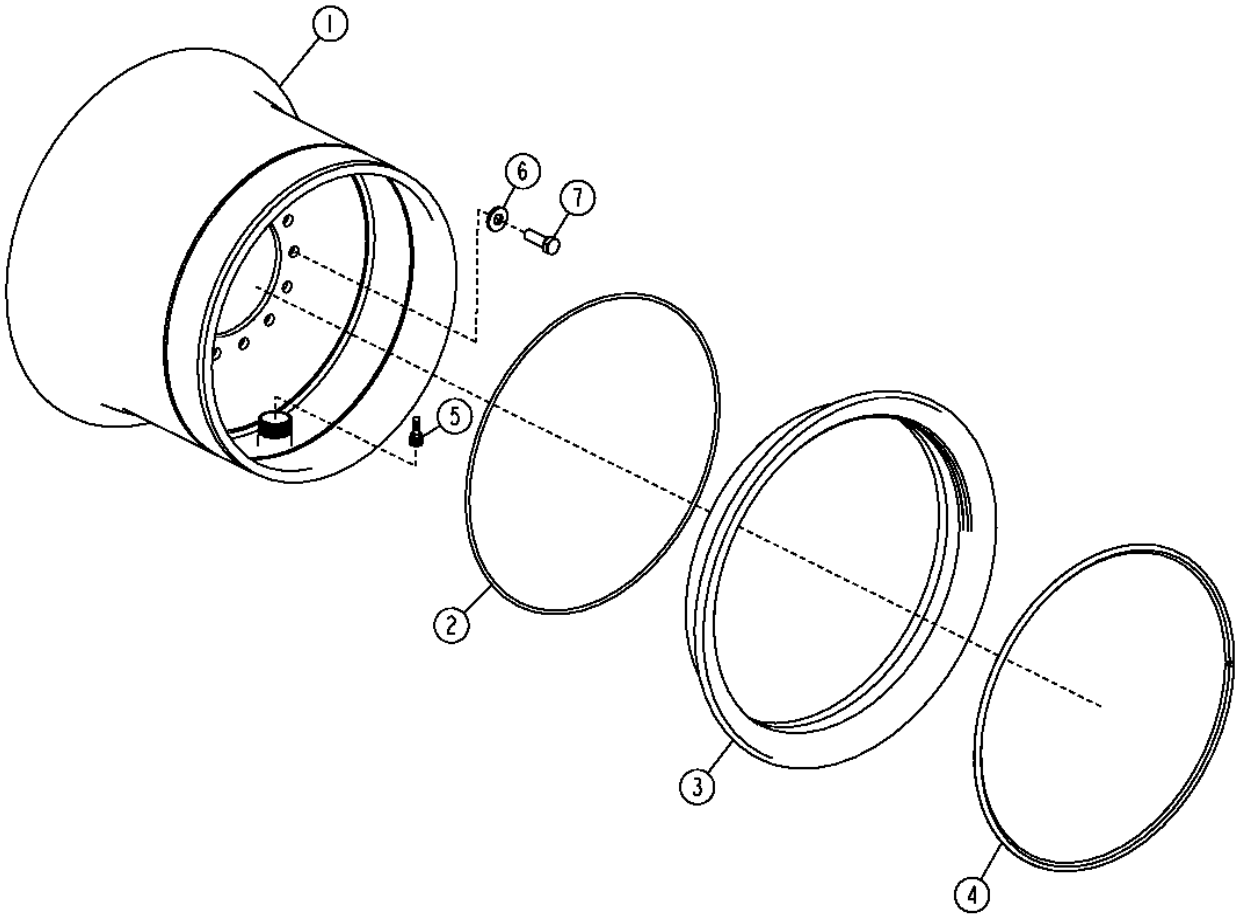

T207705

WHEEL RIM ASSEMBLY
(SERIAL NO. -943697)

KEY	PART NO.	PART NAME	QTY	SERIAL NO.	REMARKS
1	.....	WHEEL	1		(AT225307 NO LONGER AVAILABLE) (SUB AT317474) (635 MM X 602 MM) (25" X 17") RIM
2	T59933	O-RING	1		(USE WITH AT225307)
3	T27532	WHEEL RING	1		(USE WITH AT225307)
4	T27194	WHEEL RING	1		(USE WITH AT225307)
5	AT25226	TIRE VALVE STEM	1		
6	R54124	WASHER	14		
7	19H2431	CAP SCREW	14		3/4" X 2-1/4"

WHEEL RIM ASSEMBLYWHEEL
(SERIAL NO. 943698-)

T202699 -UN-08SEP04

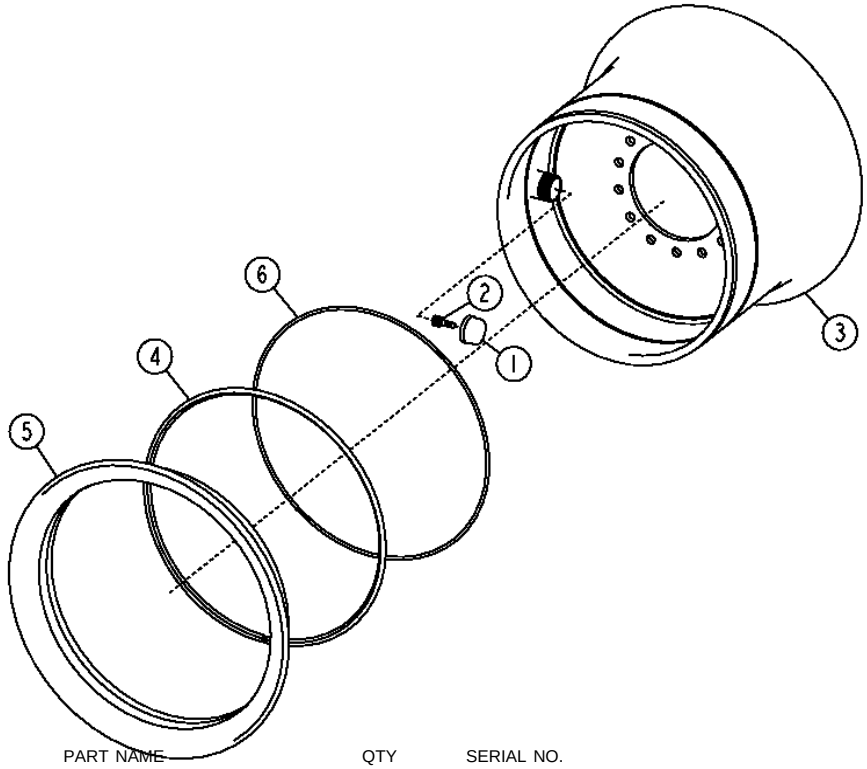

T202699

KEY	PART NO.	PART NAME	QTY	SERIAL NO.	REMARKS
1	15H709	FITTING	1		2"
2	AT25226	TIRE VALVE STEM	1		
3	AT317474	WHEEL	1		
4	T212452	WHEEL RING	1		(USE WITH AT317474)
5	T212453	WHEEL RING	1		(USE WITH AT317474)
6	T59933	O-RING	1		23-1/4" X 0.260", (USE WITH AT317474)

FRONT WHEEL
(WITHOUT MECHANICAL FRONT WHEEL DRIVE)

T155736 -UN-05JUN02

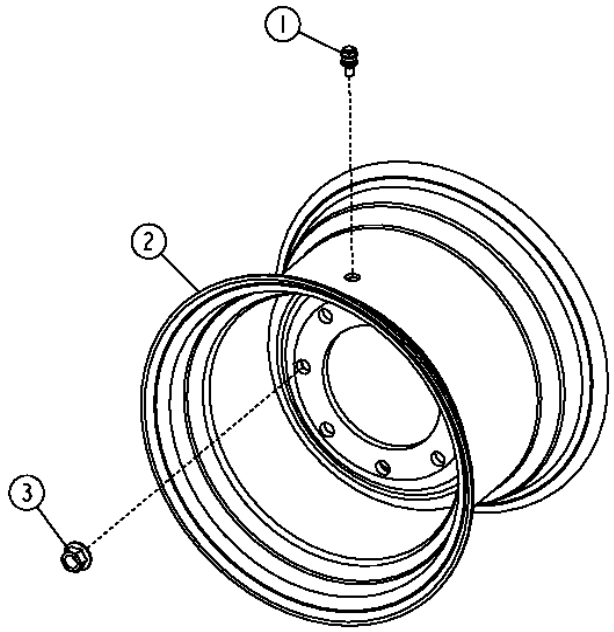

T155736

KEY	PART NO.	PART NAME	QTY	SERIAL NO.	REMARKS
1	AT25226	TIRE VALVE STEM	1		(USE WITH JD3051)
	AN132749	TIRE VALVE STEM	1		(TUBELESS) (USE WITH AT309101)
2	JD3051	RIM	1		(USE WITH TIRE 14.5/75 X 16.1)
	AT309101	WHEEL	1		(USE WITH TIRE 16.5L X 16.1) (SUB FOR AT135688)
3	E62156	NUT	16		5/8"

DIFFERENTIAL HOUSING, AXLE HOUSING AND SHAFT

TP57989 -UN-03FEB99

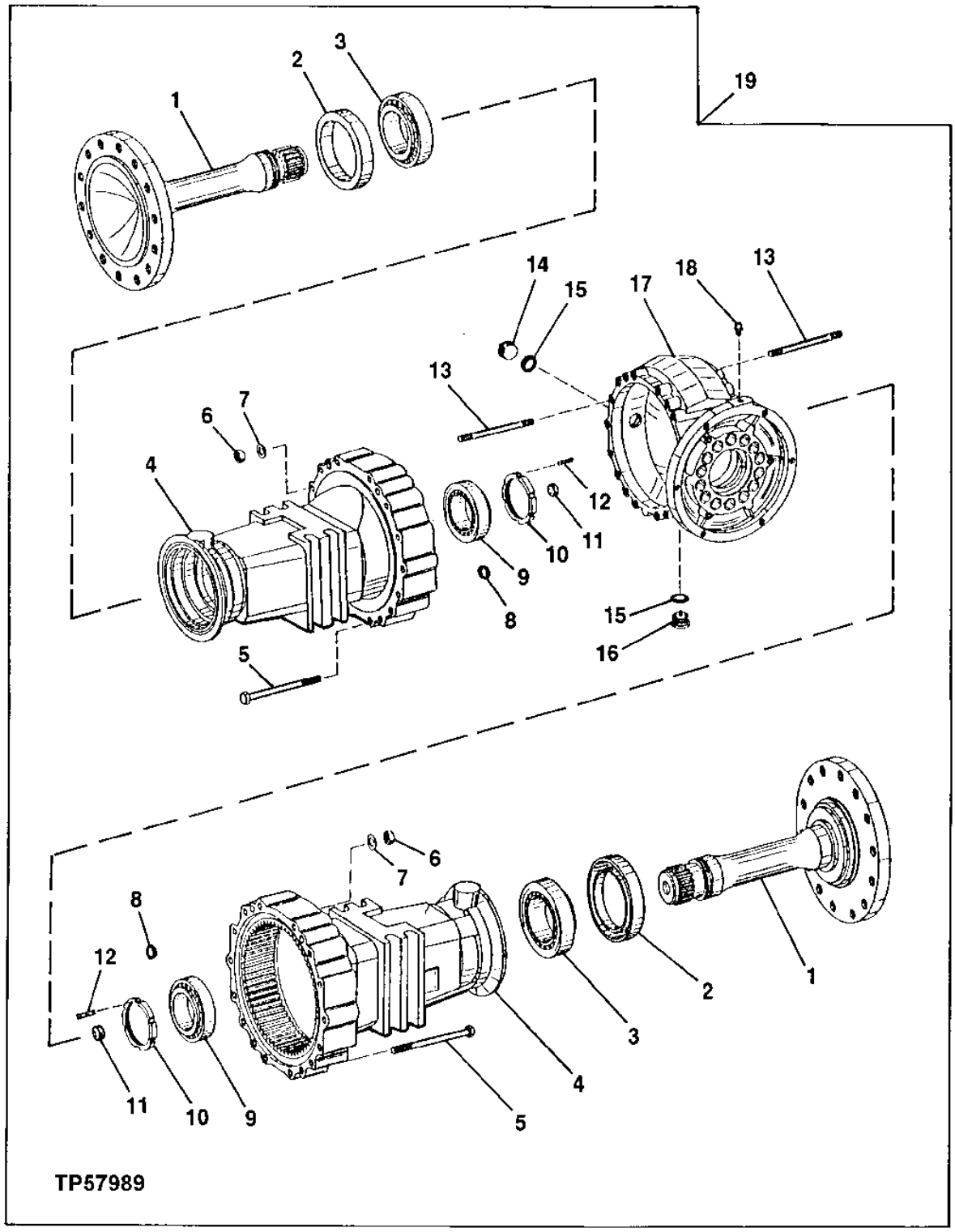

DIFFERENTIAL HOUSING, AXLE HOUSING AND SHAFT

KEY	PART NO.	PART NAME	QTY	SERIAL NO.	REMARKS
1	T164841	AXLE	2		
2	AT184275	SEAL	2		
3	AT184272	CYLINDRICAL ROLLER BEARING	2		
4	AT184269	HOUSING	2		
5	19M7677	CAP SCREW	28		M16 X 240
6	T159389	NUT	4		
7	T159386	WASHER	4		
8	T159373	O-RING	12		
9	AT184273	CYLINDRICAL ROLLER BEARING	2		
10	T164843	NUT	2		
11	R79132	PIN	2		
12	T164844	GROOVE PIN	2		(SUB FOR AT186927, ALSO ORDER INSTR. T184401)
13	T159388	STUD	4		
14	15M7030	PIPE PLUG	1		
15	L55580	O-RING	2		
16	L56822	PIPE PLUG	1		
17	T164836	HOUSING	1		
18	AL32877	VENT	1		BREATHER
19	.....	AXLE	1	-932800	(AT307686 NO LONGER AVAILABLE) (SUB FOR AT182141) (SUB AT308205)
	AT308205	AXLE	1	932801-	(CONVENIENCE ASSEMBLY), ALSO INCLUDES PLANETARY PINION CARRIER, RING GEAR ASSEMBLY, DIFFERENTIAL ASSEMBLY WITH LOCK, SERVICE BRAKE, PARK BRAKE AND INPUT YOKE

PLANETARY PINION CARRIER

T199459 -UN-26APR04

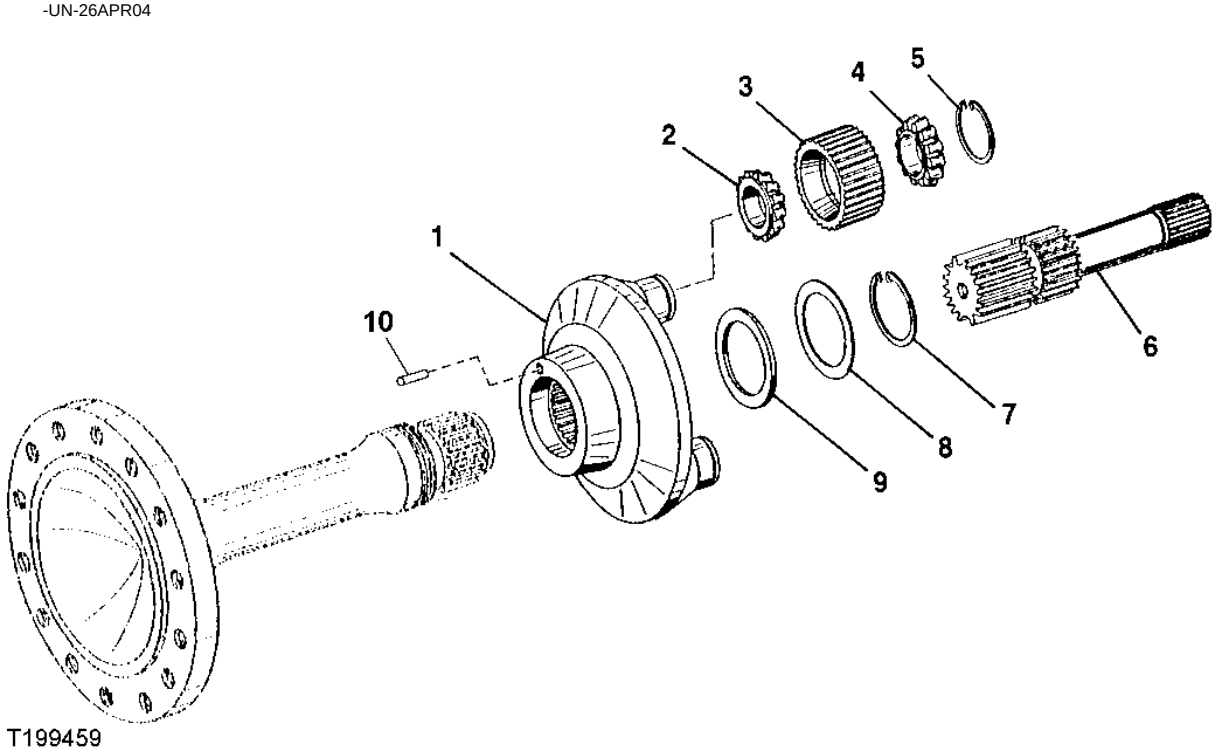

T199459

KEY	PART NO.	PART NAME	QTY	SERIAL NO.	REMARKS
1	T164902	PLANET PINION CARRIER	1		
2	AT184287	TAPERED ROLLER BEARING	4		
3	T164903	PLANET PINION	4		
4	AT184286	TAPERED ROLLER BEARING	4		
5	T164904	SNAP RING	4		
6	.....	SHAFT	1	-924268	(T164901 NO LONGER AVAILABLE) (SUB (2) T206519, (4) T205960 AND T205961)
	.....	SHAFT	1	924269-932800	(T164901 NO LONGER AVAILABLE) (ORDER (2) T206519 AND T205961)
	T206519	SHAFT	1	932801-	
7	T164906	SNAP RING	1		
8	T116929	WASHER	AR		1.4 MM
	T116930	WASHER	AR		1.3 MM
	T116931	WASHER	AR		1.2 MM
	T116932	WASHER	AR		1.1 MM
	T116933	WASHER	AR		1 MM
	T116934	WASHER	AR		.9 MM
	T116935	WASHER	AR		.8 MM
	T116936	SHIM	AR		.7 MM
	T116937	SHIM	AR		.6 MM
	T116939	SHIM	AR		.5 MM
	T116938	SHIM	AR		.3 MM
	T123090	SHIM	AR		.15 MM
	T164907	SHIM	AR		.1 MM
9	T164905	WASHER	1		
10	T164844	GROOVE PIN	1		(SUB FOR AT186927, ALSO ORDER INSTR. T184401)

MEMORANDA

REAR AXLE HOUSING MOUNTING PLATE AND HARDWARE

T211083 -UN-16MAY05

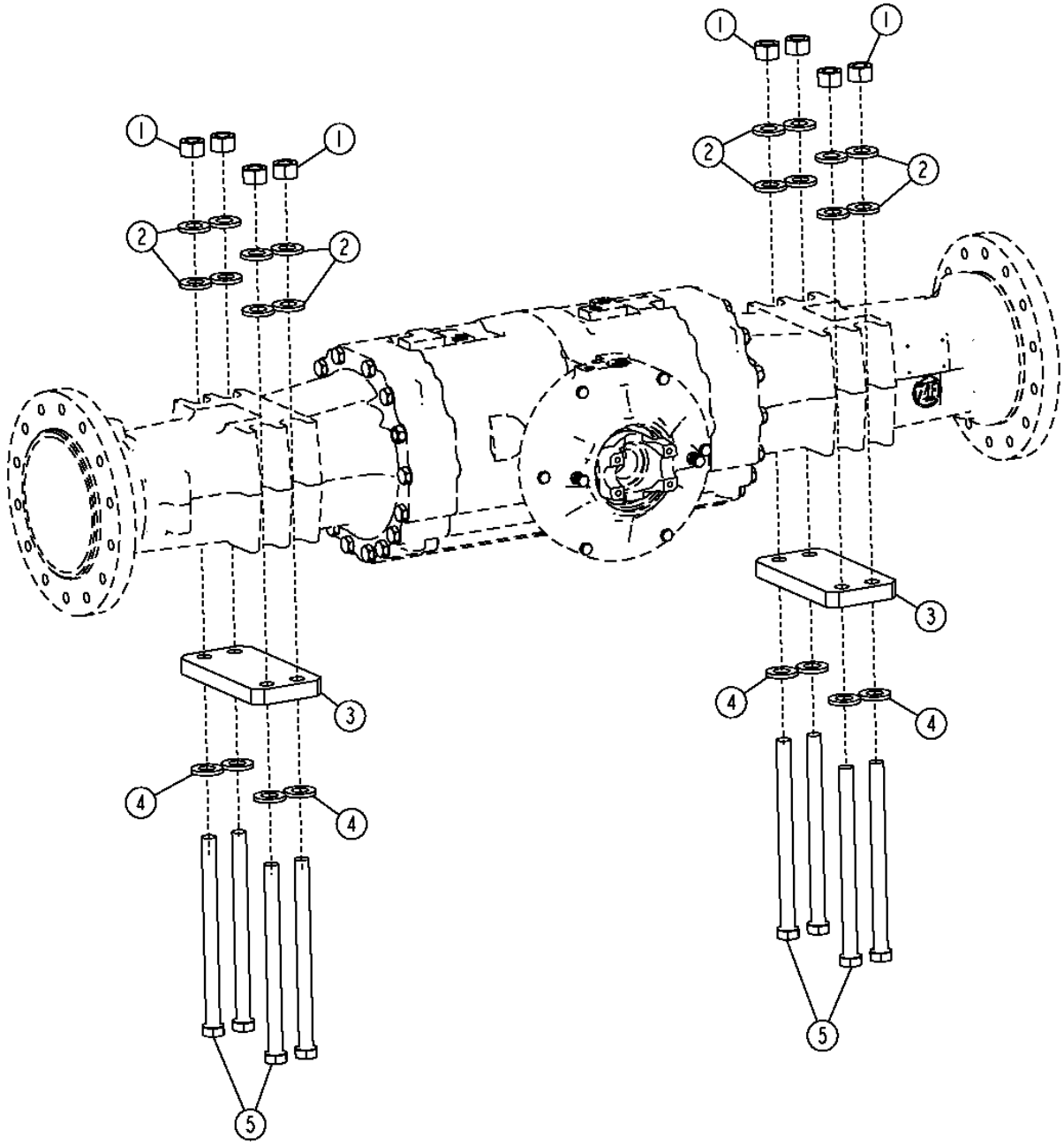

T211083

REAR AXLE HOUSING MOUNTING PLATE AND HARDWARE

KEY	PART NO.	PART NAME	QTY	AXLE SERIAL NO.	REMARKS
1	14H1044	NUT	8		7/8"
2	24M7243	WASHER	16		
3	T162074	PLATE	2		
4	24M7243	WASHER	8		
5	19H3815	CAP SCREW	8		7/8" X 12"

MEMORANDA

SPIRAL BEVEL INPUT PINION AND RING GEAR SET

TP58174 -UN-21FEB00

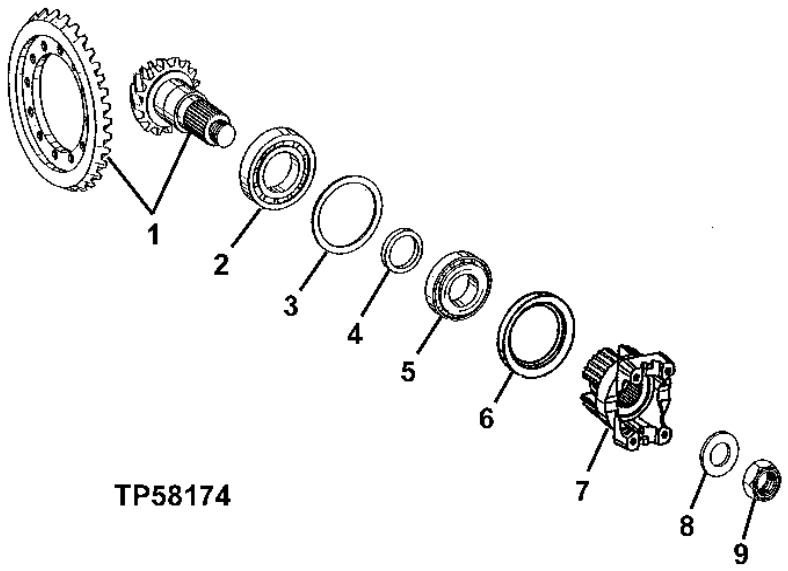

KEY	PART NO.	PART NAME	QTY	SERIAL NO.	REMARKS
1	AT184276	RING GEAR AND PINION	1		
2	AT184277	ROLLER BEARING	1		
3	T164847	SHIM	1		0.7 MM
	T164848	SHIM	1		0.8 MM
	T164849	SHIM	1		0.9 MM
	T164850	SHIM	1		1.0 MM
	T164860	SHIM	1		1.1 MM
	T164851	SHIM	1		1.2 MM
	T164852	SHIM	1		1.3 MM
	T164853	SHIM	1		1.4 MM
	T164854	SHIM	1		1.5 MM
	T164855	SHIM	1		1.6 MM
	T164856	SHIM	1		1.7 MM
	T164857	SHIM	1		1.8 MM
	T164858	SHIM	1		1.9 MM
	T164859	SHIM	1		2.0 MM
4	T164866	SHIM	1		8.3 MM
	AT253072	SPACER	1		8.4 MM, (SUB FOR T164865)
	T164864	SHIM	1		8.5 MM
	T164863	SHIM	1		8.6 MM
	T164862	SHIM	1		8.7 MM
	AT253067	SPACER	1		8.8 MM, (SUB FOR T164861)
	T164867	SHIM	1		8.9 MM
	T164868	SHIM	1		9.1 MM
	T164869	SHIM	1		9.2 MM
	T164870	SHIM	1		9.3 MM
	T164871	SHIM	1		9.4 MM
5	AT184279	ROLLER BEARING	1		
6	AT179537	SEAL	1		
7	T163544	YOKE	1		
8	T164872	WASHER	1		
9	T164873	NUT	1		

DIFFERENTIAL ASSEMBLY, WITH LOCK

T197981 -UN-24FEB04

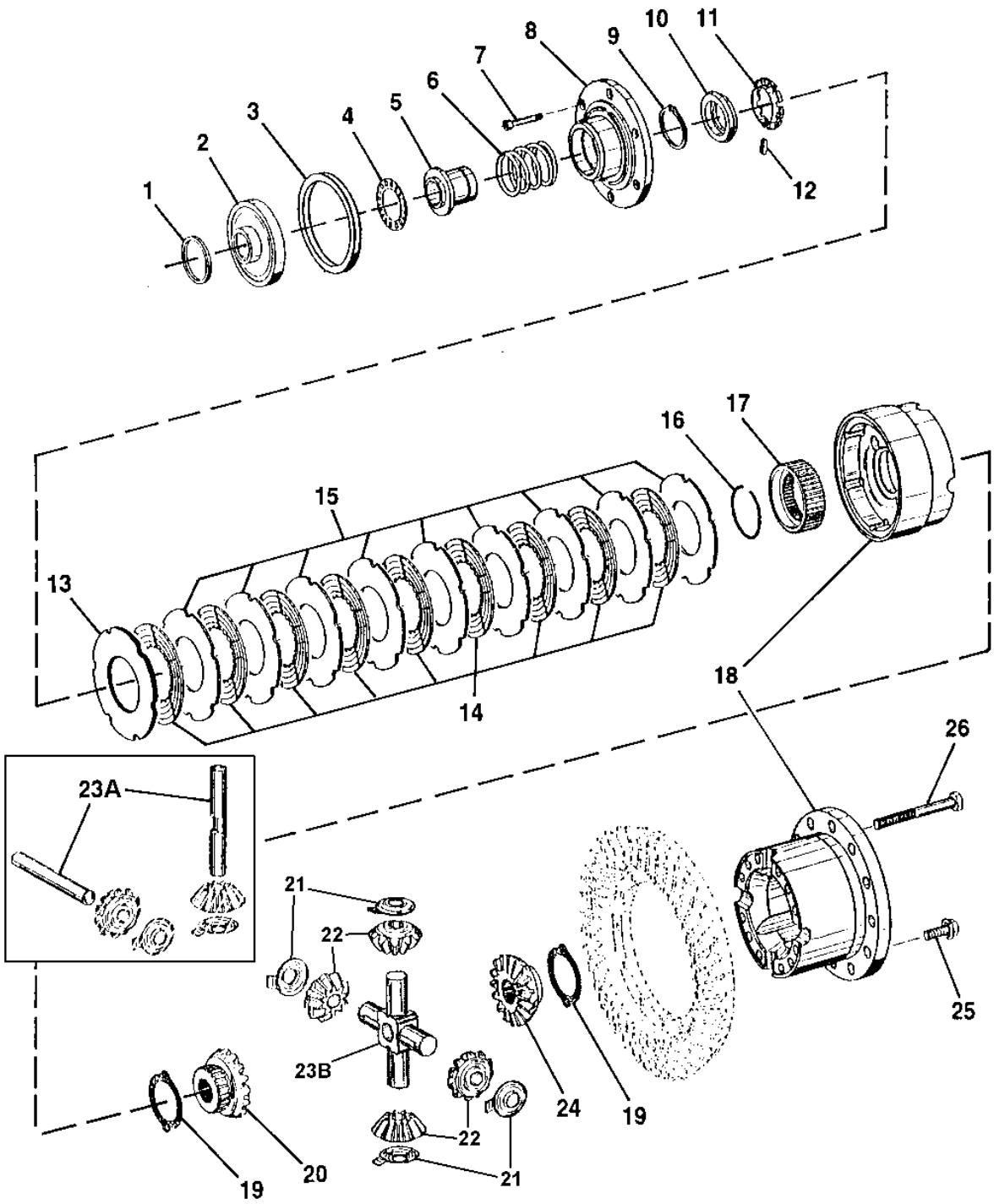

T197981

DIFFERENTIAL ASSEMBLY, WITH LOCK

KEY	PART NO.	PART NAME	QTY	SERIAL NO.	REMARKS
1	T184688	O-RING	1		
2	T164933	PISTON	1		
3	T184689	O-RING	1		
4	AT184309	NEEDLE BEARING	1		
5	T164934	BUSHING	1		
6	T164980	COMPRESSION SPRING	1		
7	T164940	SCREW	6		
8	T164971	COVER	1		(12 BOLT COVER SUBS FOR 6 BOLT COVER) (ORDER (12) T164940)
9	T159519	SNAP RING	1		
10	T164972	PLATE	1		
11	T164970	RETAINER	1		
12	T164938	LEVER	12		
13	T164979	PLATE	1		
14	AT184334	DISK WITH INNER SPLINE	8		
15	T164966	CLUTCH PLATE	8		1.2 MM
	T166238	CLUTCH PLATE	8		1.4 MM
16	40M7106	SNAP RING	1		
17	T187819	HUB	1		
18	AT195152	HOUSING	1		
19	T164959	WASHER	2		
20	T164960	GEAR	1		
21	T205960	THRUST WASHER	4		(SUB FOR T164963)
22	T164962	GEAR	4		
23A	.....	PINION SHAFT	2	-924268	(T164964 NO LONGER AVAILABLE) (ORDER T205961, (4) T205960 AND (2) T206519)
	.....	PINION SHAFT	2	924269-932800	(T164964 NO LONGER AVAILABLE) (ORDER T205961 AND (2) T206519)
23B	T205961	PINION SHAFT	1	932801-	
24	T164961	GEAR	1		
25	TTZF100236	SCREW	12		(SUB FOR T164939)
26	19M8057	CAP SCREW	12		

DIFFERENTIAL LOCK PLUMBING

T154477 -UN-30APR02

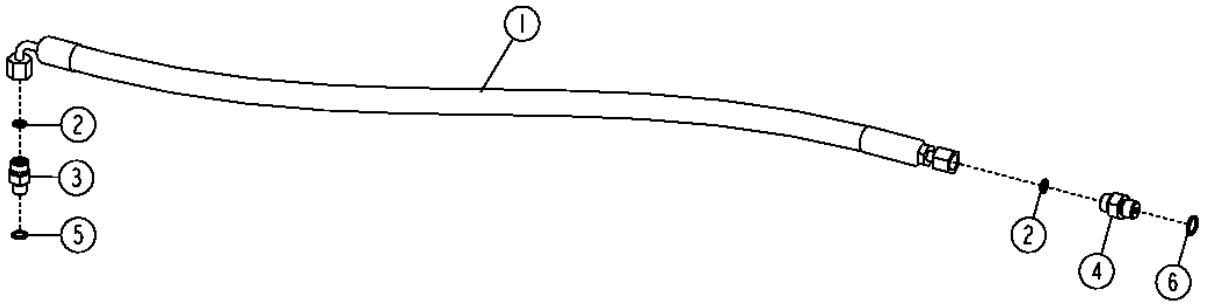

T154477

KEY	PART NO.	PART NAME	QTY	SERIAL NO.	REMARKS
1	AT171637	HYDRAULIC HOSE - FABRICATE	1	-XXXXXX	9/16" X 915 MM (36") X 9/16"
	AT309683	HYDRAULIC HOSE - FABRICATE	1	XXXXXX-	9/16" X 934 MM (36-3/4") X 9/16"
2	T77814	O-RING	2		
3	38H1159	ADAPTER	1	-XXXXXX	
	38H1003	ELBOW FITTING	1	XXXXXX-	90 DEGREE
4	38H1168	ADAPTER	1		
5	R28782	O-RING	1		
6	R26448	O-RING	1		

STANDARD FRONT AXLE
(WITHOUT MECHANICAL FRONT WHEEL DRIVE)

T159440 -UN-17SEP02

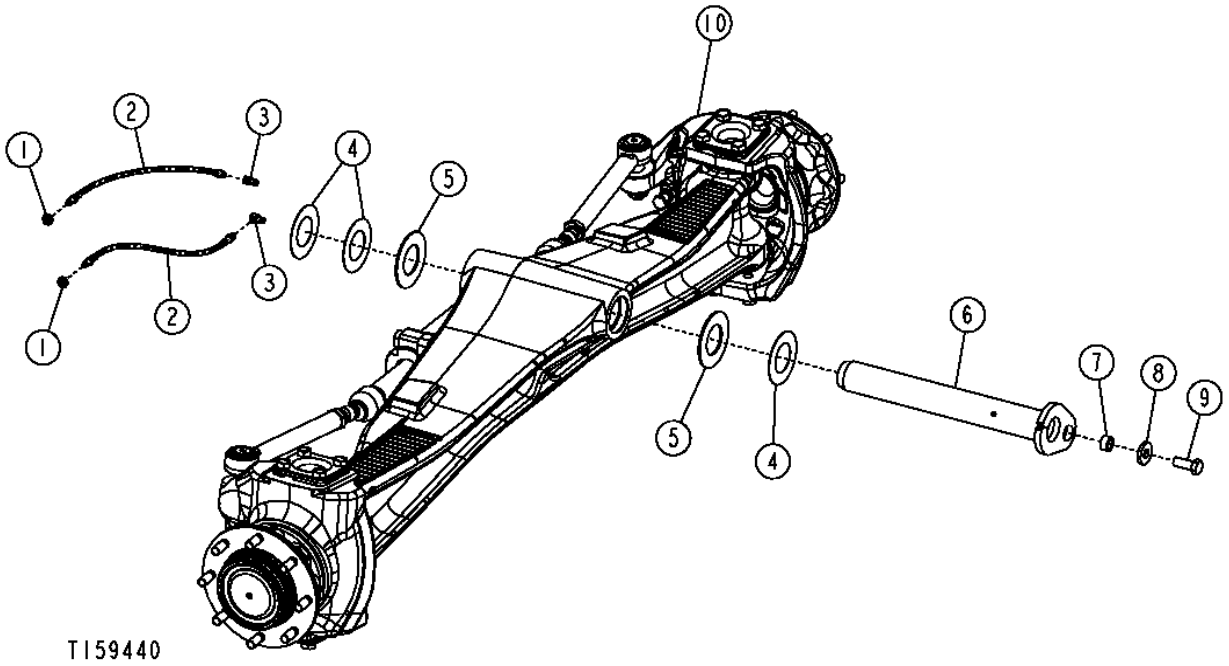

KEY	PART NO.	PART NAME	QTY	TRACTOR SERIAL NO.	REMARKS
1	E12379	NUT	2	-938195	
	E12379	NUT	1	938196-	
2A	AT224949	HOSE	2	-938195	
2B	AT114019	HYDRAULIC HOSE	1	938196-	
3	JD7838	ADAPTER	2	-938195	
	JD7838	ADAPTER	1	938196-	
4	T187399	THRUST WASHER	4		
5	T187485	THRUST WASHER	2		
6	AT190630	PIN FASTENER	1	-938195	
	AT309255	PIN	1	938196-	
7	T18145	BUSHING	1		
8	T119912	WASHER	1		
9	19M7488	CAP SCREW	1		M16 X 40
10	.....	AXLE	1	-938195	(SUB AT308203) (SUB FOR AT195136) CONVENIENCE ASSEMBLY (ALSO ORDER T125615 TO SEAL OPEN HOLE IN PIVOT BORE WITH NEW ASSEMBLY)
	AT308203	**FRONT AXLE**	**1**	**938196-**	**(CONVENIENCE ASSEMBLY)**

STANDARD FRONT AXLE HOUSING
(WITHOUT MECHANICAL FRONT WHEEL DRIVE)

T159541 -UN-23SEP02

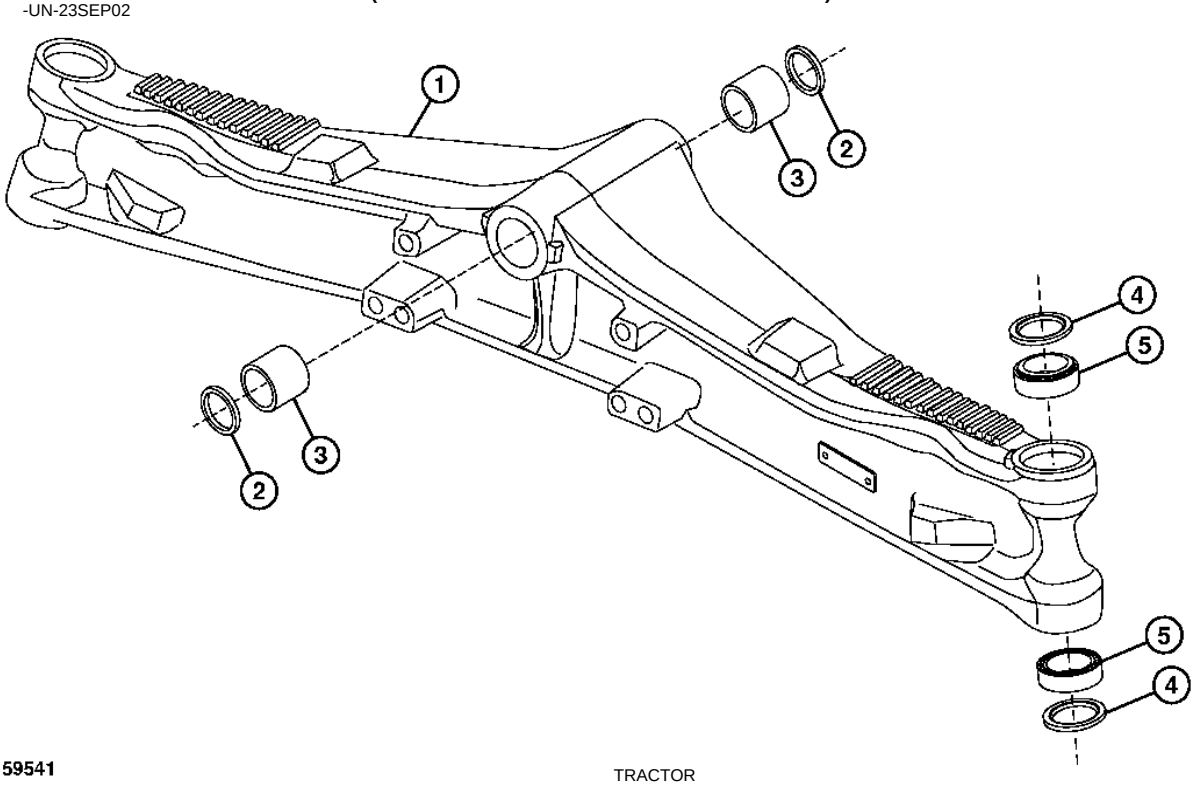

T159541

KEY	PART NO.	PART NAME	QTY	TRACTOR SERIAL NO.	REMARKS
1	.....	BEAM	1	-938195	(SUB T206517) (SUB FOR T188450) (ALSO ORDER T125615 TO SEAL OPEN HOLE IN PIVOT BORE WHEN ORDERING NEW BEAM)
	T206517	BEAM	1	938196-	
2	AT196168	SEAL	2		
3	T188449	BUSHING	2		
4	AT196172	SEAL	4		
5	AT196171	BEARING	4		

SWIVEL HOUSINGS AND STEERING CYLINDER
(WITHOUT MECHANICAL FRONT WHEEL DRIVE)

T159542 -UN-11OCT02

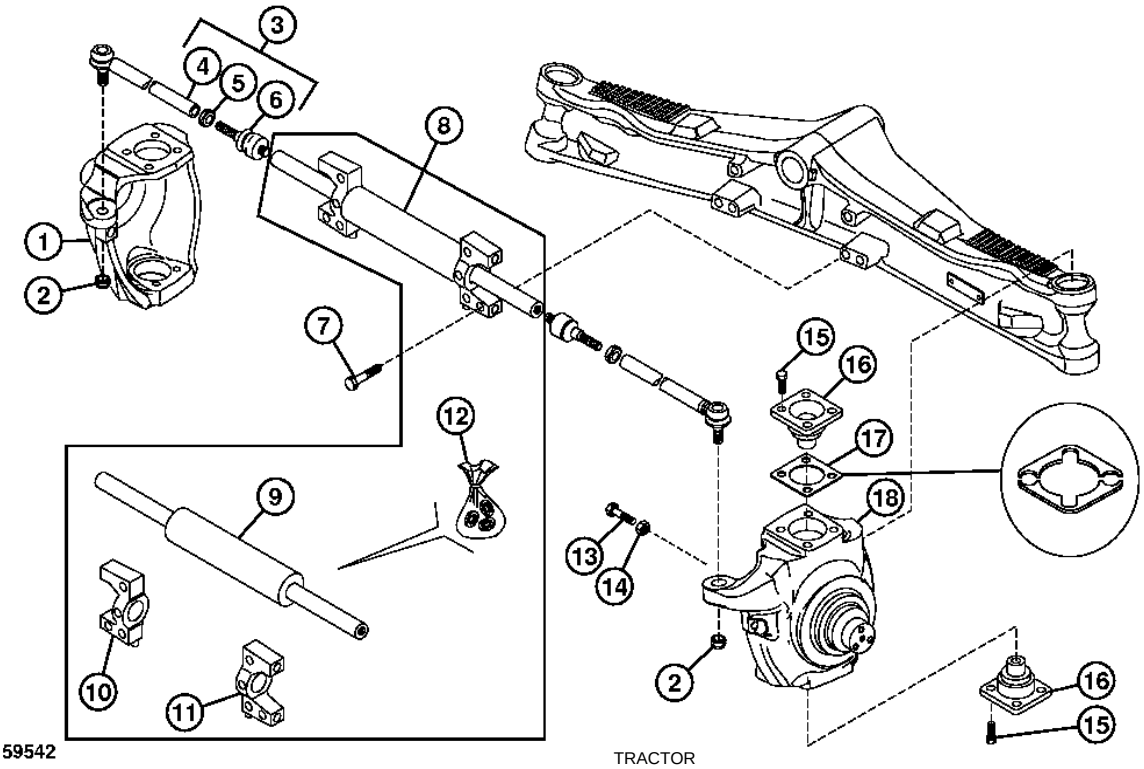

T159542

KEY	PART NO.	PART NAME	QTY	TRACTOR SERIAL NO.	REMARKS
1	T188453	HOUSING	1		L.H.
2	AT196166	LOCK NUT	2		M24
3	AT196175	TIE ROD	2		
4	T191424	TIE ROD	2		
5	14M7309	NUT	2		M24
6	T191423	BALL JOINT	2		
7	T116290	BOLT	6		M20 X 80
8	AT196173	HYDRAULIC CYLINDER	1		
9	AT280865	ROD	1		
10	.....	HYDRAULIC CYLINDER CAP	1		L.H.
11	.....	HYDRAULIC CYLINDER CAP	1		R.H.
12	T191426	SEAL KIT	1		
13	R113878	CAP SCREW	2		M16 X 75
14	14M7260	NUT	2		M16
15	4288155	BOLT	16		M16 X 38
16	T188444	KINGPIN	4		
17	T188445	SHIM	1		0.15MM
	T188446	SHIM	1		0.20MM
	T188447	SHIM	1		0.25MM
18	T188452	HOUSING	1		R.H.

WHEEL HUB
(WITHOUT MECHANICAL FRONT WHEEL DRIVE)

T159543 -UN-23SEP02

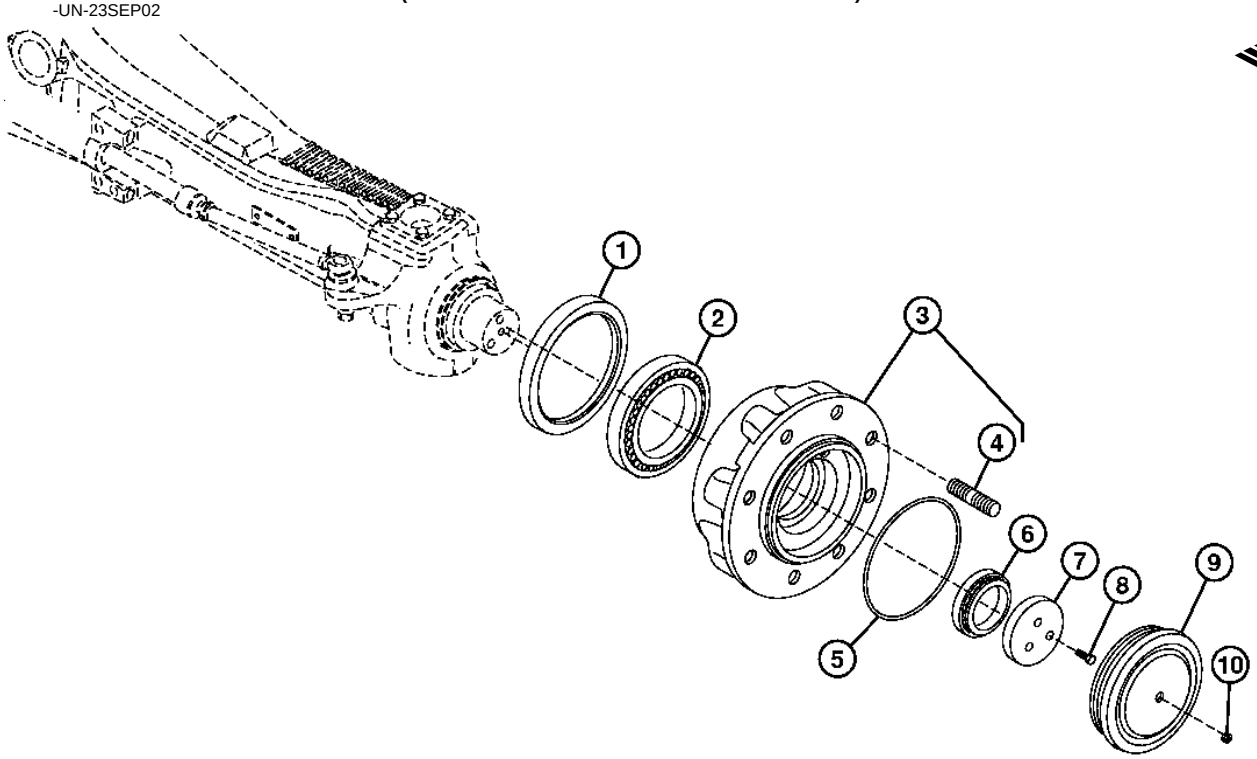

T159543

KEY	PART NO.	PART NAME	QTY	TRACTOR SERIAL NO.	REMARKS
1	AT280866	SEAL	2		
2	AT196169	BEARING	2		
3	AT280867	HUB	2		
4	T188451	STUD	16		
5	T188441	O-RING	2		
6	JD10063	TAPERED ROLLER BEARING	2		
7	T188442	RING	2		
8	19M8011	CAP SCREW	6		M12 X 30
9	T188448	CAP	2		
10	R121079	PLUG	2		M10 X 1

MEMORANDA

FRONT WHEEL DRIVE AXLE PIVOT PIN
(WITH MECHANICAL FRONT WHEEL DRIVE)

T197879 -UN-20FEB04

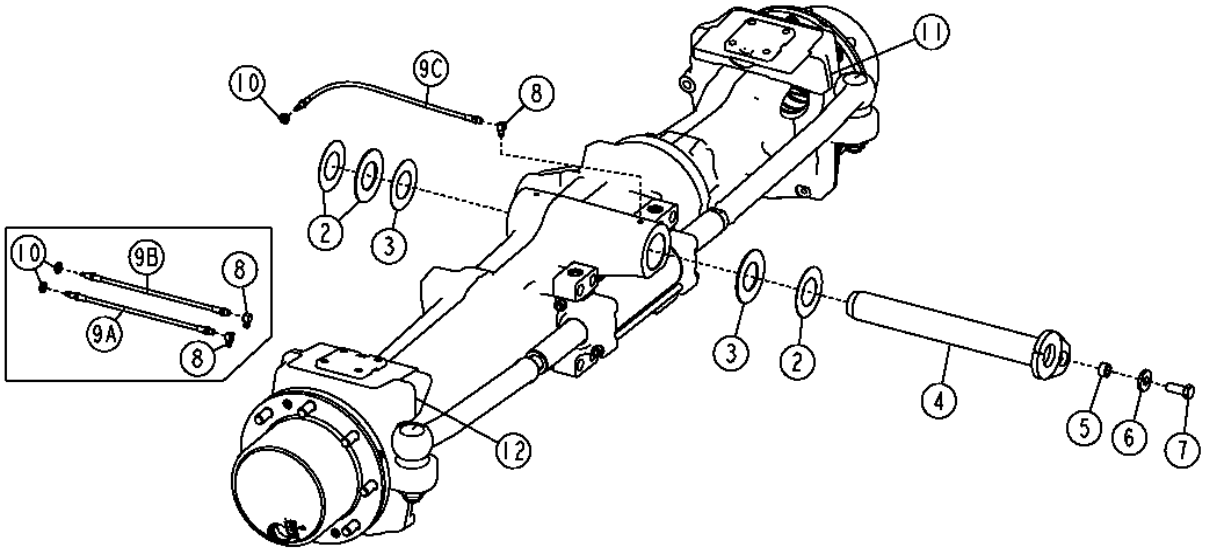

T197879

KEY	PART NO.	PART NAME	QTY	TRACTOR SERIAL NO.	REMARKS
1	.....	AXLE	1	-938195	(CONVENIENCE ASSEMBLY) (SUB AT308061) (SUB FOR AT191186) (ALSO ORDER T125615 TO SEAL OPEN HOLE IN PIVOT BORE WITH NEW ASSEMBLY)
	AT308061	**AXLE**	**1**	**938196-**	**(CONVENIENCE ASSEMBLY)**
2	T187399	THRUST WASHER	4		
3	T187485	THRUST WASHER	2		
4	AT190630	PIN FASTENER	1	-938195	
	AT309255	PIN	1	938196-	
5	T18145	BUSHING	1		
6	T119912	WASHER	1		
7	19M7488	CAP SCREW	1		M16 X 40
8	JD7838	ADAPTER	2	-938195	
	JD7838	ADAPTER	1	938196-	
9A	AT224949	HOSE	1	-938195	
9B	AT173254	HYDRAULIC HOSE	1	-938195	
9C	AT114019	HYDRAULIC HOSE	1	938196-	
10	E12379	NUT	2	-938195	
	E12379	NUT	1	938196-	
11	T184938	HOUSING	1	-938195	
12	T184939	HOUSING	1	-938195	

DRIVE SHAFT
(WITH MECHANICAL FRONT WHEEL DRIVE)

T156391 -UN-20JUN02

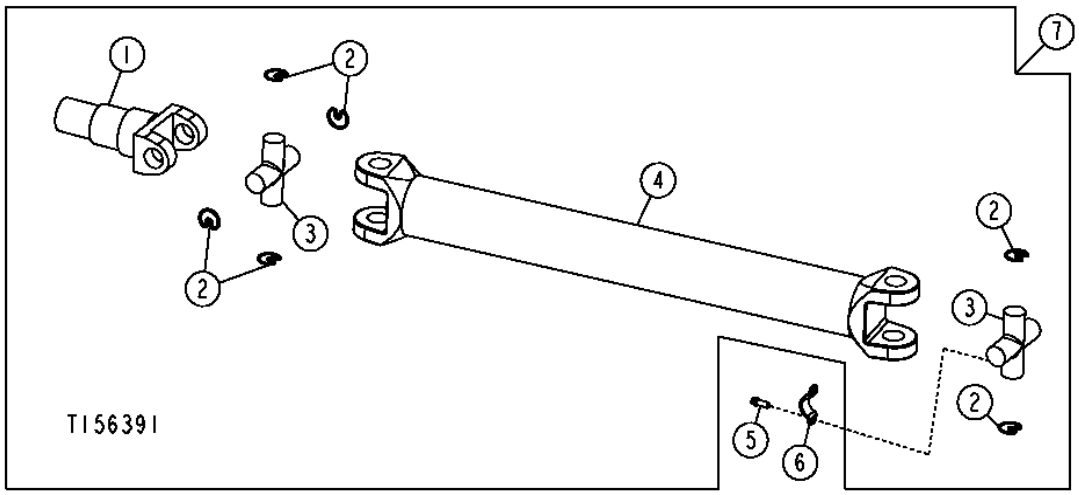

KEY	PART NO.	PART NAME	QTY	SERIAL NO.	REMARKS
1	AT182875	UNIVERSAL JOINT YOKE	1		
	AT179590	SEAL	1		(SLIDING YOKE)
2	N119316	SNAP RING	6		
3	AT178390	KIT	2		(U-JOINT) LUBED FOR LIFE
4	.....	UNIVERSAL DRIVESHAFT	1		(ORDER AT190474)
5	T113128	SCREW	4		5/16" X 3/4"
6	T69938	HALF CLAMP	2		
7	AT190474	UNIVERSAL DRIVESHAFT	1		

FRONT AXLE HOUSING AND TIE RODS
(WITH MECHANICAL FRONT WHEEL DRIVE)

T160733 -UN-29OCT02

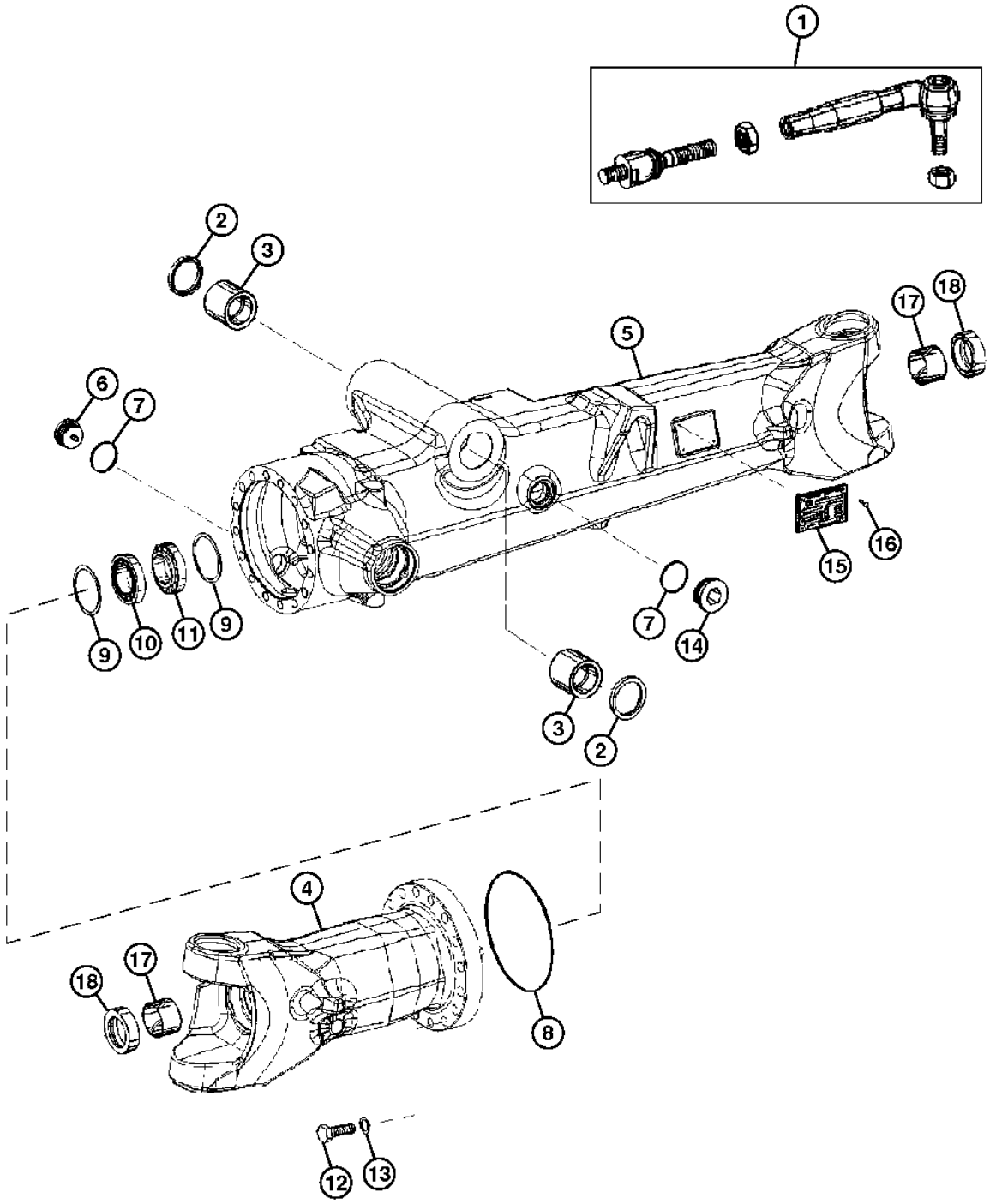

T160733

FRONT AXLE HOUSING AND TIE RODS
(WITH MECHANICAL FRONT WHEEL DRIVE)

KEY	PART NO.	PART NAME	QTY	SERIAL NO.	REMARKS
1	AT191189	TIE ROD	1		L.H.
	AT191190	TIE ROD	1		R.H.
2	T187651	SEAL	2		
3	T187639	BUSHING	2		
4	T184941	HOUSING	1		L.H.
5	.....	HOUSING	1	-938195	(SUB T206433) (SUB FOR T184940) R.H. (ALSO ORDER T125615 TO SEAL OPEN HOLE IN PIVOT BORE WITH NEW ASSEMBLY)
	T206433	HOUSING	1	938196-	R.H.
6	L56822	PIPE PLUG	1		
7	L55580	O-RING	2		
8	T170189	O-RING	1		
9	L41005	SHIM	1		.1MM
	L41004	SHIM	1		.2MM
	L41003	SHIM	1		.3MM
	L41002	SHIM	1		.4MM
	L101689	SHIM	1		.45MM
	L41001	SHIM	1		.5MM
	L101690	SHIM	1		.55MM
	L41000	SHIM	1		.6MM
	L112211	SHIM	1		.65MM
	L112212	SHIM	1		.70MM
	L112213	SHIM	1		.75MM
	L40999	SHIM	1		.8MM
	L112214	SHIM	1		.85MM
	L112215	SHIM	1		.9MM
	L112216	SHIM	1		.95MM
	L40998	SHIM	1		1.00MM
	L112222	SHIM	1		1.05MM
	L112217	SHIM	1		1.10MM
	L112218	SHIM	1		1.15MM
	L40997	SHIM	1		1.20MM
	L112219	SHIM	1		1.25MM
	L112220	SHIM	1		1.30MM
	L112221	SHIM	1		1.35MM
	L112210	SHIM	1		1.40MM
	L112209	SHIM	1		1.45MM
	L112208	SHIM	1		1.50MM
	L112207	SHIM	1		1.55MM
	L112206	SHIM	1		1.60MM
	L112205	SHIM	1		1.65MM
	L112204	SHIM	1		1.70MM
	L112203	SHIM	1		1.75MM
	L112202	SHIM	1		1.80MM
	L112201	SHIM	1		1.85MM
	L112200	SHIM	1		1.90MM
	L112199	SHIM	1		1.95MM
	L151281	SHIM	1		2.05MM
	L151282	SHIM	1		2.10MM
	L151283	SHIM	1		2.15MM
	L151284	SHIM	1		2.20MM
	L151285	SHIM	1		2.25MM
	L151286	SHIM	1		2.30MM
	L151287	SHIM	1		2.35MM
	L151288	SHIM	1		2.40MM
	L151289	SHIM	1		2.45MM
	L151290	SHIM	1		2.50MM
10	JD37087	TAPERED ROLLER BEARING	1		
11	JD37219	BEARING	1		
12	19M7369	CAP SCREW	16		M16 X 60
13	L40274	WASHER	16		
14	15M7030	PIPE PLUG	1		
15	.....	SERIAL NUMBER PLATE	1		
16	.....	GROOVE PIN	4		
17	L114558	BUSHING	2		
18	L110233	SEAL	2		

FRONT AXLE HOUSINGS,HUBS AND UNIVERSAL JOINTS
(WITH MECHANICAL FRONT WHEEL DRIVE)

T161048 -UN-30OCT02

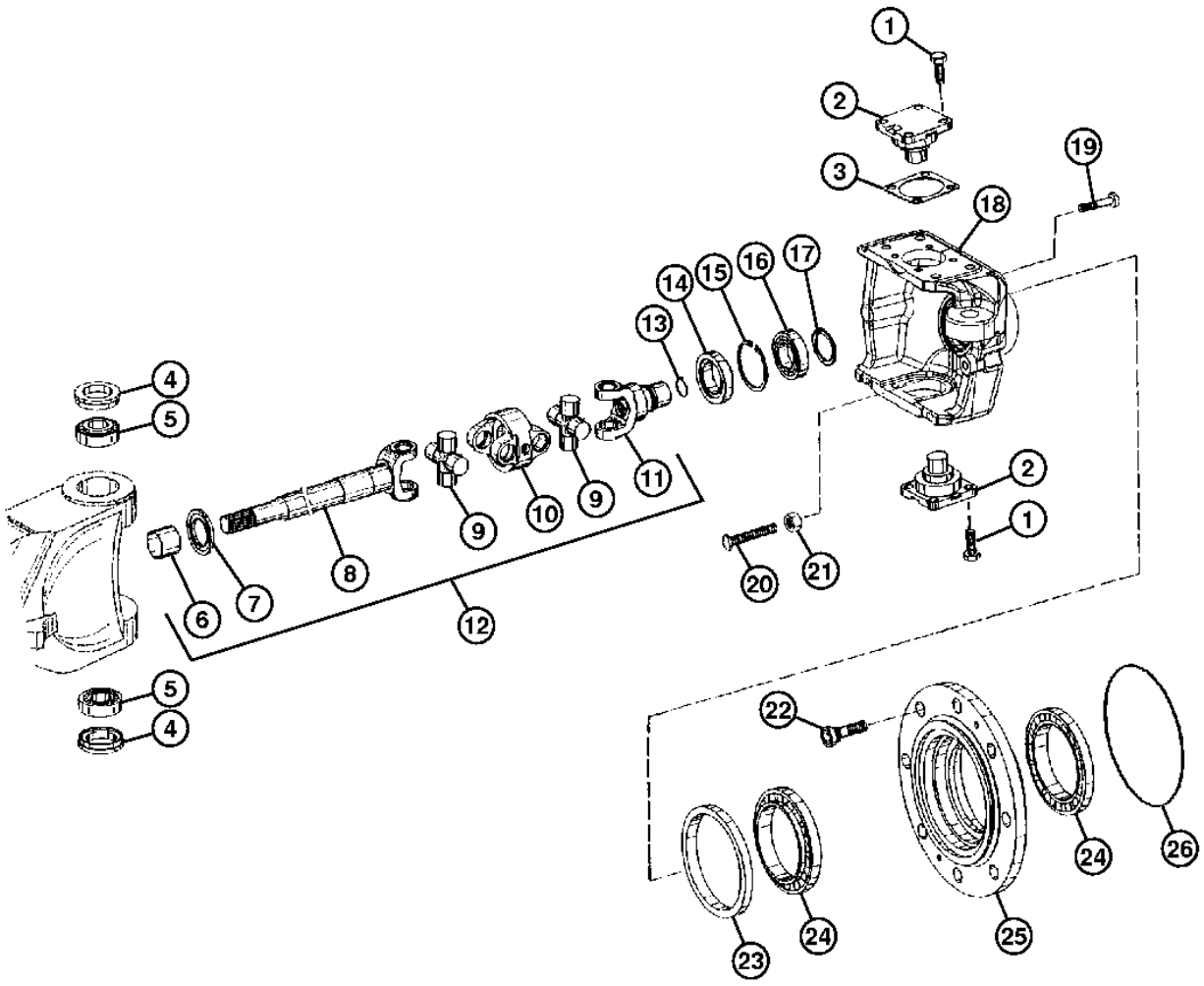

T161048

FRONT AXLE HOUSINGS,HUBS AND UNIVERSAL JOINTS
(WITH MECHANICAL FRONT WHEEL DRIVE)

KEY	PART NO.	PART NAME	QTY	SERIAL NO.	REMARKS
1	19M6332	CAP SCREW	16		M14 X 35
2	L112111	PIN	4		
3	L110711	SHIM	1		0.2MM
	L110712	SHIM	1		0.3MM
	L110713	SHIM	1		0.4MM
	L116247	SHIM	1		0.5MM
	L110714	SHIM	1		0.6MM
	L116246	SHIM	1		0.7MM
	L110715	SHIM	1		0.8MM
	L110716	SHIM	1		1.0MM
	L151983	SHIM	1		1.2MM
	L110718	SHIM	1		1.4MM
	L151984	SHIM	1		1.6MM
	L151985	SHIM	1		1.8MM
	L110721	SHIM	1		2.0MM
4	AL110924	SEAL	4		
5	AL111096	BEARING	4		
6	L101813	BUSHING	2		
7	L101812	SHEET	2		
8	.....	SHAFT	2		
9	T201277	UNIVERSAL JOINT CROSS	4		
10	T201271	UNIVERSAL JOINT YOKE	2		
11	.....	YOKE	2		
12	AT195044	UNIVERSAL DRIVESHAFT	1		L.H.
	AT195043	UNIVERSAL DRIVESHAFT	1		R.H. (NOT ILLUSTRATED)
13	T82543	SNAP RING	2		
14	AL81843	SEAL	2		
15	40M1873	SNAP RING	2		
16	AL81776	BEARING	2		
17	T159519	SNAP RING	2		
18	T184938	HOUSING	1		L.H.
	T184939	HOUSING	1		R.H. (NOT ILLUSTRATED)
19	19M8738	CAP SCREW	16		M10 X 45
20	L114785	SCREW	4		
21	T187685	NUT	4		
22	L55598	WHEEL BOLT	16		
23	T187684	SEAL	2		
24	AL81844	TAPERED ROLLER BEARING	4		
25	L101713	HUB	2		
26	L40317	O-RING	2		

PLANETARY DRIVE
(WITH MECHANICAL FRONT WHEEL DRIVE)

T161055 -UN-29OCT02

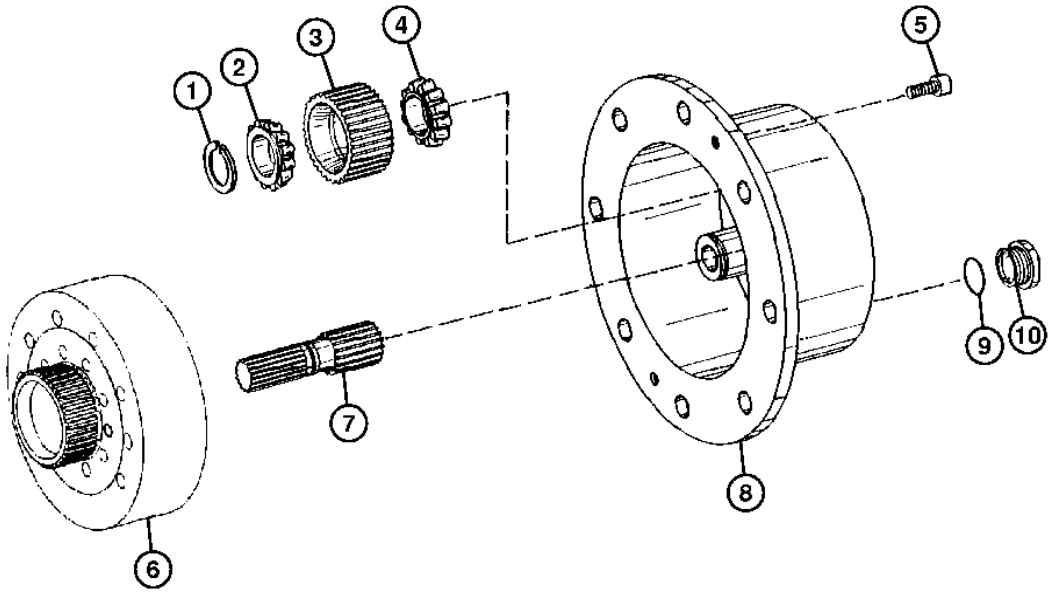

T161055

KEY	PART NO.	PART NAME	QTY	SERIAL NO.	REMARKS
1	L100169	SNAP RING	6		
2	AL117021	BEARING CONE	6		
3	T187690	PLANET PINION	6		
4	AL117022	BEARING	6		
5	19M5039	SCREW	4		M10 X 20
6	L101724	RING GEAR	2		
7	T187687	PINION SHAFT	2		
8	T187688	PLANET PINION CARRIER	2		
9	L55580	O-RING	2		
10	T187689	PLUG	2		

MEMORANDA

LIMITED SLIP DIFFERENTIAL
(WITH MECHANICAL FRONT WHEEL DRIVE)

T160679 -UN-25OCT02

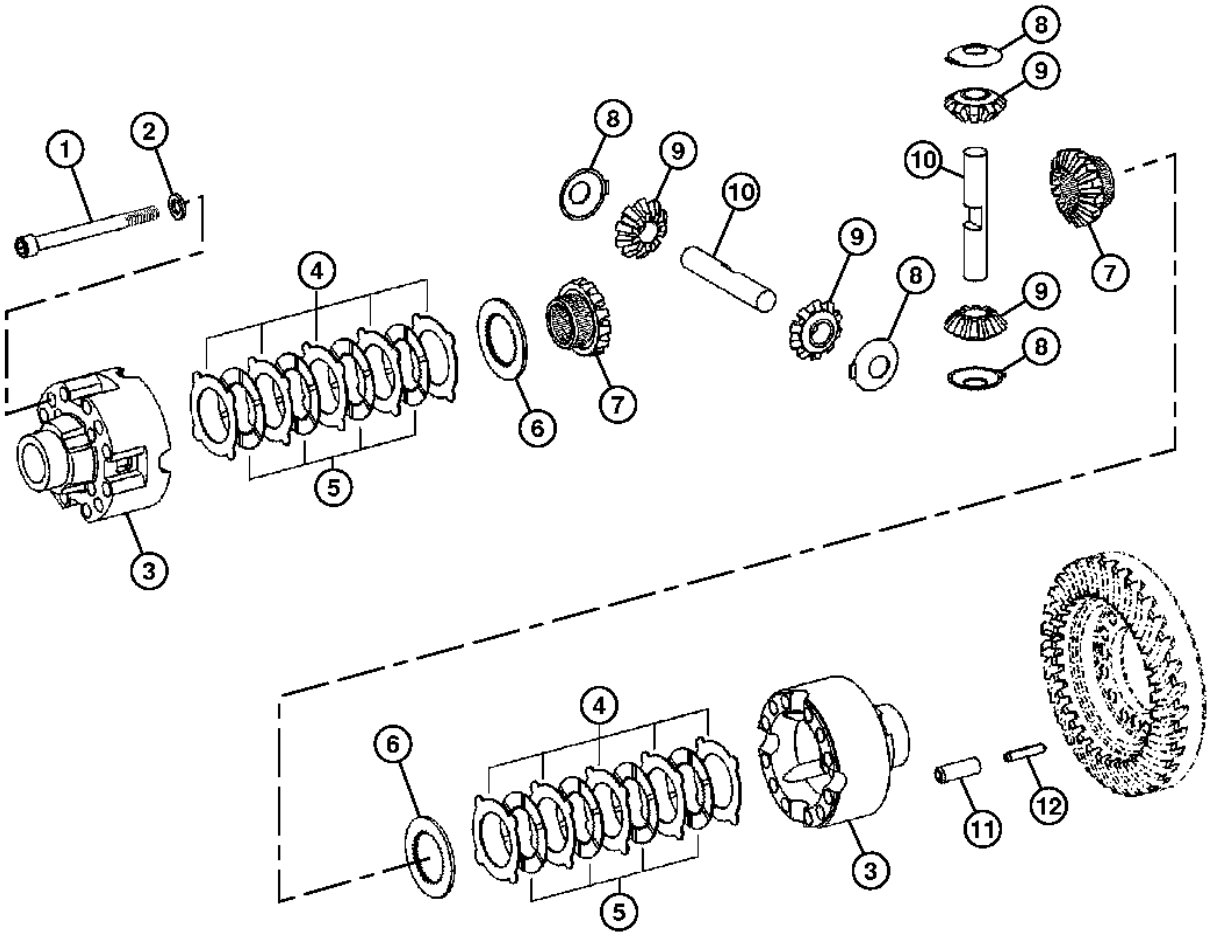

T160679

LIMITED SLIP DIFFERENTIAL
(WITH MECHANICAL FRONT WHEEL DRIVE)

KEY	PART NO.	PART NAME	QTY	SERIAL NO.	REMARKS
1	19M8119	SCREW	12		M12 X 130
2	R75522	LOCK WASHER	12		
3	AT84713	HOUSING	1		
4	L62419	DISK WITH OUTER SPLINE	10		1.2 MM
	L35577	DISK WITH OUTER SPLINE	10		1.3 MM
	Z72412	DISK WITH OUTER SPLINE	10		1.4 MM
5	T123033	CLUTCH DISK	8		
6	L40130	DISK WITH INNER SPLINE	2		
7	Z72413	BEVEL GEAR	2		
8	L40253	THRUST WASHER	4		
9	Z72414	BEVEL GEAR	4		
10	L39983	SHAFT	2		
11	34M7135	SPRING PIN	4		14 X 40 MM
12	34M7047	SPRING PIN	4		8 X 40 MM

SPIRAL BEVEL GEAR AND INPUT FLANGE
(WITH MECHANICAL FRONT WHEEL DRIVE)

T160641 -UN-25OCT02

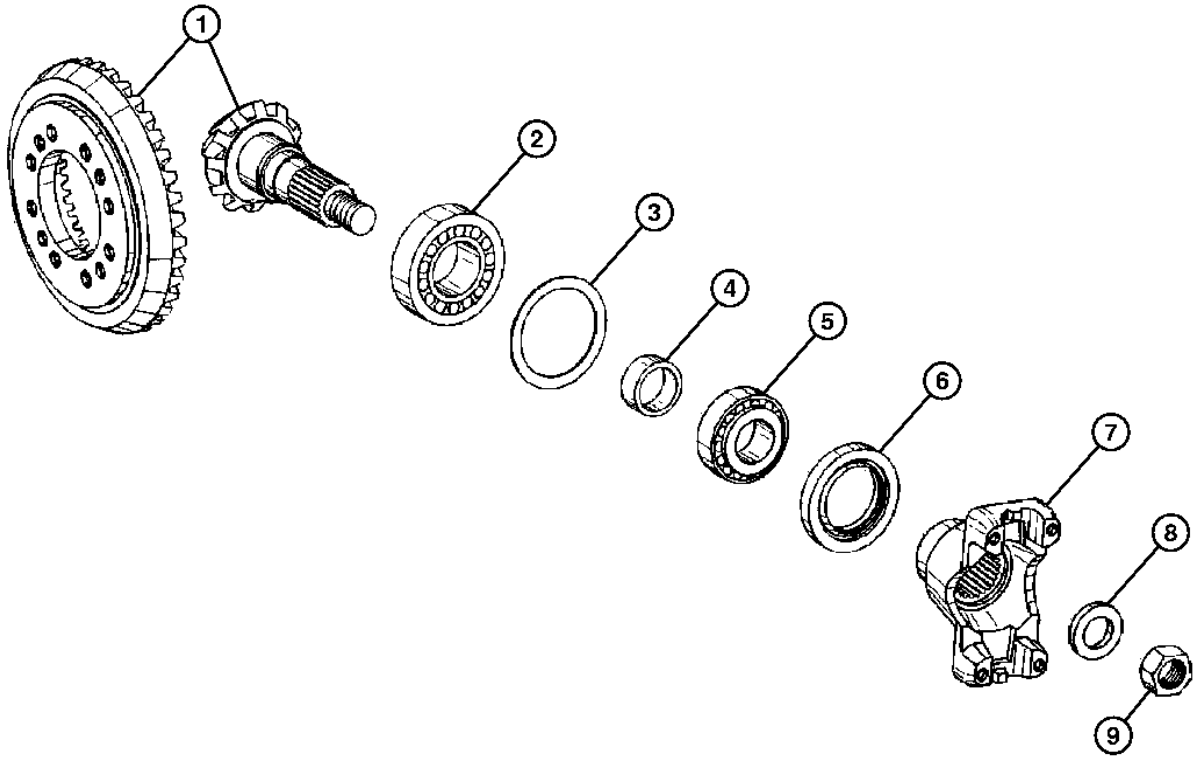

T160641

SPIRAL BEVEL GEAR AND INPUT FLANGE
(WITH MECHANICAL FRONT WHEEL DRIVE)

KEY	PART NO.	PART NAME	QTY	SERIAL NO.	REMARKS
1	AT191188	BEVEL GEAR DRIVE	1		
2	AL79794	TAPERED ROLLER BEARING	1		
3	L55606	SHIM	AR		0.650 MM (0.026")
	L55607	SHIM	AR		0.700 MM (0.028")
	L55608	SHIM	AR		0.750 MM (0.030")
	L100592	WASHER	AR		0.800 MM
	L55610	WASHER	AR		0.859 MM
	L40996	WASHER	AR		0.900 MM
	L40995	WASHER	AR		0.950 MM
	L40982	WASHER	AR		1 MM
	L40983	WASHER	AR		1.050 MM
	L40984	WASHER	AR		1.100 MM
	L40985	WASHER	AR		1.150 MM
	L40986	WASHER	AR		1.200 MM
	L40987	WASHER	AR		1.250 MM
	L40988	WASHER	AR		1.300 MM
	L40989	WASHER	AR		1.350 MM
	L40990	WASHER	AR		1.400 MM
	L40991	WASHER	AR		1.450 MM
	L40992	WASHER	AR		1.500 MM
	L40993	WASHER	AR		1.550 MM
	L40994	WASHER	AR		1.600 MM
4	L100057	SPACER	AR		15.10MM (0.5945")
	L100059	SPACER	AR		15.30MM
	L100092	SPACER	AR		15.33MM (0.6035")
	L100060	SPACER	AR		15.40MM (0.6063")
	L100089	SPACER	AR		15.46MM (0.6089")
	L100096	SPACER	AR		15.48MM (0.6094")
	L100061	SPACER	AR		15.50MM
	L100086	SPACER	AR		15.63MM (0.6154")
	T183508	SPACER	AR		15.69MM
	L100063	SPACER	AR		15.70MM (0.6181")
	T183509	SPACER	AR		15.72MM
	L100083	SPACER	AR		15.76MM (0.6205")
	T183510	SPACER	AR		15.78MM
	T183511	SPACER	AR		15.81MM
	T183512	SPACER	AR		15.84MM
	T183513	SPACER	AR		15.88MM
	T183514	SPACER	AR		15.89MM
	T183515	SPACER	AR		15.91MM
	L100080	SPACER	AR		15.93MM (0.6272)
	T183516	SPACER	AR		15.94MM
	T183517	SPACER	AR		15.97MM
	L100066	SPACER	AR		16,00MM (0.6299")
	L100077	SPACER	AR		16.06MM (0.6323")
	L100074	SPACER	AR		16.23MM (0.6390")
	L100069	SPACER	AR		16.30MM (0.6417")
5	AL111096	BEARING	1		
6	AL116557	RING	1		
7	T187681	YOKE	1		
8	L35714	WASHER	1		
9	14M7498	LOCK NUT	1		M24

TRANSMISSION CONTROL LEVER

T135287 -UN-08NOV00

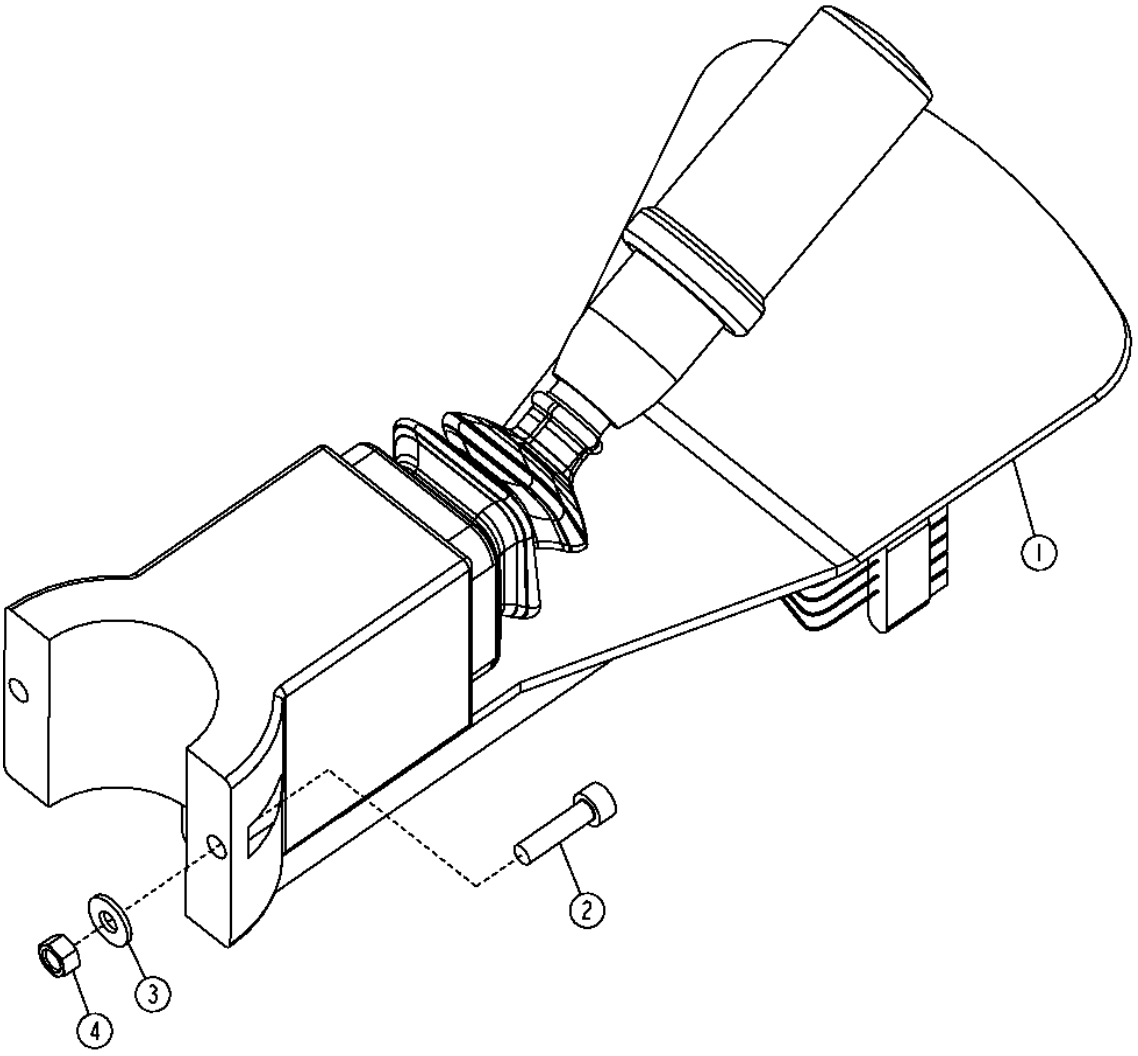

T135287

TRANSMISSION CONTROL LEVER

KEY	PART NO.	PART NAME	QTY	SERIAL NO.	REMARKS
1	AT182520	SWITCH	1		
2	19M8581	SCREW	2		M5 X 20
3	24H1283	WASHER	2		
4	14M7297	NUT	2		M5

MEMORANDA

TRANSMISSION DRIVE SHAFT (REAR)

T155221 -UN-23MAY02

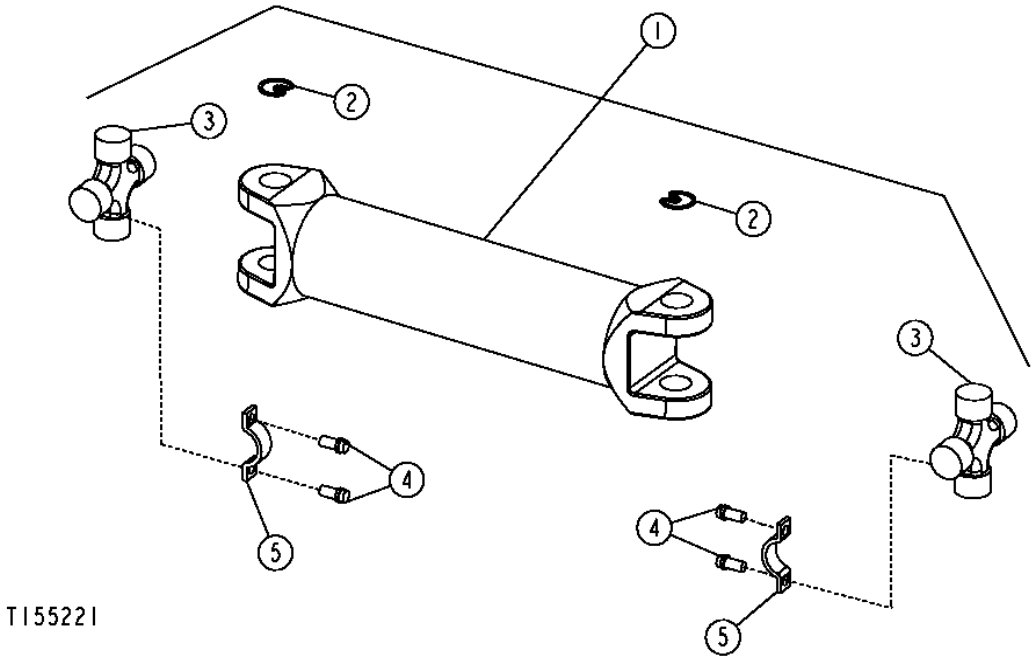

KEY	PART NO.	PART NAME	QTY	SERIAL NO.	REMARKS
1	AT175775	UNIVERSAL DRIVESHAFT	1		
2	N119316	SNAP RING	4		
3	AT207990	SPIDER	2		
4	R85169	SCREW	8		3/8" X 3/4"
5	R85168	CLAMP	4		

TRANSMISSION, DIPSTICK AND TUBE

T211457 -UN-03JUN05

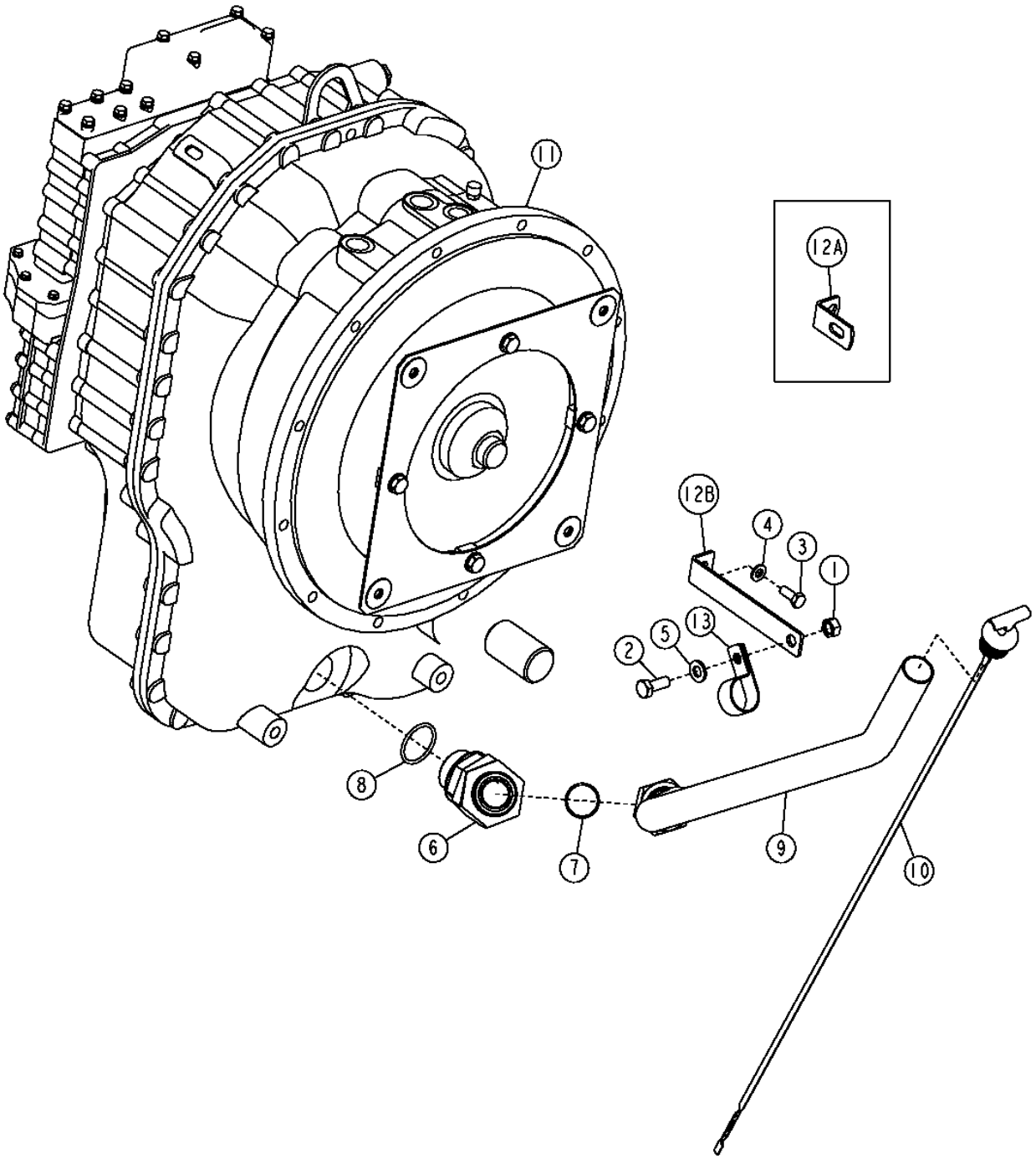

TRANSMISSION, DIPSTICK AND TUBE

KEY	PART NO.	PART NAME	QTY	SERIAL NO.	REMARKS
1	14M7274	NUT	1		M10
2	19M7402	CAP SCREW	1		M10 X 25
3	19M7881	SCREW	1		M8 X 20
4	24M7238	WASHER	1		
5	24M7239	WASHER	1		
6	38H1050	ELBOW FITTING	1		
7	T78612	O-RING	1		
8	U13639	O-RING	1		
9	AT191414	DIPSTICK TUBE	1		
10	AT191415	DIPSTICK	1		
11	AT192354	TRANSMISSION	1	-XXXXXX	(CONVENIENCE ASSEMBLY) (WITH MFWD)(INCLUDES TORQUE CONVERTOR, BELL HOUSING,TRANSMISSION CONTROL VALVE, TRANSMISSION SOLENOIDS,CHARGE PUMP AND FILTER)
	AT308713	TRANSMISSION	1	XXXXXX-	(CONVENIENCE ASSEMBLY) (WITH MFWD)(INCLUDES TORQUE CONVERTOR, BELL HOUSING,TRANSMISSION CONTROL VALVE, TRANSMISSION SOLENOIDS,CHARGE PUMP AND FILTER)
	AT192352	TRANSMISSION	1	-XXXXXX	(CONVENIENCE ASSEMBLY),(WITHOUT MFWD), (INCLUDES TORQUE CONVERTOR,BELL HOUSING, TRANSMISSION CONTROL VALVE,TRANSMISSION SOLENOIDS,CHARGE PUMP AND FILTER)
	AT308714	TRANSMISSION	1	XXXXXX-	(CONVENIENCE ASSEMBLY),(WITHOUT MFWD), (INCLUDES TORQUE CONVERTOR,BELL HOUSING, TRANSMISSION CONTROL VALVE,TRANSMISSION SOLENOIDS,CHARGE PUMP AND FILTER)
12A	R73975	BRACKET	1	-XXXXXX	
12B	T189008	ANGLE	1	XXXXXX-	
13	T26955	CLAMP	1		

TRANSMISSION HOUSING

T196028 -UN-06NOV03

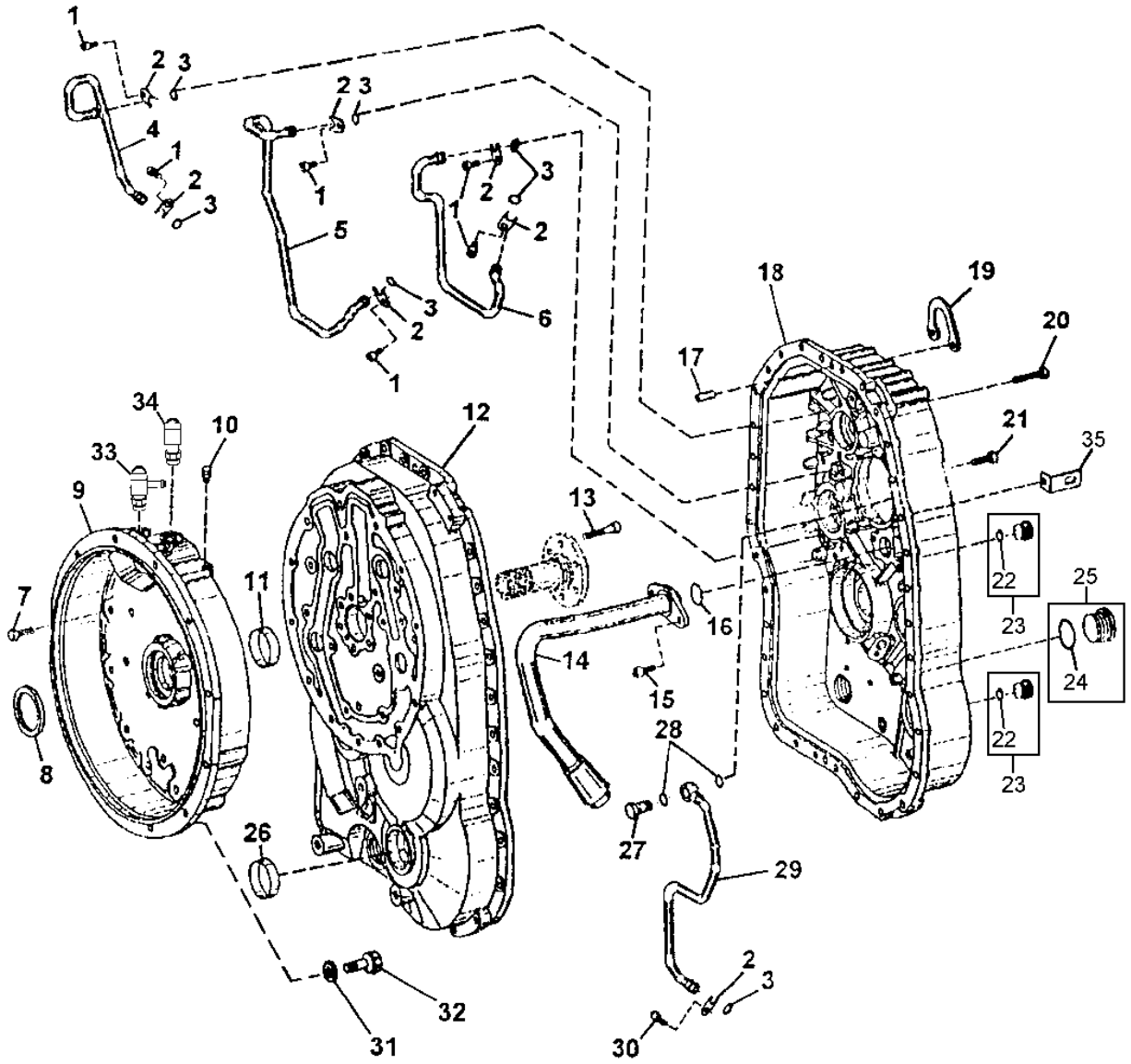

T196028

TRANSMISSION HOUSING

KEY	PART NO.	PART NAME	QTY	SERIAL NO.	REMARKS
1	T164648	CAP SCREW	6		
2	T164573	PLATE	6		
3	T161218	O-RING	6		
4	AT184060	OIL LINE	1		
5	AT184061	OIL LINE	1		
6	AT184062	OIL LINE	1		
7	T164660	SCREW	24		
8	AT179316	SEAL	1		
9	T164659	HOUSING	1		
10	T116918	BREATHER	1		
11	T164665	BUSHING	1		
12	T164657	HOUSING	1		FRONT, (ALSO ORDER T159683)
13	T164666	CAP SCREW	6		
14	AT184059	PIPE	1		
15	T161182	CAP SCREW	2		
16	T161181	O-RING	1		
17	T164662	PIN	2		
18	T164658	HOUSING	1	-926743	REAR
	T164658	HOUSING	1	926744-	(ALSO ORDER AT185791 AND U13639)
19	T159567	PLATE	1		
20	T164661	SCREW	6		
21	T164660	SCREW	28		
22	H81744	O-RING	2		
23	T159565	PLUG	2		
24	U13639	O-RING	1		
25	AT185791	PLUG	1		
26	T159683	COVER	1		MFWD OUTPUT SHAFT HOLE PLUG
27	T164703	CAP SCREW	1		
28	T164704	O-RING	1		
29	AT184360	OIL LINE	1		
30	T164648	CAP SCREW	1		
31	24M7239	WASHER	12		
32	19M7662	CAP SCREW	12		M10 X 30
33	AH64349	HOSE FITTING	1		
34	AH64349	HOSE FITTING	1		
35	T164671	BRACKET	2		

MEMORANDA

TORQUE CONVERTOR

TP69688 -UN-14SEP00

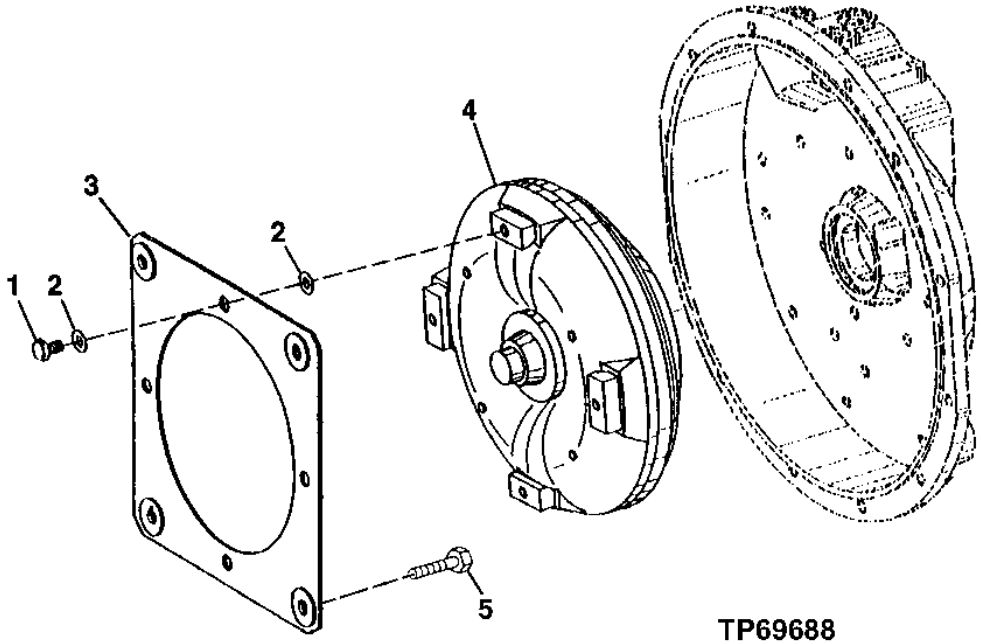

KEY	PART NO.	PART NAME	QTY	SERIAL NO.	REMARKS
1	19M8289	CAP SCREW	4		M10 X 16
2	T155324	THRUST WASHER	8		
3	AT179312	PLATE	2		
4	AT196806	TORQUE CONVERTER	1		
5	19M7402	CAP SCREW	4		M10 X 25

TRANSMISSION INPUT SHAFT

TP58038 -UN-18MAY99

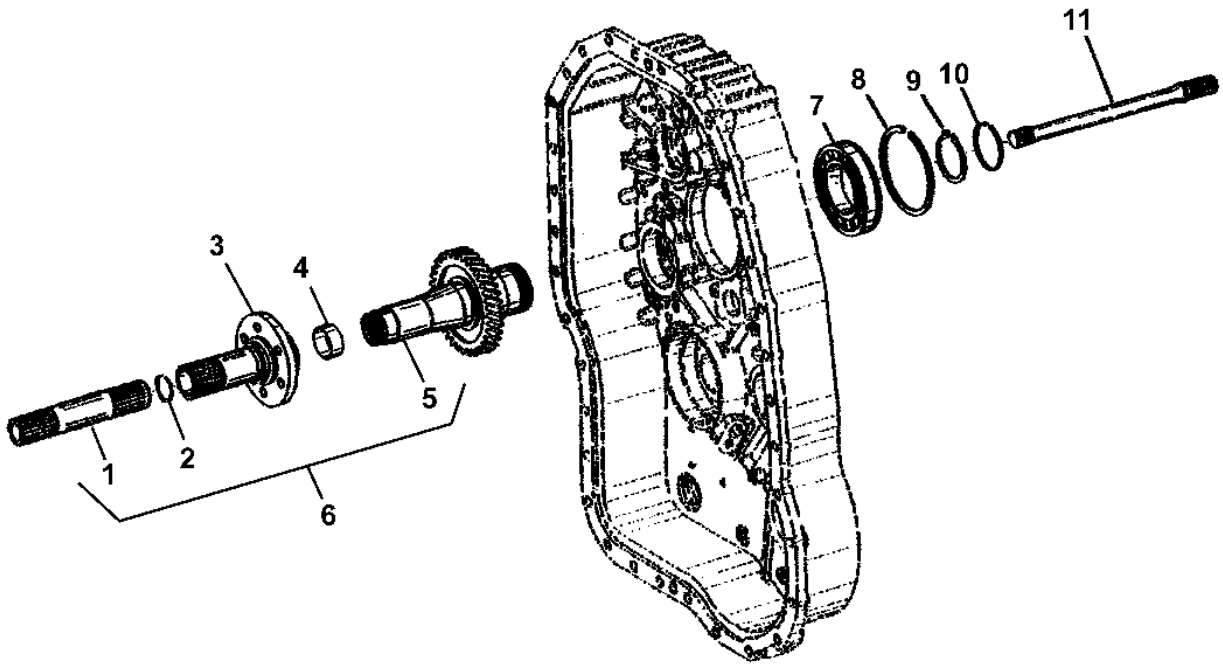

TP58038

TRANSMISSION INPUT SHAFT

KEY	PART NO.	PART NAME	QTY	SERIAL NO.	REMARKS
1	.....	SHAFT	1		
2	T158720	SNAP RING	1		
3	T164654	SHAFT	1		
4	T164655	BUSHING	1		
5	.....	SHAFT	1		
6	AT187711	SHAFT	1		
7	AT179314	BALL BEARING	1		
8	T158717	SNAP RING	1		
9	T158718	SNAP RING	1		
10	T158740	PACKING	1		
11	T155259	SHAFT	1		

FIRST GEAR CLUTCH ASSEMBLY

T151462 -UN-21FEB02

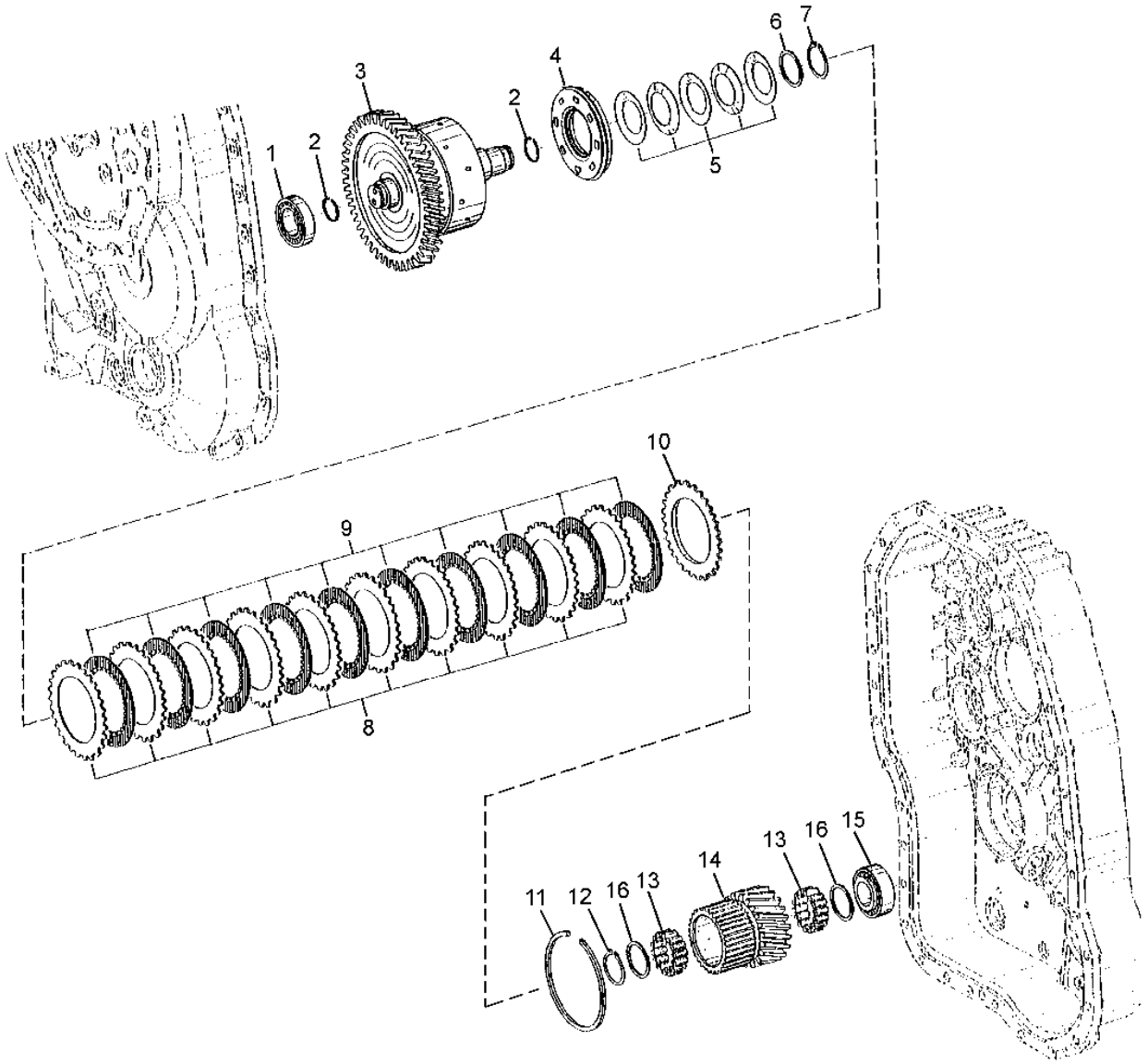

T151462

FIRST GEAR CLUTCH ASSEMBLY

KEY	PART NO.	PART NAME	QTY	SERIAL NO.	REMARKS
1	AT179472	TAPERED ROLLER BEARING	1		
2	T158742	RING	2		
3	AT197604	DRUM	1		DISK CARRIER
4	AT193704	PISTON	1		
5	T158775	DISK SPRING	5		
6	T164712	SHIM	1		2 MM
7	40M7058	SNAP RING	1		
8	T158801	CLUTCH PLATE	12		
9	T164626	DISK	12		
10	T161147	PLATE	1		
11	T161183	SNAP RING	1		4 MM
	T158778	SNAP RING	1		3.5 MM
	T159568	SNAP RING	1		3 MM
	T159569	SNAP RING	1		2.5 MM
	T159570	SNAP RING	1		2 MM
12	40M7058	SNAP RING	1		
13	AT185793	ROLLER	2		
14	T164640	GEAR	1		
15	AT184052	ROLLER	1		
16	T166062	THRUST WASHER	2		

SECOND GEAR CLUTCH ASSEMBLY

T151470 -UN-21FEB02

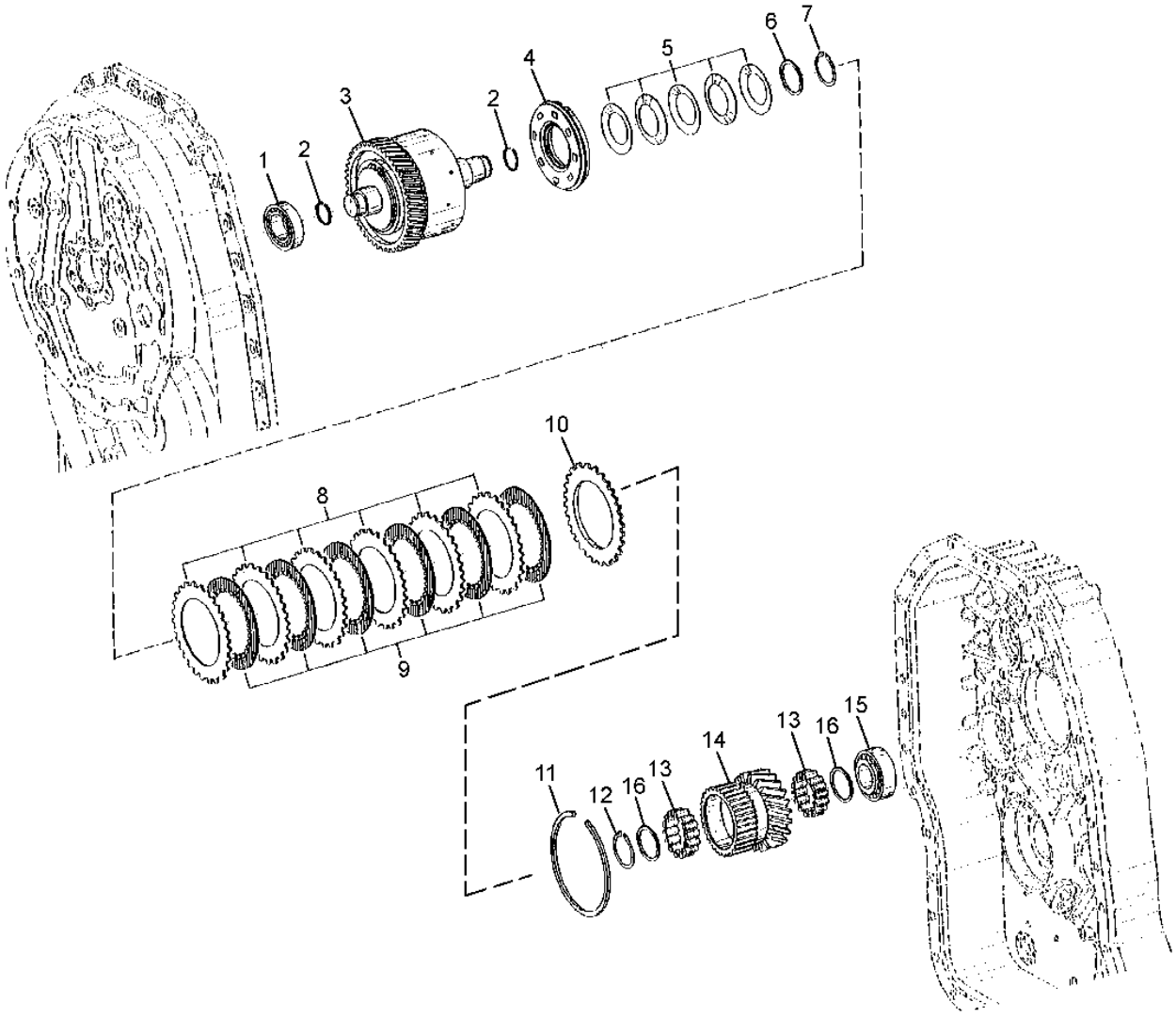

T151470

SECOND GEAR CLUTCH ASSEMBLY

KEY	PART NO.	PART NAME	QTY	SERIAL NO.	REMARKS
1	AT179472	TAPERED ROLLER BEARING	1		
2	T158742	RING	2		
3	AT197605	DRUM	1		DISK CARRIER
4	AT193704	PISTON	1		
5	T158775	DISK SPRING	5		
6	T164712	SHIM	1		
7	40M7058	SNAP RING	1		2 MM
8	T158801	CLUTCH PLATE	8		
9	T164626	DISK	8		
10	T161147	PLATE	1		
11	T161183	SNAP RING	1		4 MM
	T158778	SNAP RING	1		3.5 MM
	T159568	SNAP RING	1		3 MM
	T159569	SNAP RING	1		2.5 MM
	T159570	SNAP RING	1		2 MM
12	40M7058	SNAP RING	1		
13	AT185793	ROLLER	2		
14	T164643	GEAR	1		
15	AT184052	ROLLER BEARING	1		
16	T166062	SNAP RING	2		

THIRD GEAR CLUTCH ASSEMBLY

T151480 -UN-21FEB02

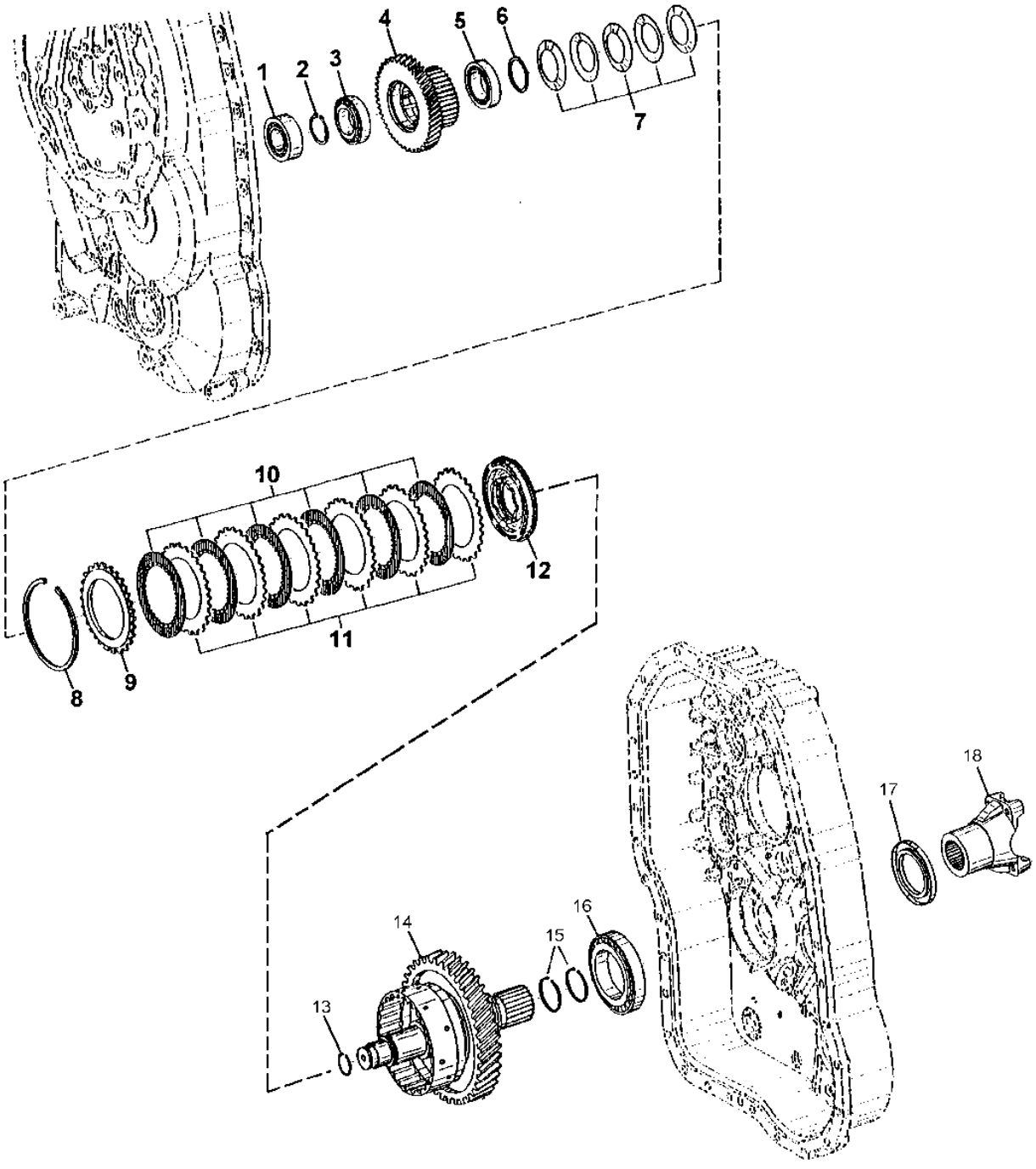

T151480

THIRD GEAR CLUTCH ASSEMBLY

KEY	PART NO.	PART NAME	QTY	SERIAL NO.	REMARKS
1	AT184052	ROLLER BEARING	1		
2	T161186	SNAP RING	1		3.2 MM
	T161187	SNAP RING	1		3.1 MM
	T161188	SNAP RING	1		3 MM
	T161189	SNAP RING	1		2.9 MM
	T161190	SNAP RING	1		2.8 MM
	T161191	SNAP RING	1		2.7 MM
	T161192	SNAP RING	1		2.6 MM
	T161193	SNAP RING	1		2.5 MM
	T164628	SNAP RING	1		2.3 MM
	T164629	SNAP RING	1		2.2 MM
	T164630	SNAP RING	1		2.1 MM
3	AT179470	TAPERED ROLLER BEARING	1		
4	T166065	GEAR	1		
5	AT179469	TAPERED ROLLER BEARING	1		
6	T158756	WASHER	1		
7	T158775	DISK SPRING	5		
8	T161183	SNAP RING	1		4 MM
	T158778	SNAP RING	1		3.5 MM
	T159568	SNAP RING	1		3 MM
	T159569	SNAP RING	1		2.5 MM
	T159570	SNAP RING	1		2 MM
9	T161147	PLATE	1		2 MM
10	T164626	DISK	6		
11	T158801	CLUTCH PLATE	6		
12	AT193704	PISTON	1		
13	T158742	RING	1		
14	AT197603	DRUM	1		DISK CARRIER
15	T164646	O-RING	2		
16	AT184056	ROLLER BEARING	1		
17	AT179481	SEAL	1		
18	AT181746	UNIVERSAL JOINT YOKE	1		

FOURTH GEAR CLUTCH ASSEMBLY

T151484 -UN-21FEB02

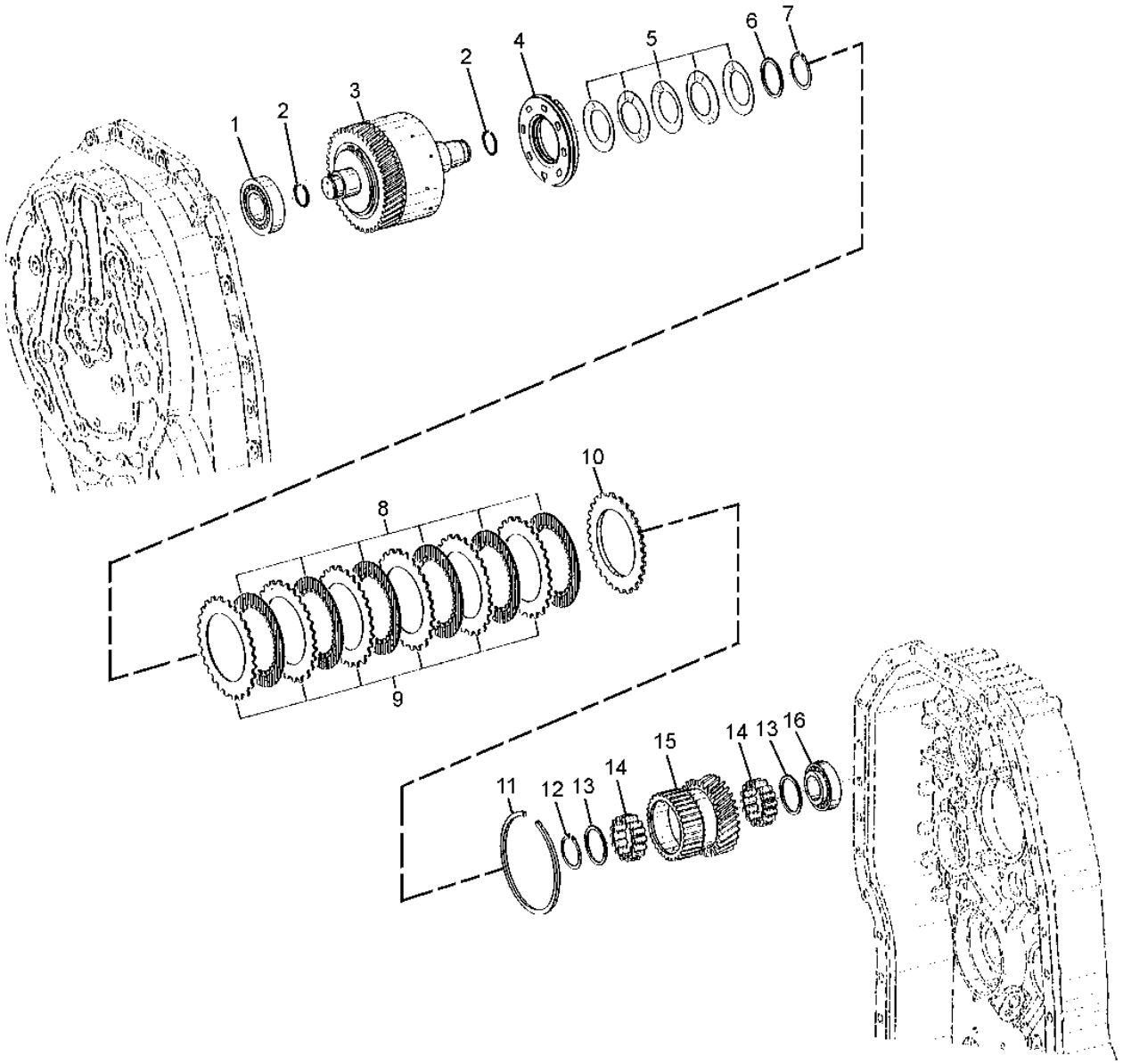

T151484

FOURTH GEAR CLUTCH ASSEMBLY

KEY	PART NO.	PART NAME	QTY	SERIAL NO.	REMARKS
1	AT184042	BEARING	1		
2	T158742	RING	2		
3	AT197606	DRUM	1		DISK CARRIER
4	AT193704	PISTON	1		
5	T158775	DISK SPRING	5		
6	T164712	SHIM	1		
7	40M7058	SNAP RING	1		2 MM
8	T158801	CLUTCH PLATE	8		
9	T164626	DISK	8		
10	T161147	PLATE	1		
11	T161183	SNAP RING	1		4 MM
	T158778	SNAP RING	1		3.5 MM
	T159568	SNAP RING	1		3 MM
	T159569	SNAP RING	1		2.5 MM
	T159570	SNAP RING	1		2 MM
12	40M7058	SNAP RING	1		
13	T166062	THRUST WASHER	2		
14	AT185793	ROLLER	2		
15	T164647	GEAR	1		
16	AT179471	TAPERED ROLLER BEARING	1		

FORWARD CLUTCH ASSEMBLY

T151487 -UN-21FEB02

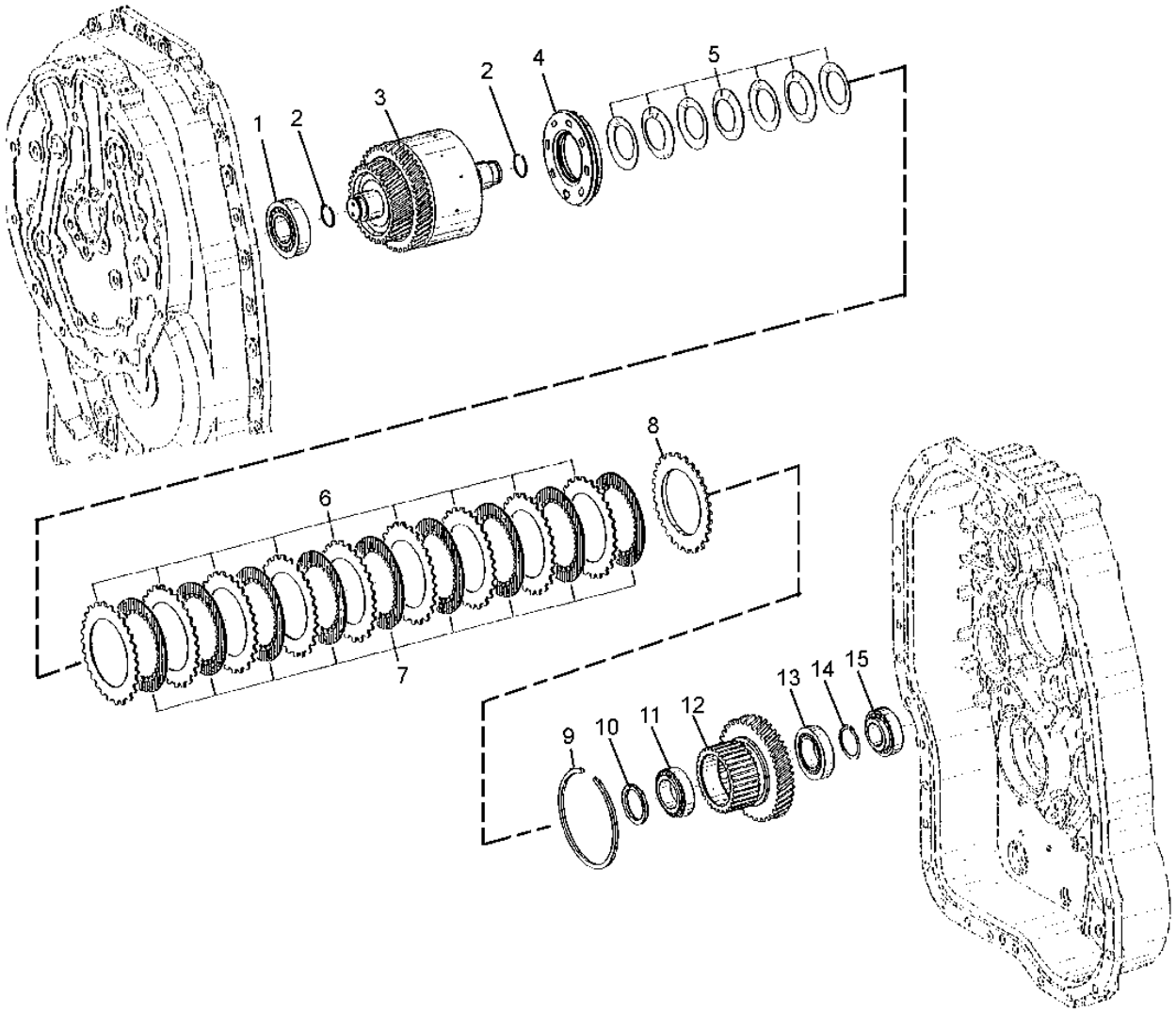

T151487

FORWARD CLUTCH ASSEMBLY

KEY	PART NO.	PART NAME	QTY	SERIAL NO.	REMARKS
1	AT184042	BEARING	1		
2	T158742	RING	2		
3	AT197601	DRUM	1		DISK CARRIER
4	AT193704	PISTON	1		
5	T158775	DISK SPRING	7		
6	T158801	CLUTCH PLATE	11		
7	T164626	DISK	11		
8	T161147	PLATE	1		
9	T161183	SNAP RING	1		4 MM
	T158778	SNAP RING	1		3.5 MM
	T159568	SNAP RING	1		3 MM
	T159569	SNAP RING	1		2.5 MM
	T159570	SNAP RING	1		2 MM
10	T158756	WASHER	1		
11	AT179469	TAPERED ROLLER BEARING	1		
12	T164711	GEAR	1		
13	AT179470	TAPERED ROLLER BEARING	1		
14	T161186	SNAP RING	1		3.2 MM
	T161187	SNAP RING	1		3.1 MM
	T161188	SNAP RING	1		3 MM
	T161189	SNAP RING	1		2.9 MM
	T161190	SNAP RING	1		2.8 MM
	T161191	SNAP RING	1		2.7 MM
	T161192	SNAP RING	1		2.6 MM
	T161193	SNAP RING	1		2.5 MM
	T164628	SNAP RING	1		2.3 MM
	T164629	SNAP RING	1		2.2 MM
	T164630	SNAP RING	1		2.1 MM
15	AT179471	TAPERED ROLLER BEARING	1		

REVERSE CLUTCH ASSEMBLY

T151488 -UN-21FEB02

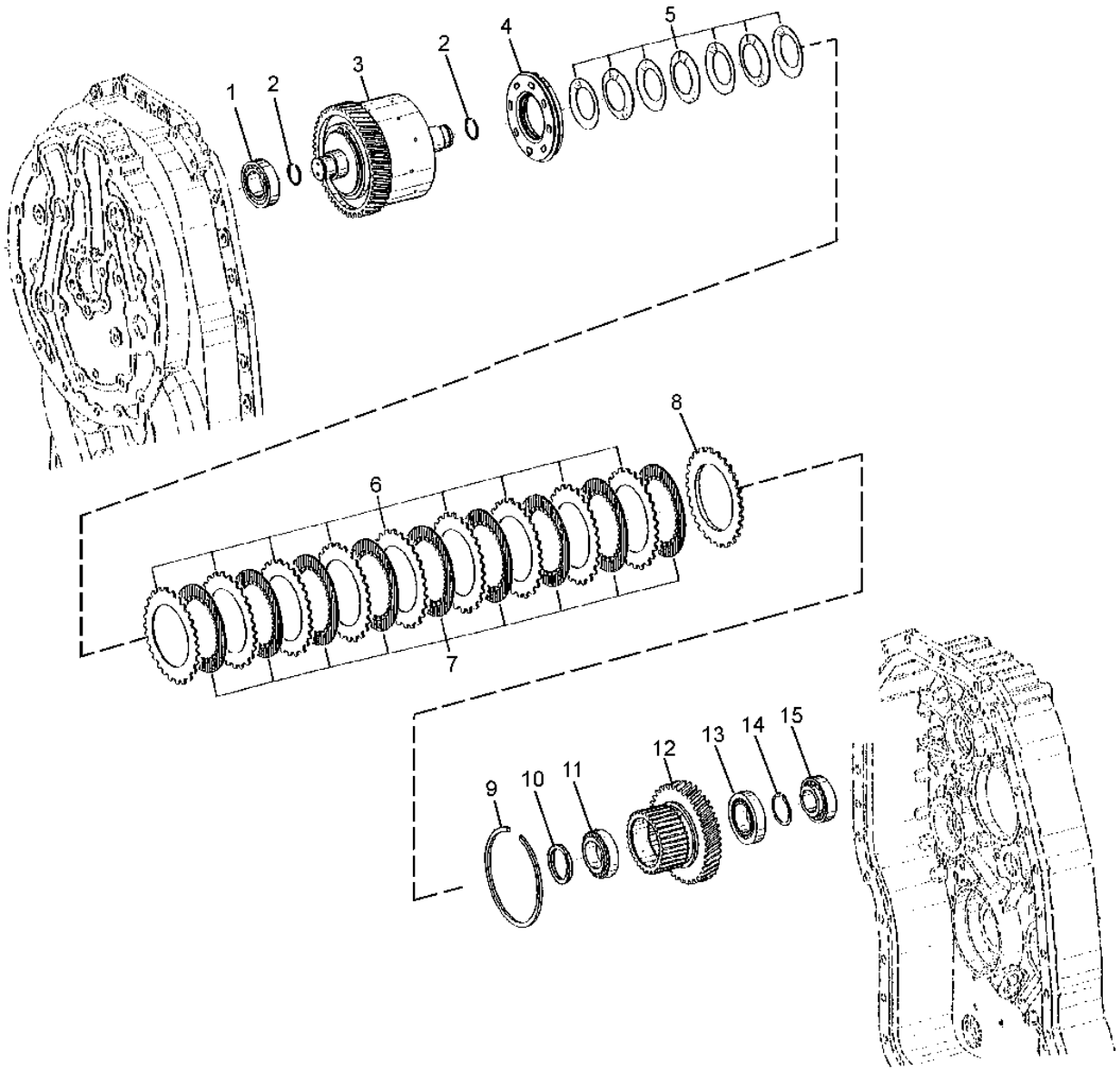

T151488

REVERSE CLUTCH ASSEMBLY

KEY	PART NO.	PART NAME	QTY	SERIAL NO.	REMARKS
1	AT179472	TAPERED ROLLER BEARING	1		
2	T158742	RING	2		
3	AT197602	DRUM	1		DISK CARRIER
4	AT193704	PISTON	1		
5	T158775	DISK SPRING	7		
6	T158801	CLUTCH PLATE	11		
7	T164626	DISK	11		
8	T161147	PLATE	1		
9	T161183	SNAP RING	1		4 MM
	T158778	SNAP RING	1		3.5 MM
	T159568	SNAP RING	1		3 MM
	T159569	SNAP RING	1		2.5 MM
	T159570	SNAP RING	1		2 MM
10	T158756	WASHER	1		
11	AT179469	TAPERED ROLLER BEARING	1		
12	T164711	DISK	1		
13	AT179470	TAPERED ROLLER BEARING	1		
14	T161186	SNAP RING	1		3.2 MM
	T161187	SNAP RING	1		3.1 MM
	T161188	SNAP RING	1		3 MM
	T161189	SNAP RING	1		2.9 MM
	T161190	SNAP RING	1		2.8 MM
	T161191	SNAP RING	1		2.7 MM
	T161192	SNAP RING	1		2.6 MM
	T161193	SNAP RING	1		2.5 MM
	T164628	SNAP RING	1		2.3 MM
	T164629	SNAP RING	1		2.2 MM
	T164630	SNAP RING	1		2.1 MM
15	AT179471	TAPERED ROLLER BEARING	1		

TRANSMISSION OUTPUT SHAFT
MFWD CLUTCH ASSEMBLY

T195856 -UN-07NOV03

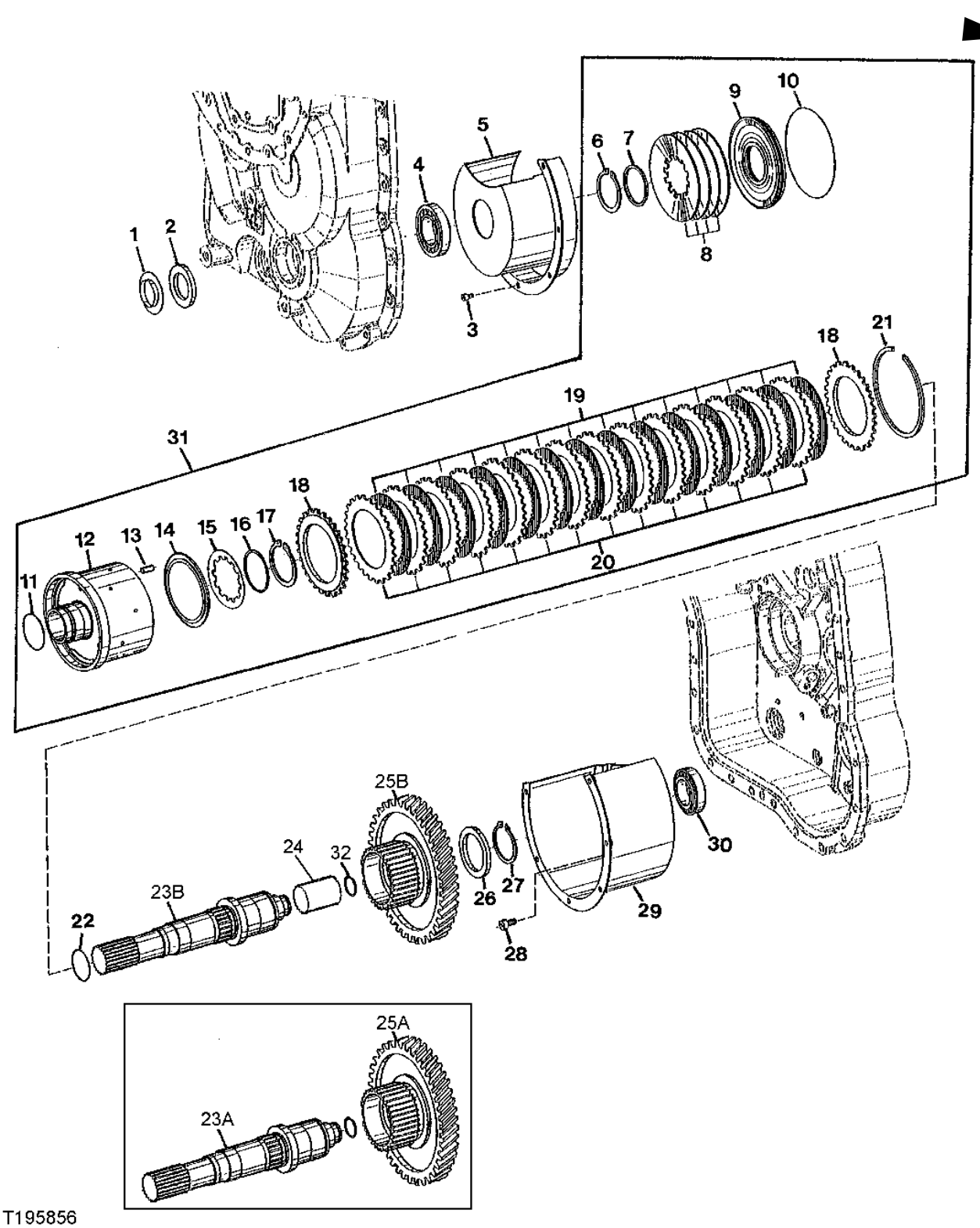

T195856

TRANSMISSION OUTPUT SHAFT
MFWD CLUTCH ASSEMBLY

KEY	PART NO.	PART NAME	QTY	SERIAL NO.	REMARKS
1	T159572	SEAL	1		
2	AT179466	SEAL	1		
3	T166078	SCREW	6		
4	AT179468	TAPERED ROLLER BEARING	1		
5	T164576	SCREEN	1		
6	T165144	SNAP RING	1		
7	T165139	SPACER	1		
8	T165138	SPRING	4		
9	T165137	PISTON	1		
10	T165136	O-RING	1		
11	T165135	O-RING	1		
12	T165134	CLUTCH DISK	1		
13	T165140	ROLLER	3		
14	T165141	PLATE	1		
15	T165142	SPRING	1		
16	T165143	SOLID SHIM	1		
17	T159575	SNAP RING	1		
18	T161147	PLATE	2		
19	T164626	DISK	14		
20	T158801	CLUTCH PLATE	14		
21	T161183	SNAP RING	1		
	T158778	SNAP RING	1		
	T159568	SNAP RING	1		
	T159569	SNAP RING	1		
	T159570	SNAP RING	1		
22	T164989	O-RING	1		
23A	T164988	SHAFT	1		(SUB T202661) (ALSO ORDER T202660 AND T202662)
23B	T202661	SHAFT	1		
24	T202660	BUSHING	1		
25A	T164990	CLUTCH DISK	1		(SUB T202662) (ALSO ORDER T202660 AND T202661)
25B	T202662	CLUTCH DISK	1		
26	T158760	THRUST WASHER	1		
27	L78069	RING	1		
28	T164648	CAP SCREW	5		
29	T184918	SCREEN	1		
30	AT179472	TAPERED ROLLER BEARING	1		
31	AT184361	CLUTCH	1		
32	T158742	RING	1		

MEMORANDA

TRANSMISSION CHARGE PUMP

TP57925 -UN-14SEP98

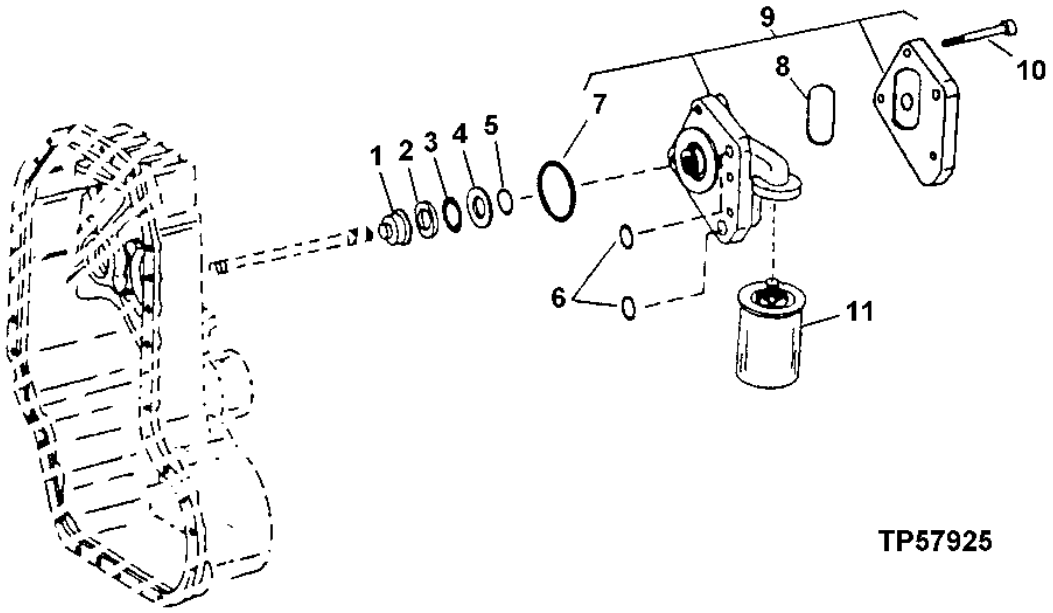

KEY	PART NO.	PART NAME	QTY	SERIAL NO.	REMARKS
1	T166077	STOP	1		
2	T158732	DISK	1		
3	AT179153	NEEDLE BEARING	1		
4	T158749	THRUST WASHER	1		
5	T141689	O-RING	1		
6	T19854	O-RING	1		
7	T162446	PACKING	1		
8	T162935	O-RING	1		
9	AT192356	HYDRAULIC PUMP	1	-XXXXXX	
	AT308304	HYDRAULIC PUMP	1	XXXXXX-	
10	T158754	CAP SCREW	4		
11	AT179323	OIL FILTER	1		

TRANSMISSION CONTROL VALVE GROUP

T150758 -UN-05FEB02

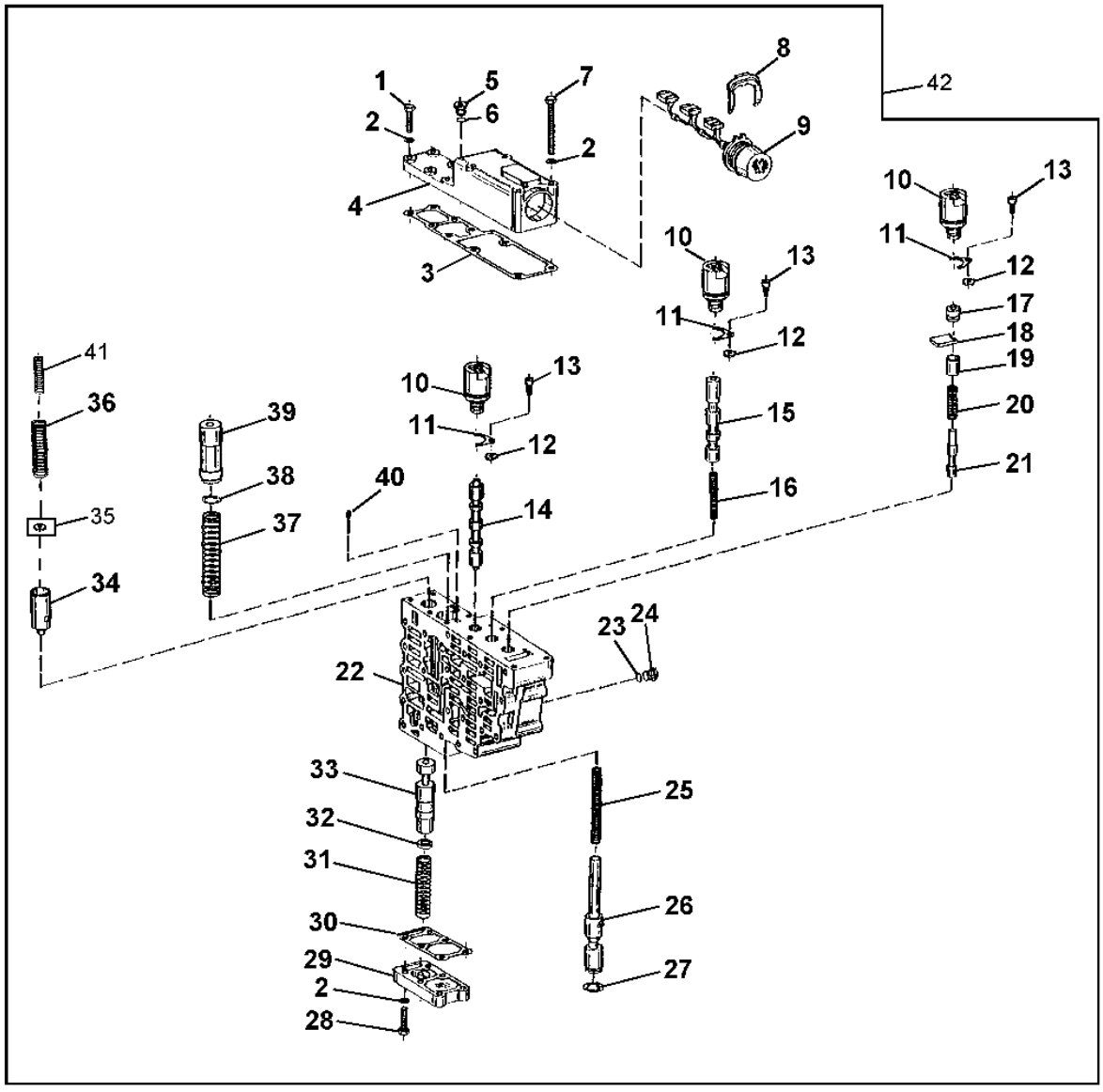

T150758

TRANSMISSION CONTROL VALVE GROUP

KEY	PART NO.	PART NAME	QTY	SERIAL NO.	REMARKS
1	T159593	CAP SCREW	6		
2	T161204	WASHER	16		
3	T159604	GASKET	1		
4	T185606	COVER	1		
5	T161194	PLUG	3		
6	L11698	O-RING	3		
7	T159607	CAP SCREW	4		
8	T161207	CLAMP	1		
9	AT179492	WIRING HARNESS	1		
10	AT179491	SOLENOID VALVE	3		FORWARD, NEUTRAL, REVERSE
11	T144486	PLATE	3		
12	T144487	WASHER	3		
13	T164693	SCREW	3		
14	AT182947	PISTON	1		
15	T164578	PISTON	1		
16	T159596	SPRING	1		
17	T159599	PLUG	1		
18	T159600	PLATE	1		
19	T164585	SPACER	1		
20	T159598	SPRING	1		
21	T159597	PISTON	1		
22	T159582	HOUSING	1		
23	L11698	O-RING	5		
24	T161194	PLUG	5		
25	T159589	SPRING	1		
26	T159587	PISTON	1		
27	T159588	LOCK WASHER	1		
28	T159593	CAP SCREW	6		
29	T159592	COVER	1		
30	T159591	GASKET	1		
31	T159586	SPRING	1		
32	T161200	SPACER	1		2.4 MM
	T161199	SPACER	1		2.8 MM
	T161198	SPACER	1		3.2 MM
	T161197	SPACER	1		3.6 MM
33	T164579	PISTON	1		
34	T188172	PISTON	1		
35	T159584	SPRING	1		
36	T188173	SPRING	1		
37	T161202	SPRING	1		
38	T164584	SPACER	1		.2 MM
	T164583	SPACER	1		.3 MM
	T164582	SPACER	1		.5 MM
	T161203	SHIM	1		1 MM
	T164581	SPACER	1		2 MM
39	T162947	PISTON	1		
40	T164577	ORIFICE	1		
41	T188173	SPRING	1		
42	AT195753	HYD ACTUATED CONTROL VALVE	1		

RANGE SHIFT VALVE GROUP

TP57938 -UN-17SEP98

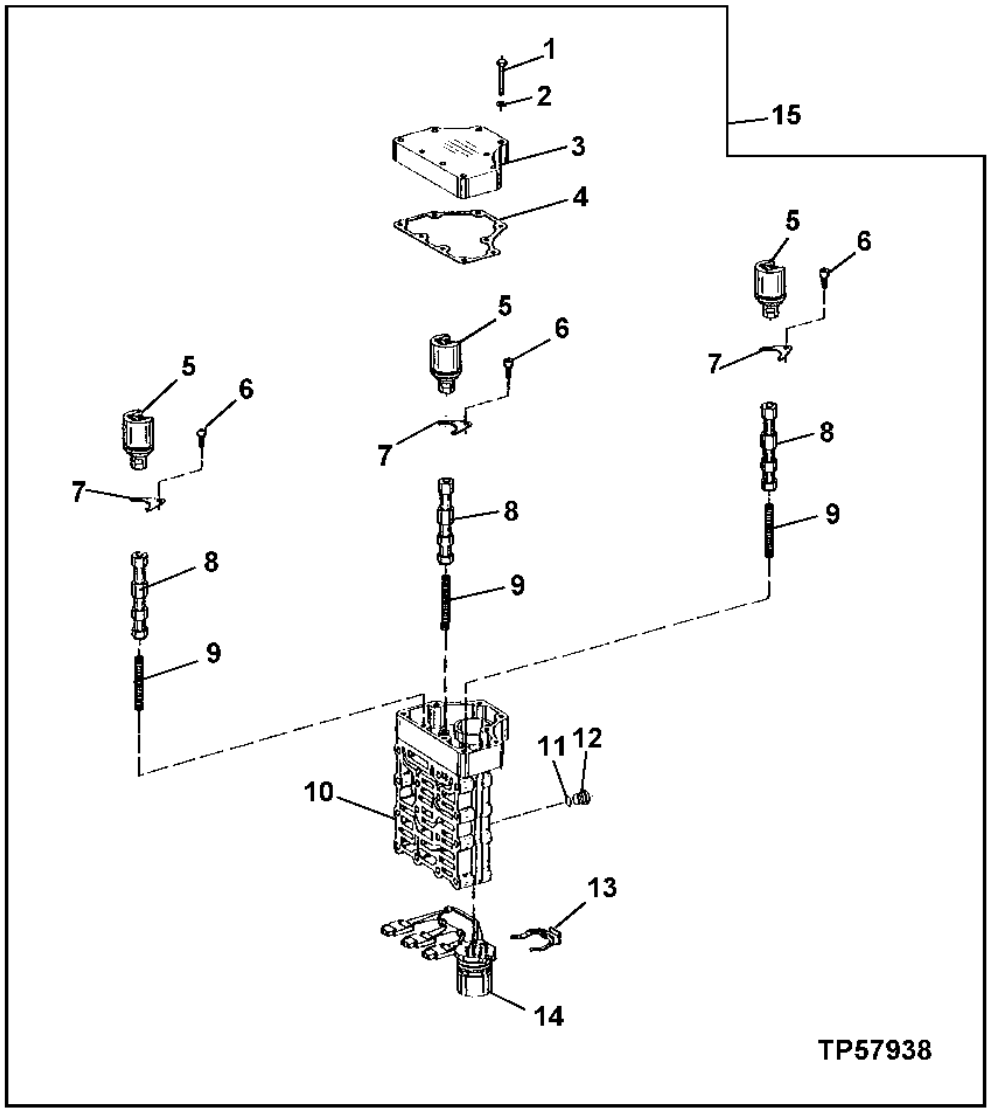

RANGE SHIFT VALVE GROUP

KEY	PART NO.	PART NAME	QTY	SERIAL NO.	REMARKS
1	T166066	CAP SCREW	9		
2	T164702	WASHER	9		
3	T164611	COVER	1		
4	T164612	GASKET	1		
5	AT179491	SOLENOID VALVE	3		
6	T164693	SCREW	3		
7	T144486	PLATE	3		
8	T164610	PISTON	3		
9	T159596	SPRING	3		
10	T164609	HOUSING	1		
11	L11698	RING	4		
12	T161194	PLUG	4		
13	T161207	CLAMP	1		
14	AT184007	WIRING HARNESS	1		
15	AT183973	HYD ACTUATED CONTROL VALVE	1		

TRANSMISSION INTERMEDIATE PLATE AND GASKETS

T151527 -UN-22FEB02

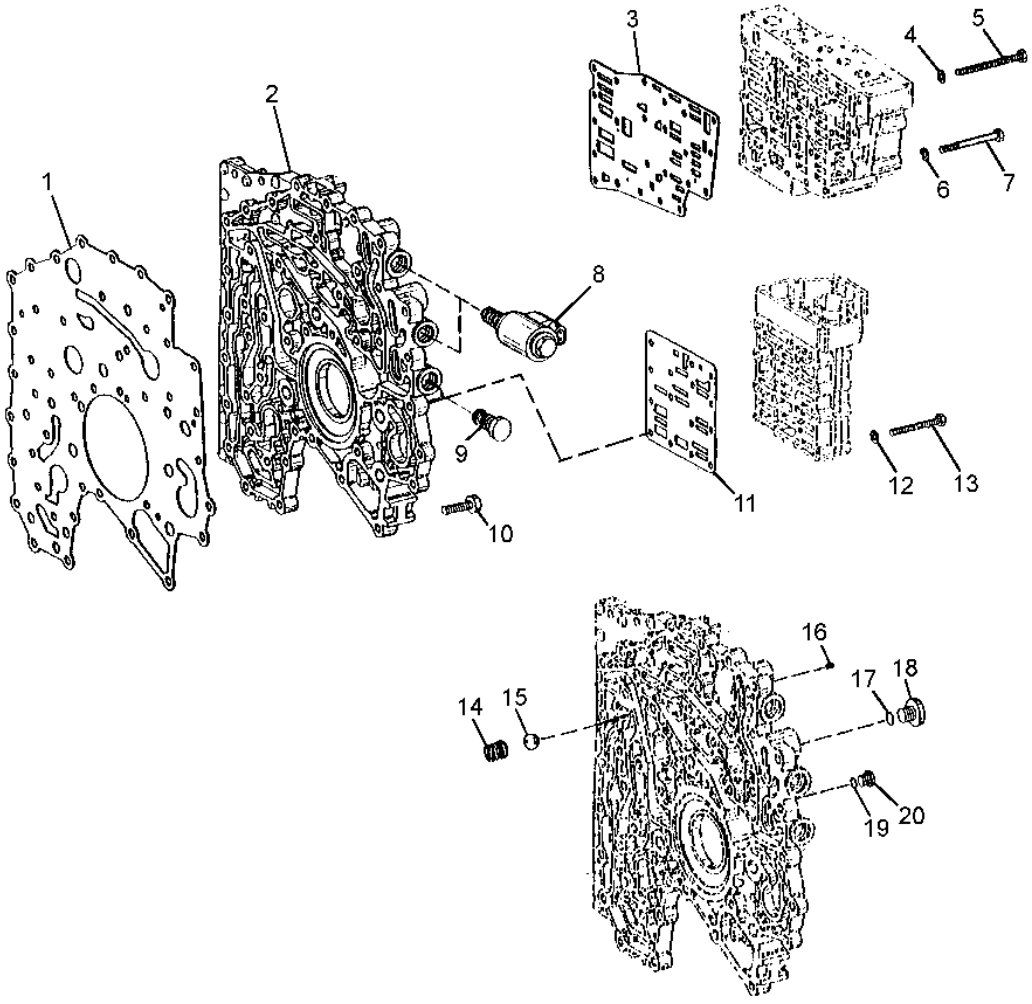

T151527

TRANSMISSION INTERMEDIATE PLATE AND GASKETS

KEY	PART NO.	PART NAME	QTY	SERIAL NO.	REMARKS
1	T164592	GASKET	1		
2	T186560	HOUSING	1		
3	AT192552	PLATE	1		(ALSO ORDER (19) T164682)
4	T161204	WASHER	4		
5	T159613	CAP SCREW	4		
6	T161204	WASHER	19		
7	T164682	CAP SCREW	19		
8	AT177703	SOLENOID VALVE	3		
	AT179319	ELECTRICAL COIL	3		
	AT179320	O-RING KIT	3		
	T161144	NUT	3		
9	T159684	PLUG	1		MFWD SOLINOID HOLE PLUG
10	T161208	CAP SCREW	43		
11	AT192553	PLATE	1		(ALSO ORDER (19) T164682)
12	T161204	WASHER	15		
13	T164686	CAP SCREW	15		
14	T144494	COMPRESSION SPRING	1		
15	T144493	BALL	1		
16	T164577	ORIFICE	1		
17	R26286	O-RING	1		
18	R27094	DRAIN PLUG	1		
19	L11698	O-RING	1		
20	T161194	PLUG	1		

CRANKSHAFT,CRANKSHAFT GEARS AND MAIN BEARINGS

TP60709 -UN-09JUN98

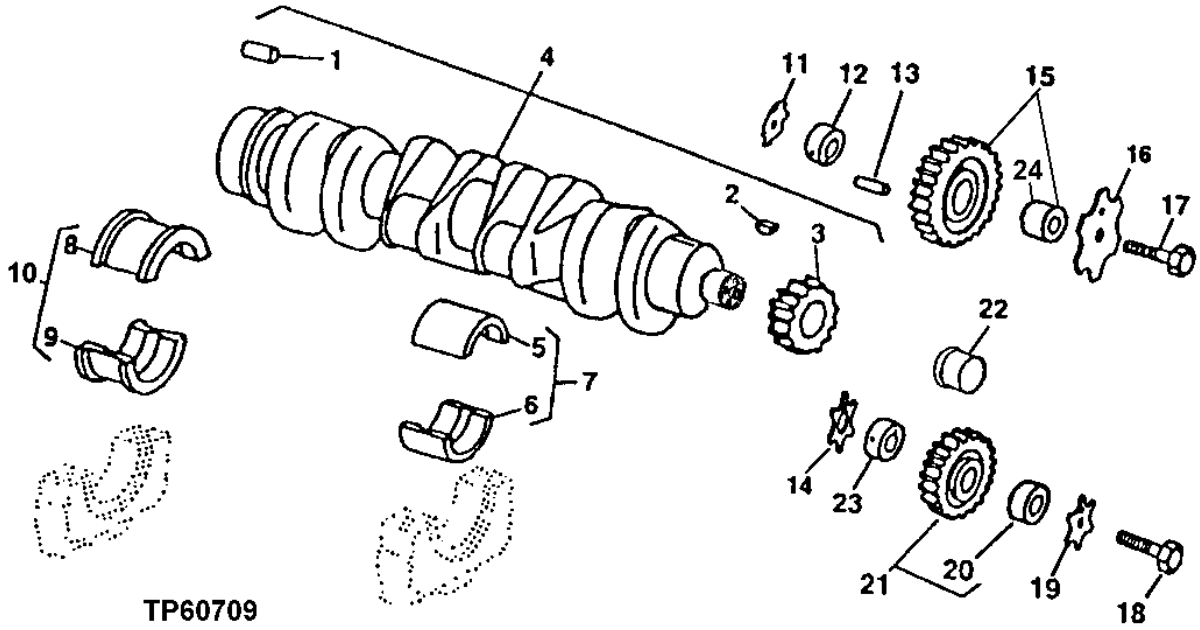

TP60709

KEY	PART NO.	PART NAME	QTY	ENGINE SERIAL NO.	REMARKS
1	R48685	DOWEL PIN	1		12.700 X 28.448 MM (1/2" X 1.120")
2	R505609	SHAFT KEY	1		
3	R120631	HELICAL GEAR	1		(30 TEETH)
4	RE515785	CRANKSHAFT	1		(MARKED R116076) (ALSO ORDER RE59811)
5	.....	BEARING	6		STANDARD UPPER, (MARKED R123561)
	.....	BEARING	6		UNDERSIZE UPPER .254 MM, (MARKED R130576)
6	.....	BEARING	6		STANDARD LOWER, (MARKED R123562)
	.....	BEARING	6		UNDERSIZE LOWER .254 MM, (MARKED R130577)
7	RE65165	BEARING KIT	6		STANDARD
	RE65911	BEARING	6		UNDERSIZE .254 MM
8	.....	BEARING	1		STANDARD UPPER, (MARKED R123563)
	.....	BEARING	1		UNDERSIZE UPPER .254 MM, (MARKED R130574)
9	.....	BEARING	1		STANDARD LOWER, (MARKED R123564)
	.....	BEARING	1		UNDERSIZE LOWER .254 MM, (MARKED R130575)
10	RE65168	BEARING KIT	1		STANDARD
	RE65912	THRUST BEARING	1		UNDERSIZE .254 MM
11	R123174	LOCK WASHER	1		
12	R120641	SHAFT	1		
13	34H288	SPRING PIN	1		4.775 X 44.450 MM (3/16" X 1-3/4")
14	R101225	THRUST WASHER	1		
15	RE56313	GEAR	1		
16	R131206	THRUST WASHER	1		
17	19M8997	SCREW	1		M10 X 65
18	19M8966	SCREW	1		M10 X 50
19	R131283	THRUST WASHER	1		
20	R114193	BUSHING	1		
21	RE56369	GEAR	1		
22	RE59811	SLEEVE	1		WITH INSTALLATION TOOL
23	R114194	SHAFT	1		
24	.....	BUSHING	1		

ROCKER ARM COVER AND GASKET

TP62408 -UN-10MAY00

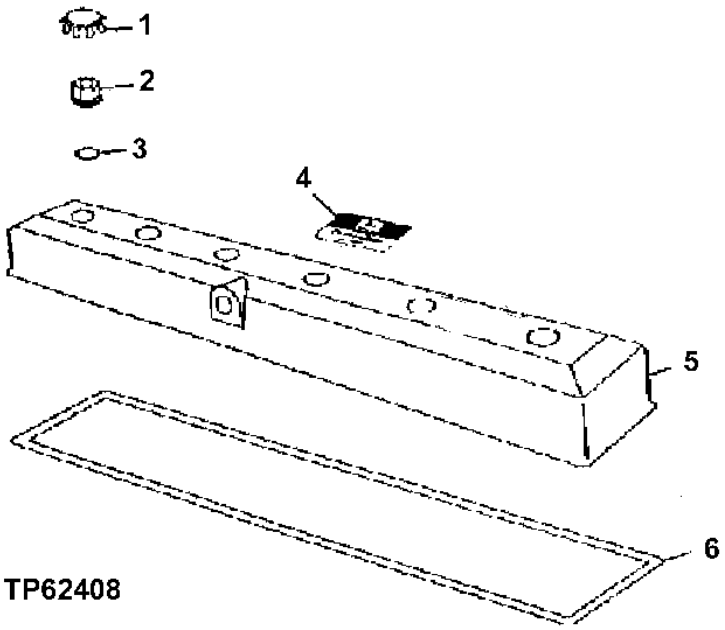

KEY	PART NO.	PART NAME	QTY	ENGINE SERIAL NO.	REMARKS
1	H23125	PLUG	6		
2	R123574	NUT	6		
3	R123575	O-RING	6		
4	R121674	MEDALLION	1		
5	RE503027	VALVE COVER	1		
6	R123543	GASKET	1		
	RE520540	GASKET KIT	1		(HIGH TEMPERATURE)

ROCKER ARM SHAFT, PUSH RODS AND ROCKER ARMS

TP49263 -UN-20JUN95

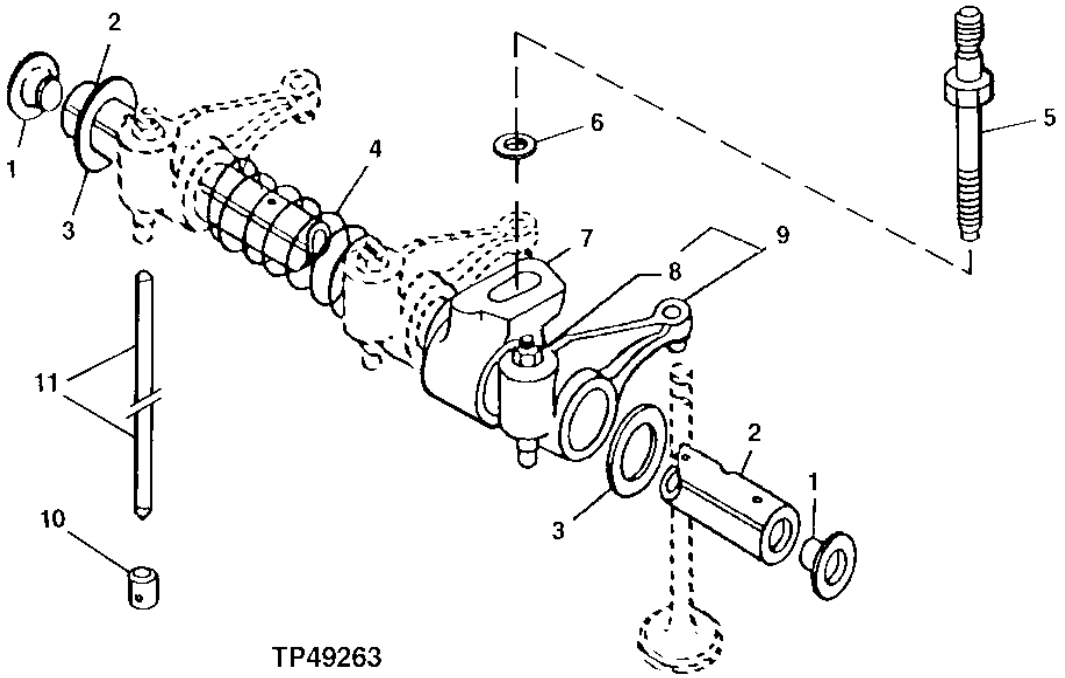

TP49263

KEY	PART NO.	PART NAME	QTY	ENGINE SERIAL NO.	REMARKS
1	R54565	PLUG	2		
2	R123514	ROCKER ARM SHAFT	1		
3	T20316	WASHER	2		
4	T20314	SPRING	5		
5	R123271	STUD	6		
6	24M7346	WASHER	6		
7	R123161	SUPPORT	6		
8	14M7148	NUT	1		M10
9	RE68695	ROCKER ARM	12		(SUB RE508317, THIS APPLICATION)
10	R123565	FOLLOWER	12		
11	R107731	PUSH ROD	12		

MEMORANDA

TIMING GEAR COVER, WATER PUMP

CDP45098 -UN-23NOV01

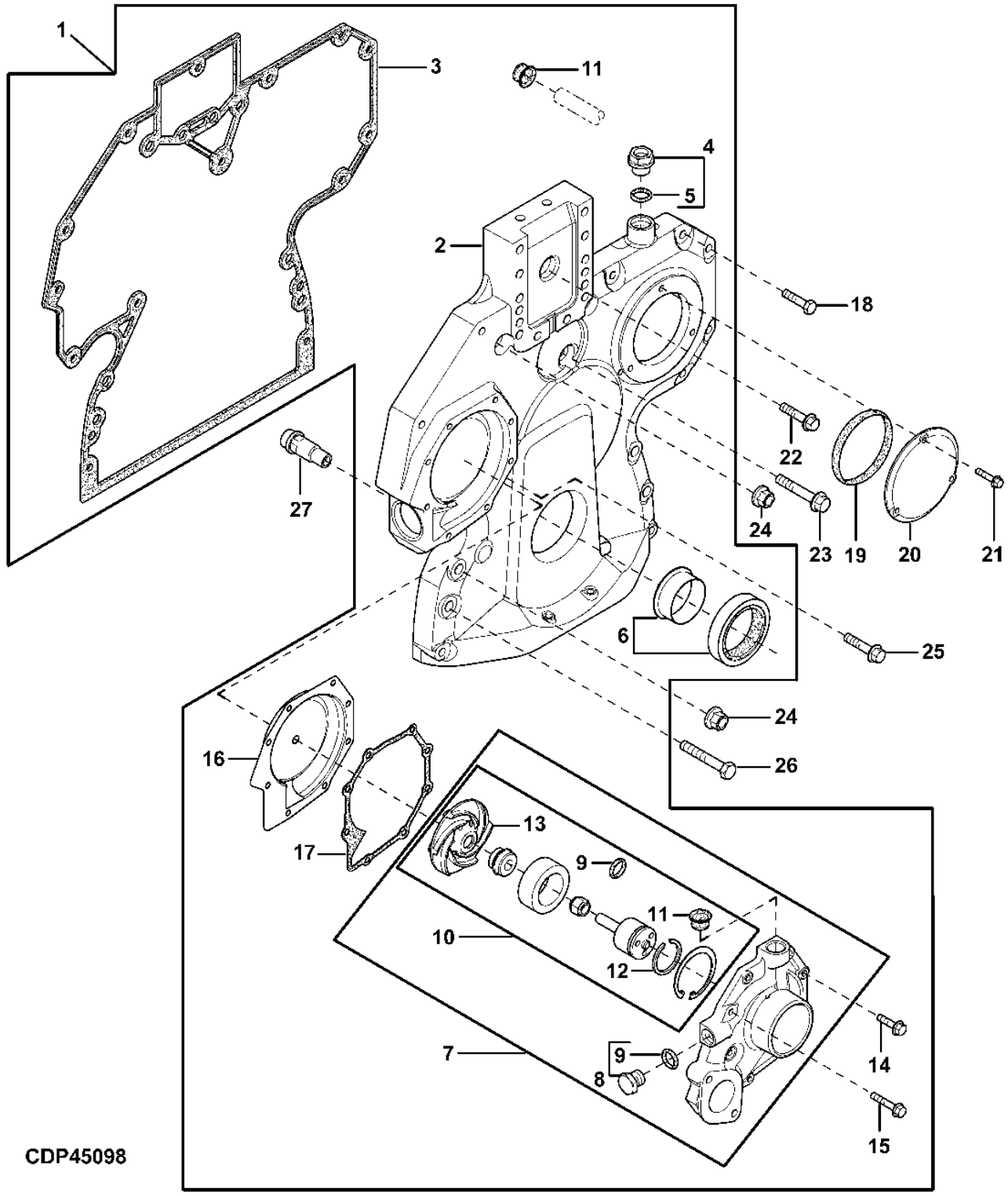

KEY	PART NO.	PART NAME	QTY	ENGINE SERIAL NO.	REMARKS
1	RE506381	KIT	1		
2	R504725	COVER	1		MARKED R504725
3	R136516	GASKET	1		
4	RE501938	PLUG	1		M20 X 1.5
5	51M7044	O-RING	1		17.300 X 2.200 MM
6	RE516340	KIT	1		(SUB FOR RE59810) (MARKED RE505515 OR RE52346)
7	RE505981	WATER PUMP	1		(ALSO ORDER R123417 AND R123226)
8	RE46685	PLUG	1		M18 X 1.5
9	51M7043	O-RING	1		15.300 X 2.200 MM
10	RE70962	KIT	1		(ALSO ORDER R123417 AND R123226)
11	R123226	SEALING RING	1		
12	A364R	SNAP RING	1		
13	.....	IMPELLER	1		
14	19M7863	SCREW	5		M6 X 25
15	19M7796	SCREW	2		M6 X 30
16	RE508566	INSERT	1		KIT
17	R123417	GASKET	1		
18	19M8317	SCREW	6		M8 X 40
	19M7867	SCREW	1		M8 X 25
19	R121424	O-RING	1		
20	R121411	COVER	1		
21	19M7775	SCREW	3		M6 X 16
22	19M8291	SCREW	1		M8 X 35
23	RE67239	SCREW	1		THREADS WITH PRE-APPLIED SEALANT,
24	14M7296	FLANGE NUT	6		M10
25	19M7801	SCREW	1		M8 X 60
26	19M7979	SCREW	2		M8 X 55
27	RE505501	OIL PRESSURE REG. VALVE	1		

PISTON, PISTON AND CYLINDER LINER KIT, CONNECTING RODS AND CONNECTING ROD BEARINGS

TP49283 -UN-17JUL95

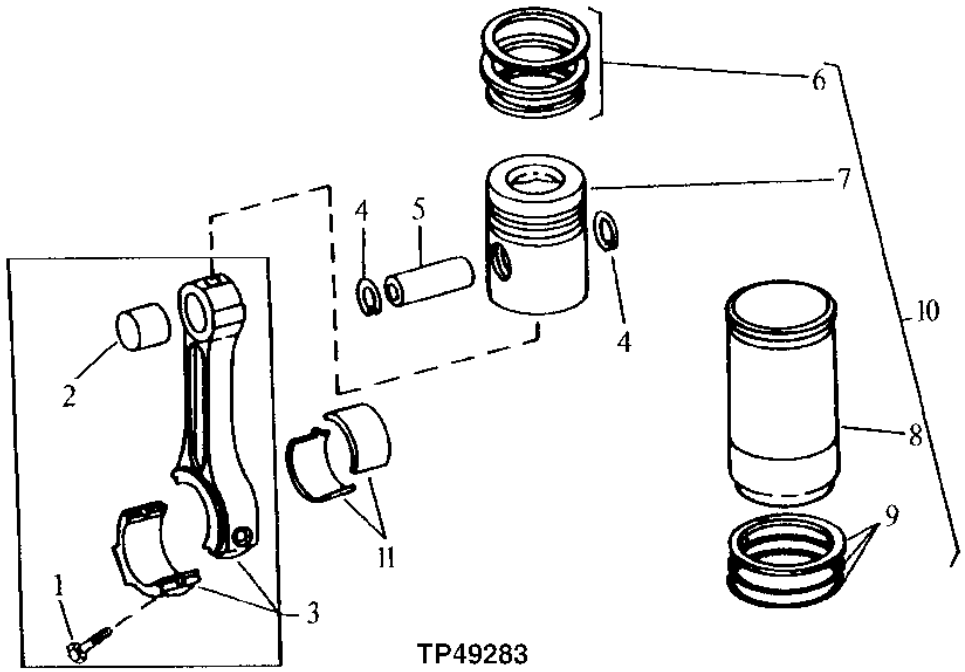

KEY	PART NO.	PART NAME	QTY	ENGINE SERIAL NO.	REMARKS
1	R501124	SCREW	12		
2	R114082	BUSHING	6		
3	RE500608	CONNECTING ROD	6		(MARKED RE500335)
4	R54114	SNAP RING	12		
5	R123177	PISTON PIN	6		
6	RE507852	PISTON RING KIT	6		
7	.....	PISTON	6		FURNISH RE507850
8	.....	CYLINDER LINER	6		FURNISH RE507850
9	AR65507	O-RING KIT	6		CYLINDER LINER
10	RE507850	PISTON-LINER KIT	6		PISTON WITH LINER
11	RE65908	BEARING	6		STANDARD
	RE65909	BEARING	6		.010" UNDERSIZE

ENGINE FRONT PLATE

TP49330 -UN-14NOV95

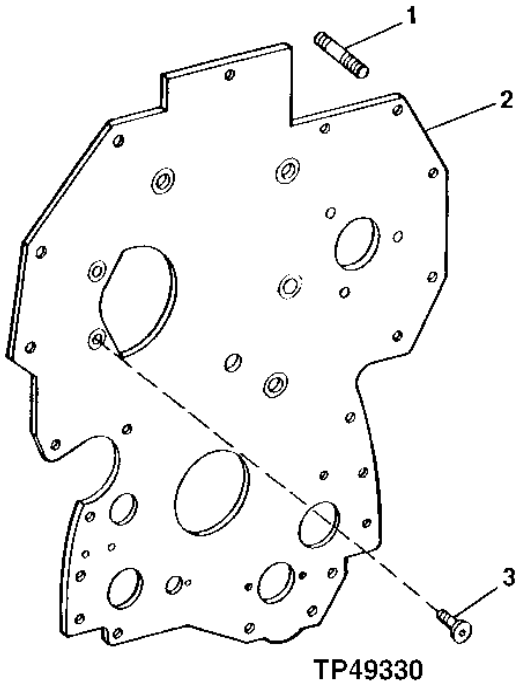

TP49330

KEY	PART NO.	PART NAME	QTY	ENGINE SERIAL NO.	REMARKS
1	R116386	STUD	3		
2	R134527	PLATE	1		
3	R136475	SCREW	4		

CYLINDER BLOCK AND MAIN BEARING CAPS

T146505 -UN-12OCT01

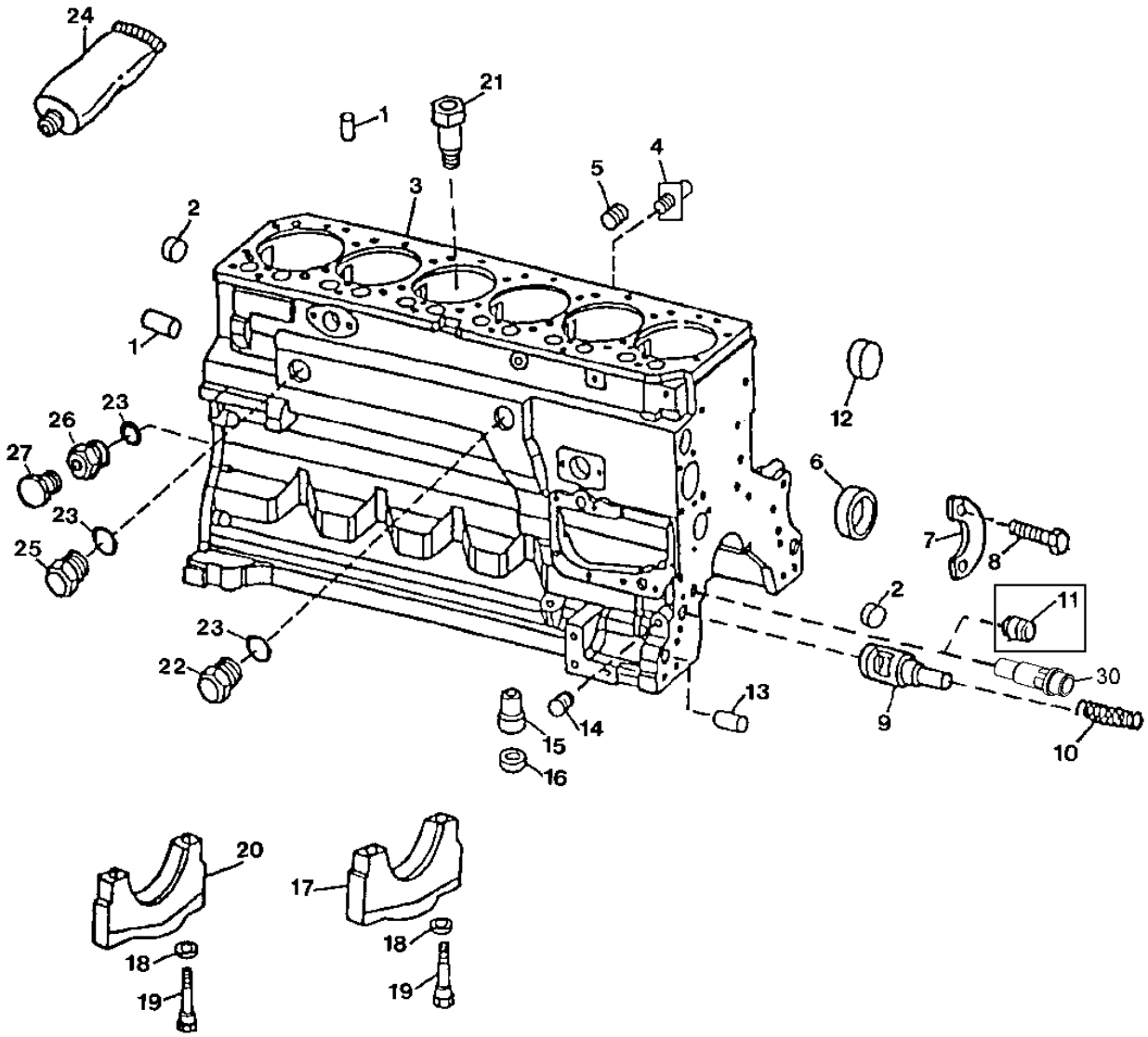

T146505

CYLINDER BLOCK AND MAIN BEARING CAPS

KEY	PART NO.	PART NAME	QTY	ENGINE SERIAL NO.	REMARKS
1	R48685	DOWEL PIN	2		
2	T18891	PLUG	2		
3	.....	CYLINDER BLOCK	1		(MARKED R119565) (ORDER RE518527)
4	AT13740	DRAIN VALVE	1		
5	R104592	PIPE PLUG	7		
6	R119874	BUSHING	1		CAMSHAFT
7	R132518	PLATE	1		
8	19M8999	SCREW	2		M8 X 25
9	R121043	FLOW CONTROL HYD. VALVE	1		ENGINE OIL BY-PASS
10	R111137	SPRING	1		
11	.....	BUSHING	1		
12	R116466	BUSHING	1		
13	R26650	DOWEL PIN	2		
14	15H623	PIPE PLUG	1		3/8"
15	R115390	BUSHING	1		
16	R75892	O-RING	1		
17	R114241	BEARING CAP	6		MAIN BEARING
18	T20168	WASHER	14		
19	T23474	CAP SCREW	14		
20	R132186	BEARING CAP	1		MAIN THRUST BEARING
21	R131182	ORIFICE	6		
22	R39741	DRAIN PLUG	1		
23	U13639	O-RING	2		
24	PM38655	SEALANT	1		(SUB FOR T43514) (PLASTIC GASKET)
25	R39741	DRAIN PLUG	1		(WITHOUT CAB HEATER)
26	R123616	PLUG	1		(WITH CAB HEATER)
27	RE46685	PLUG	1		(WITHOUT CAB HEATER)
28	51M7043	O-RING	1		(WITH CAB HEATER)
29	AT174697	PIPE ELBOW	1		(WITH CAB HEATER)
30	RE505501	OIL PRESSURE REG. VALVE	1		(OIL PRESSURE REGULATING)

ENGINE OIL FILLER INLET

TP69531 -UN-26JUL00

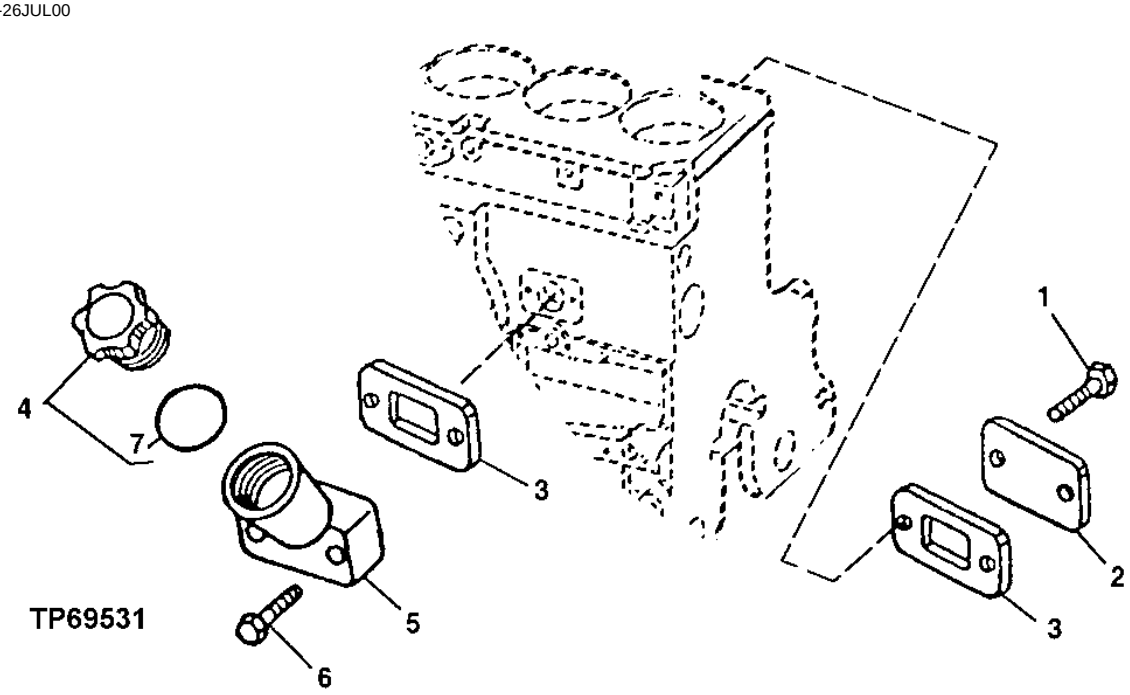

KEY	PART NO.	PART NAME	QTY	ENGINE SERIAL NO.	REMARKS
1	RE67238	SCREW	2		M8 X 20 (WITH PRE-APPLIED SEALANT)
2	R116296	COVER	1		
3	R136495	GASKET	2		
4	RE500005	FILLER CAP	1		
5	RE501377	FILLER NECK	1		
6	RE67239	SCREW	2		M8 X 100 (WITH PRE-APPLIED SEALANT)
7	R502902	PACKING	1		

ENGINE OIL DIPSTICK AND DIPSTICK TUBE

TP49535 -UN-03JAN97

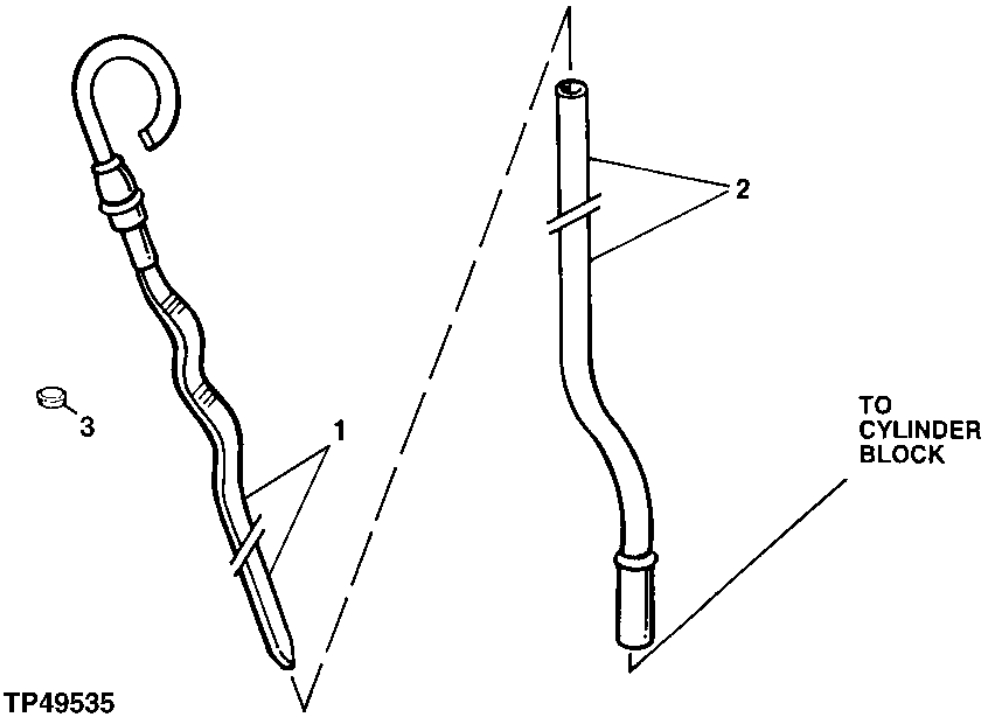

KEY	PART NO.	PART NAME	QTY	ENGINE SERIAL NO.	REMARKS
1	RE69243	DIPSTICK	1		
2	R502604	DIPSTICK TUBE	1		
3	R502725	PLUG	1		

ENGINE OIL PAN AND GASKET

T156393 -UN-01NOV02

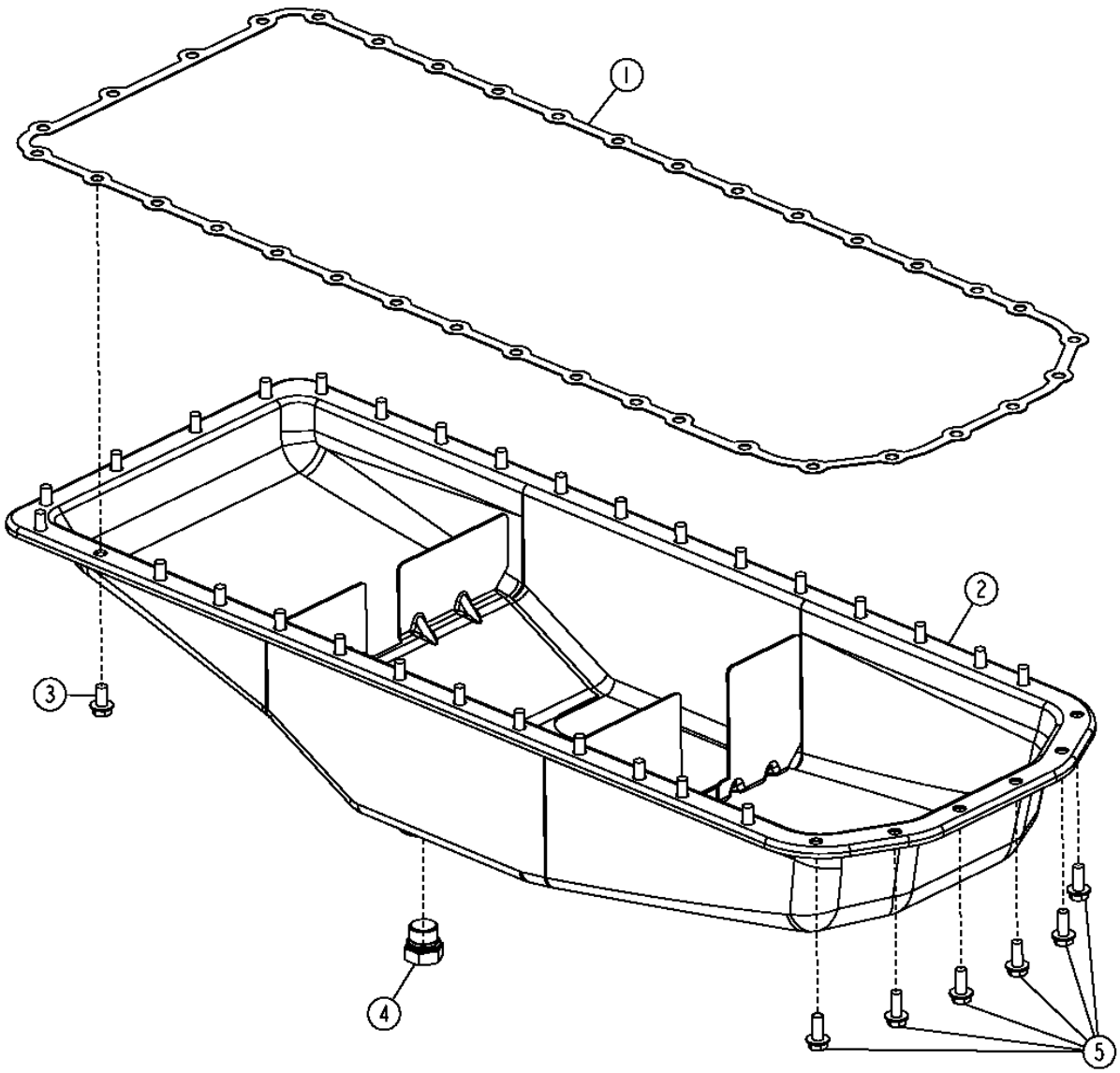

T156393

ENGINE OIL PAN AND GASKET

KEY	PART NO.	PART NAME	QTY	ENGINE SERIAL NO.	REMARKS
1	R500349	GASKET	1		
2	RE500612	OIL PAN	1		
3	19M8163	CAP SCREW	30		M8 X 16
4	RE46687	DRAIN PLUG	1		(INCLUDES 51M7045)
5	19M7866	BOLT	6		M8 X 20, (SUB FOR 19M8062)

ENGINE OIL FILTER AND OIL FILTER HEADER

T161063 -UN-31OCT02

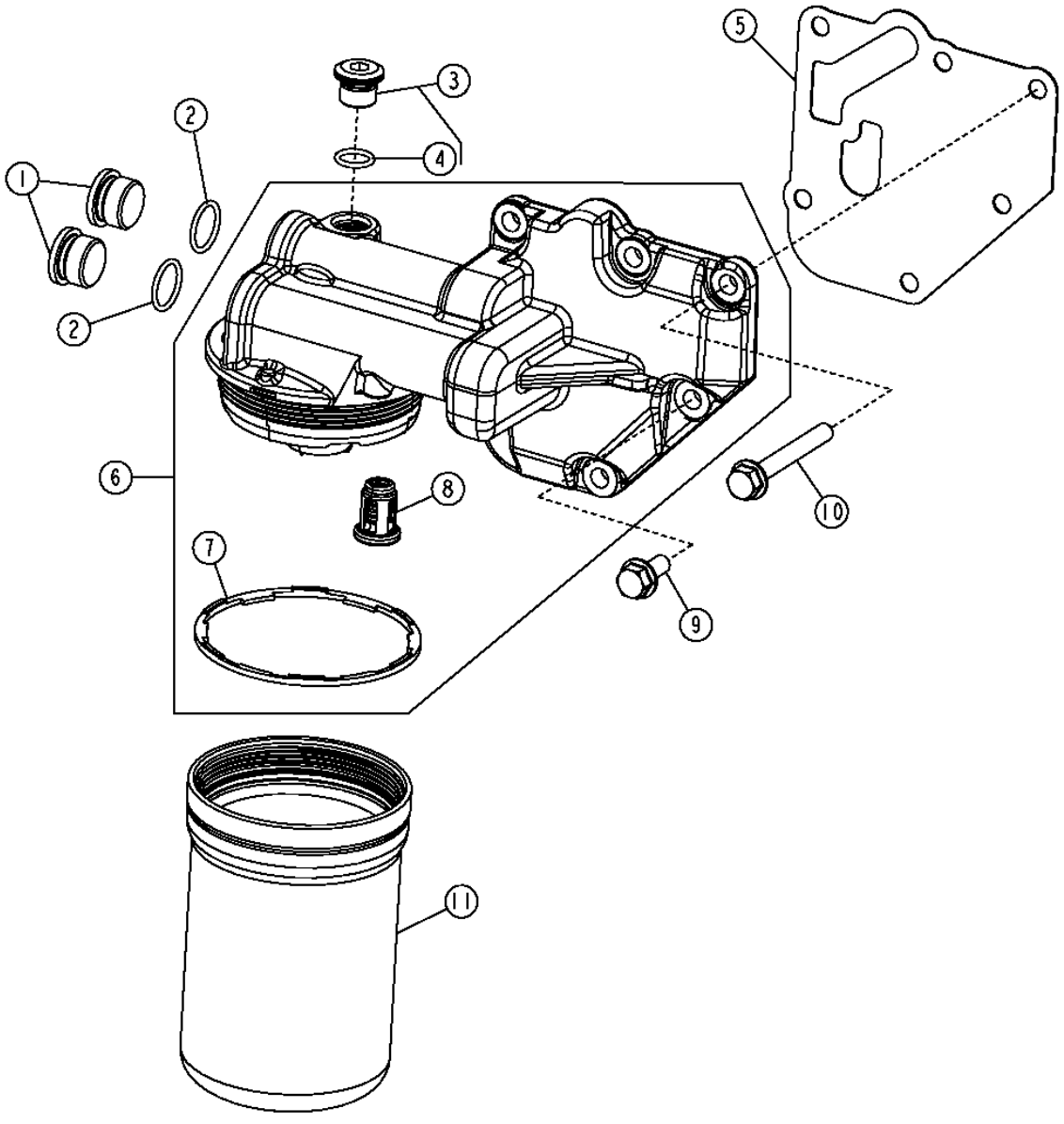

ENGINE OIL FILTER AND OIL FILTER HEADER

KEY	PART NO.	PART NAME	QTY	ENGINE SERIAL NO.	REMARKS
1	R116115	FITTING	2		
2	51M7045	O-RING	2		
3	RE52242	DRAIN PLUG	1		
4	51M7042	O-RING	1		
5	R500374	GASKET	1		
6	RE504564	FILTER HEAD	1		
7	R502513	SEAL	1		
8	RE504543	FLOW CONTROL HYD. VALVE	1		
9	19M7866	BOLT	1		M8 X 20
10	19M7802	SCREW	5		M8 X 65
11	RE504836	OIL FILTER	1		(ALSO ORDER R502513)

ENGINE OIL PUMP AND OIL PUMP INTAKE

TP49570 -UN-17FEB97

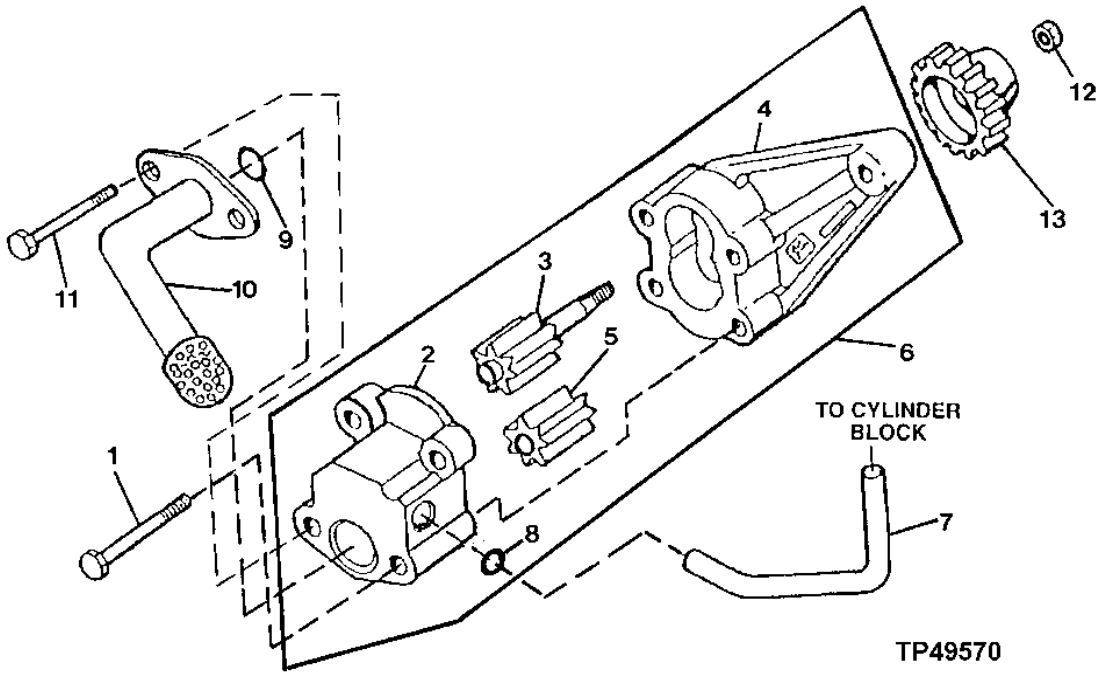

KEY	PART NO.	PART NAME	QTY	ENGINE SERIAL NO.	REMARKS
1	19M8987	SCREW	2		M8 X 65
2	.....	COVER	1		
3	.....	GEAR	1		
4	.....	HOUSING	1		
5	.....	GEAR	1		
6	RE504914	OIL PUMP	1		
7	R121376	TUBE	1		
8	R97185	O-RING	1		
9	R61871	O-RING	1		
10	RE71143	OIL PUMP INTAKE	1		
11	19M8986	SCREW	2		M8 X 100
12	14M7066	NUT	1		M12
13	R120638	GEAR	1		(30 TEETH)

MEMORANDA

ENGINE VENTILATING SYSTEM

T160749 -UN-22OCT02

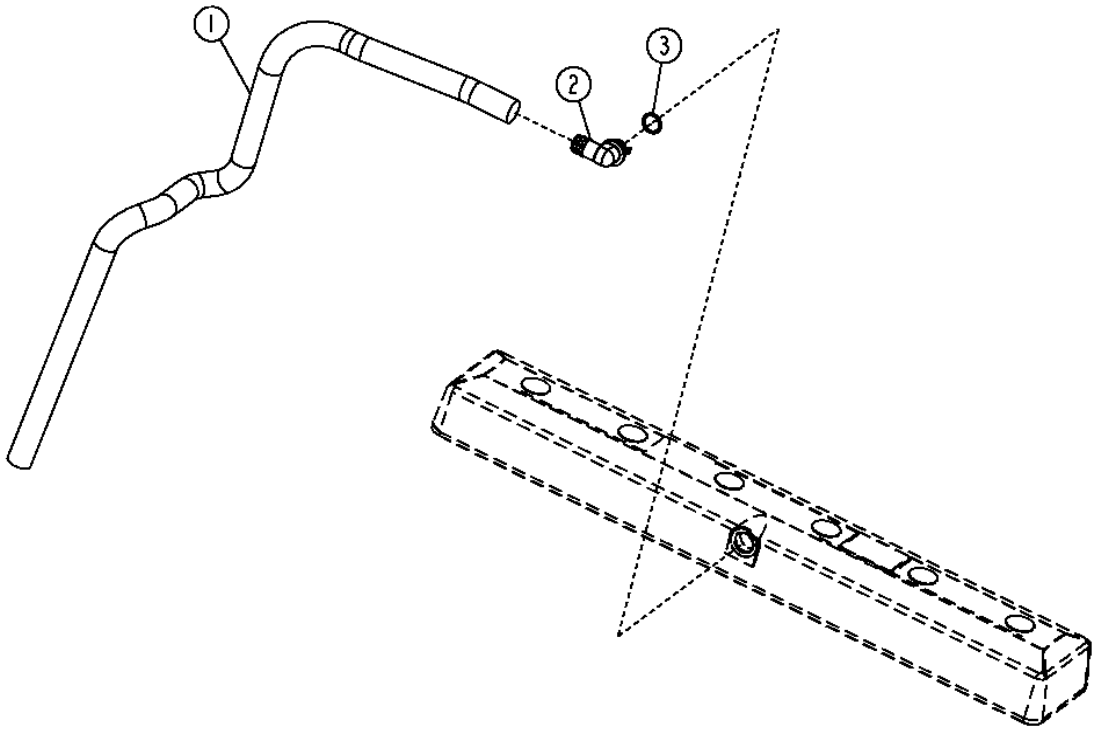

TI60749

ENGINE VENTILATING SYSTEM
TO4045TT082 - PE4045TT082

KEY	PART NO.	PART NAME	QTY	ENGINE SERIAL NO.	REMARKS
1	H36031	HOSE	1		
2	R120467	ELBOW FITTING	1		
3	R72328	O-RING	1		

CYLINDER HEAD, HEAD GASKET, AND VALVES

T161187 -UN-31OCT02

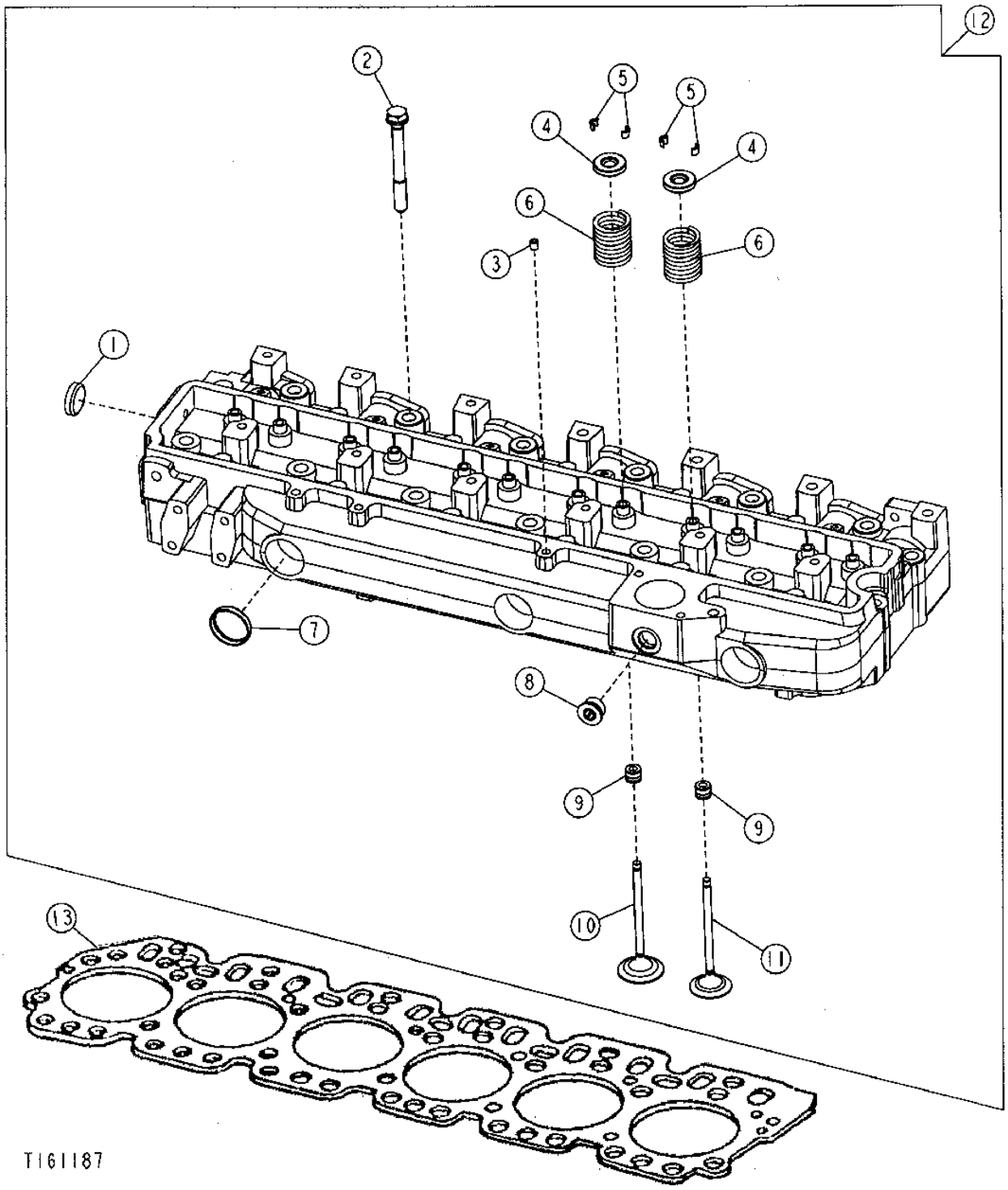

CYLINDER HEAD, HEAD GASKET AND VALVES
TO4045TT082 - PE4045TT082

KEY	PART NO.	PART NAME	QTY	ENGINE SERIAL NO.	REMARKS
1	CD16284	PLUG	1		
2	R85363	CAP SCREW	26		
3	R104592	PIPE PLUG	1		
4	RE60005	ROTATOR	12		
5	R91889	RETAINER	24		
6	R26125	SPRING	12		
7	R43409	PLUG	3		
8	T58477	FITTING	1		
	R26906	O-RING	1		
9	RE31617	SEAL	12		
10	R98062	INTAKE VALVE	6		(INTAKE VALVE)
11	R90692	EXHAUST VALVE	6		(EXHAUST VALVE)
12	RE57489	CYLINDER HEAD	1		
13	R116516	ENGINE CYLINDER HEAD GASKET	1		

EXHAUST ELBOW

TP49256 -UN-15MAY95

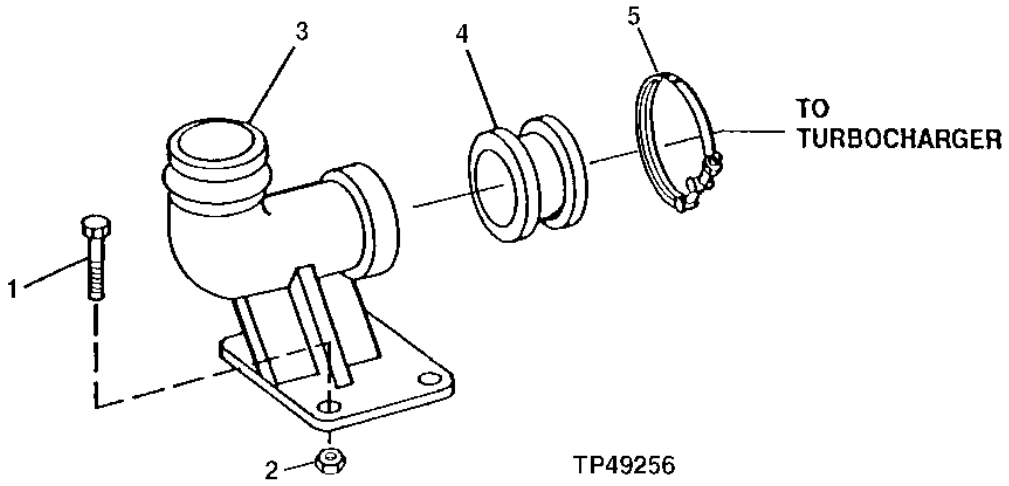

KEY	PART NO.	PART NAME	QTY	ENGINE SERIAL NO.	REMARKS
1	19M8162	SCREW	4		M10 X 40
2	14M7296	FLANGE NUT	4		M10
3	R123246	PIPE ELBOW	1		
4	R87732	ADAPTER	1		
5	RE40048	CLAMP	1		

EXHAUST MANIFOLD

TP49516 -UN-21NOV96

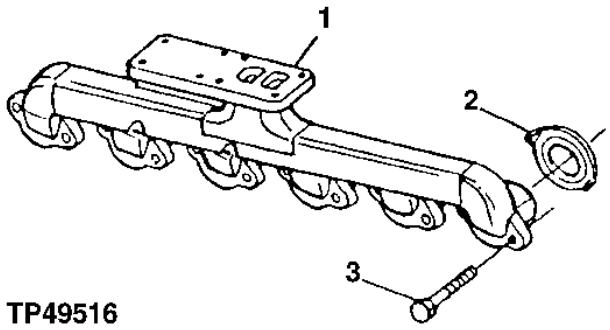

TP49516

KEY	PART NO.	PART NAME	QTY	ENGINE SERIAL NO.	REMARKS
1	R132262	EXHAUST MANIFOLD	1		
2	R90658	GASKET	6		
3	19M7810	SCREW	12		M10 X 80

FUEL INJECTION SYSTEM

T160604 -UN-22OCT02

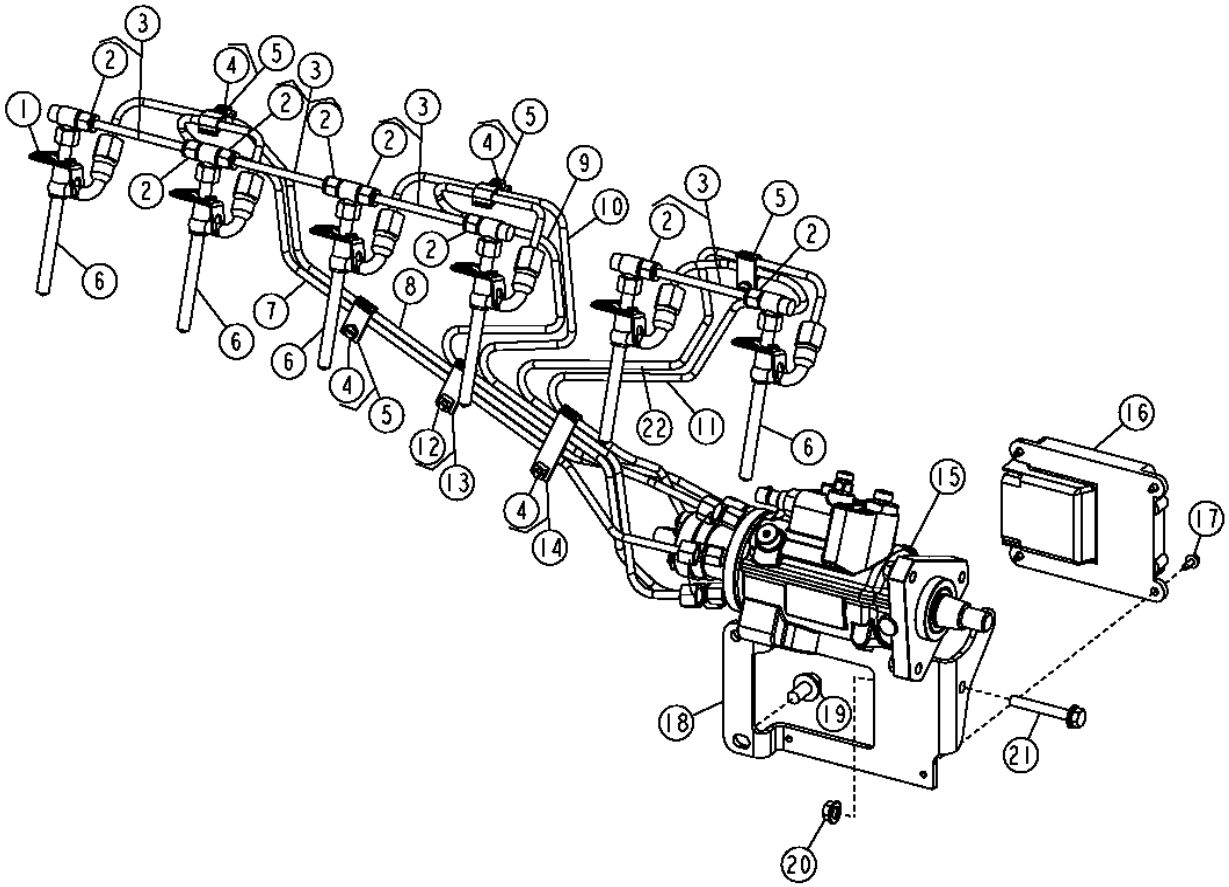

FUEL INJECTION SYSTEM

KEY	PART NO.	PART NAME	QTY	ENGINE SERIAL NO.	REMARKS
1	RE508716	CLAMP	6		
2	R123593	TUBE NUT	8		
3	RE68748	TUBE	4		
	R51936	SEALING WASHER	8		
4	19M7923	CAP SCREW	4		
5	RE19797	CLAMP	4		
6	RE507766	INJECTION NOZZLE	6		
	SE500831	NOZZLE	1		(REMANUFACTURED) (INCLUDES 6 NOZZLES)
7	RE515232	FUEL LINE	1		
8	RE515233	FUEL LINE	1		
9	RE515230	FUEL LINE	1		
10	RE515231	FUEL LINE	1		
11	RE515229	FUEL LINE	1		
12	19M8560	CAP SCREW	1		
13	RE20901	CLAMP	1		
14	RE19800	CLAMP	1		
15	RE518089	FUEL INJECTION PUMP	1		
	R505472	GEAR	1		
	R502076	BACK-UP RING	1		
16	RE522527	ENGINE CONTROLLER	1		(SUB FOR RE518176)
17	37M7059	SCREW	4		
18	R503520	BRACKET	1		
19	19M7784	SCREW	1		
20	14M7298	FLANGE NUT	5		
21	19M7979	SCREW	2		
22	RE515228	FUEL LINE	1		

FUEL LINES (FUEL FILTER-FUEL INJECTION PUMP)

RE518224PCDD01 -UN-27SEP04

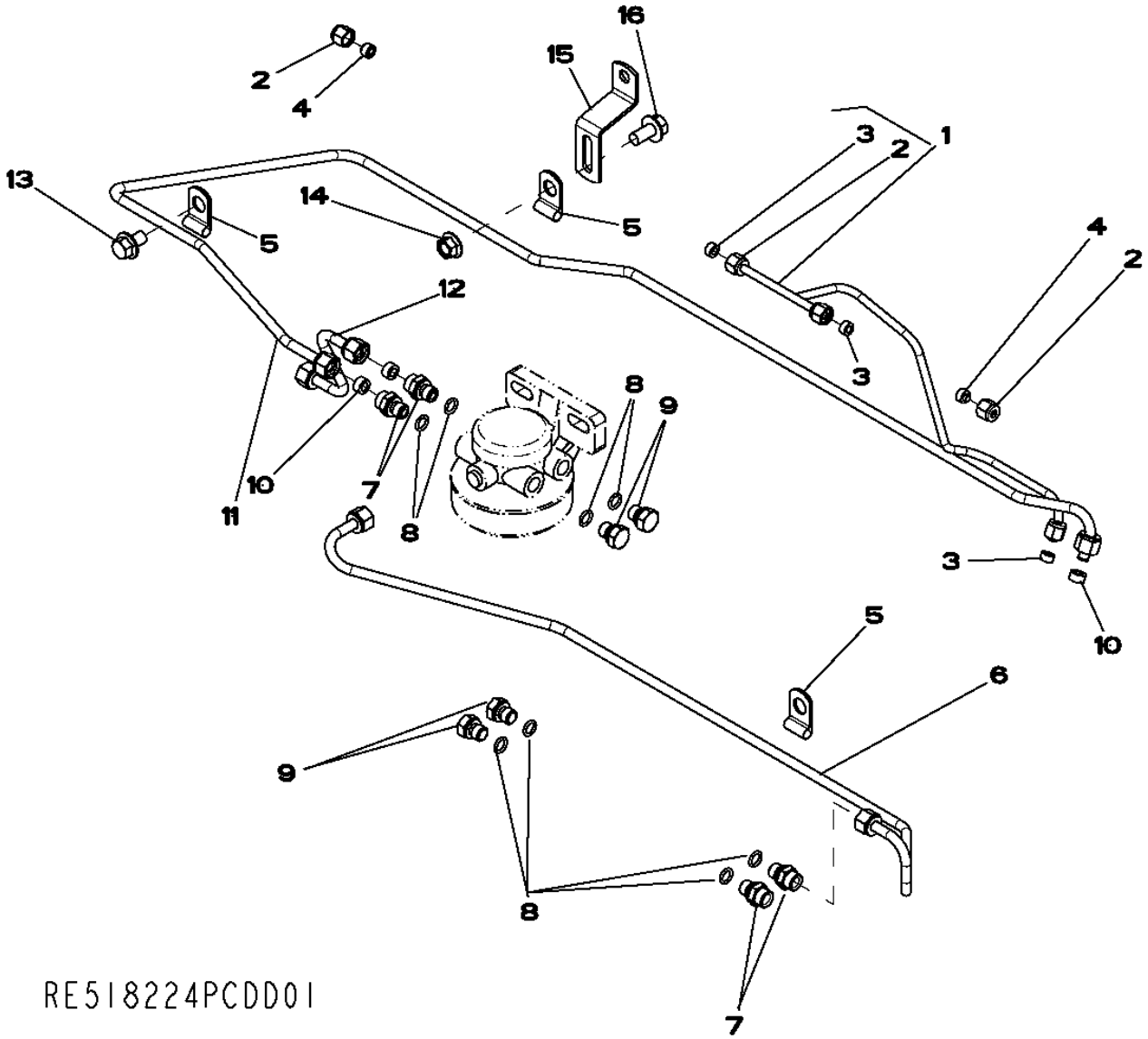

FUEL LINES (FUEL FILTER-FUEL INJECTION PUMP)

KEY	PART NO.	PART NAME	QTY	ENGINE SERIAL NO.	REMARKS
1	RE507598	FUEL LINE	1		
2	R123593	TUBE NUT	3		
3	R51936	SEALING WASHER	3		
4	AR85519	PLUG	2		
5	T30367	CLAMP	3		
6	RE518262	FUEL LINE	1		
7	RE60029	ADAPTER	4		
8	51M7040	O-RING	1		
9	RE46686	PLUG	4		
10	R74012	SEALING WASHER	2		
11	RE518259	FUEL LINE	1		
12	RE518156	FUEL LINE	1		
13	19M7783	SCREW	1		
14	14M7296	FLANGE NUT	1		
15	R504859	BRACKET	1		
16	19M7784	SCREW	1		
17	R123593	TUBE NUT	2		

AIR INTAKE SYSTEM

RGP8571 -UN-20FEB02

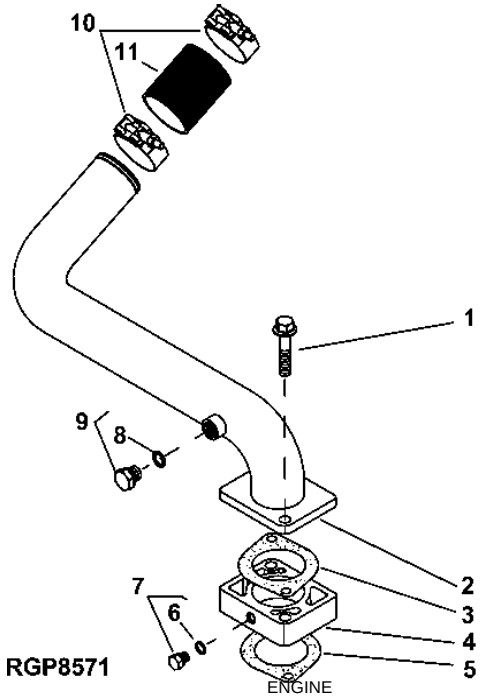

ENGINE

KEY	PART NO.	PART NAME	QTY	SERIAL NO.	REMARKS
1	19M8292	SCREW	2		M10 X 50
2	RE515393	TUBE	1		
3	R81275	GASKET	1		
4	R501472	SPACER	1		
5	R81275	GASKET	1		
6	51M7039	O-RING	1		8.100 X 1.600 MM
7	RE60071	FITTING	1		
8	51M7041	O-RING	1		11.300 X 2.200 MM
9	RE46684	PLUG	1		
10	R110531	CLAMP	2		
11	R500596	HOSE	1		(SUB FOR R56551)

MEMORANDA

TURBOCHARGER AND LINES

T161056 -UN-31OCT02

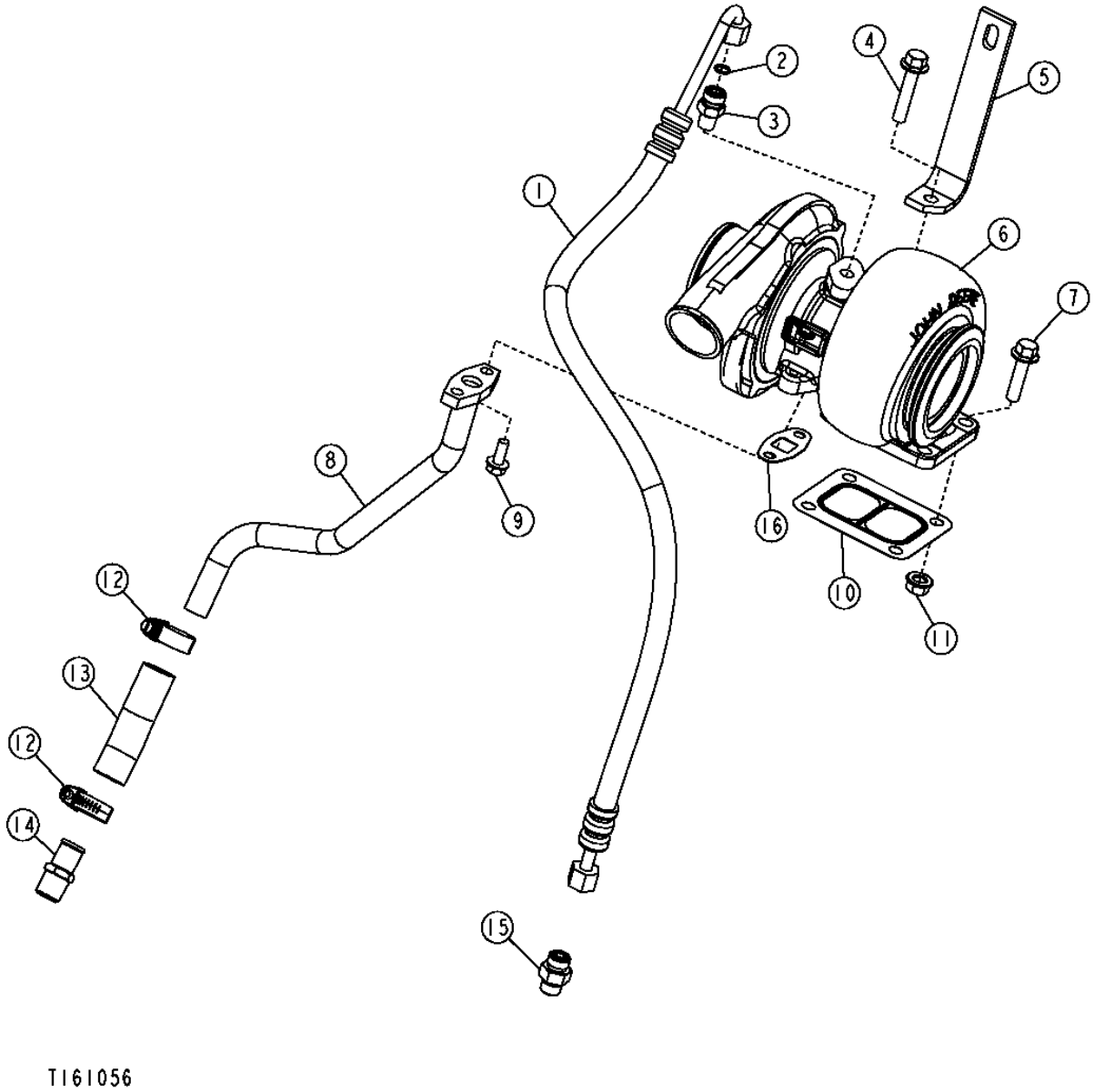

TURBOCHARGER AND GASKET

KEY	PART NO.	PART NAME	QTY	ENGINE SERIAL NO.	REMARKS
1	RE501260	OIL LINE	1		
2	R63548	O-RING	1		
3	M87733	ADAPTER	1		
4	19M8292	SCREW	4		M10 X 50
5	T68098	ANGLE	1		(SUB T201123)
6	RE508719	TURBOCHARGER	1		
7	19M8162	SCREW	3		M10 X 40
8	RE59438	OIL LINE	1		
9	19M7866	BOLT	2		M8 X 20
10	R123572	GASKET	1		
11	14M7296	FLANGE NUT	4		
12	RE65978	CLAMP	2		
13	R120013	HOSE	1		(CUT TO LENGTH)
14	RE54885	HOSE FITTING	1		
15	38H5037	ADAPTER	1		
	T77613	O-RING	1		
16	R123570	GASKET	1		

WATER PUMP INLET AND PULLEY

TP49372 -UN-18JAN96

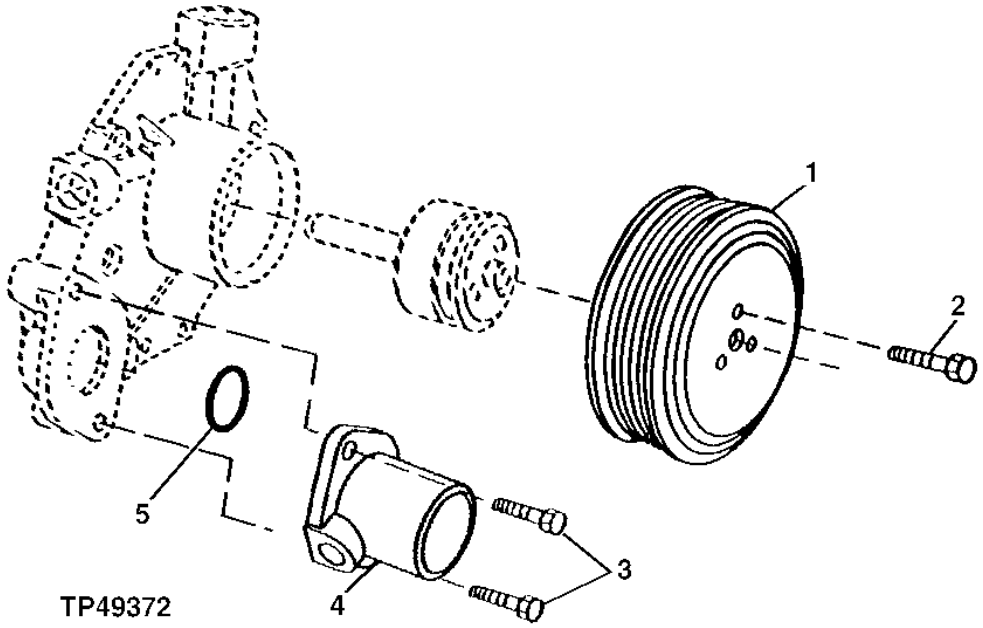

KEY	PART NO.	PART NAME	QTY	ENGINE SERIAL NO.	REMARKS
1	R115250	PULLEY	1		
2	19M7774	SCREW	3		M6 X 12
3	19M7867	SCREW	2		M8 X 25
4	R121634	WATER PUMP CONNECTION	1		
5	R89944	O-RING	1		

MEMORANDA

THERMOSTAT AND THERMOSTAT COVER

T160736 -UN-22OCT02

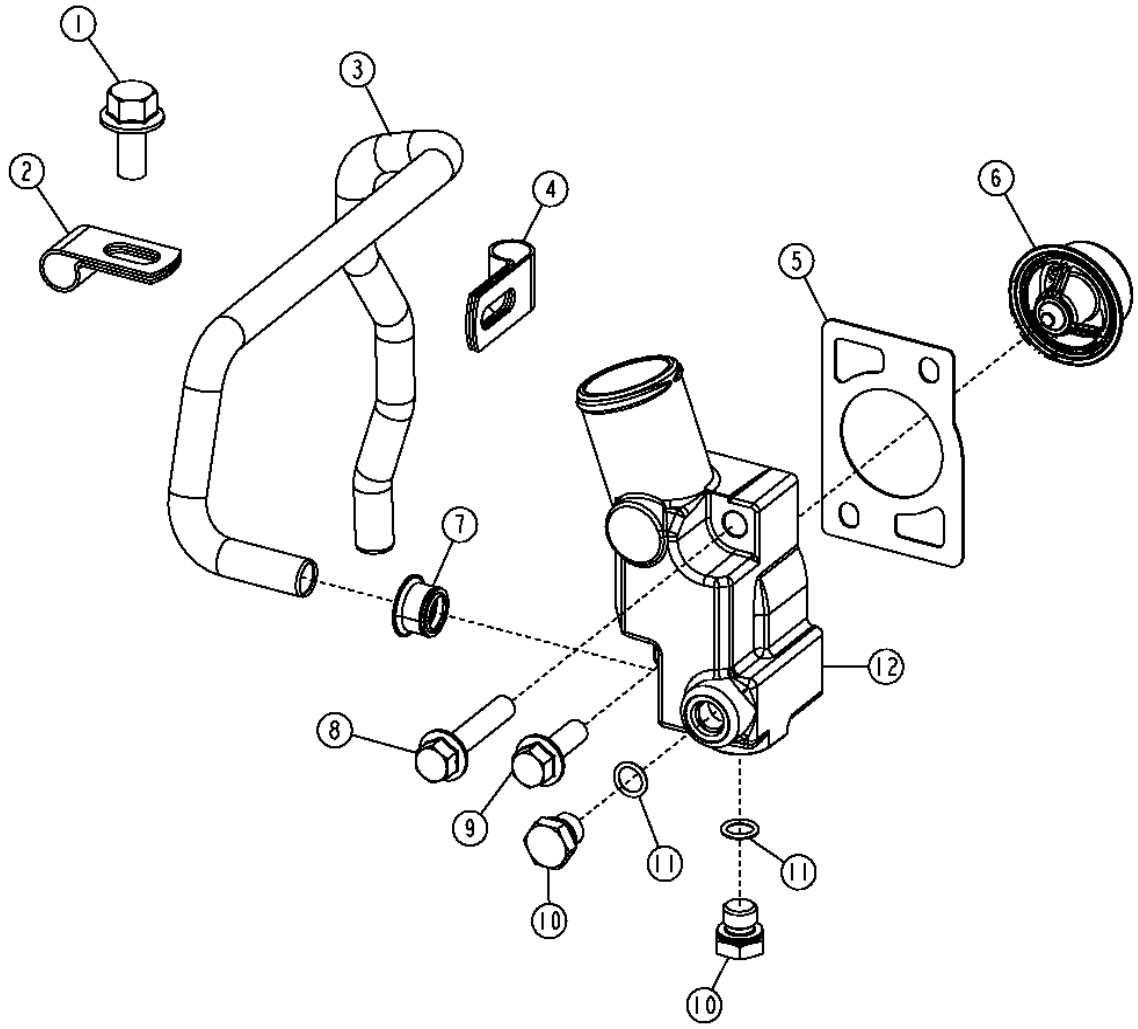

THERMOSTAT AND THERMOSTAT COVER

KEY	PART NO.	PART NAME	QTY	ENGINE SERIAL NO.	REMARKS
1	19M7788	SCREW	1		M12 X 25
2	R123323	CLAMP	1		
3	R501144	TUBE	1		
4	R123324	CLAMP	1		
5	R502814	GASKET	1		
6	RE522076	THERMOSTAT	1		82° C (180° F) (SUB FOR RE506300)
7	R123226	SEAL	1		
8	19M8292	SCREW	1		M10 X 50
9	19M7786	SCREW	1		M10 X 30
10	RE46684	PLUG	2		
11	51M7041	O-RING	2		
12	R131016	COVER	1		

ENGINE OIL COOLER AND ADAPTER

T161134 -UN-31OCT02

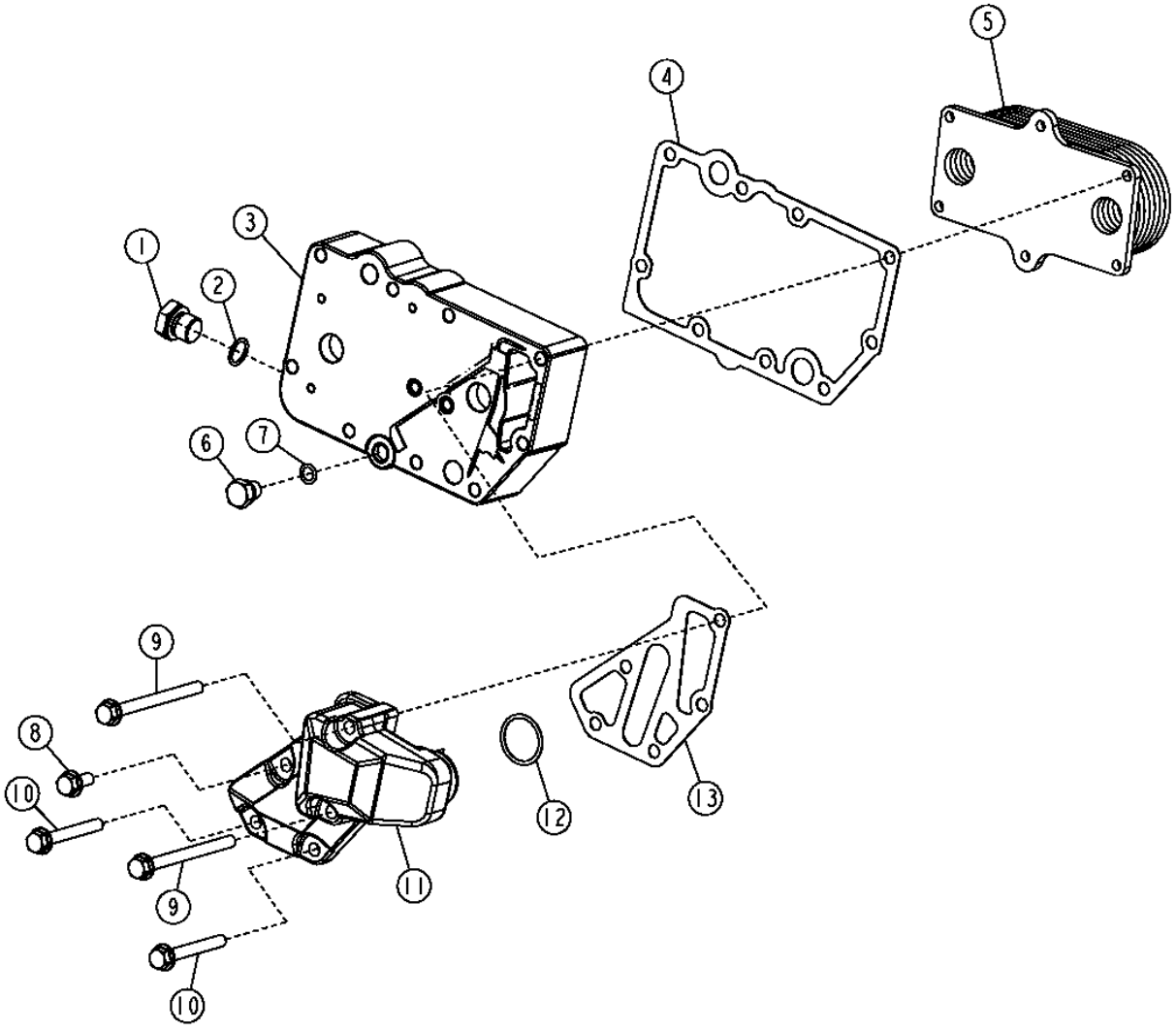

ENGINE OIL COOLER AND ADAPTER
TO4045TT082 - PE4045TT082

KEY	PART NO.	PART NAME	QTY	ENGINE SERIAL NO.	REMARKS
1	RE46685	PLUG	1		
2	51M7043	O-RING	1		
3	R123471	HOUSING	1		
	RE67231	SCREW	6		M6 X 16
4	R123501	GASKET	1		
5	RE56690	OIL COOLER	1		
	RE522821	OIL COOLER	1		(7-PLATE TESTED ASSEMBLY)
6	RE46686	PLUG	1		
7	51M7040	O-RING	1		
8	RE67238	SCREW	1		M8 X 20, (WITH PRE-APPLIED SEALANT)
9	19M7970	SCREW	2		M8 X 100
10	19M7802	SCREW	2		M8 X 65
11	R502811	ADAPTER	1		
12	T122075	O-RING	2		
13	R501428	GASKET	1		

FUEL PREFILTER ELEMENT,HEADER AND SERVICE KITS

T189320 -UN-16APR03

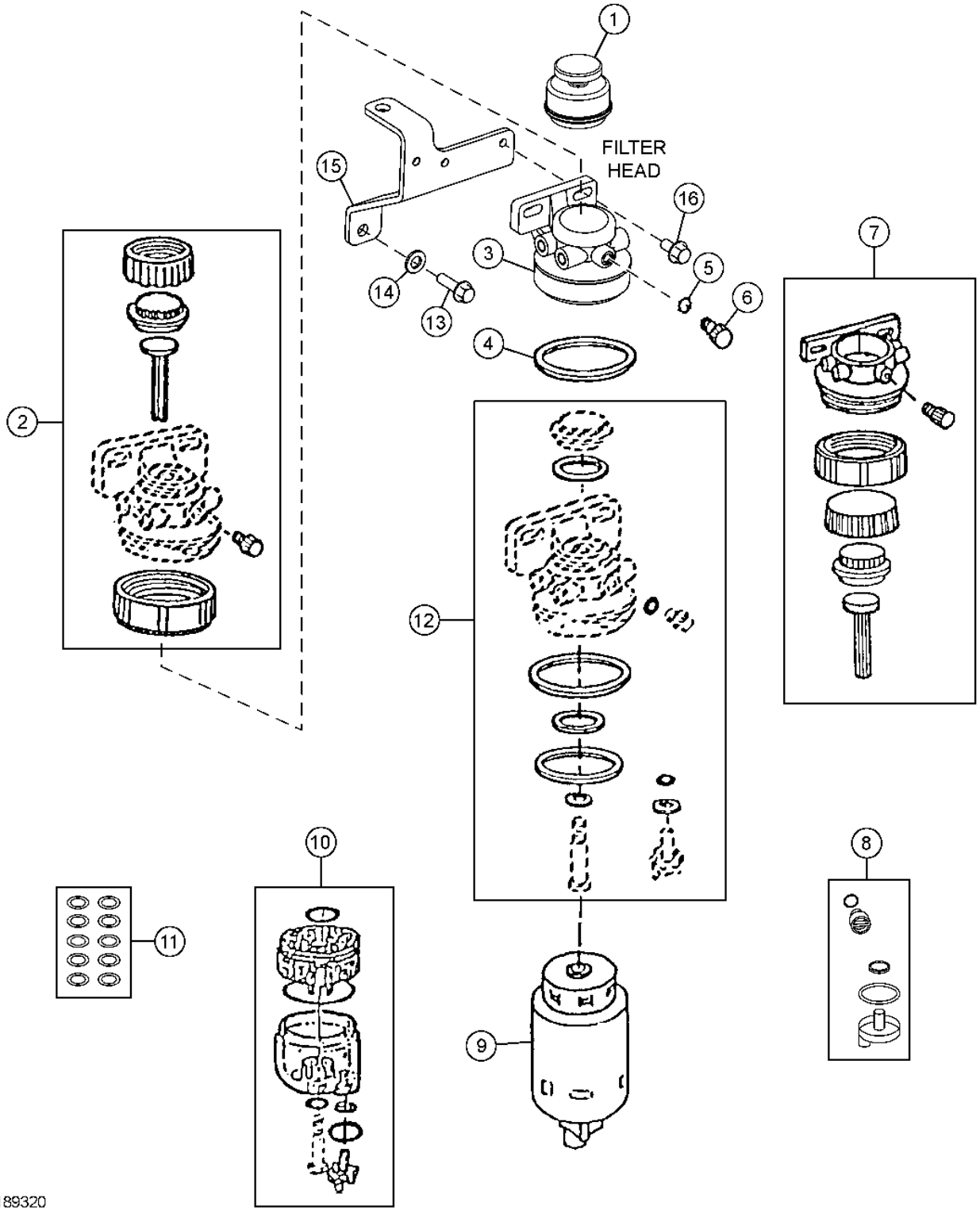

FUEL PREFILTER HEADER,ELEMENT AND SERVICE KITS

KEY	PART NO.	PART NAME	QTY	SERIAL NO.	REMARKS
1	RE515404	KIT	1		
2	RE51649	SEAL KIT	1		
3	.....	FILTER HEAD	1		(FURNISH RE508847)
4	R113565	SEAL	1		
5	R113562	RING	1		
6	R113563	DRAIN PLUG	1		
7	RE508847	FILTER HEAD	1		
8	RE60854	KIT	1		
9	RE517181	FUEL FILTER	1		
	RE516477	FILTER ELEMENT	1		(ANTI-FUEL GELLING) (USE IN COLD CLIMATE APPLICATIONS)
10	RE51650	SEDIMENT BOWL	1		
11	RE516513	KIT	1		
12	RE516553	KIT	1		(WITH HAND PRIMER) (CONTAINS 10 O-RINGS)
13	19M7835	SCREW	1		M10 X 35
14	24M7047	WASHER	1		
15	R516671	BRACKET	1		
16	19M7784	SCREW	2		M10 X 20

FINAL FUEL FILTER ELEMENTS AND SERVICE KITS

T189670 -UN-22APR03

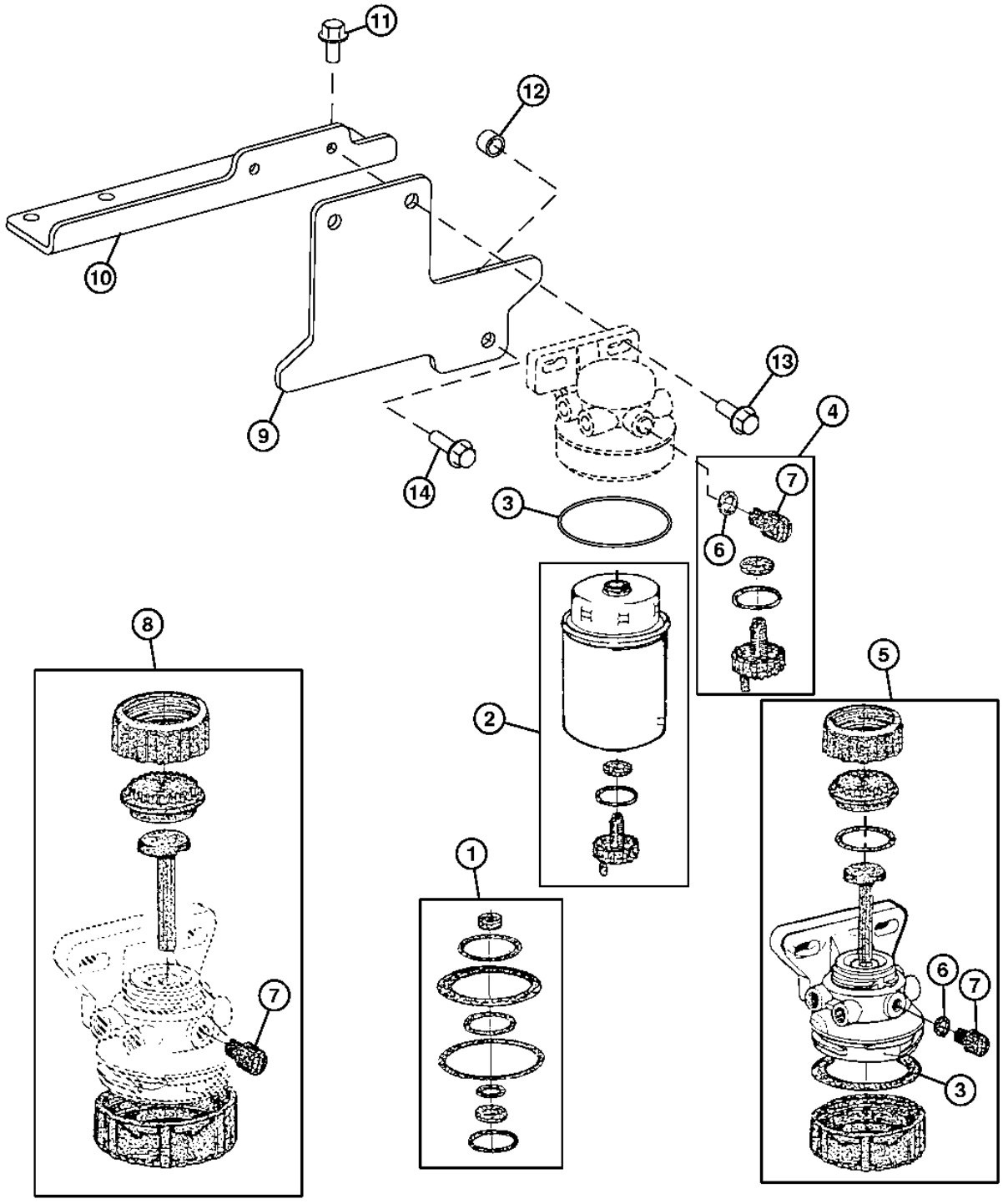

T189670

FINAL FUEL FILTER ELEMENTS AND SERVICE KITS

KEY	PART NO.	PART NAME	QTY	ENGINE SERIAL NO.	REMARKS
1	RE516553	KIT	1		FUEL FILTER SEAL
2	RE509031	FILTER ELEMENT	1		FUEL FILTER WITH DRAIN VALVE
3	R113565	SEAL	1		
4	RE60854	KIT	1		DRAIN VALVE
5	RE509794	KIT	1		FILTER HEAD
6	R113562	RING	1		
7	R113563	DRAIN PLUG	1		
8	RE51649	KIT	1		MECHANICAL COMPONENTS
9	R517211	BRACKET	1		
10	R516691	BRACKET	1		
11	19M7784	SCREW	2		M10 X 20
12	28H1884	SPACER	1		
13	19M7786	SCREW	2		M10 X 30
14	19M7835	SCREW	1		M10 X 35

FUEL TRANSFER PUMP

T161072 -UN-31OCT02

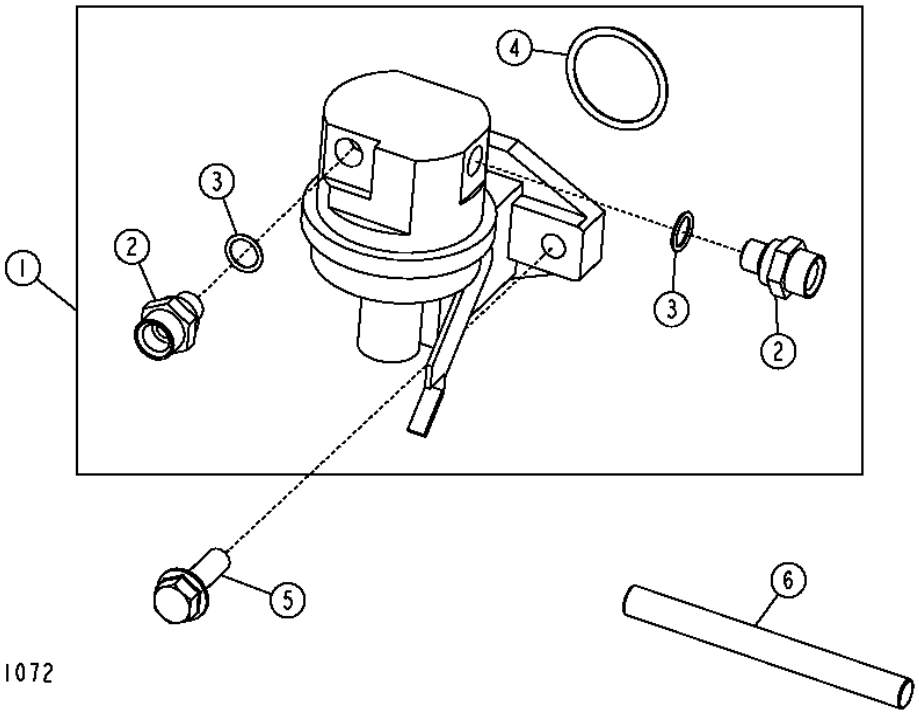

KEY	PART NO.	PART NAME	QTY	ENGINE SERIAL NO.	REMARKS
1	RE66153	FUEL PUMP	1		
2	R500270	FITTING	2		
3	R500271	O-RING	2		
4	R123273	O-RING	1		
5	RE504233	SCREW	2		M8 X 30
6	R133405	PUSH ROD	1		

MEMORANDA

STARTING MOTOR
(12-VOLT L.H. DENSO)

T134292 -UN-07OCT00

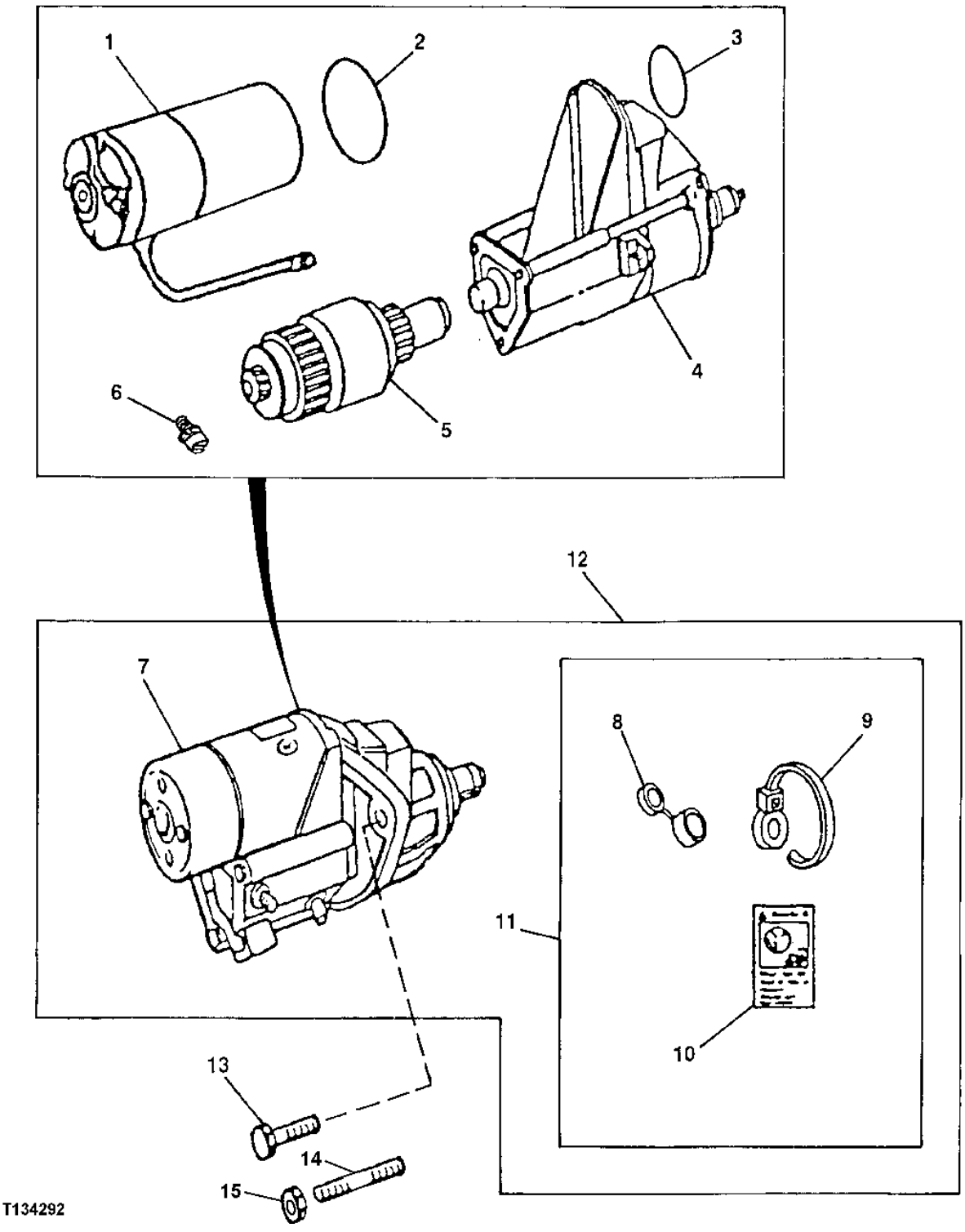

STARTING MOTOR AND SOLENOID KIT
(12-VOLT L.H. DENSO)

KEY	PART NO.	PART NAME	QTY	ENGINE SERIAL NO.	REMARKS
1	.....	MOTOR	1		
2	R135509	SEAL	1		
3	R135510	O-RING	1		
4	RE70486	SOLENOID	1		
5	RE70487	CLUTCH	1		
6	RE71256	SCREW WITH WASHER	1		M5 X .8
7	.....	STARTER MOTOR	1		(12-VOLT L.H. DENSO)
8	.....	COVER	1		
9	R96703	TIE BAND	1		
10	T146102	LABEL	1		(BYPASS START)
11	RE70756	KIT	1		(SOLENOID KIT)
12	RE501298	STARTER MOTOR	1		(STARTER AND SOLENOID KIT)
13	19M7786	SCREW	2		M10 X 30
14	R503419	STUD	1		(LOWER RIGHT HAND)
15	14M7299	FLANGE NUT	1		(LOWER RH)

ALTERNATOR MOUNTING BRACKETS

T154742 -UN-10MAY02

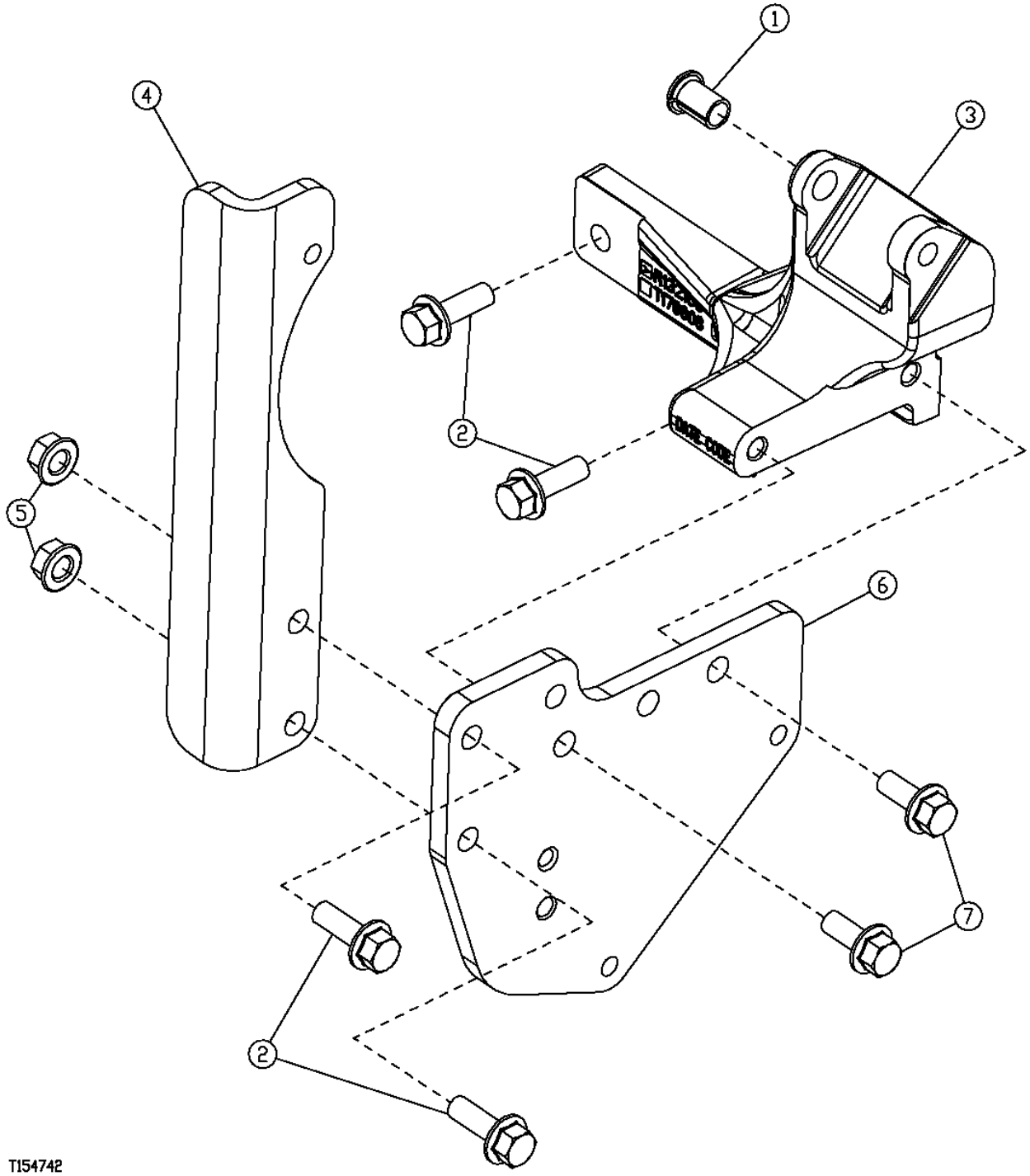

ALTERNATOR MOUNTING BRACKETS

KEY	PART NO.	PART NAME	QTY	ENGINE SERIAL NO.	REMARKS
1	R100377	BUSHING	1		
2	19M7786	SCREW	4		M10 X 30
3	R132166	BRACKET	1		
4	R500531	STRAP	1		
5	14M7296	FLANGE NUT	2		M10
6	R133978	SUPPORT	1		
7	19M7785	SCREW	2		M10 X 25

CRANKSHAFT PULLEY AND DAMPER

CDP45050 -UN-13NOV01

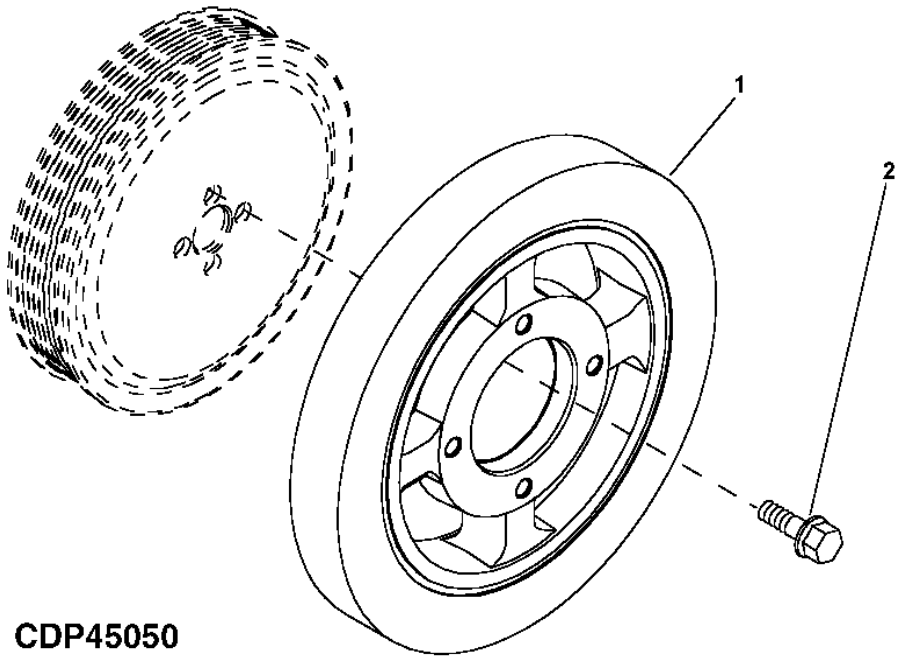

KEY	PART NO.	PART NAME	QTY	ENGINE SERIAL NO.	REMARKS
1	RE59355	TORSIONAL DAMPER	1		
2	R121897	SCREW	4		M10 X 50

MEMORANDA

FAN DRIVE HOUSING, PULLEYS, AND TENSIONERS

T160446 -UN-22OCT02

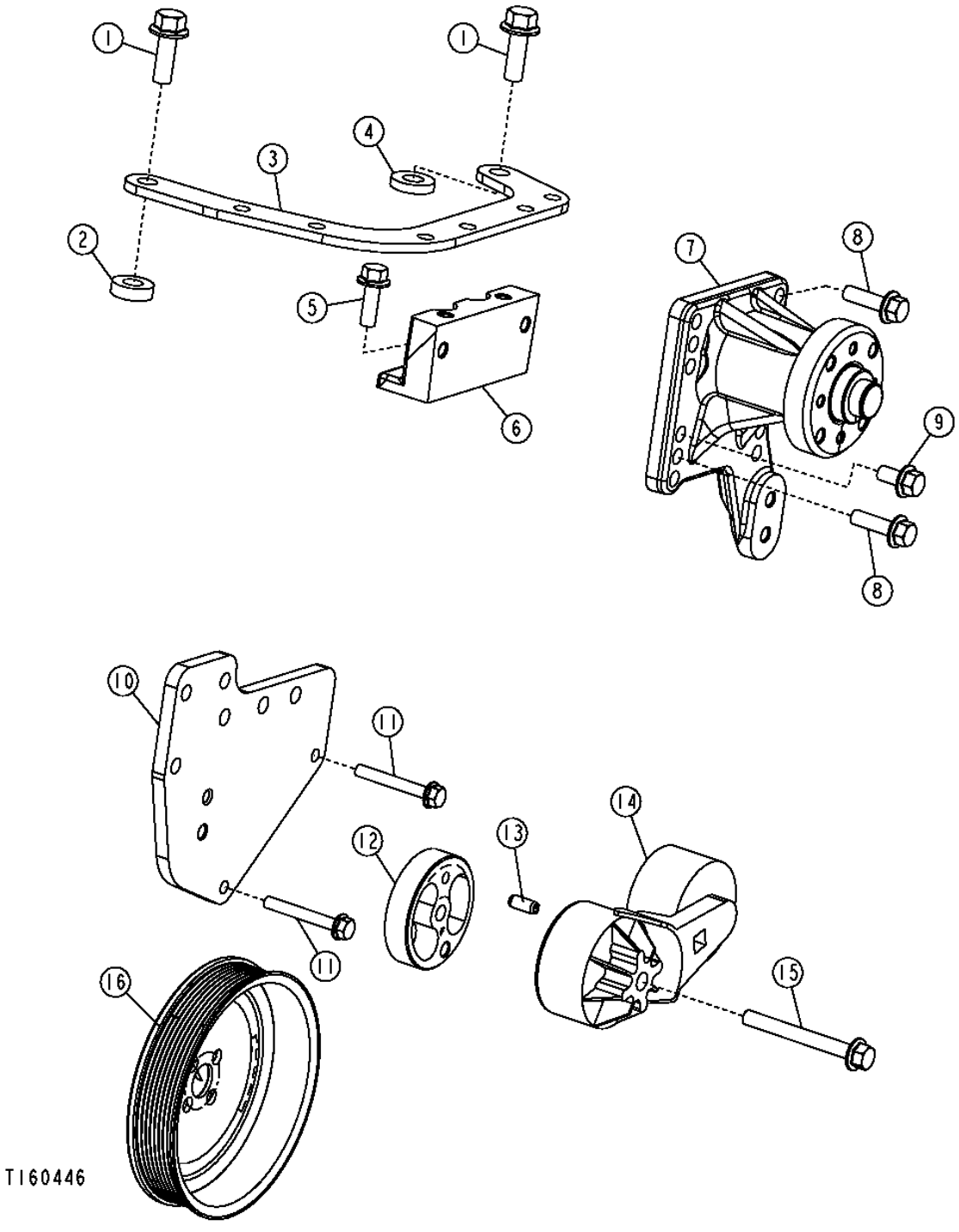

FAN DRIVE HOUSING, PULLEYS, AND TENSIONERS

KEY	PART NO.	PART NAME	QTY	ENGINE SERIAL NO.	REMARKS
1	19M7790	SCREW	2		M12 X 35
2	H98792	WASHER	1		
3	R134891	BRACKET	1		
4	T151858	WASHER	1		
5	19M7786	SCREW	2		M10 X 30
6	R134890	SPACER	1		
7	RE503664	SUPPORT	1		
8	19M7835	SCREW	4		M10 X 35
9	19M7784	SCREW	2		M10 X 20
10	R133978	SUPPORT	1		(SUB R516639)
11	19M7801	SCREW	2		M8 X 60
12	R500322	SPACER	1		
13	34M7061	SPRING PIN	1		
14	.....	TIGHTENER	1	-255150	(SUB RE518097 AND R516623)
	RE518097	TIGHTENER	1	255151-	
	R516623	SPACER	1		
15	19M7811	SCREW	1		M10 X 90
16	R133295	PULLEY	1		

ENGINE FLYWHEEL

T160718 -UN-22OCT02

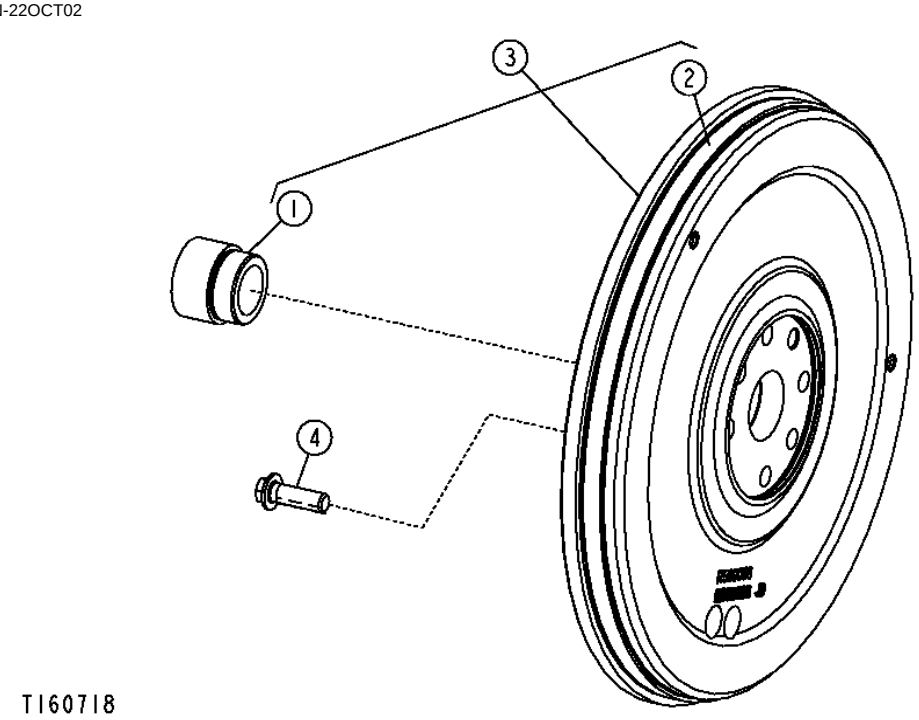

KEY	PART NO.	PART NAME	QTY	ENGINE SERIAL NO.	REMARKS
1	R123521	SLEEVE	1		(129 TEETH)
2	R28811	RING GEAR	1		
3	RE500137	FLYWHEEL	1		
4	R135918	BOLT	4		(MARKED R500096)

FLYWHEEL HOUSING

T157770 -UN-02AUG02

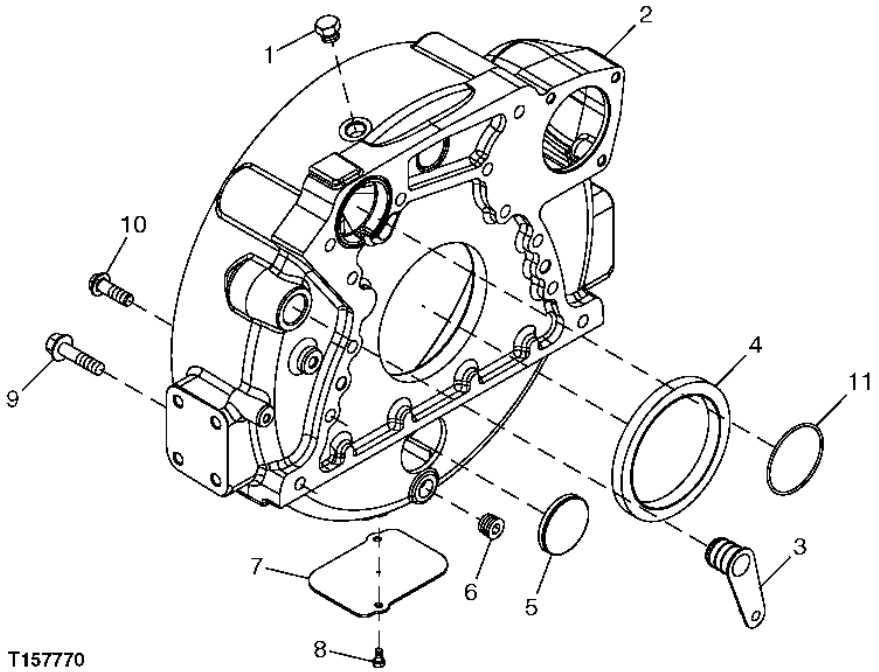

KEY	PART NO.	PART NAME	QTY	ENGINE SERIAL NO.	REMARKS
1	R39112	FITTING	1		
2	R503451	HOUSING	1		
3	R131769	PLUG	1		
4	RE44574	SEAL	1		
5	T13518	PLUG	1		
6	RE57836	PIPE PLUG	1		1/2", (SUB FOR 15H624)
7	R121039	PLATE	1		
8	19M7923	CAP SCREW	2		M6 X 12
9	19M8306	SCREW	4		M12 X 50
10	R135918	BOLT	8		
11	R61467	O-RING	1		

ENGINE SENSORS

CDP45110 -UN-18DEC01

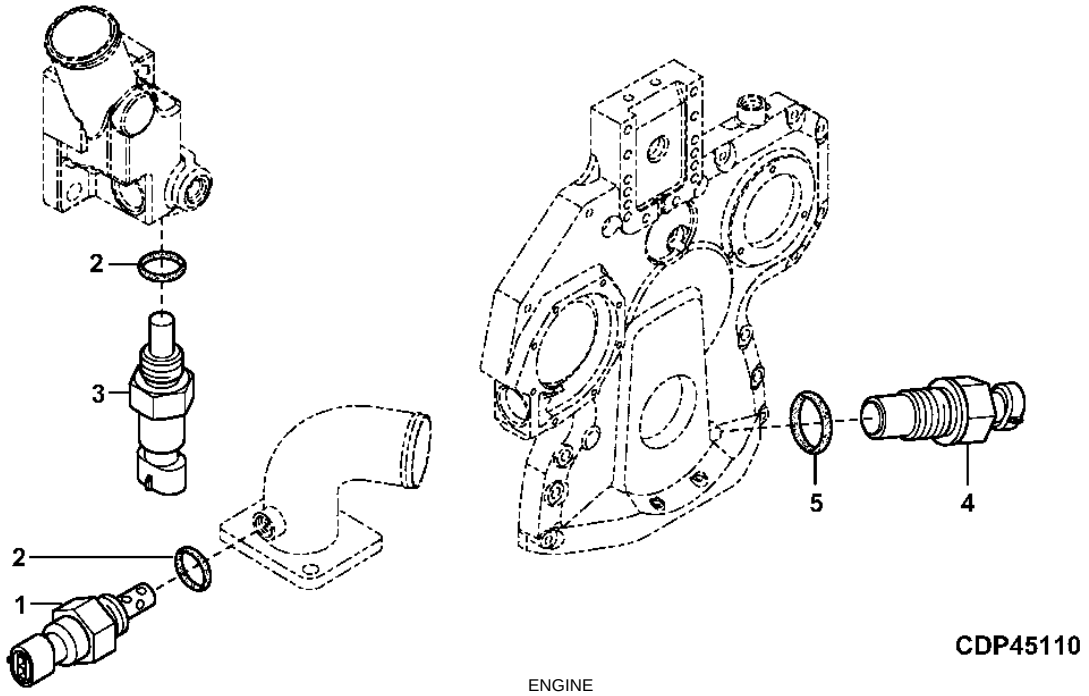

KEY	PART NO.	PART NAME	QTY	ENGINE SERIAL NO.	REMARKS
1	RE61812	SENSOR	1		(AIR TEMPERATURE) (ALSO ORDER 51M7041)
2	51M7041	O-RING	2		11.300 X 2.200 MM
3	RE52722	SENSOR	1		(WATER TEMPERATURE) (ALSO ORDER 51M7041)
4	RE519144	SENSOR	1		(TACHOMETER DRIVE) (ALSO ORDER 51M7044)
5	51M7044	O-RING	1		17.300 X 2.200 MM
..	R501489	WHEEL SPEED SENSOR	1		

MEMORANDA

COLD WEATHER STARTING AID

T155240 -UN-24JUN02

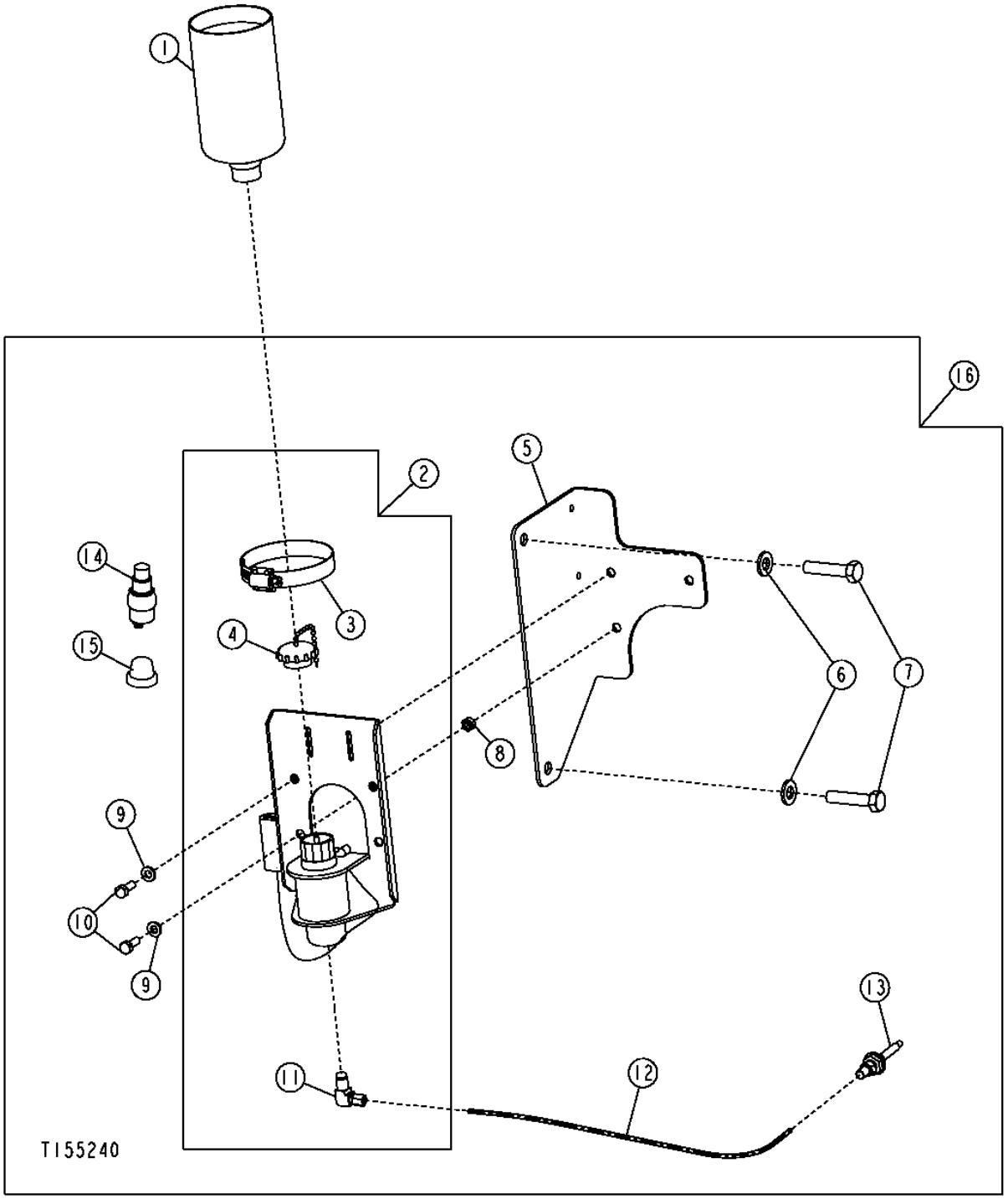

COLD WEATHER STARTING AID

KEY	PART NO.	PART NAME	QTY	SERIAL NO.	REMARKS
1	AT171162	STARTING FLUID	1		
2	AT173385	STARTING AID SOLENOID	1		
3	AR21999	HOSE CLAMP	1		
4	AT171539	CAP (HAT)	1		
5	T190525	BRACKET	1		
6	24M7239	WASHER	2		
7	19M7572	CAP SCREW	2		M10 X 45
8	14M7272	NUT	3		M6
9	24M7293	WASHER	3		6.500 X 13 X 1.600 MM
10	19M8425	CAP SCREW	3		M6 X 16
11	AT181582	ELBOW FITTING	1		
12	T186717	TUBE	1		
13	AT183222	NOZZLE	1		
14	R39554	SWITCH	1		
15	T55585	CAP	1		
16	AT196994	KIT	1		

ENGINE COOLANT HEATER

TP58143 -UN-03OCT00

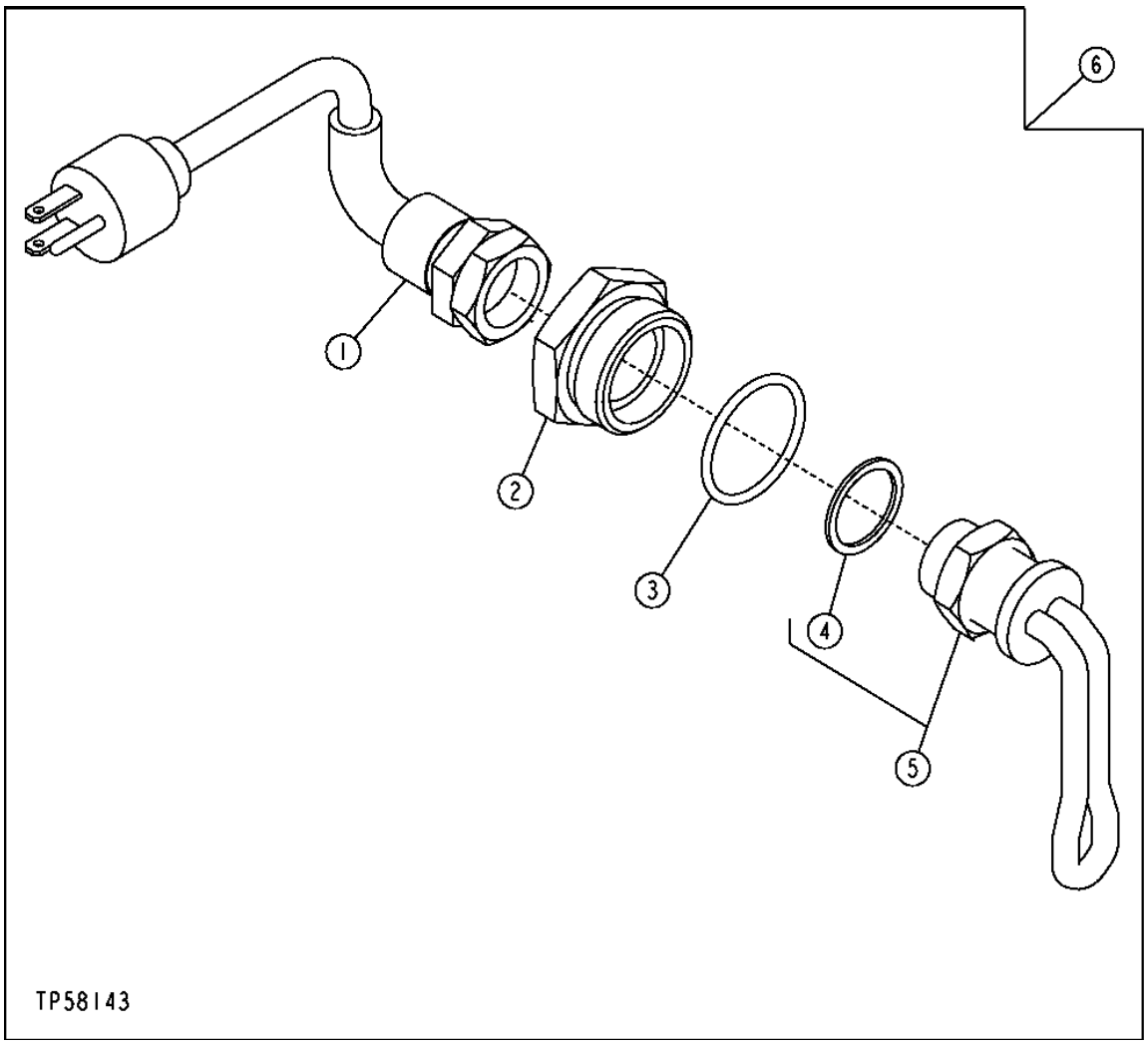

ENGINE COOLANT HEATER

KEY	PART NO.	PART NAME	QTY	SERIAL NO.	REMARKS
1	AT73296	POWER CORD	1		
2	R54123	ADAPTER	1		
3	U13639	O-RING	1		
4	R206883	WASHER	1		(SUB FOR R47693)
5	RE42139	HEATING ELEMENT	1		(SUB FOR RE504122, THIS APPLICATION)
6	**AT159688**	**KIT**	**1**		**(WHOLE GOODS)**

RADIATOR, RADIATOR HOSES, FAN SHROUD AND FAN GUARD

T153029 -UN-01NOV02

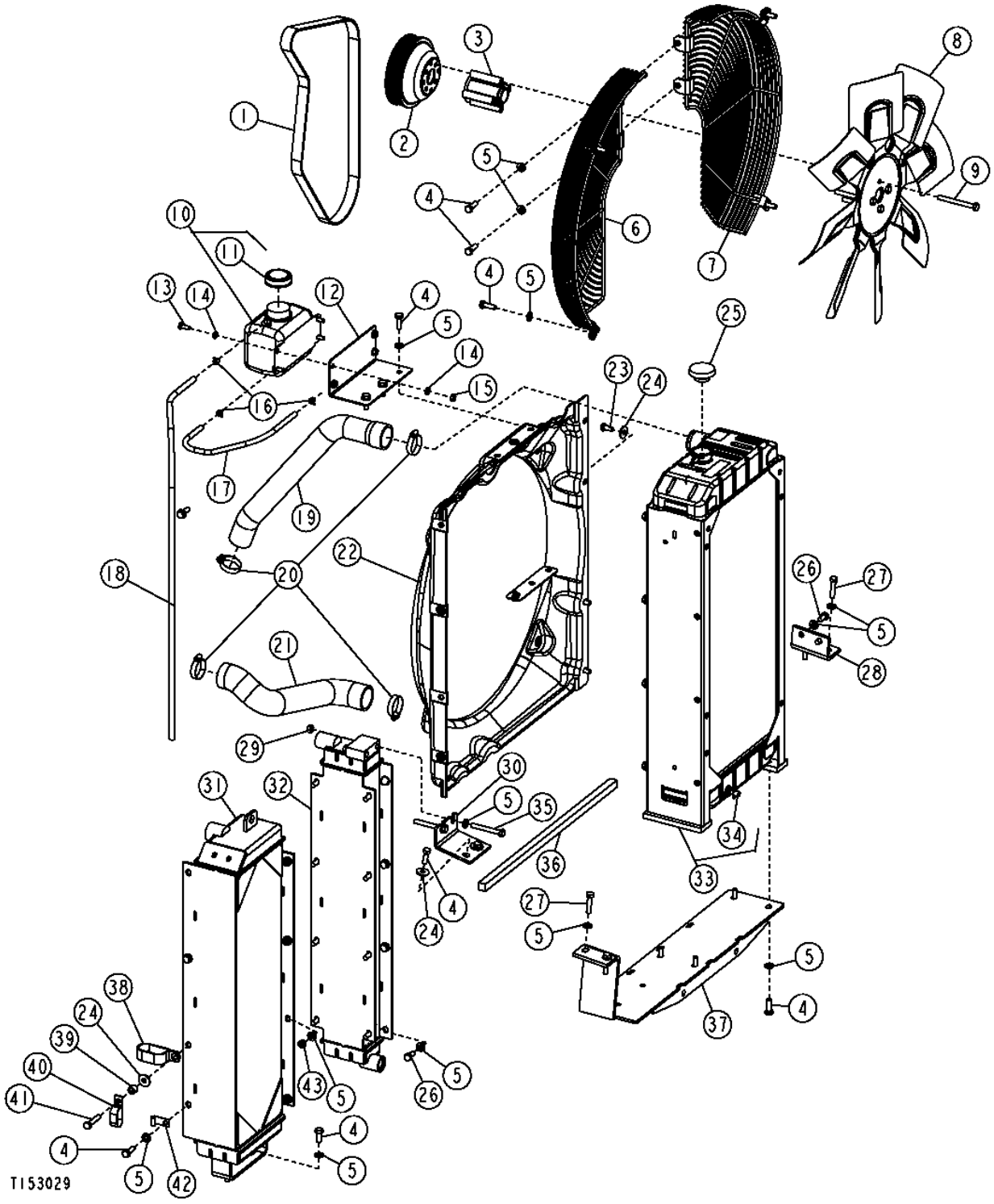

RADIATOR, RADIATOR HOSES, FAN SHROUD AND FAN GUARD

KEY	PART NO.	PART NAME	QTY	SERIAL NO.	REMARKS
1	T186776	V-BELT	1		(WITHOUT AIR CONDITIONING)
2	R128660	PULLEY	1		
3	R81876	HUB	1		
4	19M7662	CAP SCREW	21		M10 X 30
5	24M7239	WASHER	36		
6	AT196816	GUARD	1		RIGHT
7	AT196817	GUARD	1		LEFT
8	AT189518	FAN	1		
9	19M8166	CAP SCREW	4		M10 X 110
10	AN205068	TANK	1		
11	AT186925	FILLER CAP	1		
12	T188764	ANGLE	1		
13	19M7881	SCREW	4		M8 X 20
14	24M7238	WASHER	8		
15	14M7273	NUT	4		M8
16	R56101	CLIP	3		
17	.....	HOSE	1		(MAKE FROM TY22566, CUT TO 1.46 FT.)
18	.....	HOSE	1		(MAKE FROM TY22566, CUT TO 4.70 FT.)
19	T183886	RADIATOR HOSE	1		
20	AT308555	HOSE CLAMP	4		(SUB FOR AR65294)
21	T183887	RADIATOR HOSE	1		
22	AT280939	SHROUD	1		
23	T105891	CAP SCREW	4		
24	24M7296	WASHER	9		
25	AT173610	FILLER CAP	1		
26	19M7938	CAP SCREW	8		M10 X 20
27	19M8488	CAP SCREW	4		M10 X 45
28	T188231	ANGLE	1		
29	14M7274	NUT	2		M10
30	T184006	ANGLE	1		
31	AT280937	OIL COOLER	1		HYDRAULIC
32	AT280938	OIL COOLER	1		TRANSMISSION
33	AT189514	RADIATOR	1		
34	AT13740	DRAIN VALVE	1		
35	19M7938	CAP SCREW	2		M10 X 20
36	.....	WEATHERSTRIP	2		(MAKE FROM AT305126, CUT TO 2.08 FT.)
37	AT189614	BRACKET	1		
38	T185154	CLAMP	1		
39	28H3381	SPACER	1		
40	AH89557	CLIP	1		
41	19M7384	CAP SCREW	1		M10 X 60
42	AH89557	CLIP	1		
43	14M7274	NUT	2		M10

RADIATOR, BAFFLES

T162112 -UN-27NOV02

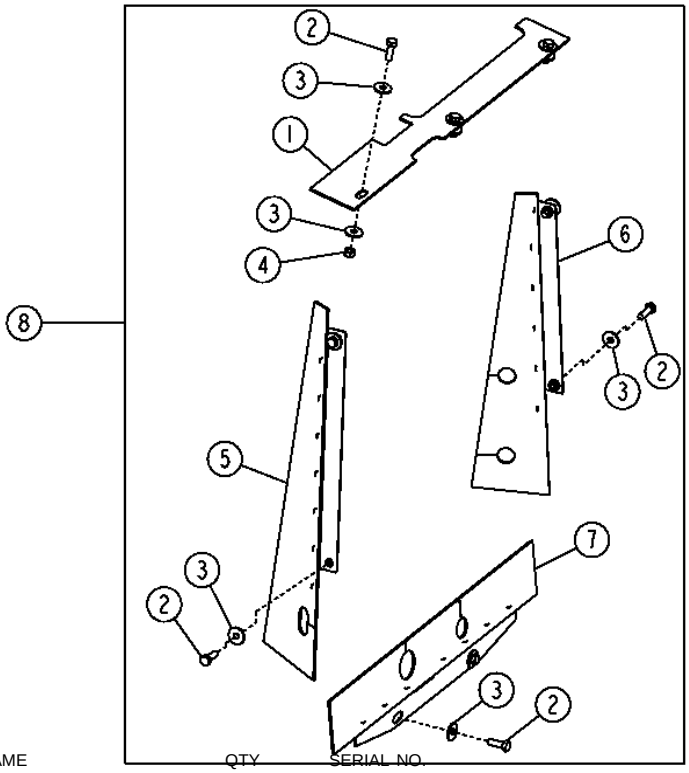

T162112

KEY	PART NO.	PART NAME	QTY	SERIAL NO.	REMARKS
1	T191355	DEFLECTOR	1		
2	19M7402	CAP SCREW	9		M10 X 25
3	24M7296	WASHER	12		
4	14M7274	NUT	3		M10
5	AT280739	DEFLECTOR	1		
6	AT280740	DEFLECTOR	1		
7	AT280741	DEFLECTOR	1		
8	**AT280624**	**KIT**	**1**		**(WHOLE GOODS)**

MEMORANDA

ENGINE SPEED CONTROL LINKAGE

T200896 -UN-11JUN04

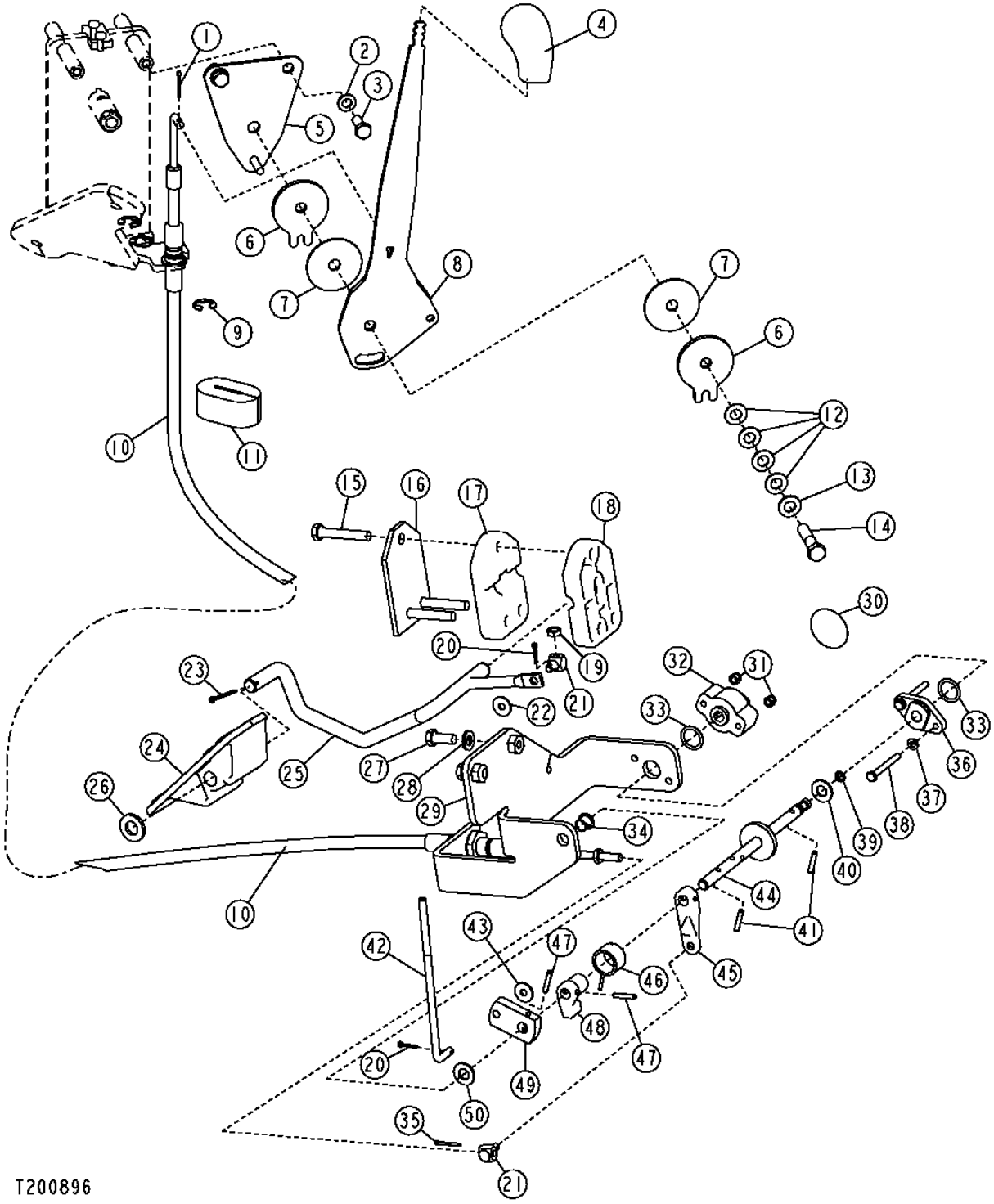

ENGINE SPEED CONTROL LINKAGE

KEY	PART NO.	PART NAME	QTY	SERIAL NO.	REMARKS
1	11M7081	COTTER PIN	1		
2	24M7055	WASHER	2		
3	19M7881	SCREW	2		M8 X 20
4	M48534	KNOB	1		
5	.....	BRACKET	1	-913488	(AT280518 NO LONGER AVAILABLE) (SUB AT300768) (ALSO ORDER AT300769, AT300770 AND AT300771)
	AT300768	BRACKET	1	913489-	
6	R33976	PLATE	2		
7	R105812	WASHER	2		
8	T185491	LEVER	1		
9	R106466	CLIP	1		
10	AT196338	PUSH PULL CABLE	1		
	24H1368	WASHER	2		
11	T183217	SEAL	1		
12	12M7117	WASHER	4		
13	24M7028	WASHER	1		
14	R41920	CAP SCREW	1		3/8" X 1-3/4"
15	19M8397	CAP SCREW	3		M8 X 50
16	T129732	PLATE	1		
17	T137321	SUPPORT	1		
18	T137322	SUPPORT	1		
19	14H649	NUT	1		1/4"
20	11M7009	COTTER PIN	2		2 X 16 MM
21	T213225	SWIVEL	2		(SUB FOR T35887, THIS APPLICATION)
22	24M7139	WASHER	2		
23	11M7082	COTTER PIN	1		2.500 X 25 MM
24	T137318	PEDAL	1		
25	AT185836	ROD	1		ACCELERATOR
26	24M7240	WASHER	1		
27	19M7881	SCREW	2		M8 X 20
28	24M7238	WASHER	2		
29	AT195421	BRACKET	1		
30	T186793	LABEL	1		GREY CIRCLE
31	14M7360	LOCK NUT	2		M5
32	RE56165	POTENTIOMETER	1		
33	P48347	O-RING	2		
34	T187920	BUSHING	1		
35	11M7081	COTTER PIN	1		2.500 X 20 MM
36	R86457	SUPPORT	1		
37	24M7027	WASHER	2		
38	19M8834	CAP SCREW	2		M5 X 45
39	A4365R	O-RING	1		
40	24H1305	WASHER	1		
41	34H264	SPRING PIN	2		3.962 X 22.225 MM
42	T166174	HOOK BOLT	1		
43	24H1287	WASHER	1		
44	AT192776	SHAFT	1		
45	T22240	ARM	1		
46	T77165	SPRING	1		
47	34H264	SPRING PIN	2		3.962 X 22.225 MM
48	T22150	ARM	1		
49	T135342	LEVER	1		
50	24H1305	WASHER	1		

AIR CLEANER, MOUNTING BRACKETS, ELEMENTS AND RESTRICTION SENSOR

T165030 -UN-06FEB03

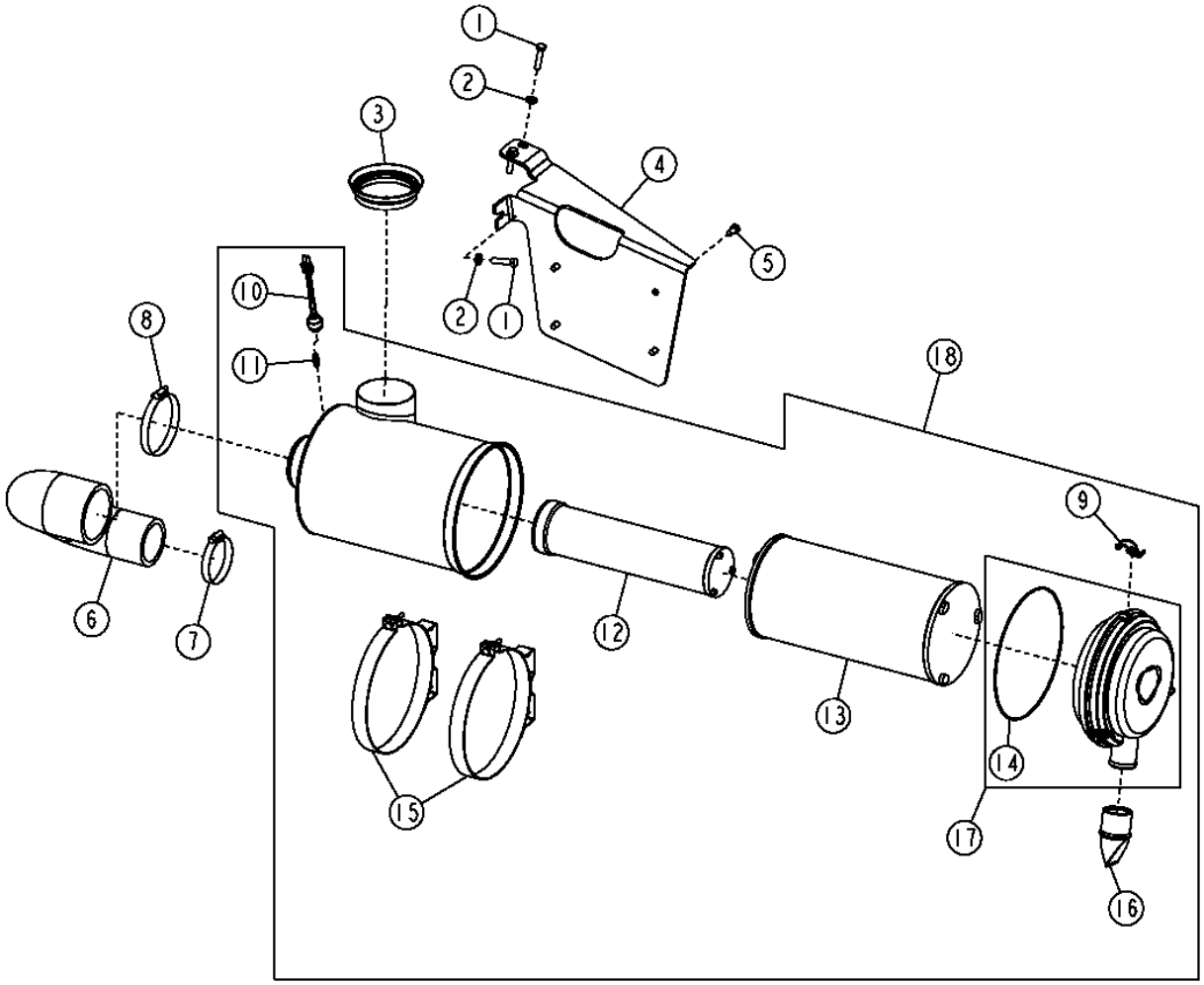

T165030

AIR CLEANER, MOUNTING BRACKETS, ELEMENTS AND RESTRICTION SENSOR

KEY	PART NO.	PART NAME	QTY	SERIAL NO.	REMARKS
1	19M7572	CAP SCREW	3		M10 X 45, (SUB FOR 19M8488, THIS APPLICATION)
2	24M7239	WASHER	3		
3	T166137	SEAL	1		
4	T184347	SUPPORT	1		
5	19M7938	CAP SCREW	4		M10 X 20, (SUB FOR 19M7662, THIS APPLICATION)
6	T186653	SUCTION HOSE	1		
7	AH104837	HOSE CLAMP	1		
8	AH103182	HOSE CLAMP	1		
9	AT209926	CLIP	3		
10	AT178542	AIR RESTRICTION SENSOR	1		
11	AR44361	FITTING	1		
12	AT203470	FILTER ELEMENT	1		SECONDARY
13	AT222722	FILTER ELEMENT	1		PRIMARY
14	T163113	O-RING	1		
15	AT206842	BAND	2		(SUB FOR AT182946)
16	T158495	VALVE	1		
17	AT175357	COVER	1		
18	AT190495	AIR CLEANER	1		

PRE CLEANER

T155268 -UN-24MAY02

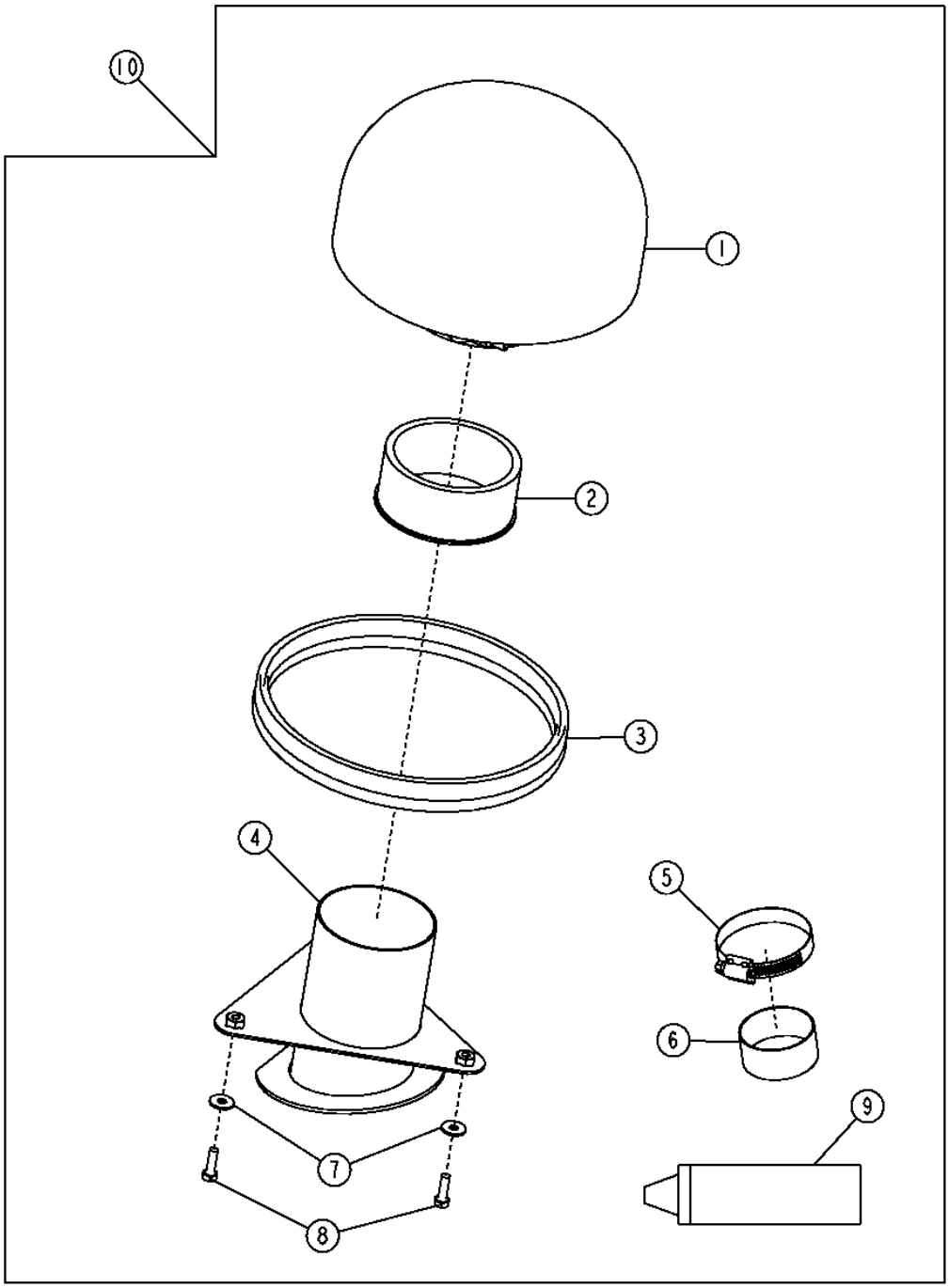

AIR PRE-CLEANER

KEY	PART NO.	PART NAME	QTY	SERIAL NO.	REMARKS
1	AT220930	PRECLEANER	1		
2	TY24867	KIT	1		
3	AH140044	ISOLATOR	1		
4	AT196857	TUBE	1		
5	AR40418	HOSE CLAMP	1		
6	T176553	PLUG	1		
7	24M7139	WASHER	3		
8	19M7077	CAP SCREW	3		M6 X 20
9	TY24344	LIQUID GASKET	1		
10	AT196832	KIT	1		

T151251 -UN-12FEB02

EXHAUST EXTENSION AND MUFFLER

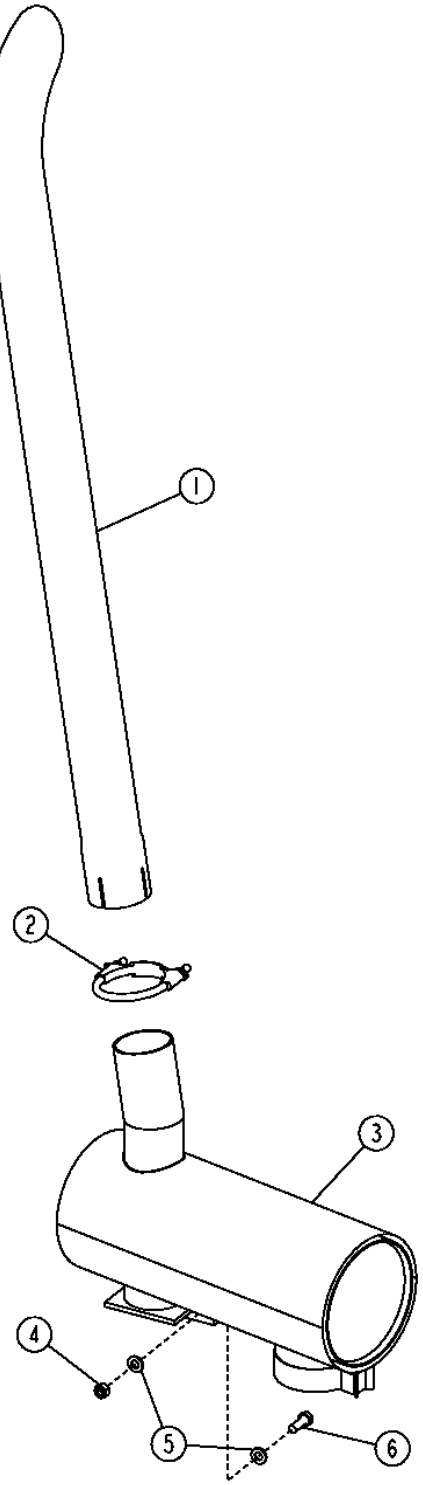

T151251

EXHAUST EXTENSION AND MUFFLER

KEY	PART NO.	PART NAME	QTY	SERIAL NO.	REMARKS
1	T118750	EXTENSION	1		BLACK
	T143355	EXTENSION	1		CHROME
2	AT167754	CLAMP	1		
3	AT188002	MUFFLER	1		
4	14M7274	NUT	1		M10
5	24M7239	WASHER	2		
6	19M7662	CAP SCREW	1		M10 X 30

ENGINE MOUNTS AND ISOLATORS

T155883 -UN-11JUN02

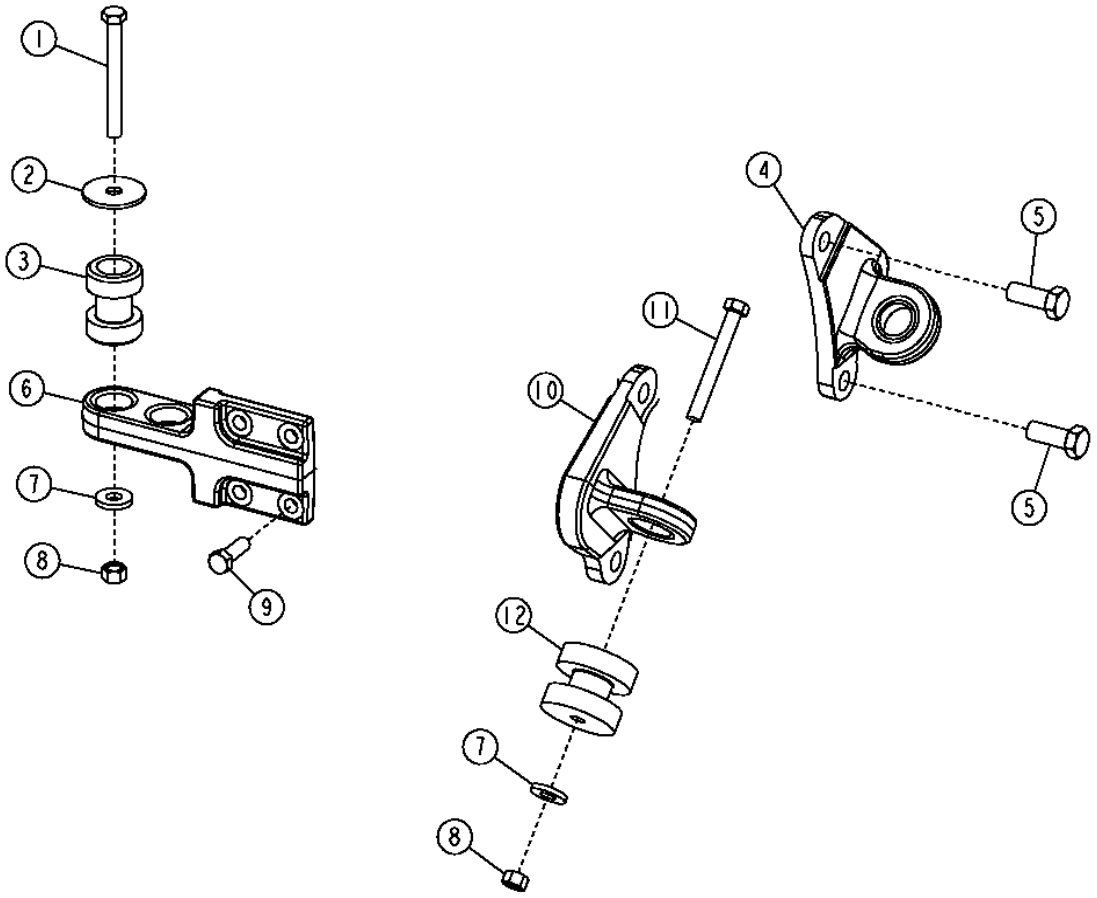

T155883

ENGINE MOUNTS AND ISOLATORS

KEY	PART NO.	PART NAME	QTY	SERIAL NO.	REMARKS
1	19M7908	CAP SCREW	4		M12 X 110
2	T158648	WASHER	4		
3	AT175374	ISOLATOR	4		
4	T187571	MOUNTING PARTS	1		
5	19M7488	CAP SCREW	4		M16 X 40
6	T154449	PLATE	2		
7	T29342	WASHER	6		
8	14M7275	NUT	6		M12
9	19M7403	CAP SCREW	8		M12 X 35
10	T170784	SUPPORT	1		
11	19M7949	CAP SCREW	2		M12 X 100
12	AT173400	ISOLATOR	2		

FUEL TANK, FUEL HOSES AND FUEL GAUGE SENDER

T208947 -UN-03JUN05

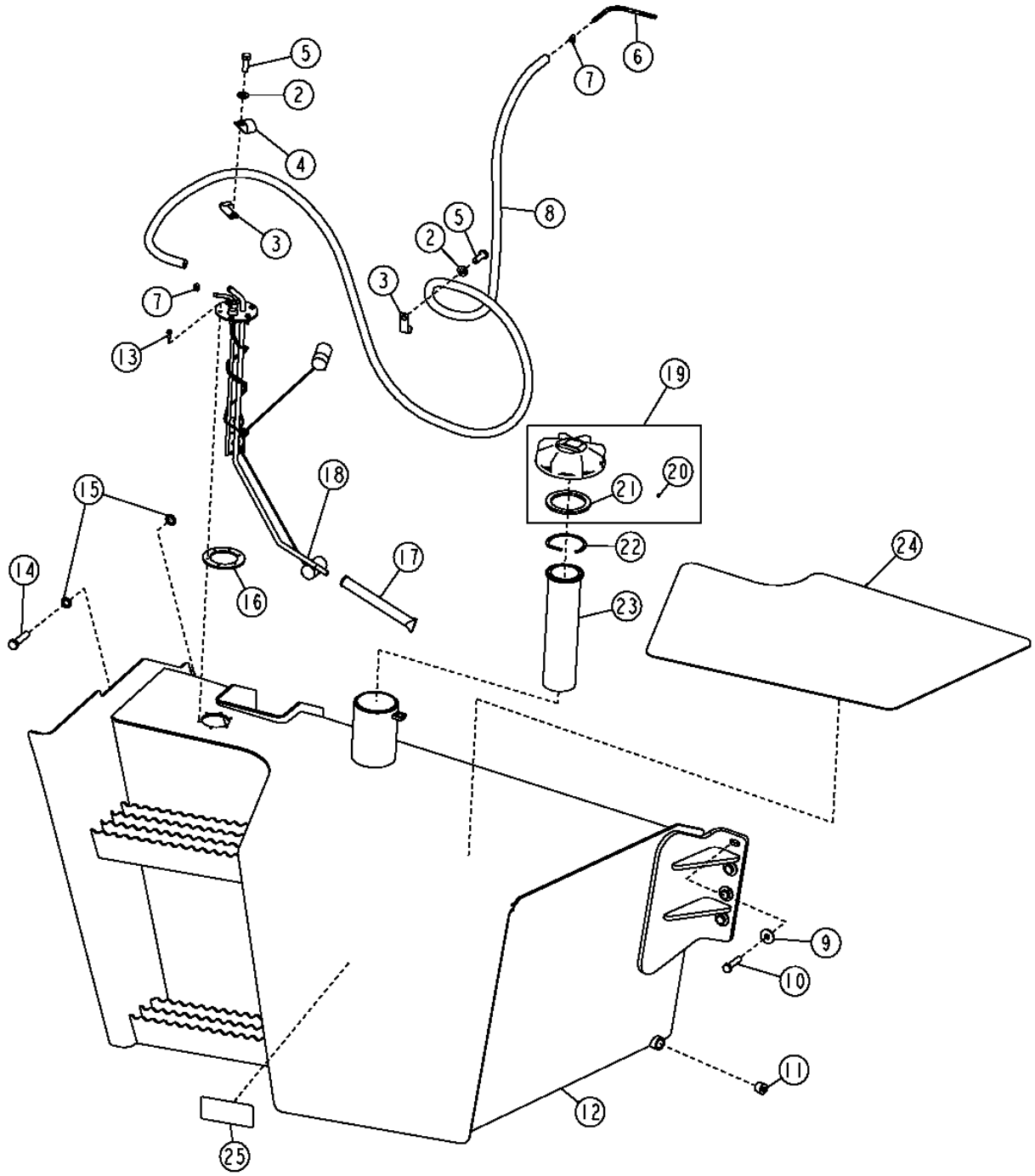

FUEL TANK, FUEL HOSES AND FUEL GAUGE SENDER

KEY	PART NO.	PART NAME	QTY	SERIAL NO.	REMARKS
1	14M7274	NUT	2		M10
2	24M7239	WASHER	2		
3	AH89557	CLIP	2		(SUB FOR T76252, THIS APPLICATION)
4	AH96317	CLIP	1		
5	19M7662	CAP SCREW	2		M10 X 30
6	T188987	TUBE	1		
7	TY22462	CLAMP	3		(SUB FOR AR48236)
8	.....	HOSE	1		(MAKE FROM TY22559, CUT TO 8.6 FEET)
9	24M7296	WASHER	7		
10	19M8488	CAP SCREW	7		M10 X 45
11	RE57836	PIPE PLUG	1		(SUB FOR 15H561)
12	AT195751	FUEL TANK	1		(SERVICE ONLY)
13	37H129	SCREW	6		(SERVICE ONLY)
14	19M7361	CAP SCREW	1		M12 X 50
15	T77258	WASHER	2		
16	T165292	GASKET	1		
17	AT65241	STRAINER	1		
18	AT197153	FUEL SENDER	1	-940786	(ALSO ORDER AT304837 AND AT65241)
	AT197153	FUEL SENDER	1	940787-	(ALSO ORDER AT65241)
19	AT156445	FILLER CAP	1		
20	T24652	BALL	1		
21	T103461	SEALING WASHER	1		
22	T39155	SNAP RING	1		(SERVICE ONLY)
23	AT161638	STRAINER	1		(SERVICE ONLY)
24	T188193	ANTI-SKID PAD	1		
25	JD5933	REFLECTOR	1		

FUEL COOLER

T200946 -UN-15JUN04

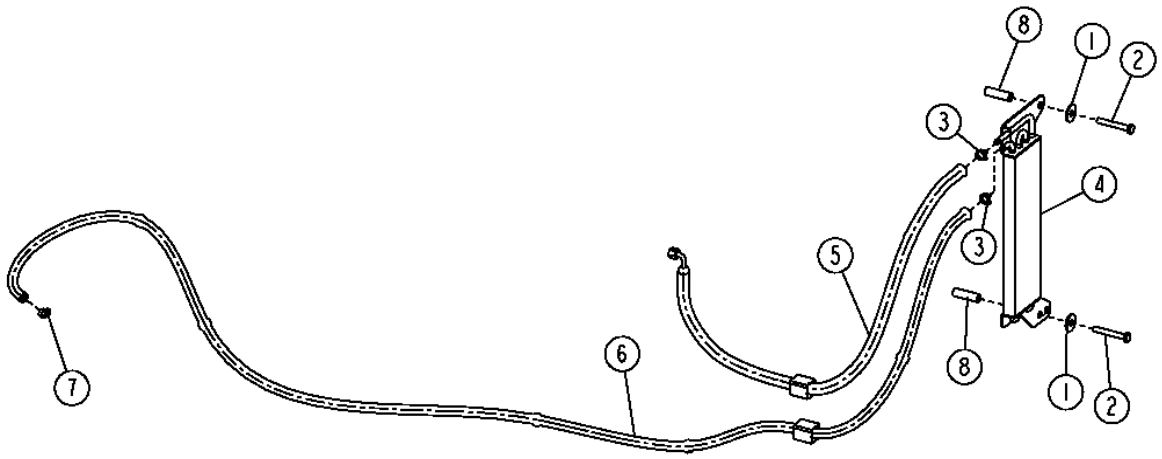

T200946

FUEL COOLER

KEY	PART NO.	PART NAME	QTY	SERIAL NO.	REMARKS
1	.....	WASHER	2	-937306	(SUB 24M7101)
	24M7101	WASHER	2	937307-	
2	.....	CAP SCREW	2	-937306	(19M7938 NO LONGER RECOMMENDED) (SUB (2) 19M7875, (2) 24M7101 AND (2) L3483N)
	19M7875	CAP SCREW	2	937307-	M10 X 70
3	R97021	CLAMP	2		
4	AT199908	FUEL COOLER	1		
5	AT183881	HOSE	1		
6	.....	BULK HOSE	1		(ORDER M87571, CUT TO 8'46" LENGTH)
7	AR77962	HOSE CLAMP	1		
8	L3483N	BUSHING	2	937307-	13/32" X 5/8" X 2-1/8"

STEERING WHEEL, AND COLUMN

T151615 -UN-18FEB02

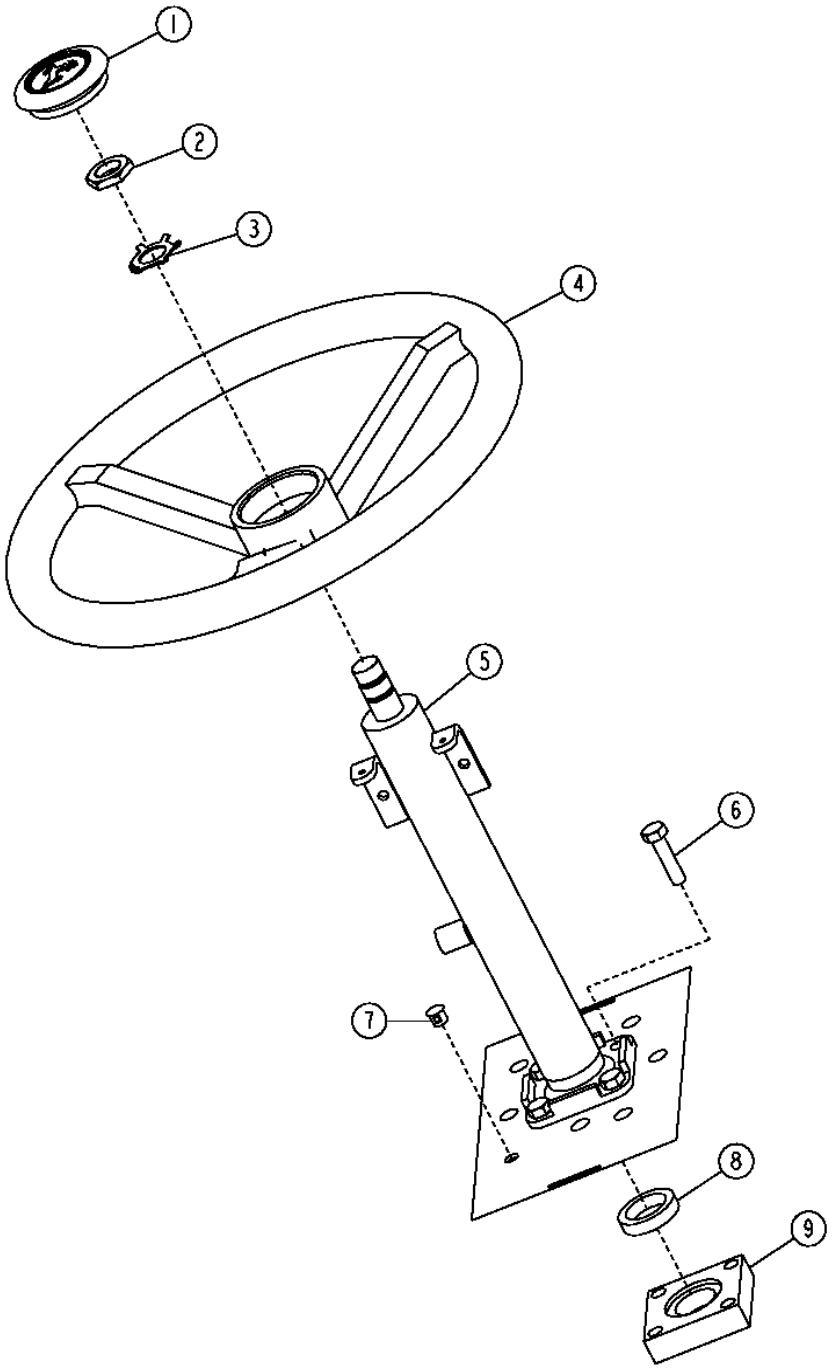

STEERING WHEEL, AND COLUMN

KEY	PART NO.	PART NAME	QTY	SERIAL NO.	REMARKS
1	AL155227	COVER	1		
2	T13630	NUT	1		
3	T17148	LOCK WASHER	1		
4	AT139694	STEERING WHEEL	1		
5	AT184728	STEERING COLUMN	1	-926969	
	AT307345	STEERING COLUMN	1	926970-	
6	19M8637	CAP SCREW	4	-926969	M10 X 40
	19M7938	CAP SCREW	1	926970-	M10 X 20
7	H113924	PLUG	8		
8	T167416	WASHER	1	-926969	
9	T167319	ADAPTER	1	-926969	

STEERING WHEEL, AND TILT COLUMN

T151625 -UN-26FEB02

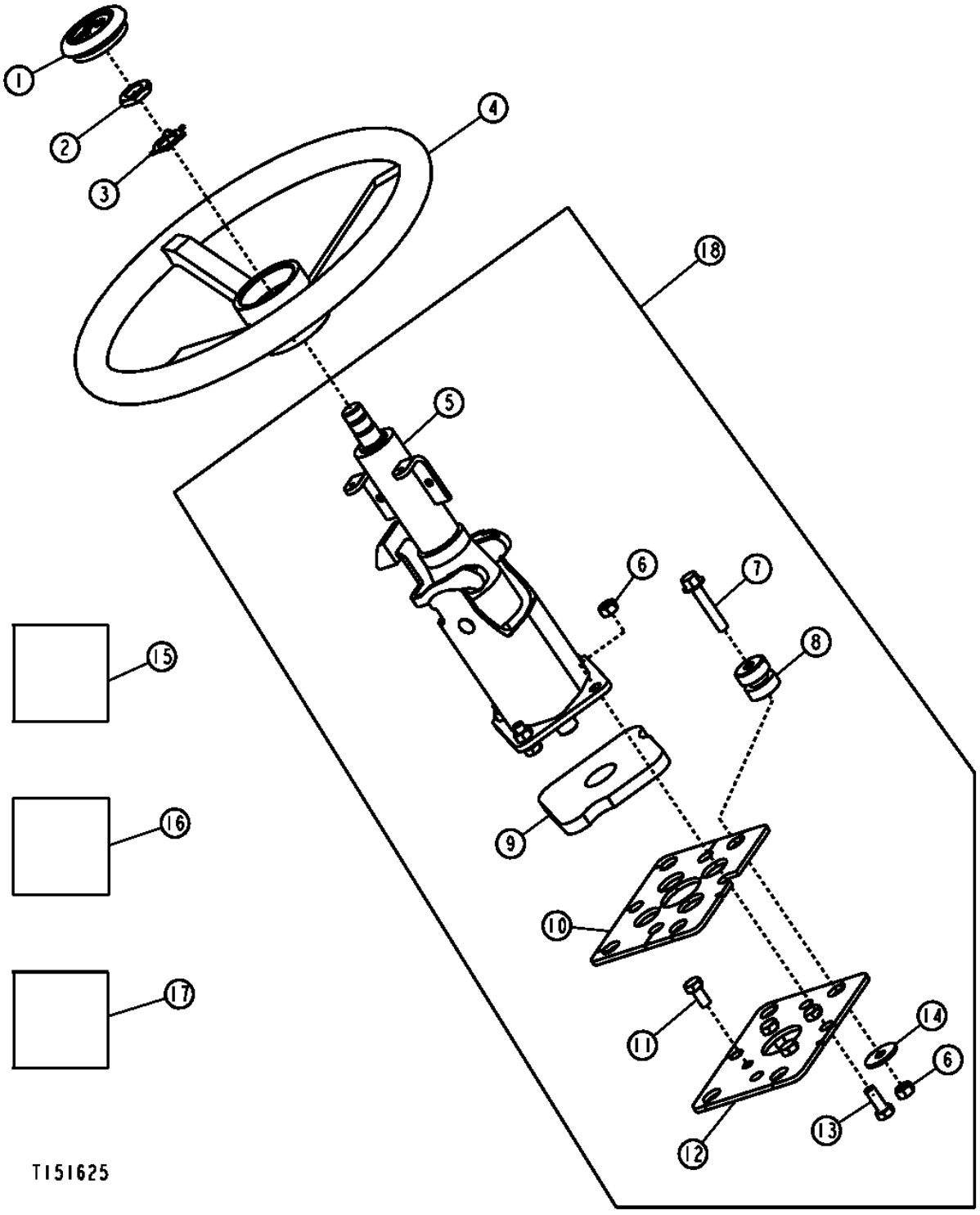

STEERING WHEEL, AND TILT COLUMN

KEY	PART NO.	PART NAME	QTY	SERIAL NO.	REMARKS
1	AL155227	COVER	1		
2	T13630	NUT	1		
3	T17148	LOCK WASHER	1		
4	AT139694	STEERING WHEEL	1		
5	AT184397	STEERING COLUMN	1		
6	14M7274	NUT	8		M10
7	19M8528	SCREW	4		M10 X 55
8	AT219940	ISOLATOR	4		
9	T165533	GASKET	1		
10	T165188	PLATE	1		
11	19M7938	CAP SCREW	4		M10 X 20
12	T165256	PLATE	1		
13	19M7402	CAP SCREW	4		M10 X 25
14	24M7101	WASHER	4		11 X 34 X 3 MM, (SUB FOR 24H1312, THIS APPLICATION)
15	AT192278	KIT	1		COLUMN TILT UP SPRING KIT
16	AT192279	KIT	1		LEVER RETURN SPRING KIT
17	AT192280	KIT	1		KNOB KIT
18	AT195686	STEERING COLUMN	1		(WHOLE GOODS) TILT STEERING KIT

STEERING HYDRAULICS
(WITH MECHANICAL FRONT WHEEL DRIVE)

T208375 -UN-18FEB05

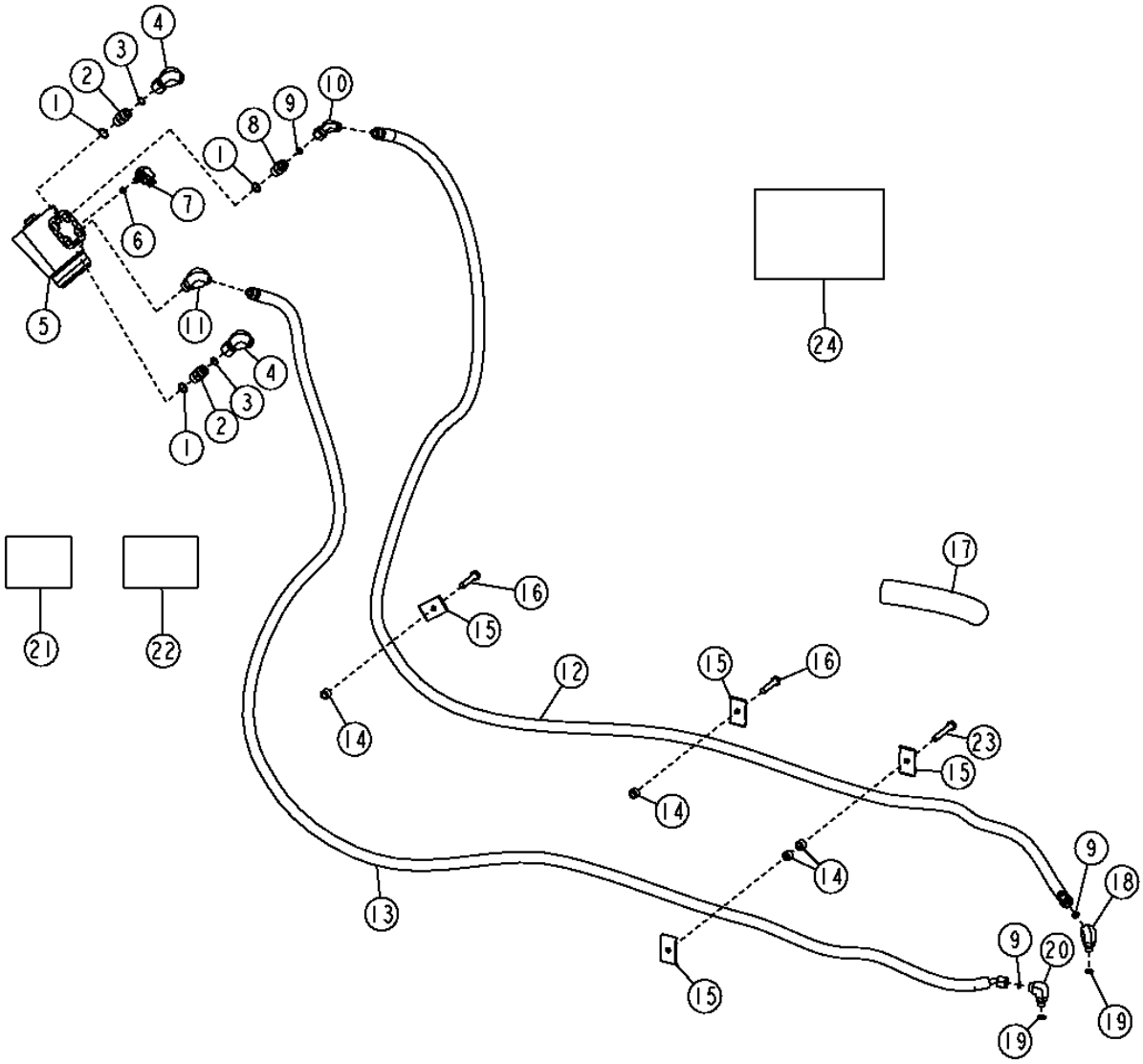

STEERING HYDRAULICS
(WITH MECHANICAL FRONT WHEEL DRIVE)

KEY	PART NO.	PART NAME	QTY	SERIAL NO.	REMARKS
1	R26375	O-RING	4		
2	38H1161	ADAPTER	2		
3	T77857	O-RING	2		
4	AT195203	ELBOW FITTING	2		STC (-08)
5	AT309883	MANUAL HYDRAULIC VALVE	1		STEERING VALVE, (SUB FOR AT197782)
	AT316249	SEAL KIT	1		(INCLUDES (3) T152288 AND T180289) (SUB FOR AT198090)
	T152288	O-RING	3		SECTION SEAL
	T180289	SEAL	1		
6	R28782	O-RING	1		
7	AT188010	ELBOW FITTING	1		STC (-06)
8	38H1171	ADAPTER	1		
9	T77613	O-RING	3		
10	AT195201	ELBOW FITTING	1		STC (-06)
11	AT195202	ELBOW FITTING	1		STC (-06)
12	AT311587	HYDRAULIC HOSE - FABRICATE	1		(RIGHT) (ALSO ORDER 62H1042 AND T77613) (SUB FOR AT187690)
13	AT197214	HYDRAULIC HOSE - FABRICATE	1		(LEFT) (ALSO ORDER 62H1042 AND T77613)
14	28H3421	SPACER	3		
15	R46919	HALF CLAMP	4		
16	19M8600	CAP SCREW	2		M10 X 50
17	.....	HOSE	1		(MAKE FROM T78606, CUT TO 254 MM)
18	38H1004	ELBOW FITTING	1		
19	R26448	O-RING	2		
20	38H1004	ELBOW FITTING	1		(SUB FOR 38H1045, THIS APPLICATION)
21	T200085	LABEL	1		LABEL, HOSE
22	T184320	LABEL	1		DECAL, HOSE
23	19M7742	CAP SCREW	1		M10 X 65
24	AT193365	KIT	3		STC REPAIR (-06)
	AT193366	KIT	1		STC REPAIR (-08)

STEERING HYDRAULICS
(WITHOUT MECHANICAL FRONT WHEEL DRIVE)

T208376 -UN-18FEB05

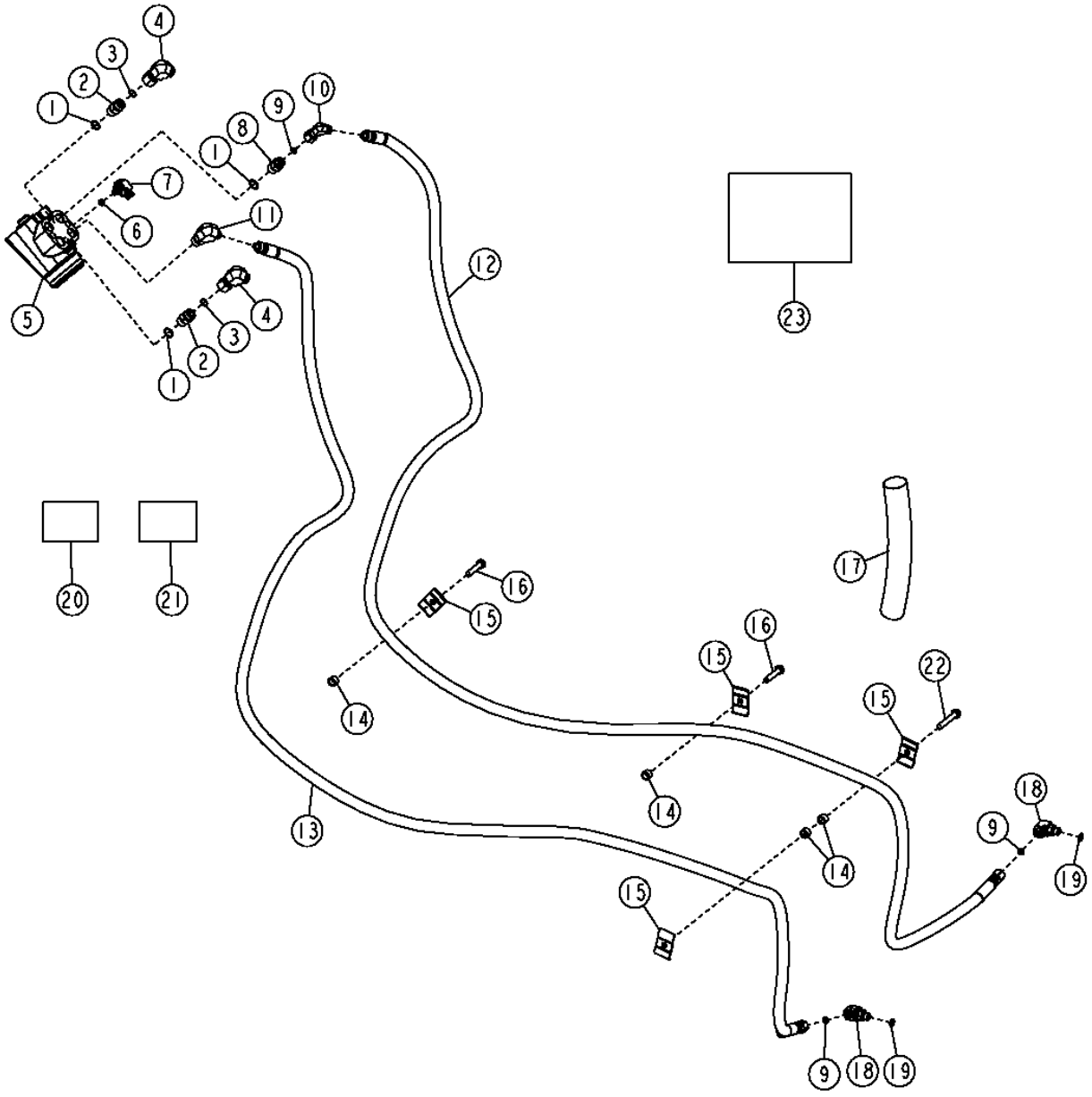

STEERING HYDRAULICS
(WITHOUT MECHANICAL FRONT WHEEL DRIVE)

KEY	PART NO.	PART NAME	QTY	SERIAL NO.	REMARKS
1	R26375	O-RING	4		
2	38H1161	ADAPTER	2		
3	T77857	O-RING	2		
4	AT195203	ELBOW FITTING	2		STC (-08)
5	AT309883	MANUAL HYDRAULIC VALVE	1		STEERING VALVE, (SUB FOR AT197782)
	AT316249	SEAL KIT	1		(INCLUDES (3) T152288 AND T180289) (SUB FOR AT198090)
	T152288	O-RING	3		(SECTION SEAL)
	T180289	SEAL	1		
6	R28782	O-RING	1		
7	AT188010	ELBOW FITTING	1		STC (-06)
8	38H1171	ADAPTER	1		
9	T77613	O-RING	3		
10	AT195201	ELBOW FITTING	1		STC (-06)
11	AT195202	ELBOW FITTING	1		STC (-06)
12	AT187684	HYDRAULIC HOSE - FABRICATE	1		(ALSO ORDER 62H1042 AND T77613
13	AT187686	HYDRAULIC HOSE - FABRICATE	1		(ALSO ORDER 62H1042 AND T77613)
14	28H3421	SPACER	3		
15	R46919	HALF CLAMP	4		
16	19M8600	CAP SCREW	2		M10 X 50
17	.....	HOSE	1		(MAKE FROM T78606, CUT TO 254 MM)
18	38H1004	ELBOW FITTING	2		
19	R26448	O-RING	2		
20	T200085	LABEL	1		LABEL, HOSE
21	T184320	LABEL	1		DECAL, HOSE
22	19M7742	CAP SCREW	1		M10 X 65
23	AT193365	KIT	3		STC REPAIR (-06)
	AT193366	KIT	1		STC REPAIR (-08)

STEERING CYLINDER
(MECHANICAL FRONT WHEEL DRIVE)

T189438 -UN-15APR03

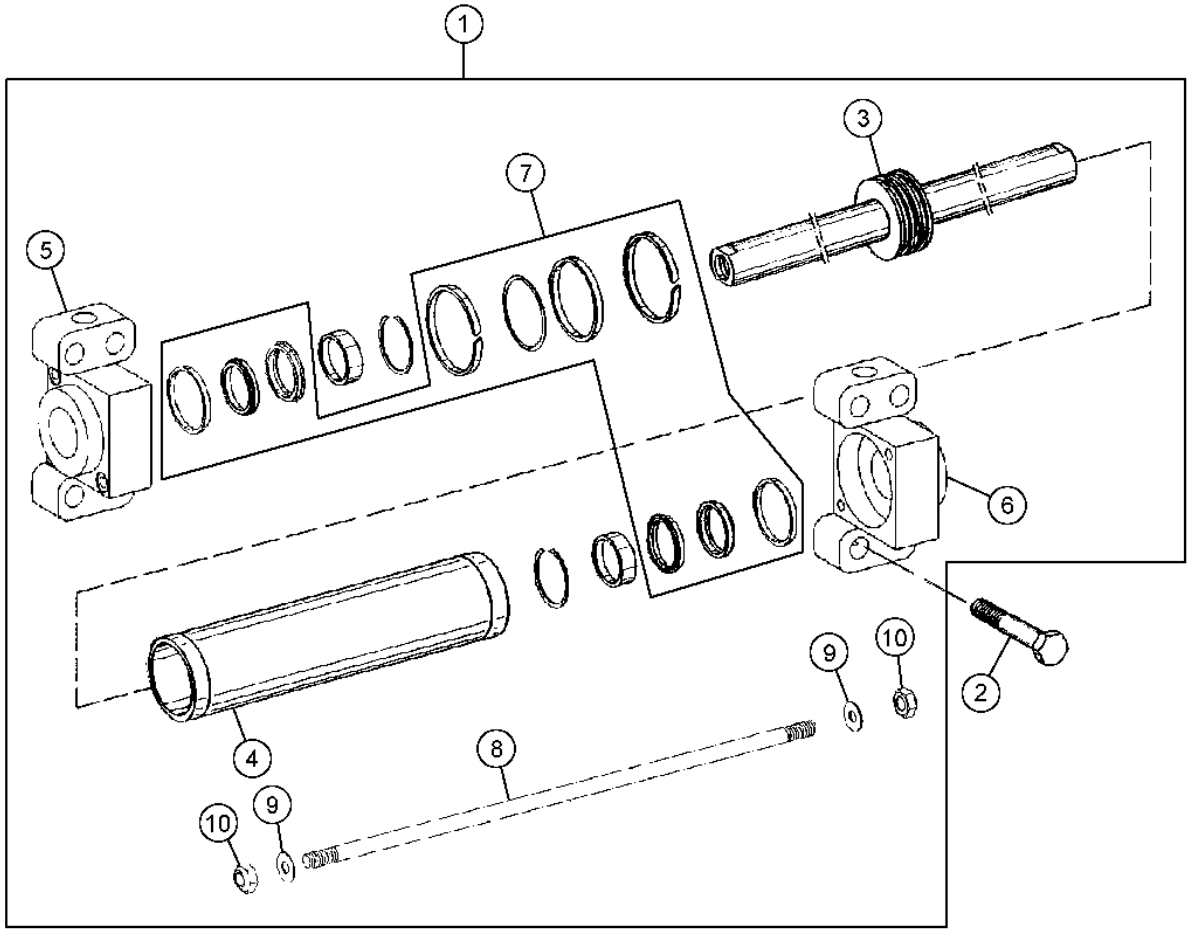

T189438

STEERING CYLINDER
(MECHANICAL FRONT WHEEL DRIVE)

KEY	PART NO.	PART NAME	QTY	SERIAL NO.	REMARKS
1	AT191187	CYLINDER	1		
2	19M7892	CAP SCREW	8		M20 X 80
3	AT301774	PISTON	1		
4	T201276	HYDRAULIC CYLINDER BARREL	1		
5	T201275	HYDR. CYLINDER ROD GUIDE	1		
6	T201283	HYDR. CYLINDER ROD GUIDE	1		
7	AT301907	HYDRAULIC CYLINDER KIT	1		
8	T202417	PIN FASTENER	1		
9	24M7028	WASHER	2		
10	14M7517	LOCK NUT	2		M10

SERVICE BRAKE ASSEMBLY

T164981 -UN-11FEB03

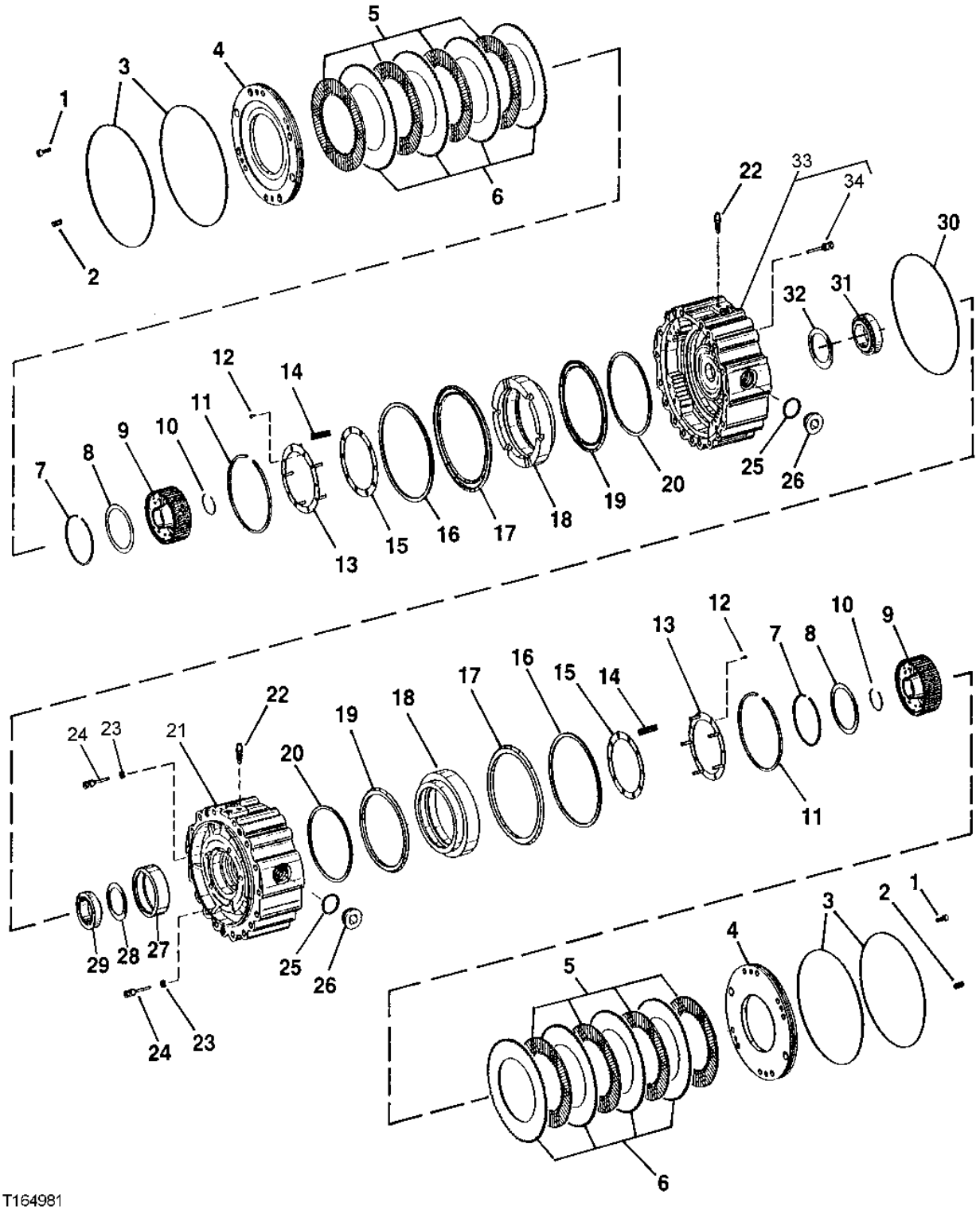

T164981

SERVICE BRAKE ASSEMBLY

KEY	PART NO.	PART NAME	QTY	SERIAL NO.	REMARKS
1	T164898	SCREW	8		
2	T164894	PIN	8		
3	T159362	O-RING	4		
4	T164899	PLATE	2		
5	AT184281	BRAKE DISK	8		
6	T164885	CLUTCH PLATE	8		
7	T164888	SNAP RING	2		
8	T164887	WASHER	2		
9	T165101	GEAR	2		
10	T164893	SNAP RING	2		
11	T164884	SNAP RING	2		
12	19M7600	SCREW	10		M5 X 12
13	AT184280	HOUSING	2		
14	T164880	COMPRESSION SPRING	20		
15	T164883	WASHER	2		
16	T164878	BACK-UP RING	2		
17	T164877	SEAL	2		
18	T164879	PISTON	2		
19	T159400	SEAL	2		
20	T159401	BACK-UP RING	2		
21	T164875	HOUSING	1		RIGHT
22	T162517	BRAKE	2		
23	T159407	RING	10		
24	T164881	PIN	10		
25	L55580	O-RING	2		
26	15M7030	PIPE PLUG	2		
27	T164892	BUSHING	1		
28	T159425	SHIM	1		1.5 MM
	T159427	SHIM	1		1.4 MM
	T159429	SHIM	1		1.3 MM
	T159431	SHIM	1		1.2 MM
	T159435	SHIM	1		1 MM
	T161238	SHIM	1		.95 MM
	T161239	SHIM	1		.9 MM
	T161240	SHIM	1		.85 MM
	T161241	SHIM	1		.8 MM
	T161242	SHIM	1		.75 MM
	T161243	SHIM	1		.7 MM
	T161244	SHIM	1		.5 MM
	T161245	SHIM	1		.4 MM
	T161246	SHIM	1		.3 MM
	T161247	SHIM	1		.2 MM
29	T168910	TAPERED ROLLER BEARING	1		
30	T159362	O-RING	2		
31	AT184284	TAPERED ROLLER BEARING	1		
32	T159444	SHIM	1		.1 MM
	T159445	SHIM	1		.15 MM
	T159443	SHIM	1		.2 MM
	T159440	SHIM	1		.3 MM
	T159441	SHIM	1		.5 MM
	T159479	SHIM	1		.6 MM
	T159480	SHIM	1		.7 MM
	T159481	SHIM	1		.8 MM
	T159482	SHIM	1		.9 MM
	T159442	SHIM	1		1 MM
	T159446	SHIM	1		1.1 MM
	T159447	SHIM	1		1.2 MM
	T159448	SHIM	1		1.3 MM
	T159449	SHIM	1		1.4 MM
	T159450	SHIM	1		1.5 MM
	T159451	SHIM	1		1.6 MM
	T159452	SHIM	1		1.7 MM
	T159453	SHIM	1		1.8 MM
	T159483	SHIM	1		2.0 MM
33	AT197871	HOUSING	1		LEFT
34	.....	PLUG	1		

BRAKE VALVE AND PEDALS

T155448 -UN-31MAY02

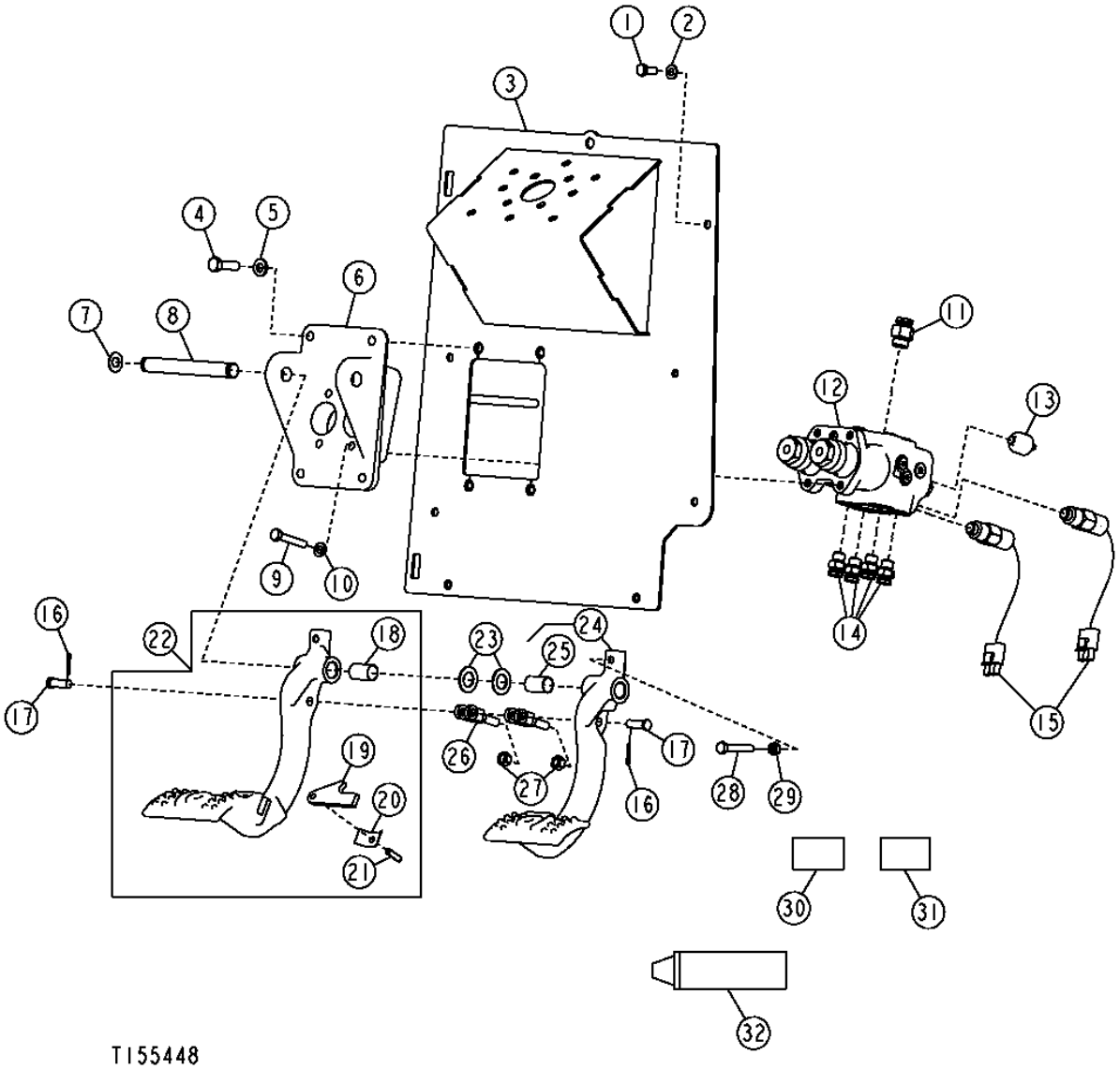

BRAKE VALVE AND PEDALS

KEY	PART NO.	PART NAME	QTY	SERIAL NO.	REMARKS
1	19M7881	SCREW	1		M8 X 20
2	24M7238	WASHER	1		
3	AT186839	SUPPORT	1		
4	19M7550	CAP SCREW	4		M10 X 35
5	24M7239	WASHER	4		
6	T183616	BRACKET	1		
7	F2863R	SNAP RING	2		
8	T165282	PIN FASTENER	1		
9	19M8397	CAP SCREW	4		M8 X 50
10	24M7238	WASHER	4		
11	AT187667	ADAPTER	1		(SERVICED IN AT193366)
12	AT197552	VALVE	1		
13	R32548	PRESSURE SWITCH	1		
14	AT187666	ADAPTER	4		(SERVICED IN AT193365)
15	AT184695	PRESSURE SWITCH	2		
16	11M7012	COTTER PIN	2		
17	R65563	PIN FASTENER	2		
18	B177R	BUSHING	1		
19	R50879	ARM	1		
20	R50034	LEAF SPRING	1		
21	34H312	SPRING PIN	1		
22	AT189182	PEDAL	1		
23	24H1381	WASHER	2		
24	AT189183	PEDAL	1		
25	B177R	BUSHING	1		
26	T164482	YOKE	2		
27	14H1080	NUT	2		3/8"
28	19M7164	CAP SCREW	2		M8 X 50
29	14M7273	NUT	2		M8
30	AT193365	KIT	1		STC REPAIR
31	AT193366	KIT	1		STC REPAIR
32	TY9370	SEALANT	1		

BRAKE VALVE

T157515 -UN-18JUL02

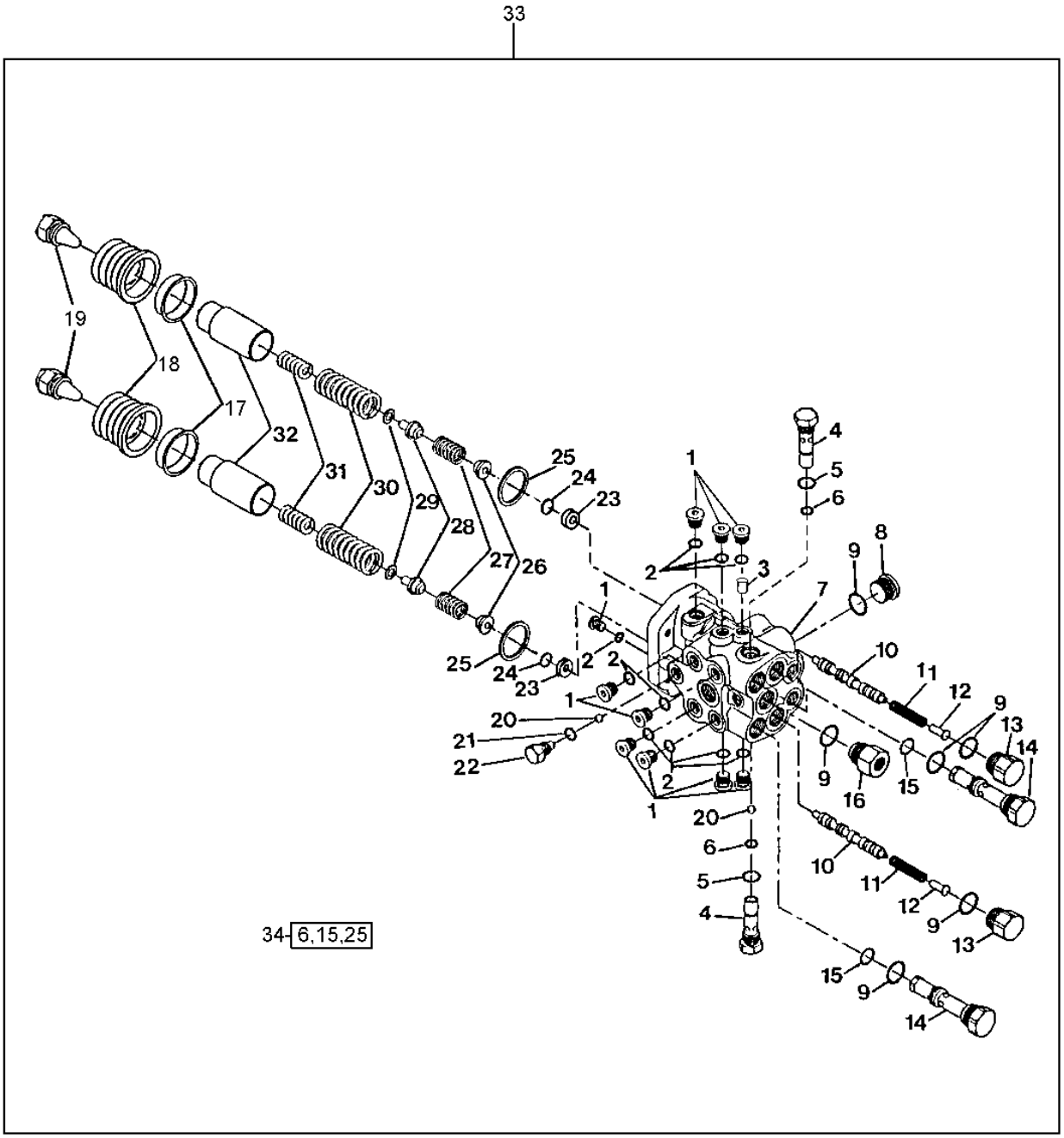

T157515

1H11

BRAKE VALVE

KEY	PART NO.	PART NAME	QTY	SERIAL NO.	REMARKS
1	T165819	PLUG	10		
2	R28782	O-RING	10		
3	T165818	ORIFICE	1		
4	T165820	PLUG	2		
5	R26448	O-RING	2		
6	T77814	O-RING	2		
7	.....	HOUSING	1		(ORDER AT197552)
8	T165824	SHIM	1		
9	R26375	O-RING	6		
10	.....	SPOOL	2		(ORDER AT197552)
11	T165815	SPRING	2		
12	T165816	RETAINER	2		
13	T165817	PLUG	2		
14	AT185405	CHECK VALVE	2		
15	T77857	O-RING	2		
16	T165821	ADAPTER	1		
17	T165811	RETAINER	2		
18	T164804	BOOT	2		
19	T164331	ADAPTER	2		
20	T165938	BALL	2		
21	R28782	O-RING	1		
22	T165823	PLUG	1		
23	T165813	RETAINER	2		
24	T165812	SNAP RING	2		
25	.....	O-RING	2		
26	AT185398	RETAINER	2		
27	T165810	SPRING	2		LOW RATE
28	T165862	RETAINER	2		
29	T165859	SHIM	2		.005 INCH
	T165858	SHIM	2		.010 INCH
	T166023	SHIM	2		.0179 INCH
	T165860	SHIM	2		.020 INCH
30	T165809	SPRING	2		RETURN
31	T165861	SPRING	2		
32	T165822	PISTON	2		
33	AT197552	VALVE	1		
34	AT184696	SEAL KIT	1		

BRAKE CHARGE VALVE SUPPLY

T158061 -UN-29JUL02

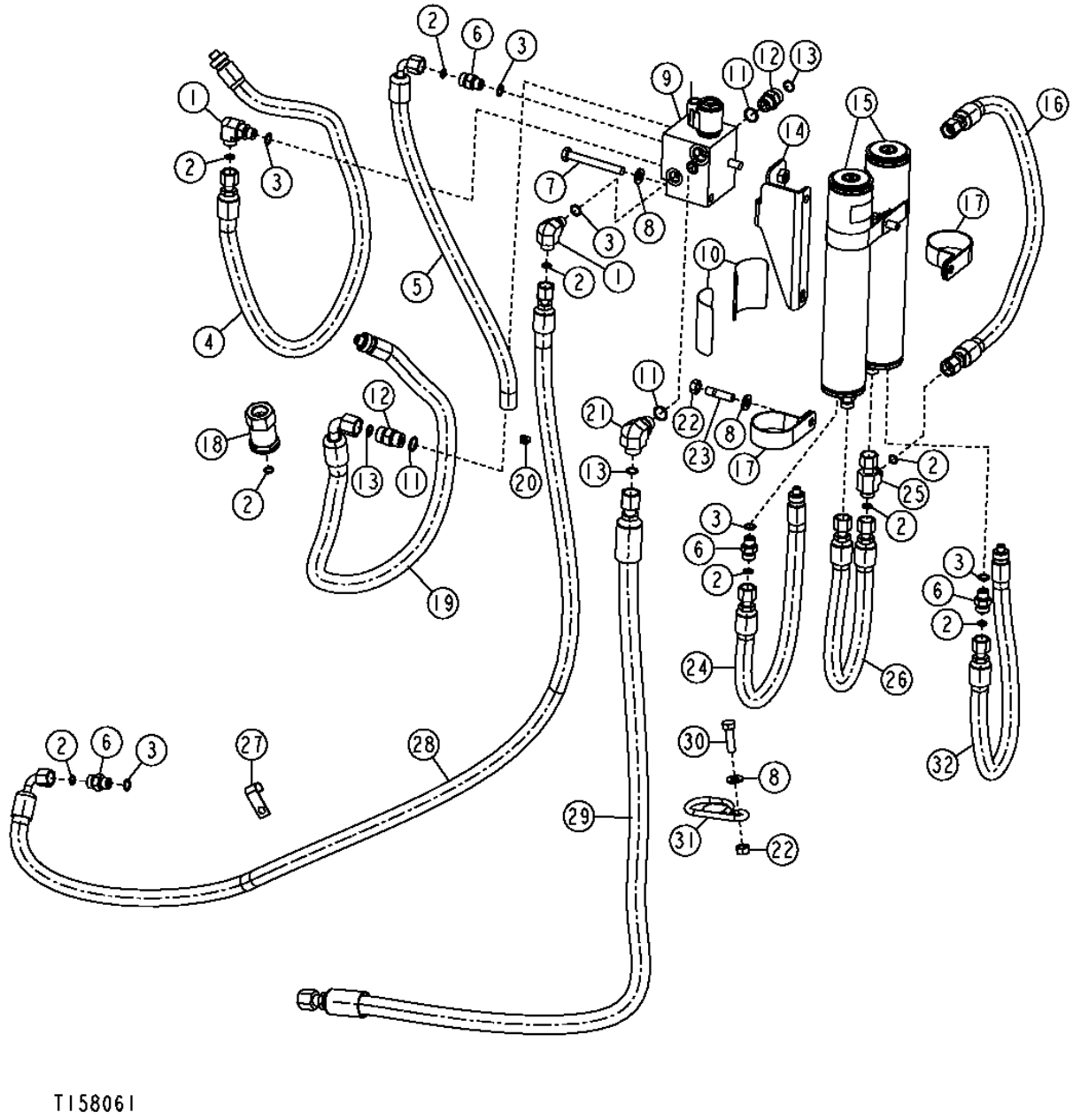

BRAKE CHARGE VALVE SUPPLY

KEY	PART NO.	PART NAME	QTY	SERIAL NO.	REMARKS
1	38H1004	ELBOW FITTING	2		
2	T77613	O-RING	9		
3	R26448	O-RING	6		
4	AT190014	HYDRAULIC HOSE - FABRICATE	1		(ALSO ORDER 62H1043 AND T77857)
5	AT190013	HYDRAULIC HOSE - FABRICATE	1		
6	38H1160	ADAPTER	4		
7	19M8197	CAP SCREW	2		M10 X 85
8	24M7239	WASHER	5		
9	AT184233	SOLENOID VALVE	1		
	AT195140	CHECK VALVE	1		
	AT195141	SEAL KIT	1		(USE WITH AT195140)
	AT195142	HYD ACTUATED CONTROL VALVE	1		(VALVE, CARTRIDGE)
	AT195143	SEAL KIT	1		(USE WITH AT195142)
	AT195144	SOLENOID VALVE COIL	1		(USE WITH AT195142)
10	T164124	LABEL	2		ACCUMULATOR LABEL
11	R26375	O-RING	3		
12	38H1161	ADAPTER	2		
13	T77857	O-RING	3		
14	AT194984	BRACKET	1		
15	AT171108	HYDRAULIC ACCUMULATOR	2		
16	AT198138	HYDRAULIC HOSE - FABRICATE	1		
17	T213734	CLAMP	4		(SUB FOR T164326 AND T208227)
18	AT183869	FILTER ELEMENT	1		
19	AT188497	HYDRAULIC HOSE - FABRICATE	1		(ALSO ORDER 62H1043 AND T77857)
20	TY22462	CLAMP	1		(SUB FOR AR48236)
21	38H1005	ELBOW FITTING	1		
22	14M7274	NUT	2		M10
23	42M7058	STUD	2		
24	AT190888	HYDRAULIC HOSE - FABRICATE	1		(ALSO ORDER 62H1042 AND T77613)
25	38H1030	TEE FITTING	1		
26	AT190011	HYDRAULIC HOSE - FABRICATE	1		
27	AH89557	CLIP	1		
28	AT190015	HYDRAULIC HOSE - FABRICATE	1		
29	AT190012	HYDRAULIC HOSE - FABRICATE	1		
30	19M7550	CAP SCREW	1		M10 X 35
31	T166223	GUIDE	1		HOSE GUIDE
32	AT198743	HYDRAULIC HOSE - FABRICATE	1		(ALSO ORDER 62H1042 AND T77613)

SERVICE BRAKE HYDRAULICS

T154730 -UN-09MAY02

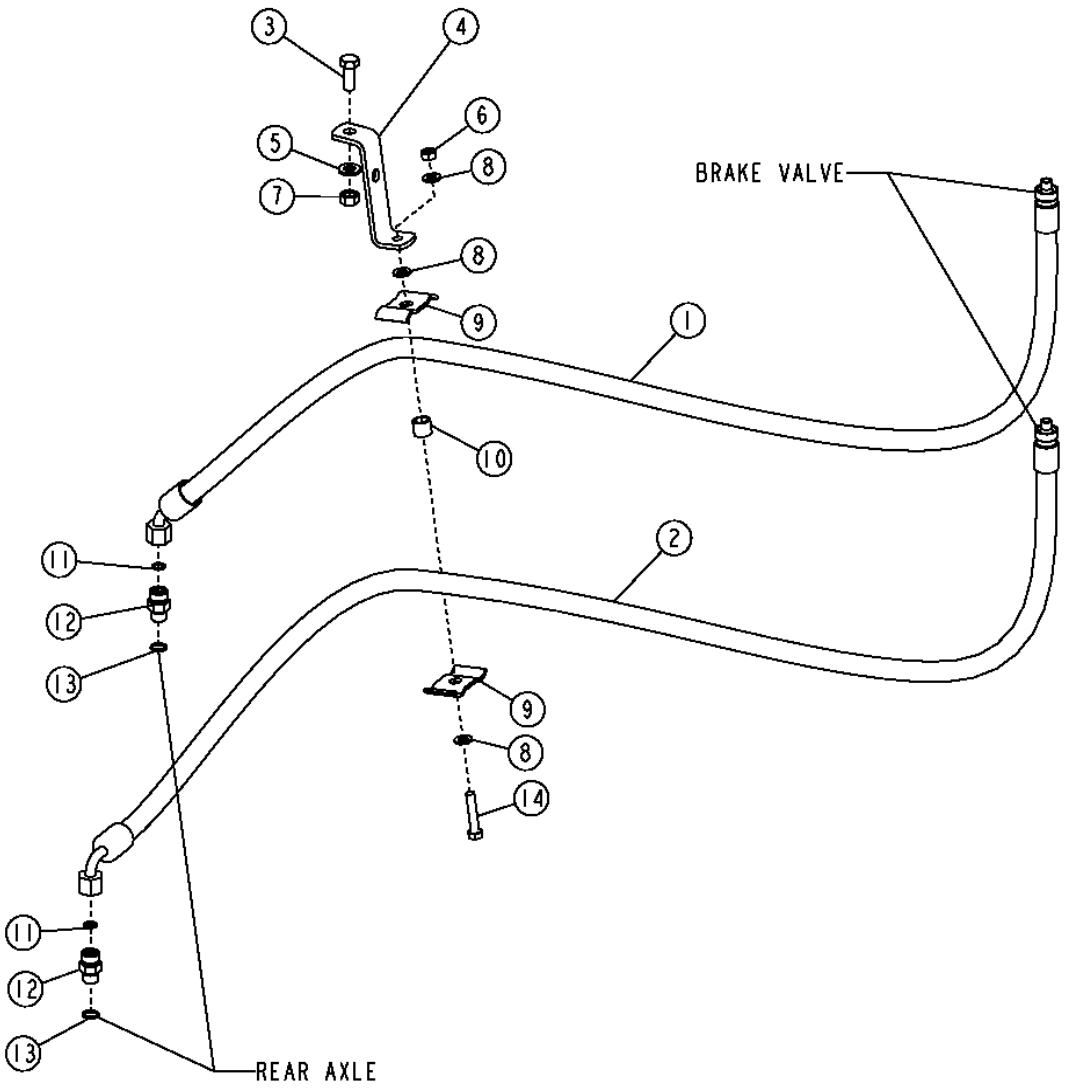

T154730

SERVICE BRAKE HYDRAULICS

KEY	PART NO.	PART NAME	QTY	SERIAL NO.	REMARKS
1	AT188042	HYDRAULIC HOSE - FABRICATE	1		(ALSO ORDER 62H1042 AND T77613)
2	AT188041	HYDRAULIC HOSE - FABRICATE	1		(ALSO ORDER 62H1042 AND T77613)
3	19M7402	CAP SCREW	1		M10 X 25
4	T158245	STRAP	1		
5	24M7239	WASHER	1		
6	14M7273	NUT	1		M8
7	14M7274	NUT	1		M10
8	24M7238	WASHER	3		
9	R46919	HALF CLAMP	2		
10	T126052	SPACER	1		
11	T77613	O-RING	2		
12	38H1160	ADAPTER	2		
13	R26448	O-RING	2		
14	19M7922	CAP SCREW	1		M8 X 40

PARKING BRAKE

TP57991 -UN-09FEB99

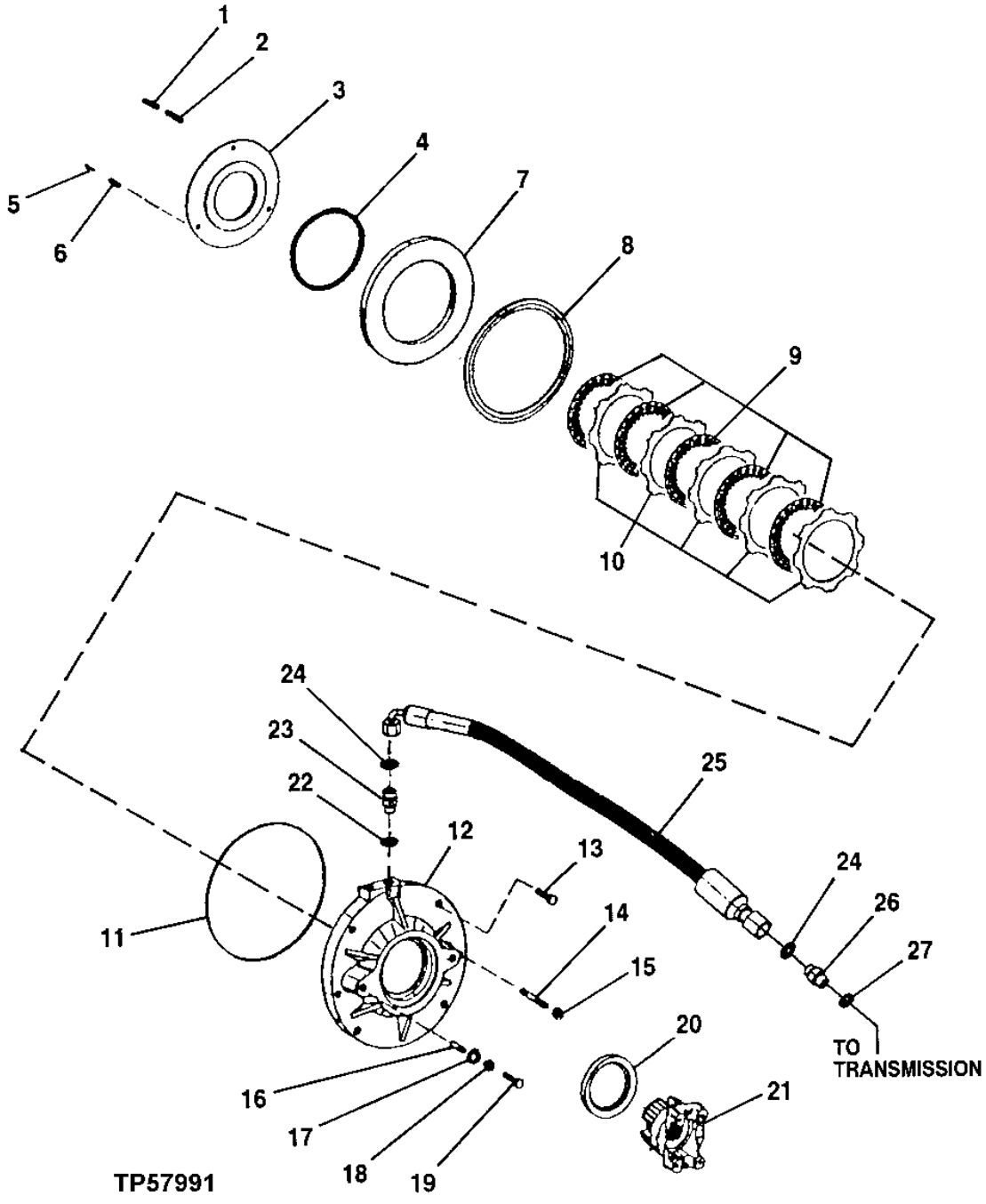

PARKING BRAKE

KEY	PART NO.	PART NAME	QTY	SERIAL NO.	REMARKS
1	T164917	COMPRESSION SPRING	14		
2	T164916	COMPRESSION SPRING	14		
3	T164915	PLATE	1		
4	T159477	SEAL	1		
5	T164911	PIN	3		
6	T159359	SPRING PIN	2		
7	T164914	PISTON	1		
8	T159478	SEAL	1		
9	T159475	CLUTCH DISK	5		
10	T159474	PLATE	4		
11	T164909	O-RING	1		
12	T164908	HOUSING	1		
13	19M7179	CAP SCREW	4		M10 X 50
14	T164912	STUD	2		
15	T164913	NUT	2		
16	T164918	PIN	2		
17	T159487	O-RING	2		
18	T159502	LOCK NUT	2		
19	T164922	SCREW	2		
20	AT179537	SEAL	1		
21	T163544	YOKE	1		
22	R26906	O-RING	1		
23	38H1162	ADAPTER	1	-XXXXXX	
	38H1047	ELBOW FITTING	1	XXXXXX-	45 DEGREE
24	T77932	O-RING	2		
25	AT180746	HYDRAULIC HOSE - FABRICATE	1	-XXXXXX	
	AT179899	HYDRAULIC HOSE - FABRICATE	1	XXXXXX-	1" X 655 MM (25-3/4") X 1"
26	38H1317	FITTING	1		
27	R26375	O-RING	1		

LOADER ARM SERVICE LOCK

T154748 -UN-31OCT02

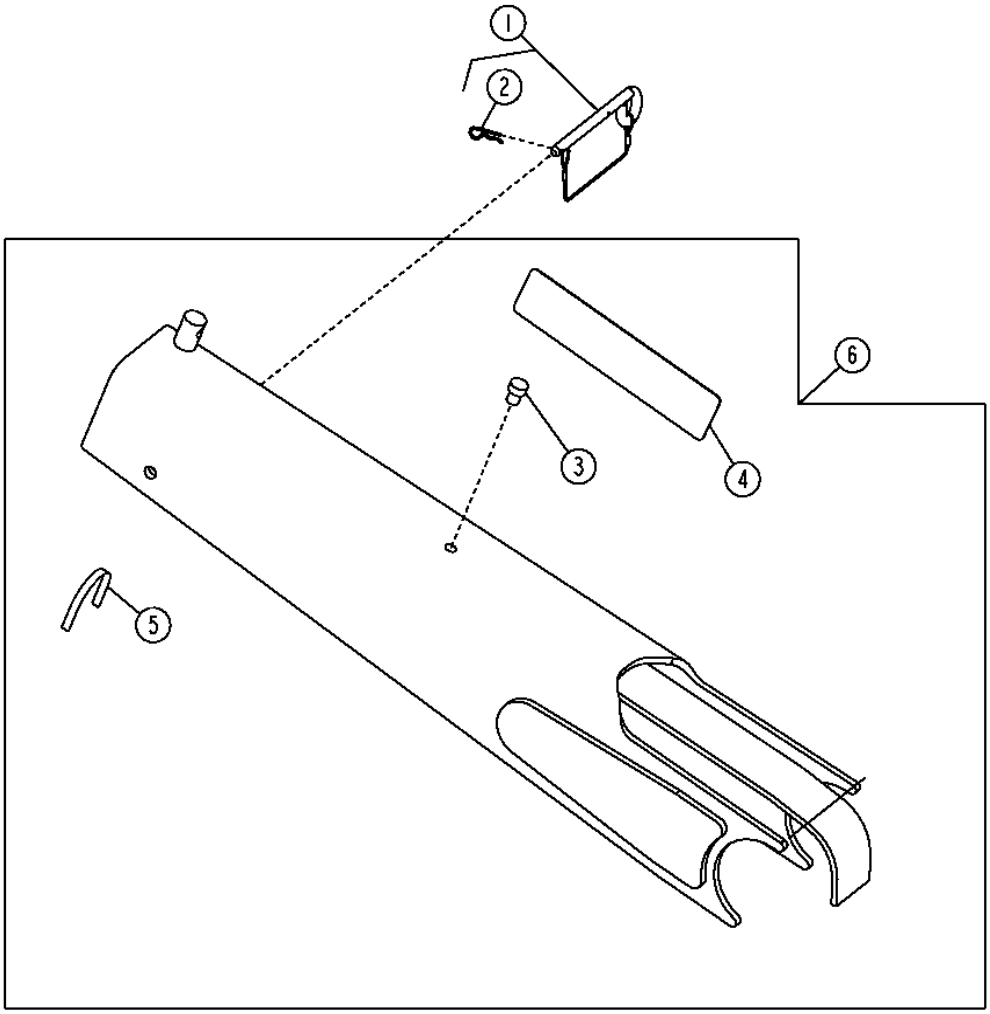

T154748

LOADER ARM SERVICE LOCK

KEY	PART NO.	PART NAME	QTY	SERIAL NO.	REMARKS
1	AT195244	PIN FASTENER	1		
2	J16931	PIN	1		
3	T14083	BUMPER	2		
4	T185902	LABEL	1		
5	T152648	ISOLATOR	1		
6	AT311084	LOCK	1		(SUB FOR AT188241)

LICENCE PLATE LIGHT AND BRACKET

T139757 -UN-12MAR01

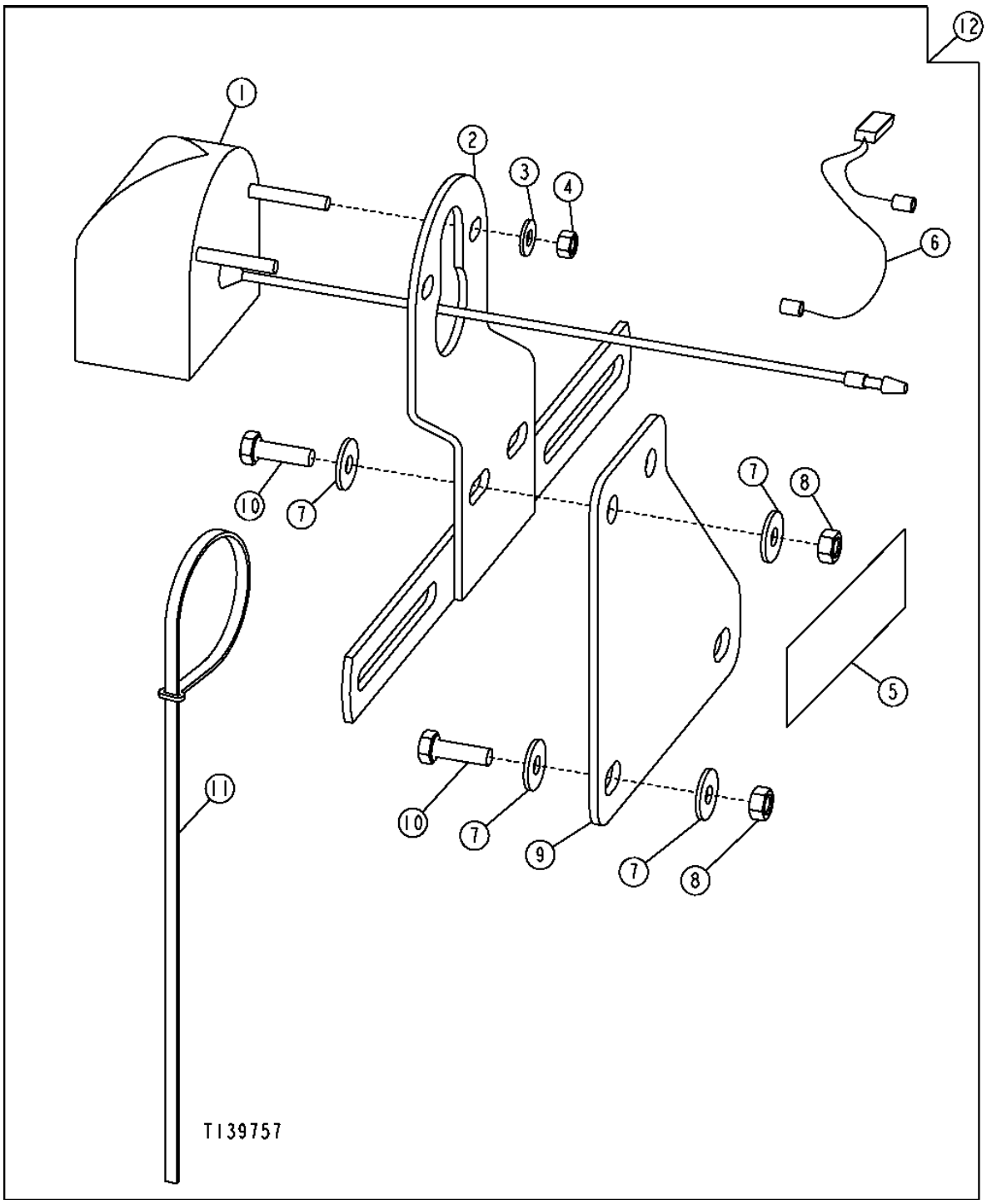

LICENCE PLATE LIGHT AND BRACKET

KEY	PART NO.	PART NAME	QTY	SERIAL NO.	REMARKS
1	AT34211	LAMP	1		(INCLUDES (2) 24H1283 AND (2) 14M7297)
	AB2599R	BULB	1		
2	AT34210	BRACKET	1		
3	24H1283	WASHER	2		
4	14M7297	NUT	2		M5
5	JD5920	REFLECTOR	2		
6	AT187708	WIRING HARNESS	1		
7	24M7139	WASHER	8		
8	14M7272	NUT	4		M6
9	T186062	PLATE	1		
10	19M7077	CAP SCREW	4		M6 X 20
11	H77698	TIE BAND	6		
12	AT187707	MOUNTING PARTS	1		(WHOLE GOODS)

TRADEMARKS AND LABELS

T211742 -UN-15JUN05

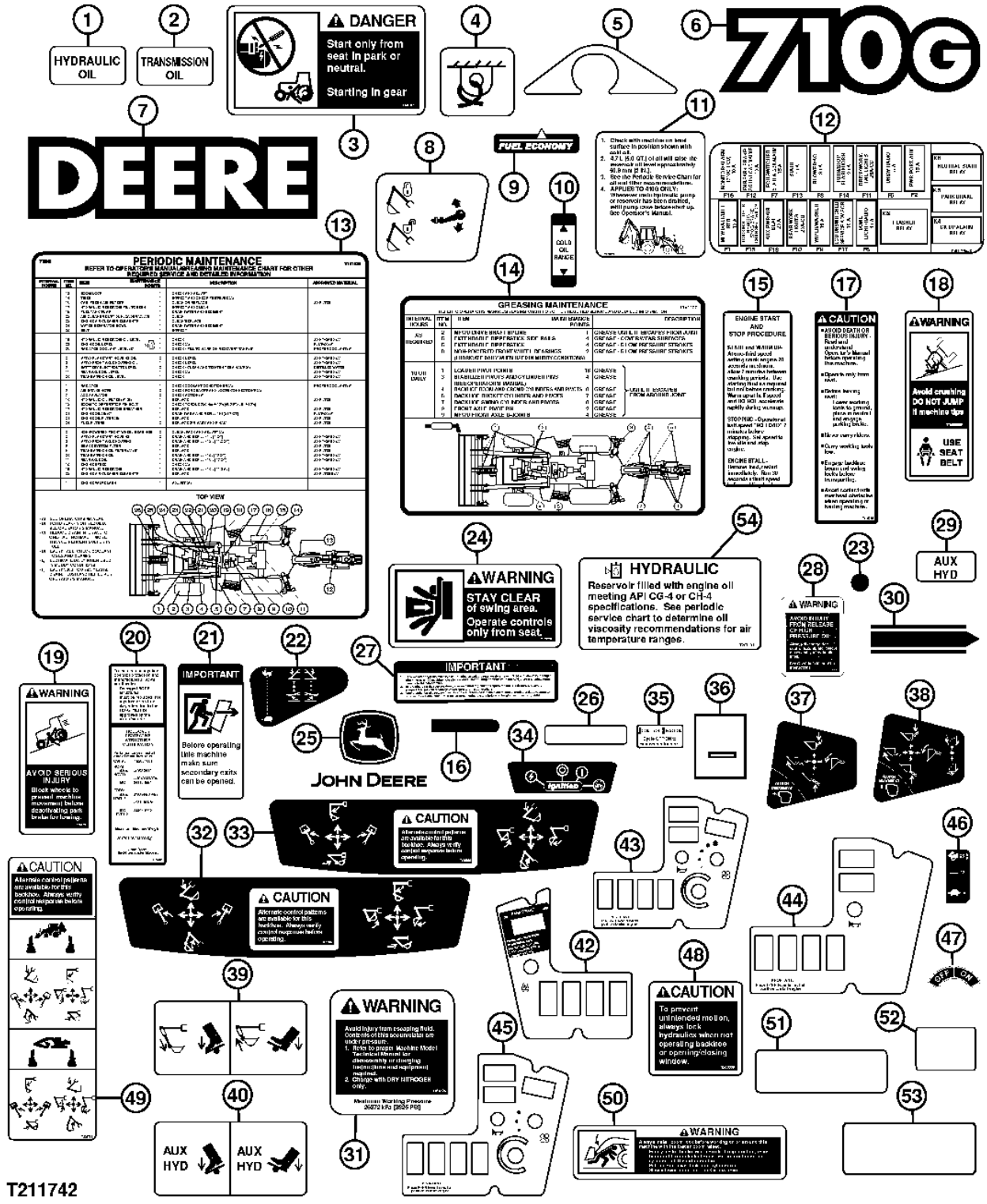

TRADEMARKS AND LABELS

KEY	PART NO.	PART NAME	QTY	SERIAL NO.	REMARKS
1	T140283	LABEL	1	-XXXXXX	HYDRAULIC OIL
2	T140311	LABEL	1		TRANSMISSION OIL
3	T146102	LABEL	1		BYPASS STARTING
4	T153680	LABEL	4		TIE DOWN
5	T161678	LABEL	1		PROTECTIVE
6	T166909	LABEL	2		MODEL DESIGNATION
	T206953	LABEL	2		MODEL DESIGNATION
7	T184759	LABEL	1		DEERE
	JD5836	LABEL	1		DEERE (BOLD OUTLINE)
8	T185330	LABEL	1		BOOM LOCK, (WITH STANDARD COMTROLS)
	T200990	LABEL	1		(USE WITH HYDRAULIC PILOT CONTROLS)
9	T185556	LABEL	1		FUEL ECONOMY
10	T186123	LABEL	1		HYDRAULIC OIL COLD RANGE
11	T186124	LABEL	1		HYDRAULIC OIL RESERVOIR
12	T188817	LABEL	1	-XXXXXX	FUSEBLOCK
	T207040	LABEL	1	XXXXXX-	FUSEBLOCK
13	T201287	LABEL	1	-943092	PERIODIC MAINTENANCE CHART, (SUB FOR T191078)
	T213327	LABEL	1	943093-XXXXXX	PERIODIC MAINTENANCE CHART
	T209536	LABEL	1	XXXXXX-	PERIODIC MAINTENANCE CHART
14	T191100	LABEL	1	-XXXXXX	PERIODIC GREASING
15	T131938	LABEL	1		ENGINE START/STOP
16	T137790	COVER	2		COAT HOOK
17	T146080	LABEL	1		CAUTION, SAFETY
18	T146097	LABEL	1		SEAT BELT WARNING
19	T159028	LABEL	1		PARK BRAKE WARNING
20	T166896	LABEL	1		ROPS
21	T184789	LABEL	1		EXIT UNLOCK
22	T185646	LABEL	1		STABILIZER CONTROL
23	T186793	LABEL	9		GRAY CIRCLE
24	T183768	LABEL	2		SWING AREA WARNING
25	JD5750	LABEL	1		LEAPING DEER
	JD5717	LABEL	2		LEAPING DEER (DOOR GLASS)
	JD5761	LABEL	1		LEAPING DEER (GRILLE)
26	JD5920	REFLECTOR	2		REFLECTIVE LABEL(RED)
27	T145560	LABEL	1		RECEIVER/DRYER
28	T146792	SAFETY SIGN	1		RIDE CONTROL WARNING
29	T149199	LABEL	1		AUXILIARY HYDRAULICS
30	T160759	LABEL	1		BUCKET LEVEL INDICATOR
31	T164124	LABEL	1		ACCUMULATOR WARNING
32	T165584	LABEL	1		BACKHOE CONTROL(TWO LEVER)
33	T165595	LABEL	1		CONTROL, SAE
34	T166300	LABEL	1		START SWITCH
35	T166538	LABEL	1		FLOW CONTROL
36	T185469	LABEL	1		PROTECTIVE
37	T185675	LABEL	1		LOADER CONTROL
38	T185676	LABEL	1		LOADER CONTROL(THIRD FUNCTION)
39	T185691	LABEL	1		FOOT PEDAL
40	T185692	LABEL	1		AUXILIARY HYDRAULICS
42	T186400	LABEL	1		INSTRUMENT PANEL L.H.
43	T186401	LABEL	1		INSTRUMENT PANEL R.H. (CAB)
44	T186402	LABEL	1		INSTRUMENT PANEL R.H. (CANOPY)
45	T186552	LABEL	1		INSTRUMENT PANEL R.H. (CANOPY WITH HEATER)
46	.....	LABEL	1		SPEED CONTROL
47	T42199	LABEL	1		ON/OFF SWITCH
48	T200658	LABEL	1		CAUTION, MOTION
49	T200781	LABEL	1		BACKHOE CONTROL
50	T152442	LABEL	1		BOOM LOCK
51	JD5837	LABEL	1		JOHN DEERE
52	JD5933	REFLECTOR	1		REFLECTIVE YELLOW
53	T184402	LABEL	1		V65 FLOW SETTINGS
54	T207191	LABEL	1	XXXXXX-	HYDRAULIC

TRADEMARKS AND LABELS (FRENCH)

T211630 -UN-07JUN05

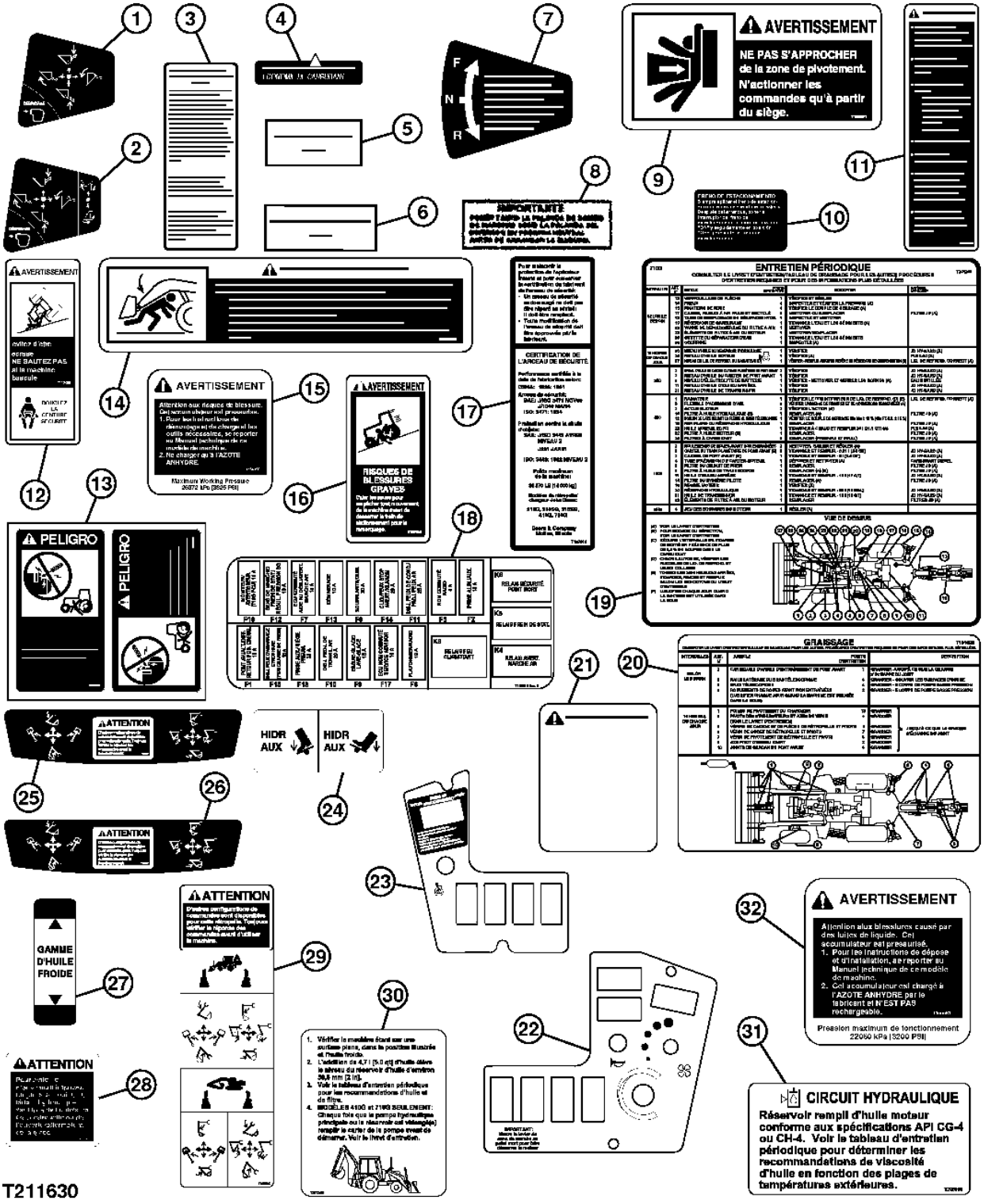

TRADEMARKS AND LABELS
(FRENCH)

KEY	PART NO.	PART NAME	QTY	SERIAL NO.	REMARKS
1	T185567	LABEL	1		LOADER CONTROL AND CLUTCH (FRENCH)
2	T185568	LABEL	1		LOADER 4 IN 1 (FRENCH)
3	T139165	LABEL	1		ENGINE START AND STOP (FRENCH)
4	T185569	LABEL	1		FUEL ECONOMY (FRENCH)
5	T141093	LABEL	1		HYDRAULIC OIL (FRENCH)
6	T160761	LABEL	1		TRANSMISSION OIL (FRENCH)
7	T141096	LABEL	1		DIRECTION CONTROL SWITCH (FRENCH)
8	T141099	LABEL	1		INSTRUCTION (FRENCH)
9	T185571	LABEL	1		SWING AREA WARNING (FRENCH)
10	T146093	LABEL	1		PARK BRAKE (FRENCH)
11	T146095	SAFETY SIGN	1		CAUTION, SAFETY (FRENCH)
12	T146099	SAFETY SIGN	1		SEAT BELT WARNING (FRENCH)
13	T146104	LABEL	1		BY-PASS STARTING (FRENCH)
14	T152997	LABEL	1		BOOM LOCK (FRENCH)
15	T164128	LABEL	1		ACCUMULATOR WARNING (FRENCH)
16	T160762	LABEL	1		PARK BRAKE WARNING (FRENCH)
17	T167012	LABEL	1		ROPS (FRENCH)
18	T188819	LABEL	1		FUSEBLOCK (FRENCH)
	T207042	LABEL	1	XXXXXX-	
19	T201288	LABEL	1	-943092	PERIODIC MAINTENANCE CHART (FRENCH)
	T213328	LABEL	1	943093-	PERIODIC MAINTENANCE CHART (FRENCH)
	T209537	LABEL	1	XXXXXX-	
20	T191098	LABEL	1		PERIODIC GREASING (FRENCH)
	T214323	LABEL	1	XXXXXX-	PERIODIC GREASING (FRENCH)
21	T146908	SAFETY SIGN	1		RIDE CONTROL WARNING (FRENCH)
22	T185570	LABEL	1		INSTRUMENT PANAL (FRENCH)
23	T186441	LABEL	1		INSTRUMENT PANAL (FRENCH)
24	T185695	LABEL	1		AUXILIARY HYDRAULICS (FRENCH)
25	T185577	LABEL	1		BACKHOE CONTROL (FRENCH)
26	T188018	LABEL	1		SAE (FRENCH)
27	T186128	LABEL	1		HYD. OIL RANGE (FRENCH)
28	T200659	SAFETY SIGN	1		CAUTION, MOTION (FRENCH)
29	T200895	SAFETY SIGN	1		BACKHOE CONTROL (FRENCH)
30	T201286	LABEL	1		HYDRAULIC OIL RESERVOIR (FRENCH)
31	T208008	LABEL	1		HYDRAULIC RESERVOIR (FRENCH)
32	T155581	SAFETY SIGN	1		ACCUMULATOR (FRENCH)
33	.....	KIT	1		(FRENCH) (LANGUAGE KIT NO LONGER AVAILABLE)

TRADEMARKS AND LABELS (SPANISH)

T211652 -UN-07JUN05

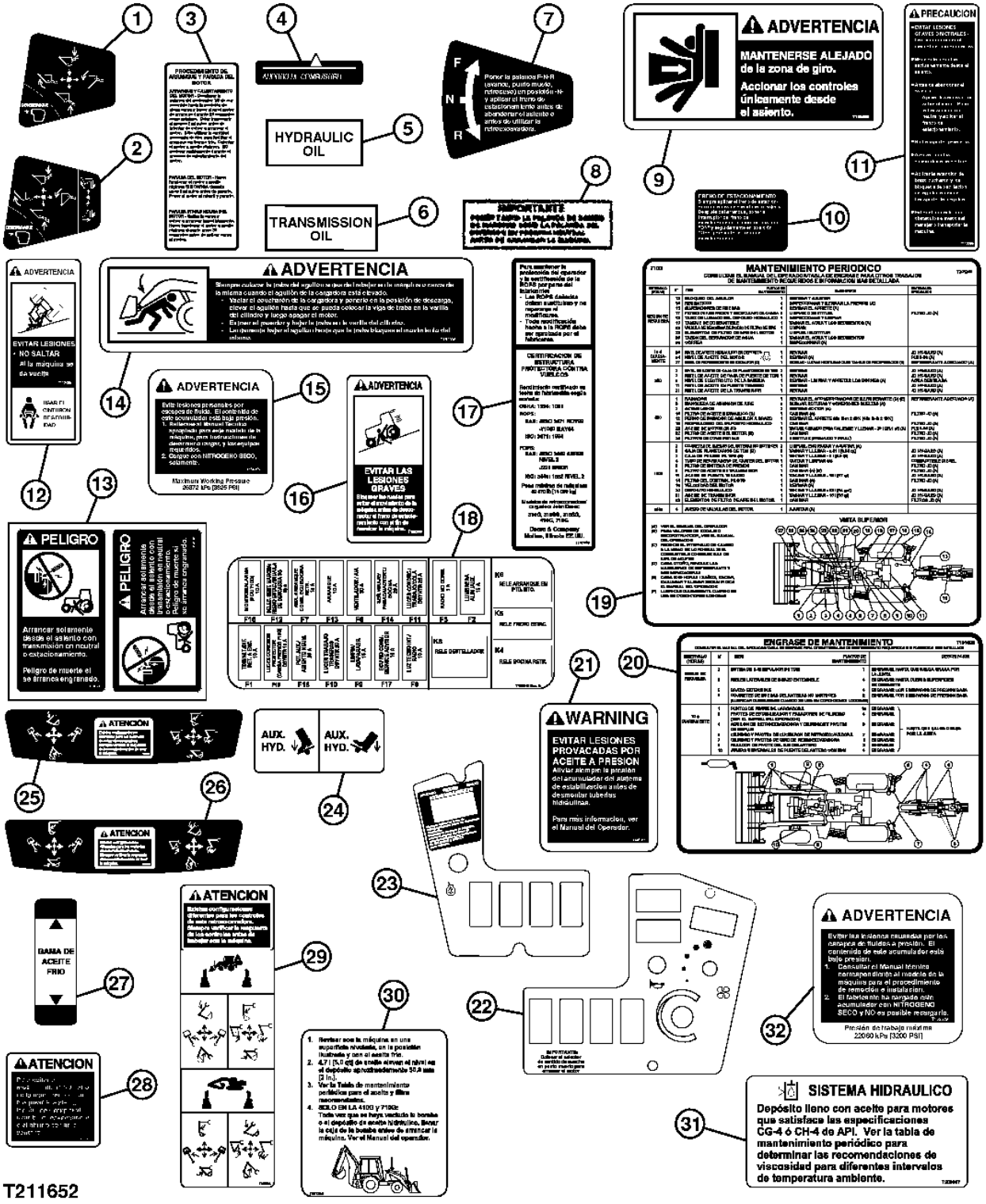

TRADEMARKS AND LABELS (SPANISH)

KEY	PART NO.	PART NAME	QTY	SERIAL NO.	REMARKS
1	T185545	LABEL	1		LOADER CONTROL AND CLUTCH (SPANISH)
2	T185546	LABEL	1		LOADER 4 IN 1 (SPANISH)
3	T139167	LABEL	1		ENGINE START AND STOP (SPANISH)
4	T185547	LABEL	1		FUEL ECONOMY SPANISH)
5	T141075	LABEL	1		HYDRAULIC OIL (SPANISH)
6	T160763	LABEL	1		TRANSMISSION OIL (SPANISH)
7	T141078	LABEL	1		DIRECTION CONTROL SWITCH (SPANISH)
8	T141081	LABEL	1		INSTRUCTION (SPANISH)
9	T185549	LABEL	1		SWING AREA WARNING (SPANISH)
10	T146090	LABEL	1		PARK BRAKE (SPANISH)
11	T146089	SAFETY SIGN	1		CAUTION, SAFETY (SPANISH)
12	T146098	SAFETY SIGN	1		SEAT BELT WARNING (SPANISH)
13	T146106	LABEL	1		BY-PASS STARTING (SPANISH)
14	T152996	LABEL	1		BOOM LOCK (SPANISH)
15	T164129	LABEL	1		ACCUMULATOR WARNING (SPANISH)
16	T160769	LABEL	1		PARK BRAKE WARNING (SPANISH)
17	T167008	LABEL	1		ROPS (SPANISH)
18	T188818	LABEL	1	-XXXXXX	FUSEBLOCK (SPANISH)
	T207041	LABEL	1	XXXXXX-	FUSEBLOCK (SPANISH)
19	T201289	LABEL	1	-943092	PERIODIC MAINTENANCE CHART (SPANISH)
	T213329	LABEL	1	943093-XXXXXX	PERIODIC MAINTENANCE CHART (SPANISH)
	T209538	LABEL	1	XXXXXX-	
20	T191099	LABEL	1	-XXXXXX	PERIODIC GREASING (SPANISH)
	T214322	LABEL	1	XXXXXX-	PERIODIC GREASING (SPANISH)
21	T146911	LABEL	1		RIDE CONTROL WARNING (SPANISH)
22	T185548	LABEL	1		INSTRUMENT PANAL (SPANISH)
23	T186442	LABEL	1		INSTRUMENT PANAL (SPANISH)
24	T185696	LABEL	1		AUXILIARY HYDRAULICS (SPANISH)
25	T185553	LABEL	1		BACKHOE CONTROL (SPANISH)
26	T188019	LABEL	1		SAE (SPANISH)
27	T186125	LABEL	1		HYD. OIL RANGE (SPANISH)
28	T200660	SAFETY SIGN	1		CAUTION, MOTION (SPANISH)
29	T200896	SAFETY SIGN	1		BACKHOE CONTROL (SPANISH)
30	T201285	LABEL	1		HYDRAULIC OIL RESERVOIR (SPANISH)
31	T208007	LABEL	1	XXXXXX-	HYDRAULIC RESERVOIR (SPANISH)
32	T155579	SAFETY SIGN	1	XXXXXX-	ACCUMULATOR (SPANISH)
33	.....	KIT	1		(SPANISH) (LANGUAGE KIT NO LONGER AVAILABLE)

LOCTITE SERVICE KIT
(PARTS LISTED BELOW ARE NOT ILLUSTRATED)

KEY	PART NO.	PART NAME	QTY	SERIAL NO.	REMARKS
1	TY16285	PRIMER	1		
	T43512	SEALANT	1		LOCTITE
	T43513	SEALANT	1		
	PM38655	SEALANT	1		(SUB FOR T43514) PLASTIC
	TY15969	ADHESIVE	1		

MEMORANDA

FLUID ANALYSIS PRODUCTS (OILSCAN PLUS TEST KIT)

T135474 -UN-15NOV00



T135474

FLUID ANALYSIS PRODUCTS (OILSCAN PLUS TEST KIT)

KEY	PART NO.	PART NAME	QTY	SERIAL NO.	REMARKS
1	.....	KIT	1		STANDARD ENGINE, TRANSMISSION, GEARBOXES & BASIC HYDRAULIC SYSTEM, SELF EXTRACTION 12 PER PACKAGE)(INCLUDES SPECTROCHEMICAL ANALYSIS, VISCOSITY, ° WATER, FUEL DILUTION, GLYCOL, FUEL SOOT) (AT178840 NO LONGER AVAILABLE FOR SERVICE - SUB AT180333)
	AT180333	KIT	1		STANDARD ENGINE, 4 OZ BOTTLE (10 PER PACKAGE) (SAME AS AT178840)
	.....	KIT	1		COMPREHENSIVE ENGINE W/TBN (EXTENDED DRAIN) (12 PER PACKAGE)(SAME AS AT178840 PLUS TBN) (AT178842 NO LONGER AVAILABLE FOR SERVICE - SUB AT180334)
	AT180334	KIT	1		COMPREHENSIVE ENGINE W/TBN (EXTENDED DRAIN) 4 OZ BOTTLE (10 PRT PACKAGE) (SAME AS AT178842)
	AT303189	KIT	1		COMPREHENSIVE HYDRAULIC & HYDROSTATIC SYSTEMS, 4 OZ BOTTLE (10 PER PACKAGE) (REQUIRES USE OF A SAMPLING VALVE FOR ACCURATE RESULTS) (SUB FOR AT178844)
	AT182602	ASSEMBLY LINE PARTS	1		VALVE, SAMPLING, 1000 PSI RATING, (5 PER PACKAGE) (PUSH BUTTON, 1/8" NPT MALE)
	AT182603	KIT	1		FITTING, PRESSURE REDUCING (5 PER PACKAGE) (REQUIRED FOR CIRCUIT PRESSURE OVER 100 PSI) (USED WITH AT182602) (7/16"O-RING MALE X 1/8" NPT FEMALE WITH 0.025" ORIFACE)
	IPSKIT3	PUMP	1		OIL EXTRACTION (1 PER PACKAGE)(CAN BE USED WITH AT180333 AND AT180334 KITS TO EXTRACAT OIL SAMPLE)
	DS0345	TUBE	1		500'ROLL (USED WITH IPSKIT3 PUMP TO EXTRACT SAMPLE)
	DS0346	TUBE	1		100' ROLL (USED WITH IPSKIT3 PUMP TO EXTRACT SAMPLE)

O-RING KIT

TP70402 -UN-13JUL00

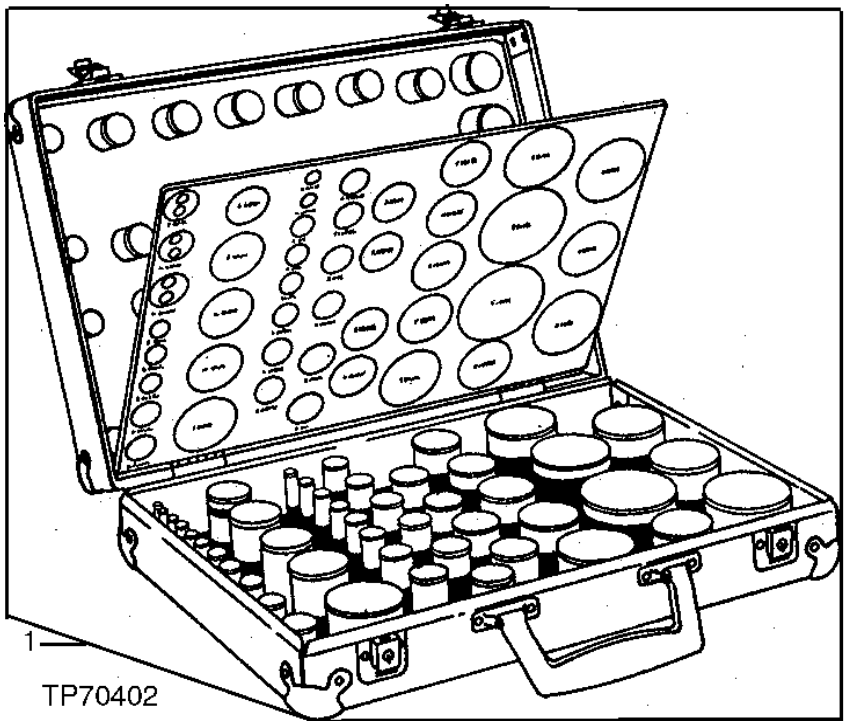

O-RING KIT

KEY	PART NO.	PART NAME	QTY	SERIAL NO.	REMARKS
1	AT130208	O-RING KIT	1		(CONTAINS FIVE OF EACH O-RING LISTED BELOW) (INCLUDES CARRYING CASE)
	A3606R	O-RING	1		
	A3917R	O-RING	1		
	A4365R	O-RING	1		
	A4730R	O-RING	1		
	B2762R	O-RING	1		
	B3690R	O-RING	1		
	F1056R	O-RING	1		
	F1870R	O-RING	1		
	U12547	O-RING	1		
	F3353R	O-RING	1		
	H35244	RING	1		
	T78313	O-RING	1		
	M4237T	O-RING	1		
	N131838	O-RING	1		
	P46051	O-RING	1		
	P48403	O-RING	1		
	P50631	O-RING	1		
	R375R	O-RING	1		
	R394R	O-RING	1		
	R459R	O-RING	1		
	R460R	O-RING	1		
	R495R	O-RING	1		
	R10093	O-RING	1		
	R26286	O-RING	1		
	R26287	O-RING	1		
	R26375	O-RING	1		
	R26448	O-RING	1		
	R26773	O-RING	1		
	R26863	O-RING	1		
	R26906	O-RING	1		
	R27166	O-RING	1		
	R27928	O-RING	1		
	R28776	O-RING	1		
	R28782	O-RING	1		
	R29463	O-RING	1		
	R29936	O-RING	1		
	R30903	O-RING	1		
	R33259	O-RING	1		
	R56461	O-RING	1		
	R48638	O-RING	1		
	R71732	O-RING	1		
	R53543	O-RING	1		
	R56463	O-RING	1		
	R56751	O-RING	1		
	R60332	O-RING	1		
	R80632	O-RING	1		
	T12275	O-RING	1		
	T13119	O-RING	1		
	T16752	O-RING	1		
	T19687	O-RING	1		
	R112857	O-RING	1		
	T25335	O-RING	1		
	T34248	O-RING	1		
	U10289	O-RING	1		
	U10746	O-RING	1		
	U10776	O-RING	1		
	U11326	O-RING	1		
	U11343	O-RING	1		
	U12037	O-RING	1		
	U12198	O-RING	1		
	U12331	O-RING	1		
	U12547	O-RING	1		
	U13639	O-RING	1		
	U15415	O-RING	1		
	U15973	O-RING	1		
	U17409	O-RING	1		
	U42111	O-RING	1		

ENVIRONMENTAL DRAIN PACKAGE

T156101 -UN-16JUL02

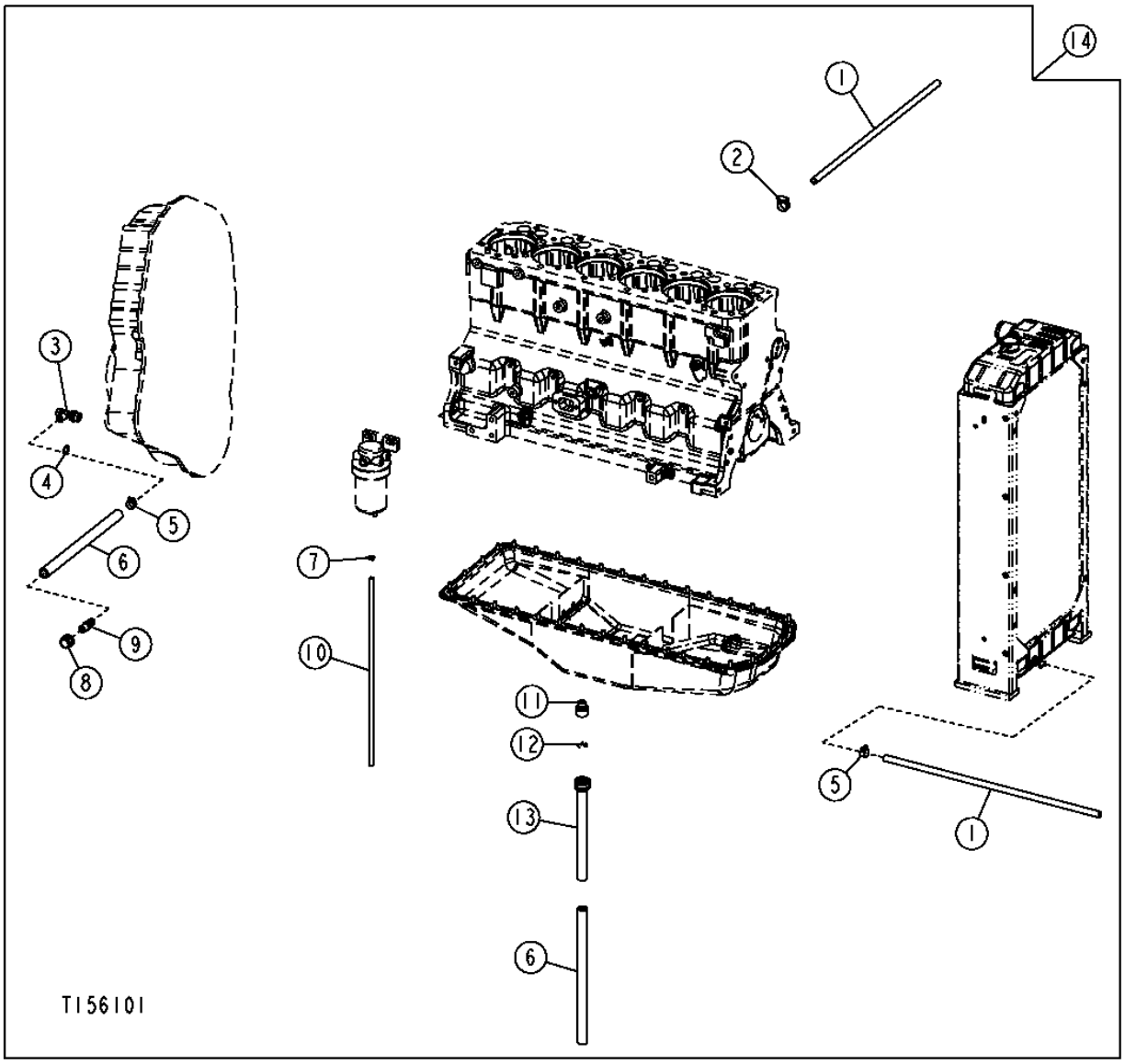

ENVIORMENTAL DRAIN PACKAGE

KEY	PART NO.	PART NAME	QTY	SERIAL NO.	REMARKS
1	T161002	HOSE	2		
2	AR21837	CLAMP	1		
3	AT152180	DRAIN VALVE	1		
4	R26906	O-RING	1		
5	RE65978	CLAMP	2		
6	T60811	BULK HOSE	2		(MAKE FROM T60811 BULK MATERIAL, CUT TO 5 LINEAL FEET)
7	T13254	CLAMP	2		
8	15H3	FITTING	1		
9	H23196	FITTING	1		
10	T161093	HOSE	2		
11	AT305767	DRAIN VALVE	1		
12	T161615	PIN	1		
13	AT179996	HOSE	1		
14	AT196889	KIT	1		

DUAL BATTERY INSTALLATION

T154967 -UN-20MAY02

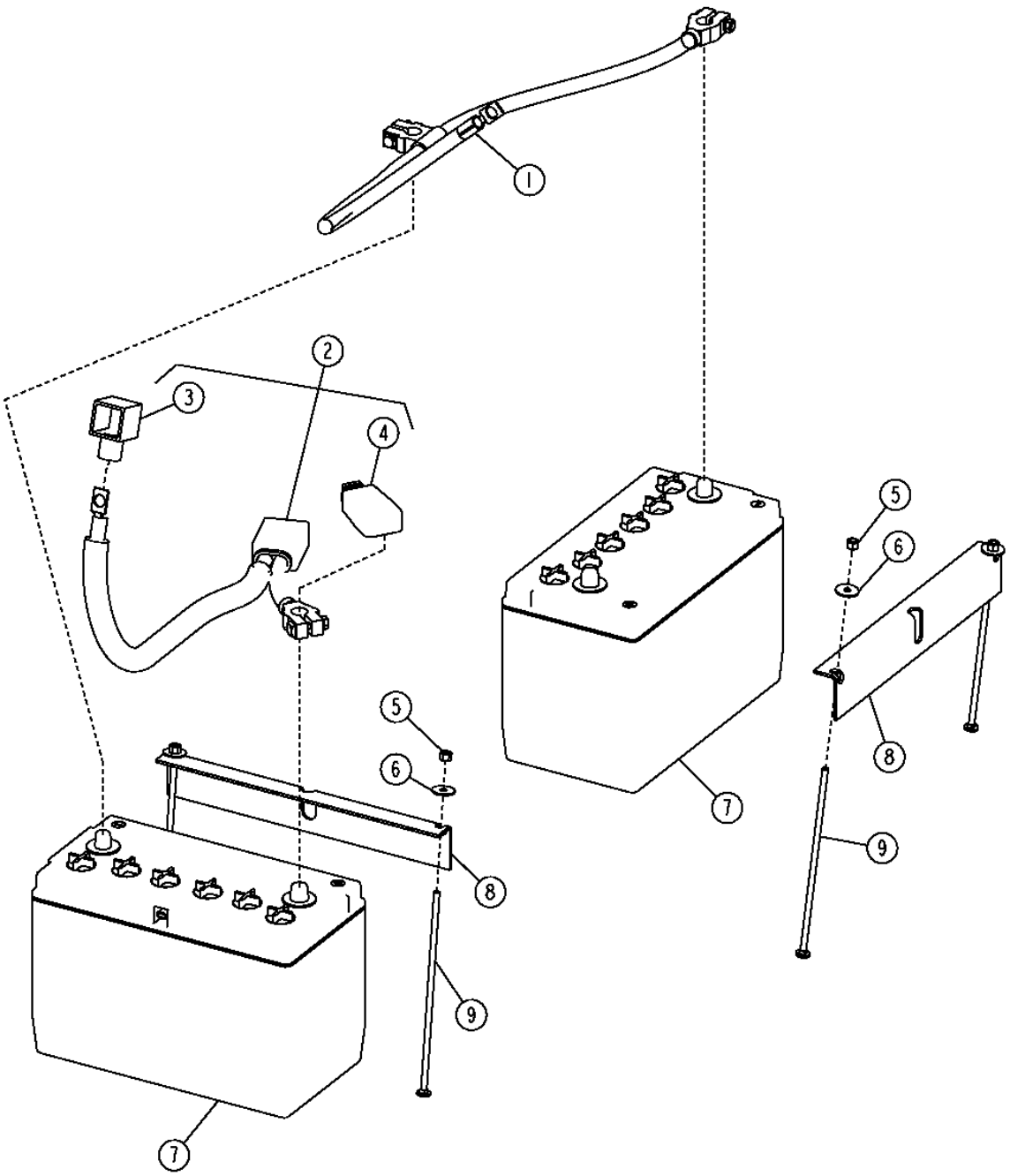

T154967

DUAL BATTERY INSTALLATION

KEY	PART NO.	PART NAME	QTY	SERIAL NO.	REMARKS
1	AT195911	BATTERY CABLE	1		NEGATIVE, (SUB FOR AT191817)
2	AT195622	BATTERY CABLE	1		
3	T129165	BOOT	1		
4	T107117	COVER	1		
5	M40333	LOCK NUT	4		6.350 MM
6	24H1288	WASHER	4		
7	TY6128	DRY CHARGED BATTERY	2		(WARRANTY NO. AT132864) (950 CCA) (ALSO ORDER (2) TY25913)
	TY25913	FELT	2		BATTERY TERMINAL PROTECTOR
8	T121288	ANGLE	2		
9	03H2208	BOLT	4		1/4" X 9-1/4"

BATTERY DISCONNECT

T152635 -UN-21MAR02

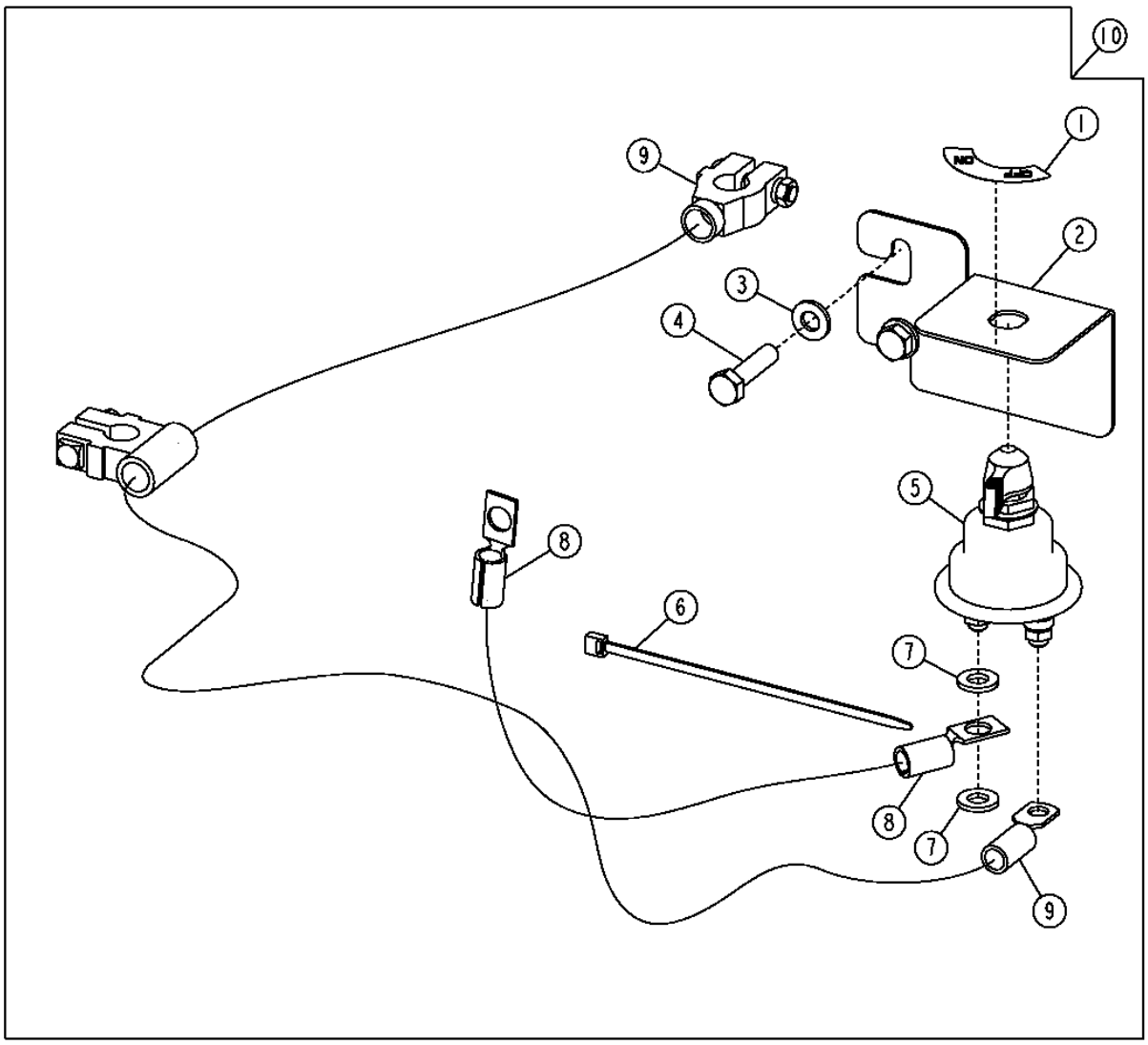

T152635

BATTERY DISCONNECT

KEY	PART NO.	PART NAME	QTY	SERIAL NO.	REMARKS
1	T42199	LABEL	1		
2	T190658	BRACKET	1		
3	24M7239	WASHER	2		
4	19M8637	CAP SCREW	2		M10 X 40
5	AT41188	SWITCH	1		
6	R44302	TIE BAND	1		
7	24M7239	WASHER	2		
8	AR67069	GROUND CABLE	1		
9	AT197922	BATTERY CABLE	1		
10	AT198096	KIT	1		WHOLE GOODS

REMOTE START POST

T144950 -UN-20AUG01

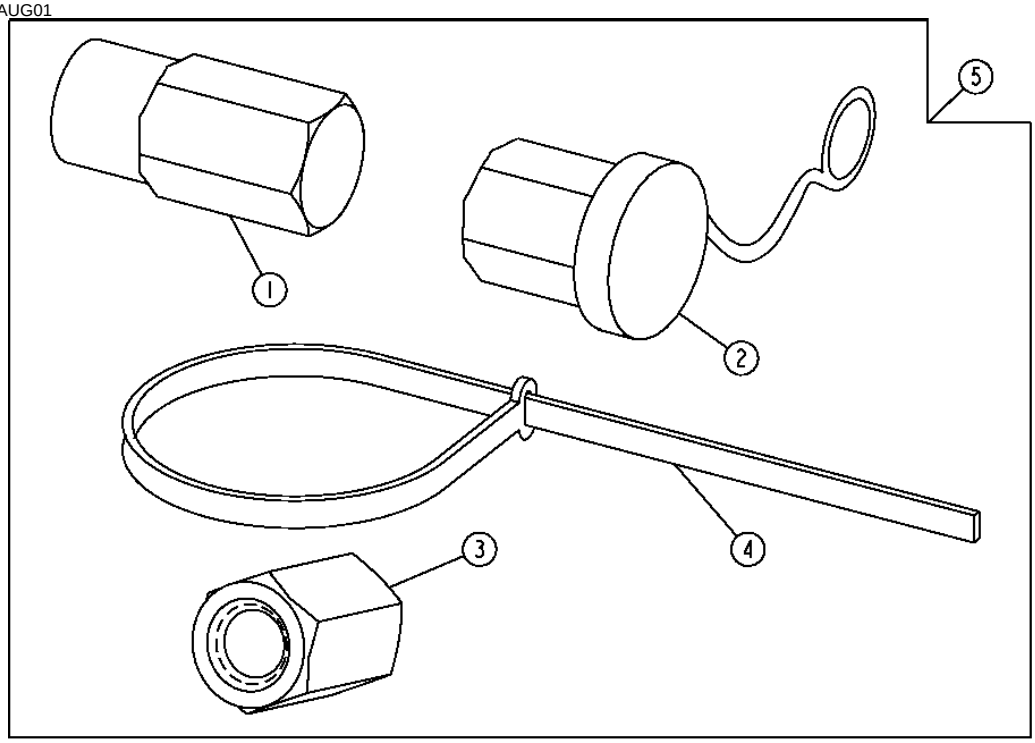

T144950

KEY	PART NO.	PART NAME	QTY	SERIAL NO.	REMARKS
1	T172353	TERMINAL	1		ISKRA
2	T134104	COVER	1		REMOTE START POST
3	E64052	NUT	1		DENSO, (SUB FOR T174530)
4	H77698	TIE BAND	1		
5	AT186213	KIT	1		(WHOLE GOODS)

MEMORANDA

ALTERNATOR

T152387 -UN-03APR02

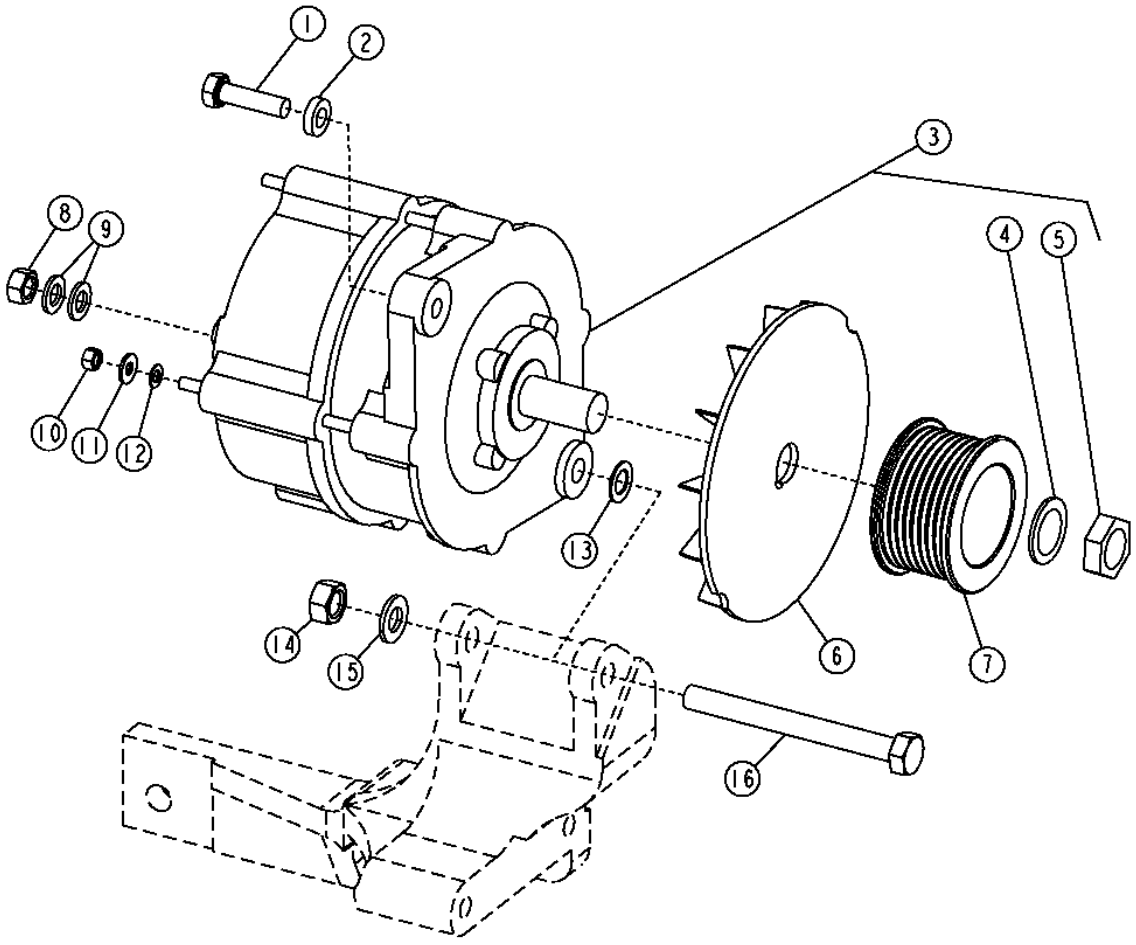

T152387

ALTERNATOR

KEY	PART NO.	PART NAME	QTY	SERIAL NO.	REMARKS
1	19M7513	CAP SCREW	1		M8 X 30
2	R48808	WASHER	1		
3	TY24485	ALTERNATOR	1		12 VOLT 95 AMPERE (REMANUFACTURED)
	TY6799	ALTERNATOR	1		12 VOLT 65 AMPERE (REMANUFACTURED)
4	T10745	WASHER	1		
5	14M7158	NUT	1		M16
6	T158584	FAN	1		
7	R501486	PULLEY	1		
8	14M7273	NUT	1		M8
9	24M7036	WASHER	2		
10	14M7297	NUT	2		M5
11	24H1283	WASHER	1		
12	12M7060	WASHER	3		
13	R64525	THRUST WASHER	1		
14	14M7274	NUT	1		M10
15	24M7028	WASHER	1		
16	19M8093	CAP SCREW	1		M10 X 100

ROTATING BEACON AND STROBE LIGHT

T209083 -UN-11MAR05

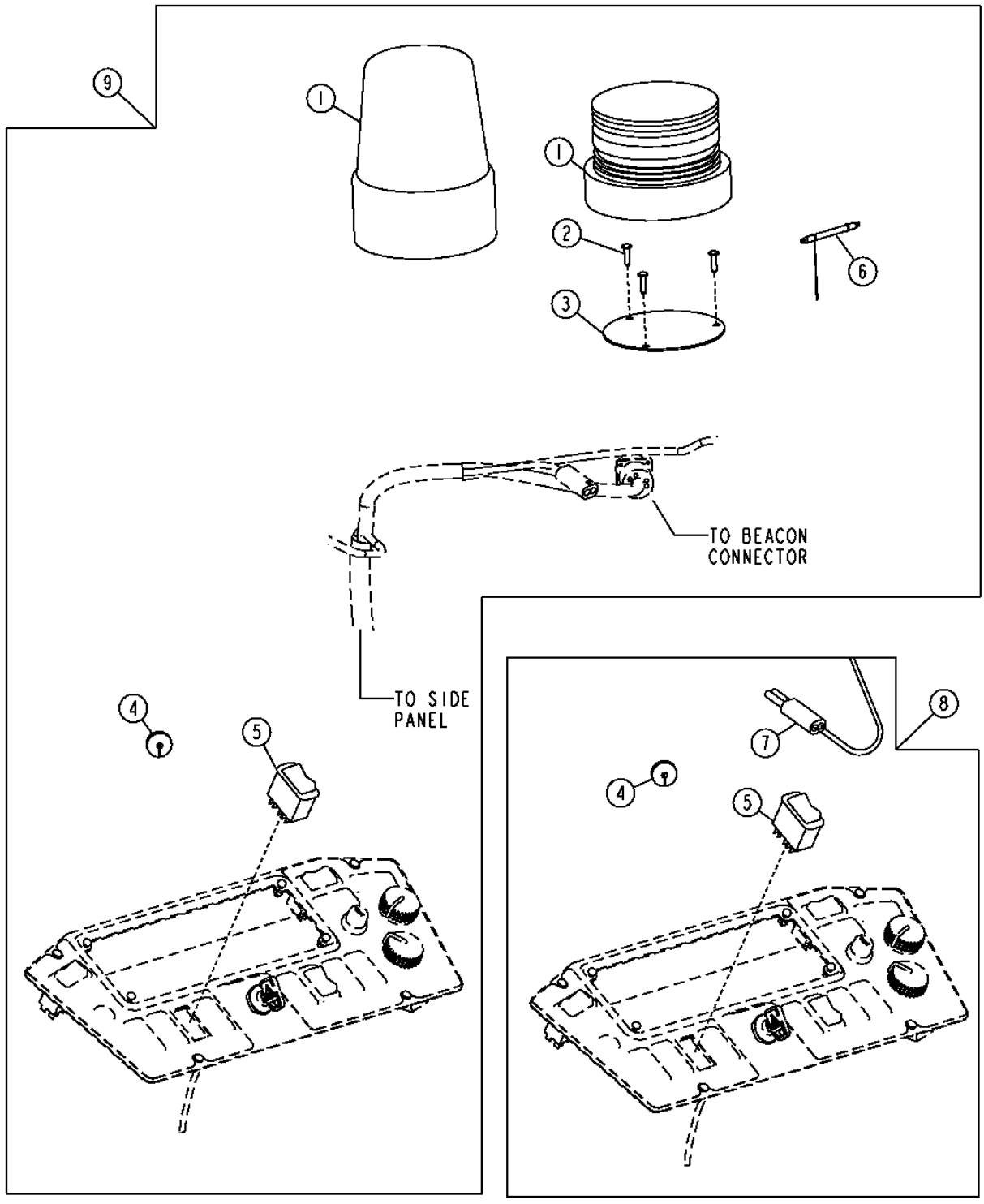

T209083

ROTATING BEACON AND STROBE LIGHT

KEY	PART NO.	PART NAME	QTY	SERIAL NO.	REMARKS
1	AT187816	STROBE LIGHT	1		STROBE
	AT310650	LAMP	1		BEACON
2	37M7218	SCREW	3		
3	T167214	PLATE	1		
4	T74952	GROMMET	1		
5	AT175603	TOGGLE/ROCKER SWITCH	1		
6	PML377	STROBE LIGHT	1		12 VOLT
	AT310630	LAMP	1		12 VOLT
7	AT195461	ROOF WIRING HARNESS	1		
8	**AT195462**	**KIT**	**1**		**(WHOLE GOODS) WIRING KIT**
9	AT187815	KIT	1		(WHOLE GOODS) STROBE LIGHT
	AT194821	KIT	1		(WHOLE GOODS) ROTATING BEACON

STANDARD LIGHTS, DELUXE LIGHTS AND ROOF HARNESS

T138541 -UN-22FEB01

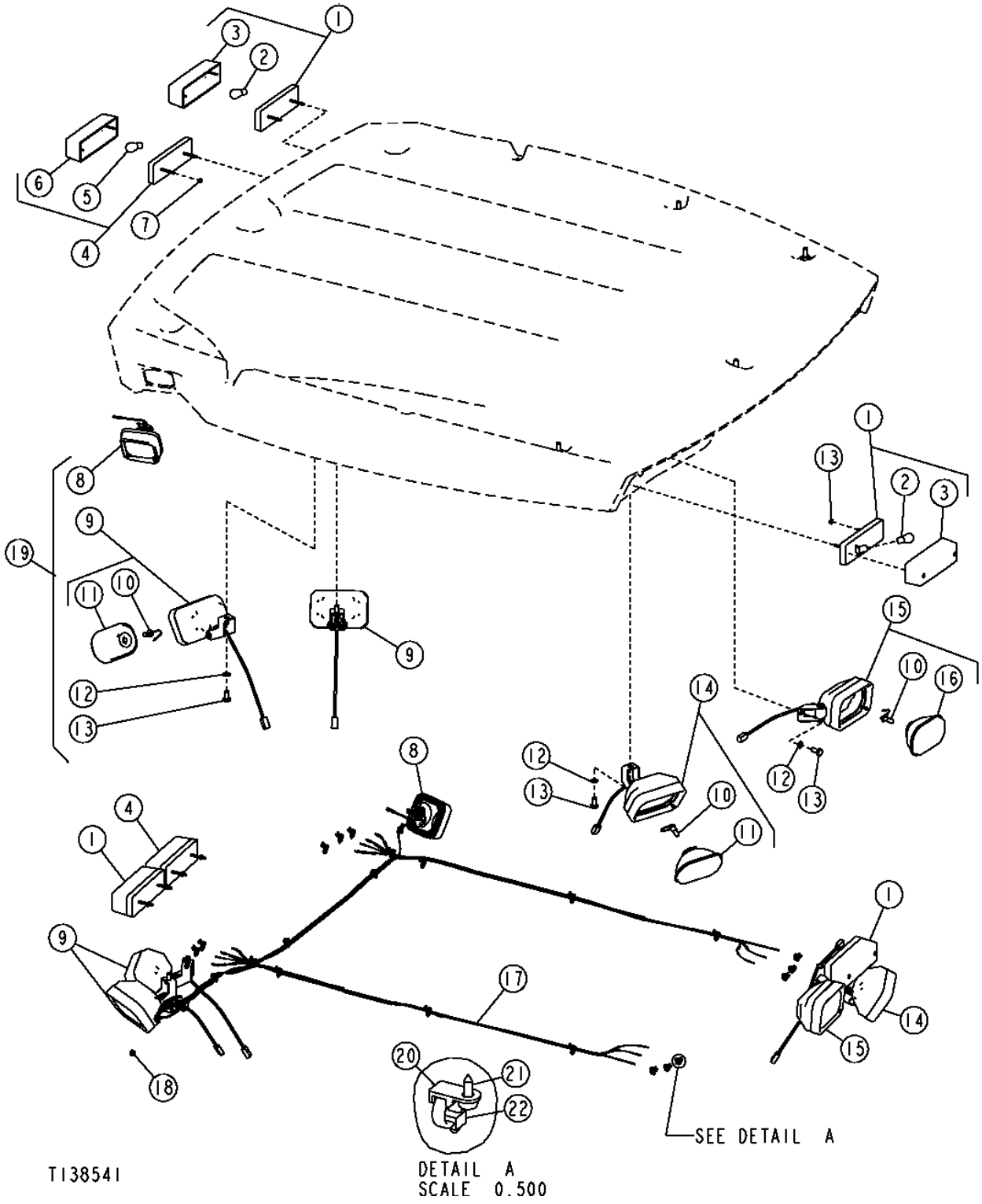

STANDARD LIGHTS, DELUXE LIGHTS AND ROOF HARNESS

KEY	PART NO.	PART NAME	QTY	SERIAL NO.	REMARKS
1	AT184736	LAMP	4		(WARNING)
2	AD2062R	BULB	4		
3	T165542	LENS	4		(AMBER)
4	AT184737	LAMP	2		(STOP/TAIL)
5	AR48041	BULB	2		
6	T165543	LENS	2		(RED)
7	14M7375	FLANGE NUT	12		M5
8	AT187868	LAMP	2		(DOCKING)
	AT130104	BULB	2		(HALOGEN LONG LIFE)
	AT191409	LENS	2		
9	AT191875	LAMP	4		(WORK)
10	AT130104	BULB	4		(HALOGEN LONG LIFE)
11	AT191408	LENS	4		
12	24M7239	WASHER	8		(SUB FOR 24M7096, THIS APPLICATION)
13	19M8324	CAP SCREW	8		M10 X 16
14	AT192460	LAMP	2		(WORK)
	AT130104	BULB	2		(HALOGEN LONG LIFE)
	AT191408	LENS	2		
15	AT184972	LAMP	1		(RIGHT)
	AT185451	LAMP	1		(LEFT)
16	AT191407	LENS	2		(WITH REFLECTOR)
17	AT191873	ROOF WIRING HARNESS	1		
18	R41440	GROMMET	2		
19	AT192242	KIT	1		WHOLE GOODS
20	T187394	ANCHOR	30		
21	T185769	SCREW	30		
22	R44302	TIE BAND	30		

FRONT CONSOLE WIRING HARNESSES

T157580 -UN-16JUL02

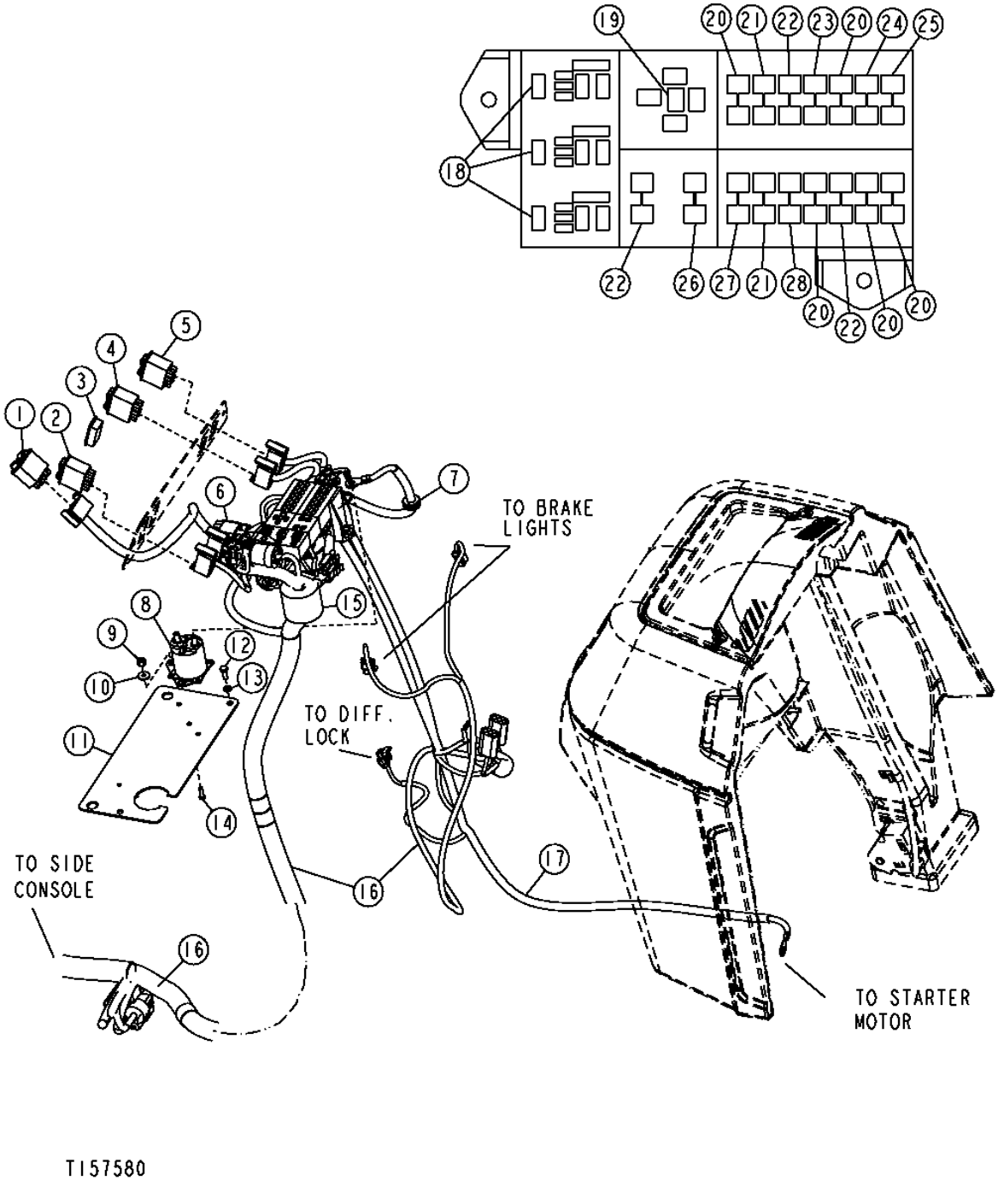

FRONT CONSOLE WIRING HARNESSES

KEY	PART NO.	PART NAME	QTY	SERIAL NO.	REMARKS
1	AT175300	SWITCH	1		TURN SIGNAL
	T162380	BULB	1		
2	AT175071	SWITCH	1		FRONT WIPER
	AT175072	SWITCH	1		FRONT WASHER
3	.....	PLUG	1		(T163309 NLA) (SUB T207060)
	M115279	PLUG	1		SMALL BLANK
4	AT175070	SWITCH	1		WARNING LIGHT
5	AT175069	SWITCH	1		FRONT LIGHT
6	.....	WIRING HARNESS	1		
7	M85517	GROMMET	1		
8	AR73144	RELAY	1		
9	14M7375	FLANGE NUT	2		M5
10	.....	WASHER	2		(24M7210 NO LONGER AVAILABLE)
11	T206491	PLATE	1		(SUB FOR T183600) (ALSO ORDER T186793)
12	19M7775	SCREW	2		M6 X 16, (SUB FOR 19M8425, THIS APPLICATION)
13	.....	WASHER	2		(24M7054 NO LONGER REQUIRED)
14	19M7372	CAP SCREW	2		M5 X 16
15	T166244	BUSHING	1		
	T215293	FLASHER	1		
16	AT194894	WIRING HARNESS	1	-XXXXXX	CAB
	AT303582	WIRING HARNESS	1	-XXXXXX	CANOPY, (SUB FOR AT194895)
17	AT196390	WIRING HARNESS	1		POWER CABLE
18	AT310980	RELAY	3	-943218	CAB, (SUB FOR AT189041)
	AT310980	RELAY	3	-941353	CANOPY, (SUB FOR AT189041)
	AT308380	RELAY	3	943219-	CAB
	AT308380	RELAY	3	941354-	CANOPY
19	AT163088	FLASHER	1		
	T215293	FLASHER	1	XXXXXX-	4-WAY FLASHER
20	57M7121	FUSE	5		10 AMP
21	57M7120	FUSE	2		20 AMP
22	99M7065	FUSE	3		15 AMP
23	T103834	CIRCUIT BREAKER	1		
24	T108357	CIRCUIT BREAKER	1		
25	99M7064	FUSE	1		7-1/2 AMP
26	57M7125	FUSE	1		5 AMP
27	T102780	CIRCUIT BREAKER	1		
28	57M7146	FUSE	1		30 AMP

SIDE CONSOLE WIRING HARNESSES

T203893 -UN-04NOV04

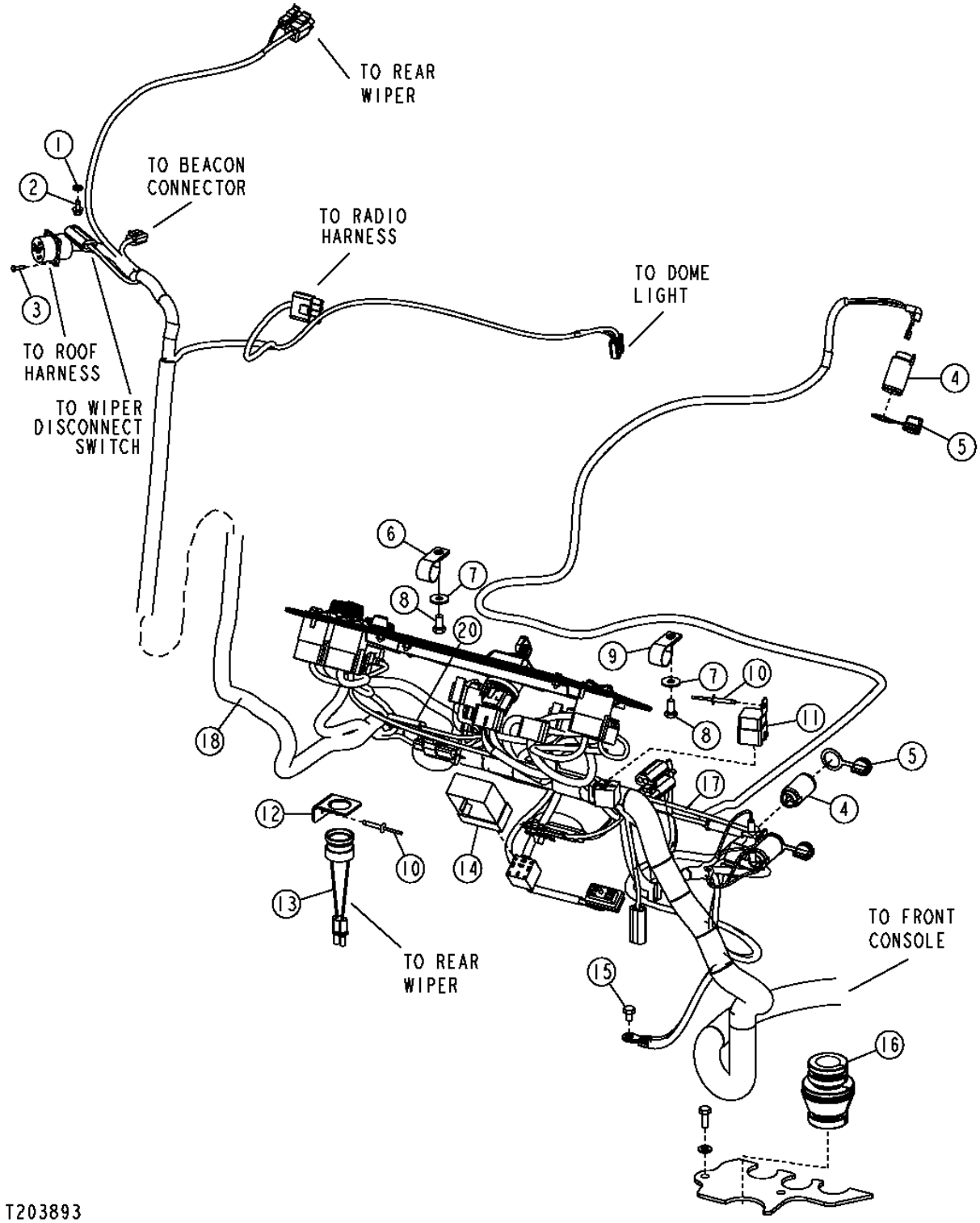

SIDE CONSOLE WIRING HARNESSES

KEY	PART NO.	PART NAME	QTY	SERIAL NO.	REMARKS
1	24M7054	WASHER	1		
2	37M7089	SCREW	1		M6 X 12
3	37M7066	SCREW	4		
4	AT78633	HOUSING	3		
5	R131671	PLUG	3		
6	T74416	CLAMP	1		
7	24M7207	WASHER	2		
8	19M7932	CAP SCREW	2		M8 X 16
9	T102934	CLAMP	1		
10	T184345	RIVET	2		
11	AT75769	RELAY	1		AIR CONDITION ACTUATOR DOOR
12	T166344	BRACKET	1		
13	AT178526	AUDIBLE WARNING ALARM	1		WARNING
14	AT180485	RELAY MODULE	1		
15	19M7008	CAP SCREW	1		M8 X 10
16	T143596	GROMMET	1		
17	L38138	ELEC. CONNECTOR HOUSING	1		
	AT189174	WIRING HARNESS	1		RIDE CONTROL
18	AT194894	WIRING HARNESS	1	-XXXXXX	CAB
	AT308176	WIRING HARNESS	1	XXXXXX-	CAB
	AT303582	WIRING HARNESS	1	-XXXXXX	CANOPY, (SUB FOR AT194895)
	AT308158	WIRING HARNESS	1	XXXXXX-	CANOPY
19	AT191747	WIRING HARNESS	1	-843495	A/C SWITCH TO CONSOLE HARNESS CONNECTOR
	AT302727	WIRING HARNESS	1	843496-	A/C SWITCH TO CONSOLE HARNESS CONNECTOR
20	57M8131	ELEC. CONNECTOR TERMINAL	1		CAN RISISTOR

PILOT ENABLE ELECTRICAL

T165340 -UN-13FEB03

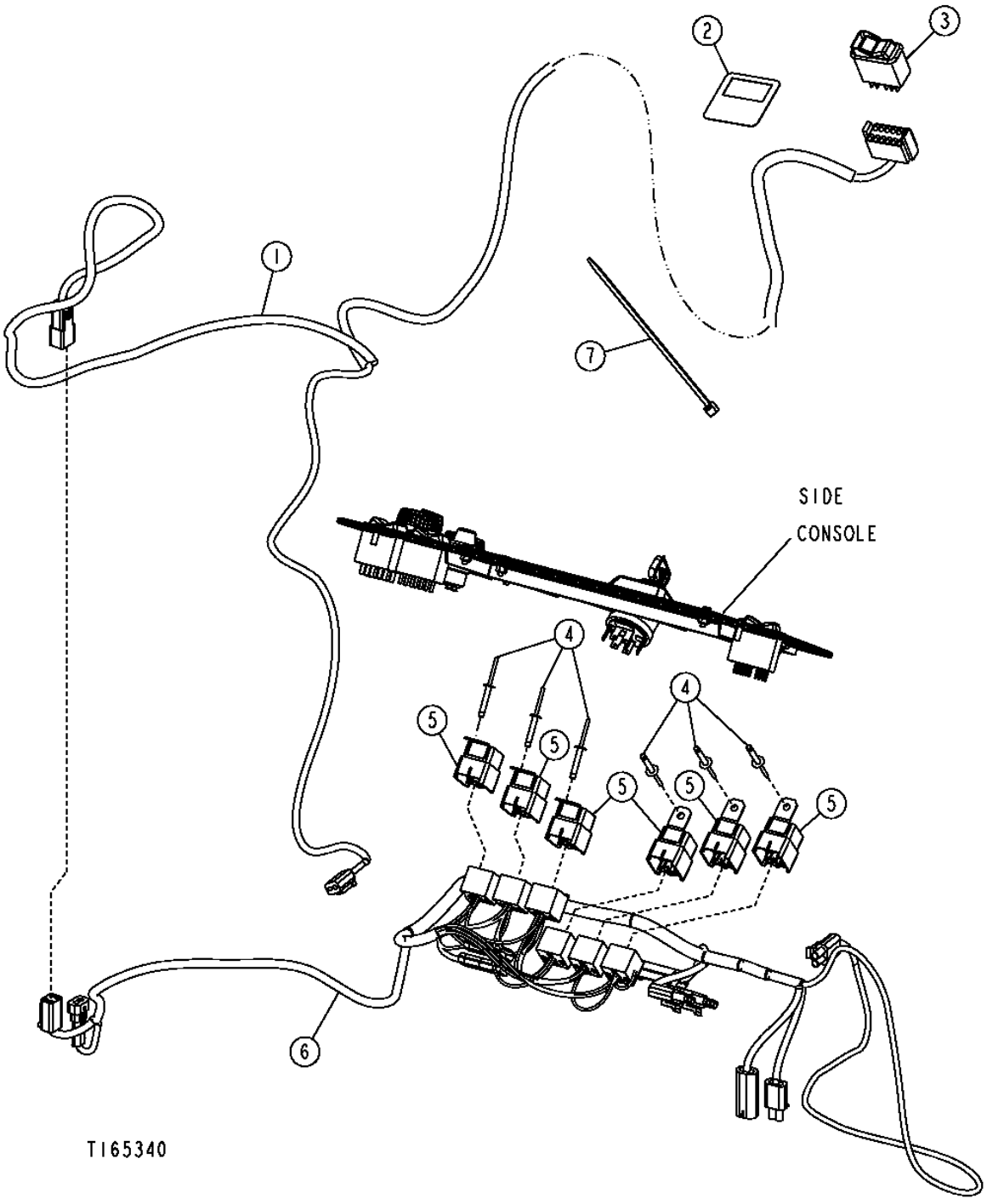

PILOT ENABLE
ELECTRICAL

KEY	PART NO.	PART NAME	QTY	SERIAL NO.	REMARKS
1	.....	CAB WIRING HARNESS	1	-918287	(AT199016 NO LONGER AVAILABLE) (SUB AT302625) (ALSO ORDER 57M7535, 57M7618, (4) R78065, 57M7628, 57M7619 AND (4) R78066)
	AT302625	CAB WIRING HARNESS	1	918288-	
	AT309971	CAB WIRING HARNESS	1	XXXXXX-	
2	T200424	LABEL	1		
3	AT301427	SWITCH	1		
4	T184345	RIVET	6		
5	AT75769	RELAY	6		
6	AT302628	WIRING HARNESS	1		(SUB FOR AT198844)
7	R44302	TIE BAND	1		

HYDRAULIC FRONT COUPLER HARNESS
ELECTRICAL

T205502 -UN-29NOV04

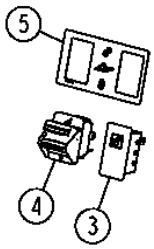

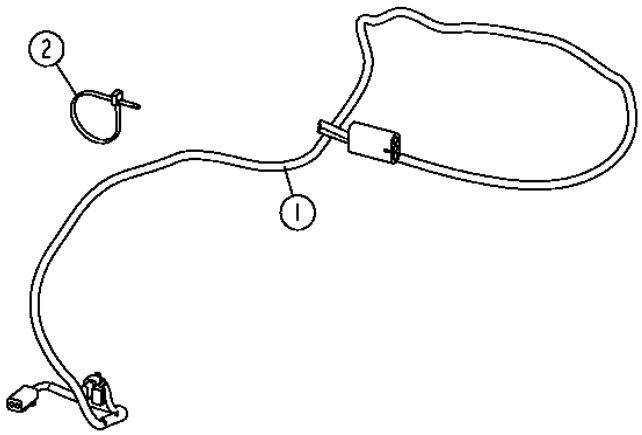

T205502

THIS PARTS LISTING IS CONTINUED

HYDRAULIC FRONT COUPLER HARNESS
ELECTRICAL

KEY	PART NO.	PART NAME	QTY	SERIAL NO.	REMARKS
1	AT308440	WIRING HARNESS	1		LOADER COUPLER
	AT308473	WIRING HARNESS	1		LOAD COUPLER CONTROL CHASSIS
	14M7303	FLANGE NUT	1		M6
	21M7247	SCREW	1		M6 X 35
	24M7139	WASHER	1		
	24M7239	WASHER	1		
	AE44436	HORN	1		AUDIBLE ALARM
	AT308237	RELAY MODULE	1		
	AT308475	WIRING HARNESS	1		LOADER COUPLER CAB
	T206695	BRACKET	1		ALARM MOUNTING
	H77698	TIE BAND	1		
	T186793	LABEL	1		GRAY CIRCLE
2	R44302	TIE BAND	4		
3	AT311598	INDICATOR LAMP	1		PIN DISCONNECT
4	AT225952	SWITCH	1		PIN DISCONNECT
5	T209212	LABEL	1		ENABLE/DISABLE

MONITOR PANEL WITH MONITOR, SWITCHES AND LABELS

T192707 -UN-18JUL03

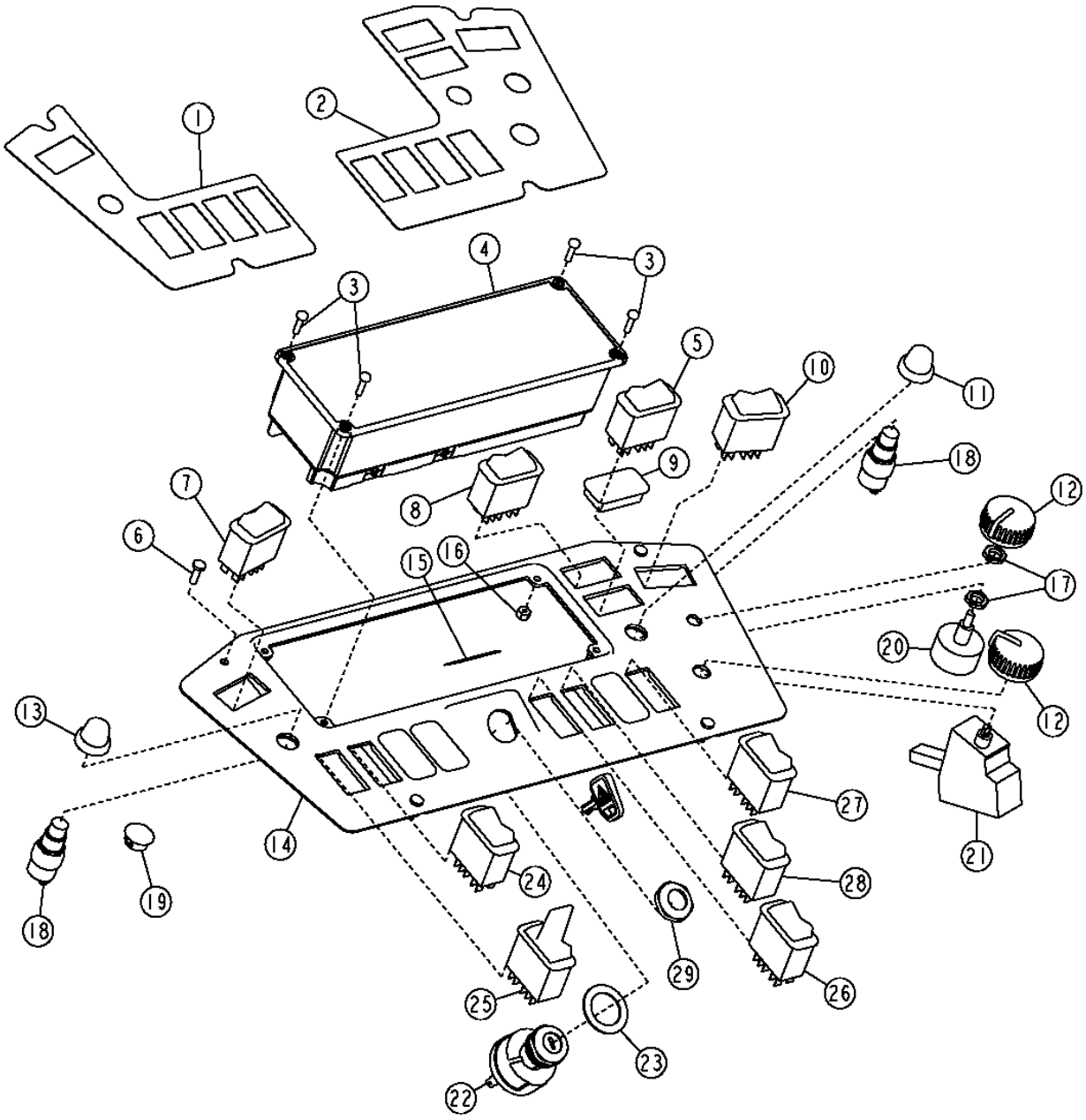

T192707

MONITOR PANEL WITH MONITOR,SWITCHES AND LABELS

KEY	PART NO.	PART NAME	QTY	SERIAL NO.	REMARKS
1	T186400	LABEL	1		L.H.
2	T186401	LABEL	1		R.H.
3	T82791	SCREW	4		
4	AT304971	MONITOR	1		(SUB FOR AT194492, AT300129 AND AT303521)
5	AT189473	ROTARY SWITCH	1		DOCKING LIGHT
6	21M7271	SCREW	4		M5 X 16
7	AT189088	SWITCH	1		PARK BRAKE
8	AT189473	ROTARY SWITCH	1		REAR LIGHT
9	.....	PLUG	9		(SUB T207060) (T163309 NLA)
10	AT189630	ROTARY SWITCH	1	-919463	REAR WIPER
	AT199633	TOGGLE/ROCKER SWITCH	1	919464-	PATTERN SELECT
11	T55501	CAP	1		
12	R111632	KNOB	2		
13	T55585	CAP	1		
14	T167065	INSTRUMENT PANEL	1		
15	T166300	LABEL	1		START SWITCH
16	M63431	LOCK NUT	4		0.164"
17	R44165	LOCK NUT	2		7/16"
18	R39554	SWITCH	2		ETHER OR HORN
19	T154361	PLUG	2		
20	RE43497	ROTARY SWITCH	1		AC/HEAT TEMPERATURE SWITCH
21	RE46742	TEMPERATURE SWITCH	1		
	12H292	LOCK WASHER	1		
	14H934	NUT	1		7/16"
22	AT195301	SWITCH	1		IGNITION
	AT195302	KEY	1		
23	24H1441	WASHER	1		(SUB FOR R52725)
24	AT184335	SWITCH	1		RIDE CONTROL
25	AT189692	ROTARY SWITCH	1		MFWD
26	AT189145	SWITCH	1		AIR SEAT
27	AT192716	TOGGLE/ROCKER SWITCH	1		A/C SWITCH
28	AT304561	ROTARY SWITCH	1	919464-	REAR WIPER
29	R44342	NUT	1		1"

ENGINE WIRING HARNESS

T211960 -UN-01JUL05

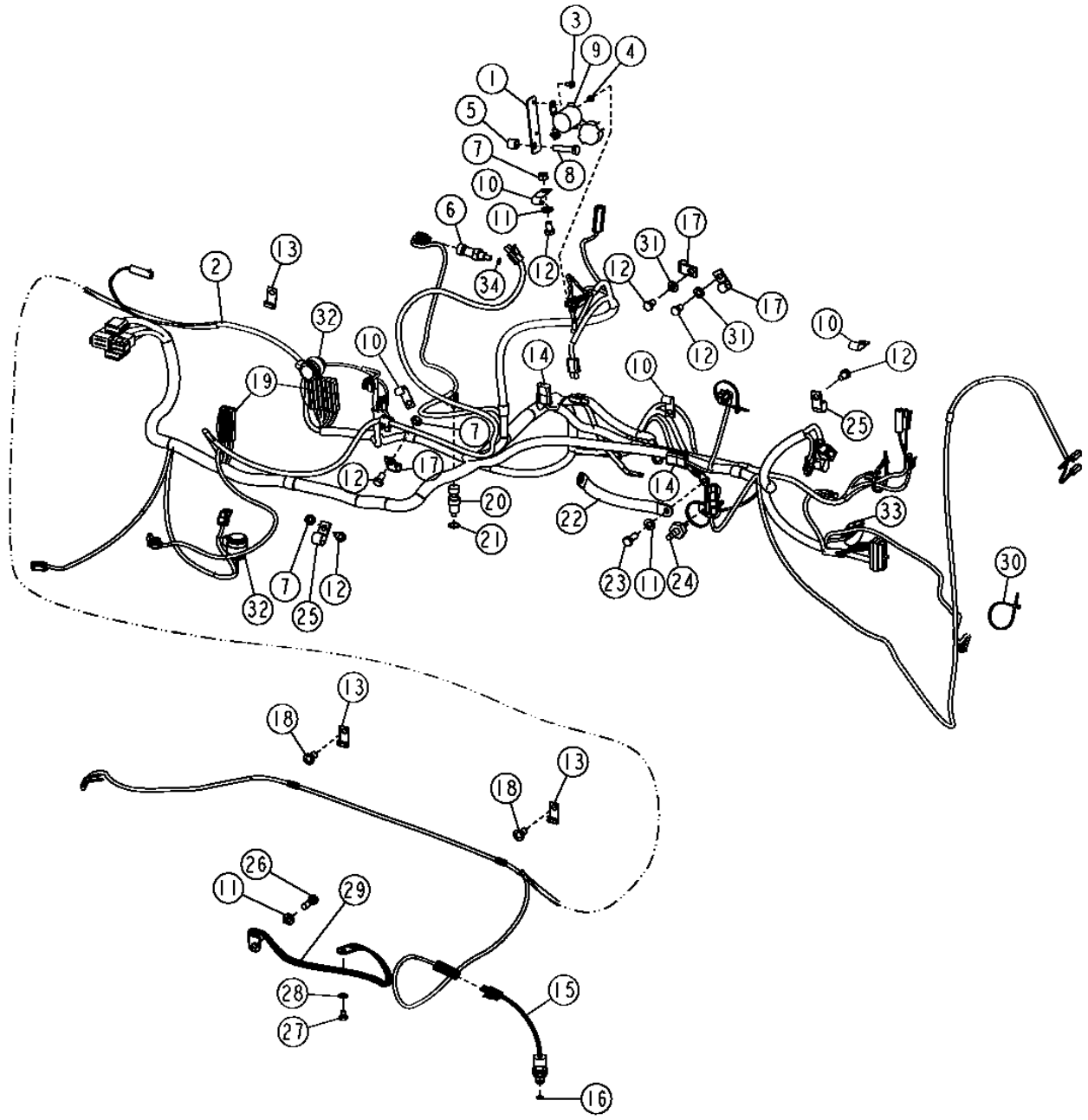

ENGINE WIRING HARNESS

KEY	PART NO.	PART NAME	QTY	SERIAL NO.	REMARKS
1	T184676	STRAP	1		
2	.....	WIRING HARNESS	1	-940786	(AT195856 NO LONGER AVAILABLE) (SUB AT304827) (ALSO ORDER 57M7254, (2) R104846 AND (2) 57M7289)
	AT304827	WIRING HARNESS	1	940787-	
3	37H116	SCREW	2		
4	14M7272	NUT	2		M6
	24M7088	WASHER	2		
5	28H3381	SPACER	1		
6	RE52722	SENSOR	1		HYDRAULIC TEMPERATURE, (INCLUDES 51M7041)
7	14M7274	NUT	4		M10
8	19M7572	CAP SCREW	1		M10 X 45
9	AT141011	RELAY	1		(12V) STARTER
10	AH89557	CLIP	5		
11	24M7239	WASHER	7		
12	19M7557	CAP SCREW	6		M10 X 16
13	T19935	CLAMP	3		
14	AT103399	DIODE	4		ALTERNATOR, STARTER, A/C COMPRESSOR AND PARK BRAKE RELAY
15	AT159811	SWITCH	1		PARK BRAKE OIL PRESSURE
16	51M7039	O-RING	1		
17	T75197	CLAMP	2		
18	MT2485	PLUG	2		FASTENER, (SUB FOR T161380)
19	AR94101	DIODE	9		DIFF LOCK, MFWD, PARK BRAKE, LOW RANGE, REVERSE, AND FORWARD SOLENOIDS
20	AT183823	SENDER	1		TORQUE CONVERTER TEMPERATURE
21	R26375	O-RING	1		
22	AT167399	GROUND CABLE	1		GROUND
23	19M7402	CAP SCREW	1		M10 X 25
24	AT85174	SWITCH	1		ENGINE OIL PRESSURE
25	T74416	CLAMP	1		
26	19M7662	CAP SCREW	1		M10 X 30
27	19M7008	CAP SCREW	1		M8 X 10
28	24M7238	WASHER	1		
29	AT180705	GROUND CABLE	1		GROUND
30	R44302	TIE BAND	5		
31	24M7239	WASHER	2		
32	AT180706	KIT	1		HARNESS CONNECTOR
	.....	TERMINAL	6		(ORDER AT180706)
	.....	SEAL	6		(ORDER AT180706)
	.....	PLUG	14		(ORDER AT180706)
	.....	CONNECTOR	1		(ORDER AT180706)
33	57M8131	ELEC. CONNECTOR TERMINAL	1		CAN RISISTOR
34	51M7041	O-RING	1		

ENGINE FRONT HARNESS

T196984 -UN-17DEC03

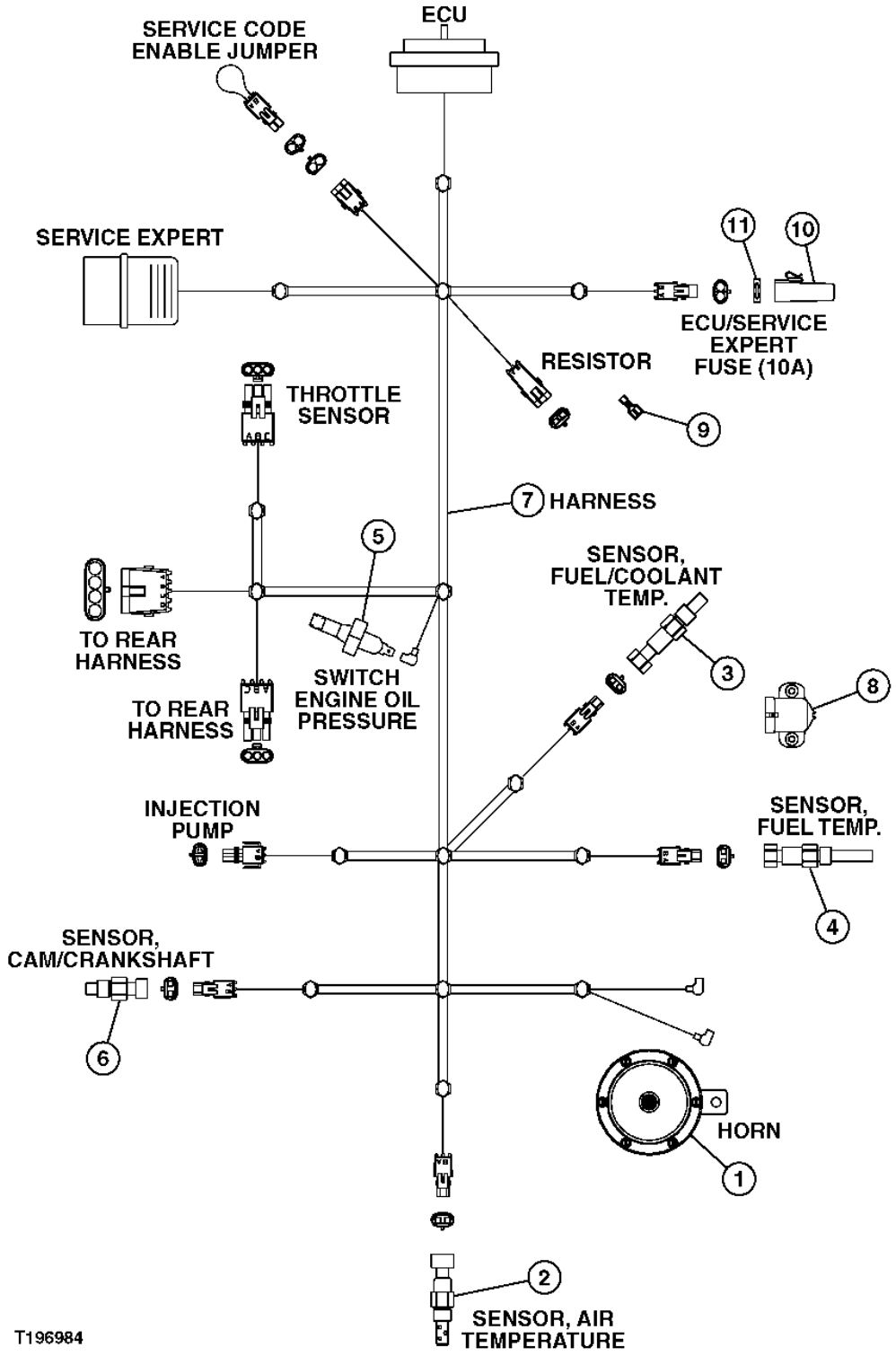

ENGINE FRONT HARNESS

KEY	PART NO.	PART NAME	QTY	SERIAL NO.	REMARKS
1	AT226281	HORN	1		
2	RE61812	SENSOR	1		AIR TEMPERATURE
3	RE52722	SENSOR	1		FUEL/COOLANT TEMPERATURE
4	AH156144	COOLANT TEMPERATURE SENSOR	1		
5	AT85174	SWITCH	1		ENGINE OIL PRESSURE
6	RE519144	SENSOR	1		CAM/CRANKSHAFT, (SENSOR CRANKSHAFT POSITION) (SENSOR CRANKSHAFT SPEED)
7	.....	WIRING HARNESS	1		
8	RE56165	POTENTIOMETER	1		
9	AT190929	RESISTOR	1		
10	57M8487	ELECTRICAL CONNECTOR CAP	1		
11	57M7121	FUSE	1		(10 AMP)

DIFFERENTIAL LOCK SWITCH

TP58124 -UN-03OCT00

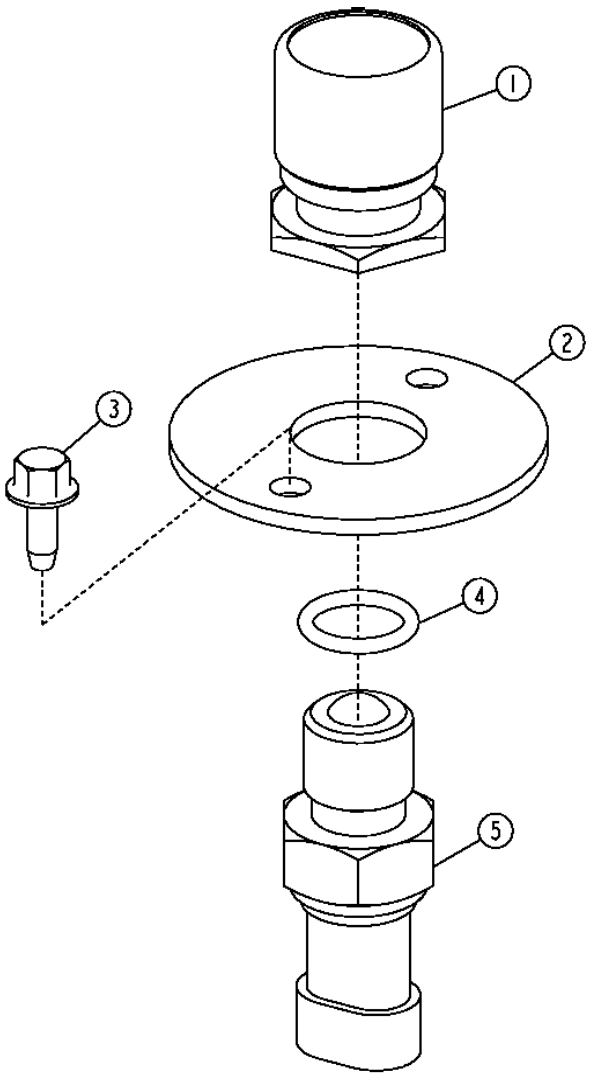

TP58124

DIFFERENTIAL LOCK SWITCH

KEY	PART NO.	PART NAME	QTY	SERIAL NO.	REMARKS
1	RE43637	ACTUATOR	1		
2	T186024	PLATE	1		
3	37M7059	SCREW	2		M5 X 12
4	51M7042	O-RING	1		
5	RE46534	SWITCH	1		(DIFFERENTIAL LOCK)

RETURN-TO-DIG SWITCH

T144515 -UN-14AUG01

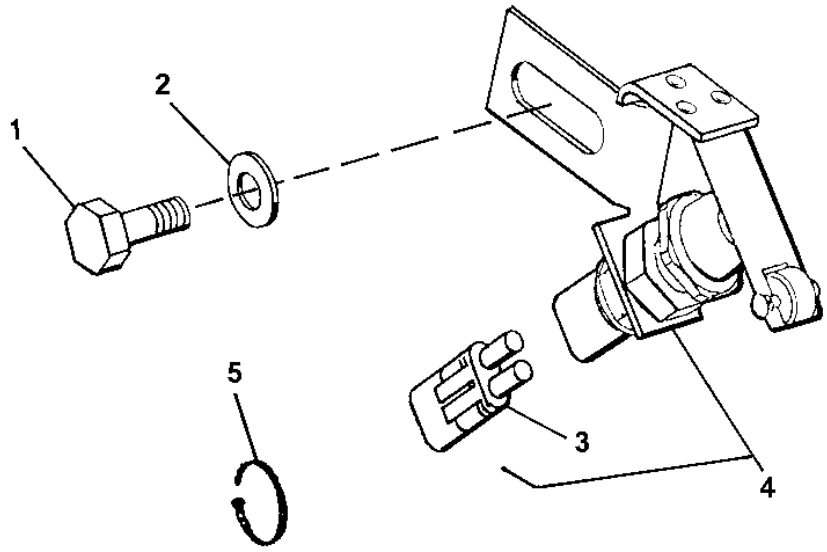

T144515

KEY	PART NO.	PART NAME	QTY	SERIAL NO.	REMARKS
1	19M8017	CAP SCREW	1		M12 X 20
2	24M7047	WASHER	1		13 X 24 X 2.500 MM
3	RE12363	ELECTRICAL CONNECTOR ASSY	1		
4	AT183246	SWITCH	1		
5	R44302	TIE BAND	AR		

MEMORANDA

SELECTIVE FLOW CONTROL AND PUMP CONTROL WIRE HARNESS

T164766 -UN-29JAN03

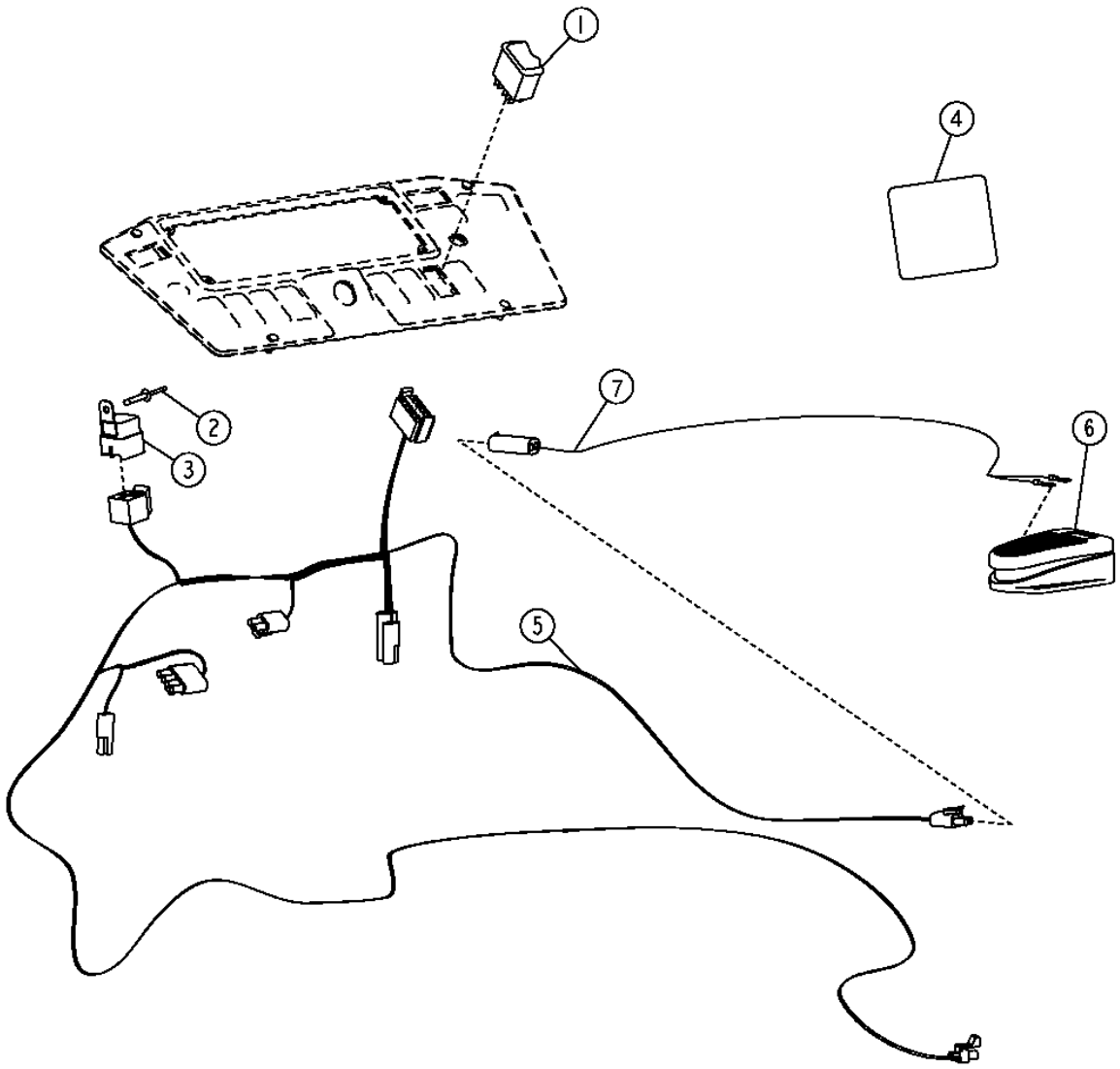

T164766

SELECTIVE FLOW CONTROL AND PUMP CONTROL WIRE HARNESS

KEY	PART NO.	PART NAME	QTY	SERIAL NO.	REMARKS
1	AT175604	SWITCH	1		
2	T184345	RIVET	1		4.780 MM
3	AT75769	RELAY	1		
4	T166538	LABEL	1		(FLOW CONTROL)
5	AT187797	WIRING HARNESS	1		FLOW CONTROL VALVE
6	AT82210	SWITCH	1		
7	AT156431	WIRING HARNESS	1		

WIRE LEAD KIT

TP24072 -UN-01JAN94

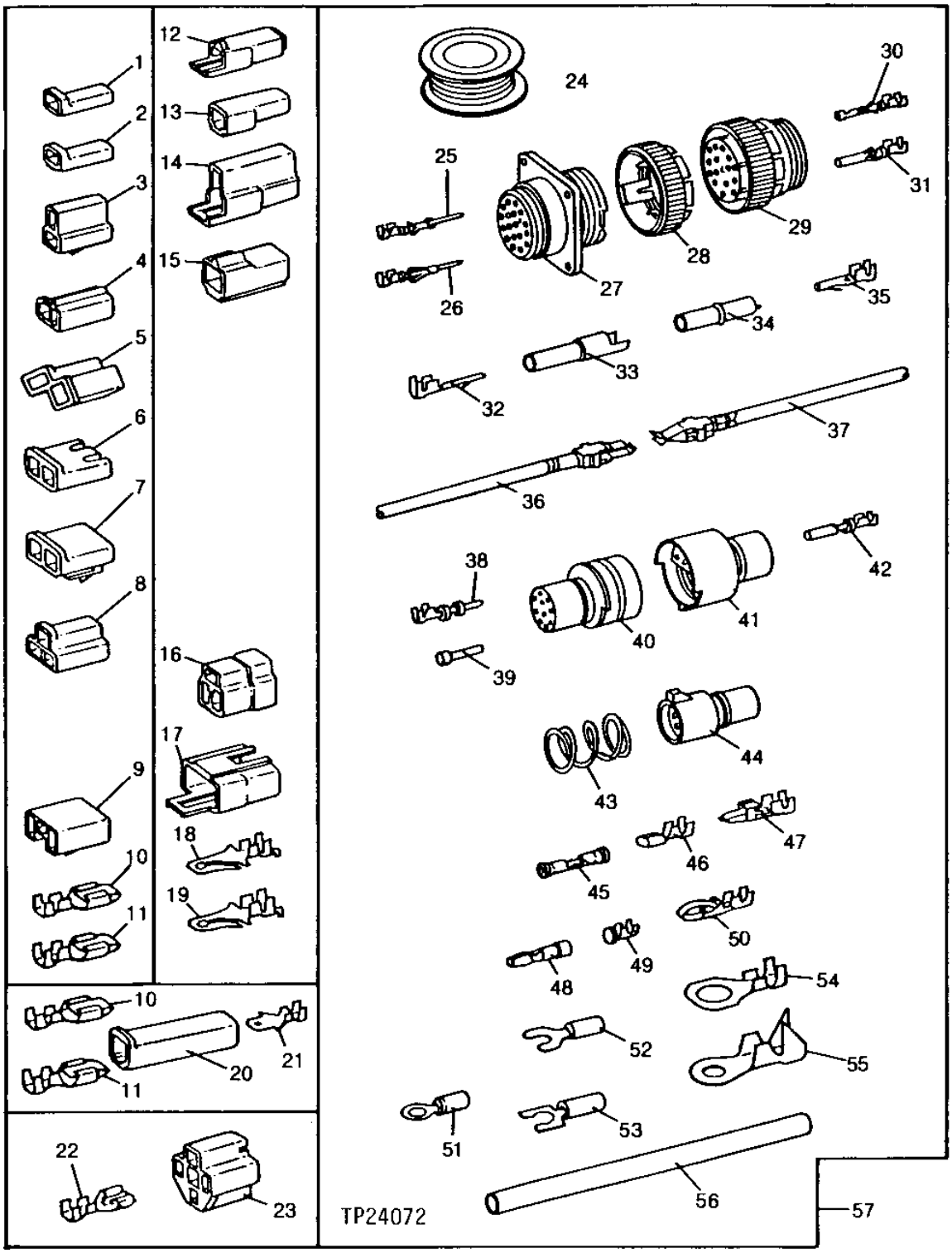

WIRE LEAD KIT

KEY	PART NO.	PART NAME	QTY	SERIAL NO.	REMARKS
1	T28583	ELEC. CONNECTOR HOUSING	1		(B)
2	M43835	ELECTRICAL CONNECTOR ASSY	1		(B)
3	R77476	ELECTRICAL CONNECTOR ASSY	1		(A)
4	R77477	ELEC. CONNECTOR HOUSING	1		(A)
5	R77479	ELECTRICAL CONNECTOR ASSY	1		(A)
6	R77480	ELECTRICAL CONNECTOR ASSY	1		(A)
7	R77481	ELECTRICAL CONNECTOR ASSY	1		(A)
8	R77482	ELECTRICAL CONNECTOR ASSY	1		
9	H104855	ELECTRICAL CONNECTOR ASSY	1		
10	U46662	ELEC. CONNECTOR TERMINAL	1		(E) (F)
11	N115096	TERMINAL	1		(G) (PKG. OF 15)
12	T28585	ELECTRICAL CONNECTOR ASSY	1		(B)
13	R77475	ELECTRICAL CONNECTOR ASSY	1		(B)
14	T28586	ELECTRICAL CONNECTOR ASSY	1		(A)
15	R77478	ELECTRICAL CONNECTOR ASSY	1		(A)
16	R77483	ELECTRICAL CONNECTOR ASSY	1		
17	R48887	ELECTRICAL CONNECTOR ASSY	1		
18	T34067	ELEC. CONNECTOR TERMINAL	1		(E) (F)
19	R77484	ELEC. CONNECTOR TERMINAL	1		(G) (PKG. OF 15)
20	U46370	ELECTRICAL CONNECTOR ASSY	1		(B)
21	R77485	ELEC. CONNECTOR TERMINAL	1		(C) (F)
22	R77486	ELEC. CONNECTOR TERMINAL	1		(E) (F)
23	R77487	ELECTRICAL CONNECTOR ASSY	1		(B)
24	R66321	WIRING LEAD	1		15M (50 FT.) 10 GA.
	R66320	WIRING LEAD	1		30.5M (100 FT.) 12 GA.
	R77501	WIRE	1		30.5M (100 FT.) 14 GA.
	R77500	WIRE	1		30.5M (100 FT.) 16 GA.
	R77499	WIRE	1		30.5M (100 FT.) 18 GA.
	R77498	WIRE	1		30.5M (100 FT.) 20 GA.
25	R77462	ELEC. CONNECTOR TERMINAL	1		(PKG. OF 40) (20-22 OR 24 GA. WIRE)
26	R77464	ELEC. CONNECTOR TERMINAL	1		(H) (PKG. OF 50)
27	R77456	ELEC. CONNECTOR TERMINAL	1		(37 WAY)
28	R77458	ELEC.CONNECT LOCKING DEVICE	1		(A) (SIZE 23)
	R77459	ELEC.CONNECT LOCKING DEVICE	1		(A) (SIZE 17)
	R77460	ELEC.CONNECT LOCKING DEVICE	1		(A) (SIZE 13)
	R77461	ELEC.CONNECT LOCKING DEVICE	1		(A) (SIZE 11)
29	R77457	ELEC. CONNECTOR TERMINAL	1		(37 WAY)
30	R77463	ELEC. CONNECTOR TERMINAL	1		(PKG. OF 40) (20-22 OR 24 GA. WIRE)
31	R77465	ELEC. CONNECTOR TERMINAL	1		(H) (PKG. OF 50)
32	R77468	ELEC. CONNECTOR TERMINAL	1		(PKG. OF 5)
33	R77466	ELECTRICAL CONNECTOR ASSY	1		(A)
34	R77467	ELECTRICAL CONNECTOR ASSY	1		(A)

(A) PKG. OF 2
(B) PKG. OF 3
(C) PKG. OF 10
(D) PKG. OF 20
(E) PKG. OF 25
(F) 14 OR 16 GA. WIRE
(G) 10 OR 12 GA. WIRE
(H) 14-16 OR 18 GA. WIRE

WIRE LEAD KIT

TP24072 -UN-01JAN94

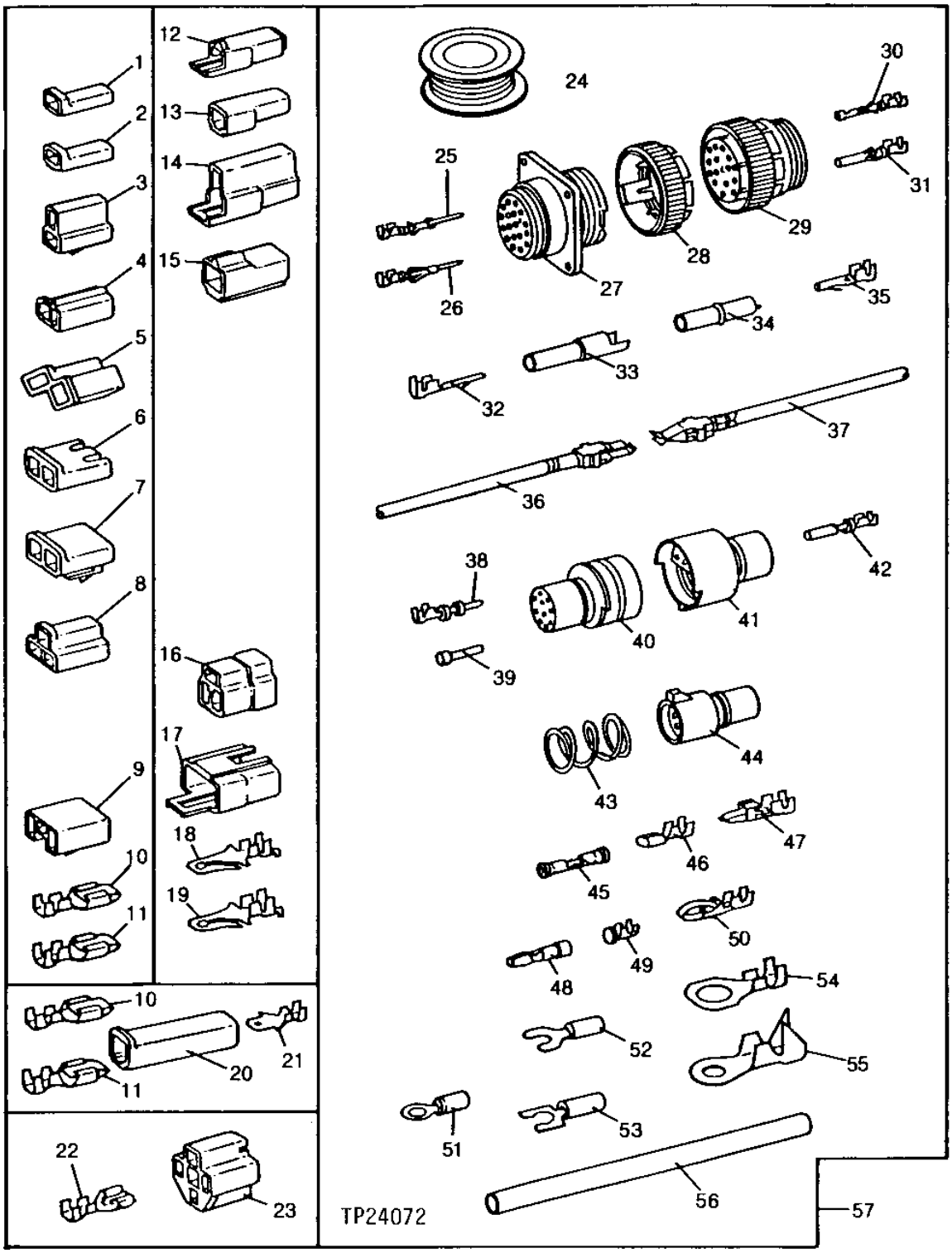

WIRE LEAD KIT

KEY	PART NO.	PART NAME	QTY	SERIAL NO.	REMARKS
35	R77469	ELEC. CONNECTOR TERMINAL	1		(PKG. OF 5)
36	RE11156	ELEC. CONNECTOR TERMINAL	1		(B) (MALE)
37	RE11157	ELEC. CONNECTOR TERMINAL	1		(B) (FEMALE)
38	R70222	ELEC. CONNECTOR TERMINAL	1		(D) (H)
39	R70221	ELEC. CONNECTOR TERMINAL	1		(E)
40	R70219	PLUG	1		(A) (10 WAY)
	R70217	PLUG	1		(A) (7 WAY)
	R70215	PLUG	1		(A) (4 WAY)
	R70213	ELEC. CONNECTOR HOUSING	1		(A) (3 WAY)
	R70211	ELECTRICAL CONNECTOR ASSY	1		(A) (2 WAY)
41	R70218	ELEC. CONNECTOR TERMINAL	1		(A) (10 WAY)
	R70216	ELEC. CONNECTOR TERMINAL	1		(A) (7 WAY)
	R70214	ELEC. CONNECTOR TERMINAL	1		(A) (4 WAY)
	R70212	ELEC. CONNECTOR TERMINAL	1		(A) (3 WAY)
	R70210	ELEC. CONNECTOR TERMINAL	1		(A) (2 WAY)
42	AR91793	ELEC. CONNECTOR TERMINAL	1		(D)
43	R30378	SPRING	1		(C)
44	R77474	ELECTRICAL CONNECTOR ASSY	1		(A) (6 WAY)
45	R77470	ELEC. CONNECTOR TERMINAL	1		SPLICE (PKG. OF 15) (16-18-20 OR 22 GA. WIRE)
	R77471	ELEC. CONNECTOR TERMINAL	1		(C) (G) SPLICE
	R77472	ELEC. CONNECTOR TERMINAL	1		(A) SPLICE (8 GA. WIRE)
	R77473	ELEC. CONNECTOR TERMINAL	1		(A) SPLICE (6 GA. WIRE)
46	R65607	ELEC. CONNECTOR TERMINAL	1		(C) (18 OR 20 GA. WIRE)
47	U46664	ELEC. CONNECTOR TERMINAL	1		(C) (F)
48	R32026	ELEC. CONNECTOR TERMINAL	1		(D) (F)
49	R65602	ELEC. CONNECTOR TERMINAL	1		(C) (16 OR 18 GA. WIRE)
50	R70220	ELEC. CONNECTOR TERMINAL	1		(C) (18 OR 20 GA. WIRE)
51	R77489	ELEC. CONNECTOR TERMINAL	1		(D) (14-16-18 OR 20 GA. WIRE) (NO. 10 EYELET)
	R77493	ELEC. CONNECTOR TERMINAL	1		(D) (G) (NO. 10 EYELET)
	R77488	ELEC. CONNECTOR TERMINAL	1		(D) (14-16-18 OR 20 GA. WIRE) (3/8" EYELET)
	R77490	ELEC. CONNECTOR TERMINAL	1		(D) (G) (1/2" EYELET)
52	R77496	ELEC. CONNECTOR TERMINAL	1		(D) (F) (NO. 8 SPADE)
	R77495	ELEC. CONNECTOR TERMINAL	1		(D) (18 GA. WIRE) (NO. 10 SPADE)
53	R77497	ELEC. CONNECTOR TERMINAL	1		(D) (F) (NO. 6 SPADE)
54	R77491	ELEC. CONNECTOR TERMINAL	1		(D) (G) (3/8" EYELET)
	R77492	ELEC. CONNECTOR TERMINAL	1		(D) (G) (1/4" EYELET)
55	R77494	ELEC. CONNECTOR TERMINAL	1		(D) (6 OR 8 GA. WIRE) (1/4" EYELET)
56	R77502	TUBE	1		(PKG. OF 8) 3/8" (HEAT SHRINK)
	R77503	TUBE	1		(PKG. OF 8) 3/16" (HEAT SHRINK)
57	PM797NA	KIT	1		(SUB FOR RE11154)

(A) PKG. OF 2
(B) PKG. OF 3
(C) PKG. OF 10
(D) PKG. OF 20
(E) PKG. OF 25
(F) 14 OR 16 GA. WIRE
(G) 10 OR 12 GA. WIRE
(H) 14-16 OR 18 GA. WIRE

WEATHERPACK TERMINALS AND CONNECTORS

TP17921 -UN-01JAN94

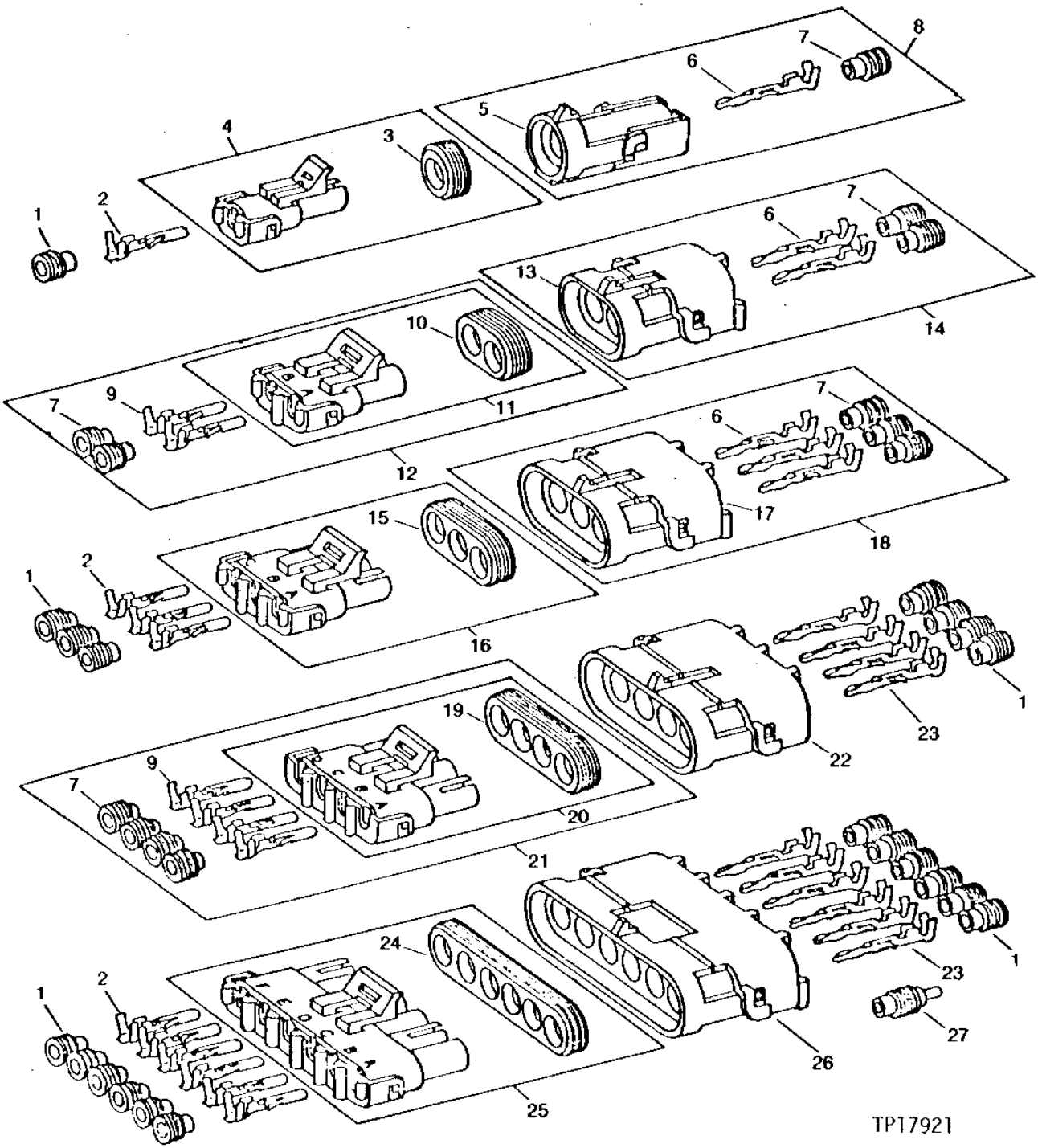

WEATHERPACK TERMINALS AND CONNECTORS

KEY	PART NO.	PART NAME	QTY	SERIAL NO.	REMARKS
1	R78063	ELEC. CONNECTOR SEAL	1		(PKG. OF 40) (16 GA. WIRE) (GRAY)
	R78059	ELECTRICAL CONNECTOR ASSY	1		(PKG. OF 40) (18 OR 20 GA. WIRE) (GREEN)
	R78062	ELEC. CONNECTOR ACCESSORY	1		(PKG. OF 40) (14 GA. WIRE) (BLUE)
2	R78057	ELEC. CONNECTOR TERMINAL	1		(PKG. OF 40) (18 OR 20 GA. WIRE) (NO. 19)
	R78060	ELEC. CONNECTOR TERMINAL	1		(PKG. OF 40) (14 OR 16 GA. WIRE) (NO. 15)
3	R78047	SEAL	1		(PKG. OF 5)
4	RE12362	ELECTRICAL CONNECTOR ASSY	1		(PKG. OF 3)
5	R78052	ELECTRICAL CONNECTOR ASSY	1		(PKG. OF 3)
6	R78061	ELEC. CONNECTOR TERMINAL	1		(PKG. OF 40) (14 OR 16 GA. WIRE) (NO. 15)
7	R78063	ELEC. CONNECTOR SEAL	1		(PKG. OF 40) (16 GA. WIRE) (GRAY)
8	RE12334	ELECTRICAL CONNECTOR ASSY	1		
9	R78060	ELEC. CONNECTOR TERMINAL	1		(PKG. OF 40) (14 OR 16 GA. WIRE) (NO. 15)
10	R78048	ELEC. CONNECTOR ACCESSORY	1		(PKG. OF 5)
11	RE12363	ELECTRICAL CONNECTOR ASSY	1		(PKG. OF 3)
12	RE12331	ELECTRICAL CONNECTOR ASSY	1		
13	R78053	ELECTRICAL CONNECTOR ASSY	1		(PKG. OF 3)
14	RE12330	ELECTRICAL CONNECTOR ASSY	1		
15	R78049	SEAL	1		(PKG. OF 5)
16	RE12364	ELECTRICAL CONNECTOR ASSY	1		(PKG. OF 3)
17	R78054	ELECTRICAL CONNECTOR ASSY	1		(PKG. OF 3)
18	RE12332	ELECTRICAL CONNECTOR ASSY	1		
19	R78050	SEAL	1		(PKG. OF 5)
20	RE12365	ELECTRICAL CONNECTOR ASSY	1		(PKG. OF 2)
21	RE12333	ELECTRICAL CONNECTOR ASSY	1		
22	R78055	ELECTRICAL CONNECTOR ASSY	1		(PKG. OF 2)
23	R78061	ELEC. CONNECTOR TERMINAL	1		(PKG. OF 40) (14 OR 16 GA. WIRE) (NO. 15)
	R78058	ELEC. CONNECTOR TERMINAL	1		(PKG. OF 40) (18 OR 20 GA. WIRE) (NO. 19)
24	R78051	SEAL	1		(PKG. OF 5)
25	RE12366	ELECTRICAL CONNECTOR ASSY	1		(PKG. OF 2)
26	R78056	ELECTRICAL CONNECTOR ASSY	1		(PKG. OF 2)
27	R78064	ELEC. CONNECTOR CAVITY PLUG	1		(PKG. OF 40)

SUPPLEMENTARY TERMINALS, CONNECTORS AND REPAIR CONDUIT

TP24539 -UN-01JAN94

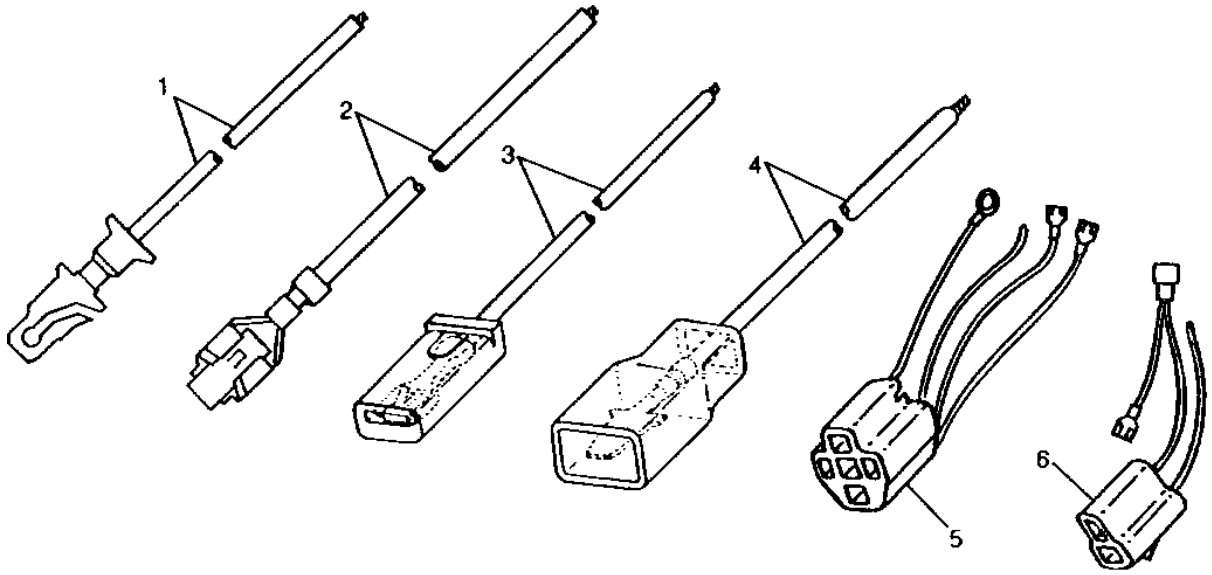

TP24539

KEY	PART NO.	PART NAME	QTY	SERIAL NO.	REMARKS
1	AR65005	ELEC. CONNECTOR TERMINAL	1		
2	AR65006	ELEC. CONNECTOR TERMINAL	1		
3	R32024	WIRING LEAD	1		
4	R32025	WIRING LEAD	1		
5	RE21730	ELECTRICAL CONNECTOR ASSY	1		(ILLUSTRATED)
	RE21731	ELECTRICAL CONNECTOR ASSY	1		
6	RE21732	ELECTRICAL CONNECTOR ASSY	1		
	R93219	CONDUIT	1		0.3 X 3048 MM (1/4" X 120")
	R93220	CONDUIT	1		10.4 X 2048 MM (13/32" X 120")
	R93221	CONDUIT	1		15.9 X 3048 MM (5/8" X 120")
	R93222	CONDUIT	1		25.4 X 3048 MM (1" X 120")

DEUTSCH TERMINALS

TP24540 -UN-01JAN94

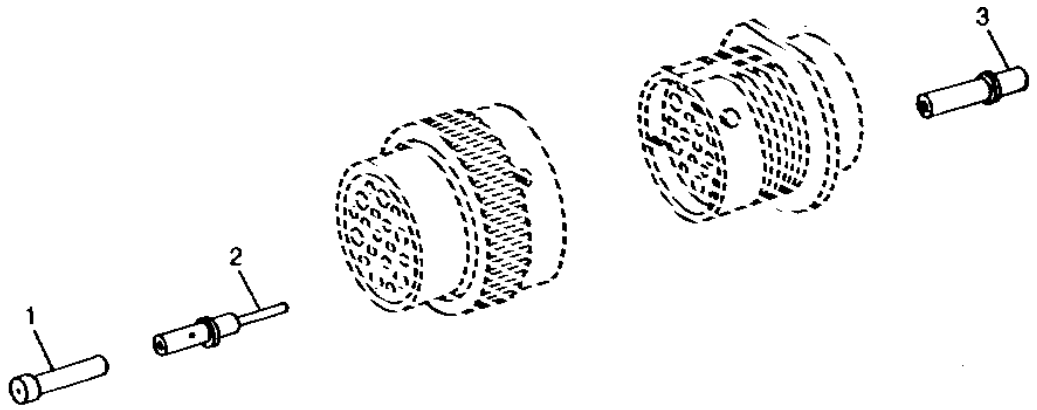

TP24540

KEY	PART NO.	PART NAME	QTY	SERIAL NO.	REMARKS
1	R78069	ELEC. CONNECTOR TERMINAL	3		(PKG OF 40)
2	R78066	ELEC. CONNECTOR TERMINAL	14		(PKG OF 40) (16 OR 18 GA WIRE)
	R78068	ELEC. CONNECTOR TERMINAL	4		(PKG OF 40) (12 OR 14 GA WIRE)
3	R78065	ELEC. CONNECTOR TERMINAL	14		(PKG OF 40) (16 OR 18 GA WIRE)
	R78067	ELEC. CONNECTOR TERMINAL	4		(PKG OF 40) (12 OR 14 GA WIRE)

MEMORANDA

PUMP CONTROL
(SERIAL NO. -XXXXXX)

T158535 -UN-15AUG02

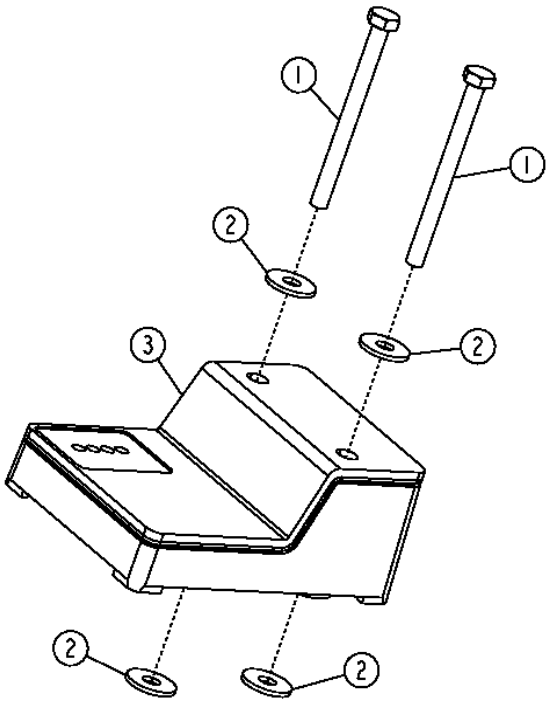

KEY	PART NO.	PART NAME	QTY	SERIAL NO.	REMARKS
1	19M7685	CAP SCREW	2		M6 X 70
2	24M7139	WASHER	4		
3	AT197539	PUMP/VALVE CONTROLLER	1		

PUMP CONTROL
(SERIAL NO. XXXXXX-)

T211368 -UN-02JUN05

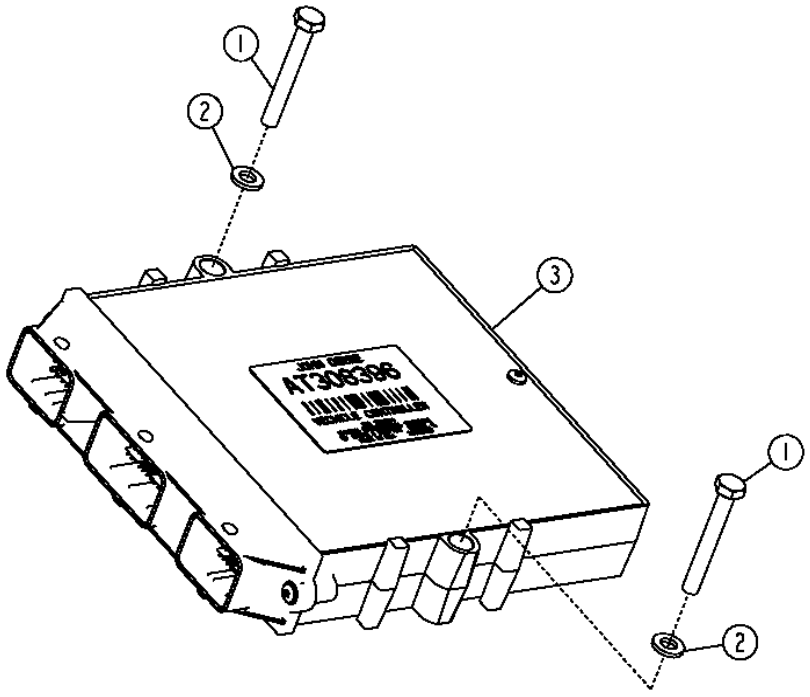

T211368

PUMP CONTROL
(SERIAL NO. XXXXXX-)

KEY	PART NO.	PART NAME	QTY	SERIAL NO.	REMARKS
1	19M8538	CAP SCREW	2		M6 X 45
2	24M7054	WASHER	2		
3	AT308396	VEHICLE CONTROLLER	1		

MAIN FRAME

T151399 -UN-30APR02

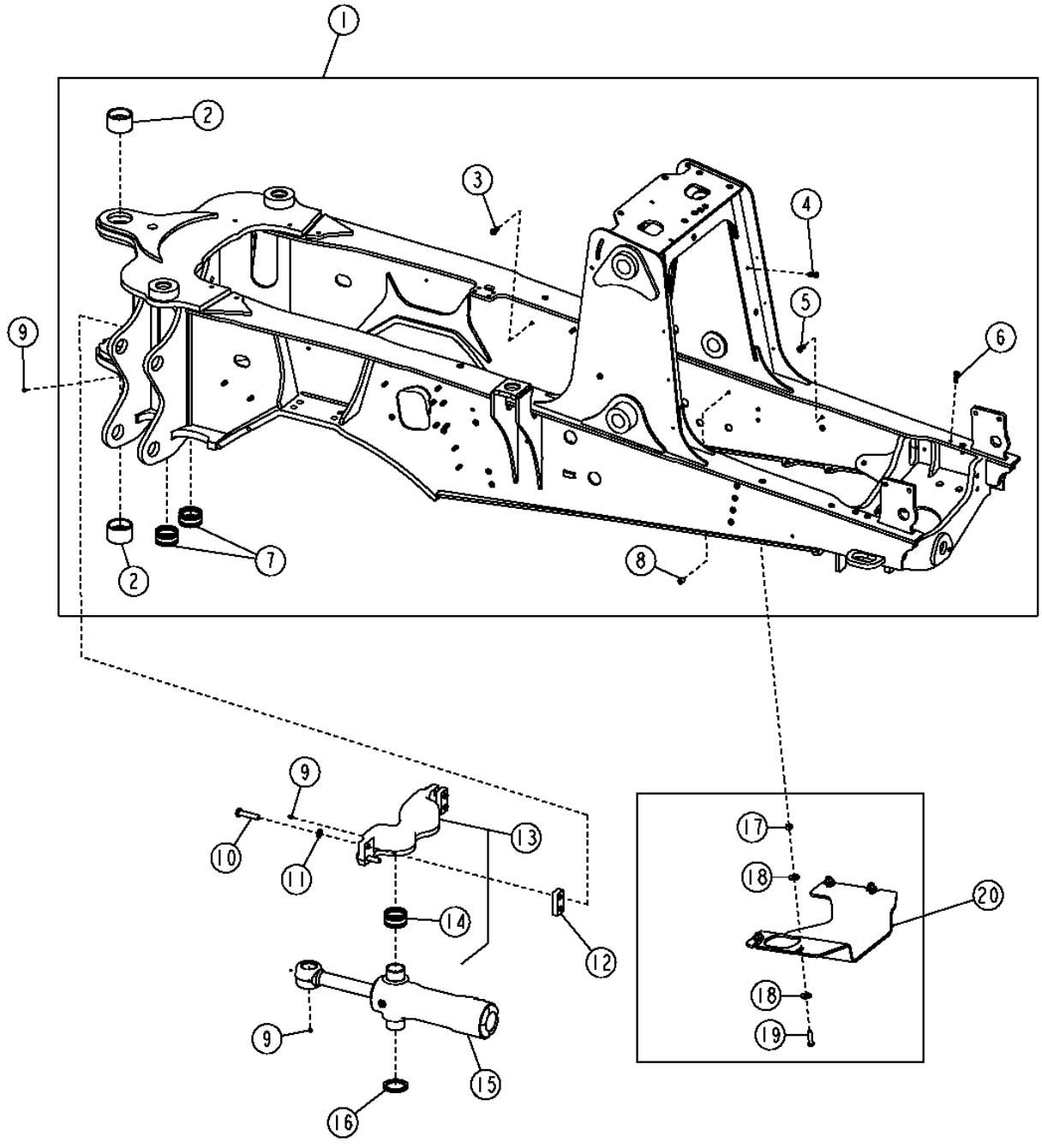

MAIN FRAME

KEY	PART NO.	PART NAME	QTY	SERIAL NO.	REMARKS
1	AT181838	MAIN FRAME	1		CONVENIENCE ASSEMBLY
2	T163922	BUSHING	2		
3	T148410	NUT	25		M10
4	T148411	NUT	AR		M10, 10MM PLATE
5	T148409	NUT	7		M10
6	T150768	NUT	AR		M10, 12MM PLATE
7	T163918	BUSHING	2		
8	T72414	BUSHING	2		
9	T162396	LUBRICATION FITTING	6		
10	19M8224	CAP SCREW	4		M20 X 60
11	T83426	WASHER	4		
12	T188606	STRAP	2		
13	AT183410	TRUNNION	1		
14	T163918	BUSHING	2		
15	.....	HYDRAULIC CYLINDER	2		SWING CYLINDER
16	T164796	WASHER	2		
17	14M7276	NUT	4		M16
18	24H1698	WASHER	8		
19	19M8295	CAP SCREW	4		M16 X 55
20	AT193132	GUARD	1		(WHOLE GOODS)

STABILIZER CYLINDER GUARD KIT

T156595 -UN-25JUN02

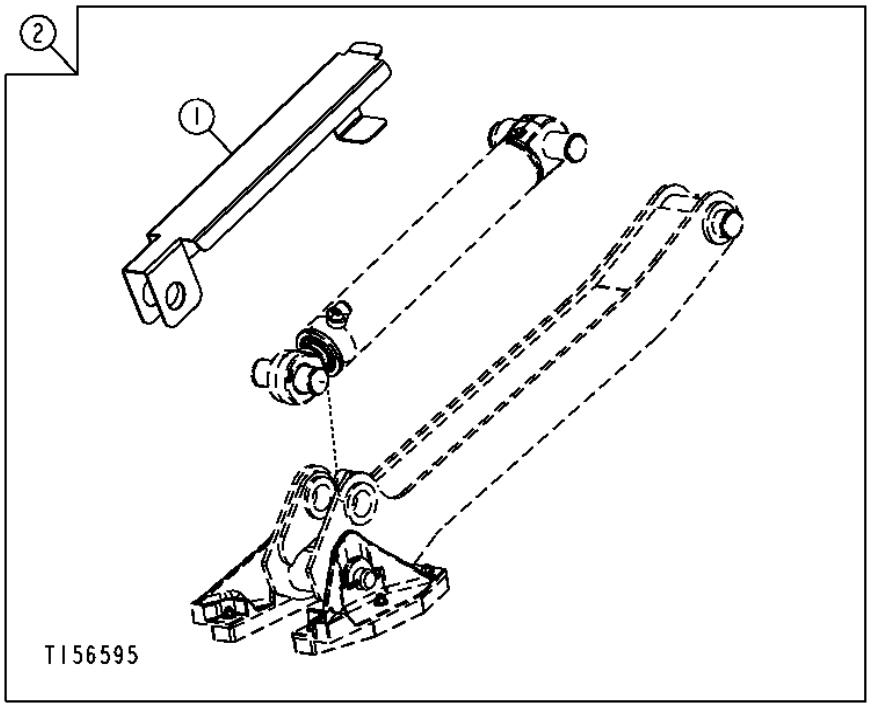

KEY	PART NO.	PART NAME	QTY	SERIAL NO.	REMARKS
1	T211387	GUARD	1		(RIGHT) (SUB FOR T190961)
	T211388	GUARD	1		(LEFT) (SUB FOR T190962)
2	**AT315225**	**KIT**	**1**		**(WHOLE GOODS) (SUB FOR AT199333)**

MEMORANDA

FRONT COUNTERWEIGHT

T151258 -UN-14FEB02

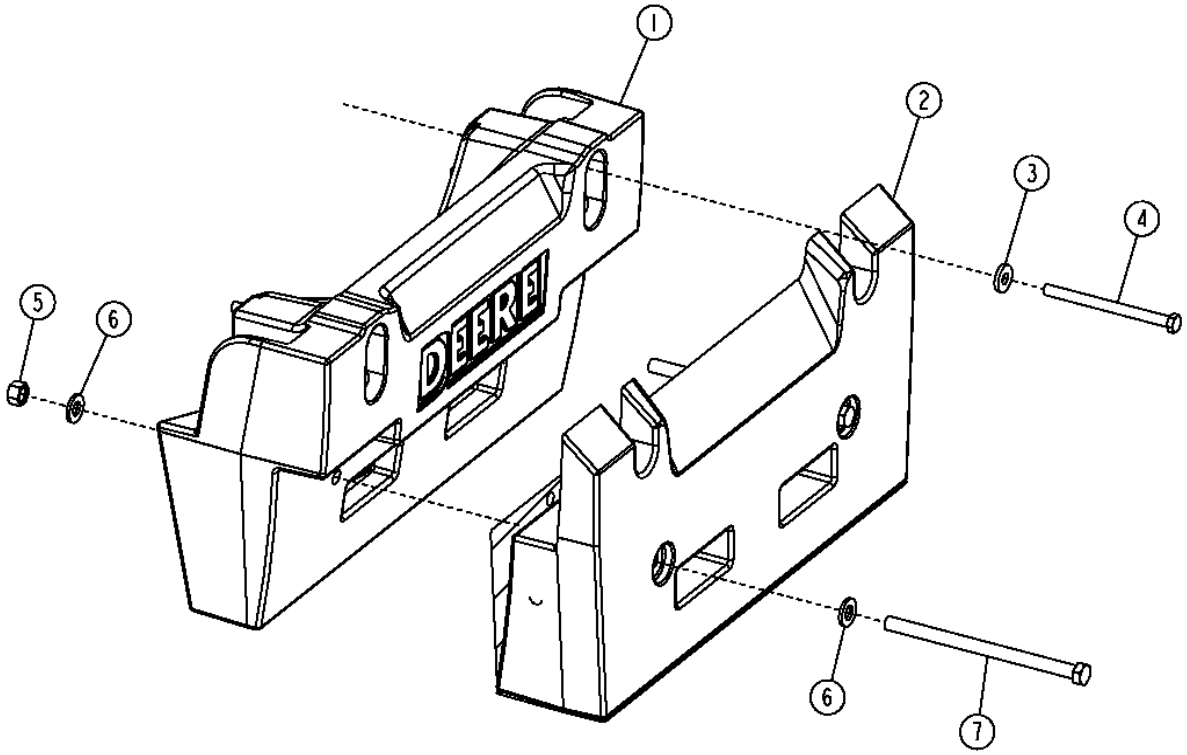

T151258

FRONT COUNTERWEIGHT

KEY	PART NO.	PART NAME	QTY	SERIAL NO.	REMARKS
1	**T183144**	**COUNTERWEIGHT**	**1**		**(WHOLE GOODS) (950 LB.) PRIMARY COUNTERWEIGHT**
2	**T187909**	**COUNTERWEIGHT**	**1**		**(WHOLE GOODS) (700 LB.) ADDITIONAL COUNTERWEIGHT**
3	T119912	WASHER	4		
4	19M8044	CAP SCREW	4		M16 X 210
5	14M7277	NUT	2		M20
6	T151797	WASHER	4		(SUB FOR 24M7242, THIS APPLICATION)
7	19M8494	CAP SCREW	2		M20 X 320

ROPS CANOPY HEADLINER AND MOUNTING ISOLATORS

T155921 -UN-26SEP02

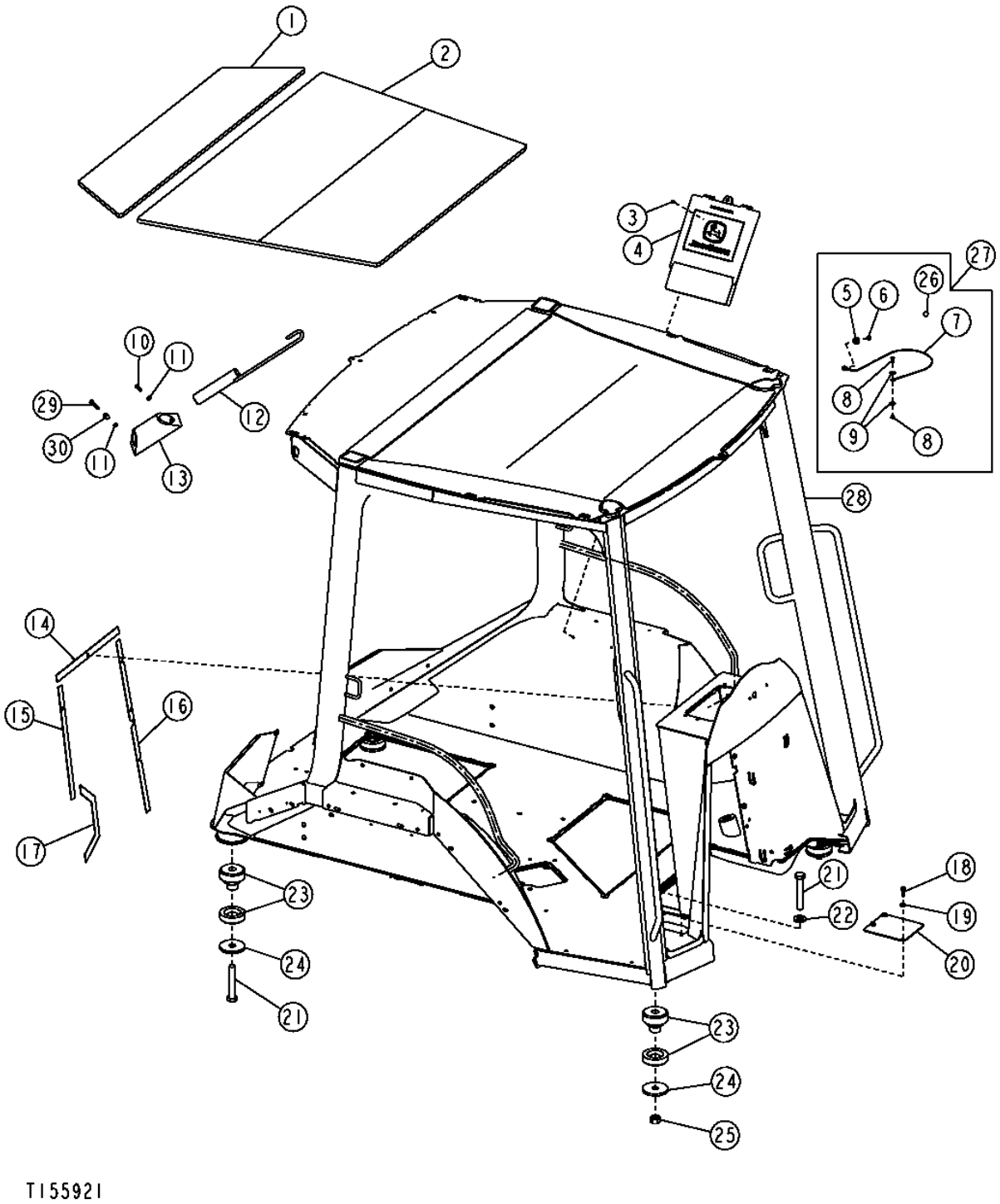

ROPS CANOPY HEADLINER AND MOUNTING ISOLATORS

KEY	PART NO.	PART NAME	QTY	SERIAL NO.	REMARKS
1	T186029	HEADLINER	1		
2	T186030	HEADLINER	1		
3	R79033	RIVET	2		
4	AT195894	HOLDER	1		
5	24M7100	WASHER	1		
6	37M7109	SCREW	1		
7	AT164804	CABLE	1		
8	AT164803	BOLT	1		
9	24M7139	WASHER	2		
10	21M7310	SCREW	1		M6 X 25, (SUB FOR T134895, THIS APPLICATION)
11	24M7238	WASHER	2		
12	AT183425	PIN	1		
13	T141235	HOLDER	1		
14	T185782	GASKET	1		
15	T185784	ISOLATOR	1		
16	T185783	GASKET	1		
17	T185785	GASKET	1		
18	19M7863	SCREW	3		M6 X 25
19	24M7139	WASHER	3		
20	T166360	COVER	1		
21	19M7883	SCREW	4		M20 X 120
22	24M7242	WASHER	2		
23	AT165288	ISOLATOR	4		
24	T101807	WASHER	4		
25	14M7277	NUT	2		M20
26	R55326	RIVET	1		
27	**AT192032**	**KIT**	**1**		**(WHOLE GOODS) (OPERATOR MANUAL TETHER KIT)**
28	AT188965	FRAME	1		(INCLUDES T166896)
	AT304887	FRAME	1		(PILOT CONTROL) (INCLUDES T166896)
29	T134874	SELF-LOCKING SCREW	1		M6 X 40, (SUB FOR 21M7403, THIS APPLICATION)
30	H128841	SPACER	1		

CAB FRAME, HEADLINER AND CAB MOUNTING ISOLATORS

TP58119 -UN-06OCT00

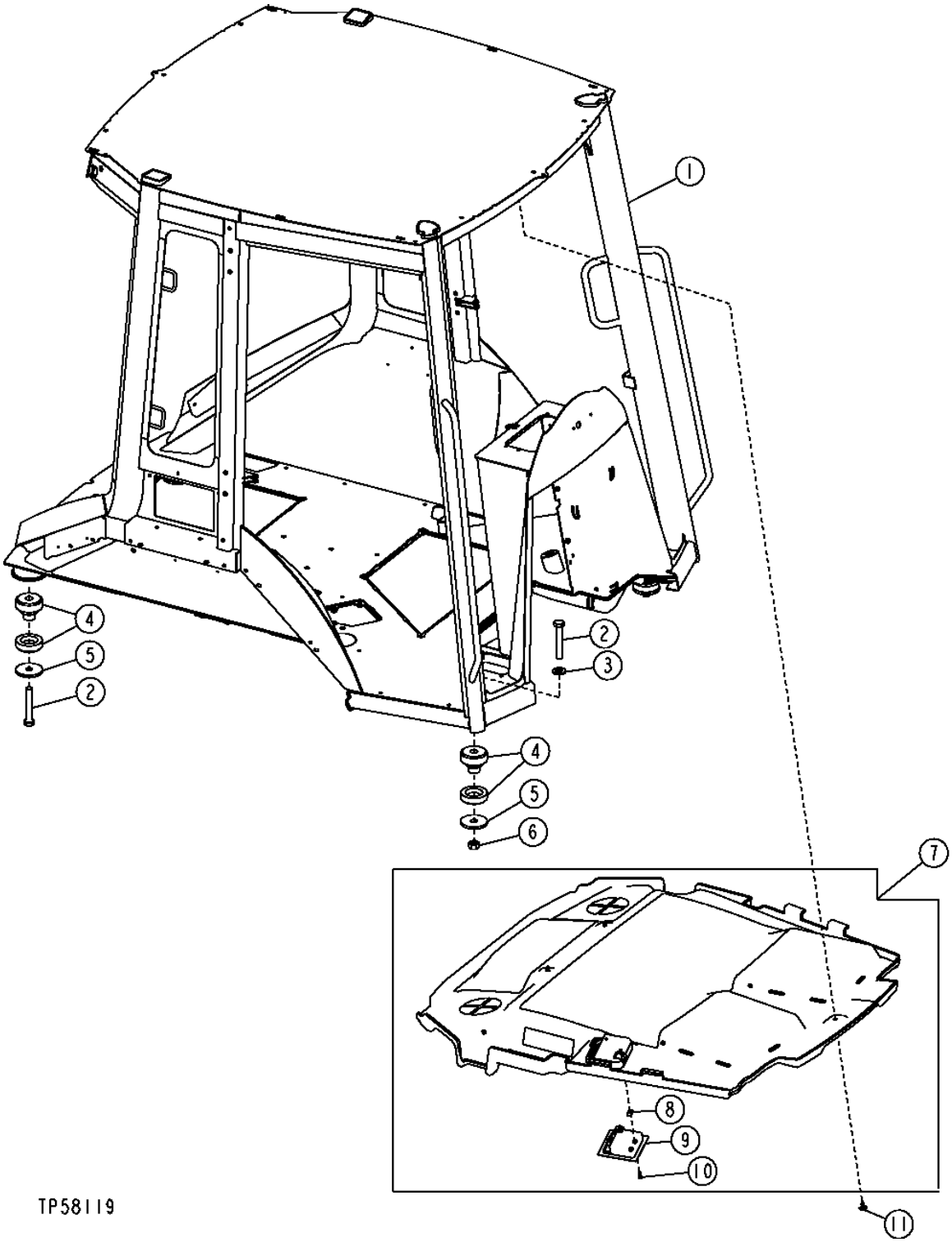

CAB FRAME, HEADLINER AND CAB MOUNTING ISOLATORS

KEY	PART NO.	PART NAME	QTY	SERIAL NO.	REMARKS
1	AT187096	FRAME	1		(LEVER CONTROL)
	AT199734	FRAME	1		(PILOT CONTROL)
2	19M7883	SCREW	4		M20 X 120
3	24M7242	WASHER	2		
4	AT165288	ISOLATOR	4		
5	T101807	WASHER	4		
6	14M7277	NUT	2		M20
7	.....	HEADLINER	1	-XXXXXX	WITHOUT RADIO (AT185498 NLA) (SUB AT321004) (ALSO ORDER AT326356 AND AT320544)
	.....	HEADLINER	1	-XXXXXX	WITH RADIO (AT185499 NLA) (SUB AT321005) (ALSO ORDER AT326356 AND AT320544)
	AT321004	HEADLINER	1	XXXXXX-	WITHOUT RADIO
	AT321005	HEADLINER	1	XXXXXX-	WITH RADIO
8	M84972	NUT	2	-XXXXXX	
9	.....	LAMP	1	-XXXXXX	(SUB AT320544) (ALSO ORDER AT326356)
	AT320544	LAMP	1	XXXXXX-	
10	T134895	SELF-LOCKING SCREW	2	-XXXXXX	
11	.....	PLUG	9	-921525	(T184892 NO LONGER USED) (SUB (9) MT2485) (DRILL HOLE TO 10MM)
	MT2485	PLUG	9	921526-	FASTENER, (SUB FOR T161380)
12	AT326356	CAB WIRING HARNESS	1		
13	AT192414	BULB	1	XXXXXX-	

ROOF WITH CAB,OR ROPS

T138530 -UN-22FEB01

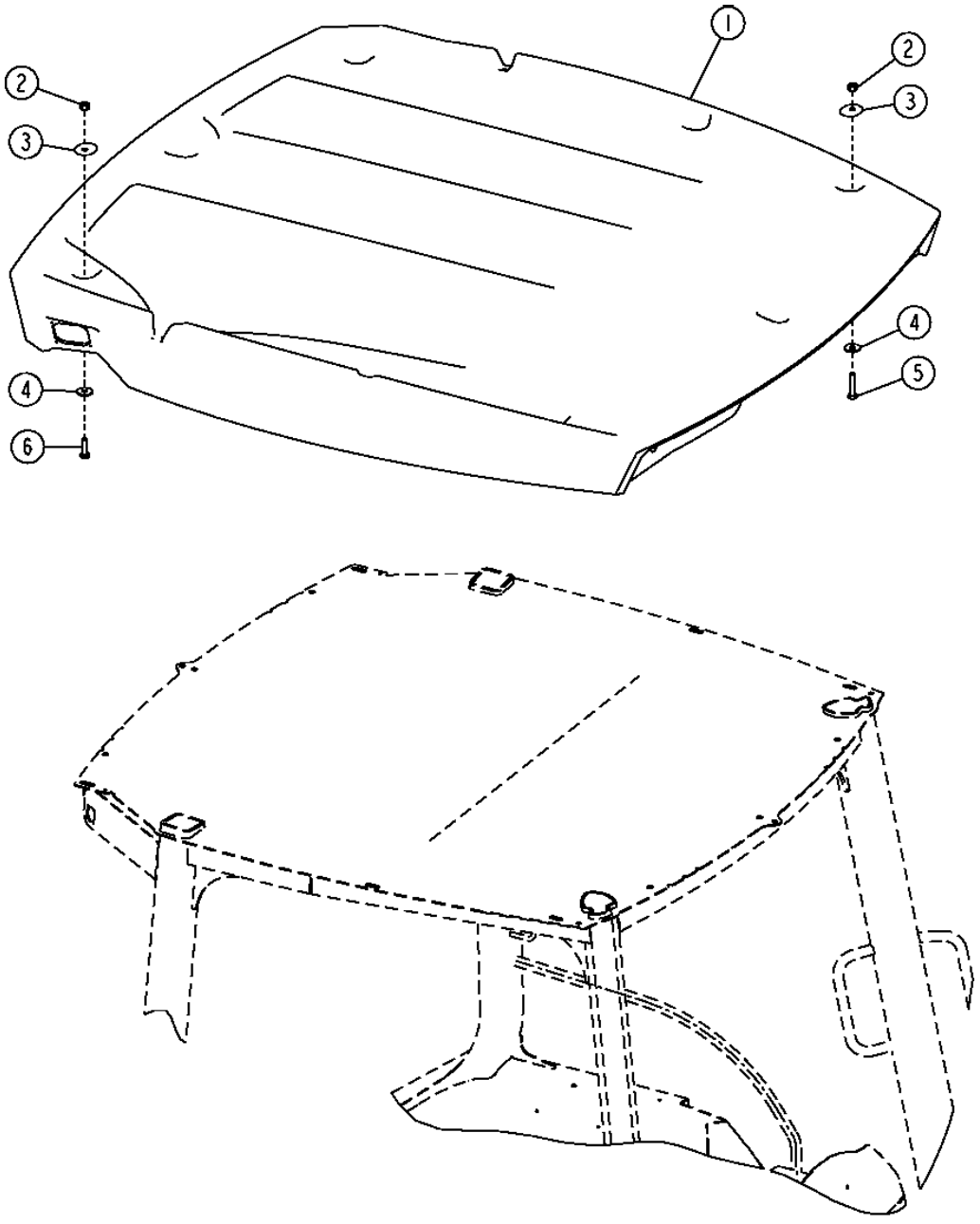

2B11

ROOF WITH CAB,OR ROPS

KEY	PART NO.	PART NAME	QTY	SERIAL NO.	REMARKS
1	T185328	ROOF	1		(WITH DELUXE LIGHYING)(YELLOW)
	T185329	ROOF	1		(WITH STANDARD LIGHTING)(YELLOW)
2	14M7517	LOCK NUT	8		M10
3	T185664	SEALING WASHER	8		
4	24M7101	WASHER	8		11 X 34 X 3 MM
5	19M8600	CAP SCREW	3		M10 X 50, (SUB FOR 19M7550, THIS APPLICATION)
6	19M8600	CAP SCREW	5		M10 X 50

FLOOR RAMPS, FLOOR MATS AND ANTI-SKID MATS

T136077 -UN-05DEC00

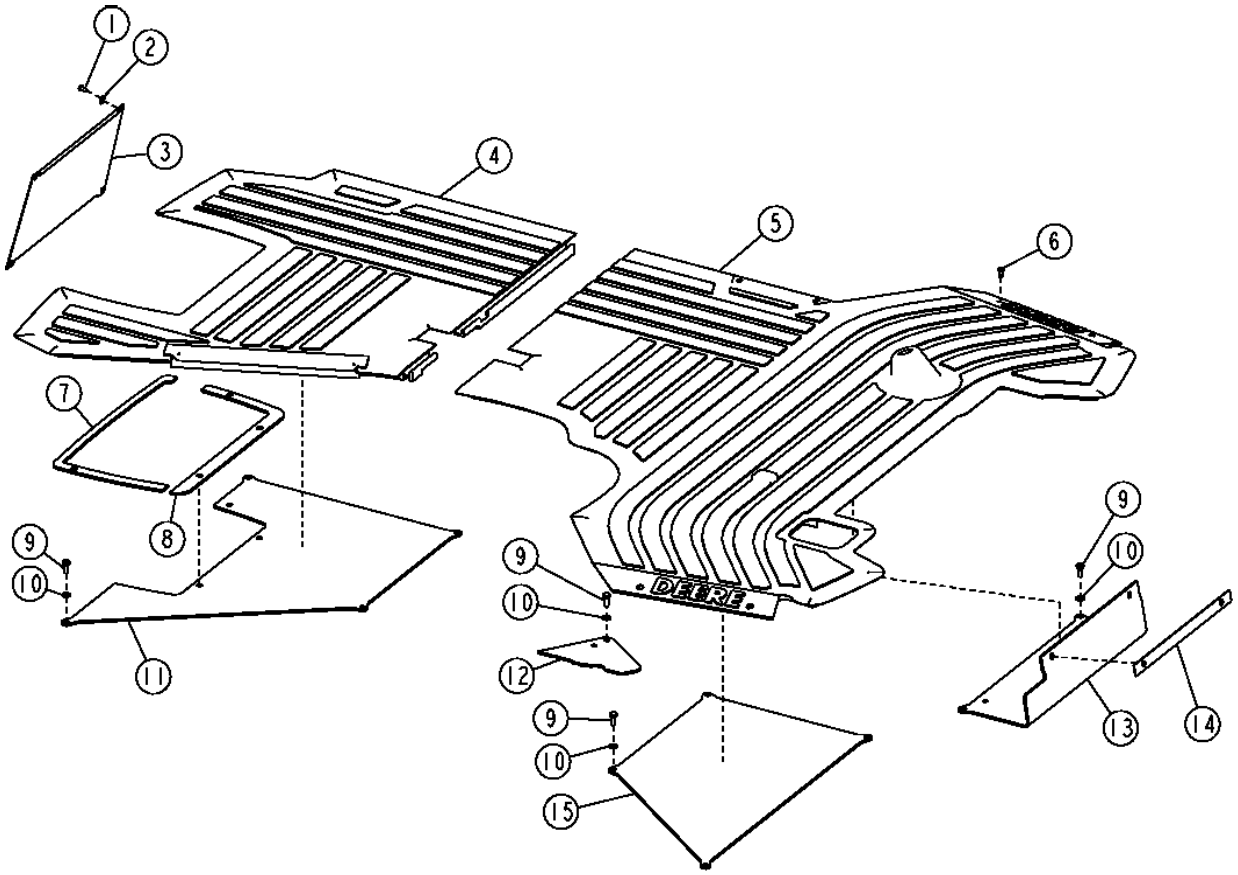

T136077

FLOOR RAMPS, FLOOR MATS AND ANTI-SKID MATS

KEY	PART NO.	PART NAME	QTY	SERIAL NO.	REMARKS
1	19M7923	CAP SCREW	4		M6 X 12
2	24M7139	WASHER	4		
3	T203458	PANEL	1		(SUB FOR T185524)
4	T166000	MAT	1		REAR
	T188726	MAT	1		REAR FLOOR (PILOT CONTROLS)
5	T165969	MAT	1		FRONT
6	21M7292	SCREW	4		M6 X 16, (SUB FOR T133674, THIS APPLICATION)
7	T185773	GASKET	1		
8	T185774	GASKET	1		(LEVER CONTROLS)
	T191142	GASKET	1		(PILOT CONTROLS)
9	19M7881	SCREW	13		M8 X 20
10	24M7238	WASHER	13		
11	AT186321	COVER	1		REAR
	AT196294	COVER	1		REAR (PILOT CONTROLS)
12	AT197479	COVER	1		LINKAGE
	AT300928	COVER	1		LINKAGE WITH RIDE CONTROL OR SEL. FLOW VALVE
13	T188565	COVER	1		FRONT
14	T185775	GASKET	1		
15	T165948	COVER	1		MIDDLE

DOORS AND SIDE WINDOWS FOR CAB

T152008 -UN-27FEB02

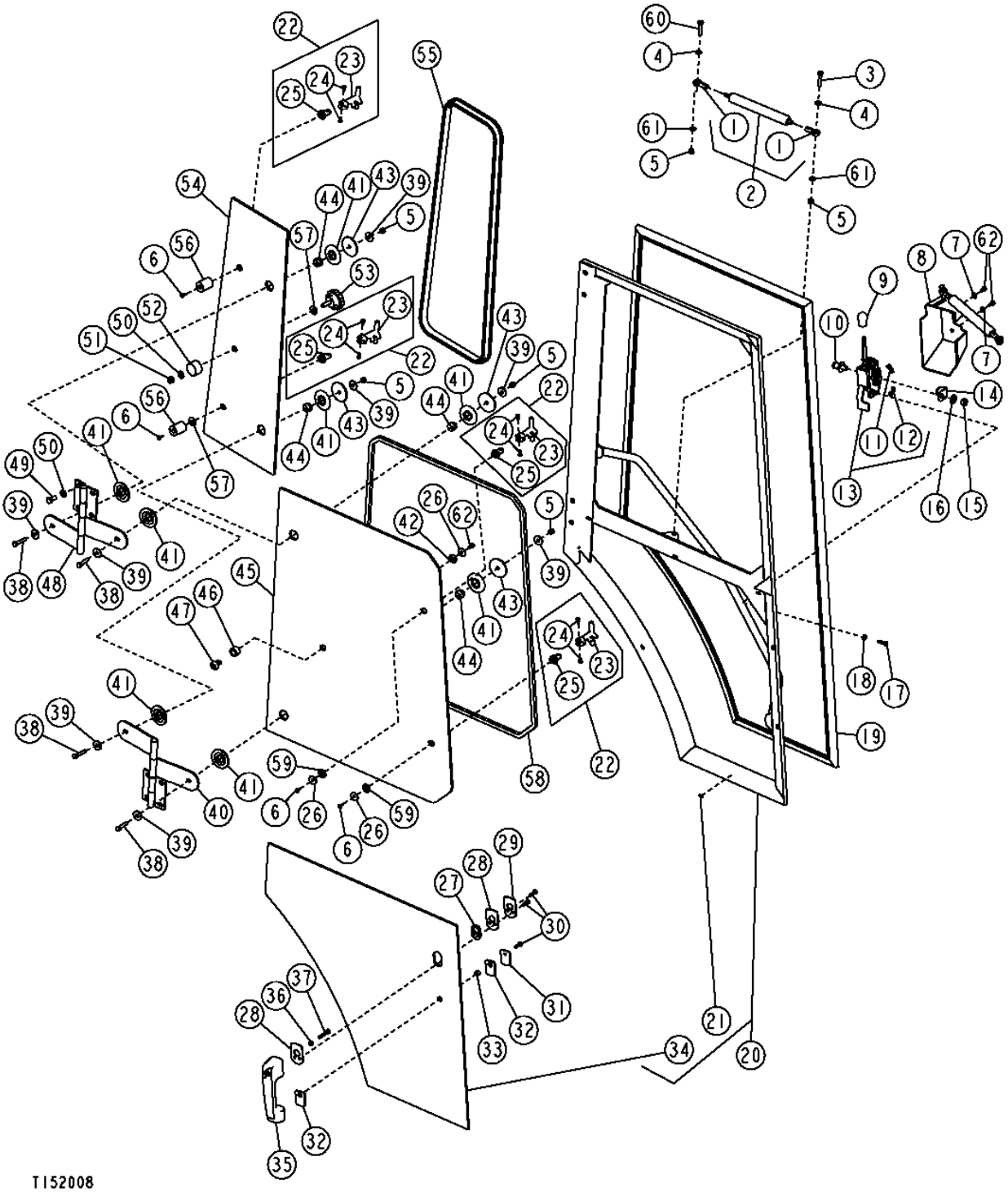

DOORS AND SIDE WINDOWS FOR CAB

KEY	PART NO.	PART NAME	QTY	SERIAL NO.	REMARKS
1	AM102062	LINK END	2		
2	AT194718	CYLINDER	1		
3	19M8008	CAP SCREW	2		M8 X 35
4	24M7238	WASHER	4		
5	14M7426	LOCK NUT	6		M8
6	T188806	SCREW	4		
	T133674	SELF-LOCKING SCREW	3		
7	.....	WASHER	2		
8	T165095	COVER	1		RIGHT
	T165096	COVER	1		LEFT
9	T133487	KNOB	1		
10	AR91896	STRIKER	2		
11	T161373	CLIP	1		
12	R26491	CLIP	1		
13	AT145792	LATCH	1		RIGHT
	AT184767	LATCH	1		LEFT
14	T135583	GUARD	1		STRICKER
15	14H1047	NUT	1		7/16"
16	T105740	WASHER	1		
17	19H1914	CAP SCREW	2		1/4" X 1"
18	24H1287	WASHER	2		
19	AT184652	ISOLATOR	1		RIGHT
	AT184719	ISOLATOR	1		LEFT
20	AT184416	DOOR	1		RIGHT
	AT184417	DOOR	1		LEFT
21	T135675	STAND-OFF	7		
22	AT196522	LATCH	4		
23	T119153	LATCH	4		
24	A48970	DUAL LOCK FASTENER	8		
25	.....	BASE	4		
26	24H1288	WASHER	3		
27	T175645	SPACER	1		
28	T175642	GROMMET	2		
29	T175641	PLATE	1		
30	T134895	SELF-LOCKING SCREW	3		
31	T175644	PLATE	1		
32	T175643	GROMMET	2		
33	T175646	SPACER	1		
34	T165158	WINDOWPANE	1		RIGHT
	T165336	WINDOWPANE	1		LEFT

THIS PARTS LISTING IS CONTINUED

DOORS AND SIDE WINDOWS FOR CAB

T152008 -UN-27FEB02

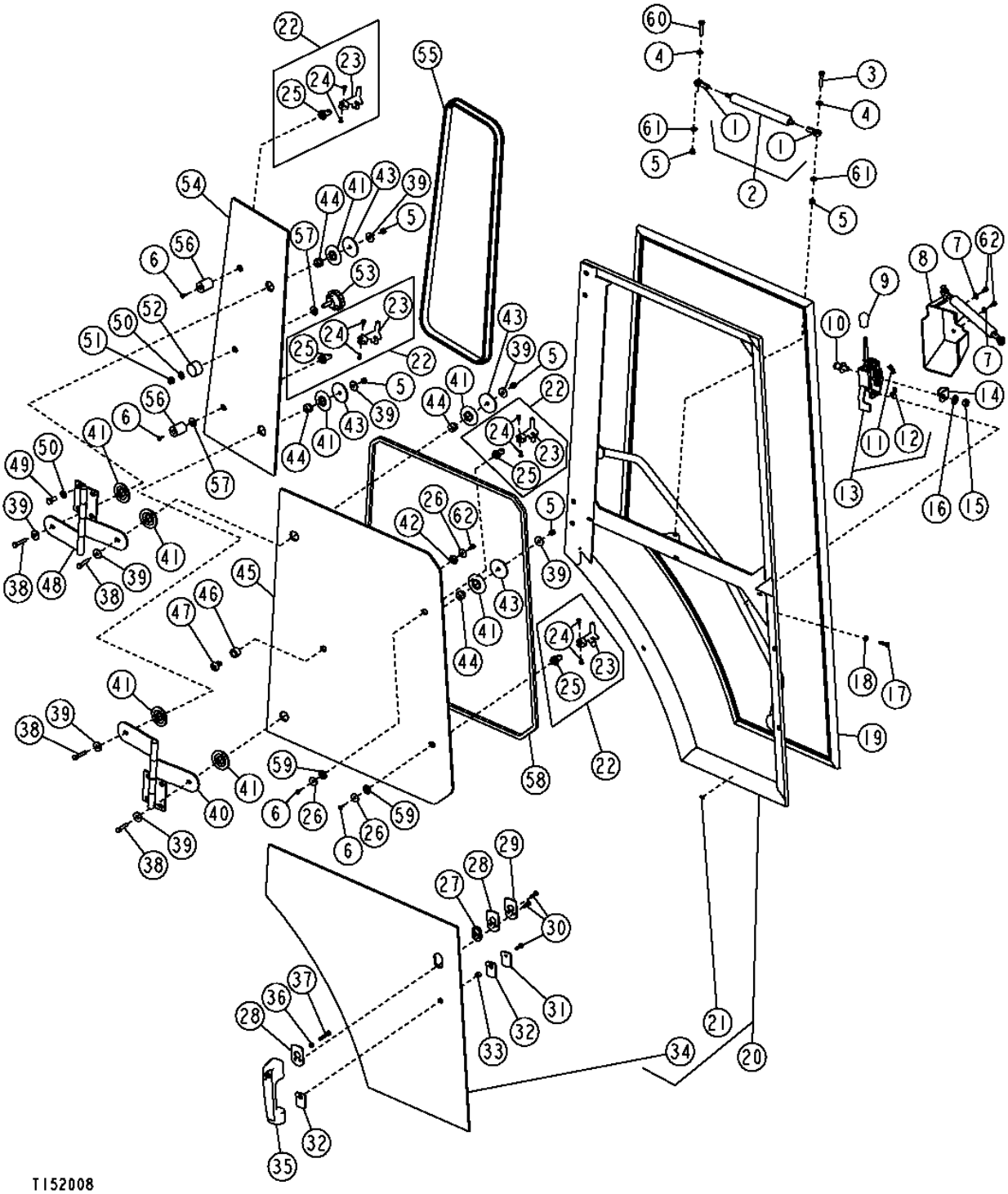

DOORS AND SIDE WINDOWS FOR CAB

KEY	PART NO.	PART NAME	QTY	SERIAL NO.	REMARKS
35	AT220317	HANDLE	1		
36	14H786	NUT	1		
37	T166035	SCREW	1		
38	19M7922	CAP SCREW	4		M8 X 40
39	24M7024	WASHER	8		
40	AT184524	HINGE	2		LOWER R.H. AND UPPER L.H.
41	T158081	WASHER	8		
42	T76832	WASHER	1		
43	T185678	WASHER	4		
44	T158358	BUSHING	4		
45	T164707	WINDOWPANE	1		RIGHT AND LEFT
46	T186017	BUSHING	1		
47	T186016	BUSHING	1		
48	AT184651	HINGE	2		LOWER L.H. AND UPPER R.H.
49	19M7938	CAP SCREW	8		M10 X 20
50	24M7239	WASHER	8		
51	14M7167	LOCK NUT	1		M10
52	T76830	GUARD	1		
53	AT75311	KNOB	1		
54	T164706	WINDOWPANE	1		RIGHT
	T166060	WINDOWPANE	1		LEFT
55	T164710	ISOLATOR	1		RIGHT
	T164709	ISOLATOR	1		LEFT
56	T186018	BUMPER	2		
57	R52921	WASHER	2		PLASTIC
	T76833	WASHER	2		RUBBER
58	T165357	ISOLATOR	1		
59	T76833	WASHER	2		
60	19M7922	CAP SCREW	1		M8 X 40
61	24M7298	WASHER	2		
62	T133674	SELF-LOCKING SCREW	3		

WINDSHIELD GLASS FOR CAB

TP69621 -UN-05OCT00

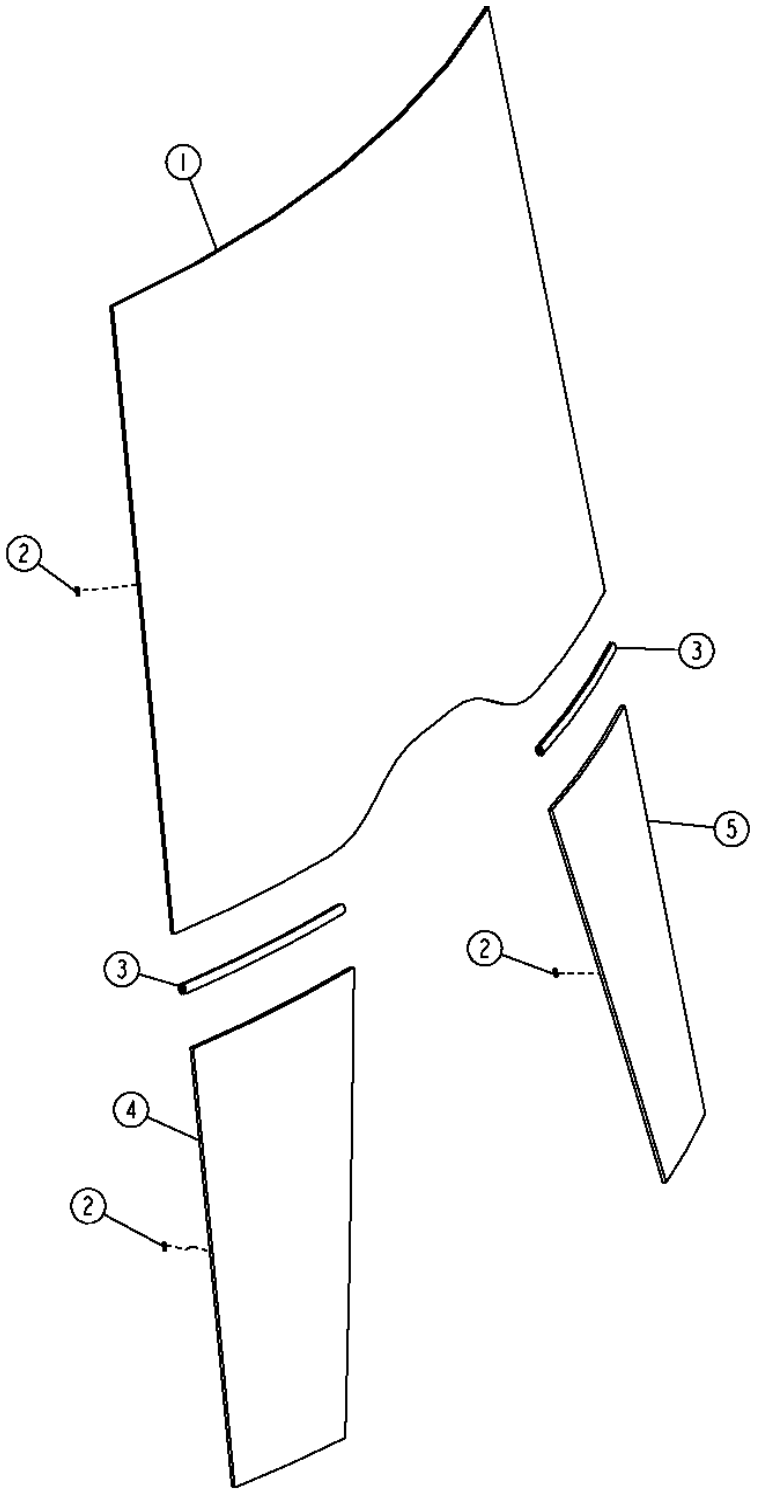

WINDSHIELD GLASS FOR CAB

KEY	PART NO.	PART NAME	QTY	SERIAL NO.	REMARKS
1	T191071	WINDOWPANE	1		
2	T135675	STAND-OFF	22		
3	T164697	ISOLATOR	2		
4	T191072	WINDOWPANE	1		LOWER RIGHT
5	T191073	WINDOWPANE	1		LOWER LEFT

SLIDING REAR WINDOWS AND CORNER WINDOWPANES (SER.NO. -920856)

T147513 -UN-29OCT01

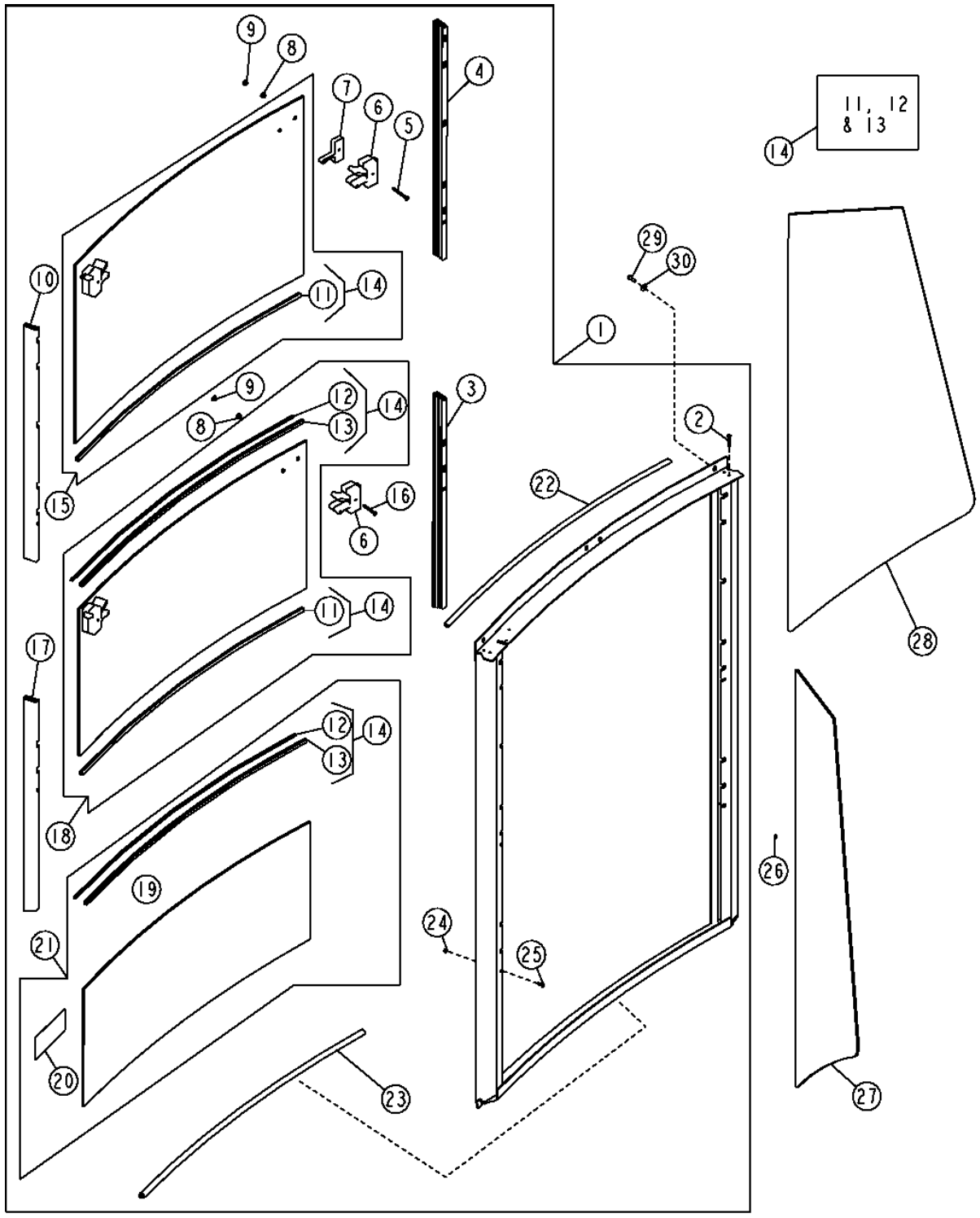

SLIDING REAR WINDOWS AND CORNER WINDOWPANES (SER.NO. -920856)

KEY	PART NO.	PART NAME	QTY	SERIAL NO.	REMARKS
1	.....	WINDOW	1		CONVENIENCE ASSEMBLY (AT184089 NO LONGER AVAILABLE) (SUB AT302812)
2	T164698	SCREW	8		
3	AT190194	GUIDE	1		(BOTTOM LEFT WINDOW)
4	AT190193	GUIDE	1		(TOP LEFT WINDOW)
5	T166368	SCREW	4		
6	AT309347	LATCH	1		(LEFT AND RIGHT) (DOES NOT INCLUDE HARDWARE) (SUB FOR AT196391)
7	T165561	SPACER	2		
8	T166371	GROMMET	8		
9	T187765	INSERT	8		
10	AT190191	GUIDE	1		(TOP RIGHT WINDOW)
11	.....	SEAL	1		(A) (ORDER AT190490)
12	.....	WEATHERSTRIP	1		(A) (ORDER AT190490)
13	.....	SEAL	1		(A) (ORDER AT190490)
14	AT190490	KIT	1		(A) ONE KIT WILL SERVICE THE MIDDLE WINDOW, TWO KITS WILL SERVICE ALL THREE WINDOWS
15	AT189176	WINDOW	1		(UPPER WINDOW)
16	T166369	SCREW	4		
17	AT190192	GUIDE	1		(BOTTOM RIGHT WINDOW)
18	AT189175	WINDOW	1		(MIDDLE WINDOW)
19	JD5750	LABEL	1		LEAPING DEER
20	T183768	LABEL	2		WARNING
21	AT187036	WINDOW	1		(LOWER WINDOW)
22	T166881	WEATHERSTRIP	1		
23	T187780	ISOLATOR	1		
24	T185378	NUT	2		
25	T185377	SCREW	2		
26	T135675	STAND-OFF	20		
27	T164705	WINDOWPANE	1		(RIGHT REAR CORNER)
28	T164708	WINDOWPANE	1		(LEFT REAR CORNER)
29	19M7775	SCREW	6		M6 X 16
30	24M7139	WASHER	6		

SLIDING REAR WINDOWS AND CORNER WINDOWPANES (SERIAL NO. 920857-)

T200471 -UN-28MAY04

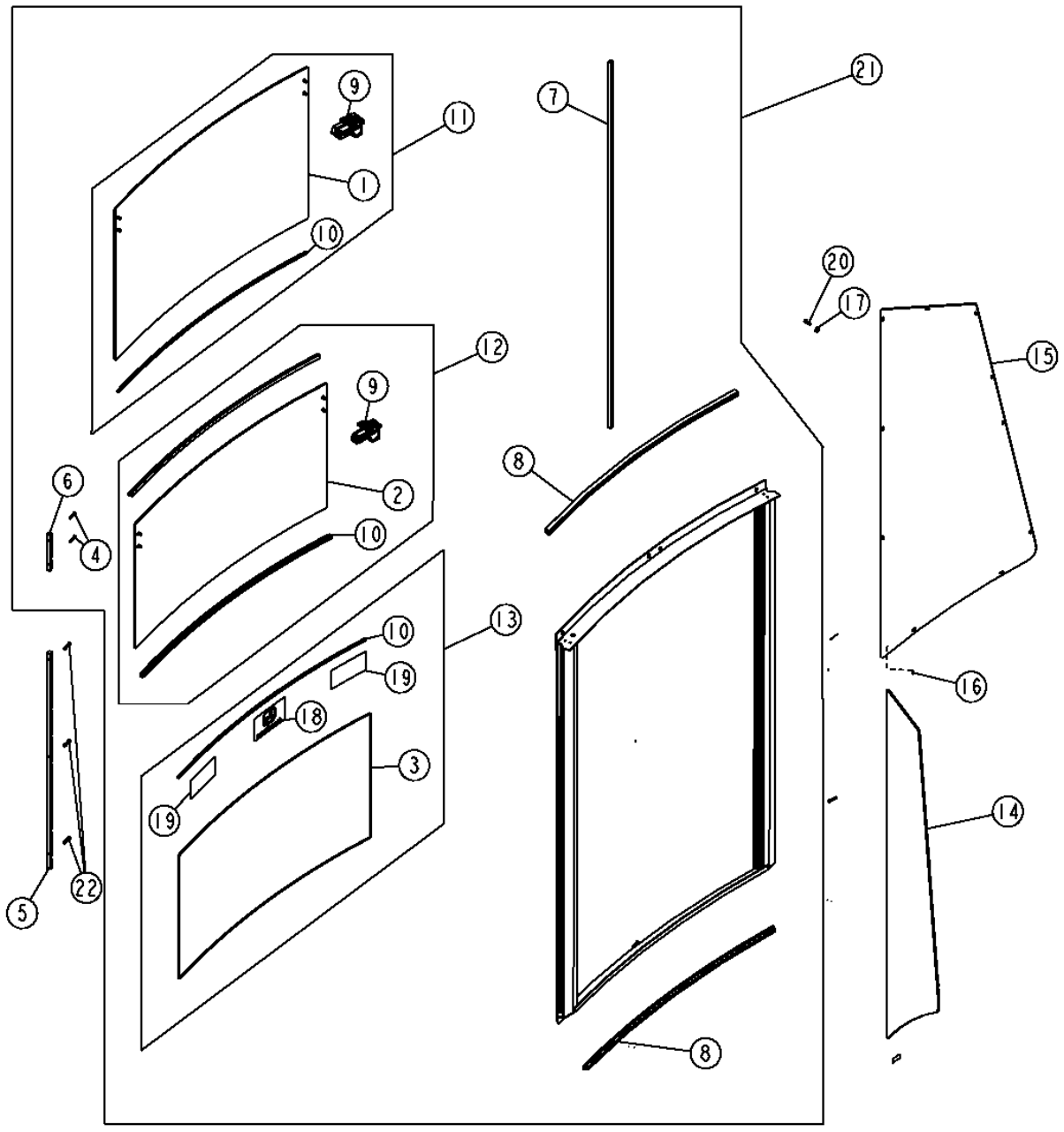

T200471

SLIDING REAR WINDOWS AND CORNER WINDOWPANES (SERIAL NO. 920857-)

KEY	PART NO.	PART NAME	QTY	SERIAL NO.	REMARKS
1	T201955	WINDOWPANE	1		
2	T201954	WINDOWPANE	1		
3	T201953	WINDOWPANE	1		
4	T201952	SCREW	10		
5	T201957	FRAME	2		
6	T201956	FRAME	2		
7	T201958	WEATHERSTRIP	2		
8	T201968	GASKET	2		
9	AT302817	LATCH	2		(INCLUDES HARDWARE)
10	AT307770	SEAL	1		
11	AT302816	WINDOW	1		
12	AT302815	WINDOW	1		
13	AT302813	WINDOW	1		
14	T164705	WINDOWPANE	1		(RIGHT REAR CORNER)
15	T164708	WINDOWPANE	1		(LEFT REAR CORNER)
16	T135675	STAND-OFF	22		
17	24M7139	WASHER	6		
18	JD5750	LABEL	1		
19	T183768	LABEL	1		
20	19M7775	SCREW	6		M6 X 16, (SUB FOR 19M7077 AND 19M7862, THIS APPLICATION)
21	AT302812	WINDOW	1		CONVENIENCE ASSEMBLY, (ALSO ORDER (2) T201957 AND (6) T208077)
22	T208077	SCREW	6		

FRONT WINDSHIELD WIPER SYSTEM

T137150 -UN-30JAN01

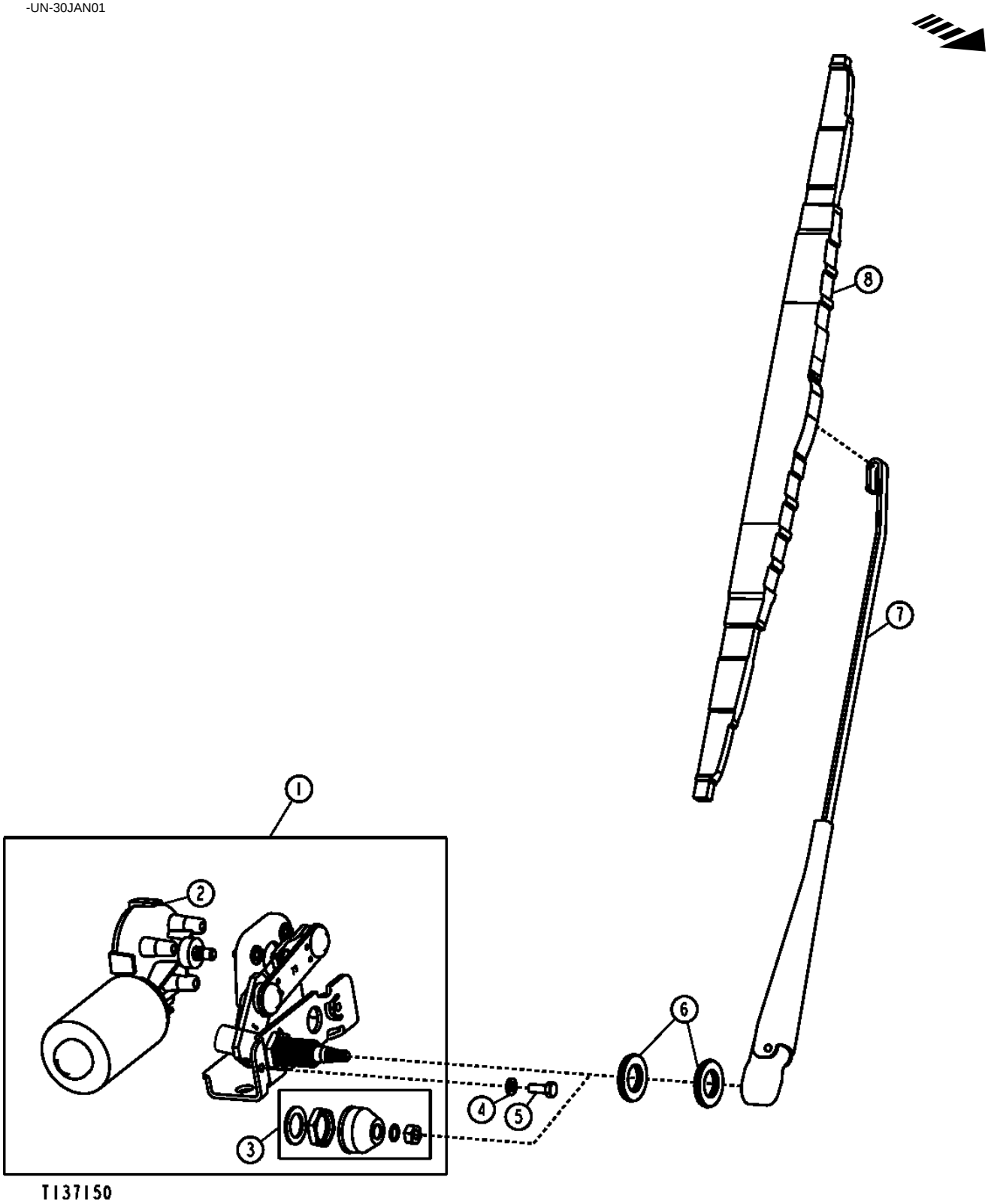

FRONT WINDSHIELD WIPER SYSTEM

KEY	PART NO.	PART NAME	QTY	SERIAL NO.	REMARKS
1	AT192587	WIPER MOTOR	1		INCLUDES DRIVE ASSEMBLY AND MOUNTING HARDWARE
2	.....	WIPER MOTOR	1		
3	RE40049	KIT	1		MOUNTING HARDWARE KIT
4	.....	WASHER	2		(12H302 NOT USED IN THIS APPLICATION)
5	19M7775	SCREW	2		M6 X 16, (SUB FOR 19M8425, THIS APPLICATION)
6	T183664	WASHER	2		
7	AT184965	WIPER ARM	1		
8	AL153661	WIPER BLADE	1		(SUB FOR AT184966)

FRONT WINDSHIELD WASHER RESERVOIR AND PUMP

T154739 -UN-15MAY02

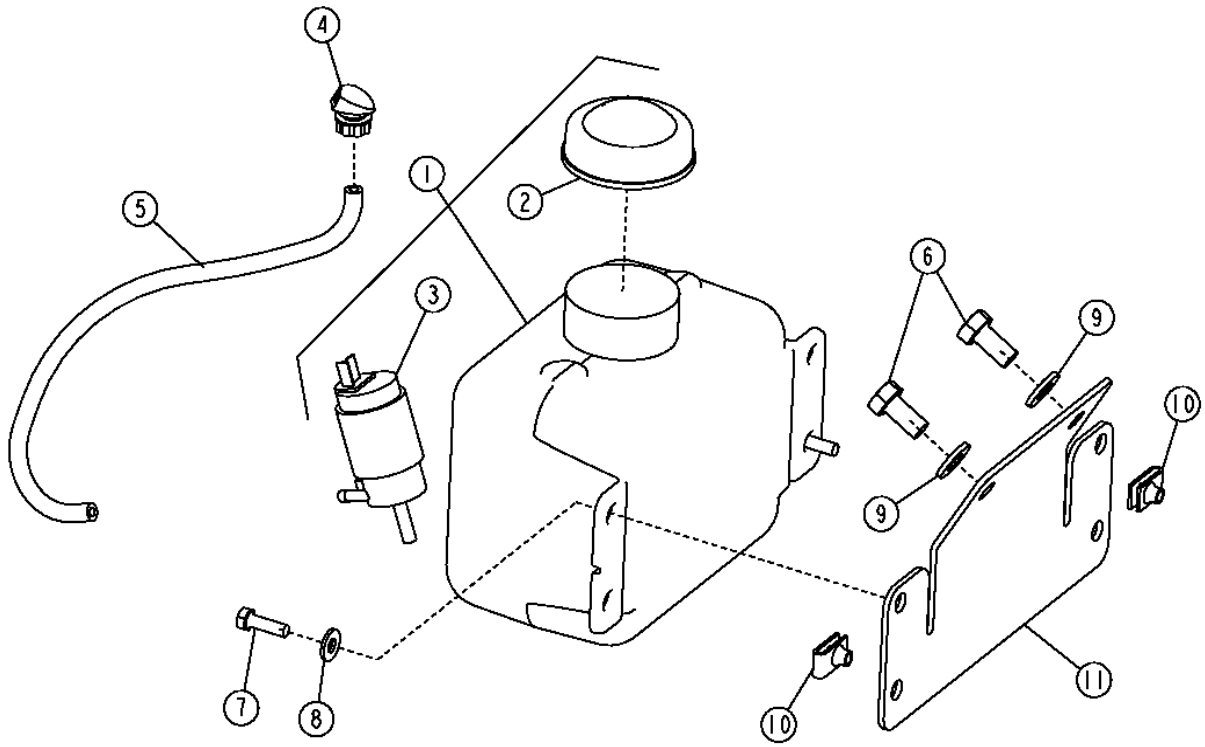

T154739

FRONT WINDSHIELD WASHER RESERVOIR AND PUMP

KEY	PART NO.	PART NAME	QTY	SERIAL NO.	REMARKS
1	AT169058	RESERVOIR	1		
2	AT106413	CAP	1		
3	AT174348	PUMP	1		
4	AT188766	NOZZLE	1		
5	R120653	HOSE	1		
6	19M7938	CAP SCREW	2		M10 X 20
7	19M7077	CAP SCREW	2		M6 X 20
8	24H1287	WASHER	2		
9	24M7239	WASHER	2		
10	M84972	NUT	2		
11	T188570	BRACKET	1		

REAR WINDSHIELD WIPER SYSTEM

T192678 -UN-09JUL03

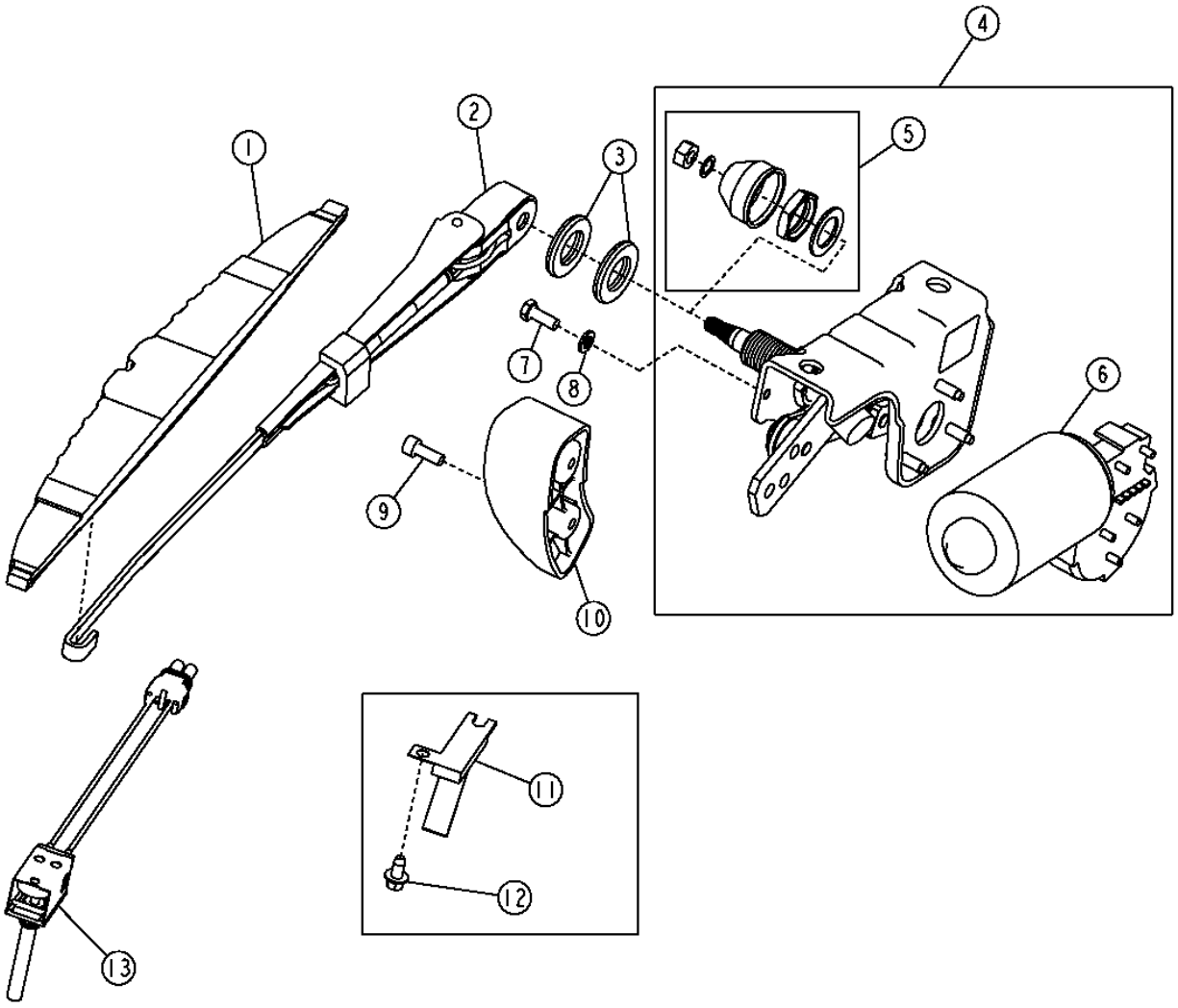

T192678

REAR WINDSHIELD WIPER SYSTEM

KEY	PART NO.	PART NAME	QTY	SERIAL NO.	REMARKS
1	AT304631	WIPER BLADE	1		(SUB FOR AT184970)
2	AT184969	WIPER ARM	1		
3	T183664	WASHER	2		
4	AT194279	WIPER MOTOR	1		INCLUDES DRIVE ASSEMBLY AND MOUNTING HARDWARE
5	RE40049	KIT	1		MOUNTING HARDWARE KIT
6	.....	WIPER MOTOR	1		
7	19M7775	SCREW	2		M6 X 16, (SUB FOR 19M8425, THIS APPLICATION)
8	.....	LOCK WASHER	2		(12H302 NOT USED IN THIS APPLICATION)
9	19M8553	SCREW	2		M6 X 16
10	AT187229	RAMP	1		
11	AT186913	SWITCH	1	-920856	
12	37M7089	SCREW	2	-920856	M6 X 12
13	AT305685	PUSH SWITCH	1	920857-	

BACKHOE CONTROL CONSOLE
TWO LEVER

TP58177 -UN-12AUG00

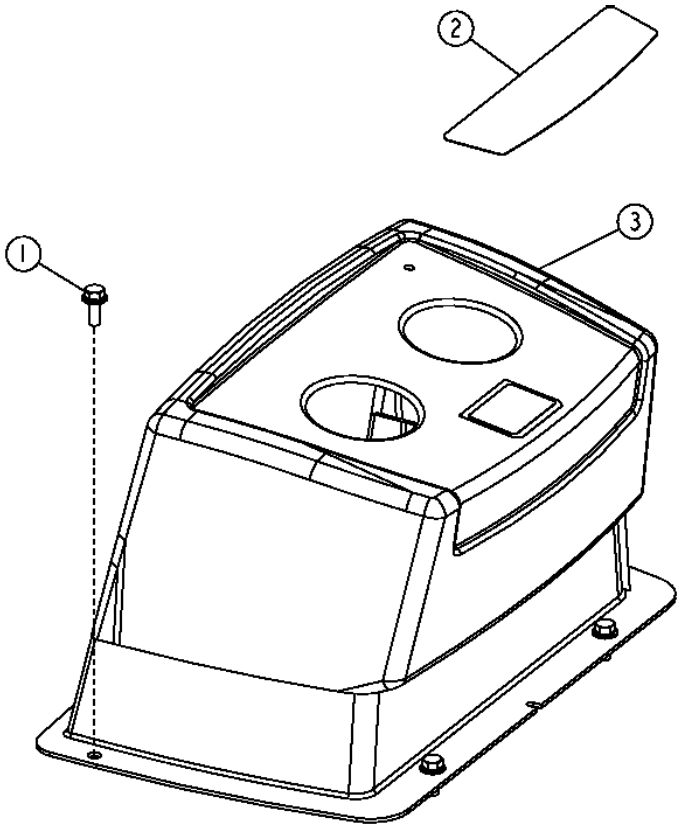

TP58177

BACKHOE CONTROL CONSOLE
TWO LEVER

KEY	PART NO.	PART NAME	QTY	SERIAL NO.	REMARKS
1	19M7866	BOLT	4		M8 X 20
2	T165584	LABEL	1		
3	AT189269	COVER	1		
	AT189270	COVER	1		WITH RIGHT PEDAL
	AT189271	COVER	1		WITH LEFT AND RIGHT PEDAL

**BACKHOE CONSOLE
(PILOT CONTROL)**

T165569 -UN-18FEB03

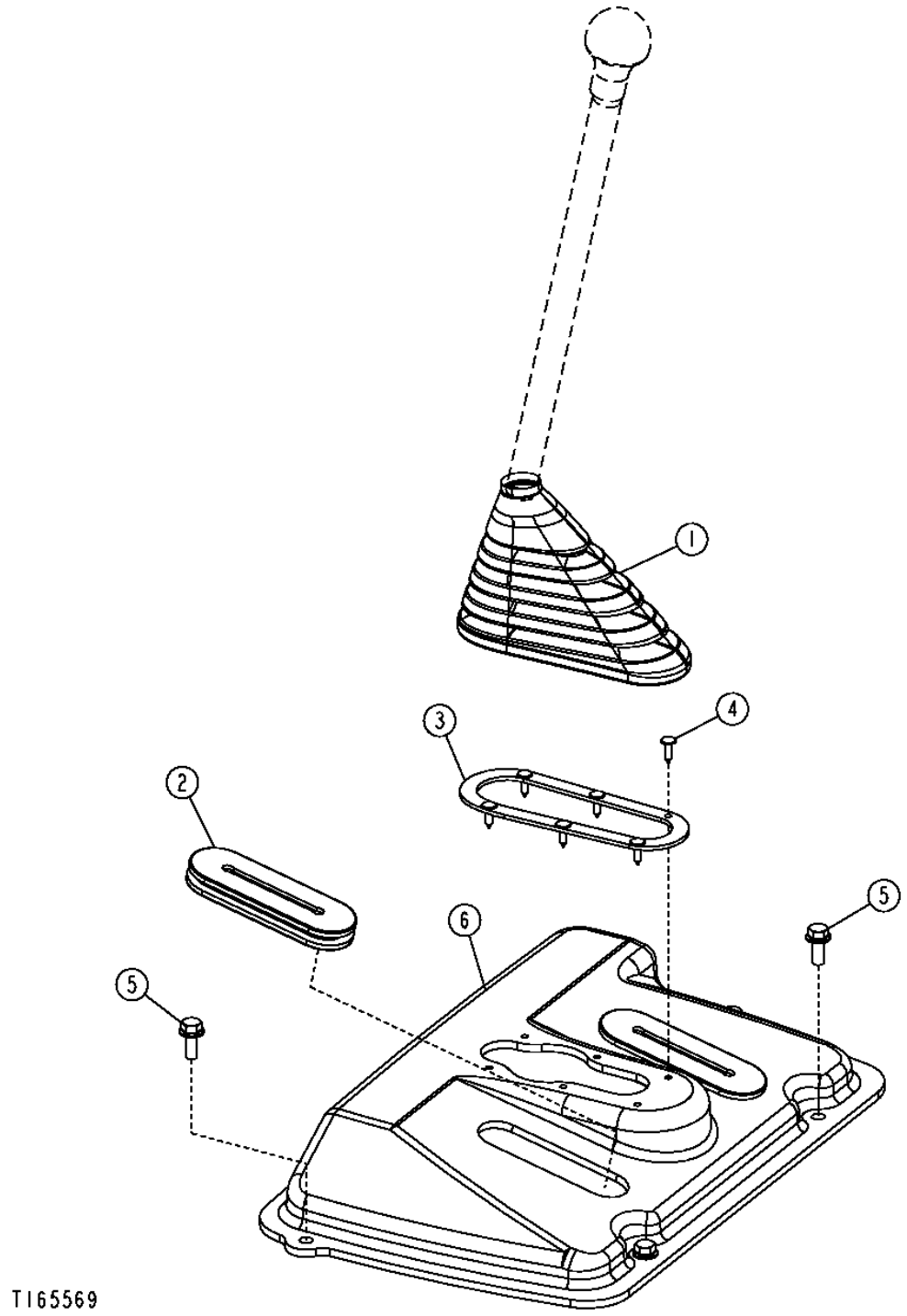

BACKHOE CONSOLE
(PILOT CONTROL)

KEY	PART NO.	PART NAME	QTY	SERIAL NO.	REMARKS
1	T183468	BOOT	1		
2	T200095	GROMMET	AR		
3	T183404	RING	1		
4	T183882	CLIP	6		
5	19M7866	BOLT	4		
6	T200092	COVER	1		(NO PEDALS)
	T200093	COVER	1		(ONE PEDAL)
	T200094	COVER	1		(TWO PEDALS)

STEERING COLUMN COVERS

TP58083 -UN-05OCT00

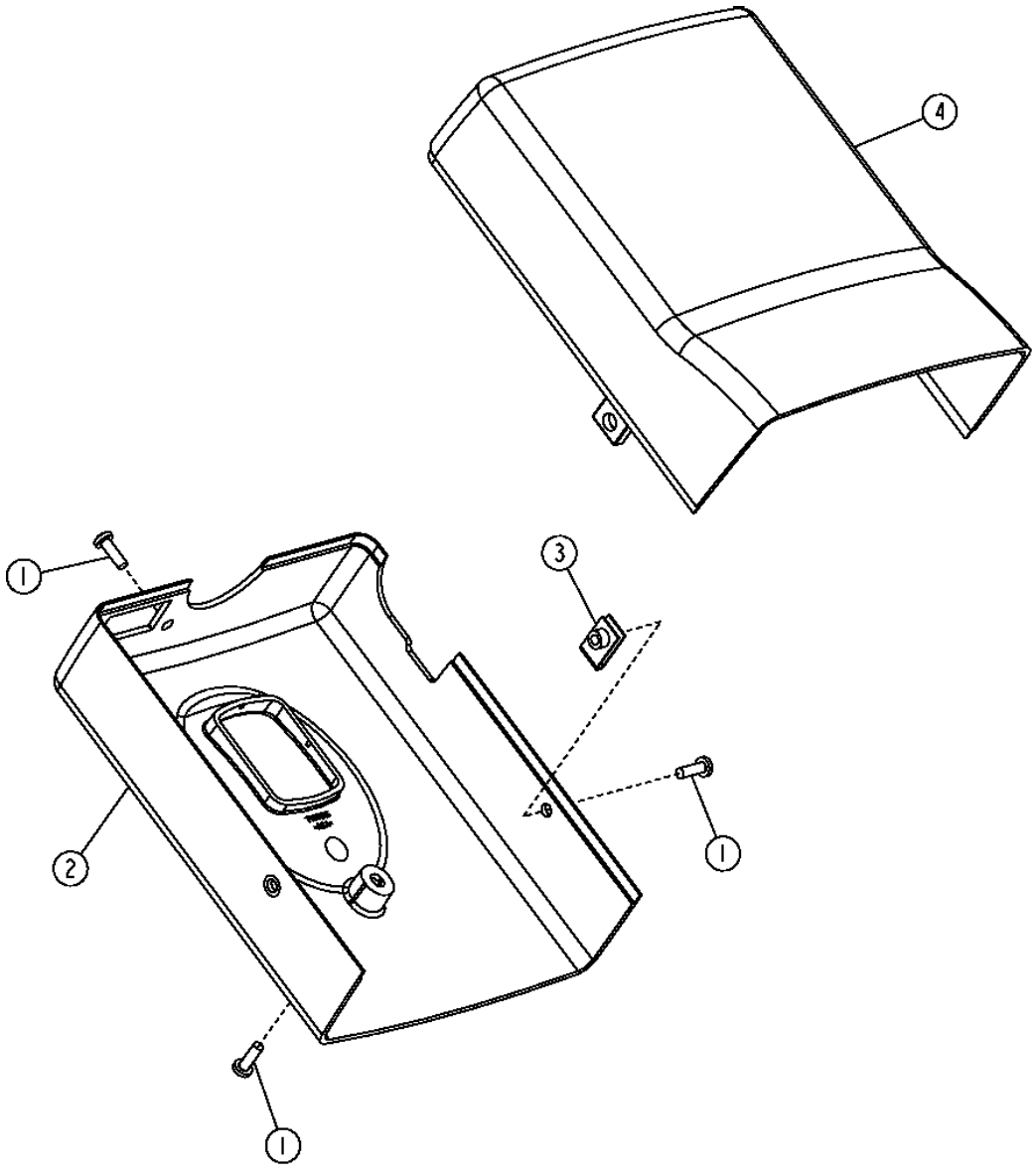

TP58083

STEERING COLUMN COVERS

KEY	PART NO.	PART NAME	QTY	SERIAL NO.	REMARKS
1	21M7271	SCREW	5		M5 X 16
2	T166213	COVER	1		TILT AND STANDARD
3	R117892	NUT	2		
4	T166211	COVER	1		

FRONT CONSOLE FOR CAB AND CANOPY

T209250 -UN-11MAR05

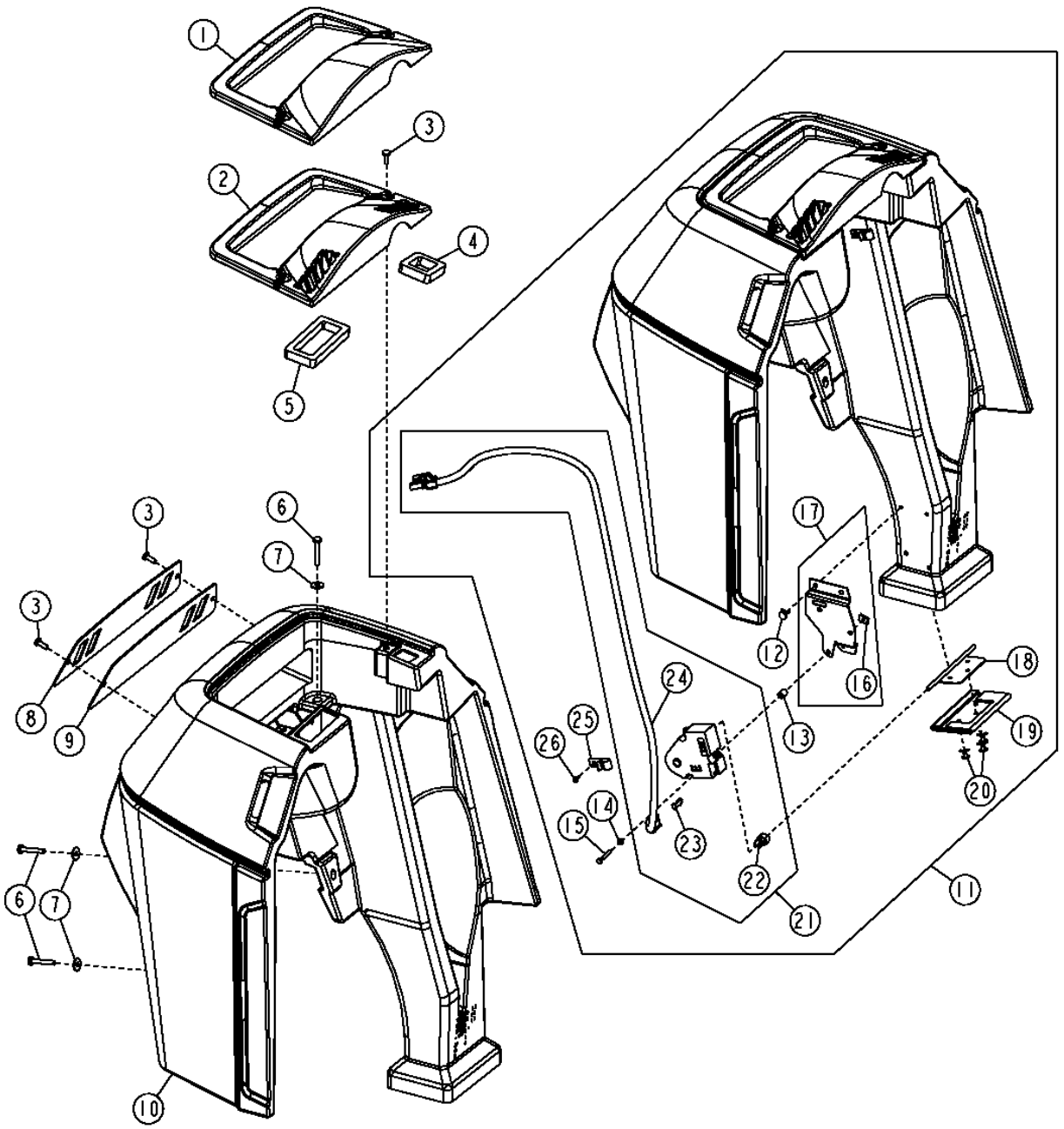

FRONT CONSOLE FOR CAB AND CANOPY

KEY	PART NO.	PART NAME	QTY	SERIAL NO.	REMARKS
1	T183706	PANEL	1		(CANOPY)
2	T167083	PANEL	1		(CAB)
3	21M7292	SCREW	2		M6 X 16, (SUB FOR T133674, THIS APPLICATION)
4	T184008	ISOLATOR	1		LEFT
5	T184009	ISOLATOR	1		RIGHT
6	T134874	SELF-LOCKING SCREW	6		M6 X 40, (SUB FOR 21M7403, THIS APPLICATION)
7	24H1821	WASHER	4		
8	T206457	PANEL	1		(CAB) (SUB FOR T167150)
9	T206457	PANEL	1		(CANOPY) (SUB FOR T167149)
10	T167082	COVER	1		(CAB)
	T167119	COVER	1		(CANOPY/ROPS)
11	AT191629	COVER	1		(WITH AIR CONDITIONING)
12	T184345	RIVET	6		
13	T134586	SPACER	1		
14	24M7117	WASHER	3		
15	19M7715	CAP SCREW	3		M4 X 30
16	T185742	NUT	3		
17	AT191877	BRACKET	1		
18	AT191826	GATE	1		
19	AT191688	PLATE	1		(WITH SEAL)
20	T184345	RIVET	6		
21	AT191876	ACTUATOR	1		
22	T185485	ADAPTER	1		
23	T186022	ELECTRICAL CONNECTOR ASSY	1		
24	AT191919	WIRING HARNESS	1		
25	T185743	CLIP	3		
26	T185769	SCREW	3		

SIDE INSTRUMENT PANEL HOUSING AND STABILIZER LEVER COVER (CANOPY)

T137242 -UN-05MAR02

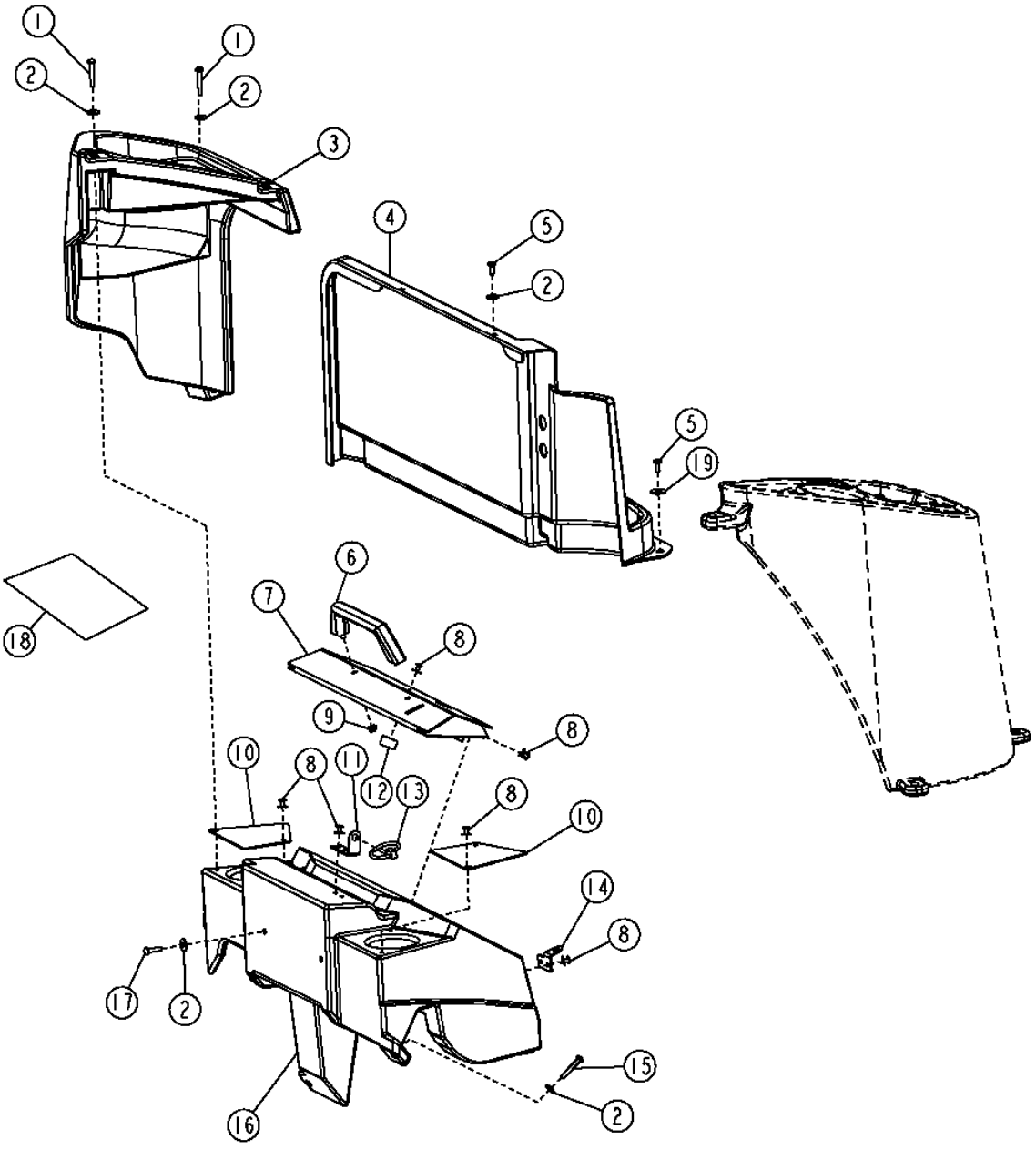

SIDE INSTRUMENT PANEL HOUSING AND STABILIZER LEVER COVER (CANOPY)

KEY	PART NO.	PART NAME	QTY	SERIAL NO.	REMARKS
1	T134874	SELF-LOCKING SCREW	3		M6 X 40, (SUB FOR 21M7403, THIS APPLICATION)
2	24H1821	WASHER	9		
3	T185619	COVER	1		STABILIZER CONTROL
	AT304324	COVER	1		PILOT CONTROL COVER
4	AT304593	COVER	1		CENTER, (SUB FOR T166875)
5	T133674	SELF-LOCKING SCREW	5		M6 X 16
6	AM118928	HANDLE	1		
7	AT192122	COVER	1		VANDAL PROTECTION
8	T184345	RIVET	13		
9	14M7303	FLANGE NUT	2		M6
10	T185654	PANEL	2		
11	T185905	ANGLE	1		
12	T134896	BUMPER	1		VANDAL PROTECTION
13	M72598	QUICK LOCK PIN	1		
14	T183151	STRAP	1		
15	T134874	SELF-LOCKING SCREW	2		M6 X 40
16	T185653	HOUSING	1		INSTRUMENT PANEL
17	T134895	SELF-LOCKING SCREW	2		M6 X 25
18	T186552	LABEL	1		TEMPERATURE AND FAN SPEED CONTROL
19	24M7207	WASHER	3		

SIDE INSTRUMENT PANEL HOUSING AND STABILIZER CONTROL COVER (CAB)

T147548 -UN-30OCT01

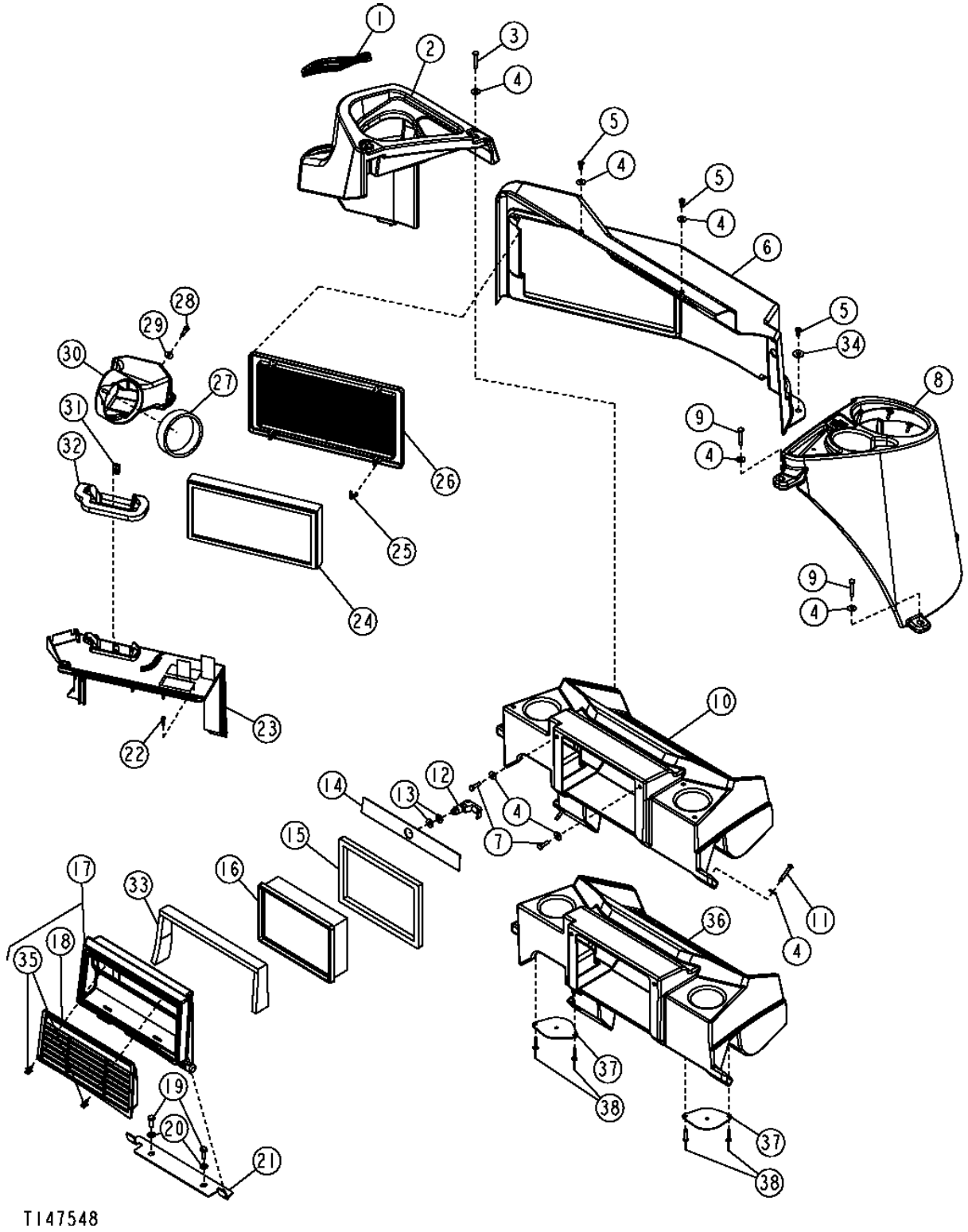

SIDE INSTRUMENT PANEL HOUSING AND STABILIZER CONTROL COVER (CAB)

KEY	PART NO.	PART NAME	QTY	SERIAL NO.	REMARKS
1	.....	ISOLATOR	1		(MAKE FROM T58056, CUT TO 445 MM)
2	T185494	COVER	1		STABILIZER CONTROL
	AT304891	COVER	1		STABILIZER CONTROL (FOR PILOT CONTROL WITH SELECTOR VALVE) (SUB FOR AT280255)
	.....	PLUG	1		(SUB T207060) (T163309 NLA)
3	T134874	SELF-LOCKING SCREW	3		M6 X 40, (SUB FOR 21M7403, THIS APPLICATION)
4	24H1821	WASHER	12		
5	21M7292	SCREW	5		M6 X 16, (SUB FOR T133674, THIS APPLICATION)
6	T166874	ASSEMBLY LINE PARTS	1		CENTER
7	T134895	SELF-LOCKING SCREW	2		M6 X 25
8	T185493	COVER	1		LOADER CONTROL
9	T134874	SELF-LOCKING SCREW	3		M6 X 40, (SUB FOR 21M7403, THIS APPLICATION)
10	T185495	HOUSING	1		INSTRUMENT PANEL (AIR CONDITIONING)
11	T134874	SELF-LOCKING SCREW	2		M6 X 40
12	AT222150	LATCH	1		
13	24H1136	WASHER	2		
14	T185896	ISOLATOR	1		
15	T185770	ISOLATOR	1		
16	AT191102	AIR FILTER	1		FRESH AIR
17	AT185396	COVER	1		FRESH AIR
18	T165808	GRILLE	1		
19	19M7881	SCREW	2		M8 X 20
20	24M7238	WASHER	2		
21	T184164	BRACKET	1		
22	T184620	SCREW	4		
23	T164620	HOUSING	1		TOP ACCESS
24	AT184590	AIR FILTER	1		
25	R120160	CLIP	4		
26	T164621	GRILLE	1		
27	T185844	ISOLATOR	1		
28	19M7933	CAP SCREW	2		M6 X 25
29	24M7139	WASHER	2		
30	T166322	AIR DUCT	1		
31	M84972	NUT	1		
32	T184370	SEAL	1		
33	T187110	ISOLATOR	1		
34	24M7207	WASHER	3		
35	T184214	RIVET	2		
36	T185651	HOUSING	1		INSTRUMENT PANEL (HEATER)
37	T185652	PANEL	2		
38	T184345	RIVET	4		

PILOT CONTROLLER ARM
(LEFT SIDE)

T212891 -UN-25JUL05

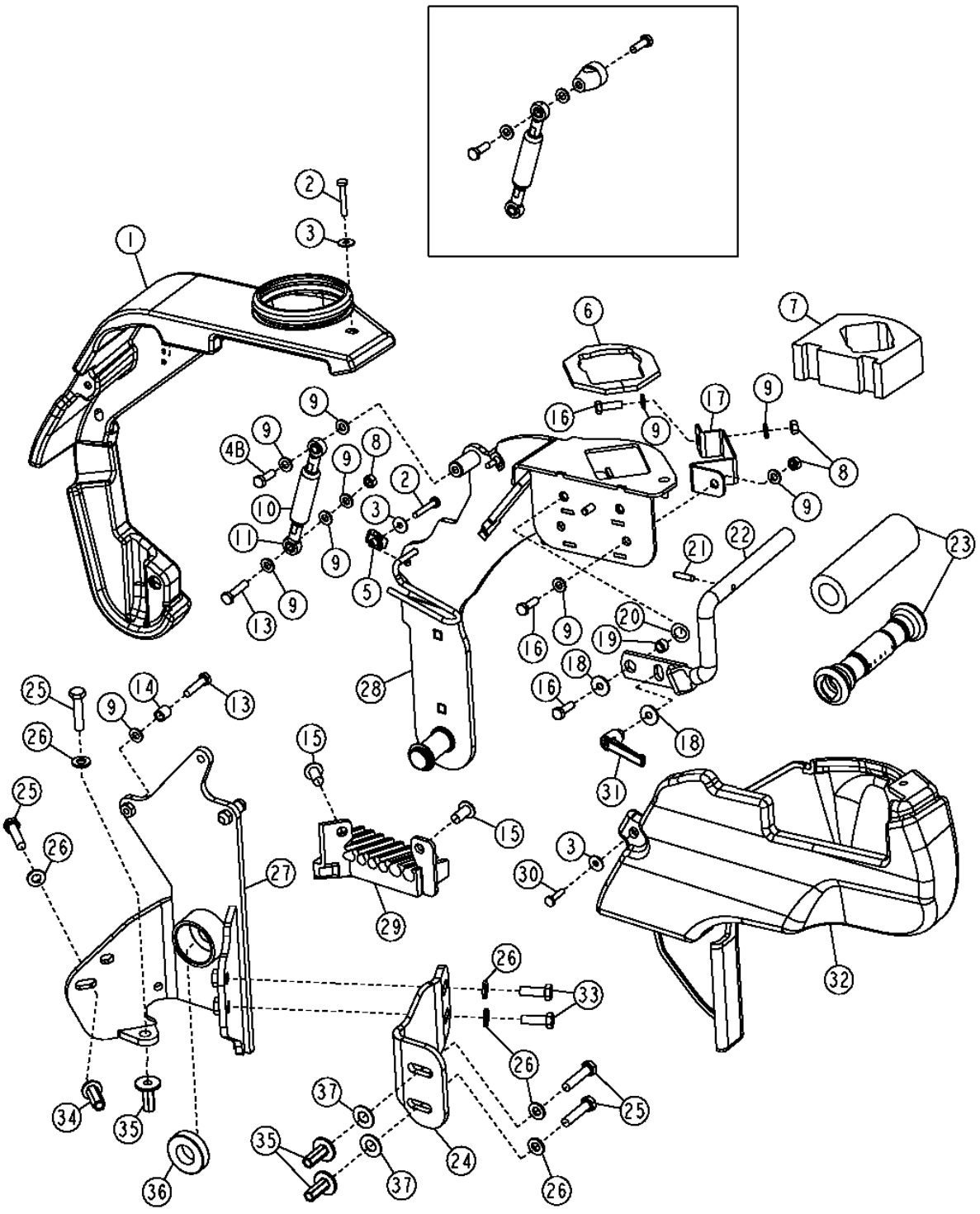

PILOT CONTROLLER ARM
(LEFT SIDE)

KEY	PART NO.	PART NAME	QTY	SERIAL NO.	REMARKS
1	AT199591	COVER	1		
2	T134874	SELF-LOCKING SCREW	3		M6 X 40
3	24H1346	WASHER	5		
4A	.....	CAP SCREW	2	-943052	
4B	19M7407	CAP SCREW	1	943053-	M8 X 25
5	R120332	NUT	2		
6	T190998	ISOLATOR	1		
7	T190999	ISOLATOR	1		
8	14M7273	NUT	4		M8
9	24M7238	WASHER	9		
10	AT280674	GAS OPERATED CYLINDER	1		
11	AM102062	LINK END	2		
12	T213244	BUSHING	1	-943052	
13	19M8008	CAP SCREW	3		M8 X 35
14	28H3376	SPACER	2		
15	MT2485	PLUG	2		FASTENER, (SUB FOR T161380)
16	19M7407	CAP SCREW	3		M8 X 25
17	T190868	STRAP	1		
18	24M7298	WASHER	2		
19	28H3392	WASHER	1		
20	M87534	SPRING WASHER	1		
21	T190956	PIN	1		
22	AT300750	BRACKET	1		
23	AT303853	SLEEVE	1		
24	T190912	SUPPORT	1		
25	19M7572	CAP SCREW	4		M10 X 45
26	24M7239	WASHER	5		
27	AT198778	SUPPORT	1		
28	AT198777	ARM	1		
29	T190960	GUIDE	1		
30	T134895	SELF-LOCKING SCREW	2		M6 X 25
31	AT227063	LEVER	1		
32	AT199592	COVER	1		
33	19M7662	CAP SCREW	2		M10 X 30
34	T148410	NUT	2		M10
35	H173411	NUT	3		M10
36	JD10373	BALL BEARING	2		
37	24H1261	WASHER	2		

PILOT CONTROLLER ARM
(RIGHT SIDE)

T199111 -UN-07APR04

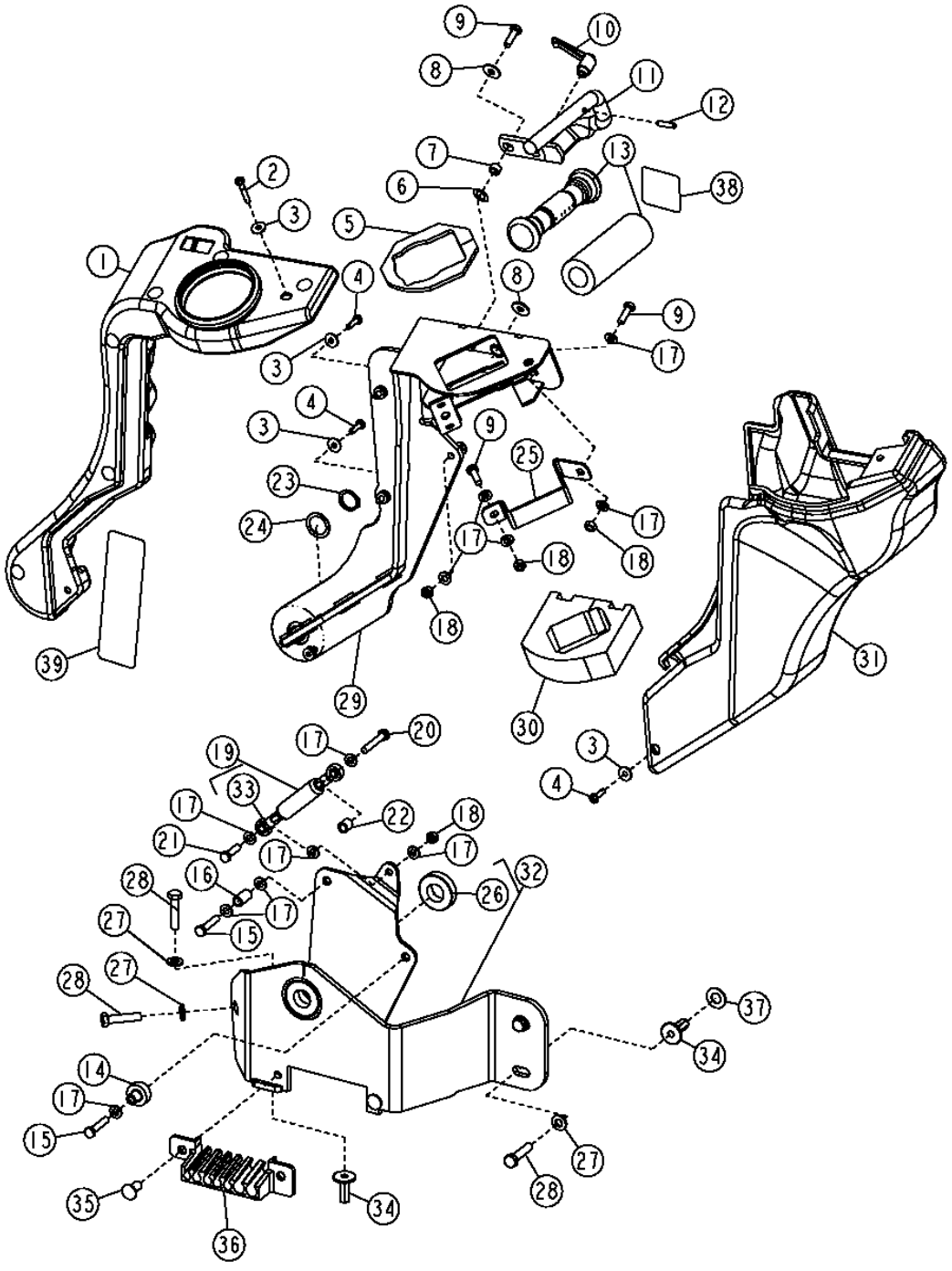

T199111

PILOT CONTROLLER ARM
(RIGHT SIDE)

KEY	PART NO.	PART NAME	QTY	SERIAL NO.	REMARKS
1	AT199594	COVER	1		
2	T134874	SELF-LOCKING SCREW	1		M6 X 40
3	24H1646	WASHER	5		
4	T134895	SELF-LOCKING SCREW	4		M6 X 25
5	T191000	ISOLATOR	1		
6	M87534	SPRING WASHER	1		
7	28H3392	WASHER	1		
8	24M7298	WASHER	2		
9	19M7407	CAP SCREW	3		M8 X 25
10	AT227063	LEVER	1		
11	AT300885	BRACKET	1		
12	T190956	PIN	1		
13	AT303853	SLEEVE	1		
14	T202720	BUSHING	1		
15	19M7922	CAP SCREW	2		M8 X 40
16	28H3390	SPACER	1		
17	24M7238	WASHER	14		
18	14M7273	NUT	4		M8
19	AT280674	GAS OPERATED CYLINDER	1		
20	19M8397	CAP SCREW	1		M8 X 50
21	19M7513	CAP SCREW	1		M8 X 30
22	28H3376	SPACER	1		
23	W23122	SNAP RING	1		
24	24H1844	WASHER	1		
25	T190868	STRAP	1		
26	JD10373	BALL BEARING	2		
27	24M7239	WASHER	5		
28	19M7572	CAP SCREW	4		M10 X 45
29	AT198776	ARM	1		
30	T190999	ISOLATOR	1		
31	AT199595	COVER	1		
32	AT198865	SUPPORT	1		
33	AM102062	LINK END	2		
34	H173411	NUT	6		M10
35	MT2485	PLUG	2		FASTENER, (SUB FOR T161380)
36	T190964	GUIDE	1		
37	24H1261	WASHER	2		
38	T200658	SAFETY SIGN	1		
39	T200781	LABEL	1		(BACKHOE CONTROLS DECAL)

SEATS,SEAT BELTS,AND ARM REST

T160495 -UN-21OCT02

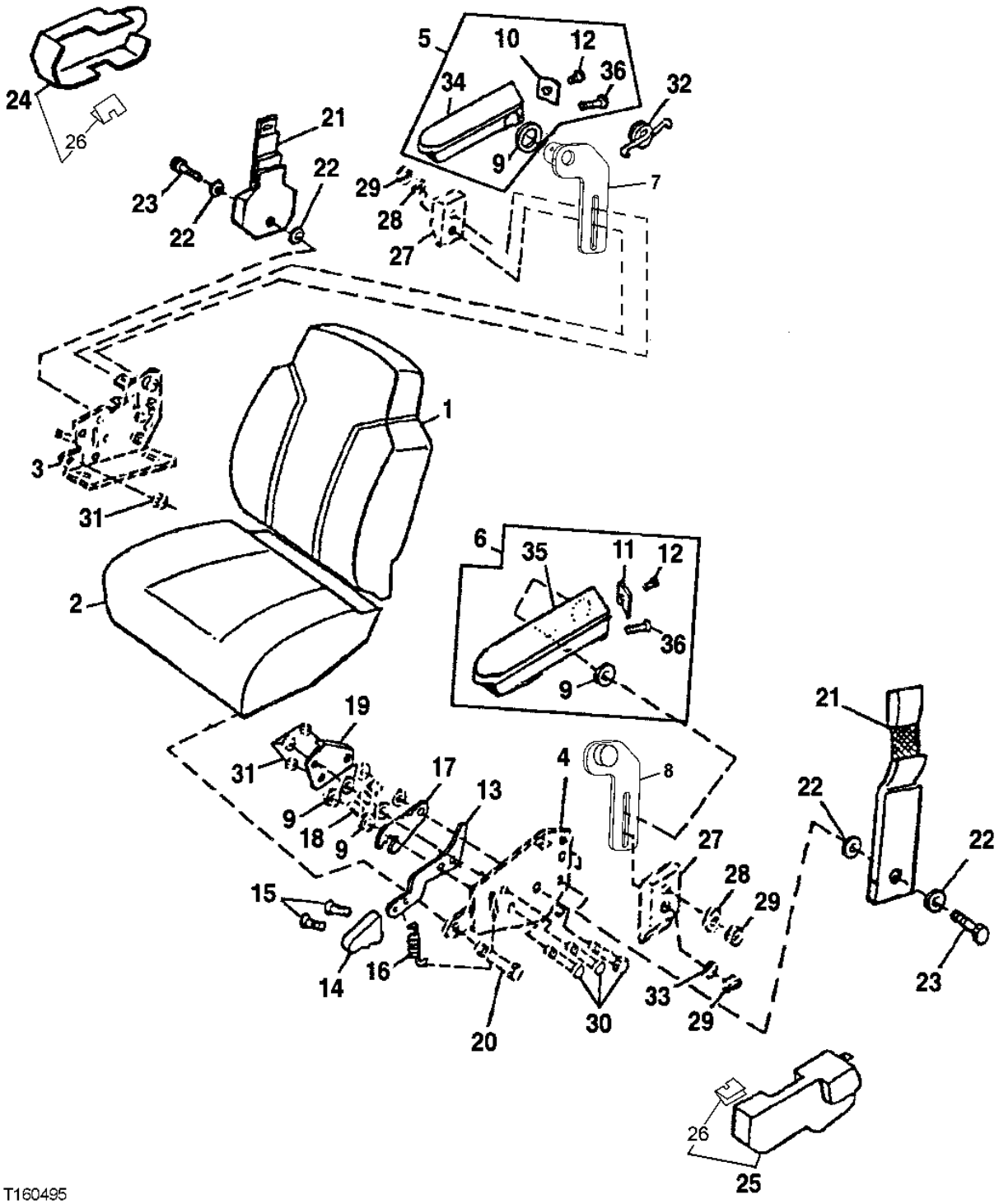

T160495

SEATS,SEAT BELTS,AND ARM RESTS

KEY	PART NO.	PART NAME	QTY	SERIAL NO.	REMARKS
1	AT308796	CUSHION	1		(BACK PAD,CLOTH) (SUB FOR AT221020)
	AT221016	CUSHION	1		(BACK PAD,VINYL)
	T171686	CLIP	4		
	AT308797	CUSHION	AR		(HEADREST OPTIONAL) (NOT ILLUSTRATED)
2	AT308795	CUSHION	1		(SEAT PAD, CLOTH) (SUB FOR AT221019)
	AT221015	CUSHION	1		(SEAT PAD, VINYL)
3	.....	PLATE	1		(RIGHT BACKREST ANGLE ADJUSTMENT)
4	.....	PLATE	1		(LEFT BACKREST ANGLE ADJUSTMENT)
5	AT312730	ARMREST	1		(RIGHT HAND) (SUB FOR AT186152)
6	AT312728	ARMREST	1		(LEFT HAND) (SUB FOR AT186156)
7	AT189059	BRACKET	1		(R.H. ARM REST ASSEMBLY)
8	AT189030	BRACKET	1		(L.H. ARM REST ASSEMBLY)
9	T120545	WASHER	2		(WAVE)
10	T166226	PLATE	1		(R.H. COVER PLATE)
11	T166227	PLATE	1		(L.H. COVER PLATE)
12	T120543	SCREW	2		(SET SCREW)
13	AT209225	KIT	1		(RECLINER KIT) INCLUDES EXTENSION SPRING, TORSION SPRING, BACKING PLATE, LATCH, SPACERS AND HARDWARE.
	.....	LEVER	1		
14	AT209025	KIT	1		(KNOB AND SCREW) (RECLINER)
15	37H121	SCREW	2		(RECLINER KNOB)
16	.....	SPRING	1		(TILT LEVER)
17	.....	LATCH	1		(RECLINER-SAW TOOTH)
18	.....	SPACER	3		(BETWEEN SMALL AND LARGE PLATE) (TILT LEVER)
19	.....	PLATE	1		(SMALL 3 -HOLE INSIDE PLATE)
20	19H1813	CAP SCREW	2		5/16" X 5/8", (TILT LEVER)
	24H1136	WASHER	2		
21	AT179423	SEAT BELT	1		(2 INCH) (ALSO ORDER (4) T105740 AND (2) 19H2109)
	AT308199	SEAT BELT	1		(3 INCH) (ALSO ORDER (4) T105740 AND (2) 19H2109) (SUB FOR AT178065)
22	T105740	WASHER	4		(SEAT BELT)
23	19H2109	CAP SCREW	2		7/16" X 1-1/4", (SEAT BELT)
24	T160896	COVER	1		(SEAT BELT - RIGHT) REQUIRES SCREWS
25	T163962	COVER	1		(SUB FOR T160895, THIS APPLICATION) (SEAT BELT - LEFT) REQUIRES SCREWS
26	.....	CLIP	1		
27	.....	SPACER	2		
28	.....	WASHER	4		
29	.....	NUT	4		
30	19H1914	CAP SCREW	3		1/4" X 1"
	24H1287	WASHER	6		
31	M453T	LOCK NUT	3		1/4", (RECLINER)
32	.....	SPRING	1		SEAT BACK
33	.....	WASHER	2		
34	.....	ARMREST	1		(RIGHT HAND)
35	.....	ARMREST	1		(LEFT HAND)
36	T120544	SCREW	2		

SEAT SLIDE,SEAT SWIVEL AND LUMBAR ADJUSTER CONTROL LEVERS

T144454 -UN-08AUG01

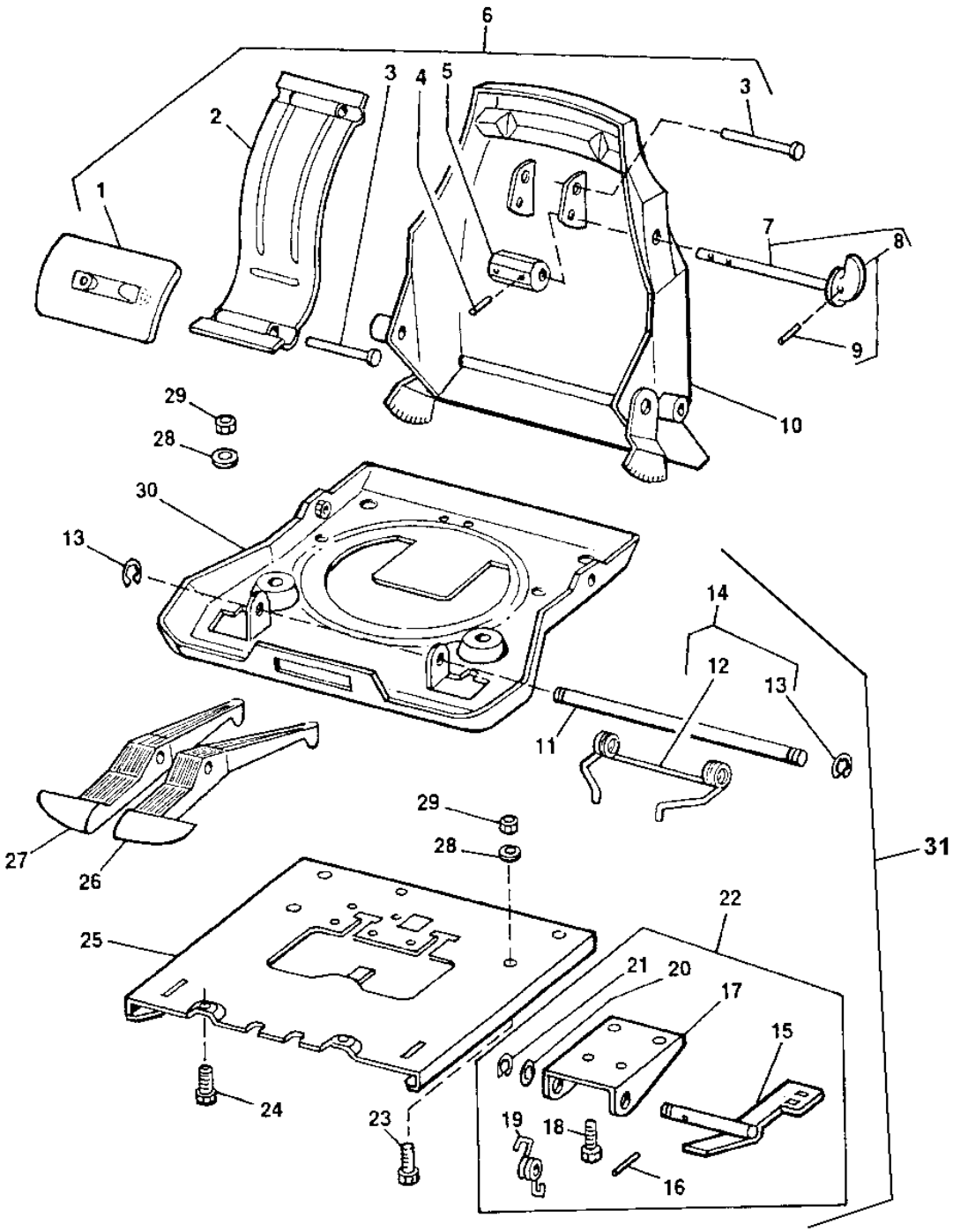

T144454

SEAT SLIDE,SEAT SWIVEL AND LUMBAR ADJUSTER CONTROL LEVERS

KEY	PART NO.	PART NAME	QTY	SERIAL NO.	REMARKS
1	.....	PADDLE	1		
2	.....	TORSION SPRING	1		
3	.....	NAIL	2		
4	34H387	SPRING PIN	1		3/16" X 3/4"
5	.....	CAM	1		
6	AT209026	KIT	1		(LUMBAR ADJUSTER)
7	.....	KNOB	1		WITH SHAFT(LUMBAR ADJUSTER)
8	AT209024	KIT	1		(LUMBAR ADJUSTER KNOB)
9	34H262	SPRING PIN	1		5/32" X 3/4"
10	AT280583	SEAT BACK	1		
11	.....	SHAFT	1		
12	.....	SPRING	1		(DOUBLE TORSION)
13	R72655	SNAP RING	2		
14	AT179688	KIT	1		(SLIDE LATCH SPRING)
15	.....	LATCH	1		
16	34H262	SPRING PIN	1		5/32" X 3/4"
17	.....	BRACKET	1		
18	19H1227	CAP SCREW	4		1/4" X 1/2"
19	.....	SPRING	1		
20	24H1305	WASHER	2		
21	R72655	SNAP RING	1		
22	AT179691	KIT	1		(SLIDE CONTROL)
23	.....	BOLT	3		
24	.....	CAP SCREW	2		
25	.....	PLATE	1		
26	.....	CONTROL LEVER	1		(SWIVEL) (ORDER AT179692)
27	.....	CONTROL LEVER	1		(FORE-AFT) (ORDER AT179691)
28	.....	WASHER	2		
29	.....	NUT	2		
30	AT191620	PAN	1		
31	AT179686	KIT	1		ALSO INCLUDES SWIVEL SERVICE KIT, SWIVEL LATCH KIT AND SLIDE PUCK

SEAT SWIVEL AND SWIVEL LATCH
(WITH OR WITHOUT SUSPENDED SEAT)

T138328 -UN-20FEB01

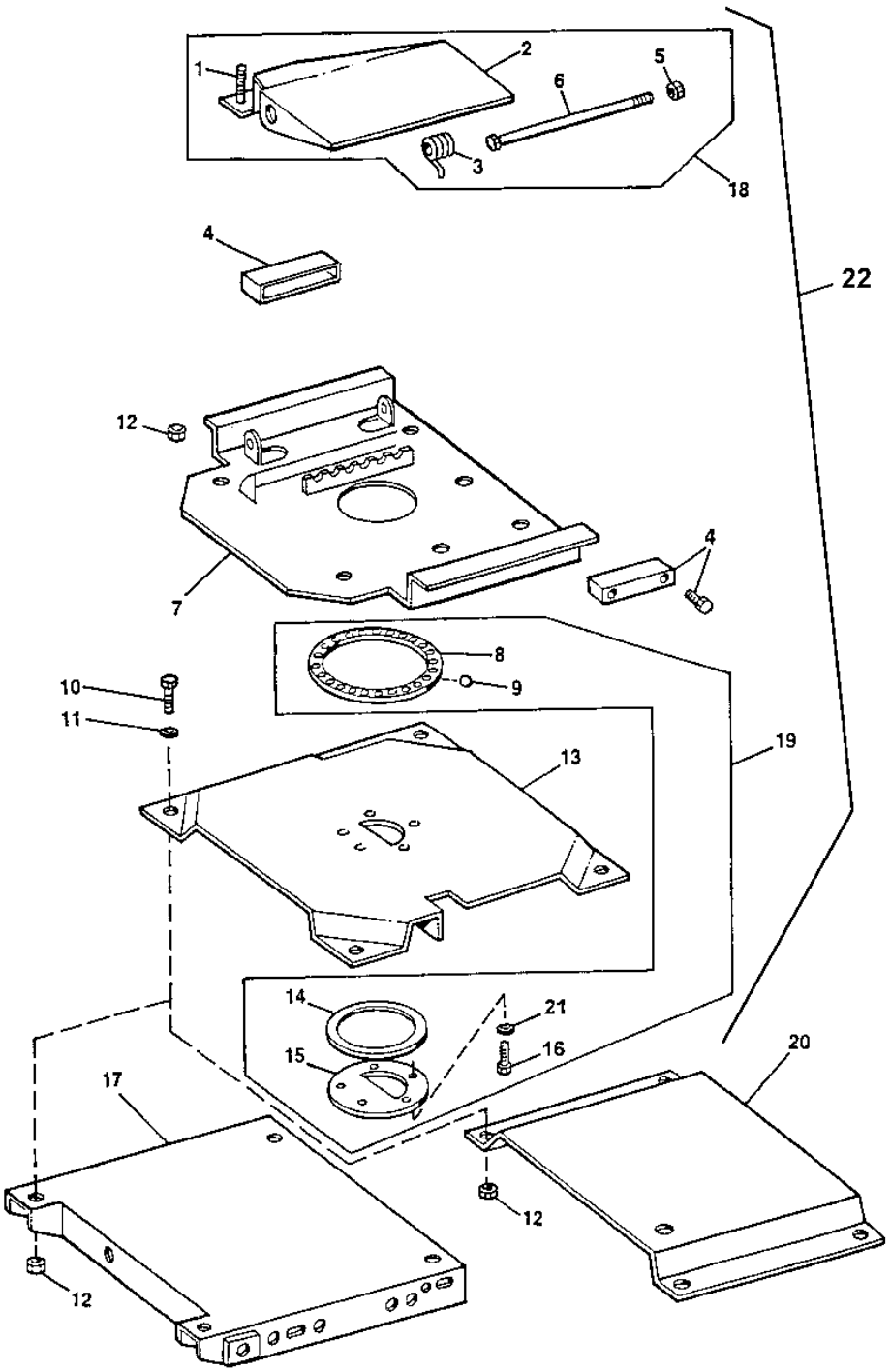

SEAT SWIVEL AND SWIVEL LATCH
(WITH OR WITHOUT SUSPENDED SEAT)

KEY	PART NO.	PART NAME	QTY	SERIAL NO.	REMARKS
1	.....	CLIP	1		
2	.....	LOCK PLATE	1		
3	.....	SPRING	1		
4	AT209020	KIT	1		(SLIDE PUCK)
5	M47031	LOCK NUT	1		
6	.....	BOLT	1		3/8-16 X 8.5
7	.....	PLATE	1		(TOP SWIVEL)
8	.....	RETAINER	1		(BALL BEARING)
9	M87261	BALL	24		BEARING
10	19M7402	CAP SCREW	4		M10 X 25
11	24M7239	WASHER	4		
12	M47031	LOCK NUT	4		9.525 MM
13	.....	PLATE	1		(BOTTOM SWIVEL)
14	.....	PLATE	1		(BEARING)
15	.....	PLATE	1		(RETAINING)
16	.....	BOLT	5		(SHOULDER)
17	.....	TRAY	1		(UPPER)(WITH SUSPENDED SEAT)
18	AT179692	KIT	1		(SWIVEL LATCH)
19	AT179687	KIT	1		(SWIVEL)
20	.....	PLATFORM	1		(WITH NON SUSPENDED SEAT)
	AT186701	PLATE	1		(AIR SUSPENSION TO SWIVEL)
21	24M6504	WASHER	5		
22	AT179686	KIT	1		ALSO INCLUDES SLIDE LATCH KIT AND SLIDE CONTROL KIT

**SEAT SUSPENSION AND SHOCK ABSORBER
(WITH SUSPENDED SEAT)**

TP50540 -UN-02JAN97

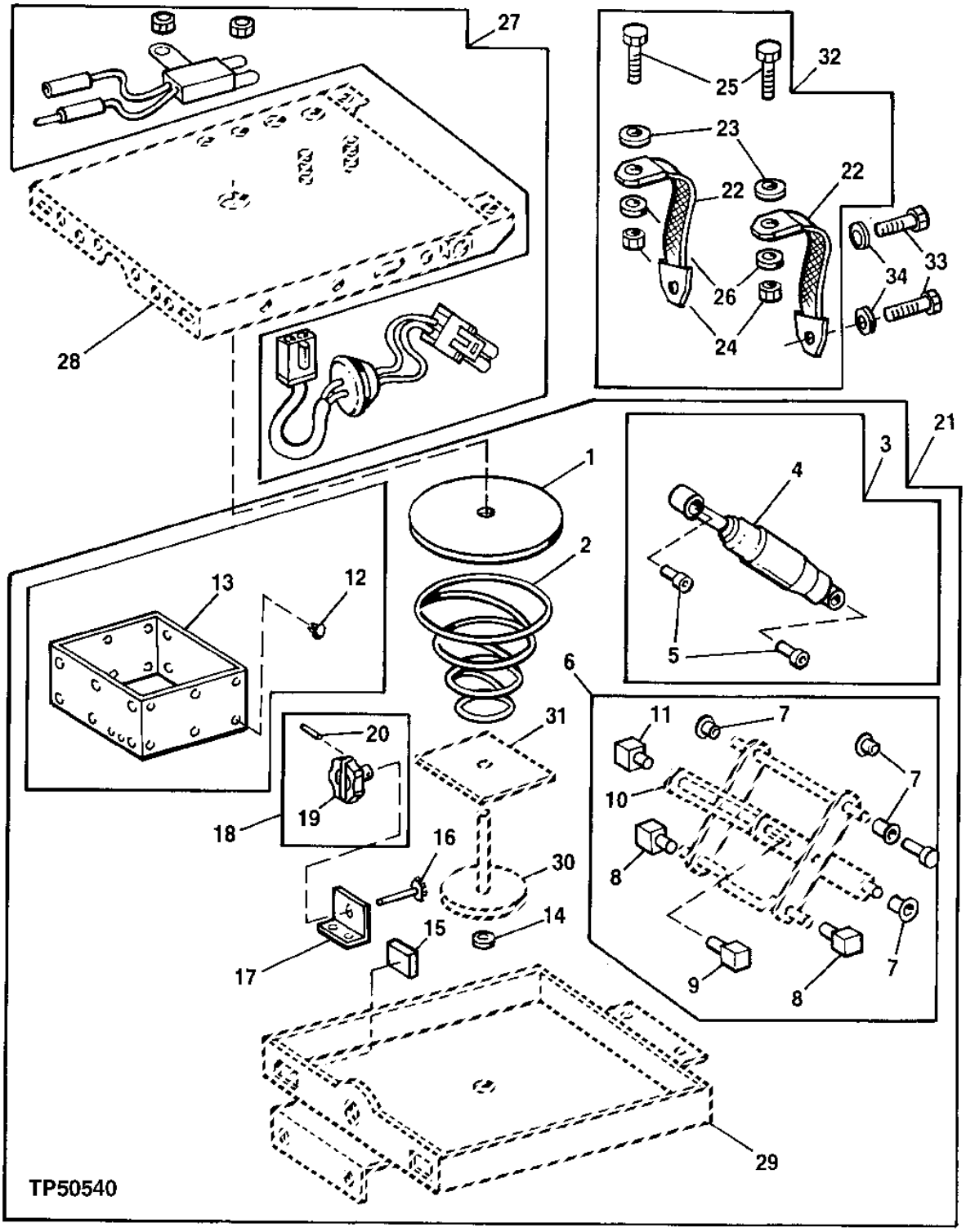

SEAT SUSPENSION AND SHOCK ABSORBER
(WITH SUSPENDED SEAT)

KEY	PART NO.	PART NAME	QTY	SERIAL NO.	REMARKS
1	T55208	PAD	1		
2	AT125801	SPRING	1		(REGULAR)
	T160315	SPRING	1		(HEAVY DUTY)
3	AT175436	KIT	1		(SHOCK ABSORBER)
4	.....	ABSORBER	1		(SHOCK)
5	T55222	BUSHING	2		(SHOCK ABSORBER)
6	AT106397	KIT	1		(BEARING/BUSHING)
7	.....	BUSHING	4		
8	.....	PILLOW BLOCK	2		
9	.....	PILLOW BLOCK	1		
10	.....	FRAME	1		(SCISSOR)
11	.....	PILLOW BLOCK	1		
12	T63798	PLUG	25		(FASTENER)
13	AT179699	BOOT	1		(VINYL)
14	T158481	WASHER	1		
15	T55224	BUMPER	2		
16	AT175353	GEAR	1		
17	T55214	ANGLE	1		
18	AT125805	KIT	1		(ADJUSTING KNOB)
19	AT125829	KNOB	1		
20	34H266	SPRING PIN	1		(ADJUSTING KNOB)
21	AT186150	KIT	1		(GUARDIAN SUSPENSION)
22	.....	BELT	2		(TETHER)
23	M1340T	WASHER	2		(TETHER)
24	M47031	LOCK NUT	2		9.525 MM, (TETHER)
25	19H2676	CAP SCREW	2		3/8" X 1", (TETHER)
26	24H1305	WASHER	2		(TETHER)
27	AT179694	KIT	1		(SWIVEL SWITCH KIT)
	AT196793	SWITCH	1		(SWIVEL SWITCH KIT) (WITH PILOT CONTROLS)
	AT304775	KIT	1		(FORWARD SEAT POSITION SWITCH) (SUB FOR AT192687)
	AT304776	KIT	1		(REAR SEAT POSITION SWITCH) (INCLUDES AT196793)
	.....	SENSOR	1		
	.....	WIRE	1		
	M453T	LOCK NUT	4		6.350 MM
	.....	TIE BAND	2		(PLASTIC)
28	.....	TRAY	1		(UPPER)
29	.....	TRAY	1		(LOWER)
30	.....	GEAR	1		(LARGE BASE)
31	.....	PLATE	1		(SPRING SUPPORT)
32	AT179693	KIT	1		(TETHER BELT SET)
33	19M7402	CAP SCREW	4		M10 X 25
34	24M7239	WASHER	4		

SEAT BASE TETHER BELT
(WITH NON-SUSPENDED SEAT)

T134229 -UN-06OCT00

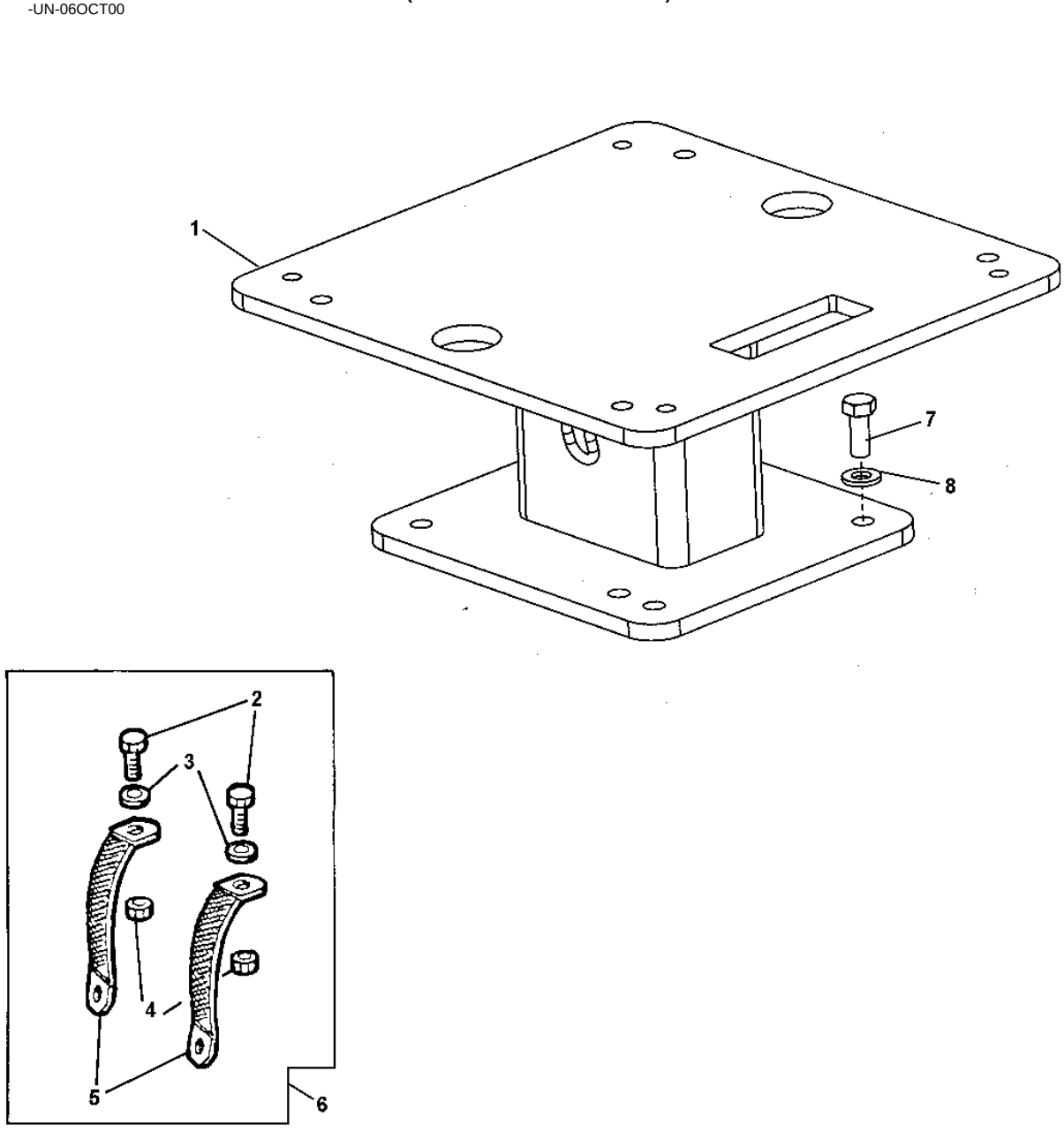

T134229

SEAT BASE TETHER BELT
(WITH NON-SUSPENDED SEAT)

KEY	PART NO.	PART NAME	QTY	SERIAL NO.	REMARKS
1	AT184609	BASE	1		
2	19H2676	CAP SCREW	2		3/8" X 1"
3	24H1305	WASHER	2		
4	M47031	LOCK NUT	2		3/8"
5	.....	BELT	4		
6	AT179714	KIT	1		TETHER BELT
7	19M7402	CAP SCREW	4		M10 X 25
8	24M7239	WASHER	4		

**SEAT BASE AND HEIGHT ADJUSTER
(WITH NON-SUSPENDED SEAT)**

T137895 -UN-08FEB01

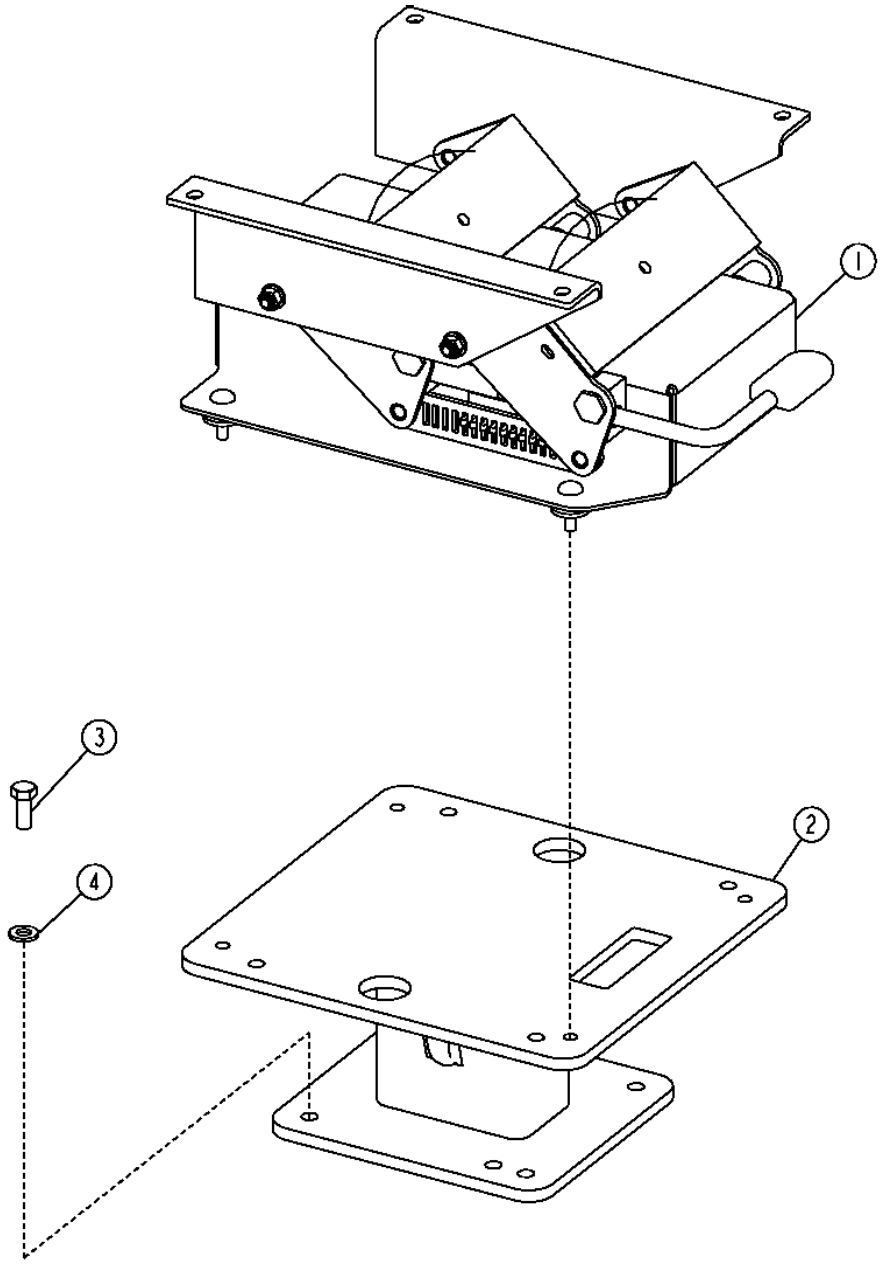

T137895

SEAT BASE AND HEIGHT ADJUSTER
(WITH NON-SUSPENDED SEAT)

KEY	PART NO.	PART NAME	QTY	SERIAL NO.	REMARKS
1	AT186204	ADJUSTER	1		
2	AT184609	BASE	1		
3	19M7402	CAP SCREW	4		M10 X 25
4	24M7239	WASHER	4		

AIR SUSPENSION SEAT AND SHOCK ABSORBER
(SERIAL NO. 849689-)

TP57915 -UN-31AUG98

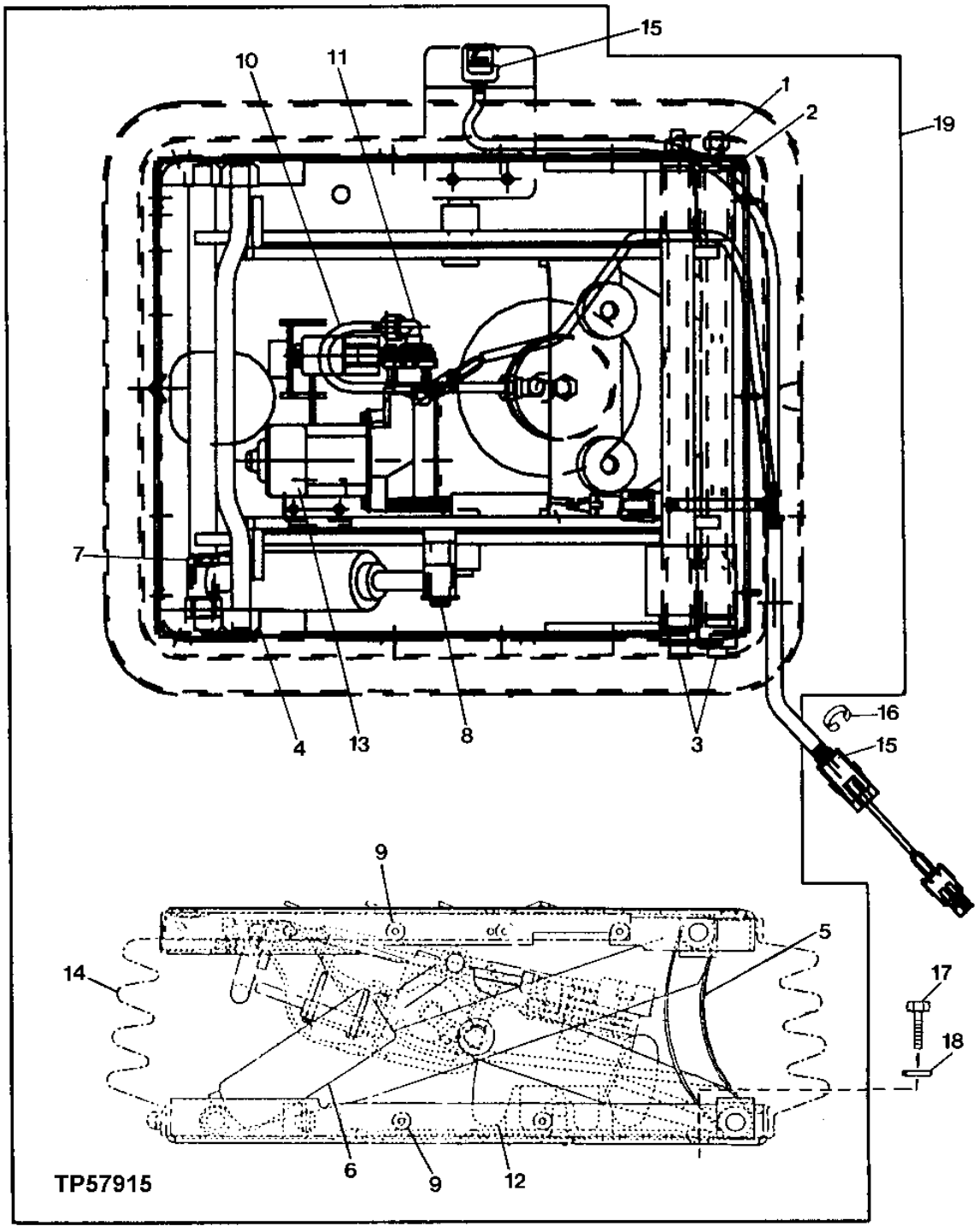

AIR SUSPENSION SEAT AND SHOCK ABSORBER
(SERIAL NO. 849689-)

KEY	PART NO.	PART NAME	QTY	SERIAL NO.	REMARKS
1	.....	LOCK NUT	2		(A)
2	.....	SHAFT	4		(A)
3	.....	BEARING	2		(A)
4	AT173314	SEAT BEARING ROLLER KIT	1		SUSPENSION ROLLER KIT
5	AT173315	KIT	1		TETHER BELT SERVICE KIT
6	.....	ABSORBER	1		(B)
7	.....	BEARING	2		(B)
8	.....	BOLT	1		(B)
9	AT173321	SEAT SUSPENSION BOOT KIT	1		BOOT CLIP SERVICE KIT
10	.....	LINE	1		(C)
11	.....	FITTING	2		(C)
12	AT208486	KIT	1		AIR SPRING SEAT KIT, (AIR BLADDER SPRING)
	AT208483	HOUSING	1		LOWER HOUSING WELDMENT KIT
13	AT198694	KIT	1		COMPRESSOR KIT
14	AT208491	KIT	1		BOOT SERVICE KIT (INCLUDES AT173321)
15	AT183810	KIT	1		SUSPENSION SWITCH KIT
16	T164714	GROMMET	1		
17	19M7402	CAP SCREW	4		
18	24M7239	WASHER	4		
19	AT186224	SEAT SUSPENSION	1		(ALSO ORDER AT189145) AIR (INCLUDES AT208485)
	AT173313	SHAFT	1		INCLUDES ALL (A) PARTS (SUSPENSION SHAFT SERVICE) (ALSO ORDER AT189145)
	AT182954	KIT	1		INCLUDES ALL (B) PARTS (SUSPENSION SHOCK SERVICE)
	AT208493	FITTING KIT	1		INCLUDES ALL (C) PARTS (AIRLINE/FITTING SERVICE)
	AT208485	ARM	1		(NOT ILLUSTRATED) AIR SUSPENSION ARM WELDMENT)
20	T55224	BUMPER	1		(NOT ILLUSTRATED)

CAB HEATER AND AIR CONDITIONING DUCTING

T142008 -UN-10MAY01

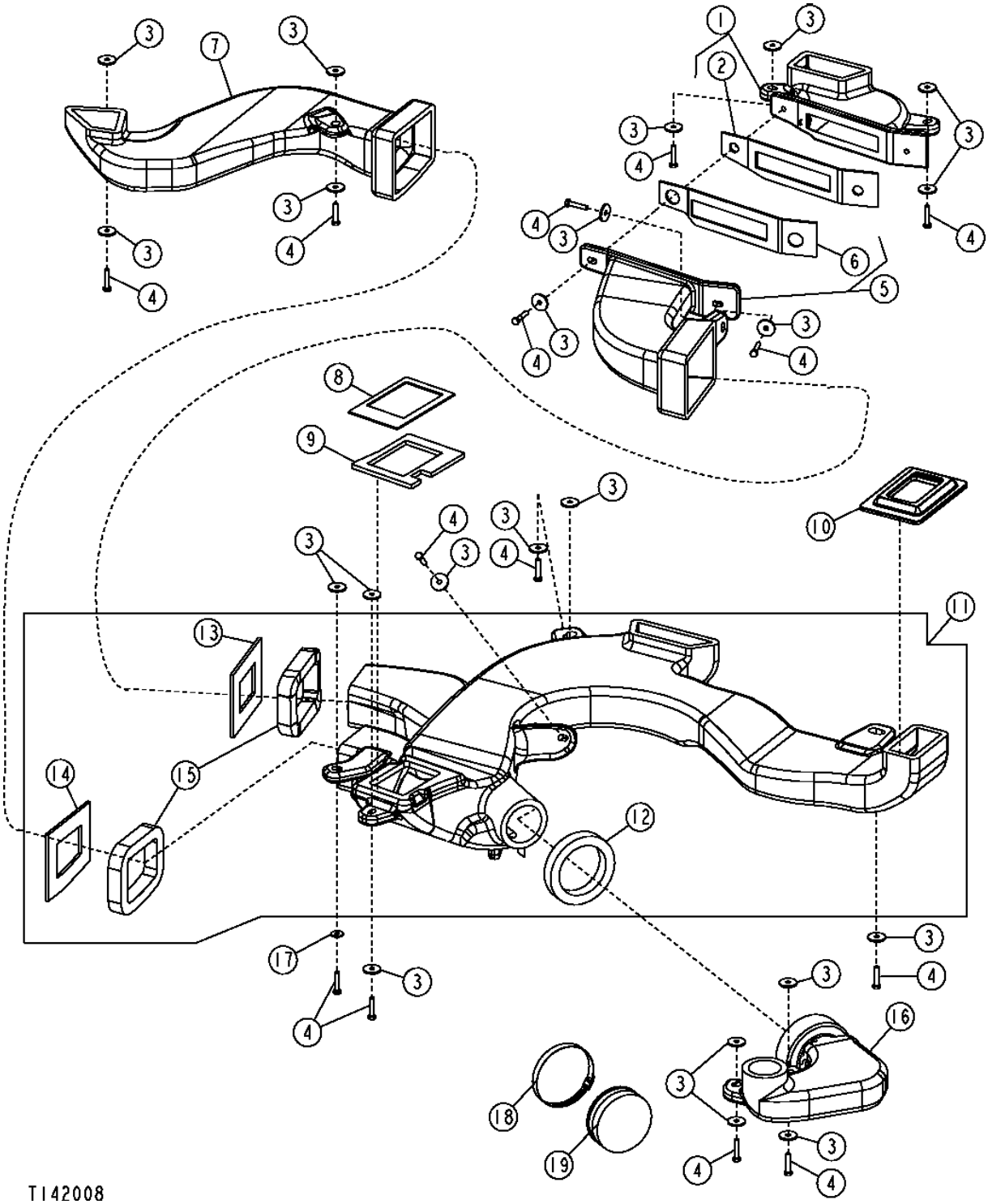

CAB HEATER AND AIR CONDITIONING DUCTING

KEY	PART NO.	PART NAME	QTY	SERIAL NO.	REMARKS
1	AT188307	AIR DUCT	1		(LEFT REAR)
2	T185841	ISOLATOR	1		
3	24H1296	WASHER	21		
4	19M7922	CAP SCREW	14		M8 X 40
5	AT192074	AIR DUCT	1		(REAR CONNECTOR)
6	T185840	ISOLATOR	1		
7	T167325	AIR DUCT	1		(RIGHT REAR)
8	T185842	ISOLATOR	1		
9	T185843	ISOLATOR	1		
10	T185850	ISOLATOR	1		
11	AT188306	AIR DUCT	1		(MAIN BOTTOM)
12	T185867	ISOLATOR	1		
13	T185779	ISOLATOR	1		
14	T185780	ISOLATOR	1		
15	T185866	ISOLATOR	2		
16	T167324	AIR DUCT	1		(RIGHT FRONT)
17	24M7207	WASHER	2		
18	TY22490	HOSE CLAMP	1		
19	T185673	CAP	1		

CAB HEATER AND AIR CONDITIONING DUCTING

T157864 -UN-31OCT02

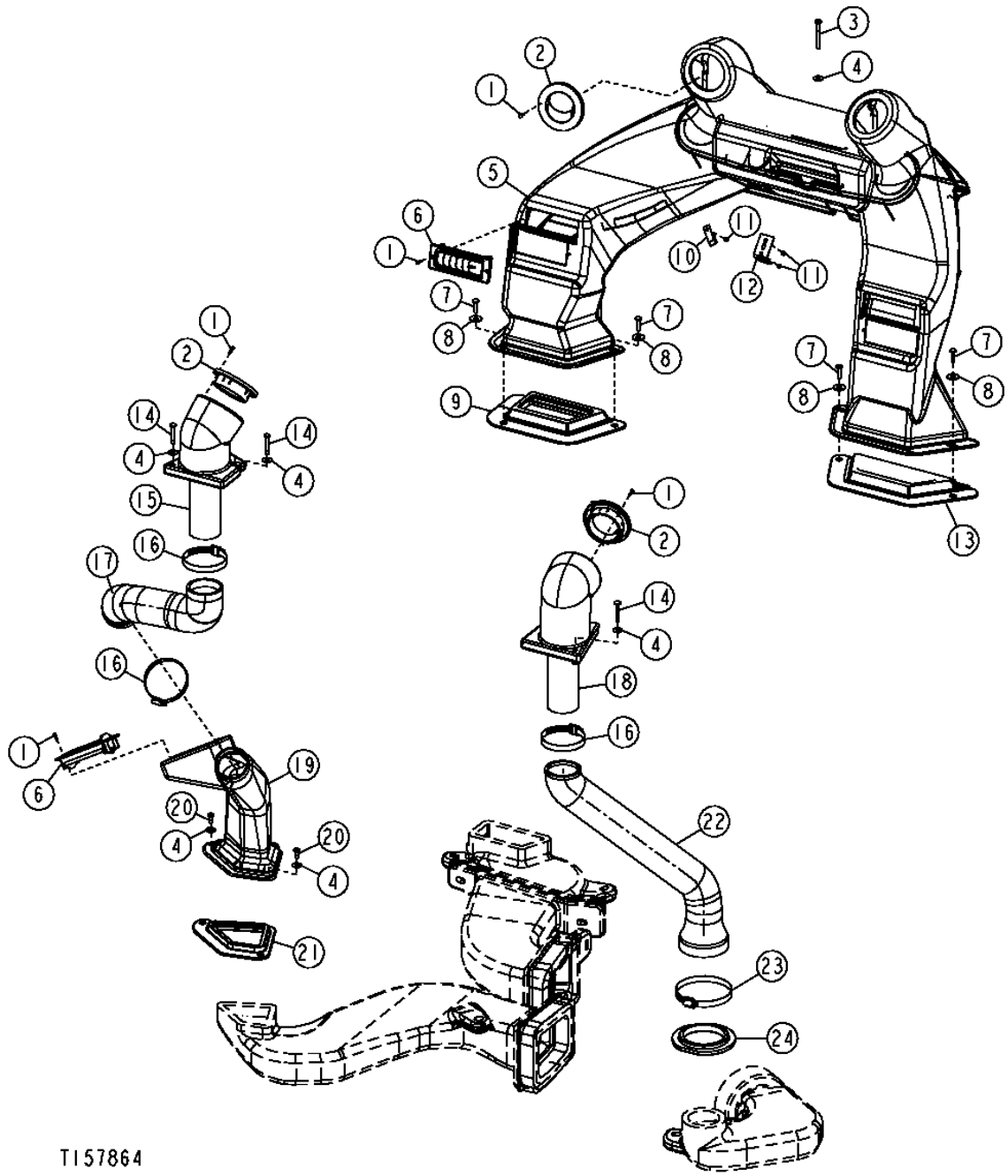

CAB HEATER AND AIR CONDITIONING DUCTING

KEY	PART NO.	PART NAME	QTY	SERIAL NO.	REMARKS
1	37M7333	SCREW	22		
2	AT227669	LOUVER	4		(SUB FOR AT151036)
3	T186873	SCREW	1		M6 X 60
4	24H1646	WASHER	7		
5	T185540	AIR DUCT	1		(LEFT FENDER) WITH AIR CONDITIONING
	T185744	AIR DUCT	1		LEFT FENDER) WITHOUT AIR CONDITIONING
6	AT177227	LOUVER	AR		
7	21M7310	SCREW	4		M6 X 25, (SUB FOR T134895, THIS APPLICATION)
8	24M7207	WASHER	4		
9	T185848	ISOLATOR	1		
10	T185743	CLIP	3		
11	T185769	SCREW	5		
12	T183560	BRACKET	1		
13	T185849	ISOLATOR	1		
14	T134874	SELF-LOCKING SCREW	4		M6 X 40, (SUB FOR 21M7403, THIS APPLICATION)
15	T185479	AIR DUCT	1		(REAR EXTENSION)
16	AR62936	CLAMP	3		
17	T185482	AIR DUCT	1		(REAR UPPER)
18	T185478	AIR DUCT	1		(FRONT EXTENSION)
19	T185481	AIR DUCT	1		(REAR LOWER)
20	21M7310	SCREW	2		M6 X 25, (SUB FOR T133674, THIS APPLICATION)
21	T185847	ISOLATOR	1		
22	T185480	AIR DUCT	1		(FRONT)
23	AR21842	CLAMP	1		
24	T185846	ISOLATOR	1		

HEATER, AIR CONDITIONING WITH PRESSURIZER

T197624 -UN-03FEB04

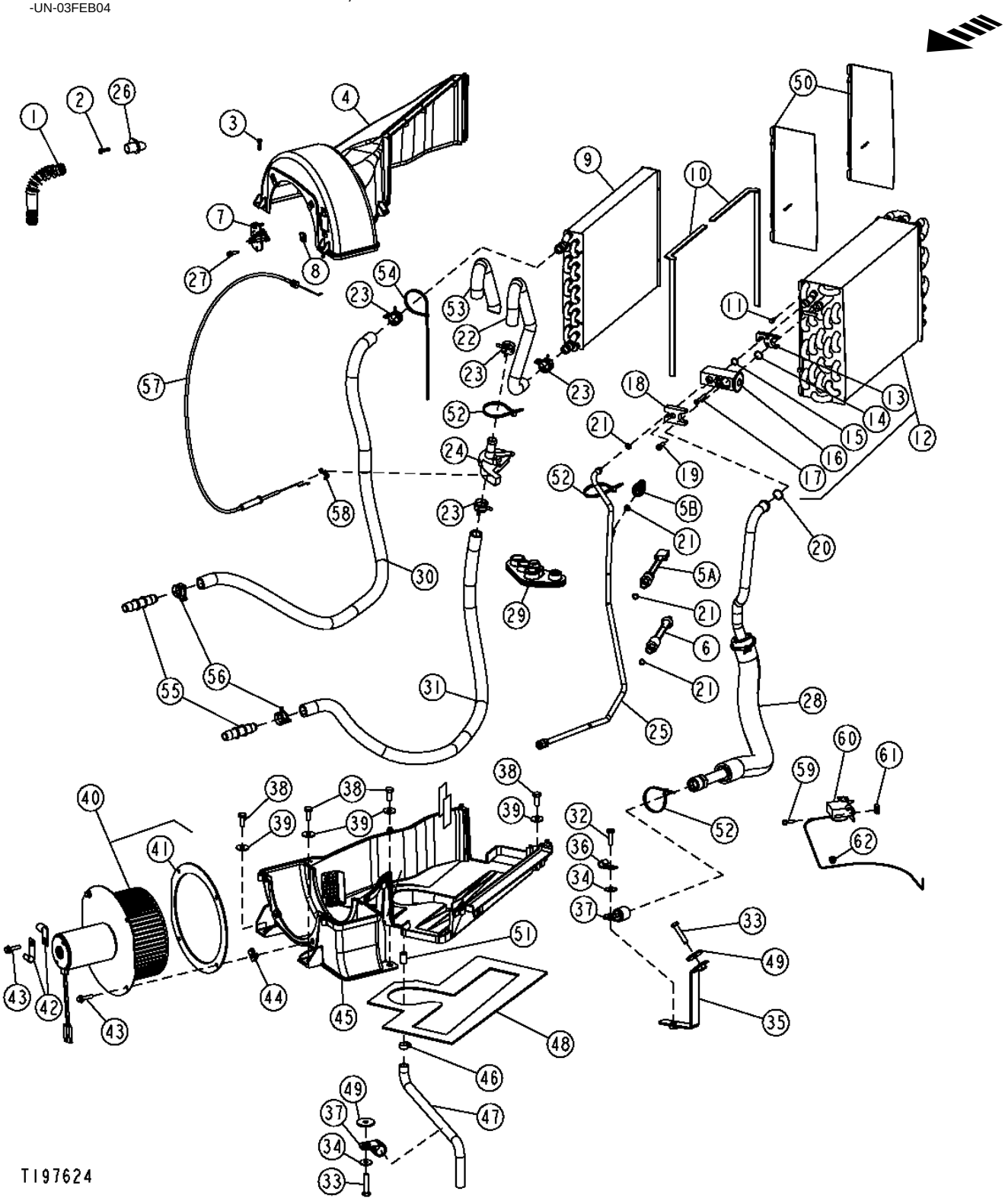

HEATER, AIR CONDITIONING WITH PRESSURIZER

KEY	PART NO.	PART NAME	QTY	SERIAL NO.	REMARKS
1	T165169	HOSE	1	-926427	
2	T184620	SCREW	1	-926427	
3	T184620	SCREW	9		
4	T164619	HOUSING	1	-926427	(TOP)
	T205969	HOUSING	1	926428-	
5A	RE155938	PRESSURE SWITCH	1	-843495	
5B	RE157329	SWITCH	1	843496-	
6	RE60888	PRESSURE SWITCH	1	-843495	
7	AT210515	RESISTOR	1		
8	R50279	NUT	2		
9	AT191993	CORE	1		(HEATER)
10	T184369	SEAL	2		
11	H85092	SCREW	4		
12	AT191994	EVAPORATOR	1		
13	T181522	PLATE	1		
14	R33259	O-RING	1		
15	R113050	O-RING	1		
16	RE174764	VALVE	1		(EXPANSION)
17	PT11778	BOLT	2		
18	R125223	PLATE	1		
19	19M8553	SCREW	1		M6 X 16
20	T143169	O-RING	1		
21	R10093	O-RING	3		
22	T185789	RADIATOR HOSE	1		
23	T184924	HOSE CLAMP	4		
24	AT193500	HAND OPERATED VALVE	1		(WATER)
25	AT192033	LINE	1	-843495	(LIQUID REFRIGERANT)
	AT303214	LINE	1	843496-	(LIQUID REFRIGERANT)
26	RE36133	TUBE	1	-926427	(AIR OUTLET)
27	37M7073	SCREW	2		
28	AT191990	REFRIGERANT HOSE	1		
29	T166297	GROMMET	1		
30	.....	BULK HOSE	1		(MAKE FROM T60811, CUT TO 38 INCHES)
31	.....	BULK HOSE	1		(MAKE FROM T60811, CUT TO 33 INCHES)
32	19M7407	CAP SCREW	1		M8 X 25
33	19M7922	CAP SCREW	2		M8 X 40
34	24H1296	WASHER	2		
35	AT192509	BRACKET	1		
36	T13814	CLAMP	1		
37	T70659	CLAMP	2		
38	19M7881	SCREW	4		M8 X 20
39	24M7207	WASHER	4		
40	.....	BLOWER MOTOR	1	-926427	(AT195731 NO LONGER AVAILABLE) (PRESSURIZER) (SUB AT307691)
	AT307691	BLOWER MOTOR	1	926428-	

THIS PARTS LISTING IS CONTINUED

HEATER, AIR CONDITIONING WITH PRESSURIZER

T197624 -UN-03FEB04

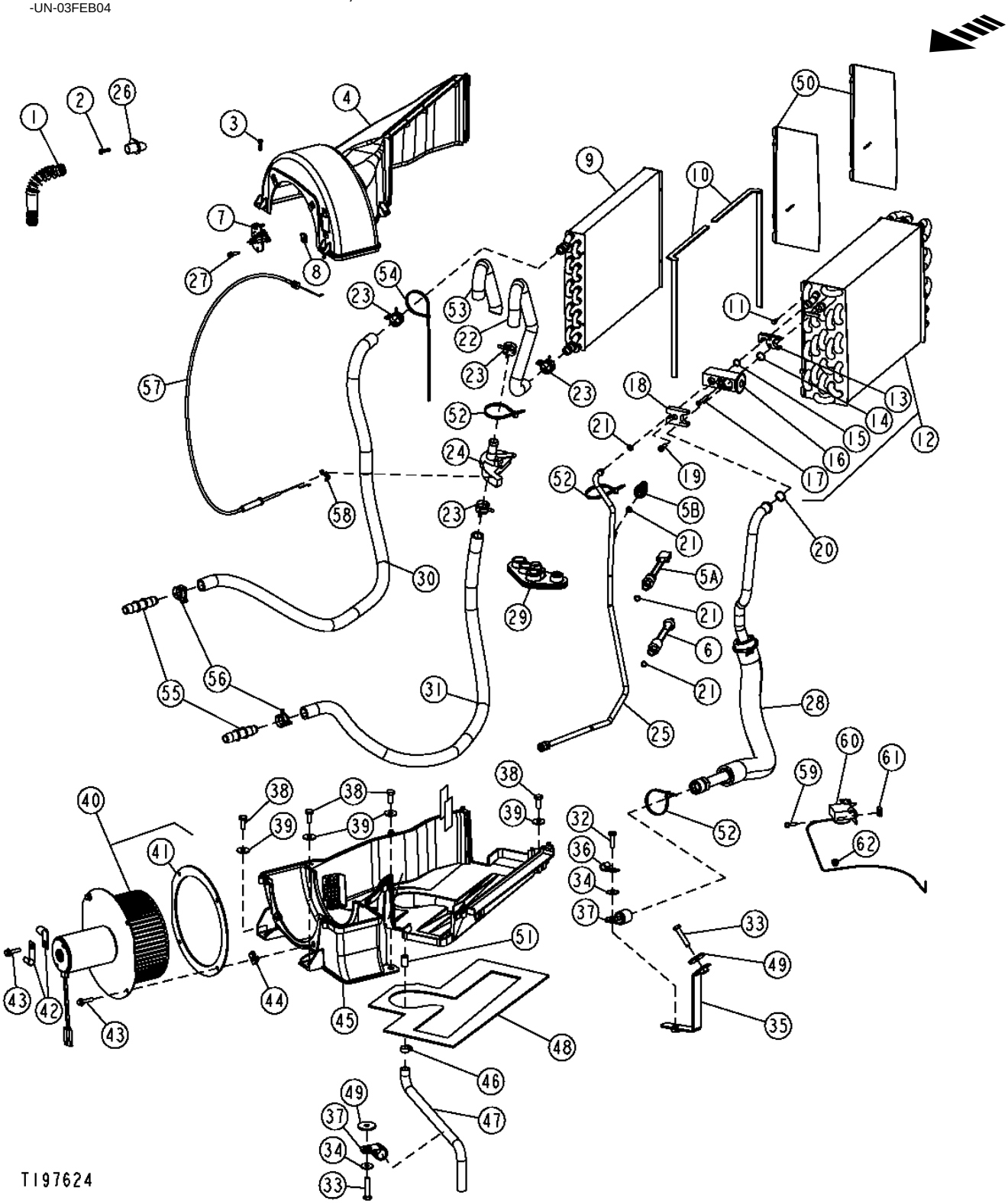

HEATER, AIR CONDITIONING WITH PRESSURIZER

KEY	PART NO.	PART NAME	QTY	SERIAL NO.	REMARKS
41	T184368	SEAL	2		
42	AH89557	CLIP	2		
43	T178251	CAP SCREW	4		
44	M84972	NUT	5		
45	T164618	HOUSING	1		(BOTTOM)
46	AR77962	HOSE CLAMP	1		
47	AT186304	HOSE	1		(CONDENSATE)
48	T185845	ISOLATOR	1		
49	24H1296	WASHER	2		
50	T184414	SHEET	2		
51	T184415	PLUG	1		
52	R44302	TIE BAND	4		
53	T186766	HOSE GUARD	1		
54	H77698	TIE BAND	1		
55	T160492	ELEC. CONNECTOR ACCESSORY	2		
56	R117721	CLAMP	2		
57	AT186289	CABLE	1		(HEATER CONTROL)
58	L57881	CLIP	1		
59	37M7073	SCREW	2		
60	RE198074	TEMPERATURE SWITCH	1		A/C THERMOSTAT SWITCH
61	R50279	NUT	2		
62	T178971	GROMMET	1		

CANOPY HEATER,HOSES AND HEATER CONTROL

T134910 -UN-08NOV00

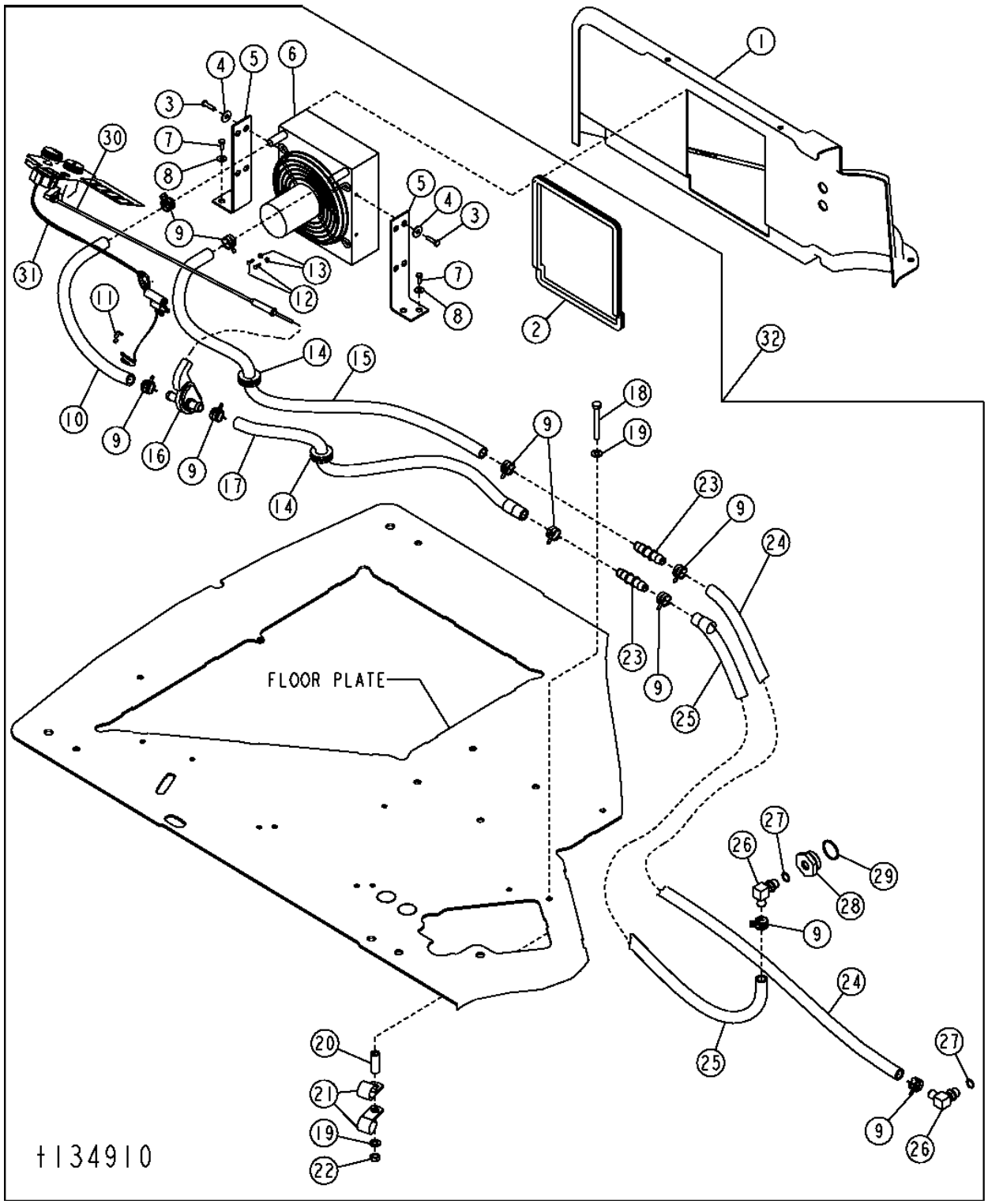

CANOPY HEATER,HOSES AND HEATER CONTROL

KEY	PART NO.	PART NAME	QTY	SERIAL NO.	REMARKS
1	AT304593	COVER	1		(SUB FOR T185763)
2	.....	ISOLATOR	1		(MAKE FROM T58056 BULK MATERIAL, CUT TO 3.23 FT. (986 MM)
3	19H1914	CAP SCREW	4		1/4" X 1"
4	24H1287	WASHER	4		
5	T185762	BRACKET	2		
6	AT169175	HEATER	1		
7	19M8425	CAP SCREW	4		M6 X 16
8	24M7139	WASHER	4		
9	R117721	CLAMP	10		
10	.....	HOSE	1		(MAKE FROM T60811 BULK MATERIAL, CUT TO 1.37 FT. (416MM)
11	L57881	CLIP	1		
12	21H1290	SCREW	2		0.138" X 1/2", CONNECTS HEATER UNIT ELECTRICL EYELETS TO VEHICLE HARNESS
13	14H1026	NUT	2		0.138"
14	T58739	GROMMET	2		
15	.....	HOSE	1		(MAKE FROM T60811 BULK MATERIAL, CUT TO 2.92 FT. (890MM)
16	AT193500	HAND OPERATED VALVE	1		(TEMPERATURE/HEATER)
17	.....	HOSE	1		(MAKE FROM T60811 BULK MATERIAL, CUT TO 2.21 FT. (675MM)
18	19M8081	CAP SCREW	1		M10 X 80
19	24M7239	WASHER	2		
20	T101975	BUSHING	1		
21	R46667	CLAMP	2		
22	14M7274	NUT	1		M10
23	T160492	ELEC. CONNECTOR ACCESSORY	2		
24	.....	BULK HOSE	1		(MAKE FROM T60811 CUT TO 6' LENGTH)
25	.....	BULK HOSE	1		(MAKE FROM T60811 CUT TO 5.2'LENGTH)
26	AT174697	PIPE ELBOW	2		
27	51M7043	O-RING	2		
28	R123616	PLUG	1		
29	U13639	O-RING	1		
30	AT186289	CABLE	1		
31	AT191507	MOTOR WIRING HARNESS	1		
32	**AT192200**	**COOLANT HEATER**	**1**		**(WHOLE GOODS)**

CAB HEATER
(20,000 BTU)

TP32349 -UN-01JAN94

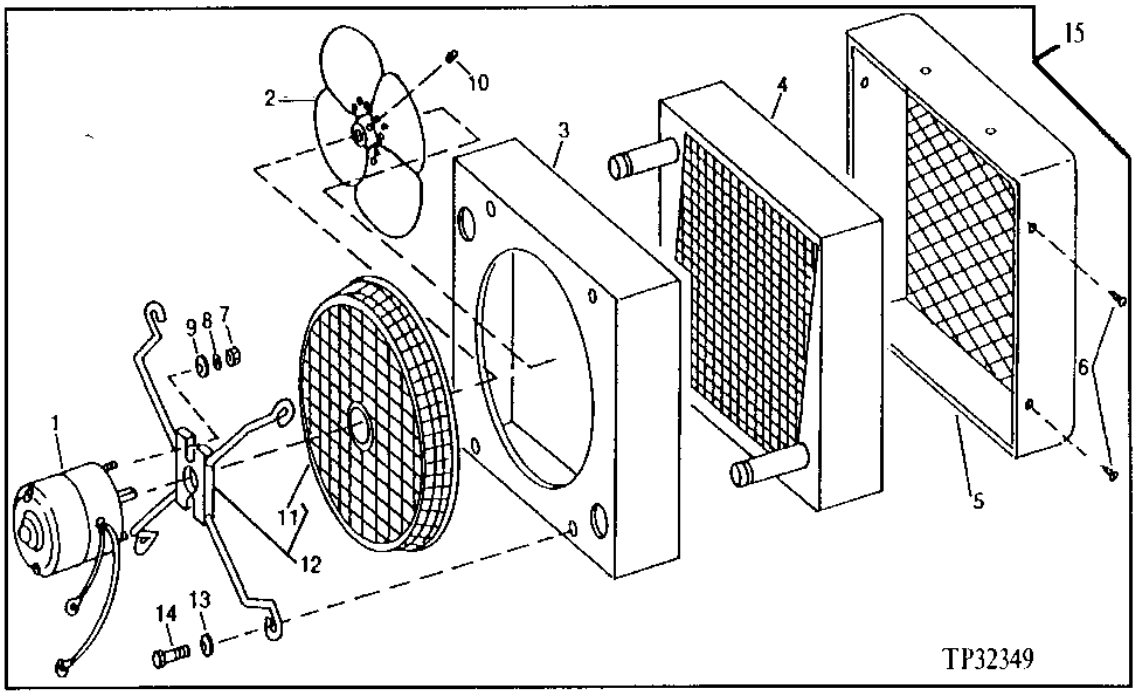

KEY	PART NO.	PART NAME	QTY	SERIAL NO.	REMARKS
1	AT169180	ELECTRIC MOTOR	1		
2	AT112810	FAN	1		
3	.....	CASE	1		(ORDER AT169175)
4	AT156440	CORE	1		
	AT169929	HEATING ELEMENT	1		(NOT ILLUSTRATED)
5	.....	SHROUD	1		(ORDER AT169175)
6	37H43	SCREW	4		
7	14H778	NUT	2		0.190"
8	12M7060	WASHER	2		
9	24H1283	WASHER	2		
10	22H897	SET SCREW	1		1/4" X 1/4"
11	.....	SCREEN	1		(ORDER T114774)
12	T114774	GUARD	1		
13	24H1287	WASHER	4		
14	19H1227	CAP SCREW	4		1/4" X 1/2"
15	AT169175	HEATER	1		

MEMORANDA

AIR CONDITIONING COMPRESSOR, MOUNTING BRACKETS, RECEIVER DRYER,CONDENSER AND HOSES

T212916 -UN-21JUL05

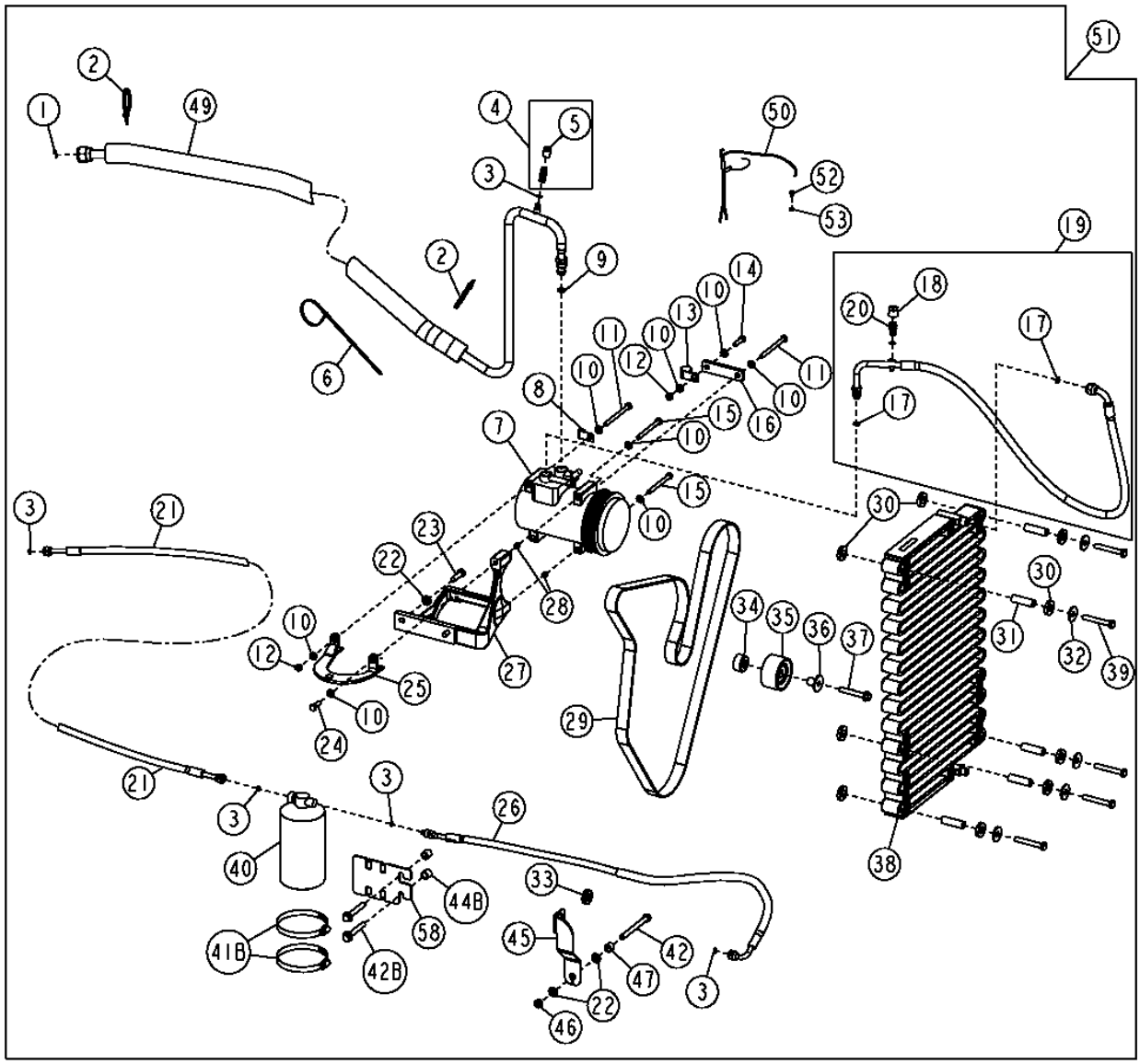

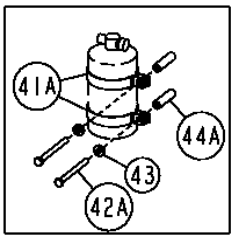

T212916

AIR CONDITIONING COMPRESSOR, MOUNTING BRACKETS, RECEIVER DRYER,CONDENSER AND HOSES

KEY	PART NO.	PART NAME	QTY	SERIAL NO.	REMARKS
1	T143169	O-RING	2		
2	R44302	TIE BAND	AR		
3	R10093	O-RING	7		
4	AT181530	FLOW CONTROL HYD. VALVE	1		(LOW SIDE)
5	T162557	CAP	1		
6	H77698	TIE BAND	1		
7	TY6764	COMPRESSOR	1		
8	AH89557	CLIP	1		(SUB FOR T19935, THIS APPLICATION)
9	R33259	O-RING	1		
10	24M7238	WASHER	8		
11	19M8456	CAP SCREW	2		M8 X 100
12	14M7273	NUT	2		M8
13	T78787	CLAMP	1		
14	19M7513	CAP SCREW	1		M8 X 30
15	19M8539	CAP SCREW	2		M8 X 90
16	M86533	STRAP	1		
17	R113050	O-RING	2		
18	T160938	CAP	1		
19	AT185982	REFRIGERANT HOSE	1		
20	AT178930	HYDRAULIC CYLINDER PORT	1		(HIGH SIDE)
21	AT195409	REFRIGERANT HOSE	1		
22	24M7239	WASHER	4		
23	19M7550	CAP SCREW	2		M10 X 35
24	19M7407	CAP SCREW	1		M8 X 25
25	R504191	BRACKET	1		
26	AT185983	REFRIGERANT HOSE	1		
27	R504192	BRACKET	1		
28	34M7189	SPRING PIN	2		
29	R500382	V-BELT	1		
30	T158424	WASHER	8		RUBBER
31	L3483N	BUSHING	4		
32	24M7101	WASHER	15		
33	R115350	GROMMET	1		
34	R500320	SPACER	1		
35	RE505264	IDLER	1		
36	R502079	SLEEVE	1		
37	19M7808	SCREW	1		M10 X 65
38	AT189543	VAPOR CONDENSER	1		
39	19M8049	CAP SCREW	2		M10 X 80
40	AT162848	RECEIVER-DRYER	1		
41A	99M7102	CLAMP	2	-XXXXXX	
41B	AR21842	CLAMP	2	XXXXXX-	
42A	19M7875	CAP SCREW	2	-XXXXXX	M10 X 70
42B	19M7804	SCREW	2	XXXXXX-	M10 X 40
43	24H1781	WASHER	2	-XXXXXX	
44A	28H3381	SPACER	2		
44B	28H3381	SPACER	2		
45	T185949	BRACKET	1		
46	14M7274	NUT	1		M10
47	28H3394	BUSHING	1		
48	19M8049	CAP SCREW	2		M10 X 80
49	AT195411	REFRIGERANT HOSE	1		
50	AT190658	AC COMPRESSOR WRG HARNESS	1		
51	**AT187441**	**KIT**	**1**		**(WHOLE GOODS)**
52	21M7283	SCREW	1		
53	12H316	LOCK WASHER	1		
54	T145560	LABEL	1		
55	L3483N	BUSHING	1		
56	24M7101	WASHER	1		
57	19M7875	CAP SCREW	1		
58	T212352	BRACKET	1	XXXXXX-	

HEAT AND NOISE BARRIER

T153223 -UN-02APR02

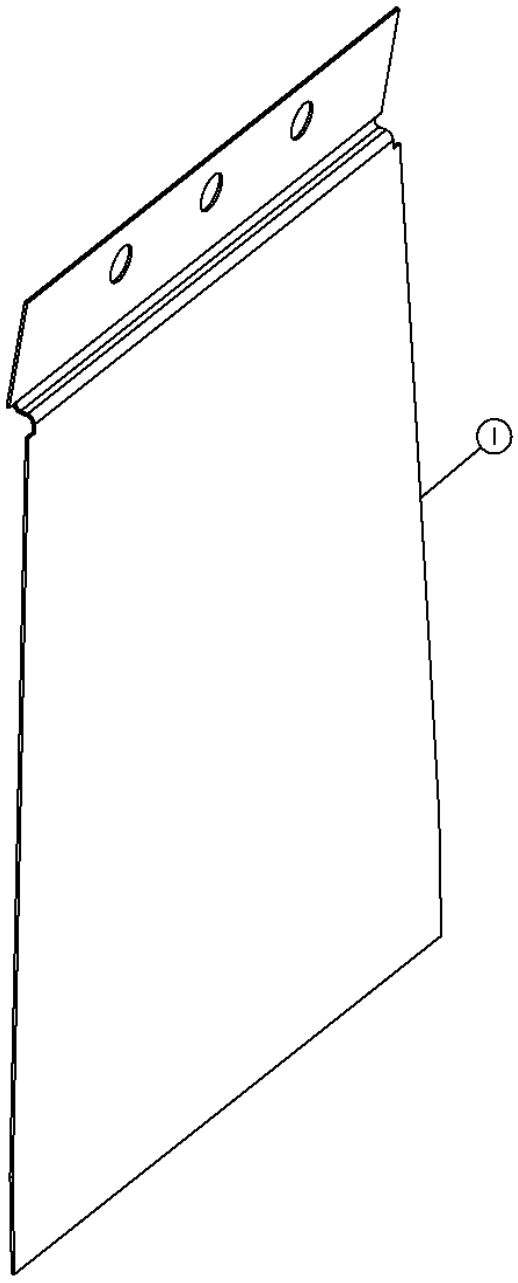

T153223

HEAT AND NOISE BARRIER

KEY	PART NO.	PART NAME	QTY	SERIAL NO.	REMARKS
1	T187216	DEFLECTOR	1		

HOOD AND ENGINE SIDE PANELS

T152792 -UN-06JUN02

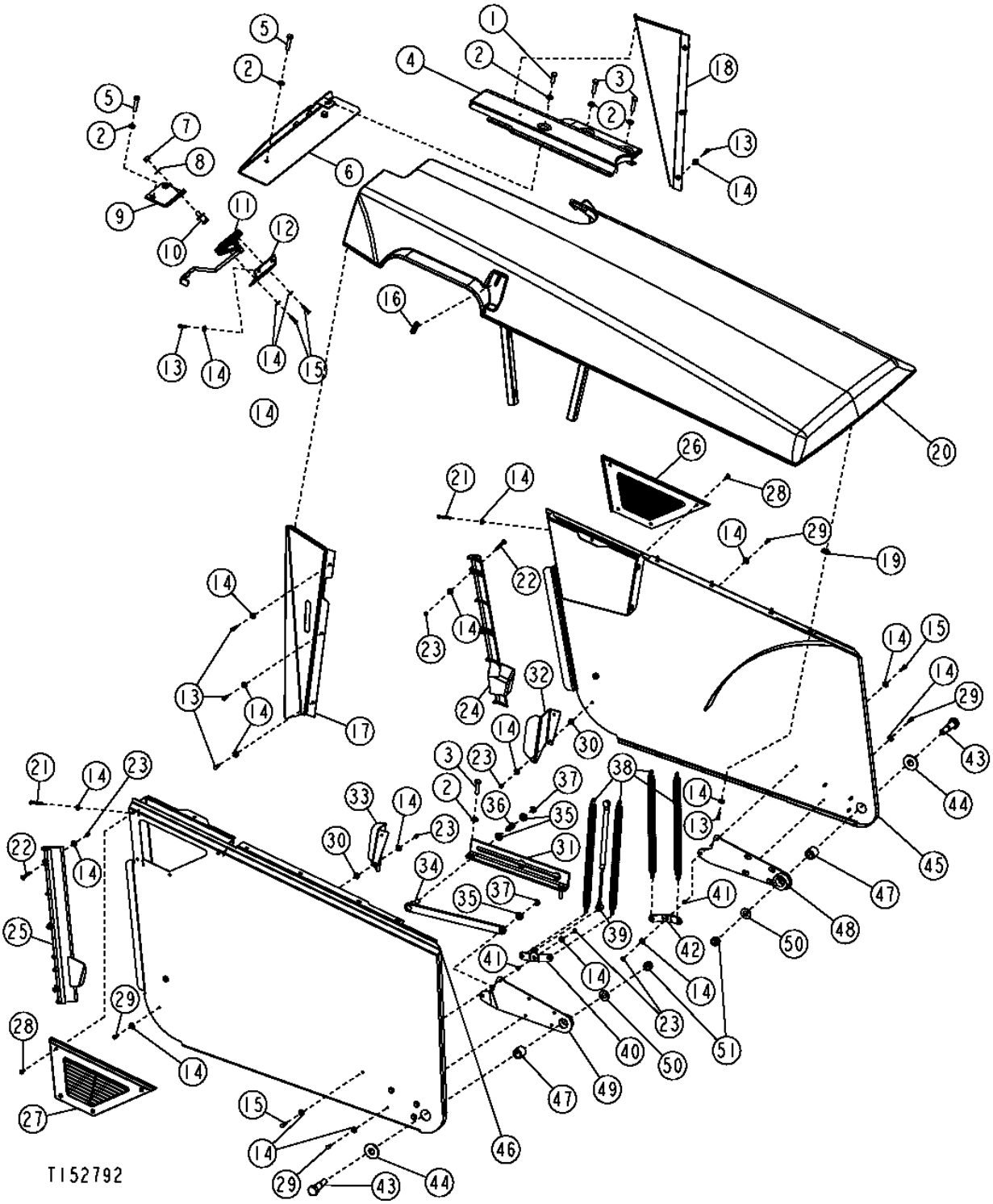

HOOD AND ENGINE SIDE PANELS

KEY	PART NO.	PART NAME	QTY	SERIAL NO.	REMARKS
1	19M7402	CAP SCREW	1		M10 X 25
2	24M7239	WASHER	9		
3	19M8637	CAP SCREW	4		M10 X 40
4	AT196879	HOOD	1		STATIONARY
5	19M8637	CAP SCREW	4		M10 X 40
6	AT196619	SUPPORT	1		
7	14H1047	NUT	1		7/16"
8	T105740	WASHER	1		
9	T188967	BRACKET	1		STRIKER BOLT BRACKET
10	AR91896	STRIKER	1		
11	AT196358	LATCH	1		
12	T187954	BRACKET	1		
13	19M7077	CAP SCREW	18		M6 X 20
14	24M7139	WASHER	54		
15	19M7933	CAP SCREW	4		M6 X 25
16	T188642	GROMMET	1		
17	AT199612	COVER	1		RIGHT
18	AT199613	COVER	1		LEFT
19	T190549	NUT	10		CLAMP-ON
20	AT196308	HOOD	1		
21	19M8477	CAP SCREW	8		M6 X 40
22	19M9100	SCREW	6		M6 X 50
23	14M7272	NUT	12		M6
24	T184393	GUIDE	1		LEFT
25	T165976	GUIDE	1		RIGHT
26	T165916	LOUVER	1		LEFT
27	T165915	LOUVER	1		RIGHT
28	21M7246	SCREW	8		M6 X 16
29	19M8425	CAP SCREW	12		M6 X 16
30	24M7250	WASHER	4		
31	T165978	GUIDE	1		
32	T184788	BRACKET	1		LEFT
33	T184787	BRACKET	1		RIGHT
34	AT189661	BAR	1		
35	24M7047	WASHER	3		
36	T165981	COMPRESSION SPRING	1		
37	R26871	SNAP RING	2		
38	T165977	EXTENSION SPRING	4		
39	AT311378	GAS OPERATED CYLINDER	1		(SUB FOR AT196433)
40	AT196425	STRAP	1		RIGHT
41	28H3359	WASHER	2		
42	T190200	STRAP	1		LEFT
43	T165975	BOLT	2		
44	24H1236	WASHER	2		
45	AT196307	PANEL	1		LEFT
46	AT196306	PANEL	1		RIGHT
47	T165911	BUSHING	2		
48	AT196487	PIVOT	1		LEFT
49	AT196373	PIVOT	1		RIGHT
50	24M7241	WASHER	2		
51	14M7328	LOCK NUT	2		M16

BATTERY ENCLOSURE AND TOOL BOX

T208946 -UN-04MAR05

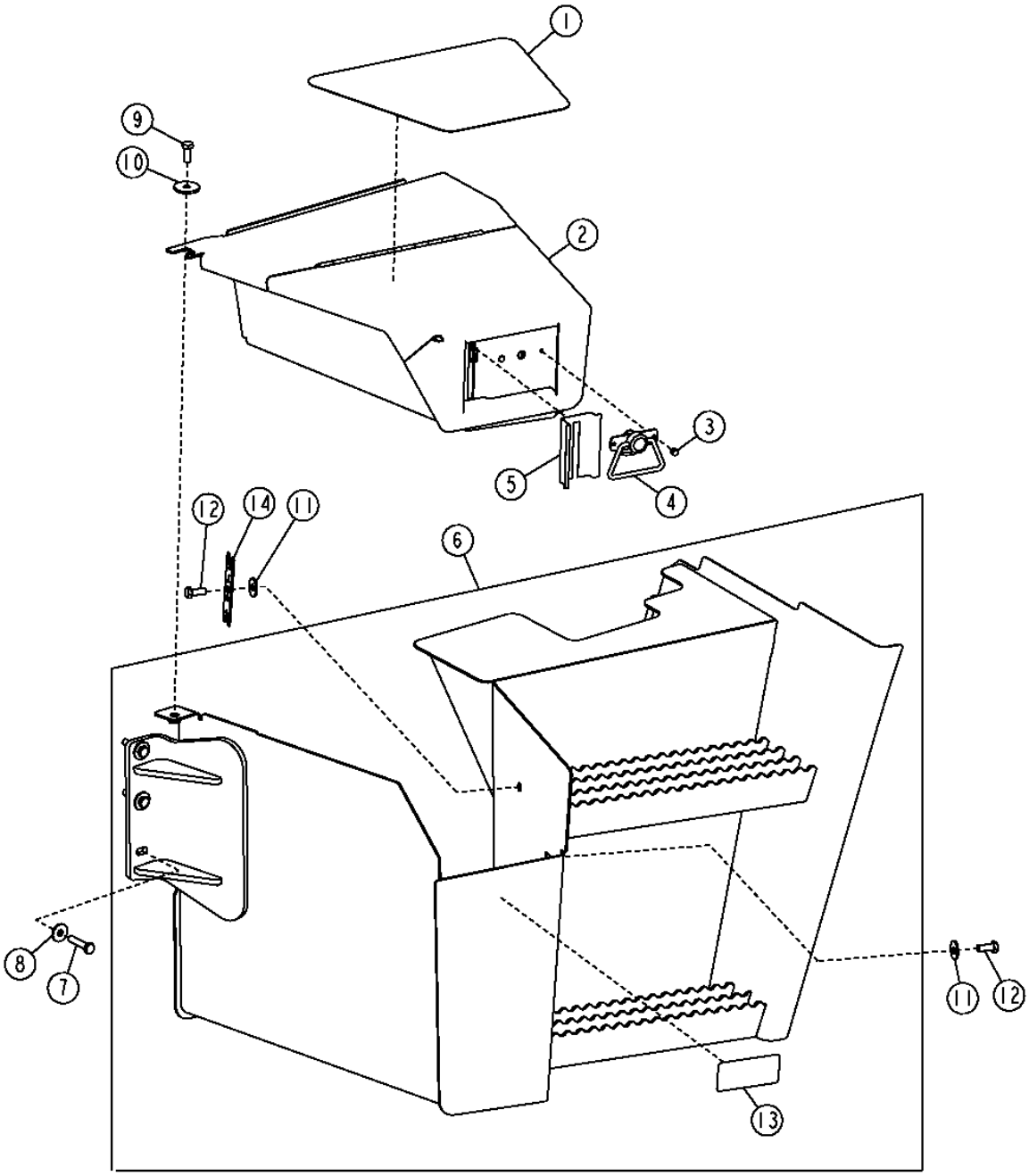

T208946

BATTERY ENCLOSURE AND TOOL BOX

KEY	PART NO.	PART NAME	QTY	SERIAL NO.	REMARKS
1	T165290	ANTI-SKID PAD	1		
2	AT183428	TOOLBOX	1		
3	M63200	RIVET	2		
4	T185360	LATCH	1		(ALSO ORDER (2) M63200)
5	T185469	LABEL	1		CLEAR PROTECTIVE LABEL
6	AT188073	BATTERY BOX	1		
7	19M7572	CAP SCREW	6		M10 X 45
8	24M7296	WASHER	6		
9	19M7402	CAP SCREW	1		M10 X 25, (SUB FOR 19M7938)
10	24H1718	WASHER	1		
11	24M7296	WASHER	2		
12	19M7402	CAP SCREW	2		M10 X 25, (SUB FOR 19M7938)
13	JD5933	REFLECTOR	1		
14	T212304	TOOL	1		STC

GRILLE AND GRILLE HOUSING

T151172 -UN-08FEB02

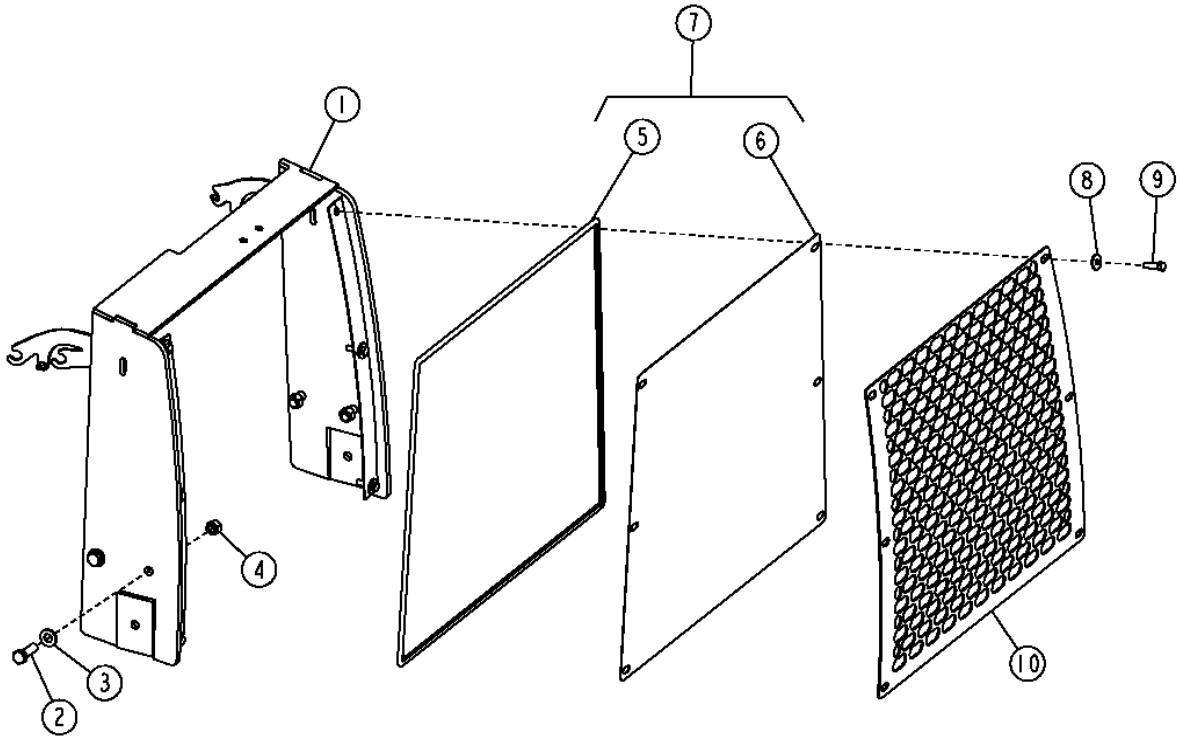

T151172

GRILLE AND GRILLE HOUSING

KEY	PART NO.	PART NAME	QTY	SERIAL NO.	REMARKS
1	AT188006	FRAME	1		
2	19M7409	CAP SCREW	4		M16 X 50
3	24M7241	WASHER	4		
4	14M7276	NUT	4		M16
5	.....	MOLDING	1		(MAKE FROM T58056, CUT TO 9.144 FT.)
6	.....	SCREEN	1		
7	**AT196279**	**SCREEN**	**1**		**WHOLE GOODS**
8	24M7296	WASHER	6		
9	19M7550	CAP SCREW	6		M10 X 35
10	T217003	GRILLE	1		(SUB FOR T167318, THIS APPLICATION)

OPERATOR STATION FENDERS AND SKIRTS

TP58069 -UN-05OCT00

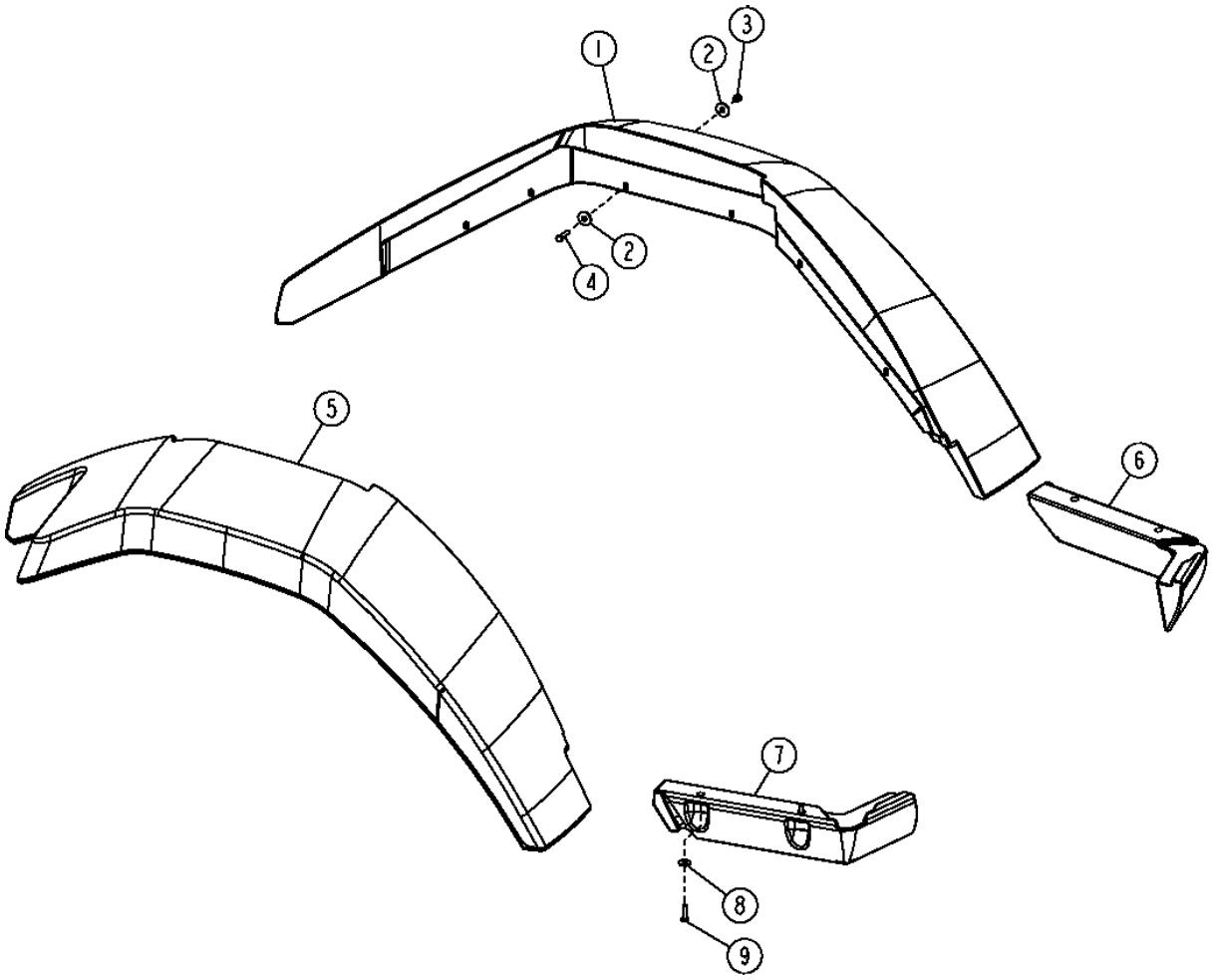

TP58069

OPERATOR STATION FENDERS AND SKIRTS

KEY	PART NO.	PART NAME	QTY	SERIAL NO.	REMARKS
1	T177187	FENDER	1		LEFT
2	24M7296	WASHER	24		
3	14M7426	LOCK NUT	12		M8
4	19M7513	CAP SCREW	12		M8 X 30
5	T165870	FENDER	1		RIGHT
6	T166331	COVER	1		LEFT
7	T166332	COVER	1		RIGHT
8	24M7298	WASHER	4		
9	19M7513	CAP SCREW	4		M8 X 30

RADIO,RADIO ANTENA,SPEAKERS AND WIRE HARNESS
(FOR USE WITH CAB ONLY)

T142516 -UN-06JUN01

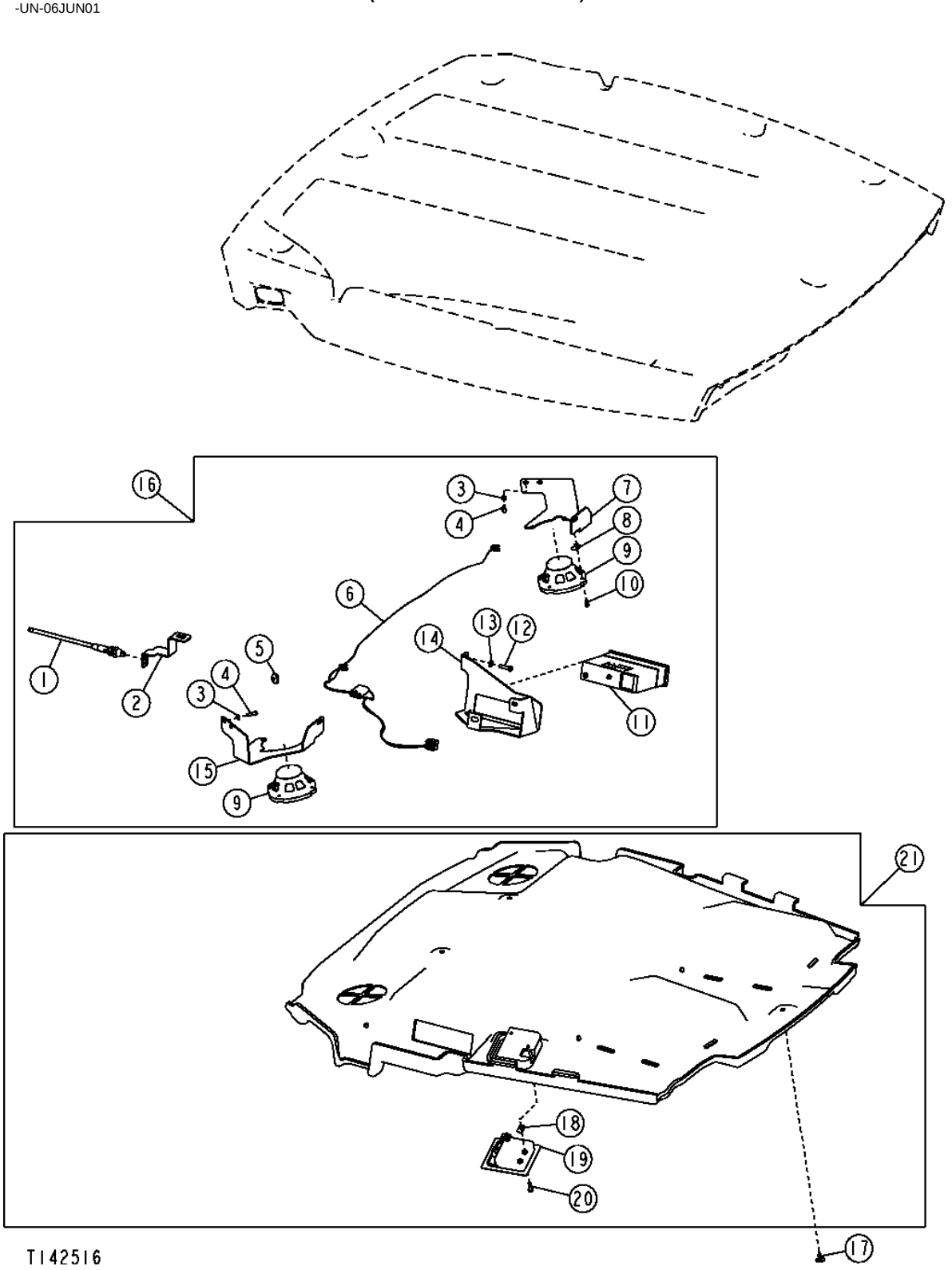

RADIO,RADIO ANTENA,SPEAKERS AND WIRE HARNESS
(FOR USE WITH CAB ONLY)

KEY	PART NO.	PART NAME	QTY	SERIAL NO.	REMARKS
1	AT199388	ANTENNA	1		
2	T167232	BRACKET	1		ANTENNA BRACKET
3	24M7054	WASHER	6		
4	19M7775	SCREW	6		M6 X 16, (SUB FOR 19M7933, THIS APPLICATION)
5	T74952	GROMMET	1		
6	AT191575	WIRING HARNESS	1		
7	T186443	BRACKET	1		LEFT SPEAKER BRACKET
8	R117892	NUT	6		RADIO/SPEAKER MOUNTING
9	AT188759	SPEAKER	2		
10	21M7271	SCREW	6		M5 X 16
11	RE190139	RADIO	1		AM/FM STEREO
12	19M7513	CAP SCREW	2		M8 X 30
13	24M7238	WASHER	2		
14	T165951	BRACKET	1		RADIO BRACKET
15	T186444	BRACKET	1		RIGHT SPEAKER BRACKET
16	**AT192217**	**RADIO**	**1**		**(WHOLE GOODS)**
17	.....	PLUG	9	-921525	(T184892 NO LONGER USED) (SUB (9) MT2485) (DRILL HOLE TO 10MM)
	MT2485	PLUG	9	921526-	FASTENER, (SUB FOR T161380)
18	M84972	NUT	2	-XXXXXX	
19	.....		1	-XXXXXX	(SUB AT320544) (ALSO ORDER AT326356) (AT185500 NLA)
	AT320544	LAMP	1	XXXXXX-	
20	T134895	SELF-LOCKING SCREW	2	-XXXXXX	
21	.....	HEADLINER	1	-XXXXXX	HEADLINER FOR RADIO, (SUB AT321005) (ALSO ORDER AT326356 AND AT320544) (AT185499 NLA)
	AT321005	HEADLINER	1	XXXXXX-	
22	AT326356	CAB WIRING HARNESS	1	-XXXXXX	

INTERIOR REAR VIEW MIRROR

T145088 -UN-24AUG01

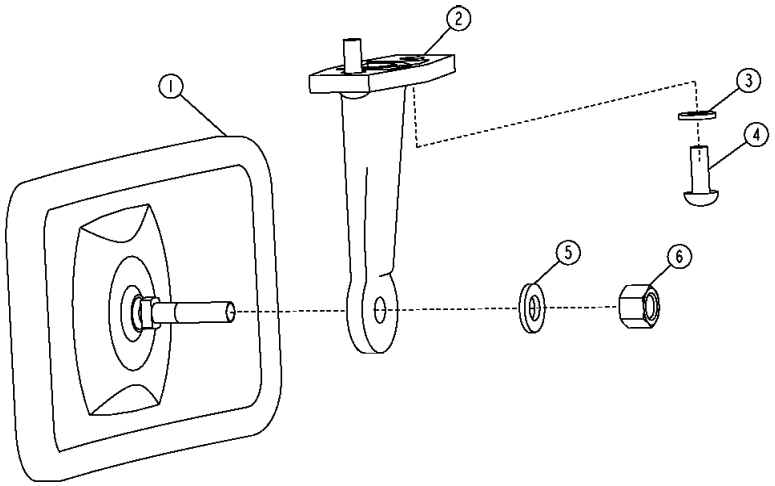

KEY	PART NO.	PART NAME	QTY	SERIAL NO.	REMARKS
1	AT222333	REAR VIEW MIRROR	1		(RECOMMENDED FOR USE IN HIGHLY CORROSIVE ENVIRONMENT)
	AT196427	REAR VIEW MIRROR	1		
2	L75379	BRACKET	1		
3	24M7054	WASHER	2		(SUB FOR 24M7293, THIS APPLICATION)
4	21M7246	SCREW	2		M6 X 16
5	24M7238	WASHER	1		
6	14M7426	LOCK NUT	1		M8

EXTERNAL MIRROR

T146538 -UN-11OCT01

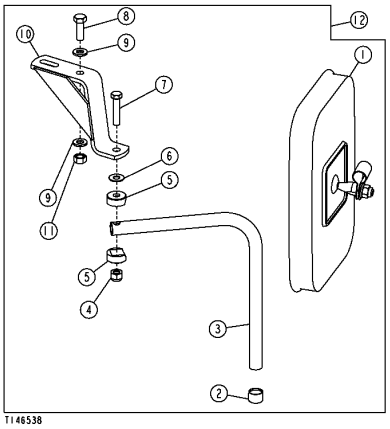

KEY	PART NO.	PART NAME	QTY	SERIAL NO.	REMARKS
1	AT103919	REAR VIEW MIRROR	2		
2	T128437	CAP	2		
3	T148817	TUBE	2		
4	T11234	LOCK NUT	2		3/8"
5	T115030	HALF CLAMP	4		
6	T60920	WASHER	2		
7	19H3217	CAP SCREW	2		3/8" X 1-3/4"
8	19M7662	CAP SCREW	2		M10 X 30
9	24M7239	WASHER	4		
10	AT195814	BRACKET	1		LEFT
	AT195815	BRACKET	1		RIGHT
11	14M7274	NUT	2		M10
12	AT186155	REAR VIEW MIRROR	1		

HORN

T154411 -UN-29APR02

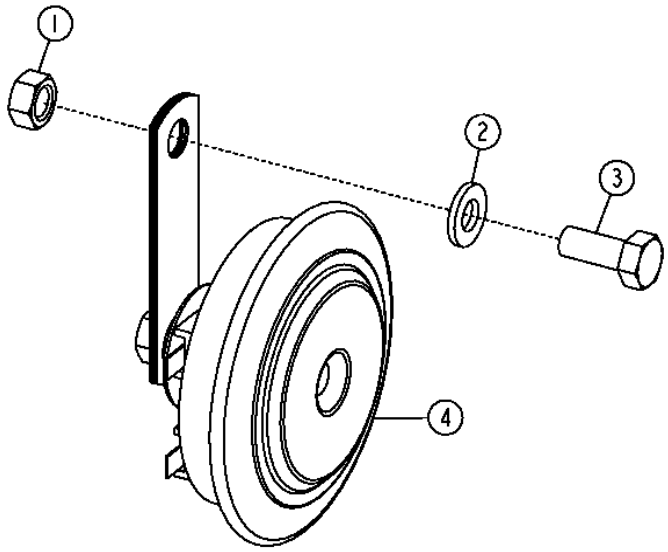

T154411

KEY	PART NO.	PART NAME	QTY	SERIAL NO.	REMARKS
1	14M7273	NUT	1		M8
2	24M7238	WASHER	1		
3	M86877	BOLT	1		M8 X 20
4	AT226281	HORN	1		(12V) (SUB FOR AT222276)

BACK-UP ALARM SYSTEM

T154413 -UN-01OCT02

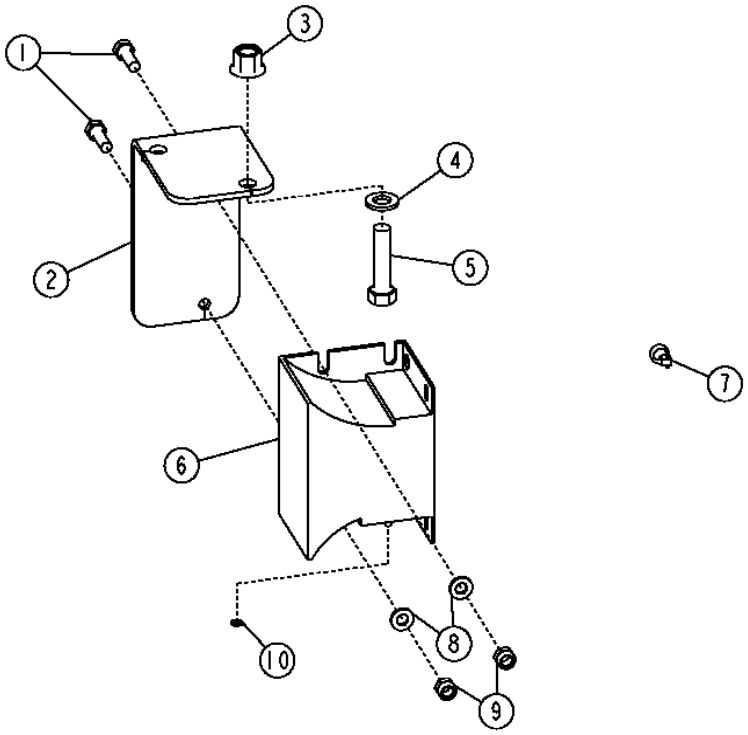

KEY	PART NO.	PART NAME	QTY	SERIAL NO.	REMARKS
1	19M7407	CAP SCREW	2		M8 X 25
2	T200479	BRACKET	1		
3	14M7401	LOCK NUT	2		
4	24M7047	WASHER	2		
5	19M7361	CAP SCREW	2		M12 X 50
6	AT120461	TRAVEL WARNING ALARM	1		
7	R44302	TIE BAND	1		
8	24M7238	WASHER	2		
9	14M7426	LOCK NUT	2		M8
10	12M7084	LOCK WASHER	2		

SUN VISOR

TP58072 -UN-09OCT00

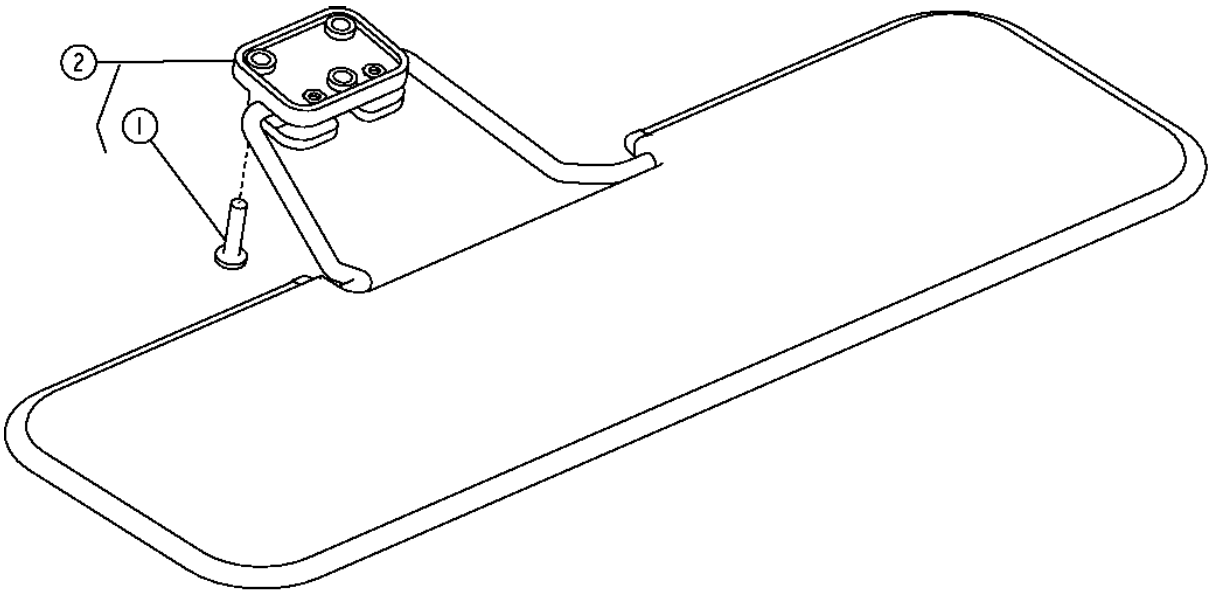

TP58072

SUN VISOR

KEY	PART NO.	PART NAME	QTY	SERIAL NO.	REMARKS
1	T134895	SELF-LOCKING SCREW	3		M6 X 25
2	AT186307	SUN VISOR	1		WHOLE GOODS

TP69633 -UN-09OCT00

SMV EMBLEM

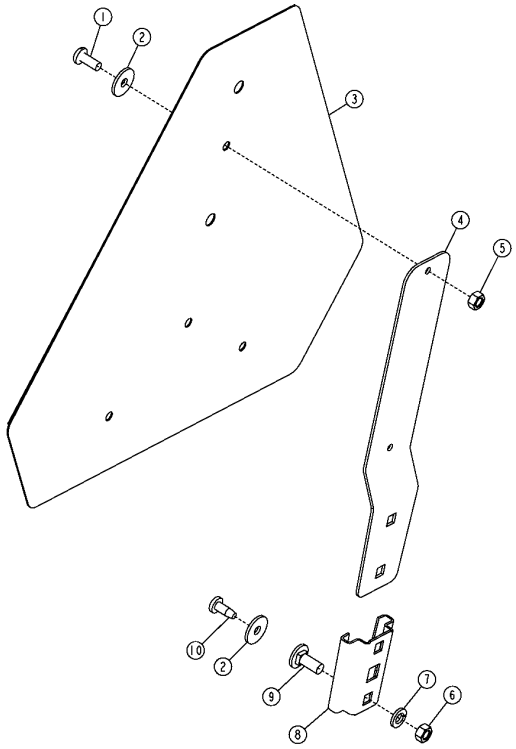

KEY	PART NO.	PART NAME TP69633	QTY	SERIAL NO.	REMARKS
1	21H1302	SCREW	2		1/4" X 5/8"
2	24M7100	WASHER	4		
3	JD5930	SMV EMBLEM	1		
	JD5920	REFLECTOR	2		
4	JD5404	BRACKET	1		
5	14H786	NUT	2		1/4"
6	14H785	NUT	2		5/16"
7	12M7065	LOCK WASHER	2		
8	JD126	BRACKET	1		
9	03H1268	BOLT	2		5/16" X 3/4"
10	37M7074	SCREW	2		

MEMORANDA

MAIN HYDRAULIC PUMP
(SERIAL NO. -XXXXXX)

T158665 -UN-20AUG02

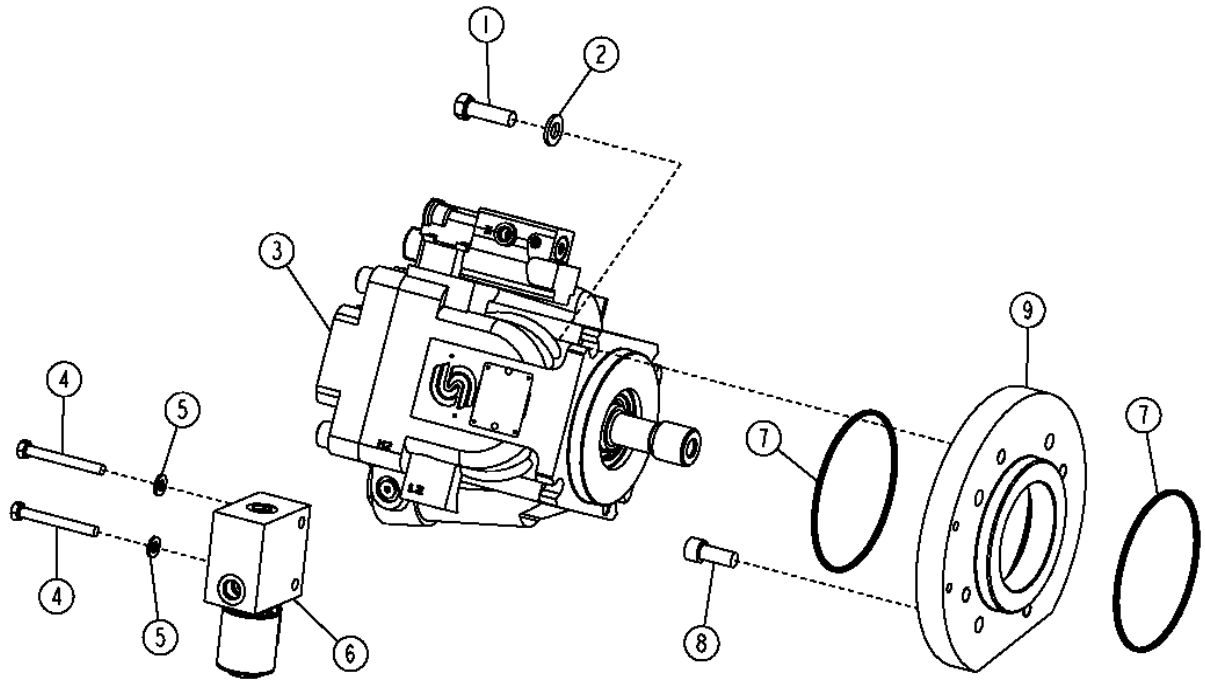

TI58665

MAIN HYDRAULIC PUMP
(SERIAL NO. -XXXXXX)

KEY	PART NO.	PART NAME	QTY	SERIAL NO.	REMARKS
1	19M7493	CAP SCREW	4		M12 X 40
2	24M7240	WASHER	4		
3	AT197843	HYDRAULIC PUMP	1		
4	19M7663	CAP SCREW	2		M8 X 70
5	24M7238	WASHER	2		
6	AT197872	SOLENOID VALVE	1		
	AT198518	HOUSING	1		
	AT198519	SOLENOID VALVE COIL	1		
7	F37030250	O-RING	2		
8	19M8169	SCREW	4		M12 X 30
9	T187136	SPACER	1		

MAIN HYDRAULIC PUMP
(SERIAL NO.XXXXXX-)

T211333 -UN-02JUN05

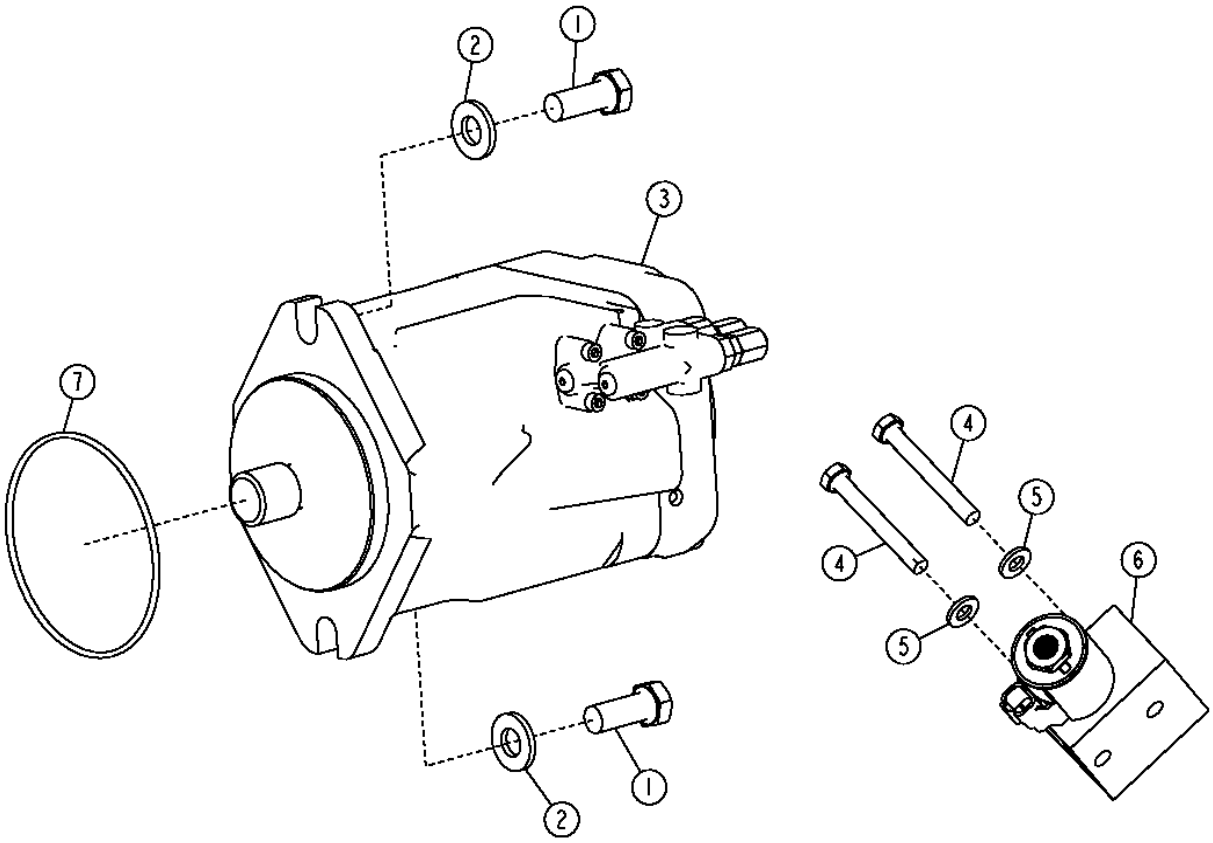

T211333

MAIN HYDRAULIC PUMP
(SERIAL NO.XXXXXX-)

KEY	PART NO.	PART NAME	QTY	SERIAL NO.	REMARKS
1	19M7488	CAP SCREW	2		M16 X 40
2	24M7241	WASHER	2		
3	AT303593	HYDRAULIC PUMP	1		
	AT302145	SEAL KIT	1		
	AT309544	KIT	1		
	AT306219	SEAL KIT	1		
	T201521	GASKET	1		
	T201525	SEAL	1		
4	19M8081	CAP SCREW	2		M10 X 80
5	24M7239	WASHER	2		
6	AT307580	SOLENOID VALVE	1		
	AT198518	HOUSING	1		
	AT309768	SOLENOID VALVE COIL	1		
7	F37030250	O-RING	1		

MAIN HYDRAULIC PUMP REPAIR KITS
(SERIAL NO. -XXXXXX)

T158674 -UN-10SEP02

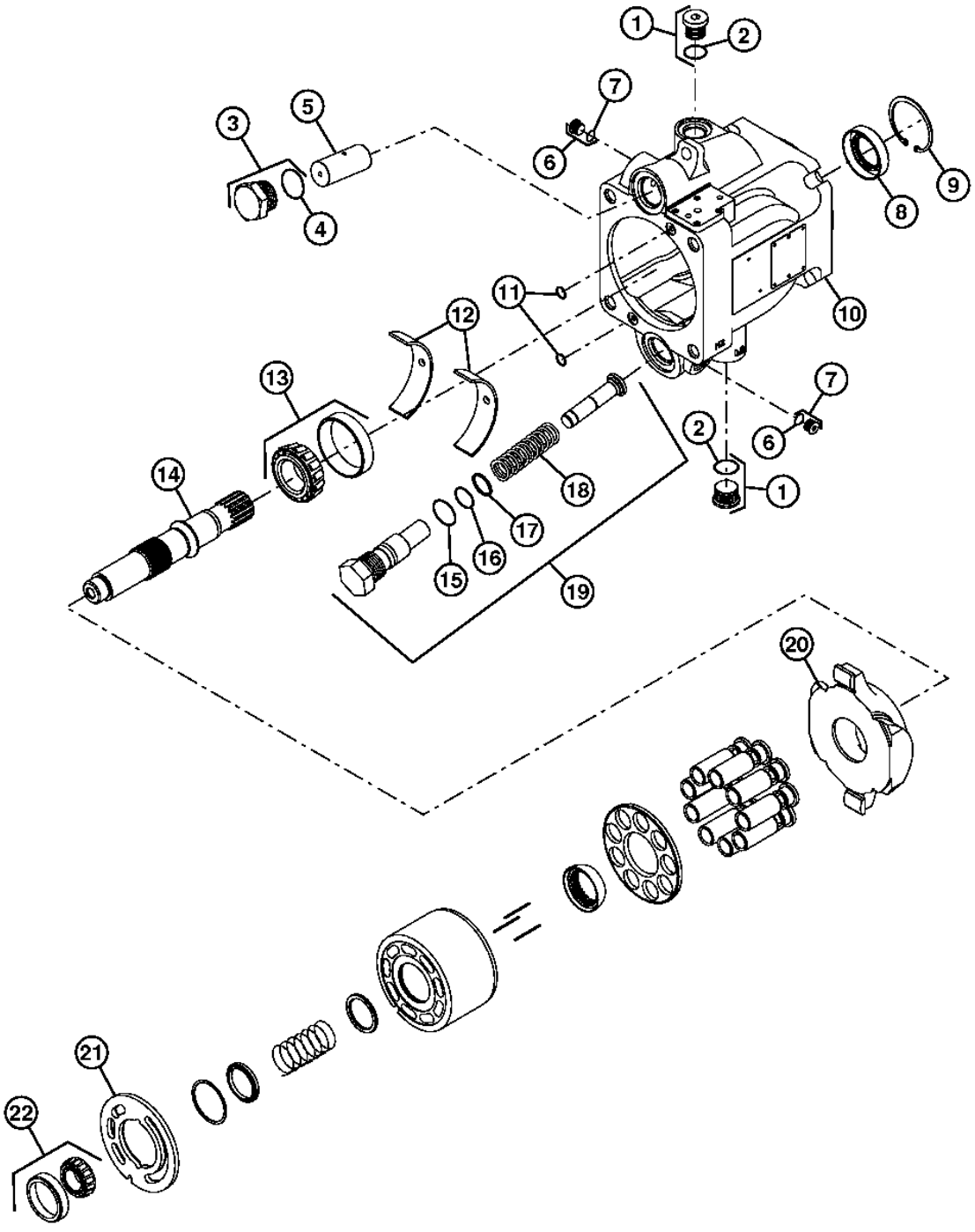

T158674

MAIN HYDRAULIC PUMP REPAIR KITS
(SERIAL NO. -XXXXXX)

KEY	PART NO.	PART NAME	QTY	SERIAL NO.	REMARKS
1	M74877	PLUG	1		
2	M45387	O-RING	1		
3	.....	PLUG	1		
4	.....	O-RING	1		(ORDER AT191371)
5	.....	PISTON	1		
6	T176425	PLUG	2		
7	R28782	O-RING	2		
8	T185183	SEAL	1		
9	T185254	SNAP RING	1		
10	.....	HOUSING	1		
11	.....	SEAL	2		(ORDER AT191371)
12	AT191368	BEARING	2		
13	AT191367	BEARING KIT	1		
14	.....	SHAFT	1		
15	.....	O-RING	1		(ORDER AT191371)
16	T76938	O-RING	1		
17	T185185	BACK-UP RING	1		
18	T185135	SPRING	1		
19	AT191369	PISTON REPLACEMENT KIT	1		
20	.....	SWASH PLATE	1		
21	T188686	PLATE	1		
22	AT191366	BEARING KIT	1		

MAIN HYDRAULIC PUMP REPAIR KITS
(SERIAL NO. -XXXXXX)

T194433 -UN-02SEP03

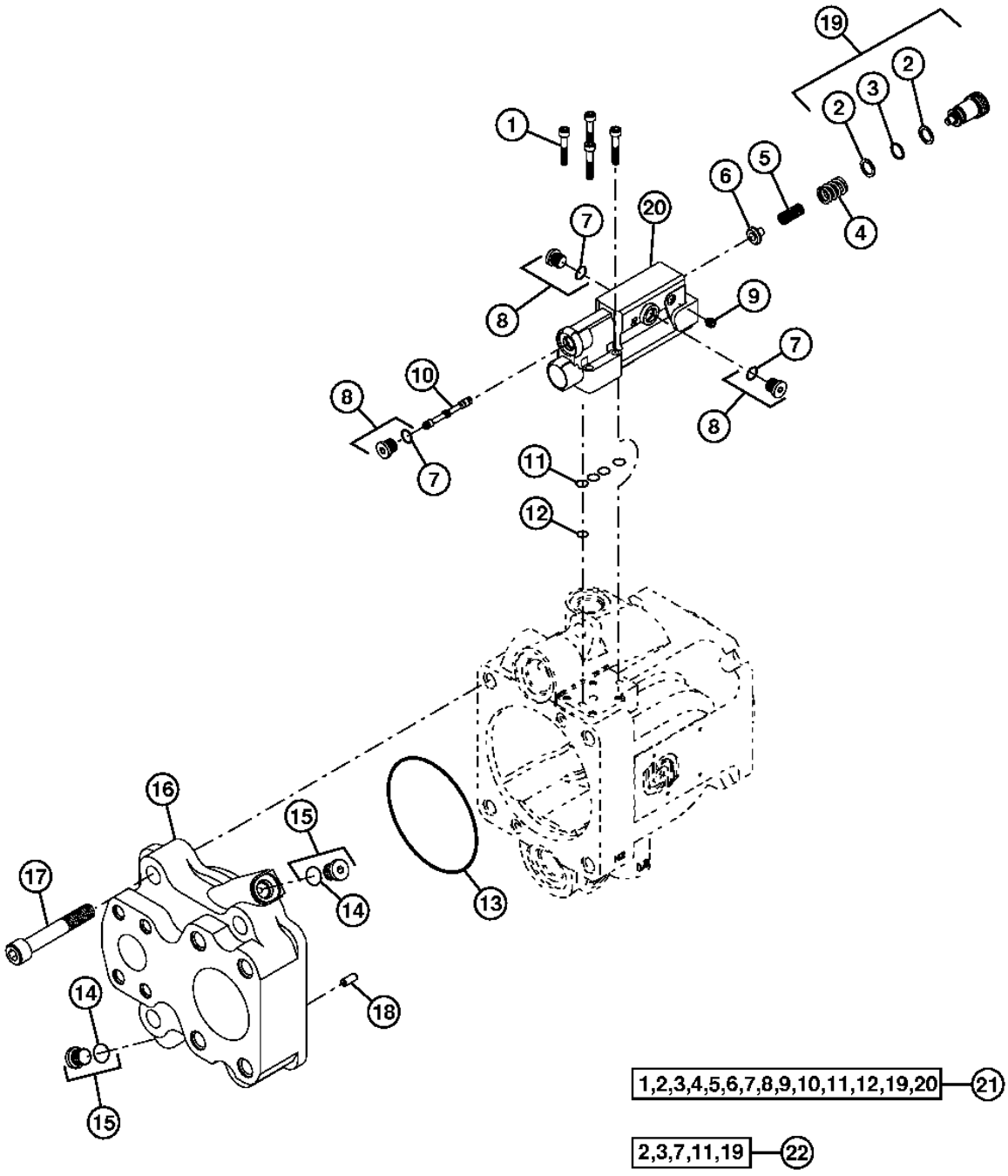

T194433

MAIN HYDRAULIC PUMP REPAIR KITS
(SERIAL NO. -XXXXXX)

KEY	PART NO.	PART NAME	QTY	SERIAL NO.	REMARKS
1	T185186	SCREW	4		
2	.....	BACK-UP RING	2		
3	.....	O-RING	1		
4	.....	SPRING	1		
5	.....	SPRING	1		
6	.....	GUIDE	1		
7	R28782	O-RING	3		
8	T176425	PLUG	3		
9	T188687	SCREW	1		
10	T190243	SPOOL	1		
11	T185181	RING	4		
12	.....	SCREEN	1		
13	N203952	O-RING	1		
14	R28782	O-RING	2		
15	T176425	PLUG	2		
16	.....	CAP	1		
17	.....	CAP SCREW	4		
18	R136572	PIN	1		
19	.....	PLUG	1		
20	.....	HOUSING	1		
21	AT199076	KIT	1		PUMP CONTROL
22	AT305110	SEAL KIT	1		PUMP CONTROL, (SUB FOR AT199077)

MAIN HYDRAULIC PUMP REPAIR KITS
(SERIAL NO. -XXXXXX)

T158676 -UN-10SEP02

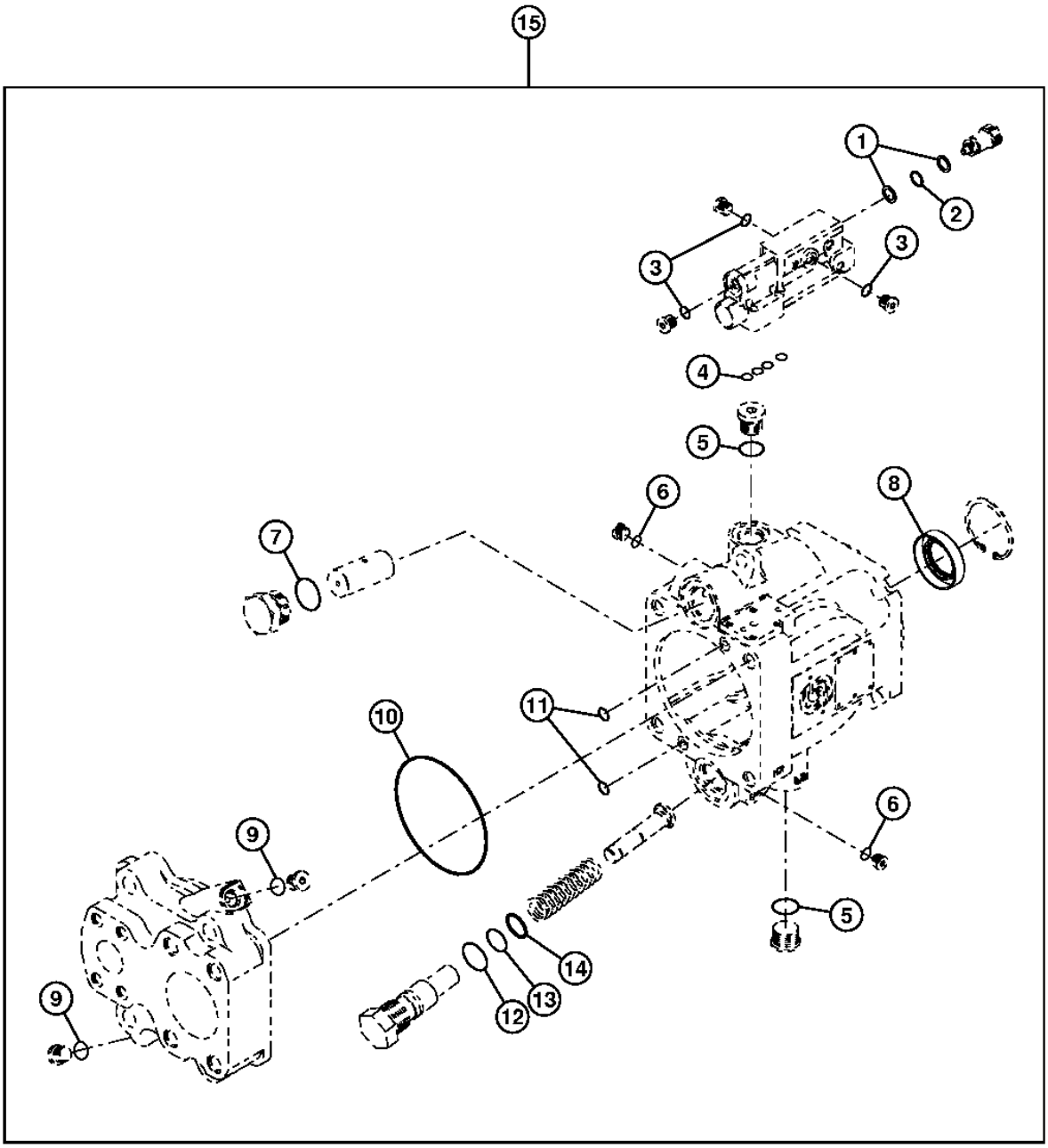

T158676

MAIN HYDRAULIC PUMP REPAIR KITS
(SERIAL NO. -XXXXXX)

KEY	PART NO.	PART NAME	QTY	SERIAL NO.	REMARKS
1	.....	BACK-UP RING	2		
2	.....	O-RING	1		
3	R28782	O-RING	3		
4	T185181	RING	4		
5	M45387	O-RING	2		
6	R28782	O-RING	2		
7	.....	O-RING	1		
8	T185183	SEAL	1		
9	R28782	O-RING	2		
10	N203952	O-RING	1		
11	.....	SEAL	2		
12	.....	O-RING	1		
13	T76938	O-RING	1		
14	T185185	BACK-UP RING	1		
15	AT191371	SEAL KIT	1		

MAIN HYDRAULIC SYSTEM

T192806 -UN-17JUL03

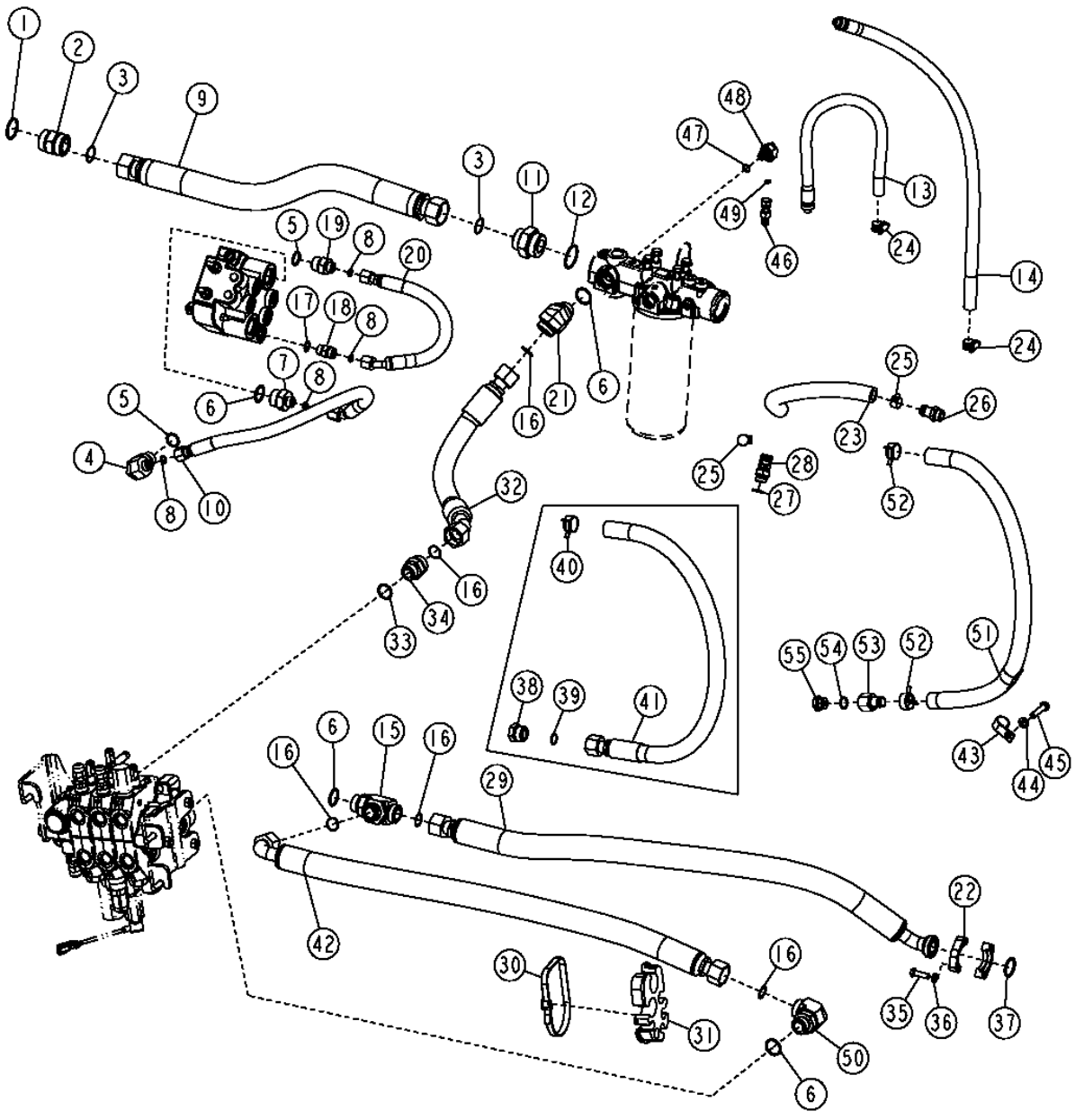

MAIN HYDRAULIC SYSTEM

KEY	PART NO.	PART NAME	QTY	SERIAL NO.	REMARKS
1	U13639	O-RING	1		
2	38H1165	ADAPTER	1		
3	T78612	O-RING	2		
4	38H1013	ELBOW FITTING	1		
5	U12547	O-RING	2		
6	R29936	O-RING	4		
7	38H1176	ADAPTER	1		
8	T77857	O-RING	4		
9	AT188492	HYDRAULIC HOSE - FABRICATE	1		
10	AT196058	HYDRAULIC HOSE - FABRICATE	1		
11	38H1595	ADAPTER	1		
12	R26773	O-RING	1		
13	AT188495	HYDRAULIC HOSE - FABRICATE	1		(ALSO ORDER 62H1043 AND T77857)
14	AT188366	HYDRAULIC HOSE - FABRICATE	1		(ALSO ORDER 62H1043 AND T77857)
15	38H1027	TEE FITTING	1		
16	T76938	O-RING	5		
17	R26375	O-RING	1		
18	38H1161	ADAPTER	1		
19	38H1175	ADAPTER	1		
20	AT188016	HYDRAULIC HOSE - FABRICATE	1		
21	38H1049	ELBOW FITTING	1		
22	H61354	FLANGE FITTING	2		
23	.....	HYDRAULIC HOSE - FABRICATE	1		(FURNISH T78497 , CUT TO 329MM))
24	AR21836	CLAMP	2		
25	AT301917	HOSE CLAMP	4		(SUB FOR RE65978)
26	R52683	FITTING	1		
27	R26906	O-RING	2		
28	AH64349	HOSE FITTING	1		
29	AT188491	HYDRAULIC HOSE - FABRICATE	1		
30	N189220	TIE BAND	2		
31	T190669	HOSE CLAMP	2		
32	AT188503	HYDRAULIC HOSE - FABRICATE	1		
33	U17409	O-RING	1		
34	38H1346	ADAPTER	1		
35	19H3239	CAP SCREW	4		3/8" X 1-1/4"
36	12H304	LOCK WASHER	4		
37	T78313	O-RING	1		
38	38H1149	FITTING PLUG	1	-923038	
39	T77858	O-RING	1	-923038	
40	T185826	CLAMP	1	-923038	
41	AT196814	HYDRAULIC HOSE - FABRICATE	1	-923038	
42	AT196753	HYDRAULIC HOSE - FABRICATE	1		(2 FUNCTION)
	AT188502	HYDRAULIC HOSE - FABRICATE	1		(3 FUNCTION)
43	T102934	CLAMP	2		
44	24M7239	WASHER	2		
45	19M7572	CAP SCREW	2		M10 X 45
46	RE60700	DIAGNOSTIC COUPLING	1		
47	R26448	O-RING	1		
48	38H1009	ELBOW FITTING	1		
49	T77814	O-RING	1		
50	38H1037	ELBOW FITTING	1		
51	.....	BULK HOSE	1	923939-	(FURNISH T78497, CUT TO 32 IN.) (SUB FOR T203949)
52	T185826	CLAMP	2	923039-	
53	T190892	HOSE FITTING	1	923039-	
54	R26906	O-RING	1	923039-	
55	R27474	DRAIN PLUG	1	923039-	

MAIN HYDRAULIC SYSTEM

T191859 -UN-23JUN03

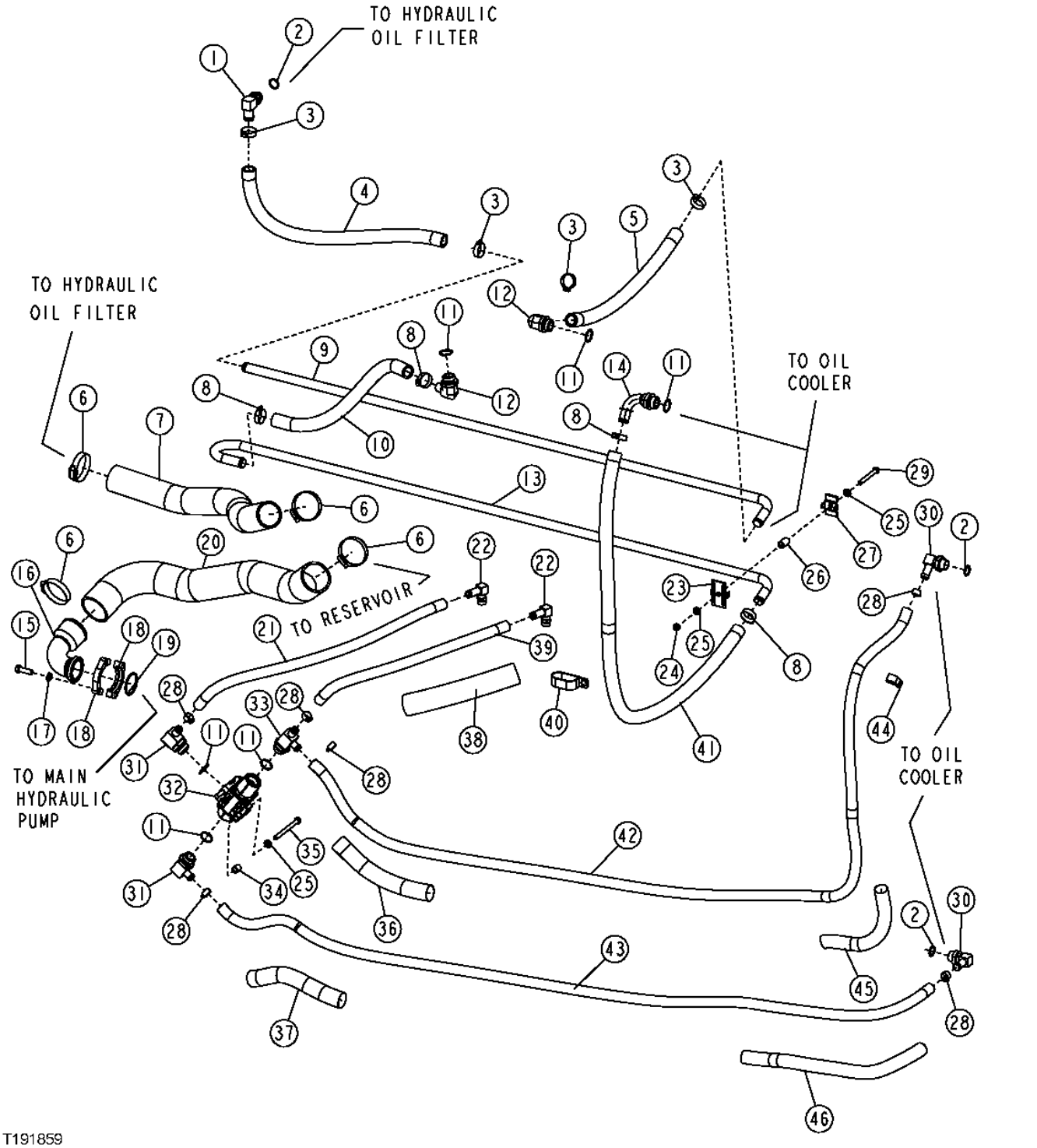

MAIN HYDRAULIC SYSTEM

KEY	PART NO.	PART NAME	QTY	SERIAL NO.	REMARKS
1	AR68999	ELBOW FITTING	1		
2	U12547	O-RING	3		
3	AT300153	HOSE CLAMP	4		(SUB FOR (4) AT197413)
4	.....	HOSE	1		(FURNISH TY22556, CUT TO 688MM)
5	.....	HOSE	1		(FURNISH TY22556, CUT TO 611MM)
6	TY22487	HOSE CLAMP	4		(SUB FOR AR85328)
7	T187523	HOSE	1		
8	AT300153	HOSE CLAMP	4		(SUB FOR AH105968, THIS APPLICATION)
9	T187484	OIL TUBE	1		
10	.....	HOSE	1		(FURNISH TY22556, CUT TO 610MM)
11	R29936	O-RING	6		
12	AH75162	FITTING	2		
13	T190298	OIL TUBE	1		
14	AH96708	ELBOW FITTING	1		
15	19H2993	CAP SCREW	4		1/2" X 1-1/2"
16	T158298	LINE	1		
17	12H301	LOCK WASHER	4		
18	R37023	FLANGE FITTING	2		
19	U46457	O-RING	1		
20	AT196790	SUCTION HOSE	1		
21	.....	HOSE	1		(FURNISH T78497, CUT TO 627MM)
22	AH64349	HOSE FITTING	2		
23	T159956	CLAMP	2		
24	14M7274	NUT	2		M10
25	24M7239	WASHER	4		
26	T166772	SPACER	2		
27	KV22609	CLAMP	2		(SUB FOR T160550)
28	AT301917	HOSE CLAMP	6		(SUB FOR RE65978)
29	19M8197	CAP SCREW	2		M10 X 85
30	AH61472	HOSE FITTING	2		
31	AT43223	ELBOW FITTING	2		
32	AT223937	FLOW CONTROL HYD. VALVE	1		
33	AT183373	FITTING	1		
34	28H3383	BUSHING	2		
35	19M8343	CAP SCREW	2		M10 X 120
36	.....	HOSE GUARD	1		(FURNISH T78606, CUT TO 254MM)
37	.....	HOSE GUARD	1		(FURNISH T78606, CUT TO 254MM)
38	.....	HOSE GUARD	2		(SUB FOR T161463, THIS APPLICATION) (SUB FOR T178346) (CUT FROM BULK 457.2MM, PARKER PS-B-35)
39	.....	HOSE	1		(FURNISH T78497, CUT TO 612MM)
40	T185154	CLAMP	1		
41	.....	HOSE	1		(FURNISH TY22556, CUT TO 1236MM)
42	.....	HOSE	1		(FURNISH T78497, CUT TO 2794MM)
43	.....	HOSE	1		(FURNISH T78497, CUT TO 2155MM)
44	T102934	CLAMP	2		
45	.....	HOSE GUARD	1		
46	T185189	HOSE GUARD	1		

LOAD SENSE HYDRAULICS
(SERIAL NO. -XXXXXX)

T164485 -UN-23JAN03

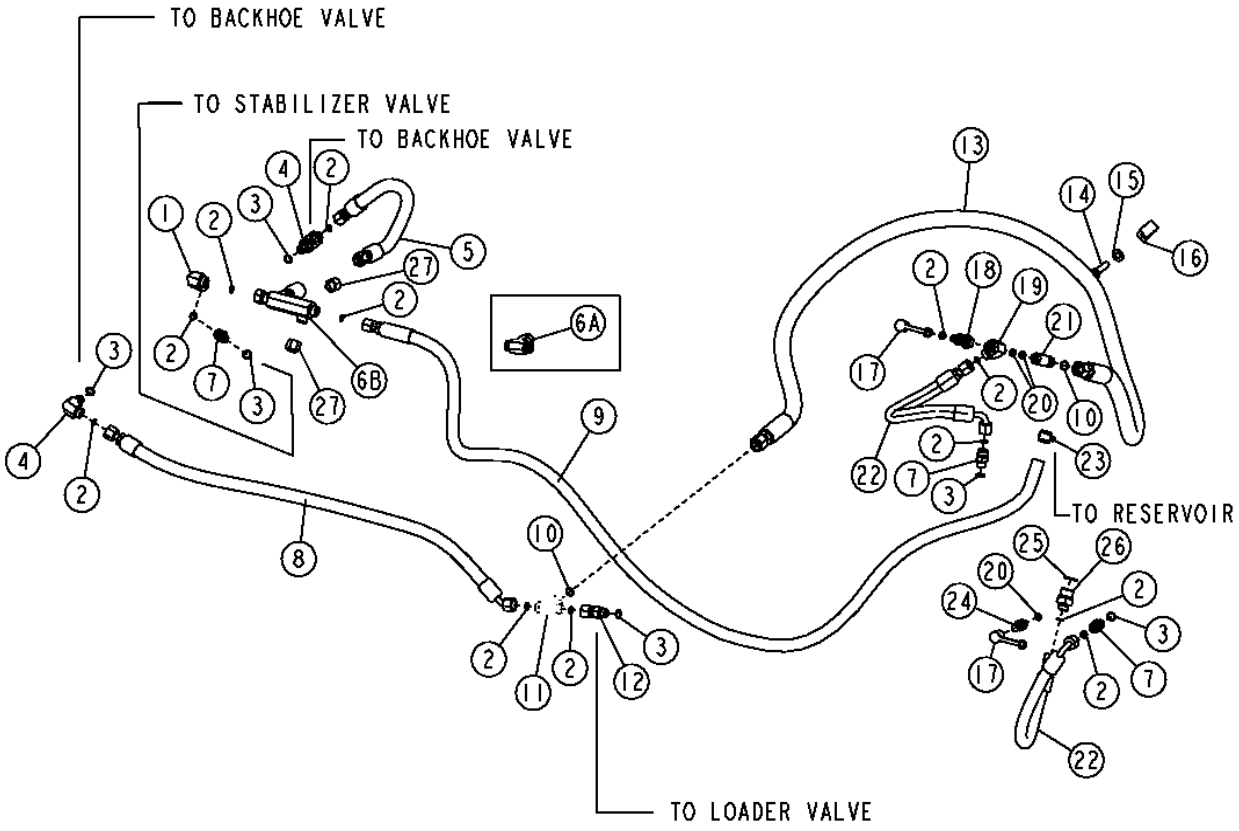

T164485

LOAD SENSE HYDRAULICS
(SERIAL NO. -XXXXXX)

KEY	PART NO.	PART NAME	QTY	SERIAL NO.	REMARKS
1	38H1094	ELBOW FITTING	1		
2	T77613	O-RING	13		
3	R26448	O-RING	6		
4	38H1004	ELBOW FITTING	2		
5	AT188519	HYDRAULIC HOSE - FABRICATE	1		
6A	AT196298	TEE FITTING	1	-913488	
6B	AT280808	ORIFICE	1	913489-	
7	38H1160	ADAPTER	3		
8	AT188028	HYDRAULIC HOSE - FABRICATE	1		
9	AT301436	HYDRAULIC HOSE - FABRICATE	1		(SUB FOR AT188520)
10	T77857	O-RING	2		
11	AT194937	CHECK VALVE	1		(SUB FOR AT180887)
12	38H1067	ADAPTER	1		
13	AT188521	HYDRAULIC HOSE - FABRICATE	1		
14	19M8637	CAP SCREW	1		M10 X 40
15	24M7239	WASHER	1		
16	T78787	CLAMP	1		
17	R77175	COVER	2		
18	RE60701	DIAGNOSTIC COUPLING	1		
19	38H1434	TEE FITTING	1		
20	R28782	O-RING	3		
21	AT198594	ADAPTER	1		
22	AT197875	HYDRAULIC HOSE - FABRICATE	2		
23	AR21836	CLAMP	1		
24	RE31495	ELEC. CONNECTOR TERMINAL	1		
25	R26906	O-RING	1		
26	38H1172	ADAPTER	1		
27	38H1415	FITTING	2	913489-	

LOAD SENSE HYDRAULICS
(SERIAL NO. XXXXXX-)

T211283 -UN-13JUN05

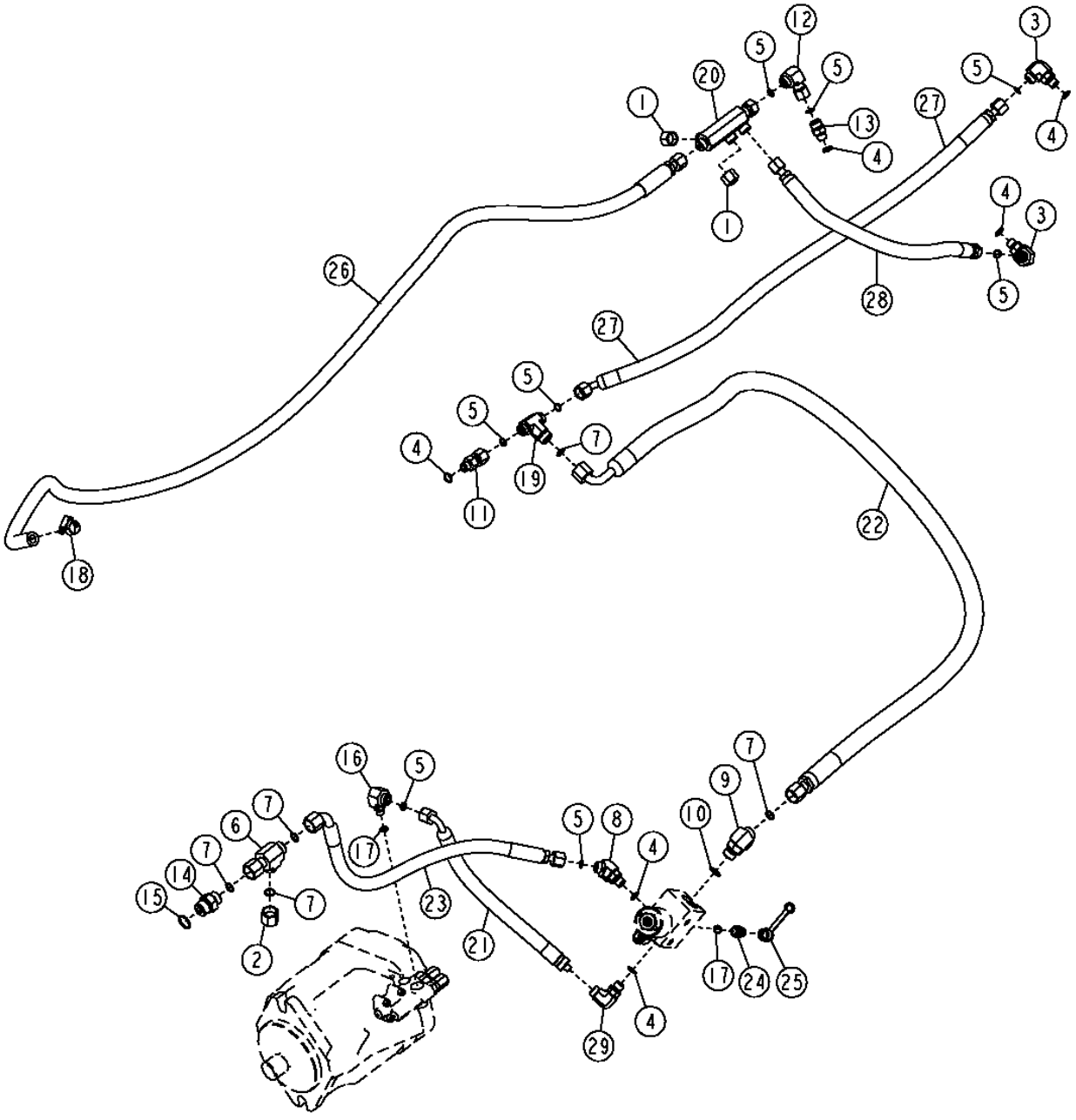

LOAD SENSE HYDRAULICS
(SERIAL NO. XXXXXX-)

KEY	PART NO.	PART NAME	QTY	SERIAL NO.	REMARKS
1	38H1415	FITTING	2		
2	38H1416	FITTING	1		
3	38H1004	ELBOW FITTING	1		
4	R26448	O-RING	4		
5	T77613	O-RING	7		
6	38H1031	TEE FITTING	1		
7	T77857	O-RING	5		
8	38H1045	ELBOW FITTING	1		
9	38H1046	ELBOW FITTING	1		
10	R26375	O-RING	1		
11	38H1067	ADAPTER	1		
12	38H1094	ELBOW FITTING	1		
13	38H1160	ADAPTER	1		
14	38H1174	ADAPTER	1		
15	R26906	O-RING	1		
16	38H1435	ELBOW FITTING	1		
17	R28782	O-RING	2		
18	TY22464	CLAMP	1		
19	AT194937	CHECK VALVE	1		
20	AT280808	FITTING	1		
21	AT303680	HYDRAULIC HOSE - FABRICATE	1		
22	AT303769	HYDRAULIC HOSE - FABRICATE	1		13/16" X 1 574 MM (62") X 13/16"
23	AT306786	HYDRAULIC HOSE - FABRICATE	1		11/16" X 584 MM (23") X 13/16"
24	RE31495	ELEC. CONNECTOR TERMINAL	1		
25	R77175	COVER	1		
26	AT301436	HYDRAULIC HOSE - FABRICATE	1		
27	AT188028	HYDRAULIC HOSE - FABRICATE	1		11/16" X 914 MM (36") X 11/16"
28	AT188519	HYDRAULIC HOSE - FABRICATE	1		11/16" X 485 MM (19") X 11/16"

MAIN HYDRAULIC SYSTEM RESERVOIR

T150873 -UN-02AUG02

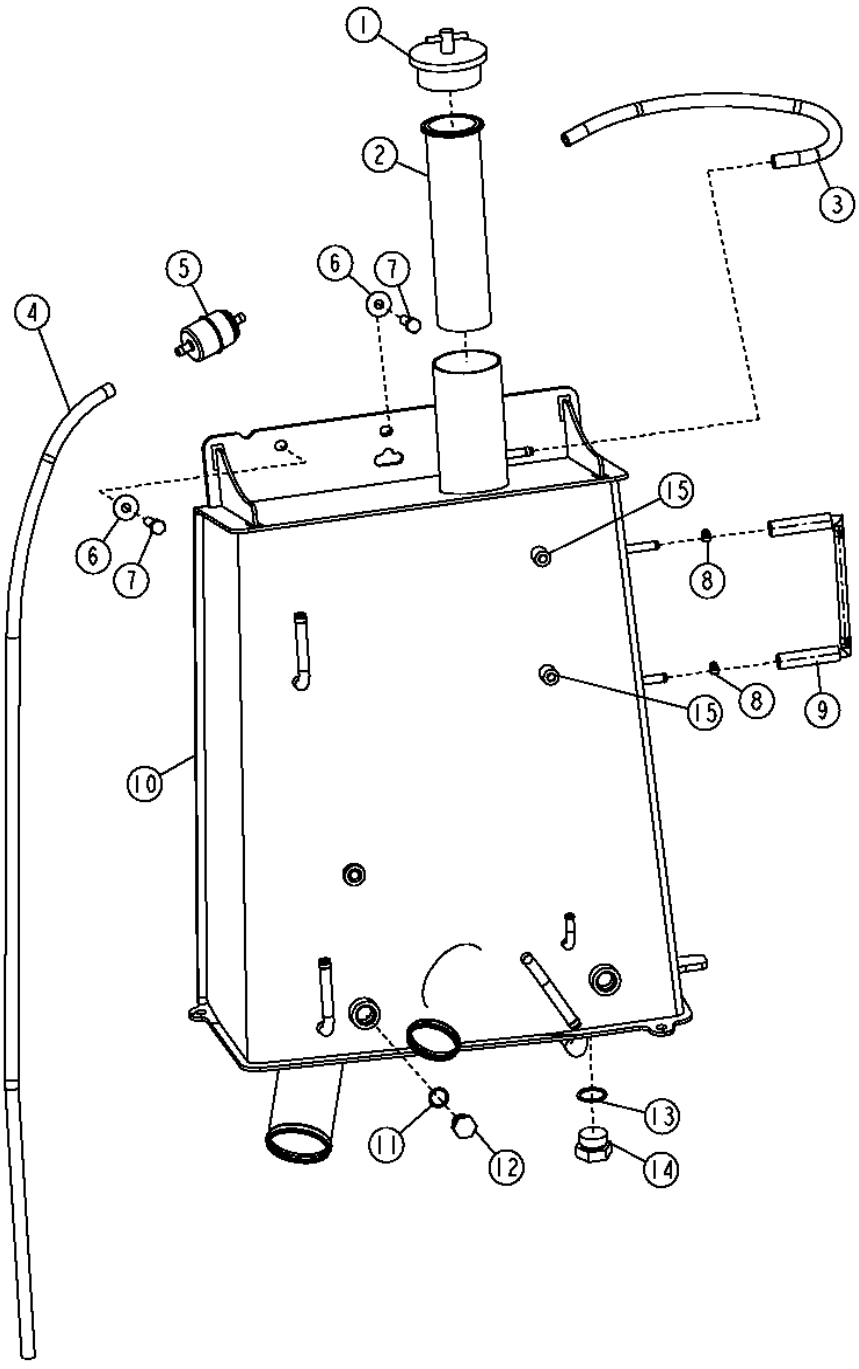

T150873

MAIN HYDRAULIC SYSTEM RESERVOIR

KEY	PART NO.	PART NAME	QTY	SERIAL NO.	REMARKS
1	AT174743	FILLER CAP	1		
2	AT161638	STRAINER	1		(SERVICE ONLY)
3	.....	HOSE	1		(MAKE FROM TY22566, CUT TO 1.5 FT.)
4	.....	HOSE	1		(MAKE FROM TY22566, CUT TO 4.2 FT.)
5	AT101565	AIR FILTER	1		BREATHER (INSTALL WITH FLOW ARROW POINTING TOWARD RESERVOIR)
6	24M7296	WASHER	3		
7	19M8488	CAP SCREW	3		M10 X 45
8	AR77962	HOSE CLAMP	2		(SUB FOR AR48236, THIS APPLICATION)
9	AT191813	LEVEL GAUGE	1		
10	AT188235	HYDRAULIC RESERVOIR	1		
11	R26906	O-RING	1		
12	R27474	DRAIN PLUG	1		
13	R29936	O-RING	1		
14	R36636	FITTING PLUG	1		
15	T72414	BUSHING	2		

HYDRAULIC OIL FILTER

T156699 -UN-26JUN02

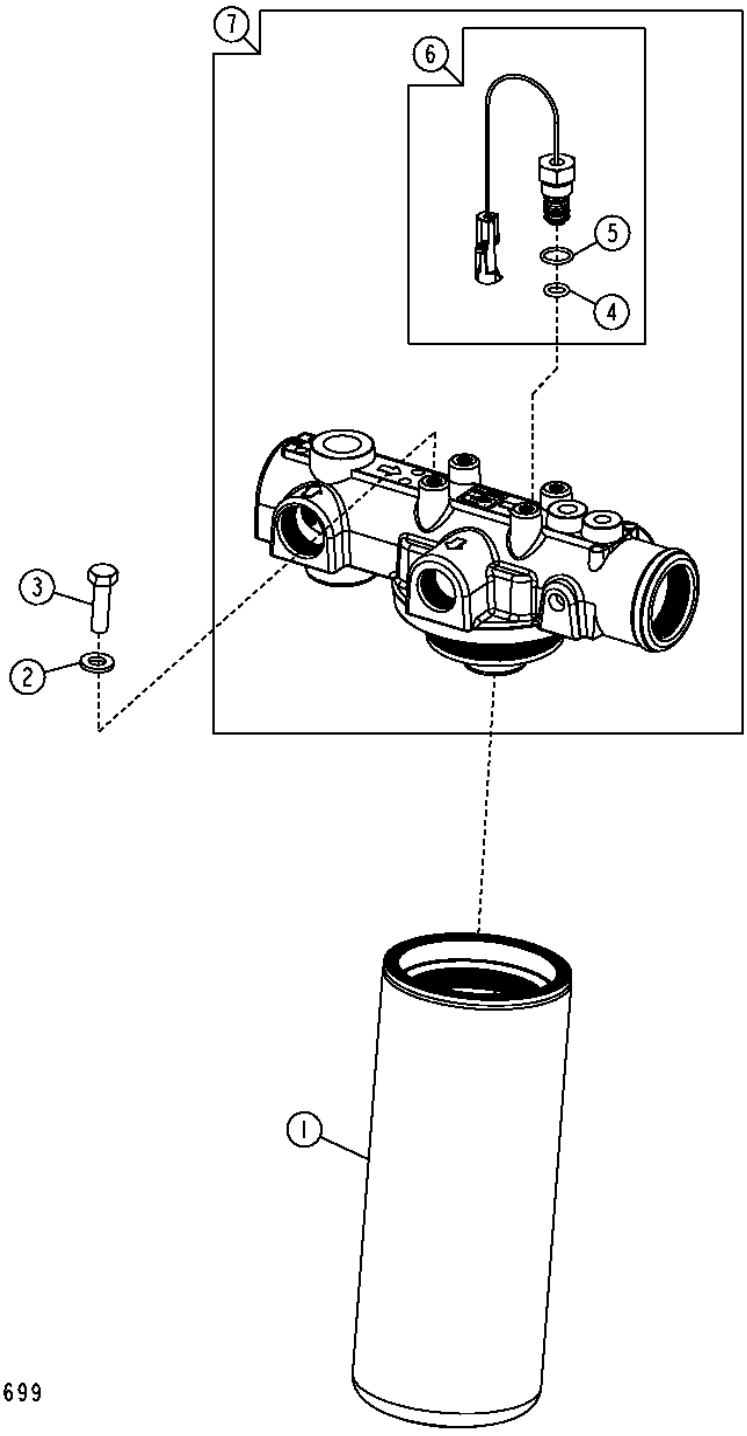

HYDRAULIC OIL FILTER

KEY	PART NO.	PART NAME	QTY	SERIAL NO.	REMARKS
1	AT228474	FILTER ELEMENT	1		(SUB FOR AT223235, THIS APPLICATION)
2	24M7239	WASHER	4		
3	19M7550	CAP SCREW	4		M10 X 35
4	T186154	O-RING	1		
5	R26375	O-RING	1		
6	AT192373	KIT	1		
7	AT195276	FILTER HEAD	1		

RIDE CONTROL

T161910 -UN-18DEC02

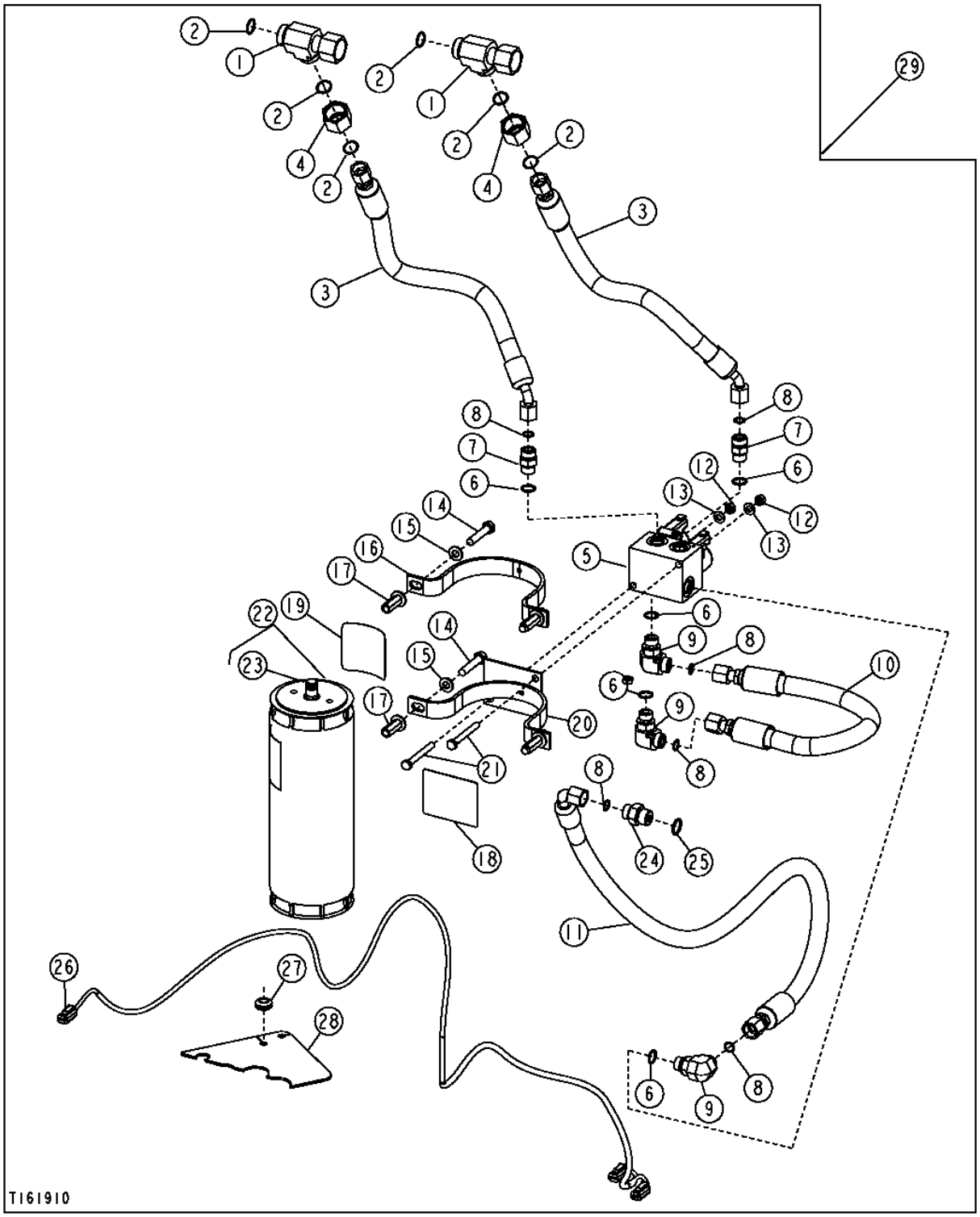

RIDE CONTROL

KEY	PART NO.	PART NAME	QTY	SERIAL NO.	REMARKS
1	38H1033	TEE FITTING	2		
2	T77858	O-RING	4		
3	AT196714	HYDRAULIC HOSE - FABRICATE	2	-931676	13/16" X 483 MM (19") X 13/16"
	AT199640	HYDRAULIC HOSE - FABRICATE	2	931677-	
4	38H1474	REDUCER	2	-931676	
	38H1356	TUBE NUT	2		
5	AT310818	SOLENOID HYDRAULIC VALVE	1		(SUB FOR AT198760)
	AT280440	SOLENOID HYDRAULIC VALVE	2		CARTRIDGE
	AT280441	SOLENOID VALVE COIL	2		COIL
	E71998	BACK-UP RING	2		
	R28776	O-RING	2		
	R47151	O-RING	2		
	14M7477	NUT	2		M18
6	R26375	O-RING	5		
7	38H1161	ADAPTER	2		
8	T77857	O-RING	6		
9	38H1005	ELBOW FITTING	3		
10	AT199640	HYDRAULIC HOSE - FABRICATE	1		13/16" X 533 MM (21") X 13/16"
11	AT196716	HYDRAULIC HOSE - FABRICATE	1		13/16" X 983 MM (38-3/4") X 13/16"
	AT310598	HYDRAULIC HOSE - FABRICATE	1		13/16" X 837 MM (33") X 13/16"
12	14M7273	NUT	2		M8
13	24M7238	WASHER	2		
14	19M8600	CAP SCREW	4		M10 X 50
15	24M7239	WASHER	4		
16	T166761	CLAMP	1		
17	T148410	NUT	4		
18	T146792	SAFETY SIGN	1		
19	T164124	LABEL	1		ENGLISH ACCUMULATOR WARNING
	.....	LABEL KIT	1		FRENCH LABEL KIT, (ORDER AT301861)
	.....	LABEL KIT	1		SPANISH LABEL KIT, (ORDER AT301860)
20	AT189210	CLAMP	1		
21	19M7663	CAP SCREW	2		M8 X 70
22	AT196351	HYDRAULIC ACCUMULATOR	1		(ALSO ORDER T164124, T164128 OR T164129)
23	AT196760	KIT	1		(GAS VALVE)
24	38H1174	ADAPTER	1		
25	R26906	O-RING	1		
26	AT199646	WIRING HARNESS	1		
27	T162238	GROMMET	1		
28	AT300928	PLATE	1		
29	**AT309648**	**KIT**	**1**		**(SUB FOR AT196855) (KIT INCLUDES HOSES)**

LOADER BUCKET AND CUTTING EDGE
1.24 CUBIC METER
1.43 CUBIC METER

T155438 -UN-30MAY02

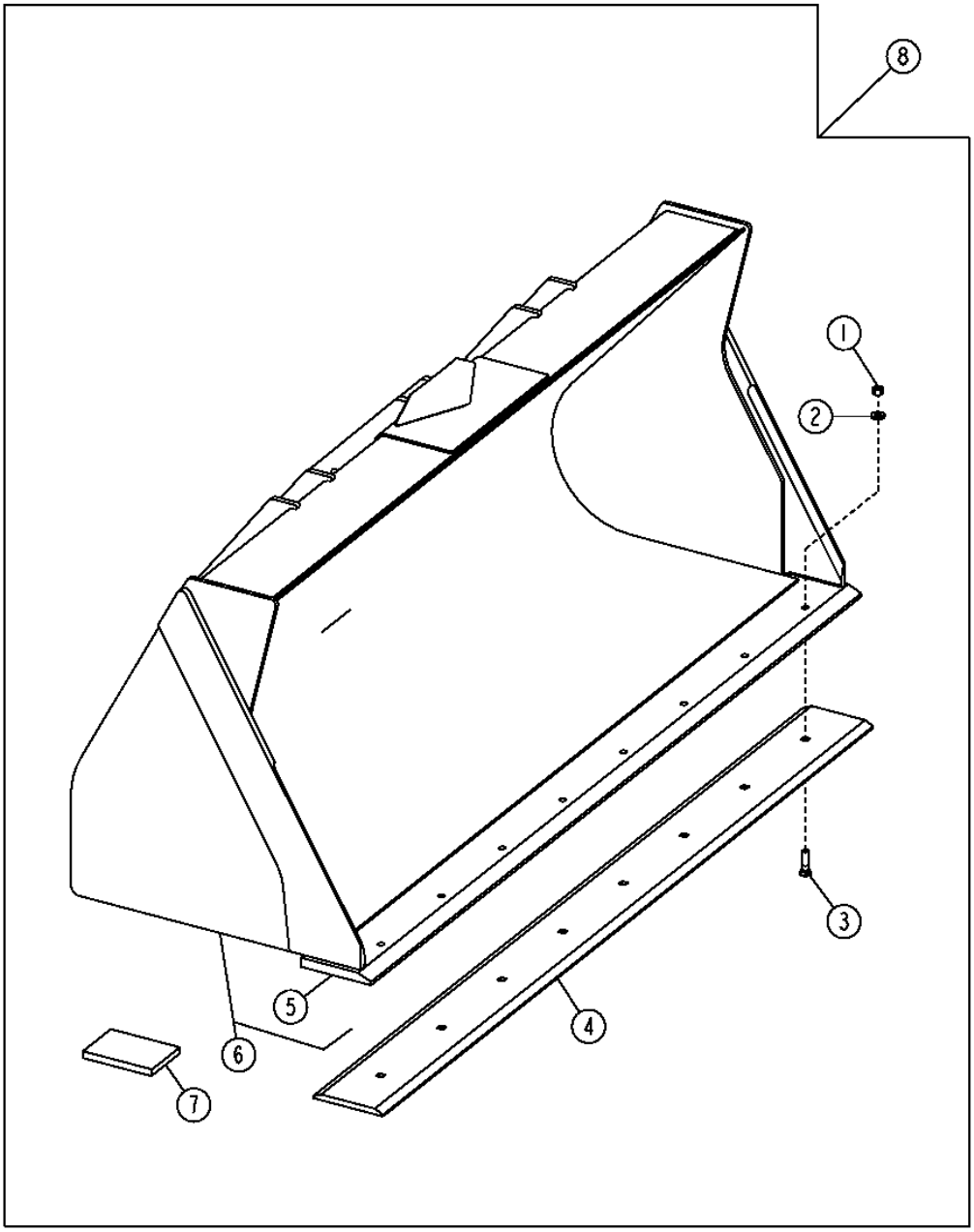

T155438

LOADER BUCKET AND CUTTING EDGE
1.24 CUBIC METER
1.43 CUBIC METER

KEY	PART NO.	PART NAME	QTY	SERIAL NO.	REMARKS
1	14H1039	NUT	8		5/8"
2	24M7241	WASHER	8		
3	09H1759	BOLT	8		5/8" X 2-1/4"
	09H1764	BOLT	8		5/8" X 2-1/2"
4	T126774	DURA-MAX TM CUTTING EDGE	1		(USE WITH (8) 09H1759, (8) 24M7241 AND (8) 14H1039)
	T126774HD	DURA-MAX TM CUTTING EDGE	1		(USE WITH (8) 09H1764, (8) 24M7241 AND (8) 14H1039)
5	T143074	DURA-MAX TM CUTTING EDGE	1		
6	.....	LOADER BUCKET	1		
7	T147296	SHOE	2		
8	**AT188049**	**LOADER BUCKET**	**1**		**1.24 CUBIC METERS (WHOLE GOODS)**
	AT188048	**LOADER BUCKET**	**1**		**1.43 CUBIC METERS (WHOLE GOODS)**

LOADER BUCKET PINS

T155383 -UN-29MAY02

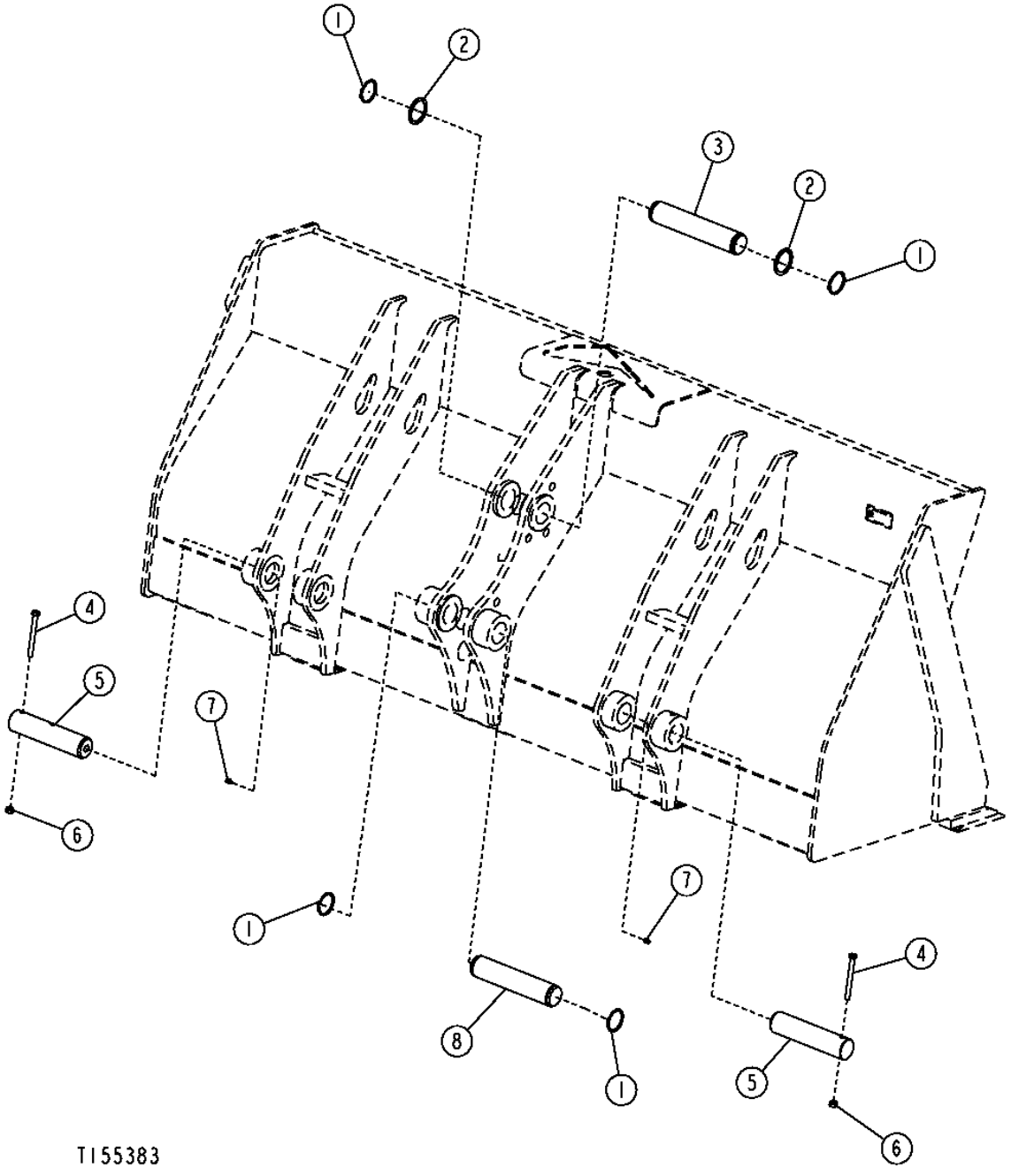

LOADER BUCKET PINS

KEY	PART NO.	PART NAME	QTY	SERIAL NO.	REMARKS
1	40M7048	SNAP RING	4		
2	24M7443	WASHER	5		
3	T183316	PIN FASTENER	1		
4	19M7914	CAP SCREW	2		M12 X 120
5	T183314	PIN FASTENER	2		
6	14M7319	LOCK NUT	2		M12
7	T162396	LUBRICATION FITTING	2		
8	T183315	PIN FASTENER	1		

MULTI-PURPOSE BUCKET MOLDBOARD, CUTTING EDGE AND HINGE

T201293 -UN-29JUN04

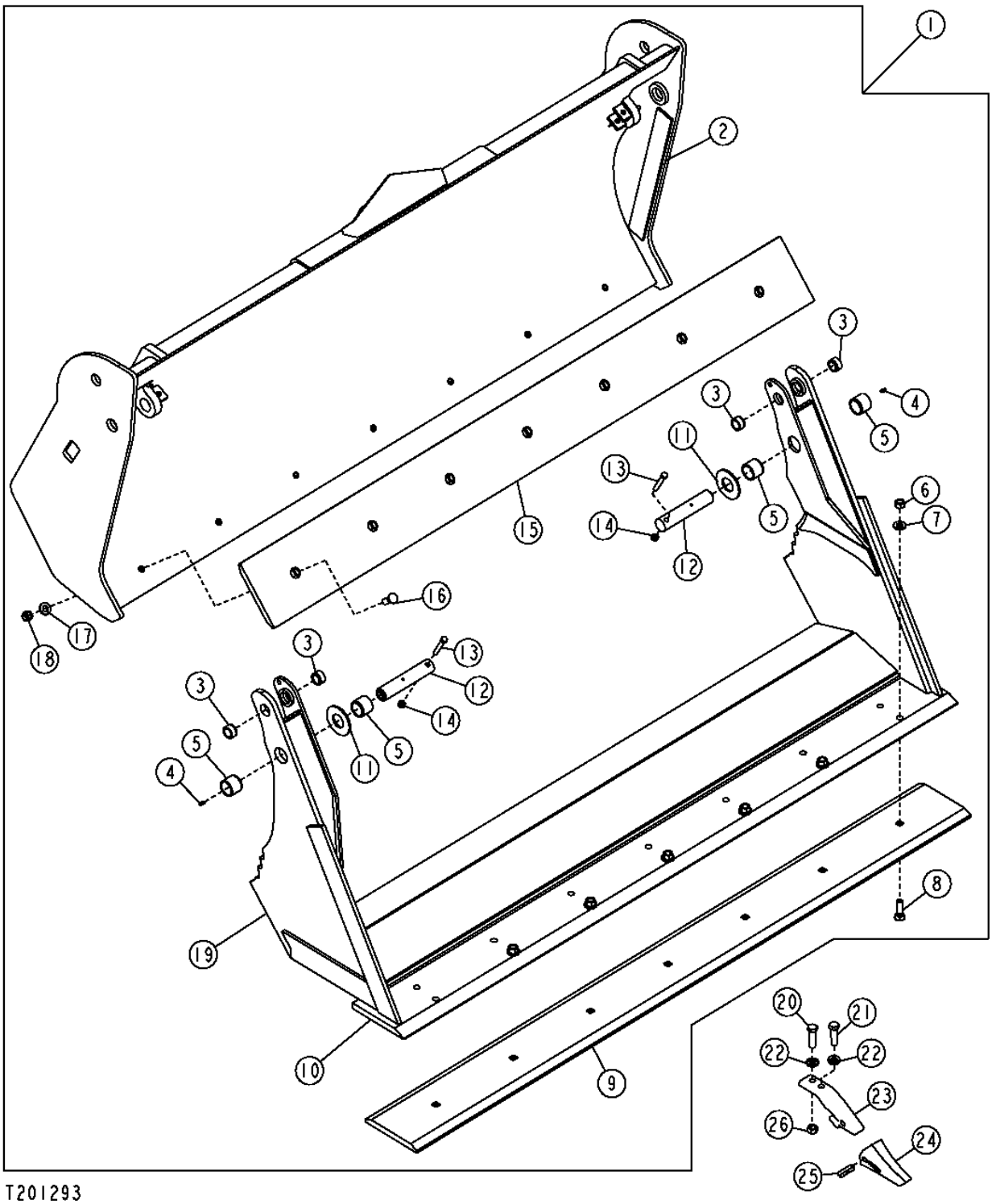

MULTI-PURPOSE BUCKET MOLDBOARD, CUTTING EDGE AND HINGE

KEY	PART NO.	PART NAME	QTY	SERIAL NO.	REMARKS
1	AT188053	MULTI-PURPOSE BUCKET	1		INCLUDES CYLINDERS, LINES AND HOSES (WHOLE GOODS)
2	.....	MOLDBOARD	1		(ORDER AT188053)
3	T166433	BUSHING	4		
4	JD7797	LUBRICATION FITTING	2		
5	T128533	BUSHING	4		
6	14H1039	NUT	8		5/8"
7	24M7241	WASHER	8		
8	09H1759	BOLT	8		5/8" X 2-1/4"
9	T126774	DURA-MAX TM CUTTING EDGE	1		(AUXILIARY) 5/8 INCH THICK X 8 INCH DBF X 97 INCH, (ALSO ORDER (8) 09H1759 AND (8) 24M7241 AND (8) 14H1039)
10	T128539	CUTTING EDGE	1		
11	24H1554	WASHER	2		
12	T167059	PIN	2		
13	19H2106	CAP SCREW	2		7/16" X 2-3/4"
14	K40006	LOCK NUT	2		7/16"
15	T143804	CUTTING EDGE	1		
16	09H1776	BOLT	8		5/8" X 1-3/4"
17	24M7241	WASHER	8		
18	14H1039	NUT	8		5/8"
19	.....	HINGE	1		(ORDER AT188053)
20	19H3244	CAP SCREW	1		5/8" X 2-1/4"
21	19H2599	CAP SCREW	1		5/8" X 2-1/2"
22	24H1367	WASHER	2		
23	T221X230	ADAPTER	1		
24	T230SP	TOOTH	1		
25	T23P	PIN	1		
26	14H1039	NUT	1		

MULTI-PURPOSE BUCKET,BUCKET CYLINDER AND HYDRAULIC OIL LINES

T153162 -UN-10APR02

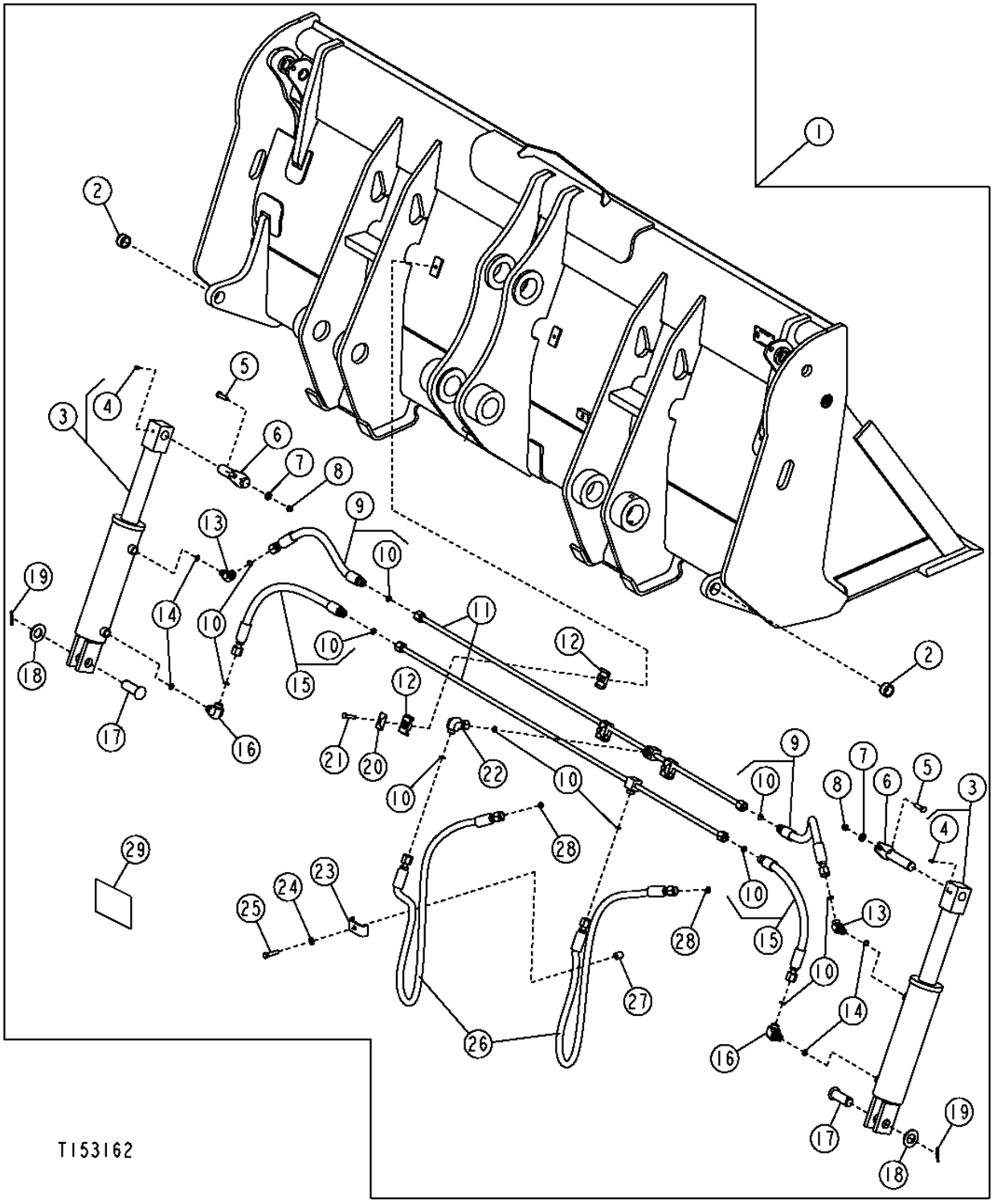

2G11

MULTI-PURPOSE BUCKET,BUCKET CYLINDER AND HYDRAULIC OIL LINES

KEY	PART NO.	PART NAME	QTY	SERIAL NO.	REMARKS
1	AT188053	MULTI-PURPOSE BUCKET	1		(WHOLE GOODS)
2	T166433	BUSHING	2		
3	AT190880	CYLINDER	2	-925076	
	AH210737	HYDRAULIC CYLINDER	2	925077-	
4	JD7797	LUBRICATION FITTING	2	-925076	
	JD7844	LUBRICATION FITTING	2	925077-	
5	19H1732	CAP SCREW	2		3/8" X 1-1/4"
6	AT190900	PIN	2		
7	24M7239	WASHER	2		
8	T54568	LOCK NUT	2		3/8"
9	AT189822	HYDRAULIC HOSE - FABRICATE	2		
10	T77857	O-RING	11		
11	AT189694	TUBE	2		
12	H135156	CLAMP	6		
13	38H1521	ELBOW FITTING	2		
14	RE26448	O-RING	4		
15	AT190701	HYDRAULIC HOSE - FABRICATE	2		
16	38H1314	ELBOW FITTING	2		
17	.....	PIN	2	-925076	(T185041 NO LONGER AVAILABLE) (SUB (2) T191318) (ALSO ORDER (6) 24H1138)
	T191318	PIN FASTENER	2	925077-	
18	24H1138	WASHER	2		
19	34M7141	SPRING PIN	2		5 X 30 MM
20	H121168	PLATE	3		
21	19H3552	CAP SCREW	3		5/16" X 1-1/2"
22	38H1095	ELBOW FITTING	1		
23	T27022	CLAMP	1		(SUB FOR U40398, THIS APPLICATION)
24	24M7106	WASHER	1		
25	19H2633	CAP SCREW	1		3/8" X 1-1/2"
26	AT142403	HYDRAULIC HOSE - FABRICATE	2		
27	28H3383	BUSHING	1		
28	T77857	O-RING	2		
29	T160759	LABEL	1		BUCKET LEVEL INDICATOR

MULTI-PURPOSE BUCKET CYLINDER AND REPAIR KIT
(SERIAL NO. -925076)

TP62438 -UN-06JUL00

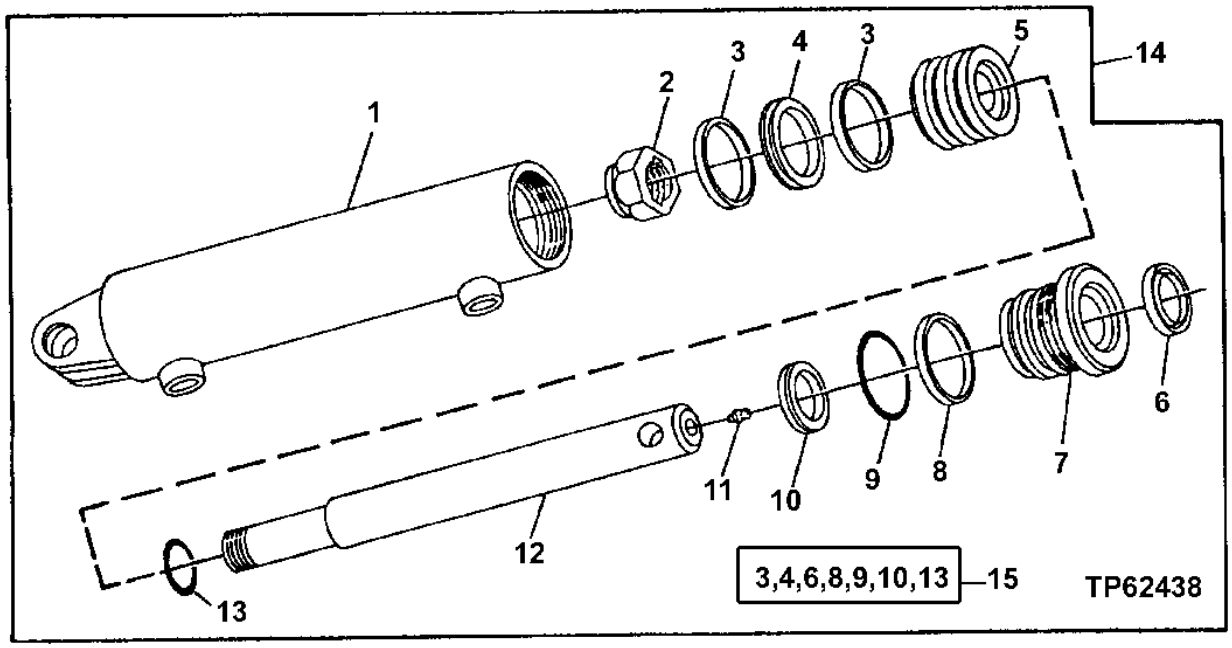

KEY	PART NO.	PART NAME	QTY	SERIAL NO.	REMARKS
1	AT190881	BARREL	1		
2	H29619	LOCK NUT	1		
3	.....	WEAR RING	2		
4	.....	SEAL	1		
5	T163117	PISTON	1		
6	.....	SEAL	1		
7	T163116	HYDR. CYLINDER ROD GUIDE	1		
8	.....	BACK-UP RING	1		
9	.....	O-RING	1		
10	.....	SEAL	1		
11	JD7797	LUBRICATION FITTING	1		
12	T163118	HYDRAULIC CYLINDER ROD	1		
13	.....	O-RING	1		
14	AT190880	CYLINDER	1		
15	AT190898	KIT	1		

MULTI-PURPOSE BUCKET CYLINDER AND REPAIR KIT
(SERIAL NO. 925077-)

T197121 -UN-08JAN04

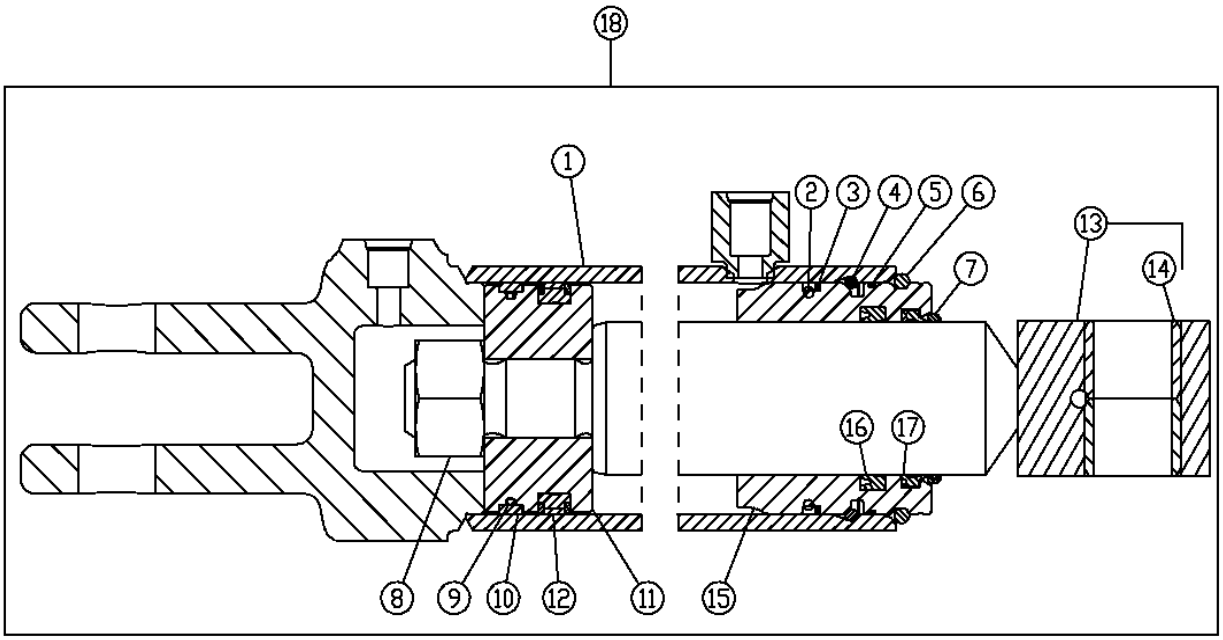

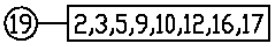

T197121

KEY	PART NO.	PART NAME	QTY	SERIAL NO.	REMARKS
1	.....	HYDRAULIC CYLINDER BARREL	1		
2	T14065	O-RING	1		
3	.....	RING	2		
4	H177854	SNAP RING	1		
5	.....	O-RING	1		
6	H180927	SNAP RING	1		
7	.....	O-RING	1		
8	14H1112	NUT	1		1", (SUB FOR H179692)
9	.....	WEAR RING	1		
10	.....	O-RING	1		
11	.....	PISTON	1		
12	.....	SEAL	1		
13	.....	ROD	1		
14	.....	BUSHING	1		
15	.....	HYDR. CYLINDER ROD GUIDE	1		
16	H152203	SEAL	1		
17	.....	SEAL	1		
18	AH210737	HYDRAULIC CYLINDER	1		
19	AH209022	HYDRAULIC CYLINDER KIT	1		KIT

LOADER COUPLER BUCKET AND CUTTING EDGE
2.0 CUBIC YARD

T205101 -UN-18NOV04

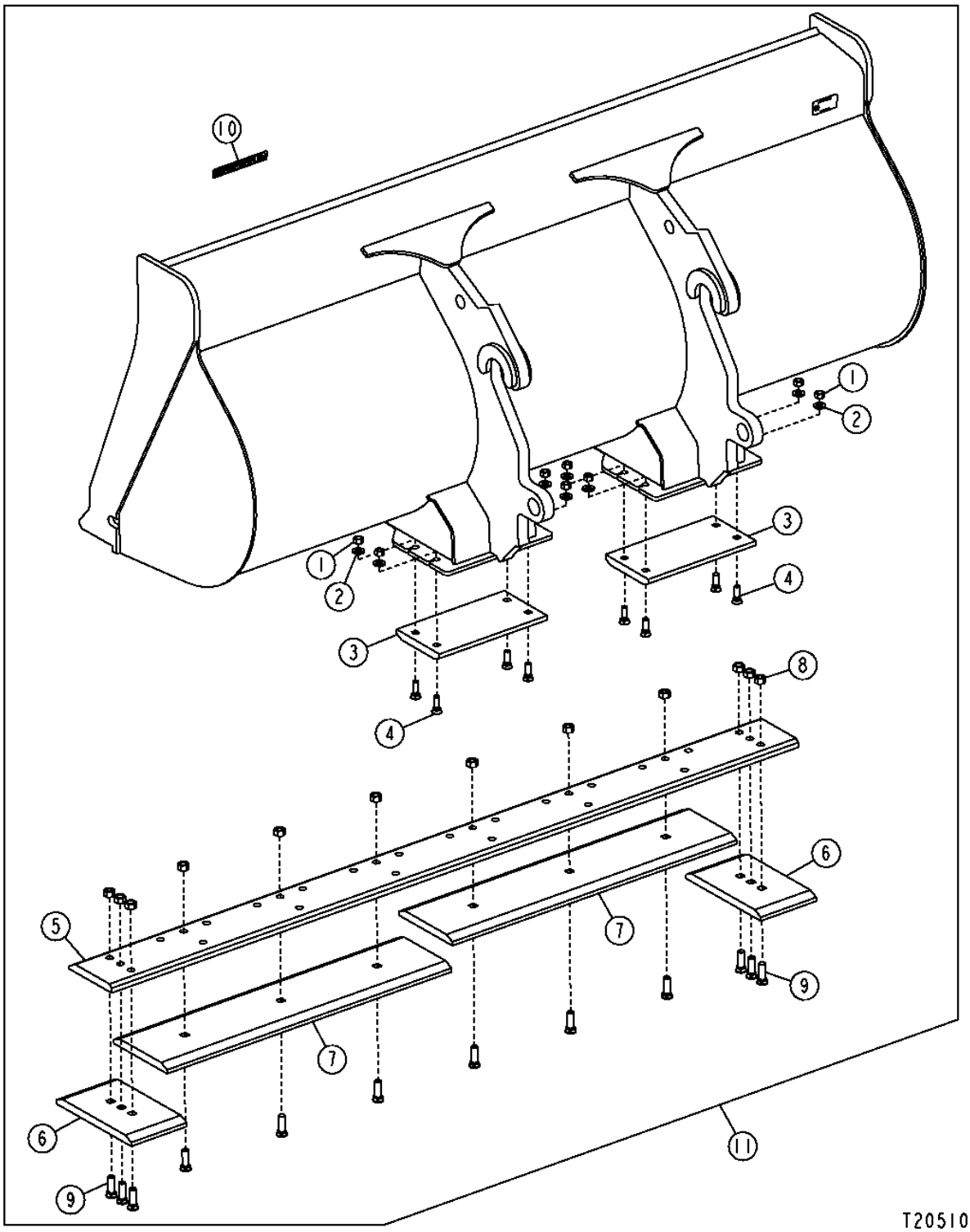

LOADER COUPLER BUCKET AND CUTTING EDGE
2.0 CUBIC YARD

KEY	PART NO.	PART NAME	QTY	SERIAL NO.	REMARKS
1	14H1039	NUT	8		5/8"
2	24M7241	WASHER	8		
3	T156599	SHOE	2		
4	09H1587	BOLT	8		5/8" X 2"
5	T157282	CUTTING EDGE	1		(DURA MAX)
6	T146672	CUTTING EDGE	2		AUXILIARY DBF (OUTER)
7	T157311	CUTTING EDGE	2		AUXILIARY DBF (INNER)
8	14H1058	NUT	12		3/4"
9	T146934	BOLT	12		3/4" X 2-1/2"
10	KV22121	LABEL	1		WORKSITE PRO
11	**AT309342**	**LOADER BUCKET**	**1**		**(WHOLE GOODS)**

QUICK COUPLER MULTI-PURPOSE BUCKET, CYLINDERS AND AND HYDRAULIC OIL LINES

T205143 -UN-23NOV04

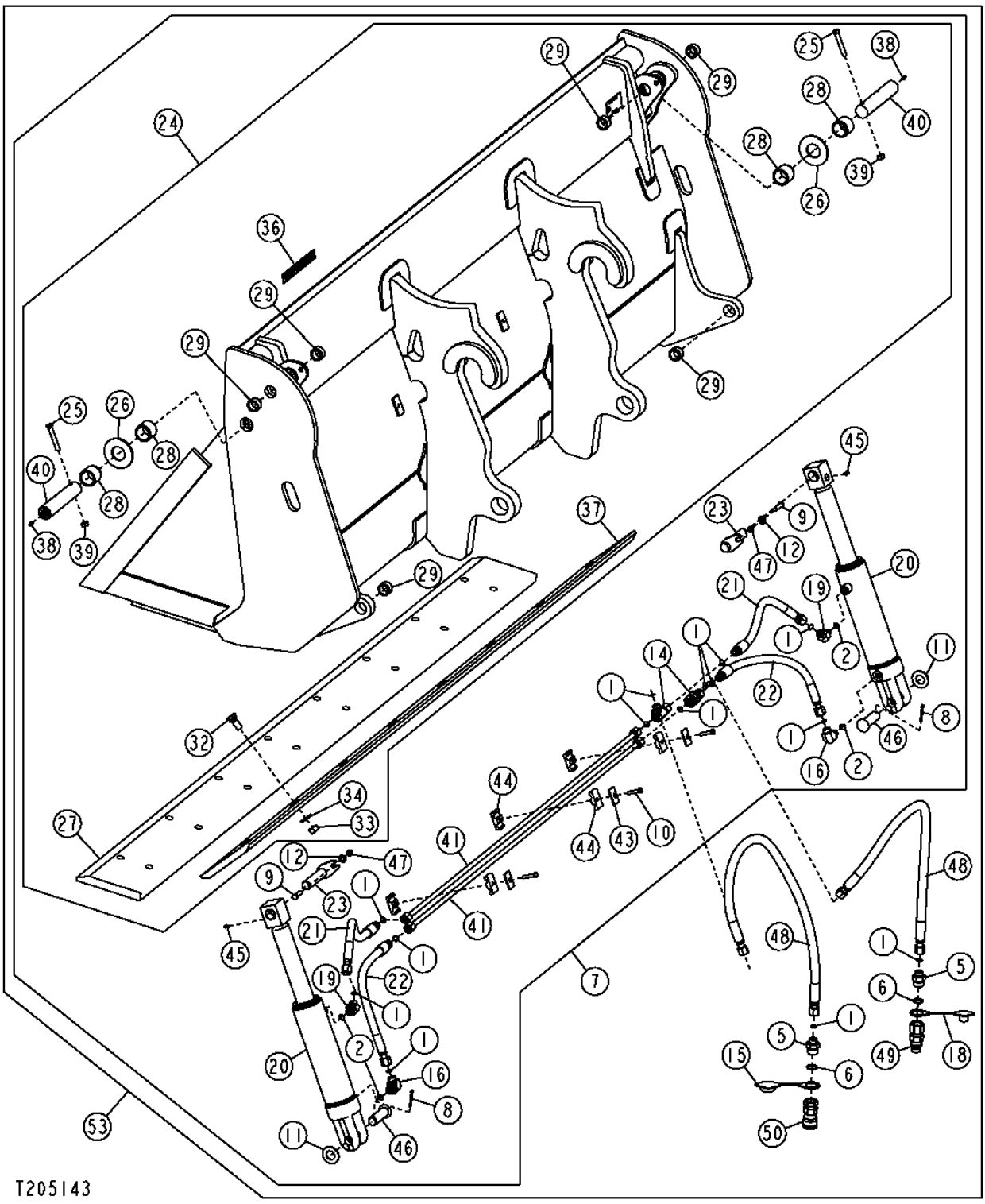

QUICK COUPLER MULTI-PURPOSE BUCKET, CYLINDERS AND AND HYDRAULIC OIL LINES

KEY	PART NO.	PART NAME	QTY	SERIAL NO.	REMARKS
1	T77857	O-RING	9		
2	R26448	O-RING	2		
3	38H1416	FITTING	1		
4	38H1175	ADAPTER	2		
5	38H1175	ADAPTER	1		
6	U12547	O-RING	1		
7	.....	MULTI-PURPOSE BUCKET	1		(ORDER AT308984)
8	11M7030	COTTER PIN	2		0.197" X 1.575"
9	19H3239	CAP SCREW	2		3/8" X 1-1/4"
10	19H3552	CAP SCREW	3		5/16" X 1-1/2"
11	24H1138	WASHER	2		
12	24M7239	WASHER	2		
13	T162396	LUBRICATION FITTING	2		
14	38H1031	TEE FITTING	1		
15	T188879	BOOT	1		
16	38H1314	ELBOW FITTING	1		
17	38H1474	REDUCER	2		
18	T188880	BOOT	1		
19	38H1521	ELBOW FITTING	1		
20	AH210737	HYDRAULIC CYLINDER	2		
21	AT189822	HYDRAULIC HOSE - FABRICATE	2		
22	AT190701	HYDRAULIC HOSE - FABRICATE	2		13/16" X 470 MM (18-1/2") X 13/16"
23	AT190900	PIN	2		
24	.....	MOLDBOARD	1		(ORDER AT308984)
25	19H2106	CAP SCREW	2		7/16" X 2-3/4"
26	24H1554	WASHER	2		
27	T128539	CUTTING EDGE	1		
28	T128533	BUSHING	4		
29	T166433	BUSHING	2		
32	09H1776	BOLT	8		5/8" X 1-3/4"
33	14H1039	NUT	8		5/8"
34	24M7241	WASHER	8		
36	KV22121	LABEL	1		WORKSITE PRO
37	T143804	CUTTING EDGE	1		DBF
38	JD7797	LUBRICATION FITTING	2		
39	K40006	LOCK NUT	2		7/16"
40	T167059	PIN	2		
41	AT311142	TUBE	2		
42	38H1354	TUBE NUT	2		
43	H121168	PLATE	3		
44	H135156	CLAMP	6		
45	JD7844	LUBRICATION FITTING	2		
46	T191318	PIN FASTENER	2		
47	T54568	LOCK NUT	2		3/8"
48	AT310035	HYDRAULIC HOSE - FABRICATE	2		
49	AT312470	HYD. QUICK-CONNECT COUPLER	1		
50	KV14216	HYD. QUICK-CONNECT COUPLER	1		
51	T148182	RING	1		
52	T160759	LABEL	1		BUCKET LEVEL INDICATOR
53	**AT308984**	**MULTI-PURPOSE BUCKET**	**1**		**(WHOLE GOODS)**

QUICK COUPLER FORKS AND FRAME

T197666 -UN-19FEB04

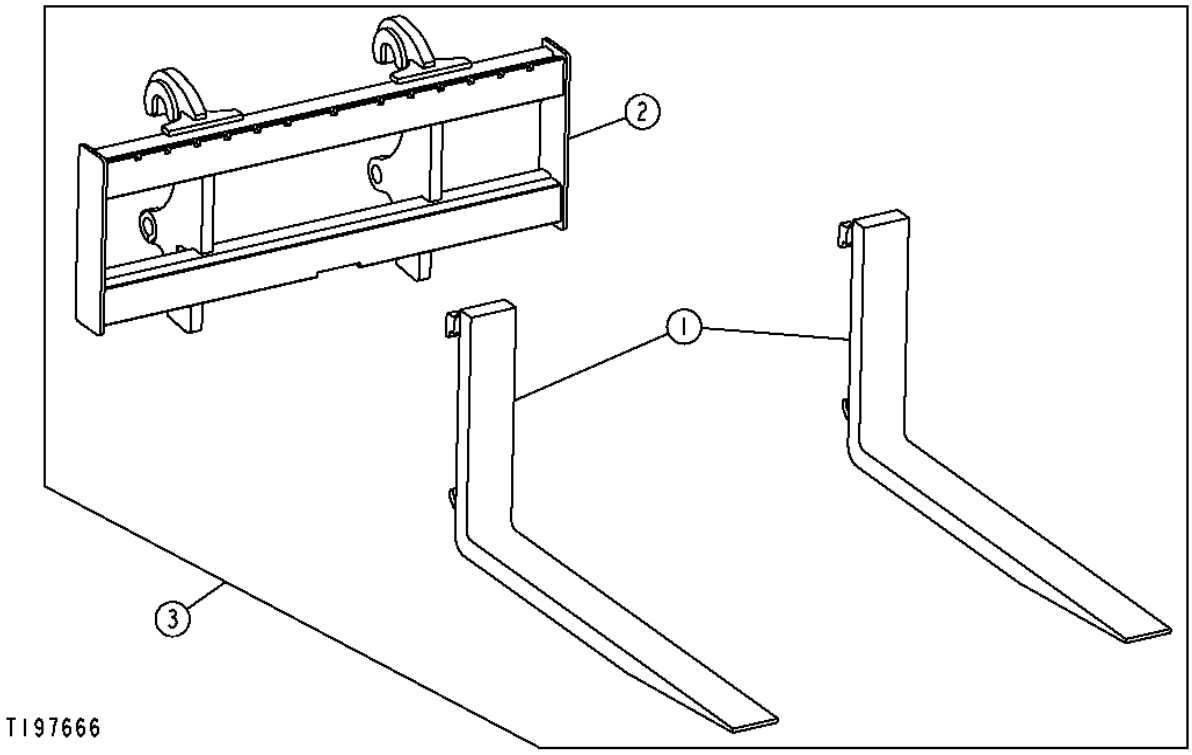

QUICK COUPLER FORKS AND FRAME

KEY	PART NO.	PART NAME	QTY	SERIAL NO.	REMARKS
1	AT308065	FORK	1		CONVENIENCE ASSEMBLY (48 INCH)
	AT308066	FORK	1		CONVENIENCE ASSEMBLY (60 INCH)
2	AT310060	FRAME	1		CONVENIENCE ASSEMBLY
3	**AT300238**	**FORKLIFT**	**1**		**(48 INCH)**
	AT300237	**FORKLIFT**	**1**		**(60 INCH)**

HYDRAULIC FRONT COUPLER

T209829 -UN-11APR05

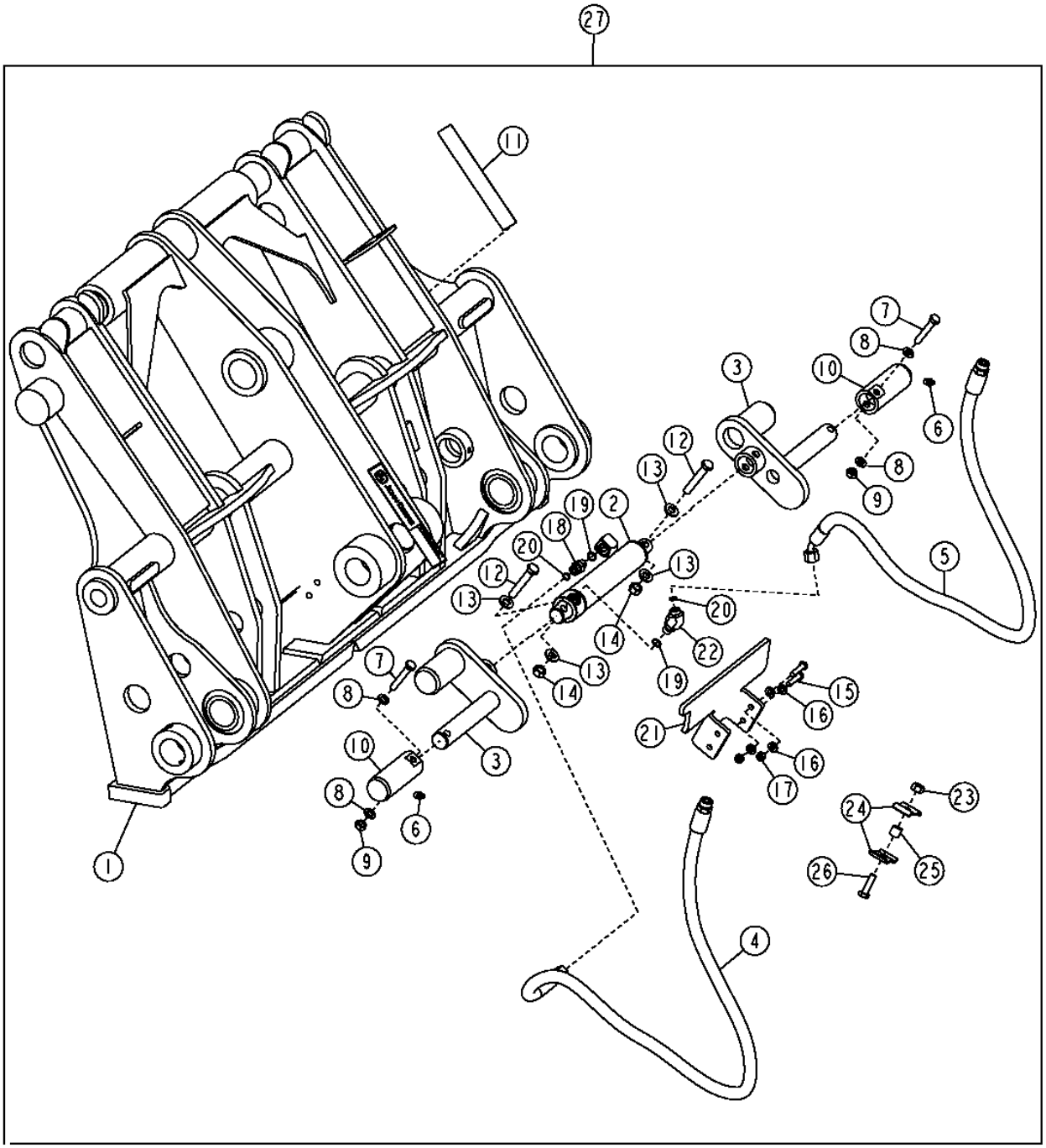

T209829

HYDRAULIC FRONT COUPLER

KEY	PART NO.	PART NAME	QTY	SERIAL NO.	REMARKS
1	.....	QUICK COUPLER	1		(ORDER AT307921)
2	AH217349	HYDRAULIC CYLINDER	1		
3	AT308851	PIN	2		
4	AT309983	HYDRAULIC HOSE - FABRICATE	1		11/16" X 1 334 MM (52-1/2") X 13/16"
5	AT309982	HYDRAULIC HOSE - FABRICATE	1		11/16" X 1 118 MM (44") X 13/16"
6	T162396	LUBRICATION FITTING	2		
7	.....	CAP SCREW	2		
8	.....	WASHER	4		
9	.....	NUT	2		
10	.....	PIN	2		
11	T213143	LABEL	1		
12	19M7753	CAP SCREW	2		M12 X 70
13	24M7240	WASHER	4		
14	14M7275	NUT	2		M12
15	19M8008	CAP SCREW	4		M8 X 35
16	24M7238	WASHER	8		
17	14M7273	NUT	4		M8
18	38H1160	ADAPTER	1		
19	R26448	O-RING	2		
20	T77613	O-RING	2		
21	T213260	GUARD	1		
22	38H1045	ELBOW FITTING	1		
23	14M7274	NUT	1		M10
24	R46919	HALF CLAMP	2		
25	28H3381	SPACER	1		
26	19M7550	CAP SCREW	1		M10 X 35
27	**AT307921**	**KIT**	**1**		**(WHOLE GOODS) KIT INCLUDES, HYDRAULIC LINES, FITTINGS, SOLINOID VALVE, HARNESS, SWITHCES AND, HARDWARE.**

FRONT COUPLER CYLINDER

T206291 -UN-06JAN05

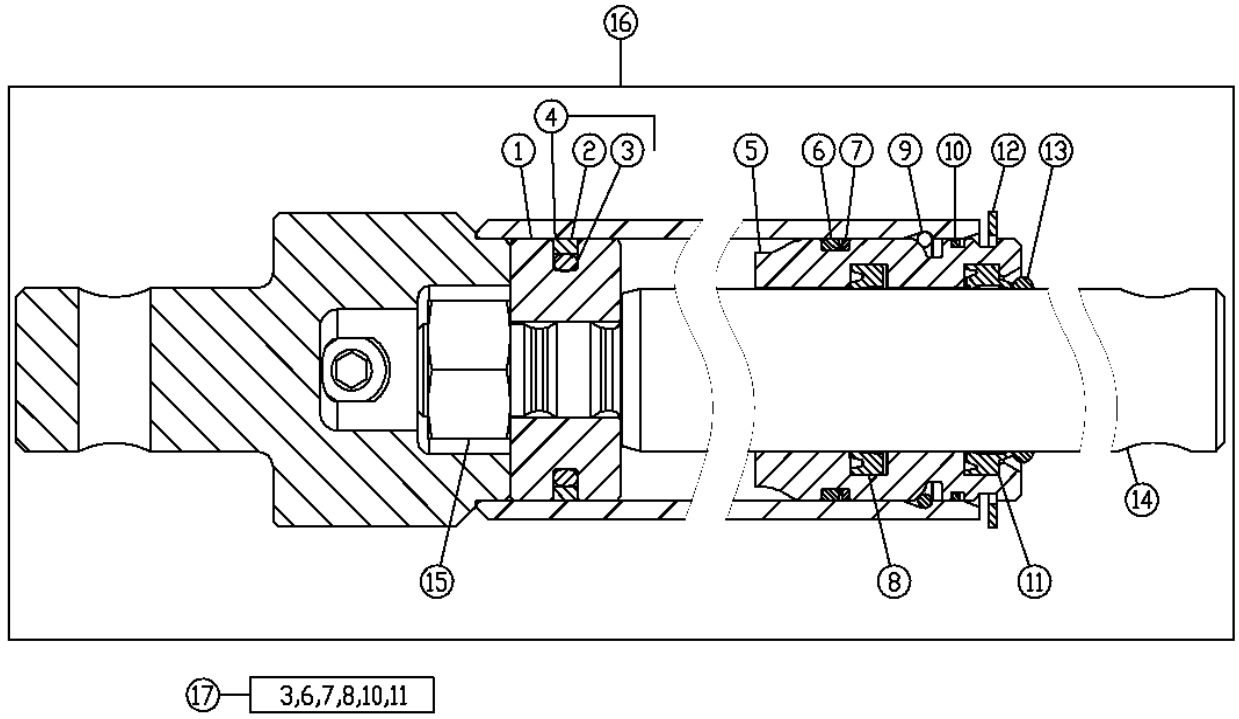

2G23

FRONT COUPLER CYLINDER

KEY	PART NO.	PART NAME	QTY	SERIAL NO.	REMARKS
1	H172639	PISTON	1		
2	.....	SEAL	1		
3	.....	O-RING	1		
4	AH176232	SEAL	1		
5	H172456	HYDR. CYLINDER ROD GUIDE	1		
6	U15973	O-RING	1		
7	R81865	BACK-UP RING	1		
8	H172764	SEAL	1		
9	H172780	RING	1		
10	T31029	O-RING	1		
11	H172765	SEAL	1		
12	H172779	SNAP RING	1		
13	P45750	O-RING	1		
14	.....	ROD	1		
15	14H1083	NUT	1	5/8"	
16	AH217349	HYDRAULIC CYLINDER	1		
17	AH176273	HYDRAULIC CYLINDER KIT	1		

BUCKET LEVELING AND RETURN-TO-DIG LINKAGE

T194544 -UN-03SEP03

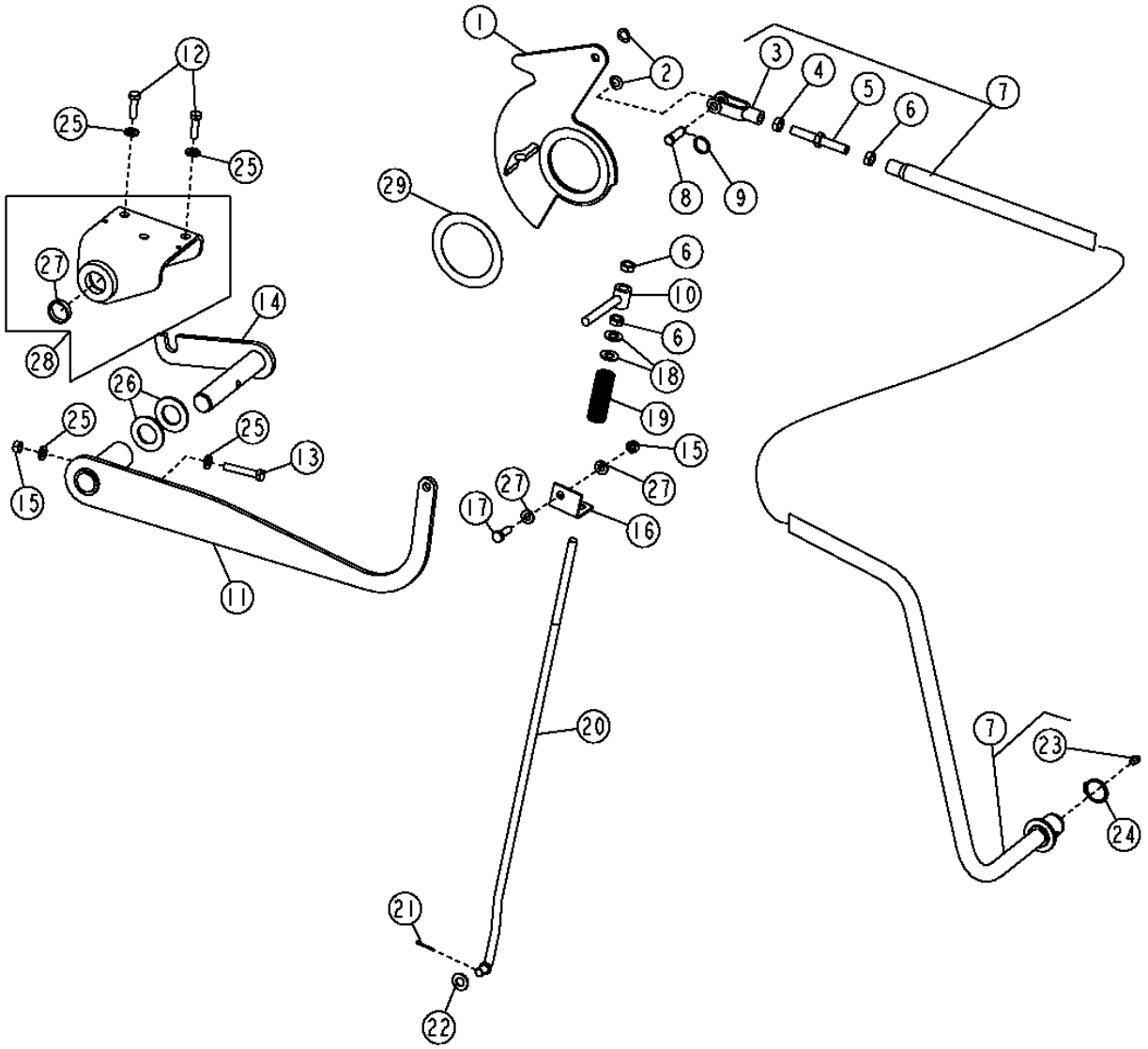

T194544

BUCKET LEVELING AND RETURN-TO-DIG LINKAGE

KEY	PART NO.	PART NAME	QTY	SERIAL NO.	REMARKS
1	AT188348	PLATE	1		
2	T146757	WASHER	2		
3	T159981	YOKE	1		
4	14H881	NUT	1		1/2"
5	T159980	STUD	1		
6	14H856	NUT	4		1/2"
7	AT188346	TUBE	1		
8	R72855	PIN FASTENER	1		
9	T148182	RING	1		
10	AT300159	LINK	1		(SUB FOR AT196811, THIS APPLICATION)
11	AT280214	LEVER	1		
12	19M7550	CAP SCREW	2		M10 X 35, (SUB FOR 19M7662, THIS APPLICATION)
13	19M8499	CAP SCREW	1		M10 X 60
14	AT280215	PIN FASTENER	1		
15	14M7274	NUT	2		M10
16	T190286	CONTROL SUPPORT	1		
17	19M7662	CAP SCREW	1		M10 X 30, (SUB FOR 19M7402 AND 19M7550, THIS APPLICATION)
18	24H1111	WASHER	2		
19	T190992	COMPRESSION SPRING	1		
20	T190997	ROD	1		
21	11M7082	COTTER PIN	1		(SUB FOR R46528, THIS APPLICATION)
22	24H1111	WASHER	1		(SUB FOR 24H1341, THIS APPLICATION)
23	T162396	LUBRICATION FITTING	1		
24	40M7046	SNAP RING	1		
25	24M7239	WASHER	4		
26	24H1499	WASHER	2		
27	T191240	BUSHING	2		
28	AT280216	BRACKET	1		
29	T201483	SHIM	2		(SHIM FOR PLATE AT188348) (NOT ILLUSTRATED)

LOADER CONTROL VALVE LINKAGE

T164098 -UN-16JAN03

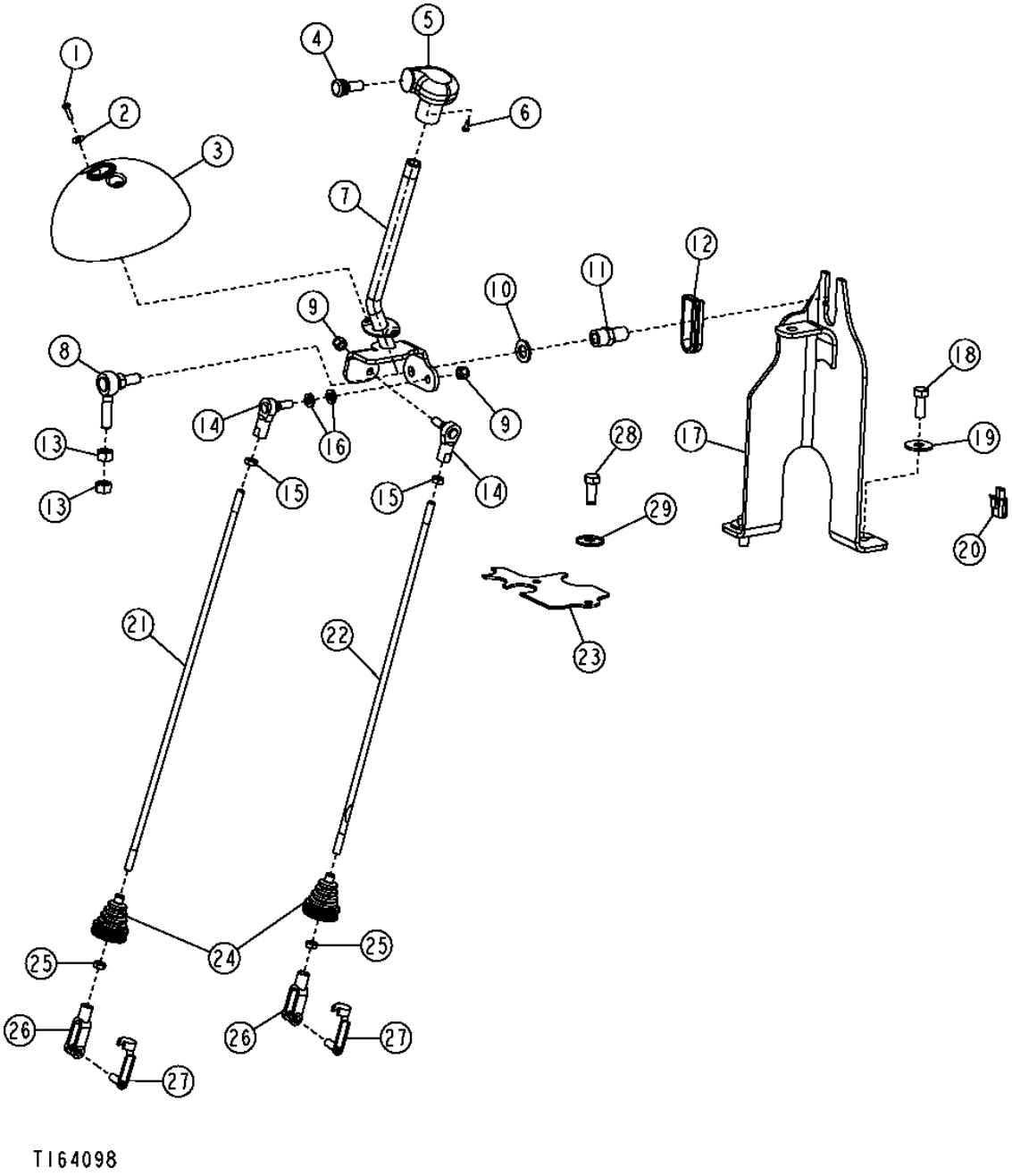

LOADER CONTROL VALVE LINKAGE

KEY	PART NO.	PART NAME	QTY	SERIAL NO.	REMARKS
1	21H1406	SCREW	2		0.190" X 3/4"
2	T83061	WASHER	2		
3	T166899	COVER	1		
4	AT162180	SWITCH	1		
5	AT171550	KNOB	1		
6	37H95	SCREW	2		
7	AT196591	LEVER	1		
8	AT124107	BALL JOINT	1		
9	M68954	LOCK NUT	2		9.525 MM
10	24M7053	WASHER	1		
11	T187072	SPACER	1		
12	T167192	INSERT	1		
13	14H865	NUT	2		1/2"
14	AT169087	BALL JOINT	2		
15	14H774	NUT	2		3/8"
16	24M7106	WASHER	2		10 X 18 X 2.500 MM
17	AT196590	CONTROL SUPPORT	1		
18	19M8011	CAP SCREW	2		M12 X 30
19	24M7180	WASHER	2		
20	RE12363	ELECTRICAL CONNECTOR ASSY	1		
21	T188901	STUD	1		
22	T188900	STUD	1		
23	T190473	PLATE	1		
24	T185710	BOOT	2		
25	14H913	NUT	2		3/8"
26	T140328	YOKE	2		
27	T183617	PIN FASTENER	2		
28	19M7881	SCREW	2		M8 X 20
29	24M7238	WASHER	2		

THIRD FUNCTION LOADER CONTROL VALVE LINKAGE

T161644 -UN-12NOV02

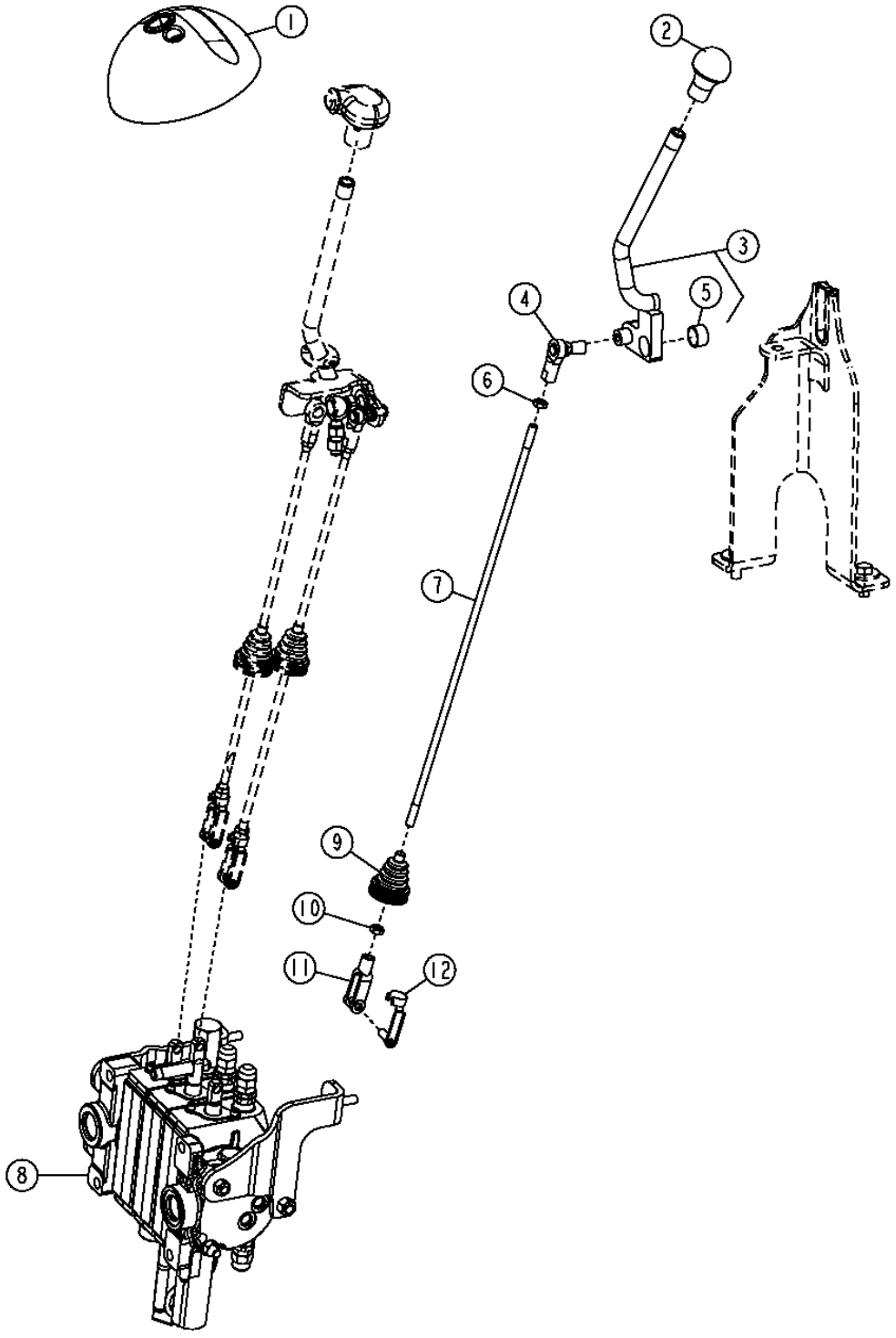

THIRD FUNCTION LOADER CONTROL VALVE LINKAGE

KEY	PART NO.	PART NAME	QTY	SERIAL NO.	REMARKS
1	T166900	COVER	1		
2	T133291	KNOB	1		
3	AT196596	LEVER	1		
4	AT169087	BALL JOINT	1		
5	L4694T	BUSHING	1		
6	14H774	NUT	1	3/8"	
7	T188901	STUD	1		
8	.....	VALVE STACK	1		
9	T185710	BOOT	1		
10	14H913	NUT	1	3/8"	
11	T140328	YOKE	1		
12	T183617	PIN FASTENER	1		

LOADER LIFT ARM

T153070 -UN-27MAR02

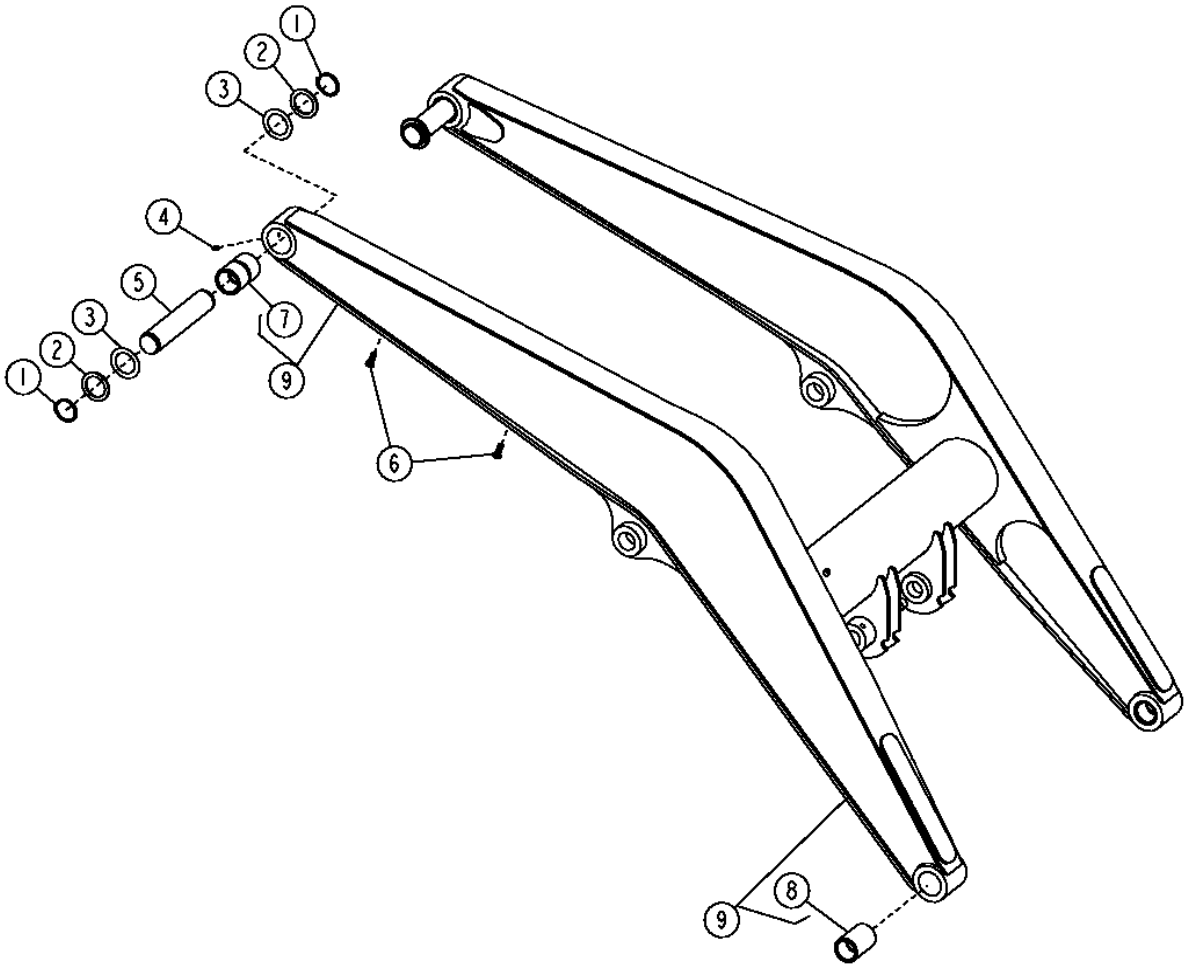

T153070

2H6

LOADER LIFT ARM

KEY	PART NO.	PART NAME	QTY	SERIAL NO.	REMARKS
1	40M7120	SNAP RING	4		
2	24H1615	WASHER	4		
3	24H1616	WASHER	4		
4	T162396	LUBRICATION FITTING	2		
5	T165844	PIN FASTENER	2		
6	T150768	NUT	2		(M10 FOR 12MM PLATE)
7	T165849	BUSHING	2		
8	T165825	BUSHING	2		
9	AT185419	LIFT ARM	1		

BOOM CYLINDER PINS

T199225 -UN-13APR04

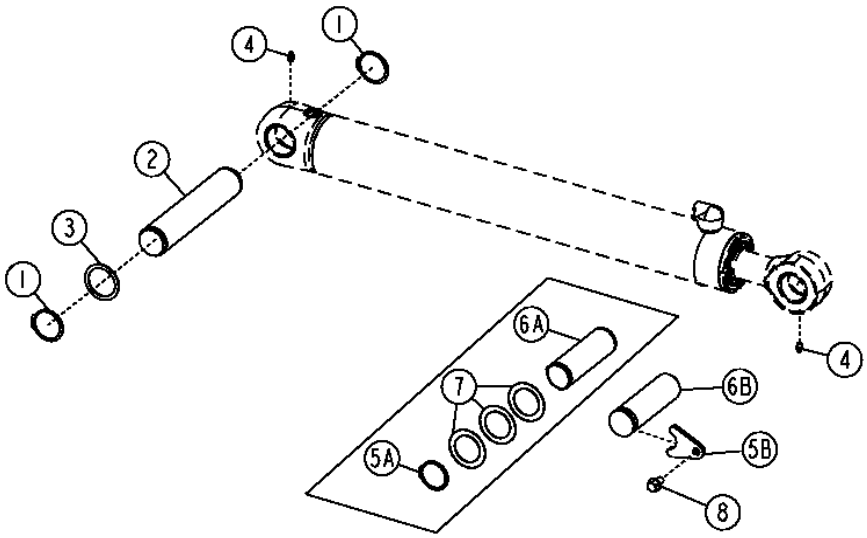

T199225

KEY	PART NO.	PART NAME	QTY	SERIAL NO.	REMARKS
1	40M7048	SNAP RING	2		
2	T183267	PIN FASTENER	1		
3	24M7443	WASHER	1		
4	T162396	LUBRICATION FITTING	2		
5A	40M7066	SNAP RING	2	-938840	
5B	T207768	PLATE	2	938841-	
6A	T183266	PIN FASTENER	2	-938840	
6B	T207767	PIN FASTENER	2	938841-	
7	T161036	WASHER	3	-938840	
8	19M7788	SCREW	2	938841-	M12 X 25

MEMORANDA

LOADER BUCKET LINKAGE AND PINS

T153085 -UN-02APR02

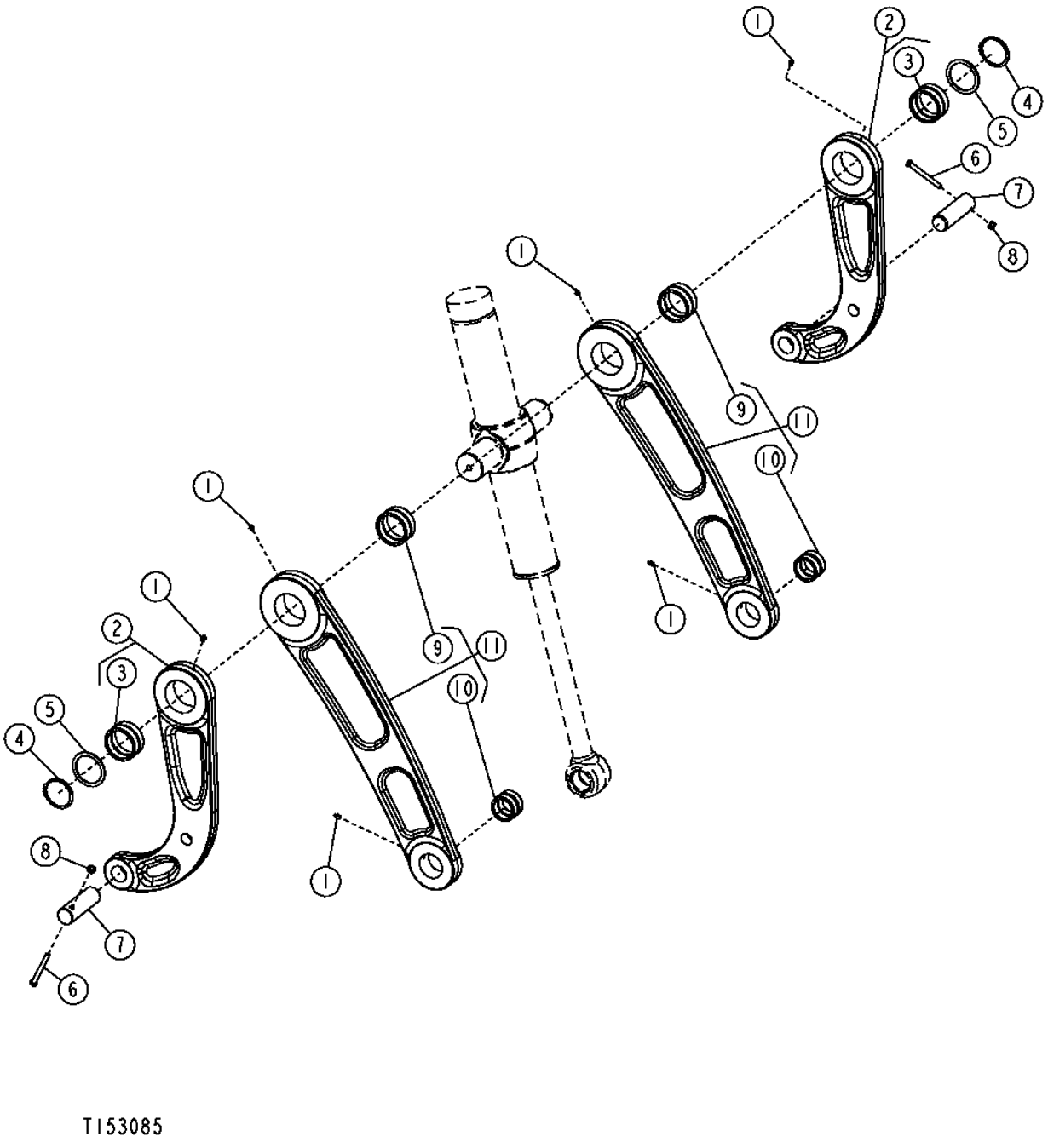

LOADER BUCKET LINKAGE AND PINS

KEY	PART NO.	PART NAME	QTY	SERIAL NO.	REMARKS
1	T162396	LUBRICATION FITTING	6		
2	AT188412	LINK	2		
3	T183760	BUSHING	2		
4	40M7164	SNAP RING	2		
5	24M7444	WASHER	2		
6	19M7908	CAP SCREW	2		M12 X 110
7	T183311	PIN FASTENER	2		
8	14M7319	LOCK NUT	2		M12
9	T183760	BUSHING	2		
10	T183759	BUSHING	2		
11	AT188410	LINK	2		

LOADER CONTROL VALVE (HUSCO)

T158409 -UN-29OCT02

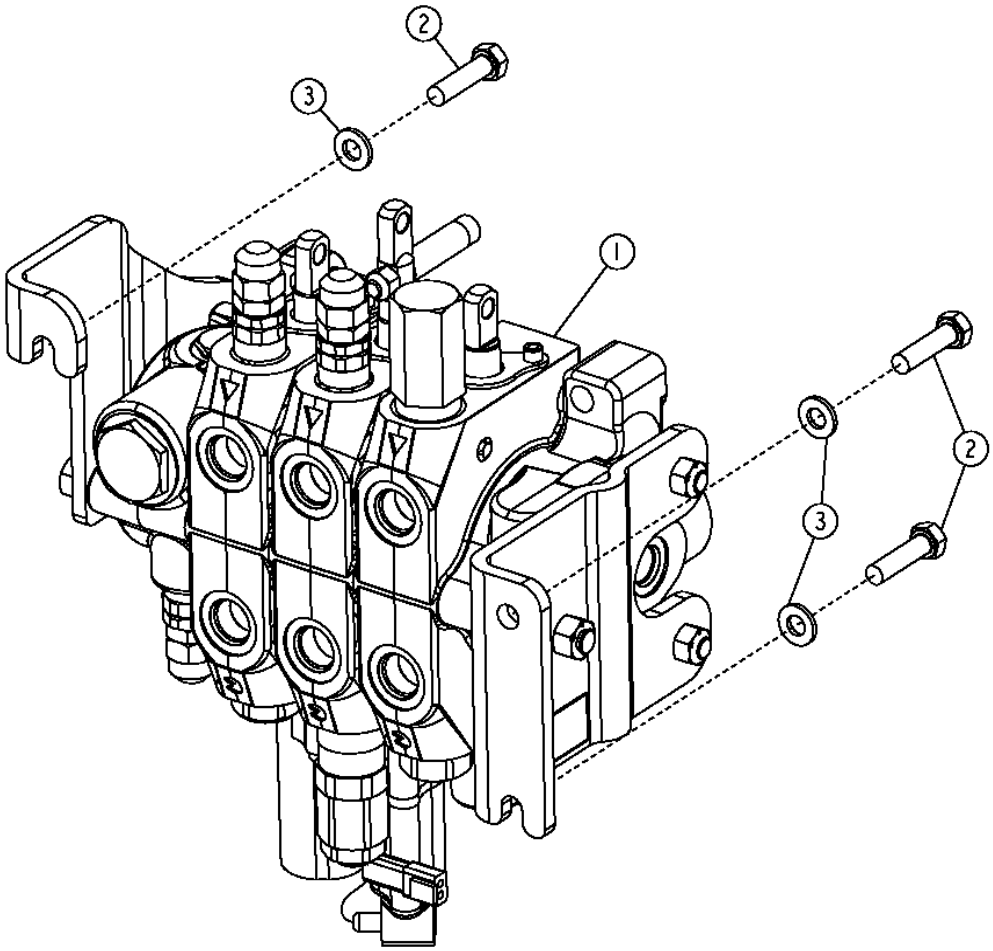

T158409

LOADER CONTROL VALVE (HUSCO)

KEY	PART NO.	PART NAME	QTY	SERIAL NO.	REMARKS
1	**AT187484**	**VALVE**	**1**	**-915139**	**CONVENIENCE ASSEMBLY (2 FUNCTION)**
	AT301025	**VALVE**	**1**	**915140-**	**CONVENIENCE ASSEMBLY (2 FUNCTION)**
	AT183521	**VALVE**	**1**	**-915139**	**CONVENIENCE ASSEMBLY (3 FUNCTION)**
	AT301022	**VALVE**	**1**	**915140-**	**CONVENIENCE ASSEMBLY (3 FUNCTION)**
2	19M8637	CAP SCREW	3		M10 X 40
3	24M7239	WASHER	3		

LOADER CONTROL VALVE
(HUSCO)

T191236 -UN-19MAY03

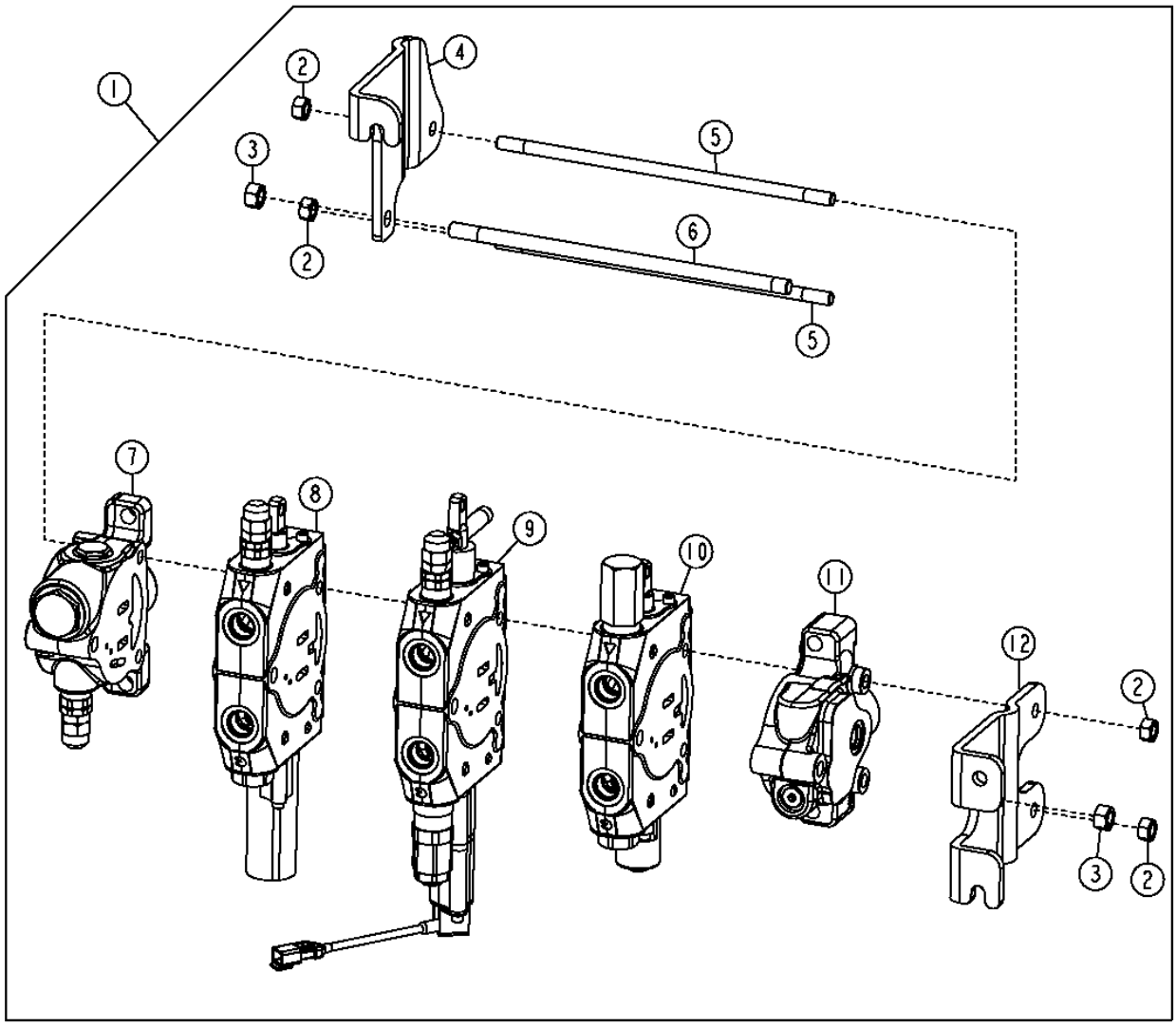

T191236

2H13

LOADER CONTROL VALVE (HUSCO)

KEY	PART NO.	PART NAME	QTY	SERIAL NO.	REMARKS
1	**AT187484**	**VALVE**	**1**	**-915139**	**(CONVENIENCE ASSEMBLY) (2 FUNCTION)**
	AT301025	**VALVE**	**1**	**915140-**	**(CONVENIENCE ASSEMBLY) (2 FUNCTION)**
	AT183521	**VALVE**	**1**	**-915139**	**(CONVENIENCE ASSEMBLY) (3 FUNCTION)**
	AT301022	**VALVE**	**1**	**915140-**	**(CONVENIENCE ASSEMBLY) (3 FUNCTION)**
2	14H807	NUT	4		7/16"
3	14H865	NUT	2		1/2"
4	T190792	PLATE	1		
5	T122865	STUD	2		(2 FUNCTION)
	T185981	STUD	2		(3 FUNCTION)
6	T122864	STUD	1		(2 FUNCTION)
	T149570	STUD	1		(3 FUNCTION)
7	T190796	HOUSING	1		(OUTLET HOUSING)
8	AT198632	SPOOL VALVE	1	-915139	(BOOM SECTION)
	AT301781	SPOOL VALVE	1	915140-	(BOOM SECTION)
9	AT198630	SPOOL VALVE	1	-915139	(BUCKET SECTION)
	AT301780	SPOOL VALVE	1	915140-	(BUCKET SECTION)
10	AT300685	SPOOL VALVE	1		(AUXILIARY SECTION)
11	AT198629	PORT PLATE	1		(INLET SECTION)
12	T190793	PLATE	1		

INLET SECTION
LOADER VALVE

T158410 -UN-31OCT02

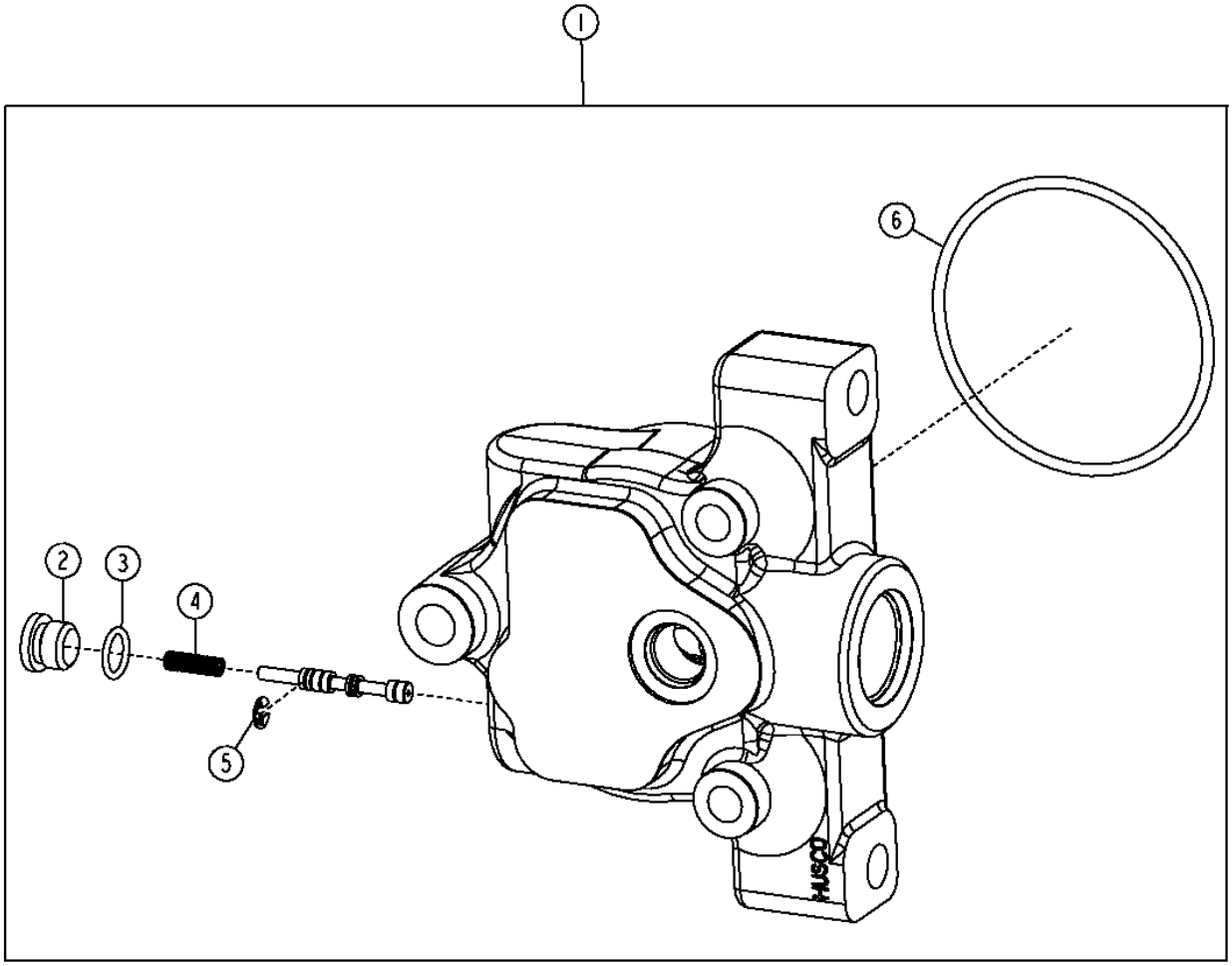

T158410

INLET SECTION
LOADER VALVE

KEY	PART NO.	PART NAME	QTY	SERIAL NO.	REMARKS
1	AT198629	VALVE	1		
2	R111493	FITTING PLUG	1		
3	T70177	O-RING	1		
4	T160617	SPRING	1		
5	T160619	SNAP RING	1		
6	T118685	O-RING	1		

BUCKET SECTION
LOADER VALVE

T191214 -UN-19MAY03

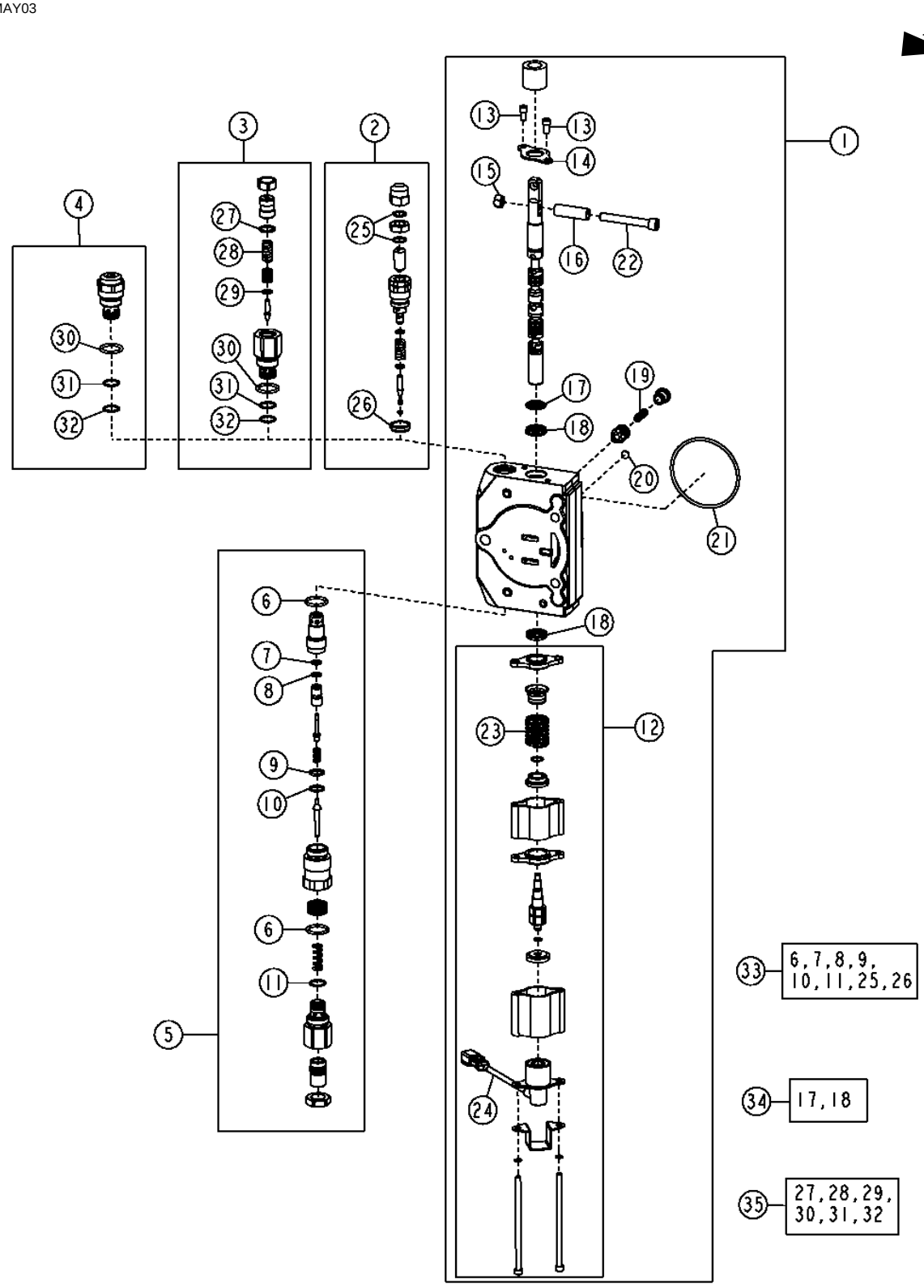

BUCKET SECTION
LOADER VALVE

KEY	PART NO.	PART NAME	QTY	SERIAL NO.	REMARKS
1	AT198630	SPOOL VALVE	1	-915139	
	AT301780	SPOOL VALVE	1	915140-	
2	AT172937	PRESSURE RELIEF VALVE	1	-915139	(4600 PSI) (7/8" PORT)
3	AT301526	PRESSURE RELIEF VALVE	1	915140-	(4600 PSI) (1 1/16' PORT) (NOT ANTI-CAVITATION)
4	AT301527	PRESSURE RELIEF VALVE	1	915140-	(4600 PSI) (1 1/16" PORT) (ANTI-CAVITATION)
5	AT192457	PRESSURE RELIEF VALVE	1		(4600 PSI)
6	T118681	O-RING	2		
7	T150958	BACK-UP RING	1		
8	R63548	O-RING	1		
9	.....	O-RING	1		
10	.....	BACK-UP RING	1		
11	T107887	O-RING	1		
12	AT196245	DETENT	1		
13	21H1352	SCREW	2		1/4" X 3/8"
14	T81524	PLATE	1		
15	14H1076	NUT	1		
16	T190795	TUBE	1		
17	.....	SEAL	1		
18	.....	SEAL	2		
19	T161835	COMPRESSION SPRING	1		
20	R95493	DISK	1		
21	T118685	O-RING	1		
22	T190794	SCREW	1		
23	T134881	SPRING	1		
24	AT196246	MAGNET	1		
25	.....	O-RING	2		
26	T183756	SEAL	1		
27	.....	O-RING	1		
28	.....	SPRING	1		
29	R63548	O-RING	1		
30	T118681	O-RING	2		
31	.....	BACK-UP RING	2		
32	T107887	O-RING	2		
33	AT314538	SEAL KIT	1		7/8 INCH RELIEF VALVE SEAL KIT, (SUB FOR AT189413)
	AT314539	SEAL KIT	1		1 1/16 INCH RELIEF VALVE SEAL KIT, (SUB FOR AT189413)
34	AT280406	SEAL KIT	1		
35	AT300801	SEAL KIT	1		

2H18

BOOM SECTION
LOADER VALVE

T191231 -UN-19MAY03

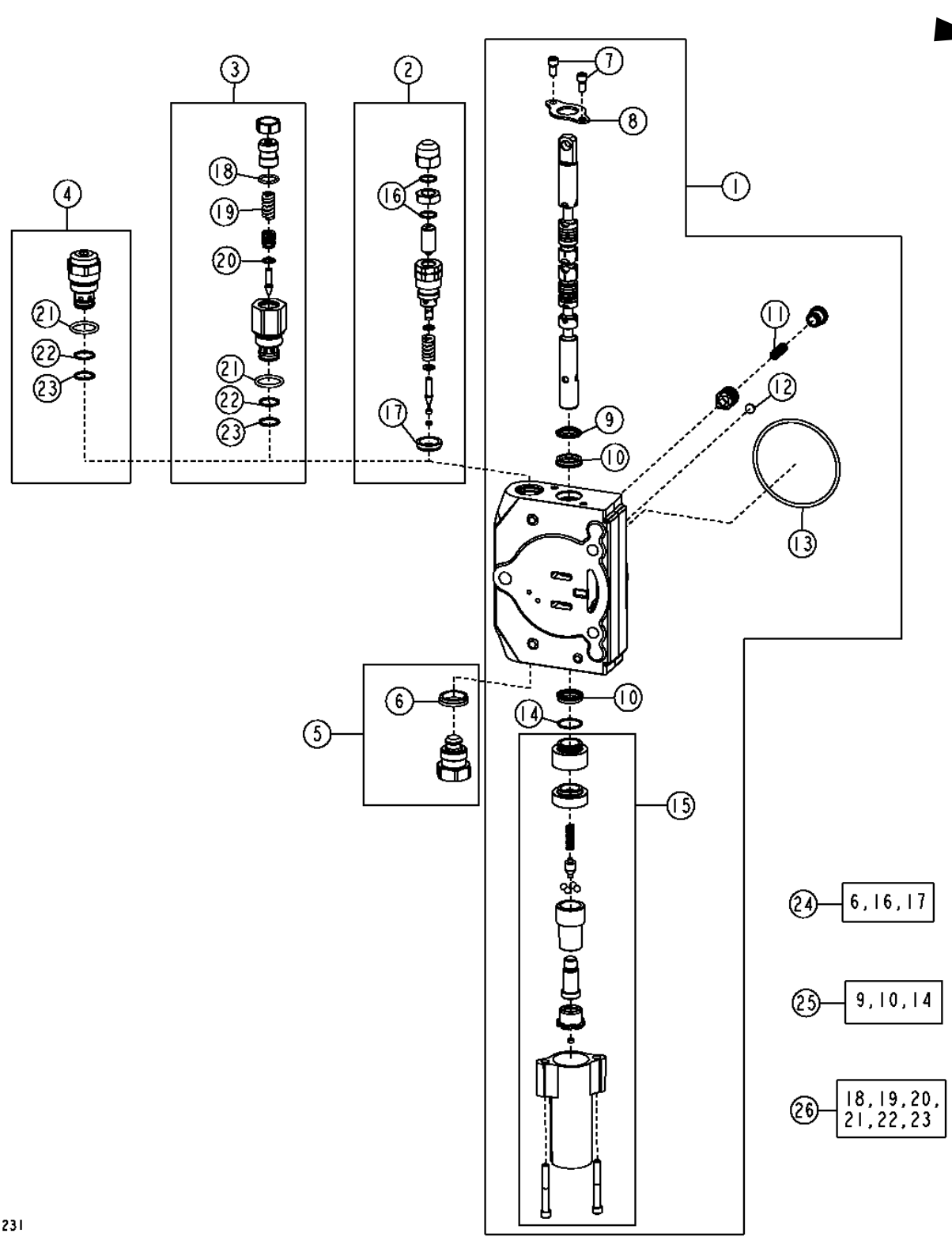

2H19

BOOM SECTION
LOADER VALVE

KEY	PART NO.	PART NAME	QTY	SERIAL NO.	REMARKS
1	AT198632	VALVE STACK	1	-915139	
	AT301781	VALVE STACK	1	915140-	
2	AT198633	PRESSURE RELIEF VALVE	1	-915139	(5300 PSI) (7/8" PORT)
3	AT301779	PRESSURE RELIEF VALVE	1	915140-	(5300 PSI) (1 1/16" PORT) (NOT ANTI-CAVITATION)
4	AT301778	PRESSURE RELIEF VALVE	1	915140-	(5300 PSI) (1 1/16" PORT) (ANTI-CAVITATION)
5	AT169373	CHECK VALVE	1		
6	T183757	SEAL	1		
7	21H1352	SCREW	2		1/4" X 3/8"
8	T81524	PLATE	1		
9	.....	SEAL	1		
10	.....	SEAL	2		
11	T161835	COMPRESSION SPRING	1		
12	R95493	DISK	1		
13	T118685	O-RING	1		
14	.....	O-RING	1		
15	AT192372	DETENT	1		
16	.....	O-RING	2		
17	T183756	SEAL	1		
18	.....	O-RING	1		
19	.....	SPRING	1		
20	R63548	O-RING	1		
21	T118681	O-RING	2		
22	.....	BACK-UP RING	2		
23	T107887	O-RING	2		
24	AT314538	SEAL KIT	1		7/8 INCH RELIEF VALVE SEAL KIT, (SUB FOR AT189413)
	AT314539	SEAL KIT	1		1 1/16 INCH RELIEF VALVE SEAL KIT, (SUB FOR AT189413)
25	AT280406	SEAL KIT	1		
26	AT300801	SEAL KIT	1		

AUXILIARY SECTION
LOADER VALVE

T158413 -UN-31OCT02

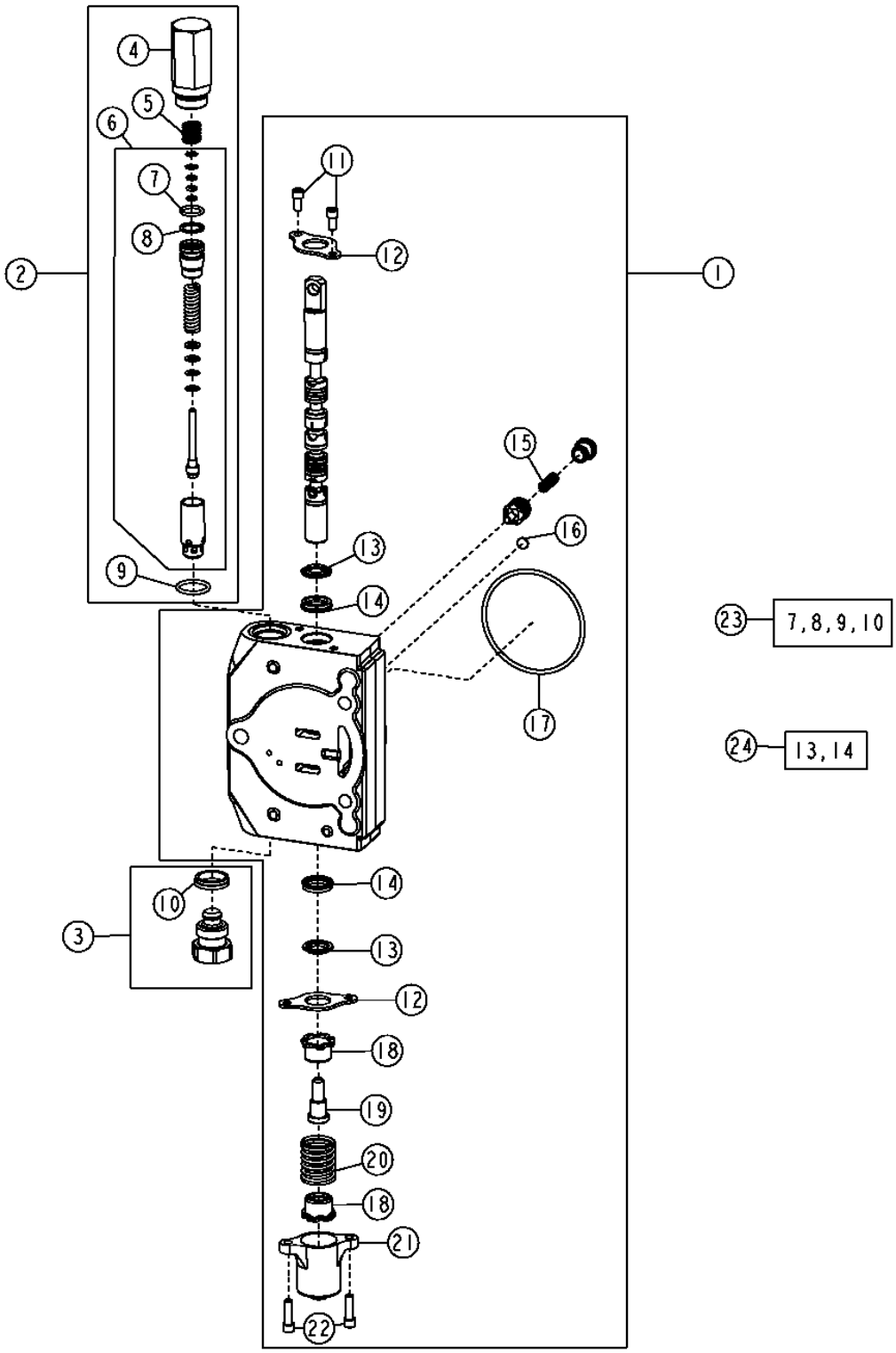

AUXILIARY SECTION
LOADER VALVE

KEY	PART NO.	PART NAME	QTY	SERIAL NO.	REMARKS
1	AT300685	SPOOL VALVE	1		(SUB FOR AT280405)
2	.....	PRESSURE RELIEF VALVE	1		(3800 PSI)
3	AT83174	PLUG	1		
4	T118866	HOUSING	1		
5	T118867	SPRING	1		
6	AT178362	KIT	1		
7	.....	O-RING	1		
8	.....	BACK-UP RING	1		
9	T118681	O-RING	1		
10	T183757	SEAL	1		
11	21H1352	SCREW	2		1/4" X 3/8"
12	T81524	PLATE	2		
13	.....	SEAL	2		
14	.....	SEAL	2		
15	T161835	COMPRESSION SPRING	1		
16	R95493	DISK	1		
17	T118685	O-RING	1		
18	T81540	RETAINER	2		
19	T81541	SCREW	1		
20	T153105	SPRING	1		
21	T118808	CAP	1		
22	19H3554	SCREW	2		1/4" X 0.880"
23	AT314538	SEAL KIT	1		7/8 INCH RELIEF VALVE SEAL KIT, (SUB FOR AT189413)
	AT314539	SEAL KIT	1		1 1/16 INCH RELIEF VALVE SEAL KIT, (SUB FOR AT189413)
24	AT280406	SEAL KIT	1		

OUTLET SECTION
LOADER VALVE

T158414 -UN-31OCT02

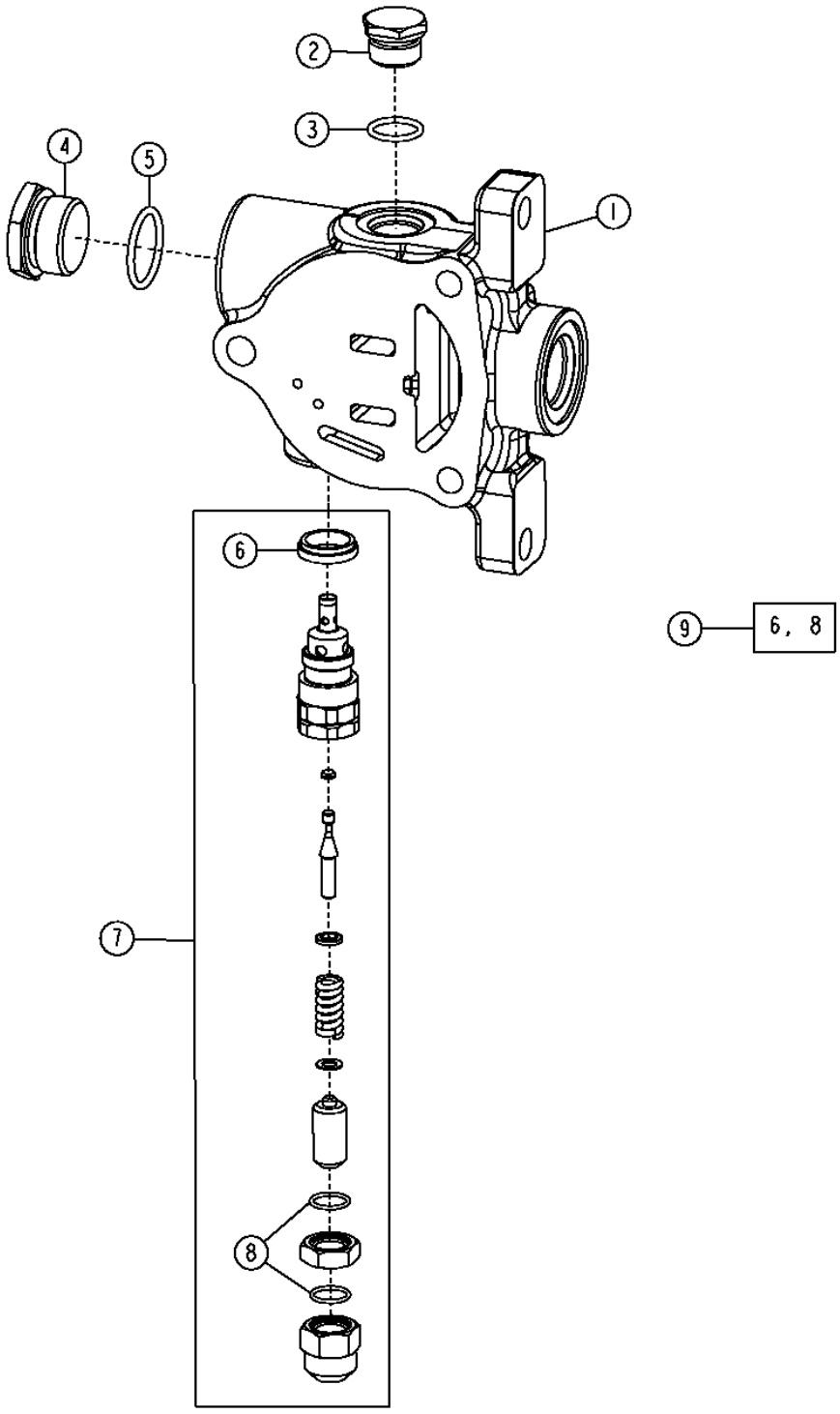

OUTLET SECTION
LOADER VALVE

KEY	PART NO.	PART NAME	QTY	SERIAL NO.	REMARKS
1	T190796	HOUSING	1		
2	T76502	FITTING	1		
3	R26906	O-RING	1		
4	R36636	FITTING PLUG	1		
5	R29936	O-RING	1		
6	T183756	SEAL	1		
7	AT173840	PRESSURE RELIEF VALVE	1		(3625 PSI)
8	.....	O-RING	2		
9	AT314538	SEAL KIT	1		7/8 INCH RELIEF VALVE SEAL KIT, (SUB FOR AT189413)
	AT314539	SEAL KIT	1		1 1/16 INCH RELIEF VALVE SEAL KIT, (SUB FOR AT189413)

2H24

HYDRAULIC FRONT COUPLER VALVE

T209329 -UN-10MAR05

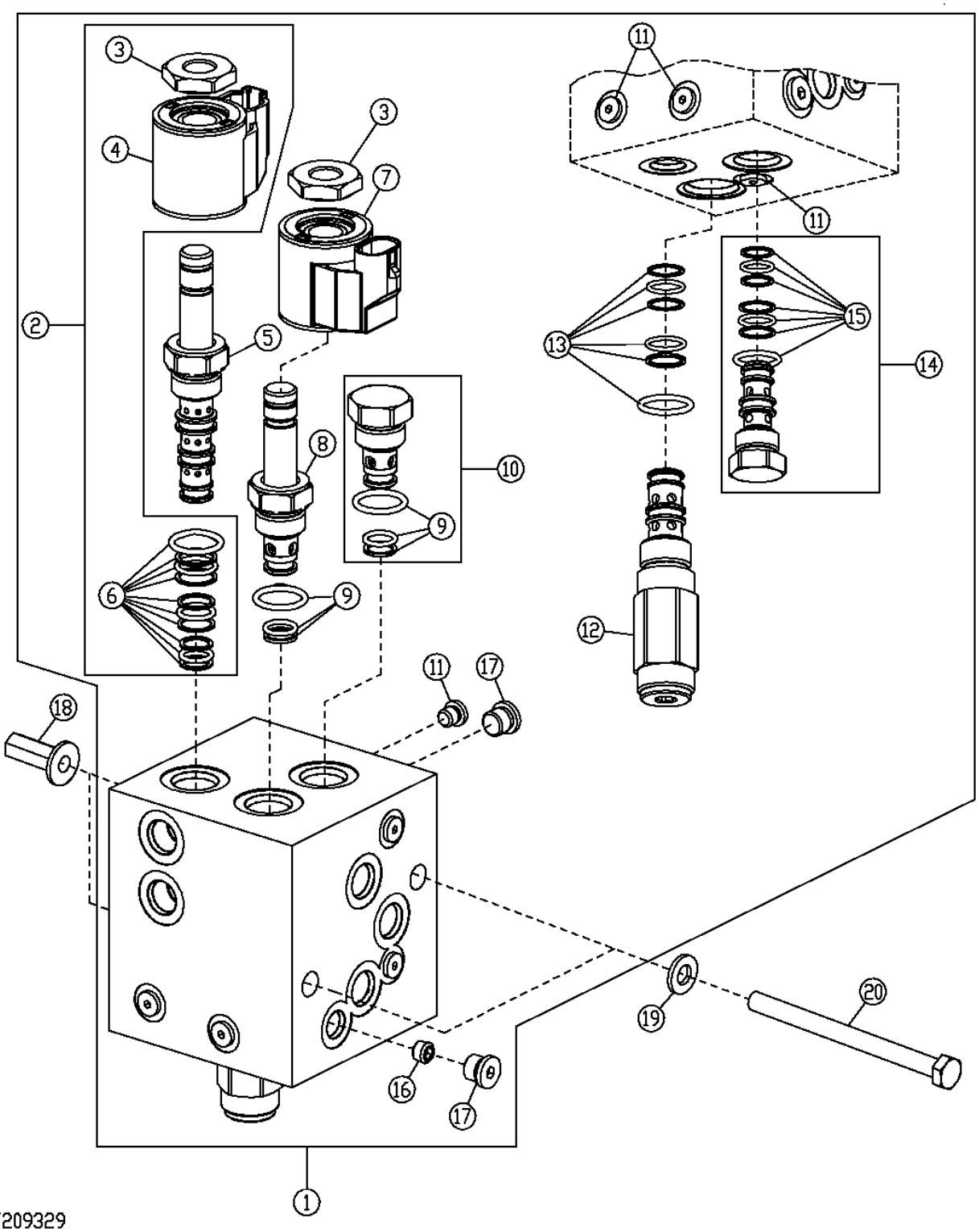

THIS PARTS LISTING IS CONTINUED

HYDRAULIC FRONT COUPLER VALVE

KEY	PART NO.	PART NAME	QTY	SERIAL NO.	REMARKS
1	AT312547	SOLENOID VALVE	1		
	T187815	O-RING	1		
	AT312681	HYD. QUICK-CONNECT COUPLER	1		
2	AT301765	SOLENOID VALVE	1		
3	T181306	NUT	1		
4	AT301767	ELECTRICAL COIL	1		
5	AT195922	HYD ACTUATED CONTROL VALVE	1		
6	AT301766	O-RING KIT	1		
7	AT195144	SOLENOID VALVE COIL	1		
8	AT307315	SOLENOID VALVE	1		
9	AT224862	SEAL KIT	1		
10	AT224570	CHECK VALVE	1		
11	.....	PLUG	1		
12	AT310817	HYDRAULIC PRESSURE VALVE	1		
13	AT196943	SEAL KIT	1		
14	AT195140	CHECK VALVE	1		
15	AT195141	SEAL KIT	1		
16	.....	ORIFICE	1		
17	.....	PLUG	1		
18	T148409	NUT	2		M10, (FOR 6MM PLATE)
19	24M7239	WASHER	2		
20	19M7638	CAP SCREW	2		M10 X 130

LOADER BOOM LIFT CYLINDER HYDRAULICS

T189243 -UN-02APR03

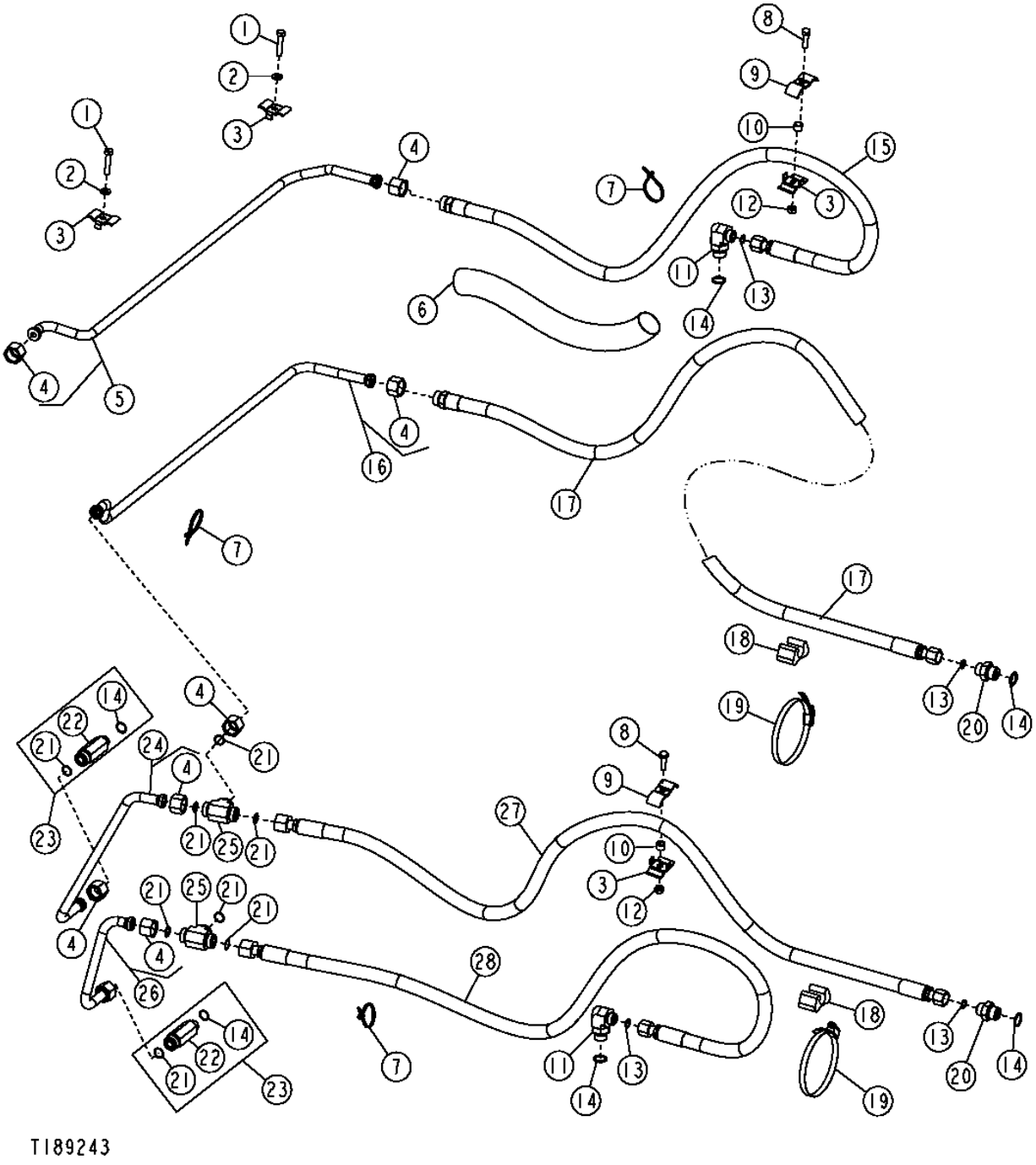

LOADER BOOM LIFT CYLINDER HYDRAULICS

KEY	PART NO.	PART NAME	QTY	SERIAL NO.	REMARKS
1	19M8600	CAP SCREW	2		M10 X 50
2	24M7239	WASHER	2		
3	KV22609	CLAMP	4		(SUB FOR T160550)
4	38H1356	TUBE NUT	8		
5	AT195782	OIL LINE	1		
6	T161463	SLEEVE	1		
7	R44302	TIE BAND	AR		
8	19M7550	CAP SCREW	2		M10 X 35
9	U46753	HOSE CLAMP	2		
10	28H3394	BUSHING	2		
11	38H1404	ELBOW FITTING	2		
12	14M7274	NUT	2		M10
13	T77932	O-RING	4		
14	U12547	O-RING	6		
15	AT195770	HYDRAULIC HOSE - FABRICATE	1		
16	AT195783	OIL LINE	1		
17	AT195771	HYDRAULIC HOSE - FABRICATE	1		
18	T105773	GUIDE	3		
19	AC15595	CLAMP	4		(SUB FOR AR85327, THIS APPLICATION)
20	38H1329	ADAPTER	2		
21	T77858	O-RING	8		
22	T188927	FITTING	2		
23	T188927	FITTING	2		(SUB FOR (2) AT196852) (ALSO ORDER (2) T77858 AND (2) R26906)
24	AT195780	OIL LINE	1		
25	38H1208	TEE FITTING	2		
26	AT195781	OIL LINE	1		
27	AT195769	HYDRAULIC HOSE - FABRICATE	1		
28	AT195768	HYDRAULIC HOSE - FABRICATE	1		

LOADER BUCKET CYLINDER AND THIRD FUNCTION HYDRAULICS

T209853 -UN-11APR05

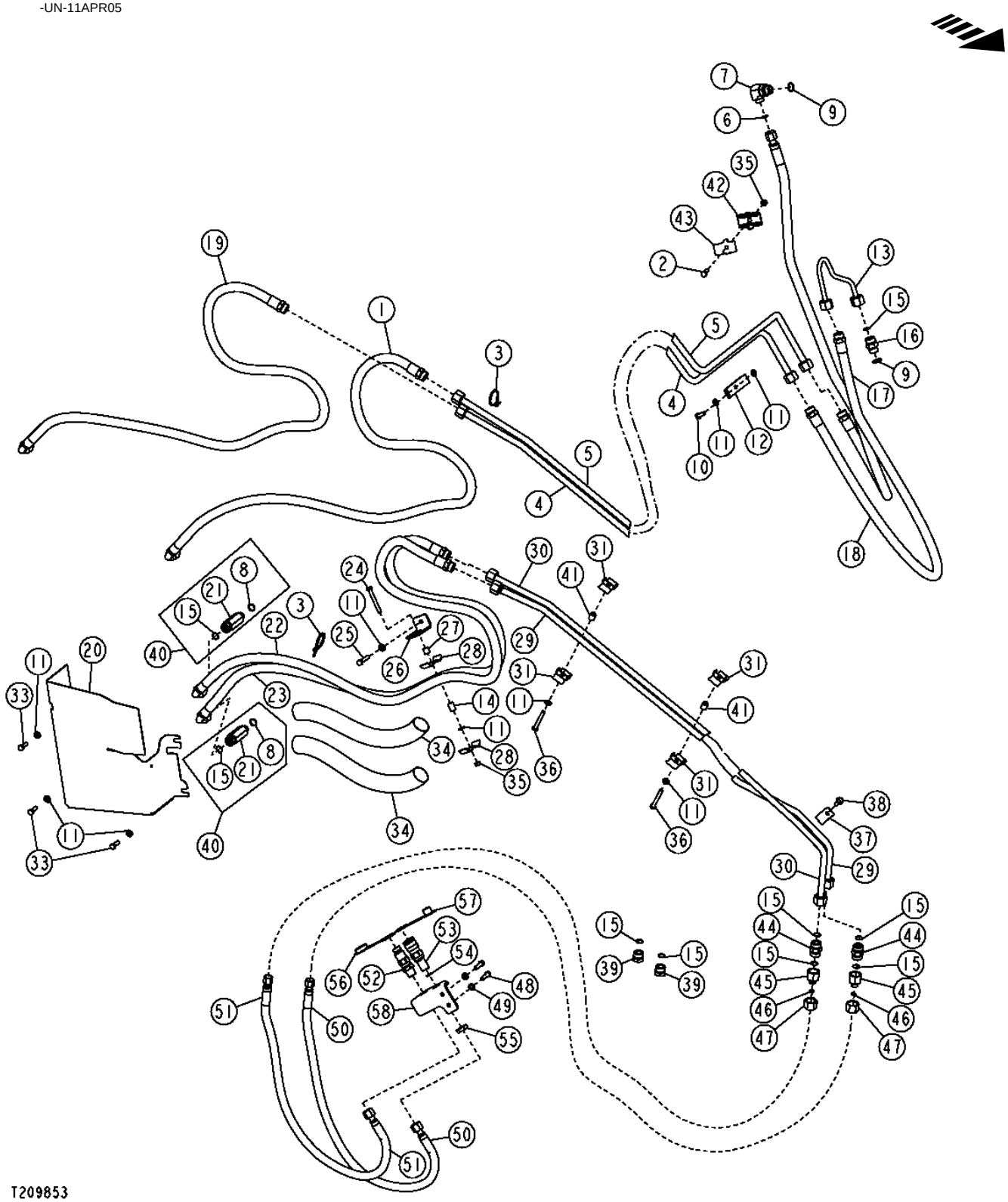

THIS PARTS LISTING IS CONTINUED

LOADER BUCKET CYLINDER AND THIRD FUNCTION HYDRAULICS

KEY	PART NO.	PART NAME	QTY	SERIAL NO.	REMARKS
1	AT195775	HYDRAULIC HOSE - FABRICATE	1		(SUB FOR AT195765)
2	19M7550	CAP SCREW	1		
3	R44302	TIE BAND	AR		
4	AT195776	OIL LINE	1		
5	AT195777	OIL LINE	1		
6	T77932	O-RING	1		
7	38H1404	ELBOW FITTING	1		
8	R26906	O-RING	4		
9	U12547	O-RING	2		
10	19M7402	CAP SCREW	1		M10 X 25
11	24M7239	WASHER	8		
12	T105720	CLAMP	1		
13	AT199231	OIL LINE	1		
14	H141836	BUSHING	1		
15	T77858	O-RING	5		
16	38H1163	ADAPTER	1		
17	AT195773	HYDRAULIC HOSE - FABRICATE	1		
18	AT195772	HYDRAULIC HOSE - FABRICATE	1		
19	AT195775	HYDRAULIC HOSE - FABRICATE	1		(SUB FOR AT195765)
20	T189064	SHIELD	1	-944518	
	T206908	SHIELD	1	944519-	
21	T188927	FITTING	2		
22	AT195775	HYDRAULIC HOSE - FABRICATE	1		
23	AT195775	HYDRAULIC HOSE - FABRICATE	1		
24	19M8081	CAP SCREW	1		M10 X 80
25	19M8600	CAP SCREW	1		M10 X 50
26	T202050	ANGLE	1		(SUB FOR T166245, THIS APPLICATION)
27	T126051	SPACER	1		(SUB FOR T190690)
28	U46753	HOSE CLAMP	2		
29	AT195779	OIL LINE	1		
30	AT195778	OIL LINE	1		
31	KV22609	CLAMP	4		(SUB FOR T160550)
32	28H3394	BUSHING	1		
33	19M7662	CAP SCREW	3		M10 X 30
34	T161463	SLEEVE	2		
35	14M7274	NUT	2		M10
36	19M7875	CAP SCREW	2		
37	U40398	CLAMP	1		
38	19M7784	SCREW	1		M10 X 20, (SUB FOR 19M7938, THIS APPLICATION)
39	38H1149	FITTING PLUG	2		
40	T188927	FITTING	2		(ALSO ORDER (2) T77858 AND (2) R26906) (SUB FOR (2) AT196852)
41	28H3383	BUSHING	2		(SUB FOR 28H1523, THIS APPLICATION)
42	T159956	CLAMP	1		
43	T159848	CLAMP	1		
44	38H1272	UNION FITTING	2		
45	38H1474	REDUCER	2		
46	T77857	O-RING	2		
47	38H1356	TUBE NUT	2		
48	19M7550	CAP SCREW	2		M10 X 35
49	24M7239	WASHER	2		
50	AT310033	HYDRAULIC HOSE - FABRICATE	1		
51	AT310034	HYDRAULIC HOSE - FABRICATE	1		
52	AT312681	HYD. QUICK-CONNECT COUPLER	1		
53	KV11305	HYD. QUICK-CONNECT COUPLER	1		
54	T77932	O-RING	2		
55	T80306	NUT	2		
56	T188879	BOOT	1		
57	T188880	BOOT	1		
58	T207889	BRACKET	1		

HYDRAULIC FRONT COUPLER

T209854 -UN-02JUN05

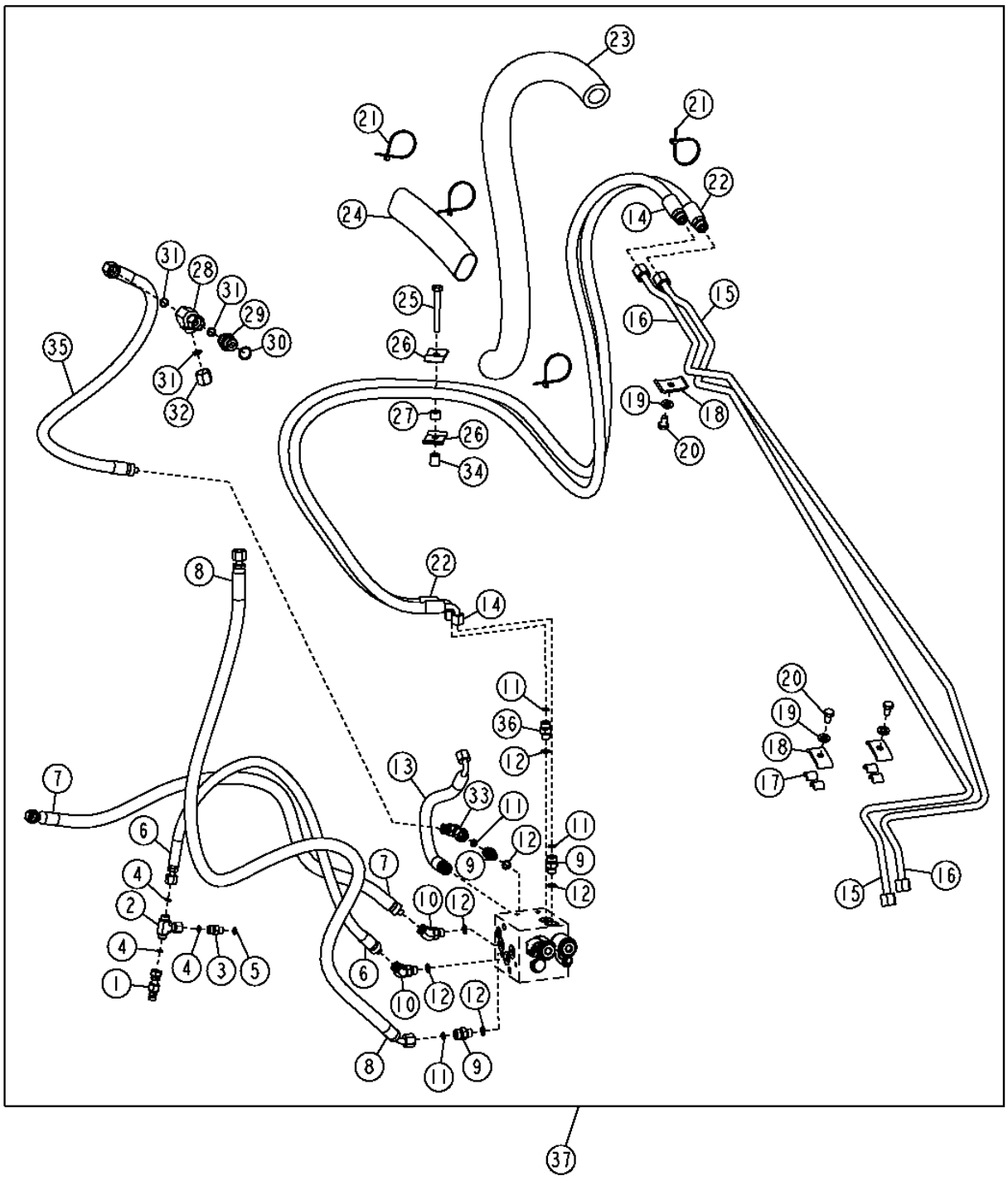

HYDRAULIC FRONT COUPLER

KEY	PART NO.	PART NAME	QTY	SERIAL NO.	REMARKS
1	RE60700	DIAGNOSTIC COUPLING	1		
2	38H1036	TEE FITTING	1		
3	38H1159	ADAPTER	1		
4	T77814	O-RING	3		
5	R28782	O-RING	1		
6	AT309675	HYDRAULIC HOSE - FABRICATE	1		
7	AT309664	HYDRAULIC HOSE - FABRICATE	1		
8	AT309671	HYDRAULIC HOSE - FABRICATE	1		11/16" X 1 556 MM (61-1/4") X 11/16"
9	38H1160	ADAPTER	4		
10	AT318341	ELBOW FITTING	2		
11	T77613	O-RING	4		
12	R26448	O-RING	6		
13	AT309743	HYDRAULIC HOSE - FABRICATE	1		
14	AT309678	HYDRAULIC HOSE - FABRICATE	1		
15	AT309674	OIL LINE	1		
16	AT309673	OIL LINE	1		
17	.....	ISOLATOR	4		.812 MAX X .500 ID HOSE
18	U10516	HOSE CLAMP	3		
19	24M7239	WASHER	7		
20	19M8324	CAP SCREW	3		M10 X 16
21	R44302	TIE BAND	4		
22	AT314398	HYDRAULIC HOSE - FABRICATE	1		
23	T185089	SLEEVE	1		
24	T78606	HOSE GUARD	2		(CUT TO 254MM)
25	19M8081	CAP SCREW	1		M10 X 80
26	R46919	HALF CLAMP	4		
27	28H3394	BUSHING	1		
28	38H1031	TEE FITTING	1		
29	38H1174	ADAPTER	1		
30	R26906	O-RING	1		
31	T77857	O-RING	3		
32	38H1416	FITTING	1		
33	AT195201	ELBOW FITTING	1		
34	28H3393	BUSHING	1		
35	AT309679	HYDRAULIC HOSE - FABRICATE	1		
36	38H1212	ADAPTER	1		
37	**AT307921**	**KIT**	**1**		

MEMORANDA

BOOM LIFT CYLINDER AND REPAIR KITS
(SERIAL NO. -943817)

T159056 -UN-10SEP02

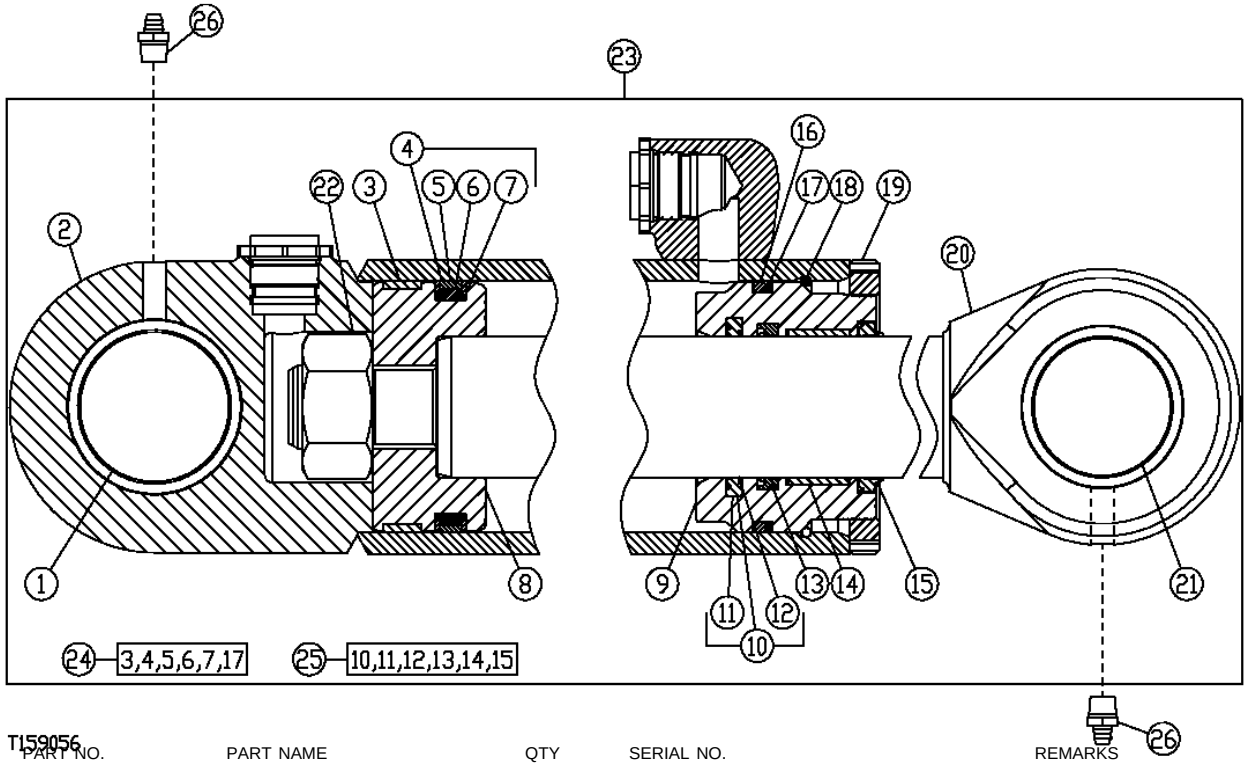

T159056

KEY	PART NO.	PART NAME	QTY	SERIAL NO.	REMARKS
1	.....	BUSHING	1		
2	AH176032	HYDRAULIC CYLINDER BARREL	1		
3	R81775	WEAR RING	1		
4	RE20343	SEAL	1		
5	.....	SEAL	1		
6	.....	SEAL	1		
7	.....	BACK-UP RING	2		
8	R93028	PISTON	1		
9	H157427	HYDR. CYLINDER ROD GUIDE	1		
10	AH146562	SEAL	1		
11	.....	SEAL	1		
12	.....	BACK-UP RING	1		
13	H152204	SEAL	1		
14	H152795	WEAR RING	1		
15	AH146558	SEAL	1		
16	F950R	O-RING	1		
17	R81862	BACK-UP RING	1		
18	R81787	RING	1		
19	R81793	NUT	1		
20	AH174946	HYDRAULIC CYLINDER ROD	1		
21	R97727	BUSHING	1		
22	.....	NUT	1		
23	.....	HYDRAULIC CYLINDER	1		(AH174944 NO LONGER AVAILABLE) (SUB AH211105)
24	AH212101	HYDRAULIC CYLINDER KIT	1		BORE SEAL KIT, (SUB FOR AH149844)
25	AH149814	KIT	1		ROD SEAL KIT
26	T162396	LUBRICATION FITTING	2		

BOOM LIFT CYLINDER AND REPAIR KITS
(SERIAL NO. 943818-)

T209049 -UN-10MAR05

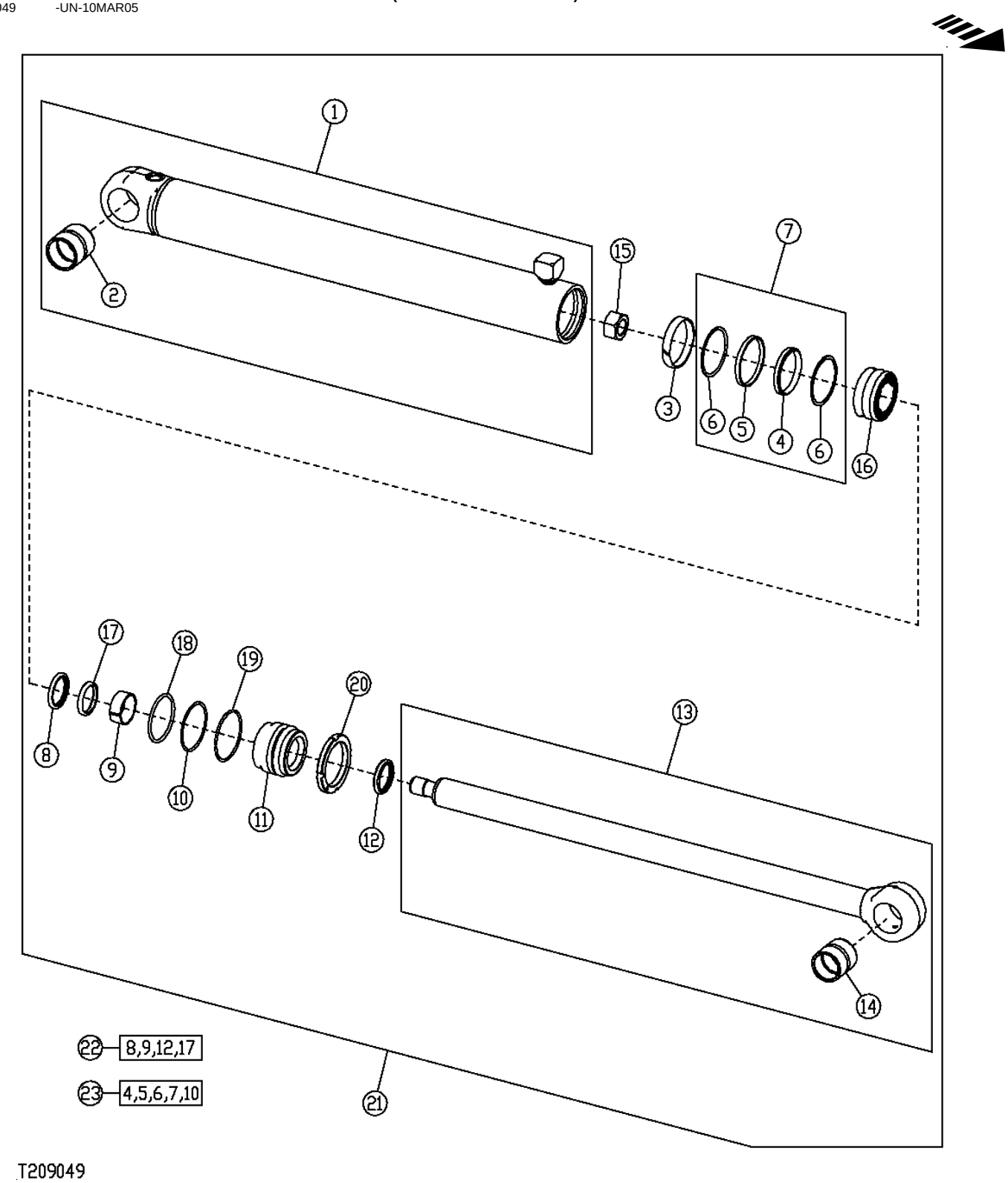

BOOM LIFT CYLINDER AND REPAIR KITS
(SERIAL NO. 943818-)

KEY	PART NO.	PART NAME	QTY	SERIAL NO.	REMARKS
1	AH211106	HYDRAULIC CYLINDER BARREL	1		
2	R83469	O-RING	1		
3	R81775	WEAR RING	1		
4	.....	SEAL	1		
5	.....	SEAL	1		
6	.....	BUSHING	1		
7	RE20343	SEAL	1		
8	AH146562	SEAL	1		
9	H152795	WEAR RING	1		
10	R81862	BACK-UP RING	1		
11	H157427	HYDR. CYLINDER ROD GUIDE	1		
12	AH146558	SEAL	1		
13	AH174946	HYDRAULIC CYLINDER ROD	1		
14	R97727	BUSHING	1		
15	H170540	LOCK NUT	1		
16	R93028	PISTON	1		
17	H152204	SEAL	1		
18	F950R	O-RING	1		
19	R81787	RING	1		
20	R81793	NUT	1		
21	AH211105	HYDRAULIC CYLINDER	1		
22	AH149814	HYDRAULIC CYLINDER KIT	1		ROD SEAL KIT
23	AH212101	HYDRAULIC CYLINDER KIT	1		BORE SEAL KIT

LOADER BUCKET CYLINDER AND REPAIR KITS

T159057 -UN-11SEP02

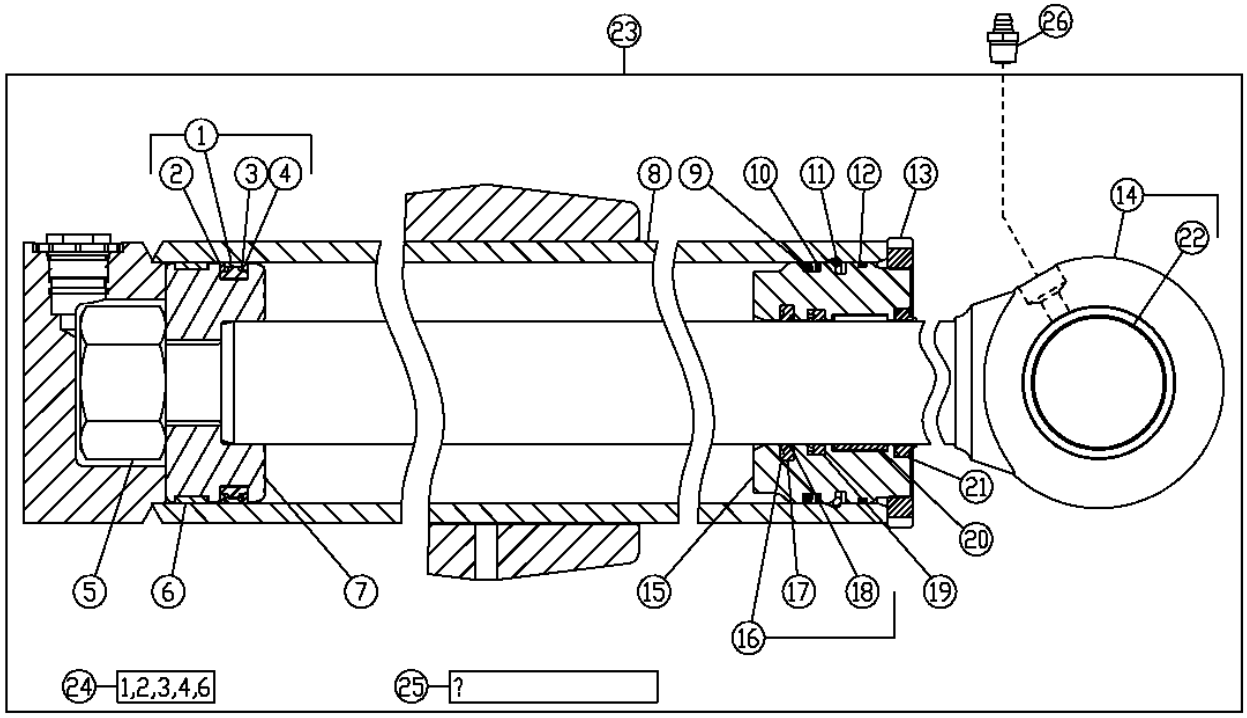

TI59057

KEY	PART NO.	PART NAME	QTY	SERIAL NO.	REMARKS
1	AH138082	SEAL	1		
2	.....	SEAL	1		
3	.....	SEAL	1		
4	.....	BACK-UP RING	1		
5	H155561	NUT	1		
6	H155543	SCRAPER RING	1		
7	H157082	PISTON	1		
8	.....	HYDRAULIC CYLINDER BARREL	1	-929339	(AH206178 NO LONGER AVAILABLE) (SUB AH212542)
	AH212542	HYDRAULIC CYLINDER BARREL	1	929240-	
9	.....	RING	1		
10	.....	BACK-UP RING	1		
11	H173154	SNAP RING	1		
12	T42302	O-RING	1		
13	R82086	NUT	1		
14	.....	ROD	1	-929239	(AH174951 NO LONGER AVAILABLE) (SUB AH212543)
	AH212543	ROD	1	929240-	
15	H211173	HYDR. CYLINDER ROD GUIDE	1		(SUB FOR H173149, THIS APPLICATION)
16	AH146562	SEAL	1		
17	.....	SEAL	1		
18	H174164	BACK-UP RING	1		
19	H152204	SEAL	1		
20	H152795	WEAR RING	1		
21	AH146558	SEAL	1		
22	H208785	BUSHING	1		(SUB FOR H150111)
23	.....	HYDRAULIC CYLINDER	1	-929239	(AH174952 NO LONGER AVAILABLE)
	.....	HYDRAULIC CYLINDER	1	929240-XXXXXX	(SUB AH212541) (AH212541 NO LONGER AVAILABLE)
	AH217890	HYDRAULIC CYLINDER	1	XXXXXX-	
24	AH212585	HYDRAULIC CYLINDER KIT	1		BORE SEAL KIT, (SUB FOR AH149845, THIS APPLICATION) (SUB FOR AH210287)
25	AH149814	KIT	1		ROD SEAL KIT
26	T162396	LUBRICATION FITTING	1		

MEMORANDA

EXTENSION CYLINDER AND REPAIR KITS

T159062 -UN-23SEP02

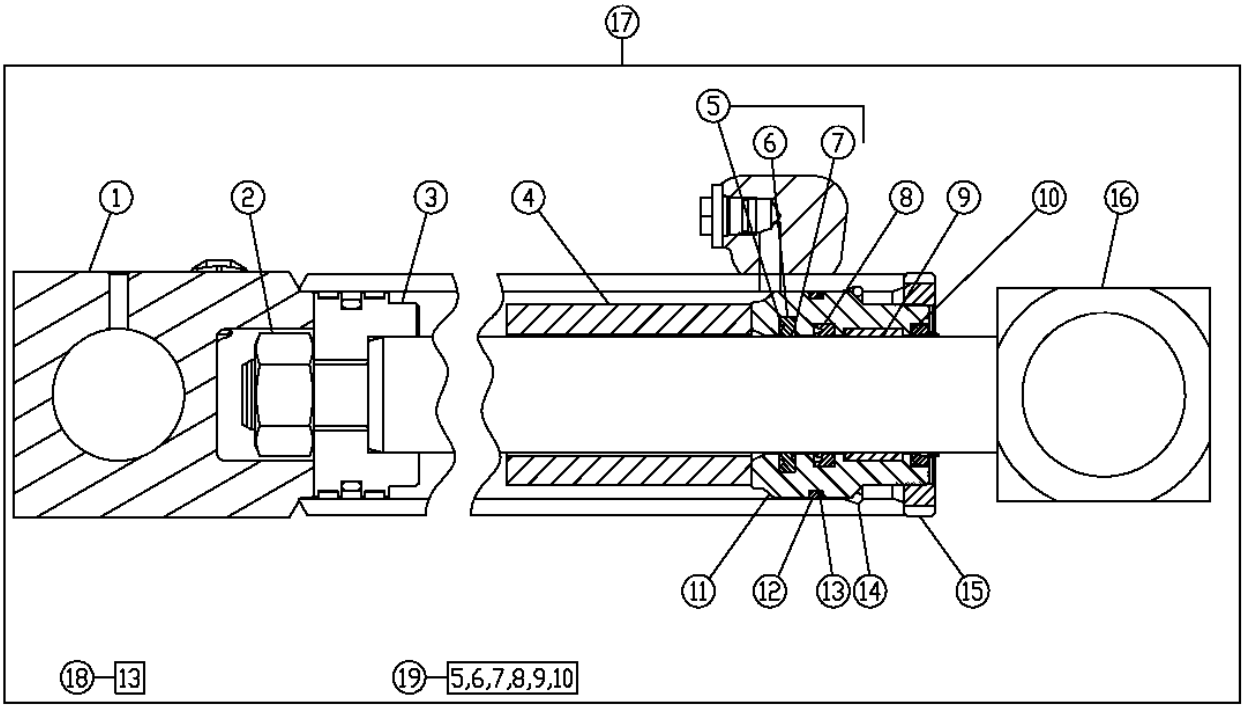

T159062

KEY	PART NO.	PART NAME	QTY	SERIAL NO.	REMARKS
1	AH208338	HYDRAULIC CYLINDER BARREL	1		
2	H170538	NUT	1		
3	RE33968	PISTON	1		
4	H150292	BUSHING	1		
5	AH146560	SEAL	1		
6	.....	SEAL	1		
7	.....	BACK-UP RING	1		
8	H152202	SEAL	1		
9	H152793	BACK-UP RING	1		
10	AH146556	SEAL	1		
11	.....	HYDR. CYLINDER ROD GUIDE	1		
12	T12582	O-RING	1		
13	R81864	BACK-UP RING	1		
14	R81789	RING	1		
15	R81795	NUT	1		
16	AH167956	HYDRAULIC CYLINDER ROD	1		
17	AH166659	HYDRAULIC CYLINDER	1		
18	AH212092	HYDRAULIC CYLINDER KIT	1		BORE SEAL KIT, (SUB FOR AH202080)
19	AH149813	HYDRAULIC CYLINDER KIT	1		ROD SEAL KIT

THIS PARTS LISTING IS CONTINUED

MEMORANDA

BACKHOE BUCKETS AND PINS

T152950 -UN-04APR02

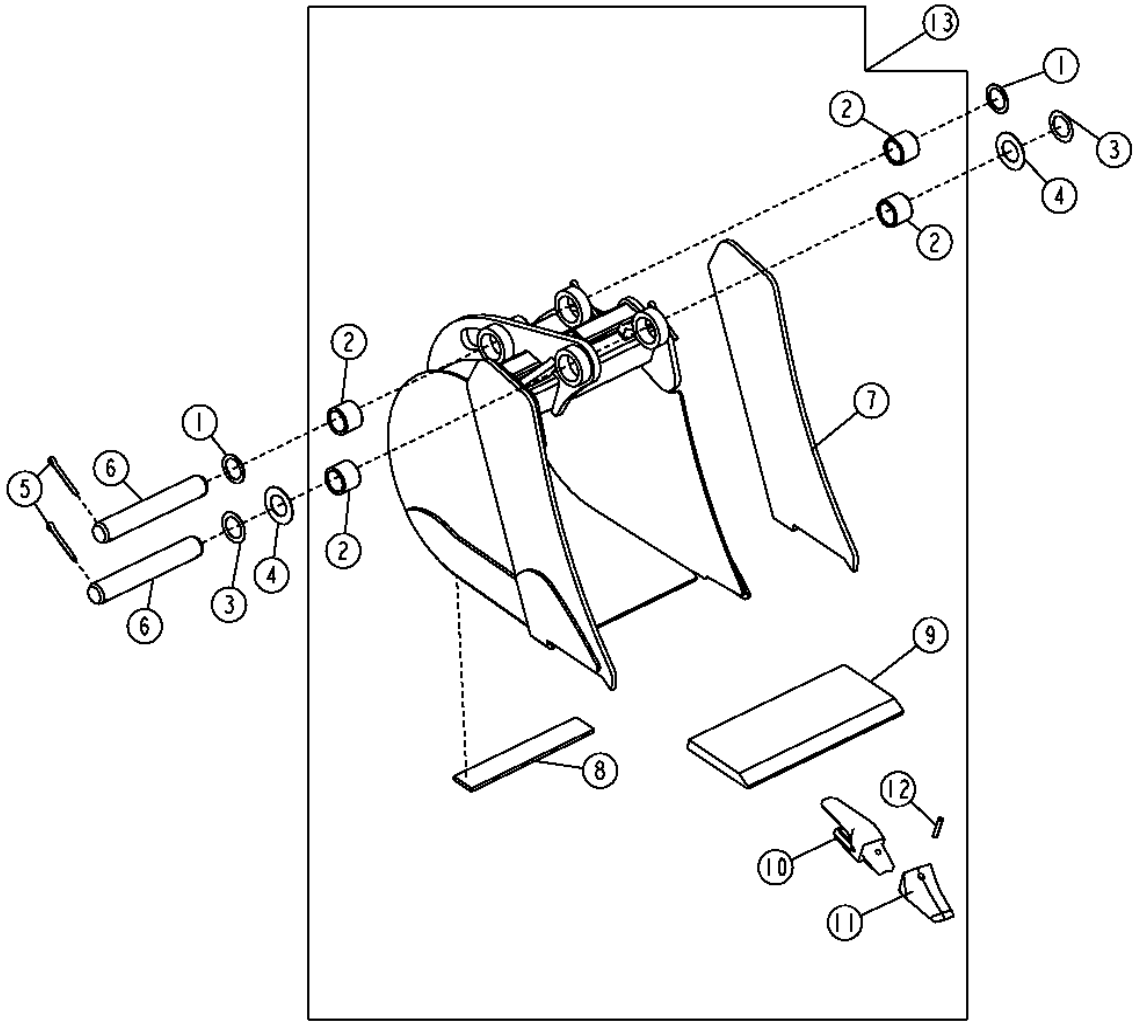

T152950

BACKHOE BUCKETS AND PINS

KEY	PART NO.	PART NAME	QTY	SERIAL NO.	REMARKS
1	U43779	WASHER	2		2.530" X 3-1/2" X 0.120"
2	U45351	BUSHING	4		
3	24H1616	WASHER	6		2-9/16" X 3-3/4" X 0.036"
4	T125956	WASHER	2		2.560" X 4.530" X 0.098"
5	11H277	COTTER PIN	4		
6	T126041	PIN FASTENER	2		
7	T163758	PLATE	8		(A)
	T163781	PLATE	2		(B)
8	T163804	PLATE	8		(USE WITH SEVERE DUTY BUCKET)
9	T148602	CUTTING EDGE	1		(A) (CUT TO LENGTH)
	T148753	CUTTING EDGE	1		(B) (CUT TO LENGTH)
10	U43792	BUCKET TOOTH ADAPTER	AR		(A)
	T109X220	BUCKET TOOTH ADAPTER	AR		(B)
11	TF23D	TOOTH	AR		(A) (ALSO ORDER TF23P)
	TF220	TOOTH	AR		(B) (ALSO ORDER TP160)
12	TF23P	PIN	AR		(A)
	TP160	PIN	AR		(B)
13	AT183048	BACKHOE BUCKET	1		(A) 457MM (18") HEAVY DUTY 7.5 CUBIC FEET, (WHOLE GOODS)
	AT183049	BACKHOE BUCKET	1		(B) 457MM (18") SEVERE DUTY 7.5 CUBIC FEET, (WHOLE GOODS)
	AT183050	BACKHOE BUCKET	1		(A) 610MM (24") HEAVY DUTY 11.0 CUBIC FEET, (WHOLE GOODS)
	AT183052	BACKHOE BUCKET	1		(B) 610MM (24") SEVERE DUTY 11.0 CUBIC FEET, (WHOLE GOODS)
	AT183053	BACKHOE BUCKET	1		(A) 762MM (30") HEAVY DUTY 14.5 CUBIC FEET, (WHOLE GOODS)
	AT183055	BACKHOE BUCKET	1		(B) 762MM (30") SEVERE DUTY 14.5 CUBIC FEET, (WHOLE GOODS)
	AT183056	BACKHOE BUCKET	1		(A) 914MM (36") HEAVY DUTY 18.0 CUBIC FEET, (WHOLE GOODS)
	AT183058	BACKHOE BUCKET	1		(B) 914MM (36") SEVERE DUTY 18.0 CUBIC FEET, (WHOLE GOODS)

BACKHOE VALVE MOUNTING PLATE

T160059 -UN-01OCT02

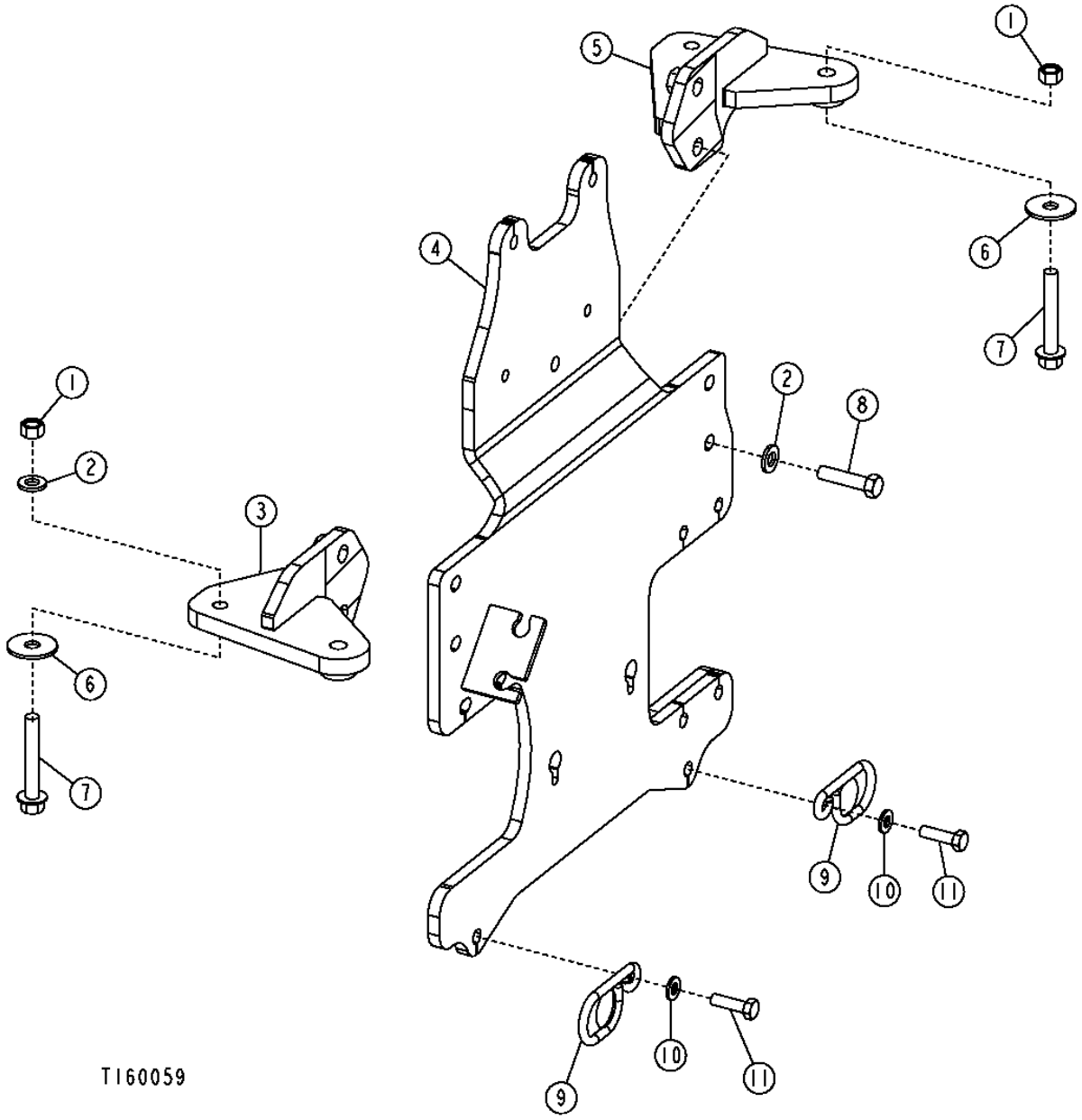

BACKHOE VALVE MOUNTING PLATE

KEY	PART NO.	PART NAME	QTY	SERIAL NO.	REMARKS
1	14M7275	NUT	4		
2	24M7240	WASHER	8		
3	AT224515	BRACKET	1		(RIGHT HAND)
4	AT199683	PLATE	1		
5	AT224516	BRACKET	1		(LEFT HAND)
6	T187044	WASHER	4		
7	19M7818	SCREW	4		M12 X 80
8	19M7363	CAP SCREW	4		M12 X 60
9	T166223	GUIDE	2		
10	24M7239	WASHER	2		
11	19M7550	CAP SCREW	2		M10 X 35

BACKHOE VALVE MOUNTING PLATE
(PILOT CONTROL)

T192701 -UN-09JUL03

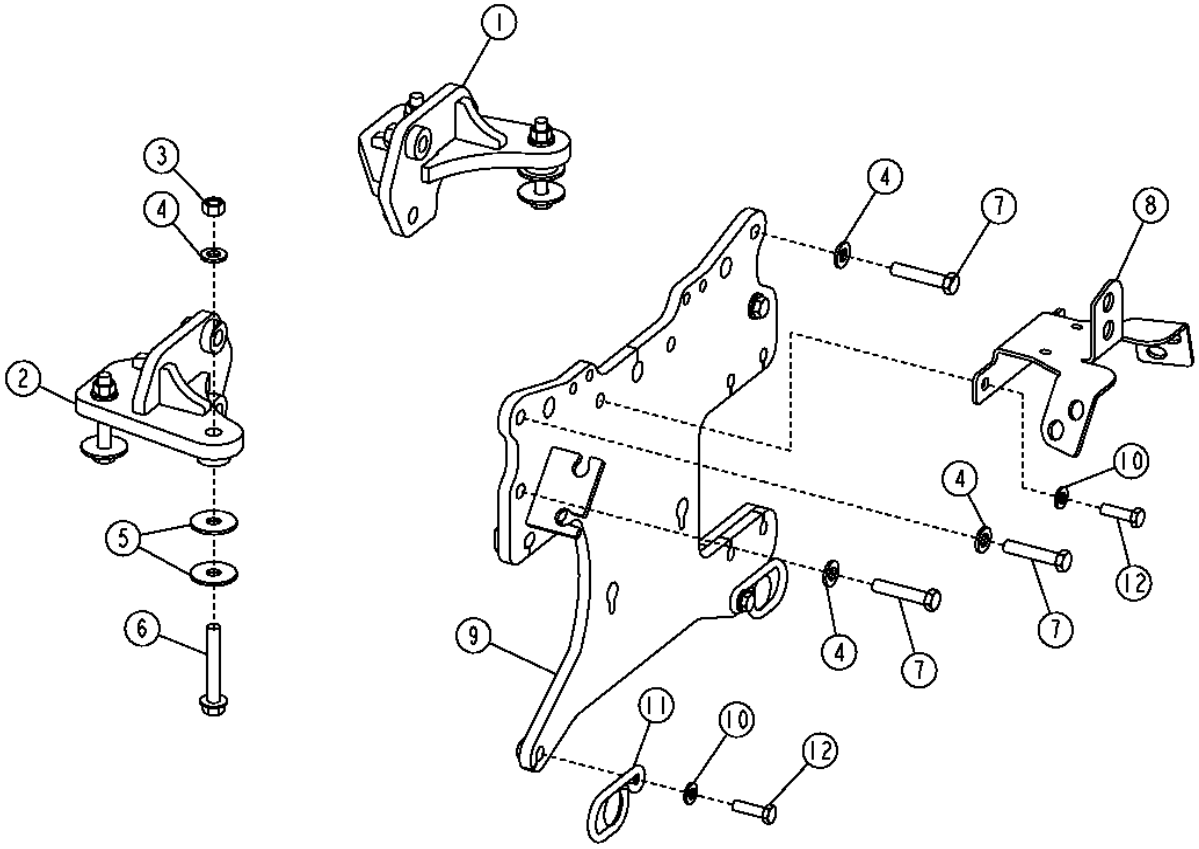

T192701

BACKHOE VALVE MOUNTING PLATE
(PILOT CONTROL)

KEY	PART NO.	PART NAME	QTY	SERIAL NO.	REMARKS
1	AT224516	BRACKET	1		(L.H)
2	AT224515	BRACKET	1		(R.H.)
3	14M7275	NUT	4		
4	24M7240	WASHER	8		
5	T187044	WASHER	6		
6	19M7364	CAP SCREW	4		
7	19M7361	CAP SCREW	4		
8	T190976	BRACKET	1		
9	AT198455	PLATE	1		
10	24M7239	WASHER	4		
11	T166223	GUIDE	2		
12	19M7550	CAP SCREW	4		

TWO LEVER BACKHOE CONTROL VALVE LINKAGE

T193212 -UN-17JUL03

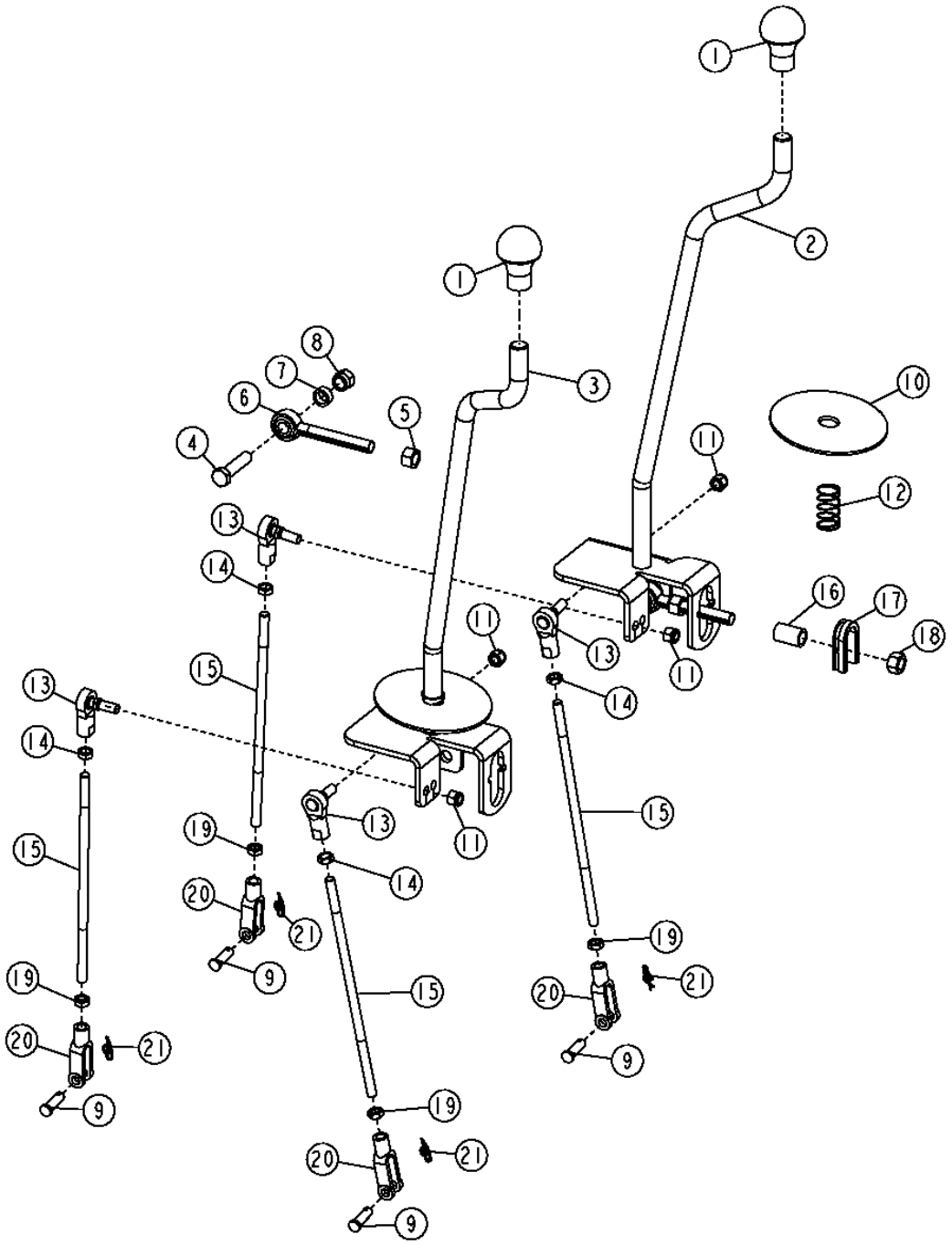

THIS PARTS LISTING IS CONTINUED

3B13

TWO LEVER BACKHOE CONTROL VALVE LINKAGE CONVERSION KIT

KEY	PART NO.	PART NAME	QTY	SERIAL NO.	REMARKS
1	T133291	KNOB	2		
2	AT184599	LEVER	1		(RIGHT HAND)
3	AT184598	LEVER	1		(LEFT HAND)
4	19M7361	CAP SCREW	2		M12 X 50
5	14H865	NUT	1		1/2"
6	AT300152	LINK END	2		(SUB FOR AT186382)
7	T166773	WASHER	2		
8	14M7313	LOCK NUT	2		M12
9	R65563	PIN FASTENER	4		
10	T165590	DUST SHIELD	2		
11	M68954	LOCK NUT	4		9.525 MM
12	T185085	SPRING	2		
13	AT169087	BALL JOINT	4		
14	14H774	NUT	4		3/8"
15	T184354	STUD	4		
16	T166772	SPACER	2		
17	T188639	GROMMET	2		
18	14H865	NUT	2		1/2"
19	14H913	NUT	4		3/8"
20	T140328	YOKE	4		
21	T202956	RETAINER	4		(SUB FOR R46528, THIS APPLICATION)

FIFTH FUNCTION PEDAL
(LEVER CONTROL)

T193235 -UN-17JUL03

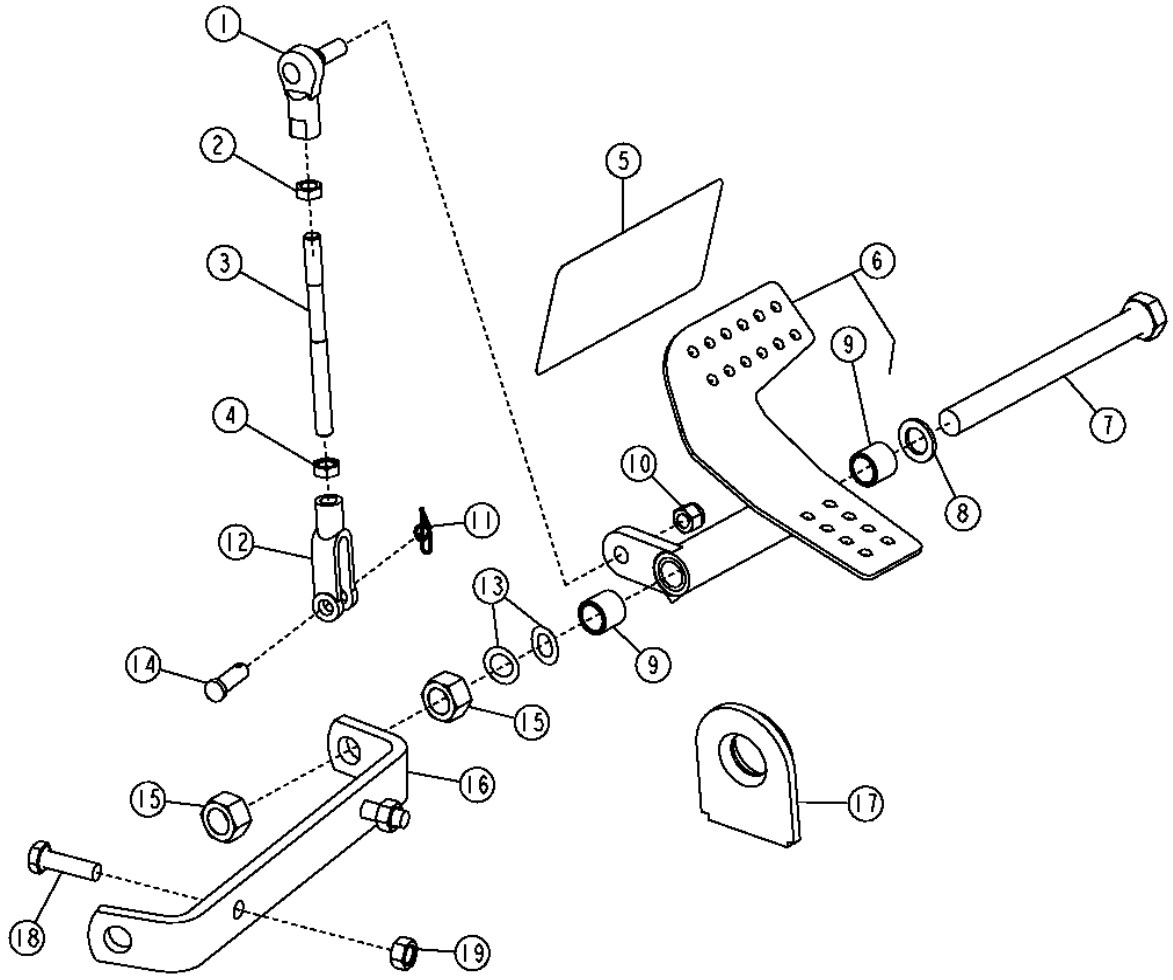

T193235

FIFTH FUNCTION PEDAL
(LEVER CONTROL)

KEY	PART NO.	PART NAME	QTY	SERIAL NO.	REMARKS
1	AT169087	BALL JOINT	1		
2	14H774	NUT	1		3/8"
3	T184129	ROD	1		
4	14H913	NUT	1		3/8"
5	T185691	LABEL	1		
6	AT191446	PEDAL	1		
7	19H3450	CAP SCREW	1		5/8" X 6-3/4"
8	N119479	WASHER	1		(SUB FOR R64059)
9	T58109	BUSHING	2		
10	M68954	LOCK NUT	1		9.525 MM
11	T202956	RETAINER	1		(SUB FOR R46528, THIS APPLICATION)
12	T140328	YOKE	1		
13	M87534	SPRING WASHER	2		
14	R65563	PIN FASTENER	1		
15	14H1039	NUT	2		5/8"
16	T190797	BRACKET	1		
17	T166224	GROMMET	1		
18	19M7550	CAP SCREW	2		M10 X 35
19	14M7274	NUT	2		M10
20	.....	KIT	1		(AT195758 NO LONGER AVAILABLE) (SUB COMPONENTS)

FIFTH FUNCTION PEDAL
(PILOT CONTROL)

T193860 -UN-07AUG03

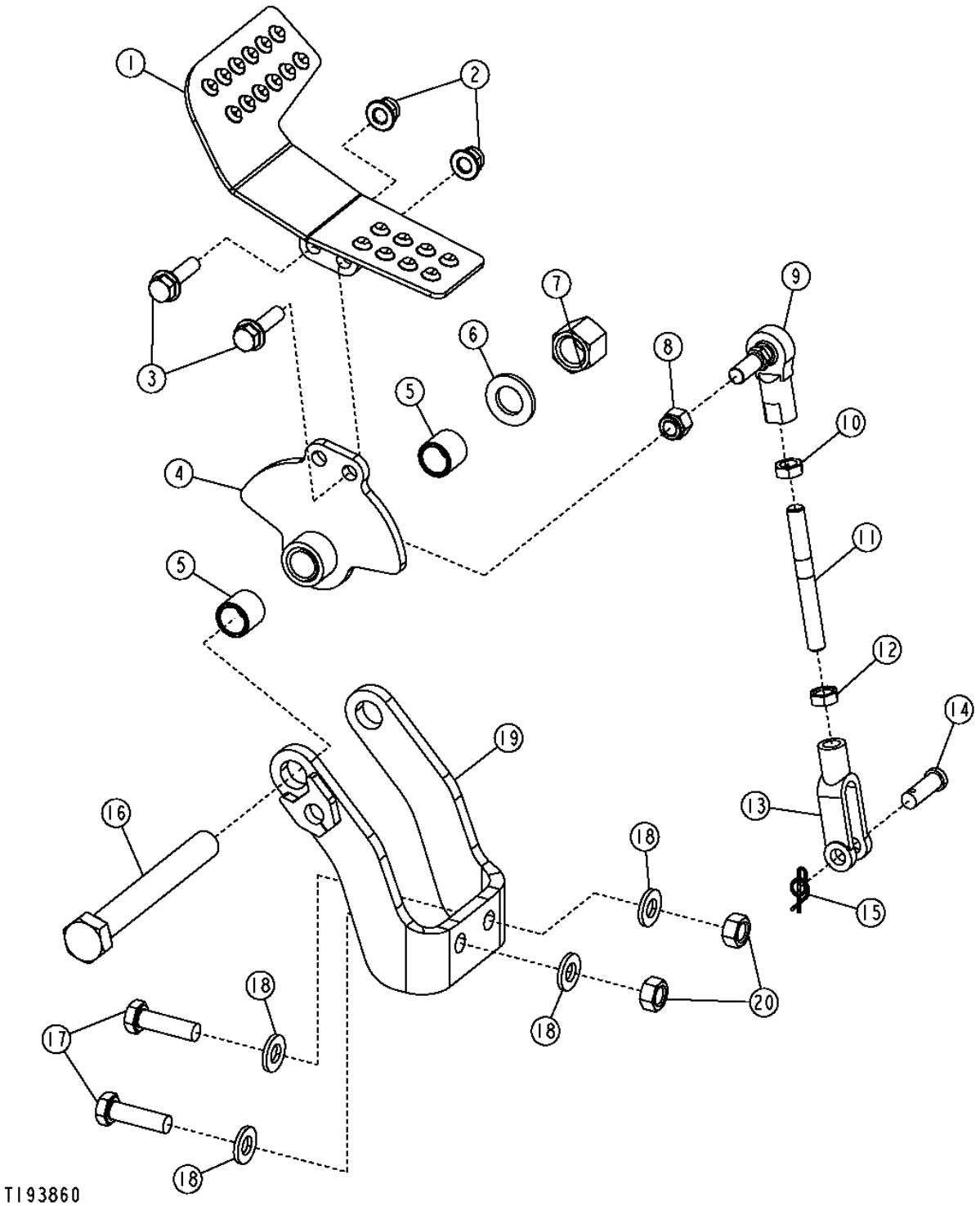

FIFTH FUNCTION PEDAL
(PILOT CONTROL)

KEY	PART NO.	PART NAME	QTY	SERIAL NO.	REMARKS
1	AT300058	PEDAL	1		
2	14M7396	LOCK NUT	2		M8
3	19M7868	SCREW	2		M8 X 30
4	AT300056	PIVOT	1		
5	T58109	BUSHING	2		
6	24M7053	WASHER	1		
7	U14555	LOCK NUT	1		5/8"
8	M68954	LOCK NUT	1		3/8"
9	AT169087	BALL JOINT	1		
10	14H774	NUT	1		3/8"
11	T200078	STUD	1		
12	14H913	NUT	1		3/8"
13	T140328	YOKE	1		
14	R65563	PIN FASTENER	1		
15	T202956	RETAINER	1		(SUB FOR R46528, THIS APPLICATION)
16	19H3353	CAP SCREW	1		5/8" X 5"
17	19M7550	CAP SCREW	2		M10 X 35
18	24M7239	WASHER	4		
19	AT300675	BRACKET	1		
20	14M7274	NUT	2		M10

SIXTH FUNCTION PEDAL
(LEVER CONTROL)

T193243 -UN-18JUL03

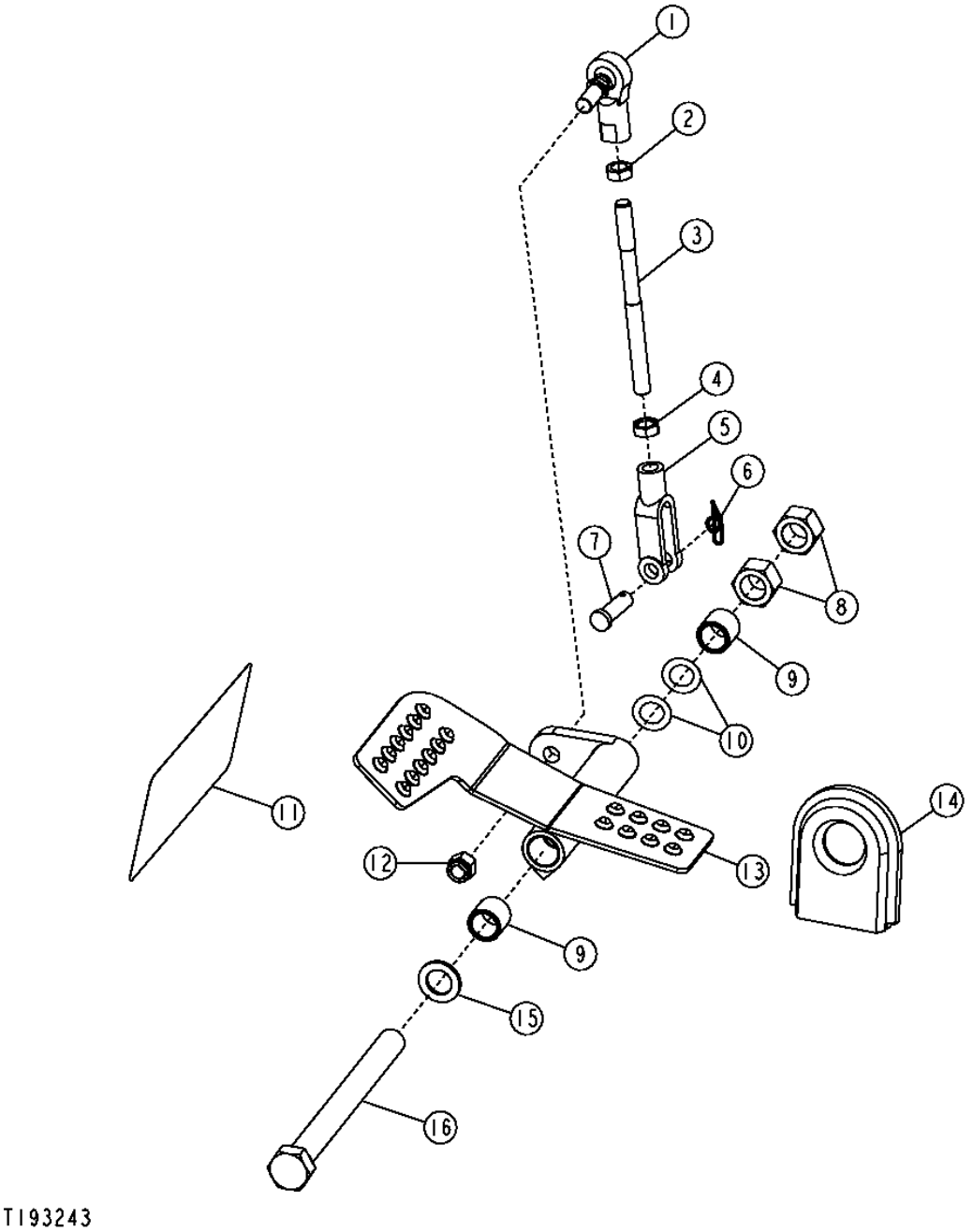

SIXTH FUNCTION PEDAL
(LEVER CONTROL)

KEY	PART NO.	PART NAME	QTY	SERIAL NO.	REMARKS
1	AT169087	BALL JOINT	1		
2	14H774	NUT	1		3/8"
3	T184129	ROD	1		
4	14H913	NUT	1		3/8"
5	T140328	YOKE	1		
6	T202956	RETAINER	1		(SUB FOR R46528, THIS APPLICATION)
7	R65563	PIN FASTENER	1		
8	14H1039	NUT	2		5/8"
9	T58109	BUSHING	2		
10	M87534	SPRING WASHER	2		
11	T185692	LABEL	1		
12	M68954	LOCK NUT	1		9.525 MM
13	AT190073	PEDAL	1		
14	T166224	GROMMET	1		
15	N119479	WASHER	1		(SUB FOR R64059)
16	19H3450	CAP SCREW	1		5/8" X 6-3/4"
17	.....	KIT	1		(AT195759 NO LONGER AVAILABLE) (SUB COMPONENTS)

SIXTH FUNCTION PEDAL
(PILOT CONTROL)

T193867 -UN-07AUG03

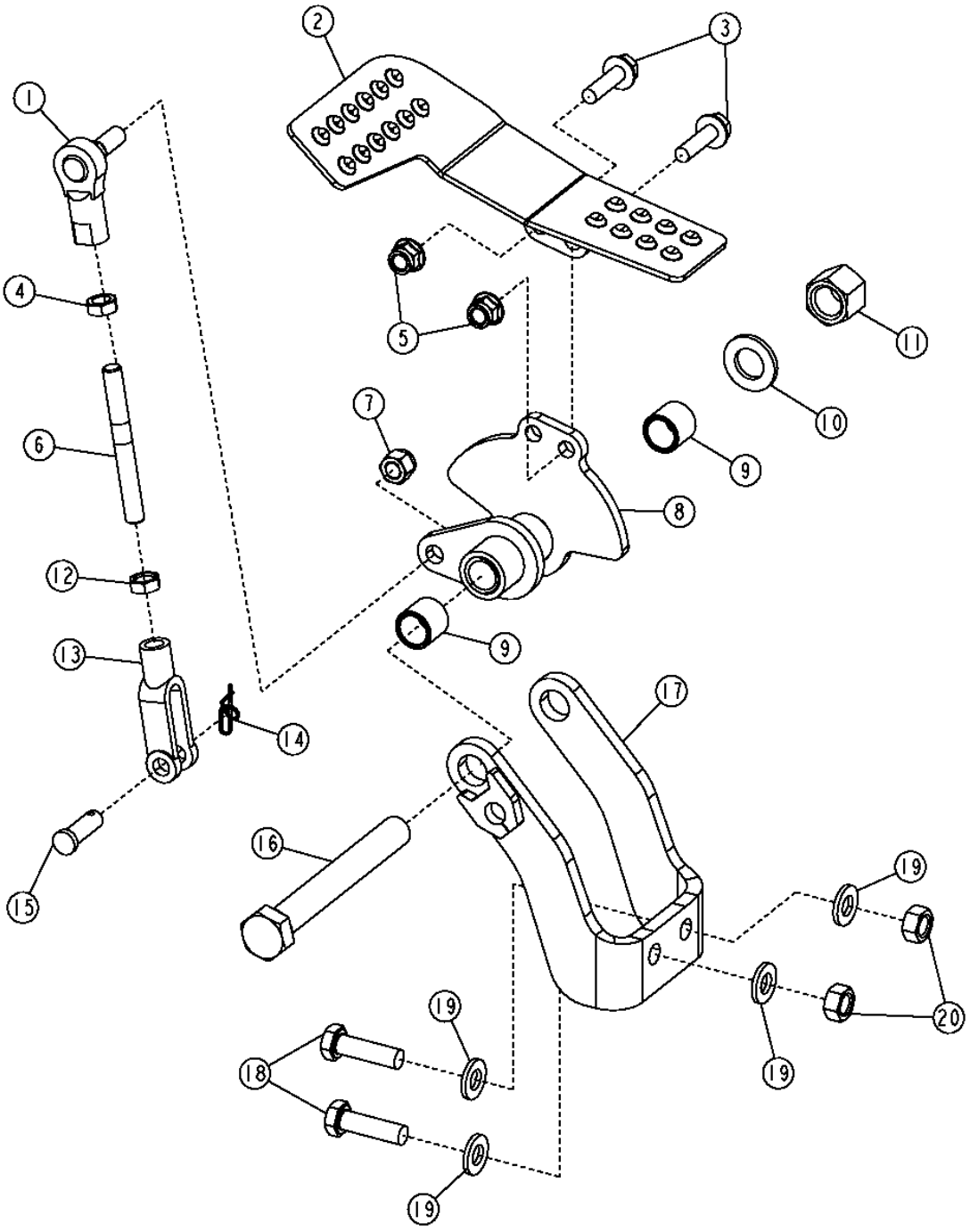

SIXTH FUNCTION PEDAL
(PILOT CONTROL)

KEY	PART NO.	PART NAME	QTY	SERIAL NO.	REMARKS
1	AT169087	BALL JOINT	1		
2	AT300057	PEDAL	1		
3	19M7868	SCREW	2		M8 X 30
4	14H774	NUT	1		3/8"
5	14M7396	LOCK NUT	2		M8
6	T200078	STUD	1		
7	M68954	LOCK NUT	1		3/8"
8	AT300055	PIVOT	1		
9	T58109	BUSHING	2		
10	24M7053	WASHER	1		
11	U14555	LOCK NUT	1		5/8"
12	14H913	NUT	1		3/8"
13	T140328	YOKE	1		
14	T202956	RETAINER	1		(SUB FOR R46528, THIS APPLICATION)
15	R65563	PIN FASTENER	1		
16	19H3353	CAP SCREW	1		5/8" X 5"
17	AT300675	BRACKET	1		
18	19M7550	CAP SCREW	2		M10 X 35
19	24M7239	WASHER	4		
20	14M7274	NUT	2		M10

BACKHOE BOOM LOCK CONTROL LEVER AND LINKAGE

T193891 -UN-08AUG03

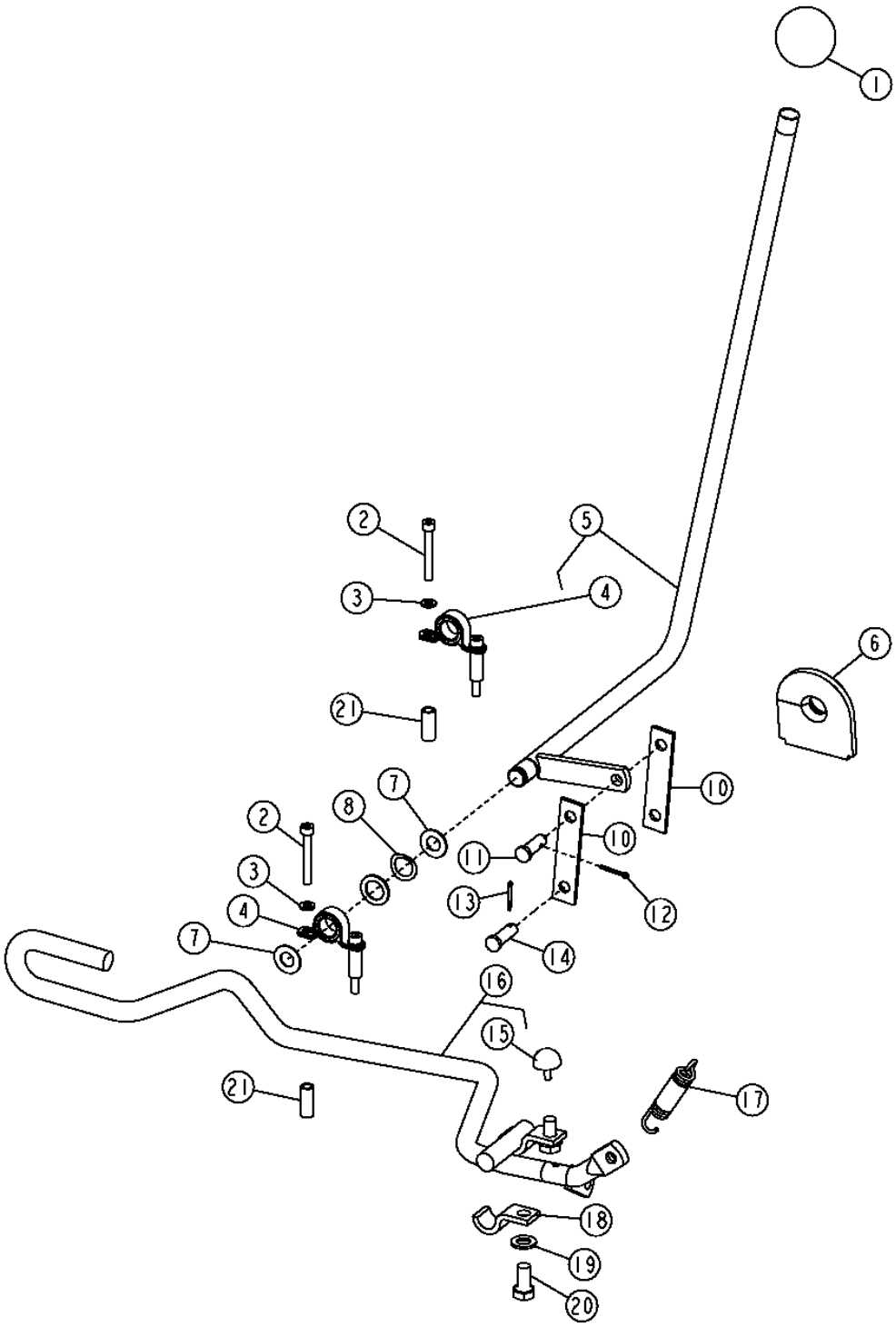

BACKHOE BOOM LOCK CONTROL LEVER AND LINKAGE

KEY	PART NO.	PART NAME	QTY	SERIAL NO.	REMARKS
1	T185309	KNOB	1		(MANUAL CONTROL)
	T133291	KNOB	1		(PILOT CONTROL)
2	19M8713	SCREW	4		M6 X 45
3	24M7054	WASHER	4		
4	AT195620	PILLOW BLOCK	2		
5	AT195623	LEVER	1		(STANDARD CONTROLS)
	AT196387	LEVER	1		(PILOT CONTROLS)
6	T177623	GROMMET	1		
7	F2863R	SNAP RING	2		
8	T166237	SPRING WASHER	1		
9	24H1658	WASHER	1		(STANDARD CONTROLS)
	24H1658	WASHER	3		(PILOT CONTROLS)
10	T188356	STRAP	2		
11	M40569	PIN FASTENER	1		
12	11M7081	COTTER PIN	1		
13	11M7081	COTTER PIN	1		(SUB FOR R46528, THIS APPLICATION)
14	R65563	PIN FASTENER	1		
15	AT185847	BUMPER	1		
16	AT301535	ROD	1	-917338	(ALSO ORDER T200793) (SUB FOR AT190385)
	AT301535	ROD	1	917339-	
17	T24509	SPRING	1		
18	T157785	CLAMP	2		
19	24M7040	WASHER	2		
20	19M7938	CAP SCREW	2		M10 X 20
21	28H1921	BUSHING	4		

BACKHOE BOOM LOCK

T155529 -UN-03JUN02

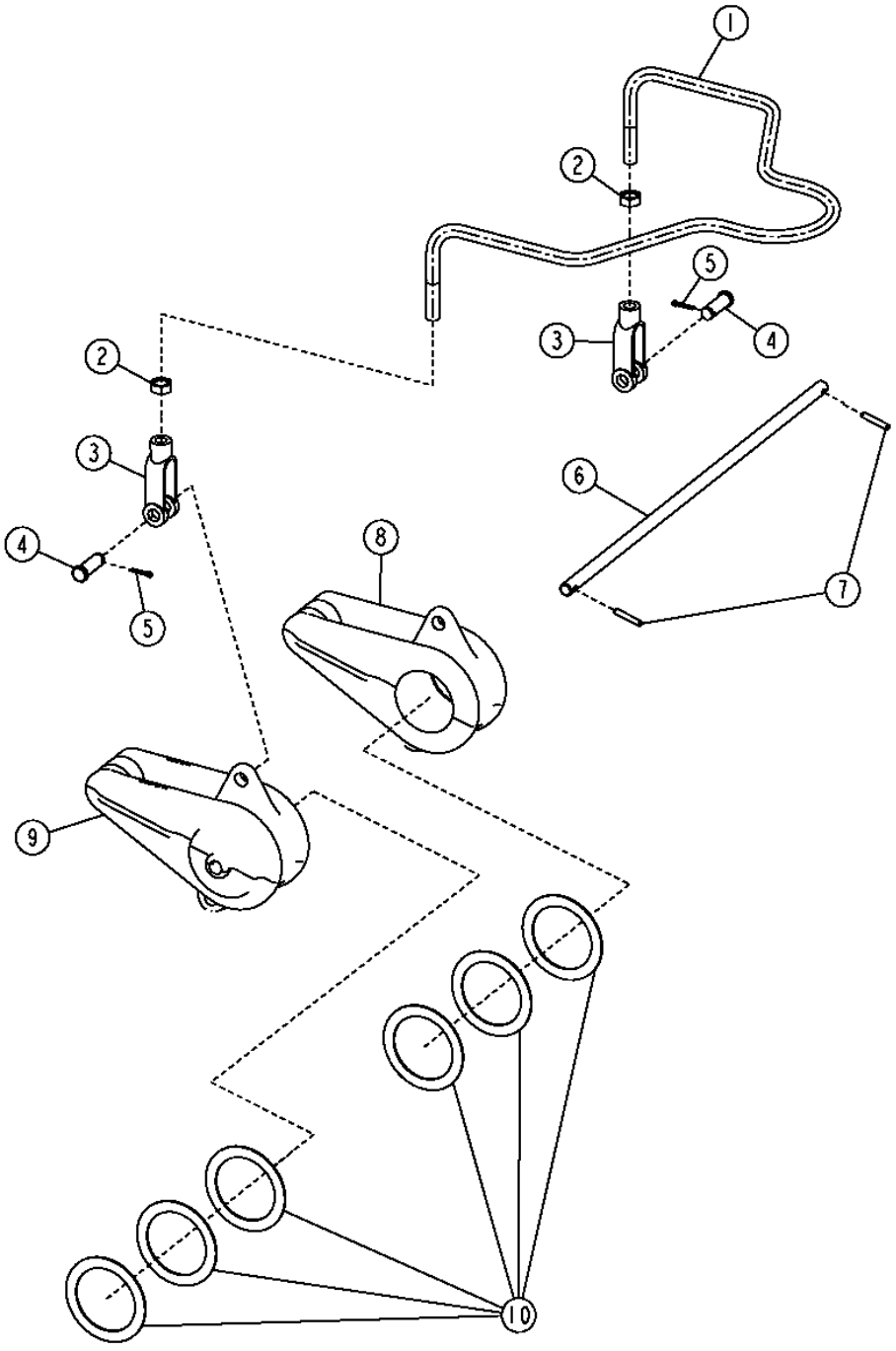

T155529

BACKHOE BOOM LOCK

KEY	PART NO.	PART NAME	QTY	SERIAL NO.	REMARKS
1	T200793	ROD	1	-917338	(ALSO ORDER AT301535) (SUB FOR T184418)
	T200793	ROD	1	917339-	
2	14H856	NUT	2		1/2"
3	T121474	YOKE	2		
4	R72855	PIN FASTENER	2		
5	11M7012	COTTER PIN	2		
6	T184465	PIN FASTENER	1		
7	34M7141	SPRING PIN	2		
8	T184597	LOCK	1		
9	T163632	LOCK	1		
10	T164631	WASHER	AR		

STABILIZER VALVE LINKAGE

T197647 -UN-20FEB04

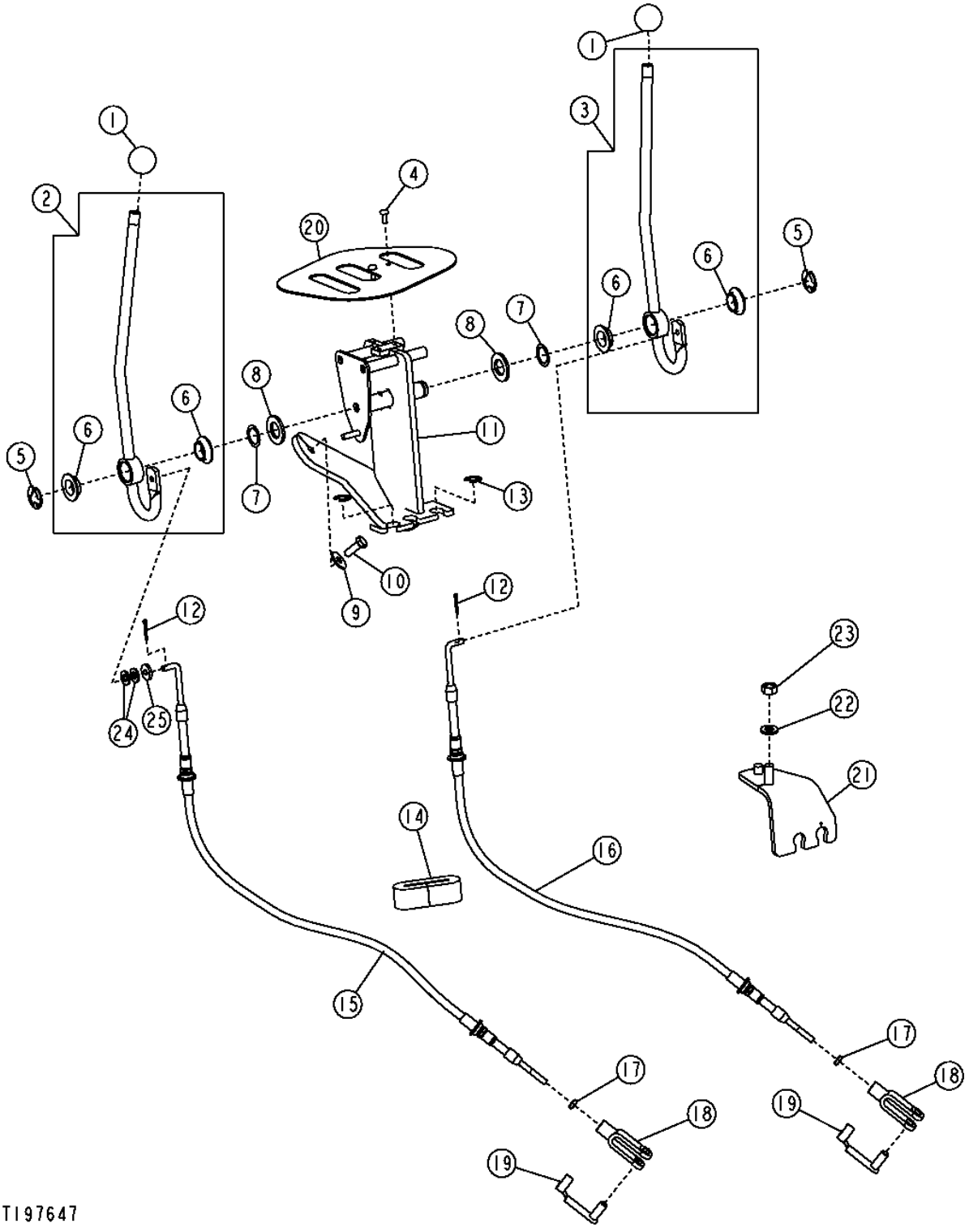

THIS PARTS LISTING IS CONTINUED

STABILIZER VALVE LINAKGE

KEY	PART NO.	PART NAME	QTY	SERIAL NO.	REMARKS
1	T185766	KNOB	2		
2	.....	LEVER	2	-913488	(AT196571 NO LONGER AVAILABLE) (SUB AT300770) (ALSO ORDER AT300771, AT300768 AND AT300769)
	AT300770	LEVER	1	913489-	(LEFT)
3	.....	LEVER	1	-913488	(AT196571 NO LONGER AVAILABLE) (SUB AT300771) (ALSO ORDER AT300770, AT300768 AND AT300769)
	AT300771	LEVER	1	913489-	(RIGHT)
4	21H1316	SCREW	2		0.190" X 1/2"
5	R27434	SNAP RING	2		
6	T166097	BEARING	2		
7	R26081	WASHER	2		
8	24H1392	WASHER	2		
9	24M7207	WASHER	2		
10	19M7376	CAP SCREW	2		M8 X 22
11	.....	BRACKET	1	-913488	(AT197087 NO LONGER AVAILABLE) (SUB AT300769) (ALSO ORDER AT300768, AT300770 AND AT300771)
	AT300769	BRACKET	1	913489-	
12	11M7081	COTTER PIN	2		
13	R26871	SNAP RING	2		
14	T183905	SEAL	1		
15	AT196573	PUSH PULL CABLE	1		(LEFT STABILIZER)
16	AT196572	PUSH PULL CABLE	1		(RIGHT STABILIZER)
17	14H649	NUT	2		1/4"
18	T166102	YOKE	2		
19	T183617	PIN FASTENER	2		
20	T185496	PLATE	1		
21	AT280363	BRACKET	1		
22	24M7239	WASHER	1		
23	14M7274	NUT	1		M10
24	24M7238	WASHER	2		
25	24H1923	WASHER	1		

SAE BACKHOE CONTROL LINKAGE PATTERN KIT

T156583 -UN-25JUN02

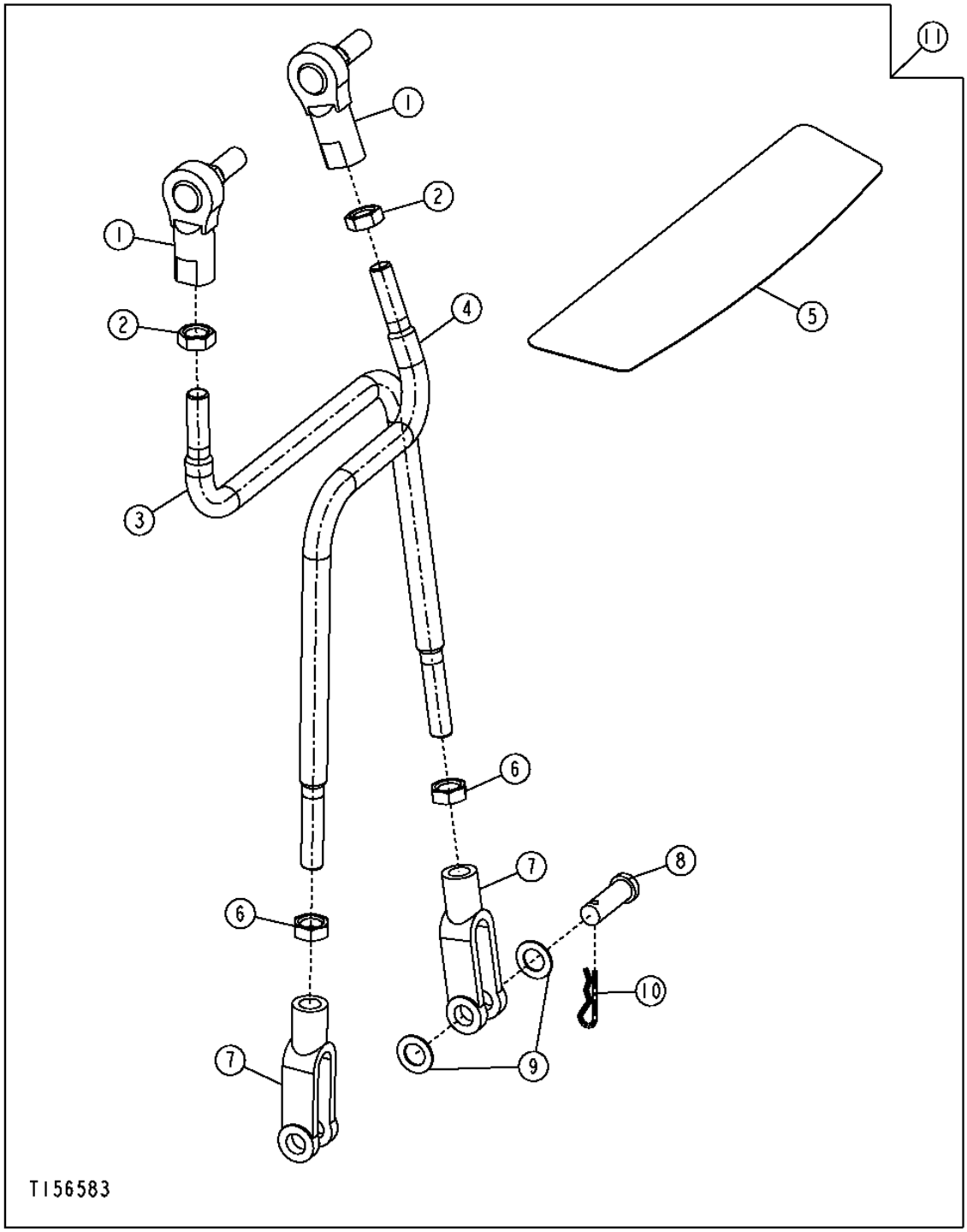

SAE BACKHOE CONTROL LINKAGE PATTERN KIT

KEY	PART NO.	PART NAME	QTY	SERIAL NO.	REMARKS
1	AT169087	BALL JOINT	2		
2	14H774	NUT	2		3/8"
3	T184710	ROD	1		(DIPPERSTICK LINKAGE)
4	T184711	ROD	1		(BOOM LINKAGE)
5	T165595	LABEL	1		BACKHOE CONTROL
6	14H913	NUT	2		3/8"
7	T140328	YOKE	2		
8	R65563	PIN FASTENER	2		
9	24H1302	WASHER	6		
10	T202956	RETAINER	2		(SUB FOR R46528, THIS APPLICATION)
11	**AT301429**	**KIT**	**1**		**(WHOLE GOODS)**

SWING FRAME AND PINS

T162750 -UN-12DEC02

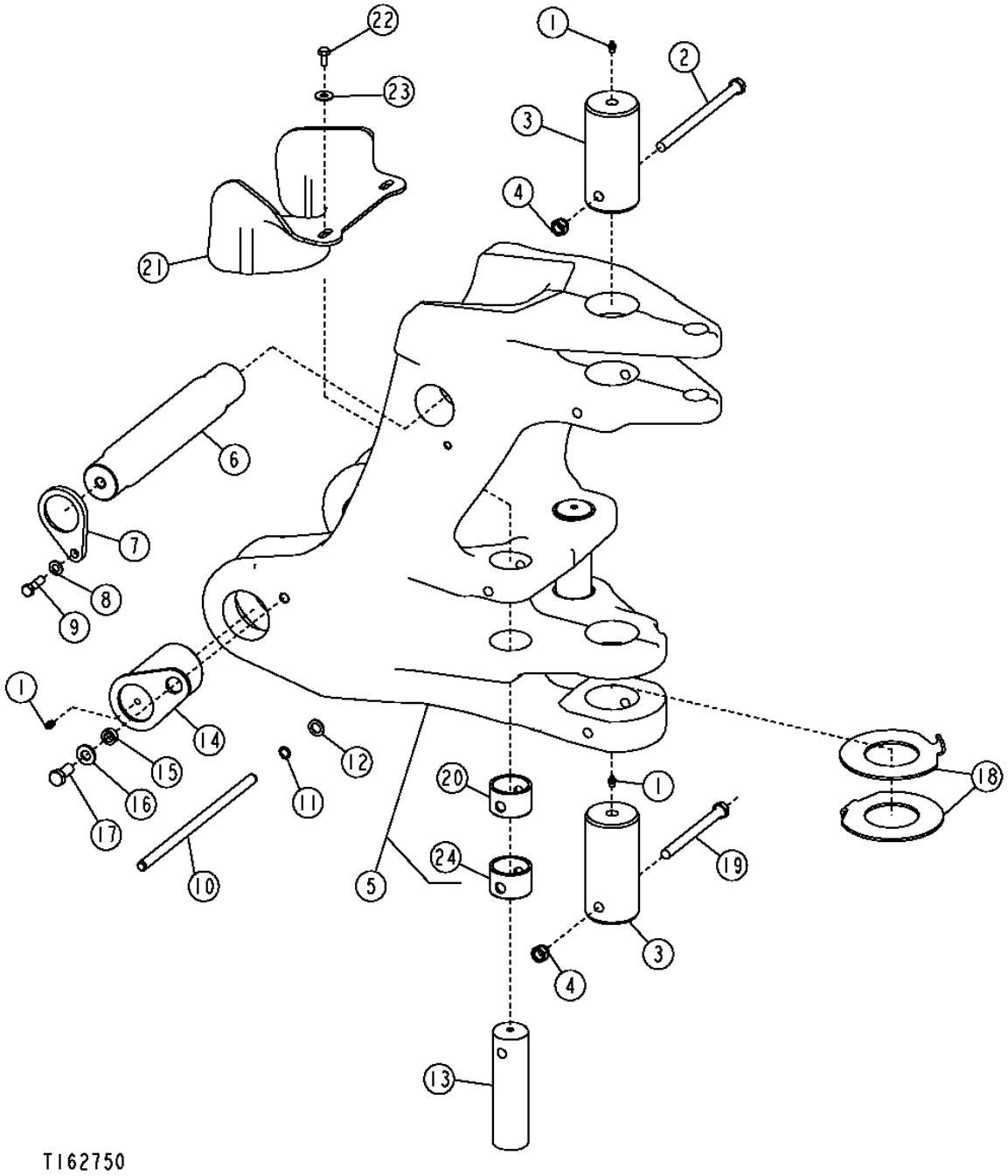

SWING FRAME AND PINS

KEY	PART NO.	PART NAME	QTY	SERIAL NO.	REMARKS
1	T162396	LUBRICATION FITTING	4		
2	19M9024	CAP SCREW	1		M16 X 250
3	T187354	PIN FASTENER	2		
4	14M7328	LOCK NUT	2		M16
5	.....	FRAME	1	-913912	(AT199059 NO LONGER AVAILABLE) (SUB AT300767)
	AT300767	FRAME	1	913913-	
6	T163331	PIN FASTENER	1		
7	T163330	RETAINER	2		
8	24M7047	WASHER	2		
9	19M7493	CAP SCREW	2		M12 X 40
10	T191437	PIN FASTENER	1		
11	N105572	SNAP RING	2		
12	24M7097	WASHER	2		
13	T163328	PIN FASTENER	2		
14	AT182575	PIN FASTENER	2		
15	T215678	BUSHING	2		(SUB FOR M2649DN, THIS APPLICATION)
16	24M7241	WASHER	2		
17	19M8035	CAP SCREW	2		M16 X 35
18	T205876	THRUST WASHER	1		(SUB FOR (2) T163327)
	T210118	WASHER	3		
19	19M8486	CAP SCREW	1		M16 X 180
20	.....	BUSHING	2	-913912	(T190887 NO LONGER AVAILABLE) (SUB T200474)
	T200474	BUSHING	2	913913-	
21	T189096	HOSE GUARD	1		
22	19M7938	CAP SCREW	2		M10 X 20
23	24M7296	WASHER	2		
24	.....	BUSHING	2	-913912	(T190887 NO LONGER AVAILABLE) (SUB (2) T200268)
	T200268	BUSHING	2	913913-	

BACKHOE BOOM AND PINS

T207942 -UN-18FEB05

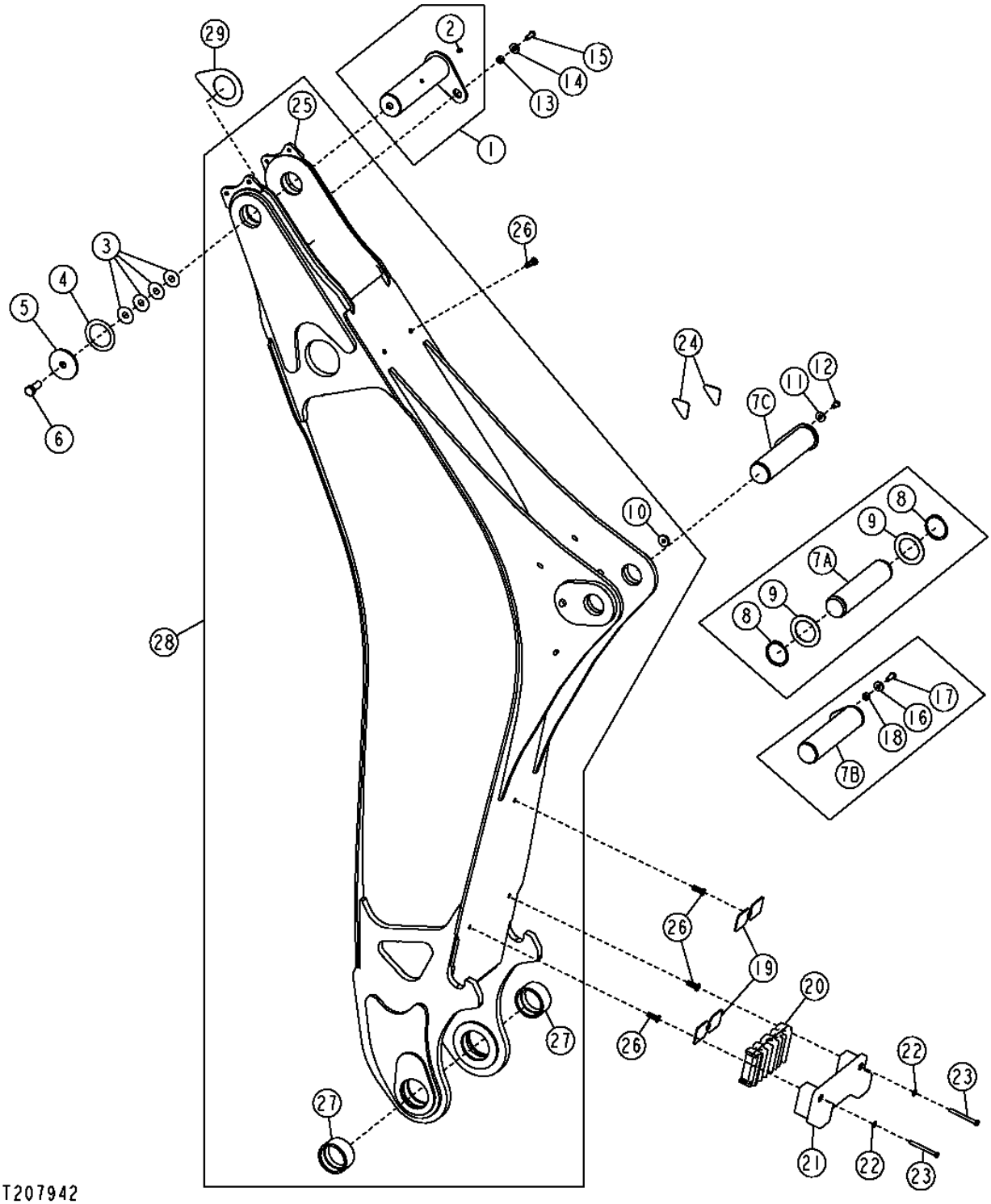

THIS PARTS LISTING IS CONTINUED

BACKHOE BOOM AND PINS

KEY	PART NO.	PART NAME	QTY	SERIAL NO.	REMARKS
1	.....	PIN FASTENER	1	-931891	(AT182490 NO LONGER AVAILABLE) (SUB AT310317, (3) T208953, (10) T33376, 19M8011, T29342 AND 28H3447)
	AT310317	PIN FASTENER	1	931892-	
2	T162396	LUBRICATION FITTING	1		
3	T33376	SHIM	4		0.020"
4	T163643	WASHER	3		
5	T163646	WASHER	1		
6	19M7597	CAP SCREW	1		M20 X 50, (SUB FOR 19M8002)
7A	.....	PIN FASTENER	1	-931891	(T163250 NO LONGER AVAILABLE) (SUB AT318183, T188568, T29342 AND 19M8935)
7B	.....	PIN FASTENER	1	931892-943433	(AT309684 NO LONGER AVAILABLE) (SUB AT318183, T188568, T29342 AND 19M8935)
7C	AT318183	PIN FASTENER	1	943434-	
8	40M7217	SNAP RING	2	-931891	
9	T158579	WASHER	2	-931891	
10	T188568	BUSHING	1	943434-	
11	T29342	WASHER	1	943434-	
12	19M8935	CAP SCREW	1	943434-	M12 X 16
13	T188568	BUSHING	1	-931891	
	28H3447	SPACER	1	931892-	
14	24M7296	WASHER	1	-931891	
	T29342	WASHER	1	931892-	
15	19M8935	CAP SCREW	1	-931891	M12 X 16
	19M8011	CAP SCREW	1	931892-	
16	T29342	WASHER	1	931892-943433	
17	19M8011	CAP SCREW	1	931892-943433	M12 X 30
18	28H3447	SPACER	1	931892-943433	
19	T165740	ISOLATOR	2		
20	T184767	CLAMP	1		
21	AT190903	STOP	1		
22	24M7239	WASHER	2		
23	19M8093	CAP SCREW	2		M10 X 100
24	T165742	ISOLATOR	2		
25	T159853	STRAP	2		
26	T148411	NUT	5		M10
27	T163242	BUSHING	2		
28	AT182488	BACKHOE BOOM	1		
29	T208953	WASHER	2		

BACKHOE BOOM PROTECTION KIT

T153633 -UN-05APR02

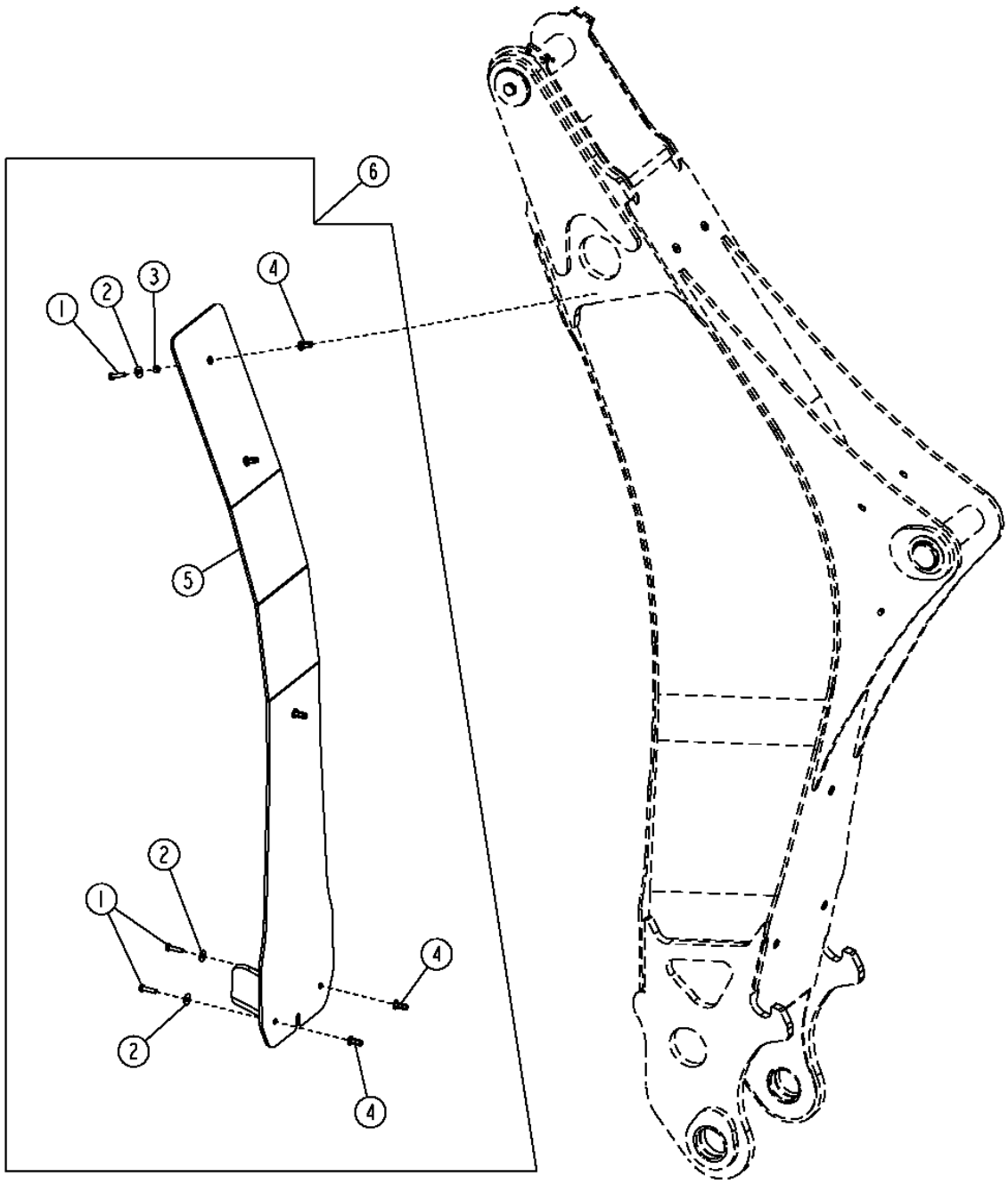

T153633

BACKHOE BOOM PROTECTION KIT

KEY	PART NO.	PART NAME	QTY	SERIAL NO.	REMARKS
1	19M8637	CAP SCREW	5		M10 X 40
2	24M7296	WASHER	5		
3	28H1519	SPACER	3		
4	T148409	NUT	5		M10
5	AT190724	PLATE	1		
6	**AT187793**	**KIT**	**1**		**(WHOLE GOODS)**

BACKHOE BUCKET LINKS AND PINS

T201675 -UN-14JUL04

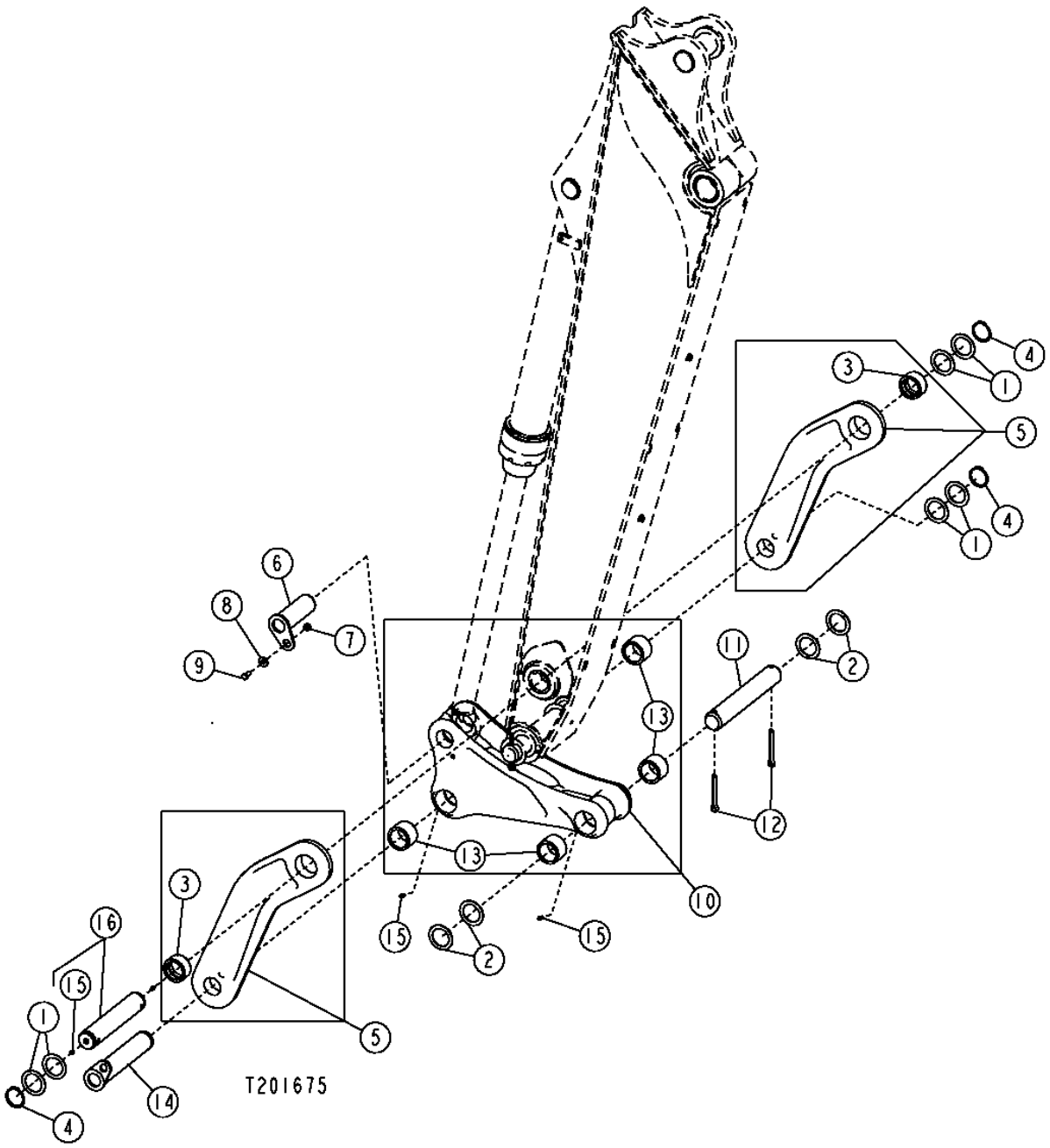

BACKHOE BUCKET LINKS AND PINS

KEY	PART NO.	PART NAME	QTY	SERIAL NO.	REMARKS
1	24H1616	WASHER	6		
2	U43779	WASHER	4		
3	T163532	BUSHING	2	-938773	
	T206647	BUSHING	2	938774-	
4	40M7288	SNAP RING	3		
5	.....	LINK	2	-938773	(AT194498 NO LONGER AVAILABLE) (SUB (2) AT311412) (ALSO ORDER AT308409 AND AT308801)
	AT311412	LINK	2	938774-	
6	AT183412	PIN FASTENER	1		
7	28H3418	WASHER	1		
8	T29342	WASHER	1		
9	19M7872	CAP SCREW	1		M12 X 25
10	AT308410	LINK	1		(SUB FOR AT189836)
11	T126041	PIN FASTENER	1		
12	11H277	COTTER PIN	2		
13	T163852	BUSHING	4	-938773	
	T206648	BUSHING	4	938774-	
14	.....	PIN FASTENER	1	-938773	(AT183405 NO LONGER AVAILABLE) (SUB AT308409) (ALSO ORDER (6) U43779 AND (2) 24H1616)
	AT308409	PIN FASTENER	1	938774-	
15	T162396	LUBRICATION FITTING	4		
16	.....	PIN FASTENER	1	-938773	(AT183404 NO LONGER AVAILABLE) (SUB AT308801)
	AT308801	PIN FASTENER	1	938774-	

STANDARD ARM AND PINS

T189011 -UN-27MAR03

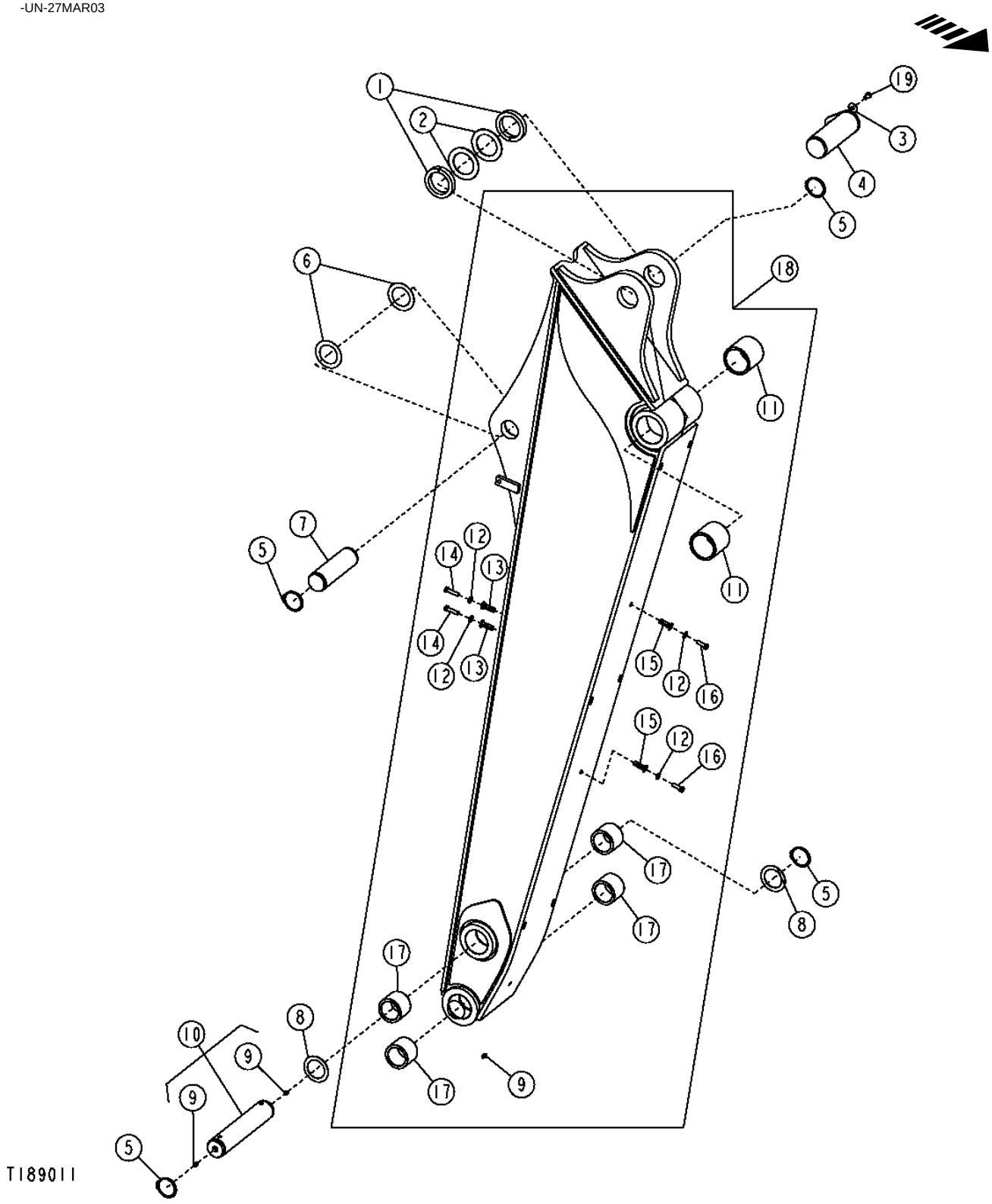

STANDARD ARM AND PINS

KEY	PART NO.	PART NAME	QTY	SERIAL NO.	REMARKS
1	T190779	SPACER	2		
2	T158579	WASHER	2		
3	24M7296	WASHER	1		
4	AT182505	PIN FASTENER	1		
5	40M7288	SNAP RING	4		
6	T54087	WASHER	4	-914998	65.024 X 115.062 X 2.500 MM
	24H1616	WASHER	2	914999-	
7	T163527	PIN FASTENER	1		
8	24H1671	WASHER	2		
9	T162396	LUBRICATION FITTING	2		
10	.....	PIN FASTENER	1	-938773	(AT183404 NO LONGER AVAILABLE) (SUB AT308801) (ALSO ORDER (6) U43779)
	AT308801	PIN FASTENER	1	938774-	
11	T202671	BUSHING	2	-914998	(SUB FOR T163526)
	T202332	BUSHING	2	914999-	
12	24M7239	WASHER	4	-927733	10.700 X 21 X 2.500 MM
	24M7239	WASHER	6	927734-	10.700 X 21 X 2.500 MM
13	T150768	NUT	2	-927733	M10
	T150768	NUT	4	927734-	
14	19M8637	CAP SCREW	2	-927733	M10 X 40
	19M8600	CAP SCREW	4	927734-	M10 X 50
15	T148411	NUT	2	-914998	M10
	T150768	NUT	2	914999-	
16	19M8600	CAP SCREW	2		M10 X 50
17	U45351	BUSHING	2	-938773	
	T206645	BUSHING	2	938774-	
18	.....	DIPPERSTICK	1	-914998	(AT182506 NO LONGER AVAILABLE) (SUB AT303770)
	AT303770	DIPPERSTICK	1	914999-	
19	19M8324	CAP SCREW	1		M10 X 16

EXTENDABLE ARM,HYDRAULIC CYLINDER AND PINS

T212826 -UN-19JUL05

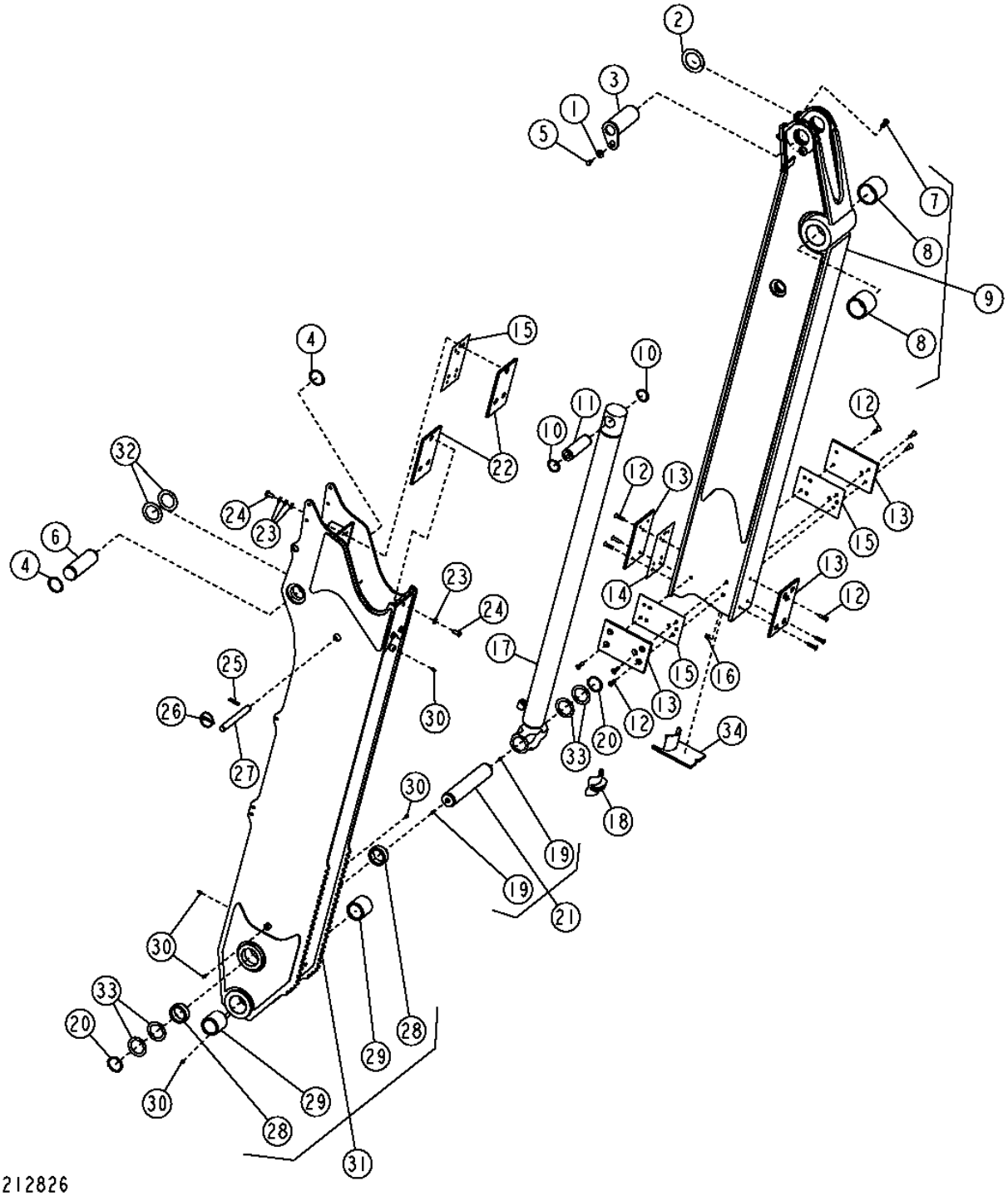

EXTENDABLE ARM,HYDRAULIC CYLINDER AND PINS

KEY	PART NO.	PART NAME	QTY	SERIAL NO.	REMARKS
1	24M7296	WASHER	1		
2	T158579	WASHER	3		
3	AT189311	PIN FASTENER	1		
4	40M7288	SNAP RING	2		
5	19M8324	CAP SCREW	1		M10 X 16
6	T183231	PIN FASTENER	1		
7	T148410	NUT	1		
8	T202671	BUSHING	2	-914998	(SUB FOR T163526)
	T202332	BUSHING	2	914999-	
9	.....	DIPPERSTICK	1	-914998	(AT188295 NO LONGER AVAILABLE) (SUB AT303962)
	AT303962	DIPPERSTICK	1	914999-	
10	40M7166	SNAP RING	2		
11	T183220	BUSHING	1		
12	19M7666	SCREW	12		M10 X 40
13	T183225	PAD	4		
14	T190727	SHIM	3		.010"/.254MM
15	T183226	SHIM	11		.030"/.762MM
16	14M7400	LOCK NUT	12		M10
17	AH216318	HYDRAULIC CYLINDER	1		
18	.....	GUIDE	1		(SUB AT323987) (AT191241 NLA)
19	T162396	LUBRICATION FITTING	2		
20	40M7288	SNAP RING	2		
21	.....	PIN FASTENER	1	-938773	(AT183404 NO LONGER AVAILABLE) (SUB AT308801) (ALSO ORDER (6) U43779)
	AT308801	PIN FASTENER	1	938774-	
22	AT188293	PAD	2		
23	24M7240	WASHER	12		
24	19H2472	CAP SCREW	6		1/2" X 1"
25	34M7054	SPRING PIN	1		
26	AR83396	QUICK LOCK PIN	1		
27	T183219	PIN FASTENER	1		
28	T183713	BUSHING	2		
29	U45351	BUSHING	2	-938773	
	T206645	BUSHING	2	938774-	
30	T162396	LUBRICATION FITTING	5		
31	AT188294	DIPPERSTICK	1		
32	24H1616	WASHER	2		(SUB FOR T54087)
33	24H1671	WASHER	4		
34	AT323987	GUIDE	1		

STABILIZER ARMS,FEET AND PINS

T199899 -UN-13MAY04

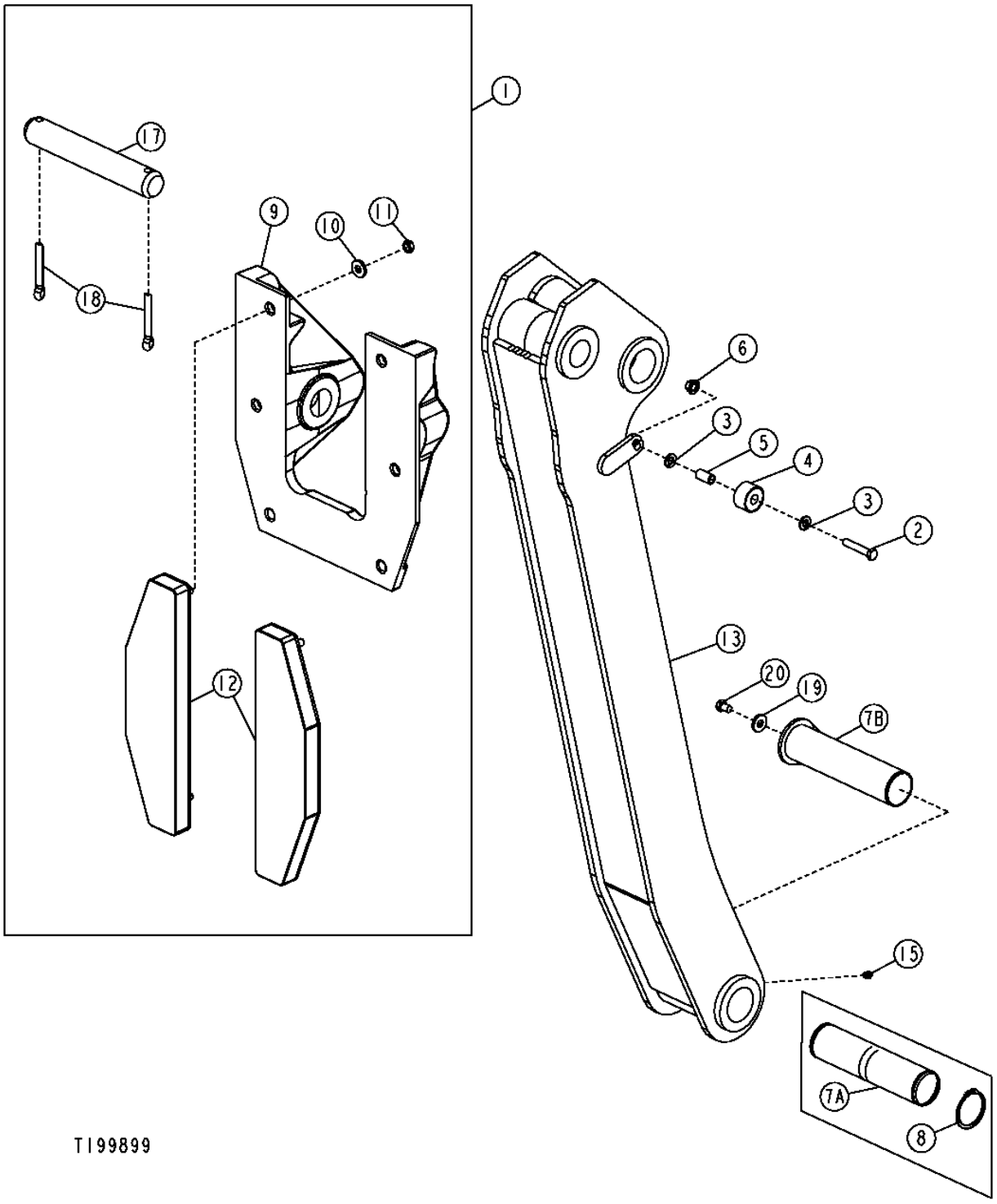

STABILIZER ARMS,FEET AND PINS

KEY	PART NO.	PART NAME	QTY	SERIAL NO.	REMARKS
1	AT195855	KIT	1		(INCLUDES (2) 19M8348, (2) 24M7240, (2) AT197876, (2) 28H3387 AND (2) H137329) (WHOLE GOODS) REVERSIBLE STREET PAD
2	19M8348	CAP SCREW	2		M12 X 65
3	24M7240	WASHER	4		
4	AT197876	STOP	2		
5	28H3387	BUSHING	2		
6	H137329	LOCK NUT	2		M12
7A	T201940	PIN FASTENER	2	-937066	(SUB FOR T183247, THIS APPLICATION)
7B	AT310933	PIN	2	937067-	
8	40M7120	SNAP RING	4	-937066	
9	T206569	STABILIZER FOOT	2		(SUB FOR T166258)
10	T29342	WASHER	12		
11	14H826	NUT	12		1/2", (SUB FOR 14H809, THIS APPLICATION)
12	AT195669	STREET PAD	4		
13	AT188245	STABILIZER	2		
14	40M7120	SNAP RING	4		
15	T162396	LUBRICATION FITTING	2		
16	T201940	PIN FASTENER	2		(SUB FOR T183247, THIS APPLICATION)
17	T69472	PIN FASTENER	2		
18	11H270	COTTER PIN	4		1/2" X 3"
19	T29342	WASHER	2	937067-	
20	19M8935	CAP SCREW	2	937067-	M12 X 16

STABILIZER CYLINDER PINS AND SPACER

T165107 -UN-18FEB03

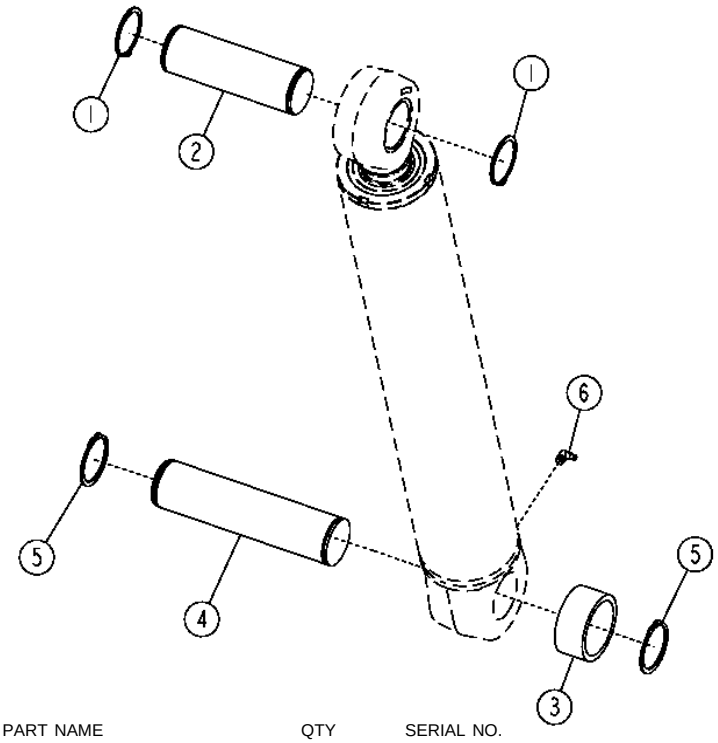

T165107

KEY	PART NO.	PART NAME	QTY	SERIAL NO.	REMARKS
1	40M7120	SNAP RING	2		
2	T183245	PIN FASTENER	1		63.250 X 197 MM (2.490" X 7.756")
3	T186340	HOSE	1		
4	T183247	PIN FASTENER	1		64.475 X 267.300 MM (2.538" X 10.524")
5	T41471	SNAP RING	2		
6	JD7799	LUBRICATION FITTING	1		

MEMORANDA

STABILIZER VALVE
(EATON)

T144119 -UN-17JUL01

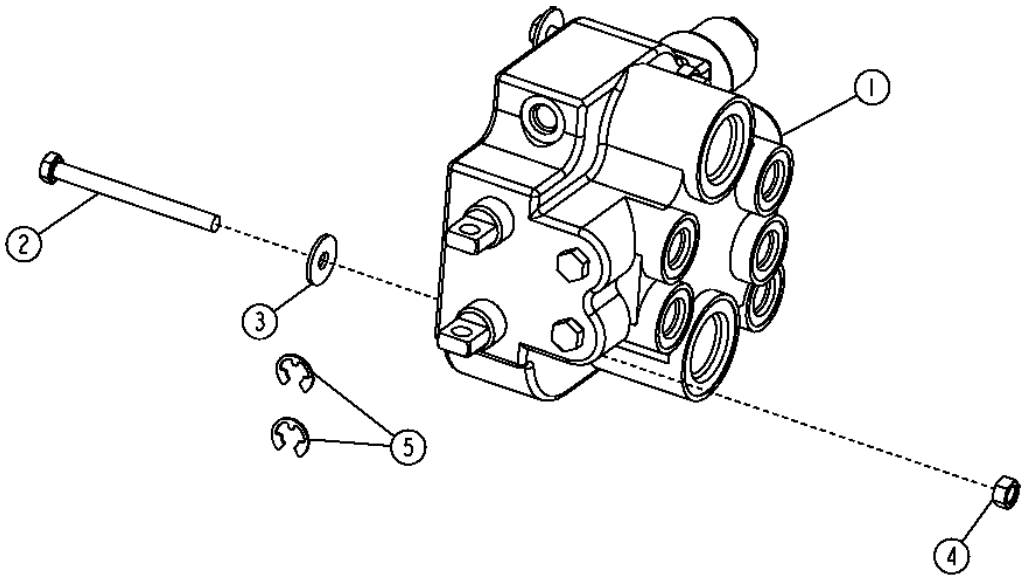

T144119

STABILIZER VALVE
(EATON)

KEY	PART NO.	PART NAME	QTY	SERIAL NO.	REMARKS
1	AT190331	SPOOL VALVE	1		
2	19M8539	CAP SCREW	2		M8 X 90
3	24M7238	WASHER	2		8.700 X 17 X 2 MM
4	14M7273	NUT	2		M8
5	R26871	SNAP RING	2		

STABILIZER VALVE (EATON)

T160068 -UN-19OCT02

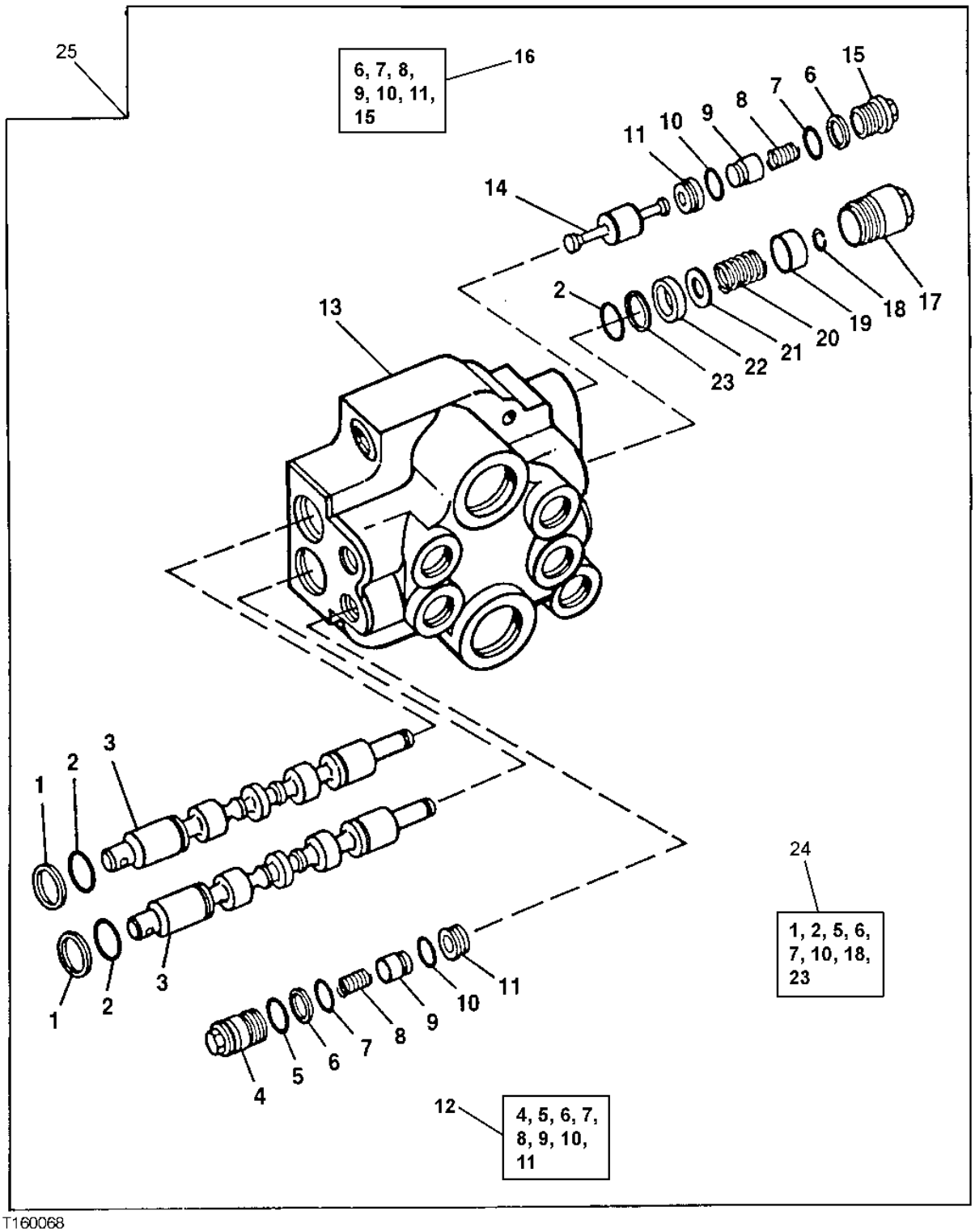

T160068

STABILIZER VALVE
(EATON)

KEY	PART NO.	PART NAME	QTY	SERIAL NO.	REMARKS
1	T127265	SEAL	2		
2	T127268	O-RING	4		
3	.....	VALVE SPOOL	2		(SUB AT190331)
4	.....	RETAINER	2		(SUB AT190334)
5	R116031	O-RING	2		
6	T154187	BACK-UP RING	4		
7	R72328	O-RING	4		
8	.....	SPRING	4		(SUB AT190333 AND AT190334)
9	.....	POPPET	4		(SUB AT190333 AND AT190334)
10	R56464	O-RING	4		
11	.....	SEAT	4		(SUB AT190333 AND AT190334)
12	AT190334	KIT	2		(THERMAL RELIEF)
13	.....	HOUSING	1		(SUB AT190331)
14	T127257	PLUNGER	2		
15	.....	RETAINER	2		(SUB AT190333)
16	AT190333	KIT	2		(STANDARD)
17	AT135767	CAP	2		
18	T127263	SNAP RING	2		
19	T127261	RETAINER	2		
20	MG272321	SPRING	2		
21	T127264	WASHER	2		
22	T127260	SPACER	2		
23	R73530	BACK-UP RING	2		
24	AT190741	SEAL KIT	1		
25	AT190331	SPOOL VALVE	1		

**BACKHOE CONTROL VALVE
(HUSCO)**

T159632 -UN-01OCT02

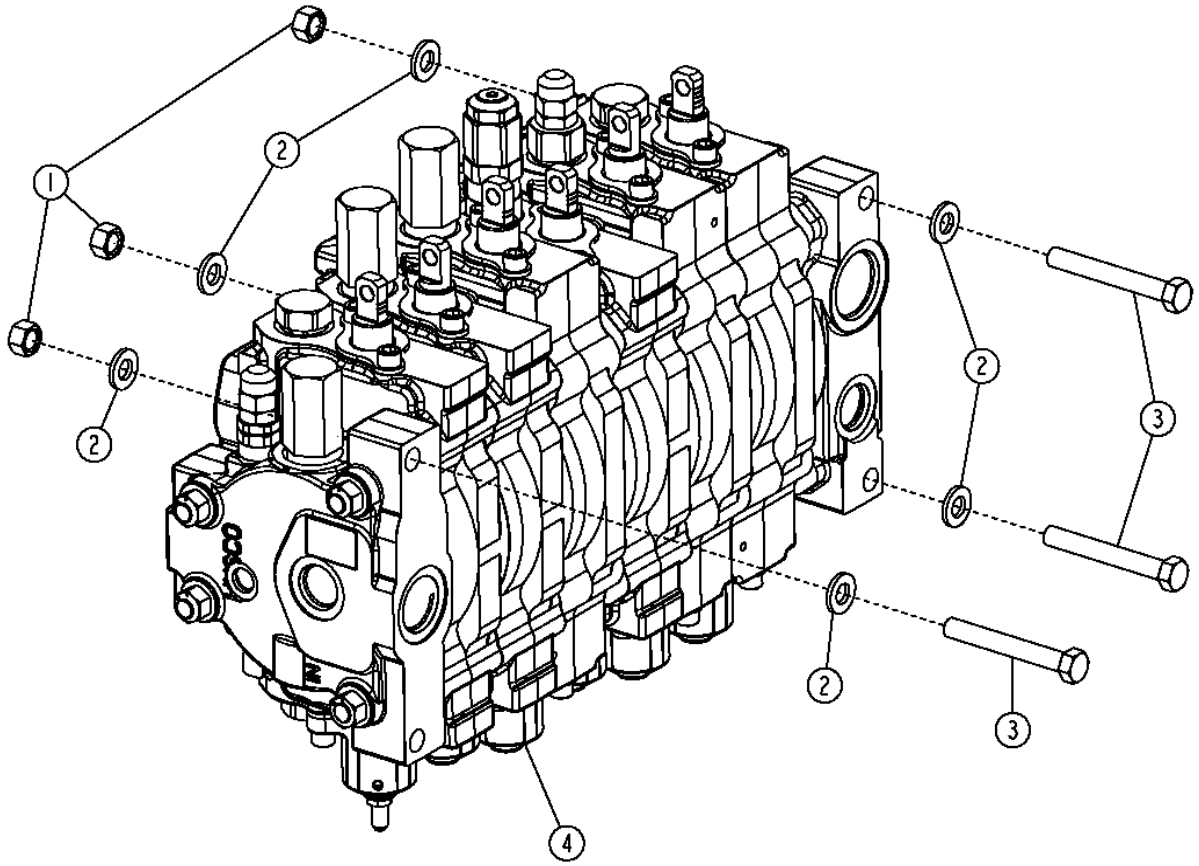

BACKHOE CONTROL VALVE (HUSCO)

KEY	PART NO.	PART NAME	QTY	SERIAL NO.	REMARKS
1	14M7275	NUT	3		M12
2	24M7240	WASHER	6		
3	19M7943	CAP SCREW	3		M12 X 90
4	.....	CONTROL VALVE	1		(4-FUNCTION) (MANUAL) (AT301135 NO LONGER AVAILABLE) (SUB FOR AT183392)
	.....	CONTROL VALVE	1		(4-FUNCTION) (PILOT) (AT196063 NO LONGER AVAILABLE)
	AT301136	CONTROL VALVE	1		CONVENIENCE ASSEMBLY (5-FUNCTION) (MANUAL) (SUB FOR AT190462)
	AT196064	CONTROL VALVE	1		CONVENIENCE ASSEMBLY (5-FUNCTION) (PILOT)
	AT301121	CONTROL VALVE	1		CONVENIENCE ASSEMBLY (6-FUNCTION) (MANUAL) (SUB FOR AT190476)
	AT196065	CONTROL VALVE	1		CONVENIENCE ASSEMBLY (6-FUNCTION) (PILOT)

**BACKHOE CONTROL VALVE
(HUSCO)**

T162989 -UN-17DEC02

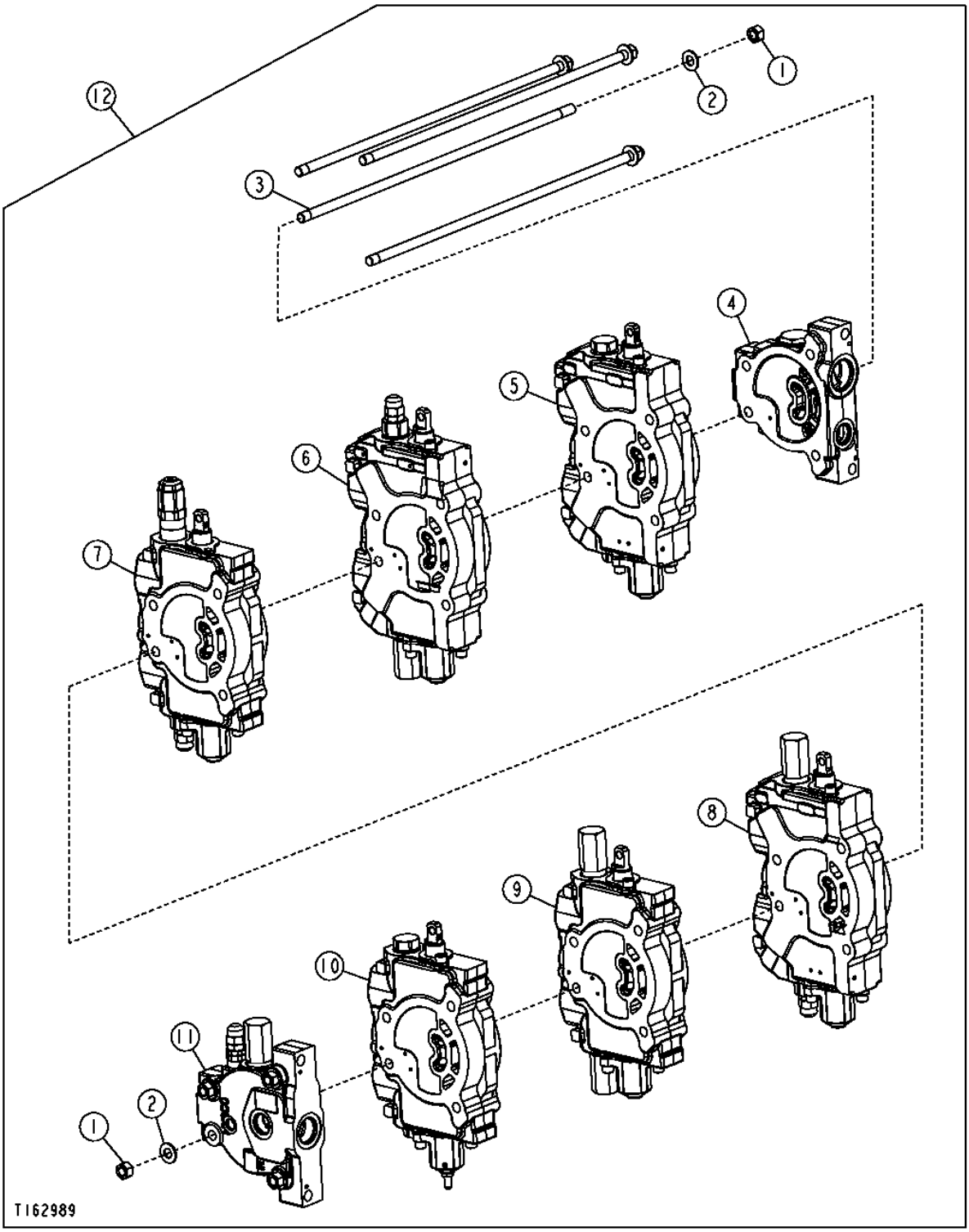

BACKHOE CONTROL VALVE (HUSCO)

KEY	PART NO.	PART NAME	QTY	SERIAL NO.	REMARKS
1	14H865	NUT	8		1/2"
2	T190753	WASHER	8		
3	T163999	TIE ROD	4		(4-FUNCTION)
	T163998	TIE ROD	4		(5-FUNCTION)
	T163960	TIE ROD	4		(6-FUNCTION)
4	T190789	PORT PLATE	1		(OUTLET SECTION)
5	AT198625	SPOOL VALVE	1		(EXTENDIBLE SECTION)
6	.....	SPOOL VALVE	1	-915139	(CROWD SECTION) (MANUAL) (AT199325 NO LONGER AVAILABLE) (SUB AT301120) (ALSO ORDER AT301134 AND AT301129)
	AT301120	SPOOL VALVE	1	915140-	(CROWD SECTION) (MANUAL)
	AT198623	SPOOL VALVE	1		(CROWD SECTION) (PILOT)
7	AT199324	SPOOL VALVE	1	-915139	(BUCKET SECTION) (MANUAL)
	AT301123	SPOOL VALVE	1	915140-	(BUCKET SECTION) (MANUAL)
	AT198622	HYD ACTUATED CONTROL VALVE	1		(BUCKET SECTION) (PILOT)
8	.....	SPOOL VALVE	1	-915139	(BOOM SECTION) (MANUAL) (AT199245 NO LONGER AVAILABLE) (SUB AT301122) (ALSO ORDER AT300803 OR AT301128)
	AT301122	SPOOL VALVE	1	915140-	(BOOM SECTION) (MANUAL)
	AT198619	HYD ACTUATED CONTROL VALVE	1		(BOOM SECTION) (PILOT)
9	AT199244	SPOOL VALVE	1		(SWING SECTION) (MANUAL)
	AT198615	HYD ACTUATED CONTROL VALVE	1		(SWING SECTION) (PILOT)
10	AT198613	SPOOL VALVE	1		(AUXILIARY SECTION)
11	AT198612	VALVE COVER	1		(INLET SECTION)
12	.....	CONTROL VALVE	1		(4-FUNCTION) (MANUAL) (AT301135 NO LONGER AVAILABLE) (SUB FOR AT183392)
	.....	CONTROL VALVE	1		(4-FUNCTION) (PILOT) (AT196063 NO LONGER AVAILABLE)
	AT301136	CONTROL VALVE	1		CONVENIENCE ASSEMBLY (5-FUNCTION) (MANUAL) (SUB FOR AT190462)
	AT196064	CONTROL VALVE	1		CONVENIENCE ASSEMBLY (5-FUNCTION) (PILOT)
	AT301121	CONTROL VALVE	1		CONVENIENCE ASSEMBLY (6-FUNCTION) (MANUAL) (SUB FOR AT190476)
	AT196065	CONTROL VALVE	1		CONVENIENCE ASSEMBLY (6-FUNCTION) (PILOT)

INLET SECTION
BACKHOE VALVE

T162975 -UN-17DEC02

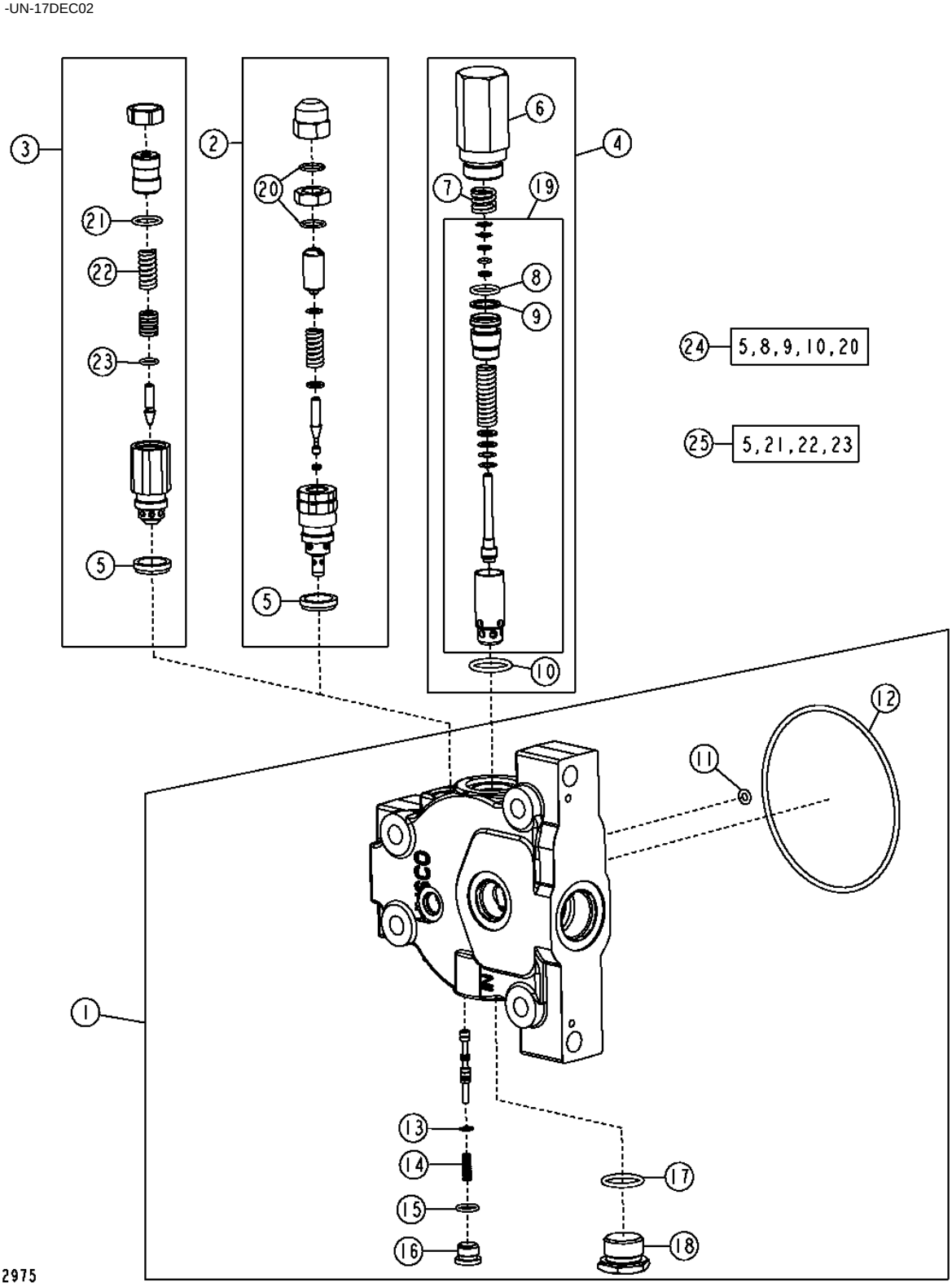

THIS PARTS LISTING IS CONTINUED

INLET SECTION
BACKHOE VALVE

KEY	PART NO.	PART NAME	QTY	SERIAL NO.	REMARKS
1	AT198612	VALVE	1		
2	AT173840	PRESSURE RELIEF VALVE	1	-915139	(3625 PSI) (7/8" PORT)
	AT173840	PRESSURE RELIEF VALVE	1	915641-	(3625 PSI) (7/8" PORT)
3	AT301226	PRESSURE RELIEF VALVE	1	915140-915640	(3625 PSI) (7/8" PORT)
4	.....	PRESSURE RELIEF VALVE	1		(4000 PSI)
5	T183756	SEAL	1		
6	T118866	HOUSING	1		
7	T127401	SPRING	1		
8	.....	O-RING	1		
9	.....	BACK-UP RING	1		
10	T118681	O-RING	1		
11	T190766	SEAL	1		
12	T163954	SEAL	1		
13	T160619	SNAP RING	1		
14	T160617	SPRING	2		
15	T70177	O-RING	1		
16	R111493	FITTING PLUG	1		
17	U12547	O-RING	1		
18	R27175	DRAIN PLUG	1		
19	AT178632	KIT	1		RELIEF VALVE CARTRIDGE
20	.....	O-RING	1		
21	.....	O-RING	1		
22	.....	SPRING	1		
23	R63548	O-RING	1		
24	AT314538	SEAL KIT	1		7/8 INCH RELIEF VALVE SEAL KIT, (SUB FOR AT189413)
	AT314539	SEAL KIT	1		1 1/16 INCH RELIEF VALVE SEAL KIT, (SUB FOR AT189413)
25	AT301227	KIT	1		RELIEF VALVE SEAL AND SPRING

BOOM SECTION, MANUAL VALVE
BACKHOE VALVE

T162659 -UN-06DEC02

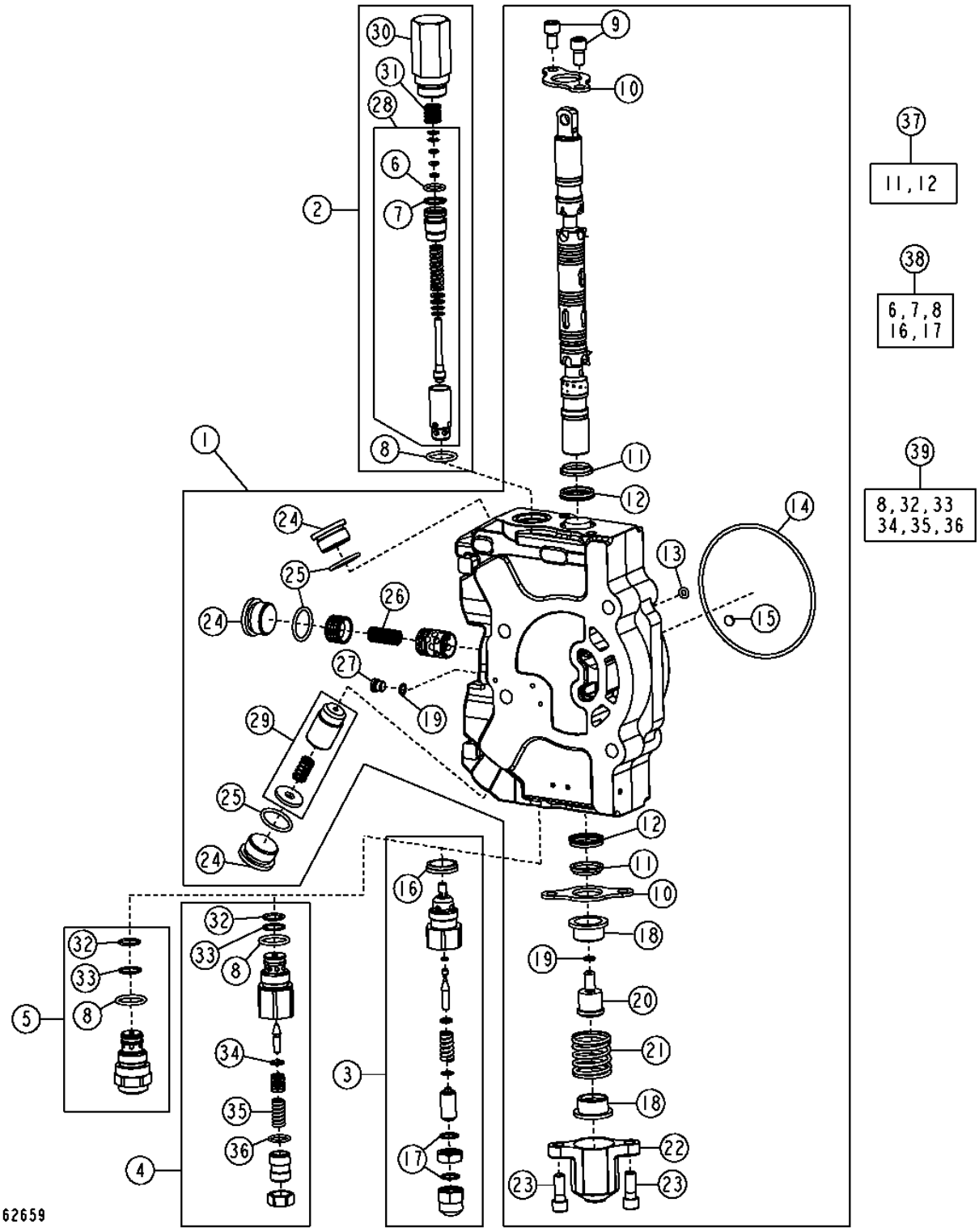

BOOM SECTION, MANUAL VALVE
BACKHOE VALVE

KEY	PART NO.	PART NAME	QTY	SERIAL NO.	REMARKS
1	.....	VALVE	1	-915139	(AT199245 NO LONGER AVAILABLE) (SUB AT301122) (ALSO ORDER AT300803 OR AT301128)
	AT301122	SPOOL VALVE	1	915140-	
2	AT171403	PRESSURE RELIEF VALVE	1		(2150 PSI)
3	AT198620	PRESSURE RELIEF VALVE	1	-915139	(7/8" PORT)
4	AT300803	PRESSURE RELIEF VALVE	1	915140-	(1 1/16" PORT)
5	AT301128	PRESSURE RELIEF VALVE	1	915140-	(1 1/16" PORT) (ANTI-CAVITATION)
6	.....	O-RING	1		
7	.....	BACK-UP RING	1		
8	T118681	O-RING	3		
9	21H1334	SCREW	2		
10	T191243	PLATE	2		
11	.....	SEAL	2		
12	.....	SEAL	2		
13	T190766	SEAL	1		
14	T163954	SEAL	1		
15	R95493	DISK	1		
16	T183757	SEAL	1		
17	.....	O-RING	2		
18	T163959	SEAT	2		
19	R26287	O-RING	2		
20	T163995	SCREW	1		
21	T163955	SPRING	1		
22	T190788	CAP	1		
23	19H2923	SCREW	2		
24	T190775	PLUG	1		
25	U17409	O-RING	2		
26	T190767	SPRING	1		
27	T190776	PLUG	1		
28	AT178363	SEAL KIT	1		
29	AT198621	SEAL KIT	1		
30	T118866	HOUSING	1		
31	T118867	SPRING	1		
32	T107887	O-RING	2		
33	.....	BACK-UP RING	2		
34	R63548	O-RING	1		
35	.....	SPRING	1		
36	.....	O-RING	1		
37	AT320423	SEAL KIT	1		SPOOL SEAL (ONE KIT SERVICES SECTION) (SUB FOR AT280407)
38	AT314538	SEAL KIT	1		7/8 INCH RELIEF VALVE SEAL KIT, (SUB FOR AT189413)
	AT314539	SEAL KIT	1		1 1/16 INCH RELIEF VALVE SEAL KIT, (SUB FOR AT189413)
39	AT300801	SEAL KIT	1		

BUCKET SECTION, MANUAL VALVE
BACKHOE VALVE

T162822 -UN-12DEC02

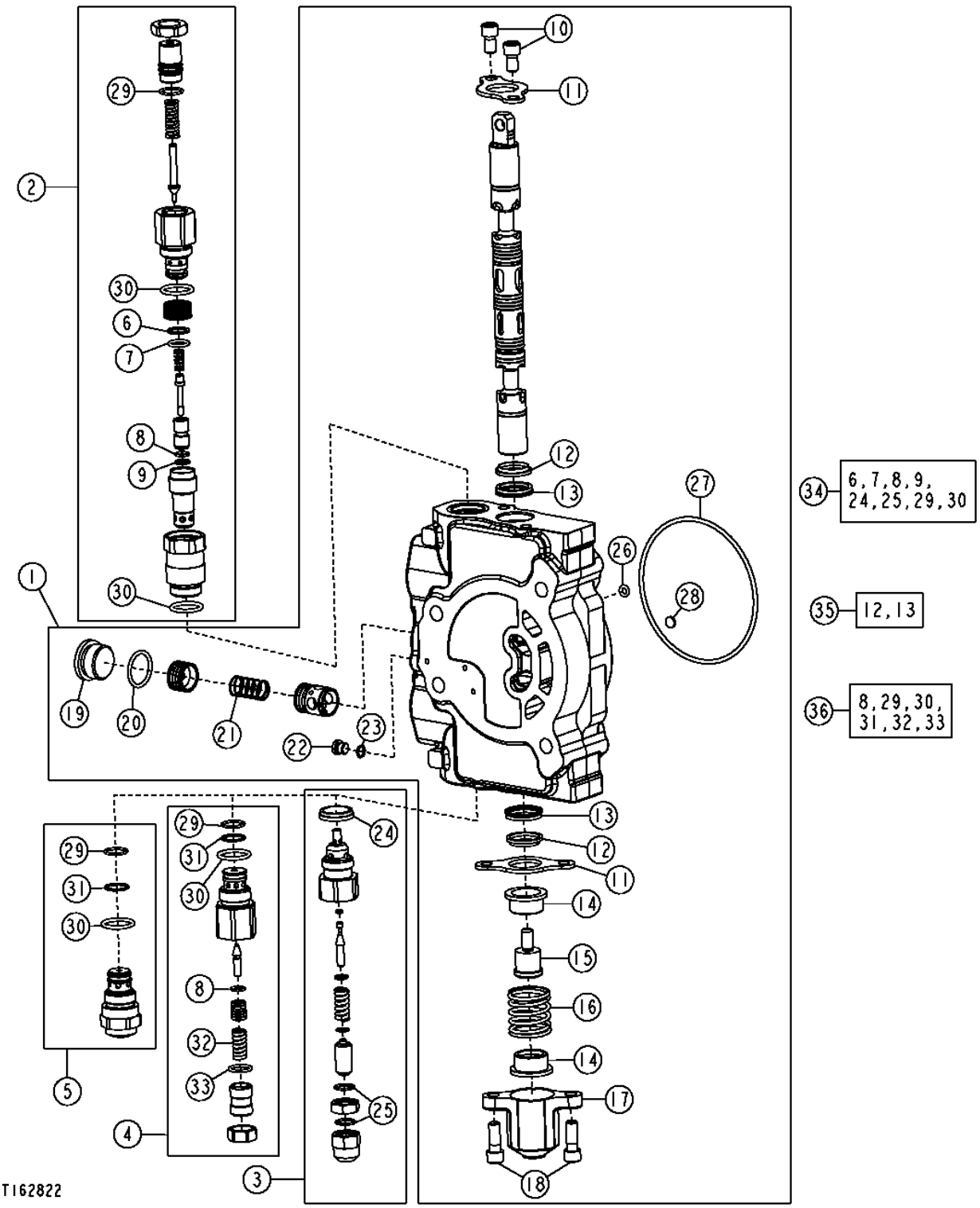

BUCKET SECTION, MANUAL VALVE
BACKHOE VALVE

KEY	PART NO.	PART NAME	QTY	SERIAL NO.	REMARKS
1	AT199324	SPOOL VALVE	1	-915139	
	AT301123	SPOOL VALVE	1	915140-	
2	AT192457	PRESSURE RELIEF VALVE	2		(4600 PSI)
3	AT165735	PRESSURE RELIEF VALVE	2	-915139	(7/8" PORT)
4	AT301526	PRESSURE RELIEF VALVE	1	915140-	(1 1/16" PORT) (NOT ANTI-CAVITATION) (SUB FOR AT300802) (4600 PSI)
5	AT301527	PRESSURE RELIEF VALVE	1	915140-	(1 1/16" PORT) (ANTI-CAVITATION) (SUB FOR AT301127) (4600 PSI)
6	.....	BACK-UP RING	1		
7	.....	O-RING	1		
8	R63548	O-RING	1		
9	T150958	BACK-UP RING	1		
10	21H1334	SCREW	2		3/8" X 1/2"
11	T191243	PLATE	2		
12	.....	O-RING	2		
13	.....	O-RING	2		
14	T163959	SEAT	1		
15	T163995	SCREW	1		
16	T163955	SPRING	1		
17	T190788	CAP	1		
18	19H2923	SCREW	2		3/8" X 1"
19	T190775	PLUG	1		
20	U17409	O-RING	1		
21	T190767	SPRING	1		
22	T190776	PLUG	1		
23	R26287	O-RING	1		
24	T183757	SEAL	1		
25	.....	O-RING	2		
26	T190766	SEAL	1		
27	T163954	SEAL	1		
28	R95493	DISK	1		
29	T107887	O-RING	1		
30	T118681	O-RING	2		
31	.....	BACK-UP RING	2		
32	.....	SPRING	1		
33	.....	O-RING	1		
34	AT314538	SEAL KIT	1		7/8 INCH RELIEF VALVE SEAL KIT, (SUB FOR AT189413)
	AT314539	SEAL KIT	1		1 1/16 INCH RELIEF VALVE SEAL KIT, (SUB FOR AT189413)
35	AT320423	SEAL KIT	1		SPOOL SEAL (ONE KIT SERVICES SECTION) (SUB FOR AT280407)
36	AT300801	SEAL KIT	1		

CROWD SECTION, MANUAL VALVE
BACKHOE VALVE

T162861 -UN-13DEC02

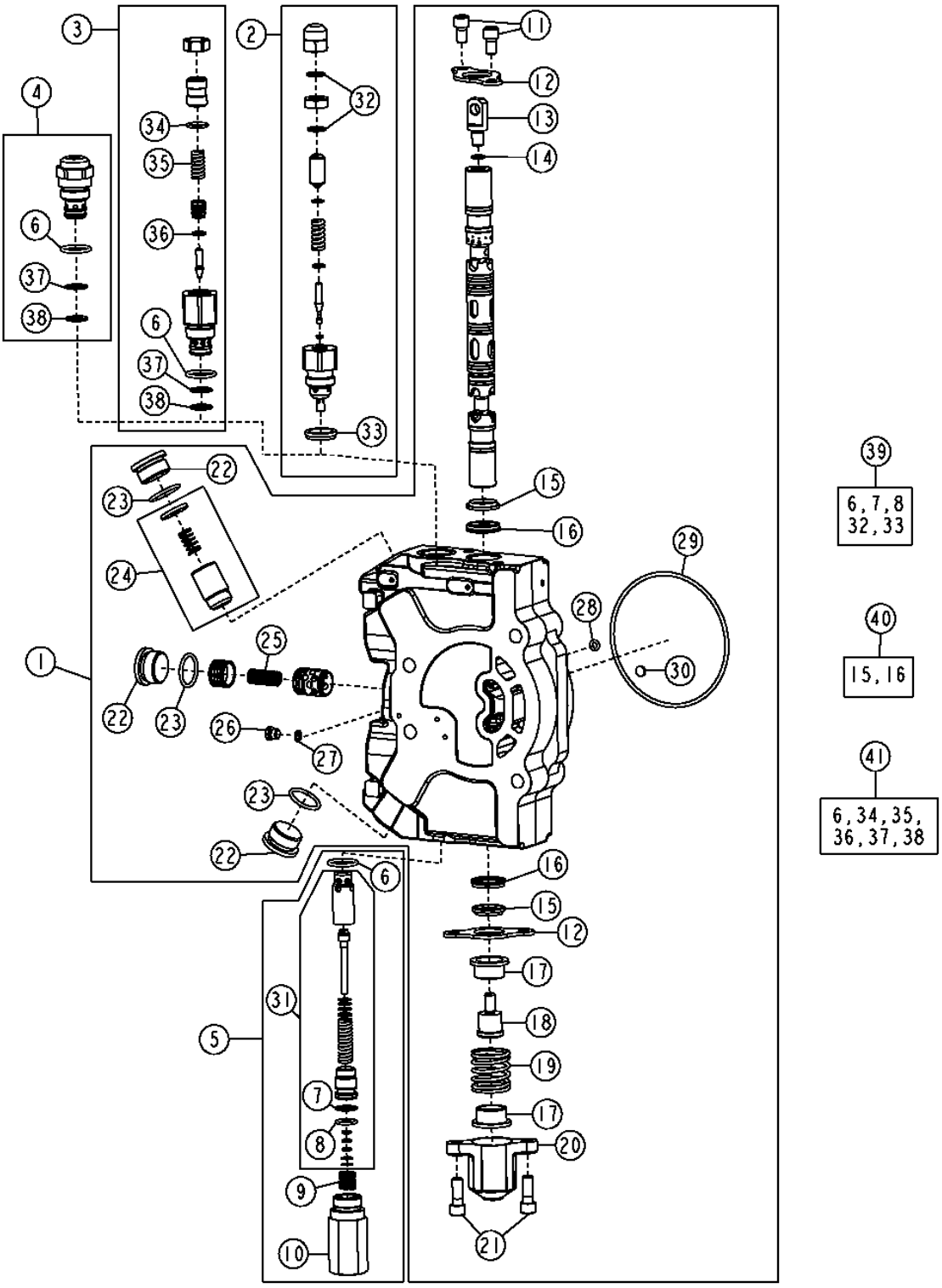

THIS PARTS LISTING IS CONTINUED

CROWD SECTION, MANUAL VALVE
BACKHOE VALVE

KEY	PART NO.	PART NAME	QTY	SERIAL NO.	REMARKS
1	.....	SPOOL VALVE	1	-915139	(AT199325 NO LONGER AVAILABLE) (SUB AT301120) (ALSO ORDER AT301134 AND AT301129)
	AT301120	SPOOL VALVE	1	915140-	
2	AT198624	PRESSURE RELIEF VALVE	1	-915139	(7/8" PORT)
3	AT301134	PRESSURE RELIEF VALVE	1	915140-	(1 1/16" PORT) (4750 PSI)
4	AT301129	PRESSURE RELIEF VALVE	1	915140-	(1 1/16" PORT) (4750 PSI) (ANTI-CAVITATION)
5	.....	PRESSURE RELIEF VALVE	1		(3800 PSI)
6	T118681	O-RING	1		
7	.....	BACK-UP RING	1		
8	.....	O-RING	1		
9	T118867	SPRING	1		
10	T118866	HOUSING	1		
11	21H1334	SCREW	2		3/8" X 1/2"
12	T191243	PLATE	2		
13	T163994	SCREW	1		
14	R28782	O-RING	1		
15	.....	SEAL	2		
16	.....	SEAL	2		
17	T163959	SEAT	2		
18	T163995	SCREW	1		
19	T163955	SPRING	1		
20	T190788	CAP	1		
21	19H2923	SCREW	2		3/8" X 1"
22	T190775	PLUG	3		
23	U17409	O-RING	3		
24	AT198621	SEAL KIT	1		
25	T190767	SPRING	1		
26	T190776	PLUG	1		
27	R26287	O-RING	1		
28	T190766	SEAL	1		
29	T163954	SEAL	1		
30	R95493	DISK	1		
31	AT178362	KIT	1		
32	.....	O-RING	2		
33	T183756	SEAL	1		
34	.....	O-RING	1		
35	.....	SPRING	1		
36	R63548	O-RING	1		
37	.....	BACK-UP RING	2		
38	T107887	O-RING	2		
39	AT314538	SEAL KIT	1		7/8 INCH RELIEF VALVE SEAL KIT, (SUB FOR AT189413)
	AT314539	SEAL KIT	1		1 1/16 INCH RELIEF VALVE SEAL KIT, (SUB FOR AT189413)
40	AT320423	SEAL KIT	1		SPOOL SEAL (ONE KIT SERVICES SECTION) (SUB FOR AT280407)
41	AT300801	SEAL KIT	1		

SWING SECTION, MANUAL VALVE
BACKHOE VALVE

T157765 -UN-17OCT02

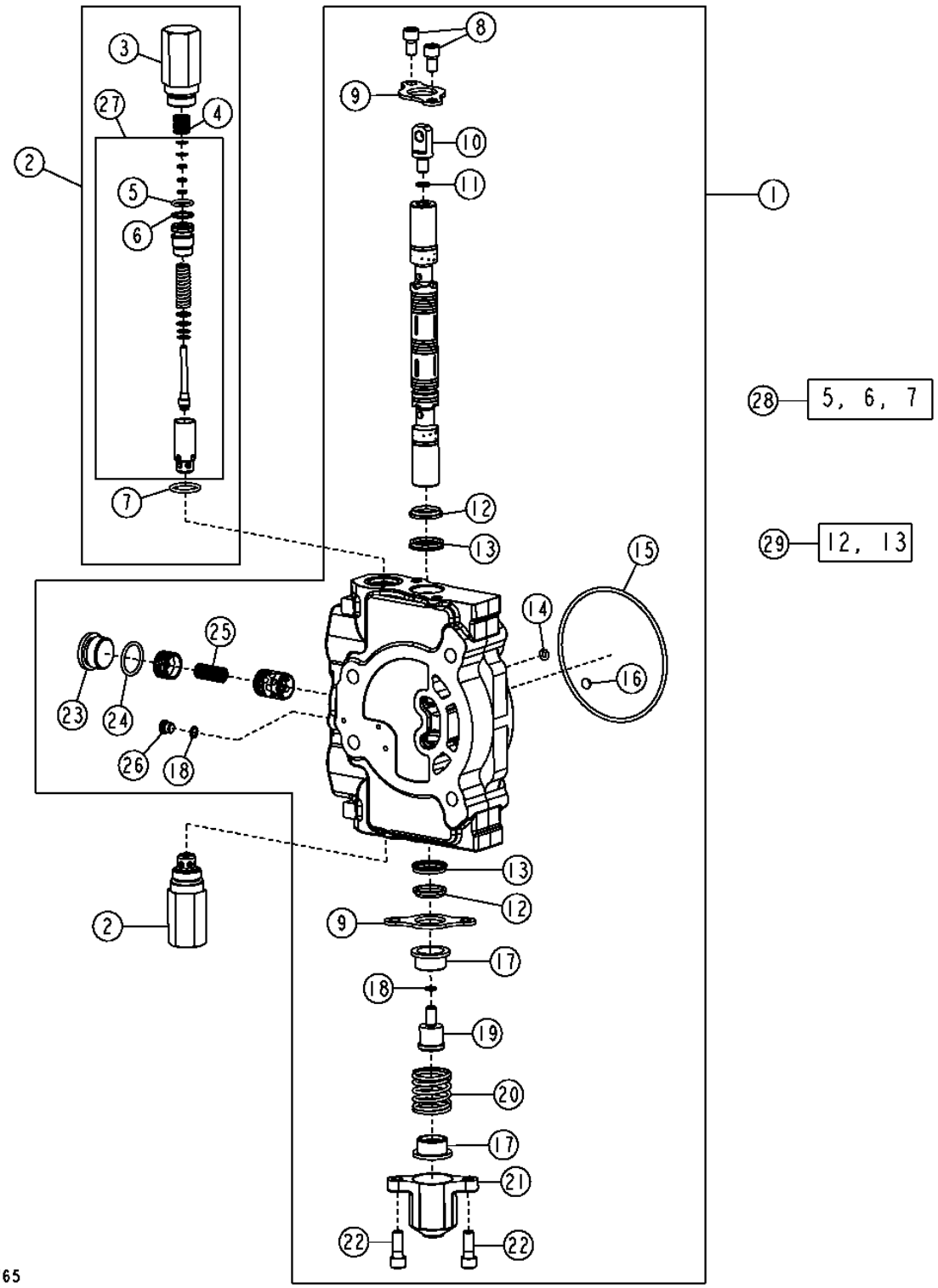

SWING SECTION, MANUAL VALVE
BACKHOE VALVE

KEY	PART NO.	PART NAME	QTY	SERIAL NO.	REMARKS
1	AT199244	VALVE	1		
2	.....	RELIEF VALVE	2		(4200 PSI) (ORDER AT178402, T118681, T118866 AND T118867)
3	T118866	HOUSING	2		
4	T118867	SPRING	2		
5	.....	O-RING	2		
6	.....	BACK-UP RING	2		
7	T118681	O-RING	2		
8	21H1334	SCREW	2		3/8" X 1/2"
9	T191243	PLATE	2		
10	T163994	SCREW	1		TANG END
11	R28782	O-RING	1		
12	.....	SEAL	2		
13	.....	SEAL	2		
14	T190766	SEAL	1		
15	T163954	SEAL	1		
16	R95493	DISK	1		
17	T163959	SEAT	2		
18	R26287	O-RING	3		
19	T163995	SCREW	1		
20	T201403	SPRING	1		
21	T190788	CAP	1		
22	19H2923	SCREW	2		
23	T190775	PLUG	1		
24	U17409	O-RING	1		
25	T190767	SPRING	1		
26	T190776	PLUG	1		
27	AT178402	SEAL KIT	2		RELIEF VALVE CARTRIDGE
28	AT314538	SEAL KIT	1		7/8 INCH RELIEF VALVE SEAL KIT, (SUB FOR AT189413)
	AT314539	SEAL KIT	1		1 1/16 INCH RELIEF VALVE SEAL KIT, (SUB FOR AT189413)
29	AT320423	SEAL KIT	1		SPOOL SEAL (ONE KIT SERVICES SECTION) (SUB FOR AT280407)

EXTENDIBLE SECTION
BACKHOE VALVE

T157766 -UN-25OCT02

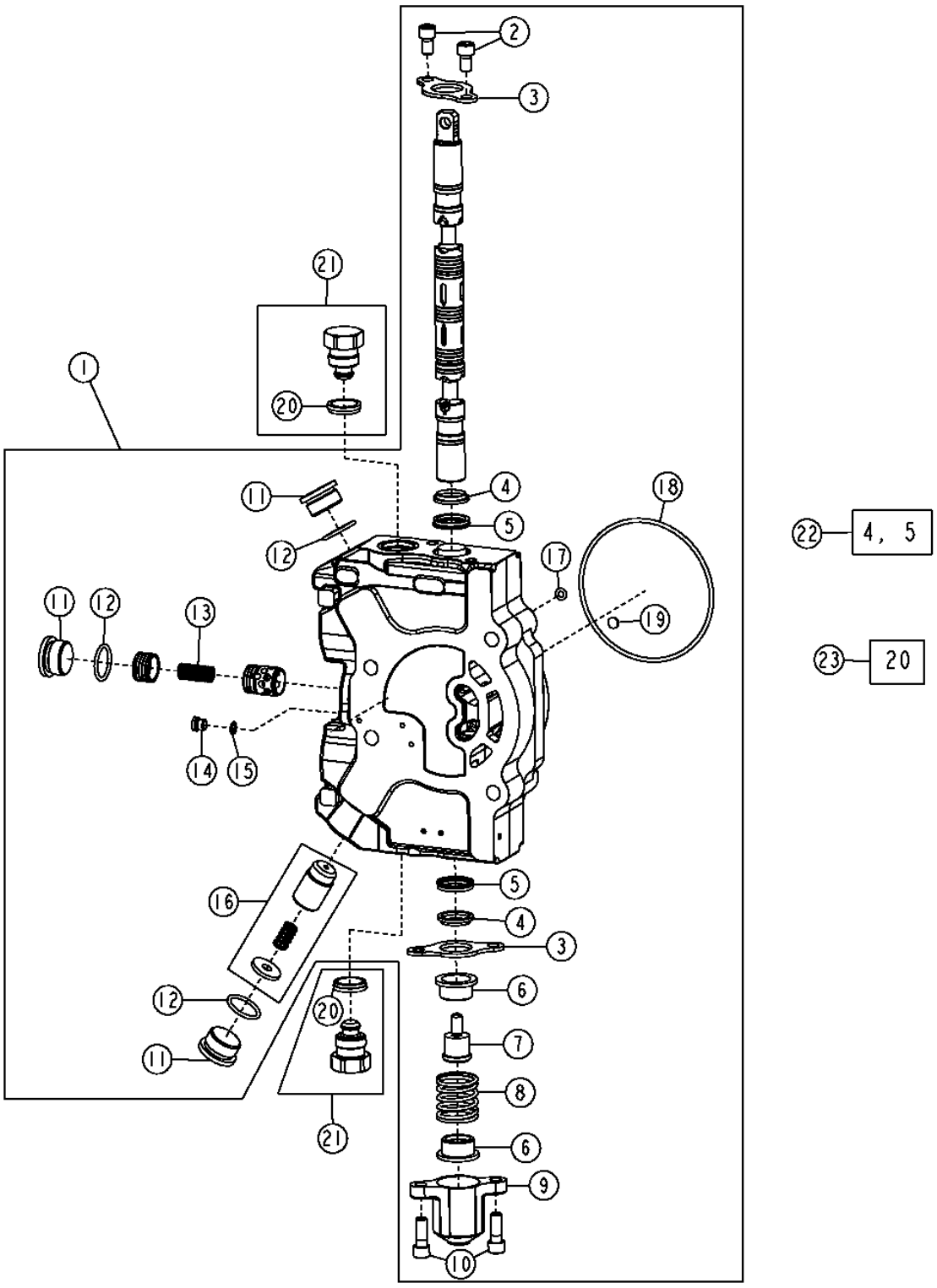

EXTENDIBLE SECTION
BACKHOE VALVE

KEY	PART NO.	PART NAME	QTY	SERIAL NO.	REMARKS
1	AT198625	VALVE	1		
2	21H1334	SCREW	2		3/8" X 1/2"
3	T191243	PLATE	2		
4	.....	SEAL	2		
5	.....	SEAL	2		
6	T163959	SEAT	2		
7	T163995	SCREW	1		
8	T201403	SPRING	1		
9	T190788	CAP	1		
10	19H2923	SCREW	2		
11	T190775	PLUG	3		
12	U17409	O-RING	3		
13	T190767	SPRING	1		
14	T190776	PLUG	1		
15	R26287	O-RING	1		
16	AT198621	SEAL KIT	1		
17	T190766	SEAL	1		
18	T163954	SEAL	1		
19	R95493	DISK	1		
20	T183757	SEAL	2		
21	AT83174	PLUG	2		
22	AT320423	SEAL KIT	1		SPOOL SEAL (ONE KIT SERVICES SECTION) (SUB FOR AT280407)
23	AT314538	SEAL KIT	1		7/8 INCH RELIEF VALVE SEAL KIT, (SUB FOR AT189413)
	AT314539	SEAL KIT	1		1 1/16 INCH RELIEF VALVE SEAL KIT, (SUB FOR AT189413)

AUXILIARY SECTION
BACKHOE VALVE

T157767 -UN-18OCT02

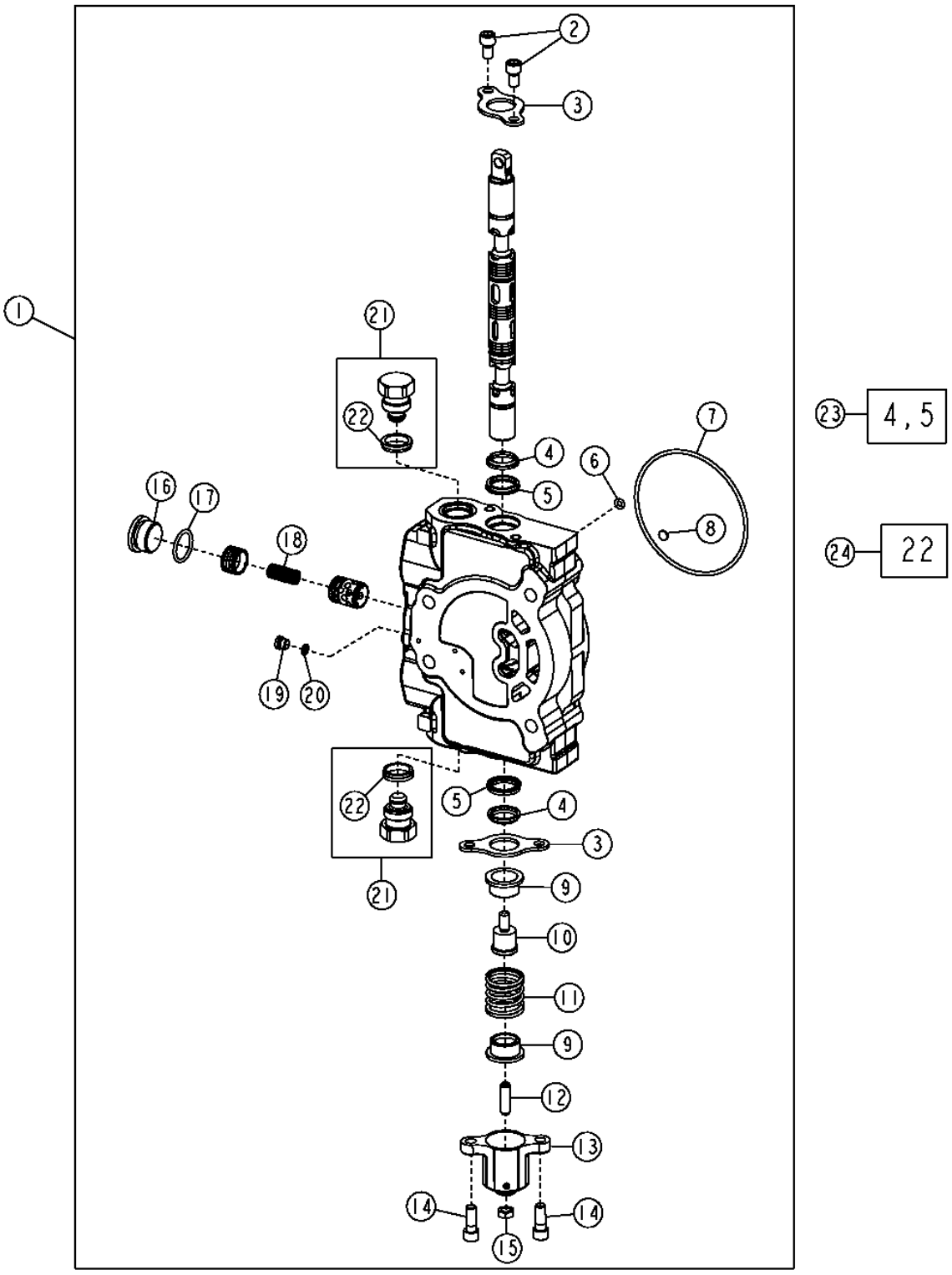

AUXILIARY SECTION
BACKHOE VALVE

KEY	PART NO.	PART NAME	QTY	SERIAL NO.	REMARKS
1	AT198613	SPOOL VALVE	1		
2	21H1334	SCREW	2		3/8" X 1/2"
3	T191243	PLATE	2		
4	.....	SEAL	2		
5	.....	SEAL	2		
6	T190766	SEAL	1		
7	T163954	SEAL	1		
8	R95493	DISK	1		
9	T163959	SEAT	2		
10	T163995	SCREW	1		
11	T201403	SPRING	1		
12	T190774	SCREW	1		
13	T190771	CAP	1		
14	19H2923	SCREW	2		3/8" X 1"
15	T190768	NUT	1		
16	T190775	PLUG	1		
17	U17409	O-RING	1		
18	T190767	SPRING	1		
19	T190776	PLUG	1		
20	R26287	O-RING	1		
21	AT83174	PLUG	2		
22	T183757	SEAL	2		
23	AT320423	SEAL KIT	1		SPOOL SEAL (ONE KIT SERVICES SECTION) (SUB FOR AT280407)
24	AT314538	SEAL KIT	1		7/8 INCH RELIEF VALVE SEAL KIT, (SUB FOR AT189413)
	AT314539	SEAL KIT	1		1 1/16 INCH RELIEF VALVE SEAL KIT, (SUB FOR AT189413)

OUTLET SECTION
BACKHOE VALVE

T157768 -UN-25OCT02

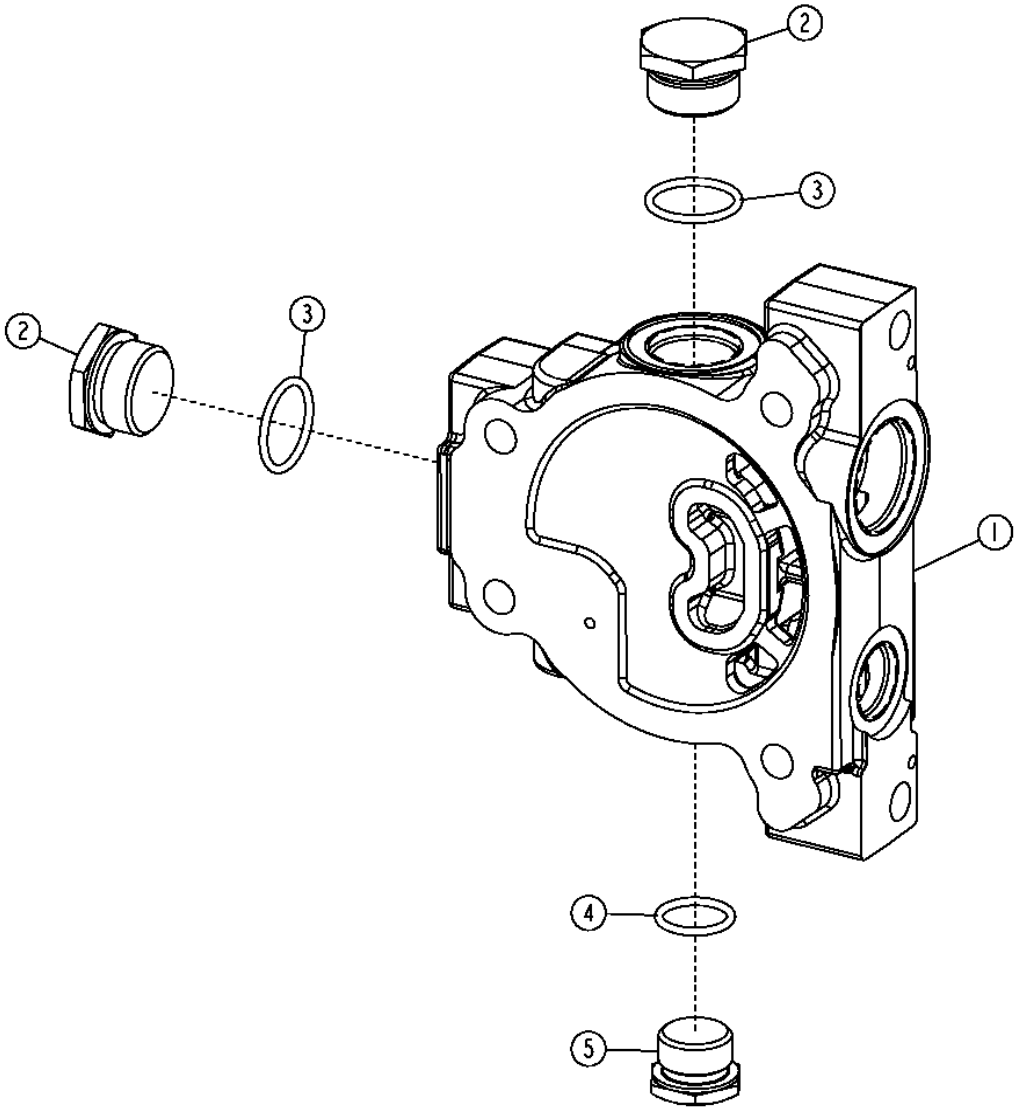

T157768

OUTLET SECTION
BACKHOE VALVE

KEY	PART NO.	PART NAME	QTY	SERIAL NO.	REMARKS
1	T190789	VALVE	1		
2	R36646	FITTING PLUG	2		
3	R29936	O-RING	2		
4	U12547	O-RING	1		
5	R27175	FITTING PLUG	1		

SELECTIVE FLOW SOLENOID CONTROL VALVE

T164624 -UN-27JAN03

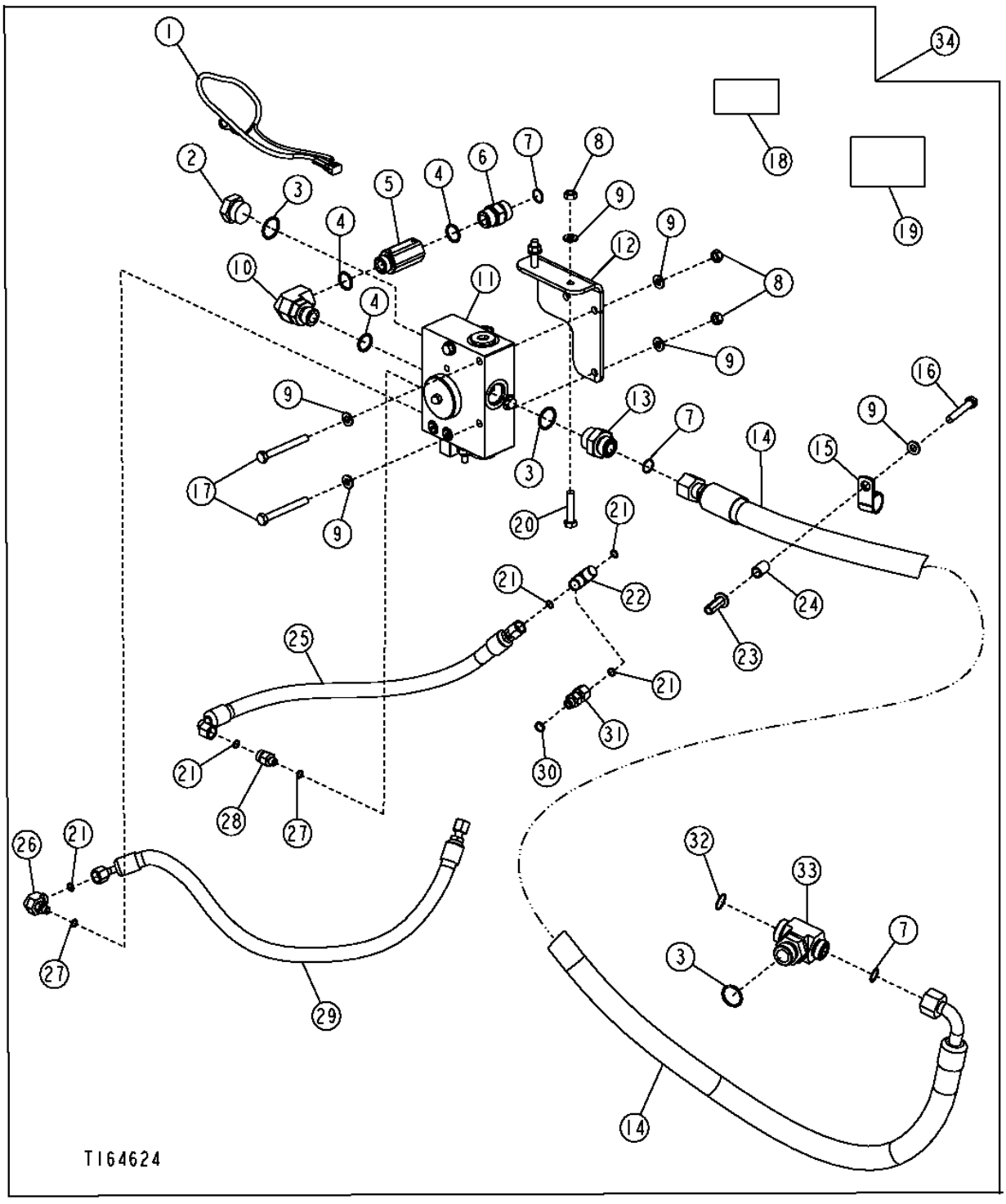

SELECTIVE FLOW SOLENOID CONTROL VALVE

KEY	PART NO.	PART NAME	QTY	SERIAL NO.	REMARKS
1	AT187811	CAB WIRING HARNESS	1		
2	R36636	FITTING PLUG	1		
3	R29936	O-RING	3		
4	U12547	O-RING	3		
5	AT117631	CHECK VALVE	1		
6	38H1163	ADAPTER	1		
7	T77858	O-RING	2		
8	14M7274	NUT	5		M10
9	24M7239	WASHER	9		
10	AT189078	ELBOW FITTING	1		
11	.....	SELECTIVE CONTROL VALVE	1		(AT198698 NO LONGER AVAILABLE) (SUB AT323347)
12	AT280804	BRACKET	1		
13	38H1194	ADAPTER	1		
14	AT195612	HYDRAULIC HOSE - FABRICATE	1		1-3/16" X 1 676 MM (66") X 1-3/16"
15	R46667	CLAMP	1		
16	19M7742	CAP SCREW	1		M10 X 65
17	19M8183	CAP SCREW	3		M10 X 90
18	T149199	LABEL	1		(AUXILIARY HYDRAULICS LABEL)
19	T166538	LABEL	1		(FLOW CONTROL SWITCH LABEL)
	T184402	LABEL	1		(V65 FLOW SETTINGS)
20	19M8600	CAP SCREW	2		M10 X 50
21	T77613	O-RING	5		
22	AT171681	CHECK VALVE	1		
23	T150768	NUT	1		M10
24	H141836	BUSHING	1		
25	AT195613	HYDRAULIC HOSE - FABRICATE	1		11/16" X 768 MM (30-1/4") X 11/16"
26	38H1435	ELBOW FITTING	1		
27	R28782	O-RING	2		
28	38H1309	ADAPTER	1		
29	AT195614	HYDRAULIC HOSE - FABRICATE	1		11/16" X 749 MM (29-1/2") X 11/16"
30	R26448	O-RING	1		
31	38H1067	ADAPTER	1		
32	T76938	O-RING	1		
33	38H1437	TEE FITTING	1		
34	**AT196443**	**KIT**	**1**		

SELECTIVE FLOW SOLENOID CONTROL VALVE
(SERIAL NO. XXXXXX-)

T211559 -UN-02JUN05

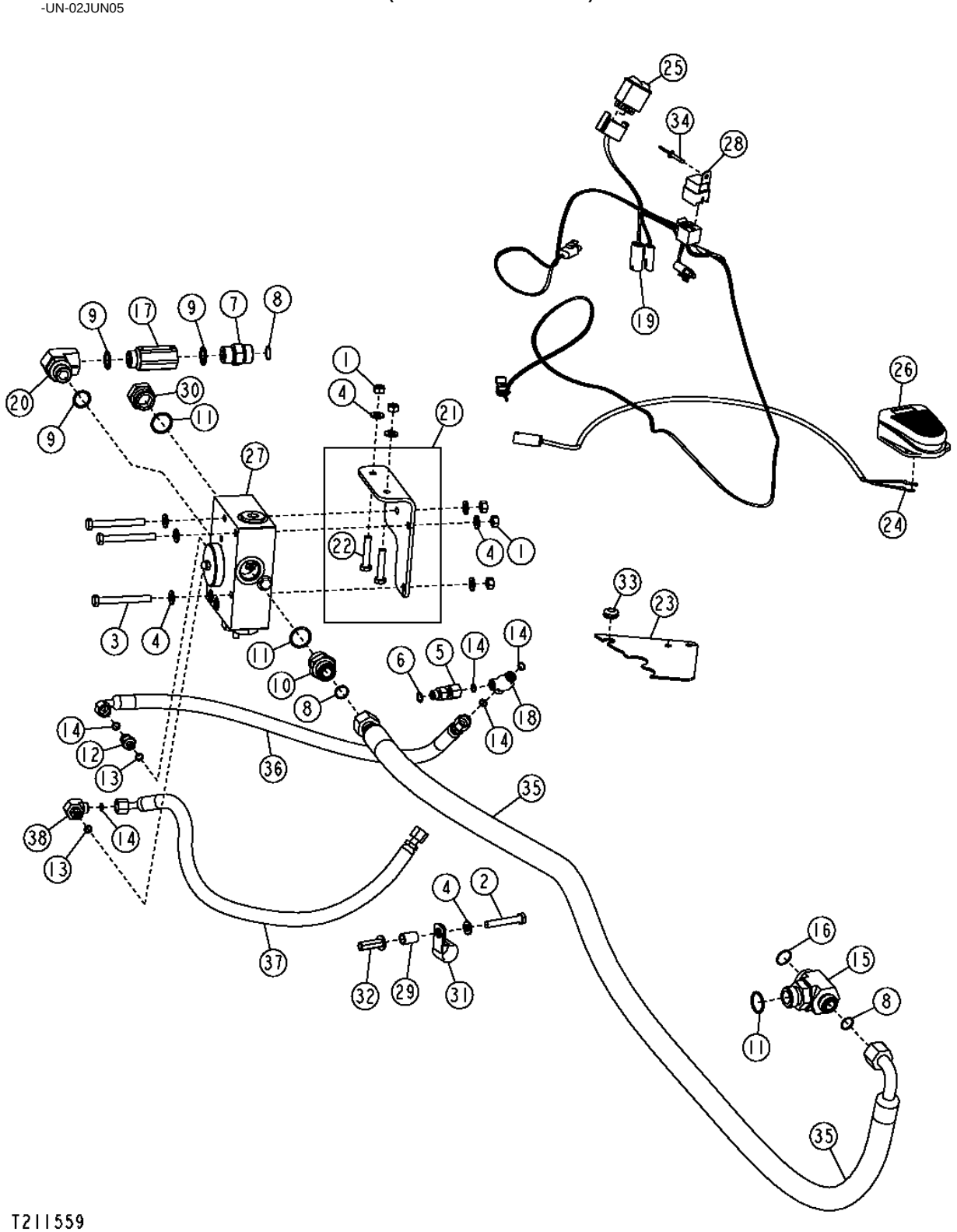

THIS PARTS LISTING IS CONTINUED

SELECTIVE FLOW SOLENOID CONTROL VALVE
(SERIAL NO. XXXXXX-)

KEY	PART NO.	PART NAME	QTY	SERIAL NO.	REMARKS
1	14M7274	NUT	5		M10
2	19M7742	CAP SCREW	1		M10 X 65
3	19M8183	CAP SCREW	3		M10 X 90
4	24M7239	WASHER	9		
5	38H1067	ADAPTER	1		
6	R26448	O-RING	1		
7	38H1163	ADAPTER	1		
8	T77858	O-RING	3		
9	U12547	O-RING	1		
10	38H1194	ADAPTER	1		
11	R26936	GROMMET	3		
12	38H1309	ADAPTER	1		
13	R28782	O-RING	1		
14	T77613	O-RING	2		
15	38H1437	TEE FITTING	1		
16	T76938	O-RING	1		
17	AT117631	CHECK VALVE	1		
18	AT171681	CHECK VALVE	1		SHUTTLE CHECK
19	AT187797	WIRING HARNESS	1		
20	AT189078	ELBOW FITTING	1		
21	AT280804	BRACKET	1		
22	19M8600	CAP SCREW	2		M10 X 50
23	AT300928	PLATE	1		
24	AT156431	WIRING HARNESS	1		
25	AT175604	SWITCH	1		
	T162380	BULB	1		
26	AT82210	SWITCH	1		
27	AT323347	SELECTIVE CONTROL VALVE	1		
28	AT75769	RELAY	1		
29	H141836	BUSHING	1		12.522 X 17.145 X 25.400 MM (0.493" X 0.675" X 1")
30	R36636	FITTING PLUG	1		
31	R46667	CLAMP	1		
32	T150768	NUT	1		
33	T162238	GROMMET	1		
34	T184345	RIVET	1		
35	AT195612	HYDRAULIC HOSE - FABRICATE	1		1-3/16" X 1 676 MM (66") X 1-3/16"
36	AT195613	HYDRAULIC HOSE - FABRICATE	1		11/16" X 768 MM (30-1/4") X 11/16"
37	AT195614	HYDRAULIC HOSE - FABRICATE	1		11/16" X 749 MM (29-1/2") X 11/16"

SELECTIVE FLOW SOLENOID CONTROL VALVE

TP58109 -UN-28OCT99

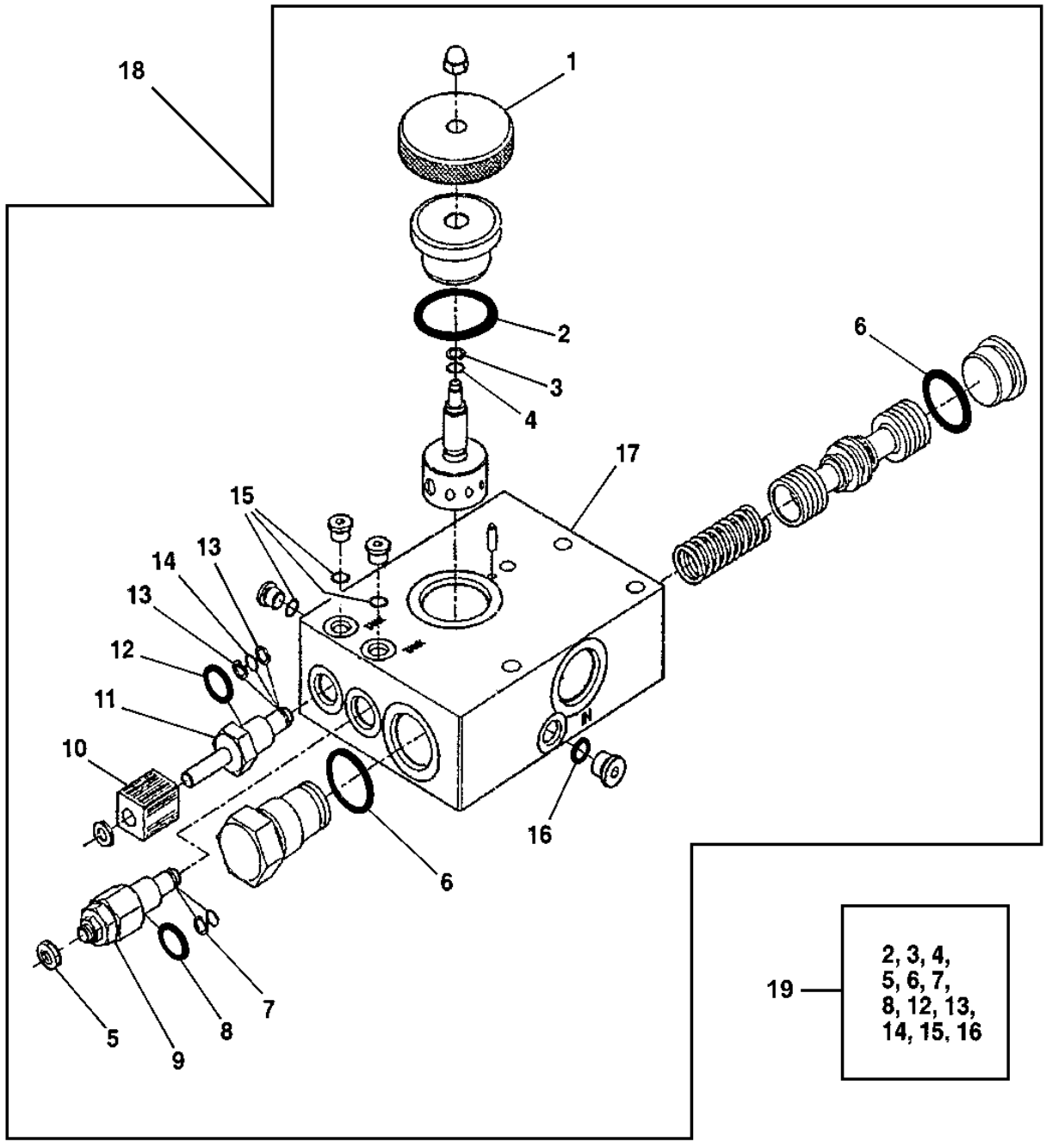

TP58109

SELECTIVE FLOW SOLENOID CONTROL VALVE

KEY	PART NO.	PART NAME	QTY	SERIAL NO.	REMARKS
1	T183561	KNOB	1		
	T184402	LABEL	1		FLOW SELECTOR KNOB SETTINGS
2	.....	O-RING	1		
3	.....	BACK-UP RING	1		
4	.....	O-RING	1		
5	L102678	NUT	1		
6	.....	O-RING	2		
7	.....	BACK-UP RING	1		
8	.....	O-RING	1		
9	AT106655	PRESSURE RELIEF VALVE	1		
10	AT323346	ELECTRICAL COIL	1		(SUB FOR AT180037)
11	AT189036	SOLENOID	1		
12	.....	O-RING	1		
13	.....	BACK-UP RING	2		
14	.....	O-RING	1		
15	.....	O-RING	3		
16	.....	O-RING	1		
17	.....	HOUSING	1		
18	AT323347	SELECTIVE CONTROL VALVE	1		(SUB FOR AT198698)
19	AT189038	SEAL KIT	1		

ACCU-SWING VALVE

T201568 -UN-07JUL04

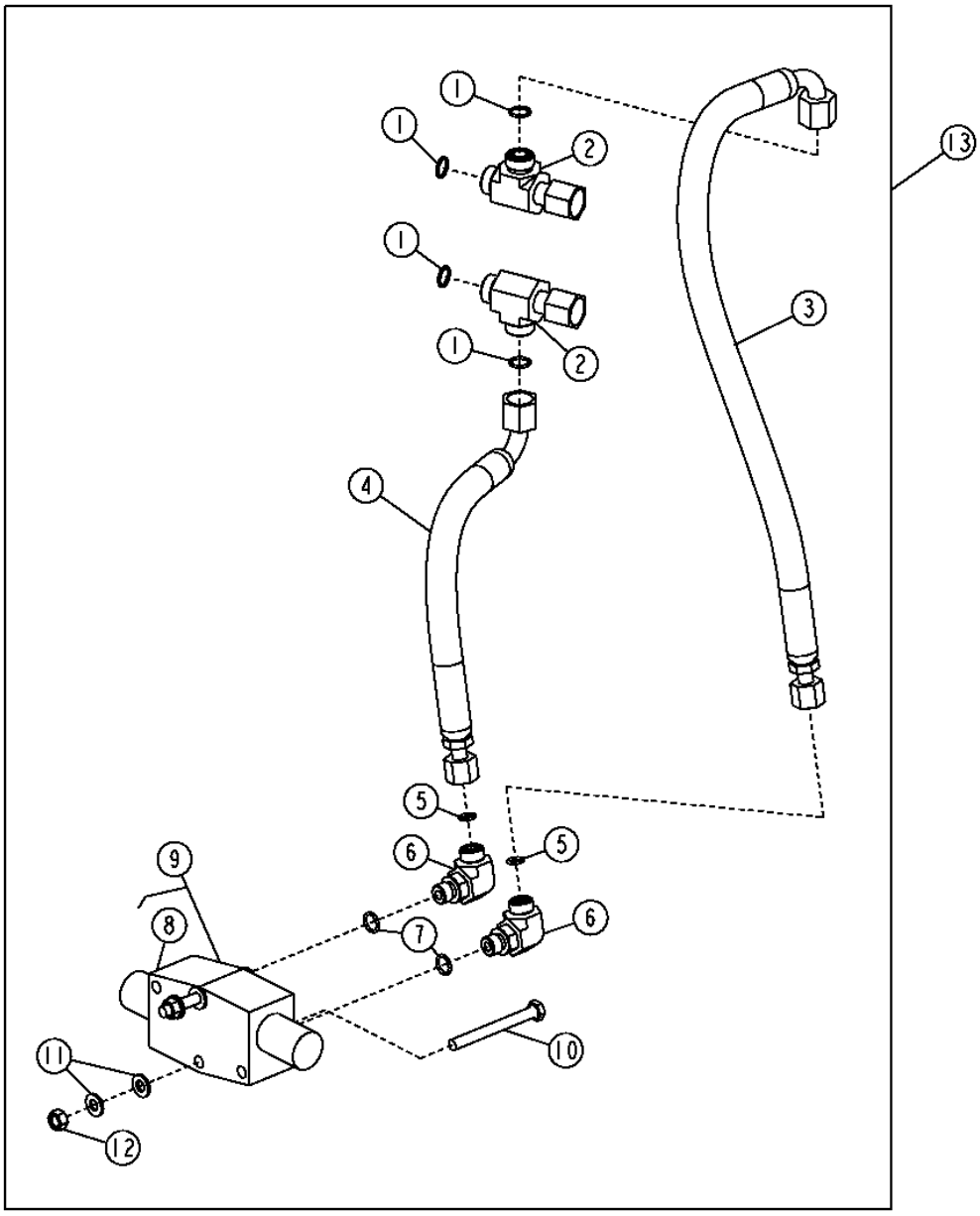

T201568

ACCU-SWING VALVE

KEY	PART NO.	PART NAME	QTY	SERIAL NO.	REMARKS
1	T77857	O-RING	4		
2	38H1031	TEE FITTING	2		
3	AT312919	HYDRAULIC HOSE	1		9/16" X 552 MM (21-3/4") X 9/16"
4	AT312918	HYDRAULIC HOSE	1		9/16" X 386 MM (15-1/4") X 9/16"
5	T77613	O-RING	2		
6	38H1004	ELBOW FITTING	2		
7	R26448	O-RING	2		
8	AT314127	SEAL KIT	1		
9	AT312944	VALVE	1		
10	19M8504	CAP SCREW	2		M8 X 80
11	24M7238	WASHER	4		8.700 X 17 X 2 MM
12	14M7273	NUT	2		M8
13	**AT312949**	**KIT**	**1**		**(INCLUDES AT312918 AND AT312919)**

PILOT CONTROL MANIFOLD (SPAM VALVE)

T198598 -UN-22MAR04

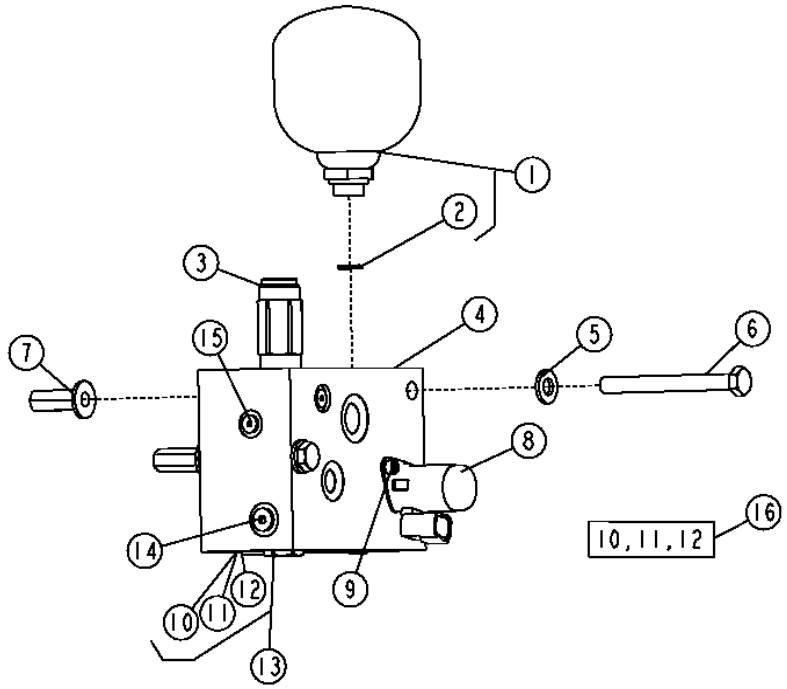

KEY	PART NO.	PART NAME	QTY	SERIAL NO.	REMARKS
1	AT195957	PNEUMATIC ACCUMULATOR	1		
2	R26448	O-RING	1		
3	AT313708	HYDRAULIC PRESSURE VALVE	1		(SUB FOR AT300230)
4	.....	FLOW CONTROL HYD. VALVE	1	-943092	(AT197769 NO LONGER AVAILABLE) (INCLUDES AT224570, AT300230, AT49216, KV25678 AND (6) T105368) (SUB AT306550) (ALSO ORDER AT187669 AND AT317349)
	AT306550	FLOW CONTROL HYD. VALVE	1	943093-	(INCLUDES AT224570, AT313708, AT49216, KV25678 AND (6) T105368)
5	24M7239	WASHER	2		
6	19M8093	CAP SCREW	2		M10 X 100
7	T148410	NUT	2		M10
8	KV25678	SOLENOID VALVE	1		(SUB FOR AT300254)
9	0344046	BOLT	2		(SUB FOR AT121123)
10	.....	BACK-UP RING	1		
11	.....	O-RING	1		
12	.....	O-RING	1		
13	AT224570	CHECK VALVE	1		(MARKED CV08)
14	AT49216	FITTING PLUG	1		(INCLUDES R26448)
15	T105368	FITTING PLUG	6		
16	AT300255	SEAL KIT	1		

MEMORANDA

**PATTERN SELECTOR VALVE
(PILOT CONTROL)**

T193763 -UN-06AUG03

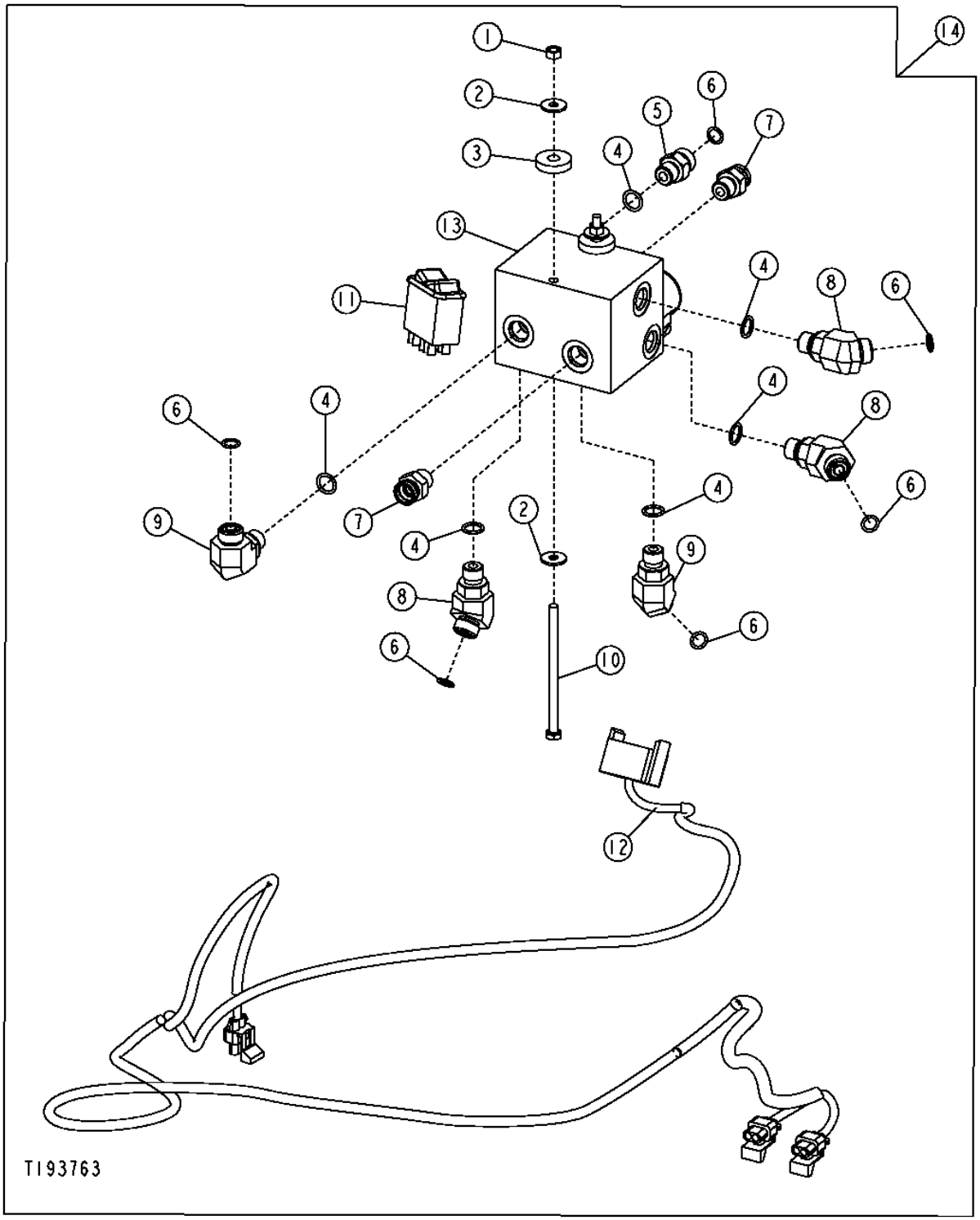

PATTERN SELECTOR VALVE
(PILOT CONTROL)

KEY	PART NO.	PART NAME	QTY	SERIAL NO.	REMARKS
1	14M7272	NUT	2		M6
2	24M7139	WASHER	4		
3	24H1621	WASHER	2		
4	R26448	O-RING	6		
5	38H1160	ADAPTER	4		
6	T77613	O-RING	6		
7	AT187666	ADAPTER	2		
	AT193365	KIT	2		STC REPAIR
8	38H1045	ELBOW FITTING	3		
9	38H1004	ELBOW FITTING	4		(90 DEGREE FITTING)
10	19M9090	CAP SCREW	2		
11	AT199633	TOGGLE/ROCKER SWITCH	1		
12	AT198847	WIRING HARNESS	1		
13	AT199065	FLOW CONTROL HYD. VALVE	1		
	AT195144	SOLENOID VALVE COIL	1		
	AT195922	HYD ACTUATED CONTROL VALVE	1		
14	**AT197165**	**KIT**	**1**		

**PILOT CONTROLLER VALVE
(LEFT HAND)**

T188654 -UN-18MAR03

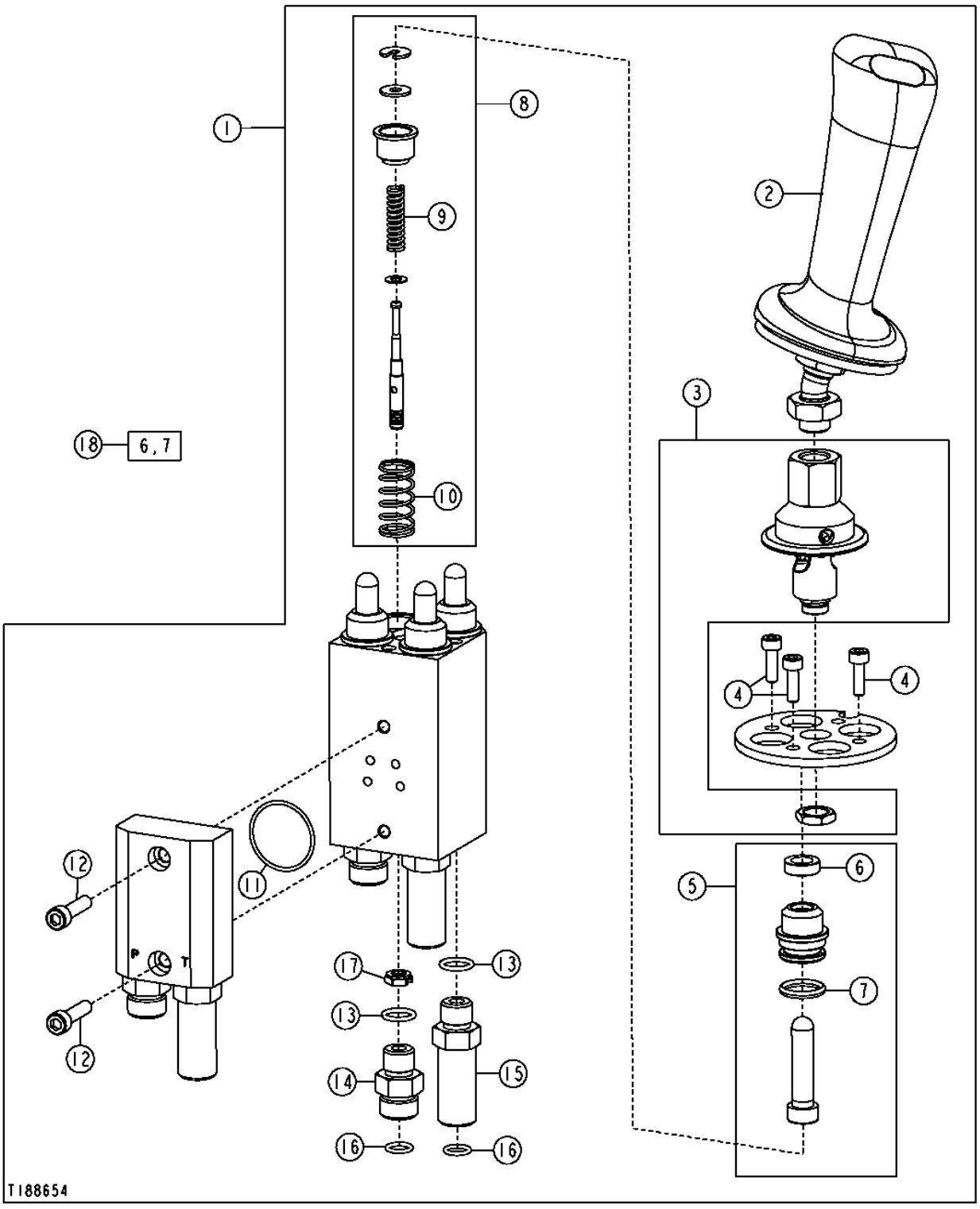

PILOT CONTROLLER VALVE
(LEFT HAND)

KEY	PART NO.	PART NAME	QTY	SERIAL NO.	REMARKS
1	AT303890	HYDR./PILOT CONTROL VALVE	1		(LEFT HAND) (SUB FOR AT196178)
	T190825	BOOT	1		(NOT ILLUSTRATED)
2	AT198768	HANDLE	1		
3	AT198773	KIT	1		
4	T190824	SCREW	3		
5	AT198770	KIT	4		
6	.....	SEAL	4		
7	.....	O-RING	4		
8	AT307187	SPOOL VALVE	4		(SUB FOR AT198772) (SUB FOR AT303892)
9	.....	SPRING	4		
10	.....	SPRING	4		
11	T190819	O-RING	1		
12	T190820	CAP SCREW	2		
13	R26448	O-RING	6		
14	38H1160	ADAPTER	3		
15	38H1212	ADAPTER	3		
16	T77613	O-RING	6		
17	T200956	ORIFICE	1		(ONLY USED IN PORT 4, BOOM DOWN FUNCTION)
18	AT198771	KIT	4		

**PILOT CONTROLLER VALVE
(RIGHT HAND)**

T188655 -UN-18MAR03

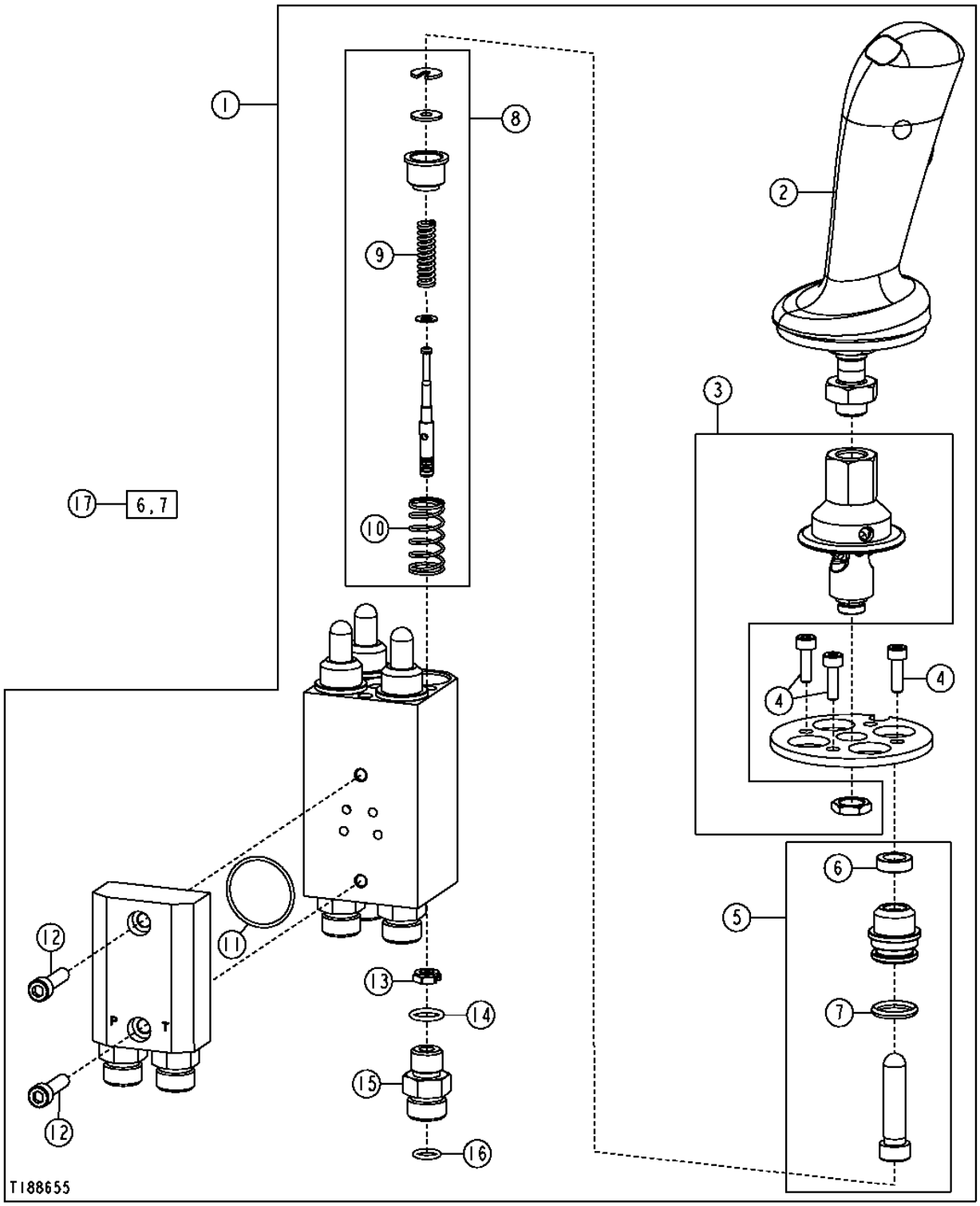

PILOT CONTROLLER VALVE
(RIGHT HAND)

KEY	PART NO.	PART NAME	QTY	SERIAL NO.	REMARKS
1	AT303891	HYDR./PILOT CONTROL VALVE	1		(RIGHT HAND) (SUB FOR AT196179)
	T190825	BOOT	1		(NOT ILLUSTRATED)
2	AT198774	HANDLE	1		
3	AT198773	KIT	1		
4	T190824	SCREW	3		
5	AT198770	KIT	4		
6	.....	SEAL	4		
7	.....	O-RING	4		
8	AT307187	SPOOL VALVE	4		(SUB FOR AT198772) (SUB FOR AT303892)
9	.....	SPRING	4		
10	.....	SPRING	4		
11	T190819	O-RING	1		
12	T190820	CAP SCREW	2		
13	T200956	ORIFICE	1		(ONLY USED IN PORT 2, CROWD OUT FUNCTION)
14	R26448	O-RING	6		
15	38H1160	ADAPTER	6		
16	T77613	O-RING	6		
17	AT198771	KIT	4		

PILOT CONTROL HANDLE BUTTON FUNCTION KIT

T202931 -UN-30SEP04

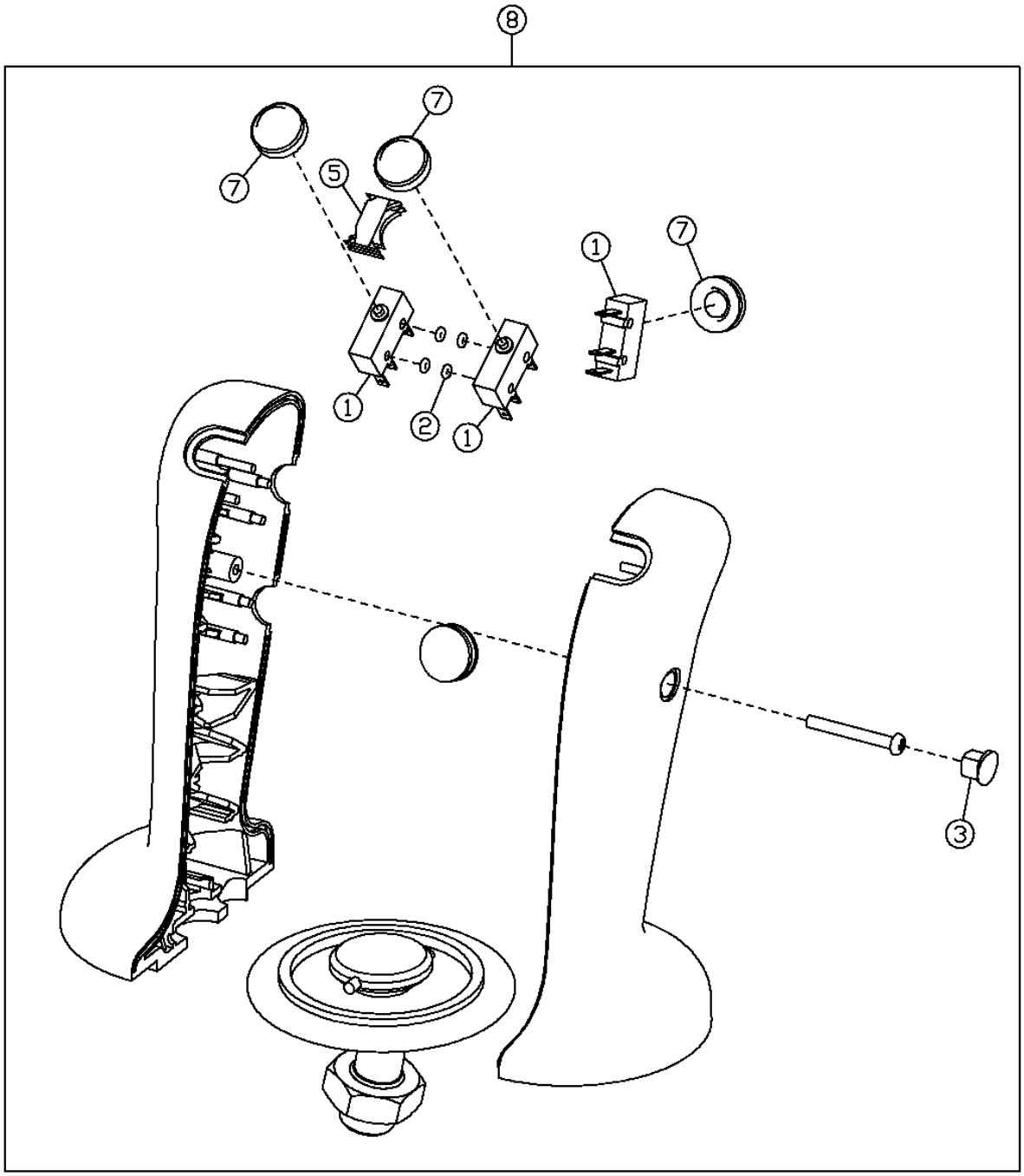

T202931

PILOT CONTROL HANDLE BUTTON FUNCTION KIT

KEY	PART NO.	PART NAME	QTY	SERIAL NO.	REMARKS
1	.....	SWITCH	4		
2	.....	O-RING	4		
3	.....	PLUG	1		
4	.....	TIE BAND	1		
5	.....	SPACER	1		
6	.....	WIRING HARNESS	1		
7	.....	PUSH BUTTON	4		
8	AT314668	KIT	1		(BUTTON HANDLE)

BOOM SECTION, PILOT
BACKHOE VALVE

T189054 -UN-28MAR03

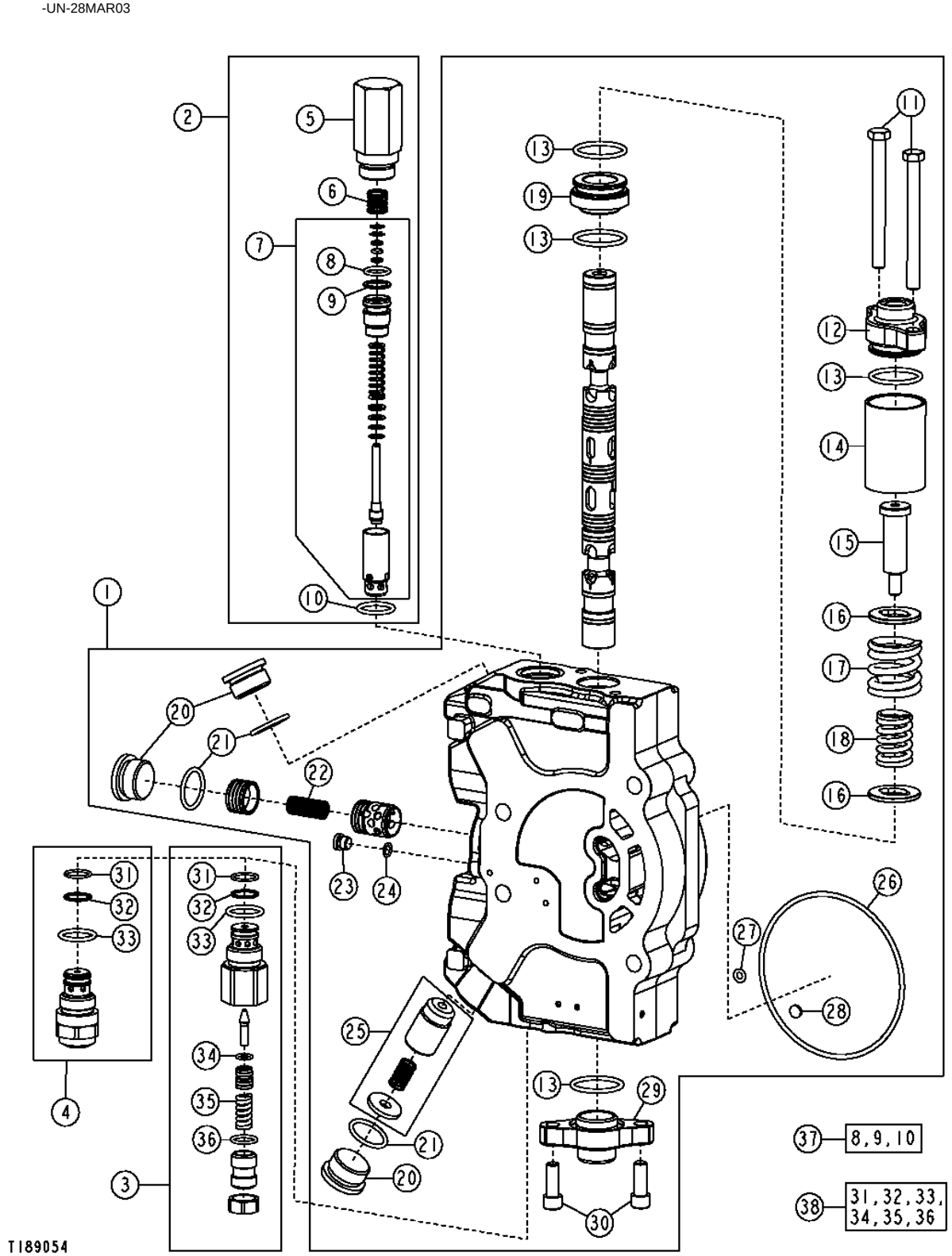

BOOM SECTION, PILOT
BACKHOE VALVE

KEY	PART NO.	PART NAME	QTY	SERIAL NO.	REMARKS
1	AT198619	VALVE	1		
2	AT171403	PRESSURE RELIEF VALVE	1		(2150 PSI)
3	AT300803	PRESSURE RELIEF VALVE	1		(5000 PSI) (NOT ANTI-CAVITATION)
4	AT301128	PRESSURE RELIEF VALVE	1		(5000 PSI) (ANTI-CAVITATION)
5	T118866	HOUSING	1		
6	T118867	SPRING	1		
7	AT178363	SEAL KIT	1		
8	.....	O-RING	1		
9	.....	BACK-UP RING	1		
10	T118681	O-RING	1		
11	790024700	SCREW	2		
12	T190783	CAP	1		
13	T190777	O-RING	4		
14	T190780	TUBE	1		
15	T190786	END	1		
16	T190782	SPACER	2		
17	T190785	SPRING	1		
18	T190787	SPRING	1		
19	T190781	RETAINER	1		
20	T190775	PLUG	3		
21	U17409	O-RING	3		
22	T190767	SPRING	1		
23	T190776	PLUG	1		
24	R26287	O-RING	1		
25	AT198621	SEAL KIT	1		
26	T163954	SEAL	1		
27	T190766	SEAL	1		
28	R95493	DISK	1		
29	T190784	CAP	1		
30	19H2923	SCREW	2		3/8" X 1"
31	T107887	O-RING	2		
32	.....	BACK-UP RING	2		
33	T118681	O-RING	2		
34	R63548	O-RING	1		
35	.....	SPRING	1		
36	.....	O-RING	1		
37	AT314538	SEAL KIT	1		7/8 INCH RELIEF VALVE SEAL KIT, (SUB FOR AT189413)
	AT314539	SEAL KIT	1		1 1/16 INCH RELIEF VALVE SEAL KIT, (SUB FOR AT189413)
38	AT300801	SEAL KIT	1		(SEAL AND SPRING)

BUCKET SECTION, PILOT
BACKHOE VALVE

T189064 -UN-28MAR03

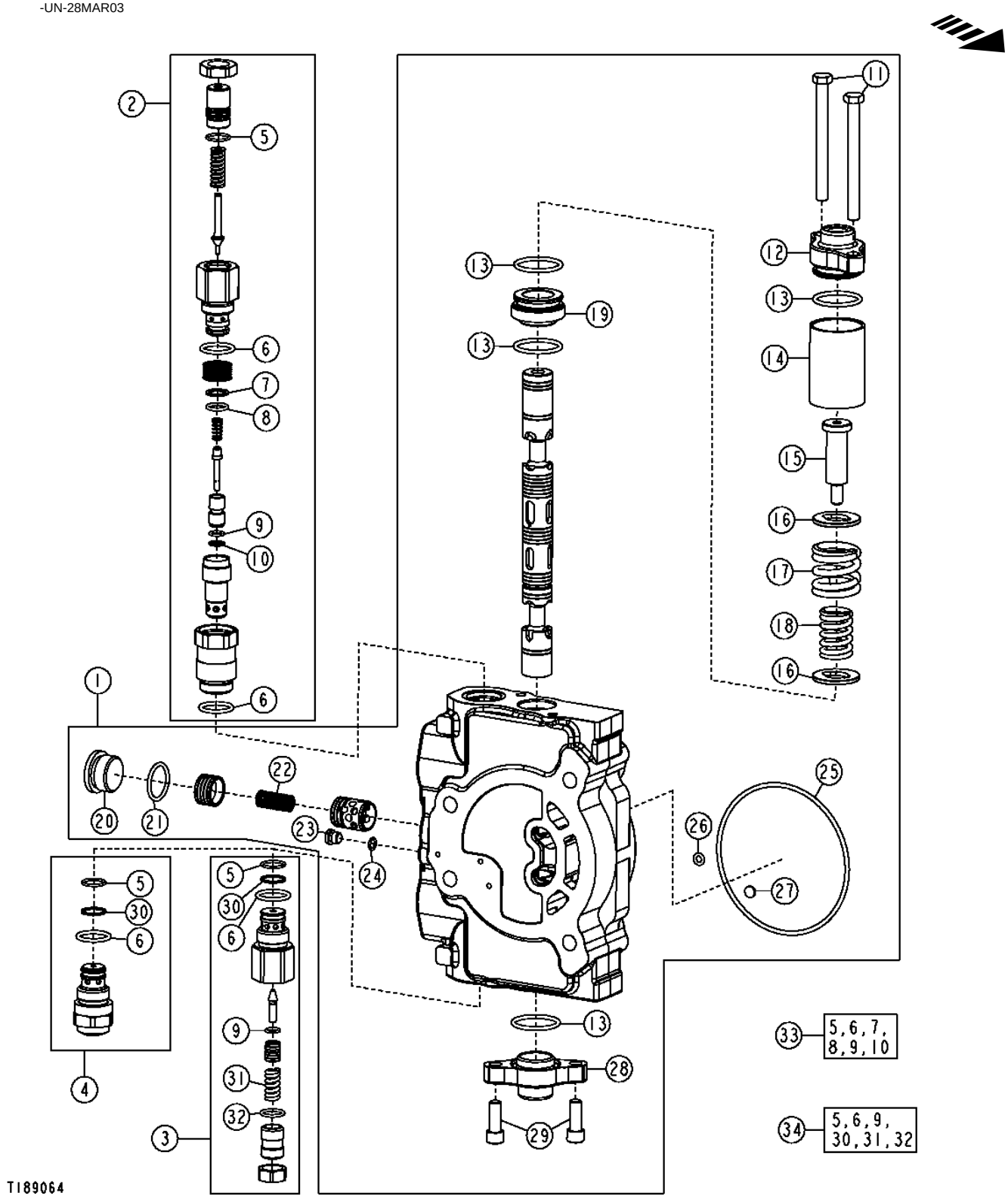

BUCKET SECTION, PILOT
BACKHOE VALVE

KEY	PART NO.	PART NAME	QTY	SERIAL NO.	REMARKS
1	AT198622	VALVE	1		
2	AT192457	PRESSURE RELIEF VALVE	1		(4600 PSI)
3	AT301526	PRESSURE RELIEF VALVE	1		(4600 PSI) (NOT ANTI-CAVITATION)
4	AT301527	PRESSURE RELIEF VALVE	1		(4600 PSI) (ANTI-CAVITATION) (SUB FOR AT301127)
5	T107887	O-RING	3		
6	T118681	O-RING	4		
7	.....	BACK-UP RING	1		
8	.....	O-RING	1		
9	R63548	O-RING	2		
10	T150958	BACK-UP RING	1		
11	790024700	SCREW	2		
12	T190783	CAP	1		
13	T190777	O-RING	4		
14	T190780	TUBE	1		
15	T190786	END	1		
16	T190782	SPACER	2		
17	T190785	SPRING	1		
18	T190787	SPRING	1		
19	T190781	RETAINER	1		
20	T190775	PLUG	1		
21	U17409	O-RING	1		
22	T190767	SPRING	1		
23	T190776	PLUG	1		
24	R26287	O-RING	1		
25	T163954	SEAL	1		
26	T190766	SEAL	1		
27	R95493	DISK	1		
28	T190784	CAP	1		
29	19H2923	SCREW	2		3/8" X 1"
30	.....	BACK-UP RING	2		
31	.....	SPRING	1		
32	.....	O-RING	1		
33	AT314538	SEAL KIT	1		7/8 INCH RELIEF VALVE SEAL KIT, (SUB FOR AT189413)
	AT314539	SEAL KIT	1		1 1/16 INCH RELIEF VALVE SEAL KIT, (SUB FOR AT189413)
34	AT300801	SEAL KIT	2		(SEAL AND SPRING)

CROWD SECTION, PILOT
BACKHOE VALVE

T189072 -UN-28MAR03

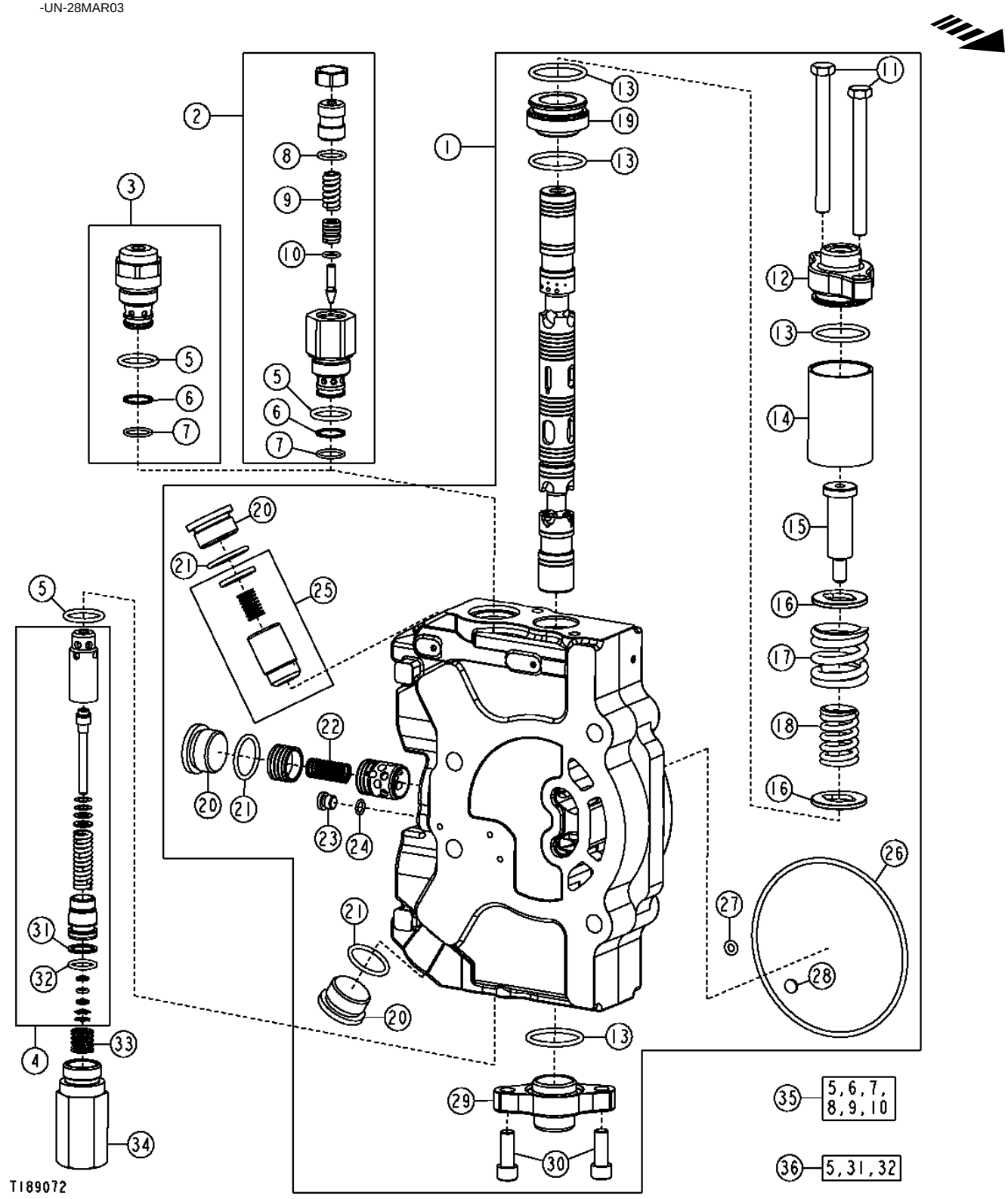

CROWD SECTION, PILOT
BACKHOE VALVE

KEY	PART NO.	PART NAME	QTY	SERIAL NO.	REMARKS
1	AT198623	VALVE	1		
2	AT301134	PRESSURE RELIEF VALVE	1		(4750 PSI) (NOT ANTI-CAVITATION)
3	AT301129	PRESSURE RELIEF VALVE	1		(4750 PSI) (ANTI-CAVITATION)
4	AT178362	KIT	1		(3800 PSI)
5	T118681	O-RING	3		
6	.....	BACK-UP RING	2		
7	T107887	O-RING	2		
8	.....	O-RING	1		
9	.....	SPRING	1		
10	R63548	O-RING	1		
11	790024700	SCREW	2		
12	T190783	CAP	1		
13	T190777	O-RING	4		
14	T190780	TUBE	1		
15	T190786	END	1		
16	T190782	SPACER	2		
17	T190785	SPRING	1		
18	T190787	SPRING	1		
19	T190781	RETAINER	1		
20	T190775	PLUG	3		
21	U17409	O-RING	3		
22	T190767	SPRING	1		
23	T190776	PLUG	1		
24	R26287	O-RING	1		
25	AT198621	SEAL KIT	1		
26	T163954	SEAL	1		
27	T190766	SEAL	1		
28	R95493	DISK	1		
29	T190784	CAP	1		
30	19H2923	SCREW	2		3/8" X 1"
31	.....	O-RING	1		
32	.....	BACK-UP RING	1		
33	T118867	SPRING	1		
34	T118866	HOUSING	1		
35	AT300801	SEAL KIT	1		(SEAL AND SPRING)
36	AT314538	SEAL KIT	1		7/8 INCH RELIEF VALVE SEAL KIT, (SUB FOR AT189413)
	AT314539	SEAL KIT	1		1 1/16 INCH RELIEF VALVE SEAL KIT, (SUB FOR AT189413)

SWING SECTION, PILOT
BACKHOE VALVE

T189078 -UN-28MAR03

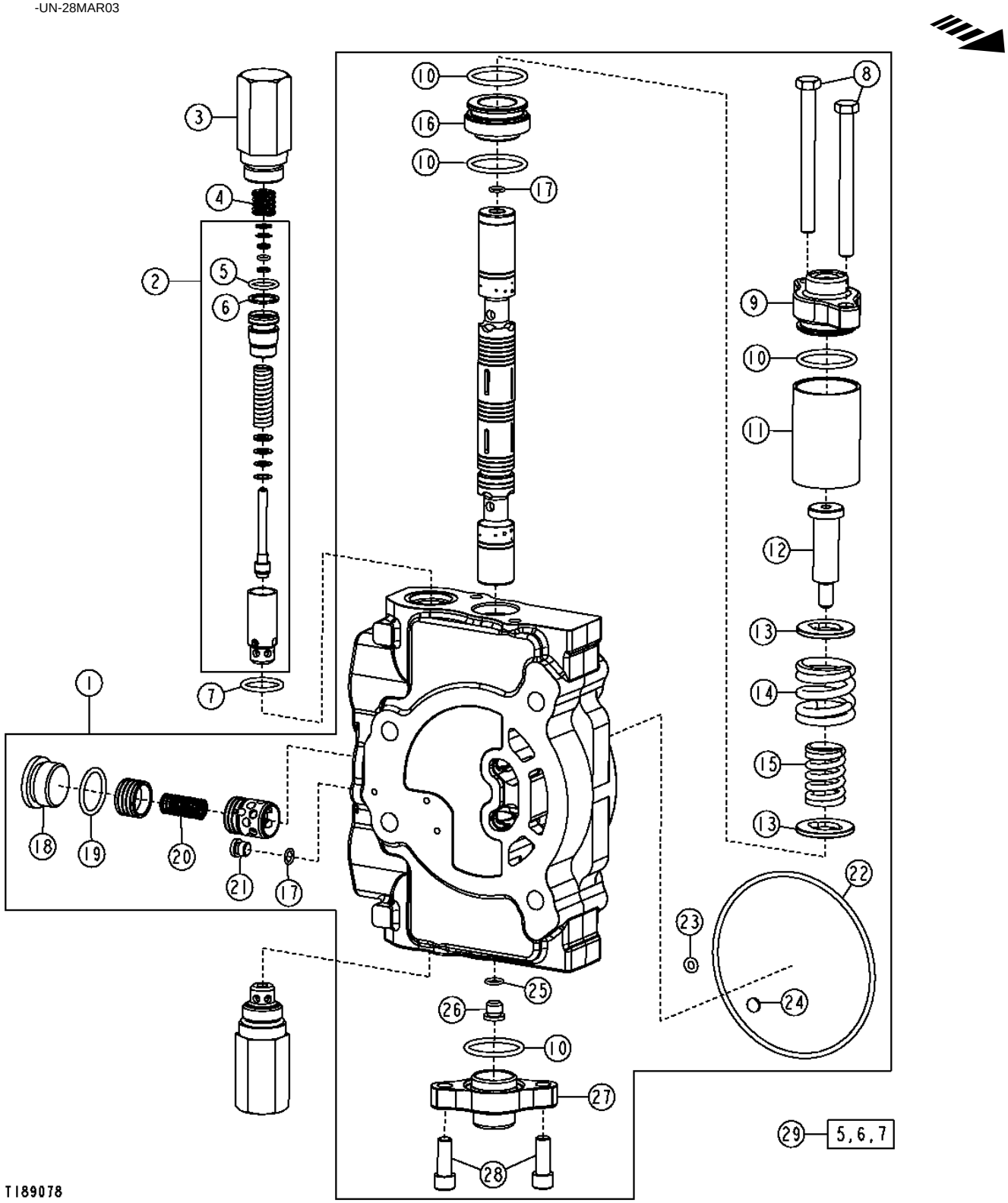

THIS PARTS LISTING IS CONTINUED

SWING SECTION, PILOT
BACKHOE VALVE

KEY	PART NO.	PART NAME	QTY	SERIAL NO.	REMARKS
1	AT198615	VALVE	1		
2	AT178402	SEAL KIT	2		(4200 PSI)
3	T118866	HOUSING	2		
4	T118867	SPRING	2		
5	.....	O-RING	2		
6	.....	BACK-UP RING	2		
7	T118681	O-RING	2		
8	790024700	SCREW	2		
9	T190783	CAP	1		
10	T190777	O-RING	4		
11	T190780	TUBE	1		
12	T190786	END	1		
13	T190782	SPACER	2		
14	T190785	SPRING	1		
15	T190787	SPRING	1		
16	T190781	RETAINER	1		
17	R26287	O-RING	2		
18	T190775	PLUG	1		
19	U17409	O-RING	1		
20	T190767	SPRING	2		
21	T190776	PLUG	1		
22	T163954	SEAL	1		
23	T190766	SEAL	1		
24	R95493	DISK	1		
25	R28782	O-RING	1		
26	T190778	PLUG	1		
27	T190784	CAP	1		
28	19H2923	SCREW	2		3/8" X 1"
29	AT314538	SEAL KIT	1		7/8 INCH RELIEF VALVE SEAL KIT, (SUB FOR AT189413)
	AT314539	SEAL KIT	1		1 1/16 INCH RELIEF VALVE SEAL KIT, (SUB FOR AT189413)

PILOT CONTROL HYDRAULICS WITH SELECTOR VALVE

T204651 -UN-18NOV04

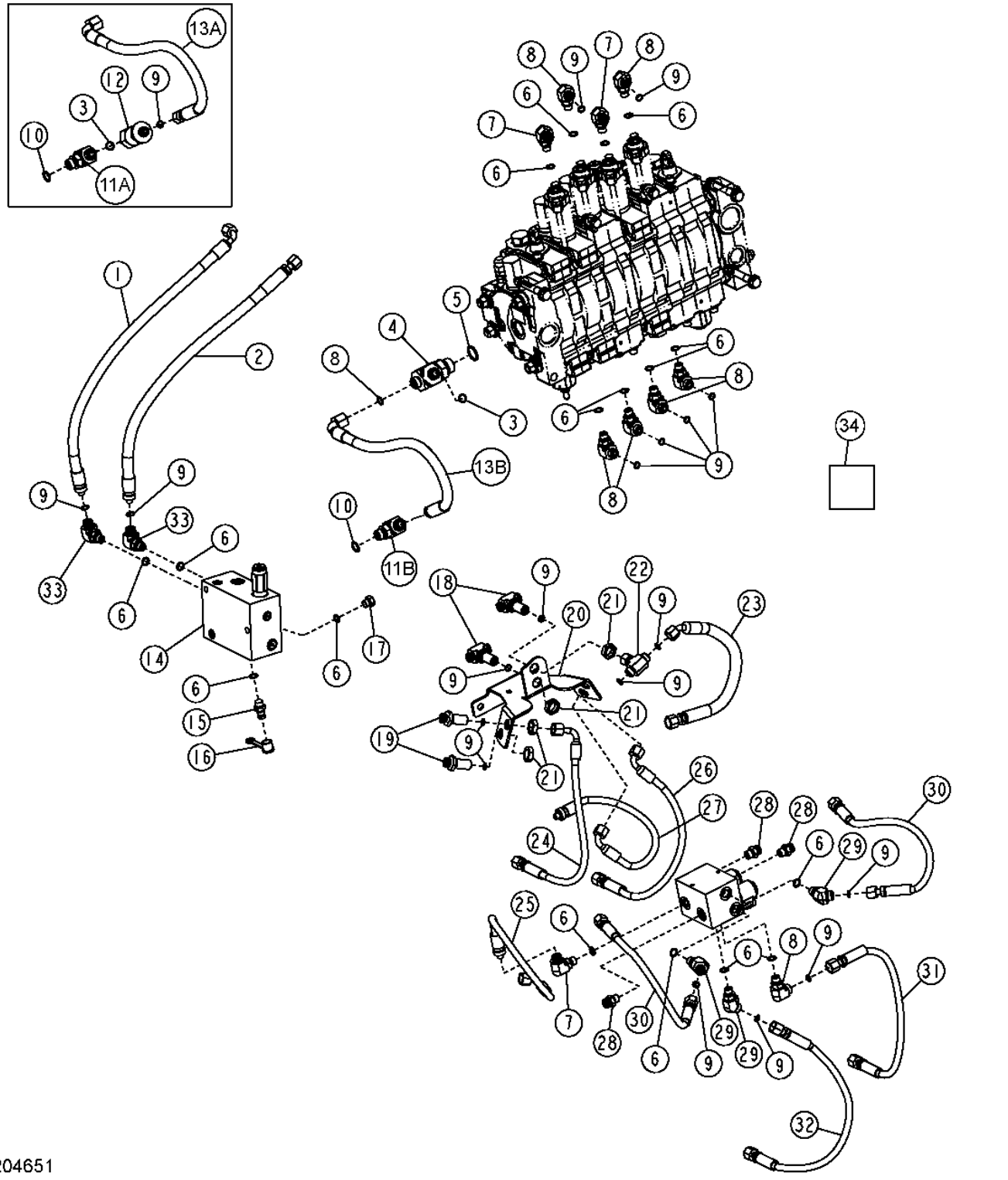

T204651

PILOT CONTROL HYDRAULICS WITH SELECTOR VALVE

KEY	PART NO.	PART NAME	QTY	SERIAL NO.	REMARKS
1	AT199688	HYDRAULIC HOSE - FABRICATE	1		
	AT193365	KIT	1		STC REPAIR (-06)
2	AT199686	HYDRAULIC HOSE - FABRICATE	1		
	AT193365	KIT	1		STC REPAIR (-06)
3	T77857	O-RING	3		
4	38H1374	TEE FITTING	1		
5	U12547	O-RING	1		
6	R26448	O-RING	17		
7	AT187669	ADAPTER	3		
8	38H1004	ELBOW FITTING	7		
9	T77613	O-RING	19		
10	R26375	O-RING	1		
11A	38H1005	ELBOW FITTING	1	-943092	
11B	AT187669	ADAPTER	1	943093-	
12	AT183869	FILTER ELEMENT	1	-943092	(USE WITH AT197769)
13A	AT199706	HYDRAULIC HOSE - FABRICATE	1	-943092	11/16" X 565 MM (22-1/4") X 13/16"
13B	AT317349	HYDRAULIC HOSE - FABRICATE	1	943093-	
14	.....	FLOW CONTROL HYD. VALVE	1	-943092	(AT197769 NO LONGER AVAILABLE) (SUB AT306550) (ALSO ORDER AT187669 AND AT317349)
	AT306550	FLOW CONTROL HYD. VALVE	1	943093-	
15	AH125760	HYD. QUICK-CONNECT COUPLER	1		
16	R77175	COVER	1		
17	R27218	FITTING PLUG	1		
18	AT199496	TEE FITTING	2		
19	AT199495	FITTING	4		
20	T190976	BRACKET	1		
21	T81029	NUT	6		
22	38H1038	TEE FITTING	1		
23	AT199685	HYDRAULIC HOSE - FABRICATE	1		11/16" X 384 MM (15") X 11/16"
24	AT300533	HYDRAULIC HOSE - FABRICATE	1		11/16" X 556 MM (22") X 11/16"
25	AT199705	HYDRAULIC HOSE - FABRICATE	1	-924792	(WITHOUT SELECTOR VALVE)
	AT280220	HYDRAULIC HOSE - FABRICATE	1		
26	AT199704	HYDRAULIC HOSE - FABRICATE	1		11/16" X 516 MM (20-1/4") X 11/16"
27	AT199705	HYDRAULIC HOSE - FABRICATE	1	-924792	(WITHOUT SELECTOR VALVE)
	AT280221	HYDRAULIC HOSE - FABRICATE	1		STC
28	AT187666	ADAPTER	3		
29	38H1045	ELBOW FITTING	3		
30	AT196046	HYDRAULIC HOSE - FABRICATE	2		11/16" X 489 MM (19-1/4") X 11/16"
31	AT196056	HYDRAULIC HOSE - FABRICATE	1		11/16" X 495 MM (19-1/2") X 11/16"
32	AT196055	HYDRAULIC HOSE - FABRICATE	1		11/16" X 524 MM (20-3/4") X 11/16"
33	AT187669	ADAPTER	2		STC
34	AT193365	KIT	1		STC REPAIR (-06)
	AT193366	KIT	1		STC REPAIR (-08)

PILOT CONTROL HYDRAULICS

T165883 -UN-27FEB03

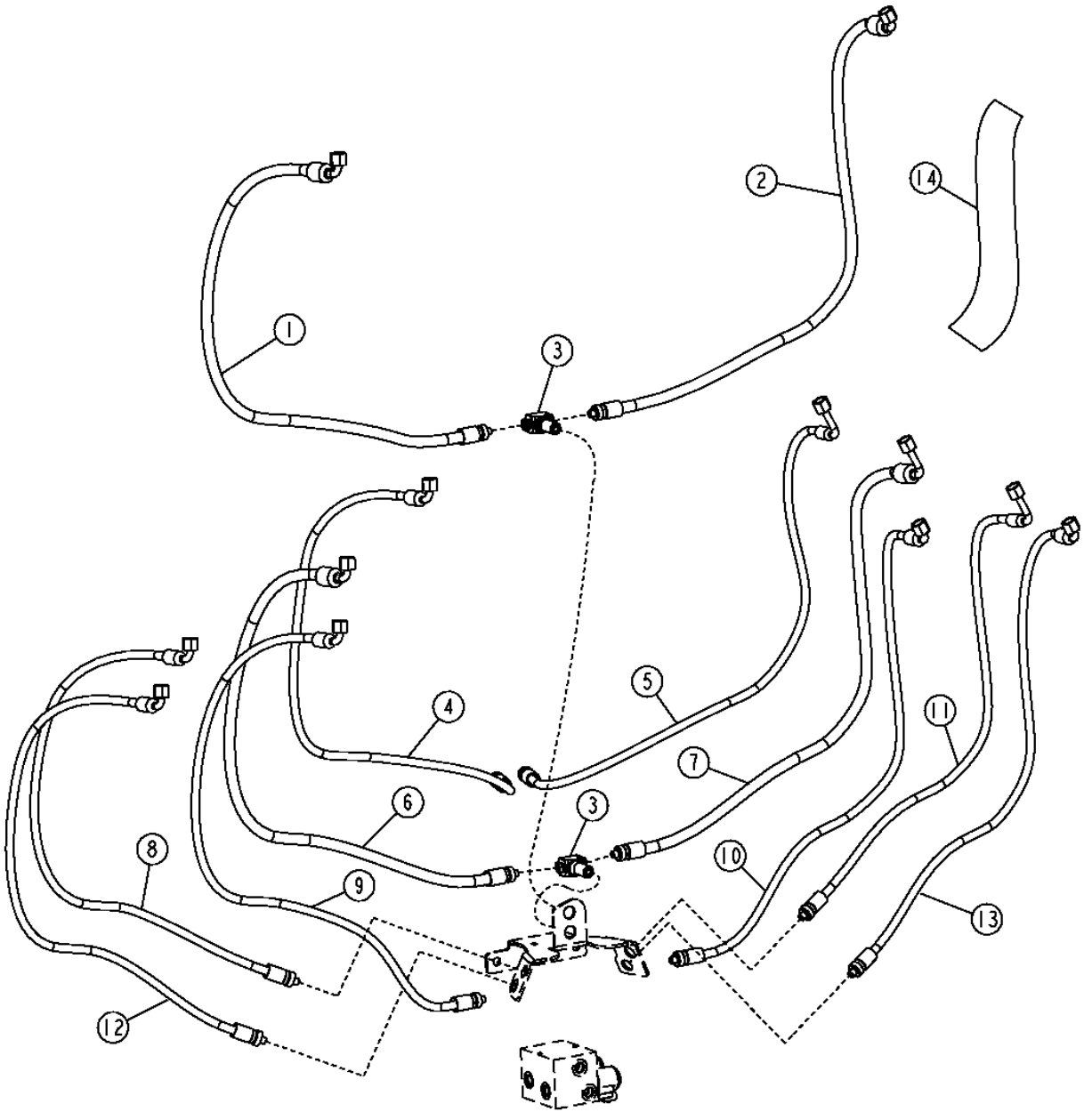

T165883

PILOT CONTROL HYDRAULICS

KEY	PART NO.	PART NAME	QTY	SERIAL NO.	REMARKS
1	AT198350	HYDRAULIC HOSE - FABRICATE	1		11/16" X 1 048 MM (41-1/4") X 11/16", (ALSO ORDER 62H1042 AND T77613)
2	AT198355	HYDRAULIC HOSE - FABRICATE	1		11/16" X 1 033 MM (40-3/4") X 11/16", (ALSO ORDER 62H1042 AND T77613)
3	AT199496	TEE FITTING	2		
4	AT198351	HYDRAULIC HOSE - FABRICATE	1		11/16" X 1 100 MM (43-1/4") X 11/16", (ALSO ORDER 62H1042 AND T77613)
5	AT198360	HYDRAULIC HOSE - FABRICATE	1		11/16" X 1 070 MM (42-1/4") X 11/16", (ALSO ORDER 62H1042 AND T77613)
6	AT198349	HYDRAULIC HOSE - FABRICATE	1		11/16" X 1 075 MM (42-1/4") X 11/16", (ALSO ORDER 62H1042 AND T77613)
7	AT198356	HYDRAULIC HOSE - FABRICATE	1		11/16" X 1 015 MM (40") X 11/16", (ALSO ORDER 62H1042 AND T77613)
8	AT198352	HYDRAULIC HOSE - FABRICATE	1		11/16" X 1 005 MM (39-1/2") X 11/16", (ALSO ORDER 62H1042 AND T77613)
9	AT198354	HYDRAULIC HOSE - FABRICATE	1		11/16" X 1 125 MM (44-1/4") X 11/16", (ALSO ORDER 62H1042 AND T77613)
10	AT198358	HYDRAULIC HOSE - FABRICATE	1		11/16" X 1 021 MM (40-1/4") X 11/16", (ALSO ORDER 62H1042 AND T77613)
11	AT198357	HYDRAULIC HOSE - FABRICATE	1		11/16" X 938 MM (37") X 11/16", (ALSO ORDER 62H1042 AND T77613)
12	AT198353	HYDRAULIC HOSE - FABRICATE	1		11/16" X 1 047 MM (41-1/4") X 11/16", (ALSO ORDER 62H1042 AND T77613)
13	AT198359	HYDRAULIC HOSE - FABRICATE	1		11/16" X 981 MM (38-1/2") X 11/16", (ALSO ORDER 62H1042 AND T77613)
14	T201656	HOSE GUARD	1		

STABILIZER CYLINDER HYDRAULIC HOSES

T153923 -UN-16APR02

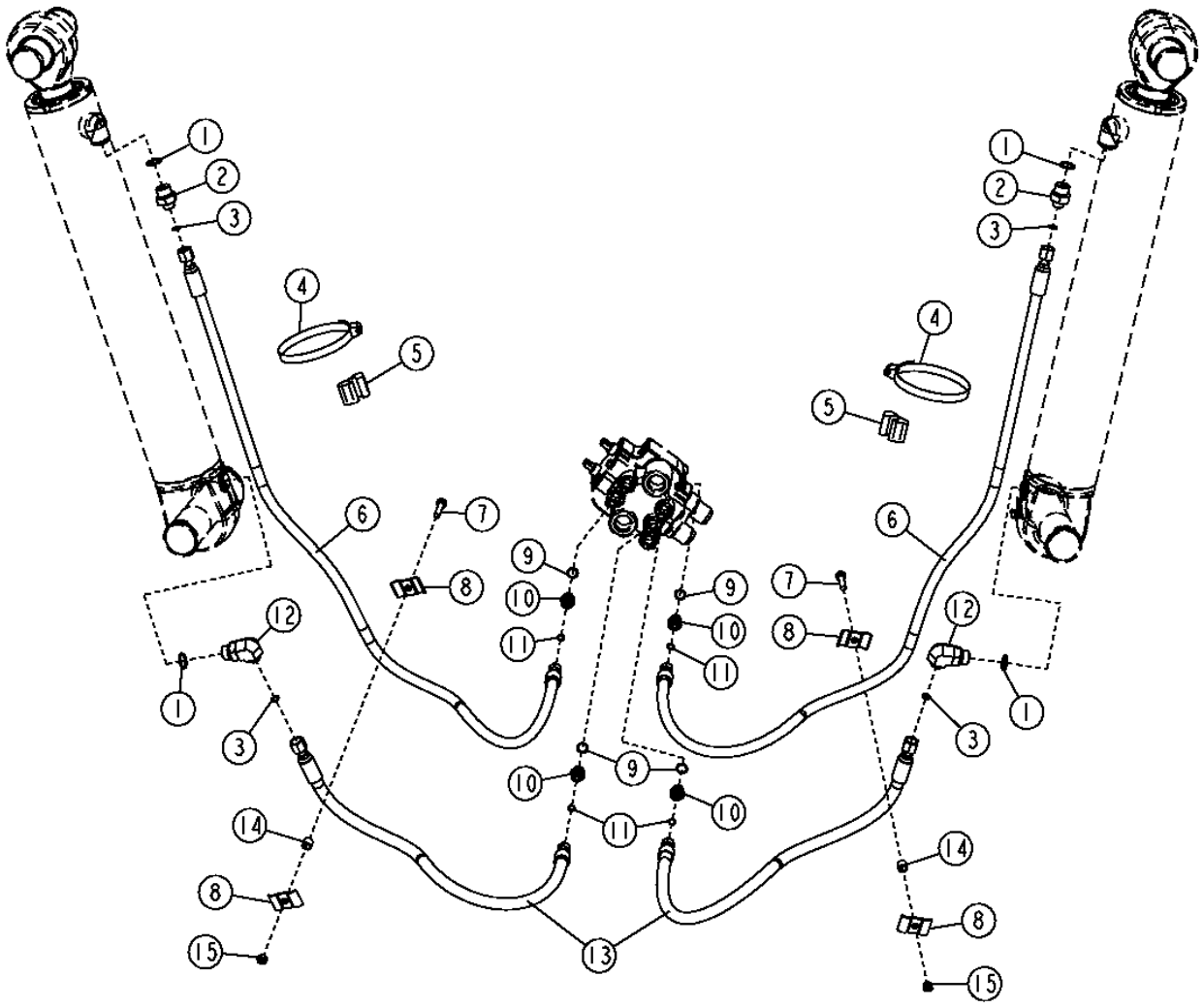

T153923

STABILIZER CYLINDER HYDRAULIC HOSES

KEY	PART NO.	PART NAME	QTY	SERIAL NO.	REMARKS
1	U12547	O-RING	4		
2	38H1175	ADAPTER	2		
3	T77857	O-RING	4		
4	AR85327	CLAMP	2		
5	T105774	GUIDE	2		
6	AT188428	HYDRAULIC HOSE - FABRICATE	2		
7	19M7550	CAP SCREW	2		M10 X 35
8	R46919	HALF CLAMP	4		
9	R26375	O-RING	4		
10	38H1171	ADAPTER	4		
11	T77613	O-RING	4		
12	38H1013	ELBOW FITTING	2		
13	AT307196	HYDRAULIC HOSE - FABRICATE	2		(SUB FOR AT188429)
14	28H1521	SPACER	2		
15	14M7274	NUT	2		M10

BOOM CYLINDER HYDRAULIC HOSES AND FITTINGS

T154256 -UN-23APR02

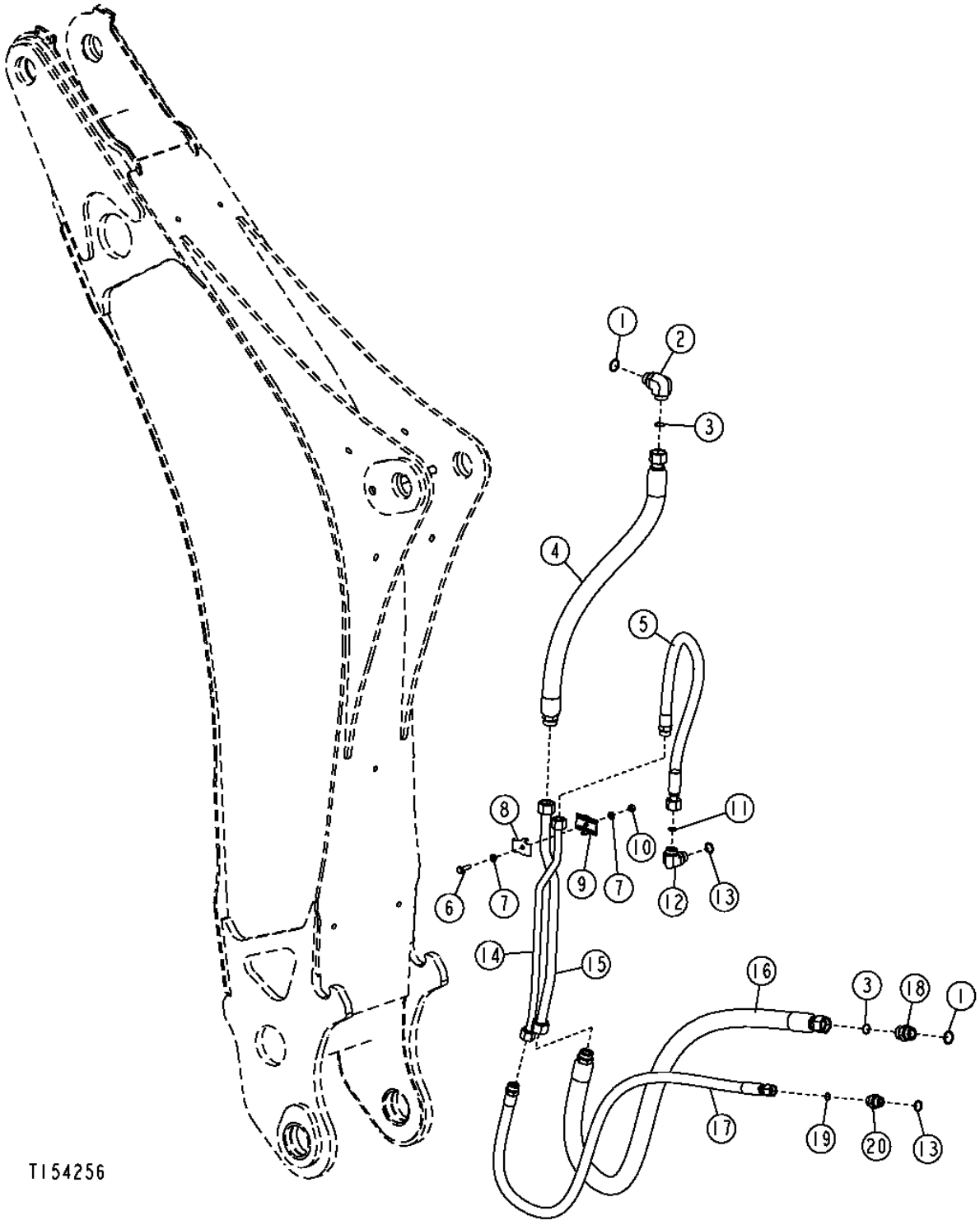

BOOM CYLINDER HYDRAULIC HOSES AND FITTINGS

KEY	PART NO.	PART NAME	QTY	SERIAL NO.	REMARKS
1	R29936	O-RING	2		
2	38H1037	ELBOW FITTING	1		
3	T76938	O-RING	2		
4	AT188391	HYDRAULIC HOSE - FABRICATE	1		
5	AT188507	HYDRAULIC HOSE - FABRICATE	1		
6	19M7550	CAP SCREW	1		M10 X 35
7	24M7239	WASHER	2		
8	T160548	CLAMP	1		
9	T159956	CLAMP	1		
10	14M7274	NUT	1		M10
11	T77858	O-RING	1		
12	38H1007	ELBOW FITTING	1		
13	U12547	O-RING	2		
14	AT182555	OIL LINE	1		
15	AT182559	OIL LINE	1		
16	AT188390	HYDRAULIC HOSE - FABRICATE	1		
17	AT190712	HYDRAULIC HOSE - FABRICATE	1		
18	38H1164	ADAPTER	1		
19	T77932	O-RING	1		
20	AT196992	CHECK VALVE	1		

BUCKET CYLINDER HYDRAULIC HOSES,OIL LINES AND FITTINGS (STANDARD DIPPERSTICK)

T211943 -UN-23JUN05

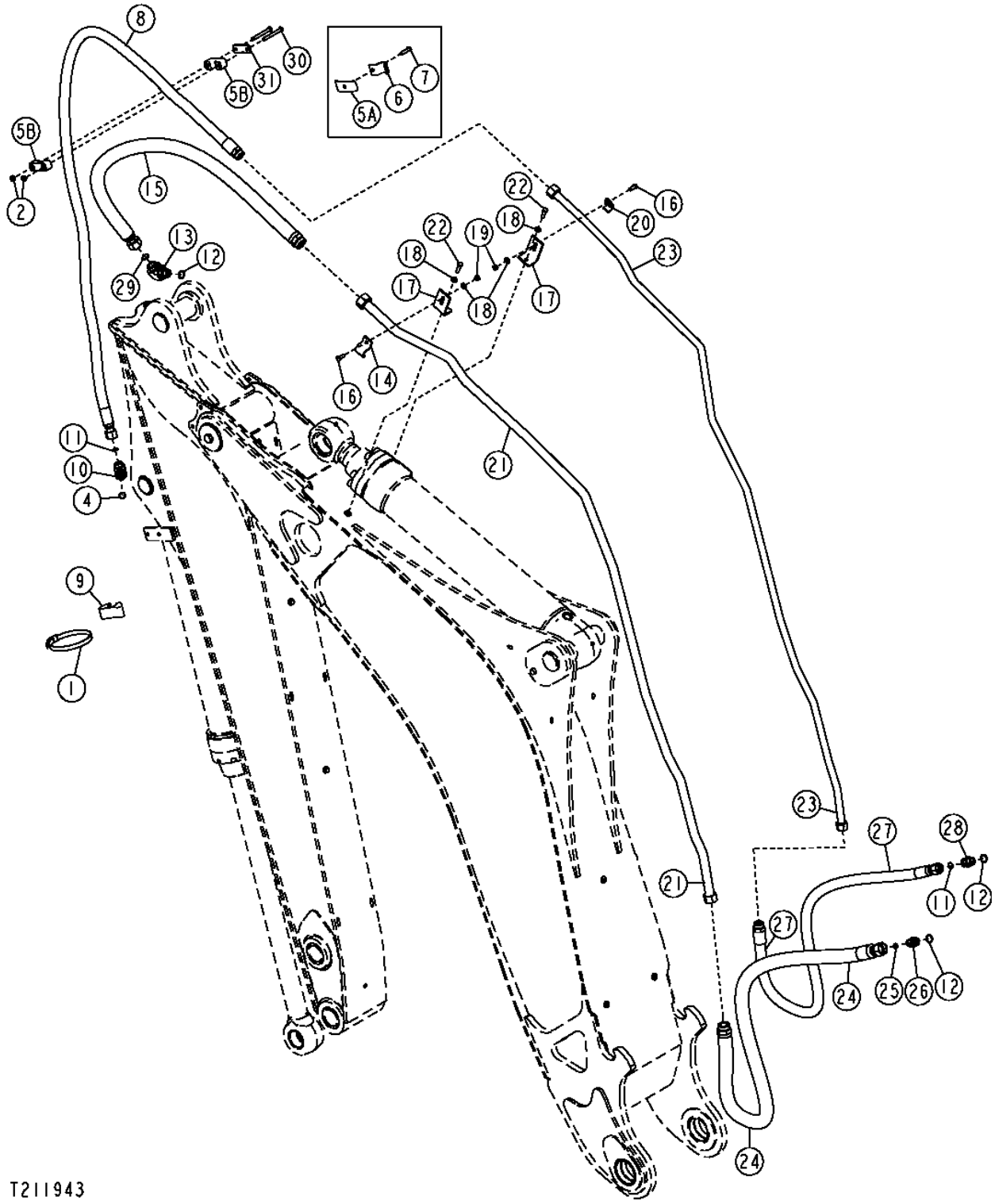

BUCKET CYLINDER HYDRAULIC HOSES,OIL LINES AND FITTINGS (STANDARD DIPPERSTICK)

KEY	PART NO.	PART NAME	QTY	SERIAL NO.	REMARKS
1	TY22493	HOSE CLAMP	2		(SUB FOR AR89602)
2	14M7167	LOCK NUT	AR		
3	24M7239	WASHER	AR		
4	R26906	O-RING	1		
5A	T190979	HALF CLAMP	1	-XXXXXX	
5B	T200232	HOSE CLAMP	2	XXXXXX-	
6	U15939	CLAMP	1	-XXXXXX	
7	19M8637	CAP SCREW	1		M10 X 40
8	AT188546	HYDRAULIC HOSE - FABRICATE	1		
9	T102005	GUIDE	1		
10	38H1014	ELBOW FITTING	2		
11	T77858	O-RING	2		
12	U12547	O-RING	3		
13	38H1305	ELBOW FITTING	1		
14	T35829	CLAMP	1		
15	AT315005	HYDRAULIC HOSE	1		(ALSO ORDER 38H1484) (ALSO ORDER T78612 AND T76938) (SUB FOR AT188545)
16	19M7402	CAP SCREW	2		
17	T188183	ANGLE	2		
18	24M7239	WASHER	4		
19	14M7274	NUT	2		
20	T190703	HALF CLAMP	1		
21	AT182560	OIL LINE	1		
22	19M7550	CAP SCREW	2		M10 X 35
23	AT182556	OIL LINE	1		
24	AT188547	HYDRAULIC HOSE - FABRICATE	1		
25	T77932	O-RING	1		
26	38H1329	ADAPTER	1		
27	AT190712	HYDRAULIC HOSE - FABRICATE	1		
28	38H1163	ADAPTER	1		
29	T76938	O-RING	1		
30	19M8183	CAP SCREW	2		M10 X 90
31	T200237	PLATE	1	XXXXXX-	

BUCKET CYLINDER HYDRAULIC HOSES AND OIL LINES (EXTENDIBLE DIPPERSTICK)

T197482 -UN-28JAN04

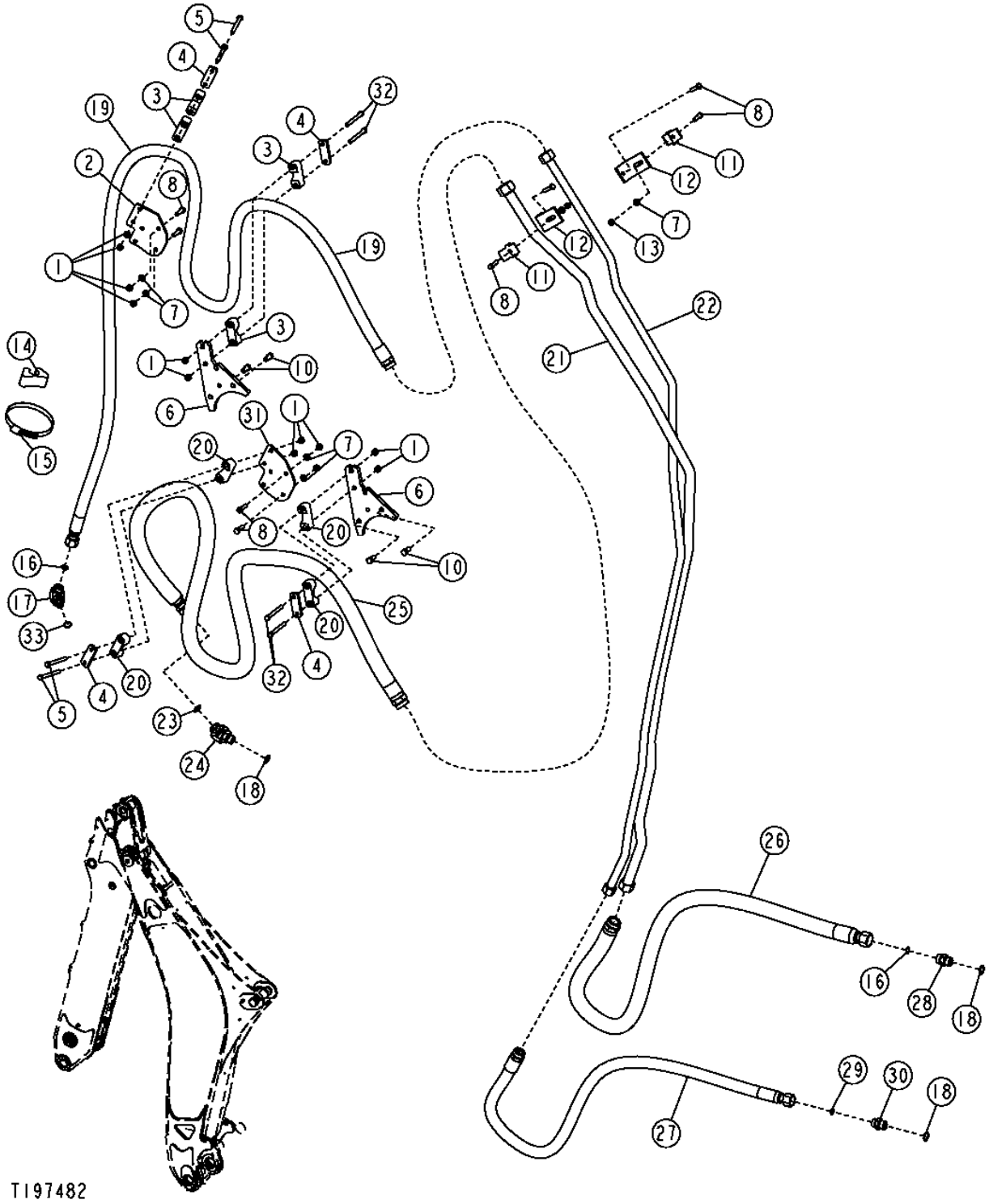

BUCKET CYLINDER HYDRAULIC HOSES AND OIL LINES
(EXTENDIBLE DIPPERSTICK)

KEY	PART NO.	PART NAME	QTY	SERIAL NO.	REMARKS
1	14M7167	LOCK NUT	12		M10
2	T206860	BRACKET	1		RIGHT, (SUB FOR T200402)
3	T200232	HOSE CLAMP	4		
4	T200237	PLATE	4		
5	19M8183	CAP SCREW	4		M10 X 90
6	T201889	PLATE	2		(SUB FOR T200216)
7	24M7239	WASHER	7		
8	19M7550	CAP SCREW	8		M10 X 35
9	24M7036	WASHER	4	-828471	
10	19M7932	CAP SCREW	4	-828471	M8 X 16
	19M7872	CAP SCREW	4	828472-	M12 X 25
11	T159848	CLAMP	2		
12	T188183	ANGLE	2		
13	14M7274	NUT	2		M10
14	T102005	GUIDE	1		
15	TY22493	HOSE CLAMP	1		(SUB FOR AR89602)
16	T77858	O-RING	2		
17	38H1014	ELBOW FITTING	1		
18	U12547	O-RING	4		
19	AT188558	HYDRAULIC HOSE - FABRICATE	1		1-3/16" X 3 975 MM (156-1/2") X 1-7/16"
20	T200233	HOSE CLAMP	4		
21	AT182560	OIL LINE	1		
22	AT182556	OIL LINE	1		
23	T76938	O-RING	1		
24	38H1431	ELBOW FITTING	1		
25	AT188559	HYDRAULIC HOSE	1		1-7/16" X 2 946 MM (116") X 1-11/16"
26	AT188547	HYDRAULIC HOSE - FABRICATE	1		1-3/16" X 1 525 MM (60") X 1-7/16"
27	AT190712	HYDRAULIC HOSE - FABRICATE	1		1" X 1 575 MM (62") X 1-3/16"
28	38H1163	ADAPTER	1		
29	T77932	O-RING	1		
30	38H1329	ADAPTER	1		
31	T202721	BRACKET	1		LEFT, (SUB FOR T200402)
32	19M8197	CAP SCREW	4	-928471	M10 X 85
	19M8183	CAP SCREW	4	928472-	M10 X 90
33	R26906	O-RING	1		

CROWD CYLINDER HYDRAULIC HOSES AND OIL LINES

T154257 -UN-23APR02

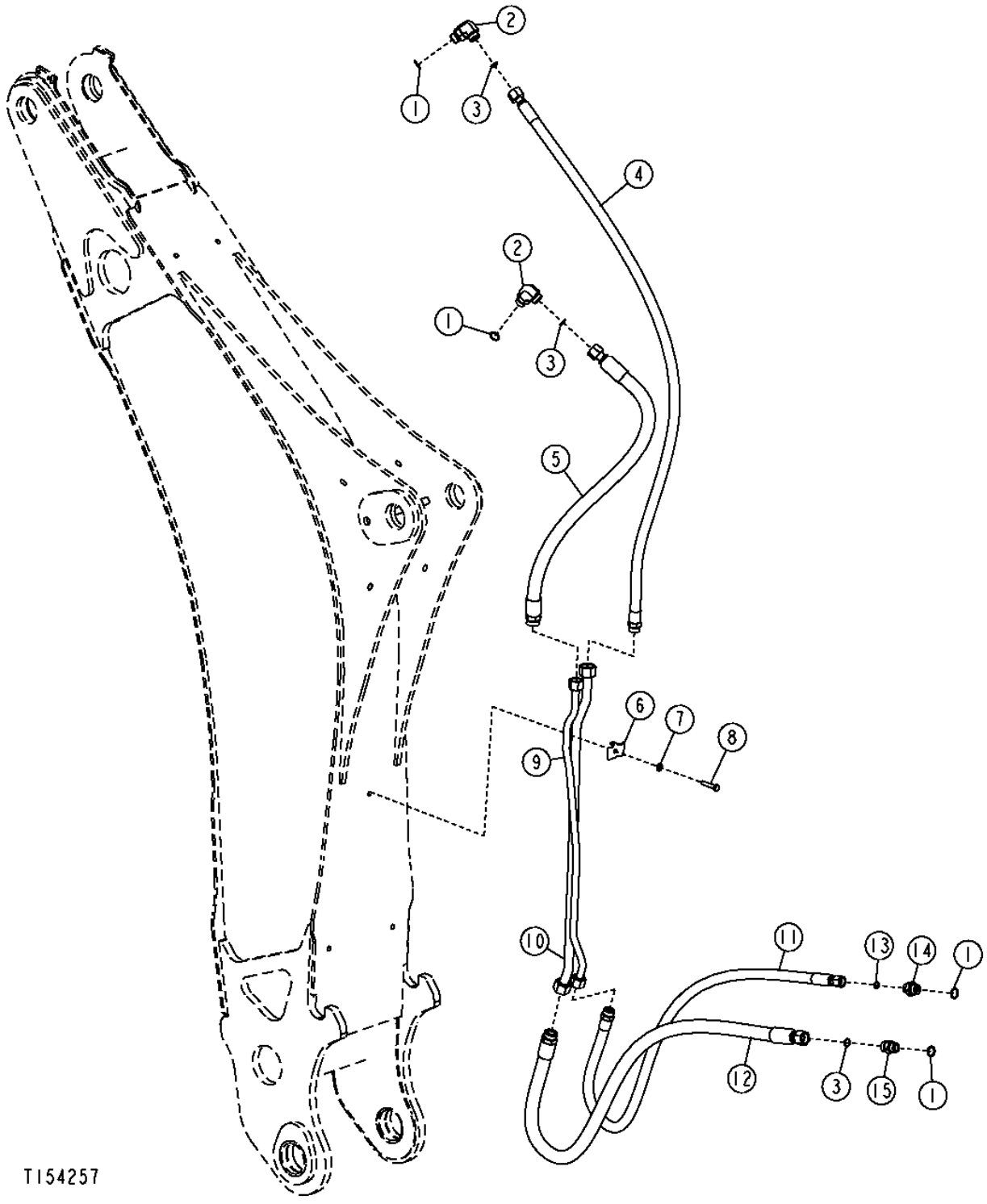

CROWD CYLINDER HYDRAULIC HOSES AND OIL LINES

KEY	PART NO.	PART NAME	QTY	SERIAL NO.	REMARKS
1	U12547	O-RING	4		
2	38H1007	ELBOW FITTING	2		
3	T77858	O-RING	3		
4	AT188389	HYDRAULIC HOSE - FABRICATE	1		
5	AT189432	HYDRAULIC HOSE - FABRICATE	1		
6	T160548	CLAMP	1		
7	24M7239	WASHER	1		
8	19M7658	CAP SCREW	1		M10 X 50
9	AT182561	OIL LINE	1		
10	AT182557	OIL LINE	1		
11	AT190714	HYDRAULIC HOSE - FABRICATE	1		
12	AT190713	HYDRAULIC HOSE - FABRICATE	1		
13	T77932	O-RING	1		
14	.....	ADAPTER	1	-939116	(SUB AT196992) (SUB FOR 38H1329)
	AT196992	CHECK VALVE	1	939117-	
15	38H1163	ADAPTER	1		

SWING CYLINDER HYDRAULIC HOSES

T153985 -UN-15APR02

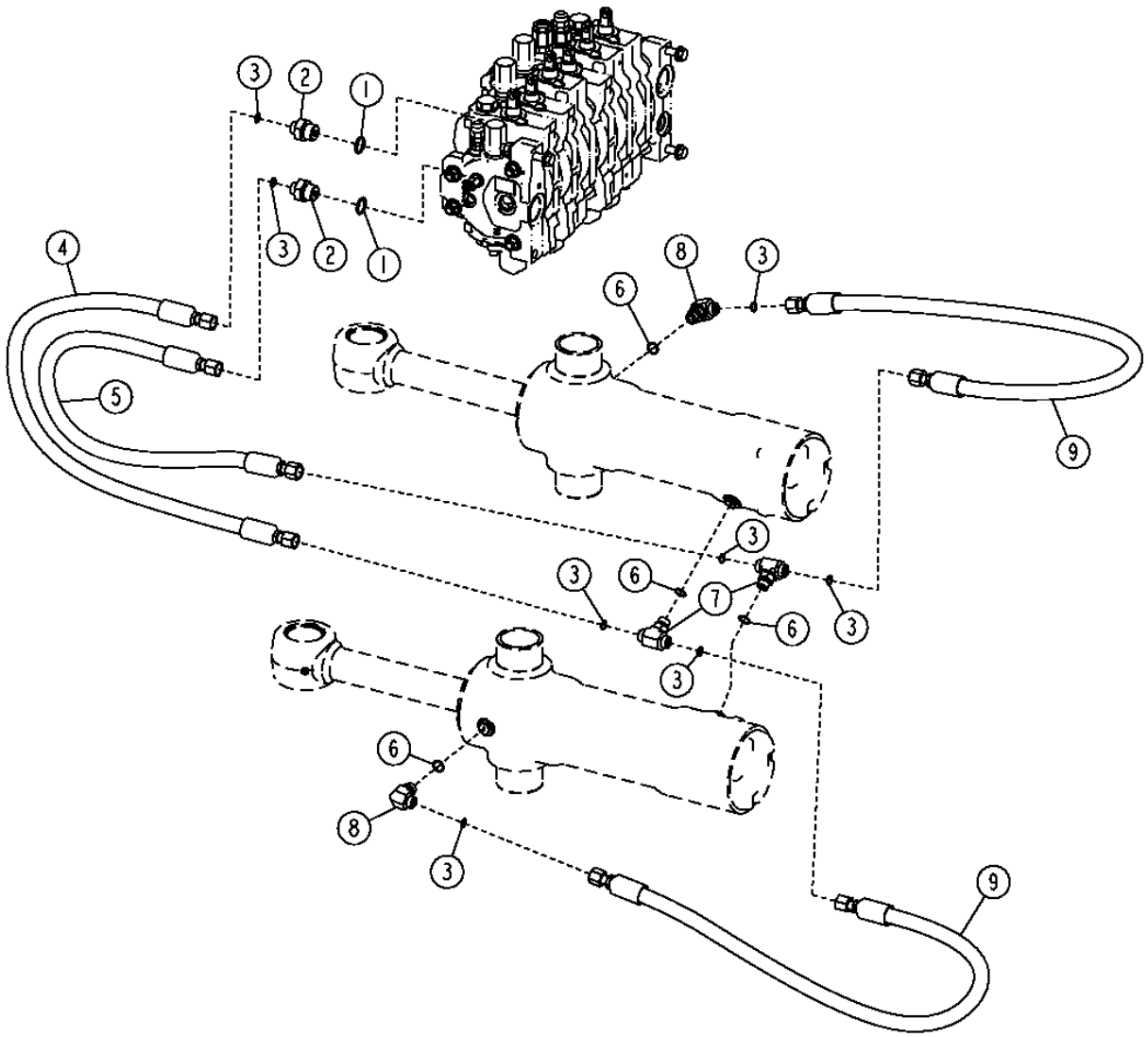

SWING CYLINDER HYDRAULIC HOSES

KEY	PART NO.	PART NAME	QTY	SERIAL NO.	REMARKS
1	U12547	O-RING	2		
2	38H1175	ADAPTER	2		
3	T77857	O-RING	8		
4	AT195685	HYDRAULIC HOSE - FABRICATE	1		
5	AT195680	HYDRAULIC HOSE - FABRICATE	1		
6	R26375	O-RING	4		
7	38H1017	TEE FITTING	2		
8	38H1005	ELBOW FITTING	2		
9	AT195679	HYDRAULIC HOSE - FABRICATE	2		

EXTENSION CYLINDER HYDRAULICS
(EXTENDIBLE DIPPERSTICK)

T197518 -UN-28JAN04

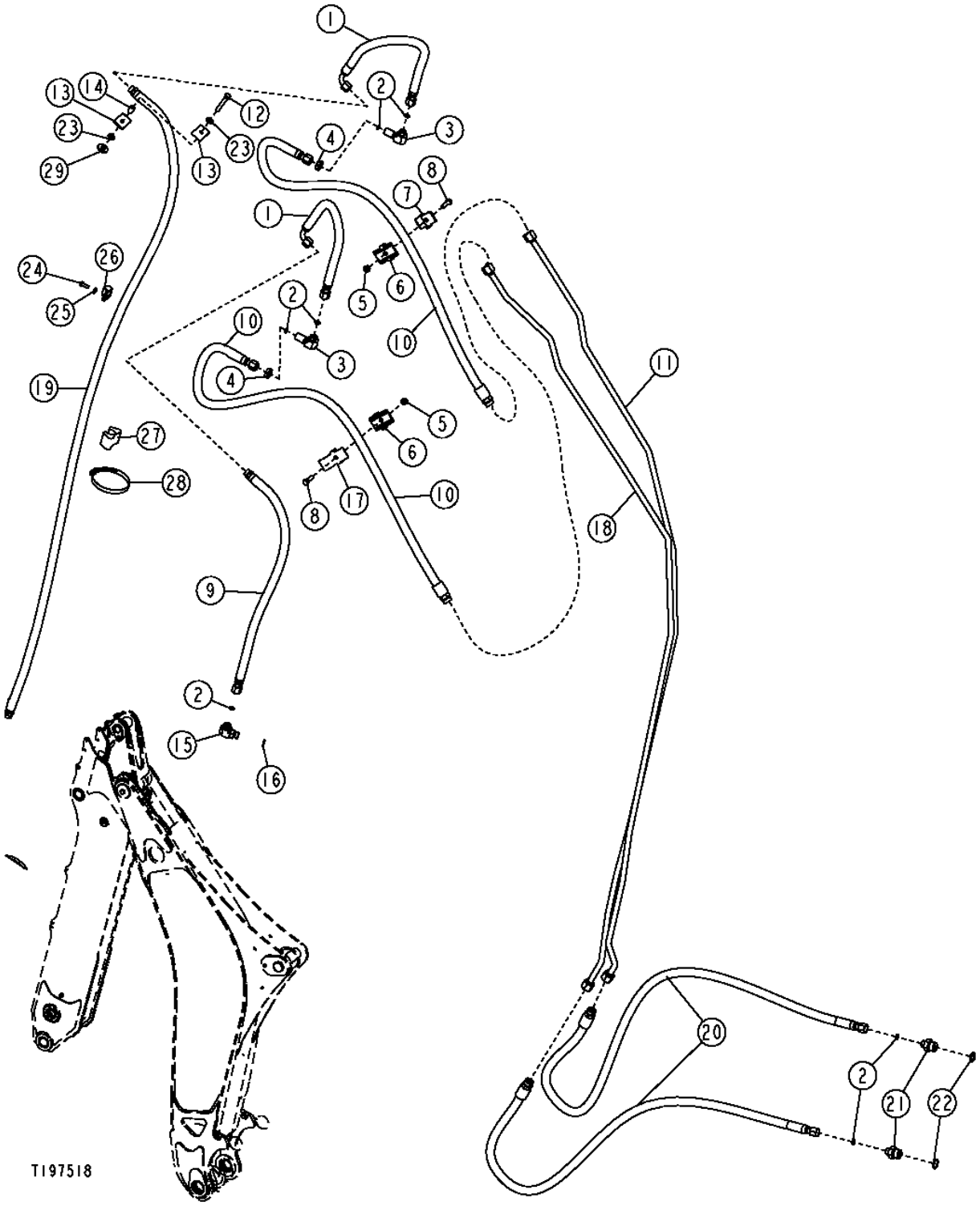

THIS PARTS LISTING IS CONTINUED

EXTENSION CYLINDER HYDRAULICS
(EXTENDIBLE DIPPERSTICK)

KEY	PART NO.	PART NAME	QTY	SERIAL NO.	REMARKS
1	AT197223	HYDRAULIC HOSE - FABRICATE	2		13/16" X 584 MM (23") X 13/16"
2	T77857	O-RING	7		
3	38H1323	ELBOW FITTING	2		
4	T78716	NUT	2		13/16"
5	14M7274	NUT	2		M10
6	T159956	CLAMP	2		
7	T159848	CLAMP	1		
8	19M7550	CAP SCREW	2		M10 X 35
9	AT188553	HYDRAULIC HOSE - FABRICATE	1		13/16" X 838 MM (33") X 13/16"
10	AT188563	HYDRAULIC HOSE - FABRICATE	2		13/16" X 1 378 MM (54-1/4") X 1"
11	AT182558	OIL LINE	1		
12	19M7742	CAP SCREW	1		M10 X 65, (SUB FOR 19M7935, THIS APPLICATION)
13	R46919	HALF CLAMP	2		
14	T190403	SPACER	1		
15	38H1005	ELBOW FITTING	1		
16	R26375	O-RING	1		
17	T160551	CLAMP	1		
18	AT182562	OIL LINE	1		
19	AT188554	HYDRAULIC HOSE - FABRICATE	1		13/16" X 2 426 MM (95-1/2") X 13/16"
20	AT188560	HYDRAULIC HOSE - FABRICATE	2		13/16" X 1 575 MM (62") X 1"
21	38H1175	ADAPTER	2		
22	U12547	O-RING	2		
23	24M7239	WASHER	1		
24	M86877	BOLT	1		M8 X 20
25	24M7238	WASHER	1		
26	T70659	CLAMP	1		
27	T105773	GUIDE	1		
28	AR21842	CLAMP	1		
29	T29342	WASHER	1		

AUXILIARY EQUIPMENT HYDRAULIC HOSES AND OIL LINES (STANDARD DIPPERSTICK)

T211942 -UN-23JUN05

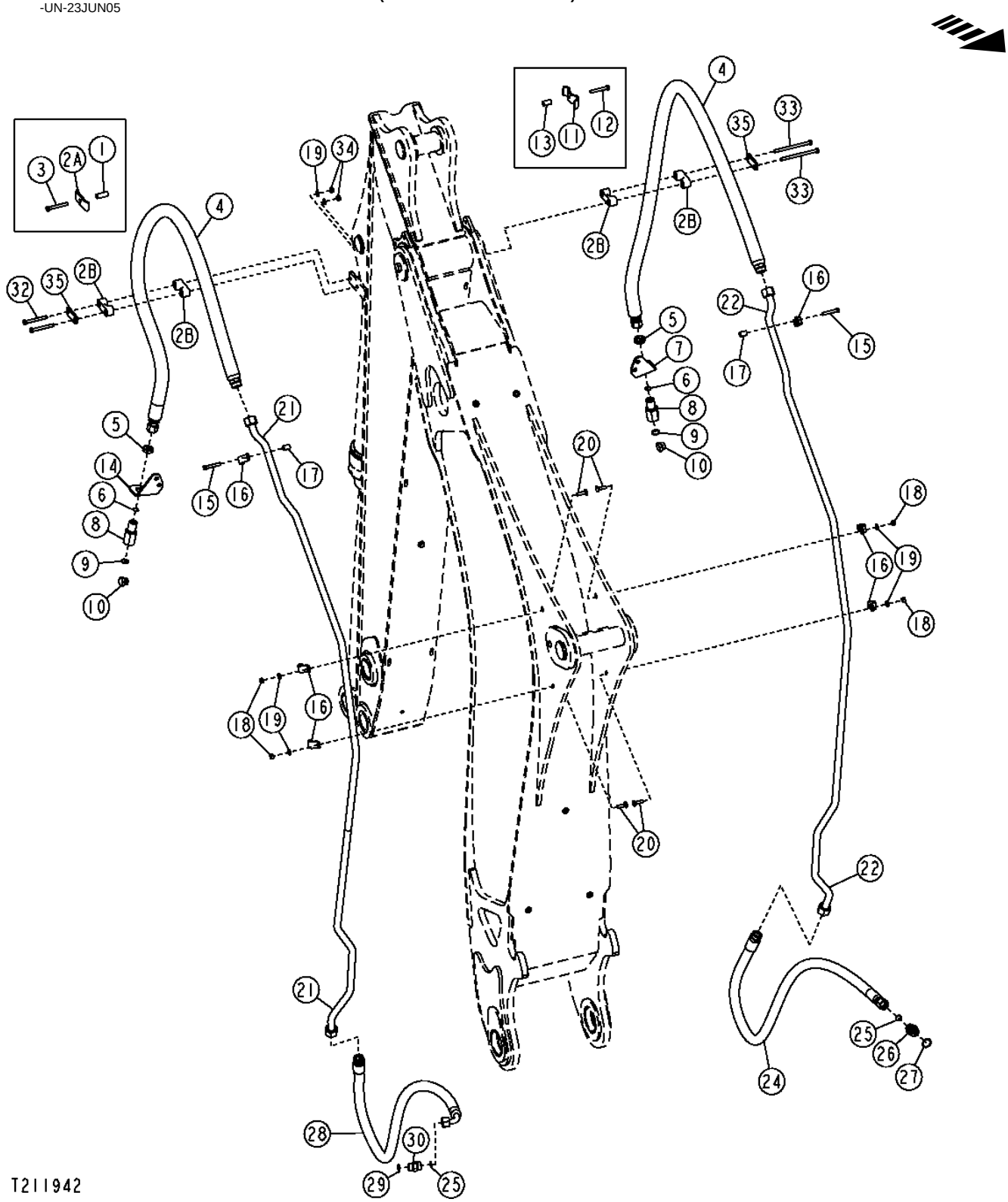

THIS PARTS LISTING IS CONTINUED

AUXILIARY EQUIPMENT HYDRAULIC HOSES AND OIL LINES
(STANDARD DIPPERSTICK)

KEY	PART NO.	PART NAME	QTY	SERIAL NO.	REMARKS
1	28H3387	BUSHING	AR		
2A	T190856	HALF CLAMP	1	-XXXXXX	
2B	T200233	HOSE CLAMP	4	XXXXXX-	
3	19M7875	CAP SCREW	1		
4	AT188570	HYDRAULIC HOSE - FABRICATE	2		
5	T78707	NUT	2		
6	T77858	O-RING	2		
7	.....	BRACKET	1	-927733	(SUB AT309649 KIT) (SUB FOR T162682, THIS APPLICATION) (CONVERTS 1 BOLT BRACKET TO 2 BOLT BRACKET)
	T205637	BRACKET	1	927734-	
8	T163702	REDUCER	2		
9	U12547	O-RING	2		
10	R27175	DRAIN PLUG	2		
11	T190979	HALF CLAMP	1	-XXXXXX	
12	19M8081	CAP SCREW	1		
13	28H1529	BUSHING	AR		
14	.....	BRACKET	1	-927733	(SUB AT309649 KIT) (SUB FOR T162681, THIS APPLICATION) (CONVERTS 1 BOLT BRACKET TO 2 BOLT BRACKET)
	T205636	BRACKET	1	927734-	
15	19M8499	CAP SCREW	2		M10 X 60
16	T190703	HALF CLAMP	6		
17	28H3389	SPACER	2		
18	14M7274	NUT	4		
19	24M7239	WASHER	5		
20	03M7193	BOLT	4		M10 X 35
21	AT182563	OIL LINE	1		
22	AT182564	OIL LINE	1		
23	T76938	O-RING	1		
24	AT195979	HYDRAULIC HOSE - FABRICATE	1		
25	T77858	O-RING	2		
26	38H1194	ADAPTER	1		
27	R29936	O-RING	1		
28	AT195978	HYDRAULIC HOSE - FABRICATE	1		
29	U12547	O-RING	1		
30	38H1163	ADAPTER	1		
31	AT309649	KIT	1		(NOT ILLUSTRATED) (INCLUDES T205636, T205637, (2) T150768, (4) 19M8600 AND (4) 24M7239) (1 BOLT TO 2 BOLT BRACKET CONVERSION KIT)
32	19M8183	CAP SCREW	2		
33	KV21460	CAP SCREW	2		
34	14M7176	LOCK NUT	1		
35	T200237	PLATE	2	XXXXXX-	

AUXILIARY EQUIPMENT HYDRAULIC HOSES AND OIL LINES (EXTENDIBLE DIPPERSTICK)

T197839 -UN-23FEB04

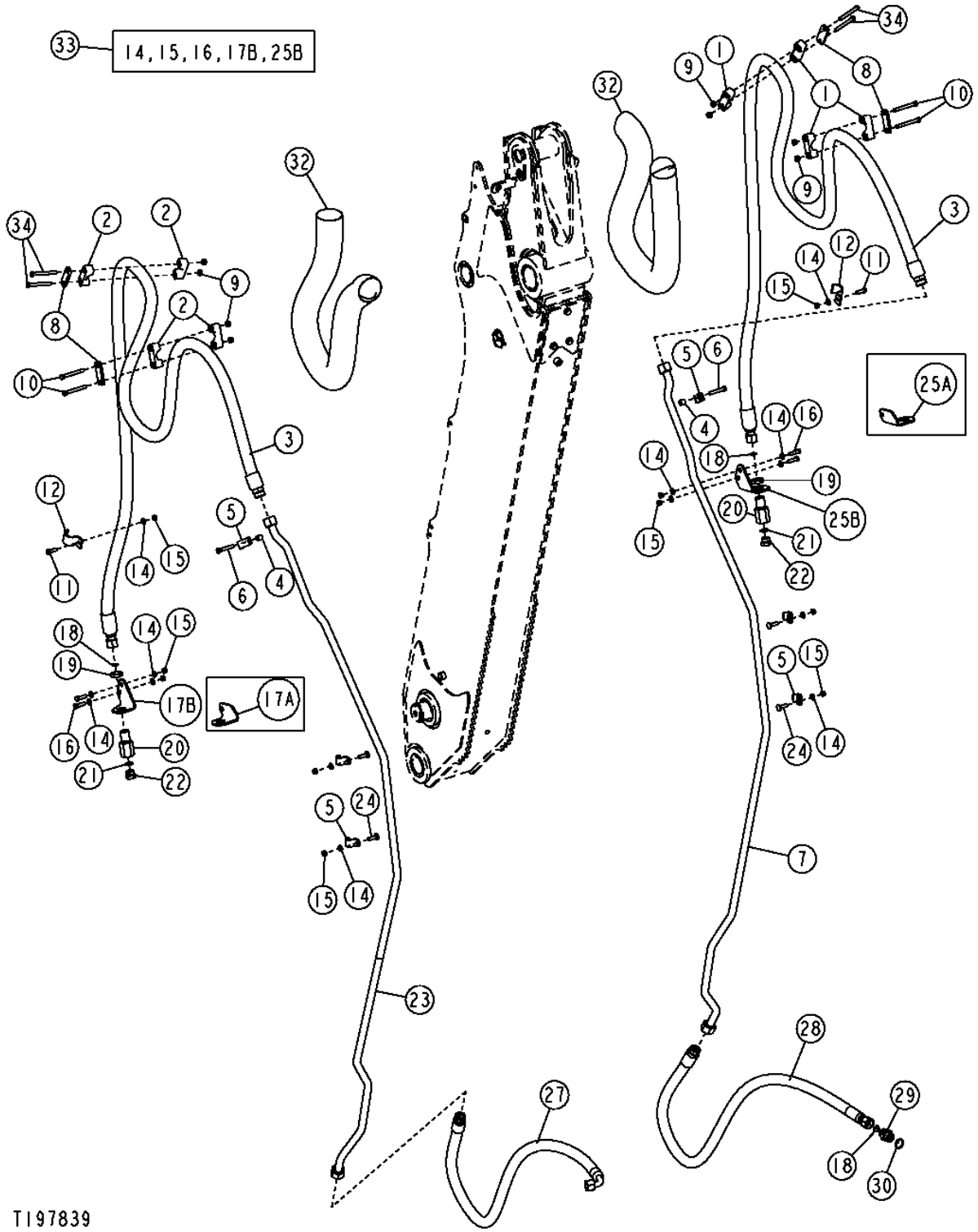

AUXILIARY EQUIPMENT HYDRAULIC HOSES AND OIL LINES (EXTENDIBLE DIPPERSTICK)

KEY	PART NO.	PART NAME	QTY	SERIAL NO.	REMARKS
1	T200233	HOSE CLAMP	4		(SUB FOR (4) T200232, THIS APPLICATION)
2	T200233	HOSE CLAMP	4		
3	AT188572	HYDRAULIC HOSE - FABRICATE	2		
4	28H3381	SPACER	2		0.493" X 0.675" X 5/8"
5	T190703	HALF CLAMP	6		
6	19M8499	CAP SCREW	2		M10 X 60
7	AT182564	OIL LINE	1		
8	T200237	PLATE	4		
9	14M7167	LOCK NUT	8		M10
10	19M8183	CAP SCREW	4		M10 X 90
11	19M7662	CAP SCREW	2		M10 X 30
12	T35829	CLAMP	2		
14	24M7239	WASHER	10	-927904	10.700 X 21 X 2.500 MM
	24M7239	WASHER	14	927905-	10.700 X 21 X 2.500 MM
15	14M7274	NUT	8	-927904	M10
	14M7274	NUT	10	927905-	M10
16	19M7550	CAP SCREW	2	-927904	M10 X 35
	19M7550	CAP SCREW	4	927905-	M10 X 35
17A	.....	BRACKET	1	-927904	(SUB AT309649 KIT) (SUB FOR T162682, THIS APPLICATION) (1 BOLT TO 2 BOLT CONVERSION KIT)
17B	T205636	BRACKET	1	927905-	
18	T77858	O-RING	3		
19	T78707	NUT	2		
20	T163702	REDUCER	2		
21	U12547	O-RING	2		
22	R27175	DRAIN PLUG	2		
23	AT182563	OIL LINE	1		
24	03M7193	BOLT	4		
25A	.....	BRACKET	1	-927904	(SUB AT309649 KIT) (SUB FOR T162682, THIS APPLICATION) (1 BOLT TO 2 BOLT CONVERSION KIT)
25B	T205637	BRACKET	1	927905-	
26	T76938	O-RING	2		
27	AT195978	HYDRAULIC HOSE - FABRICATE	1		
28	AT195979	HYDRAULIC HOSE - FABRICATE	1		
29	38H1194	ADAPTER	1		
30	R29936	O-RING	1		
32	T200631	HOSE GUARD	2		
	H77698	TIE BAND	4		
33	AT309649	KIT	1		(1 BOLT TO 2 BOLT CONVERSION KIT)
34	19M8197	CAP SCREW	4	-927904	M10 X 85
	19M8183	CAP SCREW	4	927905-	M10 X 90

CONTROLLED LOAD LOWERING DEVISE, BOOM CYLINDER KIT

T200797 -UN-09JUN04

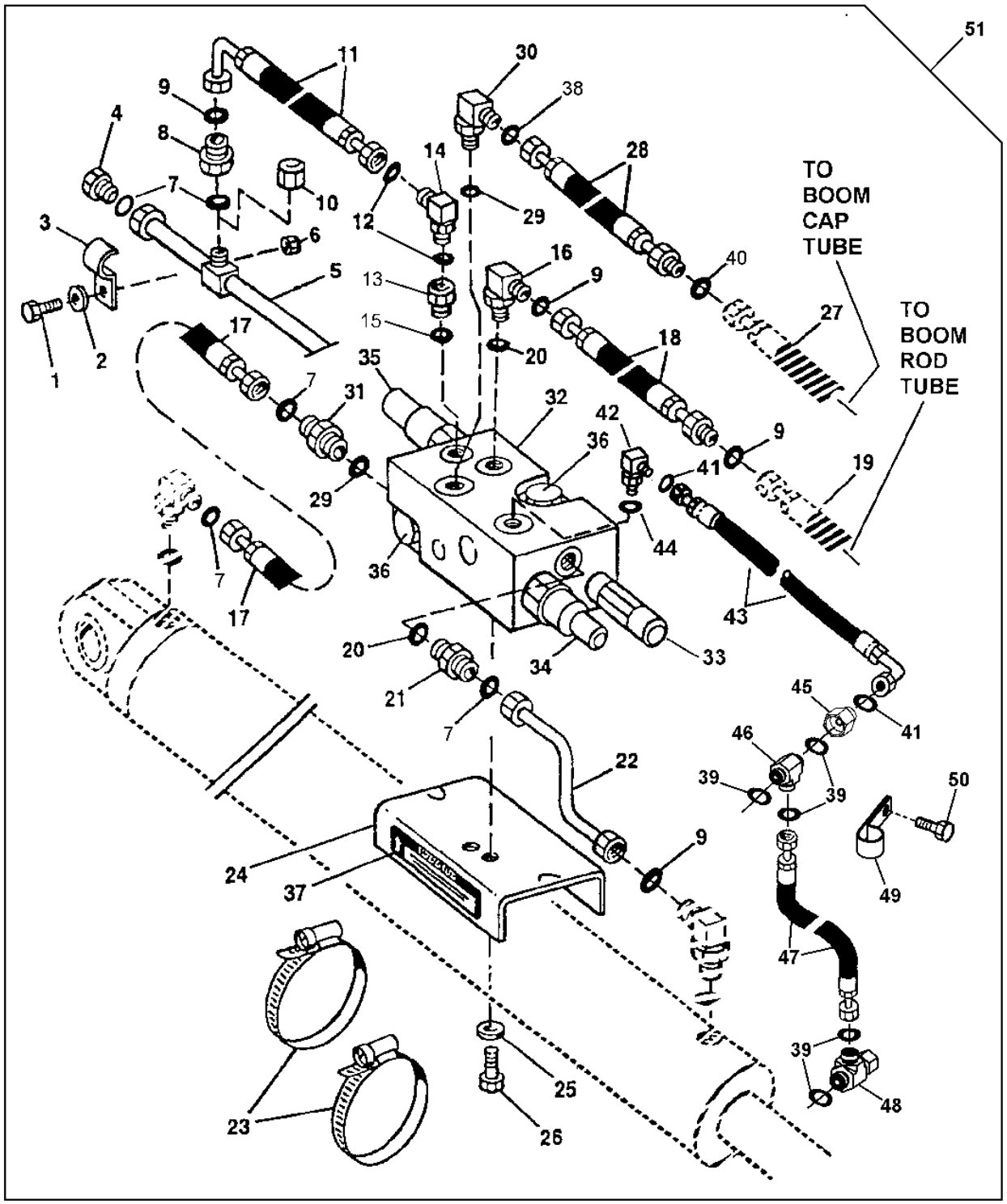

T200797

CONTROLLED LOAD LOWERING DEVICE, BOOM CYLINDER KIT

KEY	PART NO.	PART NAME	QTY	SERIAL NO.	REMARKS
1	03M7193	BOLT	2		M10 X 35, (RETURN LINE)
2	24M7239	WASHER	2		
3	T160376	CLAMP	3		(RIGHT SIDE BOOM LINE)
4	38H1149	FITTING PLUG	1		(RETURN LINE)
5	AT280207	OIL LINE	1		(RIGHT SIDE OF BOOM)
6	14M7274	NUT	2		M10, (RETURN LINE)
7	T77858	O-RING	6		
8	38H1482	REDUCER	1		(RETURN LINE)
9	T77932	O-RING	6		
10	38H1418	FITTING	1		(TEE CAP WHEN CROWD CLLD IS NOT REQUIRED)
11	AT280228	HYDRAULIC HOSE - FABRICATE	1		1-7/16" X 660 MM (26") X 1-3/16", (PORT "M")
12	T77857	O-RING	2		(PORT "M" FITTING)
13	38H1161	ADAPTER	1		(PORT "M")
14	38H1095	ELBOW FITTING	1		(PORT "M")
15	R26375	O-RING	1		
16	38H1006	ELBOW FITTING	1		(PORT "B")
17	AT280228	HYDRAULIC HOSE - FABRICATE	1		1-7/16" X 660 MM (26") X 1-3/16", (PORT "FB")
18	AT280232	HYDRAULIC HOSE - FABRICATE	1		1" X 1 200 MM (47-1/4") X 1-3/16", (PORT "B")
19	.....	OIL LINE	1		(TO BOOM ROD TUBE)
20	R26906	O-RING	2		(PORT "B" (1) - PORT "ANN" (1))
21	38H1193	ADAPTER	1		(PORT "ANN")
22	AT280222	OIL LINE	1		(PORT "ANN")
23	TY22497	HOSE CLAMP	2		(MOUNTING PLATE)
24	T161769	PLATE	1		(TO BOOM CYLINDER)
25	24M7239	WASHER	6		(RETURN LINE)
26	19H1134	CAP SCREW	2		3/8" X 3/4", (MOUNTING BRACKET)
27	.....	OIL LINE	1		(TO BOOM CAP TUBE)
28	AT280230	HYDRAULIC HOSE - FABRICATE	1		1-7/16" X 1 003 MM (39-1/2") X 1-7/16", (PORT "A")
29	U12547	O-RING	2		(PORT "FB" (1) - PORT "A" (1))
30	38H1305	ELBOW FITTING	1		(PORT "A")
31	38H1163	ADAPTER	1		(PORT "FB")
32	AT302183	VALVE	1		CONTROLLED LOAD LOWERING DEVICE (BOOM)
33	AT180076	PRESSURE RELIEF VALVE	1		RELIEF (5000 PSI)
	AT180081	SEAL KIT	1		
34	AT180408	HYD ACTUATED CONTROL VALVE	1		SEQUENCE (470 PSI)
	AT180082	SEAL KIT	1		
35	AT180409	HYD ACTUATED CONTROL VALVE	1		LOAD CONTROL (470 PSI)
	AT180083	SEAL KIT	1		
36	AT180079	CHECK VALVE	1		CHECK
	AT180086	SEAL KIT	1		
37	T161665	LABEL	1		(SERVICE VALVE)
38	T76938	O-RING	1		(BOOM CAP TUBE END)
39	T77613	O-RING	5		
40	T77858	O-RING	1		(BETWEEN PORT "A" FITTING AND HOSE)
41	T77814	O-RING	3		(BETWEEN PORT "D" FITTING AND HOSE)
42	38H1003	ELBOW FITTING	1		(PORT "D")
43	AT180861	HYDRAULIC HOSE - FABRICATE	1		9/16" X 868 MM (34-1/4") X 9/16", (PORT "D" ELBOW)
44	R28782	O-RING	1		(PORT "D" ELBOW)
45	38H1480	REDUCER	1		
46	38H1205	TEE FITTING	1		
47	AT308762	HYDRAULIC HOSE - FABRICATE	1		
48	38H1030	TEE FITTING	1		
49	T151192	CLAMP	1		
50	19M8166	CAP SCREW	1		M10 X 110
51	**AT197163**	**KIT**	**1**		**(WHOLE GOODS) (ALSO INCLUDES ADDITIONAL FITTINGS AND, MISCELLANEOUS PARTS)**

CONTROLLED LOAD LOWERING DEVICE,CROWD CYLINDER KIT

T194323 -UN-27AUG03

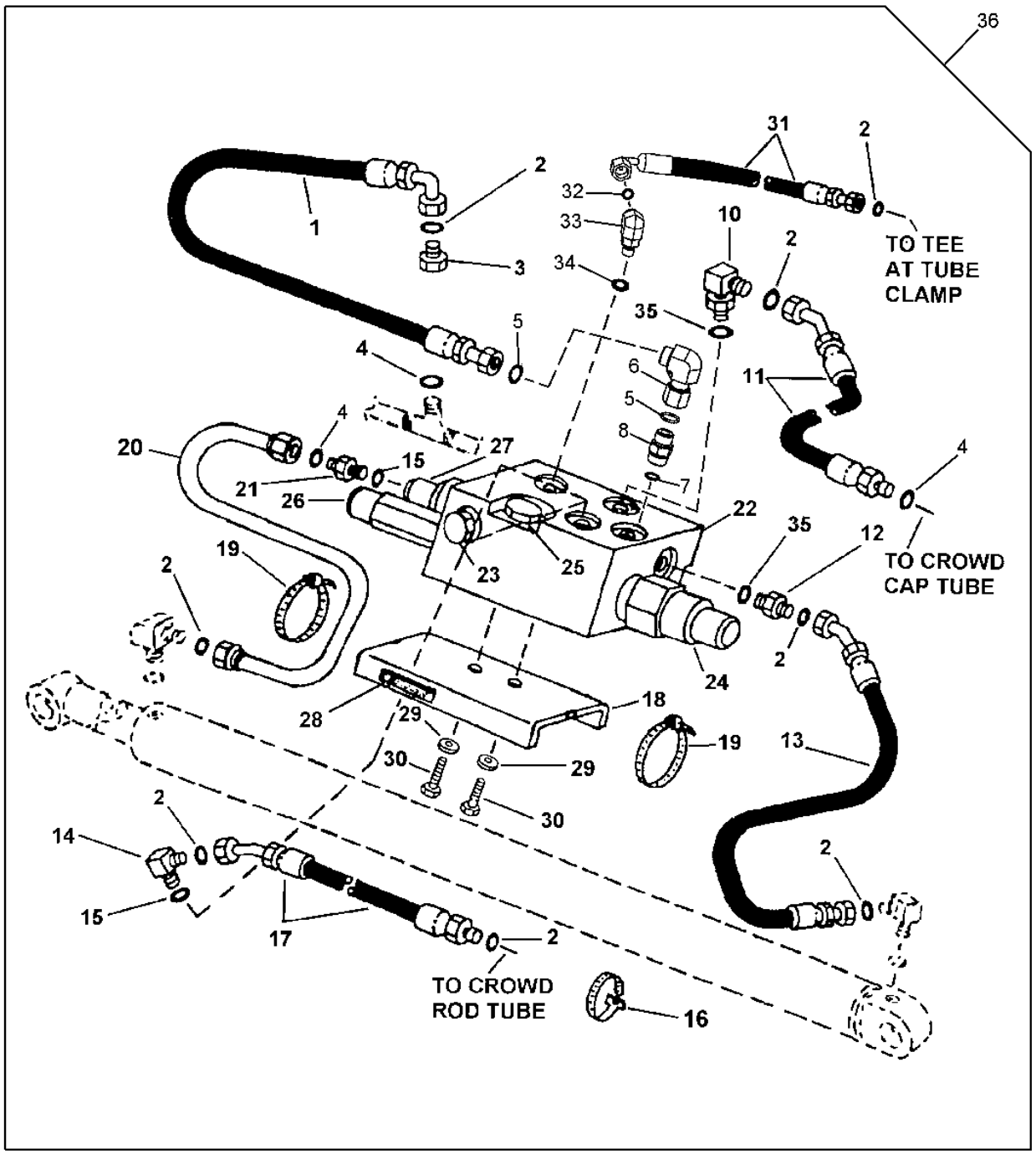

T194323

CONTROLLED LOAD LOWERING DEVICE, CROWD CYLINDER KIT

KEY	PART NO.	PART NAME	QTY	SERIAL NO.	REMARKS
1	AT280239	HYDRAULIC HOSE - FABRICATE	1		13/16" X 724 MM (28-1/2") X 1-3/16", (PORT "M")
2	T77932	O-RING	7		
3	38H1480	REDUCER	1		(RETURN LINE)
4	T77858	O-RING	1		
5	T77857	O-RING	2		(PORT "M" HOSE ENDS)
6	38H1095	ELBOW FITTING	1		(PORT "M")
7	R26375	O-RING	1		(PORT "M")
8	38H1161	ADAPTER	1		(PORT "M")
9	T77858	O-RING	1		(PORT "A")
10	38H1007	ELBOW FITTING	1		(PORT "A")
11	AT280238	HYDRAULIC HOSE - FABRICATE	1		1-3/16" X 1 422 MM (56") X 1-7/16", (PORT "A")
12	38H1163	ADAPTER	1		(PORT "FB")
13	AT280236	HYDRAULIC HOSE - FABRICATE	1		1-3/16" X 457 MM (18") X 1-3/16", (PORT "FB")
14	38H1006	ELBOW FITTING	1		(PORT "B")
15	R26906	O-RING	2		(PORT "B" (1) - PORT "ANN" (1)
16	R44302	TIE BAND	1		(PORT "A" AND PORT "B" HOSES)
17	AT280237	HYDRAULIC HOSE - FABRICATE	1		1" X 1 372 MM (54") X 1-3/16", (PORT "B")
18	T161769	PLATE	1		(TO CROWD CYLINDER)
19	TY22497	HOSE CLAMP	2		(MOUNTING PLATE) (SUB FOR AT84191, THIS APPLICATION)
20	AT280235	OIL LINE	1		(PORT "ANN")
21	38H1193	ADAPTER	1		(PORT "ANN")
22	AT175177	HYD ACTUATED CONTROL VALVE	1		(CONTROLLED LOAD LOWERING DEVICE - CROWD)
23	AT180079	CHECK VALVE	1		
	AT180086	SEAL KIT	1		
24	AT180409	HYD ACTUATED CONTROL VALVE	1		LOAD CONTROL (470 PSI)
	AT180083	SEAL KIT	1		
25	AT180079	CHECK VALVE	1		
	AT180086	SEAL KIT	1		
26	AT180076	PRESSURE RELIEF VALVE	1		RELIEF (5000 PSI)
	AT180081	SEAL KIT	1		
27	AT180408	HYD ACTUATED CONTROL VALVE	1		SEQUENCE (470 PSI)
	AT180082	SEAL KIT	1		
28	T161665	LABEL	1		(SERVICE VALVE)
29	24M7239	WASHER	2		(MOUNTING BRACKET SCREWS)
30	19H1648	CAP SCREW	2		(MOUNTING BRACKET)
31	AT181146	HYDRAULIC HOSE - FABRICATE	1		9/16" X 1 823 MM (71-3/4") X 9/16", (PORT "D")
32	T77814	O-RING	1		(PORT "D" FITTING TO HOSE)
33	38H1003	ELBOW FITTING	1		(PORT "D")
34	R28782	O-RING	1		(PORT "D")
35	U12547	O-RING	2		(PORT "FB"(1) - PORT "A" (1))
36	**AT197164**	**KIT**	**1**		**(WHOLE GOODS) (ALSO INCLUDES ADDITIONAL FITTINGS AND, MISCELLANEOUS PARTS)**

LOW PRESSURE AUXILIARY RETURN KIT

T159336 -UN-12SEP02

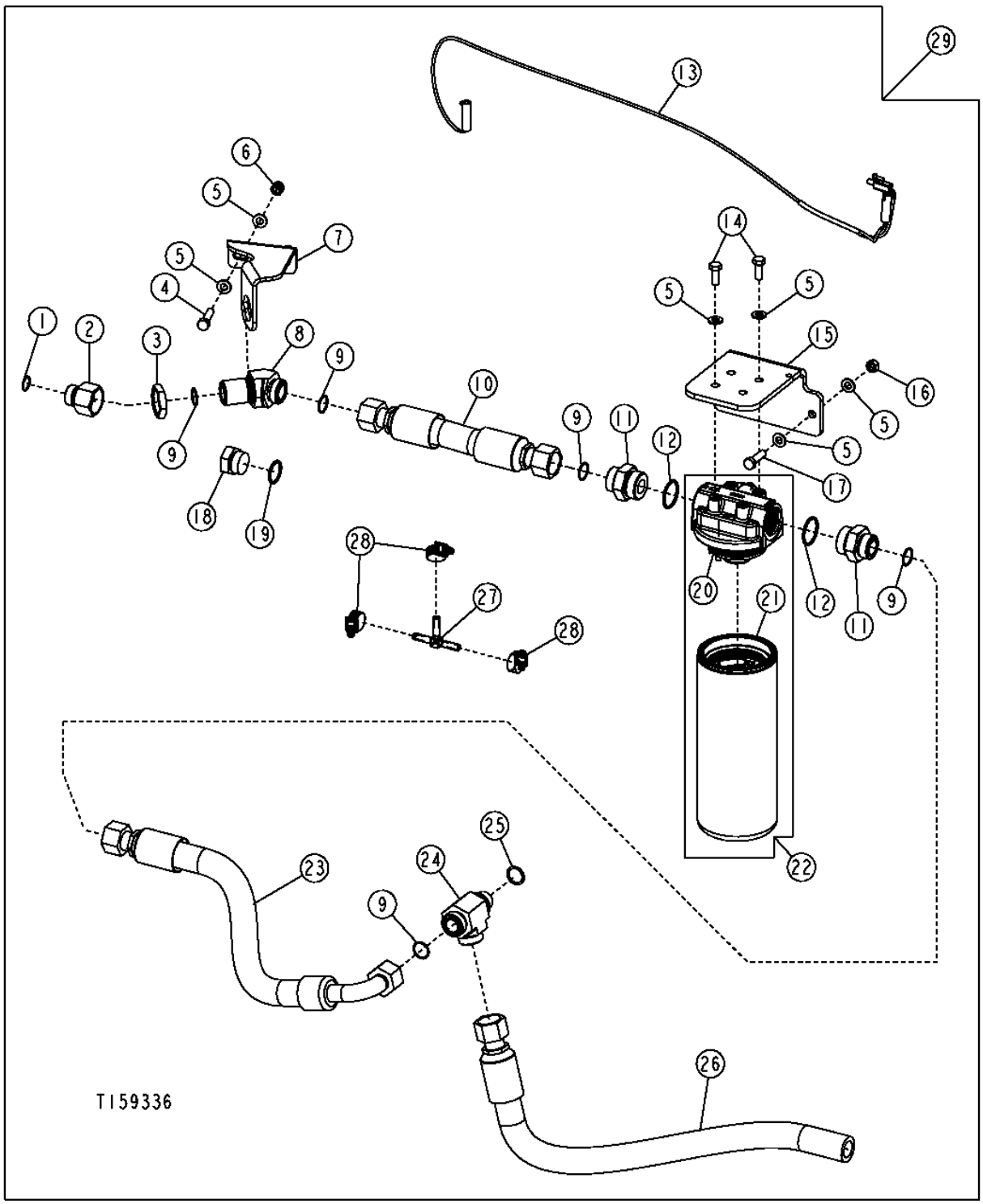

LOW PRESSURE AUXILIARY RETURN KIT

KEY	PART NO.	PART NAME	QTY	SERIAL NO.	REMARKS
1	T77858	O-RING	1		
2	38H1483	REDUCER	1		
	AT280386	ADAPTER	1		
3	T78715	NUT	1		
4	19M8600	CAP SCREW	2		M10 X 50
5	24M7239	WASHER	12		
6	14M7517	LOCK NUT	2		
7	T191077	BRACKET	1		
8	38H1536	ELBOW FITTING	1		
9	T76938	O-RING	5		
10	AT199797	HYDRAULIC HOSE - FABRICATE	1		
11	38H1180	ADAPTER	2		
12	U13639	O-RING	2		
13	AT199803	CAB WIRING HARNESS	1		
14	19M7402	CAP SCREW	4		
15	T191070	BRACKET	1		
16	14M7274	NUT	2		
17	19M7550	CAP SCREW	2		
18	R36636	FITTING PLUG	1		
19	R29936	O-RING	1		
20	AT224105	FILTER HEAD	1		
21	AT228474	FILTER ELEMENT	1		(SUB FOR AT223235, THIS APPLICATION)
22	AT223277	FILTER	1		
23	AT199798	HYDRAULIC HOSE - FABRICATE	1		
24	38H1572	TEE FITTING	1		
	T76938	O-RING	1		
25	U12547	O-RING	1		
26	AT199799	HYDRAULIC HOSE - FABRICATE	1		
27	M86863	TEE FITTING	1		
28	AR21837	CLAMP	3		
29	**AT197166**	**KIT**	**1**		**(WHOLE GOODS)**

PILOT CONTROL MANIFOLD (SPAM VALVE)

T198598 -UN-22MAR04

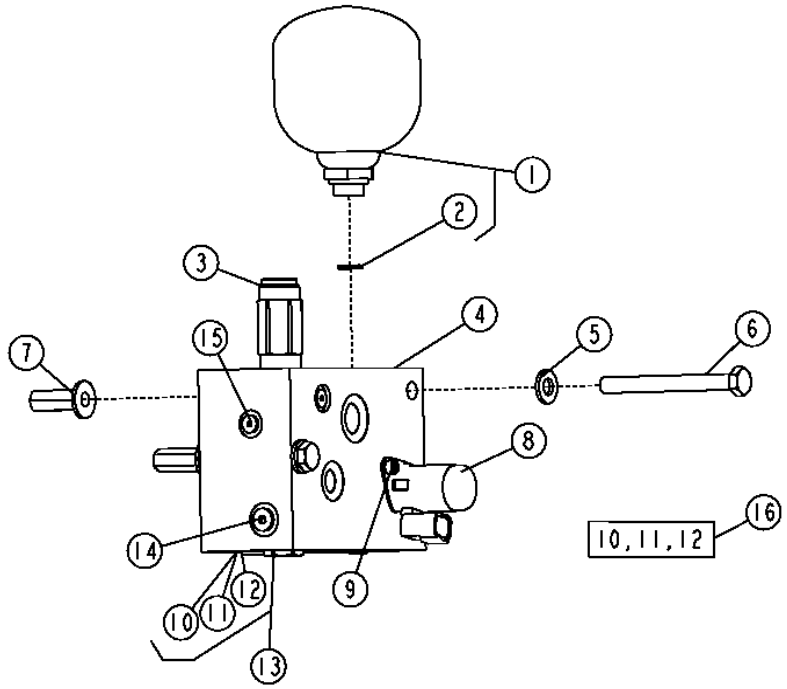

KEY	PART NO.	PART NAME	QTY	SERIAL NO.	REMARKS
1	AT195957	PNEUMATIC ACCUMULATOR	1		
2	R26448	O-RING	1		
3	AT300230	HYDRAULIC PRESSURE VALVE	1		
4	AT197769	FLOW CONTROL HYD. VALVE	1		(INCLUDES AT224570, AT300230, AT49216, KV25678 AND (6) T105368)
5	24M7239	WASHER	2		
6	19M8093	CAP SCREW	2		M10 X 100
7	T148410	NUT	2		M10
8	KV25678	SOLENOID VALVE	1		(SUB FOR AT300254)
9	0344046	BOLT	2		(SUB FOR AT121123)
10	.....	BACK-UP RING	1		
11	.....	O-RING	1		
12	.....	O-RING	1		
13	AT224570	CHECK VALVE	1		(MARKED CV08)
14	AT49216	FITTING PLUG	1		(INCLUDES R26448)
15	T105368	FITTING PLUG	6		
16	AT300255	SEAL KIT	1		

MEMORANDA

BOOM CYLINDER AND REPAIR KITS

T159058 -UN-10SEP02

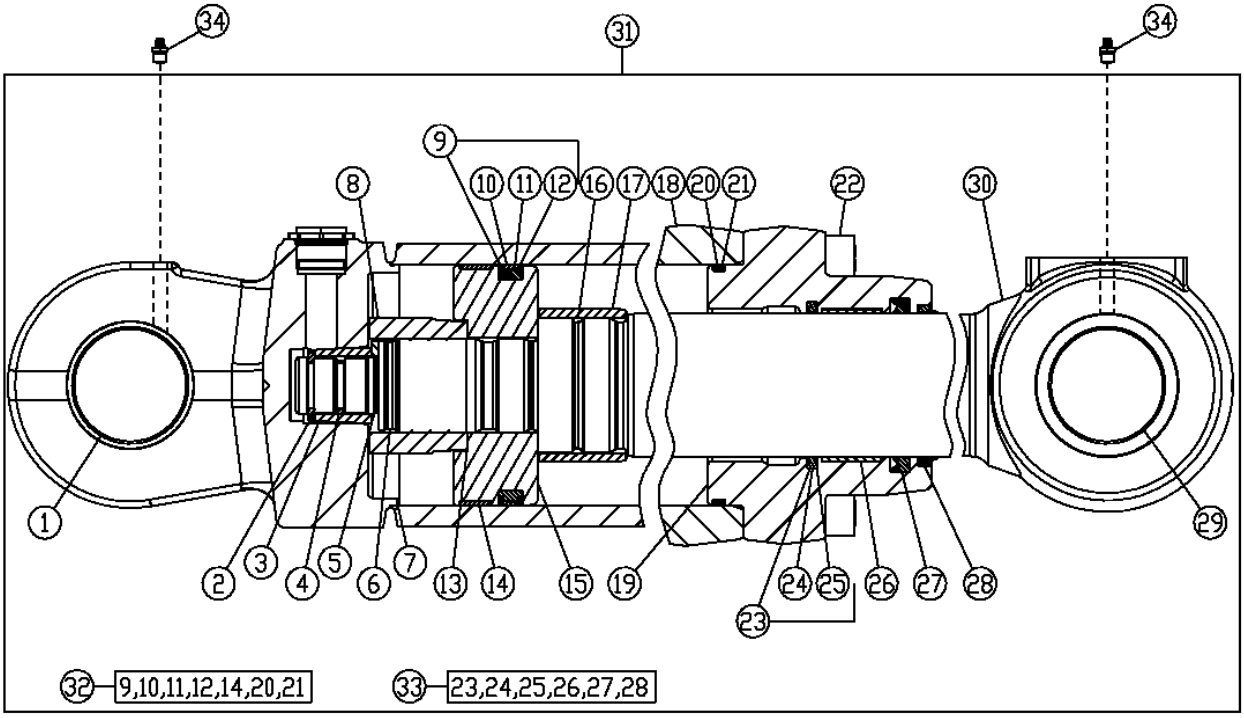

T159058

KEY	PART NO.	PART NAME	QTY	SERIAL NO.	REMARKS
1	H166850	BUSHING	2		
2	H155329	RING	2		
3	H155321	SPACER	1		
4	H155322	SEAL	1		
5	H163222	SNAP RING	1		
6	22M7009	SET SCREW	1		M12 X 12
7	T13624	BALL	1		
8	H155924	NUT	1		
9	RE25146	SEAL	1		
10	.....	BACK-UP RING	1		
11	.....	WEAR RING	1		
12	.....	RING	1		
13	0309013	SHIM	1		(SUB FOR T108030)
14	R85228	WEAR RING	1		
15	H167146	PISTON	1		
16	H155320	SEAL	1		
17	H155319	RING	1		
18	AH160260	HYDRAULIC CYLINDER BARREL	1		
19	H166560	HYDR. CYLINDER ROD GUIDE	1		
20	H88900	O-RING	1		
21	R98669	BACK-UP RING	1		
22	19M8985	SCREW	8		M20 X 80
23	AH157292	SEAL	1		
24	.....	RING	1		
25	.....	BACK-UP RING	1		
26	H163980	BUSHING	1		
27	H163979	SEAL	1		
28	AH157291	SEAL	1		
29	H166849	BUSHING	1		
30	AH160261	ROD	1		
31	AH160259	HYDRAULIC CYLINDER	1		
32	AH137210	KIT	1		BORE SEAL KIT
33	AH159192	KIT	1		ROD SEAL KIT
34	T162396	LUBRICATION FITTING	3		

BUCKET CYLINDER AND REPAIR KITS

T159059 -UN-11SEP02

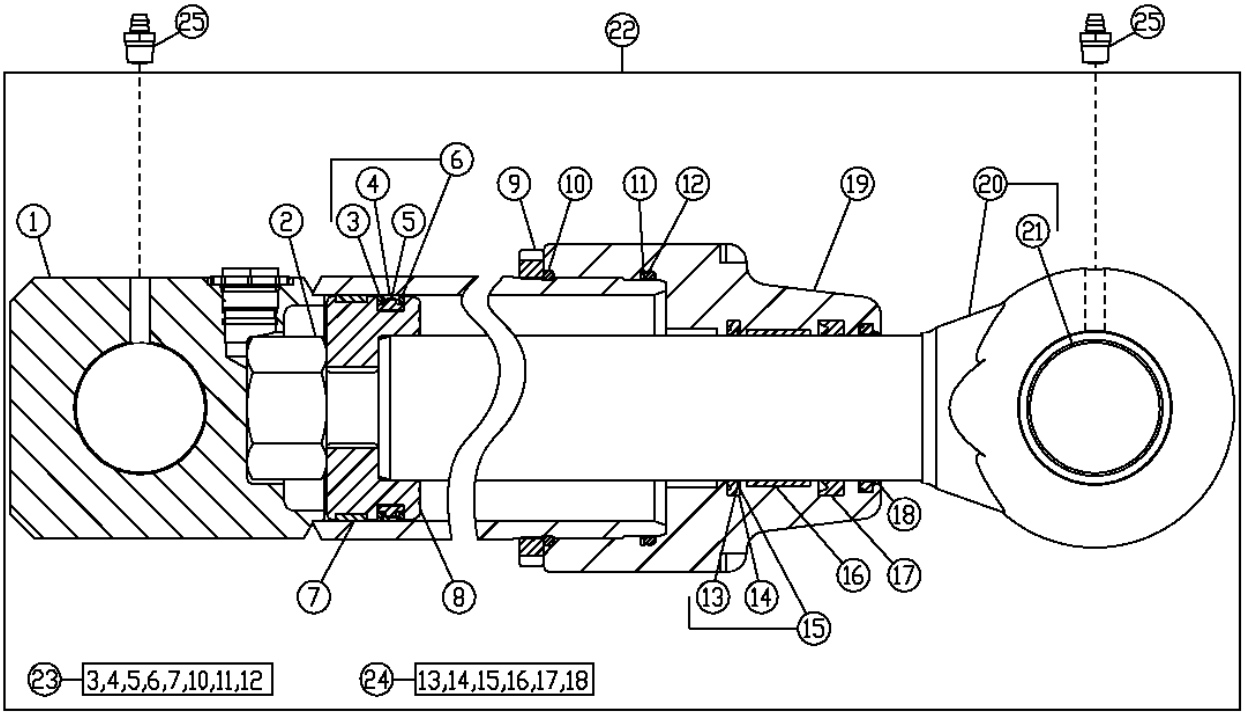

T159059

KEY	PART NO.	PART NAME	QTY	SERIAL NO.	REMARKS
1	AH209656	HYDRAULIC CYLINDER BARREL	1		(SUB FOR AH160006)
2	H155561	NUT	1		
3	.....	BACK-UP RING	2		
4	.....	RING	1		
5	.....	SEAL	1		
6	AH138082	SEAL	1		
7	H155543	SCRAPER RING	1		
8	H160456	PISTON	1		
9	H180431	NUT	1		
10	C11884	O-RING	1		
11	H155540	BACK-UP RING	1		
12	T41356	O-RING	1		
13	.....	BACK-UP RING	1		
14	.....	SEAL	1		
15	AH150932	SEAL	1		
16	H158437	WEAR RING	1		
17	H158436	SEAL	1		
18	AH150933	SEAL	1		
19	.....	HYDR. CYLINDER ROD GUIDE	1		
20	AH160007	HYDRAULIC CYLINDER ROD	1		
21	H167293	BUSHING	1		
22	.....	HYDRAULIC CYLINDER	1	-916980	(AH160005 NO LONGER AVAILABLE) (SUB AH209507)
	AH209507	HYDRAULIC CYLINDER	1	916981-	
23	AH149845	KIT	1		BORE SEAL KIT
24	AH156466	KIT	1		ROD SEAL KIT
25	T162396	LUBRICATION FITTING	2		

CROWD CYLINDER AND REPAIR KITS

T159060 -UN-11OCT02

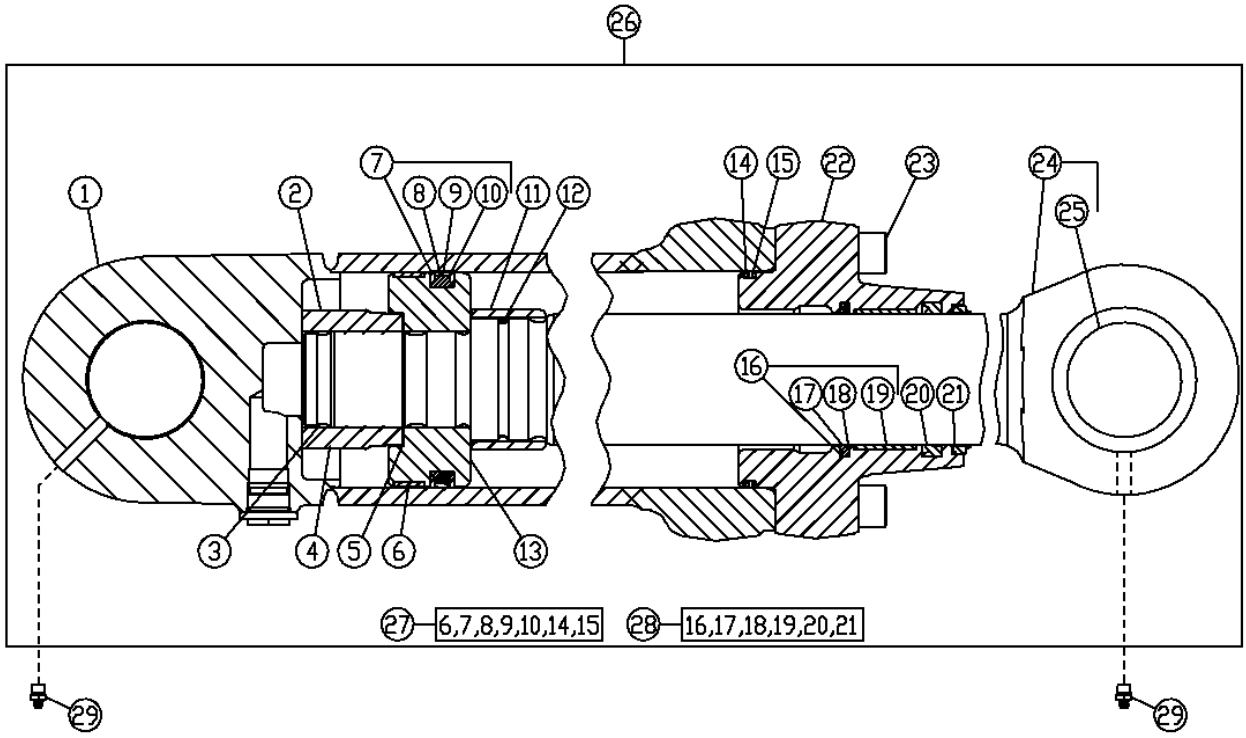

KEY	PART NO.	PART NAME	QTY	SERIAL NO.	REMARKS
1	AH160263	HYDRAULIC CYLINDER BARREL	1		
2	H155924	NUT	1		
3	T13624	BALL	1		
4	22M7009	SET SCREW	1		M12 X 12
5	0309013	SHIM	1		(SUB FOR T108030)
6	R85192	WEAR RING	1		
7	RE25102	SEAL	1		
8	.....	RING	1		
9	.....	SCRAPER RING	1		
10	.....	BACK-UP RING	1		
11	H155920	RING	1		
12	H155919	SEAL	1		
13	H167147	PISTON	1		
14	T38485	O-RING	1		
15	R78818	BACK-UP RING	1		
16	.....	SEAL	1		
17	.....	SEAL	1		
18	.....	RING	2		
19	.....	WEAR RING	1		
20	.....	SEAL	1		
21	.....	SEAL	1		
22	H167677	HYDR. CYLINDER ROD GUIDE	1		
23	19M8913	SCREW	8		M18 X 80
24	AH174988	HYDRAULIC CYLINDER ROD	1		
25	H180112	BUSHING	1		
26	AH174993	HYDRAULIC CYLINDER	1		
27	AH216299	KIT	1		BORE SEAL KIT, (SUB FOR AH176126)
28	AH207190	KIT	1		ROD SEAL KIT

SWING CYLINDER AND REPAIR KITS

T159169 -UN-11OCT02

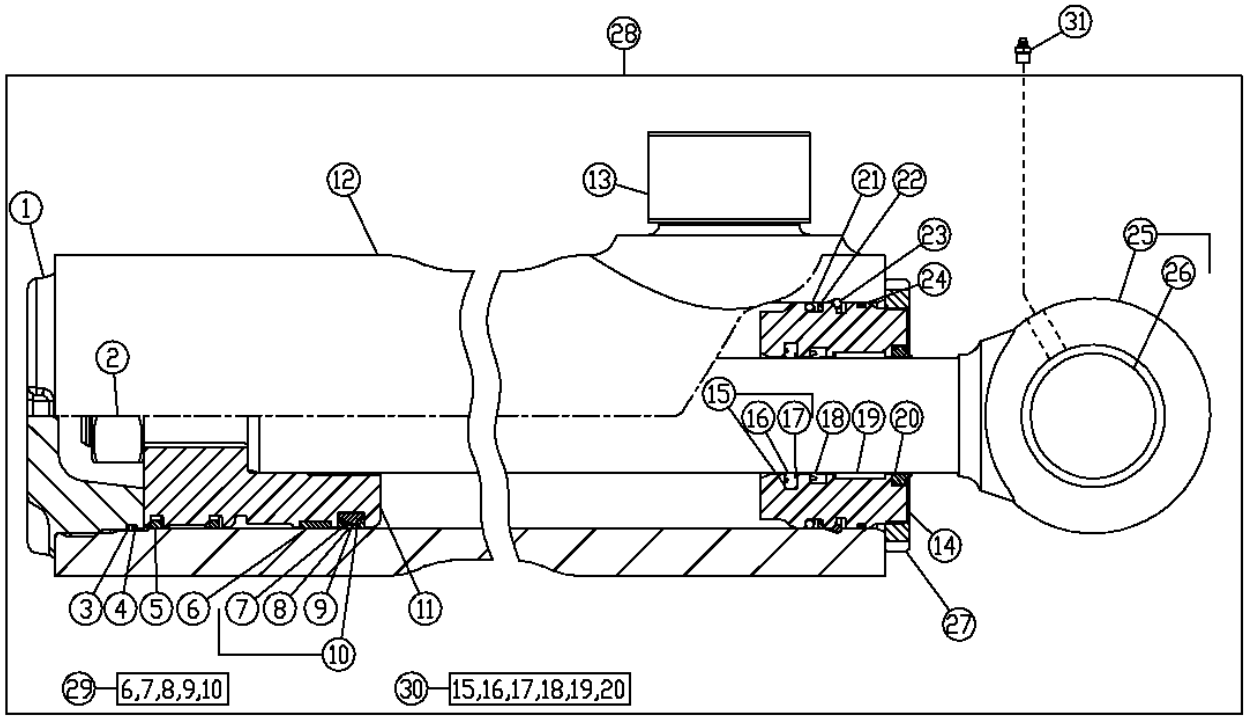

T159169

KEY	PART NO.	PART NAME	QTY	SERIAL NO.	REMARKS
1	.....	HYDRAULIC CYLINDER CAP	1		
2	H170539	NUT	1		M30, (USE WITH AH168041)
	19M9420	SCREW	1		M30 X 100, SEVERE DUTY, (USE WITH AH216602)
3	H174165	BACK-UP RING	1		
4	R11120	O-RING	1		
5	H173152	PISTON RING	1		
6	H155543	SCRAPER RING	1		
7	.....	BACK-UP RING	1		
8	.....	RING	1		
9	.....	SEAL	1		
10	AH138082	SEAL	1		
11	H207360	PISTON	1		
12	AH207312	HYDRAULIC CYLINDER BARREL	1		
13	H180542	BUSHING	2		
14	H211173	HYDR. CYLINDER ROD GUIDE	1		(SUB FOR H173149)
15	AH146562	SEAL	1		
16	.....	SEAL	1		
17	.....	RING	1		
18	H152204	SEAL	1		
19	H152795	WEAR RING	1		
20	AH146558	SEAL	1		
21	F2576R	O-RING	1		
22	H174164	BACK-UP RING	1		
23	H173154	SNAP RING	2		
24	T42302	O-RING	1		
25	AH168041	HYDRAULIC CYLINDER ROD	1		
	AH216602	HYDRAULIC CYLINDER ROD	1		SEVERE DUTY, (ALSO ORDER 19M9420)
26	H208785	BUSHING	1		(SUB FOR H206453)
27	R82086	NUT	1		
28	AH175021	HYDRAULIC CYLINDER	1		
29	AH210287	KIT	1		BORE SEAL KIT
30	AH149814	KIT	1		ROD SEAL KIT
31	T162396	LUBRICATION FITTING	1		

STABILIZER CYLINDER AND REPAIR KITS
(SERIAL NO. -932172)

T159061 -UN-23SEP02

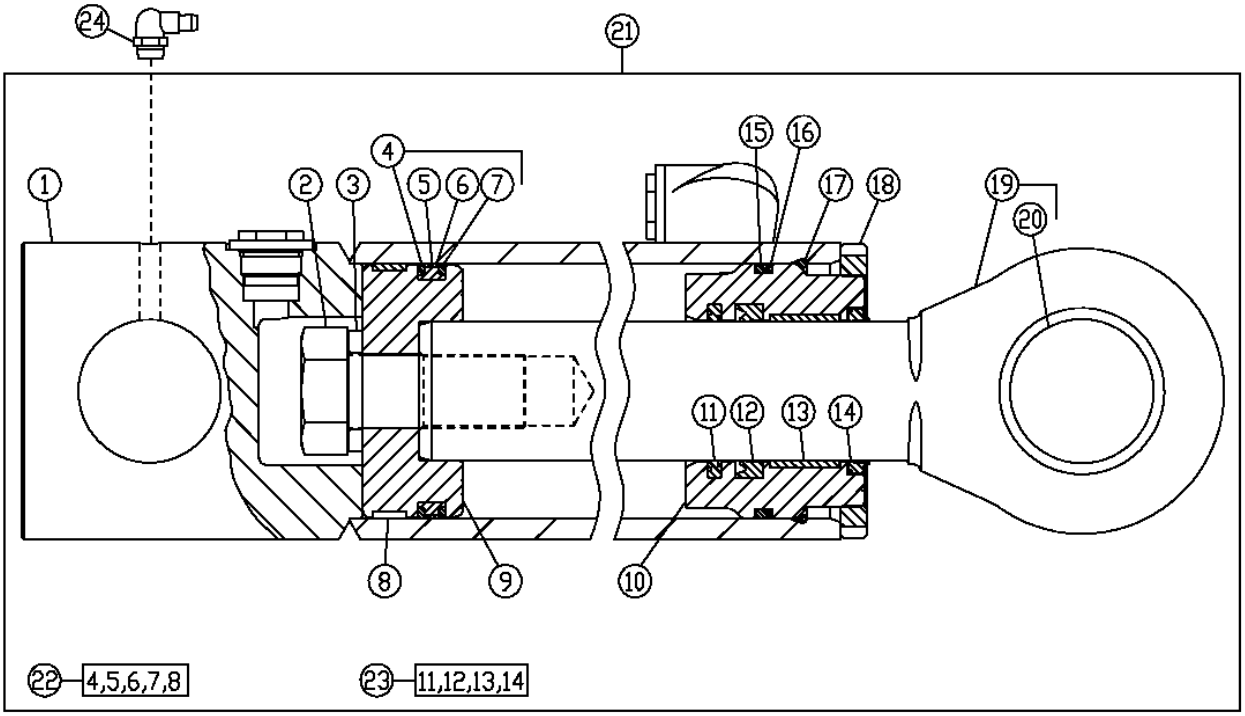

T159061

KEY	PART NO.	PART NAME	QTY	SERIAL NO.	REMARKS
1	AH168036	HYDRAULIC CYLINDER BARREL	1		LEFT
	AH168037	HYDRAULIC CYLINDER BARREL	1		RIGHT
2	H145161	CAP SCREW	1		
3	H145139	WASHER	1		
4	RE20809	SEAL	1		
5	.....	SEAL	1		
6	.....	SEAL	1		
7	.....	BACK-UP RING	1		
8	R82095	WEAR RING	1		
9	R98329	PISTON	1		
10	H157429	HYDR. CYLINDER ROD GUIDE	1		
11	AH146563	SEAL	1		
12	H152205	SEAL	1		
13	H152796	WEAR RING	1		
14	AH146559	SEAL	1		
15	.....	O-RING	1		
16	R79001	BACK-UP RING	1		
17	R82093	SNAP RING	1		
18	R82086	NUT	1		
19	AH168034	HYDRAULIC CYLINDER ROD	1		
20	R98334	BUSHING	1		
21	.....	HYDRAULIC CYLINDER	1		LEFT (AH166660 NO LONGER AVAILABLE) (SUB AH211148)
	.....	HYDRAULIC CYLINDER	1		RIGHT (AH166661 NO LONGER AVAILABLE) (SUB AH211146)
22	AH212103	HYDRAULIC CYLINDER KIT	1		BORE SEAL KIT, (SUB FOR AH149846)
23	AH149815	KIT	1		ROD SEAL KIT
24	JD7799	LUBRICATION FITTING	1		

STABILIZER CYLINDER AND REPAIR KITS
(SERIAL NO. -932172)
(REPLACEMENT CYLINDER)

T198566 -UN-19MAR04

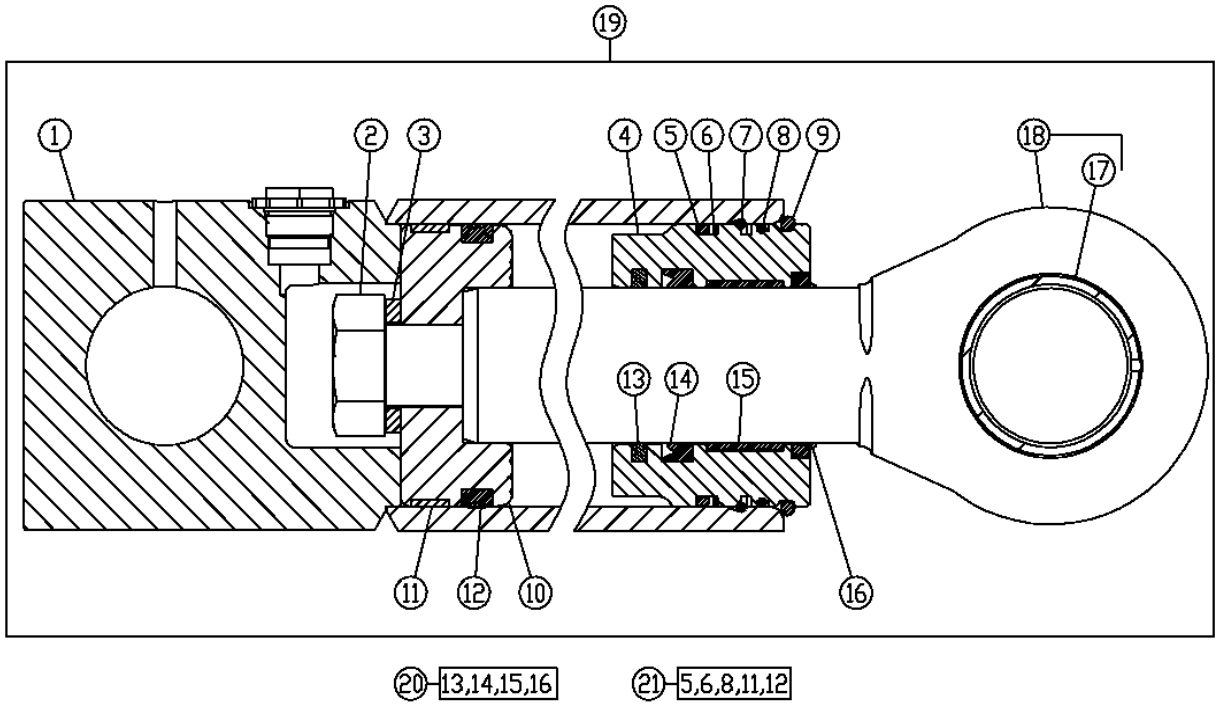

T198566

KEY	PART NO.	PART NAME	QTY	SERIAL NO.	REMARKS
1	AH211149	HYDRAULIC CYLINDER BARREL	1		LEFT
	AH211147	HYDRAULIC CYLINDER BARREL	1		RIGHT
2	H145161	CAP SCREW	1		
3	H145139	WASHER	1		
4	H210842	HYDR. CYLINDER ROD GUIDE	1		
5	R83578	O-RING	1		
6	R79001	BACK-UP RING	1		
7	H180100	SNAP RING	1		
8	U10746	O-RING	1		
9	H179659	SNAP RING	1		
10	R98329	PISTON	1		
11	R82095	WEAR RING	1		
12	RE20809	SEAL	1		
13	AH146563	SEAL	1		
14	H152205	SEAL	1		
15	H152796	WEAR RING	1		
16	AH146559	SEAL	1		
17	R98334	BUSHING	1		
18	AH168034	HYDRAULIC CYLINDER ROD	1		
19	AH211148	HYDRAULIC CYLINDER	1		LEFT
	AH211146	HYDRAULIC CYLINDER	1		RIGHT
20	AH149815	HYDRAULIC CYLINDER KIT	1		ROD SEAL KIT
21	AH212103	HYDRAULIC CYLINDER KIT	1		BORE SEAL KIT

STABILIZER CYLINDER AND REPAIR KITS
(SERIAL NO. 932173-)

T198566 -UN-19MAR04

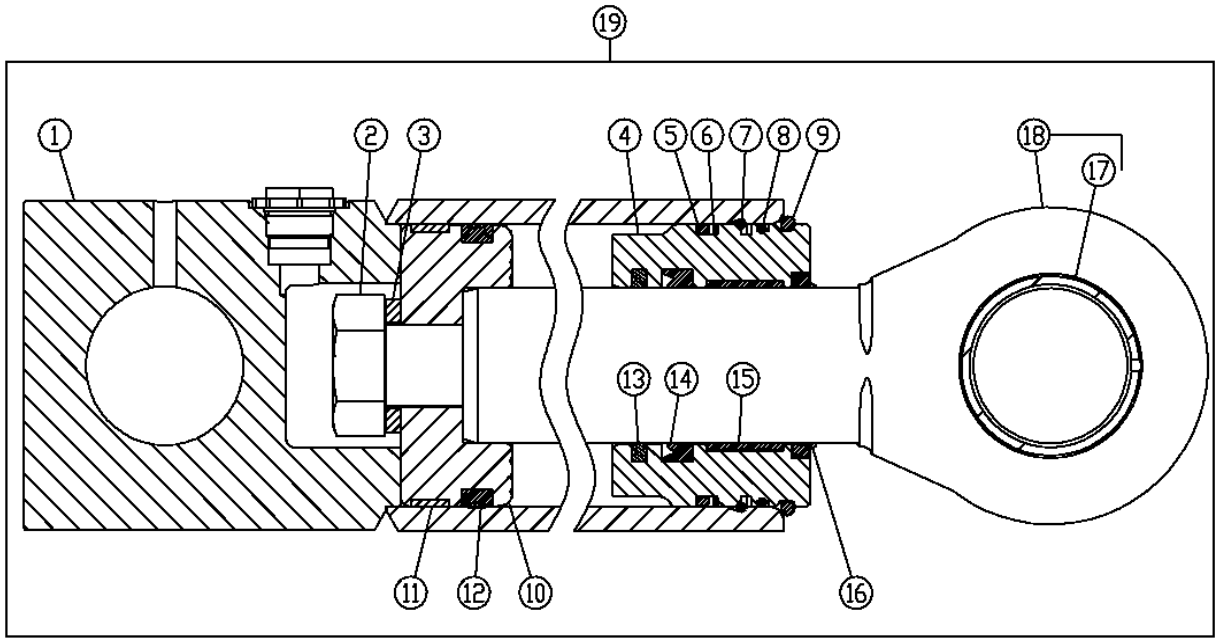

T198566

KEY	PART NO.	PART NAME	QTY	SERIAL NO.	REMARKS
1	AH213635	HYDRAULIC CYLINDER BARREL	1		LEFT
	AH213633	HYDRAULIC CYLINDER BARREL	1		RIGHT
2	H145161	CAP SCREW	1		
3	H145139	WASHER	1		
4	H210842	HYDR. CYLINDER ROD GUIDE	1		
5	R83578	O-RING	1		
6	R79001	BACK-UP RING	1		
7	H180100	SNAP RING	1		
8	U10746	O-RING	1		
9	H179659	SNAP RING	1		
10	R98329	PISTON	1		
11	R82095	WEAR RING	1		
12	RE20809	SEAL	1		
13	AH146563	SEAL	1		
14	H152205	SEAL	1		
15	H152796	WEAR RING	1		
16	AH146559	SEAL	1		
17	R98334	BUSHING	1		
18	AH213888	ROD	1		
19	AH213631	HYDRAULIC CYLINDER	1		LEFT
	AH213632	HYDRAULIC CYLINDER	1		RIGHT
20	AH149815	HYDRAULIC CYLINDER KIT	1		ROD SEAL KIT
21	AH212103	HYDRAULIC CYLINDER KIT	1		BORE SEAL KIT

EXTENSION CYLINDER AND REPAIR KITS
(SERIAL NO. -945479)

T159062 -UN-23SEP02

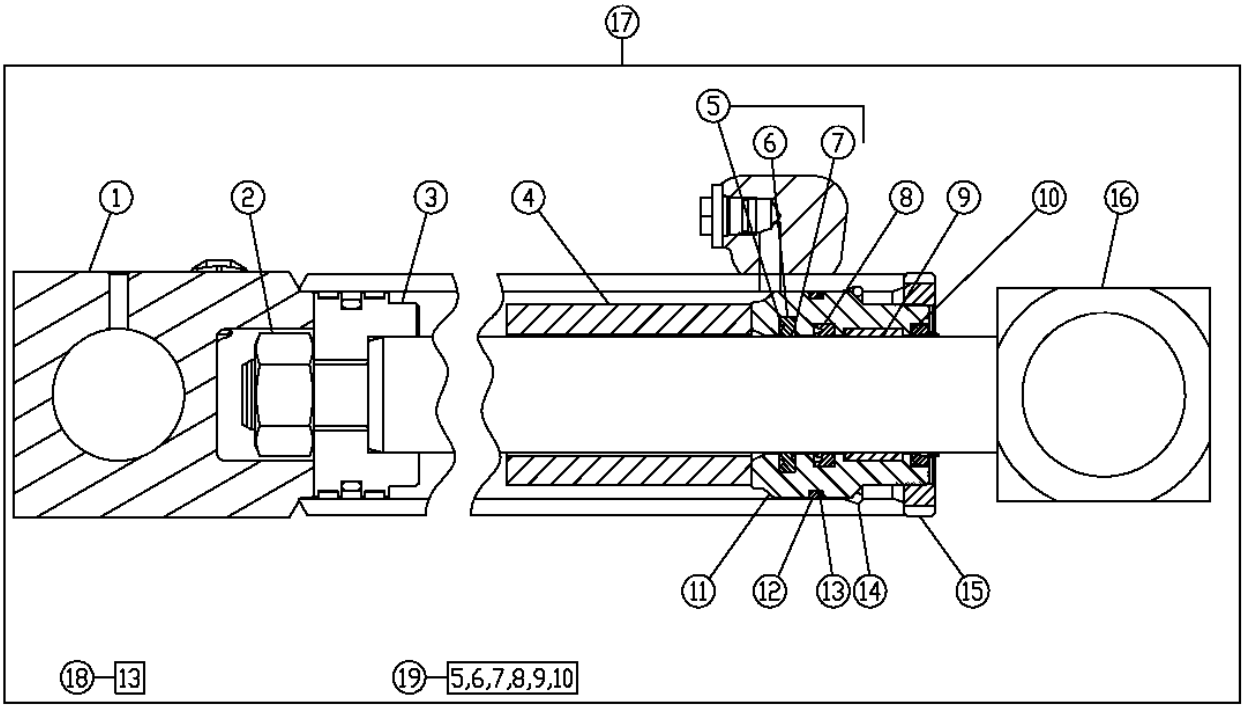

T159062

KEY	PART NO.	PART NAME	QTY	SERIAL NO.	REMARKS
1	AH208338	HYDRAULIC CYLINDER BARREL	1		
2	H170538	NUT	1		
3	RE33968	PISTON	1		
4	H150292	BUSHING	1		
5	AH146560	SEAL	1		
6	.....	SEAL	1		
7	.....	BACK-UP RING	1		
8	H152202	SEAL	1		
9	H152793	BACK-UP RING	1		
10	AH146556	SEAL	1		
11	.....	HYDR. CYLINDER ROD GUIDE	1		
12	T12582	O-RING	1		
13	R81864	BACK-UP RING	1		
14	R81789	RING	1		
15	R81795	NUT	1		
16	AH167956	HYDRAULIC CYLINDER ROD	1		
17	AH166659	HYDRAULIC CYLINDER	1		
18	AH212092	HYDRAULIC CYLINDER KIT	1		BORE SEAL KIT, (SUB FOR AH202080)
19	AH149813	HYDRAULIC CYLINDER KIT	1		ROD SEAL KIT

THIS PARTS LISTING IS CONTINUED

EXTENSION CYLINDER AND REPAIR KITS
(SERIAL NO. 945480-)

T209031 -UN-09MAR05

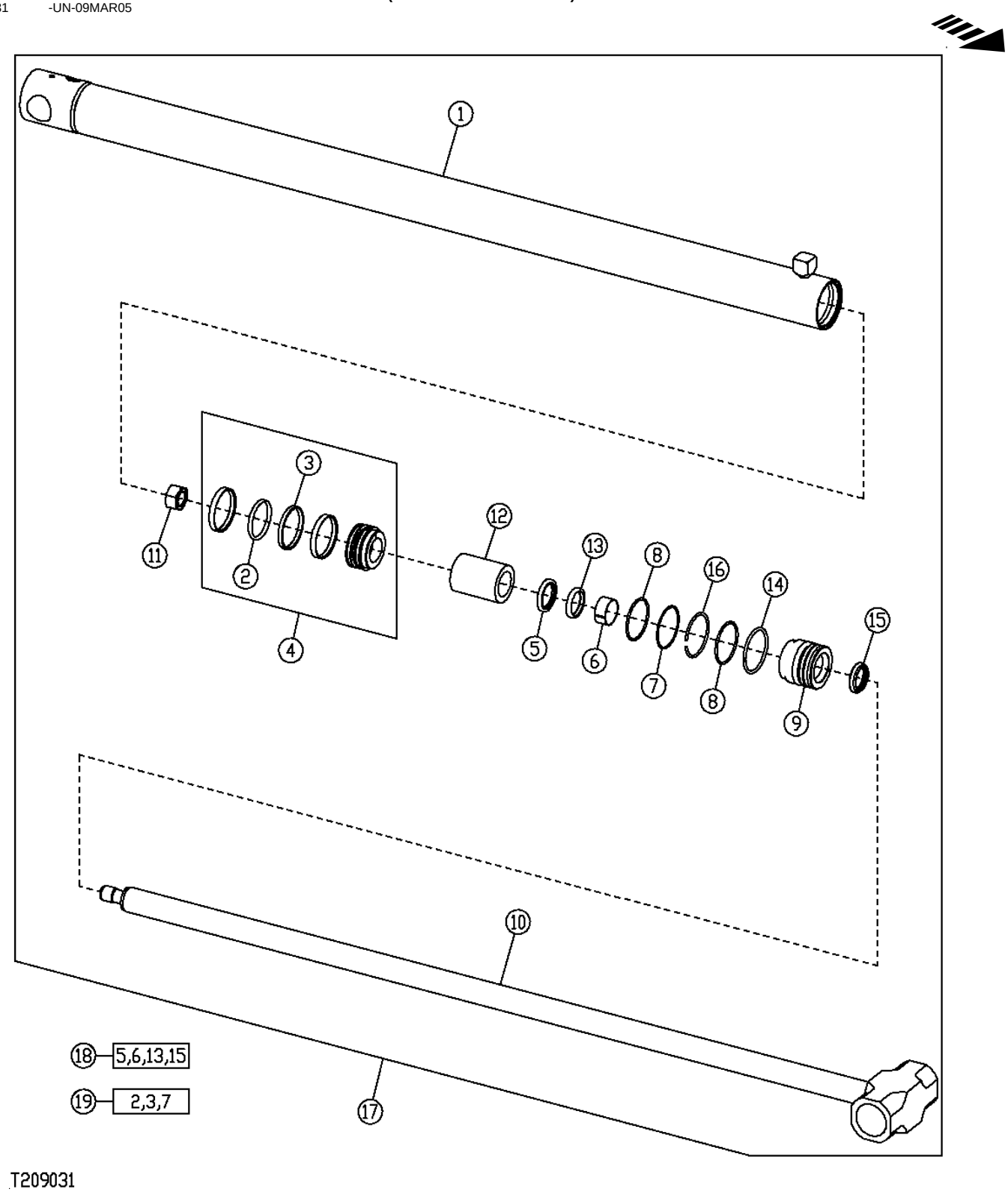

EXTENSION CYLINDER AND REPAIR KITS
(SERIAL NO. 945480-)

KEY	PART NO.	PART NAME	QTY	SERIAL NO.	REMARKS
1	AH216375	HYDRAULIC CYLINDER BARREL	1		
2	R98322	SEAL	1		
3	R98323	SEAL	1		
4	RE33968	PISTON	1		
5	AH146560	SEAL	1		
6	H157898	WEAR RING	1		
7	R81864	BACK-UP RING	1		
8	T12582	O-RING	1		
9	H210731	HYDR. CYLINDER ROD GUIDE	1		
10	AH167956	HYDRAULIC CYLINDER ROD	1		
11	H170538	NUT	1		
12	H150292	BUSHING	1		
13	H152202	SEAL	1		
14	H180787	SNAP RING	1		
15	AH146556	SEAL	1		
16	H170216	SNAP RING	1		
17	AH216318	HYDRAULIC CYLINDER	1		
18	AH149813	HYDRAULIC CYLINDER KIT	1		ROD SEAL KIT
19	AH212092	HYDRAULIC CYLINDER KIT	1		BORE SEAL KIT

MEMORANDA

NUMERICAL INDEX

PART NO.	GRID	KEY	PAGE
AB2599R	1H23	1	1314 - 3
AC15595	2I2	19	3163 - 3
AD2062R	1I25	2	1673 - 5
AE44436	1J8	1	1674 - 5D
AH103182	1G7	8	0520 - 3
AH104837	1G7	7	0520 - 3
AH105968	2F10	8	2160 - 15
AH125760	3E21	15	3363 - 1B
AH137210	3F24	32	3365 - 2
AH138082	2I10	1	3165 - 4
AH138082	3F25	6	3365 - 3
AH138082	3G2	10	3365 - 5
AH140044	1G9	3	0520 - 5
AH146556	2I11	10	3165 - 8
AH146556	3G6	10	3365 - 9
AH146556	3G8	15	3365 - 11
AH146558	2I7	15	3165 - 1
AH146558	2I9	12	3165 - 3
AH146558	2I10	21	3165 - 4
AH146558	3G2	20	3365 - 5
AH146559	3G3	14	3365 - 6
AH146559	3G4	16	3365 - 7
AH146559	3G5	16	3365 - 8
AH146560	2I11	5	3165 - 8
AH146560	3G6	5	3365 - 9
AH146560	3G8	5	3365 - 11
AH146562	2I7	10	3165 - 1
AH146562	2I9	8	3165 - 3
AH146562	2I10	16	3165 - 4
AH146562	3G2	15	3365 - 5
AH146563	3G3	11	3365 - 6
AH146563	3G4	13	3365 - 7
AH146563	3G5	13	3365 - 8
AH149813	2I11	19	3165 - 8
AH149813	3G6	19	3365 - 9
AH149813	3G8	18	3365 - 11
AH149814	2I7	25	3165 - 1
AH149814	2I9	22	3165 - 3
AH149814	2I10	25	3165 - 4
AH149814	3G2	30	3365 - 5
AH149815	3G3	23	3365 - 6
AH149815	3G4	20	3365 - 7
AH149815	3G5	20	3365 - 8
AH149844	2I7	24	3165 - 1
AH149845	2I10	24	3165 - 4
AH149845	3F25	23	3365 - 3
AH149846	3G3	22	3365 - 6
AH150932	3F25	15	3365 - 3
AH150933	3F25	18	3365 - 3
AH156144	1J14	4	1674 - 9B
AH156466	3F25	24	3365 - 3
AH157291	3F24	28	3365 - 2
AH157292	3F24	23	3365 - 2
AH159192	3F24	33	3365 - 2
AH160005	3F25	22	3365 - 3
AH160006	3F25	1	3365 - 3
AH160007	3F25	20	3365 - 3
AH160259	3F24	31	3365 - 2
AH160260	3F24	18	3365 - 2
AH160261	3F24	30	3365 - 2
AH160263	3G1	1	3365 - 4
AH166659	2I11	17	3165 - 8
AH166659	3G6	17	3365 - 9
AH166660	3G3	21	3365 - 6
AH166661	3G3	21	3365 - 6
AH167956	2I11	16	3165 - 8
AH167956	3G6	16	3365 - 9
AH167956	3G8	10	3365 - 11
AH168034	3G3	19	3365 - 6
AH168034	3G4	18	3365 - 7
AH168036	3G3	1	3365 - 6
AH168037	3G3	1	3365 - 6
AH168041	3G2	2	3365 - 5
AH168041	3G2	25	3365 - 5
AH174944	2I7	23	3165 - 1
AH174946	2I7	20	3165 - 1
AH174946	2I9	13	3165 - 3
AH174951	2I10	14	3165 - 4
AH174952	2I10	23	3165 - 4
AH174988	3G1	24	3365 - 4
AH174993	3G1	26	3365 - 4
AH175021	3G2	28	3365 - 5
AH176032	2I7	2	3165 - 1
AH176126	3G1	27	3365 - 4
AH176232	2G23	4	3104 - 5
AH176273	2G23	17	3104 - 5
AH202080	2I11	18	3165 - 8
AH202080	3G6	18	3365 - 9
AH206178	2I10	8	3165 - 4
AH207190	3G1	28	3365 - 4
AH207312	3G2	12	3365 - 5
AH208338	2I11	1	3165 - 8
AH208338	3G6	1	3365 - 9
AH209022	2G13	19	3102 - 13
AH209507	3F25	22	3365 - 3
AH209656	3F25	1	3365 - 3
AH210287	2I10	24	3165 - 4
AH210287	3G2	29	3365 - 5
AH210737	2G11	3	3102 - 11
AH210737	2G13	18	3102 - 13
AH210737	2G17	20	3102 - 17
AH211105	2I7	23	3165 - 1
AH211105	2I9	21	3165 - 3
AH211106	2I9	1	3165 - 3
AH211146	3G3	21	3365 - 6
AH211146	3G4	19	3365 - 7
AH211147	3G4	1	3365 - 7
AH211148	3G3	21	3365 - 6
AH211148	3G4	19	3365 - 7
AH211149	3G4	1	3365 - 7
AH212092	2I11	18	3165 - 8
AH212092	3G6	18	3365 - 9
AH212092	3G8	19	3365 - 11
AH212101	2I7	24	3165 - 1
AH212101	2I9	23	3165 - 3
AH212103	3G3	22	3365 - 6
AH212103	3G4	21	3365 - 7
AH212103	3G5	21	3365 - 8
AH212541	2I10	23	3165 - 4
AH212542	2I10	8	3165 - 4
AH212543	2I10	14	3165 - 4
AH212585	2I10	24	3165 - 4
AH213631	3G5	19	3365 - 8
AH213632	3G5	19	3365 - 8
AH213633	3G5	1	3365 - 8
AH213635	3G5	1	3365 - 8
AH213888	3G5	18	3365 - 8
AH216299	3G1	27	3365 - 4
AH216318	3C16	17	3346 - 5
AH216318	3G8	17	3365 - 11
AH216375	3G8	1	3365 - 11
AH216602	3G2	2	3365 - 5
AH216602	3G2	25	3365 - 5
AH217349	2G21	2	3104 - 3
AH217349	2G23	16	3104 - 5
AH217890	2I10	23	3165 - 4
AH61472	2F10	30	2160 - 15
AH64349	1C18	33	0341 - 5
AH64349	1C18	34	0341 - 5
AH64349	2F8	28	2160 - 13
AH64349	2F10	22	2160 - 15
AH75162	2F10	12	2160 - 15
AH86866	1B2	1	0110 - 2
AH89557	1G2	40	0510 - 3
AH89557	1G2	42	0510 - 3
AH89557	1G15	3	0560 - 3
AH89557	1H13	27	1060 - 7
AH89557	1J12	10	1674 - 9
AH89557	2D18	42	1830 - 7B
AH89557	2D23	8	1830 - 13
AH96317	1G15	4	0560 - 3
AH96708	2F10	14	2160 - 15
AL110924	1C4	4	0250 - 7
AL111096	1C4	5	0250 - 7
AL111096	1C9	5	0250 - 13
AL116557	1C9	6	0250 - 13
AL117021	1C5	2	0250 - 8
AL117022	1C5	4	0250 - 8
AL153661	2B25	8	1814 - 11
AL155227	1G20	1	0960 - 3
AL155227	1G22	1	0960 - 5
AL32877	1B11	18	0201 - 3
AL79794	1C9	2	0250 - 13
AL81776	1C4	16	0250 - 7
AL81843	1C4	14	0250 - 7
AL81844	1C4	24	0250 - 7
AM102062	2B15	1	1814 - 3
AM102062	2C18	11	1816 - 15
AM102062	2C20	33	1816 - 17
AM118928	2C14	6	1816 - 11
AN132749	1B7	1	0120 - 1
AN205068	1G2	10	0510 - 3
AR21836	2F8	24	2160 - 13
AR21836	2F12	23	2160 - 17
AR21837	1I11	2	1369 - 7
AR21837	3F22	28	3363 - 29
AR21842	2D14	23	1830 - 5
AR21842	2D23	41B	1830 - 13
AR21842	3F12	28	3363 - 15
AR21999	1F23	3	0505 - 3
AR40418	1G9	5	0520 - 5
AR44361	1G7	11	0520 - 3
AR48041	1I25	5	1673 - 5
AR48236	1G15	7	0560 - 3
AR48236	1H13	20	1060 - 7
AR48236	2F16	8	2160 - 19
AR62936	2D14	16	1830 - 5
AR65005	1K1	1	1674 - 24
AR65006	1K1	2	1674 - 24
AR65294	1G2	20	0510 - 3
AR65507	1E1	9	0403 - 2
AR67069	1I18	8	1671 - 7
AR68999	2F10	1	2160 - 15
AR73144	1J2	8	1674 - 3
AR77962	1G17	7	0560 - 5
AR77962	2D18	46	1830 - 7B
AR77962	2F16	8	2160 - 19
AR83396	3C16	26	3346 - 5
AR85327	2I2	19	3163 - 3
AR85327	3E25	4	3363 - 3
AR85328	2F10	6	2160 - 15

NUMERICAL INDEX - CONTINUED

PART NO.	GRID	KEY	PAGE
AR85519	1E21	4	0413 - 5
AR89602	3F4	1	3363 - 7
AR89602	3F6	15	3363 - 9
AR91793	1J23	42	1674 - 21
AR91896	2B15	10	1814 - 3
AR91896	2E3	10	1910 - 3
AR94101	1J12	19	1674 - 9
AT101565	2F16	5	2160 - 19
AT103399	1J12	14	1674 - 9
AT103919	2E14	1	2002 - 3
AT106397	2D4	6	1821 - 9
AT106413	2C2	2	1814 - 13
AT106655	3D24	9	3362 - 29
AT112810	2D21	2	1830 - 10
AT114019	1B19	2B	0230 - 1
AT114019	1B23	9C	0250 - 2
AT117631	3D20	5	3362 - 27
AT117631	3D22	17	3362 - 27B
AT120461	2E16	6	2004 - 3
AT121123	3E3	9	3362 - 30
AT121123	3F23	9	3363 - 30
AT124107	2H2	8	3115 - 5
AT125801	2D4	2	1821 - 9
AT125805	2D4	18	1821 - 9
AT125829	2D4	19	1821 - 9
AT130104	1I25	8	1673 - 5
AT130104	1I25	10	1673 - 5
AT130104	1I25	14	1673 - 5
AT130208	1I9	1	1369 - 5
AT132864	1I16	7	1671 - 5
AT135688	1B7	2	0120 - 1
AT135767	3C23	17	3362 - 5
AT13740	1E4	4	0404 - 3
AT13740	1G2	34	0510 - 3
AT139694	1G20	4	0960 - 3
AT139694	1G22	4	0960 - 5
AT141011	1J12	9	1674 - 9
AT142403	2G11	26	3102 - 11
AT145792	2B15	13	1814 - 3
AT151036	2D14	2	1830 - 5
AT152180	1I11	3	1369 - 7
AT156431	1J19	7	1674 - 17
AT156431	3D22	24	3362 - 27B
AT156440	2D21	4	1830 - 10
AT156445	1G15	19	0560 - 3
AT159688	1F25	6	0505 - 5
AT159811	1J12	15	1674 - 9
AT161638	1G15	23	0560 - 3
AT161638	2F16	2	2160 - 19
AT162180	2H2	4	3115 - 5
AT162848	2D23	40	1830 - 13
AT163088	1J2	19	1674 - 3
AT164803	2B7	8	1811 - 3
AT164804	2B7	7	1811 - 3
AT165288	2B7	23	1811 - 3
AT165288	2B9	4	1811 - 5
AT165735	3D8	3	3362 - 15
AT167399	1J12	22	1674 - 9
AT167754	1G11	2	0530 - 3
AT169058	2C2	1	1814 - 13
AT169087	2H2	14	3115 - 5
AT169087	2H4	4	3115 - 7
AT169087	3B13	13	3315 - 5
AT169087	3B15	1	3315 - 11
AT169087	3B17	9	3315 - 11B
AT169087	3B19	1	3315 - 13
AT169087	3B21	1	3315 - 13B
AT169087	3C4	1	3315 - 25
AT169175	2D20	6	1830 - 9
AT169175	2D21	3	1830 - 10
AT169175	2D21	5	1830 - 10
AT169175	2D21	15	1830 - 10
AT169180	2D21	1	1830 - 10
AT169373	2H19	5	3162 - 11
AT169929	2D21	4	1830 - 10
AT171108	1H13	15	1060 - 7
AT171162	1F23	1	0505 - 3
AT171403	3D6	2	3362 - 13
AT171403	3E13	2	3362 - 41
AT171539	1F23	4	0505 - 3
AT171550	2H2	5	3115 - 5
AT171637	1B18	1	0210 - 4
AT171681	3D20	22	3362 - 27
AT171681	3D22	18	3362 - 27B
AT172937	2H17	2	3162 - 9
AT173254	1B23	9B	0250 - 2
AT173313	2D10	19	1821 - 15
AT173314	2D10	4	1821 - 15
AT173315	2D10	5	1821 - 15
AT173321	2D10	9	1821 - 15
AT173321	2D10	14	1821 - 15
AT173385	1F23	2	0505 - 3
AT173400	1G13	12	0540 - 3
AT173610	1G2	25	0510 - 3
AT173840	2H23	7	3162 - 15
AT173840	3D4	2	3362 - 11
AT174348	2C2	3	1814 - 13
AT174697	1E4	29	0404 - 3
AT174697	2D20	26	1830 - 9
AT174743	2F16	1	2160 - 19
AT175069	1J2	5	1674 - 3
AT175070	1J2	4	1674 - 3
AT175071	1J2	2	1674 - 3
AT175072	1J2	2	1674 - 3
AT175177	3F20	22	3363 - 23
AT175300	1J2	1	1674 - 3
AT175353	2D4	16	1821 - 9
AT175357	1G7	17	0520 - 3
AT175374	1G13	3	0540 - 3
AT175436	2D4	3	1821 - 9
AT175603	1I23	5	1673 - 3
AT175604	1J19	1	1674 - 17
AT175604	3D22	25	3362 - 27B
AT175775	1C14	1	0325 - 1
AT177227	2D14	6	1830 - 5
AT177703	1D17	8	0360 - 7
AT178065	2C22	21	1821 - 3
AT178362	2H21	6	3162 - 13
AT178362	3D10	31	3362 - 17
AT178362	3E17	4	3362 - 45
AT178363	3D6	28	3362 - 13
AT178363	3E13	7	3362 - 41
AT178390	1B24	3	0250 - 3
AT178402	3D12	2	3362 - 19
AT178402	3D12	27	3362 - 19
AT178402	3E19	2	3362 - 47
AT178526	1J4	13	1674 - 5
AT178542	1G7	10	0520 - 3
AT178632	3D4	19	3362 - 11
AT178840	1I7	1	1369 - 3
AT178842	1I7	1	1369 - 3
AT178844	1I7	1	1369 - 3
AT178930	2D23	20	1830 - 13
AT179153	1D11	3	0360 - 1
AT179312	1C19	3	0350 - 1
AT179314	1C21	7	0350 - 3
AT179316	1C18	8	0341 - 5
AT179319	1D17	8	0360 - 7
AT179320	1D17	8	0360 - 7
AT179323	1D11	11	0360 - 1
AT179423	2C22	21	1821 - 3
AT179466	1D10	2	0350 - 17
AT179468	1D10	4	0350 - 17
AT179469	1D2	5	0350 - 9
AT179469	1D6	11	0350 - 13
AT179469	1D8	11	0350 - 15
AT179470	1D2	3	0350 - 9
AT179470	1D6	13	0350 - 13
AT179470	1D8	13	0350 - 15
AT179471	1D4	16	0350 - 11
AT179471	1D6	15	0350 - 13
AT179471	1D8	15	0350 - 15
AT179472	1C23	1	0350 - 5
AT179472	1C25	1	0350 - 7
AT179472	1D8	1	0350 - 15
AT179472	1D10	30	0350 - 17
AT179481	1D2	17	0350 - 9
AT179491	1D13	10	0360 - 3
AT179491	1D15	5	0360 - 5
AT179492	1D13	9	0360 - 3
AT179537	1B15	6	0210 - 1
AT179537	1H18	20	1111 - 3
AT179590	1B24	1	0250 - 3
AT179686	2C24	31	1821 - 5
AT179686	2D2	22	1821 - 7
AT179687	2D2	19	1821 - 7
AT179688	2C24	14	1821 - 5
AT179691	2C24	22	1821 - 5
AT179691	2C24	27	1821 - 5
AT179692	2C24	26	1821 - 5
AT179692	2D2	18	1821 - 7
AT179693	2D4	32	1821 - 9
AT179694	2D4	27	1821 - 9
AT179699	2D4	13	1821 - 9
AT179714	2D6	6	1821 - 11
AT179899	1H18	25	1111 - 3
AT179996	1I11	13	1369 - 7
AT180037	3D24	10	3362 - 29
AT180076	3F18	33	3363 - 21
AT180076	3F20	26	3363 - 23
AT180079	3F18	36	3363 - 21
AT180079	3F20	23	3363 - 23
AT180079	3F20	25	3363 - 23
AT180081	3F18	33	3363 - 21
AT180081	3F20	26	3363 - 23
AT180082	3F18	34	3363 - 21
AT180082	3F20	27	3363 - 23
AT180083	3F18	35	3363 - 21
AT180083	3F20	24	3363 - 23
AT180086	3F18	36	3363 - 21
AT180086	3F20	23	3363 - 23
AT180086	3F20	25	3363 - 23
AT180333	1I7	1	1369 - 3
AT180334	1I7	1	1369 - 3
AT180408	3F18	34	3363 - 21
AT180408	3F20	27	3363 - 23
AT180409	3F18	35	3363 - 21
AT180409	3F20	24	3363 - 23
AT180485	1J4	14	1674 - 5
AT180705	1J12	29	1674 - 9
AT180706	1J12	32	1674 - 9

NUMERICAL INDEX - CONTINUED

PART NO.	GRID	KEY	PAGE
AT180746	1H18	25	1111 - 3
AT180861	3F18	43	3363 - 21
AT180887	2F12	11	2160 - 17
AT181146	3F20	31	3363 - 23
AT181530	2D23	4	1830 - 13
AT181582	1F23	11	0505 - 3
AT181746	1D2	18	0350 - 9
AT181838	1K8	1	1740 - 3
AT182141	1B11	19	0201 - 3
AT182488	3C8	28	3344 - 3
AT182490	3C8	1	3344 - 3
AT182505	3C14	4	3346 - 3
AT182506	3C14	18	3346 - 3
AT182520	1C13	1	0315 - 5
AT182555	3F2	14	3363 - 5
AT182556	3F4	23	3363 - 7
AT182556	3F6	22	3363 - 9
AT182557	3F8	10	3363 - 11
AT182558	3F12	11	3363 - 15
AT182559	3F2	15	3363 - 5
AT182560	3F4	21	3363 - 7
AT182560	3F6	21	3363 - 9
AT182561	3F8	9	3363 - 11
AT182562	3F12	18	3363 - 15
AT182563	3F14	21	3363 - 17
AT182563	3F16	23	3363 - 19
AT182564	3F14	22	3363 - 17
AT182564	3F16	7	3363 - 19
AT182575	3C6	14	3343 - 3
AT182602	1I7	1	1369 - 3
AT182603	1I7	1	1369 - 3
AT182875	1B24	1	0250 - 3
AT182946	1G7	15	0520 - 3
AT182947	1D13	14	0360 - 3
AT182954	2D10	19	1821 - 15
AT183048	3B7	13	3302 - 3
AT183049	3B7	13	3302 - 3
AT183050	3B7	13	3302 - 3
AT183052	3B7	13	3302 - 3
AT183053	3B7	13	3302 - 3
AT183055	3B7	13	3302 - 3
AT183056	3B7	13	3302 - 3
AT183058	3B7	13	3302 - 3
AT183222	1F23	13	0505 - 3
AT183246	1J17	4	1674 - 14
AT183373	2F10	33	2160 - 15
AT183392	3C25	4	3362 - 7
AT183392	3D2	12	3362 - 9
AT183404	3C12	16	3345 - 3
AT183404	3C14	10	3346 - 3
AT183404	3C16	21	3346 - 5
AT183405	3C12	14	3345 - 3
AT183410	1K8	13	1740 - 3
AT183412	3C12	6	3345 - 3
AT183425	2B7	12	1811 - 3
AT183428	2E5	2	1913 - 3
AT183521	2H11	1	3162 - 3
AT183521	2H13	1	3162 - 5
AT183810	2D10	15	1821 - 15
AT183823	1J12	20	1674 - 9
AT183869	1H13	18	1060 - 7
AT183869	3E21	12	3363 - 1B
AT183881	1G17	5	0560 - 5
AT183973	1D15	15	0360 - 5
AT184007	1D15	14	0360 - 5
AT184042	1D4	1	0350 - 11
AT184042	1D6	1	0350 - 13
AT184052	1C23	15	0350 - 5
AT184052	1C25	15	0350 - 7
AT184052	1D2	1	0350 - 9
AT184056	1D2	16	0350 - 9
AT184059	1C18	14	0341 - 5
AT184060	1C18	4	0341 - 5
AT184061	1C18	5	0341 - 5
AT184062	1C18	6	0341 - 5
AT184089	2B21	1	1814 - 9
AT184233	1H13	9	1060 - 7
AT184269	1B11	4	0201 - 3
AT184272	1B11	3	0201 - 3
AT184273	1B11	9	0201 - 3
AT184275	1B11	2	0201 - 3
AT184276	1B15	1	0210 - 1
AT184277	1B15	2	0210 - 1
AT184279	1B15	5	0210 - 1
AT184280	1H7	13	1011 - 3
AT184281	1H7	5	1011 - 3
AT184284	1H7	31	1011 - 3
AT184286	1B12	4	0201 - 4
AT184287	1B12	2	0201 - 4
AT184309	1B17	4	0210 - 3
AT184334	1B17	14	0210 - 3
AT184335	1J10	24	1674 - 7
AT184360	1C18	29	0341 - 5
AT184361	1D10	31	0350 - 17
AT184397	1G22	5	0960 - 5
AT184416	2B15	20	1814 - 3
AT184417	2B15	20	1814 - 3
AT184524	2B17	40	1814 - 5
AT184590	2C16	24	1816 - 13
AT184598	3B13	3	3315 - 5
AT184599	3B13	2	3315 - 5
AT184609	2D6	1	1821 - 11
AT184609	2D8	2	1821 - 13
AT184651	2B17	48	1814 - 5
AT184652	2B15	19	1814 - 3
AT184695	1H9	15	1060 - 3
AT184696	1H11	34	1060 - 5
AT184719	2B15	19	1814 - 3
AT184728	1G20	5	0960 - 3
AT184736	1I25	1	1673 - 5
AT184737	1I25	4	1673 - 5
AT184767	2B15	13	1814 - 3
AT184965	2B25	7	1814 - 11
AT184966	2B25	8	1814 - 11
AT184969	2C4	2	1814 - 15
AT184970	2C4	1	1814 - 15
AT184972	1I25	15	1673 - 5
AT185396	2C16	17	1816 - 13
AT185398	1H11	26	1060 - 5
AT185405	1H11	14	1060 - 5
AT185419	2H6	9	3140 - 3
AT185451	1I25	15	1673 - 5
AT185498	2B9	7	1811 - 5
AT185499	2B9	7	1811 - 5
AT185499	2E12	21	2001 - 3
AT185500	2E12	19	2001 - 3
AT185791	1C18	18	0341 - 5
AT185791	1C18	25	0341 - 5
AT185793	1C23	13	0350 - 5
AT185793	1C25	13	0350 - 7
AT185793	1D4	14	0350 - 11
AT185836	1G5	25	0515 - 3
AT185847	3B23	15	3315 - 17
AT185982	2D23	19	1830 - 13
AT185983	2D23	26	1830 - 13
AT186150	2D4	21	1821 - 9
AT186152	2C22	5	1821 - 3
AT186155	2E14	12	2002 - 3
AT186156	2C22	6	1821 - 3
AT186204	2D8	1	1821 - 13
AT186213	1I19	5	1671 - 8
AT186224	2D10	19	1821 - 15
AT186289	2D18	57	1830 - 7B
AT186289	2D20	30	1830 - 9
AT186304	2D18	47	1830 - 7B
AT186307	2E18	2	2007 - 3
AT186321	2B13	11	1812 - 3
AT186382	3B13	6	3315 - 5
AT186701	2D2	20	1821 - 7
AT186839	1H9	3	1060 - 3
AT186913	2C4	11	1814 - 15
AT186925	1G2	11	0510 - 3
AT186927	1B11	12	0201 - 3
AT186927	1B12	10	0201 - 4
AT187036	2B21	21	1814 - 9
AT187096	2B9	1	1811 - 5
AT187229	2C4	10	1814 - 15
AT187441	2D23	51	1830 - 13
AT187484	2H11	1	3162 - 3
AT187484	2H13	1	3162 - 5
AT187666	1H9	14	1060 - 3
AT187666	3E5	7	3362 - 33
AT187666	3E21	28	3363 - 1B
AT187667	1H9	11	1060 - 3
AT187669	3E3	4	3362 - 30
AT187669	3E21	7	3363 - 1B
AT187669	3E21	11B	3363 - 1B
AT187669	3E21	14	3363 - 1B
AT187669	3E21	33	3363 - 1B
AT187684	1H2	12	0960 - 9
AT187686	1H2	13	0960 - 9
AT187690	1G24	12	0960 - 7
AT187707	1H23	12	1314 - 3
AT187708	1H23	6	1314 - 3
AT187711	1C21	6	0350 - 3
AT187793	3C10	6	3344 - 5
AT187797	1J19	5	1674 - 17
AT187797	3D22	19	3362 - 27B
AT187811	3D20	1	3362 - 27
AT187815	1I23	9	1673 - 3
AT187816	1I23	1	1673 - 3
AT187868	1I25	8	1673 - 5
AT188002	1G11	3	0530 - 3
AT188006	2E7	1	1921 - 3
AT188010	1G24	7	0960 - 7
AT188010	1H2	7	0960 - 9
AT188016	2F8	20	2160 - 13
AT188028	2F12	8	2160 - 17
AT188028	2F14	27	2160 - 17B
AT188041	1H15	2	1060 - 9
AT188042	1H15	1	1060 - 9
AT188048	2G5	8	3102 - 5
AT188049	2G5	8	3102 - 5
AT188053	2G9	1	3102 - 9
AT188053	2G11	1	3102 - 11
AT188073	2E5	6	1913 - 3
AT188235	2F16	10	2160 - 19
AT188241	1H21	6	1313 - 3
AT188245	3C18	13	3348 - 3
AT188293	3C16	22	3346 - 5
AT188294	3C16	31	3346 - 5

NUMERICAL INDEX - CONTINUED

PART NO.	GRID	KEY	PAGE
AT188295	3C16	9	3346 - 5
AT188306	2D12	11	1830 - 3
AT188307	2D12	1	1830 - 3
AT188346	2G25	7	3115 - 3
AT188348	2G25	1	3115 - 3
AT188366	2F8	14	2160 - 13
AT188389	3F8	4	3363 - 11
AT188390	3F2	16	3363 - 5
AT188391	3F2	4	3363 - 5
AT188410	2H9	11	3140 - 7
AT188412	2H9	2	3140 - 7
AT188428	3E25	6	3363 - 3
AT188429	3E25	13	3363 - 3
AT188491	2F8	29	2160 - 13
AT188492	2F8	9	2160 - 13
AT188495	2F8	13	2160 - 13
AT188497	1H13	19	1060 - 7
AT188502	2F8	42	2160 - 13
AT188503	2F8	32	2160 - 13
AT188507	3F2	5	3363 - 5
AT188519	2F12	5	2160 - 17
AT188519	2F14	28	2160 - 17B
AT188520	2F12	9	2160 - 17
AT188521	2F12	13	2160 - 17
AT188545	3F4	15	3363 - 7
AT188546	3F4	8	3363 - 7
AT188547	3F4	24	3363 - 7
AT188547	3F6	26	3363 - 9
AT188553	3F12	9	3363 - 15
AT188554	3F12	19	3363 - 15
AT188558	3F6	19	3363 - 9
AT188559	3F6	25	3363 - 9
AT188560	3F12	20	3363 - 15
AT188563	3F12	10	3363 - 15
AT188570	3F14	4	3363 - 17
AT188572	3F16	3	3363 - 19
AT188759	2E12	9	2001 - 3
AT188766	2C2	4	1814 - 13
AT188965	2B7	28	1811 - 3
AT189030	2C22	8	1821 - 3
AT189036	3D24	11	3362 - 29
AT189038	3D24	19	3362 - 29
AT189041	1J2	18	1674 - 3
AT189059	2C22	7	1821 - 3
AT189078	3D20	10	3362 - 27
AT189078	3D22	20	3362 - 27B
AT189088	1J10	7	1674 - 7
AT189145	1J10	26	1674 - 7
AT189145	2D10	19	1821 - 15
AT189174	1J4	17	1674 - 5
AT189175	2B21	18	1814 - 9
AT189176	2B21	15	1814 - 9
AT189182	1H9	22	1060 - 3
AT189183	1H9	24	1060 - 3
AT189210	2F20	20	2160 - 23
AT189269	2C6	3	1816 - 3
AT189270	2C6	3	1816 - 3
AT189271	2C6	3	1816 - 3
AT189311	3C16	3	3346 - 5
AT189413	2H17	33	3162 - 9
AT189413	2H19	24	3162 - 11
AT189413	2H21	23	3162 - 13
AT189413	2H23	9	3162 - 15
AT189413	3D4	24	3362 - 11
AT189413	3D6	38	3362 - 13
AT189413	3D8	34	3362 - 15
AT189413	3D10	39	3362 - 17
AT189413	3D12	28	3362 - 19
AT189413	3D14	23	3362 - 21
AT189413	3D16	24	3362 - 23
AT189413	3E13	37	3362 - 41
AT189413	3E15	33	3362 - 43
AT189413	3E17	36	3362 - 45
AT189413	3E19	29	3362 - 47
AT189432	3F8	5	3363 - 11
AT189473	1J10	5	1674 - 7
AT189473	1J10	8	1674 - 7
AT189514	1G2	33	0510 - 3
AT189518	1G2	8	0510 - 3
AT189543	2D23	38	1830 - 13
AT189614	1G2	37	0510 - 3
AT189630	1J10	10	1674 - 7
AT189661	2E3	34	1910 - 3
AT189692	1J10	25	1674 - 7
AT189694	2G11	11	3102 - 11
AT189822	2G11	9	3102 - 11
AT189822	2G17	21	3102 - 17
AT189836	3C12	10	3345 - 3
AT190011	1H13	26	1060 - 7
AT190012	1H13	29	1060 - 7
AT190013	1H13	5	1060 - 7
AT190014	1H13	4	1060 - 7
AT190015	1H13	28	1060 - 7
AT190073	3B19	13	3315 - 13
AT190191	2B21	10	1814 - 9
AT190192	2B21	17	1814 - 9
AT190193	2B21	4	1814 - 9
AT190194	2B21	3	1814 - 9
AT190331	3C21	1	3362 - 3
AT190331	3C23	3	3362 - 5
AT190331	3C23	13	3362 - 5
AT190331	3C23	25	3362 - 5
AT190333	3C23	8	3362 - 5
AT190333	3C23	9	3362 - 5
AT190333	3C23	11	3362 - 5
AT190333	3C23	15	3362 - 5
AT190333	3C23	16	3362 - 5
AT190334	3C23	4	3362 - 5
AT190334	3C23	8	3362 - 5
AT190334	3C23	9	3362 - 5
AT190334	3C23	11	3362 - 5
AT190334	3C23	12	3362 - 5
AT190385	3B23	16	3315 - 17
AT190462	3C25	4	3362 - 7
AT190462	3D2	12	3362 - 9
AT190474	1B24	4	0250 - 3
AT190474	1B24	7	0250 - 3
AT190476	3C25	4	3362 - 7
AT190476	3D2	12	3362 - 9
AT190490	2B21	11	1814 - 9
AT190490	2B21	12	1814 - 9
AT190490	2B21	13	1814 - 9
AT190490	2B21	14	1814 - 9
AT190495	1G7	18	0520 - 3
AT190630	1B19	6	0230 - 1
AT190630	1B23	4	0250 - 2
AT190658	2D23	50	1830 - 13
AT190701	2G11	15	3102 - 11
AT190701	2G17	22	3102 - 17
AT190712	3F2	17	3363 - 5
AT190712	3F4	27	3363 - 7
AT190712	3F6	27	3363 - 9
AT190713	3F8	12	3363 - 11
AT190714	3F8	11	3363 - 11
AT190724	3C10	5	3344 - 5
AT190741	3C23	24	3362 - 5
AT190880	2G11	3	3102 - 11
AT190880	2G12	14	3102 - 12
AT190881	2G12	1	3102 - 12
AT190888	1H13	24	1060 - 7
AT190898	2G12	15	3102 - 12
AT190900	2G11	6	3102 - 11
AT190900	2G17	23	3102 - 17
AT190903	3C8	21	3344 - 3
AT190929	1J14	9	1674 - 9B
AT191102	2C16	16	1816 - 13
AT191186	1B23	1	0250 - 2
AT191187	1H4	1	0960 - 11
AT191188	1C9	1	0250 - 13
AT191189	1C2	1	0250 - 5
AT191190	1C2	1	0250 - 5
AT191241	3C16	18	3346 - 5
AT191366	2F2	22	2160 - 5
AT191367	2F2	13	2160 - 5
AT191368	2F2	12	2160 - 5
AT191369	2F2	19	2160 - 5
AT191371	2F2	4	2160 - 5
AT191371	2F2	11	2160 - 5
AT191371	2F2	15	2160 - 5
AT191371	2F6	15	2160 - 9
AT191407	1I25	16	1673 - 5
AT191408	1I25	11	1673 - 5
AT191408	1I25	14	1673 - 5
AT191409	1I25	8	1673 - 5
AT191414	1C16	9	0341 - 3
AT191415	1C16	10	0341 - 3
AT191446	3B15	6	3315 - 11
AT191507	2D20	31	1830 - 9
AT191575	2E12	6	2001 - 3
AT191620	2C24	30	1821 - 5
AT191629	2C12	11	1816 - 9
AT191688	2C12	19	1816 - 9
AT191747	1J4	19	1674 - 5
AT191813	2F16	9	2160 - 19
AT191817	1I16	1	1671 - 5
AT191826	2C12	18	1816 - 9
AT191873	1I25	17	1673 - 5
AT191875	1I25	9	1673 - 5
AT191876	2C12	21	1816 - 9
AT191877	2C12	17	1816 - 9
AT191919	2C12	24	1816 - 9
AT191990	2D16	28	1830 - 7
AT191993	2D16	9	1830 - 7
AT191994	2D16	12	1830 - 7
AT192032	2B7	27	1811 - 3
AT192033	2D16	25	1830 - 7
AT192074	2D12	5	1830 - 3
AT192122	2C14	7	1816 - 11
AT192200	2D20	32	1830 - 9
AT192217	2E12	16	2001 - 3
AT192242	1I25	19	1673 - 5
AT192278	1G22	15	0960 - 5
AT192279	1G22	16	0960 - 5
AT192280	1G22	17	0960 - 5
AT192352	1C16	11	0341 - 3
AT192354	1C16	11	0341 - 3
AT192356	1D11	9	0360 - 1
AT192372	2H19	15	3162 - 11
AT192373	2F18	6	2160 - 21
AT192414	2B9	13	1811 - 5
AT192457	2H17	5	3162 - 9

NUMERICAL INDEX - CONTINUED

PART NO.	GRID	KEY	PAGE
AT192457	3D8	2	3362 - 15
AT192457	3E15	2	3362 - 43
AT192460	1I25	14	1673 - 5
AT192509	2D16	35	1830 - 7
AT192552	1D17	3	0360 - 7
AT192553	1D17	11	0360 - 7
AT192587	2B25	1	1814 - 11
AT192625	1B3	1	0110 - 3
AT192687	2D4	27	1821 - 9
AT192716	1J10	27	1674 - 7
AT192776	1G5	44	0515 - 3
AT193132	1K8	20	1740 - 3
AT193365	1G24	24	0960 - 7
AT193365	1H2	23	0960 - 9
AT193365	1H9	14	1060 - 3
AT193365	1H9	30	1060 - 3
AT193365	3E5	7	3362 - 33
AT193365	3E21	1	3363 - 1B
AT193365	3E21	2	3363 - 1B
AT193365	3E21	34	3363 - 1B
AT193366	1G24	24	0960 - 7
AT193366	1H2	23	0960 - 9
AT193366	1H9	11	1060 - 3
AT193366	1H9	31	1060 - 3
AT193366	3E21	34	3363 - 1B
AT193500	2D16	24	1830 - 7
AT193500	2D20	16	1830 - 9
AT193704	1C23	4	0350 - 5
AT193704	1C25	4	0350 - 7
AT193704	1D2	12	0350 - 9
AT193704	1D4	4	0350 - 11
AT193704	1D6	4	0350 - 13
AT193704	1D8	4	0350 - 15
AT194279	2C4	4	1814 - 15
AT194492	1J10	4	1674 - 7
AT194498	3C12	5	3345 - 3
AT194718	2B15	2	1814 - 3
AT194821	1I23	9	1673 - 3
AT194894	1J2	16	1674 - 3
AT194894	1J4	18	1674 - 5
AT194895	1J2	16	1674 - 3
AT194895	1J4	18	1674 - 5
AT194937	2F12	11	2160 - 17
AT194937	2F14	19	2160 - 17B
AT194984	1H13	14	1060 - 7
AT195043	1C4	12	0250 - 7
AT195044	1C4	12	0250 - 7
AT195136	1B19	10	0230 - 1
AT195140	1H13	9	1060 - 7
AT195140	2H25	14	3162 - 17
AT195141	1H13	9	1060 - 7
AT195141	2H25	15	3162 - 17
AT195142	1H13	9	1060 - 7
AT195143	1H13	9	1060 - 7
AT195144	1H13	9	1060 - 7
AT195144	2H25	7	3162 - 17
AT195144	3E5	13	3362 - 33
AT195152	1B17	18	0210 - 3
AT195201	1G24	10	0960 - 7
AT195201	1H2	10	0960 - 9
AT195201	2I6	33	3163 - 7
AT195202	1G24	11	0960 - 7
AT195202	1H2	11	0960 - 9
AT195203	1G24	4	0960 - 7
AT195203	1H2	4	0960 - 9
AT195244	1H21	1	1313 - 3
AT195276	2F18	7	2160 - 21
AT195301	1J10	22	1674 - 7
AT195302	1J10	22	1674 - 7
AT195409	2D23	21	1830 - 13
AT195411	2D23	49	1830 - 13
AT195421	1G5	29	0515 - 3
AT195461	1I23	7	1673 - 3
AT195462	1I23	8	1673 - 3
AT195612	3D20	14	3362 - 27
AT195612	3D22	35	3362 - 27B
AT195613	3D20	25	3362 - 27
AT195613	3D22	36	3362 - 27B
AT195614	3D20	29	3362 - 27
AT195614	3D22	37	3362 - 27B
AT195620	3B23	4	3315 - 17
AT195622	1I16	2	1671 - 5
AT195623	3B23	5	3315 - 17
AT195669	3C18	12	3348 - 3
AT195679	3F10	9	3363 - 13
AT195680	3F10	5	3363 - 13
AT195685	3F10	4	3363 - 13
AT195686	1G22	18	0960 - 5
AT195731	2D16	40	1830 - 7
AT195751	1G15	12	0560 - 3
AT195753	1D13	42	0360 - 3
AT195758	3B15	20	3315 - 11
AT195759	3B19	17	3315 - 13
AT195765	2I4	1	3163 - 5
AT195765	2I4	19	3163 - 5
AT195768	2I2	28	3163 - 3
AT195769	2I2	27	3163 - 3
AT195770	2I2	15	3163 - 3
AT195771	2I2	17	3163 - 3
AT195772	2I4	18	3163 - 5
AT195773	2I4	17	3163 - 5
AT195775	2I4	1	3163 - 5
AT195775	2I4	19	3163 - 5
AT195775	2I4	22	3163 - 5
AT195775	2I4	23	3163 - 5
AT195776	2I4	4	3163 - 5
AT195777	2I4	5	3163 - 5
AT195778	2I4	30	3163 - 5
AT195779	2I4	29	3163 - 5
AT195780	2I2	24	3163 - 3
AT195781	2I2	26	3163 - 3
AT195782	2I2	5	3163 - 3
AT195783	2I2	16	3163 - 3
AT195814	2E14	10	2002 - 3
AT195815	2E14	10	2002 - 3
AT195855	3C18	1	3348 - 3
AT195856	1J12	2	1674 - 9
AT195894	2B7	4	1811 - 3
AT195911	1I16	1	1671 - 5
AT195922	2H25	5	3162 - 17
AT195922	3E5	13	3362 - 33
AT195957	3E3	1	3362 - 30
AT195957	3F23	1	3363 - 30
AT195978	3F14	28	3363 - 17
AT195978	3F16	27	3363 - 19
AT195979	3F14	24	3363 - 17
AT195979	3F16	28	3363 - 19
AT196046	3E21	30	3363 - 1B
AT196055	3E21	32	3363 - 1B
AT196056	3E21	31	3363 - 1B
AT196058	2F8	10	2160 - 13
AT196063	3C25	4	3362 - 7
AT196063	3D2	12	3362 - 9
AT196064	3C25	4	3362 - 7
AT196064	3D2	12	3362 - 9
AT196065	3C25	4	3362 - 7
AT196065	3D2	12	3362 - 9
AT196166	1B21	2	0230 - 3
AT196168	1B20	2	0230 - 2
AT196169	1B22	2	0230 - 4
AT196171	1B20	5	0230 - 2
AT196172	1B20	4	0230 - 2
AT196173	1B21	8	0230 - 3
AT196175	1B21	3	0230 - 3
AT196178	3E7	1	3362 - 35
AT196179	3E9	1	3362 - 37
AT196245	2H17	12	3162 - 9
AT196246	2H17	24	3162 - 9
AT196279	2E7	7	1921 - 3
AT196294	2B13	11	1812 - 3
AT196298	2F12	6A	2160 - 17
AT196306	2E3	46	1910 - 3
AT196307	2E3	45	1910 - 3
AT196308	2E3	20	1910 - 3
AT196338	1G5	10	0515 - 3
AT196351	2F20	22	2160 - 23
AT196358	2E3	11	1910 - 3
AT196373	2E3	49	1910 - 3
AT196387	3B23	5	3315 - 17
AT196390	1J2	17	1674 - 3
AT196391	2B21	6	1814 - 9
AT196425	2E3	40	1910 - 3
AT196427	2E13	1	2002 - 2
AT196433	2E3	39	1910 - 3
AT196443	3D20	34	3362 - 27
AT196487	2E3	48	1910 - 3
AT196522	2B15	22	1814 - 3
AT196571	3C2	2	3315 - 23
AT196571	3C2	3	3315 - 23
AT196572	3C2	16	3315 - 23
AT196573	3C2	15	3315 - 23
AT196590	2H2	17	3115 - 5
AT196591	2H2	7	3115 - 5
AT196596	2H4	3	3115 - 7
AT196619	2E3	6	1910 - 3
AT196714	2F20	3	2160 - 23
AT196716	2F20	11	2160 - 23
AT196753	2F8	42	2160 - 13
AT196760	2F20	23	2160 - 23
AT196790	2F10	20	2160 - 15
AT196793	2D4	27	1821 - 9
AT196806	1C19	4	0350 - 1
AT196811	2G25	10	3115 - 3
AT196814	2F8	41	2160 - 13
AT196816	1G2	6	0510 - 3
AT196817	1G2	7	0510 - 3
AT196832	1G9	10	0520 - 5
AT196852	2I2	23	3163 - 3
AT196852	2I4	40	3163 - 5
AT196855	2F20	29	2160 - 23
AT196857	1G9	4	0520 - 5
AT196879	2E3	4	1910 - 3
AT196889	1I11	14	1369 - 7
AT196943	2H25	13	3162 - 17
AT196992	3F2	20	3363 - 5
AT196992	3F8	14	3363 - 11
AT196994	1F23	16	0505 - 3
AT197025	1B2	2	0110 - 2
AT197026	1B2	1	0110 - 2
AT197026	1B2	2	0110 - 2
AT197087	3C2	11	3315 - 23

NUMERICAL INDEX - CONTINUED

PART NO.	GRID	KEY	PAGE
AT197153	1G15	18	0560 - 3
AT197163	3F18	51	3363 - 21
AT197164	3F20	36	3363 - 23
AT197165	3E5	14	3362 - 33
AT197166	3F22	29	3363 - 29
AT197214	1G24	13	0960 - 7
AT197223	3F12	1	3363 - 15
AT197413	2F10	3	2160 - 15
AT197479	2B13	12	1812 - 3
AT197539	1K3	3	1675 - 1
AT197552	1H9	12	1060 - 3
AT197552	1H11	7	1060 - 5
AT197552	1H11	10	1060 - 5
AT197552	1H11	33	1060 - 5
AT197601	1D6	3	0350 - 13
AT197602	1D8	3	0350 - 15
AT197603	1D2	14	0350 - 9
AT197604	1C23	3	0350 - 5
AT197605	1C25	3	0350 - 7
AT197606	1D4	3	0350 - 11
AT197769	3E3	4	3362 - 30
AT197769	3E21	12	3363 - 1B
AT197769	3E21	14	3363 - 1B
AT197769	3F23	4	3363 - 30
AT197782	1G24	5	0960 - 7
AT197782	1H2	5	0960 - 9
AT197843	2E23	3	2160 - 3
AT197871	1H7	33	1011 - 3
AT197872	2E23	6	2160 - 3
AT197875	2F12	22	2160 - 17
AT197876	3C18	1	3348 - 3
AT197876	3C18	4	3348 - 3
AT197922	1I18	9	1671 - 7
AT198090	1G24	5	0960 - 7
AT198090	1H2	5	0960 - 9
AT198096	1I18	10	1671 - 7
AT198138	1H13	16	1060 - 7
AT198349	3E23	6	3363 - 1D
AT198350	3E23	1	3363 - 1D
AT198351	3E23	4	3363 - 1D
AT198352	3E23	8	3363 - 1D
AT198353	3E23	12	3363 - 1D
AT198354	3E23	9	3363 - 1D
AT198355	3E23	2	3363 - 1D
AT198356	3E23	7	3363 - 1D
AT198357	3E23	11	3363 - 1D
AT198358	3E23	10	3363 - 1D
AT198359	3E23	13	3363 - 1D
AT198360	3E23	5	3363 - 1D
AT198455	3B11	9	3315 - 3B
AT198518	2E23	6	2160 - 3
AT198518	2E25	6	2160 - 3B
AT198519	2E23	6	2160 - 3
AT198594	2F12	21	2160 - 17
AT198612	3D2	11	3362 - 9
AT198612	3D4	1	3362 - 11
AT198613	3D2	10	3362 - 9
AT198613	3D16	1	3362 - 23
AT198615	3D2	9	3362 - 9
AT198615	3E19	1	3362 - 47
AT198619	3D2	8	3362 - 9
AT198619	3E13	1	3362 - 41
AT198620	3D6	3	3362 - 13
AT198621	3D6	29	3362 - 13
AT198621	3D10	24	3362 - 17
AT198621	3D14	16	3362 - 21
AT198621	3E13	25	3362 - 41
AT198621	3E17	25	3362 - 45
AT198622	3D2	7	3362 - 9
AT198622	3E15	1	3362 - 43
AT198623	3D2	6	3362 - 9
AT198623	3E17	1	3362 - 45
AT198624	3D10	2	3362 - 17
AT198625	3D2	5	3362 - 9
AT198625	3D14	1	3362 - 21
AT198629	2H13	11	3162 - 5
AT198629	2H15	1	3162 - 7
AT198630	2H13	9	3162 - 5
AT198630	2H17	1	3162 - 9
AT198632	2H13	8	3162 - 5
AT198632	2H19	1	3162 - 11
AT198633	2H19	2	3162 - 11
AT198694	2D10	13	1821 - 15
AT198698	3D20	11	3362 - 27
AT198698	3D24	18	3362 - 29
AT198743	1H13	32	1060 - 7
AT198760	2F20	5	2160 - 23
AT198768	3E7	2	3362 - 35
AT198770	3E7	5	3362 - 35
AT198770	3E9	5	3362 - 37
AT198771	3E7	18	3362 - 35
AT198771	3E9	17	3362 - 37
AT198772	3E7	8	3362 - 35
AT198772	3E9	8	3362 - 37
AT198773	3E7	3	3362 - 35
AT198773	3E9	3	3362 - 37
AT198774	3E9	2	3362 - 37
AT198776	2C20	29	1816 - 17
AT198777	2C18	28	1816 - 15
AT198778	2C18	27	1816 - 15
AT198844	1J6	6	1674 - 5B
AT198847	3E5	12	3362 - 33
AT198865	2C20	32	1816 - 17
AT199016	1J6	1	1674 - 5B
AT199059	3C6	5	3343 - 3
AT199065	3E5	13	3362 - 33
AT199076	2F4	21	2160 - 7
AT199077	2F4	22	2160 - 7
AT199231	2I4	13	3163 - 5
AT199244	3D2	9	3362 - 9
AT199244	3D12	1	3362 - 19
AT199245	3D2	8	3362 - 9
AT199245	3D6	1	3362 - 13
AT199324	3D2	7	3362 - 9
AT199324	3D8	1	3362 - 15
AT199325	3D2	6	3362 - 9
AT199325	3D10	1	3362 - 17
AT199333	1K9	2	1746 - 2
AT199388	2E12	1	2001 - 3
AT199495	3E21	19	3363 - 1B
AT199496	3E21	18	3363 - 1B
AT199496	3E23	3	3363 - 1D
AT199591	2C18	1	1816 - 15
AT199592	2C18	32	1816 - 15
AT199594	2C20	1	1816 - 17
AT199595	2C20	31	1816 - 17
AT199612	2E3	17	1910 - 3
AT199613	2E3	18	1910 - 3
AT199633	1J10	10	1674 - 7
AT199633	3E5	11	3362 - 33
AT199640	2F20	3	2160 - 23
AT199640	2F20	10	2160 - 23
AT199646	2F20	26	2160 - 23
AT199683	3B9	4	3315 - 3
AT199685	3E21	23	3363 - 1B
AT199686	3E21	2	3363 - 1B
AT199688	3E21	1	3363 - 1B
AT199704	3E21	26	3363 - 1B
AT199705	3E21	25	3363 - 1B
AT199705	3E21	27	3363 - 1B
AT199706	3E21	13A	3363 - 1B
AT199734	2B9	1	1811 - 5
AT199797	3F22	10	3363 - 29
AT199798	3F22	23	3363 - 29
AT199799	3F22	26	3363 - 29
AT199803	3F22	13	3363 - 29
AT199908	1G17	4	0560 - 5
AT203470	1G7	12	0520 - 3
AT206842	1G7	15	0520 - 3
AT207990	1C14	3	0325 - 1
AT208483	2D10	12	1821 - 15
AT208485	2D10	19	1821 - 15
AT208486	2D10	12	1821 - 15
AT208491	2D10	14	1821 - 15
AT208493	2D10	19	1821 - 15
AT209020	2D2	4	1821 - 7
AT209024	2C24	8	1821 - 5
AT209025	2C22	14	1821 - 3
AT209026	2C24	6	1821 - 5
AT209225	2C22	13	1821 - 3
AT209926	1G7	9	0520 - 3
AT210515	2D16	7	1830 - 7
AT219940	1G22	8	0960 - 5
AT220317	2B17	35	1814 - 5
AT220930	1G9	1	0520 - 5
AT221015	2C22	2	1821 - 3
AT221016	2C22	1	1821 - 3
AT221019	2C22	2	1821 - 3
AT221020	2C22	1	1821 - 3
AT222150	2C16	12	1816 - 13
AT222276	2E15	4	2004 - 2
AT222333	2E13	1	2002 - 2
AT222722	1G7	13	0520 - 3
AT223235	2F18	1	2160 - 21
AT223235	3F22	21	3363 - 29
AT223277	3F22	22	3363 - 29
AT223937	2F10	32	2160 - 15
AT224105	3F22	20	3363 - 29
AT224515	3B9	3	3315 - 3
AT224515	3B11	2	3315 - 3B
AT224516	3B9	5	3315 - 3
AT224516	3B11	1	3315 - 3B
AT224570	2H25	10	3162 - 17
AT224570	3E3	4	3362 - 30
AT224570	3E3	13	3362 - 30
AT224570	3F23	4	3363 - 30
AT224570	3F23	13	3363 - 30
AT224862	2H25	9	3162 - 17
AT224949	1B19	2A	0230 - 1
AT224949	1B23	9A	0250 - 2
AT225307	1B5	1	0110 - 5
AT225307	1B5	2	0110 - 5
AT225307	1B5	3	0110 - 5
AT225307	1B5	4	0110 - 5
AT225952	1J8	4	1674 - 5D
AT226281	1J14	1	1674 - 9B
AT226281	2E15	4	2004 - 2
AT227063	2C18	31	1816 - 15
AT227063	2C20	10	1816 - 17
AT227669	2D14	2	1830 - 5
AT228474	2F18	1	2160 - 21

NUMERICAL INDEX - CONTINUED

PART NO.	GRID	KEY	PAGE
AT228474	3F22	21	3363 - 29
AT25226	1B2	3	0110 - 2
AT25226	1B3	4	0110 - 3
AT25226	1B5	5	0110 - 5
AT25226	1B6	2	0110 - 5A
AT25226	1B7	1	0120 - 1
AT253067	1B15	4	0210 - 1
AT253072	1B15	4	0210 - 1
AT280207	3F18	5	3363 - 21
AT280214	2G25	11	3115 - 3
AT280215	2G25	14	3115 - 3
AT280216	2G25	28	3115 - 3
AT280220	3E21	25	3363 - 1B
AT280221	3E21	27	3363 - 1B
AT280222	3F18	22	3363 - 21
AT280228	3F18	11	3363 - 21
AT280228	3F18	17	3363 - 21
AT280230	3F18	28	3363 - 21
AT280232	3F18	18	3363 - 21
AT280235	3F20	20	3363 - 23
AT280236	3F20	13	3363 - 23
AT280237	3F20	17	3363 - 23
AT280238	3F20	11	3363 - 23
AT280239	3F20	1	3363 - 23
AT280255	2C16	2	1816 - 13
AT280363	3C2	21	3315 - 23
AT280386	3F22	2	3363 - 29
AT280405	2H21	1	3162 - 13
AT280406	2H17	34	3162 - 9
AT280406	2H19	25	3162 - 11
AT280406	2H21	24	3162 - 13
AT280407	3D6	37	3362 - 13
AT280407	3D8	35	3362 - 15
AT280407	3D10	40	3362 - 17
AT280407	3D12	29	3362 - 19
AT280407	3D14	22	3362 - 21
AT280407	3D16	23	3362 - 23
AT280440	2F20	5	2160 - 23
AT280441	2F20	5	2160 - 23
AT280518	1G5	5	0515 - 3
AT280583	2C24	10	1821 - 5
AT280624	1G3	8	0510 - 4
AT280674	2C18	10	1816 - 15
AT280674	2C20	19	1816 - 17
AT280739	1G3	5	0510 - 4
AT280740	1G3	6	0510 - 4
AT280741	1G3	7	0510 - 4
AT280804	3D20	12	3362 - 27
AT280804	3D22	21	3362 - 27B
AT280808	2F12	6B	2160 - 17
AT280808	2F14	20	2160 - 17B
AT280865	1B21	9	0230 - 3
AT280866	1B22	1	0230 - 4
AT280867	1B22	3	0230 - 4
AT280937	1G2	31	0510 - 3
AT280938	1G2	32	0510 - 3
AT280939	1G2	22	0510 - 3
AT300055	3B21	8	3315 - 13B
AT300056	3B17	4	3315 - 11B
AT300057	3B21	2	3315 - 13B
AT300058	3B17	1	3315 - 11B
AT300129	1J10	4	1674 - 7
AT300152	3B13	6	3315 - 5
AT300153	2F10	3	2160 - 15
AT300153	2F10	8	2160 - 15
AT300159	2G25	10	3115 - 3
AT300230	3E3	3	3362 - 30
AT300230	3E3	4	3362 - 30
AT300230	3F23	3	3363 - 30
AT300230	3F23	4	3363 - 30
AT300237	2G19	3	3103 - 3
AT300238	2G19	3	3103 - 3
AT300254	3E3	8	3362 - 30
AT300254	3F23	8	3363 - 30
AT300255	3E3	16	3362 - 30
AT300255	3F23	16	3363 - 30
AT300533	3E21	24	3363 - 1B
AT300675	3B17	19	3315 - 11B
AT300675	3B21	17	3315 - 13B
AT300685	2H13	10	3162 - 5
AT300685	2H21	1	3162 - 13
AT300750	2C18	22	1816 - 15
AT300767	3C6	5	3343 - 3
AT300768	1G5	5	0515 - 3
AT300768	3C2	2	3315 - 23
AT300768	3C2	3	3315 - 23
AT300768	3C2	11	3315 - 23
AT300769	1G5	5	0515 - 3
AT300769	3C2	2	3315 - 23
AT300769	3C2	3	3315 - 23
AT300769	3C2	11	3315 - 23
AT300770	1G5	5	0515 - 3
AT300770	3C2	2	3315 - 23
AT300770	3C2	3	3315 - 23
AT300770	3C2	11	3315 - 23
AT300771	1G5	5	0515 - 3
AT300771	3C2	2	3315 - 23
AT300771	3C2	3	3315 - 23
AT300771	3C2	11	3315 - 23
AT300801	2H17	35	3162 - 9
AT300801	2H19	26	3162 - 11
AT300801	3D6	39	3362 - 13
AT300801	3D8	36	3362 - 15
AT300801	3D10	41	3362 - 17
AT300801	3E13	38	3362 - 41
AT300801	3E15	34	3362 - 43
AT300801	3E17	35	3362 - 45
AT300802	3D8	4	3362 - 15
AT300803	3D2	8	3362 - 9
AT300803	3D6	1	3362 - 13
AT300803	3D6	4	3362 - 13
AT300803	3E13	3	3362 - 41
AT300885	2C20	11	1816 - 17
AT300928	2B13	12	1812 - 3
AT300928	2F20	28	2160 - 23
AT300928	3D22	23	3362 - 27B
AT301022	2H11	1	3162 - 3
AT301022	2H13	1	3162 - 5
AT301025	2H11	1	3162 - 3
AT301025	2H13	1	3162 - 5
AT301120	3D2	6	3362 - 9
AT301120	3D10	1	3362 - 17
AT301121	3C25	4	3362 - 7
AT301121	3D2	12	3362 - 9
AT301122	3D2	8	3362 - 9
AT301122	3D6	1	3362 - 13
AT301123	3D2	7	3362 - 9
AT301123	3D8	1	3362 - 15
AT301127	3D8	5	3362 - 15
AT301127	3E15	4	3362 - 43
AT301128	3D2	8	3362 - 9
AT301128	3D6	1	3362 - 13
AT301128	3D6	5	3362 - 13
AT301128	3E13	4	3362 - 41
AT301129	3D2	6	3362 - 9
AT301129	3D10	1	3362 - 17
AT301129	3D10	4	3362 - 17
AT301129	3E17	3	3362 - 45
AT301134	3D2	6	3362 - 9
AT301134	3D10	1	3362 - 17
AT301134	3D10	3	3362 - 17
AT301134	3E17	2	3362 - 45
AT301135	3C25	4	3362 - 7
AT301135	3D2	12	3362 - 9
AT301136	3C25	4	3362 - 7
AT301136	3D2	12	3362 - 9
AT301226	3D4	3	3362 - 11
AT301227	3D4	25	3362 - 11
AT301427	1J6	3	1674 - 5B
AT301429	3C4	11	3315 - 25
AT301436	2F12	9	2160 - 17
AT301436	2F14	26	2160 - 17B
AT301526	2H17	3	3162 - 9
AT301526	3D8	4	3362 - 15
AT301526	3E15	3	3362 - 43
AT301527	2H17	4	3162 - 9
AT301527	3D8	5	3362 - 15
AT301527	3E15	4	3362 - 43
AT301535	3B23	16	3315 - 17
AT301535	3B25	1	3315 - 21
AT301765	2H25	2	3162 - 17
AT301766	2H25	6	3162 - 17
AT301767	2H25	4	3162 - 17
AT301774	1H4	3	0960 - 11
AT301778	2H19	4	3162 - 11
AT301779	2H19	3	3162 - 11
AT301780	2H13	9	3162 - 5
AT301780	2H17	1	3162 - 9
AT301781	2H13	8	3162 - 5
AT301781	2H19	1	3162 - 11
AT301860	2F20	19	2160 - 23
AT301861	2F20	19	2160 - 23
AT301907	1H4	7	0960 - 11
AT301917	2F8	25	2160 - 13
AT301917	2F10	28	2160 - 15
AT302145	2E25	3	2160 - 3B
AT302183	3F18	32	3363 - 21
AT302625	1J6	1	1674 - 5B
AT302628	1J6	6	1674 - 5B
AT302727	1J4	19	1674 - 5
AT302812	2B21	1	1814 - 9
AT302812	2B23	21	1814 - 9B
AT302813	2B23	13	1814 - 9B
AT302815	2B23	12	1814 - 9B
AT302816	2B23	11	1814 - 9B
AT302817	2B23	9	1814 - 9B
AT303189	1I7	1	1369 - 3
AT303214	2D16	25	1830 - 7
AT303521	1J10	4	1674 - 7
AT303582	1J2	16	1674 - 3
AT303582	1J4	18	1674 - 5
AT303593	2E25	3	2160 - 3B
AT303680	2F14	21	2160 - 17B
AT303769	2F14	22	2160 - 17B
AT303770	3C14	18	3346 - 3
AT303853	2C18	23	1816 - 15
AT303853	2C20	13	1816 - 17
AT303890	3E7	1	3362 - 35
AT303891	3E9	1	3362 - 37
AT303892	3E7	8	3362 - 35
AT303892	3E9	8	3362 - 37

NUMERICAL INDEX - CONTINUED

PART NO.	GRID	KEY	PAGE
AT303962	3C16	9	3346 - 5
AT304324	2C14	3	1816 - 11
AT304561	1J10	28	1674 - 7
AT304593	2C14	4	1816 - 11
AT304593	2D20	1	1830 - 9
AT304631	2C4	1	1814 - 15
AT304775	2D4	27	1821 - 9
AT304776	2D4	27	1821 - 9
AT304827	1J12	2	1674 - 9
AT304837	1G15	18	0560 - 3
AT304887	2B7	28	1811 - 3
AT304891	2C16	2	1816 - 13
AT304971	1J10	4	1674 - 7
AT305110	2F4	22	2160 - 7
AT305126	1G2	36	0510 - 3
AT305685	2C4	13	1814 - 15
AT305767	1I11	11	1369 - 7
AT306219	2E25	3	2160 - 3B
AT306550	3E3	4	3362 - 30
AT306550	3E21	14	3363 - 1B
AT306786	2F14	23	2160 - 17B
AT307187	3E7	8	3362 - 35
AT307187	3E9	8	3362 - 37
AT307196	3E25	13	3363 - 3
AT307315	2H25	8	3162 - 17
AT307345	1G20	5	0960 - 3
AT307580	2E25	6	2160 - 3B
AT307686	1B11	19	0201 - 3
AT307691	2D16	40	1830 - 7
AT307770	2B23	10	1814 - 9B
AT307921	2G21	1	3104 - 3
AT307921	2G21	27	3104 - 3
AT307921	2I6	37	3163 - 7
AT308061	1B23	1	0250 - 2
AT308065	2G19	1	3103 - 3
AT308066	2G19	1	3103 - 3
AT308158	1J4	18	1674 - 5
AT308176	1J4	18	1674 - 5
AT308199	2C22	21	1821 - 3
AT308203	1B19	10	0230 - 1
AT308205	1B11	19	0201 - 3
AT308237	1J8	1	1674 - 5D
AT308304	1D11	9	0360 - 1
AT308380	1J2	18	1674 - 3
AT308396	1K5	3	1675 - 3
AT308409	3C12	5	3345 - 3
AT308409	3C12	14	3345 - 3
AT308410	3C12	10	3345 - 3
AT308440	1J8	1	1674 - 5D
AT308473	1J8	1	1674 - 5D
AT308475	1J8	1	1674 - 5D
AT308555	1G2	20	0510 - 3
AT308713	1C16	11	0341 - 3
AT308714	1C16	11	0341 - 3
AT308762	3F18	47	3363 - 21
AT308795	2C22	2	1821 - 3
AT308796	2C22	1	1821 - 3
AT308797	2C22	1	1821 - 3
AT308801	3C12	5	3345 - 3
AT308801	3C12	16	3345 - 3
AT308801	3C14	10	3346 - 3
AT308801	3C16	21	3346 - 5
AT308851	2G21	3	3104 - 3
AT308984	2G17	7	3102 - 17
AT308984	2G17	24	3102 - 17
AT308984	2G17	53	3102 - 17
AT309101	1B7	1	0120 - 1
AT309101	1B7	2	0120 - 1
AT309108	1B2	1	0110 - 2
AT309108	1B2	2	0110 - 2
AT309255	1B19	6	0230 - 1
AT309255	1B23	4	0250 - 2
AT309342	2G15	11	3102 - 15
AT309347	2B21	6	1814 - 9
AT309544	2E25	3	2160 - 3B
AT309648	2F20	29	2160 - 23
AT309649	3F14	7	3363 - 17
AT309649	3F14	14	3363 - 17
AT309649	3F14	31	3363 - 17
AT309649	3F16	17A	3363 - 19
AT309649	3F16	25A	3363 - 19
AT309649	3F16	33	3363 - 19
AT309664	2I6	7	3163 - 7
AT309671	2I6	8	3163 - 7
AT309673	2I6	16	3163 - 7
AT309674	2I6	15	3163 - 7
AT309675	2I6	6	3163 - 7
AT309678	2I6	14	3163 - 7
AT309679	2I6	35	3163 - 7
AT309683	1B18	1	0210 - 4
AT309684	3C8	7B	3344 - 3
AT309743	2I6	13	3163 - 7
AT309768	2E25	6	2160 - 3B
AT309883	1G24	5	0960 - 7
AT309883	1H2	5	0960 - 9
AT309971	1J6	1	1674 - 5B
AT309982	2G21	5	3104 - 3
AT309983	2G21	4	3104 - 3
AT310033	2I4	50	3163 - 5
AT310034	2I4	51	3163 - 5
AT310035	2G17	48	3102 - 17
AT310060	2G19	2	3103 - 3
AT310317	3C8	1	3344 - 3
AT310598	2F20	11	2160 - 23
AT310630	1I23	6	1673 - 3
AT310650	1I23	1	1673 - 3
AT310817	2H25	12	3162 - 17
AT310818	2F20	5	2160 - 23
AT310933	3C18	7B	3348 - 3
AT310980	1J2	18	1674 - 3
AT311084	1H21	6	1313 - 3
AT311142	2G17	41	3102 - 17
AT311378	2E3	39	1910 - 3
AT311412	3C12	5	3345 - 3
AT311587	1G24	12	0960 - 7
AT311598	1J8	3	1674 - 5D
AT312470	2G17	49	3102 - 17
AT312547	2H25	1	3162 - 17
AT312681	2H25	1	3162 - 17
AT312681	2I4	52	3163 - 5
AT312728	2C22	6	1821 - 3
AT312730	2C22	5	1821 - 3
AT312918	3E2	4	3362 - 29B
AT312918	3E2	13	3362 - 29B
AT312919	3E2	3	3362 - 29B
AT312919	3E2	13	3362 - 29B
AT312944	3E2	9	3362 - 29B
AT312949	3E2	13	3362 - 29B
AT313708	3E3	3	3362 - 30
AT313708	3E3	4	3362 - 30
AT314127	3E2	8	3362 - 29B
AT314398	2I6	22	3163 - 7
AT314538	2H17	33	3162 - 9
AT314538	2H19	24	3162 - 11
AT314538	2H21	23	3162 - 13
AT314538	2H23	9	3162 - 15
AT314538	3D4	24	3362 - 11
AT314538	3D6	38	3362 - 13
AT314538	3D8	34	3362 - 15
AT314538	3D10	39	3362 - 17
AT314538	3D12	28	3362 - 19
AT314538	3D14	23	3362 - 21
AT314538	3D16	24	3362 - 23
AT314538	3E13	37	3362 - 41
AT314538	3E15	33	3362 - 43
AT314538	3E17	36	3362 - 45
AT314538	3E19	29	3362 - 47
AT314539	2H17	33	3162 - 9
AT314539	2H19	24	3162 - 11
AT314539	2H21	23	3162 - 13
AT314539	2H23	9	3162 - 15
AT314539	3D4	24	3362 - 11
AT314539	3D6	38	3362 - 13
AT314539	3D8	34	3362 - 15
AT314539	3D10	39	3362 - 17
AT314539	3D12	28	3362 - 19
AT314539	3D14	23	3362 - 21
AT314539	3D16	24	3362 - 23
AT314539	3E13	37	3362 - 41
AT314539	3E15	33	3362 - 43
AT314539	3E17	36	3362 - 45
AT314539	3E19	29	3362 - 47
AT314668	3E11	8	3362 - 39
AT315005	3F4	15	3363 - 7
AT315225	1K9	2	1746 - 2
AT316249	1G24	5	0960 - 7
AT316249	1H2	5	0960 - 9
AT317349	3E3	4	3362 - 30
AT317349	3E21	13B	3363 - 1B
AT317349	3E21	14	3363 - 1B
AT317474	1B5	1	0110 - 5
AT317474	1B6	3	0110 - 5A
AT317474	1B6	4	0110 - 5A
AT317474	1B6	5	0110 - 5A
AT317474	1B6	6	0110 - 5A
AT318183	3C8	7A	3344 - 3
AT318183	3C8	7B	3344 - 3
AT318183	3C8	7C	3344 - 3
AT318341	2I6	10	3163 - 7
AT320423	3D6	37	3362 - 13
AT320423	3D8	35	3362 - 15
AT320423	3D10	40	3362 - 17
AT320423	3D12	29	3362 - 19
AT320423	3D14	22	3362 - 21
AT320423	3D16	23	3362 - 23
AT320544	2B9	7	1811 - 5
AT320544	2B9	9	1811 - 5
AT320544	2E12	19	2001 - 3
AT320544	2E12	21	2001 - 3
AT321004	2B9	7	1811 - 5
AT321005	2B9	7	1811 - 5
AT321005	2E12	21	2001 - 3
AT323346	3D24	10	3362 - 29
AT323347	3D20	11	3362 - 27
AT323347	3D22	27	3362 - 27B
AT323347	3D24	18	3362 - 29
AT323987	3C16	18	3346 - 5
AT323987	3C16	34	3346 - 5
AT326356	2B9	7	1811 - 5
AT326356	2B9	9	1811 - 5
AT326356	2B9	12	1811 - 5

NUMERICAL INDEX - CONTINUED

PART NO.	GRID	KEY	PAGE
AT326356	2E12	19	2001 - 3
AT326356	2E12	21	2001 - 3
AT326356	2E12	22	2001 - 3
AT34210	1H23	2	1314 - 3
AT34211	1H23	1	1314 - 3
AT41188	1I18	5	1671 - 7
AT43223	2F10	31	2160 - 15
AT49216	3E3	4	3362 - 30
AT49216	3E3	14	3362 - 30
AT49216	3F23	4	3363 - 30
AT49216	3F23	14	3363 - 30
AT65241	1G15	17	0560 - 3
AT65241	1G15	18	0560 - 3
AT73296	1F25	1	0505 - 5
AT75311	2B17	53	1814 - 5
AT75769	1J4	11	1674 - 5
AT75769	1J6	5	1674 - 5B
AT75769	1J19	3	1674 - 17
AT75769	3D22	28	3362 - 27B
AT78633	1J4	4	1674 - 5
AT82210	1J19	6	1674 - 17
AT82210	3D22	26	3362 - 27B
AT83174	2H21	3	3162 - 13
AT83174	3D14	21	3362 - 21
AT83174	3D16	21	3362 - 23
AT84191	3F20	19	3363 - 23
AT84713	1C7	3	0250 - 11
AT85174	1J12	24	1674 - 9
AT85174	1J14	5	1674 - 9B
A3606R	1I9	1	1369 - 5
A364R	1D25	12	0402 - 7
A3917R	1I9	1	1369 - 5
A4365R	1G5	39	0515 - 3
A4365R	1I9	1	1369 - 5
A4730R	1I9	1	1369 - 5
A48970	2B15	24	1814 - 3
B177R	1H9	18	1060 - 3
B177R	1H9	25	1060 - 3
B2762R	1I9	1	1369 - 5
B3690R	1I9	1	1369 - 5
CD16284	1E15	1	0409 - 3
CV08	3E3	13	3362 - 30
CV08	3F23	13	3363 - 30
C11884	3F25	10	3365 - 3
DS0345	1I7	1	1369 - 3
DS0346	1I7	1	1369 - 3
E12379	1B19	1	0230 - 1
E12379	1B23	10	0250 - 2
E62156	1B7	3	0120 - 1
E64052	1I19	3	1671 - 8
E71998	2F20	5	2160 - 23
F1056R	1I9	1	1369 - 5
F1870R	1I9	1	1369 - 5
F2576R	3G2	21	3365 - 5
F2863R	1H9	7	1060 - 3
F2863R	3B23	7	3315 - 17
F3353R	1I9	1	1369 - 5
F37030250	2E23	7	2160 - 3
F37030250	2E25	7	2160 - 3B
F950R	2I7	16	3165 - 1
F950R	2I9	18	3165 - 3
H104855	1J21	9	1674 - 19
H113924	1G20	7	0960 - 3
H121168	2G11	20	3102 - 11
H121168	2G17	43	3102 - 17
H128841	2B7	30	1811 - 3
H135156	2G11	12	3102 - 11
H135156	2G17	44	3102 - 17
H137329	3C18	1	3348 - 3
H137329	3C18	6	3348 - 3
H141836	2I4	14	3163 - 5
H141836	3D20	24	3362 - 27
H141836	3D22	29	3362 - 27B
H145139	3G3	3	3365 - 6
H145139	3G4	3	3365 - 7
H145139	3G5	3	3365 - 8
H145161	3G3	2	3365 - 6
H145161	3G4	2	3365 - 7
H145161	3G5	2	3365 - 8
H150111	2I10	22	3165 - 4
H150292	2I11	4	3165 - 8
H150292	3G6	4	3365 - 9
H150292	3G8	12	3365 - 11
H152202	2I11	8	3165 - 8
H152202	3G6	8	3365 - 9
H152202	3G8	13	3365 - 11
H152203	2G13	16	3102 - 13
H152204	2I7	13	3165 - 1
H152204	2I9	17	3165 - 3
H152204	2I10	19	3165 - 4
H152204	3G2	18	3365 - 5
H152205	3G3	12	3365 - 6
H152205	3G4	14	3365 - 7
H152205	3G5	14	3365 - 8
H152793	2I11	9	3165 - 8
H152793	3G6	9	3365 - 9
H152795	2I7	14	3165 - 1
H152795	2I9	9	3165 - 3
H152795	2I10	20	3165 - 4
H152795	3G2	19	3365 - 5
H152796	3G3	13	3365 - 6
H152796	3G4	15	3365 - 7
H152796	3G5	15	3365 - 8
H155319	3F24	17	3365 - 2
H155320	3F24	16	3365 - 2
H155321	3F24	3	3365 - 2
H155322	3F24	4	3365 - 2
H155329	3F24	2	3365 - 2
H155540	3F25	11	3365 - 3
H155543	2I10	6	3165 - 4
H155543	3F25	7	3365 - 3
H155543	3G2	6	3365 - 5
H155561	2I10	5	3165 - 4
H155561	3F25	2	3365 - 3
H155919	3G1	12	3365 - 4
H155920	3G1	11	3365 - 4
H155924	3F24	8	3365 - 2
H155924	3G1	2	3365 - 4
H157082	2I10	7	3165 - 4
H157427	2I7	9	3165 - 1
H157427	2I9	11	3165 - 3
H157429	3G3	10	3365 - 6
H157898	3G8	6	3365 - 11
H158436	3F25	17	3365 - 3
H158437	3F25	16	3365 - 3
H160456	3F25	8	3365 - 3
H163222	3F24	5	3365 - 2
H163979	3F24	27	3365 - 2
H163980	3F24	26	3365 - 2
H166560	3F24	19	3365 - 2
H166849	3F24	29	3365 - 2
H166850	3F24	1	3365 - 2
H167146	3F24	15	3365 - 2
H167147	3G1	13	3365 - 4
H167293	3F25	21	3365 - 3
H167677	3G1	22	3365 - 4
H170216	3G8	16	3365 - 11
H170538	2I11	2	3165 - 8
H170538	3G6	2	3365 - 9
H170538	3G8	11	3365 - 11
H170539	3G2	2	3365 - 5
H170540	2I9	15	3165 - 3
H172456	2G23	5	3104 - 5
H172639	2G23	1	3104 - 5
H172764	2G23	8	3104 - 5
H172765	2G23	11	3104 - 5
H172779	2G23	12	3104 - 5
H172780	2G23	9	3104 - 5
H173149	2I10	15	3165 - 4
H173149	3G2	14	3365 - 5
H173152	3G2	5	3365 - 5
H173154	2I10	11	3165 - 4
H173154	3G2	23	3365 - 5
H173411	2C18	35	1816 - 15
H173411	2C20	34	1816 - 17
H174164	2I10	18	3165 - 4
H174164	3G2	22	3365 - 5
H174165	3G2	3	3365 - 5
H177854	2G13	4	3102 - 13
H179659	3G4	9	3365 - 7
H179659	3G5	9	3365 - 8
H179692	2G13	8	3102 - 13
H180100	3G4	7	3365 - 7
H180100	3G5	7	3365 - 8
H180112	3G1	25	3365 - 4
H180431	3F25	9	3365 - 3
H180542	3G2	13	3365 - 5
H180787	3G8	14	3365 - 11
H180927	2G13	6	3102 - 13
H206453	3G2	26	3365 - 5
H207360	3G2	11	3365 - 5
H208785	2I10	22	3165 - 4
H208785	3G2	26	3365 - 5
H210731	3G8	9	3365 - 11
H210842	3G4	4	3365 - 7
H210842	3G5	4	3365 - 8
H211173	2I10	15	3165 - 4
H211173	3G2	14	3365 - 5
H23125	1D22	1	0402 - 3
H23196	1I11	9	1369 - 7
H29619	2G12	2	3102 - 12
H35244	1I9	1	1369 - 5
H36031	1E13	1	0408 - 3
H61354	2F8	22	2160 - 13
H77698	1H23	11	1314 - 3
H77698	1I19	4	1671 - 8
H77698	1J8	1	1674 - 5D
H77698	2D18	54	1830 - 7B
H77698	2D23	6	1830 - 13
H77698	3F16	32	3363 - 19
H81744	1C18	22	0341 - 5
H85092	2D16	11	1830 - 7
H88900	3F24	20	3365 - 2
H98792	1F16	2	0429 - 5
IPSKIT3	1I7	1	1369 - 3
JD10063	1B22	6	0230 - 4
JD10373	2C18	36	1816 - 15
JD10373	2C20	26	1816 - 17
JD126	2E19	8	2008 - 2
JD3051	1B7	1	0120 - 1
JD3051	1B7	2	0120 - 1

NUMERICAL INDEX - CONTINUED

PART NO.	GRID	KEY	PAGE
JD37087	1C2	10	0250 - 5
JD37219	1C2	11	0250 - 5
JD5404	2E19	4	2008 - 2
JD5717	1H25	25	1320 - 3
JD5750	1H25	25	1320 - 3
JD5750	2B21	19	1814 - 9
JD5750	2B23	18	1814 - 9B
JD5761	1H25	25	1320 - 3
JD5836	1H25	7	1320 - 3
JD5837	1H25	51	1320 - 3
JD5920	1H23	5	1314 - 3
JD5920	1H25	26	1320 - 3
JD5920	2E19	3	2008 - 2
JD5930	2E19	3	2008 - 2
JD5933	1G15	25	0560 - 3
JD5933	1H25	52	1320 - 3
JD5933	2E5	13	1913 - 3
JD7797	2G9	4	3102 - 9
JD7797	2G11	4	3102 - 11
JD7797	2G12	11	3102 - 12
JD7797	2G17	38	3102 - 17
JD7799	3C19	6	3348 - 4
JD7799	3G3	24	3365 - 6
JD7838	1B19	3	0230 - 1
JD7838	1B23	8	0250 - 2
JD7844	2G11	4	3102 - 11
JD7844	2G17	45	3102 - 17
J16931	1H21	2	1313 - 3
KV11305	2I4	53	3163 - 5
KV14216	2G17	50	3102 - 17
KV21460	3F14	33	3363 - 17
KV22121	2G15	10	3102 - 15
KV22121	2G17	36	3102 - 17
KV22609	2F10	27	2160 - 15
KV22609	2I2	3	3163 - 3
KV22609	2I4	31	3163 - 5
KV25678	3E3	4	3362 - 30
KV25678	3E3	8	3362 - 30
KV25678	3F23	4	3363 - 30
KV25678	3F23	8	3363 - 30
K40006	2G9	14	3102 - 9
K40006	2G17	39	3102 - 17
L100057	1C9	4	0250 - 13
L100059	1C9	4	0250 - 13
L100060	1C9	4	0250 - 13
L100061	1C9	4	0250 - 13
L100063	1C9	4	0250 - 13
L100066	1C9	4	0250 - 13
L100069	1C9	4	0250 - 13
L100074	1C9	4	0250 - 13
L100077	1C9	4	0250 - 13
L100080	1C9	4	0250 - 13
L100083	1C9	4	0250 - 13
L100086	1C9	4	0250 - 13
L100089	1C9	4	0250 - 13
L100092	1C9	4	0250 - 13
L100096	1C9	4	0250 - 13
L100169	1C5	1	0250 - 8
L100592	1C9	3	0250 - 13
L101689	1C2	9	0250 - 5
L101690	1C2	9	0250 - 5
L101713	1C4	25	0250 - 7
L101724	1C5	6	0250 - 8
L101812	1C4	7	0250 - 7
L101813	1C4	6	0250 - 7
L102678	3D24	5	3362 - 29
L110233	1C2	18	0250 - 5
L110711	1C4	3	0250 - 7
L110712	1C4	3	0250 - 7
L110713	1C4	3	0250 - 7
L110714	1C4	3	0250 - 7
L110715	1C4	3	0250 - 7
L110716	1C4	3	0250 - 7
L110718	1C4	3	0250 - 7
L110721	1C4	3	0250 - 7
L112111	1C4	2	0250 - 7
L112199	1C2	9	0250 - 5
L112200	1C2	9	0250 - 5
L112201	1C2	9	0250 - 5
L112202	1C2	9	0250 - 5
L112203	1C2	9	0250 - 5
L112204	1C2	9	0250 - 5
L112205	1C2	9	0250 - 5
L112206	1C2	9	0250 - 5
L112207	1C2	9	0250 - 5
L112208	1C2	9	0250 - 5
L112209	1C2	9	0250 - 5
L112210	1C2	9	0250 - 5
L112211	1C2	9	0250 - 5
L112212	1C2	9	0250 - 5
L112213	1C2	9	0250 - 5
L112214	1C2	9	0250 - 5
L112215	1C2	9	0250 - 5
L112216	1C2	9	0250 - 5
L112217	1C2	9	0250 - 5
L112218	1C2	9	0250 - 5
L112219	1C2	9	0250 - 5
L112220	1C2	9	0250 - 5
L112221	1C2	9	0250 - 5
L112222	1C2	9	0250 - 5
L114558	1C2	17	0250 - 5
L114785	1C4	20	0250 - 7
L116246	1C4	3	0250 - 7
L116247	1C4	3	0250 - 7
L11698	1D13	6	0360 - 3
L11698	1D13	23	0360 - 3
L11698	1D15	11	0360 - 5
L11698	1D17	19	0360 - 7
L151281	1C2	9	0250 - 5
L151282	1C2	9	0250 - 5
L151283	1C2	9	0250 - 5
L151284	1C2	9	0250 - 5
L151285	1C2	9	0250 - 5
L151286	1C2	9	0250 - 5
L151287	1C2	9	0250 - 5
L151288	1C2	9	0250 - 5
L151289	1C2	9	0250 - 5
L151290	1C2	9	0250 - 5
L151983	1C4	3	0250 - 7
L151984	1C4	3	0250 - 7
L151985	1C4	3	0250 - 7
L3483N	1G17	2	0560 - 5
L3483N	1G17	8	0560 - 5
L3483N	2D23	31	1830 - 13
L3483N	2D23	55	1830 - 13
L35577	1C7	4	0250 - 11
L35714	1C9	8	0250 - 13
L38138	1J4	17	1674 - 5
L39983	1C7	10	0250 - 11
L40130	1C7	6	0250 - 11
L40253	1C7	8	0250 - 11
L40274	1C2	13	0250 - 5
L40317	1C4	26	0250 - 7
L40982	1C9	3	0250 - 13
L40983	1C9	3	0250 - 13
L40984	1C9	3	0250 - 13
L40985	1C9	3	0250 - 13
L40986	1C9	3	0250 - 13
L40987	1C9	3	0250 - 13
L40988	1C9	3	0250 - 13
L40989	1C9	3	0250 - 13
L40990	1C9	3	0250 - 13
L40991	1C9	3	0250 - 13
L40992	1C9	3	0250 - 13
L40993	1C9	3	0250 - 13
L40994	1C9	3	0250 - 13
L40995	1C9	3	0250 - 13
L40996	1C9	3	0250 - 13
L40997	1C2	9	0250 - 5
L40998	1C2	9	0250 - 5
L40999	1C2	9	0250 - 5
L41000	1C2	9	0250 - 5
L41001	1C2	9	0250 - 5
L41002	1C2	9	0250 - 5
L41003	1C2	9	0250 - 5
L41004	1C2	9	0250 - 5
L41005	1C2	9	0250 - 5
L4694T	2H4	5	3115 - 7
L55580	1B11	15	0201 - 3
L55580	1C2	7	0250 - 5
L55580	1C5	9	0250 - 8
L55580	1H7	25	1011 - 3
L55598	1C4	22	0250 - 7
L55606	1C9	3	0250 - 13
L55607	1C9	3	0250 - 13
L55608	1C9	3	0250 - 13
L55610	1C9	3	0250 - 13
L56822	1B11	16	0201 - 3
L56822	1C2	6	0250 - 5
L57881	2D18	58	1830 - 7B
L57881	2D20	11	1830 - 9
L62419	1C7	4	0250 - 11
L75379	2E13	2	2002 - 2
L78069	1D10	27	0350 - 17
MG272321	3C23	20	3362 - 5
MT2485	1J12	18	1674 - 9
MT2485	2B9	11	1811 - 5
MT2485	2C18	15	1816 - 15
MT2485	2C20	35	1816 - 17
MT2485	2E12	17	2001 - 3
M115279	1J2	3	1674 - 3
M1340T	2D4	23	1821 - 9
M2649DN	3C6	15	3343 - 3
M40333	1I16	5	1671 - 5
M40569	3B23	11	3315 - 17
M4237T	1I9	1	1369 - 5
M43835	1J21	2	1674 - 19
M453T	2C22	31	1821 - 3
M453T	2D4	27	1821 - 9
M45387	2F2	2	2160 - 5
M45387	2F6	5	2160 - 9
M47031	2D2	5	1821 - 7
M47031	2D2	12	1821 - 7
M47031	2D4	24	1821 - 9
M47031	2D6	4	1821 - 11
M48534	1G5	4	0515 - 3
M63200	2E5	3	1913 - 3
M63200	2E5	4	1913 - 3
M63431	1J10	16	1674 - 7
M68954	2H2	9	3115 - 5
M68954	3B13	11	3315 - 5

NUMERICAL INDEX - CONTINUED

PART NO.	GRID	KEY	PAGE
M68954	3B15	10	3315 - 11
M68954	3B17	8	3315 - 11B
M68954	3B19	12	3315 - 13
M68954	3B21	7	3315 - 13B
M72598	2C14	13	1816 - 11
M74877	2F2	1	2160 - 5
M84972	2B9	8	1811 - 5
M84972	2C2	10	1814 - 13
M84972	2C16	31	1816 - 13
M84972	2D18	44	1830 - 7B
M84972	2E12	18	2001 - 3
M85517	1J2	7	1674 - 3
M86533	2D23	16	1830 - 13
M86863	3F22	27	3363 - 29
M86877	2E15	3	2004 - 2
M86877	3F12	24	3363 - 15
M87261	2D2	9	1821 - 7
M87534	2C18	20	1816 - 15
M87534	2C20	6	1816 - 17
M87534	3B15	13	3315 - 11
M87534	3B19	10	3315 - 13
M87571	1G17	6	0560 - 5
M87733	1E24	3	0416 - 3
N105572	3C6	11	3343 - 3
N115096	1J21	11	1674 - 19
N119316	1B24	2	0250 - 3
N119316	1C14	2	0325 - 1
N119479	3B15	8	3315 - 11
N119479	3B19	15	3315 - 13
N131838	1I9	1	1369 - 5
N189220	2F8	30	2160 - 13
N203952	2F4	13	2160 - 7
N203952	2F6	10	2160 - 9
PML377	1I23	6	1673 - 3
PM38655	1E4	24	0404 - 3
PM38655	1I5	1	1330 - 2
PM797NA	1J23	57	1674 - 21
PT11778	2D16	17	1830 - 7
P45750	2G23	13	3104 - 5
P46051	1I9	1	1369 - 5
P48347	1G5	33	0515 - 3
P48403	1I9	1	1369 - 5
P50631	1I9	1	1369 - 5
RE11154	1J23	57	1674 - 21
RE11156	1J23	36	1674 - 21
RE11157	1J23	37	1674 - 21
RE12330	1J25	14	1674 - 23
RE12331	1J25	12	1674 - 23
RE12332	1J25	18	1674 - 23
RE12333	1J25	21	1674 - 23
RE12334	1J25	8	1674 - 23
RE12362	1J25	4	1674 - 23
RE12363	1J17	3	1674 - 14
RE12363	1J25	11	1674 - 23
RE12363	2H2	20	3115 - 5
RE12364	1J25	16	1674 - 23
RE12365	1J25	20	1674 - 23
RE12366	1J25	25	1674 - 23
RE155938	2D16	5A	1830 - 7
RE157329	2D16	5B	1830 - 7
RE174764	2D16	16	1830 - 7
RE190139	2E12	11	2001 - 3
RE19797	1E19	5	0413 - 3
RE19800	1E19	14	0413 - 3
RE198074	2D18	60	1830 - 7B
RE20343	2I7	4	3165 - 1
RE20343	2I9	7	3165 - 3
RE20809	3G3	4	3365 - 6
RE20809	3G4	12	3365 - 7
RE20809	3G5	12	3365 - 8
RE20901	1E19	13	0413 - 3
RE21730	1K1	5	1674 - 24
RE21731	1K1	5	1674 - 24
RE21732	1K1	6	1674 - 24
RE25102	3G1	7	3365 - 4
RE25146	3F24	9	3365 - 2
RE26448	2G11	14	3102 - 11
RE31495	2F12	24	2160 - 17
RE31495	2F14	24	2160 - 17B
RE31617	1E15	9	0409 - 3
RE33968	2I11	3	3165 - 8
RE33968	3G6	3	3365 - 9
RE33968	3G8	4	3365 - 11
RE36133	2D16	26	1830 - 7
RE40048	1E16	5	0410 - 2
RE40049	2B25	3	1814 - 11
RE40049	2C4	5	1814 - 15
RE42139	1F25	5	0505 - 5
RE43497	1J10	20	1674 - 7
RE43637	1J16	1	1674 - 13
RE44574	1F18	4	0433 - 3
RE46534	1J16	5	1674 - 13
RE46684	1E22	9	0414 - 2
RE46684	1F2	10	0418 - 3
RE46685	1D25	8	0402 - 7
RE46685	1E4	27	0404 - 3
RE46685	1F4	1	0419 - 3
RE46686	1E21	9	0413 - 5
RE46686	1F4	6	0419 - 3
RE46687	1E8	4	0407 - 5
RE46742	1J10	21	1674 - 7
RE500005	1E5	4	0407 - 2
RE500137	1F17	3	0433 - 2
RE500335	1E1	3	0403 - 2
RE500608	1E1	3	0403 - 2
RE500612	1E8	2	0407 - 5
RE501260	1E24	1	0416 - 3
RE501298	1F11	12	0422 - 3
RE501377	1E5	5	0407 - 2
RE501938	1D25	4	0402 - 7
RE503027	1D22	5	0402 - 3
RE503664	1F16	7	0429 - 5
RE504122	1F25	5	0505 - 5
RE504233	1F9	5	0421 - 2
RE504543	1E10	8	0407 - 7
RE504564	1E10	6	0407 - 7
RE504836	1E10	11	0407 - 7
RE504914	1E11	6	0407 - 8
RE505264	2D23	35	1830 - 13
RE505501	1D25	27	0402 - 7
RE505501	1E4	30	0404 - 3
RE505515	1D25	6	0402 - 7
RE505981	1D25	7	0402 - 7
RE506300	1F2	6	0418 - 3
RE506381	1D25	1	0402 - 7
RE507598	1E21	1	0413 - 5
RE507766	1E19	6	0413 - 3
RE507850	1E1	10	0403 - 2
RE507852	1E1	6	0403 - 2
RE508317	1D23	9	0402 - 4
RE508566	1D25	16	0402 - 7
RE508716	1E19	1	0413 - 3
RE508719	1E24	6	0416 - 3
RE508847	1F6	3	0420 - 3
RE508847	1F6	7	0420 - 3
RE509031	1F8	2	0420 - 5
RE509794	1F8	5	0420 - 5
RE515228	1E19	22	0413 - 3
RE515229	1E19	11	0413 - 3
RE515230	1E19	9	0413 - 3
RE515231	1E19	10	0413 - 3
RE515232	1E19	7	0413 - 3
RE515233	1E19	8	0413 - 3
RE515393	1E22	2	0414 - 2
RE515404	1F6	1	0420 - 3
RE515785	1D21	4	0401 - 2
RE516340	1D25	6	0402 - 7
RE516477	1F6	9	0420 - 3
RE51649	1F6	2	0420 - 3
RE51649	1F8	8	0420 - 5
RE51650	1F6	10	0420 - 3
RE516513	1F6	11	0420 - 3
RE516553	1F6	12	0420 - 3
RE516553	1F8	1	0420 - 5
RE517181	1F6	9	0420 - 3
RE518089	1E19	15	0413 - 3
RE518097	1F16	14	0429 - 5
RE518156	1E21	12	0413 - 5
RE518176	1E19	16	0413 - 3
RE518259	1E21	11	0413 - 5
RE518262	1E21	6	0413 - 5
RE518527	1E4	3	0404 - 3
RE519144	1F19	4	0433 - 4
RE519144	1J14	6	1674 - 9B
RE520540	1D22	6	0402 - 3
RE522076	1F2	6	0418 - 3
RE52242	1E10	3	0407 - 7
RE522527	1E19	16	0413 - 3
RE522821	1F4	5	0419 - 3
RE52346	1D25	6	0402 - 7
RE52722	1F19	3	0433 - 4
RE52722	1J12	6	1674 - 9
RE52722	1J14	3	1674 - 9B
RE54885	1E24	14	0416 - 3
RE56165	1G5	32	0515 - 3
RE56165	1J14	8	1674 - 9B
RE56313	1D21	15	0401 - 2
RE56369	1D21	21	0401 - 2
RE56690	1F4	5	0419 - 3
RE57489	1E15	12	0409 - 3
RE57836	1F18	6	0433 - 3
RE57836	1G15	11	0560 - 3
RE59355	1F14	1	0429 - 2
RE59438	1E24	8	0416 - 3
RE59810	1D25	6	0402 - 7
RE59811	1D21	4	0401 - 2
RE59811	1D21	22	0401 - 2
RE60005	1E15	4	0409 - 3
RE60029	1E21	7	0413 - 5
RE60071	1E22	7	0414 - 2
RE60700	2F8	46	2160 - 13
RE60700	2I6	1	3163 - 7
RE60701	2F12	18	2160 - 17
RE60854	1F6	8	0420 - 3
RE60854	1F8	4	0420 - 5
RE60888	2D16	6	1830 - 7
RE61812	1F19	1	0433 - 4
RE61812	1J14	2	1674 - 9B
RE65165	1D21	7	0401 - 2
RE65168	1D21	10	0401 - 2
RE65908	1E1	11	0403 - 2

NUMERICAL INDEX - CONTINUED

PART NO.	GRID	KEY	PAGE
RE65909	1E1	11	0403 - 2
RE65911	1D21	7	0401 - 2
RE65912	1D21	10	0401 - 2
RE65978	1E24	12	0416 - 3
RE65978	1I11	5	1369 - 7
RE65978	2F8	25	2160 - 13
RE65978	2F10	28	2160 - 15
RE66153	1F9	1	0421 - 2
RE67231	1F4	3	0419 - 3
RE67238	1E5	1	0407 - 2
RE67238	1F4	8	0419 - 3
RE67239	1D25	23	0402 - 7
RE67239	1E5	6	0407 - 2
RE68695	1D23	9	0402 - 4
RE68748	1E19	3	0413 - 3
RE69243	1E6	1	0407 - 3
RE70486	1F11	4	0422 - 3
RE70487	1F11	5	0422 - 3
RE70756	1F11	11	0422 - 3
RE70962	1D25	10	0402 - 7
RE71143	1E11	10	0407 - 8
RE71256	1F11	6	0422 - 3
R100377	1F13	1	0423 - 3
R10093	1I9	1	1369 - 5
R10093	2D16	21	1830 - 7
R10093	2D23	3	1830 - 13
R101225	1D21	14	0401 - 2
R104592	1E4	5	0404 - 3
R104592	1E15	3	0409 - 3
R104846	1J12	2	1674 - 9
R105812	1G5	7	0515 - 3
R106466	1G5	9	0515 - 3
R107731	1D23	11	0402 - 4
R110531	1E22	10	0414 - 2
R111137	1E4	10	0404 - 3
R11120	3G2	4	3365 - 5
R111493	2H15	2	3162 - 7
R111493	3D4	16	3362 - 11
R111632	1J10	12	1674 - 7
R112857	1I9	1	1369 - 5
R113050	2D16	15	1830 - 7
R113050	2D23	17	1830 - 13
R113562	1F6	5	0420 - 3
R113562	1F8	6	0420 - 5
R113563	1F6	6	0420 - 3
R113563	1F8	7	0420 - 5
R113565	1F6	4	0420 - 3
R113565	1F8	3	0420 - 5
R113878	1B21	13	0230 - 3
R114082	1E1	2	0403 - 2
R114193	1D21	20	0401 - 2
R114194	1D21	23	0401 - 2
R114241	1E4	17	0404 - 3
R115250	1E25	1	0417 - 2
R115350	2D23	33	1830 - 13
R115390	1E4	15	0404 - 3
R116031	3C23	5	3362 - 5
R116076	1D21	4	0401 - 2
R116115	1E10	1	0407 - 7
R116296	1E5	2	0407 - 2
R116386	1E2	1	0404 - 1
R116466	1E4	12	0404 - 3
R116516	1E15	13	0409 - 3
R117721	2D18	56	1830 - 7B
R117721	2D20	9	1830 - 9
R117892	2C10	3	1816 - 7
R117892	2E12	8	2001 - 3
R119565	1E4	3	0404 - 3
R119874	1E4	6	0404 - 3
R120013	1E24	13	0416 - 3
R120160	2C16	25	1816 - 13
R120332	2C18	5	1816 - 15
R120467	1E13	2	0408 - 3
R120631	1D21	3	0401 - 2
R120638	1E11	13	0407 - 8
R120641	1D21	12	0401 - 2
R120653	2C2	5	1814 - 13
R121039	1F18	7	0433 - 3
R121043	1E4	9	0404 - 3
R121079	1B22	10	0230 - 4
R121376	1E11	7	0407 - 8
R121411	1D25	20	0402 - 7
R121424	1D25	19	0402 - 7
R121634	1E25	4	0417 - 2
R121674	1D22	4	0402 - 3
R121897	1F14	2	0429 - 2
R123161	1D23	7	0402 - 4
R123174	1D21	11	0401 - 2
R123177	1E1	5	0403 - 2
R123226	1D25	7	0402 - 7
R123226	1D25	10	0402 - 7
R123226	1D25	11	0402 - 7
R123226	1F2	7	0418 - 3
R123246	1E16	3	0410 - 2
R123271	1D23	5	0402 - 4
R123273	1F9	4	0421 - 2
R123323	1F2	2	0418 - 3
R123324	1F2	4	0418 - 3
R123417	1D25	7	0402 - 7
R123417	1D25	10	0402 - 7
R123417	1D25	17	0402 - 7
R123471	1F4	3	0419 - 3
R123501	1F4	4	0419 - 3
R123514	1D23	2	0402 - 4
R123521	1F17	1	0433 - 2
R123543	1D22	6	0402 - 3
R123561	1D21	5	0401 - 2
R123562	1D21	6	0401 - 2
R123563	1D21	8	0401 - 2
R123564	1D21	9	0401 - 2
R123565	1D23	10	0402 - 4
R123570	1E24	16	0416 - 3
R123572	1E24	10	0416 - 3
R123574	1D22	2	0402 - 3
R123575	1D22	3	0402 - 3
R123593	1E19	2	0413 - 3
R123593	1E21	2	0413 - 5
R123593	1E21	17	0413 - 5
R123616	1E4	26	0404 - 3
R123616	2D20	28	1830 - 9
R125223	2D16	18	1830 - 7
R128660	1G2	2	0510 - 3
R130574	1D21	8	0401 - 2
R130575	1D21	9	0401 - 2
R130576	1D21	5	0401 - 2
R130577	1D21	6	0401 - 2
R131016	1F2	12	0418 - 3
R131182	1E4	21	0404 - 3
R131206	1D21	16	0401 - 2
R131283	1D21	19	0401 - 2
R131671	1J4	5	1674 - 5
R131769	1F18	3	0433 - 3
R132166	1F13	3	0423 - 3
R132186	1E4	20	0404 - 3
R132262	1E17	1	0410 - 3
R132518	1E4	7	0404 - 3
R133295	1F16	16	0429 - 5
R133405	1F9	6	0421 - 2
R133978	1F13	6	0423 - 3
R133978	1F16	10	0429 - 5
R134527	1E2	2	0404 - 1
R134890	1F16	6	0429 - 5
R134891	1F16	3	0429 - 5
R135509	1F11	2	0422 - 3
R135510	1F11	3	0422 - 3
R135918	1F17	4	0433 - 2
R135918	1F18	10	0433 - 3
R136475	1E2	3	0404 - 1
R136495	1E5	3	0407 - 2
R136516	1D25	3	0402 - 7
R136572	2F4	18	2160 - 7
R206883	1F25	4	0505 - 5
R26081	3C2	7	3315 - 23
R26125	1E15	6	0409 - 3
R26286	1D17	17	0360 - 7
R26286	1I9	1	1369 - 5
R26287	1I9	1	1369 - 5
R26287	3D6	19	3362 - 13
R26287	3D8	23	3362 - 15
R26287	3D10	27	3362 - 17
R26287	3D12	18	3362 - 19
R26287	3D14	15	3362 - 21
R26287	3D16	20	3362 - 23
R26287	3E13	24	3362 - 41
R26287	3E15	24	3362 - 43
R26287	3E17	24	3362 - 45
R26287	3E19	17	3362 - 47
R26375	1G24	1	0960 - 7
R26375	1H2	1	0960 - 9
R26375	1H11	9	1060 - 5
R26375	1H13	11	1060 - 7
R26375	1H18	27	1111 - 3
R26375	1I9	1	1369 - 5
R26375	1J12	21	1674 - 9
R26375	2F8	17	2160 - 13
R26375	2F14	10	2160 - 17B
R26375	2F18	5	2160 - 21
R26375	2F20	6	2160 - 23
R26375	3E21	10	3363 - 1B
R26375	3E25	9	3363 - 3
R26375	3F10	6	3363 - 13
R26375	3F12	16	3363 - 15
R26375	3F18	15	3363 - 21
R26375	3F20	7	3363 - 23
R26448	1B18	6	0210 - 4
R26448	1G24	19	0960 - 7
R26448	1H2	19	0960 - 9
R26448	1H11	5	1060 - 5
R26448	1H13	3	1060 - 7
R26448	1H15	13	1060 - 9
R26448	1I9	1	1369 - 5
R26448	2F8	47	2160 - 13
R26448	2F12	3	2160 - 17
R26448	2F14	4	2160 - 17B
R26448	2G17	2	3102 - 17
R26448	2G21	19	3104 - 3
R26448	2I6	12	3163 - 7
R26448	3D20	30	3362 - 27
R26448	3D22	6	3362 - 27B
R26448	3E2	7	3362 - 29B
R26448	3E3	2	3362 - 30

NUMERICAL INDEX - CONTINUED

PART NO.	GRID	KEY	PAGE
R26448	3E3	14	3362 - 30
R26448	3E5	4	3362 - 33
R26448	3E7	13	3362 - 35
R26448	3E9	14	3362 - 37
R26448	3E21	6	3363 - 1B
R26448	3F23	2	3363 - 30
R26448	3F23	14	3363 - 30
R26491	2B15	12	1814 - 3
R26650	1E4	13	0404 - 3
R26773	1I9	1	1369 - 5
R26773	2F8	12	2160 - 13
R26863	1I9	1	1369 - 5
R26871	2E3	37	1910 - 3
R26871	3C2	13	3315 - 23
R26871	3C21	5	3362 - 3
R26906	1E15	8	0409 - 3
R26906	1H18	22	1111 - 3
R26906	1I9	1	1369 - 5
R26906	1I11	4	1369 - 7
R26906	2F8	27	2160 - 13
R26906	2F8	54	2160 - 13
R26906	2F12	25	2160 - 17
R26906	2F14	15	2160 - 17B
R26906	2F16	11	2160 - 19
R26906	2F20	25	2160 - 23
R26906	2H23	3	3162 - 15
R26906	2I2	23	3163 - 3
R26906	2I4	8	3163 - 5
R26906	2I4	40	3163 - 5
R26906	2I6	30	3163 - 7
R26906	3F4	4	3363 - 7
R26906	3F6	33	3363 - 9
R26906	3F18	20	3363 - 21
R26906	3F20	15	3363 - 23
R26936	3D22	11	3362 - 27B
R27094	1D17	18	0360 - 7
R27166	1I9	1	1369 - 5
R27175	3D4	18	3362 - 11
R27175	3D18	5	3362 - 25
R27175	3F14	10	3363 - 17
R27175	3F16	22	3363 - 19
R27218	3E21	17	3363 - 1B
R27434	3C2	5	3315 - 23
R27474	2F8	55	2160 - 13
R27474	2F16	12	2160 - 19
R27928	1I9	1	1369 - 5
R28776	1I9	1	1369 - 5
R28776	2F20	5	2160 - 23
R28782	1B18	5	0210 - 4
R28782	1G24	6	0960 - 7
R28782	1H2	6	0960 - 9
R28782	1H11	2	1060 - 5
R28782	1H11	21	1060 - 5
R28782	1I9	1	1369 - 5
R28782	2F2	7	2160 - 5
R28782	2F4	7	2160 - 7
R28782	2F4	14	2160 - 7
R28782	2F6	3	2160 - 9
R28782	2F6	6	2160 - 9
R28782	2F6	9	2160 - 9
R28782	2F12	20	2160 - 17
R28782	2F14	17	2160 - 17B
R28782	2I6	5	3163 - 7
R28782	3D10	14	3362 - 17
R28782	3D12	11	3362 - 19
R28782	3D20	27	3362 - 27
R28782	3D22	13	3362 - 27B
R28782	3E19	25	3362 - 47
R28782	3F18	44	3363 - 21
R28782	3F20	34	3363 - 23
R28811	1F17	2	0433 - 2
R29463	1I9	1	1369 - 5
R29936	1I9	1	1369 - 5
R29936	2F8	6	2160 - 13
R29936	2F10	11	2160 - 15
R29936	2F16	13	2160 - 19
R29936	2H23	5	3162 - 15
R29936	3D18	3	3362 - 25
R29936	3D20	3	3362 - 27
R29936	3F2	1	3363 - 5
R29936	3F14	27	3363 - 17
R29936	3F16	30	3363 - 19
R29936	3F22	19	3363 - 29
R30378	1J23	43	1674 - 21
R30903	1I9	1	1369 - 5
R32024	1K1	3	1674 - 24
R32025	1K1	4	1674 - 24
R32026	1J23	48	1674 - 21
R32548	1H9	13	1060 - 3
R33259	1I9	1	1369 - 5
R33259	2D16	14	1830 - 7
R33259	2D23	9	1830 - 13
R33976	1G5	6	0515 - 3
R36636	2F16	14	2160 - 19
R36636	2H23	4	3162 - 15
R36636	3D20	2	3362 - 27
R36636	3D22	30	3362 - 27B
R36636	3F22	18	3363 - 29
R36646	3D18	2	3362 - 25
R37023	2F10	18	2160 - 15
R375R	1I9	1	1369 - 5
R39112	1F18	1	0433 - 3
R394R	1I9	1	1369 - 5
R39554	1F23	14	0505 - 3
R39554	1J10	18	1674 - 7
R39741	1E4	22	0404 - 3
R39741	1E4	25	0404 - 3
R41440	1I25	18	1673 - 5
R41920	1G5	14	0515 - 3
R43409	1E15	7	0409 - 3
R44165	1J10	17	1674 - 7
R44302	1I18	6	1671 - 7
R44302	1I25	22	1673 - 5
R44302	1J6	7	1674 - 5B
R44302	1J8	2	1674 - 5D
R44302	1J12	30	1674 - 9
R44302	1J17	5	1674 - 14
R44302	2D18	52	1830 - 7B
R44302	2D23	2	1830 - 13
R44302	2E16	7	2004 - 3
R44302	2I2	7	3163 - 3
R44302	2I4	3	3163 - 5
R44302	2I6	21	3163 - 7
R44302	3F20	16	3363 - 23
R44342	1J10	29	1674 - 7
R459R	1I9	1	1369 - 5
R460R	1I9	1	1369 - 5
R46528	2G25	21	3115 - 3
R46528	3B13	21	3315 - 5
R46528	3B15	11	3315 - 11
R46528	3B17	15	3315 - 11B
R46528	3B19	6	3315 - 13
R46528	3B21	14	3315 - 13B
R46528	3B23	13	3315 - 17
R46528	3C4	10	3315 - 25
R46667	2D20	21	1830 - 9
R46667	3D20	15	3362 - 27
R46667	3D22	31	3362 - 27B
R46919	1G24	15	0960 - 7
R46919	1H2	15	0960 - 9
R46919	1H15	9	1060 - 9
R46919	2G21	24	3104 - 3
R46919	2I6	26	3163 - 7
R46919	3E25	8	3363 - 3
R46919	3F12	13	3363 - 15
R47151	2F20	5	2160 - 23
R47693	1F25	4	0505 - 5
R48638	1I9	1	1369 - 5
R48685	1D21	1	0401 - 2
R48685	1E4	1	0404 - 3
R48808	1I21	2	1672 - 3
R48887	1J21	17	1674 - 19
R495R	1I9	1	1369 - 5
R500096	1F17	4	0433 - 2
R500270	1F9	2	0421 - 2
R500271	1F9	3	0421 - 2
R500320	2D23	34	1830 - 13
R500322	1F16	12	0429 - 5
R50034	1H9	20	1060 - 3
R500349	1E8	1	0407 - 5
R500374	1E10	5	0407 - 7
R500382	2D23	29	1830 - 13
R500531	1F13	4	0423 - 3
R500596	1E22	11	0414 - 2
R501124	1E1	1	0403 - 2
R501144	1F2	3	0418 - 3
R501428	1F4	13	0419 - 3
R501472	1E22	4	0414 - 2
R501486	1I21	7	1672 - 3
R501489	1F19	..	0433 - 4
R502076	1E19	15	0413 - 3
R502079	2D23	36	1830 - 13
R502513	1E10	7	0407 - 7
R502513	1E10	11	0407 - 7
R502604	1E6	2	0407 - 3
R502725	1E6	3	0407 - 3
R50279	2D16	8	1830 - 7
R50279	2D18	61	1830 - 7B
R502811	1F4	11	0419 - 3
R502814	1F2	5	0418 - 3
R502902	1E5	7	0407 - 2
R503419	1F11	14	0422 - 3
R503451	1F18	2	0433 - 3
R503520	1E19	18	0413 - 3
R504191	2D23	25	1830 - 13
R504192	2D23	27	1830 - 13
R504725	1D25	2	0402 - 7
R504859	1E21	15	0413 - 5
R505472	1E19	15	0413 - 3
R505609	1D21	2	0401 - 2
R50879	1H9	19	1060 - 3
R516623	1F16	14	0429 - 5
R516639	1F16	10	0429 - 5
R516671	1F6	15	0420 - 3
R516691	1F8	10	0420 - 5
R517211	1F8	9	0420 - 5
R51936	1E19	3	0413 - 3
R51936	1E21	3	0413 - 5
R52683	2F8	26	2160 - 13
R52725	1J10	23	1674 - 7
R52921	2B17	57	1814 - 5

NUMERICAL INDEX - CONTINUED

PART NO.	GRID	KEY	PAGE
R53543	1I9	1	1369 - 5
R54114	1E1	4	0403 - 2
R54123	1F25	2	0505 - 5
R54124	1B2	4	0110 - 2
R54124	1B5	6	0110 - 5
R54565	1D23	1	0402 - 4
R55326	2B7	26	1811 - 3
R56101	1G2	16	0510 - 3
R56461	1I9	1	1369 - 5
R56463	1I9	1	1369 - 5
R56464	3C23	10	3362 - 5
R56551	1E22	11	0414 - 2
R56751	1I9	1	1369 - 5
R60332	1I9	1	1369 - 5
R61467	1F18	11	0433 - 3
R61871	1E11	9	0407 - 8
R63548	1E24	2	0416 - 3
R63548	2H17	8	3162 - 9
R63548	2H17	29	3162 - 9
R63548	2H19	20	3162 - 11
R63548	3D4	23	3362 - 11
R63548	3D6	34	3362 - 13
R63548	3D8	8	3362 - 15
R63548	3D10	36	3362 - 17
R63548	3E13	34	3362 - 41
R63548	3E15	9	3362 - 43
R63548	3E17	10	3362 - 45
R64059	3B15	8	3315 - 11
R64059	3B19	15	3315 - 13
R64525	1I21	13	1672 - 3
R65563	1H9	17	1060 - 3
R65563	3B13	9	3315 - 5
R65563	3B15	14	3315 - 11
R65563	3B17	14	3315 - 11B
R65563	3B19	7	3315 - 13
R65563	3B21	15	3315 - 13B
R65563	3B23	14	3315 - 17
R65563	3C4	8	3315 - 25
R65602	1J23	49	1674 - 21
R65607	1J23	46	1674 - 21
R66320	1J21	24	1674 - 19
R66321	1J21	24	1674 - 19
R70210	1J23	41	1674 - 21
R70211	1J23	40	1674 - 21
R70212	1J23	41	1674 - 21
R70213	1J23	40	1674 - 21
R70214	1J23	41	1674 - 21
R70215	1J23	40	1674 - 21
R70216	1J23	41	1674 - 21
R70217	1J23	40	1674 - 21
R70218	1J23	41	1674 - 21
R70219	1J23	40	1674 - 21
R70220	1J23	50	1674 - 21
R70221	1J23	39	1674 - 21
R70222	1J23	38	1674 - 21
R71732	1I9	1	1369 - 5
R72328	1E13	3	0408 - 3
R72328	3C23	7	3362 - 5
R72655	2C24	13	1821 - 5
R72655	2C24	21	1821 - 5
R72855	2G25	8	3115 - 3
R72855	3B25	4	3315 - 21
R73530	3C23	23	3362 - 5
R73975	1C16	12A	0341 - 3
R74012	1E21	10	0413 - 5
R75522	1C7	2	0250 - 11
R75892	1E4	16	0404 - 3
R77175	2F12	17	2160 - 17
R77175	2F14	25	2160 - 17B
R77175	3E21	16	3363 - 1B
R77456	1J21	27	1674 - 19
R77457	1J21	29	1674 - 19
R77458	1J21	28	1674 - 19
R77459	1J21	28	1674 - 19
R77460	1J21	28	1674 - 19
R77461	1J21	28	1674 - 19
R77462	1J21	25	1674 - 19
R77463	1J21	30	1674 - 19
R77464	1J21	26	1674 - 19
R77465	1J21	31	1674 - 19
R77466	1J21	33	1674 - 19
R77467	1J21	34	1674 - 19
R77468	1J21	32	1674 - 19
R77469	1J23	35	1674 - 21
R77470	1J23	45	1674 - 21
R77471	1J23	45	1674 - 21
R77472	1J23	45	1674 - 21
R77473	1J23	45	1674 - 21
R77474	1J23	44	1674 - 21
R77475	1J21	13	1674 - 19
R77476	1J21	3	1674 - 19
R77477	1J21	4	1674 - 19
R77478	1J21	15	1674 - 19
R77479	1J21	5	1674 - 19
R77480	1J21	6	1674 - 19
R77481	1J21	7	1674 - 19
R77482	1J21	8	1674 - 19
R77483	1J21	16	1674 - 19
R77484	1J21	19	1674 - 19
R77485	1J21	21	1674 - 19
R77486	1J21	22	1674 - 19
R77487	1J21	23	1674 - 19
R77488	1J23	51	1674 - 21
R77489	1J23	51	1674 - 21
R77490	1J23	51	1674 - 21
R77491	1J23	54	1674 - 21
R77492	1J23	54	1674 - 21
R77493	1J23	51	1674 - 21
R77494	1J23	55	1674 - 21
R77495	1J23	52	1674 - 21
R77496	1J23	52	1674 - 21
R77497	1J23	53	1674 - 21
R77498	1J21	24	1674 - 19
R77499	1J21	24	1674 - 19
R77500	1J21	24	1674 - 19
R77501	1J21	24	1674 - 19
R77502	1J23	56	1674 - 21
R77503	1J23	56	1674 - 21
R78019	1B3	2	0110 - 3
R78047	1J25	3	1674 - 23
R78048	1J25	10	1674 - 23
R78049	1J25	15	1674 - 23
R78050	1J25	19	1674 - 23
R78051	1J25	24	1674 - 23
R78052	1J25	5	1674 - 23
R78053	1J25	13	1674 - 23
R78054	1J25	17	1674 - 23
R78055	1J25	22	1674 - 23
R78056	1J25	26	1674 - 23
R78057	1J25	2	1674 - 23
R78058	1J25	23	1674 - 23
R78059	1J25	1	1674 - 23
R78060	1J25	2	1674 - 23
R78060	1J25	9	1674 - 23
R78061	1J25	6	1674 - 23
R78061	1J25	23	1674 - 23
R78062	1J25	1	1674 - 23
R78063	1J25	1	1674 - 23
R78063	1J25	7	1674 - 23
R78064	1J25	27	1674 - 23
R78065	1J6	1	1674 - 5B
R78065	1K2	3	1674 - 25
R78066	1J6	1	1674 - 5B
R78066	1K2	2	1674 - 25
R78067	1K2	3	1674 - 25
R78068	1K2	2	1674 - 25
R78069	1K2	1	1674 - 25
R78818	3G1	15	3365 - 4
R79001	3G3	16	3365 - 6
R79001	3G4	6	3365 - 7
R79001	3G5	6	3365 - 8
R79033	2B7	3	1811 - 3
R79132	1B11	11	0201 - 3
R80632	1I9	1	1369 - 5
R81275	1E22	3	0414 - 2
R81275	1E22	5	0414 - 2
R81775	2I7	3	3165 - 1
R81775	2I9	3	3165 - 3
R81787	2I7	18	3165 - 1
R81787	2I9	19	3165 - 3
R81789	2I11	14	3165 - 8
R81789	3G6	14	3365 - 9
R81793	2I7	19	3165 - 1
R81793	2I9	20	3165 - 3
R81795	2I11	15	3165 - 8
R81795	3G6	15	3365 - 9
R81862	2I7	17	3165 - 1
R81862	2I9	10	3165 - 3
R81864	2I11	13	3165 - 8
R81864	3G6	13	3365 - 9
R81864	3G8	7	3365 - 11
R81865	2G23	7	3104 - 5
R81876	1G2	3	0510 - 3
R82086	2I10	13	3165 - 4
R82086	3G2	27	3365 - 5
R82086	3G3	18	3365 - 6
R82093	3G3	17	3365 - 6
R82095	3G3	8	3365 - 6
R82095	3G4	11	3365 - 7
R82095	3G5	11	3365 - 8
R83469	2I9	2	3165 - 3
R83578	3G4	5	3365 - 7
R83578	3G5	5	3365 - 8
R85168	1C14	5	0325 - 1
R85169	1C14	4	0325 - 1
R85192	3G1	6	3365 - 4
R85228	3F24	14	3365 - 2
R85363	1E15	2	0409 - 3
R86457	1G5	36	0515 - 3
R87732	1E16	4	0410 - 2
R89944	1E25	5	0417 - 2
R90658	1E17	2	0410 - 3
R90692	1E15	11	0409 - 3
R91889	1E15	5	0409 - 3
R93028	2I7	8	3165 - 1
R93028	2I9	16	3165 - 3
R93219	1K1	6	1674 - 24
R93220	1K1	6	1674 - 24
R93221	1K1	6	1674 - 24
R93222	1K1	6	1674 - 24
R95493	2H17	20	3162 - 9

NUMERICAL INDEX - CONTINUED

PART NO.	GRID	KEY	PAGE
R95493	2H19	12	3162 - 11
R95493	2H21	16	3162 - 13
R95493	3D6	15	3362 - 13
R95493	3D8	28	3362 - 15
R95493	3D10	30	3362 - 17
R95493	3D12	16	3362 - 19
R95493	3D14	19	3362 - 21
R95493	3D16	8	3362 - 23
R95493	3E13	28	3362 - 41
R95493	3E15	27	3362 - 43
R95493	3E17	28	3362 - 45
R95493	3E19	24	3362 - 47
R96703	1F11	9	0422 - 3
R97021	1G17	3	0560 - 5
R97185	1E11	8	0407 - 8
R97727	2I7	21	3165 - 1
R97727	2I9	14	3165 - 3
R98062	1E15	10	0409 - 3
R98322	3G8	2	3365 - 11
R98323	3G8	3	3365 - 11
R98329	3G3	9	3365 - 6
R98329	3G4	10	3365 - 7
R98329	3G5	10	3365 - 8
R98334	3G3	20	3365 - 6
R98334	3G4	17	3365 - 7
R98334	3G5	17	3365 - 8
R98669	3F24	21	3365 - 2
SE500831	1E19	6	0413 - 3
TF220	3B7	11	3302 - 3
TF23D	3B7	11	3302 - 3
TF23P	3B7	11	3302 - 3
TF23P	3B7	12	3302 - 3
TP160	3B7	11	3302 - 3
TP160	3B7	12	3302 - 3
TTZF100236	1B17	25	0210 - 3
TY15969	1I5	1	1330 - 2
TY16285	1I5	1	1330 - 2
TY22462	1G15	7	0560 - 3
TY22462	1H13	20	1060 - 7
TY22464	2F14	18	2160 - 17B
TY22487	2F10	6	2160 - 15
TY22490	2D12	18	1830 - 3
TY22493	3F4	1	3363 - 7
TY22493	3F6	15	3363 - 9
TY22497	3F18	23	3363 - 21
TY22497	3F20	19	3363 - 23
TY22556	2F10	4	2160 - 15
TY22556	2F10	5	2160 - 15
TY22556	2F10	10	2160 - 15
TY22556	2F10	41	2160 - 15
TY22559	1G15	8	0560 - 3
TY22566	1G2	17	0510 - 3
TY22566	1G2	18	0510 - 3
TY22566	2F16	3	2160 - 19
TY22566	2F16	4	2160 - 19
TY24344	1G9	9	0520 - 5
TY24485	1I21	3	1672 - 3
TY24867	1G9	2	0520 - 5
TY25913	1I16	7	1671 - 5
TY6128	1I16	7	1671 - 5
TY6764	2D23	7	1830 - 13
TY6799	1I21	3	1672 - 3
TY9370	1H9	32	1060 - 3
T101807	2B7	24	1811 - 3
T101807	2B9	5	1811 - 5
T101975	2D20	20	1830 - 9
T102005	3F4	9	3363 - 7
T102005	3F6	14	3363 - 9
T102780	1J2	27	1674 - 3
T102934	1J4	9	1674 - 5
T102934	2F8	43	2160 - 13
T102934	2F10	44	2160 - 15
T103461	1G15	21	0560 - 3
T103834	1J2	23	1674 - 3
T105368	3E3	4	3362 - 30
T105368	3E3	15	3362 - 30
T105368	3F23	4	3363 - 30
T105368	3F23	15	3363 - 30
T105720	2I4	12	3163 - 5
T105740	2B15	16	1814 - 3
T105740	2C22	21	1821 - 3
T105740	2C22	22	1821 - 3
T105740	2E3	8	1910 - 3
T105773	2I2	18	3163 - 3
T105773	3F12	27	3363 - 15
T105774	3E25	5	3363 - 3
T105891	1G2	23	0510 - 3
T107117	1I16	4	1671 - 5
T10745	1I21	4	1672 - 3
T107887	2H17	11	3162 - 9
T107887	2H17	32	3162 - 9
T107887	2H19	23	3162 - 11
T107887	3D6	32	3362 - 13
T107887	3D8	29	3362 - 15
T107887	3D10	38	3362 - 17
T107887	3E13	31	3362 - 41
T107887	3E15	5	3362 - 43
T107887	3E17	7	3362 - 45
T108030	3F24	13	3365 - 2
T108030	3G1	5	3365 - 4
T108357	1J2	24	1674 - 3
T109X220	3B7	10	3302 - 3
T11234	2E14	4	2002 - 3
T113128	1B24	5	0250 - 3
T114774	2D21	11	1830 - 10
T114774	2D21	12	1830 - 10
T115030	2E14	5	2002 - 3
T116290	1B21	7	0230 - 3
T116918	1C18	10	0341 - 5
T116929	1B12	8	0201 - 4
T116930	1B12	8	0201 - 4
T116931	1B12	8	0201 - 4
T116932	1B12	8	0201 - 4
T116933	1B12	8	0201 - 4
T116934	1B12	8	0201 - 4
T116935	1B12	8	0201 - 4
T116936	1B12	8	0201 - 4
T116937	1B12	8	0201 - 4
T116938	1B12	8	0201 - 4
T116939	1B12	8	0201 - 4
T118681	2H17	6	3162 - 9
T118681	2H17	30	3162 - 9
T118681	2H19	21	3162 - 11
T118681	2H21	9	3162 - 13
T118681	3D4	10	3362 - 11
T118681	3D6	8	3362 - 13
T118681	3D8	30	3362 - 15
T118681	3D10	6	3362 - 17
T118681	3D12	2	3362 - 19
T118681	3D12	7	3362 - 19
T118681	3E13	10	3362 - 41
T118681	3E13	33	3362 - 41
T118681	3E15	6	3362 - 43
T118681	3E17	5	3362 - 45
T118681	3E19	7	3362 - 47
T118685	2H15	6	3162 - 7
T118685	2H17	21	3162 - 9
T118685	2H19	13	3162 - 11
T118685	2H21	17	3162 - 13
T118750	1G11	1	0530 - 3
T118808	2H21	21	3162 - 13
T118866	2H21	4	3162 - 13
T118866	3D4	6	3362 - 11
T118866	3D6	30	3362 - 13
T118866	3D10	10	3362 - 17
T118866	3D12	2	3362 - 19
T118866	3D12	3	3362 - 19
T118866	3E13	5	3362 - 41
T118866	3E17	34	3362 - 45
T118866	3E19	3	3362 - 47
T118867	2H21	5	3162 - 13
T118867	3D6	31	3362 - 13
T118867	3D10	9	3362 - 17
T118867	3D12	2	3362 - 19
T118867	3D12	4	3362 - 19
T118867	3E13	6	3362 - 41
T118867	3E17	33	3362 - 45
T118867	3E19	4	3362 - 47
T119153	2B15	23	1814 - 3
T119912	1B19	8	0230 - 1
T119912	1B23	6	0250 - 2
T119912	1K11	3	1749 - 3
T120543	2C22	12	1821 - 3
T120544	2C22	36	1821 - 3
T120545	2C22	9	1821 - 3
T121288	1I16	8	1671 - 5
T121474	3B25	3	3315 - 21
T122075	1F4	12	0419 - 3
T12275	1I9	1	1369 - 5
T122864	2H13	6	3162 - 5
T122865	2H13	5	3162 - 5
T123033	1C7	5	0250 - 11
T123090	1B12	8	0201 - 4
T12582	2I11	12	3165 - 8
T12582	3G6	12	3365 - 9
T12582	3G8	8	3365 - 11
T125956	3B7	4	3302 - 3
T126041	3B7	6	3302 - 3
T126041	3C12	11	3345 - 3
T126051	2I4	27	3163 - 5
T126052	1H15	10	1060 - 9
T126774	2G5	4	3102 - 5
T126774	2G9	9	3102 - 9
T126774HD	2G5	4	3102 - 5
T127257	3C23	14	3362 - 5
T127260	3C23	22	3362 - 5
T127261	3C23	19	3362 - 5
T127263	3C23	18	3362 - 5
T127264	3C23	21	3362 - 5
T127265	3C23	1	3362 - 5
T127268	3C23	2	3362 - 5
T127401	3D4	7	3362 - 11
T128437	2E14	2	2002 - 3
T128533	2G9	5	3102 - 9
T128533	2G17	28	3102 - 17
T128539	2G9	10	3102 - 9
T128539	2G17	27	3102 - 17
T129165	1I16	3	1671 - 5
T129732	1G5	16	0515 - 3
T13119	1I9	1	1369 - 5
T131938	1H25	15	1320 - 3

NUMERICAL INDEX - CONTINUED

PART NO.	GRID	KEY	PAGE
T13254	1I11	7	1369 - 7
T133291	2H4	2	3115 - 7
T133291	3B13	1	3315 - 5
T133291	3B23	1	3315 - 17
T133487	2B15	9	1814 - 3
T133674	2B13	6	1812 - 3
T133674	2B15	6	1814 - 3
T133674	2B17	62	1814 - 5
T133674	2C12	3	1816 - 9
T133674	2C14	5	1816 - 11
T133674	2C16	5	1816 - 13
T133674	2D14	20	1830 - 5
T134104	1I19	2	1671 - 8
T134586	2C12	13	1816 - 9
T134874	2B7	29	1811 - 3
T134874	2C12	6	1816 - 9
T134874	2C14	1	1816 - 11
T134874	2C14	15	1816 - 11
T134874	2C16	3	1816 - 13
T134874	2C16	9	1816 - 13
T134874	2C16	11	1816 - 13
T134874	2C18	2	1816 - 15
T134874	2C20	2	1816 - 17
T134874	2D14	14	1830 - 5
T134881	2H17	23	3162 - 9
T134895	2B7	10	1811 - 3
T134895	2B9	10	1811 - 5
T134895	2B15	30	1814 - 3
T134895	2C14	17	1816 - 11
T134895	2C16	7	1816 - 13
T134895	2C18	30	1816 - 15
T134895	2C20	4	1816 - 17
T134895	2D14	7	1830 - 5
T134895	2E12	20	2001 - 3
T134895	2E18	1	2007 - 3
T134896	2C14	12	1816 - 11
T13518	1F18	5	0433 - 3
T135342	1G5	49	0515 - 3
T135583	2B15	14	1814 - 3
T135675	2B15	21	1814 - 3
T135675	2B19	2	1814 - 7
T135675	2B21	26	1814 - 9
T135675	2B23	16	1814 - 9B
T13624	3F24	7	3365 - 2
T13624	3G1	3	3365 - 4
T13630	1G20	2	0960 - 3
T13630	1G22	2	0960 - 5
T137318	1G5	24	0515 - 3
T137321	1G5	17	0515 - 3
T137322	1G5	18	0515 - 3
T137790	1H25	16	1320 - 3
T13814	2D16	36	1830 - 7
T139165	1I2	3	1320 - 5
T139167	1I4	3	1320 - 7
T140283	1H25	1	1320 - 3
T140311	1H25	2	1320 - 3
T140328	2H2	26	3115 - 5
T140328	2H4	11	3115 - 7
T140328	3B13	20	3315 - 5
T140328	3B15	12	3315 - 11
T140328	3B17	13	3315 - 11B
T140328	3B19	5	3315 - 13
T140328	3B21	13	3315 - 13B
T140328	3C4	7	3315 - 25
T14065	2G13	2	3102 - 13
T14083	1H21	3	1313 - 3
T141075	1I4	5	1320 - 7
T141078	1I4	7	1320 - 7
T141081	1I4	8	1320 - 7
T141093	1I2	5	1320 - 5
T141096	1I2	7	1320 - 5
T141099	1I2	8	1320 - 5
T141235	2B7	13	1811 - 3
T141689	1D11	5	0360 - 1
T143074	2G5	5	3102 - 5
T143169	2D16	20	1830 - 7
T143169	2D23	1	1830 - 13
T143355	1G11	1	0530 - 3
T143596	1J4	16	1674 - 5
T143804	2G9	15	3102 - 9
T143804	2G17	37	3102 - 17
T144486	1D13	11	0360 - 3
T144486	1D15	7	0360 - 5
T144487	1D13	12	0360 - 3
T144493	1D17	15	0360 - 7
T144494	1D17	14	0360 - 7
T145560	1H25	27	1320 - 3
T145560	2D23	54	1830 - 13
T146080	1H25	17	1320 - 3
T146089	1I4	11	1320 - 7
T146090	1I4	10	1320 - 7
T146093	1I2	10	1320 - 5
T146095	1I2	11	1320 - 5
T146097	1H25	18	1320 - 3
T146098	1I4	12	1320 - 7
T146099	1I2	12	1320 - 5
T146102	1F11	10	0422 - 3
T146102	1H25	3	1320 - 3
T146104	1I2	13	1320 - 5
T146106	1I4	13	1320 - 7
T146672	2G15	6	3102 - 15
T146757	2G25	2	3115 - 3
T146792	1H25	28	1320 - 3
T146792	2F20	18	2160 - 23
T146908	1I2	21	1320 - 5
T146911	1I4	21	1320 - 7
T146934	2G15	9	3102 - 15
T147296	2G5	7	3102 - 5
T148182	2G17	51	3102 - 17
T148182	2G25	9	3115 - 3
T148409	1K8	5	1740 - 3
T148409	2H25	18	3162 - 17
T148409	3C10	4	3344 - 5
T148410	1K8	3	1740 - 3
T148410	2C18	34	1816 - 15
T148410	2F20	17	2160 - 23
T148410	3C16	7	3346 - 5
T148410	3E3	7	3362 - 30
T148410	3F23	7	3363 - 30
T148411	1K8	4	1740 - 3
T148411	3C8	26	3344 - 3
T148411	3C14	15	3346 - 3
T148602	3B7	9	3302 - 3
T148753	3B7	9	3302 - 3
T148817	2E14	3	2002 - 3
T149199	1H25	29	1320 - 3
T149199	3D20	18	3362 - 27
T149570	2H13	6	3162 - 5
T150768	1K8	6	1740 - 3
T150768	2H6	6	3140 - 3
T150768	3C14	13	3346 - 3
T150768	3C14	15	3346 - 3
T150768	3D20	23	3362 - 27
T150768	3D22	32	3362 - 27B
T150768	3F14	31	3363 - 17
T150958	2H17	7	3162 - 9
T150958	3D8	9	3362 - 15
T150958	3E15	10	3362 - 43
T151192	3F18	49	3363 - 21
T151797	1K11	6	1749 - 3
T151858	1F16	4	0429 - 5
T152288	1G24	5	0960 - 7
T152288	1H2	5	0960 - 9
T152442	1H25	50	1320 - 3
T152648	1H21	5	1313 - 3
T152996	1I4	14	1320 - 7
T152997	1I2	14	1320 - 5
T153105	2H21	20	3162 - 13
T153680	1H25	4	1320 - 3
T154187	3C23	6	3362 - 5
T154361	1J10	19	1674 - 7
T154449	1G13	6	0540 - 3
T155259	1C21	11	0350 - 3
T155324	1C19	2	0350 - 1
T155579	1I4	32	1320 - 7
T155581	1I2	32	1320 - 5
T156599	2G15	3	3102 - 15
T157282	2G15	5	3102 - 15
T157311	2G15	7	3102 - 15
T157785	3B23	18	3315 - 17
T158081	2B17	41	1814 - 5
T158245	1H15	4	1060 - 9
T158298	2F10	16	2160 - 15
T158358	2B17	44	1814 - 5
T158424	2D23	30	1830 - 13
T158481	2D4	14	1821 - 9
T158495	1G7	16	0520 - 3
T158579	3C8	9	3344 - 3
T158579	3C14	2	3346 - 3
T158579	3C16	2	3346 - 5
T158584	1I21	6	1672 - 3
T158648	1G13	2	0540 - 3
T158717	1C21	8	0350 - 3
T158718	1C21	9	0350 - 3
T158720	1C21	2	0350 - 3
T158732	1D11	2	0360 - 1
T158740	1C21	10	0350 - 3
T158742	1C23	2	0350 - 5
T158742	1C25	2	0350 - 7
T158742	1D2	13	0350 - 9
T158742	1D4	2	0350 - 11
T158742	1D6	2	0350 - 13
T158742	1D8	2	0350 - 15
T158742	1D10	32	0350 - 17
T158749	1D11	4	0360 - 1
T158754	1D11	10	0360 - 1
T158756	1D2	6	0350 - 9
T158756	1D6	10	0350 - 13
T158756	1D8	10	0350 - 15
T158760	1D10	26	0350 - 17
T158775	1C23	5	0350 - 5
T158775	1C25	5	0350 - 7
T158775	1D2	7	0350 - 9
T158775	1D4	5	0350 - 11
T158775	1D6	5	0350 - 13
T158775	1D8	5	0350 - 15
T158778	1C23	11	0350 - 5
T158778	1C25	11	0350 - 7
T158778	1D2	8	0350 - 9
T158778	1D4	11	0350 - 11
T158778	1D6	9	0350 - 13

NUMERICAL INDEX - CONTINUED

PART NO.	GRID	KEY	PAGE
T158778	1D8	9	0350 - 15
T158778	1D10	21	0350 - 17
T158801	1C23	8	0350 - 5
T158801	1C25	8	0350 - 7
T158801	1D2	11	0350 - 9
T158801	1D4	8	0350 - 11
T158801	1D6	6	0350 - 13
T158801	1D8	6	0350 - 15
T158801	1D10	20	0350 - 17
T159028	1H25	19	1320 - 3
T159359	1H18	6	1111 - 3
T159362	1H7	3	1011 - 3
T159362	1H7	30	1011 - 3
T159373	1B11	8	0201 - 3
T159386	1B11	7	0201 - 3
T159388	1B11	13	0201 - 3
T159389	1B11	6	0201 - 3
T159400	1H7	19	1011 - 3
T159401	1H7	20	1011 - 3
T159407	1H7	23	1011 - 3
T159425	1H7	28	1011 - 3
T159427	1H7	28	1011 - 3
T159429	1H7	28	1011 - 3
T159431	1H7	28	1011 - 3
T159435	1H7	28	1011 - 3
T159440	1H7	32	1011 - 3
T159441	1H7	32	1011 - 3
T159442	1H7	32	1011 - 3
T159443	1H7	32	1011 - 3
T159444	1H7	32	1011 - 3
T159445	1H7	32	1011 - 3
T159446	1H7	32	1011 - 3
T159447	1H7	32	1011 - 3
T159448	1H7	32	1011 - 3
T159449	1H7	32	1011 - 3
T159450	1H7	32	1011 - 3
T159451	1H7	32	1011 - 3
T159452	1H7	32	1011 - 3
T159453	1H7	32	1011 - 3
T159474	1H18	10	1111 - 3
T159475	1H18	9	1111 - 3
T159477	1H18	4	1111 - 3
T159478	1H18	8	1111 - 3
T159479	1H7	32	1011 - 3
T159480	1H7	32	1011 - 3
T159481	1H7	32	1011 - 3
T159482	1H7	32	1011 - 3
T159483	1H7	32	1011 - 3
T159487	1H18	17	1111 - 3
T159502	1H18	18	1111 - 3
T159519	1B17	9	0210 - 3
T159519	1C4	17	0250 - 7
T159565	1C18	23	0341 - 5
T159567	1C18	19	0341 - 5
T159568	1C23	11	0350 - 5
T159568	1C25	11	0350 - 7
T159568	1D2	8	0350 - 9
T159568	1D4	11	0350 - 11
T159568	1D6	9	0350 - 13
T159568	1D8	9	0350 - 15
T159568	1D10	21	0350 - 17
T159569	1C23	11	0350 - 5
T159569	1C25	11	0350 - 7
T159569	1D2	8	0350 - 9
T159569	1D4	11	0350 - 11
T159569	1D6	9	0350 - 13
T159569	1D8	9	0350 - 15
T159569	1D10	21	0350 - 17
T159570	1C23	11	0350 - 5
T159570	1C25	11	0350 - 7
T159570	1D2	8	0350 - 9
T159570	1D4	11	0350 - 11
T159570	1D6	9	0350 - 13
T159570	1D8	9	0350 - 15
T159570	1D10	21	0350 - 17
T159572	1D10	1	0350 - 17
T159575	1D10	17	0350 - 17
T159582	1D13	22	0360 - 3
T159584	1D13	35	0360 - 3
T159586	1D13	31	0360 - 3
T159587	1D13	26	0360 - 3
T159588	1D13	27	0360 - 3
T159589	1D13	25	0360 - 3
T159591	1D13	30	0360 - 3
T159592	1D13	29	0360 - 3
T159593	1D13	1	0360 - 3
T159593	1D13	28	0360 - 3
T159596	1D13	16	0360 - 3
T159596	1D15	9	0360 - 5
T159597	1D13	21	0360 - 3
T159598	1D13	20	0360 - 3
T159599	1D13	17	0360 - 3
T159600	1D13	18	0360 - 3
T159604	1D13	3	0360 - 3
T159607	1D13	7	0360 - 3
T159613	1D17	5	0360 - 7
T159683	1C18	12	0341 - 5
T159683	1C18	26	0341 - 5
T159684	1D17	9	0360 - 7
T159848	2I4	43	3163 - 5
T159848	3F6	11	3363 - 9
T159848	3F12	7	3363 - 15
T159853	3C8	25	3344 - 3
T159956	2F10	23	2160 - 15
T159956	2I4	42	3163 - 5
T159956	3F2	9	3363 - 5
T159956	3F12	6	3363 - 15
T159980	2G25	5	3115 - 3
T159981	2G25	3	3115 - 3
T160315	2D4	2	1821 - 9
T160376	3F18	3	3363 - 21
T160492	2D18	55	1830 - 7B
T160492	2D20	23	1830 - 9
T160548	3F2	8	3363 - 5
T160548	3F8	6	3363 - 11
T160550	2F10	27	2160 - 15
T160550	2I2	3	3163 - 3
T160550	2I4	31	3163 - 5
T160551	3F12	17	3363 - 15
T160617	2H15	4	3162 - 7
T160617	3D4	14	3362 - 11
T160619	2H15	5	3162 - 7
T160619	3D4	13	3362 - 11
T160759	1H25	30	1320 - 3
T160759	2G11	29	3102 - 11
T160759	2G17	52	3102 - 17
T160761	1I2	6	1320 - 5
T160762	1I2	16	1320 - 5
T160763	1I4	6	1320 - 7
T160769	1I4	16	1320 - 7
T160895	2C22	25	1821 - 3
T160896	2C22	24	1821 - 3
T160938	2D23	18	1830 - 13
T161002	1I11	1	1369 - 7
T161036	2H7	7	3140 - 4
T161093	1I11	10	1369 - 7
T161144	1D17	8	0360 - 7
T161147	1C23	10	0350 - 5
T161147	1C25	10	0350 - 7
T161147	1D2	9	0350 - 9
T161147	1D4	10	0350 - 11
T161147	1D6	8	0350 - 13
T161147	1D8	8	0350 - 15
T161147	1D10	18	0350 - 17
T161181	1C18	16	0341 - 5
T161182	1C18	15	0341 - 5
T161183	1C23	11	0350 - 5
T161183	1C25	11	0350 - 7
T161183	1D2	8	0350 - 9
T161183	1D4	11	0350 - 11
T161183	1D6	9	0350 - 13
T161183	1D8	9	0350 - 15
T161183	1D10	21	0350 - 17
T161186	1D2	2	0350 - 9
T161186	1D6	14	0350 - 13
T161186	1D8	14	0350 - 15
T161187	1D2	2	0350 - 9
T161187	1D6	14	0350 - 13
T161187	1D8	14	0350 - 15
T161188	1D2	2	0350 - 9
T161188	1D6	14	0350 - 13
T161188	1D8	14	0350 - 15
T161189	1D2	2	0350 - 9
T161189	1D6	14	0350 - 13
T161189	1D8	14	0350 - 15
T161190	1D2	2	0350 - 9
T161190	1D6	14	0350 - 13
T161190	1D8	14	0350 - 15
T161191	1D2	2	0350 - 9
T161191	1D6	14	0350 - 13
T161191	1D8	14	0350 - 15
T161192	1D2	2	0350 - 9
T161192	1D6	14	0350 - 13
T161192	1D8	14	0350 - 15
T161193	1D2	2	0350 - 9
T161193	1D6	14	0350 - 13
T161193	1D8	14	0350 - 15
T161194	1D13	5	0360 - 3
T161194	1D13	24	0360 - 3
T161194	1D15	12	0360 - 5
T161194	1D17	20	0360 - 7
T161197	1D13	32	0360 - 3
T161198	1D13	32	0360 - 3
T161199	1D13	32	0360 - 3
T161200	1D13	32	0360 - 3
T161202	1D13	37	0360 - 3
T161203	1D13	38	0360 - 3
T161204	1D13	2	0360 - 3
T161204	1D17	4	0360 - 7
T161204	1D17	6	0360 - 7
T161204	1D17	12	0360 - 7
T161207	1D13	8	0360 - 3
T161207	1D15	13	0360 - 5
T161208	1D17	10	0360 - 7
T161218	1C18	3	0341 - 5
T161238	1H7	28	1011 - 3
T161239	1H7	28	1011 - 3
T161240	1H7	28	1011 - 3
T161241	1H7	28	1011 - 3
T161242	1H7	28	1011 - 3
T161243	1H7	28	1011 - 3

NUMERICAL INDEX - CONTINUED

PART NO.	GRID	KEY	PAGE
T161244	1H7	28	1011 - 3
T161245	1H7	28	1011 - 3
T161246	1H7	28	1011 - 3
T161247	1H7	28	1011 - 3
T161373	2B15	11	1814 - 3
T161380	1J12	18	1674 - 9
T161380	2B9	11	1811 - 5
T161380	2C18	15	1816 - 15
T161380	2C20	35	1816 - 17
T161380	2E12	17	2001 - 3
T161463	2F10	38	2160 - 15
T161463	2I2	6	3163 - 3
T161463	2I4	34	3163 - 5
T161615	1I11	12	1369 - 7
T161665	3F18	37	3363 - 21
T161665	3F20	28	3363 - 23
T161678	1H25	5	1320 - 3
T161769	3F18	24	3363 - 21
T161769	3F20	18	3363 - 23
T161835	2H17	19	3162 - 9
T161835	2H19	11	3162 - 11
T161835	2H21	15	3162 - 13
T162074	1B14	3	0201 - 7
T162238	2F20	27	2160 - 23
T162238	3D22	33	3362 - 27B
T162380	1J2	1	1674 - 3
T162380	3D22	25	3362 - 27B
T162396	1K8	9	1740 - 3
T162396	2G7	7	3102 - 7
T162396	2G17	13	3102 - 17
T162396	2G21	6	3104 - 3
T162396	2G25	23	3115 - 3
T162396	2H6	4	3140 - 3
T162396	2H7	4	3140 - 4
T162396	2H9	1	3140 - 7
T162396	2I7	26	3165 - 1
T162396	2I10	26	3165 - 4
T162396	3C6	1	3343 - 3
T162396	3C8	2	3344 - 3
T162396	3C12	15	3345 - 3
T162396	3C14	9	3346 - 3
T162396	3C16	19	3346 - 5
T162396	3C16	30	3346 - 5
T162396	3C18	15	3348 - 3
T162396	3F24	34	3365 - 2
T162396	3F25	25	3365 - 3
T162396	3G2	31	3365 - 5
T162446	1D11	7	0360 - 1
T162517	1H7	22	1011 - 3
T162557	2D23	5	1830 - 13
T162681	3F14	14	3363 - 17
T162682	3F14	7	3363 - 17
T162682	3F16	17A	3363 - 19
T162682	3F16	25A	3363 - 19
T162935	1D11	8	0360 - 1
T162947	1D13	39	0360 - 3
T163113	1G7	14	0520 - 3
T163116	2G12	7	3102 - 12
T163117	2G12	5	3102 - 12
T163118	2G12	12	3102 - 12
T163242	3C8	27	3344 - 3
T163250	3C8	7A	3344 - 3
T163309	1J2	3	1674 - 3
T163309	1J10	9	1674 - 7
T163309	2C16	2	1816 - 13
T163327	3C6	18	3343 - 3
T163328	3C6	13	3343 - 3
T163330	3C6	7	3343 - 3
T163331	3C6	6	3343 - 3
T163526	3C14	11	3346 - 3
T163526	3C16	8	3346 - 5
T163527	3C14	7	3346 - 3
T163532	3C12	3	3345 - 3
T163544	1B15	7	0210 - 1
T163544	1H18	21	1111 - 3
T163632	3B25	9	3315 - 21
T163643	3C8	4	3344 - 3
T163646	3C8	5	3344 - 3
T163702	3F14	8	3363 - 17
T163702	3F16	20	3363 - 19
T163758	3B7	7	3302 - 3
T163781	3B7	7	3302 - 3
T163804	3B7	8	3302 - 3
T163852	3C12	13	3345 - 3
T163918	1K8	7	1740 - 3
T163918	1K8	14	1740 - 3
T163922	1K8	2	1740 - 3
T163954	3D4	12	3362 - 11
T163954	3D6	14	3362 - 13
T163954	3D8	27	3362 - 15
T163954	3D10	29	3362 - 17
T163954	3D12	15	3362 - 19
T163954	3D14	18	3362 - 21
T163954	3D16	7	3362 - 23
T163954	3E13	26	3362 - 41
T163954	3E15	25	3362 - 43
T163954	3E17	26	3362 - 45
T163954	3E19	22	3362 - 47
T163955	3D6	21	3362 - 13
T163955	3D8	16	3362 - 15
T163955	3D10	19	3362 - 17
T163959	3D6	18	3362 - 13
T163959	3D8	14	3362 - 15
T163959	3D10	17	3362 - 17
T163959	3D12	17	3362 - 19
T163959	3D14	6	3362 - 21
T163959	3D16	9	3362 - 23
T163960	3D2	3	3362 - 9
T163962	2C22	25	1821 - 3
T163994	3D10	13	3362 - 17
T163994	3D12	10	3362 - 19
T163995	3D6	20	3362 - 13
T163995	3D8	15	3362 - 15
T163995	3D10	18	3362 - 17
T163995	3D12	19	3362 - 19
T163995	3D14	7	3362 - 21
T163995	3D16	10	3362 - 23
T163998	3D2	3	3362 - 9
T163999	3D2	3	3362 - 9
T164124	1H13	10	1060 - 7
T164124	1H25	31	1320 - 3
T164124	2F20	19	2160 - 23
T164124	2F20	22	2160 - 23
T164128	1I2	15	1320 - 5
T164128	2F20	22	2160 - 23
T164129	1I4	15	1320 - 7
T164129	2F20	22	2160 - 23
T164326	1H13	17	1060 - 7
T164331	1H11	19	1060 - 5
T164482	1H9	26	1060 - 3
T164573	1C18	2	0341 - 5
T164576	1D10	5	0350 - 17
T164577	1D13	40	0360 - 3
T164577	1D17	16	0360 - 7
T164578	1D13	15	0360 - 3
T164579	1D13	33	0360 - 3
T164581	1D13	38	0360 - 3
T164582	1D13	38	0360 - 3
T164583	1D13	38	0360 - 3
T164584	1D13	38	0360 - 3
T164585	1D13	19	0360 - 3
T164592	1D17	1	0360 - 7
T164609	1D15	10	0360 - 5
T164610	1D15	8	0360 - 5
T164611	1D15	3	0360 - 5
T164612	1D15	4	0360 - 5
T164618	2D18	45	1830 - 7B
T164619	2D16	4	1830 - 7
T164620	2C16	23	1816 - 13
T164621	2C16	26	1816 - 13
T164626	1C23	9	0350 - 5
T164626	1C25	9	0350 - 7
T164626	1D2	10	0350 - 9
T164626	1D4	9	0350 - 11
T164626	1D6	7	0350 - 13
T164626	1D8	7	0350 - 15
T164626	1D10	19	0350 - 17
T164628	1D2	2	0350 - 9
T164628	1D6	14	0350 - 13
T164628	1D8	14	0350 - 15
T164629	1D2	2	0350 - 9
T164629	1D6	14	0350 - 13
T164629	1D8	14	0350 - 15
T164630	1D2	2	0350 - 9
T164630	1D6	14	0350 - 13
T164630	1D8	14	0350 - 15
T164631	3B25	10	3315 - 21
T164640	1C23	14	0350 - 5
T164643	1C25	14	0350 - 7
T164646	1D2	15	0350 - 9
T164647	1D4	15	0350 - 11
T164648	1C18	1	0341 - 5
T164648	1C18	30	0341 - 5
T164648	1D10	28	0350 - 17
T164654	1C21	3	0350 - 3
T164655	1C21	4	0350 - 3
T164657	1C18	12	0341 - 5
T164658	1C18	18	0341 - 5
T164659	1C18	9	0341 - 5
T164660	1C18	7	0341 - 5
T164660	1C18	21	0341 - 5
T164661	1C18	20	0341 - 5
T164662	1C18	17	0341 - 5
T164665	1C18	11	0341 - 5
T164666	1C18	13	0341 - 5
T164671	1C18	35	0341 - 5
T164682	1D17	3	0360 - 7
T164682	1D17	7	0360 - 7
T164682	1D17	11	0360 - 7
T164686	1D17	13	0360 - 7
T164693	1D13	13	0360 - 3
T164693	1D15	6	0360 - 5
T164697	2B19	3	1814 - 7
T164698	2B21	2	1814 - 9
T164702	1D15	2	0360 - 5
T164703	1C18	27	0341 - 5
T164704	1C18	28	0341 - 5
T164705	2B21	27	1814 - 9
T164705	2B23	14	1814 - 9B
T164706	2B17	54	1814 - 5
T164707	2B17	45	1814 - 5

NUMERICAL INDEX - CONTINUED

PART NO.	GRID	KEY	PAGE
T164708	2B21	28	1814 - 9
T164708	2B23	15	1814 - 9B
T164709	2B17	55	1814 - 5
T164710	2B17	55	1814 - 5
T164711	1D6	12	0350 - 13
T164711	1D8	12	0350 - 15
T164712	1C23	6	0350 - 5
T164712	1C25	6	0350 - 7
T164712	1D4	6	0350 - 11
T164714	2D10	16	1821 - 15
T164796	1K8	16	1740 - 3
T164804	1H11	18	1060 - 5
T164836	1B11	17	0201 - 3
T164841	1B11	1	0201 - 3
T164843	1B11	10	0201 - 3
T164844	1B11	12	0201 - 3
T164844	1B12	10	0201 - 4
T164847	1B15	3	0210 - 1
T164848	1B15	3	0210 - 1
T164849	1B15	3	0210 - 1
T164850	1B15	3	0210 - 1
T164851	1B15	3	0210 - 1
T164852	1B15	3	0210 - 1
T164853	1B15	3	0210 - 1
T164854	1B15	3	0210 - 1
T164855	1B15	3	0210 - 1
T164856	1B15	3	0210 - 1
T164857	1B15	3	0210 - 1
T164858	1B15	3	0210 - 1
T164859	1B15	3	0210 - 1
T164860	1B15	3	0210 - 1
T164861	1B15	4	0210 - 1
T164862	1B15	4	0210 - 1
T164863	1B15	4	0210 - 1
T164864	1B15	4	0210 - 1
T164865	1B15	4	0210 - 1
T164866	1B15	4	0210 - 1
T164867	1B15	4	0210 - 1
T164868	1B15	4	0210 - 1
T164869	1B15	4	0210 - 1
T164870	1B15	4	0210 - 1
T164871	1B15	4	0210 - 1
T164872	1B15	8	0210 - 1
T164873	1B15	9	0210 - 1
T164875	1H7	21	1011 - 3
T164877	1H7	17	1011 - 3
T164878	1H7	16	1011 - 3
T164879	1H7	18	1011 - 3
T164880	1H7	14	1011 - 3
T164881	1H7	24	1011 - 3
T164883	1H7	15	1011 - 3
T164884	1H7	11	1011 - 3
T164885	1H7	6	1011 - 3
T164887	1H7	8	1011 - 3
T164888	1H7	7	1011 - 3
T164892	1H7	27	1011 - 3
T164893	1H7	10	1011 - 3
T164894	1H7	2	1011 - 3
T164898	1H7	1	1011 - 3
T164899	1H7	4	1011 - 3
T164901	1B12	6	0201 - 4
T164902	1B12	1	0201 - 4
T164903	1B12	3	0201 - 4
T164904	1B12	5	0201 - 4
T164905	1B12	9	0201 - 4
T164906	1B12	7	0201 - 4
T164907	1B12	8	0201 - 4
T164908	1H18	12	1111 - 3
T164909	1H18	11	1111 - 3
T164911	1H18	5	1111 - 3
T164912	1H18	14	1111 - 3
T164913	1H18	15	1111 - 3
T164914	1H18	7	1111 - 3
T164915	1H18	3	1111 - 3
T164916	1H18	2	1111 - 3
T164917	1H18	1	1111 - 3
T164918	1H18	16	1111 - 3
T164922	1H18	19	1111 - 3
T164933	1B17	2	0210 - 3
T164934	1B17	5	0210 - 3
T164938	1B17	12	0210 - 3
T164939	1B17	25	0210 - 3
T164940	1B17	7	0210 - 3
T164940	1B17	8	0210 - 3
T164959	1B17	19	0210 - 3
T164960	1B17	20	0210 - 3
T164961	1B17	24	0210 - 3
T164962	1B17	22	0210 - 3
T164963	1B17	21	0210 - 3
T164964	1B17	23A	0210 - 3
T164966	1B17	15	0210 - 3
T164970	1B17	11	0210 - 3
T164971	1B17	8	0210 - 3
T164972	1B17	10	0210 - 3
T164979	1B17	13	0210 - 3
T164980	1B17	6	0210 - 3
T164988	1D10	23A	0350 - 17
T164989	1D10	22	0350 - 17
T164990	1D10	25A	0350 - 17
T165095	2B15	8	1814 - 3
T165096	2B15	8	1814 - 3
T165101	1H7	9	1011 - 3
T165134	1D10	12	0350 - 17
T165135	1D10	11	0350 - 17
T165136	1D10	10	0350 - 17
T165137	1D10	9	0350 - 17
T165138	1D10	8	0350 - 17
T165139	1D10	7	0350 - 17
T165140	1D10	13	0350 - 17
T165141	1D10	14	0350 - 17
T165142	1D10	15	0350 - 17
T165143	1D10	16	0350 - 17
T165144	1D10	6	0350 - 17
T165158	2B15	34	1814 - 3
T165169	2D16	1	1830 - 7
T165188	1G22	10	0960 - 5
T165256	1G22	12	0960 - 5
T165282	1H9	8	1060 - 3
T165290	2E5	1	1913 - 3
T165292	1G15	16	0560 - 3
T165336	2B15	34	1814 - 3
T165357	2B17	58	1814 - 5
T165533	1G22	9	0960 - 5
T165542	1I25	3	1673 - 5
T165543	1I25	6	1673 - 5
T165561	2B21	7	1814 - 9
T165584	1H25	32	1320 - 3
T165584	2C6	2	1816 - 3
T165590	3B13	10	3315 - 5
T165595	1H25	33	1320 - 3
T165595	3C4	5	3315 - 25
T165740	3C8	19	3344 - 3
T165742	3C8	24	3344 - 3
T165808	2C16	18	1816 - 13
T165809	1H11	30	1060 - 5
T165810	1H11	27	1060 - 5
T165811	1H11	17	1060 - 5
T165812	1H11	24	1060 - 5
T165813	1H11	23	1060 - 5
T165815	1H11	11	1060 - 5
T165816	1H11	12	1060 - 5
T165817	1H11	13	1060 - 5
T165818	1H11	3	1060 - 5
T165819	1H11	1	1060 - 5
T165820	1H11	4	1060 - 5
T165821	1H11	16	1060 - 5
T165822	1H11	32	1060 - 5
T165823	1H11	22	1060 - 5
T165824	1H11	8	1060 - 5
T165825	2H6	8	3140 - 3
T165844	2H6	5	3140 - 3
T165849	2H6	7	3140 - 3
T165858	1H11	29	1060 - 5
T165859	1H11	29	1060 - 5
T165860	1H11	29	1060 - 5
T165861	1H11	31	1060 - 5
T165862	1H11	28	1060 - 5
T165870	2E9	5	1927 - 3
T165911	2E3	47	1910 - 3
T165915	2E3	27	1910 - 3
T165916	2E3	26	1910 - 3
T165938	1H11	20	1060 - 5
T165948	2B13	15	1812 - 3
T165951	2E12	14	2001 - 3
T165969	2B13	5	1812 - 3
T165975	2E3	43	1910 - 3
T165976	2E3	25	1910 - 3
T165977	2E3	38	1910 - 3
T165978	2E3	31	1910 - 3
T165981	2E3	36	1910 - 3
T166000	2B13	4	1812 - 3
T166023	1H11	29	1060 - 5
T166035	2B17	37	1814 - 5
T166060	2B17	54	1814 - 5
T166062	1C23	16	0350 - 5
T166062	1C25	16	0350 - 7
T166062	1D4	13	0350 - 11
T166065	1D2	4	0350 - 9
T166066	1D15	1	0360 - 5
T166077	1D11	1	0360 - 1
T166078	1D10	3	0350 - 17
T166097	3C2	6	3315 - 23
T166102	3C2	18	3315 - 23
T166137	1G7	3	0520 - 3
T166174	1G5	42	0515 - 3
T166211	2C10	4	1816 - 7
T166213	2C10	2	1816 - 7
T166223	1H13	31	1060 - 7
T166223	3B9	9	3315 - 3
T166223	3B11	11	3315 - 3B
T166224	3B15	17	3315 - 11
T166224	3B19	14	3315 - 13
T166226	2C22	10	1821 - 3
T166227	2C22	11	1821 - 3
T166237	3B23	8	3315 - 17
T166238	1B17	15	0210 - 3
T166244	1J2	15	1674 - 3
T166245	2I4	26	3163 - 5
T166258	3C18	9	3348 - 3
T166297	2D16	29	1830 - 7
T166300	1H25	34	1320 - 3

NUMERICAL INDEX - CONTINUED

PART NO.	GRID	KEY	PAGE
T166300	1J10	15	1674 - 7
T166322	2C16	30	1816 - 13
T166331	2E9	6	1927 - 3
T166332	2E9	7	1927 - 3
T166344	1J4	12	1674 - 5
T166360	2B7	20	1811 - 3
T166368	2B21	5	1814 - 9
T166369	2B21	16	1814 - 9
T166371	2B21	8	1814 - 9
T166433	2G9	3	3102 - 9
T166433	2G11	2	3102 - 11
T166433	2G17	29	3102 - 17
T166538	1H25	35	1320 - 3
T166538	1J19	4	1674 - 17
T166538	3D20	19	3362 - 27
T166761	2F20	16	2160 - 23
T166772	2F10	26	2160 - 15
T166772	3B13	16	3315 - 5
T166773	3B13	7	3315 - 5
T166874	2C16	6	1816 - 13
T166875	2C14	4	1816 - 11
T166881	2B21	22	1814 - 9
T166896	1H25	20	1320 - 3
T166896	2B7	28	1811 - 3
T166899	2H2	3	3115 - 5
T166900	2H4	1	3115 - 7
T166909	1H25	6	1320 - 3
T167008	1I4	17	1320 - 7
T167012	1I2	17	1320 - 5
T167059	2G9	12	3102 - 9
T167059	2G17	40	3102 - 17
T167065	1J10	14	1674 - 7
T167082	2C12	10	1816 - 9
T167083	2C12	2	1816 - 9
T167119	2C12	10	1816 - 9
T167149	2C12	9	1816 - 9
T167150	2C12	8	1816 - 9
T167192	2H2	12	3115 - 5
T167214	1I23	3	1673 - 3
T167232	2E12	2	2001 - 3
T167318	2E7	10	1921 - 3
T167319	1G20	9	0960 - 3
T167324	2D12	16	1830 - 3
T167325	2D12	7	1830 - 3
T167416	1G20	8	0960 - 3
T16752	1I9	1	1369 - 5
T168910	1H7	29	1011 - 3
T170189	1C2	8	0250 - 5
T170784	1G13	10	0540 - 3
T17148	1G20	3	0960 - 3
T17148	1G22	3	0960 - 5
T171686	2C22	1	1821 - 3
T172353	1I19	1	1671 - 8
T174530	1I19	3	1671 - 8
T175641	2B15	29	1814 - 3
T175642	2B15	28	1814 - 3
T175643	2B15	32	1814 - 3
T175644	2B15	31	1814 - 3
T175645	2B15	27	1814 - 3
T175646	2B15	33	1814 - 3
T176425	2F2	6	2160 - 5
T176425	2F4	8	2160 - 7
T176425	2F4	15	2160 - 7
T176553	1G9	6	0520 - 5
T177187	2E9	1	1927 - 3
T177623	3B23	6	3315 - 17
T178251	2D18	43	1830 - 7B
T178346	2F10	38	2160 - 15
T178971	2D18	62	1830 - 7B
T180289	1G24	5	0960 - 7
T180289	1H2	5	0960 - 9
T181306	2H25	3	3162 - 17
T18145	1B19	7	0230 - 1
T18145	1B23	5	0250 - 2
T181522	2D16	13	1830 - 7
T183144	1K11	1	1749 - 3
T183151	2C14	14	1816 - 11
T183217	1G5	11	0515 - 3
T183219	3C16	27	3346 - 5
T183220	3C16	11	3346 - 5
T183225	3C16	13	3346 - 5
T183226	3C16	15	3346 - 5
T183231	3C16	6	3346 - 5
T183245	3C19	2	3348 - 4
T183247	3C18	7A	3348 - 3
T183247	3C18	16	3348 - 3
T183247	3C19	4	3348 - 4
T183266	2H7	6A	3140 - 4
T183267	2H7	2	3140 - 4
T183311	2H9	7	3140 - 7
T183314	2G7	5	3102 - 7
T183315	2G7	8	3102 - 7
T183316	2G7	3	3102 - 7
T183404	2C8	3	1816 - 5
T183468	2C8	1	1816 - 5
T183508	1C9	4	0250 - 13
T183509	1C9	4	0250 - 13
T183510	1C9	4	0250 - 13
T183511	1C9	4	0250 - 13
T183512	1C9	4	0250 - 13
T183513	1C9	4	0250 - 13
T183514	1C9	4	0250 - 13
T183515	1C9	4	0250 - 13
T183516	1C9	4	0250 - 13
T183517	1C9	4	0250 - 13
T183560	2D14	12	1830 - 5
T183561	3D24	1	3362 - 29
T183600	1J2	11	1674 - 3
T183616	1H9	6	1060 - 3
T183617	2H2	27	3115 - 5
T183617	2H4	12	3115 - 7
T183617	3C2	19	3315 - 23
T183664	2B25	6	1814 - 11
T183664	2C4	3	1814 - 15
T183706	2C12	1	1816 - 9
T183713	3C16	28	3346 - 5
T183756	2H17	26	3162 - 9
T183756	2H19	17	3162 - 11
T183756	2H23	6	3162 - 15
T183756	3D4	5	3362 - 11
T183756	3D10	33	3362 - 17
T183757	2H19	6	3162 - 11
T183757	2H21	10	3162 - 13
T183757	3D6	16	3362 - 13
T183757	3D8	24	3362 - 15
T183757	3D14	20	3362 - 21
T183757	3D16	22	3362 - 23
T183759	2H9	10	3140 - 7
T183760	2H9	3	3140 - 7
T183760	2H9	9	3140 - 7
T183768	1H25	24	1320 - 3
T183768	2B21	20	1814 - 9
T183768	2B23	19	1814 - 9B
T183882	2C8	4	1816 - 5
T183886	1G2	19	0510 - 3
T183887	1G2	21	0510 - 3
T183905	3C2	14	3315 - 23
T184006	1G2	30	0510 - 3
T184008	2C12	4	1816 - 9
T184009	2C12	5	1816 - 9
T184129	3B15	3	3315 - 11
T184129	3B19	3	3315 - 13
T184164	2C16	21	1816 - 13
T184214	2C16	35	1816 - 13
T184320	1G24	22	0960 - 7
T184320	1H2	21	0960 - 9
T184345	1J4	10	1674 - 5
T184345	1J6	4	1674 - 5B
T184345	1J19	2	1674 - 17
T184345	2C12	12	1816 - 9
T184345	2C12	20	1816 - 9
T184345	2C14	8	1816 - 11
T184345	2C16	38	1816 - 13
T184345	3D22	34	3362 - 27B
T184347	1G7	4	0520 - 3
T184354	3B13	15	3315 - 5
T184368	2D18	41	1830 - 7B
T184369	2D16	10	1830 - 7
T184370	2C16	32	1816 - 13
T184393	2E3	24	1910 - 3
T184402	1H25	53	1320 - 3
T184402	3D20	19	3362 - 27
T184402	3D24	1	3362 - 29
T184414	2D18	50	1830 - 7B
T184415	2D18	51	1830 - 7B
T184418	3B25	1	3315 - 21
T184465	3B25	6	3315 - 21
T184597	3B25	8	3315 - 21
T184620	2C16	22	1816 - 13
T184620	2D16	2	1830 - 7
T184620	2D16	3	1830 - 7
T184676	1J12	1	1674 - 9
T184688	1B17	1	0210 - 3
T184689	1B17	3	0210 - 3
T184710	3C4	3	3315 - 25
T184711	3C4	4	3315 - 25
T184759	1H25	7	1320 - 3
T184767	3C8	20	3344 - 3
T184787	2E3	33	1910 - 3
T184788	2E3	32	1910 - 3
T184789	1H25	21	1320 - 3
T184892	2B9	11	1811 - 5
T184892	2E12	17	2001 - 3
T184918	1D10	29	0350 - 17
T184924	2D16	23	1830 - 7
T184938	1B23	11	0250 - 2
T184938	1C4	18	0250 - 7
T184939	1B23	12	0250 - 2
T184939	1C4	18	0250 - 7
T184940	1C2	5	0250 - 5
T184941	1C2	4	0250 - 5
T185041	2G11	17	3102 - 11
T185085	3B13	12	3315 - 5
T185089	2I6	23	3163 - 7
T185135	2F2	18	2160 - 5
T185154	1G2	38	0510 - 3
T185154	2F10	40	2160 - 15
T185181	2F4	11	2160 - 7
T185181	2F6	4	2160 - 9
T185183	2F2	8	2160 - 5
T185183	2F6	8	2160 - 9

NUMERICAL INDEX - CONTINUED

PART NO.	GRID	KEY	PAGE
T185185	2F2	17	2160 - 5
T185185	2F6	14	2160 - 9
T185186	2F4	1	2160 - 7
T185189	2F10	46	2160 - 15
T185254	2F2	9	2160 - 5
T185309	3B23	1	3315 - 17
T185328	2B11	1	1811 - 7
T185329	2B11	1	1811 - 7
T185330	1H25	8	1320 - 3
T185360	2E5	4	1913 - 3
T185377	2B21	25	1814 - 9
T185378	2B21	24	1814 - 9
T185469	1H25	36	1320 - 3
T185469	2E5	5	1913 - 3
T185478	2D14	18	1830 - 5
T185479	2D14	15	1830 - 5
T185480	2D14	22	1830 - 5
T185481	2D14	19	1830 - 5
T185482	2D14	17	1830 - 5
T185485	2C12	22	1816 - 9
T185491	1G5	8	0515 - 3
T185493	2C16	8	1816 - 13
T185494	2C16	2	1816 - 13
T185495	2C16	10	1816 - 13
T185496	3C2	20	3315 - 23
T185524	2B13	3	1812 - 3
T185540	2D14	5	1830 - 5
T185545	1I4	1	1320 - 7
T185546	1I4	2	1320 - 7
T185547	1I4	4	1320 - 7
T185548	1I4	22	1320 - 7
T185549	1I4	9	1320 - 7
T185553	1I4	25	1320 - 7
T185556	1H25	9	1320 - 3
T185567	1I2	1	1320 - 5
T185568	1I2	2	1320 - 5
T185569	1I2	4	1320 - 5
T185570	1I2	22	1320 - 5
T185571	1I2	9	1320 - 5
T185577	1I2	25	1320 - 5
T185606	1D13	4	0360 - 3
T185619	2C14	3	1816 - 11
T185646	1H25	22	1320 - 3
T185651	2C16	36	1816 - 13
T185652	2C16	37	1816 - 13
T185653	2C14	16	1816 - 11
T185654	2C14	10	1816 - 11
T185664	2B11	3	1811 - 7
T185673	2D12	19	1830 - 3
T185675	1H25	37	1320 - 3
T185676	1H25	38	1320 - 3
T185678	2B17	43	1814 - 5
T185691	1H25	39	1320 - 3
T185691	3B15	5	3315 - 11
T185692	1H25	40	1320 - 3
T185692	3B19	11	3315 - 13
T185695	1I2	24	1320 - 5
T185696	1I4	24	1320 - 7
T185710	2H2	24	3115 - 5
T185710	2H4	9	3115 - 7
T185742	2C12	16	1816 - 9
T185743	2C12	25	1816 - 9
T185743	2D14	10	1830 - 5
T185744	2D14	5	1830 - 5
T185762	2D20	5	1830 - 9
T185763	2D20	1	1830 - 9
T185766	3C2	1	3315 - 23
T185769	1I25	21	1673 - 5
T185769	2C12	26	1816 - 9
T185769	2D14	11	1830 - 5
T185770	2C16	15	1816 - 13
T185773	2B13	7	1812 - 3
T185774	2B13	8	1812 - 3
T185775	2B13	14	1812 - 3
T185779	2D12	13	1830 - 3
T185780	2D12	14	1830 - 3
T185782	2B7	14	1811 - 3
T185783	2B7	16	1811 - 3
T185784	2B7	15	1811 - 3
T185785	2B7	17	1811 - 3
T185789	2D16	22	1830 - 7
T185826	2F8	40	2160 - 13
T185826	2F8	52	2160 - 13
T185840	2D12	6	1830 - 3
T185841	2D12	2	1830 - 3
T185842	2D12	8	1830 - 3
T185843	2D12	9	1830 - 3
T185844	2C16	27	1816 - 13
T185845	2D18	48	1830 - 7B
T185846	2D14	24	1830 - 5
T185847	2D14	21	1830 - 5
T185848	2D14	9	1830 - 5
T185849	2D14	13	1830 - 5
T185850	2D12	10	1830 - 3
T185866	2D12	15	1830 - 3
T185867	2D12	12	1830 - 3
T185896	2C16	14	1816 - 13
T185902	1H21	4	1313 - 3
T185905	2C14	11	1816 - 11
T185949	2D23	45	1830 - 13
T185981	2H13	5	3162 - 5
T186016	2B17	47	1814 - 5
T186017	2B17	46	1814 - 5
T186018	2B17	56	1814 - 5
T186022	2C12	23	1816 - 9
T186024	1J16	2	1674 - 13
T186029	2B7	1	1811 - 3
T186030	2B7	2	1811 - 3
T186062	1H23	9	1314 - 3
T186123	1H25	10	1320 - 3
T186124	1H25	11	1320 - 3
T186125	1I4	27	1320 - 7
T186128	1I2	27	1320 - 5
T186154	2F18	4	2160 - 21
T186340	3C19	3	3348 - 4
T186400	1H25	42	1320 - 3
T186400	1J10	1	1674 - 7
T186401	1H25	43	1320 - 3
T186401	1J10	2	1674 - 7
T186402	1H25	44	1320 - 3
T186441	1I2	23	1320 - 5
T186442	1I4	23	1320 - 7
T186443	2E12	7	2001 - 3
T186444	2E12	15	2001 - 3
T186552	1H25	45	1320 - 3
T186552	2C14	18	1816 - 11
T186560	1D17	2	0360 - 7
T186653	1G7	6	0520 - 3
T186717	1F23	12	0505 - 3
T186766	2D18	53	1830 - 7B
T186776	1G2	1	0510 - 3
T186793	1G5	30	0515 - 3
T186793	1H25	23	1320 - 3
T186793	1J2	11	1674 - 3
T186793	1J8	1	1674 - 5D
T186873	2D14	3	1830 - 5
T187044	3B9	6	3315 - 3
T187044	3B11	5	3315 - 3B
T187072	2H2	11	3115 - 5
T187110	2C16	33	1816 - 13
T187136	2E23	9	2160 - 3
T187216	2D25	1	1834 - 3
T187354	3C6	3	3343 - 3
T187394	1I25	20	1673 - 5
T187399	1B19	4	0230 - 1
T187399	1B23	2	0250 - 2
T187484	2F10	9	2160 - 15
T187485	1B19	5	0230 - 1
T187485	1B23	3	0250 - 2
T187523	2F10	7	2160 - 15
T187571	1G13	4	0540 - 3
T187639	1C2	3	0250 - 5
T187651	1C2	2	0250 - 5
T187681	1C9	7	0250 - 13
T187684	1C4	23	0250 - 7
T187685	1C4	21	0250 - 7
T187687	1C5	7	0250 - 8
T187688	1C5	8	0250 - 8
T187689	1C5	10	0250 - 8
T187690	1C5	3	0250 - 8
T187765	2B21	9	1814 - 9
T187780	2B21	23	1814 - 9
T187815	2H25	1	3162 - 17
T187819	1B17	17	0210 - 3
T187909	1K11	2	1749 - 3
T187920	1G5	34	0515 - 3
T187954	2E3	12	1910 - 3
T188018	1I2	26	1320 - 5
T188019	1I4	26	1320 - 7
T188172	1D13	34	0360 - 3
T188173	1D13	36	0360 - 3
T188173	1D13	41	0360 - 3
T188183	3F4	17	3363 - 7
T188183	3F6	12	3363 - 9
T188193	1G15	24	0560 - 3
T188231	1G2	28	0510 - 3
T188356	3B23	10	3315 - 17
T188441	1B22	5	0230 - 4
T188442	1B22	7	0230 - 4
T188444	1B21	16	0230 - 3
T188445	1B21	17	0230 - 3
T188446	1B21	17	0230 - 3
T188447	1B21	17	0230 - 3
T188448	1B22	9	0230 - 4
T188449	1B20	3	0230 - 2
T188450	1B20	1	0230 - 2
T188451	1B22	4	0230 - 4
T188452	1B21	18	0230 - 3
T188453	1B21	1	0230 - 3
T188565	2B13	13	1812 - 3
T188568	3C8	7A	3344 - 3
T188568	3C8	7B	3344 - 3
T188568	3C8	10	3344 - 3
T188568	3C8	13	3344 - 3
T188570	2C2	11	1814 - 13
T188606	1K8	12	1740 - 3
T188639	3B13	17	3315 - 5
T188642	2E3	16	1910 - 3
T188686	2F2	21	2160 - 5
T188687	2F4	9	2160 - 7
T188726	2B13	4	1812 - 3

NUMERICAL INDEX - CONTINUED

PART NO.	GRID	KEY	PAGE
T188764	1G2	12	0510 - 3
T188806	2B15	6	1814 - 3
T188817	1H25	12	1320 - 3
T188818	1I4	18	1320 - 7
T188819	1I2	18	1320 - 5
T188879	2G17	15	3102 - 17
T188879	2I4	56	3163 - 5
T188880	2G17	18	3102 - 17
T188880	2I4	57	3163 - 5
T188900	2H2	22	3115 - 5
T188901	2H2	21	3115 - 5
T188901	2H4	7	3115 - 7
T18891	1E4	2	0404 - 3
T188927	2I2	22	3163 - 3
T188927	2I2	23	3163 - 3
T188927	2I4	21	3163 - 5
T188927	2I4	40	3163 - 5
T188967	2E3	9	1910 - 3
T188987	1G15	6	0560 - 3
T189008	1C16	12B	0341 - 3
T189064	2I4	20	3163 - 5
T189096	3C6	21	3343 - 3
T190200	2E3	42	1910 - 3
T190243	2F4	10	2160 - 7
T190286	2G25	16	3115 - 3
T190298	2F10	13	2160 - 15
T190403	3F12	14	3363 - 15
T190473	2H2	23	3115 - 5
T190525	1F23	5	0505 - 3
T190549	2E3	19	1910 - 3
T190658	1I18	2	1671 - 7
T190669	2F8	31	2160 - 13
T190690	2I4	27	3163 - 5
T190703	3F4	20	3363 - 7
T190703	3F14	16	3363 - 17
T190703	3F16	5	3363 - 19
T190727	3C16	14	3346 - 5
T190753	3D2	2	3362 - 9
T190766	3D4	11	3362 - 11
T190766	3D6	13	3362 - 13
T190766	3D8	26	3362 - 15
T190766	3D10	28	3362 - 17
T190766	3D12	14	3362 - 19
T190766	3D14	17	3362 - 21
T190766	3D16	6	3362 - 23
T190766	3E13	27	3362 - 41
T190766	3E15	26	3362 - 43
T190766	3E17	27	3362 - 45
T190766	3E19	23	3362 - 47
T190767	3D6	26	3362 - 13
T190767	3D8	21	3362 - 15
T190767	3D10	25	3362 - 17
T190767	3D12	25	3362 - 19
T190767	3D14	13	3362 - 21
T190767	3D16	18	3362 - 23
T190767	3E13	22	3362 - 41
T190767	3E15	22	3362 - 43
T190767	3E17	22	3362 - 45
T190767	3E19	20	3362 - 47
T190768	3D16	15	3362 - 23
T190771	3D16	13	3362 - 23
T190774	3D16	12	3362 - 23
T190775	3D6	24	3362 - 13
T190775	3D8	19	3362 - 15
T190775	3D10	22	3362 - 17
T190775	3D12	23	3362 - 19
T190775	3D14	11	3362 - 21
T190775	3D16	16	3362 - 23
T190775	3E13	20	3362 - 41
T190775	3E15	20	3362 - 43
T190775	3E17	20	3362 - 45
T190775	3E19	18	3362 - 47
T190776	3D6	27	3362 - 13
T190776	3D8	22	3362 - 15
T190776	3D10	26	3362 - 17
T190776	3D12	26	3362 - 19
T190776	3D14	14	3362 - 21
T190776	3D16	19	3362 - 23
T190776	3E13	23	3362 - 41
T190776	3E15	23	3362 - 43
T190776	3E17	23	3362 - 45
T190776	3E19	21	3362 - 47
T190777	3E13	13	3362 - 41
T190777	3E15	13	3362 - 43
T190777	3E17	13	3362 - 45
T190777	3E19	10	3362 - 47
T190778	3E19	26	3362 - 47
T190779	3C14	1	3346 - 3
T190780	3E13	14	3362 - 41
T190780	3E15	14	3362 - 43
T190780	3E17	14	3362 - 45
T190780	3E19	11	3362 - 47
T190781	3E13	19	3362 - 41
T190781	3E15	19	3362 - 43
T190781	3E17	19	3362 - 45
T190781	3E19	16	3362 - 47
T190782	3E13	16	3362 - 41
T190782	3E15	16	3362 - 43
T190782	3E17	16	3362 - 45
T190782	3E19	13	3362 - 47
T190783	3E13	12	3362 - 41
T190783	3E15	12	3362 - 43
T190783	3E17	12	3362 - 45
T190783	3E19	9	3362 - 47
T190784	3E13	29	3362 - 41
T190784	3E15	28	3362 - 43
T190784	3E17	29	3362 - 45
T190784	3E19	27	3362 - 47
T190785	3E13	17	3362 - 41
T190785	3E15	17	3362 - 43
T190785	3E17	17	3362 - 45
T190785	3E19	14	3362 - 47
T190786	3E13	15	3362 - 41
T190786	3E15	15	3362 - 43
T190786	3E17	15	3362 - 45
T190786	3E19	12	3362 - 47
T190787	3E13	18	3362 - 41
T190787	3E15	18	3362 - 43
T190787	3E17	18	3362 - 45
T190787	3E19	15	3362 - 47
T190788	3D6	22	3362 - 13
T190788	3D8	17	3362 - 15
T190788	3D10	20	3362 - 17
T190788	3D12	21	3362 - 19
T190788	3D14	9	3362 - 21
T190789	3D2	4	3362 - 9
T190789	3D18	1	3362 - 25
T190792	2H13	4	3162 - 5
T190793	2H13	12	3162 - 5
T190794	2H17	22	3162 - 9
T190795	2H17	16	3162 - 9
T190796	2H13	7	3162 - 5
T190796	2H23	1	3162 - 15
T190797	3B15	16	3315 - 11
T190819	3E7	11	3362 - 35
T190819	3E9	11	3362 - 37
T190820	3E7	12	3362 - 35
T190820	3E9	12	3362 - 37
T190824	3E7	4	3362 - 35
T190824	3E9	4	3362 - 37
T190825	3E7	1	3362 - 35
T190825	3E9	1	3362 - 37
T190856	3F14	2A	3363 - 17
T190868	2C18	17	1816 - 15
T190868	2C20	25	1816 - 17
T190887	3C6	20	3343 - 3
T190887	3C6	24	3343 - 3
T190892	2F8	53	2160 - 13
T190912	2C18	24	1816 - 15
T190956	2C18	21	1816 - 15
T190956	2C20	12	1816 - 17
T190960	2C18	29	1816 - 15
T190961	1K9	1	1746 - 2
T190962	1K9	1	1746 - 2
T190964	2C20	36	1816 - 17
T190976	3B11	8	3315 - 3B
T190976	3E21	20	3363 - 1B
T190979	3F4	5A	3363 - 7
T190979	3F14	11	3363 - 17
T190992	2G25	19	3115 - 3
T190997	2G25	20	3115 - 3
T190998	2C18	6	1816 - 15
T190999	2C18	7	1816 - 15
T190999	2C20	30	1816 - 17
T191000	2C20	5	1816 - 17
T191070	3F22	15	3363 - 29
T191071	2B19	1	1814 - 7
T191072	2B19	4	1814 - 7
T191073	2B19	5	1814 - 7
T191077	3F22	7	3363 - 29
T191078	1H25	13	1320 - 3
T191098	1I2	20	1320 - 5
T191099	1I4	20	1320 - 7
T191100	1H25	14	1320 - 3
T191142	2B13	8	1812 - 3
T191240	2G25	27	3115 - 3
T191243	3D6	10	3362 - 13
T191243	3D8	11	3362 - 15
T191243	3D10	12	3362 - 17
T191243	3D12	9	3362 - 19
T191243	3D14	3	3362 - 21
T191243	3D16	3	3362 - 23
T191318	2G11	17	3102 - 11
T191318	2G17	46	3102 - 17
T191355	1G3	1	0510 - 4
T191423	1B21	6	0230 - 3
T191424	1B21	4	0230 - 3
T191426	1B21	12	0230 - 3
T191437	3C6	10	3343 - 3
T19687	1I9	1	1369 - 5
T19854	1D11	6	0360 - 1
T19935	1J12	13	1674 - 9
T19935	2D23	8	1830 - 13
T200078	3B17	11	3315 - 11B
T200078	3B21	6	3315 - 13B
T200085	1G24	21	0960 - 7
T200085	1H2	20	0960 - 9
T200092	2C8	6	1816 - 5
T200093	2C8	6	1816 - 5
T200094	2C8	6	1816 - 5
T200095	2C8	2	1816 - 5

NUMERICAL INDEX - CONTINUED

PART NO.	GRID	KEY	PAGE
T200216	3F6	6	3363 - 9
T200232	3F4	5B	3363 - 7
T200232	3F6	3	3363 - 9
T200232	3F16	1	3363 - 19
T200233	3F6	20	3363 - 9
T200233	3F14	2B	3363 - 17
T200233	3F16	1	3363 - 19
T200233	3F16	2	3363 - 19
T200237	3F4	31	3363 - 7
T200237	3F6	4	3363 - 9
T200237	3F14	35	3363 - 17
T200237	3F16	8	3363 - 19
T200268	3C6	24	3343 - 3
T200402	3F6	2	3363 - 9
T200402	3F6	31	3363 - 9
T200424	1J6	2	1674 - 5B
T200474	3C6	20	3343 - 3
T200479	2E16	2	2004 - 3
T200631	3F16	32	3363 - 19
T200658	1H25	48	1320 - 3
T200658	2C20	38	1816 - 17
T200659	1I2	28	1320 - 5
T200660	1I4	28	1320 - 7
T200781	1H25	49	1320 - 3
T200781	2C20	39	1816 - 17
T200793	3B23	16	3315 - 17
T200793	3B25	1	3315 - 21
T200895	1I2	29	1320 - 5
T200896	1I4	29	1320 - 7
T200956	3E7	17	3362 - 35
T200956	3E9	13	3362 - 37
T200990	1H25	8	1320 - 3
T201123	1E24	5	0416 - 3
T201271	1C4	10	0250 - 7
T201275	1H4	5	0960 - 11
T201276	1H4	4	0960 - 11
T201277	1C4	9	0250 - 7
T201283	1H4	6	0960 - 11
T201285	1I4	30	1320 - 7
T201286	1I2	30	1320 - 5
T201287	1H25	13	1320 - 3
T201288	1I2	19	1320 - 5
T201289	1I4	19	1320 - 7
T201403	3D12	20	3362 - 19
T201403	3D14	8	3362 - 21
T201403	3D16	11	3362 - 23
T201483	2G25	29	3115 - 3
T201521	2E25	3	2160 - 3B
T201525	2E25	3	2160 - 3B
T201656	3E23	14	3363 - 1D
T20168	1E4	18	0404 - 3
T201889	3F6	6	3363 - 9
T201940	3C18	7A	3348 - 3
T201940	3C18	16	3348 - 3
T201952	2B23	4	1814 - 9B
T201953	2B23	3	1814 - 9B
T201954	2B23	2	1814 - 9B
T201955	2B23	1	1814 - 9B
T201956	2B23	6	1814 - 9B
T201957	2B23	5	1814 - 9B
T201957	2B23	21	1814 - 9B
T201958	2B23	7	1814 - 9B
T201968	2B23	8	1814 - 9B
T202050	2I4	26	3163 - 5
T202332	3C14	11	3346 - 3
T202332	3C16	8	3346 - 5
T202417	1H4	8	0960 - 11
T202660	1D10	23A	0350 - 17
T202660	1D10	24	0350 - 17
T202660	1D10	25A	0350 - 17
T202661	1D10	23A	0350 - 17
T202661	1D10	23B	0350 - 17
T202661	1D10	25A	0350 - 17
T202662	1D10	23A	0350 - 17
T202662	1D10	25A	0350 - 17
T202662	1D10	25B	0350 - 17
T202671	3C14	11	3346 - 3
T202671	3C16	8	3346 - 5
T202720	2C20	14	1816 - 17
T202721	3F6	31	3363 - 9
T202956	3B13	21	3315 - 5
T202956	3B15	11	3315 - 11
T202956	3B17	15	3315 - 11B
T202956	3B19	6	3315 - 13
T202956	3B21	14	3315 - 13B
T202956	3C4	10	3315 - 25
T20314	1D23	4	0402 - 4
T20316	1D23	3	0402 - 4
T203458	2B13	3	1812 - 3
T203949	2F8	51	2160 - 13
T205636	3F14	14	3363 - 17
T205636	3F14	31	3363 - 17
T205636	3F16	17B	3363 - 19
T205637	3F14	7	3363 - 17
T205637	3F14	31	3363 - 17
T205637	3F16	25B	3363 - 19
T205876	3C6	18	3343 - 3
T205960	1B12	6	0201 - 4
T205960	1B17	21	0210 - 3
T205960	1B17	23A	0210 - 3
T205961	1B12	6	0201 - 4
T205961	1B17	23A	0210 - 3
T205961	1B17	23B	0210 - 3
T205969	2D16	4	1830 - 7
T206433	1C2	5	0250 - 5
T206457	2C12	8	1816 - 9
T206457	2C12	9	1816 - 9
T206491	1J2	11	1674 - 3
T206517	1B20	1	0230 - 2
T206519	1B12	6	0201 - 4
T206519	1B17	23A	0210 - 3
T206569	3C18	9	3348 - 3
T206645	3C14	17	3346 - 3
T206645	3C16	29	3346 - 5
T206647	3C12	3	3345 - 3
T206648	3C12	13	3345 - 3
T206695	1J8	1	1674 - 5D
T206860	3F6	2	3363 - 9
T206908	2I4	20	3163 - 5
T206953	1H25	6	1320 - 3
T207040	1H25	12	1320 - 3
T207041	1I4	18	1320 - 7
T207042	1I2	18	1320 - 5
T207060	1J2	3	1674 - 3
T207060	1J10	9	1674 - 7
T207060	2C16	2	1816 - 13
T207191	1H25	54	1320 - 3
T207767	2H7	6B	3140 - 4
T207768	2H7	5B	3140 - 4
T207889	2I4	58	3163 - 5
T208007	1I4	31	1320 - 7
T208008	1I2	31	1320 - 5
T208077	2B23	21	1814 - 9B
T208077	2B23	22	1814 - 9B
T208227	1H13	17	1060 - 7
T208953	3C8	1	3344 - 3
T208953	3C8	29	3344 - 3
T209212	1J8	5	1674 - 5D
T209536	1H25	13	1320 - 3
T209537	1I2	19	1320 - 5
T209538	1I4	19	1320 - 7
T210118	3C6	18	3343 - 3
T211387	1K9	1	1746 - 2
T211388	1K9	1	1746 - 2
T212304	2E5	14	1913 - 3
T212352	2D23	58	1830 - 13
T212452	1B6	4	0110 - 5A
T212453	1B6	5	0110 - 5A
T213143	2G21	11	3104 - 3
T213225	1G5	21	0515 - 3
T213244	2C18	12	1816 - 15
T213260	2G21	21	3104 - 3
T213327	1H25	13	1320 - 3
T213328	1I2	19	1320 - 5
T213329	1I4	19	1320 - 7
T213734	1H13	17	1060 - 7
T214322	1I4	20	1320 - 7
T214323	1I2	20	1320 - 5
T215293	1J2	15	1674 - 3
T215293	1J2	19	1674 - 3
T215678	3C6	15	3343 - 3
T217003	2E7	10	1921 - 3
T221X230	2G9	23	3102 - 9
T22150	1G5	48	0515 - 3
T22240	1G5	45	0515 - 3
T23P	2G9	25	3102 - 9
T230SP	2G9	24	3102 - 9
T23474	1E4	19	0404 - 3
T24509	3B23	17	3315 - 17
T24652	1G15	20	0560 - 3
T25335	1I9	1	1369 - 5
T26955	1C16	13	0341 - 3
T27022	2G11	23	3102 - 11
T27194	1B5	4	0110 - 5
T27532	1B5	3	0110 - 5
T28583	1J21	1	1674 - 19
T28585	1J21	12	1674 - 19
T28586	1J21	14	1674 - 19
T29342	1G13	7	0540 - 3
T29342	3C8	1	3344 - 3
T29342	3C8	7A	3344 - 3
T29342	3C8	7B	3344 - 3
T29342	3C8	11	3344 - 3
T29342	3C8	14	3344 - 3
T29342	3C8	16	3344 - 3
T29342	3C12	8	3345 - 3
T29342	3C18	10	3348 - 3
T29342	3C18	19	3348 - 3
T29342	3F12	29	3363 - 15
T30367	1E21	5	0413 - 5
T31029	2G23	10	3104 - 5
T33376	3C8	1	3344 - 3
T33376	3C8	3	3344 - 3
T34067	1J21	18	1674 - 19
T34248	1I9	1	1369 - 5
T35829	3F4	14	3363 - 7
T35829	3F16	12	3363 - 19
T35887	1G5	21	0515 - 3
T38485	3G1	14	3365 - 4
T39155	1G15	22	0560 - 3
T41356	3F25	12	3365 - 3

NUMERICAL INDEX - CONTINUED

PART NO.	GRID	KEY	PAGE
T41471	3C19	5	3348 - 4
T42199	1H25	47	1320 - 3
T42199	1I18	1	1671 - 7
T42302	2I10	12	3165 - 4
T42302	3G2	24	3365 - 5
T43512	1I5	1	1330 - 2
T43513	1I5	1	1330 - 2
T43514	1E4	24	0404 - 3
T43514	1I5	1	1330 - 2
T54087	3C14	6	3346 - 3
T54087	3C16	32	3346 - 5
T54568	2G11	8	3102 - 11
T54568	2G17	47	3102 - 17
T55208	2D4	1	1821 - 9
T55214	2D4	17	1821 - 9
T55222	2D4	5	1821 - 9
T55224	2D4	15	1821 - 9
T55224	2D10	20	1821 - 15
T55501	1J10	11	1674 - 7
T55585	1F23	15	0505 - 3
T55585	1J10	13	1674 - 7
T58056	2C16	1	1816 - 13
T58056	2D20	2	1830 - 9
T58056	2E7	5	1921 - 3
T58109	3B15	9	3315 - 11
T58109	3B17	5	3315 - 11B
T58109	3B19	9	3315 - 13
T58109	3B21	9	3315 - 13B
T58477	1E15	8	0409 - 3
T58739	2D20	14	1830 - 9
T59933	1B5	2	0110 - 5
T59933	1B6	6	0110 - 5A
T60811	1I11	6	1369 - 7
T60811	2D16	30	1830 - 7
T60811	2D16	31	1830 - 7
T60811	2D20	10	1830 - 9
T60811	2D20	15	1830 - 9
T60811	2D20	17	1830 - 9
T60811	2D20	24	1830 - 9
T60811	2D20	25	1830 - 9
T60920	2E14	6	2002 - 3
T63798	2D4	12	1821 - 9
T68098	1E24	5	0416 - 3
T69472	3C18	17	3348 - 3
T69938	1B24	6	0250 - 3
T70177	2H15	3	3162 - 7
T70177	3D4	15	3362 - 11
T70659	2D16	37	1830 - 7
T70659	3F12	26	3363 - 15
T72414	1K8	8	1740 - 3
T72414	2F16	15	2160 - 19
T74416	1J4	6	1674 - 5
T74416	1J12	25	1674 - 9
T74952	1I23	4	1673 - 3
T74952	2E12	5	2001 - 3
T75197	1J12	17	1674 - 9
T76252	1G15	3	0560 - 3
T76502	2H23	2	3162 - 15
T76830	2B17	52	1814 - 5
T76832	2B17	42	1814 - 5
T76833	2B17	57	1814 - 5
T76833	2B17	59	1814 - 5
T76938	2F2	16	2160 - 5
T76938	2F6	13	2160 - 9
T76938	2F8	16	2160 - 13
T76938	3D20	32	3362 - 27
T76938	3D22	16	3362 - 27B
T76938	3F2	3	3363 - 5
T76938	3F4	15	3363 - 7
T76938	3F4	29	3363 - 7
T76938	3F6	23	3363 - 9
T76938	3F14	23	3363 - 17
T76938	3F16	26	3363 - 19
T76938	3F18	38	3363 - 21
T76938	3F22	9	3363 - 29
T76938	3F22	24	3363 - 29
T77165	1G5	46	0515 - 3
T77258	1G15	15	0560 - 3
T77613	1E24	15	0416 - 3
T77613	1G24	9	0960 - 7
T77613	1H2	9	0960 - 9
T77613	1H13	2	1060 - 7
T77613	1H13	24	1060 - 7
T77613	1H13	32	1060 - 7
T77613	1H15	1	1060 - 9
T77613	1H15	2	1060 - 9
T77613	1H15	11	1060 - 9
T77613	2F12	2	2160 - 17
T77613	2F14	5	2160 - 17B
T77613	2G21	20	3104 - 3
T77613	2I6	11	3163 - 7
T77613	3D20	21	3362 - 27
T77613	3D22	14	3362 - 27B
T77613	3E2	5	3362 - 29B
T77613	3E5	6	3362 - 33
T77613	3E7	16	3362 - 35
T77613	3E9	16	3362 - 37
T77613	3E21	9	3363 - 1B
T77613	3E23	1	3363 - 1D
T77613	3E23	2	3363 - 1D
T77613	3E23	4	3363 - 1D
T77613	3E23	5	3363 - 1D
T77613	3E23	6	3363 - 1D
T77613	3E23	7	3363 - 1D
T77613	3E23	8	3363 - 1D
T77613	3E23	9	3363 - 1D
T77613	3E23	10	3363 - 1D
T77613	3E23	11	3363 - 1D
T77613	3E23	12	3363 - 1D
T77613	3E23	13	3363 - 1D
T77613	3E25	11	3363 - 3
T77613	3F18	39	3363 - 21
T77814	1B18	2	0210 - 4
T77814	1H11	6	1060 - 5
T77814	2F8	49	2160 - 13
T77814	2I6	4	3163 - 7
T77814	3F18	41	3363 - 21
T77814	3F20	32	3363 - 23
T77857	1G24	3	0960 - 7
T77857	1H2	3	0960 - 9
T77857	1H11	15	1060 - 5
T77857	1H13	4	1060 - 7
T77857	1H13	13	1060 - 7
T77857	1H13	19	1060 - 7
T77857	2F8	8	2160 - 13
T77857	2F8	13	2160 - 13
T77857	2F8	14	2160 - 13
T77857	2F12	10	2160 - 17
T77857	2F14	7	2160 - 17B
T77857	2F20	8	2160 - 23
T77857	2G11	10	3102 - 11
T77857	2G11	28	3102 - 11
T77857	2G17	1	3102 - 17
T77857	2I4	46	3163 - 5
T77857	2I6	31	3163 - 7
T77857	3E2	1	3362 - 29B
T77857	3E21	3	3363 - 1B
T77857	3E25	3	3363 - 3
T77857	3F10	3	3363 - 13
T77857	3F12	2	3363 - 15
T77857	3F18	12	3363 - 21
T77857	3F20	5	3363 - 23
T77858	2F8	39	2160 - 13
T77858	2F20	2	2160 - 23
T77858	2I2	21	3163 - 3
T77858	2I2	23	3163 - 3
T77858	2I4	15	3163 - 5
T77858	2I4	40	3163 - 5
T77858	3D20	7	3362 - 27
T77858	3D22	8	3362 - 27B
T77858	3F2	11	3363 - 5
T77858	3F4	11	3363 - 7
T77858	3F6	16	3363 - 9
T77858	3F8	3	3363 - 11
T77858	3F14	6	3363 - 17
T77858	3F14	25	3363 - 17
T77858	3F16	18	3363 - 19
T77858	3F18	7	3363 - 21
T77858	3F18	40	3363 - 21
T77858	3F20	4	3363 - 23
T77858	3F20	9	3363 - 23
T77858	3F22	1	3363 - 29
T77932	1H18	24	1111 - 3
T77932	2I2	13	3163 - 3
T77932	2I4	6	3163 - 5
T77932	2I4	54	3163 - 5
T77932	3F2	19	3363 - 5
T77932	3F4	25	3363 - 7
T77932	3F6	29	3363 - 9
T77932	3F8	13	3363 - 11
T77932	3F18	9	3363 - 21
T77932	3F20	2	3363 - 23
T78313	1I9	1	1369 - 5
T78313	2F8	37	2160 - 13
T78497	2F8	23	2160 - 13
T78497	2F8	51	2160 - 13
T78497	2F10	21	2160 - 15
T78497	2F10	39	2160 - 15
T78497	2F10	42	2160 - 15
T78497	2F10	43	2160 - 15
T78606	2F10	36	2160 - 15
T78606	2F10	37	2160 - 15
T78606	2I6	24	3163 - 7
T78612	1C16	7	0341 - 3
T78612	2F8	3	2160 - 13
T78612	3F4	15	3363 - 7
T78707	3F14	5	3363 - 17
T78707	3F16	19	3363 - 19
T78715	3F22	3	3363 - 29
T78716	3F12	4	3363 - 15
T78787	2D23	13	1830 - 13
T78787	2F12	16	2160 - 17
T80306	2I4	55	3163 - 5
T81029	3E21	21	3363 - 1B
T81524	2H17	14	3162 - 9
T81524	2H19	8	3162 - 11
T81524	2H21	12	3162 - 13
T81540	2H21	18	3162 - 13
T81541	2H21	19	3162 - 13
T82543	1C4	13	0250 - 7
T82791	1J10	3	1674 - 7

NUMERICAL INDEX - CONTINUED

PART NO.	GRID	KEY	PAGE
T83061	2H2	2	3115 - 5
T83426	1K8	11	1740 - 3
U10289	1I9	1	1369 - 5
U10516	2I6	18	3163 - 7
U10746	1I9	1	1369 - 5
U10746	3G4	8	3365 - 7
U10746	3G5	8	3365 - 8
U10776	1I9	1	1369 - 5
U11326	1I9	1	1369 - 5
U11343	1I9	1	1369 - 5
U12037	1I9	1	1369 - 5
U12198	1I9	1	1369 - 5
U12331	1I9	1	1369 - 5
U12547	1I9	1	1369 - 5
U12547	2F8	5	2160 - 13
U12547	2F10	2	2160 - 15
U12547	2G17	6	3102 - 17
U12547	2I2	14	3163 - 3
U12547	2I4	9	3163 - 5
U12547	3D4	17	3362 - 11
U12547	3D18	4	3362 - 25
U12547	3D20	4	3362 - 27
U12547	3D22	9	3362 - 27B
U12547	3E21	5	3363 - 1B
U12547	3E25	1	3363 - 3
U12547	3F2	13	3363 - 5
U12547	3F4	12	3363 - 7
U12547	3F6	18	3363 - 9
U12547	3F8	1	3363 - 11
U12547	3F10	1	3363 - 13
U12547	3F12	22	3363 - 15
U12547	3F14	9	3363 - 17
U12547	3F14	29	3363 - 17
U12547	3F16	21	3363 - 19
U12547	3F18	29	3363 - 21
U12547	3F20	35	3363 - 23
U12547	3F22	25	3363 - 29
U13639	1C16	8	0341 - 3
U13639	1C18	18	0341 - 5
U13639	1C18	24	0341 - 5
U13639	1E4	23	0404 - 3
U13639	1F25	3	0505 - 5
U13639	1I9	1	1369 - 5
U13639	2D20	29	1830 - 9
U13639	2F8	1	2160 - 13
U13639	3F22	12	3363 - 29
U14555	3B17	7	3315 - 11B
U14555	3B21	11	3315 - 13B
U15415	1I9	1	1369 - 5
U15939	3F4	6	3363 - 7
U15973	1I9	1	1369 - 5
U15973	2G23	6	3104 - 5
U17409	1I9	1	1369 - 5
U17409	2F8	33	2160 - 13
U17409	3D6	25	3362 - 13
U17409	3D8	20	3362 - 15
U17409	3D10	23	3362 - 17
U17409	3D12	24	3362 - 19
U17409	3D14	12	3362 - 21
U17409	3D16	17	3362 - 23
U17409	3E13	21	3362 - 41
U17409	3E15	21	3362 - 43
U17409	3E17	21	3362 - 45
U17409	3E19	19	3362 - 47
U40398	2G11	23	3102 - 11
U40398	2I4	37	3163 - 5
U42111	1I9	1	1369 - 5
U43779	3B7	1	3302 - 3
U43779	3C12	2	3345 - 3
U43779	3C12	14	3345 - 3
U43779	3C14	10	3346 - 3
U43779	3C16	21	3346 - 5
U43792	3B7	10	3302 - 3
U45351	3B7	2	3302 - 3
U45351	3C14	17	3346 - 3
U45351	3C16	29	3346 - 5
U46370	1J21	20	1674 - 19
U46457	2F10	19	2160 - 15
U46662	1J21	10	1674 - 19
U46664	1J23	47	1674 - 21
U46753	2I2	9	3163 - 3
U46753	2I4	28	3163 - 5
W23122	2C20	23	1816 - 17
Z72412	1C7	4	0250 - 11
Z72413	1C7	7	0250 - 11
Z72414	1C7	9	0250 - 11
0309013	3F24	13	3365 - 2
0309013	3G1	5	3365 - 4
0344046	3E3	9	3362 - 30
0344046	3F23	9	3363 - 30
4288155	1B21	15	0230 - 3
790024700	3E13	11	3362 - 41
790024700	3E15	11	3362 - 43
790024700	3E17	11	3362 - 45
790024700	3E19	8	3362 - 47

PART NO.	GRID	KEY	PAGE