MASSEY FERGUSON

MF 7242 COMBINE - 1637439
D-ZAZA-007-B

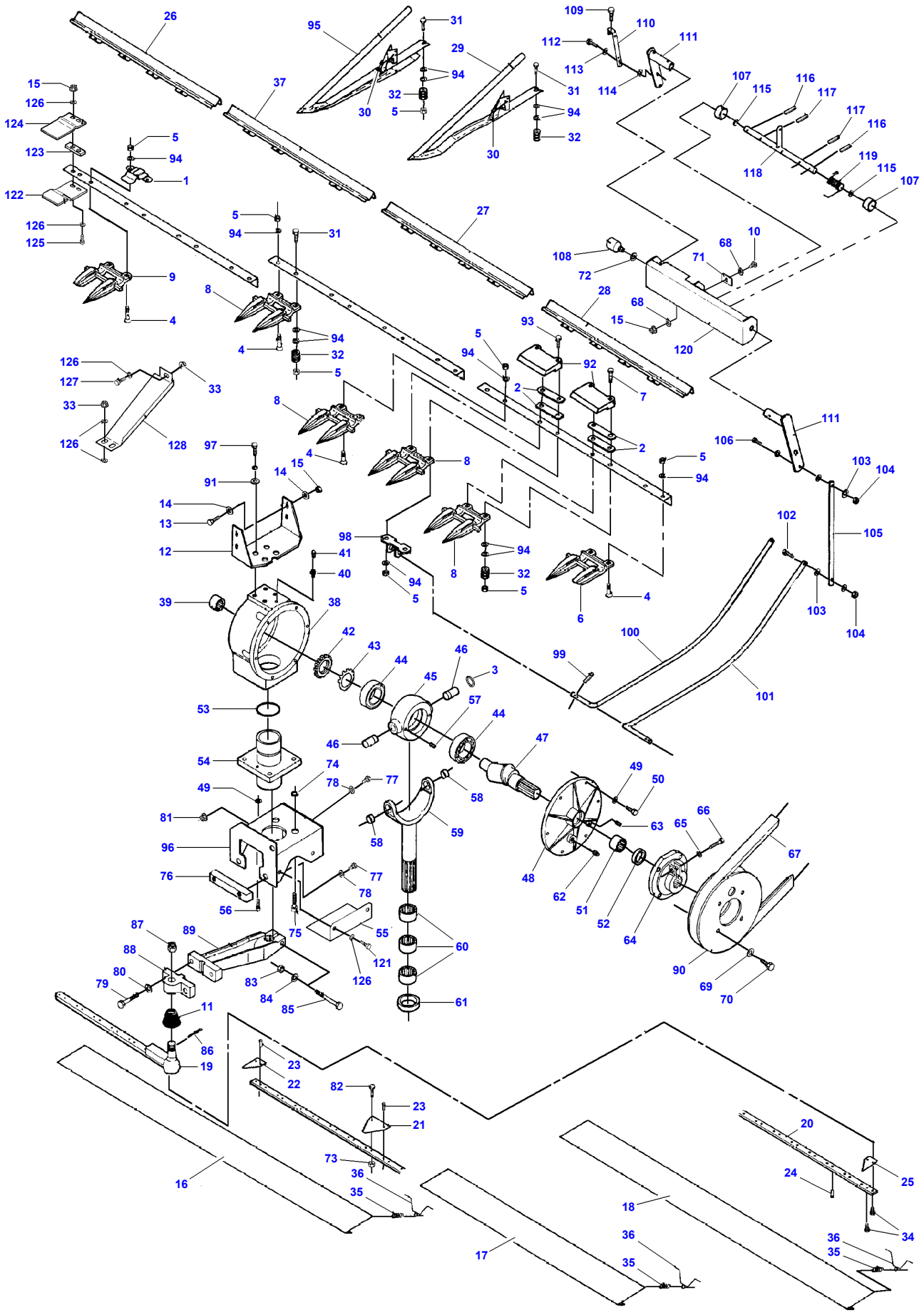

D-ZAZA-007-B

Item	Part Number	Qty	Description	Comments
1	**D28283934**	11	Clip	12' - 3,72M
	D28283934	13	Clip	14' - 4,34M
	D28283934	15	Clip	16' - 4,95M
2	**D28230292**	4	Shim	
3	D45483000	1	O Ring	[C]
4	**D40551500**	X	Bolt	
5	339402X1	X	Nut	M10
6	**D44104700**	1	Finger	Left Hand
7	D40067600	X	Screw	
8	**D44104500**	25	Finger	12' - 3,72M
	D44104500	27	Finger	14' - 4,34M
	D44104500	31	Finger	16' - 4,95M
9	**D44104600**	1	Finger	Right Hand
10	339123X1	2	Hex. Sock. Screw	M8 X 20
11	**D44120500**	1	Cap	
12	D28283104	1	Support	
13	339337X1	2	Hex. Sock. Screw	M8 X 30
14	D20400414	4	Washer	
15	394367X1	12	Locknut	M8
16	D28230842	1	Guard	14' - 4,34M
	D28230845	1	Guard	16' - 4,95M
17	D28230843	1	Guard	
18	D28230844	1	Guard	
	D28230845	1	Guard	
19	D28283306	2	Blade	12' - 3,72M
	D28283307	2	Blade	14' - 4,34M
	D28283308	2	Blade	16' - 4,95M
	D28283011	2	Knife Head	
20	D28281488	2	Knife Back	12' - 3,72M
	D28281489	2	Knife Back	14' - 4,34M
	D28281490	2	Knife Back	16' - 4,95M
21	**D44103700**	X	Section	[D]
22	**D44103800**	2	Half Section	
23	**D41306100**	X	Rivet	[D]
24	**D41306200**	X	Rivet	[D]
25	**D44104000**	2	Half Section	Left Hand
26	D18283701	1	Stone Trap	Right Hand
27	D18283704	1	Stone Trap	16' - 4.95M
28	D18283702	1	Stone Trap	Left Hand
29	D49040200	X	Ear Lifter	
30	D49040400	X	Spring	
31	339019X1	X	Hex. Sock. Screw	M10 X 50
32	D49040600	X	Roller	
33	D41017500	3	Locknut	
34	339560X1	2	Hex. Sock. Screw	M6 X 16
35	D26500317	2	Spring	(16)
	D26500317	2	Spring	(17)
	D26500317	2	Spring	(18)
36	D28230841	2	Spring	(16)
	D28230841	2	Spring	(17)
	D28230841	2	Spring	(18)
37	D18283703	1	Stone Trap	14' - 4,34M
38	D28281324	1	Wobble Drive	[B]
	D44127800	1	Box	[B] (38)
	D28281324	1	Wobble Drive	[C] (38)
	D44126500	1	Box	[C] (38)
39	D44128800	1	Bearing Needle	(38)
40	D44129400	1	Connector	(38)
41	D46116500	1	Valve.	(38)
42	D44129100	1	Nut	(38)
43	D44129200	1	Washer	(38)
44	D41668400	2	Bearing Roller	(38)
45	D44127900	1	Housing	[B] (38)
	D44126400	1	Housing	[C] (38)
46	D44128000	2	Journal	[B] (38)

Item	Part Number	Qty	Description	Comments
46	D44125900	2	Journal	[C] (38)
47	D44129300	1	Shaft	(38)
48	D44128200	1	Cover	[B] (38)
48	D44126300	1	Cover	[C] (38)
49	D41102100	8	Washer	(38)
50	339123X1	6	Hex. Sock. Screw	(38) M8 X 20
51	D41669700	1	Bearing Needle	(38)
52	D45412000	1	Gasket	(38)
53	D45481500	1	O Ring	(38)
54	D44128300	1	Bearing Carrier	[B] (38)
54	D44126200	1	Bearing Carrier	[C] (38)
55		1	Guard	Replace and repair. Old not interchangeable with new D18281706
56	D40697200	2	Screw	[B] (38)
56	D40697700	2	Screw	[C] (38)
57	D40639600	2	Pin	[B] (38)
58	D44128400	2	Bush	[B] (38)
58	D44126100	2	Bush	[C] (38)
59	D44128500	1	Yoke	[B] (38)
59	D44126000	1	Yoke	[C] (38)
60	D41669800	3	Bearing Needle	(38)
61	D45409500	1	Gasket	(38)
62	D44128600	1	Plug	(38)
63	D45236200	1	Plug	(38)
64	D44127100	1	Hub	(38)
65	D41100900	1	Spring Washer	(38)
66	D40694000	1	Screw	(38)
67	**D41985600**	1	Belt	
68	D20400416	4	Washer	
69	D20400426	4	Washer	
70	1440716X1	4	Hex. Sock. Screw	M12 X 30
71	D28284268	2	Stop	
72	D20400441	1	Washer	
73	1441462X1	X	Locknut	Alternative D41306100 M6
74	D20400522	4	Spacer	
75	D40465400	4	Screw	
76	D28283103	1	Clamp	
77	390419X1	5	Hex. Sock. Screw	M16 X 40
78	D20400461	5	Washer	
79	D40698400	2	Screw	
80	D20400438	2	Washer	
81	1442739X1	2	Locknut	
82	339560X1	X	Hex. Sock. Screw	Alternative D41306100 M6 X 16
83	1442190X1	1	Locknut	
84	D20400428	1	Washer	
85	390826X1	1	Hex. Sock. Screw	
86	391423X1	1	Split Pin	4 X 40
87	**D41054300**	1	Nut	
88	D44126900	1	Flange	
89	D44127000	1	Swivel Arm	
90	D44127200	1	Pulley	
91	D28280986	4	Washer	
92	**D28260362**	X	Clip	
93	1441671X1	X	Screw Special	M10 X 50
94	D20400419	X	Washer	
95	D49040300	X	Ear Lifter	
96	D28283109	1	Support	Replace and repair. Old not interchangeable with new D18283109

Item	Part Number	Qty	Description	Comments
97	339337X1	4	Hex. Sock. Screw	M8 X 30
98	D28284356	4	Fitting	[A]
99	D42611800	8	Pin	[A]
100	D28284257	2	Sensor	[A]
101	D28284258	2	Sensor	[A]
102	D40405300	4	Screw	[A]
103	D20400506	20	Washer	[A]
104	394367X1	2	Locknut	[A] M8
105	D28284223	4	Link	[A]
106	339009X1	4	Hex. Sock. Screw	[A] M8 X 35
107	D28284456	4	Bush	[A]
108	**D28780523**	2	Potentiometer	[A]
109	D40464900	2	Screw	[A]
110	D28780845	2	Rod	[A]
111	D28284234	4	Lever	[A]
112	339804X1	2	Hex. Sock. Screw	[A] M6 X 25
113	D20400404	2	Washer	[A]
114	1441462X1	2	Locknut	[A] M6
115	D28200551	4	Washer	[A]
116	D42611900	8	Pin	[A]
117	D42612300	4	Pin	[A]
118	D28284232	2	Shaft	[A]
119	D28284389	2	Spring	[A]
120	D28284222	2	Support	AUTO LEVEL 16' - 4,95M
121	339124X1	2	Hex. Sock. Screw	M8 X 16
122	D28281576	1	Plate	
123	D28281575	1	Shim	
124	D28281574	1	Plate	
125	339010X1	2	Hex. Sock. Screw	
126	D20400506	7	Washer	
127	339761X1	1	Hex. Sock. Screw	M8 X 25
128	D18281572	1	Guard	

FOOTNOTE [A] OPTIONAL EQUIPMENT AUTO LEVEL
FOOTNOTE [B] USED ONLY IN KNIFE DRIVES WITH 6 HOLES IN BEARING HOUSING BOTTOM
FOOTNOTE [C] USED ONLY IN KNIFE DRIVES WITH 8HOLES IN BEARING HOUSING BOTTOM AND BULGES SIDES
FOOTNOTE [D] OPTIONAL

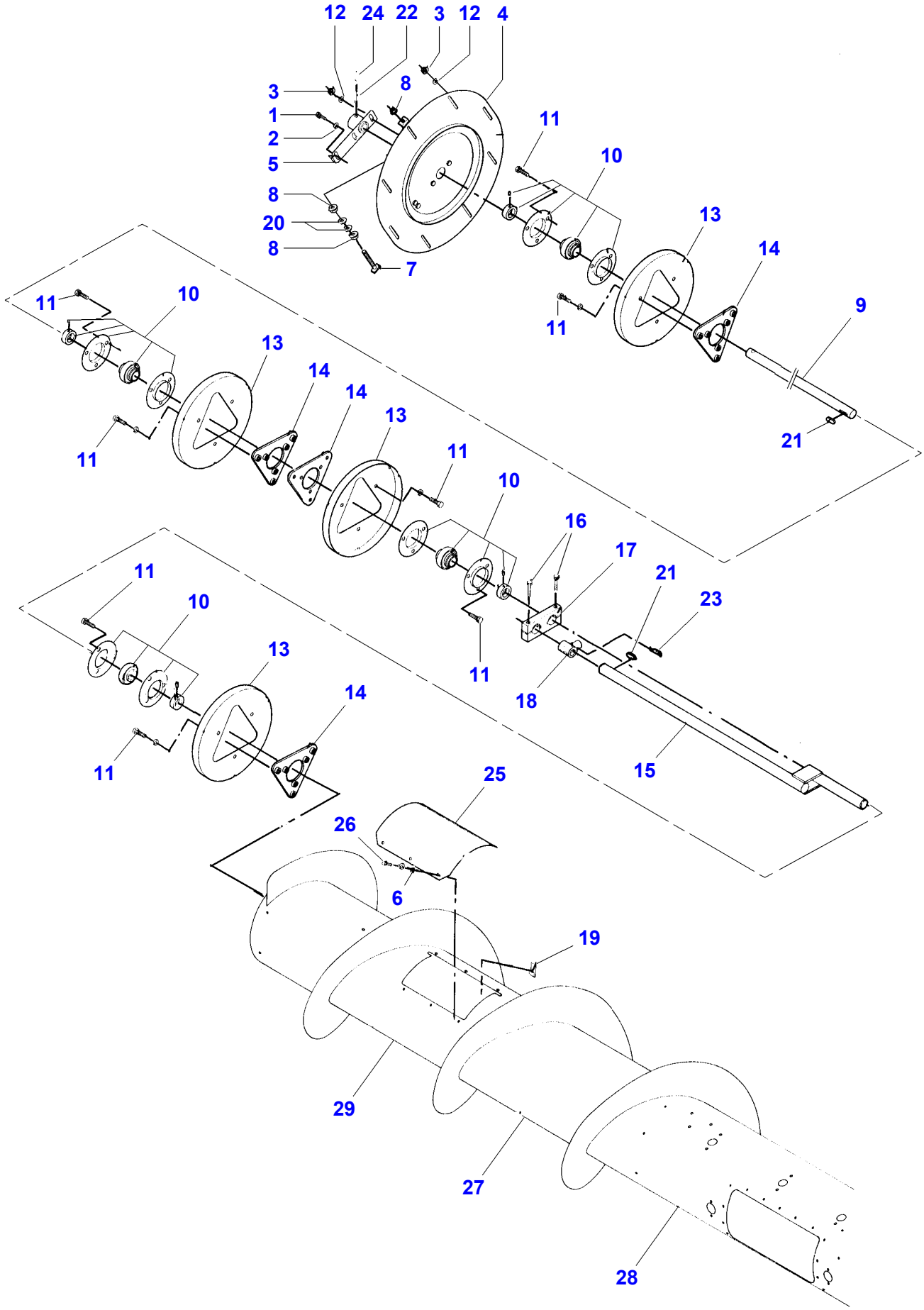
12
24
22
3
12
4
3
1
2
5
8
20
8
8
7
11
10
13
14
9
21
11
10
13
14
14
13
11
10
16
17
21
23
18
15
11
10
13
14
11
11
25
26
6
19
29
27
28

D-ZAZB-007-B

Item	Part Number	Qty	Description	Comments
1	339124X1	1	Hex. Sock. Screw	M8 X 16
2	D20400506	1	Washer	
3	D41017500	10	Locknut	
4	D18280040	1	Plate	
5	D28283029	1	Adjuster	
6	D20400470	6	Washer	Diameter 6
7	D28211023	1	Bolt	
8	1440329X1	2	Locknut	M10
9	D28283035	1	Shaft	12' - 3,72 M
	D28283767	1	Shaft	14' - 4,34 M
	D28283768	1	Shaft	16' - 4,95 M
10	D41707800	4	Bearing	
11	339814X1	24	Hex. Sock. Screw	M10 X 35
12	D20400414	X	Washer	
13	D28280014	4	Plate	
14	D28283847	4	Bearing Plate	
15	D28283016	1	Crankshaft	
16	339556X1	2	Hex. Sock. Screw	
17	D28283039	1	Arm	
18	**D28251831**	15	Bearing Carrier	
19	D43428200	6	Nut	
20	D20400471	2	Washer	
21	339441X1	2	Key Parallel	10 X 8 X 40 A
22	D42625300	1	Pin	13 X 56
23	D28283853	15	Hair Pin	
24	1441645X1	1	Pin	
25	D18283070	1	Cover	
26	339666X1	6	Hex. Sock. Screw	M6 X 20
27	D18285987	1	Table Auger	12' - 3,72 M
	D18283789	1	Table Auger	14' - 4,34 M
	D18283790	1	Table Auger	16' - 4,95 M
28	D28283012	1	Body	
29	D28286008	1	Body	Right Hand 12' - 3,72 M
	D28283792	1	Body	Right Hand 14' - 4,34 M
	D28283795	1	Body	Right Hand 16' - 4,95 M

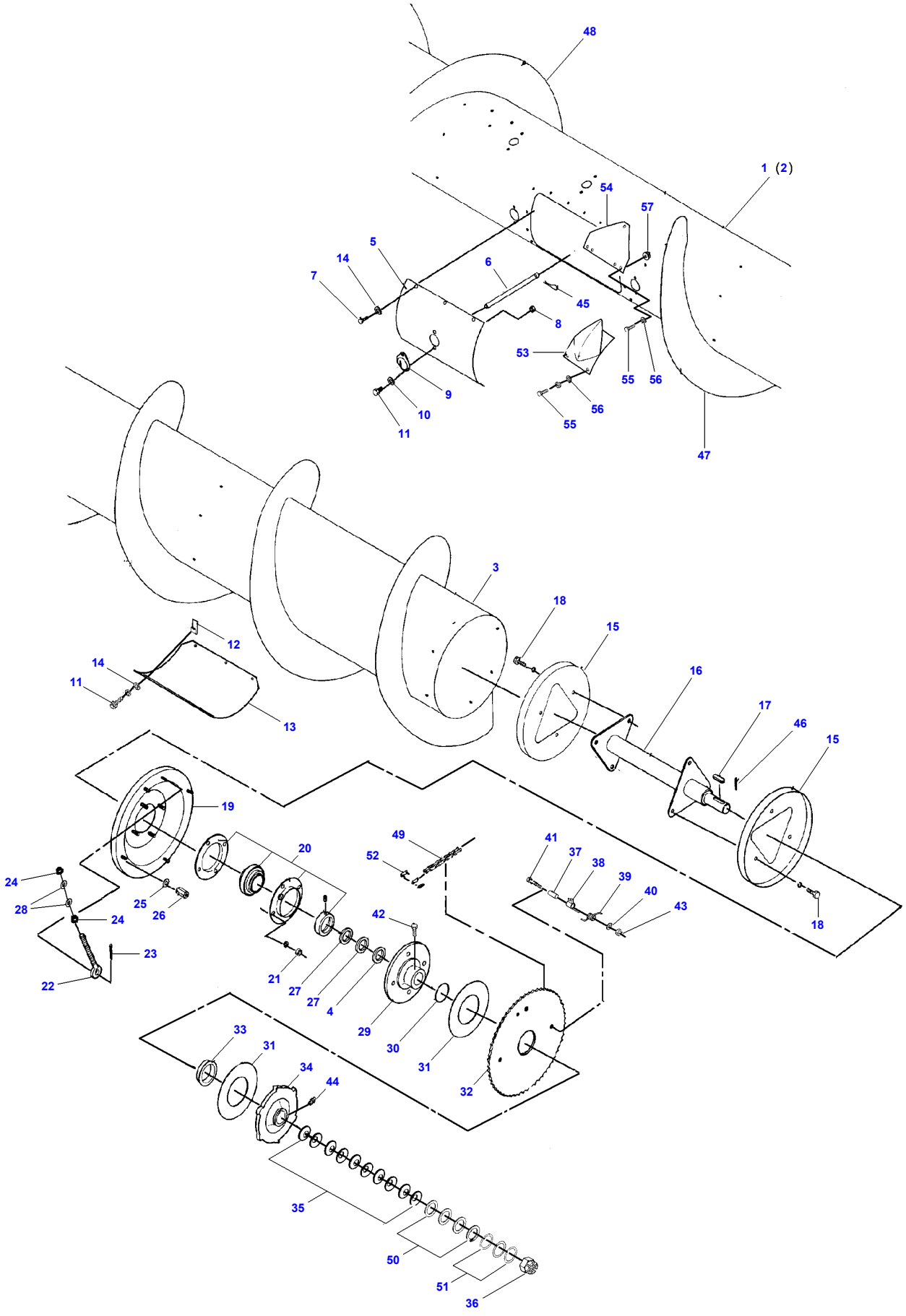
48
1 (2)
54
57
5
14
7
6
45
8
53
55
56
9
10
11
56
55
47
3
18
15
12
14
11
16
17
46
15
13
19
20
49
52
41
37
38
39
40
43
24
28
25
26
24
42
18
23
22
21
27
27
4
29
30
31
32
33
31
34
44
35
50
51
36

D-ZAZC-007-A

Item	Part Number	Qty	Description	Comments
1	D18285987	1	Table Auger	12' - 3,72M
	D18283789	1	Table Auger	14' - 4,34M
	D18283790	1	Table Auger	16' - 4,95M
2	D28283012	1	Body	
3	D28285998	1	Body	Left Hand 12' - 3,72M
	D28283793	1	Body	Left Hand 14' - 4,34M
	D28283794	1	Body	Left Hand 16' - 4,95M
4	D41653500	X	Washer	OPTIONAL 40 X 50 X 1
5	D18283078	1	Cover	
6	**D28283815**	15	Finger	
7	339560X1	X	Hex. Sock. Screw	M6 X 16
8	1441462X1	X	Locknut	M6
9	**D28283060**	15	Bush	
10	D20400404	X	Washer	
11	339666X1	X	Hex. Sock. Screw	M6 X 20
12	D43428200	6	Nut	M20
13	D18283070	1	Cover	
14	D20400470	6	Washer	
15	D28280014	2	Plate	
16	D28283007	1	Drive Shaft	
17	D43106800	1	Key	
18	3009491X1	6	Hex. Sock. Screw	M10 X 20
19	D18283053	1	Plate	
20	D41716500	1	Bearing	
21	3009695X1	4	Nut	M12
22	D28281387	1	Screw	
23	3000197X1	1	Split Pin	4 X 32
24	339402X1	2	Nut	M10
25	D20400415	4	Washer	
26	D28280729	4	Nut	
27	D41653500	X	Washer	40 X 50 X 1
28	D20400471	2	Washer	
29	D28283004	1	Washer	
30	D45481600	1	O Ring	
31	**D45904300**	2	Facing	
32	D28286047	1	Sprocket	
33	D28286049	1	Insert	
34	D28286166	1	Clutch Disc	
35	D41112400	10	Washer	
36	D41054100	1	Castle Nut	
37	D28281431	1	Spacer	
38	D28281432	1	Support	
39	D28283006	1	Spring	
40	D20400507	1	Spacer	
41	339556X1	1	Hex. Sock. Screw	
42	339761X1	1	Hex. Sock. Screw	M8 X 25
43	1440329X1	1	Locknut	M10
44	1441858X1	1	Grease Nipple	M6
45	D28283853	15	Hair Pin	
46	391405X1	1	Split Pin	4 X 25
47	D28281448	1	Spiral	12' - 3,72M
	D28280988	1	Auger	14' - 4,34M
	D28280052	1	Auger	16' - 4,95M
48	D28281449	1	Spiral	12' - 3,72M
	D28280989	1	Auger	14' - 4,34M
	D28280054	1	Auger	16' - 4,95M
49	**D42329300**	1	Chain	
50	D20400520	4	Spacer	
51	D20400522	3	Spacer	
52	**D42365100**	1	Link	
53	D28283294	4	Spike	
54	D28281694	4	Threaded Part	
55	339123X1	20	Hex. Sock. Screw	M8 X 20
56	D20400506	20	Washer	
57	394367X1	12	Locknut	M8

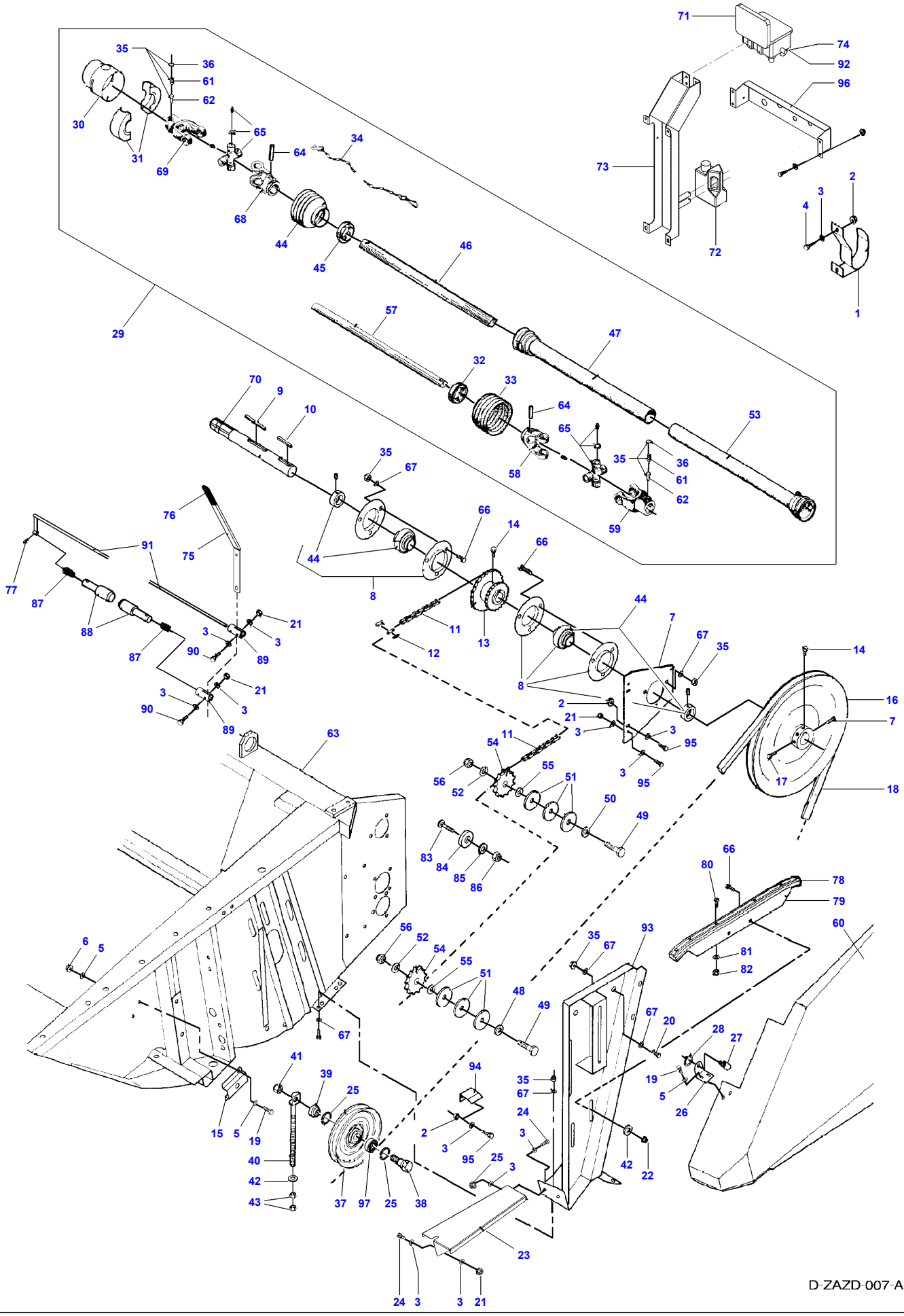
D-ZAZD-007-A

Item	Part Number	Qty	Description	Comments
1	D18281345	1	Stirrup	
2	394367X1	X	Locknut	
3	D20400506	X	Washer	
4	339124X1	X	Hex. Sock. Screw	M8 X 16
5	391038X1	X	Washer	
6	1441462X1	X	Locknut	M6
7	D18283099	1	Bearing Carrier	
8	D41707800	2	Bearing	
9	D43114900	1	Key	
10	1441579X1	1	Key Parallel	10 X 8 X 56
11	**D42329300**	1	Chain	
12	**D42365100**	1	Link	
13	D28280225	1	Sprocket	
14	D40697900	1	Screw	
15	D28281578	1	Retainer	
16	D28285423	1	Pulley	
17	D40697900	2	Screw	M10 X 25
18	**D41985600**	1	Belt	
19	339666X1	X	Hex. Sock. Screw	M6 X 20
20	3009492X1	4	Hex. Sock. Screw	M10 X 25
21	394367X1	X	Locknut	M8
22	1440329X1	X	Locknut	M10
23	D28281570	1	Plate	
24	339761X1	3	Hex. Sock. Screw	M8 X 25
25	339199X1	2	Circlip	47 X 1,75
26	D28281577	1	Angle.	
27	D43427500	1	Pin	
28	1440988X1	1	Circlip	
29	D45608800	1	Shaft	12' - 3,72M
	D45608900	1	Shaft	14' - 4,34M
	D45609000	1	Shaft	16' - 4,95M
30	D45632900	1	Bush	
31	D45633000	1	Ring	
32	D45630700	1	Ring	
33	D45630500	1	Guard	
34	D45681800	2	Chain	
35	D45632400	2	Tube	
36	D45645700	2	Washer	
37	D28760574	1	Pulley	Valid from machine/table no,can be used in new as well as in older machines 938215
38	D28760156	1	Screw	
39	D28760155	1	Bush	
40	D28260181	1	Bolt	
41	1442739X1	X	Locknut	
42	D20400416	X	Washer	
43	339402X1	X	Nut	M10
44	D45630400	1	Guard	
45	D45630600	1	Ring	
46	D45632800	1	Tube	16' - 4,95M
47	D45632600	1	Tube	16' - 4,95M
48	D28181284	1	Washer	
49	391889X1	2	Hex. Sock. Screw	M16 X 70
50	D20400463	1	Washer	
51	D20400460	6	Washer	
52	D20400459	2	Washer	
53	D45632100	1	Tube	14' - 4,34M
	D45632500	1	Tube	16' - 4,95M
54	D41716800	2	Tightener	
55	D20400516	X	Spacer	OPTIONAL
56	D41087900	2	Locknut	M16
57	D45632700	1	Tube	16' - 4,95M
58	D45630100	1	Yoke	
59	D45633200	1	Yoke	
60	D18281583	1	Guard	
61	D45667300	2	Spring	
62	D45665300	2	Pin	

Item	Part Number	Qty	Description	Comments
63	D18286022	1	Table	12' - 3,72M
63	D18285501	1	Table Housing	14' - 4,34M
63	D18285502	1	Table Housing	16' - 4,95M
64	D42619100	2	Pin	
65	D45630300	2	Hub	
66	D40066800	8	Screw Special	M10 X 30
67	D20400419	X	Washer	
68	D45630200	1	Yoke	
69	D45633100	1	Yoke	
70	D28284404	1	Shaft	
71	D28785641	1	Clutch	[A]
72	D45148900	1	Container	[A]
73	D28285296	1	Bracket	[A]
74	D45140037	2	Screw	[A]
75	D28285536	1	Lever	
76	D43484900	1	Lever	
77	D42612200	X	Pin	
78	D28280787	1	Rail	
79	D28281365	1	Crossmember	Replace and repair. Old not interchangeable with new D18281365
80	D40609300	6	Screw	
81	D20400466	6	Washer	4,3 X 9 X 0,8
82	D41087200	6	Locknut	M4
83	D40073100	1	Screw	
84	D28280981	1	Spacer	
85	D20400459	1	Washer	
86	1442739X1	1	Locknut	
87	D27100794	2	Spring	
88	D28283200	1	Shaft	
89	D28285535	2	Fork	
90	339168X1	X	Hex. Sock. Screw	M8 X 50
91	D28285531	1	Journal	
92	D45140038	2	Ring	[A]
93	D18283090	1	Plate	
94	D18283098	1	Fitting	
95	339123X1	X	Hex. Sock. Screw	M8 X 20
96	D18285215	1	Bracket	
97	339599X1	1	Bear. 6204 2rs	Valid from machine/table no,can be used in new as well as in older machines 938215

FOOTNOTE [A] OPTIONAL EQUIPMENT

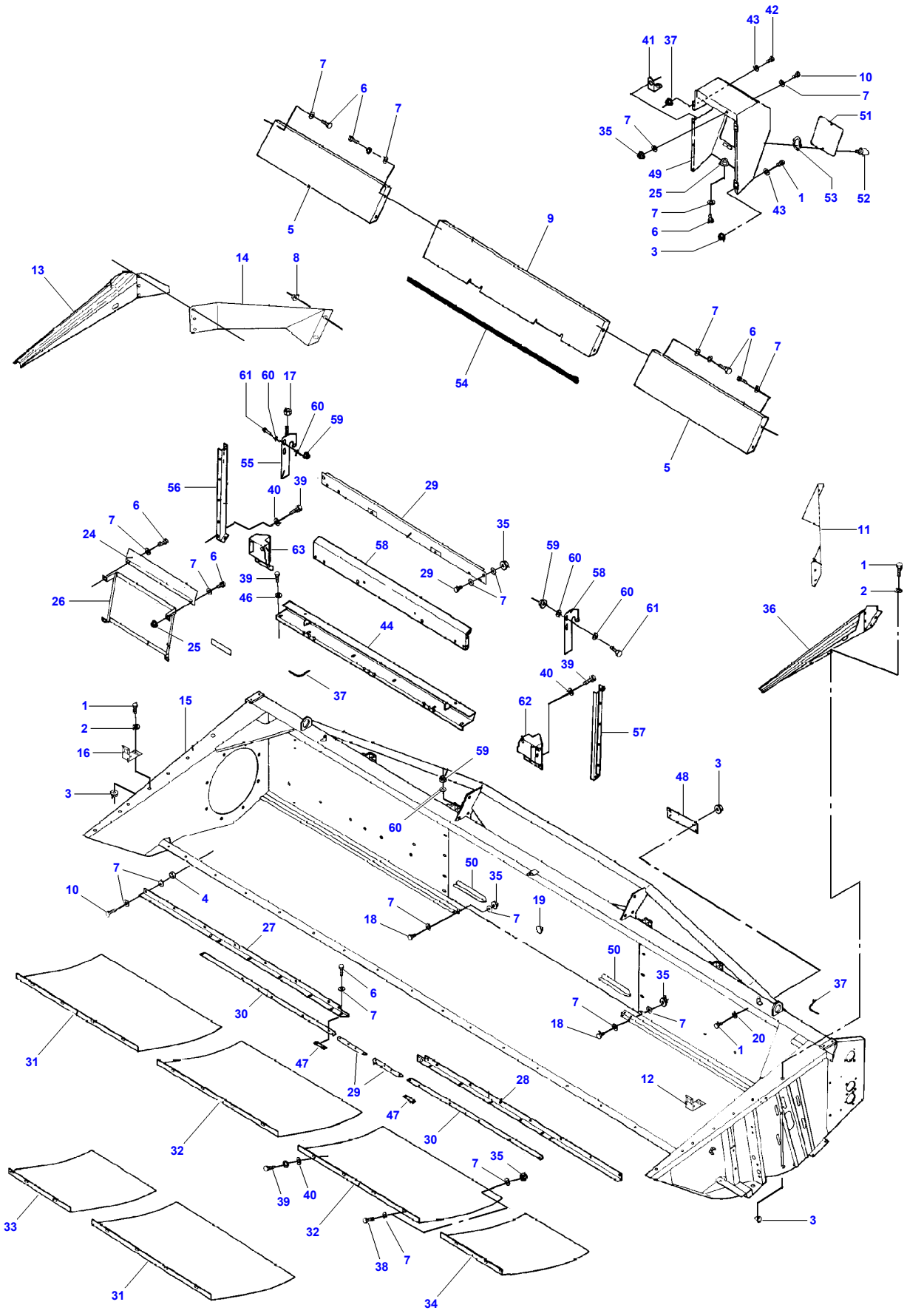
7
6
7
5
41
37
43
42
10
7
51
35
7
49
25
7
6
3
1
53
52
43
9
54
13
14
8
7
6
7
5
61
60
17
60
59
55
56
40
39
29
35
29
7
58
63
6
7
24
6
7
39
46
26
25
44
37
59
60
58
60
61
11
1
2
36
40
39
62
57
1
15
2
16
3
59
60
48
3
7
4
10
50
35
7
19
7
18
27
50
35
37
7
18
20
1
6
7
30
31
47
29
28
12
47
30
32
7
35
39
40
32
38
7
33
31
34
3

D-ZAZE-007-c

Item	Part Number	Qty	Description	Comments
1	339560X1	X	Hex. Sock. Screw	M6 X 16
2	391038X1	X	Washer	
3	1441462X1	X	Locknut	M6
4	339169X1	X	Nut	M8
5	D18283429	2	Cowl	12' - 3,72M
	D18283428	2	Cowl	14' - 4,34M
	D18283427	2	Cowl	16' - 3,95M
6	339123X1	X	Hex. Sock. Screw	M8 X 20
7	D20400506	X	Washer	
8	394367X1	X	Locknut	
9	D18283236	1	Cowl	
10	339761X1	X	Hex. Sock. Screw	M8 X 25
11	D18283233	1	Cowl	Left Hand
12	D28780381	1	Retainer	[B]
13	D18283516	1	Side	Right Hand
14	D18283232	1	Cowl	Right Hand
15	D18286022	1	Table	12' - 3,72M
	D18285501	1	Table Housing	14' - 4,34M
	D18285502	1	Table Housing	16' - 4,95M
16	D28780381	2	Retainer	[C]
17	339034X1	1	Nut	M16
18	339337X1	4	Hex. Sock. Screw	M8 X 30
19	D45745300	X	Plug	
20	D20400404	X	Washer	
21	339124X1	2	Hex. Sock. Screw	[A,D] M8 X 16
22	D28284249	1	Plate	[A,D]
23	D20400506	2	Washer	[A,D]
24	D18285765	1	Protector	12' - 3,72M
	D18285764	1	Protector	14' - 16' 4,34M - 4,95M
25	394367X1	X	Locknut	
26	D18285769	1	Bracket	12' - 3,72M
	D18285768	1	Bracket	14' - 16' 4,34M - 4,95M
27	D28282206	1	Deflector	Right Hand 12' - 3,72M Replace and repair. Old interchangeable with new D18281804
	D28282208	1	Deflector	Right Hand 14' - 4,34M Replace and repair. Old interchangeable with new D18282208
	D28281802	1	Deflector	Right Hand 16' - 4,95M Replace and repair. Old interchangeable with new D18281802
28	D28282205	1	Deflector	Left Hand 12' - 3,72M Replace and repair. Old interchangeable with new D18281803
	D28282207	1	Deflector	Left Hand 14' - 4,34M Replace and repair. Old interchangeable with new D18282207
	D28281801	1	Deflector	Left Hand 16' - 4,95M Replace and repair. Old interchangeable with new D18281801
29	D18285218	1	Plate	[A] 14' - 16' 4,34M - 4,95M
30	D28283241	2	Deflector	12' - 3,72M
	D28283327	2	Deflector	14' - 4,34M Replace and repair. Old interchangeable with new D18283327
	D28283326	2	Deflector	16' - 4,95M
31	D28283256	2	Wearplate	12' - 3,72M Replace and repair. Old interchangeable with new D18283256
	D28283256	1	Wearplate	14' - 4,34M Replace and repair. Old interchangeable with new D18283256
	D28283256	3	Wearplate	16' - 4,95M Replace and repair. Old interchangeable with new D18283256
32	D28283255	2	Wearplate	14' - 18' 4,34M - 5,56M Replace and repair. Old interchangeable with new D18283255
33	D28283253	1	Wearplate	Right Hand
34	D28283254	1	Wearplate	Left Hand Replace and repair. Old interchangeable with new D18283254
35	394367X1	X	Locknut	M8
36	D18283938	1	Plate	Left Hand
37	D28782178	X	Seal Section	Length 5 M
38	D40405300	X	Screw	
39	3009493X1	X	Hex. Sock. Screw	M10 X 30

Item	Part Number	Qty	Description	Comments
40	D20400419	X	Washer	
41	D18250648	1	Clip	
42	339666X1	5	Hex. Sock. Screw	M6 X 20
43	D20400405	5	Washer	
44	D18285529	1	Profile	
46	D20400415	8	Washer	
47	D28283321	2	Clamp	16' - 4,95M
48	D18285613	1	Cover	
49	D18284331	1	Guard	
50	D28283406	2	Deflector	Replace and repair. Old interchangeable with new D18283406
51	D18280958	1	Cover	
52	D43427500	2	Pin	
53	1440988X1	2	Circlip	
54	D28283557	X	Tensioner	
55	D18285738	1	Hook	
56	D18285775	1	Support	Right Hand
57	D18285776	1	Support	Left Hand
58	D18285739	1	Hook	
59	1442739X1	5	Locknut	
60	D28181284	9	Washer	
61	339881X1	4	Hex. Sock. Screw	M16 X 60
62	D58285756	1	Bracket	
63	D58285752	1	Bracket	

FOOTNOTE [A] OPTIONAL EQUIPMENT AUTO LEVEL
FOOTNOTE [B] OPTIONAL EQUIPMENT ELECTRIC - VERTICAL KNIFE LEFT
FOOTNOTE [C] OPTIONAL EQUIPMENT ELECTRIC VERTICAL KNIFE RIGHT
FOOTNOTE [D] NOT ILLUSTRATED

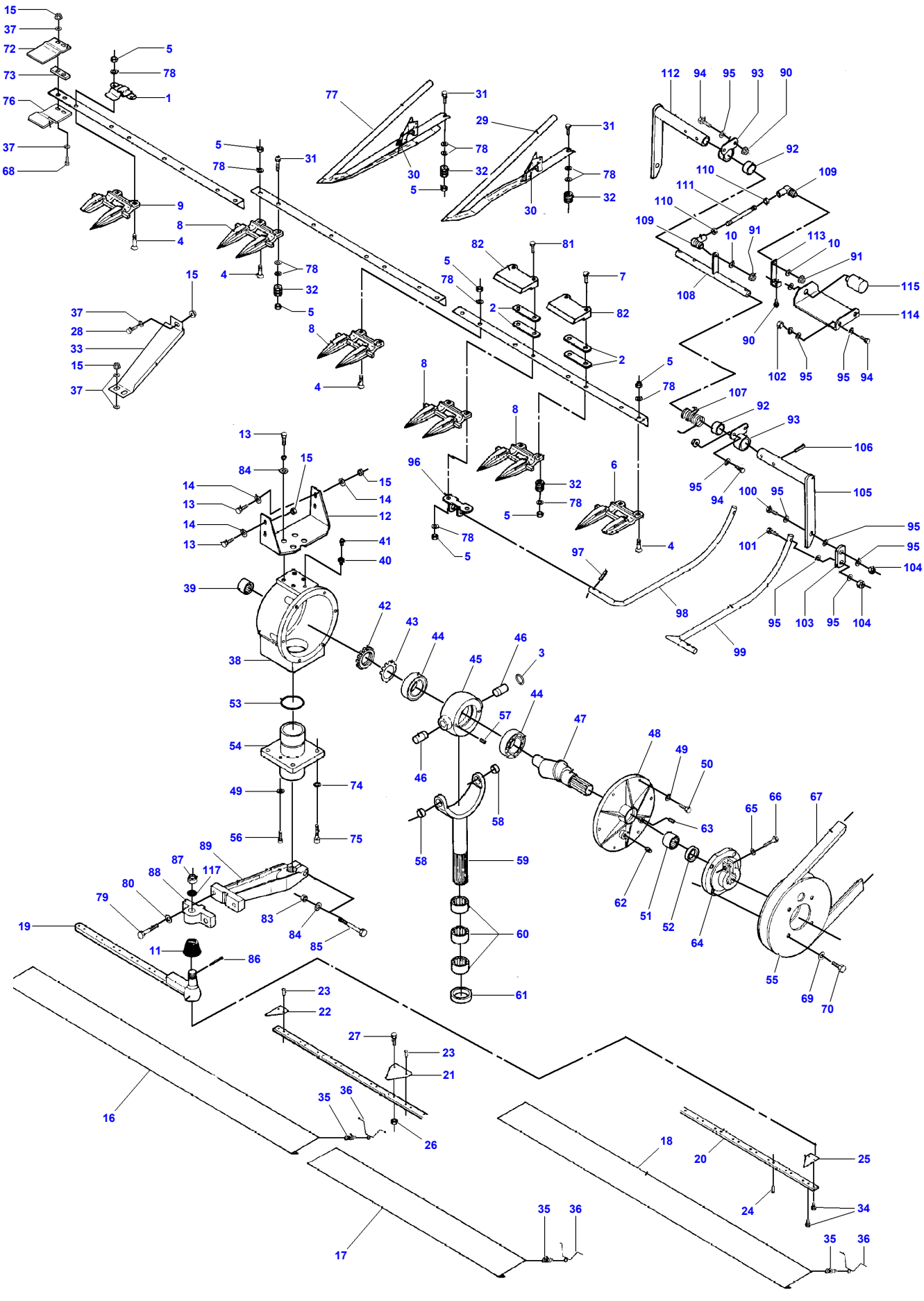

D-ZAZF-007-C

Item	Part Number	Qty	Description	Comments
1	**D28283934**	13	Clip	12' - 3,72M
	D28283934	13	Clip	14' - 4,34M
	D28283934	15	Clip	16' - 4,95M
2	**D28230292**	4	Shim	
3	D45483000	1	O Ring	[C]
4	**D40551500**	X	Bolt	
5	339402X1	X	Nut	M10
6	**D44104700**	1	Finger	Left Hand
7	D40067600	X	Screw	
8	**D44104500**	27	Finger	12' - 3,72M
	D44104500	27	Finger	14' - 4,34M
	D44104500	31	Finger	16' - 4,95M
9	**D44104600**	1	Finger	Right Hand
10	D20400404	4	Washer	
11	**D44120500**	1	Cap	
12	D28283104	1	Support	From Serial or Engine Number 939560
13	339337X1	8	Hex. Sock. Screw	M8 X 30
14	D20400414	4	Washer	
15	394367X1	7	Locknut	M8
16	D28230842	1	Guard	14' - 4,34M
	D28230845	1	Guard	16' - 4,95M
17	D28230843	1	Guard	14' - 20' 4,34M - 6,16M
18	D28230844	1	Guard	
19	D28283006	2	Spring	12' - 3,72M
	D28283307	2	Blade	14' - 4,34M
	D28283308	2	Blade	16' - 4,95M
	D28283011	2	Knife Head	
20	D28281488	2	Knife Back	12' - 3,72M
	D28281489	2	Knife Back	14' - 4,34M
	D28281490	2	Knife Back	16' - 4,95M
21	**D44103700**	X	Section	
22	**D44103800**	X	Half Section	Right Hand
23	**D41306100**	X	Rivet	
24	**D41306200**	X	Rivet	
25	**D44104000**	1	Half Section	Left Hand
26	1441462X1	X	Locknut	Alternative D41306100 M6
27	339560X1	X	Hex. Sock. Screw	Alternative D41306100 M6 X 16
28	339761X1	1	Hex. Sock. Screw	M8 X 25
29	D49040200	X	Ear Lifter	
30	D49040400	X	Spring	
31	339019X1	X	Hex. Sock. Screw	M10 X 50
32	D49040600	15	Roller	12' - 3,72M
	D49040600	15	Roller	14' - 4,34M
	D49040600	17	Roller	16' - 4,95M
33	D18281572	1	Guard	
34	339560X1	2	Hex. Sock. Screw	M6 X 16
35	D26500317	4	Spring	(16)
	D26500317	4	Spring	(17)
	D26500317	4	Spring	(18)
36	D28230841	4	Spring	(16)
	D28230841	4	Spring	(17)
	D28230841	4	Spring	(18)
37	D20400506	5	Washer	
38	D28281324	1	Wobble Drive	[B]
	D44127800	1	Box	[B] (38)
	D28281324	1	Wobble Drive	[C] (38)
	D44126500	1	Box	[C] (38)
39	D44128800	1	Bearing Needle	(38)
40	D44129400	1	Connector	(38)
41	D46116500	1	Valve.	(38)
42	D44129100	1	Nut	(38)
43	D44129200	1	Washer	(38)
44	D41668400	2	Bearing Roller	(38)
45	D44127900	1	Housing	[B] (38)

Item	Part Number	Qty	Description	Comments
45	D44126400	1	Housing	[C] (38)
46	D44128000	2	Journal	[B] (38)
46	D44125900	2	Journal	[C] (38)
47	D44129300	1	Shaft	(38)
48	D44128200	1	Cover	[B] (38)
48	D44126300	1	Cover	[C] (38)
49	D41102100	8	Washer	(38) A8
50	339123X1	6	Hex. Sock. Screw	(38) M8 X 20
51	D41669700	1	Bearing Needle	(38)
52	D45412000	1	Gasket	(38)
53	D45481500	1	O Ring	(38)
54	D44128300	1	Bearing Carrier	[B] (38)
54	D44126200	1	Bearing Carrier	[C] (38)
55	D44127200	1	Pulley	(38) A8
56	D40697200	2	Screw	[B] (38)
56	D40697700	2	Screw	[C] (38)
57	D40639600	2	Pin	[B] (38)
58	D44128400	2	Bush	[B] (38)
58	D44126100	2	Bush	[C] (38)
59	D44128500	1	Yoke	[B] (38)
59	D44126000	1	Yoke	[C] (38)
60	D41669800	3	Bearing Needle	(38)
61	D45409500	1	Gasket	(38)
62	D44128600	1	Plug	(38)
63	D45236200	1	Plug	(38)
64	D44127100	1	Hub	(38)
65	D41100900	1	Spring Washer	(38)
66	D40694000	1	Screw	(38)
67	**D41986300**	1	V Belt	
68	339010X1	2	Hex. Sock. Screw	
69	D20400426	4	Washer	
70	1440716X1	4	Hex. Sock. Screw	M12 X 30
71	D40405300	2	Screw	[E]
72	D28281574	1	Plate	
73	D28281575	1	Shim	
74	D20400522	4	Spacer	
75	D40465100	4	Screw	
76	D28281576	1	Plate	
77	D49040300	X	Ear Lifter	
78	D20400419	X	Washer	
79	D40698400	2	Screw	
80	D20400523	4	Spacer	
81	1441671X1	X	Screw Special	M10 X 50
82	**D28260362**	2	Clip	
83	1442190X1	1	Locknut	
84	D28280986	4	Washer	
85	390826X1	1	Hex. Sock. Screw	
86	391423X1	1	Split Pin	4 X 40
87	**D41054300**	1	Nut	
88	D44126900	1	Flange	
89	D44127000	1	Swivel Arm	
90	394367X1	8	Locknut	[A]
91	D41088800	2	Locknut	[A] M6

Item	Part Number	Qty	Description	Comments
92	D28284456	4	Bush	[A]
93	D28284458	4	Bearing Bush	[A]
94	339123X1	12	Hex. Sock. Screw	[A] M8 X 20
95	D20400506	36	Washer	[A]
96	D28284356	4	Fitting	[A]
97	D42611800	8	Pin	[A]
98	D28284259	2	Sensor	[A]
99	D28284260	2	Sensor	[A]
100	339337X1	4	Hex. Sock. Screw	[A] M8 X 30
101	D40405300	4	Screw	[A]
102	339169X1	4	Nut	[A] M8
103	D28284363	4	Link	[A]
104	394367X1	8	Locknut	[A] M8
105	D28284227	2	Lever	[A] Left Hand
106	D42611900	8	Pin	[A]
107	D28281693	2	Spring	[A]
108	D28284232	2	Shaft	[A]
109	D46437300	4	Toggle	[A]
110	D41010600	4	Nut	[A] M6
111	D28780446	2	Rod	[A]
112	D28284226	2	Lever	[A] Right Hand
113	D28284361	2	Connecting Link	[A]
114	D28284360	2	Plate	[A]
115	D28780523	2	Potentiometer	[A]
116	D40464900	2	Screw	[A,E]
117	D20400438	1	Washer	

FOOTNOTE [A] OPTIONAL EQUIPMENT AUTO LEVEL
FOOTNOTE [B] USED ONLY IN KNIFE DRIVES WITH 6 HOLES IN BEARING HOUSING BOTTOM
FOOTNOTE [C] USED ONLY IN KNIFE DRIVES WITH 8HOLES IN BEARING HOUSING BOTTOM AND BULGES SIDES
FOOTNOTE [E] NOT ILLUSTRATED

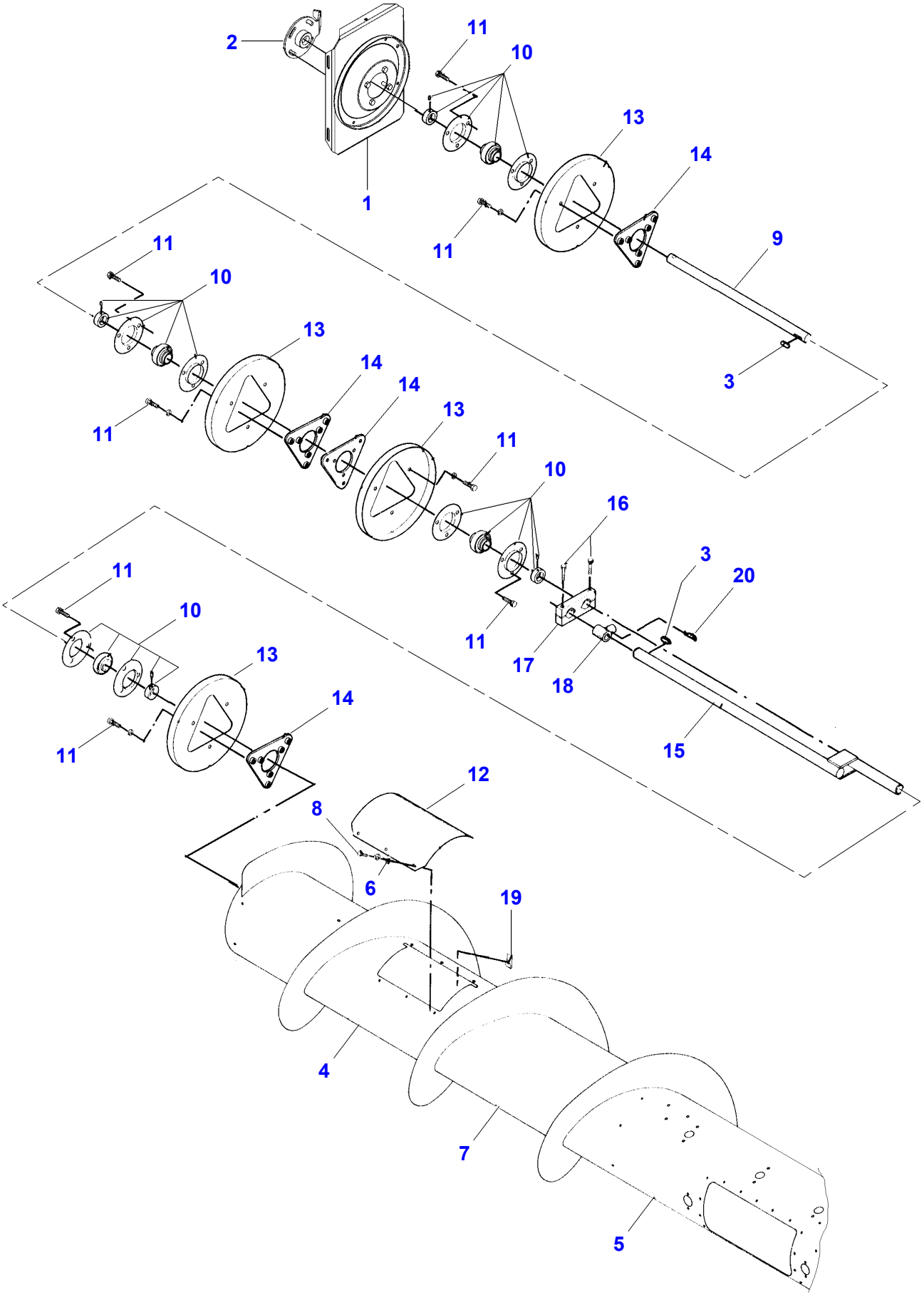
2
11
10
13
14
1
11
9
3
11
10
13
14
14
13
11
10
16
3
20
11
17
18
15
11
10
13
14
11
12
8
6
19
4
7
5

D-ZAZG-008-A

Item	Part Number	Qty	Description	Comments
1	D18285102	1	Cover	
2	D28285130	1	Fitting	
3	339441X1	2	Key Parallel	10 X 8 X 40 A
4	D28285999	1	Body	Right Hand 12' - 3,72M
	D28283792	1	Body	Right Hand 14' - 4,34M
	D28283795	1	Body	Right Hand 16' - 4,95M
5	D28283012	1	Body	
6	391038X1	12	Washer	
7	D18285982	1	Table Auger	12' - 3,72M
	D18285983	1	Table Auger	14' - 4,34M
	D18285984	1	Table Auger	16' - 4,95M
8	339666X1	6	Hex. Sock. Screw	M6 X 20
9	D28283035	1	Shaft	12' - 3,72M
	D28283767	1	Shaft	14' - 4,34M
	D28283768	1	Shaft	16' - 4,95M
10	D41707800	4	Bearing	
11	339814X1	24	Hex. Sock. Screw	M10 X 35
12	D18285312	1	Cover	
13	D28280014	4	Plate	
14	D28283847	4	Bearing Plate	
15	D28283016	1	Crankshaft	
16	339556X1	2	Hex. Sock. Screw	
17	D28283039	1	Arm	
18	**D28251831**	15	Bearing Carrier	
19	D43428200	6	Nut	M6
20	D28283853	15	Hair Pin	

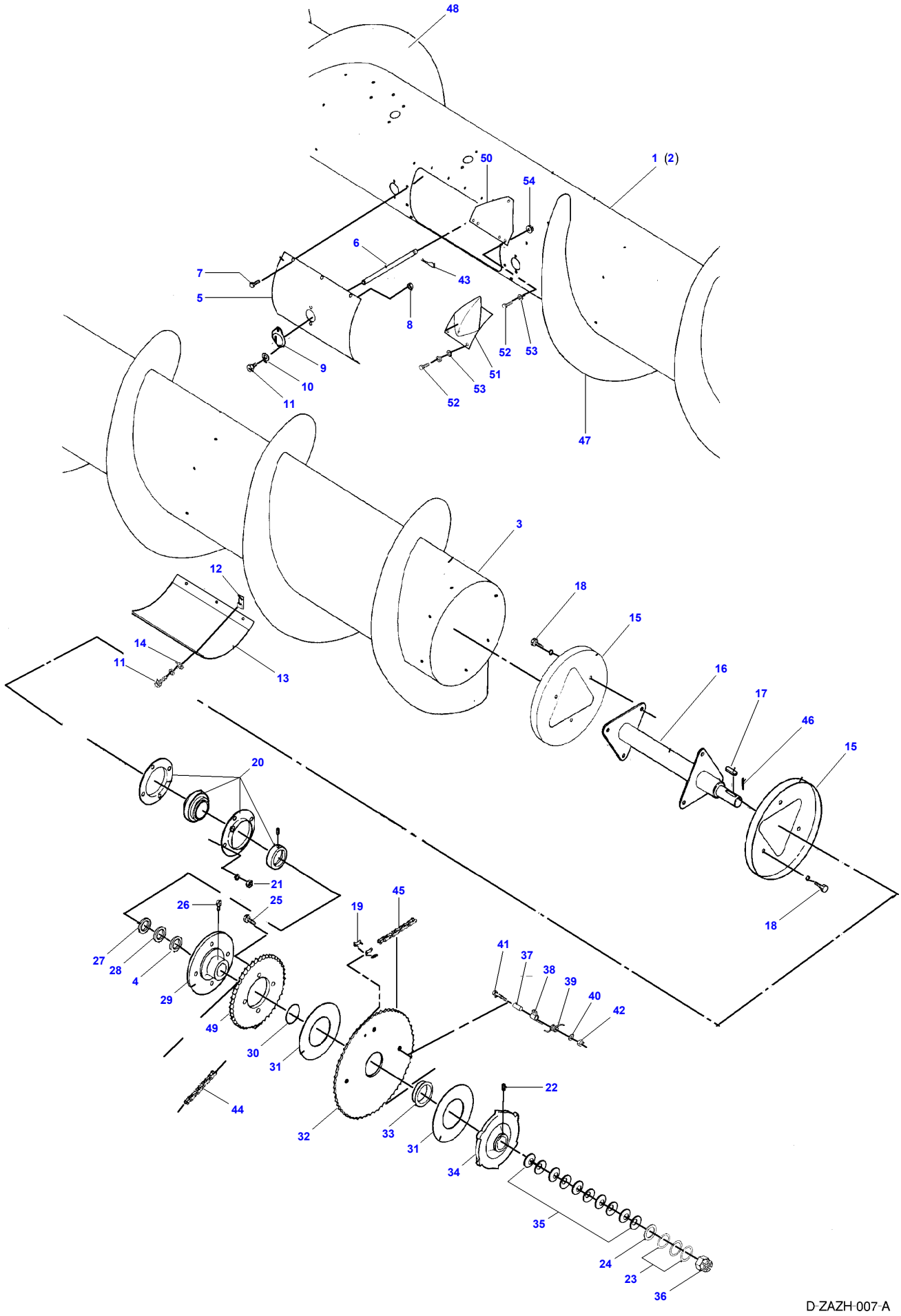
48
50
54
1 (2)
6
7
43
5
8
9
10
11
52
53
51
53
52
47
3
12
18
15
14
11
13
16
17
46
15
20
18
21
26
25
19
45
27
28
4
29
49
30
31
41
37
38
39
40
42
44
32
33
31
22
34
35
24
23
36
D-ZAZH-007-A

Item	Part Number	Qty	Description	Comments
1	D18285982	1	Table Auger	12' - 3,72M
	D18285983	1	Table Auger	14' - 4,34M
	D18285984	1	Table Auger	16' - 4,94M
2	D28283012	1	Body	
3	D28285998	1	Body	Left Hand 12' - 3,75M
	D28283793	1	Body	Left Hand 14' - 4,34M
	D28283794	1	Body	Left Hand 16' - 4,95M
4	D41653500	2	Washer	40 X 50 X 1
5	D18283078	1	Cover	
6	**D28283815**	15	Finger	
7	339560X1	8	Hex. Sock. Screw	M6 X 16
8	1441462X1	X	Locknut	M6
9	**D28283060**	15	Bush	
10	D20400404	X	Washer	
11	339666X1	X	Hex. Sock. Screw	M6 X 20
12	D43428200	6	Nut	M6
13	D18285312	1	Cover	
14	391038X1	6	Washer	
15	D28280014	2	Plate	
16	D28285100	1	Drive Shaft	
17	D43106800	1	Key	
18	339814X1	X	Hex. Sock. Screw	M10 X 35
19	**D42365500**	1	Link	
20	D41716500	1	Bearing	
21	3009695X1	4	Nut	M12
22	1441858X1	1	Grease Nipple	M6
23	D20400522	4	Spacer	
24	D20400520	1	Spacer	
25	339123X1	4	Hex. Sock. Screw	M8 X 20
26	339761X1	1	Hex. Sock. Screw	M8 X 25
27	D41653500	X	Washer	OPTIONAL 40 X 50 X 1
28	D41653500	4	Washer	OPTIONAL 40 X 50 X 1
29	D28283004	1	Washer	
30	D45481600	1	O Ring	
31	**D45904300**	2	Facing	
32	D28286046	1	Sprocket	
33	D28286049	1	Insert	
34	D28286166	1	Clutch Disc	
35	D41112400	10	Washer	
36	D41054100	1	Castle Nut	
37	D28281431	1	Spacer	
38	D28281432	1	Support	
39	D28283006	1	Spring	
40	D20400507	1	Spacer	
41	339556X1	1	Hex. Sock. Screw	
42	1440329X1	1	Locknut	M10
43	D28283853	15	Hair Pin	
44	**D42332800**	1	Chain	
45	**D42329200**	1	Chain	
46	391405X1	1	Split Pin	4 X 25
47	D28283944	1	Screw	Right Hand 12' - 3,72M
	D28283945	1	Auger	Right Hand 14' - 4,34M
	D28283946	1	Auger	Right Hand 16' - 4,95M
48	D28283939	1	Screw	Left Hand 12' -3,72M
	D28283940	1	Auger	Left Hand 14' - 4,34M
	D28283941	1	Auger	Left Hand 16' - 4,95M
49	D28283182	1	Sprocket	
50	D28281694	4	Threaded Part	[B]
51	D28283297	4	Finger	[B]
52	339123X1	20	Hex. Sock. Screw	[B] M8 X 20
53	D20400506	20	Washer	[B]
54	394367X1	12	Locknut	[B] M8

FOOTNOTE [B] OPTIONAL EQUIPMENT STANDARD COMBINE, STANDARD EQUIPMENT AUTO LEVEL COMBINE,SLOPES

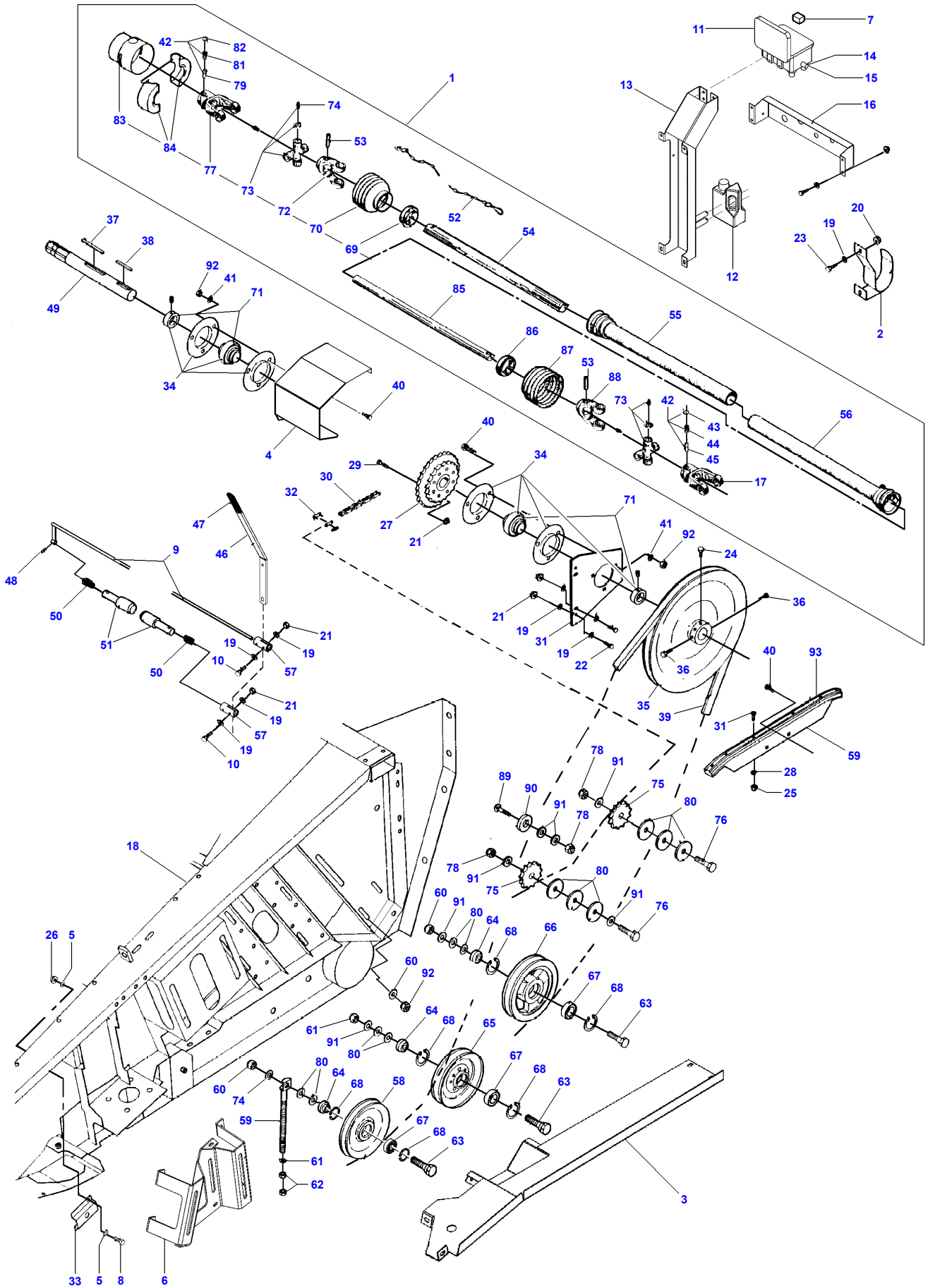
1
2
3
4
5
6
7
8
9
10
11
12
13
14
15
16
17
18
19
20
21
22
23
24
25
26
27
28
29
30
31
32
33
34
35
36
37
38
39
40
41
42
43
44
45
46
47
48
49
50
51
52
53
54
55
56
57
58
59
60
61
62
63
64
65
66
67
68
69
70
71
72
73
74
75
76
77
78
79
80
81
82
83
84
85
86
87
88
89
90
91
92
93

D-ZAZI-007-A

Item	Part Number	Qty	Description	Comments
1	D45608800	1	Shaft	12' - 3,72M
	D45608900	1	Shaft	14' - 4,34M
	D45609000	1	Shaft	16' - 4,95M
2	D18281345	1	Stirrup	
3	D28285366	1	Guard	
4	D18285795	1	Guard	
5	391038X1	X	Washer	
6	D18285089	1	Bracket	
7	D45140039	2	Plug	
8	339666X1	X	Hex. Sock. Screw	M6 X 20
9	D28285117	1	Rod	
10	339168X1	X	Hex. Sock. Screw	M8 X 50
11	D28785641	1	Clutch	[G]
12	D45148900	1	Container	[G]
13	D28285296	1	Bracket	[G]
14	D45140037	2	Screw	[G]
15	D45140038	2	Ring	[G]
16	D18285215	1	Bracket	
17	D45633200	1	Yoke	[A]
18	D18285832	1	Table Housing	12' - 3,72M
	D18285831	1	Table Housing	14' - 4,34M
	D18285510	1	Table Housing	16' - 4,95M
19	D20400506	X	Washer	
20	394367X1	X	Locknut	
21	394367X1	X	Locknut	M8
22	339761X1	X	Hex. Sock. Screw	M8 X 25
23	339124X1	X	Hex. Sock. Screw	M8 X 16
24	D40466200	4	Setscrew	
25	D41087200	6	Locknut	M4
26	1441462X1	X	Locknut	M6
27	D28280830	1	Sprocket	
28	D20400466	6	Washer	4,3 X 9 X 0,8
29	339009X1	8	Hex. Sock. Screw	M8 X 35
30	**D42329200**	1	Chain	
31	D40609300	6	Screw	
32	**D42365500**	1	Link	
33	D28281578	1	Retainer	
34	D41707800	2	Bearing	
35	D28285423	1	Pulley	
36	D40466700	2	Hex. Sock. Screw	M10 X 25
37	D43114900	1	Key	
38	1441579X1	1	Key Parallel	10 X 8 X 56
39	**D41986300**	1	V Belt	
40	D40066800	6	Screw Special	M10 X 30
41	D20400419	6	Washer	
42	D45632400	2	Tube	
43	D45645700	2	Washer	
44	D45667300	2	Spring	
45	D45665300	2	Pin	
46	D28285127	1	Lever	
47	D43484900	1	Lever	
48	D42612200	X	Pin	
49	D28284404	1	Shaft	
50	D27100794	2	Spring	
51	D28283200	1	Shaft	
52	D45681800	2	Chain	
53	D42619100	2	Pin	
54	D45632800	1	Tube	16' - 4,95M
55	D45632600	1	Tube	16' - 4,95M
56	D45632100	1	Tube	14' - 4,34M
	D45632500	1	Tube	16' - 4,95M
57	D28285126	2	Fork	
58	D28760574	1	Pulley	Valid from machine/table no,can be used in new as well as in older machines 938215
59	D28281365	1	Crossmember	

Item	Part Number	Qty	Description	Comments
60	1442739X1	3	Locknut	
61	D20400416	X	Washer	
62	339402X1	X	Nut	M10
63	D28760156	3	Screw	
64	D28760155	3	Bush	
65	D28752130	1	Pulley	
66	D28280819	1	Pulley	
67	339599X1	3	Bear. 6204 2rs	
68	339199X1	6	Circlip	47 X 1,75
69	D45630600	1	Ring	
70	D45630400	1	Guard	
71	D41663400	2	Ball Bearing	
72	D45630200	1	Yoke	
73	D45630300	2	Hub	
74	D43001600	2	Greaser	AM6
75	D41716800	2	Tightener	
76	391889X1	2	Hex. Sock. Screw	M16 X 70
77	D45633100	1	Yoke	[A]
78	1442739X1	X	Locknut	M16
79	D45665300	2	Pin	
80	D20400460	X	Washer	
81	D45667300	2	Spring	
82	D45645700	2	Washer	
83	D45632900	1	Bush	
84	D45633300	1	Tube	
85	D45632700	1	Tube	16' - 4,95M
86	D45630700	1	Ring	
87	D45630500	1	Guard	
88	D45630100	1	Yoke	
89	D40073100	1	Screw	
90	D28280981	1	Spacer	
91	D28181284	X	Washer	
92	1440329X1	X	Locknut	M10
93	D28280787	1	Rail	

FOOTNOTE [A] DELIVERED IN SETS
FOOTNOTE [G] OPTIONAL EQUIPMENT

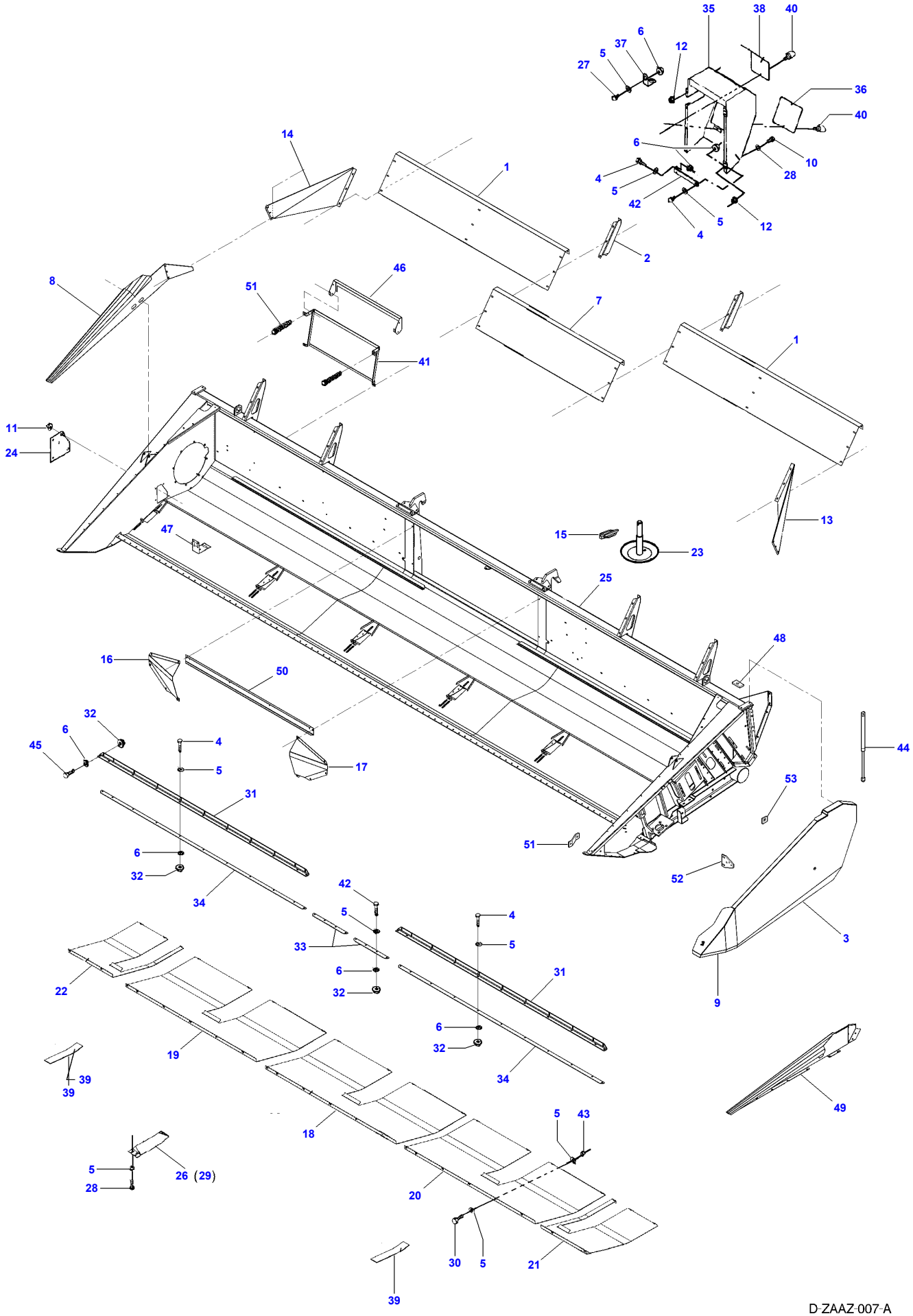
35
38
40
6
37
12
5
27
36
40
14
1
6
10
4
28
5
42
5
12
4
2
46
51
8
7
1
41
11
24
47
15
23
13
25
48
16
50
44
32
6
4
45
5
17
53
31
51
6
52
32
34
42
3
5
4
33
5
31
6
9
32
22
6
19
32
34
39
49
39
18
5
43
5
26 (29)
28
20
30
5
21
39

D-ZAAZ-007-A

Item	Part Number	Qty	Description	Comments
1	D18285659	1	Plate	12' - 3,72M
	D18285660	2	Plate	14' - 4,34M
	D18285661	2	Plate	16' - 4,95M
2	D18285124	1	Support	12' - 3,72M
	D18285124	2	Support	
3	D18280552	1	Guard	
4	339123X1	X	Hex. Sock. Screw	M8 X 20
5	D20400506	X	Washer	
6	394367X1	X	Locknut	M8
7	D18285120	1	Guard	
8	D18283554	1	Panel	Right Hand
9	D18281582	1	Guard	
10	339560X1	X	Hex. Sock. Screw	M6 X 16
11	D20400404	X	Washer	
12	1441462X1	X	Locknut	M6
13	D18285122	1	Guard	
14	D18285121	1	Guard	
15	D41446200	1	Split Pin	
16	D18285313	1	Guard	Right Hand
17	D18285314	1	Guard	Left Hand
18	D28280255	2	Wearplate	[A] 14' - 4,34M
	D28280255	1	Wearplate	[A] 16' - 4,95M
19	D28285376	1	Wearplate	
20	D28285376	1	Wearplate	
21	D28285081	1	Wearplate	[A] Left Hand 12' - 3,72M
	D28280253	1	Wearplate	[A] Left Hand 14' - 4,34M
	D28280915	1	Wearplate	Left Hand 16' - 4,95M
22	D28285082	1	Wearplate	[A] Right Hand 12' - 3,72M
	D28280254	1	Wearplate	[A] Right Hand 14' - 4,34M
	D28280916	1	Wearplate	Right Hand 16' - 4,95M
23	D28286101	1	Support	
24	D18280359	1	Shutter	
25	D18285832	1	Table Housing	12' - 3,72M
	D18285509	1	Table Housing	14' - 4,34M
	D18285510	1	Table Housing	16' - 4,95M
26	D28251486	2	Cover	14' - 4,34M
	D28251486	3	Cover	16' - 4,95M
27	339124X1	X	Hex. Sock. Screw	M8 X 16
28	391038X1	X	Washer	
29	D28285194	3	Cover	16' - 4,95M
30	339010X1	X	Hex. Sock. Screw	
31	D28285647	2	Angle.	12' - 3,72M
	D28285648	2	Angle.	14' - 4,34M
	D28285649	2	Angle.	16' - 4,95M
32	339169X1	X	Nut	M8
33	D28285197	2	Scraper	
34	D28286123	1	Strip	
	D28285654	1	Strip	14' - 4,34M
	D28285655	1	Strip	16' - 4,95M
35	D18283723	1	Panel	
36	D18280958	1	Cover	
37	D18250648	1	Clip	
38	D18280965	1	Cover	
39	D28283984	2	Wearplate	
40	D43427500	4	Pin	
41	D18285769	1	Bracket	12' - 3,72M
	D18285768	1	Bracket	14'-16' 4,34M - 4,94M
42	D28283924	1	Reinforcement	
43	394367X1	X	Locknut	M8

Item	Part Number	Qty	Description	Comments
44	D45056600	1	Gas Strut	Valid from machine/table no,can be used in new as well as in older machines 931560
45	339761X1	X	Hex. Sock. Screw	M8 X 25
46	D18285765	1	Protector	12' -3,72M
46	D18285764	1	Protector	14' - 16' 4,34M - 4,95M
47	D28780381	X	Retainer	
48	D28285289	1	Support	Valid from machine/table no,can be used in new as well as in older machines 931560
49	D18285590	1	Side	Left Hand
50	D18285801	1	Plate	
51	D18285375	1	Plate	
52	D28285170	1	Cover	Valid from machine/table no,can be used in new as well as in older machines 931560
53	D28285271	1	Dog	Valid from machine/table no,can be used in new as well as in older machines 931560

FOOTNOTE [A] BOTH AL AND STD

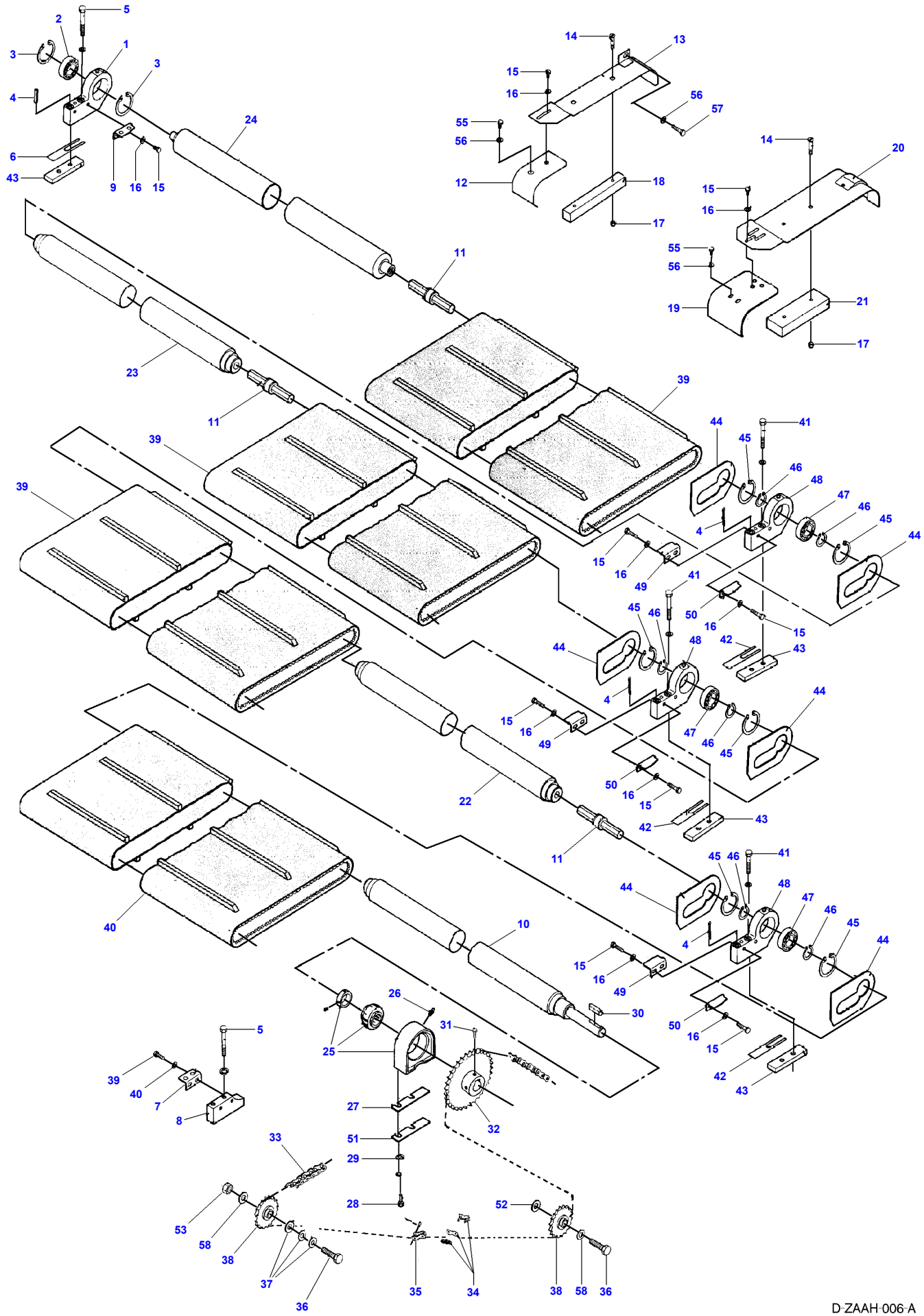
D-ZAAH-006-A

Item	Part Number	Qty	Description	Comments
1	D28251562	1	Bearing Carrier	
	D28251581	1	Bearing Carrier	(1)
2	D41715600	1	Ball Bearing	(1)
3	1440479X1	2	Circlip	(1)
				62 X 2
4	339055X1	6	Pin	8 X 40
5	339365X1	X	Hex. Sock. Screw	M10 X 80
6	D28251519	X	Shim	OPTIONAL
7	D28251380	4	Bracket	Right Hand
				12' - 3,72M
				14' - 4,34M
	D28251380	5	Bracket	Right Hand
				16' - 4,95M
8	D28251419	1	Bracket	
9	D28251379	4	Bracket	Left Hand
				12' - 3,72M
				14' - 4,34M
	D28251379	5	Bracket	Left Hand
				16'- 4,95M
10	D28285142	1	Roller	14'- 4,34 M
	D28285817	1	Roller	16'- 4,95 M
11	D28251565	2	Shaft	12' - 3,72M
				14' - 4,95M
	D28251565	3	Shaft	16'- 4,95M
12	D18284384	1	Shield	Right Hand 12' - 3,72M
	D18284385	1	Shield	Right Hand 14' - 4,34M
	D18284386	1	Shield	Right Hand 16' - 4,95M
13	D18284373	1	Shield	Right Hand 12' - 3,72M
	D18284374	1	Shield	Right Hand 14' - 4,34M
	D18284379	1	Shield	Right Hand 16' - 4,95M
14	D40064000	X	Screw	
15	339123X1	X	Hex. Sock. Screw	M8 X 20
16	D20400506	X	Washer	
17	394367X1	X	Locknut	M8
18	D28281310	2	Guide	From Serial or Engine Number 937533
19	D18281698	2	Shield	12' - 3,72M
				14' - 4,34M
	D18281698	3	Shield	16' - 4,95M
20	D18281699	2	Shield	12' - 3,72M
				14' - 4,34M
	D18281699	3	Shield	16'- 4,95M
21	D28281311	4	Guide	From Serial or Engine Number 937533
22	D28285817	1	Roller	12'- 3,72 M
				14'- 4,34 M
				16'- 4,95 M
23	D28285817	1	Roller	12'- 3,72 M
	D28284145	1	Roller	16'- 4,95 M
				Length 1172 MM
24	D28285817	1	Roller	12'- 3,72 M
				16'- 4,95 M
25	D41715800	1	Bearing Carrier	
26	339608X1	1	Grease Nipple	M10 X 1
27	D28251448	X	Shim	OPTIONAL
28	D40408000	X	Hex. Sock. Screw	M10 X 40
29	D20400419	X	Washer	
30	D43104900	1	Key	10 X 8 X 50
31	D40466200	2	Setscrew	
32	D28251161	1	Sprocket	Number of teeth/spines 32
	D28251163	2	Sprocket	[A]
				Number of teeth/spines 25
33	**D42332800**	1	Chain	
34	D42363100	1	Link	
35	**D42363500**	1	Link	
36	391889X1	2	Hex. Sock. Screw	M16 X 70
37	D20400460	4	Washer	
38	D41712300	2	Tensioner	
39	D28250931	3	Band	12'- 3,72 M
				16'- 4,95 M
				Width 1170 MM
	D28250932	3	Band	14'- 4,34 M
				Width 1460 MM

Item	Part Number	Qty	Description	Comments
40	D28250931	1	Band	16' - 4,95M Width 1170 MM
41	D40693100	X	Screw	
42	D28251445	X	Shim	OPTIONAL
43	D28285303	3	Strap	12' - 3,72M
43	D28251146	3	Strap	14' - 4,34M
43	D28251146	4	Strap	16' - 4,95M
44	D28251420	4	Control	12' - 3,72M 14' - 4,34M
44	D28251420	6	Control	16' - 4,95M
45	339437X1	8	Circlip	80 X 2,5
46	339469X1	8	Circlip	35 X 1,5
47	D41716300	4	Ball Bearing	
48	D28251583	2	Bearing Carrier	12' - 3,72M 14' - 4,34M
48	D28251583	3	Bearing Carrier	16' - 4,95M
49	D28251417	2	Scraper	Left Hand 12' - 3,72M 14' - 4,34M
49	D28251417	3	Scraper	Left Hand 16' - 4,95M
50	D28251418	2	Scraper	Right Hand 12' - 3,72M 14' - 4,34M
50	D28251418	3	Scraper	Right Hand 16' - 4,95M
51	D28281522	X	Shim	OPTIONAL
52	D20400516	X	Spacer	OPTIONAL
53	1442739X1	1	Locknut	M16
55	339230X1	X	Hex. Sock. Screw	M6 X 10
56	391038X1	X	Washer	
57	339560X1	1	Hex. Sock. Screw	M6 X 16
58	D28181284	2	Washer	
59	D44742000	1	Kit, Repair	[B]

FOOTNOTE [A] OPTIONAL EQUIPMENT
FOOTNOTE [B] NOT ILLUSTRATED

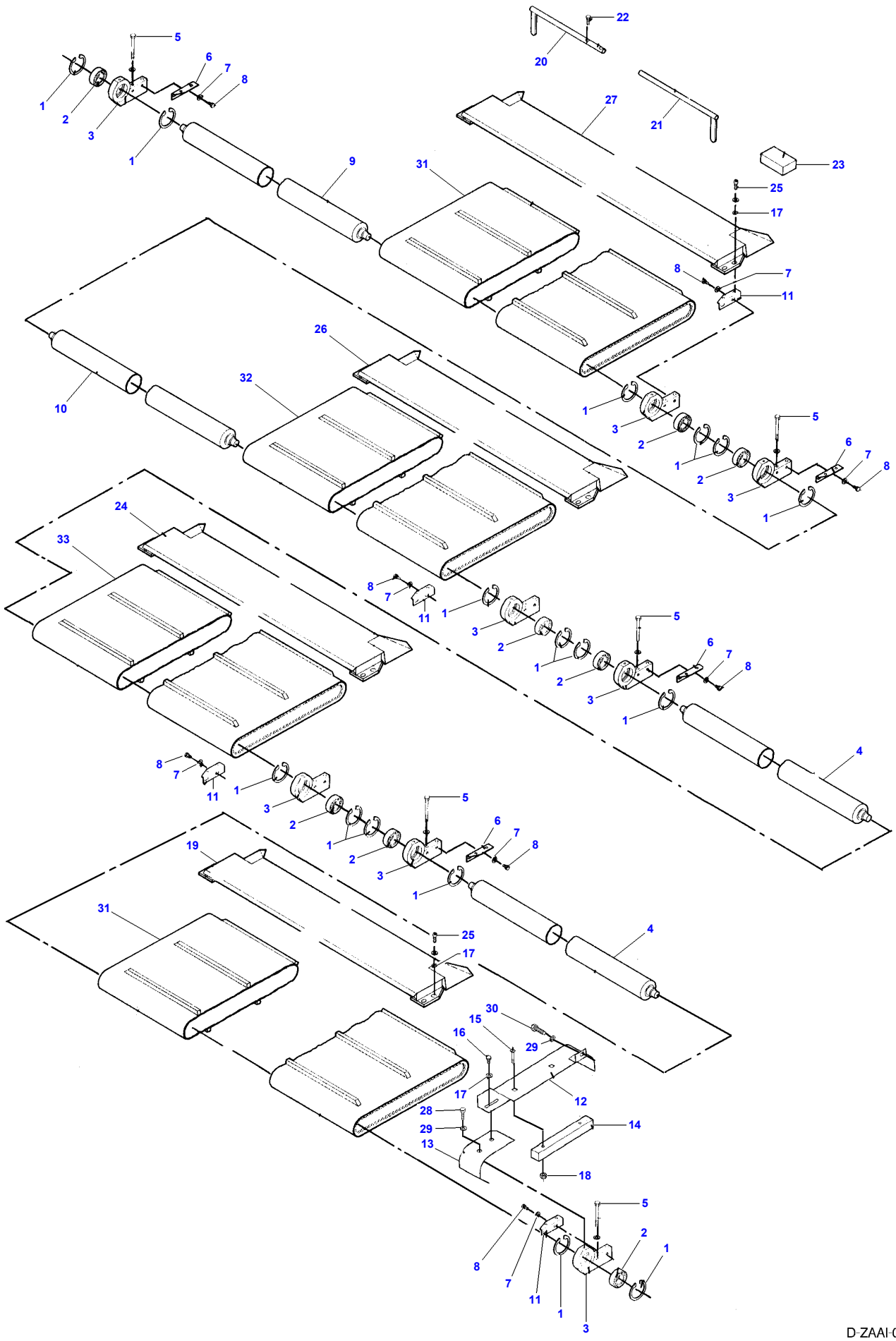
D-ZAAI-006-B

Item	Part Number	Qty	Description	Comments
1	1440479X1	12	Circlip	12' - 3,72M 14' - 4,34M 62 X 2
	1440479X1	16	Circlip	16' - 4,95M 62 X 2
2	D41715600	6	Ball Bearing	12' - 3,72M 14' - 4,34M
	D41715600	8	Ball Bearing	16' - 4,95M
3	D28251582	6	Bearing Carrier	12' - 3,72M 14' - 4,34M
	D28251582	8	Bearing Carrier	16' - 4,95M
4	D28285817	2	Roller	12' - 3,72M 16' - 4,95M
5	339365X1	16	Hex. Sock. Screw	M10 X 80
6	D28251380	3	Bracket	Right Hand 12' - 3,72M Right Hand 14' - 4,34M
	D28251380	4	Bracket	Right Hand 16' - 4,95M
7	D20400506	16	Washer	12' - 3,72M 14' - 4,34M
8	D40697400	12	Screw	12' - 3,72M 14' - 4,34M
	D40697400	16	Screw	16' - 4,95M
9	D28285817	1	Roller	12' - 3,72M 16' - 4,95M
	D28285142	1	Roller	14' - 4,34M
10	D28285817	1	Roller	12' - 3,72M 14' - 4,34M 16' - 4,95M
11	D28251379	3	Bracket	Left Hand 12' - 3,72M Left Hand 14' - 4,34M
	D28251379	4	Bracket	Left Hand 16' - 4,95M
12	D18284373	1	Shield	12' - 3,72M
	D18284374	1	Shield	14' - 4,34M
	D18284378	1	Shield	16' - 4,95M
13	D18284380	1	Shield	12' - 3,75M
	D18284381	1	Shield	14' - 4,34M
	D18284382	1	Shield	16' - 4,95M
14	D28281310	2	Guide	Valid from machine/table no,can be used in new as well as in older machines 937533
15	D40064000	X	Screw	
16	339123X1	X	Hex. Sock. Screw	M8 X 20
17	D20400506	X	Washer	
18	394367X1	X	Locknut	M8
19	D28281563	1	Scraper	12' - 3,72M 16' - 4,95M
20	D28251543	1	Tool	
	D28251545	1	Tool	(20)
21	D28251544	1	Tool	(20)
22	D43385200	2	Screw	(20)
23	D28251547	1	Adjuster	(20)
24	D28281563	1	Scraper	12' - 3,72M 16' - 4,95M
25	391148X1	12	Screw	12' - 3,75M 14' - 4,34M
	391148X1	16	Screw	16' - 4,95M
26	D28281563	1	Scraper	12' - 3,72M 14' - 4,34M 16' - 4,95M
27	D28281563	1	Scraper	12' - 3,72M 16' - 4,95M
	D28281562	1	Scraper	14' - 4,34M
28	339230X1	X	Hex. Sock. Screw	
29	391038X1	X	Washer	
30	339560X1	1	Hex. Sock. Screw	M6 X 16
31	D28250931	2	Band	12' - 3,72M 16' - 4,95M Width 1170 MM

Item	Part Number	Qty	Description	Comments
31	D28250932	2	Band	14' - 4,34M Width 1460 MM
32	D28250931	1	Band	12' - 3,75M 14' - 4,34M 16' - 4,95M Width 1170 MM
33	D28250931	1	Band	16' - 4,95M Width 1170 MM

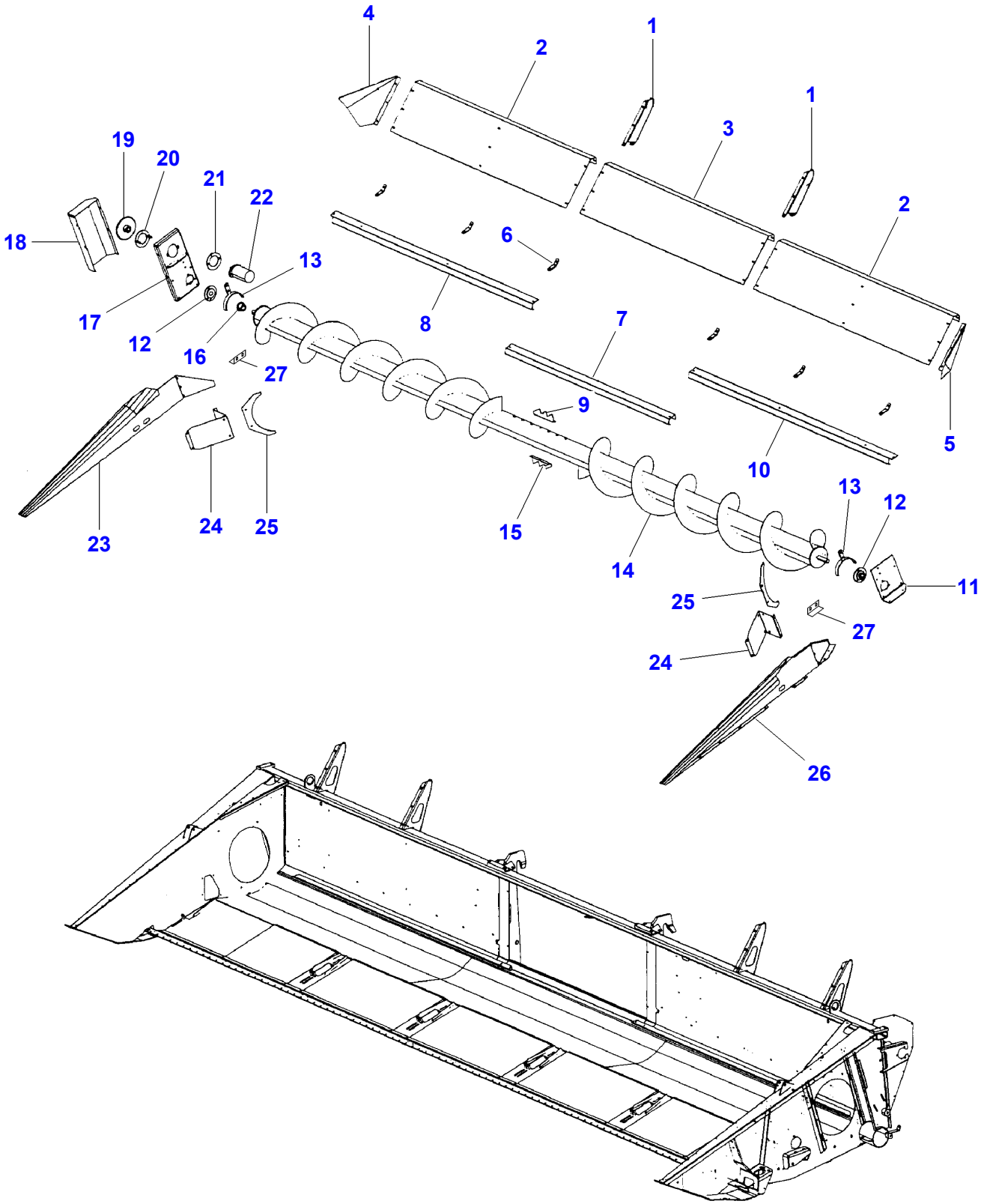
4
2
1
1
3
2
19
20
21
22
18
6
13
17
12
16
27
8
7
9
10
5
23
24
25
15
14
13
12
11
25
27
24
26

D-ZAAY-002-A

Item	Part Number	Qty	Description	Comments
1	D18285124	2	Support	
2	D18285661	2	Plate	
3	D28285120	1	Guard	
4	D28282326	1	Guard	
5	D28282327	1	Guard	
6	D28282287	1	Clamp	
7	D28282288	1	Clamp	
8	D28282321	1	Strip	
9	D28282304	1	Slat	
10	D28282320	1	Strip	
11	D28282284	1	Guard	
12	D41709600	2	Bearing	
13	D28282299	2	Rail	
14	D28282318	1	Auger	
15	D28282307	1	Slat	
16	D28281339	1	Drive	
17	D28282283	1	Bracket	
18	D28282285	1	Guard	
19	D28281338	1	Sprocket	Number of teeth/spines 34
20	D28650018	1	Plate	
21	D28650101	1	Plate	
22	D45120700	1	Hydraulic Motor	
23	D18283554	1	Panel	
24	D28282301	2	Deflector	
25	D28282328	2	Plate	
26	D18285590	1	Side	
27	D28281390	1	Shim	Thickness 1 MM
	D28281391	1	Shim	Thickness 2 MM

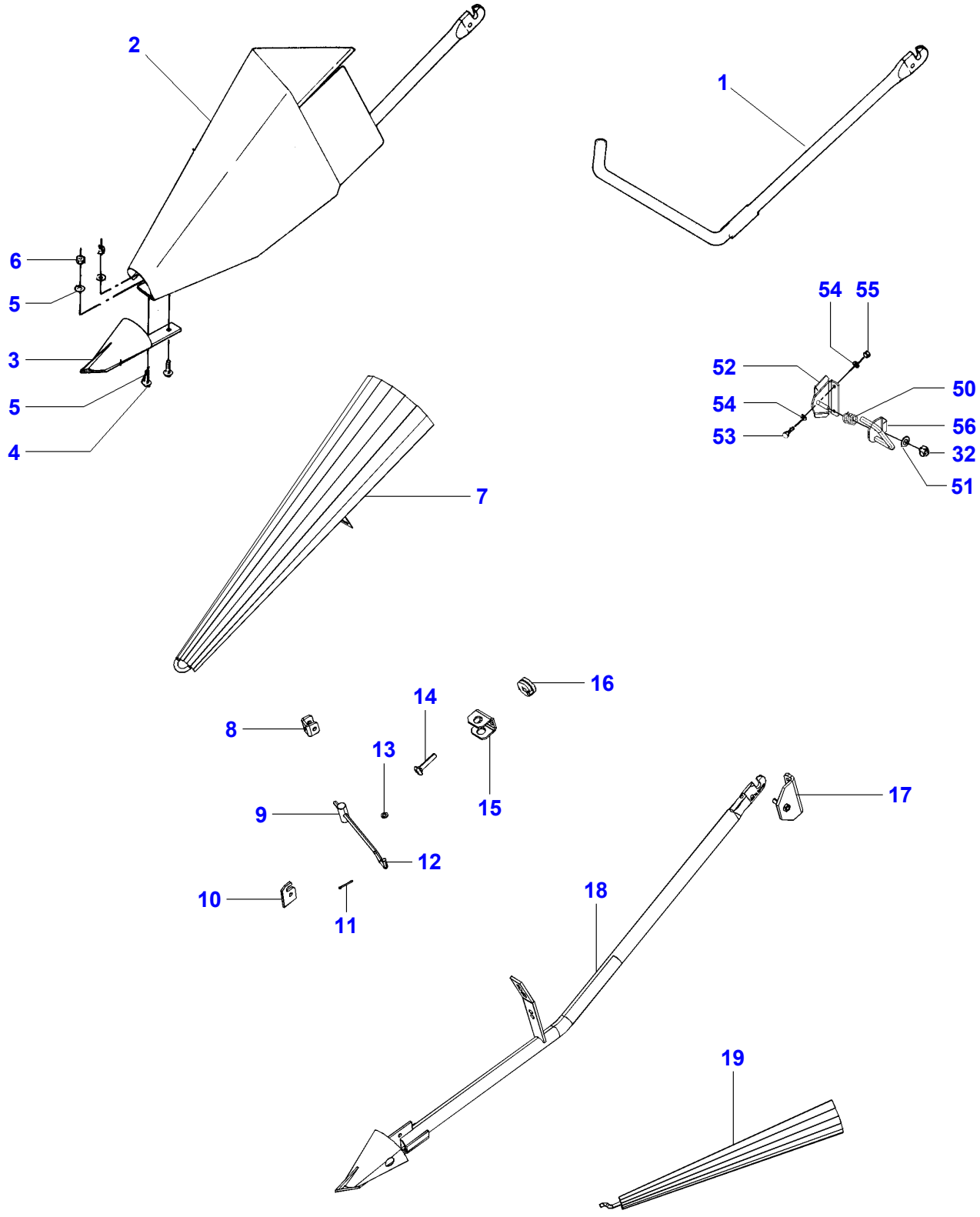

D-ZABZ-006-B

Item	Part Number	Qty	Description	Comments
1	D18251600	1	Divider	
2	D28251604	1	Divider	RH + LH
	D18151602	1	Divider	(2) Left Hand
	D18251603	1	Divider	(2) Right Hand
3	D18260226	2	Point	(2)
4	D40066800	4	Screw Special	(2) M10 X 30
5	D20400471	4	Washer	(2)
6	1440329X1	4	Locknut	(2) M10
7	D28282361	1	Divider	
8	D28282369	1	Clamp	
9	D28282368	1	Bracket	
10	D28282375	1	Locking Plate	
11	3000197X1	1	Split Pin	
12	D28282372	1	Arm	
13	D20400471	1	Washer	
14	D40070900	1	Screw	
15	D28282364	1	Bracket	
16	D28230488	2	Clutch	
17	D28286051	1	Bracket	
18	D28282417	1	Support	
19	D28282367	1	Blade	
32	1442190X1	4	Locknut	
50	D28285270	2	Spring	
51	D20400537	2	Spacer	
52	D28286051	2	Bracket	
53	339814X1	4	Hex. Sock. Screw	M10 X 35
54	390734X1	8	Washer	
55	1440329X1	4	Locknut	M10
56	D28285185	1	Arm	Right Hand
	D28285162	1	Arm	Left Hand

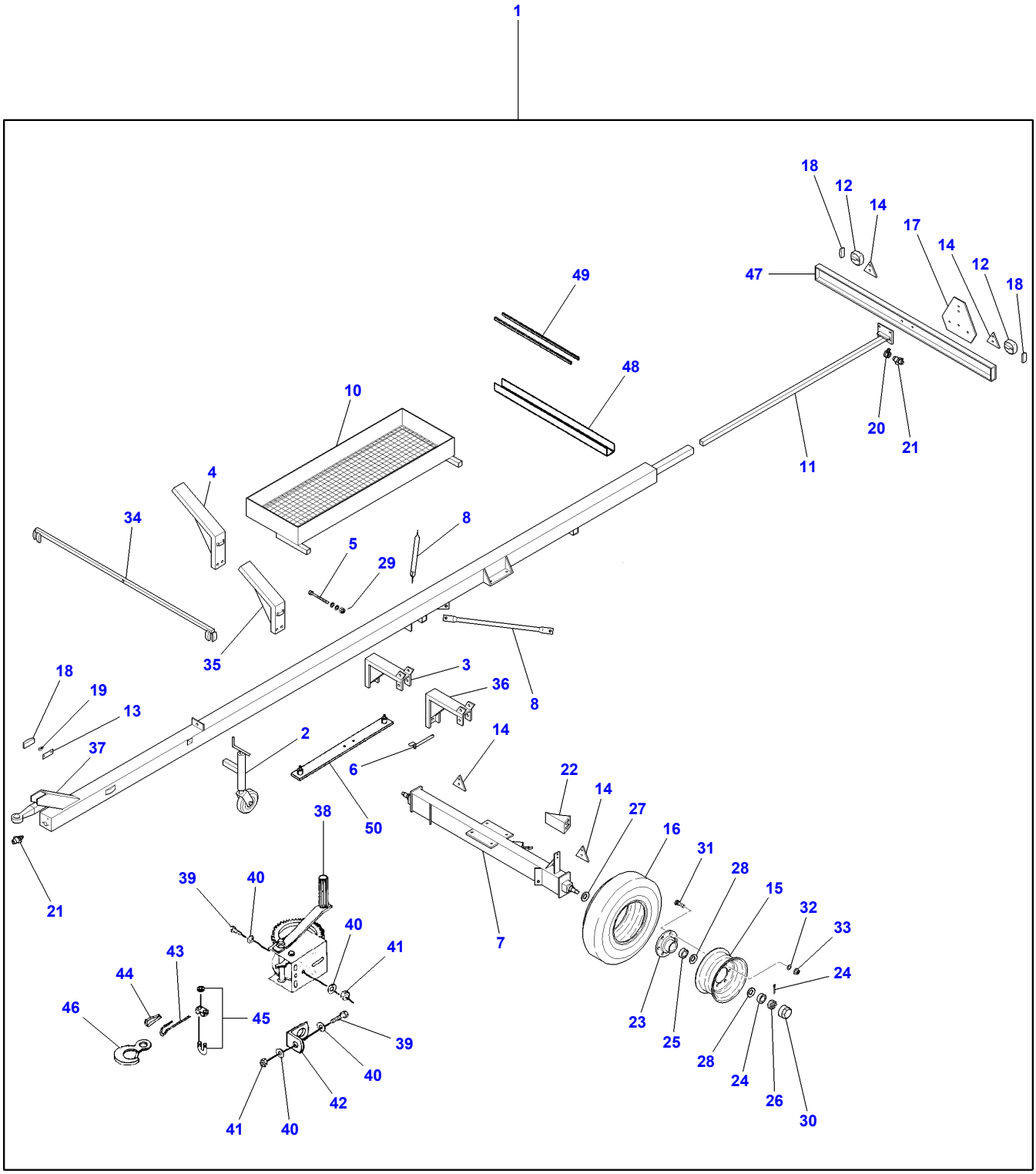
1
18
12
14
17
14
12
18
47
49
48
10
4
34
8
5
29
35
20
21
11
18
19
13
37
21
3
36
8
2
6
50
14
22
14
27
16
31
28
15
32
33
24
7
38
39
40
40
41
43
44
46
45
39
40
42
41
40
23
25
28
24
26
30

D-ZABA-007-B

Item	Part Number	Qty	Description	Comments
1	D28282399	1	Tube	[A] 18' - 25' 5,56 - 7,60M
	D28282402	1	Tube	[C] 12' - 16' 3,72 - 4,95M
	D28282403	1	Tube	[B] 18' - 25' 5,56 - 7,60M
	D28282404	1	Tube	[B] 12' - 16' 3,72 - 4,95M
	D28088428	1	Trailer	[A] 12' - 16' 3,72 - 4,95M
2	D28282642	1	Wheel	CPL.
3	D28282490	2	Bracket	Left Hand FREEFLOW
4	D28282485	2	Bracket	Right Hand POWERFLOW
5	D28282389	2	Bolt	
6	D28283693	4	Bolt	
7	D28282391	1	Axle	
8	D28282390	2	Stay	
10	D28282398	1	Support	
11	D28282393	1	Clevis Pin	
12	D45000228	2	Light	
13	D45084600	6	Reflector	
14	D45083900	4	Reflector	
15	D28282392	2	Rim	
16	D46731800	2	Tyre	
17	D45084500	1	Reflector	
18	D45000268	8	Side Lamp	
19	D45081300	6	Bulb	
20	D45005200	1	Electric Socket	
21	D45005300	2	Electric Socket	
22	D45907200	2	Shoe	
23	D46743600	2	Housing	
24	D41663000	2	Bearing Taper	
25	950579M1	2	Bearing Taper	
26	D41049500	2	Nut	
27	D46743400	2	Ring	
28	D46743500	2	Ring	
29	339037X1	2	Split Pin	Diameter 5 X 50
30	D46743700	2	Cap	
31	D46743800	12	Bolt	
32	339448X1	12	Spring Washer	
33	339447X1	12	Nut	M18
34	D28282395	1	Front Light	
35	D28282495	2	Bracket	Right Hand FREEFLOW
36	D28282480	2	Bracket	Left Hand POWERFLOW
37	D28282609	1	Bracket	CPL
38	D45906700	1	Capstan	[D]
39	339761X1	3	Hex. Sock. Screw	[D] M8 X 25
40	D20400506	6	Washer	[D]
41	394367X1	3	Locknut	[D] M8
42	D28284042	1	Ring	[D]
43	D28284143	1	Pipe	[D]
	D28282153	1	Rail	[D] (43)
44	D43409000	1	Thimble	[D] (43)
45	D43405900	2	Bracket	[D] (43)
46	D43410400	1	Hook	[D] (43)
47	D28282540	1	Plate	
48	D28282645	2	Support	
49	D28282647	4	Protective Strip	
50	D28282633	1	Bracket	

Item	Part Number	Qty	Description	Comments
FOOTNOTE	[A]		WITHOUT TRAILER BRAKING	
FOOTNOTE	[B]		WITH TRAILOR BRAKING	
FOOTNOTE	[C]		FOR ITALY ONLY	
FOOTNOTE	[D]		OPTIONAL EQUIPMENT	

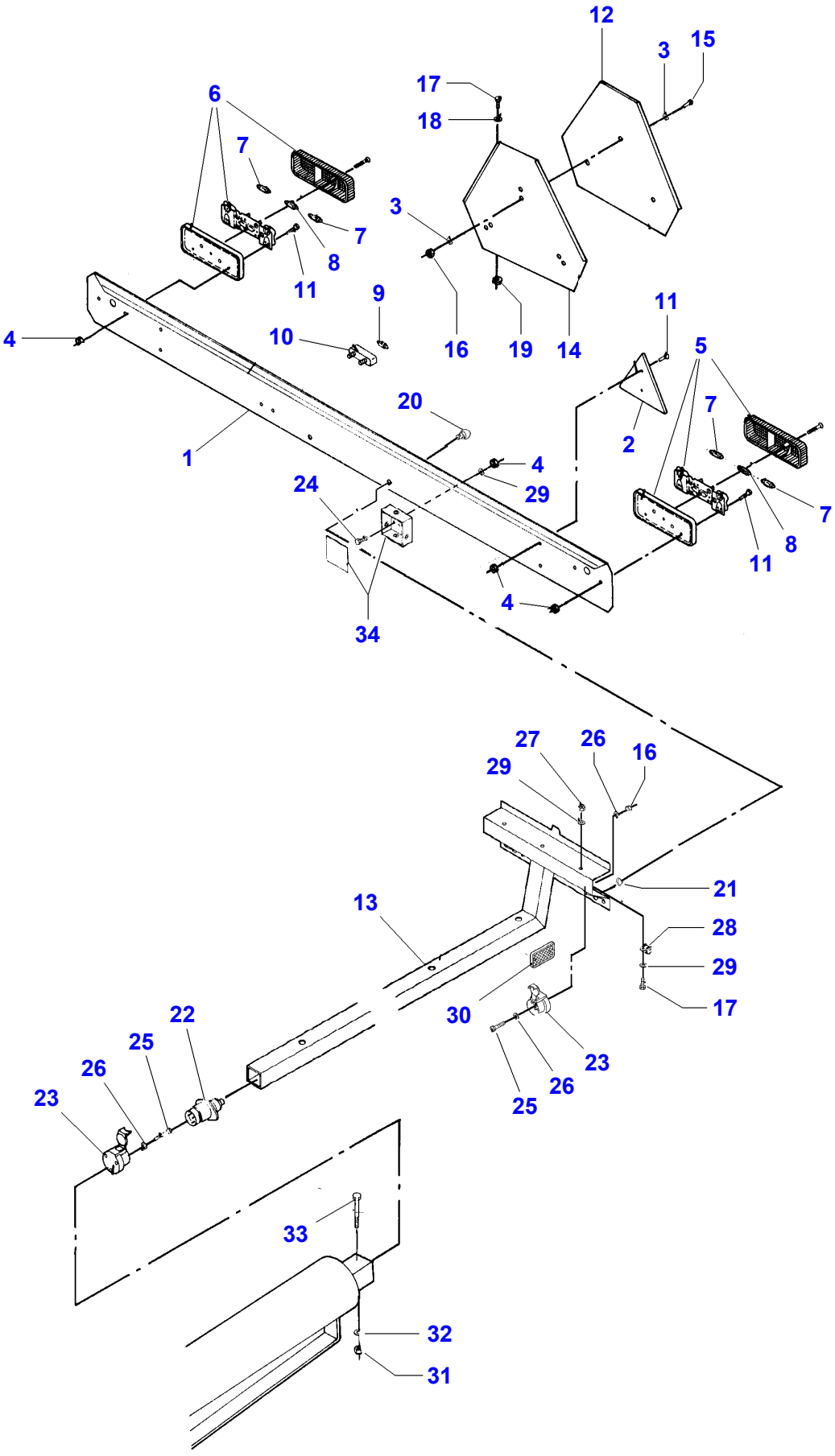
12
3
15
17
18
6
7
3
7
8
11
9
10
16
19
14
11
5
4
20
2
7
1
4
29
24
7
8
11
4
34
27
26
16
29
21
13
28
29
17
30
23
22
25
26
23
26
25
33
32
31

D-ZABB-005-A

Item	Part Number	Qty	Description	Comments
1	D28285744	1	Bar	
	D28285770	1	Ramp	
2	D45083900	2	Reflector	
3	339102X1	6	Washer	
4	D41010500	10	Nut	
5	3042085M1	1	Rh Rear Lamp	
6	D45077300	1	Lh Rear Lamp	
7	**621235M1**	4	Bulb 12v 21w Sbc	
8	**3002706X1**	2	Bulb 12v 10w	
9	D45080900	2	Bulb	
10	D45085500	2	Lamp	
11	390958X1	8	Screw Special	M5 X 16
12	D45084500	1	Reflector	
13	D28285152	1	Support	
14	D28251559	1	Support	
15	3001162X1	3	Hex. Sock. Screw	
16	D41010400	3	Nut	
17	339560X1	3	Hex. Sock. Screw	M6 X 16
18	390971X1	3	Washer	
19	1441462X1	3	Locknut	M6
20	D43427500	2	Pin	
21	1440988X1	2	Circlip	
22	1427996M1	1	Plug 7 Pin Sup	
23	409965M1	2	Socket 7 Pin Sup	
24	339804X1	2	Hex. Sock. Screw	M6 X 25
25	D40351600	3	Screw Metric	
26	339102X1	3	Washer	
27	1441462X1	1	Locknut	M6
28	D45729400	1	Clamp	
29	D20400404	4	Washer	
30	D45084600	2	Reflector	
31	1442190X1	1	Locknut	M12
32	D20400426	1	Washer	
33	391885X1	1	Hex. Sock. Screw	
34	D28781903	1	Connector	

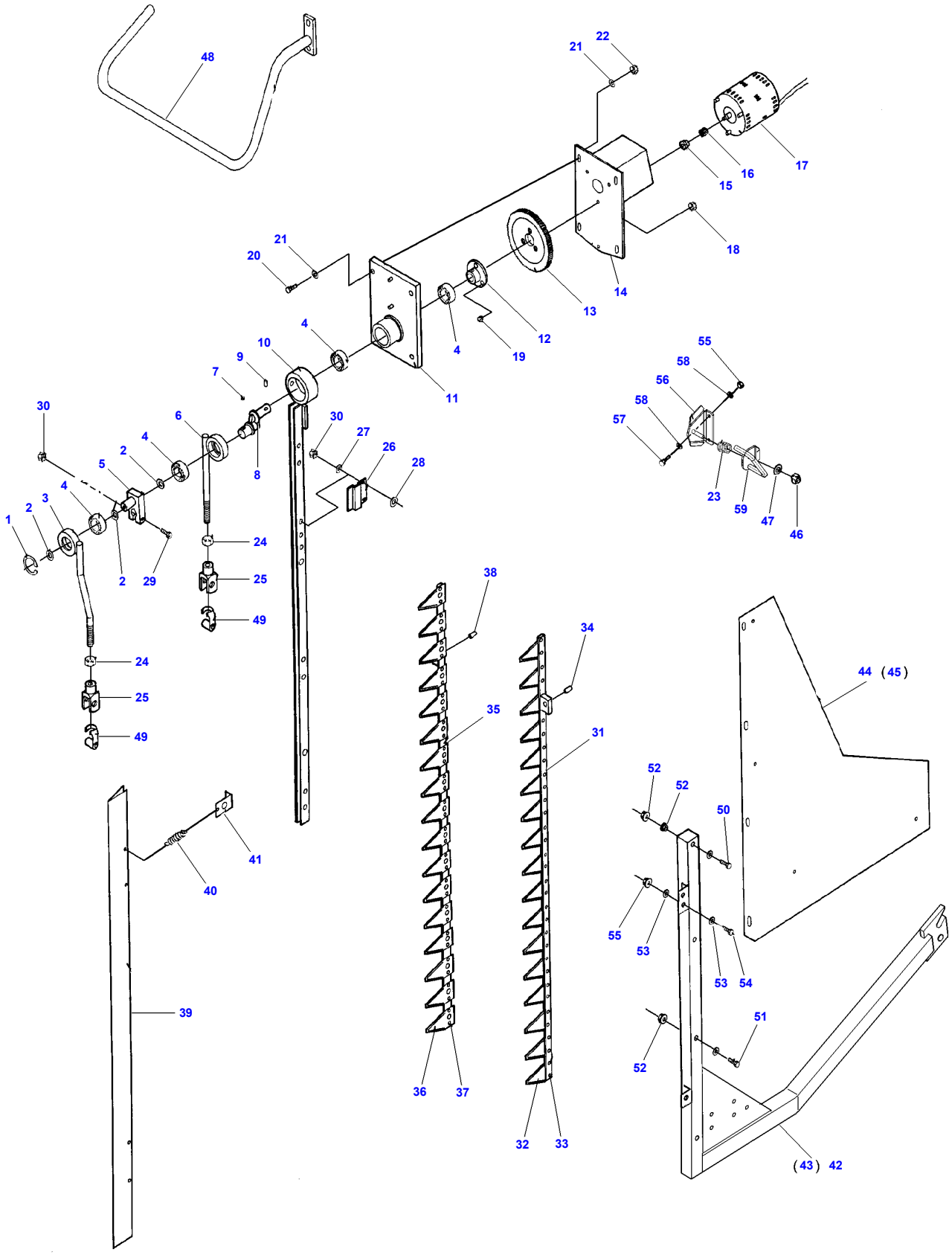
48
21
22
17
16
15
18
14
13
12
19
4
11
20
10
9
7
30
6
4
2
5
4
3
2
1
8
27
26
28
24
25
49
29
55
58
56
58
57
23
59
47
46
38
34
35
31
36
37
32
33
44
(45)
52
52
50
55
53
53
54
51
52
41
40
39
(43)
42

D-ZABC-005-A

Item	Part Number	Qty	Description	Comments
1	1440475X1	1	Circlip	20 X 1,2
2	D20400441	X	Washer	
3	D28284090	1	Bracket	
4	391057X1	4	Bear. 6004 2rs	
5	D28284087	1	Crank	
6	D28284289	1	Conrod	
7	D43100900	1	Key	
8	D28284084	1	Crank	
9	339071X1	1	Pin	
10	D28284291	1	Knife	
11	D28284292	1	Bearing Shell	
12	D28284069	1	Hub	
13	D28284081	1	Gear	
14	D28284090	1	Bracket	
15	D28284111	1	Nut	
16	D28284080	1	Pinion	
17	D45070083	1	Electric Motor	
18	D40688000	3	Screw	
19	D41010600	3	Nut	M6
20	339019X1	4	Hex. Sock. Screw	M10 X 50
21	D20400471	8	Washer	
22	339402X1	4	Nut	M10
23	D28285270	2	Spring	
24	339079X1	2	Nut	M14
25	D45905200	2	Fork Head	
26	D28284094	8	Clip	
27	D20400500	X	Spacer	
28	D20400506	32	Washer	
29	339010X1	16	Hex. Sock. Screw	
30	394367X1	16	Locknut	M8
31	D28284060	1	Knife	
	D28284105	1	Knife Back	(31)
32	D44104100	17	Knife	(31)
33	D41314900	34	Rivet	(31)
34	D43360800	1	Bush	(31)
35	D28284061	1	Knife	
	D28284104	1	Knife Back	(35)
36	D44104100	17	Knife	(35)
37	D41314900	34	Rivet	(35)
38	D43360800	1	Bush	(35)
39	D28284124	1	Guard	
40	D26500317	2	Spring	
41	D28284125	2	Retainer	
42	D28285169	1	Bracket	[B]
43	D28285168	1	Bracket	[A]
44	D28285187	1	Guard	[B]
45	D28285189	1	Guard	[A]
46	1442190X1	2	Locknut	M12
47	D20400537	2	Spacer	
48	D28284107	1	Deflector	
49	D45904800	2	Pin	
50	D40422400	X	Screw	
51	D40422300	X	Hex. Sock. Screw	
52	1441462X1	X	Locknut	M6
53	D20400419	2	Washer	
54	3009495X1	1	Hex. Sock. Screw	M10 X 40
55	1440329X1	5	Locknut	M10
56	D28285166	2	Bracket	
57	339814X1	4	Hex. Sock. Screw	M10 X 35
58	390734X1	8	Washer	
59	D28285185	1	Arm	Right Hand
	D28285162	1	Arm	Left Hand

FOOTNOTE [A] OPTIONAL EQUIPMENT ELECTRIC - VERTICAL KNIFE LEFT
FOOTNOTE [B] OPTIONAL EQUIPMENT ELECTRIC VERTICAL KNIFE RIGHT

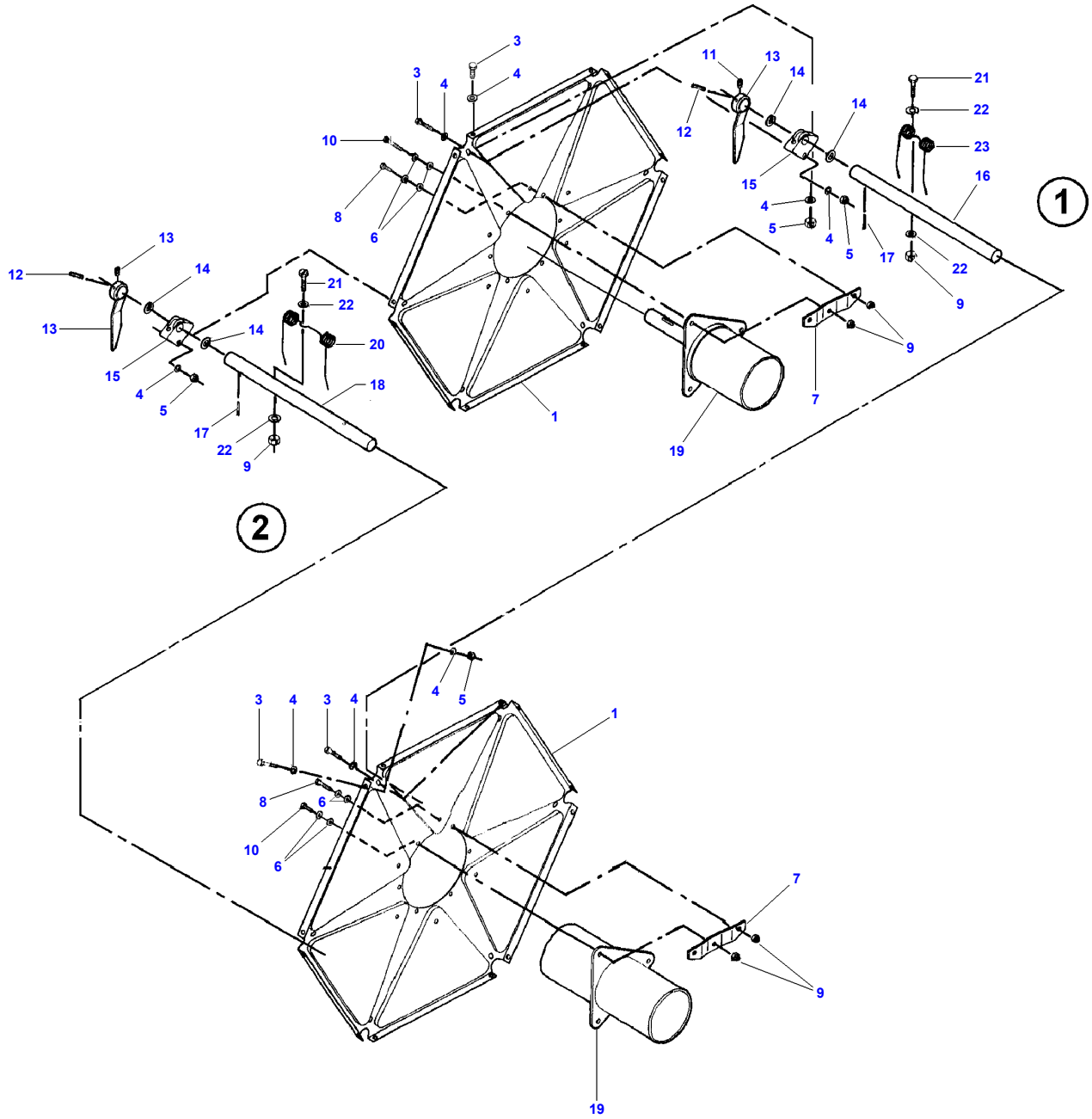

D-ZBZA-004-B

Item	Part Number	Qty	Description	Comments
1	D28680240	2	Plate	
3	339804X1	X	Hex. Sock. Screw	M6 X 25
4	D20400403	X	Washer	
5	1441462X1	X	Locknut	M6
6	D20400413	X	Washer	
7	D28660051	6	Dog	
8	339124X1	X	Hex. Sock. Screw	M8 X 16
9	394367X1	X	Locknut	M8
10	339761X1	X	Hex. Sock. Screw	M8 X 25
11	D40632000	6	Stud	
12	D42614300	6	Pin	
13	D28680107	6	Finger	
14	D20400586	X	Washer	
15	D28680117	X	Bearing Carrier	
16	D28680247	3	Rake	Right Hand 12' - 3,72M
				See Page - Reference Number 002-0003/49
	D28680170	3	Rake	14' - 4,34M
				See Page - Reference Number 002-0003/49
	D28680168	3	Rake	16' - 4,95M
				See Page - Reference Number 002-0003/49
17	339037X1	X	Split Pin	5 X 50
18	D28680248	3	Rake	12' - 3,72M
	D28680171	3	Rake	14' - 4,34M
	D28680167	3	Rake	16' - 4,95M
19	D28680179	1	Tube	12' - 3,72M
	D28680174	1	Tube	14' - 4,34M
	D28680166	1	Tube	16' - 4,95M
20	**D28680130**	X	Spring	
21	339168X1	X	Hex. Sock. Screw	M8 X 50
22	D20400506	X	Washer	
23	**D28680131**	3	Spring	

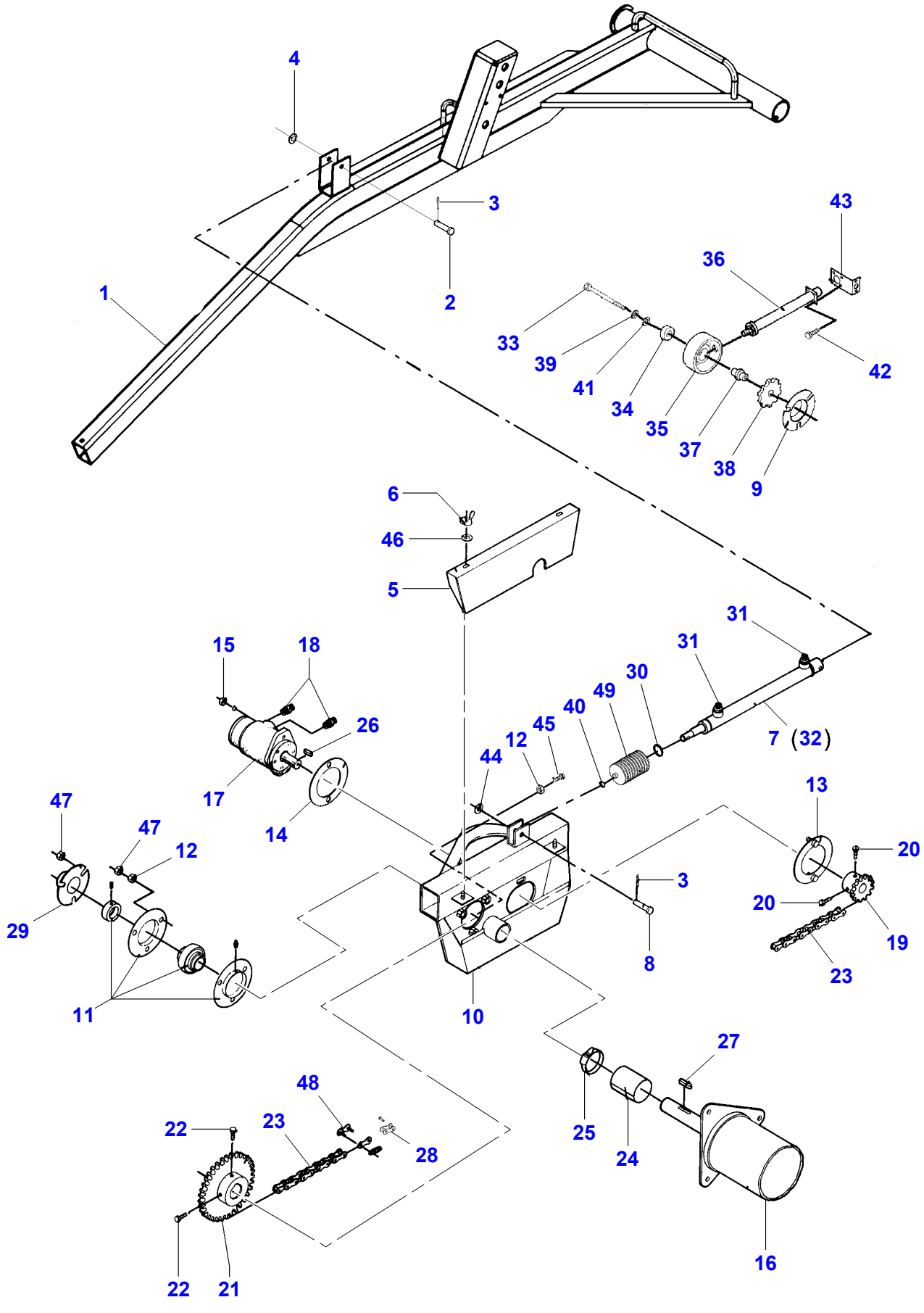
4
3
2
1
43
36
33
39
41
34
35
37
38
9
42
6
46
5
31
31
15
18
30
49
40
26
45
12
44
7 (32)
17
14
13
47
47
12
20
29
3
20
19
8
23
11
10
27
48
22
23
28
25
24
16
22
21

D-ZBZD-006-A

Item	Part Number	Qty	Description	Comments
1	D18285026	1	Frame	Right Hand FREEFLOW
	D18285024	1	Frame	Right Hand POWERFLOW
2	D28280383	1	Pin	
3	391405X1	2	Split Pin	4 X 25
4	D20400471	1	Washer	
5	D28680046	1	Cover	
6	339106X1	2	Wing Nut	M8
7	D45100027	2	Cylinder	
8	D28280382	1	Pin	
9	D28281517	1	Cover	
10	D28680055	1	Housing	
11	D41707800	1	Bearing	
12	339402X1	4	Nut	M10
13	D28650018	1	Plate	
14	D28650101	1	Plate	
15	3009695X1	2	Nut	M12
16	D28680151	1	Pipe	
	D28680159	1	Tube	
	D28680166	1	Tube	
	D28680174	1	Tube	
17	D45120700	1	Hydraulic Motor	
18	D45250700	2	Union	
19	D28650023	1	Sprocket	
20	339123X1	2	Hex. Sock. Screw	M8 X 20
21	D28680013	1	Sprocket	Number of teeth/spines 34
22	339337X1	2	Hex. Sock. Screw	M8 X 30
23	**D42325700**	1	Chain	
24	D28680087	1	Tube	
25	338617X1	1	Hose Clip	Diameter 40-60
26	D43103400	1	Key	8 X 7 X 32
27	1440375X1	1	Key Parallel	
28	**329491M91**	1	Cranked Link	
29	D28761977	1	Cover	
30	D45050037	1	Retainer	
31	D45250000	2	Union	
32	D45110083	1	Kit, Seal	
33	339814X1	1	Hex. Sock. Screw	M10 X 35
34	D28781020	1	Sensor	
	1440487X1	1	Bear. 6203 2rs	(34)
35	D28751223	1	Cup	(34)
36	D28781016	1	Sensor	(34)
37	D28751218	1	Journal	(34)
38	D28750922	1	Wheel	(34)
39	D41101900	1	Spring Washer	A10
40	D45007800	1	Retainer	
41	D20400419	1	Washer	
42	D40740400	4	Screw	
43	D28780772	1	Retainer	
44	D20400505	1	Spacer	
45	D40408400	1	Bolt Metric	
46	D20400414	2	Washer	
47	394367X1	6	Locknut	M8
48	**329488M91**	1	Link	
49	D28281626	1	Rubber	

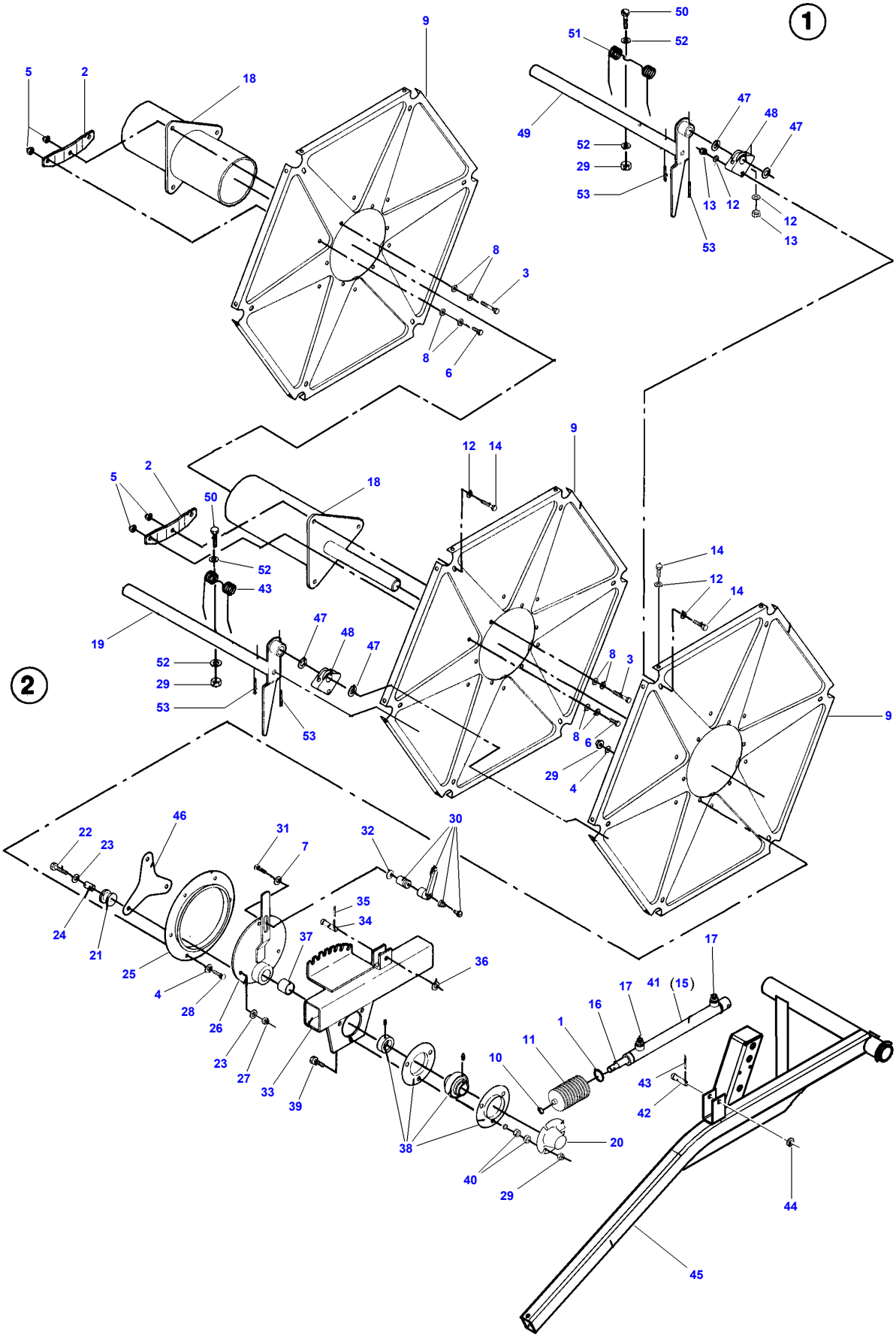
1
2
50
51
52
49
47
48
47
52
29
53
13
12
12
13
53
9
5
2
18
8
3
8
6
9
12
14
5
2
50
18
52
43
19
47
48
47
52
29
53
53
14
12
14
8
3
8
6
29
4
9
46
22
23
31
7
32
30
35
34
24
21
25
37
36
4
28
26
23
27
33
39
38
40
29
17
17
41
(15)
16
1
11
10
43
42
20
44
45

D-ZBZB-006-A

Item	Part Number	Qty	Description	Comments
1	D45050037	1	Retainer	
2	D28660051	6	Dog	
3	339761X1	X	Hex. Sock. Screw	M8 X 25
4	D20400506	X	Washer	
5	394367X1	X	Locknut	M8
6	339124X1	X	Hex. Sock. Screw	M8 X 16
7	D20400518	1	Spacer	
8	D20400413	X	Washer	
9	D28680240	3	Plate	
10	D45007800	1	Retainer	
11	D28281626	1	Rubber	
12	D20400403	X	Washer	
13	1441462X1	X	Locknut	M6
14	339804X1	X	Hex. Sock. Screw	M6 X 25
15	D45100080	1	Kit, Seal	PACOMA
	D45110020	1	Kit	PPT
	D45110084	1	Kit, Seal	SERTA
16	D45100021	1	Cylinder Rod	PACOMA
17	D45250000	2	Union	PACOMA
	D45252800	2	Union	PPT
18	D28680179	1	Tube	12' - 3,72 M
	D28680174	1	Tube	14' - 4,34 M
	D28680166	1	Tube	16' - 4,95 M
19	D28680248	3	Rake	12' - 3,72 M
	D28680171	3	Rake	14' - 4,34 M
	D28680167	3	Rake	16' - 4,95 M
20	D28761977	1	Cover	
21	D28660005	3	Roller	
22	339019X1	3	Hex. Sock. Screw	M10 X 50
23	D20400416	3	Washer	
24	D28660143	3	Bush	
25	D28660036	1	Ring	
26	D28680097	1	Plate	
27	1440329X1	3	Locknut	M10
28	339123X1	6	Hex. Sock. Screw	M8 X 20
29	394367X1	X	Locknut	M8
30	D43387500	1	Lever	
31	390787X1	1	Screw Special	
32	D20400426	1	Washer	
33	D28680054	1	Housing	
34	D28280382	1	Pin	
35	391405X1	2	Split Pin	4 X 25
36	D20400505	1	Spacer	
37	D43338200	1	Lining	(26)
38	D41707800	1	Bearing	
39	3009493X1	3	Hex. Sock. Screw	M10 X 30
40	339402X1	3	Nut	M10
41	D45100028	1	Cylinder	
42	D28280383	1	Pin	
43	**D28680131**	3	Spring	
44	D20400471	1	Washer	
45	D18685025	1	Frame	Left Hand FREEFLOW
	D18685023	1	Frame	Left Hand POWERFLOW
46	D28680120	1	Plate	
47	D20400586	X	Washer	
48	D28680117	X	Bearing Carrier	
49	D28680247	3	Rake	12' - 3,72M
	D28680170	3	Rake	14' - 4,34M
	D28680168	3	Rake	16' - 4,95M
50	339168X1	X	Hex. Sock. Screw	M8 X 50
51	**D28680130**	X	Spring	
52	D20400506	X	Washer	
53	339037X1	X	Split Pin	5 X 50

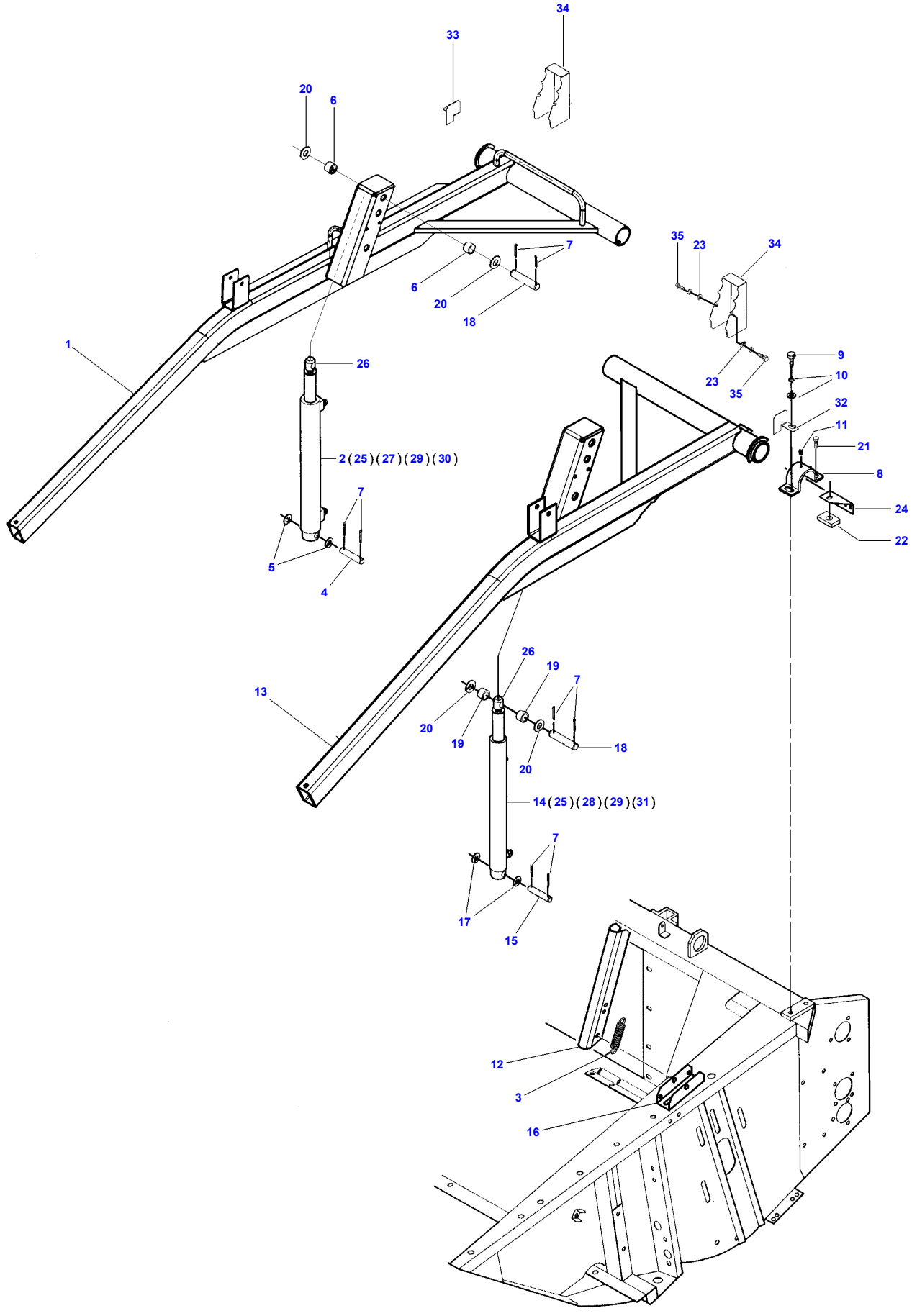
34
33
20
6
7
6
20
18
1
26
2(25)(27)(29)(30)
7
5
4
35
23
34
23
35
9
10
32
11
21
8
24
22
26
19
7
13
20
19
18
20
14(25)(28)(29)(31)
7
17
15
12
3
16

D-ZBZC-005-A

Item	Part Number	Qty	Description	Comments
1	D18685026	1	Frame	Right Hand FREEFLOW
	D18685024	1	Frame	Right Hand POWERFLOW
2	D45100066	1	Cylinder	
3	D28710853	2	Spring	
4	D28280236	1	Pin	
5	D20400518	2	Spacer	
6	D28751140	2	Spacer	
7	391405X1	10	Split Pin	4 X 25
8	D18283300	2	Half Flange	
9	339139X1	2	Hex. Sock. Screw	
10	D20400424	2	Washer	
11	1441858X1	2	Grease Nipple	M6
12	D28685015	2	Stand	
13	D18685025	1	Frame	Left Hand FREEFLOW
	D18685023	1	Frame	Left Hand POWERFLOW
14	D45100067	1	Cylinder	
15	D28280236	1	Pin	
16	D28685027	2	Console	
17	D20400518	2	Spacer	
18	D28280237	2	Pin	
19	D28751140	2	Spacer	
20	D20400520	4	Spacer	
21	1440716X1	2	Hex. Sock. Screw	M12 X 30
22	D28283835	2	Support	
23	D20400404	4	Washer	
24	D18283251	1	Retainer	
25	D41042700	2	Nut	
26	D45100044	2	Piston Head	
27	D45100016	1	Cylinder Rod	PACOMA
28	D45100017	1	Cylinder Rod	PACOMA
29	D45252800	3	Union	
30	D45100031	1	Gasket	PACOMA
	D45110030	1	Kit, Joint	PPT
	D45110089	1	Kit, Seal	SERTA
31	D45100032	1	Kit,Joint/Gasket	PACOMA
	D45110022	1	Kit, Joint	PPT
	D45110090	1	Kit, Seal	SERTA
32	D18680025	1	Angle.	
33	D18680024	1	Angle.	
34	D18281518	2	Guard	
35	339560X1	4	Hex. Sock. Screw	M6 X 16

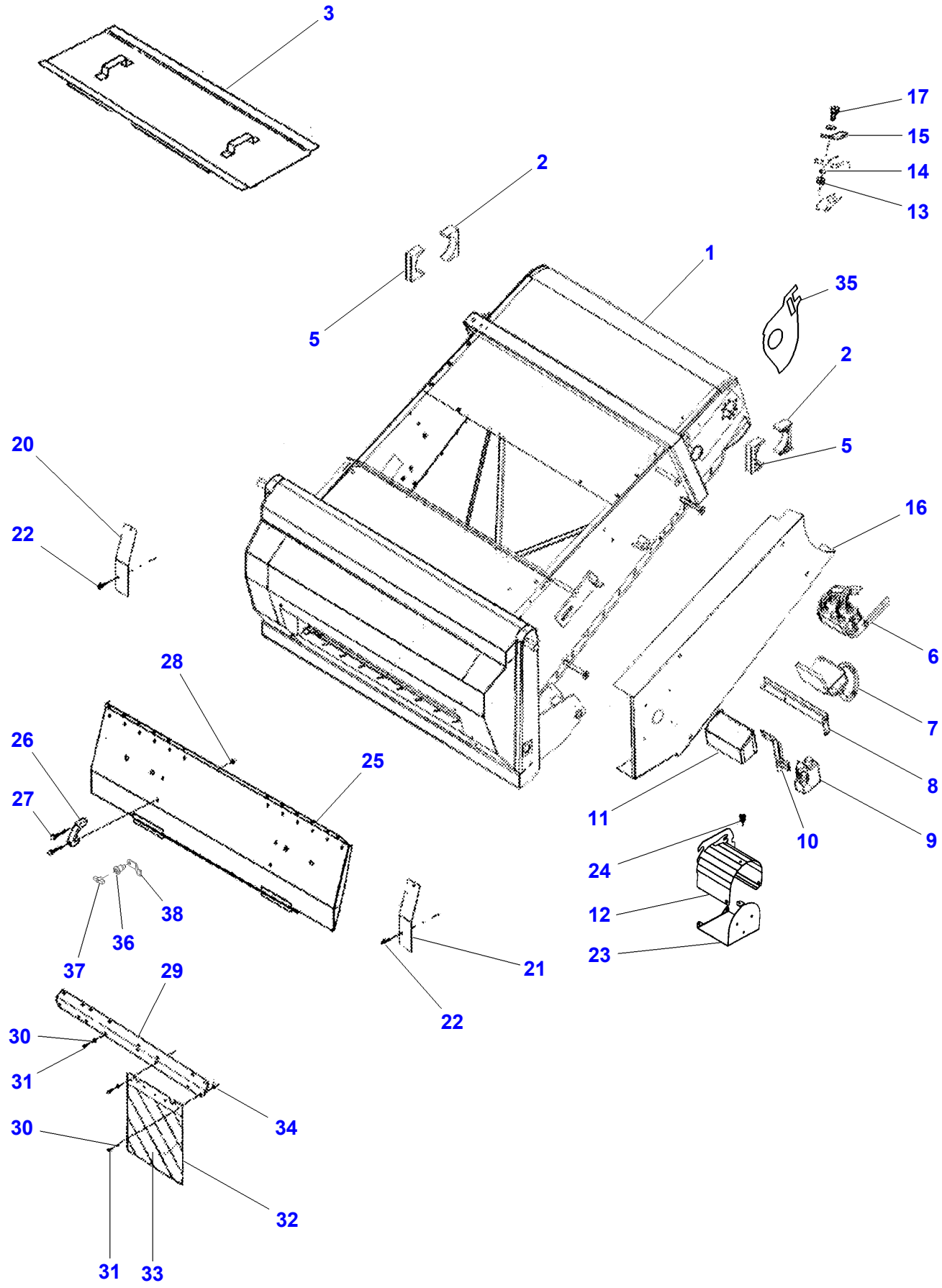
3
17
15
14
13
2
1
35
5
2
5
20
22
16
6
28
7
26
25
8
27
11
10
9
24
12
23
38
36
37
21
22
29
30
31
34
30
32
31
33

D-ZCZQ-001-B

Item	Part Number	Qty	Description	Comments
1	D28288000	1	Table Elevator	
2	D28288024	2	Bearing Housing	
3	D28288187	1	Cover	
4	D26741034	1	Clevis Pin	[A]
5	D28288023	2	Bearing Housing	
6	D45148700	1	Female Coupler	
7	D45148800	1	Male Coupler	
8	D28288572	1	Bracket	
9	D45148900	X	Container	
10	D28288310	1	Bracket	
11	D28285284	1	Cover	
12	D28282251	1	Shield	
13	339402X1	8	Nut	M10
14	D41101900	8	Spring Washer	A10
15	D26741036	2	Clip	
16	D28288096	1	Cover	
17	D26739757	2	Hex. Sock. Screw	
18	D26739992	2	Washer	[A]
20	D28288312	1	Cover	
21	D28288313	1	Shim	
22	D40685000	2	Screw	
23	D28282460	1	Shield	
24	D43385200	2	Screw	
25	D28288470	1	Plate	
26	D43386900	2	Handle	
27	391148X1	4	Screw	
28	D41083500	4	Nut	
29	D28181073	2	Suspension	
30	391038X1	8	Washer	
31	339666X1	8	Hex. Sock. Screw	
32	D28761501	2	Plate	
33	D49157500	4	Decal	
34	394367X1	8	Locknut	
35	D28282275	1	Shim	Thickness 4mm
	D28282274	1	Shim	Thickness 3mm
	D28282273	1	Shim	Thickness 2mm
36	D43429200	2	Housing	
37	D43429300	2	Punch	
38	D43429400	2	Latch	

FOOTNOTE [A] NOT ILLUSTRATED

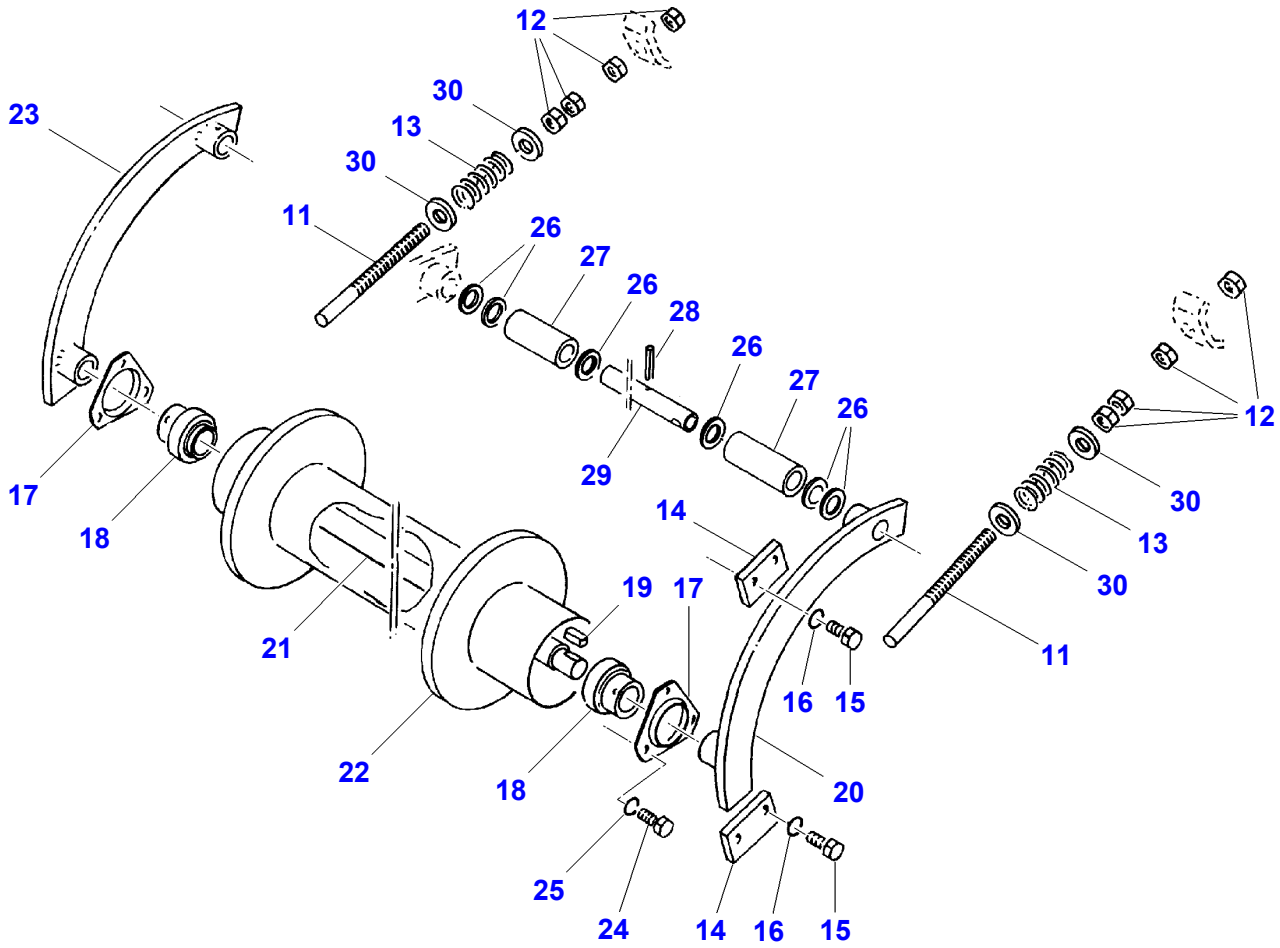
12
30
13
30
11
26
27
26
28
26
27
26
29
23
17
18
21
19
17
22
18
14
16
15
20
25
24
14
16
15
12
30
13
30
11

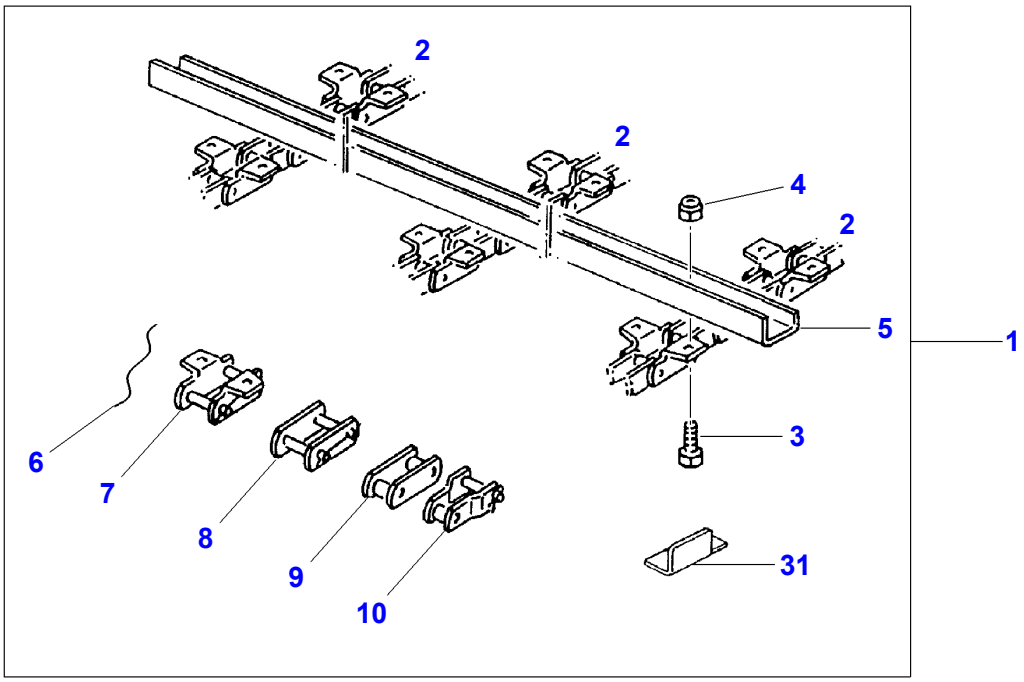
2
2
4
2
5
1
3
6
7
8
9
10
31

D-ZCZK-006-A

Item	Part Number	Qty	Description	Comments
1		1	Kit, Chain	
2	**D28288059**	3	Chain	(1) 38,4 X 97 16WL
3	3009491X1	86	Hex. Sock. Screw	(1) M10 X 20
	3009492X1	10	Hex. Sock. Screw	(1) M10 X 25
4	D28288162	96	Locknut	(1) M10
5	**D28288016**	16	Dog	(5)
6	D28273968	X	Wire	(1)
7	**D42350600**	X	Link	(1) T 38,4
8	**D42350800**	X	Connecting Link	(1)
9	**D42354900**	X	Link	(1) B 38,4-1
10	**D42350900**	X	Link	(1) H 38,4-1
11	D28288190	2	Rod	
12	339034X1	8	Nut	M16
13	D28288171	2	Comp.Spring	
14	D28288053	4	Stop	
15	D26739708	8	Hex. Sock. Screw	M12 X 20
16	D26739978	8	Spring Washer	A12
17	D28288183	2	Bearing Shell	
18	D41701400	2	Ball Bearing	Diameter 30
19	D28288157	1	Key Parallel	8 X 7 X 22
20	D28288084	1	Arm	Left Hand
21	D28288185	1	Shaft	30 X 1227
22	D26736911	1	Drum	
23	D28288085	1	Arm	Right Hand
24	3009491X1	6	Hex. Sock. Screw	M10 X 20
25	D41101900	6	Spring Washer	A10
26	D28288167	6	Washer	29 X 42 X 5
27	D28288196	2	Bush	
28	D41409300	4	Split Pin	4 X 45
29	D28288182	1	Tube	
30	D28288166	4	Washer	17 X 40 X 6
31	D28288017	5	Stripper	Left Hand
	D28288018	5	Stripper	Right Hand

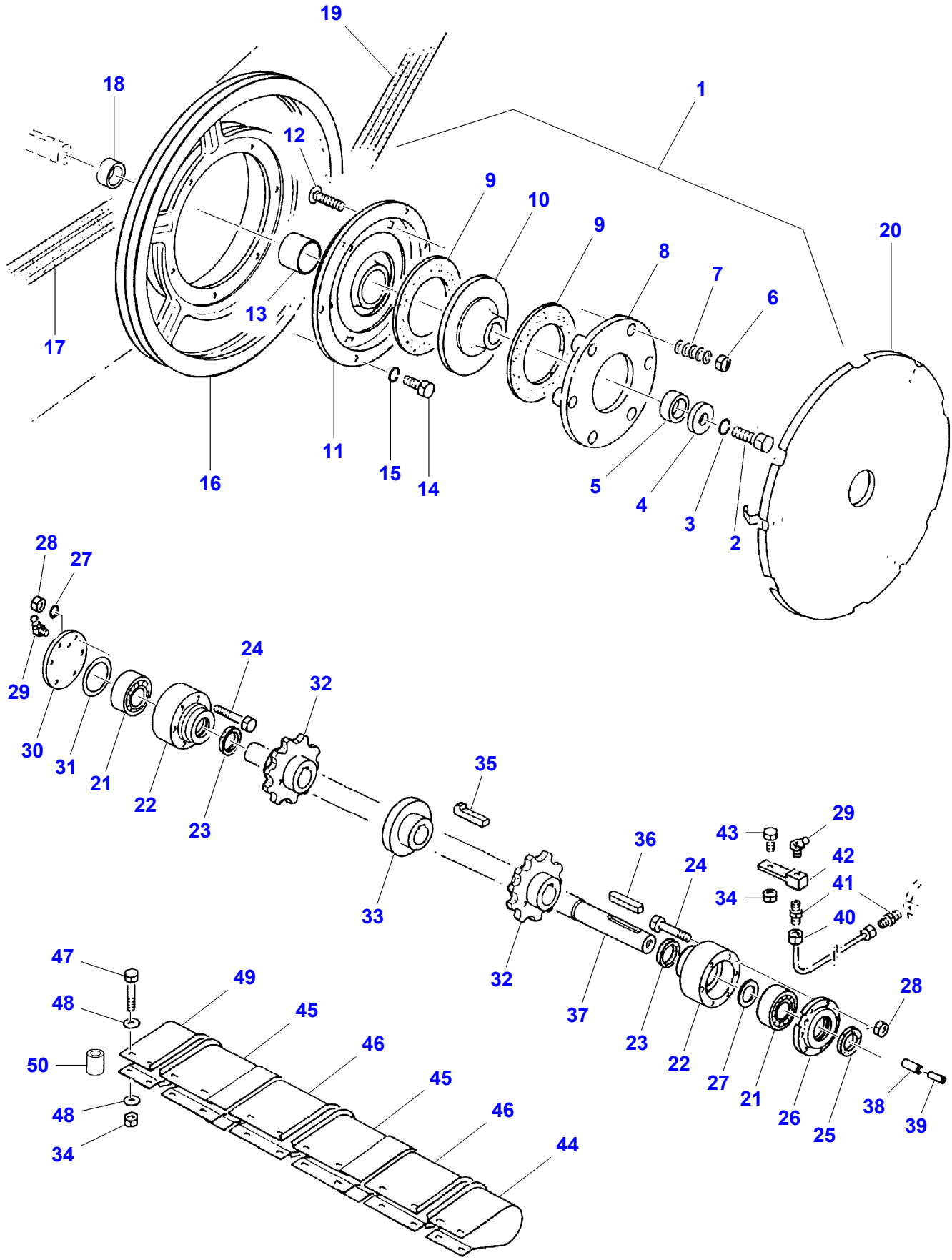
19
18
1
12
9
10
9
8
7
6
20
13
17
11
15
14
16
5
4
3
2
28
27
29
24
32
30
31
21
22
23
35
33
36
43
29
42
24
34
41
40
32
37
23
22
27
21
26
25
28
38
39
47
49
48
45
46
50
45
48
46
34
44

D-ZCZR-001-A

Item	Part Number	Qty	Description	Comments
1	D28288179	1	Torque Limiter	
2	D26739724	1	Hex. Sock. Screw	M16 X 45
3	D26730126	1	Ring	
4	D26740960	1	Washer	18 X 60 X 6
5	D26730145	2	Washer	41 X 58 X 4
6	D28288162	6	Locknut	M10
7	D26733332	6	Comp.Spring	
8	D26740583	1	Thrust Plate	
9	**D26740582**	2	Clutch Lining	
10	D26740419	1	Hub	
11	D26740584	1	Clutch Disc	
12	1441671X1	6	Screw Special	M10 X 50
13	D26738470	1	Sleeve	
14	3009492X1	6	Hex. Sock. Screw	M10 X 25
15	D41101900	6	Spring Washer	A10
16	D28288178	1	Pulley	
	D26733962	1	Pulley	[B] 3HBX
17	**D41981700**	2	Kit, V Belt	2 / 22 X 3700
18	D28288176	1	Bearing Assy	
19	**D26735939**	1	V Belt	2HBX 3280
	D26732883	1	V Belt	[B] 3HBX 3280
20	D26735145	1	Cover	
21	D41609300	2	Ball Bearing	2308
22	D28288020	2	Bearing Housing	
23	D43506700	2	Felt Ring	45 X 57 X 5
24	339365X1	10	Hex. Sock. Screw	M10 X 80
	D26739710	2	Hex. Sock. Screw	M10 X 100
25	D43501300	1	Felt Ring	48 X 64 X 6,5
26	D28288022	1	Bearing Cap	
27	D26739287	1	Washer	40 X 50 X 2,5
28	D28288162	12	Locknut	M10
29	D43002600	2	Greaser	BM8 X 1
30	D28288021	1	Bearing Cap	
31	D26739793	X	Washer	70 X 90 X 1
	D26739165	X	Washer	70 X 90 X 0,5
32	**D26744394**	2	Sprocket	Number of teeth/spines 11 Length 45 MM
33	D26738487	1	Support	
34	D26740007	13	Locknut	M8
35	D26732793	3	Gib Key	14 X 9 X 50
36	339825X1	1	Key Parallel	12 X 8 X 80
37	D26738555	1	Shaft	45 X 1466
38	D28288156	4	Dowel	10 X 28
39		4	Dowel	[A] 6 X 28
40		1	Tube	[A] 4 X 313
41	D26733404	2	Union	GE4LLM
42		1	Support	[A]
43	339123X1	1	Hex. Sock. Screw	M8 X 20
44	D28288198	1	Antiwinder	Left Hand
45	D28288197	2	Antiwinder	
46	D28288200	2	Antiwinder	
47	339168X1	12	Hex. Sock. Screw	M8 X 50
48		24	Washer	[A] 8,4 X 18 X 2
49	D28288199	1	Antiwinder	Right Hand
50		12	Spacer	[A]

FOOTNOTE [A] NUMBER TO BE ADVISED
FOOTNOTE [B] MAIZE EQUIPMENT

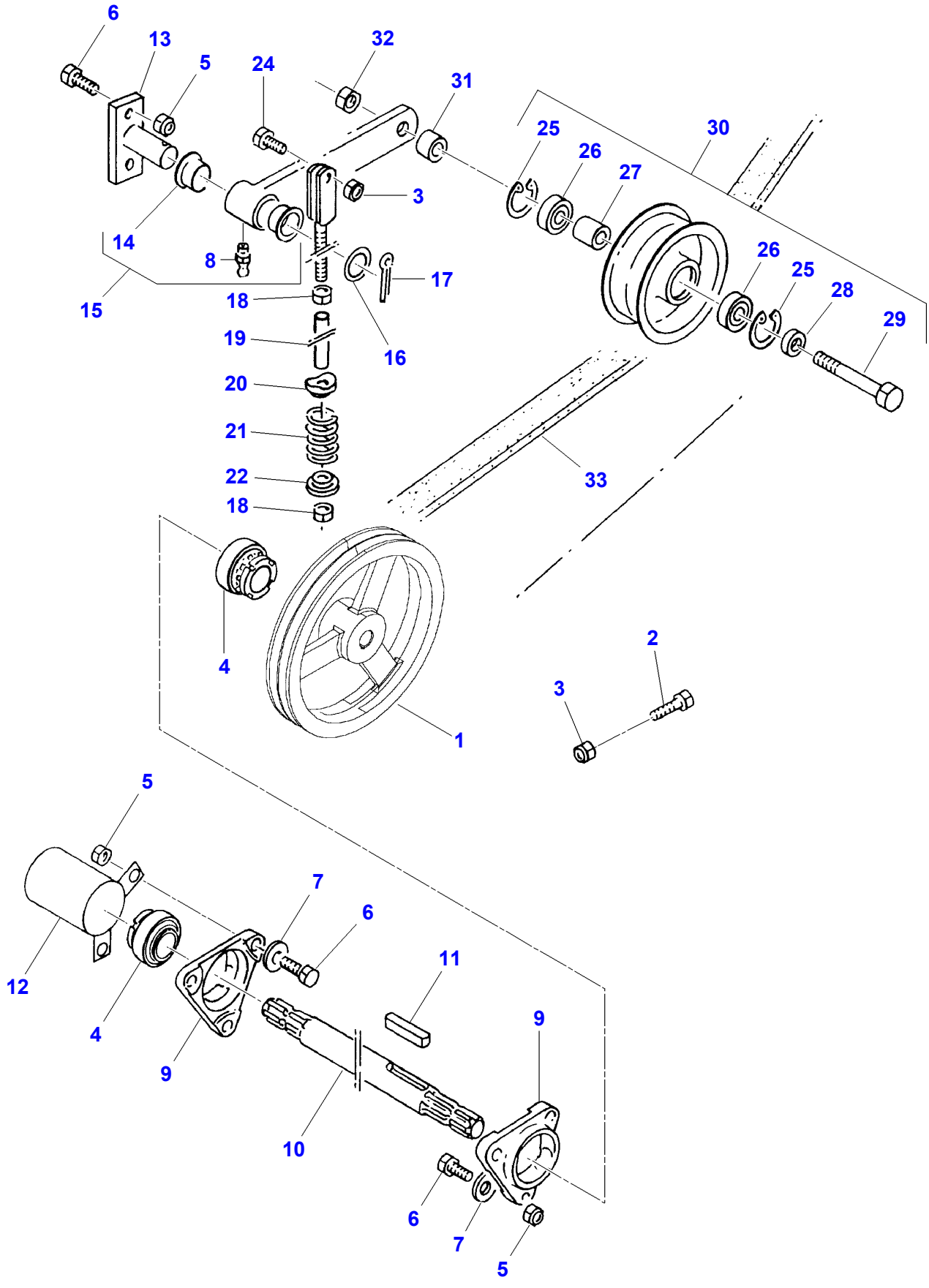
6
13
5
24
32
31
25
30
26
27
3
14
8
17
15
18
16
19
20
21
22
18
33
4
1
2
3
5
7
6
11
12
4
9
9
10
6
7
5

D-ZCZK-008-B

Item	Part Number	Qty	Description	Comments
1	D28788136	1	Pulley	2 X 430
2	339291X1	2	Hex. Sock. Screw	M8 X 55
3	D28288162	2	Locknut	M10
4	**D41718000**	2	Ball Bearing	Diameter 35
5	D26740020	8	Locknut	M12
6	3009507X1	6	Hex. Sock. Screw	M12 X 35
7	D26739281	6	Washer	13-140HV
8	D26733079	1	Greaser	AS 8
9	D28288195	2	Bearing Housing	Diameter 35
10	D28288054	1	Pto Shaft	
11	D26740028	1	Key Parallel	10 X 8 X 63
12	D28288194	1	Tube	
13	D28288174	1	Support	
14	D26736008	2	Sleeve	(15) 30 X 45 X 20
15	D26736937	1	Arm	
16	D26740124	1	Washer	31 X 45 X 2 ZN
17	D41415100	1	Split Pin	6,3 X 45
18	3009695X1	2	Nut	M12
19	D28288173	1	Tube	
20	D28288192	1	Spring Pot	
21	D28288170	1	Comp.Spring	
22	D28288188	1	Spring Pot	
23	D28288175	1	Tie Rod	[B] 12 X 320
24	3009493X1	1	Hex. Sock. Screw	M10 X 30
25	339199X1	2	Circlip	47 X 1,75
26	D26735920	2	Bear. 6303 2rs	
27	D26736063	1	Bush	
28	D26733620	1	Washer	17,2 X 25 X 4,3
29	D40434200	1	Hex. Sock. Screw	M6 X 100
30	**D26736050**	1	Pulley,Tensioner	64 / 220
31	D26735994	1	Spacer	
32		1	Nut	[A] VM16
33	**D41981700**	2	Kit, V Belt	2 / 22 X 3700

FOOTNOTE [A] NUMBER TO BE ADVISED
FOOTNOTE [B] NOT ILLUSTRATED

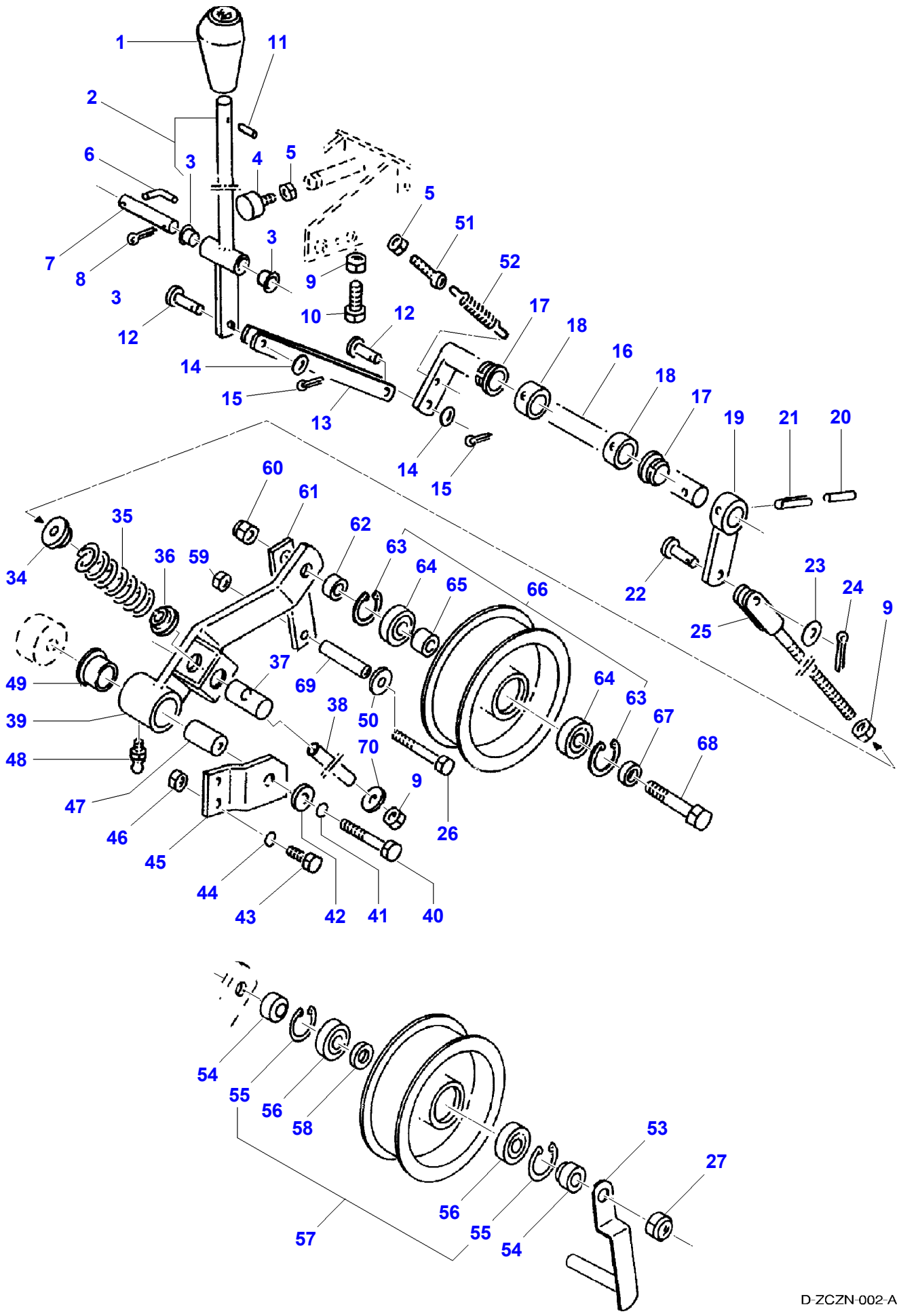
1
11
2
6
3
4
5
5
51
52
7
8
3
3
9
10
12
12
17
18
16
18
17
19
21
20
14
15
13
14
15
60
61
62
63
64
65
66
35
34
36
59
22
23
24
9
25
49
37
69
64
63
67
68
39
38
50
70
48
9
47
46
45
44
43
42
41
40
26
54
55
56
58
53
27
57
56
55
54

D-ZCZN-002-A

Item	Part Number	Qty	Description	Comments
1	D26734237	1	Knob	
2	D26735519	1	Lever	
3	D26736130	2	Bush	(2) 16 X 18 X 24/17
4	D26733845	1	Buffer	
5	339169X1	3	Nut	M8
6	D26734248	1	Pin	
7	D26732756	1	Clevis Pin	16 X 100 / 90
8	391405X1	1	Split Pin	4 X 25
9	3009695X1	3	Nut	M12
10	D26739295	1	Hex. Sock. Screw	M12 X 70
11	D26739296	1	Groove Pin	6 X 24
12	D26740036	2	Clevis Pin	10 X 28 / 24
13	D26734402	2	Linkage	
14	D20400471	2	Washer	10,5 X 20 X 2
15	D41405800	2	Split Pin	3,2 X 20
16	D26734233	1	Shaft	
17	D26733675	2	Bush	30,3 X 35 X 15
18	D26733371	2	Adjusting Collar	30 X 44
19	D26733944	1	Lever	
20	D26747057	1	Pin	5 X 45
21	D42616200	1	Pin	8 X 45
22	D26740011	1	Clevis Pin	10 X 30 / 26
23	D26739992	1	Washer	11 X 20 X 2
24	D41405800	1	Split Pin	3,2 X 20
25	D26734145	1	Tie Rod	
26	D40427200	1	Hex. Sock. Screw	[B] M10 X 110
27		1	Nut	VM16
28	D26735992	1	Support	[B]
29	D26736009	1	Spacer	[B] 30 X 5
30	**D26733667**	1	Pulley,Tensioner	[B] 40 / 200
31	D26733646	1	Bush	[B] Length 20 MM
32	D26732784	1	Bolt	[B] M16 X 85
33	D26734323	1	Arm	[B]
34	D26734087	1	Retaining Plate	
35	D26733335	1	Comp.Spring	
36	D26734150	1	Guide	
37	D26736529	1	Clevis Pin	
38	D26733798	1	Spacer	
39	D26736456	1	Lever	
40	D26739950	1	Hex. Sock. Screw	M12 X 85
41	D26739978	1	Spring Washer	A12
42	D20400446	1	Washer	13 X 30 X 4
43	3009493X1	2	Hex. Sock. Screw	M10 X 30
44	D41101900	2	Spring Washer	A10
45	D26734329	1	Joint Piece	
46	339402X1	2	Nut	M10
47	D26734330	1	Spacer	
48	339003X1	1	Greaser	AM8 X 1
49	D26733716	2	Bush	
50	D26740160	1	Washer	10,5 X 40 X 3
51	D26739257	1	Eye Bolt	M8 X 50
52	D26733346	1	Tension Spring	
53	D26736731	1	Joint Piece	[C]
54	D26733515	2	Spacer	[C] 30 X 12
55	390936X1	2	Circlip	[C] (57) 40 X 1,75
56	**D26732764**	2	Bear. 6203 2rs	[C] (57)
57	D49030029	1	Pulley,Tensioner	[C] 61 / 185
58	D26733620	1	Washer	[C] (57) 17,2 X 25 X 4,3

Item	Part Number	Qty	Description	Comments
59	D28288162	1	Locknut	M10
60	D26740304	1	Nut	M16
61	D26736531	1	Joint Piece	
62	D26735980	1	Bush	
63	390936X1	2	Circlip	(66)
64	**D26732764**	2	Bear. 6203 2rs	(66)
65	**D26733568**	1	Bush	(66)
66	D26733837	1	Pulley,Tensioner	64 / 180
67	D26734835	1	Bush	
68	D40434600	1	Hex. Sock. Screw	M16 X 110
69	D26736532	1	Pipe	
70		1	Washer	[A]

FOOTNOTE [A] NUMBER TO BE ADVISED
FOOTNOTE [B] NOT ILLUSTRATED
FOOTNOTE [C] MAIZE EQUIPMENT

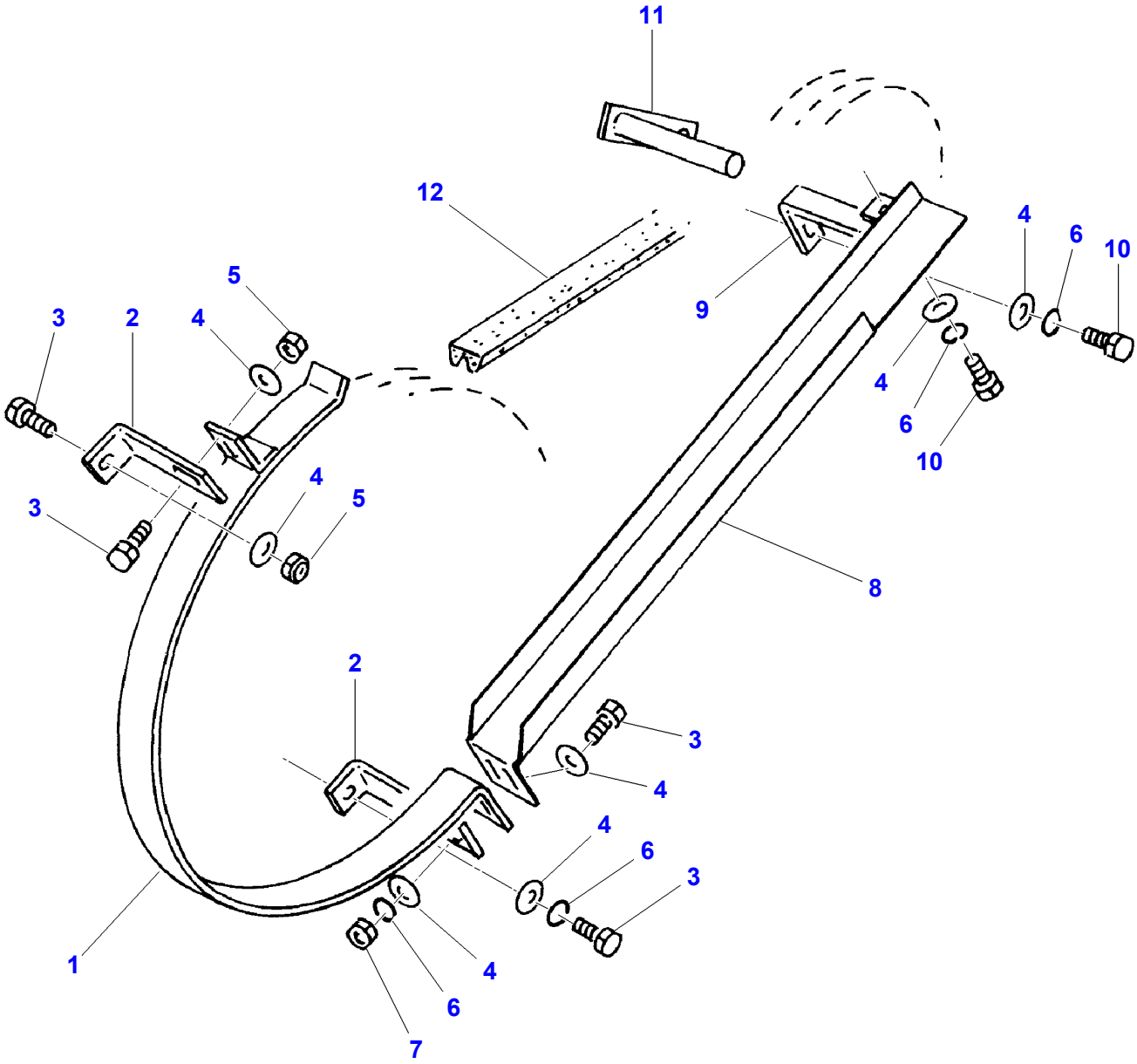

D-ZCZN-003-A

Item	Part Number	Qty	Description	Comments
1	D16734101	1	Belt Guide	
	D26739018	1	Belt Guide	[B]
2	D26734048	1	Anglepiece	
3	339761X1	5	Hex. Sock. Screw	M8 X 25
4	D20400408	10	Washer	8,4 X 25 X 3
5	D26740007	2	Locknut	M8
6	D41102100	5	Washer	A8
7	339169X1	2	Nut	M8
8	D26734102	1	Belt Guide	
	D26734105	1	Belt Guide	[B]
9		1	Angle.	[A]
10	339123X1	2	Hex. Sock. Screw	M8 X 20
11	D26734103	1	Tube	
12	**D26735939**	1	V Belt	2HBX 3280
	D26732883	1	V Belt	[B] 3HBX 3280

FOOTNOTE [A] NUMBER TO BE ADVISED
FOOTNOTE [B] MAIZE EQUIPMENT

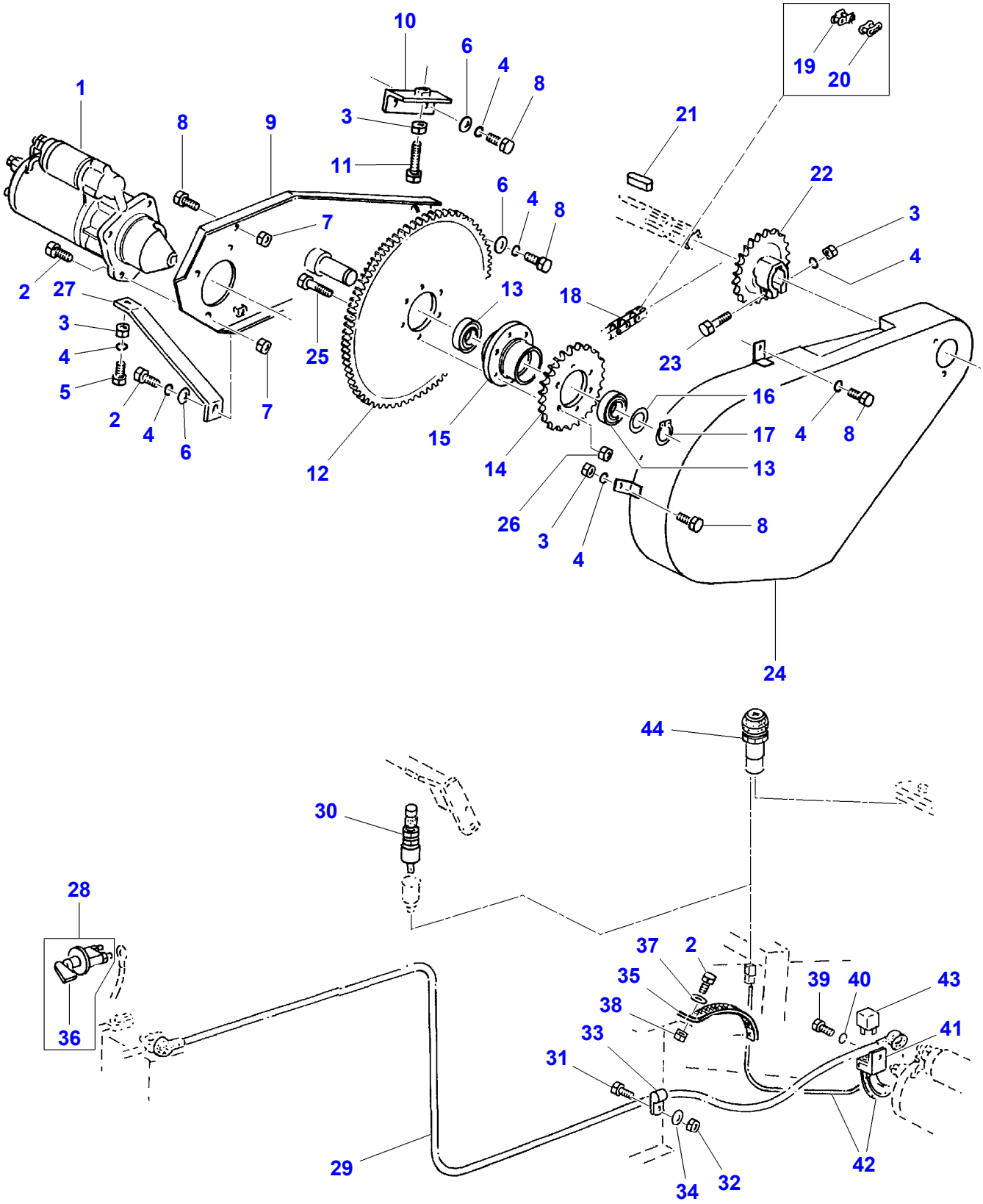
1
2
27
3
4
5
2
4
6
8
9
7
7
10
6
4
8
3
11
6
4
8
25
12
13
15
14
18
21
19
20
22
3
4
23
16
17
4
8
13
8
26
3
4
24
44
30
28
36
37
2
35
38
33
31
29
34
32
39
40
43
41
42

D-ZCZE-006-B

Item	Part Number	Qty	Description	Comments
1	D26735451	1	Startermotor	
2	3009493X1	5	Hex. Sock. Screw	M10 X 30
3	339402X1	4	Nut	M10
4	D26739978	8	Spring Washer	A12
5	D26739757	1	Hex. Sock. Screw	M10 X 35
6	D26740188	3	Washer	10,5 X 25 X 4
7	D28288162	3	Locknut	M10
8	3009492X1	7	Hex. Sock. Screw	M10 X 25
9	D26735452	1	Plate	
10	D26734395	1	Anglepiece	
11	339269X1	1	Hex. Sock. Screw	M10 X 100
12	D26740561	1	Flywheel	
13	D41617000	2	Ball Bearing	H4461-060 06
14	D26734392	1	Sprocket	Number of teeth/spines 25
15	D26734394	1	Hub	
16	D41653600	3	Spacer	30 X 42 X 0,5
	D41653700	3	Spacer	30 X 42 X 1,0
17	D26732706	1	Snapring	30 X 1,5
18	D42333800	1	Chain	12B 1 X 81
19	**D42355100**	X	Link	(18) 12B-1D
20	**D42355000**	X	Link	(18) 12B-1E
21	D43104700	1	Key	10 X 8 X 40
22	D26734393	1	Sprocket	Number of teeth/spines 23
23		1	Hex. Sock. Screw	[A] M10 X 55
24	D28288308	1	Guard	
25	339168X1	6	Hex. Sock. Screw	M8 X 50
26	D26740007	6	Locknut	M8
27	D26735713	1	Support	
28	D26732865	1	Switch	
29	D26735756	1	Wire	
30	**D26733123**	1	Switch	
31	339123X1	1	Hex. Sock. Screw	M8 X 20
32	D26740007	3	Locknut	M8
33	D26733206	2	Hose Clip	19 X 23
34	D26739993	2	Washer	9 X 17 X 1,6
35	D26732778	2	Earth Strap	12 X 280
36		X	Spanner	[A] (28)
37	D26739992	2	Washer	11 X 20 X 2
38	D28288162	1	Locknut	M10
39		1	Hex. Sock. Screw	[A] M6 X 10
40	D41100600	1	Spring Washer	A6
41	D26739091	1	Pedestal	
42	D26734531	1	Kit, Cable	
43	**D45070089**	1	Relay	
44	D26733127	1	Switch	

FOOTNOTE [A] NUMBER TO BE ADVISED

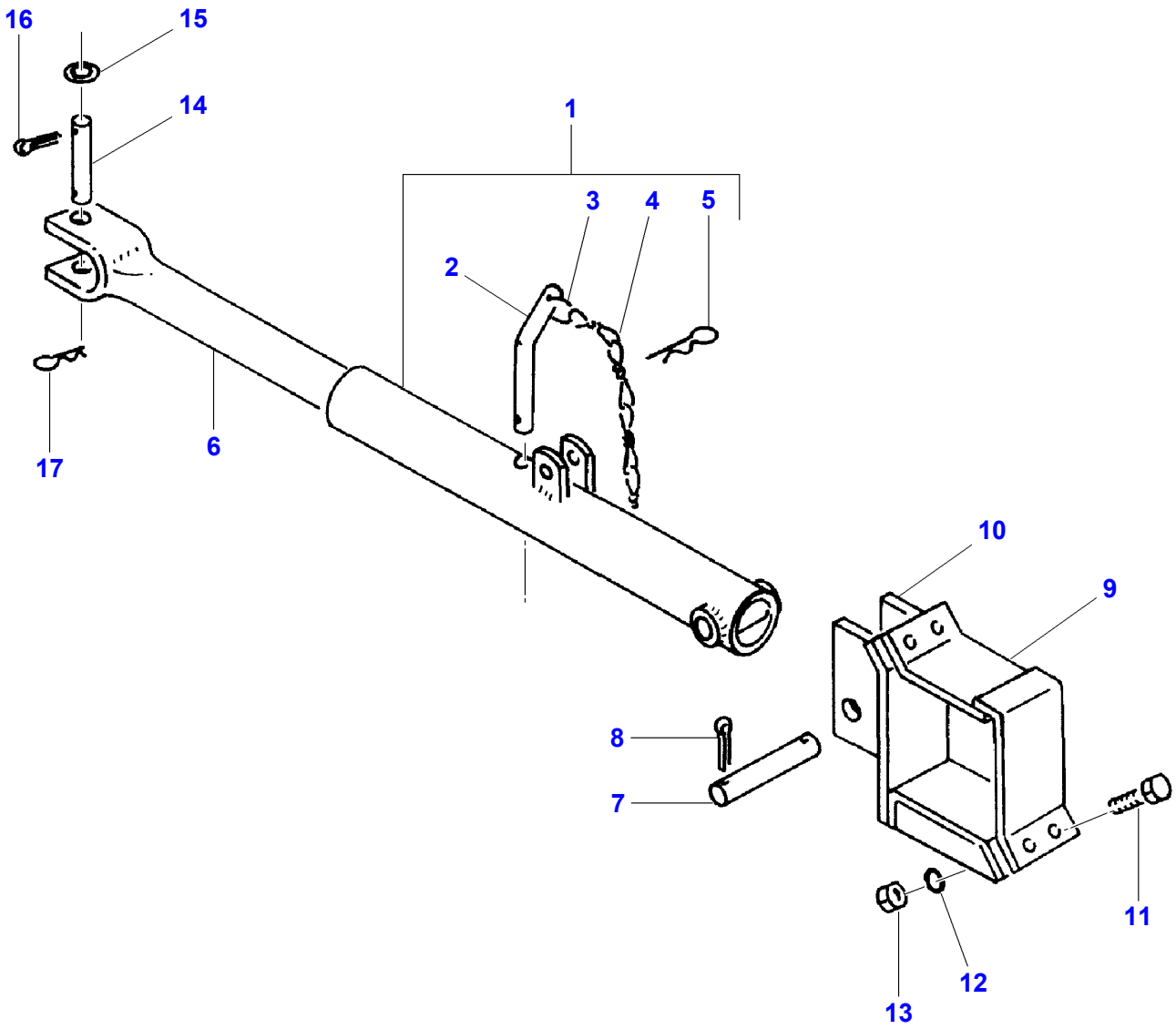

D-ZCZP-002-A

Item	Part Number	Qty	Description	Comments
1	D16734159	1	Tube	
2	D16733442	1	Pin	(1)
3	D26733511	1	Ring	(1)
4	D26732788	1	Chain	(1)
5	D26733427	1	Clip Pin	(1)
6	D16734827	1	Tube	
7	D26733870	1	Clevis Pin	
8	D26739346	2	Split Pin	5 X 45
9	D26734219	1	Retainer	
10	D26734218	1	Bracket	
11	D40411200	4	Hex. Sock. Screw	M12 X 45
12	D26739978	4	Spring Washer	A12
13	D26740193	4	Nut	M12
14	D26733237	1	Clevis Pin	16 X 85 / 75
15	D26739192	1	Washer	17 X 28 X 1,5
16	D41409300	1	Split Pin	4 X 45
17	D26733428	1	Spring Clip	

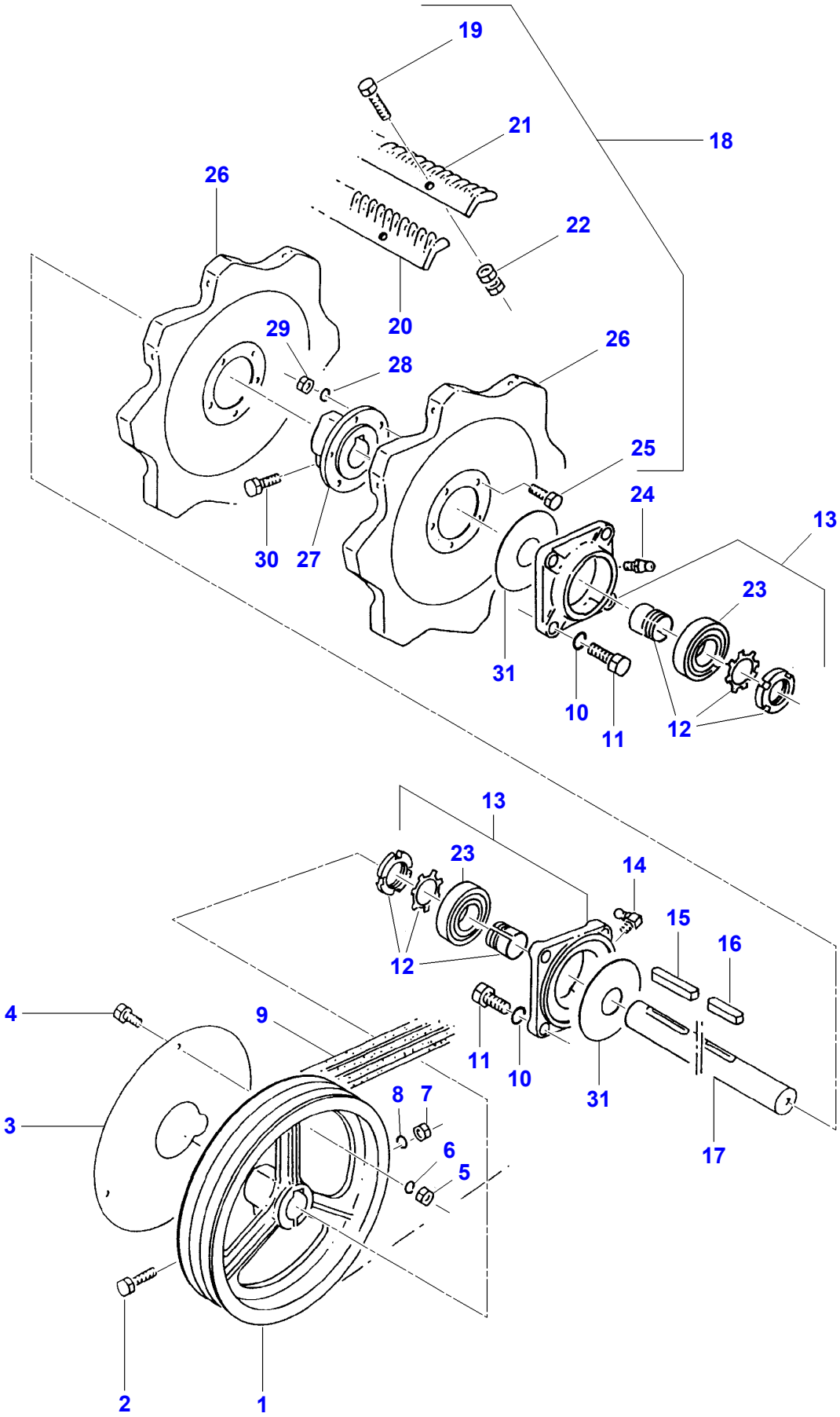
19
21
18
26
22
20
29
26
28
25
24
13
30
27
23
31
10
11
12
13
23
14
15
16
12
4
9
11
10
31
8
7
3
6
5
17
2
1

D-ZDZC-004-A

Item	Part Number	Qty	Description	Comments
1	D26733872	1	Pulley	3/17 X 507
2		1	Hex. Sock. Screw	[A] M12 X 65
3	D26733853	1	Cover	
4	339123X1	3	Hex. Sock. Screw	M8 X 20
5	339169X1	3	Nut	M8
6	D41102100	3	Washer	A8
7	3009695X1	1	Nut	M12
8	D26739978	1	Spring Washer	A12
9	**D26733578**	1	Kit, V Belt	3/17 X 2435 LI
10		8	Washer	[A] A16
11	D26739724	8	Hex. Sock. Screw	M16 X 45
12	**D26746907**	2	Insert	50 H 211
		2	Insert	[A] H 2311
13	D26733585	2	Bearing Flange	
14	D43002600	1	Greaser	BM8 X 1
15	D26739850	2	Key Parallel	14 X 9 X 100
16	D43107900	2	Key	14 X 9 X 70
17	D26734898	1	Shaft	
18		1	Beater	[A]
19	**D26739706**	40	Hex. Sock. Screw	(18) M12 X 35
	D26739353	3	Hex. Sock. Screw	(18) M12 X 45
20	**D28088063**	2	Kit, Beater Bar	[B] (18) Right Hand
21	**D28088062**	2	Kit, Beater Bar	[B] (18) Left Hand
22	**D26739237**	80	Nut	(18) M12
23	**D26747138**	2	Ball Bearing	76211 K 2RS
		2	Bearing Assy	[A] UK 211
24	D26733079	1	Greaser	AS8
25	3009492X1	15	Hex. Sock. Screw	(18) M10 X 25
26	D26733854	5	Ring	(18)
27	D26733574	3	Hub	(18)
28	D41101900	15	Spring Washer	(18) A10
29	339402X1	15	Nut	(18) M10
30	390912X1	3	Hex. Sock. Screw	(18) M12 X 40
31		2	Flat Washers	[A]

FOOTNOTE [A] NUMBER TO BE ADVISED
FOOTNOTE [B] SERVICED IN PAIRS

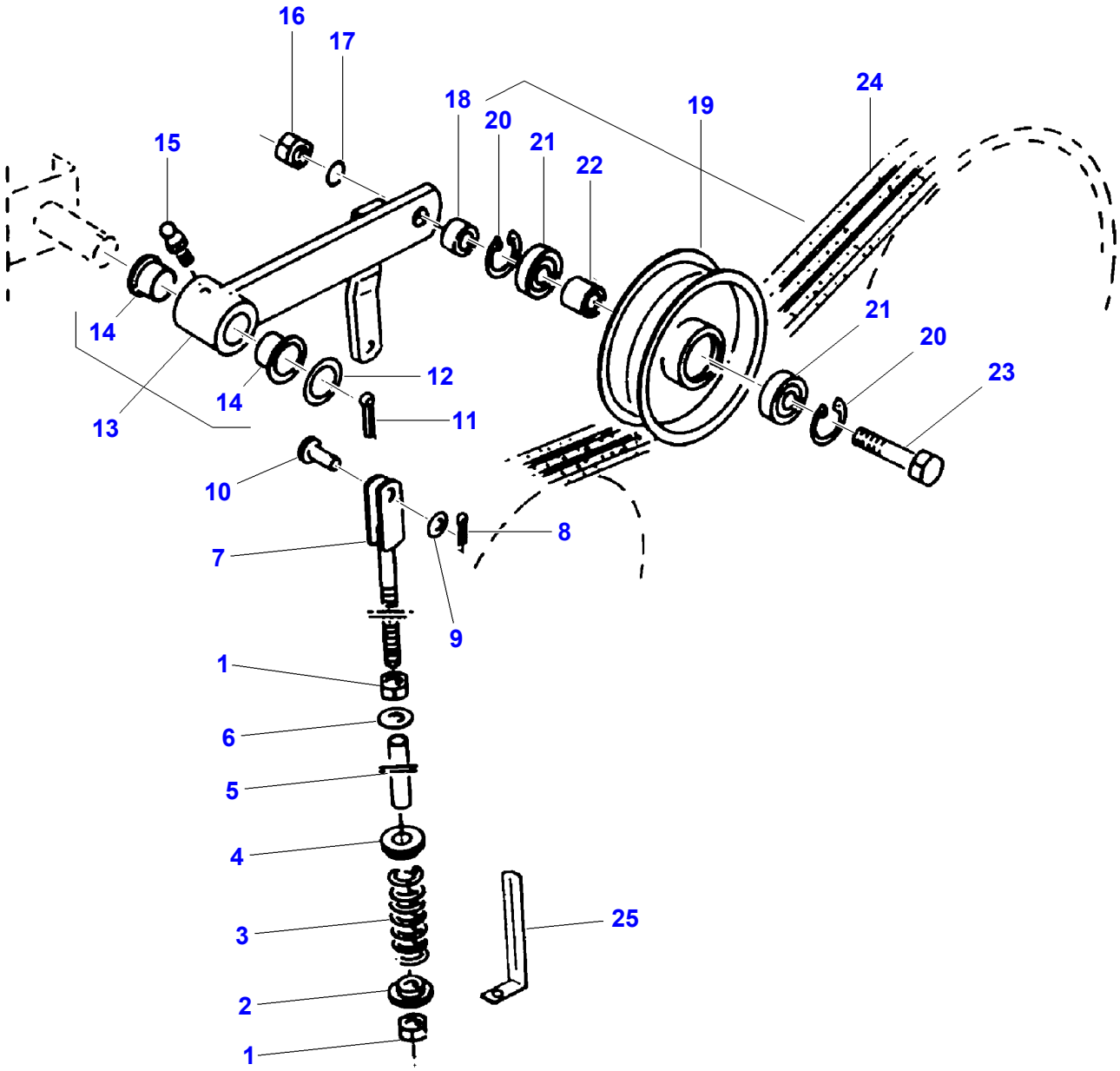

D-ZDZH-001-A

Item	Part Number	Qty	Description	Comments
1	3009695X1	2	Nut	M12
2	D26734087	1	Retaining Plate	
3	D26733731	1	Comp.Spring	
4	D26734150	1	Guide	
5	D26734149	1	Tube	17,2 X 200
6	D26740203	1	Washer	Diameter 13,5
7	D26733945	1	Tie Rod	12 X 320
8	D41405800	1	Split Pin	3,2 X 20
9	D26739992	1	Washer	11 X 20 X 2
10	D26740036	1	Clevis Pin	10 X 28 / 24
11	391371X1	1	Split Pin	5 X 40
12	D26740300	1	Washer	26 X 44 X 4
13	D26738594	1	Lever	
14	D26736080	2	Bush	25 X 28 X 35
15	D26739779	1	Grease Nipple	AM6
16	339034X1	1	Nut	M16
17	D26739976	1	Spring Washer	A16
18	D26735994	1	Spacer	
19	D26733979	1	Pulley,Tensioner	64 / 180
20	390936X1	2	Circlip	40 X 1,75
21	**D26732764**	2	Bear. 6203 2rs	
22	**D26733568**	1	Bush	
23	D26739253	1	Bolt	M16 X 100
24	**D26733578**	1	Kit, V Belt	3/17 X 2435 LI
25	D26747995	1	Shield	

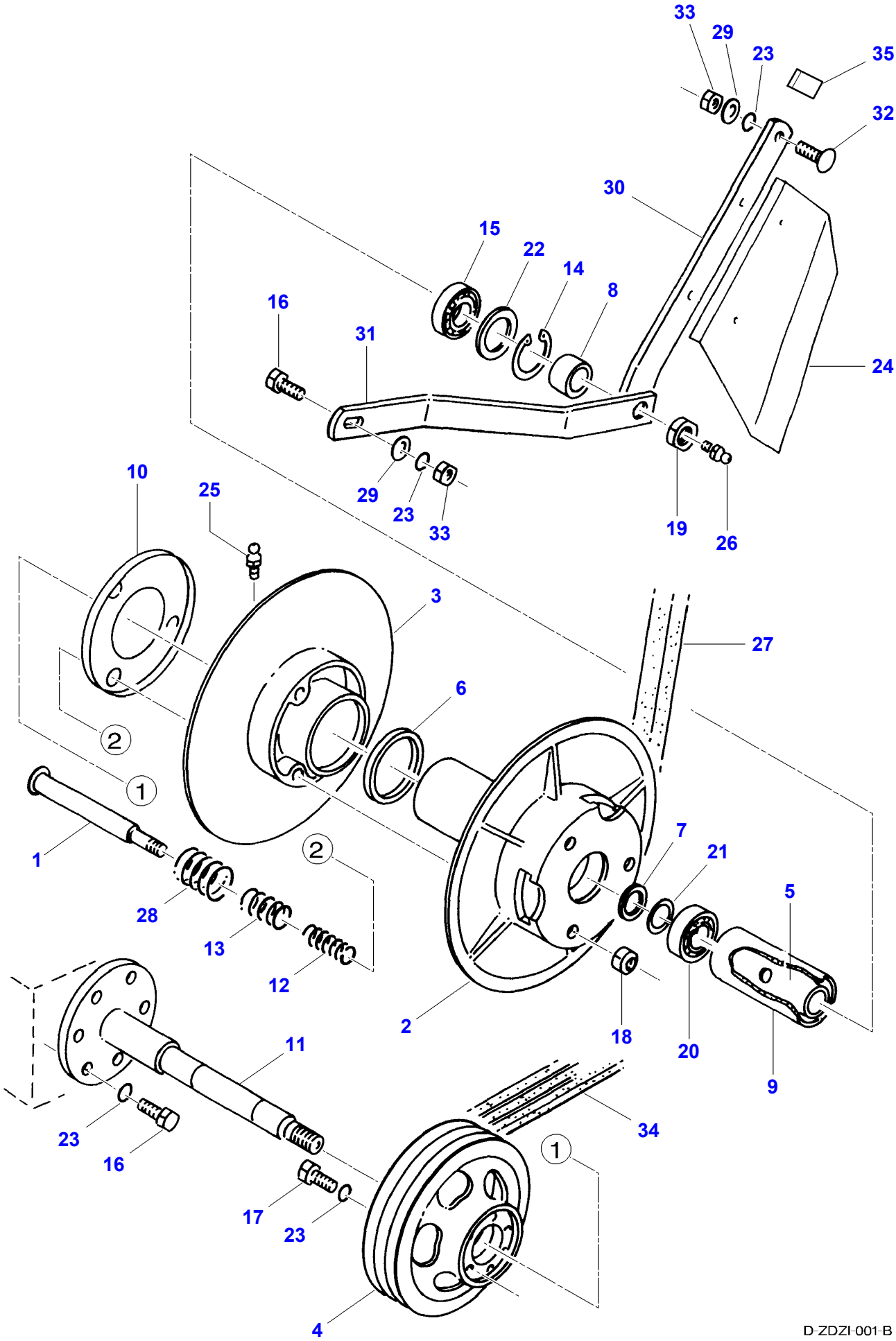
33
29
23
35
32
30
15
22
14
8
16
31
24
29
23
33
19
26
10
25
3
27
6
2
1
1
28
13
12
2
7
21
5
18
20
9
11
23
16
34
1
17
23
4
D-ZDZI-001-B

Item	Part Number	Qty	Description	Comments
1	D26733779	3	Plug	M20 X 260
2	D26734126	1	Pulley Half	
3	D26733874	1	Pulley Half	
4	D26733873	1	Pulley	
5	D26733584	1	Bush	50 X 145
6	D26733580	1	Scraper	
7	D26733295	1	Washer	36 X 50 X 3
8	D26733855	1	Spacer	
9	D26733581	1	Spacer	
10	D26733801	1	Spring Plate	
11	D26733856	1	Countershaft	
12	D26733327	3	Comp.Spring	
13	D26733334	3	Comp.Spring	
14	1440480X1	1	Circlip	72 X 2,5
15	D26732710	1	Bear. 6207 Z	
16	3009507X1	8	Hex. Sock. Screw	M12 X 35
17	390912X1	6	Hex. Sock. Screw	M12 X 40
18		3	Locknut	[A] VM16
19	D26739260	2	Nut	M24
20	D26732727	1	Bearing Roller	NU 2207
21	D26740112	1	Pulley	35 X 45 X 1,0
22	D26739240	1	Washer	56 X 72 X 3
23	D26739978	14	Spring Washer	A12
24	D26735375	1	Guard	
25	D43002500	1	Greaser	M8
26	D26733079	1	Greaser	AS8
27	**D26733312**	1	V Belt	55 X 22 X 2021
28	D26733333	3	Comp.Spring	
29	D26739281	2	Washer	13-140HV
30	D26733802	1	Brace	
31	D26733803	1	Brace	
32	D40070200	1	Screw Metric	M12 X 30
33	3009695X1	2	Nut	M12
34	**D26733578**	1	Kit, V Belt	3/17 X 2435 LI
35	D26733795	1	Stop	

FOOTNOTE [A] NUMBER TO BE ADVISED

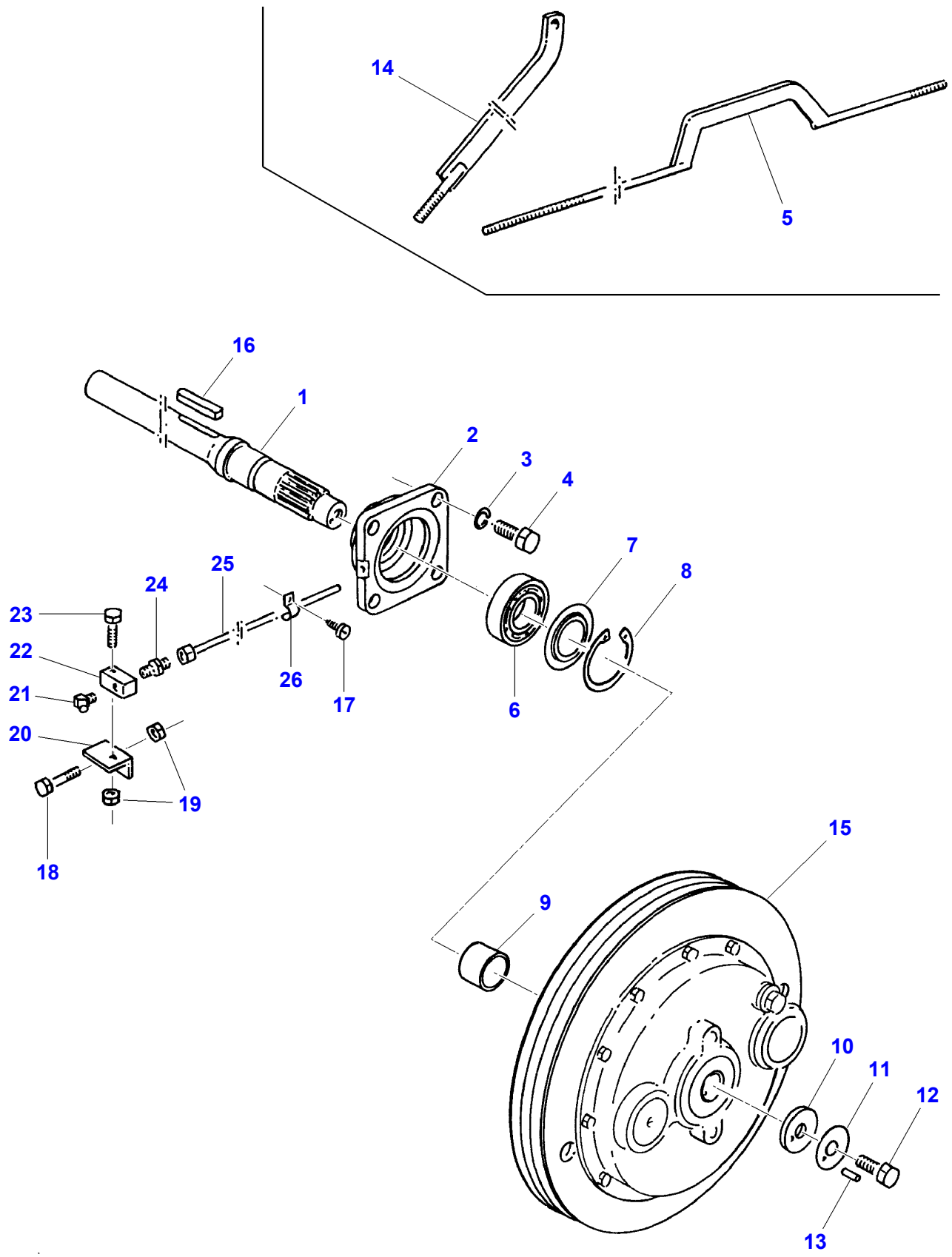

D-ZDZJ-001-A

Item	Part Number	Qty	Description	Comments
1	D26734899	1	Shaft	
2	D26734390	1	Bearing Housing	
3		4	Washer	[A] A16
4	D26739724	4	Hex. Sock. Screw	M16 X 45
5		1	Rod	[A] See Page - Reference Number 009-0004
6	D26732863	1	Bearing Roller	22211 ES
7	D26732834	1	Ring	22211 JV
8	D26732709	1	Snapring	3 X 100
9	D26734389	1	Bush	
10	D26734449	1	Washer	
11		1	Washer	[A] (10)
12	D40433200	1	Hex. Sock. Screw	M16 X 50
13		1	Pin	[A] (10) 4 X 24
14	D26740436	1	Strut	M16 X 60
15	D26734418	1	Pulley	
16	D43107900	1	Key	14 X 9 X 70
17	D26739270	1	Screw	B3,5 X 13
18	D26740194	1	Hex. Sock. Screw	M8 X 60
19	D26740007	2	Locknut	M8
20	D26735780	1	Retainer	
21	D43002600	1	Greaser	BM8 X 1
22	D26733728	1	Support	
23	339337X1	1	Hex. Sock. Screw	M8 X 30
24	D26733404	1	Union	GE4LLM
25	D26735725	1	Lub.Oil Pipe	
26	D26732747	1	Brace	1 X 4

FOOTNOTE [A] NUMBER TO BE ADVISED

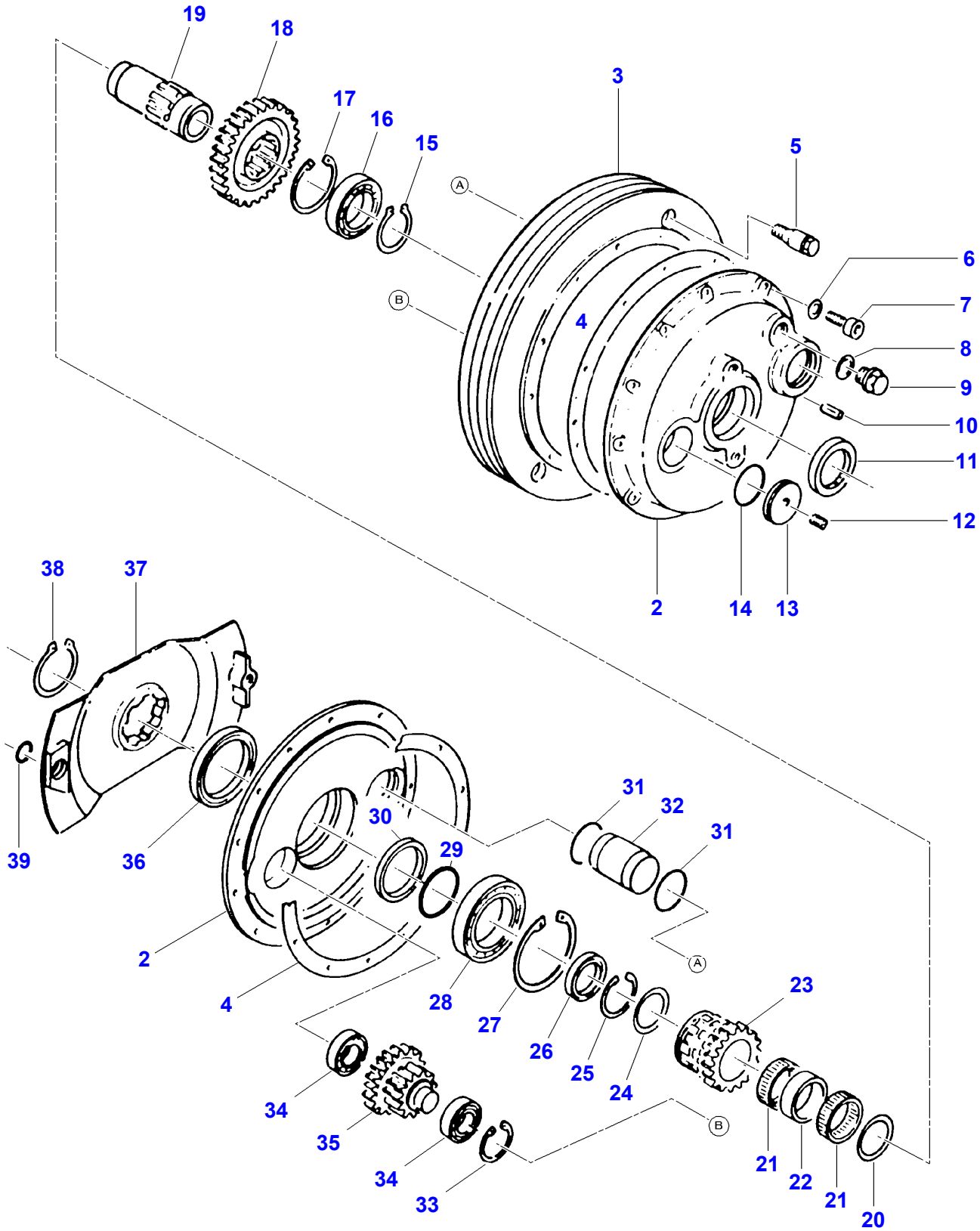
19
18
17
16
15
3
5
A
6
B
4
7
8
9
10
11
12
2
14
13
38
37
39
36
31
32
30
29
31
A
2
4
28
27
26
25
24
23
34
35
34
33
B
21
22
21
20

D-ZDZJ-002-A

Item	Part Number	Qty	Description	Comments
1	D26734418	1	Pulley	[B]
2		1	Chassis	[A] (1)
3		1	Pulley	[A] (1)
4		2	Gasket	[A] (1)
5		1	Screw	[A] (1)
6	D26739991	12	Spring Washer	(1) B8
7	339745X1	12	Hex. Sock. Screw	(1) M8 X 45
8		1	Gasket	[A] (1) 26 X 32
9		1	Plug	[A] (1) AM26
10		1	Pin	[A] (1) 8 X 36
11	D49030008	1	Shaft Seal	(1) 70 X 90 X 10
12		1	Grub Screw	[A] (1) M8 X 8
13		1	Cover	[A] (1)
14	D49030010	1	O Ring	(1) 56 X 2
15		1	Circlip	[A] (1) 70 X 2,5
16	1442699X1	1	Bear. 6014	(1)
17	D26735917	1	Circlip	(1) 110 X 4
18		1	Gear	[A] (1) Number of teeth/spines 33
19		1	Shaft	[A] (1)
20		1	Washer	[A] (1) 68 X 0,5
21	D49030076	2	Bearing Needle	(1) K 68 X 75 X 21
22	D49030077	1	Bearing Bush	(1)
23		1	Gear	[A] (1) Number of teeth/spines 25
24		1	Washer	[A] (1) 60 X 1
25		1	Circlip	[A] (1) 75 X 2,5
26	D49030009	1	Shaft Seal	(1) 60 X 75 X 8
27		1	Circlip	[A] (1) 150 X 4
28	D41614600	1	Ball Bearing	(1) 6020
29	D49030012	1	O Ring	(1) 80 X 5
30		1	Insert	[A] (1)
31	D49030011	2	O Ring	(1) 65 X 2
32		1	Counterweight	[A] (1)

Item	Part Number	Qty	Description	Comments
33	1440479X1	1	Circlip	(1) 62 X 2
34	D41630073	2	Bearing Roller	(1) NJ 2206 MA
35		1	Shaft	[A] (1) Number of teeth/spines 22 / 14
36	D49030048	1	Shaft Seal	(1) 110 X 140 X 12
37		1	Plate	[A] (1)
38		1	Circlip	[A] (1) 90 X 3
39	D49030013	1	O Ring	(1) 25 X 5

FOOTNOTE [A] NUMBER TO BE ADVISED
FOOTNOTE [B] NOT ILLUSTRATED

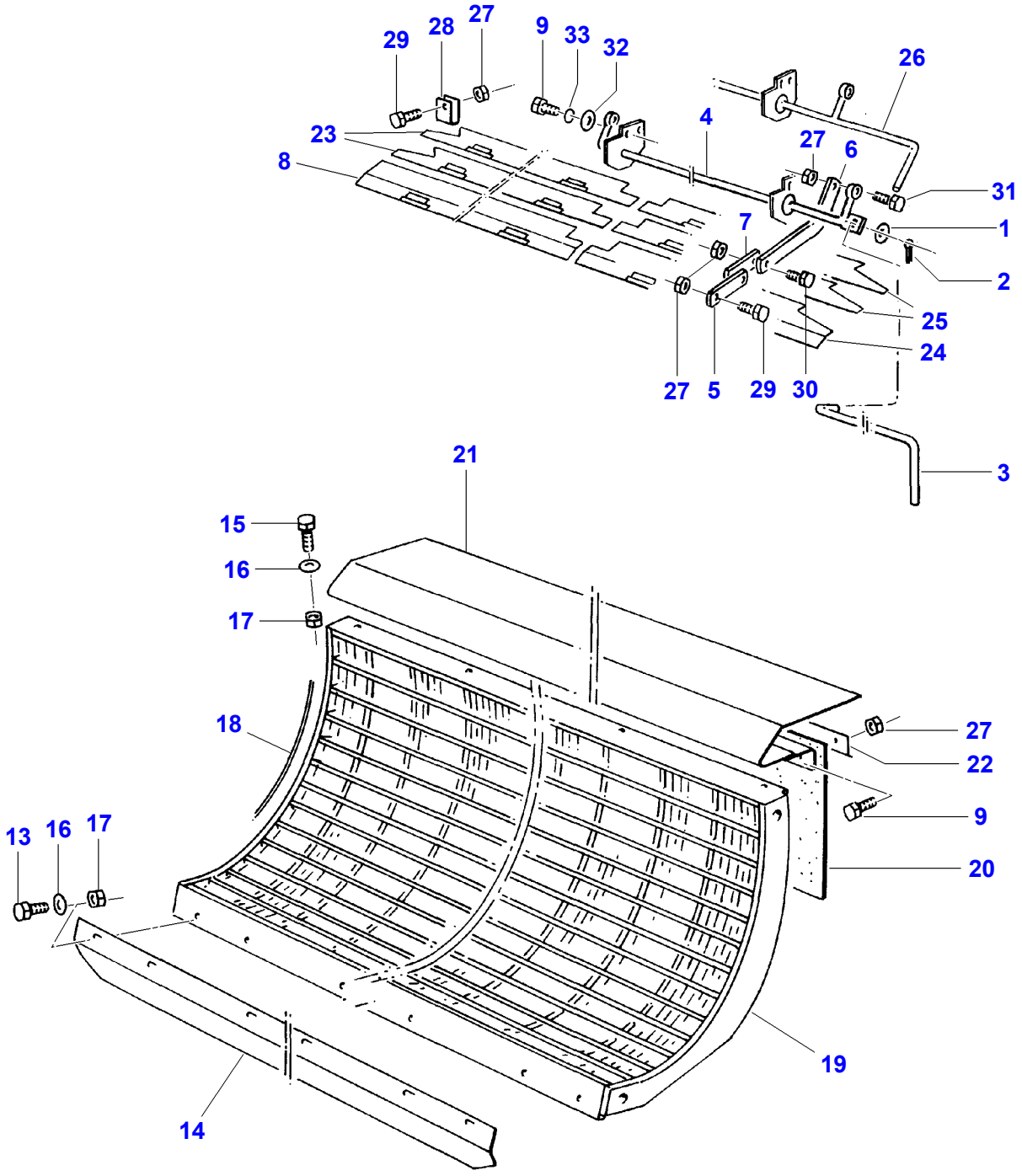
29
28
27
9
33
32
26
23
4
27
6
8
31
7
1
2
25
24
27
5
29
30
3
21
15
16
17
18
27
22
9
13
16
17
20
19
14

Item	Part Number	Qty	Description	Comments
1	D26740159	1	Washer	13 X 28 X 2
2	1442034X1	1	Split Pin	4 X 20
3	D26744968	1	Lever	
4	D26745153	1	Rod	
5	D26740377	2	Tie Rod	
6	D26740375	2	Tie Rod	
7	D26740376	2	Tie Rod	
8	D26740722	1	Louvre	
9	339124X1	10	Hex. Sock. Screw	M8 X 16
10	D26733571	2	Bush	[F] Up to Serial or Engine Number 6063
11	D26740295	2	Washer	[F] Up to Serial or Engine Number 6063 10,5 X 30 X 2,5
12	D41101900	2	Spring Washer	[F] Up to Serial or Engine Number 6063 A10
13	3009492X1	6	Hex. Sock. Screw	M10 X 25
14	D26740649	1	Inlet	
15	3009492X1	4	Hex. Sock. Screw	M10 X 25
16	D26739992	8	Washer	11 X 20 X 2
17	D28288162	10	Locknut	M10
18	**D26736755**	X	Spring Wire	
19	D26734477	1	Concave	[E]
	D26734562	1	Concave	[B]
	D26734563	1	Concave	[C]
20	D26740953	1	Canvas	
21	D26733635	1	Plate	
	D26741103	1	Plate	[D]
22	D26740952	1	Clamping Piece	
23	D26740646	2	Louvre	
24	D26740733	1	Louvre	
25	D26740637	2	Louvre	
26		1	Lever	[A]
27	D26740007	24	Locknut	M8
28	D26740973	8	Channel Section	
29	339123X1	17	Hex. Sock. Screw	M8 X 20
30	339761X1	1	Hex. Sock. Screw	M8 X 25
31	339337X1	1	Hex. Sock. Screw	M8 X 30
32	D26739993	2	Washer	9 X 17 X 1,6
33	D41102100	2	Washer	A8

FOOTNOTE [A] NUMBER TO BE ADVISED
FOOTNOTE [B] FOR HARD WHEAT
FOOTNOTE [C] EXPORT ONLY
FOOTNOTE [D] WIDE
FOOTNOTE [E] FOR MAIZE
FOOTNOTE [F] NOT ILLUSTRATED

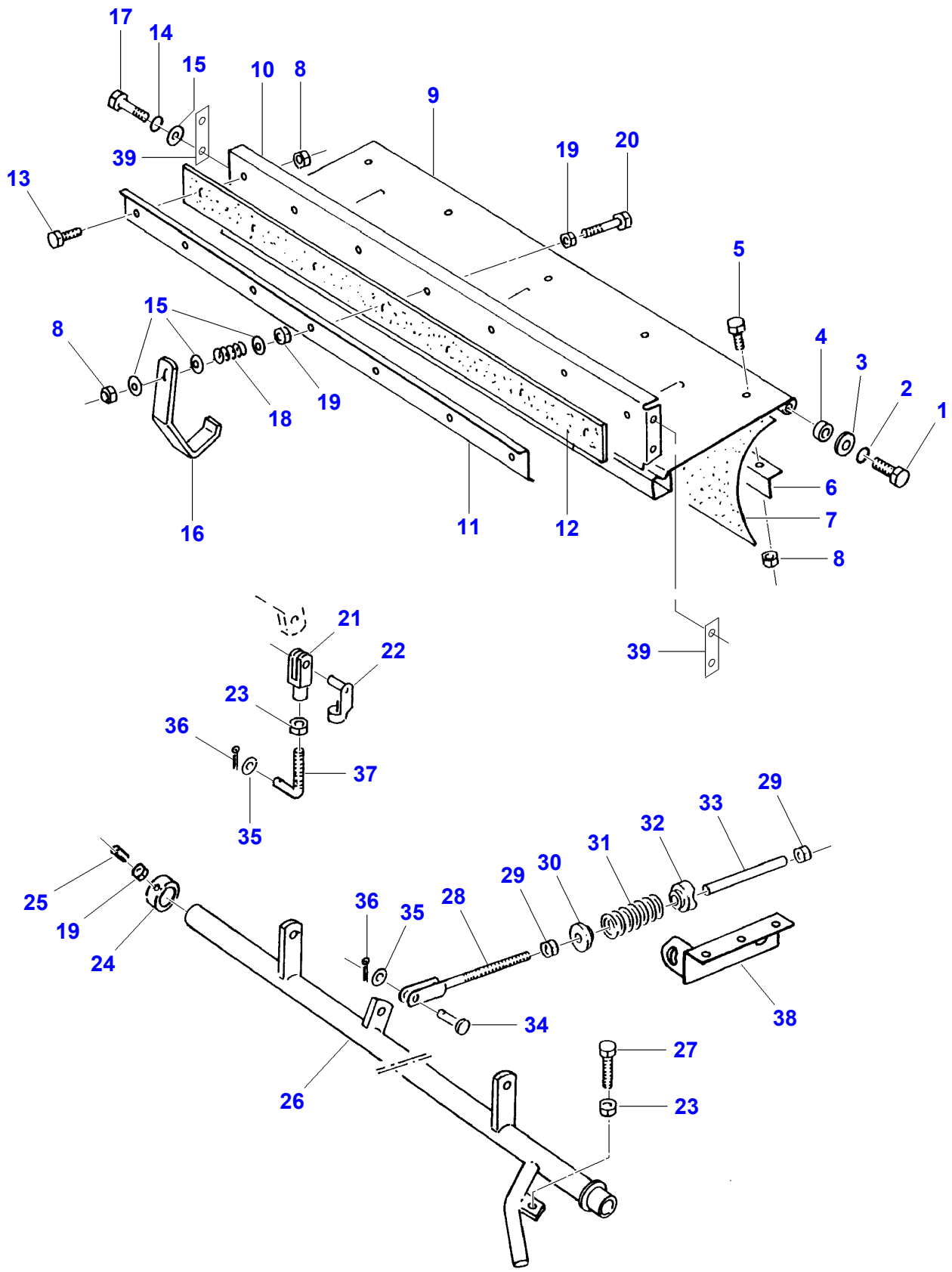
17
14
15
10
8
9
39
19
20
13
5
15
8
4
3
2
1
18
19
6
7
16
11
12
8
21
39
22
23
36
37
35
29
33
32
31
25
29
30
19
36
35
28
24
38
34
27
26
23

D-ZDZK-001-B

Item	Part Number	Qty	Description	Comments
1	3009491X1	2	Hex. Sock. Screw	M10 X 20
2	D41101900	2	Spring Washer	A10
3	D20400416	2	Washer	11 X 20 X 2
4	D26733571	2	Bush	
5	339124X1	5	Hex. Sock. Screw	M8 X 16
6	D26734803	1	Angle.	
7	D26733535	1	Canvas	
8	D26740007	10	Locknut	M8
9	D26735612	1	Stone Trap	
10	D26734730	1	Plate	
11	D26734732	1	Retainer	
12	D26734731	1	Sealing Strip	
13	339123X1	6	Hex. Sock. Screw	M8 X 20
14	D41102100	4	Washer	A8
15	D26739993	4	Washer	9 X 17 X 1,6
16	D28388002	1	Hook	
17	339168X1	4	Hex. Sock. Screw	M8 X 50
18	D26733319	1	Comp.Spring	
19	339169X1	3	Nut	M8
20	339291X1	1	Hex. Sock. Screw	M8 X 55
21	D26739776	2	Fork Head	G12 X 24
22	D26733072	2	Bolt	12 X 24
23	3009695X1	3	Nut	M12
24	D26734939	1	Adjusting Collar	
25	D40404900	1	Hex. Sock. Screw	M8 X 20
26	D28388008	1	Lever	
27		1	Hex. Sock. Screw	[A] M10 X 40
28	D26734031	1	Tie Rod	12 X 240
29	3009695X1	2	Nut	M12
30	D26734087	1	Retaining Plate	
31	D26733335	1	Comp.Spring	
32	D26734150	1	Guide	
33	D26733669	1	Tube	
34	D26740011	1	Clevis Pin	10 X 30 / 26
35	D20400471	1	Washer	10,5 X 20 X 2
36	D41405800	1	Split Pin	3,2 X 20
37	D26735611	1	Screw	
38	D26735613	1	Bracket	
39	D26734794	12	Shim	

FOOTNOTE [A] NUMBER TO BE ADVISED

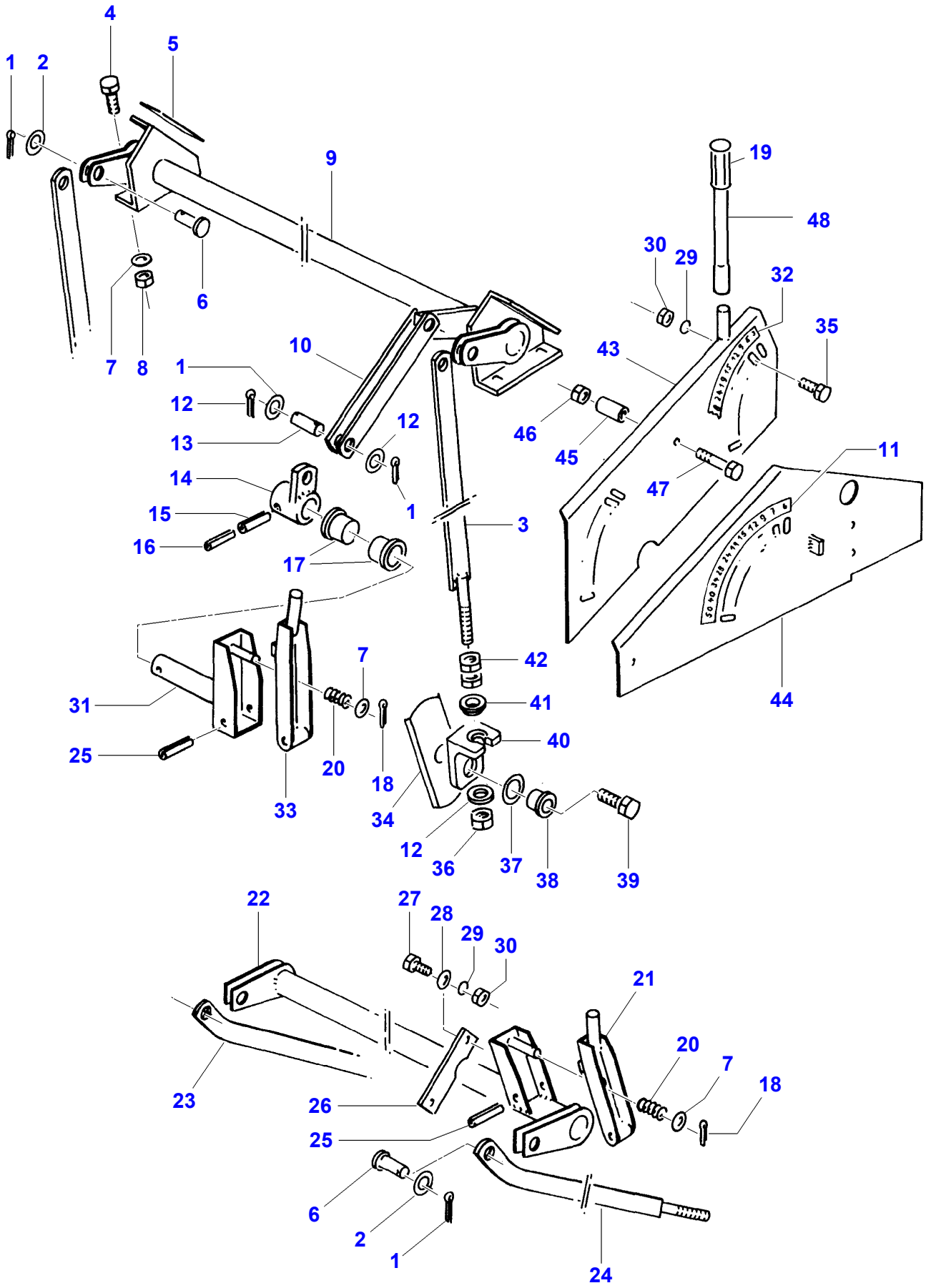
4
5
1
2
9
19
48
30
29
32
35
43
10
1
12
13
12
46
45
47
11
14
15
16
17
1
3
42
41
40
7
31
25
20
18
33
34
12
36
37
38
39
44
22
27
28
29
30
21
20
7
18
23
26
25
6
2
1
24

D-ZDZB-004-C

Item	Part Number	Qty	Description	Comments
1	D41409300	8	Split Pin	4 X 45
2	D26739989	4	Washer	13 X 24 X 2,5
3	D26733891	2	Tie Rod	
4	3009493X1	8	Hex. Sock. Screw	M10 X 30
5	D26733824	X	Compens. Sheet	
6	D26740038	4	Clevis Pin	12 X 30 / 25
7	D26739992	18	Washer	11 X 20 X 2
8	D28288162	8	Locknut	M10
9	D26734053	1	Connection	
10	D26734010	2	Strut	
11	D26732825	1	Decal	
12	D26740166	8	Washer	18 X 30 X 3
13	D26734012	2	Clevis Pin	
14		1	Insert	[A]
15		1	Pin	[A] 10 X 60
16		1	Pin	[A] 6 X 60
17	D26733563	2	Bush	
18	D42601100	2	Split Pin	[A] 3,2 X 36
19	D26734741	1	Grip	
20	D26733320	2	Comp.Spring	
21	D16734080	1	Lever	
22	D26734086	1	Tube	
23	D26734082	1	Tie Rod	Right Hand
	D26740436	1	Strut	[B] See Page - Reference Number 004-0004/14
24	D26734081	1	Tie Rod	Left Hand
25	D26739099	2	Pin	10 X 55
26	D26734076	2	Connection	
27	339761X1	4	Hex. Sock. Screw	M8 X 25
28	D26739993	4	Washer	9 X 17 X 1,6
29	D41102100	9	Washer	A8
30	339169X1	9	Nut	M8
31		1	Lever	[A]
32	D26732824	1	Indicator	
33	D16733688	1	Lever	
34	D26733572	4	Plate	
35	339123X1	5	Hex. Sock. Screw	M8 X 20
36	339034X1	4	Nut	M16
37	D20400439	4	Washer	30,5 X 39,5 X1,5
38	D26733796	4	Bearing Bush	
39	D40433200	4	Hex. Sock. Screw	M16 X 50
40	D26733569	4	Retainer	
41	D26733573	4	Washer	30 X 5
42	3764827M1	8	Nut	BM16
43	D16735518	1	Notched Plate	
44	D16734435	1	Notched Plate	
45	D26741204	1	Spacer	
46	D28288162	1	Locknut	M10
47	339019X1	1	Hex. Sock. Screw	M10 X 50
48	D16733899	1	Tube	

FOOTNOTE [A] NUMBER TO BE ADVISED
FOOTNOTE [B] ON REQUEST

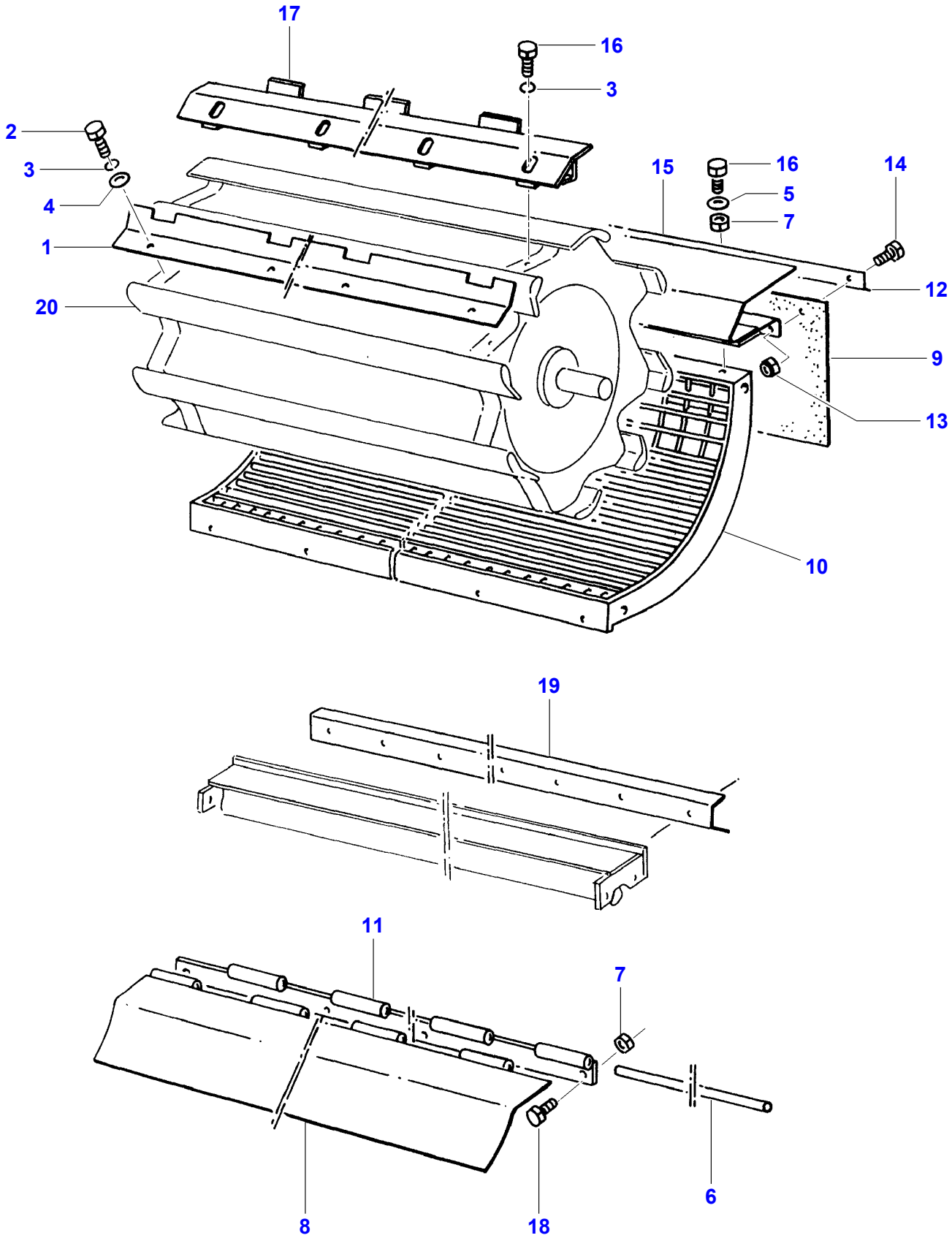

D-ZDZL-001-B

Item	Part Number	Qty	Description	Comments
1	D26736670	8	Cover	[B]
2	3009492X1	X	Hex. Sock. Screw	M10 X 25
3	D41101900	X	Spring Washer	A10
4	D26740161	X	Washer	10,2 X 30 X 3 ZN
5	D26739992	X	Washer	11 X 20 X 2
6	D26737106	1	Hinge Rod	
7	D28288162	X	Locknut	M10
8	D26740374	1	Shield	
9	D26740953	1	Canvas	
10	D26745925	1	Concave	
11	D26741453	1	Hinge	
12	D26740952	1	Clamping Piece	
13	D26740007	4	Locknut	M8
14	339123X1	4	Hex. Sock. Screw	M8 X 20
15	D26733635	1	Plate	
16	D26739757	46	Hex. Sock. Screw	M10 X 35
17	D26741444	8	Shield	[C]
18	3009493X1	4	Hex. Sock. Screw	M10 X 30
19	D26741105	1	Dust Shield	
20	D26850020	1	Threshing Cyl	

FOOTNOTE [B] FOR GRAIN MAIZE
FOOTNOTE [C] FOR C.C.M.

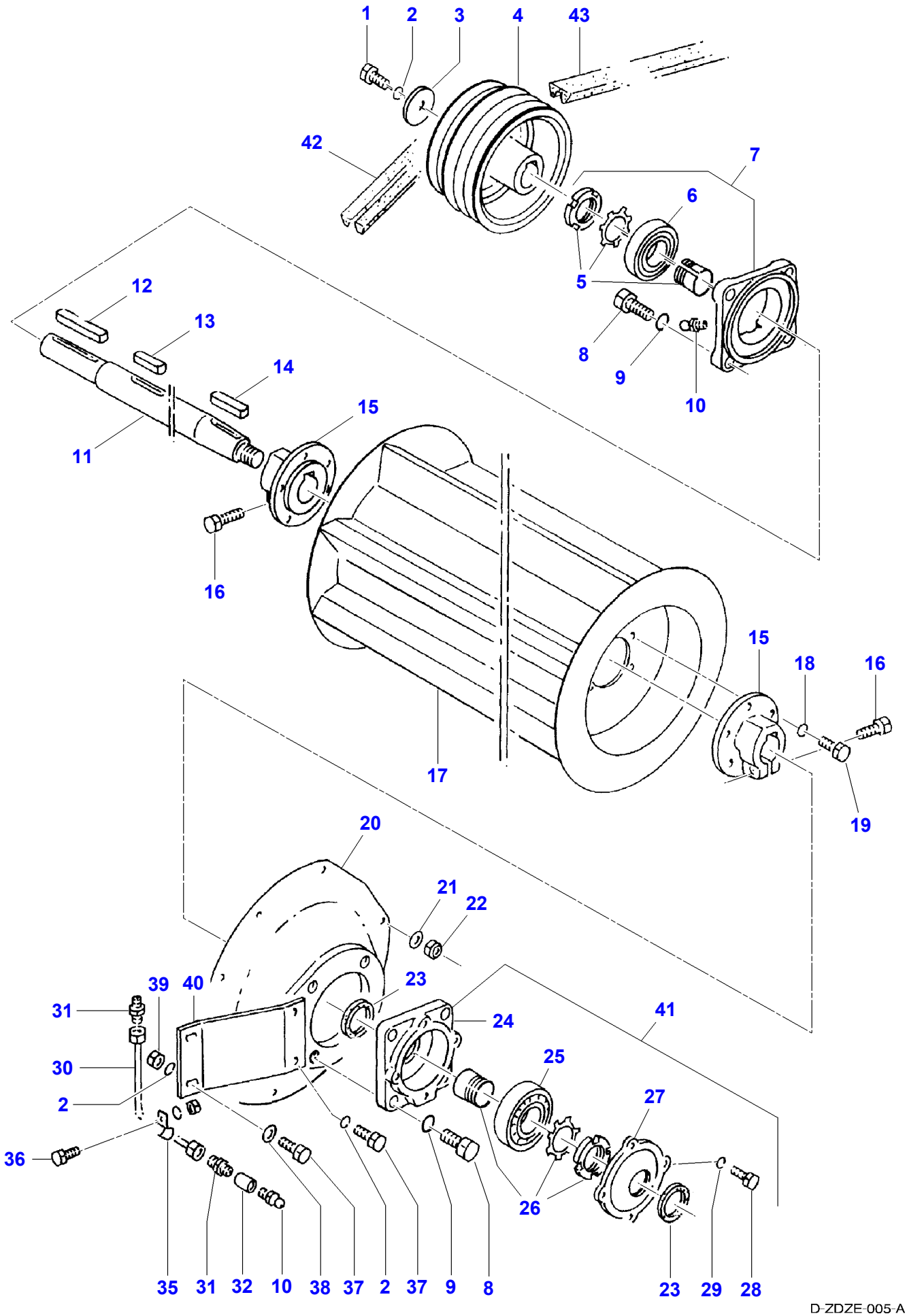
1
2
3
4
43
42
7
6
5
8
9
10
12
13
14
15
11
16
17
15
18
16
19
20
21
22
39
40
23
31
24
41
30
25
2
27
36
26
35
31
32
10
38
37
2
37
9
8
23
29
28
D-ZDZE-005-A

Item	Part Number	Qty	Description	Comments
1	3009507X1	1	Hex. Sock. Screw	M12 X 35
2	D26739978	5	Spring Washer	A12
3	D26733797	1	Disc	
4	D26734039	1	Pulley	5 X 215
5		1	Insert	[A] (7) 50 H 211 FAG
		1	Insert	[A] (7) H 2311 NTN
6	**D26747138**	1	Ball Bearing	(7) 76211 K 2RS FAG
		1	Bearing Assy	[A] (7) UK 211 NTN
7	D26733585	1	Bearing Flange	
8	391120X1	8	Hex. Sock. Screw	M16 X 45
9	D26739976	8	Spring Washer	A16
10	339003X1	2	Greaser	AM8
11	D26733636	1	Shaft	
12	D26739820	1	Key Parallel	12 X 8 X 110
13	D26740037	2	Key Parallel	14 X 9 X 50
14	D43107900	1	Key	14 X 9 X 70
15	D26733574	2	Hub	
16		2	Hex. Sock. Screw	[A] M12 X 40
17	D26850021	1	Beater	
18	D41101900	10	Spring Washer	A10
19	3009493X1	10	Hex. Sock. Screw	M10 X 30
20	D26736990	1	Cover	
21	D26739993	8	Washer	9 X 17 X 1,6
22	D26740007	8	Locknut	M8
23	D26736000	2	Seal	(41)
24	D26736095	1	Bearing Housing	(41)
25	D26735933	1	Ball Bearing	(41) 1311K TV C3
26	D26735922	1	Bush	(41) 50 H 311
27	D26736096	1	Bearing Cap	(41)
28	339123X1	4	Hex. Sock. Screw	(41) M8 X 20
29	D41102100	4	Washer	(41) A8
30	D26735723	1	Lub.Oil Pipe	
31	D26733513	2	Union	
32	D26735983	1	Sleeve	10 X 20
33	D41010600	1	Nut	[B] M6
34	D41100600	1	Spring Washer	[B] A6
35	D26733383	1	Clamp	12 X 20
36	339560X1	1	Hex. Sock. Screw	M6 X 16
37	1440716X1	4	Hex. Sock. Screw	M12 X 30
38	D26740159	2	Washer	13 X 28 X 2
39	3009695X1	2	Nut	M12
40	D26733998	1	Reinforcement	
41	D49030030	1	Bearing Flange	
42	**D26733588**	1	Kit, V Belt	2/17 X 2835
43	**D26735939**	1	V Belt	2HBX 3280

FOOTNOTE [A] NUMBER TO BE ADVISED
FOOTNOTE [B] NOT ILLUSTRATED

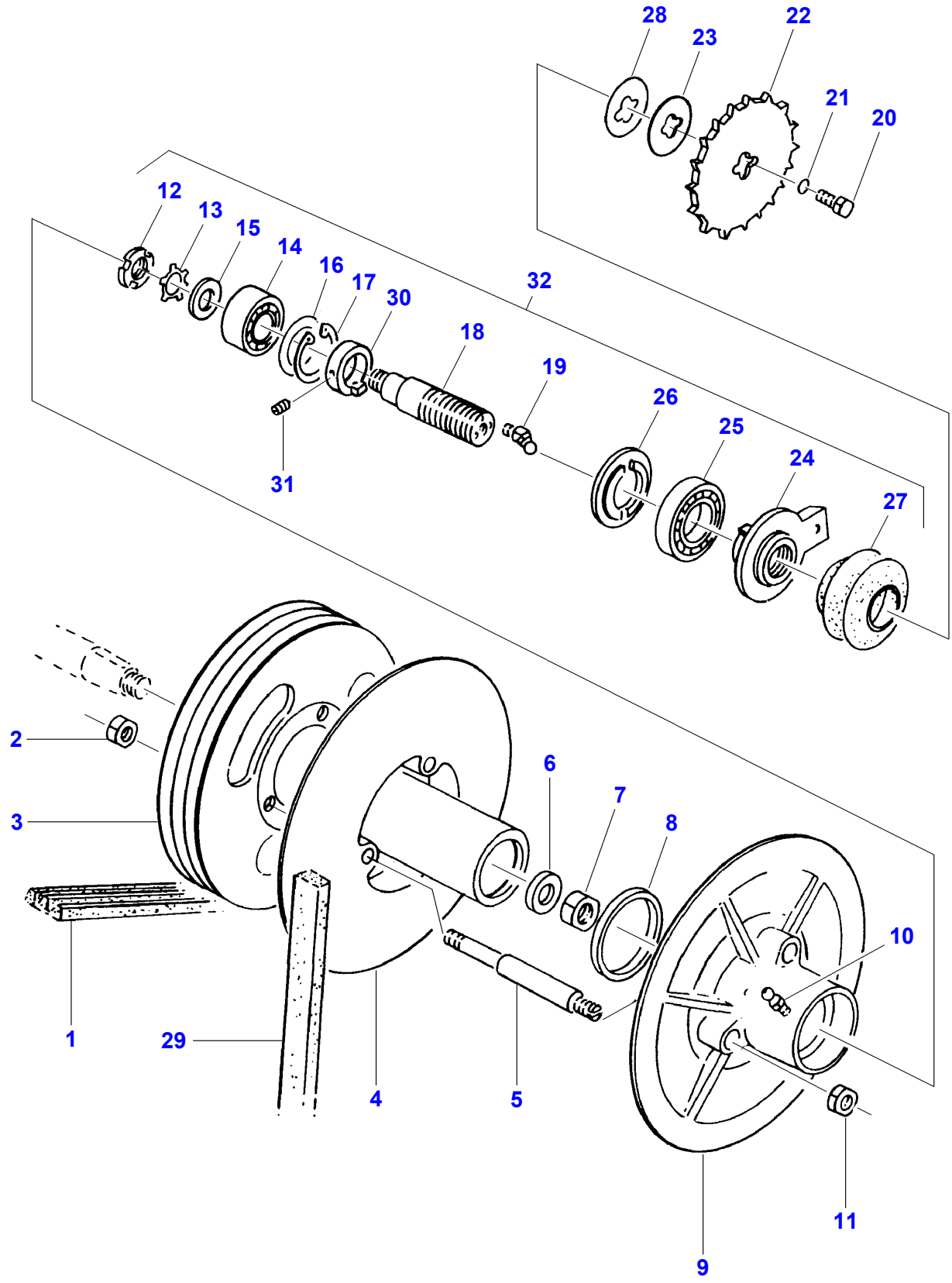
28
23
22
21
20
12
13
15
14
16
17
30
32
18
19
26
25
24
27
31
2
3
6
7
8
10
1
29
4
5
11
9

D-ZDZM-001-B

Item	Part Number	Qty	Description	Comments
1	**D26732815**	1	V Belt	3HBX 4480
2		3	Locknut	[A] VM16
3	D26733882	1	Pulley	3/17 X 430
4	D26733875	1	Pulley Half	
5	D26733902	3	Clevis Pin	
6	D26733886	1	Washer	25 X 55 X 10
7	D26739727	1	Nut	M24
8	D26733580	1	Scraper	
9	D26733995	1	Pulley Half	
10	D26739779	2	Grease Nipple	AM6
11	3764827M1	6	Nut	BM16
12	D26739782	1	Groove Nut	(32) M30
13	D26735924	1	Lock Washer	(32) A30
14	**D26735947**	1	Ball Bearing	(32) 5307
15	D26733582	1	Bush	(32)
16	D46173300	X	Spacer	(32) 63 X 80 X 0,1
	D26740108	X	Spacer	(32) 63 X 80 X 0,2
17	339437X1	1	Circlip	(32) 80 X 4
18	D26736107	1	Bush	(32)
19	D43002600	1	Greaser	(32) BM8
20	339761X1	2	Hex. Sock. Screw	M8 X 25
21	D41102100	2	Washer	A8
22	D26734108	1	Sprocket	Number of teeth/spines 48
23	D26734109	1	Retainer	
24	D26736210	1	Disc	(32)
25	D26735919	1	Bear. 6212	(32)
26	D26733981	1	Thrust Washer	(32)
27	D26733443	1	Bellows	(32)
28	D26734180	X	Washer	
29	**D26733312**	1	V Belt	55 X 22 X 2021
30		1	Bush	[A] (32)
31	D26739356	2	Stud	(32) M6 X 6
32	D26850029	1	Bush	

FOOTNOTE [A] NUMBER TO BE ADVISED

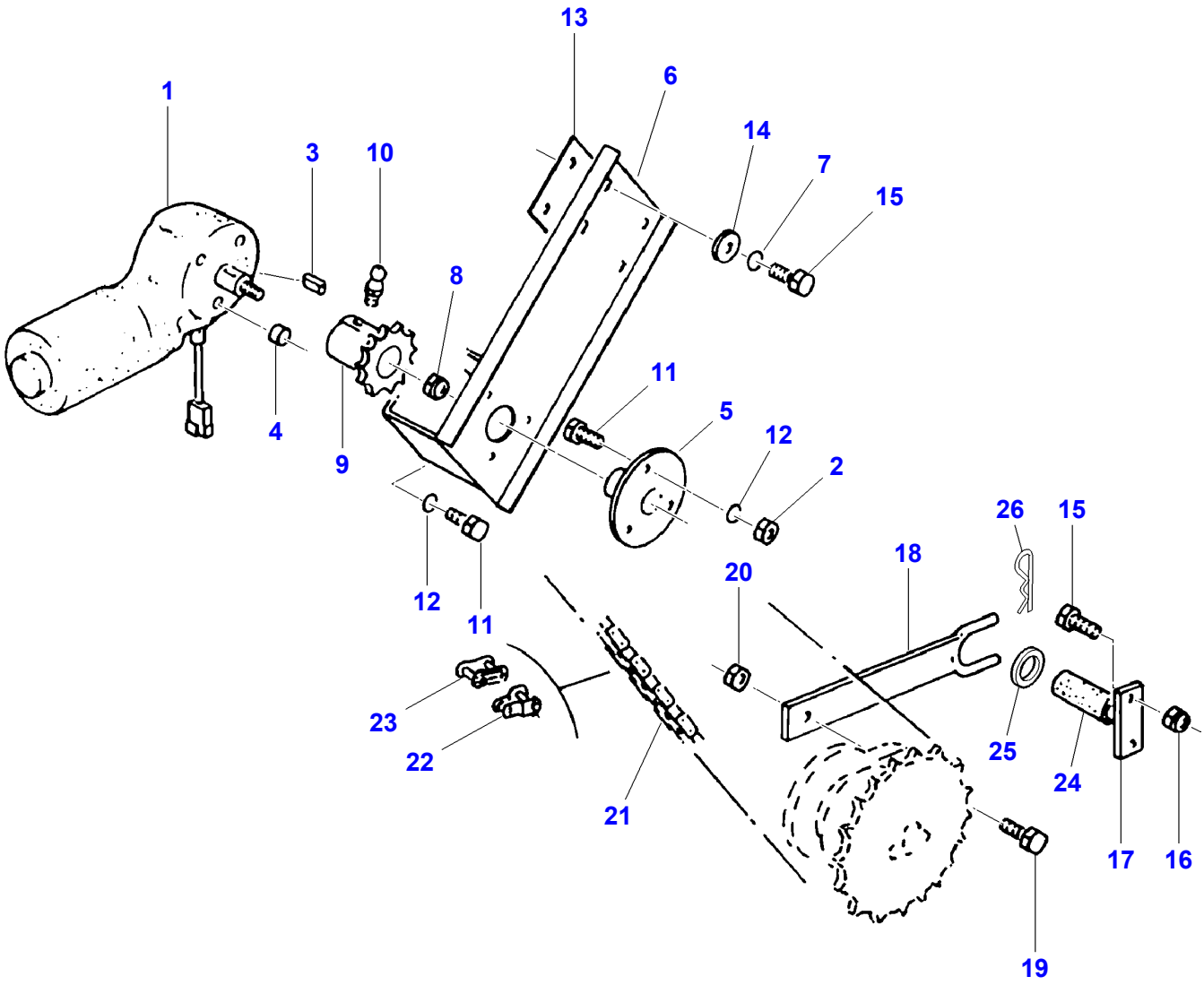

D-ZDZN-001-B

Item	Part Number	Qty	Description	Comments
1	**D26735392**	1	Electric Motor	
2	D41010600	3	Nut	M6
3	D26732798	1	Key Parallel	2 X 3 X 10
4	D26734052	3	Spacer	
5	D26734452	1	Clevis Pin	
6	D26734451	1	Retainer	
7	D41101900	4	Spring Washer	A10
8	D41088800	1	Locknut	M6
9	D26734051	1	Sprocket	Number of teeth/spines 11
10	D43000300	1	Greaser	
11	339666X1	6	Hex. Sock. Screw	M6 X 20
12	D41100600	12	Spring Washer	A6
13	D26734274	X	Plate	
14	D26740188	4	Washer	40,5 X 25 X 4
15	3009492X1	6	Hex. Sock. Screw	M10 X 25
16	D28288162	2	Locknut	M10
17	D26734047	1	Retainer	
18	D26734074	1	Support	
19	339761X1	1	Hex. Sock. Screw	M8 X 25
20	D26740007	1	Locknut	M8
21	**D26733262**	1	Chain	085 1X70
22	**D49030003**	X	Chain Link	085 1C
23	**D49030021**	X	Chain Link	085 1E
24	D26733670	1	Hose	19 X 29 X 80
25	D20400523	1	Spacer	21/37 X 3
26	D41410700	1	Split Pin	5 X 32

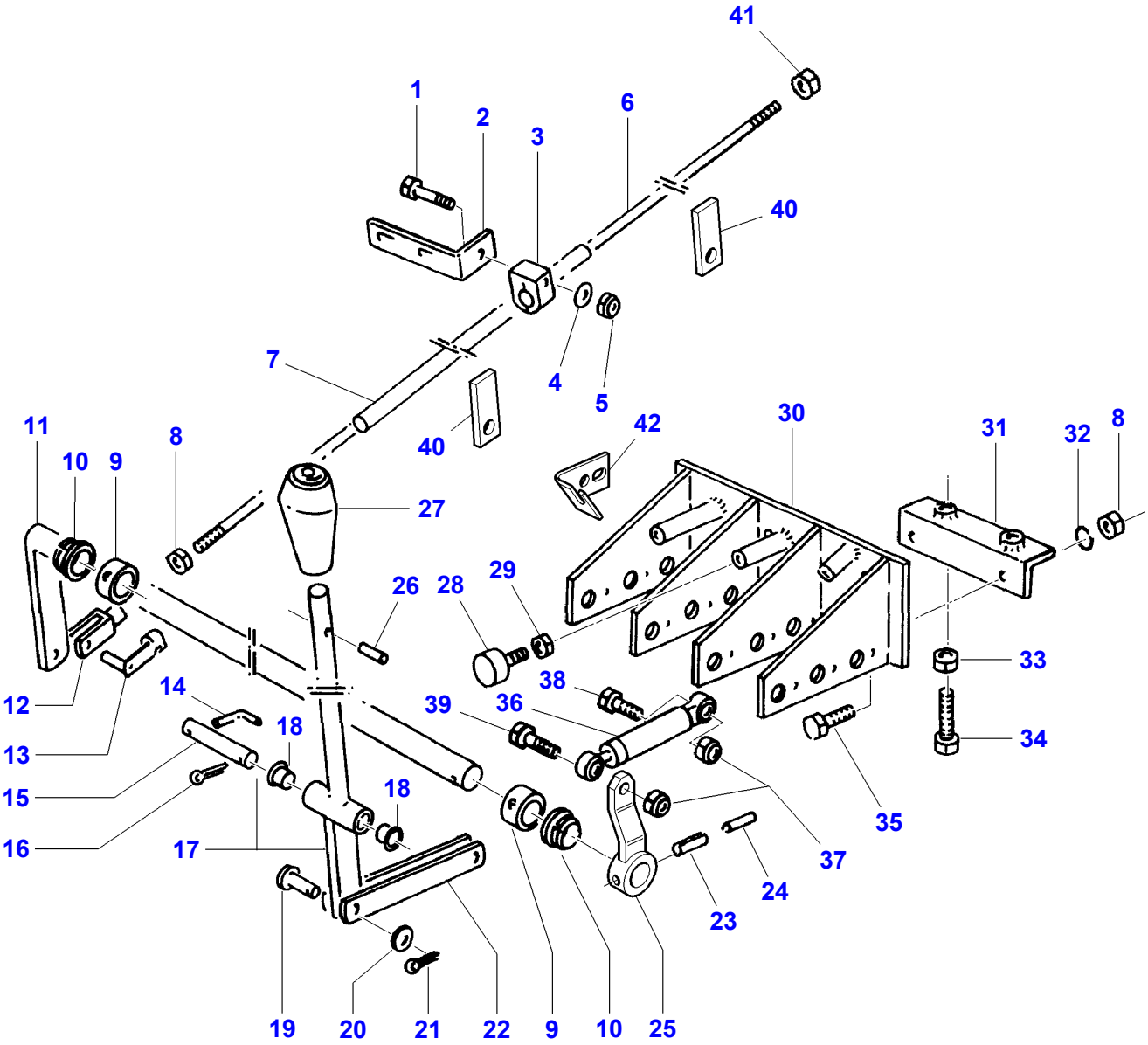
41
1
2
3
6
40
4
5
7
40
42
30
31
32
8
11
10
9
8
27
26
28
29
33
38
39
36
34
12
14
18
13
15
18
16
17
35
37
24
23
19
20
21
22
9
10
25

Item	Part Number	Qty	Description	Comments
1	D40422100	1	Hex. Sock. Screw	M6 X 45
2	D26734255	1	Anglepiece	
3	D26732826	1	Clamp	Diameter 15
4	D26739994	1	Washer	6,6 X 12,5 X 1,6
5	D41088800	1	Locknut	M6
6	D26734254	1	Linkage	
7	D26734240	1	Tube	
8	339402X1	1	Nut	M10
9	D26733371	2	Adjusting Collar	30 X 44
10	D26733675	2	Bush	30,3 X 35 X 15
11	D26734235	1	Cross Shaft	
12	D45905300	1	Fork Head	G10 X 40
13	D26739190	1	Bolt	10 X 40
14	D26734248	1	Pin	
15	D26732756	1	Clevis Pin	16 X 100 / 90
16	391405X1	1	Split Pin	4 X 25
17	D26735689	1	Lever	
18	D26736130	2	Bush	16 X 18 X 24/17
19	D26740036	1	Clevis Pin	10 X 28 / 24
20	D20400471	1	Washer	10,5 X 20 X 2
21	D41405800	1	Split Pin	3,2 X 20
22	D26735521	2	Joint Piece	
23	D42616200	1	Pin	8 X 45
24	D26747057	1	Pin	5 X 45
25	D26736514	1	Lever	
26	D26739296	1	Groove Pin	6 X 24
27	D26734238	1	Knob	
28	D26733845	1	Buffer	
29	339169X1	1	Nut	M8
30	D26734246	1	Retaining Plate	
31	D26734249	1	Stop	
32	D41101900	4	Spring Washer	A10
33	D41087600	2	Locknut	M12
34	D40408000	1	Hex. Sock. Screw	M10 X 40
35	D26739757	4	Hex. Sock. Screw	M10 X 35
36	D26734257	1	Shock Absorber	
37	D28288162	2	Locknut	M10
38	D40426000	1	Hex. Sock. Screw	M10 X 50
39	D40426200	1	Screw	M10 X 60
40	D26734096	2	Bracket	
41	D41010800	1	Nut	M10
42	D28188137	1	Bracket	

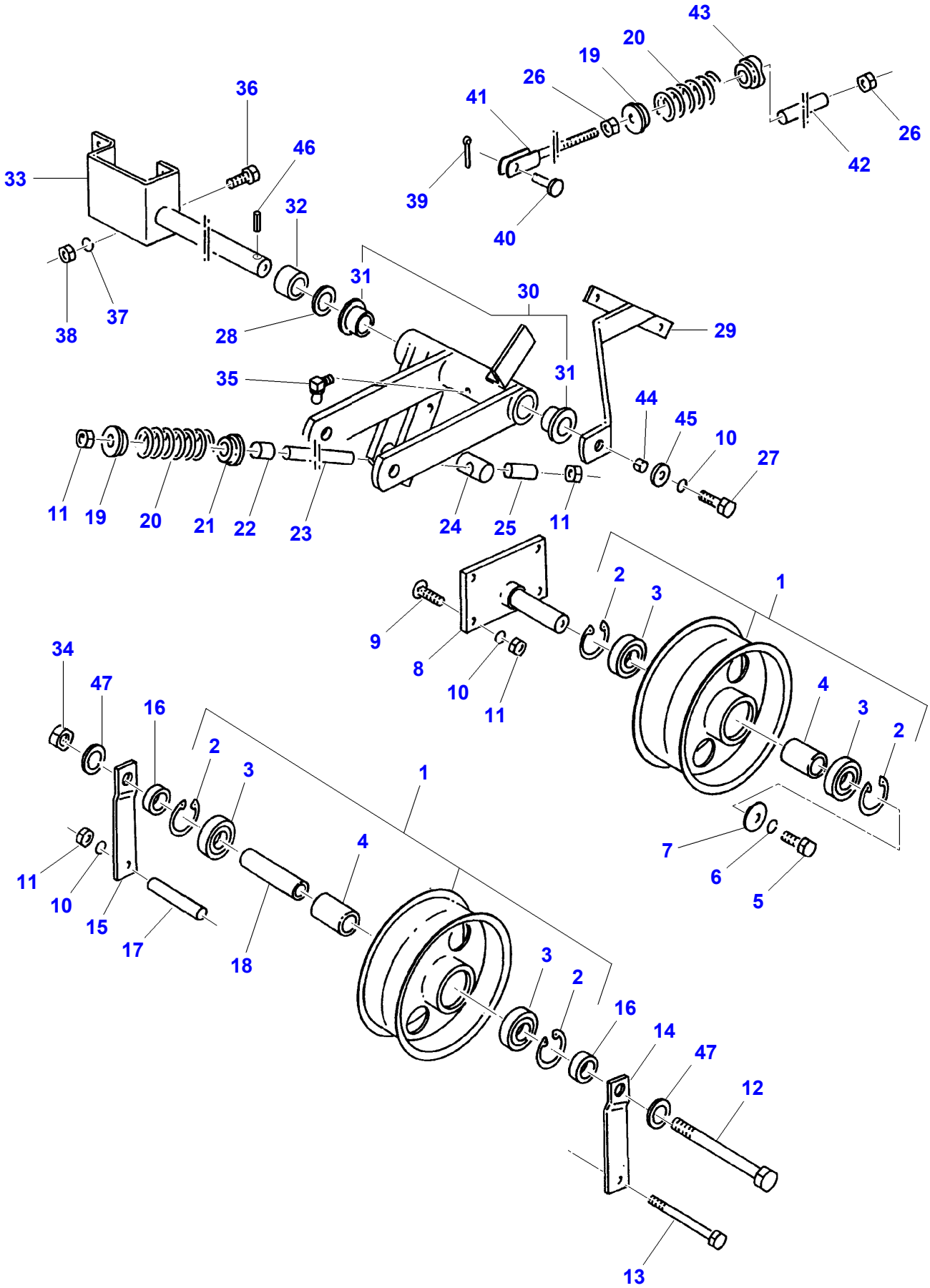
43
20
19
26
41
36
46
33
32
39
40
42
26
31
30
38
37
28
29
35
31
44
45
10
27
11
19
20
21
22
23
24
25
11
2
3
1
9
8
10
11
34
47
16
2
3
1
4
4
3
2
7
6
5
11
10
15
17
18
3
2
16
14
47
12
13

D-ZDZO-002-B

Item	Part Number	Qty	Description	Comments
1	D26736029	2	Pulley,Tensioner	95 / 250
2	D42514000	2	Circlip	(1) 52 X 2
3	D41622800	4	Bear. 6205 2rs	(1)
4	D26736040	2	Bush	(1)
5	D26739708	1	Hex. Sock. Screw	M12 X 20
6	D26739978	1	Spring Washer	A12
7	D26740100	1	Washer	13 X 32 X 3
8	D26733586	1	Clevis Pin	
9	D26740082	4	Bolt	M10 X 25
10	D41101900	6	Spring Washer	A10
11	339402X1	7	Nut	M10
12	D26739746	1	Hex. Sock. Screw	M16 X 160
13	D26734182	1	Bolt	M10 X 130
14	D26733575	1	Joint Piece	
15	D26733576	1	Joint Piece	
16	D26733529	2	Bush	
17	D26733798	1	Spacer	
18	D26733780	1	Bearing Bush	
19	D26734087	2	Retaining Plate	
20	D26733731	2	Comp.Spring	
21	D26734088	1	Spring Pot	
22	D26733671	1	Bush	22 X 20
23	D26734128	1	Tube	3/8 X 220
24	D26733896	1	Clevis Pin	
25	D26733672	1	Bush	22 X 40
26	3009695X1	4	Nut	M12
27		1	Hex. Sock. Screw	[A] M10 X 40
28	D26741113	1	Washer	26 X 44 X 4
29	D26734654	1	Retainer	
30	D26736074	1	Support	
31	D26735995	2	Bush	Diameter 25,3
32	D26733579	1	Spacer	
33	D26734652	1	Support	
34	D41087900	1	Locknut	M16
35	D43002600	1	Greaser	CM8
36	339123X1	4	Hex. Sock. Screw	M8 X 20
37	D41102100	4	Washer	A8
38	339169X1	1	Nut	M8
39	D41406200	1	Split Pin	3,2 X 20
40	D26740036	1	Clevis Pin	10 X 28 / 24
	D20400471	1	Washer	10,5 X 20 X 2
41	D26733945	1	Tie Rod	12 X 320
42	D26734149	1	Tube	
43	D26734150	1	Guide	
44		1	Pin	[A] 13 X 16
45	D26740188	1	Washer	10,5 X 25 X 4
46	D26739246	1	Dowel	
47	D20400518	2	Spacer	16,5 X 33 X 2

FOOTNOTE [A] NUMBER TO BE ADVISED

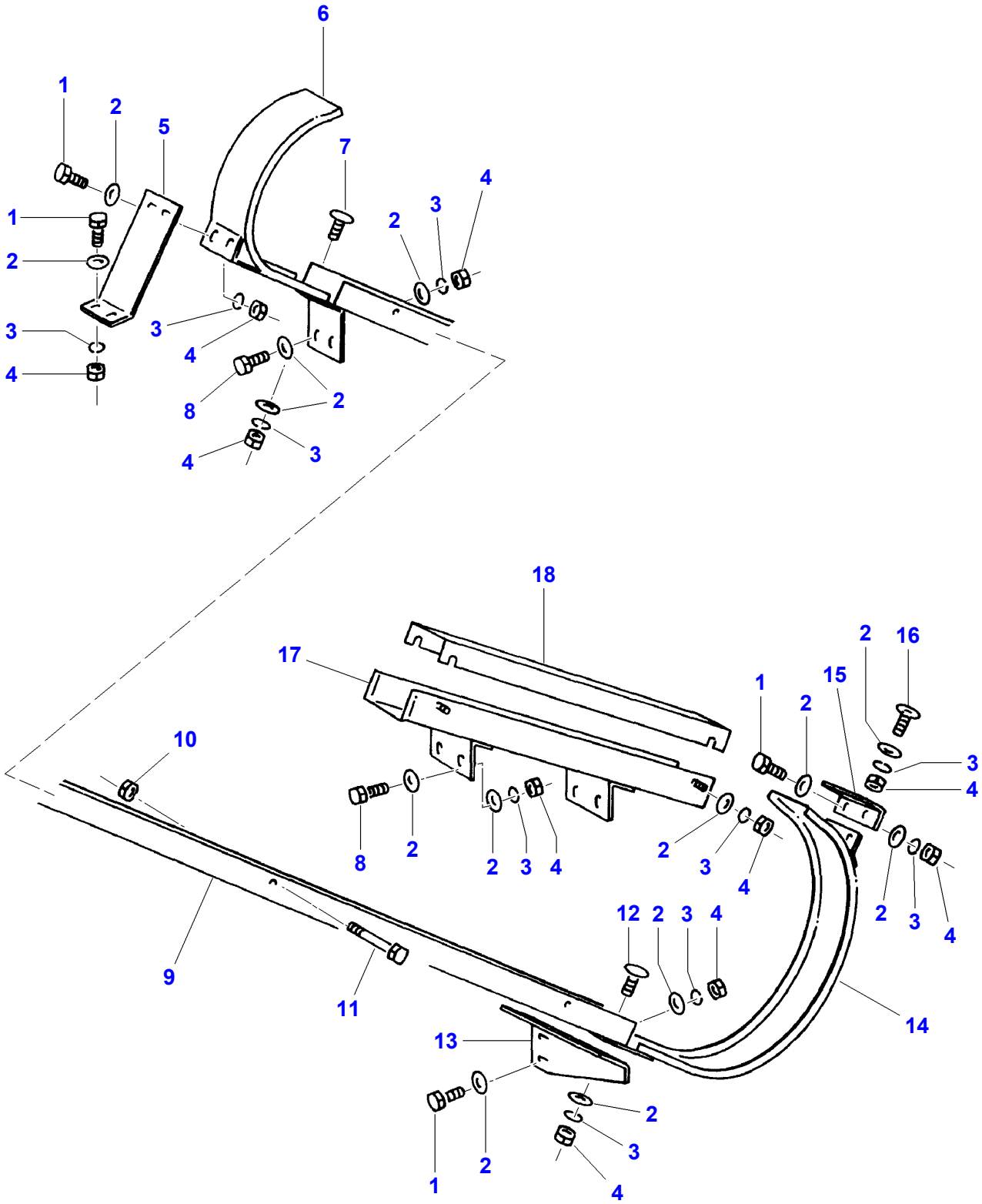
6
1
2
5
7
4
3
2
1
2
3
3
4
4
8
2
4
3
18
17
2
16
1
15
2
3
4
10
8
2
2
3
4
2
3
4
2
3
4
12
2
3
4
9
11
14
13
2
3
1
2
4

Item	Part Number	Qty	Description	Comments
1	339123X1	8	Hex. Sock. Screw	M8 X 20
2	D26739993	X	Washer	9 X 17 X 1,6
3	D41102100	24	Washer	A8
4	339169X1	24	Nut	M8
5	D26733577	1	Joint Piece	
6	D26733530	1	Belt Guide	
7	D40063700	2	Screw Special	
8	339761X1	6	Hex. Sock. Screw	M8 X 25
9	D26733859	1	Belt Guide	
10	D26740007	3	Locknut	M8
11	D26739965	3	Hex. Sock. Screw	M8 X 80
12	D40063700	2	Screw Special	
13	D26733799	1	Belt Guide	
14	D26733826	1	Belt Guide	
15	D26733800	1	Anglepiece	
16	D40063700	2	Screw Special	
17	D26733637	1	Belt Guide	
18	D26733825	1	Belt Guide	

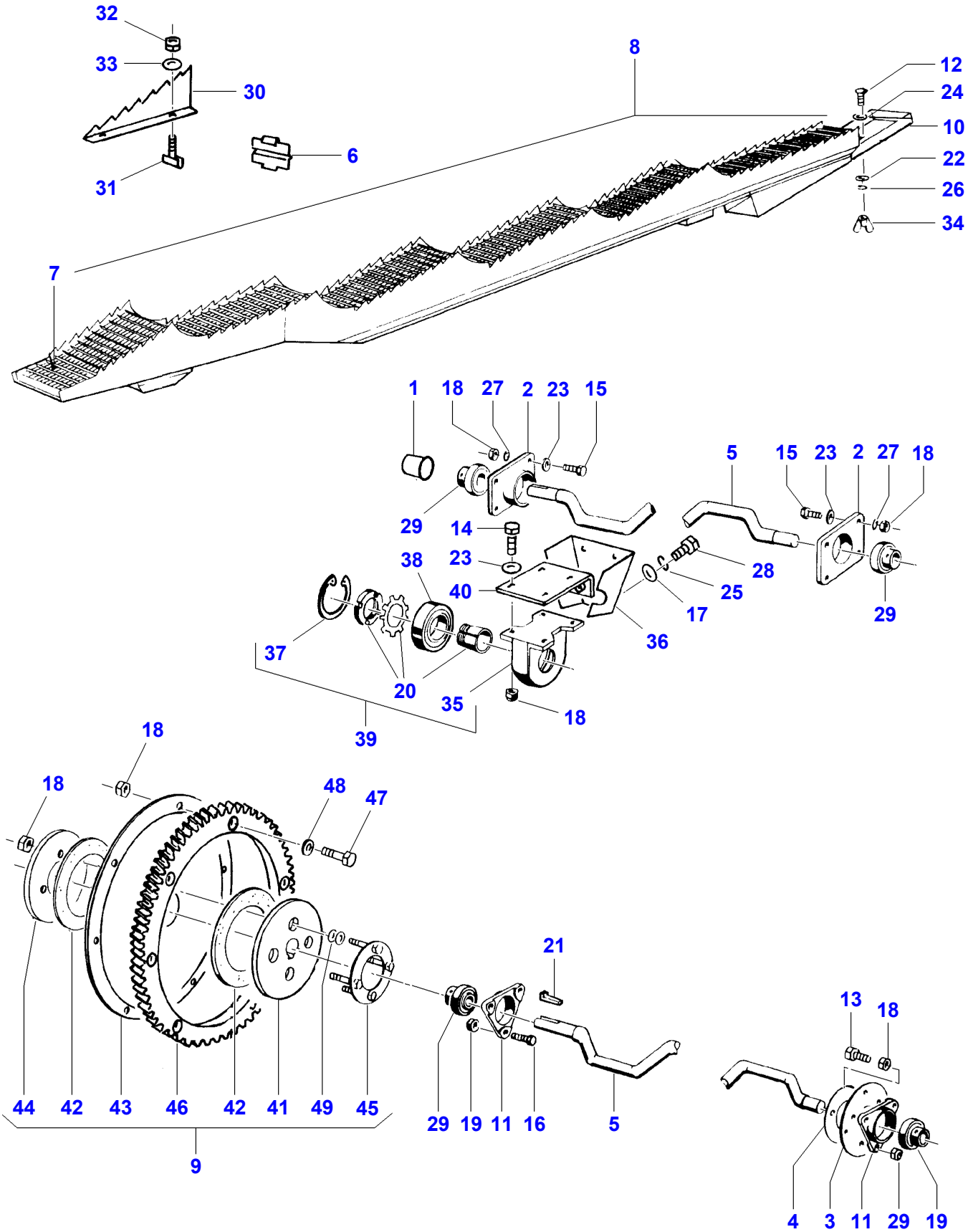
32
33
30
31
6
8
12
24
10
22
26
34
7
1
18
27
2
23
15
29
14
38
23
40
37
20
35
18
39
36
17
25
28
5
15
23
2
27
18
29
18
18
48
47
44
42
43
46
42
41
49
45
9
21
29
19
11
16
5
13
18
4
3
11
29
19

D-ZEZA-006-A

Item	Part Number	Qty	Description	Comments
1	D26734353	1	Cap	
2	D16736089	2	Bearing Housing	
3	D26733587	1	Cover	
4	D26733589	1	Washer	
5	D26733781	2	Crankshaft	
6	D26741031	20	Cover	
7	D26738051	X	Facing	
8	D26734192	5	Walker	
9		1	Torque Limiter	[A,B]
10		5	Support	[A]
11	D26733721	2	Bearing Housing	Diameter 35
12	339170X1	10	Screw Special	[A] M8 X 20
13	3009491X1	4	Hex. Sock. Screw	M10 X 20
14	3009493X1	40	Hex. Sock. Screw	M10 X 30
15	D26739757	8	Hex. Sock. Screw	M10 X 35
16	3009507X1	8	Hex. Sock. Screw	M12 X 35
17	D26739994	10	Washer	6,6 X 12,5 X 1,6
18	D28288162	64	Locknut	M10
19	D26740020	6	Locknut	M12
20	D26734152	10	Tension Bushing	
21	D43155000	1	Gib Key	10 X 8 X 50
22	D26739993	6	Washer	9 X 17 X 1,6
23	D26740161	48	Washer	10,5 X 30 X 3 ZN
24	D26740159	6	Washer	13 X 28 X 2
25	D41100600	10	Spring Washer	A6
26	D41102100	X	Washer	A8
27	D41101900	X	Spring Washer	A10
28	391074X1	10	Hex. Sock. Screw	M6 X 12
29	**D26733362**	4	Bearing	YS 35
30	D26733907	X	Raiser	[C]
31	D26733475	X	Bolt	[C]
32	D41010600	X	Nut	[C] M6
33	D26739994	X	Washer	[C] 6,6 X 12,5 X 1,6
34	339106X1	10	Wing Nut	M8
35	D26733877	10	Bearing Housing	(39)
36	D26733689	5	Bearing Cap	
37	1440516X1	10	Circlip	(39) 90 X 3
38	**D26733363**	10	Bearing Assy	(39) K 50
39	**D26737040**	10	Bearing	
40	D26733690	5	Cover	
41	D26734120	1	Hub	(9)
42	**D26734144**	2	Clutch Lining	(9)
43	D26733863	1	Retaining Plate	(9)
44	D26733862	1	Thrust Plate	(9)
45	D26733533	1	Retaining Plate	(9)
46	D26733782	1	Crownwheel	[B] (9) Number of teeth/spines 60
	D26733532	1	Crownwheel	[D] (9) Number of teeth/spines 59
47	D26739755	6	Hex. Sock. Screw	M10 X 45
48	D20400512	12	Washer	10.5 X 25 X 2.5
49	D41112000	48	Washer	(9) 10,2 X 20 X 1,1

FOOTNOTE [A] NUMBER TO BE ADVISED
FOOTNOTE [B] STANDARD
FOOTNOTE [C] OPTIONAL
FOOTNOTE [D] FOR RICE

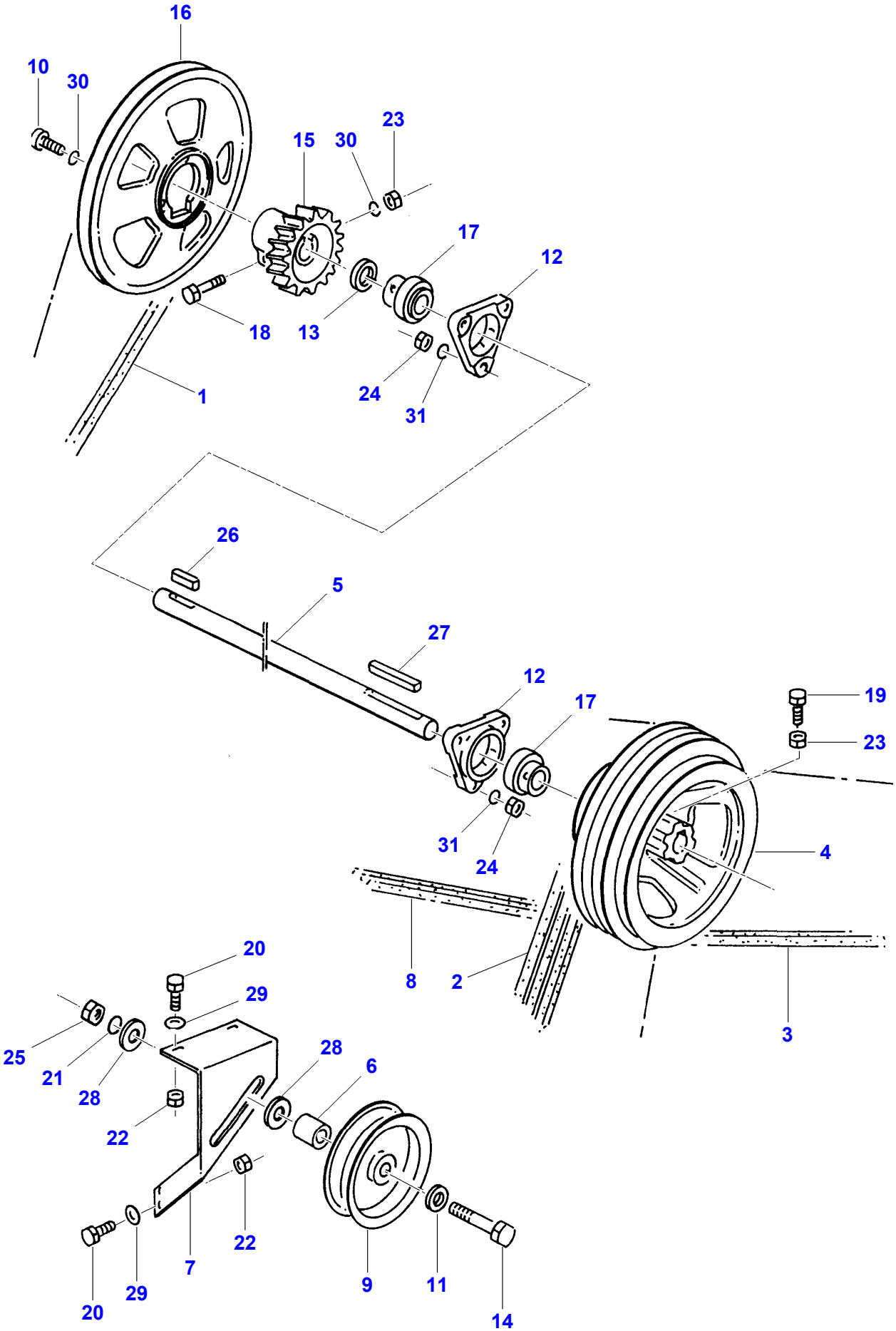
16
10
30
15
30
23
17
12
18
13
1
24
31
26
5
27
12
17
19
23
31
24
4
8
2
3
20
29
25
21
28
28
6
22
22
7
9
11
14
20
29

D-ZFAF-001-A

Item	Part Number	Qty	Description	Comments
1	**D26732797**	1	V Belt	SPBX 3425 LW
2	**D26733596**	1	Kit, V Belt	3/17 X 1981
3	**D26733248**	1	V Belt	17 X 3150
4	D26734029	1	Pulley	
5	D26733531	1	Countershaft	35 X 1634
6	D26736081	1	Spacer	
7	D26735984	1	Support	
8	**D26733588**	1	Kit, V Belt	2/17 X 2835
9	**D26733667**	1	Pulley,Tensioner	40 / 200
10	D26739267	3	Screw	M10 X 30
11	D26733620	1	Washer	17,2 X 25 X 4,3
12	**D26733356**	2	Bearing	Diameter 35
13		1	Chock	[A]
14	D40434200	1	Hex. Sock. Screw	M16 X 100
15	D26733868	1	Pinion	Number of teeth/spines 16
	D26733534	1	Pinion	[B] Number of teeth/spines 17
16	D26740112	1	Pulley	
	D26734444	1	Pulley	[C]
17	**D26733356**	2	Bearing	YB 35
18	339019X1	1	Hex. Sock. Screw	M10 X 50
19	339814X1	2	Hex. Sock. Screw	M10 X 35
20	3009493X1	4	Hex. Sock. Screw	M10 X 30
21		1	Washer	[A] A16
22	D28288162	4	Locknut	M10
23	339402X1	3	Nut	M10
24	3009695X1	6	Nut	M12
25	339034X1	1	Nut	M16
26	1441579X1	1	Key Parallel	10 X 8 X 56
27	D26739840	1	Key Parallel	10 X 8 X 125
28	D26740087	1	Washer	17 X 44 X 3
29	D26739992	4	Washer	11 X 20 X 2
30	D41101900	4	Spring Washer	A10
31	D26739978	6	Spring Washer	A12

FOOTNOTE [A] NUMBER TO BE ADVISED
FOOTNOTE [B] FOR RICE
FOOTNOTE [C] HC-CLEANING SYSTEM

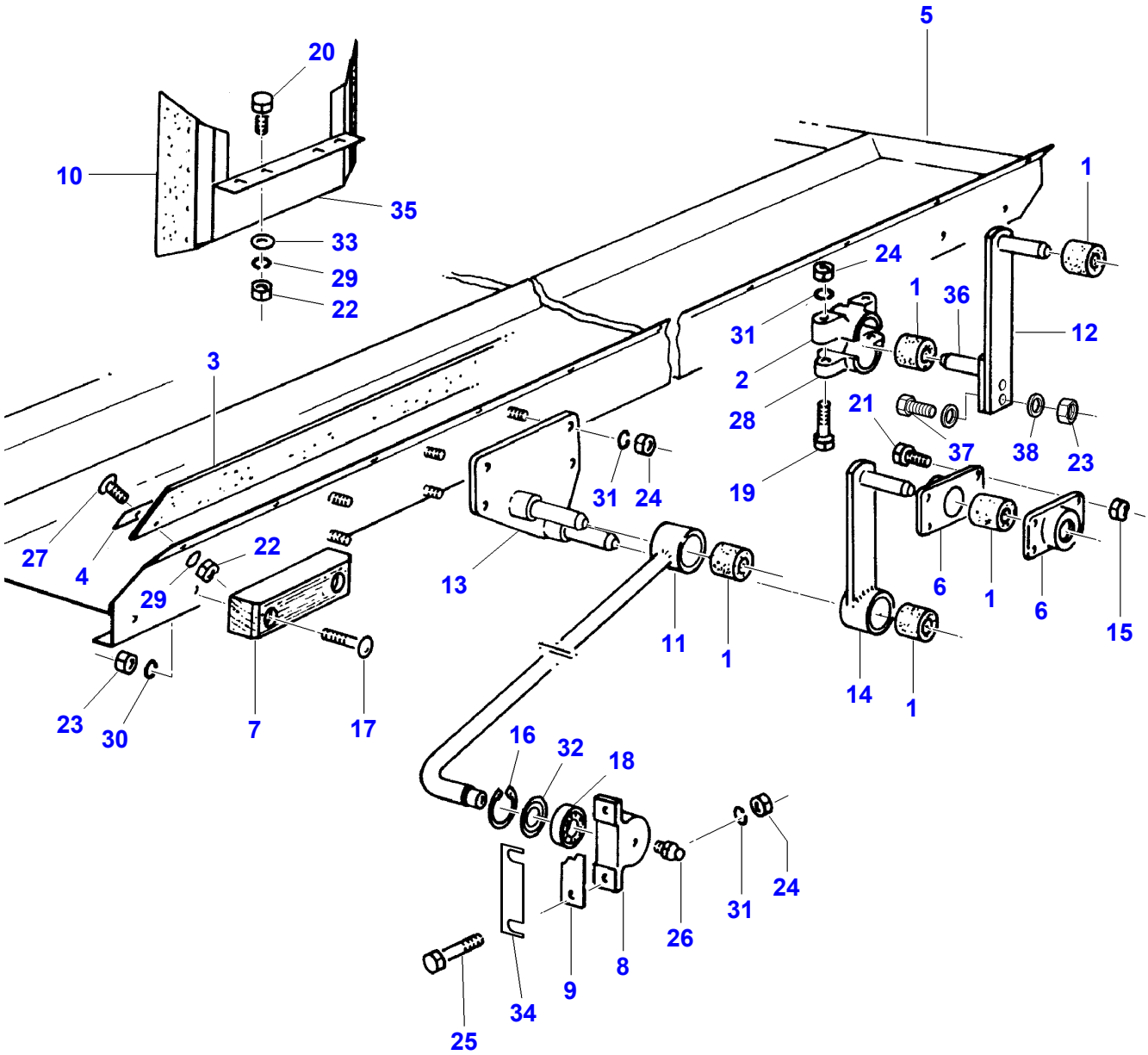
5
20
10
35
33
29
22
1
24
1
36
12
31
2
28
21
37
38
23
19
3
31
24
27
4
22
29
13
11
1
6
1
6
15
14
1
23
30
7
17
16
32
18
24
31
26
8
9
34
25

D-ZFAG-001-B

Item	Part Number	Qty	Description	Comments
1	**D26733464**	10	Vibration Mount	
2	**D26733591**	2	Bearing	
3	D26733639	2	Gasket	
4	D26741102	2	Strap	
5	D28488047	1	Grain Pan	
6	**D26736036**	2	Bearing	
7	D26733595	4	Spacer	
8	D26736001	2	Bearing Housing	
9	D26733638	1	Shim	
10	D26736141	2	Seal Plate	
11	D26744342	2	Draglink	
12	D26736787	2	Rockerarm	
13	D26736002	1	Plate	Left Hand
	D26736003	1	Plate	Right Hand
14	D26736004	2	Rockerarm	
15	D26740007	8	Locknut	M8
16	339199X1	2	Circlip	47 X 1,75
17		8	Screw	[A] M8 X 45
18	D26741110	2	Ring	H4470
19	D40426400	4	Hex. Sock. Screw	M10 X 65
20	339560X1	4	Hex. Sock. Screw	M6 X 16
21	339761X1	8	Hex. Sock. Screw	M8 X 25
22	D41010600	38	Nut	M6
23	339169X1	8	Nut	M8
24	339402X1	16	Nut	M10
25	D26739880	4	Hex. Sock. Screw	M10 X 100
26	D26733079	2	Greaser	AS8
27	D26740135	34	Bolt	M6 X 15
28	**D26733590**	2	Bearing	
29	D41100600	38	Spring Washer	A6
30	D41102100	28	Washer	A8
31	D41101900	16	Spring Washer	A10
32	D26741110	2	Ring	2204 JV
33	D26740136	4	Washer	6,4 X 18 X 2 ZN
34	D26733827	2	Spacer	
35	D26736142	2	Plate	
36	D26737768	1	Rockerarm	
37	D40423600	2	Hex. Sock. Screw	M8 X 35
38	D20400413	4	Washer	

FOOTNOTE [A] NUMBER TO BE ADVISED

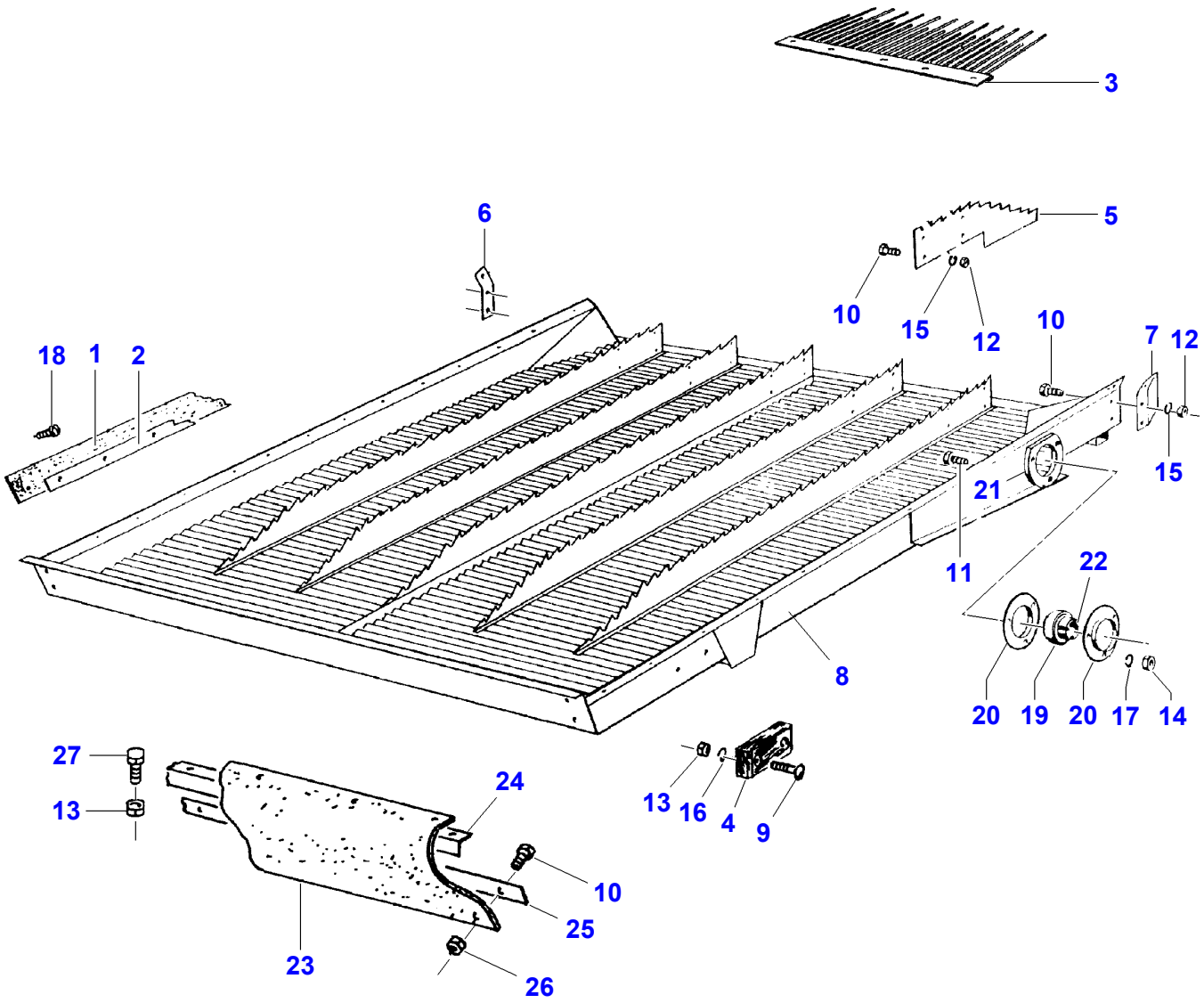
3
6
5
10
15
12
10
7
12
18
1
2
15
21
11
22
8
20
19
20
17
14
27
13
24
13
16
4
9
10
25
23
26

D-ZFAH-001-A

Item	Part Number	Qty	Description	Comments
1	D26733804	2	Rubber Section	
2	D26733592	2	Strap	20 X 1832
3	D26735245	3	Rake	
4	D26733595	2	Spacer	
5	D26733805	5	Plate	
6	D26733806	1	Gusset	
7	D26733807	1	Gusset	
8	D26735275	1	Grain Pan	
9		4	Screw	[A] M8 X 45
10	339560X1	39	Hex. Sock. Screw	M6 X 16
11	D26739757	6	Hex. Sock. Screw	M10 X 35
12	D41010600	26	Nut	M6
13	339169X1	11	Nut	M8
14	339402X1	6	Nut	M10
15	D41100600	32	Spring Washer	A6
16	D41102100	4	Washer	A8
17	D41101900	6	Spring Washer	A10
18	D40741100	24	Screw	B4,2 X 16
19	D26733370	2	Bearing	Diameter 30
20	D41708800	4	Bearing Flange	RB 30
21	D26733942	2	Spacer	
22	D26733898	2	Adjusting Collar	
23	D26733535	1	Canvas	
24	D26733783	1	Angle.	Up to Serial or Engine Number 6063
	D26734803	1	Angle.	From Serial or Engine Number 6064
25	D26734407	1	Strap	30 X 1104
26	D41088800	7	Locknut	M6
27	339124X1	6	Hex. Sock. Screw	M8 X 16

FOOTNOTE [A] NUMBER TO BE ADVISED

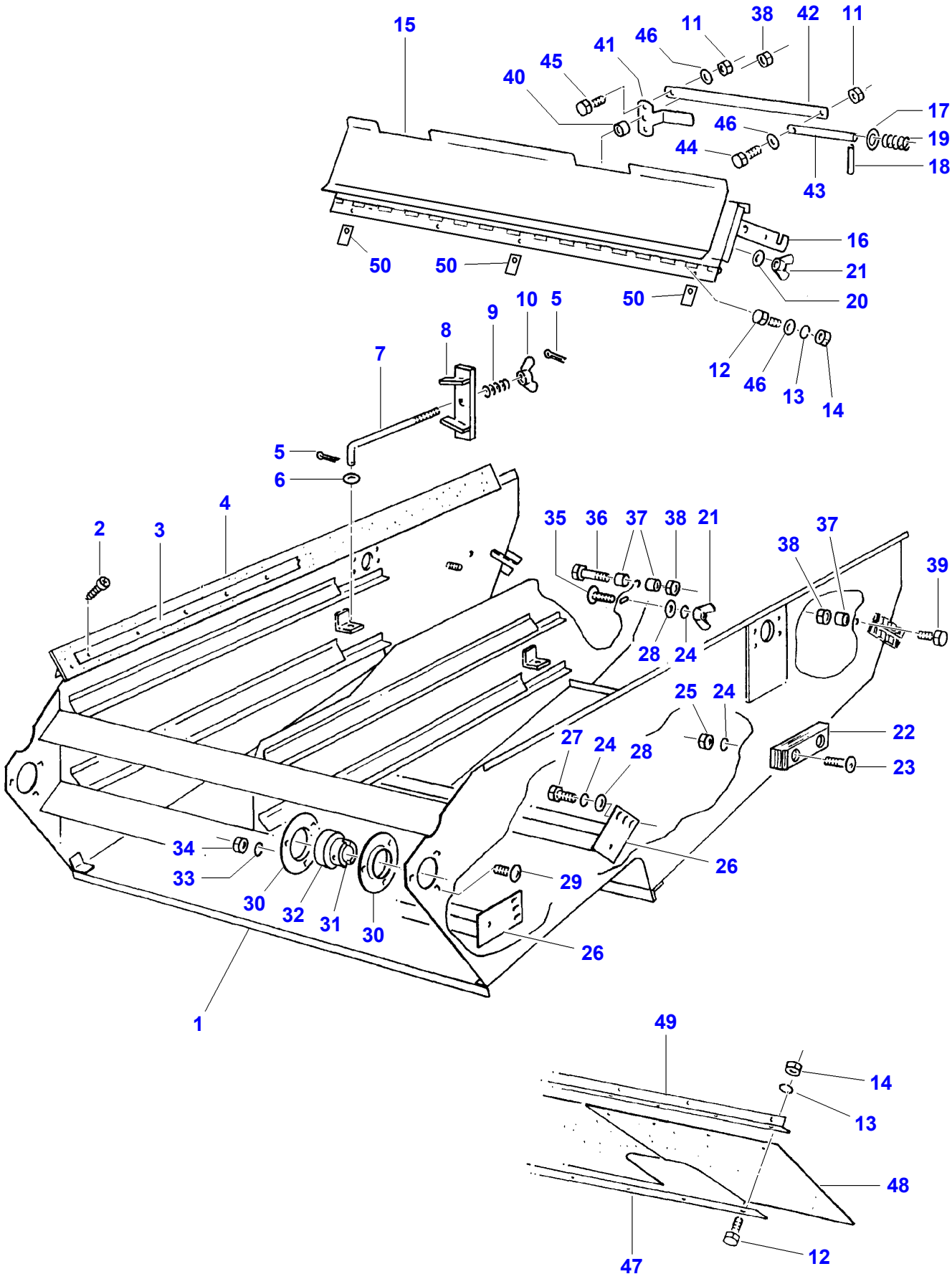
15
11
38
42
11
46
41
45
40
17
46
19
44
18
43
16
50
50
21
20
50
10
5
9
8
7
12
46
13
14
5
6
4
2
3
35
36
37
38
21
37
38
39
28
24
25
24
22
27
24
28
23
34
33
30
32
31
30
29
26
26
1
49
14
13
48
47
12

D-ZFAX-001-B

Item	Part Number	Qty	Description	Comments
1	D26850006	1	Sieve	
2	D40741100	24	Screw	B4,2 X 16
3	D26733594	2	Rail	
4	D26733857	2	Rubber Section	
5	D41405900	8	Pin	3,2 X 25
6	D26739992	4	Washer	11 X 20 X 2
7	D26733982	4	Bolt	
8	D26734703	4	Clamping Piece	
9	D26733328	4	Comp.Spring	
10	339539X1	4	Wing Nut	M10
11	D41088800	4	Locknut	M6
12	339560X1	13	Hex. Sock. Screw	M6 X 16
13	D41100600	13	Spring Washer	A6
14	D41010600	13	Nut	M6
15	D28488268	1	Seal Plate	
16	D26734628	1	Backplate	
17	D26740203	2	Washer	Diameter 13,5
18	D26739096	2	Pin	6 X 50
19	D26733321	2	Comp.Spring	
20	D20400408	3	Washer	8,4 X 25 X 3
21	339106X1	6	Wing Nut	M8
22	D26733593	2	Spacer	
23	D26739261	4	Screw	M8 X 25
24	D41102100	13	Washer	A8
25	339169X1	4	Nut	M8
26	D26733895	4	Guide	
27	339124X1	10	Hex. Sock. Screw	M8 X 16
	339123X1	2	Hex. Sock. Screw	M8 X 20
28	D26739993	X	Washer	9 X 17 X 1,6
29	390809X1	6	Screw Special	M10 X 25
30	D41708800	4	Bearing Flange	RB 30
31	D26733898	2	Adjusting Collar	
32	D26733370	2	Bearing	Diameter 30
33	D41101900	6	Spring Washer	A10
34	339402X1	6	Nut	M10
35		1	Screw	[A] M8 X 30
36	339745X1	1	Hex. Sock. Screw	M8 X 45
37	D26733510	3	Spacer	
38	D26740007	3	Locknut	M8
39	339761X1	2	Hex. Sock. Screw	M8 X 25
40	D26733510	1	Spacer	
41	D26734602	1	Joint Piece	
42	D26734603	2	Tie Rod	
43	D26734767	2	Bolt	
44	339804X1	2	Hex. Sock. Screw	M6 X 25
45	339666X1	2	Hex. Sock. Screw	M6 X 20
46	D26740136	9	Washer	6,4 X 18 X 2 ZN
47	D26734362	1	Band	
48	D26734551	2	Plate	
49	D26734456	2	Anglepiece	
50	D26735004	3	Joint Piece	

FOOTNOTE [A] NUMBER TO BE ADVISED

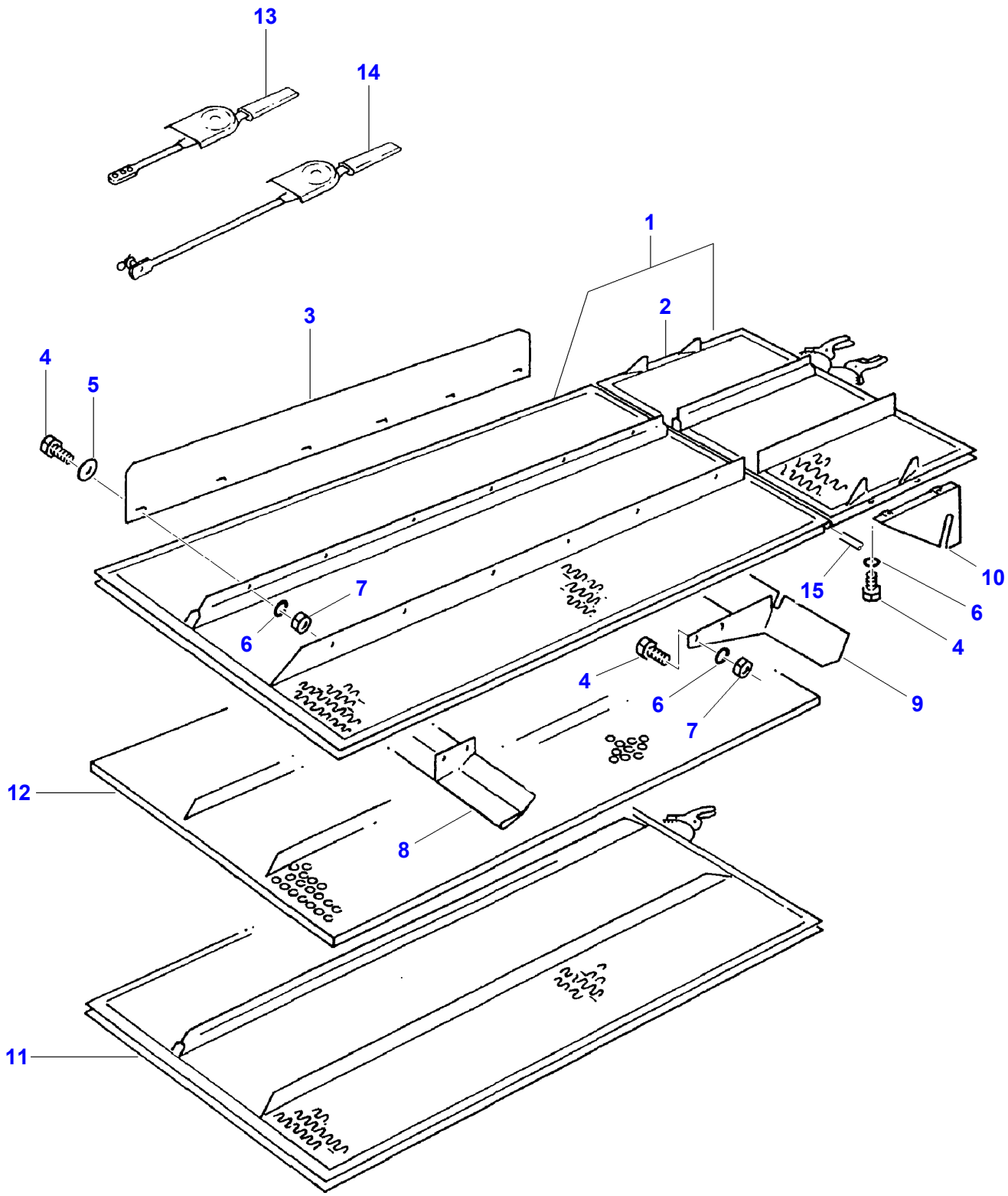

D-ZFAJ-001-B

Item	Part Number	Qty	Description	Comments
1	D26734677	2	Sieve	KL. US
	D26734678	2	Sieve	[B] (1) Top Z23-LAM
2		2	Extension	[A]
3	D26741030	4	Bar	
4	391074X1	48	Hex. Sock. Screw	M6 X 12
5	D26739994	24	Washer	6,6 X 12,5 X 1,6
6	D41100600	48	Spring Washer	A6
7	D41010600	36	Nut	M6
8	D26735282	2	Deflector	
9	D26735273	2	Deflector	
10	D26745240	2	Plate	Left Hand
	D26745239	2	Plate	Right Hand
11	D26734513	2	Sieve	[B] Bottom KL. US
12	D26734459	2	Sieve	Thickness 7,0 MM
	D26734460	2	Sieve	Thickness 11,0 MM
	D26734461	2	Sieve	Thickness 13,0 MM
		2	Sieve	[B] Thickness 3,0 MM
	D26734462	2	Sieve	[B] Thickness 4,0 MM
	D26734463	2	Sieve	[B] Thickness 5,5 MM
	D26734464	2	Sieve	[B] Thickness 9,0 MM
	D26734465	2	Sieve	[B] Thickness 15,0 MM
	D26734466	2	Sieve	[B] Thickness 18,0 MM
13		X	Lever	[A]
14		X	Lever	[B]
15	D28488259	2	Tube	

FOOTNOTE [A] NUMBER TO BE ADVISED
FOOTNOTE [B] OPTIONAL

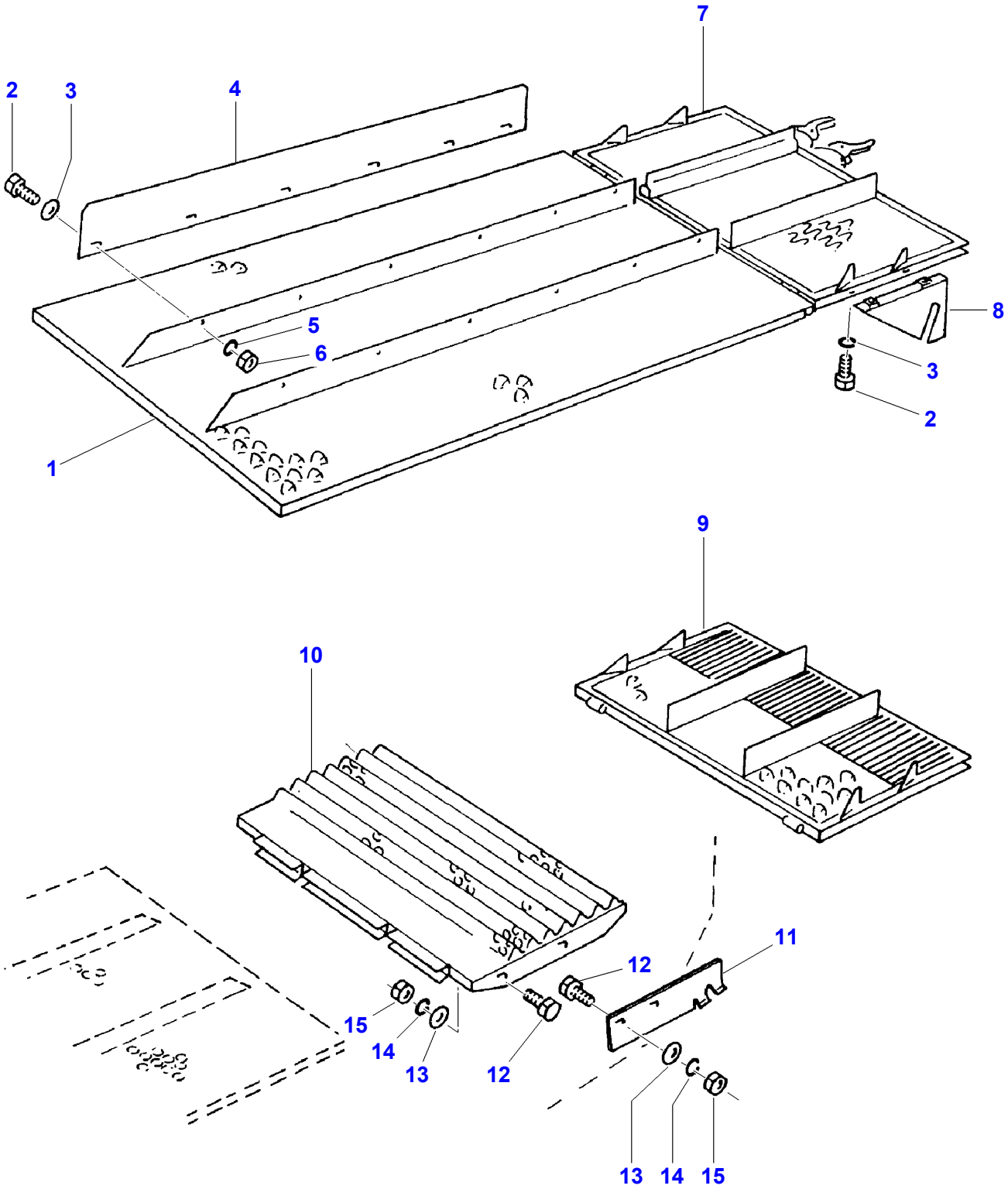

D-ZFAL-001-B

Item	Part Number	Qty	Description	Comments
1	D26734679	2	Sieve	32 / XV
	D26734680	2	Sieve	52 MM
	D26735026	2	Sieve	CCS
2	391074X1	32	Hex. Sock. Screw	M6 X 12
3	D26739994	32	Washer	6,6 X 12,5 X 1,6
4	D26741030	4	Bar	
5	D41100600	32	Spring Washer	A6
6	D41010600	24	Nut	M6
7		2	Extension	[A]
8	D26745240	2	Plate	(8) Left Hand
	D26745239	2	Plate	(8) Right Hand
9		2	Extension	[A]
10	D26734545	2	Extension	
		2	Extension	[A,B]
11	D26745235	1	Plate	Left Hand
	D26745234	1	Plate	Right Hand
12	339123X1	10	Hex. Sock. Screw	M8 X 20
13	D26739993	10	Washer	9 X 17 X 1,6
14	D41102100	10	Washer	A8
15	339169X1	10	Nut	M8

FOOTNOTE [A] NUMBER TO BE ADVISED
FOOTNOTE [B] FOR SUNFLOWERS

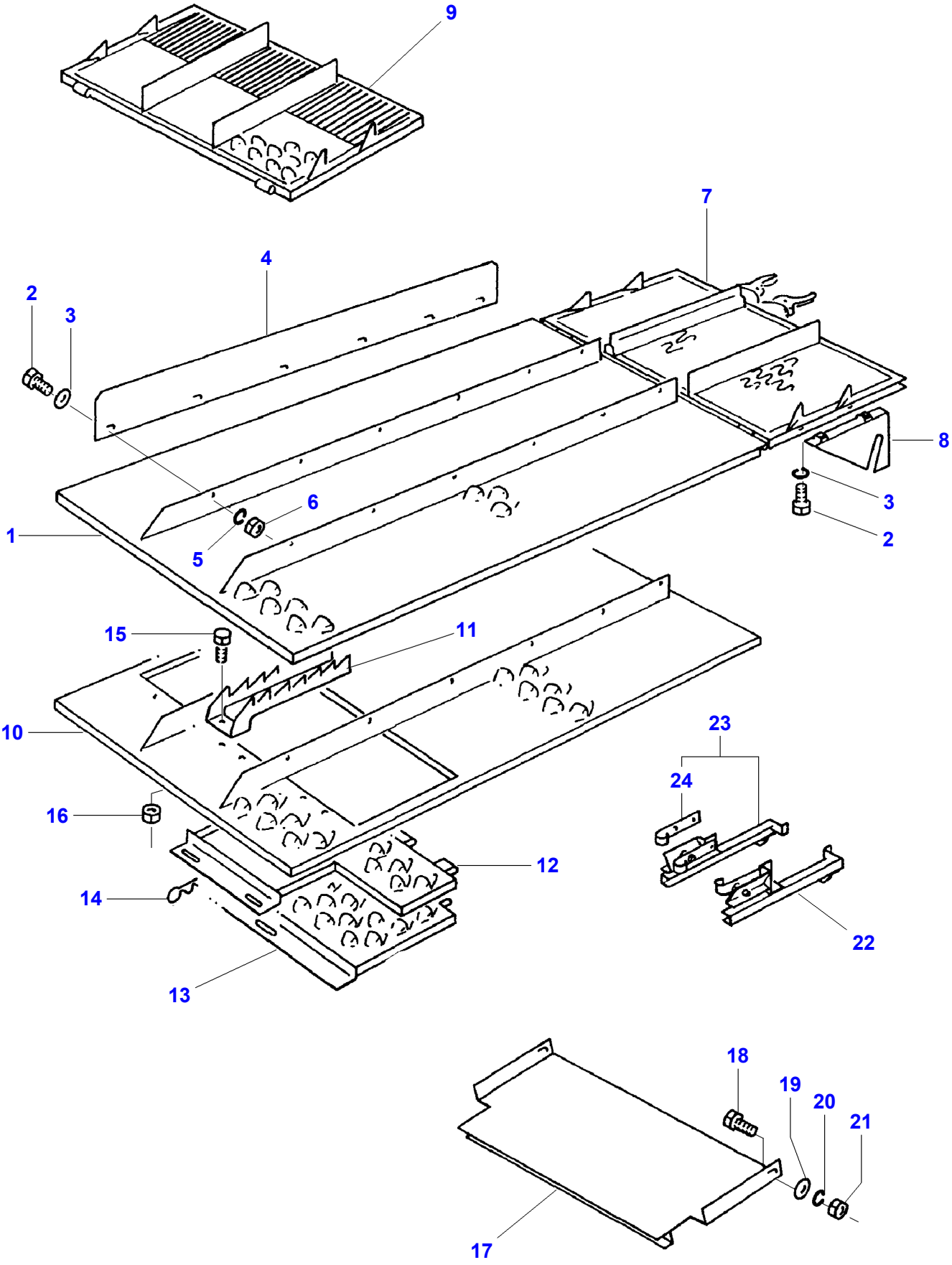

D-ZFAM-001-B

Item	Part Number	Qty	Description	Comments
1	D26734680	2	Sieve	52 MM
	D26734681	2	Sieve	80 X 40
2	391074X1	32	Hex. Sock. Screw	M6 X 12
3	D26739994	32	Washer	6,6 X 12,5 X 1,6
4	D26741030	4	Bar	
5	D41100600	32	Spring Washer	A6
6	D41010600	24	Nut	M6
7	D26734685	2	Extension	
8	D26745240	2	Plate	(9) Left Hand
	D26745239	2	Plate	(9) Right Hand
9		2	Extension	[A]
10	D26734682	2	Sieve	
11		6	Rake	[A]
12	D26733750	2	Interlayer	
13	D26733749	2	Front Part	N18
14	D26733349	4	Spring Clip	
15	391074X1	24	Hex. Sock. Screw	M6 X 12
16	D41088800	24	Locknut	M6
17	D26746715	2	Shield	[B]
	D26740939	2	Shield	[C]
18	339123X1	3	Hex. Sock. Screw	M8 X 20
19	D26739993	4	Washer	9 X 17 X 1,6
20	D41102100	3	Washer	A8
21	339169X1	3	Nut	M8
22	D26741097	2	Stop	Left Hand
23	D26741088	2	Stop	Right Hand
24	D26741100	4	Flat Spring	

FOOTNOTE [A] NUMBER TO BE ADVISED
FOOTNOTE [B] STANDARD
FOOTNOTE [C] HC-CLEANING SYSTEM

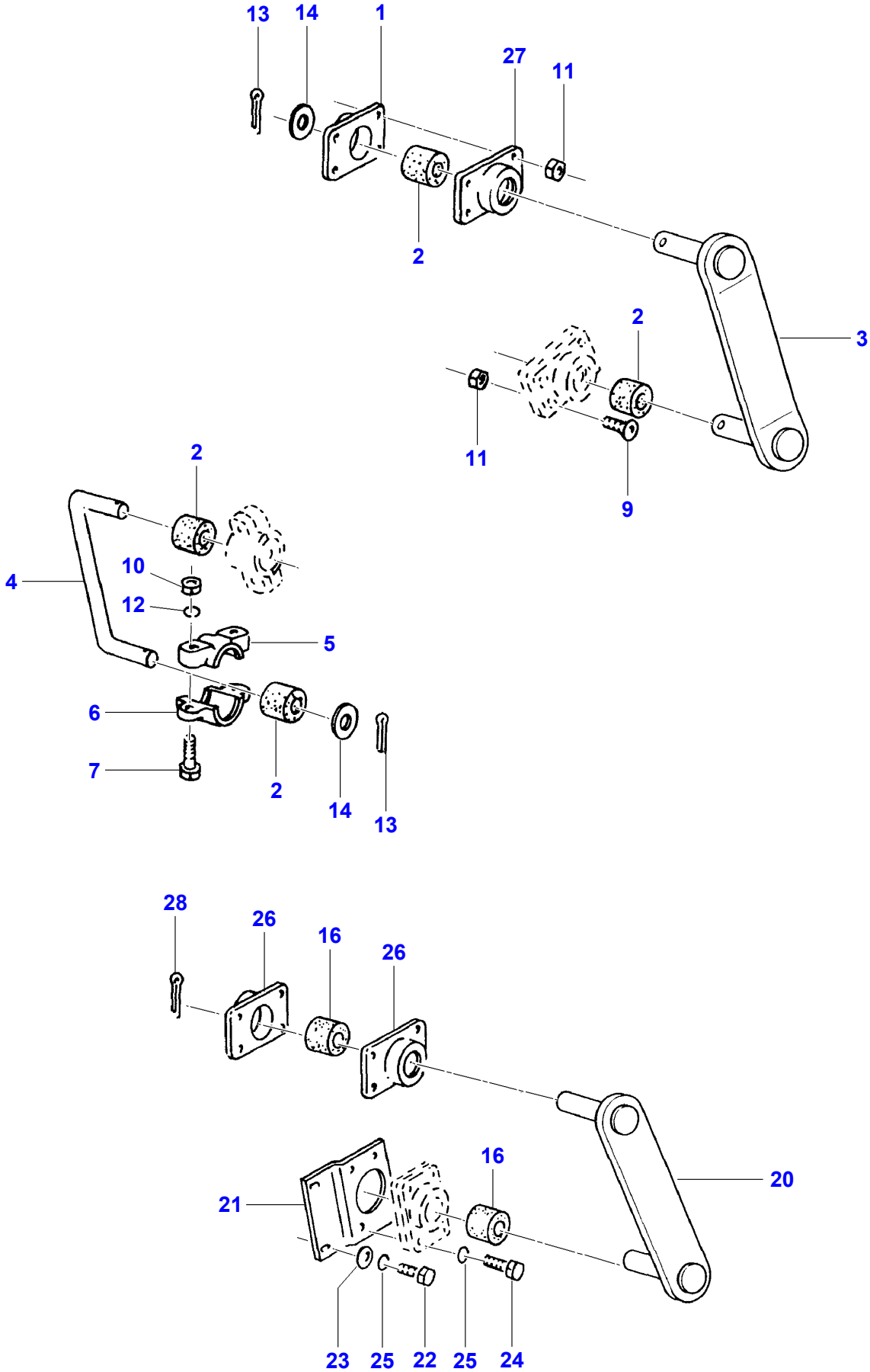
13
14
1
27
11
2
2
3
11
9
2
4
10
12
5
6
7
2
14
13
28
26
16
26
16
20
21
23
25
22
25
24

D-ZFAN-001-B

Item	Part Number	Qty	Description	Comments
1	**D26736036**	1	Bearing	
2	**D26733464**	4	Vibration Mount	(4)
3	D26736229	2	Pendulum	
4	D26736025	2	Rockerarm	
5	**D26733590**	2	Bearing	
6	**D26733591**	2	Bearing	
7	339475X1	4	Hex. Sock. Screw	M10 X 65
8	339337X1	8	Hex. Sock. Screw	[B] M8 X 30
9	D40601800	8	Screw	M8 X 35
10	339402X1	4	Nut	M10
11	D26740007	X	Locknut	M8
12	D41101900	X	Spring Washer	A10
13	D41409300	4	Split Pin	(4) 4 X 45
14	D20400438	4	Washer	(4) 21 X 37 X 3
16	**D26736174**	6	Vibration Mount	
20	D26736025	2	Rockerarm	[A]
21	D26734359	2	Holder	[A]
22	339124X1	2	Hex. Sock. Screw	[A] M8 X 16
	339761X1	2	Hex. Sock. Screw	[A] M8 X 25
23	D26739993	4	Washer	[A] 9 X 17 X 1,6
24	D40425000	4	Hex. Sock. Screw	[A] M8 X 35
	D40900017	4	Hex. Sock. Screw	[A] M8 X 40
25	D41102100	8	Washer	[A] A8
26	**D26736036**	8	Bearing	[A]
27	**D26735996**	1	Bearing	
28	D41409100	2	Split Pin	[A] 4 X 40

FOOTNOTE [A] HC-CLEANING SYSTEM
FOOTNOTE [B] NOT ILLUSTRATED

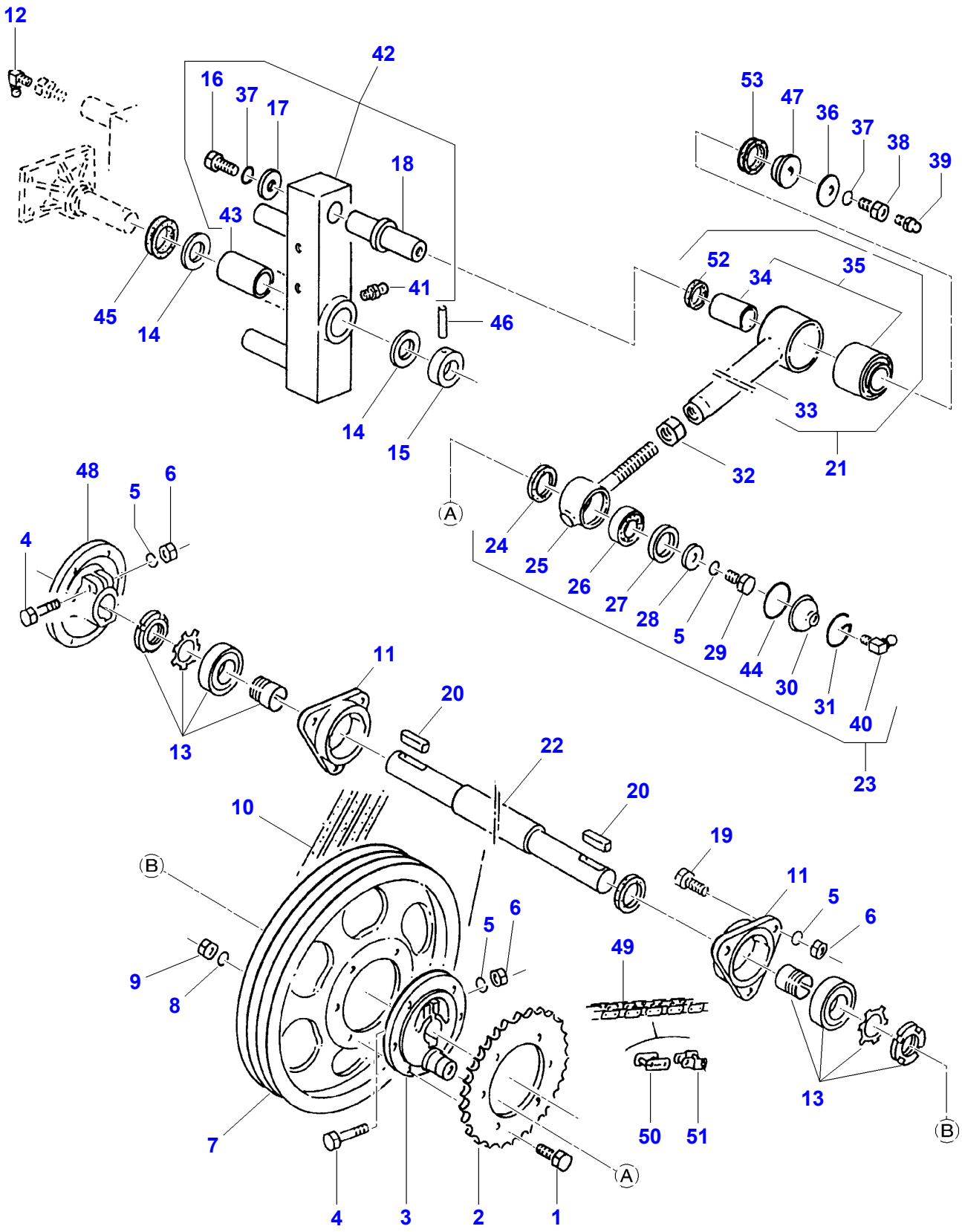
12
42
16
37
17
18
43
41
45
14
46
14
15
53
47
36
37
38
39
52
34
35
33
21
32
A
24
25
26
27
28
5
29
44
30
31
40
23
48
5
6
4
13
11
20
22
20
10
B
19
11
5
6
5
6
49
9
8
7
50
51
13
B
A
4
3
2
1

D-ZFAO-001-B

Item	Part Number	Qty	Description	Comments
1	D40900017	6	Hex. Sock. Screw	M8 X 40
2	D26736054	1	Sprocket	Number of teeth/spines 37
3	D26736037	1	Crank Disc	
4	339291X1	2	Hex. Sock. Screw	M10 X 55
5	D41101900	10	Spring Washer	A10
6	339402X1	8	Nut	M10
7	D26736038	1	Pulley	
8	D41102100	6	Washer	A8
9	339169X1	6	Nut	M8
10	**D26733596**	1	Kit, V Belt	3/17 X 1981
11	D26734091	2	Bearing Housing	
12	D26741144	1	Grease Nipple	C/S6
13	**D41718200**	2	Bearing	
14	D26733308	4	Thrust Washer	
15	D26734735	2	Packing Ring	
16	D26739707	2	Hex. Sock. Screw	(42) M12 X 25
17	D26740146	2	Washer	(42) 13 X 40 X 5 ZN
18	D26745426	2	Spigot	(42)
19	3009493X1	6	Hex. Sock. Screw	M10 X 30
20	D43104900	2	Key	10 X 8 X 50
21	D26736172	2	Conrod	
22	D26738556	1	Shaft	35 X 1548
23	D26736182	2	Conrod Bearing	
24	D26740044	2	Felt Ring	(23) 32 X 45 X 5,5
25	D26740731	2	Bearing	(23)
26	**D26740297**	2	Bearing Assy	(23) 22205
27	D26745064	2	Shim	(23)
28	D26740161	2	Washer	(23) 10,5 X 30 X 3 ZN
29	3009491X1	2	Hex. Sock. Screw	(23) M10 X 20
30	D26740784	2	Cover	(23)
31	D26739780	2	Ring	(23) Diameter 54
32	339760X1	2	Nut	M20
33	D26745074	2	Conrod	(21)
34	D26741011	2	Bush	(35) 36 X 30 X 55
35	D26740988	2	Vibration Mount	(21)
36		2	Washer	[A] 13 X 32 X 2
37	D26739978	4	Spring Washer	(42) A12
38	D26733512	2	Bolt	M12 X 20
39	D26739779	1	Grease Nipple	AM6
40	D43001700	2	Greaser	(23) CM6
41	D43002600	2	Greaser	(42) BM8
42	D26734648	1	Rockerarm	Left Hand
	D26735189	1	Rockerarm	Right Hand
43		2	Bearing	[A] (42) 42 X 33 X 80
44	D26739217	2	O Ring	(23) 48 X 2
45	D26734352	2	Packing Ring	36 X 46 X 9
46	D26739829	2	Pin	8 X 50
47	D26734310	2	Gasket	
48	D26734075	1	Crank Disc	
49	**D26732804**	1	Chain	12A 1X107 See Page - Reference Number 007-0002/17
50	**D49030004**	X	Chain Link	E 12A
51	**D26732806**	X	Chain Link	H 12A
52	D26740059	2	Felt	(21) 30 X 38 X 5
53	D26734351	2	Packing Ring	31 X 39 X 7,5

Item	Part Number	Qty	Description	Comments
54	D26740112	3	Pulley	[B] 35 X 45 X 1
55	D26740113	2	Washer	[B] 35 X 45 X 0,5

FOOTNOTE [A] NUMBER TO BE ADVISED
FOOTNOTE [B] NOT ILLUSTRATED

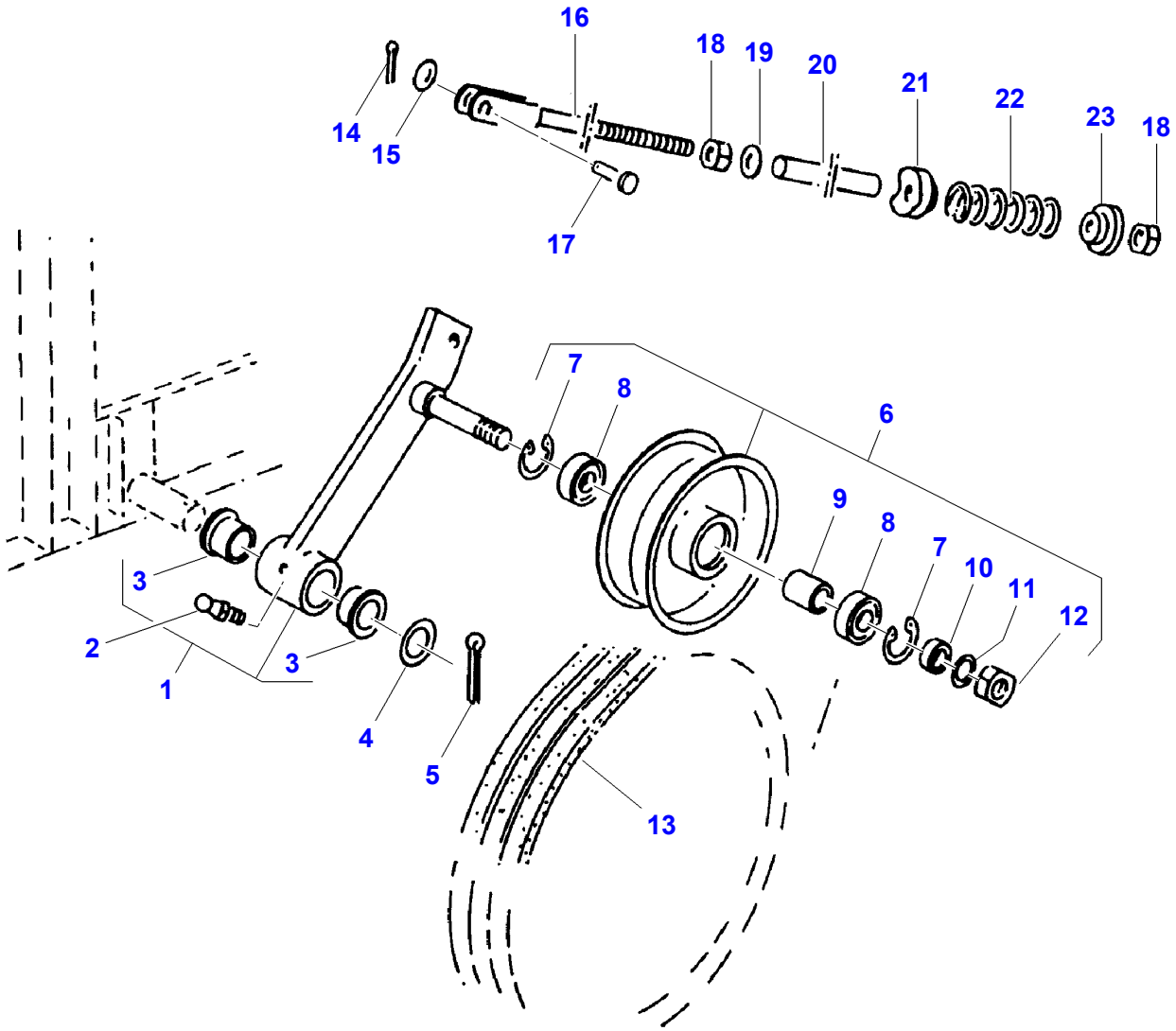

D-ZFAQ-001-A

Item	Part Number	Qty	Description	Comments
1	D26738951	1	Arm	
2	D26739779	1	Grease Nipple	AM6
3	D26736080	2	Bush	(1) 25 X 28 X 35
4	D20400531	1	Spacer	26 X 44 X 4
5	339037X1	1	Split Pin	5 X 50
6	**D49030028**	1	Pulley,Tensioner	64 / 180
7	390936X1	2	Circlip	40 X 1,75
8	**D26732764**	2	Bear. 6203 2rs	
9	**D26733568**	1	Bush	
10	D26735993	1	Shim	
11		1	Tooth Washer	[A] A16
12	339034X1	1	Nut	M16
13	**D26733596**	1	Kit, V Belt	3/17 X 1981
14	D20400471	1	Washer	[A]
15	D26739992	1	Washer	11 X 20 X 2
16	D26734031	1	Tie Rod	12 X 240
17	D26740036	1	Clevis Pin	10 X 28 / 24
18	3009695X1	2	Nut	M12
19	D26740203	1	Washer	Diameter 13,5
20	D26734032	1	Tube	
21	D26734150	1	Guide	
22	D26733335	1	Comp.Spring	
23	D26734150	1	Guide	

FOOTNOTE [A] NUMBER TO BE ADVISED

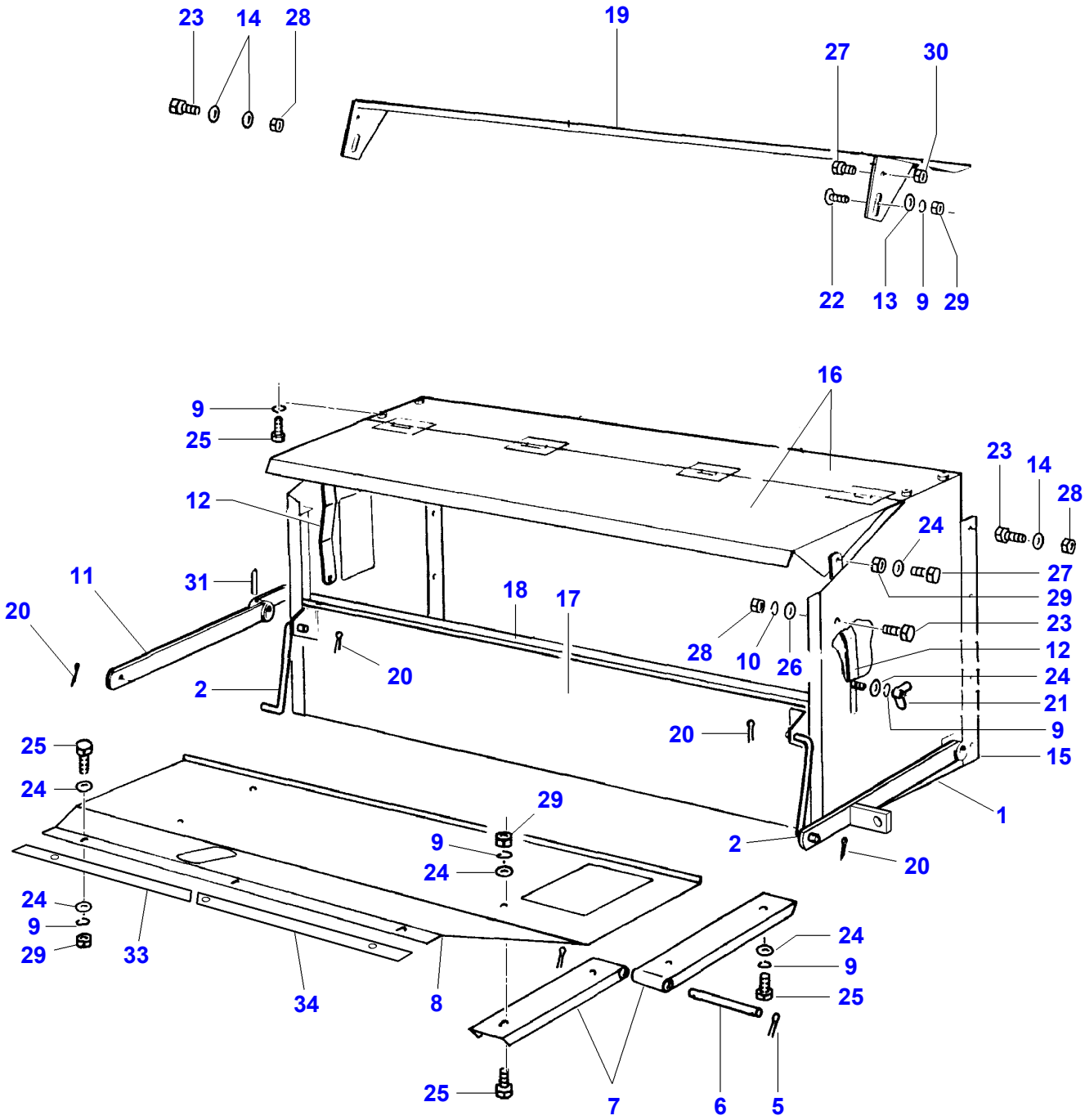
23
14
28
19
27
30
22
13
9
29
16
9
25
12
11
31
20
18
17
2
20
28
10
26
23
14
28
24
27
29
23
12
24
21
9
15
1
20
25
24
29
9
24
24
9
29
33
34
8
25
7
6
5
24
9
25

Item	Part Number	Qty	Description	Comments
1	D26734189	1	Tube	
2	D26733808	2	Adjuster	
5	D41405900	4	Pin	
6	D26733641	2	Clevis Pin	
7	D26733642	6	Support	
8	D26734666	1	Deflector	
9	D41102100	31	Washer	A8
10	D41100600	24	Spring Washer	A6
11	D26733785	1	Lever	
12	D26733784	2	Draglink	[B]
13	D20400414	6	Washer	8,4 X 24,5 X 3
14	D26739994	28	Washer	6,6 X 12,5 X 1,6
15	D26733538	1	Tunnel	
16	D26733539	1	Cover	[B]
17	D26733643	1	Louvre	
18	D26733828	1	Guide	
		1	Guide	[A,B]
19	D26733829	1	Guide	[B]
20	391403X1	8	Split Pin	3,2 X 32
21	339106X1	2	Wing Nut	M8
22	D40063700	2	Screw Special	M8 X 25
23	391074X1	20	Hex. Sock. Screw	M6 X 12
24	D20400506	14	Washer	9 X 22 X 2
25	339124X1	15	Hex. Sock. Screw	M8 X 16
26	D26739994	4	Washer	6,6 X 12,5 X 1,6
27	339761X1	4	Hex. Sock. Screw	M8 X 25
28	D41010600	14	Nut	M6
29	394367X1	11	Locknut	M8
30	D26740007	2	Locknut	M8
31	D26732718	1	Dowel	6 X 36
32	D26740135	2	Bolt	[C] M6 X 15
33	D26734984	1	Bracket	
34	D26734985	1	Bracket	

FOOTNOTE [A] NUMBER TO BE ADVISED
FOOTNOTE [B] HC-CLEANING SYSTEM
FOOTNOTE [C] NOT ILLUSTRATED

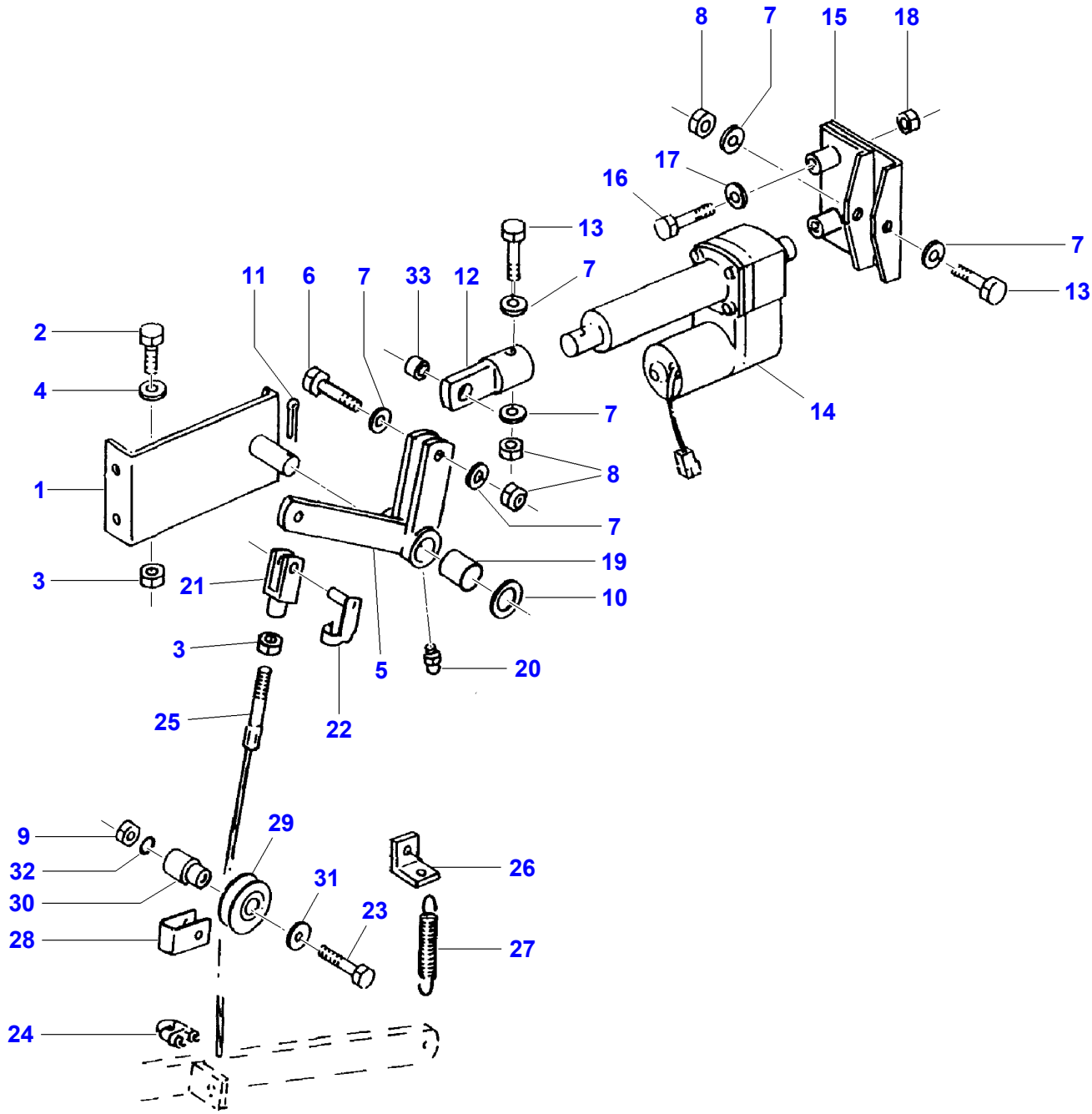
8
7
15
18
17
16
13
7
13
11
6
7
33
12
7
2
4
14
7
8
1
7
19
3
21
10
3
5
20
25
22
9
29
26
32
31
30
23
28
27
24

D-ZFAT-001-B

Item	Part Number	Qty	Description	Comments
1	D26735507	1	Support	
2	3009493X1	4	Hex. Sock. Screw	M10 X 30
3	339402X1	5	Nut	M10
4	D26739992	8	Washer	11 X 20 X 2
5	D26735508	1	Lever	
6	D40411200	1	Hex. Sock. Screw	M12 X 45
7	D20400537	6	Spacer	13 X 24 X 2,5
8	1442190X1	3	Locknut	M12
9	339169X1	1	Nut	M8
10	D26732705	1	Washer	Up to Serial or Engine Number 6063 31 X 56 X 5
	D26740124	1	Washer	From Serial or Engine Number 6064 31 X 45 X 2 ZN
11	339037X1	1	Split Pin	5 X 50
12	D26735510	1	Extension	
13	D40411500	2	Hex. Sock. Screw	M12 X 60
14	D26735598	1	Electric Motor	
15	D26735511	1	Retainer	
16	D40408600	2	Hex. Sock. Screw	M10 X 70
17	D26739992	X	Washer	11 X 20 X 2
18	D28288162	2	Locknut	M10
19	D26736008	2	Sleeve	
20	D43002600	1	Greaser	BM8
21	D45905300	1	Fork Head	G10 X 40
22	D26739190	1	Bolt	10 X 40
23	D26734567	1	Bolt	[A] M8 X 70
24	D26732773	1	Cable Clamp	Diameter 5
25	D26850031	1	Wire Rope	
26	D26733909	1	Anglepiece	
27	D26733341	1	Tension Spring	Up to Serial or Engine Number 6088
	D26733341	1	Tension Spring	From Serial or Engine Number 6089
28	D26733770	1	Yoke	
29	D26733507	1	Roller	
30	D26734567	1	Bolt	
31	D26740161	1	Washer	10,5 X 30 X 3 ZN
32	D41102100	1	Washer	A8
33	D26735509	1	Spacer	

FOOTNOTE [A] NUMBER TO BE ADVISED

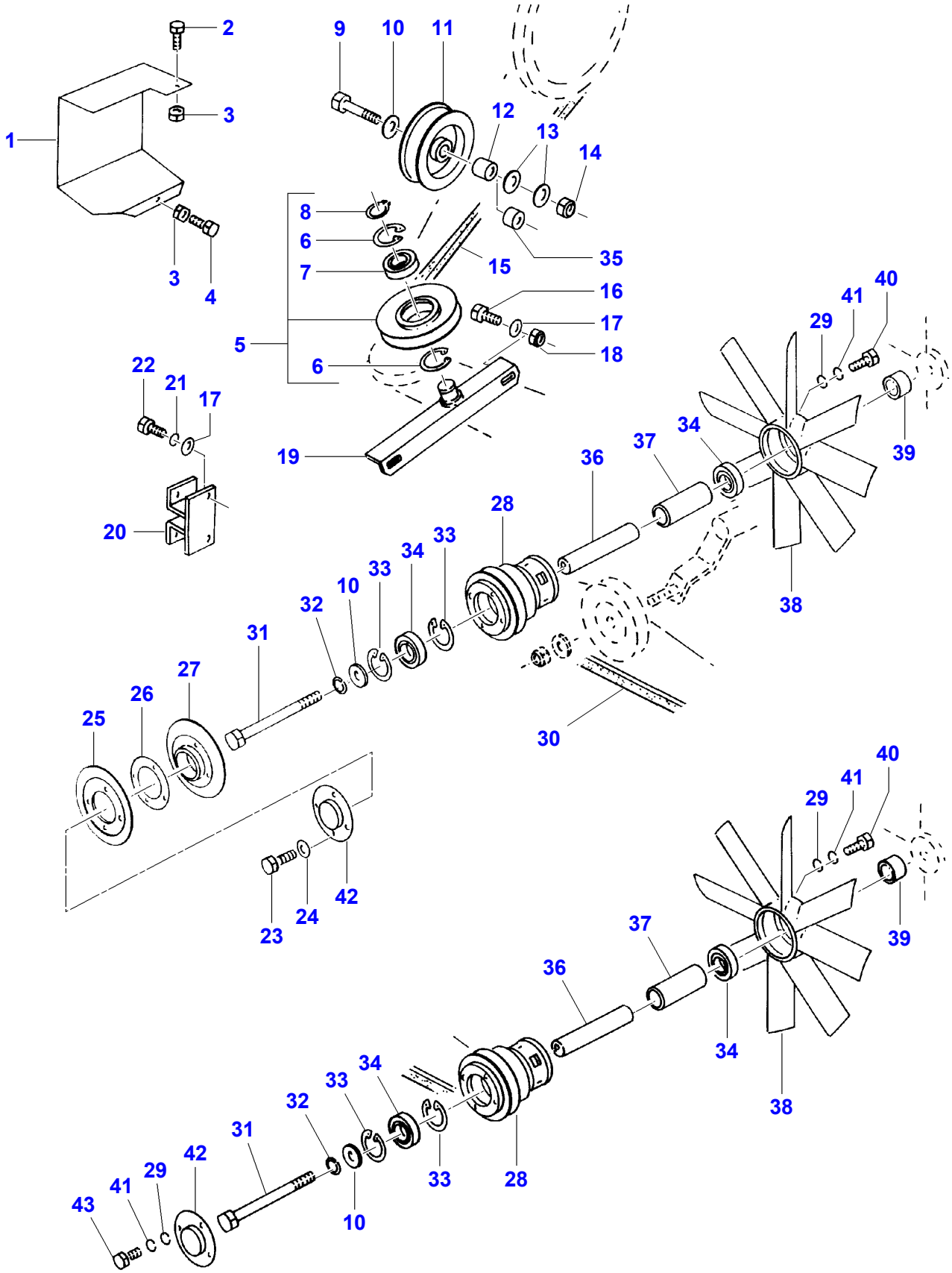
1
2
3
3
4
5
6
6
7
8
9
10
11
12
13
14
15
16
17
18
19
20
21
22
17
23
24
25
26
27
28
29
30
31
32
33
34
10
33
34
33
35
36
37
38
39
40
41
29
42
43
41
29
42
31
32
33
34
10
33
28
36
37
34
38
39
40
41
29

D-ZFAV-001-B

Item	Part Number	Qty	Description	Comments
1	D26734951	1	Guard	
2	339560X1	1	Hex. Sock. Screw	M6 X 16
3	D41088800	2	Locknut	M6
4	391074X1	1	Hex. Sock. Screw	M6 X 12
5	D26736051	2	Pulley,Tensioner	
6	1440479X1	4	Circlip	62 X 2
7	D26735941	2	Bear. 6305 2rs	
8	1440476X1	2	Circlip	25 X 1,2
9	D26739750	1	Hex. Sock. Screw	M16 X 70
	D40434200	1	Hex. Sock. Screw	[B] M16 X 100
10	D20400461	3	Washer	16,5 X 29 X 5
11	**D49030027**	1	Pulley,Tensioner	25,4 / 159
12	D26733599	1	Bush	
13	D20400433	3	Washer	17 X 34 X 3
14		1	Locknut	[A] VM16
15	**D26732797**	1	V Belt	SPBX 3425 LW
16	3009492X1	4	Hex. Sock. Screw	M10 X 25
17	D20400419	10	Washer	9 X 17 X 1,6
18	D28288162	4	Locknut	M10
19	D26735986	2	Support	
20	D26733926	1	Support	
21	D41101900	2	Spring Washer	A10
22	D40477200	2	Hex. Sock. Screw	M10 X 30
23	D40425000	4	Hex. Sock. Screw	M8 X 35
24	D26739993	8	Washer	9 X 17 X 1,6
25	D26736055	1	Pulley Half	
26	D26733601	3	Spacer	
27	D26736057	1	Pulley Half	
28	D26733878	2	Hub	
29	D20400413	12	Washer	8,4 X 16 X 1,6
30	**D26733247**	1	V Belt	17 X 1650
31	D40435300	2	Hex. Sock. Screw	M16 X 140
32	D41101200	2	Cup Spring	VS16
33	339126X1	4	Circlip	52 X 2
34	D41622800	4	Bear. 6205 2rs	
35	D26736063	1	Bush	[B]
36	D26737586	2	Bearing Bush	
37	D26736764	2	Bush	
38	D26736031	2	Blade Fan	
39	D26733600	2	Bush	
40	339761X1	8	Hex. Sock. Screw	M8 X 25
41	D41102100	16	Washer	A8
42	D26734280	2	Cover	
43	339124X1	4	Hex. Sock. Screw	M8 X 16

FOOTNOTE [A] NUMBER TO BE ADVISED
FOOTNOTE [B] HC-CLEANING SYSTEM

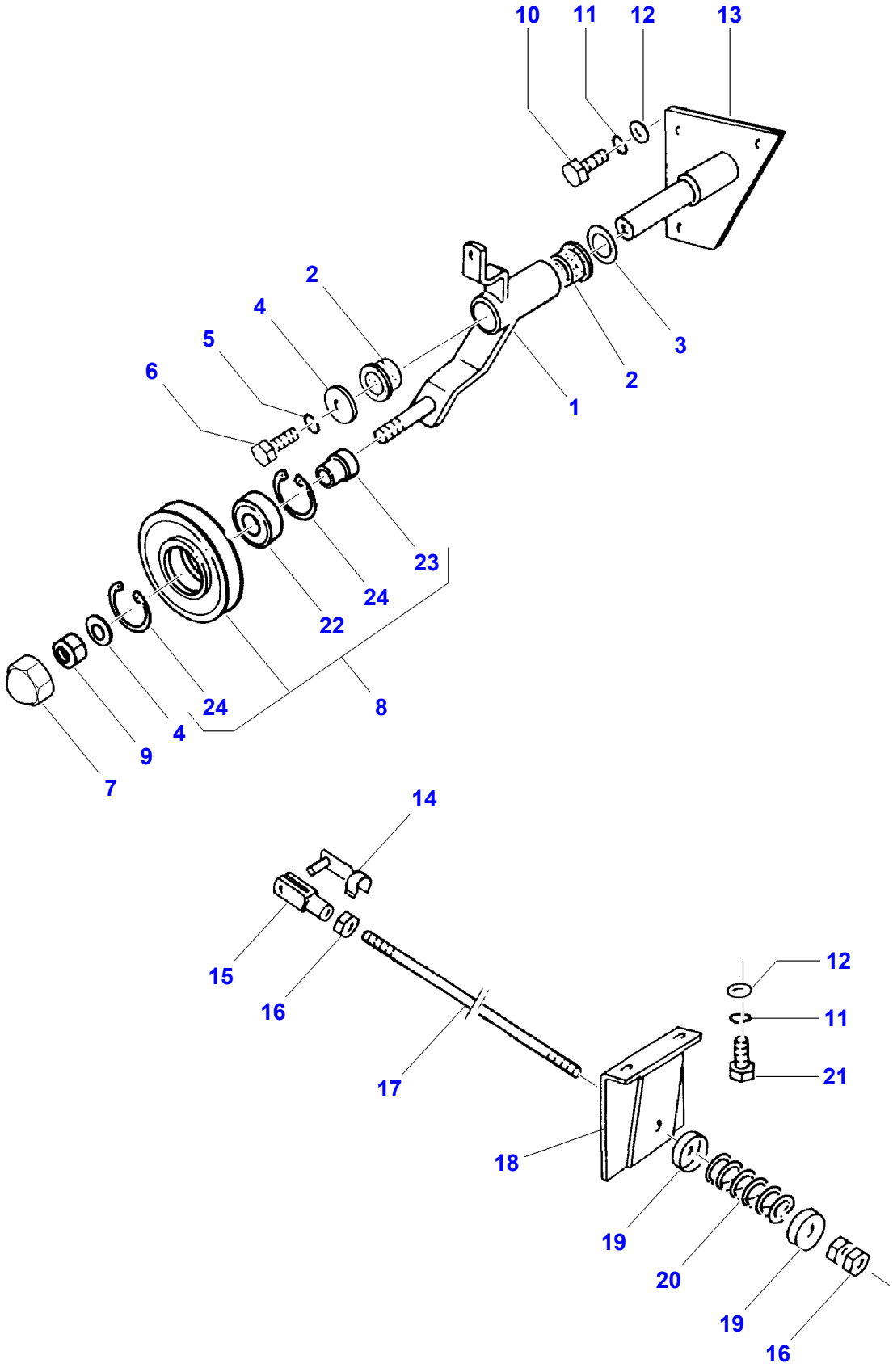
10
11
12
13
2
4
5
6
3
2
1
23
24
22
24
8
4
9
7
14
15
16
17
12
11
21
18
19
20
19
16

D-ZFAV-002-B

Item	Part Number	Qty	Description	Comments
1	D28488065	1	Arm	
2	D26735985	2	Bush	
3	D26741113	2	Washer	25 X 35 X 2
4	391212X1	2	Washer	13 X 37 X 3
5	D41100900	1	Spring Washer	A12
6	D26739707	1	Hex. Sock. Screw	M12 X 25
7	D26736236	1	Cap	17 X 34 X 3
8	D26745185	1	Pulley,Tensioner	16,3 / 130
9	339034X1	1	Nut	VM16
10	D40407700	3	Hex. Sock. Screw	M10 X 25
11	D41101900	5	Spring Washer	A10
12	D26739992	5	Washer	11 X 20 X 2
13	D26733540	1	Support	
14	D26739190	1	Bolt	10 X 40
15	D45905300	1	Fork Head	G10 X 40
16	339402X1	4	Nut	M10
17	D26733537	1	Tie Rod	10 X 670
18	D26734568	1	Support	
19	D26733876	2	Plate	
20	D26733336	1	Comp.Spring	
21	3009493X1	2	Hex. Sock. Screw	M10 X 30
22	D26735941	1	Bear. 6305 2rs	(8)
23	D26736209	1	Bush	(8)
24	1440479X1	2	Circlip	(8) 62 X 2

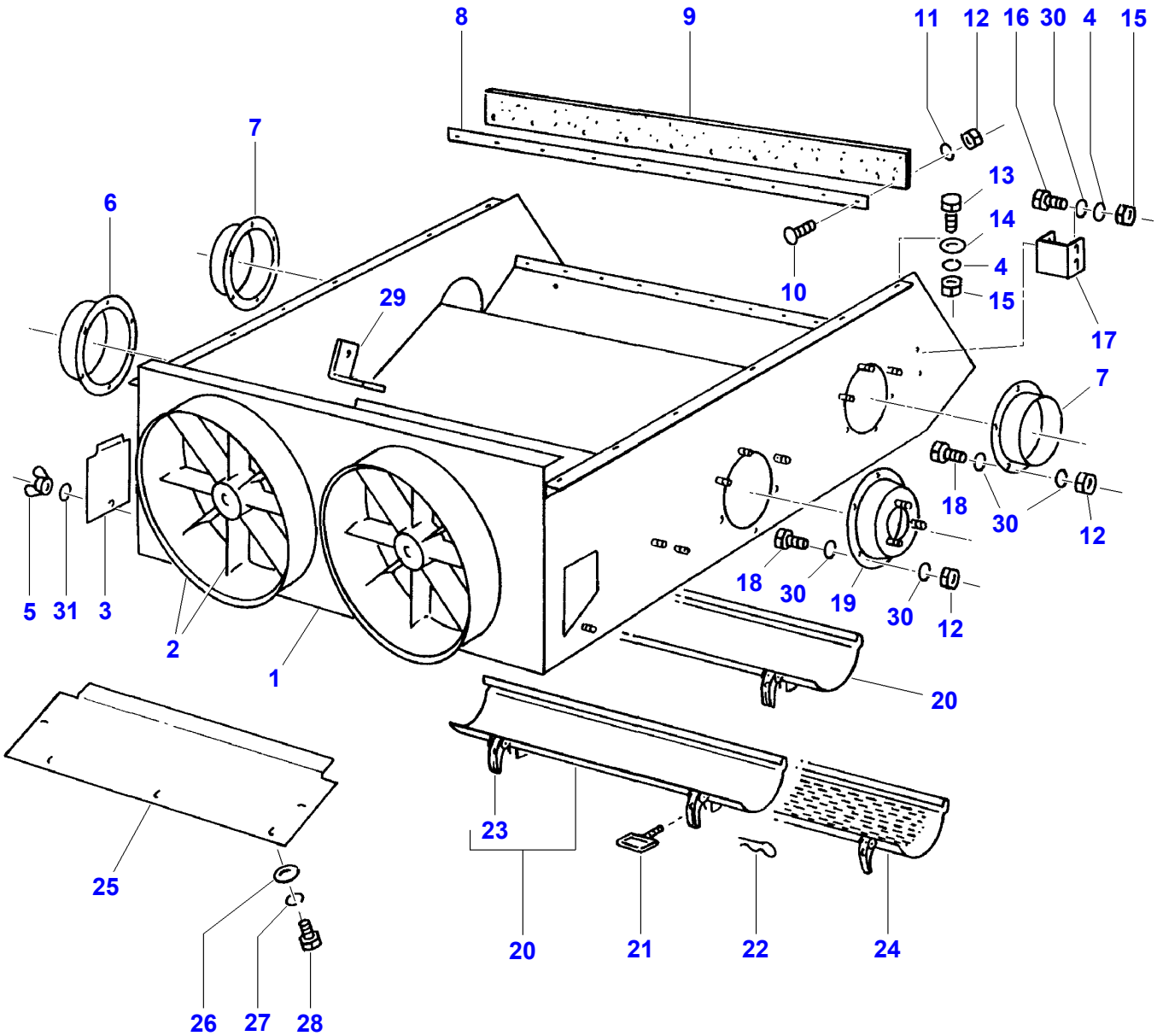
8
9
11
12
16
30
4
15
7
6
13
14
4
15
10
29
17
7
18
30
12
5
31
3
2
1
18
30
19
30
12
20
25
23
20
21
22
24
26
27
28

D-ZFAW-001-A

Item	Part Number	Qty	Description	Comments
1	D26850005	1	Blower	
2	D26741085	X	Wheel	
3	D26733603	2	Flap	
4	D41102100	25	Washer	A8
5	339106X1	2	Wing Nut	M8
6	D26733893	1	Union	
7	D26733858	2	Interm. Plate	
8	D26733645	2	Rail	
9	D26733644	2	Rubber Section	
10	D26740135	18	Bolt	M6 X 16
11	D20400404	18	Washer	A6
12	1441462X1	18	Locknut	M6
13	339123X1	11	Hex. Sock. Screw	M8 X 20
14	D26739993	X	Washer	9 X 17 X 1,6
15	339169X1	23	Nut	M8
16	339124X1	6	Hex. Sock. Screw	M8 X 16
17	D26733809	3	Support	
18	339666X1	12	Hex. Sock. Screw	M6 X 20
19	D26733605	1	Bearing Cap	
20	D26733604	2	Cover	
21	D26733514	4	Hook	
22	D26733722	4	Clip Pin	
23	D26741010	4	Lock	
24	D26737909	1	Cover	[B]
25		1	Cover	[B,A]
26	D26739993	5	Washer	[B] 9 X 17 X 1,6
27	D41102100	5	Washer	[B] A8
28	339124X1	5	Hex. Sock. Screw	[B] M8 X 16
29	D26735698	1	Stiffener	[B]
30	D20400453	21	Washer	6,4 X 12 X 1,6
31	D20400506	14	Washer	8,4 X 16 X 1,6

FOOTNOTE [A] NUMBER TO BE ADVISED
FOOTNOTE [B] HC-CLEANING SYSTEM

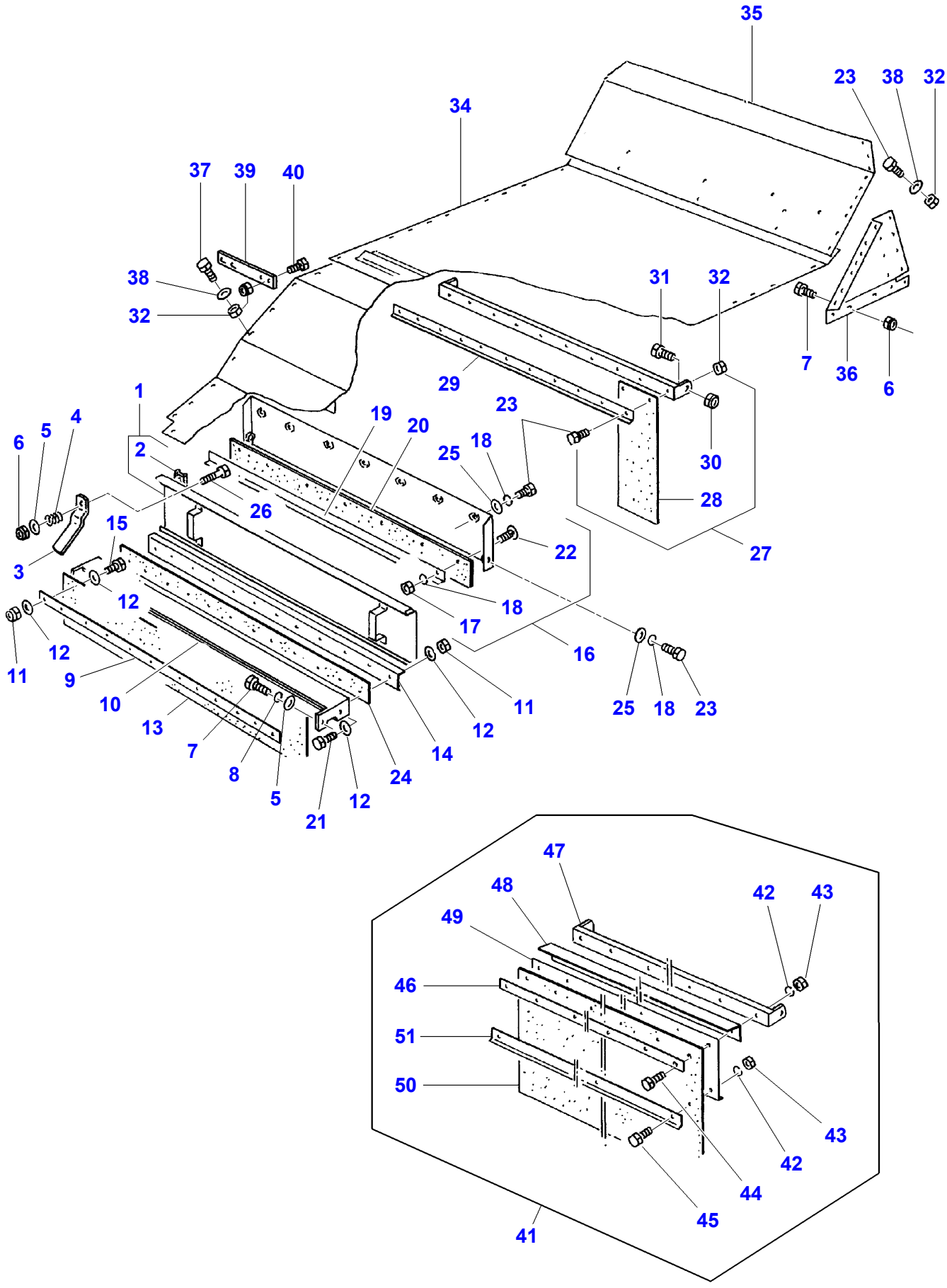
35
23
38
32
34
37
39
40
38
32
31
32
7
36
6
29
1
19
20
23
6
5
4
2
25
18
30
26
28
15
22
27
3
12
18
17
16
12
11
9
10
13
7
8
5
21
12
24
14
12
11
25
18
23
47
48
42
43
49
46
51
50
43
42
44
45
41

D-ABZT-003-A

Item	Part Number	Qty	Description	Comments
1	D26734042	1	Cover	
2	D26740063	2	Seal Section	30 X 10 X 170
3	D26733561	3	Handle	
4	D26733326	3	Comp.Spring	
5	D26739992	7	Washer	11 X 20 X 2
6	D28288162	19	Locknut	M10
7	3009492X1	20	Hex. Sock. Screw	M10 X 25
8	D41101900	4	Spring Washer	A10
9	D26736121	1	Rail	
10	D26736119	1	Brace	
11	D41088800	24	Locknut	M6
12	D26740136	44	Washer	6,4 X 18 X 2 ZN
13	D26736120	1	Seal Plate	
14	D26736087	1	Plate	
15	339804X1	11	Hex. Sock. Screw	M6 X 25
16	D26736028	1	Plate	
17	339169X1	7	Nut	M8
18	D41102100	16	Washer	A8
19	D26736013	1	Stiffener	
20	D26736014	1	Interm. Plate	60 X 1262
21	339666X1	11	Hex. Sock. Screw	M6 X 20
22	D40070200	6	Screw Metric	M8 X 20
23	339761X1	32	Hex. Sock. Screw	M8 X 25
24	D26736123	1	Seal Plate	
25	D20400506	X	Washer	9 X 22 X 2
26	D40439600	3	Hex. Sock. Screw	M10 X 90
27	D26735722	1	Retaining Plate	
28	D26735991	9	Rubber Piece	
29	D26735997	1	Rail	
30	D26740020	2	Locknut	M12
31	1440716X1	2	Hex. Sock. Screw	M12 X 30
32	D26740007	48	Locknut	M8
33	D26734063	1	Plate	[D]
34	D28788003	1	Plate	
35	D28788000	1	Plate	
36	D26734084	1	Plate	Left Hand
	D26734085	1	Plate	Right Hand
37	339123X1	19	Hex. Sock. Screw	M8 X 20
38	D26739993	X	Washer	9 X 17 X 1,6
39	D26733791	2	Bracket	
40	339761X1	4	Hex. Sock. Screw	M8 X 25
41	D26741104	1	Canvas	[B,C]
42	D41102100	14	Washer	[C] A8
43	339169X1	14	Nut	[C] M8
44	339761X1	10	Hex. Sock. Screw	[C] M8 X 25
45	339123X1	4	Hex. Sock. Screw	[C] M8 X 20
46	D26741078	1	Shield	[C]
47	D26736027	1	Plate	[C]
48	D26737740	1	Shield	[C]
49	D26737741	1	Shield	[C]
50	D26741451	1	Canvas	[C]
51	D26741106	1	Shield	[C]

FOOTNOTE [B] MAIZE & RICE EQUIPMENT
FOOTNOTE [C] OPTIONAL
FOOTNOTE [D] NOT ILLUSTRATED

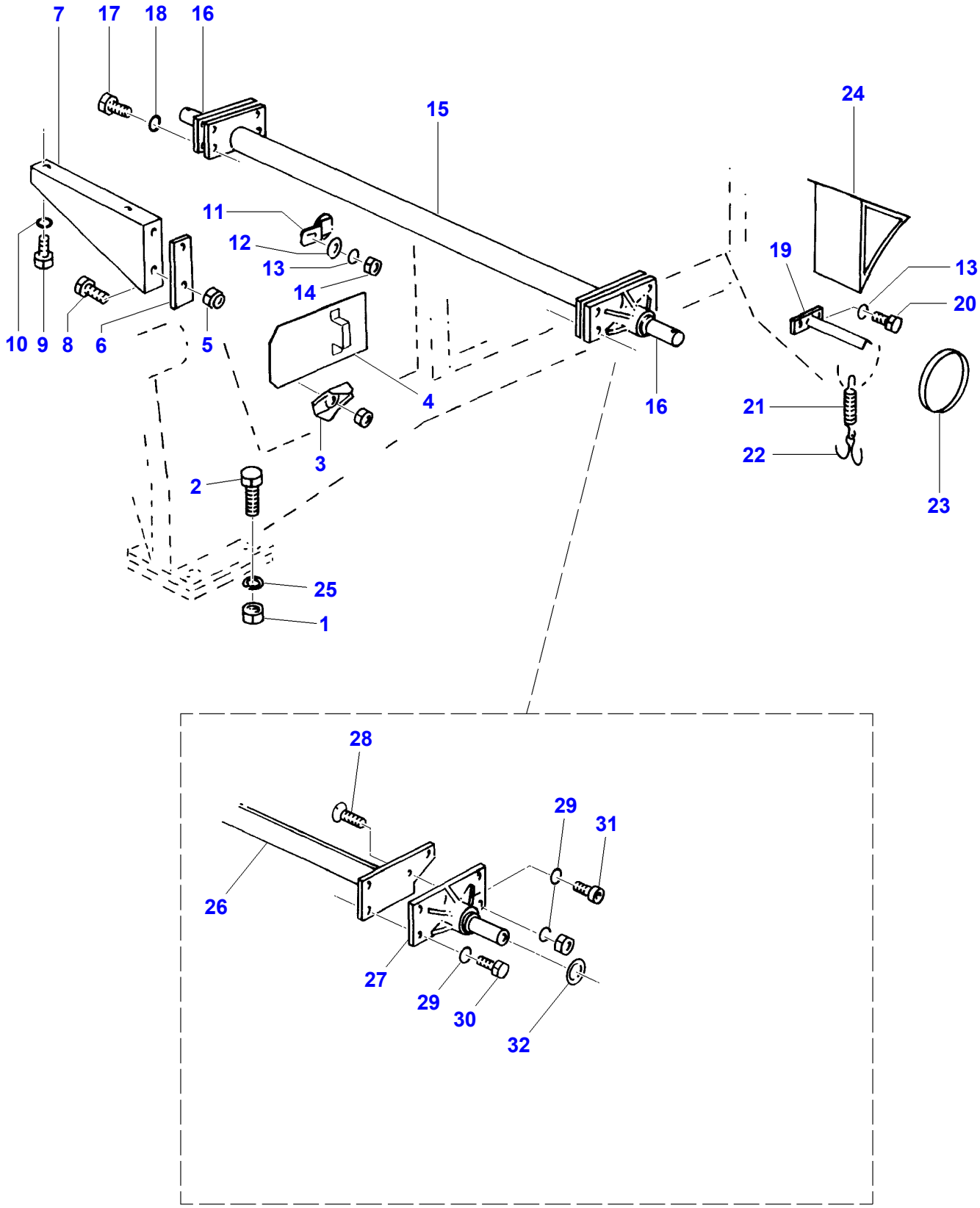
7
17
18
16
15
24
11
12
13
14
19
13
20
10
9
8
6
5
4
16
21
22
23
3
2
25
1
28
29
31
26
27
29
30
32

D-ABZT-002-B

Item	Part Number	Qty	Description	Comments
1	3009747X1	8	Nut	M20
2	D40418500	8	Hex. Sock. Screw	M20 X 55
3	D26734397	4	Lock	
4	D26734313	2	Cover	
5	D28288162	4	Locknut	M10
6	D26734041	2	Plate	
7	D26734033	1	Support	Left Hand
	D26734034	1	Support	Right Hand
8	3009492X1	4	Hex. Sock. Screw	M10 X 25
9	3009491X1	4	Hex. Sock. Screw	M10 X 20
10	D41101900	4	Spring Washer	A10
11	D26733562	2	Cover	
12	D20400506	2	Washer	9 X 22 X 2
13	D41102100	4	Washer	A8
14	339169X1	2	Nut	M8
15	D26733640	1	Tube	
16	D26744382	2	Bracket	
17	390912X1	12	Hex. Sock. Screw	M12 X 40
18	D26739978	8	Spring Washer	A12
19	D26733793	1	Anglepiece	
20	339124X1	2	Hex. Sock. Screw	M8 X 16
21	D26733339	1	Tension Spring	
22	D26733421	1	Hook	
23	D26733792	2	Cover	
24		1	Corner	[A]
25	D26739974	8	Spring Washer	A20
26	D26734476	1	Exhaust Pipe	[B]
27	D26744382	2	Bracket	[B]
28	D26740289	2	Screw	[B] M12 X 40
29	D26739978	X	Spring Washer	[B] A12
30	390912X1	4	Hex. Sock. Screw	[B] M12 X 40
31	D26740242	2	Screw	[B] M12 X 35
32	3009695X1	6	Nut	[B] M12
33	D26740113	X	Washer	[B,C] 35 X 45 X 0,5
	D26740112	X	Pulley	[B,C] 35 X 45 X 1,0

FOOTNOTE [A] NUMBER TO BE ADVISED
FOOTNOTE [B] HC-CLEANING SYSTEM
FOOTNOTE [C] NOT ILLUSTRATED

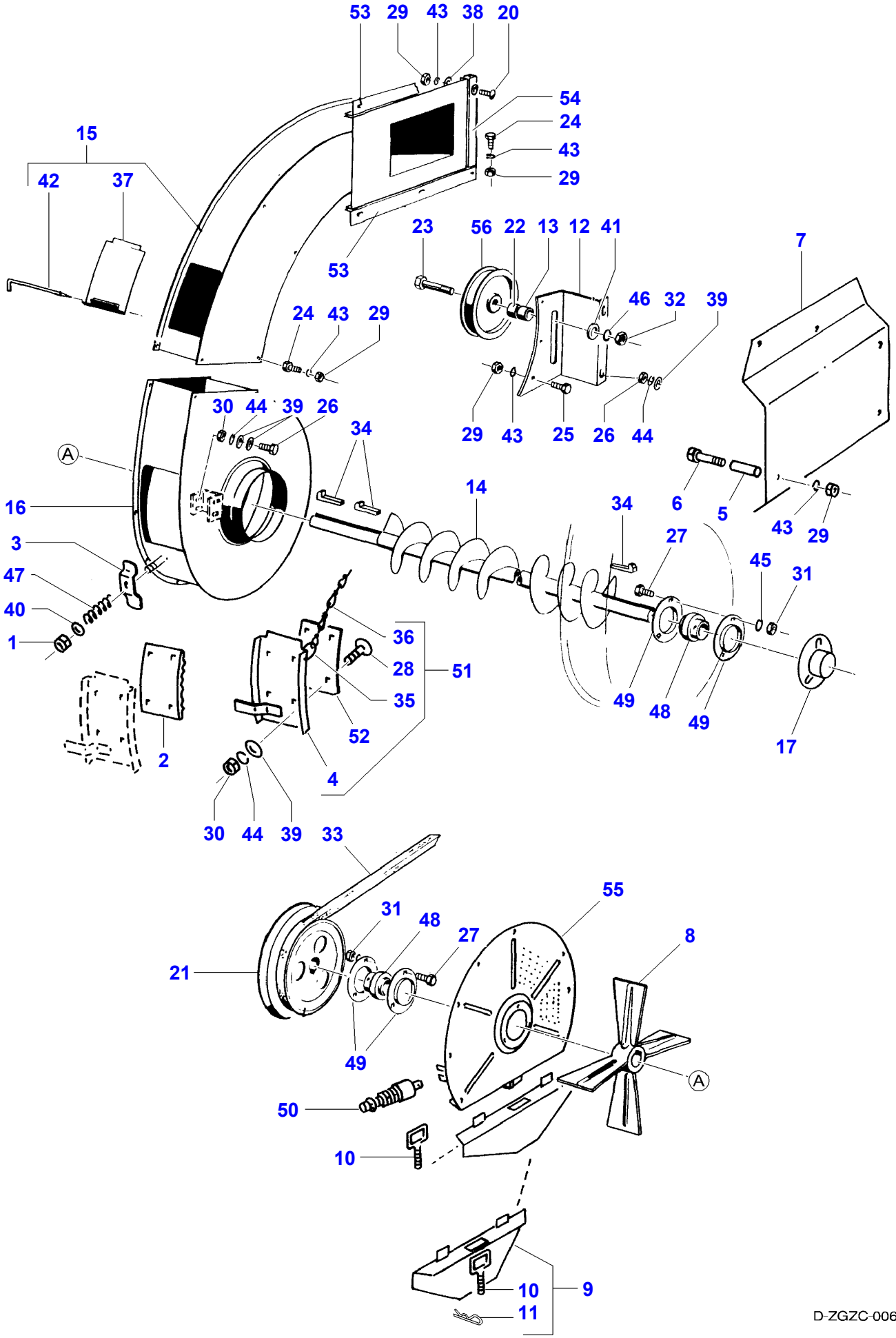
53 29 43 38 20
54
24
43
29
15
42 37
53
23 56 22 13 12 41
7
46 32 39
24 43 29
30 44 39 26
34
A
29 43 25 26 44
6 5
43 29
16
14
34
3
27
45 31
47
40
1
36
28 51
35
52
49 48 49
17
2
4
30 44 39 33
55
31 48 27
8
21
49
A
50
10
10 9
11

D-ZGZC-006-C

Item	Part Number	Qty	Description	Comments
1	D26740007	2	Locknut	M8
2	D26736071	2	Friction Disc	(51)
3	D26733865	2	Latch	
4	D26736070	1	Cover	(51) Left Hand
	D26736069	1	Cover	(51) Right Hand
5	D26734483	2	Tube	12 X 65
6	D26739932	2	Hex. Sock. Screw	M6 X 85
7	D26734482	1	Cover	
8	D26733867	2	Blade Fan	
9	D26734625	2	Cover	
10	D26733514	2	Hook	(9)
11	D26733722	1	Clip Pin	(9) 2,5 A3C
12	D26733787	1	Support	
13	D26733541	1	Bush	Length 32 MM
14	D26733830	1	Auger	
	D26738797	1	Auger	[B,C]
15		1	Tunnel	[A] Left Hand
	D26733748	1	Tunnel	[B] Left Hand
	D26733811	1	Table Elevator	Right Hand
	D26733747	1	Tunnel	[B] Right Hand
16	D26734525	1	Housing	Left Hand
	D26733745	1	Housing	[B] Left Hand
	D26734526	1	Housing	Right Hand
	D26733746	1	Housing	[B] Right Hand
17	D28761667	1	Cover	[C]
18	D26746955	2	Split Pin	[D] 3,2 X 36
20	D40060500	14	Screw Metric	M6 X 16
21	D26733879	1	Pulley	
22	D26733646	1	Bush	Length 20 MM
23	D40434200	1	Hex. Sock. Screw	M16 X 100
24	D40402600	34	Hex. Sock. Screw	M6 X 12
25	339560X1	3	Hex. Sock. Screw	M6 X 16
26	339123X1	4	Hex. Sock. Screw	M8 X 20
27	3009491X1	6	Hex. Sock. Screw	M10 X 20
28	D26740075	4	Screw	M8 X 20
29	D41010600	51	Nut	M6
30	339169X1	8	Nut	M8
31	339402X1	6	Nut	M10
32	339034X1	1	Nut	M16
33	**D26733248**	1	V Belt	17 X 3150
34	D26732729	3	Gib Key	8 X 7 X 50
35	D26733511	2	Ring	(51)
36	D26735938	2	Chain	(51)
37	D26733608	2	Cover	
	D26741454	2	Cover	[B]
38	D26739994	28	Washer	6,6 X 12,5 X 1,6
39	D20400413	2	Washer	8,4 X 16 X 1,6
40	D26739992	2	Washer	11 X 20 X 2
41	D20400433	1	Washer	17 X 34 X 3
42	D26733989	2	Nail	
43	D41100600	51	Spring Washer	A6
44	D41102100	8	Washer	A8
45	D41101900	6	Spring Washer	A10
46	D26739976	1	Spring Washer	A16
47	D26733324	2	Comp.Spring	
48	**D26733355**	2	Bearing	YS 30
49	D41708800	4	Bearing Flange	RB 30
50	**D26733123**	2	Switch	
51	D26735779	1	Cover	Left Hand
	D26739012	1	Cover	[B] Left Hand
	D26735763	1	Cover	Right Hand

Item	Part Number	Qty	Description	Comments
51	D26739011	1	Cover	[B] Right Hand
52	D26733774	2	Plate	
53	D26733607	4	Anglepiece	
54	D26733606	2	Anglepiece	
55	D26734070	1	Cover	Left Hand
55	D26734071	1	Cover	Right Hand
56	D26733979	1	Pulley,Tensioner	

FOOTNOTE [A] NUMBER TO BE ADVISED
FOOTNOTE [B] FOR RICE
FOOTNOTE [C] EXPORT ONLY
FOOTNOTE [D] NOT ILLUSTRATED

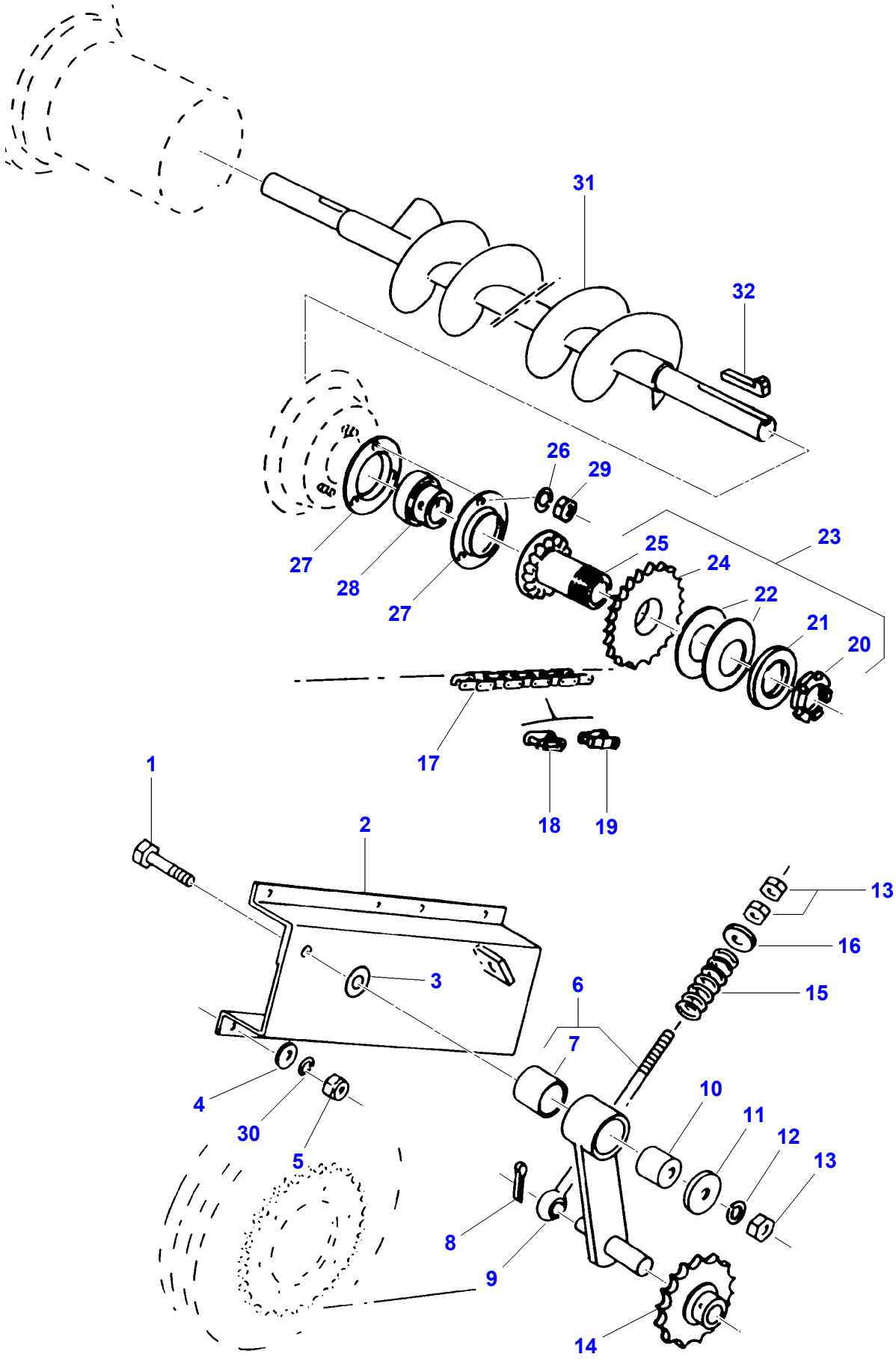
31
32
26
29
27
28
27
25
24
23
22
21
20
17
18
19
1
2
3
13
16
15
6
7
4
30
5
10
11
12
13
8
9
14

D-ZIZI-001-A

Item	Part Number	Qty	Description	Comments
1	D40429000	1	Hex. Sock. Screw	M12 X 75
2	D26736052	1	Support	
3	D26740155	1	Washer	15 X 28 X 1 ZN
4	D20400506	8	Washer	8,4 X 16 X 1,6
5	339169X1	8	Nut	M8
6	D26737135	1	Arm	
7	D26733351	1	Bush	30 X 34 X 40
8	354050X1	1	Split Pin	2,5 X 25
9	D26737116	1	Eye Bolt	AM12 X 200
10	D26733775	1	Bearing Bush	30 X 47
11	D26740106	1	Washer	13 X 44 X 6
12	D26739978	1	Spring Washer	A12
13	3009695X1	3	Nut	M12
14	D26736056	1	Sprocket	Number of teeth/spines 15
15	D26732801	1	Comp.Spring	
16	D20400446	1	Washer	13 X 30 X 4
17	**D26732804**	1	Chain	12A 1X107
18	**D49030004**	X	Chain Link	E 12A
19	**D26732806**	X	Chain Link	H 12A
20	D26739791	2	Groove Nut	(23) M50
21	D26733917	1	Disc	(23)
22	D26739249	5	Washer	(23) 100 X 51 X 3,5
23	D26850030	1	Clutch	
24	D26733930	1	Sprocket	(23) Number of teeth/spines 26
25	D26733674	1	Guide Bush	(23)
26	D41101900	3	Spring Washer	A10
27	D41708800	2	Bearing Flange	RB 30
28	**D26733355**	1	Bearing	YB 30
29	339402X1	3	Nut	M10
30	D41102100	8	Washer	A8
31	D26733786	1	Auger	
	D26740986	X	Auger	160 X 1444
	D26738796	1	Auger	[B,C]
32	D26732730	1	Gib Key	8 X 7 X 80

FOOTNOTE [B] FOR RICE
FOOTNOTE [C] EXPORT ONLY

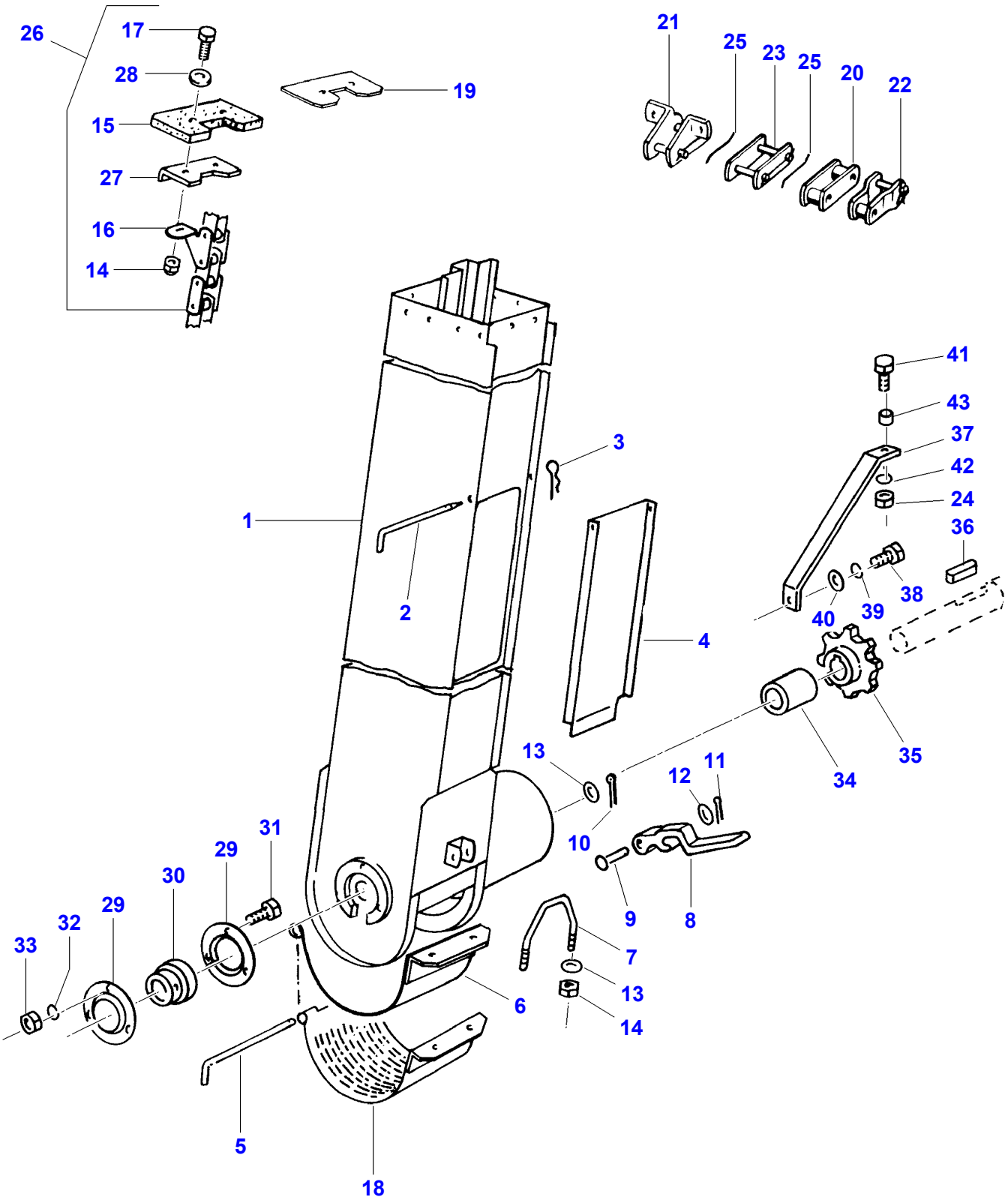
26
17
28
19
15
27
16
14
21
25
23
25
20
22
41
43
37
42
24
36
38
39
40
3
1
2
4
35
34
13
11
12
10
9
8
31
29
30
29
32
33
7
13
14
6
5
18

D-ZIZJ-001-B

Item	Part Number	Qty	Description	Comments
1	D26734606	1	Housing	
2	D26733467	1	Pin	(1)
3	D44358000	1	Hair Pin	(1)
4	D26733602	1	Cover	(1)
5	D26733692	1	Pin	(1)
6	D26733693	1	Cover	(1)
	D26733693	1	Cover	[B,C] (1)
7	D26733810	1	Bracket	(1)
8	D26733943	1	Tensioner	(1)
9	D26740010	1	Clevis Pin	(1) 10 X 40 / 35
10	D41402800	1	Split Pin	(1) 2 X 20
11	D41405900	1	Pin	(1) 3,2 X 25
12	D26739992	1	Washer	(1) 11 X 20 X 2
13	D26739993	3	Washer	(1) 9 X 17 X 1,6
14	D26740007	70	Locknut	M8
15	**D26740987**	34	Plate	(26)
16		1	Chain Link	(26) 38,4 X 136 Not serviced,order REF. 26
17	339337X1	68	Hex. Sock. Screw	(26) M8 X 30
18	D26737910	1	Cover	[D]
19	D26738102	1	Skimmershank	[D]
20	**D49030042**	X	Chain Link	38,4 B
21	**D49030025**	X	Bearing	38,4 FL
22	**D49030020**	X	Chain Link	38,4 X 19
23	**D49030041**	X	Chain Link	38,4 1G
24	339169X1	1	Nut	M8
25	D49030026	X	Locking Wire	1,6 X 60
26	**D26733903**	1	Riser	
27	**D26736758**	34	Reinforcement	(26)
28	D26740162	68	Washer	(26) 9 X 40 X 4
29	D41708800	2	Bearing Flange	RB 30
30	**D26733355**	1	Bearing	YB 30
31	3009491X1	3	Hex. Sock. Screw	M10 X 20
32	D41101900	3	Spring Washer	A10
33	339402X1	3	Nut	M10
34	D26733691	1	Bush	38 X 3,6 X 56
35	D26734110	1	Sprocket	Number of teeth/spines 8
36	D43103600	1	Key	8 X 7 X 45
37		1	Key	[A]
38	1440716X1	1	Hex. Sock. Screw	M12 X 30
39	D26739978	1	Spring Washer	A12
40	D20400446	1	Washer	13 X 30 X 4
41	339761X1	1	Hex. Sock. Screw	M8 X 25
42	D41102100	1	Washer	A8
43	D26733990	1	Spacer	

FOOTNOTE [A] NUMBER TO BE ADVISED
FOOTNOTE [B] FOR RICE
FOOTNOTE [C] EXPORT ONLY
FOOTNOTE [D] OPTIONAL

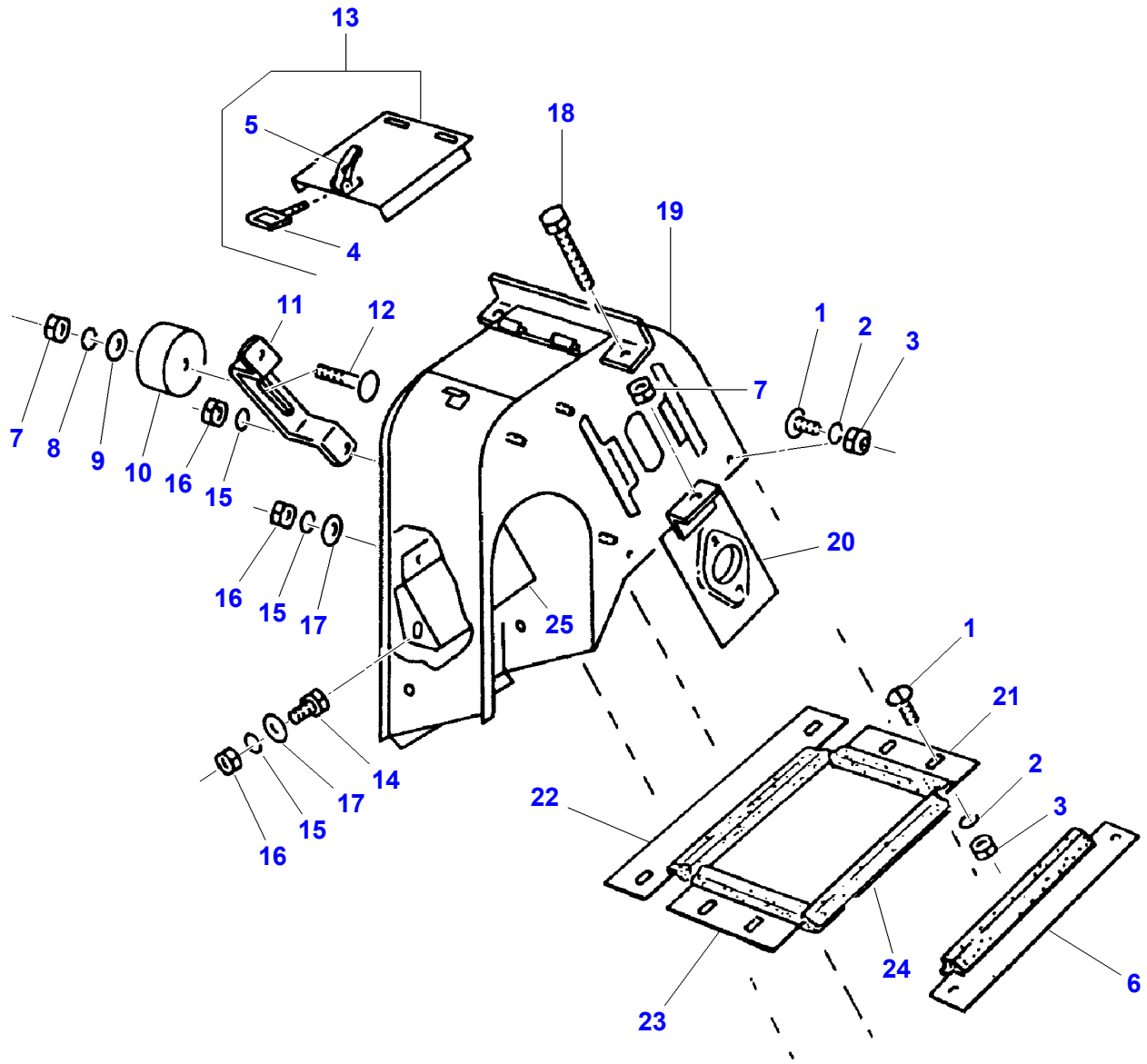
13
5
4
18
19
11
12
1
2
3
7
8
9
10
16
15
7
16
15
17
20
25
1
21
2
3
22
14
17
15
16
24
6
23

D-ZIZK-001-A

Item	Part Number	Qty	Description	Comments
1	D26740135	16	Bolt	M6 X 15
2	D41100600	16	Spring Washer	A6
3	D41010600	16	Nut	M6
4	D26733514	1	Hook	
5	D26740959	1	Locking	
6	D26736122	1	Band	
7	339402X1	3	Nut	M10
8	D41101900	1	Spring Washer	A10
9	D26739992	1	Washer	11 X 20 X 2
10	D26734742	1	Pulley,Tensioner	70 X 45
11	D26733819	1	Bracket	
12	D40067600	1	Screw	
13	D26733624	1	Cover	
14	339123X1	2	Hex. Sock. Screw	M8 X 20
15	D41102100	7	Washer	A8
16	339169X1	7	Nut	M8
17	D26739993	X	Washer	9 X 17 X 1,6
18	390122X1	2	Hex. Sock. Screw	M10 X 80
19	D26733549	1	Head	
20	D28588005	2	Bearing Housing	
21	D26736257	1	Plate	
22	D26736254	1	Plate	
23	D26736256	1	Plate	
24	D26735765	1	Profile Seal 1m	
25	D26733553	1	Inlet	

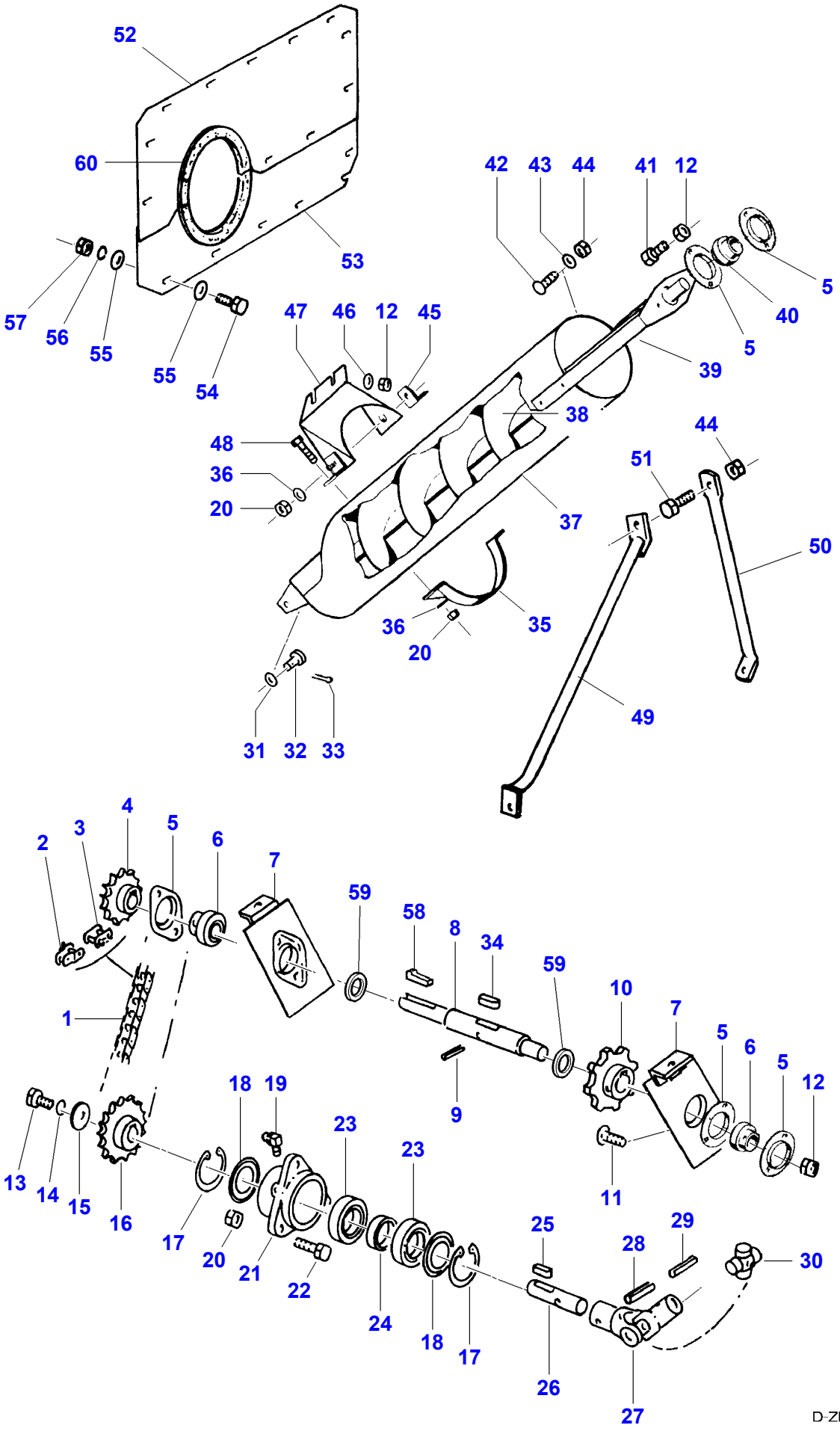
52
60
53
57
56
55
55
54
42
43
44
41
12
5
40
5
39
47
46
12
45
38
48
36
20
37
44
51
50
36
20
35
49
31
32
33
4
3
2
5
6
7
59
58
8
34
59
10
7
5
6
5
12
1
18
19
23
23
9
11
13
14
15
16
17
20
21
22
24
18
17
25
28
29
30
26
27

D-ZIZL-001-D

Item	Part Number	Qty	Description	Comments
1	**D26733265**	1	Chain	12B 1X49
2	**D42355100**	X	Link	12B-1D
3	**D26733261**	X	Chain Link	12B-1E
4	D26734220	1	Sprocket	Number of teeth/spines 13
	D26734222	1	Sprocket	[B] Number of teeth/spines 18
5	D26741113	4	Washer	Up to Serial or Engine Number 7592
	D41708700	4	Flange	From Serial or Engine Number 7592
6	D41663600	2	Ball Bearing	Diameter 25/DIAM52INA
7	D28588005	2	Bearing Housing	
8	D28788693	1	Shaft	
9	D42609900	1	Pin	
10	D26734110	1	Sprocket	Number of teeth/spines 8
11	D26740077	4	Screw	M8 X 16
12	D26740007	8	Locknut	M8
13	3009492X1	1	Hex. Sock. Screw	M10 X 25
14	D41101900	1	Spring Washer	A10
15	D20400420	1	Washer	11 X 45 X 5
16	D26734221	1	Sprocket	Number of teeth/spines 17
17	D26732707	2	Snapring	80 X 2,5
18	D26733304	2	Ring	6010 ZJV
19	D43001600	1	Greaser	BM6
20	D26740020	7	Locknut	M12
21	D26734089	1	Bearing Housing	
22	390912X1	3	Hex. Sock. Screw	M12 X 40
23	D26732754	2	Bear. 6010 Z	
24	D26733905	1	Shim	
25	D26739816	1	Key Parallel	8 X 7 X 22
26	D26733548	1	Clevis Pin	
27	D26733654	1	Universal Joint	
28	D26739097	2	Pin	13 X 50
29	D26739771	2	Dowel	
30	D49030067	1	Knuckle Joint	
31	D26739281	2	Washer	13-140HV
32	D26733544	2	Clevis Pin	
33	D41409300	2	Split Pin	4 X 45
34	D43103300	1	Key	8 X 7 X 28
35	D26733552	1	Clip	
36	D26740203	4	Washer	Diameter 13,5
37	D26734524	1	Standpipe	
38	D26733789	1	Auger	
	D26733789	X	Auger	200 X 1034
	D26740984	1	Auger	[A,C]
39	D26733551	1	Bearing	
40	D26733354	1	Spring Washer	
41	339123X1	2	Hex. Sock. Screw	M8 X 20
42	390809X1	2	Screw Special	M10 X 25
43	D26740161	2	Washer	10,5 X 30 X 3 ZN
44	D41087600	4	Locknut	
45	D26733546	2	Anglepiece	
46	D26740203	2	Washer	Diameter 13,5
47	D26733550	1	Cover	
48	D40411200	2	Hex. Sock. Screw	M12 X 45
49	D26734935	1	Support	
50	D26746696	1	Support	
51	D40066800	2	Screw Special	M10 X 30
52	D16736252	1	Seal Plate	
53	D16736253	1	Seal Plate	
54	339560X1	18	Hex. Sock. Screw	M6 X 16
55	D26739994	36	Washer	6,6 X 12,5 X 1,6
56	D41100600	18	Spring Washer	A6
57	D41010600	18	Nut	M6
58	D26732728	1	Gib Key	8 X 7 X 32
59	D26741113	2	Washer	
60		2	Profile	[D] 1400MM

FOOTNOTE [A] EXPORT ONLY
FOOTNOTE [B] FOR CORN
FOOTNOTE [C] FOR RICE
FOOTNOTE [D] NUMBER TO BE ADVISED

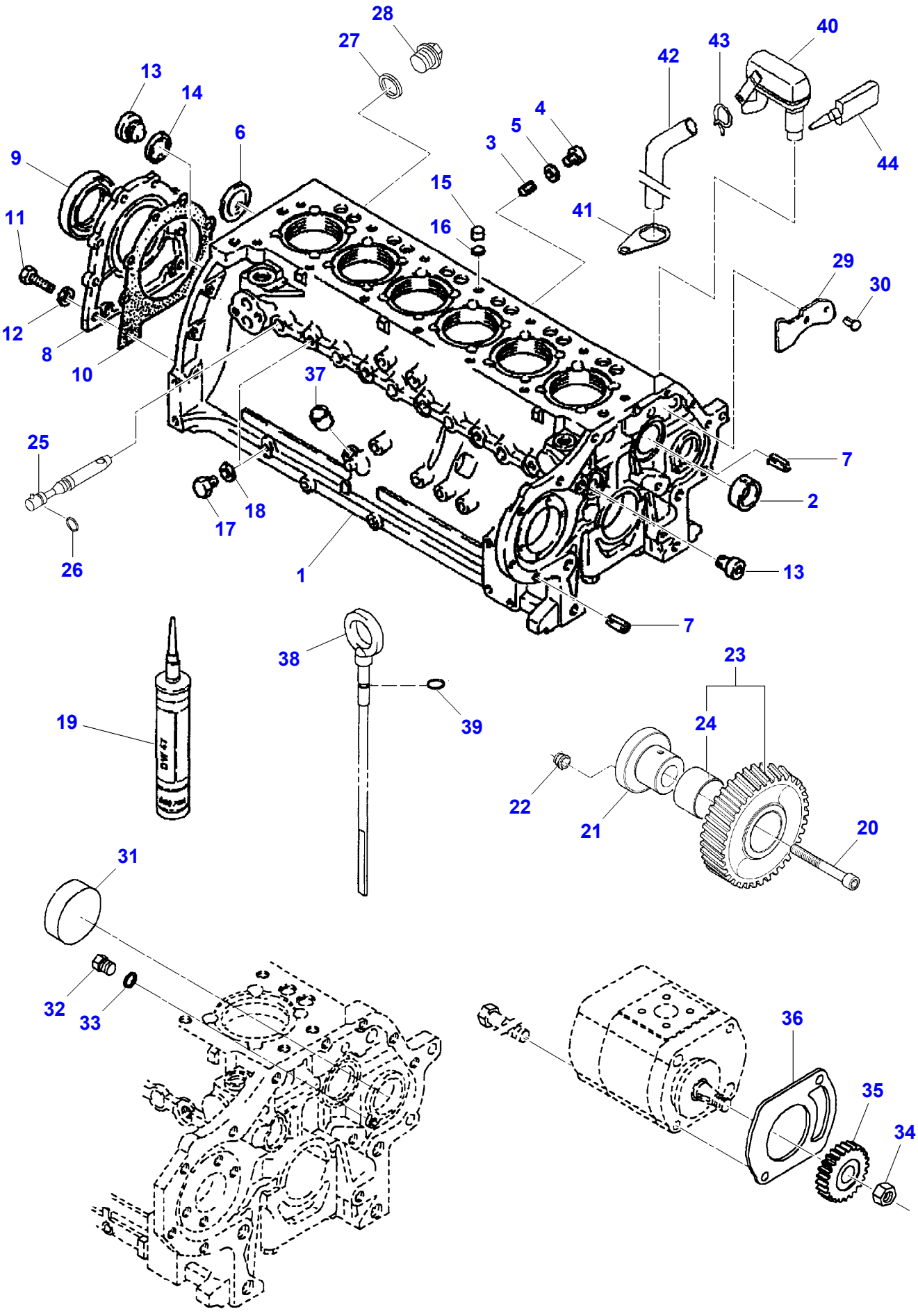
28
27
13
14
6
9
11
12
8
10
4
5
3
15
16
42
43
40
44
41
29
30
37
25
26
17
18
1
7
2
13
7
38
39
19
23
24
22
21
20
31
32
33
36
35
34

D-LA46-001-A

Item	Part Number	Qty	Description	Comments
1	F007.200.210.030	1	Crankcase	
2	F395.200.210.060	1	Bush	(1)
3	F100.001.215.235	2	Plug	(1)
4	X483.800.400.000	7	Screw	(1) M12 X 1,5
5	X540.003.278.000	7	Ring	(1) 12 X 15,5-CU
6	F100.001.216.240	1	Disc	(1)
7	F100.001.167.266	2	Tension Bushing	(1)
8	F100.002.234.870	1	Cover	
9	F148.200.210.030	1	Oil Seal	
10	F100.003.362.337	1	Gasket	
11	X487.527.741.000	8	Hex. Sock. Screw	M8 X 20
12	X450.006.308.000	8	Washer	
13	F100.001.214.987	2	Screw	(1)
14	X540.005.878.000	1	Ring	(1) A20 X 24 CU
15	F100.001.170.580	5	Plug	(1)
16	F100.001.167.010	5	Disc	(1)
17	X494.303.000.000	5	Plug	(1) CM10 X 1
18	X540.002.478.000	8	Ring	(1) A10 X 13,5 CU
19	X903.050.553.000	1	Sealer	
20	X485.013.806.000	1	Hex. Sock. Screw	M10 X 60
21	F395.200.210.090	1	Clevis Pin	
22	F395.200.210.080	1	Tension Bushing	
23	F100.004.153.996	1	Gear	
24	F100.003.362.538	1	Bush	(23)
25	F100.002.239.591	6	Nozzle	
26	F100.001.173.838	6	O Ring	
27	X540.008.278.000	1	Ring	A26 X 31 CU
28	X494.306.800.000	1	Screw	CM26
29	F395.200.210.070	1	Baffle	(1)
30	X419.446.700.000	2	Nail, Notched	(1) 6 X 10
31	F100.001.165.839	1	Plug	
32	F100.001.215.567	1	Plug	
33	X540.002.478.000	1	Ring	A10 X 13,5 CU
34	F100.001.262.635	1	Nut	
35	F100.002.235.058	1	Spur Gear	
36	016.861.011.020	1	Gasket	
37	F100.001.167.269	1	Bush	
38	F007.200.510.040	1	Oil Dipstick	
39	F100.001.174.311	1	O Ring	(38)
40	F007.200.210.140	1	Eyelet	
41	F007.200.210.150	1	Retaining Plate	
42	F007.200.210.160	1	Hose	
43	F007.200.210.170	1	Hose Clip	
44	F007.200.210.180	1	Sealer	
45	E007.200.010.010	1	Motor	[A] 170 Ch - 125KW TYPE ENG BF6L913
	E007.250.010.010	1	Motor	[A] 160 Ch - 118KW TYPE ENG BF6L913

FOOTNOTE [A] NOT ILLUSTRATED

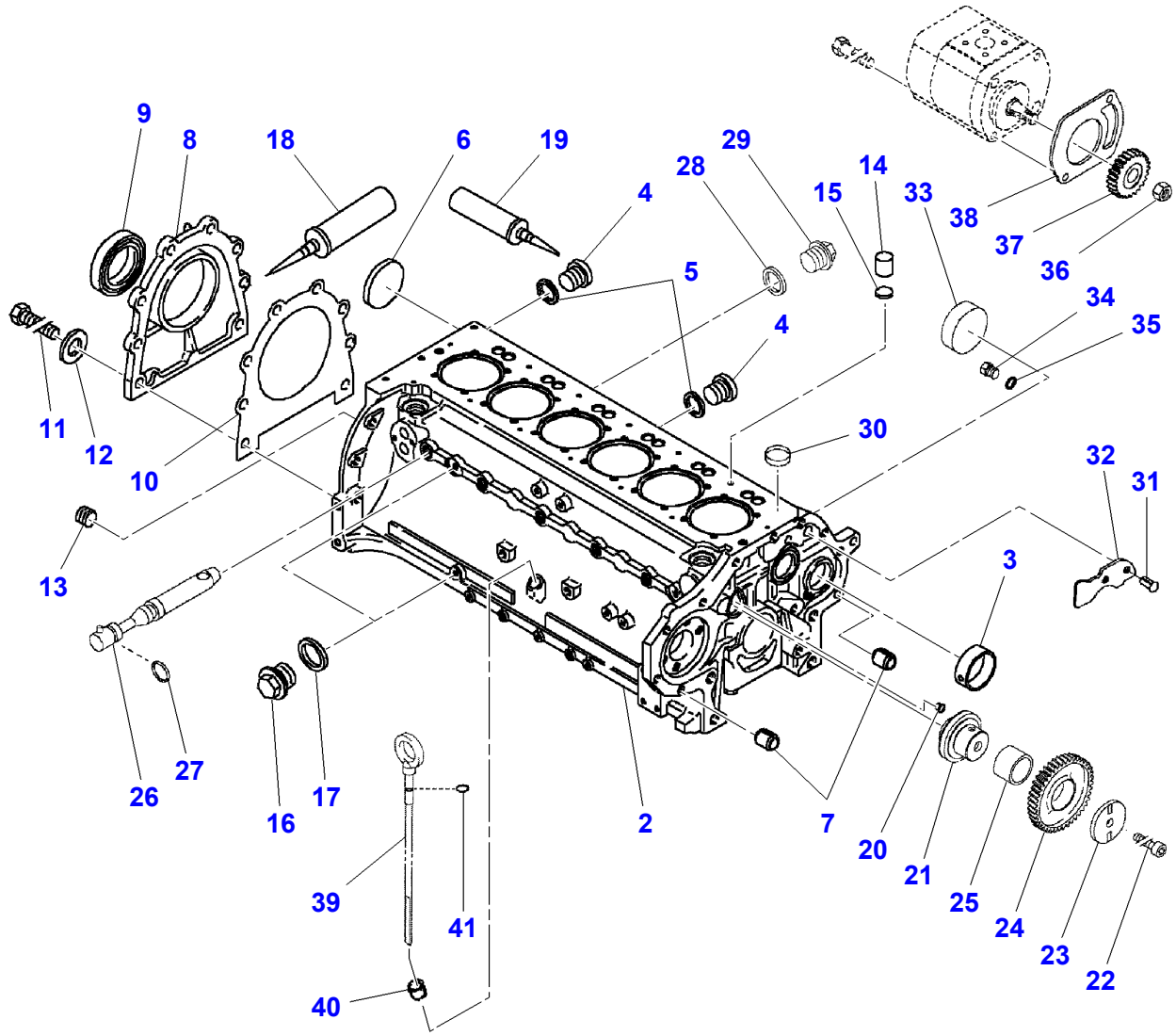
9
8
18
6
19
29
28
14
4
15
33
38
37
36
5
34
4
35
11
12
10
30
32
31
13
3
27
26
16
17
2
7
20
21
25
24
23
22
39
41
40

D-LA46-002-A

Item	Part Number	Qty	Description	Comments
1	E007.201.010.010	1	Motor	[A] TYPEENG BF6L914C
2	F007.201.210.010	1	Crankcase	
3	F395.200.210.060	1	Bush	(2)
4	X483.800.401.000	7	Screw	(2) M12X1,5
5	X540.003.278.000	7	Ring	(2) A12X15,5-CU
6	F100.001.216.240	1	Disc	(2)
7	F100.001.167.266	2	Tension Bushing	(2)
8	F100.002.234.870	1	Cover	
9	F148.200.210.030	1	Oil Seal	
10	F100.003.362.337	1	Gasket	
11	X487.527.741.000	8	Hex. Sock. Screw	M8X20
12	X450.006.308.000	8	Washer	
13	F149.200.210.210	2	Screw	(2)
14	F100.001.170.580	5	Plug	
15	F100.001.167.010	5	Disc	
16	X494.303.000.000	2	Plug	(2) CM10X1
17	X540.002.478.000	2	Ring	(2) A10X13,5-CU
18	X903.050.553.000	1	Sealer	
19	F214.202.210.020	1	Sealer	
20	F395.200.210.080	1	Tension Bushing	
21	F395.200.210.090	1	Clevis Pin	
22	F100.002.234.177	1	Hex. Sock. Screw	
23	F100.004.154.593	1	Disc	
24	F100.004.154.591	1	Gear	
25	F100.004.154.590	1	Bush	(24)
26	F100.002.239.591	6	Nozzle	
27	F100.001.173.838	6	O Ring	
28	X540.008.278.000	1	Ring	A26X31-CU
29	X494.306.800.000	1	Screw	CM26X1,5
30	F100.001.176.197	1	Core Locker	
31	X419.446.700.000	2	Nail, Notched	
32	F395.200.210.070	1	Baffle	
33	F100.001.165.839	1	Plug	
34	F100.001.215.567	1	Plug	
35	X540.002.478.000	1	Ring	A10X13,5-CU
36	F100.001.262.635	1	Nut	
37	F100.002.235.058	1	Spur Gear	
38	016.861.011.020	1	Gasket	
39	F100.001.167.269	1	Bush	
40	F007.200.510.040	1	Oil Dipstick	
41	F100.001.174.311	1	O Ring	(40)

FOOTNOTE [A] NOT ILLUSTRATED

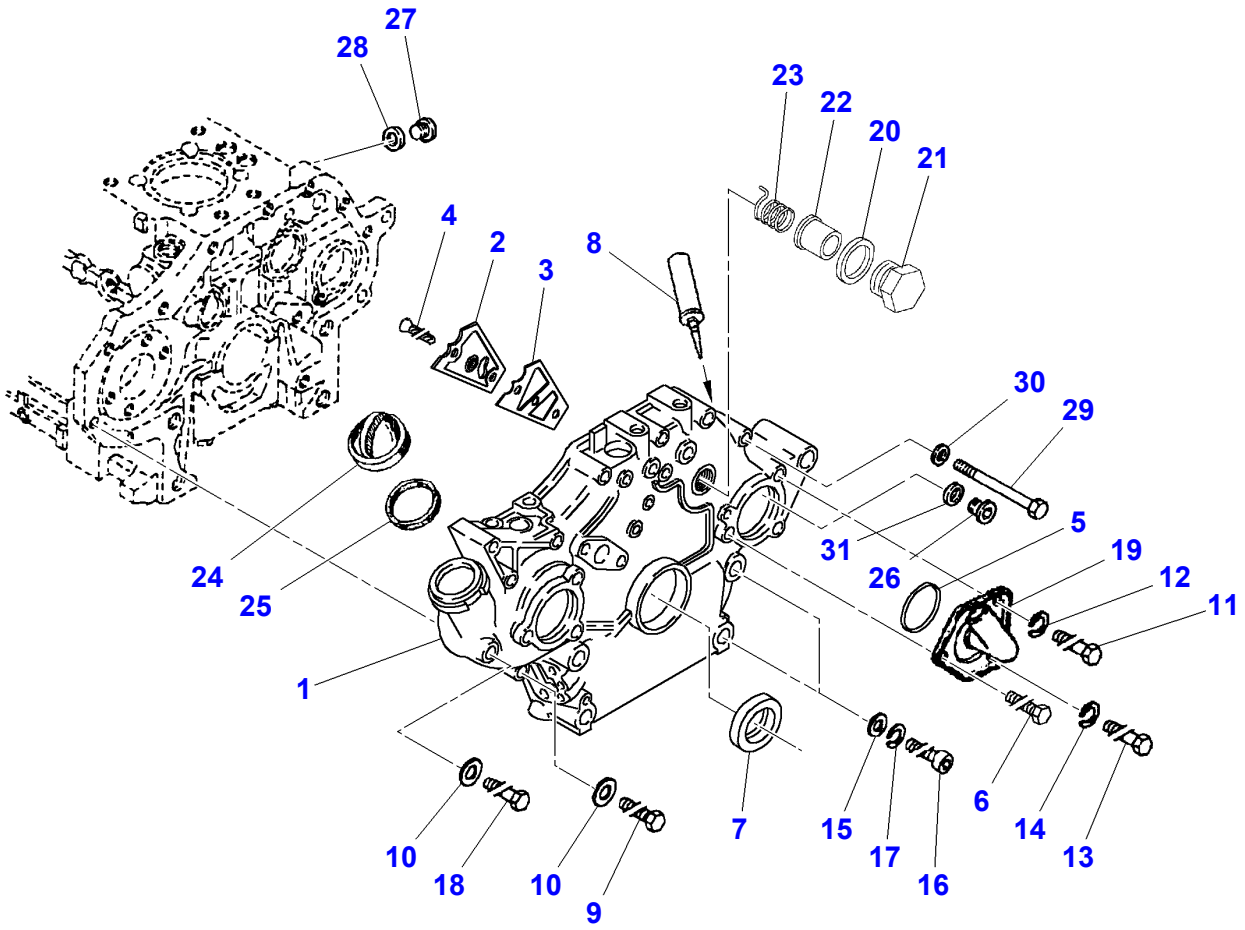
27
28
23
22
20
21
4
2
3
8
30
29
5
19
12
11
31
26
24
25
1
6
14
13
7
15
17
16
10
18
10
9

D-LA03-003-A

Item	Part Number	Qty	Description	Comments
1	F007.201.210.020	1	Cover	
2	F149.200.210.030	1	Covering	
3	F149.200.210.040	1	Gasket	
4	X494.022.500.000	3	Self Tap Screws	
5	F100.001.166.111	1	Seal	
6	X487.526.905.000	1	Hex. Sock. Screw	
7	F148.200.210.090	1	Oil Seal	
8	X903.050.553.000	1	Sealer	
9	X486.528.705.000	1	Hex. Sock. Screw	
10	X450.006.308.000	3	Washer	
11	X486.532.605.000	1	Hex. Sock. Screw	
12	X520.804.401.000	1	Lock Washer	
13	X486.529.201.000	1	Hex. Sock. Screw	
14	X520.803.901.000	1	Lock Washer	
15	X450.909.608.000	16	Disc	
16	F007.200.210.130	4	Hex. Sock. Screw	
17	X523.606.047.000	4	Lock Washer	
18	X486.529.005.000	1	Hex. Sock. Screw	
19	F007.200.090.110	1	Cover	
20	X540.007.564.000	1	Ring	
21	F100.002.135.024	1	Screw	
22	F100.002.135.019	1	Cap	
23	F100.002.237.638	1	Comp.Spring	
24	F100.001.236.291	1	Plug	
25	F100.001.236.290	1	Ring	(24)
26	X483.801.600.000	1	Screw	
27	X483.800.400.000	1	Screw	
28	X540.003.278.000	1	Ring	
29	X486.529.005.000	2	Hex. Sock. Screw	
30	X450.006.308.000	2	Washer	
31	X540.005.678.000	1	Ring	

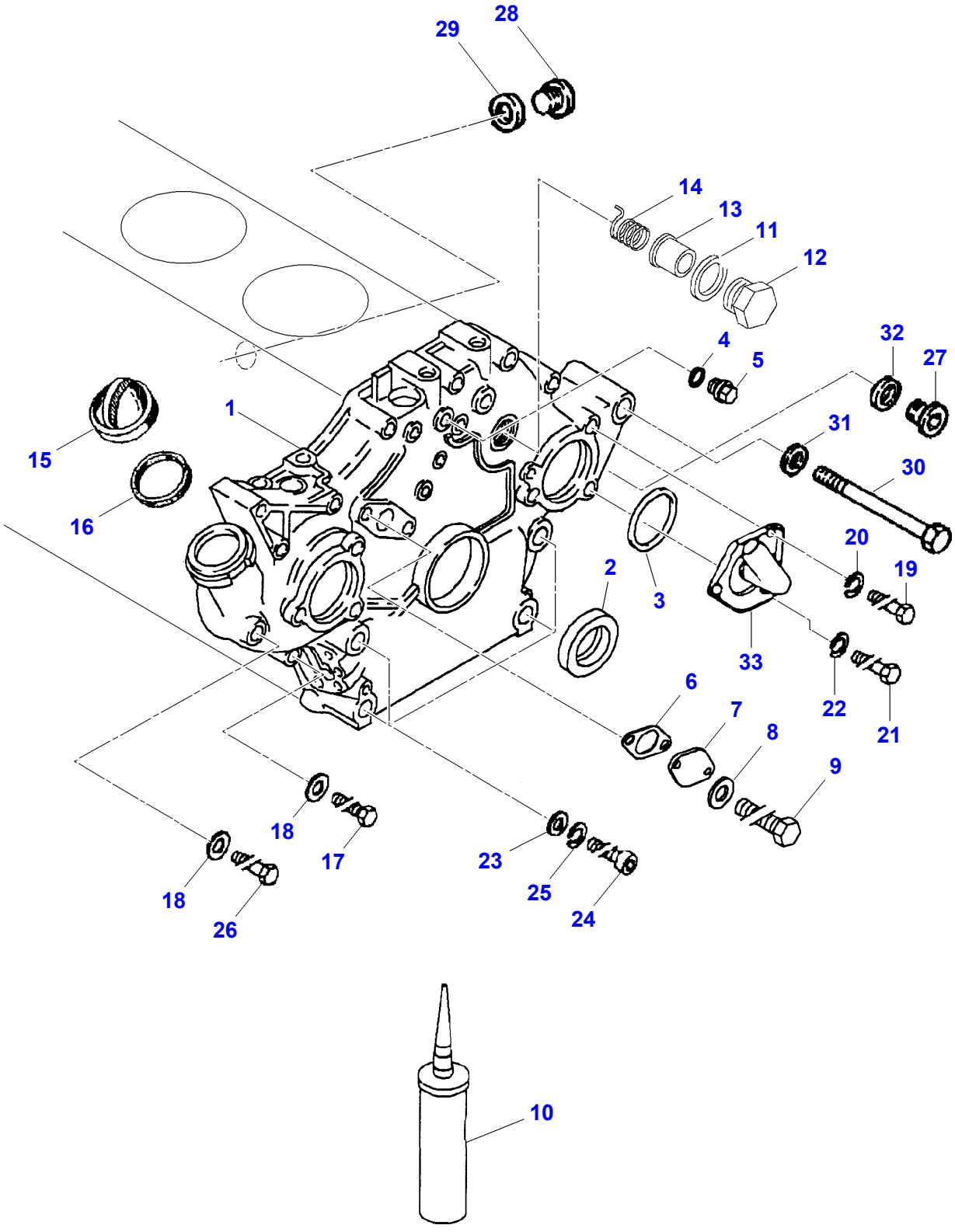
29
28
14
13
11
12
4
5
32
27
1
31
15
30
16
20
19
2
3
33
22
21
6
7
8
9
18
17
23
18
25
26
24
10

D-LA03-002-A

Item	Part Number	Qty	Description	Comments
1	F395.200.210.100	1	Cover	
2	F148.200.210.090	1	Oil Seal	
3	F100.001.166.111	1	Seal	
4	X540.003.078.000	1	Ring	A10 X 16 CU
5	X484.400.000.000	1	Plug	M10 X 1
6	F395.200.210.110	1	Joint.	
7	F395.200.210.120	1	Flange	
8	X450.006.308.000	2	Washer	
9	X487.526.841.000	2	Hex. Sock. Screw	M8 X 16
10	X903.050.553.000	1	Sealer	
11	X540.007.564.000	1	Ring	24 X 30 ALU
12	F100.002.135.024	1	Screw	
13	F100.002.135.019	1	Cap	
14	F100.002.237.638	1	Comp.Spring	
15	F100.001.236.291	1	Plug	
16	F100.001.236.290	1	Ring	(15)
17	X486.528.705.000	1	Hex. Sock. Screw	M8 X 60
18	X450.006.308.000	3	Washer	
19	X486.532.605.000	1	Hex. Sock. Screw	M10 X 75
20	X520.804.401.000	1	Lock Washer	
21	X486.529.201.000	1	Hex. Sock. Screw	M8 X 85
22	X520.803.901.000	1	Lock Washer	
23	X450.909.608.000	16	Disc	
24	F007.200.210.130	4	Hex. Sock. Screw	
25	X523.606.047.000	4	Lock Washer	
26	X486.529.005.000	1	Hex. Sock. Screw	M8 X 70
27	X483.801.600.000	1	Screw	M18
28	X483.800.400.000	1	Screw	M12
29	X540.003.278.000	1	Ring	A12 X 15,5 CU
30	X486.529.005.000	2	Hex. Sock. Screw	M8 X 70
31	X450.006.308.000	2	Washer	
32	**X540.005.678.000**	1	Ring	A18 X 24 CU
33	F007.200.090.110	1	Cover	

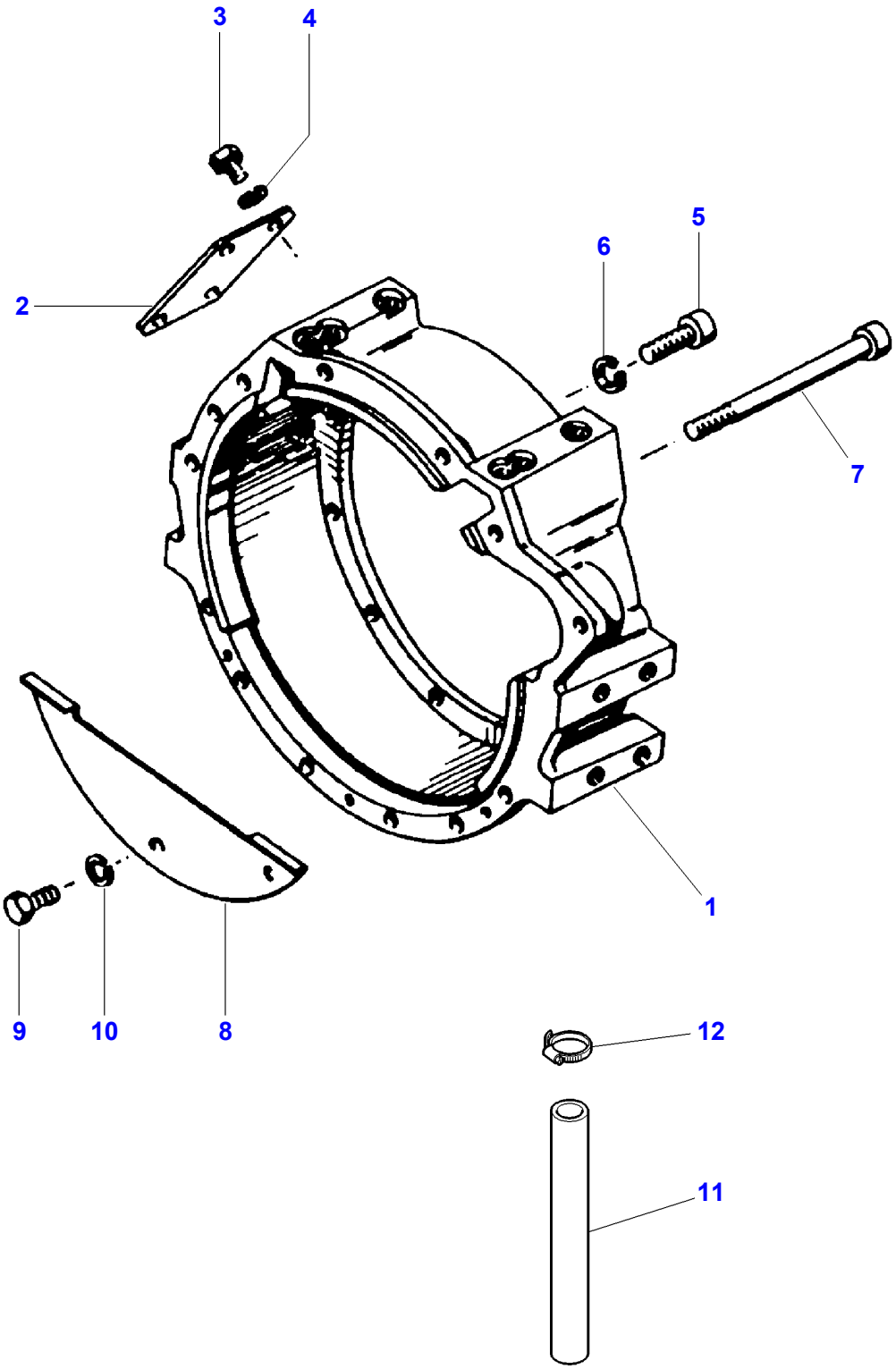

D-LA04-003-B

Item	Part Number	Qty	Description	Comments
1	D26733173	1	Housing	
2	D26733170	1	Cover	
3	D26739736	4	Hex. Sock. Screw	M8 X 10
4	D41102100	4	Washer	A8
5	D26739935	11	Screw	M10 X 30
6	D26739810	11	Spring Washer	A10
7		3	Screw	[A] M10 X 120
8	D26733192	1	Shield	
9		3	Hex. Sock. Screw	[A] M6 X 10
10	D41100600	3	Spring Washer	A6
11	D28788412	1	Hydraulic Hose	
12	D26732769	1	Clamp	

FOOTNOTE [A] NUMBER TO BE ADVISED

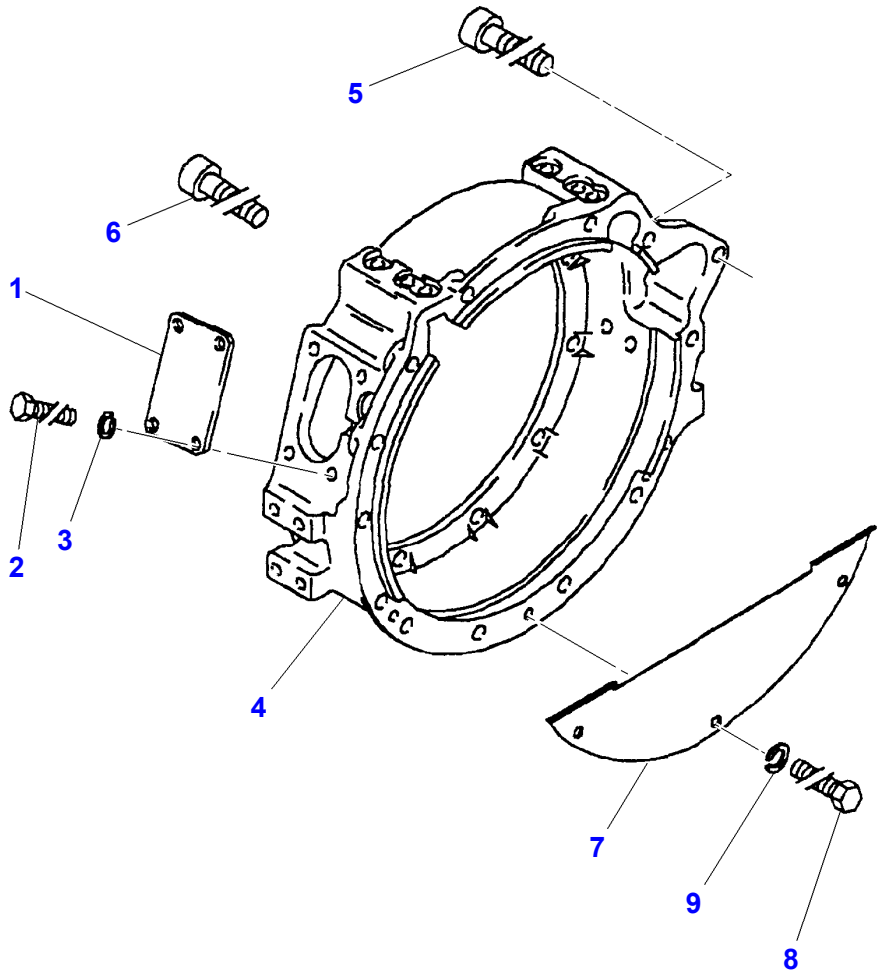

D-LA04-004-A

Item	Part Number	Qty	Description
1	F007.200.210.430	1	Cover
2	X487.527.341.000	4	Screw
3	X520.803.901.000	4	Lock Washer
4	F007.200.210.420	1	Housing
5	X485.013.206.000	11	Hex. Sock. Screw
6	F002.900.010.140	3	Hex. Sock. Screw
7	F007.200.210.440	1	Cover
8	X487.520.305.000	3	Hex. Sock. Screw
9	X520.803.001.000	3	Lock Washer

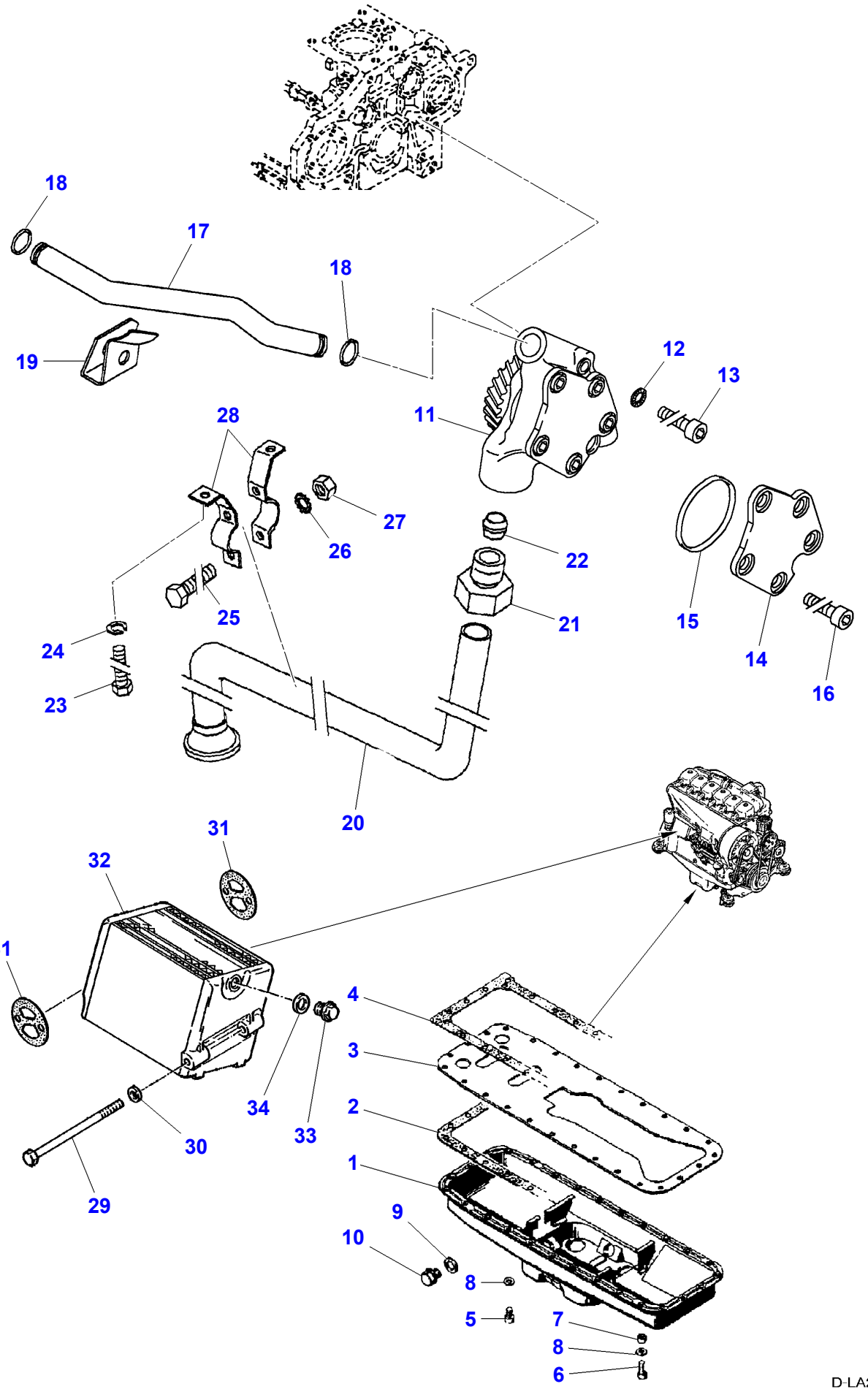
18
17
18
19
12
13
11
28
27
26
22
25
21
24
15
14
16
23
20
31
32
31
4
3
2
1
34
33
30
29
9
10
8
5
7
8
6
D-LA26-001-B

Item	Part Number	Qty	Description	Comments
1	F007.200.510.050	1	Oil Sump	
2	F007.200.510.060	1	Joint.	
3	F007.200.510.070	1	Interm. Plate	
4	F007.200.510.080	1	Joint.	
5	X485.009.405.000	26	Hex. Sock. Screw	M8 X 16
6	X485.007.505.000	1	Hex. Sock. Screw	M8 X 25
7	F007.200.510.100	1	Bush	
8	F100.001.216.121	27	Disc	
9	X540.009.464.000	1	Ring	A30 X 36 AL
10	F007.200.510.090	1	Screw	
11	F007.200.510.110	1	Oil Pump	Up to Serial or Engine Number 58869
	F007.201.510.010	1	Oil Pump	From Serial or Engine Number 58870
12	F100.001.169.689	2	Lock Washer	
13	X485.008.201.000	2	Hex. Sock. Screw	M8 X 60
14	F007.200.510.120	1	Cover	(11)
15	F149.200.510.030	1	O Ring	(11) Up to Serial or Engine Number 58869
16	F007.200.510.130	5	Hex. Sock. Screw	(11)
17	F149.200.510.010	1	Tube	
18	F100.001.174.605	2	O Ring	
19	F100.002.234.165	1	Spring	
20	F007.200.510.140	1	Intake	
21	F395.200.510.100	1	Screw	
22	F395.200.510.110	1	Ring	
23	X487.527.441.000	2	Hex. Sock. Screw	M8 X 12
24	X520.803.901.000	2	Lock Washer	
25	X487.520.041.000	2	Hex. Sock. Screw	M6 X 16
26	X522.103.246.000	2	Tooth Washer	
27	X428.202.239.000	2	Nut	M6
28	F007.200.510.150	2	Clip	
29	F007.200.510.160	1	Screw	Up to Serial or Engine Number 58869
	F007.201.510.030	1	Screw	From Serial or Engine Number 58869
30	X450.007.508.000	3	Washer	
31	F100.004.154.482	2	Gasket	
32	F007.200.510.010	1	Oil Cooler	Up to Serial or Engine Number 58869
	F007.201.510.020	1	Oil Cooler	From Serial or Engine Number 58870
33	X494.204.800.000	1	Screw	From Serial or Engine Number 58870
34	X540.005.478.000	1	Ring	From Serial or Engine Number 58870

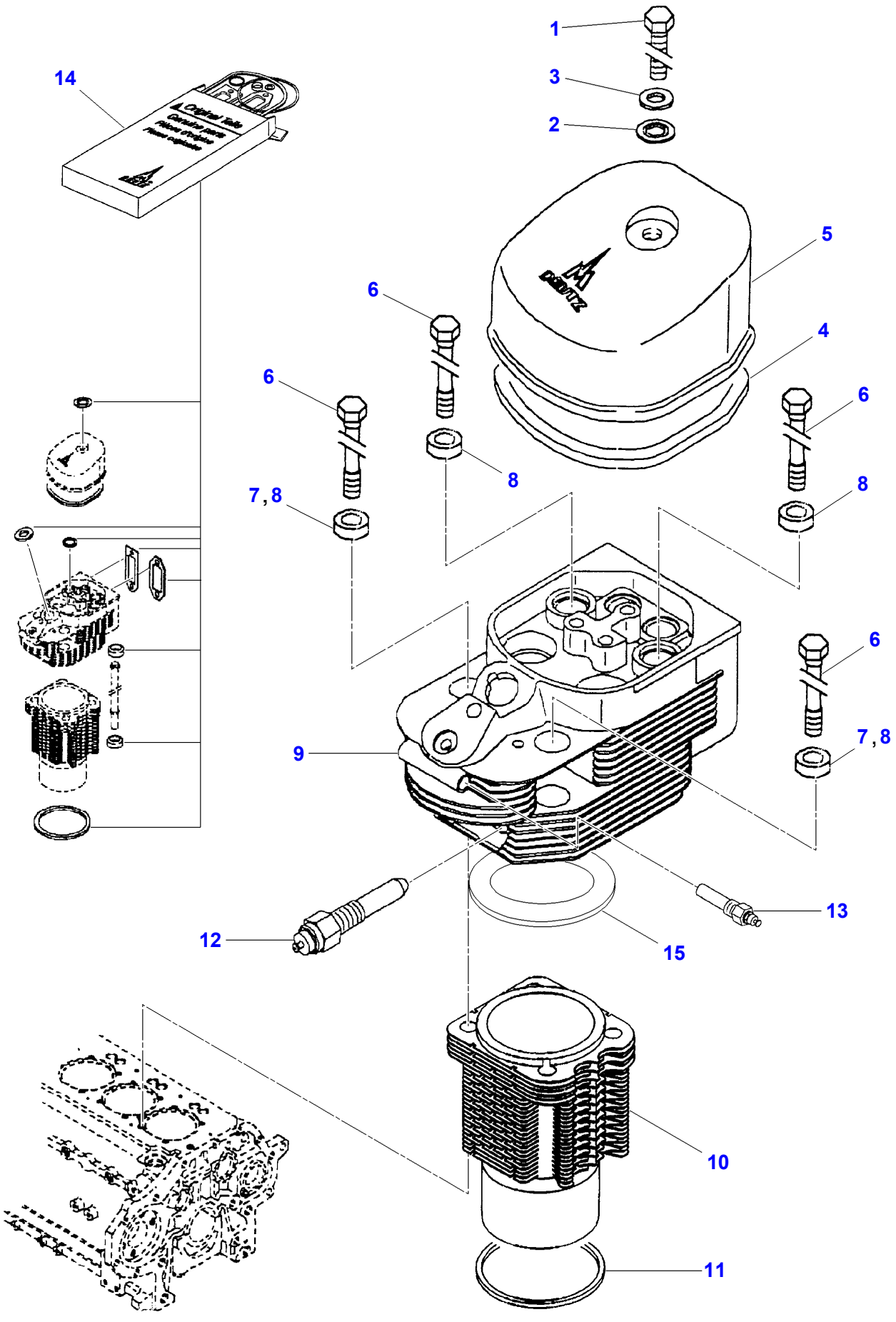

D-LA07-001-A

Item	Part Number	Qty	Description	Comments
1	X487.528.141.000	6	Hex. Sock. Screw	M8 X 30
2	F100.001.216.307	6	Ring	
3	X450.006.308.000	6	Washer	
4	F100.004.157.234	6	Gasket	
5	F100.002.234.784	6	Cyl.Head Cover	
6	F007.200.210.190	24	Bolt	
7	F007.200.210.200	12	Washer	170 Ch
8	F100.003.371.666	24	Washer	160 Ch
9	F007.200.210.210	6	Cylinder Head	170 Ch
	F149.200.210.190	6	Cylinder Head	160 Ch
10	F007.200.210.410	6	Cylinder	170 Ch
	F100.004.156.586	6	Cylinder	160 Ch
11	F100.002.137.256	6	Ring	0,2 MM
	F148.200.210.120	6	Ring	0,3 MM
	F100.002.232.963	6	Ring	0,5 MM
	F100.004.150.264	6	Ring	0,8 MM
	F100.002.239.331	6	Ring	1,00 MM
12	X830.030.059.000	1	Temp. Sensor	M14
13	F007.250.210.010	1	Temp. Sensor	M10
14	F007.200.210.020	1	Kit, Joint	
15	F007.200.210.220	X	Ring	3,10 MM 170 Ch
	F390.200.210.070	X	Ring	1,20 MM 160 Ch
	F007.200.210.230	X	Ring	3,35 MM 170 Ch
	F390.200.210.120	X	Ring	1,45 MM 160 Ch
	F007.200.210.240	X	Ring	3,45 MM 170 Ch
	F390.200.210.140	X	Ring	1,55 MM 160 Ch
	F007.200.210.250	X	Ring	3,55 MM 170 Ch
	F205.200.210.160	X	Ring	1,65 MM 160 Ch
	F007.200.210.260	X	Ring	3,80 MM 170 Ch
	F205.200.210.170	X	Ring	1,90 MM 160 Ch
	F007.200.210.400	X	Ring	3,00 MM 170 Ch
	F100.004.157.654	X	Ring	1,10 MM 160 Ch
	F007.200.210.270	X	Ring	3,05 MM 170 Ch
	F390.200.210.060	X	Ring	1,15 MM 160 Ch
	F007.200.210.280	X	Ring	3,15 MM 170 Ch
	F390.200.210.080	X	Ring	1,25 MM 160 Ch
	F007.200.210.290	X	Ring	3,20 MM 170 Ch
	F390.200.210.090	X	Ring	1,30 MM 160 Ch
	F007.200.210.300	X	Ring	3,25 MM 170 Ch
	F390.200.210.100	X	Ring	1,35 MM 160 Ch
	F007.200.210.310	X	Ring	3,30 MM 170 Ch
	F390.200.210.110	X	Ring	1,40 MM 160 Ch
	F007.200.210.320	X	Ring	3,40 MM 170 Ch
	F390.200.210.130	X	Ring	1,50 MM 160 Ch
	F007.200.210.330	X	Ring	3,50 MM 170 Ch
	F148.200.210.150	X	Ring	1,60 MM 160 Ch

Item	Part Number	Qty	Description	Comments
15	F007.200.210.340	X	Ring	3,60 MM 170 Ch
15	F148.200.210.160	X	Ring	1,70 MM 160 Ch
15	F007.200.210.350	X	Ring	3,65 MM 170 Ch
15	F148.200.210.170	X	Ring	1,75 MM 160 CH
15	F007.200.210.360	X	Ring	3,70 MM 170 Ch
15	F148.200.210.180	X	Ring	1,80 MM 160 Ch
15	F007.200.210.370	X	Ring	3,75 MM 170 Ch
15	F148.200.210.190	X	Ring	1,85 MM 160 Ch
15	F007.200.210.380	X	Ring	3,85 MM 170 Ch
15	F148.200.210.200	X	Ring	1,95 MM 160 Ch
15	F007.200.210.390	X	Ring	3,90 MM 170 Ch
15	F148.200.210.210	X	Ring	2,00 MM 160 Ch

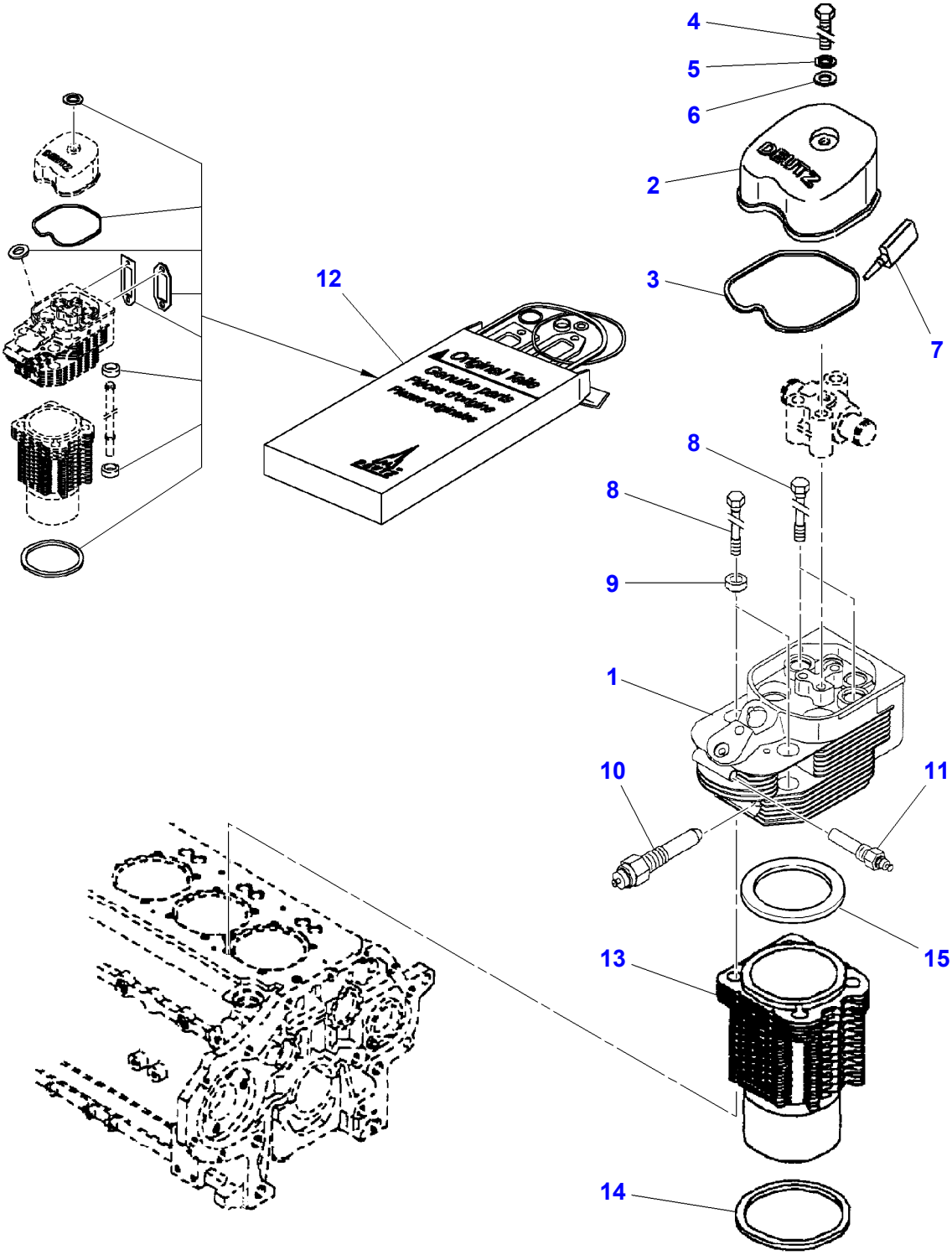
4
5
6
2
3
7
12
8
8
9
1
10
11
15
13
14
DEUTZ
Original Teile
Genuine Parts
Pièces d'origine
Ricambi originali

D-LA07-002-A

Item	Part Number	Qty	Description	Comments
1	F007.201.210.110	1	Cylinder Head	
2	F214.202.210.110	6	Cyl.Head Cover	
3	F214.202.210.010	6	Joint.	
4	X487.528.141.000	6	Hex. Sock. Screw	
5	F100.001.216.307	6	Ring	
6	X450.006.308.000	6	Washer	
7	F007.200.210.180	1	Sealer	
8	F007.200.210.190	24	Bolt	
9	F007.200.210.200	12	Washer	
10	X830.030.059.000	1	Temp. Sensor	
11	F007.250.210.010	1	Temp. Sensor	
12	F007.201.210.030	6	Kit, Joint	
13	F007.200.210.410	6	Cylinder	
14	F100.002.232.963	6	Ring	0,5MM
	F100.002.137.256	X	Ring	0,2MM
	F148.200.210.120	1	Ring	0,3MM
	F100.004.150.264	1	Ring	0,8MM
	F100.002.239.331	1	Ring	1,00MM
15	F007.200.210.400	6	Ring	3,00M
	F007.200.210.270	6	Ring	3,05MM
	F007.200.210.220	6	Ring	3,10MM
	F007.200.210.280	6	Ring	3,15MM
	F007.200.210.290	6	Ring	3,20MM
	F007.200.210.300	6	Ring	3,25MM
	F007.200.210.310	6	Ring	3,30MM
	F007.200.210.230	6	Ring	3,35MM
	F007.200.210.320	6	Ring	3,40MM
	F007.200.210.240	6	Ring	3,45MM
	F007.200.210.330	6	Ring	3,50MM
	F007.200.210.250	6	Ring	3,55MM
	F007.200.210.340	6	Ring	3,60MM
	F007.200.210.350	6	Ring	3,65MM
	F007.200.210.360	6	Ring	3,70MM
	F007.200.210.370	6	Ring	3,75MM
	F007.200.210.260	6	Ring	3,80MM
	F007.200.210.380	6	Ring	3,85MM
	F007.200.210.390	6	Ring	3,90MM

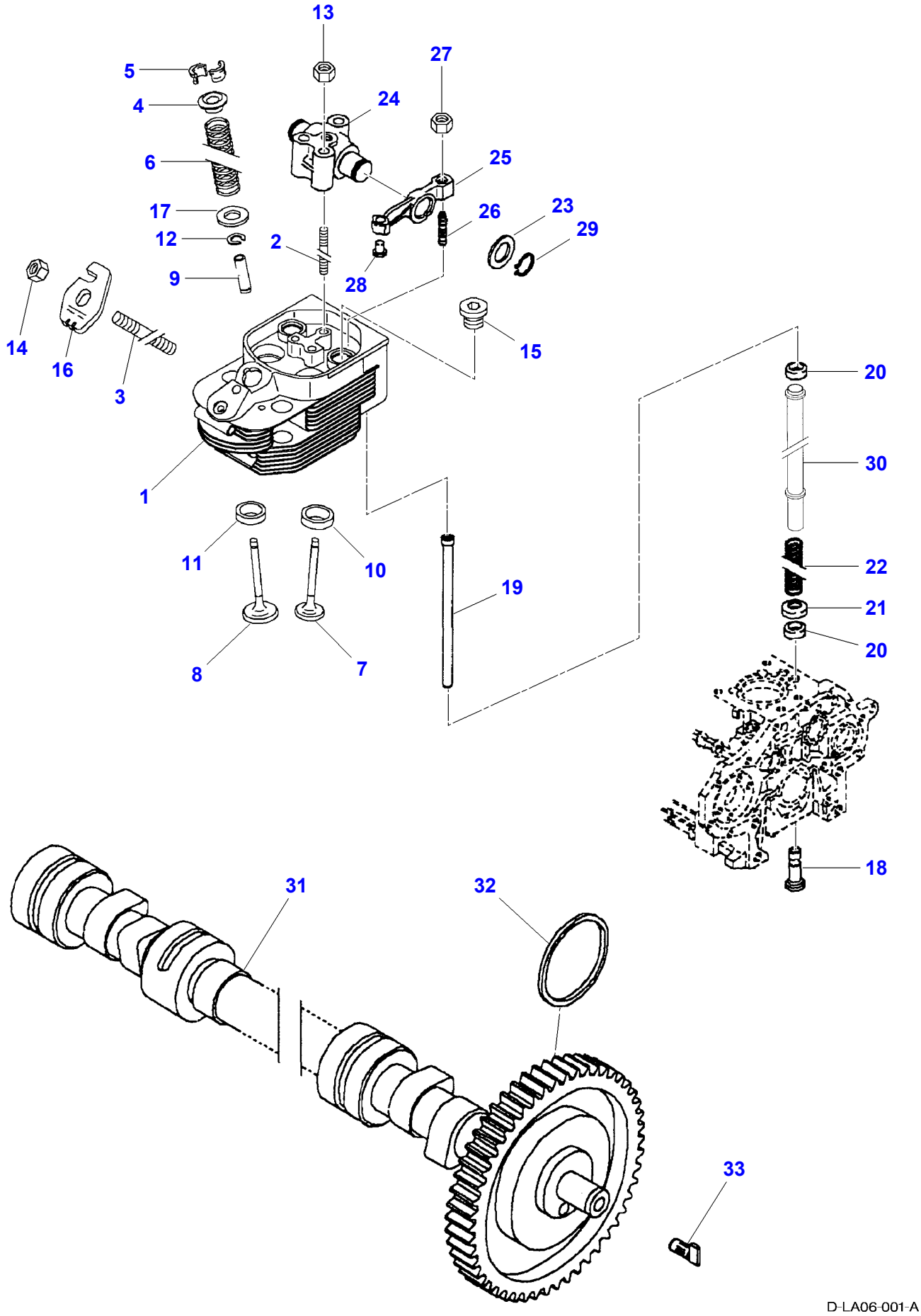
13
27
5
24
4
6
25
17
26
23
12
2
29
9
28
14
15
16
3
1
20
30
22
21
20
11
10
19
8
7
18
31
32
33
D-LA06-001-A

Item	Part Number	Qty	Description	Comments
1	F007.200.210.210	6	Cylinder Head	170 Ch
	F149.200.210.190	6	Cylinder Head	160 Ch
2	X482.915.706.000	18	Stud	(1) M8 X 55
3	X482.922.106.000	6	Stud	(1) M10 X 50
4	F100.003.371.748	12	Spring Seat	(1)
5	F205.200.210.020	24	Valve Cone	(1)
6	F100.003.369.305	12	Comp.Spring	(1)
7	F149.200.210.200	6	Valve Exhaust	(1)
8	F149.200.210.070	6	Valve Inlet	(1)
9	F148.200.210.250	12	Valve Guide	(1) 15,00 MM
	F148.200.210.260	12	Valve Guide	(1) 15,25 MM
	F148.200.210.270	12	Valve Guide	(1) 15,50 MM
10	F100.002.137.306	6	Valve Seat	(1) 40,16 MM
	F100.002.137.307	6	Valve Seat	(1) 40,26 MM
	F100.002.137.308	6	Valve Seat	(1) 40,36 MM
11	F149.200.210.100	6	Valve Seat	(1) 45,66 MM
	F149.200.210.130	6	Valve Seat	(1) 45,76 MM
	F149.200.210.140	6	Valve Seat	(1) 45,86 MM
12	F100.001.215.500	12	Circlip	(1)
13	X428.202.439.000	18	Nut	M8
14	X428.202.839.000	6	Nut	M10
15	X483.803.200.000	12	Plug	M26
16	F206.200.210.040	6	Stirrup	
17	F149.200.210.080	12	Disc	
18	F100.003.371.885	12	Tappet	
19	F100.004.152.877	12	Pushrod	
20	F100.002.232.840	24	Ring	
21	F100.003.371.887	12	Cap	
22	F100.003.371.876	12	Spring	
23	F390.200.410.020	12	Disc	
24	F148.200.410.020	6	Rocker Shaft Ass	
25	F208.200.410.010	12	Rockerarm	
26	F100.003.365.861	6	Adjusting Screw	(25)
27	F119.200.410.050	6	Nut	(25)
28	F100.002.236.578	6	Clevis Pin	(25)
29	X530.002.846.000	12	Circlip	21 X 1,2
30	F100.003.371.888	12	Tube	
31	F007.200.410.010	1	Camshaft	
32	F100.003.367.789	1	Disc	
33	F100.002.137.015	1	Trunnion	

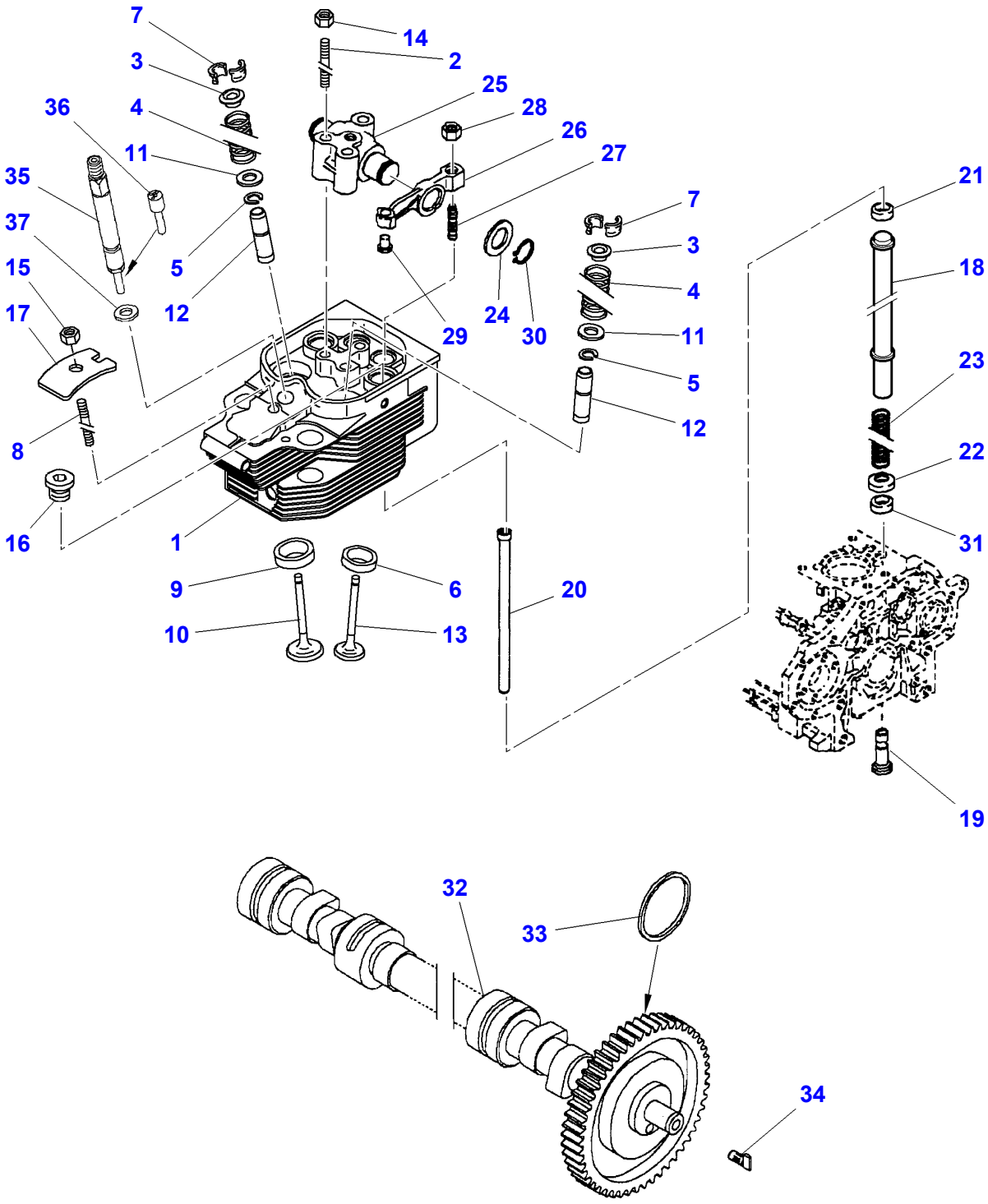
7
14
3
2
25
28
36
4
26
11
27
35
7
21
37
3
18
15
4
5
12
24
30
29
17
11
23
5
8
12
22
16
1
31
9
6
20
10
13
19
32
33
34

D-LA06-002-A

Item	Part Number	Qty	Description	Comments
1	F007.201.210.110	6	Cylinder Head	
2	X482.915.706.000	18	Stud	
3	F100.003.371.748	12	Spring Seat	
4	F100.003.369.305	12	Comp.Spring	
5	F100.001.215.500	12	Circlip	
6	F100.002.137.306	6	Valve Seat	40,16MM
	F100.002.137.307	6	Valve Seat	40,26MM
	F100.002.137.308	6	Valve Seat	40,36MM
7	F205.200.210.020	24	Valve Cone	
8	X482.922.106.000	6	Stud	
9	F149.200.210.100	6	Valve Seat	45,66MM
	F149.200.210.130	6	Valve Seat	45,76MM
	F149.200.210.140	6	Valve Seat	45,86MM
10	F149.200.210.070	6	Valve Inlet	
11	F149.200.210.080	12	Disc	
12	F148.200.210.250	12	Valve Guide	15,00MM
	F148.200.210.260	6	Valve Guide	15,25MM
	F148.200.210.270	6	Valve Guide	15,50MM
13	F149.200.210.200	6	Valve Exhaust	
14	X428.202.439.000	18	Nut	
15	X428.202.839.000	6	Nut	
16	X483.803.200.000	12	Plug	
17	F214.202.210.130	6	Holder	
18	F214.202.410.010	12	Exhaust Pipe	
19	F100.003.371.885	12	Tappet	
20	F100.004.152.877	12	Pushrod	
21	F100.002.232.840	12	Ring	
22	F100.003.371.887	12	Cap	
23	F100.003.371.876	12	Spring	
24	F390.200.410.020	12	Disc	
25	F148.200.410.020	6	Rocker Shaft Ass	
26	F208.200.410.010	12	Rockerarm	
27	F100.003.365.861	6	Adjusting Screw	
28	F119.200.410.050	6	Nut	
29	F100.002.236.578	6	Clevis Pin	
30	X530.002.846.000	12	Circlip	
31	F100.002.232.840	12	Ring	
32	F007.200.410.010	1	Camshaft	
33	F100.003.367.789	1	Disc	
34	F100.002.137.015	1	Trunnion	
35	F214.202.710.210	6	Valve.	
36	F214.202.710.220	6	Nozzle	
37	F119.200.710.650	6	Gasket	

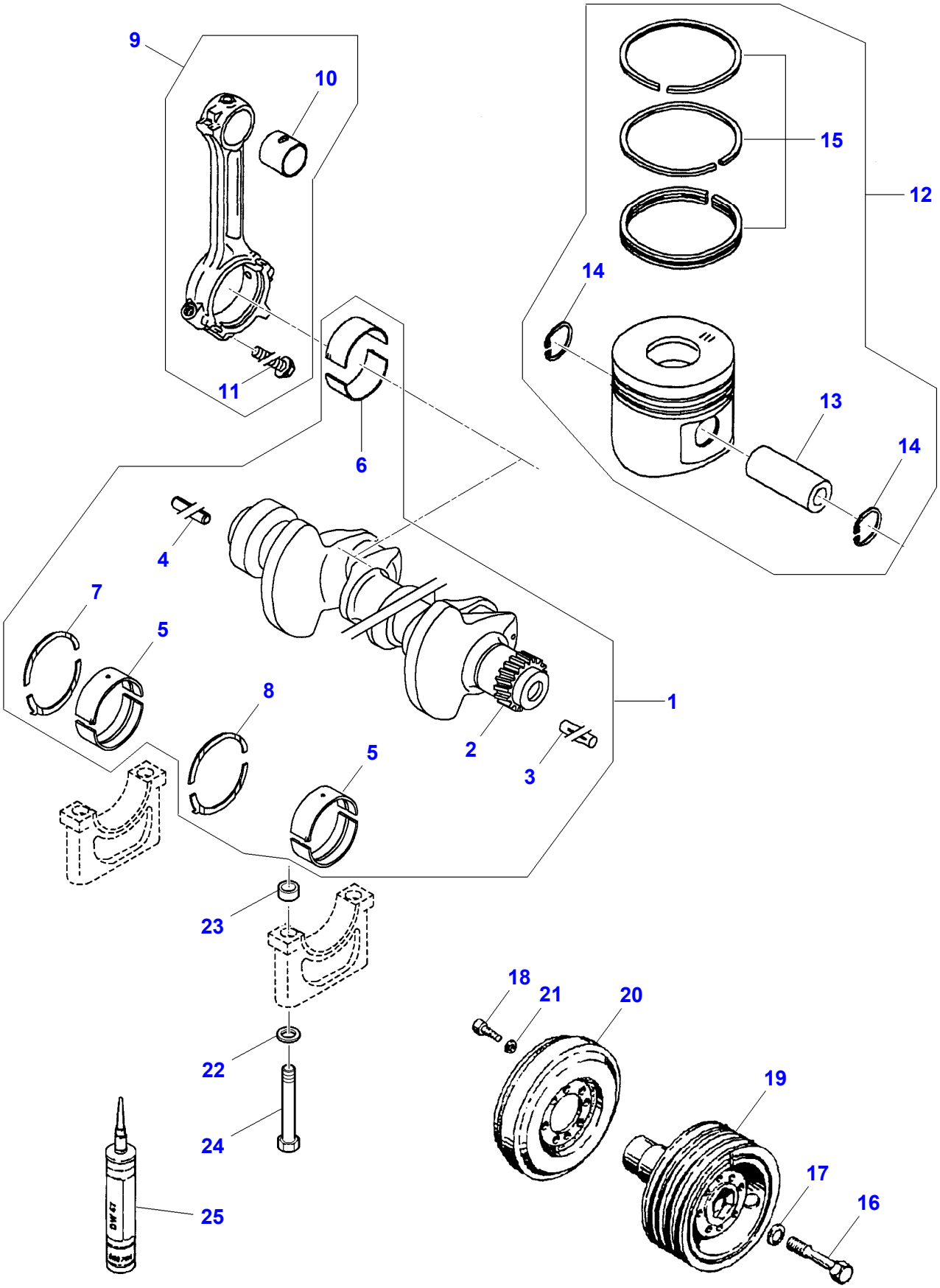

D-LA05-003-A

Item	Part Number	Qty	Description	Comments
1	F007.200.310.040	1	Crankshaft	Up to Serial or Engine Number 58869
	F007.201.310.020	1	Crankshaft	From Serial or Engine Number 58870
2	F100.002.237.257	1	Gear	(1)
3	X419.153.301.000	1	Groove Pin	(1)
4	X500.628.046.000	1	Roll Pin	(1) 8 X 18
5	F007.200.210.040	7	Bearing	(1) 75,00MM
	F007.200.210.050	7	Bearing	(1) 74,75MM
	F007.200.210.060	7	Bearing	(1) 74,50MM
6	F007.200.310.050	6	Conrod Bearing	(1) 60,00MM
	F007.200.310.060	6	Conrod Bearing	(1) 59,75MM
	F007.200.310.070	6	Conrod Bearing	(1) 59,50MM
7	F007.200.210.070	1	Ring	(1) 2,94MM
	F007.200.210.080	1	Ring	(1) 3,14MM
8	F007.200.210.100	1	Ring	(1) 2,94MM
	F007.200.210.110	1	Ring	(1) 3,14MM
9	F007.200.310.020	6	Piston Rod	
10	F007.200.310.030	6	Bush	(9)
11	F100.004.157.075	12	Hex. Sock. Screw	(9) 170 Ch
	F007.250.310.010	12	Hex. Sock. Screw	(9) 160 Ch
12	F007.200.310.010	6	Piston	Up to Serial or Engine Number 58869
	F007.201.310.010	6	Piston	From Serial or Engine Number 58870
13		6	Bush	[A] (12)
14	X530.105.246.000	12	Circlip	(12) 40 X 1,75
15	F149.200.310.020	6	Kit, Piston Ring	(12)
16	F395.200.310.030	1	Screw	
17	F100.001.216.128	1	Disc	
18	X485.007.306.000	8	Hex. Sock. Screw	M8 X 20
19	F007.200.310.080	1	Pulley,Crank	
20	F007.200.310.090	1	Damper	
21	F100.001.172.303	8	Washer	
22	F100.001.216.107	14	Disc	
23	F395.200.210.040	14	Bush	
24	F395.200.210.050	14	Hex. Sock. Screw	
25	X903.050.553.000	1	Sealer	

FOOTNOTE [A] NOT SUPPLIED

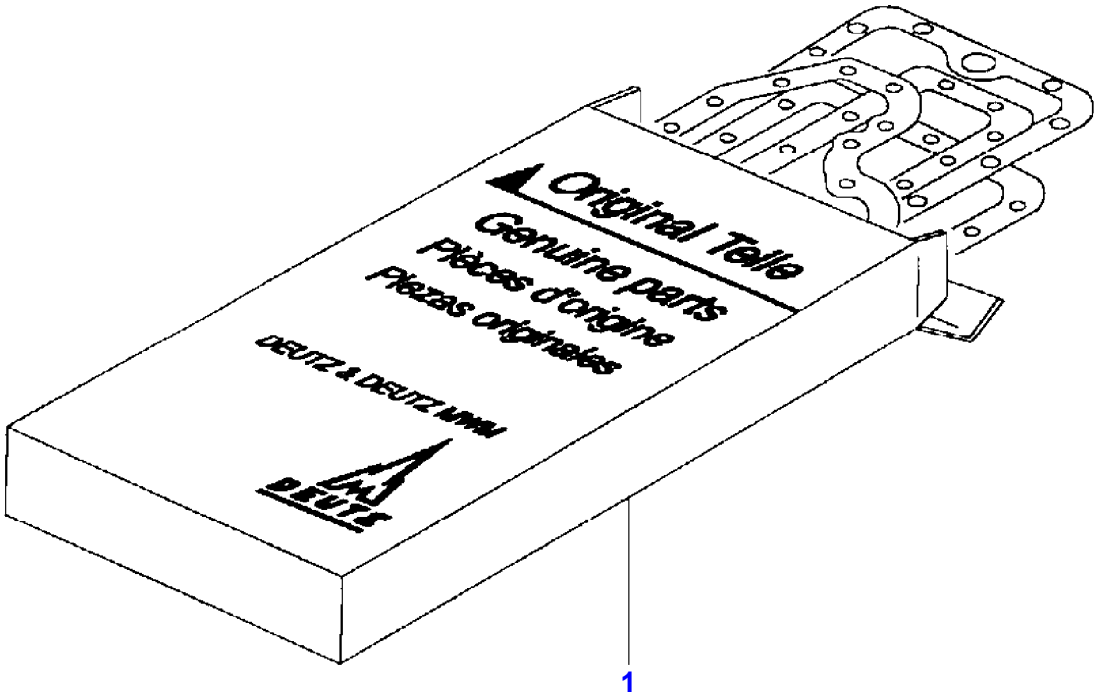
Original Teile
Genuine parts
Pièces d'origine
Piezas originales
DEUTZ & DEUTZ MWM
DEUTZ
1

D-0110-002-B

Item	Part Number	Qty	Description
1	F007.200.210.010	1	Kit, Joint

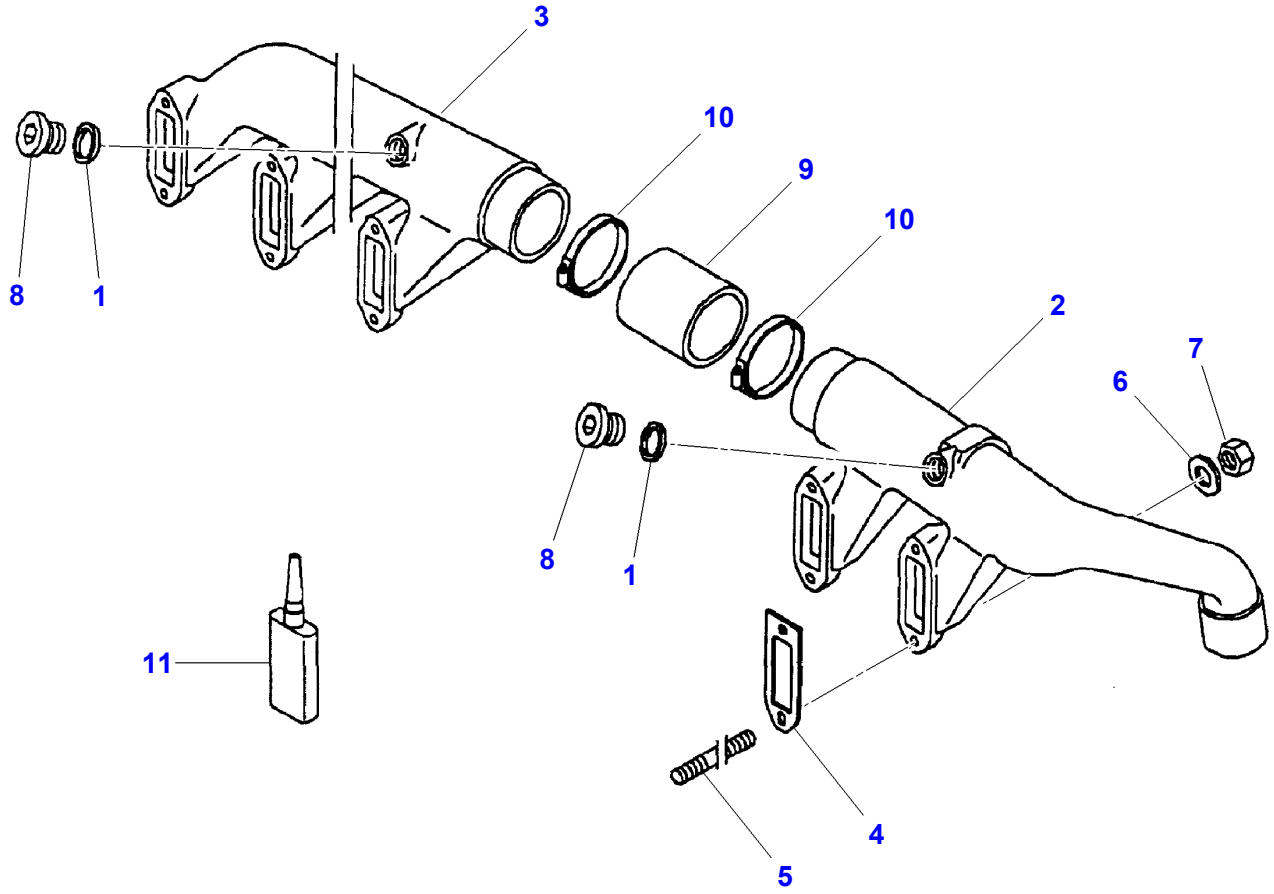

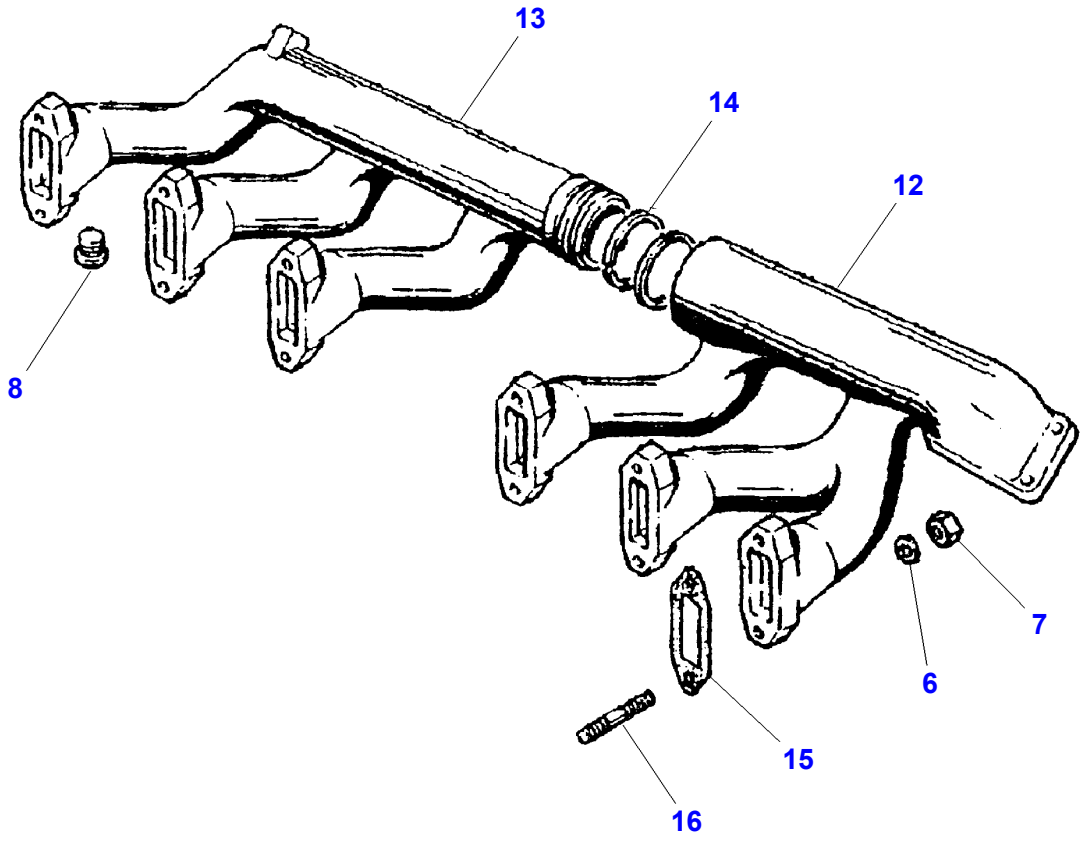

D-LA19-003-B

Item	Part Number	Qty	Description	Comments
1	X540.005.878.000	2	Ring	A20 X 24 CU
2	F007.200.090.040	1	Pipe,Exhaust	
3	F100.002.134.712	1	Intake	
4	F100.004.157.248	6	Gasket	
5	X489.128.306.000	12	Stud	M8 X 40
6	X450.006.308.000	24	Washer	
7	F149.200.100.050	24	Nut	
8	X483.802.000.000	3	Screw	M20
9	F007.200.090.020	1	Thimble	
10	X458.648.500.000	2	Hose Clip	
11	F007.200.090.030	1	Safe.Lock Agent	
12	F007.200.100.020	1	Tube	
13	F007.200.100.030	1	Tube	
14	F149.200.100.080	2	Ring	
15	F100.004.157.247	6	Gasket	
16	F149.200.100.040	12	Stud	

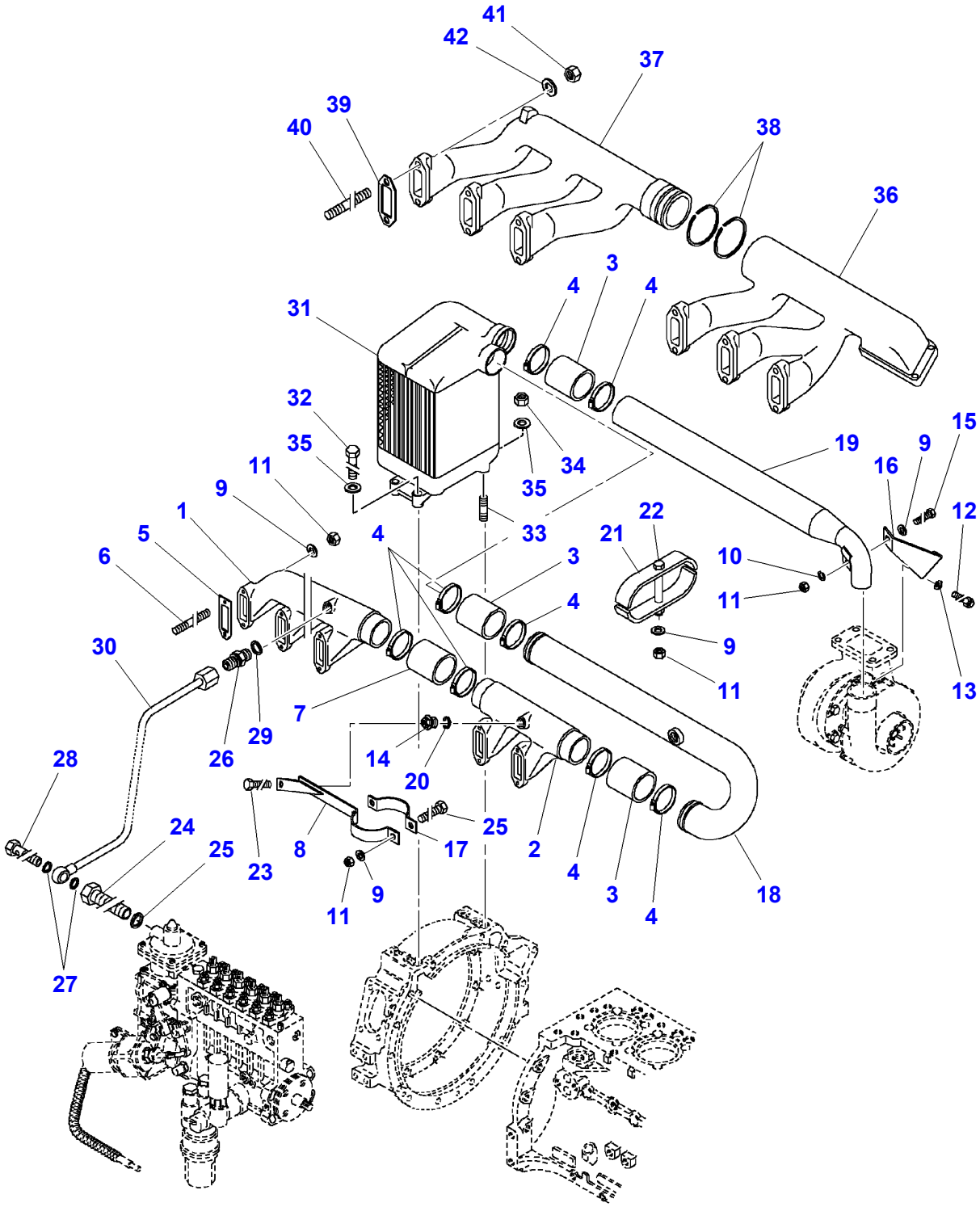
41
42
37
39
40
38
36
3
4
4
31
32
35
34
35
19
15
9
16
11
9
1
4
33
22
12
5
21
10
6
3
11
4
9
30
11
13
7
29
26
14
20
28
25
24
8
17
2
25
23
4
11
9
3
18
4
27

Item	Part Number	Qty	Description	Comments
1	F100.002.134.712	1	Intake	
2	F007.201.090.010	1	Air Funnel	
3	F007.200.090.020	3	Thimble	
4	X458.648.500.000	8	Hose Clip	
5	F100.004.157.248	6	Gasket	
6	X489.128.306.000	12	Stud	M8X40
7	F395.200.090.030	1	Thimble	
8	F007.201.090.020	1	Clip	
9	X450.006.308.000	16	Washer	
10	X520.803.901.000	1	Lock Washer	
11	X428.202.439.000	16	Nut	
12	X450.907.508.000	2	Disc	
13	F007.201.090.030	2	Screw	
14	F007.201.090.040	1	Screw	
15	X487.527.941.000	1	Hex. Sock. Screw	M8X25
16	F007.201.090.050	1	Holder	
17	F007.201.090.060	1	Clip	
18	F007.201.090.070	1	Pipe,Exhaust	
19	F007.201.090.080	1	Tube	
20	X540.005.878.000	1	Ring	A20X24-CU
21	F007.201.090.090	1	Clip	
22	X487.529.505.000	1	Hex. Sock. Screw	M8X100
23	X487.726.805.000	2	Hex. Sock. Screw	M8X16
24	F007.201.090.100	1	Nipple	
25	X540.005.878.000	1	Ring	A20X24-CU
26	F149.200.090.230	1	Thread. Part	
27	X540.002.800.000	2	Ring	A10X14-CU
28	F149.200.090.240	1	Banjo Bolt	
29	X540.002.478.000	1	Ring	A10X13,5-CU
30	F007.201.090.110	1	Pipe	
31	F007.201.090.130	1	Radiator	
32	X486.532.800.000	2	Hex. Sock. Screw	
33	X489.132.106.000	2	Stud	
34	X428.202.839.000	2	Nut	
35	X450.007.508.000	4	Washer	
36	F007.201.100.010	1	Tube	
37	F007.201.100.020	1	Tube	
38	F149.200.100.080	2	Ring	
39	F100.004.157.247	6	Gasket	
40	F214.202.100.020	12	Screw	
41	F119.200.100.060	12	Nut	
42	X450.006.308.000	12	Washer	

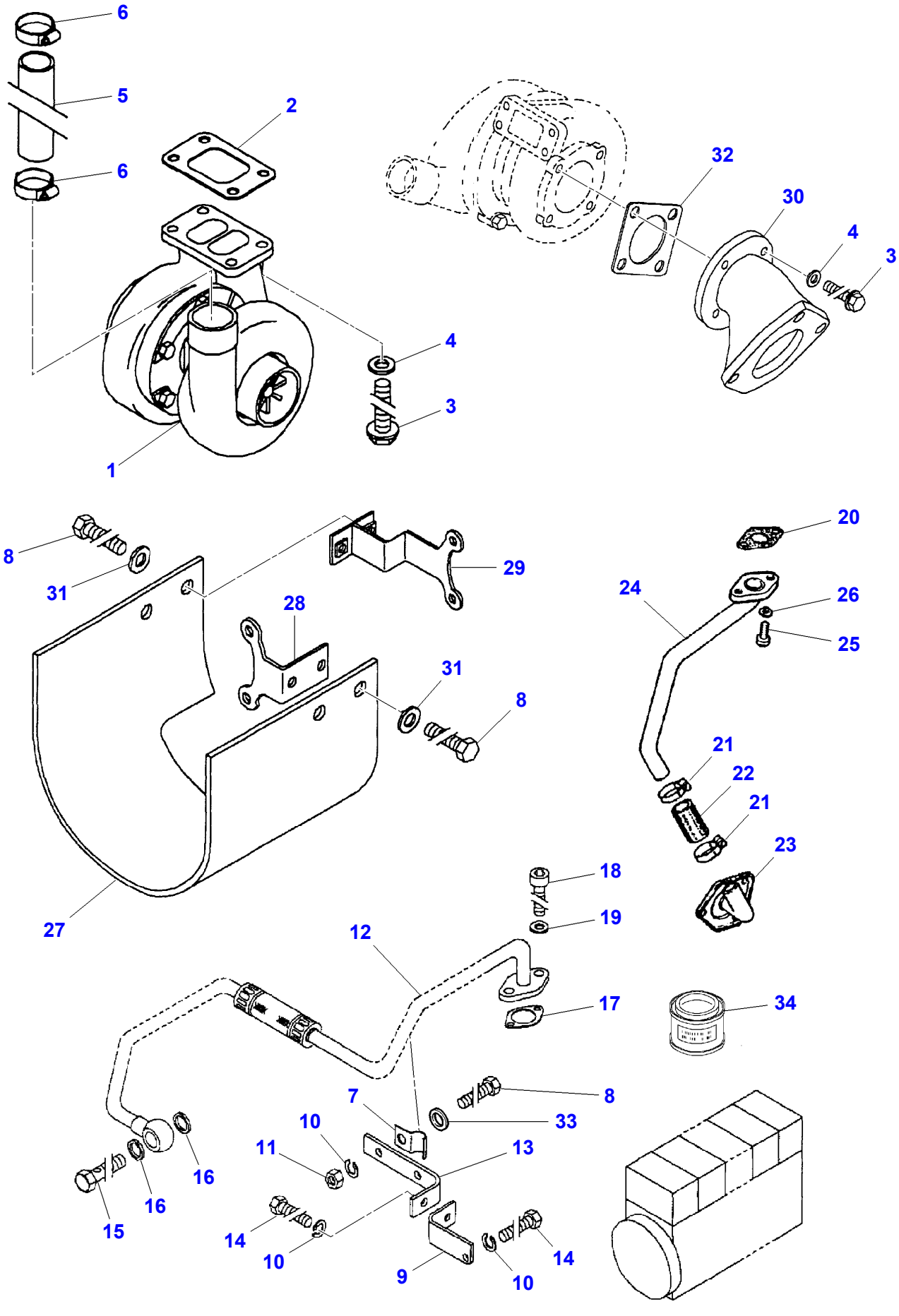
6
5
6
2
1
4
3
32
30
4
3
8
31
29
28
31
8
27
20
24
26
25
21
22
21
23
18
19
12
17
34
7
8
33
10
11
13
16
16
15
14
10
9
10
14

D-AC51-003-B

Item	Part Number	Qty	Description	Comments
1	F007.200.090.010	1	Turbocharger	
2	F007.200.090.050	1	Joint.	170 Ch
	F004.200.100.020	1	Joint.	160 Ch
3	F007.200.090.060	8	Screw	
4	X450.907.500.000	8	Disc	
5	F312.200.090.030	1	Hose	
6	X458.648.000.000	2	Hose Clip	
7	F100.001.168.142	1	Clamp	
8	X487.520.041.000	5	Hex. Sock. Screw	M6 X 16
9	F007.200.090.080	1	Holder	
10	X520.803.001.000	3	Lock Washer	
11	X428.202.239.000	1	Nut	M6
12	F007.200.090.070	1	Lub.Oil Pipe	Up to Serial or Engine Number 58869
	F007.201.090.140	1	Lub.Oil Pipe	From Serial or Engine Number 58870
13	F100.004.154.626	1	Angle.	
14	X487.520.441.000	2	Hex. Sock. Screw	M6 X 12
15	F100.001.119.241	1	Banjo Bolt	
16	X540.003.278.000	2	Ring	A12 X 15,5 CU
17	F149.200.090.050	1	Gasket	
18	X485.007.305.000	2	Hex. Sock. Screw	M8 X 20
19	X450.906.300.000	2	Washer	Up to Serial or Engine Number 58869
	X450.006.308.000	3	Washer	
	X450.006.308.000	3	Washer	From Serial or Engine Number 58870
20	F149.200.090.170	1	Gasket	
21	X458.651.300.000	2	Hose Clip	
22	F007.200.090.090	1	Thimble	
23	F007.200.090.110	1	Cover	
24	F007.200.090.100	1	Pipe	
25	X485.007.505.000	2	Hex. Sock. Screw	M8 X 25
26	X450.006.308.000	2	Washer	
27	F007.200.090.120	1	Protector	
28	F007.200.090.130	1	Holder	
29	F007.200.090.140	1	Holder	
30	F007.200.100.010	1	Manifold	
31	F149.200.180.030	4	Disc	
32	F004.200.090.100	1	Gasket	
33	X454.305.108.000	2	Disc	
34	F119.200.210.860	1	Fitting Compound	

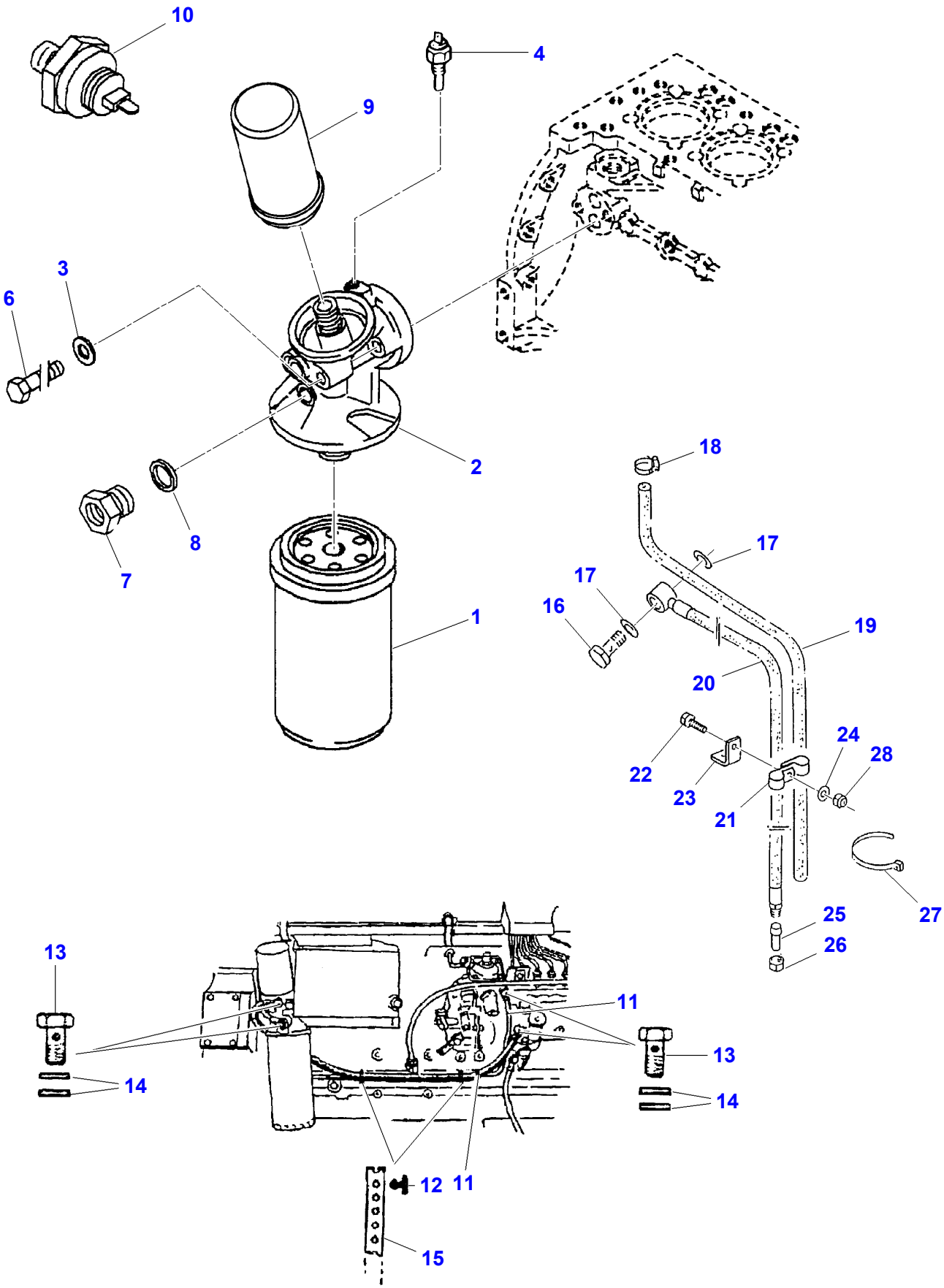
10
4
9
3
6
2
8
7
1
18
17
17
16
19
20
22
24
28
23
21
27
25
26
13
11
13
14
14
12
11
15

D-LA43-001-B

Item	Part Number	Qty	Description	Comments
1	**F284.201.310.040**	1	Oil Filter	
2	F007.200.510.180	1	Filter Support	
3	X450.007.508.000	2	Washer	
4	D26733708	1	Temp. Sensor	AM14
6	F007.200.510.170	2	Screw	
7	F007.200.510.190	1	Adaptor	
8	**X540.004.678.000**	1	Ring	A16 X 20 CU
9	**F181.200.060.030**	1	Fuel Filter	
10	F007.200.510.030	1	Oil Press.Switch	Up to Serial or Engine Number 58869
	F007.201.510.040	1	Oil Press.Switch	From Serial or Engine Number 58870
11	F007.200.060.020	2	Lead	
12	F100.001.169.360	2	Button	
13	F100.001.119.246	4	Banjo Bolt	
14	X540.004.278.000	8	Ring	A14 X 20 CU
15	F100.001.169.359	2	Cable Tie	
16	D26732796	1	Banjo Bolt	M30
17	D45236900	2	Gasket	30 X 36 X 2
18	D26732769	1	Clamp	Diameter 20-32
19		1	Hydr. Hose	[A]
20	D26735191	1	Hose	
21	D26733385	4	Clamp	27 X 20 NE
22	339337X1	2	Hex. Sock. Screw	M8 X 30
23	D26734880	1	Support	
24		2	Washer	[A] 8,4 X 17 X 1,6
25	D26733151	1	Tap	Diameter 18
26	D26732757	1	Union Nut	CL18
27	D45068000	1	Cable Clamp	4,8 X 360
28		1	Nut	[A]

FOOTNOTE [A] NUMBER TO BE ADVISED

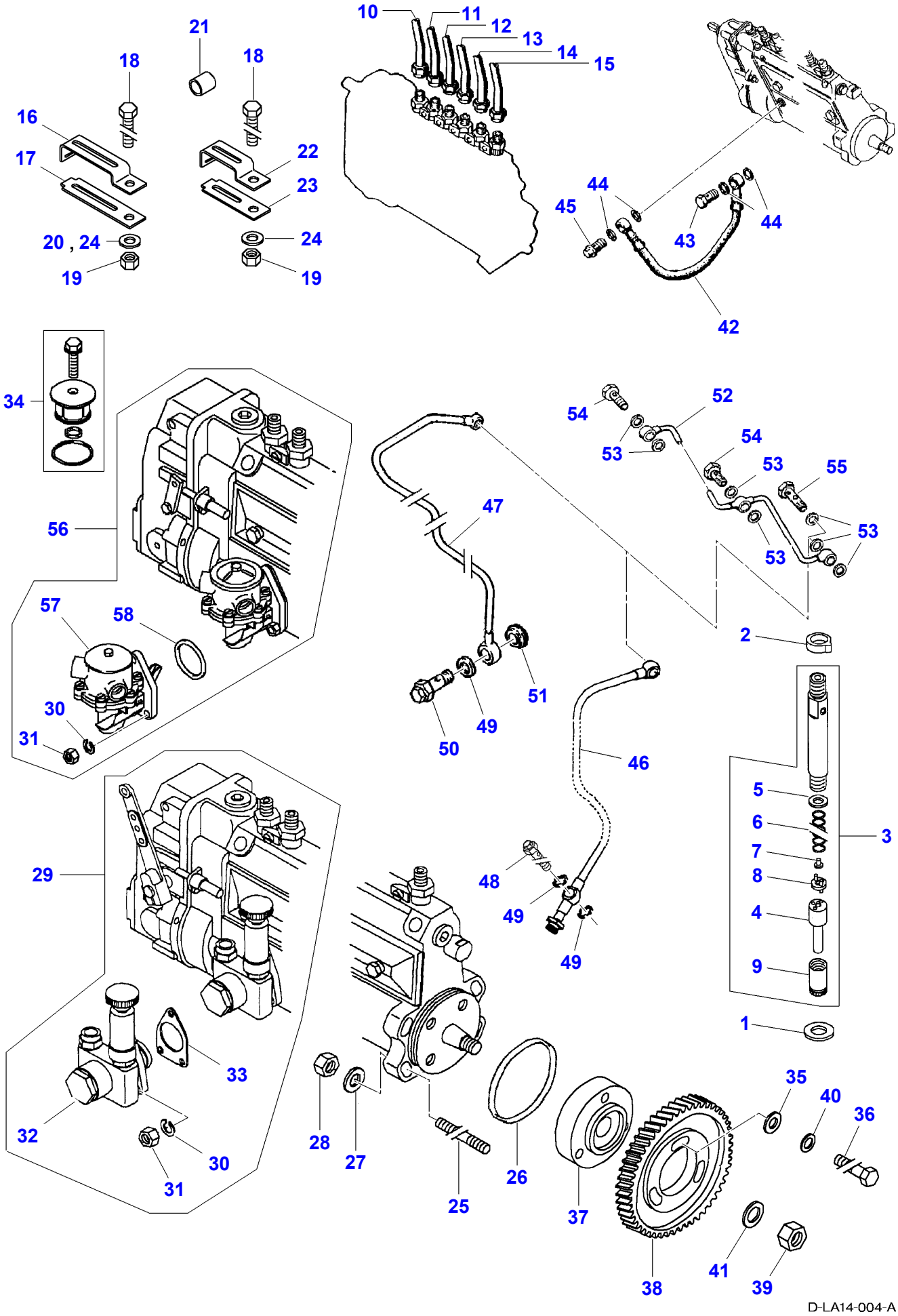
10
11
12
13
14
15
21
18
18
16
17
22
23
20 , 24
24
19
19
44
45
44
43
42
34
56
54
52
53
54
53
55
53
53
53
47
57
58
2
30
31
51
49
50
46
5
6
7
8
4
9
3
48
49
49
29
1
33
32
30
31
28
27
25
26
35
40
36
37
38
41
39
D-LA14-004-A

Item	Part Number	Qty	Description	Comments
1	F390.200.710.080	6	Ring	
2	F205.200.710.040	6	Ring	
3	F149.200.710.090	6	Injector	
4	F149.200.710.100	6	Nozzle	(3)
5	F119.200.710.480	6	Disc	(3) 1,00 MM
	F119.200.710.540	X	Disc	(3) 1,10 MM
	F119.200.710.550	X	Disc	(3) 1,20 MM
	F119.200.710.560	X	Disc	(3) 1,30 MM
	F119.200.710.570	X	Disc	(3) 1,40 MM
	F119.200.710.580	X	Disc	(3) 1,50 MM
	F119.200.710.590	X	Disc	(3) 1,60 MM
	F119.200.710.600	X	Disc	(3) 1,70 MM
	F119.200.710.610	X	Disc	(3) 1,80 MM
	F119.200.710.620	X	Disc	(3) 1,90 MM
6	F119.200.710.490	6	Comp.Spring	(3)
7	F119.200.710.500	6	Pin	(3)
8	F119.200.710.510	6	Adjusting Collar	(3)
9	F119.200.710.530	6	Turnbuckle	(3)
10	F007.200.710.030	1	Fuel Pump	No. 1
11	F007.200.710.040	1	Injection Pipe	No. 2
12	F007.200.710.050	1	Injection Pipe	No. 3
13	F007.200.710.060	1	Injection Pipe	No. 4
14	F007.200.710.070	1	Injection Pipe	No. 5
15	F007.200.710.080	1	Injection Pipe	No. 6
16	F007.200.710.090	1	Clip	
17	F007.200.710.100	1	Plate	
18	X487.520.441.000	1	Hex. Sock. Screw	M6 X 12 170 Ch
	X487.520.441.000	3	Hex. Sock. Screw	M6 X 12 160 Ch
19	X428.202.239.000	1	Nut	M6 170 Ch
	X428.202.239.000	3	Nut	M6 160 Ch
20	X520.803.001.000	1	Lock Washer	170 Ch
21	F100.003.372.269	6	Thimble	
22	F007.250.710.010	2	Clamp	160 Ch
23	F007.250.710.020	2	Plate	160 Ch
24	X450.005.108.000	3	Washer	160 ch
25	X482.921.705.000	4	Stud	M10 X 30
26	F100.001.166.103	1	O Ring	
27	X450.007.508.000	4	Washer	
28	X428.202.839.000	4	Nut	M10
29	F007.200.710.010	1	Injection Pump	170 Ch
30	X520.803.001.000	3	Lock Washer	(29)
31	X428.202.239.000	3	Nut	(29) M6
32	F007.200.710.020	1	Fuel Pump	(29) 170 Ch
33	F100.003.372.182	1	Gasket	(29) 170 Ch
34	F208.200.710.010	1	Kit, Repair	160 Ch
35	F100.002.132.685	3	Washer	
36	X487.527.906.000	3	Hex. Sock. Screw	M8 X 25
37	F148.200.710.060	1	Hub	
38	F100.002.139.287	1	Gear	
39	X428.203.842.000	1	Nut	M14
40	X521.403.947.000	3	Spring Plate	
41	F100.002.235.118	1	Disc	
42	F100.001.174.429	1	Hose	
43	X494.603.001.000	1	Banjo Bolt	

Item	Part Number	Qty	Description	Comments
44	X540.002.478.000	4	Ring	A10 X 13,5 CU
45	F100.002.231.136	1	Banjo Bolt	
46	F007.200.710.110	1	Pipe	170 Ch
47	F007.250.710.050	1	Pipe	160 Ch
48	X820.310.230.000	1	Blow Off Valve	170 Ch
49	X540.004.278.000	2	Ring	A14 X 20 CU 170 Ch
49	X540.004.278.000	1	Ring	A14 X 20 CU 160 Ch
50	X820.310.231.000	1	Blow Off Valve	160 Ch
51	F007.250.710.030	1	Ring	160 Ch
52	F395.200.710.110	1	Bypass	
53	X540.001.678.000	13	Ring	A8 X 11,5 CU 170 Ch
53	X540.001.678.000	14	Ring	A8 X 11,5 CU 160 Ch
54	F395.200.710.130	5	Banjo Bolt	170 Ch
54	F395.200.710.130	4	Banjo Bolt	160 Ch
55	F395.200.710.120	1	Banjo Bolt	170 Ch
55	F395.200.710.120	2	Banjo Bolt	160 Ch
56	F007.250.710.040	1	Injection Pump	160 Ch
57	F208.200.710.030	1	Lift Pump	(56) 160 Ch
58	F100.001.174.706	1	Gasket	(56)

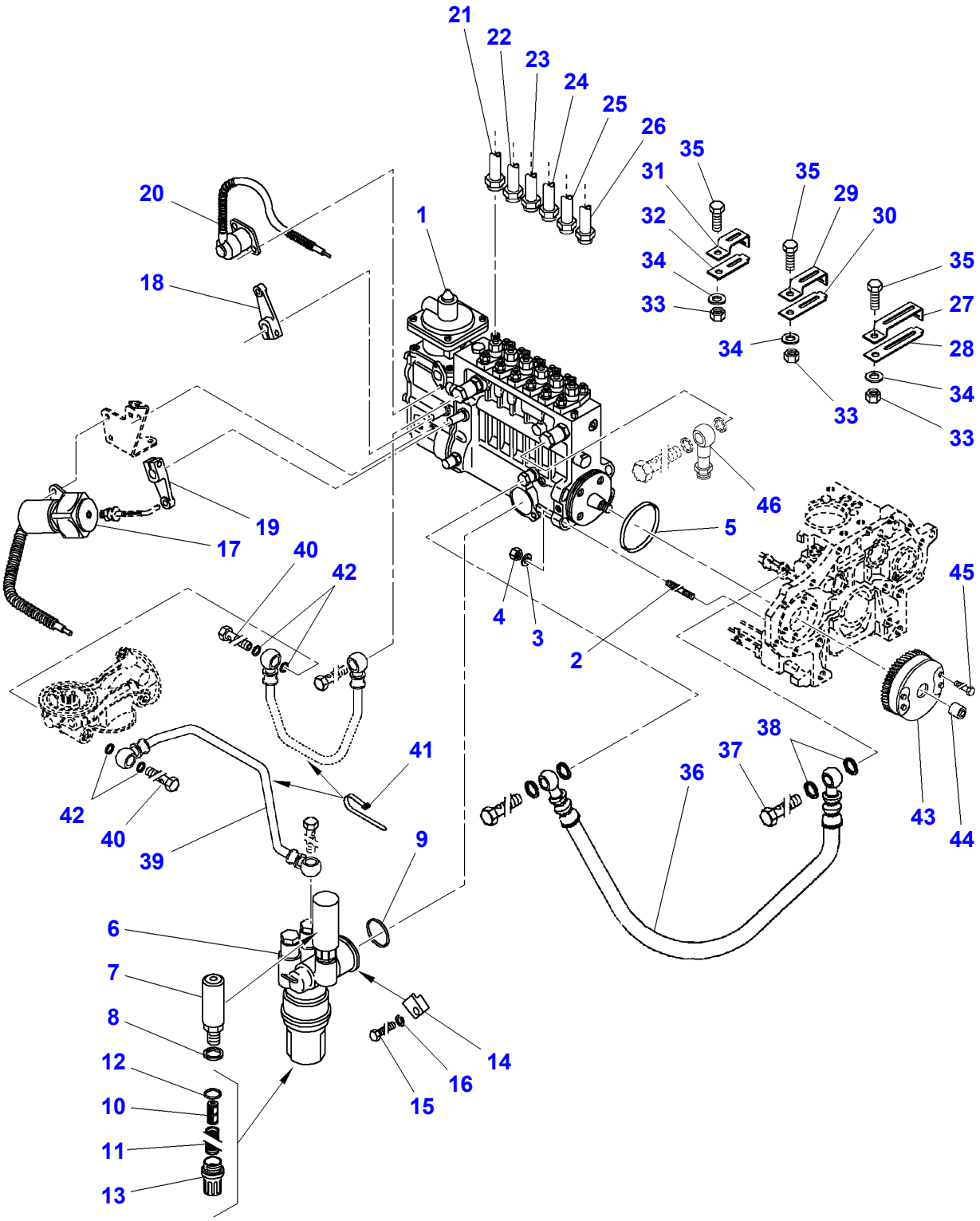
21
22
23
24
25
26
35
31
35
29
30
20
1
32
34
35
18
33
27
34
28
34
33
33
46
19
5
17
40
42
45
4
3
2
42
41
38
37
36
43
40
39
9
44
6
7
8
14
12
16
10
15
11
13

D-LA14-005-A

Item	Part Number	Qty	Description	Comments
1	F007.201.710.100	1	Injection Pump	
2	X482.921.705.000	4	Stud	M10X30
3	X450.007.508.000	4	Washer	
4	X428.202.839.000	4	Nut	
5	F100.001.166.103	1	O Ring	
6	F214.202.710.020	1	Fuel Pump	
7	F149.200.710.440	1	Hand Pump	
8	F149.200.710.430	1	Ring	
9	F149.200.710.230	1	O Ring	
10	F214.202.710.030	1	Strainer	
11	F214.202.710.040	1	Comp.Spring	
12	F214.202.710.050	1	Seal	
13	F214.202.710.060	1	Filter Housing	
14	F149.200.710.240	2	Clip	
15	X487.520.041.000	2	Hex. Sock. Screw	
16	X520.803.001.000	2	Lock Washer	
17	F149.200.710.260	1	Magnet	
18	F149.200.710.340	1	Lever	
19	F149.200.710.330	1	Lever	
20	F149.200.710.200	1	Magnet	
21	F007.201.710.040	1	Injection Pipe	NO.1
22	F007.201.710.050	1	Injection Pipe	NO.2
23	F007.201.710.060	1	Injection Pipe	NO.3
24	F007.201.710.070	1	Injection Pipe	NO.4
25	F007.201.710.080	1	Injection Pipe	NO.5
26	F007.201.710.090	1	Injection Pipe	NO.6
27	F007.200.710.090	1	Clip	
28	F007.200.710.100	1	Plate	
29	F007.250.710.010	1	Clamp	
30	F007.250.710.020	1	Plate	
31	F100.001.170.287	1	Clamp	
32	F100.001.170.291	1	Plate	
33	X428.202.239.000	3	Nut	
34	X450.005.108.000	3	Washer	
35	X487.520.441.000	3	Hex. Sock. Screw	
36	F149.200.710.120	1	Lub.Oil Pipe	
37	F100.001.119.237	1	Banjo Bolt	
38	X540.003.078.000	2	Ring	A10X16-CU
39	F007.200.060.020	2	Lead	
40	F100.001.119.246	2	Banjo Bolt	
41	F007.201.060.010	2	Brace	
42	X540.004.278.000	4	Ring	A14X20-CU
43	F007.201.710.020	1	Adjust. Device	
44	F214.202.710.160	1	Turnbuckle	
45	F007.201.710.030	4	Adjusting Screw	
46	F007.201.710.010	1	Fuel Pipe	

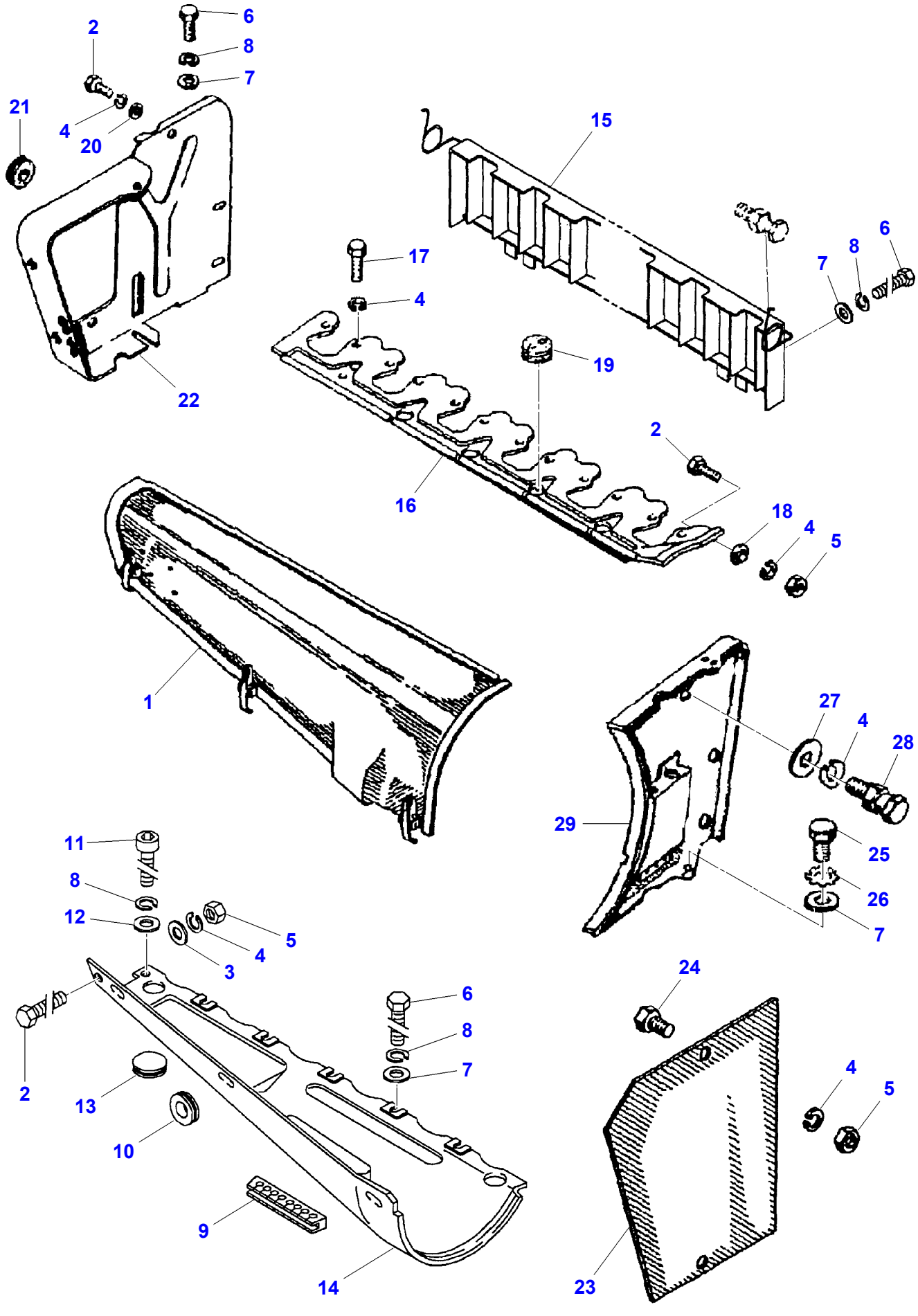
2
6
8
7
21
4
20
22
15
17
4
19
6
8
7
16
2
18
4
5
1
27
4
28
29
25
26
7
11
8
12
5
4
3
2
6
8
7
13
10
9
14
24
4
5
23

D-AEZL-003-A

Item	Part Number	Qty	Description	Comments
1	F007.200.810.070	1	Duct	
2	X487.520.441.000	3	Hex. Sock. Screw	M6 X 12
3	X450.005.108.000	1	Washer	
4	X520.803.001.000	18	Lock Washer	
5	X428.202.239.000	4	Nut	M6
6	X487.526.841.000	9	Hex. Sock. Screw	M8 X 16
7	X450.006.308.000	10	Washer	
8	X520.803.901.000	10	Lock Washer	
9	F100.002.101.802	1	Seal Section	
10	F100.001.160.592	1	Grommet	
11	X485.009.402.000	1	Hex. Sock. Screw	M8 X 16
12	F149.200.810.070	1	Washer	
13	F007.200.810.090	1	Plug	
14	F007.200.810.080	1	Guide	
15	F007.200.810.100	1	Protector	
16	F007.200.810.110	1	Ledge	170 Ch
	F007.250.810.030	1	Ledge	160 Ch
17	X487.520.041.000	12	Hex. Sock. Screw	M6 X 16
18	F007.200.810.120	1	Disc	
19	F100.003.361.809	4	Grommet	
20	F100.001.215.850	1	Disc	
21		1	Grommet	
22	F007.200.810.130	1	Sheet Metal	
23	F007.200.810.140	1	Blanking Plate	
24	X487.520.305.000	2	Hex. Sock. Screw	M6 X 10
25	X487.527.441.000	1	Hex. Sock. Screw	M8 X 12
26	X521.403.947.000	1	Spring Plate	B8
27	F100.001.215.850	1	Disc	
28	F100.002.101.801	1	Taper Pin	
29	F007.200.810.180	1	Sheet Metal	

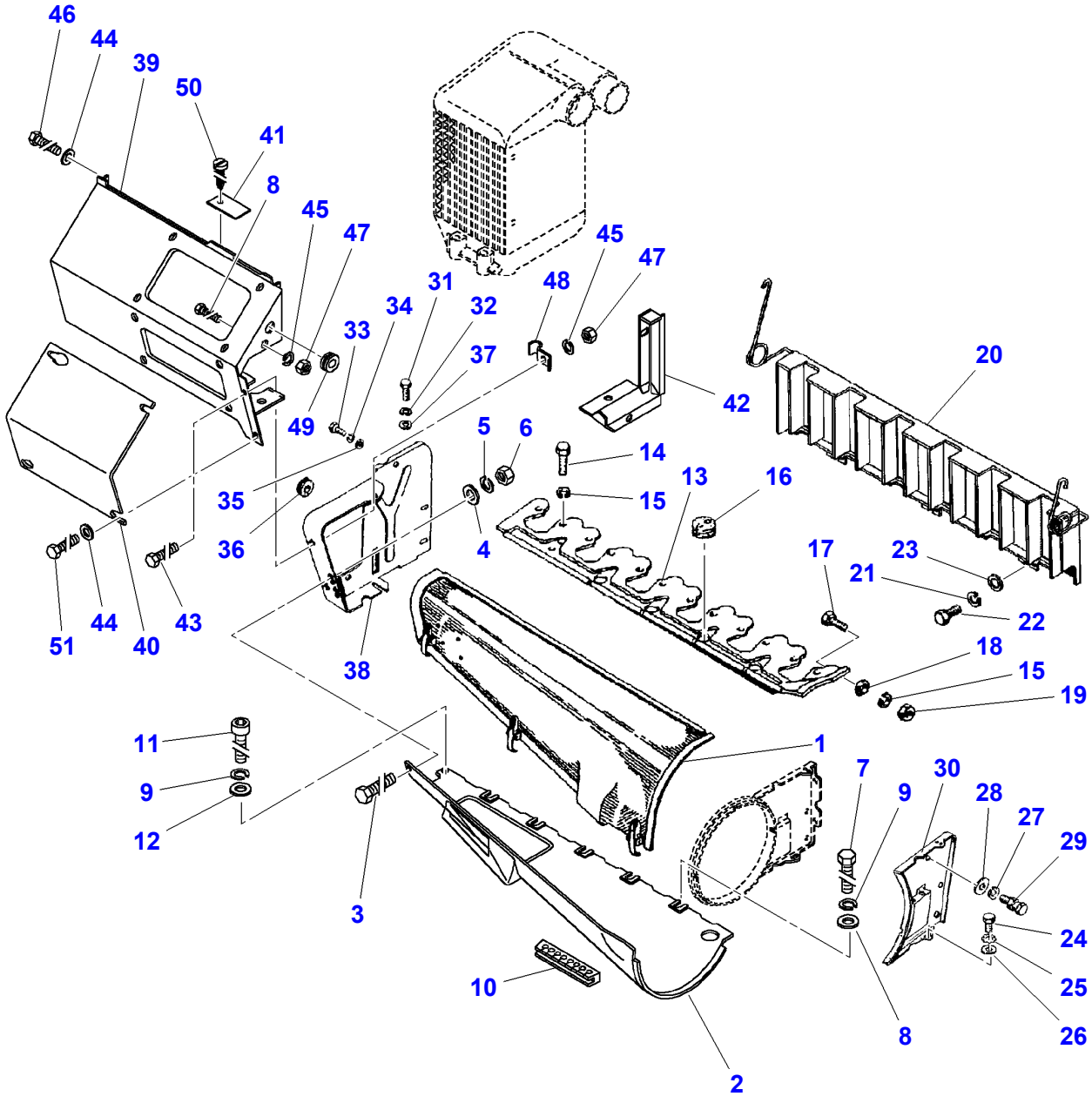
46
44
39
50
41
8
45
47
31
34
32
33
37
49
48
45
47
42
20
5
6
14
15
13
16
35
36
4
17
23
21
22
18
15
19
51
44
40
43
38
11
9
12
3
1
7
9
30
28
27
29
24
25
26
8
10
2

D-AEZL-004-A

Item	Part Number	Qty	Description	Comments
1	F007.200.810.070	1	Duct	
2	F007.201.810.010	1	Guide	
3	X487.520.441.000	1	Hex. Sock. Screw	
4	X450.005.108.000	1	Washer	
5	X520.803.001.000	1	Lock Washer	
6	X428.202.239.000	1	Nut	
7	X487.526.841.000	5	Hex. Sock. Screw	
8	X450.006.308.000	5	Washer	
9	X520.803.901.000	6	Lock Washer	
10	F100.002.101.802	1	Seal Section	
11	X485.009.402.000	1	Hex. Sock. Screw	M8X16
12	F149.200.810.070	1	Washer	
13	F007.250.810.030	1	Ledge	
14	X487.520.041.000	12	Hex. Sock. Screw	M6X16
15	X520.803.001.000	12	Lock Washer	
16	F100.003.361.809	4	Grommet	
17	X487.520.441.000	1	Hex. Sock. Screw	M6X12
18	F007.200.810.120	1	Disc	
19	X428.202.239.000	1	Nut	
20	F007.201.810.020	1	Protector	
21	X520.803.901.000	3	Lock Washer	
22	X487.526.841.000	3	Hex. Sock. Screw	M8X16
23	X450.006.308.000	3	Washer	
24	X487.527.441.000	1	Hex. Sock. Screw	
25	X521.403.947.000	1	Spring Plate	
26	X450.006.308.000	1	Washer	
27	X520.803.001.000	1	Lock Washer	
28	F100.001.215.850	1	Disc	
29	F100.002.101.801	1	Taper Pin	
30	F007.200.810.180	1	Sheet Metal	
31	X487.526.841.000	1	Hex. Sock. Screw	M8X16
32	X520.803.901.000	1	Lock Washer	
33	X487.520.441.000	1	Hex. Sock. Screw	M6X12
34	X520.803.001.000	1	Lock Washer	
35	F100.001.215.850	1	Disc	
36	F100.001.167.425	1	Grommet	
37	X450.006.308.000	1	Washer	
38	F007.200.810.130	1	Sheet Metal	
39	F007.201.810.030	1	Hood	
40	F007.201.810.040	1	Sheet Metal	
41	F007.201.810.050	1	Sheet Metal	
42	F007.201.810.060	1	Junction	
43	X487.520.741.000	2	Hex. Sock. Screw	M6X20
44	X450.005.108.000	5	Washer	
45	X520.803.001.000	5	Lock Washer	
46	X487.520.341.000	8	Hex. Sock. Screw	M6X10
47	X428.202.239.000	5	Nut	
48	F100.002.130.646	2	Angle.	
49	F100.001.167.425	1	Grommet	
50	X493.808.505.000	1	Self-Tapp. Screw	
51	X487.520.441.000	4	Hex. Sock. Screw	M6X12

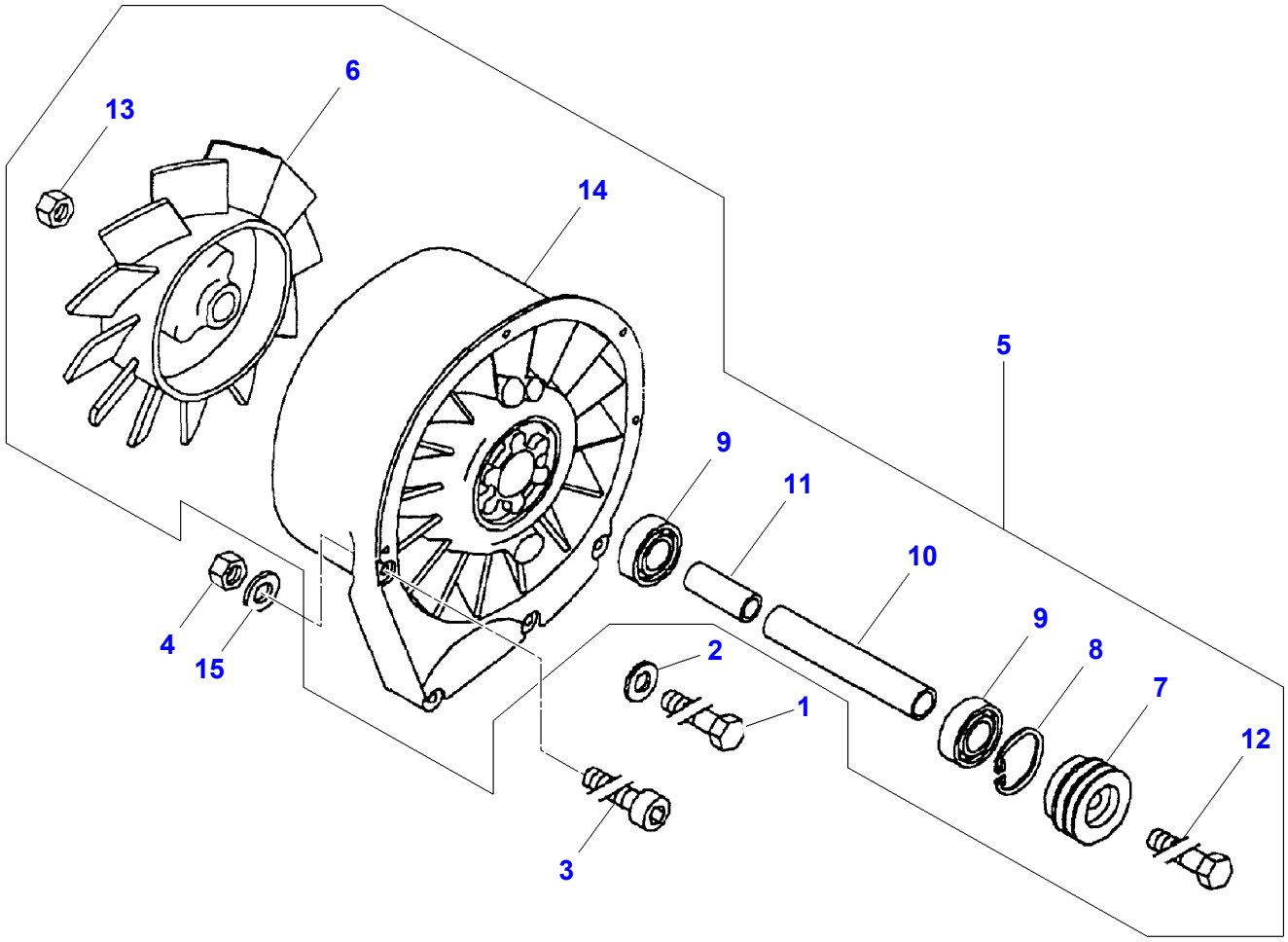

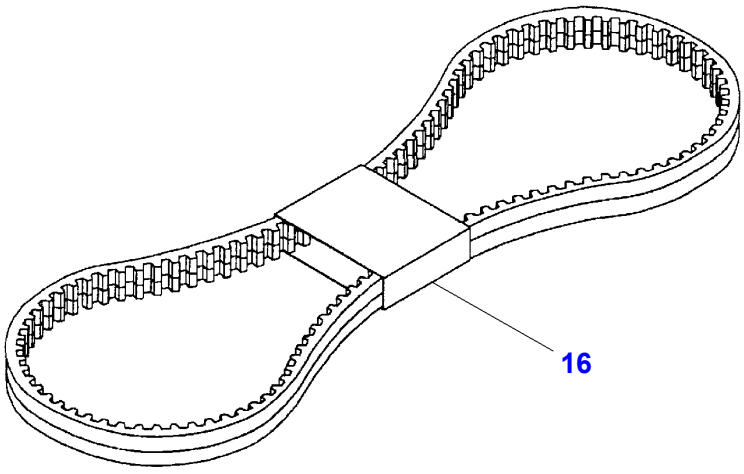

D-LA33-001-A

Item	Part Number	Qty	Description	Comments
1	X486.526.605.000	3	Hex. Sock. Screw	M8 X 130
2	X450.006.308.000	3	Washer	
3	X485.009.301.000	1	Hex. Sock. Screw	M8 X 140
4	X428.202.439.000	1	Nut	M8
5	F007.200.810.010	1	Blower	170 Ch
	F007.250.810.010	1	Blower	160 Ch
6	F007.200.810.050	1	Impeller	(5)
7	F007.200.810.020	1	Pulley	(5) 170 Ch
	F007.250.810.020	1	Pulley	(5) 160 Ch
8	**X530.106.046.000**	1	Circlip	(5)
9	X606.410.601.000	2	Bear. 6205	(5)
10	F390.200.810.030	1	Tubular Shaft	(5)
11	F007.200.810.060	1	Bush	(5)
12	F007.200.810.030	1	Screw	(5)
13	X428.203.241.000	1	Nut	(5) M12
14	F007.200.810.040	1	Housing	(5)
15	X450.006.308.000	2	Washer	
16	**F007.200.040.010**	1	V Belt	10 X 1375 170 Ch
	F007.250.040.010	1	V Belt	10 X 1400 160 Ch

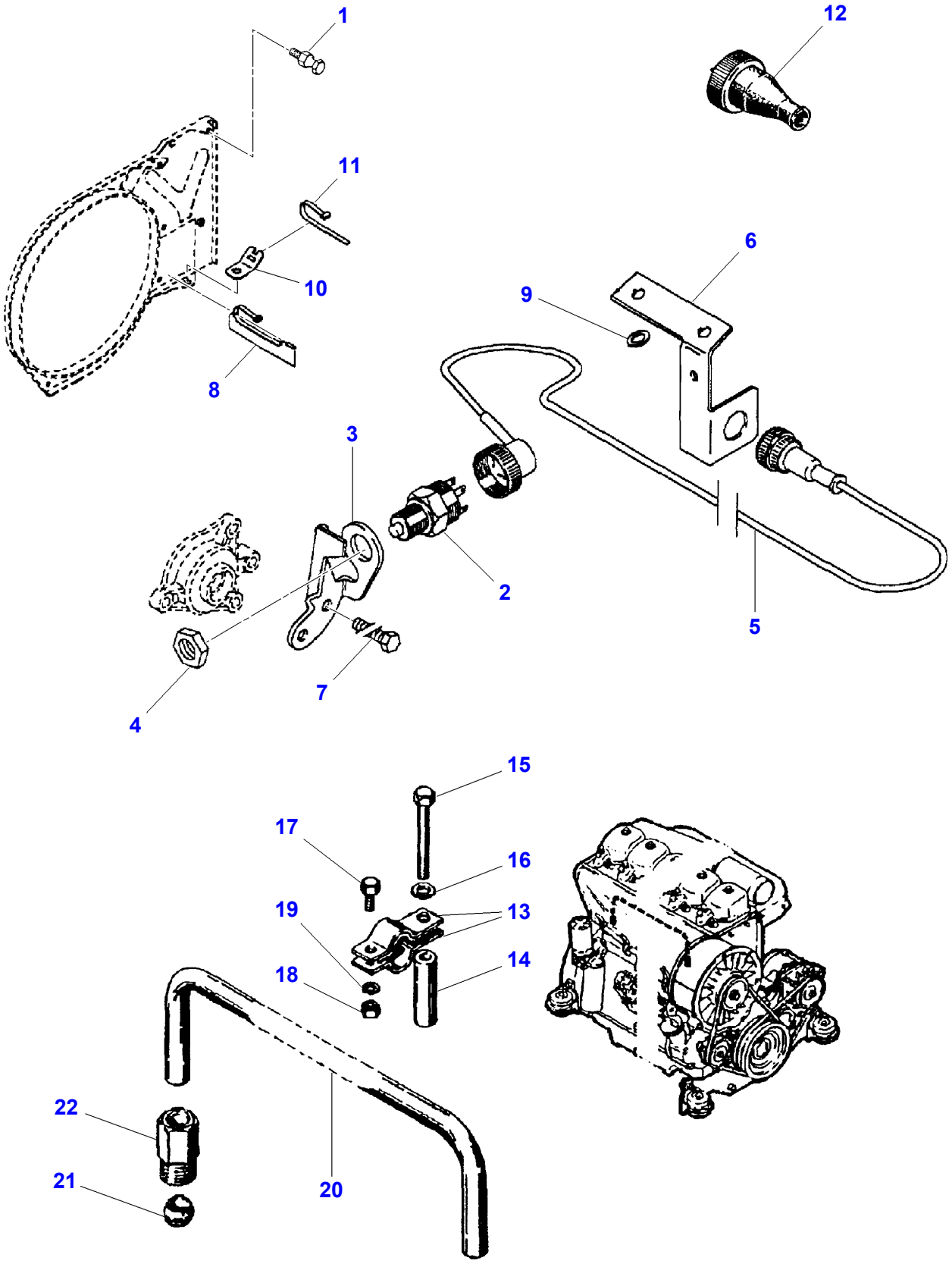

D-AW20-003-A

Item	Part Number	Qty	Description	Comments
1	F100.002.101.801	1	Taper Pin	
2	F007.200.260.010	1	Stop Switch	
3	F007.200.260.070	1	Holder	
4	F007.200.260.020	1	Nut	
5	F007.200.260.030	1	Cable	
6	F007.200.260.040	1	Holder	
7	F007.200.260.050	1	Screw	
8	F007.200.260.060	1	Brace	
9	F007.200.260.080	1	Disc	
10	F004.900.040.030	1	Holder	
11	F149.200.090.100	1	Cable Tie	
12	F007.200.260.090	1	Electrical Plug	
13	F007.200.810.160	2	Clamp	
14	F007.200.810.170	1	Sleeve	
15	X486.529.405.000	1	Hex. Sock. Screw	M8 X 80
16	X520.803.901.000	1	Lock Washer	
17	X487.520.441.000	1	Hex. Sock. Screw	M6 X 12
18	X428.202.239.000	1	Nut	M6
19	X520.803.001.000	1	Lock Washer	
20	F007.200.810.150	1	Tube	
21	F100.001.216.511	2	Ring	
22	F395.200.510.160	2	Boxnut	

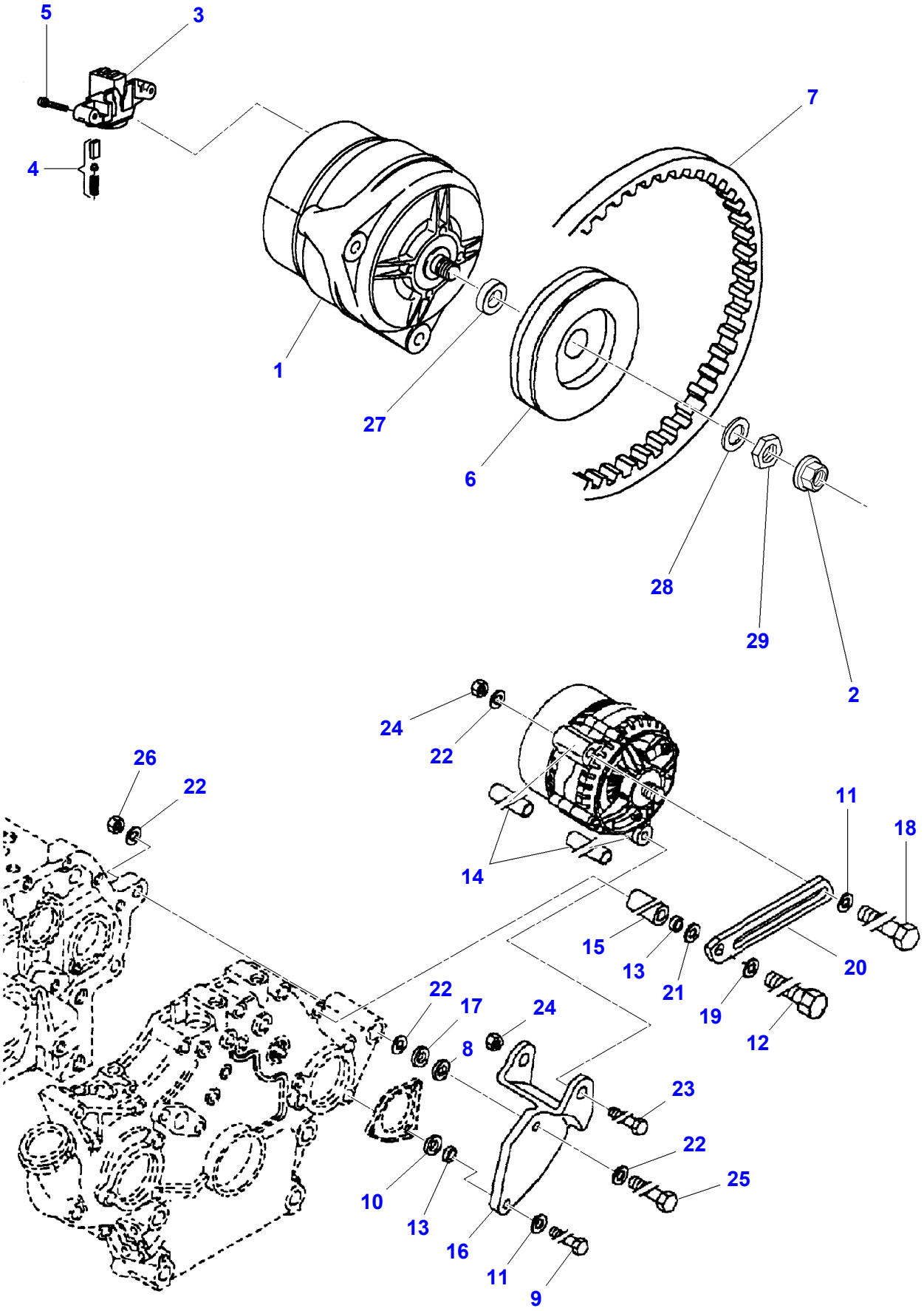
5
3
4
7
1
27
6
28
29
2
24
22
26
22
11
18
14
15
13
21
20
19
12
22
17
24
8
23
22
25
10
13
16
11
9

D-AC33-003-B

Item	Part Number	Qty	Description	Comments
1	G515.900.010.100	1	Generator	Up to Serial or Engine Number 58869
	F718.901.010.010	1	Generator	From Serial or Engine Number 58870
2	X435.504.300.000	1	Nut	(1) Up to Serial or Engine Number 58869
3	F515.900.010.010	1	Regulator	(1)
4	F515.900.010.020	1	Brush	(3)
5	F515.900.010.030	2	Screw	(1)
6	F007.900.010.010	1	Pulley	
7	**F007.200.040.020**	1	V Belt	10 X 1180
8	F100.001.215.749	2	Disc	
9	F007.900.010.030	1	Screw	
10	F100.001.215.748	3	Disc	
11	X450.006.308.000	3	Washer	
12	F007.900.010.040	1	Screw	
13	F004.200.210.510	2	Bush	
14	F007.900.010.080	2	Tube	
15	F007.900.010.050	1	Bush	
16	F007.900.010.060	1	Console	
17	F100.002.234.556	1	Disc	
18	X486.526.341.000	1	Hex. Sock. Screw	M8 X 90
19	F100.001.216.127	1	Disc	
20	F007.900.010.070	1	Strap	
21	F100.001.216.108	3	Disc	
22	X450.007.508.000	4	Washer	
23	X486.529.405.000	1	Hex. Sock. Screw	M8 X 80
24	X428.202.439.000	2	Nut	M8
25	F007.900.010.020	1	Screw	
26	X428.202.839.000	1	Nut	M10
27	F718.901.010.020	1	Disc	From Serial or Engine Number 58870
28	X521.406.647.000	1	Spring Plate	From Serial or Engine Number 58870
29	X423.504.201.000	1	Nut	From Serial or Engine Number 58870

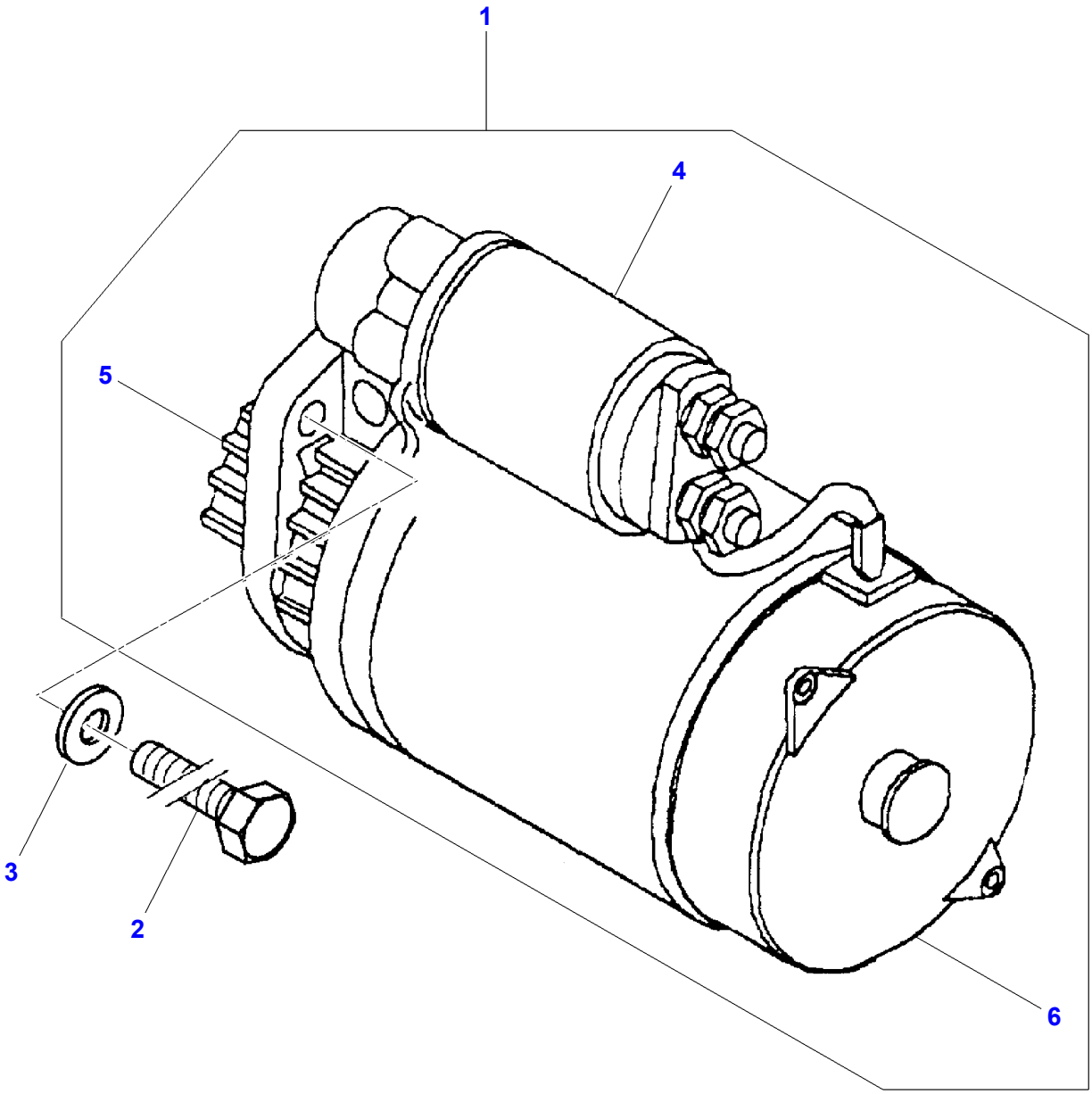

D-AC37-003-A

Item	Part Number	Qty	Description	Comments
1	F716.900.060.010	1	Startermotor	
2	X487.531.505.000	3	Hex. Sock. Screw	M10 X 25
3	X450.007.508.000	3	Washer	
4	F716.900.060.050	1	Relay	(1)
5	F716.900.060.030	1	Gear,Startermotr	(1)
6	F716.900.060.040	1	Brush	(1)

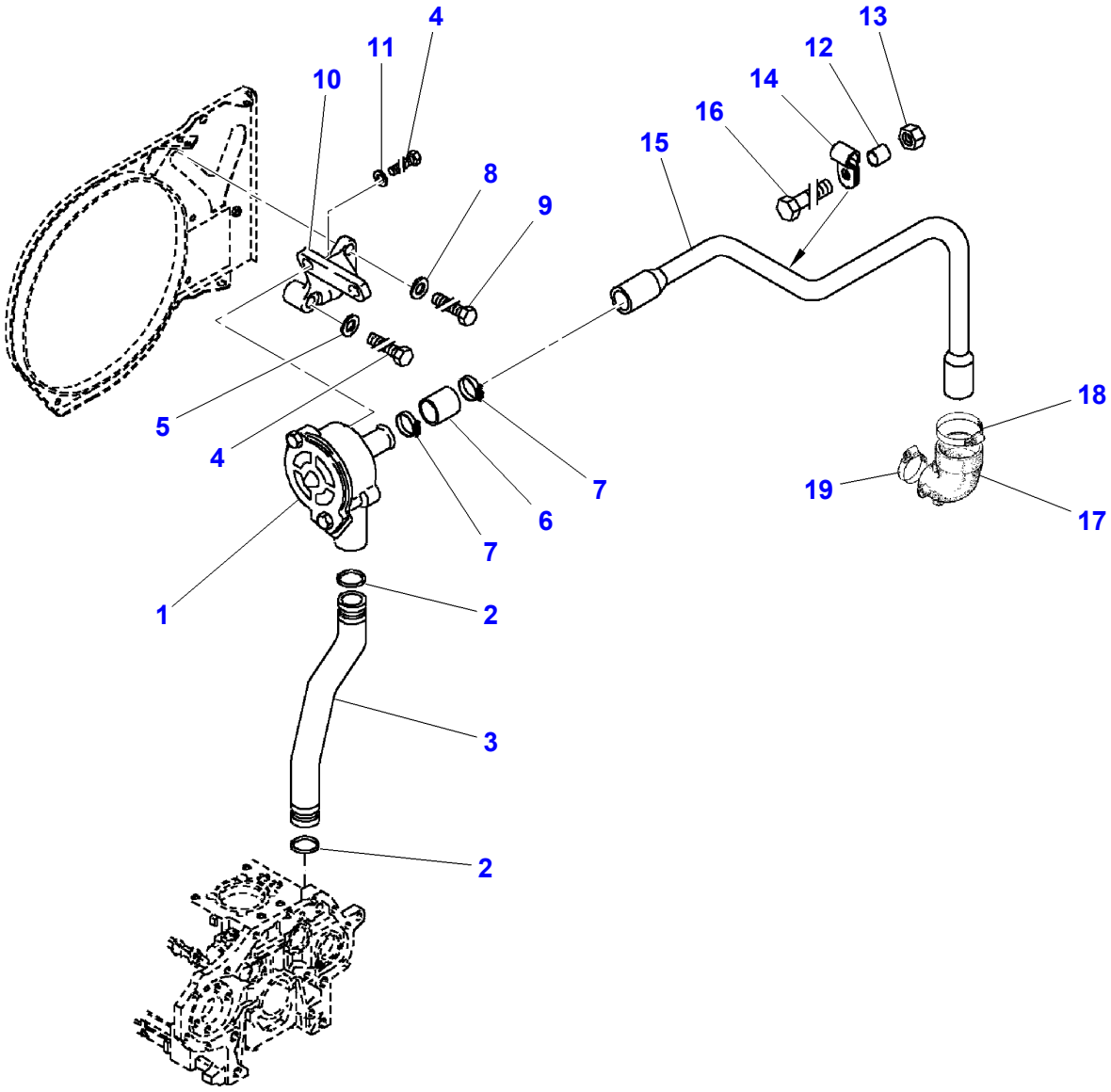

D-LA61-001-A

Item	Part Number	Qty	Description	Comments
1	F214.202.210.070	1	Breather Valve	
2	F149.200.090.140	2	O Ring	24X3
3	F007.201.210.070	1	Pipe,Breather	
4	X487.528.141.000	3	Hex. Sock. Screw	
5	F149.200.810.070	1	Washer	
6	F007.201.210.040	1	Sleeve	
7	F007.201.210.060	2	Hose Clip	
8	F149.200.180.030	1	Disc	
9	F214.202.210.060	1	Screw	M6X30
10	F007.201.210.080	1	Holder	
11	X450.006.308.000	3	Washer	
12	F007.201.210.090	1	Tube	
13	X428.202.439.000	1	Nut	
14	F007.201.210.050	1	Clamp	
15	F007.201.210.100	1	Breather Pipe	
16	X486.528.905.000	1	Hex. Sock. Screw	
17	F007.201.090.120	1	Manifold	
18	X458.658.200.000	1	Hose Clip	
19	X458.656.800.000	1	Hose Clip	

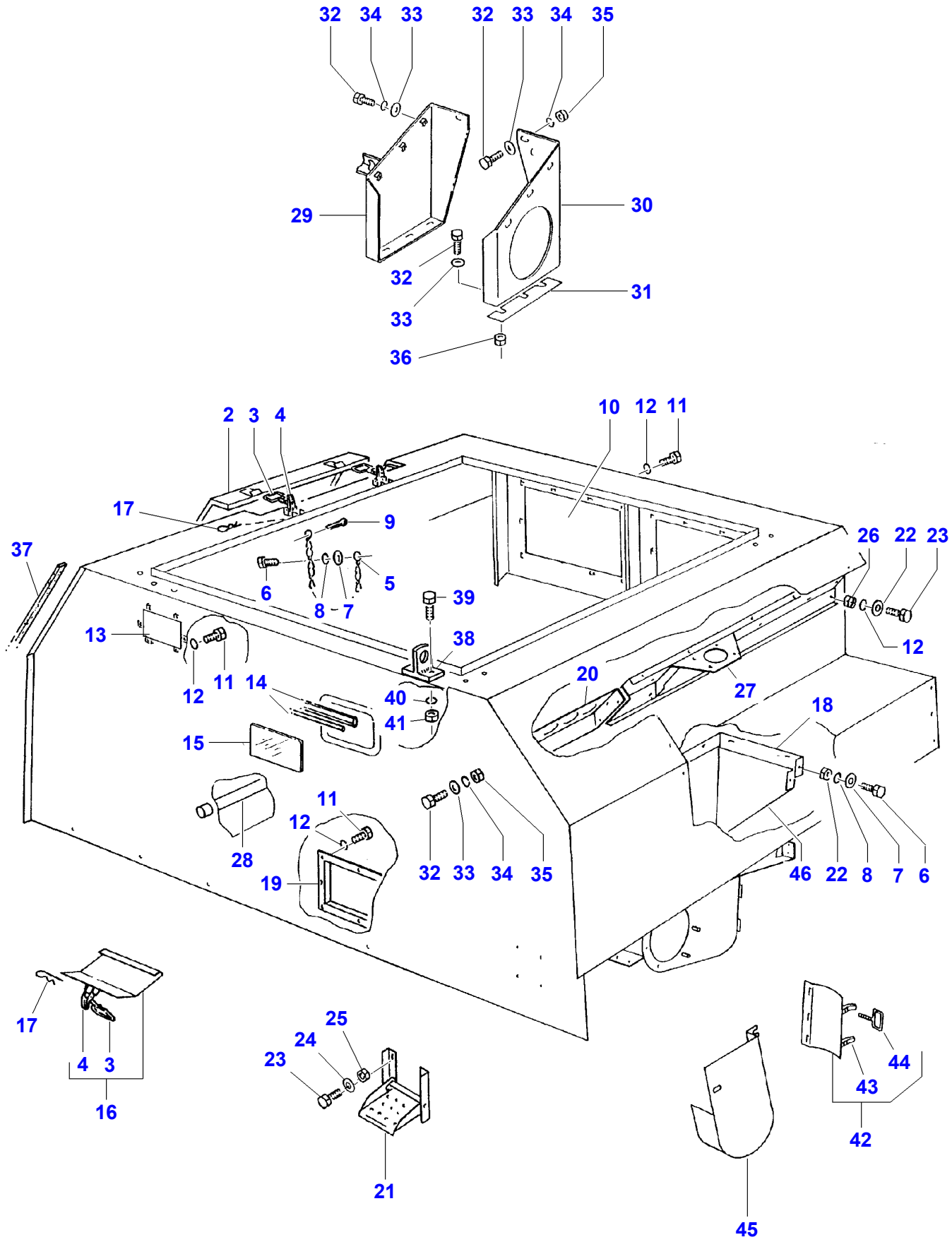
32
34
33
32
33
34
35
29
30
32
31
33
36
2
3
4
10
12
11
17
9
37
26
22
23
6
5
8
7
39
13
38
12
11
14
12
20
27
40
41
18
15
11
12
28
19
32
33
34
35
46
22
8
7
6
17
4
3
16
25
24
23
21
44
43
42
45

D-ZIZG-001-B

Item	Part Number	Qty	Description	Comments
1	D16850009	1	Grain Tank	[B]
2	D18888126	1	Cover	
3	D26733514	X	Hook	
4	D26741010	X	Lock	
5	D26732850	1	Chain	2 X 39 GL.D
6	339560X1	1	Hex. Sock. Screw	M6 X 16
7	D26739994	1	Washer	6,6 X 12,5 X 1,6
8	D41100600	1	Spring Washer	A6
9	D41410900	1	Split Pin	5 X 40
10	D16733619	3	Cover	
11	339124X1	X	Hex. Sock. Screw	M8 X 16
12	D41102100	14	Washer	A8
13	D16733720	1	Cover	
14		1	Clamping Piece	[A]
15	D26734305	1	Inspection Glass	
16	D16733913	1	Hatch	
17	D26733722	5	Clip Pin	
18	D16735532	1	Seal Section	
19	D16734046	1	Cover	
20	D16735533	1	Brace	
21	D26734841	2	Step	
22	D26740163	X	Washer	8,4 X 21 X 3 ZN
23	339123X1	X	Hex. Sock. Screw	M8 X 20
24	D26739993	4	Washer	9 X 17 X 1,6
25	D26740007	4	Locknut	M8
26	339169X1	X	Nut	M8
27	D16735604	1	Brace	
28	D26735590	1	Tube	
29	D26734283	1	Support	
30	D26733820	1	Support	
31	D26733621	X	Shim	Thickness 1,5 MM
32	3009493X1	4	Hex. Sock. Screw	M10 X 30
33	D20400416	X	Washer	11 X 20 X 2
34	D41101900	X	Spring Washer	A10
35	339402X1	X	Nut	M10
36	1440329X1	6	Locknut	M10
37	D44735900	1	Seal Section	10,5 X 4880 Length 3360 MM
38	D16735256	2	Eye	
39	D40411200	4	Hex. Sock. Screw	M12 X 45
40	D26739978	4	Spring Washer	A12
41	3009695X1	4	Nut	M12
42	D26734035	1	Hatch	
43	D26740959	2	Locking	(42)
44	D26736687	2	Hook	(42)
45	D16735466	1	Guard	
46	D16735531	1	Cover	

FOOTNOTE [A] NUMBER TO BE ADVISED
FOOTNOTE [B] NOT ILLUSTRATED

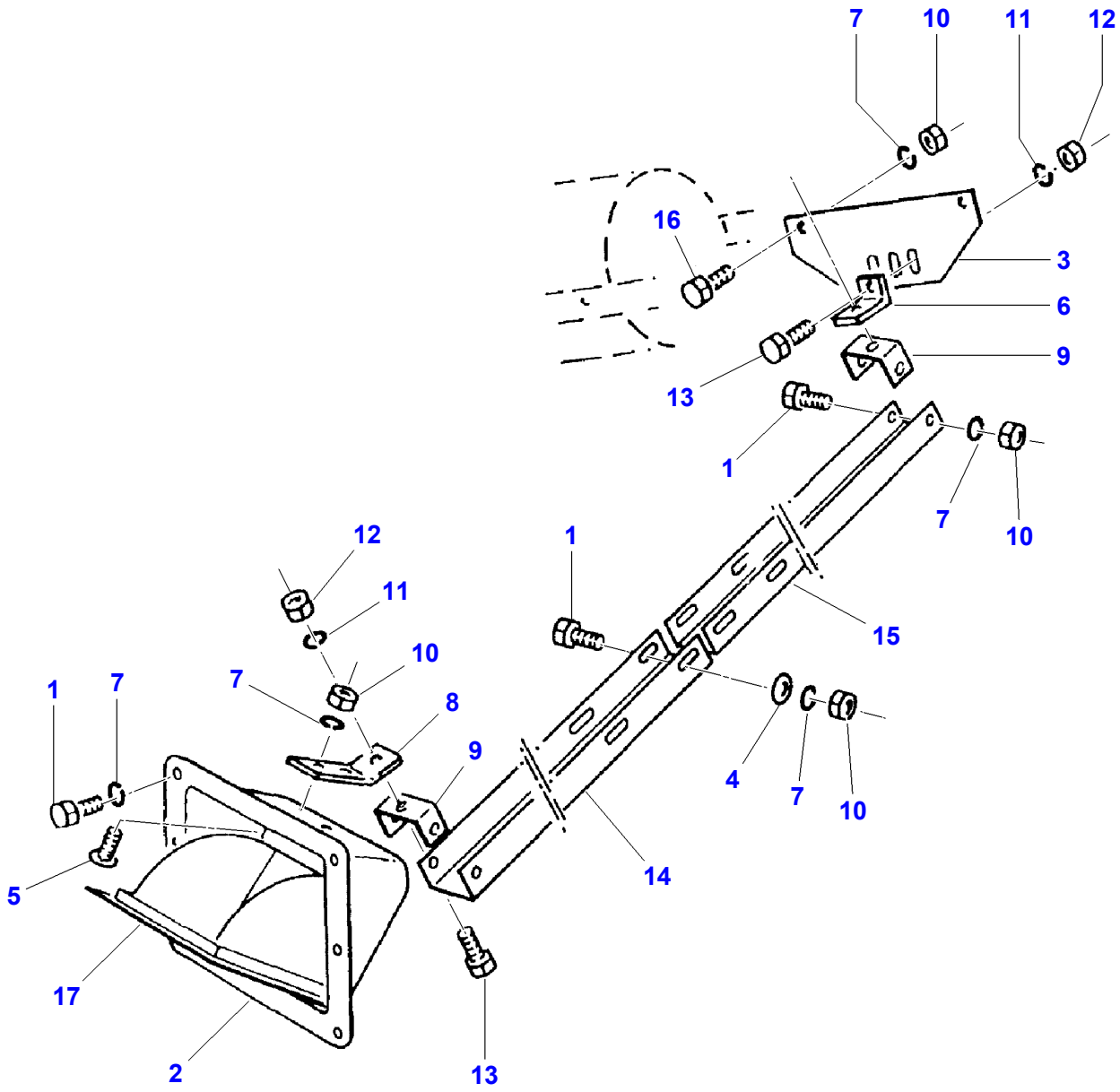

D-ZIZH-001-A

Item	Part Number	Qty	Description	Comments
1	D40475000	12	Setscrew	M6 X 20
2	D26734662	1	Cover	
3	D26744983	1	Plate	
4	D26739994	4	Washer	6,6 X 12,5 X 1,6
5	339666X1	2	Hex. Sock. Screw	M6 X 20
6	D26745477	1	Anglepiece	
7	D41100600	16	Spring Washer	A6
8	D26745437	1	Anglepiece	
9	D26745438	2	Retainer	
10	1441462X1	10	Locknut	M6
11	D41102100	3	Washer	A8
12	339169X1	3	Nut	M8
13	339123X1	3	Hex. Sock. Screw	M8 X 20
14	D26735622	1	Guideway	
15	D26745439	1	Guideway	
16	339666X1	2	Hex. Sock. Screw	M6 X 20
17	D26734663	1	Tray	

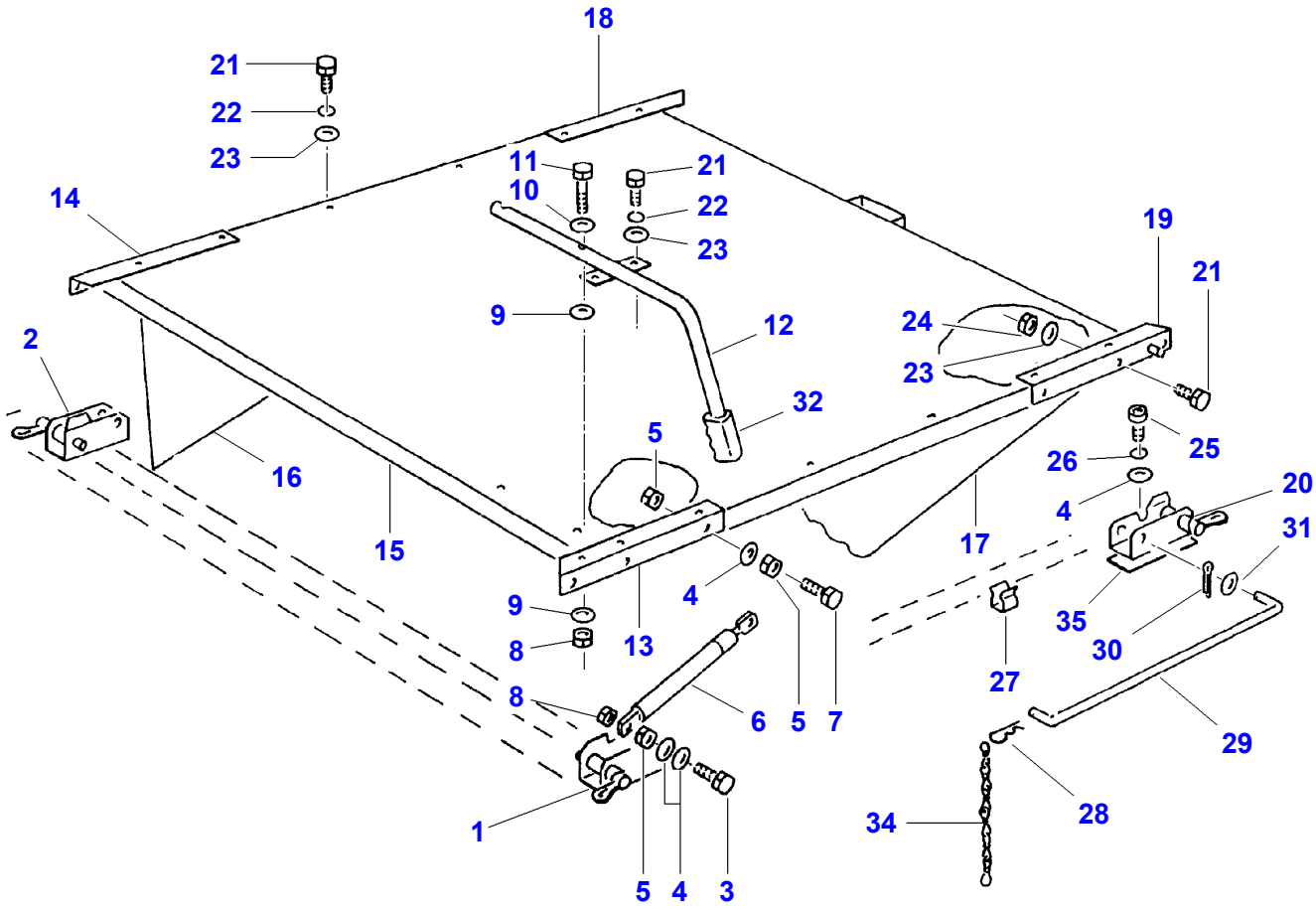
18
21
22
23
11
10
21
22
23
14
19
21
9
12
24
23
2
32
5
26
25
16
20
4
15
17
31
4
35
9
13
30
8
27
8
6
5
7
29
1
34
28
5
4
3

D-ZIZF-016-A

Item	Part Number	Qty	Description	Comments
1	D16734171	1	Bearing	Left Hand
2	D16734172	1	Bearing	Right Hand
3	339337X1	2	Hex. Sock. Screw	M8 X 30
4	D26740163	6	Washer	8,4 X 21 X 3 ZN
5	339169X1	6	Nut	M8
6	D26733960	2	Gas Strut	
7	D40425000	2	Hex. Sock. Screw	M8 X 35
8	D26740007	2	Locknut	M8
9	D20400408	4	Washer	8,4 X 25 X 3
10	D26739993	2	Washer	9 X 17 X 1,6
11	D40900017	2	Hex. Sock. Screw	M8 X 40
12	D16734167	1	Tube	
13	D16734141	1	Anglepiece	Left Hand
14	D16734140	1	Anglepiece	Right Hand
15	D16738861	1	Cover	
16	D16734138	1	Plate	Right Hand
17	D16734139	1	Plate	Left Hand
18	D16734140	1	Anglepiece	Right Hand
19	D16734173	1	Anglepiece	Left Hand
20	D16735180	1	Bearing	Left Hand
	D16735181	1	Bearing	Right Hand
21	339560X1	18	Hex. Sock. Screw	M6 X 16
22	D41100600	12	Spring Washer	A6
23	D26740136	24	Washer	6,4 X 18 X 2 ZN
24	D41088800	6	Locknut	M6
25	339124X1	8	Hex. Sock. Screw	M8 X 16
26	D41102100	8	Washer	A8
27	D26733564	1	Spring Clip	
28	D26733722	1	Clip Pin	
29	D26734160	1	Rod	
30	D41406200	1	Split Pin	3,2 X 40
31	D26739992	1	Washer	11 X 20 X 2
32	D26733668	1	Handle	
33	D26740007	2	Locknut	[A]
34	D26732789	1	Chain	2.0 7 GL.
35	D26734215	X	Shim	

FOOTNOTE [A] NOT ILLUSTRATED

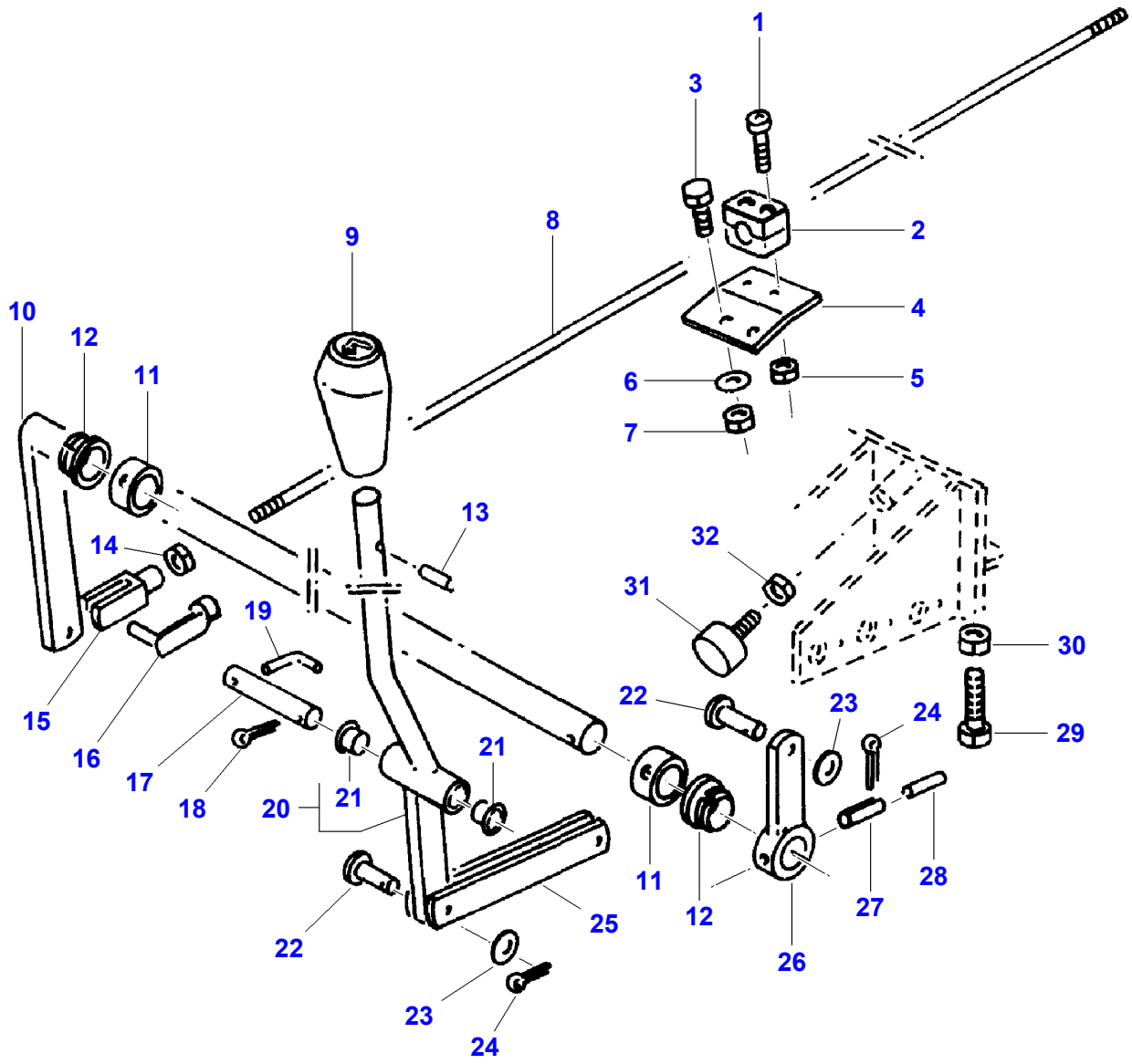
1
3
2
8
9
4
10
12
11
6
5
7
13
14
32
31
30
19
22
23
24
29
15
16
17
18
20
21
21
11
12
27
28
22
25
26
23
24

D-ZIZM-001-A

Item	Part Number	Qty	Description	Comments
1	D40422000	2	Screw Metric	M6 X 40
2	D26733656	2	Clamp	Diameter 12,2
3	339123X1	2	Hex. Sock. Screw	M8 X 20
4	D26734236	1	Retaining Plate	
5	D41088800	2	Locknut	M6
6	D26739993	2	Washer	9 X 17 X 1,6
7	D26740007	2	Locknut	M8
8	D26734253	1	Linkage	
9	D26734239	1	Knob	
10	D26734234	1	Shaft	
11	D26733371	2	Adjusting Collar	30 X 44
12	D26733675	2	Bush	30,3 X 35 X 15
13	D26739296	1	Groove Pin	
14	339402X1	1	Nut	M10
15	D45905300	1	Fork Head	G10 X 40
16	D26739190	1	Bolt	10 X 40
17	D26732756	1	Clevis Pin	16 X 100 / 90
18	391405X1	1	Split Pin	4 X 25
19	D26734248	1	Pin	
20	D26736376	1	Arm	
21	D26736130	2	Bush	16 X 18 X 24/17
22	D26740036	2	Clevis Pin	10 X 28 / 24
23	D20400471	2	Washer	10,5 X 20 X 2
24	D41405800	2	Split Pin	3,2 X 20
25	D26735520	2	Joint Piece	
26	D26733741	1	Lever	
27	D42616200	1	Pin	8 X 45
28	D26747057	1	Pin	5 X 45
29	D26739295	1	Hex. Sock. Screw	M12 X 70
30	D26740193	1	Nut	M12
31	D26733845	1	Buffer	
32	339169X1	1	Nut	M8

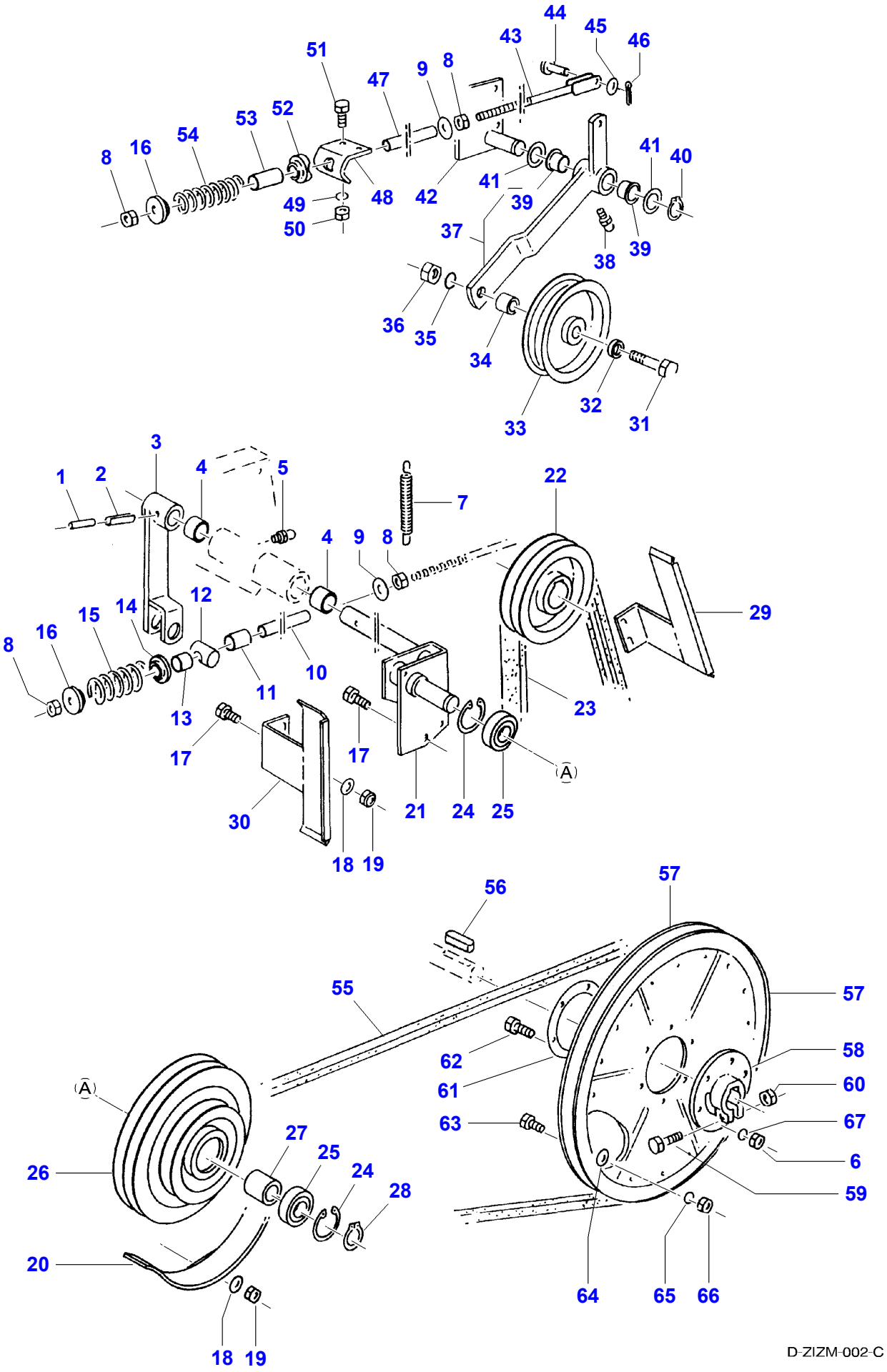
44
45
46
43
51
9
8
47
53
52
54
16
8
41
40
41
39
49
48
42
50
37
39
38
36
35
34
32
31
33
3
1
2
4
5
7
22
4
9
8
29
16
15
14
12
8
10
11
23
13
17
17
21
24
25
A
30
18
19
56
57
55
57
62
58
61
60
63
67
6
59
A
27
25
26
24
28
20
64
65
66
18
19

D-ZIZM-002-C

Item	Part Number	Qty	Description	Comments
1	D26747057	1	Pin	5 X 45
2		1	Pin	[A] 8 X 45
3	D26734030	1	Arm	
4	D26734745	2	Bush	J 30 X 40H9 X 45
5	D26733079	1	Greaser	AS8
6	339169X1	6	Nut	M8
7	D26732803	1	Tension Spring	4.0/21.0/205
8	3009695X1	4	Nut	M12
9	D20400446	2	Washer	13 X 30 X 4
10	D26734129	1	Tube	3 / 8 X 250
11	D26733672	1	Bush	22 X 40
12	D26733896	1	Clevis Pin	
13	D26733671	1	Bush	22 X 20
14	D26734088	1	Spring Pot	
15	D26733731	1	Comp.Spring	
16	D26734087	2	Retaining Plate	
17	339761X1	4	Hex. Sock. Screw	M8 X 25
18	D20400506	4	Washer	8,4 X 16 X 1,6
19	394367X1	4	Locknut	M8
20	D26734130	1	Belt Guide	
21	D26734256	1	Support	
22	D26733933	1	Pulley,Tensioner	2 / 22 X 200 See Page - Reference Number 011-0003/16
23	**D26732820**	1	V Belt	2HCX 1610
24	1440479X1	2	Circlip	62 X 2
25	D26732704	2	Bear. 6007 2rs	
26	D26734050	1	Pulley	
27	D26733788	1	Spacer	43 X 42
28	339469X1	1	Circlip	35 X 1,5
29	D26733790	1	Belt Guide	
30	D26733852	1	Belt Guide	
31	D40433600	1	Hex. Sock. Screw	M16 X 70
32	D26733620	1	Washer	17,2 X 25 X 4,3
33	**D26733667**	1	Pulley,Tensioner	40 / 200
34	D26733567	1	Spacer	
35		1	Tooth Washer	[A] A16
36	339034X1	1	Nut	M16
37	D26736078	1	Arm	
38	D43001700	1	Greaser	CM6
39	D26736080	2	Bush	25 X 28 X 35
40	1440476X1	1	Circlip	25 X 1,2
41	D26740149	4	Washer	26 X 40 X 2
42	D26734040	1	Clevis Pin	
43	D26734934	1	Tie Rod	
44	D26740036	1	Clevis Pin	10 X 28 / 24
45	D26739992	1	Washer	11 X 20 X 2
46	D41405900	1	Pin	
47	D26733751	1	Tube	17,2 X 200
48	D26734832	1	Retainer	
49	D41101900	2	Spring Washer	A10
50	339402X1	4	Nut	M10
51	3009491X1	2	Hex. Sock. Screw	M10 X 20
52	D26734150	1	Guide	
53	D26734170	1	Spacer	
54	D26733739	1	Comp.Spring	
55	**D26732833**	1	V Belt	HCX 4835 LA
56	1441579X1	1	Key Parallel	10 X 8 X 56
57	D26734000	2	Pulley Half	
58	D26733665	1	Hub	
59	339019X1	1	Hex. Sock. Screw	M10 X 50
60	D28288162	1	Locknut	M10
61	D26733666	1	Reinforcement	
62	339761X1	6	Hex. Sock. Screw	M8 X 25
63	339560X1	18	Hex. Sock. Screw	M6 X 16
64	D26740136	18	Washer	6,4 X 18 X 2 ZN
65	D41100600	18	Spring Washer	A6
66	D41010600	18	Nut	M6
67	D41102100	6	Washer	A8

Item	Part Number	Qty	Description	Comments

FOOTNOTE [A] NUMBER TO BE ADVISED

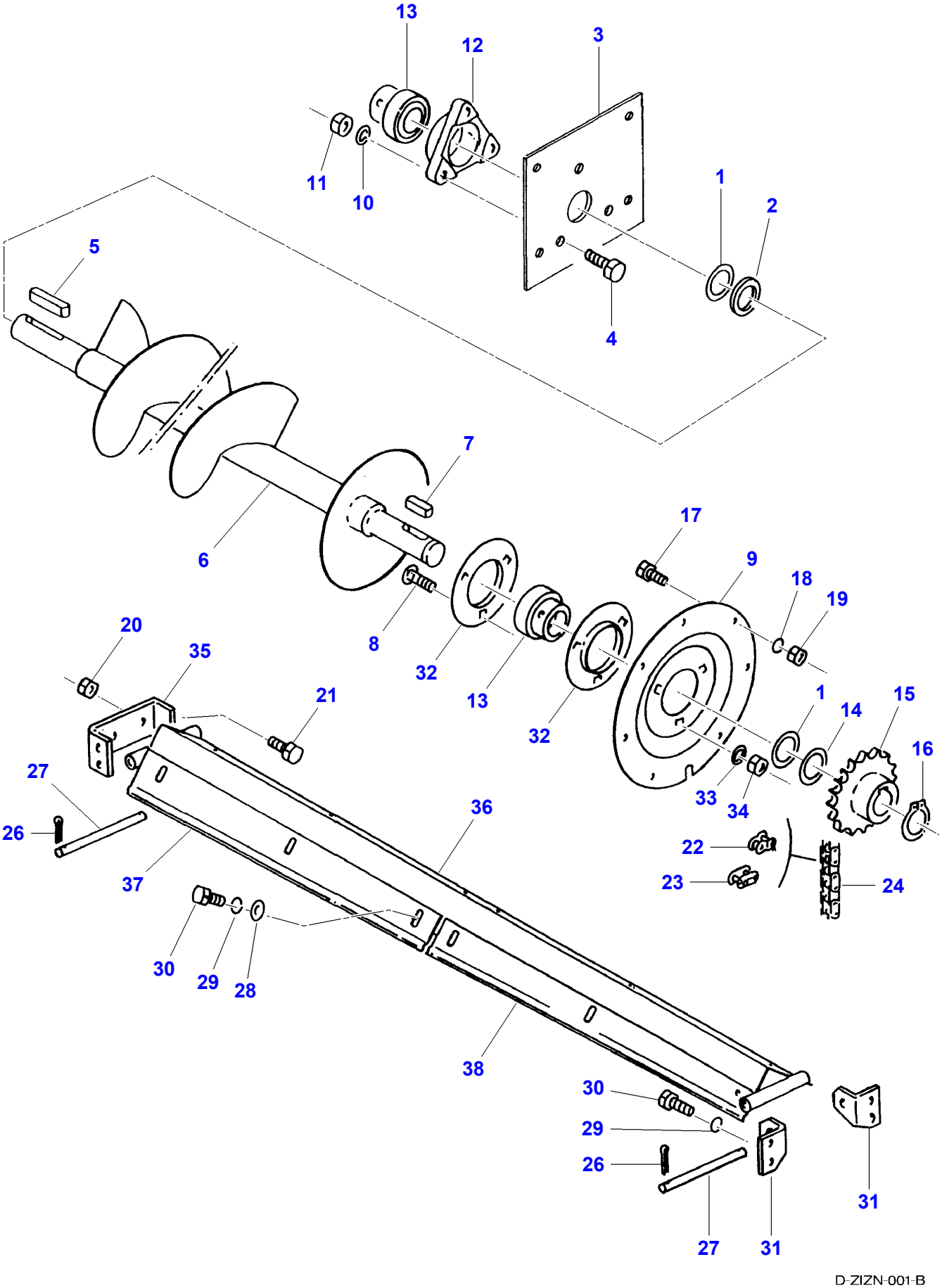
13
12
3
11
10
1
2
5
4
7
6
17
9
18
19
20
35
8
32
13
21
32
1
14
15
16
27
33
34
36
26
22
23
24
37
30
29
28
38
30
29
26
31
27
31
D-ZIZN-001-B

Item	Part Number	Qty	Description	Comments
1	D26740112	5	Pulley	35 X 45 X 1,0
2	D26733543	1	Spacer	50 X 6,5
3	D26734927	1	Cover	
4	D40411200	3	Hex. Sock. Screw	M12 X 45
5		1	Key Parallel	[A] 10 X 8 X 80 Up to Serial or Engine Number 6088
	1441579X1	1	Key Parallel	From Serial or Engine Number 6089 10 X 8 X 56
6	D26735752	1	Union	Up to Serial or Engine Number 6088
		1	Auger	[A] From Serial or Engine Number 6089
	D26743847	1	Auger	200 X 2176
		1	Auger	[A,B]
7	D26739876	1	Key Parallel	10 X 8 X 36
8	D26740082	3	Bolt	M10 X 25
9	D26734018	1	Cover	
10	D26739978	3	Spring Washer	A12
11	3009695X1	3	Nut	M12
12	D26733721	1	Bearing Housing	Diameter 35
13	**D26733362**	2	Bearing	YS 35
14	D26740113	2	Washer	35 X 45 X 0,5
15	D26734308	1	Sprocket	Number of teeth/spines 29
16	339469X1	1	Circlip	35 X 1,5
17	339123X1	3	Hex. Sock. Screw	M8 X 20
18	D41102100	8	Washer	A8
19	339169X1	8	Nut	M8
20	D28288162	2	Locknut	M10
21	3009492X1	2	Hex. Sock. Screw	M10 X 25
22	**D49030022**	X	Chain Link	1D
23	**D42365500**	X	Link	1E
24	D26732924	1	Chain	19,05 X 62
25	**D26746972**	1	Belt	[C] HCX 5505 LA
26	D41404400	4	Split Pin	
27	D26733545	2	Stem	
28	D26739238	12	Washer	8,4 X 21 X 4
29	D41102100	16	Washer	A8
30	339123X1	16	Hex. Sock. Screw	M8 X 20
31	D26734175	2	Anglepiece	Left Hand
32	**D26733366**	2	Bearing Housing	RB 35
33	D41101900	3	Spring Washer	A10
34	339402X1	3	Nut	M10
35	D26733763	1	Retainer	
36	D26738099	1	Shield	
37	D26735730	2	Shield	Right Hand
38	D26734177	2	Shield	Left Hand
39	D20400471	4	Washer	[C] 10,5/ X 2

FOOTNOTE [A] NUMBER TO BE ADVISED
FOOTNOTE [B] FOR RICE
FOOTNOTE [C] NOT ILLUSTRATED

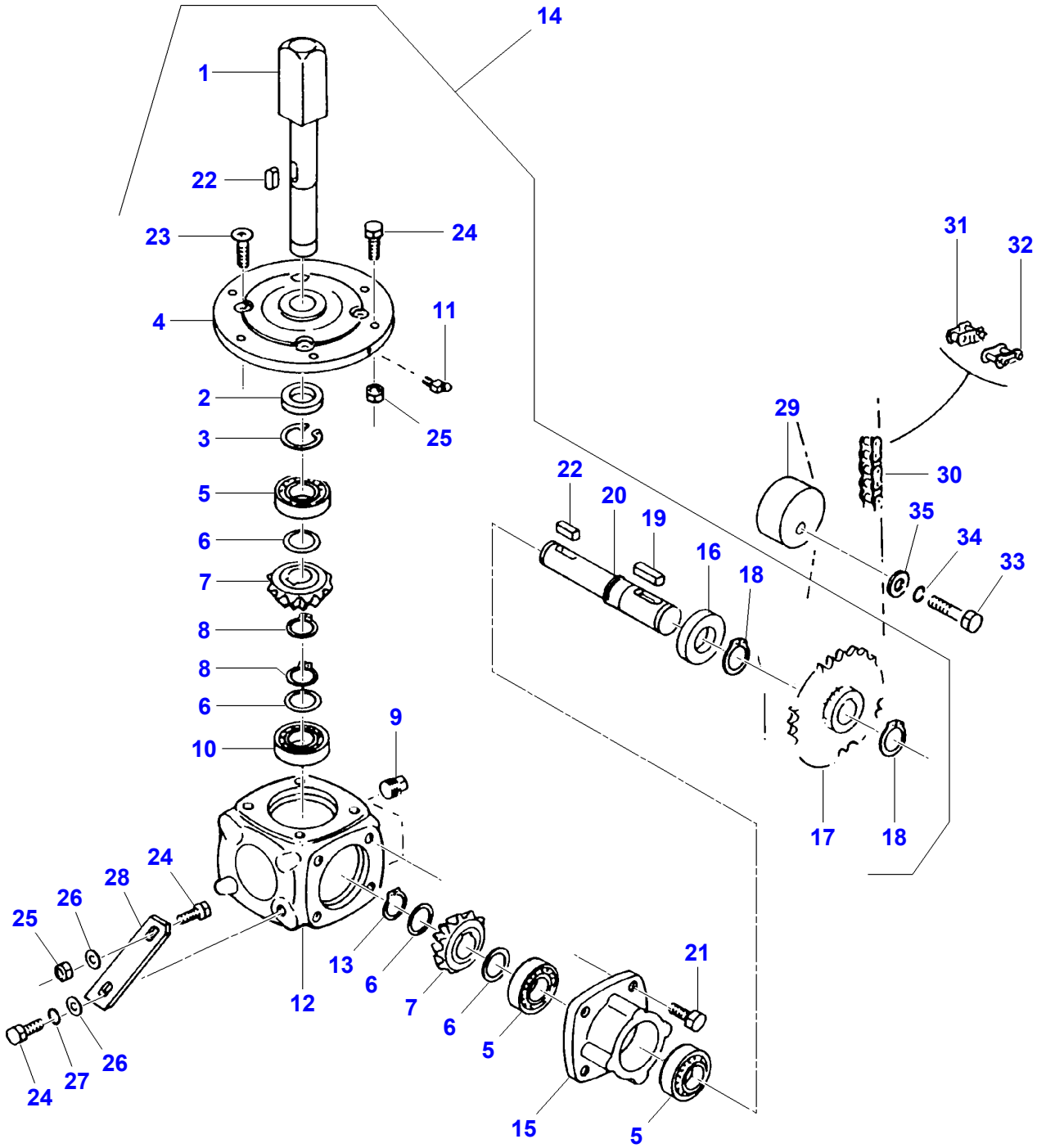
14
1
22
23
24
4
11
2
25
3
5
6
7
8
8
6
10
9
24
28
26
25
24
27
26
12
13
6
7
6
5
21
15
5
22
20
19
16
18
31
32
29
30
35
34
33
17
18

D-ZIZ0-001-A

Item	Part Number	Qty	Description	Comments
1		1	Shaft	[A]
2		1	Gasket	[A] 35 X 52 X 7
3	339126X1	1	Circlip	52 X 2
4		1	Flange	[A]
5	D26732711	3	Bearing Roller	30207
6		4	Washer	[A]
7		2	Diff Pinion	[A]
8	339469X1	2	Circlip	35 X 1,5
9		2	Plug	[A] 3 / 8
10		1	Bear. 6207	[A]
11	D43002600	1	Greaser	BM8
12		1	Housing	[A]
13		1	Circlip	[A] 35 X 2,5
14	D26735330	1	Angle Drive	
15		1	Extension	[A]
16		1	Gasket	[A] 40 X 72 X 10
17	D49030073	1	Sprocket	Number of teeth/spines 25
18	D26746878	2	Circlip	40 X 1,75
19		1	Key	[A] 12 X 8 X 36
20		1	Shaft	[A]
21	D26739707	4	Hex. Sock. Screw	M12 X 25
22		2	Key	[A] 10 X 8 X 25
23		4	Screw	[A] M12 X 40
24	3009493X1	8	Hex. Sock. Screw	M10 X 30
25	D28288162	7	Locknut	M10
26	D26739992	8	Washer	11 X 20 X 2
27	D41101900	1	Spring Washer	A10
28	D26735331	1	Support	
29	D26734276	1	Pulley,Tensioner	
30	D26732924	1	Chain	19,05 X 62
31	**D42365500**	X	Link	1E
32	**D49030022**	X	Chain Link	1D
33	D26739295	1	Hex. Sock. Screw	M12 X 70
34	D26739978	1	Spring Washer	A12
35	D20400446	1	Washer	13 X 30 X 4

FOOTNOTE [A] NUMBER TO BE ADVISED

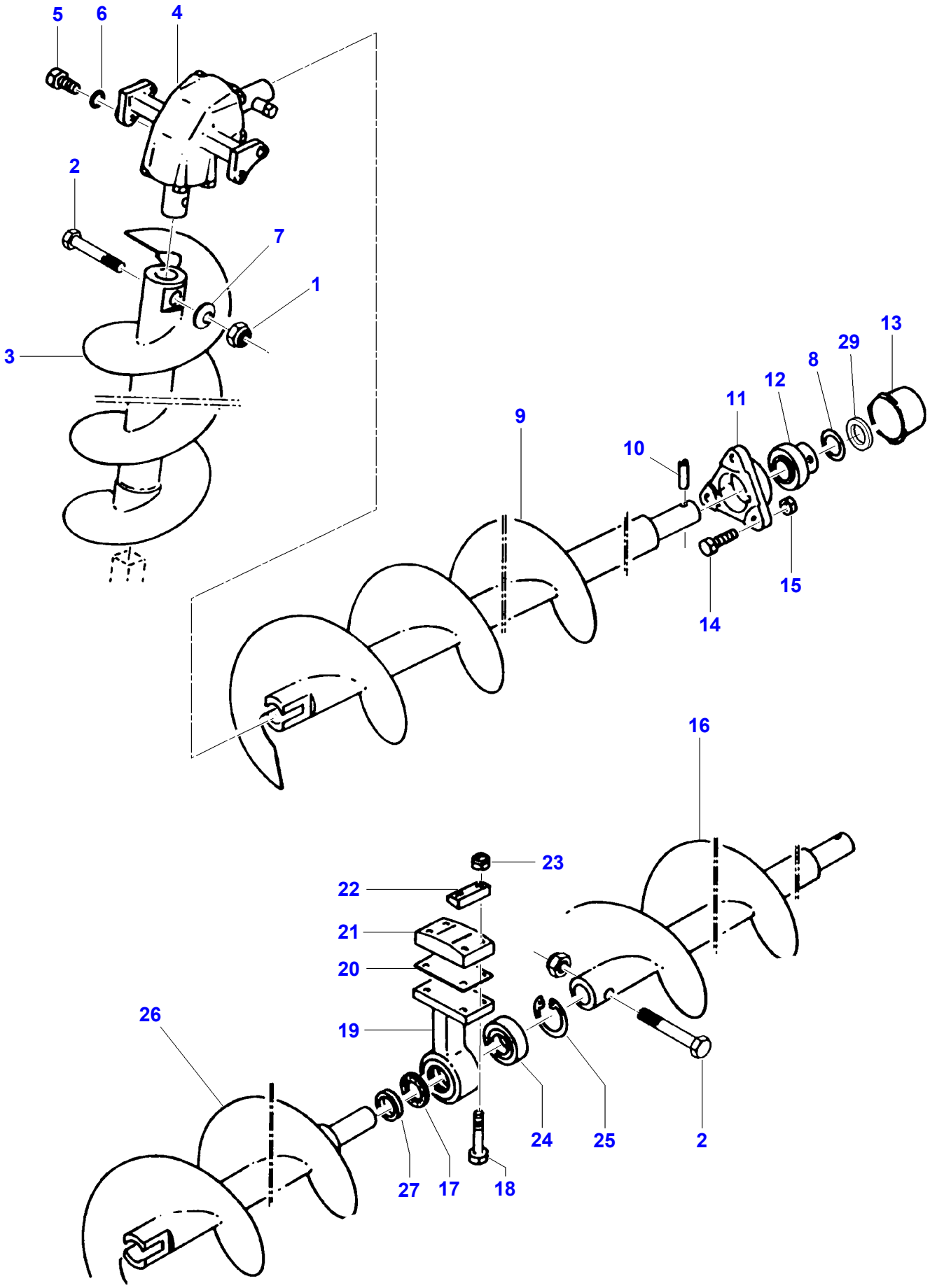

D-ZIZP-001-B

Item	Part Number	Qty	Description	Comments
1	1442190X1	1	Locknut	M12
2	D26739307	1	Bolt	M12 X 75
3	D26734749	1	Auger	CPL.
	D26744416	1	Auger	280 X 1075
		1	Auger	[A,B,D]
4	D26734414	1	Angle Drive	
5	3009492X1	4	Hex. Sock. Screw	M10 X 25
6	D41101900	4	Spring Washer	A10
7	D41112300	1	Washer	12,2 X 25 X 1,5
8	D26739286	4	Washer	35 X 45 X 2,5
9	D26734314	1	Auger	
	D26741519	1	Auger	280 X 3313
		1	Auger	[A,B,C]
10	D42616300	1	Pin	8 X 50
	D42610000	1	Pin	5 X 50
11	D26734090	1	Bearing Housing	Diameter 35
12	**D26733356**	1	Bearing	YB 35
13	D26733701	1	Cap	
14	3009507X1	3	Hex. Sock. Screw	M12 X 35
15	D26740020	3	Locknut	M12
16	D26734320	1	Auger	[C]
	D26734320	1	Auger	280 X 1543
	D26741525	1	Auger	[B,D]
17	D26736005	1	Felt Ring	[C]
18	339291X1	4	Hex. Sock. Screw	[C] M10 X 55
19	D26736039	1	Bearing Housing	[C]
20	D26734008	1	Shim	[C]
21	D26734158	1	Support	[C]
22	D26734009	2	Collet	[C]
23	D28288162	4	Locknut	[C] M10
24	D41623000	1	Bear. 6207 2rs	[C]
25	1440480X1	1	Circlip	[C] 72 X 2,5
26	D26734319	1	Auger	[C]
	D26741519	1	Auger	[C] 280 X 3313
	D26741507	1	Auger	[C] 280 X 150
		1	Auger	[A,B,D]
27	D26734178	1	Oil Seal	[C]
28	D20400419	4	Washer	[E] 9 X 17 X 1,6
29	D26740113	4	Washer	

FOOTNOTE [A] NUMBER TO BE ADVISED
FOOTNOTE [B] FOR RICE
FOOTNOTE [C] OPTIONAL
FOOTNOTE [D] EXPORT ONLY
FOOTNOTE [E] NOT ILLUSTRATED

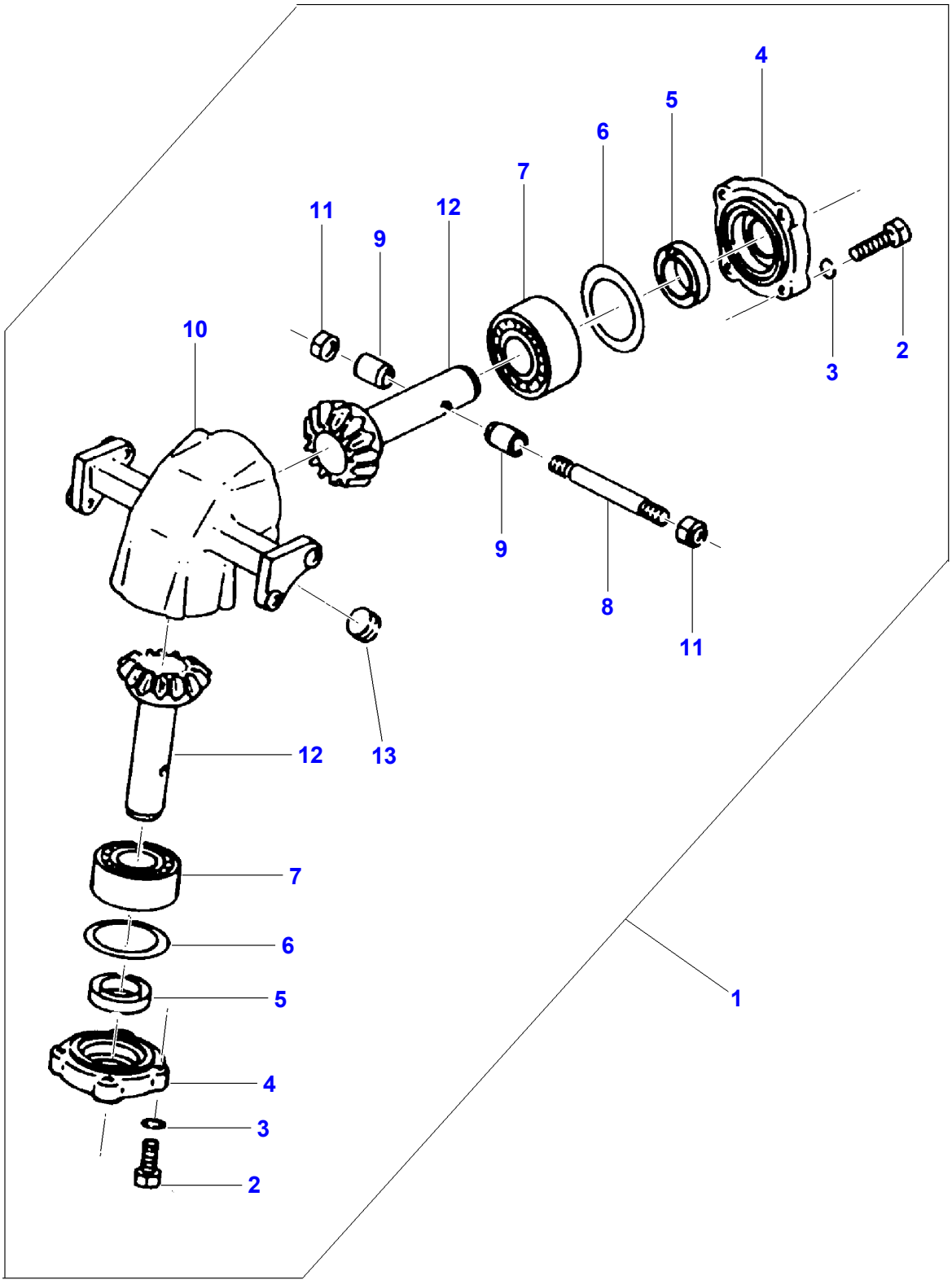

D-ZIZQ-001-A

Item	Part Number	Qty	Description	Comments
1	D26734414	1	Angle Drive	
2	339337X1	8	Hex. Sock. Screw	M8 X 30
3	D41102100	8	Washer	A8
4		2	Cover	[A]
5	D26739374	2	Shaft Seal	35 X 55 X 9/11
6	D26739673	X	Spacer	63 X 80 X 0,5
	D26740107	X	Spacer	63 X 80 X 0,3
	D46173300	X	Spacer	[A] 63 X 80 X 0,1
7	D26739316	2	Ball Bearing	3307 2RS C3
8	D26740378	1	Flanged Pin	
9	D26740445	2	Bush	18 X 20,5
10	D26741523	1	Housing	
11	D26740020	2	Locknut	M12
12	D26741501	2	Pinion Shaft	
13		1	Screw	[A]

FOOTNOTE [A] NUMBER TO BE ADVISED

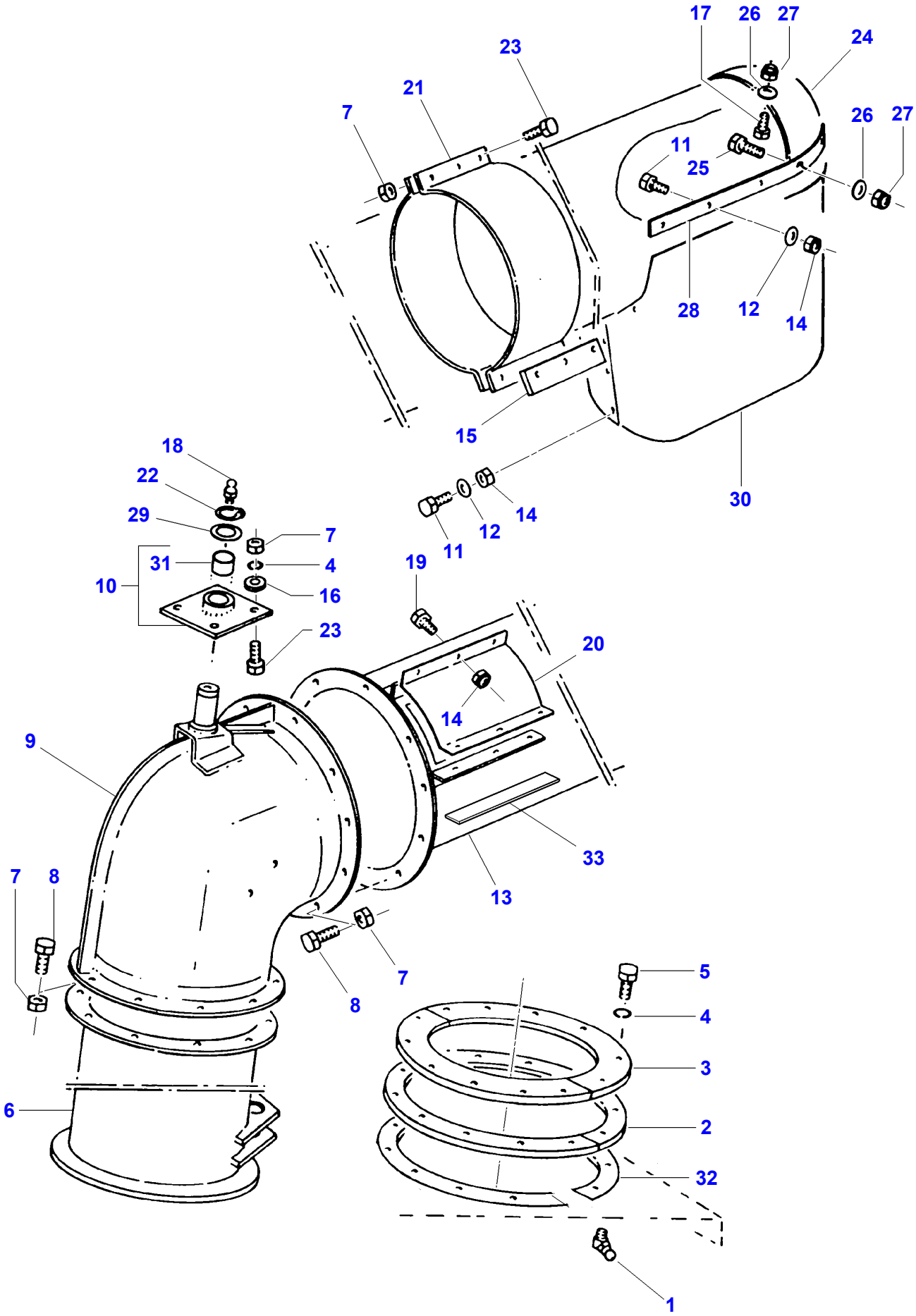
17
26
27
24
23
21
7
26
27
11
25
28
12
14
15
30
18
22
29
7
31
4
10
16
23
19
20
14
9
33
13
7
8
7
8
5
4
3
2
32
6
1

D-ZIZR-001-B

Item	Part Number	Qty	Description	Comments
1	D43002600	2	Greaser	BM8
2	D26734037	1	Ring	25 X 593
3	D26734036	2	Ring	45 X 562
4	D41101900	16	Spring Washer	A10
5	339814X1	12	Hex. Sock. Screw	M10 X 35
6	D16734734	1	Standpipe	
7	1440329X1	32	Locknut	M10
8	3009493X1	8	Hex. Sock. Screw	M10 X 30
9	D16734179	1	Tube	
10	D16735606	1	Bearing	
11	339123X1	20	Hex. Sock. Screw	M8 X 20
12	D26739993	X	Washer	9 X 17 X 1,6
13	D18888159	1	Unloader	Length 4000 MM
	D18888143	1	Tube	[A] Length 5000 MM
14	D26740007	26	Locknut	M8
15	D16734842	1	Reinforcement	
	D56734842	1	Reinforcement	
16	D26740161	8	Washer	10,5 X 30 X 3 ZN
17	D26739707	2	Hex. Sock. Screw	M12 X 25
18	D43002600	1	Greaser	AS8
19	339124X1	6	Hex. Sock. Screw	M8 X 16
20	D16734045	1	Cover	
21	D16734044	2	Half Section	
22	339469X1	1	Circlip	35 X 1,5
23	3009493X1	10	Hex. Sock. Screw	M10 X 30
24	D16734043	1	Cap	
25	1440716X1	2	Hex. Sock. Screw	M12 X 30
26	D26740203	X	Washer	Diameter 13,5
27	D26740020	X	Locknut	M12
28	D26734011	2	Strap	
29	D26739286	1	Washer	35 X 45 X 2,5
30	D26734142	1	Elbow Nipple	
31	D26735987	2	Bush	35 X 39 X 30
32	D26736466	2	Shim	
33	D44704700	1	Strip	Length 1600mm

FOOTNOTE [A] OPTIONAL

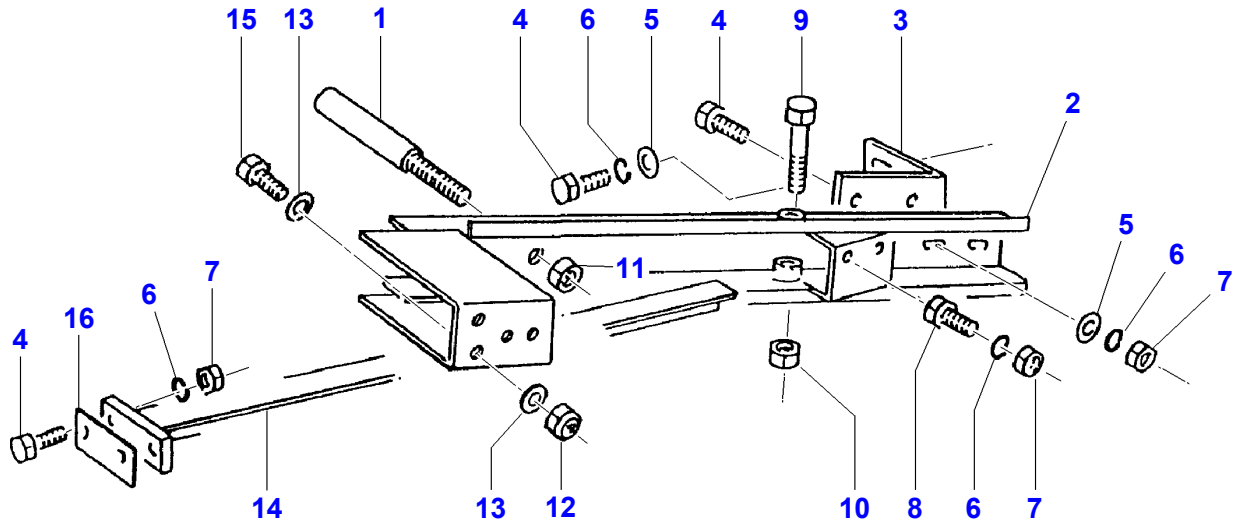
15
13
1
4
6
5
4
9
3
2
5
6
7
11
6
7
16
4
14
13
12
10
8
6
7

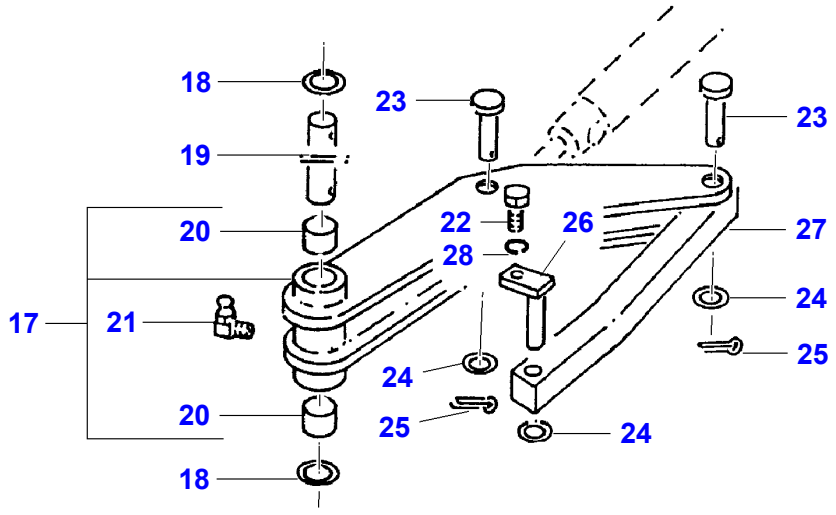
18
19
20
17
21
20
18
23
22
28
26
24
25
24
23
27
24
25

Item	Part Number	Qty	Description	Comments
1	D26740070	1	Hex. Sock. Screw	M16 X 140
2	D28888113	1	Crosspiece	
3	D28888116	1	Support	
4	D26739757	6	Hex. Sock. Screw	M10 X 35
5	D20400473	4	Washer	10,5 X 28 X 4
6	D20400419	8	Washer	10,5 X 22 X 3
7	D41087600	8	Locknut	M10
8	3009492X1	2	Hex. Sock. Screw	M10 X 25
9		1	Hex. Sock. Screw	[A] M16 X 120
10		1	Locknut	[A] VM16
11	339034X1	2	Nut	M16
12	D26740020	3	Locknut	M12
13	D20400426	6	Washer	Diameter 13/24 X 2,5
14	D26734872	1	Brace	
15	1440716X1	3	Hex. Sock. Screw	M12 X 30
16	D26734061	X	Plate	
17	D26736137	1	Lever	
18	D20400531	2	Spacer	26 X 41 X 3
19	D26734315	1	Clevis Pin	25 X 211
20	D26735979	2	Sleeve	28 X 25 X 30
21	D43002600	1	Greaser	BM8
22	339124X1	1	Hex. Sock. Screw	M8 X 16
23	D26733244	2	Clevis Pin	16 X 62 / 57
24	D20400459	4	Washer	17 X 38 X 3
25	D41409300	2	Split Pin	4 X 45
26	D26733961	1	Clevis Pin	
27	D26734077	1	Lever	
28	D41102100	1	Washer	A8

FOOTNOTE [A] NUMBER TO BE ADVISED

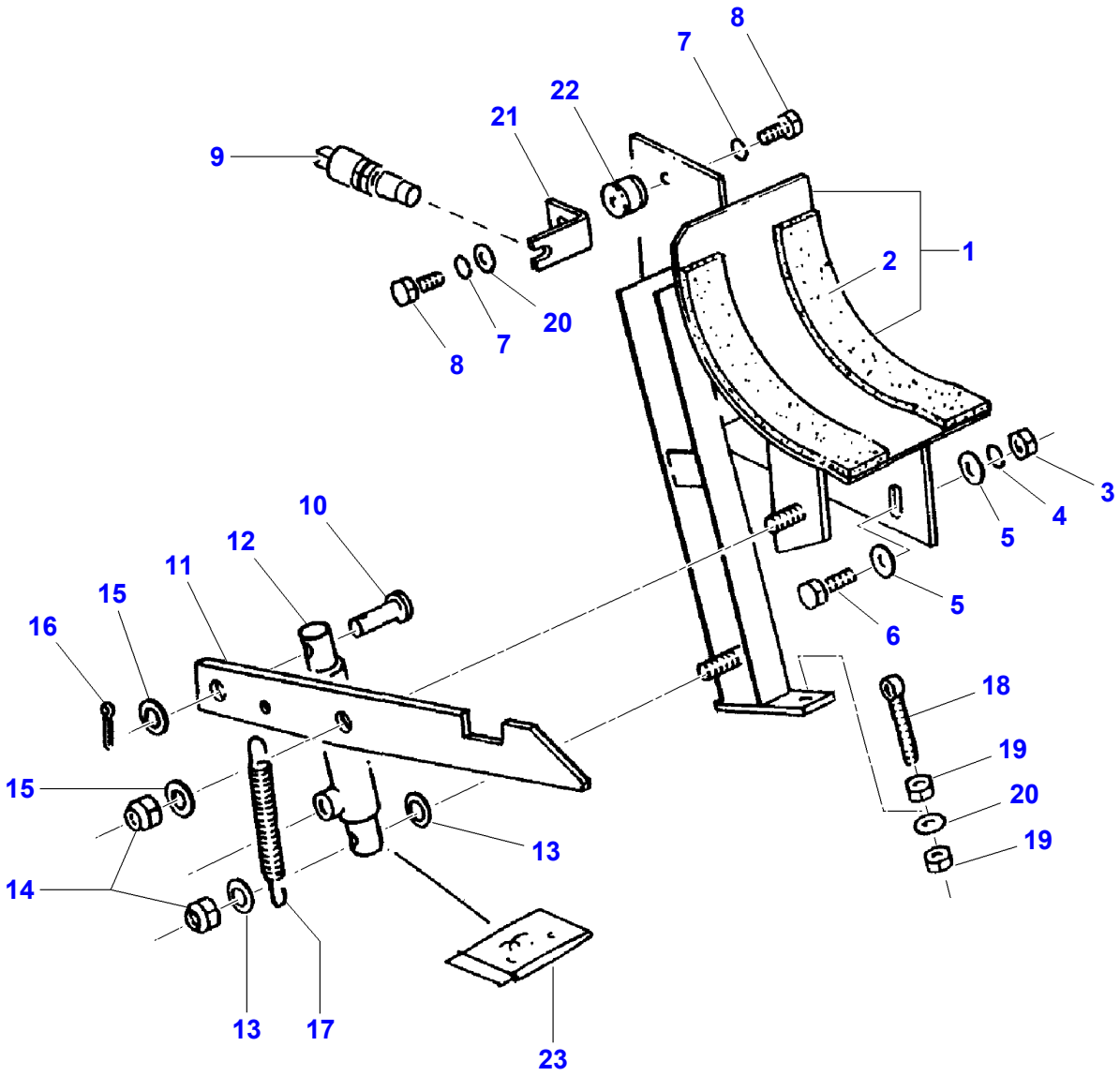

D-ZIZR-002-A

Item	Part Number	Qty	Description	Comments
1	D18888161	1	Support	
2	D26736180	2	Felt	
3	339402X1	3	Nut	M10
4	D41101900	3	Spring Washer	A10
5	D26739992	6	Washer	11 X 20 X 2
6	3009492X1	3	Hex. Sock. Screw	M10 X 25
7	D41102100	2	Washer	A8
8	339124X1	2	Hex. Sock. Screw	M8 X 16
9	**D26733124**	1	Switch	
10	D26735969	1	Clevis Pin	
11	D16736239	1	Pawl	
12	D26736334	1	Lift Cylinder	
13	D26739194	4	Washer	17 X 28 X 2
14		2	Locknut	[A] VM16
15	D26740152	2	Washer	17 X 34 X 3
16	3000197X1	1	Split Pin	4 X 32
17	D26730531	1	Tension Spring	
18	D26739256	1	Eye Bolt	LAM8 X 90
19	339169X1	2	Nut	M8
20	D20400408	2	Washer	8,4 X 25 X 3
21	D16734522	1	Anglepiece	
22	D26733372	1	Buffer	
23	D49030074	X	Kit, Seal	

FOOTNOTE [A] NUMBER TO BE ADVISED

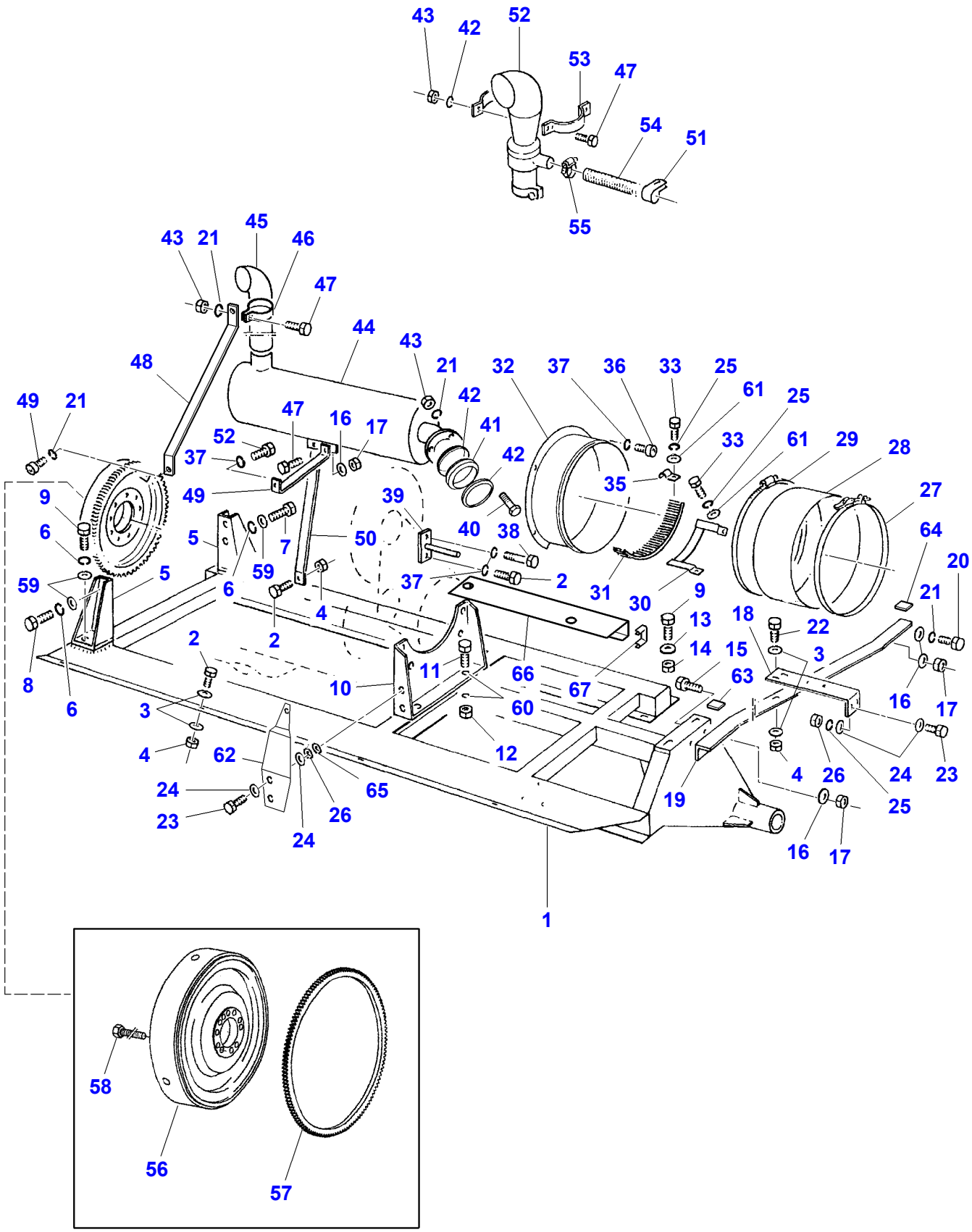
43
42
52
53
47
54
51
55
45
43
21
46
47
44
48
43
21
32
37
36
33
25
61
25
49
21
47
16
17
42
41
52
37
42
33
61
29
28
49
39
35
27
9
6
5
50
40
38
64
59
5
37
2
31
30
9
20
8
6
2
2
4
11
66
67
13
18
22
21
10
14
15
3
63
16
17
3
62
60
12
4
26
24
23
24
26
65
19
25
16
17
1
58
56
57

Item	Part Number	Qty	Description	Comments
1	D28788240	1	Engine Carrier	
2	339123X1	4	Hex. Sock. Screw	M8 X 20
3	D26739993	X	Washer	9 X 17 X 1,6
4	D26740007	5	Locknut	M8
5	D28788249	2	Bracket	
6	D41100900	8	Spring Washer	A12
7	D40411200	1	Hex. Sock. Screw	M12 X 45
8	390912X1	3	Hex. Sock. Screw	M12 X 40
9	1440716X1	8	Hex. Sock. Screw	M12 X 30
10	D28788296	1	Bracket	
11	339275X1	2	Hex. Sock. Screw	M16 X 35
12	1442739X1	2	Locknut	M16
13	D20400446	X	Washer	Diameter 13-30 X 4
14	D26740020	8	Locknut	M12
15	3009493X1	2	Hex. Sock. Screw	M10 X 30
16	D26739992	X	Washer	Diameter 11-20 X 2
17	D28288162	5	Locknut	M10
18	D28788297	1	Angle.	
19	D26734920	1	Support	
20	D26739757	1	Hex. Sock. Screw	M10 X 35
21	D41101900	X	Spring Washer	
22	339761X1	2	Hex. Sock. Screw	M8 X 25
23	339666X1	2	Hex. Sock. Screw	M6 X 20
24	D26740136	8	Washer	6,4-18 X 2
25	D41100600	7	Spring Washer	
26	1441462X1	4	Locknut	M6
27	D26732823	1	Clamp	Diameter 325 mm
28	D28788371	1	Bellows	
29	D26741246	1	Clamp	Diameter 310-330 mm
30	D28788378	1	Support	(32)
31	D26736006	1	Brush	(32)
32	D28788379	1	Guide Bush	
33	D40475000	5	Setscrew	(32) M6 X 20
34	3009491X1	1	Hex. Sock. Screw	[B] (32) M10 X 20
35	D26732719	3	Clamp	(32) Diameter 7-16 X 2
36	391148X1	4	Screw	M8 X 20
37	D41102100	14	Washer	
38	D26739940	1	Hex. Sock. Screw	M8 X 75
39	D28788370	1	Pin	
40	390799X1	4	Hex. Sock. Screw	M10 X 40
41	D26733184	1	Seal	
42	D26733195	1	Seal	
43	339402X1	4	Nut	M10
44	D46440080	1	Silencer	
45	D28788408	1	Exhaust Pipe	
46	D26732738	2	Clamp	Diameter 75,5 mm
47	3009492X1	4	Hex. Sock. Screw	M10 X 25
48	D28788398	1	Brace	FOR EJECTOR
49	D28788259	1	Support	
50	D28788410	1	Brace	
51	D26733209	4	Hose Clip	[A] Diameter 38 mm
52	D26734060	1	Ejector	[A]
53	D26733765	2	Clip	[A]
54	D26734277	1	Pipe	[A] Length 2500 mm
55	D26733110	2	Clamp	[A]
56	F007.200.310.100	1	Flywheel	
57	F100.002.131.081	1	Annular Gear	(56)
58	X491.204.942.000	10	Hex. Sock. Screw	M10 X 45
59	D20400426	6	Washer	
60	D20400518	4	Spacer	
61	D20400404	3	Washer	
62	D26735185	1	Guard	
63	D26733795	1	Stop	
64	D26734054	1	Stop	
65	D41679300	1	Ring	Diameter 6-12 X 8

Item	Part Number	Qty	Description	Comments
66	D26740716	1	Rail	
67	D26733226	1	Protective Strip	

FOOTNOTE [A] OPTIONAL
FOOTNOTE [B] NOT ILLUSTRATED

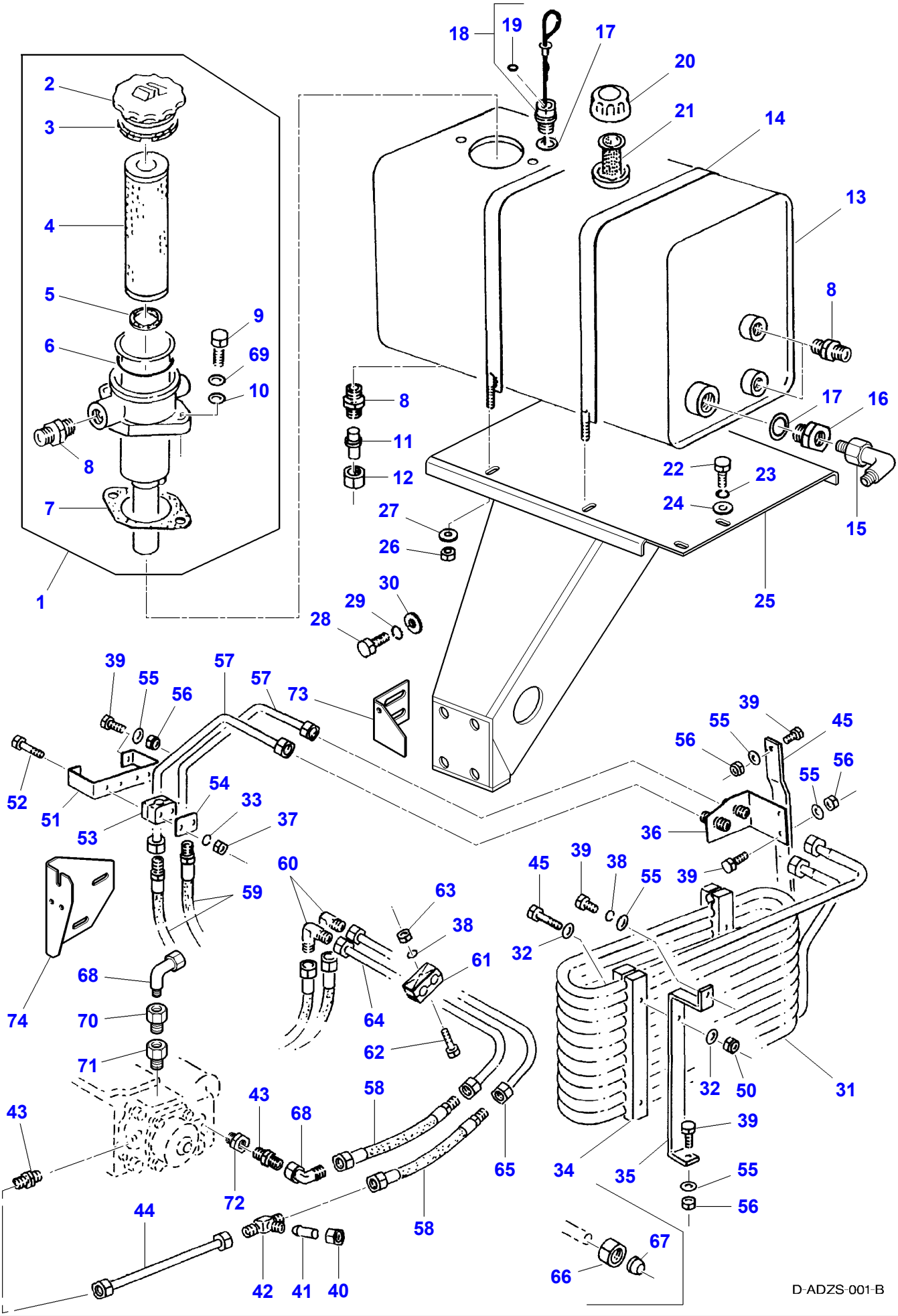
1
2
3
4
5
6
7
8
9
10
11
12
13
14
15
16
17
18
19
20
21
22
23
24
25
26
27
28
29
30
31
32
33
34
35
36
37
38
39
40
41
42
43
44
45
50
51
52
53
54
55
56
57
58
59
60
61
62
63
64
65
66
67
68
69
70
71
72
73
74
D-ADZS-001-B

Item	Part Number	Qty	Description	Comments
1	D45140068	1	Filter	
2	D49030046	1	Tank Cap	(1)
3	D49030047	1	Gasket	(1)
4	D49030053	1	Element,Filter	(1)
5		1	Seal	[A] (1)
6		1	Ring	[A] (1) 69,5 X 3,5
7		1	Gasket	[A] (1)
8	D45279100	1	Union	(1)
9	3009493X1	2	Hex. Sock. Screw	(1) M10 X 35
10	D20400471	2	Washer	(1) 10,5 X 20 X 2
11	D26733152	1	Tap	
12	D26739831	1	Union Nut	CL22
13	D28788384	1	Oil Tank	
14	D28788212	2	Band	(13)
15	D45264700	1	Elbow Union	
16	D26735219	1	Reducing Union	
17	D45714300	1	Seal	42 X 49
18	D26734199	1	Oil Dipstick	
19	D26739851	1	Seal	(18) 4,42 X 2,62
20	D26735334	1	Breather Screw	
21	D49030072	1	Element,Filter	
22	3009492X1	1	Hex. Sock. Screw	M10 X 25
23	D41101900	1	Spring Washer	A10
24	D20400416	1	Washer	11 X 20 X 2
25	D28788383	1	Saddle	
26	D41087400	4	Locknut	M6
27	D20400470	4	Washer	A6
28	D40410900	2	Hex. Sock. Screw	M12 X 30
29	D41100900	X	Spring Washer	A12
30	D20400426	2	Washer	Diameter 13
31	D26733615	1	Oil Cooler	
32	D26740136	6	Washer	6,4 X 18 X 2 ZN
33	D41100600	4	Spring Washer	A6
34	D26733649	4	Rail	
35	D26733740	1	Support	
36	D26734055	1	Connecting Link	
37	D41010600	10	Nut	M6
38	D41102100	3	Washer	A8
39	339124X1	5	Hex. Sock. Screw	M8 X 16
40	D26739831	1	Union Nut	CL22
41	D26733152	1	Tap	
42	D26732761	1	Union	T22L
43	D45279100	2	Union	GE22PL / M22
44	D26735738	1	Pipe	22 X 603
45	D26734166	1	Retainer	
46	D26732757	1	Union Nut	[B] CL18
47	D26739823	1	Ring	[B] L18
48		1	Exhaust Pipe	[A,B]
49	D26739737	2	Hex. Sock. Screw	[B] M6 X 60
		2	Hex. Sock. Screw	[A] M6 X 70
50	D41088800	4	Locknut	M6
51	D26738927	1	Bracket	
52		4	Hex. Sock. Screw	[A] M6 X 55
53	D26733460	2	Clamp	Diameter 22
54	D26733734	2	Cover	
55	D26739993	4	Washer	9 X 17 X 1,6
56	D26740007	4	Locknut	M8
57	D26735659	2	Pipe	22 X 911
58	D26733648	2	High Press Hose	NW 20 X 400

Item	Part Number	Qty	Description	Comments
59	D26734062	2	High Press Hose	DN 20 X 850
60	D26732893	2	Union	L22
61	D26733718	2	Clamp	22 X 22
62	D40424300	2	Hex. Sock. Screw	M8 X 70
63	339169X1	2	Nut	M8
64	D26735716	1	Pipe	
65	D26735768	1	Pipe	
66	D26739831	X	Union Nut	CL22
67		X	Ring	[A] L22
68	D45264300	2	Connectors	EW22-L 22-ST/A3C(L)
69	D41101900	2	Spring Washer	A10
70		1	Union	[A]
71	D45279000	1	Union	
72	D26733752	1	Reducing Union	
73	D28788406	1	Plate	20 KMH
74	D28788394	1	Plate	

FOOTNOTE [A] NUMBER TO BE ADVISED
FOOTNOTE [B] NOT ILLUSTRATED

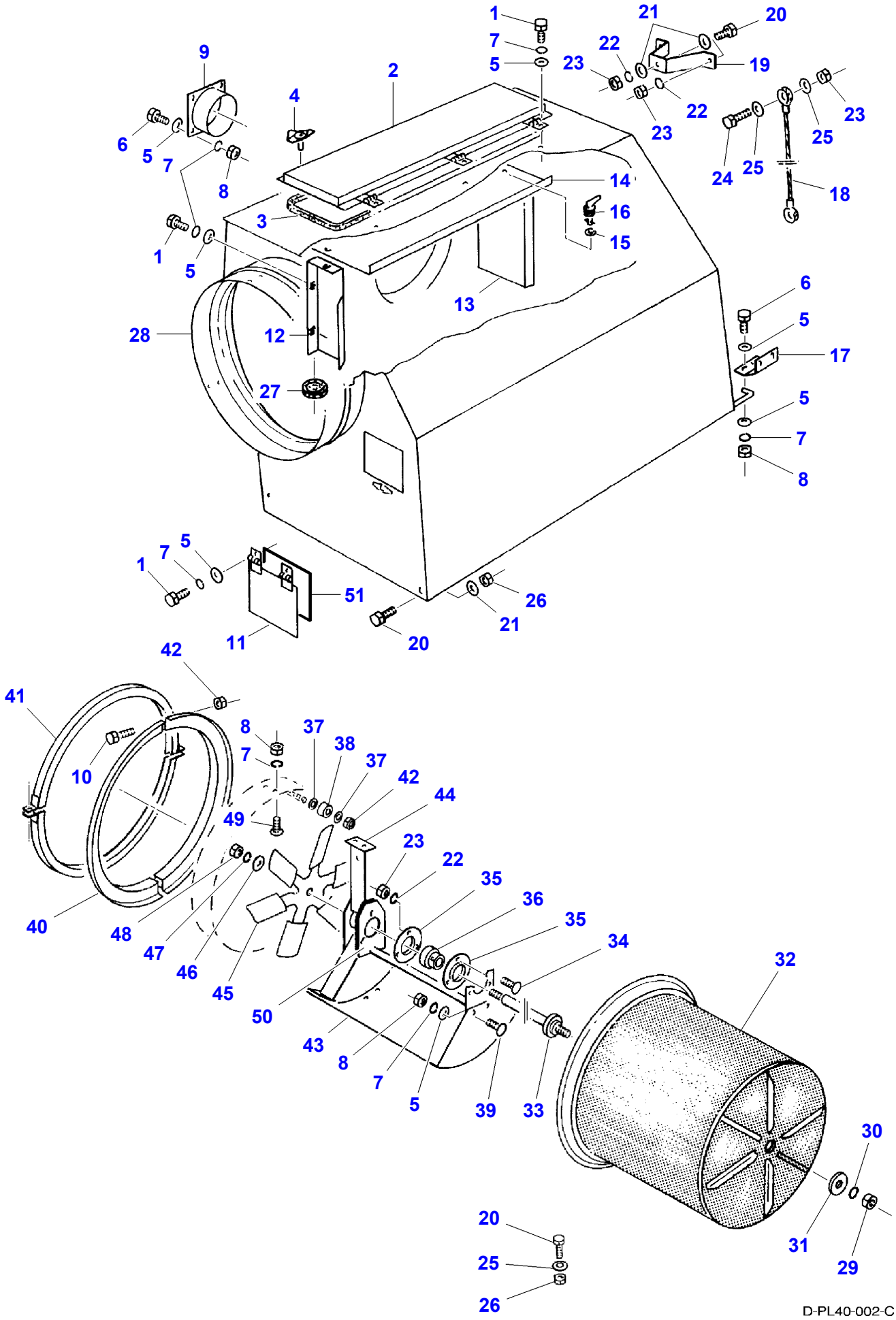
1
7
5
21
20
22
23
19
22
23
23
25
24
25
18
9
2
4
6
5
7
8
3
14
16
15
1
5
13
6
28
12
5
17
27
5
7
8
1
7
5
51
26
21
11
20
42
41
8
37
38
37
42
44
10
7
49
23
22
35
36
35
34
40
48
47
46
45
50
43
8
7
5
39
33
32
30
31
29
20
25
26
D-PL40-002-C

Item	Part Number	Qty	Description	Comments
1	391074X1	12	Hex. Sock. Screw	M6 X 12
2	D16734365	1	Cover	
3	D44743500	1	Seal	Length 2740MM
4	D26733771	3	Lock	
5	D26740136	X	Washer	6,4 X 18 X 2 ZN
6	339560X1	8	Hex. Sock. Screw	M6 X 16
7	D41100600	30	Spring Washer	A6
8	D41010600	23	Nut	M6
9	D16733559	1	Sleeve	
10		2	Hex. Sock. Screw	M6 X 30
11	D16734405	1	Cover	
12	D26734123	1	Plate	
13	D26734122	1	Plate	
14	D26734922	1	Plate	
15	D26733183	2	Lock Washer	
16	D26733182	2	Pin	
17	D26736793	1	Support	
18	D26733935	1	Cable	
19	D16735665	1	Bracket	
20	339123X1	7	Hex. Sock. Screw	M8 X 20
21	D26739993	X	Washer	9 X 17 X 1,6
22	D41102100	9	Washer	A8
23	339169X1	11	Nut	M8
24	339337X1	2	Hex. Sock. Screw	M8 X 30
25	D20400408	12	Washer	8,4 X 25 X 3
26	D26740007	4	Locknut	M8
27	D26733737	4	Rubber Bush	
28	D18788288	1	Duct	
29	3009695X1	1	Nut	M12
30	D26739978	1	Spring Washer	A12
31	D26740146	1	Washer	13 X 40 X 5 ZN
32	D26734750	1	Strainer	
33	D26734660	1	Shaft	
34		6	Screw	[A] M8 X 16
35	**D26733364**	4	Bearing Flange	RB20
36	**D26733353**	2	Bearing	YB20
37	D26739994	6	Washer	6,6 X 12,5 X 1,6
38	D26735413	3	Roll	
39		2	Screw	[A] M6 X 16
40	D16735225	2	Half Ring	
41	D16735226	2	Half Ring	
42	D41088800	2	Locknut	M6
43	D26734752	1	Plate	
44	D26734751	1	Support	
45	D26735398	1	Fan	
46	D26739992	1	Washer	11 X 20 X 2
47	D41101900	1	Spring Washer	A10
48	339402X1	1	Nut	M10
49	D26740126	6	Bolt	M6 X 12
50	D26734701	1	Bracket	
51	D44743900	X	Strip	0.900

FOOTNOTE [A] NUMBER TO BE ADVISED

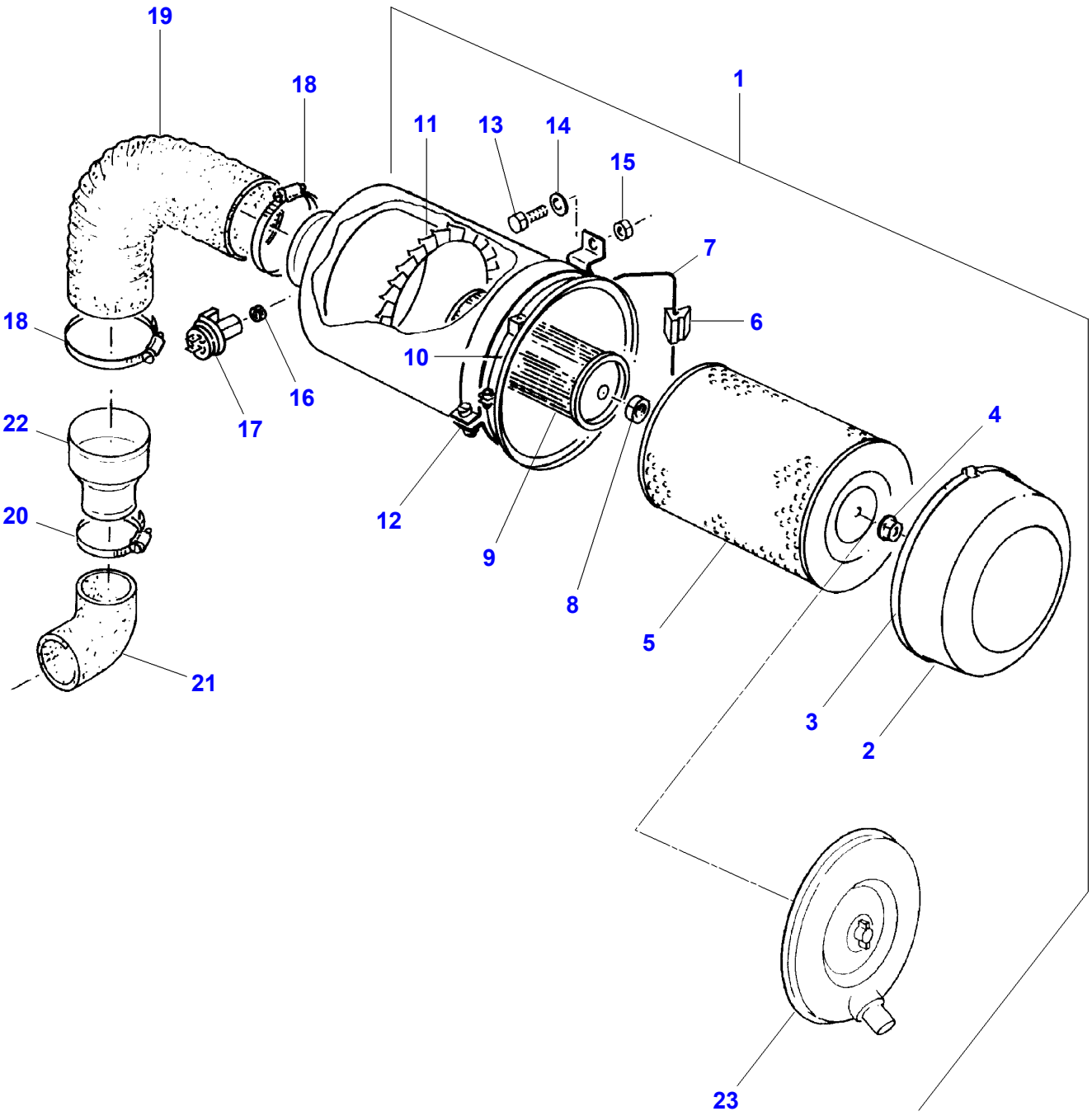

D-HB32-001-A

Item	Part Number	Qty	Description	Comments
1	D46482800	1	Air Filter	[B]
	D46482700	1	Air Filter	[C,D]
2		1	Jar	[A]
3		1	Bottom	[A]
4		1	Nut	[A]
5	D46480001	1	Air Filter	
6		2	Clamping Piece	[A]
7		2	Stirrup	[A]
8		1	Nut	[A] M16
9	D46482600	1	Air Filter	
10		1	Support	[A]
11		1	Fin	[A]
12	D26733558	2	Retainer	
13		4	Hex. Sock. Screw	[A] M12 X 20
14	D26740203	4	Washer	Diameter 13,5
15	D26740020	4	Locknut	M12
16		1	Washer	[A]
17	D46483400	1	Indicator	
18	D45729300	2	Clamp	DIN 3017
19	D26734659	1	Manifold	
20	D26733108	2	Clamp	Diameter 73-83
21	D26733629	1	Exhaust Manifold	
22	D46482900	1	Adaptor	
23		1	Cover	[D] (1)
		1	Nut	[D] (1)

FOOTNOTE [A] NUMBER TO BE ADVISED
FOOTNOTE [B] INCLUDE ITEM 2/3/4/5/6/7/8/9/10/11
FOOTNOTE [C] INCLUDE ITEM 5/6/7/8/9/10/11/23
FOOTNOTE [D] OPTIONAL

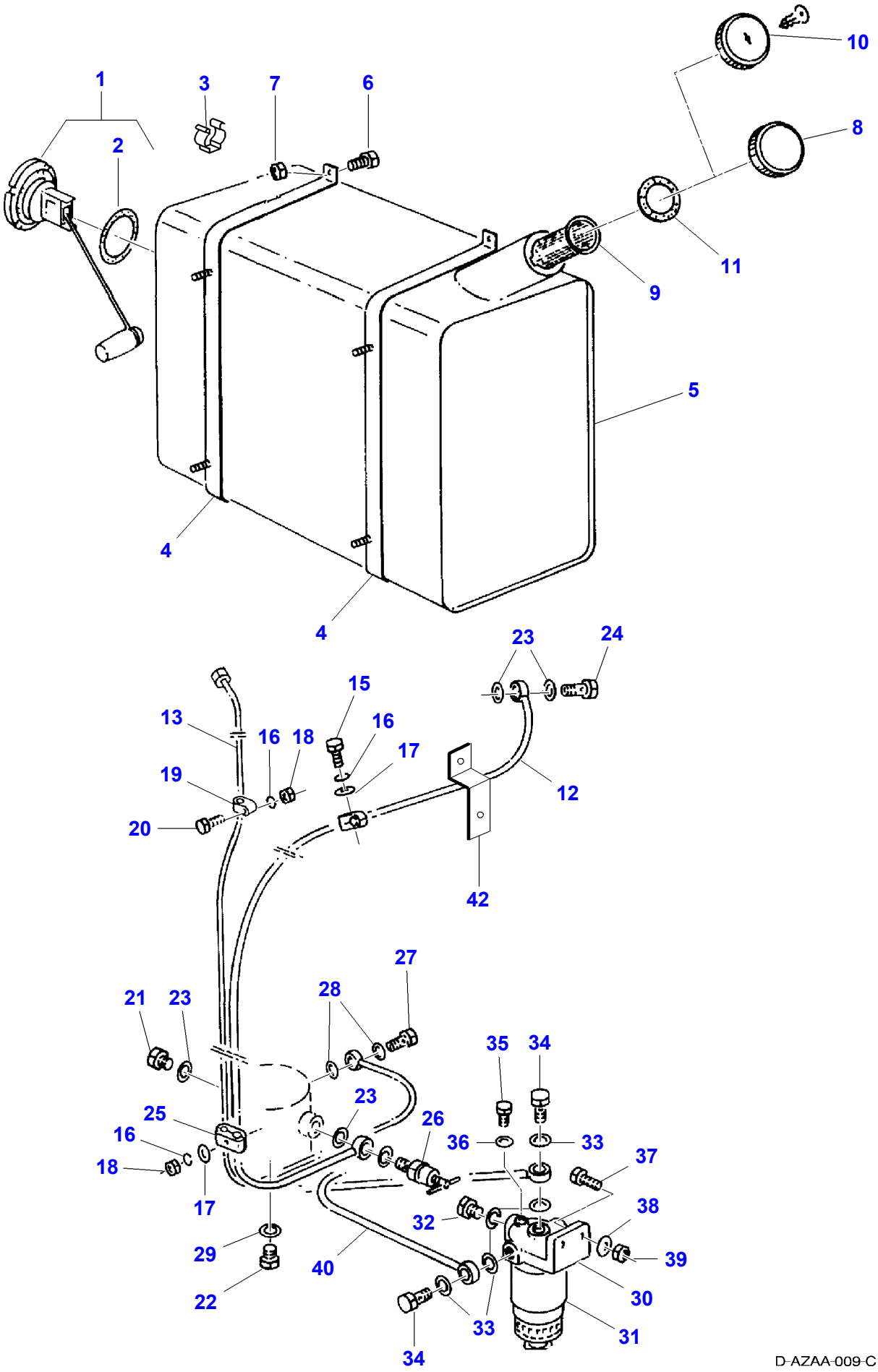
1
2
3
7
6
10
8
11
9
5
4
4
23
24
15
13
16
18
16
17
19
12
20
42
27
21
23
28
35
34
25
23
26
16
36
33
37
18
17
38
32
29
40
39
22
30
33
31
34

D-AZAA-009-C

Item	Part Number	Qty	Description	Comments
1	D26735263	1	Sensor	
2	D45466700	X	O Ring	(1)
3	D26736327	1	Clamp	
4	D26734137	2	Strap	
5	D26734889	1	Fuel Tank	
		1	Fuel Tank	[A,C]
6		2	Hex. Sock. Screw	[A] M10 X 40
	390912X1	2	Hex. Sock. Screw	M12 X 40
7	D28288162	2	Locknut	M10
	D26740020	2	Locknut	M12
8	D26730399	1	Tank Cap	[B]
9		1	Fuel Element	[A]
10	D26730401	1	Tank Cap	[B,D]
11	D26730402	1	Seal	
12	D26735628	1	Suction Hose	
13	D26735773	1	Return Flow	
15		2	Hex. Sock. Screw	[A] M6 X 30
16	D41100600	5	Spring Washer	A6
17	D26740136	4	Washer	6,4 X 18 X 2 ZN
18	D41010600	3	Nut	M6
19	D26732805	1	Clamp	Diameter 6
20	339560X1	1	Hex. Sock. Screw	M6 X 16
21	D45236200	1	Plug	AM14
22	D26739837	1	Screw	AM16
23	D26739846	5	Seal	A14 X 18
24	D26739245	1	Banjo Bolt	M14
25	D26734097	2	Clamp	Up to Serial or Engine Number 6088 Diameter 6 / 10
	D26736816	2	Clamp	From Serial or Engine Number 6089 Diameter 10 / 10
26	D26733197	1	Screw	
27	D26732795	1	Banjo Bolt	M10 X 1
28	D26739849	2	Seal	10 X 13,5
29	**D26739845**	1	Seal	16 X 20
30	D26733116	1	Holder	[D]
31	D26730120	1	Fuel Filter	[D]
32	D26739871	2	Capscrew	[D] AM14
33	D26739846	6	Seal	[D] A14 X 18
34	D26739245	2	Banjo Bolt	[D] M14
35		1	Hex. Sock. Screw	[A,D] M6 X 10
36		1	Seal	[A,D] A6 X 10
37	3009492X1	2	Hex. Sock. Screw	[D] M10 X 25
38	D26739992	2	Washer	[D] 11 X 20 X 2
39	D28288162	2	Locknut	[D] M10
40		1	Pipe	[D] 10 X 505
41		1	Clamp	[A,D,E]
42	D28781050	1	Support	

FOOTNOTE [A] NUMBER TO BE ADVISED
FOOTNOTE [B] INCLUDE ITEM 11
FOOTNOTE [C] INCLUDE ITEM 41
FOOTNOTE [D] OPTIONAL
FOOTNOTE [E] NOT ILLUSTRATED

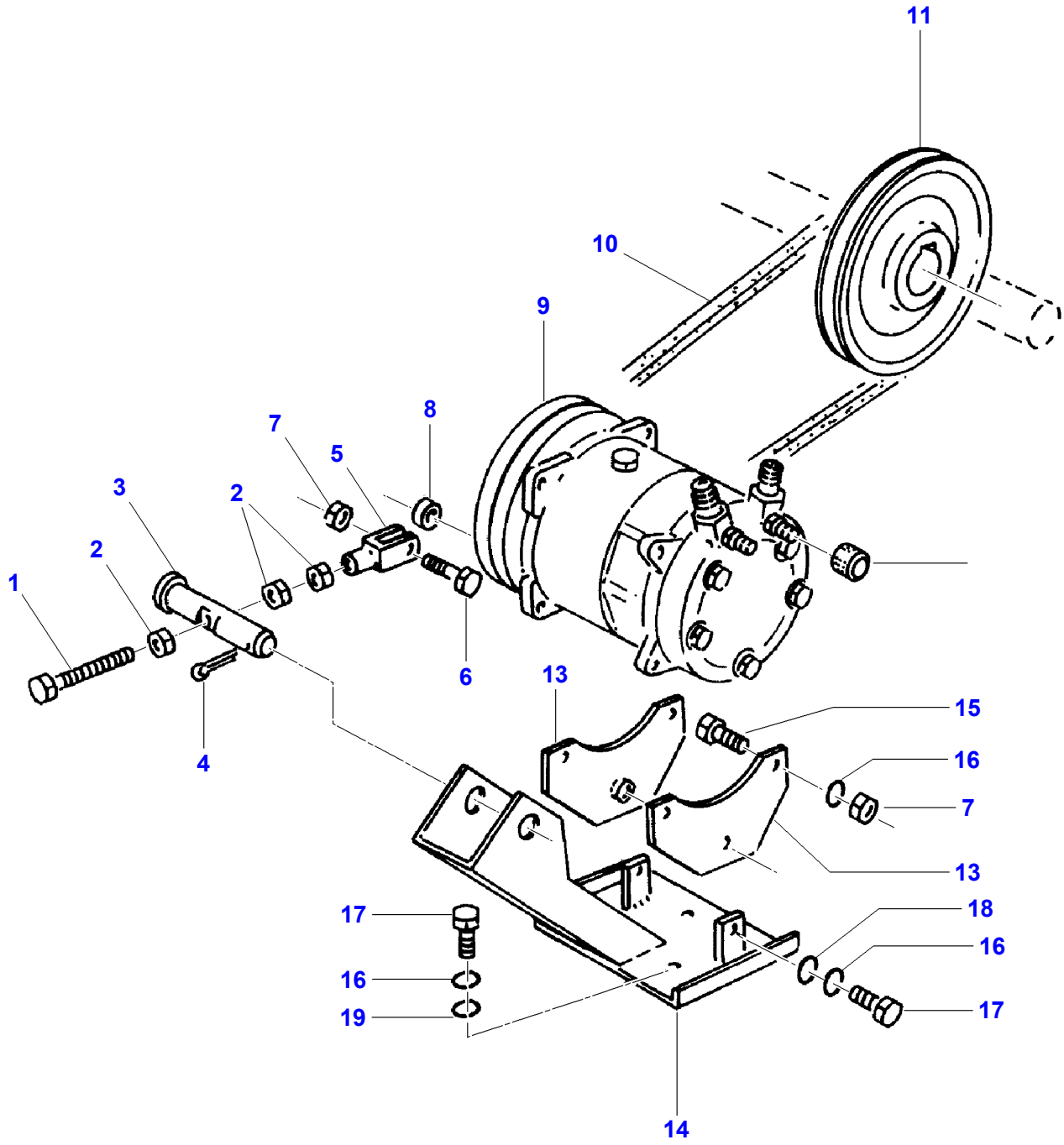

D-AZZK-001-A

Item	Part Number	Qty	Description	Comments
1	D40409000	1	Hex. Sock. Screw	M10 X 90
2	339402X1	4	Nut	M10
3	D26734079	1	Clevis Pin	
4	D26739346	1	Split Pin	5 X 45
5	D26739777	1	Fork Head	G10 X 20
6	339019X1	1	Hex. Sock. Screw	M10 X 50
7	1440329X1	5	Locknut	M10
8	D26733425	1	Spacer	
9	D26735394	1	Compressor	
10	D26732992	1	V Belt	SPAX 1120 LW
11	D26734019	1	Pulley	13 X 195
12		2	Cap	[A,B]
13	D26734095	2	Support	
14	D26734078	1	Support	
15	339814X1	5	Hex. Sock. Screw	M10 X 35
16	D41101900	9	Spring Washer	A10
17	D40477200	3	Hex. Sock. Screw	M10 X 30
18	D20400419	2	Washer	10,5 X 22 X 3
19	D20400471	3	Washer	10,5

FOOTNOTE [A] NUMBER TO BE ADVISED
FOOTNOTE [B] NOT ILLUSTRATED

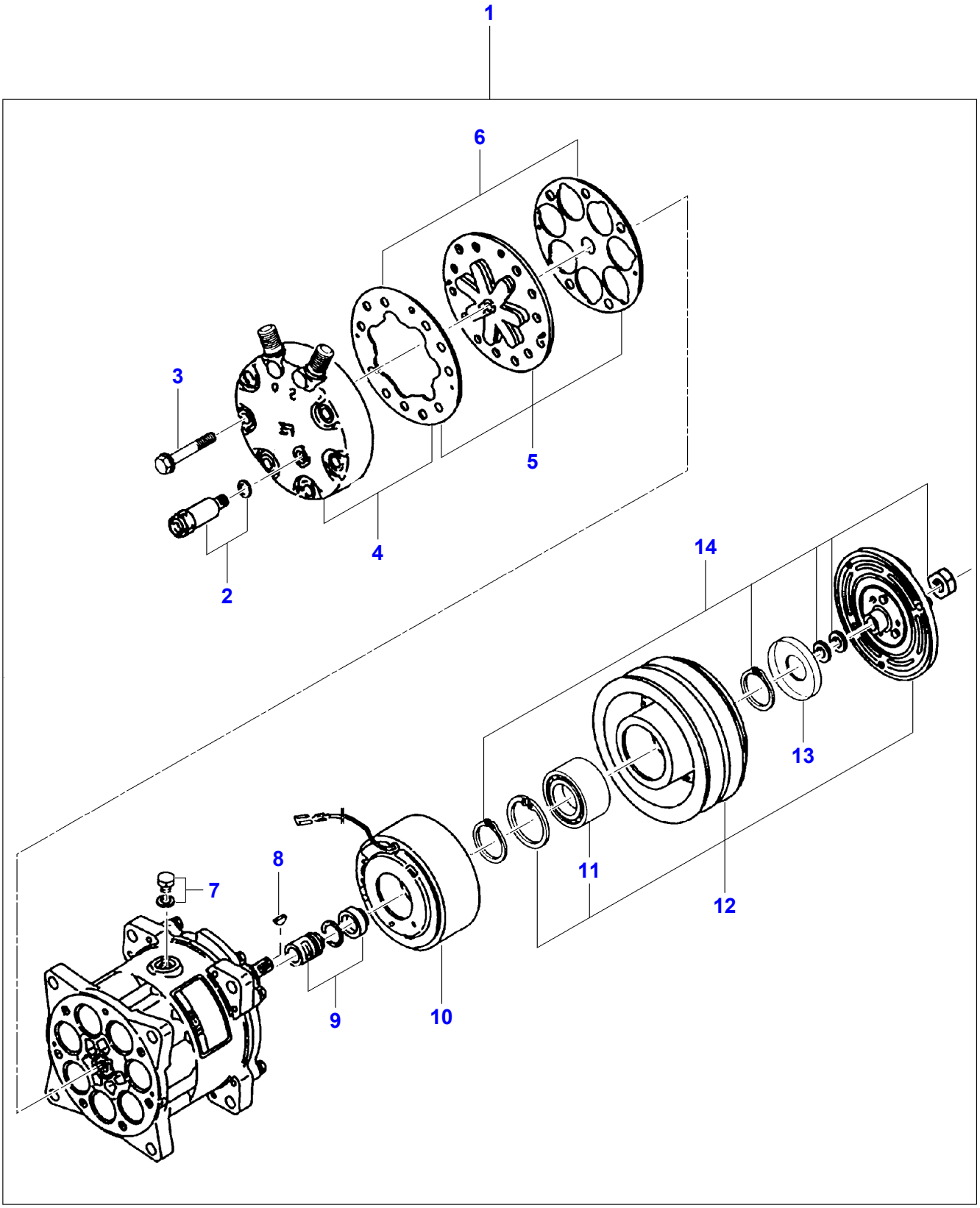

D-AZZK-002-A

Item	Part Number	Qty	Description	Comments
1	D26735394	1	Compressor	TYP C
2		1	Non Return Valve	[A] (1)
3		6	Bolt	[A] (1)
4		1	Cover	[A] (1)
5		1	Valve Seat	[A] (1)
6		X	Kit, Joint	[A] (1)
7		1	Screw	[A] (1)
8		1	Key	[A] (1)
9		X	Kit, Joint	[A] (1)
10		1	Coil	[A] (1)
11		1	Bearing Assy	[A,B] (1)
12		1	Pulley	[A] (1)
13		1	Dust Shield	[A] (1)
14		X	Bracket	[A] (1)

FOOTNOTE [A] NUMBER TO BE ADVISED
FOOTNOTE [B] NOT SUPPLIED

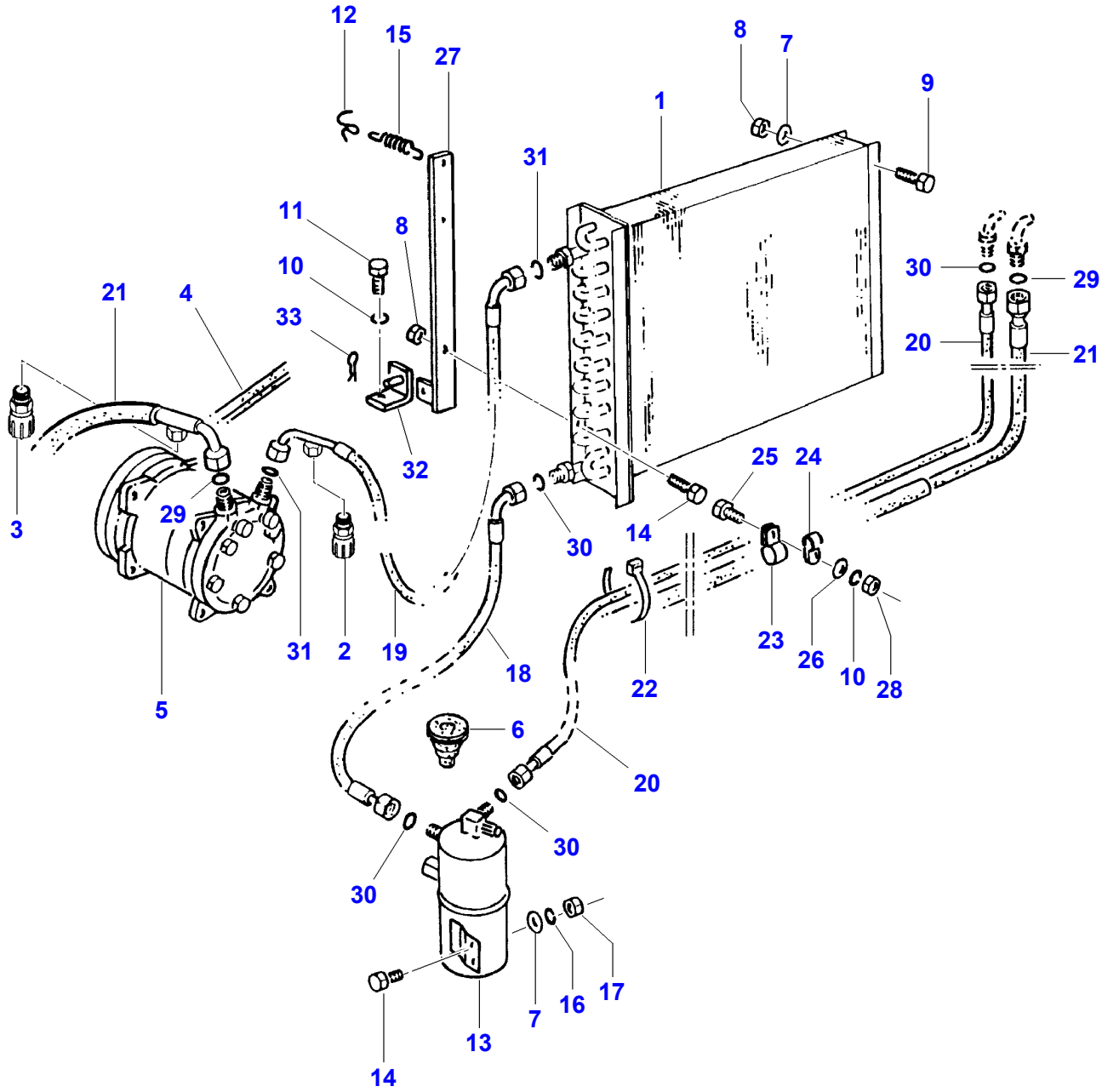
12
15
27
8
7
9
1
31
11
8
10
33
21
4
30
29
20
21
3
29
32
25
24
14
30
23
26
10
28
31
2
19
18
22
5
6
20
30
30
7
16
17
14
13

D-AZZL-001-A

Item	Part Number	Qty	Description	Comments
1	D26734537	1	Capacitor	
2		1	Union	[A] (19) M15 X 1
3		1	Union	[A] (21) M13 X 1
4	**D26732992**	1	V Belt	SPAX 1120 LW
5	D26735394	1	Compressor	TYP C
6	D26734278	2	Bellows	
7	D26740136	14	Washer	6,4 X 18 X 2 ZN
8	D41088800	4	Locknut	M6
9	339804X1	2	Hex. Sock. Screw	M6 X 25
10	D41102100	7	Washer	A8
11	339124X1	2	Hex. Sock. Screw	M8 X 16
12	D26733421	1	Hook	
13	D26734963	1	Tank	
14	339560X1	4	Hex. Sock. Screw	M6 X 16
15	D26733339	1	Tension Spring	
16	D41100600	2	Spring Washer	A6
17	D41010600	2	Nut	M6
18	D26735205	1	Hose	12,2 X 1450
19	D26735177	X	Hose	13,7 X 2150
20	D26735206	1	Hose	12,5 X 5300
21	D26735207	X	Hose	19,9 X 4910
22	D45039100	X	Cable Tie	4,6 X 146
23	D26734434	5	Hose Clip	Diameter 12,7
24	D26733385	2	Clamp	27 X 20 NE
25	339123X1	5	Hex. Sock. Screw	M8 X 20
26	D26739993	5	Washer	9 X 17 X 1,6
27	D26734824	2	Support	
28	D26740007	5	Locknut	M8
29	D26733204	2	O Ring	7 / 8"
30	D26733205	4	O Ring	5 / 8"
31	D26733299	2	O Ring	3 / 4"
32	D26733952	2	Anglepiece	
33	D26733347	1	Fastener	

FOOTNOTE [A] NUMBER TO BE ADVISED

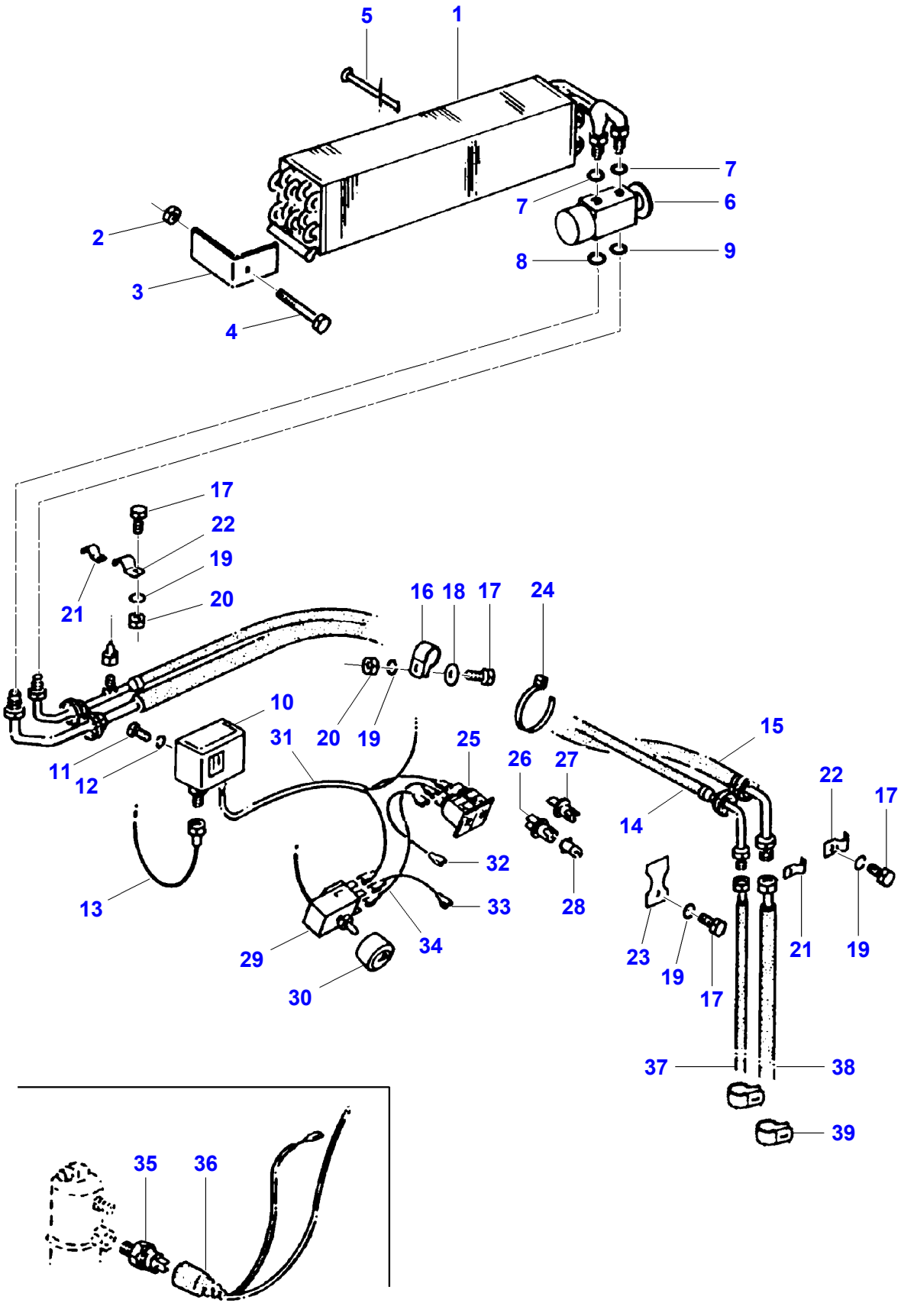
5
1
7
6
7
2
9
8
3
4
17
22
19
21
20
16
18
17
24
10
31
20
19
25
15
11
12
26
27
22
17
14
32
13
33
28
23
19
21
19
29
34
17
30
37
38
39
35
36

Item	Part Number	Qty	Description	Comments
1	D26741122	1	Vaporiser	
2	D26740007	2	Locknut	M8
3	D26736597	2	Support	
4	D26739963	2	Hex. Sock. Screw	M8 X 110
5	D26741489	1	Tube	
6	D26746523	1	Valve.	
7	D26733299	2	O Ring	3 / 4"
8	D26733204	1	O Ring	7 / 8"
9	D26733205	1	O Ring	5 / 8"
10	D26736905	1	Pressure Tank	
11	D26740006	2	Screw	AM4 X 6
12	D41100300	2	Washer	A4
13	D26740759	1	Tube	
14	D26742404	1	Hose Assy	
15	D26742395	1	Hose Assy	
16	D26734434	2	Hose Clip	Diameter 12,7
17	D26740004	7	Screw	AM6 X 16
18	D26739994	2	Washer	6,6 X 12,5 X 1,6
19	D41100600	7	Spring Washer	A6
20	D41010600	4	Nut	M6
21	D26733382	2	Clamp	10 X 20
22	D26739826	2	Clamp	15,5 X 20 X 2
23	D26741465	2	Spacer	
24	D45039100	3	Cable Tie	4,6 X 146
25	D26740631	1	Bulb P/Lamp	
26		1	Bracket Plowlamp	[A]
27		1	Bracket Plowlamp	[A]
28	D26740215	2	Bulb	J / 2W
29	D26741424	1	Temp.Regulator	
30	D26741120	1	Knob	
31	D26740758	1	Wiring Harness	
32	D26740756	1	Lead	
33	D26740757	1	Lead	
34	D26740782	1	Lead	
35	D26733210	1	Pressure Switch	
36	D26734499	1	Wiring Harness	
37	D26735206	1	Hose	12,2 X 5300
38	D26735207	1	Hose	19,9 X 4910
39	D45728300	2	Clip	

FOOTNOTE [A] NUMBER TO BE ADVISED

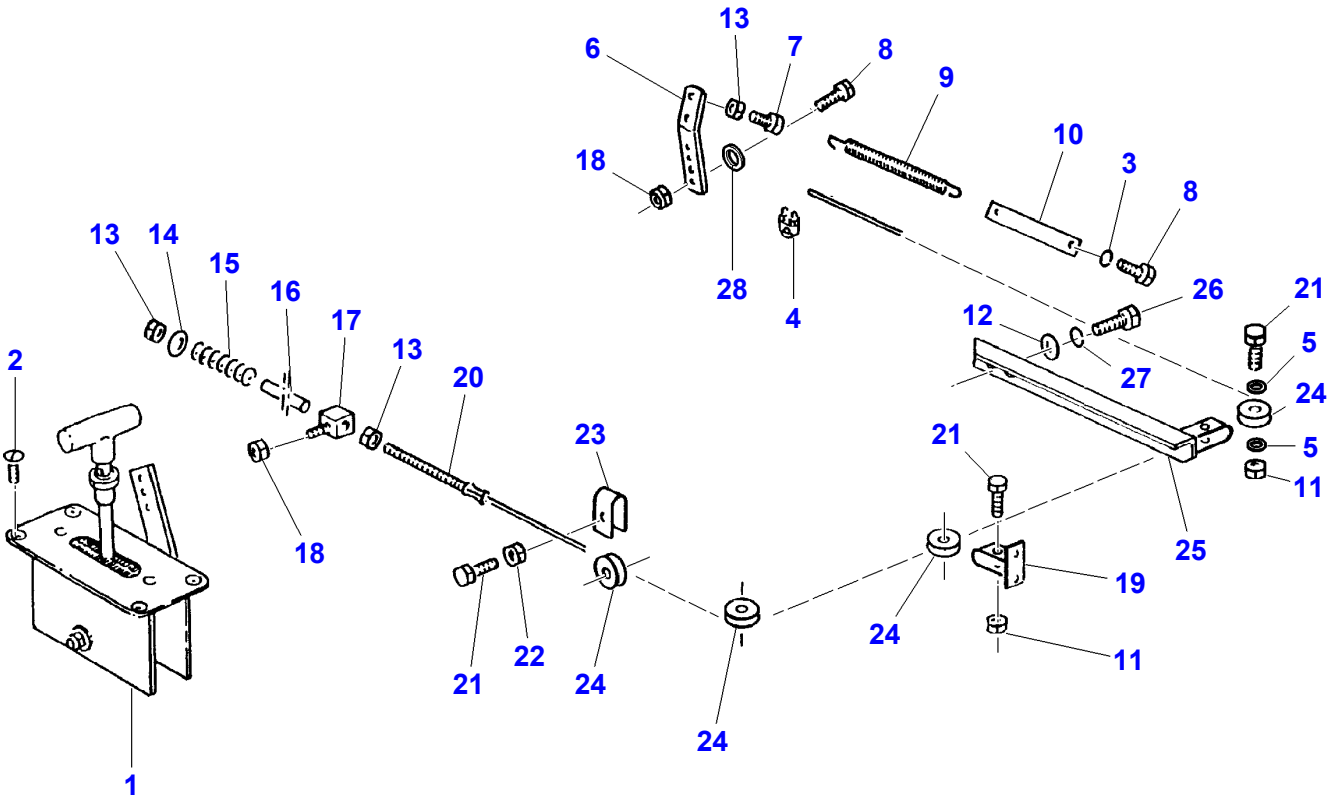
13
6
7
8
9
10
3
8
18
28
4
26
21
5
24
5
11
12
27
13
14
15
16
17
13
20
2
18
23
21
25
19
24
22
21
24
24
11
1

Item	Part Number	Qty	Description	Comments
1	D46439800	1	Selector	
2	D40600500	4	Screw	M6 X 16
3	D41100600	1	Spring Washer	A6
4	D26732699	2	Cable Clamp	Diameter 3
5	D20400506	2	Washer	8,4 X 16 X 1,6
6	D28788404	1	Lever	
7	339804X1	1	Hex. Sock. Screw	M6 X 25
8	339666X1	2	Hex. Sock. Screw	M6 X 20
9	D26733341	1	Tension Spring	Length 194 MM
10	D26744588	1	Joint Piece	
11	394367X1	1	Locknut	M8
12	D20400414	2	Washer	13 X 30 X 4
13	D41010600	2	Nut	M6
14	D26740136	1	Washer	6,4 X 18 X 2 ZN
15	D26733324	1	Comp.Spring	
16	D26734509	1	Tube	
17	D26734508	1	Joint Head	
18	D41088800	2	Locknut	M6
19	D26734744	1	Retainer	
20	D26735213	1	Cable	Length 5300 MM
21	339337X1	3	Hex. Sock. Screw	M8 X 30
22	339169X1	1	Nut	M8
23	D16734224	1	Bracket	
24	D26734744	4	Retainer	
25	D28788401	1	Roller Body	
26	D40476100	2	Hex. Sock. Screw	M12 X 35
27	D41102100	2	Washer	A8
28	D43408800	1	Thimble	

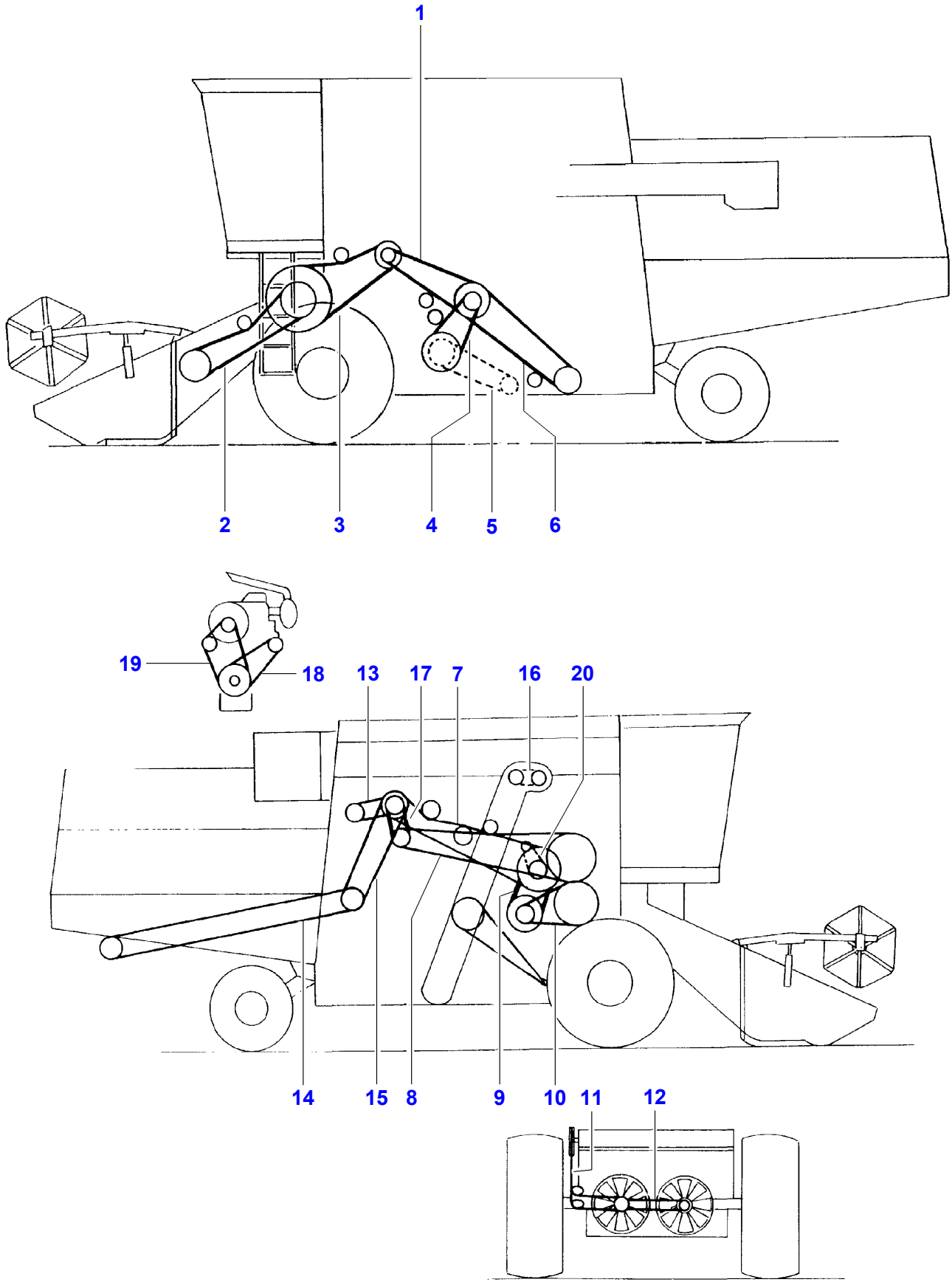

D-AAZF-003-A

Item	Part Number	Qty	Description	Comments
1	**D26733588**	1	Kit, V Belt	2 / 17 X 2835
2	**D41981700**	1	Kit, V Belt	2 / 22 X 3700
		1	Belt	[A,B] (1) 2HCX 3775
3	**D26735939**	1	V Belt	2HBX 3280
		1	Belt	[A,B] (1) 3HBX 3280
4	**D26733596**	1	Kit, V Belt	3 / 17 X 1981
5	**D26732804**	1	Chain	1 X 107
6	**D26733248**	1	V Belt	17 X 3150
7	**D26732815**	1	V Belt	3HBX 4480
8	**D26732833**	1	V Belt	HCX 4835 LA
9	**D26733312**	1	V Belt	55 X 22 X 2021
10	**D26733578**	1	Kit, V Belt	3 / 17 X 2435 LI
11	**D26732797**	1	V Belt	SPBX 3425 LW
12	**D26733247**	1	V Belt	17 X 1650
13	**D26732992**	1	V Belt	[D] SPA X 1120 LW
14	**D49030006**	1	V Belt	[C] 2HBX 5879
15	**D49030007**	1	V Belt	[D] 2HCX 3270
16	**D26733265**	1	Chain	12B 1 X 49
17	**D26732820**	1	V Belt	2HCX 1610
18	**D49030016**	1	V Belt	AVX 10 X 1180 LA
19	**D49030015**	1	V Belt	2 / AV10 X 1375
20	**D26733262**	1	Chain	[D] 085 1 X 70

FOOTNOTE [A] NUMBER TO BE ADVISED
FOOTNOTE [B] MAIZE EQUIPMENT
FOOTNOTE [C] STRAW CHOPPER
FOOTNOTE [D] OPTIONAL

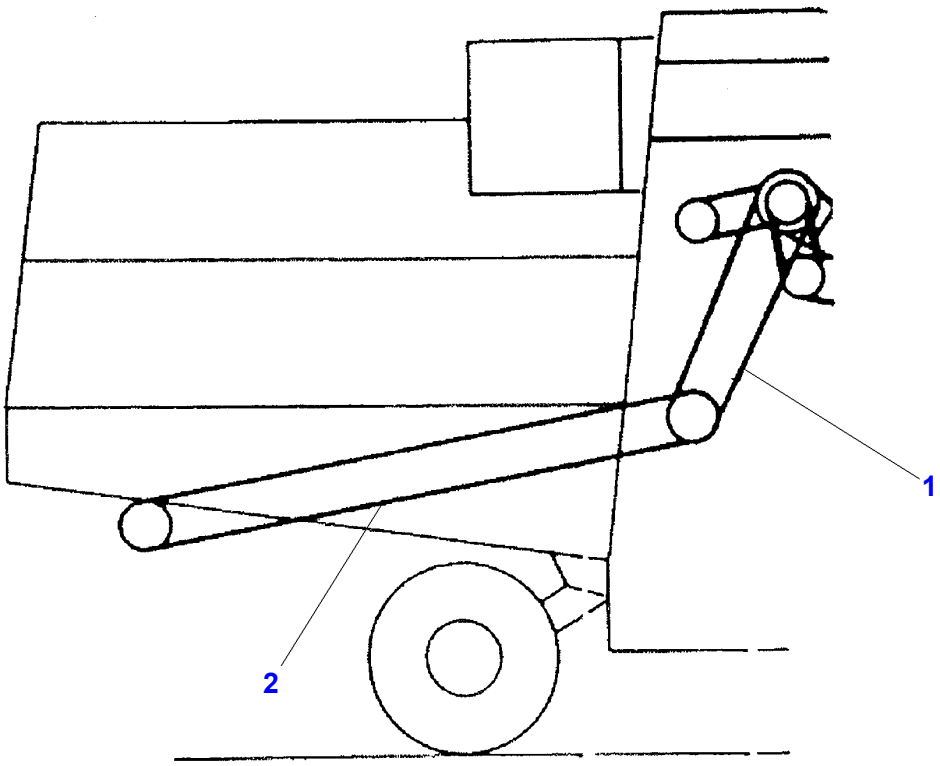

D-BG40-001-A

Item	Part Number	Qty	Description	Comments
1	D49030007	1	V Belt	2HCX3270
2	D49030006	1	V Belt	2HBX5879

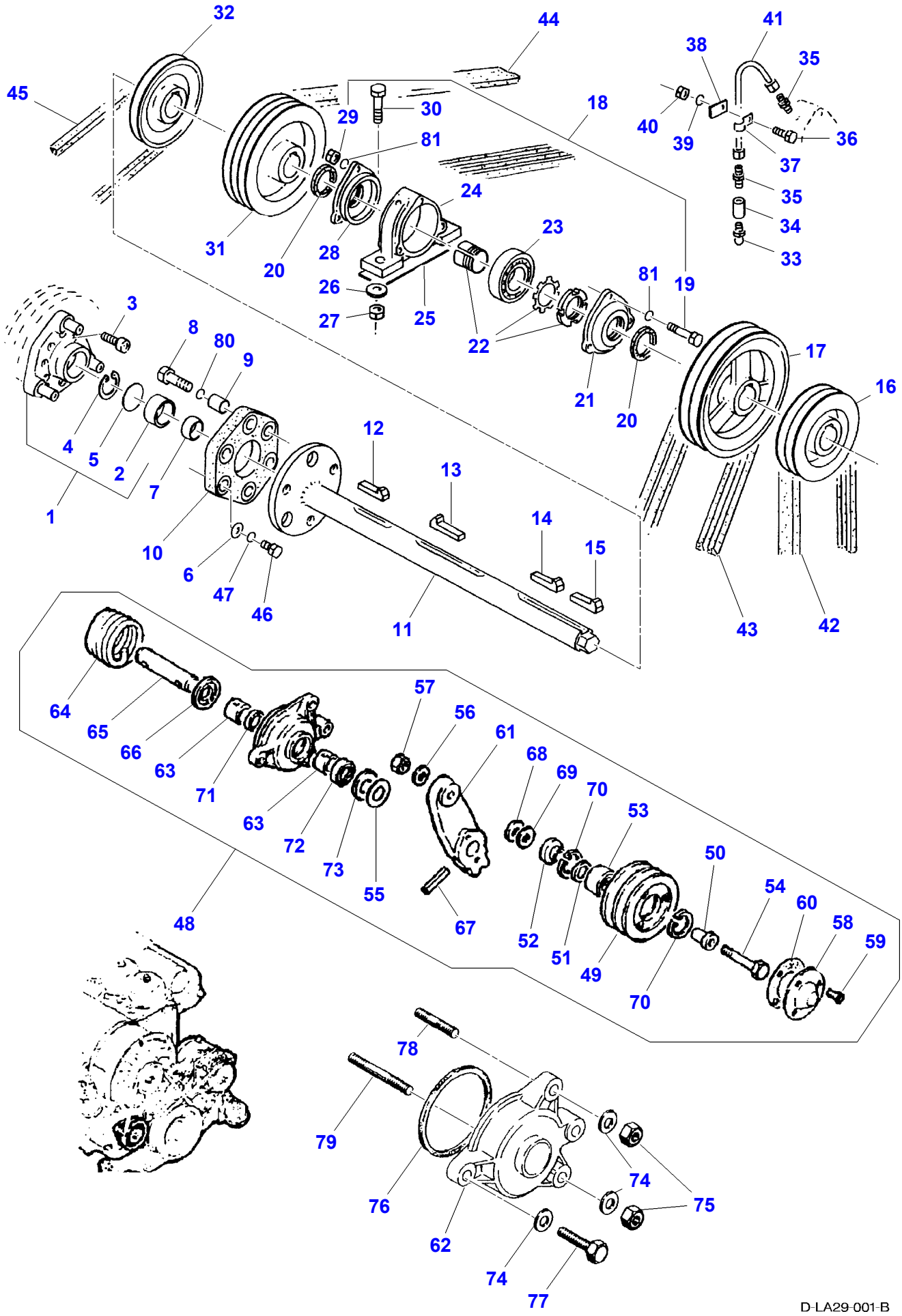
32
44
41
38
35
45
29
30
18
40
39
36
81
37
24
35
31
23
34
28
20
33
26
81
19
3
27
25
22
8
80
9
17
16
21
20
4
5
2
12
13
7
1
14
15
10
6
47
46
11
43
42
64
57
56
61
68
69
70
53
65
66
63
71
63
72
73
55
48
67
52
51
49
50
54
60
58
59
70
78
79
74
76
75
62
74
77
D-LA29-001-B

Item	Part Number	Qty	Description	Comments
1	D26738503	1	Flange	
2	D26745813	1	Bush	(1)
3	D40690400	8	Screw	(1) M8 X 25
4	390791X1	1	Circlip	(1) 55 X 2
5	D26737598	1	Shim	(1)
6	D20400408	3	Washer	8,4 X 25 X 3
7	D26734016	1	Ring	
8	D40900050	3	Hex. Sock. Screw	M16 X 50
9	D26733760	3	Spacer	20 X 16 X 32
10	D26733555	1	Clutch Disc	
11	D26734065	1	Drive Shaft	
12	D26732792	1	Gib Key	14 X 9 X 45
13	D26733254	1	Gib Key	14 X 9 X 90
14	D26732731	1	Gib Key	14 X 9 X 63
15	D26732793	1	Gib Key	14 X 9 X 50
16	D26733933	1	Pulley,Tensioner	2 / 22 X 200 See Page - Reference Number 009-0005/22
17	D26733880	1	Pulley,Tensioner	[A] 2 / 22 X 275
18	D26735641	1	Bearing Carrier	
19	D40422700	3	Hex. Sock. Screw	(18) M6 X 75
20	D26735990	2	Felt Ring	(18) 50 X 67 X 7 / 5
21	D26736035	1	Bearing Cap	(18)
22	D26735922	1	Bush	(18)
23	D26735967	1	Bearing Roller	(18) 22211 CK
24	D26735988	1	Bearing Housing	(18)
25	D26733630	X	Shim	(18) 1,00 MM
	D26733631	X	Shim	(18) 1,5 MM
26	D20400446	2	Washer	(18) 13 X 30 X 4
27	1442190X1	2	Locknut	(18) M12
28	D26735989	1	Bearing Cap	(18)
29	1441462X1	3	Locknut	(18) M6
30	391198X1	2	Hex. Sock. Screw	(18) M12 X 50
31	D28788103	1	Pulley	3 / 16 X 230
32	D26734019	1	Pulley	[A] 13 X 195
33	339608X1	1	Grease Nipple	M10 X 1
34	D26735983	1	Sleeve	10 X 20
35	D26733513	1	Union	
36	339560X1	1	Hex. Sock. Screw	M6 X 16
37	D26733725	1	Clamp	
38	D26733557	1	Shim	
39	D41100600	1	Spring Washer	A6
40	D41010600	1	Nut	M6
41	D26735739	1	Lub.Oil Pipe	
42	**D26732820**	1	V Belt	2HCX 1610
43	**D49030007**	1	V Belt	[A] 2HCX 3270
44	**D26732815**	1	V Belt	3HBX 4480
45	**D26732992**	1	V Belt	[A] SPA X 1120 LW
46	339124X1	3	Hex. Sock. Screw	M8 X 16
47	D41102100	3	Washer	A8
48	F007.200.210.450	1	Tightener	
49	F007.200.210.480	1	Disc	(48)
50	F007.200.210.490	1	Bush	(48)
51	F007.200.210.500	1	Disc	(48)
52	F007.200.210.510	1	Ring	(48)
53	F007.200.210.520	1	Ball Bearing	(48)

Item	Part Number	Qty	Description	Comments
54	X487.532.306.000	1	Hex. Sock. Screw	(48) M10 X 60
55	F395.200.210.150	1	Thrust Washer	(48)
56	X450.007.508.000	1	Washer	(48)
57	X428.202.839.000	1	Nut	(48) M10
58	F100.002.237.847	1	Cover	(48)
59	X491.821.939.000	3	Screw	(48) M6 X 16
60	F100.002.136.434	1	Gasket	(48)
61	F007.200.210.460	1	Pulley,Idler	(48)
62	F100.004.153.130	1	Cover	(48)
63	F100.002.238.022	2	Bearing Bush	(48)
64	F100.002.238.021	1	Spring	(48)
65	F100.002.238.081	1	Shaft	(48)
66	F100.002.238.083	1	Disc	(48)
67	X500.628.946.000	1	Roll Pin	(48) 8 X 40
68	F007.200.210.470	3	Disc	(48)
69	F007.200.210.530	2	Disc	(48)
70	X530.103.546.000	2	Circlip	(48) 32 X 1,2
71	F100.002.238.084	1	Spacer	(48)
72	F100.002.238.056	1	Oil Seal	(48)
73	F395.200.210.160	1	Thrust Washer	(48)
74	F100.001.216.108	3	Disc	
75	X428.202.439.000	2	Nut	M8
76	F345.200.210.020	1	Seal	
77	X487.528.141.000	1	Hex. Sock. Screw	M8 X 30
78	X482.915.000.000	1	Stud	M8 X 25
79	F148.200.210.110	1	Stud	
80	D20400433	6	Washer	17,5 X 33 X 3
81	D20400453	6	Washer	6,4

FOOTNOTE [A] ONLY FOR STRAW CHOPPER

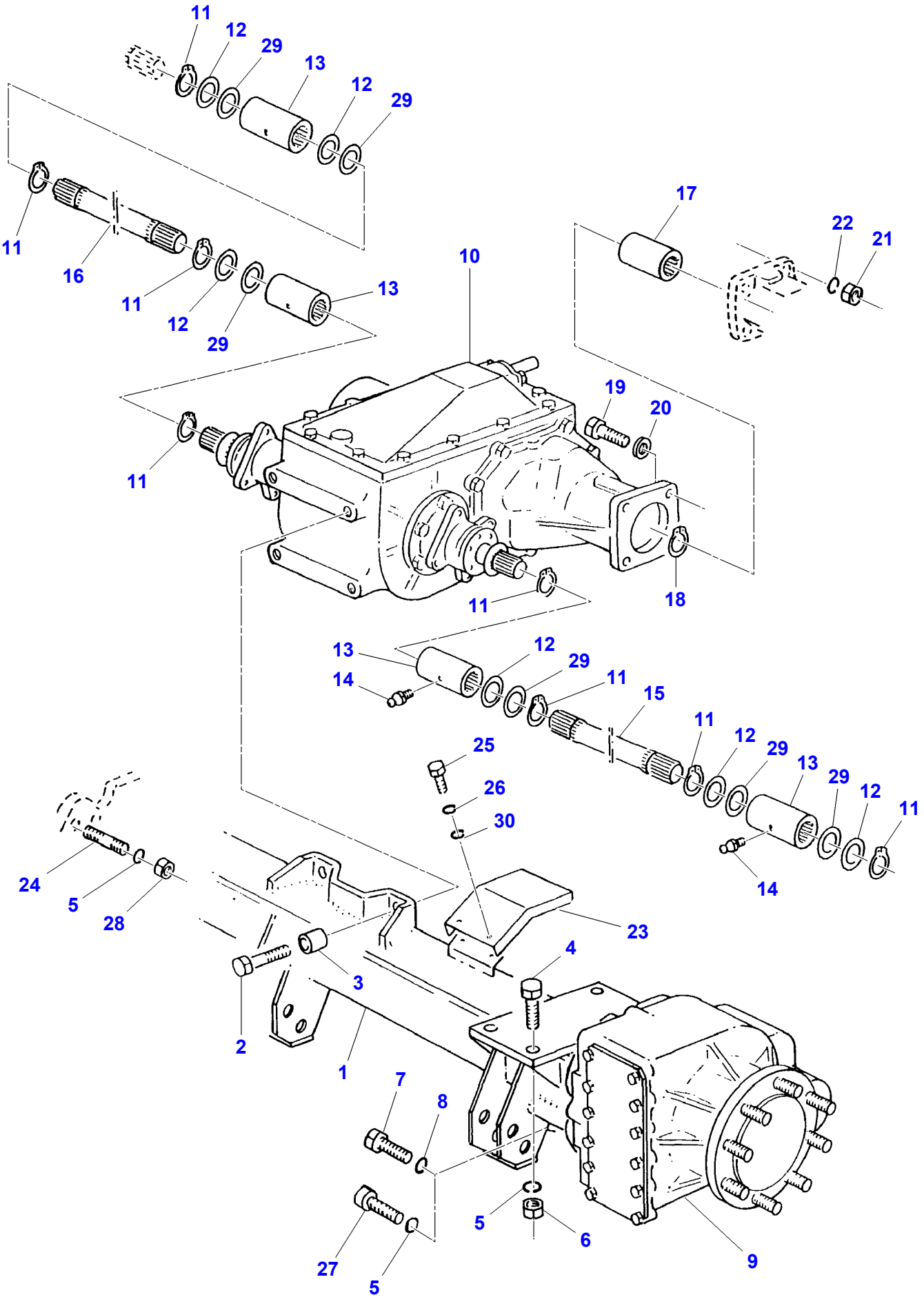
11
12
29
13
12
29
11
16
11
12
29
13
17
22
21
10
19
20
11
18
11
13
12
29
14
11
15
11
12
29
13
29
12
11
14
25
26
30
24
5
28
23
4
3
2
1
7
8
5
6
9
27
5

D-AJ01-001-A

Item	Part Number	Qty	Description	Comments
1	D26736500	1	Front Axle	
2	D26740171	4	Hex. Sock. Screw	M6 X 60
3	D26733661	4	Spacer	28 X 25
4	D40437300	2	Hex. Sock. Screw	M20 X 65
5	D26739974	8	Spring Washer	A20
6	D26739347	8	Nut	M20
7	D26739305	15	Hex. Sock. Screw	M20 X 55
8	D41101400	15	Washer	
9	D26735356	2	Final Drive	See Page - Reference Number 012-0006/1
10	D26735355	1	Gearbox	5670
11	D42509500	8	Circlip	45 X 2,5
12	D41652800	6	Bush	45 X 55 X 3
	D41652800	2	Bush	45 X 55 X 3
13	D26734596	4	Coupling	
14	D43004600	4	Greaser	AM10 X 1
15	D26735593	1	Shaft	Left Hand Length 388 MM
16	D26735594	1	Shaft	Right Hand Length 266 MM
17	D26735019	1	Sleeve Tooth	
18	339469X1	1	Circlip	35 X 1,5
19	D26740171	2	Hex. Sock. Screw	M16 X 60
20	D26739188	2	Washer	16,5 X 31 X 7
21	339034X1	2	Nut	M16
22		2	Bush	[A] A16
23	D26734518	1	Cover	
24	D26735025	3	Stud	M20 X 78
25	D40476100	4	Hex. Sock. Screw	M8 X 20
26	D41102100	4	Washer	A8
27	D26739306	2	Screw Metric	M20 X 55
28	D26739884	3	Nut	M20
29	D26740110	6	Washer	S 45 X 55 X 3
30	D20400506	4	Washer	

FOOTNOTE [A] NUMBER TO BE ADVISED

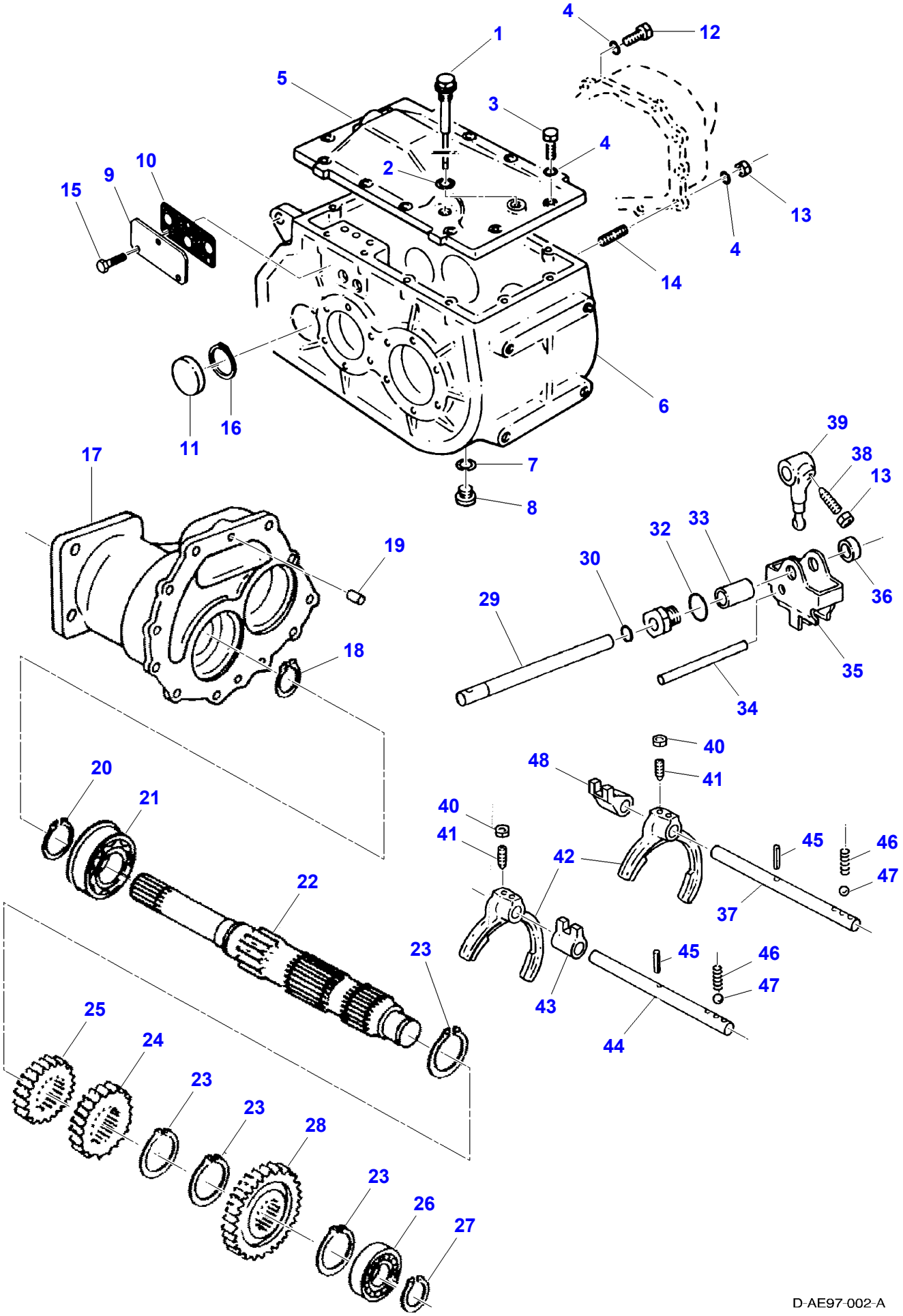
1
2
3
4
5
6
7
8
9
10
11
12
13
14
15
16
17
18
19
20
21
22
23
24
25
26
27
28
29
30
32
33
34
35
36
37
38
39
40
41
42
43
44
45
46
47
48
D-AE97-002-A

Item	Part Number	Qty	Description	Comments
1	D26730021	1	Oil Dipstick	
2		1	Seal	[A] A24 X 29
3	D26740173	12	Hex. Sock. Screw	M10 X 35
4	D26739967	23	Spring Washer	B10
5		1	Cover	[A]
6		1	Gearbox	[A]
7	D45202000	1	Packing Ring	26 X 32
8	D26730022	1	Plug	magnetic
9	D26730024	1	Cover	
10	D26730025	1	Gasket	
11	D26730023	1	Cover	
12		9	Hex. Sock. Screw	[A] M10 X 25
13	D26739300	4	Nut	M10
14		3	Stud	[A] M10 X 28
15	391074X1	3	Hex. Sock. Screw	M6 X 12
16	D45219200	1	Circlip	80 X 4
17	D26730040	1	Housing	
18	D42503200	1	Ring	34 X 1,5
19	D26730041	2	Dowel	12 X 20
20	D42504000	1	Circlip	45 X 1,75
21	D26730042	1	Ball Bearing	
22	D26730043	1	Drive Shaft	
23	D42504800	2	Circlip	60 X 2
24	D26730044	1	Gear	Number of teeth/spines 29
25	D26730045	1	Gear	Number of teeth/spines 26
26	D41624900	1	Ball Bearing	
27	339469X1	1	Circlip	35 X 1,5
28	D26730046	1	Gear	Number of teeth/spines 40
29	D26730026	1	Shaft	
30		1	O Ring	[A] 20,29 X 2,62
31	D26730027	1	Guide Bush	[B]
32		1	O Ring	[A] 32,2 X 3
33	D26730028	1	Distance Piece	
34	D26730029	1	Pin	
35	D26730030	1	Locking	
36	D26730031	1	Ring	
37	D26730039	1	Pinion Shaft	
38		1	Grub Screw	[A]
39	D26730032	1	Selector	
40		4	Nut	[A] M8
41		4	Grub Screw	[A]
42	D26730033	2	Shift Fork	
43	D26730034	1	Cam	
44	D26730036	2	Pinion Shaft	
45		3	Stud	[A] M6 X 28
46	D26730035	3	Comp.Spring	
47	D26730037	3	Ball	Diameter 10,319
48	D26730038	2	Cam	

FOOTNOTE [A] NUMBER TO BE ADVISED
FOOTNOTE [B] NOT ILLUSTRATED

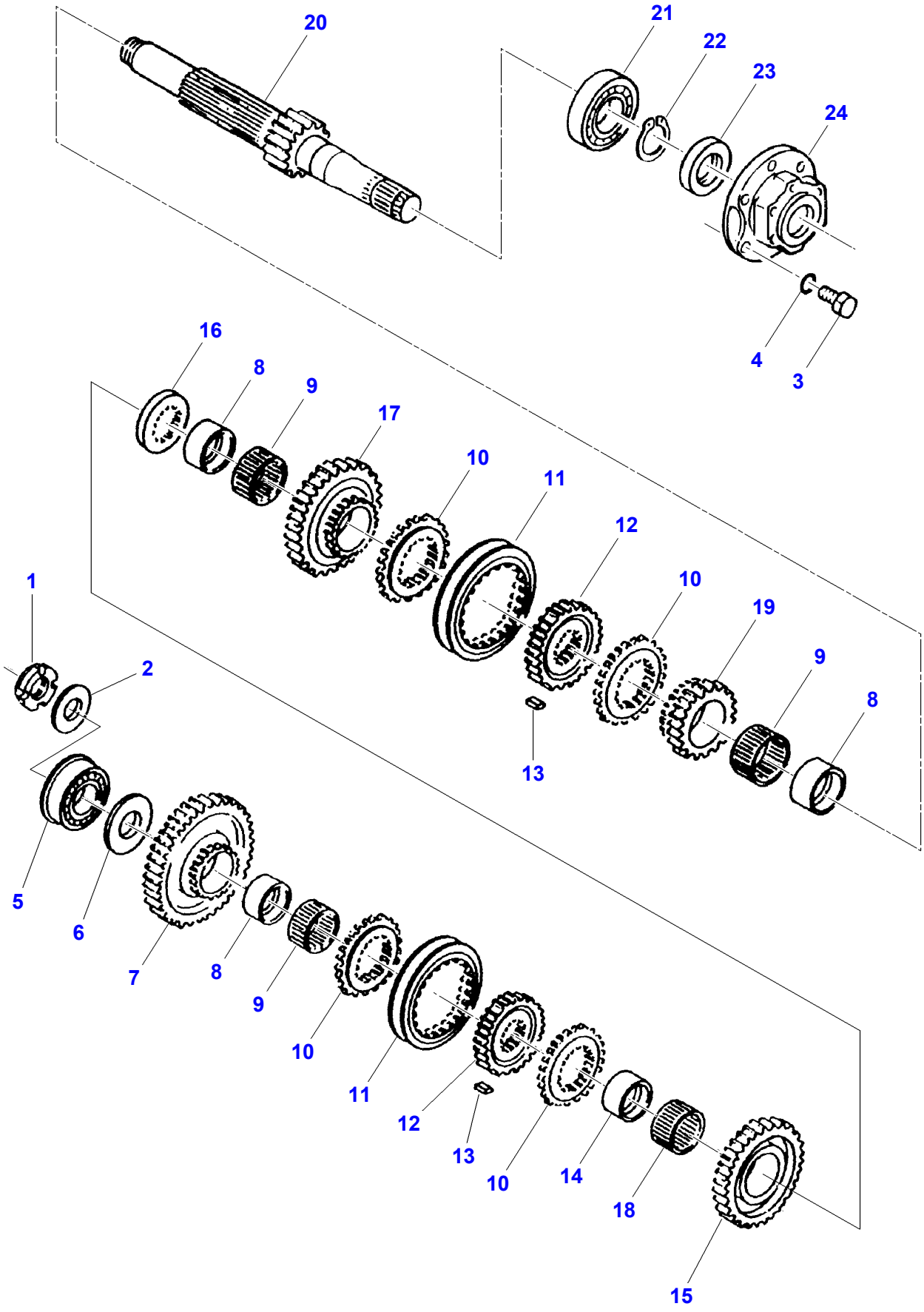
20
21
22
23
24
4
3
16
8
9
17
10
11
12
10
19
9
8
13
1
2
5
6
7
8
9
10
11
12
13
10
14
18
15

D-AE97-004-A

Item	Part Number	Qty	Description	Comments
1	D26730047	1	Groove Nut	M42
2	D26730048	1	Washer	
3	D26730068	6	Screw	M10 X 25
4	D26739967	6	Spring Washer	B10
5	D26730042	1	Ball Bearing	
6	D26730050	1	Washer	
7	D26730051	1	Gear	Number of teeth/spines 49
8	D26730052	3	Sleeve	
9	D26730053	3	Bearing Needle	K 60 X 65 X 30
10	D26730054	3	Gear	
11	D26730055	2	Ring	
12	D26730056	2	Hub	
13	D26730057	6	Spline	
14	D26730058	1	Bush	
15	D26730059	1	Gear	Number of teeth/spines 39
16	D26730060	1	Thrust Washer	
17	D26730061	1	Gear	Number of teeth/spines 36
18	D26730062	1	Bearing Needle	K 58 X 65 X 36
19	D26730063	1	Gear	Number of teeth/spines 25
20	D26730064	1	Shaft	
21	D26730065	1	Bearing Roller	NUP 309 EC
22	D42504000	1	Circlip	45 X 1,75
23	D26730066	1	Shaft Seal	45 X 62 X 10
24	D26730067	1	Brake Carrier	

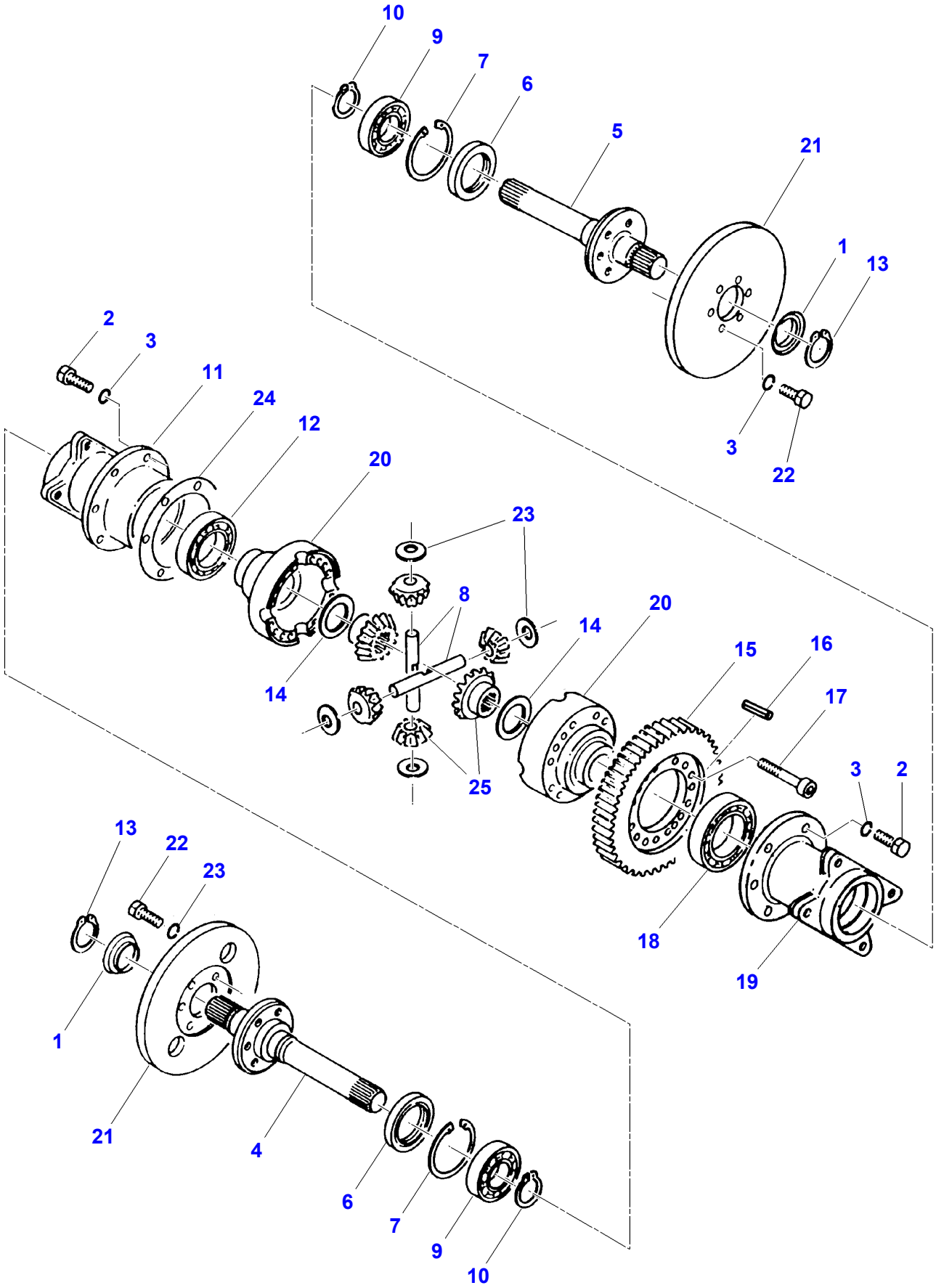
10
9
7
6
5
21
1
13
3
22
2
3
11
24
12
20
23
8
14
20
14
15
16
17
3
2
25
18
19
13
22
23
1
21
4
6
7
9
10

D-ABAA-004-A

Item	Part Number	Qty	Description	Comments
1		2	Shield	[A]
2		12	Hex. Sock. Screw	[A] M10 X 25
3	D26739967	24	Spring Washer	B10
4	D26730069	1	Shaft	
5	D26730070	1	Shaft	
6	D26730071	2	Shaft Seal	70 X 90 X 10
7	D42506300	2	Circlip	90 X 3
8	D26730082	2	Pin	
9	D26730072	2	Ball Bearing	
10	D26746878	2	Circlip	40 X 1,75
11	D26730073	1	Brake Carrier	
12	D41618900	1	Ball Bearing	
13	D42503200	2	Ring	45 X 1,75
14	D26730081	2	Washer	
15	D26730074	1	Gear	Number of teeth/spines 62
16		1	Pin	[A] 8 X 40
17	D26747056	16	Screw Metric	M10 X 110
18	D41619200	1	Bear. 6215	
19	D26730075	1	Brake Carrier	
20	D26730076	1	Housing	
21	D26730077	2	Brake Disc	
22		12	Hex. Sock. Screw	M10 X 35
23	D26730077	4	Brake Disc	
24	D26730078	1	Clamp	
25	D26730079	1	Bevel Gear	Number of teeth/spines 10 / 16

FOOTNOTE [A] NUMBER TO BE ADVISED

-

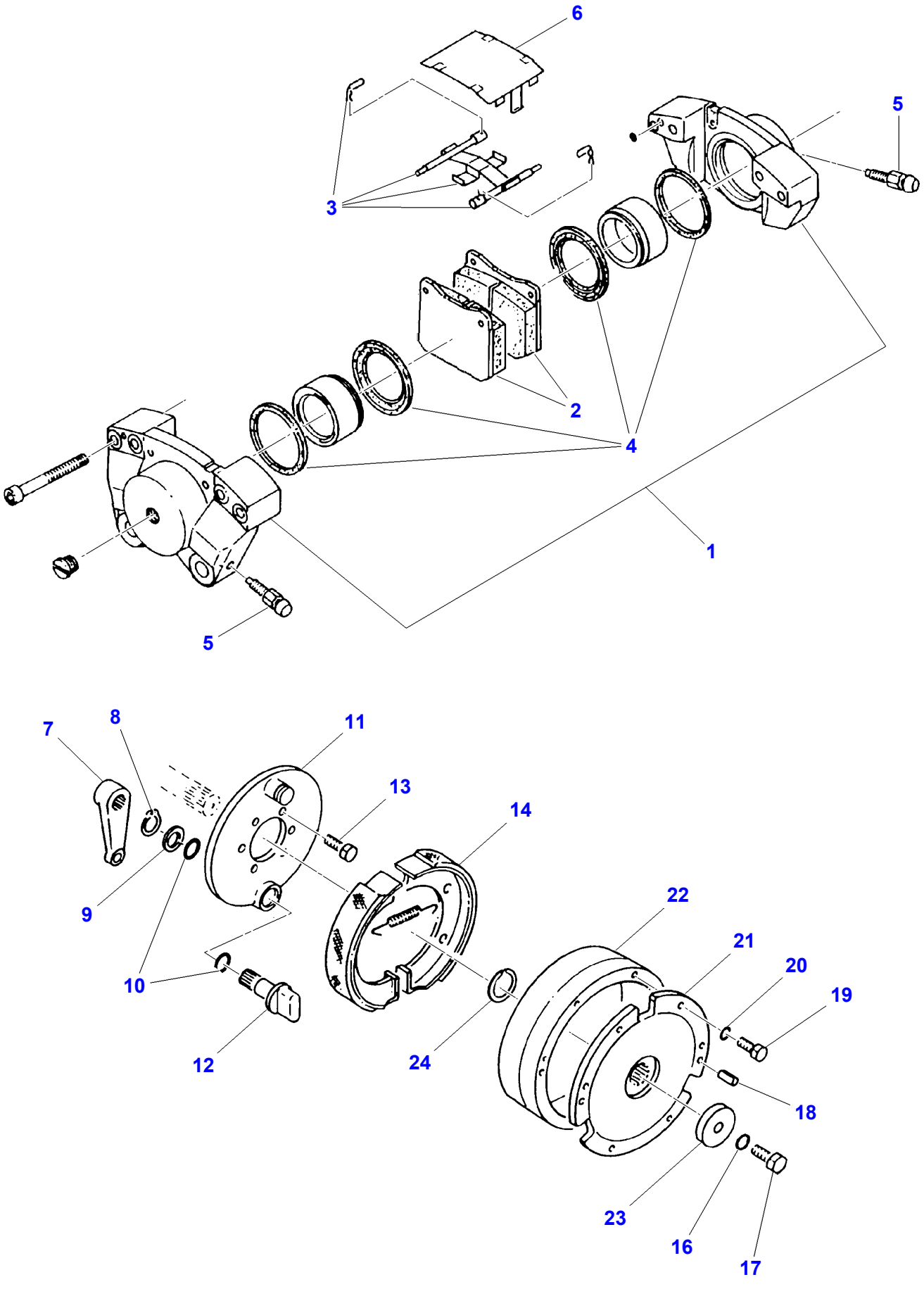

D-ABZG-003-A

Item	Part Number	Qty	Description	Comments
1	D26735286	1	Brake Caliper	Right Hand Top
	D26735284	1	Brake Caliper	Left Hand Top
	D26735287	1	Brake Caliper	Right Hand Bottom
	D26735285	1	Brake Caliper	Left Hand Bottom
2	**D49030069**	X	Brake Lining	[B]
3	D26730083	X	Accessory	
4	D26730084	X	Gasket	[A]
5	D26730085	8	Breather Valve	
6	D26730086	2	Cover	
7	D26730087	1	Brake Lever	
8	D26735915	1	Circlip	20 X 1,2
9	D26747273	1	Disc	20,5 X 28 X 2
10	D26747274	2	O Ring	22 X 2
11	D26747275	1	Brake Plate	
12	D26747276	1	Shaft	
13	D26739763	6	Hex. Sock. Screw	M8 X 20
14	D49030068	2	Brake Caliper	180 X 60
15		2	Tension Spring	[A,C]
16		1	Washer	[A] B12
17		1	Hex. Sock. Screw	[A] M12 X 35
18		2	Pin	[A] 8 X 26
19	D26730090	6	Screw	M8 X 30
20	D26739991	6	Spring Washer	B8
21	D26730091	1	Flange	
22	D26730092	1	Brake Drum	
23	D26730093	1	Disc	
24	D26730094	1	Snapring	

FOOTNOTE [A] NUMBER TO BE ADVISED
FOOTNOTE [B] SERVICED IN PAIRS
FOOTNOTE [C] NOT ILLUSTRATED

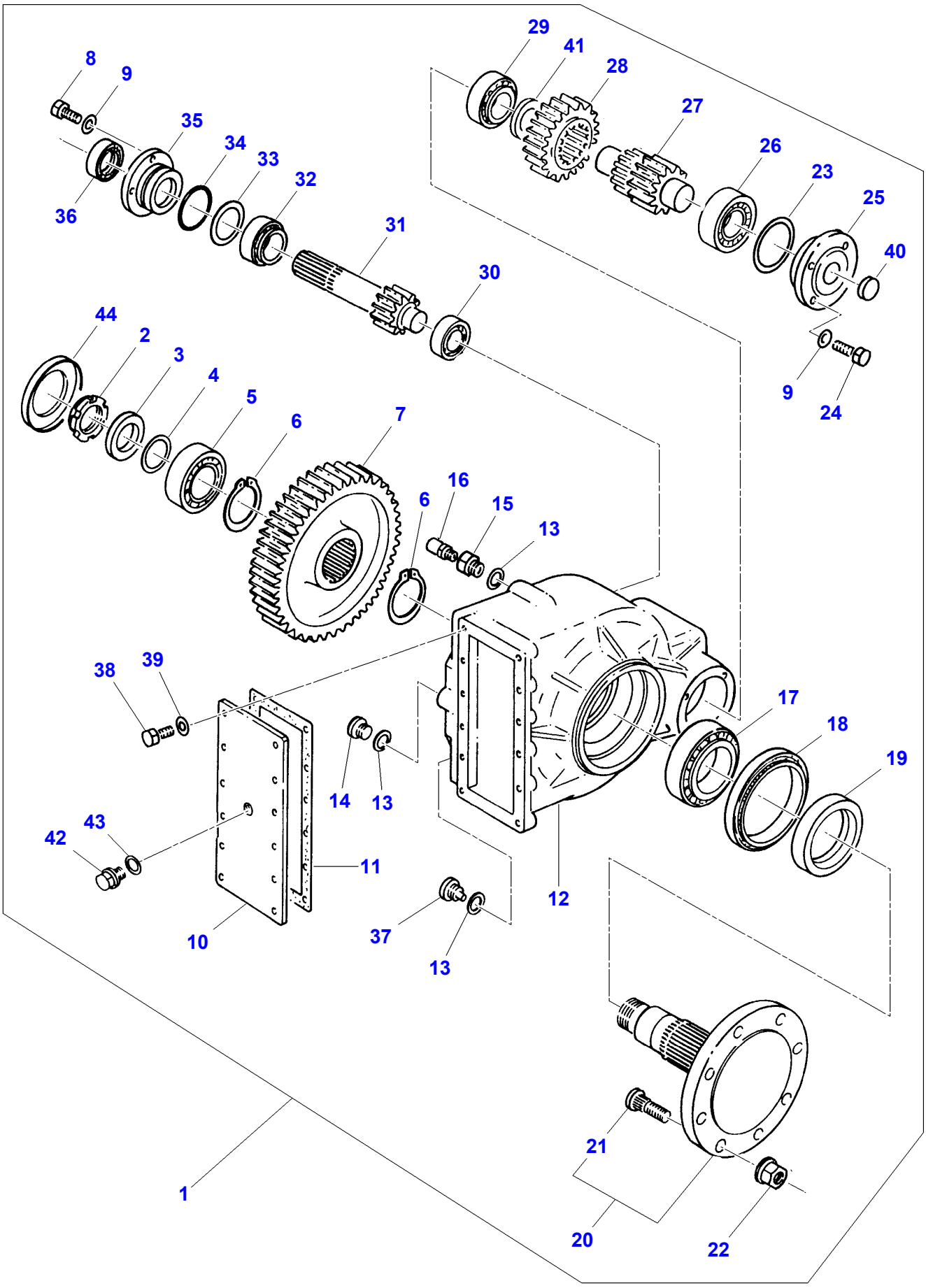
1
2
3
4
5
6
7
8
9
10
11
12
13
14
15
16
17
18
19
20
21
22
23
24
25
26
27
28
29
30
31
32
33
34
35
36
37
38
39
40
41
42
43
44

D-ABZQ-004-A

Item	Part Number	Qty	Description	Comments
1	D26735356	1	Final Drive	
2	D26730096	2	Groove Nut	(1)
3	D26730097	2	Shim	(1)
4	D26730098	4	Spacer	(1) S = 0,15
	D26730099	2	Spacer	(1) S = 0,50
	D26730100	6	Spacer	(1) S = 0,20
5	D26730101	2	Bearing Roller	(1) 33214
6	D26739944	4	Circlip	(1) 85 X 3
7	D26730102	2	Gear	(1) Number of teeth/spines 64
8	D26739763	8	Hex. Sock. Screw	(1) M8 X 20
9		16	Washer	[A] (1) 8 H2203
10		2	Cover	[A] (1)
11	D26730103	2	Cover Gasket	(1)
12		2	Housing	[A] (1)
13	D26730104	6	Washer	(1)
14	D26730105	2	Plug	(1)
15	D26730106	2	Plug	(1)
16	D26730107	2	Breather Valve	(1)
17	D26730108	2	Bearing Roller	(1) 32218
18	D26730109	2	Shaft Seal	(1)
19	D26730110	2	Spacer	(1)
20	D26730111	2	Hub	(1)
21	**D49030080**	16	Bolt	(1) M22 X 67
22	**D26740137**	16	Wheel Nut	(1) M22
23	D26730112	4	Spacer	(1) S = 0,15
	D26730113	2	Spacer	(1) S = 0,50
	D26730114	6	Spacer	(1) S = 0,20
24		8	Hex. Sock. Screw	[A] (1) M8 X 30
25	D26730115	2	Bearing Cap	(1)
26	D41668700	2	Bearing Taper	(1) 33210
27	D26730116	2	Countershaft	(1) Number of teeth/spines 13
28	D26730117	2	Gear	(1) Number of teeth/spines 28
29	D41668700	2	Bearing Taper	(1) 33210
30	D26739294	2	Bearing Assy	(1) 33207
31	D26730118	2	Drive Shaft	(1) Number of teeth/spines 13
32	D26740286	2	Bearing Assy	(1)
33	D26730098	4	Spacer	(1) S = 0,15
	D26730099	2	Spacer	(1) S = 0,50
	D26730100	6	Spacer	(1) S = 0,20
34		2	O Ring	[A] (1) 74,2 X 3
35	D26730122	2	Bearing Cap	(1)
36	D26740247	2	Kit, Lip	(1)

Item	Part Number	Qty	Description	Comments
37	D26730123	2	Plug	(1)
38		24	Hex. Sock. Screw	[A] (1) M10 X 30
39		24	Tooth Washer	[A] (1) A10
40		2	Cover	[A] (1)
41		2	Chock	[A] (1)
42	D26730124	2	Plug	(1)
43	D26730125	2	Gasket	(1)
44	D26730095	2	Cover	(1)

FOOTNOTE [A] NUMBER TO BE ADVISED

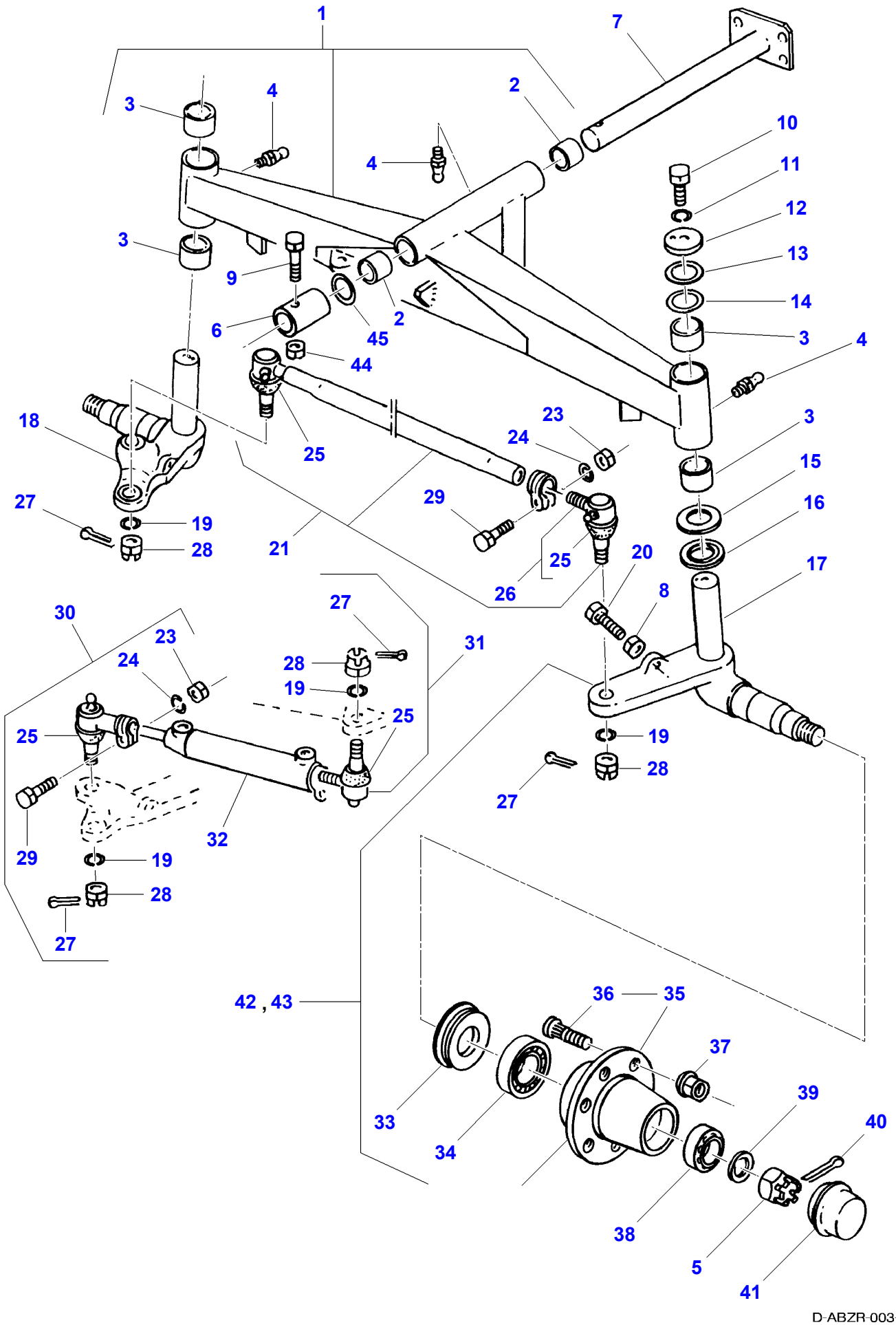
1
7
3
4
2
10
4
11
12
3
13
9
14
6
2
45
3
4
44
18
25
23
24
3
15
27
29
16
19
28
21
25
20
17
26
8
30
27
23
31
24
28
19
25
25
19
28
27
29
32
19
28
27
42 , 43
36
35
37
33
39
40
34
38
5
41
D-ABZR-003-A

Item	Part Number	Qty	Description	Comments
1	D26734486	1	Axle Holder	
2	D26733352	2	Bush	40 X 44 X 40
3	**D26732781**	4	Bush	50 X 55 X 60
4	D26739779	3	Grease Nipple	AM6
5	D26740017	3	Groove Nut	M30
6	D26733947	1	Insert	
7	D26733946	1	Clevis Pin	
8	3009695X1	2	Nut	M12
9	339484X1	1	Hex. Sock. Screw	M12 X 70
10	1440716X1	2	Hex. Sock. Screw	M12 X 30
11	D41100900	2	Spring Washer	A12
12	D26733941	2	Cover	
13	D26733940	2	Washer	
14	D41653900	X	Ring	50 X 62 X 0,1
	D41653800	X	Ring	50 X 62 X 0,3
	D26739277	X	Ring	50 X 62 X 0,5
15	D26733938	2	Thrust Washer	
16	D26733939	2	Washer	
17	D26736462	1	Steering Knuckle	Left Hand
18	D26736461	1	Steering Knuckle	Right Hand
19	D20400438	4	Washer	20 X 30 X 2
20	391198X1	2	Hex. Sock. Screw	M12 X 50
21	D26733936	1	Steering Tie Rod	
22		1	Clip	[A,B]
23	339402X1	2	Nut	M10
24	D41101900	2	Spring Washer	A10
25		4	Ball Joint	[A]
26	D49030035	1	Toggle	
27	391423X1	4	Split Pin	4 X 40
28	D41048800	4	Groove Nut	M18
29	339019X1	2	Hex. Sock. Screw	M10 X 50
30	D26733554	1	Toggle	
31	D26733461	1	Toggle	
32	D26735335	1	Hydraulic, Cylin	See Page - Reference Number 014-0003/28
33	D26733937	2	Ring	
34	D26732712	2	Bearing Roller	30211
35	D26736068	2	Hub	
36	**D26741199**	12	Stud	M18 X 57
37	**D41021800**	12	Nut	M18
38	D26732711	2	Bearing Roller	30207
39	D26740114	2	Washer	30 X 48 X 2
40	D26733046	2	Split Pin	6,3 X 50
41	D26734083	2	Cap	
42	D26735750	1	Hub	Left Hand
43	D26735749	1	Hub	Right Hand
44	D26740020	1	Locknut	M12
45	D41653500	3	Washer	40 X 50 X 1

FOOTNOTE [A] NUMBER TO BE ADVISED
FOOTNOTE [B] NOT ILLUSTRATED

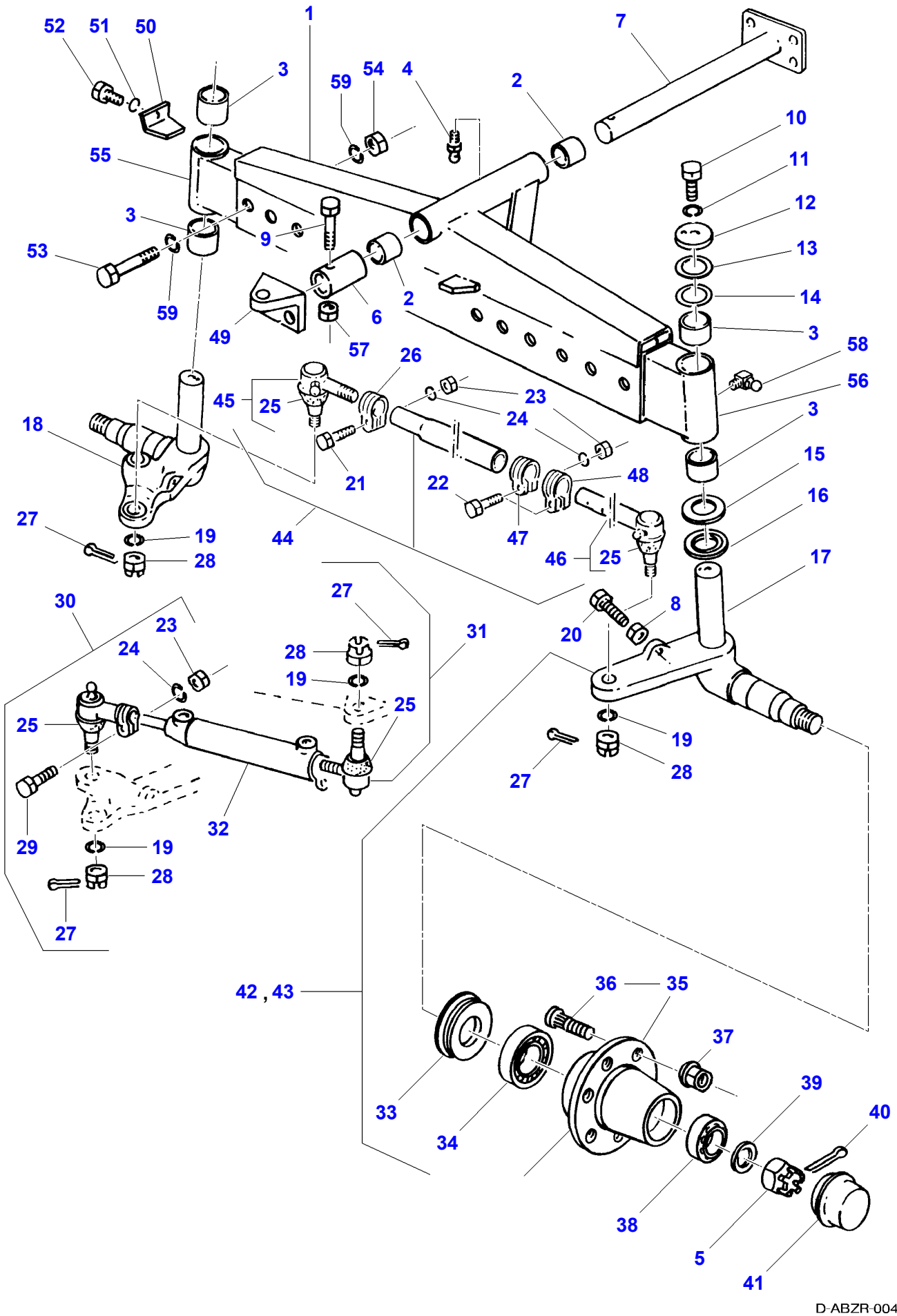
1
2
3
4
5
6
7
8
9
10
11
12
13
14
15
16
17
18
19
20
21
22
23
24
25
26
27
28
29
30
31
32
33
34
35
36
37
38
39
40
41
42 , 43
44
45
46
47
48
49
50
51
52
53
54
55
56
57
58
59
D-ABZR-004-A

Item	Part Number	Qty	Description	Comments
1	D26734015	1	Axle Holder	
2	D26733352	2	Bush	40 X 44 X 40
3	**D26732781**	4	Bush	50 X 55 X 60
4	D43001600	1	Greaser	M6
5	D26740017	3	Groove Nut	M30
6	D26733947	1	Insert	
7	D26733946	1	Clevis Pin	
8	D40900071	2	Nut	M12
9	339484X1	1	Hex. Sock. Screw	M12 X 70
10	1440716X1	2	Hex. Sock. Screw	M12 X 30
11	D26739978	2	Spring Washer	A12
12	D26733941	2	Cover	
13	D26733940	2	Washer	
14	D41653900	X	Ring	50 X 62 X 0,1
	D41653800	X	Ring	50 X 62 X 0,3
	D26739277	X	Ring	50 X 62 X 0,5
15	D26733938	2	Thrust Washer	
16	D26733939	2	Washer	
17	D26736462	1	Steering Knuckle	Left Hand
18	D26736461	1	Steering Knuckle	Right Hand
19		4	Washer	[A]
20	D40411200	2	Hex. Sock. Screw	M12 X 45
21		1	Hex. Sock. Screw	[A]
22		1	Hex. Sock. Screw	[A]
23	339402X1	3	Nut	M10
24	D41101900	3	Spring Washer	A10
25		4	Ball Joint	[A]
26		1	Clip	[A]
27	D41409300	4	Split Pin	4 X 45
28	D41048800	4	Groove Nut	M18
29	339019X1	2	Hex. Sock. Screw	M10 X 50
30	D26734366	1	Toggle	
31	D26734367	1	Toggle	
32	D26734424	1	Hydraulic, Cylin	See Page - Reference Number 014-0003/29
33	D26733937	2	Ring	
34	D26733712	2	Cable Sleeve	30211
35	D26736068	2	Hub	
36	**D26741199**	12	Stud	M18 X 57
37	**D41021800**	12	Nut	M18
38	D26732711	2	Bearing Roller	30207
39	D26740114	2	Washer	30 X 48 X 2
40	D26733046	2	Split Pin	6,3 X 50
41	D26734083	2	Cap	
42	D26735751	1	Hub	Left Hand
43	D26735776	1	Steering Knuckle	Right Hand
44	D26734430	1	Steering Tie Rod	
45		1	Toggle	[A]
46		1	Rod	[A]
47		1	Clip	[A]
48		1	Clip	[A]
49	D26734819	1	Support	
50	D26735774	2	Stop	
51	D41102100	2	Washer	A8
52	339337X1	2	Hex. Sock. Screw	M8 X 30
53	D26740069	6	Bolt	M20 X 170
54	D40900071	12	Nut	M20
55	D26734419	1	Beam	Left Hand
56	D26734420	1	Beam	Right Hand
57	D26740020	1	Locknut	M12
58	D43001700	2	Greaser	CM6
59	D20400523	12	Spacer	

FOOTNOTE [A] NUMBER TO BE ADVISED

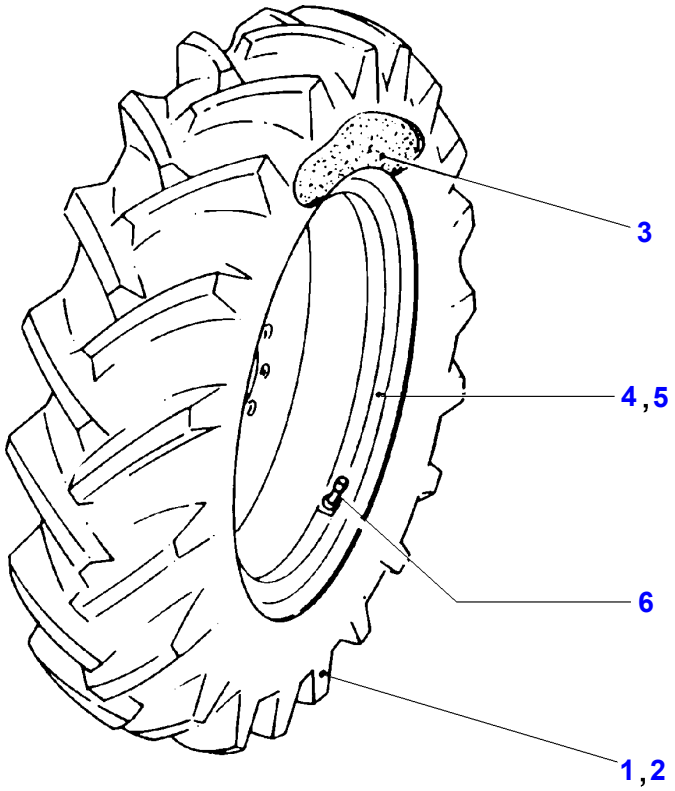

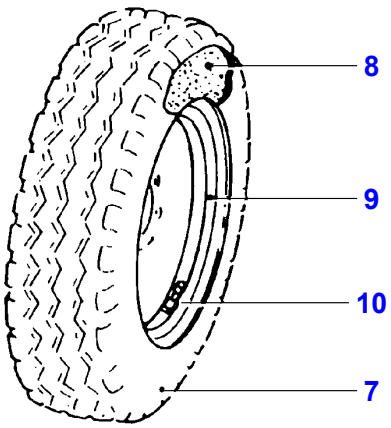

D-ABZS-002-A

Item	Part Number	Qty	Description	Comments
1	D46731600	2	Tyre	23,1-26 R-1 DIAGONAL
2	D26732926	2	Tyre	[A] 620 / 75 R30
3	D46707800	2	Tyre Tube	23,1 / 18-26
4	D28181911	2	Rim	16L X 26 ET 13
5	D28181912	2	Rim	[A] 16 X 30 ET 80
	D28181915	2	Rim	[A] 20 X 30
6	D46733256	2	Pressure Valve	[A]
7	D46734300	2	Tyre	12,5 / 80-18
	D26850154	2	Tyre	[A] 405 / 70 R20
8	D26732927	2	Tyre Tube	[A] 14,5 / 75-20
9	D28181918	2	Rim	11 X 18 ET -25
	D28181920	2	Rim	[A] 13 X 20 ET -45
10	D46738700	2	Pressure Valve	
11	**D41021800**	X	Nut	[B] M18

FOOTNOTE [A] OPTIONAL
FOOTNOTE [B] NOT ILLUSTRATED

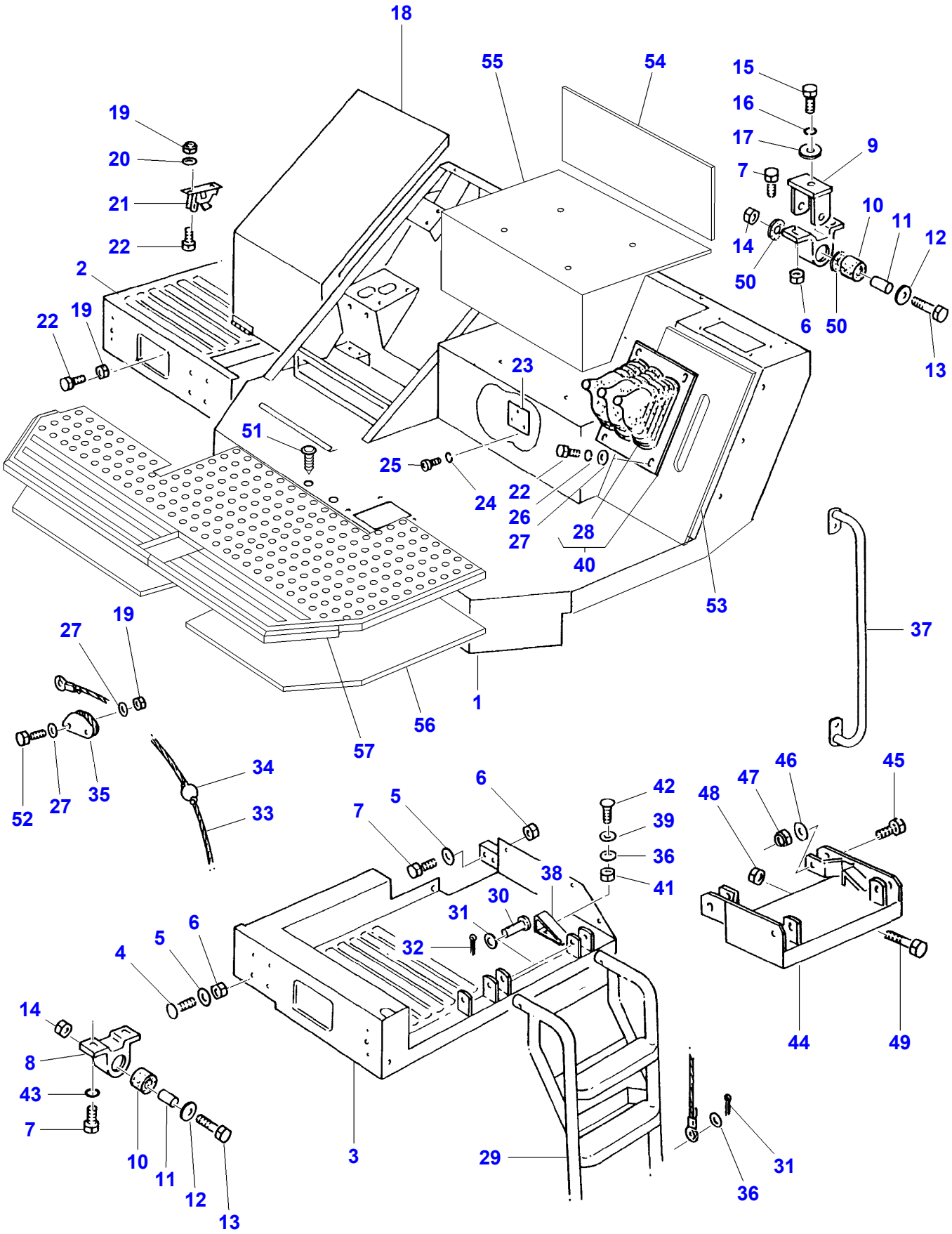
18
55
54
15
16
17
9
7
19
20
21
22
10
11
12
14
50
6
50
13
2
22
19
23
51
25
24
22
26
27
28
40
53
37
1
56
57
27
19
52
27
35
34
33
6
5
7
42
39
36
41
38
30
31
32
4
5
6
14
8
43
7
10
11
12
13
3
29
31
36
46
47
48
45
44
49

D-ACZK-001-C

Item	Part Number	Qty	Description	Comments
1	D26734800	1	Platform	
2	D16734836	1	Platform	
3	D16735514	1	Platform	
4	D40066800	8	Screw Special	M10 X 30
5	D26739992	10	Washer	11 X 20 X 2
6	D28288162	14	Locknut	M10
7	3009493X1	8	Hex. Sock. Screw	M10 X 30
8	D26734107	4	Bracket	
9	D26736103	2	Retainer	
10	D26733464	4	Vibration Mount	
11	D26734106	4	Bush	20 X 57
12	D20400446	4	Washer	13 X 30 X 4
13	390826X1	4	Hex. Sock. Screw	M12 X 90
14	D26740020	8	Locknut	M12
15	1440716X1	2	Hex. Sock. Screw	M12 X 30
16	D26739978	2	Spring Washer	A12
17	D26740146	2	Washer	13 X 40 X 5 ZN
18	D16734844	1	Panel	
19	D41088800	6	Locknut	M6
20	D26739994	2	Washer	6,6 X 12,5 X 1,6
21	D26733202	1	Lock	
22	339560X1	8	Hex. Sock. Screw	M6 X 16
23		1	Cover	[A]
24	D41100300	3	Washer	A4
25	D26739203	3	Bolt	M4 X 10
26	D41100600	4	Spring Washer	A6
27	D26740136	4	Washer	6,4 X 18 X 2 ZN
28	D26734639	1	Bellows	(40)
29	D16734605	1	Stair	
30	D26733240	2	Clevis Pin	12 X 60 / 55
31	D26740003	3	Split Pin	2 X 12
32	1442034X1	2	Split Pin	4 X 20
33	D26735966	1	Cable	Length 2450mm
34	D26735936	1	Claw	
35	D26734104	1	Clip	
36	D20400408	2	Washer	8,4 X 25 X 3
37	D18988095	1	Handle	
38	D16744651	1	Stop	
39	D26739281	1	Washer	13-140HV
40	D26735494	1	Bellows	
41	D26740007	1	Locknut	M8
42	D26739261	1	Screw	M8 X 25
43	D41101900	4	Spring Washer	A10
44	D26734049	1	Extension	[B] Length 200 MM
		1	Extension	[B] Length 300 MM
45	1440716X1	2	Hex. Sock. Screw	[B] M12 X 30
46	D26739281	2	Washer	[B] 13-140HV
47	D28288162	2	Locknut	[B] M10
48	D28288162	X	Locknut	M10
49	D40408600	2	Hex. Sock. Screw	M10 X 70
50	D26734901	4	Washer	
51	D26735023	1	Plug	
52		2	Hex. Sock. Screw	[A] M6 X 35
53	D26735545	1	Insulating Mat	
54	D26735404	1	Insulating Mat	
55	D26735402	1	Insulating Mat	
56	D26735399	1	Insulating Mat	
57	D45941200	1	Mat	

FOOTNOTE [A] NUMBER TO BE ADVISED
FOOTNOTE [B] OPTIONAL

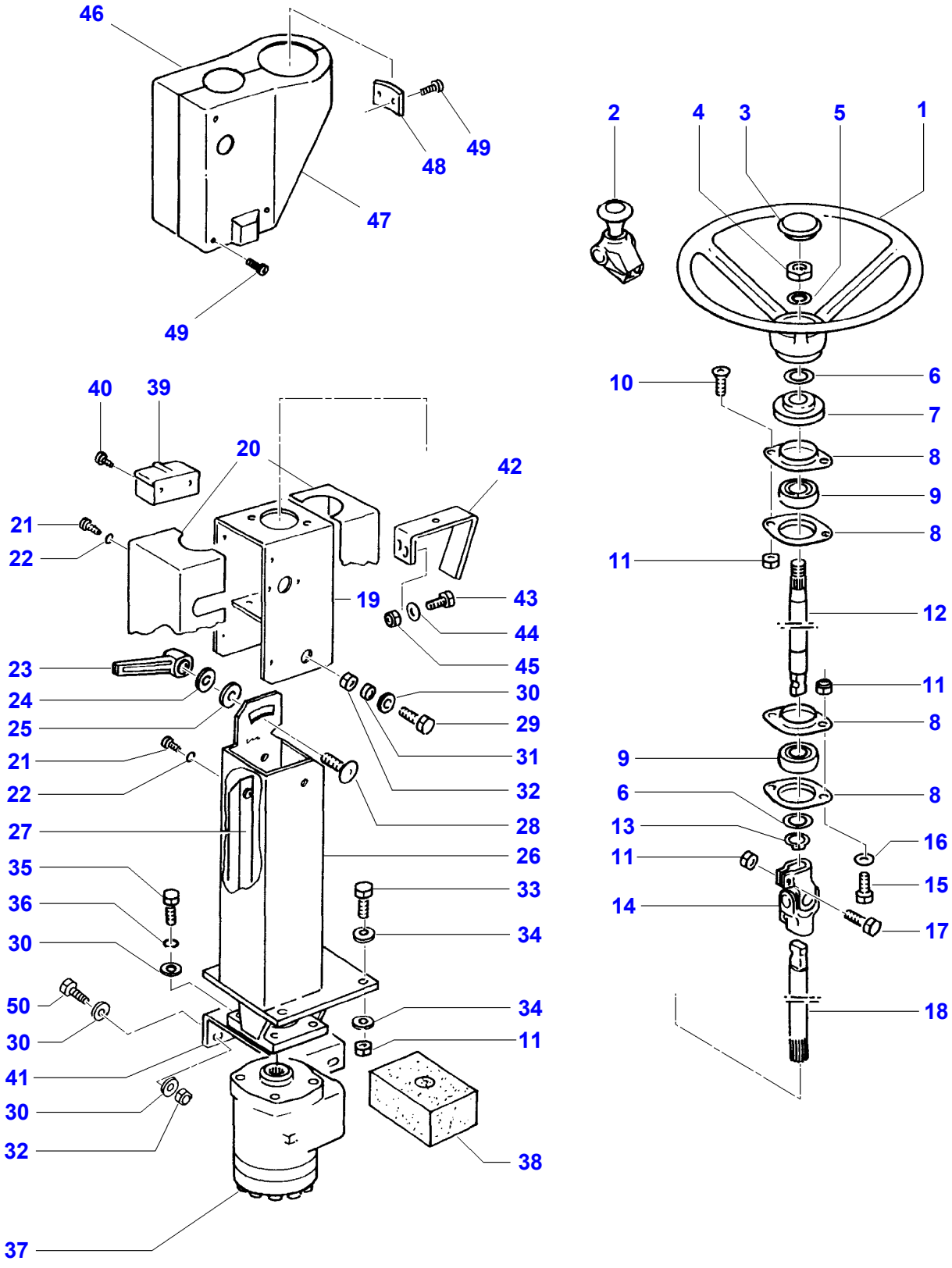
46
49
48
47
49
2
4
3
5
1
10
6
7
8
9
8
11
12
11
8
9
6
8
13
16
11
15
14
17
18
40
39
20
42
21
22
19
43
44
45
23
24
25
30
29
21
22
31
32
27
28
26
35
36
30
33
34
50
30
34
11
41
30
32
38
37

D-ACZL-001-A

Item	Part Number	Qty	Description	Comments
1	D26735541	1	Steering Wheel	
2	D26734577	1	Lever	
3	D26733221	1	Helmet	
4	D41042800	1	Nut	M18
5	D41101300	1	Spring Washer	A18
6	D26740115	X	Washer	25 X 35 X 0,3
	D26740125	X	Washer	25 X 35 X 1,0
	D26741113	X	Washer	25 X 35 X 2,0
7	D26734828	1	Spacer	
8	D26733369	4	Bearing Housing	EB25
9	D26733034	2	Bearing Assy	Diameter 25
10	3009440X1	2	Screw Special	M8 X 20
11	D26740007	10	Locknut	M8
12	D28988096	1	Shaft	
13	1440476X1	1	Circlip	25 X 1,2
14	D26733685	1	Universal Joint	
15	339123X1	2	Hex. Sock. Screw	M8 X 20
16	D26739993	2	Washer	9 X 17 X 1,6
17	D40425000	2	Hex. Sock. Screw	M8 X 35
18	D28988097	1	Countershaft	
19	D26734916	1	Top Part	
20	D26734897	1	Panel	[C]
21	D40669300	4	Screw	[C] M4 X 10
22	D41100300	4	Washer	[C] A4
23	D26734577	1	Lever	
24	D20400446	1	Washer	13 X 30 X 4
25	D26740150	1	Washer	21 X 32 X 2
26	D26735209	1	Steering Column	
27	D26735242	1	Rail	
28	D26740058	1	Bolt	M12 X 25
29	D40689800	2	Hex. Sock. Screw	M10 X 25
30	D20400471	14	Washer	10,5 X 20 X 2
31	D26733794	2	Bush	
32	D28288162	6	Locknut	M10
33	339761X1	4	Hex. Sock. Screw	M8 X 25
34	D20400408	8	Washer	8,4 X 25 X 3
35	3009491X1	4	Hex. Sock. Screw	M10 X 20
36	D41101900	4	Spring Washer	A10
37	D26735303	1	Control Valve	See Page - Reference Number 014-0009/1
38	D26734826	1	Seal Plate	
39	D26735255	1	Ashtray	
40	D26739076	2	Screw	M3,5 X 9,5
41	D26735475	1	Retainer	
42	D26741721	1	Retainer	[B,A]
43	339666X1	2	Hex. Sock. Screw	[B] M6 X 20
44	D26739994	2	Washer	[B] 6,6 X 12,5 X 1,6
45	D41088800	2	Locknut	[B] M6
46	D26735289	1	Panel	[B] Left Hand
47	D26735290	1	Panel	[B] Right Hand
48	D26742266	1	Thread. Part	[B]
49	390961X1	8	Screw Metric	[B] M4 X 10
50	3009492X1	4	Hex. Sock. Screw	M10 X 25

FOOTNOTE [A] NUMBER TO BE ADVISED
FOOTNOTE [B] ELECTRONIC DRAFT CONTROL
FOOTNOTE [C] ON REQUEST

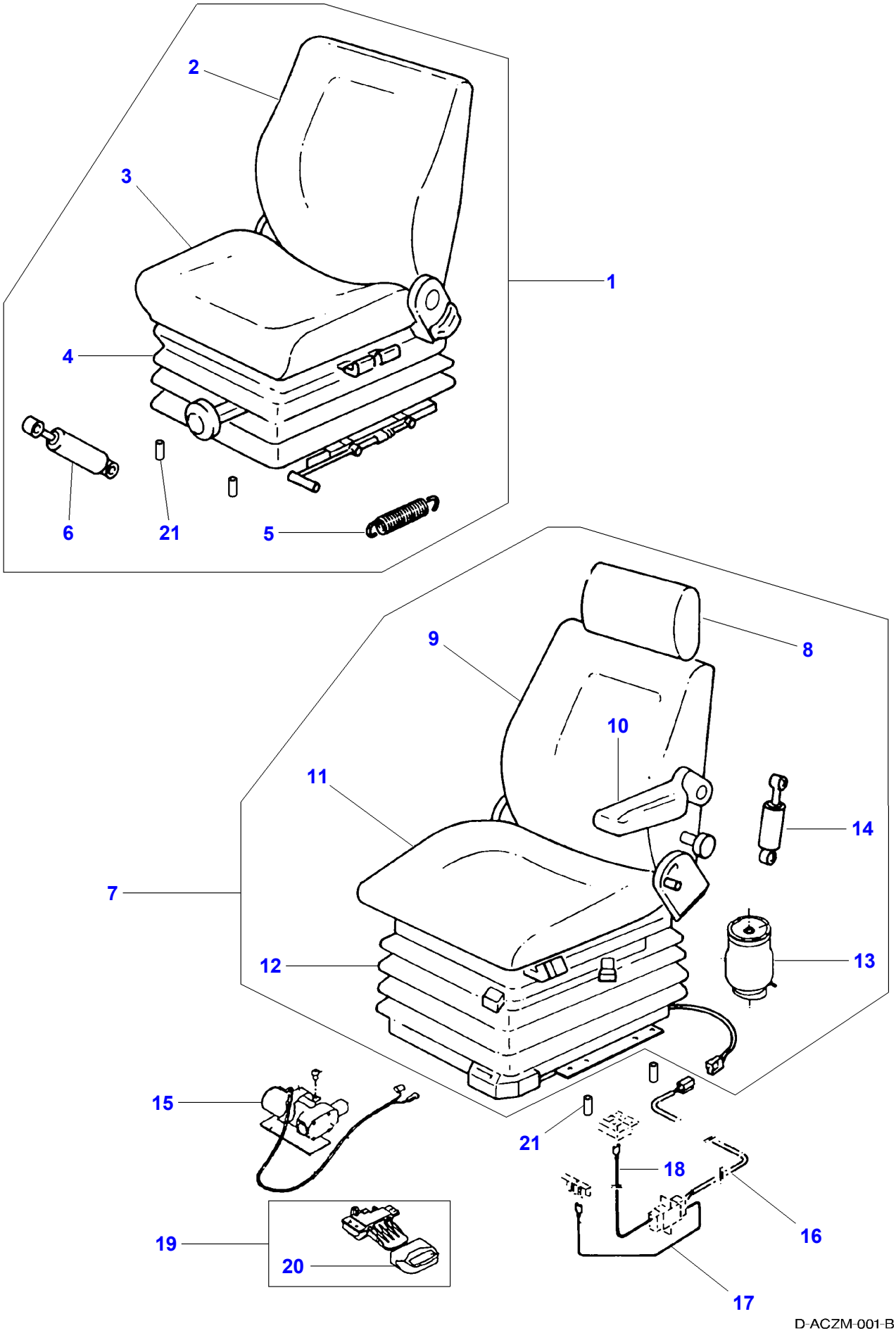
2
3
1
4
6
21
5
9
8
10
11
14
7
12
13
15
21
18
16
19
20
17
D-ACZM-001-B

Item	Part Number	Qty	Description	Comments
1	D28086590	1	Seat	[B]
2	D45939700	1	Seat	[B]
3	D45939800	1	Spring Carrier	[B]
4		1	Bellows	[A,B]
5		1	Tension Spring	[A,B]
6		1	Shock Absorber	[A,B]
7	D26746801	1	Seat	[C,D]
8		1	Rest	[A,D] (7)
9		1	Back Rest	[A,D] (7)
10		1	Armrest	[A,D] (7)
11		1	Seat	[A,D] (7)
12		1	Bellows	[A,D] (7)
13		1	Suspension	[A,D] (7)
14		1	Shock Absorber	[A,D] (7)
15		1	Compressor	[A,D] (7)
16	D26736811	1	Cable	[D]
17	D26736797	1	Wire	[D]
18	D26736784	1	Wire	[D]
19		1	Drive	[A]
20		1	Handle	[A]
21	D26733510	4	Spacer	
22	D28988029	1	Part	[E]
23	D28988030	1	Support	[E]

FOOTNOTE [A] NUMBER TO BE ADVISED
FOOTNOTE [B] MECHANICAL SEAT
FOOTNOTE [C] PNEUMATIC SEAT
FOOTNOTE [D] OPTIONAL
FOOTNOTE [E] NOT ILLUSTRATED

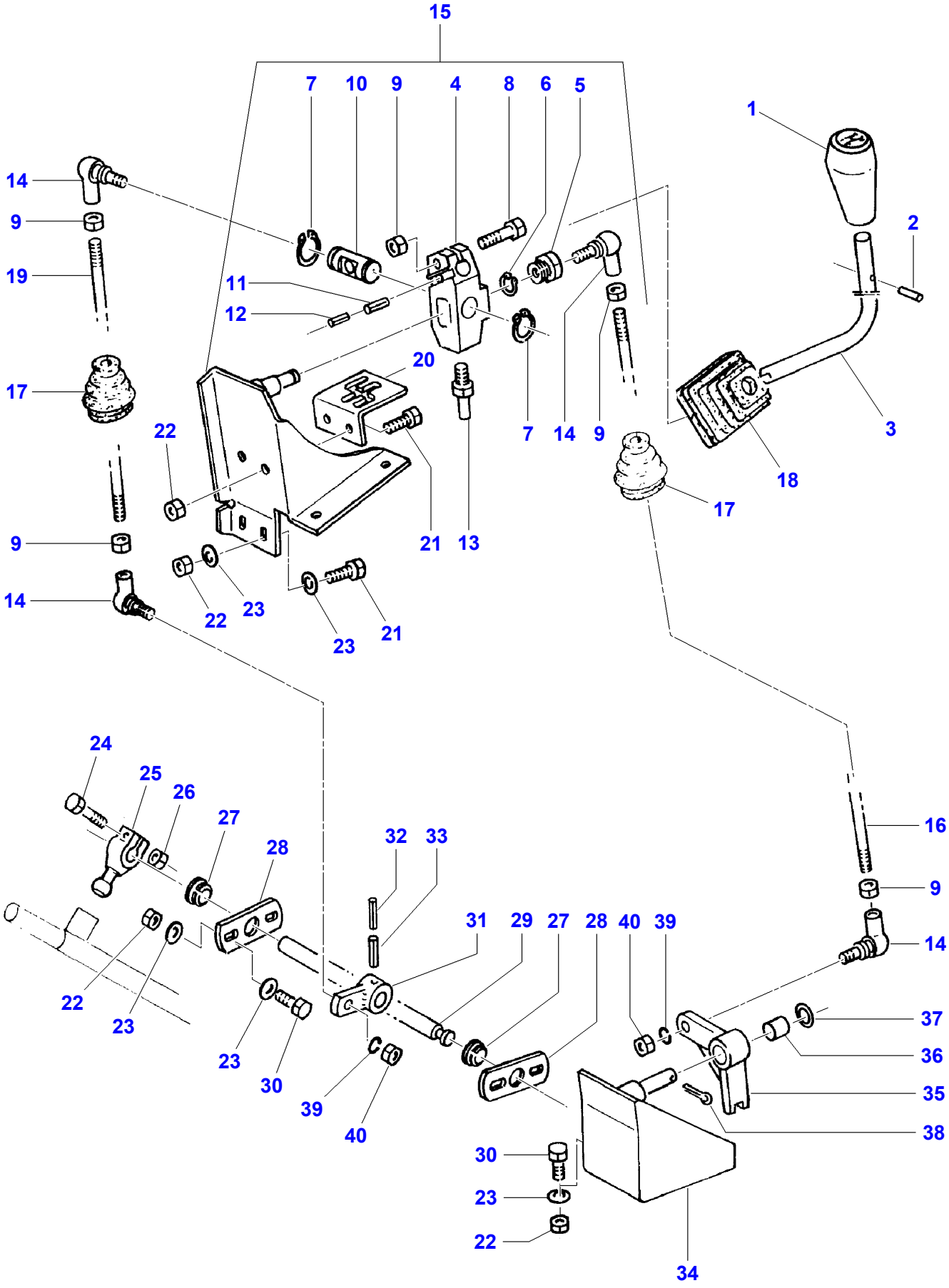
15
7
10
9
4
8
6
5
1
14
9
19
11
12
2
17
20
22
7
14
9
3
18
17
9
21
13
14
22
23
23
21
24
25
26
27
28
32
33
16
9
14
31
29
27
28
40
39
22
23
23
30
39
40
37
36
35
38
30
23
22
34

D-ACZN-001-B

Item	Part Number	Qty	Description	Comments
1	D26735595	1	Knob	
2	D26739296	1	Groove Pin	6 X 24
3	D26744466	1	Tube	
4	D26744462	1	Support	
5	D26744471	1	Screw	
6	D42501400	1	Circlip	16 X 1
7		2	Circlip	[A] 32 X 1,5
8	339019X1	1	Hex. Sock. Screw	M10 X 50
9	339402X1	5	Nut	M10
10	D26744470	1	Clevis Pin	
11		1	Pin	[A] 6 X 36
12	D26739068	1	Pin	3,5 X 36
13	D26744443	1	Coil Sleeve	
14	D26732762	4	Shank	AS16
15	D26735596	1	Support	
16	D26735515	1	Rod	
17	D26735488	2	Bellows	
18	D26734754	1	Bellows	
19	D26735516	1	Rod	
20	D26741971	1	Angle.	
21	339123X1	6	Hex. Sock. Screw	M8 X 20
22	D26740007	14	Locknut	M8
23	D26739186	X	Washer	8,5 X 22 X 2,5
24	D40407200	1	Hex. Sock. Screw	M10 X 45
25	D26734147	1	Toggle	
	D26739992	1	Washer	11 X 20 X 2
26	D26739300	1	Nut	M10
27	D26734740	2	Bush	
28	D26734636	2	Support	
29	D26744469	1	Drive Shaft	
30	339761X1	8	Hex. Sock. Screw	M8 X 25
31	D26744468	1	Lever	
32	D26739069	1	Pin	3 X 40
33		1	Pin	[A] 5 X 40
34	D26734459	1	Sieve	
35	D28181751	1	Lever	
36	D26733350	1	Bush	20 X 23 X 25
37	D26740150	1	Washer	21 X 32 X 2
38	354078X1	1	Split Pin	5 X 32
39	D41101900	2	Spring Washer	A10
40	339402X1	2	Nut	M10

FOOTNOTE [A] NUMBER TO BE ADVISED

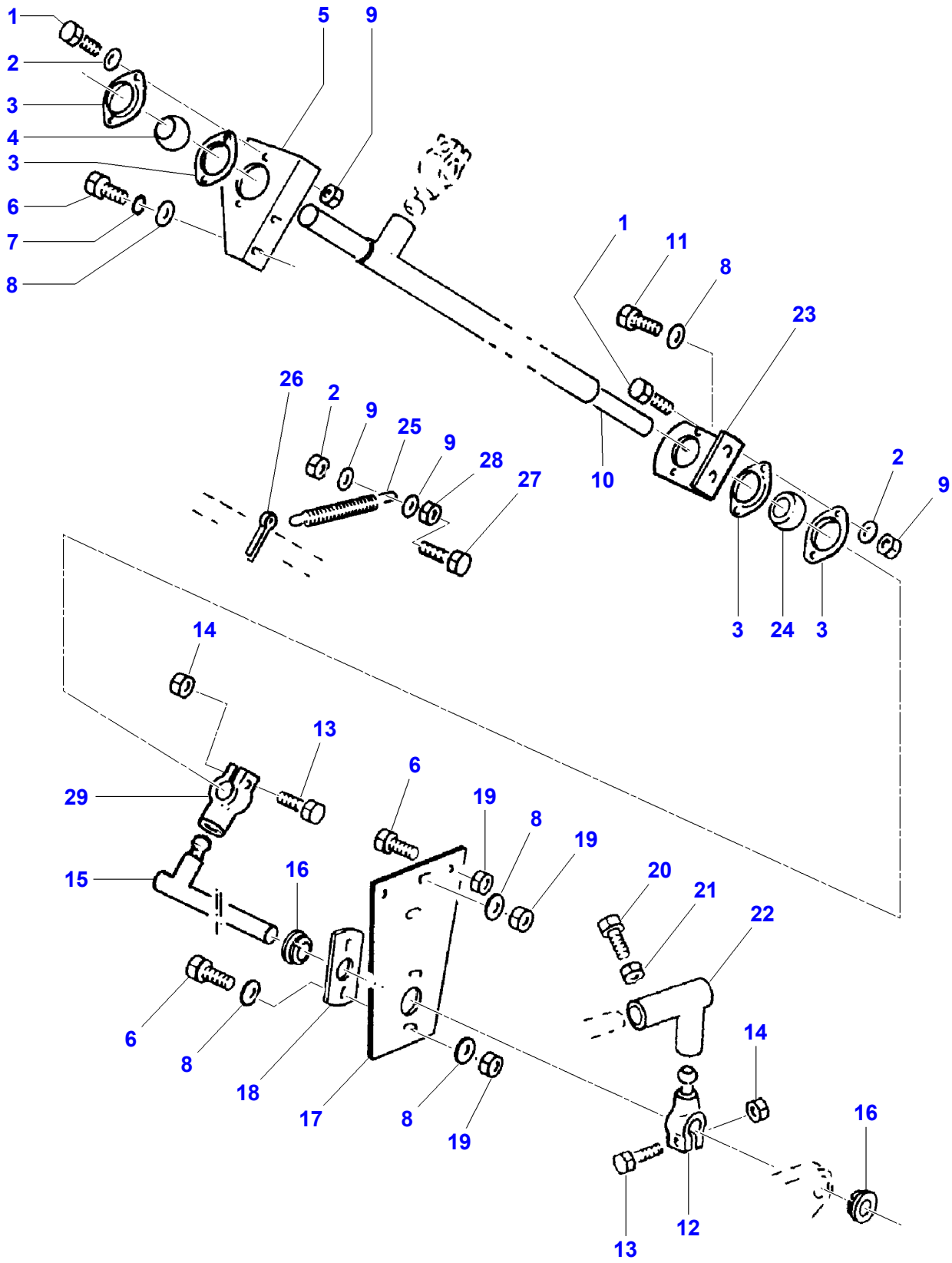
1
2
3
4
3
6
7
8
5
9
1
11
8
23
10
26
2
9
25
9
28
27
2
9
3
24
3
14
13
29
15
16
6
19
8
19
20
21
22
6
8
18
17
8
19
14
16
12
13

D-ACZN-002-B

Item	Part Number	Qty	Description	Comments
1	339666X1	4	Hex. Sock. Screw	M6 X 20
2	D26739994	X	Washer	6,6 X 12,5 X 1,6
3	D26732811	4	Half Flange	
4	D26734127	1	Ball	
5	D26734635	1	Anglepiece	
6	3009493X1	5	Hex. Sock. Screw	M10 X 30
7	D41101900	2	Spring Washer	A10
8	D26739992	X	Washer	11 X 20 X 2
9	D41088800	6	Locknut	M6
10	D26734621	1	Drive Shaft	
11	D26739757	2	Hex. Sock. Screw	M10 X 35
12	D26734147	1	Toggle	
	D26739992	1	Washer	11 X 20 X 2
13	D40407200	2	Hex. Sock. Screw	M10 X 45
14	D26739300	2	Nut	M10
15	D26734831	1	Drive Shaft	
16	D26734740	2	Bush	
17	D26735597	1	Plate	
18	D26734636	1	Support	
19	D28288162	5	Locknut	M10
20	D26745456	1	Bolt	M12 X 45
21	3009695X1	1	Nut	M12
22	D26734614	1	Arm	
23	D26734633	1	Anglepiece	
24	D26734151	1	Ball	
25	D26733340	1	Tension Spring	Length 138
26	391423X1	1	Split Pin	4 X 40
27		1	Hex. Sock. Screw	[A] M6 X 35
28	D41010600	1	Nut	M6
29	D26734787	1	Lever	

FOOTNOTE [A] NUMBER TO BE ADVISED

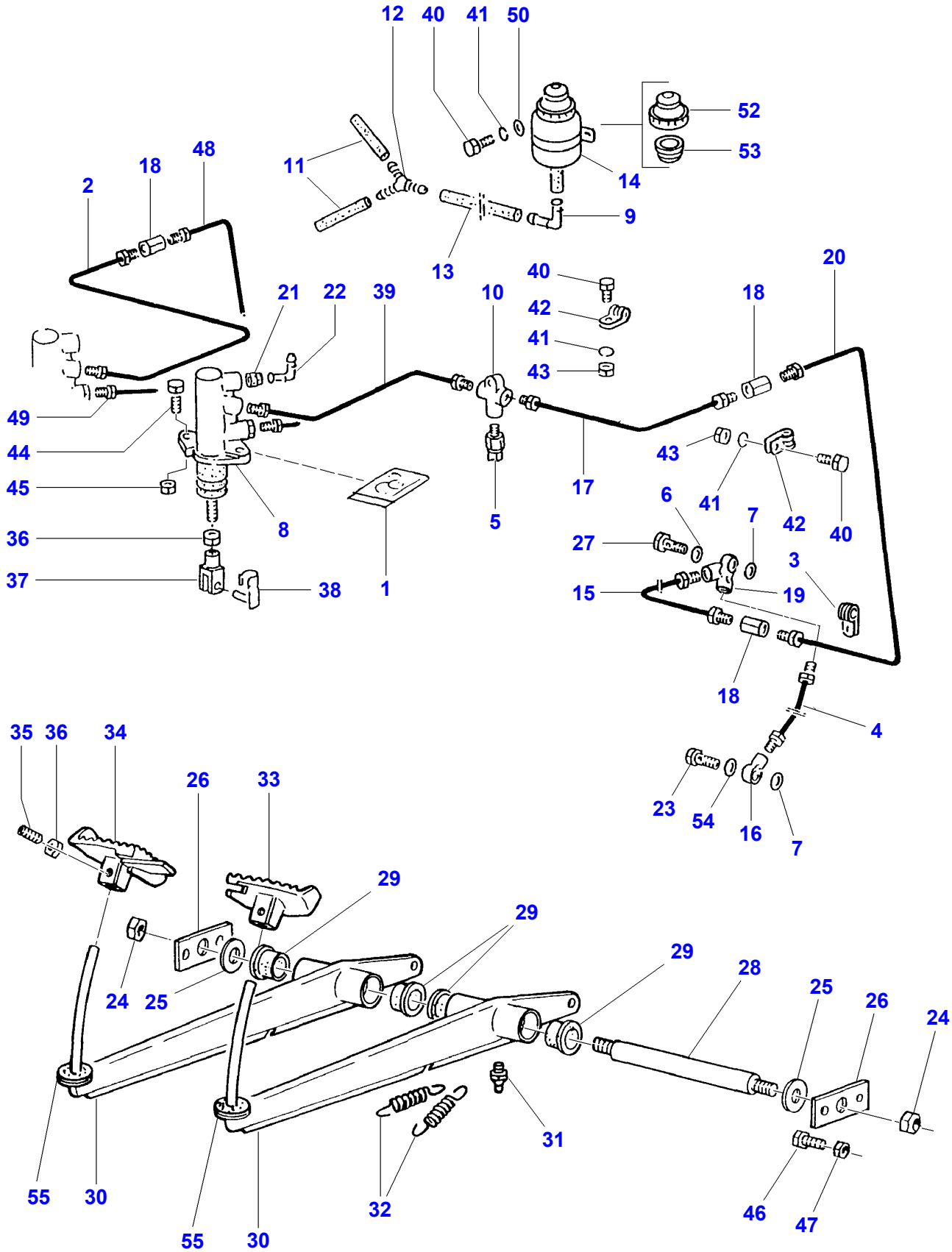
12
40
41
50
52
53
14
11
48
18
2
9
13
40
42
41
43
20
18
21
22
39
10
49
44
45
36
37
8
38
1
5
17
43
41
42
40
6
7
27
15
3
19
18
4
35
36
34
26
33
29
29
29
28
25
26
24
24
25
23
54
16
7
55
30
55
30
32
31
46
47

D-ACZO-001-B

Item	Part Number	Qty	Description	Comments
1	D49030059	X	Kit, Seal	
2	D28981839	1	Brake Line	
3	D26733386	1	Clamp	6,4 X 13
4	D26735704	1	Brake Line	Left Hand
5	**D26733174**	1	Switch	
6	D26739846	2	Seal	A14 X 18
7	D26733189	2	Seal	
8	D26734707	2	Brake Cylinder	
9	D26733200	1	Elbow	
10	D26734340	1	Distributor	
11	D44717800	1	Hose	Length 340 mm
12	D26733681	1	Union	
13	D44717800	1	Hose	Length 520 mm
14	D26733525	1	Expansion Tank	
15	D28981842	2	Pipe	
16	D26734143	2	Union	
17	D28981840	1	Brake Line	
18	D26733524	3	Adaptor	
19	D26733178	2	Union	
20	D28981843	1	Brake Line	Left Hand
21	D26734261	2	Plug	
22	D26733200	2	Elbow	
23	D26733684	2	Banjo Bolt	M10
24	D26740304	2	Nut	
25	D28288166	2	Washer	17 X 40 X 6
26	D26733839	2	Reinforcement	
27	D26733682	2	Screw	M10
28	D26733679	1	Shaft	25 X 286
29	D26733508	4	Bush	
30	D26736235	2	Brake Lever	
31	D26739779	2	Grease Nipple	AM6
32	D26733345	2	Tension Spring	
33	D26733888	1	Pedal	Left Hand
34	D26733887	1	Pedal	Right Hand
35	D40633100	2	Stud	M10 X 16-45H
36	D41012000	4	Nut	M10
37	D26739777	2	Fork Head	G10 X 20
38	D26733306	2	Clevis Pin	10 X 20
39	D28981838	1	Brake Line	
40	339666X1	X	Hex. Sock. Screw	M6 X 20
41	D41100600	X	Spring Washer	A6
42	D26733380	11	Clamp	5 X 15
43	D41010600	6	Nut	M6
44	339123X1	4	Hex. Sock. Screw	M8 X 20
45	D26740007	4	Locknut	M8
46	3009492X1	4	Hex. Sock. Screw	M10 X 25
47	D28288162	4	Locknut	M10
48	D28788597	1	Brake Line	Right Hand
49	D26735635	1	Brake Line	
50	D26740136	3	Washer	6,4 X 18 X 2 ZN
51		1	Tube	[A,B] 13 X 60 Length 50 MM
52		X	Cover	[A]
53		X	Grille	[A]
54	D26739847	2	Seal	12 X 16
55	D26734825	2	Gasket	

FOOTNOTE [A] NUMBER TO BE ADVISED
FOOTNOTE [B] NOT ILLUSTRATED

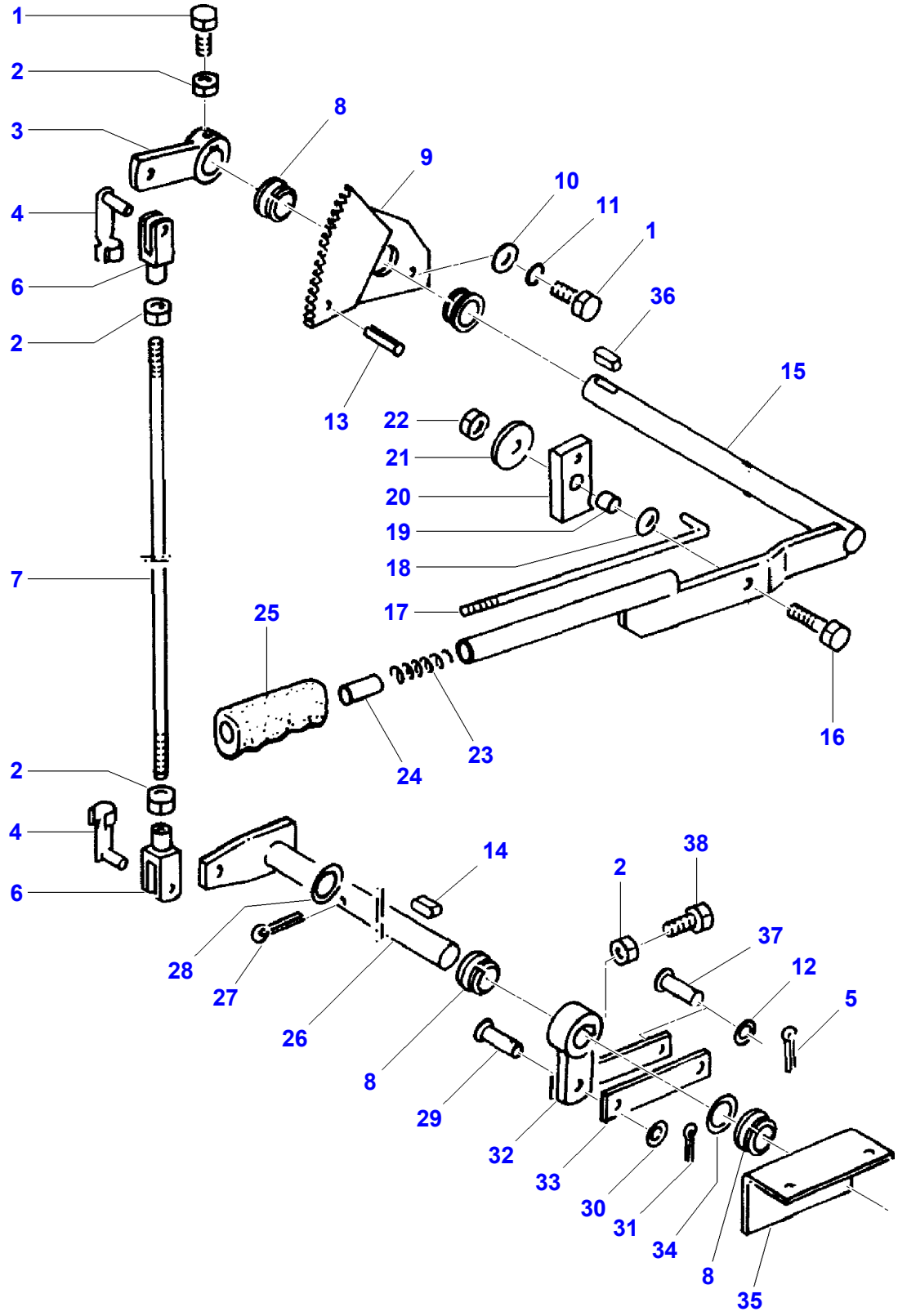
1
2
3
8
9
10
11
1
4
6
36
2
15
13
22
21
20
19
18
7
17
25
16
24
23
2
4
6
14
38
2
37
12
5
28
27
26
8
29
32
33
30
31
34
8
35

D-ACZP-001-A

Item	Part Number	Qty	Description	Comments
1	339124X1	5	Hex. Sock. Screw	M8 X 16
2	339169X1	4	Nut	M8
3	D26734669	1	Lever	
4	D26733102	2	Clevis Pin	8 X 32
5	391405X1	1	Split Pin	4 X 25
6	D26739883	2	Fork Head	8 X 32
7	D26735512	1	Rod	
8	D26733437	4	Bearing Bush	25,3 X 35 X 13
9	D26734608	1	Bracket	
10	D20400420	3	Washer	11 X 45 X 5
11	D41102100	3	Washer	A8
12	D26740099	1	Washer	13 X 24 X 2,5
13		1	Pin	[A] 6 X 40
14	D43103300	1	Key	8 X 7 X 28
15	D26734655	1	Shaft	
16	D40408100	1	Hex. Sock. Screw	
17	D26734620	1	Rod	
18	D26739992	2	Washer	11 X 20 X 2
19	D26733438	1	Spacer	16 X 14
20	D26733439	1	Pawl	30 X 13 X 73
21	D20400420	1	Washer	11 X 45 X 5
22	D28288162	1	Locknut	M10
23	D26733316	1	Comp.Spring	
24	D26733570	1	Button	15 X 30
25	D26733668	1	Handle	
26	D26734637	1	Shaft	
27	391371X1	1	Split Pin	5 X 40
28	D20400531	1	Spacer	
29	D26740036	1	Clevis Pin	10 X 28 / 24
30	D20400471	1	Washer	10,5 X 20 X 2
31	D41406200	1	Split Pin	3,2 X 40
32	D26734148	1	Brake Lever	
33	D26734610	2	Joint Piece	
34	D26740125	2	Washer	25 X 35 X 1
35	D26735613	1	Bracket	
36	D26740039	1	Key Parallel	8 X 7 X 56 A HF.
37	D26740038	1	Clevis Pin	12 X 30 / 25
38	D40404900	1	Hex. Sock. Screw	M8 X 20

FOOTNOTE [A] NUMBER TO BE ADVISED

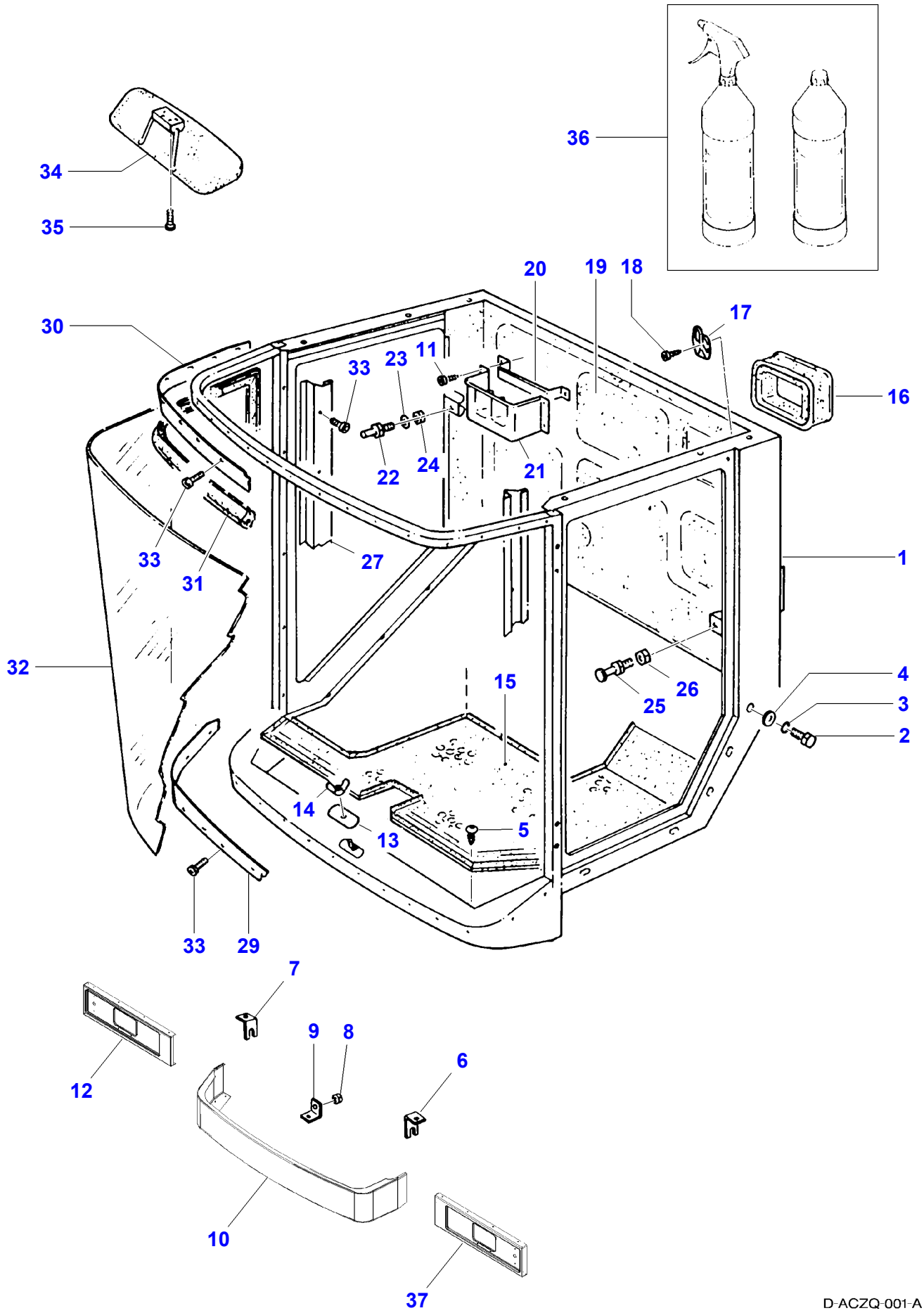
36
34
35
20
19
18
17
30
33
23
11
16
22
24
21
33
31
27
1
32
15
4
26
25
3
2
14
13
5
33
29
7
9
8
6
12
10
37

D-ACZQ-001-A

Item	Part Number	Qty	Description	Comments
1	D26746300	1	Frame	
2	339123X1	16	Hex. Sock. Screw	M8 X 20
3	D41102100	16	Washer	A8
4	D20400408	10	Washer	8,4 X 25 X 3
5	D26735023	5	Plug	
6	D28988046	1	Support	
7	D28988048	1	Support	
8	D41088800	2	Locknut	M6
9	D28988047	4	Shank	
10	D28988016	1	Guard	
11	D26740231	X	Screw	BM4,8 X 16
12	D28988004	1	Cover	
13	D26746691	1	Cover	
14	D26739999	1	Wing Nut	M6
15	D26734938	1	Mat	
16	D26734632	1	Seal	
17	D26741466	1	Hook	
18	D26739076	2	Screw	M3,5 X 9,5
19	D26746274	1	Panel	
20	D26740838	1	Support	
21	D26741268	1	Support	
22	D26746420	1	Clevis Pin	
23	D26739993	1	Washer	9 X 17 X 1,6
24	339169X1	1	Nut	M8
25	D26740306	1	Bolt	
26	3009695X1	1	Nut	M12
27	D26746175	1	Orifice Plate	Right Hand
28	D26746166	1	Orifice Plate	[B] Left Hand
29	D26746177	1	Tongue	
30	D26746245	1	Tongue	
31	D26746268	1	Sealing Strip	
32	D26746277	1	Windscreen	
33	D40402600	40	Hex. Sock. Screw	M6 X 12
34	D26741096	1	Canopy Frame	
35	D26740023	3	Screw	AM5 X 25
36		X	Glazing Kit.	[A]
37	D28988005	1	Cover	

FOOTNOTE [A] NUMBER TO BE ADVISED
FOOTNOTE [B] NOT ILLUSTRATED

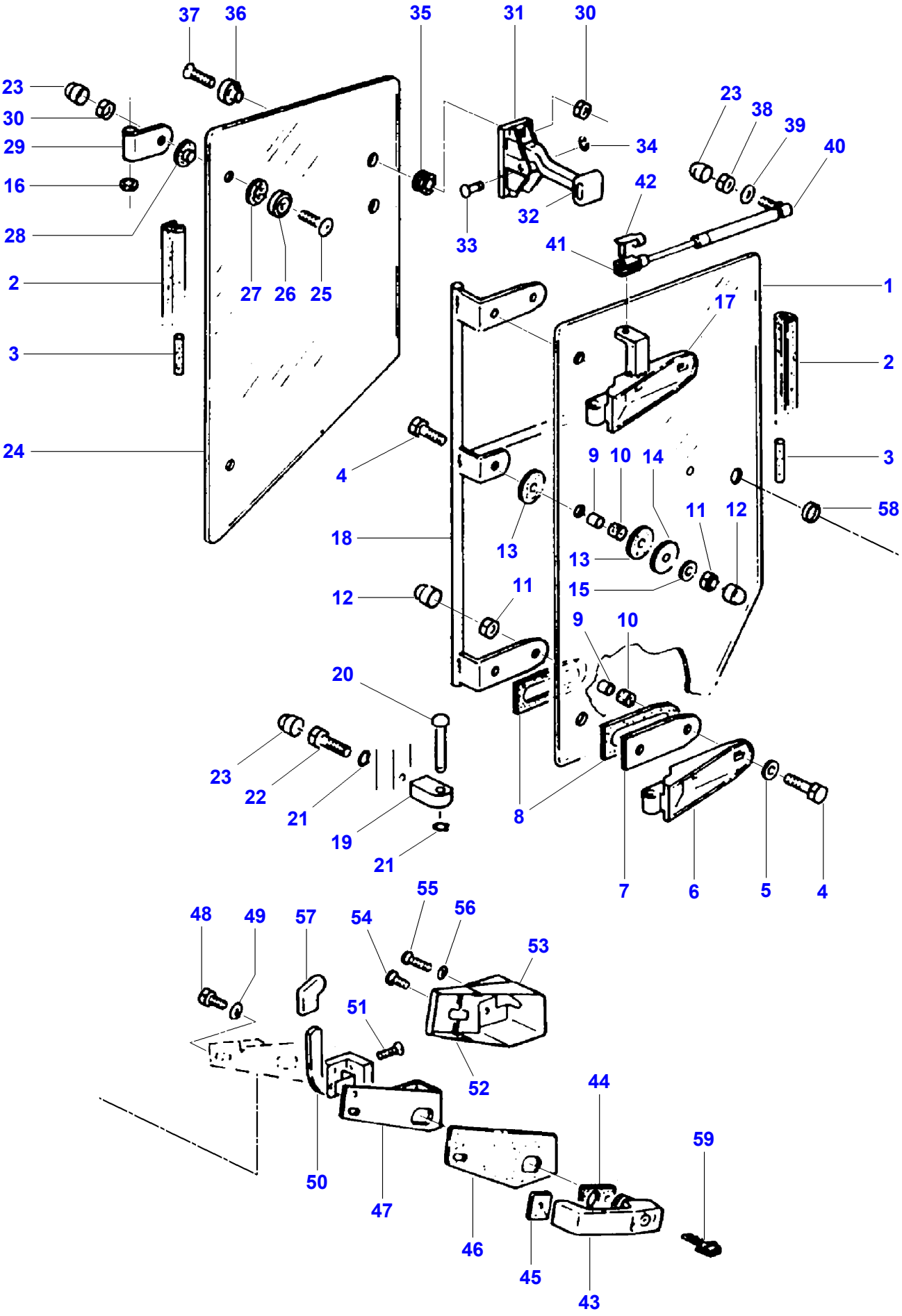
37
36
35
31
30
23
30
29
16
28
2
3
24
27
26
25
33
32
34
42
41
23
38
39
40
1
17
2
3
58
4
9
10
14
11
12
18
13
13
15
12
11
9
10
20
23
22
21
19
21
8
7
6
5
4
48
49
57
54
55
56
53
51
52
50
47
46
44
59
45
43

D-ACZS-001-B

Item	Part Number	Qty	Description	Comments
1	D26746179	1	Glass Pane	
2	D26746148	X	Sealing Strip	Length 3690 MM
3		2	Sealing Strip	[A] 9 X 4,5
4		5	Hex. Sock. Screw	[A] M10 X 40
5	D26740188	4	Washer	10,5 X 25 X 4
6	D26740307	1	Hinge	
7	D26746159	2	Plate	
8	D26740318	4	Support	
9	D26740285	5	Exhaust Pipe	
10	D26740319	5	Rubber Part	
11	D26739325	5	Locknut	M10
12	D26732944	10	Cap	
13	D26740317	2	Support	
14	D26746157	1	Plate	
15	D26740188	1	Washer	10,5 X 25 X 4
16	D26745048	2	Disc	
17	D26746156	1	Hinge	
18	D26746184	1	Door Handle	
19	D26746160	4	Hinge	
20	D26740314	2	Hinge Rod	
21	D42500700	2	Circlip	10 X 1
22	339745X1	4	Hex. Sock. Screw	M8 X 45
23	D45744900	3	Protector	K13
24	D26746180	1	Glass Pane	
25	339149X1	2	Screw Special	M8 X 30
26	D26741468	2	Washer	
27	D26741467	2	Washer	
28	D26741480	2	Washer	
29	D26745081	2	Hinge	
30	339169X1	2	Nut	M8
31	D26740313	1	Support	
32	D26740284	1	Handle	
33	D26740261	1	Clevis Pin	
34	D26739070	1	Washer	
35	D26740305	2	Rubber Piece	
36	D26740281	2	Washer	
37	D26739340	2	Screw	M8 X 30
38	D26740007	1	Locknut	M8
39	D26739993	1	Washer	9 X 17 X 1,6
40	D26746149	1	Shock Absorber	
41		1	Clevis	[A] G6 X 12
42		1	Stop	[A] 6 X 12
43	D26740253	1	Handle	
44	D26740293	1	Support	
45	D26740257	1	Support	
46	D26740322	1	Spacer	
47	D26746252	1	Support	
48	D26740196	1	Hex. Sock. Screw	M6 X 30
49	D26740136	1	Washer	6,4 X 18 X 2 ZN
50	D26740310	1	Lock	
51	D26739327	2	Screw	M6 X 30
52	D26740312	1	Bonnet.	
53	D26740303	1	Bonnet.	
54	D26739788	1	Screw	M6 X 10
55	D26739882	2	Screw	M6 X 25
56	D26739994	3	Washer	3,6 X 12,5 X 1,6
57	D26740321	1	Handle	
58	D26740311	1	Spacer	
59	D26733211	1	Ignition Key	(43)

FOOTNOTE [A] NUMBER TO BE ADVISED

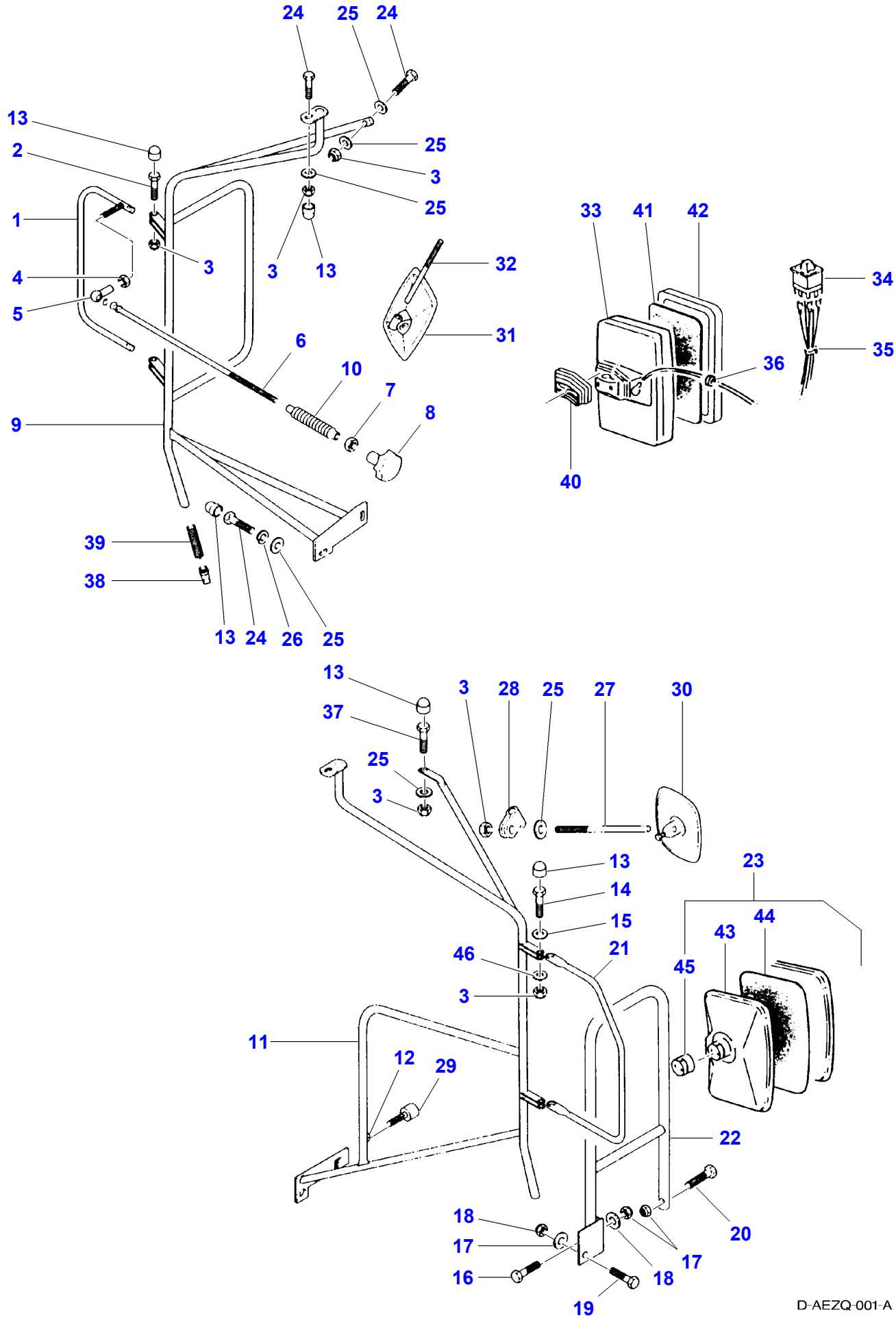
24
25
24
13
2
25
3
25
1
3
3
13
32
4
5
31
6
10
7
8
9
39
38
13
24
26
25
33
41
42
34
35
36
40
13
3
28
25
27
30
37
25
3
13
14
15
46
21
3
23
44
43
45
11
12
29
22
18
17
16
19
17
18
20

D-AEZQ-001-A

Item	Part Number	Qty	Description	Comments
1	D26734852	1	Brace	
2	D40900017	2	Hex. Sock. Screw	M8 X 40
3	D26740007	6	Locknut	M8
4	339402X1	1	Nut	M10
5	D26732875	1	Ball Socket	
6	D26734853	1	Journal	
7	339169X1	1	Nut	M8
8	D26732874	1	Knob	
9		1	Mirror Arm Assy	[A]
10	D26734883	1	Bellows	
11	D26734986	1	Mirror Arm Assy	
12	D41010600	1	Nut	M6
13	D45744900	12	Protector	K13
14	339337X1	2	Hex. Sock. Screw	M8 X 30
15	D20400408	3	Washer	8,4 X 25 X 3
16	3009492X1	1	Hex. Sock. Screw	M10 X 25
17	D28288162	3	Locknut	M10
18	D26739992	2	Washer	11 X 20 X 2
19	D40408600	1	Hex. Sock. Screw	M10 X 70
20	D40426000	1	Hex. Sock. Screw	M10 X 45
21	D26735620	1	Retainer	
22	D16735372	1	Grip	
23	D26734544	2	Mirror	
24	339123X1	X	Hex. Sock. Screw	M8 X 20
25	D26739993	X	Washer	9 X 17 X 1,6
26	D41102100	6	Washer	A8
27	D26734226	1	Retainer	
28	D26734227	2	Clamp	
29	D26733516	1	Buffer	
30	D26733426	1	Mirror	
31	D26747087	1	Mirror	
32	D26747474	1	Mirror Arm Assy	
33	D26734755	1	Mirror	[B]
34		1	Switch	[A,B]
35	D26734711	1	Kit, Cable	[B]
36	D26733627	2	Cable Sleeve	[B] 8 X 12
37	D40425000	1	Hex. Sock. Screw	M8 X 35
38	D26733714	2	Pressure Valve	
39	D26735016	2	Tube	
40		X	Bellows	[A,B]
41		X	Mirror Glass	[A,B]
42		X	Support	[A,B]
43		X	Mirror Glass	[A] (23)
44		X	Support	[A] (23)
45		X	Plate	[A] (23)
46	D20400506	1	Washer	

FOOTNOTE [A] NUMBER TO BE ADVISED
FOOTNOTE [B] FOR ELECTRIC MIRRORS

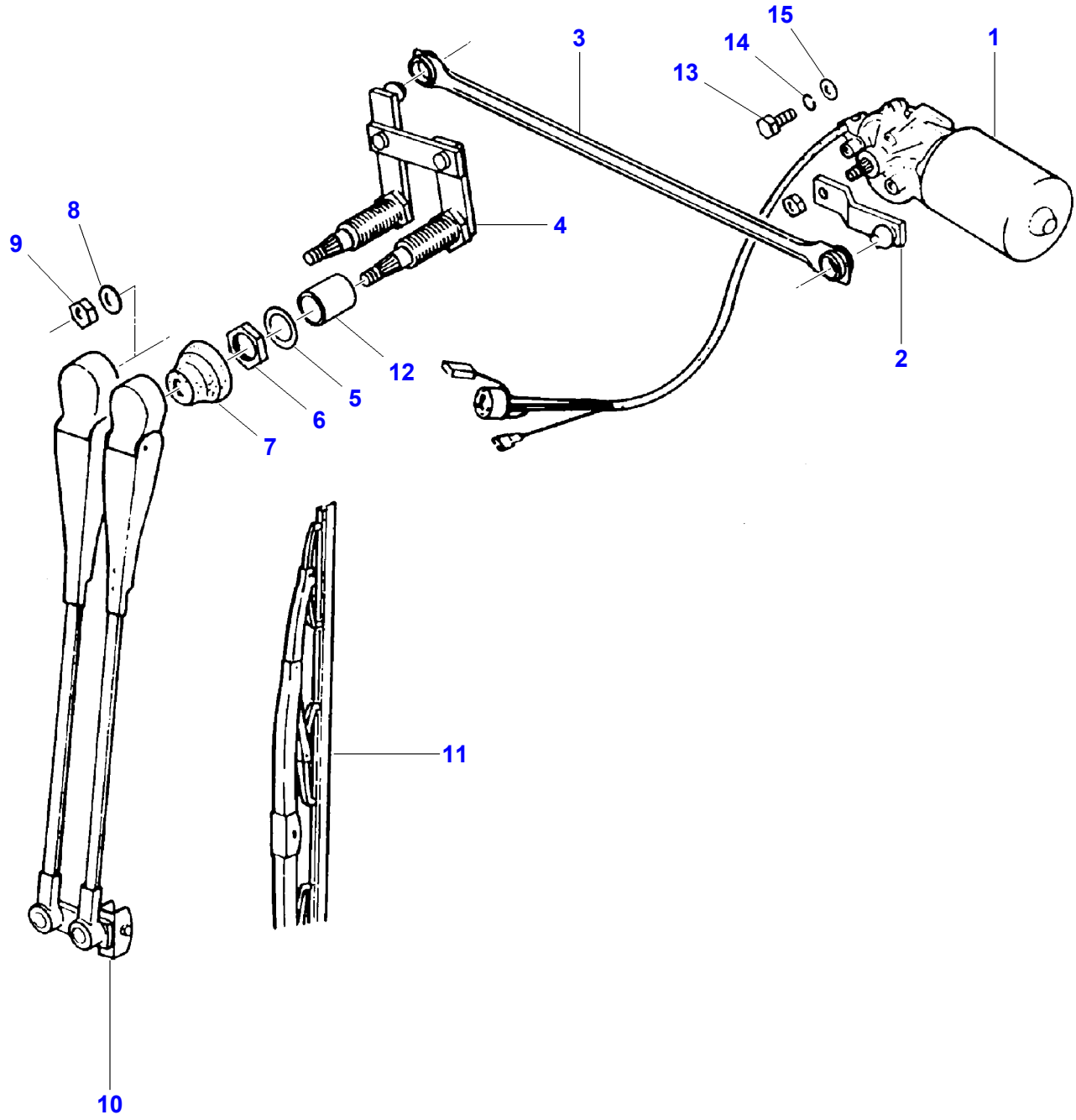

D-AEZP-001-A

Item	Part Number	Qty	Description	Comments
1	D26745999	1	Wiper Motor	
2	D26746020	1	Crank	
3	D26746019	1	Stem	
4	D26746018	1	Joint Piece	
5		X	Washer	[A]
6		X	Nut	[A] (5)
7		X	Cover Gasket	[A] (5)
8		X	Washer	[A] (5)
9		X	Nut	[A] (5)
10	D26745998	1	Wiper Arm	
11	D26745997	2	Wiper Blade	
12	D26741464	2	Spacer	
13	339666X1	3	Hex. Sock. Screw	M6 X 20
14	D41100600	3	Spring Washer	A6
15	D26740136	3	Washer	6,4 X 18 X 2 ZN
16	D26733386	1	Clamp	[B] 6,4 X 13

FOOTNOTE [A] NUMBER TO BE ADVISED
FOOTNOTE [B] NOT ILLUSTRATED

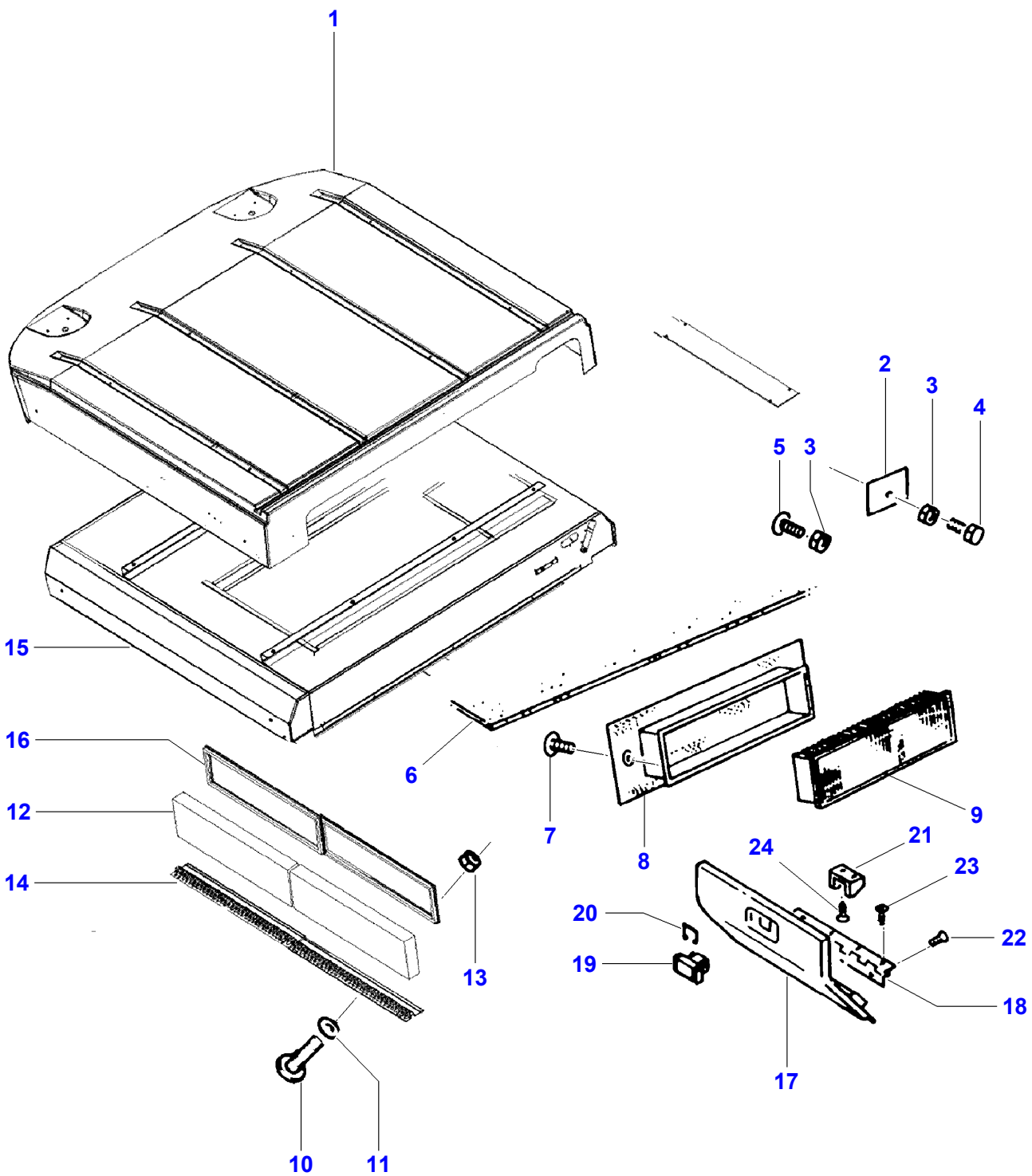

D-ACZV-001-A

Item	Part Number	Qty	Description	Comments
1	D28988050	1	Roof	
2	D26733901	1	Shield	
3	D41088800	4	Locknut	M6
4	391074X1	1	Hex. Sock. Screw	M6 X 12
5	D26740126	3	Bolt	M6 X 12
6	D26746183	1	Floor Covering	
	D26746182	1	Floor Covering	Left Hand
	D26746181	1	Floor Covering	Right Hand
7	D26740135	2	Bolt	M6 X 15
8	D26738152	1	Support	
9	**D26740287**	1	Cab Filter	
10	D26737379	4	Handle	
11	D26740161	4	Washer	10,5 X 30 X 3 ZN
12	**D26745063**	2	Cab Filter	
13	D26740007	10	Locknut	M8
14	D28988010	2	Grate	
15	D28988020	1	Roof	
16	D26738267	2	Gasket	
17	D26746473	1	Cover	
18	D26746688	1	Hinge	
19	D26746738	1	Lock	
20	D26746449	1	Brace	
21	D26746693	1	Cotter	
22	D26739328	3	Screw	M5 X 8
23	D26739326	4	Screw	
24	D26740231	2	Screw	B4,8 X 16

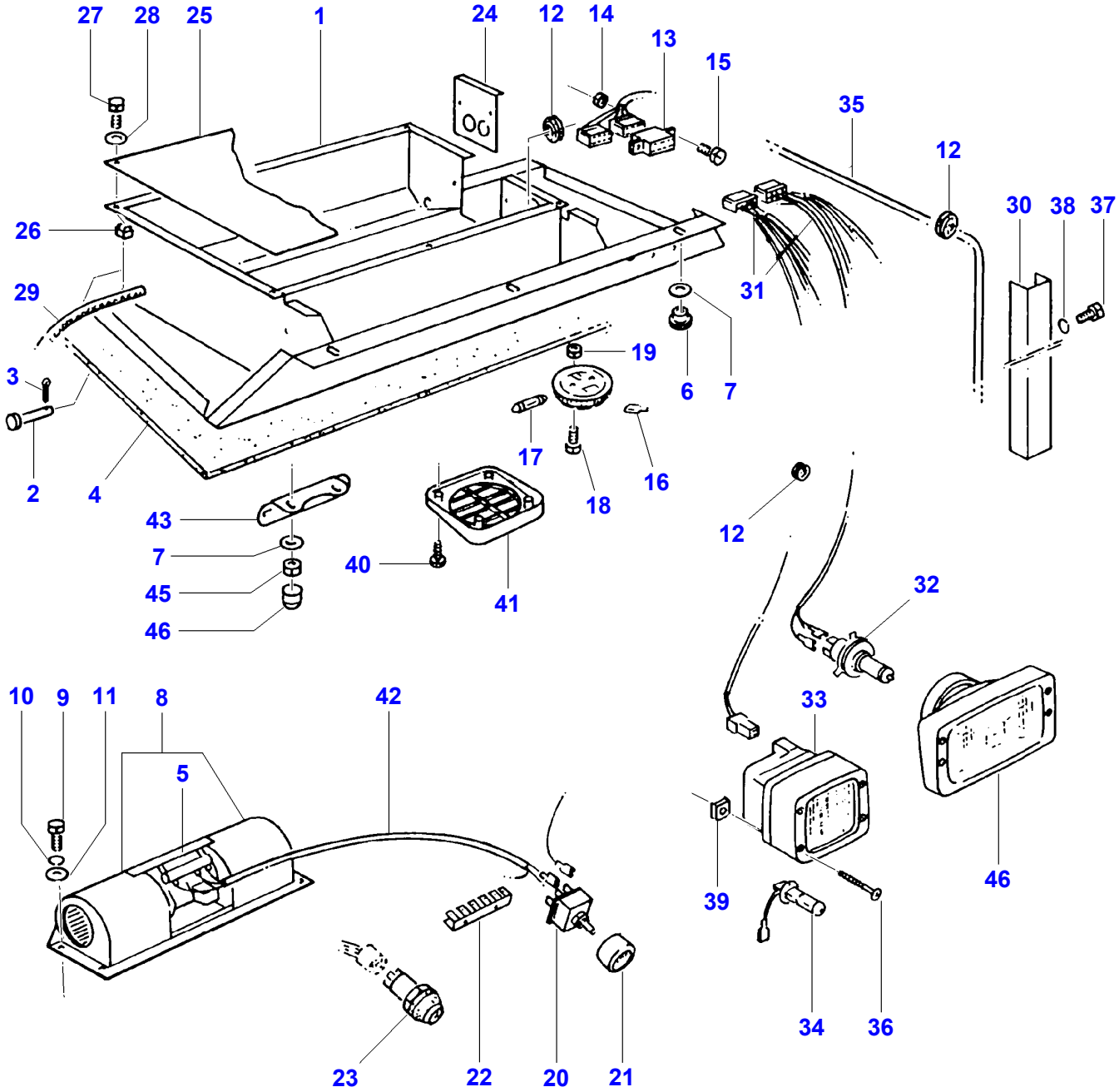
27
28
25
1
24
12
14
13
15
35
12
30
38
37
26
29
31
3
19
6
7
2
4
17
18
16
43
7
45
46
40
41
12
32
10
9
11
8
42
5
33
39
46
34
36
23
22
20
21

D-ACZW-001-A

Item	Part Number	Qty	Description	Comments
1	D26746302	1	Trough	
2	D26739313	2	Bolt	
3	391403X1	2	Split Pin	3,2 X 32
4	D26746273	1	Panel	
5	D26730000	X	Resistor	(8)
6	D26739371	3	Screw	M6
7	D26740136	3	Washer	6,4 X 18 X 2 ZN
8	D26744506	1	Fan	
9	D40400700	4	Hex. Sock. Screw	M5 X 16
10	D41100500	4	Washer	A5
11	D26739345	4	Washer	5,3 X 10 X 1
12	D26733712	12	Cable Sleeve	4 X 12 X 16
13	D26733136	1	Plug-In Nipple	
14	D26740022	2	Locknut	M5
15	D40352200	2	Screw	AM5 X 12
16	D26740320	1	Inside Light	
17	D26740241	1	Bulb 12v	15W
18	D40351800	2	Screw	AM4 X 12
19	D41087200	2	Locknut	M4
20	D26741121	1	Switch	
21	D26741050	1	Knob	
22	D26733704	1	Bar	
23	D26739216	1	Switch	
24	D26740762	1	Second. Piece	
25	D26738126	1	Cover	
26	D26739153	7	Nut	
27	D26740004	7	Screw	AM6 X 16
28	D26739994	7	Washer	6,6 X 12,5 X 1,6
29	D26739202	1	Hose	10 X 16 X 6400
30	D26740670	1	Shield	
31	D28980996	1	Wiring Harness	RADIO
32	D26733084	X	Bulb 12v	60 / 55W
33		6	Worklamp	[A]
34	D26739985	X	Bulb H3	
35		1	Harness	[A]
36		24	Screw	[A] M3,9 X 60
37	391074X1	2	Hex. Sock. Screw	M6 X 12
38	D41100600	2	Spring Washer	A6
39	D26736059	X	Nut	
40	D26739189	4	Screw	M4,2 X 25
	D26739156	4	Screw	M4,2 X 32
41	D26744245	2	Blower	
42	D26744299	1	Kit, Cable	
43	D26746150	1	Profile	
44	D26740007	2	Locknut	[C] M8
45	D45744900	2	Protector	K13
46	D26736042	2	Lamp	[B]

FOOTNOTE [A] NUMBER TO BE ADVISED
FOOTNOTE [B] OPTIONAL
FOOTNOTE [C] NOT ILLUSTRATED

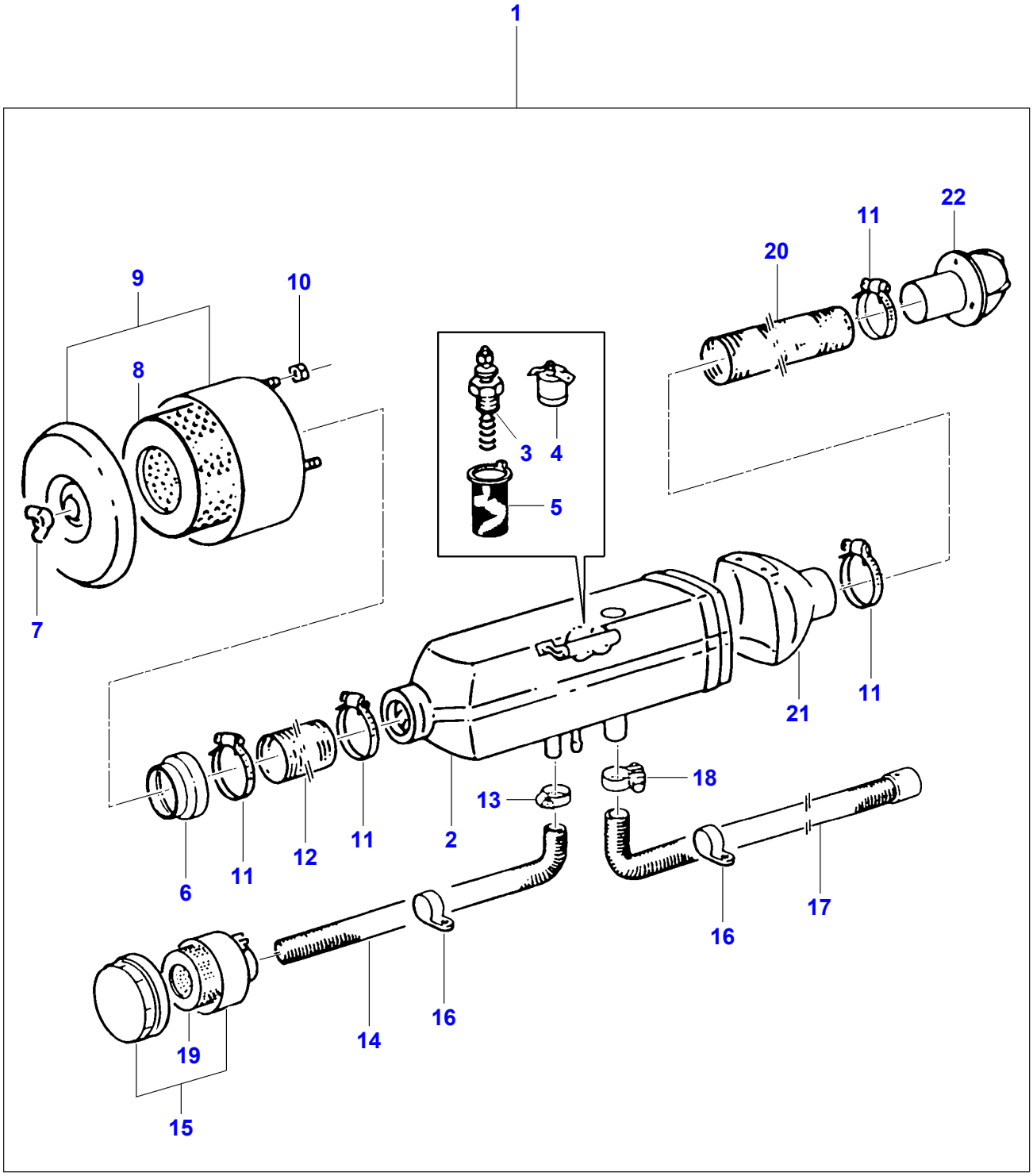

D-AZZN-001-A

Item	Part Number	Qty	Description	Comments
1		1	Kit, Heater	[A]
2	D26734704	1	Heater	
3		1	Spark Plug	[A]
4		1	Commutator	[A]
5		1	Chaffer	[A]
6		1	Reducer	[A]
7	D26739999	1	Wing Nut	M6
8		1	Cartridge	[A]
9		1	Air Filter	[A]
10	D41010600	3	Nut	M6
11	1440860X1	4	Clamp	B50-70 / 13
12		1	Hydr. Hose	[A] 60 X 700
13	D26733110	1	Clamp	B13C25-40
14		1	Warm Air Ducting	[A]
15		1	Air Filter	[A]
16		X	Clamp	[A]
17		1	Warm Air Ducting	[A]
18		1	Clamp	[A]
19	D45080106	1	Element,Filter	
20		1	Hydr. Hose	[A] 60 X 1500
21		1	Spray	[A]
22		1	Distributor	[A]

FOOTNOTE [A] NUMBER TO BE ADVISED

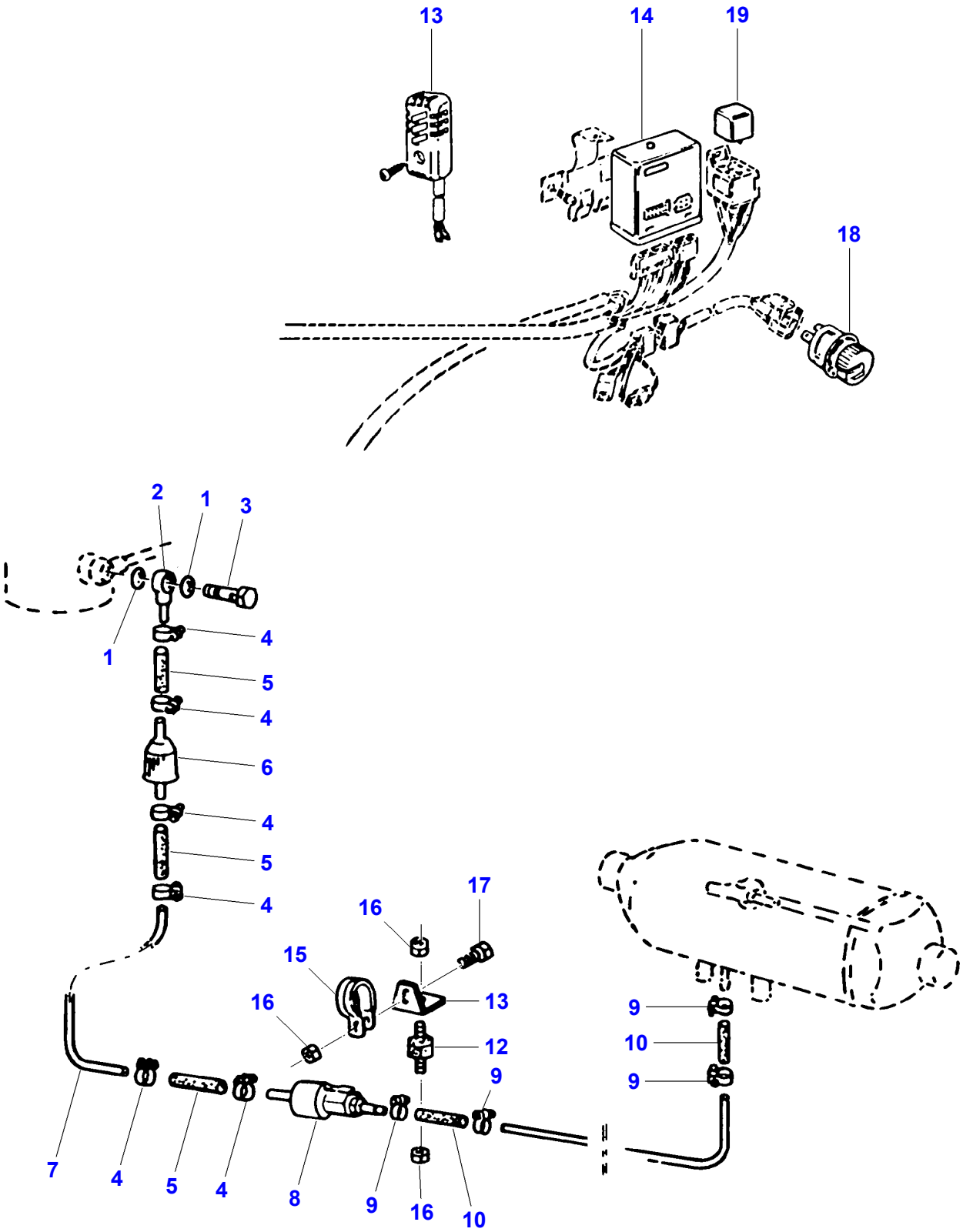

D-AZZN-002-A

Item	Part Number	Qty	Description	Comments
1	D26739846	2	Seal	A14 X 18
2		1	Sleeve	[A]
3		X	Banjo Bolt	[A]
4		6	Clamp	[A] Diameter 9
5		X	Pipe	[A] 3,5 X 2 X 100 Length 50 MM
6		1	Fuel Filter	[A]
7		1	Tube	[A] 6 X 2 X 2000
8		1	Fuel Pump	[A]
9		4	Clamp	[A] Diameter 7
10		2	Pipe	[A] 3,5 X 2 X 100
11		1	Tube	[A,B] 4 X 1,25 X 7500
12		1	Rubber Piece	[A]
13		1	Temp. Sensor	[A]
14		1	Instrument Box	[A]
15		1	Clamp	[A] Diameter 34 / 15
16	D41010600	2	Nut	M6
17	339560X1	1	Hex. Sock. Screw	M6 X 16
18		1	Commutator	[A]
19		1	Relay	[A]

FOOTNOTE [A] NUMBER TO BE ADVISED
FOOTNOTE [B] NOT ILLUSTRATED

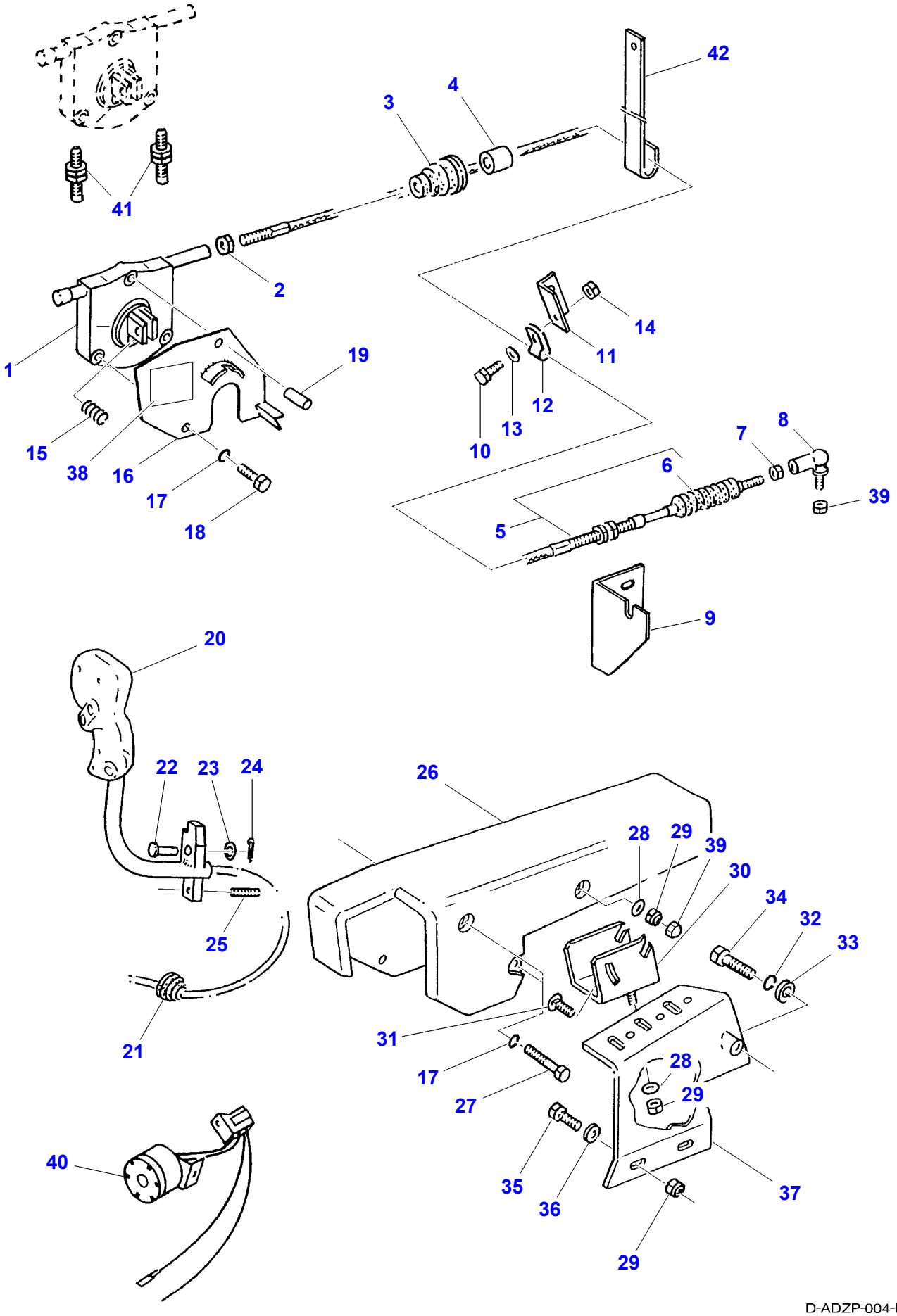
42
4
3
41
2
1
19
14
11
12
13
10
15
38
16
17
18
7
8
6
39
5
9
20
22
23
24
26
28
29
39
30
34
32
33
25
21
31
17
27
28
29
40
35
36
37
29

D-ADZP-004-B

Item	Part Number	Qty	Description	Comments
1	D26736492	1	Plug-In Nipple	
2	D46434600	1	Nut	M12
3	D26734668	1	Bellows	
4	D26734667	2	Seal	
5	D26746394	1	Cable	
6	D26734883	1	Bellows	
7	D41010600	1	Nut	M6
8	D26739334	1	Linkage	AS13 / M6
9	D26734848	1	Retainer	
10	339804X1	1	Hex. Sock. Screw	M6 X 25
11	D26734932	1	Retainer	
12	D26732906	1	Clamp	Diameter 8,7
13	391038X1	1	Washer	6,4 X 18 X 1,6
14	1441462X1	1	Locknut	M6
15	D26734882	1	Comp.Spring	
16	D26734888	1	Plate	
17	D41100600	3	Spring Washer	A6
18	339229X1	1	Hex. Sock. Screw	M6 X 40
19	D26734847	1	Spacer	
20	D26734862	1	Joystick	
21	D26734543	1	Grommet	
22	D26732903	1	Clevis Pin	
23	D26739992	1	Washer	11 X 20 X 2
24	339129X1	1	Split Pin	3,2 X 25
25	D26739074	1	Grub Screw	M6 X 35
26	D26734881	1	Arm	
27	D40422700	2	Hex. Sock. Screw	M6 X 75
28	D20400419	3	Washer	9 X 17 X 1,6
29	394367X1	5	Locknut	M8
30	D26734846	1	Support	
31	339170X1	1	Screw Special	M8 X 20
32	D26739978	1	Spring Washer	A12
33	D20400446	1	Washer	13 X 30 X 4
34		1	Hex. Sock. Screw	[A] 7 / 16"
35	339337X1	2	Hex. Sock. Screw	M8 X 30
36	D20400408	2	Washer	8,4 X 25 X 3
37	D28988030	1	Support	
38	D26732923	1	Decal	
39	D45744900	1	Protector	M6
40	D26735336	1	Horn	
41	D26736493	2	Sensor	
42	D26734933	1	Retainer	

FOOTNOTE [A] NUMBER TO BE ADVISED

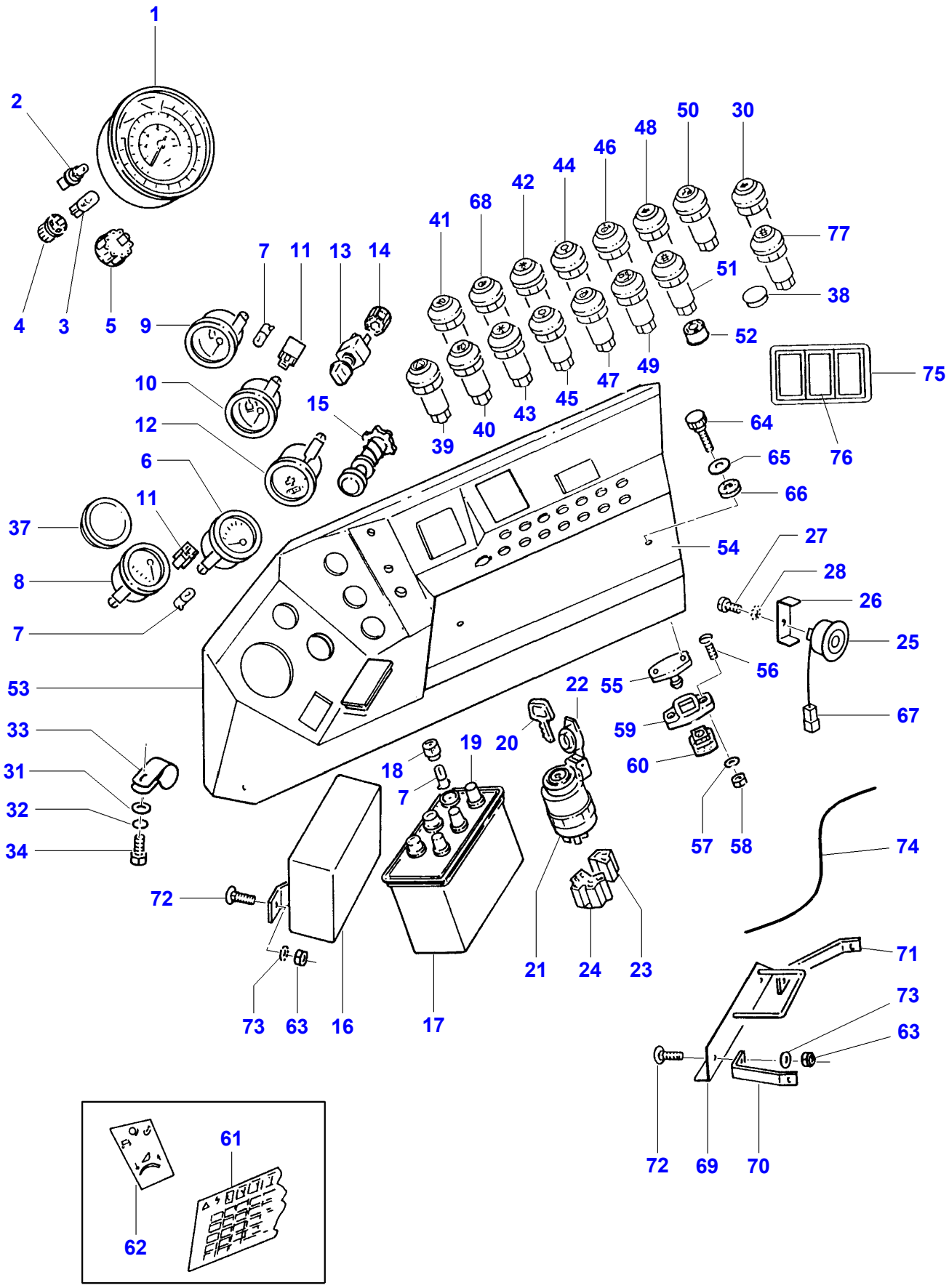
1
2
4
3
5
9
7
11
13
14
10
12
15
6
11
37
8
7
53
33
31
32
34
72
73
63
16
17
18
19
20
7
22
21
24
23
55
59
60
57
58
56
54
41
68
42
44
46
48
50
30
77
51
38
52
75
64
65
66
76
39
40
43
45
47
49
27
28
26
25
67
74
71
73
63
72
69
70
61
62

Item	Part Number	Qty	Description	Comments
1	D26738323	1	Combi-Instrument	
2		16	Bulb 12v 2w	[A]
3	D26736975	1	Bulb 12v 3w	
4	D26730129	1	Lamp Socket	
5	D26741055	1	Plug-In Nipple	12 POL SCHWARZ
	D26741054	1	Plug-In Nipple	12 POL WEISS
6	D26738908	1	Gauge	
7	D26740215	X	Bulb	J / 2W
8	D26739363	1	Gauge	[B]
9	D26733703	1	Temp Gauge	
10	D26739187	1	Temp Gauge	
11	D26739105	2	Chassis	
12	D26739364	1	Hourmeter	
13	D26739329	1	Rotary Switch	
14	D26739157	1	Fiche Holder	
15	D26741116	1	Lighter	
16	D26741067	1	Control Unit	
17	D26734496	1	Instrument Box	
18	D26730130	X	Light Part	
19	D26730131	X	Turn Button	
20	D26733211	1	Ignition Key	
21	D26739218	1	Starting Switch	
22		1	Cover	[A]
23	D26739146	1	Housing	
24	D26739147	1	Chassis	
25	D26741048	1	Buzzer	
26	D26745280	1	Bracket	
27	D26739311	1	Screw	M3 X 8
28	D26740189	1	Tooth Washer	A3,2
29		1	Union	[A,C]
30	D44900856	1	Switch	Left Hand RAPE
31	D26740136	X	Washer	6,4 X 18 X 2 ZN
32	D41100600	6	Spring Washer	A6
33	D26733209	1	Hose Clip	Diameter 38
34	391074X1	1	Hex. Sock. Screw	M6 X 12
35	D26734850	1	Cover	[C]
36	D26730132	1	Blank Cover	[C]
37	D26732912	X	Blank Cover	
38	D26733203	4	Cap	
39	D26741061	1	Blinker Switch	
40	D26739321	1	Light Switch	
41	D26730133	1	Pressure Switch	
42	D26741060	1	Switch	
43	D26741059	1	Switch	
44	D26739379	1	Switch	
45	D26739378	1	Switch	
46	D26741933	1	Switch	
47	D26741932	1	Switch	
48	D26733127	1	Switch	[B]
49	D26739330	1	Switch	
50	D26730134	1	Pressure Switch	[B]
51	D26732935	1	Switch	[B]
52	D26739199	X	Plug Socket	
53	D26742259	1	Housing	
54	D26734710	1	Cover	
55	D26744300	1	Spigot	
56	D26740283	4	Screw	
57	D26739995	4	Washer	5,5 X 10 X 1
58	D26740022	4	Locknut	M5
59	D26734795	1	Chassis	
60	D26734796	1	Buffer	
61	D26736499	1	Decal	(54)
62	D26739337	1	Decal	
63	D41088800	8	Locknut	M6
64	D26734774	2	Screw	(54) M6 X 30
65	D26732777	2	Washer	(54) 6,4 X 18 X 1,5
66	D26733686	2	Disc	(54)
67		1	Connectors	[A]
68	D26733130	1	Switch	[B]

Item	Part Number	Qty	Description	Comments
69		1	Stop	[A]
70	D26744781	1	Connection	
71	D26744780	1	Connection	
72	D26739197	8	Screw	M6 X 25
73		2	Washer	[A]
74	D28782804	1	Harness	
75	D26742580	2	Fitting	
76	D26730135	6	Blank Cover	
77	D26732943	1	Switch	Right Hand RAPE

FOOTNOTE [A] NUMBER TO BE ADVISED
FOOTNOTE [B] OPTIONAL
FOOTNOTE [C] NOT ILLUSTRATED

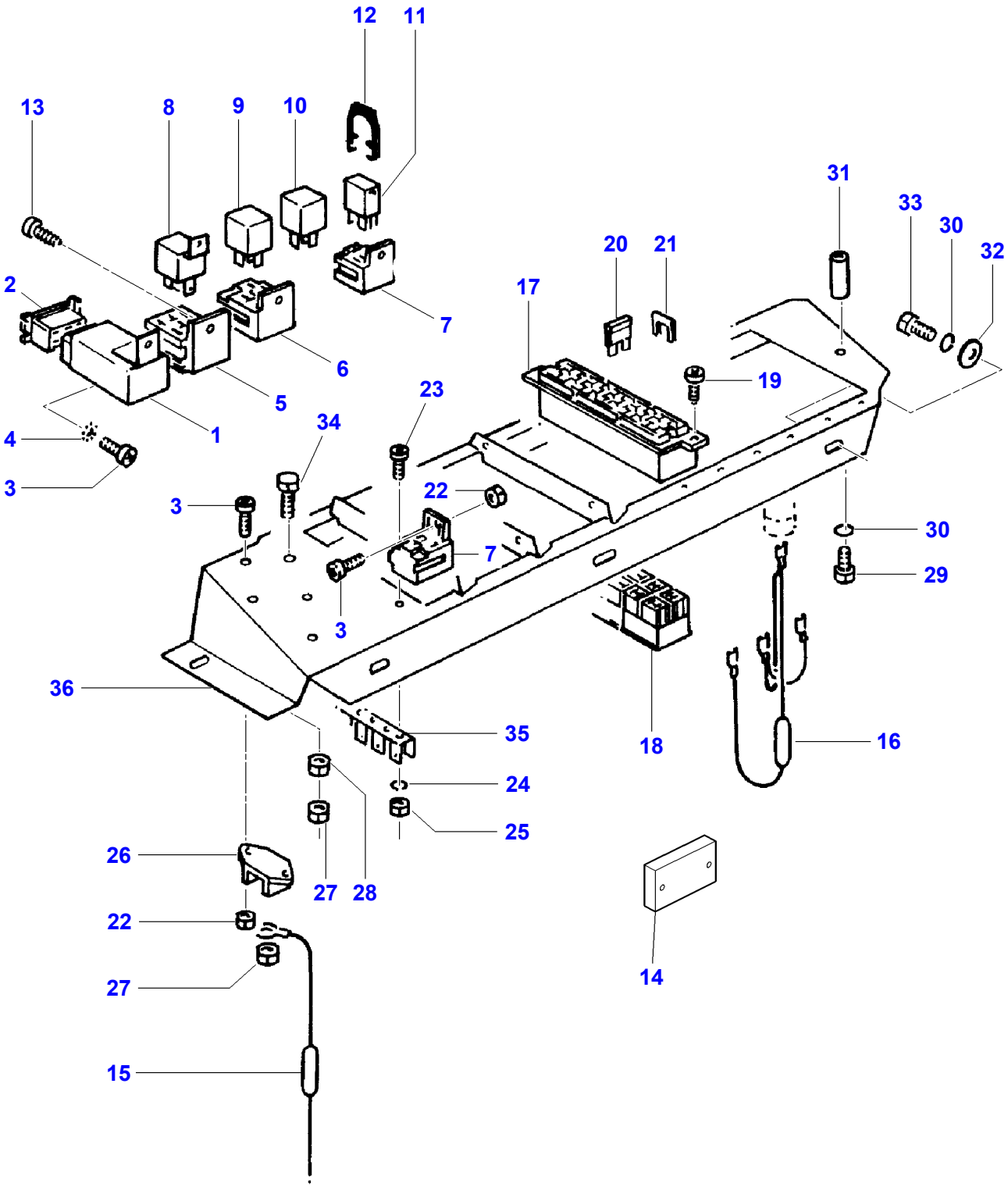
12
11
13
8
9
10
31
33
30
32
20
21
2
17
7
6
5
19
23
4
1
34
22
3
3
7
30
29
3
36
35
18
16
24
25
26
27
28
22
27
15
14

D-AAZG-001-A

Item	Part Number	Qty	Description	Comments
1	D26739193	1	Relay	
2	D26741057	1	Housing	
3	D26740177	X	Screw	M5 X 12
4	D26739819	1	Tooth Washer	Diameter 5,3
5	D26739219	1	Pedestal	L2
6	D26739091	5	Pedestal	
7	D26739161	38	Support	
8	D26740246	1	Relay	70 Amp
9	D26745282	1	Retainer	
10	**D45070089**	3	Relay	
11	**D26732913**	28	Relay	
12	D26730136	1	Trigger	
13	D26739288	4	Screw	M4,8 X 9,5
14	D28988098	1	Spacer	
15	D49030054	1	Resistor	82 Ohm
16	D26744301	1	Diode	
17	D26739888	1	Fuse Box	
	D26739853	1	Fuse Box	
	D26739879	1	Fuse Box	
	D26739881	1	Fuse Box	
	D26739862	1	Fuse Box	
18	D26739858	1	Switch,Indirect	
	D26739857	1	Switch,Indirect	
	D26739856	1	Switch,Indirect	
	D26739855	1	Switch,Indirect	
	D26739854	1	Switch,Indirect	
19	D26739971	10	Screw	M3,5 X 9,5
20		1	Fuse	[A]
				4 Amp
	D26739213	X	Fuse	7,5 Amp
	D26739145	X	Fuse	10 Amp
	D26740258	X	Fuse	15 Amp
	D26740254	X	Fuse	20 Amp
	D26739154	X	Fuse	25 Amp
21	D26739206	X	Bridge	
22	D26740022	10	Locknut	M5
23	D26739311	3	Screw	M3 X 8
24	D26739980	3	Spring Washer	A3
25		3	Nut	[A]
				M3
26	D26730137	2	Cable Clamp	
27	D26740007	3	Locknut	M8
28	339169X1	1	Nut	M8
29	339230X1	2	Hex. Sock. Screw	M6 X 10
30	D41100600	7	Spring Washer	A6
31	D26744270	2	Threaded Bush	
32	D26740136	5	Washer	6,4 X 18 X 2 ZN
33	D26739752	5	Hex. Sock. Screw	M6 X 8
34	339337X1	1	Hex. Sock. Screw	M8 X 30
35	D26733704	1	Bar	
36	D26745258	1	Fuse Holder	

FOOTNOTE [A] NUMBER TO BE ADVISED

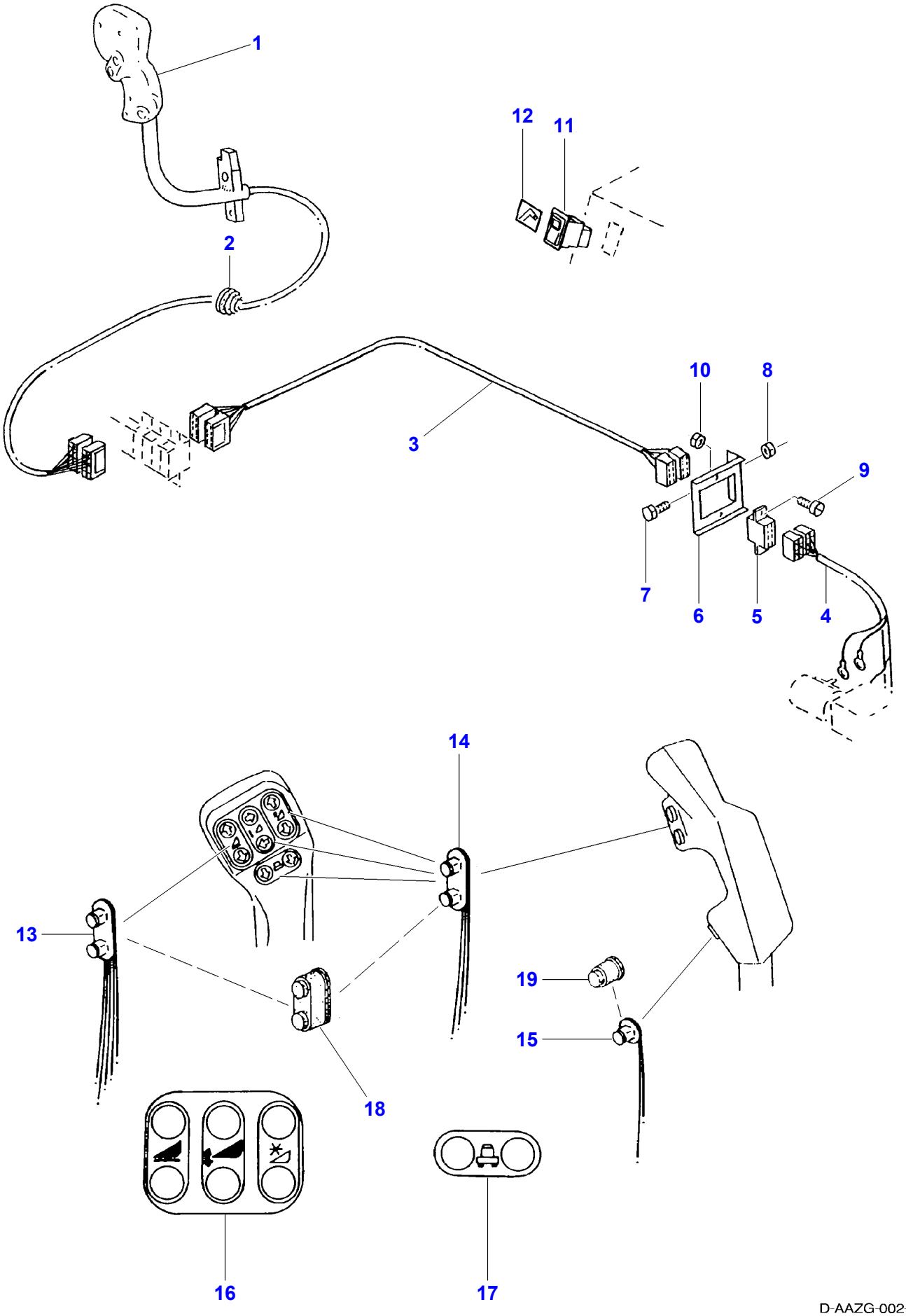
1
2
12
11
3
10
8
9
7
6
5
4
14
13
19
15
18
16
17
D-AAZG-002-A

Item	Part Number	Qty	Description	Comments
1	D26734862	1	Joystick	
2	D26734543	1	Grommet	
3	D26734640	1	Wiring Harness	
4	D26734641	1	Wiring Harness	
5	D26733140	1	Plug-In Nipple	
	D26733095	1	Plug-In Nipple	
6	D26736596	1	Retaining Plate	
7	391074X1	2	Hex. Sock. Screw	M6 X 12
8	D41088800	2	Locknut	M6
9	D40352200	2	Screw	M5 X 12
10	D26740022	2	Locknut	M5
11	D26732921	1	Switch	
12	D26732922	1	Symbol	
13		1	Commutator	[A] TYP 1
14		X	Commutator	[A] TYP 2
15		1	Commutator	[A] TYP 3
16		1	Decal	[A]
17		1	Decal	[A]
18		X	Helmet	[A]
19		1	Helmet	[A]

FOOTNOTE [A] NUMBER TO BE ADVISED

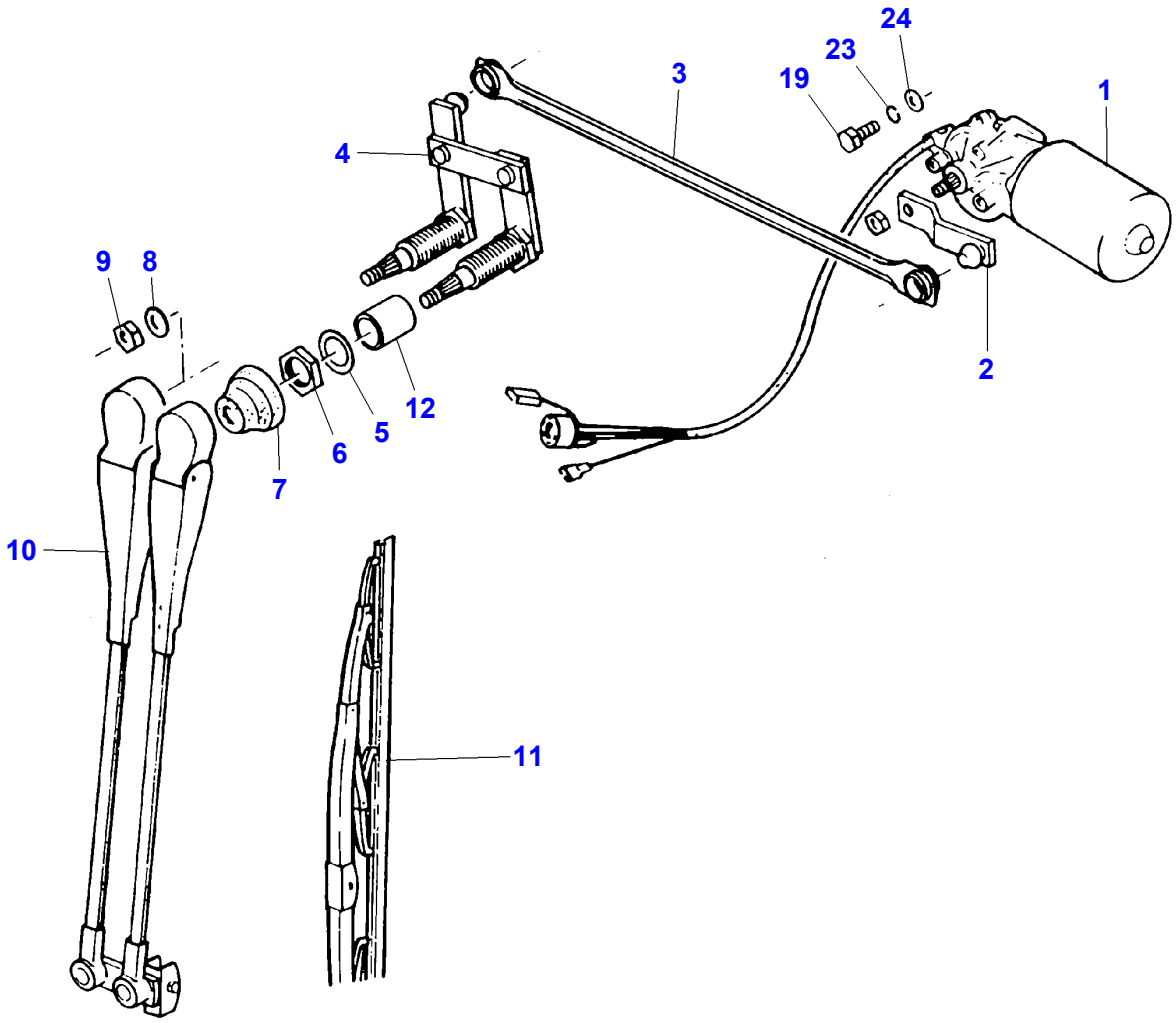

D-AEZP-002-A

Item	Part Number	Qty	Description	Comments
1	D26745999	1	Wiper Motor	
2	D26746020	1	Crank	
3	D26746019	1	Stem	
4	D26746018	1	Joint Piece	
5		1	Parts Pack	[A]
6		1	Parts Pack	[A]
7		1	Parts Pack	[A]
8		1	Washer	[A]
9		1	Nut	[A]
10	D26745998	1	Wiper Arm	
11		2	Wiper Blade	[A]
12		1	Not Used	[A]
13	D26733386	1	Clamp	[B]
				6,4X13
19	D40402600	3	Hex. Sock. Screw	M6X20
23	D41100600	3	Spring Washer	A6
24	D26740136	3	Washer	6,4X18X2

FOOTNOTE [A] NUMBER TO BE ADVISED
FOOTNOTE [B] NOT ILLUSTRATED

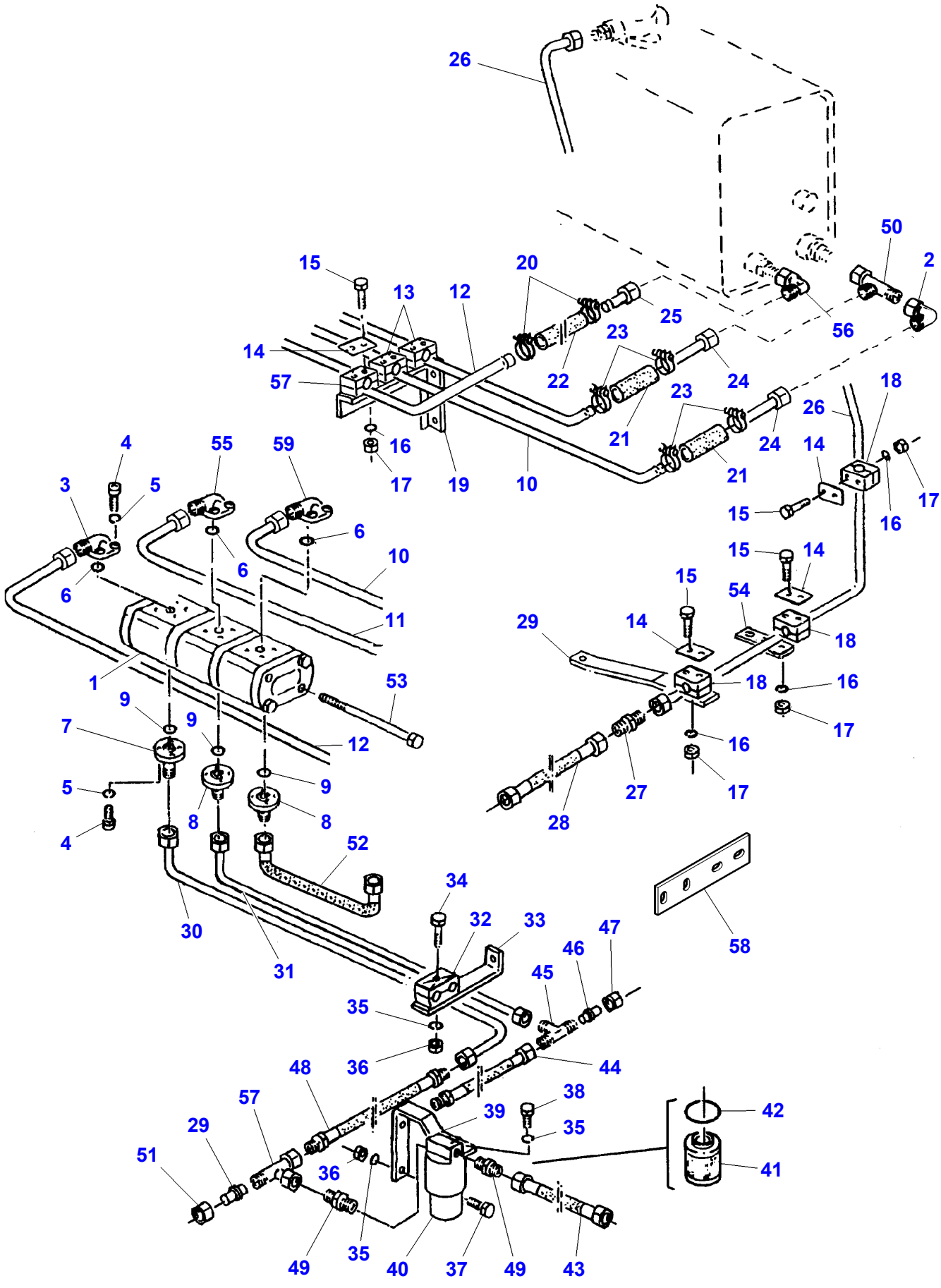
26
50
2
15
20
13
12
25
56
14
23
22
24
57
23
18
26
21
24
14
16
17
19
10
21
17
4
55
59
3
5
6
10
6
6
15
16
15
14
11
15
54
29
14
18
1
53
18
16
9
9
7
12
17
16
5
9
27
17
8
8
28
4
52
34
58
30
32
33
47
46
31
45
35
36
44
48
38
57
39
42
29
35
51
36
41
49
35
40
37
49
43

D-ADZN-003-C

Item	Part Number	Qty	Description	Comments
1	D45169800	1	Hydraulic Pump	See Page - Reference Number 014-0007/1,2
2	D45264300	4	Connectors	EW22-L 22-ST/A3C(L)
3	D26748368	3	Union	
4	3009431X1	16	Screw	M6 X 20
5	D41100600	16	Spring Washer	A6
6	D26733212	2	O Ring	24 X 2,5
7	D26733198	1	Connector	ZN12BKCC
8	D26733193	2	Connector	ZN10BKCC
9	D45462400	2	O Ring	18 X 2,5
10	D28788166	1	Suction Hose	
11	D28788160	1	Suction Hose	
12	D28788161	1	Suction Hose	
13	D45739700	2	Support	Diameter 28
14	D26733734	4	Cover	
15	D40422300	X	Hex. Sock. Screw	M6 X 60
16	D41100600	X	Spring Washer	A6
17	1441462X1	X	Locknut	M6
18	D26733460	3	Clamp	Diameter 22
19	D28788405	2	Plate	
20	D45727000	4	Clamp	31 X 15
21	D26733445	2	Hose	22,2 X 200
22	D26733695	1	Hose	2836 X 20
23	D26733387	2	Clamp	Diameter 38 / 15
24	D28788162	2	Union	
25	D26735686	1	Union	
26	D28788164	1	Return Flow	
27	D45254500	1	Union	G22L
28	D26735385	1	High Press Hose	DN 20 X 2400
29	D26735471	1	Bracket	Diameter 18
30	D26735772	1	Pipe	
31	D26735741	1	Pipe	
32	D26733696	1	Clamp	Diameter 18 / 15
33	D26737535	1	Retainer	
34	D26739931	1	Hex. Sock. Screw	M8 X 50
35	D41102100	5	Washer	A8
36	339169X1	3	Nut	M8
37	339761X1	2	Hex. Sock. Screw	M8 X 25
38	339124X1	2	Hex. Sock. Screw	M8 X 16
39	D26735472	1	Retainer	
40	D26734878	1	Filter	
41	**D49030058**	1	Element,Filter	
42	D49030061	1	O Ring	58,42 X 2,62
43	D26735379	1	High Press Hose	DN 16 X 1800
44	D26735473	1	High Press Hose	DN 12 X 1050
45	D45266800	1	Fitting	28-ST/A3C(L)
46	D26733150	1	Tap	Diameter 15
47	D45204500	1	Union Nut	CL15
48	D26735474	1	High Press Hose	DN 16 X 450
49	D26733405	2	Union	GE18LM
50	D26735352	2	Union	
51	D26732757	1	Union Nut	CL18
52	D45130081	1	Hydraulic Hose	
53	D40435200	4	Screw	M10 X 280
54	D26735468	1	Bracket	
55	D26735304	2	Elbow Union	
56	D45264700	1	Elbow Union	
57	D26733151	1	Tap	
58	D28788409	1	Plate	
59	D28788165	1	Elbow Union	Diameter 18

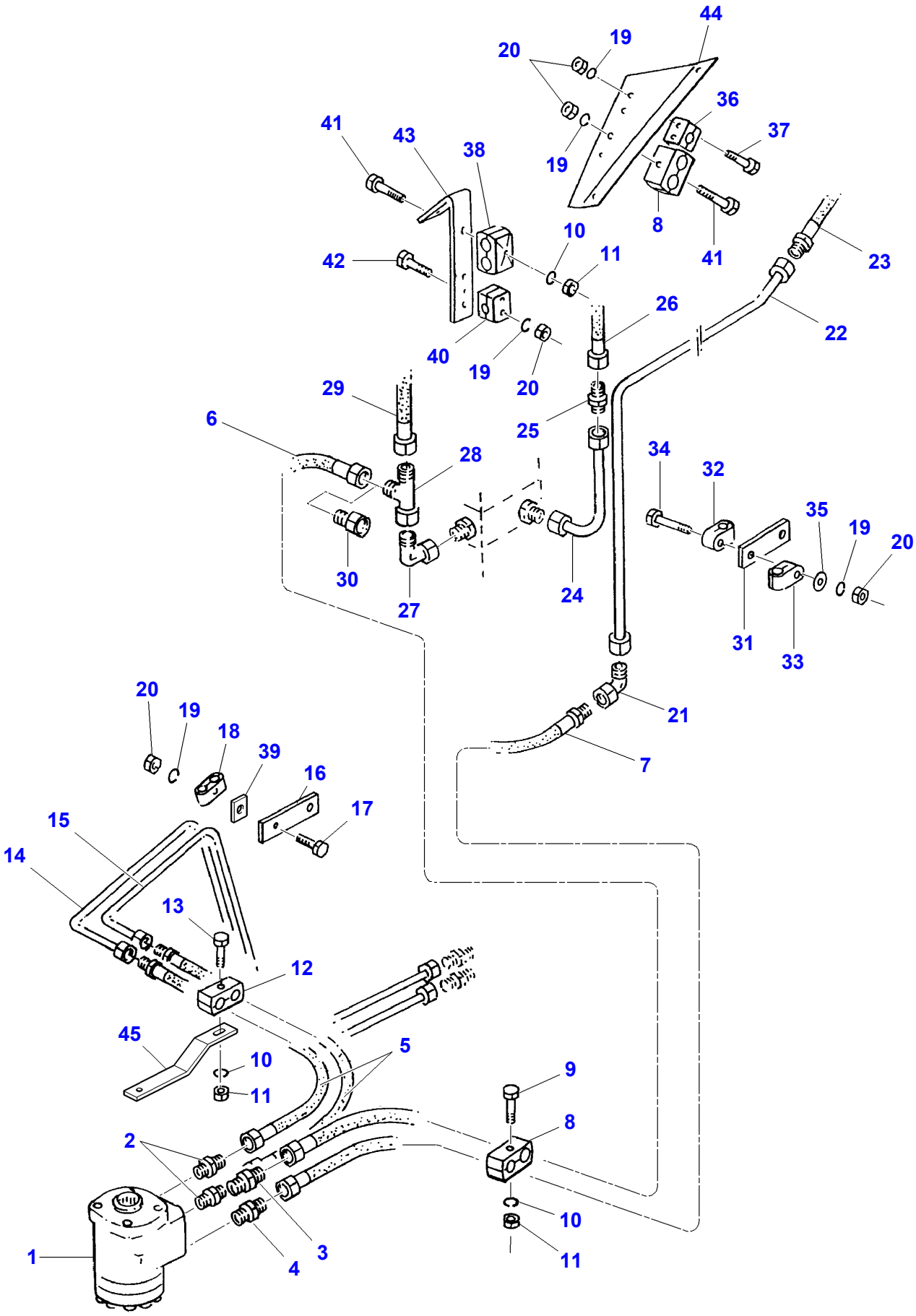
44
19
20
36
37
41
43
38
19
8
41
10
11
23
42
26
22
40
19
20
29
25
6
28
34
32
35
19
20
30
27
24
31
33
20
19
18
39
16
21
17
7
15
14
13
12
45
10
11
5
9
8
2
10
11
1
4
3

D-AN06-001-C

Item	Part Number	Qty	Description	Comments
1	D26735303	1	Control Valve	See Page - Reference Number 014-0009/1
2	D26735411	2	Union	GE12-PSM
3	D26733405	1	Union	GE18LM
4	D26732894	1	Union	L15B
5	D26735497	2	High Press Hose	DN 10 X 750
6	D26734839	1	High Press Hose	DN 16 X 1950
7	D26734425	1	High Press Hose	NW 12 X 2200
8	D26732821	2	Clamp	Diameter 25 / 22
9	D40424300	X	Hex. Sock. Screw	M8 X 60
10	D41102100	X	Washer	A8
11	339169X1	X	Nut	M8
12	D26733733	1	Clamp	Diameter 18 / 18
13	339168X1	1	Hex. Sock. Screw	M8 X 50
14	D28788585	1	Exhaust Pipe	
15	D28788584	1	Exhaust Pipe	
16	D26738354	1	Holder	
17	D26739739	3	Hex. Sock. Screw	M6 X 40
18	D26732817	3	Clamp	Diameter 12 / 12
19	D41100600	X	Spring Washer	A6
20	D41010600	X	Nut	M6
21	D26735210	1	Elbow Union	EW15-L
22	D26735735	1	Pipe	
23	D26735473	1	High Press Hose	DN 12 X 1050
24	D26735733	1	Pipe	
25	D26732759	1	Union	L18
26	D26735379	1	High Press Hose	DN 16 X 1800
27	D45264300	1	Connectors	EW22-L 22-ST/A3C(L)
28	D26735352	1	Union	EL22-L
29	D26735385	1	High Press Hose	20 X 2400
30	D26733146	1	Reducing Union	Diameter 22 / 18
31	D26742187	1	Plate	
32	D26732826	1	Clamp	Diameter 15
33	D26732818	1	Clamp	Diameter 18
34		1	Hex. Sock. Screw	[A] M6 X 80
35	D26740136	1	Washer	6,4 X 18 X 2 ZN
36	D26733730	1	Clamp	Diameter 28
37	D26739737	X	Hex. Sock. Screw	M6 X 60
38	D26734823	2	Clamp	Diameter 25 / 28
39	D25500240	1	Shim	
40	D26734822	2	Clamp	Diameter 15
41	D26739959	3	Hex. Sock. Screw	M8 X 70
42	D40424300	4	Hex. Sock. Screw	M8 X 70
43	D26738997	1	Retainer	
44	D26744541	1	Support	
45	D26735572	1	Joint Piece	

FOOTNOTE [A] NUMBER TO BE ADVISED

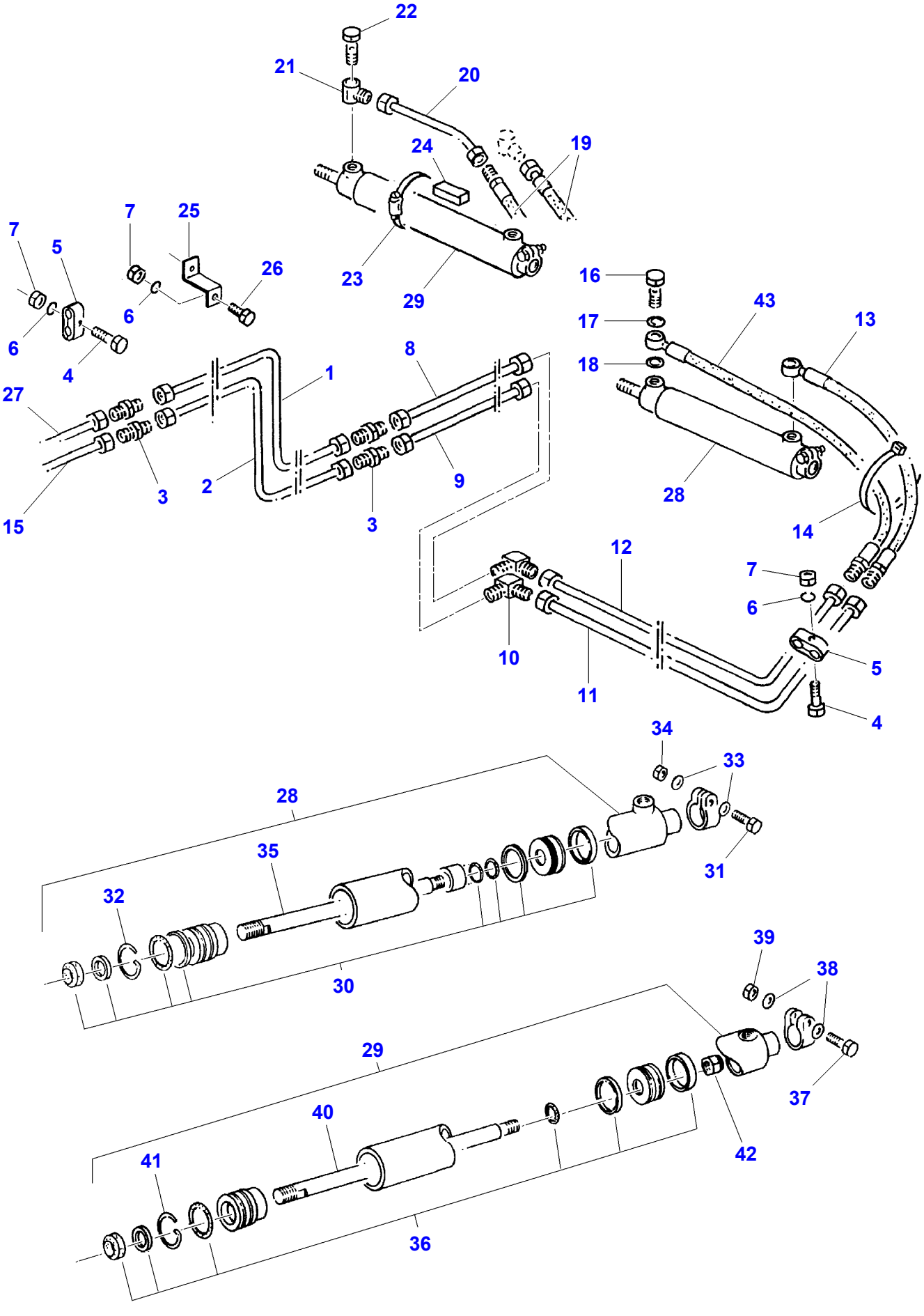
22
21
20
19
24
23
29
7
5
6
4
7
6
25
26
27
1
8
2
3
9
3
15
16
17
18
43
13
28
14
12
7
6
5
10
11
4
34
33
28
35
31
32
30
39
38
29
40
37
42
41
36

D-AN06-002-B

Item	Part Number	Qty	Description	Comments
1	D26735721	1	Pipe	12 X 2257
2	D26735729	1	Pipe	12 X 2345
3	D26732724	4	Union	G12L
4	D26739739	6	Hex. Sock. Screw	M6 X 40
5	D26732817	6	Clamp	Diameter 12 / 12
6	D41100600	6	Spring Washer	A6
7	D41010600	6	Nut	M6
8	D26735720	1	Pipe	12 X 1389
9	D26735728	1	Pipe	12 X 1296
10	D26732771	2	Union	W12L
11	D26735663	1	Pipe	
12	D26735664	1	Pipe	
13	D26734560	1	High Press Hose	DN 10 X 700
14	D45039100	1	Cable Tie	4,6 X 146
15	D28788584	1	Exhaust Pipe	
16	D26739282	2	Banjo Bolt	M16
17	D26733086	2	Seal	16,7 X 24 X 1,5
18	D26733073	2	Spacer	DKAZ 16
19	D26734229	2	High Press Hose	[B] NW 10 X 950
20	D26735775	1	Pipe	[B] 12 X 273
21	D26735313	2	Union	[B] 12LM
22	D26735315	2	Banjo Bolt	[B] M16
23	D26733109	1	Clip	[B] B50-70 / 13
24	D26733565	1	Spacer	[B]
25	D26740665	1	Retainer	
26	339666X1	1	Hex. Sock. Screw	M6 X 20
27	D28788585	1	Exhaust Pipe	
28	D26735335	1	Hydraulic, Cylin	
29	D26734424	1	Hydraulic, Cylin	[B]
30	D49030075	X	Kit, Gasket	(28)
31		1	Hex. Sock. Screw	[A] (28) M8 X 50
32		1	Snapring	[A] (28)
33		2	Washer	[A] (28) 8,4 X 17 X 1,6
34		1	Nut	[A] (28) VM8
35		1	Cylinder Rod	[A] (28)
36		X	Kit, Gasket	[A,B] (29)
37	339019X1	1	Hex. Sock. Screw	[B] (29) M10 X 50
38		2	Washer	[A,B] (29) 10,5 X 21 X 2
39	D28288162	1	Locknut	[B] (29) M10
40		1	Cylinder Rod	[A,B] (29)
41		1	Snapring	[A,B] (29) 2,5 X 135
42		1	Locknut	[A,B] (29) VM16
43	D26734646	1	High Press Hose	

FOOTNOTE [A] NUMBER TO BE ADVISED
FOOTNOTE [B] OPTIONAL

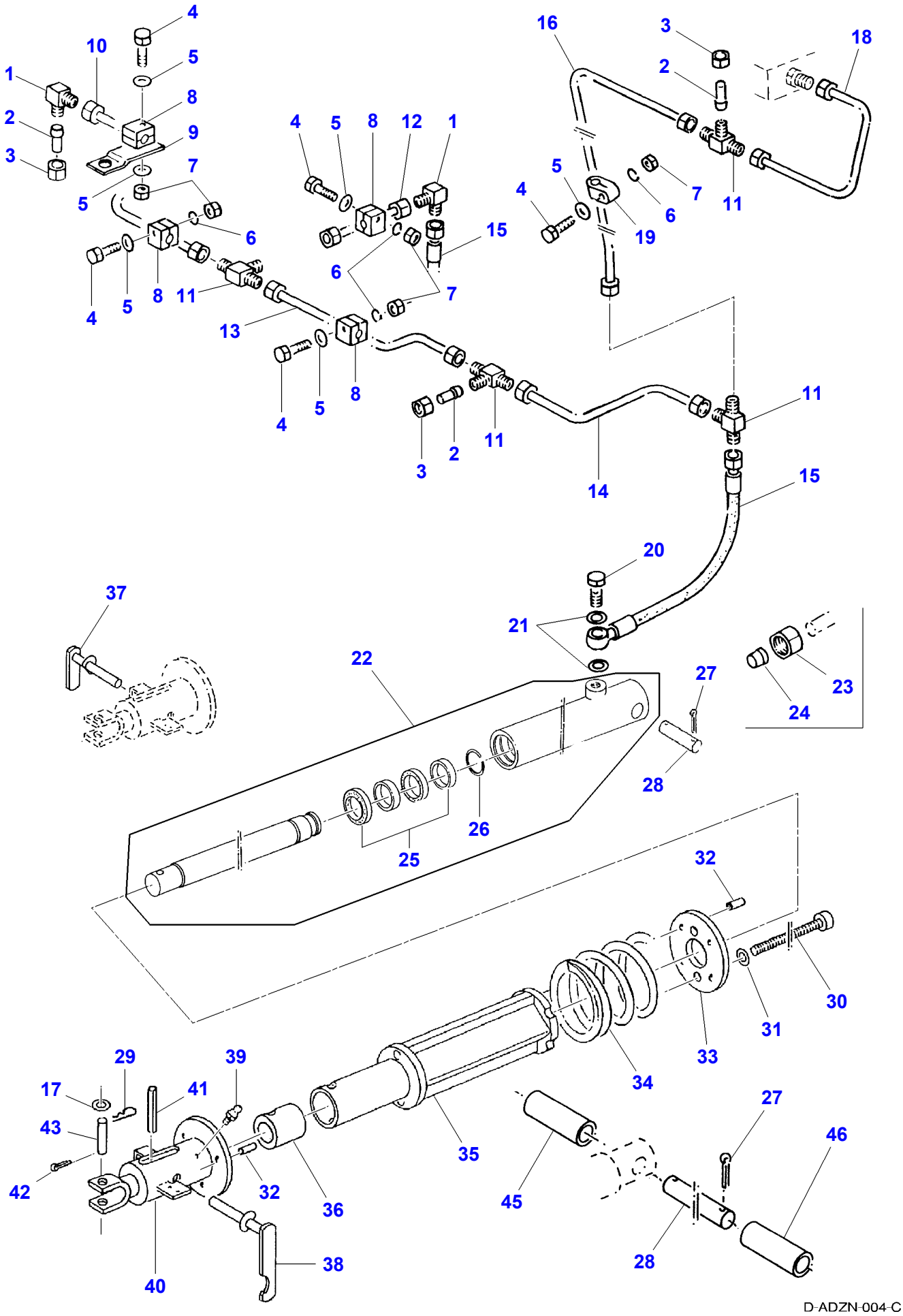
D-ADZN-004-C

Item	Part Number	Qty	Description	Comments
1	D26732771	2	Union	L12A
2	D26733153	3	Tap	Diameter 12
3	D26739163	3	Union Nut	CL12
4	D40422100	6	Hex. Sock. Screw	M6 X 45
5	391038X1	7	Washer	A6
6	D41100600	6	Spring Washer	A6
7	1441462X1	6	Locknut	M6
8	D26733459	4	Clamp	Diameter 12
9	D26734163	1	Joint Piece	
10	D26735705	1	Pipe	
11	D26732902	4	Union	DL12
12	D26735703	1	Pipe	
13	D26744739	1	Pipe	
14	D26735702	1	Pipe	
15	D26734578	2	High Press Hose	DN 10 X 650
16	D26735709	1	Pipe	
17		X	Washer	[A]
18	D26735731	1	Pipe	
19	D26732819	2	Clamp	Diameter 12
20	D26739282	2	Banjo Bolt	M16
21	D26733086	4	Seal	16,7 X 24 X 1,5
22	D26738353	2	Lift Cylinder	Diameter 50 3. Cylinder
	D28086610	1	Cylinder	
23	D26739163	X	Union Nut	CL12
24	D26748623	X	Bush	S12
25	D49030071	X	Kit, Gasket	(22)
26		2	Circlip	[A] (22) 53 X 4
27	D26739317	4	Split Pin	6,3 X 50
28	D28288465	2	Clevis Pin	30 X 120 / 104
	D26740119	X	Washer	31 X 55 X 4
29	D26733428	2	Spring Clip	
30	D28282272	4	Bolt	M16 X 340
31	D20400459	4	Washer	17 X 30 X 3
32	D26739101	14	Dowel	10 X 24
33	D16737899	2	Clamping Piece	
34	D16739377	2	Comp.Spring	
35	D16736148	2	Tie Rod	
36	D26736127	2	Bearing Cone	
37	D26734162	1	Pin Hitch	
38	D26734200	1	Pin Hitch	
39	D43002500	2	Greaser	
40	D16736143	2	Fork Head	
41	D26739250	2	Dowel	16 X 120
42	D41409300	X	Split Pin	4 X 45
43	D26733237	2	Clevis Pin	16 X 85 / 75
44		X	Washer	[A,B]
45	D28288466	1	Tube	3.Cylinder
46	D28288467	1	Tube	3.Cylinder

FOOTNOTE [A] NUMBER TO BE ADVISED
FOOTNOTE [B] NOT ILLUSTRATED

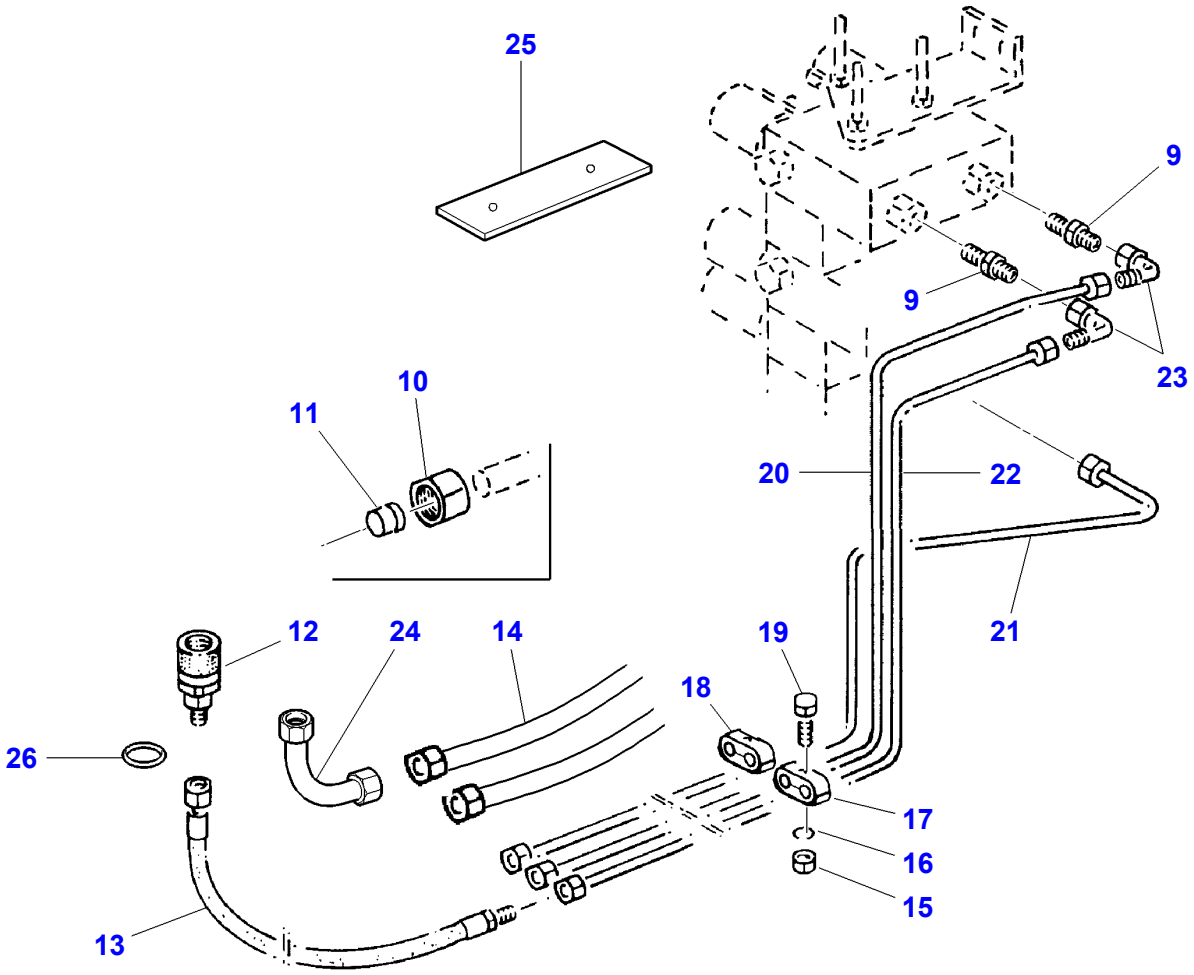

D-HB22-002-D

Item	Part Number	Qty	Description	Comments
9	D26732896	2	Union	
10	D26740190	X	Union Nut	AL8
11	D26739821	X	Bush	S8
12	D26733457	3	Coupling Piece	M24 X 2
13	D45130083	3	Hose	NW 6 X 1000
14	D45130082	2	Hose	
15	D41010600	4	Nut	M6
16	D41100600	4	Spring Washer	A6
17	D26735351	2	Union	L8B
18	D26732812	3	Clamp	Diameter 8 / 8
19	D26740196	4	Hex. Sock. Screw	M6 X 30
20	D28788566	1	Exhaust Pipe	
21	D26735710	1	Pipe	
22	D28788567	1	Exhaust Pipe	
23	D26733147	2	Elbow Nipple	BL8
24	D28788154	1	Pipe	
25	D18988052	1	Console	
26	D45232700	2	O Ring	

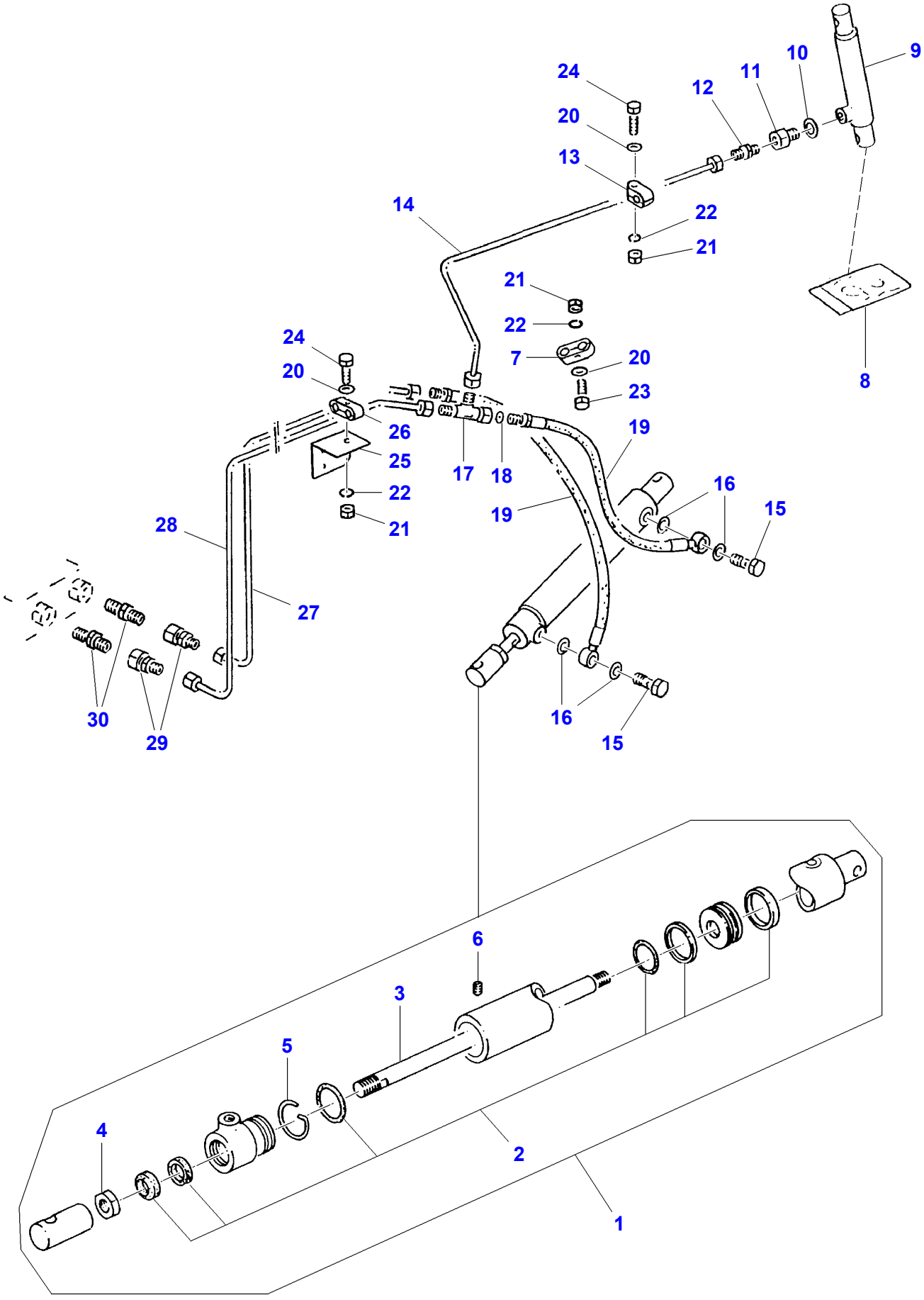
24
20
13
14
12
11
10
9
22
21
21
22
7
20
23
24
20
26
25
22
21
17
18
19
19
16
15
28
27
30
29
16
15
6
3
5
4
2
1

D-ADZN-005-B

Item	Part Number	Qty	Description	Comments
1	D26733954	1	Lift Cylinder	
2	D49030052	X	Kit, Seal	(1)
3		1	Cylinder Rod	[A] (1)
4	D41042800	1	Nut	(1) M18
5		1	Wire	[A] (1) 2,5 X 135
6		1	Grub Screw	(1) AM5 X 10
7	D26732817	1	Clamp	Diameter 12 / 12
8	D49030074	X	Kit, Seal	
9	D26736334	1	Lift Cylinder	
10	D26739846	1	Seal	A14 X 18
11	D26736335	1	Reducing Union	
12	D26732898	1	Union	L6B-M
13	D26732805	1	Clamp	Diameter 6
14	D26735734	1	Pipe	
15	D26739834	2	Banjo Bolt	M6
16	D45237000	2	Seal	12 X 16 X 3
17	D26735353	1	Union	
18	D26734161	1	Pressure Valve	Diameter 0,6
19	D26734580	2	High Press Hose	NW 6 X 500
20	D26740136	4	Washer	6,4 X 18 X 2 ZN
21	D41010600	4	Nut	M6
22	D41100600	4	Spring Washer	A6
23	D26739739	1	Hex. Sock. Screw	M6 X 40
24	D40422000	3	Screw Metric	M6 X 40
25	D26744777	1	Anglepiece	
26	D26732813	2	Clamp	Diameter 6 / 6
27	D26735737	1	Pipe	
28	D26735736	1	Pipe	
29	D26733106	2	Reducing Union	L8-6
30		2	Union	[A] 8-LR

FOOTNOTE [A] NUMBER TO BE ADVISED

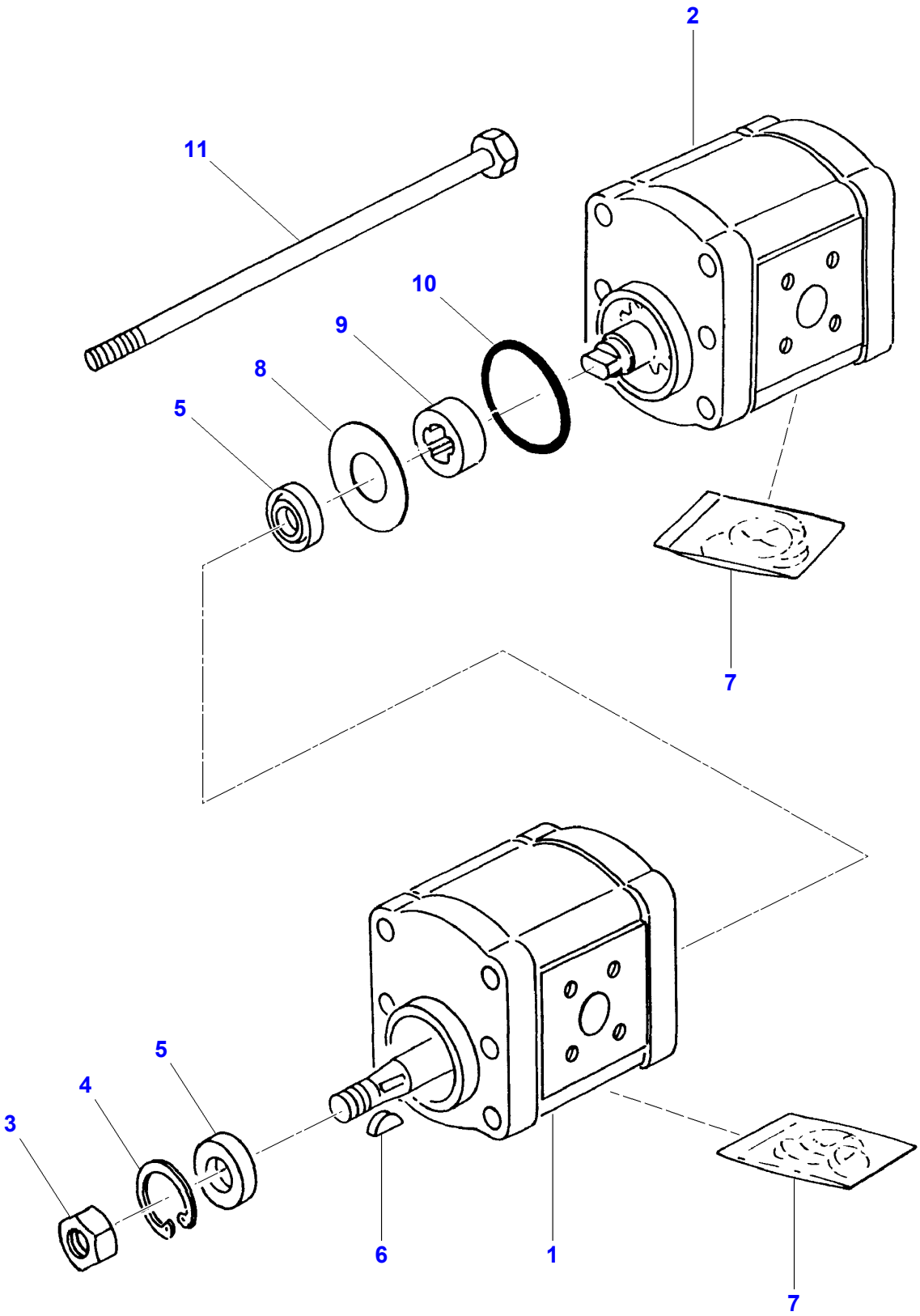

D-AP32-001-A

Item	Part Number	Qty	Description	Comments
1	D49030045	1	Hydraulic Pump	14 CC
2	D49030038	1	Hydraulic Pump	8 CC
3		1	Locknut	[A]
4		1	Circlip	[A] 30 X 1,2
5	1718961M1	2	Gasket	17 X 30 X 7 / 8
6		1	Key	[A] 3 X 5
7	3100439M91	X	Kit, Seal	
8		1	Lock Washer	[A]
9		1	Bush	[A]
10	D49030018	1	O Ring	45 X 2,5
11		2	Hex. Sock. Screw	[A] M10 X 170

FOOTNOTE [A] NUMBER TO BE ADVISED

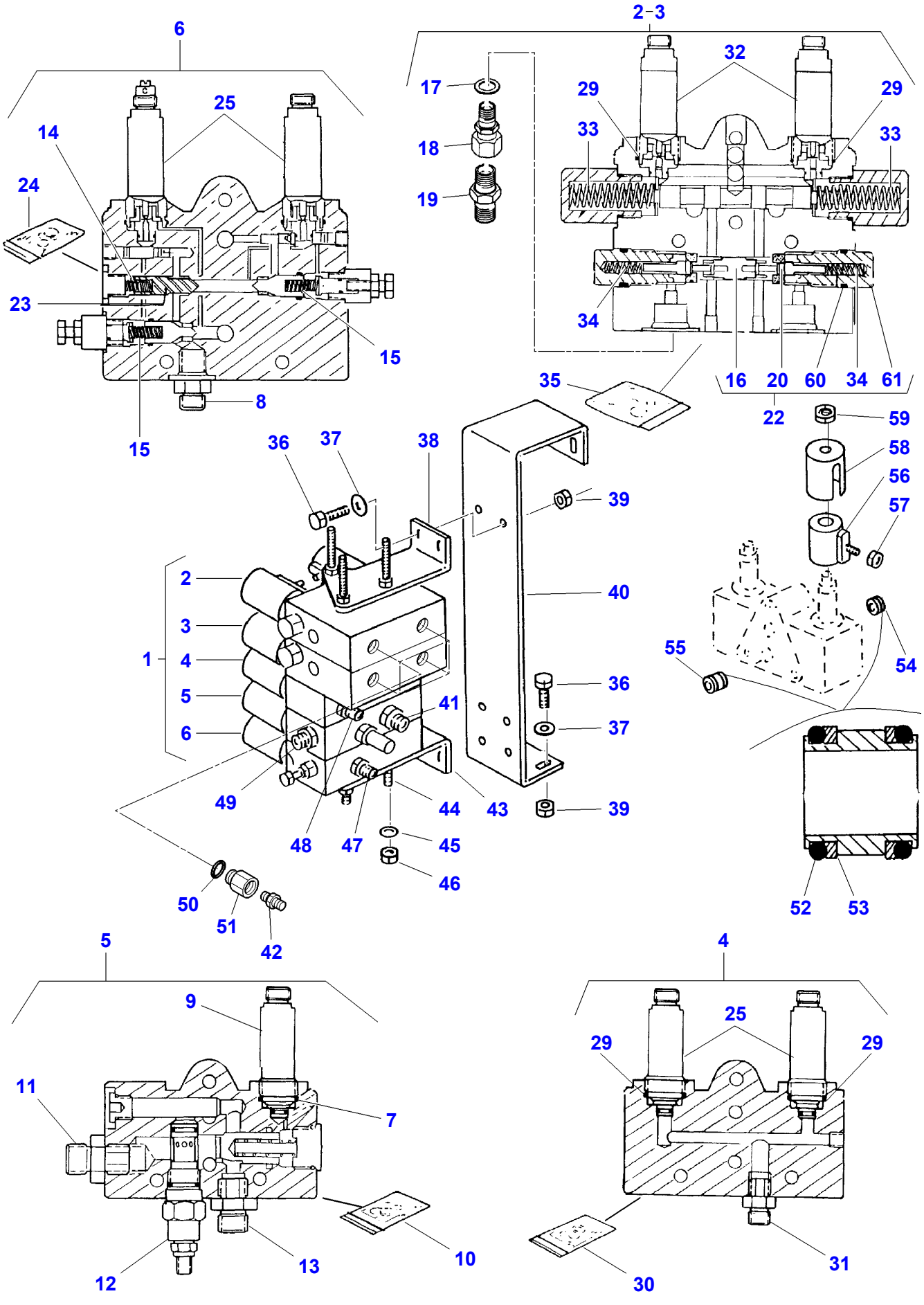
6
2-3
17
18
19
32
29
29
33
33
25
14
24
23
15
34
16
20
60
34
61
35
22
59
58
56
57
36
37
38
39
2
3
1
4
5
6
40
36
37
39
41
49
44
43
48
47
45
46
50
51
42
55
54
52
53
5
9
11
7
12
13
10
4
25
29
29
31
30

D-ADZN-006-B

Item	Part Number	Qty	Description	Comments
1	D26734706	1	Valve Block	
2	D26730146	1	Control Valve	
3	D26730146	1	Control Valve	
4	D26730147	1	Control Valve	
5	D26730148	1	Control Valve	
6	D26730149		Control Valve	
7	D26730121	X	Seal	
8	D26732891	1	Union	9 / 16-18
9	D26730190	1	Piston	
10	D26730188	X	Kit, Joint	
11	D26732957	1	Union	7 / 8-14
12	D26730180	1	Cartridge	
13	D26732958	1	Union	3 / 4-16
14		1	Comp.Spring	[A]
15	D26730161	2	Comp.Spring	
16		1	Piston	[A]
17	D45232700	4	O Ring	A20 X 24
18	D26734647	4	Reducer	
19	D26732896	4	Union	L8B
20		2	Valve.	[A]
21	D26730119	2	Valve Seat	[B]
22	D45120075	X	Kit, Repair	
23	D26730159	1	Non Return Valve	
24	D26730158	X	Kit, Joint	
25	D26730191	X	Piston	
29	D26730121	X	Seal	
30	D26730157	X	Kit, Joint	
31	D26732960	1	Union	7 / 16-20
32	D26730197	4	Piston	
33	D26730156	2	Comp.Spring	
34	D26730155	2	Comp.Spring	
35	D26730154	X	Kit, Joint	
36	D40405100	1	Hex. Sock. Screw	
37	D20400408	1	Washer	
38		1	Retainer	
39	D26740007	1	Locknut	
40	D26735164	1	Retainer	
41	D26732957	1	Union	
42	D26732896	4	Union	
43		1	Retainer	
44	D26730153	3	Stud	
45		6	Lock Washer	
46		6	Nut	
47	D26732891	1	Union	
48	D26732960	1	Union	
49	D26732958	1	Union	
50	D45232700	4	O Ring	
51	D26734647	4	Reducer	
52	**D49030050**	X	O Ring	
53	**D49030051**	X	Ring	
54	D26730152	4	Stud	
55	D26730151	8	Stud	
56	D26730150	9	Control Valve	
57		1	Nut	
58		1	Cover	
59		1	Nut	
60		2	Stud	
61		2	Valve Body	

FOOTNOTE [A] NUMBER TO BE ADVISED
FOOTNOTE [B] NOT ILLUSTRATED

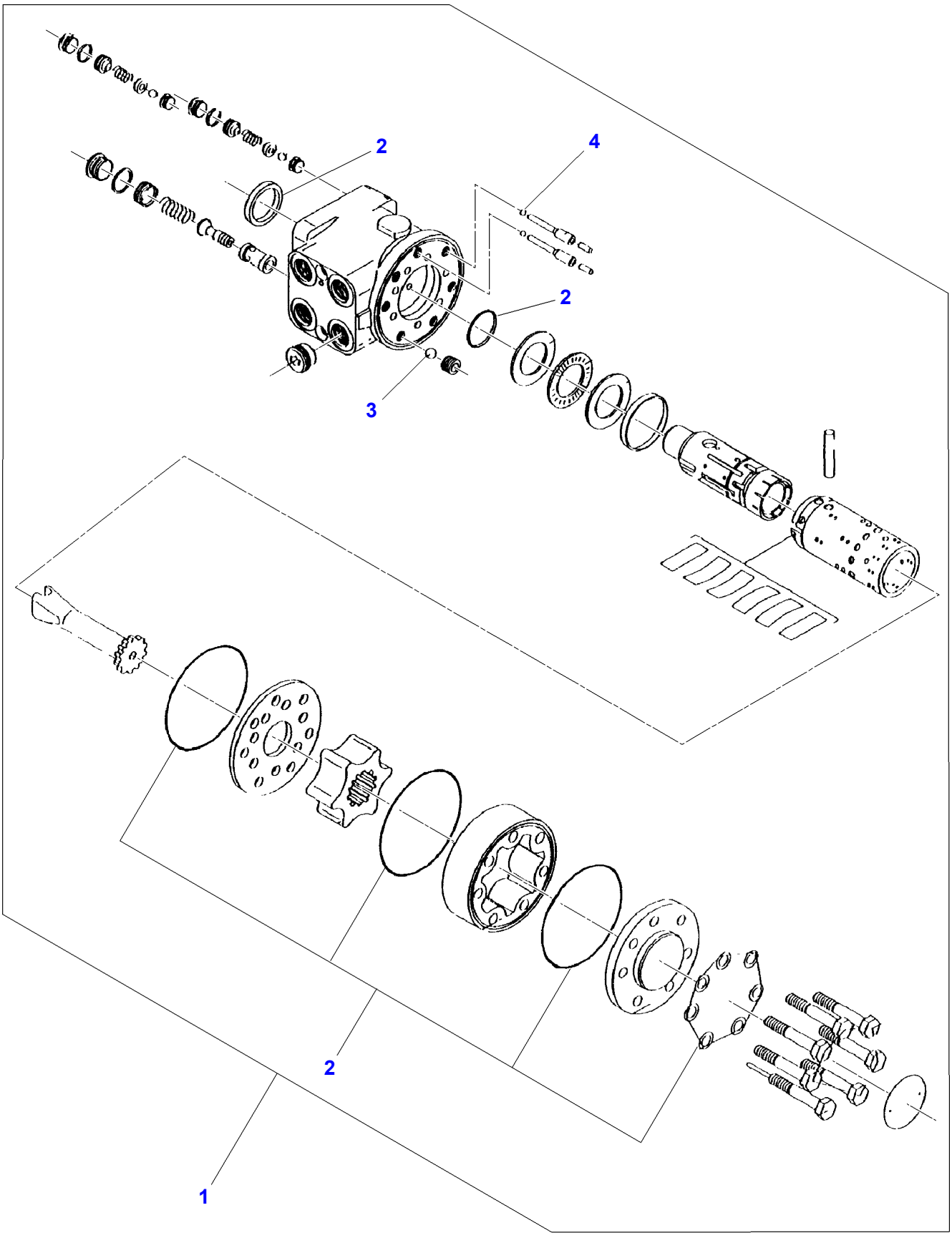

D-1275-001-A

Item	Part Number	Qty	Description	Comments
1	D26735303	1	Control Valve	
2	D49030066	X	Kit, Seal	(1)
3	D41646900	1	Ball	(1) Diameter 8,5
4	D41646700	2	Ball	(1) 3 / 16"

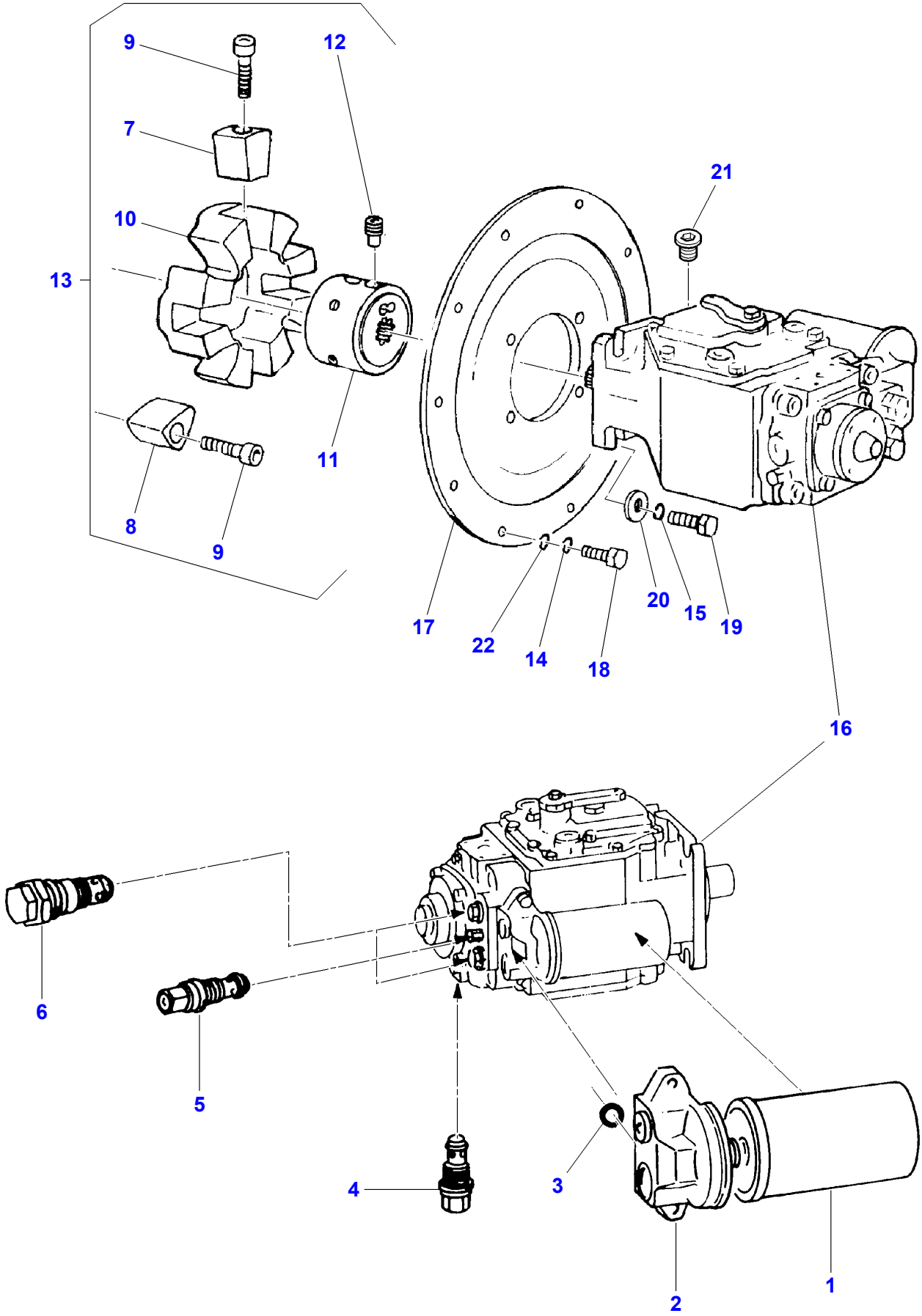

D-ADZR-002-B

Item	Part Number	Qty	Description	Comments
1	D26736502	1	Filter	
2		1	Filter Support	[A]
3		1	O Ring	[A] 16,3 X 2,4 V80
4	D49030032	1	Pressure Valve	24 Bar
5	D49030033	1	Pressure Valve	16 Bar
6	D49030034	2	Pressure Valve	BPV70
7		4	Element	[A] (13)
8		4	Element	[A] (13)
9		8	Screw	[A] (13) M16 X 55
10		1	Element	[A] (13)
11		1	Hub	[A] (13)
12		2	Stud	(13) M16 X 20
13	D46150098	1	Clutch	
14	D41101900	10	Spring Washer	A10
15	D41100900	4	Spring Washer	A12
16	D45120040	1	Pump	
17	D28788367	1	Flange	
18	3009493X1	10	Hex. Sock. Screw	M10 X 30
19	390912X1	4	Hex. Sock. Screw	M12 X 40
20	D20400446	4	Washer	13 X 30 X 4
21	D26736558	1	Plug	
22	D20400419	9	Washer	9 X 17 X 1,6

FOOTNOTE [A] NUMBER TO BE ADVISED

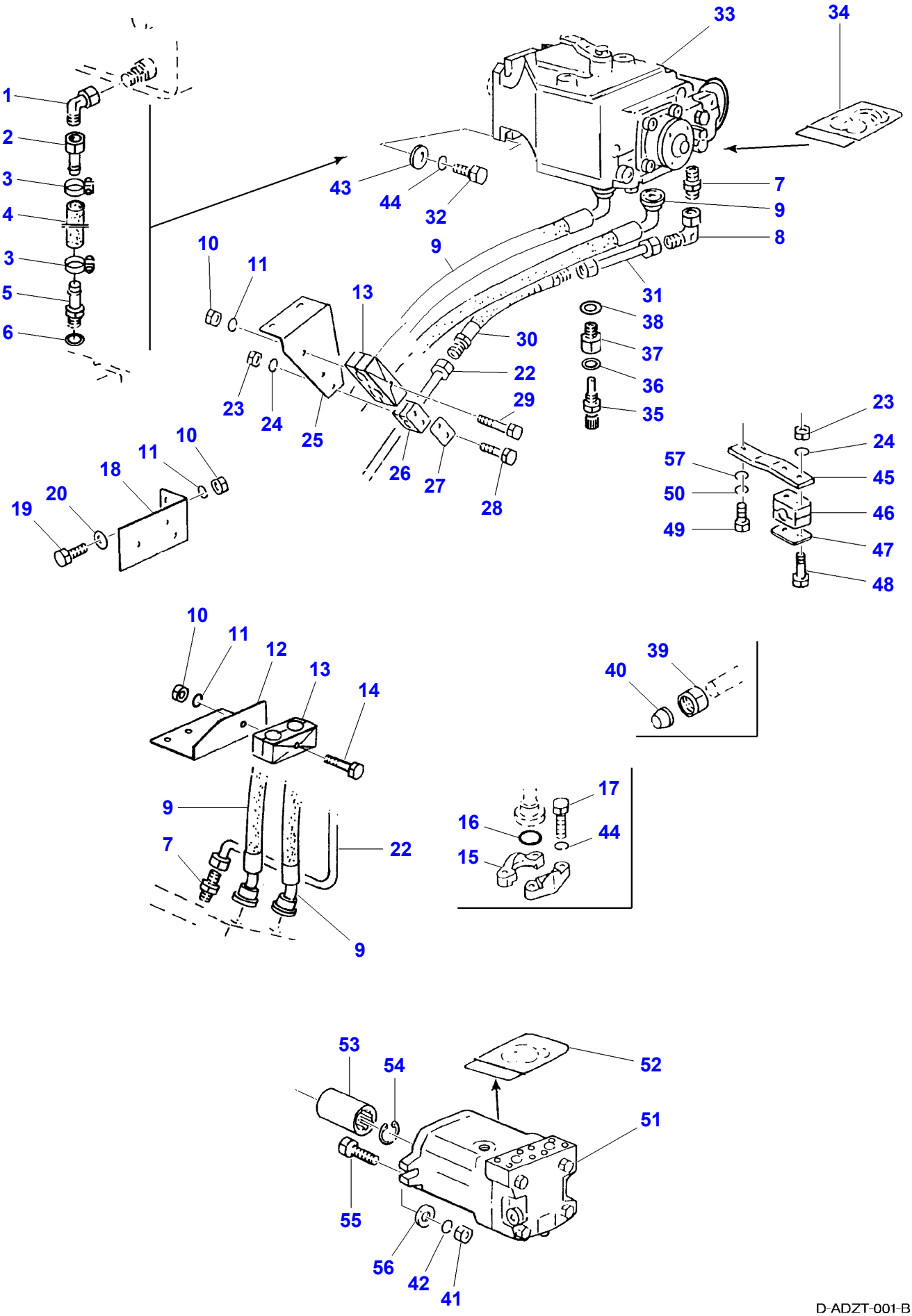
1
2
3
4
3
5
6
33
34
43
44
32
7
9
8
10
11
13
9
31
38
37
36
35
30
22
29
23
24
25
26
27
28
10
11
18
19
20
23
24
57
45
50
46
49
47
48
10
11
12
13
14
39
40
9
7
22
9
17
16
44
15

53
54
52
51
55
56
42
41

D-ADZT-001-B

Item	Part Number	Qty	Description	Comments
1	D45264300	1	Connectors	EW22-L 22-ST/A3C(L)
2	D26735752	2	Union	
3	D26732769	2	Clamp	Diameter 20-32
4	D28788407	1	Pipe	19 X 27 X 200
5	D45264300	1	Connectors	GE22PL / M22
6	**D26739845**	1	Seal	16 X 20
7	D26735410	2	Union	XGE22-PLM
8	D26735211	1	Elbow Union	EW18-L
9	D26735159	2	High Press Hose	
10	339169X1	X	Nut	M8
11	D41102100	X	Washer	A8
12	D26745835	1	Retainer	
13	D26734705	3	Clamp	
14	339136X1	1	Hex. Sock. Screw	M8 X 90
15	D26734112	8	Half Flange	
16	D26733300	4	O Ring	32 X 3,5
17	390912X1	16	Hex. Sock. Screw	M12 X 40
18	D26735692	1	Retainer	
19	339123X1	2	Hex. Sock. Screw	M8 X 20
20	D20400408	2	Washer	8,4 X 25 X 3
21	D20400419	1	Washer	[B] Diameter 10,5
22	D26735717	1	Pipe	
23	1441462X1	X	Locknut	M6
24	D20400470	2	Washer	A6
25	D26735573	1	Retainer	
26	D26733719	2	Clamp	Diameter 18
27	D26733687	2	Cover	
28	D26740185	4	Hex. Sock. Screw	M6 X 50
29	D26739964	2	Hex. Sock. Screw	M8 X 80
30	D26733617	1	High Press Hose	NW 16 X 500
31	D28788587	1	Return Flow	
32	390912X1	4	Hex. Sock. Screw	M12 X 40
33	D45120040	1	Pump	
34	D49030036	X	Kit, Seal	BPV 70
35	**D26733517**	1	Sensor	
36	**D26739845**	1	Seal	16 X 20
37	D26733614	1	Adaptor	
38	**D26739851**	1	Seal	22 X 27
39	D26732757	X	Union Nut	CL18
40	D26739823	X	Ring	L18
41	1442739X1	2	Locknut	M16
42	D28181284	2	Washer	A16
43	D20400446	4	Washer	13 X 30 X 4
44	D26739978	28	Spring Washer	A12
45	D26739037	1	Retainer	
46	D26733460	1	Clamp	Diameter 22
47	D26733734	1	Cover	
48	D40422300	2	Hex. Sock. Screw	M6 X 55
49	391561X1	1	Hex. Sock. Screw	M10 X 45
50	D41101900	1	Spring Washer	A10
51	D45165000	1	Hydraulic Motor	HMF 75-02
52	D49030062	X	Kit, Seal	HMF 75-02
53	D26735019	1	Sleeve Tooth	
54		1	Circlip	[A] 34 X 1,5
55	D26740171	2	Hex. Sock. Screw	M16 X 60
56	D26739188	2	Washer	16,5 X 31 X 7
57	D26735752	1	Union	[B]

FOOTNOTE [A] NUMBER TO BE ADVISED
FOOTNOTE [B] NOT ILLUSTRATED

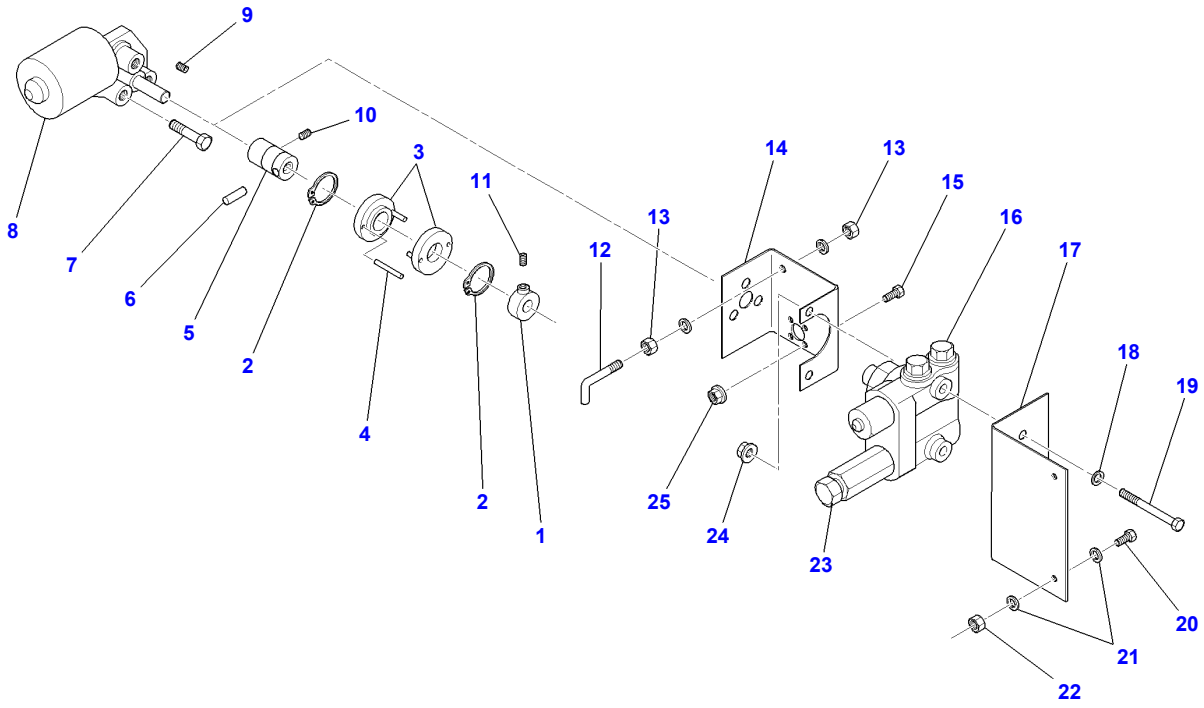

D-ADAF-001-A

Item	Part Number	Qty	Description
1	D28981086	1	Ring
2	D42502300	2	Circlip
3	D28780802	2	Washer
4	D42608700	1	Pin
5	D28981003	1	Union
6	D42609200	1	Pin
7	D28782149	3	Bolt
8	D28080790	1	Wiper Motor
9	D43170300	2	Key
10	D45626500	1	Fork
11	D40632000	1	Stud
12	D28780801	1	Screw
13	D41010600	2	Nut
14	D28981001	1	Support
15	D40741200	8	Screw
16	D45110069	1	Flow Regulator
17	D28980999	1	Support
18	D20400506	2	Washer
19	D40424400	2	Hex. Sock. Screw
20	D40408000	2	Hex. Sock. Screw
21	D20400416	4	Washer
22	D41087600	2	Locknut
23	D28251484	1	Non Return Valve
24	394367X1	1	Locknut
25	1441462X1	3	Locknut

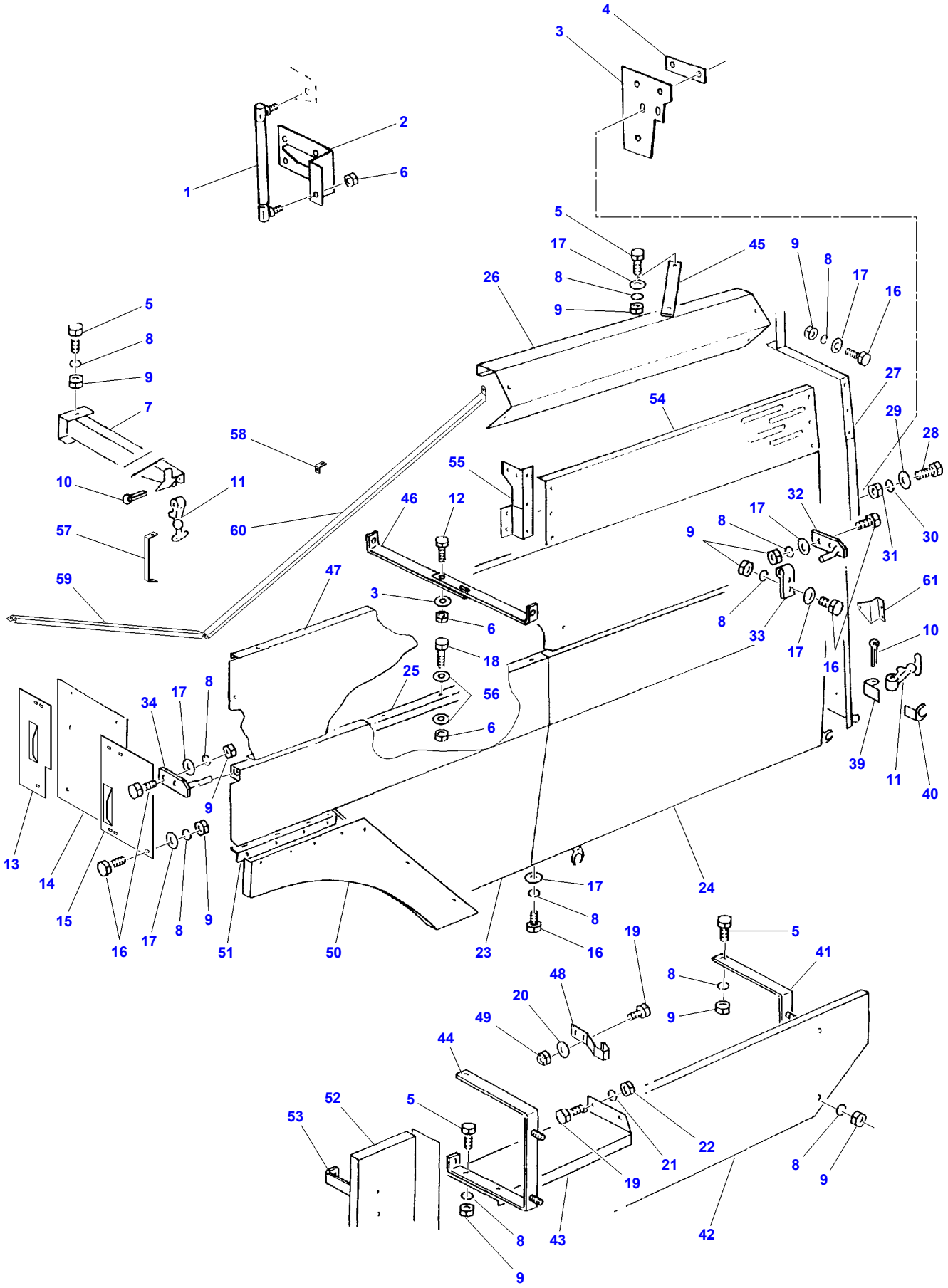
4
3
2
1
6
5
17
45
9
8
17
16
26
8
9
27
54
29
28
5
8
9
7
58
55
10
11
46
12
32
17
30
57
60
9
8
31
59
47
3
61
6
8
33
17
10
18
25
56
16
34
17
8
6
39
11
40
9
13
14
15
16
17
8
9
51
50
23
17
8
16
24
19
5
41
48
8
20
9
49
44
52
5
53
22
21
19
8
9
43
42
8
9

D-AEZL-001-B

Item	Part Number	Qty	Description	Comments
1	D26734859	1	Gas Strut	
2	D16735461	1	Plate	
3	D16735462	1	Stiffener	
4	D26735463	1	Stiffener	
5	339123X1	X	Hex. Sock. Screw	
6	394367X1	11	Locknut	M8
7	D26734193	1	Support	
8	D41102100	X	Washer	A8
9	339169X1	X	Nut	M8
10	339037X1	2	Split Pin	5 X 50
11	D26734154	2	Bonnet Fastener	
12	D26739769	2	Hex. Sock. Screw	M8 X 25
13	D18188470	1	Cover	
14	D16735525	1	Plate	
15	D16735524	1	Panel	
16	339124X1	2	Hex. Sock. Screw	M8 X 16
17	D26739993	2	Washer	9 X 17 X 1,6
18	D26739262	11	Bolt	M8 X 40
19	339560X1	8	Hex. Sock. Screw	M6 X 16
20	D26740136	8	Washer	6,4 X 18 X 2 ZN
21	D41100600	6	Spring Washer	A6
22	D41010600	6	Nut	M6
23	D18188424	1	Guard	
24	D18188425	1	Guard	
25	D28188720	1	Stiffener	
26	D18188369	1	Plate	
27	D18188461	1	Plate	Valid from machine/table no,can be used in new as well as in older machines 7600
28	3009493X1	4	Hex. Sock. Screw	M10 X 30
29	D26739992	4	Washer	11 X 20 X 2
30	D41101900	5	Spring Washer	A10
31	339402X1	5	Nut	M10
32	D28188468	1	Hinge	
33	D18188374	1	Hinge	
34	D16733894	1	Cone	
35		1	Support	[A,B]
36		1	Support	[A,B]
37	D26740077	2	Screw	[B] M8 X 16
38	3009492X1	1	Hex. Sock. Screw	[B] M10 X 25
39		X	Hook	[A]
40	D26737072	X	Hook	
41	D26735187	1	Retainer	
42	D16734952	1	Panel	
43	D28188499	1	Shield	
44	D26735186	1	Retainer	
45	D18188370	2	Joint Piece	
46	D26735465	2	Bracket	
47	D16735539	1	Plate	
48	D26736491	1	Spring	
49	D41088800	2	Locknut	M6
50	D58188429	1	Guard	
51	D56745586	1	Anglepiece	Up to Serial or Engine Number 7841
52	D26734951	1	Guard	
53		1	Support	[A]
54	D18188829	1	Plate	
55	D26735605	1	Angle.	
56	D20400506	34	Washer	8,5 X 20 X 2,5
57	D28188427	1	Handle	
58	D28188722	1	Strap	
59	D28188434	1	Crossmember	
60	D28188433	1	Crossmember	
61	D28188382	1	Crossmember	

FOOTNOTE [A] NUMBER TO BE ADVISED

Item	Part Number	Qty	Description	Comments
FOOTNOTE [B] NOT ILLUSTRATED				

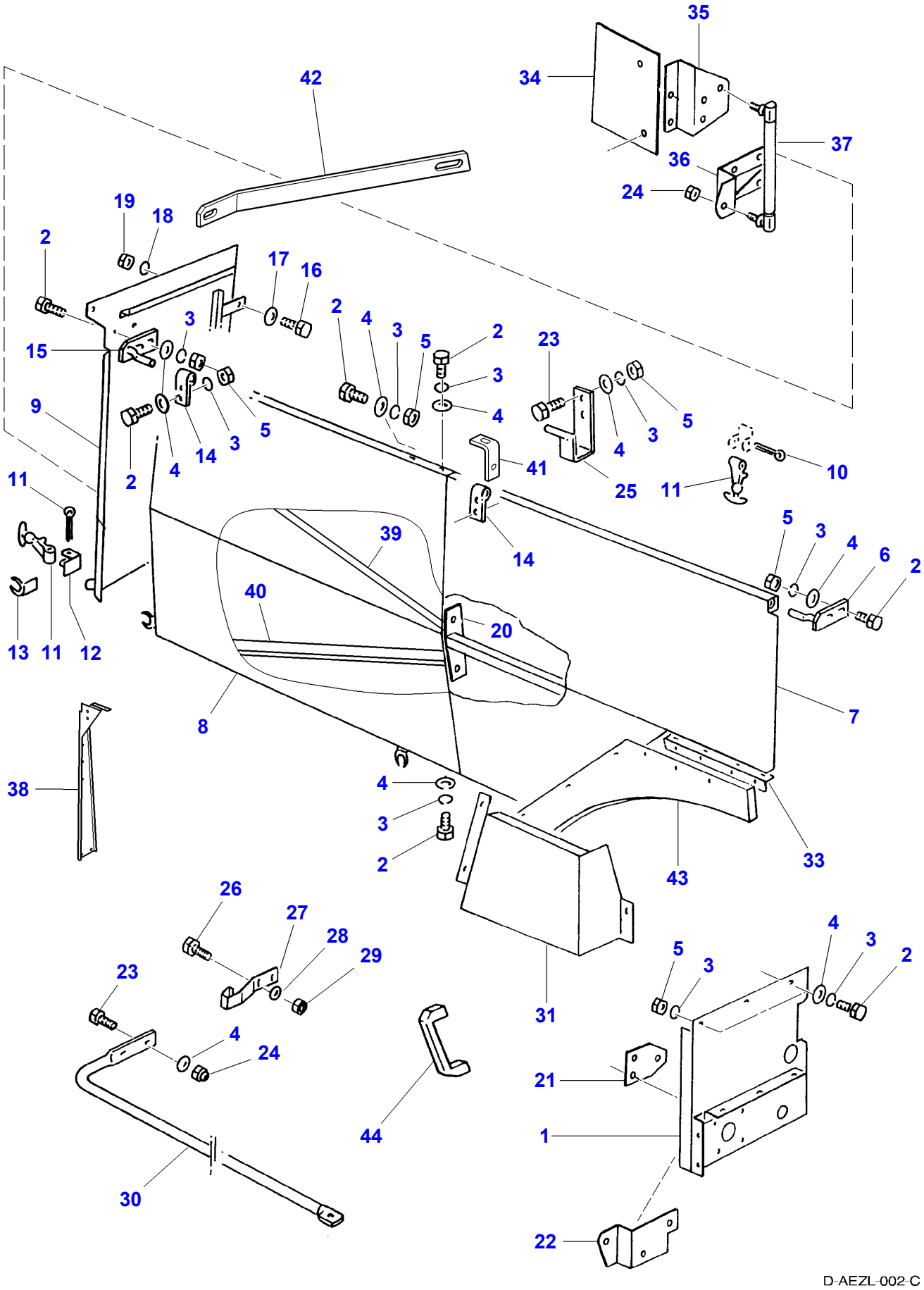
35
34
37
36
24
42
19
18
2
17
16
2
4
3
5
2
3
4
23
15
3
5
9
4
14
3
5
2
4
3
5
41
25
11
10
11
5
3
4
6
2
39
14
40
20
13
11
12
8
7
38
4
3
2
43
33
26
27
28
29
23
4
24
31
5
3
4
3
2
21
1
44
30
22

D-AEZL-002-C

Item	Part Number	Qty	Description	Comments
1	D16735517	1	Panel	
2	339124X1	22	Hex. Sock. Screw	M8 X 16
3	D41102100	21	Washer	A8
4	D26739993	X	Washer	9 X 17 X 1,6
5	339169X1	18	Nut	M8
6	D16733911	1	Cone	
7	D18188409	1	Guard	
8	D18188440	1	Cone	
9	D18188458	1	Guard	Valid from machine/table no,can be used in new as well as in older machines 7600
10	339037X1	2	Split Pin	5 X 50
11	D26734154	2	Bonnet Fastener	
12		X	Hook	
13	D26737072	X	Hook	
14	D18188374	2	Hinge	
15	D28188356	1	Hinge	
16	3009493X1	3	Hex. Sock. Screw	M10 X 30
17	D26739992	3	Washer	11 X 20 X 2
18	D41101900	3	Spring Washer	A10
19	339402X1	3	Nut	M10
20	D28188683	1	Anglepiece	
21	D28188376	1	Bracket	
22	D16735569	1	Anglepiece	
23	339123X1	6	Hex. Sock. Screw	M8 X 20
24	D26740007	2	Locknut	M8
25	D16734194	1	Bracket	
26	339560X1	2	Hex. Sock. Screw	M6 X 16
27	D26736491	1	Spring	
28	D26740136	2	Washer	6,4 X 18 X 2 ZN
29	D41088800	2	Locknut	M6
30	D28188463	1	Retainer	
31	D26735684	1	Panel	
32	D26746751	1	Guard	[B]
33	D56745586	1	Anglepiece	Up to Serial or Engine Number 7841
34	D16735455	1	Anglepiece	
35	D28188378	1	Shank	
36	D16735570	1	Anglepiece	
37	D26734859	1	Gas Strut	
38	D28188417	1	Stiffener	
39	D28188674	1	Reinforcement	
40	D28186677	1	Reinforcement	
41	D28188696	1	Angle.	
42	D28188045	1	Holder	
43	D18188428	1	Guard	
44	D43386900	1	Handle	

FOOTNOTE [B] NOT ILLUSTRATED

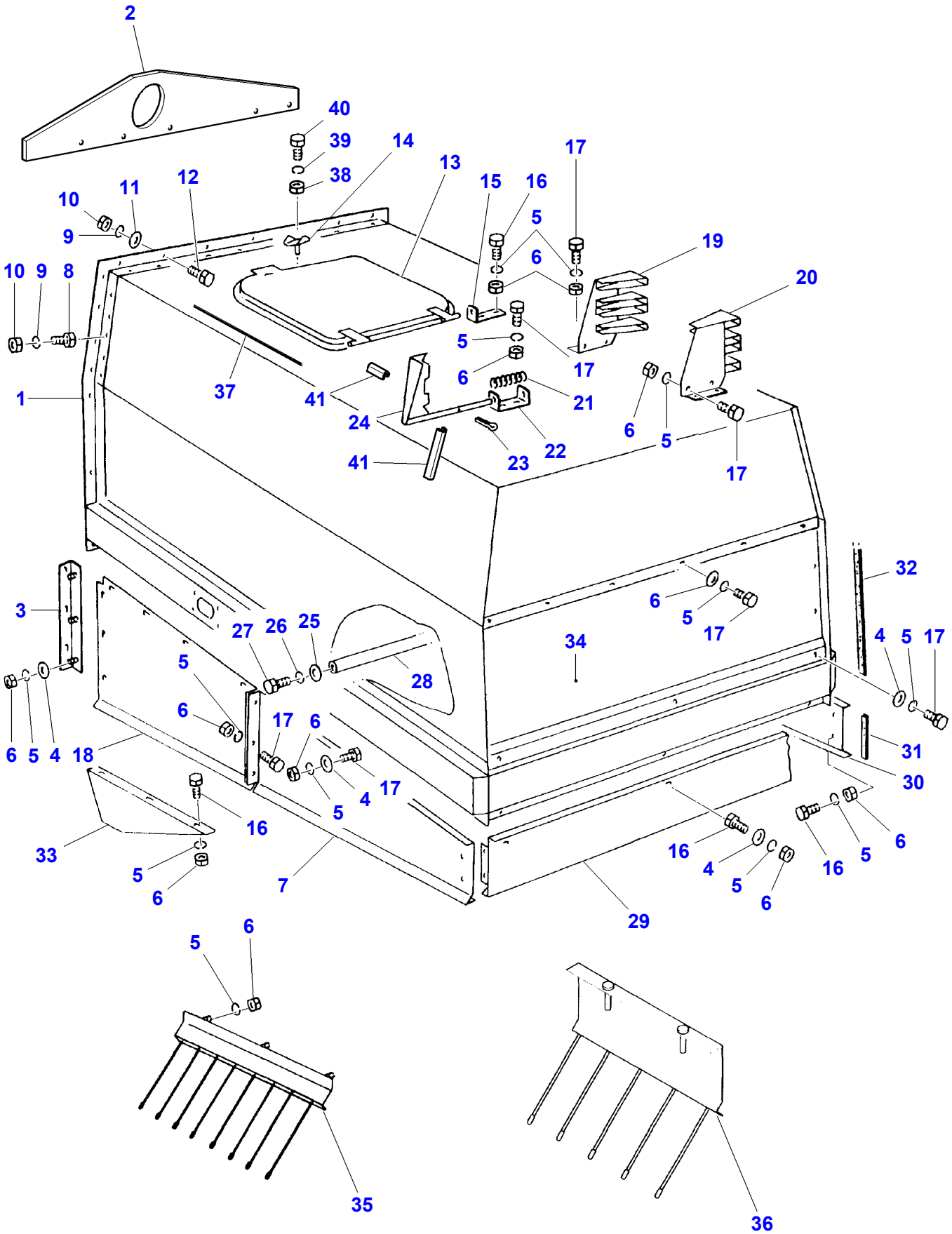
2
40
39
38
14
13
15
16
17
12
11
10
9
5
6
19
20
10
9
8
5
6
17
37
41
24
1
21
22
23
41
6
5
17
32
3
6
5
17
27
26
25
34
4
5
17
28
5
6
6
5
4
18
17
6
17
4
5
31
30
16
33
5
6
7
16
4
5
6
16
5
6
29
5
6
35
36

D-AEZM-001-C

Item	Part Number	Qty	Description	Comments
1	D16850004	1	Housing	
2	D26734217	1	Plate	
3	D16733818	1	Anglepiece	Left Hand
	D16733817	1	Anglepiece	Right Hand
4	D26739212	X	Washer	9 X 22 X 2
	D26740121	6	Washer	(3)
				10,5 X 22 X 3
5	D41102100	51	Washer	A8
6	339169X1	38	Nut	M8
	D28288162	6	Locknut	(3)
				M10
7	D16745447	1	Plate	Left Hand
8	3009491X1	18	Hex. Sock. Screw	M10 X 20
9	D41101900	39	Spring Washer	A10
10	339402X1	39	Nut	M10
11	D26739992	X	Washer	11 X 20 X 2
12	3009492X1	21	Hex. Sock. Screw	M10 X 25
13	D16733883	1	Cover	(1)
14	D26733771	1	Lock	(1)
15	D16733772	2	Hinge	(1)
16	339124X1	16	Hex. Sock. Screw	M8 X 16
17	339761X1	35	Hex. Sock. Screw	M8 X 25
18	D16734656	1	Plate	Left Hand
19	D16734809	1	Bracket	Right Hand
20	D16734808	1	Bracket	Left Hand
21	D26733322	1	Comp.Spring	
22	D16733832	1	Bracket	
23	D41409300	1	Split Pin	4 X 45
24	D16733833	1	Tensioner	
25	D26740159	2	Washer	13 X 28 X 2
26	D26739978	2	Spring Washer	A12
27	1440716X1	2	Hex. Sock. Screw	M12 X 30
28	D26733834	1	Spacer	
29	D16735660	1	Plate	
30	D16745396	1	Plate	Right Hand
31		X	Fence	10,5 X 960
				Length 210 MM
32	D26733165	1	Profile	Length 2740 MM
33	D16734657	1	Plate	Left Hand
	D16740748	1	Guard	Right Hand
34	D16734118	1	Plate	(1)
35	D26733778	1	Deflector	
36		1	Deflector	[A,B]
37	D44738900	17	Strip	
38	D41087200	1	Locknut	M4
39	D41100300	X	Washer	A4
40	D40352000	1	Screw Special	M4
41	D44744800	2	Profile	Length 80mm

FOOTNOTE [A] NUMBER TO BE ADVISED
FOOTNOTE [B] STRAW CHOPPER

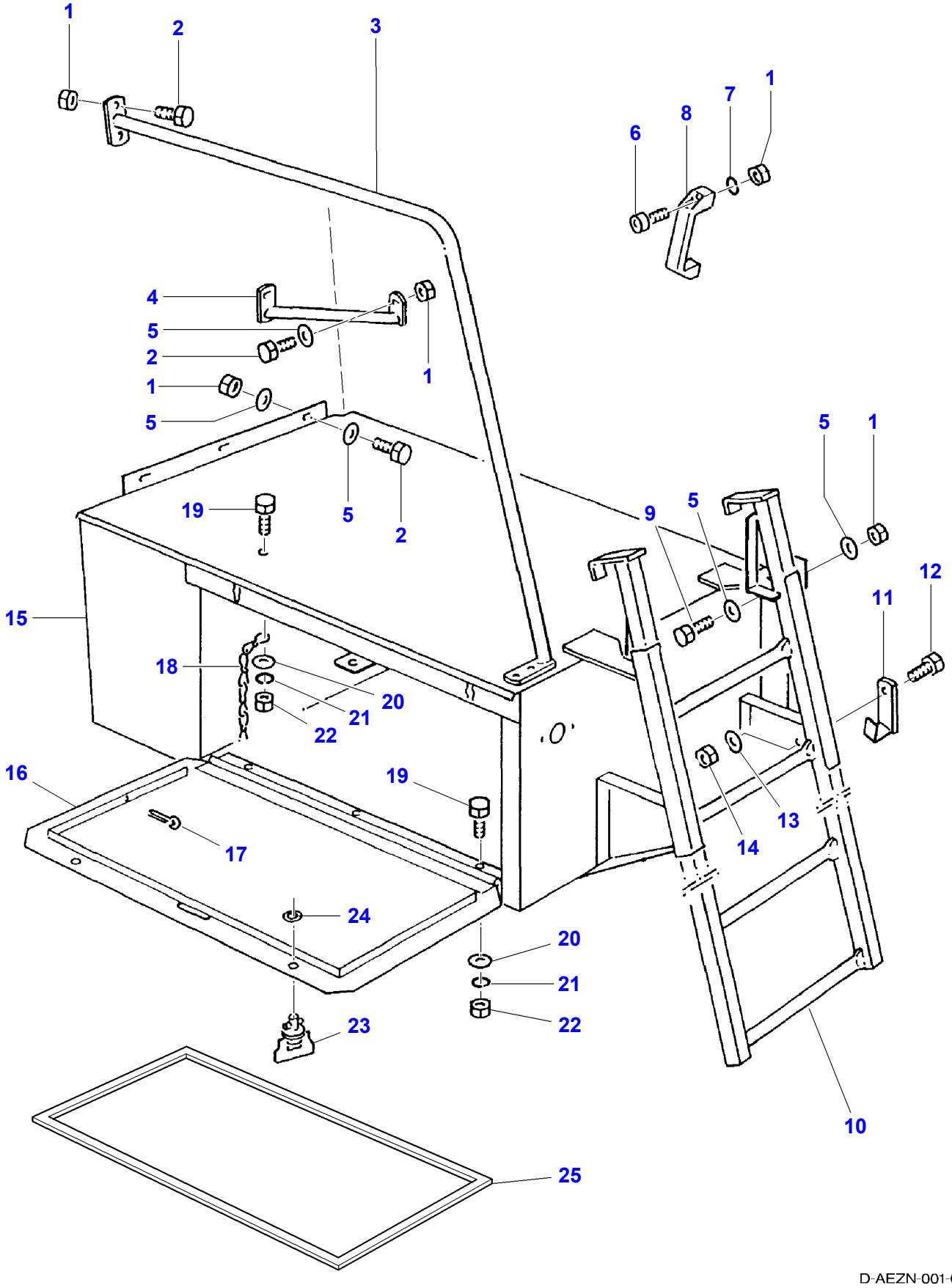
1
2
3
1
7
8
6
4
5
2
1
1
5
19
5
2
5
1
9
5
12
11
15
18
20
21
22
16
19
17
13
14
24
20
21
22
23
10
25

D-AEZN-001-C

Item	Part Number	Qty	Description	Comments
1	D26740007	18	Locknut	M8
2	339124X1	12	Hex. Sock. Screw	M8 X 16
3	D16734907	1	Grip	
4	D16742076	3	Step	
5	D26739993	X	Washer	9 X 17 X 1,6
6	D40690400	2	Screw	
7	D41102100	2	Washer	A8
8	D26732888	1	Handle	
9	339123X1	2	Hex. Sock. Screw	M8 X 20
10	D16735267	1	Ladder	
11	D56735323	1	Joint Piece	
12	3009492X1	1	Hex. Sock. Screw	M10 X 25
13	D26739992	1	Washer	11 X 20 X 2
14	D28288162	1	Locknut	M10
15	D16734617	1	Platform	
16	D56734739	1	Flap	
17	354078X1	1	Split Pin	5 X 32
18	D26732907	1	Chain	2,0 X 588
19	339560X1	5	Hex. Sock. Screw	M6 X 16
20	D26740136	5	Washer	6,4 X 18 X 2 ZN
21	D41100600	5	Spring Washer	A6
22	D41010600	5	Nut	M6
23	D26733253	2	Lock	
24	D26734743	2	Lock Washer	
25	D44704700	1	Strip	

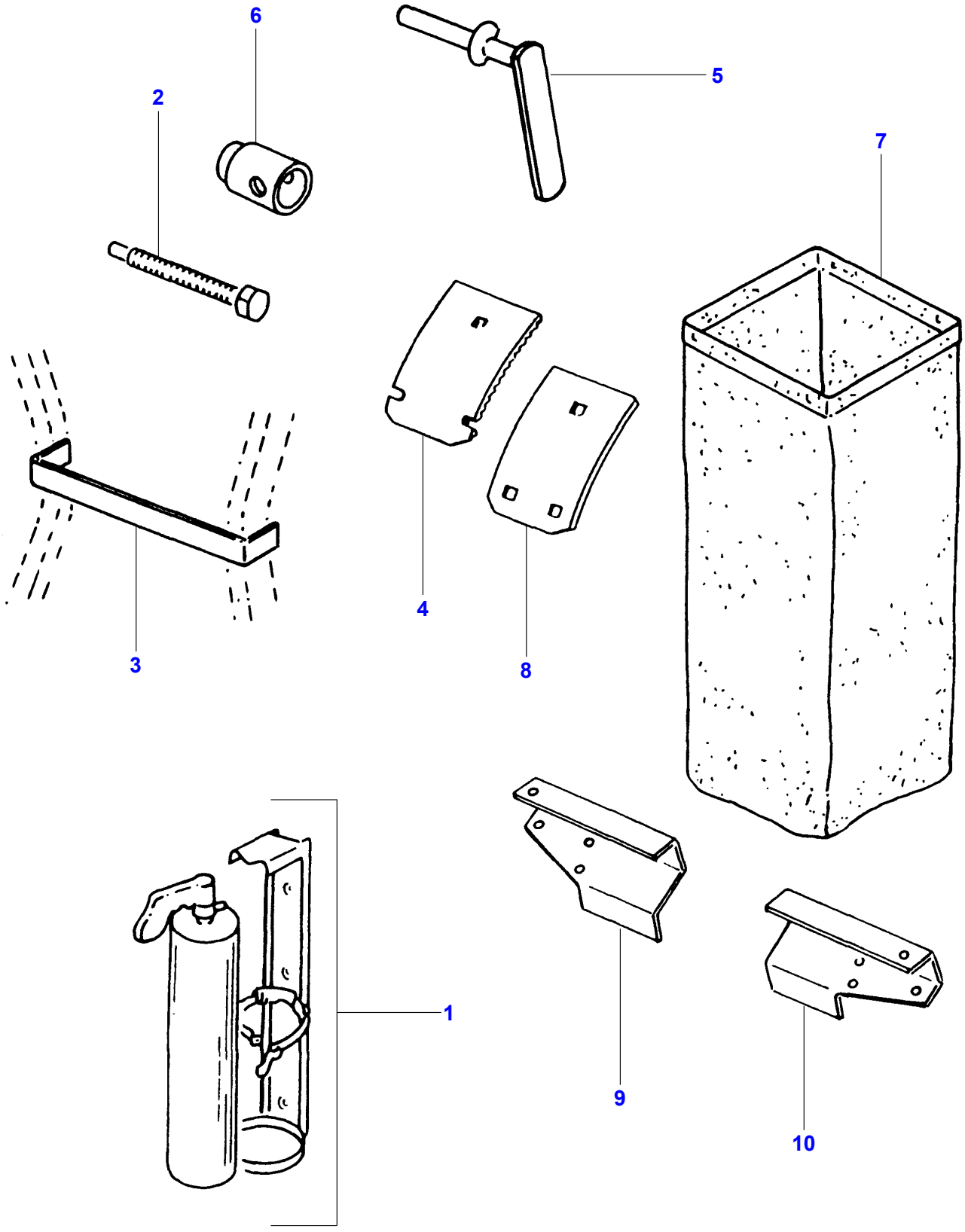

D-AAZE-001-A

Item	Part Number	Qty	Description	Comments
1	D26735182	1	Extinguisher	6Kg
2	D26741087	2	Bolt	M16X140
3		X	Strap	
4		X	Plate	
5	D26734200	1	Pin Hitch	
6	D26733505	1	Tube	
7	D26733702	1	Bag	
8	D26733774	1	Plate	
9	D26741670	1	Scraper	Right Hand
10	D26741661	1	Scraper	Left Hand

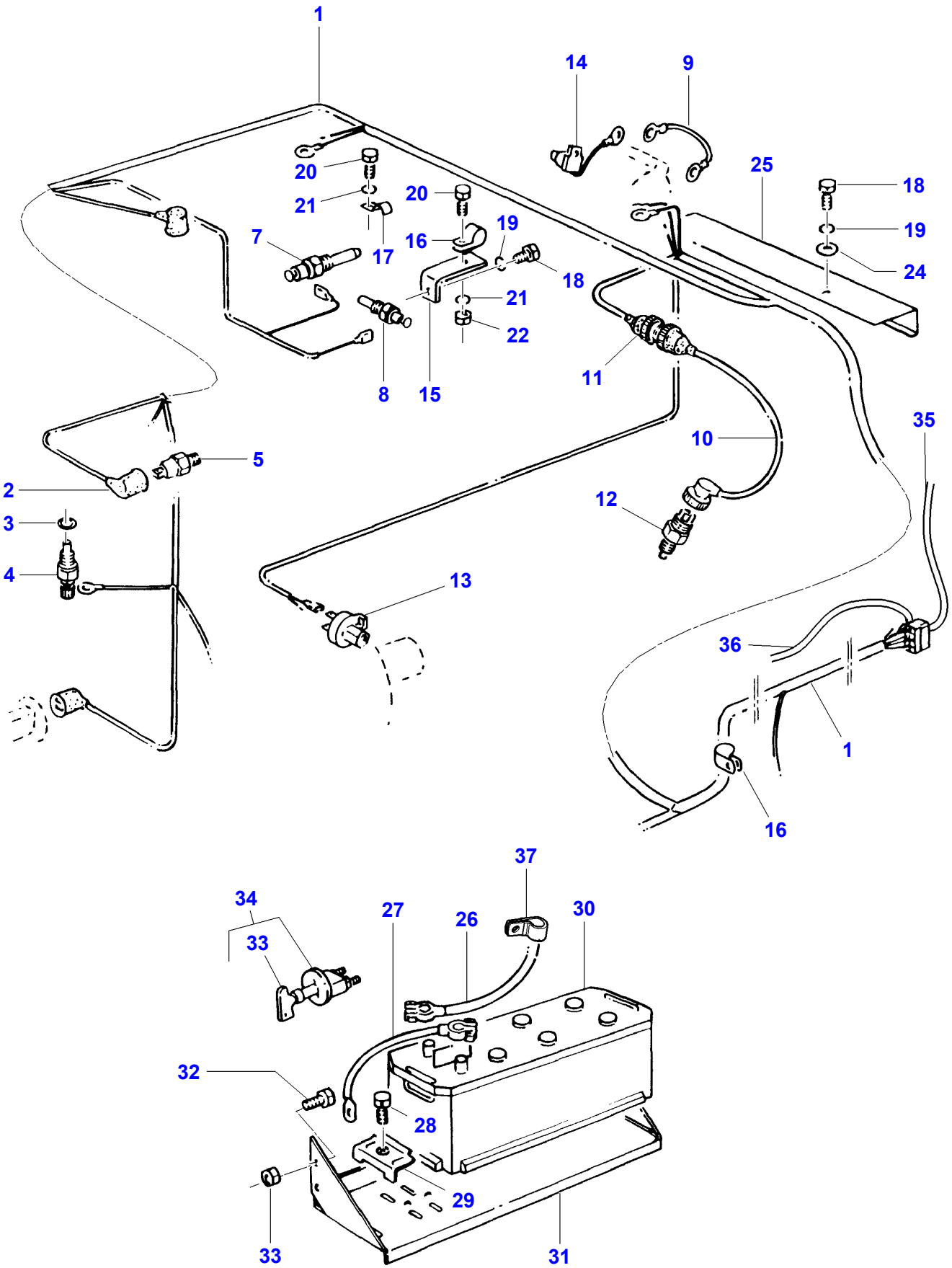
1
14
9
20
21
20
19
7
16
17
18
25
18
19
24
21
22
8
15
11
10
35
5
2
3
4
12
13
36
1
16
37
34
27
26
30
33
32
28
29
33
31

D-AFZL-001-C

Item	Part Number	Qty	Description	Comments
1	D26735446	1	Wiring Harness	
2	D26734111	X	Bush	
3	**D26739845**	1	Seal	
4	**D26733517**	1	Sensor	
5	D49030014	1	Pressure Switch	See Page - Reference Number 008-0004
7	**D26736506**	1	Temp. Sensor	See Page - Reference Number 008-0004
8	**D26736507**	1	Temp. Sensor	See Page - Reference Number 008-0004
9		1	Earth Strap	[A]
10		1	Harness	[A] See Page - Reference Number 008-0001
11	D26741156	1	Housing	
12	D26747084	1	Sensor	See Page - Reference Number 008-0001
13	D49030079	1	Sensor	
14	D49030037	2	Diode	Z 22
15	D26738189	3	Anglepiece	
16	D26733385	3	Clamp	27 X 20 NE
17	D26733381	2	Clamp	8 X 15 X 9
18	3009491X1	4	Hex. Sock. Screw	M10 X 20
19	D41101900	4	Spring Washer	A10
20	D26739735	5	Hex. Sock. Screw	M8 X 12
21	D41102100	3	Washer	A8
22	339169X1	3	Nut	M8
23	D28288162	4	Locknut	[C] M10
24	D26739992	2	Washer	11 X 20 X 2
25		1	Retainer	[A]
26	D26734073	1	Battery Cable	
27	D26850032	1	Earth Strap	
28	339761X1	1	Hex. Sock. Screw	M8 X 25
29	D26733180	1	Shank	
30	D26735152	1	Battery	12V-120AH 420Amp
31	D26733764	1	Battery Holder	
32	3009491X1	4	Hex. Sock. Screw	M10 X 20
33		X	Ignition Key	[A,B] (34)
34	D26732865	1	Switch	[B] See Page - Reference Number 003-0007/28
35	D28782805	1	Harness	
36	D28782806		Harness	
37	D26733206	2	Hose Clip	Diameter 19
38	D26739846	1	Seal	[C] 14 X 18

FOOTNOTE [A] NUMBER TO BE ADVISED
FOOTNOTE [B] OPTIONAL
FOOTNOTE [C] NOT ILLUSTRATED

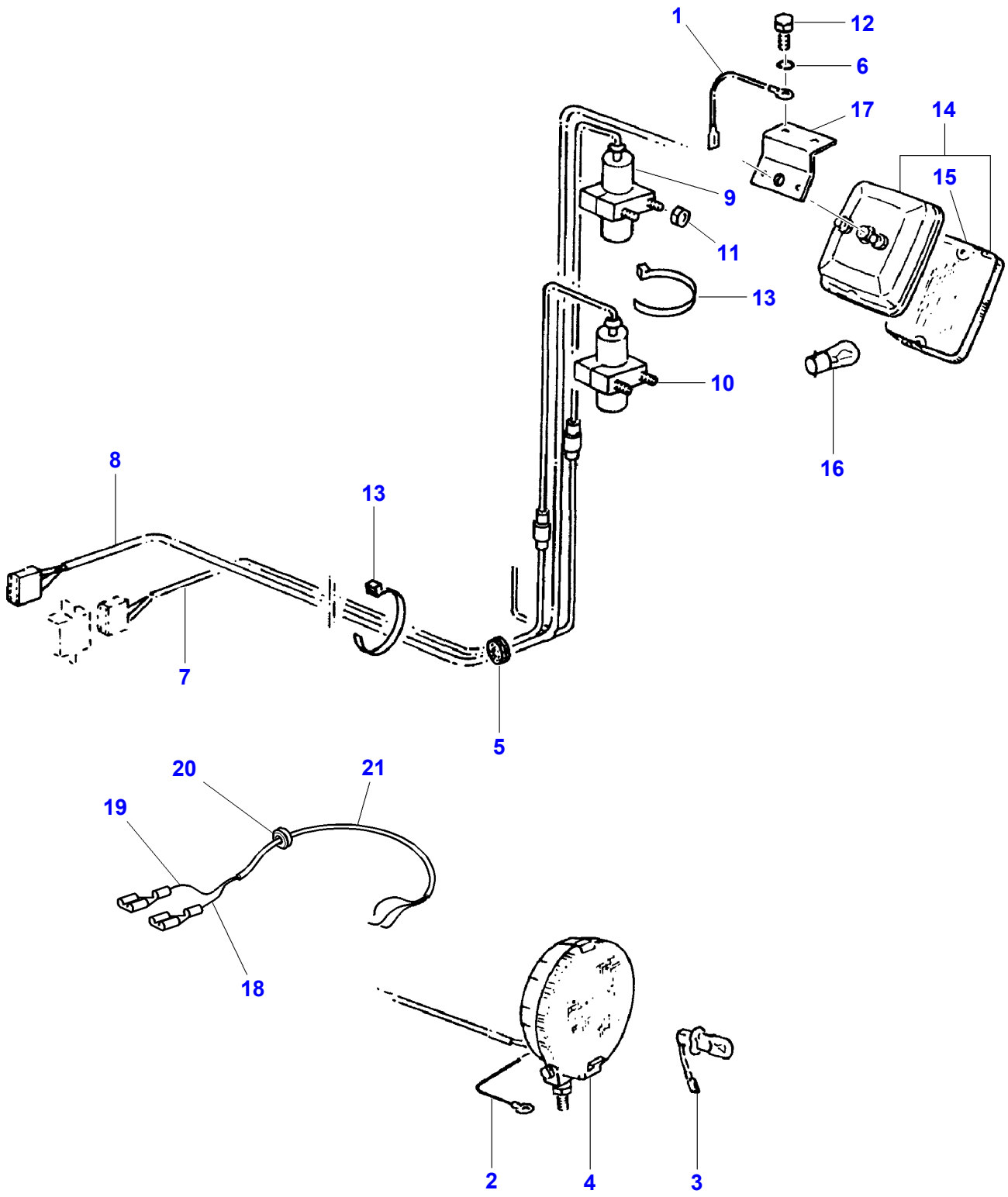

D-AFZL-002-B

Item	Part Number	Qty	Description	Comments
1		1	Earth Strap	[A]
2	D26734792	1	Wire	
3	D26739985	1	Bulb H3	
4	D26734495	1	Lamp	
5	D26734543	2	Grommet	
6	D41100600	2	Spring Washer	A6
7	D26744530	1	Cable	[B]
8	D26734502	1	Wiring Harness	
9		1	Commutator	[A]
10	D26734306	1	Switch	[B]
11	D26740022	4	Locknut	M5
12	D40402400	2	Hex. Sock. Screw	M6 X 16
13	D45039100	X	Cable Tie	4,6 X 146
14	D26734341	1	Reversing Lamp	
15		X	Inspection Glass	[A]
16	D45080700	1	Bulb 12v 10w	F / 15W
17	D26734343	1	Anglepiece	
18	D26732745	1	Wire	
19	D26732740	1	Wire	
20	D26740095	1	Sleeve	
21	D26732736	1	Insulation	

FOOTNOTE [A] NUMBER TO BE ADVISED
FOOTNOTE [B] OPTIONAL

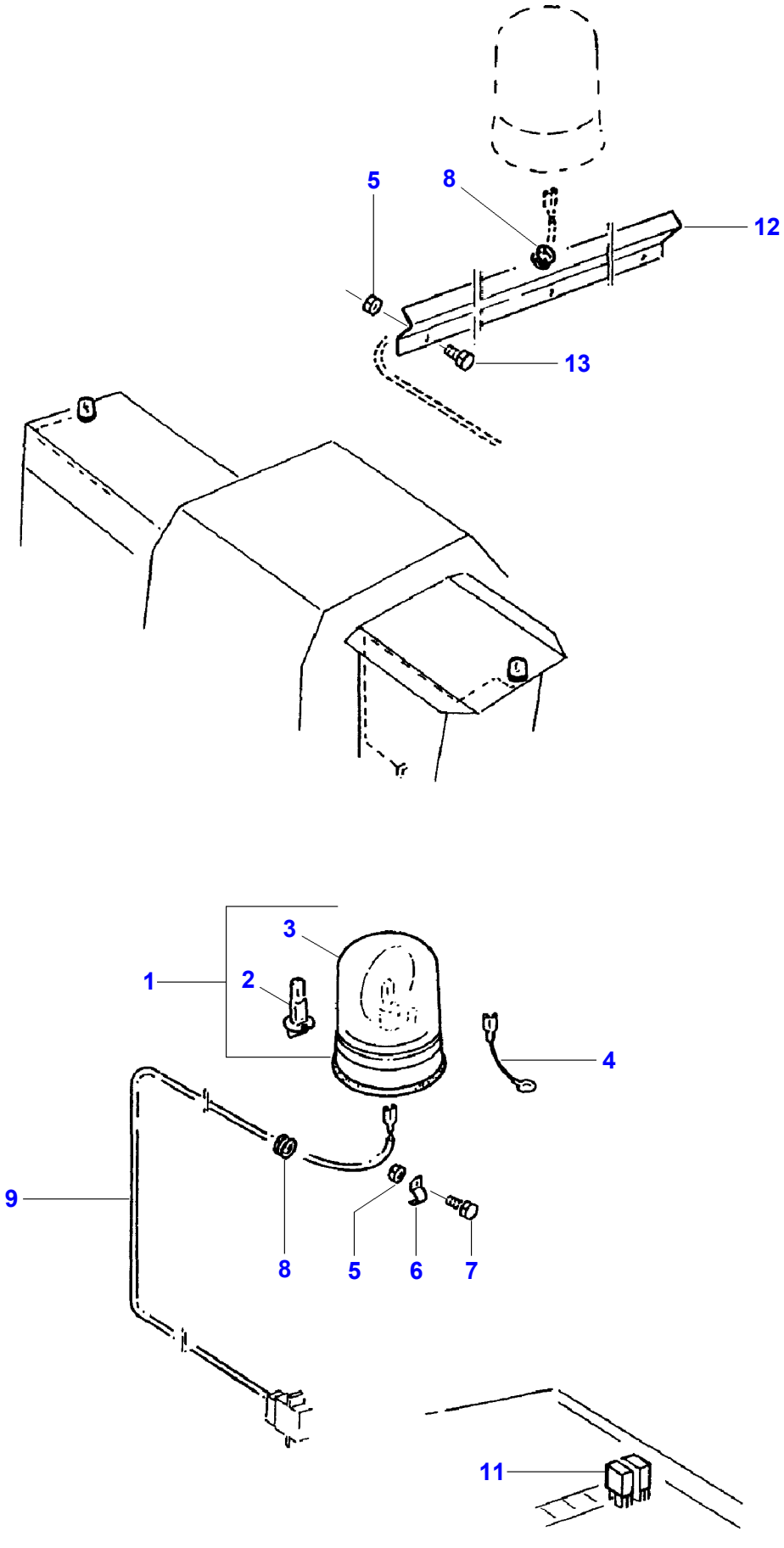

D-AFZL-003-A

Item	Part Number	Qty	Description	Comments
1	D44900990	2	Rotating Light	
2		1	Bulb 12v	[A] 55W
3		X	Box	[A,B] (1)
4	D26739797	2	Wire	
5	D41087200	4	Locknut	M4
6		1	Clamp	[A] Diameter 5
7	D26740197	1	Hex. Sock. Screw	M4 X 16
8	D26733627	3	Cable Sleeve	4 X 12 X 16
9		1	Lead	[A]
10		1	Lead	[A,C]
11	**D26732913**	2	Relay	
12	D26735757	1	Retainer	Length 1160
13	D40400200	3	Hex. Sock. Screw	M4 X 10

FOOTNOTE [A] NUMBER TO BE ADVISED
FOOTNOTE [B] ORANGE
FOOTNOTE [C] NOT ILLUSTRATED

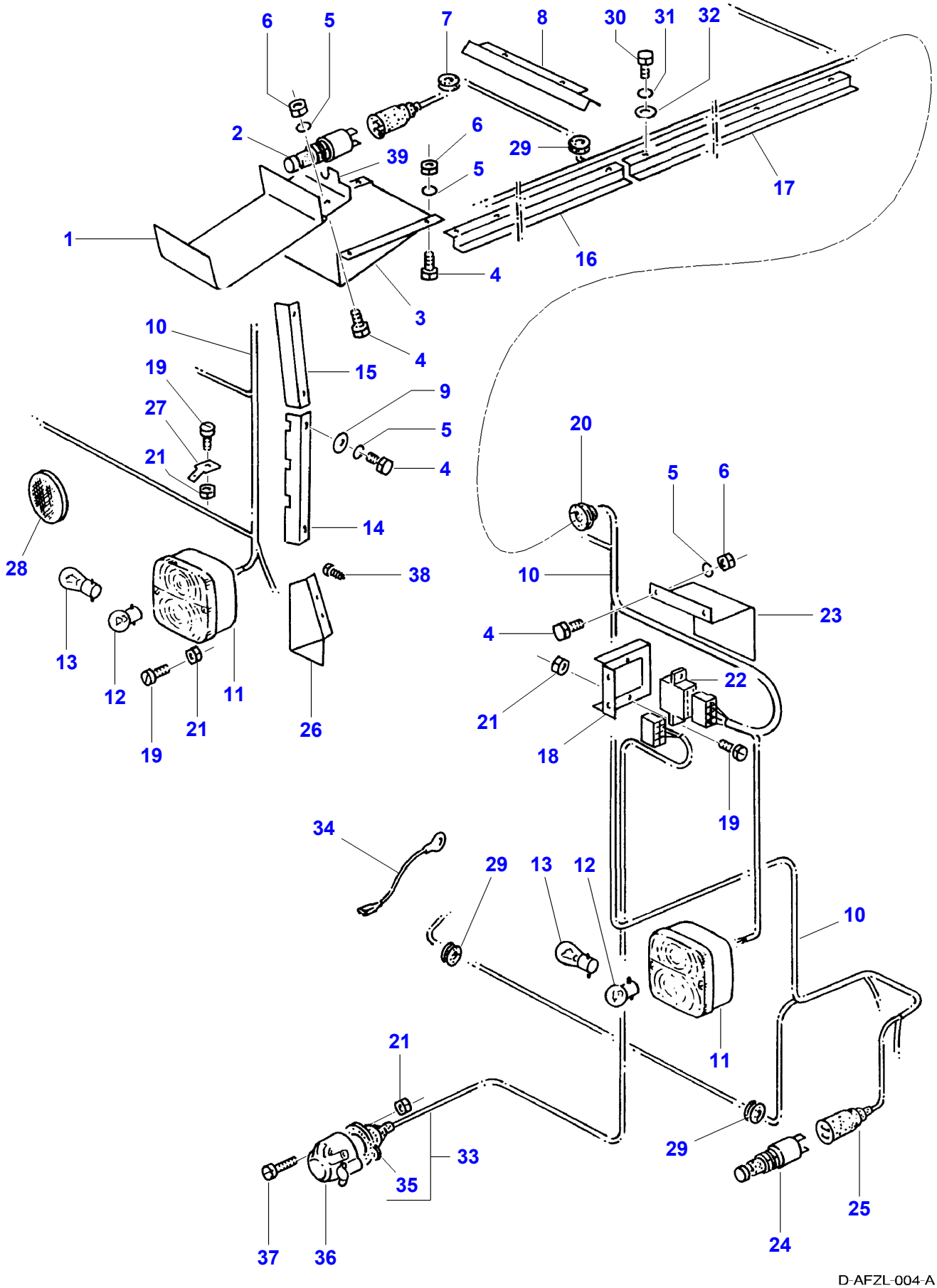
6
5
7
8
30
31
32
2
39
6
5
29
17
1
16
4
3
4
10
19
27
21
15
9
5
4
20
5
6
28
14
38
10
23
4
13
12
11
21
19
26
21
22
18
19
34
29
13
12
10
11
21
33
35
29
25
24
37
36
D-AFZL-004-A

Item	Part Number	Qty	Description	Comments
1	D26733900	1	Thrust Plate	
2	**D26733124**	1	Switch	
3	D26733841	1	Plate	M6 X 10
4	339560X1	14	Hex. Sock. Screw	M6 X 16
5	D20400470	12	Washer	A6
6	1441462X1	8	Locknut	M6
7	D26733712	1	Cable Sleeve	4 X 12 X 16
8	D16740648	1	Cover	
9	D26740136	4	Washer	6,4 X 18 X 2 ZN
10	D26735340	1	Wiring Harness	
		1	Wiring Harness	[A,B]
11	D26734186	4	Rear Light	
12	D26740234	4	Bulb	G / 10W
13	D26739984	4	Bulb	RL 21W
14	D16734485	1	Plate	
15	D16734484	1	Plate	
16	D26734481	1	Cover	
17	D26734480	1	Cover	
18	D26736596	2	Retaining Plate	
19	D26740005	14	Screw	AM5 X 16
20		1	Grommet	[A] Diameter 14-20
21	D26740022	14	Locknut	M5
22	D26733092	1	Plug-In Nipple	
	D26733096	1	Plug-In Nipple	
	D26733098	1	Plug-In Nipple	
	D26733095	1	Plug-In Nipple	
23		1	Bonnet.	[A]
24	**D26733123**	2	Switch	
25	D26734298	X	Bush	
26	D16740652	1	Guard	
27	D26733281	1	Plug-In Nipple	
28	D26733289	5	Reflector	80 ROT
	D26733287	6	Reflector	60 GELB
29	D26733627	4	Cable Sleeve	8 X 12
30	D40476100	13	Hex. Sock. Screw	M8 X 20
31	D41102100	13	Washer	A8
32	D20400414	13	Washer	8,5 X 24,5 X 3
33	D26734500	1	Wiring Harness	
34	D26738271	1	Earth Strap	
35	D26740316	1	Cap	
36	D26733118	1	Electric Socket	
37	D26740225	3	Screw	AM5 X 35
38	D26739315	2	Screw	M4,2 X 9,5
39	D26733906	1	Anglepiece	

FOOTNOTE [A] NUMBER TO BE ADVISED
FOOTNOTE [B] EXPORT ONLY

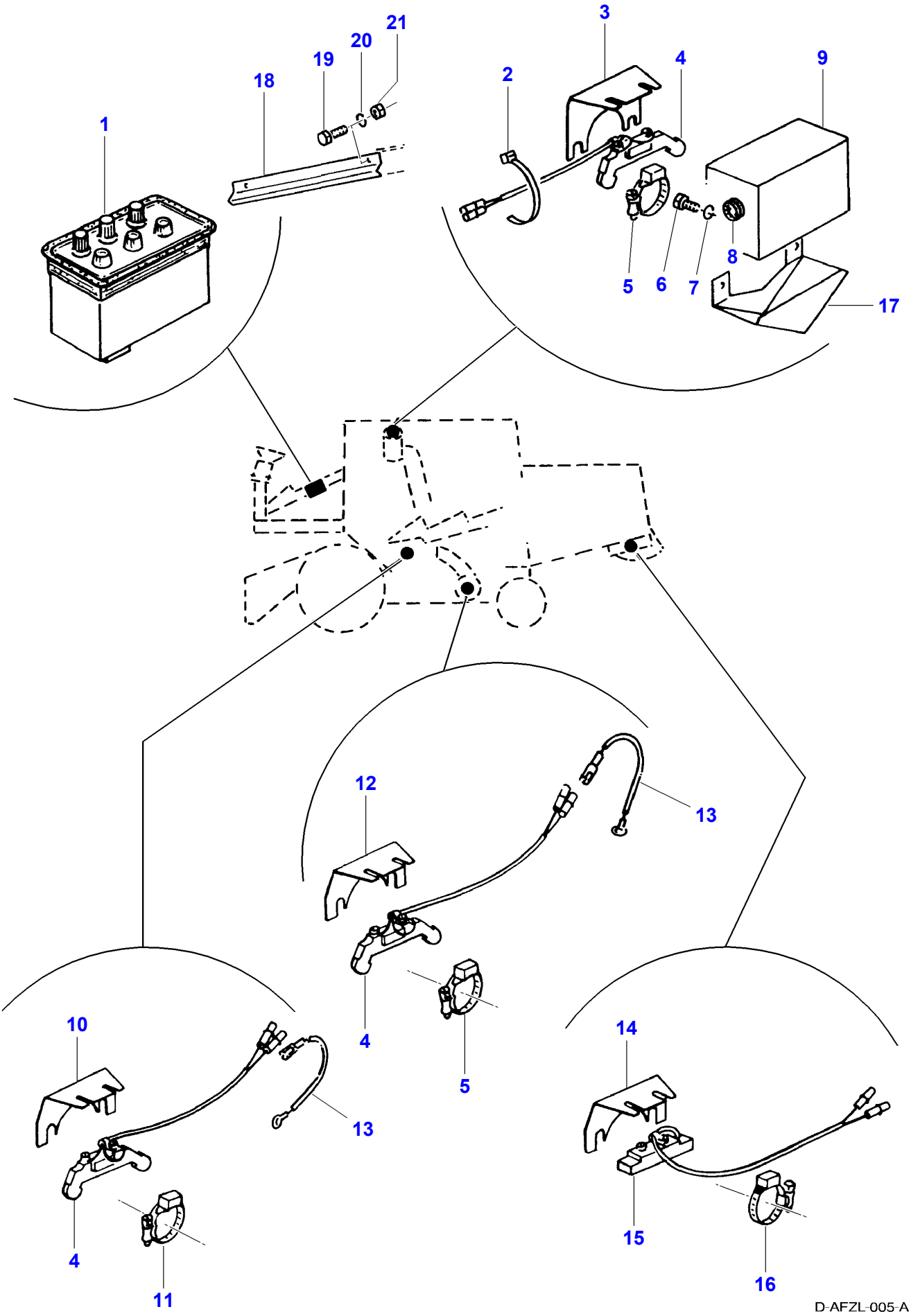
1
18
19
20
21
2
3
4
9
5
6
7
8
17
12
13
4
5
10
13
4
11
14
15
16
D-AFZL-005-A

Item	Part Number	Qty	Description	Comments
1	D26734496	1	Instrument Box	See Page - Reference Number 013-0017
2	D45039100	3	Cable Tie	4,6 X 146
3	D26734069	1	Retainer	
4	D26733848	3	Switch	
5	D26733847	2	Magnet	
6	339124X1	2	Hex. Sock. Screw	M8 X 16
7	D41102100	2	Washer	A8
8	D26733712	1	Cable Sleeve	4 X 12 X 16
9	D26734125	1	Guard	
10	D26734068	1	Retainer	
11	D26733864	1	Magnet	
12	D26733849	1	Support	
13	D26738239	2	Earth Strap	
14		1	Support	[A,B]
15	D49030040	1	Switch	[B]
16	D49030039	1	Clamp	[B]
17	D26734304	1	Guard	
18	D26734503	1	Cover	
19	D26739741	2	Hex. Sock. Screw	M6 X 18
20	D41100600	2	Spring Washer	A6
21	D41010600	2	Nut	M6

FOOTNOTE [A] NUMBER TO BE ADVISED
FOOTNOTE [B] OPTIONAL

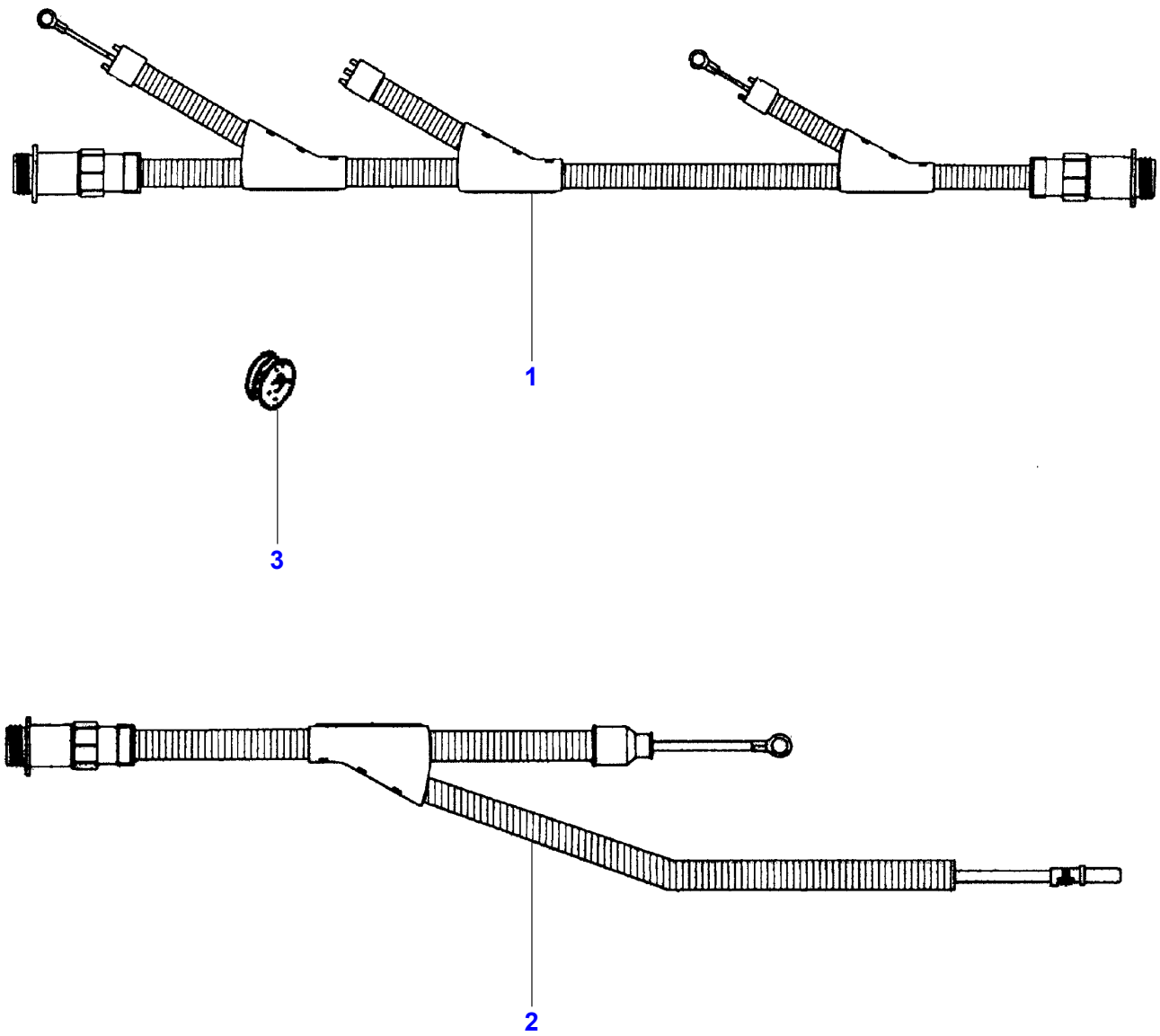

D-AFZL-016-B

Item	Part Number	Qty	Description	Comments
1	D28785458	1	Harness	Right Hand
2	D28781192	1	Harness	Left Hand
3	D26733277	1	Grommet	

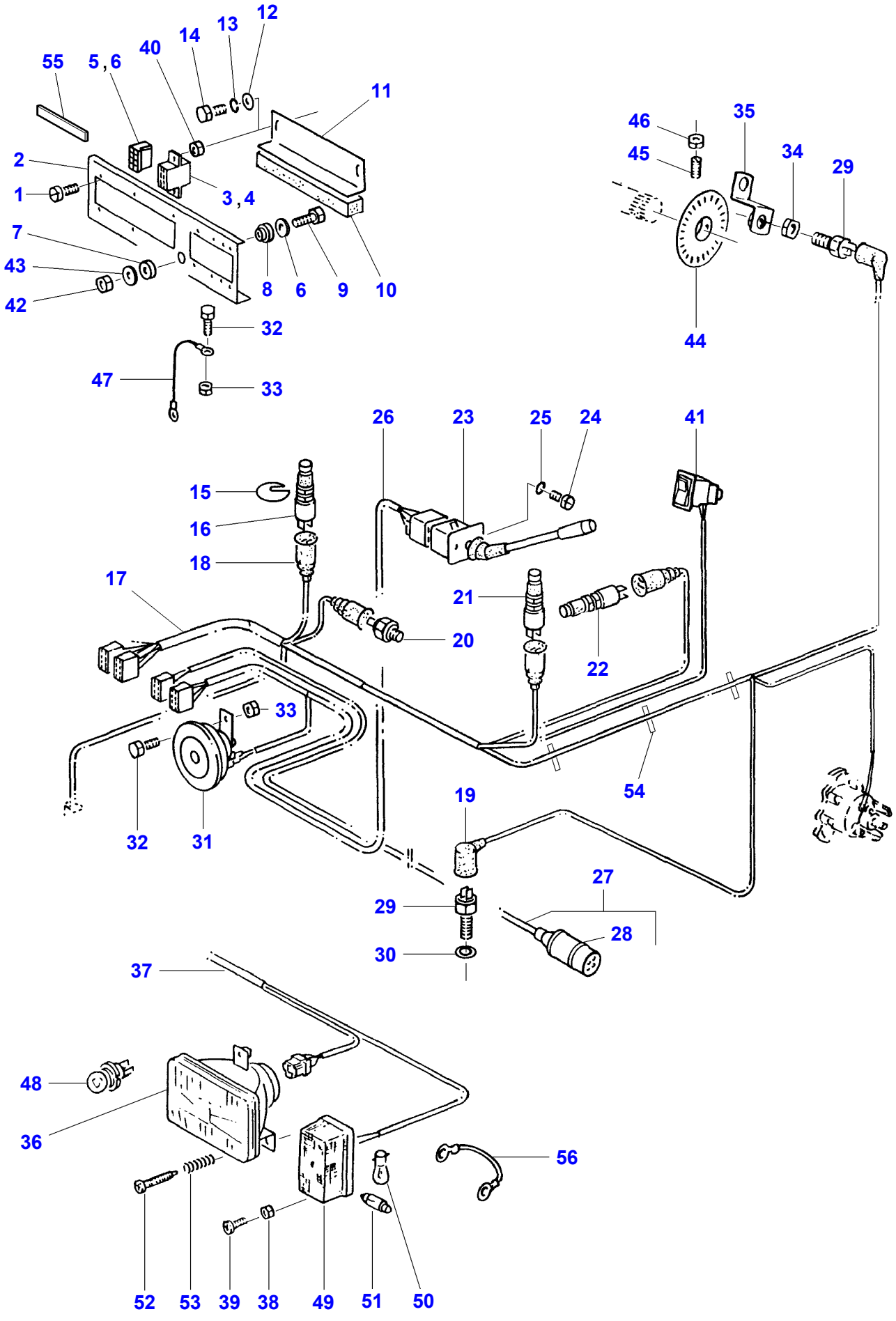
55
5 , 6
40
14
13
12
11
2
1
3 , 4
7
43
42
8
6
9
10
32
47
33
46
45
35
34
29
44
26
23
25
24
41
15
16
18
17
21
20
22
33
32
31
54
19
27
29
28
30
37
48
36
56
52
53
39
38
49
51
50

D-AFZL-017-B

Item	Part Number	Qty	Description	Comments
1	390958X1	10	Screw Special	M5 X 16
2	D26734870	1	Saddle	
3	D26733136	X	Plug-In Nipple	IVORY/IVOIRE
	D26733133	X	Plug-In Nipple	DARK GREY GRIS FONCE
	D26733139	X	Plug-In Nipple	NATURAL/NATUREL
	D26733094	X	Plug-In Nipple	
	D26733097	X	Plug-In Nipple	BLUE/BLEU
	D26733137	X	Plug-In Nipple	DARK RED ROUGE FONCE
	D26733093	X	Plug-In Nipple	BLACK/NOIR
	D26733098	X	Plug-In Nipple	DARK GREEN VERT FONCE
	D26733096	X	Plug-In Nipple	YELLOW/JAUNE
	D26733092	X	Plug-In Nipple	WHITE/BLANC
4	D26733138	X	Plug-In Nipple	DARK BLUE BLEU FONCE
	D26733134	X	Plug-In Nipple	ORANGE
	D26733135	X	Plug-In Nipple	GREEN/VERT
	D26733140	X	Plug-In Nipple	BROWN/BRUN
	D26733132	X	Plug-In Nipple	DARK BROWN BRUN FONCE
	D26733095	X	Plug-In Nipple	RED/ROUGE
5	D26733284	X	Plug-In Nipple	IVORY/IVOIRE
	D26739211	X	Plug-In Nipple	DARK GREY GRIS FONCE
	D26739179	X	Plug-In Nipple	NATURAL/NATURE
	D26739184	X	Plug-In Nipple	GREY/GRIS
	D26739177	X	Plug-In Nipple	BLUE/BLEU
	D26739208	X	Plug-In Nipple	DARK RED ROUGE FONCE
	D26733160	X	Plug-In Nipple	BLACK/NOIR
	D26739178	X	Plug-In Nipple	GREEN/VERT
	D26733159	X	Plug-In Nipple	YELLOW/JAUNE
	D26733283	X	Plug-In Nipple	WHIT/BLANC
6	D26739207	X	Plug-In Nipple	DARK BLUE BLEU FONCE
	D26735948	X	Plug-In Nipple	ORANGE
	D26739210	X	Plug-In Nipple	GREEN/VERT
	D26739176	X	Plug-In Nipple	BROWN/BRUN
	D26739209	X	Plug-In Nipple	DARK BROWN BRUN FONCE
	D26739174	X	Plug-In Nipple	RED/ROUGE
7	D26734383	1	Disc	
8	D26734382	1	Disc	
9	D26739754	1	Hex. Sock. Screw	M10 X 50
10	D26734501	2	Seal Section	
11	D26736705	1	Retainer	
12	D26739993	2	Washer	9 X 17 X 1,6
13	D41102100	2	Washer	A8
14	339123X1	2	Hex. Sock. Screw	M8 X 20
15	D26736715	1	Disc	
16	**D26733123**	1	Switch	
17	D26735444	1	Wiring Harness	
18	D26734298	X	Bush	
19	D26734111	X	Bush	
20	**D26733174**	1	Switch	
21	**D26733123**	1	Switch	[B]
22	**D26733123**	1	Switch	
23	D26733201	1	Blinker Switch	
24	1444168X1	2	Screw Special	M4 X 16
25	D41100300	2	Washer	A4
26		1	Harness	
27	D26734864	1	Wiring Harness	
28	D26733275	1	Plug-In Nipple	(27)
29	**D26733711**	2	Sensor	
30	D26739843	1	Seal	18 X 22
31	D45019500	1	Horn	
	D26736664	1	Horn	For Italy only or any text in Italian only
32	339124X1	2	Hex. Sock. Screw	M8 X 16
33	D26740007	2	Locknut	M8

Item	Part Number	Qty	Description	Comments
34	D41042800	1	Nut	M18
35	D26734066	1	Anglepiece	
36	D26733218	2	Headlamp	
36	D26733219	2	Head Lamp Ass Lh	[C] GB
37	D28788686	1	Wiring Harness	
38	D41087200	4	Locknut	M4
39	D26739842	4	Screw	M4 X 12
40	D26740022	10	Locknut	M5
41		1	Switch	[A]
42	339402X1	1	Nut	M10
43	D26740161	2	Washer	10,5 X 30 X 3 ZN
44	D26734900	1	Disc	
45	D40632000	1	Stud	M8 X 20
46	339169X1	1	Nut	M8
47	D26734790	1	Wire	
48	D26733084	2	Bulb 12v	60 / 55W
49	D26733415	2	Blinker Light	
50	D26739984	2	Bulb	RL21W
51	D26740240	2	Bulb 12v 5w	
52	D26732937	6	Screw	M5 X 55
53	D26732936	6	Comp.Spring	
54	D45036900	15	Sheath	Length 1m
55	D44709600	2	Seal Section	
56	D26733707	2	Earth Strap	[D]

FOOTNOTE [A] NUMBER TO BE ADVISED
FOOTNOTE [B] OPTIONAL
FOOTNOTE [C] EXPORT ONLY
FOOTNOTE [D] WITHOUT STRAW CHOPPER

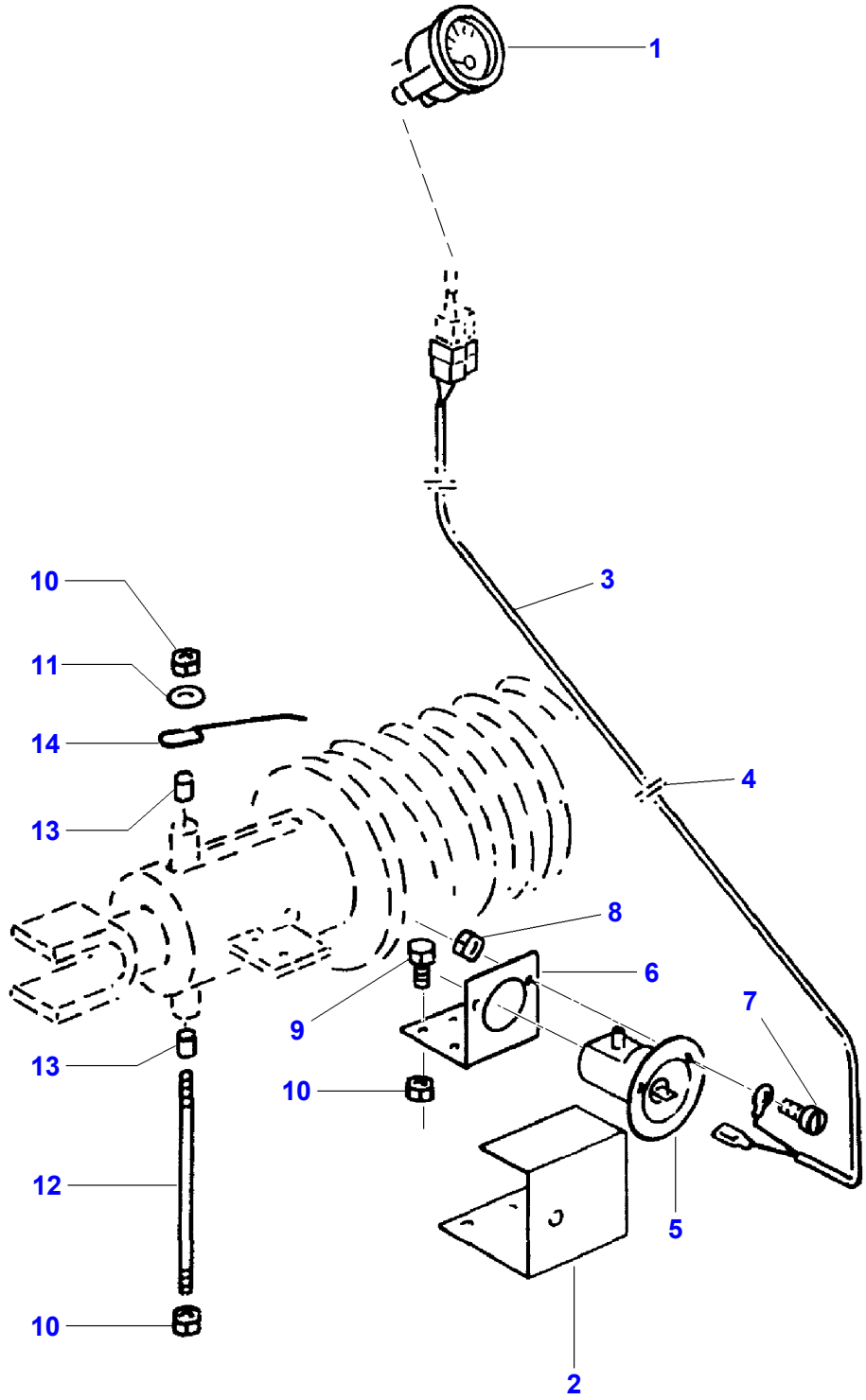

D-AFZM-001-B

Item	Part Number	Qty	Description	Comments
1	D26738908	1	Gauge	
2	D26734497	1	Cover	
3	D26734521	1	Wiring Harness	
4	D45039100	3	Cable Tie	4,6 X 146
5	D26734136	1	Sensor	
6	D26734133	1	Anglepiece	
7	D40352200	2	Screw	AM5 X 12
8	D26740022	2	Locknut	[B] M5
9	339560X1	2	Hex. Sock. Screw	M6 X 16
10	D41088800	4	Locknut	M6
11	D26740136	1	Washer	6,4 X 18 X 2 ZN
12	D28488081	1	Stud	
13		2	Spacer	[A]
14	D26734134	1	Brace	
15	D26733626	1	Bush	[B] 14 X 18 X 3

FOOTNOTE [A] NUMBER TO BE ADVISED
FOOTNOTE [B] NOT ILLUSTRATED

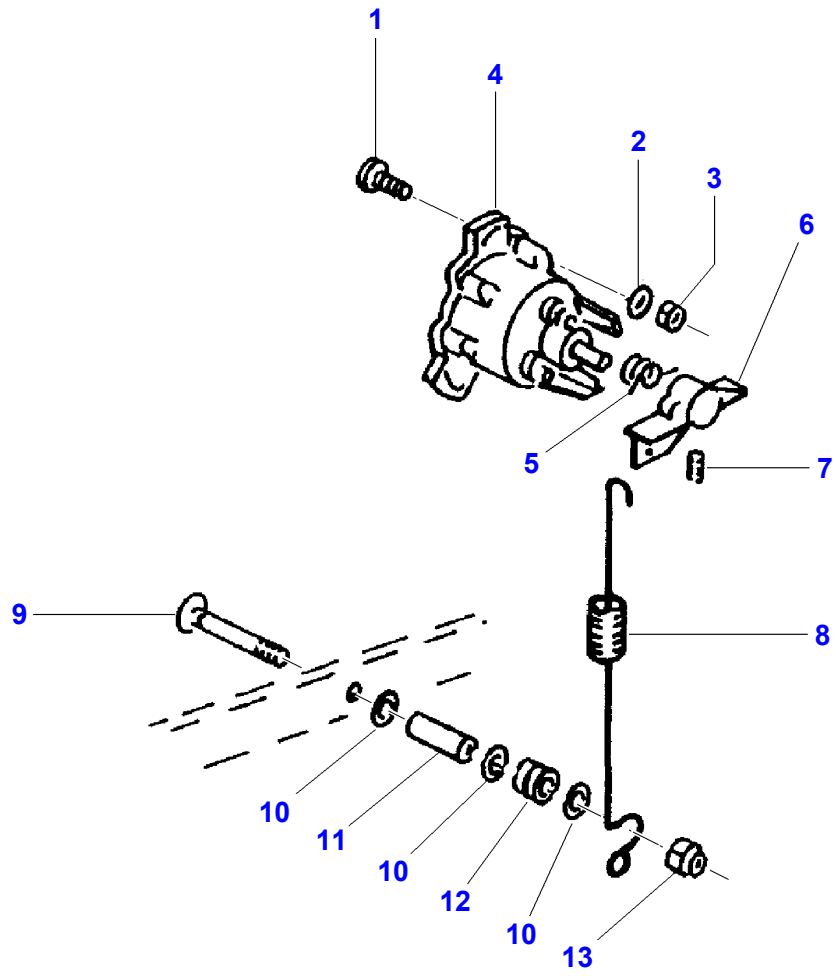
1
4
2
3
6
5
7
9
8
10
11
10
12
10
13

Item	Part Number	Qty	Description	Comments
1	D26739813	3	Screw	M4 X 16
2	D20400466	3	Washer	4,3 X 9 X 0,8
3	D41087200	3	Locknut	M4
4	D26732877	1	Sensor	
5	D26732885	1	Spring	
6	D26734572	1	Lever	
7	D40631000	1	Stud	M6 X 10
8	D26732884	1	Tension Spring	
9	D26732783	1	Bolt	M8 X 70
10	D26739993	3	Washer	9 X 17 X 1,6
11	D26735537	1	Bush	
12	D26734573	1	Bush	
13	D26740007	1	Locknut	M8

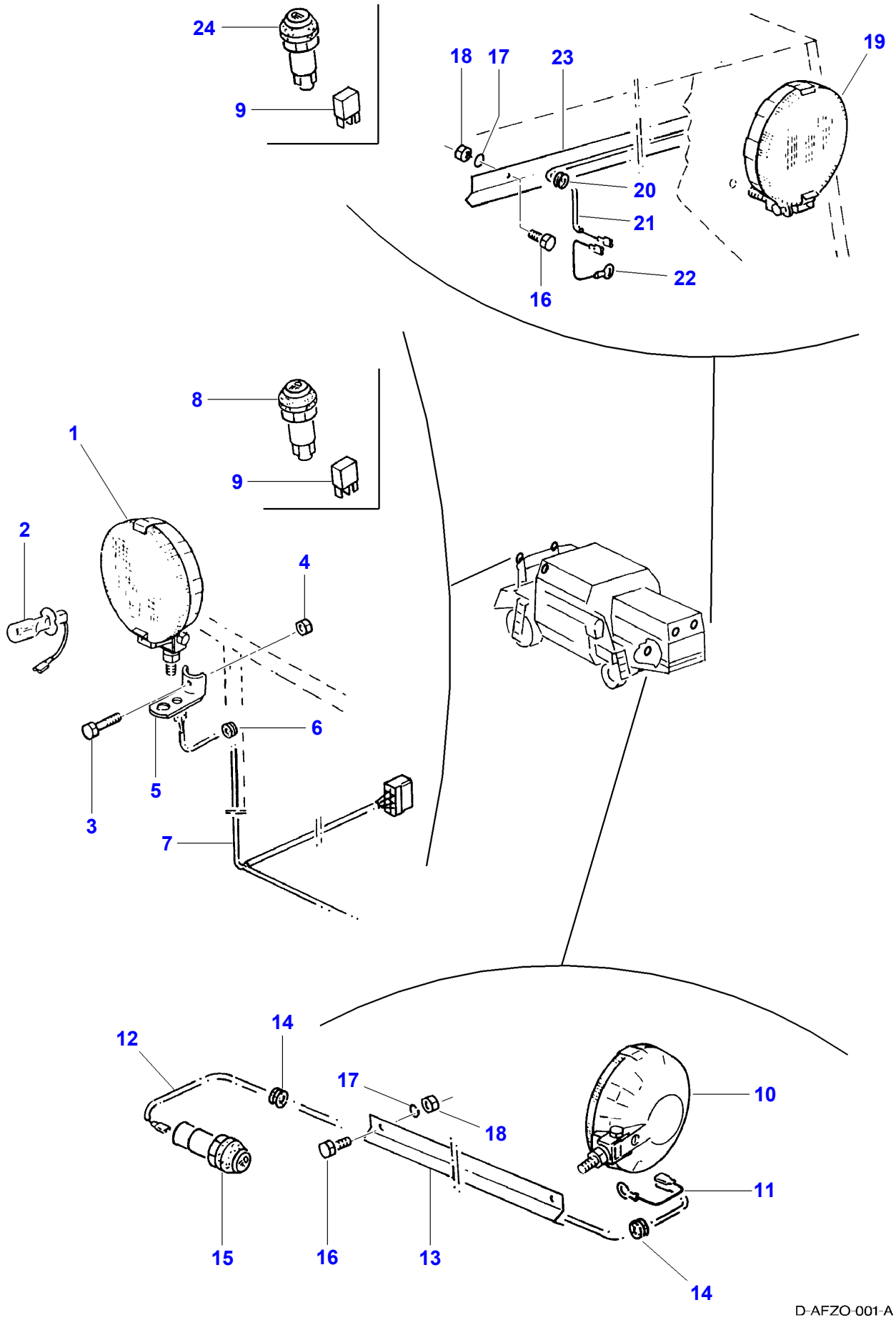
24
9
18
17
23
19
20
21
22
16
8
9
1
2
4
6
5
3
7
12
14
17
18
10
11
15
16
13
14
D-AFZO-001-A

Item	Part Number	Qty	Description	Comments
1	D26734495	5	Lamp	
2	D26739985	X	Bulb H3	
3	D40900017	2	Hex. Sock. Screw	M8 X 40
4	D26740007	2	Locknut	M8
5	D26737067	2	Headlamp Holder	
6	D26733726	1	Cable Sleeve	10 X 12 X 4
7		1	Harness	[A]
8		1	Switch	[A]
9	**D26732913**	X	Relay	
10	D26734495	1	Lamp	
11		1	Kit, Cable	[A]
12		1	Kit, Cable	[A]
13	D26734503	1	Cover	
14	D26733627	2	Cable Sleeve	8 X 12
15		1	Switch	[A]
16	D40400200	X	Hex. Sock. Screw	M4 X 10
17	D41100300	X	Washer	A4
18	D26732715	X	Nut	M4
19	D26734495	2	Lamp	
20	D26733712	2	Cable Sleeve	4 X 12 X 16
21	D26736977	1	Wire	
22		1	Kit, Cable	[A]
23	D26745249	1	Guard	
24	D26733130	1	Switch	

FOOTNOTE [A] NUMBER TO BE ADVISED

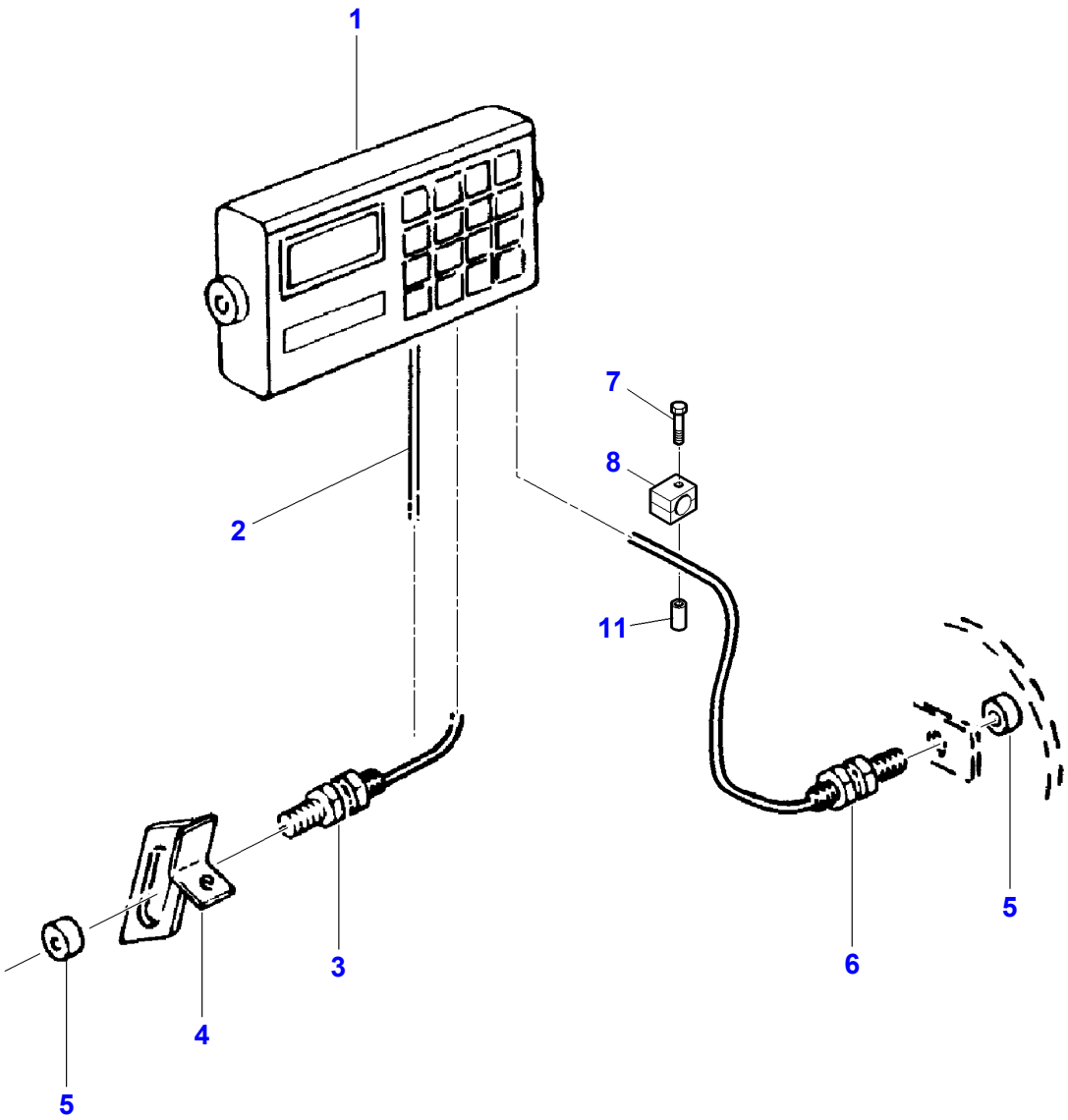

D-AFZP-001-B

Item	Part Number	Qty	Description
1	D45050090	1	Control Unit
2	D45050092	1	Cable
3	D45050088	1	Sensor
4	D45050093	1	Console
5	D45050091	2	Magnet
6	D45050089	1	Sensor
7	D40422400	1	Screw
8	D41100600	1	Spring Washer
11	D28184482	1	Tube

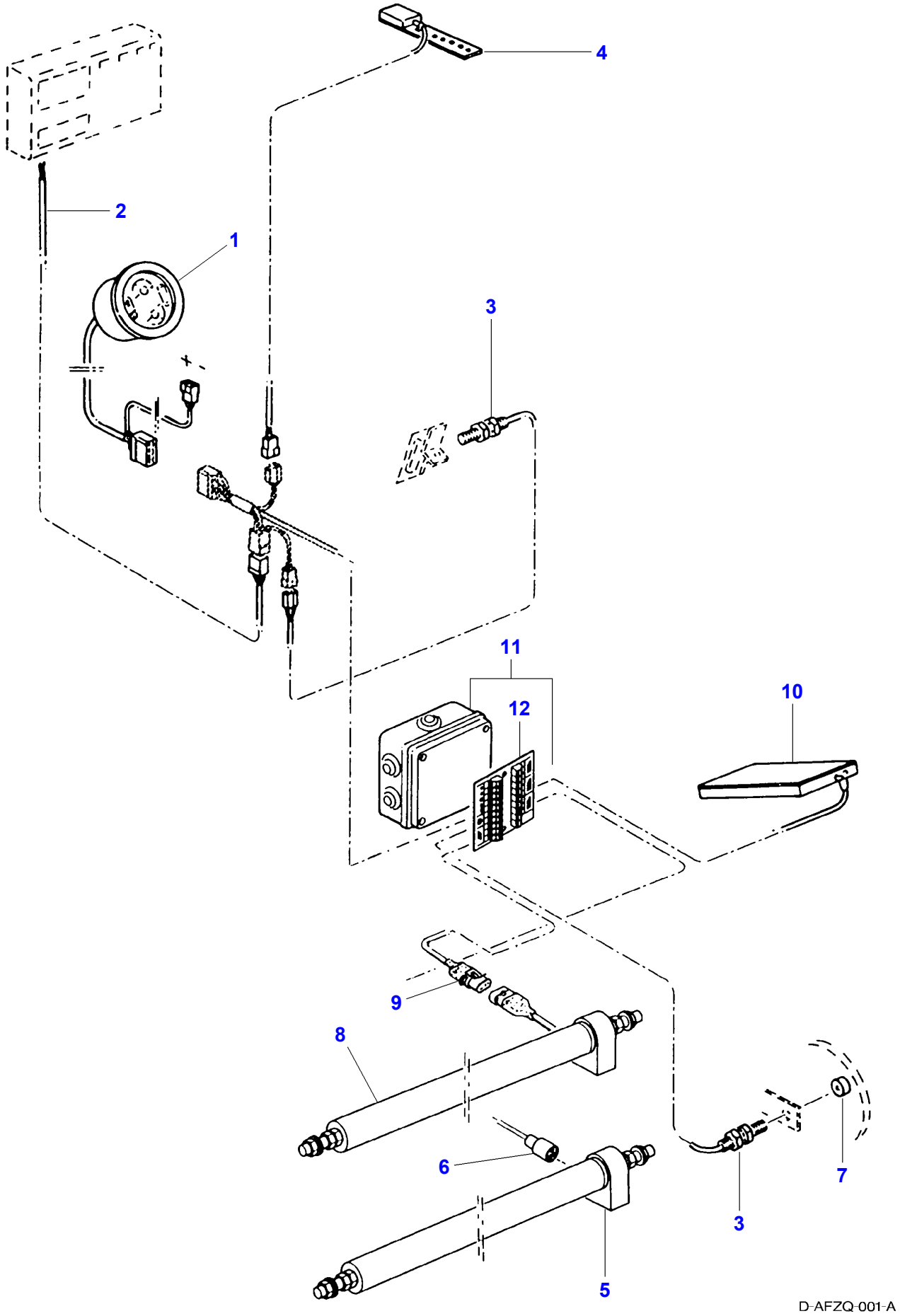
4
2
1
3
11
12
10
9
8
6
7
3
5
D-AFZQ-001-A

Item	Part Number	Qty	Description	Comments
	D45050087	1	Computer	LH 1000
	D26736490	1	Monitor	
1	D26730138	1	Instrument	
2		1	Cable	[A]
3	D45050088	X	Sensor	
4	D26730139	1	Sensor	
5		1	Sensor	[A] Up to Serial or Engine Number AN 2000
6		1	Kit, Cable	[A] Up to Serial or Engine Number AN 2000
7	D45050091	1	Magnet	
8	D26730140	1	Feeler	From Serial or Engine Number AN 2001
9	D26730141	1	Wiring Harness	From Serial or Engine Number AN 2001
10	D26730142	2	Sensor	
11	D26730143	1	Printed Circuit	
12	D26730144	1	Printed Circuit	(11)

FOOTNOTE [A] NUMBER TO BE ADVISED

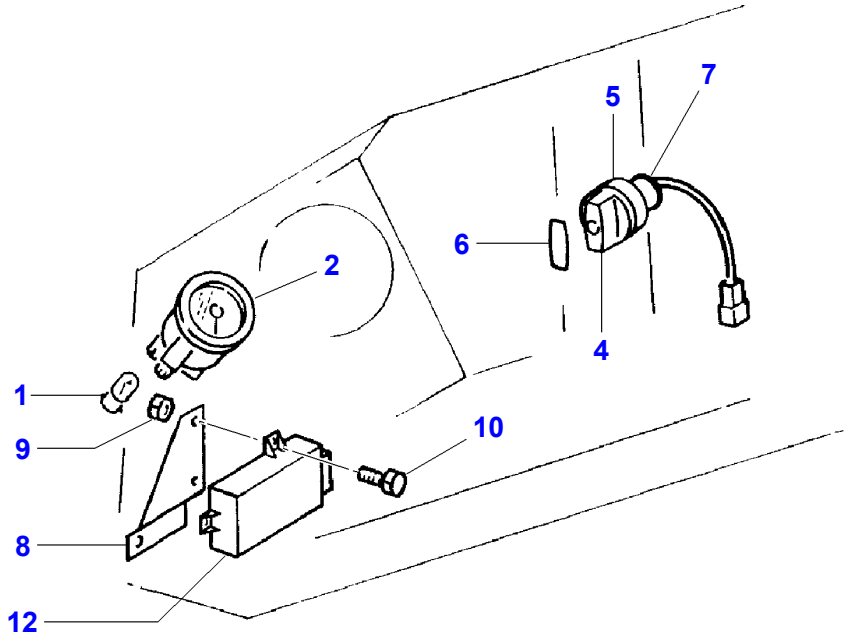

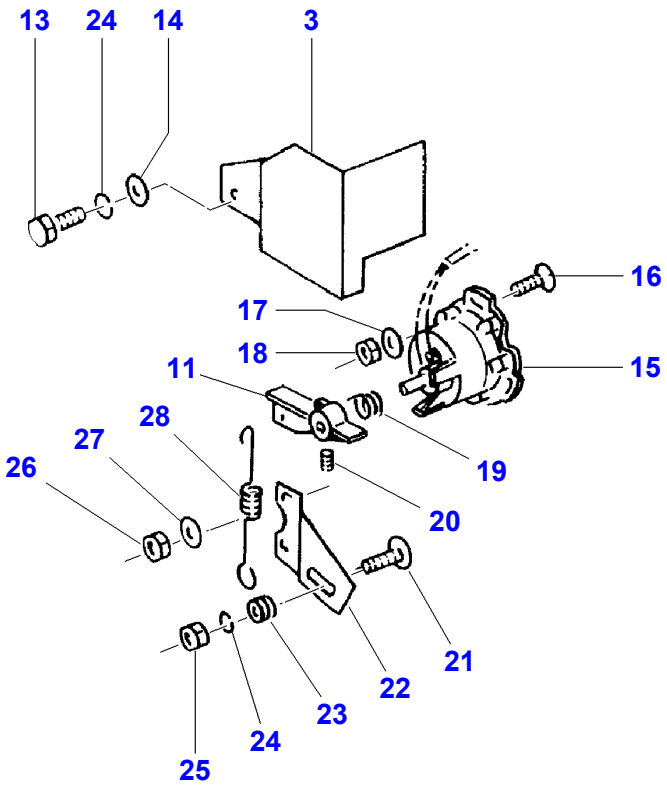

D-AFZR-001-A

Item	Part Number	Qty	Description	Comments
1	D26740215	1	Bulb	J / 2W
2	D26739363	1	Gauge	
3	D26735695	1	Guard	
4	D26732878	1	Grip	
5	D26732880	1	Cap	
6	D26732879	1	Cap	
7	D26734575	1	Torsion Bar	
8		1	Retainer	[A]
9	D41088800	2	Locknut	M6
10	339560X1	2	Hex. Sock. Screw	M6 X 16
11	D26734572	1	Lever	
12	D26732876	1	Control Unit	
13	339123X1	1	Hex. Sock. Screw	M8 X 20
14	D20400408	1	Washer	8,4 X 25 X 3
15	D26732877	1	Sensor	
16	D40400300	3	Hex. Sock. Screw	
17	D20400466	3	Washer	4,3 X 9 X 0,8
18	D41087200	3	Locknut	M4
19	D26732885	1	Spring	
20	D40631000	1	Stud	M6 X 6
21	D40400300	1	Hex. Sock. Screw	
22	D26734574	1	Plate	
23	D26734573	1	Bush	
24	D41102100	2	Washer	A8
25	339169X1	1	Nut	M8
26	D26739946	2	Nut	BM8
27	D26739993	2	Washer	9 X 17 X 1,6
28	D26732884	1	Tension Spring	

FOOTNOTE [A] NUMBER TO BE ADVISED

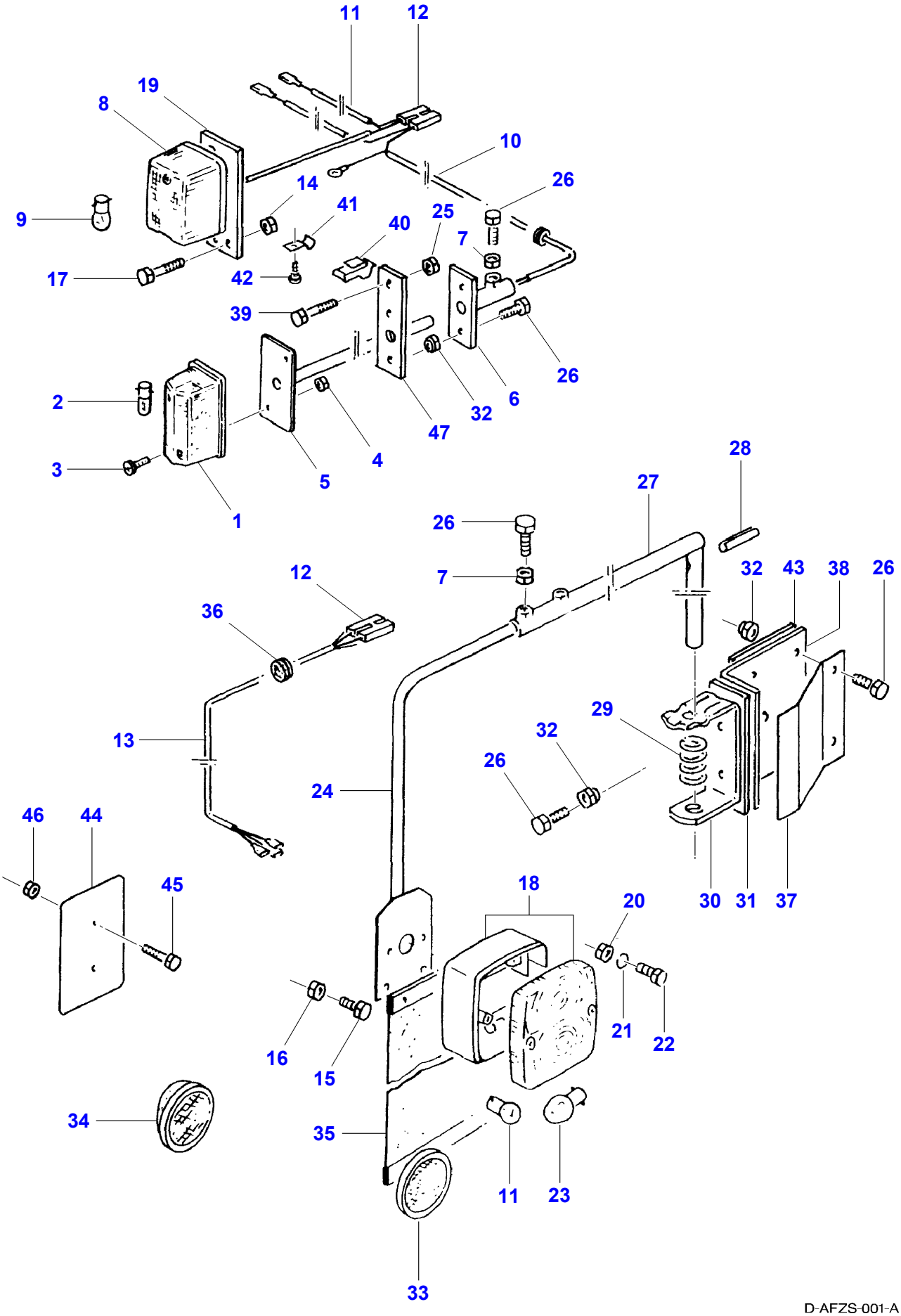
11
12
19
8
10
26
14
41
40
25
7
9
17
42
39
26
6
32
47
4
5
2
3
1
28
27
26
7
12
36
32
43
38
26
13
29
32
26
24
46
44
45
18
20
30
31
37
16
15
21
22
34
35
11
23
33

D-AFZS-001-A

Item	Part Number	Qty	Description	Comments
1	D26734867	2	Side Lamp	
2	D26732751	2	Bulb 12v 4w	
3	D26739813	4	Screw	M4 X 16
4	D41087200	4	Locknut	M4
5	D16734866	1	Extension	
6	D16734865	1	Bracket	
7	339169X1	6	Nut	M8
8	D26732951	2	Light	
9	D26732750	2	Bulb 12v 5w	
10	D26734868	2	Kit, Cable	
11	D26734869	2	Kit, Cable	
12	D26733278	6	Connectors	
13		2	Kit, Cable	[A]
14	D41088800	2	Locknut	M6
15	339560X1	4	Hex. Sock. Screw	M6 X 16
16	D41088800	4	Locknut	M6
17	D26739737	2	Hex. Sock. Screw	M6 X 60
18	D26734186	2	Rear Light	
19	D26735898	1	Plate	
20	D41010500	4	Nut	M5
21	D41100500	4	Washer	A5
22	D26739743	4	Hex. Sock. Screw	M5 X 18
23	D26740234	2	Bulb	G / 10W
24	D26733965	1	Arm	Left Hand
	D26733966	1	Arm	Right Hand
25	D28288162	1	Locknut	M10
26	D26739770	22	Hex. Sock. Screw	M8 X 22
27	D26733964	2	Extension	
28	D26739833	4	Pin	8 X 40
29	D26733329	2	Comp.Spring	
30	D26735894	2	Stirrup	
31		2	Holder	[A]
32	D26740007	22	Locknut	M8
33	D26733286	2	Reflector	
34	D26733289	4	Reflector	
35		2	Canvas	[A]
36	D26733626	2	Bush	14 X 18 X 3
37	D26735895	2	Shield	
38	D26735896	1	Plate	Left Hand
	D26735897	1	Plate	Right Hand
39		1	Hex. Sock. Screw	M10 X 75
40	D26733473	6	Connector	
41	D26740207	6	Clamp	6 X 10 X 1
42	D26739076	6	Screw	M3,5 X 9,5
43	D26735904	2	Holder	
44		2	Shield	[A]
45		4	Hex. Sock. Screw	[A] M5 X 40
46	D41010500	4	Nut	M5
47	D26735905	2	Holder	

FOOTNOTE [A] NUMBER TO BE ADVISED

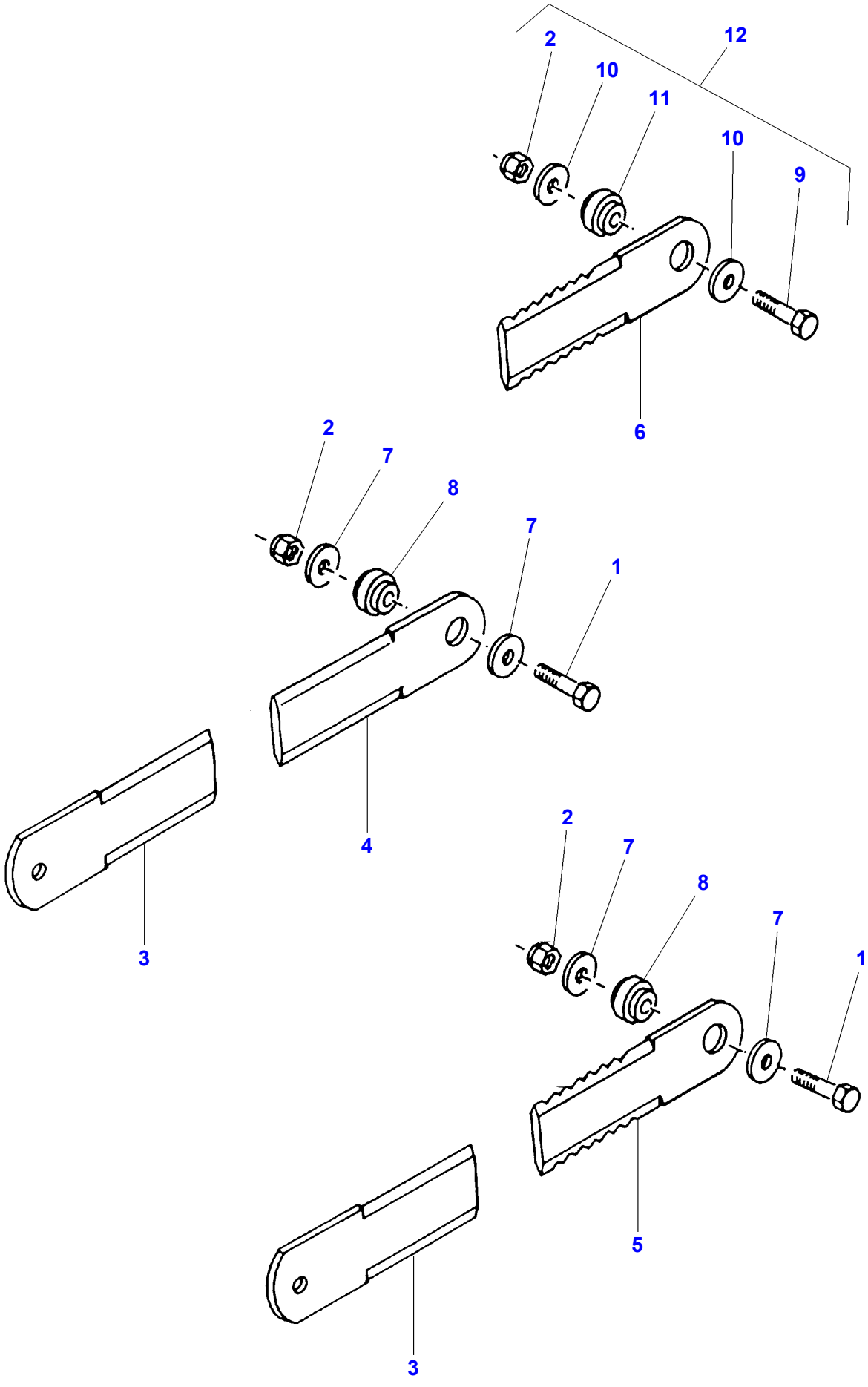

D-AFZT-001-B

Item	Part Number	Qty	Description	Comments
1	**D49030001**	X	Hex. Sock. Screw	M10 X 50
2	**D26740027**	X	Nut	M10
3	**D49030063**	X	Knife	
4		X	Blade	
5	**D49030070**	X	Straw/Chop Knife	Thickness 4 mm
6		X	Blade	Thickness 5 mm
7	**D49030065**	X	Washer	Diameter 10,5-30 X 5
8	**D49030064**	X	Sleeve	
9		X	Screw	M10 X 55
10		X	Washer	Diameter 10,5-42 X 6
11		X	Insert	
12		X	Kit, Disc	(48)
		X	Kit, Disc	(60)

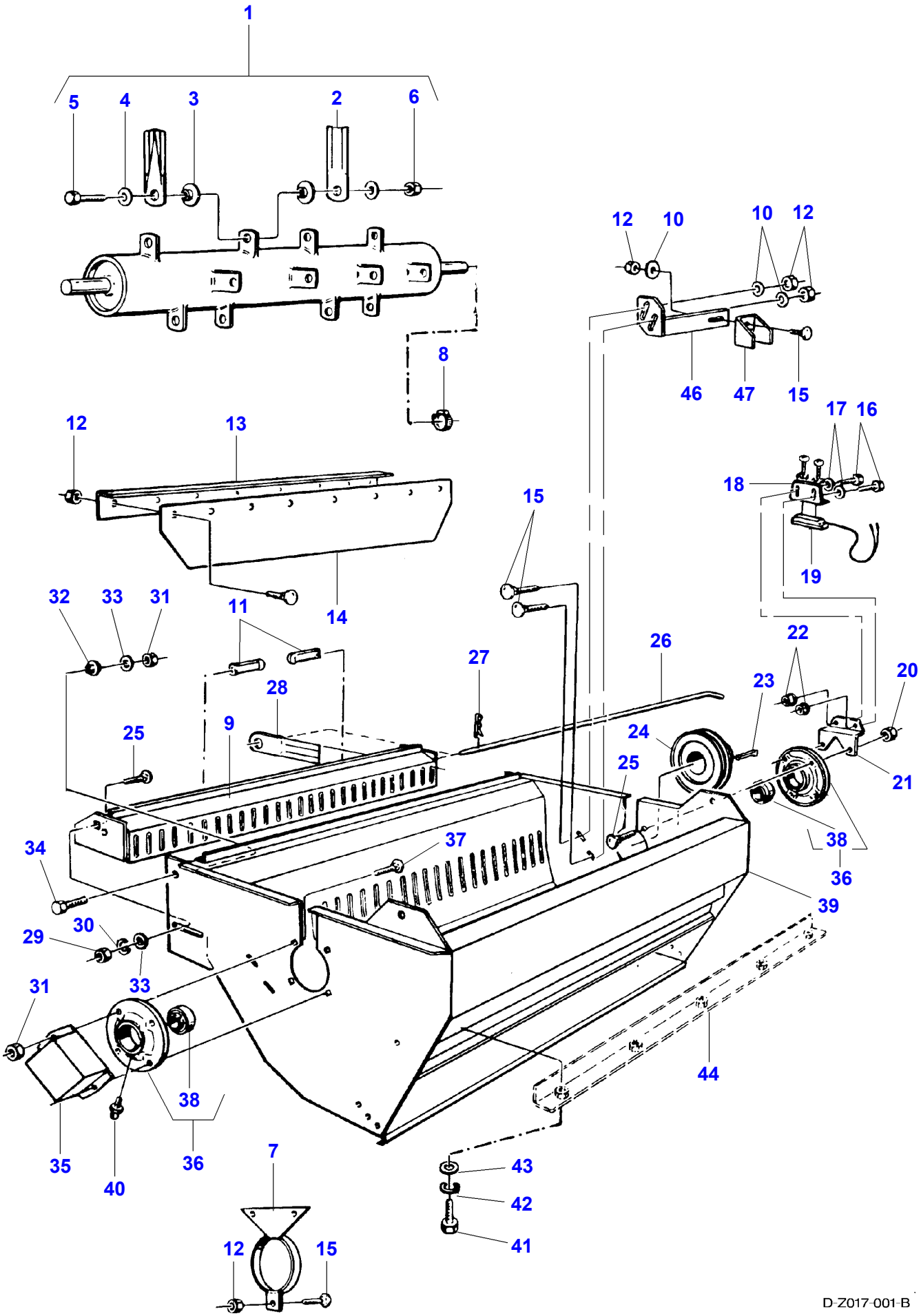
1
5
4
3
2
6
8
12
10
10
12
46
47
15
12
13
14
17
16
18
19
15
32
33
31
11
27
26
22
20
28
23
9
25
24
25
21
34
37
38
36
39
30
29
33
31
38
44
35
40
36
7
43
42
41
12
15
D-Z017-001-B

Item	Part Number	Qty	Description	Comments
1		1	Drum	[A]
2		48	Blade	[A] SMOOTH
	D49030070	48	Straw/Chop Knife	From Serial or Engine Number 1998 Thickness 4 mm
3	**D49030064**	48	Sleeve	
4	**D49030065**	48	Washer	Diameter 10,5-30 X 5
5	**D49030001**	24	Hex. Sock. Screw	M10 X 50
6	**D26740027**	24	Nut	M10
7		2	Disc	[A]
8	D49030039	1	Clamp	
9		1	Box	[A]
10		6	Washer	[A] 8,5x22
11		2	Handle	[A]
12	D26740007	16	Locknut	
13		1	Bar	[A]
14		1	Rubber Part	[A]
15	D26739943	14	Screw	
16	D40402600	2	Hex. Sock. Screw	
17		2	Washer	[A] 7x19
18		1	Support	[A]
19	D49030040	1	Switch	
20		8	Nut	[A] M12
21		1	Support	[A]
22	D41088800	2	Locknut	M6
23		1	Gib Key	
24	D49070245	1	Pulley	EQUIP. STANDARD
		1	Pulley	[A] EQUIP. MAIS
25	D40070200	6	Screw Metric	
26		1	Bar	[A]
27		1	Fastener	[A]
28	**D49030063**	47	Knife	
29	D41010900	2	Nut	M12
30	D26739978	2	Spring Washer	
31	D26740020	6	Locknut	M12
32		2	Insert	[A]
33		6	Washer	[A] 12,5X35
34	D26740233	2	Hex. Sock. Screw	
35		1	Protector	[A]
36		2	Bearing	[A]
37	D26740084	4	Screw	
38		2	Bearing	[A]
39		1	Frame Assy	[A]
40	D43004900	2	Grease Nipple	
41	D40407600	10	Hex. Sock. Screw	
42	D41100800	10	Spring Washer	
43	D26730397	10	Washer	10,5X26
44	D26730398	1	Knife	
46		1	Support	[A]
47		1	Housing	[A]

FOOTNOTE [A] NUMBER TO BE ADVISED

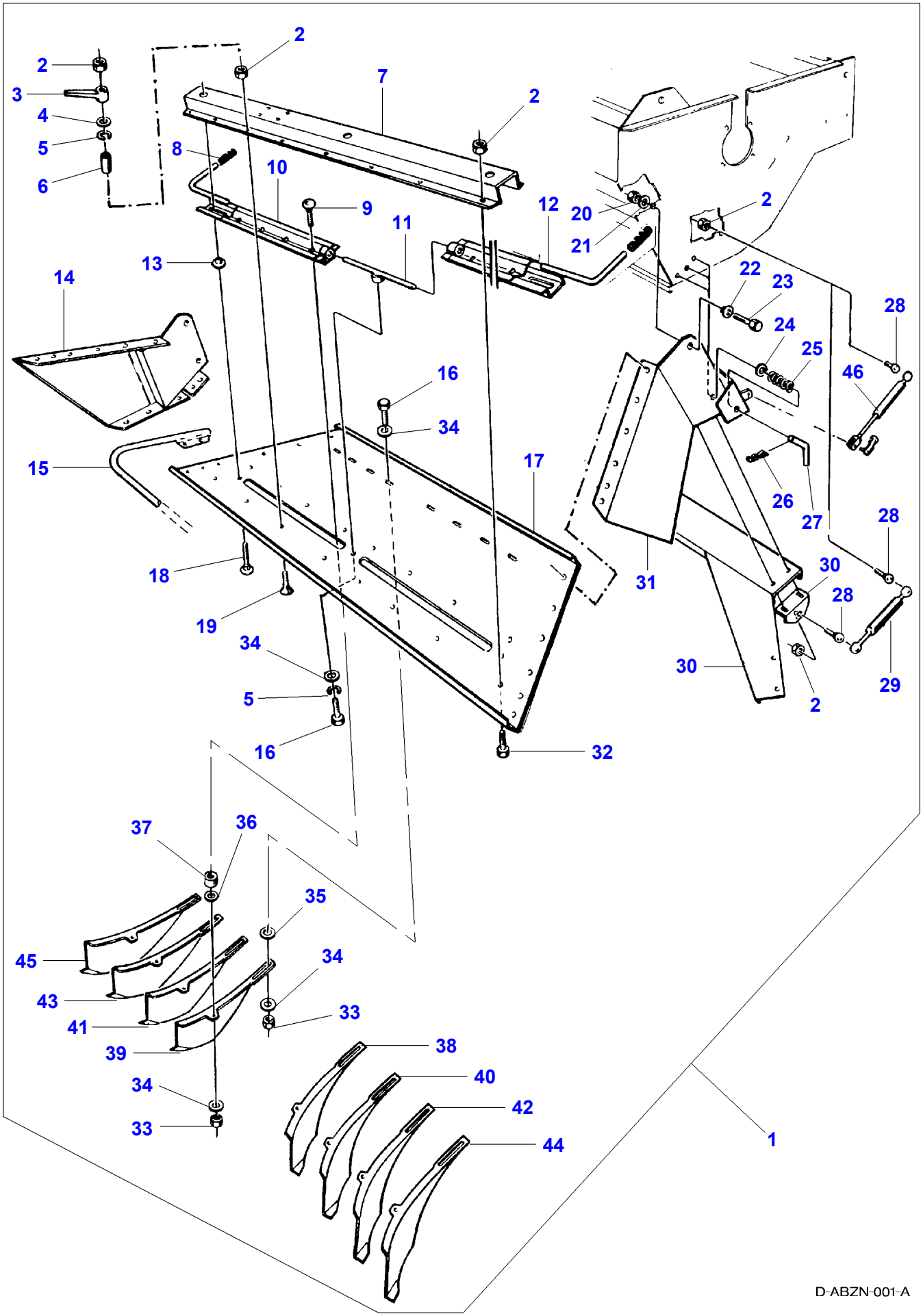
2
3
4
5
6
8
2
7
2
10
9
11
12
20
21
2
13
14
22
23
24
25
28
46
16
34
15
17
26
27
28
18
31
30
28
19
34
30
29
5
2
16
32
37
36
35
45
34
43
33
41
39
38
34
40
42
33
44
1
D-ABZN-001-A

Item	Part Number	Qty	Description	Comments
1	D26730495	1	Hood	[A] CPL.
2	D26740007	41	Locknut	
3		2	Handle	[A]
4		36	Washer	[A] 8,5X22
5	D41100700	3	Spring Washer	
6		2	Spacer	[A]
7		1	Rail	[A]
8		2	Handle	[A]
9	D40063800	8	Screw Special	M8X30
10		1	Slide	[A] Left Hand
11		1	Support	[A]
12		1	Slide	[A] Right Hand
13		2	Chock	[A]
14		1	Side Part	[A] Left Hand
15	D49070238	1	Stirrup	[A]
16	D40404900	25	Hex. Sock. Screw	M8X20
17		1	Top Part	[A]
18		2	Screw	[A] M8X90
19		10	Screw	[A] M8X16
20	D26740020	2	Locknut	
21		2	Washer	[A] 12,5X35
22		2	Insert	[A]
23	D40411000	2	Hex. Sock. Screw	M12x35
24		2	Washer	[A] 14X28
25		2	Comp.Spring	[A]
26		2	Fastener	[A]
27		2	Housing	[A]
28		4	Ball	[A]
29	D26746812	2	Shock Absorber	
30		1	Bottom Part	[A]
31		1	Side Part	[A] Right Hand
32	D40404700	5	Hex. Sock. Screw	M8X16
33		16	Nut	[A] M8
34		25	Washer	[A] 9X28
35		8	Chock	[A]
36		8	Chock	[A]
37		8	Chock	[A]
38	D49070263	1	Deflector	Right Hand
39	D49070262	1	Deflector	Right Hand
40	D49070265	1	Deflector	Right Hand
41	D49070264	1	Deflector	Left Hand
42	D49070267	1	Deflector	Right Hand
43	D49070266	1	Deflector	Left Hand
44	D49070269	1	Deflector	Right Hand
45	D49070268	1	Deflector	Left Hand
46	D26746811	2	Gas Strut	

FOOTNOTE [A] NUMBER TO BE ADVISED

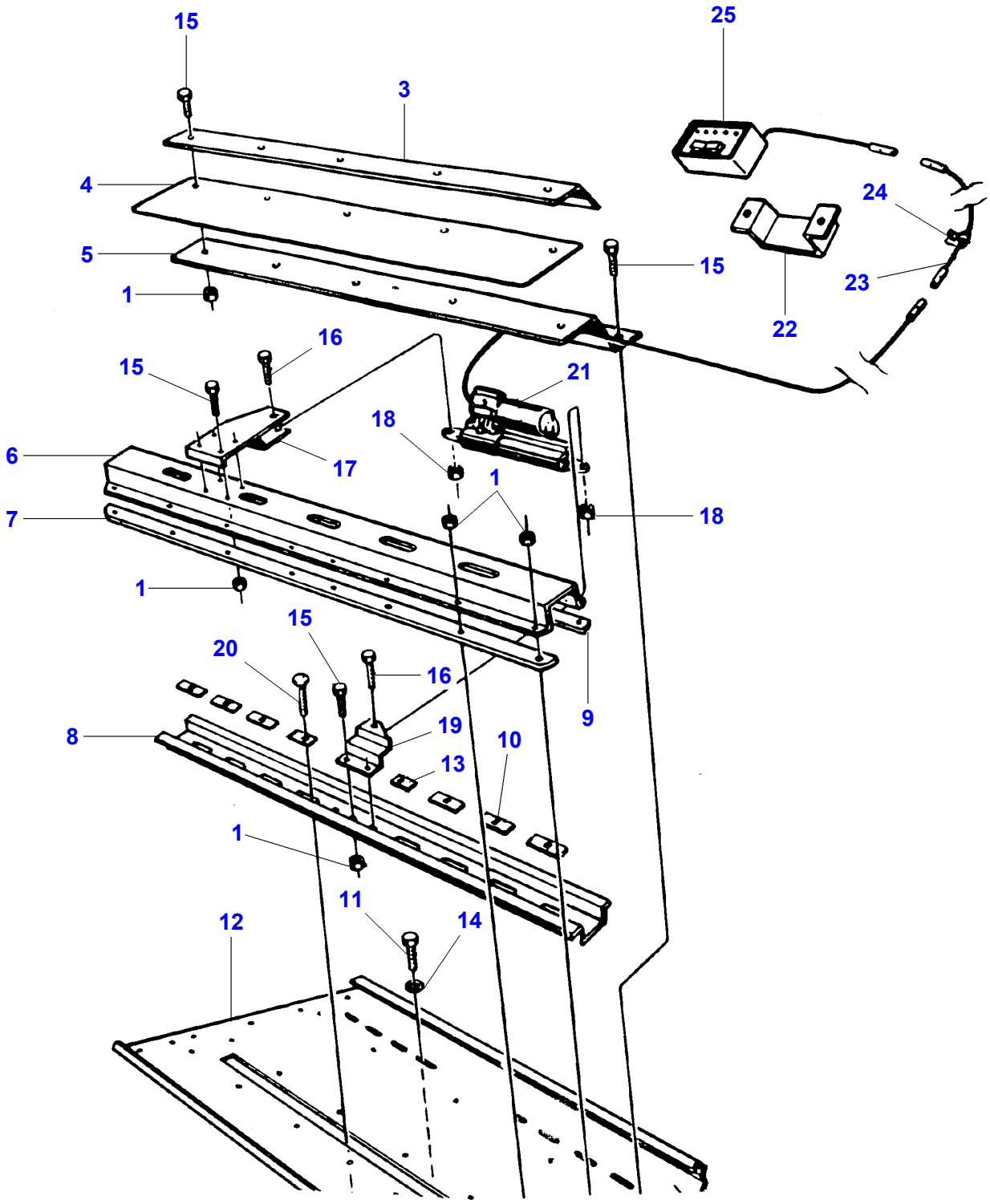
15
3
25
4
24
5
15
23
1
22
16
15
21
18
6
17
1
18
7
1
15
20
16
9
19
8
10
13
1
11
12
14

D-ADZO-001-A

Item	Part Number	Qty	Description	Comments
1	D26740007	X	Locknut	
2		X	Washer	[A,B] 8,5X22
3		1	Beading	[A]
4		1	Rubber Strap	[A]
5		1	Shield	[A]
6		1	Rail	[A]
7		1	Web	[A]
8		1	Rail	[A]
9		1	Web	[A]
10	D49070461	1	Support	
11	D26739770	8	Hex. Sock. Screw	M8X22
12		1	Top Part	[A]
13	D49070460	2	Cover	
14		X	Washer	[A] 9X28
15	D40404700	14	Hex. Sock. Screw	M8X16
16	D26739755	2	Hex. Sock. Screw	M10X45
17	D26730528	1	Support	
18	D28288162	2	Locknut	M10
19		1	Support	[A]
20	D26739261	8	Screw	M8X25
21	D49070271	1	Actuator	
22		1	Support	[A]
23		1	Cable	[A]
24		5	Clip	[A]
25		1	Instrument Panel	[A]

FOOTNOTE [A] NUMBER TO BE ADVISED
FOOTNOTE [B] NOT ILLUSTRATED

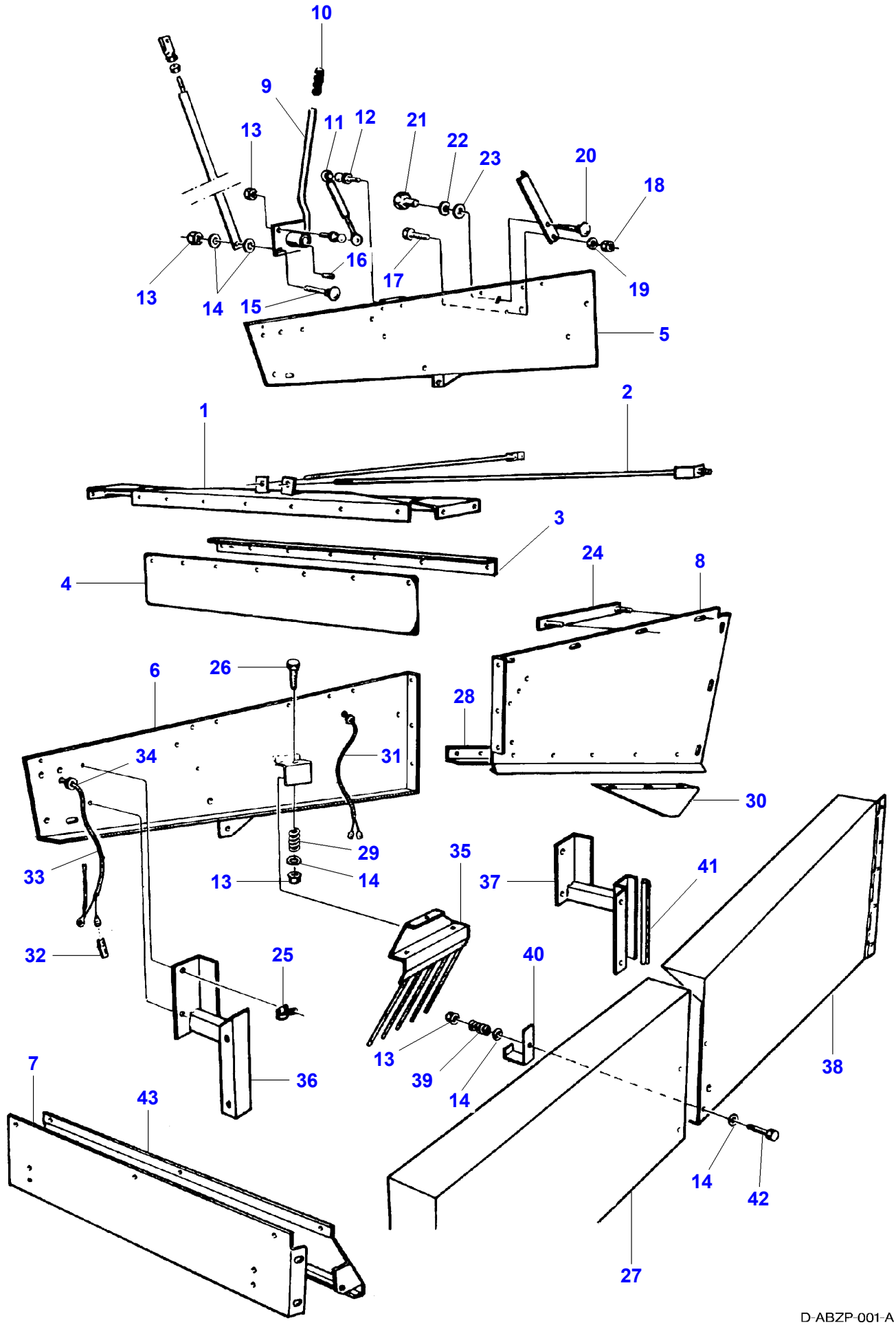
10
9
13
11
12
21
22
23
20
18
16
17
19
13
14
15
5
1
2
3
4
24
8
6
26
28
34
31
30
29
35
37
41
33
13
14
32
25
40
13
39
14
38
7
43
36
14
42
27
D-ABZP-001-A

Item	Part Number	Qty	Description	Comments
1	D26730499	1	Tube	
2	D26746839	2	Steering Tie Rod	
3	D26730501	1	Bar	
4	D26730502	1	Deflector	
5	D26730503	1	Deflector	Left Hand
6	D26730504	1	Side Part	Right Hand
7	D26730505	1	Partition	
8	D26730506	1	Shield	
9	D26730507	1	Lever	
10	D26730508	1	Handle	
11	D26746811	1	Gas Strut	
12	D49070270	2	Ball Joint	
13	D26740007	5	Locknut	M8
14	D26730510	5	Washer	8,5X22
15	D26739943	1	Screw	M8X20
16	D26730511	1	Spring	
17	D40407800	2	Hex. Sock. Screw	M10X30
18	D28288162	2	Locknut	M10
19	D26730397	2	Washer	10,5X26
20	D40066800	2	Screw Special	M10X30
21	D26730513	2	Handle	
22	D41100800	2	Spring Washer	
23	D26730397	2	Washer	10,5X26
24	D26730515	1	Rest	
25	D26730516	1	Bridle	
26	D26739964	2	Hex. Sock. Screw	
27	D26730496	1	Guard	
28	D26730497	1	List	
29	D26730517	2	Comp.Spring	
30	D26730518	1	Housing	
31	D26733518	1	Socket	12,5X15
32	D26730519	1	Connectors	
33	D26730520	1	Cable	
34	D26733627	1	Cable Sleeve	8X12
35	D26746843	1	Guide	
36	D26730521	1	Rest	
37	D26730522	1	Rest	
38	D26730523	1	Fence	
39	D26730524	1	Comp.Spring	
40	D26730525	1	Stirrup	
41	D26730526	1	Bar	
42	D40423900	1	Hex. Sock. Screw	M8X50
43	D26730527	1	Shield	

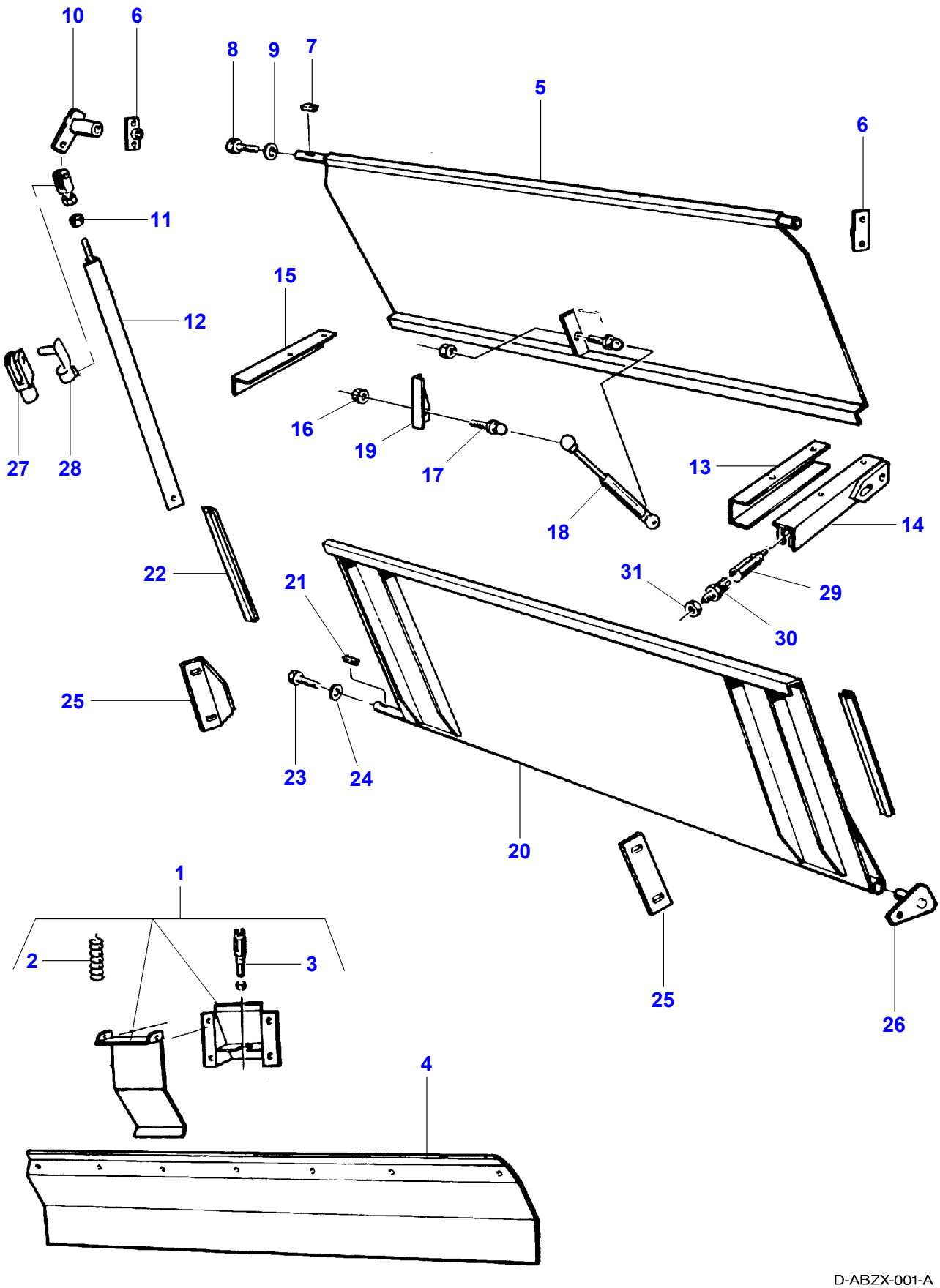
10
6
8
9
7
5
6
11
12
15
27
28
16
19
17
18
13
14
22
21
31
29
30
25
23
24
20
1
2
3
25
26
4

D-ABZX-001-A

Item	Part Number	Qty	Description	Comments
1		1	Horn	[A]
2		1	Comp.Spring	[A]
3	D49070258	1	Cutout	
4		1	Shield	[A]
5		1	Trap	[A]
6		2	Bearing Assy	[A]
7		1	Spring	[A]
8	D40407800	1	Hex. Sock. Screw	M10X30
9	D41100800	1	Spring Washer	
10		1	Lever	[A]
11	D41010800	1	Nut	M10
12		1	Actuating Rod	[A]
13		1	Panel	[A]
14		1	Stop	[A] Right Hand
15		1	Stop	[A] Left Hand
16	D26740007	2	Locknut	M8
17	D49070259	2	Ball Joint	
18	D26746813	1	Gas Strut	
19		1	Plate	[B]
20		1	Shield	[A]
21		1	Spring	[A]
22		1	Bar	[A]
23	D40407800	1	Hex. Sock. Screw	M10X30
24	D41100800	1	Spring Washer	
25		2	Stop	[A]
26		1	Pin	[A]
27	D45905300	1	Fork Head	
28	D26739190	1	Bolt	
29	D26734298	1	Bush	
30	D49070260	1	Pressure Switch	
31	D26739890	1	Nut	

FOOTNOTE [A] NUMBER TO BE ADVISED
FOOTNOTE [B] NOT SUPPLIED

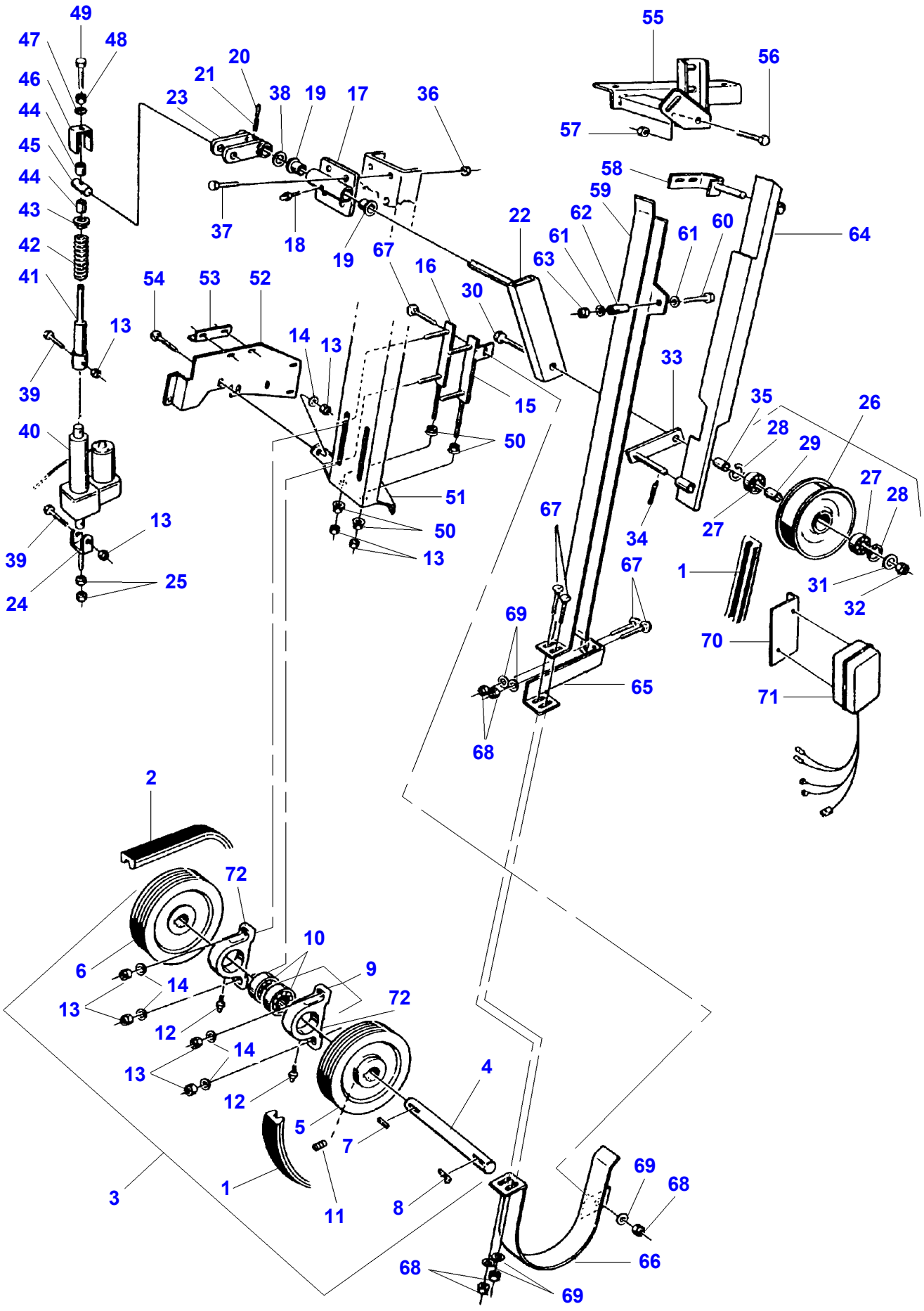
49
47
48
46
44
45
44
43
42
41
13
39
40
13
39
24
25
20
21
23
38
19
17
36
37
18
19
67
16
54
53
52
14
13
30
15
50
51
50
13
22
55
56
57
58
59
62
61
63
61
60
64
33
35
26
28
29
27
28
27
34
67
1
31
32
67
69
70
65
71
68
2
72
6
14
13
10
9
72
12
14
13
12
4
5
7
1
3
11
8
69
68
68
66
69

D-ABZK-002-A

Item	Part Number	Qty	Description	Comments
1	D26746844	1	Belt	2HCX3270
2	D26746845	1	Belt	2HBX5879
3		1	Angle Trans.	[A] CPL.
4		1	Countershaft	[A]
5	D49070246	1	Pulley	Diameter 260
6	D49070247	1	Pulley	Diameter 286
7	D43104900	1	Key	
8		1	Gib Key	[A]
9	D49070248	2	Bearing	CPL.
10	D49070249	2	Ball Bearing	
11	D40633100	4	Stud	
12	D43004900	2	Grease Nipple	
13	D26740020	11	Locknut	M12
14		7	Washer	[A] 12,5X35
15		1	Clamping Piece	[A]
16		1	Clamping Piece	[A]
17		1	Rest	[A]
18	D43002500	1	Greaser	
19		2	Insert	[A]
20	D26747057	1	Pin	5X45
21	D26739771	1	Dowel	8X45
22		1	Support	[A]
23		1	Lever	[A]
24	D26734885	1	Bracket	
25	D41011100	2	Nut	
26	D49070251	1	Pulley,Tensioner	
27	D49070252	2	Ball Bearing	
28	339199X1	2	Circlip	
29	D49070253	1	Bush	
30		1	Screw	[A] M16X130
31	D26739998	1	Washer	17X30X3
32	D26740304	1	Nut	M16
33		1	Support	[A]
34	D26746955	1	Split Pin	3,2X36
35		1	Insert	[A]
36	D28288162	4	Locknut	M10
37	D40407700	4	Hex. Sock. Screw	M10X25
38	D41653600	X	Spacer	30X42X0,5
39	D26740233	2	Hex. Sock. Screw	M12X55
40	D26735254	1	Motor	
41	D26747672	1	Mandrel	
42	D26733731	1	Comp.Spring	
43	D26734088	1	Spring Pot	
44	D26736530	2	Bush	
45	D26733896	1	Clevis Pin	
46	D26747673	1	Torque Limiter	
47		1	Washer	[A] 10,5X26
48	D41010800	1	Nut	M10
49	D26739754	1	Hex. Sock. Screw	M10X50
50		4	Nut	[A]
51		1	Frame Assy	[A]
52		1	Console	[A]
53		1	Support	[A]
54	D40070200	3	Screw Metric	M12X30
55		1	Console	[A]
56	D40416500	2	Hex. Sock. Screw	M16X40
57	D26740304	2	Nut	M16
58		1	Support	[A]
59		1	Stirrup	[A]
60	D40408600	1	Hex. Sock. Screw	M10X70
61		2	Washer	[A] 10,5X26
62		1	Spacer	[A]
63	D28288162	1	Locknut	M10
64		1	Stirrup	[A]
65		1	Support	[A]
66	D26746849	1	Support	

Item	Part Number	Qty	Description	Comments
67	D26739261	6	Screw	M8X25
68		6	Nut	[A] M8
69		6	Washer	[A] 8,5X22
70		1	Support	[A]
71	D26735234	1	Control Unit	
72	D49070250	2	Bearing Housing	

FOOTNOTE [A] NUMBER TO BE ADVISED

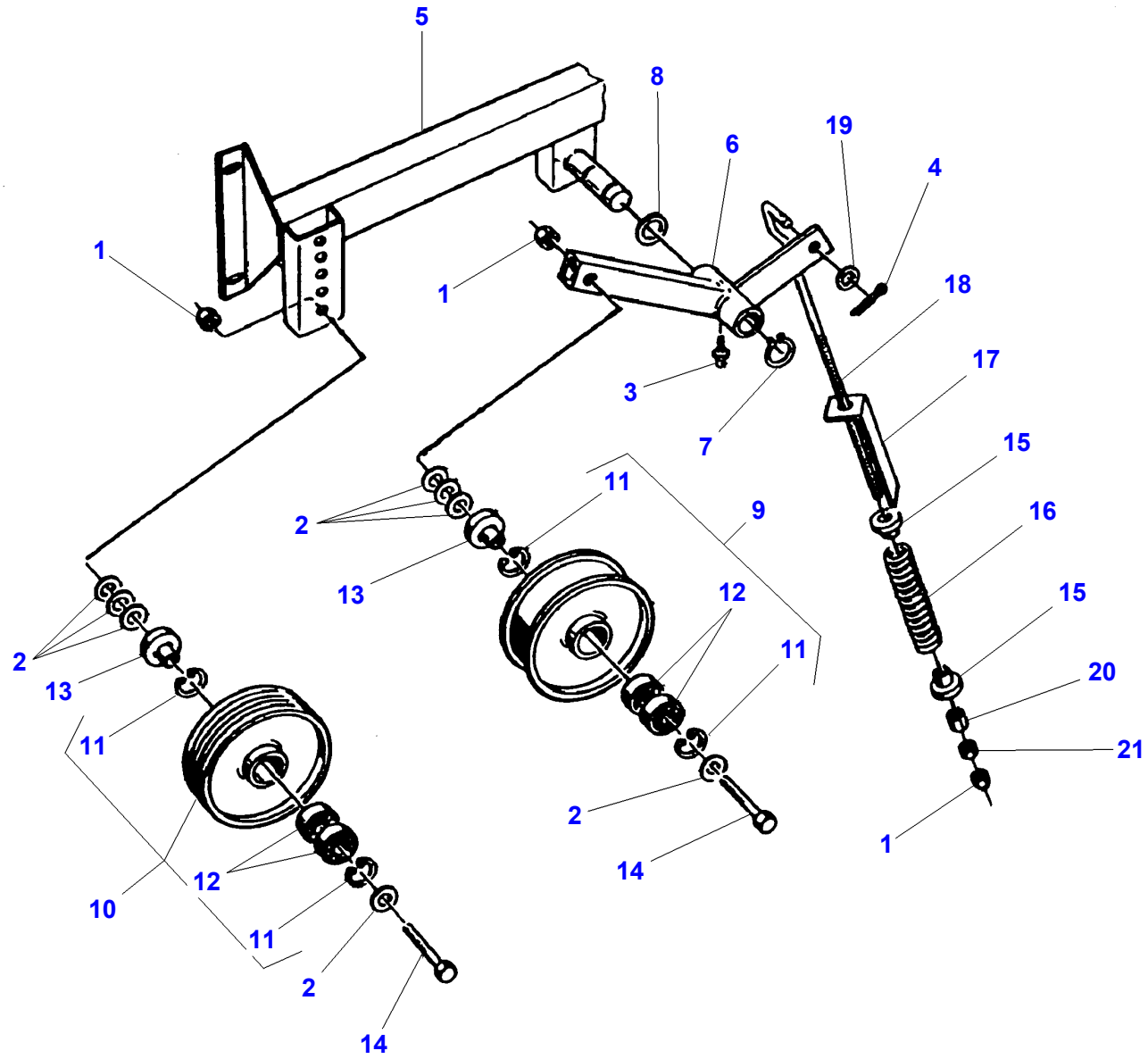
5
8
19
6
4
1
1
18
3
17
7
15
11
2
9
16
13
12
15
2
11
20
13
11
21
2
1
14
10
12
11
2
14

D-ABZK-003-A

Item	Part Number	Qty	Description	Comments
1	D26740020	3	Locknut	M12
2		8	Washer	[A] 12,5X35
3	D43002500	1	Greaser	
4	D26746955	1	Split Pin	3,2X36
5		1	Console	[A]
6		1	Support	[A]
7		1	Bush	[A] 40X2,5
8		1	Washer	[A] 40X50X0,3
9	D49070254	1	Track Roller	Diameter 190
10	D49070255	1	Roller	Diameter 190
11	339199X1	4	Circlip	
12	D49070256	4	Bear. 6204 2rs	
13	D49070257	2	Insert	
14	D26740204	2	Screw	M12X80
15		2	Insert	[A]
16		1	Comp.Spring	[A]
17		1	Shield	[A]
18		1	Stem	[A]
19		1	Washer	[A] 13X24
20		1	Nut	[A] M12
21	D41010900	1	Nut	M12

FOOTNOTE [A] NUMBER TO BE ADVISED

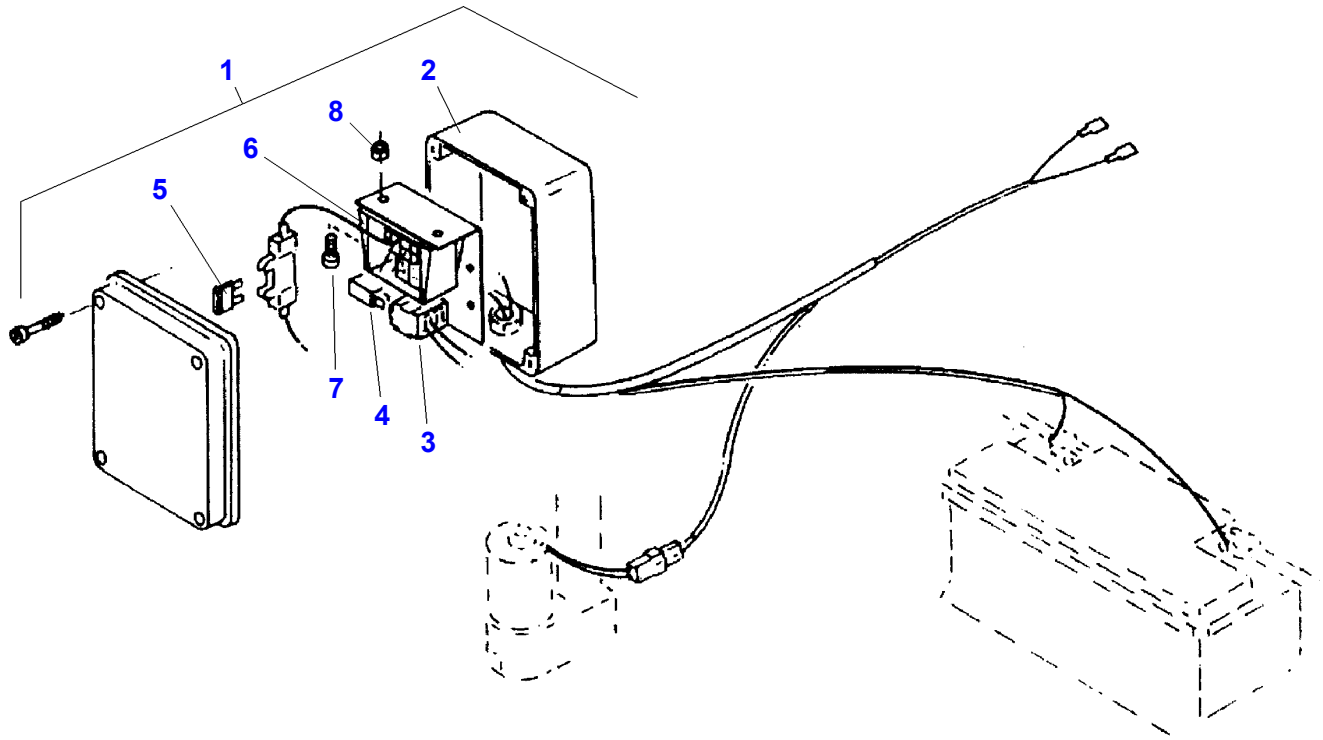

D-ABZK-001-A

Item	Part Number	Qty	Description	Comments
1	D26735234	1	Control Unit	
2		1	"Kemper" Kit	(1)
3	D26739161	1	Support	(1)
4	**D26732913**	1	Relay	(1)
5		1	Fuse	(1) 30 amp
6		1	Switch	(1)
7	D26740177	2	Screw	(1) M5 X 12
8	D41010500	2	Nut	(1) M5

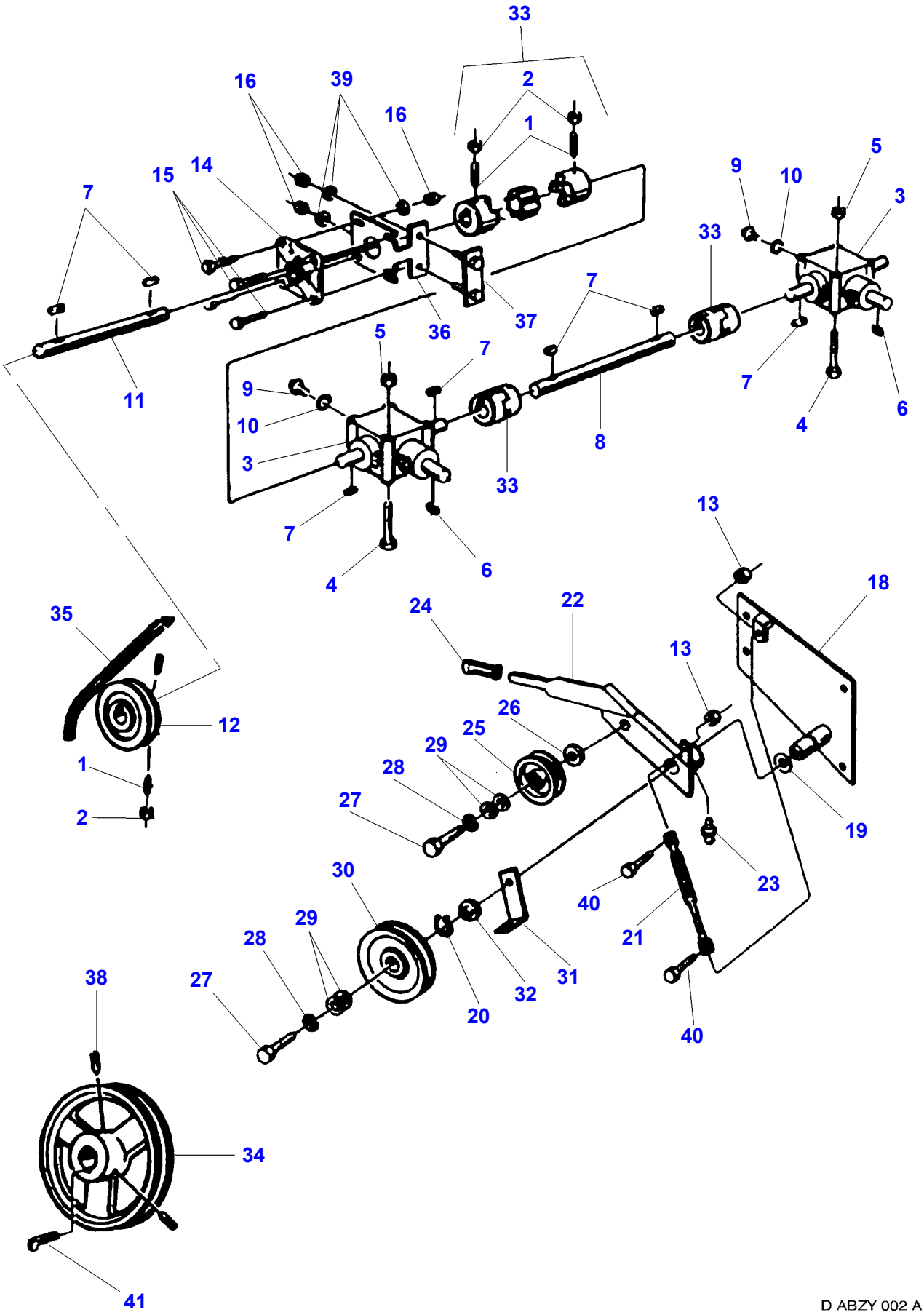
33
16
39
2
16
1
5
9
10
3
15
14
7
33
7
37
36
5
7
9
10
3
11
8
33
7
4
6
13
18
35
24
22
13
12
26
25
29
28
1
27
2
19
23
30
40
29
28
21
27
31
32
20
40
38
34
41

D-ABZY-002-A

Item	Part Number	Qty	Description	Comments
1		6	Pin	[A] M8X20
2	D41010700	6	Nut	M8
3	D26730395	2	Angle Drive	
4		8	Screw	[A] M10X120
5	D28288162	8	Locknut	M10
6	D26747115	2	Key	8X7X40
7		7	Key	[A] 8X7X25
8		1	Shaft	[A]
9		2	Plug	[A]
10		2	Ring	[A]
11		1	Drive Shaft	[A]
12		1	Pulley	[A] Diameter 115
13	D26740007	2	Locknut	M8
14		2	Bearing Carrier	[A]
15	D40407800	8	Hex. Sock. Screw	M10X30
16	D28288162	10	Locknut	M10
17	D40407600	4	Hex. Sock. Screw	[B] M10X20
18		1	Console	[A]
19		X	Washer	[A] 40X50X0,3
20		1	Bush	[A] 40X2,5
21	D49070386	1	Damper	
22		1	Track Roller	[A]
23	D43002500	1	Greaser	
24	D49070328	1	Handle	
25		1	Track Roller	[A]
26		1	Spacer	[A]
27	D26739713	2	Screw	M12X60
28	D26739978	2	Spring Washer	
29		7	Washer	[A] 12,5X35
30		1	Roll	[A] Diameter 175
31		1	Stirrup	[A]
32		1	Insert	[A]
33	D26730396	3	Clutch	
34		1	Pulley	[A]
35		1	V Belt	[A]
36		1	Console	[A]
37	D49070403	1	Tightener	[A]
38	D40633100	2	Stud	M10
39	D26739992	X	Washer	11X20X2
40	D40405000	2	Hex. Sock. Screw	M8X25
41		1	Gib Key	[A]

FOOTNOTE [A] NUMBER TO BE ADVISED
FOOTNOTE [B] NOT ILLUSTRATED

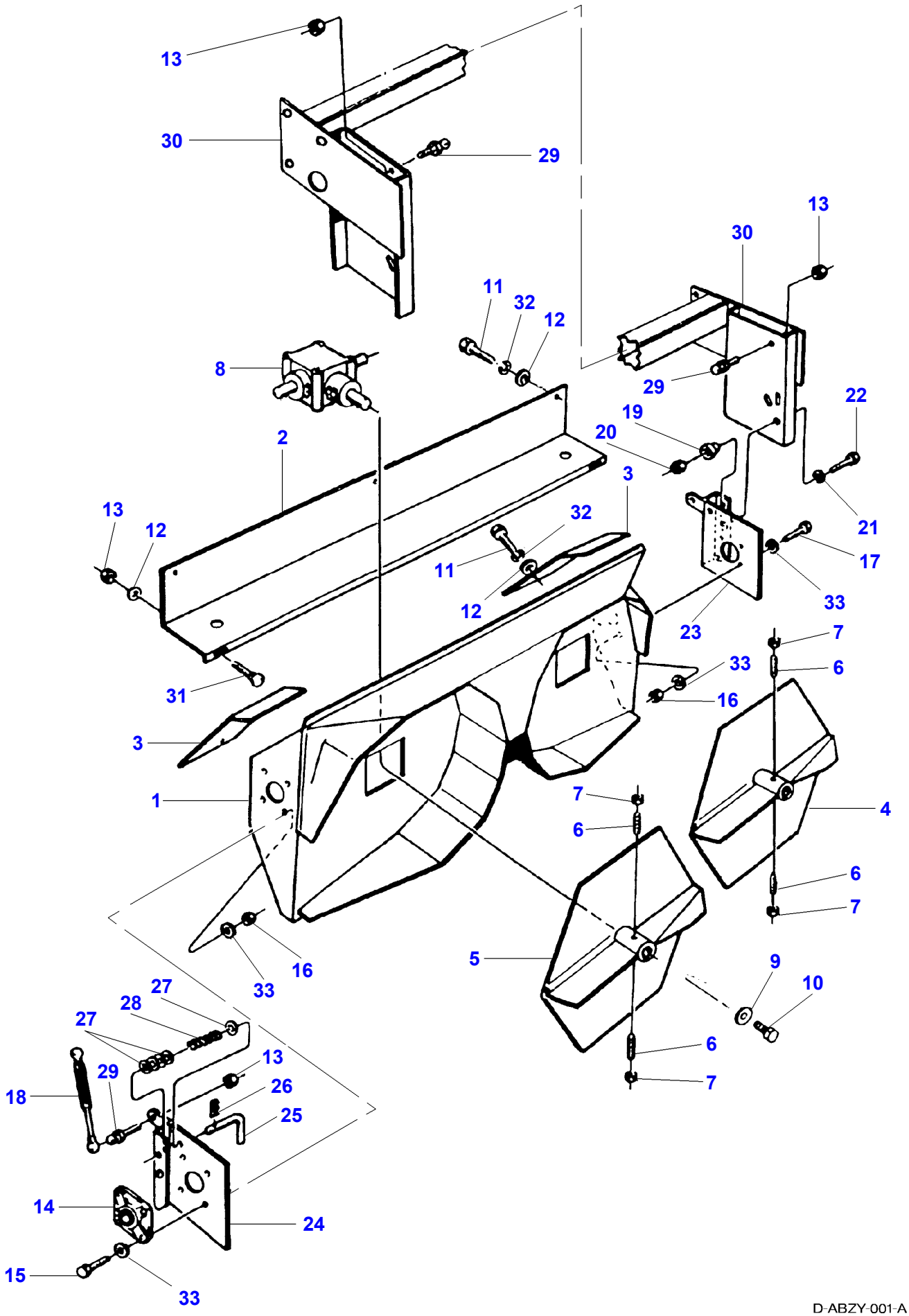
13
30
29
11
32
12
8
2
13
12
31
3
1
32
11
12
3
13
30
29
22
19
20
21
17
33
23
7
6
33
16
7
6
4
6
7
5
9
10
6
7
27
28
27
13
29
26
18
25
14
24
15
33
16
33

D-ABZY-001-A

Item	Part Number	Qty	Description	Comments
1		1	Chassis	[A]
2		1	Shield	[A]
3		2	Cover	[A]
4		1	Fan	[A] Left Hand
5		1	Fan	[A] Right Hand
6		4	Pin	[A]
7	D41010700	4	Nut	
8		X	Gear	[A]
9		2	Washer	[A]
	D41100700	2	Spring Washer	
10	D40405100	2	Hex. Sock. Screw	M8X30
11	D40404900	7	Hex. Sock. Screw	M8X20
12		10	Washer	[A] 8,5X22
13	D26740007	7	Locknut	M8
14		2	Bearing Carrier	[A]
15	D40407800	8	Hex. Sock. Screw	M10X30
16	D28288162	X	Locknut	M10
17	D40407600	4	Hex. Sock. Screw	M10X20
18	D26730498	2	Gas Strut	
19		2	Insert	[A]
20	D26740020	2	Locknut	
21		2	Washer	[A] 12,5X35
22	D40411000	2	Hex. Sock. Screw	M12X35
23		1	Console	[A] Left Hand
24		1	Console	[A] Right Hand
25		2	Housing	[A]
26		2	Fastener	[A]
27		14	Washer	[A] 14X28
28		2	Comp.Spring	[A]
29		4	Ball Joint	[A]
30		1	Console	[A]
31	D26739943	2	Screw	M8X20
32	D41100700	5	Spring Washer	
33	D26739992	X	Washer	11X20X2

FOOTNOTE [A] NUMBER TO BE ADVISED

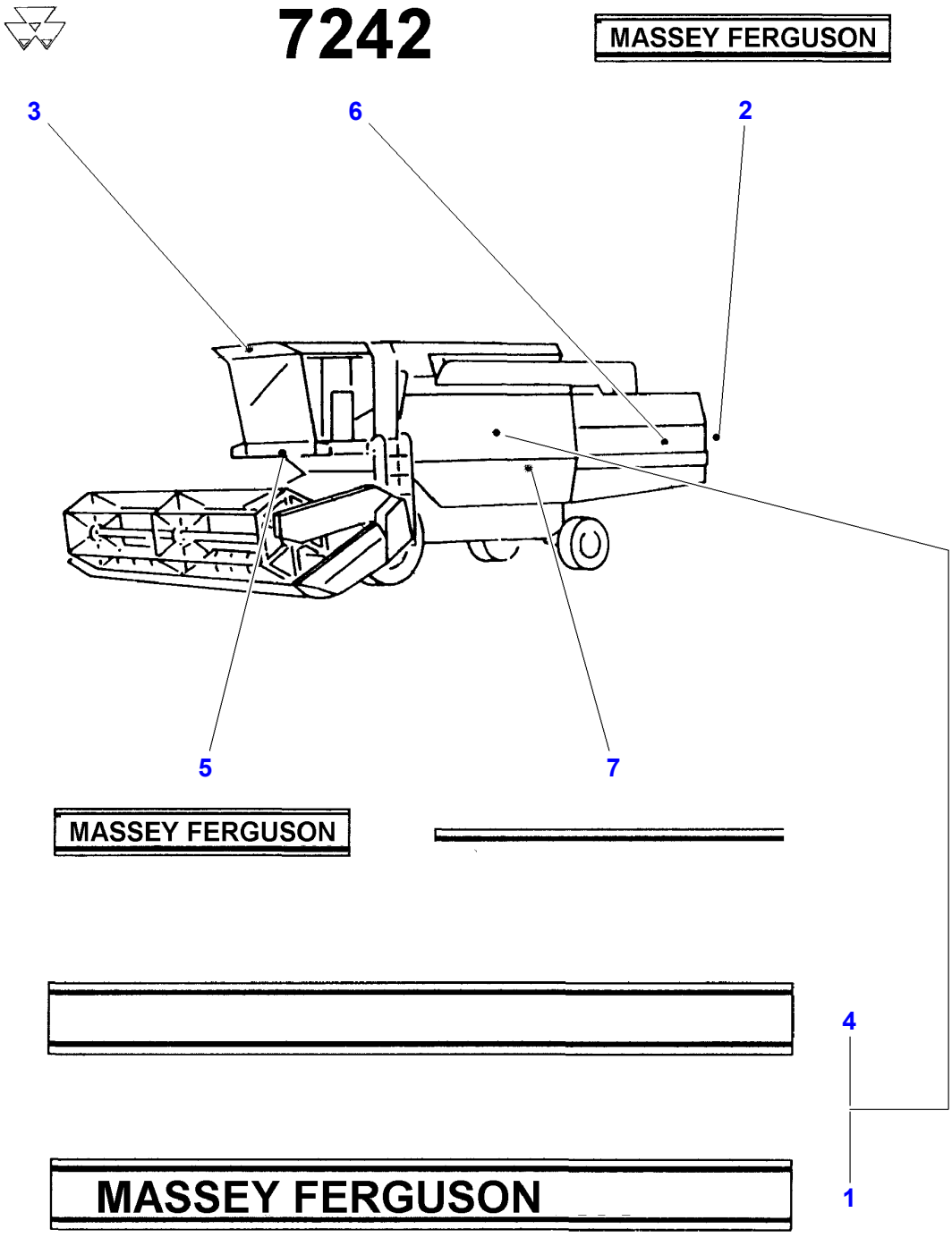
7242
MASSEY FERGUSON
3
6
2
5
7
MASSEY FERGUSON
4
1
MASSEY FERGUSON

D-AHZC-001-A

Item	Part Number	Qty	Description	Comments
1	D49130058	1	Decal	Right Hand
	D49130059	1	Decal	Left Hand
2	D49130060	1	Decal	
3	D49100121	1	Decal	
4	D49130056	1	Decal	Right Hand
	D49130055	1	Decal	Left Hand
5	D49120002	1	Decal	
6	D49130061	1	Decal	
7	D28782179	1	Decal	

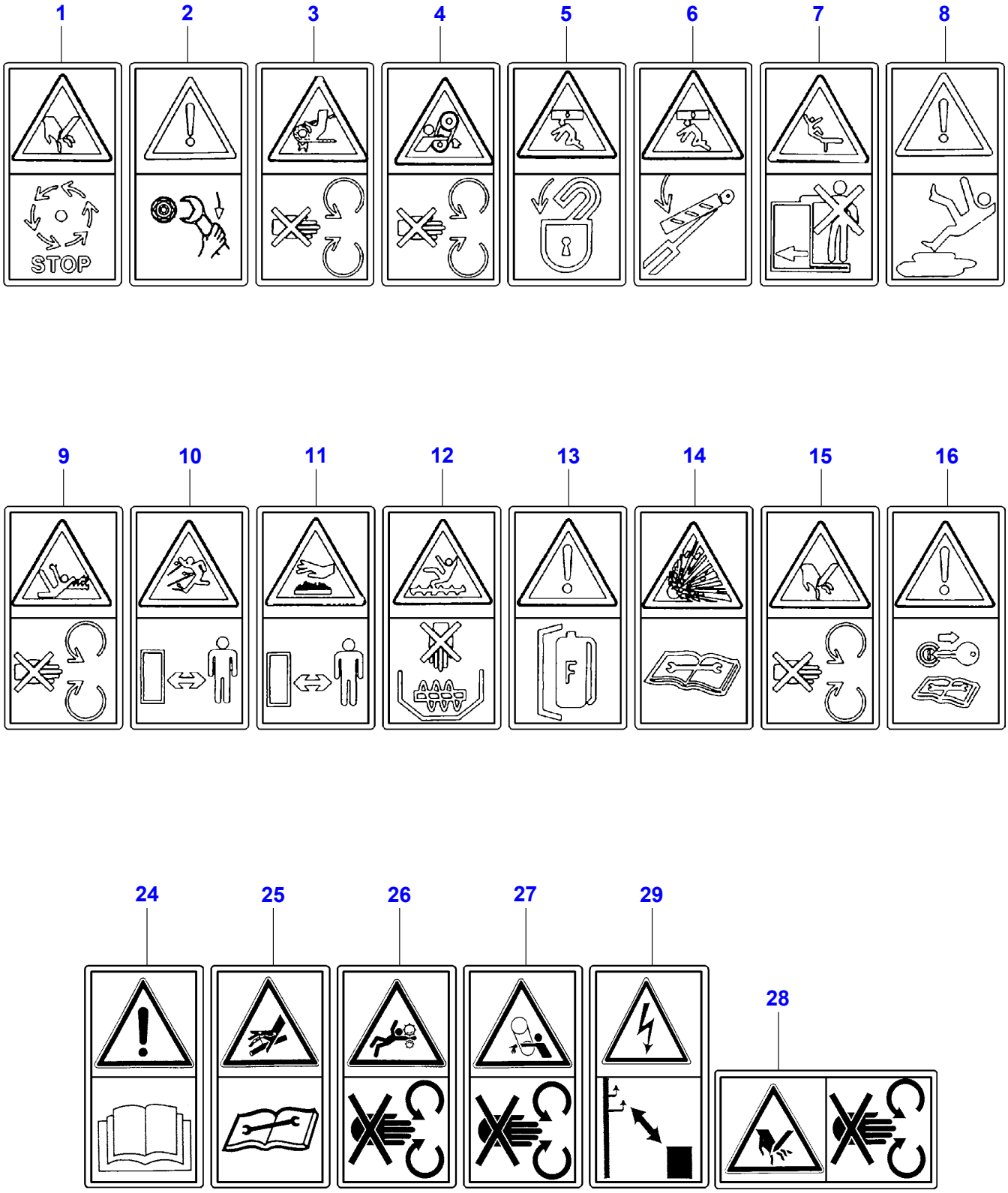

D-AHZD-001-D

Item	Part Number	Qty	Description	Comments
1	D49100159	X	Decal	
2	D26733020	X	Decal	
3	D49100158	X	Decal	Not serviced,order D49100150
4	D26733007	X	Decal	
5	D26733005	X	Decal	
6	D49100170	X	Decal	Not serviced,order D49100150
7	D49100173	X	Decal	
8	D26733022	X	Decal	
9	D26733010	X	Decal	
10	D26733012	X	Decal	
11	D49100177	X	Decal	
12	D26733008	X	Decal	
13	D26733019	X	Decal	
14	D26733016	X	Decal	
15	D26733006	X	Decal	
16	D26733013	X	Decal	
24	D49100152	X	Decal	Not serviced,order D49100150
25	D49100155	X	Decal	Not serviced,order D49100160
26	D49100181	X	Decal	
27	D49100157	X	Decal	Not serviced,order D49100160
28	D49100172	X	Decal	
29	D49130048	X	Decal	

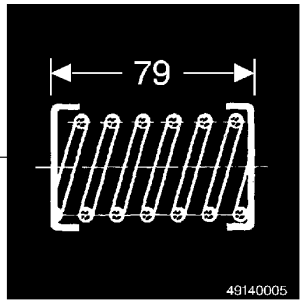
79
49140005

2

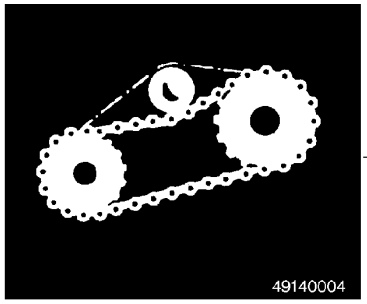
49140004

3

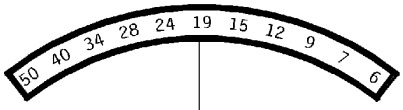
50 40 34 28 24 19 15 12 9 7 6

5

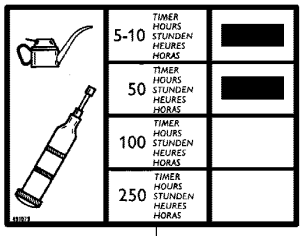
5-10 TIMER HOURS STUNDEN HEURES HORAS
50 TIMER HOURS STUNDEN HEURES HORAS
100 TIMER HOURS STUNDEN HEURES HORAS
250 TIMER HOURS STUNDEN HEURES HORAS

6


Das Führen des Mähdreschers ist nur einem unterwiesenen Fahrer gestattet.
Das Mitfahren weiterer Personen ist unzulässig.
Only a trained operator is allowed to drive the Combine Harvester.
There must not be any further persons on the driving position while travelling.
La conduite de la machine n'est permise qu'à un conducteur entraîné.
Le séjour d'autres personnes sur le poste de conduite est interdit.
Solamente un maquinista bien entrenado está autorizado para conducir la cosechadora.
La estancia en el puesto de mando no está permitida a otras personas.
La guida della mietitrebbia è permessa soltanto ad un conducente allenato.
E' vietato il soggiorno di ulteriori persone sul posto di guida.

7

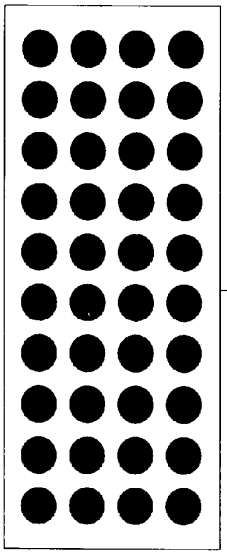

1


20

4

8

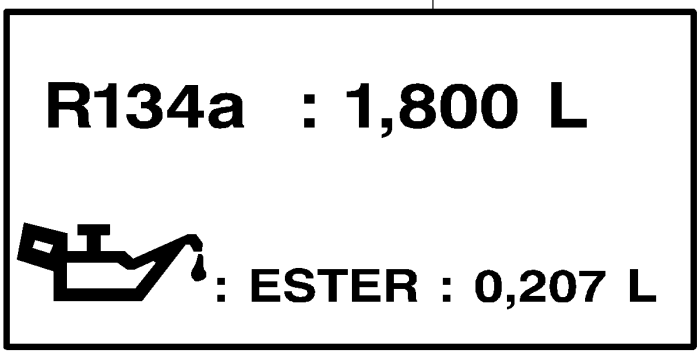
R134a : 1,800 L
: ESTER : 0,207 L

Item	Part Number	Qty	Description	Comments
1	D49178600	X	Decal	[A]
	D49178700	X	Decal	[B]
2	D49140005	X	Decal	
3	D49140004	X	Decal	
4	D26732887	X	Decal	
5	D26732825	X	Decal	
6	D49107900	X	Decal	
7	D26732810	X	Decal	
8	D49140034	X	Decal	

FOOTNOTE [A] RED
FOOTNOTE [B] BLUE