MASSEY FERGUSON

L-LC02-001-B

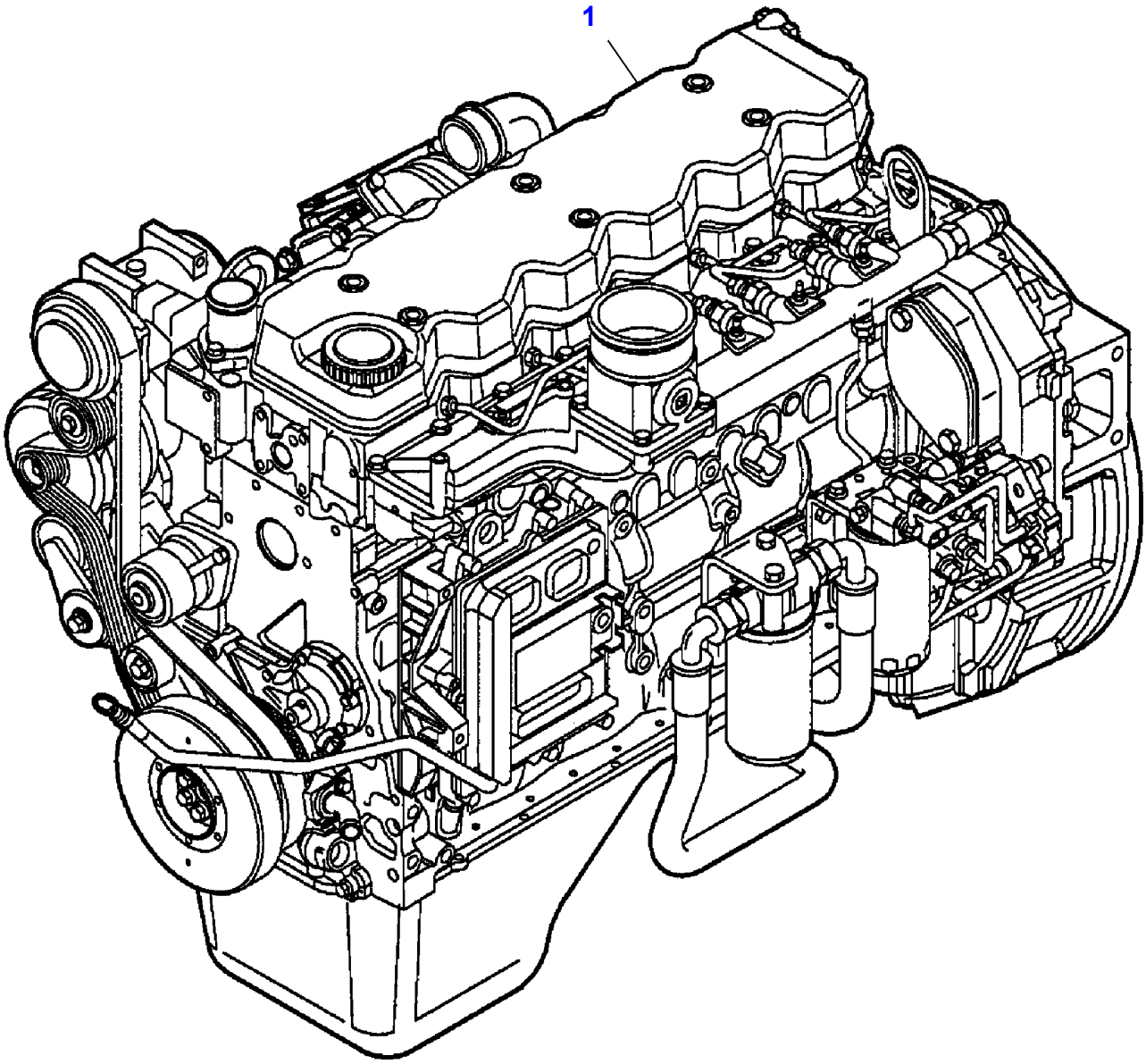

Item	Part Number	Qty	Description	Comments
1	LA322966200	1	Engine	Up to Serial or Engine Number
	LA323199100	1	Engine	From Serial or Engine Number 551710035

L-LE04-001-B

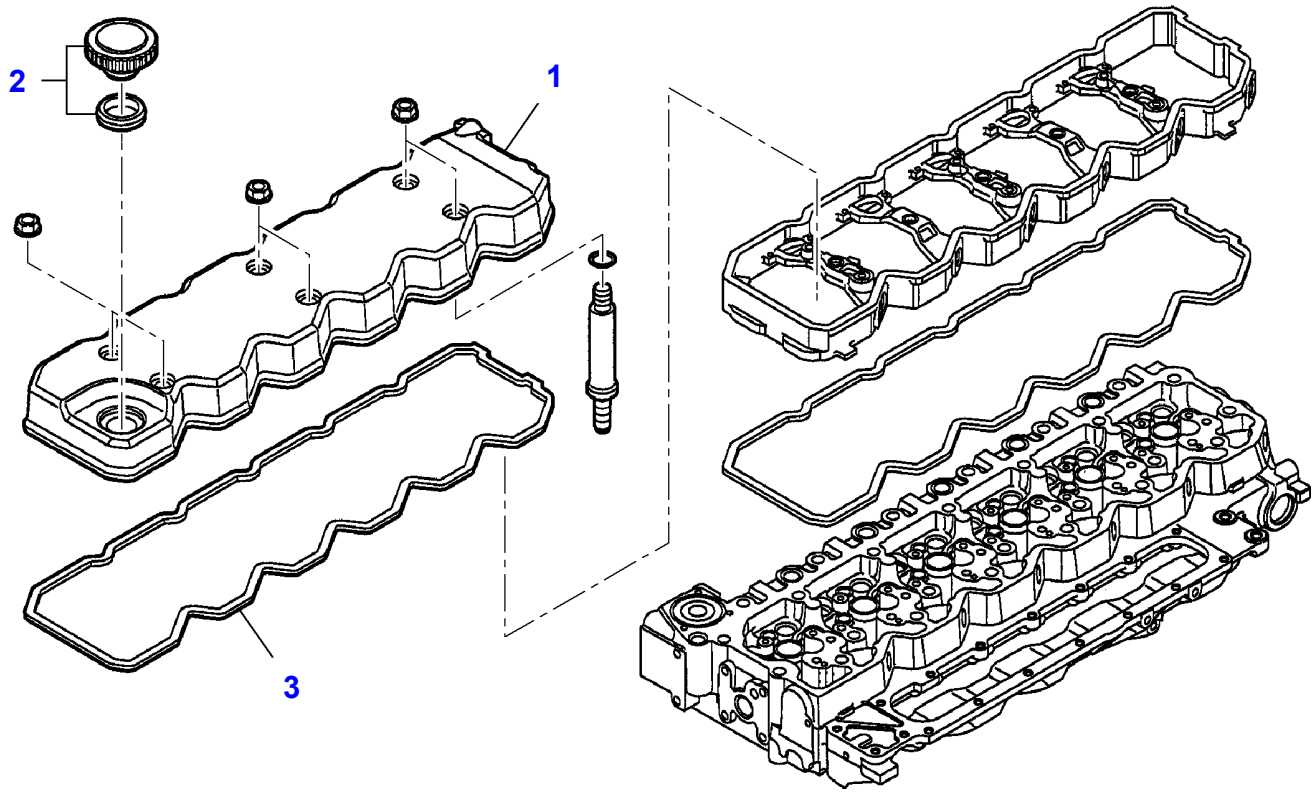

Item	Part Number	Qty	Description
1	LA323015750	1	Cover
2	LA323017750	1	Plug
3	**LA323015850**	1	Gasket

L-LE09-001-B

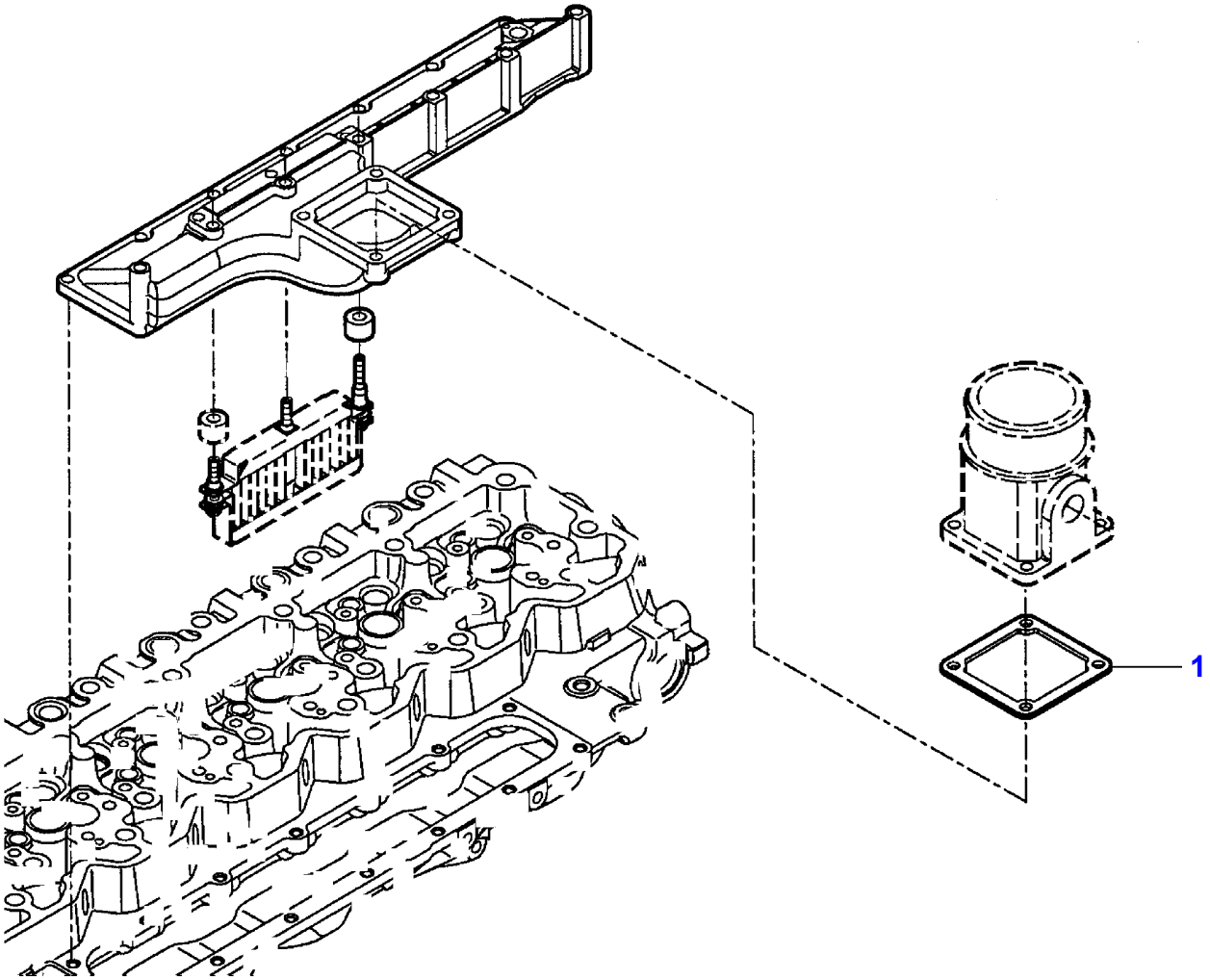

Item	Part Number	Qty	Description
1	LA323017450	1	Gasket

L-LE07-001-B

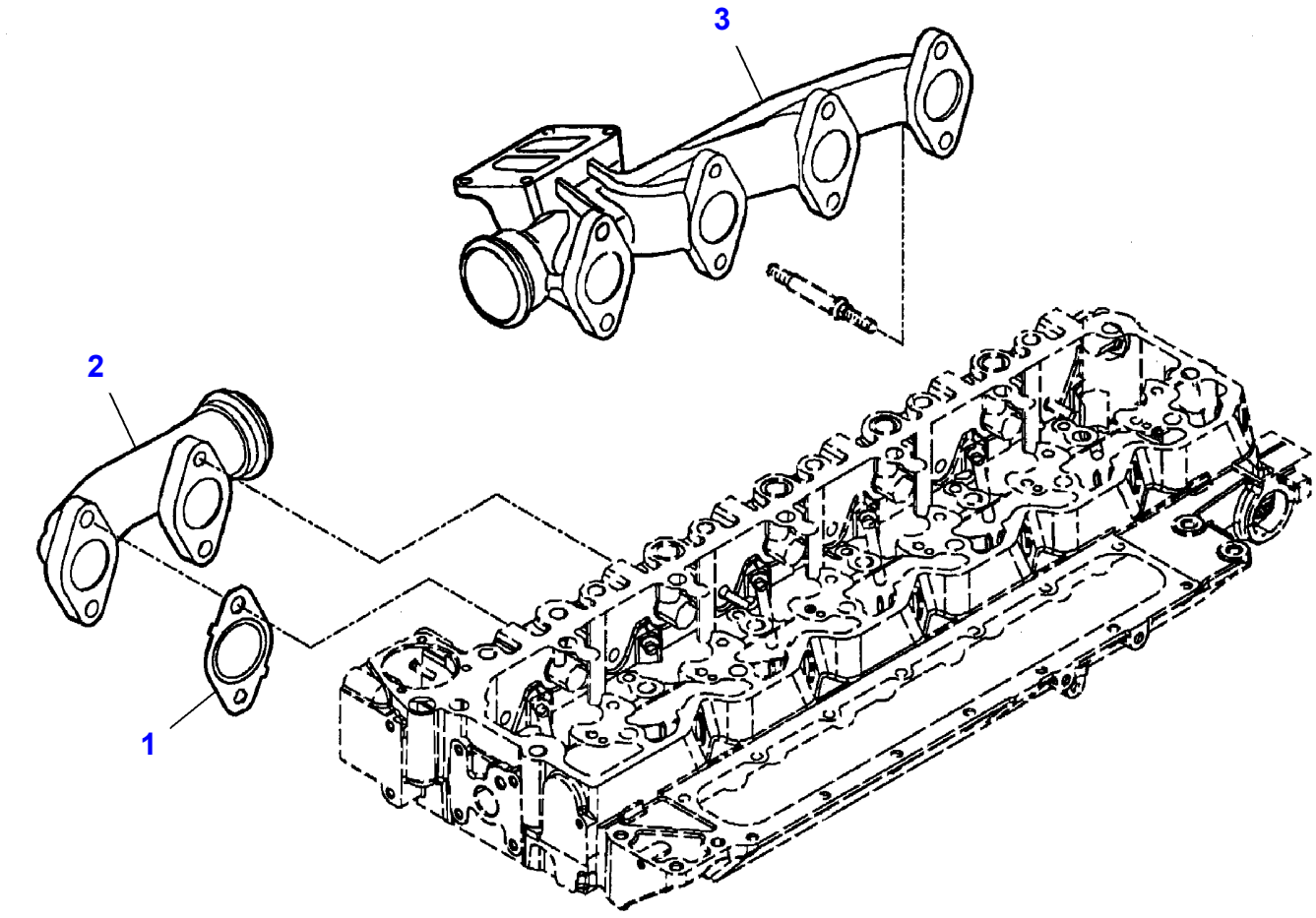

Item	Part Number	Qty	Description
1	LA323016350	1	Gasket
2	LA4897890	1	Exhaust Manifold
3	LA4897889	1	Exhaust Manifold

L-LE11-001-B

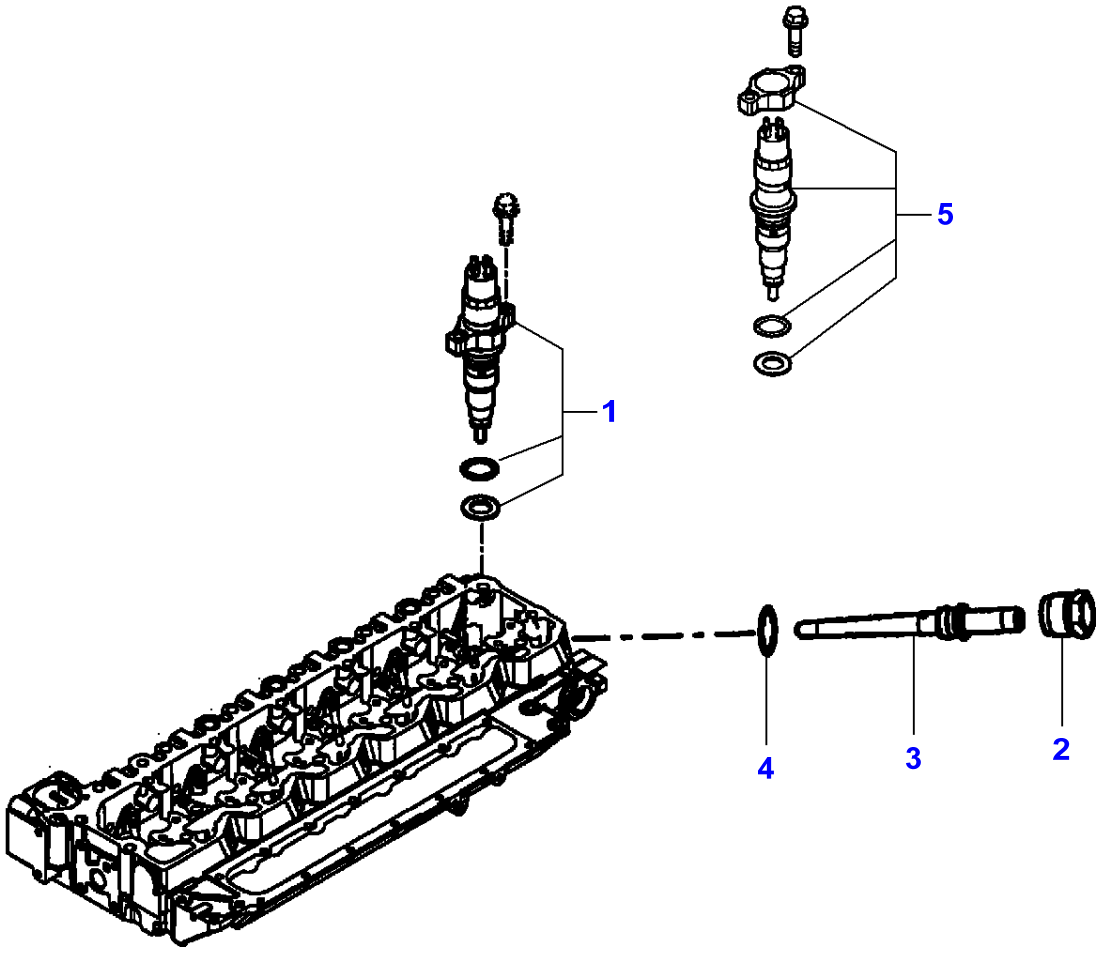

Item	Part Number	Qty	Description	Comments
1	LA323015950	6	Nozzle	Up to Serial or Engine Number
2	LA4893739	1	Nut	
3	LA4897114	1	Fuel Hose	
4	LA4890929	1	Gasket	
5	LA323222850	6	Atomiser	From Serial or Engine Number 551710035

L-LE08-001-B

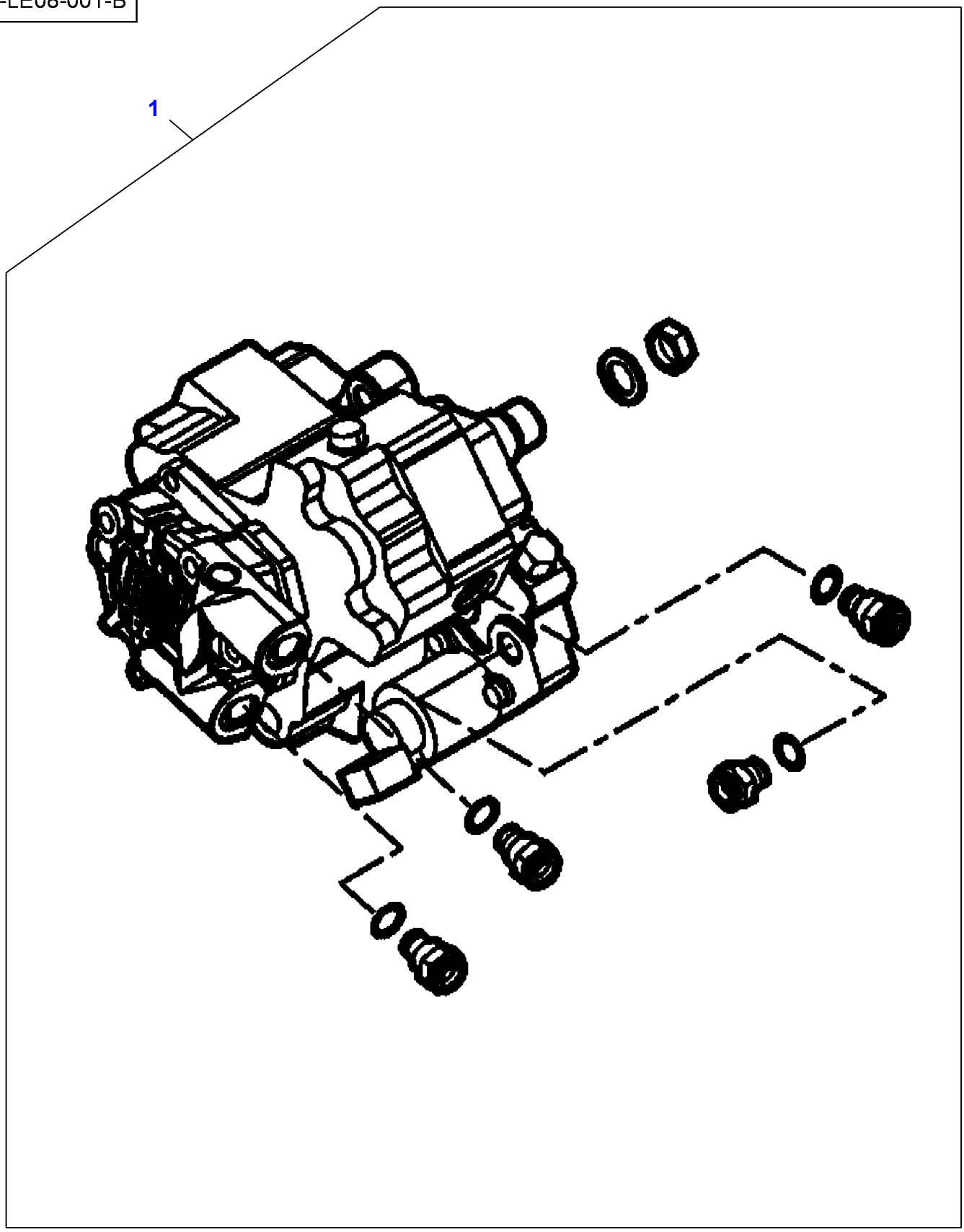

Item	Part Number	Qty	Description
1	LA323036750	1	Pump

L-LC54-001-A

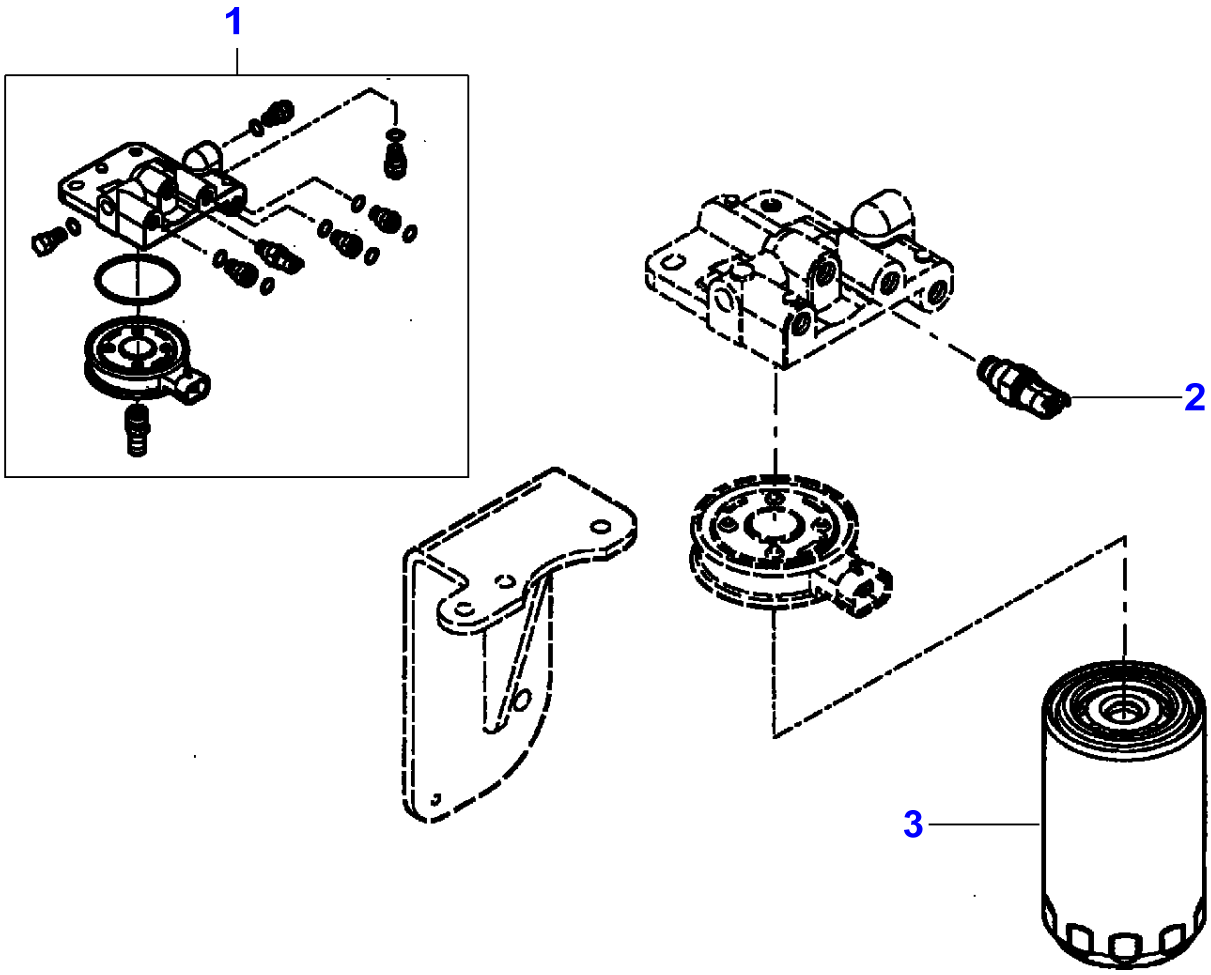

Item	Part Number	Qty	Description
1	LA323016550	1	Support
2	**LA323018650**	1	Sensor
3	**LA323016450**	1	Fuel Filter

L-LC54-006-B

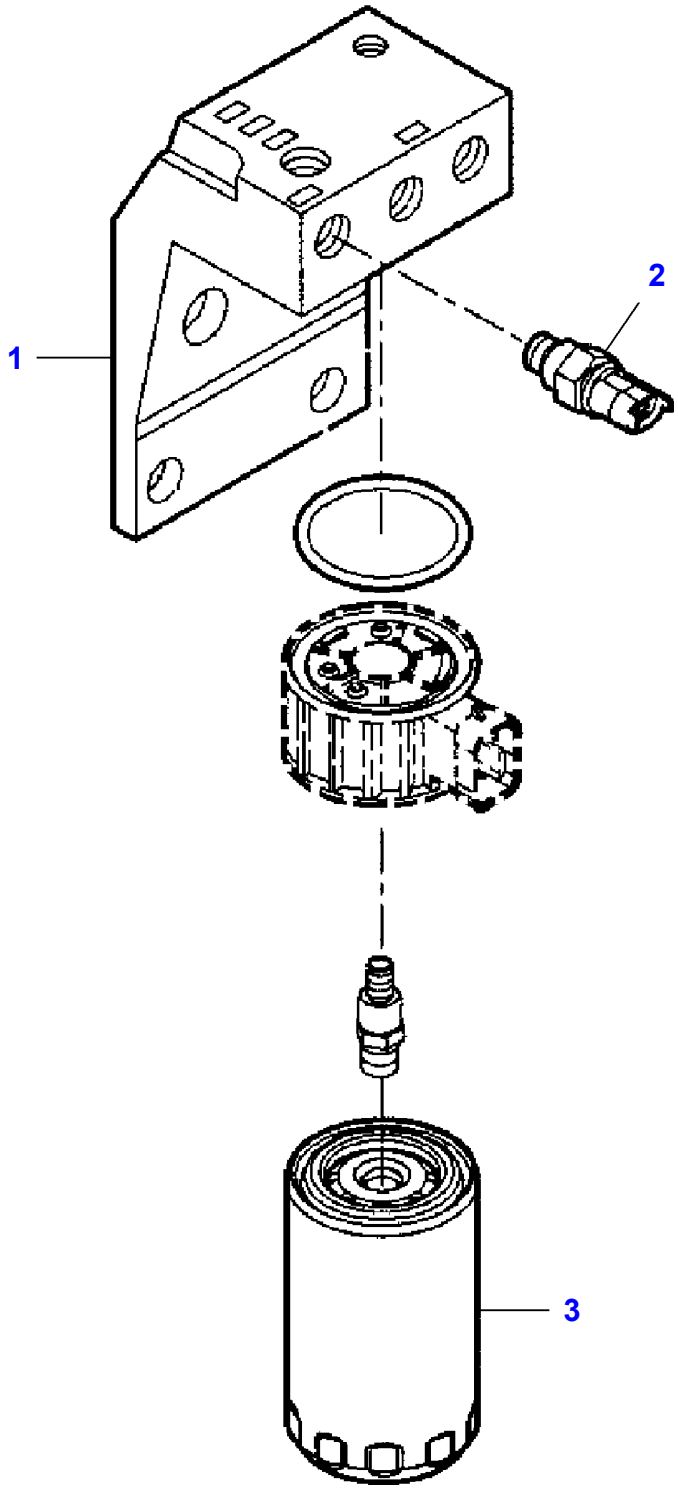

Item	Part Number	Qty	Description
1	LA323223150	1	Support
2	**LA323018650**	1	Sensor
3	**LA323016450**	1	Fuel Filter

L-LE01-001-A

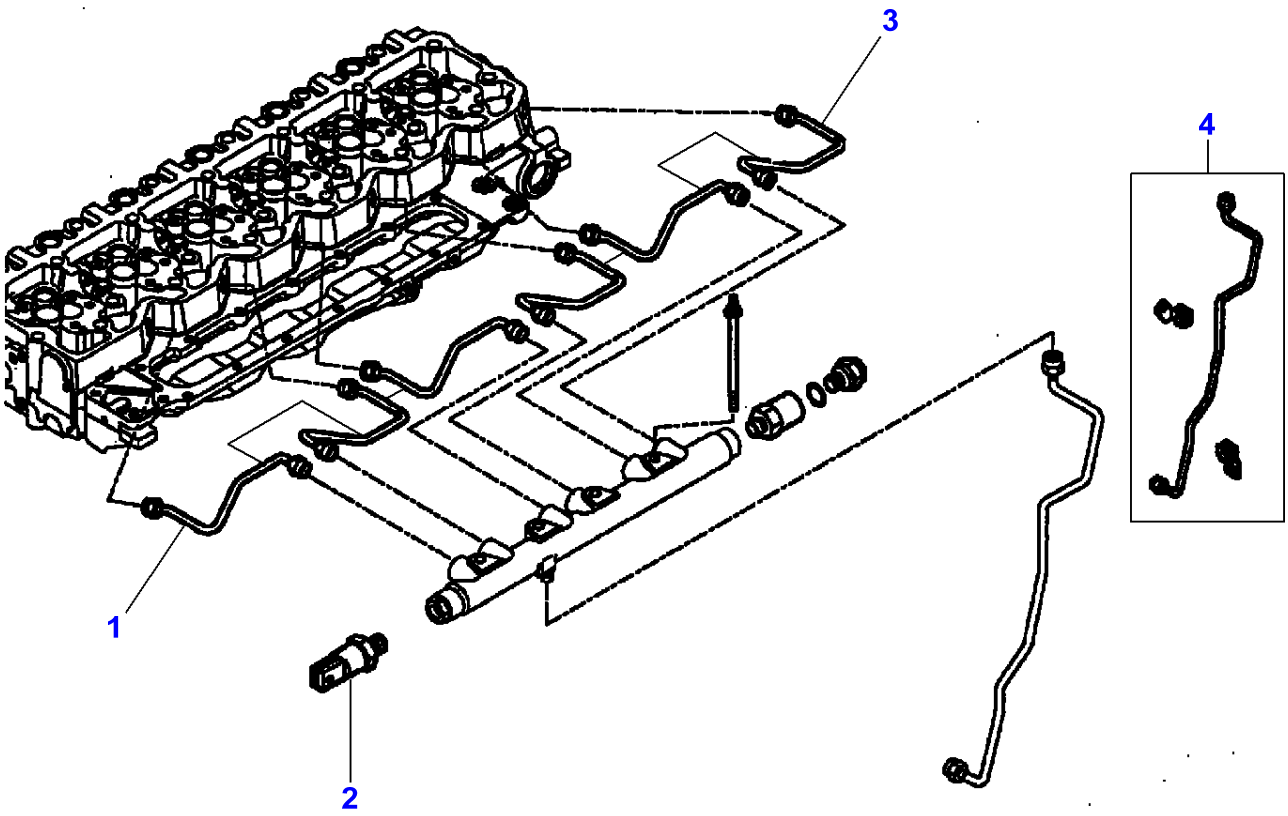

Item	Part Number	Qty	Description
1	LA323017150	3	Fuel Hose
2	LA323018250	1	Sensor
3	LA323017250	3	Fuel Hose
4	LA323017350	1	Fuel Hose

L-LE01-002-B

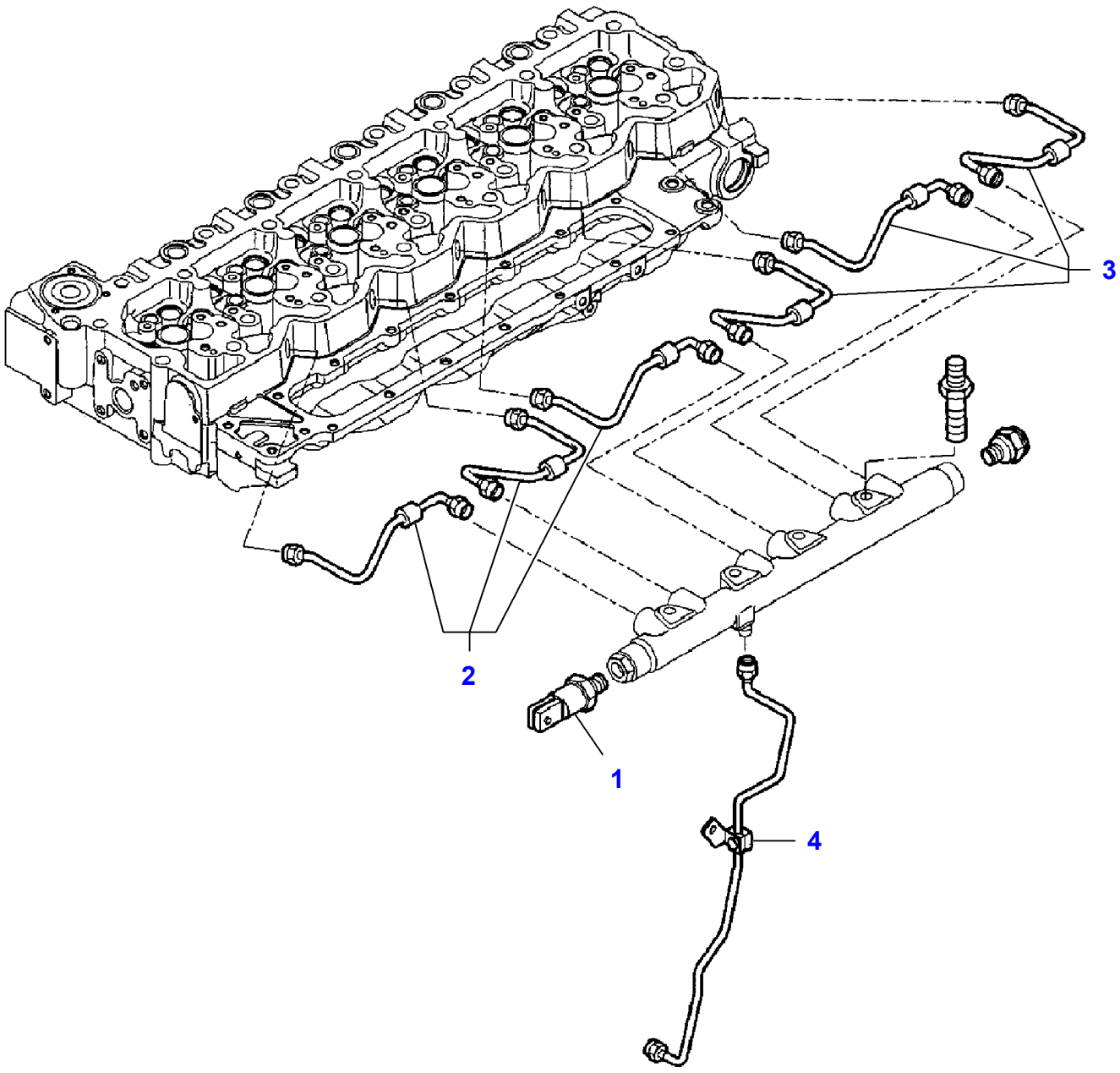

Item	Part Number	Qty	Description
1	LA323018250	1	Sensor
2	LA323223750	3	Injection Pipe
3	LA323223850	3	Injection Pipe
4	LA323223950	1	Injection Pipe

L-LC54-002-A

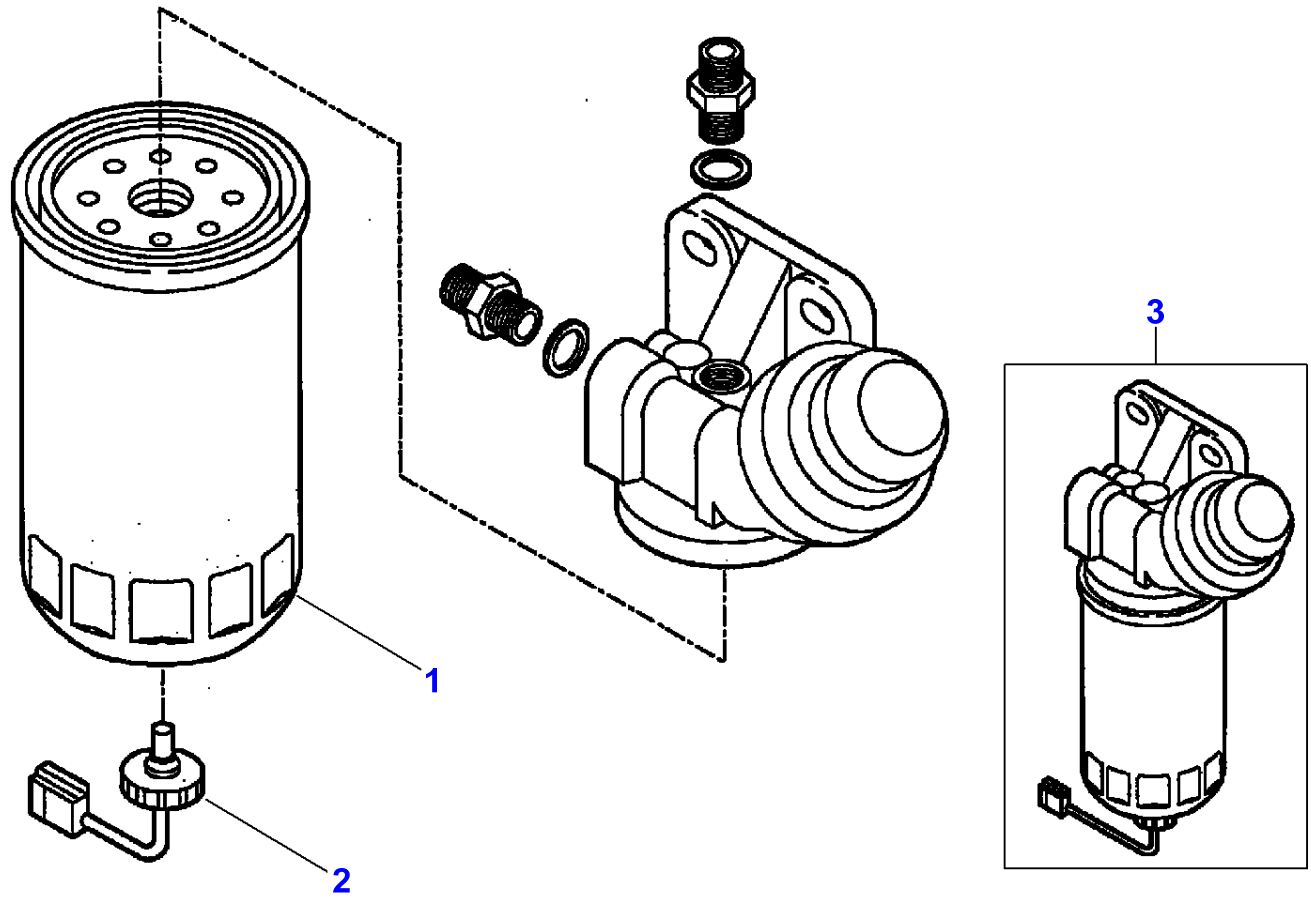

Item	Part Number	Qty	Description
1	**LA323007250**	1	Fuel Filter
2	LA323007350	1	Valve
3	LA323007400	1	Fuel Filter

L-LC54-007-B

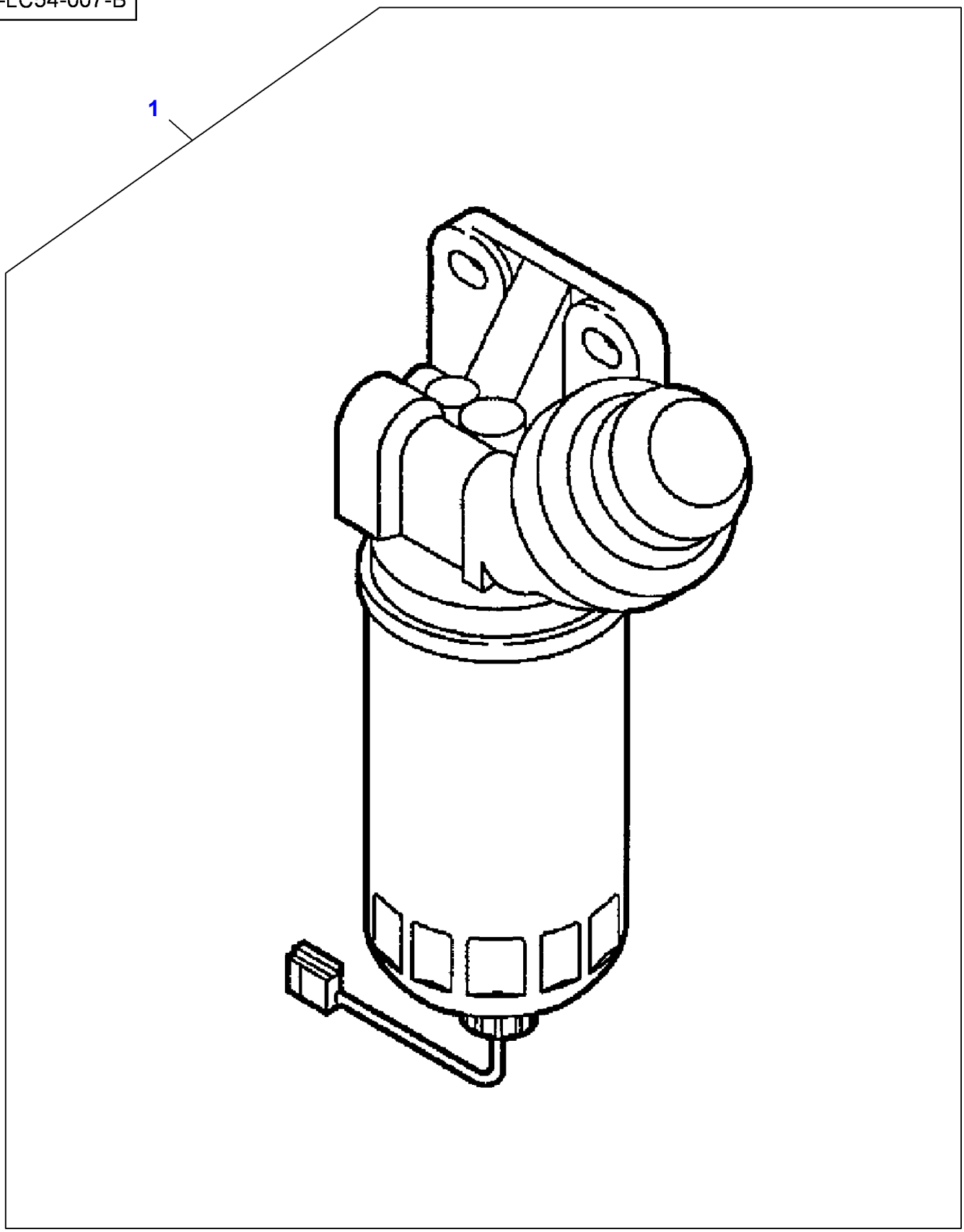

Item	Part Number	Qty	Description	Comments
1	LA323180600	1	Fuel Filter	See Page - Reference Number 140-0145/6

L-LE22-001-B

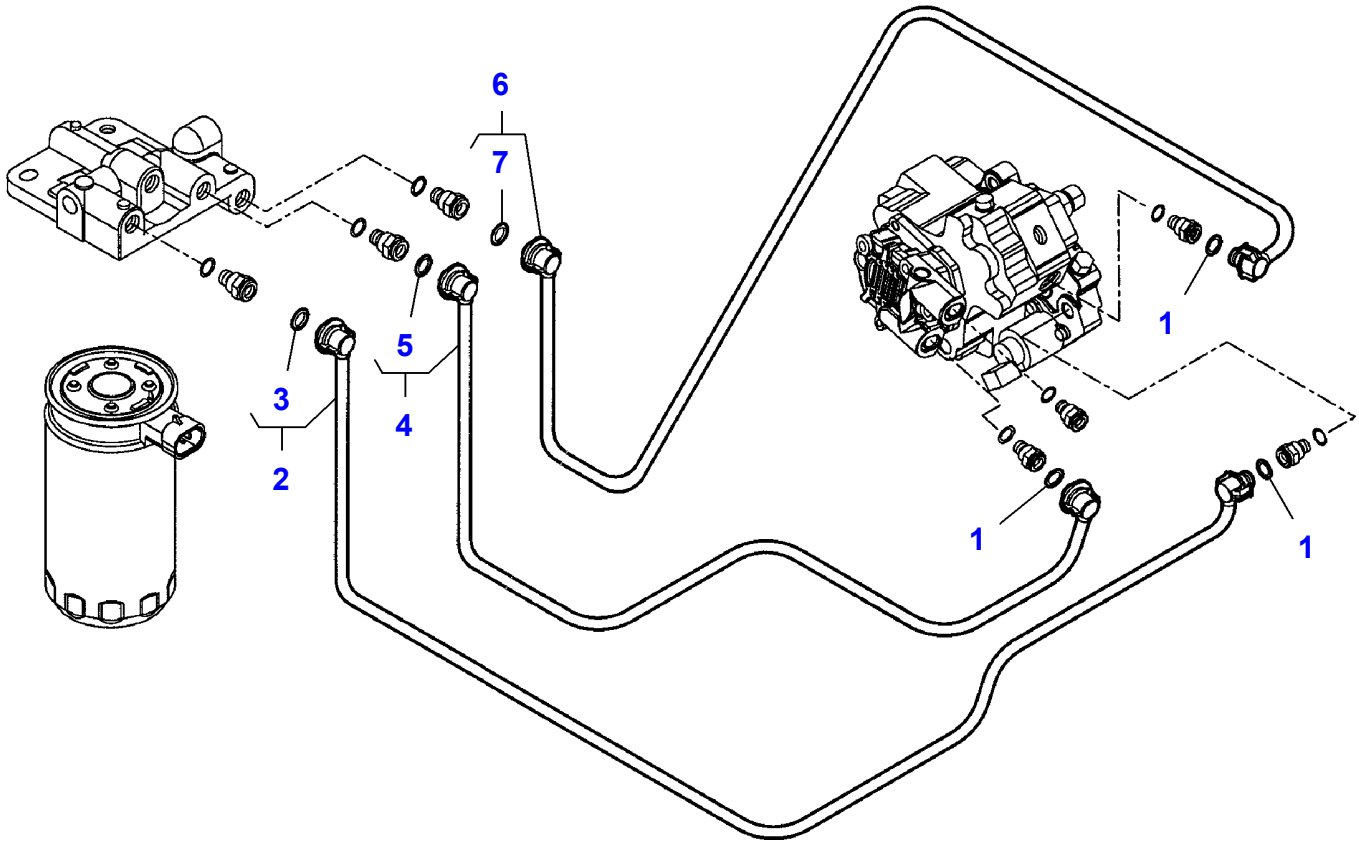

Item	Part Number	Qty	Description	Comments
1	LA4894095	3	Gasket	
2	LA323016650	1	Fuel Line	Up to Serial or Engine Number
	LA323223250	1	Fuel Line	From Serial or Engine Number 551710035
3	LA4894095	1	Gasket	(2)
4	LA323016950	1	Fuel Line	Up to Serial or Engine Number
	LA323223550	1	Fuel Line	From Serial or Engine Number 551710035
5	LA4894095	1	Gasket	(4)
6	LA323017050	1	Fuel Line	Up to Serial or Engine Number
	LA323223650	1	Fuel Line	From Serial or Engine Number 551510035
7	LA4894095	1	Gasket	(6)

L-LE22-002-B

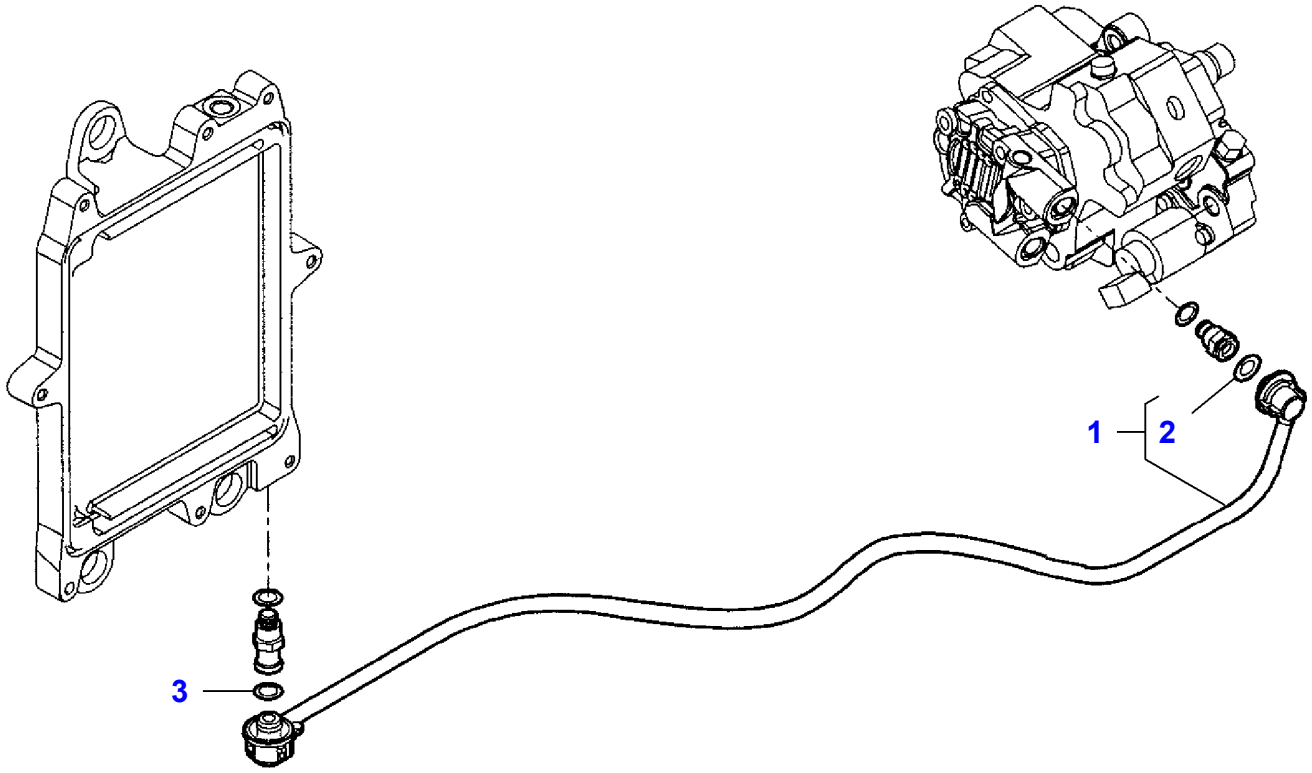

Item	Part Number	Qty	Description	Comments
1	LA323016750	1	Fuel Line	Up to Serial or Engine Number
	LA323223350	1	Fuel Line	From Serial or Engine Number 551710035
2	LA4894095	1	Gasket	(1)
3	LA4894095	1	Gasket	

L-LE22-003-B

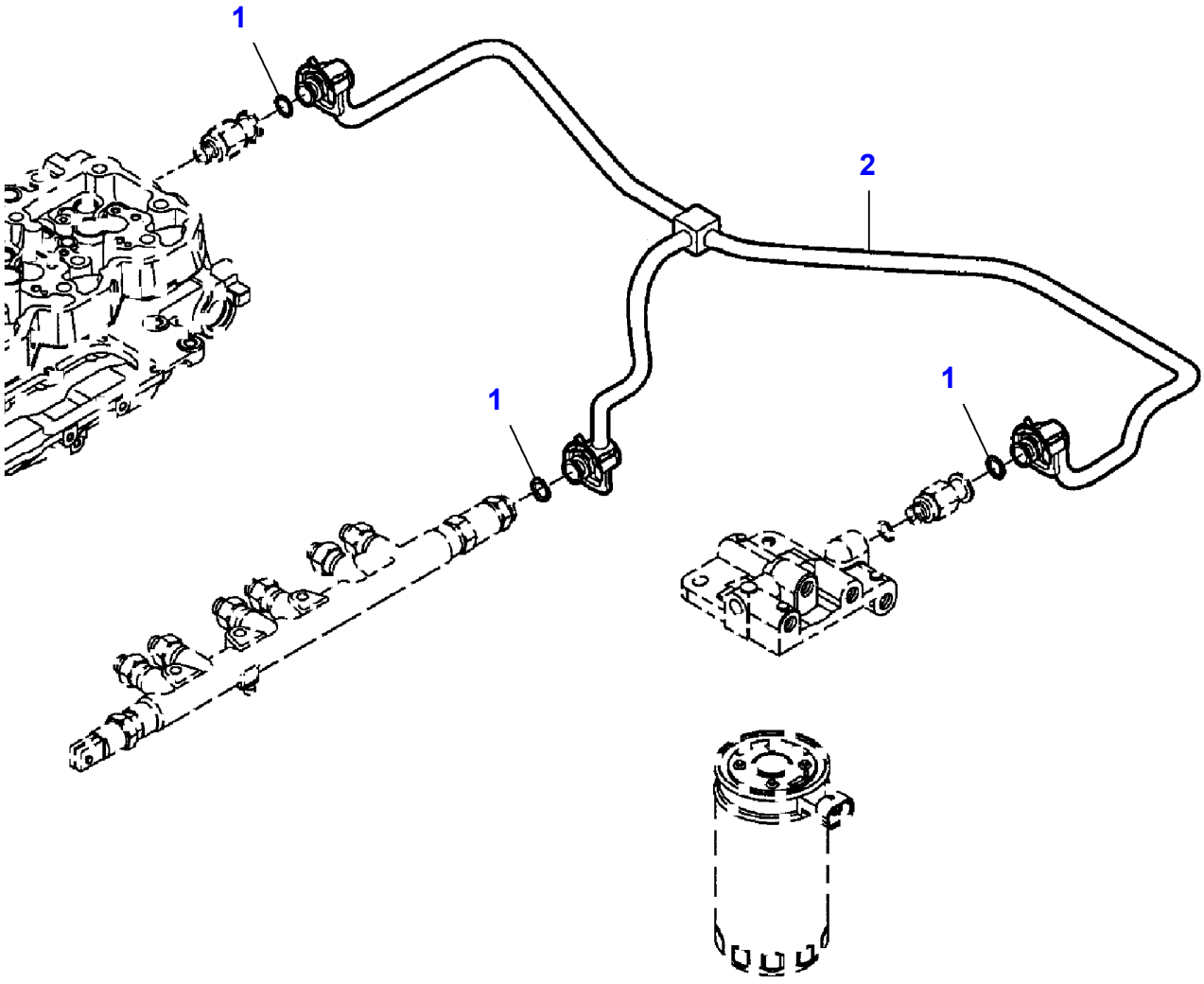

Item	Part Number	Qty	Description	Comments
1	LA4894095	3	Gasket	
2	LA323016850	1	Fuel Line	Up to Serial or Engine Number
	LA323223450	1	Fuel Line	From Serial or Engine Number 551710035

L-LE10-001-B

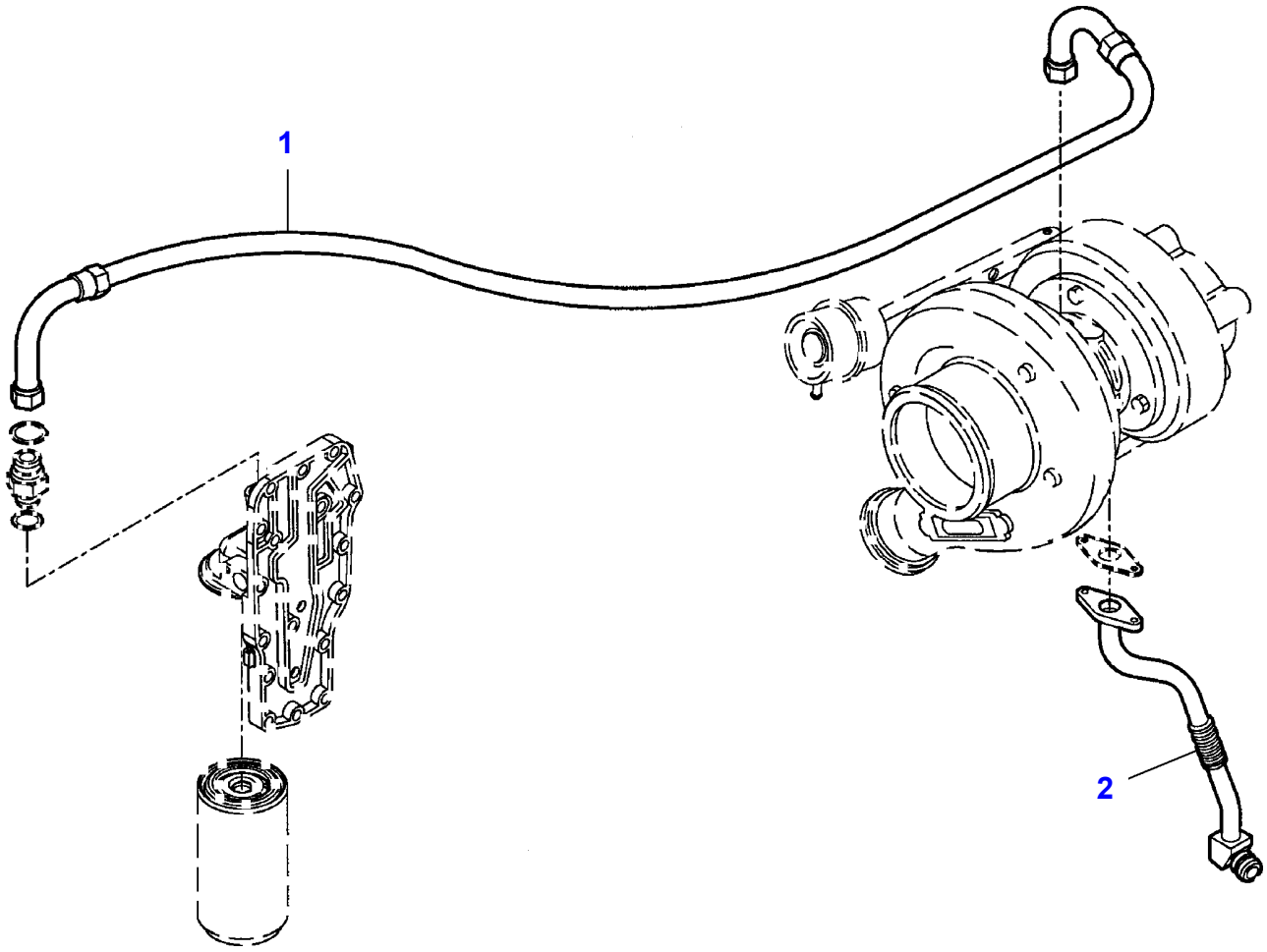

Item	Part Number	Qty	Description
1	LA323017950	1	Oil Pipe
2	LA323018050	1	Oil Pipe

L-LE15-001-A

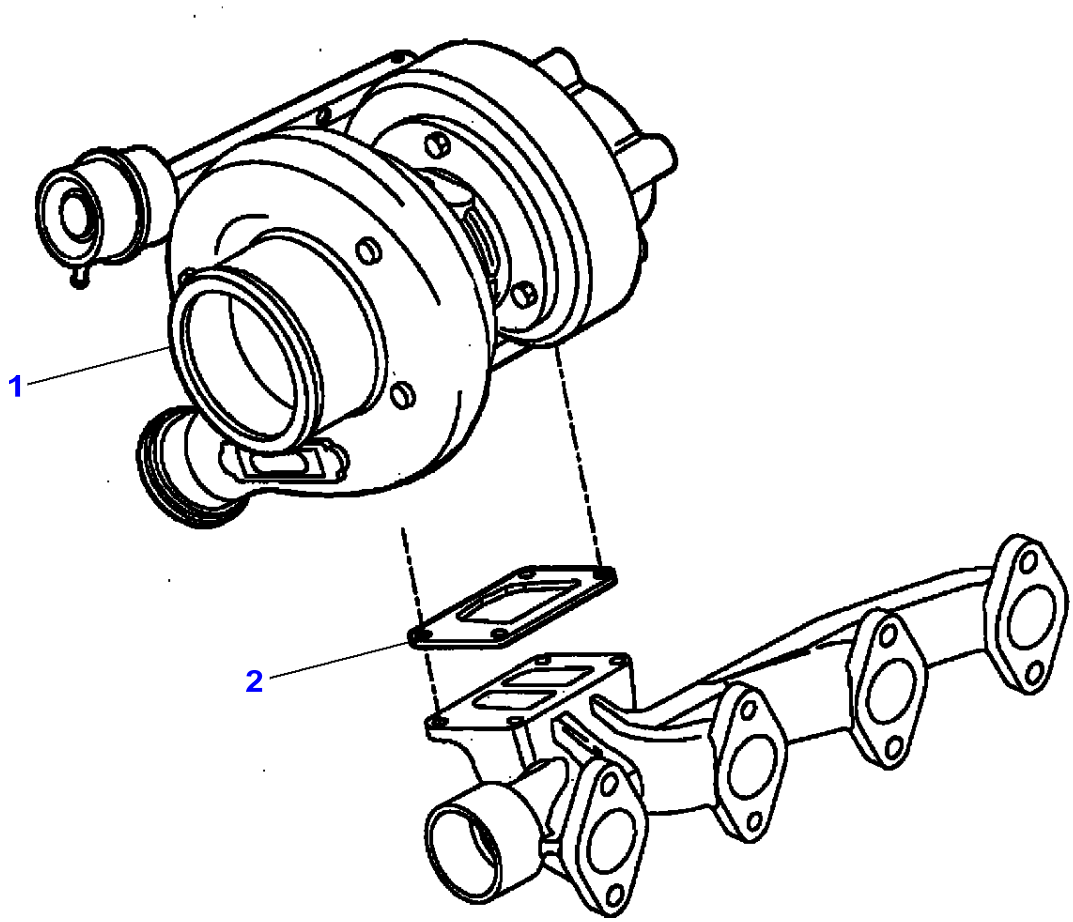

Item	Part Number	Qty	Description
1	LA323019550	1	Turbocharger
2	LA323019650	1	Gasket

L-LE15-002-B

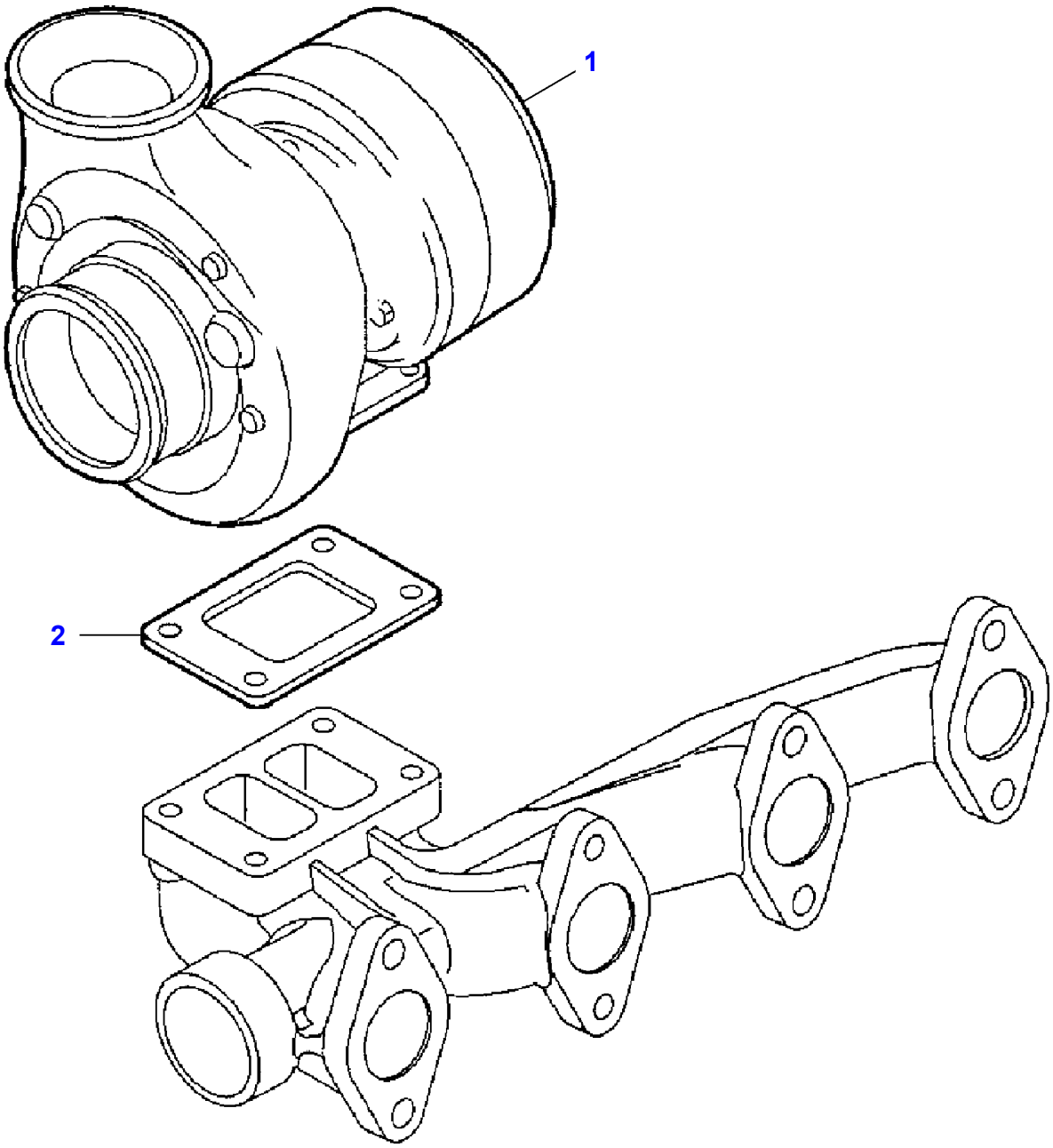

Item	Part Number	Qty	Description
1	LA323224050	1	Turbocharger
2	LA323224150	1	Gasket

L-LE12-001-B

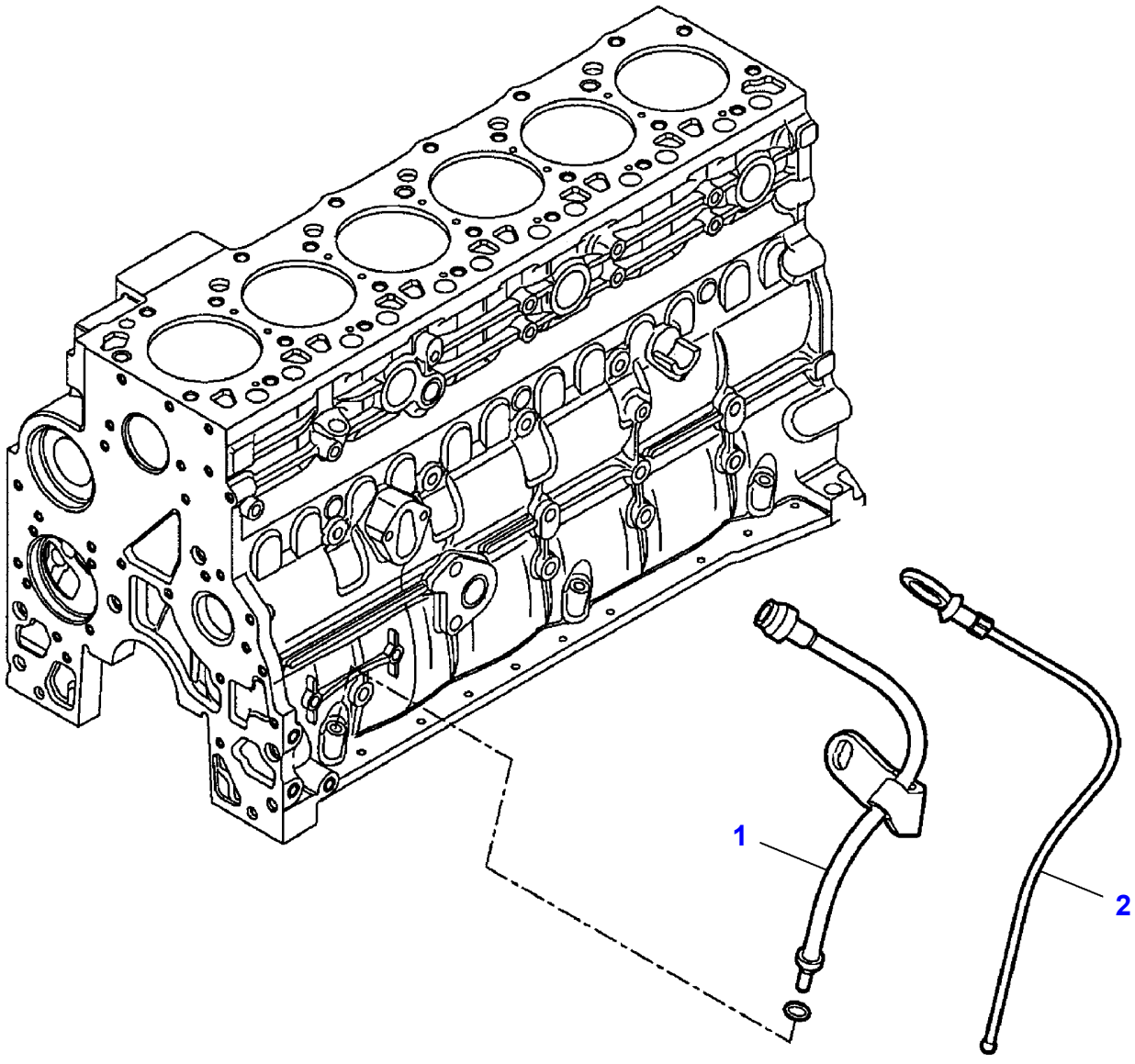

Item	Part Number	Qty	Description
1	LA323017650	1	Oil Pipe
2	LA323017550	1	Oil Dipstick

L-LC55-001-B

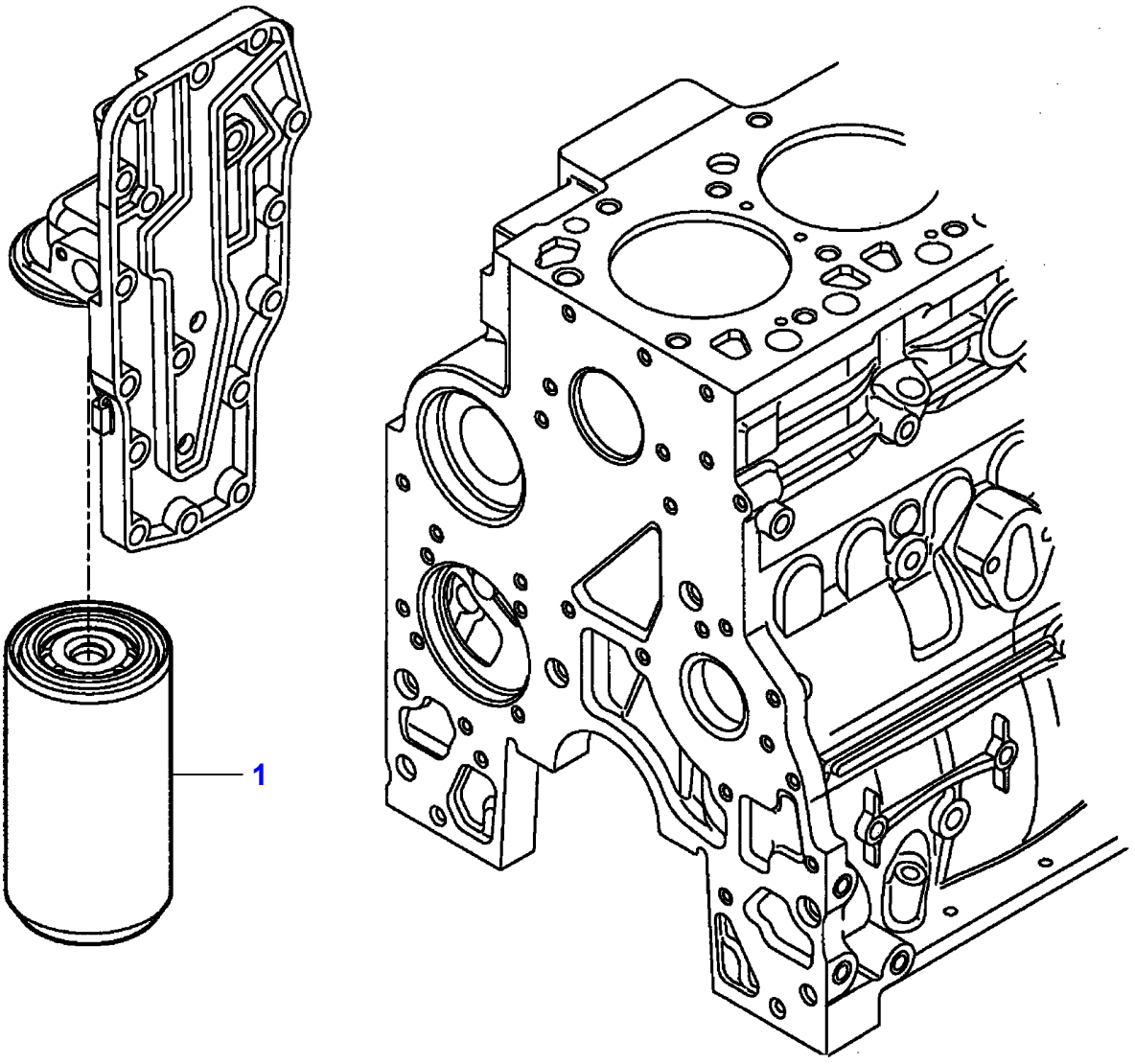

Oil Filters

Item	Part Number	Qty	Description
1	LA323017850	1	Oil Filter

L-LE17-001-B

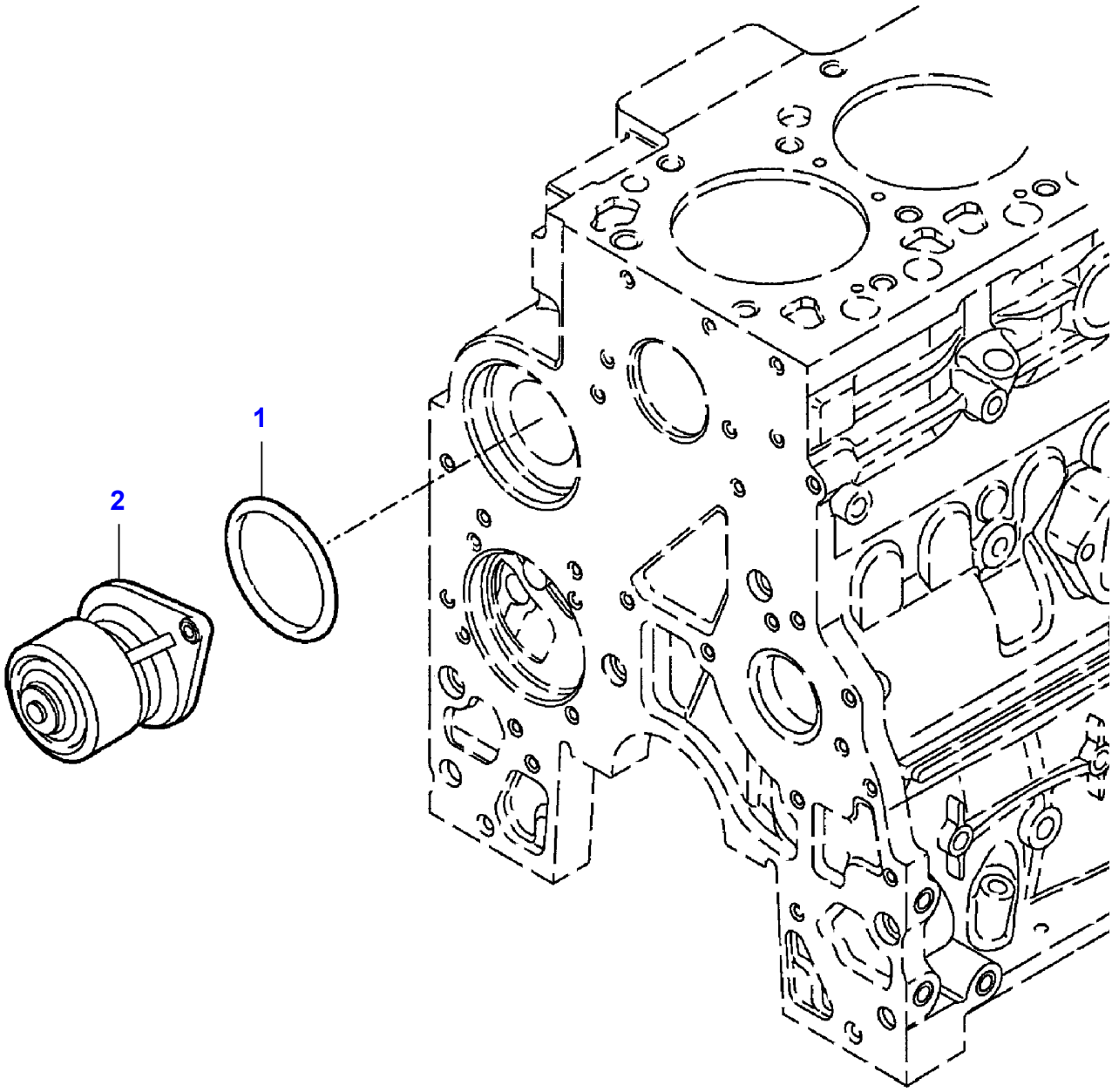

Item	Part Number	Qty	Description
1	LA323018150	1	O Ring
2	LA323019850	1	Water Pump

L-LE14-001-B

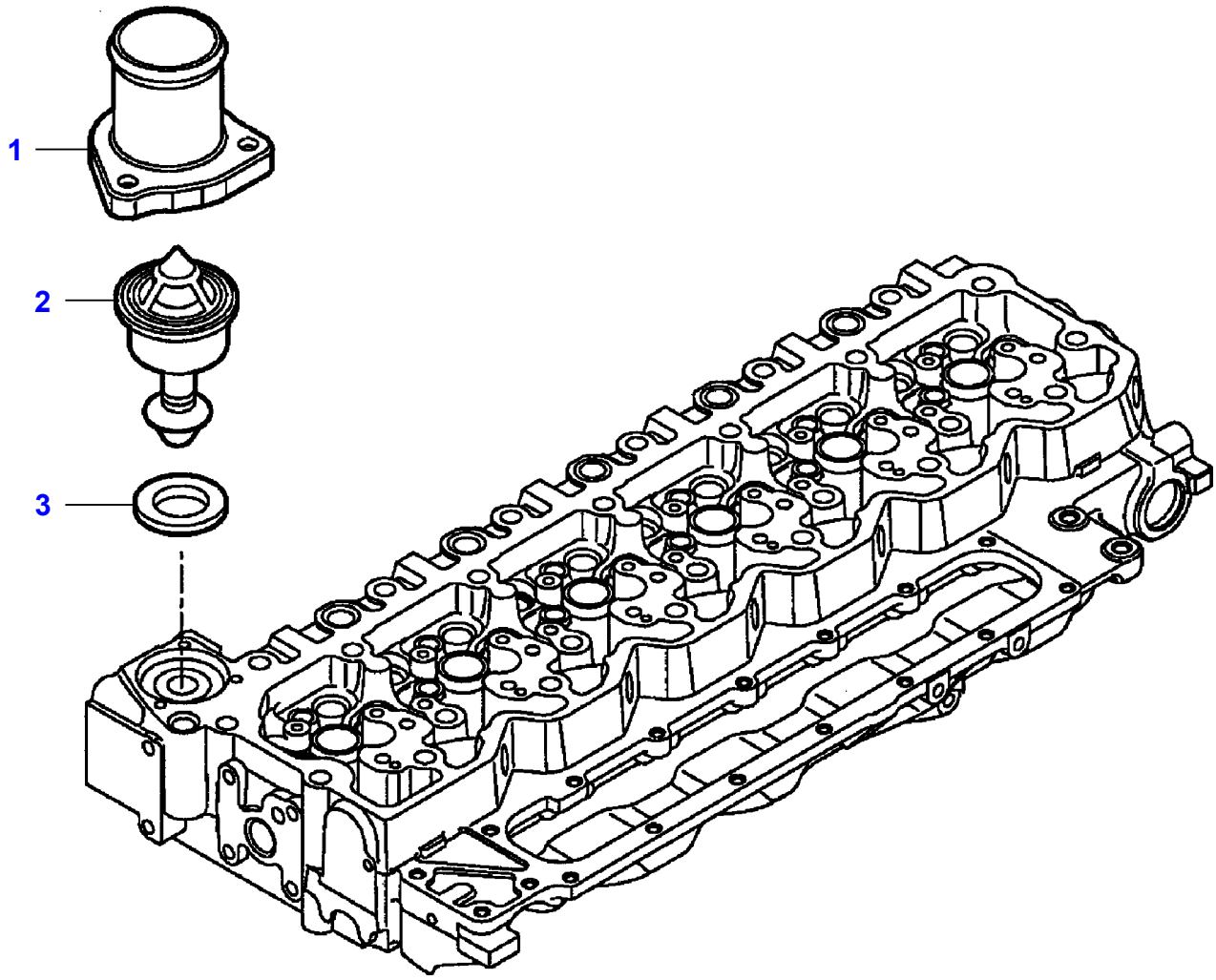

Item	Part Number	Qty	Description
1	LA323019250	1	Body
2	**LA323019150**	1	Thermostat
3	**LA323019450**	1	Gasket

L-LE06-001-B

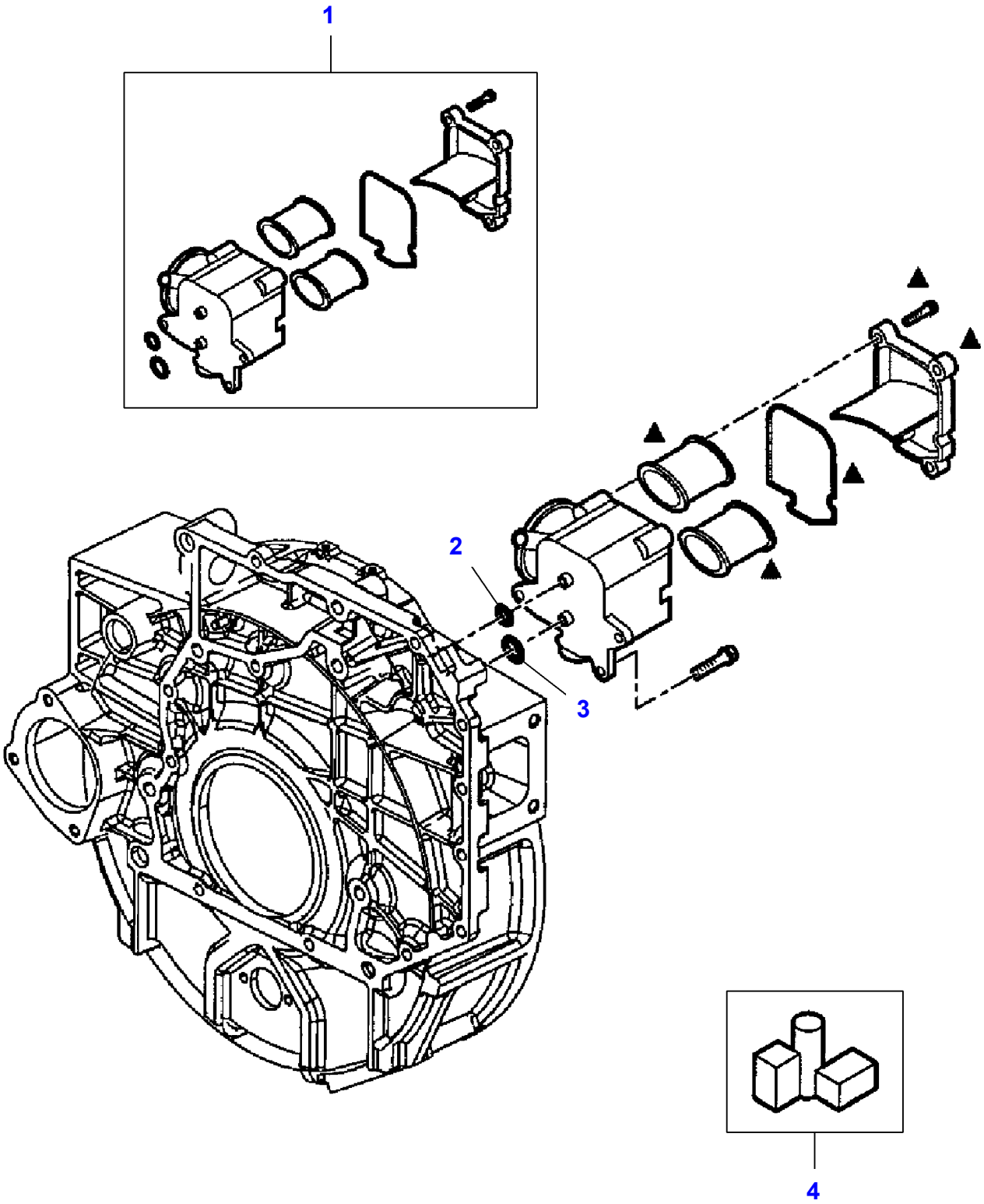

Item	Part Number	Qty	Description
1	LA323016050	1	Breather
2	LA323036850	1	Gasket
3	LA323036950	1	Gasket
4	LA323063350	1	Filter

L-LE13-001-B

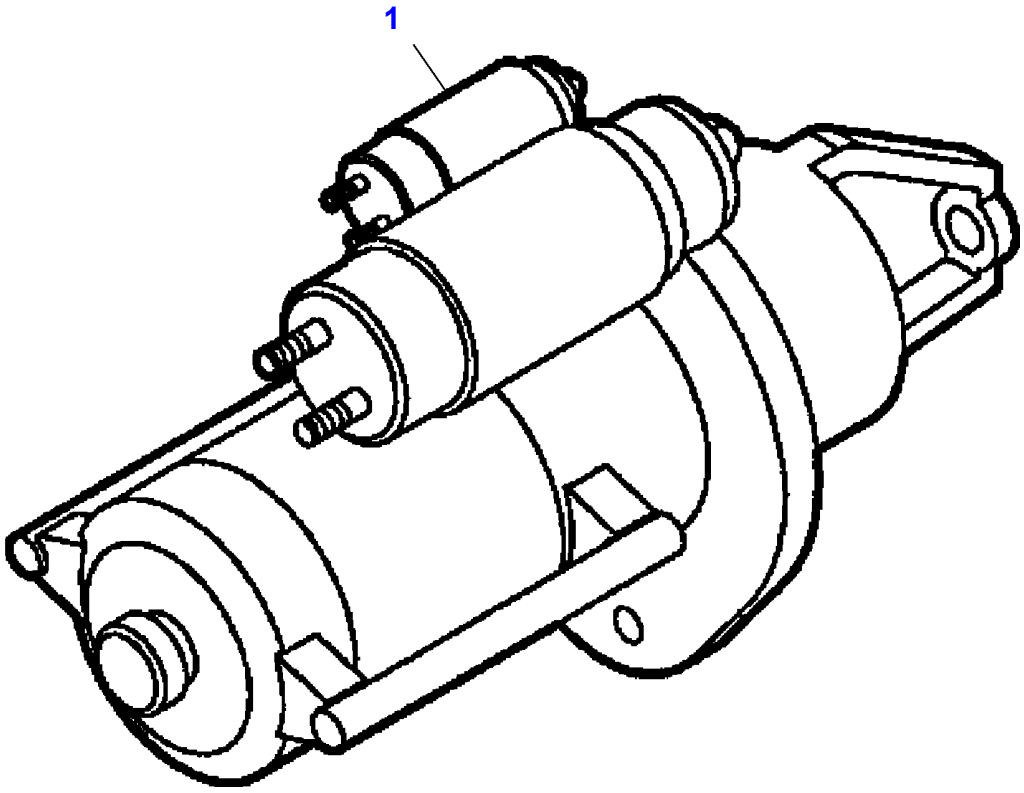

Item	Part Number	Qty	Description
1	LA323019050	1	Startermotor

L-LE02-001-B

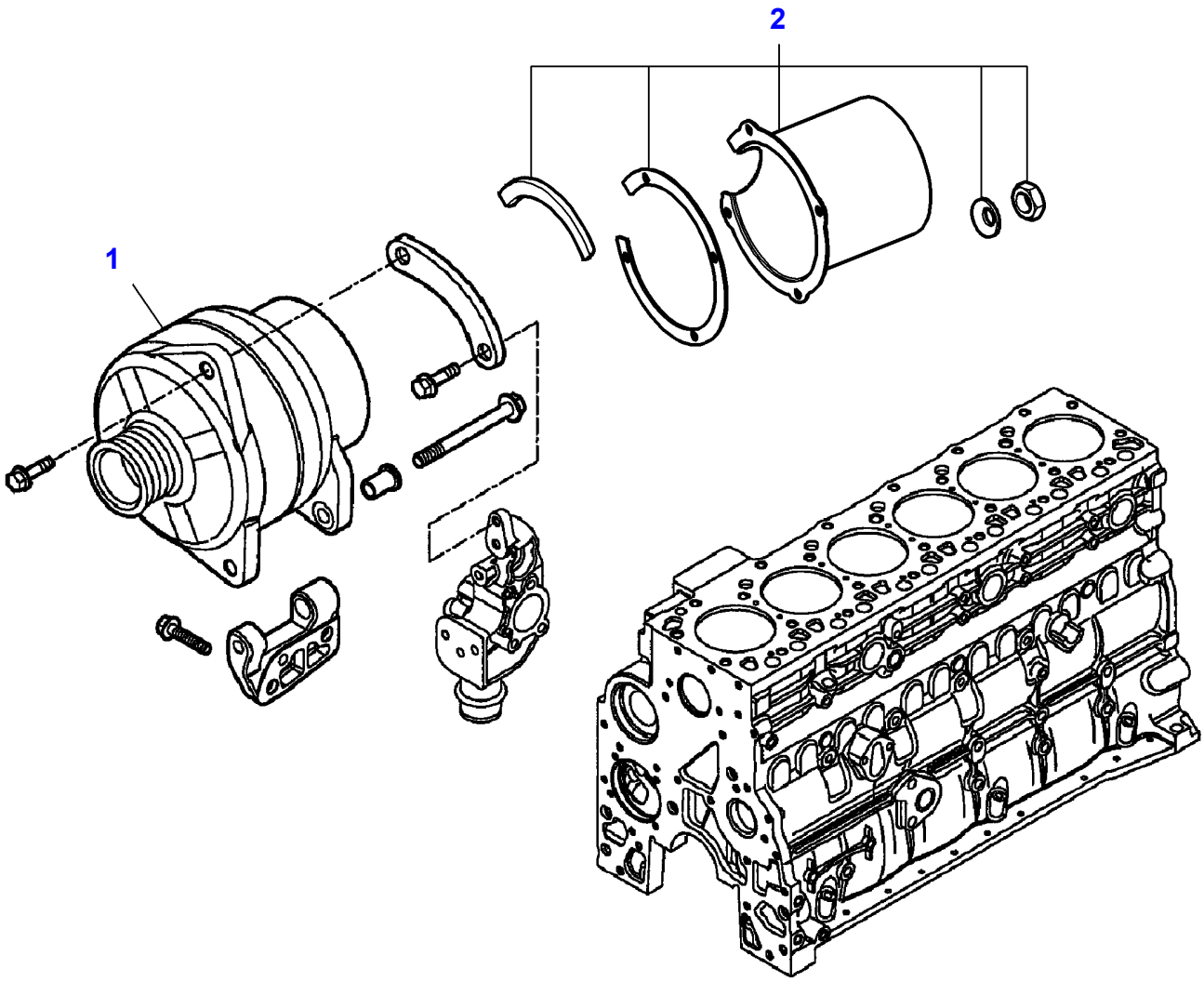

Item	Part Number	Qty	Description	Comments
1	LA323015650	1	Alternator	
2		1	Protection.	See Page - Reference Number 020-0035/13

L-LE03-001-A

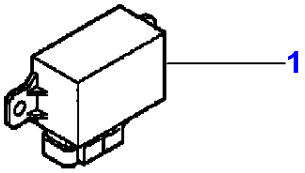

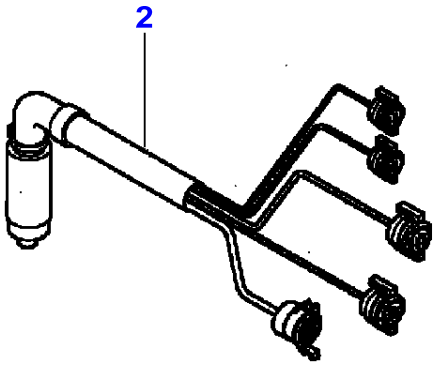

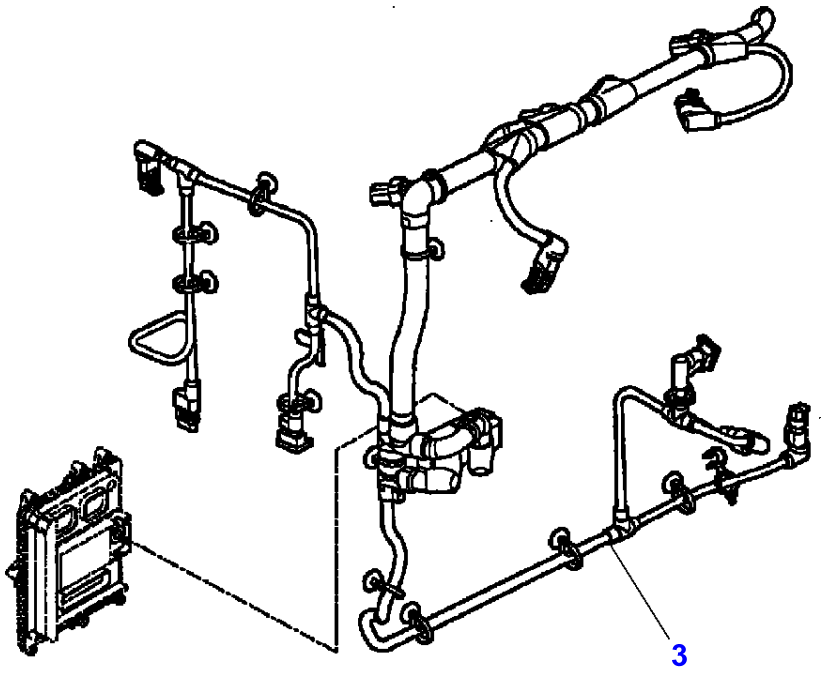

Item	Part Number	Qty	Description
1	LA323041750	1	Relay
2	LA323016150	1	Cable
3	LA323016250	1	Cable

L-LE03-002-B

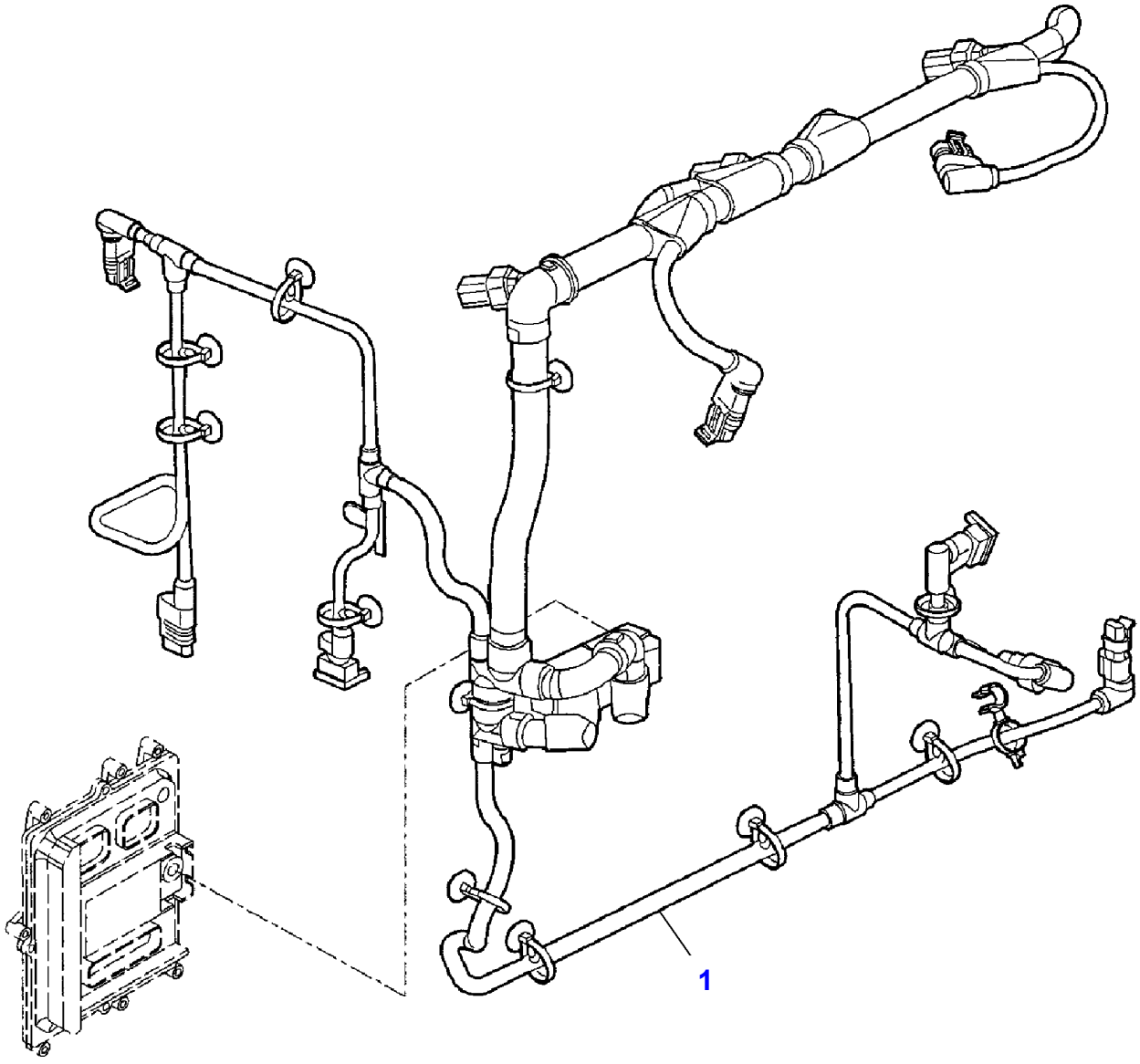

Item	Part Number	Qty	Description
1	LA323222950	1	Harness

L-LE16-001-C

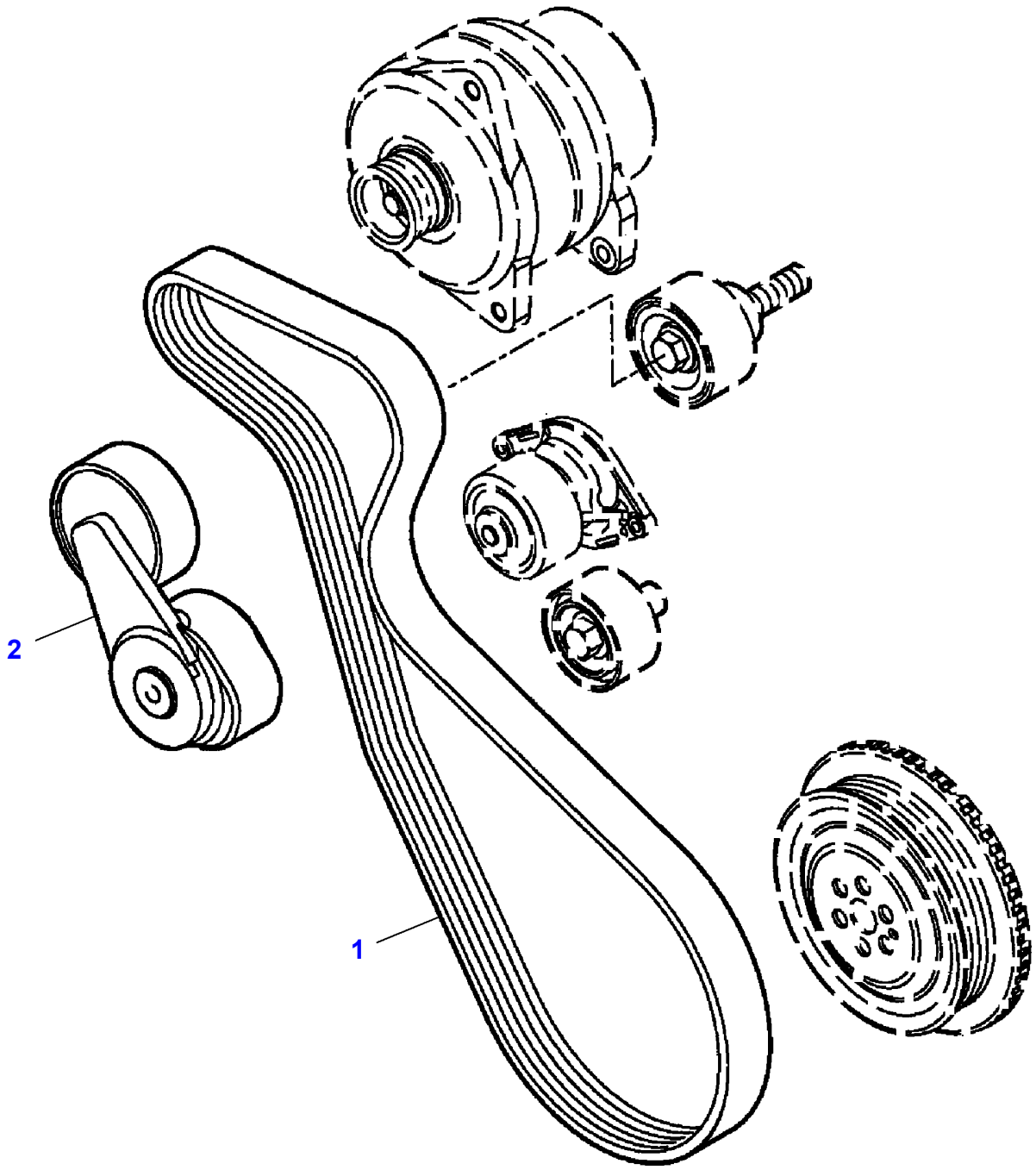

Item	Part Number	Qty	Description
1	**LA323019750**	1	Belt
2	LA504065874	1	Tightener

L-LE05-001-C

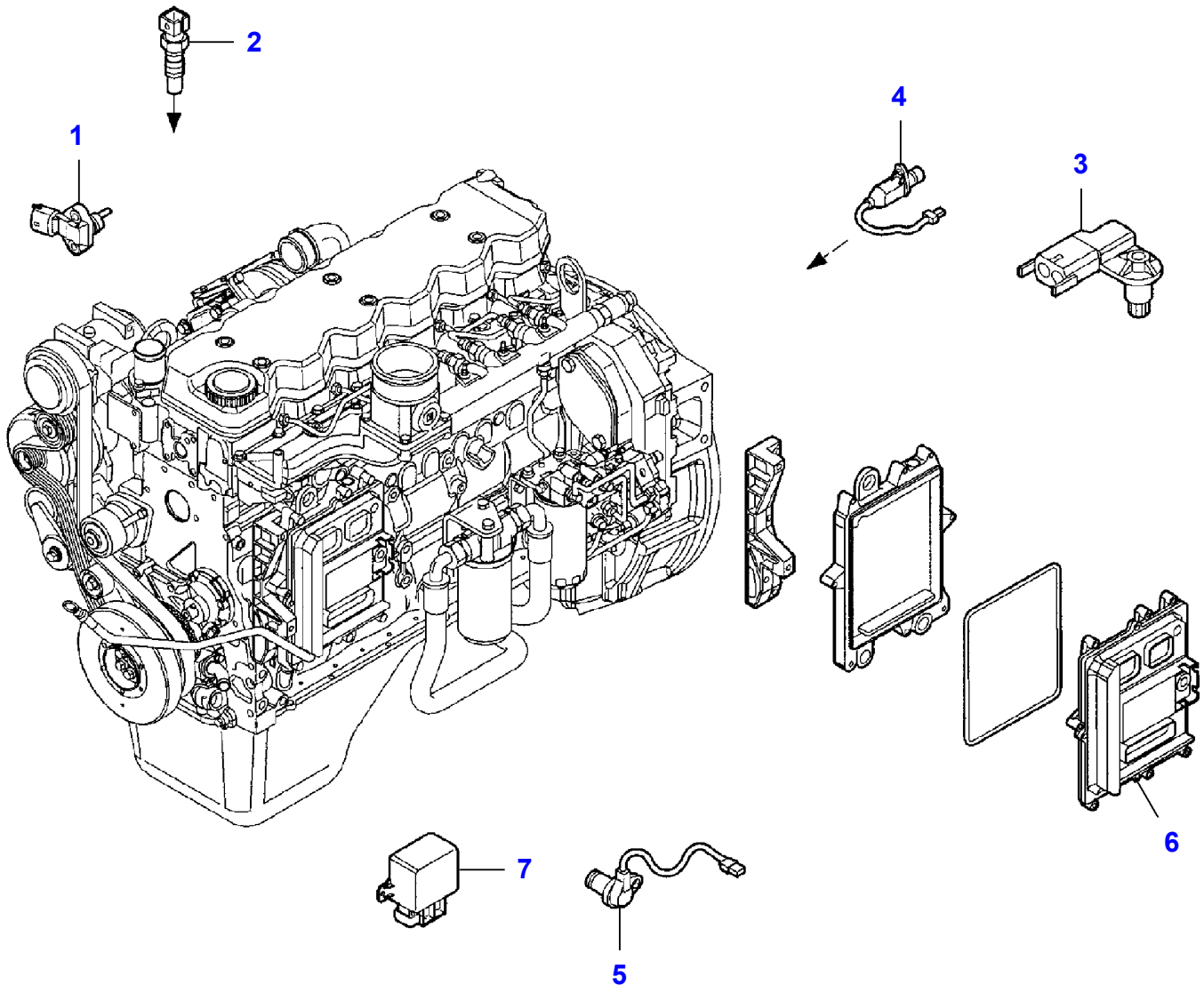

Item	Part Number	Qty	Description	Comments
1	**LA323018550**	1	Sensor	
2	**LA323018650**	1	Sensor	
3	**LA323018750**	1	Sensor	
4	**LA323018450**	1	Sensor	
5	**LA323018350**	1	Sensor	
6	LA323089150	1	Control Unit	Up to Serial or Engine Number
	LA323224550	1	Control Unit	From Serial or Engine Number 551710035
7	LA323041750	1	Relay	From Serial or Engine Number 551710035

L-LC03-001A

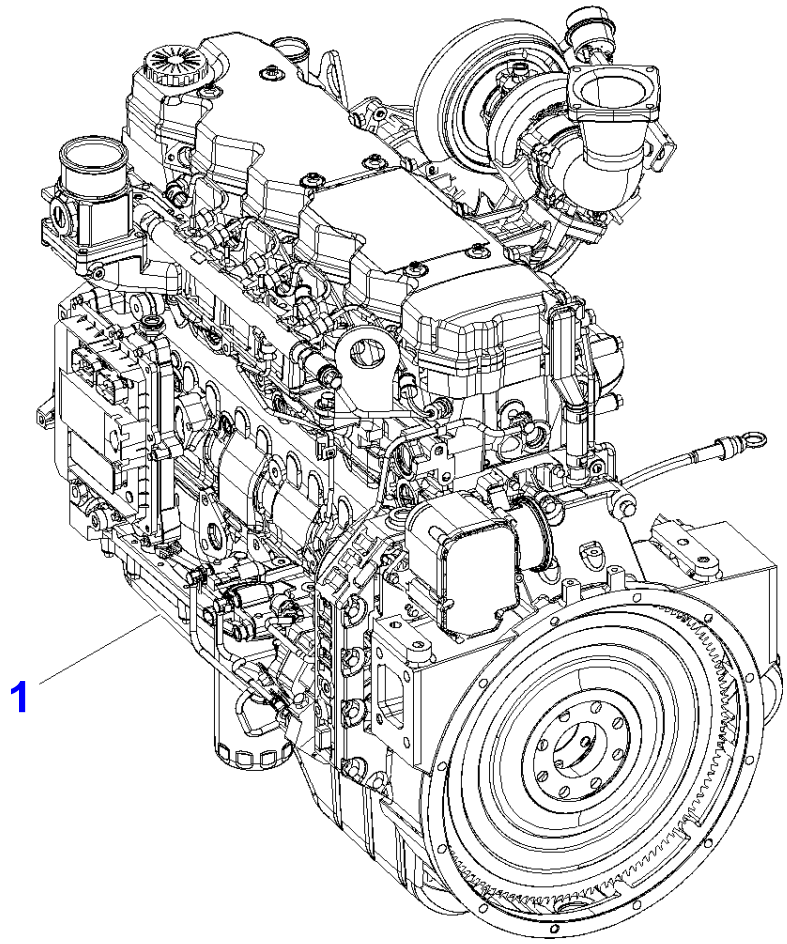

Item	Part Number	Qty	Description
1	LA322966200	1	Engine

L-LC03-016-B

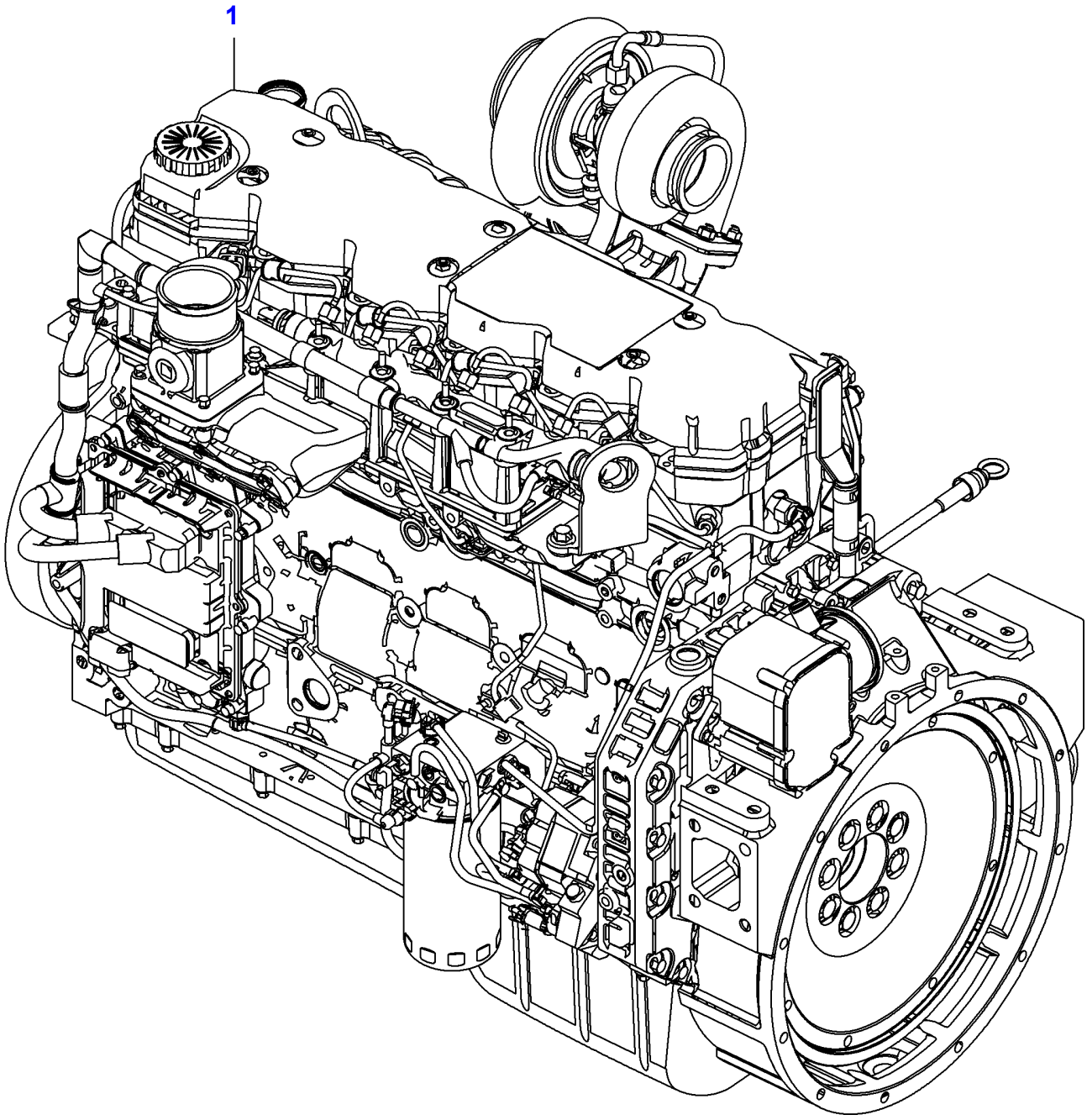

Item	Part Number	Qty	Description	Comments
1	LA323199100	1	Engine	From Serial or Engine Number 551710035

L-LC03-002-B

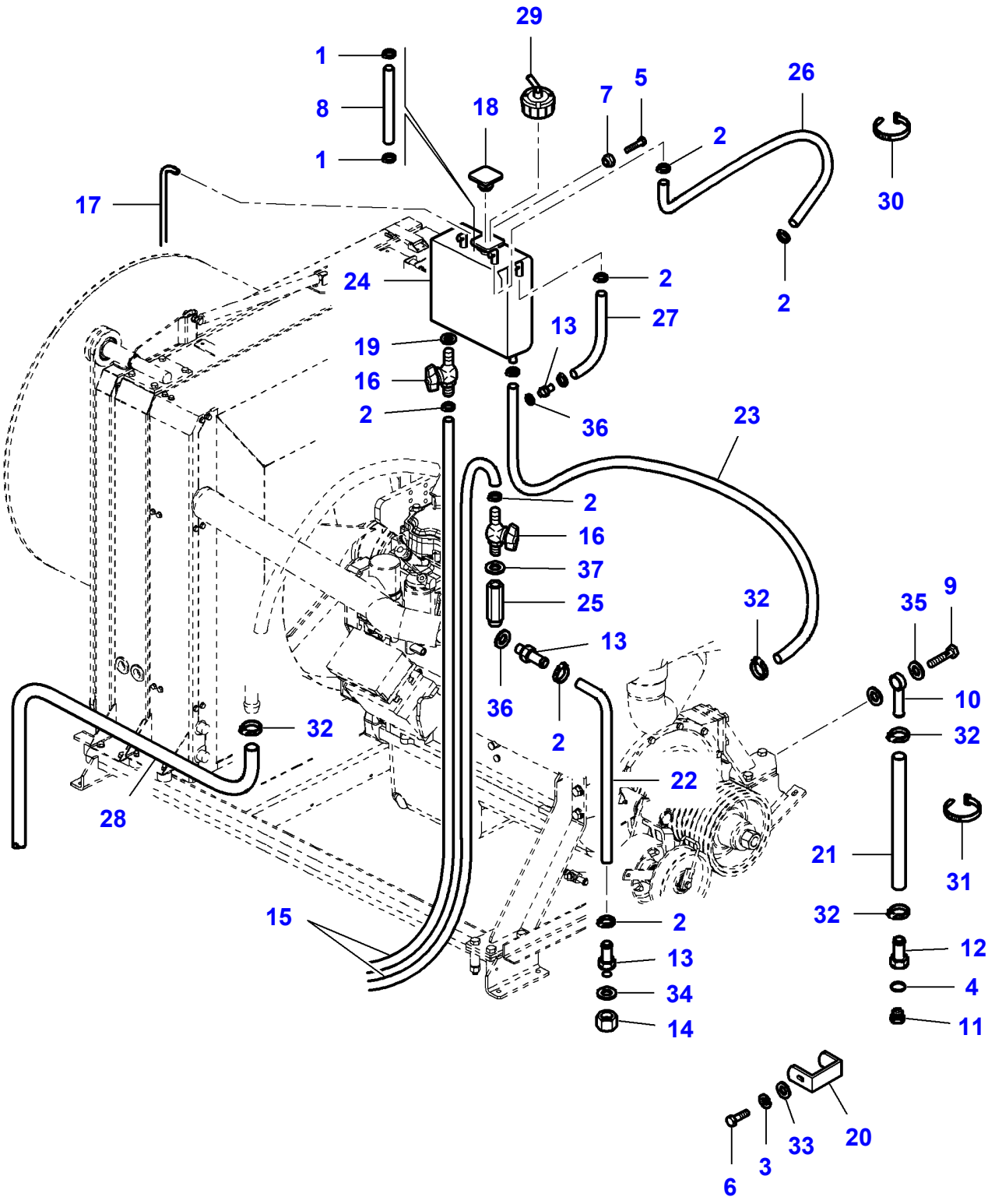
29
1
8
1
18
7
5
26
2
30
17
24
2
27
2
13
19
16
2
36
23
2
16
37
25
32
35
9
13
36
2
10
32
32
22
21
31
32
28
15
2
13
34
14
12
4
11
20
33
3
6

Item	Part Number	Qty	Description
1	LA350391506	X	Hose Clip
2	LA350391506	X	Hose Clip
3	LA12034571	1	Lock Washer
4	LA14457180	1	O Ring
5	LA16104111	1	Locknut
6	LA16043421	1	Cap Screw
7	LA16043221	1	Cap Screw
8	LA19053182	1	Hose
9	LA300128295	1	Bolt
10	LA300136355	1	Bolt
11	LA320479650	1	Plug
12	LA321806450	1	Connector
13	LA321946550	3	Union
14	LA321946650	1	Plug
15	LA322303650	2	Hose
16	LA322310850	2	Cock
17	LA322327850	1	Hose
18	LA322638350	1	Plug
19	LA322731950	1	Washer
20	LA322869150	1	Collar
21	LA322895950	1	Hose
22	LA322896150	1	Hose
23	LA322944150	1	Hose
24	LA322995200	1	Tank
25	LA322999150	1	Connector
26	LA323013450	1	Hose
27	LA323013550	1	Hose
28	LA323036450	1	Hose
29	LA323105850	1	Plug
30	LA340481806	1	Cable Tie
31	LA340481808	1	Cable Tie
32	LA350391518	3	Clip
33	LA355510820	1	Flat Washer
34	LA355561430	1	Gasket
35	LA355562230	1	Washer
36	LA355571415	2	Washer
37	LA410000794	1	Washer

L-LC03-003-B

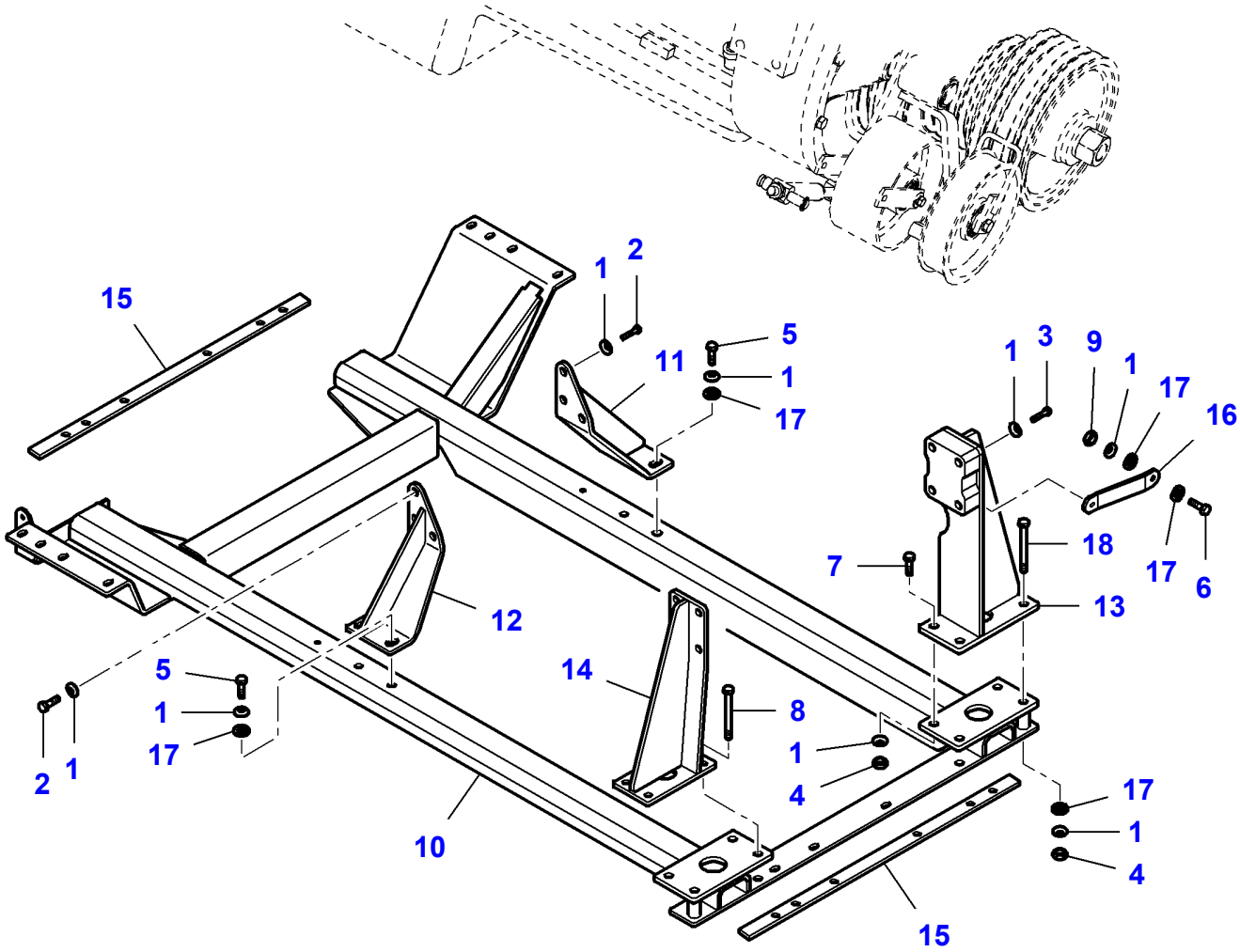

Item	Part Number	Qty	Description
1	LA140046	8	Washer
2	LA11112421	2	Cap Screw
3	LA11113521	1	Screw
4	LA11702911	2	Nut
5	LA15540521	3	Cap Screw
6	LA15540524	1	Screw
7	LA15540621	1	Cap Screw
8	LA15541621	2	Screw
9	LA16101511	1	Nut
10	LA322910250	1	Frame
11	LA322910350	1	Bracket
12	LA322910450	1	Bracket
13	LA322910650	1	Bracket
14	LA322910750	1	Bracket
15	LA322911250	2	Shim
16	LA323003650	1	Stop
17	LA355501320	5	Flat Washer
18	LA15541521	1	Cap Screw

L-LC03-004-B

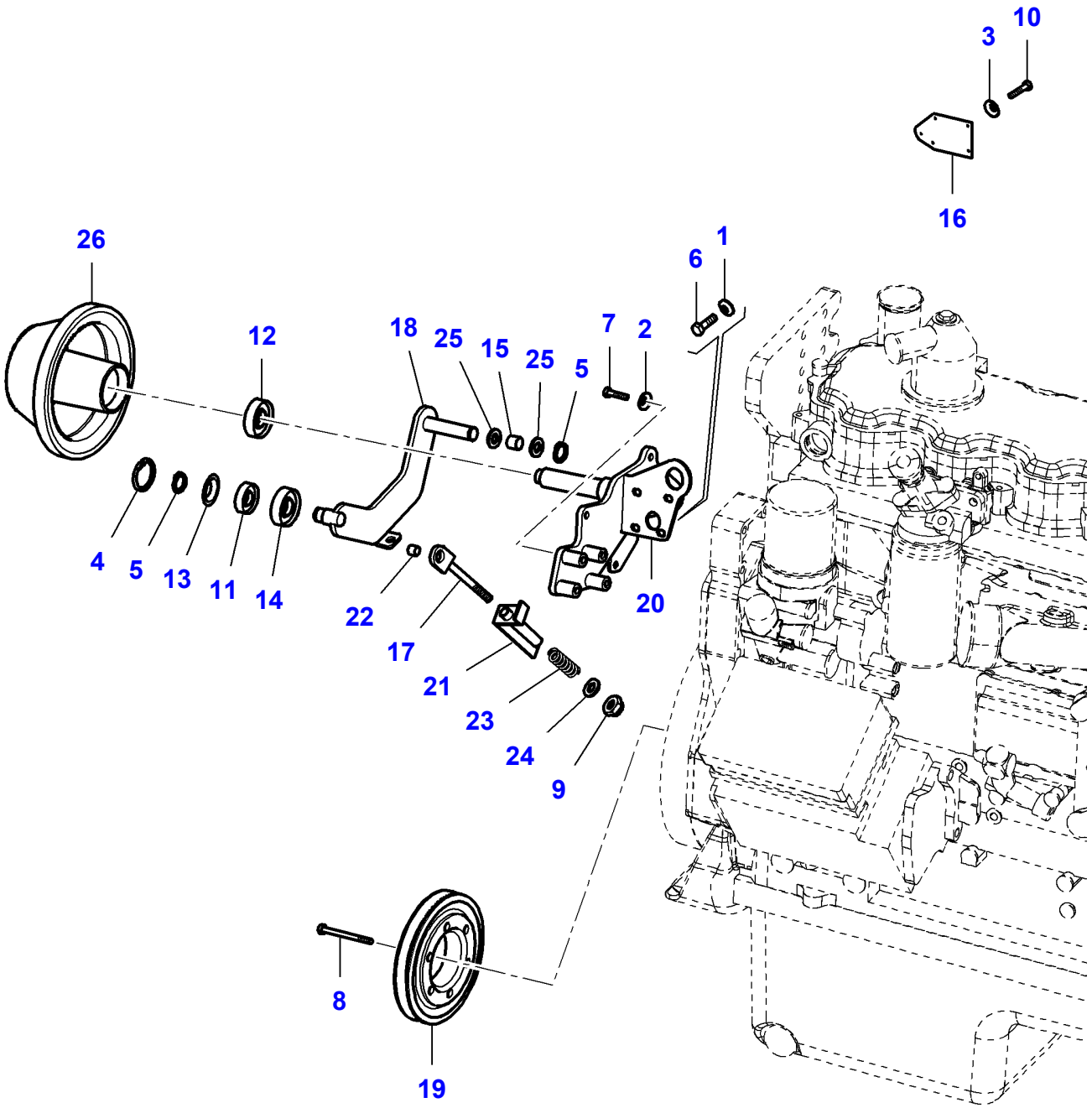

Item	Part Number	Qty	Description	Comments
1	LA140045	1	Washer	
2	LA140046	1	Washer	
3	LA322358	1	Lock Washer	
4	LA11060276	1	Circlip	
5	LA11066876	2	Circlip	
6	LA11106421	1	Cap Screw	
7	LA16044621	1	Screw	
8	LA11343831	1	Cap Screw	
9	LA12577211	1	Nut	
10	LA16043221	1	Cap Screw	
11	LA28996510	1	Bear. 6204 2rs	
12	**LA28996540**	1	Bearing Assy	
13	LA300022242	1	Shield	
14	**LA320810050**	1	Pulley	
15	LA322882350	1	Sleeve	
16	LA322982650	1	Support	
17	LA323008050	1	Tie Rod	
18	LA323024050	1	Support	
19	LA323051550	1	Pulley	
20	LA323067450	1	Bracket	
21	LA323073350	1	Gauge	
22	LA340415514	1	Bush	
23	LA350356184	1	Spring	
24	LA355511030	1	Flat Washer	
25	LA355533810	2	Flat Washer	
26		1	Pulley	See Page - Reference Number 020-0030/7

L-LC03-005-B

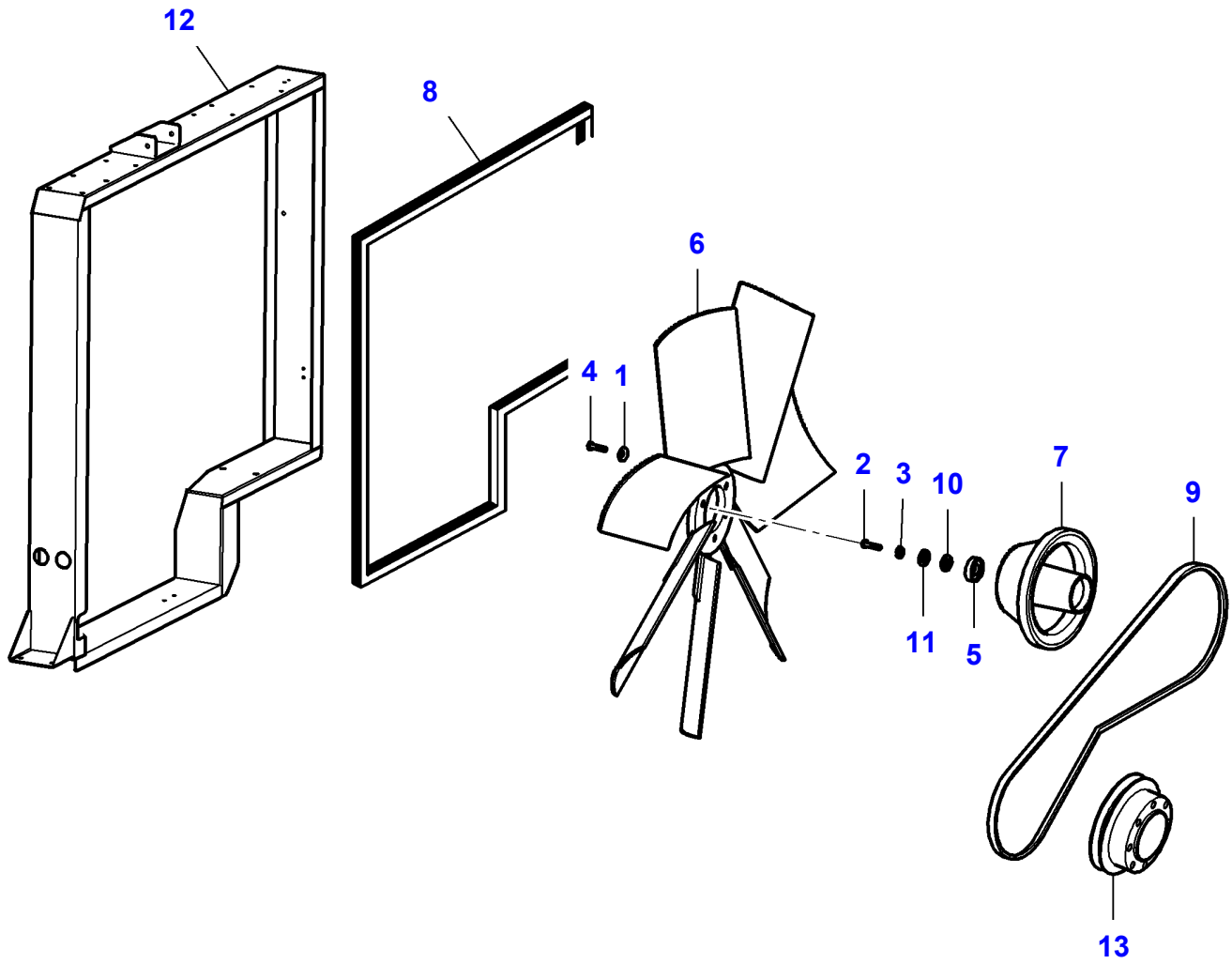

Item	Part Number	Qty	Description	Comments
1	LA140045	1	Washer	
2	LA11408321	1	Cap Screw	
3	LA12035571	1	Lock Washer	
4	LA16040821	1	Cap Screw	
5	**LA28996520**	1	Bearing Assy	
6	LA322829350	1	Blower	
7	LA322911650	1	Pulley	
8	LA322991350	1	Gasket	
9	**LA340433253**	1	Belt	
10	LA355531720	1	Washer	
11	LA355531950	1	Washer	
12		1	Frame	See Page - Reference Number 020-0085/15
13		1	Pulley	See Page - Reference Number 020-0025/19

L-LC03-006-B

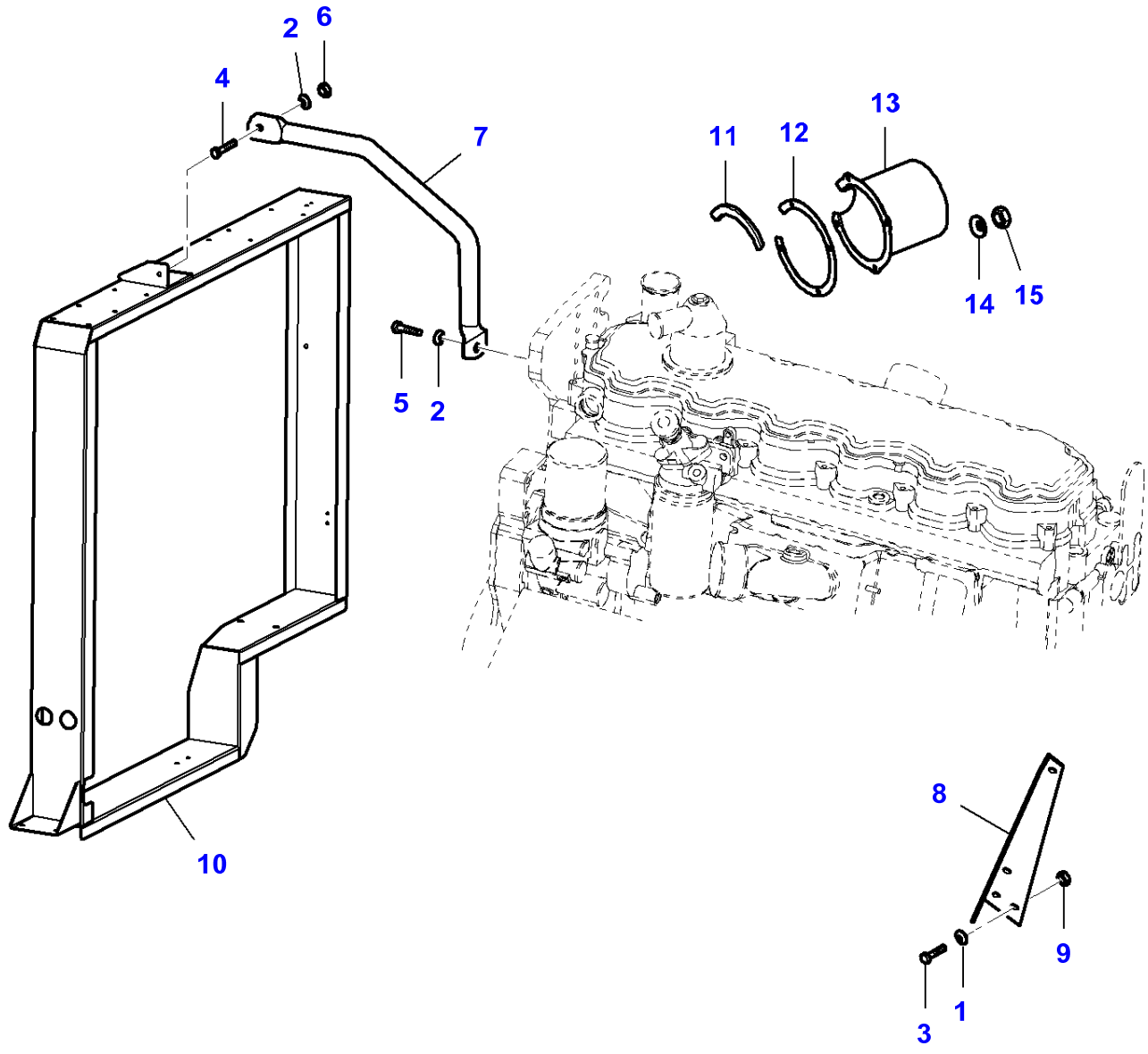

Item	Part Number	Qty	Description	Comments
1	LA140045	1	Washer	
2	LA322358	2	Lock Washer	
3	LA11106421	1	Cap Screw	
4	LA16043221	1	Cap Screw	
5	LA16043624	1	Cap Screw	
6	LA16100811	1	Nut	
7	LA322913250	1	Stop	
8	LA323001950	1	Bracket	
9	LA11701711	1	Nut	
10		1	Frame	See Page - Reference Number 020-0085/15
11	LA300135968	1	Spacer	
12	LA323264350	1	Rubber	
13	LA323208550	1	Guard	
14	LA355500615	4	Flat Washer	
15	LA15896221	4	Nut	

L-LC57-001-B

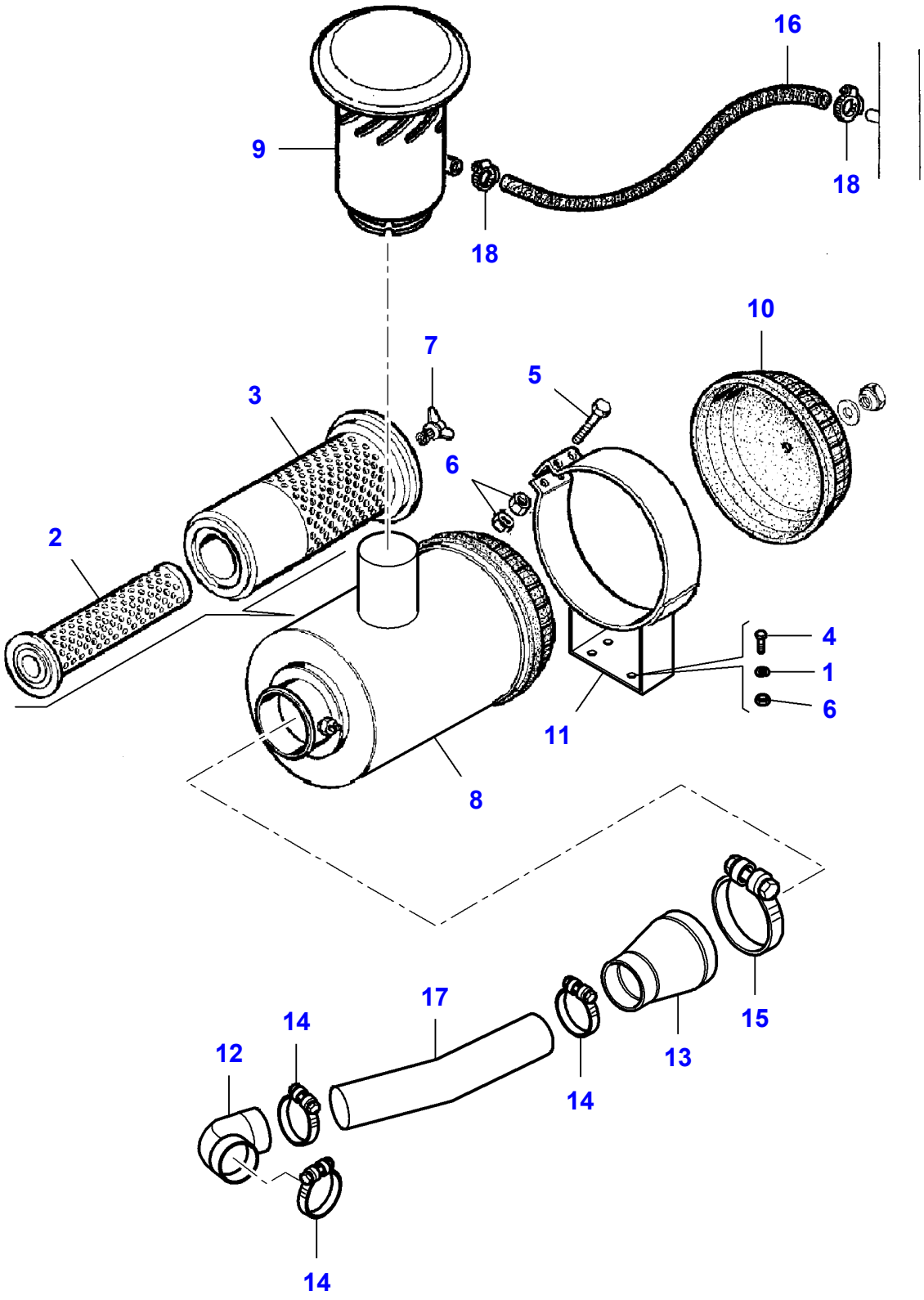

Item	Part Number	Qty	Description
1	LA12034571	1	Lock Washer
2	**LA1930748**	1	Air Filter
3	**LA1930788**	1	Air Filter
4	LA16043421	1	Cap Screw
5	LA16043924	1	Cap Screw
6	LA16100811	2	Nut
7	LA79062701	1	Nut
8	**LA321545300**	1	Air Filter
9	LA321545500	1	Prefilter
10	LA322214450	1	Cover
11	LA322871650	1	Support
12	LA322883250	1	Tube
13	LA322883350	1	Connector
14	LA322884750	3	Collar
15	LA322884850	1	Collar
16	LA322896050	1	Hose
17	LA322965850	1	Tube
18	LA350391532	2	Clip

L-LC58-001-B

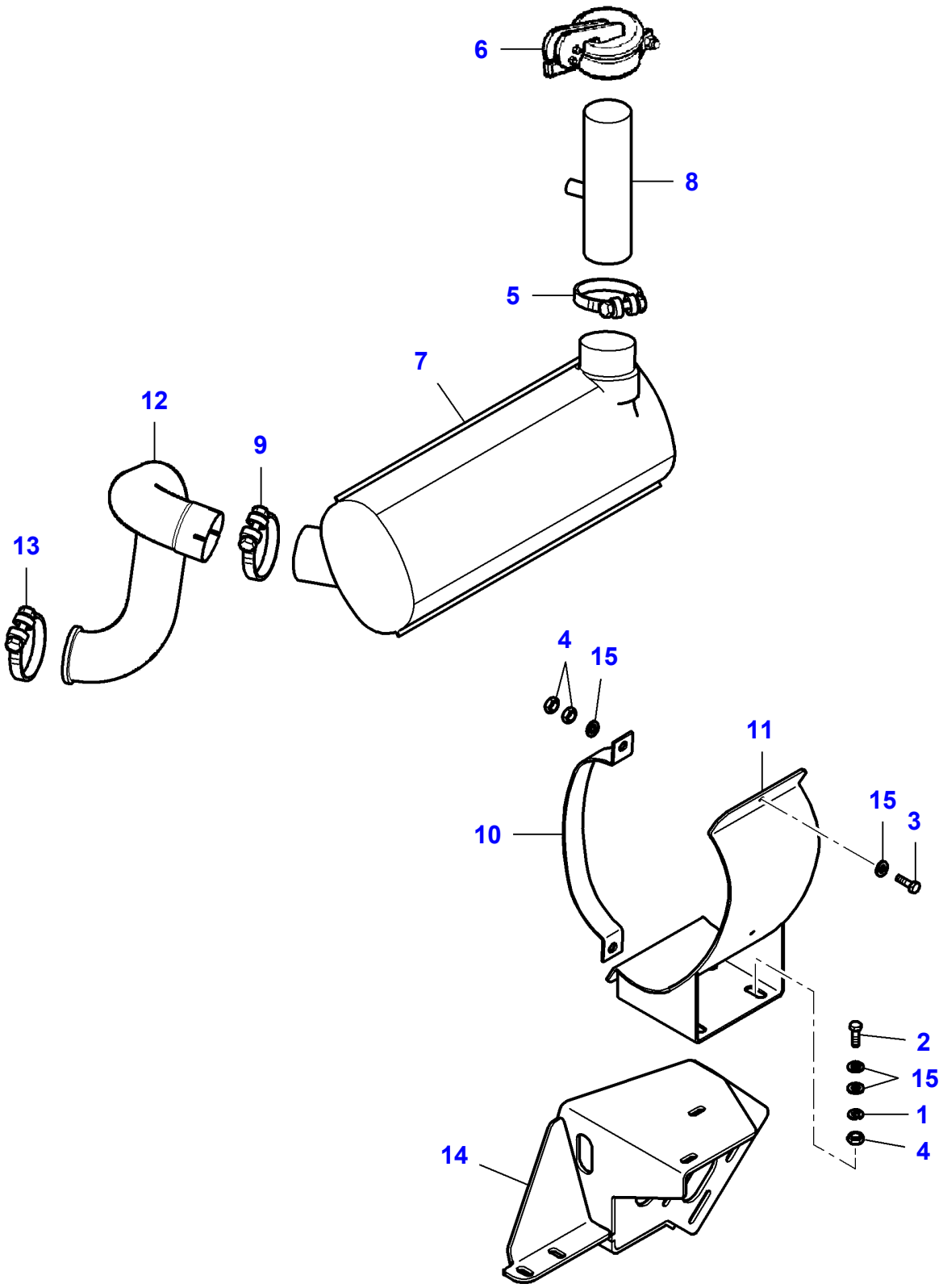

Item	Part Number	Qty	Description
1	LA12034571	1	Lock Washer
2	LA16043624	1	Cap Screw
3	LA16043924	1	Cap Screw
4	LA16100811	3	Nut
5	LA321816400	1	Collar
6	LA321852200	1	Cover
7	LA322229550	1	Muffler
8	LA322231850	1	Tube
9	LA322559800	1	Collar
10	LA321815750	1	Strap
11	LA322871350	1	Bracket
12	LA323013050	1	Tube
13	LA323051650	1	Collar
14	LA323077450	1	Support
15	LA355500920	3	Flat Washer

L-LC59-001-A

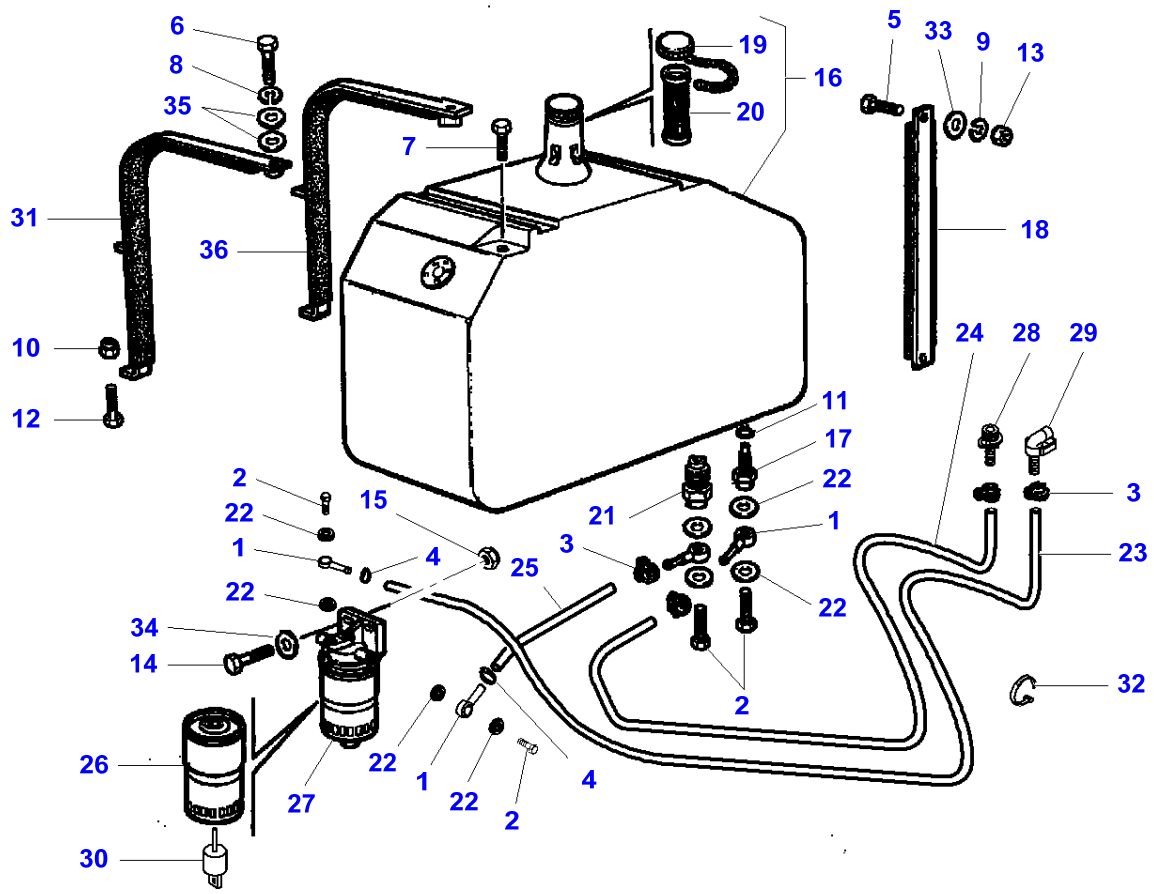
6
8
35
31
36
10
12
7
19
20
16
5
33
9
13
18
24
28
29
11
17
22
21
1
3
2
22
15
1
4
25
22
34
14
26
27
22
1
22
2
4
2
22
3
23
32
30

Item	Part Number	Qty	Description	Comments
1	LA5150924	4	Union	
2	LA10184314	2	Banjo Bolt	
3	LA350391506	4	Hose Clip	Repairs and replaces LA10186790
4	LA350391506	3	Hose Clip	Repairs and replaces LA10186790
5	LA10902224	1	Cap Screw	
6	LA11106624	1	Cap Screw	
7	LA11422324	1	Cap Screw	
8	LA12034671	1	Lock Washer	
9	LA12035670	1	Lock Washer	
10	LA12577211	1	Nut	
11	LA14462880	1	Gasket	
12	LA15214821	1	Cap Screw	
13	LA15896221	1	Nut	
14	LA16043824	1	Cap Screw	
15	LA16104111	1	Locknut	
16	LA322139100	1	Tank	
17	LA322154150	1	Union	
18	LA322157450	1	Gasket	
19	LA322165550	1	Plug	
20	**LA322165650**	1	Fuel Filter	
21	LA322223650	1	Union	
22	LA322325850	5	Washer	
23	LA322783550	1	Hose	
24	LA322893050	1	Hose	
25	LA323006550	1	Hose	
26	**LA323007250**	1	Fuel Filter	
27	LA323007400	1	Fuel Filter	
		X	Fuel Filter	10 Micron See Page - Reference Number 140-0145
28	LA323007750	1	Connector	
29	LA323007850	1	Connector	
30	LA323007350	1	Valve	
31	LA323091150	1	Strap	
32	LA340481806	1	Cable Tie	
33	LA355500720	1	Flat Washer	
34	LA355510820	1	Flat Washer	
35	LA355511030	1	Flat Washer	
36	LA322140850	1	Strap	

L-LC59-005-B

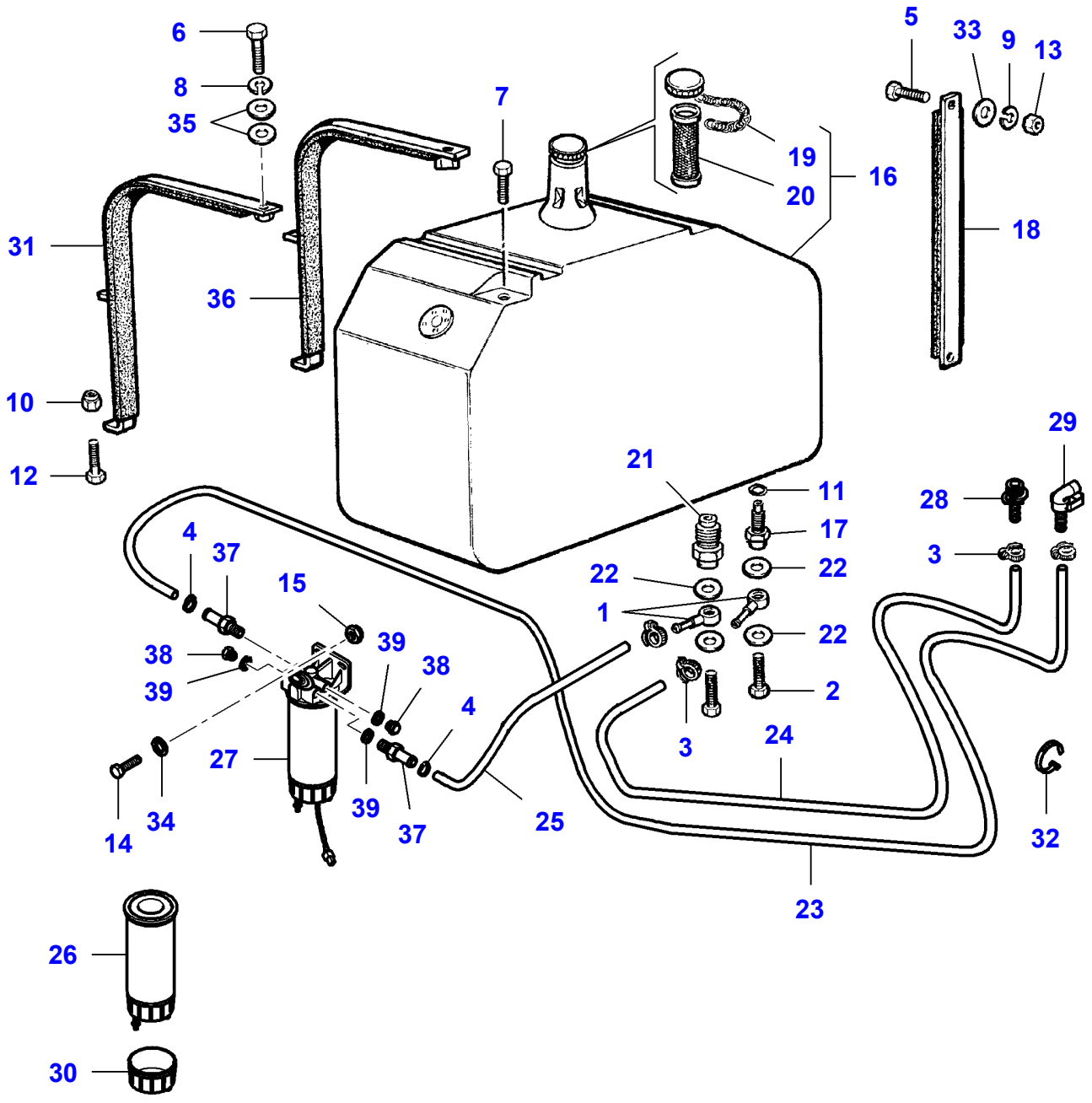
6
8
35
31
36
10
12
7
19
20
16
5
33
9
13
18
29
28
3
21
11
17
22
22
22
1
2
3
24
4
37
15
38
39
39
38
4
27
14
34
39
37
25
23
32
26
30

Item	Part Number	Qty	Description	Comments
1	LA5150924	6	Union	
2	LA10184314	2	Banjo Bolt	
3	LA350391506	4	Hose Clip	Repairs and replaces LA10186790
4	LA350391506	3	Hose Clip	Repairs and replaces LA10186790
5	LA10902224	1	Cap Screw	
6	LA11106624	1	Cap Screw	
7	LA11422324	1	Cap Screw	
8	LA12034671	1	Lock Washer	
9	LA12035670	1	Lock Washer	
10	LA12577211	1	Nut	
11	LA14462880	1	Gasket	
12	LA15214821	1	Cap Screw	
13	LA15896221	1	Nut	
14	LA16043824	1	Cap Screw	
15	LA16104111	1	Locknut	
16	LA323194700	1	Tank	
17	LA322154150	1	Union	
18	LA322157450	1	Gasket	
19	LA323205550	1	Plug	(16) Repairs and replaces LA322165550
20	LA323205650	1	Filter	(16)
21	LA322223650	1	Union	
22	LA322325850	5	Washer	
23	LA322783550	1	Hose	
24	LA322893050	1	Hose	
25	LA323006550	1	Hose	
26	LA323180750	1	Filter	
27	**LA323180600**	1	Fuel Filter	
28	LA323007750	1	Connector	
29	LA323007850	1	Connector	
30	LA323182050	1	Bowl	
31	LA323091150	1	Strap	
32	LA340481806	1	Cable Tie	
33	LA355500720	1	Flat Washer	
34	LA355510820	1	Flat Washer	
35	LA355511030	1	Flat Washer	
36	LA322140850	1	Strap	
37	LA323182150	2	Connector	
38	LA10300714	2	Plug	
39	LA322731950	X	Washer	

L-LC59-002-B

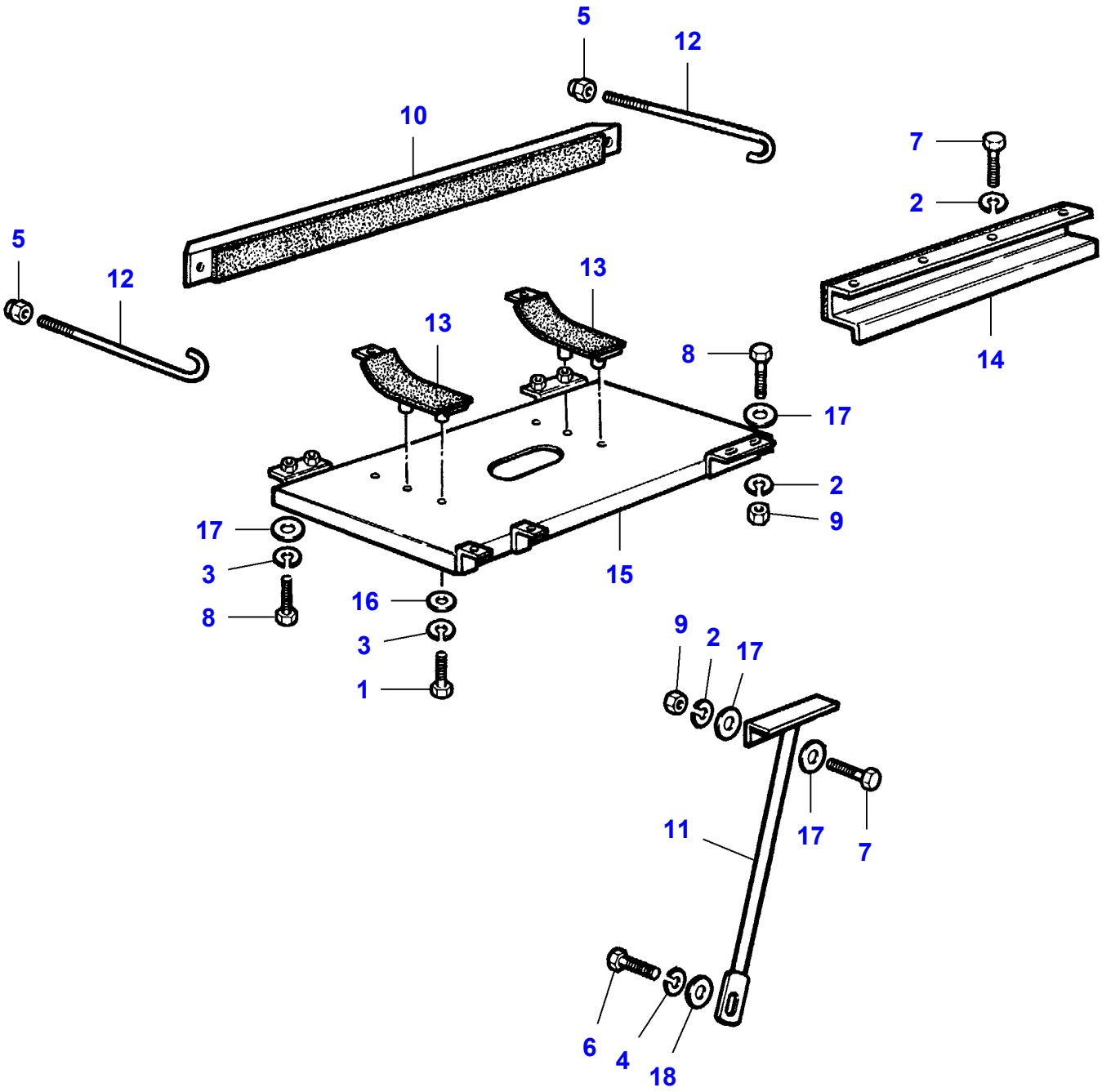

Item	Part Number	Qty	Description	Comments
1	LA11106021	1	Cap Screw	
2	LA12034571	3	Lock Washer	
3	LA12034671	2	Lock Washer	
4	LA12034771	1	Lock Washer	
5	LA12577211	2	Nut	
6	LA15540531	1	Screw	
7	LA16043424	2	Cap Screw	
8	LA16043624	2	Cap Screw	
9	LA16100811	2	Nut	
10	LA322139350	1	Crossbar	
11	LA322139850	1	Stop	
12	LA322140050	2	Tie Rod	
13	LA322171750	2	Clip	
14	LA322912150	1	Anchor	
15	LA323000050	1	Support	Repairs and replaces LA322913650
16	LA355501120	1	Flat Washer	
17	LA355510820	4	Flat Washer	
18	LA355511230	1	Flat Washer	

L-LC60-002-B

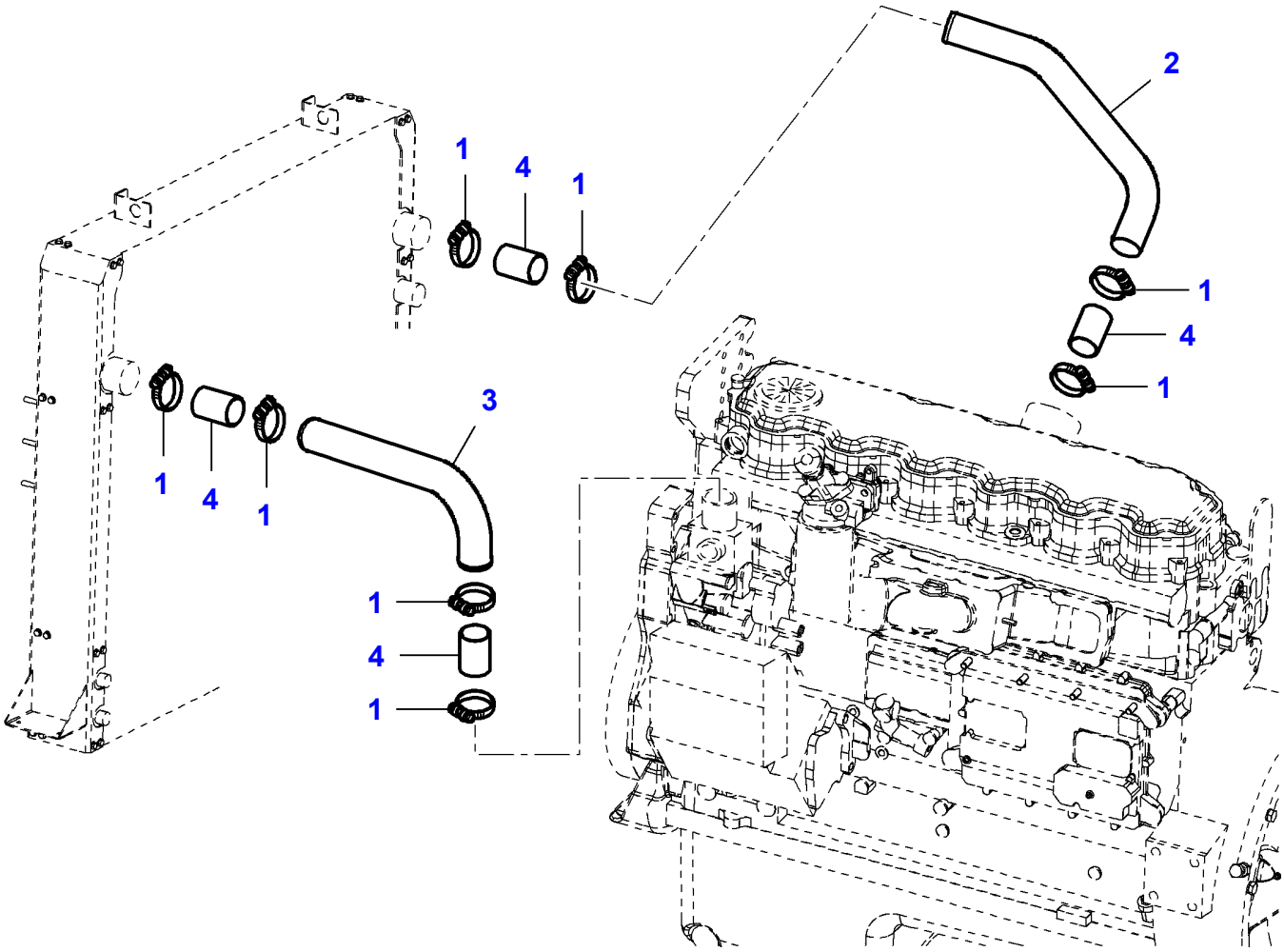

Item	Part Number	Qty	Description
1	LA322884950	8	Hose Clip
2	LA322949750	1	Water Hose
3	LA322981550	1	Water Hose
4	LA322984250	4	Hose

L-LC60-003-B

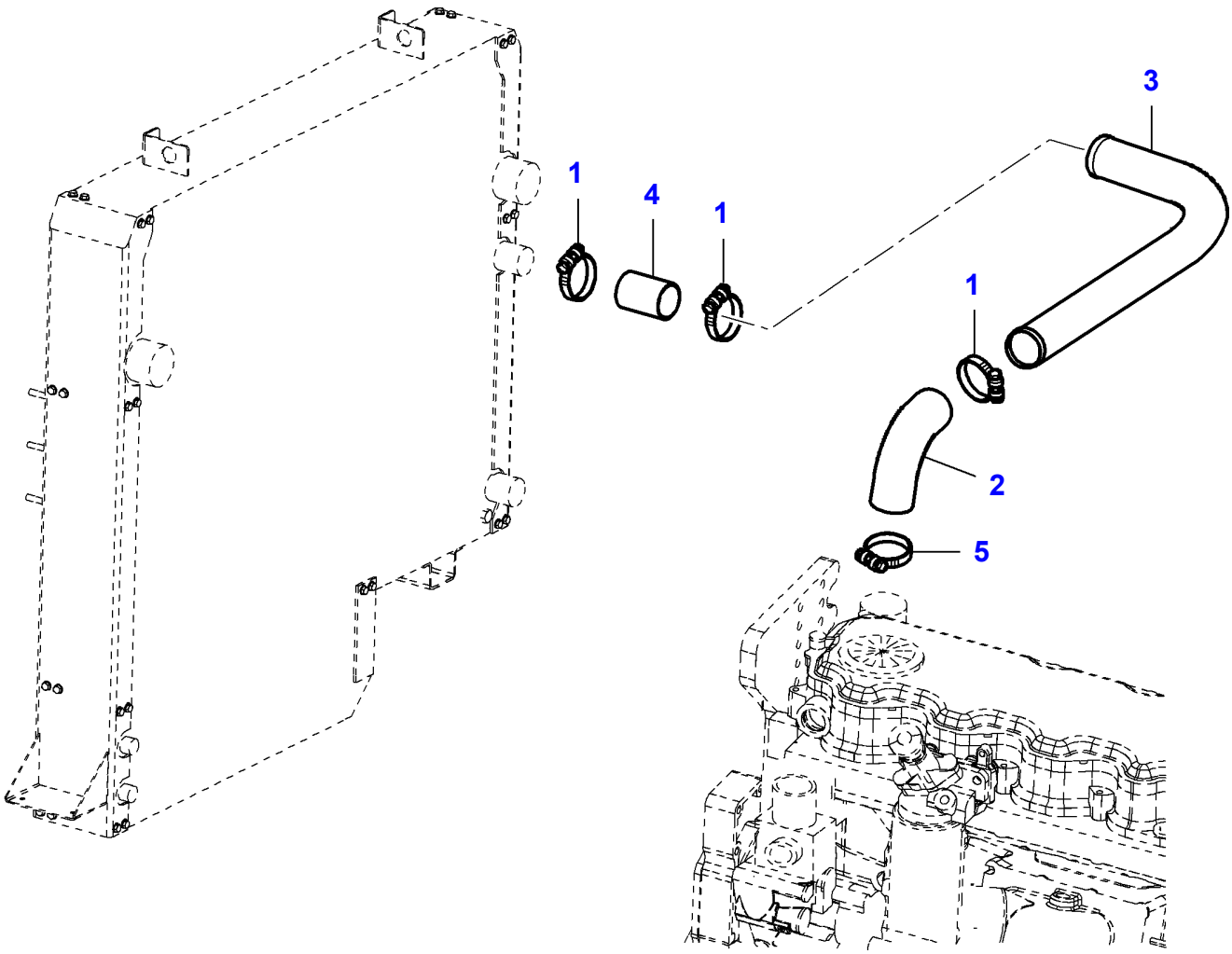

Item	Part Number	Qty	Description
1	LA322885050	4	Collar
2	LA322982550	1	Tube
3	LA322983750	1	Tube
4	LA322984350	1	Sleeve
5	LA323001850	1	Collar

L-LC60-004-B

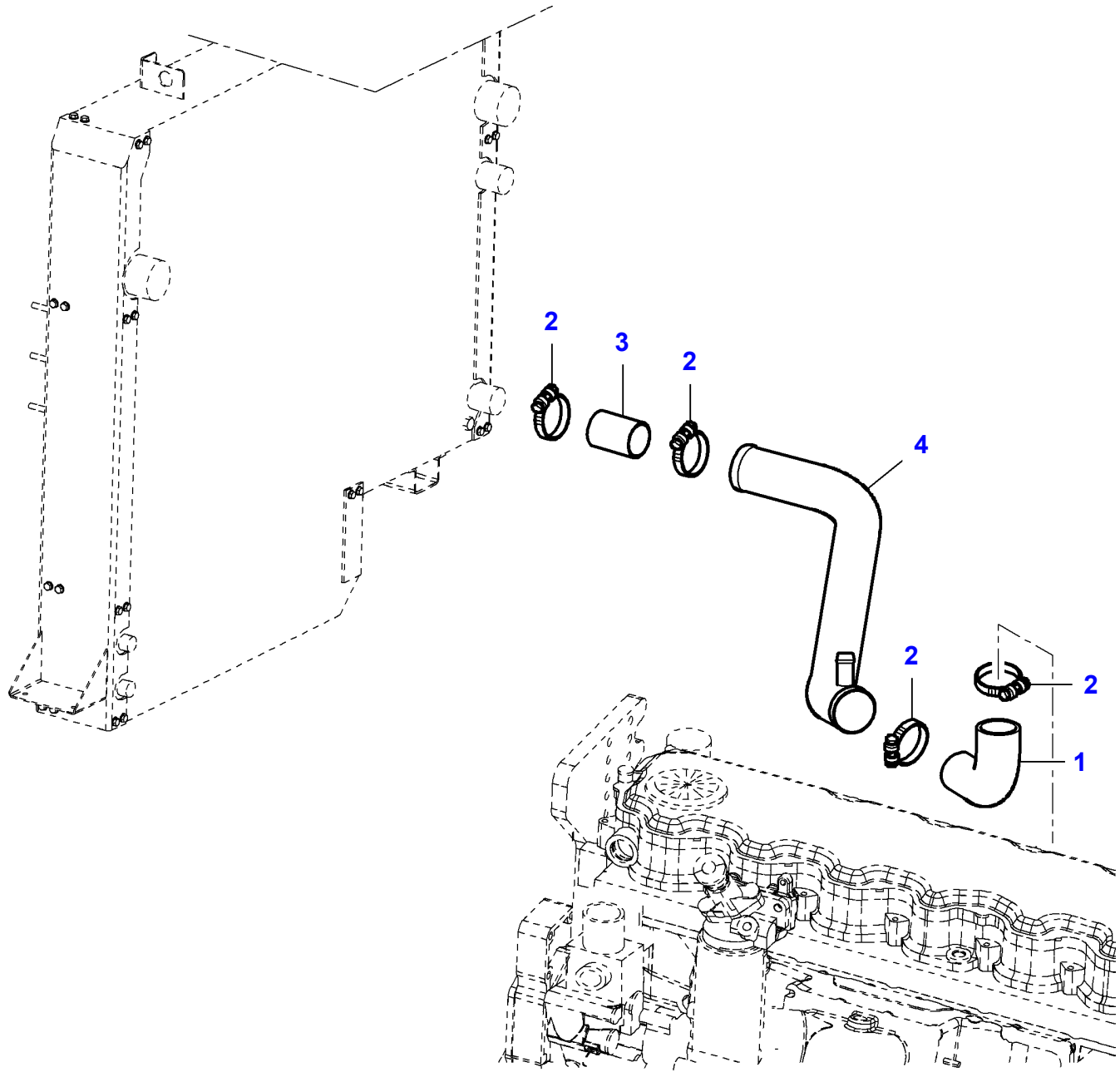

Item	Part Number	Qty	Description
1	LA322883750	1	Tube
2	LA322885050	4	Collar
3	LA322984350	1	Sleeve
4	LA322989250	1	Tube

L-LC60-005-B

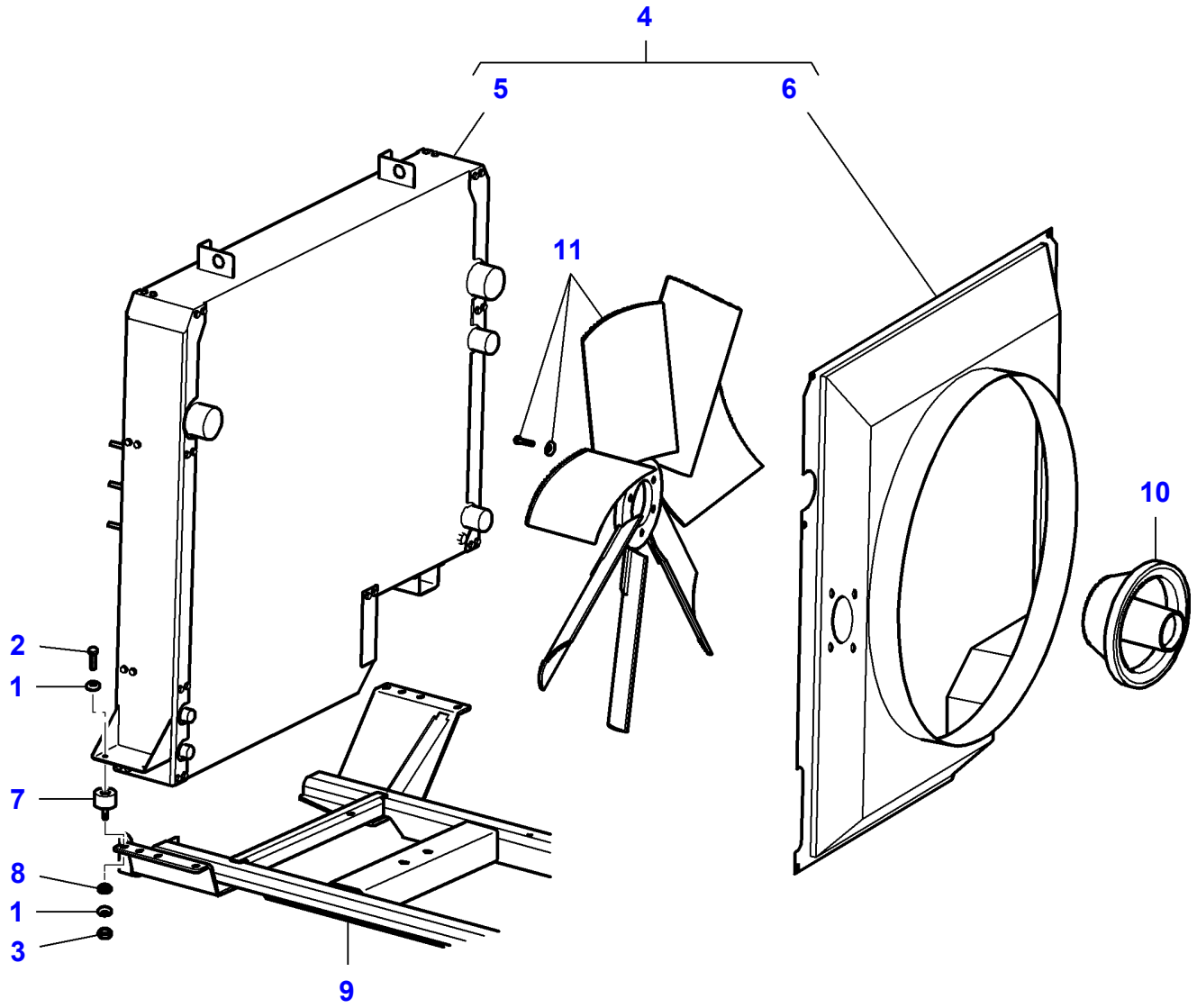

Item	Part Number	Qty	Description	Comments
1	LA322358	2	Lock Washer	
2	LA16043221	1	Cap Screw	
3	LA16100811	1	Nut	
4	LA322993300	1	Radiator	Up to Serial or Engine Number
5	LA322942400	1	Radiator	(4) Up to Serial or Engine Number
		1	Radiator	(4) See Page - Reference Number 020-0120/1 From Serial or Engine Number 551710035
6	LA322982050	1	Shroud	(4)
7	LA340449023	1	Vibration Mount	
8	LA355510820	1	Flat Washer	
9		1	Frame	See Page - Reference Number 020-0020/10
10		1	Pulley	See Page - Reference Number 020-0030/7
11		1	Fan	See Page - Reference Number 020-0030/6

L-LC60-006-A

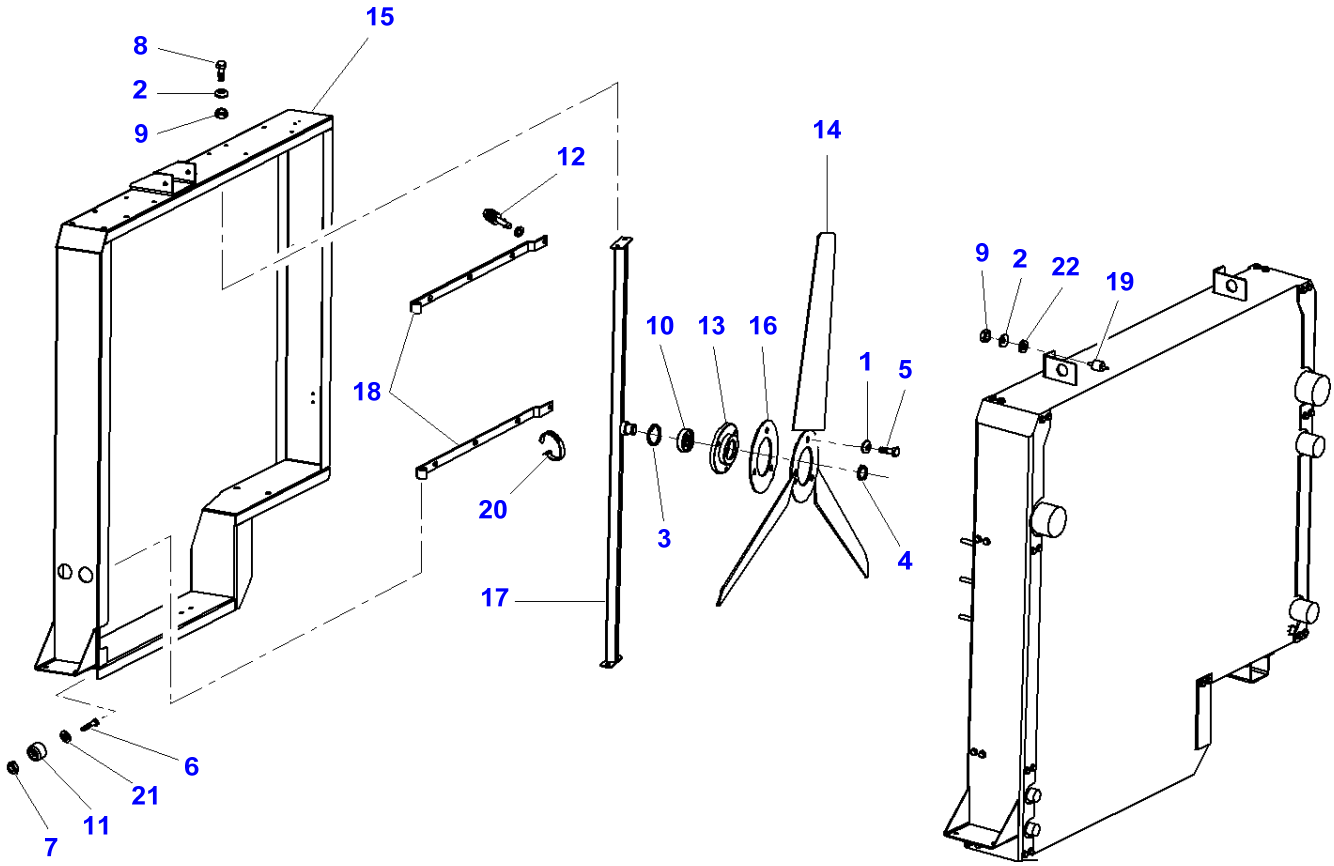

Item	Part Number	Qty	Description
1	LA140045	1	Washer
2	LA322358	2	Lock Washer
3	LA11060576	1	Circlip
4	LA11067376	1	Circlip
5	LA11106021	3	Cap Screw
6	LA15212721	1	Cap Screw
7	LA15896211	1	Nut
8	LA16043221	4	Cap Screw
9	LA16100811	2	Nut
10	**LA28996520**	1	Bearing Assy
11	LA201139752	1	Stop
12	LA320797250	1	Screw
13	LA322733350	1	Hub
14	LA322885250	1	Fan
15	LA322938450	1	Frame
16	LA323001750	1	Shim
17	LA323074250	1	Support
18	LA323074350	1	Bar
19	LA340449024	1	Vibration Mount
20	LA340481804	1	Cable Tie
21	LA355500715	1	Flat Washer
22	LA355500815	1	Washer

L-LC60-023-B

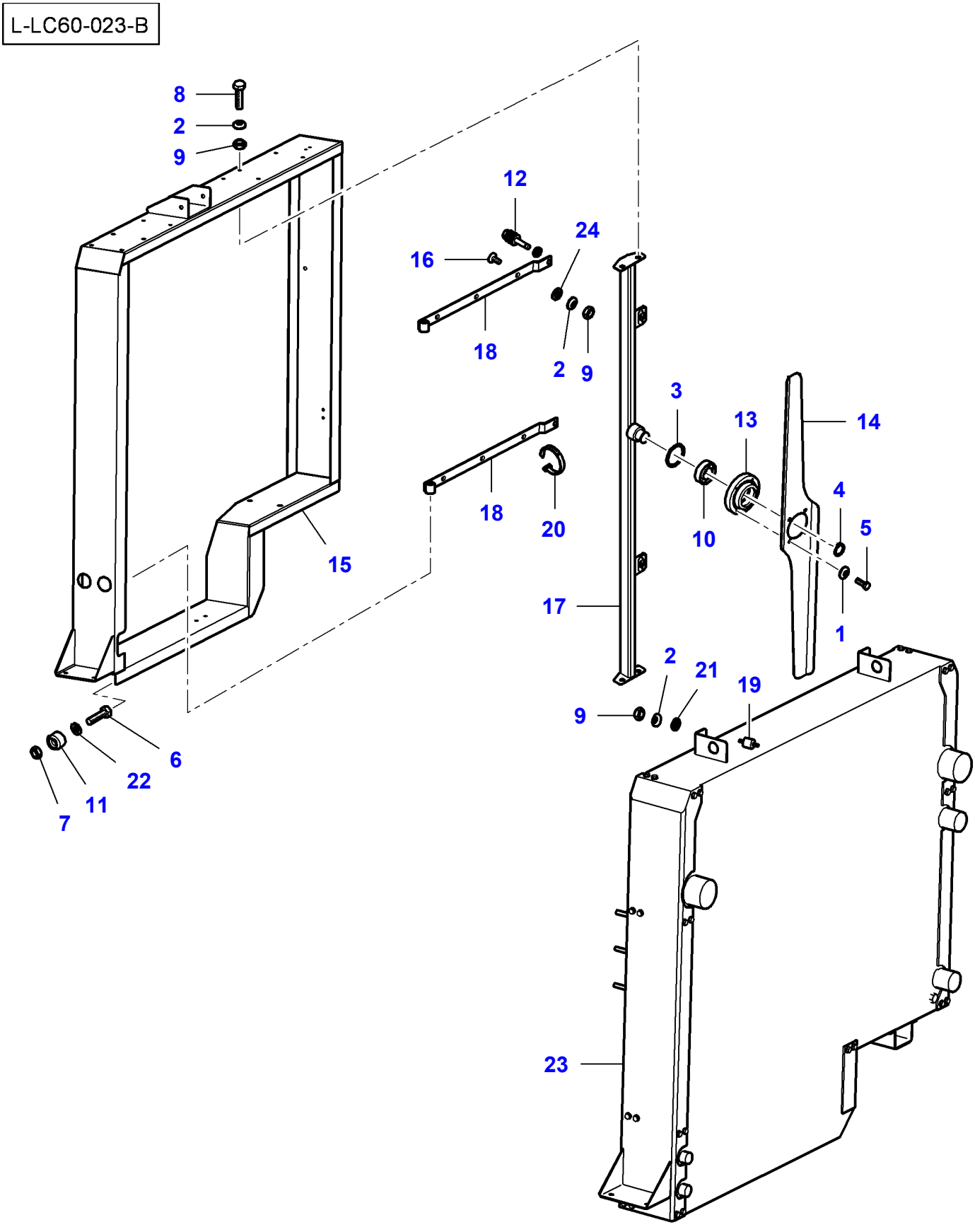

Item	Part Number	Qty	Description	Comments
1	LA322357	X	Lock Washer	
2	LA322358	3	Lock Washer	
3	LA11060576	1	Circlip	
4	LA11067376	1	Circlip	
5	LA10902221	X	Cap Screw	
6	LA15212721	1	Cap Screw	
7	LA15896211	1	Nut	
8	LA16043221	1	Cap Screw	
9	LA16100811	3	Nut	
10	**LA28996520**	1	Bearing Assy	
11	LA201139752	1	Stop	
12	LA320797250	1	Screw	
13	LA323179050	1	Hub	
14	LA323178950	1	Fan	
15	LA323102100	1	Frame	
16	LA350342510	1	Carriage Bolt	
17	LA323074250	1	Support	
18	LA323074350	2	Bar	
19	LA340449024	1	Vibration Mount	
20	LA340481804	1	Cable Tie	
21	LA355500815	1	Washer	
22	LA355500715	1	Flat Washer	
23		1	Radiator	See Page - Reference Number 020-0115/4
24	LA355500915	X	Flat Washer	

L-LC60-007-B

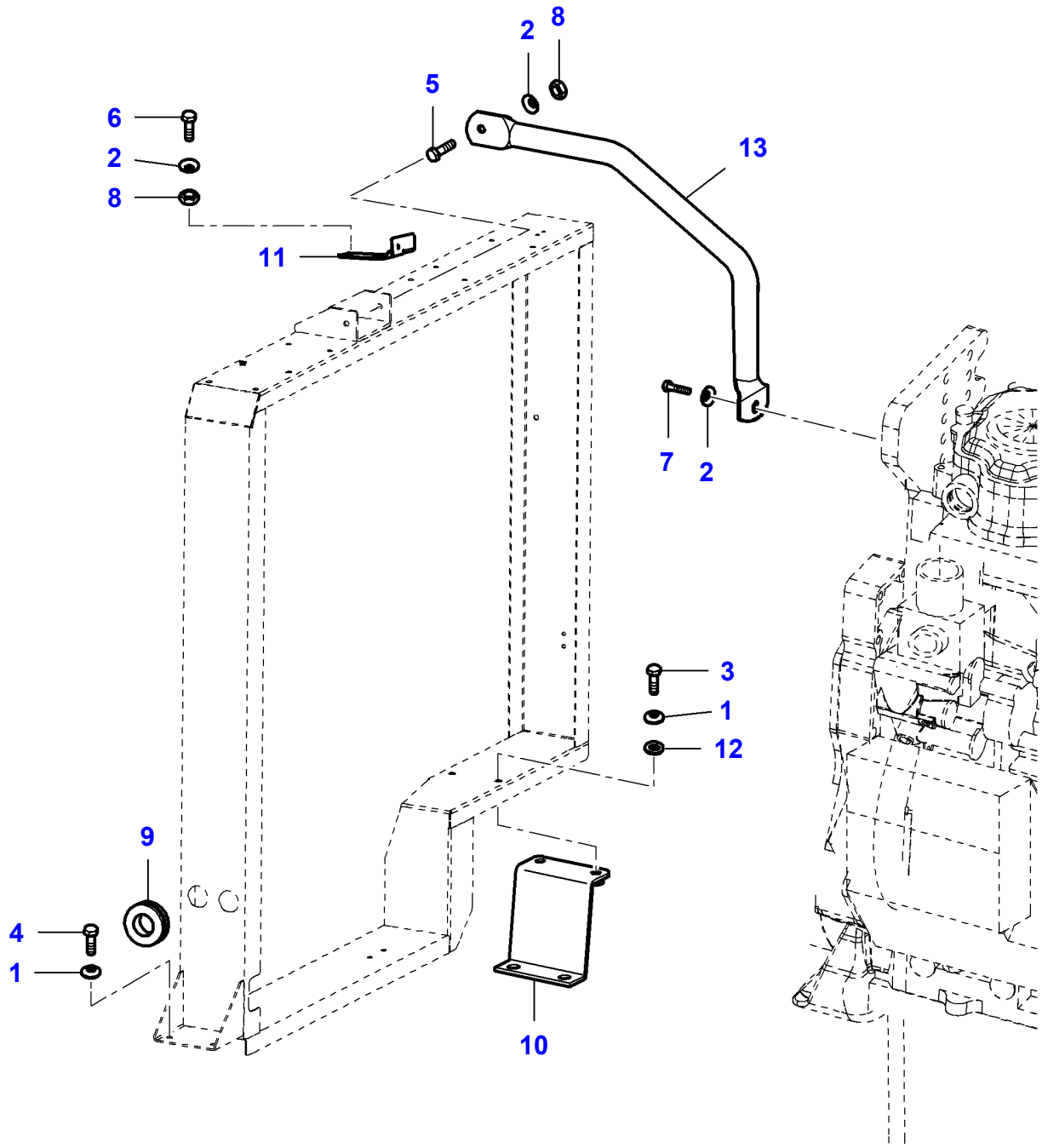

Item	Part Number	Qty	Description	Comments
1	LA140045	2	Washer	
2	LA322358	3	Lock Washer	
3	LA11106421	1	Cap Screw	
4	LA11106621	1	Cap Screw	
5	LA16043221	1	Cap Screw	
6	LA16043421	4	Cap Screw	
7	LA16043624	1	Cap Screw	
8	LA16100811	2	Nut	
9	LA320432450	1	Gasket	
10	LA322910850	1	Bracket	
11	LA322957650	1	Bracket	
12	LA355501120	1	Flat Washer	
13		1	Stop	See Page - Reference Number 020-0035/7

L-LC60-008-B

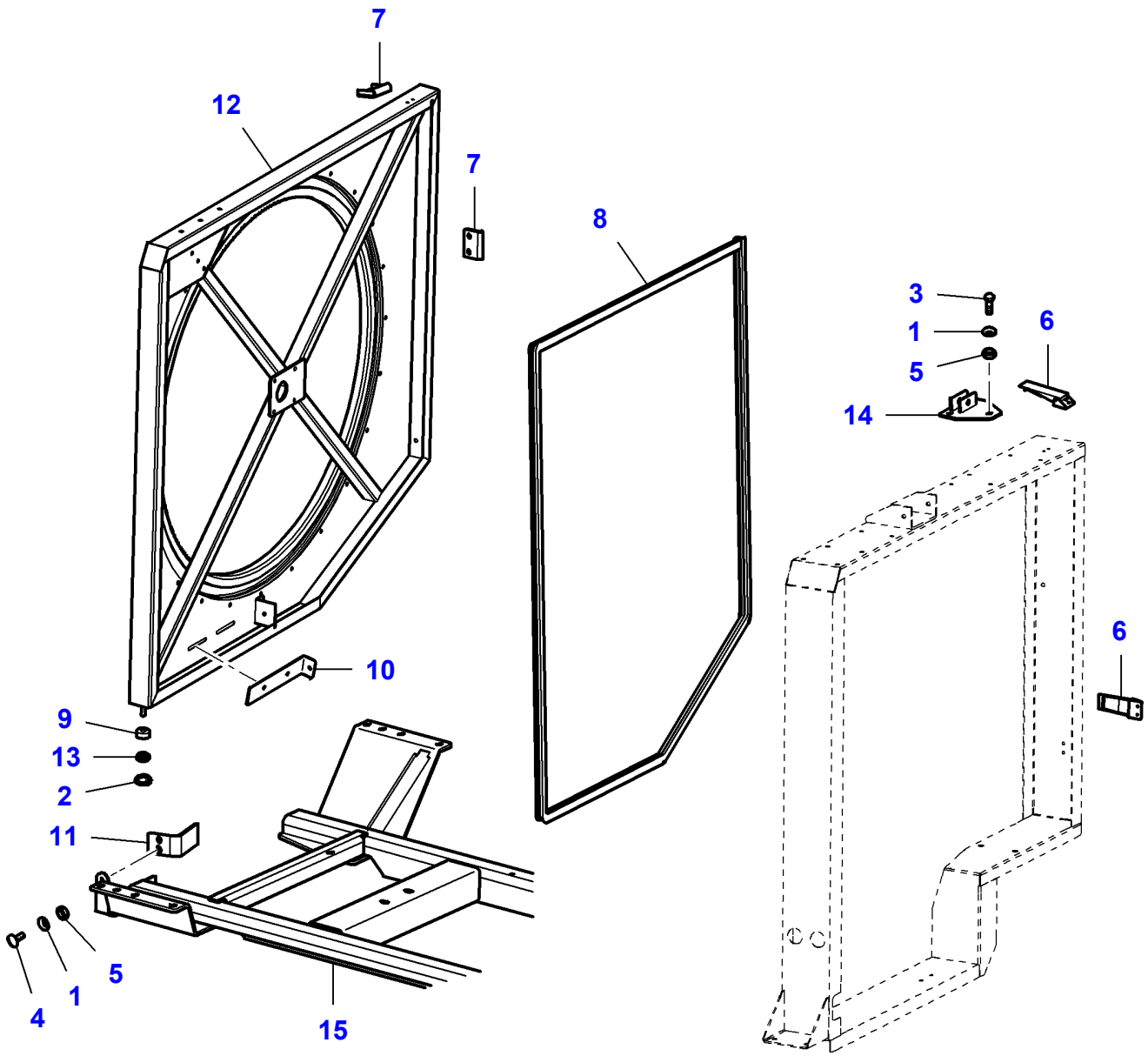

Item	Part Number	Qty	Description	Comments
1	LA322358	2	Lock Washer	
2	LA11087976	1	Circlip	
3	LA16043221	1	Cap Screw	
4	LA350342511	1	Carriage Bolt	
5	LA16100811	2	Nut	
6	LA300132764	2	Stop	
7	LA300132987	2	Plate	
8	LA322827250	1	Gasket	
9	LA322882550	1	Washer	
10	LA322882650	1	Plate	
11	LA322910550	1	Stirrup	
12	LA322938550	1	Wall	
13	LA355501125	1	Washer	
14		1	Support	See Page - Reference Number 020-0105/18
15		1	Support	See Page - Reference Number 020-0020/10

L-LC60-009-A

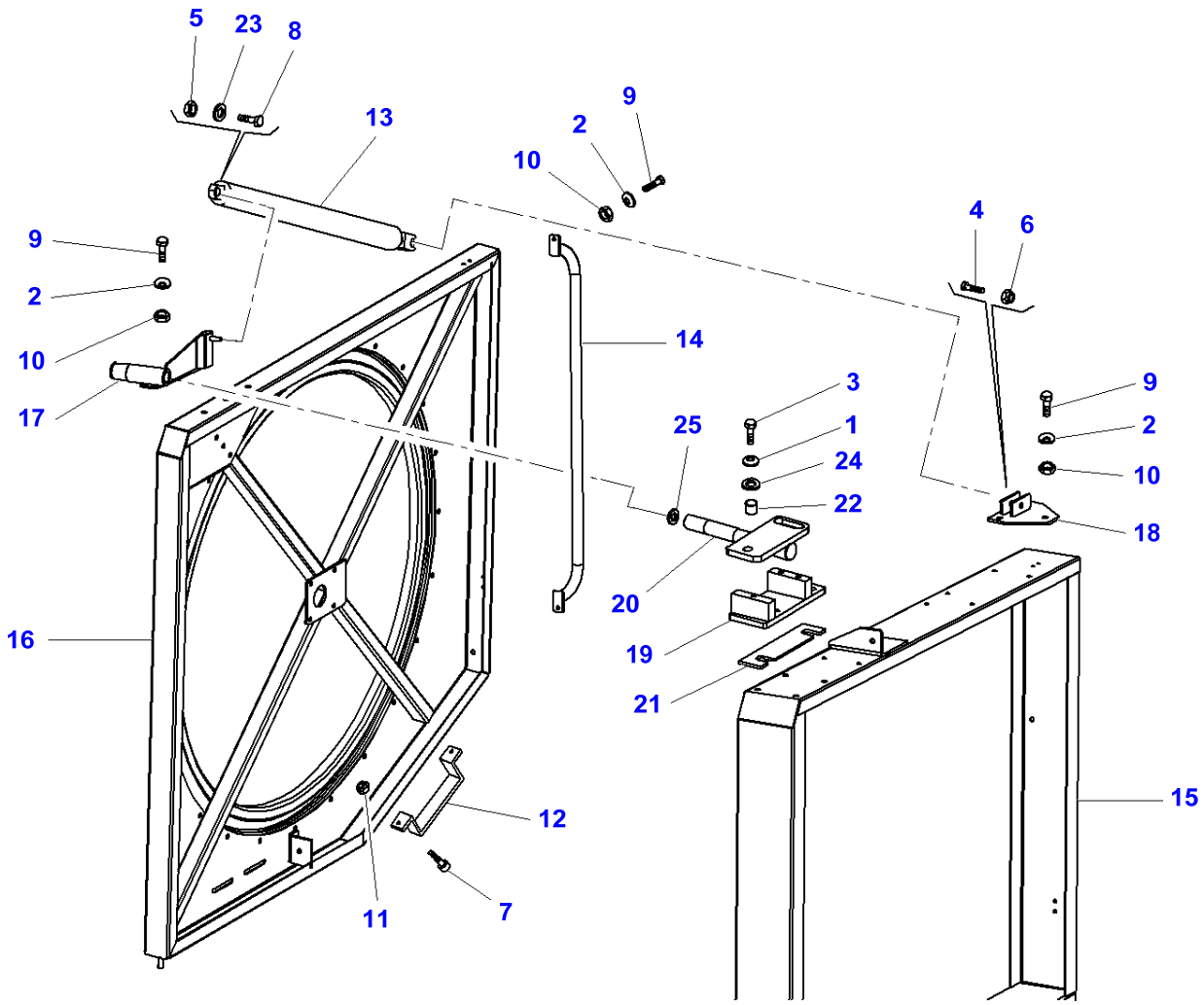

Item	Part Number	Qty	Description	Comments
1	LA140045	1	Washer	
2	LA322358	3	Lock Washer	
3	LA11106421	1	Cap Screw	
4	LA11107221	1	Cap Screw	
5	LA11701711	1	Nut	
6	LA12577211	1	Nut	
7	LA14306920	1	Screw	
8	LA15214821	1	Cap Screw	
9	LA16043221	4	Cap Screw	
10	LA16100811	3	Nut	
11	LA16104111	1	Locknut	
12	LA321836450	1	Grip	
13	LA322883050	1	Spring	
14	LA322883150	1	Grip	
15	LA323102100	1	Frame	Repairs and replaces LA322938450
16	LA322938550	1	Wall	
17	LA322938750	1	Hinge	
18	LA322957550	1	Support	
19	LA323006650	1	Plate	
20	LA323006750	1	Support	
21	LA323006850	1	Shim	
22	LA340415574	1	Bush	
23	LA355501120	1	Flat Washer	
24	LA355511040	1	Washer	
25	LA355536430	1	Washer	

L-LC60-010-B

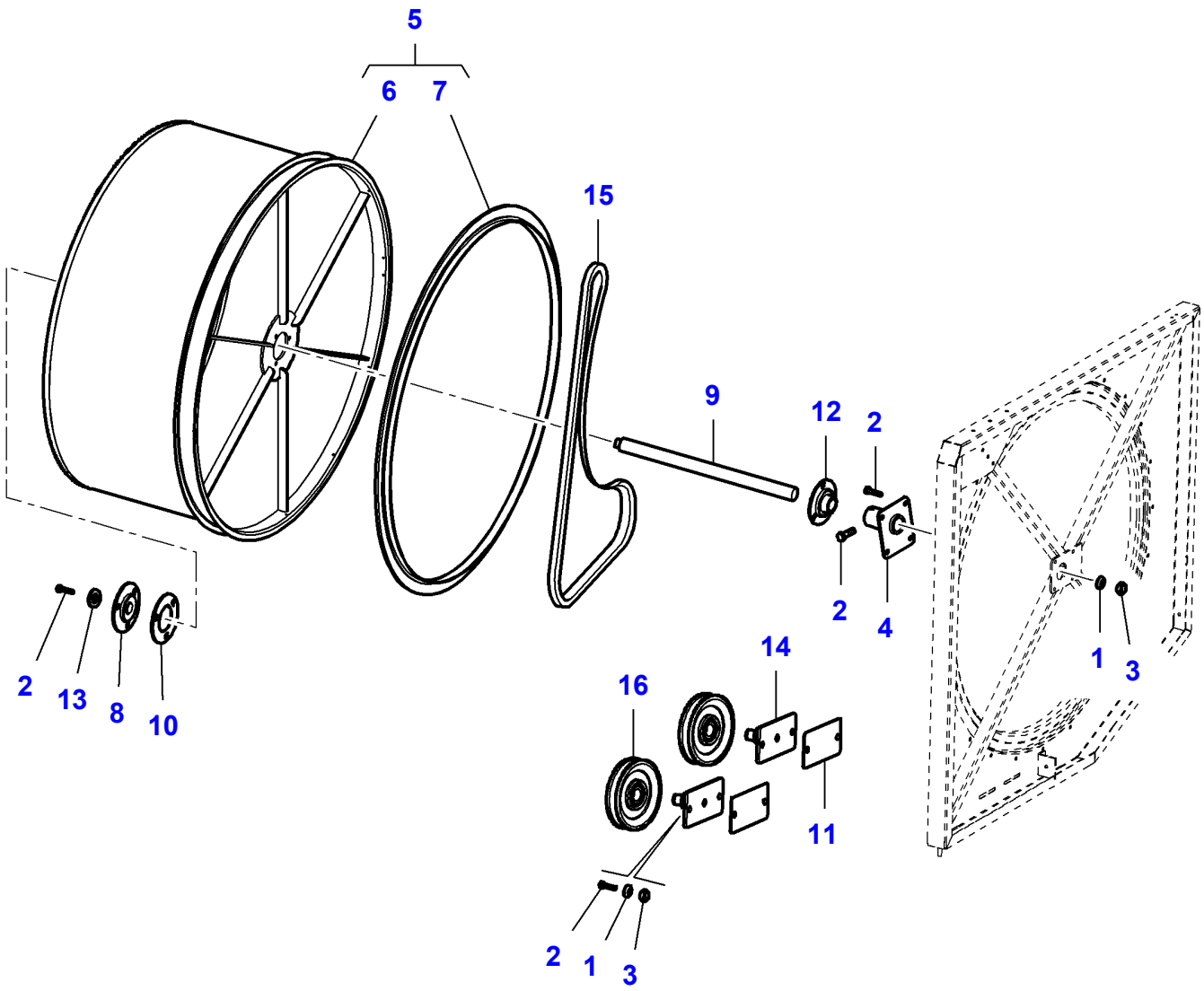

Item	Part Number	Qty	Description	Comments
1	LA322358	2	Lock Washer	
2	LA16043421	4	Cap Screw	
3	LA16100811	2	Nut	
4	LA322824250	1	Connection	
5	LA322957200	1	Filter	
6	LA322957150	1	Filter	(5)
7	LA322829250	1	Brush	(5)
8	LA322885350	2	Support	
9	LA322957350	1	Shaft	
10	LA323020350	1	Ring	
11	LA323026350	2	Shim	
12	LA340411009	1	Support	
13	LA355510830	1	Flat Washer	
14	LA322938950	1	Support	
15	**LA340433197**	1	Belt	
16		1	Pulley	See Page - Reference Number 020-0125/9

L-LC60-001-A

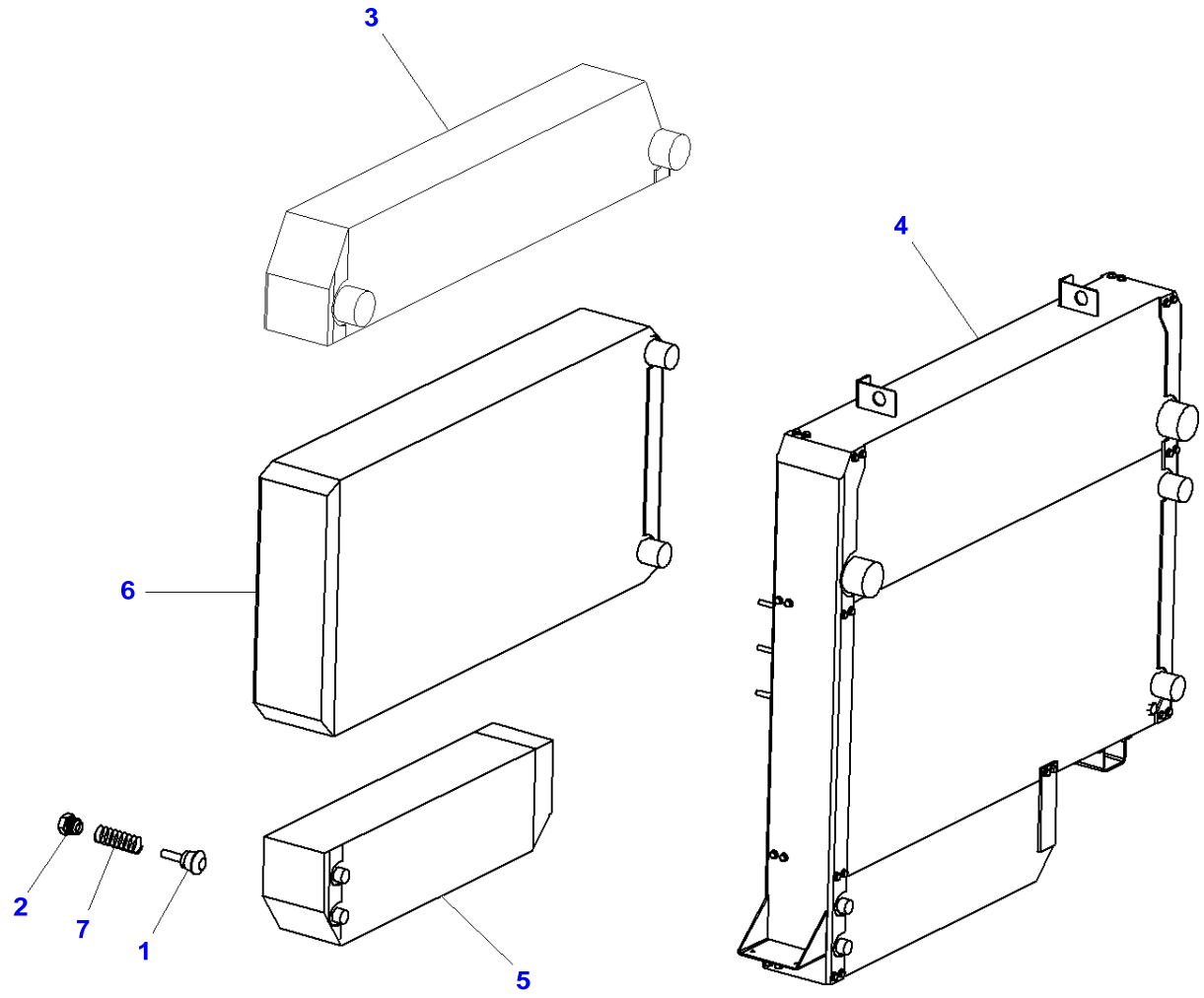

Item	Part Number	Qty	Description
1	LA321230650	1	Valve
2	LA321230750	1	Plug
3	LA322883650	1	Radiator
4	LA322942400	1	Radiator
5	LA322962450	1	Radiator
6	LA322962550	1	Radiator
7	LA350356127	1	Spring

L-LE18-001-B

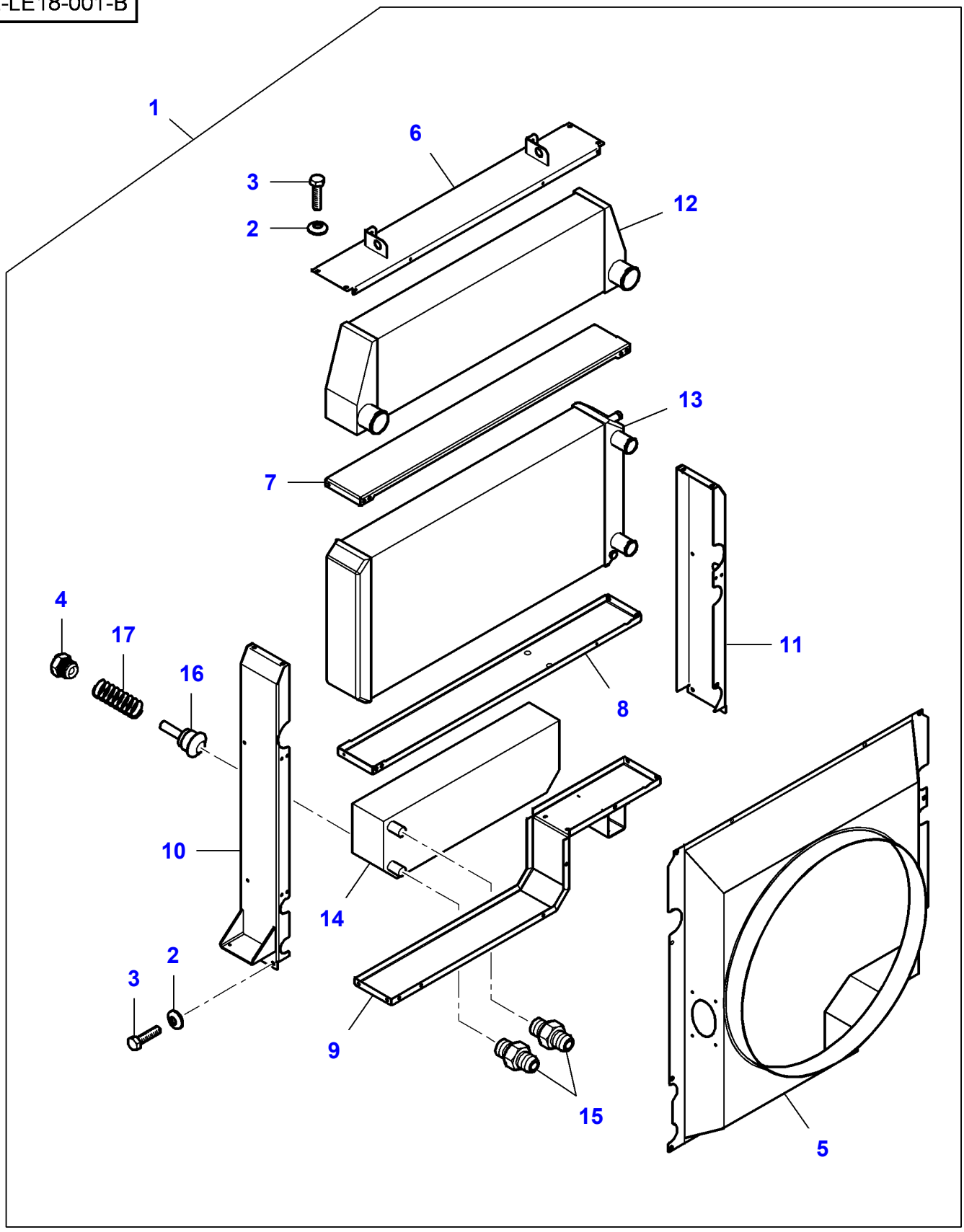

Item	Part Number	Qty	Description
1	LA323097900	1	Radiator
2	LA322358	4	Lock Washer
3	LA16043221	4	Cap Screw
4	LA321230750	1	Plug
5	LA323096250	1	Shroud
6	LA323096350	1	Cover
7	LA323096450	1	Lid
8	LA323096550	1	Plate
9	LA323096650	1	Frame
10	LA323096750	1	Side
11	LA323096850	1	Side
12	LA323098050	1	Radiator
13	LA323098150	1	Radiator
14	LA323098250	1	Radiator
15	LA323105400	2	Union
16	LA323105550	1	Valve
17	LA350356127	1	Spring

L-LC61-001-B

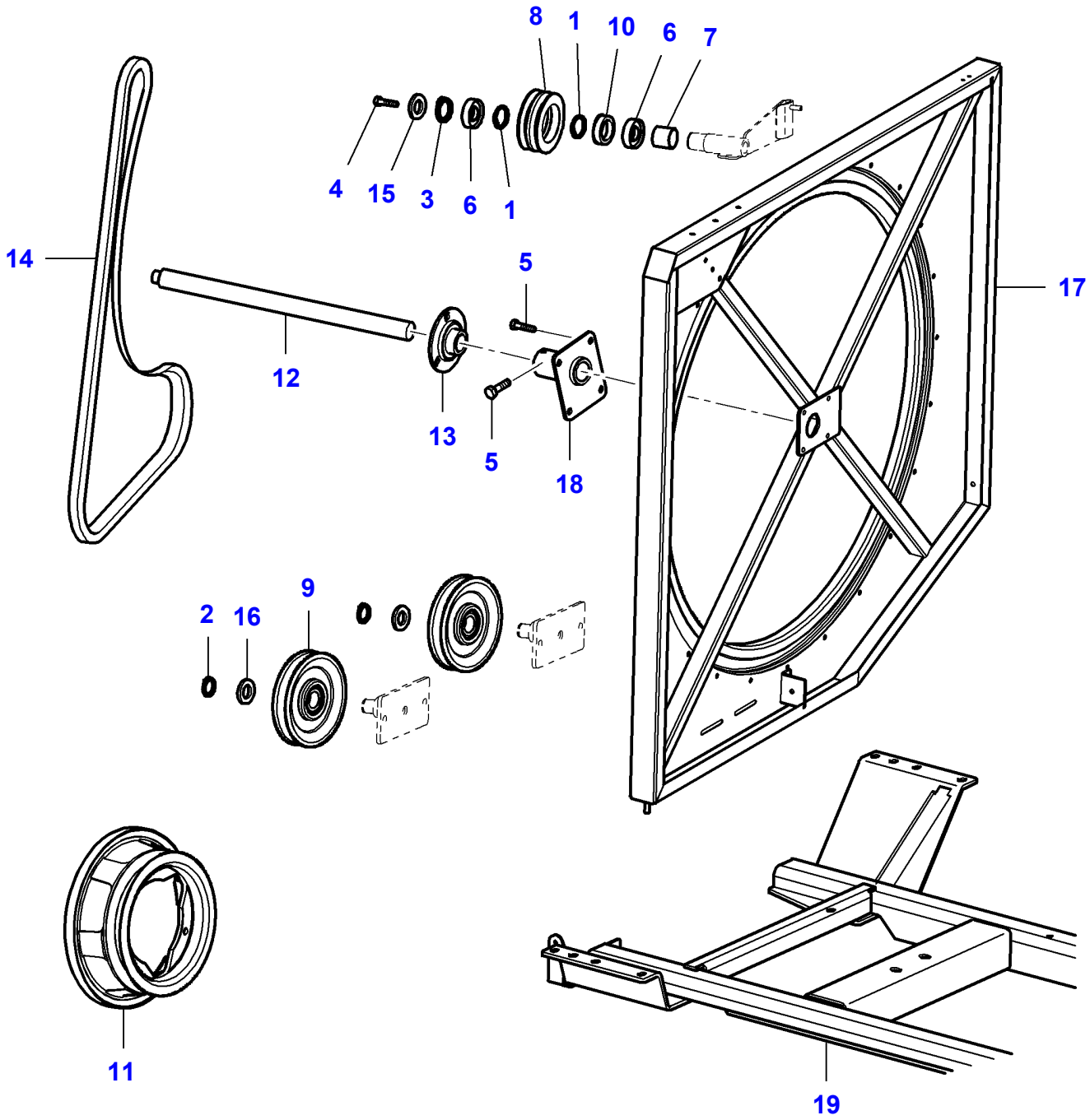

Item	Part Number	Qty	Description	Comments
1	LA11061376	2	Circlip	
2	LA11066576	2	Ring	
3	LA11068876	1	Circlip	
4	LA11106221	1	Cap Screw	
5	LA16043421	2	Cap Screw	
6	LA24905120	2	Bear. 6008 2rs	
7	LA322100750	1	Spacer	
8	LA322826850	1	Pulley	
9	LA322882950	2	Pulley	
10	LA322950750	1	Bush	
11	LA322956250	1	Pulley	
12	LA322957350	1	Shaft	
13	LA340411009	1	Support	
14	**LA340433197**	1	Belt	
15	LA355521050	1	Flat Washer	
16	LA355533210	2	Washer	
17		1	Wall	See Page - Reference Number 020-0100/12
18		1	Connection	See Page - Reference Number 020-0110/4
19		1	Frame	See Page - Reference Number 020-0020/10

L-LC62-001-B

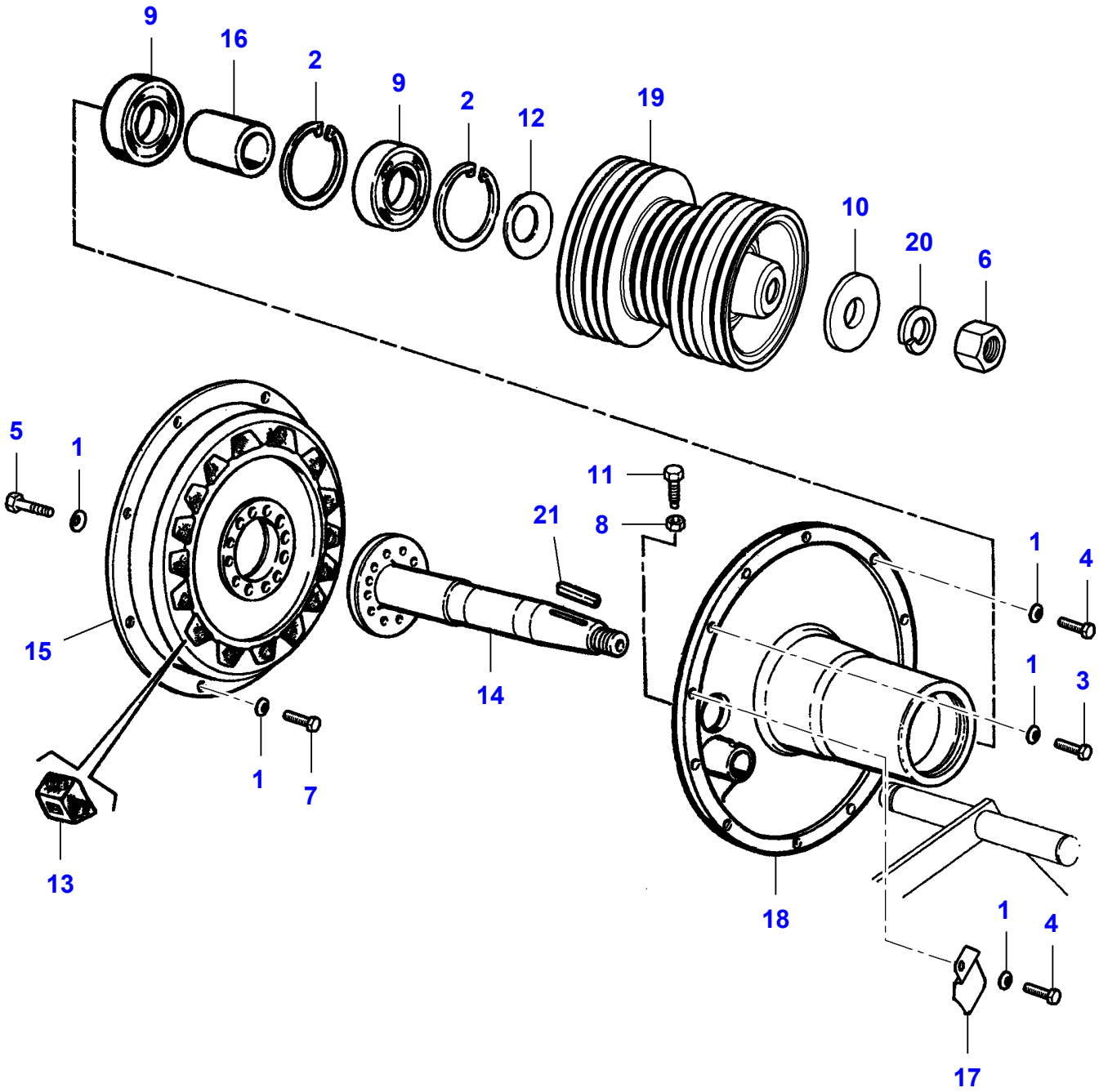

Item	Part Number	Qty	Description	Comments
1	LA140045	5	Washer	
2	LA11062976	2	Circlip	
3	LA11107021	1	Cap Screw	
4	LA11306924	2	Cap Screw	
5	LA11343831	1	Cap Screw	
6	LA15500521	1	Nut	
7	LA15970724	1	Cap Screw	
8	LA16101514	1	Nut	
9	**LA28996580**	2	Bearing Assy	
10	LA300018047	1	Flat Washer	
11	LA300110585	1	Cap Screw	
12	LA300112170	1	Washer	
13	LA300137932	1	Block	Replace and repair. Old not interchangeable with new LA300135980
14	LA300137930	1	Shaft	Up to Serial or Engine Number
	LA323173550	1	Shaft	From Serial or Engine Number 551710035
15	LA313597700	1	Coupling	
16	LA320583950	1	Spacer	
17	LA322020550	1	Plate	Up to Serial or Engine Number
	LA323035150	1	Plate	From Serial or Engine Number 551710035
18	LA322099850	1	Support	
19	LA322810450	1	Pulley	
20	LA350354030	1	Lock Washer	
21	LA350382975	1	Key	

L-LC62-002-B

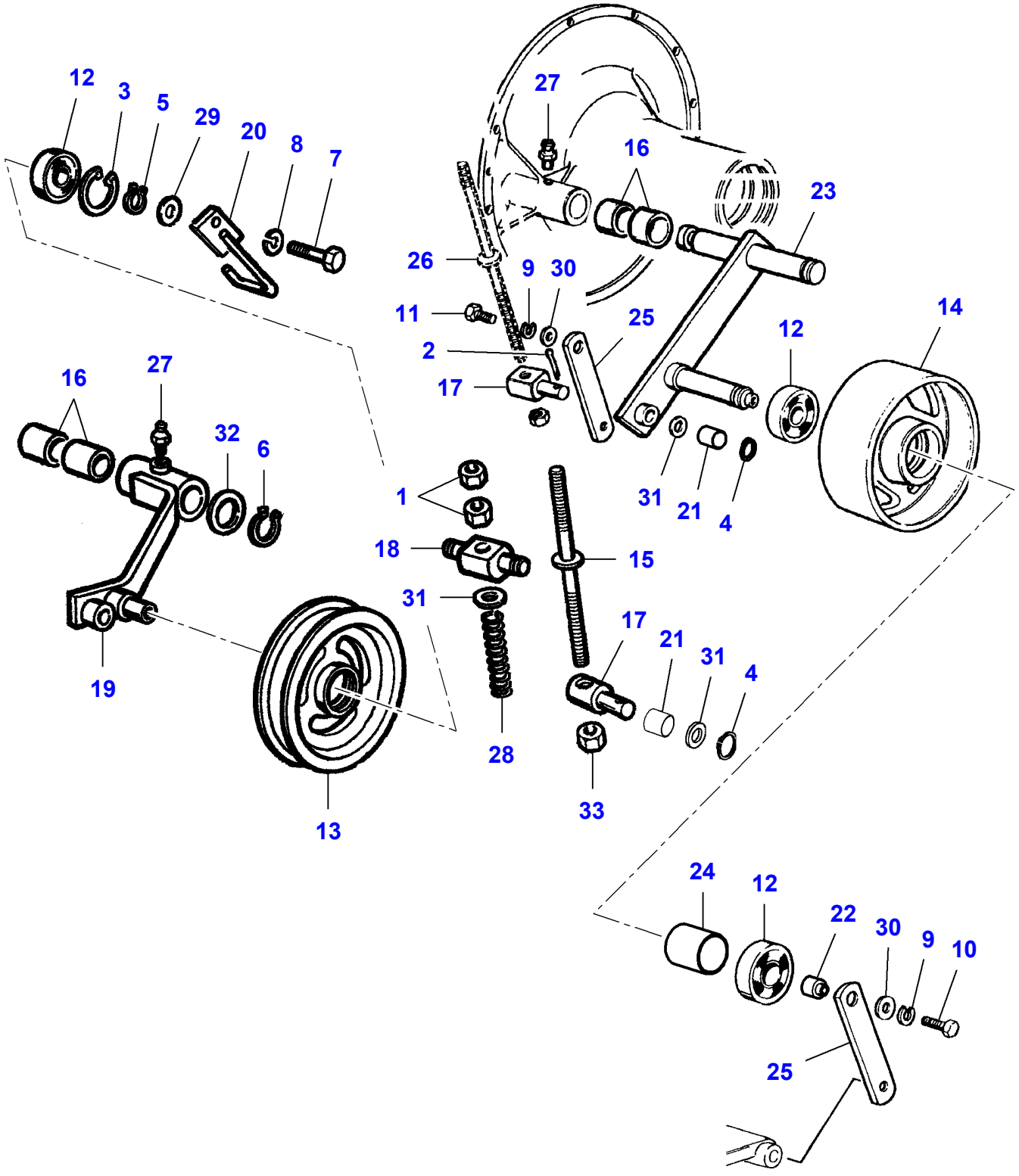
12
3
5
29
20
8
7
27
16
23
26
9
30
11
25
2
17
14
12
31
21
4
16
27
32
6
1
18
15
31
17
21
31
4
19
28
33
13
24
12
22
30
9
10
25

Item	Part Number	Qty	Description
1	LA10717421	2	Nut
2	LA10733701	1	Split Pin
3	LA11060576	1	Circlip
4	LA11066276	2	Circlip
5	LA11067376	1	Circlip
6	LA11068376	1	Circlip
7	LA11106424	1	Cap Screw
8	LA12034671	1	Lock Washer
9	LA12034771	1	Lock Washer
10	LA15232721	1	Cap Screw
11	LA15540321	1	Cap Screw
12	**LA28042320**	2	Bearing Assy
13	LA300015561	1	Pulley
14	LA300112255	1	Pulley,Tensioner
15	LA322031750	1	Tie Rod
16	LA322100250	4	Bush
17	LA322811450	1	Rod
18	LA322811550	1	Rod
19	LA322812050	1	Support
20	LA322812150	1	Support
21	LA322878750	1	Sleeve
22	LA322950250	1	Bush
23	LA322950350	1	Support
24	LA322956850	1	Bush
25	LA322956950	2	Support
26	LA323006950	1	Tie Rod
27	LA350357803	1	Grease Fitting
28	LA353561159	1	Spring
29	LA355511050	1	Flat Washer
30	LA355530830	2	Flat Washer
31	LA355531220	1	Washer
32	LA355541410	1	Washer
33	LA12163211	1	Nut

L-LC63-001-B

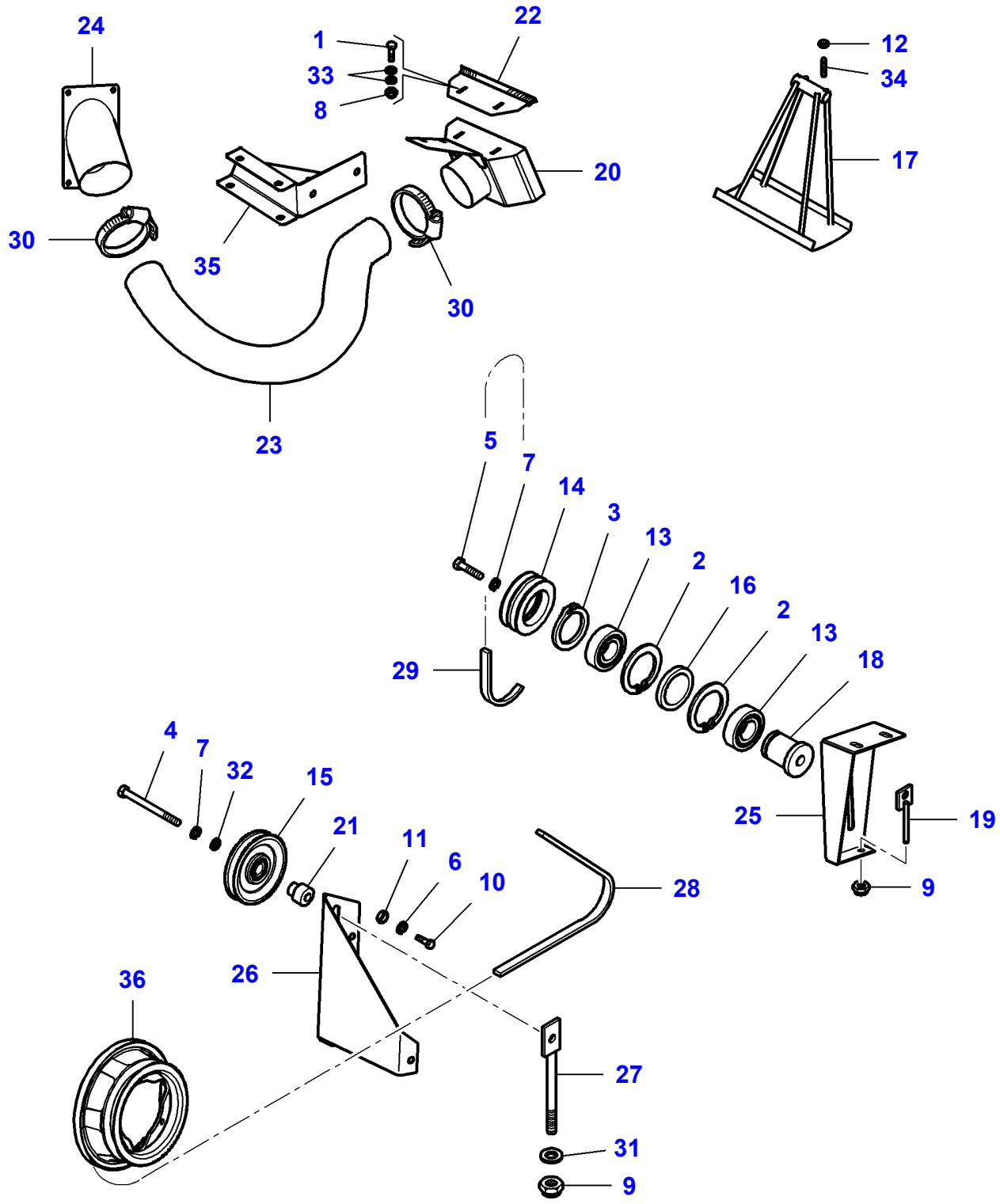
24
1
33
8
22
12
34
17
20
30
35
30
23
5
7
14
3
13
2
16
2
13
18
29
4
7
32
15
21
11
6
10
28
25
19
9
36
26
27
31
9

Item	Part Number	Qty	Description	Comments
1	LA10902421	1	Cap Screw	
2	LA11061376	2	Circlip	
3	LA11068876	2	Circlip	
4	LA11107221	1	Cap Screw	
5	LA11107621	1	Cap Screw	
6	LA12034571	1	Lock Washer	
7	LA12034671	2	Lock Washer	
8	LA12574211	1	Locknut	
9	LA12577211	2	Nut	
10	LA16043221	1	Cap Screw	
11	LA16100811	1	Nut	
12	LA16102311	1	Nut	
13	LA24905120	1	Bear. 6008 2rs	
14	LA322826850	1	Pulley	
15	LA322882950	1	Pulley	
16	LA322950750	1	Bush	
17	LA322957450	1	Shield	
18	LA322957950	1	Pin	
19	LA322958050	1	Tie Rod	
20	LA322969350	1	Conveyor	
21	LA322997350	1	Bush	
22	LA322998550	1	Brush	
23	LA322998850	1	Tube	
24	LA323030250	1	Flange	
25	LA323035350	1	Bracket	
26	LA323038150	1	Bracket	
27	LA323038350	1	Tie Rod	
28	**LA340433181**	1	Belt	
29	**LA340433198**	1	Belt	
30	LA353915107	2	Clip	
31	LA355501130	1	Flat Washer	
32	LA355501140	1	Washer	
33	LA355510615	2	Flat Washer	
34	LA366340814	1	Grub Screw	
35		1	Profile	See Page - Reference Number 080-0125/7
36		1	Pulley	See Page - Reference Number 020-0125/11

L-LC31-002-B

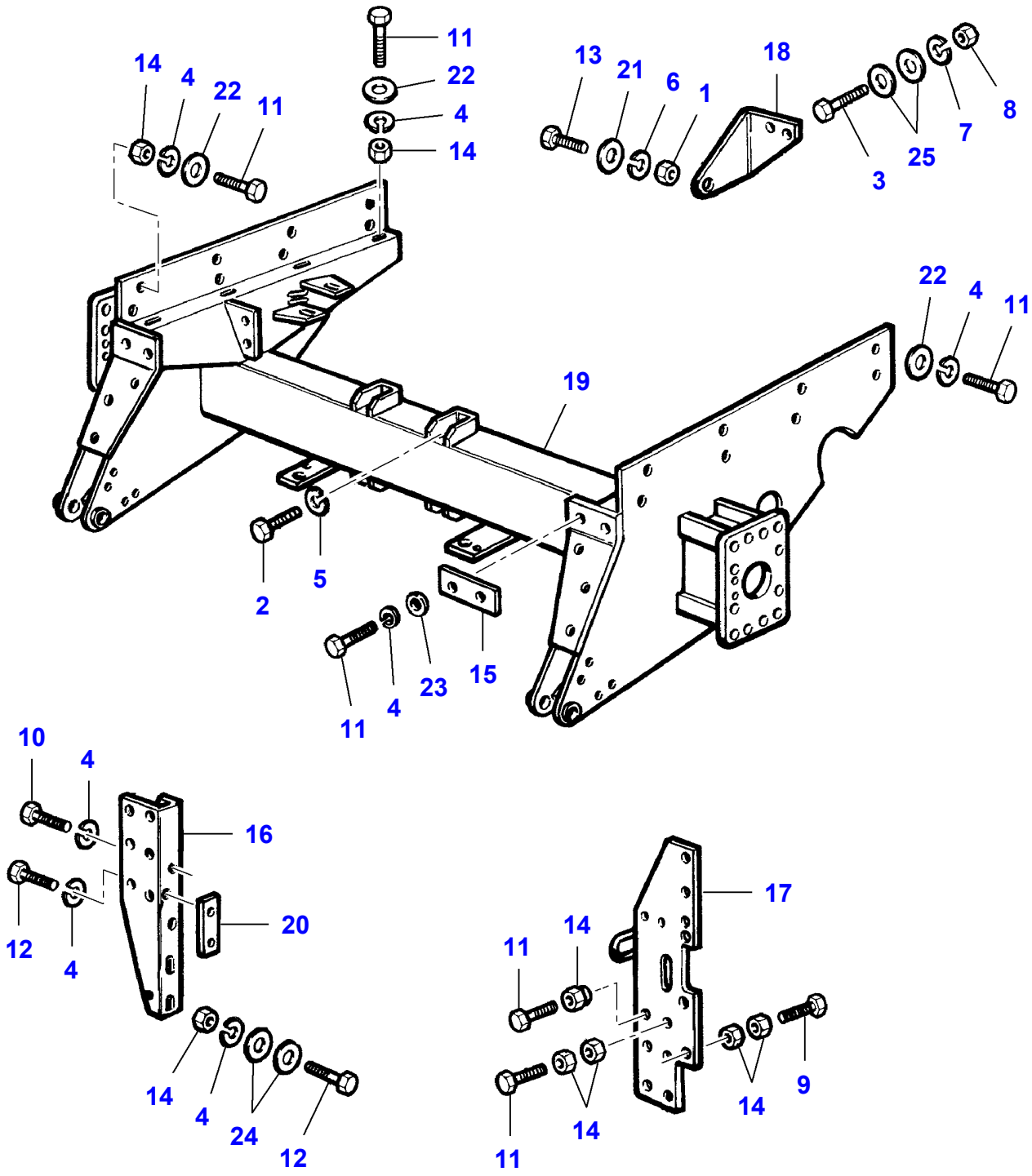
11
22
4
14
14
4
22
11
13
21
6
1
18
3
25
7
8
22
4
11
19
2
5
11
4
23
15
10
4
16
12
4
20
14
4
24
12
17
11
14
14
9
11
14
11

Item	Part Number	Qty	Description
1	LA10721121	1	Nut
2	LA11119037	1	Cap Screw
3	LA11255924	1	Cap Screw
4	LA12034771	7	Lock Washer
5	LA12034871	1	Lock Washer
6	LA12035071	1	Lock Washer
7	LA12035571	1	Lock Washer
8	LA12164021	1	Nut
9	LA15232721	1	Cap Screw
10	LA15540321	1	Cap Screw
11	LA15540521	12	Cap Screw
12	LA15540624	2	Cap Screw
13	LA15988421	1	Cap Screw
14	LA16101521	6	Nut
15	LA300132095	1	Shim
16	LA321862250	1	Bracket
17	LA321862350	1	Reinforcement
18	LA321882850	1	Plate
19	LA321897150	1	Front Axle
20	LA322519850	1	Shim
21	LA355502140	1	Flat Washer
22	LA355511230	12	Flat Washer
23	LA355511250	1	Washer
24	LA355530830	1	Flat Washer
25	LA355531830	1	Flat Washer

L-LC31-003-B

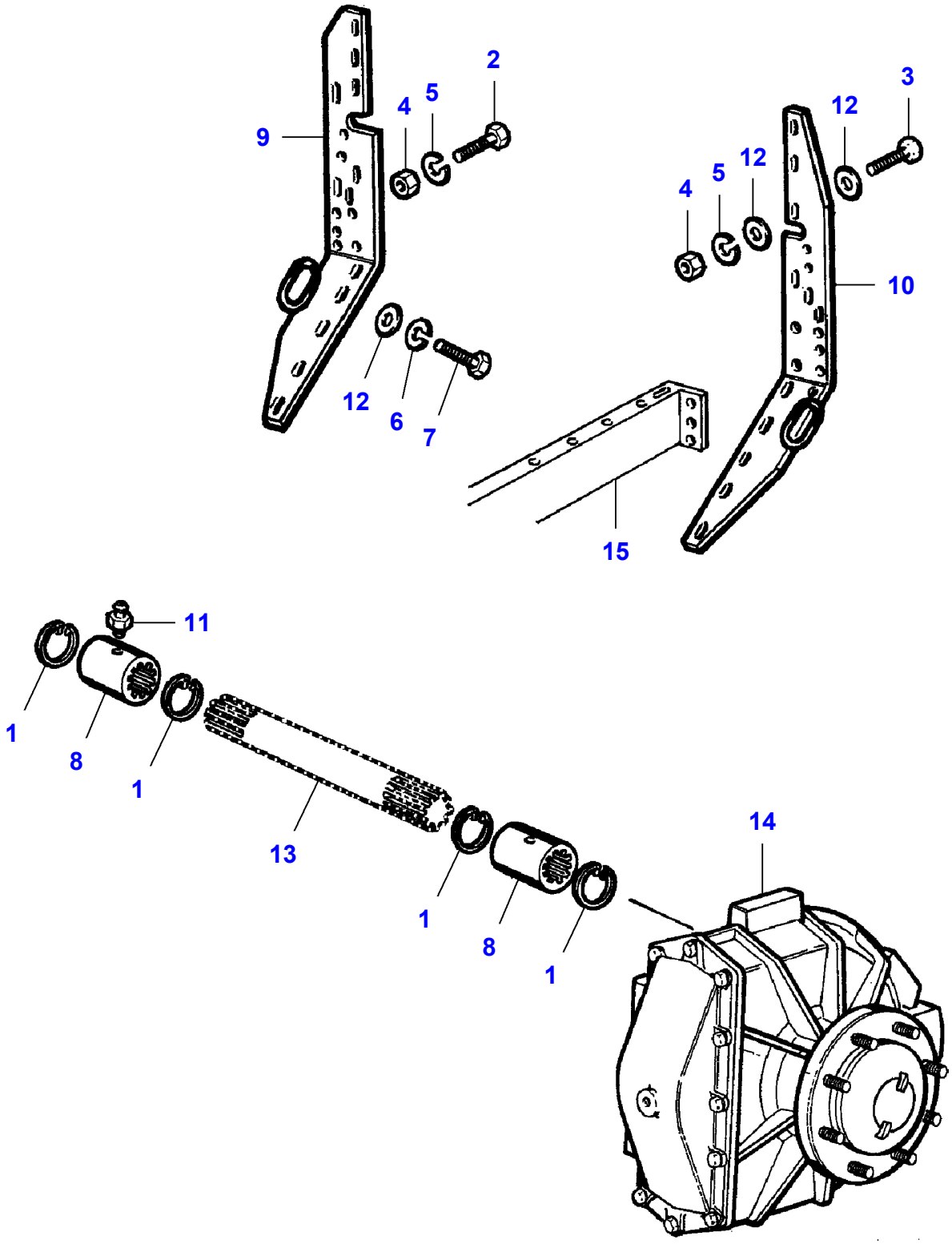

Item	Part Number	Qty	Description	Comments
1	LA11069376	4	Circlip	
2	LA11106424	1	Cap Screw	
3	LA11106624	1	Cap Screw	
4	LA11701721	2	Nut	
5	LA12034671	2	Lock Washer	
6	LA12034771	1	Lock Washer	
7	LA15540424	1	Cap Screw	
8	LA322061750	2	Bush	
9	LA322198350	1	Reinforcement	
10	LA322198450	1	Reinforcement	
11	LA350357803	2	Grease Fitting	
12	LA355530830	3	Flat Washer	
13	LA321892850	1	Shaft	Length 378 mm
		X	Shaft	[A]
				See Page - Reference Number 140-0065/5
14		1	Final Drive	Left Hand
				See Page - Reference Number 030-0060/1
		1	Final Drive	Right Hand
				See Page - Reference Number 030-0060/1
15		1	Frame	See Page - Reference Number 050-0005/17

FOOTNOTE [A] WITH SPACER

L-LC32-001-B

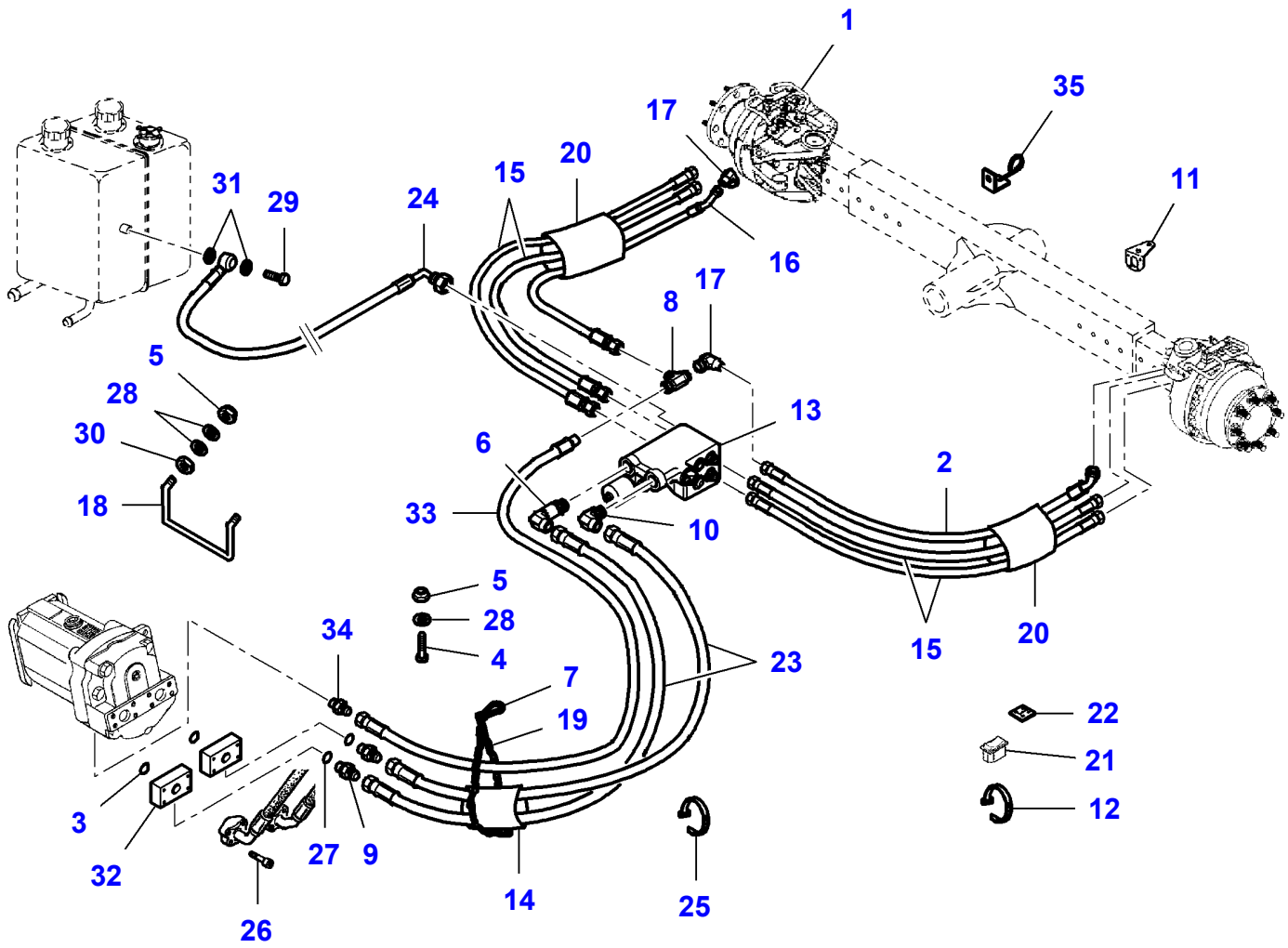
1
35
17
20
15
31
29
24
16
11
17
8
5
28
30
13
6
2
18
33
10
5
28
4
34
23
15
20
7
19
22
21
12
3
32
27
9
14
25
26

Item	Part Number	Qty	Description	Comments
1	LA9512176	2	Final Drive	See Page - Reference Number 030-0025/1
2	LA9512241	1	WorKshop Manual.	
3	LA14463780	2	Air Filter	
4	LA16043421	1	Cap Screw	
5	LA16104111	2	Locknut	
6	LA89512237	1	Elbow Union	
7	LA320641050	1	Hook	
8	LA321473450	1	T-Piece	
9	LA321961600	2	Union	
10	LA321961800	1	Elbow Union	
11	LA322684450	1	Support	
12	LA322709000	1	Cable Tie	
13	LA322713700	1	Valve	
14	LA322717450	1	Protective Strip	
15	LA322719050	4	Hydraulic Hose	
16	LA322719150	1	Hydraulic Hose	
17	LA322736050	2	Elbow Union	
18	LA322843650	1	Support	
19	LA322848350	1	Chain	
20	LA322876050	2	Protective Strip	
21	**LA322946650**	1	Switch	
22	LA322947050	1	Button	
23	LA323008150	2	Hydraulic Hose	
24	LA323008250	1	Hydraulic Hose	
25	LA340481808	7	Cable Tie	
26	LA350345120	4	Hex Socket Screw	
27	LA353587177	2	O Ring	
28	LA355510820	3	Flat Washer	
29	LA400853151	1	Banjo Bolt	
	LA400853501	1	Banjo Bolt	
30	LA16100811	1	Nut	
31	LA410000794	2	Washer	
32	LA89811684	2	Distance Piece	
33	LA323114450	1	Hydraulic Hose	
34	LA323114350	1	Union	
35	LA323015350	1	Support	

L-LC32-002-B

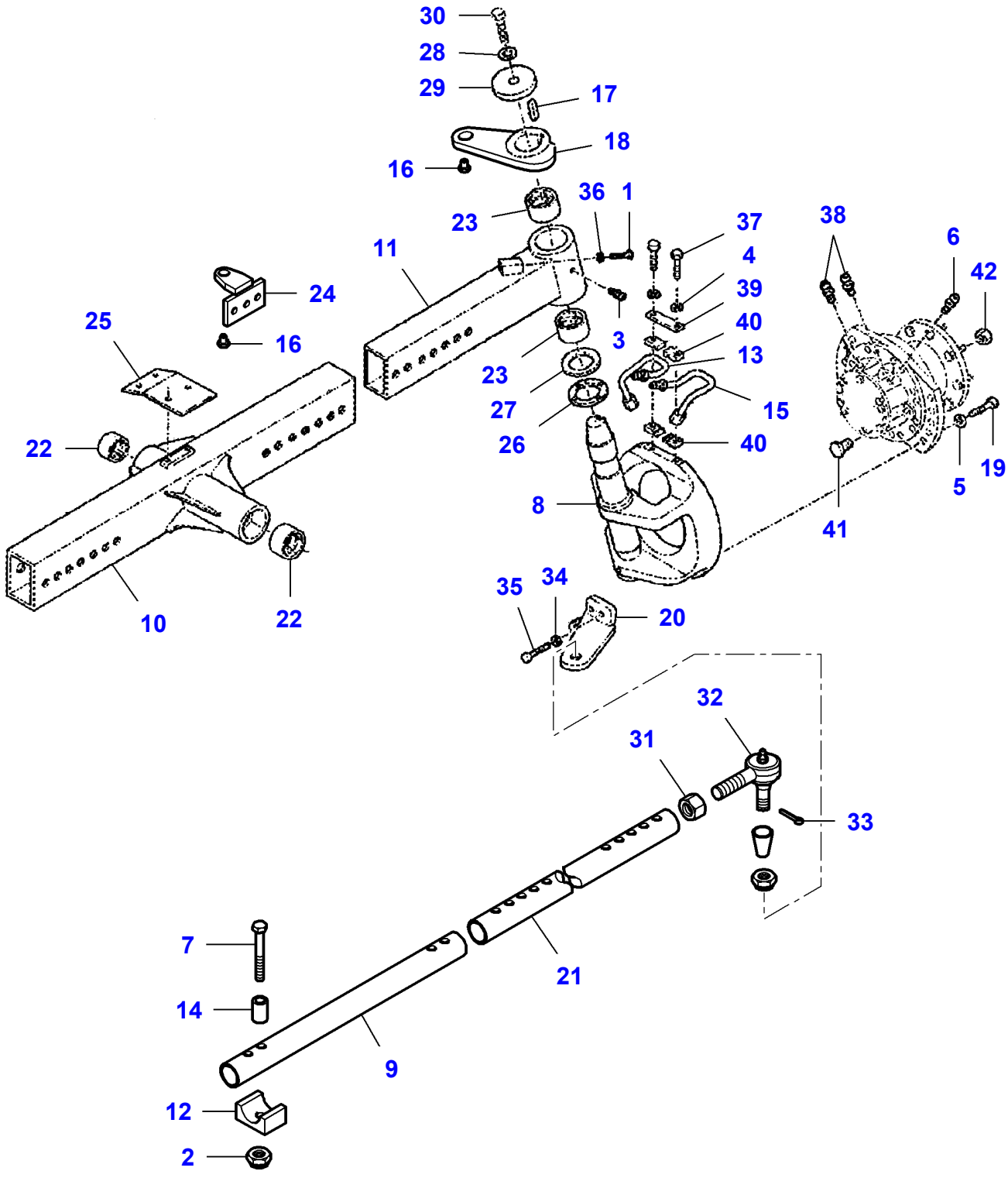
30
28
29
17
18
16
36
1
23
37
4
39
40
13
15
40
3
23
27
26
11
24
16
25
22
10
22
8
38
6
42
5
19
41
35
34
20
32
31
33
7
14
9
12
2
21

Item	Part Number	Qty	Description	Comments
1	LA80088706	1	Cap Screw	
2	LA80088871	1	Nut	
3	LA80321204	1	Grease Fitting	
4	LA80322358	2	Lock Washer	
5	LA80394631	1	Washer	
6	LA84018587	1	Adaptor	
7	LA89818286	1	Cap Screw	
8	LA322715300	1	Spindle	
9	LA322715450	1	Rod	
10	LA322715550	1	Axle	
11	LA322715600	1	End	
	LA322715700	1	End	
12	LA80627347	1	Support	
13	LA322715850	1	Tube	
	LA322715950	1	Tube	
14	LA89512175	1	Spacer	
15	LA322716050	1	Tube	
	LA322716150	1	Tube	
16	LA84026784	2	Stub	
17	LA322716250	1	Key	
18	LA322716350	1	Arm	Left Hand
	LA322716450	1	Arm	Right Hand
19	LA80088685	1	Hex Socket Screw	
20	LA322716550	1	Support	Left Hand
	LA322716650	1	Support	Right Hand
21	LA89512164	1	Rod	
22	LA322716750	2	Bush	
23	LA322716850	2	Bush	
24	LA322716950	1	Support	
25	LA322718150	1	Support	
26	LA322718250	1	Washer	
27	LA322718350	1	Washer	
28	LA322718450	1	Washer	
29	LA322718550	1	Washer	
30	LA322847750	1	Screw	
31	LA80087319	1	Nut	
32	LA80677952	1	Rod Link	
33	LA80300401	1	Pin	
34	LA80140248	1	Washer	
35	LA80280355	1	Cap Screw	
36	LA80084971	1	Washer	
37	LA89636711	2	Cap Screw	
38	LA80176081	2	Grease Fitting	
39	LA89512166	1	Plate	
40	LA89512165	4	Support	
41	LA84018588	1	Plug	
42	LA89512180	1	Nut	

L-LC32-003-B

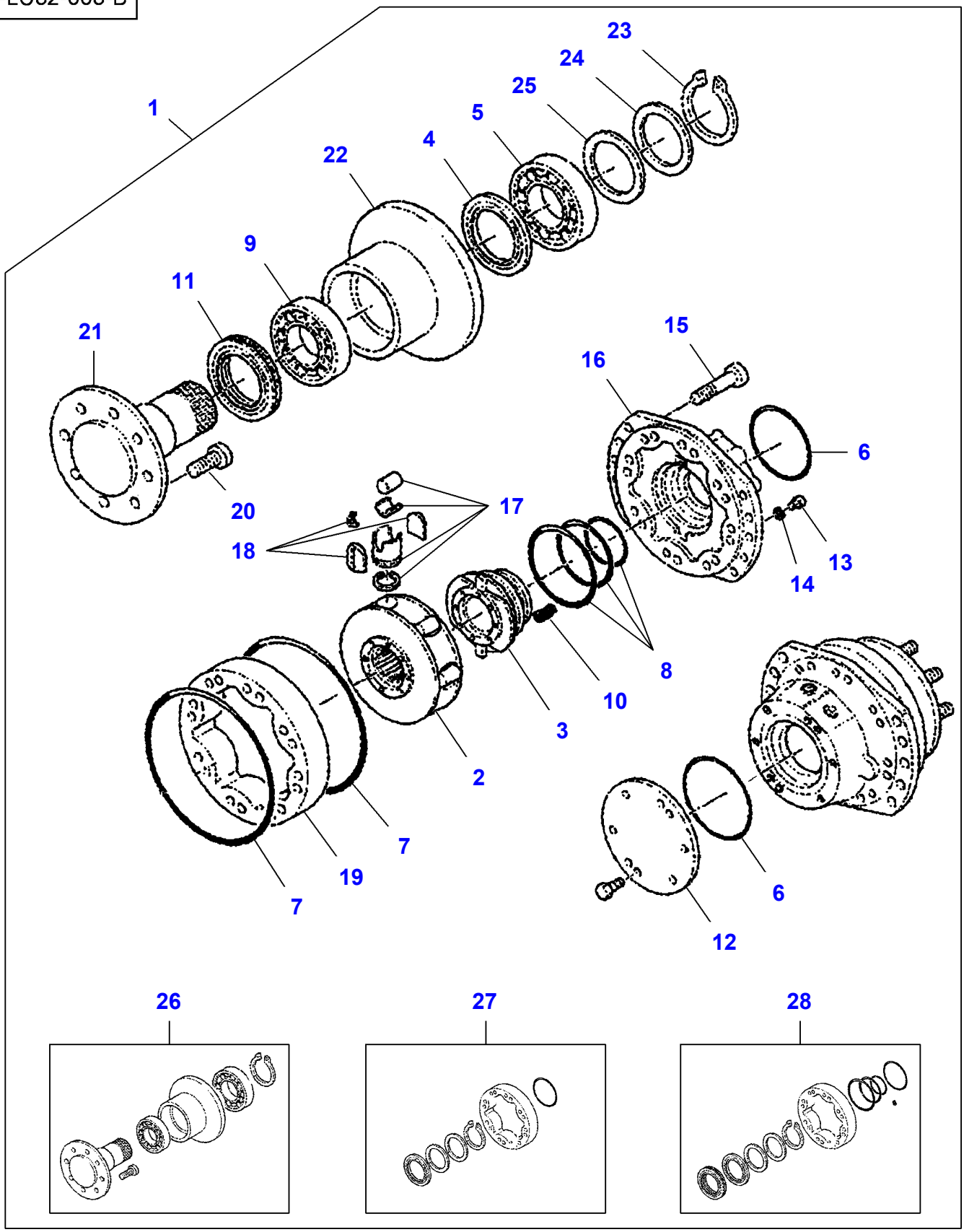

Item	Part Number	Qty	Description	Comments
1	LA9512176	1	Final Drive	
2	LA84018630	1	Housing	(1)
3	LA89512193	1	Housing	(1)
4	LA89512187	1	Gasket	(1)
5	LA89512188	1	Ball Bearing	(1)
6	LA89512197	2	O Ring	(1)
7	LA89512199	2	O Ring	(1)
8	LA89512218	1	Kit, Joint	(1)
9	LA89512185	1	Ball Bearing	(1)
10	LA89512195	1	Spring	(1)
11	LA322718650	1	Gasket	(1)
12	LA323100650	1	Cover	(1)
13	LA84018634	1	Screw	(1)
14	LA84018633	1	Washer	(1)
15	LA84018635	1	Hex Socket Screw	(1)
16	LA84018632	1	Housing	(1)
17	LA89512215	1	Kit	(1)
18	LA84018631	1	Kit	(1)
19	LA89512192	1	Housing	(1)
20	LA89512182	1	Hex Socket Screw	(1)
21	LA89512181	1	Shaft	(1)
22	LA89512186	1	Support	(1)
23	LA89512190	1	Circlip	(1)
24	LA89512189	1	Washer	(1)
25	LA89512217	1	Washer	(1)
26	LA84018659	1	Kit, Bracket	[A]
27	LA89512219	1	Kit, Seal	[B]
28	LA89512220	1	Kit, Seal	[C]

FOOTNOTE [A] INCLUDE ITEMS 5-9-20-21-22-23
FOOTNOTE [B] INCLUDE ITEMS 4-6-19-23-24-25
FOOTNOTE [C] INCLUDE ITEMS 4-6-8-11-14-19-23-24-25

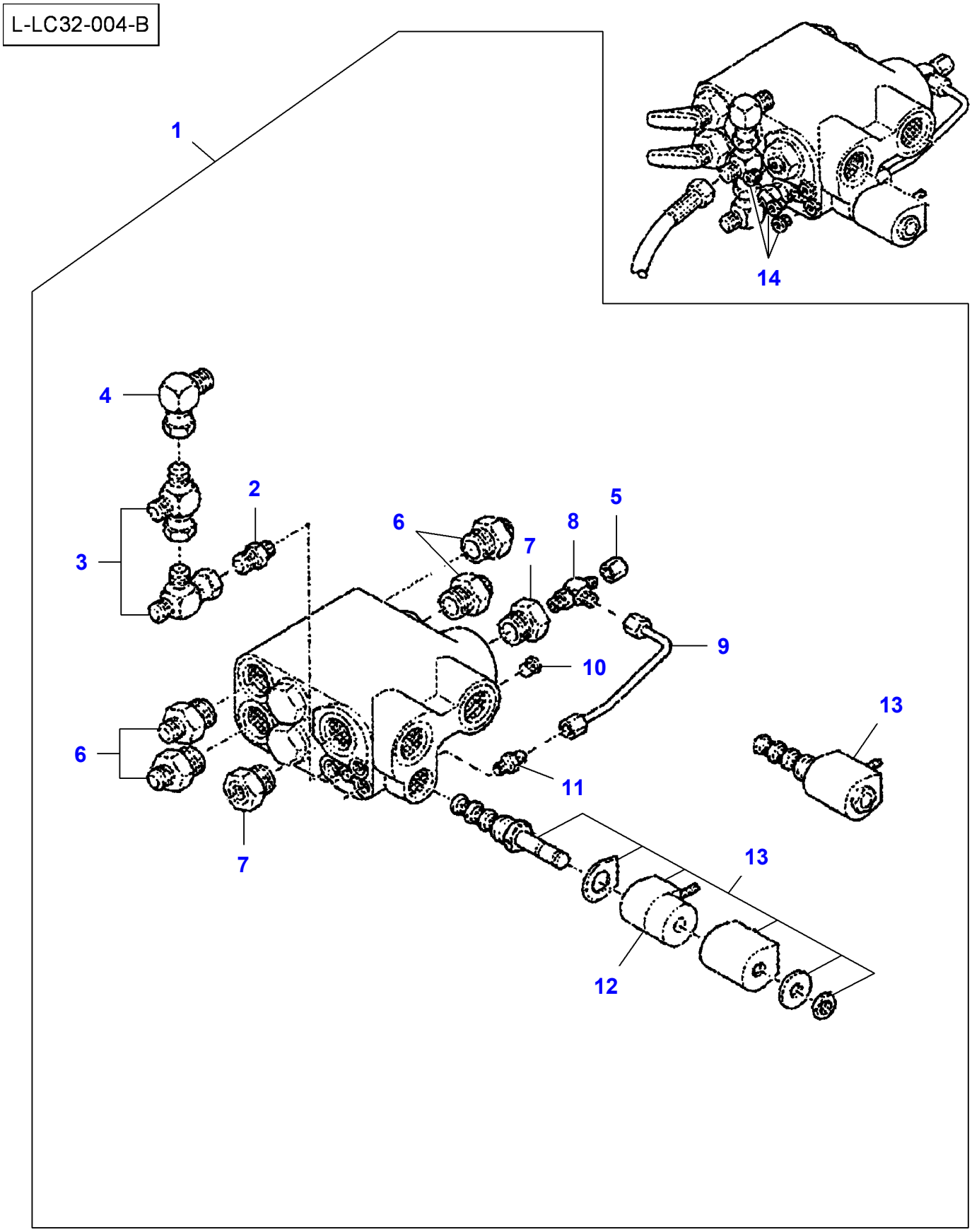
L-LC32-004-B
1
14
4
2
3
6
7
8
5
9
10
13
6
11
7
13
12

Item	Part Number	Qty	Description	Comments
1	LA322713700	1	Valve	
2	LA89512223	1	Union	(1)
3	LA321473450	2	T-Piece	(1)
4	LA322736050	1	Elbow Union	(1)
5	LA86511869	1	Plug	(1)
6	LA80176081	4	Grease Fitting	(1)
7	LA89512150	2	Union Nut	(1)
8	LA89512226	1	T-Piece	(1)
9	LA89512171	1	Tube	(1)
10	LA89512255	1	Plug	(1)
11	LA80265235	1	Union	(1)
12	LA89512196	1	Rod	(1)
13	**LA89512173**	1	Electrovalve	(1)
14	LA89512255	3	Plug	

L-LC32-005-B

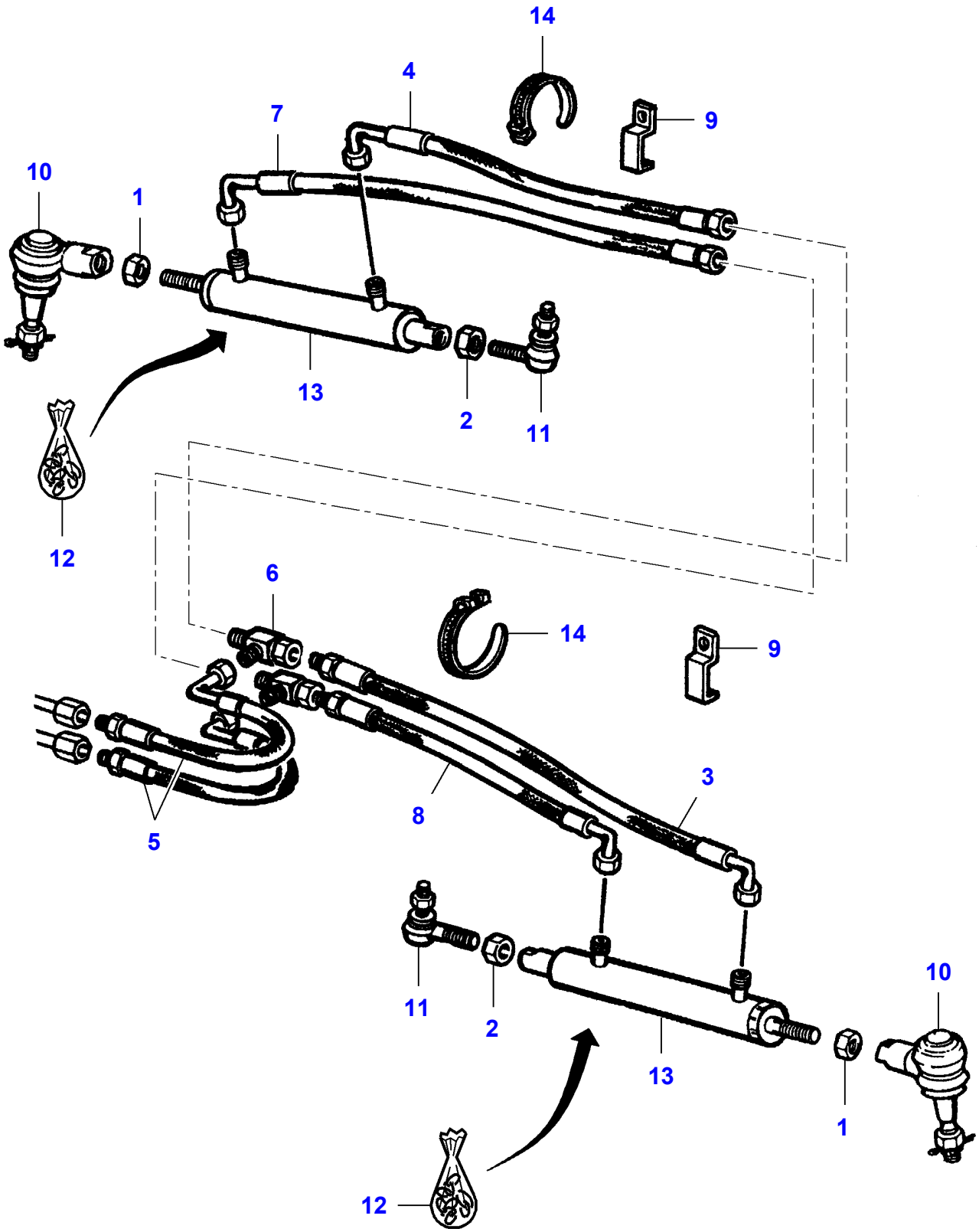

Item	Part Number	Qty	Description
1	LA10726711	2	Nut
2	LA10726911	2	Nut
3	LA320881550	1	Hydraulic Hose
4	LA320881750	1	Hydraulic Hose
5	LA321420250	2	Hydraulic Hose
6	LA321473450	2	T-Piece
7	LA321980550	1	Hydraulic Hose
8	LA321980650	1	Hydraulic Hose
9	LA322060650	2	Collar
10	LA322169500	2	Rod
11	LA322517300	2	Rod
12	LA322543600	1	Kit, Seal
13	LA323090600	2	Hydraulic, Cylin
14	LA340481810	2	Cable Tie

L-LC64-001-B

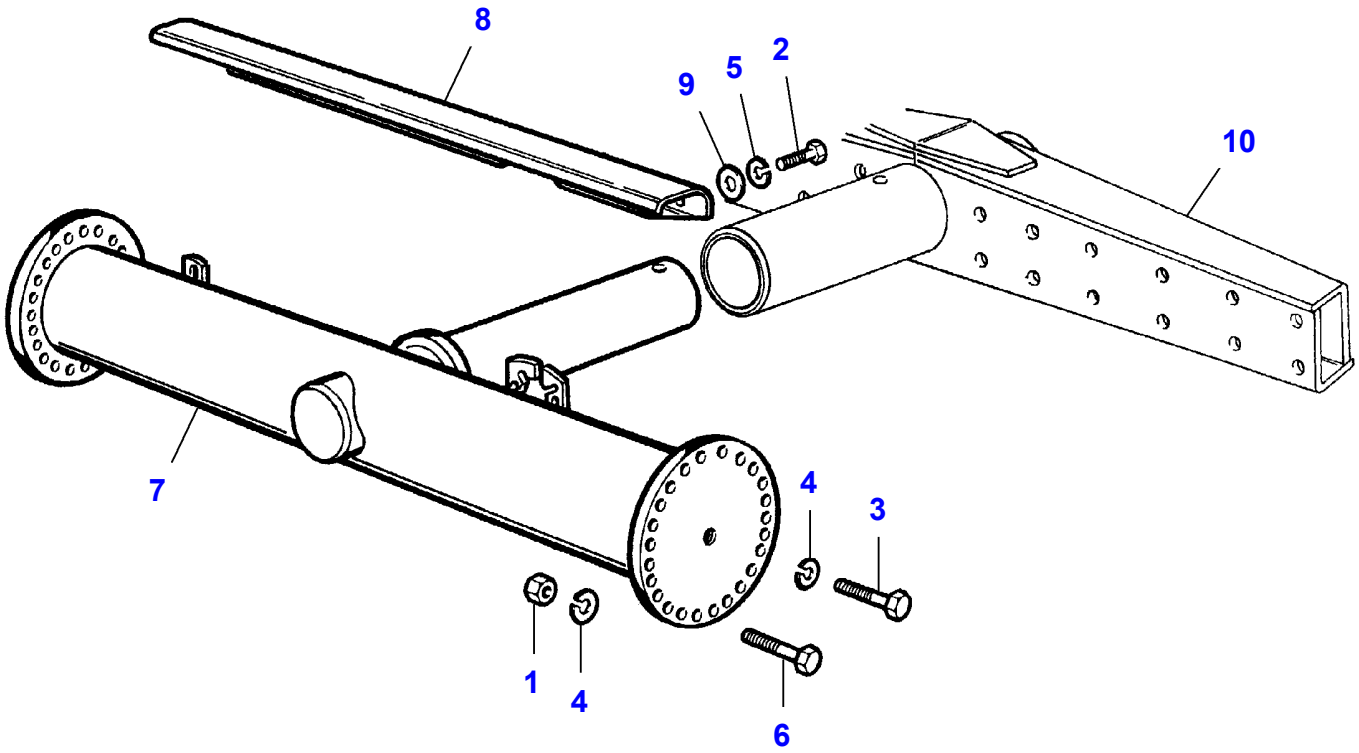

Item	Part Number	Qty	Description	Comments
1	LA10790421	1	Nut	
2	LA10902024	1	Cap Screw	
3	LA11116421	1	Cap Screw	
4	LA12035571	2	Lock Washer	
5	LA12035670	1	Lock Washer	
6	LA15977621	1	Cap Screw	
7	LA320940150	1	Support	
8	LA320940650	1	Shield	
9	LA355500715	1	Flat Washer	
10		1	Front Axle	See Page - Reference Number 030-0045/19

L-LC65-001-B

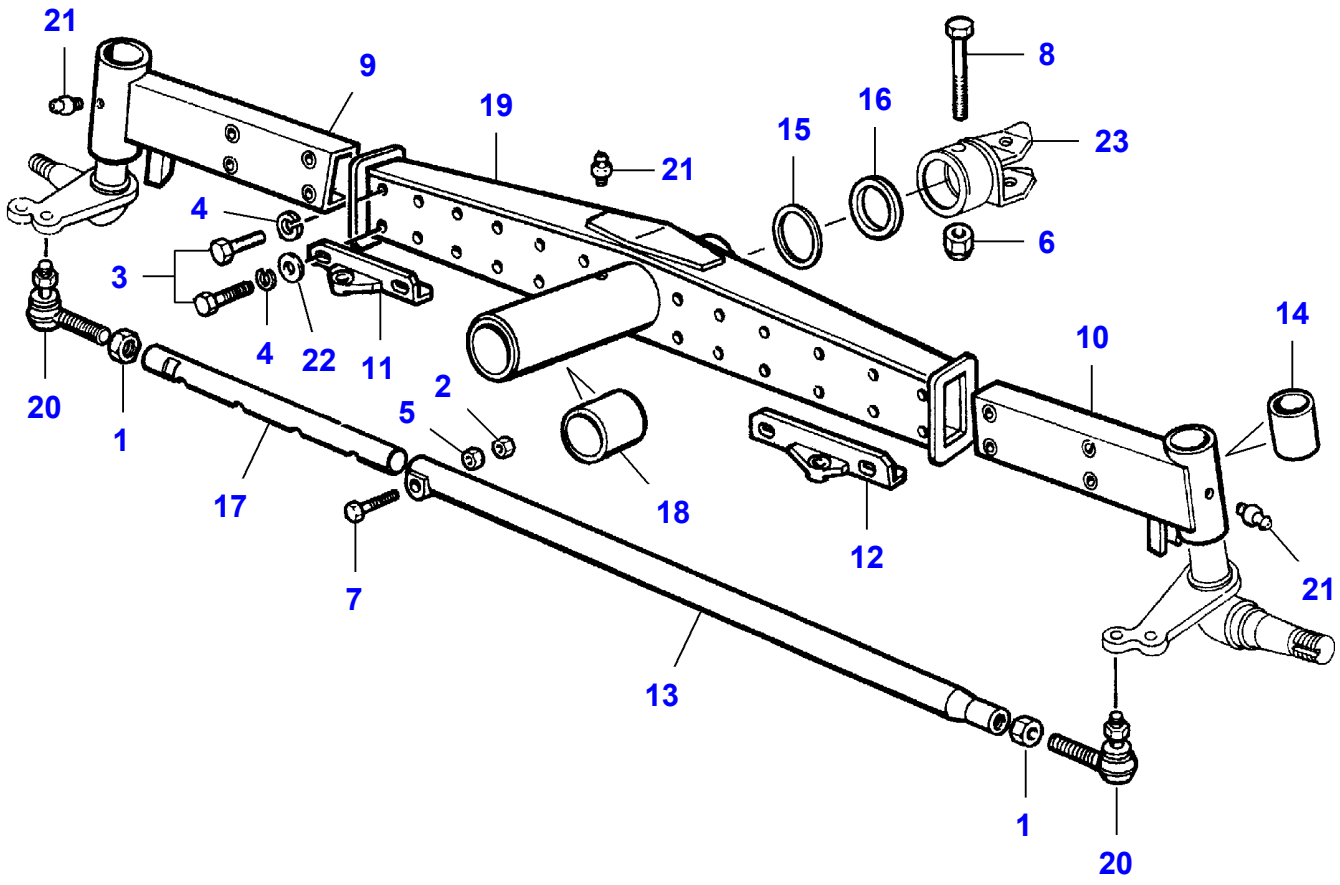

Item	Part Number	Qty	Description	Comments
1	LA10726911	2	Nut	
2	LA10791324	1	Nut	
3	LA11118931	2	Cap Screw	
4	LA12034871	2	Lock Washer	
5	LA12164011	1	Nut	
6	LA12575121	1	Nut	
7	LA15862131	1	Cap Screw	
8	LA15990531	1	Cap Screw	
9	LA320941050	1	End	
10	LA320941150	1	End	
11	LA320941250	1	Bracket	
12	LA320941350	1	Bracket	
13	LA320941950	1	Tie Rod	
14	LA320942450	1	Bush	
15	LA323201650	1	Support	
16	LA321937450	1	Washer	
17	LA322131950	1	Tie Rod	
18	LA322202250	1	Bush	
19	LA321302050	1	Washer	
20	LA322517300	2	Rod	
21	LA350357803	3	Grease Fitting	
22	LA355501740	1	Flat Washer	
23		1	Hook	See Page - Reference Number 030-0110/2

L-LC65-002-B

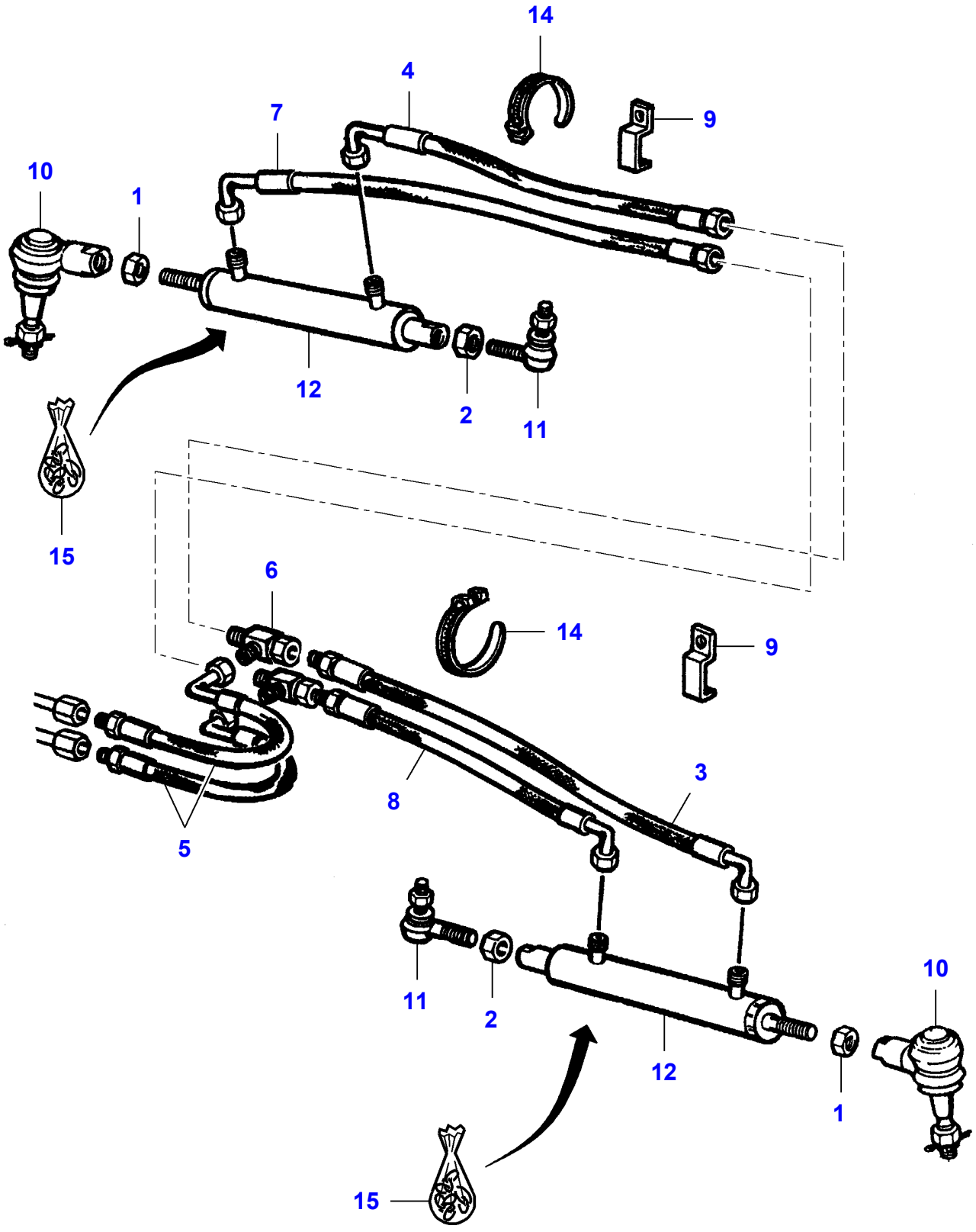

Item	Part Number	Qty	Description	Comments
1	LA10726711	2	Nut	
2	LA10726911	2	Nut	
3	LA320881550	1	Hydraulic Hose	
4	LA320881750	1	Hydraulic Hose	
5	LA321420250	2	Hydraulic Hose	
6	LA321473450	2	T-Piece	
7	LA321980550	1	Hydraulic Hose	
8	LA321980650	1	Hydraulic Hose	
9	LA322060650	2	Collar	
10	LA322169500	2	Rod	
11	LA322517300	2	Rod	
12	LA322545100	2	Hydraulic, Cylin	
13	LA322169700	1	Kit	[A] (12) "MITA"
	LA322545200	1	Kit	[A] (12) "PANNI"
14	LA340481810	2	Cable Tie	
15	LA322545300	1	Kit, Seal	"PANNI"

FOOTNOTE [A] NOT ILLUSTRATED

L-LC65-003-B

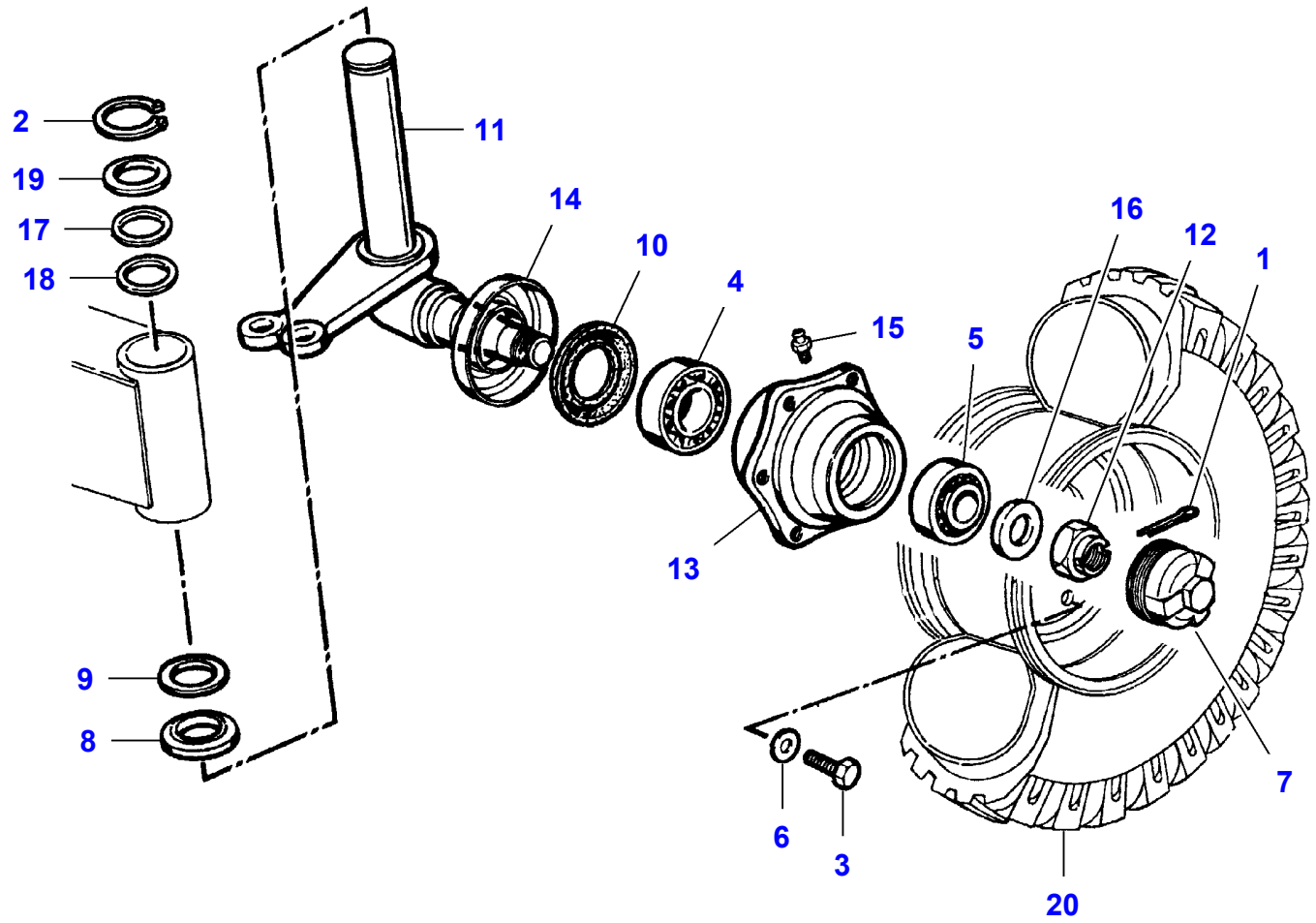

Item	Part Number	Qty	Description	Comments
1	LA10798401	1	Split Pin	
2	LA11069576	1	Circlip	
3	LA11408524	1	Cap Screw	
4	**LA24903440**	1	Ball Bearing	
5	**LA26799950**	1	Roller Bearing	
6	LA44011091	1	Washer	
7	LA300015269	1	Cover	
8	LA320942250	1	Ring	
9	LA320942350	1	Ring	
10	LA322107750	1	Bellows	
11	**LA322647050**	1	Spindle	Right Hand
	LA322647150	1	Spindle	Left Hand
12	LA360652730	1	Castle Nut	
13	LA322647450	1	Hub	
14	LA322647550	1	Shield	
15	LA350357803	1	Grease Fitting	
16	LA355538830	1	Washer	
17	LA355547004	1	Washer	Thickness 0,40 MM
18	LA355547006	1	Washer	Thickness 0,60 MM
19	LA355547030	1	Washer	
20		2	Wheel	See Page - Reference Number 140-0265/1

L-LC66-001-B

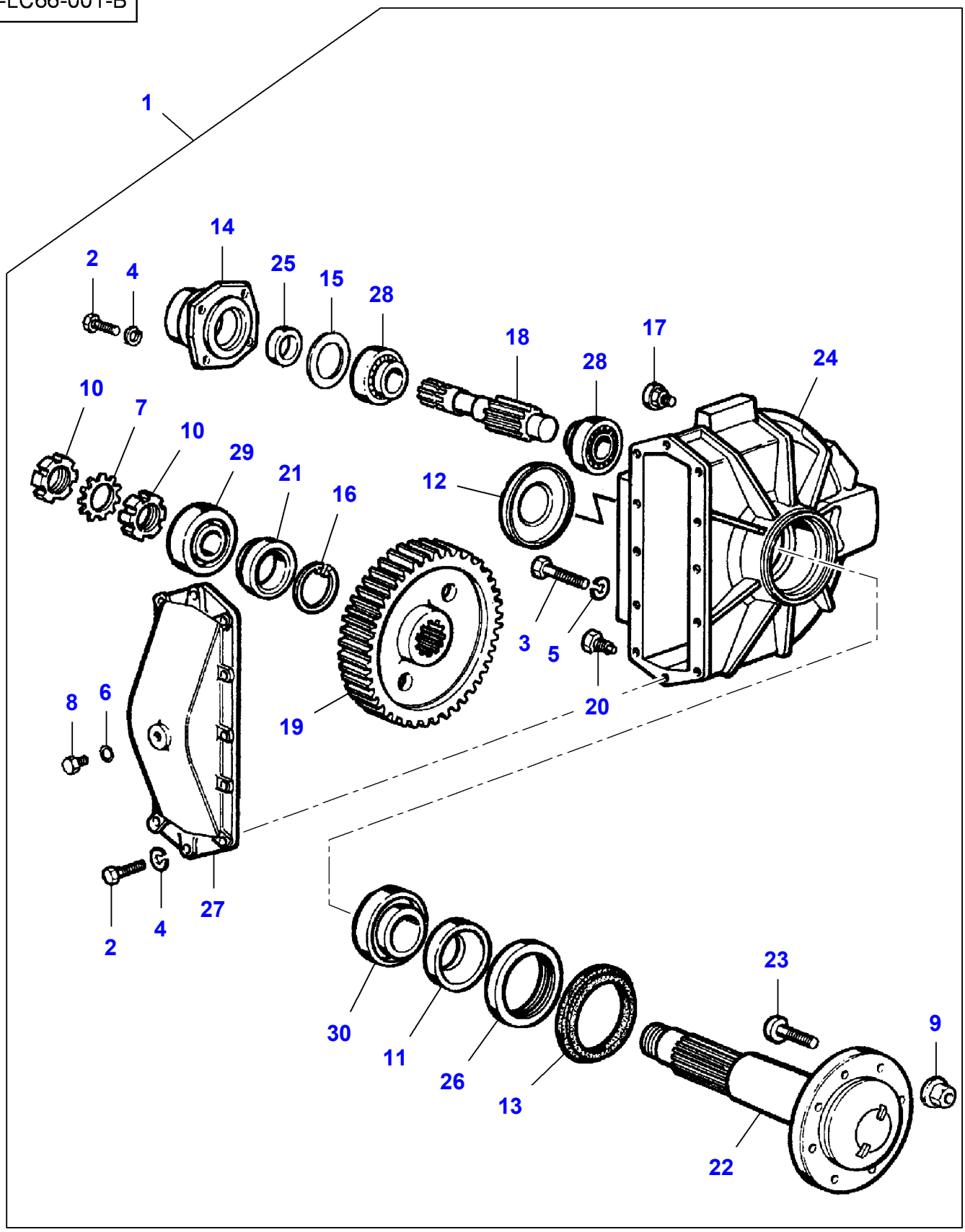
1
14
2
4
25
15
28
18
28
17
24
10
7
10
29
21
16
12
3
5
20
19
8
6
27
2
4
30
11
26
13
23
9
22

Item	Part Number	Qty	Description	Comments
1	LA322353900	1	Gear	Left Hand
	LA322354600	1	Gear	Right Hand
2	LA11106424	2	Cap Screw	(1)
3	LA11119231	1	Cap Screw	(1)
4	LA12034671	2	Lock Washer	(1)
5	LA12034871	1	Lock Washer	(1)
6	LA14452980	1	Support	(1)
7	LA300129763	1	Tooth Washer	(1)
8	LA300133689	1	Plug	(1)
9	LA320630350	1	Nut	(1)
10	LA321133950	2	Nut	(1)
11	LA321914250	1	Spacer	(1)
12	LA321924850	1	Cover	(1)
13	LA321925250	1	Ring	(1)
14	LA321936650	1	Cover	(1)
15	LA321982850	1	Shim	(1) Thickness 0,15 mm
	LA321982950	1	Shim	(1) Thickness 0,20 mm
	LA321983050	1	Shim	(1) Thickness 0,50 mm
16	LA11075176	1	Circlip	(1)
17	LA312974500	1	Plug	(1)
18	LA322061850	1	Shaft	(1)
19	LA322061950	1	Gear	(1)
20	LA322062500	1	Plug	(1)
21	LA322069550	1	Spacer	(1)
22	LA322069850	1	Shaft	(1)
23	LA322304650	1	Hex Socket Screw	(1)
24	LA322350850	1	Box	(1)
25	LA353587178	1	Gasket	(1)
26	LA353587179	1	Gasket	(1)
27	LA322623250	1	Cover	(1)
28	**LA340406546**	2	Bearing Assy	(1)
29	**LA340406580**	1	Bearing Assy	(1)
30	LA344065120	1	Bearing Assy	(1)

L-LC34-001-B

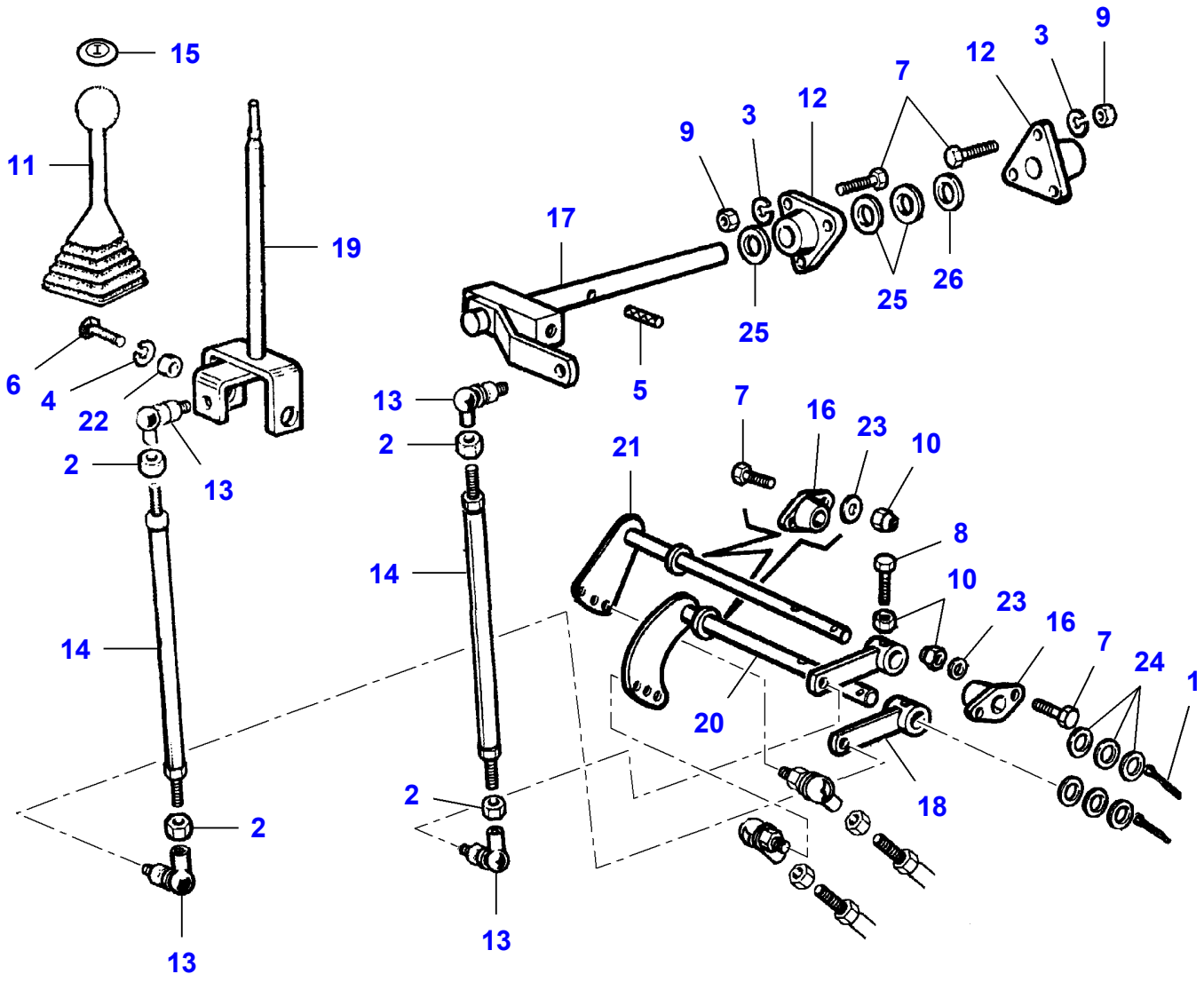
15
11
19
6
4
22
2
13
14
2
13
17
9
3
12
7
25
26
5
13
2
14
2
13
21
7
16
23
10
8
10
23
16
7
24
1
20
18

Item	Part Number	Qty	Description
1	LA10734901	2	Split Pin
2	LA11701721	4	Nut
3	LA12034571	2	Lock Washer
4	LA12034771	1	Lock Washer
5	LA14604370	1	Roll Pin
6	LA15540424	1	Cap Screw
7	LA16043624	4	Cap Screw
8	LA16044031	1	Cap Screw
9	LA16100811	2	Nut
10	LA16104121	3	Locknut
11	LA181046480	1	Grip
12	LA300033199	2	Support
13	LA301614600	4	Rod End
14	LA320426850	2	Rod
15	LA321217950	1	Cap
16	LA321907050	2	Support
17	LA322014050	1	Lever
18	LA322078250	2	Lever
19	LA322080050	1	Lever
20	LA322210950	1	Shaft
21	LA322211050	1	Shaft
22	LA340415528	1	Bush
23	LA355510820	2	Flat Washer
24	LA355533830	6	Washer
25	LA355536220	3	Flat Washer
26	LA355536230	1	Washer

L-LC34-002-B

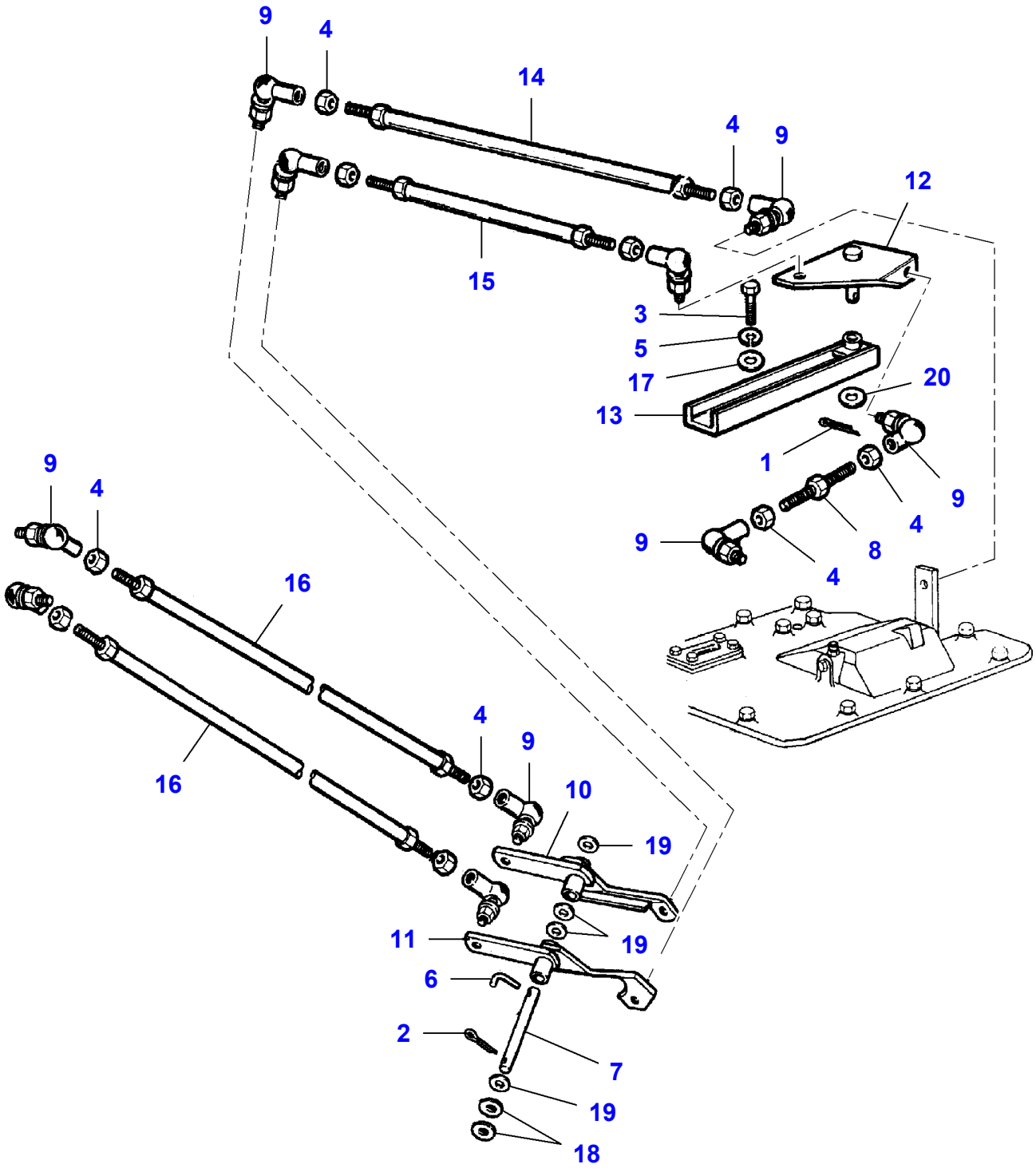

Item	Part Number	Qty	Description
1	LA10733801	1	Split Pin
2	LA10797001	1	Split Pin
3	LA11106424	1	Cap Screw
4	LA11701721	10	Nut
5	LA12034671	1	Lock Washer
6	LA300136233	1	Roll Pin
7	LA300137011	1	Pin
8	LA300137015	1	Tie Rod
9	LA301614600	10	Rod End
10	LA320664750	1	Arm
11	LA320664850	1	Arm
12	LA321882950	1	Arm
13	LA321885050	1	Support
14	LA321887550	1	Rod
15	LA321887650	1	Rod
16	LA321887950	2	Rod
17	LA355511020	1	Flat Washer
18	LA355532605	2	Washer
19	LA355532620	4	Flat Washer
20	LA355533820	1	Washer

L-LC67-001-B

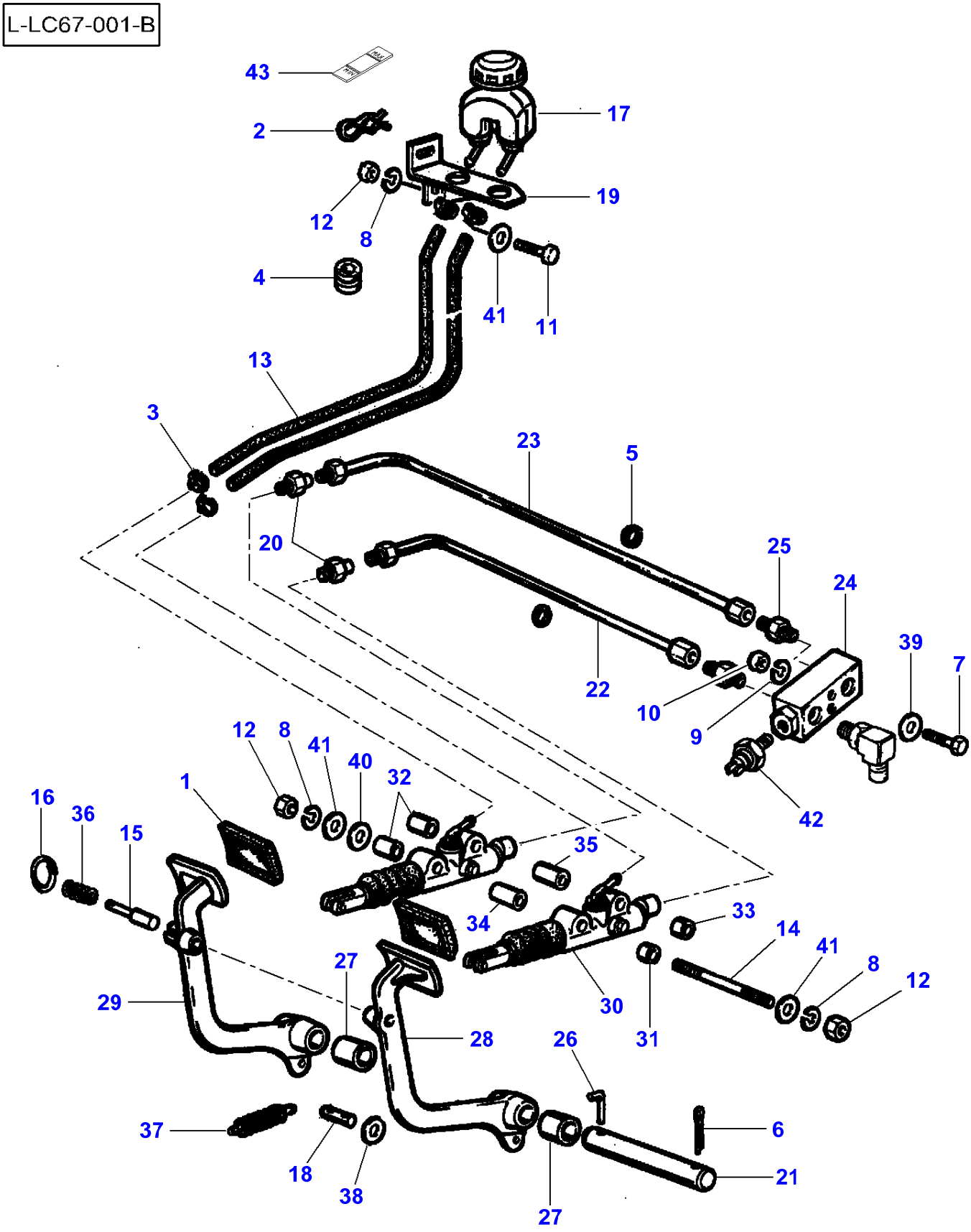
43
2
17
19
12
8
4
41
11
13
3
23
5
20
25
24
39
7
22
10
9
42
12
8
41
40
32
1
16
36
15
35
34
33
14
41
8
12
27
29
30
31
28
26
37
6
18
38
21
27

Item	Part Number	Qty	Description	Comments
1	LA5110685	2	Skate	
2	LA5141690	1	Pin	
3	LA350391506	4	Hose Clip	Repairs and replaces LA10186790
4	LA10397780	1	Grommet	
5	LA10403080	2	Grommet	
6	LA10734901	1	Split Pin	
7	LA10903921	1	Cap Screw	
8	LA12034571	3	Lock Washer	
9	LA12035670	1	Lock Washer	
10	LA15896221	1	Nut	
11	LA16043424	1	Cap Screw	
12	LA16100811	3	Nut	
13	LA19058189	2	Hose	
14	LA300017800	1	Tie Rod	
15	LA301592030	1	Pin	
16	LA301592031	1	Ring	
17	LA320956200	1	Hydraulic Tank	
18	LA321097650	1	Pin	
19	LA321266750	1	Support	
20	LA321897600	2	Union	
21	LA322016650	1	Clevis Pin	
22	LA322016750	1	Brake Pipe	
23	LA322016850	1	Brake Pipe	
24		1	Valve	See Page - Reference Number 030-0085/1
25	LA322017050	2	Union	
26	LA322017150	1	Clip	
27	LA322072050	2	Bush	
28	LA322111750	1	Pedal	
29	LA322111850	1	Pedal	
30		2	Pump	See Page - Reference Number 030-0085/7
31	LA340415007	1	Bush	
32	LA340415809	2	Bush	
33	LA340415814	1	Bush	
34	LA340415855	1	Bush	
35	LA344158153	1	Spacer	
36	LA350356444	1	Spring	
37	LA350356521	1	Spring	
38	LA355500915	1	Flat Washer	
39	LA355510620	1	Flat Washer	
40	LA355510815	1	Washer	
41	LA355510820	3	Flat Washer	
42		1	Switch	See Page - Reference Number 120-0020/8
43	LA343000006	1	Decal	

L-LC67-002-B

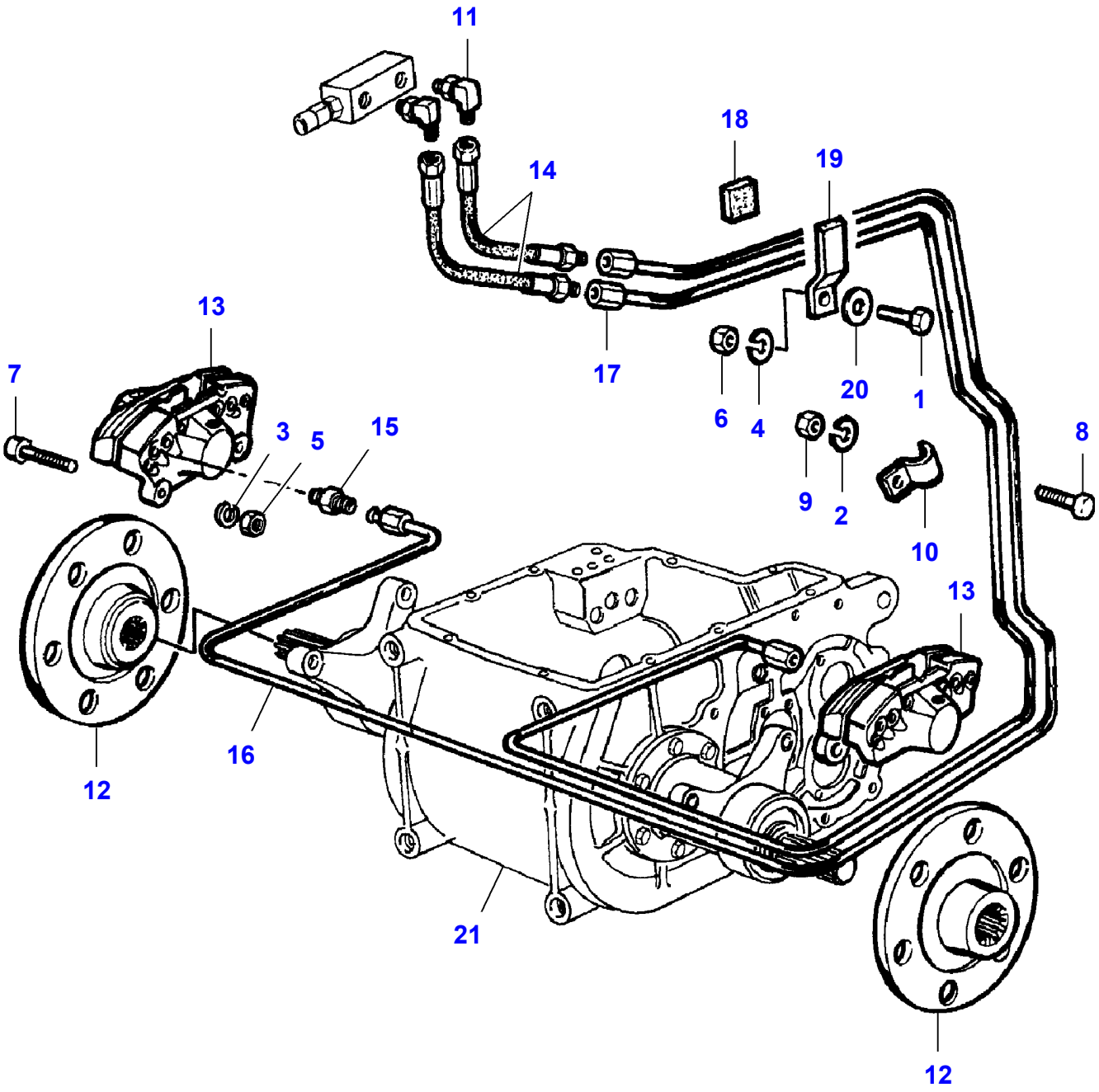

Item	Part Number	Qty	Description	Comments
1	LA10902224	1	Cap Screw	
2	LA12034571	1	Lock Washer	
3	LA12035071	4	Lock Washer	
4	LA12035670	1	Lock Washer	
5	LA12164321	4	Nut	
6	LA15896221	1	Nut	
7	LA15988637	4	Hex Socket Screw	
8	LA16043624	1	Cap Screw	
9	LA16100811	1	Nut	
10	LA300033312	1	Hinge	
11	LA320832000	2	Elbow Union	
12	LA321874150	2	Brake Disc	
13		2	Brake Caliper	See Page - Reference Number 030-0090/1
14	LA321920850	2	Brake Hose	
15	LA322017050	1	Union	
16	LA322160750	1	Brake Pipe	Right Hand
17	LA322160850	1	Brake Pipe	Left Hand
18	LA322161550	1	Gasket	
19	LA322161650	1	Plate	
20	LA355510620	1	Flat Washer	
21		1	Box	See Page - Reference Number 030-0225/24

L-LC68-001-B

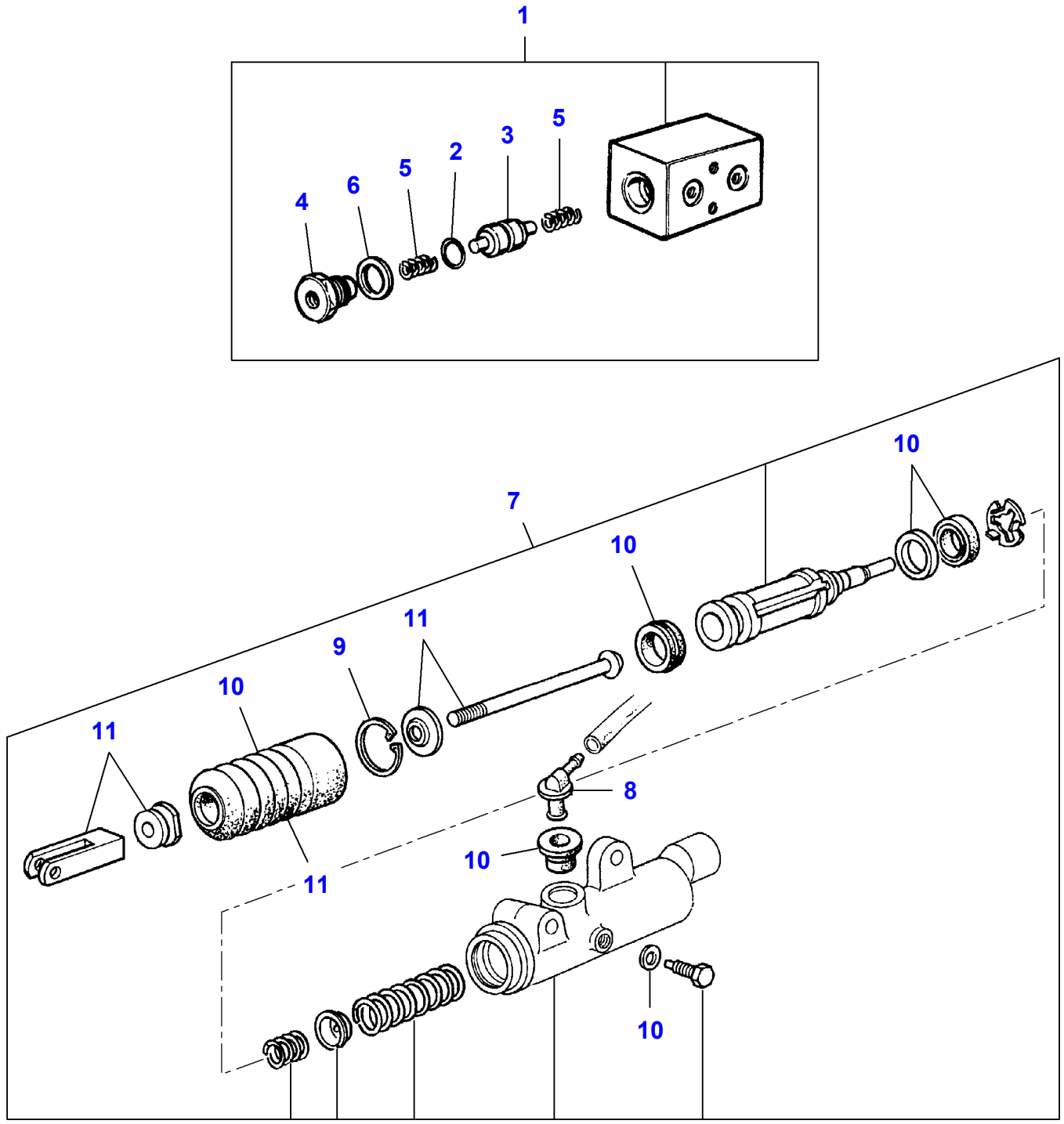

Item	Part Number	Qty	Description	Comments
1	LA322016900	1	Valve	
2	LA5135738	1	Seal	(1)
3	LA300114097	1	Piston	(1)
4	LA321987550	1	Union	(1)
5	LA350356168	2	Spring	(1)
6	LA355562430	1	Washer	(1)
7	**LA322584900**	1	Brake Cylinder	
8	LA9963010	1	Union	(7)
9	LA11058276	1	Ring	(7)
10	LA9963008	1	Kit	(7)
11	LA9963009	1	Kit	(7)

L-LC81-001-B

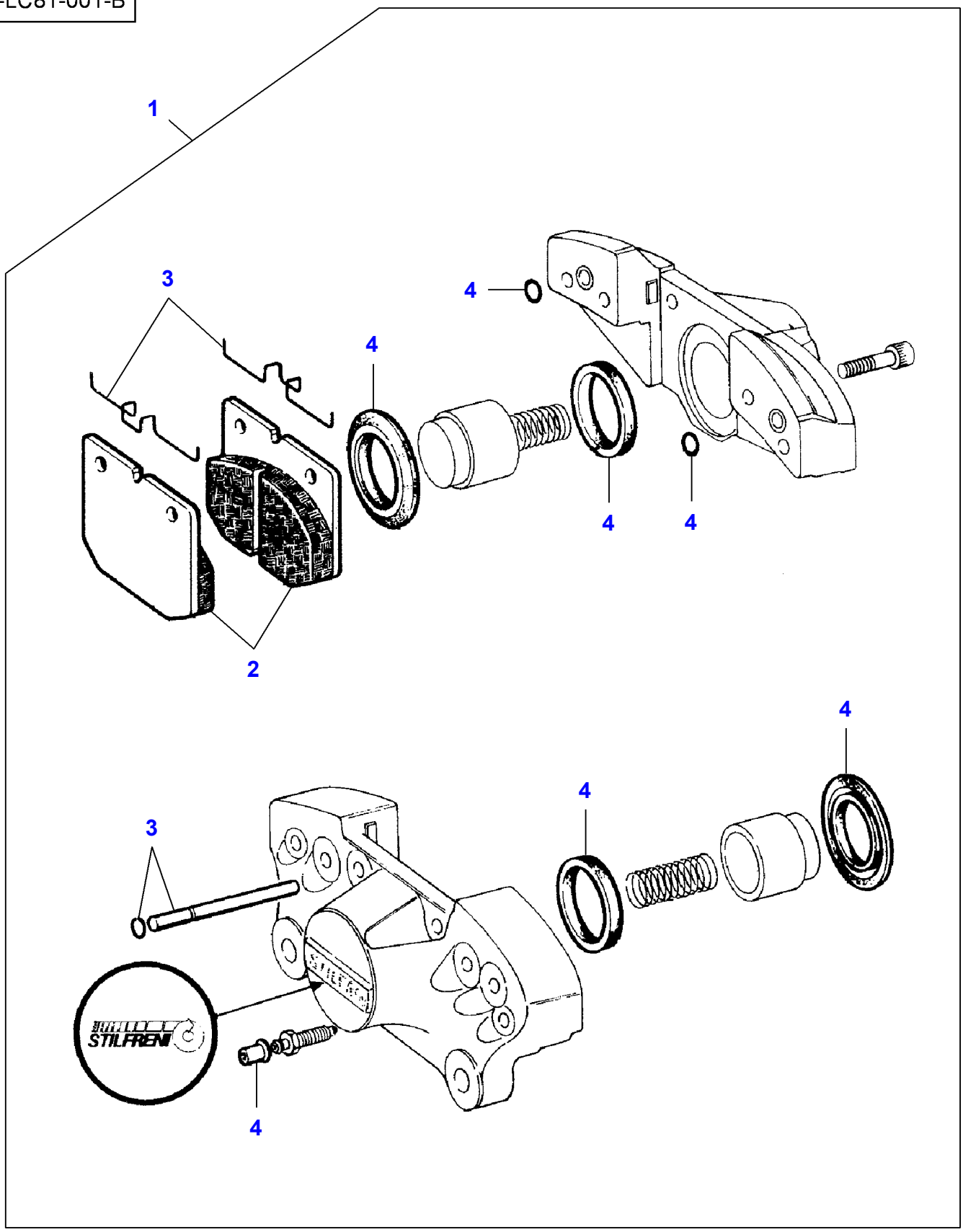

Item	Part Number	Qty	Description	Comments
1	LA321875800	1	Brake Caliper	
2	**LA321981400**	1	Brake Plate	(1)
3	LA322166500	1	Kit	(1)
4	LA322166400	1	Kit, Seal	(1)

L-LC69-001-B

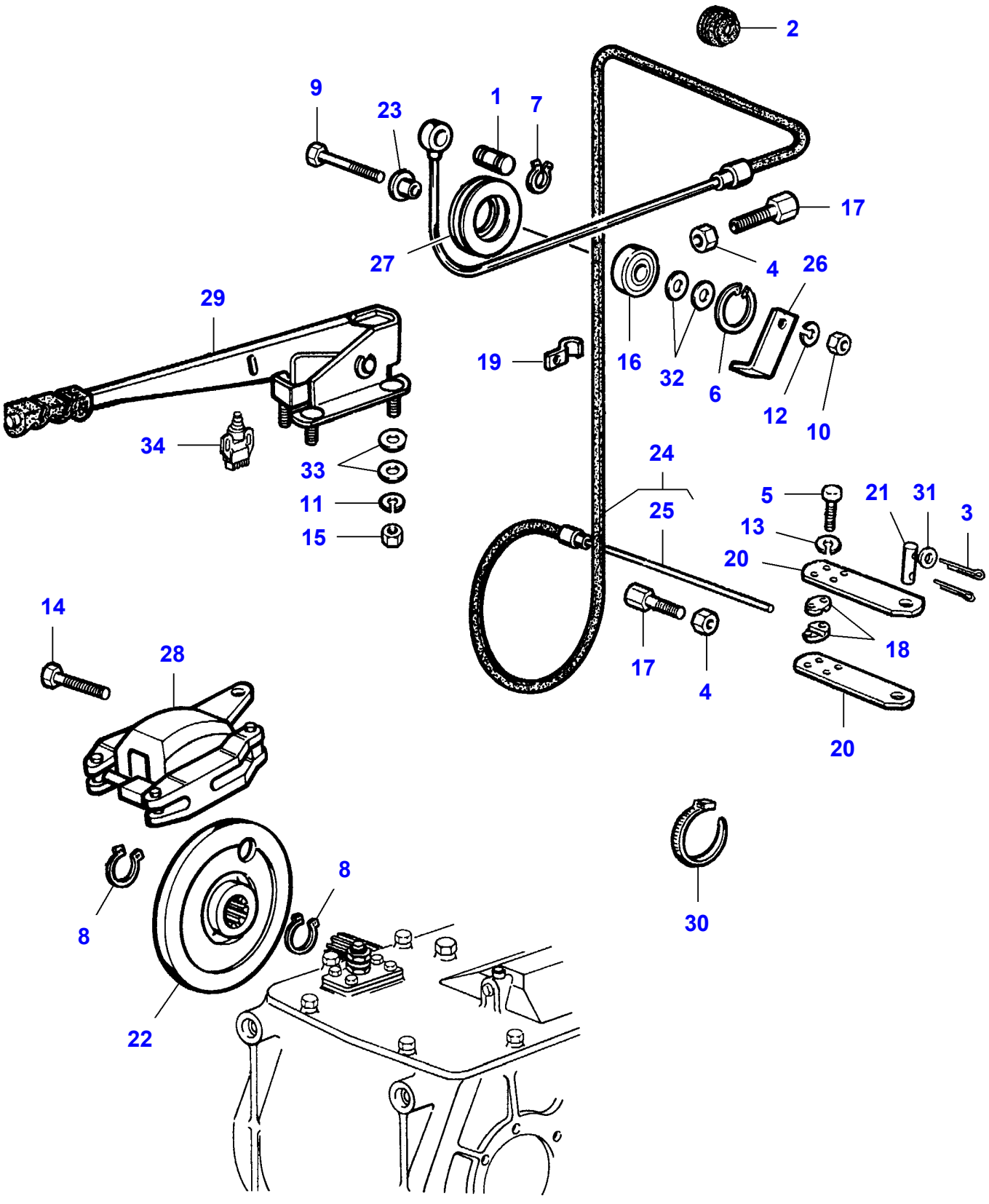
2
9
23
1
7
17
27
4
26
29
19
16
32
6
12
10
34
33
11
15
24
5
21
31
3
25
13
20
18
17
4
20
14
28
8
8
30
22

Item	Part Number	Qty	Description	Comments
1	LA5105280	1	Pin	
2	LA10403080	1	Grommet	
3	LA10733601	2	Split Pin	
4	LA10788714	2	Nut	
5	LA10902624	1	Cap Screw	
6	LA11060076	1	Circlip	
7	LA11065676	1	Circlip	
8	LA11068876	2	Circlip	
9	LA11113221	1	Cap Screw	
10	LA11702921	1	Nut	
11	LA12034571	2	Lock Washer	
12	LA12034771	1	Lock Washer	
13	LA12035670	1	Lock Washer	
14	LA14420331	1	Cap Screw	
15	LA16100824	2	Nut	
16	LA24905080	1	Ball Bearing	
17	LA300031549	2	Cap Screw	
18	LA300031960	2	Plate	
19	LA300110828	1	Collar	
20	LA320816150	2	Plate	
21	LA321097650	1	Pin	
22	LA322101950	1	Brake Disc	
23	LA322105450	1	Bush	
24	LA322131000	1	Handbrake Cable	
25	LA322165050	1	Cable	(24)
26	LA322132050	1	Bracket	
27	LA322131150	1	Pulley	
28	LA322362200	1	Brake Caliper	See Page - Reference Number 030-0100/1
29	LA322518000	1	Brake Lever	
30	LA340481809	1	Cable Tie	
31	LA355500915	1	Flat Washer	
32	LA355501330	2	Flat Washer	
33	LA355510820	3	Flat Washer	
34		1	Switch	See Page - Reference Number 120-0020/7

L-LC80-001-B

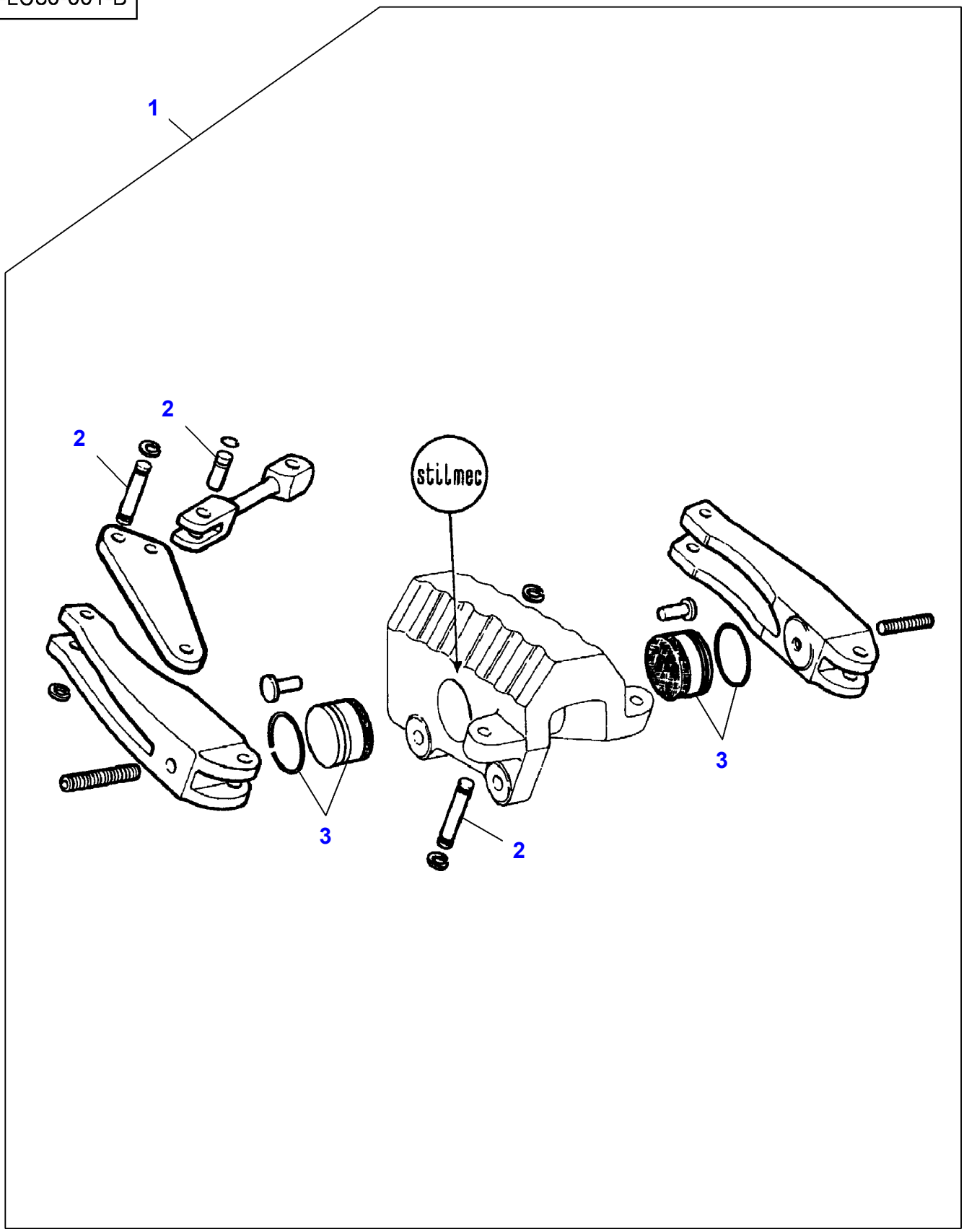

Item	Part Number	Qty	Description	Comments
1	LA322362200	1	Brake Caliper	
2	LA321155400	1	Kit	(1)
3	LA321980800	1	Kit	(1) Up to Serial or Engine Number
	LA322482200	1	Kit, Pad	(1) From Serial or Engine Number 551710031

L-LC31-001-B

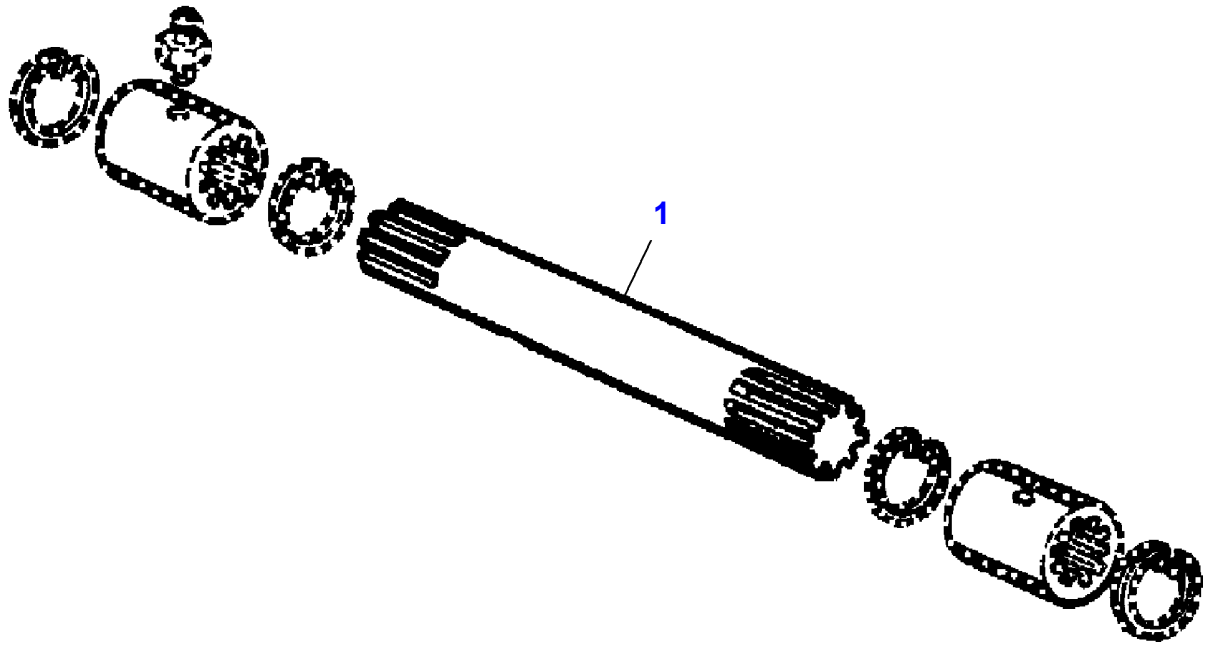

Item	Part Number	Qty	Description	Comments
1	LA321892850	2	Shaft	[A]
				Length 378 mm
		X	Shaft	[B]
				See Page - Reference Number 140-0065/5

FOOTNOTE [A] FOR WHEAT
FOOTNOTE [B] WITH SPACER

L-LC70-001-B

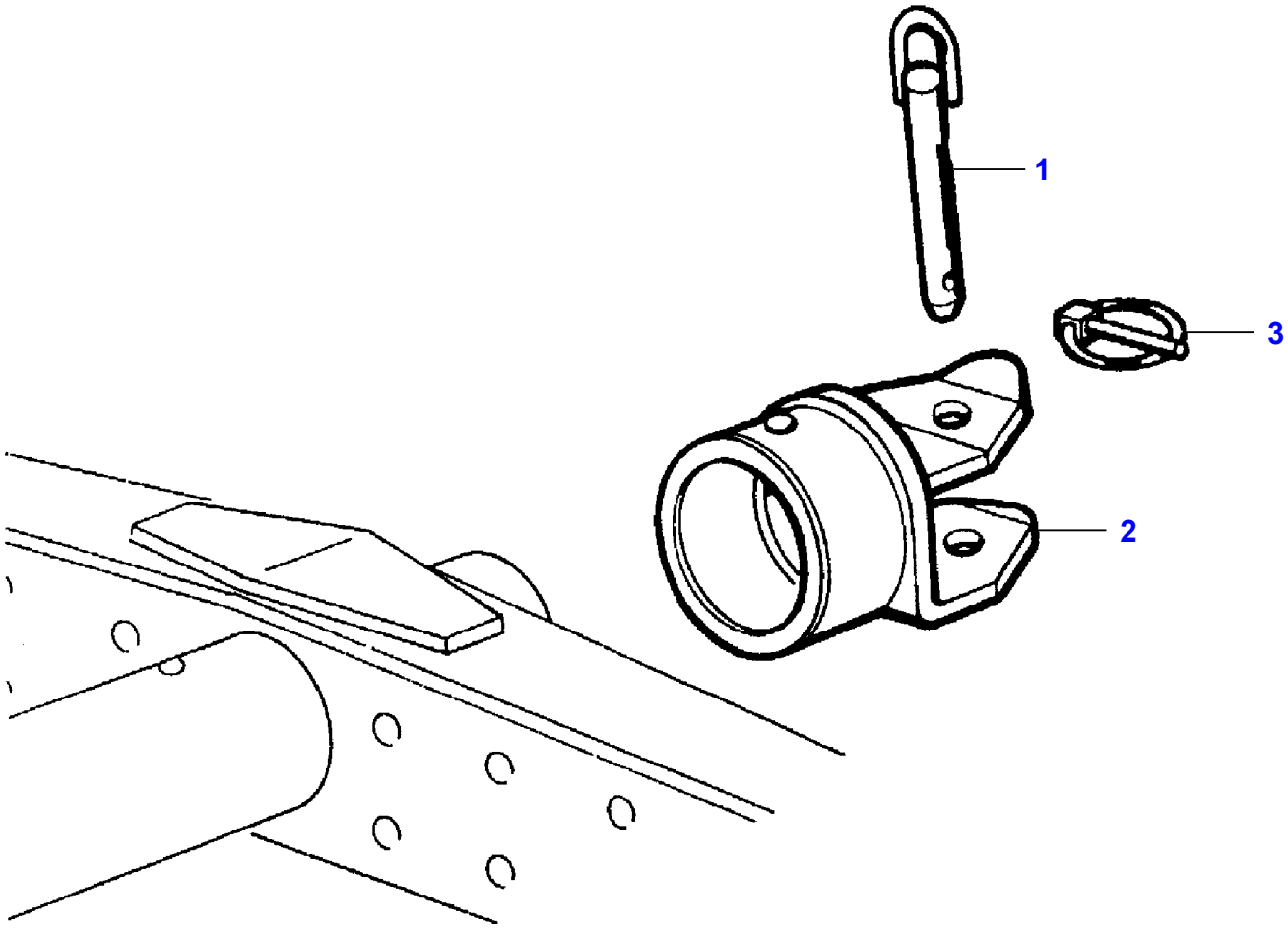

Item	Part Number	Qty	Description
1	LA320841650	1	Clevis Pin
2	LA320943250	1	Hook
3	LA340441801	1	Pin

L-LC70-002-A

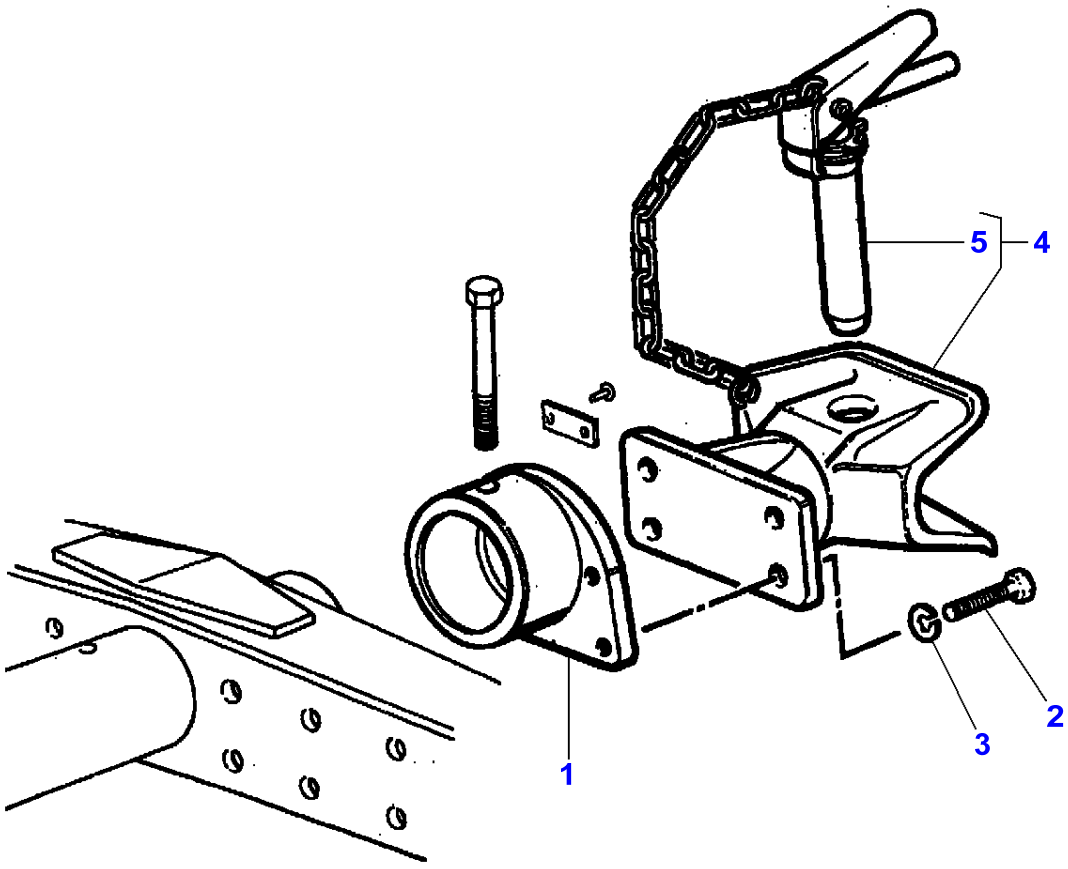

Item	Part Number	Qty	Description	Comments
1	LA322798250	1	Extension	
2	LA11422324	4	Cap Screw	
3	LA12035571	4	Lock Washer	
4	LA320871900	1	Hook	
5	LA9928594	1	Pin	(4)

L-LC72-001-B

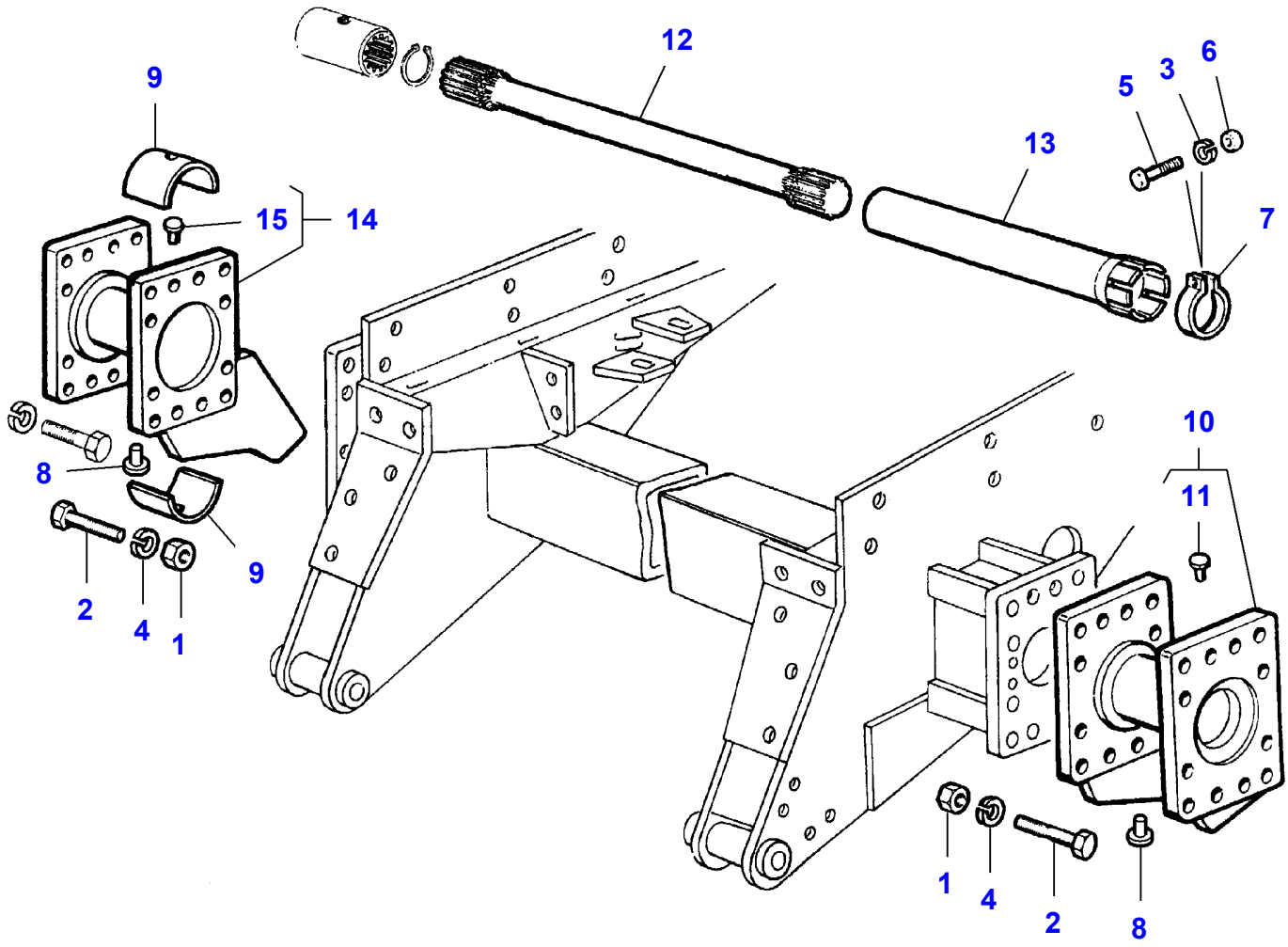

Item	Part Number	Qty	Description	Comments
1	LA10790521	2	Nut	
2	LA11254131	2	Cap Screw	
3	LA12034571	1	Lock Washer	
4	LA12034871	2	Lock Washer	
5	LA15213321	1	Cap Screw	
6	LA16100811	1	Nut	
7	LA300015911	1	Collar	
8	LA300131341	2	Pin	
9	LA300132993	2	Bearing	
10	LA320695550	1	Extension	
11	LA300131341	1	Pin	(10)
12	LA321987650	2	Shaft	Length 626 mm
13	LA322004650	1	Shield	
14	LA320695650	1	Extension	
15	LA300131341	1	Pin	(14)

L-LC72-002-B

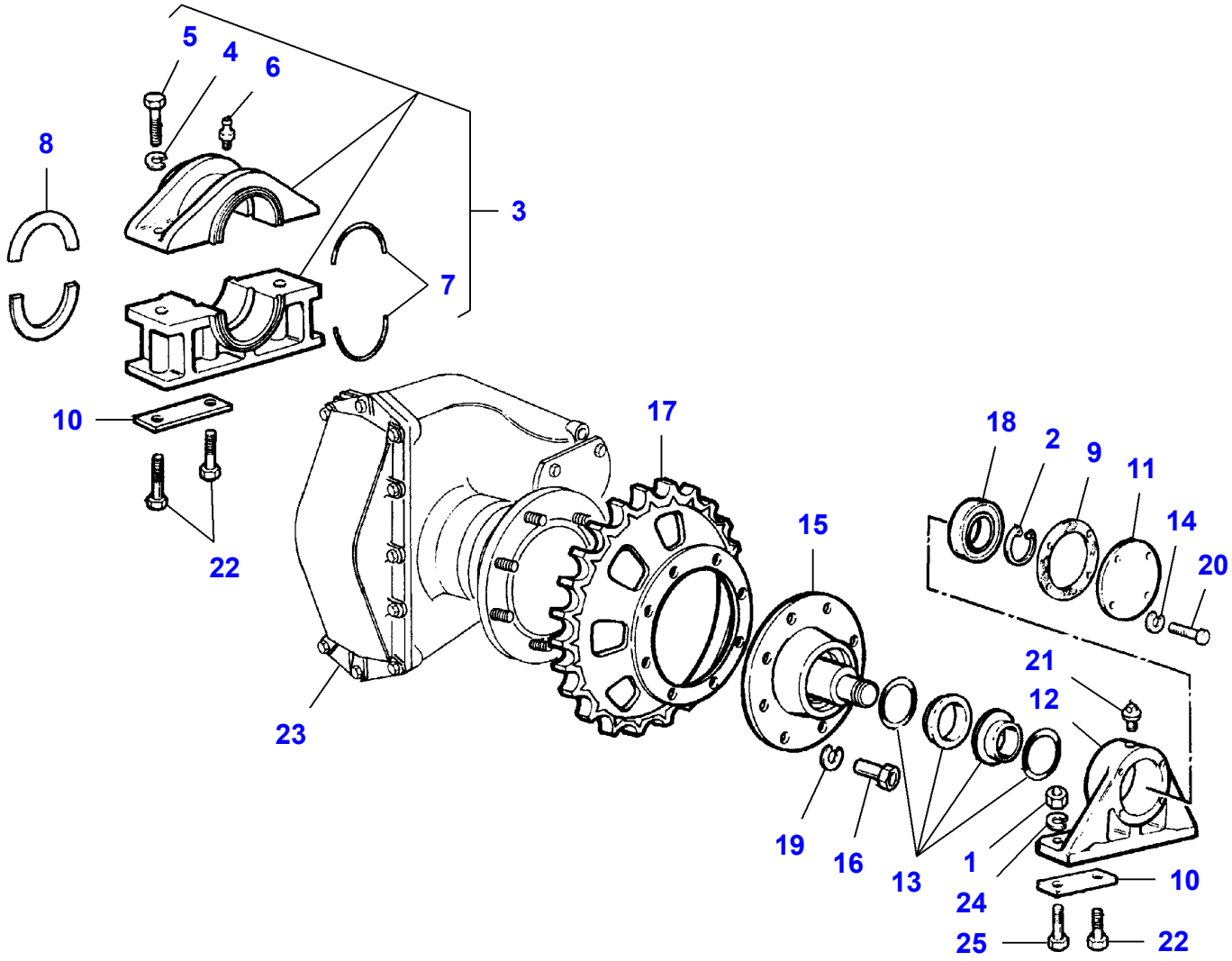

Item	Part Number	Qty	Description	Comments
1	LA10721121	1	Nut	
2	LA11070076	1	Circlip	
3	LA313299000	1	Support	
4	LA12035071	2	Lock Washer	(3)
5	LA15988531	2	Cap Screw	(3)
6	LA350357803	1	Grease Fitting	(3)
7	LA300134550	2	Gasket	(3)
8	LA300132992	2	Half Ring	
9	LA300132994	1	Gasket	
10	LA300132996	2	Plate	
11	LA300132997	1	Cover	
12	LA300132991	1	Support	
13	LA311455700	4	Kit, Joint	
14	LA12034571	1	Lock Washer	
15	LA320779450	1	Flange	
16	LA321119750	1	Screw	
17	LA322581850	2	Sprocket	
18	LA340405365	1	Bearing Assy	
19	LA350354533	1	Lock Washer	
20	LA16043424	1	Cap Screw	
21	LA350359405	1	Plug	
22	LA366172030	3	Cap Screw	
23		1	Gear	Left Hand See Page - Reference Number 030-0060/1
		1	Gear	Right Hand See Page - Reference Number 030-0060/1
24	LA12035071	4	Lock Washer	
25	LA15988531	4	Cap Screw	

L-LC72-003-B

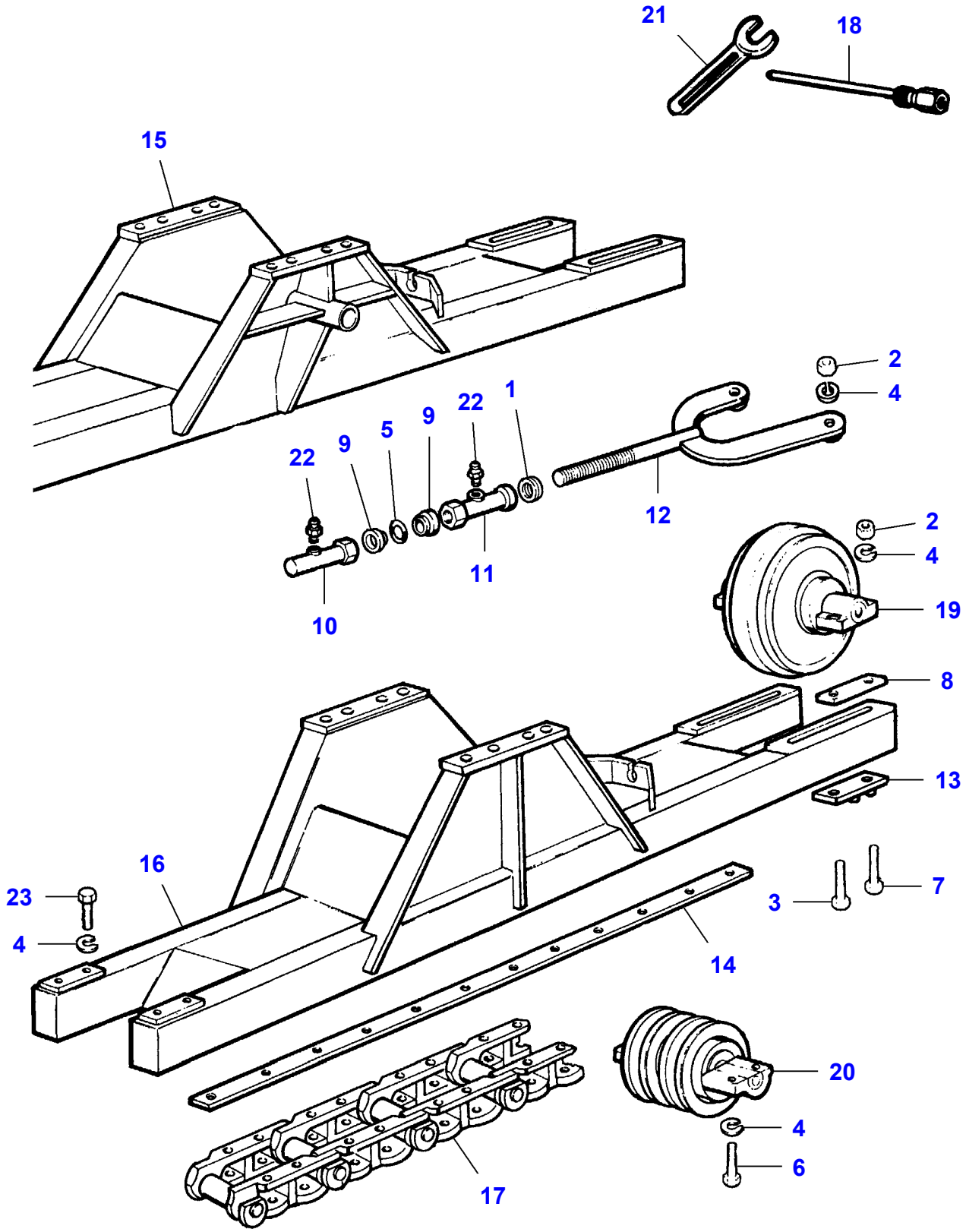

Item	Part Number	Qty	Description	Comments
1	LA8281085	1	Ring	
2	LA10790521	6	Nut	
3	LA11369631	2	Cap Screw	
4	LA12034871	14	Lock Washer	
5	LA14463680	1	O Ring	
6	LA15981121	4	Cap Screw	
7	LA15981531	2	Cap Screw	
8	LA300128829	2	Plate	
9	LA300130883	2	Washer	
10	LA300131661	1	Union	
11	LA300131662	1	Union	
12	LA300131664	1	Support	
13	LA300134329	4	Reinforcement	
14	LA300134399	1	Plate	
15	LA322029350	1	Body	
16	LA322029450	1	Body	
17	**LA322483000**	1	Track	
18	LA322488450	1	Grease Fitting	
19		1	Wheel	See Page - Reference Number 030-0155
20		1	Roller	See Page - Reference Number 030-0155
21	LA340440131	1	Tool	
22	LA350357803	2	Grease Fitting	
23	LA15981131	4	Cap Screw	

L-LC72-004-B

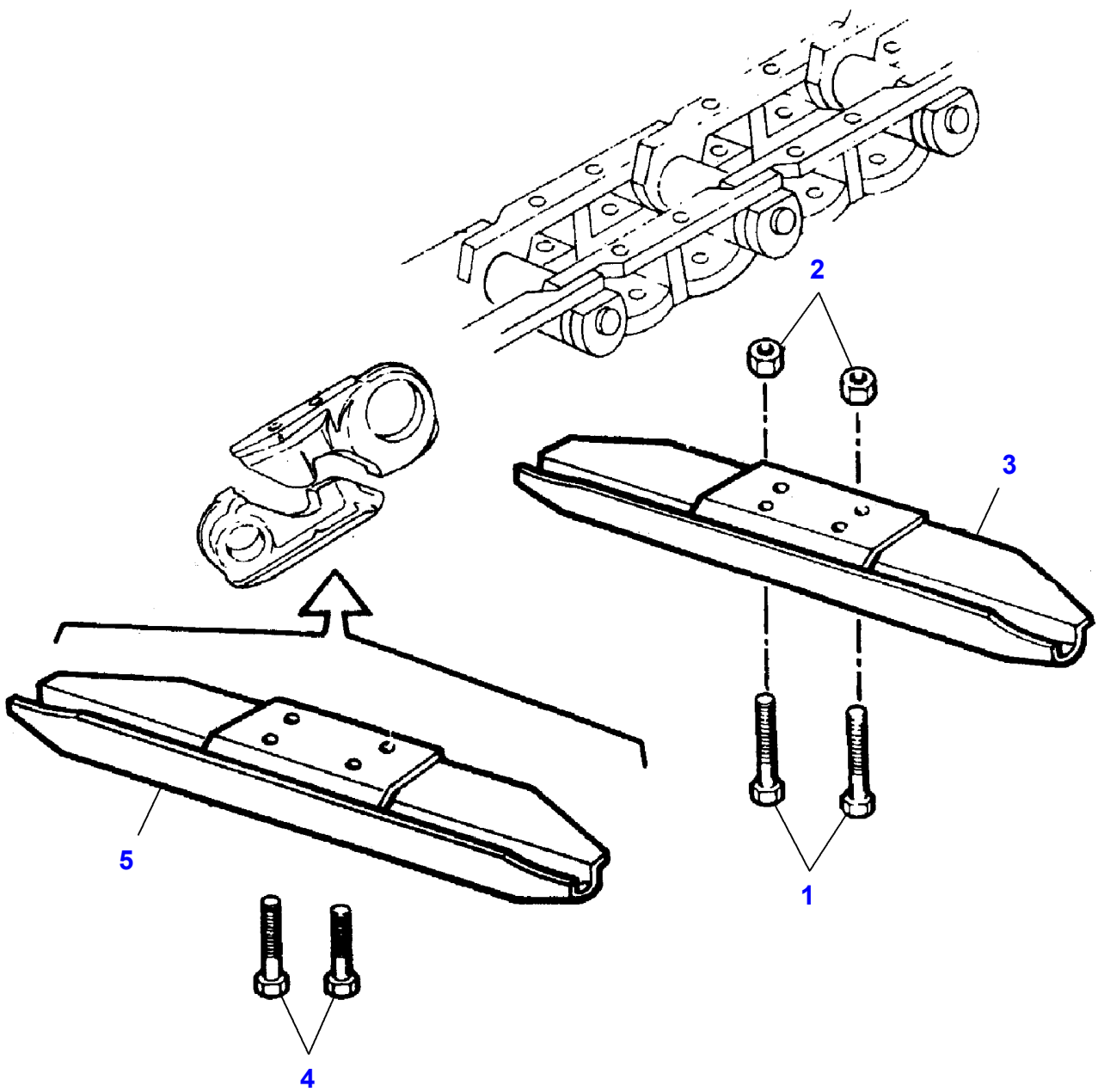

Item	Part Number	Qty	Description	Comments
1	LA15981031	2	Cap Screw	
2	LA300135424	30	Nut	
3	LA322029550	1	Skate	Right Hand
	LA322029650	1	Skate	Left Hand
4	LA322583250	2	Cap Screw	
5	LA322029750	1	Skate	Right Hand
	LA322029850	1	Skate	Left Hand

L-LC72-005-B

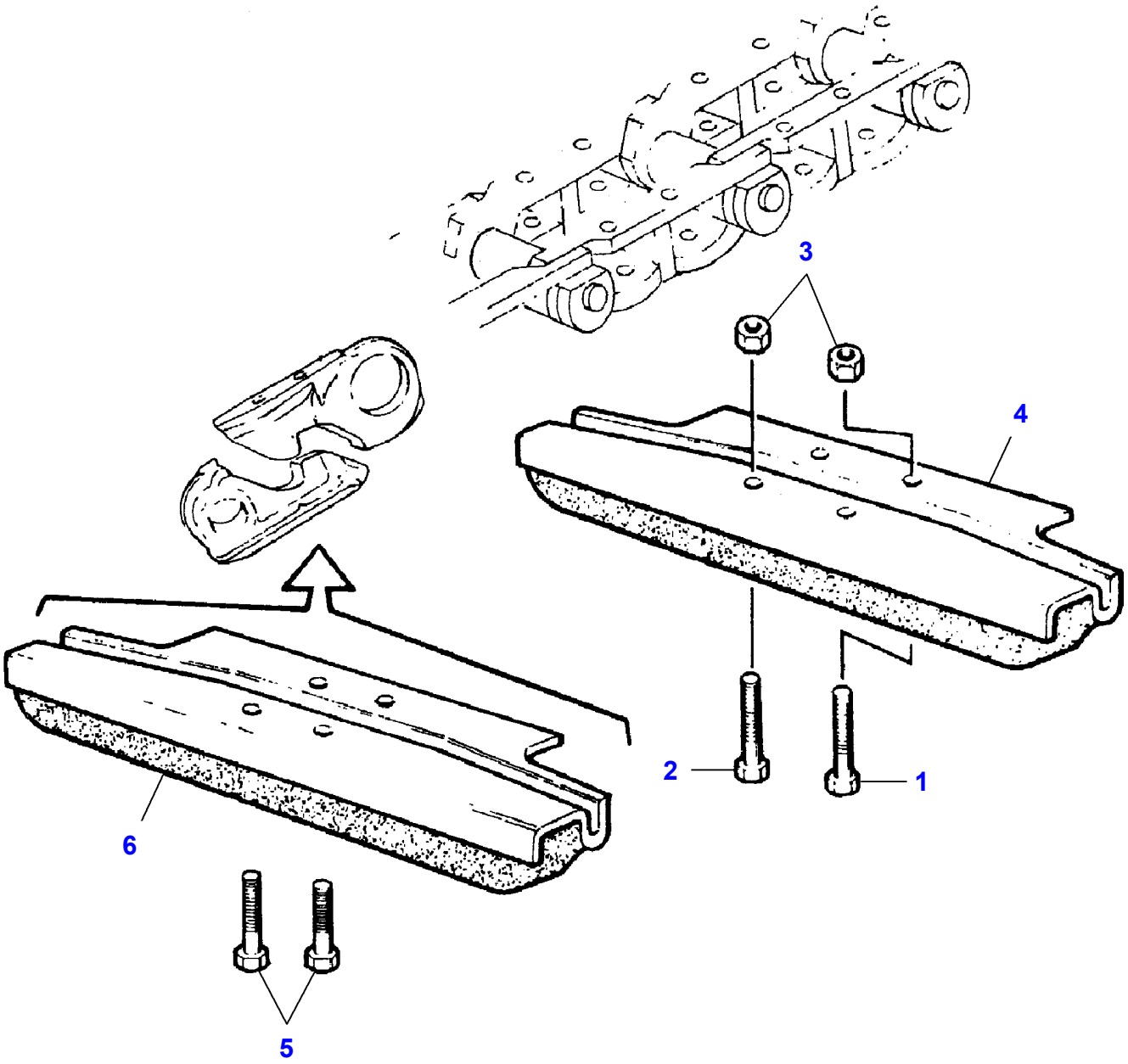

Item	Part Number	Qty	Description	Comments
1	LA11391531	1	Cap Screw	
2	LA15835231	1	Cap Screw	
3	LA300135424	30	Nut	
4	LA322029950	1	Skate	Right Hand RUBBER
	LA322030050	1	Skate	Left Hand RUBBER
5	LA322565650	2	Cap Screw	
6	LA322030150	1	Skate	Right Hand RUBBER
	LA322030250	1	Skate	Left Hand RUBBER

L-LC72-006-A

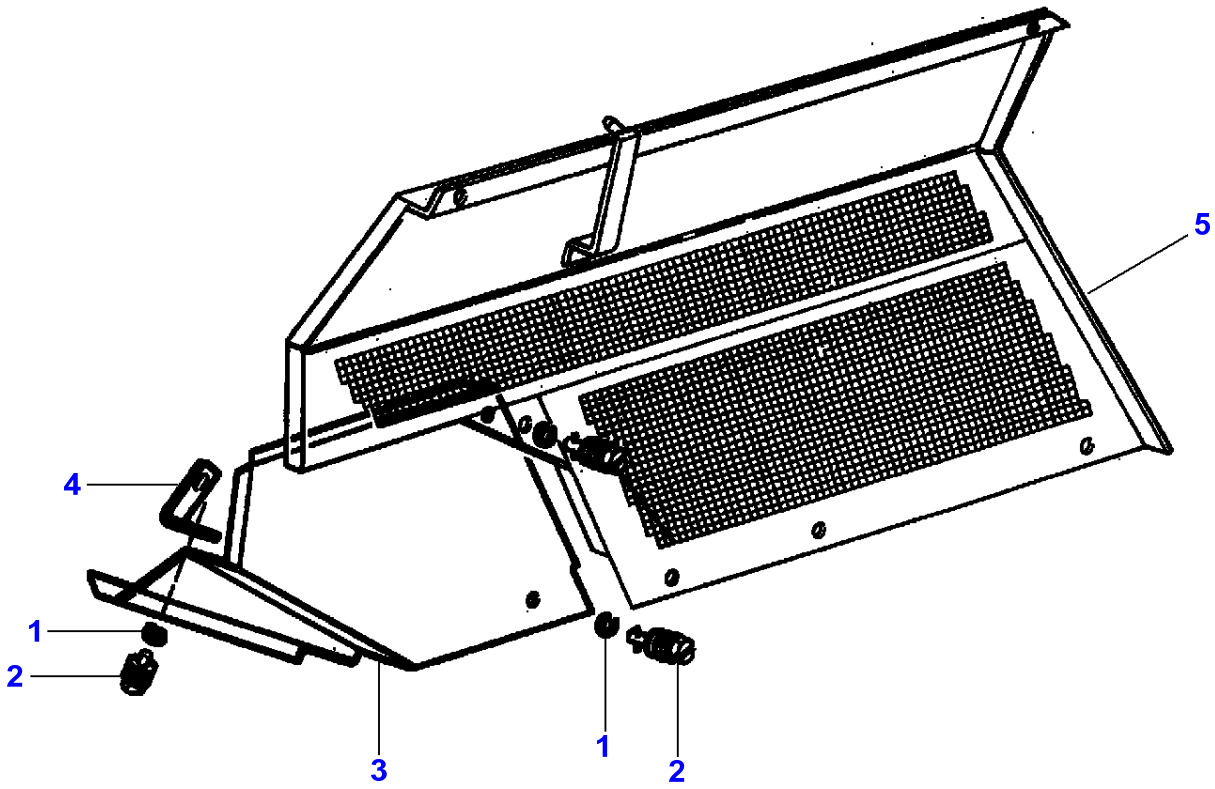

Item	Part Number	Qty	Description	Comments
1	LA320899350	2	Lock Washer	
2	LA321551650	2	Screw Special	
3	LA322646050	1	Shield	
4	LA322646150	1	Cover	
5		1	Shield	See Page - Reference Number 090-0020/9

L-LC72-013-B

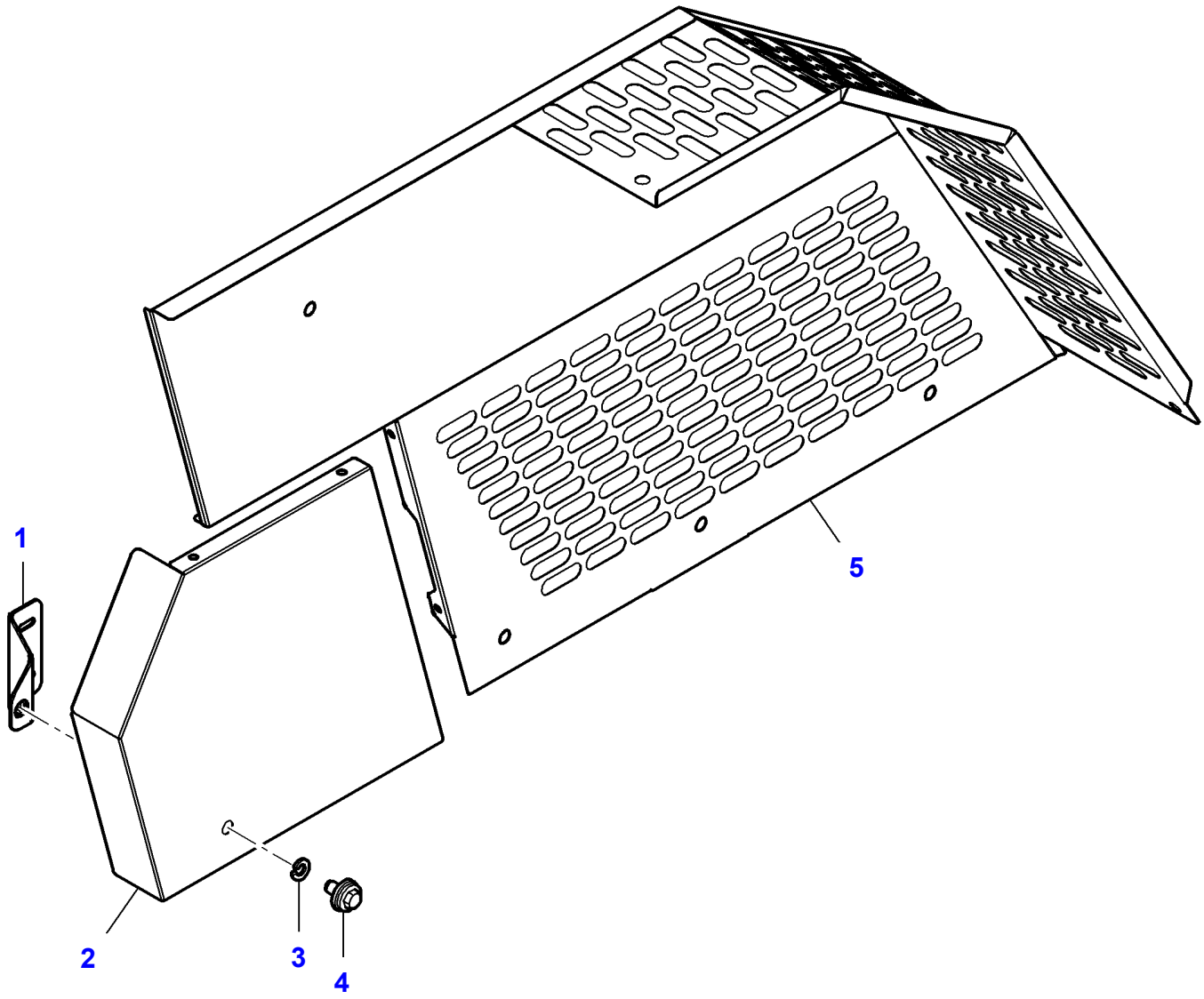

Item	Part Number	Qty	Description	Comments
1	LA323184850	1	Support	
2	LA323184750	1	Shield	
3	LA320899350	1	Lock Washer	
4	LA321551650	1	Screw Special	
5		1	Shield	See Page - Reference Number 090-0025/4

L-LD95-001-B

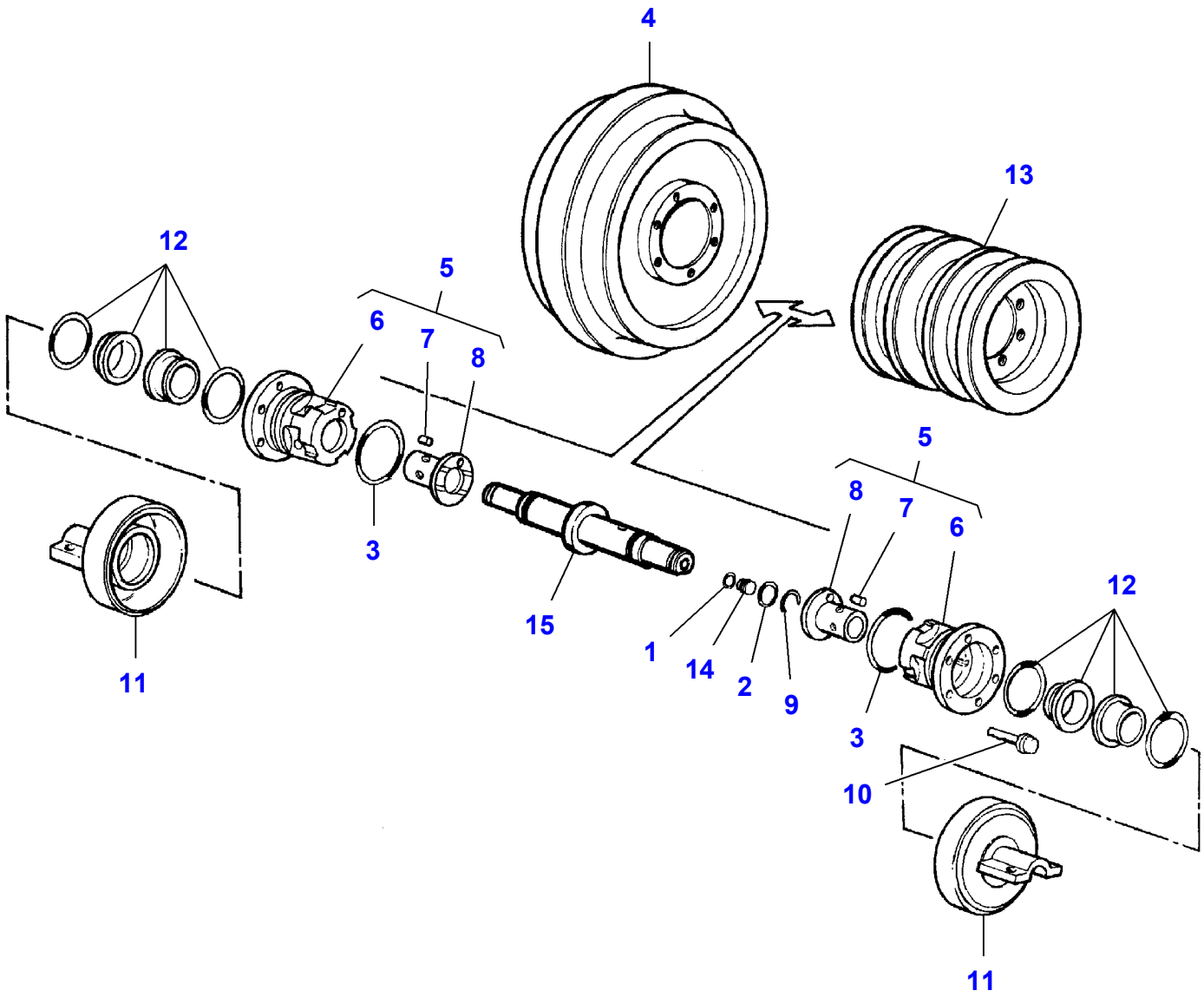

Item	Part Number	Qty	Description	Comments
1	LA5135735	1	O Ring	
2	LA14464380	1	O Ring	
3	LA14465680	2	O Ring	
4	LA300134325	1	Wheel	
5	LA313461800	2	Hub	
6	LA300134618	1	Hub	(5)
7	LA300134619	1	Roll Pin	(5)
8	LA300134620	1	Bush	(5)
9	LA300134624	1	Ring	
10	LA300134625	1	Screw	
11	LA300134626	2	Support	
12	LA311816500	2	Kit, Joint	
13	LA300134326	1	Roller	
14	LA322583550	1	Plug	
15	LA322583650	1	Shaft	

L-LC75-001-B

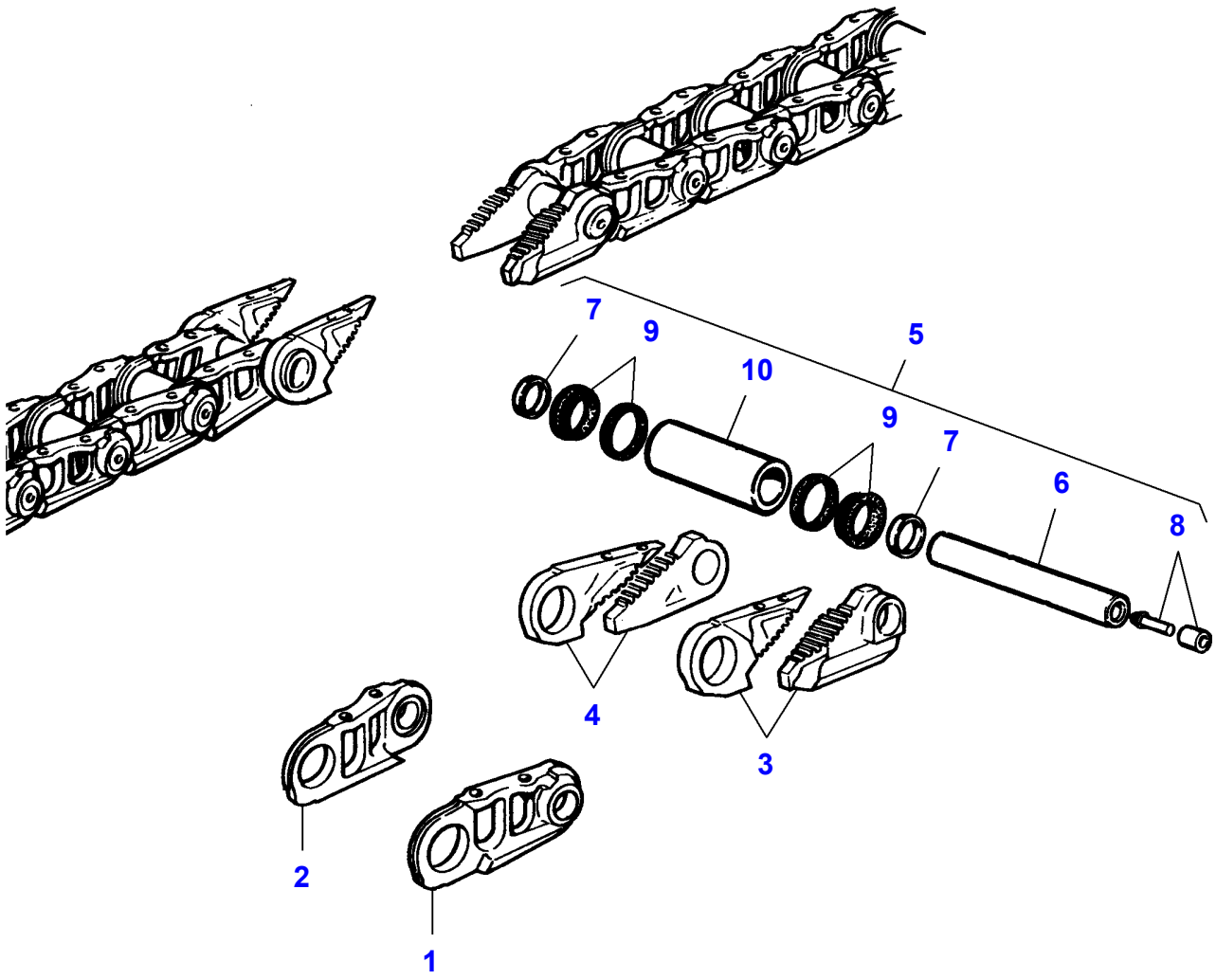

Item	Part Number	Qty	Description	Comments
1	**LA300134628**	1	Link	
2	**LA300134635**	1	Link	
3	**LA313545400**	2	Link	
4	**LA313545500**	2	Link	
5	**LA322583800**	2	Kit	
6	LA322507550	1	Pin	(5)
7	LA322507650	2	Spacer	(5)
8	LA322580500	1	Kit	(5)
9	LA322581100	2	Kit	(5)
10	LA322507450	1	Bush	(5)

L-LC72-007-B

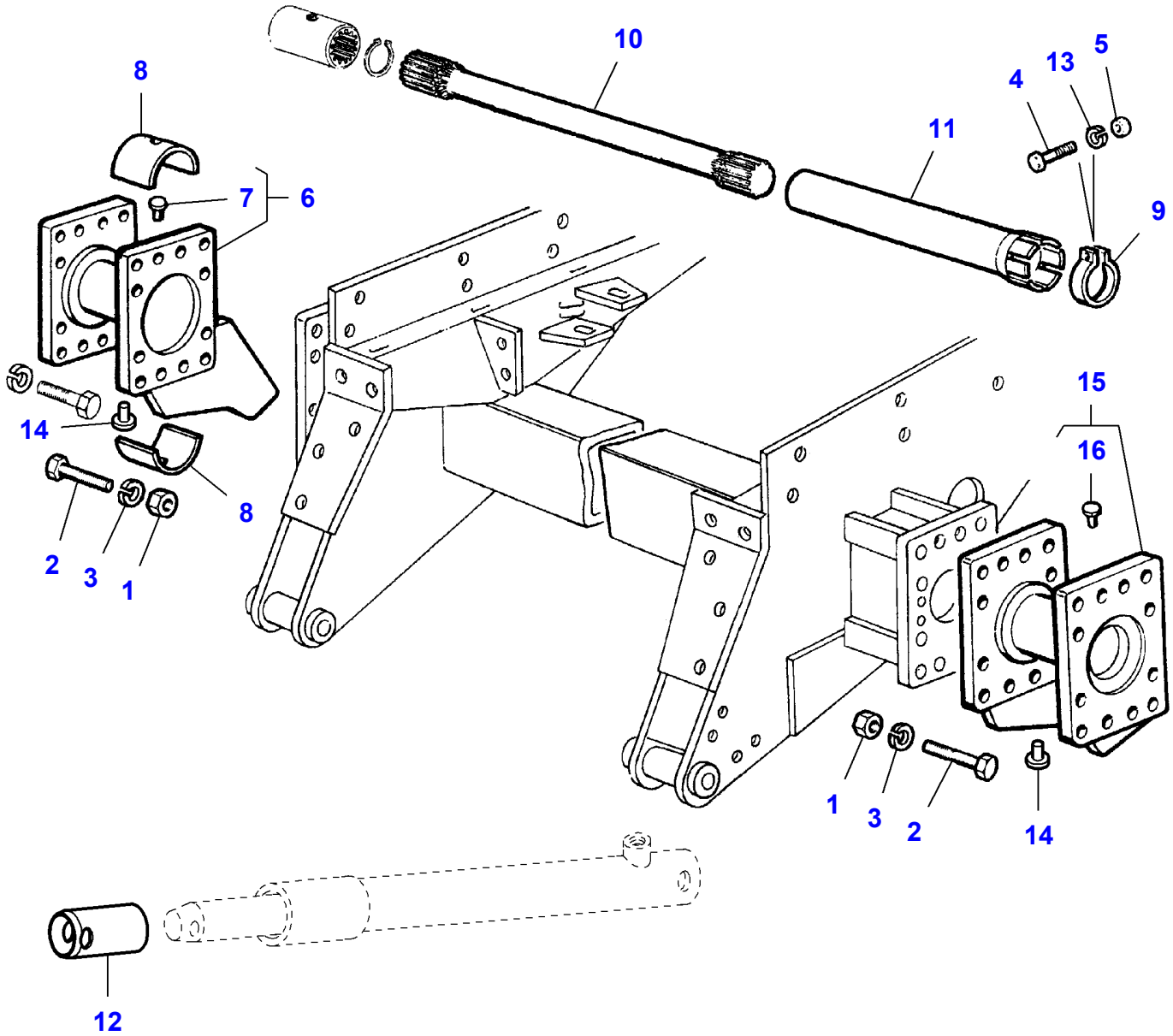

Item	Part Number	Qty	Description	Comments
1	LA10790521	32	Nut	
2	LA11254134	24	Cap Screw	
3	LA12034871	88	Lock Washer	
4	LA15213321	1	Cap Screw	
5	LA16100811	1	Nut	
6	LA320695650	1	Extension	
7	LA300131341	1	Pin	(6)
8	LA300132993	4	Bearing	
9	LA300015911	1	Collar	
10	LA321987650	2	Shaft	Length 626 mm
11	LA322004650	2	Shield	
12	LA323079050	2	Adaptor	
13	LA12034571	1	Lock Washer	
14	LA300131341	2	Pin	
15	LA320695550	1	Extension	
16	LA300131341	1	Pin	(15)

L-LC72-008-B

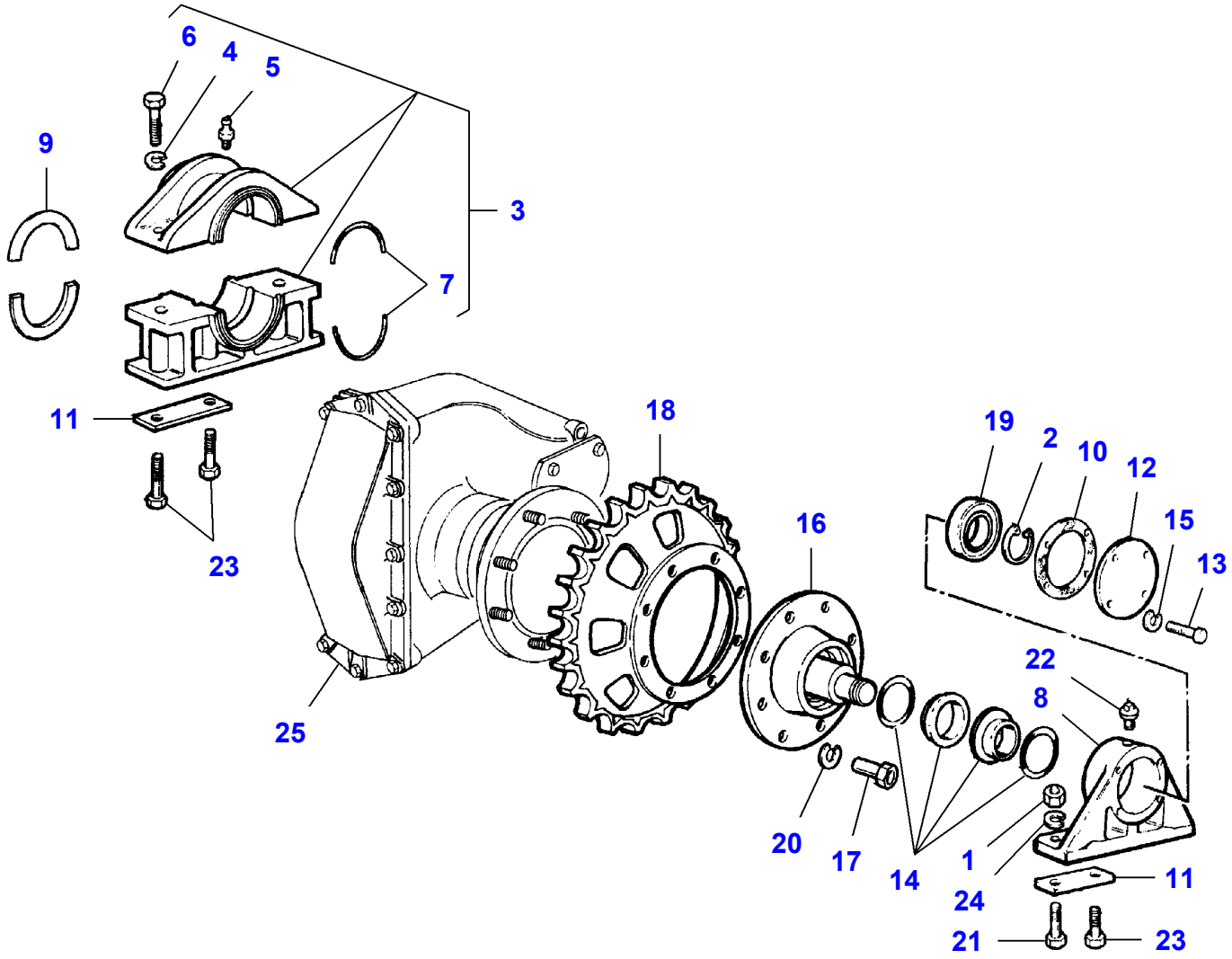

Item	Part Number	Qty	Description	Comments
1	LA10721121	4	Nut	
2	LA11070076	2	Circlip	
3	LA313299000	2	Support	
4	LA12035071	2	Lock Washer	(3)
5	LA350357803	1	Grease Fitting	(3)
6	LA15988531	2	Cap Screw	(3)
7	LA300134550	2	Gasket	(3)
8	LA300132991	2	Support	
9	LA300132992	8	Half Ring	
10	LA300132994	2	Gasket	
11	LA300132996	8	Plate	
12	LA300132997	2	Cover	
13	LA16043424	8	Cap Screw	
14	LA311455700	2	Kit, Joint	
15	LA12034571	10	Lock Washer	
16	LA320779450	2	Flange	
17	LA321119750	16	Screw	
18	LA322581850	2	Sprocket	
19	LA340405365	2	Bearing Assy	
20	LA350354533	16	Lock Washer	
21	LA15988521	4	Cap Screw	
22	LA350359405	2	Plug	
23	LA366172030	12	Cap Screw	
24	LA12035071	8	Lock Washer	
25		1	Gear	Right Hand See Page - Reference Number 030-0060/1
		1	Gear	Left Hand See Page - Reference Number 030-0060/1

L-LC72-009-B

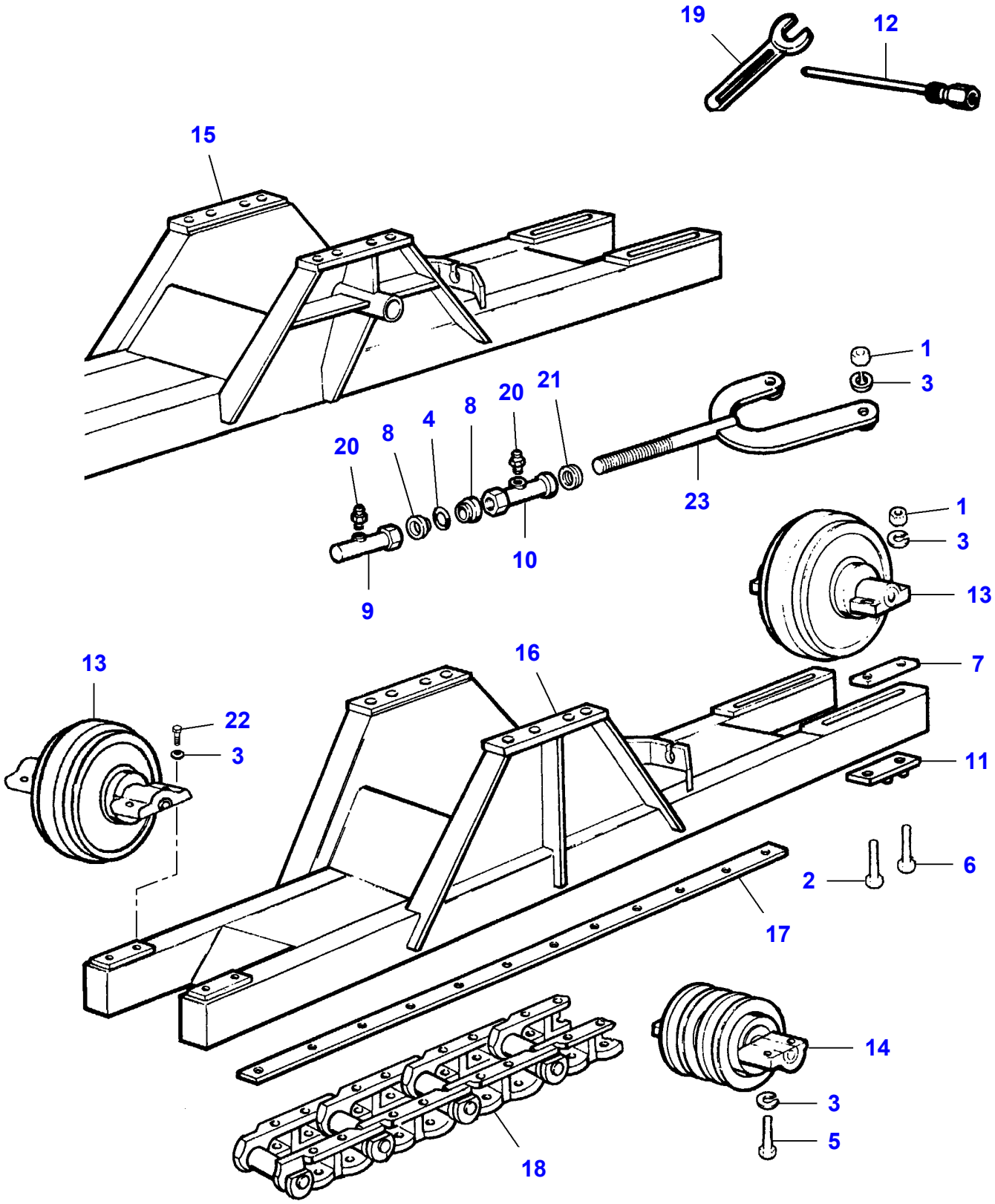

Item	Part Number	Qty	Description
1	LA10790521	32	Nut
2	LA11369631	4	Cap Screw
3	LA12034871	88	Lock Washer
4	LA14463680	2	O Ring
5	LA15981121	56	Cap Screw
6	LA15981531	4	Cap Screw
7	LA300128829	4	Plate
8	LA300130883	4	Washer
9	LA300131661	2	Union
10	LA300131662	2	Union
11	LA300134329	4	Reinforcement
12	LA322488450	1	Grease Fitting
13	LA322581900	2	Wheel
14	LA322582000	14	Roller
15	LA323077250	1	Body
16	LA323077350	1	Body
17	LA323079250	4	Rod
18	**LA323093300**	1	Chain
19	LA340440131	1	Tool
20	LA350357803	5	Grease Fitting
21	LA353587130	2	Gasket
22	LA15981131	4	Cap Screw
23	LA300131664	1	Support

L-LC72-010-B

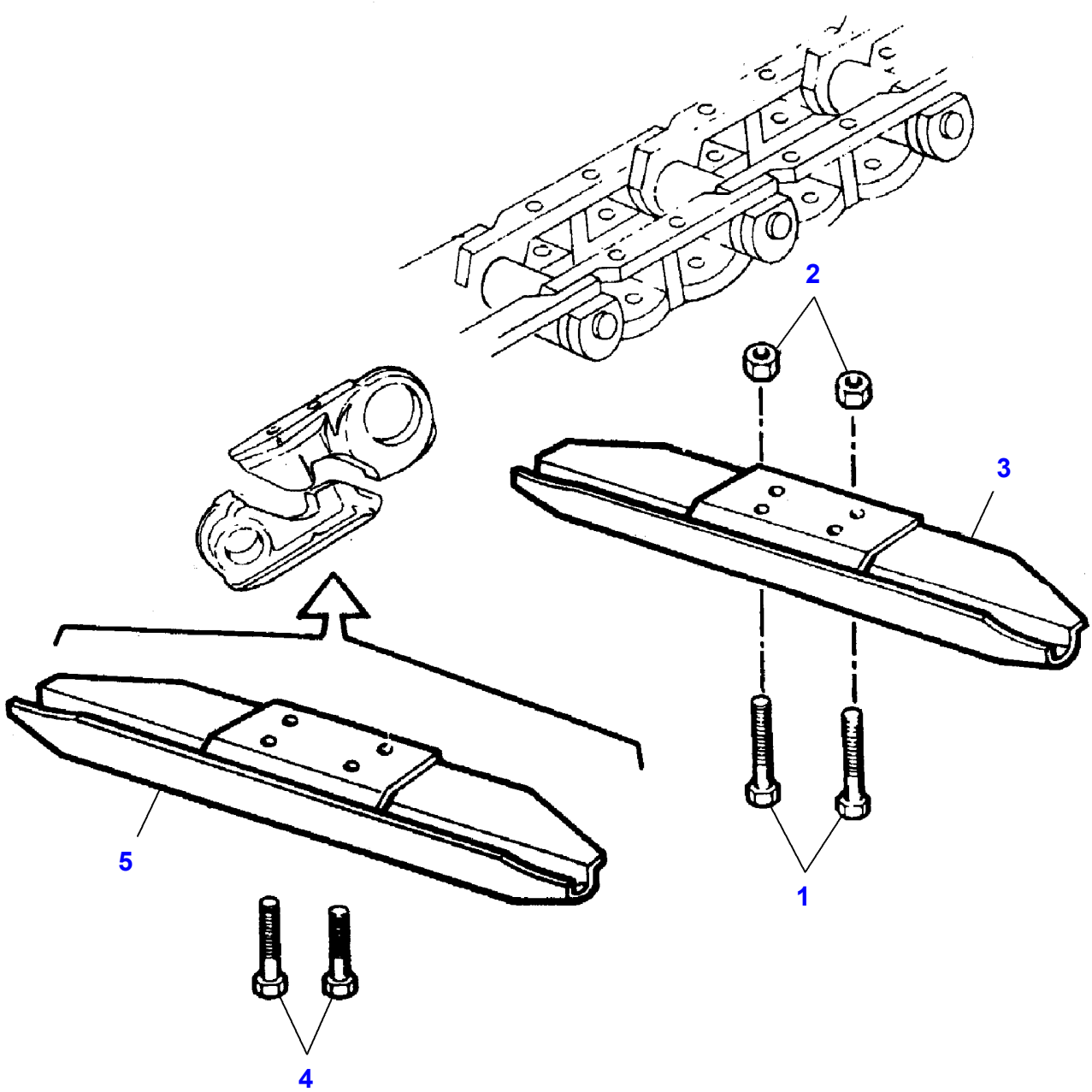

Item	Part Number	Qty	Description	Comments
1	LA15981031	4	Cap Screw	
2	LA300135424	4	Nut	
3	LA322029550	1	Skate	Right Hand
	LA322029650	1	Skate	Left Hand
4	LA322583250	4	Cap Screw	
5	LA322029750	1	Skate	Right Hand
	LA322029850	1	Skate	Left Hand

L-LC72-011-B

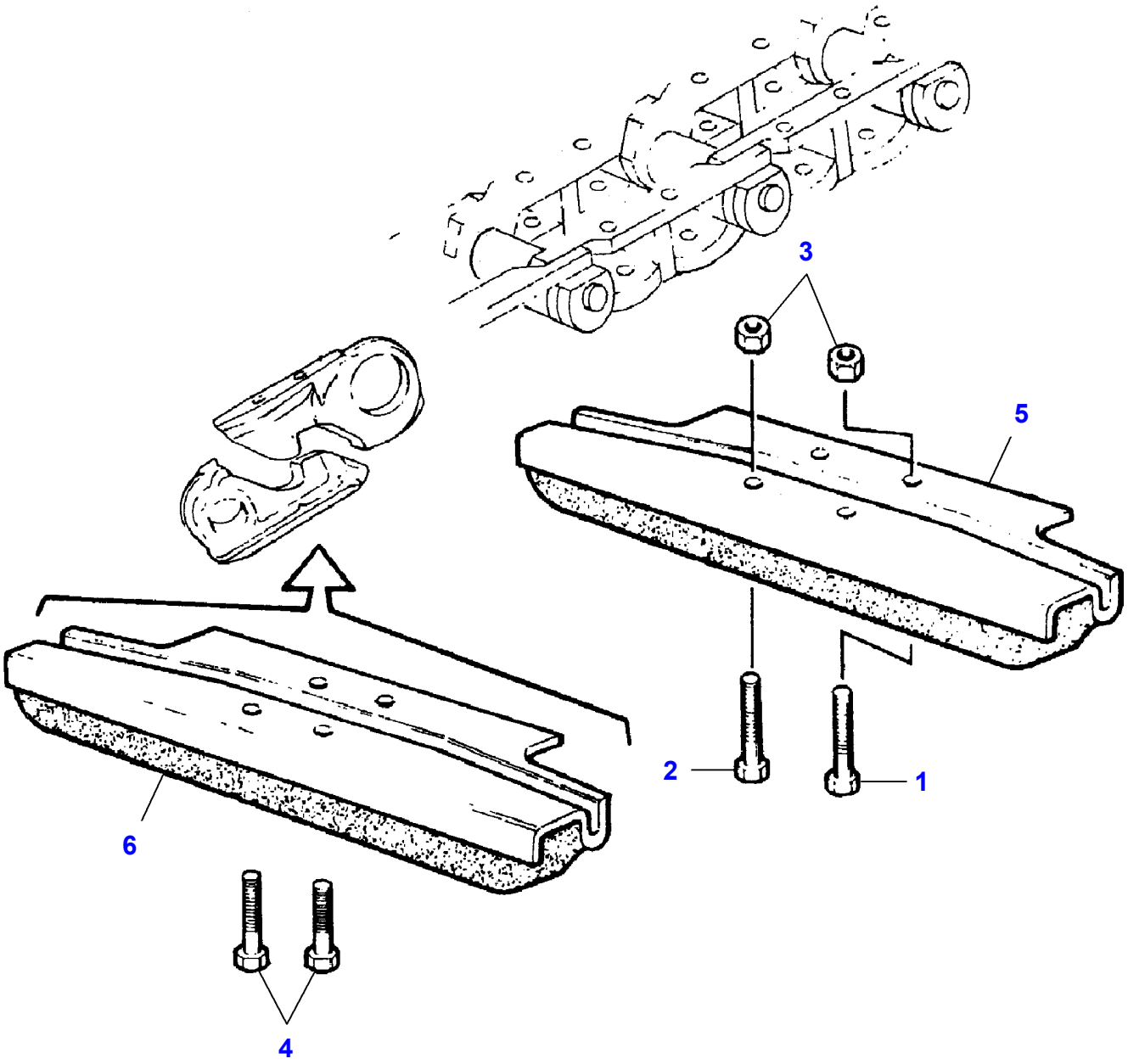

Item	Part Number	Qty	Description	Comments
1	LA11391531	2	Cap Screw	
2	LA15835231	2	Cap Screw	
3	LA300135424	4	Nut	
4	LA300135534	4	Cap Screw	
5	LA322029950	1	Skate	Right Hand
	LA322030050	1	Skate	Left Hand
6	LA322030150	1	Skate	Right Hand
	LA322030250	1	Skate	Left Hand

L-LC72-012-A

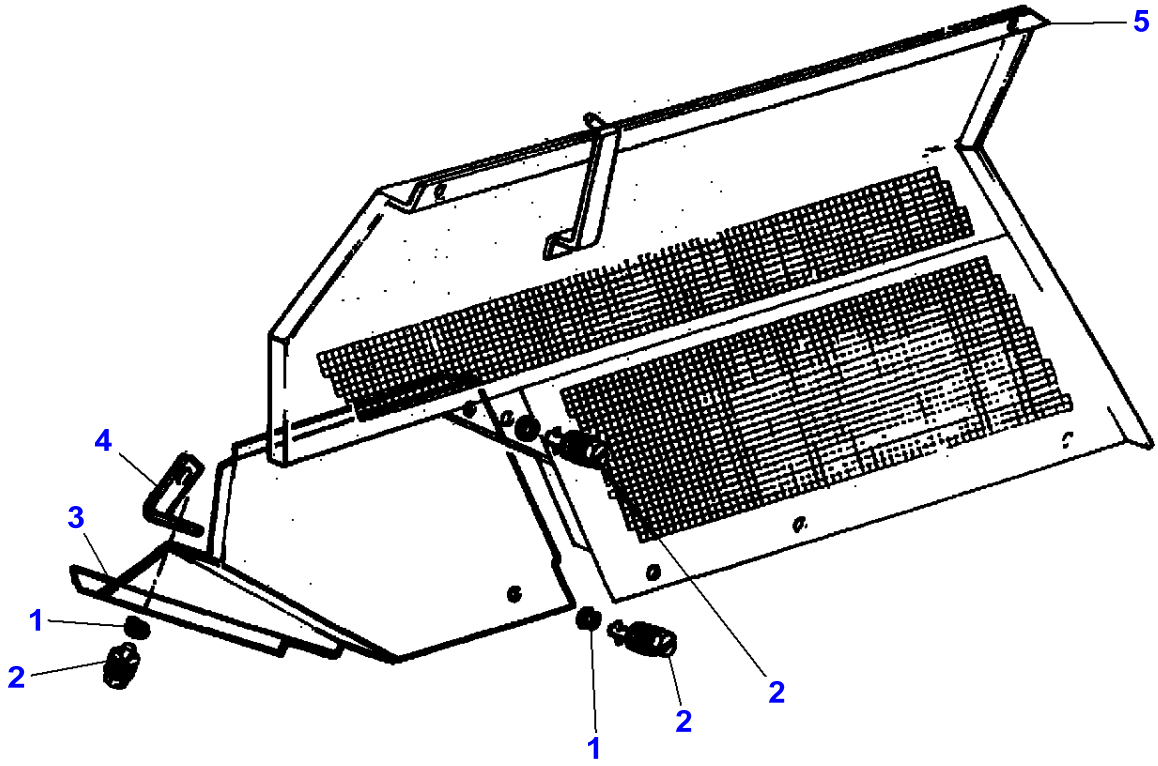

Item	Part Number	Qty	Description	Comments
1	LA320899350	3	Lock Washer	
2	LA321551650	3	Screw Special	
3	LA322646050	1	Shield	
4	LA322646150	1	Cover	
5		1	Shield	See Page - Reference Number 090-0020

L-LC72-014-B

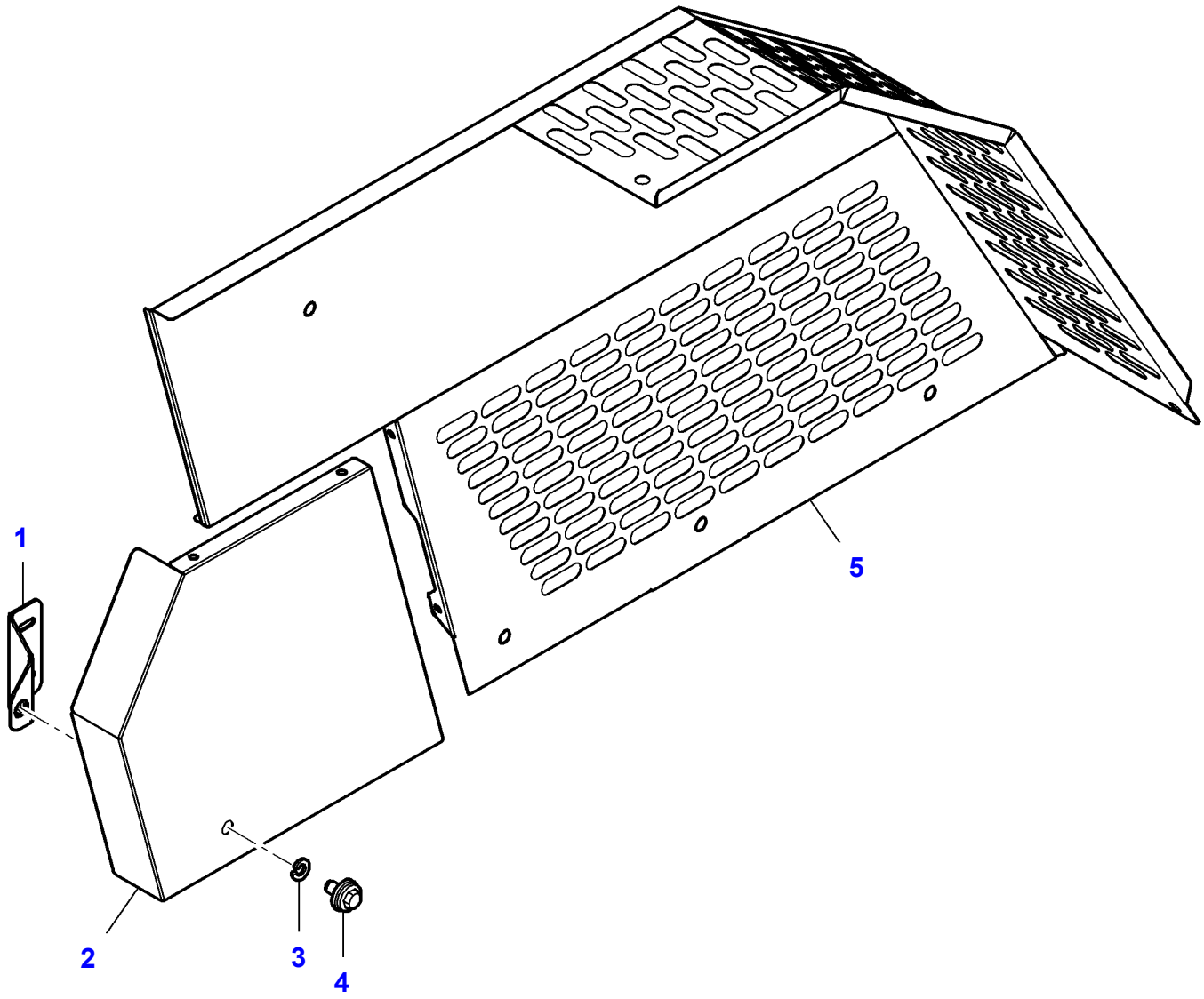

Item	Part Number	Qty	Description	Comments
1	LA323184850	1	Support	
2	LA323184750	1	Shield	
3	LA320899350	1	Lock Washer	
4	LA321551650	1	Screw Special	
5		1	Shield	See Page - Reference Number 090-0025/4

L-LC76-001-B

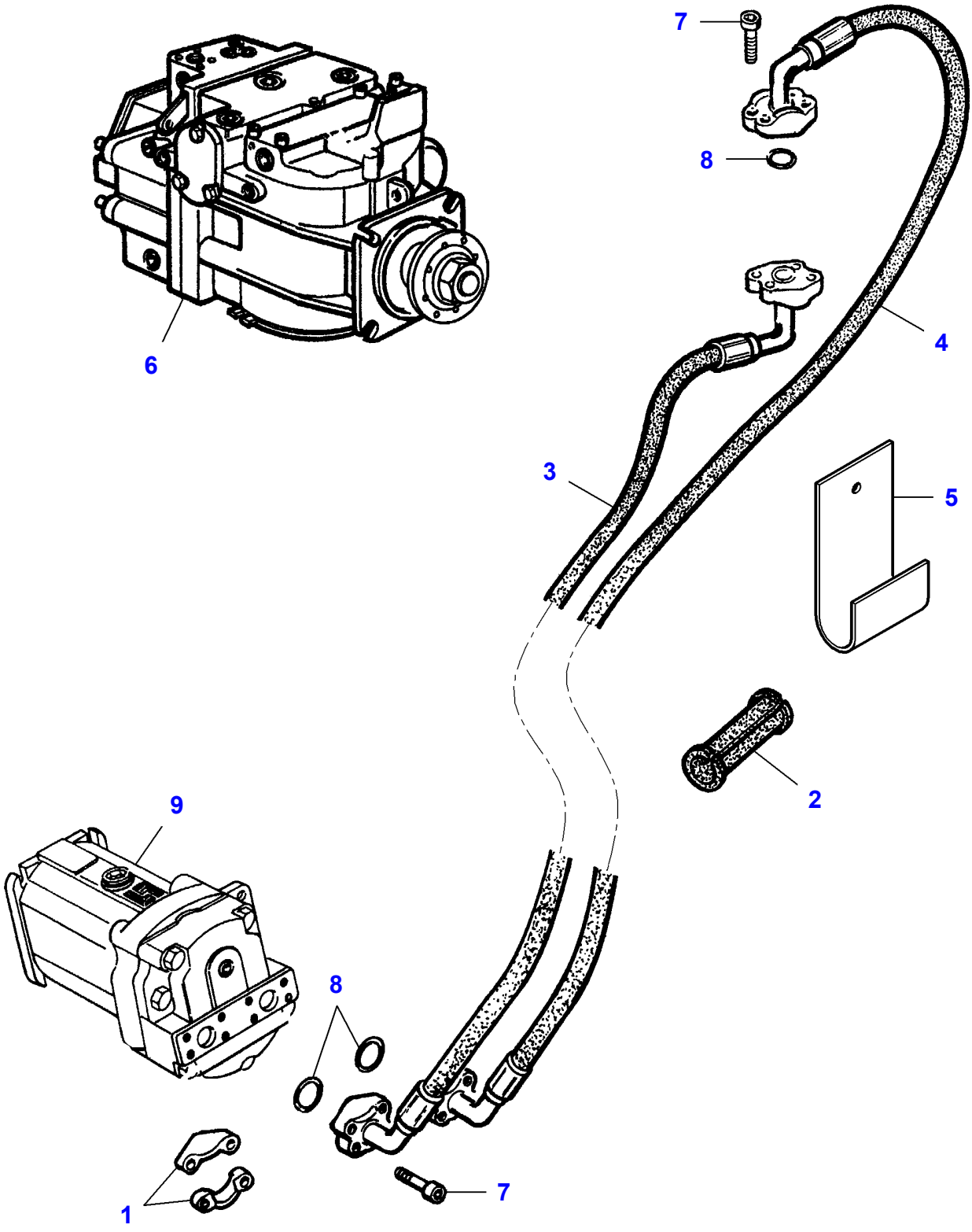

Item	Part Number	Qty	Description	Comments
1	LA311915300	2	Half Flange	
2	LA321829650	1	Bush	
3	LA322678850	1	Hydraulic Hose	
4	LA322678950	1	Hydraulic Hose	
5	LA323011750	1	Support	
6	LA323071400	1	Pump	
7	LA350345119	2	Hex Socket Screw	
8	LA350358114	3	O Ring	
9		1	Hydraulic Motor	See Page - Reference Number 030-0250/1

L-LC76-002-B

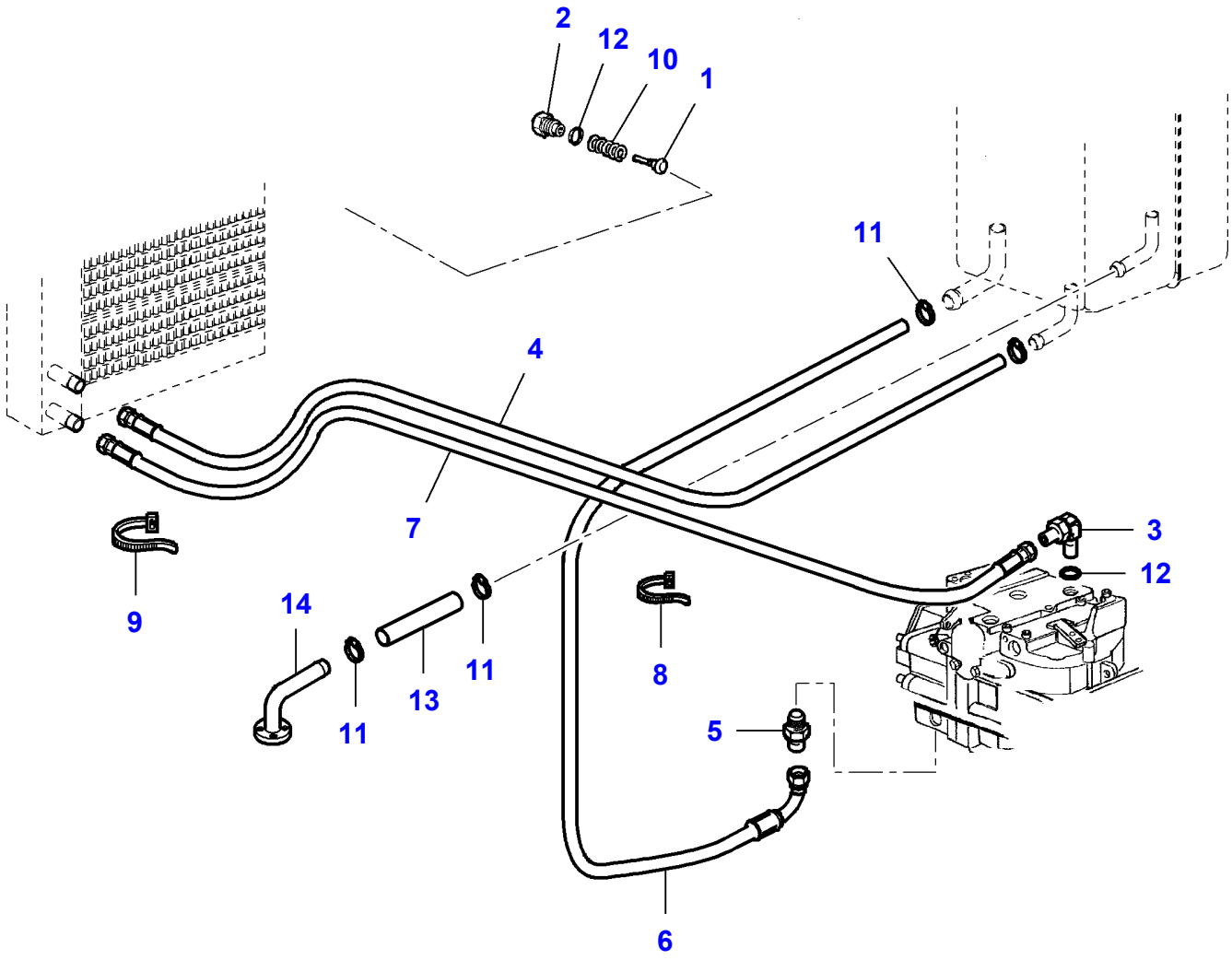

Item	Part Number	Qty	Description	Comments
1	LA321230650	1	Valve	
2	LA321230750	1	Plug	
3	LA321968400	1	Elbow Union	
4	LA322841650	1	Hose	
5	LA322943650	1	Union	
6	LA322967750	1	Hose	
7	LA322967850	1	Hose	
8	LA340481808	1	Cable Tie	
9	LA340481811	1	Cable Tie	
10	LA350356127	1	Spring	
11	LA350391526	4	Hose Clip	
12	LA353587177	2	O Ring	
13		1	Hose	See Page - Reference Number 110-0005/15
14		1	Union	See Page - Reference Number 110-0005/19

L-LC77-001-B

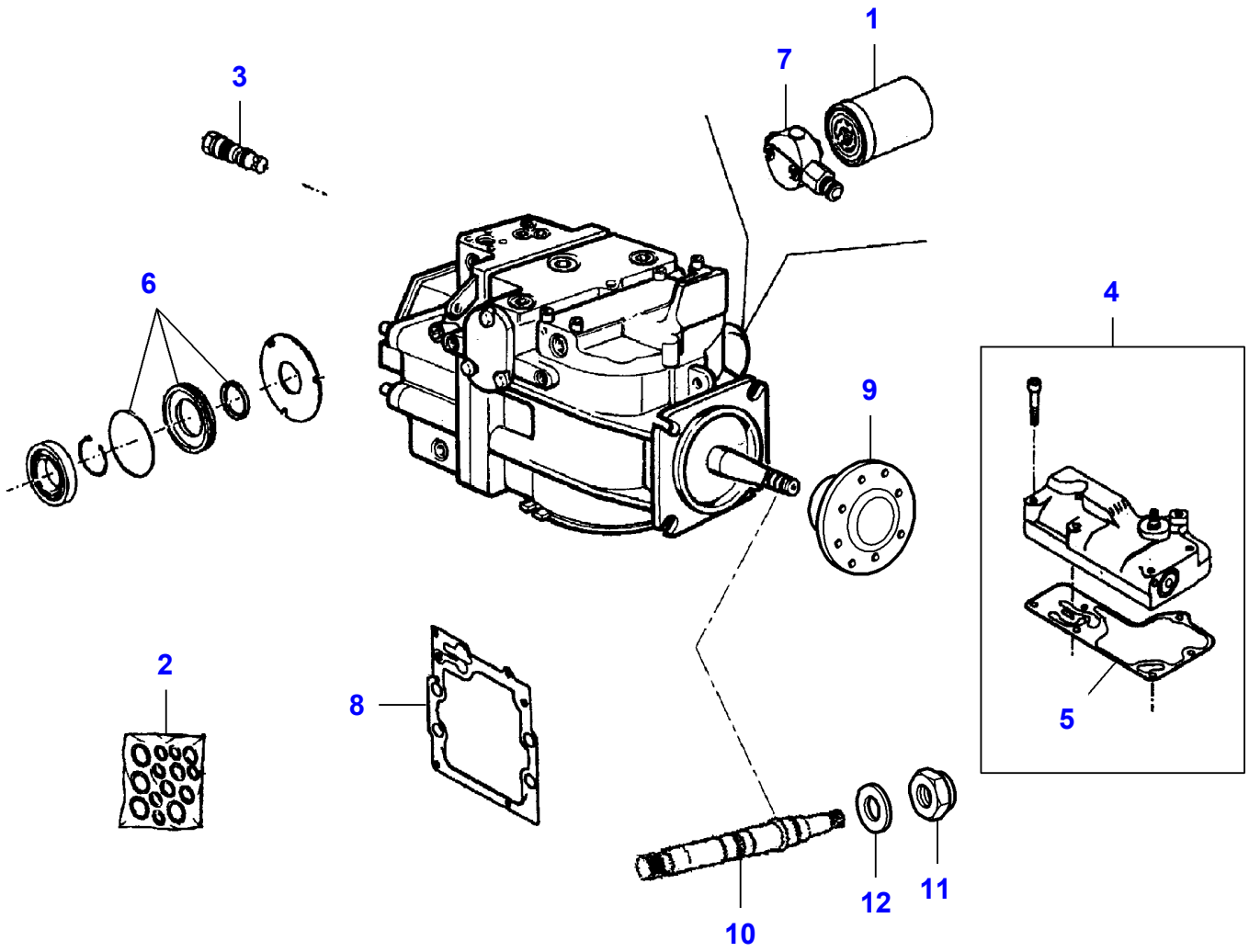

Item	Part Number	Qty	Description	Comments
1	**LA322104400**	1	Filter	
2	LA322179900	1	Kit	
3	LA322180000	1	Valve	
4	LA322180100	1	Valve	
5	LA322180250	1	Gasket	(4)
6	LA322180400	3	Kit	
7	LA322180550	1	Piston	
8	LA322329450	1	Gasket	
9	LA322981650	1	Hub	
10	LA323075850	1	Shaft	
11	LA323076050	1	Nut	
12	LA355502540	1	Washer	

L-LC78-001-B

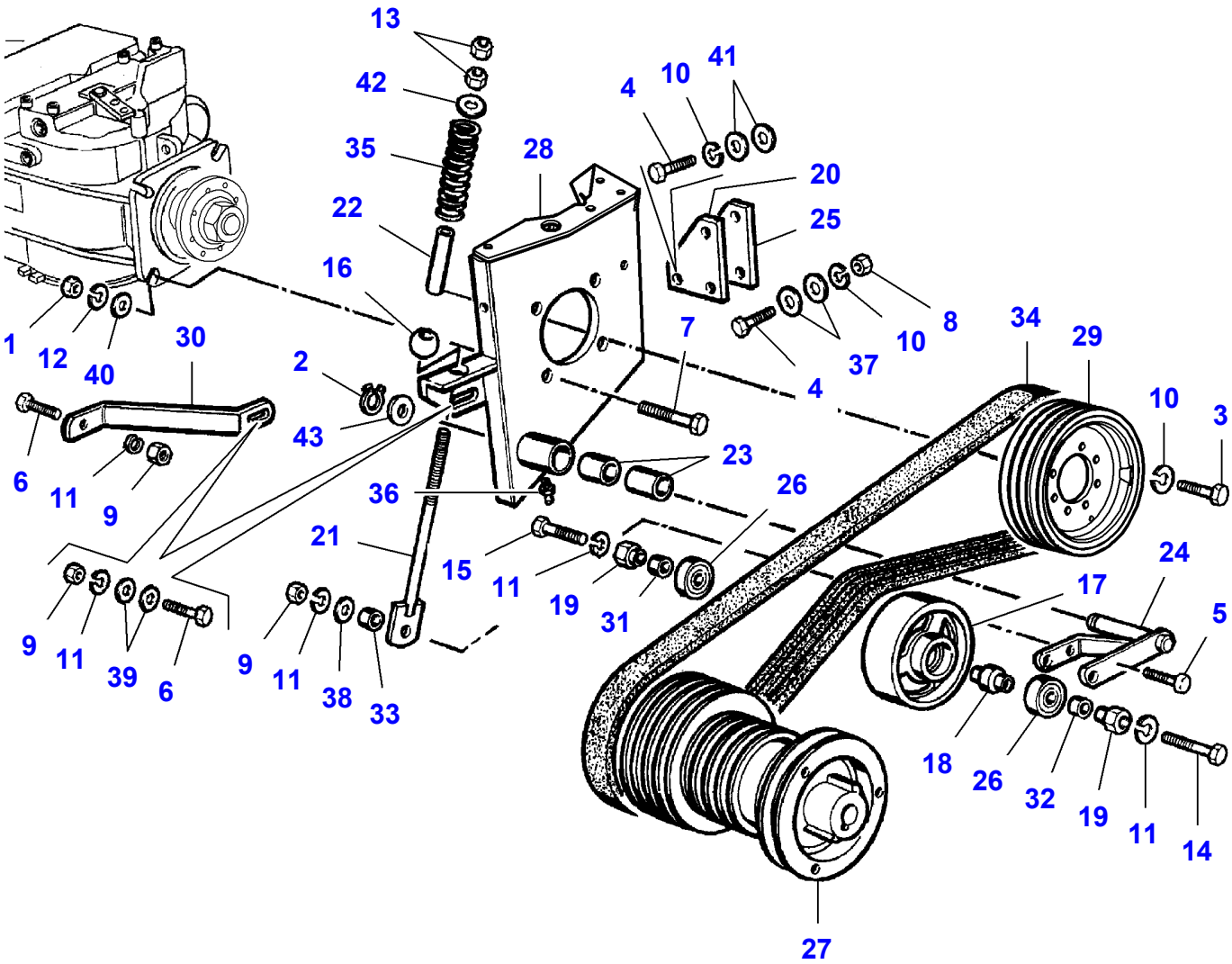
13
42
35
22
16
1
12
40
30
6
11
9
2
43
28
4
10
41
20
25
8
10
37
7
4
34
29
10
3
23
26
36
21
15
11
19
31
9
11
39
6
9
11
38
33
24
17
5
18
26
32
19
11
14
27

Item	Part Number	Qty	Description
1	LA10790421	1	Nut
2	LA11067376	1	Circlip
3	LA11106424	1	Cap Screw
4	LA11107221	2	Cap Screw
5	LA11112424	1	Cap Screw
6	LA11112821	2	Cap Screw
7	LA11394321	1	Cap Screw
8	LA11701721	1	Nut
9	LA11702921	3	Nut
10	LA12034671	3	Lock Washer
11	LA12034771	5	Lock Washer
12	LA12035571	1	Lock Washer
13	LA12163211	2	Nut
14	LA15232821	1	Cap Screw
15	LA15540521	1	Cap Screw
16	LA300015644	1	Knuckle
17	LA300117717	1	Pulley,Tensioner
18	LA300134315	1	Pin
19	LA300134396	2	Bush
20	LA321946150	1	Shim
21	LA322071250	1	Rod
22	LA322071350	1	Spacer
23	LA322100750	2	Spacer
24	LA322100950	1	Yoke
25	LA322225450	1	Shim
26	**LA322638450**	2	Bearing Assy
27	LA322810450	1	Pulley
28	LA322939050	1	Support
29	LA323003450	1	Pulley
30	LA323003650	1	Stop
31	LA340415104	1	Bush
32	LA344158143	1	Bush
33	LA344158149	1	Spacer
34	**LA344311227**	1	Belt
	LA344311233	1	Belt
35	LA350356256	1	Spring
36	LA350357851	1	Grease Fitting
37	LA355501130	2	Flat Washer
38	LA355501320	1	Flat Washer
39	LA355501330	2	Flat Washer
40	LA355501550	1	Flat Washer
41	LA355511040	2	Washer
42	LA355531830	1	Flat Washer
43	LA355536410	1	Flat Washer

L-LC78-002-A

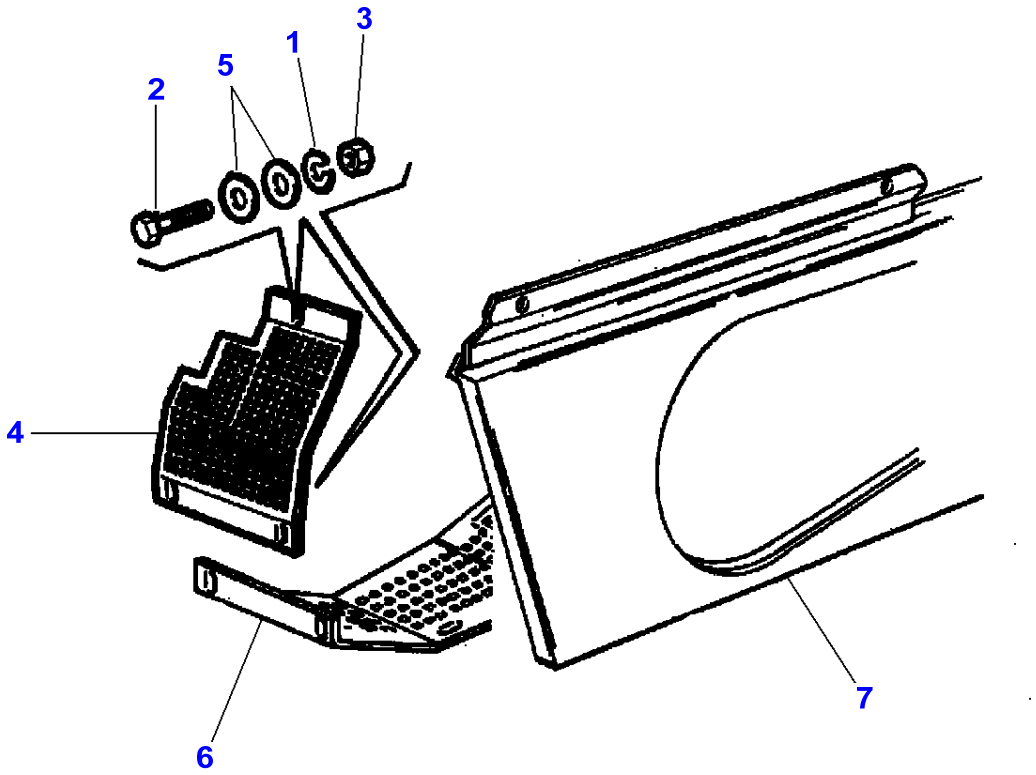

Item	Part Number	Qty	Description	Comments
1	LA12034571	1	Lock Washer	
2	LA16043624	1	Cap Screw	
3	LA16100811	1	Nut	
4	LA321930850	1	Shield	
5	LA355510820	2	Flat Washer	
6		1	Shield	See Page - Reference Number 070-0095/8
7		1	Shield	See Page - Reference Number 090-0020/10

L-LC79-001-B

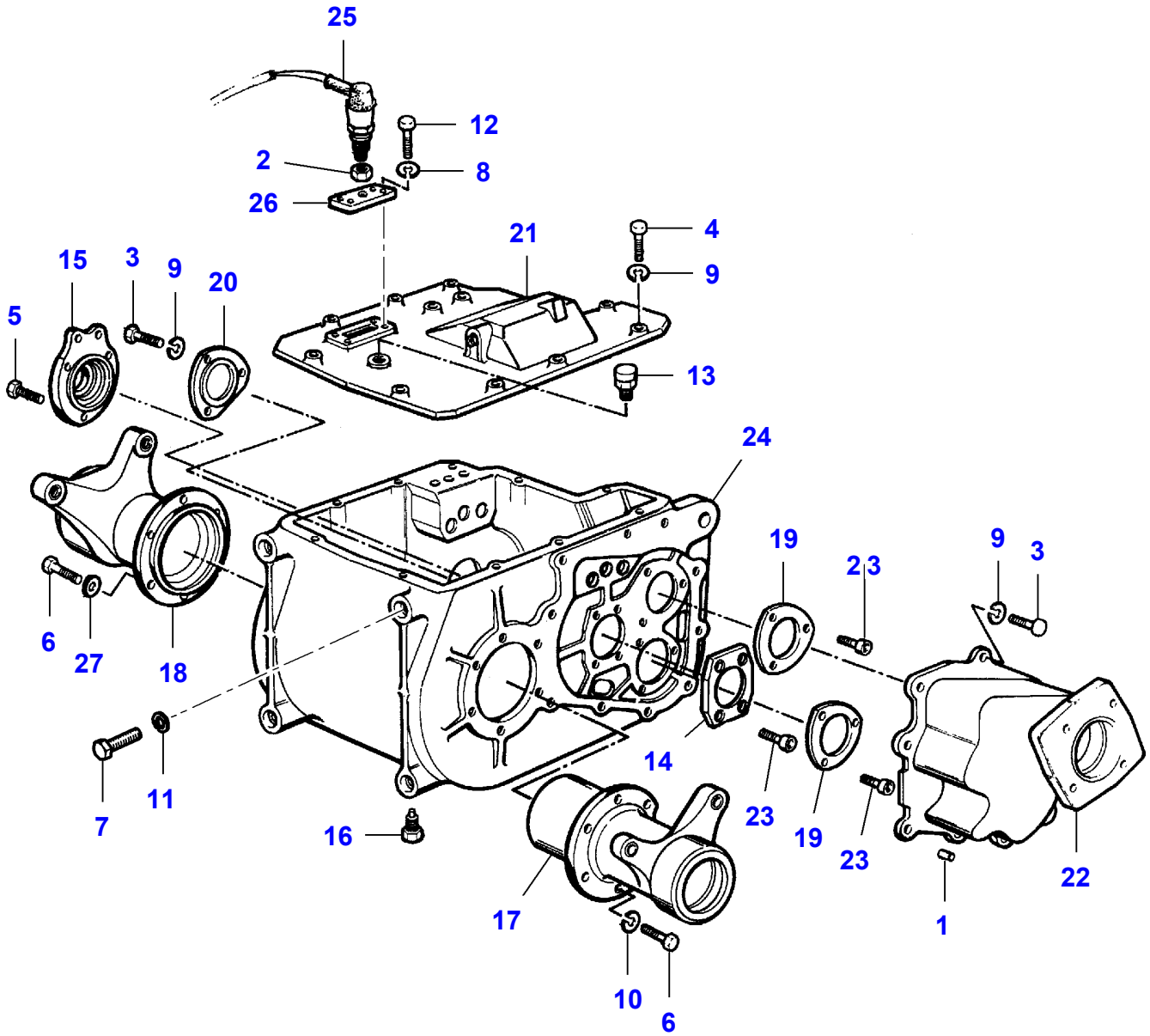
25
12
2
8
26
21
4
9
15
3
9
20
5
13
24
19
23
9
3
6
27
18
14
23
19
23
22
7
11
16
17
1
10
6

Item	Part Number	Qty	Description
1	LA10493120	1	Dowel
2	LA10726711	1	Nut
3	LA11106431	2	Cap Screw
4	LA11106631	1	Cap Screw
5	LA11107031	1	Cap Screw
6	LA11112431	2	Cap Screw
7	LA11119031	4	Cap Screw
8	LA12034571	1	Lock Washer
9	LA12034671	2	Lock Washer
10	LA12034771	1	Lock Washer
11	LA12034871	4	Lock Washer
12	LA16043424	1	Cap Screw
13	LA312974500	1	Plug
14	LA321873650	1	Flange
15	LA321873950	1	Support
16	LA322062500	1	Plug
17	LA322066050	1	Support
18	LA322066350	1	Support
19	LA322066450	2	Flange
20	LA322066550	1	Flange
21	LA322068550	1	Cover
22	LA322245550	1	Support
23	LA322276350	3	Hex Socket Screw
24	LA322534750	1	Box
25	LA322861500	1	Sensor
26	LA322861650	1	Cover
27	LA355561230	1	Washer

L-LC79-002-B

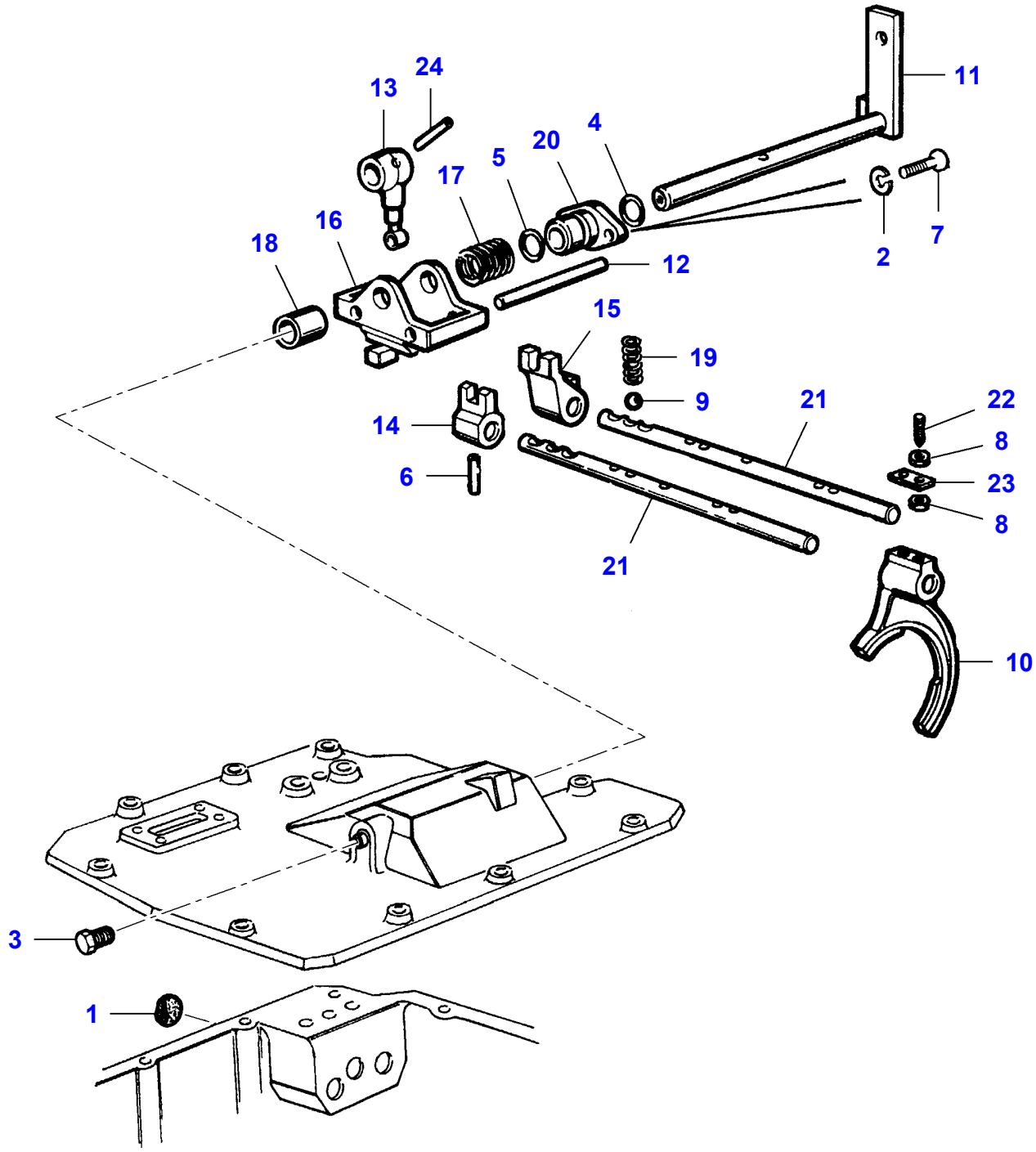

Item	Part Number	Qty	Description
1	LA10159004	1	Plug
2	LA12034571	1	Lock Washer
3	LA14325001	1	Plug
4	LA14457581	1	O Ring
5	LA14458580	1	O Ring
6	LA14604370	1	Roll Pin
7	LA16043424	1	Cap Screw
8	LA16102314	2	Nut
9	LA20063570	1	Ball
10	LA321872850	1	Yoke
11	LA321898050	1	Lever
12	LA321898150	1	Pin
13	LA321898250	1	Lever
14	LA321898350	1	Dog
15	LA321898450	1	Dog
16	LA321898650	1	Support
17	LA321898950	1	Spring
18	LA321899050	1	Spacer
19	LA321925050	1	Spring
20	LA322057050	1	Support
21	LA322099650	2	Rod
22	LA322686850	1	Grub Screw
23	LA322686950	1	Plate
24	LA350379621	1	Roll Pin

L-LC79-003-A

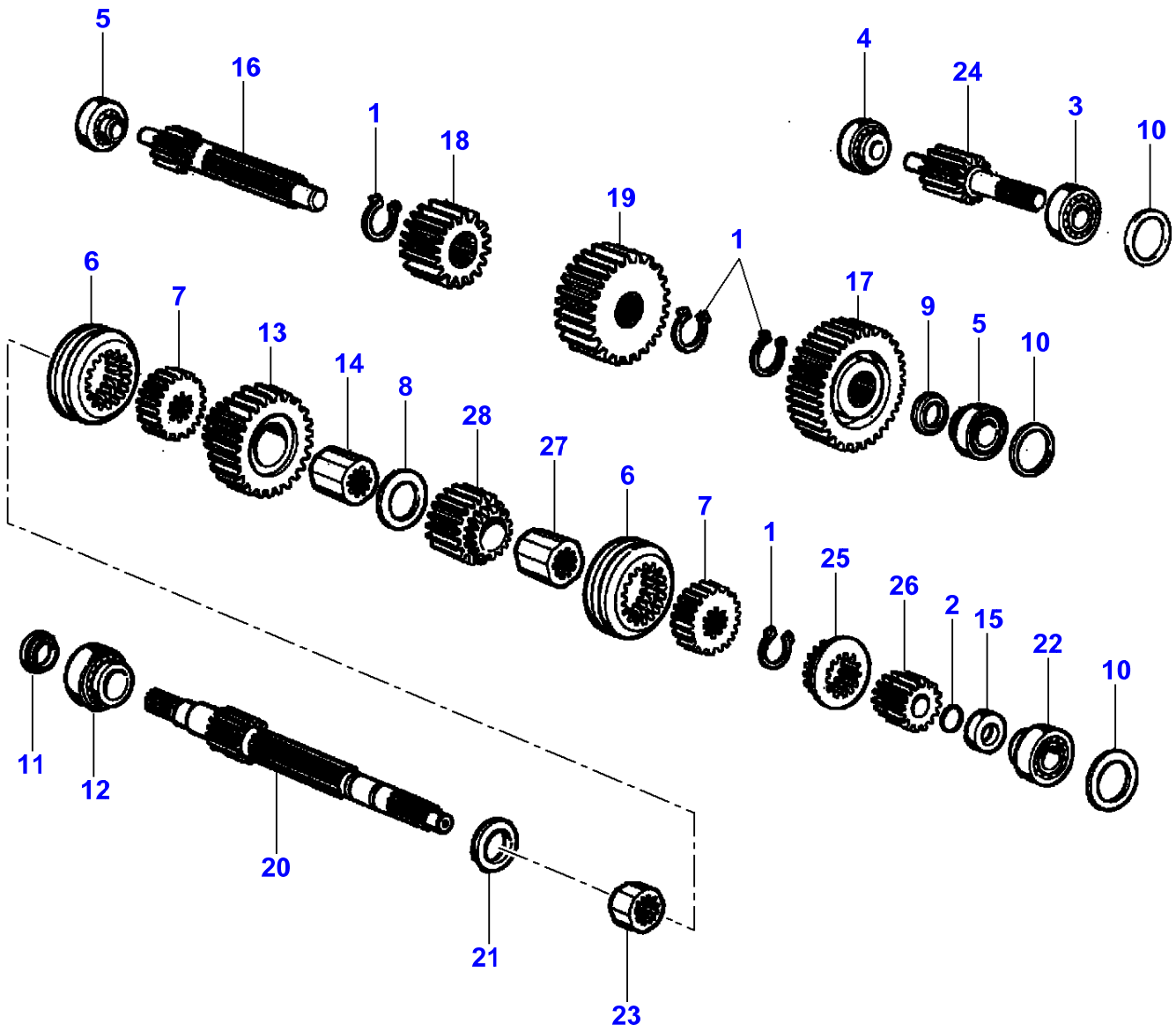
5
16
1
18
4
24
3
10
19
1
6
7
13
14
8
28
27
6
7
17
9
5
10
1
25
26
2
15
22
10
11
12
20
21
23

Item	Part Number	Qty	Description	Comments
1	LA11069576	4	Circlip	
2	LA13398976	1	Ring	
3	LA26799960	1	Bearing Assy	
4	LA26800130	1	Bearing Assy	
5	LA26800140	2	Bearing Assy	
6	LA321884250	2	Washer	
7	LA321884350	2	Gear	
8	LA321914550	1	Washer	
9	LA321914750	1	Washer	
10	LA321982550	1	Shim	Thickness 0,15 MM
	LA321982650	1	Shim	Thickness 0,20 MM
	LA321982750	1	Shim	Thickness 0,50 MM
11	LA353587180	1	Gasket	
12	LA340406551	1	Bearing Assy	
13	LA322066850	1	Gear	
14	LA322067950	1	Bush	
15	LA322068350	1	Spacer	
16	LA322097850	1	Shaft	
17	LA322097950	1	Gear	
18	LA322098050	1	Gear	
19	LA322098150	1	Gear	
20	LA322098250	1	Counter Shaft	
21	LA322098450	1	Shim	Thickness 5,00 MM
	LA322098550	1	Shim	Thickness 5,20 MM
	LA322098650	1	Shim	Thickness 5,40 MM
	LA322098750	1	Shim	Thickness 5,60 MM
	LA322098850	1	Shim	Thickness 5,80 MM
	LA322098950	1	Shim	Thickness 6,00 MM
22	LA340406540	1	Bearing Assy	
23	LA323033950	1	Spacer	
24	LA322244150	1	Shaft	
25	LA322099450	1	Gear	
26	LA322099350	1	Gear	
27	LA322099150	1	Bush	
28	LA322099250	1	Gear	

L-LC79-004-B

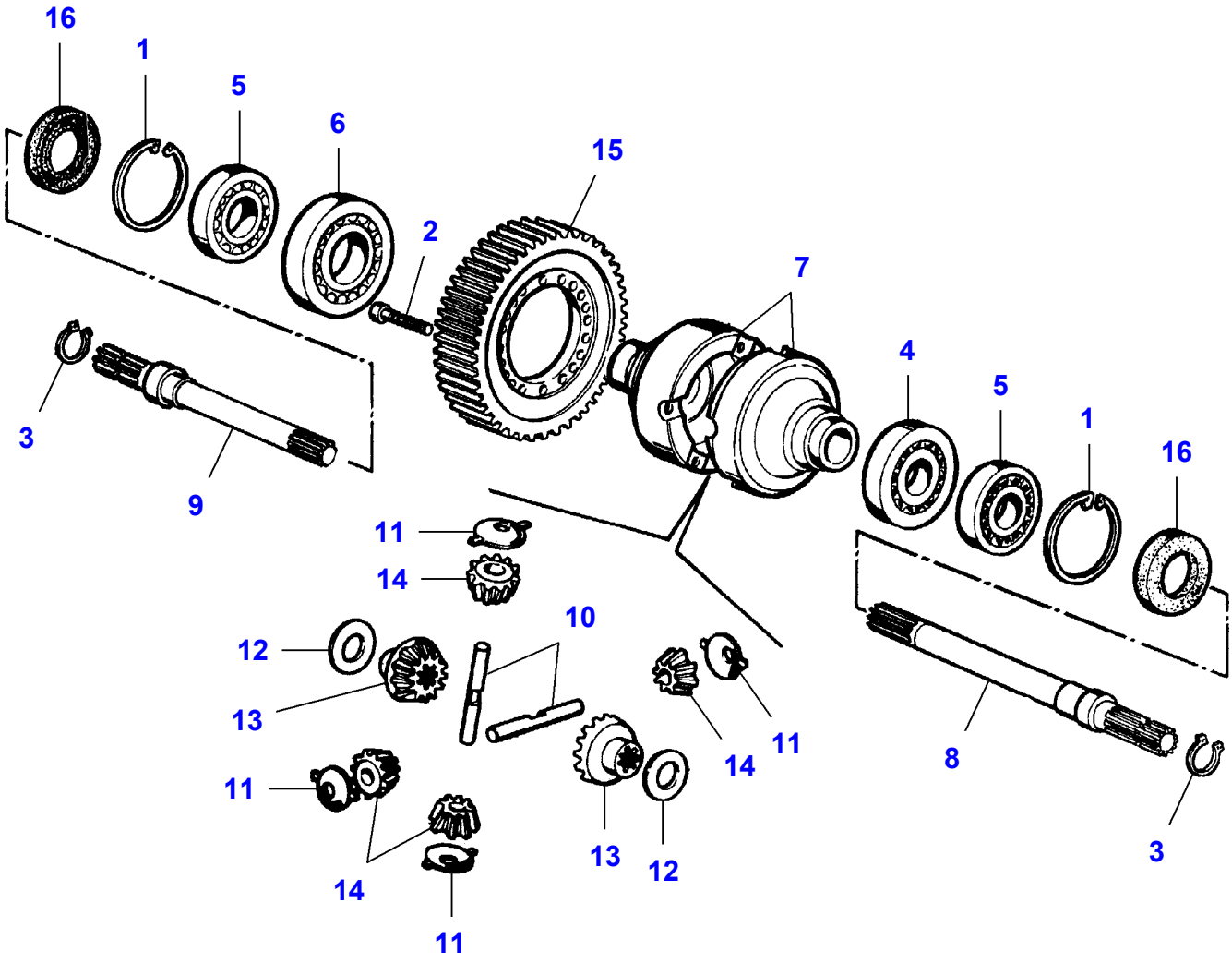

Item	Part Number	Qty	Description	Comments
1	LA11062976	2	Circlip	
2	LA14422634	1	Hex Socket Screw	Length 65 MM
	LA14423534	1	Hex Socket Screw	Length 110 MM
3	LA11069376	2	Circlip	
4	LA20645490	1	Bear. 6215	
5	LA20973340	2	Ball Bearing	
6	LA28042550	1	Bear. 6015	
7	LA321873500	2	Box	
8	LA321900450	1	Shaft	
9	LA321900550	1	Shaft	
10	LA321913250	2	Pin	
11	LA321913350	4	Plate	
12	LA321913450	2	Washer	
13	LA322095350	2	Gear	
14	LA322095450	4	Planet Gear	
15	LA322099550	1	Gear	
16	LA353583240	2	Gasket	

L-LC82-001-B

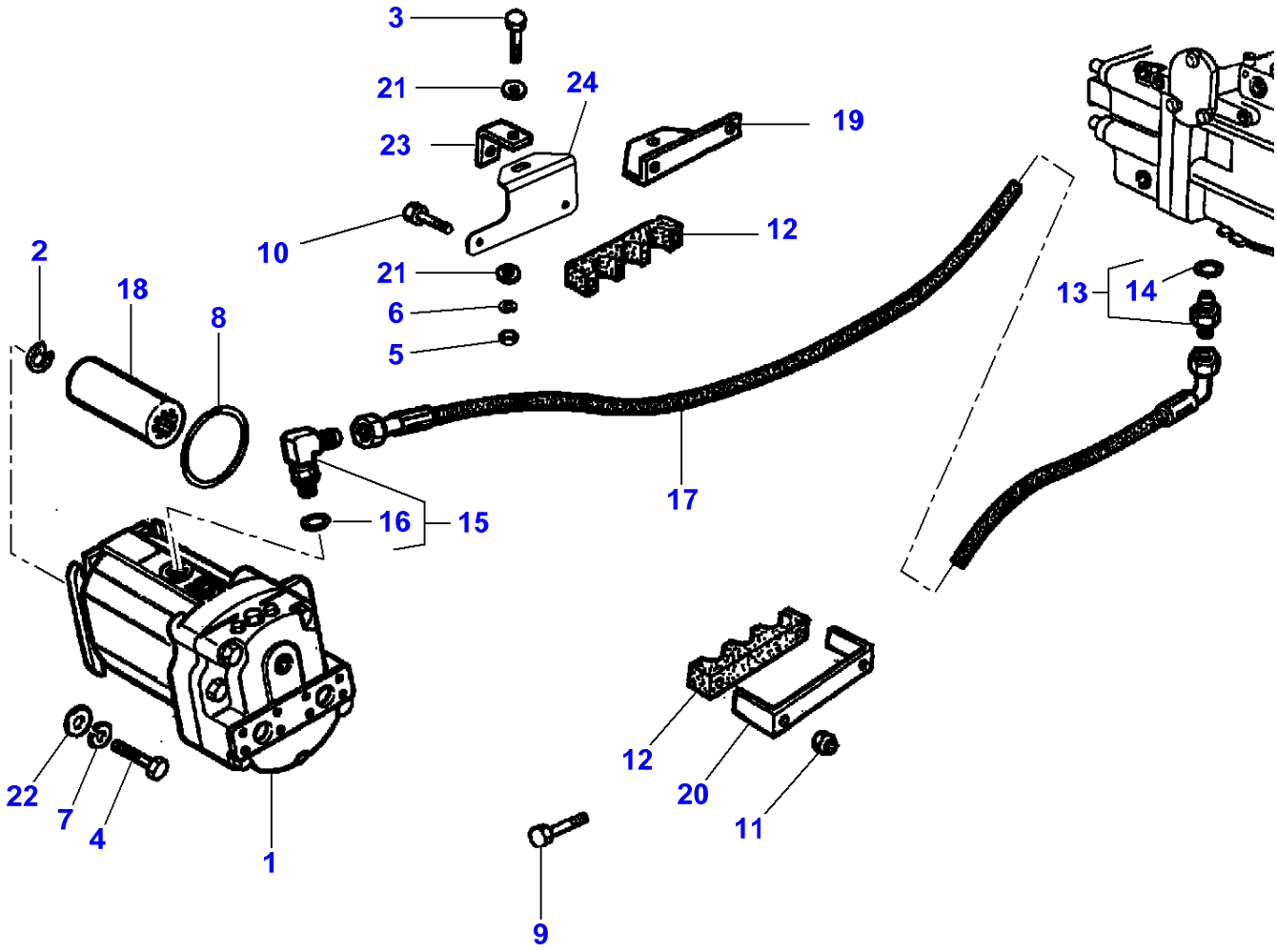

Item	Part Number	Qty	Description	Comments
1	LA9508952	1	Hydraulic Motor	See Page - Reference Number 030-0250/1
2	LA11059476	1	Circlip	
3	LA11112621	1	Cap Screw	
4	LA11116021	1	Cap Screw	
5	LA11702921	1	Nut	
6	LA12034771	1	Lock Washer	
7	LA12035571	1	Lock Washer	
8	LA14466880	1	Shield	
9	LA16043624	1	Cap Screw	
10	LA16044921	1	Cap Screw	
11	LA16104121	1	Locknut	
12	LA320978750	2	Clamp	
13	LA321961600	1	Union	
14	LA353587177	1	O Ring	(13)
15	LA321961800	1	Elbow Union	
16	LA353587177	1	O Ring	(15)
17	LA322085250	1	Hydraulic Hose	
18	LA322245850	1	Bush	
19	LA322691950	1	Support	Up to Serial or Engine Number
20	LA320978850	1	Bracket	
21	LA355501320	2	Flat Washer	
22	LA355501550	1	Flat Washer	
23	LA321980150	1	Bracket	
24	LA323184250	1	Support	From Serial or Engine Number 551710031

L-LC83-001-B

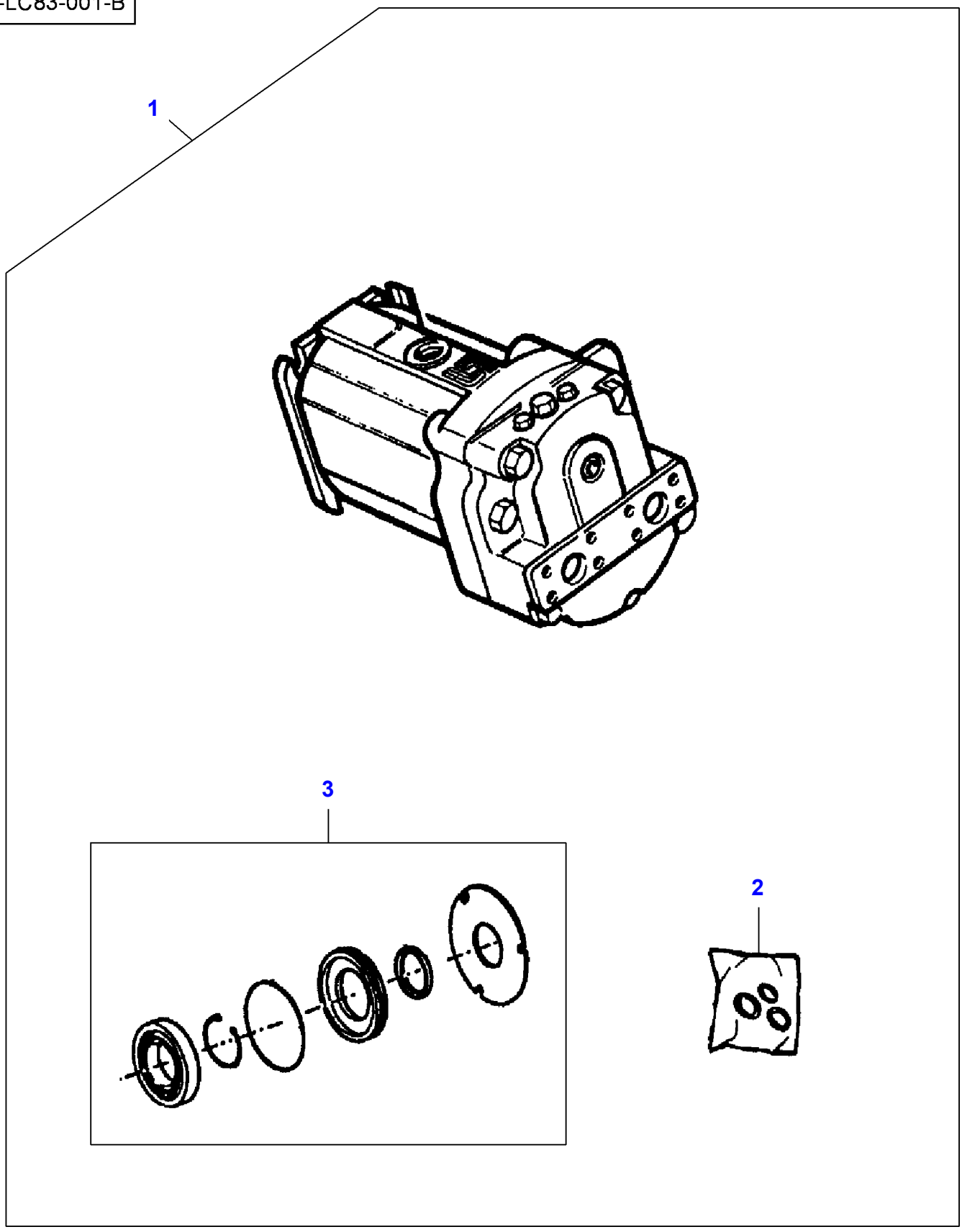

Item	Part Number	Qty	Description
1	LA9508952	1	Hydraulic Motor
2	LA322180600	1	Kit, Seal
3	LA322180400	1	Kit

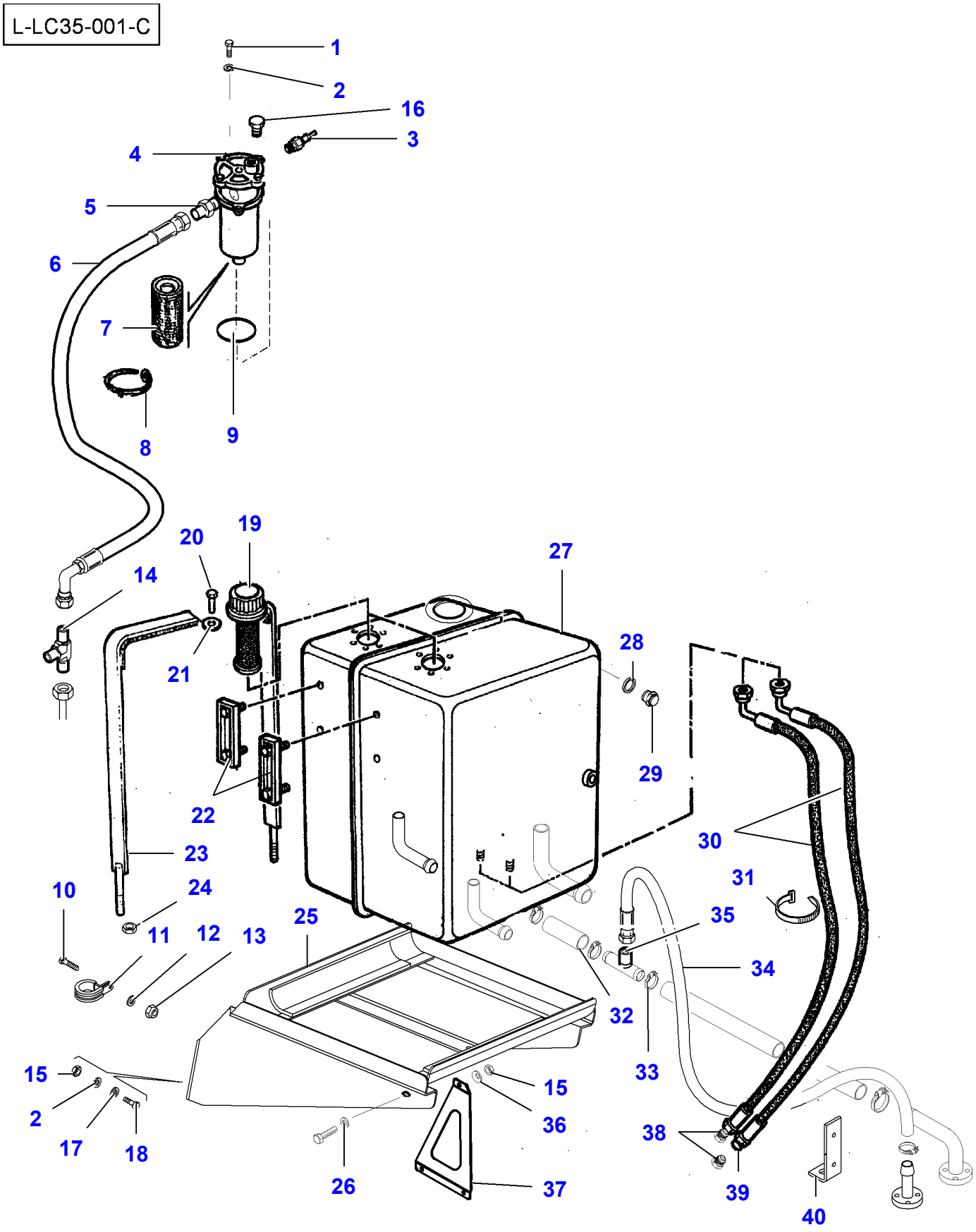
L-LC35-001-C
1
2
16
3
4
5
6
7
8
9
20
19
14
21
27
28
29
22
30
23
31
10
24
35
11
12
13
25
34
32
33
15
2
17
18
26
15
36
37
38
39
40

Item	Part Number	Qty	Description	Comments
1	LA16043424	1	Cap Screw	
2	LA12034571	2	Lock Washer	
3	LA320582450	1	Thermostat	
4	LA322736500	1	Filter	
5	LA322968200	1	Connector	
6	LA322085250	1	Hydraulic Hose	
7	**LA322736650**	1	Filter	
8	LA340481809	2	Cable Tie	
9	LA14472380	1	Seal	
10	LA10902421	1	Cap Screw	
11	LA10451090	1	Collar	
12	LA355510615	1	Flat Washer	
13	LA12574211	1	Locknut	
14	LA322870950	1	Connector	
15	LA16100811	1	Nut	
16	LA322747450	1	Plug	Up to Serial or Engine Number
17	LA355500915	1	Flat Washer	
18	LA16043421	1	Cap Screw	
19	**LA322131700**	1	Breather	
20	LA13274214	1	Screw	
21	LA355500615	1	Flat Washer	
22	LA311841100	2	Gauge	
23	LA300118433	1	Clip	
24	LA12577211	1	Nut	
25	LA322962850	1	Support	
26	LA355510820	1	Flat Washer	
27	LA322943550	1	Hydraulic Tank	
28	LA322731950	1	Washer	
29	LA350359406	4	Plug	
30	LA322159250	2	Hose	
31	LA340481809	1	Cable Tie	
32	LA300135204	1	Hose	
33	LA350391526	2	Hose Clip	
34	LA323273850	1	Hose	
35	LA323316950	1	T-Piece	
36	LA322358	1	Lock Washer	
37	LA323101950	1	Support	
38	LA321871950	1	Plug	
39	LA14462880	2	Gasket	
40	LA321963750	1	Collar	

L-LC35-013-A

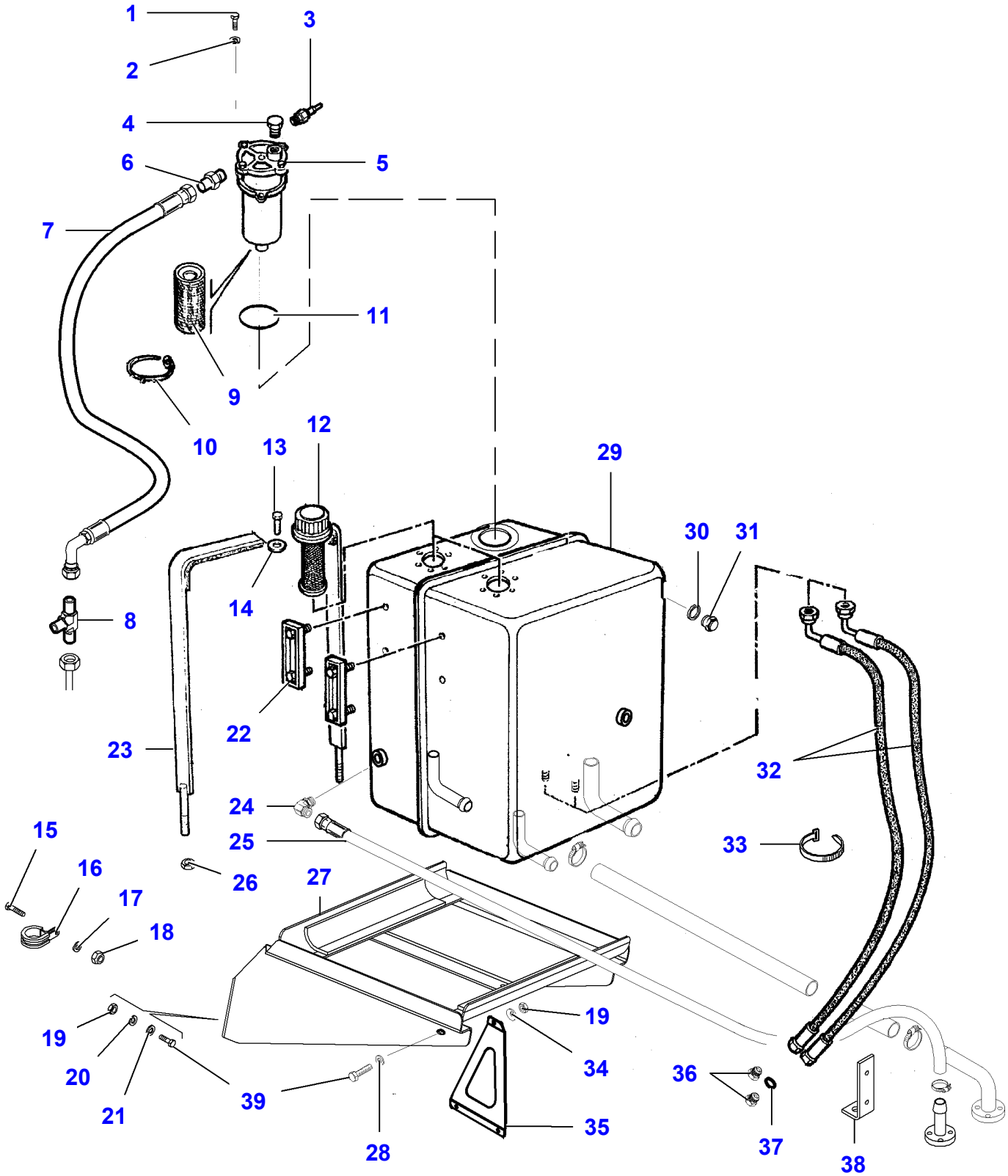
1
2
3
4
5
6
7
8
9
10
11
12
13
14
15
16
17
18
19
20
21
22
23
24
25
26
27
28
29
30
31
32
33
34
35
36
37
38
39

Item	Part Number	Qty	Description
1	LA16043424	1	Cap Screw
2	LA12034571	1	Lock Washer
3	LA320582450	3	Thermostat
4	LA322747450	1	Plug
5	LA322736500	1	Filter
6	LA322968200	1	Connector
7	LA322085250	1	Hydraulic Hose
8	LA322870950	1	Connector
9	**LA322736650**	1	Filter
10	LA340481809	1	Cable Tie
11	LA14472380	1	Seal
12	**LA322131700**	1	Breather
13	LA13274214	1	Screw
14	LA355500615	1	Flat Washer
15	LA10902421	1	Cap Screw
16	LA10451090	1	Collar
17	LA355510615	1	Flat Washer
18	LA12574211	1	Locknut
19	LA16100811	2	Nut
20	LA12034571	1	Lock Washer
21	LA355500915	1	Flat Washer
22	LA311841100	1	Gauge
23	LA300118433	1	Clip
24	LA322122300	1	Elbow Union
25	LA323273850	1	Hose
26	LA12577211	1	Nut
27	LA322962850	1	Support
28	LA355510820	1	Flat Washer
29	LA322943550	1	Hydraulic Tank
30	LA322731950	1	Washer
31	LA350359406	1	Plug
32	LA322159250	2	Hose
33	LA340481809	1	Cable Tie
34	LA322358	1	Lock Washer
35	LA323101950	1	Support
36	LA321871950	2	Plug
37	LA14462880	1	Gasket
38	LA321963750	1	Collar
39	LA16043421	2	Cap Screw

L-LC35-002-A

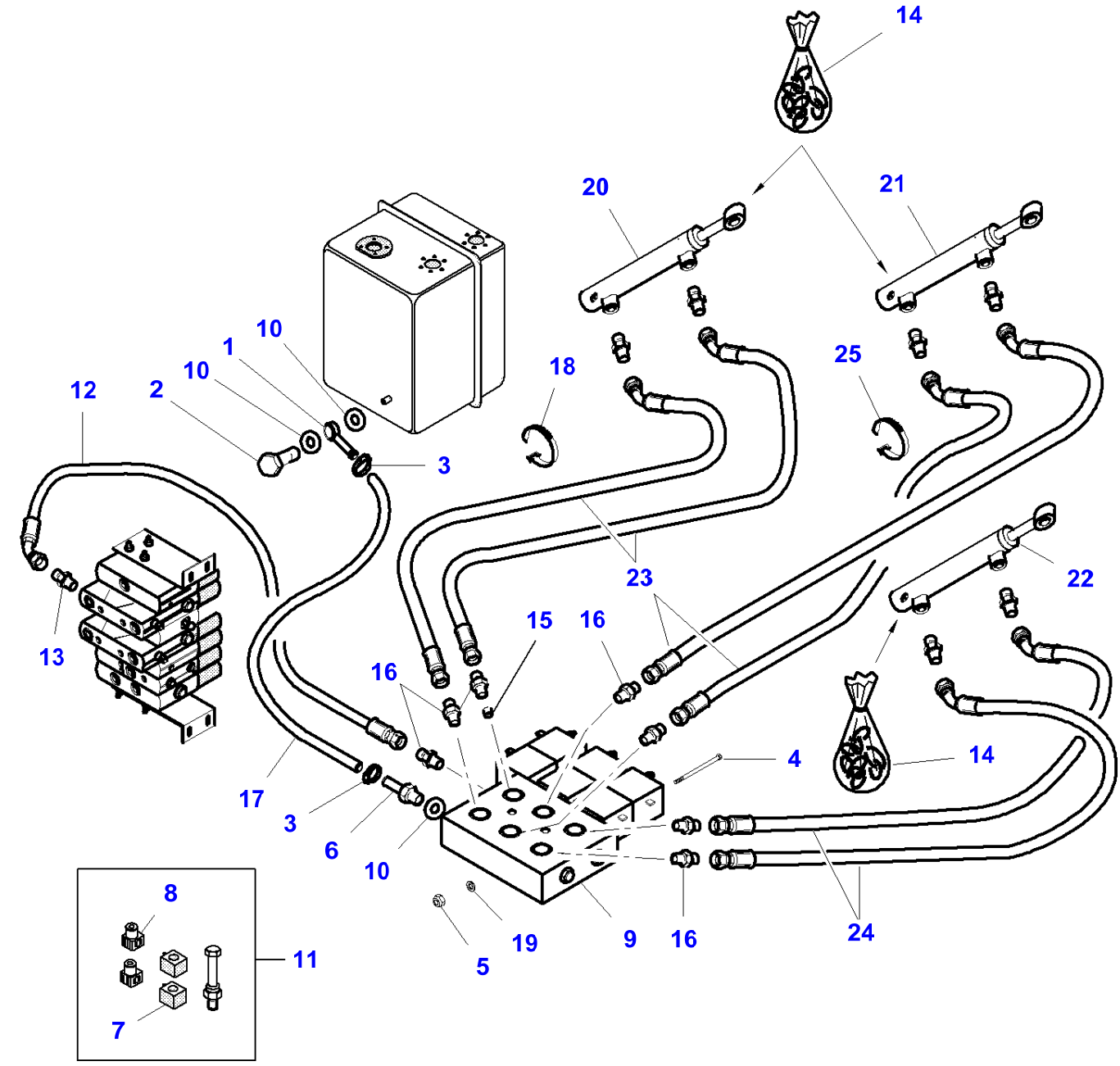
14
20
21
10
1
10
2
12
18
25
3
23
22
13
15
16
16
4
14
17
3
6
10
8
11
7
5
19
9
16
24

Item	Part Number	Qty	Description	Comments
1	LA5150924	1	Union	
2	LA10184314	1	Banjo Bolt	
3	LA10186890	2	Hose Clip	
4	LA11030421	1	Cap Screw	
5	LA12574211	1	Locknut	
6	LA321946550	1	Union	
7	LA322412950	1	Magnet	
8	LA322413000	1	Union	
9	LA322770800	1	Block	[A]
	LA322771000	1	Block	
10	LA355571415	3	Washer	
11	LA322771100	1	Electrovalve	
12	LA322771550	1	Hose	
13	LA322783650	1	Union	
14	LA322784100	1	Kit, Seal	
15	LA322787550	1	Diaphragm	
16	LA322788600	7	Union	
17	LA322968350	1	Hose	
18	LA340481806	2	Cable Tie	
19	LA355500730	1	Washer	
20		1	Ram	See Page - Reference Number 110-0090/1
21		1	Ram	See Page - Reference Number 030-0265/7
22		1	Ram	See Page - Reference Number 040-0005/32
23		4	Hose	[B]
24		2	Hose	[B]
25	LA340481808	1	Cable Tie	

FOOTNOTE [A] ONLY FOR STRAW CHOPPER
FOOTNOTE [B] NUMBER TO BE ADVISED

L-LC35-008-B

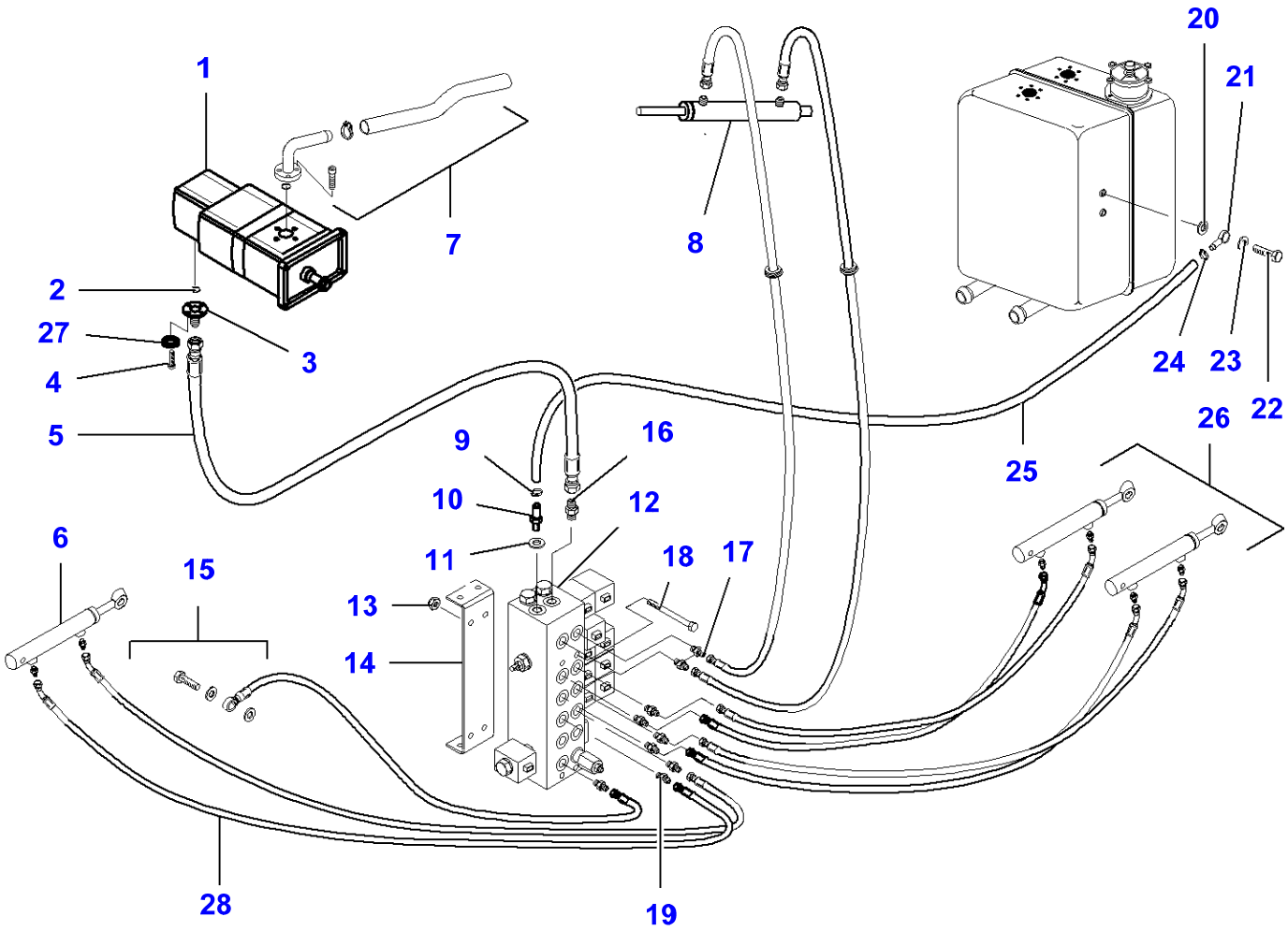

Item	Part Number	Qty	Description	Comments
1	LA323160600	1	Hydraulic Pump	Up to Serial or Engine Number ...
	LA323317300	1	Hydraulic Pump	From Serial or Engine Number 551710113
2	LA350358742	1	Gasket	
3	LA321409450	1	Flange	Up to Serial or Engine Number ...
	LA323150750	1	Flange	From Serial or Engine Number 551710113
4	LA14305321	1	Hex Socket Screw	Up to Serial or Engine Number ...
	LA14304221	4	Hex Socket Screw	From Serial or Engine Number ... M5 X 16
5	LA323162250	1	Hydr. Hose	
6		1	Ram	See Page - Reference Number 040-0005/32
7		1	Connectors	See Page - Reference Number 110-0010/1
8		1	Ram	See Page - Reference Number 080-0110/1
9	LA10186890	1	Hose Clip	
10	LA321946550	1	Union	
11	LA355571415	1	Washer	
12	LA323093200	1	Distributor	
	LA323161200	1	Distributor	[A]
13	LA12574211	1	Locknut	
14	LA323128250	1	Support	
15		1	Hydr. Hose	See Page - Reference Number 050-0030
16	LA322788600	1	Union	
17	LA322819000	1	Union	
18	LA11032321	1	Cap Screw	
19	LA322788600	1	Union	
20	LA355571415	1	Washer	
21	LA5150924	1	Union	
22	LA10184314	1	Banjo Bolt	
23	LA355571415	1	Washer	
24	LA10186890	1	Hose Clip	
25	LA322968350	1	Hose	
26		1	Ram	See Page - Reference Number 110-0095/1
27	LA12035471	4	Lock Washer	From Serial or Engine Number ...
28	LA323060050	2	Hydraulic Hose	

FOOTNOTE [A] WITHOUT STRAW CHOPPER

L-LD41-004-A

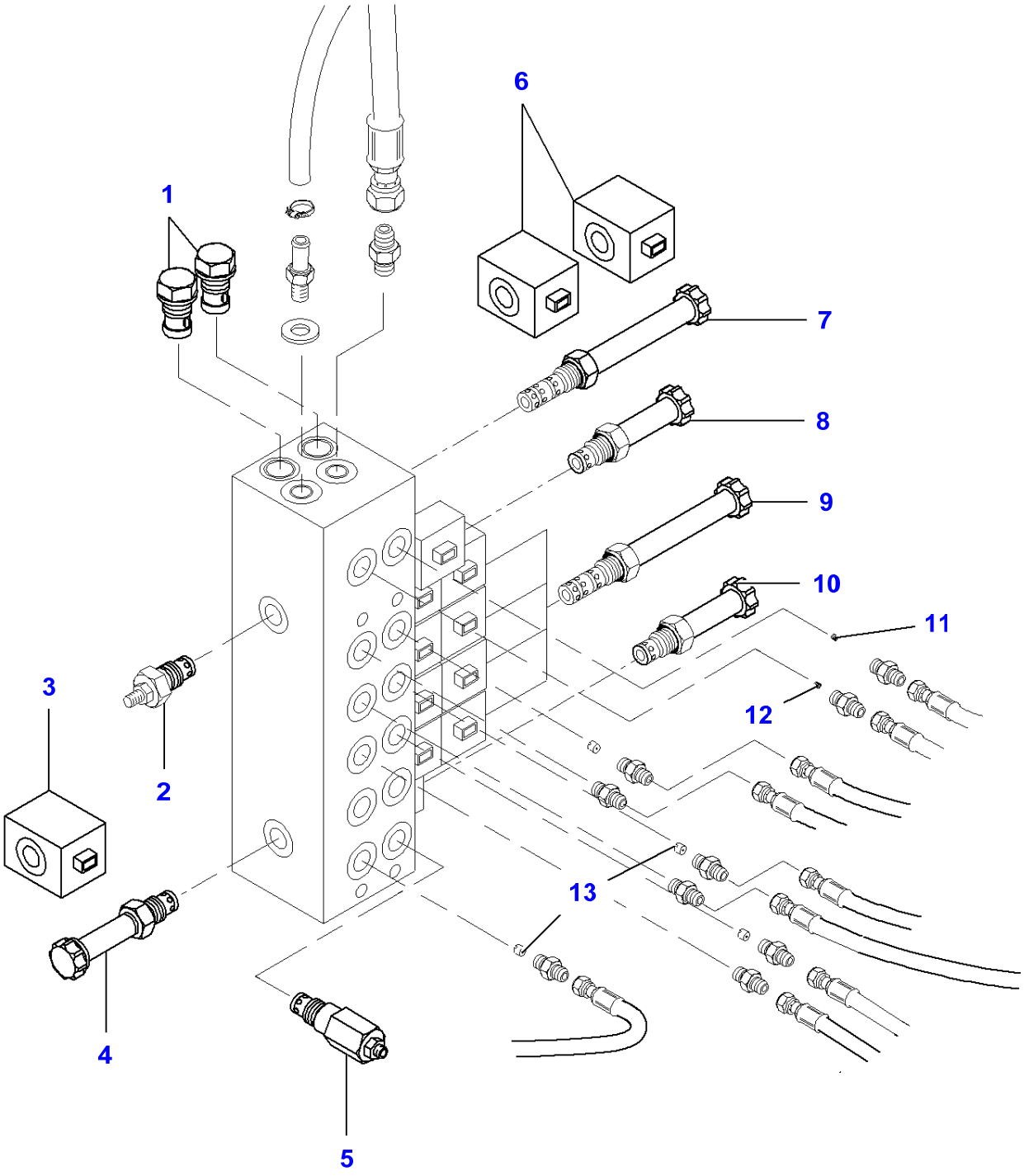

Item	Part Number	Qty	Description
1	LA323165950	2	Banjo Bolt
2	LA323166250	1	Terminal
3	LA323109050	1	Block
4	LA323170850	1	Valve
5	LA323166350	1	Valve
6	LA323109050	2	Block
7	LA322816450	1	Electrovalve
8	LA323097050	1	Electrovalve
9	LA322771100	1	Electrovalve
10	LA323170850	1	Valve
11	LA323162750	1	Centraliser
12	LA323162450	1	Centraliser
13	LA322787550	4	Diaphragm

L-LD93-001-B

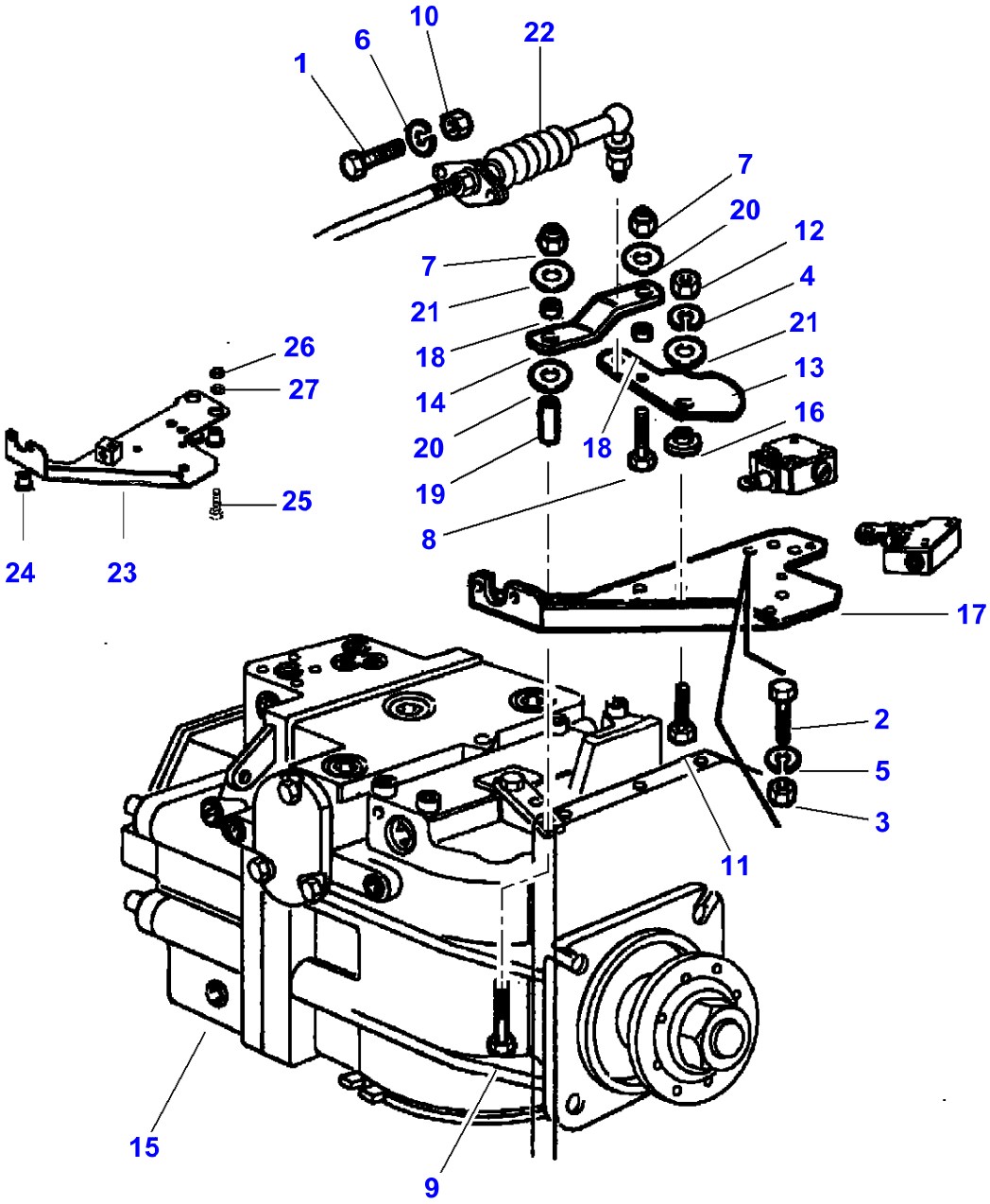
1
6
10
22
7
20
12
4
21
13
16
18
7
21
18
14
20
19
8
26
27
25
24
23
17
2
5
3
11
15
9

Item	Part Number	Qty	Description	Comments
1	LA10902424	1	Cap Screw	
2	LA11106424	1	Cap Screw	
3	LA11701721	1	Nut	
4	LA12034571	1	Lock Washer	
5	LA12034671	1	Lock Washer	
6	LA12035670	1	Lock Washer	
7	LA12574211	2	Locknut	
8	LA15212521	1	Cap Screw	
9	LA15212921	1	Cap Screw	
10	LA15896221	2	Nut	
11	LA16043824	1	Cap Screw	
12	LA16100811	1	Nut	
13	LA322086950	1	Lever	
14	LA322101850	1	Lever	
15	LA322104500	1	Pump	
16	LA322105250	1	Guide Bush	
17	LA322939150	1	Support	Up to Serial or Engine Number 551710103
18	LA340415222	2	Spacer	
19	LA340415223	1	Spacer	
20	LA355510620	2	Flat Washer	
21	LA355510820	2	Flat Washer	
22		1	Cable	See Page - Reference Number 030-0290/32
23	LA323291450	1	Bracket	From Serial or Engine Number 551710104
24	LA323287550	3	Spacer	From Serial or Engine Number 551710104
25	LA11107021	3	Cap Screw	
26	LA12577211	3	Nut	
27	LA355511020	3	Flat Washer	

L-LD93-002-B

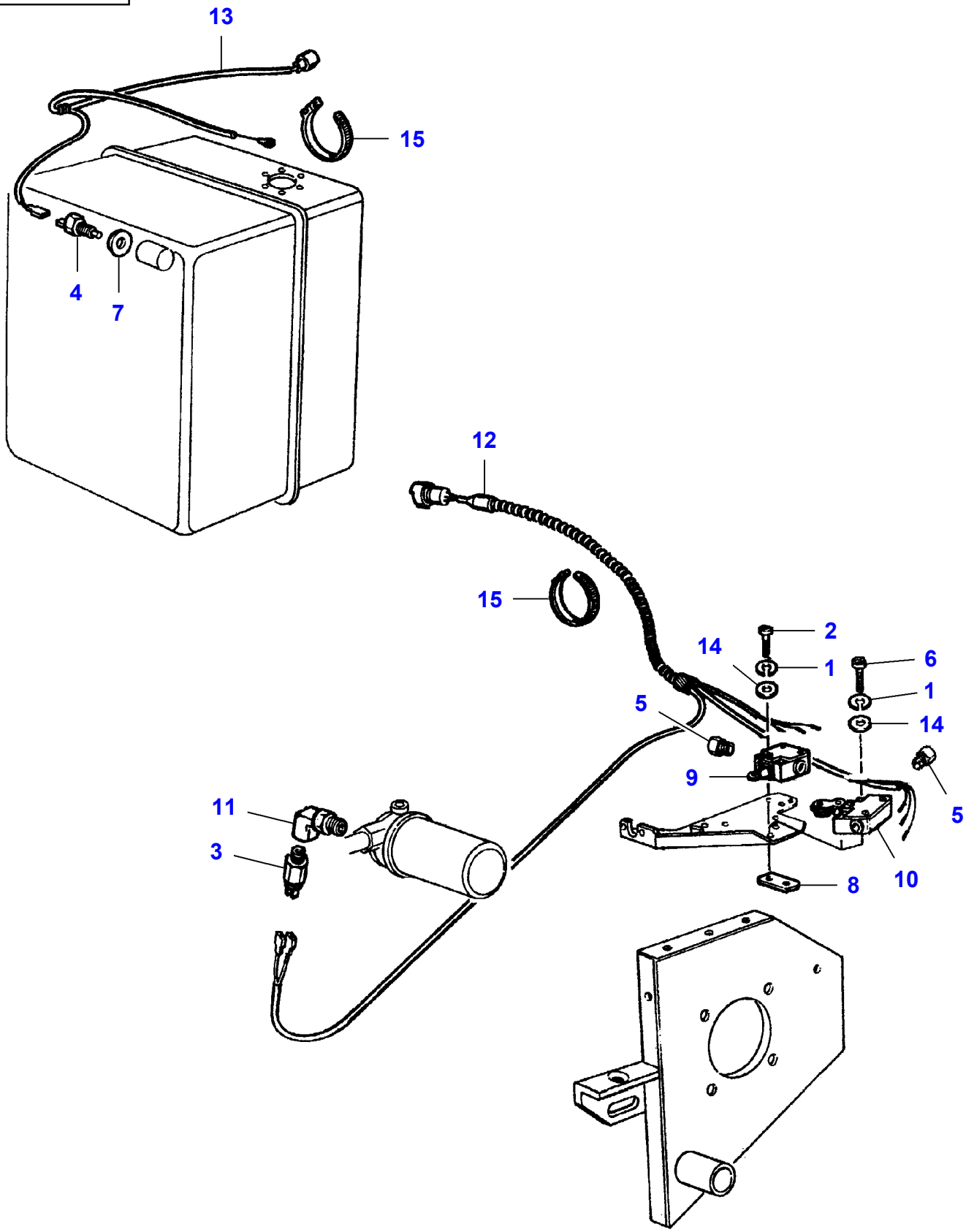

Item	Part Number	Qty	Description
1	LA12035371	2	Lock Washer
2	LA13273221	1	Screw
3	**LA321701450**	1	Transmitter
4	LA321708050	1	Transmitter
5	LA321910400	2	Nut
6	LA13273021	1	Screw
7	LA355561430	1	Gasket
8	LA322226450	1	Plate
9	**LA322622400**	1	Switch
10	**LA322622500**	1	Switch
11	LA322764350	1	Connector
12	LA322864500	1	Harness
13	LA322876800	1	Harness
14	LA355500515	2	Flat Washer
15	LA340481806	2	Cable Tie

L-LD93-003-B

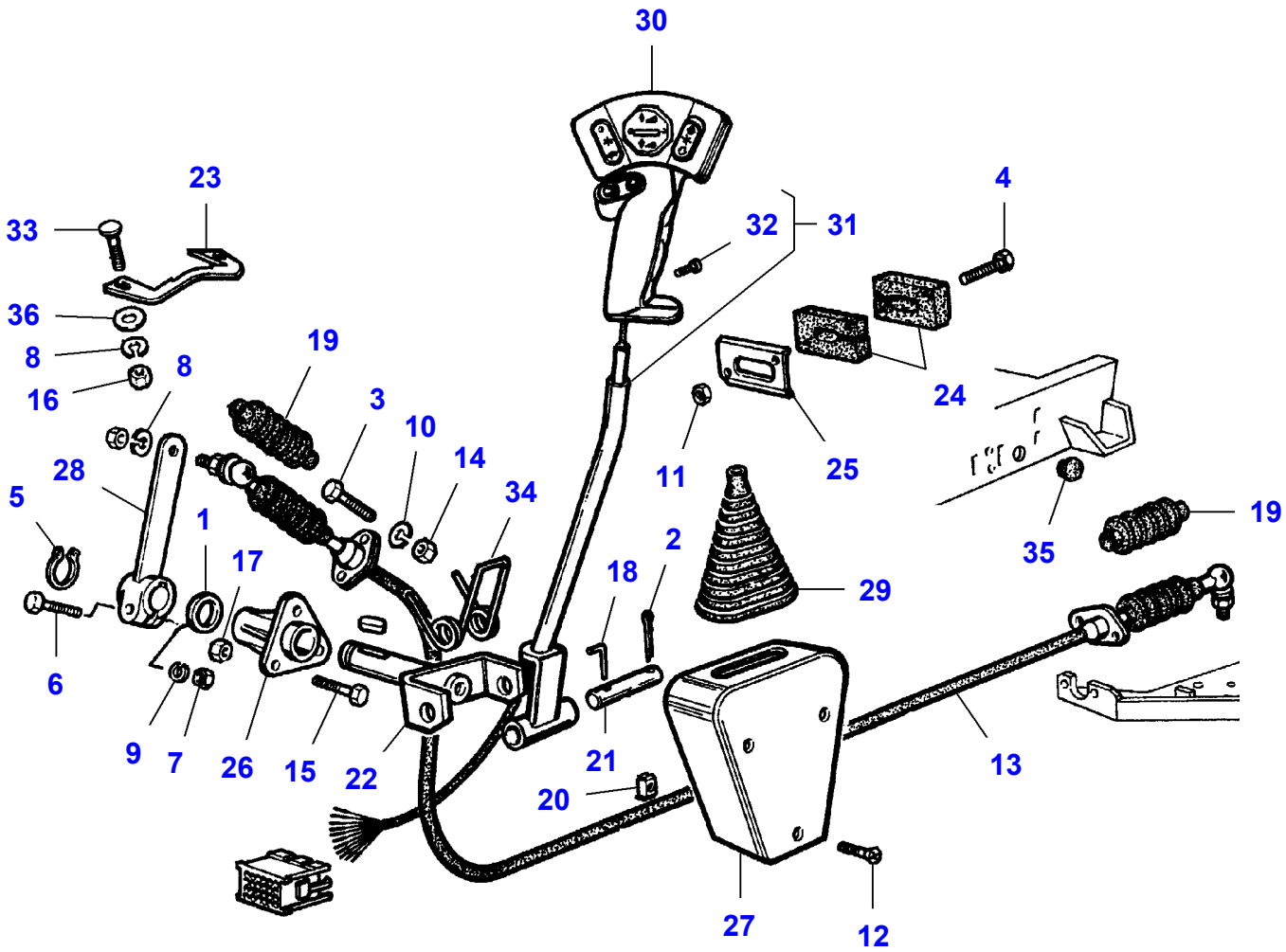
30
23
33
36
8
16
8
19
3
10
14
34
28
5
1
17
6
9
7
26
15
22
18
2
21
20
32
31
4
24
11
25
29
35
19
13
27
12

Item	Part Number	Qty	Description	Comments
1	LA355536704	1	Washer	
2	LA10797001	1	Split Pin	
3	LA10902224	1	Cap Screw	
4	LA10902621	1	Cap Screw	
5	LA11067476	1	Circlip	
6	LA11107321	1	Cap Screw	
7	LA11701721	1	Nut	
8	LA12034571	2	Lock Washer	
9	LA12034671	1	Lock Washer	
10	LA12035670	1	Lock Washer	
11	LA12574211	1	Locknut	
12	LA13311014	1	Screw	
13	**LA323006300**	1	Cable	
14	LA15896221	1	Nut	
15	LA16043824	1	Cap Screw	
16	LA16100811	1	Nut	
17	LA16104111	1	Locknut	
18	LA300136233	1	Roll Pin	
19	LA300139049	2	Boot	
20	LA321284450	1	Nut	
21	LA321395750	1	Roll Pin	
22	LA321980250	1	Yoke	
23	LA322036450	1	Sector	
24	LA322057150	2	Gasket	
25	LA322057250	1	Plate	
26	LA322090050	1	Support	
27	LA322094350	1	Shield	
28	LA322127750	1	Lever	
29	LA322134350	1	Bellows	
30	LA322639300	1	Joystick	
31	LA322657950	1	Lever	
32	LA14418921	1	Screw	(31)
33	LA350342512	2	Carriage Bolt	
34	LA350356935	1	Spring	
35	LA350359452	1	Plug	
36	LA355500920	1	Flat Washer	

L-LC85-001-B

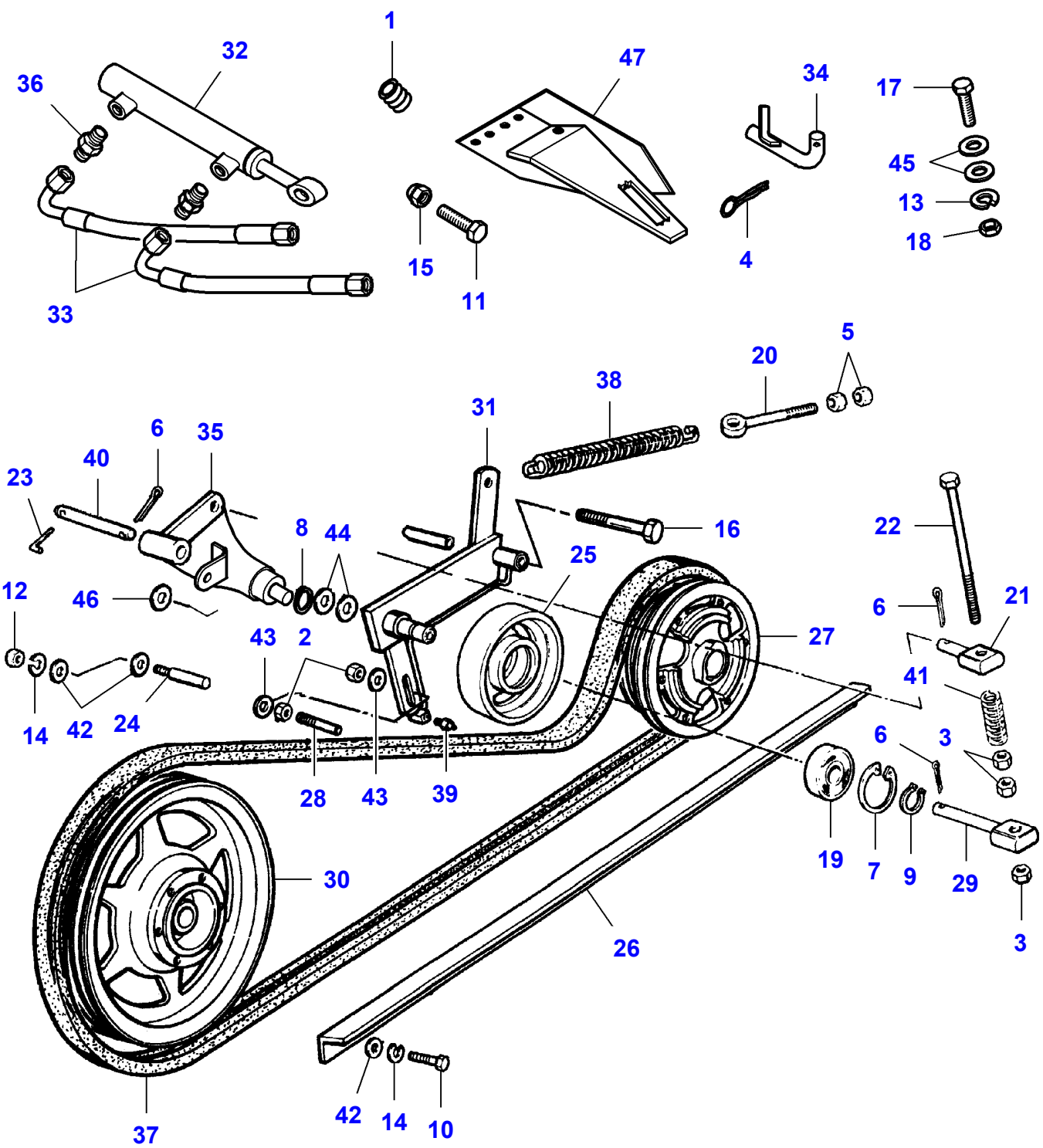
1
32
36
47
34
17
45
13
18
4
15
11
33
5
20
38
31
6
35
40
23
8
44
16
22
25
12
46
27
6
21
43
2
41
14
42
24
28
43
39
6
3
19
7
9
29
3
30
26
42
14
10
37

Item	Part Number	Qty	Description	Comments
1	LA10398480	1	Ring	
2	LA10717311	2	Nut	
3	LA10717421	3	Nut	
4	LA10733601	1	Split Pin	
5	LA10788714	2	Nut	
6	LA10797001	3	Split Pin	
7	LA11060576	1	Circlip	
8	LA11066476	1	Circlip	
9	LA11067376	1	Circlip	
10	LA11106221	1	Cap Screw	
11	LA11114221	1	Cap Screw	
12	LA11701721	1	Nut	
13	LA12034571	1	Lock Washer	
14	LA12034671	2	Lock Washer	
15	LA12577511	1	Cap Nut	
16	LA15541721	1	Cap Screw	
17	LA16043821	1	Cap Screw	
18	LA16100811	1	Nut	
19	**LA28042320**	1	Bearing Assy	
20	LA300117689	1	Tie Rod	
21	LA300136131	1	Knuckle	
22	LA300136132	1	Cap Screw	
23	LA300136233	1	Roll Pin	
24	LA300138006	1	Pin	
25	LA320653650	1	Tensioner	
26	LA320706850	1	Skate	
27	LA320971950	1	Hub	
28	LA321092750	1	Pin	
29	LA321228650	1	Knuckle	
30	LA321950550	1	Pulley	
31	LA322229050	1	Arm	
32	LA322770900	1	Hydraulic, Cylin	
33	LA322771650	2	Hydraulic Hose	See Page - Reference Number 030-0265/20 Up to Serial or Engine Number ...
	LA323060050	2	Hydraulic Hose	See Page - Reference Number 030-0270 From Serial or Engine Number 551710035
34	LA322784050	1	Tie Rod	
35	LA322784250	1	Lever	
36	LA322788600	2	Union	
37	**LA344312128**	1	Belt	
38	LA350356539	1	Spring	
39	LA350357852	1	Nipple	
40	LA350379273	1	Roll Pin	
41	LA353561157	1	Spring	
42	LA355501120	3	Flat Washer	
43	LA355501330	2	Flat Washer	
44	LA355501520	2	Washer	
45	LA355520830	2	Flat Washer	
46	LA355532620	1	Flat Washer	
47		1	Support	See Page - Reference Number 050-0060/21

L-LC36-001-A

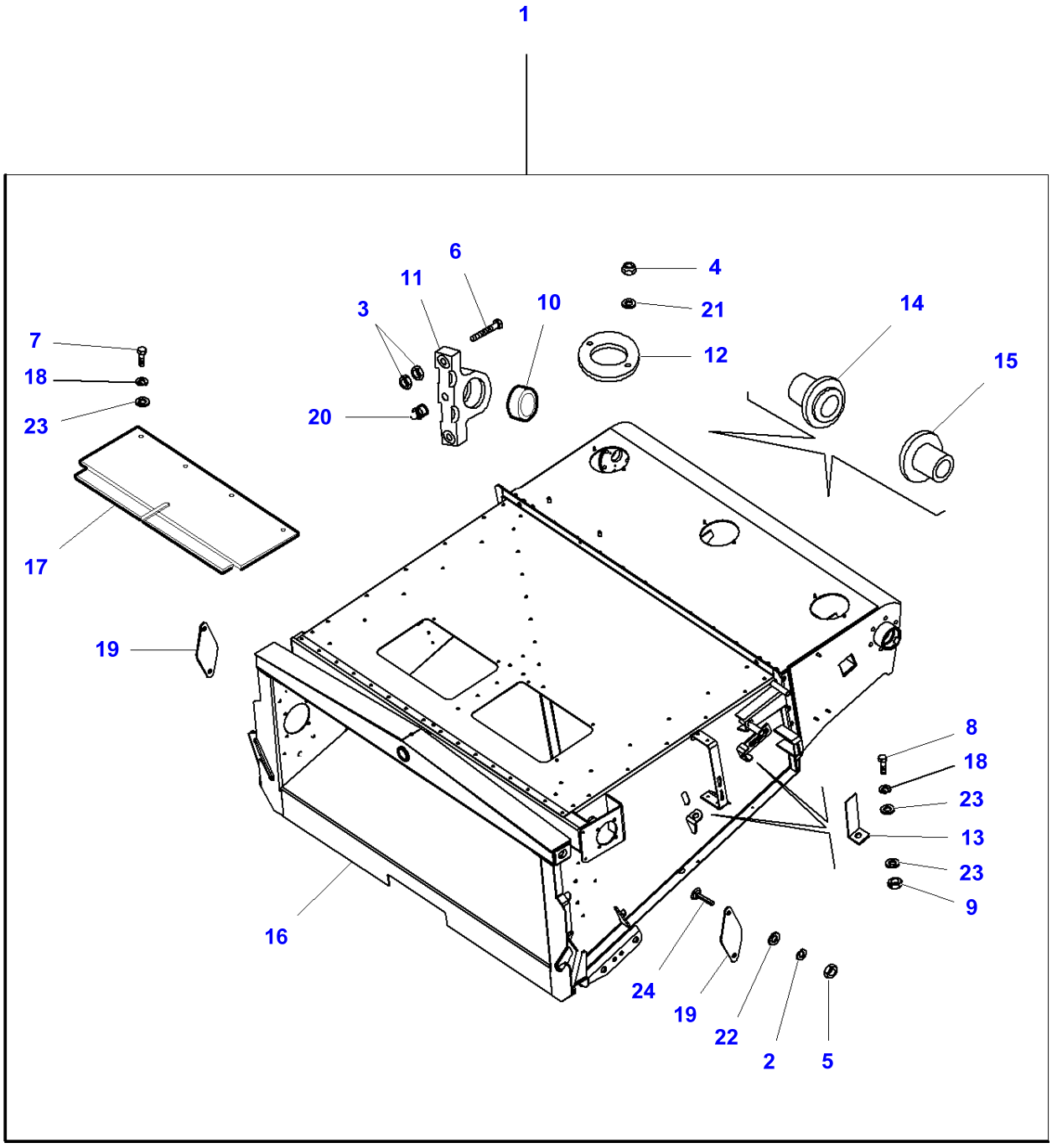

Item	Part Number	Qty	Description	Comments
1		1	Elevator	[A]
2	LA12035671	1	Lock Washer	
3	LA12164321	8	Nut	
4	LA12574211	2	Locknut	
5	LA15896211	1	Nut	
6	LA15988734	4	Cap Screw	
7	LA16043421	20	Cap Screw	
8	LA16043621	1	Cap Screw	
9	LA16100811	1	Nut	
10	LA321813050	2	Bush	
11	LA321813250	2	Support	
12	LA322075750	1	Cover	
13	LA322170850	1	Bracket	
14	LA322773295	1	Flange	
15	LA322773296	1	Flange	
16	LA322773350	1	Elevator	
17	LA322779350	1	Lid	
18	LA12034571	23	Lock Washer	
19	LA323033250	2	Cover	
20	LA350357803	2	Grease Fitting	
21	LA355500720	2	Flat Washer	
22	LA355510615	1	Flat Washer	
23	LA355510820	34	Flat Washer	
24	LA366000612	1	Screw	

FOOTNOTE [A] ORDER DETAIL

L-LC36-002-B

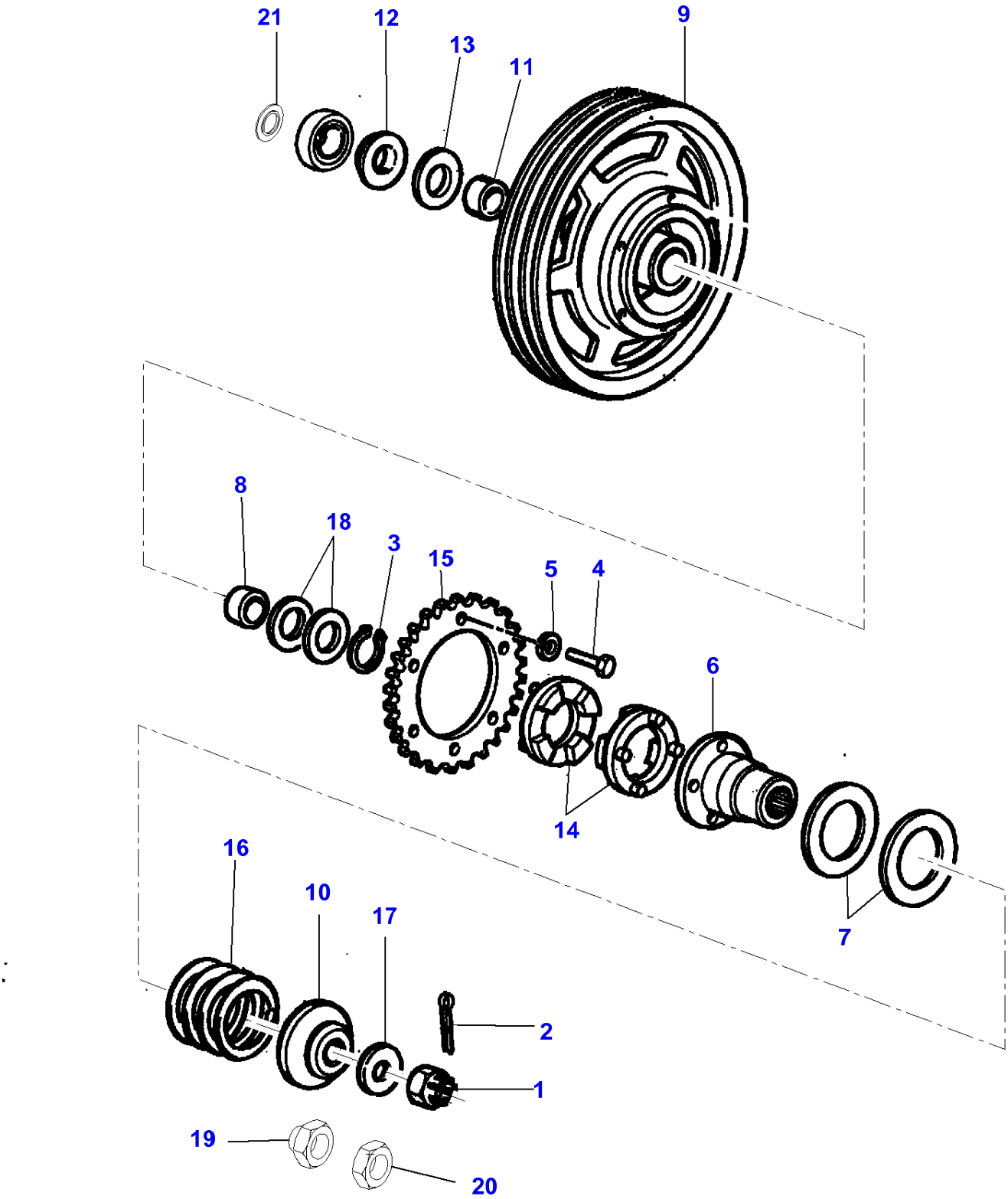

Item	Part Number	Qty	Description	Comments
1	LA10723111	1	Castle Nut	Up to Serial or Engine Number
2	LA10733801	1	Split Pin	Up to Serial or Engine Number
3	LA11068876	1	Circlip	
4	LA11106424	1	Cap Screw	
5	LA12034671	1	Lock Washer	
6	LA321886750	1	Hub	
7	LA321915150	2	Washer	
8	LA321933750	1	Bush	
9	LA321950550	1	Pulley	
10	LA322082050	1	Flange	
11	LA322222950	1	Bush	
12	LA322223150	1	Washer	
13	LA322223250	1	Washer	
14	LA322701550	2	Bush	
15	LA322774650	1	Gear	
16	LA353561115	1	Spring	
17	LA355534350	1	Washer	Up to Serial or Engine Number
18	LA355544610	2	Washer	
19	LA323180050	1	Nut	From Serial or Engine Number 551710031
20	LA10726711	1	Nut	From Serial or Engine Number 551710031
21	LA322223050	X	Washer	

L-LC36-003-B

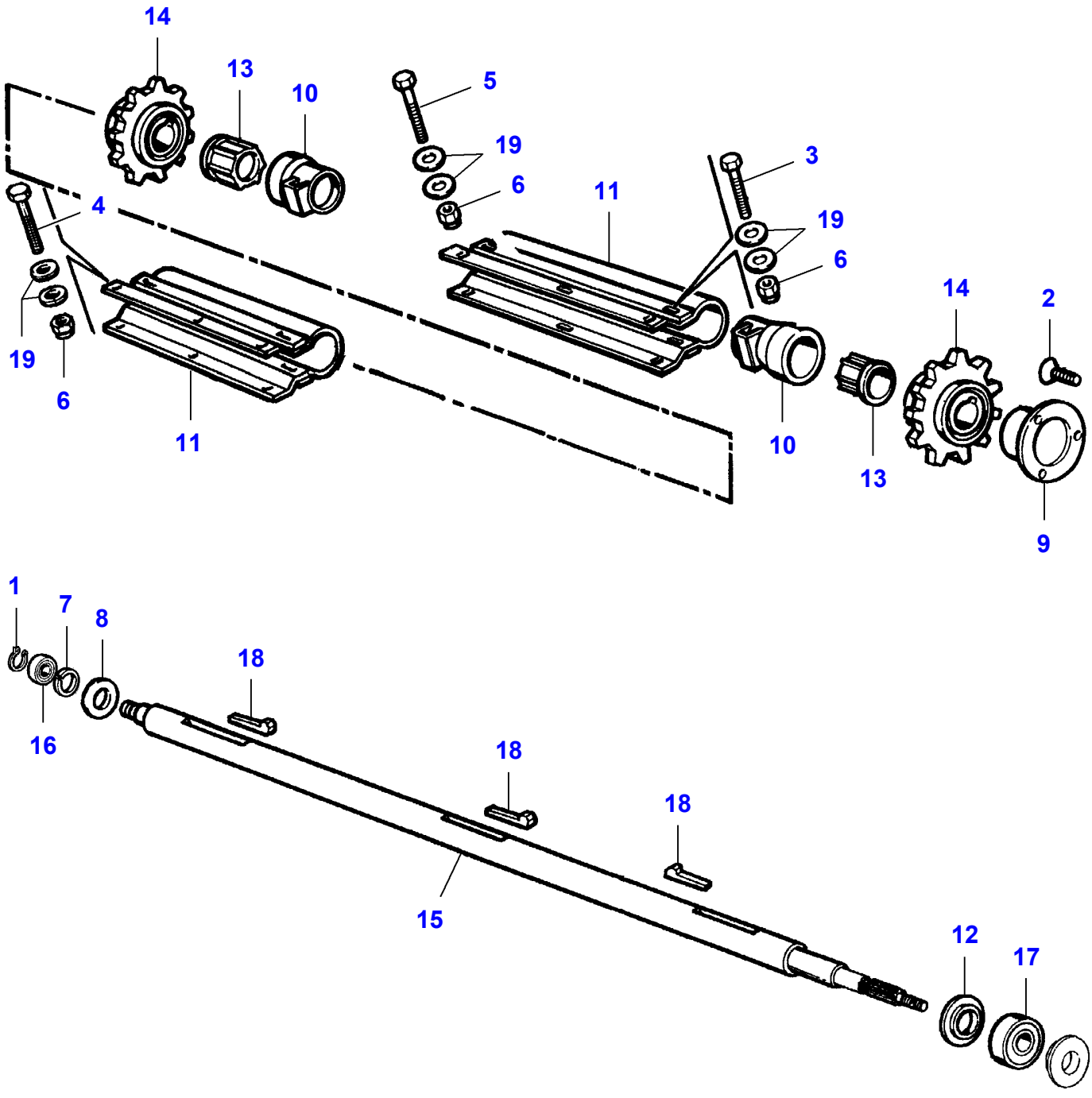

Item	Part Number	Qty	Description
1	LA11068376	1	Circlip
2	LA14441331	1	Screw
3	LA16044631	1	Cap Screw
4	LA16045021	1	Cap Screw
5	LA16045024	1	Cap Screw
6	LA16104111	3	Locknut
7	LA300116217	1	Bush
8	LA320402050	1	Shim
9	LA320973550	1	Shield
10	LA320973750	2	Shield
11	LA321692850	2	Shield
12	LA322223050	1	Washer
13	LA322225250	2	Guide Bush
14	LA322225350	2	Gear
15	LA322225950	1	Shaft
16	**LA340411238**	1	Bearing Assy
17	**LA340411277**	1	Bearing Assy
18	LA350380763	3	Key
19	LA355510820	6	Flat Washer

L-LC36-004-B

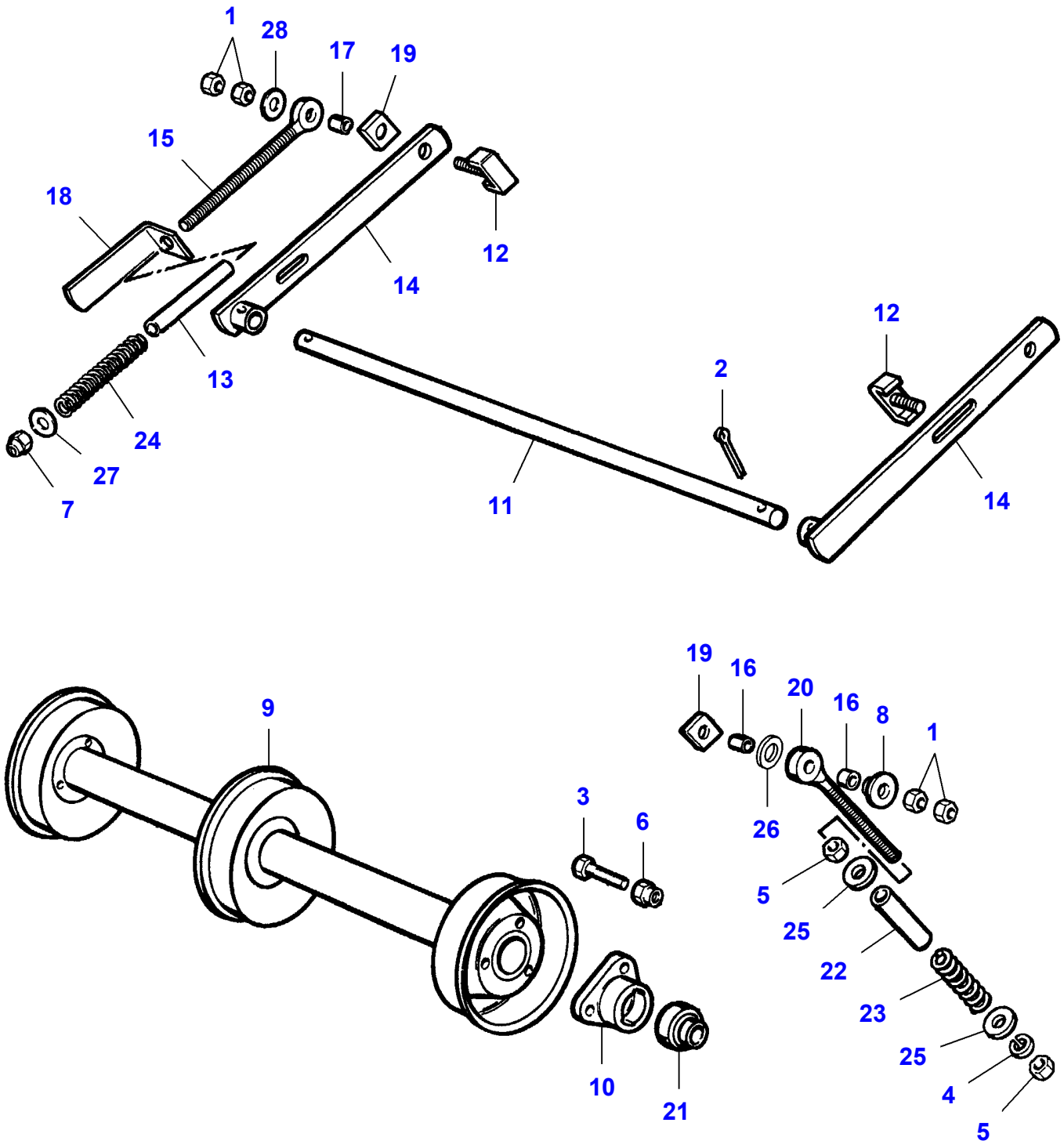
1
28
17
19
15
18
12
14
13
24
27
7
2
11
12
14
19
16
20
16
8
1
26
5
25
22
23
25
4
5
9
3
6
10
21

Item	Part Number	Qty	Description
1	LA10717511	4	Nut
2	LA10797801	1	Split Pin
3	LA11106424	1	Cap Screw
4	LA12034871	1	Lock Washer
5	LA12163321	2	Nut
6	LA12577211	1	Nut
7	LA12577511	1	Cap Nut
8	LA300114963	1	Washer
9	LA321833350	1	Roller
10	LA321833550	1	Support
11	LA321833650	1	Shaft
12	LA321948150	1	Screw
13	LA322122050	1	Spacer
14	LA322170050	2	Arm
15	LA322170950	1	Tie Rod
16	LA322171050	2	Bush
17	LA322171250	1	Bush
18	LA322171650	1	Bracket
19	LA322171850	2	Shim
20	LA322780150	1	Tie Rod
21	**LA340411205**	1	Bearing Assy
22	LA344158141	1	Bush
23	LA353561131	1	Spring
24	LA353561156	1	Spring
25	LA355501740	2	Flat Washer
26	LA355502320	1	Washer
27	LA355511240	1	Flat Washer
28	LA355532830	1	Washer

L-LC37-001-A

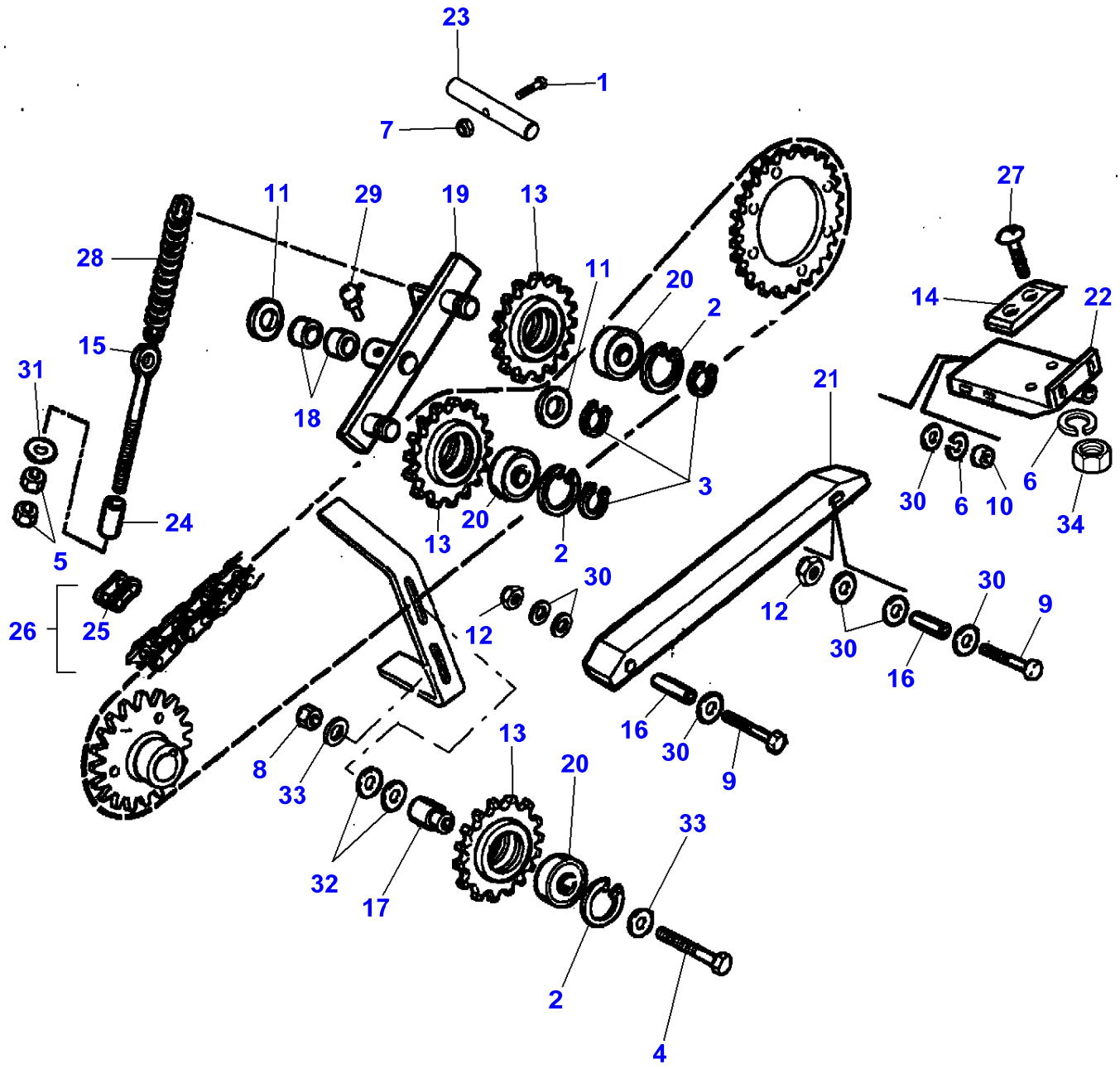
23
1
7
11
29
19
13
28
11
20
2
27
14
22
15
31
18
21
3
30
6
10
6
34
24
5
20
13
2
30
12
30
9
26
25
12
30
16
16
30
9
13
8
33
20
33
32
17
2
4

Item	Part Number	Qty	Description
1	LA10902821	1	Cap Screw
2	LA11060576	3	Circlip
3	LA11067376	1	Circlip
4	LA11113821	1	Cap Screw
5	LA11701721	2	Nut
6	LA12034571	2	Lock Washer
7	LA12574211	1	Locknut
8	LA12577511	1	Cap Nut
9	LA16045021	2	Cap Screw
10	LA16100811	1	Nut
11	LA355536410	2	Flat Washer
12	LA16104111	2	Locknut
13	LA321885850	3	Gear
14	LA321943850	1	Plate
15	LA321946750	1	Tie Rod
16	LA322090150	2	Spacer
17	LA322090350	1	Spacer
18	LA322100750	2	Spacer
19	LA322203850	1	Arm
20	**LA322638450**	3	Bearing Assy
21	LA322774950	1	Skate
22	LA322775950	1	Support
23	LA322776350	1	Retainer
24	LA340415514	1	Bush
25	**LA344377202**	1	Link
26	**LA344377212**	1	Chain
27	LA350342511	1	Carriage Bolt
28	LA350356555	1	Spring
29	LA350357852	1	Nipple
30	LA355510830	7	Flat Washer
31	LA355511030	1	Flat Washer
32	LA355511210	2	Washer
33	LA355511230	2	Flat Washer
34	LA16100824	1	Nut

L-LC37-002-B

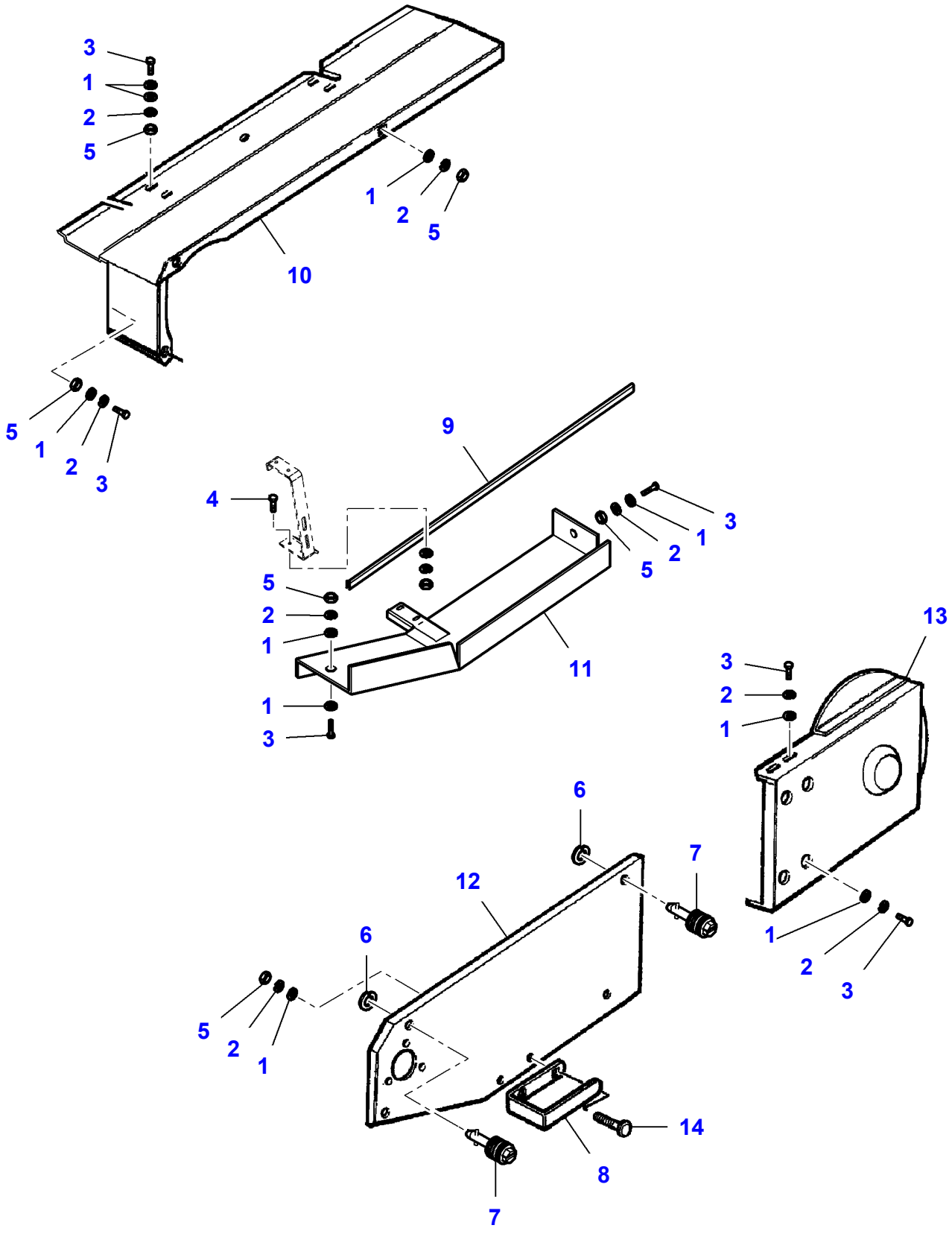

Item	Part Number	Qty	Description
1	LA355510820	11	Flat Washer
2	LA12034571	1	Lock Washer
3	LA16043421	9	Cap Screw
4	LA16043621	1	Cap Screw
5	LA16100811	6	Nut
6	LA320899350	2	Lock Washer
7	LA321551650	2	Screw Special
8	LA322107850	1	Bracket
9	LA322776150	1	Profile
10	LA322776750	1	Shield
11	LA322776850	1	Shield
12	LA322776950	1	Shield
13	LA322777050	1	Shield
14	LA350342510	1	Carriage Bolt

L-LC36-005-A

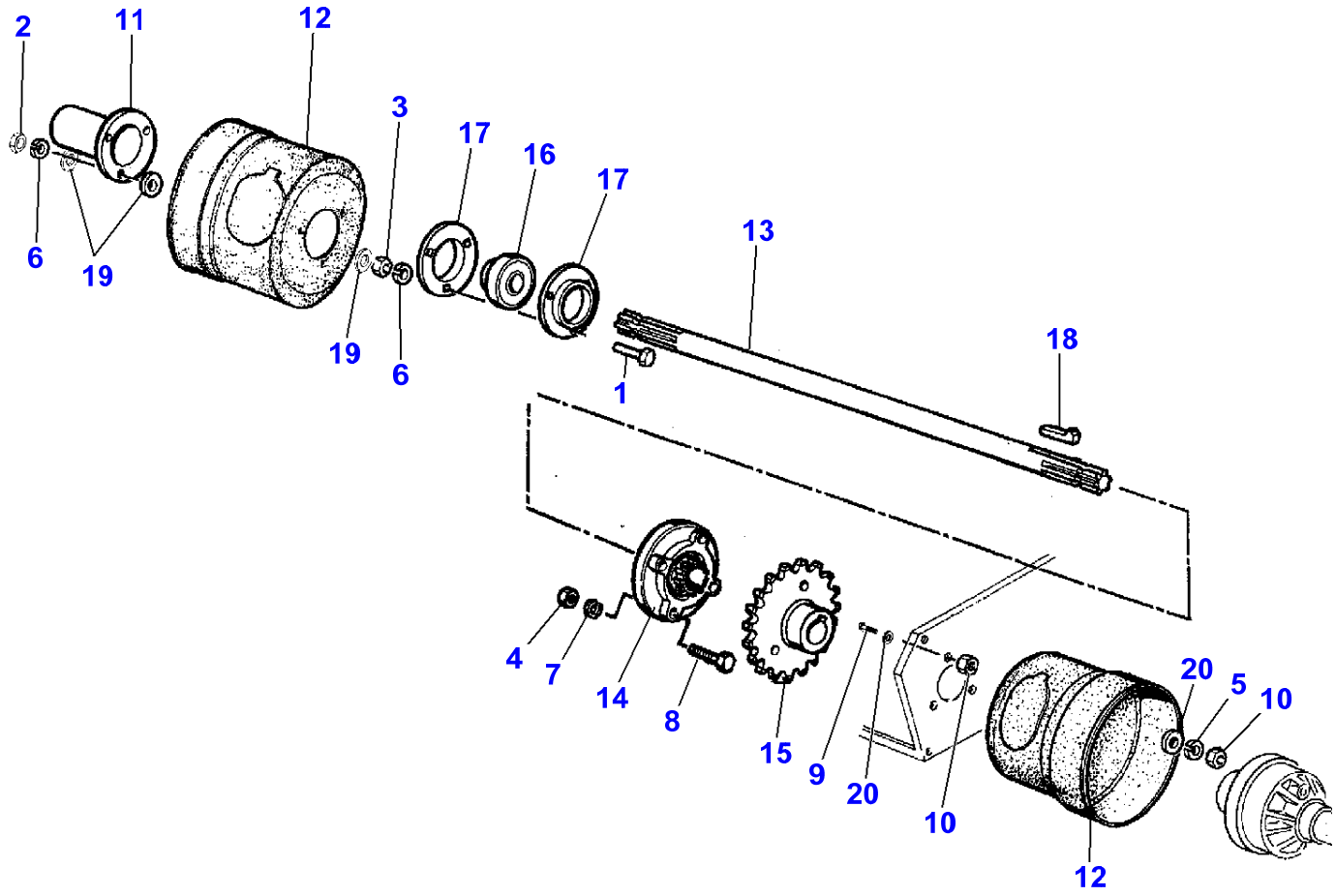

Item	Part Number	Qty	Description
1	LA11106421	1	Cap Screw
2	LA11701711	6	Nut
3	LA11701721	1	Nut
4	LA11702921	1	Nut
5	LA12034571	1	Lock Washer
6	LA12034671	1	Lock Washer
7	LA12034771	1	Lock Washer
8	LA15215721	1	Cap Screw
9	LA16043421	1	Cap Screw
10	LA16100811	2	Nut
11	LA320977050	1	Shield
12	LA322361450	1	Protection.
13	LA322394950	1	Shaft
14	**LA322683950**	1	Bearing Assy
15	LA322774550	1	Gear
16	**LA340411206**	1	Bearing Assy
17	LA340411406	1	Bearing Flange
18	LA350388205	1	Key
19	LA355501120	6	Flat Washer
20	LA355510820	2	Flat Washer

L-LC37-003-B

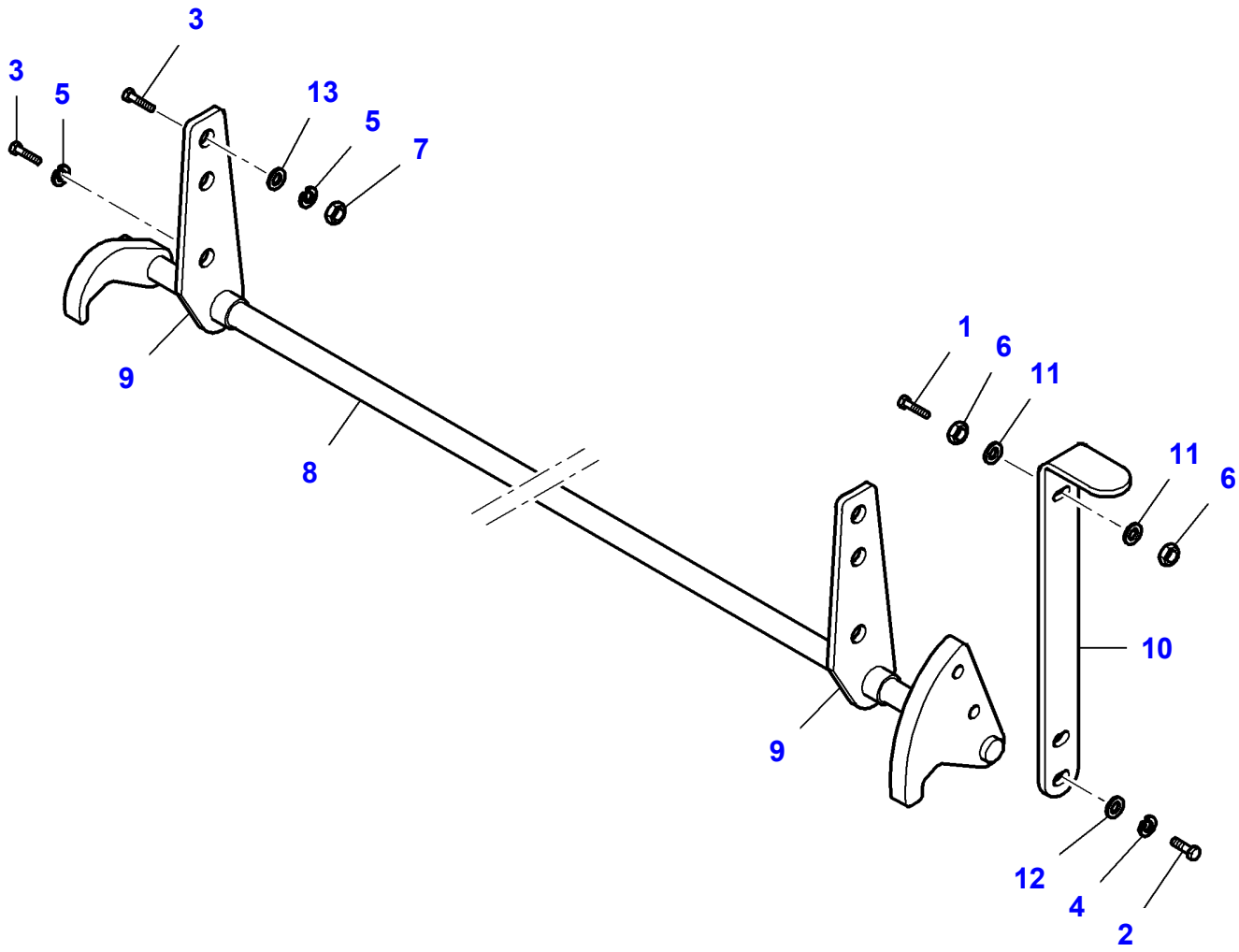

Item	Part Number	Qty	Description
1	LA11113821	1	Cap Screw
2	LA11127521	1	Cap Screw
3	LA11408621	6	Cap Screw
4	LA12034871	1	Lock Washer
5	LA12035071	2	Lock Washer
6	LA11702911	2	Nut
7	LA12164311	1	Nut
8	LA322773850	1	Lever
9	LA322774050	2	Support
10	LA322776050	1	Lever
11	LA355501320	2	Flat Washer
12	LA355501740	1	Flat Washer
13	LA355502140	1	Flat Washer

L-LC36-006-B

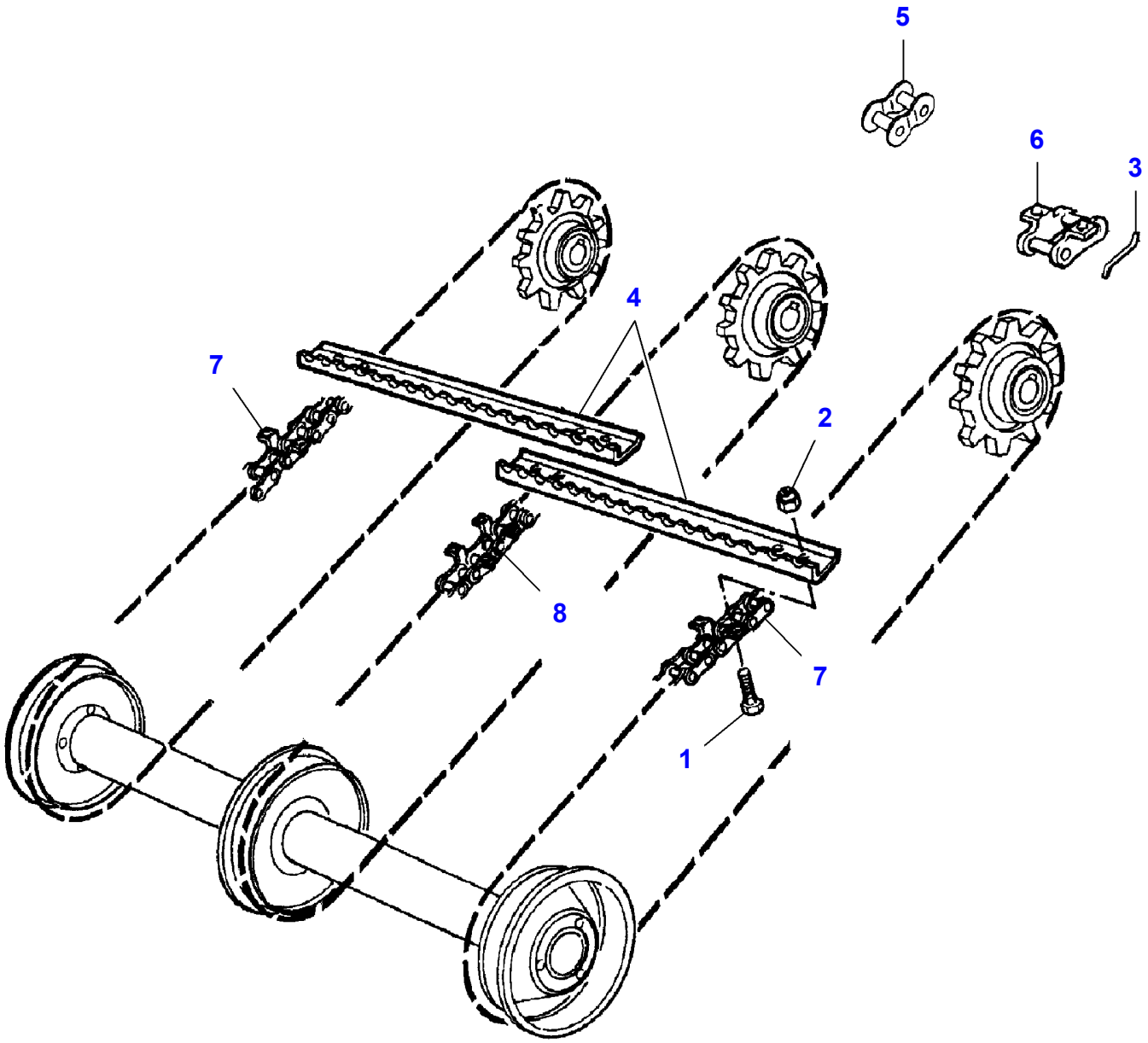

Item	Part Number	Qty	Description
1	LA16043424	1	Cap Screw
2	LA16104111	1	Locknut
3	LA322766550	1	Stop
4	LA322767650	2	Blade
5	**LA344381246**	1	Link
6	**LA344381256**	1	Link
7	**LA344381274**	2	Chain
8	**LA344381275**	1	Chain

L-LC38-001-A

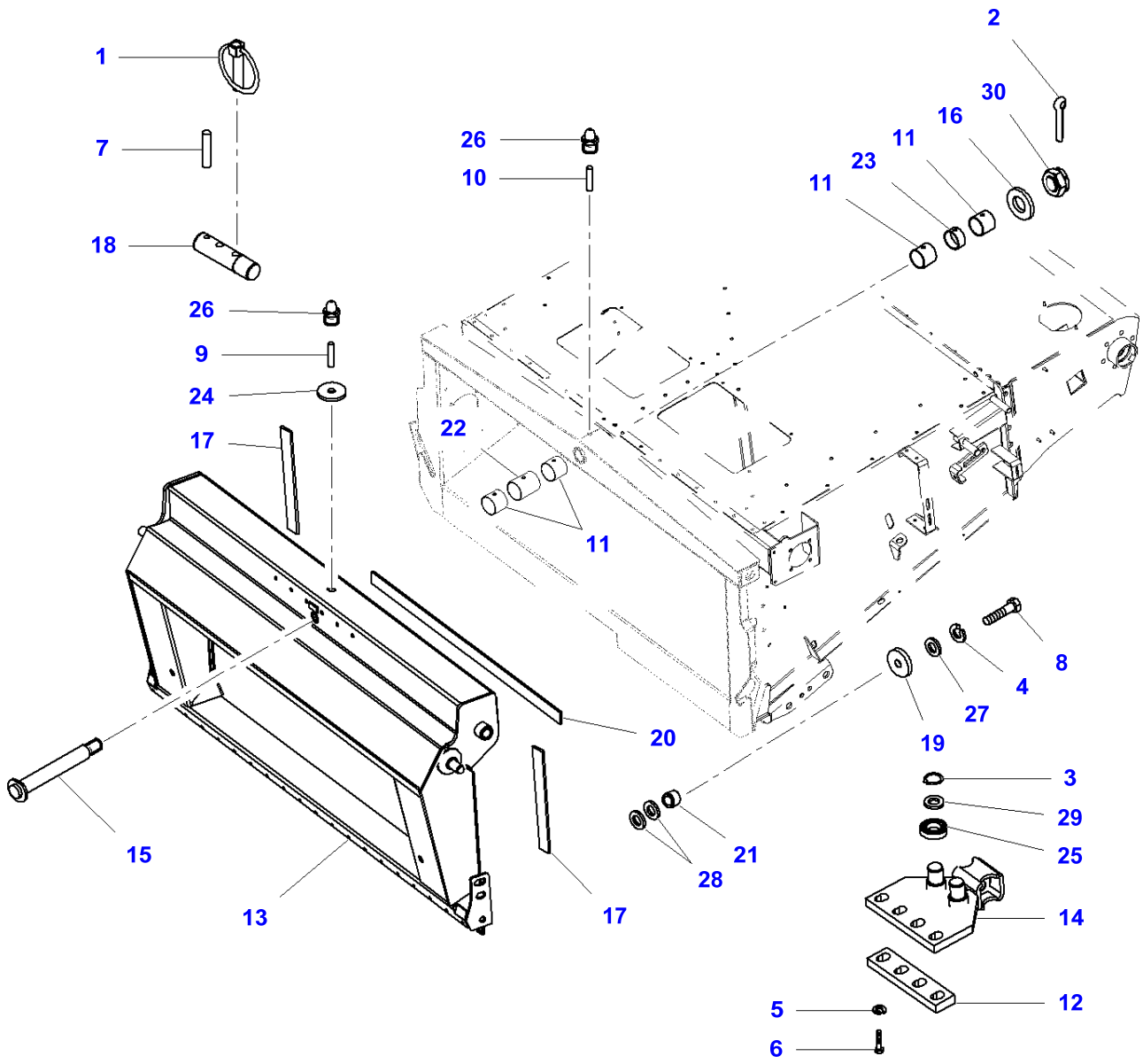
1
7
18
26
9
24
17
15
13
26
10
22
11
20
17
2
30
16
11
23
11
8
4
27
19
3
29
25
14
12
5
6
21
28

Item	Part Number	Qty	Description	Comments
1	LA9838996	1	Roll Pin	
2	LA10797601	1	Split Pin	
3	LA11067876	1	Circlip	
4	LA12034871	1	Lock Washer	
5	LA12035071	1	Lock Washer	
6	LA14318034	1	Cap Screw	
7	LA14607370	1	Roll Pin	
8	LA15981021	1	Cap Screw	
9	LA300018715	1	Tube	
10	LA321090850	1	Extension	
11	LA321933750	4	Bush	
12	LA322213350	1	Stop	
13	LA322773550	1	Elevator	Up to Serial or Engine Number
	LA323182350	1	Elevator	From Serial or Engine Number 551710023
14	LA322775150	1	Plate	
15	LA322775250	1	Pin	
16	LA322775350	1	Washer	
17	LA322775750	2	Skate	
18	LA322775850	1	Pin	
19	LA322776250	1	Washer	
20	LA322776650	1	Skate	
21	LA322779250	1	Spacer	
22	LA322779450	1	Spacer	
23	LA322779550	1	Spacer	
24	LA322779650	1	Gasket	
25	LA340409503	1	Bearing Assy	
26	LA350357803	2	Grease Fitting	
27	LA355501740	1	Flat Washer	
28	LA355532610	2	Flat Washer	
29	LA355538720	1	Flat Washer	
30	LA360652730	1	Castle Nut	

L-LC36-007-B

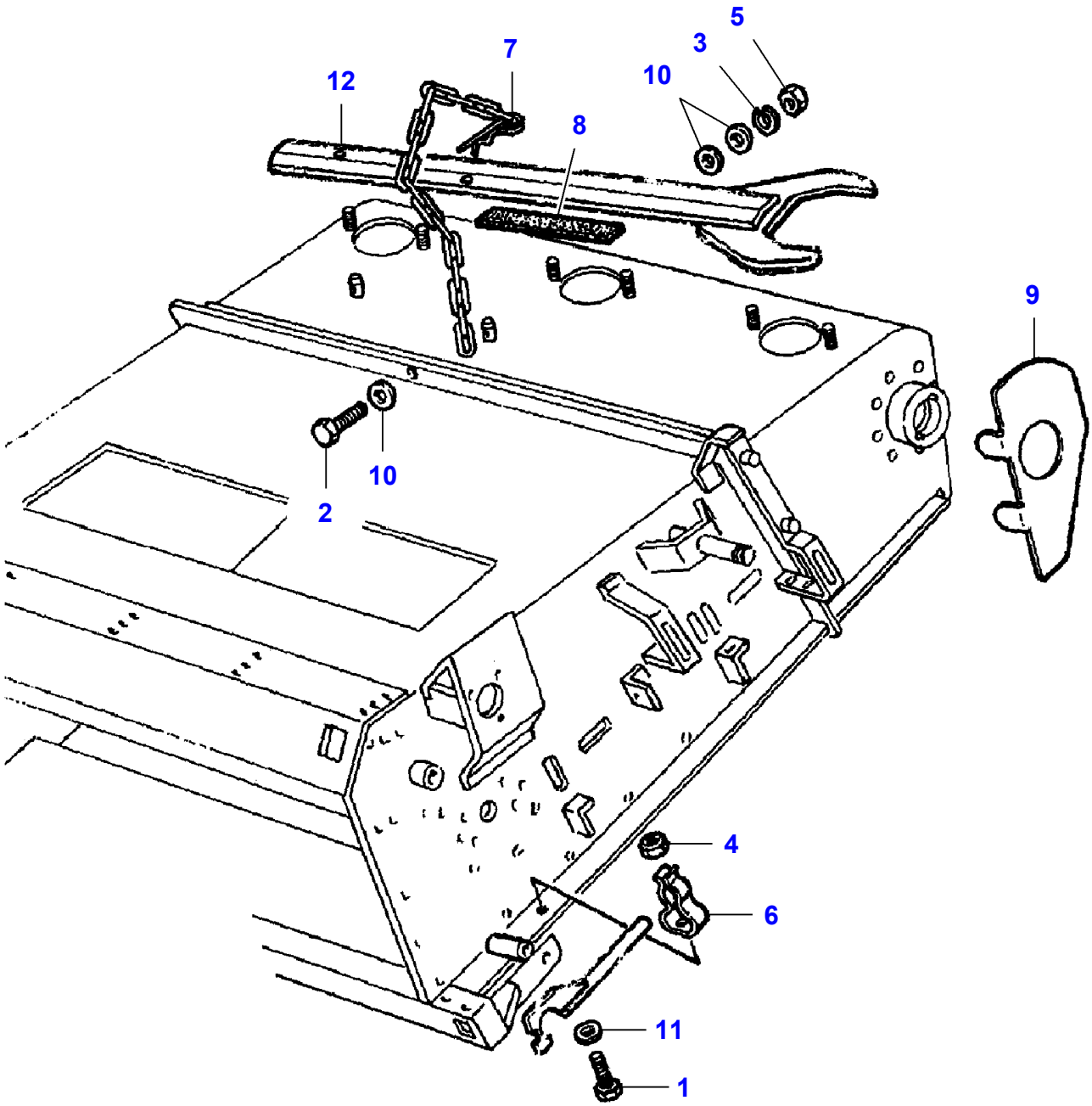

Item	Part Number	Qty	Description	Comments
1	LA10375111	1	Cap Screw	
2	LA10902421	1	Cap Screw	
3	LA12035670	1	Lock Washer	
4	LA12574011	1	Nut	
5	LA15896211	1	Nut	
6	LA322294350	1	Clip	
7	LA322366800	1	Latch	
8	LA322387450	1	Gasket	
9	LA322546450	1	Shim	
10	LA355500720	2	Flat Washer	
11	LA355510415	1	Flat Washer	
12		1	Lever	See Page - Reference Number 130-0005/3

L-LC48-001-B

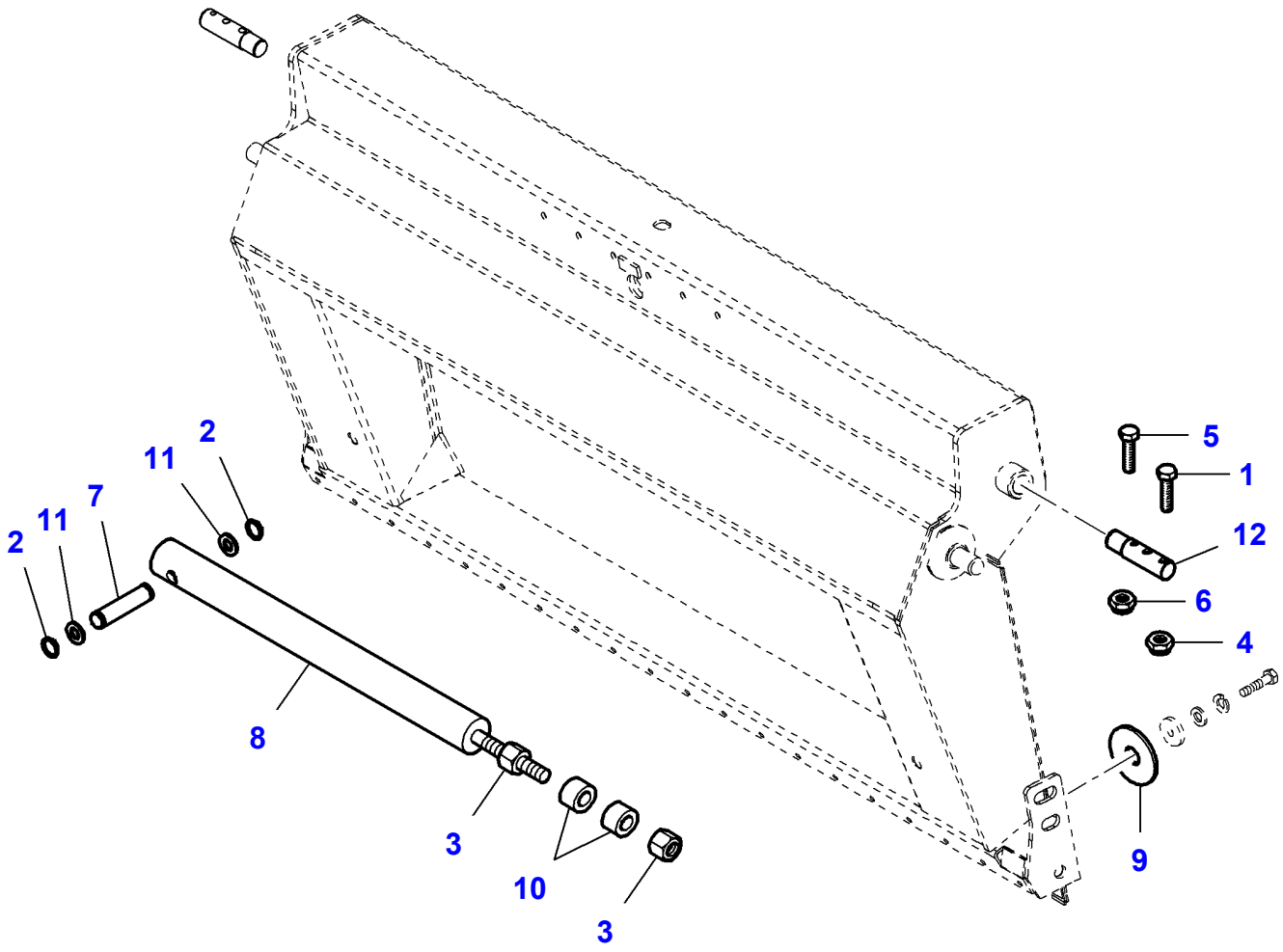

Item	Part Number	Qty	Description	Comments
1	LA10903221	1	Cap Screw	
2	LA11066476	2	Circlip	
3	LA12163511	2	Nut	
4	LA12574211	1	Locknut	
5	LA16044521	1	Cap Screw	
6	LA16104111	1	Locknut	
7	LA322213150	1	Pin	
8	LA322899550	1	Stop	
9	LA323099350	1	Washer	
10	LA340415074	1	Bush	
11	LA355532620	1	Flat Washer	
12			Pin	See Page - Reference Number 040-0055/18

L-LC41-011-B

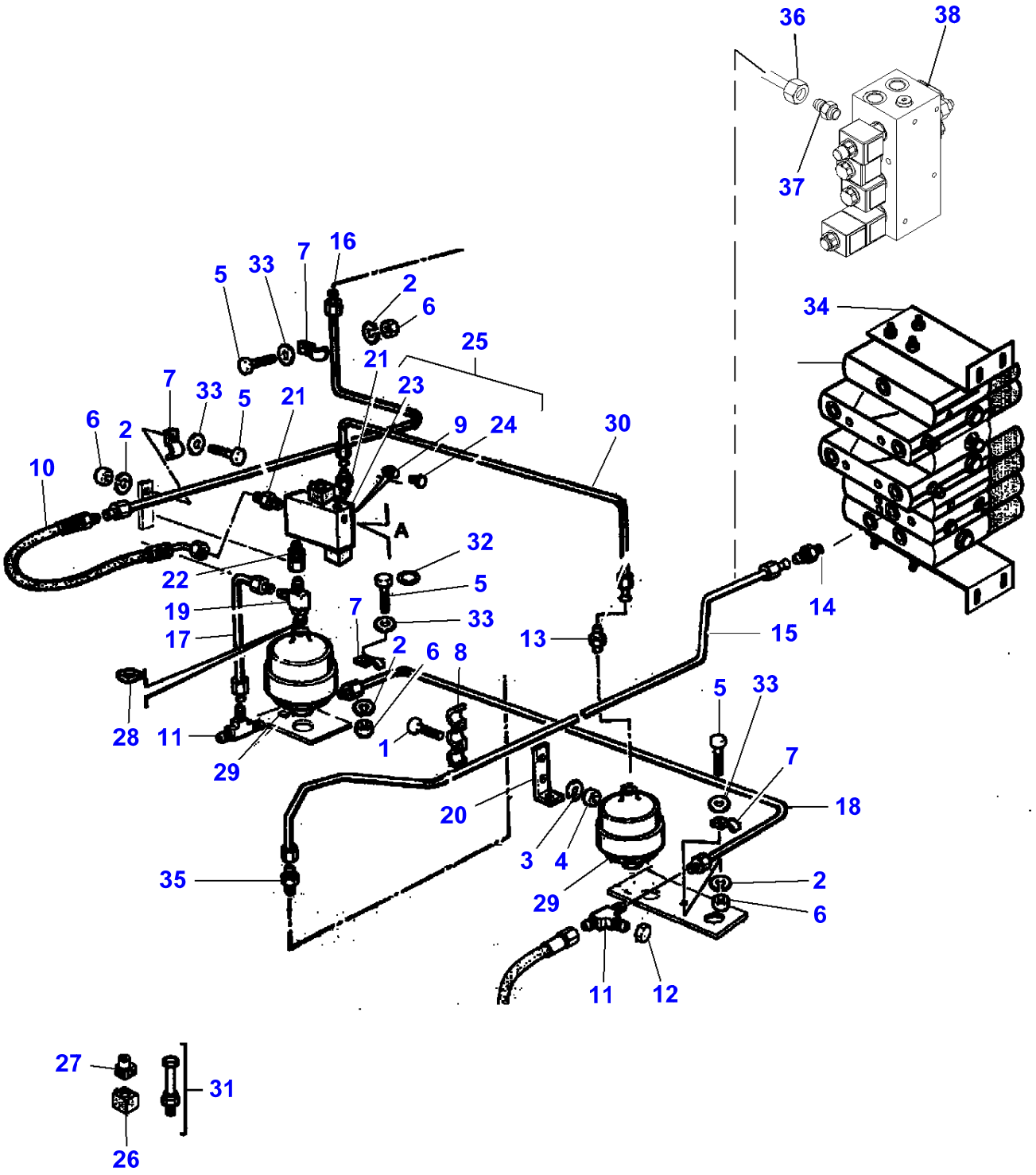
36
38
37
34
16
7
33
5
2
6
25
21
23
9
24
30
10
A
32
22
5
19
7
33
17
2
6
8
13
15
14
28
11
29
1
5
33
7
18
20
3
4
35
29
2
6
11
12
27
31
26

Item	Part Number	Qty	Description	Comments
1	LA10902621	1	Cap Screw	
2	LA12034571	4	Lock Washer	
3	LA12035670	1	Lock Washer	
4	LA15896221	1	Nut	
5	LA16043424	4	Cap Screw	
6	LA16100811	4	Nut	
7	LA300113894	4	Collar	
8	LA300136708	1	Collar	
9	LA320573950	1	Valve	
10	LA321420250	1	Hydraulic Hose	
11	LA321421650	2	T-Piece	
12	LA321427650	1	Plug	
13	LA321876900	1	Union	
14	LA322103800	1	Connector	Up to Serial or Engine Number
15	LA322109050	1	Tube	Up to Serial or Engine Number
16	LA322109150	1	Tube	
17	LA322109350	1	Tube	
18	LA322109450	1	Tube	
19	LA322110400	1	T-Piece	
20	LA322111550	1	Support	
21	LA322113600	2	Union	
22	LA322127100	1	Union	
23	LA322354250	1	Block	
24	LA322385350	1	Plug	
25	LA322385400	1	Electrovalve	
26	LA322412950	1	Magnet	
27	LA322413000	1	Union	
28	LA322718050	1	Valve	
29	LA322718750	2	Accumulator	
30	LA322763350	1	Tube	
31	LA322854750	1	Electrovalve	
32	LA350358729	1	Gasket	
33	LA355500915	4	Flat Washer	
34		1	Distributor	See Page - Reference Number 110-0015/11 Up to Serial or Engine Number
35	LA321420150	1	Union	
36	LA323160350	1	Tube	
37	LA321875100	1	Union	
38		1	Distributor	See Page - Reference Number 110-0030 From Serial or Engine Number 551710031

L-LC41-013-A

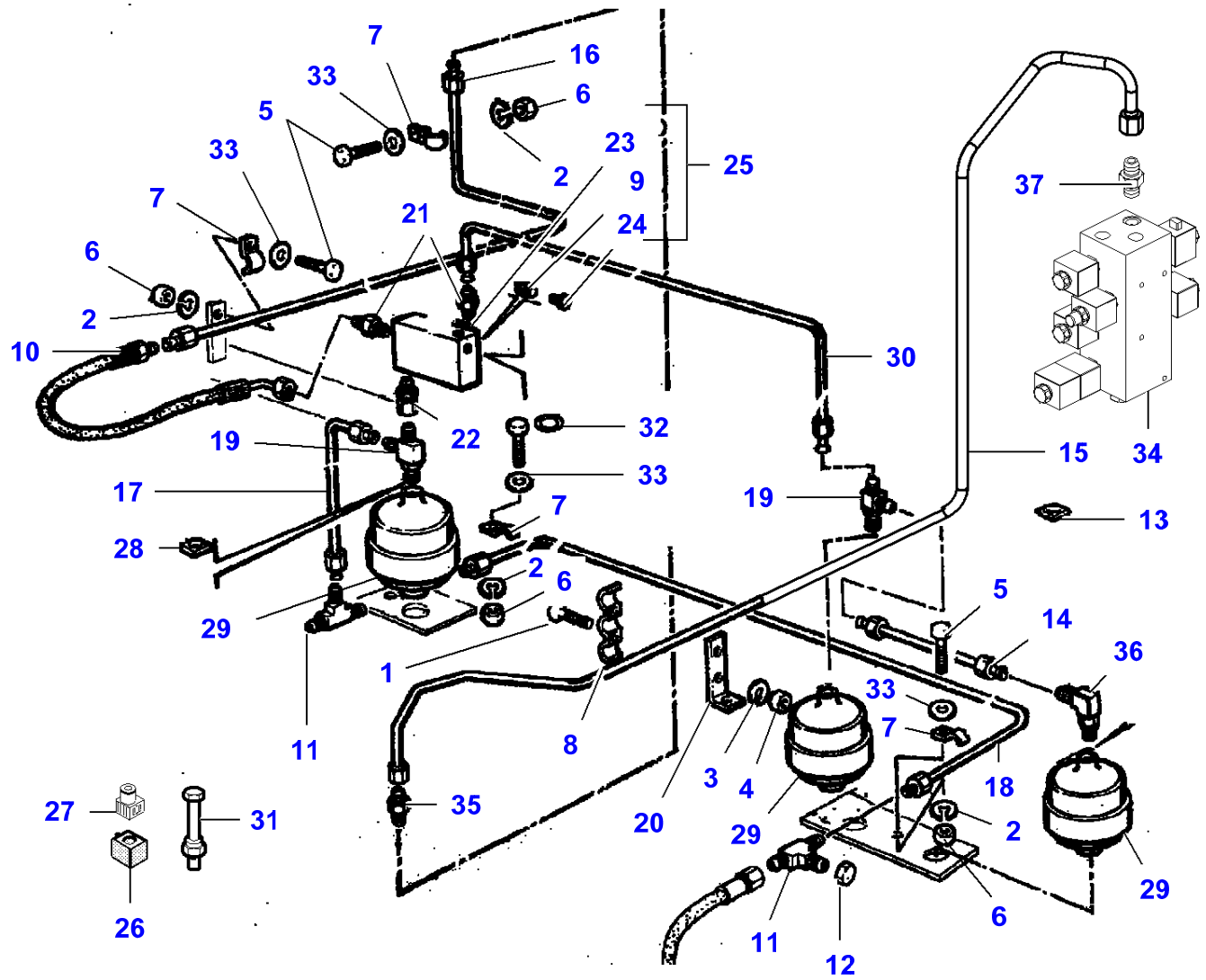
7
16
33
6
5
23
25
33
2
9
37
7
21
24
6
2
10
30
22
32
19
34
15
33
17
19
7
13
28
2
6
5
29
14
1
36
33
11
8
7
3
4
18
27
31
35
20
29
2
29
26
6
11
12

Item	Part Number	Qty	Description	Comments
1	LA10902621	1	Cap Screw	
2	LA12034571	4	Lock Washer	
3	LA12035670	1	Lock Washer	
4	LA15896221	1	Nut	
5	LA16043424	4	Cap Screw	
6	LA16100811	4	Nut	
7	LA300113894	4	Collar	
8	LA300136708	1	Collar	
9	LA320573950	1	Valve	
10	LA321420250	1	Hydraulic Hose	
11	LA321421650	2	T-Piece	
12	LA321427650	1	Plug	
13	LA322718050	1	Valve	
14	LA322110350	1	Tube	
15	LA322109050	1	Tube	
16	LA322109150	1	Tube	
17	LA322109350	1	Tube	
18	LA322109450	1	Tube	
19	LA322110400	1	T-Piece	
20	LA322111550	1	Support	
21	LA322113600	2	Union	
22	LA322127100	1	Union	
23	LA322354250	1	Block	
24	LA322385350	1	Plug	
25	LA322385400	1	Electrovalve	
26	LA322412950	1	Magnet	
27	LA322413000	1	Union	
28	LA322718050	1	Valve	
29	LA322718750	3	Accumulator	
30	LA322763350	1	Tube	
31	LA322854750	1	Electrovalve	
32	LA350358729	1	Gasket	
33	LA355500915	4	Flat Washer	
34		1	Distributor	See Page - Reference Number 110-0045/1
35	LA321420150	1	Union	
36	LA322110500	1	Elbow Union	
37	LA321875100	1	Union	

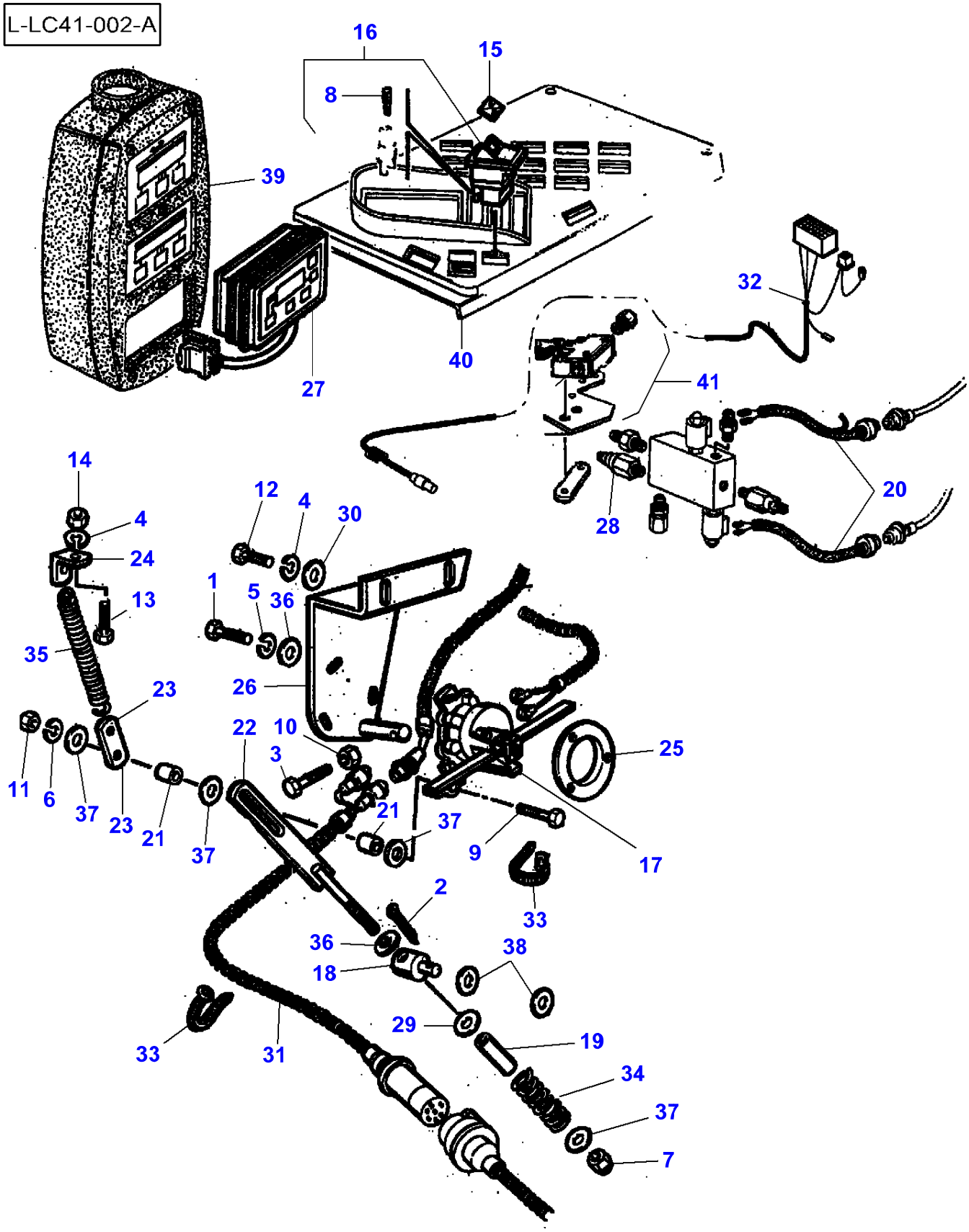
L-LC41-002-A
16
15
8
39
40
27
32
41
28
20
14
4
24
13
35
12
4
30
1
5
36
26
23
22
10
3
25
11
6
37
23
21
37
21
37
9
17
2
33
36
38
18
29
19
34
37
7
33
31

Item	Part Number	Qty	Description	Comments
1	LA10444821	1	Cap Screw	
2	LA10734301	1	Split Pin	
3	LA10903221	1	Cap Screw	
4	LA12034571	2	Lock Washer	
5	LA12035371	1	Lock Washer	
6	LA12035471	1	Lock Washer	
7	LA12574111	1	Nut	
8	LA14143790	1	Pin	
9	LA15211621	1	Cap Screw	
10	LA15896221	1	Nut	
11	LA15896421	1	Nut	
12	LA16043424	1	Cap Screw	
13	LA16043624	1	Cap Screw	
14	LA16100811	10	Nut	
15	LA321868350	1	Plate	
16	LA321896800	1	Switch	
17	**LA321909800**	1	Potentiometer	
18	LA321926050	1	Pin	
19	LA321926850	1	Spacer	
20	LA321949900	1	Harness	
21	LA321996150	2	Spacer	
22	LA321996350	1	Tie Rod	
23	LA321996650	1	Plate	
24	LA321996750	1	Bracket	
25	LA321998650	1	Ring	
26	LA322003350	1	Support	
27	LA322108900	1	Control Box	
28	**LA322147150**	1	Pressure Switch	Length 420 - 65 Bar
	LA322147250	1	Pressure Switch	Length 480 -540 -85 Bar
	LA322147350	1	Pressure Switch	Length 600-100 bar
29	LA355530130	1	Washer	
30	LA355510820	1	Flat Washer	
31	LA322310100	1	Harness	
32	LA322761100	1	Harness	
33	LA340481810	2	Cable Tie	
34	LA350356208	1	Spring	Repairs and replaces LA350356440
35	LA350356511	1	Spring	
36	LA355500515	2	Flat Washer	Up to Serial or Engine Number
37	LA355510615	4	Flat Washer	
38	LA355510815	2	Washer	
39		1	Monitor	See Page - Reference Number 120-0090
40		1	Panel	See Page - Reference Number 100-0020
41		1	Kit, Switch	See Page - Reference Number 100-0020

L-LC41-003-B

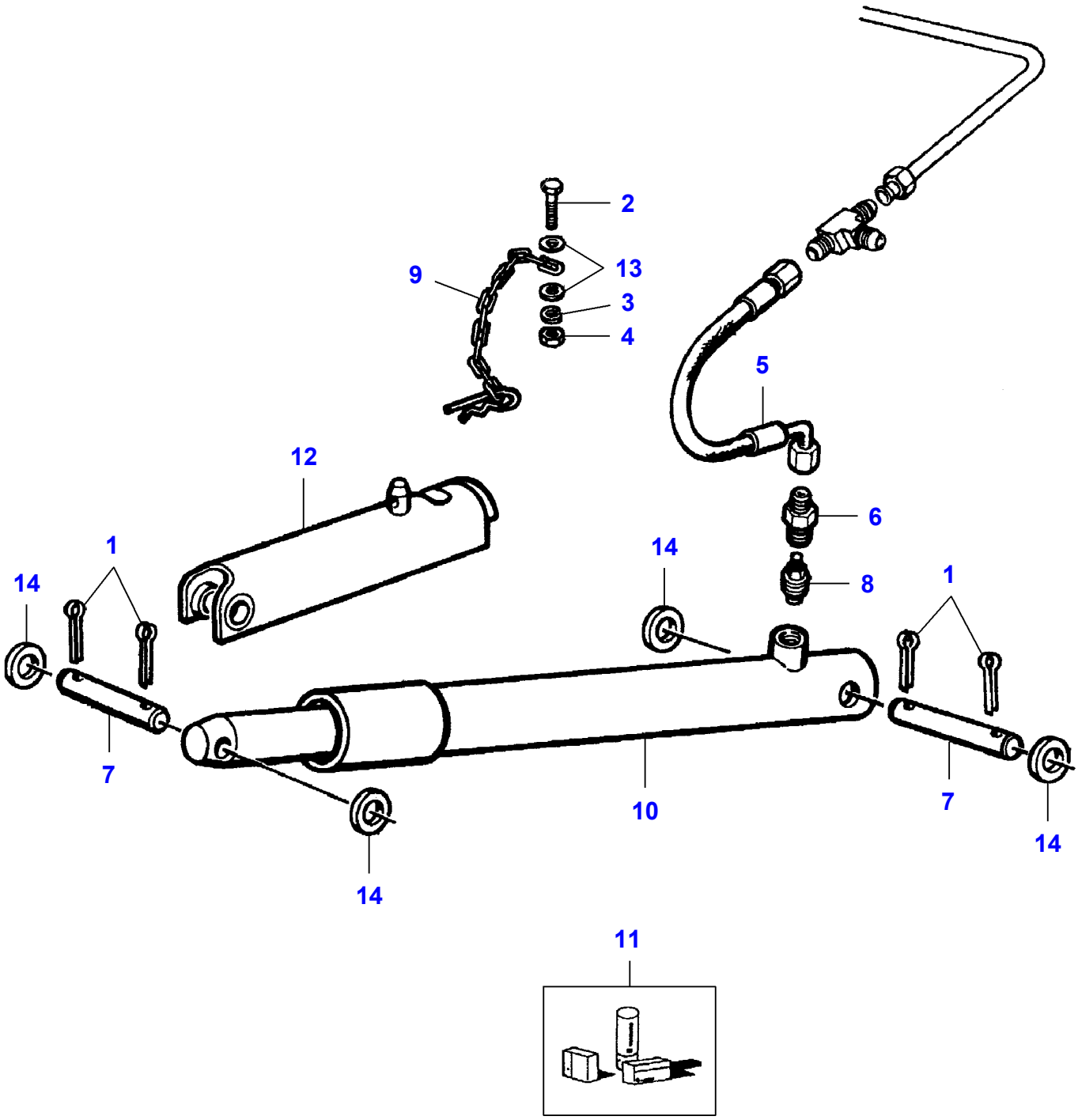

Item	Part Number	Qty	Description
1	LA10797401	4	Split Pin
2	LA10902421	1	Cap Screw
3	LA12035671	1	Lock Washer
4	LA15896211	1	Nut
5	LA321421850	1	Hydraulic Hose
6	LA321875100	1	Union
7	LA321878750	2	Pin
8	LA322308350	1	Valve
9	LA322366800	1	Latch
10	LA322546100	1	Hydraulic, Cylin
11	LA322546300	1	Kit, Seal
12	LA323074750	1	Shield
13	LA355500720	2	Flat Washer
14	LA355536430	4	Washer

L-LC53-001-B

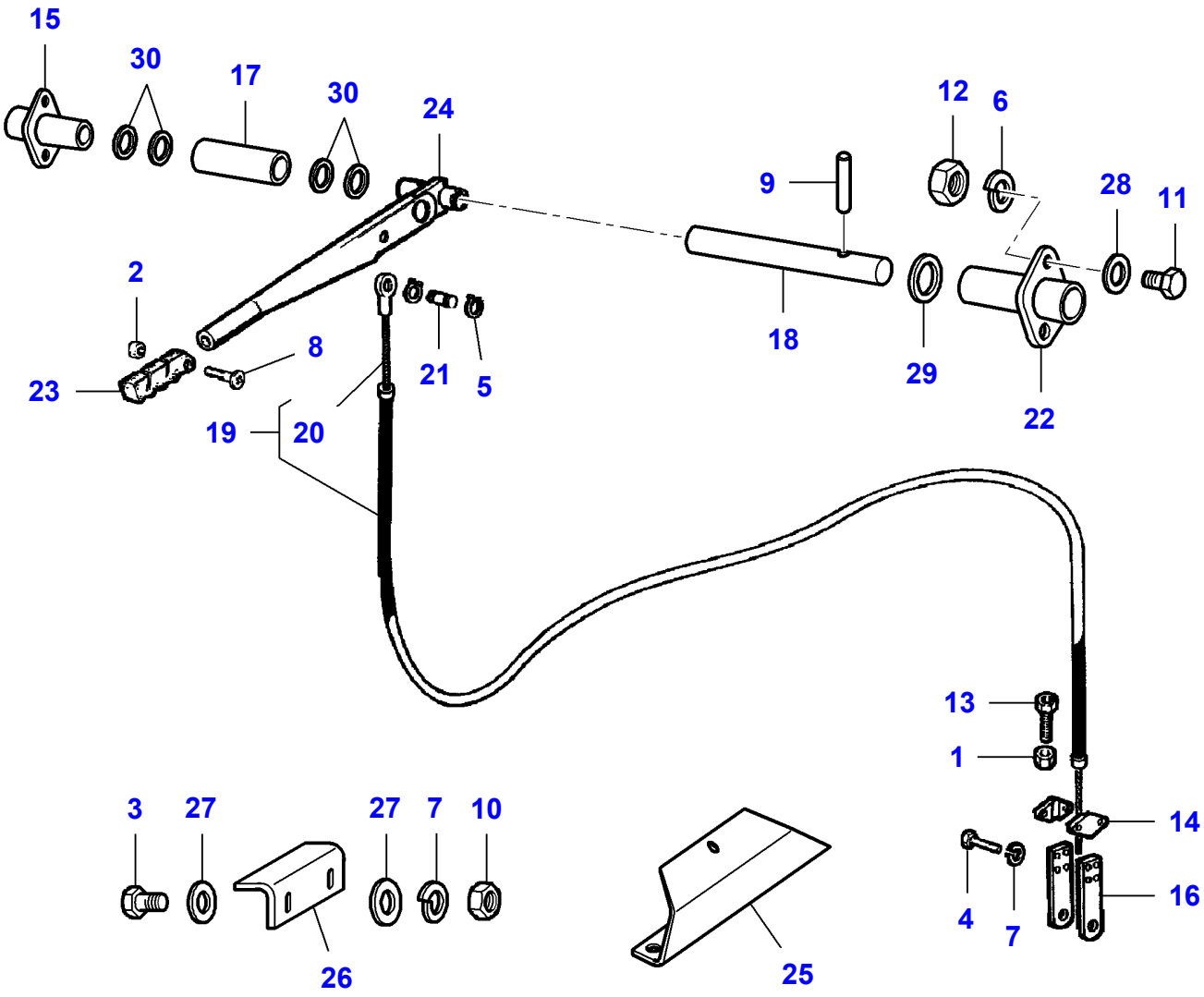
15
30
17
30
24
12
6
9
28
11
2
8
23
21
5
18
29
22
19
20
13
1
14
16
4
7
3
27
27
7
10
26
25

Item	Part Number	Qty	Description	Comments
1	LA10788714	1	Nut	
2	LA10794014	1	Nut	
3	LA10902224	1	Cap Screw	
4	LA10902624	1	Cap Screw	
5	LA11065676	2	Circlip	
6	LA12034571	1	Lock Washer	
7	LA12035670	2	Lock Washer	
8	LA13272411	1	Screw	
9	LA14601370	1	Pin	
10	LA15896221	1	Nut	
11	LA16043624	1	Cap Screw	
12	LA16100811	1	Nut	
13	LA300031549	1	Cap Screw	
14	LA300031960	2	Plate	
15	LA300112322	1	Support	
16	LA300137293	2	Plate	
17	LA320431850	1	Bush	
18	LA320432750	1	Pin	
19	**LA320437000**	1	Cable	
20	LA320436150	1	Rope	(19)
21	LA320437350	1	Pin	
22	LA320758350	1	Support	
23	LA321254150	1	Grip	
24	LA321275050	1	Lever	
25	LA322788750	1	Support	
26	LA322797950	1	Plate	
27	LA355500720	2	Flat Washer	
28	LA355500915	1	Flat Washer	
29	LA355533810	1	Flat Washer	
30	LA355533830	4	Washer	

L-LC53-002-B

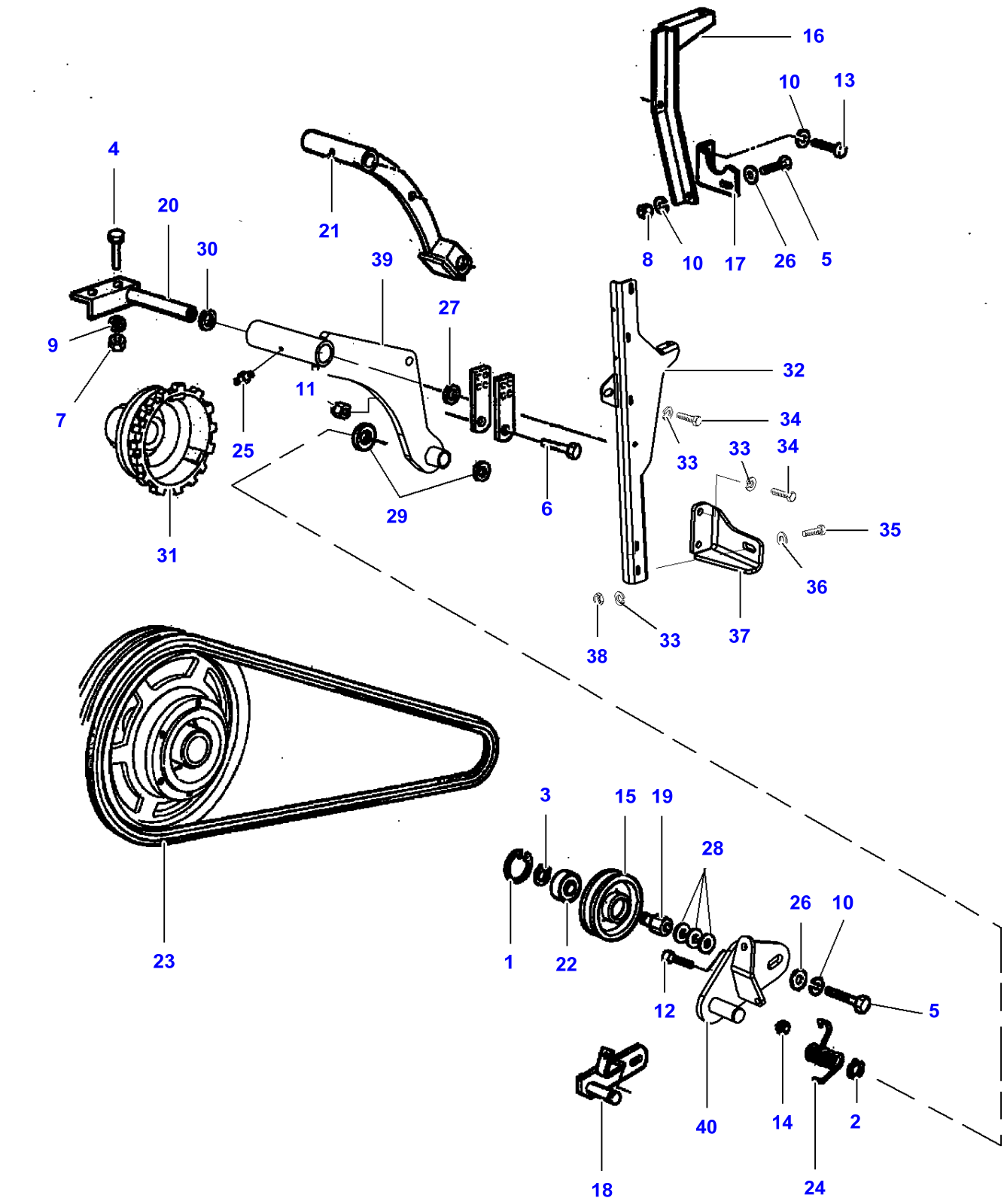
16
10
13
4
20
21
30
39
27
9
11
32
7
25
34
33
33
34
29
6
35
31
36
38
33
37
3
15
19
28
26
10
23
1
22
12
5
40
14
2
18
24

Item	Part Number	Qty	Description	Comments
1	LA11060576	1	Circlip	
2	LA11067076	1	Circlip	
3	LA11067376	1	Circlip	
4	LA11106221	2	Cap Screw	
5	LA11112621	2	Cap Screw	
6	LA11112824	1	Cap Screw	
7	LA11701721	1	Nut	
8	LA11702921	1	Nut	Up to Serial or Engine Number
9	LA12034671	1	Lock Washer	
10	LA12034771	3	Lock Washer	
11	LA12577511	1	Cap Nut	
12	LA16043824	1	Cap Screw	
13	LA16055221	1	Cap Screw	Up to Serial or Engine Number
14	LA16100811	1	Nut	
15	LA300033832	1	Pulley	
16	LA321864250	1	Stop	Up to Serial or Engine Number
17	LA321865450	1	Bracket	Up to Serial or Engine Number
18	LA322041150	1	Support	Up to Serial or Engine Number
19	LA322041250	1	Pin	
20	LA322041350	1	Support	
21	LA322041450	1	Arm	Up to Serial or Engine Number
22	**LA322638450**	1	Bearing Assy	
23	**LA340433984**	1	Belt	
24	LA350356937	1	Spring	Repairs and replaces LA350356828
25	LA350357852	1	Nipple	
26	LA355501330	2	Flat Washer	
27	LA355511210	1	Washer	
28	LA355511220	3	Washer	
29	LA355535410	2	Washer	
30	LA355536720	1	Washer	
31		1	Pulley	See Page - Reference Number 050-0020/9
32	LA323182850	1	Bracket	From Serial or Engine Number 551710031
33	LA12034771	X	Lock Washer	From Serial or Engine Number 551710031
34	LA11112221	X	Cap Screw	From Serial or Engine Number 551710031
35	LA11112621	X	Cap Screw	From Serial or Engine Number 551710031
36	LA355501330	X	Flat Washer	From Serial or Engine Number 551710031
37	LA323182950	1	Bracket	From Serial or Engine Number 551710031
38	LA11702921	X	Nut	From Serial or Engine Number 551710031
39	LA323183150	1	Arm	From Serial or Engine Number 551710031
40	LA323183050	1	Support	From Serial or Engine Number 551710031

L-LC86-001-C

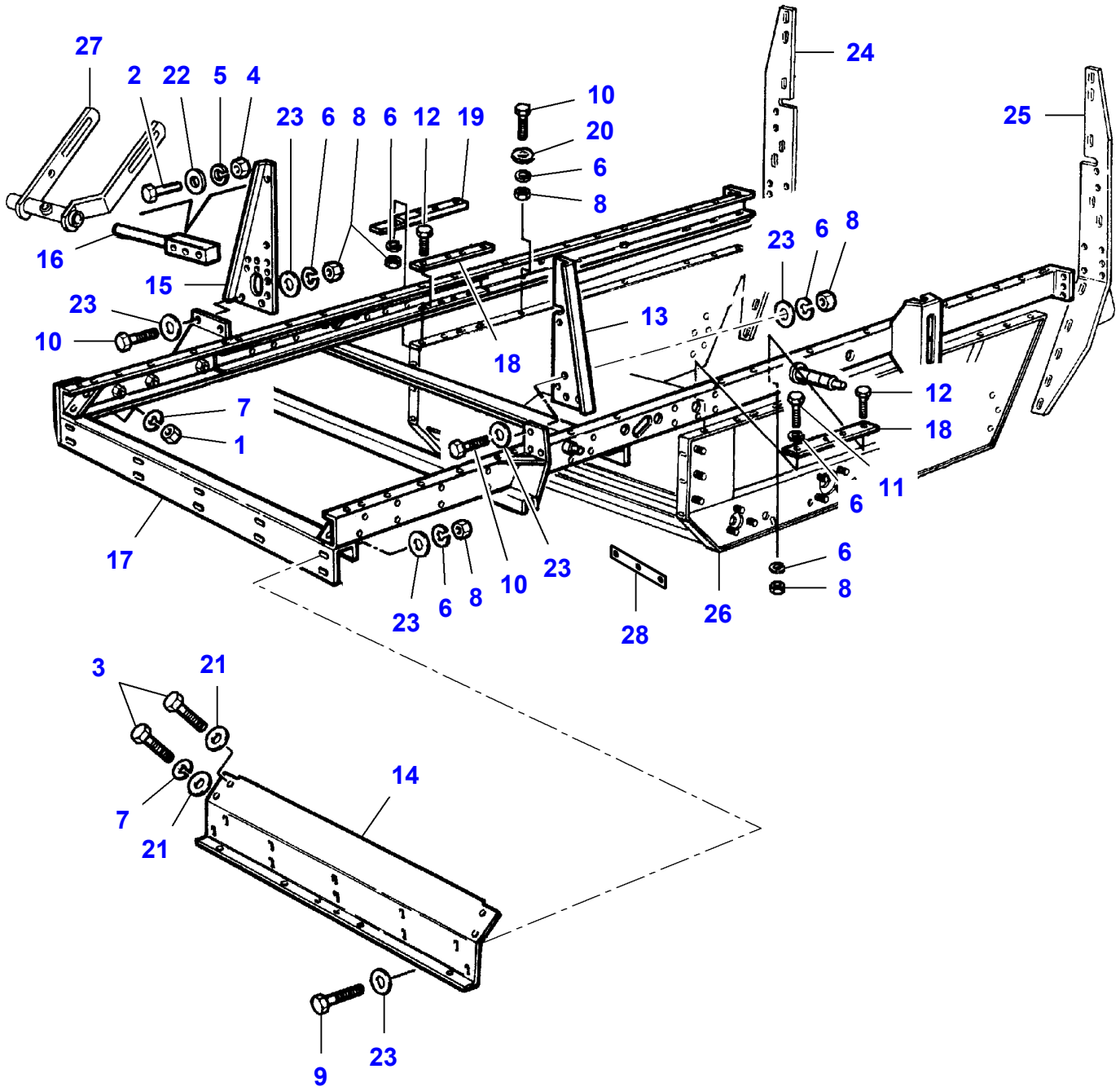
27
2
22
5
4
23
6
8
6
12
19
10
20
6
8
24
25
16
15
23
10
18
13
23
6
8
12
18
11
6
7
1
17
23
6
8
10
23
6
8
26
28
3
21
14
7
21
9
23

Item	Part Number	Qty	Description	Comments
1	LA10790421	1	Nut	
2	LA11107311	1	Cap Screw	
3	LA11408324	2	Cap Screw	
4	LA11701721	10	Nut	
5	LA12034671	1	Lock Washer	
6	LA12034771	6	Lock Washer	
7	LA12035571	2	Lock Washer	
8	LA12164911	5	Nut	
9	LA15540521	1	Cap Screw	
10	LA15540624	3	Cap Screw	
11	LA15540724	1	Cap Screw	
12	LA15541024	2	Cap Screw	
13	LA320972650	1	Reinforcement	
14	LA321868150	1	Crossbar	
15	LA322164250	1	Bracket	
16	LA322164350	1	Pin	
17	LA322385750	1	Frame	
18	LA322643450	2	Reinforcement	
19	LA322643550	1	Reinforcement	
20	LA355501330	1	Flat Washer	
21	LA355501530	2	Washer	
22	LA355530220	1	Washer	
23	LA355530830	6	Flat Washer	
24		1	Reinforcement	See Page - Reference Number 030-0010/9
25		1	Reinforcement	See Page - Reference Number 030-0010/10
26		1	Housing	See Page - Reference Number 070-0020/14
27		1	Yoke	See Page - Reference Number 070-0115/4
28	LA323163150	1	Plate	

L-LC87-001-B

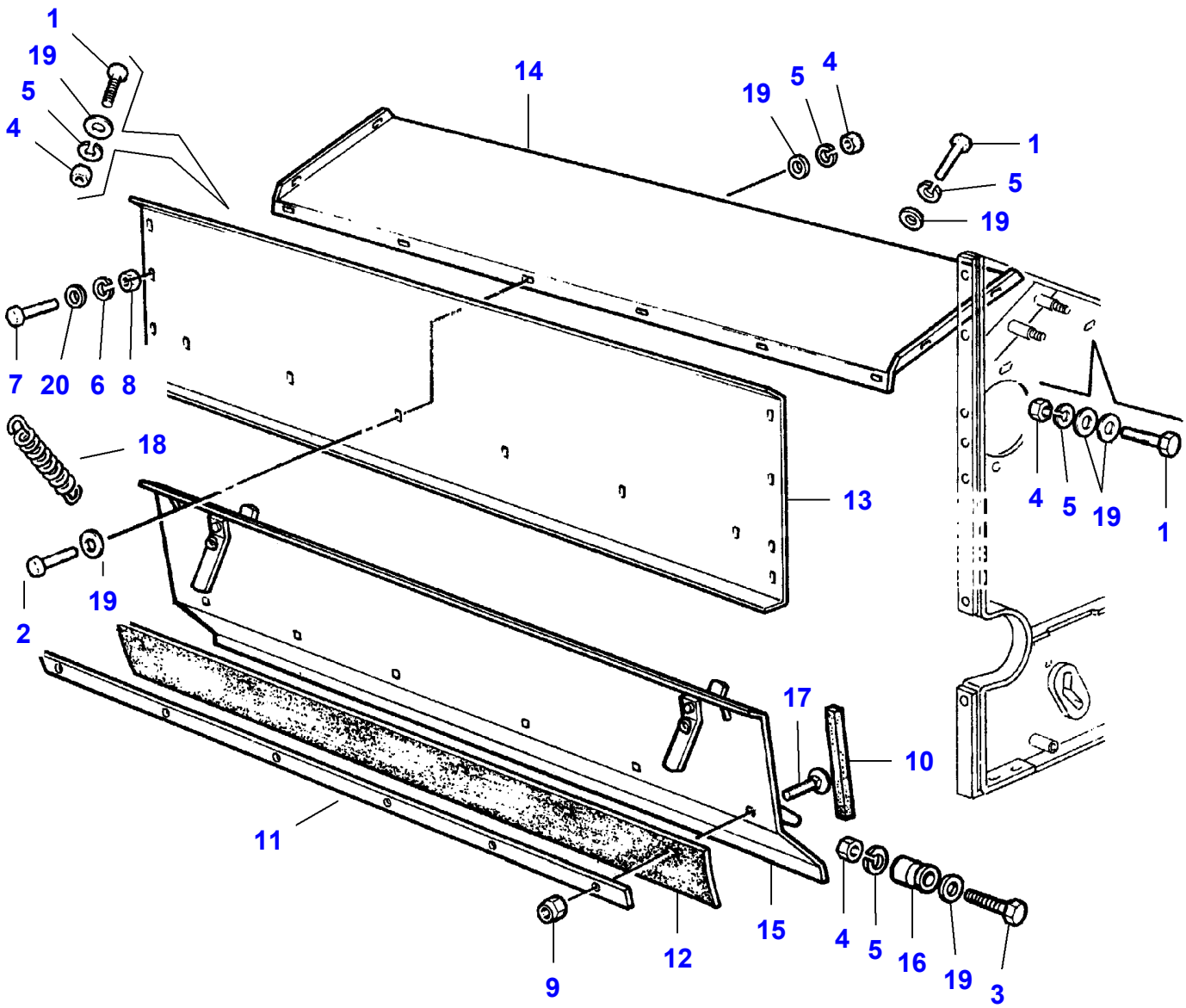
1
19
5
4
14
19
5
4
1
5
19
7
20
6
8
18
13
4
5
19
1
2
19
17
10
11
15
4
5
16
19
3
9
12

Item	Part Number	Qty	Description
1	LA11106021	6	Cap Screw
2	LA11106224	1	Cap Screw
3	LA11107421	1	Cap Screw
4	LA11701721	4	Nut
5	LA12034671	5	Lock Washer
6	LA12034771	2	Lock Washer
7	LA15540624	2	Cap Screw
8	LA16101514	2	Nut
9	LA16104111	1	Locknut
10	LA320649950	1	Gasket
11	LA320747850	1	Plate
12	LA321084650	1	Gasket
13	LA321857750	1	Wall
14	LA321857950	1	Roof
15	LA322087950	1	Lid
16	LA322088050	1	Pin
17	LA350342512	1	Carriage Bolt
18	LA350356513	1	Spring
19	LA355511020	7	Flat Washer
20	LA355530830	2	Flat Washer

L-LC87-002-B

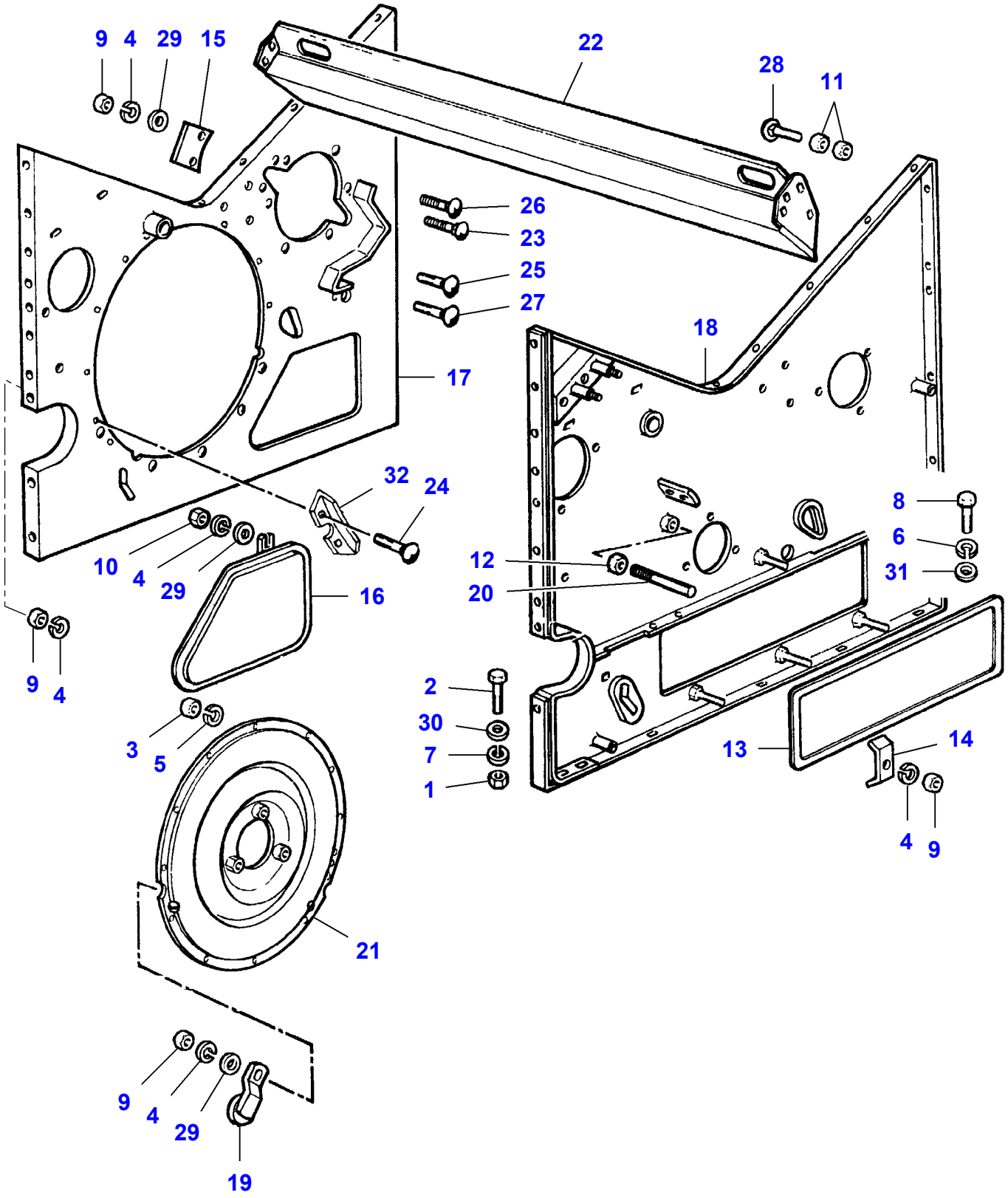
9
4
29
15
22
28
11
26
23
25
27
18
17
32
24
10
4
29
16
12
20
8
6
31
9
4
2
30
7
1
3
5
13
14
4
9
21
9
4
29
19

Item	Part Number	Qty	Description	Comments
1	LA10790421	1	Nut	
2	LA11394321	1	Cap Screw	
3	LA11701721	1	Nut	
4	LA12034571	5	Lock Washer	
5	LA12034671	1	Lock Washer	
6	LA12034771	1	Lock Washer	
7	LA12035571	1	Lock Washer	
8	LA15540521	1	Cap Screw	
9	LA16100811	4	Nut	
10	LA16100824	1	Nut	
11	LA16101511	2	Nut	
12	LA16103614	1	Nut	
13	LA300132103	1	Lid	
14	LA300135069	1	Plate	
15	LA300136152	1	Cover	
16	LA320972750	1	Lid	
17	LA320975050	1	Side	
18	LA320975150	1	Side	
19	LA321198550	1	Plate	
20	LA321865650	1	Clip	
21	LA321871550	1	Cover	
22	LA322307650	1	Plate	
23	LA350342511	1	Carriage Bolt	
24	LA350342512	1	Carriage Bolt	
25	LA350342520	1	Carriage Bolt	Length 20 mm
26	LA350342525	1	Carriage Bolt	
27	LA350342530	1	Screw	Length 30 mm
28	LA350342544	1	Carriage Bolt	
29	LA355500915	3	Flat Washer	
30	LA355501550	1	Flat Washer	
31	LA355530830	1	Flat Washer	
32		1	Plate	See Page - Reference Number 050-0040/8

L-LC87-003-B

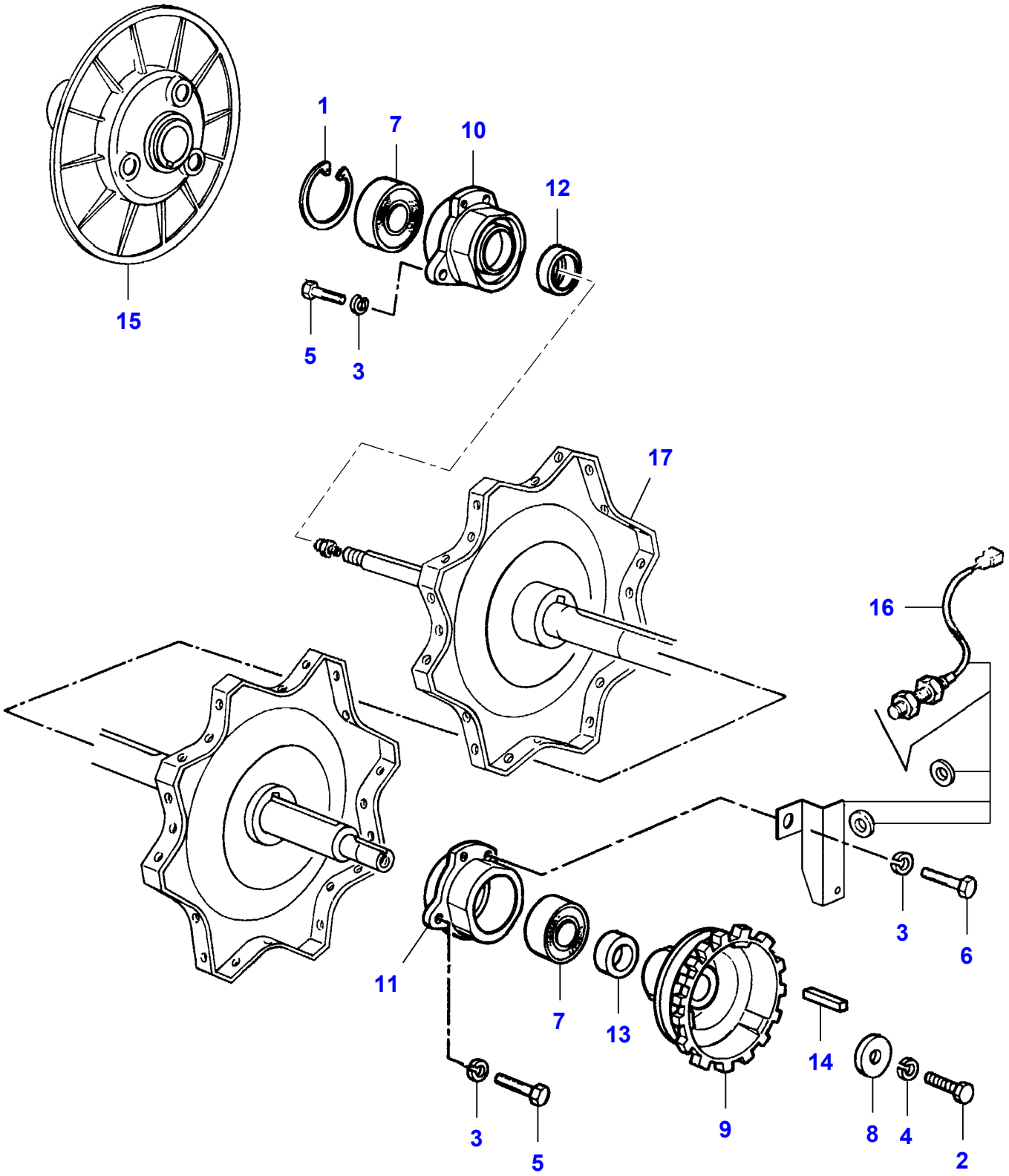

Item	Part Number	Qty	Description	Comments
1	LA11075476	1	Circlip	
2	LA11376221	1	Cap Screw	
3	LA12034771	3	Lock Washer	
4	LA12034871	1	Lock Washer	
5	LA15540521	2	Cap Screw	
6	LA15540624	1	Cap Screw	
7	**LA28040160**	2	Bearing Assy	
8	LA300015476	1	Washer	
9	LA320892550	1	Coupler	
10	LA320971250	1	Support	
11	LA320971350	1	Support	
12	LA320971450	1	Bush	
13	LA320971750	1	Spacer	
14	LA350384740	1	Key	
15		1	Disc	See Page - Reference Number 050-0025/15
16		1	Sensor	See Page - Reference Number 120-0040/1
17		1	Support	See Page - Reference Number 050-0035

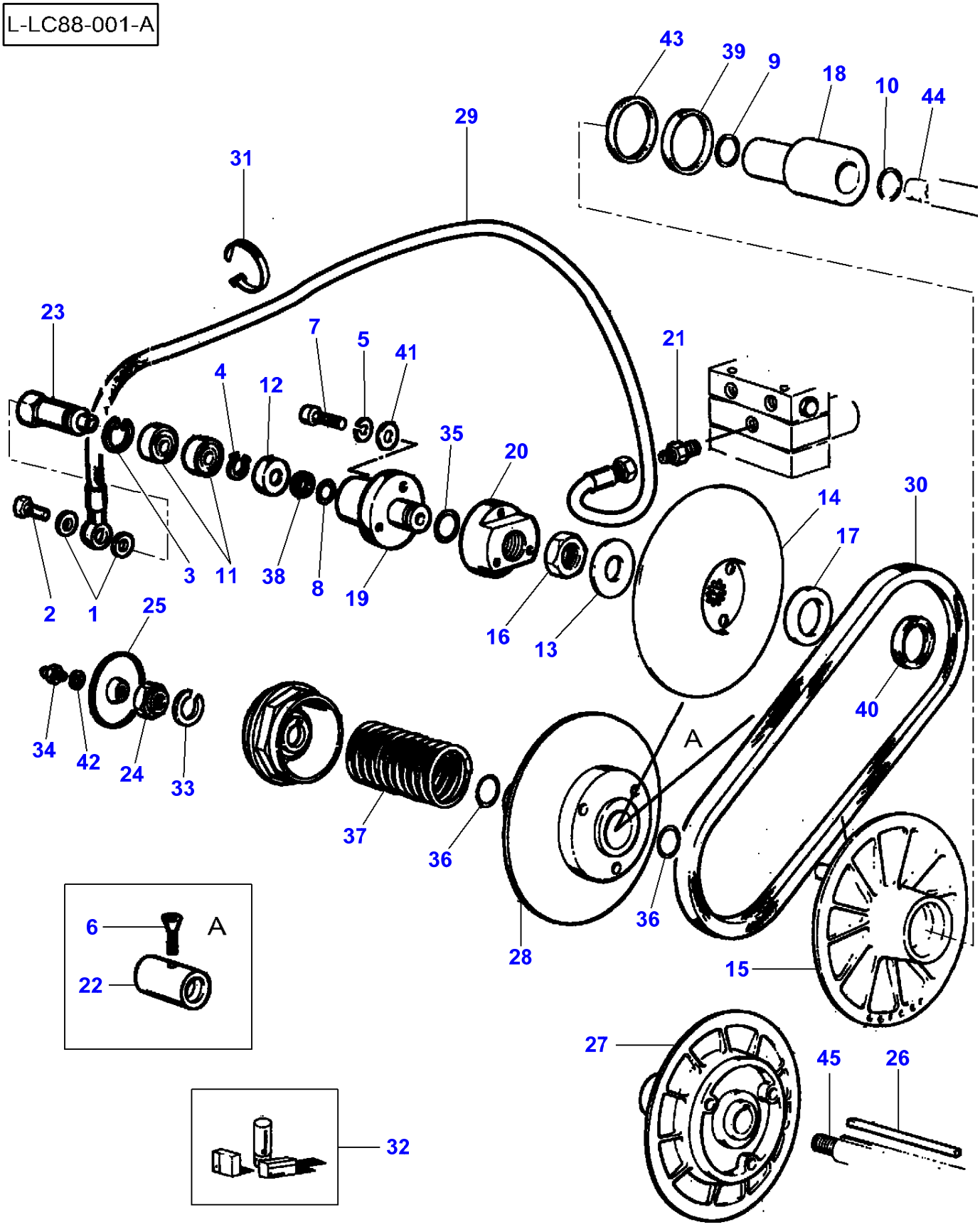
L-LC88-001-A
43
39
9
18
10
44
29
31
23
7
5
41
4
12
21
35
20
14
30
17
3
11
38
8
19
2
1
25
16
13
40
34
42
24
33
37
36
A
6
22
28
15
27
45
26
32

Item	Part Number	Qty	Description	Comments
1	LA4858606	2	Gasket	
2	LA5103908	1	Banjo Bolt	
3	LA11059476	1	Circlip	
4	LA11066376	1	Circlip	
5	LA12035670	1	Lock Washer	
6	LA13806570	1	Grub Screw	
7	LA14305420	1	Hex Socket Screw	
8	LA14452880	1	O Ring	(32)
9	LA14471280	1	O Ring	(32)
10	LA14471380	1	O Ring	(32)
11	**LA28996490**	2	Bearing Assy	
12	LA300136161	1	Bush	
13	LA300136411	1	Washer	
14	LA300136415	1	Disc	
15	LA300136416	1	Disc	
16	LA300136457	1	Nut	
17	LA320743050	1	Spacer	
18	LA320970950	1	Spacer	
19	LA321204250	1	Support	
20	LA321204350	1	Nut	
21	LA323068050	1	Connectors	
22	LA322108250	1	Bush	
23	LA322126750	1	Union	
24	LA322300650	1	Nut	
25	LA322301150	1	Shield	
26	LA322301250	1	Key	
27	LA322315850	1	Disc	
28	LA322315900	1	Disc	
29	LA323081650	6	Hose	
30	**LA340435152**	1	Belt	
31	LA340481808	1	Cable Tie	
32	LA340485388	1	Kit, Seal	
33	LA350354548	1	Snapring	
34	LA350357803	1	Grease Fitting	
35	LA350358101	1	O Ring	(32)
36	LA350358719	2	O Ring	(32)
37	LA353561149	1	Spring	
38	LA353587148	1	Gasket	(32)
39	LA353587155	1	Gasket	(32)
40	LA353587156	1	Gasket	(32)
41	LA355500715	1	Flat Washer	
42	LA355530220	1	Washer	
43	LA353358157	1	Gasket	(32)
44		1	Shaft	See Page - Reference Number 050-0045/10
45			Shaft	See Page - Reference Number 050-0035/11

L-LC88-004-B

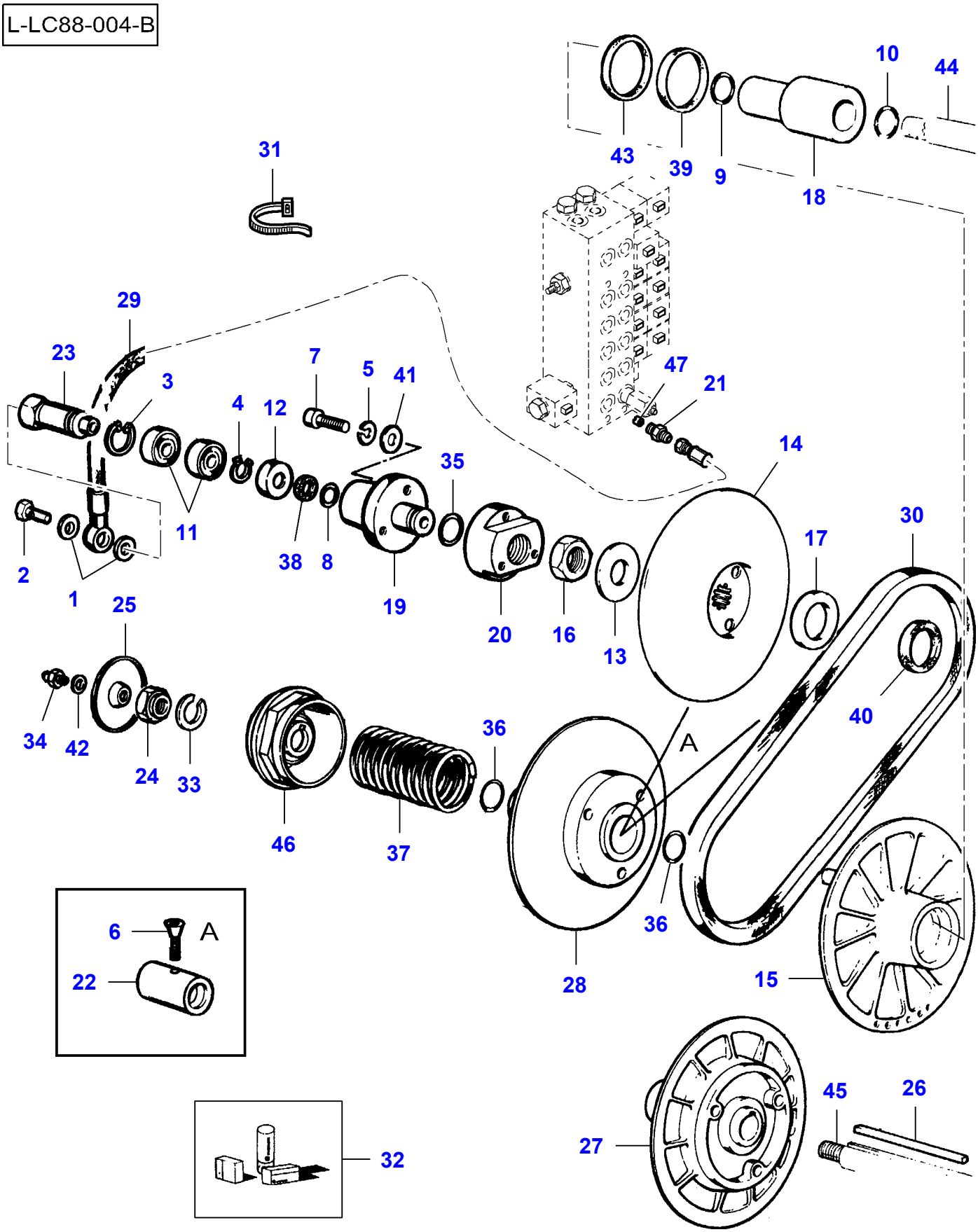
10
44
43
39
9
18
31
29
23
3
7
5
41
47
21
4
12
35
14
2
11
38
8
19
20
16
13
17
30
1
25
34
42
24
33
46
37
36
A
40
36
28
15
6
A
22
27
45
26
32

Item	Part Number	Qty	Description	Comments
1	LA4858606	2	Gasket	
2	LA5103908	1	Banjo Bolt	
3	LA11059476	1	Circlip	
4	LA11066376	1	Circlip	
5	LA12035670	1	Lock Washer	
6	LA13806570	1	Grub Screw	
7	LA14305420	1	Hex Socket Screw	
8	LA14452880	1	O Ring	(32)
9	LA14471280	1	O Ring	(32)
10	LA14471380	1	O Ring	(32)
11	**LA28996490**	2	Bearing Assy	
12	LA300136161	1	Bush	
13	LA300136411	1	Washer	
14	LA300136415	1	Disc	
15	LA300136416	1	Disc	
16	LA300136457	1	Nut	
17	LA320743050	1	Spacer	
18	LA320970950	1	Spacer	
19	LA321204250	1	Support	
20	LA321204350	1	Nut	
21	LA322788600	1	Union	
22	LA322108250	1	Bush	
23	LA322126750	1	Union	
24	LA322300650	1	Nut	
25	LA322301150	1	Shield	
26	LA322301250	1	Key	
27	LA322315850	1	Disc	
28	LA322315900	1	Disc	
29	LA323161950	1	Hydraulic Hose	
30	**LA340435155**	1	Belt	
31	LA340481808	1	Cable Tie	
32	LA340485388	1	Kit, Seal	
33	LA350354548	1	Snapring	
34	LA350357803	1	Grease Fitting	
35	LA350358101	1	O Ring	(32)
36	LA350358719	2	O Ring	(32)
37	LA353561149	1	Spring	
38	LA353587148	1	Gasket	(32)
39	LA353587155	1	Gasket	(32)
40	LA353587156	1	Gasket	(32)
41	LA355500715	1	Flat Washer	
42	LA355530220	1	Washer	
43	LA353358157	1	Gasket	(32)
44		1	Shaft	See Page - Reference Number 050-0045/10
45		1	Shaft	See Page - Reference Number 050-0035/11
46	LA322300750	1	Hub	
47	LA322787550	1	Diaphragm	

L-LC90-001-B

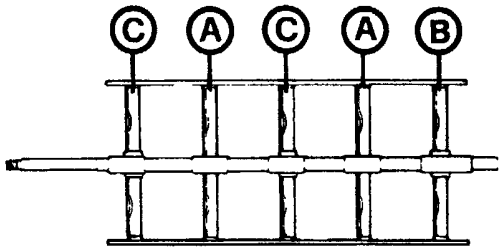

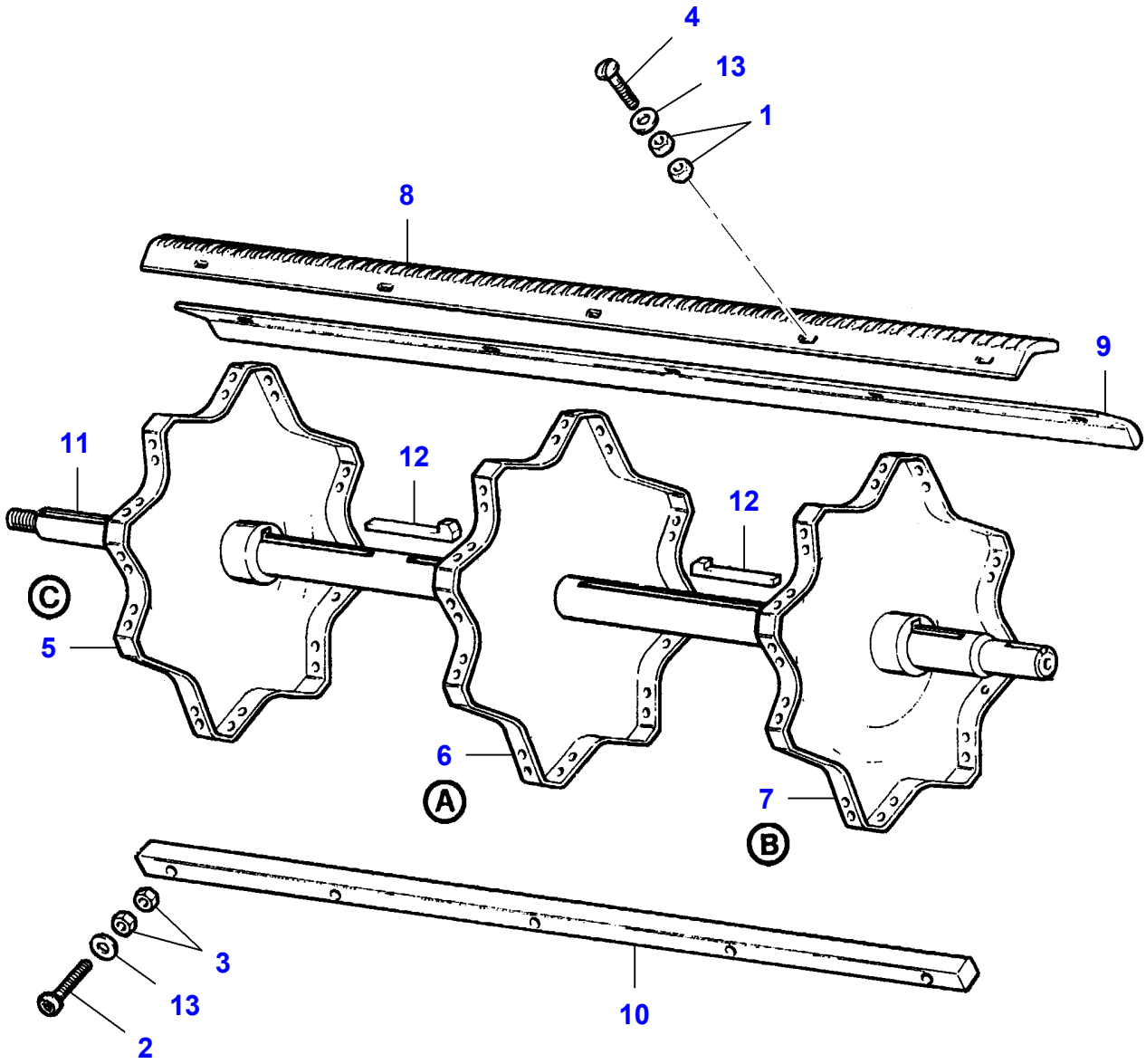

Item	Part Number	Qty	Description	Comments
1	LA11702921	2	Nut	
2	LA14331621	1	Hex Socket Screw	
3	LA16101514	2	Nut	
4	LA300015836	40	Screw	
5	LA300136196	1	Support	
6	LA300136197	1	Support	
7	LA300136316	1	Support	
8	LA311206900	1	Bar	[A] Right Hand
9	LA311206901	1	Bar	[A] Left Hand
10	LA321701250	1	Bar	
11	LA322301050	1	Shaft	
12	LA350380990	2	Key	
13	LA355501320	2	Flat Washer	

FOOTNOTE [A] SERVICED IN PAIRS

L-LC94-001-B

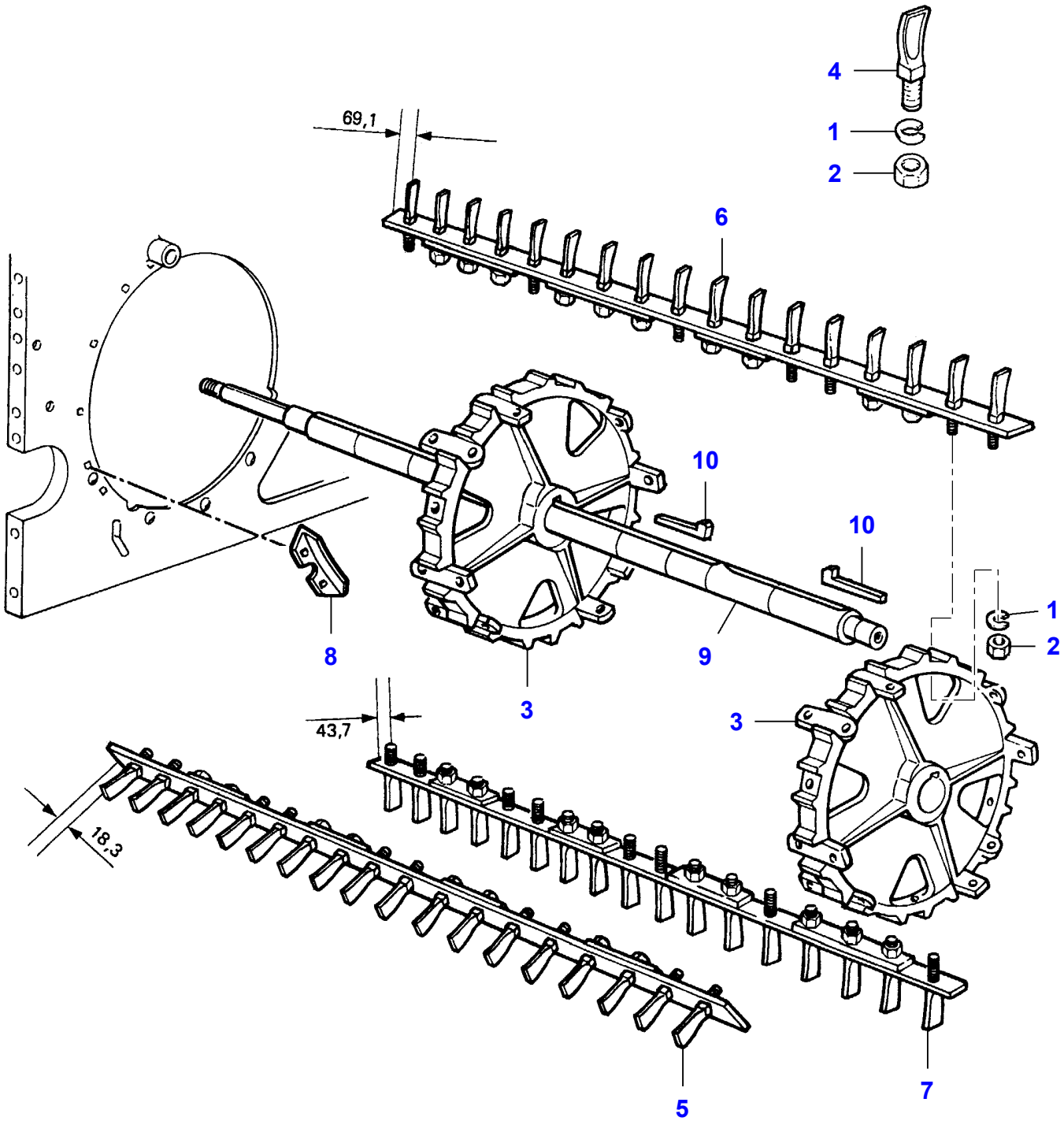

Item	Part Number	Qty	Description
1	LA12034771	2	Lock Washer
2	LA12164911	2	Nut
3	LA300137026	2	Support
4	**LA301172230**	1	Tooth
5	LA311247200	1	Bar
6	LA311247300	1	Bar
7	LA311247301	1	Bar
8	LA321871450	6	Plate
9	LA322301050	1	Shaft
10	LA350380990	1	Key

L-LC91-001-B

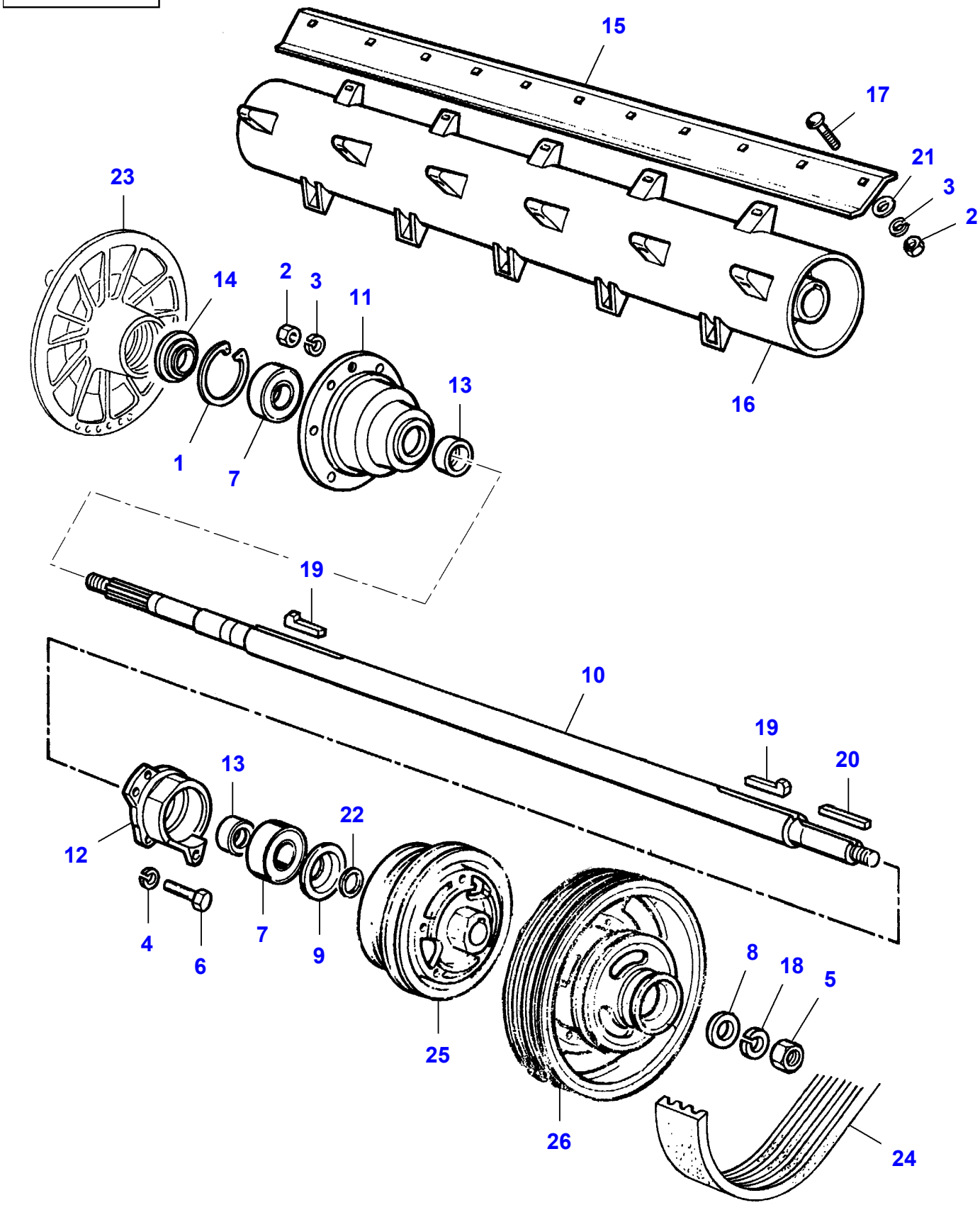
15
17
21
3
2
23
14
2
3
11
13
16
1
7
19
10
19
20
13
22
12
4
6
7
9
25
8
18
5
26
24

Item	Part Number	Qty	Description	Comments
1	LA11075976	1	Circlip	
2	LA11701721	2	Nut	
3	LA12034671	2	Lock Washer	
4	LA12034771	1	Lock Washer	
5	LA15500511	1	Nut	
6	LA15540521	1	Cap Screw	
7	LA28040170	2	Bearing Assy	
8	LA300018047	1	Flat Washer	
9	LA300132547	1	Washer	
10	LA320970550	1	Shaft	
11	LA320971050	1	Hub	
12	LA320971150	1	Support	
13	LA320971550	2	Bush	
14	LA320971650	1	Washer	
15	LA321807250	1	Blade	
16	LA321890050	1	Beater	
17	LA350342520	1	Carriage Bolt	
18	LA350354030	1	Lock Washer	
19	LA350380760	2	Key	
20	LA353848110	1	Key	
21	LA355501120	1	Flat Washer	
22	LA355547210	1	Washer	
23		1	Disc	See Page - Reference Number 050-0025/15
24		1	Belt	See Page - Reference Number 050-0105/17
25		1	Hub	See Page - Reference Number 060-0040
26		1	Pulley	See Page - Reference Number 050-0105/12

L-LC92-002-A

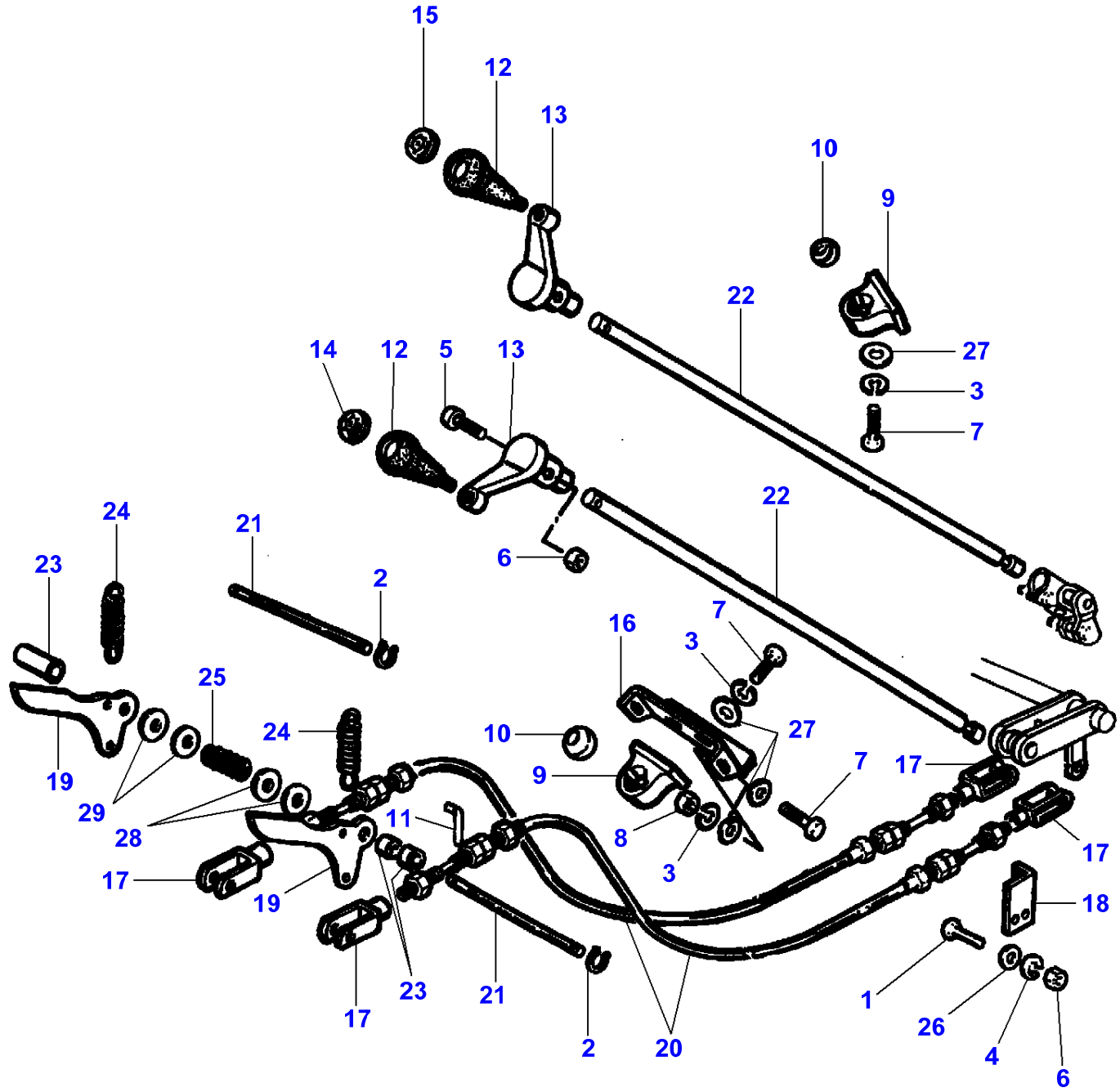
15
12
13
10
9
22
14
12
5
13
27
3
7
22
24
21
23
2
6
16
7
3
25
24
10
27
19
9
7
17
29
28
11
8
3
17
17
18
19
23
21
1
17
2
20
26
4
6

Item	Part Number	Qty	Description
1	LA10902424	1	Cap Screw
2	LA11065676	2	Circlip
3	LA12034571	3	Lock Washer
4	LA12035670	1	Lock Washer
5	LA14305624	2	Hex Socket Screw
6	LA15896221	3	Nut
7	LA16043424	3	Cap Screw
8	LA16100811	1	Nut
9	LA300112895	2	Support
10	LA300125190	2	Knuckle
11	LA300136233	1	Roll Pin
12	LA321253950	2	Grip
13	LA321254250	2	Lever
14	LA321260350	1	Plug
15	LA321260450	1	Plug
16	LA321993550	1	Plate
17	LA322014450	4	Yoke
18	LA322056350	1	Support
19	LA322252050	2	Lever
20	LA322797750	2	Cable
21	LA322801250	2	Pin
22	LA322802750	2	Rod
23	LA340415834	3	Bush
24	LA350356542	2	Spring
25	LA353561121	1	Spring
26	LA355500715	1	Flat Washer
27	LA355500915	4	Flat Washer
28	LA355501120	2	Flat Washer
29	LA355520820	2	Washer

L-LC92-006-A

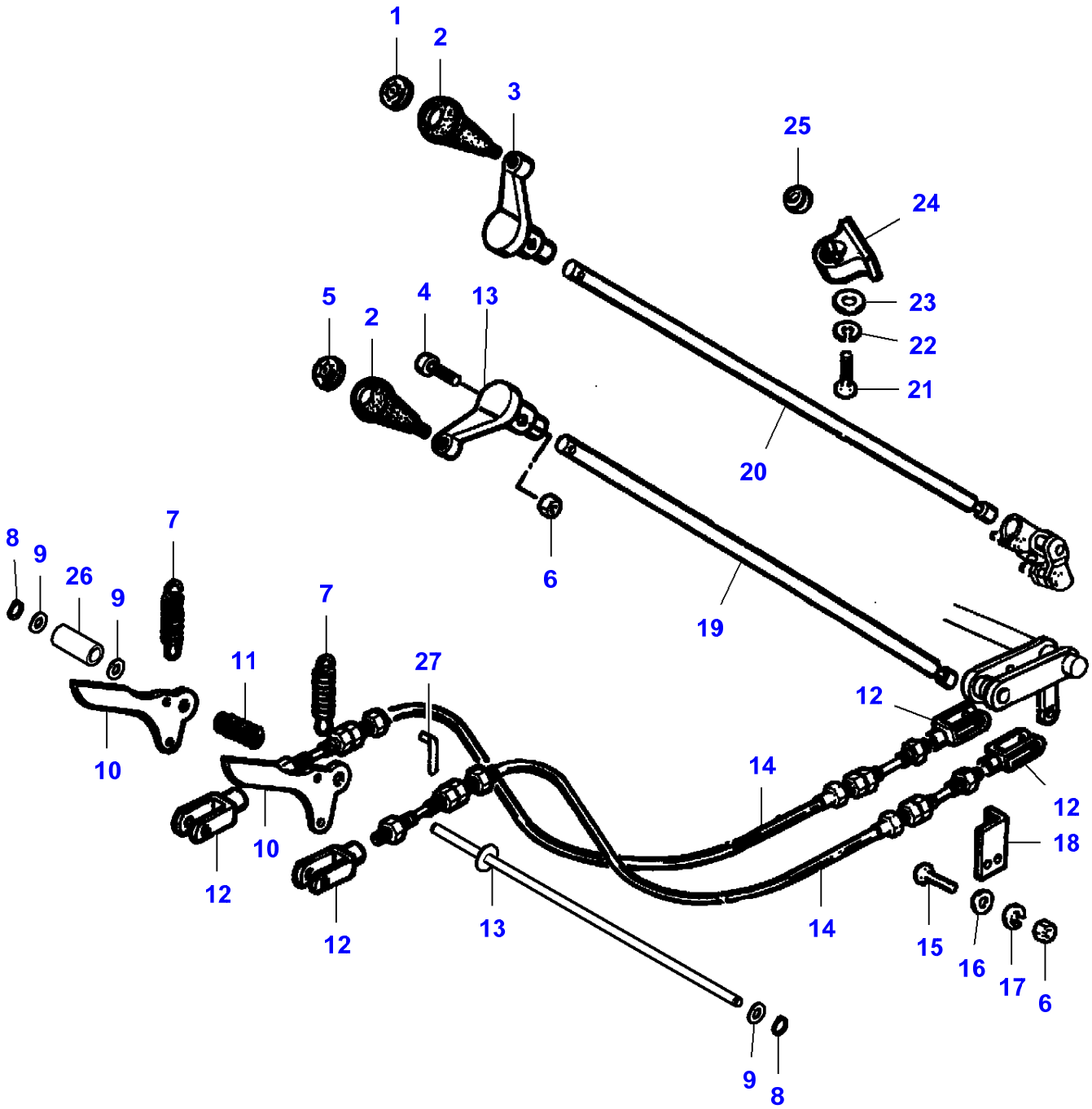
1
2
3
25
24
5
2
4
13
23
22
21
20
6
19
8
9
26
9
7
7
11
27
12
10
14
12
18
10
12
12
13
14
15
16
17
6
9
8

Item	Part Number	Qty	Description
1	LA321260450	1	Plug
2	LA321253950	2	Grip
3	LA321254250	2	Lever
4	LA14305624	2	Hex Socket Screw
5	LA321260350	1	Plug
6	LA15896221	3	Nut
7	LA350356538	2	Spring
8	LA11065676	2	Circlip
9	LA355600915	3	Flat Washer
10	LA322252050	2	Lever
11	LA353561121	1	Spring
12	LA322014450	4	Yoke
13	LA323196650	1	Rod
14	**LA322797750**	2	Cable
15	LA10902424	1	Cap Screw
16	LA355500715	1	Flat Washer
17	LA12035670	1	Lock Washer
18	LA322056350	1	Support
19	LA322802750	1	Rod
20	LA322802750	1	Rod
21	LA16043424	1	Cap Screw
22	LA12034571	1	Lock Washer
23	LA355500915	1	Flat Washer
24	LA300112895	1	Support
25	LA300125190	1	Knuckle
26	LA340415834	1	Bush
27	LA300136233	1	Roll Pin

L-LC92-003-B

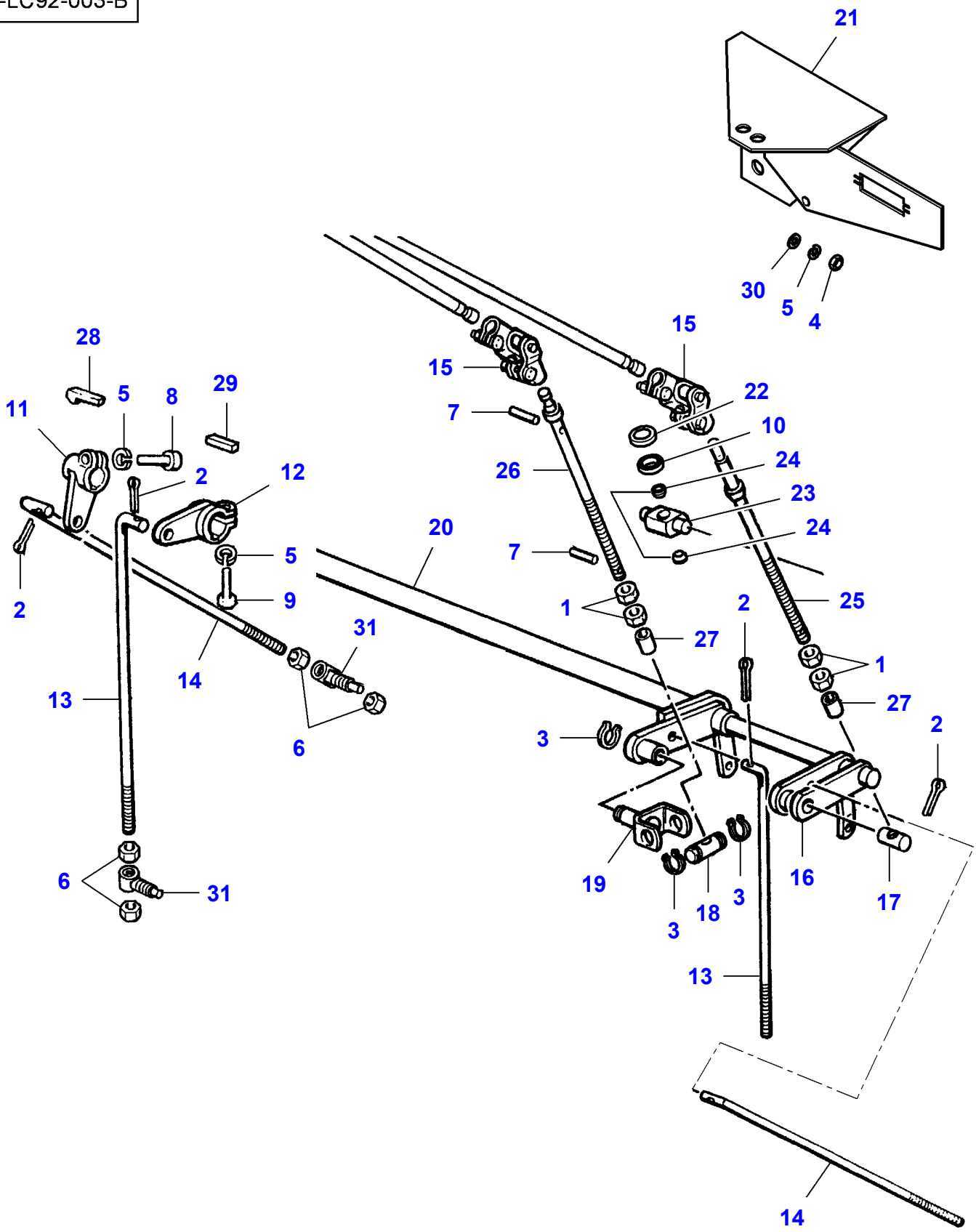
21
30
5
4
15
15
7
22
10
26
24
23
24
20
7
1
2
25
27
1
27
2
3
19
3
18
3
16
17
13
14
28
5
8
29
11
2
12
5
9
2
14
31
13
6
6
31

Item	Part Number	Qty	Description	Comments
1	LA10717511	4	Nut	
2	LA10734001	4	Split Pin	
3	LA11067876	3	Circlip	
4	LA11701721	2	Nut	
5	LA12034671	4	Lock Washer	
6	LA12163321	4	Nut	
7	LA14160670	2	Dowel	
8	LA14420321	1	Hex Socket Screw	
9	LA14420421	1	Hex Socket Screw	
10	LA26800770	1	Bearing Assy	
11	LA300136293	1	Lever	
12	LA300136294	1	Lever	
13	LA300136297	2	Tie Rod	
14	LA300136298	2	Tie Rod	
15	LA311444700	2	Universal Joint	
16	LA321866350	1	Arm	
17	LA321866650	1	Pin	
18	LA322057350	1	Pin	
19	LA322057450	1	Yoke	
20	LA322077150	1	Arm	
21	LA322880950	1	Support	
22	LA322913750	1	Cup	
23	LA322940850	1	Pin	
24	LA322940950	2	Washer	
25	LA322941350	1	Rod	
26	LA322941450	1	Rod	
27	LA340415821	2	Bush	
28	LA350381730	1	Key	
29	LA350384740	1	Key	
30	LA355501120	2	Flat Washer	
31		2	Pin	See Page - Reference Number 050-0100/6

L-LC93-001-A

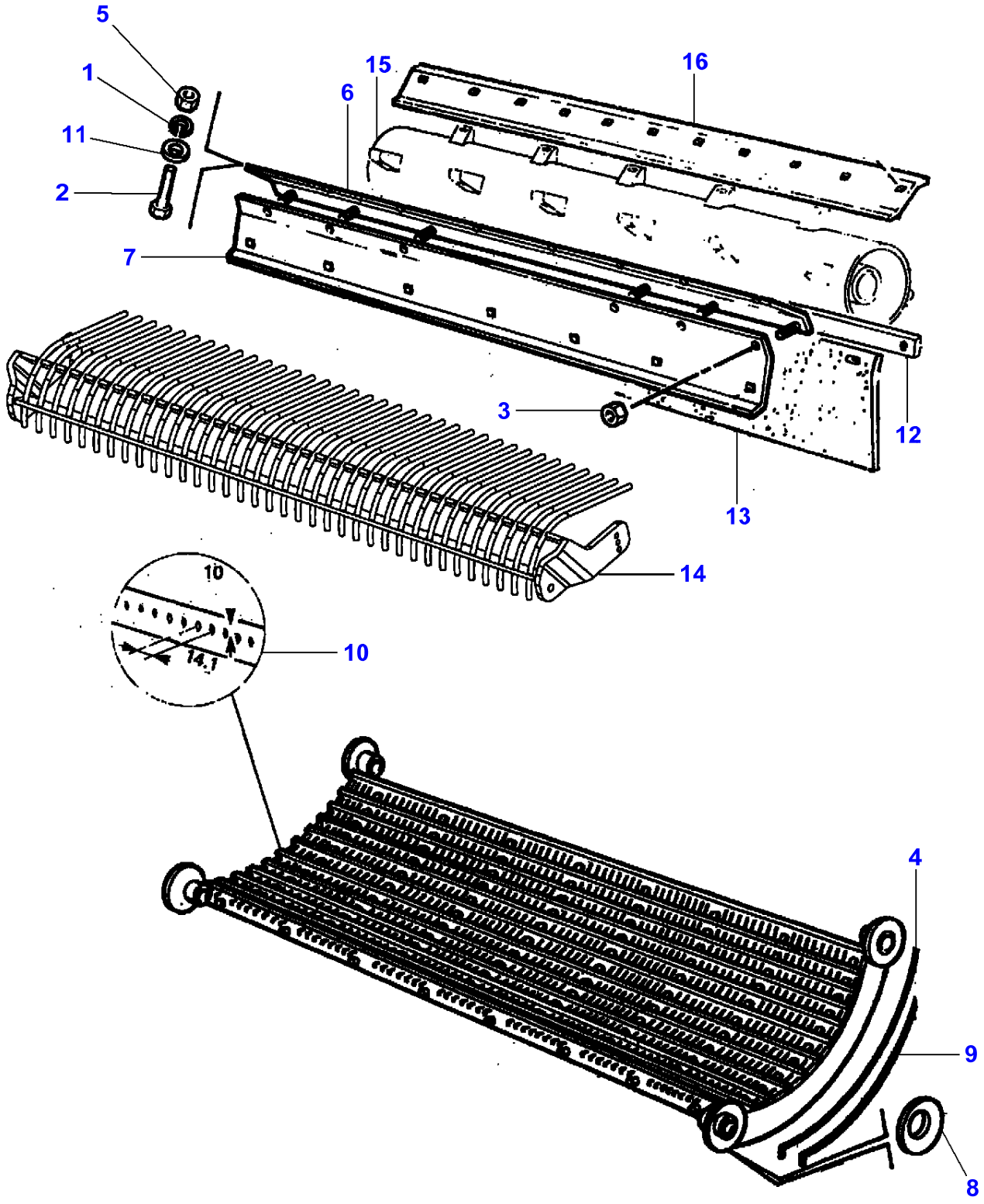

Item	Part Number	Qty	Description	Comments
1	LA12034571	1	Lock Washer	Up to Serial or Engine Number
2	LA16043424	1	Cap Screw	Up to Serial or Engine Number
3	LA16104111	1	Locknut	
4	LA300132830	2	Wire	
5	LA321211250	1	Nut	Up to Serial or Engine Number
6	LA322060750	1	Crossbar	Up to Serial or Engine Number
7	LA322060850	1	Crossbar	
8	LA322622850	4	Washer	
9	LA322690150	2	Wire	
10	LA322928300	1	Concave	
11	LA355510820	1	Flat Washer	Up to Serial or Engine Number
12		1	Plate	See Page - Reference Number 050-0100/19
13		1	Canvas	See Page - Reference Number 050-0100/13
14		1	Frame	See Page - Reference Number 050-0100/14
15		1	Beater	See Page - Reference Number 050-0045/16
16		1	Blade	See Page - Reference Number 050-0045/15

L-LC95-001-B

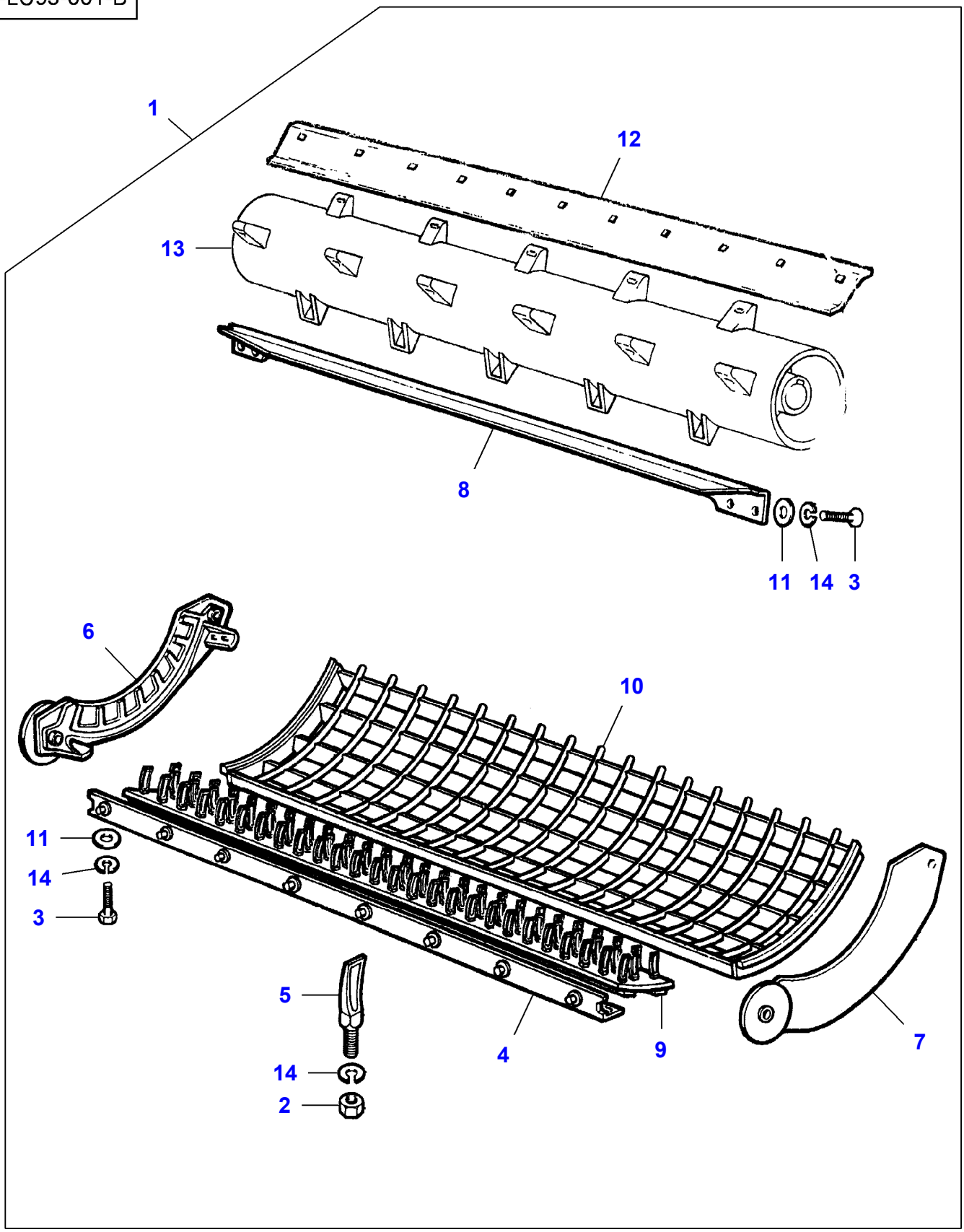

Item	Part Number	Qty	Description	Comments
1	LA322178800	1	Concave	
2	LA12164911	80	Nut	(1)
3	LA15540321	6	Cap Screw	(1)
4	LA300112467	1	Crossbar	(1)
5	**LA301172230**	80	Tooth	(1)
6	LA320886350	1	Side	(1)
7	LA320886450	1	Side	(1)
8	LA322177450	1	Crossbar	(1)
9	LA322875400	1	Plate	(1)
10	LA322875650	1	Grille	(1)
11	LA355501330	6	Flat Washer	(1)
12		1	Blade	(1)
				See Page - Reference Number 050-0045/15
13		1	Beater	(1)
				See Page - Reference Number 050-0045/16
14	LA12034771	86	Lock Washer	(1)

L-LC95-002-B

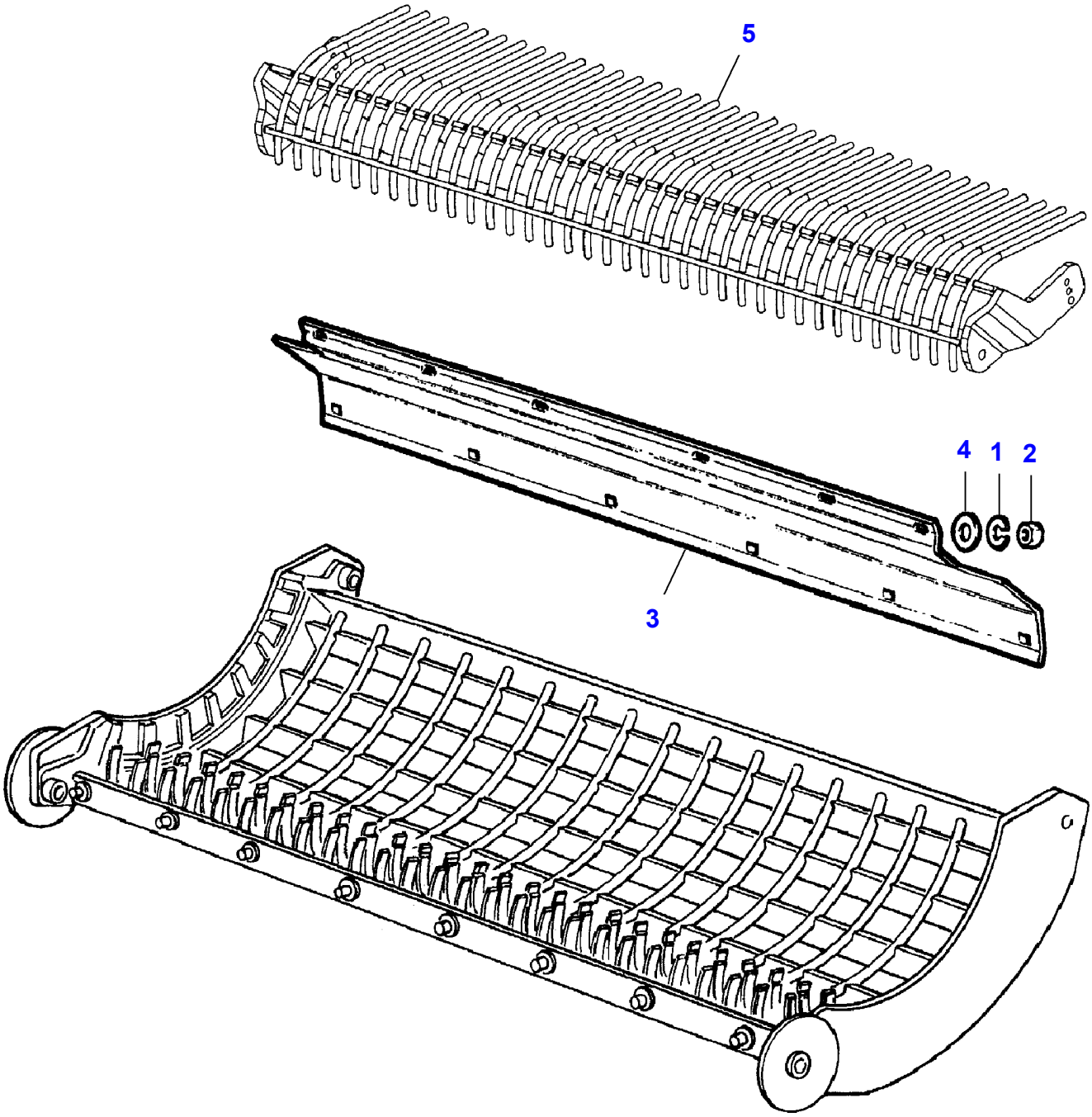

Item	Part Number	Qty	Description	Comments
1	LA12034571	6	Lock Washer	
2	LA16100811	6	Nut	
3	LA322177650	1	Crossbar	
4	LA355500920	6	Flat Washer	
5		1	Frame	See Page - Reference Number 050-0100/14

L-LD83-001-B

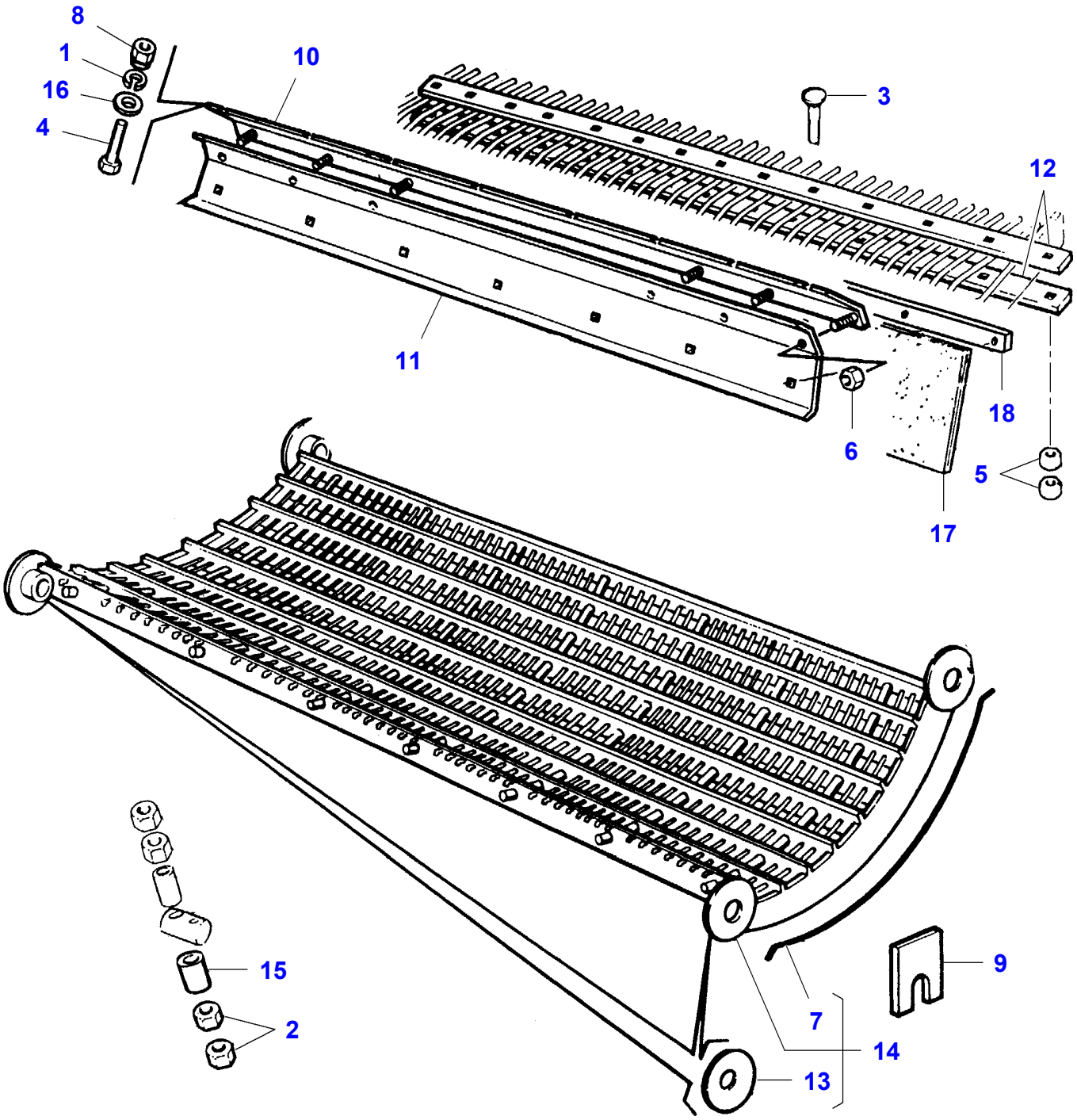

Item	Part Number	Qty	Description	Comments
1	LA12034571	7	Lock Washer	
2	LA12163321	2	Nut	
3	LA13180701	14	Screw	
4	LA16043424	7	Cap Screw	
5	LA16100811	28	Nut	
6	LA16104111	6	Locknut	
7	LA300132831	54	Wire	(14)
8	LA321211250	6	Nut	
9	LA321218050	1	Plate	
10	LA322060750	1	Crossbar	
11	LA322060850	1	Crossbar	
12	LA322306850	2	Plate	
13	LA322622850	2	Washer	(14)
14	LA322928800	1	Concave	
15	LA340415821	1	Bush	
16	LA355510820	7	Flat Washer	
17		1	Canvas	See Page - Reference Number 050-0100/13
18		1	Plate	See Page - Reference Number 050-0100/19

L-LD97-004-A

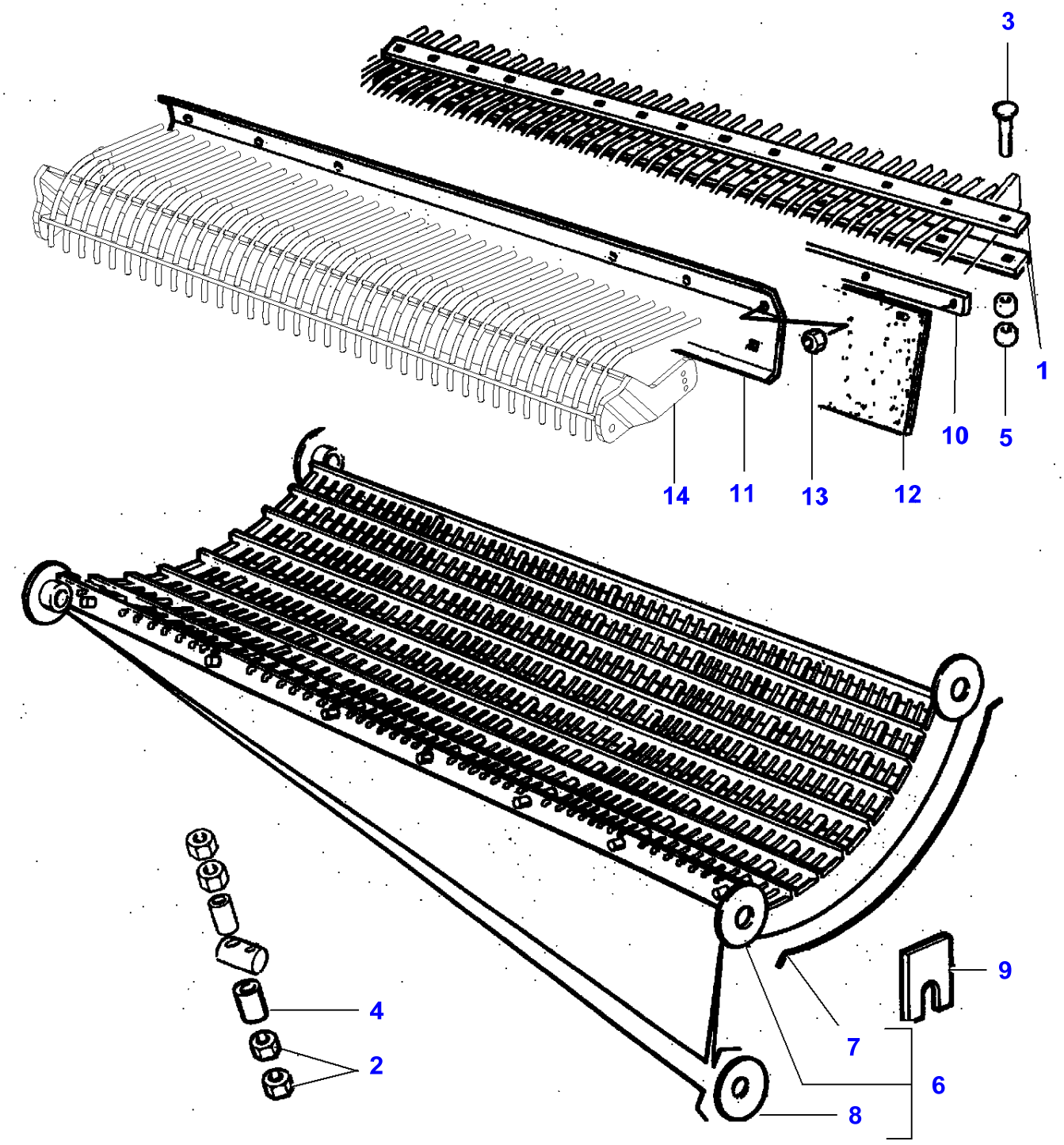

Item	Part Number	Qty	Description	Comments
1	LA322306850	2	Plate	
2	LA12163321	2	Nut	
3	LA13180701	14	Screw	
4	LA340415821	1	Bush	
5	LA16100811	28	Nut	
6	LA322928800	1	Concave	
7	LA300132831	54	Wire	(6)
8	LA322622850	2	Washer	(6)
9	LA321218050	1	Plate	
10		1	Plate	See Page - Reference Number 050-0100/19
11	LA322060850	1	Crossbar	
12		1	Canvas	See Page - Reference Number 050-0100/13
13	LA16104111	6	Locknut	
14		1	Frame	See Page - Reference Number 050-0100/14

L-LD83-002-B

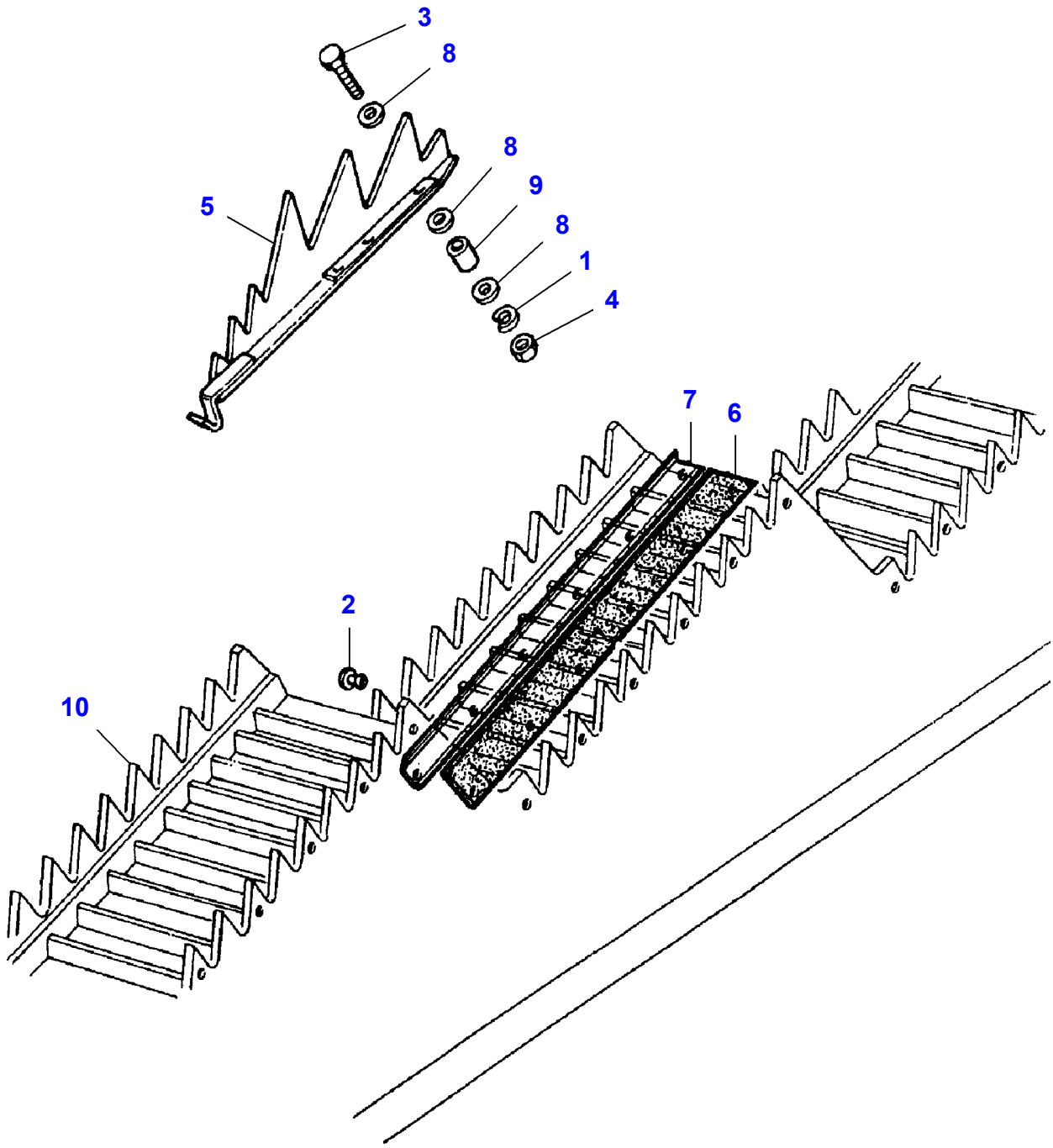

Item	Part Number	Qty	Description	Comments
1	LA12035670	3	Lock Washer	
2	LA14643292	36	Rivet	
3	LA15212721	3	Cap Screw	
4	LA15896221	3	Nut	
5	LA320691950	1	St.Walk.Project.	
6	LA322306250	1	Gasket	
7	LA322306350	1	Stop	Left Hand
	LA322306450	1	Stop	Right Hand
8	LA355500715	9	Flat Washer	
9	LA344158136	1	Bush	
10		1	Kit, Straw Walkr	See Page - Reference Number 060-0025/10

L-LC96-001-B

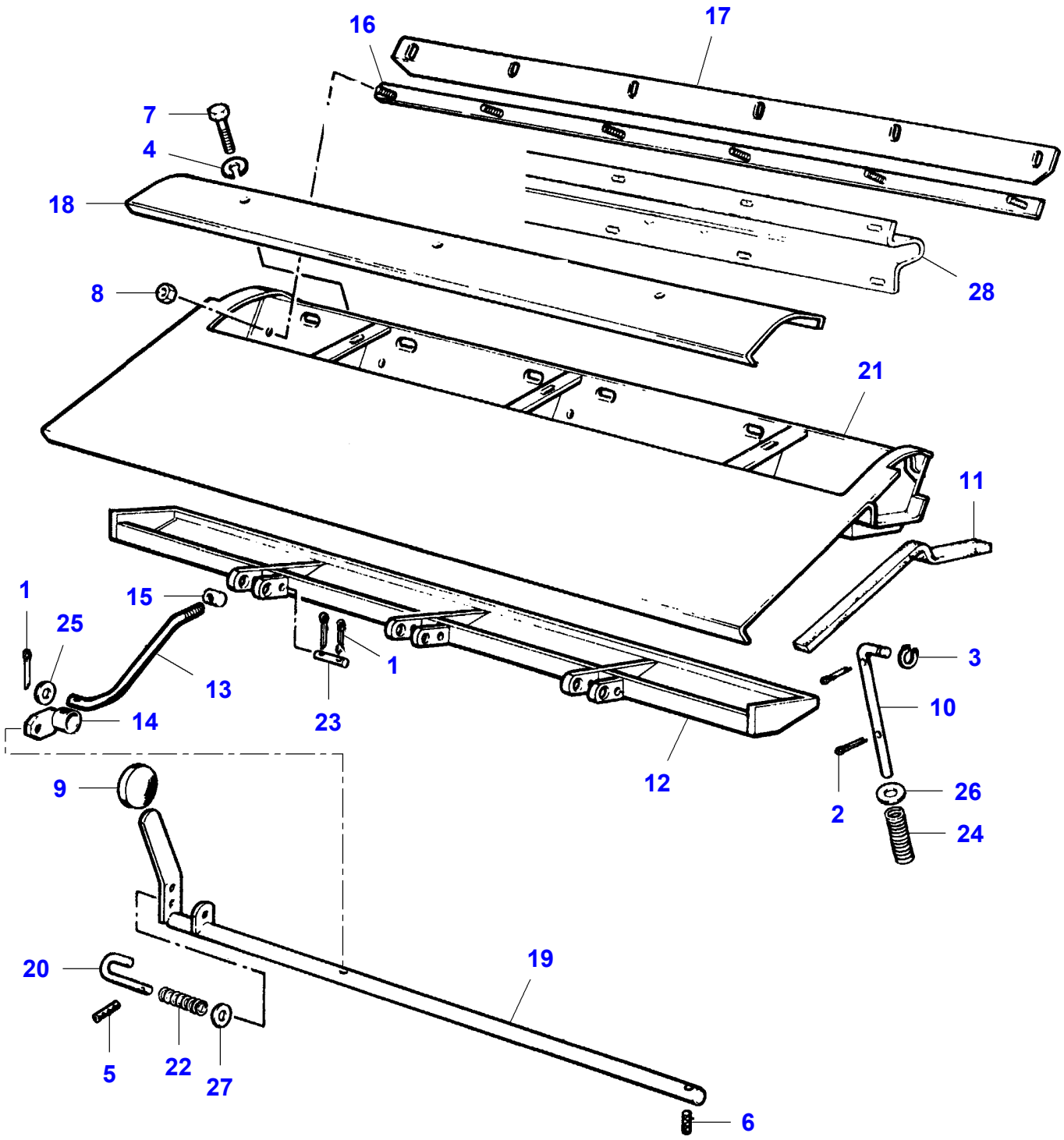

Item	Part Number	Qty	Description	Comments
1	LA10733601	3	Split Pin	
2	LA10797001	2	Split Pin	
3	LA11066276	1	Circlip	
4	LA12034771	1	Lock Washer	
5	LA13902070	1	Dowel	
6	LA14606970	1	Roll Pin	
7	LA15540724	1	Cap Screw	
8	LA16104111	1	Locknut	
9	LA300063527	1	Knob	
10	LA300132277	1	Roll Pin	
11	LA320649950	2	Gasket	
12	LA320713950	1	Lid	
13	LA320714350	1	Tie Rod	
14	LA320714450	1	Lever	
15	LA320714650	1	Pin	
16	LA320715550	1	Reinforcement	
17	LA320736350	1	Plate	
18	LA320749250	1	Cover	
19	LA320749550	1	Shaft	
20	LA320753650	1	Latch	
21	LA321211050	1	Plate	
22	LA350356127	1	Spring	
23	LA350379344	1	Roll Pin	
24	LA353561142	1	Spring	
25	LA355501120	1	Flat Washer	
26	LA355501530	1	Washer	
27	LA355530220	1	Washer	
28		1	Plate	See Page - Reference Number 070-0005/37

L-LC96-002-A

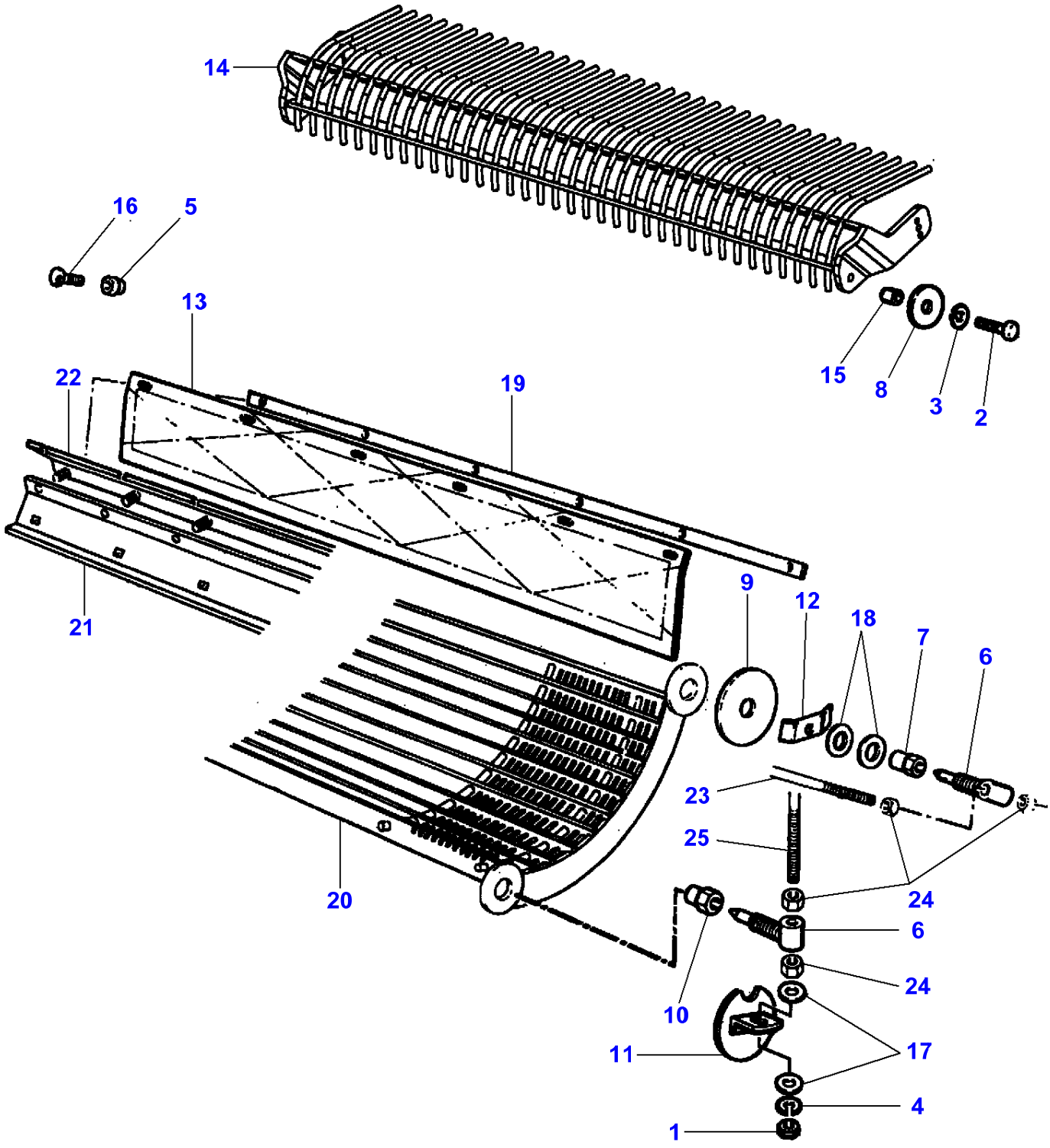

Item	Part Number	Qty	Description	Comments
1	LA10717511	1	Nut	
2	LA11112424	1	Cap Screw	
3	LA12034771	1	Lock Washer	
4	LA12034871	1	Lock Washer	
5	LA16104111	1	Locknut	
6	LA300132061	2	Pin	
7	LA300132062	1	Nut	
8	LA300135084	1	Washer	
9	LA300135086	1	Washer	
10	LA300137818	2	Nut	
11	LA320545550	1	Cover	
12	LA321123450	1	Spring	
13	LA322060950	1	Canvas	
14	LA323089350	1	Frame	
15	LA340415625	1	Bush	
16	LA350342511	1	Carriage Bolt	
17	LA355532620	2	Flat Washer	
18	LA355536220	2	Flat Washer	
19	LA321208550	1	Plate	
20		1	Concave	See Page - Reference Number 050-0080/14
21		1	Crossbar	See Page - Reference Number 050-0080/11
22		1	Crossbar	See Page - Reference Number 050-0080/10
23		1	Tie Rod	See Page - Reference Number 050-0060/14
24		X	Nut	See Page - Reference Number 050-0060/6
25		1	Tie Rod	See Page - Reference Number 050-0060/13

L-LC97-001-B

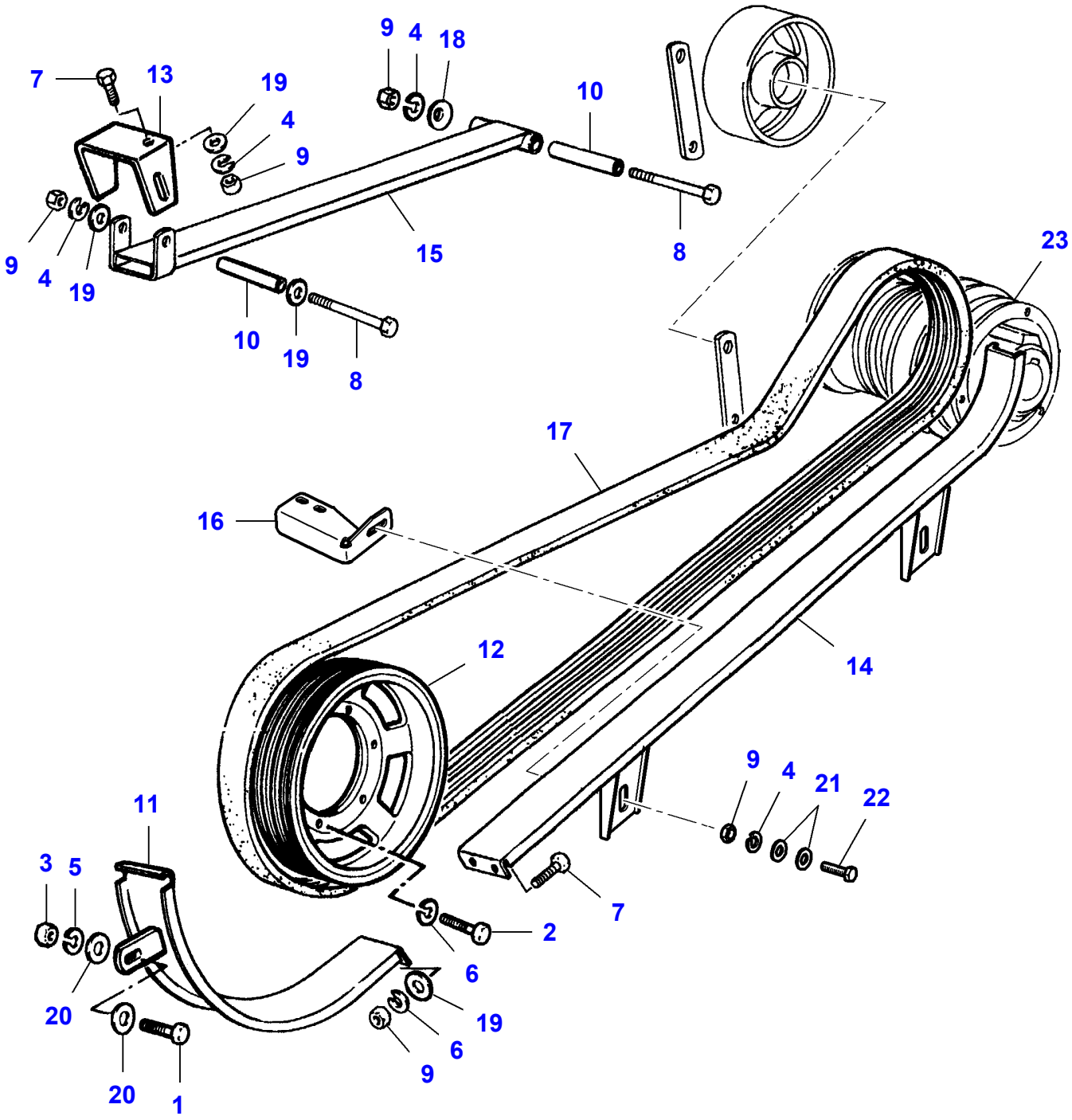
9
4
18
7
13
19
4
9
10
9
4
19
15
8
10
19
8
23
17
16
12
14
9
4
21
22
11
3
5
7
2
6
20
19
6
9
20
1

Item	Part Number	Qty	Description	Comments
1	LA11106221	1	Cap Screw	
2	LA11112824	6	Cap Screw	
3	LA11701721	1	Nut	
4	LA12034571	3	Lock Washer	
5	LA12034671	1	Lock Washer	
6	LA12034771	8	Lock Washer	
7	LA16043424	3	Cap Screw	
8	LA16045821	2	Cap Screw	
9	LA16100811	4	Nut	
10	LA300136186	2	Spacer	
11	LA321853750	1	Skate	
12	LA321904450	1	Pulley	
13	LA321951650	1	Support	
14	LA322962250	1	Skate	
15	LA322967050	1	Skate	
16	LA323083050	1	Support	
17	LA344311318	1	Belt	
18	LA350356007	1	Washer	
19	LA355510820	3	Flat Washer	
20	LA355511020	4	Flat Washer	
21	LA355500915	X	Flat Washer	
22	LA16043421	1	Cap Screw	
23		1	Pulley	See Page - Reference Number 030-0215/27

L-LD91-001-A

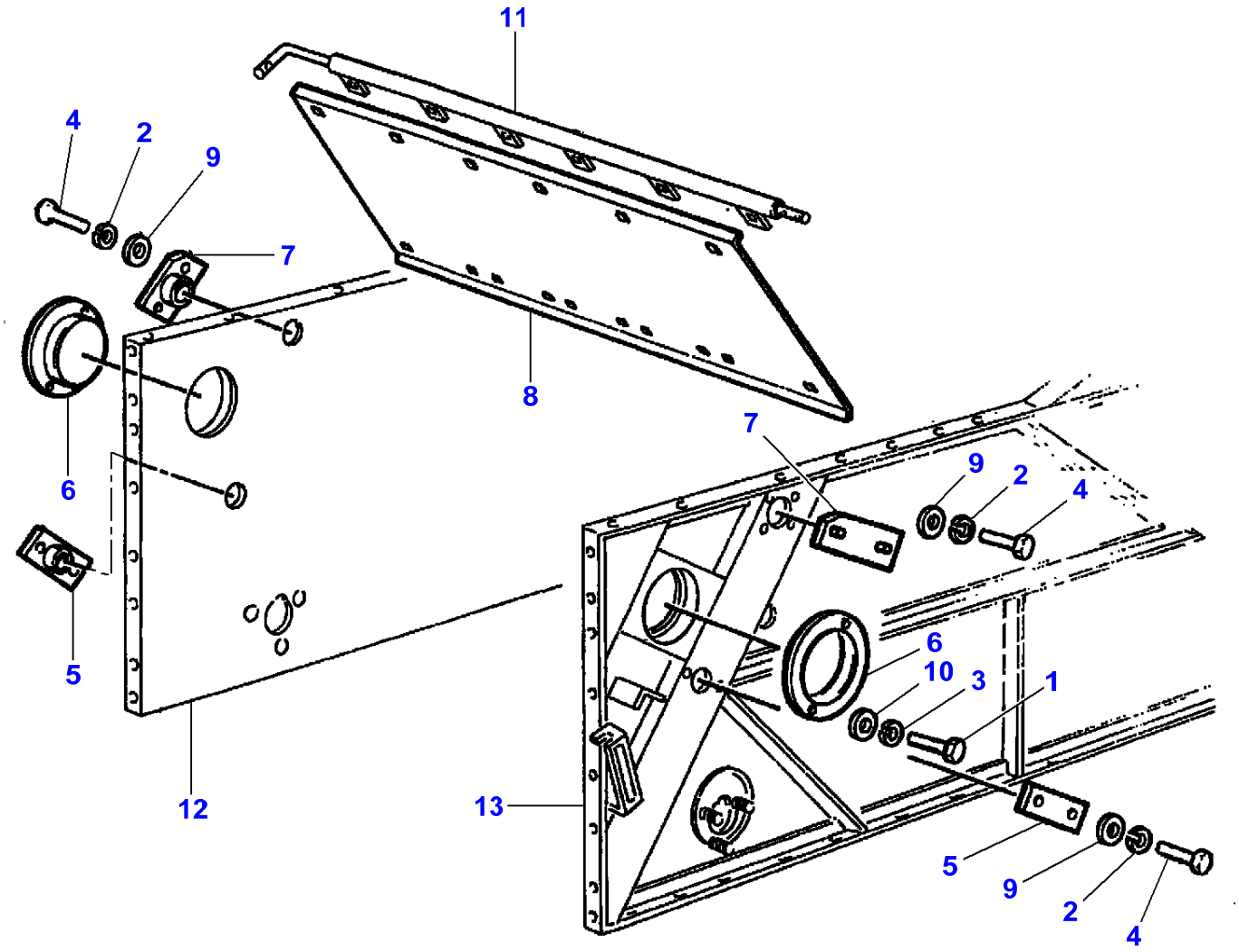

Item	Part Number	Qty	Description	Comments
1	LA11106021	1	Cap Screw	
2	LA12034571	3	Lock Washer	
3	LA12034671	1	Lock Washer	
4	LA16043424	3	Cap Screw	
5	LA321947050	2	Cover	
6	LA321947250	2	Cover	
7	LA321947350	2	Cover	
8	LA322094850	1	Plate	
9	LA355500920	3	Flat Washer	
10	LA355501120	1	Flat Washer	
11		1	Tube	See Page - Reference Number 060-0010/12
12		1	Side	See Page - Reference Number 060-0005/19
13		1	Side	See Page - Reference Number 060-0005/18

L-LD01-001-A

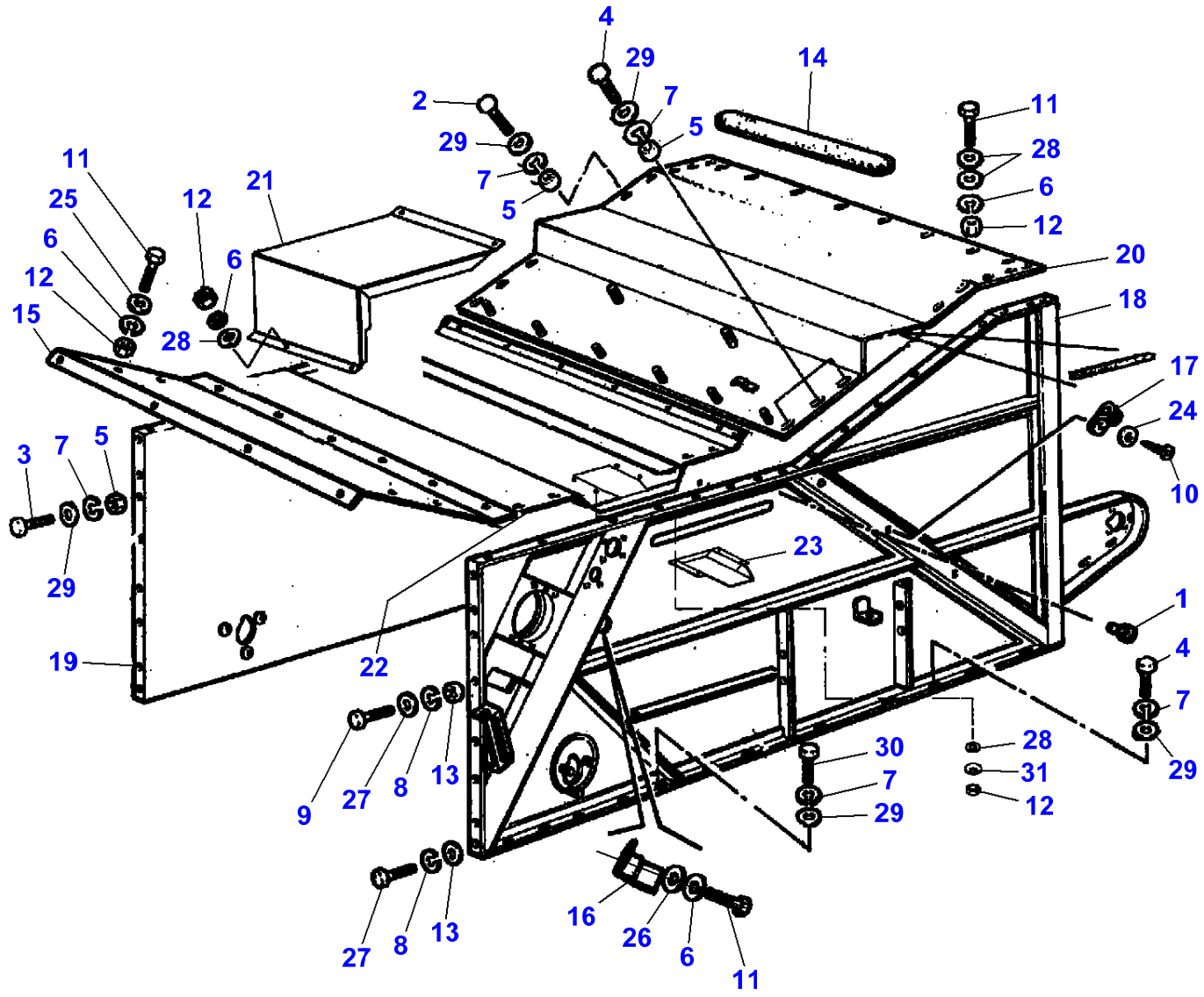
4
29
14
2
7
11
29
5
28
11
7
5
6
25
21
12
12
6
20
6
12
18
15
28
17
24
3
7
5
10
29
23
1
19
22
4
7
29
9
27
8
13
30
28
7
31
29
12
16
26
6
11
27
8
13

Item	Part Number	Qty	Description
1	LA5115197	1	Plug
2	LA11106221	14	Cap Screw
3	LA11106224	4	Cap Screw
4	LA11106424	16	Cap Screw
5	LA11701721	14	Nut
6	LA12034571	22	Lock Washer
7	LA12034671	34	Lock Washer
8	LA12034771	12	Lock Washer
9	LA15540424	12	Cap Screw
10	LA15688301	3	Screw
11	LA16043424	21	Cap Screw
12	LA16100811	20	Nut
13	LA16101514	2	Nut
14	LA300113868	1	Mat
15	LA321807950	1	Roof
16	LA321810950	1	Bracket
17	LA322393750	3	Collar
18	LA322911350	1	Side
19	LA322911450	1	Side
20	LA322963650	1	Roof
21	LA322966950	1	Plate
22	LA322980250	1	Roof
23	LA322980350	1	Channel
24	LA355500610	3	Washer
25	LA355500915	6	Flat Washer
26	LA355500920	1	Flat Washer
27	LA355501330	12	Flat Washer
28	LA355510820	3	Flat Washer
29	LA355511030	34	Flat Washer
30	LA11106621	1	Cap Screw
31	LA322358	1	Lock Washer

L-LD01-002-A

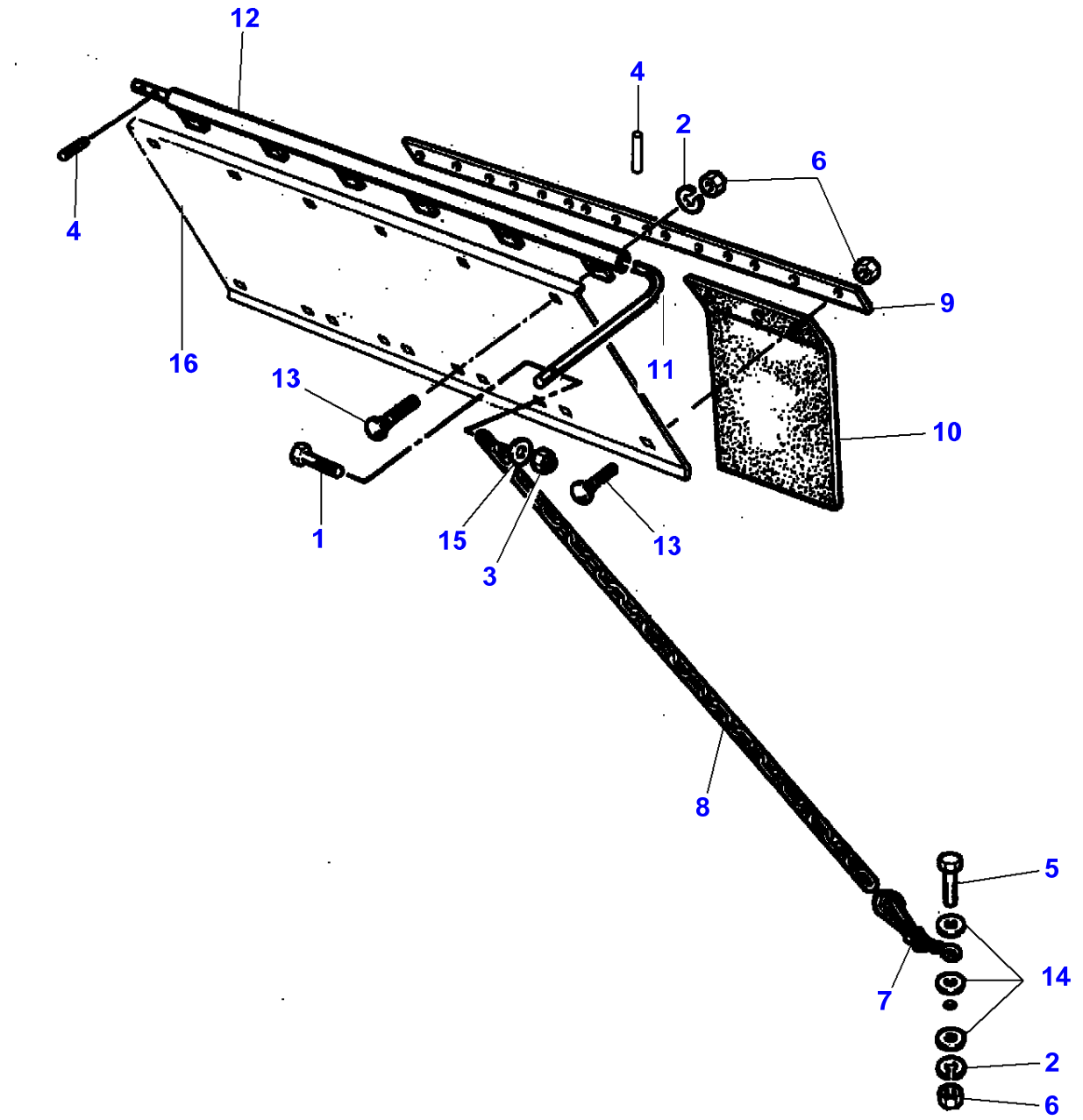

Item	Part Number	Qty	Description	Comments
1	LA10903021	1	Cap Screw	
2	LA12034571	7	Lock Washer	
3	LA12574221	1	Nut	
4	LA14600870	6	Core	
5	LA16043424	1	Cap Screw	
6	LA16100811	17	Nut	
7	LA320641050	1	Hook	
8	LA321861950	1	Chain	
9	LA322095050	1	Plate	
10	LA322095250	1	Element	
11	LA322912350	2	Grip	
12	LA322912450	1	Tube	
13	LA350342511	16	Carriage Bolt	
14	LA355500920	3	Flat Washer	
15	LA355510620	1	Flat Washer	
16		1	Plate	See Page - Reference Number 050-0110/8

L-LD02-001-A

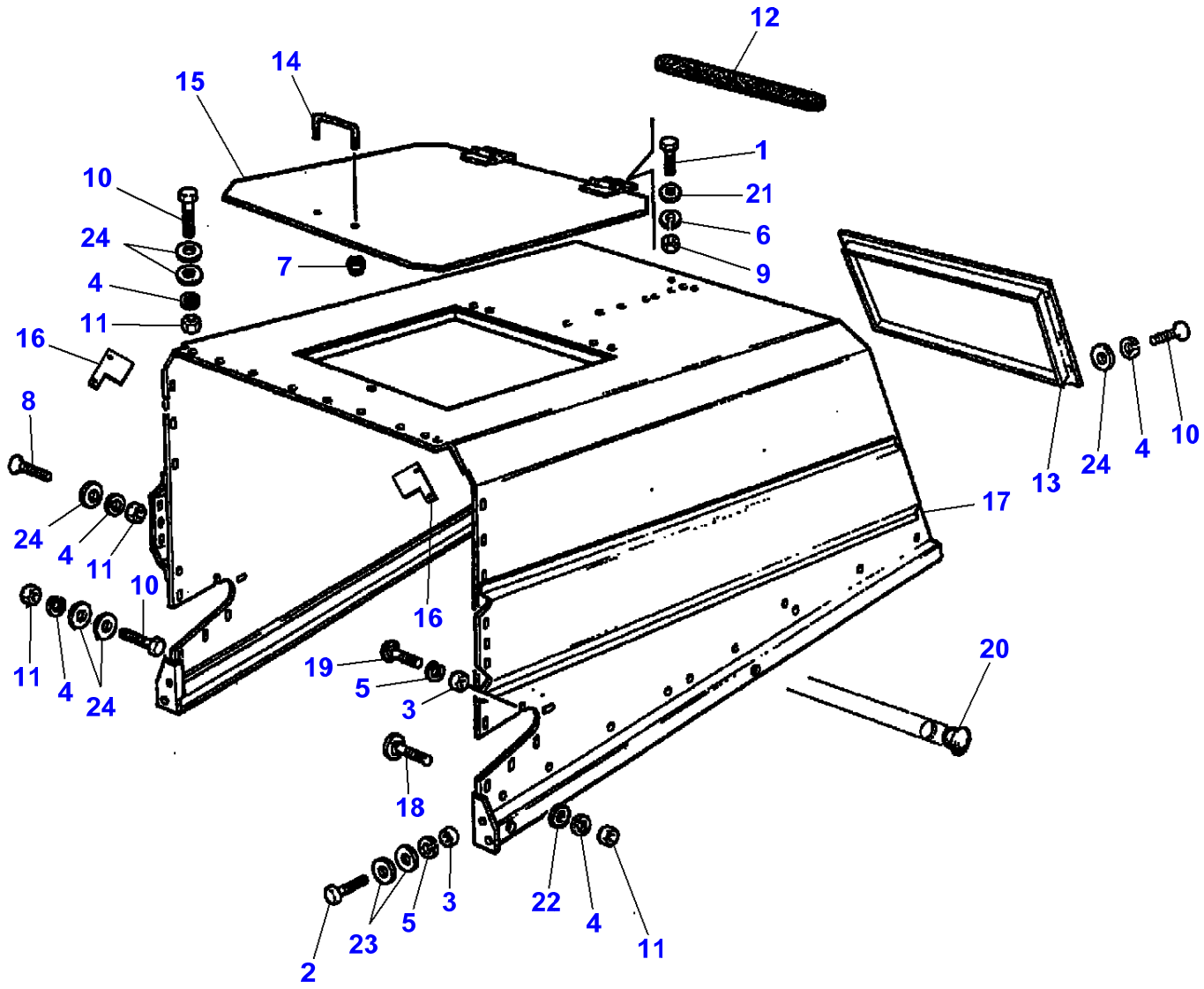
12
14
15
1
10
21
24
6
7
9
4
11
16
8
13
24
4
10
17
24
4
11
10
16
11
4
24
19
5
3
20
18
22
4
11
3
5
23
2

Item	Part Number	Qty	Description	Comments
1	LA10902224	4	Cap Screw	
2	LA11106221	4	Cap Screw	
3	LA11701721	5	Nut	
4	LA12034571	48	Lock Washer	
5	LA12034671	5	Lock Washer	
6	LA12035670	4	Lock Washer	
7	LA12574211	2	Locknut	
8	LA14442031	6	Screw	
9	LA15896221	4	Nut	
10	LA16043424	24	Cap Screw	
11	LA16100811	42	Nut	
12	LA300113868	2	Mat	
13	LA321824050	1	Cover	
14	LA322342350	1	Grip	
15	LA322342750	1	Cover	
16	LA322901950	2	Wall	
17	LA322937450	1	Bonnet	
18	LA350342511	18	Carriage Bolt	
19	LA350342525	1	Carriage Bolt	
20	LA350359452	1	Plug	Diameter 14
21	LA355500715	4	Flat Washer	
22	LA355500920	18	Flat Washer	
23	LA355501120	8	Flat Washer	
24	LA355510820	48	Flat Washer	

L-LD02-002-A

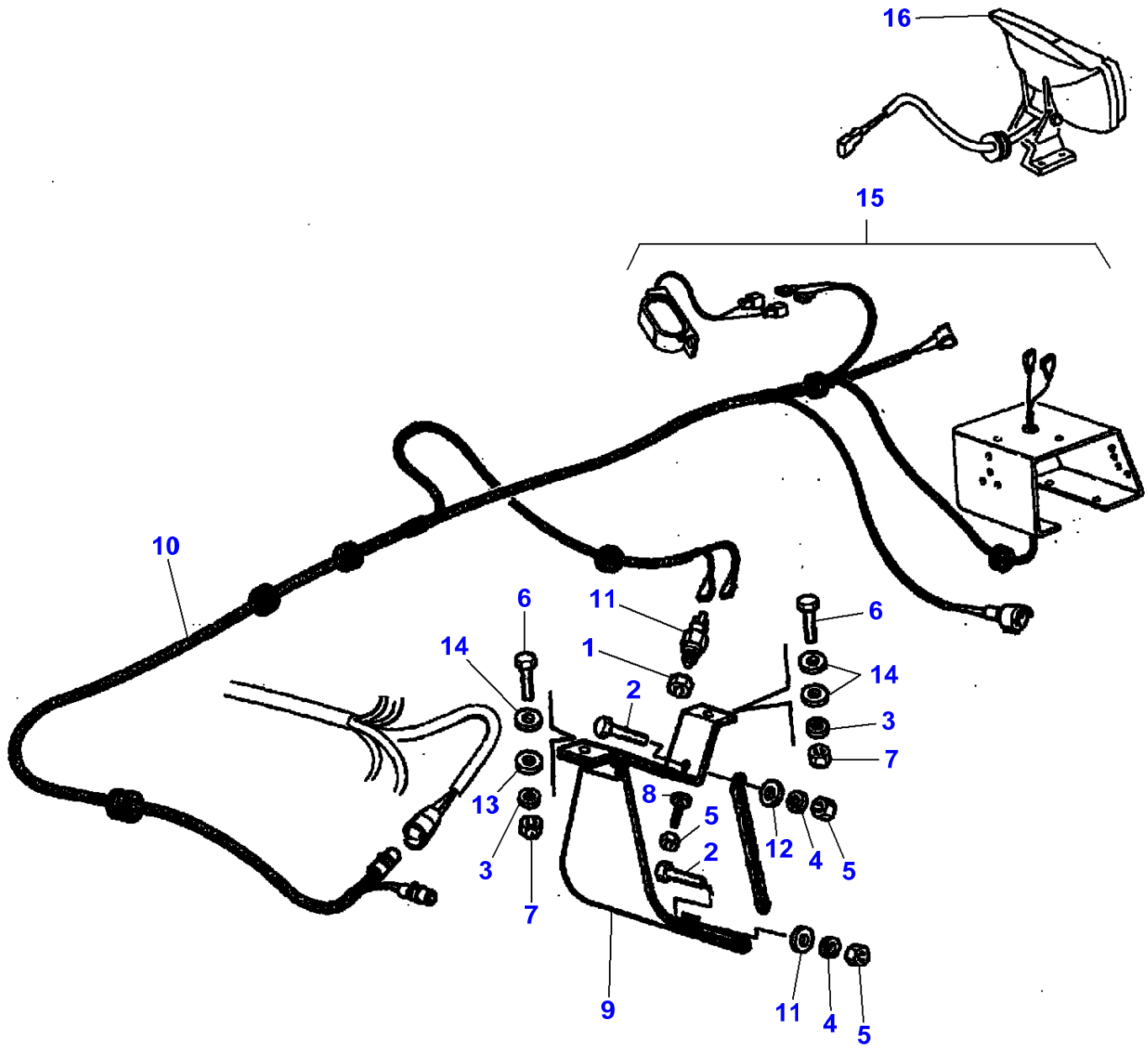

Item	Part Number	Qty	Description	Comments
1	LA10791411	1	Nut	
2	LA10902224	2	Cap Screw	
3	LA12034571	2	Lock Washer	
4	LA12035670	2	Lock Washer	
5	LA15896221	3	Nut	
6	LA16043224	2	Cap Screw	
7	LA16100811	2	Nut	
8	LA320577650	1	Cap Screw	
9	LA321116250	1	Support	
10	LA322878100	1	Cable	
11	**LA340480443**	1	Transmitter	
12	LA355500715	2	Flat Washer	
13	LA355500815	1	Washer	
14	LA355510820	3	Flat Washer	
15		1	Light	See Page - Reference Number 120-0105
16		1	Head Light	See Page - Reference Number 120-0130/2

L-LD03-001-A

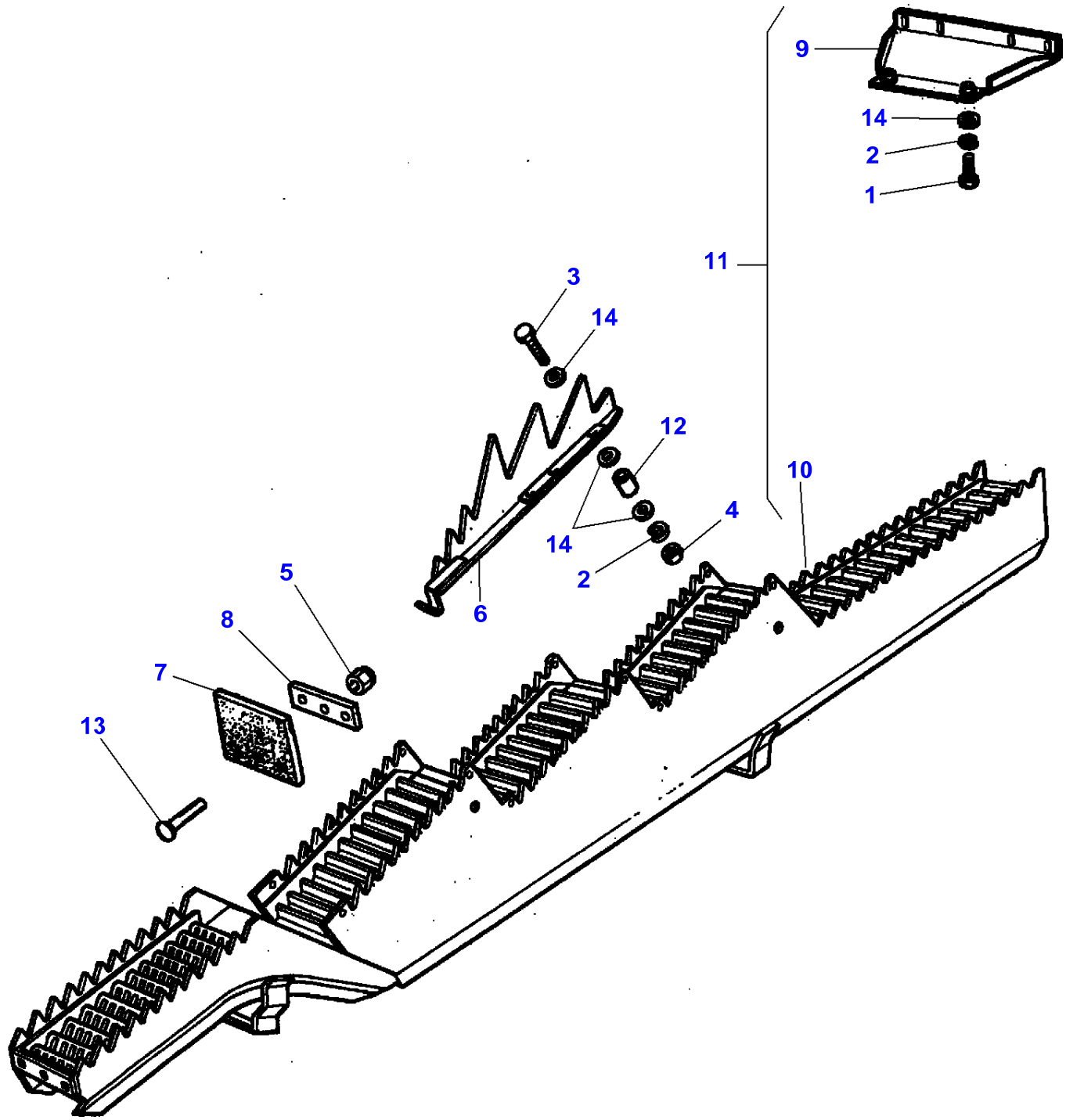

Item	Part Number	Qty	Description
1	LA10902221	2	Cap Screw
2	LA12035670	3	Lock Washer
3	LA15212721	1	Cap Screw
4	LA15896221	1	Nut
5	LA16104121	3	Locknut
6	LA320691950	1	St.Walk.Project.
7	LA320834550	1	Canvas
8	LA320834650	1	Plate
9	LA322315450	1	Extension
10	LA322315650	1	Kit, Straw Walkr
11	LA322334800	1	Kit, Straw Walkr
12	LA344158136	1	Bush
13	LA350342512	1	Carriage Bolt
14	LA355500715	3	Flat Washer

L-LD04-001-A

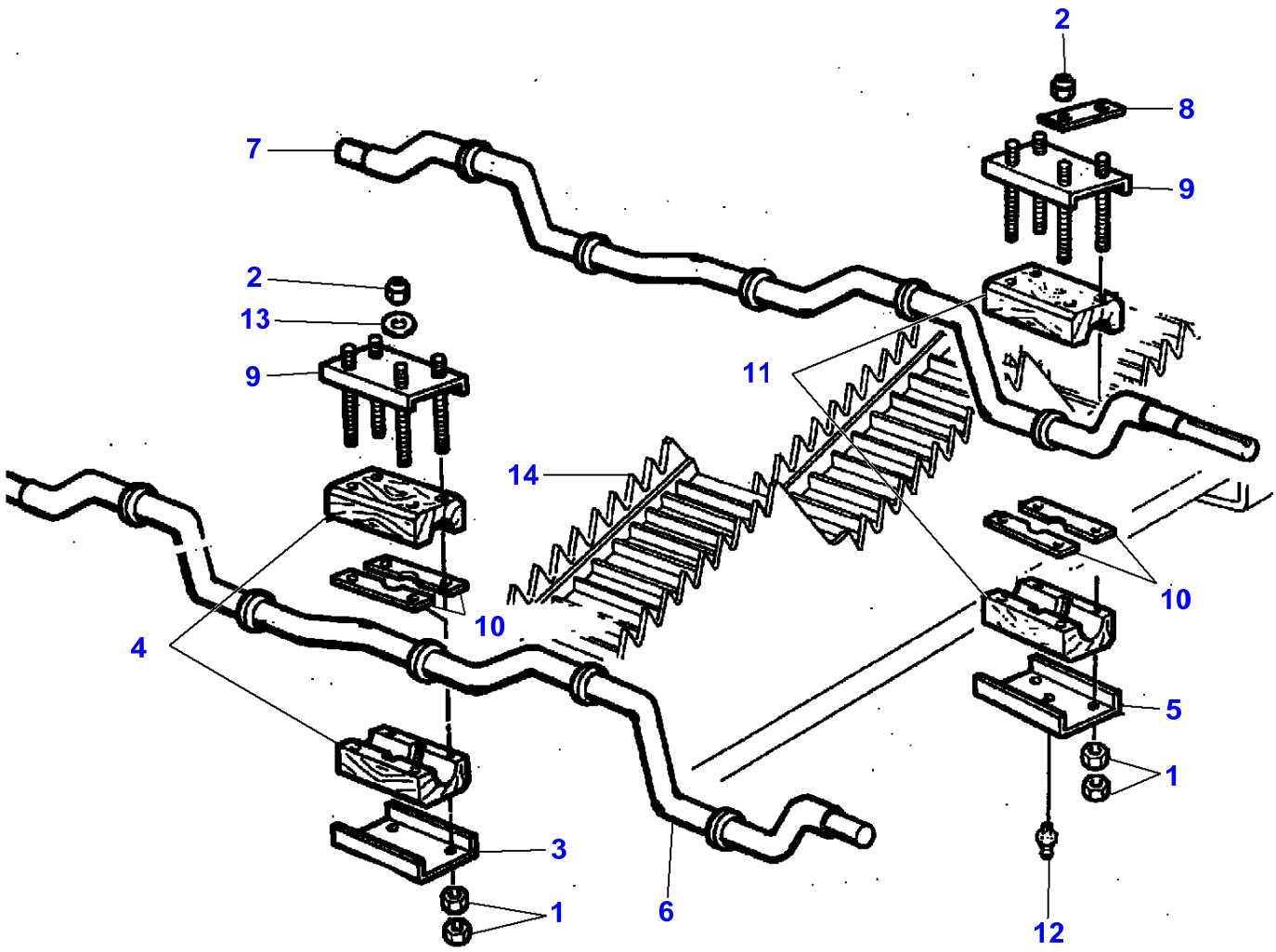

Item	Part Number	Qty	Description	Comments
1	LA11701721	80	Nut	
2	LA12577211	40	Nut	
3	LA300135128	5	Plate	
4	**LA321130450**	10	Support	
5	LA321741350	5	Plate	
6	LA322125450	1	Camshaft	
7	LA322125550	1	Camshaft	
8	LA322167550	5	Plate	
9	LA322177700	10	Plate	
10	LA322177850	20	Plate	
11	**LA322245250**	10	Support	
12	LA350357803	5	Grease Fitting	
13	LA355501130	20	Flat Washer	
14		1	Kit, Straw Walkr	See Page - Reference Number 060-0025/10

L-LD04-002-A

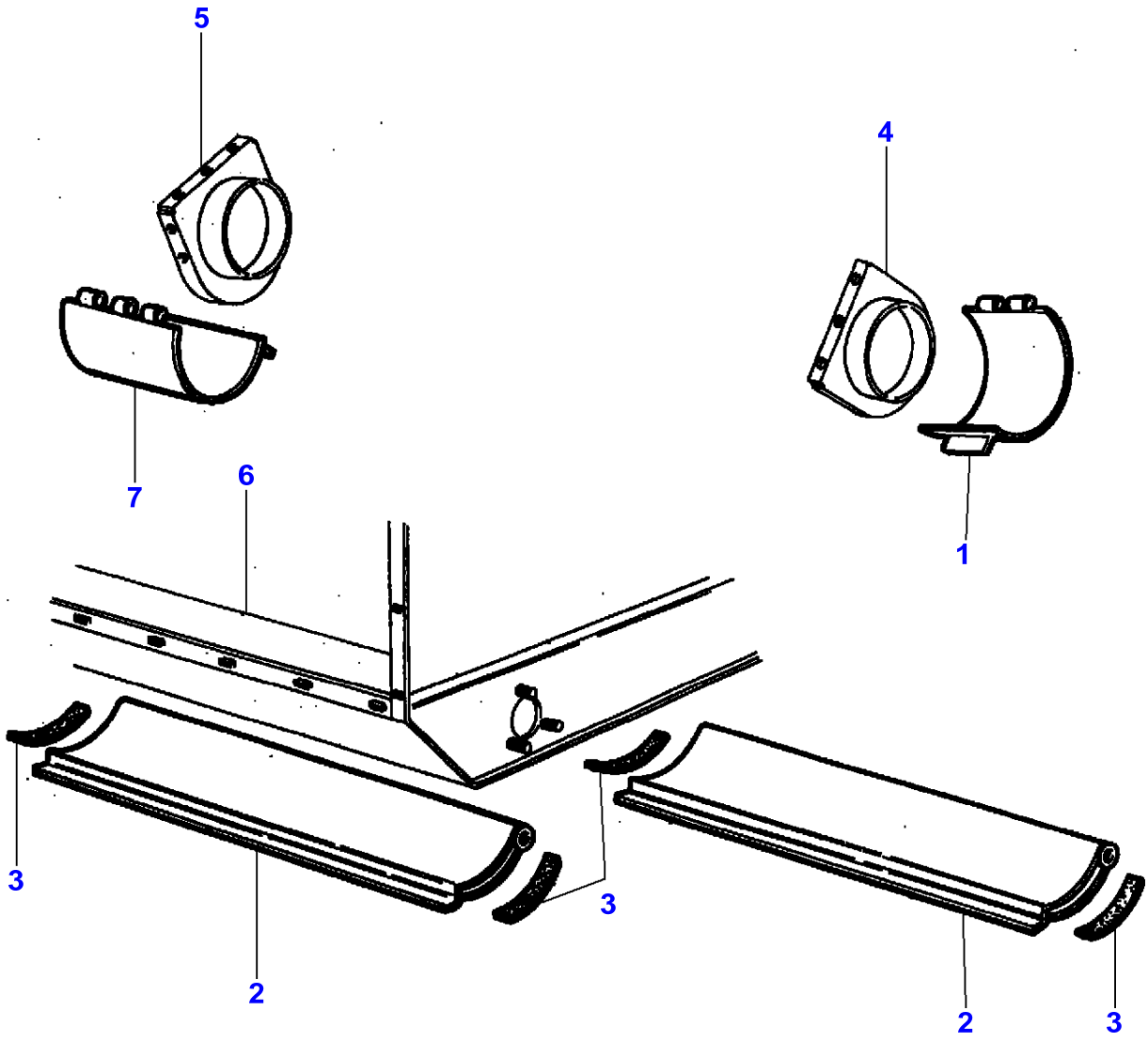

Item	Part Number	Qty	Description	Comments
1	LA321826250	1	Lid	
2	LA321841250	2	Lid	
3	LA321843650	4	Gasket	
4		1	Plate	See Page - Reference Number 070-0150
5		1	Plate	See Page - Reference Number 070-0130
6		1	Housing	See Page - Reference Number 070-0020/14
7	LA321850050	1	Lid	

L-LD05-001-A

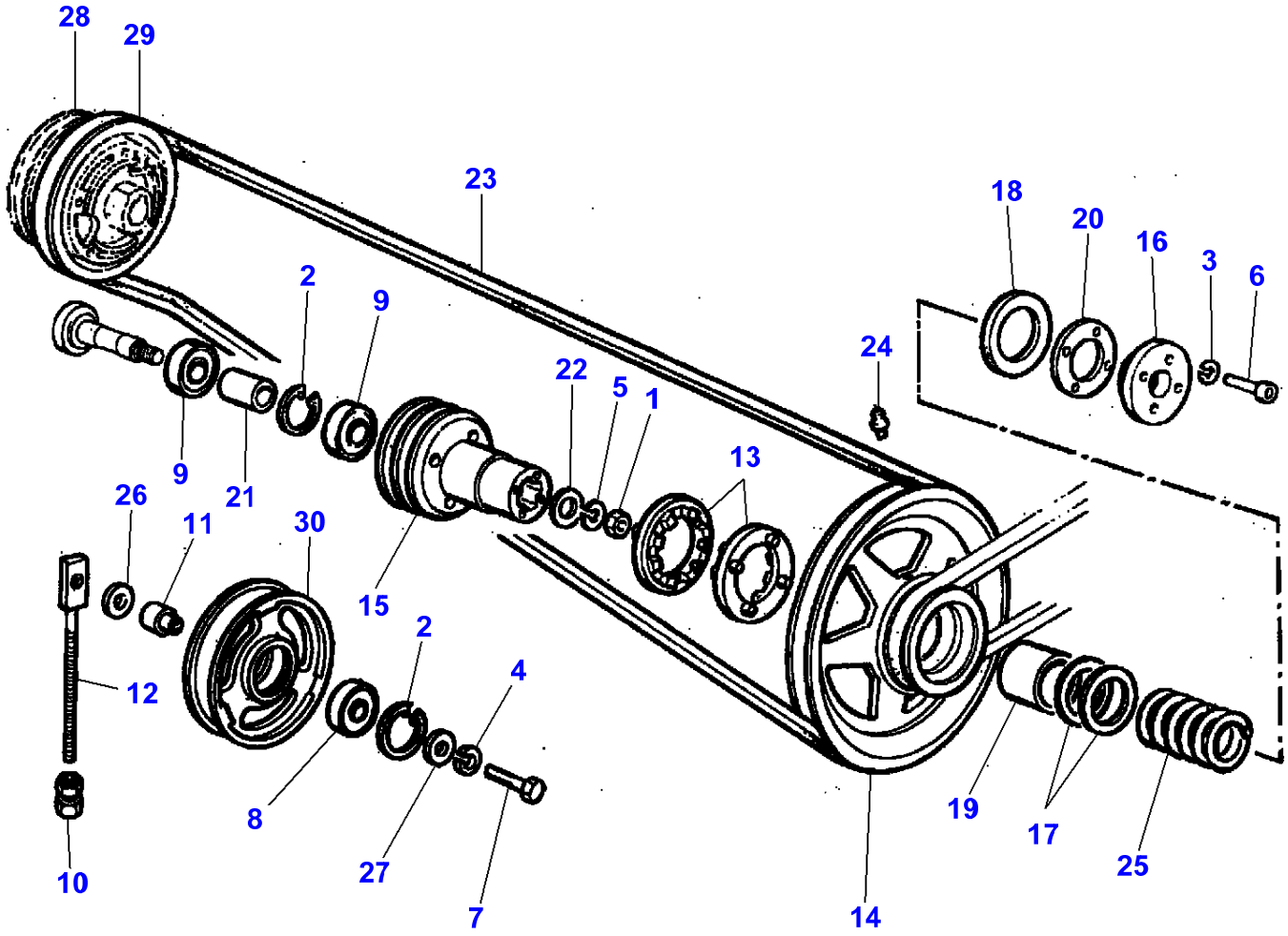
28
29
23
18
20
16
3
6
2
9
24
22
5
1
13
9
21
26
11
30
15
2
4
12
8
27
7
14
19
17
25
10

Item	Part Number	Qty	Description	Comments
1	LA10726711	1	Nut	
2	LA11061576	2	Circlip	
3	LA12034571	1	Lock Washer	
4	LA12034771	1	Lock Washer	
5	LA12035071	1	Lock Washer	
6	LA14306731	1	Hex Socket Screw	
7	LA15541121	1	Cap Screw	
8	**LA28042320**	1	Bearing Assy	
9	LA28042340	2	Bearing Assy	
10	LA300015610	1	Nut	
11	LA300015616	1	Bush	
12	LA301865550	1	Tie Rod	
13	LA322114250	2	Ring	
14	LA322117150	1	Pulley	
15	LA322119150	1	Pulley	
16	LA322119450	1	Guard	
17	LA322119550	1	Washer	
18	LA322119750	1	Washer	
19	LA322120750	1	Bush	
20	LA322194250	1	Shim	
21	LA340415156	1	Bush	
22	LA340415256	1	Flat Washer	
23	**LA340433539**	1	Belt	
24	LA350357851	1	Grease Fitting	
25	LA353561155	1	Spring	
26	LA355511230	1	Flat Washer	
27	LA355511260	1	Washer	
28		1	Hub	See Page - Reference Number 040-0005/27
29		1	Frame	See Page - Reference Number 040-0005/27
30	LA300132452	1	Pulley	

L-LD05-002-A

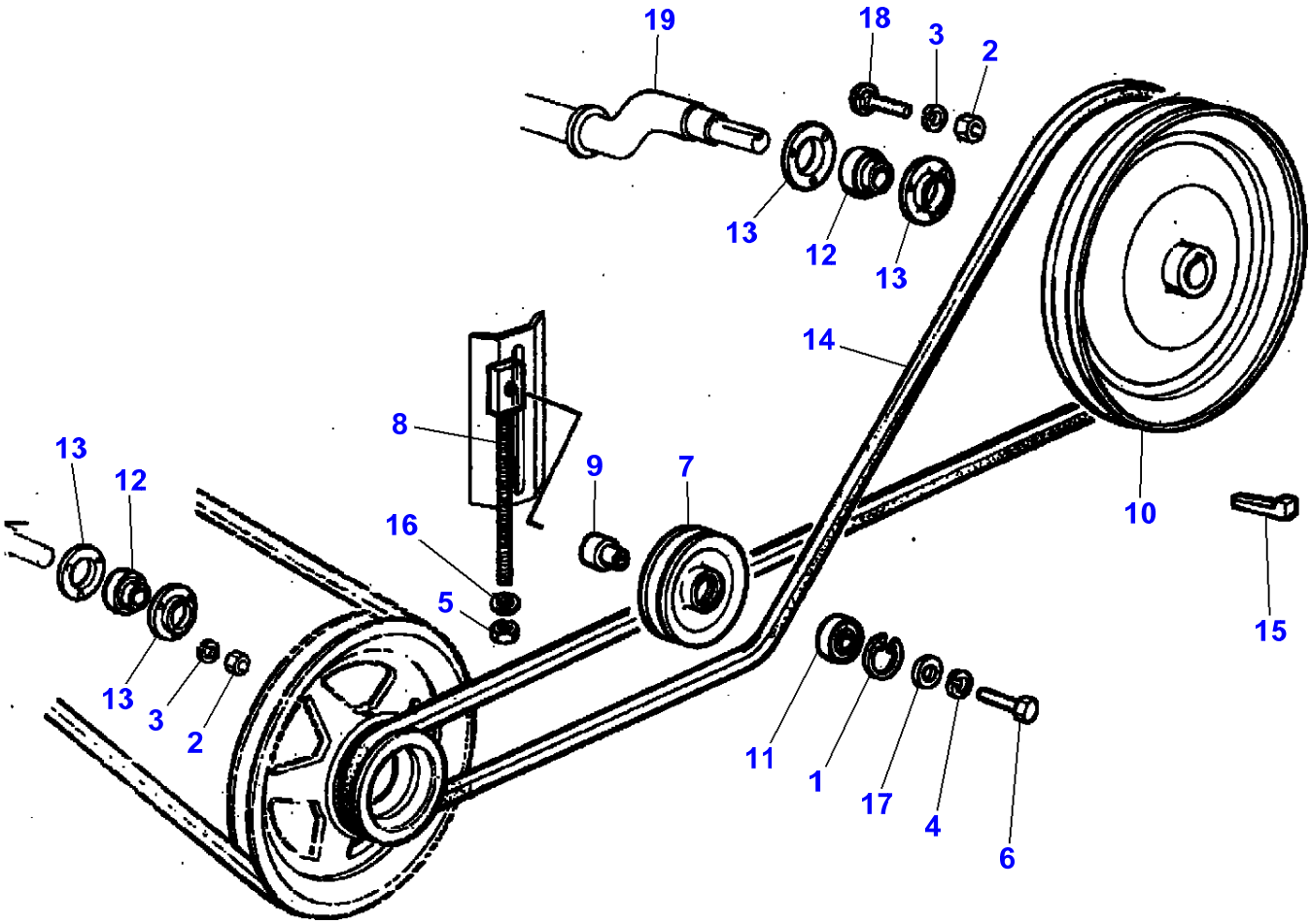

Item	Part Number	Qty	Description	Comments
1	LA11060576	0	Circlip	
2	LA11701721	2	Nut	
3	LA12034671	2	Lock Washer	
4	LA12034771	1	Lock Washer	
5	LA12577211	1	Nut	
6	LA15541124	1	Cap Screw	
7	**LA300010534**	1	Pulley	
8	LA300137498	1	Tie Rod	
9	LA321193650	1	Guide Bush	
10	LA322126250	1	Pulley	
11	**LA322638450**	1	Bearing Assy	
12	**LA340411206**	2	Bearing Assy	
13	LA340411406	4	Bearing Flange	
14	**LA340433474**	1	Belt	
15	LA350380560	1	Key	
16	LA355511020	1	Flat Washer	
17	LA355511260	1	Washer	
18	LA350342525	1	Carriage Bolt	
19		1	Camshaft	See Page - Reference Number 060-0030

L-LD06-001-B

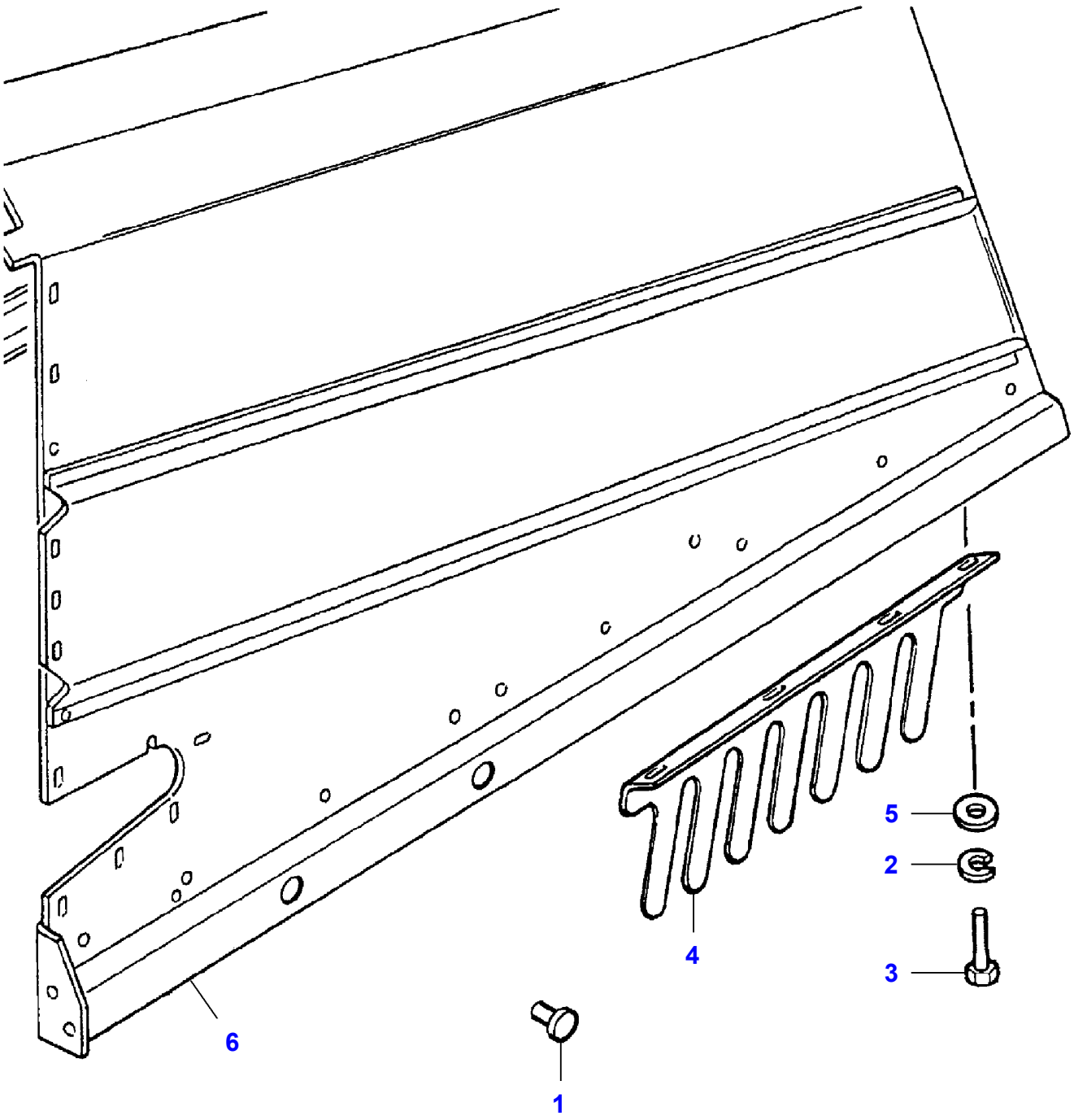

Item	Part Number	Qty	Description	Comments
1	LA5120060	2	Plug	
2	LA12034571	1	Lock Washer	
3	LA16043424	1	Cap Screw	
4	LA322342250	1	Rake	
5	LA355510820	2	Flat Washer	
6		1	Bonnet	See Page - Reference Number 060-0015/17

L-LD07-009-B

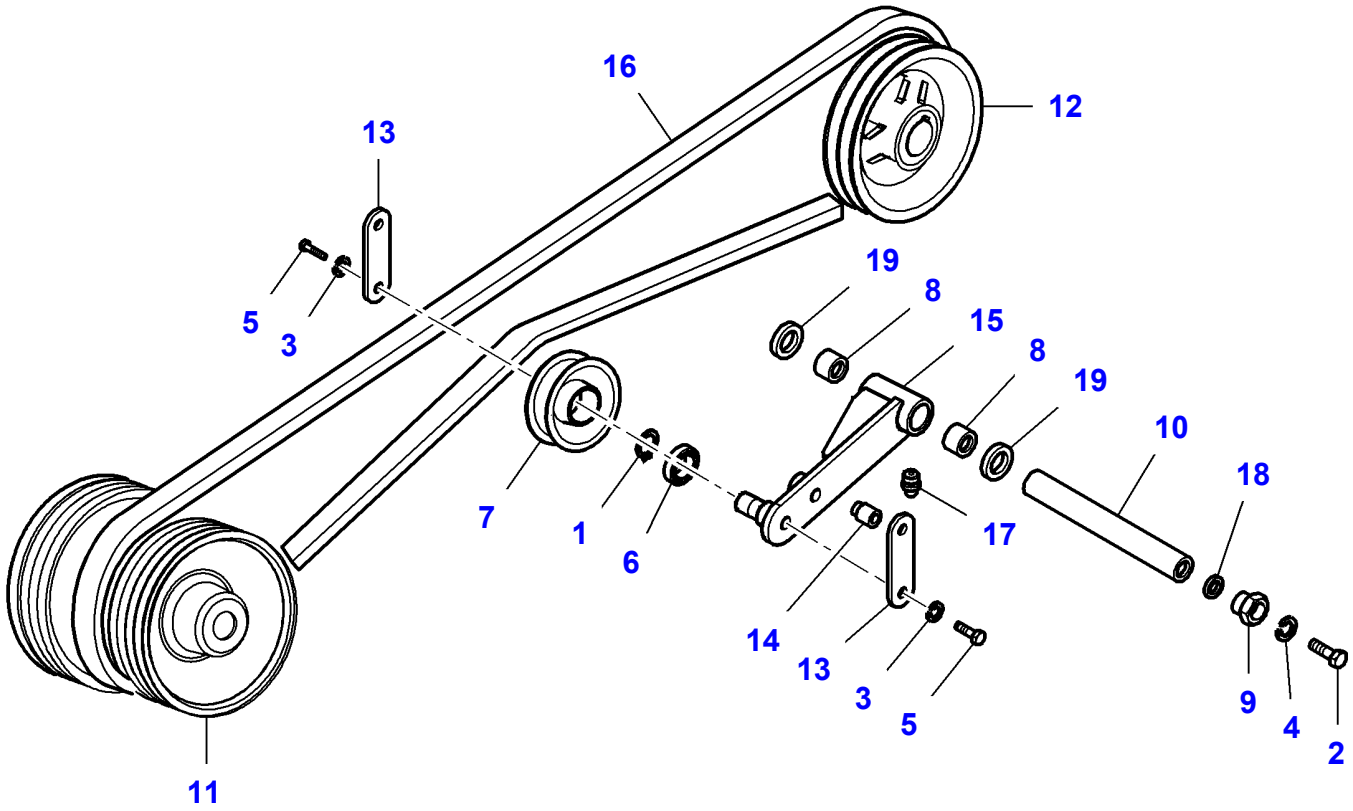

Item	Part Number	Qty	Description
1	LA11060576	1	Circlip
2	LA11112621	1	Cap Screw
3	LA12034571	4	Lock Washer
4	LA12034771	1	Lock Washer
5	LA16043221	4	Cap Screw
6	**LA28042320**	1	Bearing Assy
7	LA300015561	1	Pulley
8	LA322002050	2	Bush
9	LA322206450	1	Bush
10	LA322207150	1	Pin
11	LA322810450	1	Pulley
12	LA322834950	1	Pulley
13	LA322836950	2	Bracket
14	LA322839450	1	Bush
15	LA322955150	1	Support
16	**LA344311131**	1	Belt
17	LA350357803	1	Grease Fitting
18	LA355501310	1	Washer
	LA355501315	1	Washer
19	LA355538620	2	Washer

L-LD07-010-B

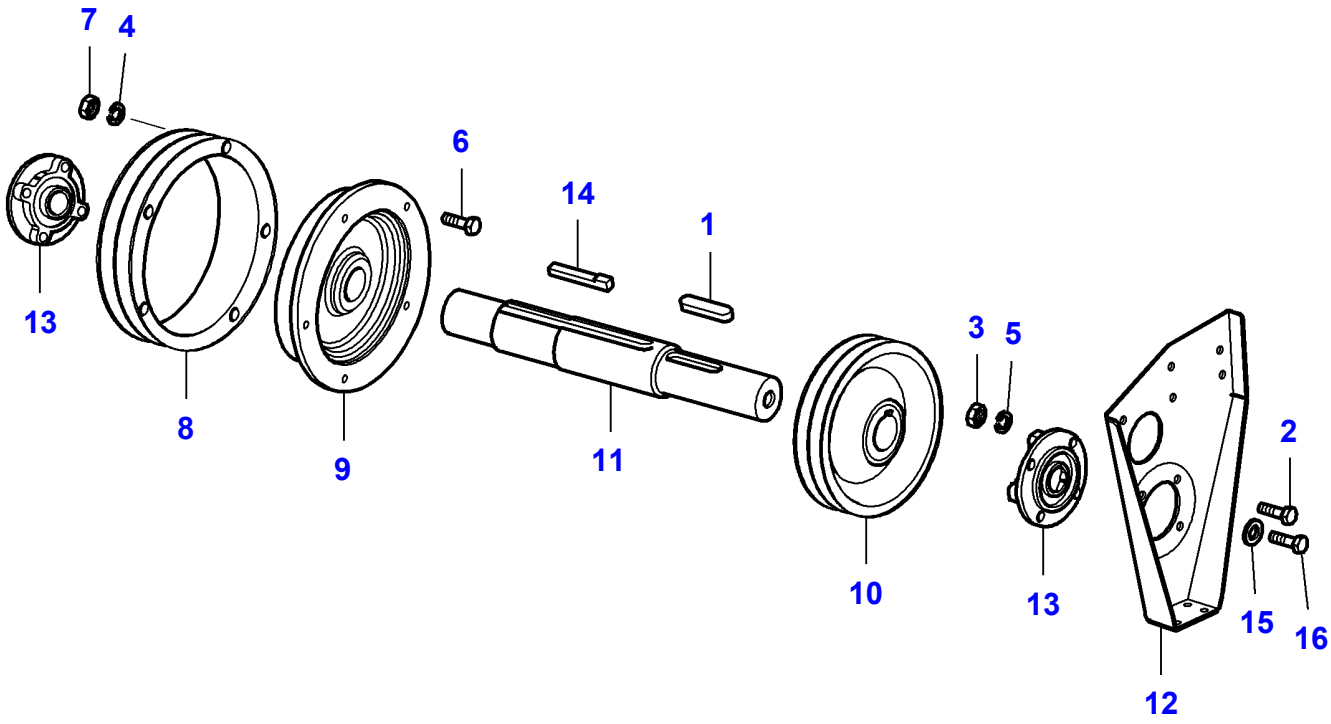

Item	Part Number	Qty	Description
1	LA10621020	1	Key
2	LA11599521	4	Cap Screw
3	LA11702911	4	Nut
4	LA12034571	5	Lock Washer
5	LA12034771	4	Lock Washer
6	LA16044524	5	Cap Screw
7	LA16100811	5	Nut
8	LA322150650	1	Pulley
9	LA322150750	1	Pulley
10	LA322834950	1	Pulley
11	LA322835050	1	Shaft
12	LA322952950	1	Bracket
13	**LA340411142**	2	Bearing Assy
14	LA350388208	1	Key
15	LA355511350	4	Flat Washer
16	LA15540421	1	Cap Screw

L-LD07-011-A

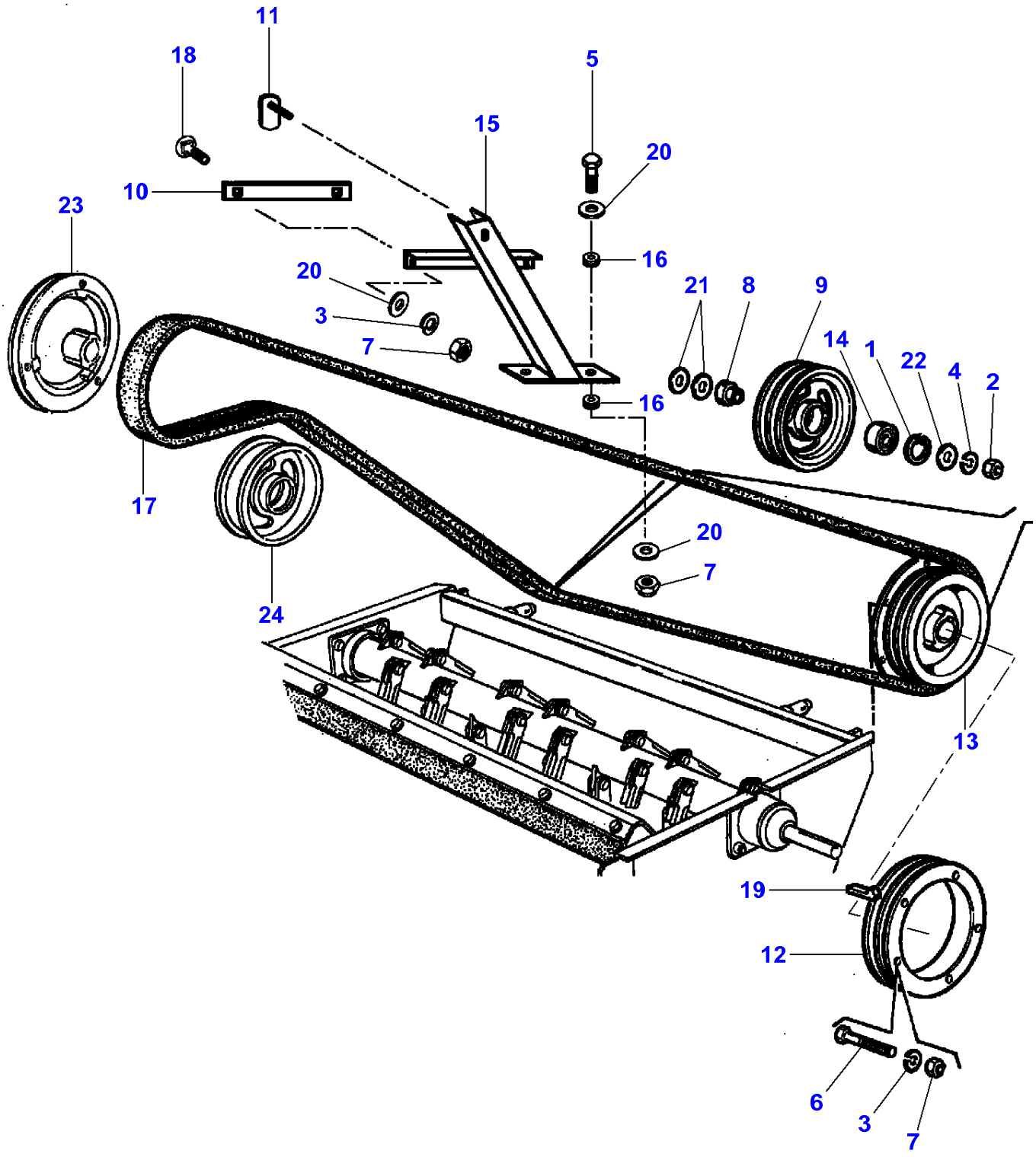

Item	Part Number	Qty	Description	Comments
1	LA11060576	1	Circlip	
2	LA11702911	1	Nut	
3	LA12034571	9	Lock Washer	
4	LA12034771	1	Lock Washer	
5	LA15212521	2	Cap Screw	
6	LA16044524	5	Cap Screw	
7	LA16100811	9	Nut	
8	LA300010497	1	Spacer	
9	LA321990850	1	Tensioner	
10	LA321993850	1	Plate	
11	LA321997250	1	Pin	
12	LA322150650	1	Pulley	
13	LA322150850	1	Pulley	
14	**LA322638450**	1	Bearing Assy	
15	LA322790550	1	Support	
16	LA340481703	2	Grommet	
17	**LA344311151**	1	Belt	
18	LA350342511	2	Carriage Bolt	
19	LA350388208	1	Key	
20	LA355510820	6	Flat Washer	
21	LA355511230	2	Flat Washer	
22	LA355511260	1	Washer	
23		1	Pulley	See Page - Reference Number 060-0060
24		1	Pulley	See Page - Reference Number 060-0070/12

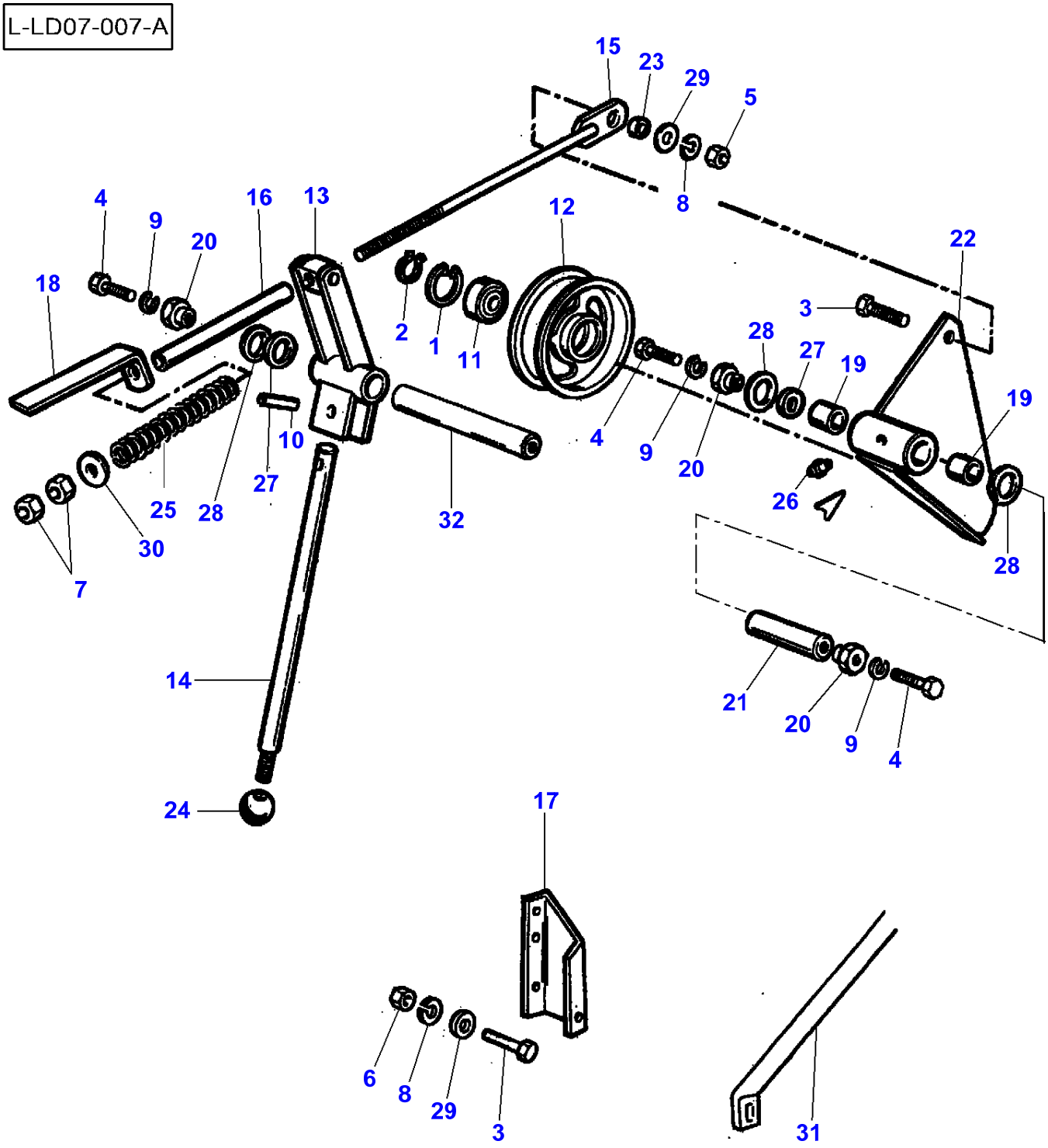
L-LD07-007-A
15
23
29
5
8
4
9
20
16
13
12
22
18
2
1
11
3
28
27
19
19
10
4
9
20
26
28
25
28
27
32
30
7
14
21
20
9
4
24
17
6
8
29
3
31

Item	Part Number	Qty	Description	Comments
1	LA11060576	1	Circlip	
2	LA11067376	1	Circlip	
3	LA11106421	2	Cap Screw	
4	LA11112621	2	Cap Screw	
5	LA11701711	1	Nut	
6	LA11701721	1	Nut	
7	LA11702921	2	Nut	
8	LA12034671	2	Lock Washer	
9	LA12034771	3	Lock Washer	
10	LA14604170	1	Roll Pin	
11	**LA28042320**	1	Bearing Assy	
12	LA300015561	1	Pulley	
13	LA321991750	1	Arm	
14	LA321992650	1	Lever	
15	LA321992950	1	Tie Rod	
16	LA321993750	1	Bush	
17	LA321997150	1	Collar	
18	LA321999250	1	Collar	
19	LA322002050	2	Bush	
20	LA322206450	3	Bush	
21	LA322207050	1	Pin	
22	LA322345850	1	Arm	
23	LA340415614	1	Bush	
24	LA340441109	1	Knob	
25	LA350356256	1	Spring	
26	LA350357805	1	Grease Fitting	
27	LA355501310	2	Washer	Thickness 1,00 mm
	LA355501315	2	Washer	Thickness 1,50 mm
28	LA355538620	2	Washer	
29	LA355511030	2	Flat Washer	
30	LA355511240	1	Flat Washer	
31		1	Tube	See Page - Reference Number 080-0145
32		1	Tube	See Page - Reference Number 060-0055/10

L-LD07-008-A

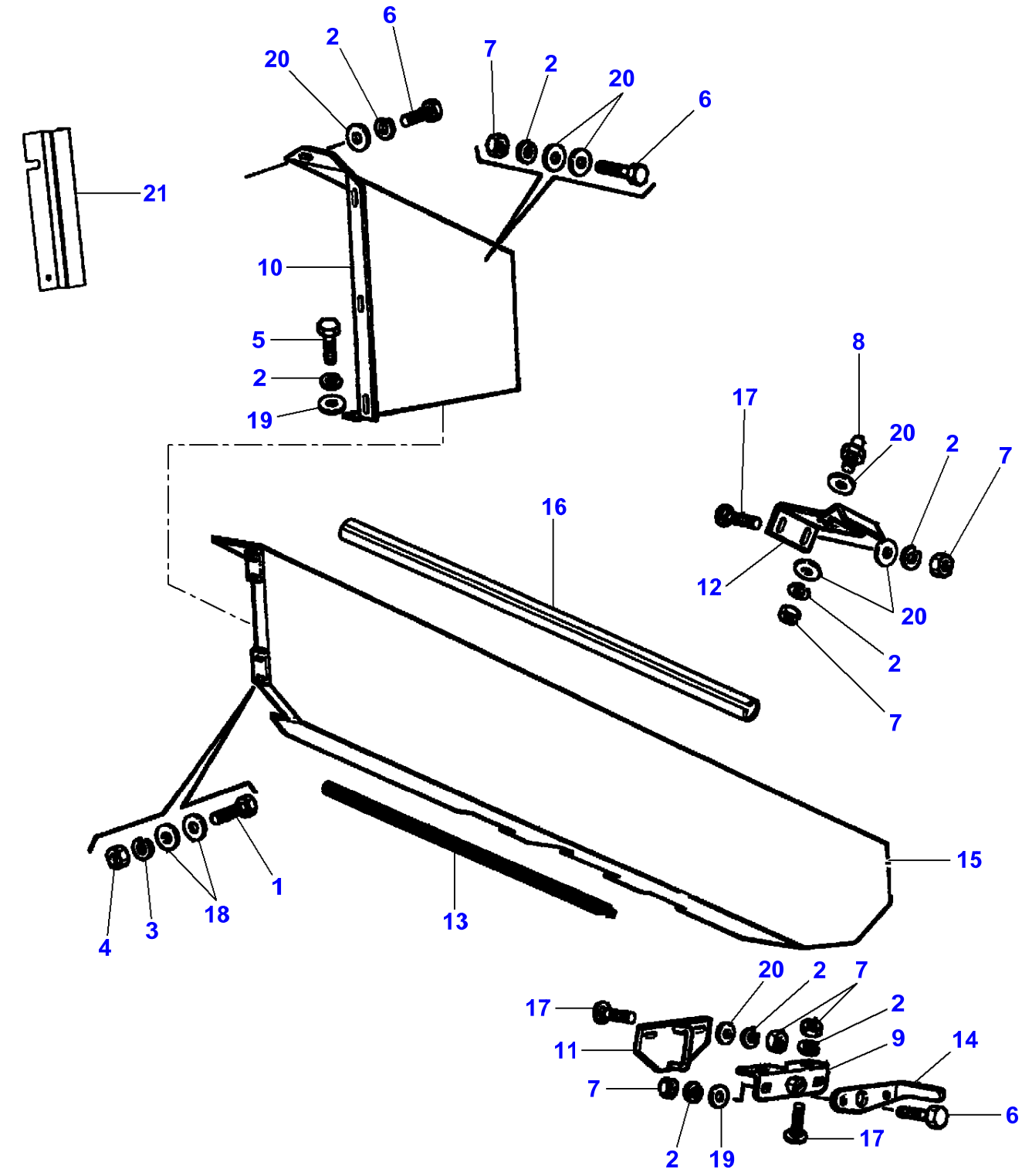
6
2
20
7
2
20
6
21
10
5
2
19
8
17
20
2
7
16
12
20
2
7
15
1
18
4
3
13
20
2
7
17
2
11
9
14
7
6
17
2
19

Item	Part Number	Qty	Description
1	LA10902221	1	Cap Screw
2	LA12034571	8	Lock Washer
3	LA12035671	1	Lock Washer
4	LA15896221	1	Nut
5	LA16043221	1	Cap Screw
6	LA16043421	3	Cap Screw
7	LA16100811	6	Nut
8	LA322171950	1	Pin
9	LA322316750	1	Lock
10	LA322344750	1	Shield
11	LA322345650	1	Stop
12	LA322345750	1	Support
13	LA322351350	1	Profile
14	LA322365350	1	Lever
15	LA322790650	1	Shield
16	LA322795450	1	Support
17	LA350342511	3	Carriage Bolt
18	LA355500715	2	Flat Washer
19	LA355500920	2	Flat Washer
20	LA355510820	7	Flat Washer
21	LA323012150	1	Shield

L-LD07-015-B

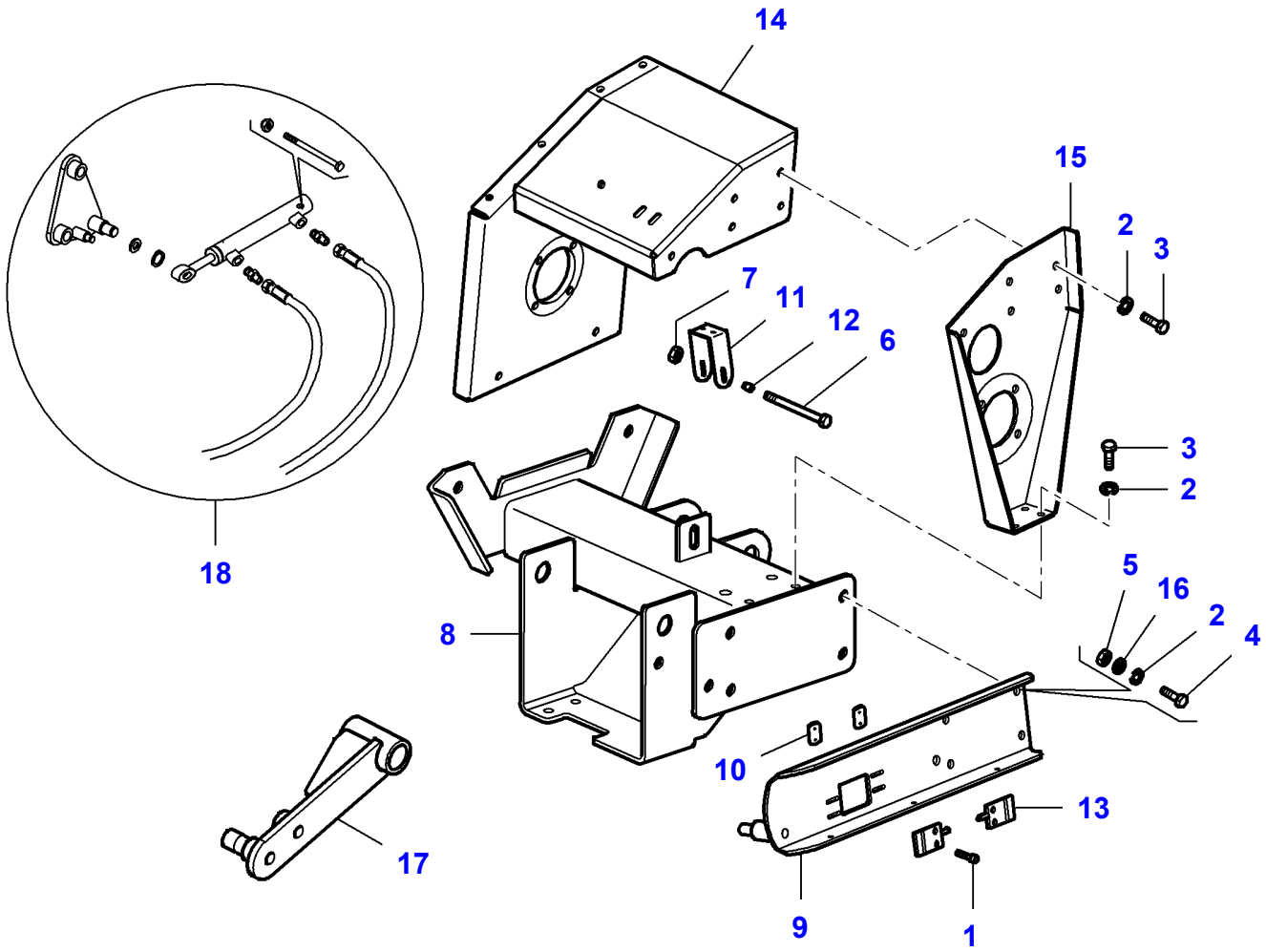

Item	Part Number	Qty	Description	Comments
1	LA14303421	4	Screw	
2	LA12034671	13	Lock Washer	
3	LA11106221	9	Cap Screw	
4	LA11106421	4	Cap Screw	
5	LA11701711	4	Nut	
6	LA16044521	1	Cap Screw	
7	LA16104111	1	Locknut	
8	LA322835150	1	Bracket	
9	LA322836050	1	Bracket	
10	LA322836150	2	Plate	
11	LA322837950	1	Yoke	
12	LA322839450	1	Bush	
13	**LA322864200**	2	Switch	
14	LA322952850	1	Plate	
15	LA322952950	1	Bracket	
16	LA355501130	4	Flat Washer	
17		1	Support	See Page - Reference Number 060-0055/15
18		1	Cylinder	See Page - Reference Number 110-0090

L-LD07-016-B

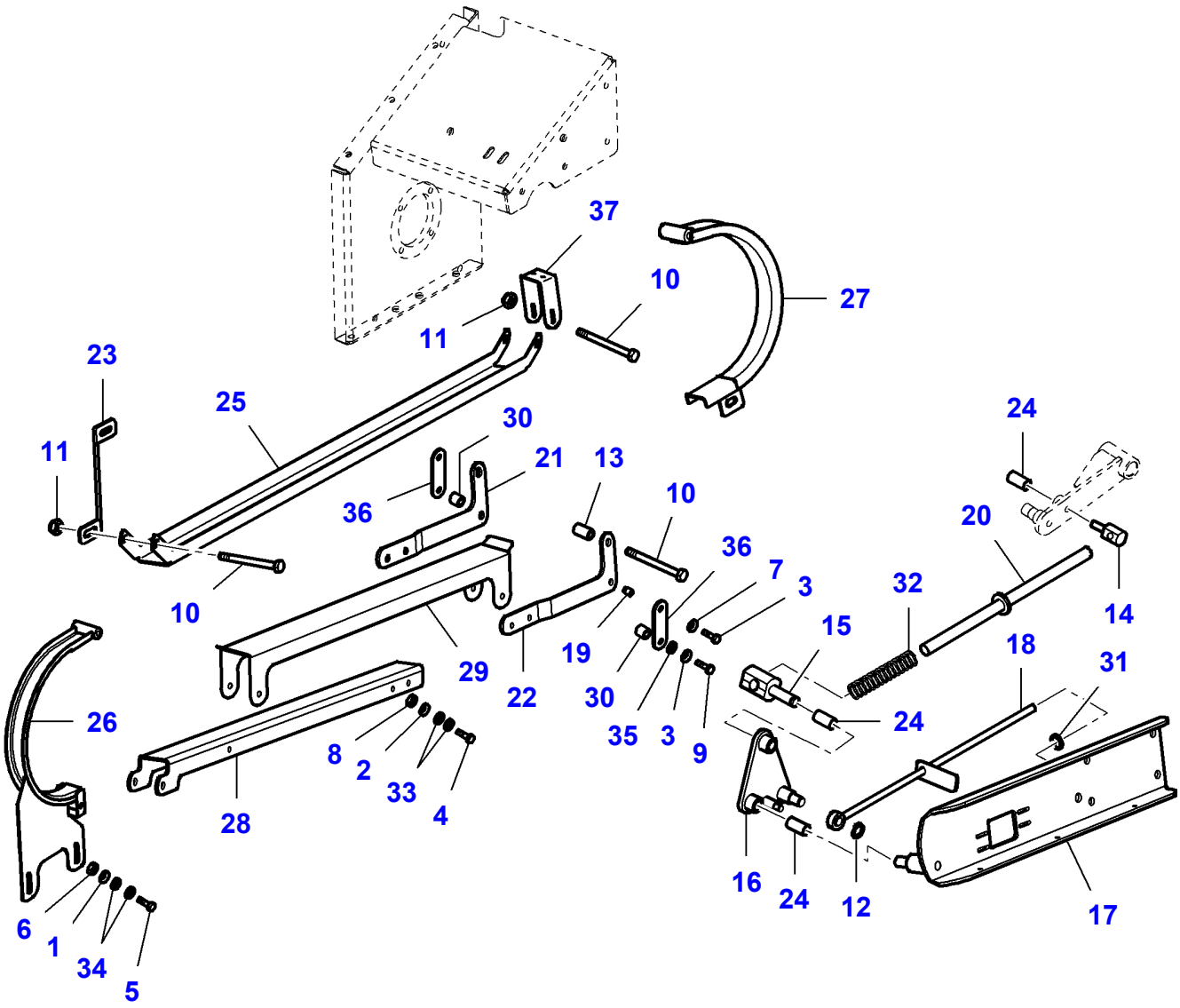
37
10
27
11
23
25
30
21
13
36
10
24
20
36
7
3
32
14
10
15
18
31
19
30
35
3
9
24
29
22
26
8
2
33
4
28
16
24
12
17
6
1
34
5

Item	Part Number	Qty	Description	Comments
1	LA140045	2	Washer	
2	LA322357	1	Lock Washer	
3	LA322358	2	Lock Washer	
4	LA10902221	1	Cap Screw	
5	LA11106421	2	Cap Screw	
6	LA11701711	2	Nut	
7	LA12034571	1	Lock Washer	
8	LA15896221	1	Nut	
9	LA16043221	1	Cap Screw	
10	LA16044521	3	Cap Screw	
11	LA16104111	8	Locknut	
12	LA16160976	1	Circlip	
13	LA320936450	1	Guide Bush	
14	LA322811450	1	Rod	
15	LA322835850	1	Rod	
16	LA322835950	1	Lever	
17	LA322836050	1	Bracket	
18	LA322836750	1	Rod	
19	LA322839450	1	Bush	
20	LA322839650	1	Tie Rod	
21	LA322846650	1	Bracket	
22	LA322846750	1	Bracket	
23	LA322847150	1	Reinforcement	
24	LA322878750	3	Sleeve	
25	LA322954750	1	Skate	
26	LA322954850	1	Skate	
27	LA322955650	1	Skate	
28	LA322956150	1	Skate	
29	LA322956450	1	Cover	
30	LA340415607	2	Bush	
31	LA340481703	1	Grommet	
32	LA353561157	1	Spring	
33	LA355500715	2	Flat Washer	
34	LA355501120	4	Flat Washer	
35	LA355510820	1	Flat Washer	
36		1	Plate	See Page - Reference Number 060-0055/13
37	LA322837950	1	Yoke	

L-LD07-018-A

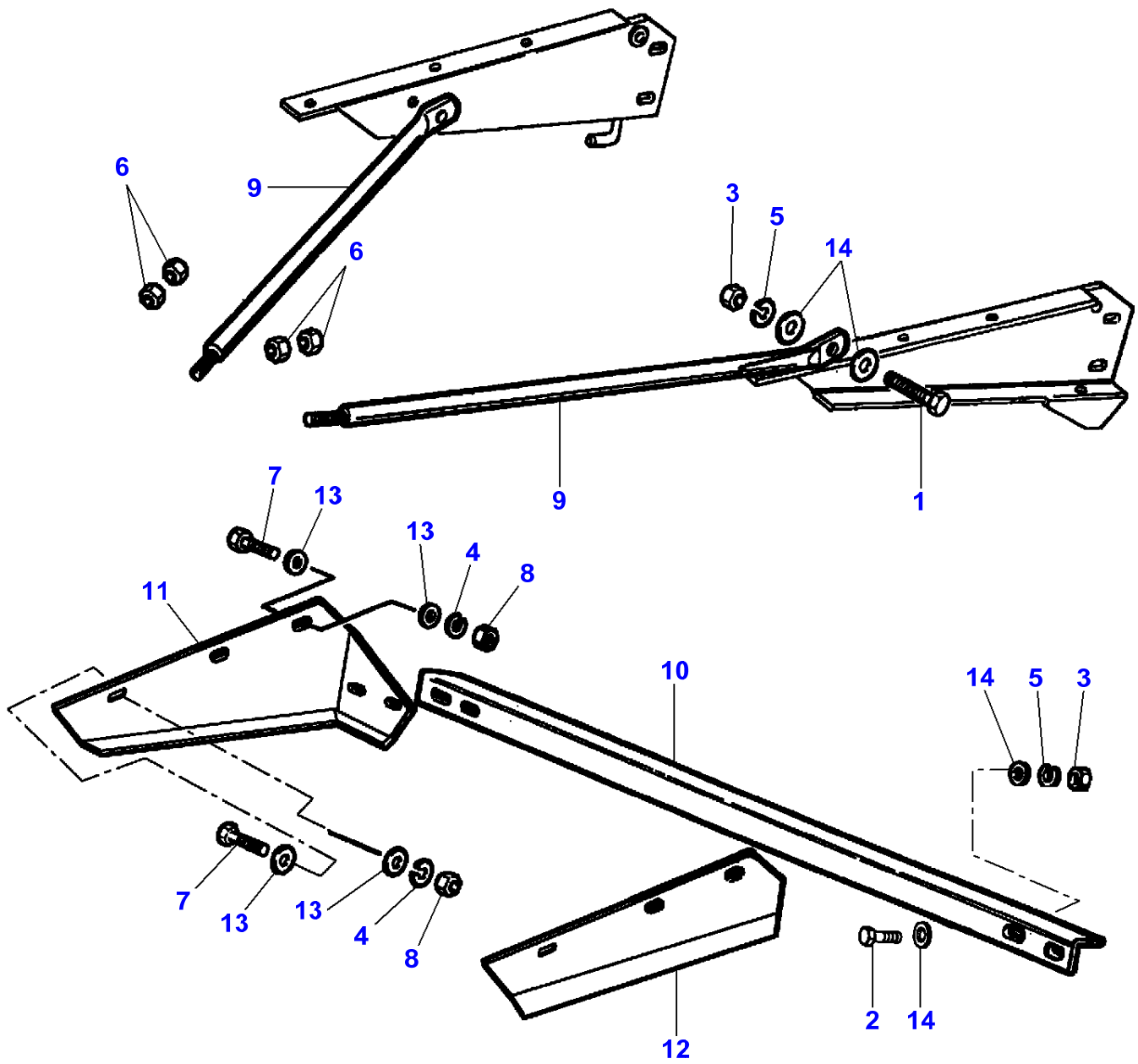

Item	Part Number	Qty	Description
1	LA11106421	1	Cap Screw
2	LA11106424	4	Cap Screw
3	LA11701711	5	Nut
4	LA12034571	2	Lock Washer
5	LA12034671	5	Lock Washer
6	LA12164011	4	Nut
7	LA16043621	2	Cap Screw
8	LA16100811	2	Nut
9	LA322349550	2	Tie Rod
10	LA322349750	1	Angle.
11	LA322873250	1	Bracket
12	LA322873350	1	Bracket
13	LA355500920	4	Flat Washer
14	LA355501120	10	Flat Washer

L-LD07-012-A

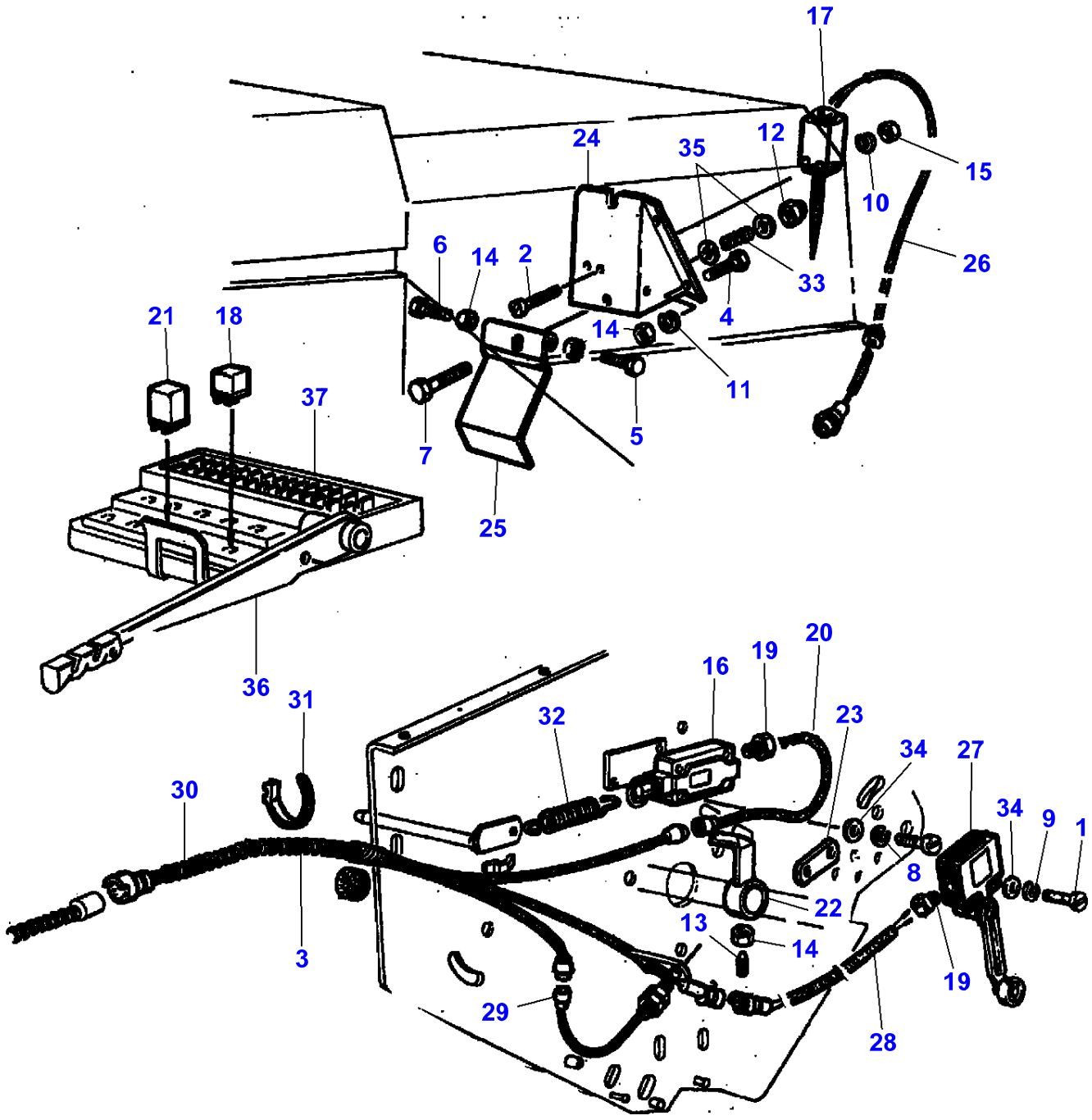
17
24
35
12
15
10
6
14
2
33
26
4
21
18
14
11
37
5
7
25
36
31
20
19
16
32
23
34
27
30
34
9
1
8
22
13
14
19
3
29
28

Item	Part Number	Qty	Description	Comments
1	LA10375811	1	Screw	
2	LA10390311	2	Screw	
3	LA10397780	1	Grommet	
4	LA10902221	1	Cap Screw	
5	LA10902621	1	Cap Screw	
6	LA10902624	1	Cap Screw	
7	LA10903821	1	Cap Screw	
8	LA12034571	1	Lock Washer	
9	LA12035371	1	Lock Washer	
10	LA12035471	1	Lock Washer	
11	LA12035671	1	Lock Washer	
12	LA12574211	1	Locknut	
13	LA13806570	1	Grub Screw	
14	LA15896221	4	Nut	
15	LA15896421	1	Nut	
16	**LA313573000**	1	Switch	
17	**LA320571200**	1	Switch	
18	**LA321908450**	1	Relay	
19	LA321910400	2	Nut	
20	LA322080600	1	Harness	
21	LA322118750	1	Relay	
22	LA322159750	1	Element	
23	LA322226450	1	Plate	
24	LA322234750	1	Support	
25	LA322234850	1	Plate	
26	LA322235300	1	Harness	
27	**LA322520600**	1	Switch	
28	LA322825800	1	Harness	
29	**LA322861400**	1	Sensor	
30	LA323001000	1	Harness	
31	LA340481810	1	Cable Tie	
32	LA350356513	1	Spring	
33	LA353561164	1	Spring	
34	LA355500515	2	Flat Washer	
35	LA355510615	2	Flat Washer	
36		1	Lever	See Page - Reference Number 040-0090/24
37		1	Box	See Page - Reference Number 120-0030

L-LD07-017-A

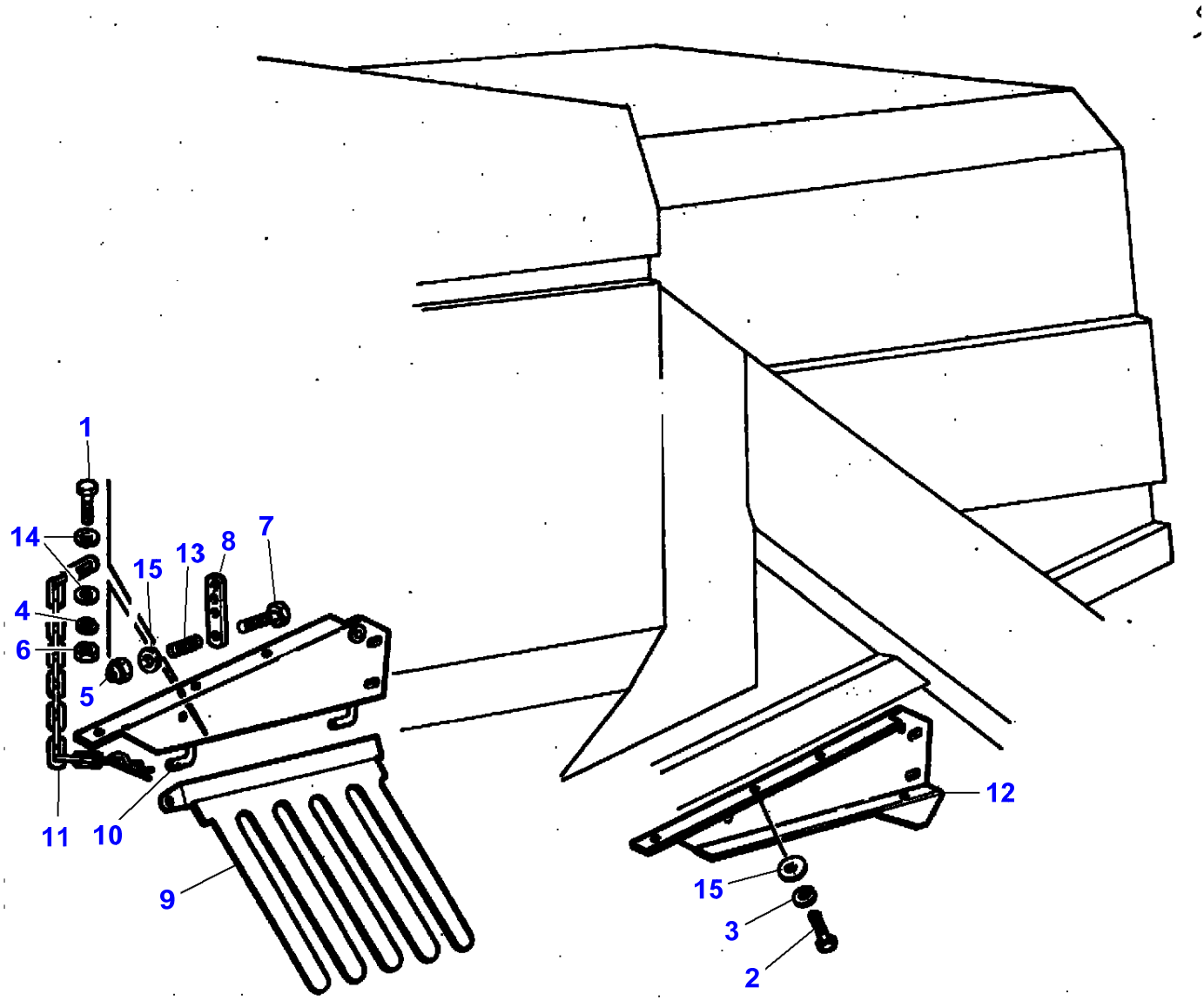

Item	Part Number	Qty	Description
1	LA10902421	1	Cap Screw
2	LA11106421	1	Cap Screw
3	LA12034671	1	Lock Washer
4	LA12035671	1	Lock Washer
5	LA12577211	1	Nut
6	LA15896211	1	Nut
7	LA16040821	1	Cap Screw
8	LA322267550	1	Plate
9	LA322342650	1	Rake
10	LA322350250	1	Side
11	LA322366800	1	Latch
12	LA322795550	1	Side
13	LA353561162	1	Spring
14	LA355500720	2	Flat Washer
15	LA355501130	2	Flat Washer

L-LD07-002-A

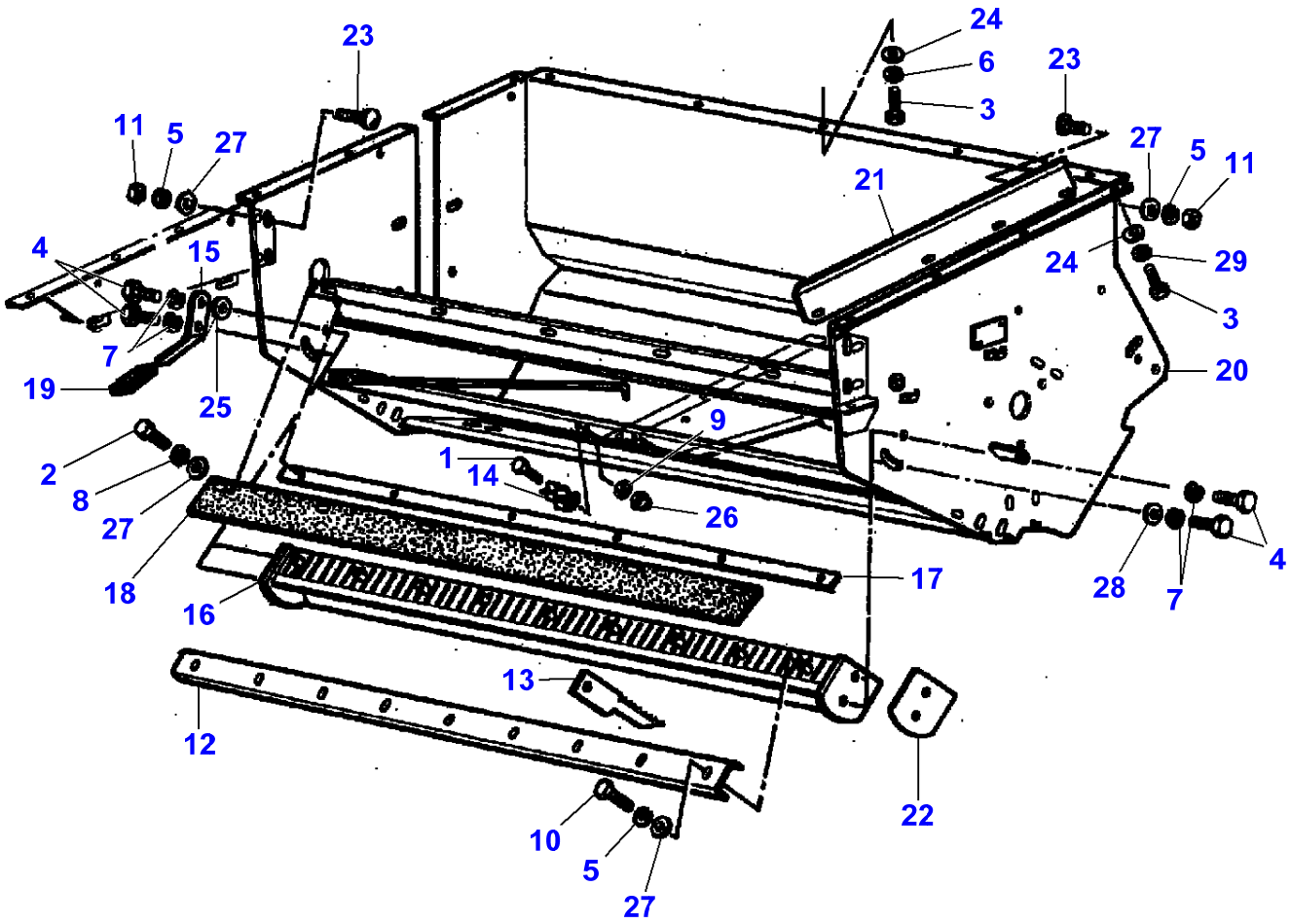
23
24
6
3
23
11
5
27
27
5
11
21
4
15
24
29
3
7
19
25
20
9
2
1
14
8
26
27
18
17
28
7
4
16
13
12
22
10
5
27

Item	Part Number	Qty	Description
1	LA10374911	1	Cap Screw
2	LA10902421	1	Cap Screw
3	LA11106421	5	Cap Screw
4	LA11127421	4	Cap Screw
5	LA12034571	16	Lock Washer
6	LA12034671	1	Lock Washer
7	LA12034871	4	Lock Washer
8	LA12035671	1	Lock Washer
9	LA12574011	1	Nut
10	LA16043421	9	Cap Screw
11	LA16100811	7	Nut
12	LA322266650	1	Channel Section
13	**LA322291650**	1	Knife
14	LA322294350	1	Clip
15	LA322322950	1	Lever
16	LA322323750	1	Carrier Plate
17	LA322324450	1	Stop
18	LA322324850	1	Canvas
19	LA322328750	1	Grip
20	LA322349250	1	Housing
21	LA322350150	1	Rail
22	LA322399450	1	Shim
23	LA350342511	8	Carriage Bolt
24	LA355501130	4	Flat Washer
25	LA355501715	1	Washer
26	LA355510415	1	Flat Washer
27	LA355510820	17	Flat Washer
28	LA355532830	1	Washer
29	LA12034671	1	Lock Washer

L-LD07-003-A

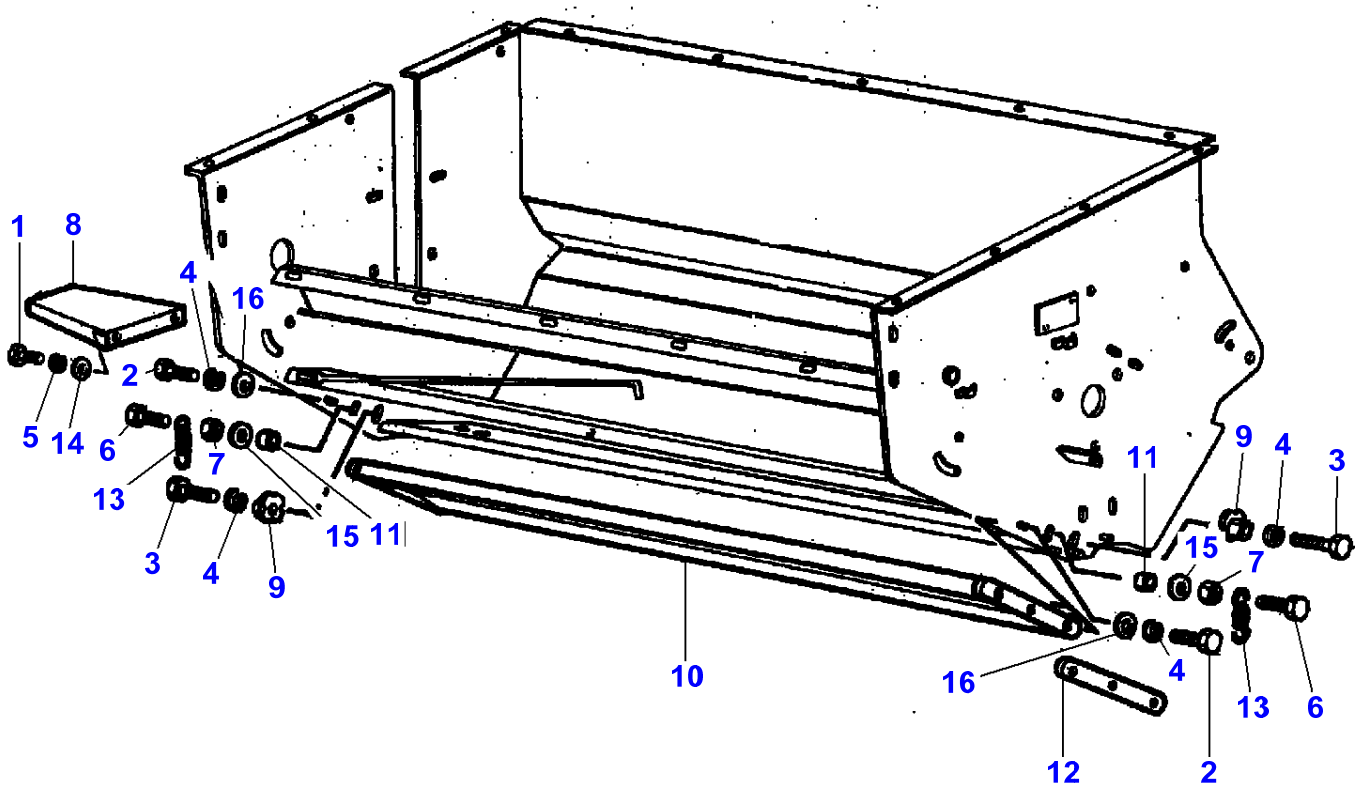

Item	Part Number	Qty	Description
1	LA10902221	1	Cap Screw
2	LA11112421	2	Cap Screw
3	LA11113221	2	Cap Screw
4	LA12034771	4	Lock Washer
5	LA12035671	1	Lock Washer
6	LA16043821	2	Cap Screw
7	LA16100811	2	Nut
8	LA322294850	1	Shield
9	LA322323350	2	Eccentric
10	LA322331750	1	Plate
11	LA322331950	2	Bush
12	LA322399550	1	Shim
13	LA350356519	2	Spring
14	LA355510620	1	Flat Washer
15	LA355510820	2	Flat Washer
16	LA355530620	10	Washer

L-LD07-004-A

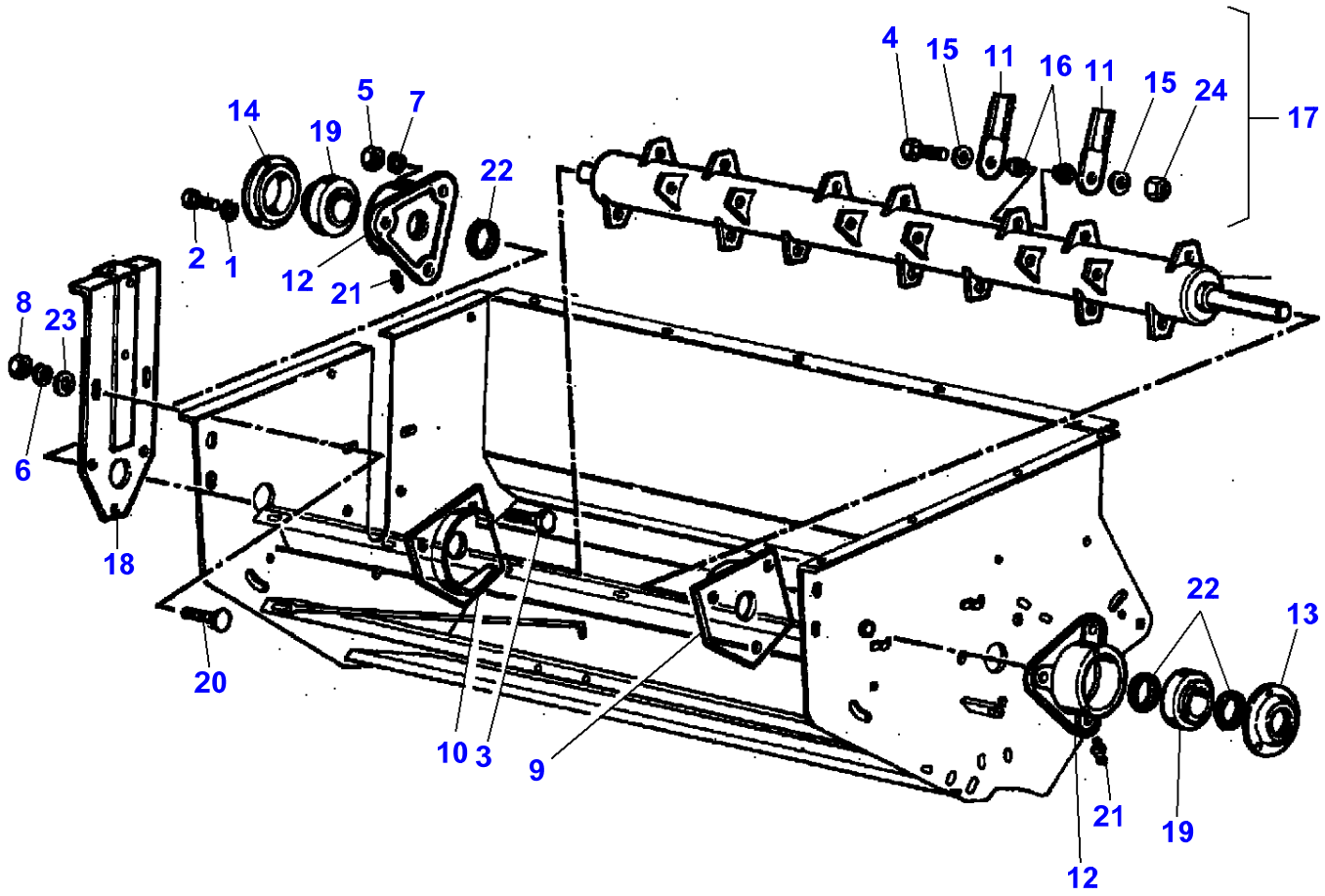
4
15
11
16
11
15
24
17
14
19
5
7
22
2
1
12
21
8
23
6
18
20
10
3
9
22
13
21
19
12

Item	Part Number	Qty	Description
1	LA10615479	1	Washer
2	LA10902421	1	Cap Screw
3	LA11112821	1	Cap Screw
4	LA11343834	1	Cap Screw
5	LA11702911	1	Nut
6	LA12034571	1	Lock Washer
7	LA12034771	1	Lock Washer
8	LA16100811	1	Nut
9	LA322162250	1	Guard
10	LA322228050	1	Guard
11	**LA322326450**	2	Knife
12	LA322329650	2	Support
13	LA322329750	1	Cover
14	LA322329850	1	Cover
15	LA322330550	2	Washer
16	**LA322331350**	2	Bush
17	LA322332300	1	Rotor
18	LA322350450	1	Plate
19	LA340403646	2	Bearing Assy
20	LA350342511	1	Carriage Bolt
21	LA350357851	2	Grease Fitting
22	LA353587212	3	Gasket
23	LA355510820	1	Flat Washer
24	LA12575621	1	Nut

L-LD07-013-A

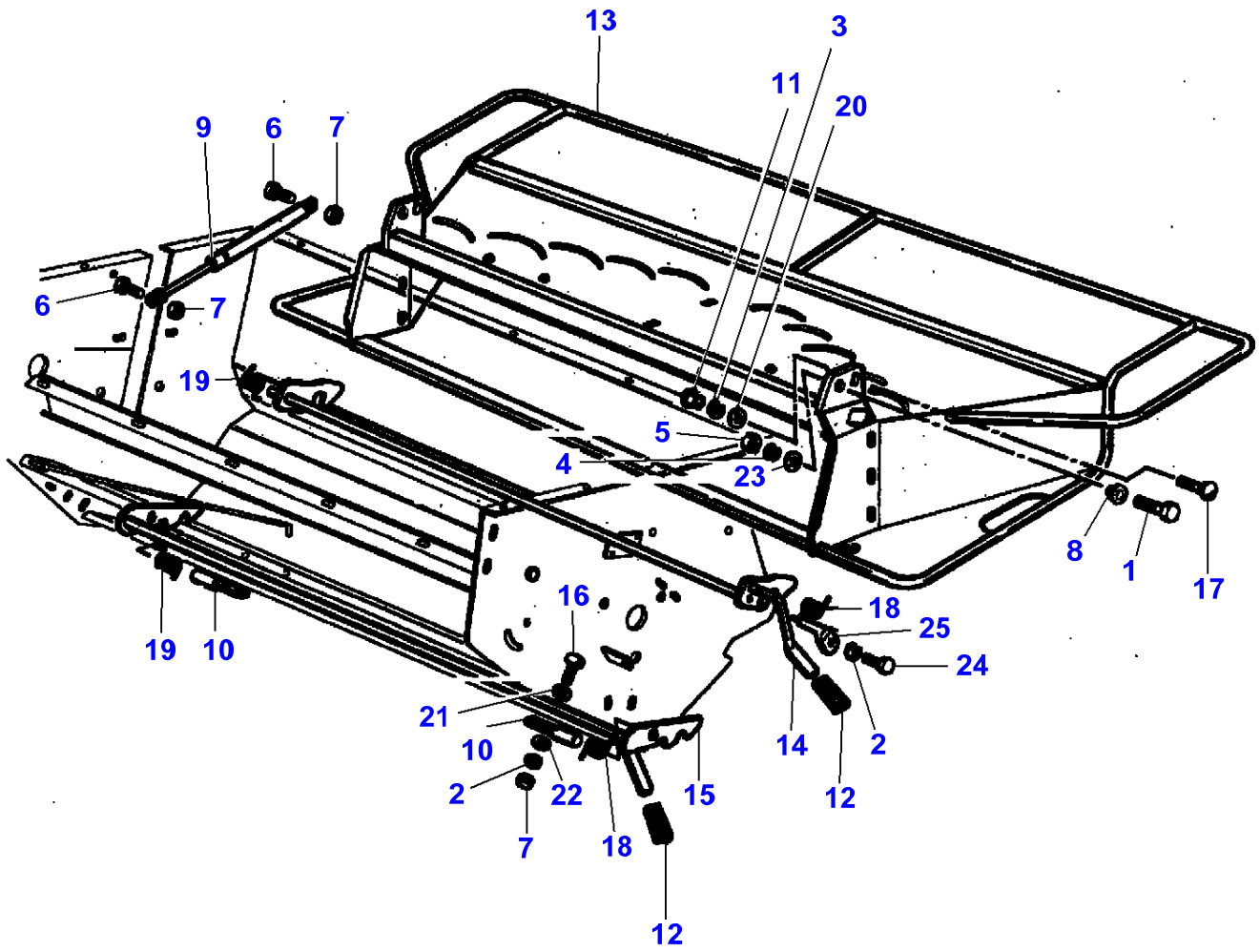
13
3
11
20
9
6
7
6
7
19
5
4
23
8
1
17
19
10
16
18
25
24
21
10
2
22
15
14
2
12
7
18
12

Item	Part Number	Qty	Description	Comments
1	LA11118921	1	Cap Screw	
2	LA12034571	2	Lock Washer	
3	LA12034771	1	Lock Washer	
4	LA12034871	1	Lock Washer	
5	LA12163311	1	Nut	
6	LA16043621	3	Cap Screw	
7	LA16100811	3	Nut	
8	LA322268450	1	Bush	
9	**LA322325550**	1	Gas Strut	
10	LA322328450	2	Pin	
11	LA322328550	1	Sleeve	
12	LA322328750	2	Grip	
13	LA322342450	1	Diffuser	
14	LA322347450	1	Lever	
15	LA322347550	1	Lever	
16	LA350342512	1	Carriage Bolt	
17	LA350342542	1	Screw	
18	LA350356936	2	Spring	
19	LA350356937	2	Spring	
20	LA355501330	1	Flat Washer	
21	LA355510810	1	Washer	
22	LA355510820	1	Flat Washer	
23	LA355532830	1	Washer	
24	LA16043421	1	Cap Screw	M8X20
25	LA322413450	1	Strap	

L-LD07-005-A

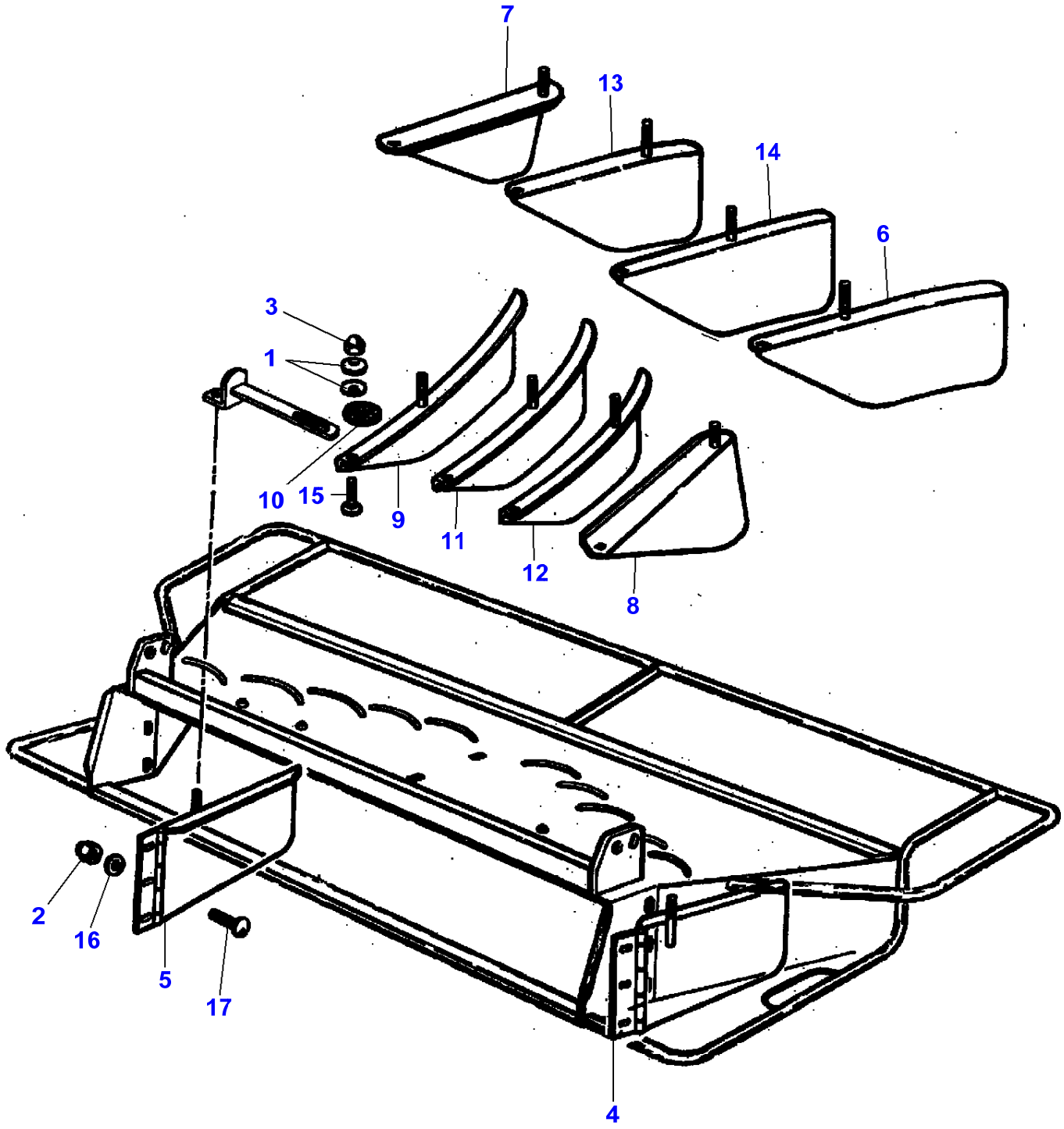

Item	Part Number	Qty	Description
1	LA321365050	16	Washer
2	LA322218650	3	Nut
3	LA322218750	8	Cap Nut
4	LA322258750	1	Deflector
5	LA322258850	1	Deflector
6	LA322260950	1	Deflector
7	LA322261050	1	Deflector
8	LA322261150	1	Deflector
9	LA322261550	1	Deflector
10	LA322338450	8	Disc
11	LA322338550	1	Deflector
12	LA322338650	1	Deflector
13	LA322338750	1	Deflector
14	LA322338850	1	Deflector
15	LA350342512	8	Carriage Bolt
16	LA355510620	3	Flat Washer
17	LA366000614	3	Carriage Bolt

L-LD07-006-A

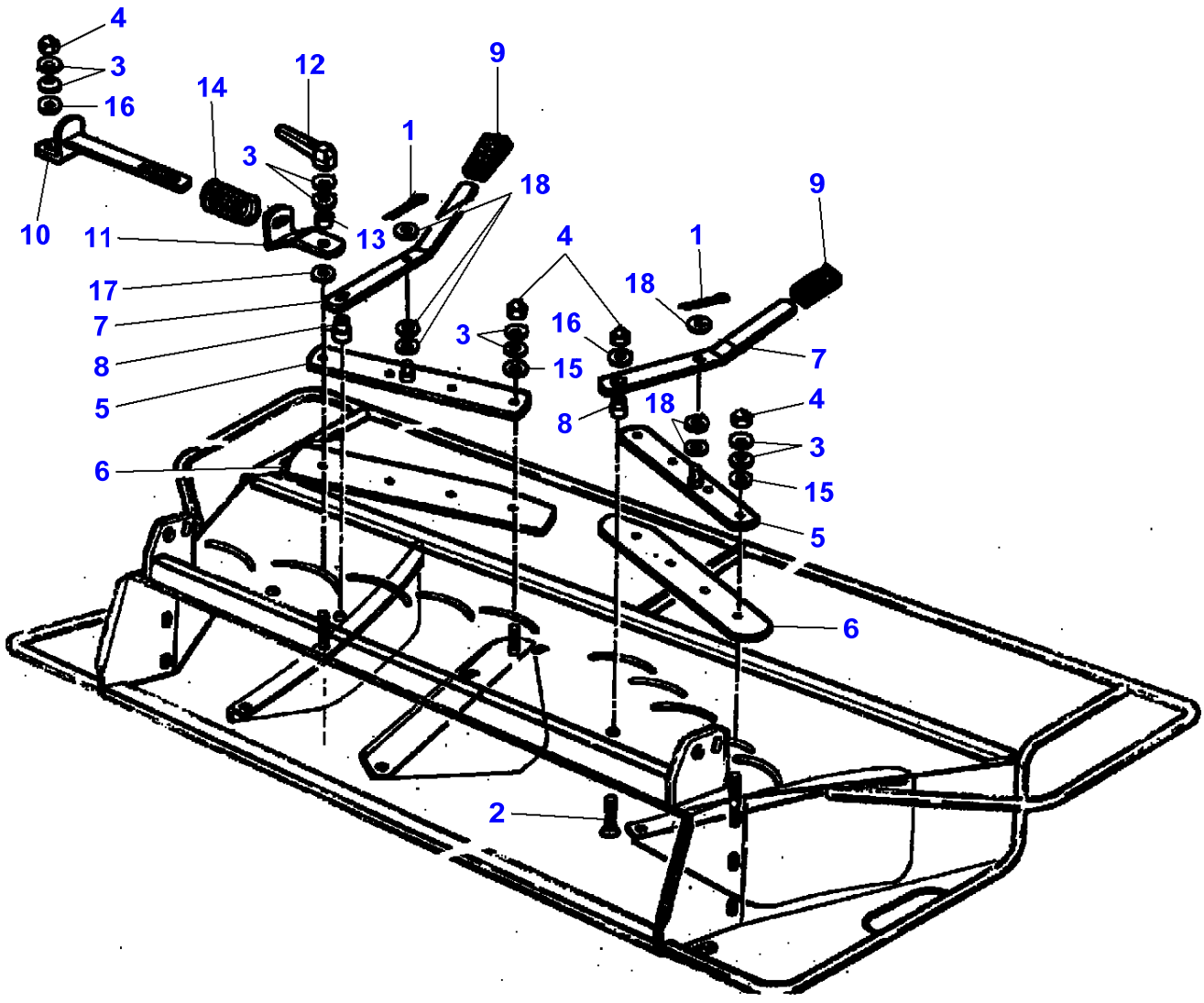

Item	Part Number	Qty	Description
1	LA10733601	2	Split Pin
2	LA14442321	4	Screw
3	LA321365050	10	Washer
4	LA322218750	8	Cap Nut
5	LA322336750	2	Skate
6	LA322336850	2	Skate
7	LA322336950	2	Lever
8	LA322337250	2	Bush
9	LA322337750	2	Grip
10	LA322338050	1	Tie Rod
11	LA322338150	1	Stop
12	LA322354150	1	Grip
13	LA340415206	1	Bush
14	LA353561167	1	Spring
15	LA355510810	2	Washer
16	LA355510820	2	Flat Washer
17	LA355520860	1	Washer
18	LA355532620	6	Flat Washer

L-LD07-014-A

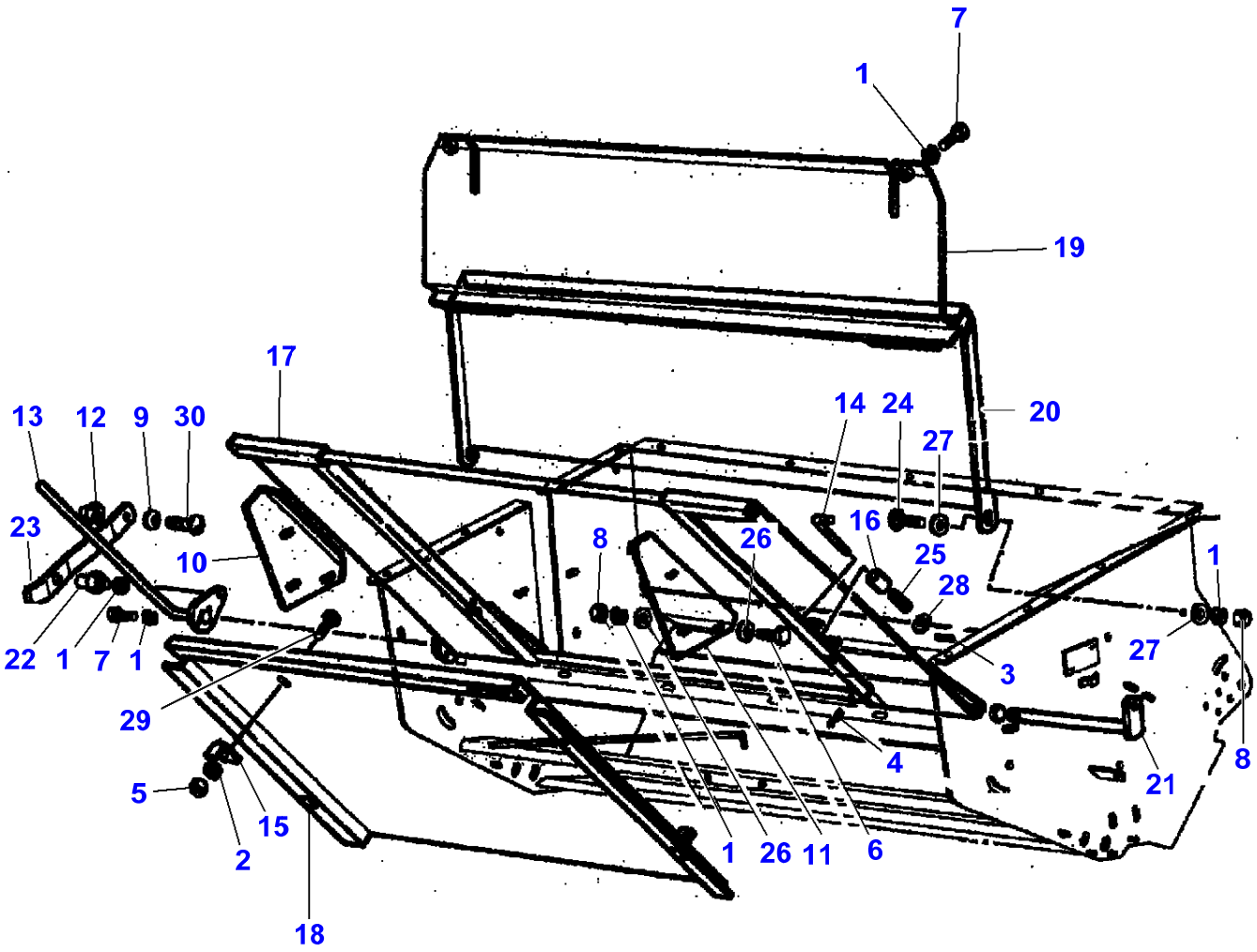
7
1
19
17
13
12
9
30
14
24
20
27
23
16
8
26
1
10
25
28
22
1
7
1
3
27
29
4
8
21
5
15
2
1
26
11
6
18

Item	Part Number	Qty	Description
1	LA12034571	5	Lock Washer
2	LA12035670	1	Lock Washer
3	LA13902070	1	Dowel
4	LA14600970	1	Core
5	LA15896221	1	Nut
6	LA16043224	1	Cap Screw
7	LA16043424	1	Cap Screw
8	LA16100811	2	Nut
9	LA321365050	1	Washer
10	LA322161050	1	Support
11	LA322161150	1	Support
12	LA322218650	1	Nut
13	LA322324150	1	Lever
14	LA322324250	1	Pin
15	LA322326150	1	Bracket
16	LA322331250	1	Bush
17	LA322346950	1	Frame
18	LA322347050	1	Chute
19	LA322347850	1	Chute
20	LA322347950	1	Chute
21	LA322348250	1	Lever
22	LA322413650	1	Pin
23	LA322413750	1	Plate
24	LA350342513	1	Carriage Bolt
25	LA350356208	1	Spring
26	LA355500915	2	Flat Washer
27	LA355510820	2	Flat Washer
28	LA355530130	1	Washer
29	LA366000607	1	Screw
30	LA366000612	1	Screw

L-LD08-001-A

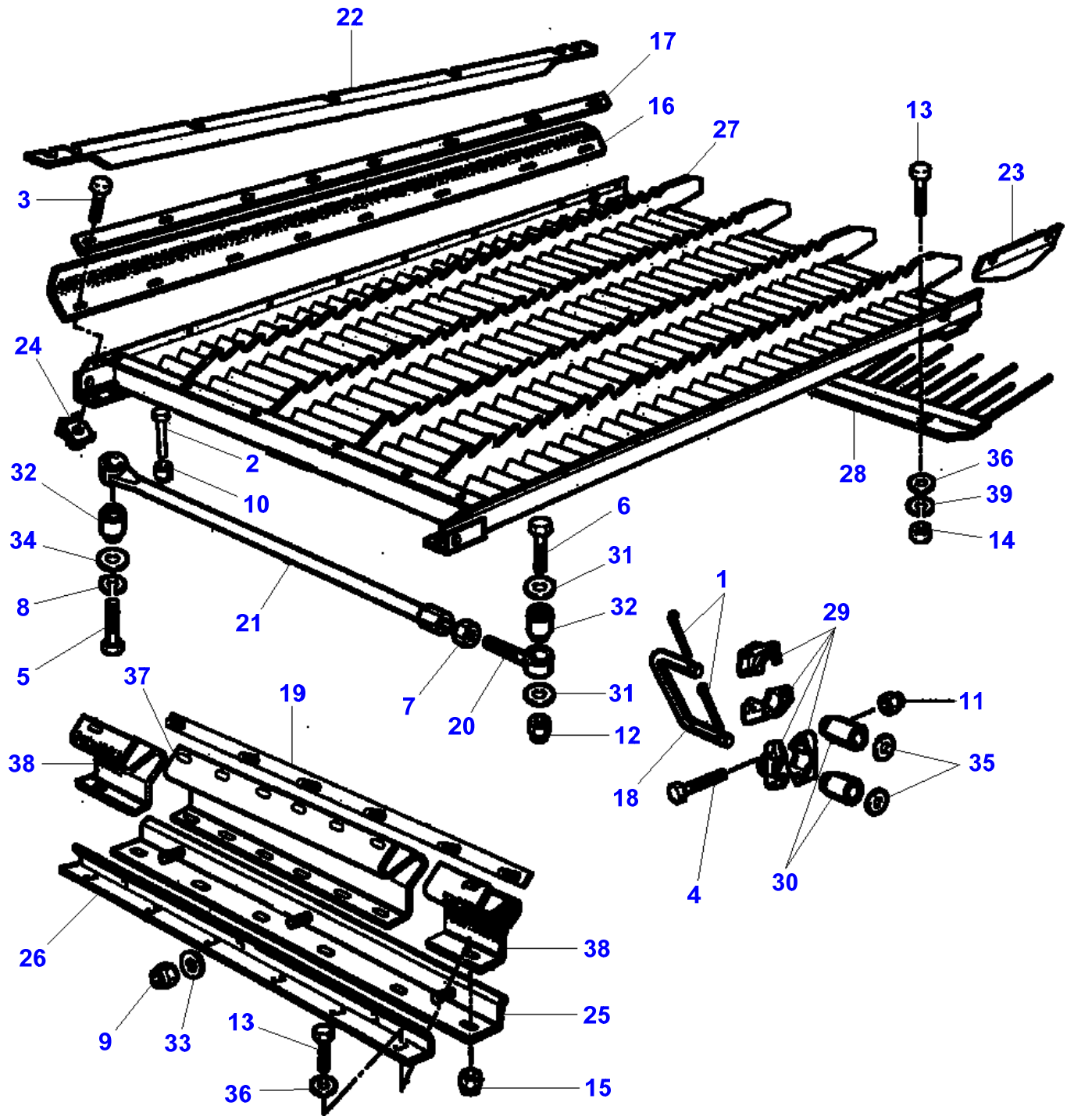
22
17
16
27
13
23
3
24
2
10
32
34
8
5
21
6
31
32
7
20
31
12
28
36
39
14
1
29
11
35
18
4
30
37
19
38
26
9
33
13
36
38
25
15

Item	Part Number	Qty	Description	Comments
1	LA10733801	2	Split Pin	
2	LA10902621	1	Cap Screw	
3	LA10977821	8	Cap Screw	
4	LA11107621	1	Cap Screw	
5	LA11116221	1	Cap Screw	
6	LA11116421	1	Cap Screw	
7	LA11702921	1	Nut	
8	LA12035571	2	Lock Washer	
9	LA12574111	3	Nut	
10	LA12574211	1	Locknut	
11	LA12577211	1	Nut	
12	LA12577311	1	Nut	
13	LA16043624	2	Cap Screw	
14	LA16100824	1	Nut	
15	LA16104111	6	Locknut	
16	LA321828250	1	Rail	
17	LA321828350	1	Stop	
18	LA321828450	1	Conrod	
19		1	Reinforcement	See Page - Reference Number 050-0095/16
20	LA321839950	1	Conrod	
21	LA321840050	1	Arm	
22	LA321844050	1	Stop	
23	LA322119850	1	Cover	
24	LA322121950	8	Nut	
25	LA322124950	1	Plate	
26	LA322125050	1	Plate	
27	LA322135750	1	Grain Pan	
28	LA322146050	1	Rake	
29	LA322194750	4	Support	
30	**LA322203650**	2	Bush	
31	LA340415093	2	Spacer	
32	LA340449005	2	Vibration Mount	
33	LA355500615	3	Flat Washer	
34	LA355501530	1	Washer	
35	LA355501930	2	Flat Washer	
36	LA355510820	7	Flat Washer	
37	LA323119950	1	Plate	
38	LA323120150	1	Canvas	
39	LA12034571	1	Lock Washer	

L-LD09-001-A

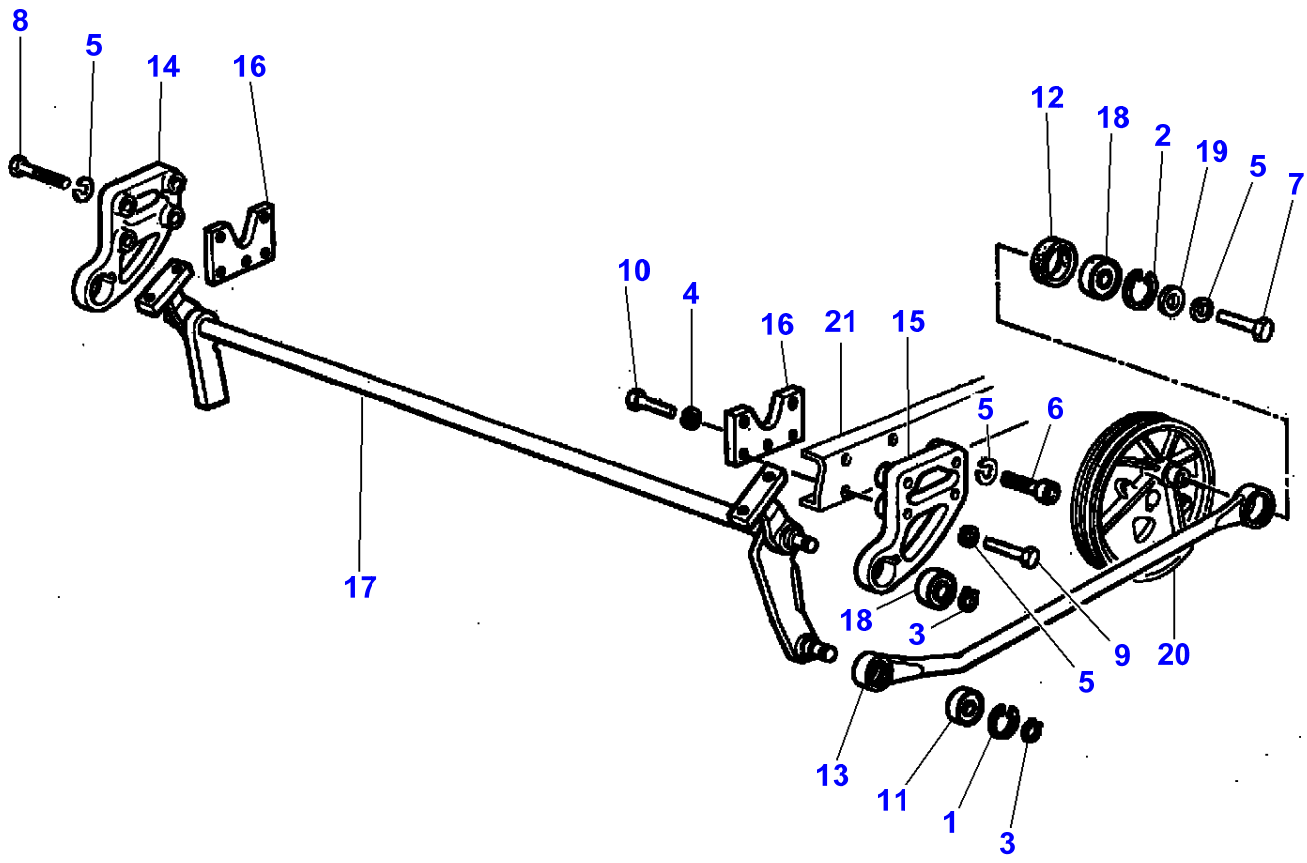

Item	Part Number	Qty	Description	Comments
1	LA11061076	1	Circlip	
2	LA11061476	1	Circlip	
3	LA11067876	2	Circlip	
4	LA12034571	4	Lock Washer	Up to Serial or Engine Number
5	LA12034771	10	Lock Washer	
6	LA14331621	1	Hex Socket Screw	
7	LA15540424	1	Cap Screw	
8	LA15540824	8	Cap Screw	
9	LA15541321	1	Cap Screw	
10	LA16043624	4	Cap Screw	Up to Serial or Engine Number
11	**LA28996530**	1	Bearing Assy	
12	LA300019272	1	Bush	
13	LA321829150	1	Conrod	
14	LA321829250	1	Support	
15	LA321829350	1	Support	
16	LA321843750	2	Plate	Up to Serial or Engine Number
17	LA322408150	1	Shaft	
18	**LA340411237**	2	Bear. 6206 2rs	
19	LA355511260	1	Washer	
20		1	Pulley	See Page - Reference Number 070-0030/17
21		1	Chassis	See Page - Reference Number 050-0005/17

L-LD09-002-A

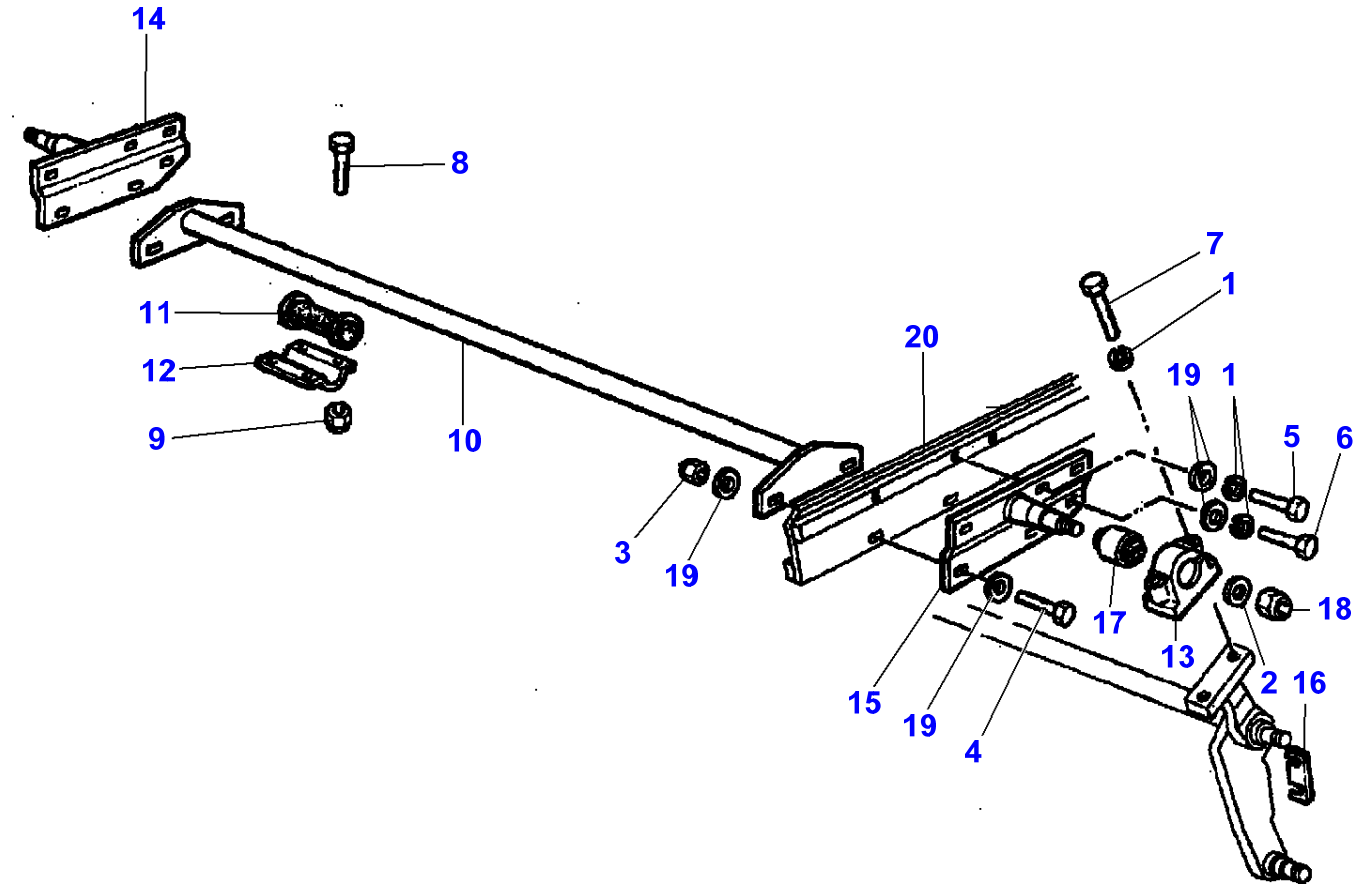

Item	Part Number	Qty	Description	Comments
1	LA12034771	3	Lock Washer	
2	LA355502150	1	Flat Washer	
3	LA12577511	1	Cap Nut	
4	LA15215721	1	Cap Screw	
5	LA15540424	1	Cap Screw	
6	LA15540624	1	Cap Screw	
7	LA15541524	1	Cap Screw	
8	LA16043624	1	Cap Screw	
9	LA16104111	1	Locknut	
10	LA321829450	1	Support	
11	LA321829650	1	Bush	
12	LA321829750	1	Collar	
13	LA321829850	1	Support	
14	LA321937150	1	Support	
15	LA321937250	1	Support	
16	LA321979850	1	Shim	
17	LA340449022	1	Vibration Mount	
18	LA12575121	1	Nut	
19	LA355530830	3	Flat Washer	
20		1	Beam	See Page - Reference Number 070-0045/26

L-LD10-001-A

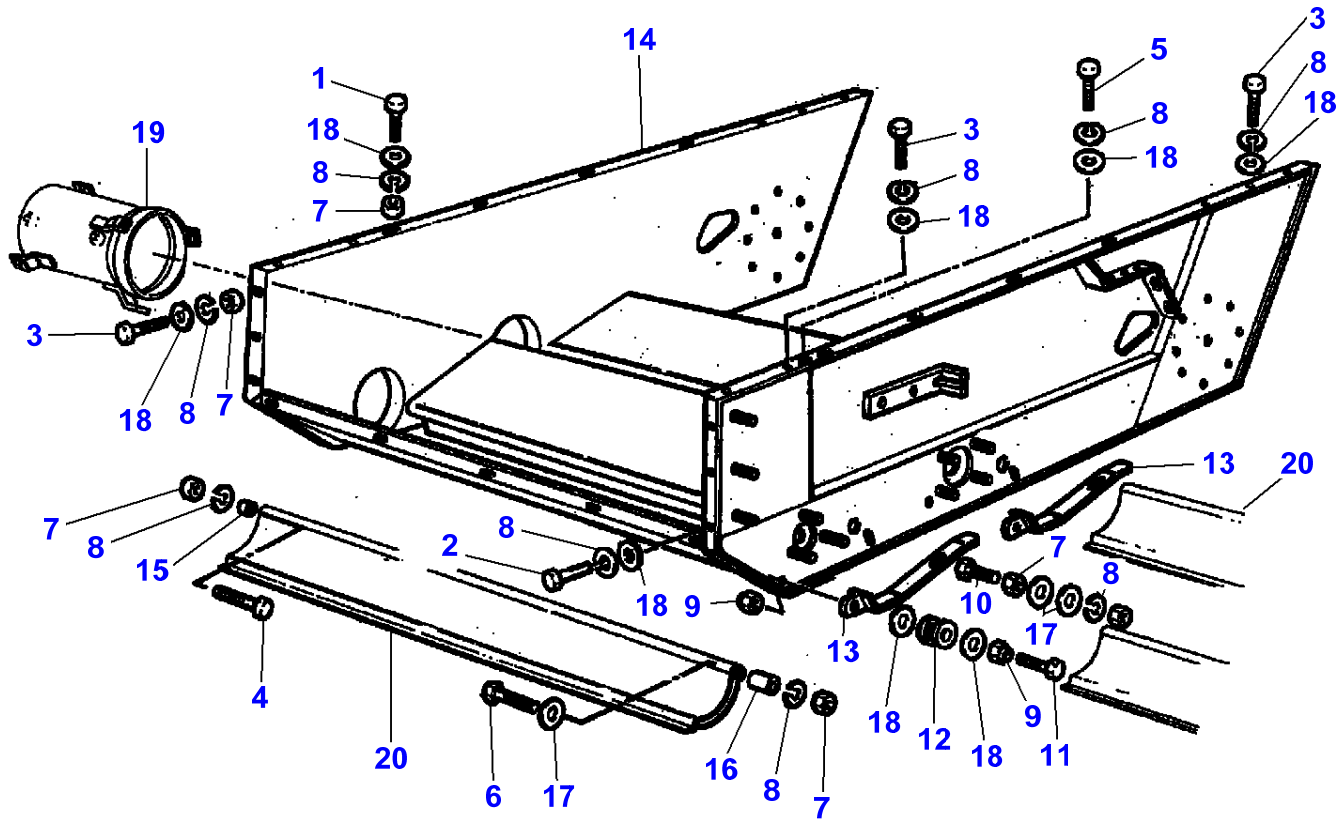
14
1
18
8
7
19
3
18
8
7
3
8
18
5
8
18
3
8
18
13
20
7
8
15
4
20
2
8
18
9
6
17
16
8
7
13
10
7
8
17
18
12
18
9
11

Item	Part Number	Qty	Description	Comments
1	LA11106221	1	Cap Screw	
2	LA11106424	1	Cap Screw	
3	LA11106624	8	Cap Screw	
4	LA11106821	1	Cap Screw	
5	LA11107221	1	Cap Screw	
6	LA11107521	1	Cap Screw	
7	LA11701721	15	Nut	
8	LA12034671	24	Lock Washer	
9	LA12577211	2	Nut	
10	LA15215021	1	Cap Screw	
11	LA15215221	1	Cap Screw	
12	LA301004831	1	Gasket	
13	LA321347650	2	Lever	
14	LA321830050	1	Housing	
15	LA340415617	1	Bush	
16	LA340415618	1	Spacer	
17	LA355501120	3	Flat Washer	
18	LA355511030	26	Flat Washer	
19		1	Tube	See Page - Reference Number 070-0150/26
20		X	Shield	See Page - Reference Number 060-0035/2

L-LD10-002-A

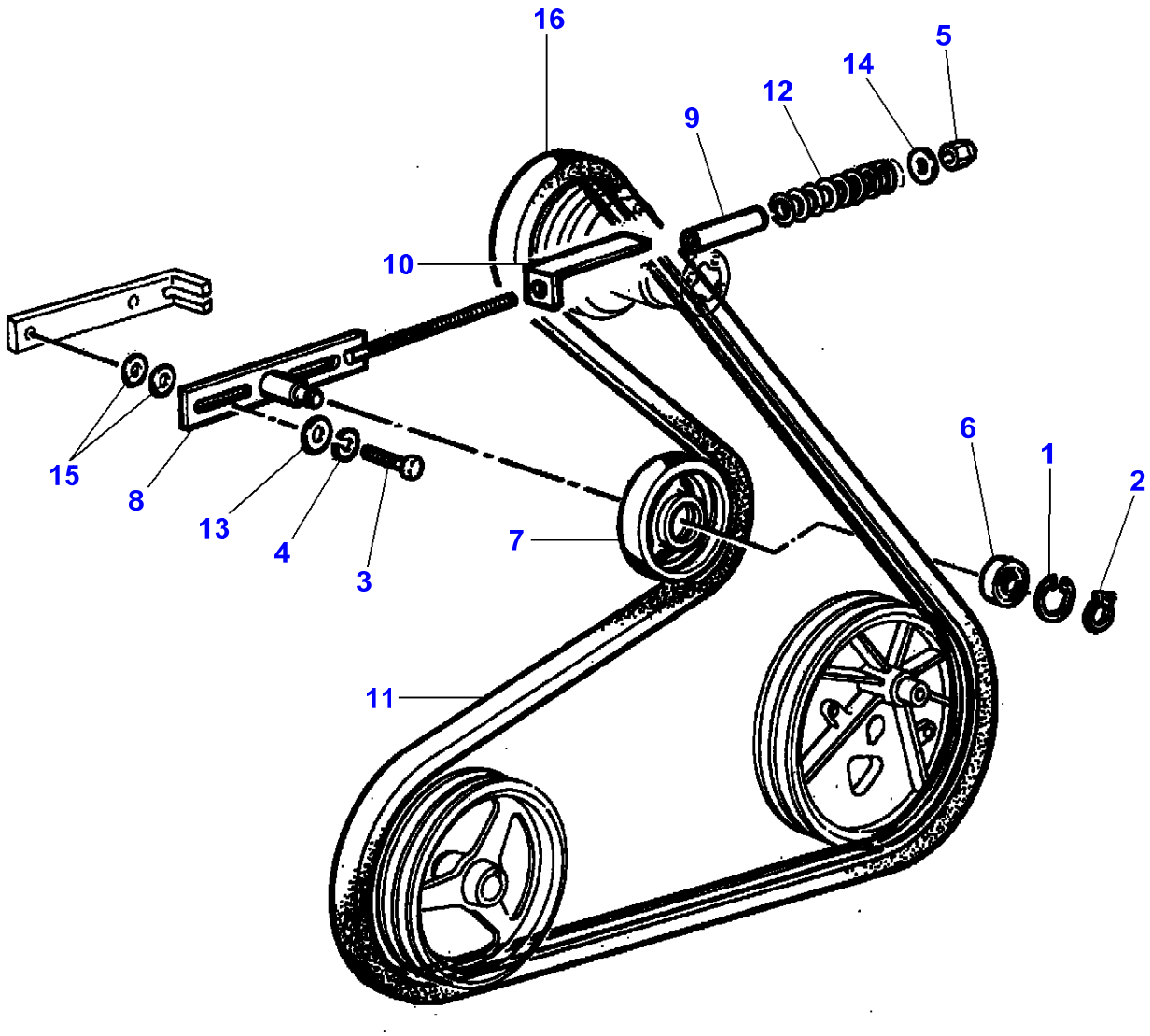

Item	Part Number	Qty	Description	Comments
1	LA11060576	1	Circlip	
2	LA11067376	1	Circlip	
3	LA11106424	1	Cap Screw	
4	LA12034671	1	Lock Washer	
5	LA12577511	1	Cap Nut	
6	**LA28042320**	1	Bearing Assy	
7	LA300133410	1	Tensioner	
8	LA322002350	1	Support	
9	LA322122050	1	Spacer	
10	LA322122150	1	Plate	
11	**LA344311123**	1	Belt	
12	LA353561156	1	Spring	
13	LA355511030	1	Flat Washer	
14	LA355511240	1	Flat Washer	
15	LA355521010	2	Washer	
16		1	Pulley	See Page - Reference Number 060-0040/15

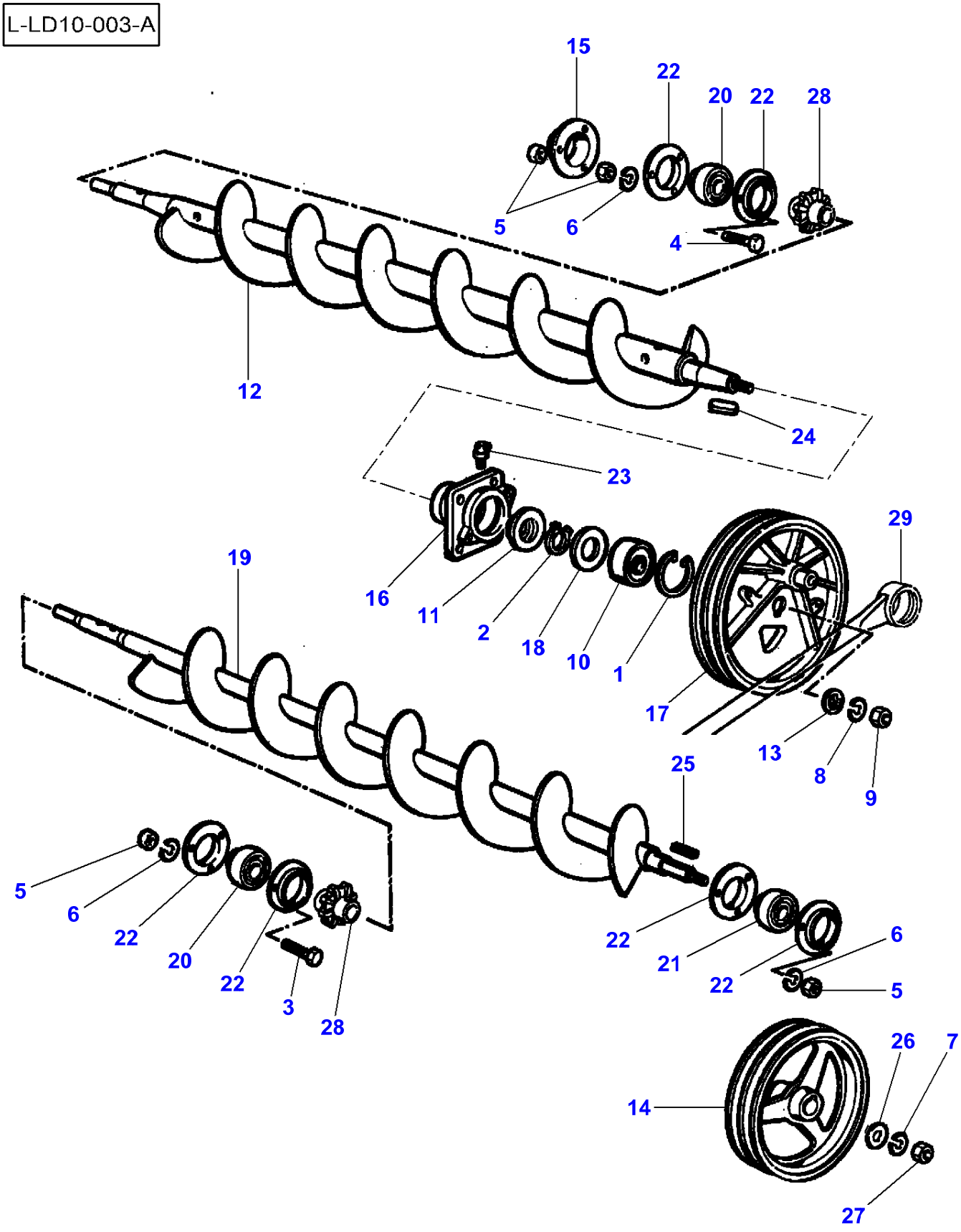
L-LD10-003-A
15
22
20
22
28
5
6
4
12
24
23
29
19
16
11
2
18
10
1
17
13
8
9
25
5
6
22
20
22
3
28
22
21
22
6
5
26
7
14
27

Item	Part Number	Qty	Description	Comments
1	LA11062976	1	Circlip	
2	LA11069576	1	Circlip	
3	LA11106221	1	Cap Screw	
4	LA11106424	1	Cap Screw	
5	LA11701721	3	Nut	
6	LA12034671	3	Lock Washer	
7	LA12035071	1	Lock Washer	
8	LA12035571	1	Lock Washer	
9	LA12164021	1	Nut	
10	**LA28996580**	1	Bearing Assy	
11	LA300018641	1	Shield	
12	LA321837150	1	Auger	
13	LA321837450	1	Washer	
14	LA321837550	1	Pulley	
15	LA322056150	1	Shield	
16	LA322203250	1	Support	
17	LA322203450	1	Pulley	
18	LA322203550	1	Shim	
19	LA322865850	1	Auger	
20	**LA340411205**	2	Bearing Assy	
21	**LA340411237**	1	Bear. 6206 2rs	
22	**LA340411405**	6	Bearing Flange	
23	LA350357805	1	Grease Fitting	
24	LA350383340	1	Key	
25	LA350384650	1	Key	
26	LA355502150	1	Flat Washer	
27	LA12164321	1	Nut	
28		2	Gear	See Page - Reference Number 070-0135 See Page - Reference Number 070-0155
29		1	Conrod	See Page - Reference Number 070-0010/13

L-LD11-001-A

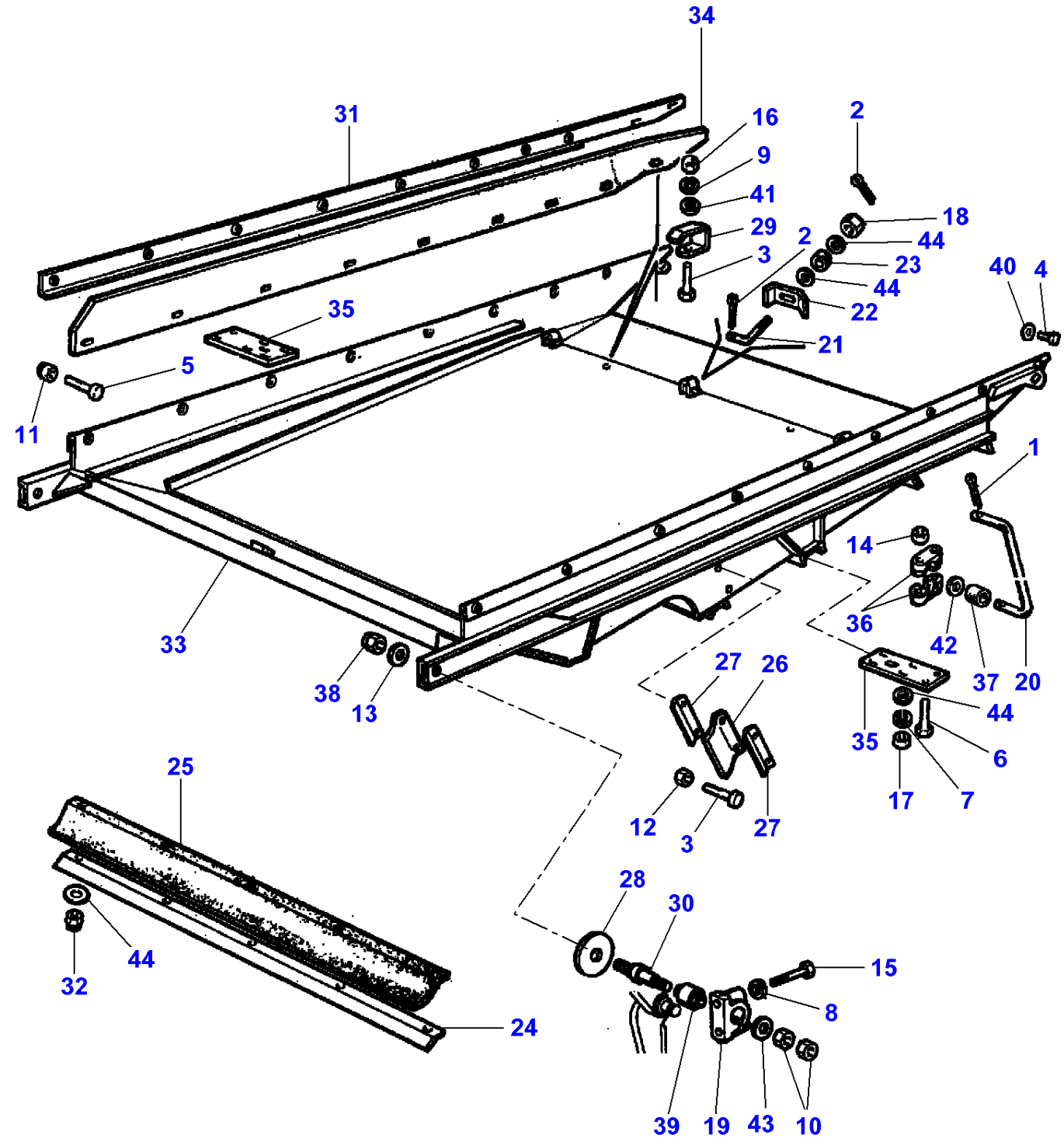
34
31
16
2
9
41
18
29
2
44
3
23
40
4
44
35
22
5
21
11
1
14
36
42
33
37
20
38
27
26
44
13
35
6
17
7
12
3
27
25
28
30
44
15
32
8
24
39
19
43
10

Item	Part Number	Qty	Description	Comments
1	LA10733801	1	Split Pin	
2	LA10734301	2	Split Pin	
3	LA10902224	2	Cap Screw	
4	LA10977524	1	Cap Screw	
5	LA10977724	8	Cap Screw	
6	LA11107621	1	Cap Screw	
7	LA12034571	1	Lock Washer	
8	LA12034771	1	Lock Washer	
9	LA12035670	1	Lock Washer	
10	LA12164321	2	Nut	
11	LA12574111	8	Nut	
12	LA12574211	1	Locknut	
13	LA340415256	1	Flat Washer	
14	LA12577211	1	Nut	
15	LA15542821	1	Screw	
16	LA15896221	1	Nut	
17	LA16100811	1	Nut	
18	LA16102211	1	Nut	
19	LA321829850	1	Support	
20	LA321830550	1	Grip	
21	LA321830850	1	Tie Rod	
22	LA321830950	1	Bracket	
23	LA321831050	1	Block	
24	LA321831150	1	Stop	
25	LA321831350	1	Canvas	
26	LA321831550	1	Canvas	
27	LA321831650	2	Reinforcement	
28	LA321831750	1	Flange	
29	LA321932350	1	Support	
30	LA321937350	1	Pin	
31	LA322114950	1	Stop	Right Hand
	LA322115050	1	Bracket	Left Hand
32	LA360653408	5	Nut	
33	LA322115250	1	Shoe	
34	LA322115650	1	Canvas	
35	LA322193650	2	Support	
36	LA322194750	2	Support	
37	**LA322203650**	1	Bush	
38	LA12575121	1	Nut	
39	LA340449022	1	Vibration Mount	
40	LA355500610	1	Washer	
41	LA355500715	1	Flat Washer	
42	LA355501930	1	Flat Washer	
43	LA355502150	1	Flat Washer	
44	LA355510820	8	Flat Washer	

L-LD11-002-A

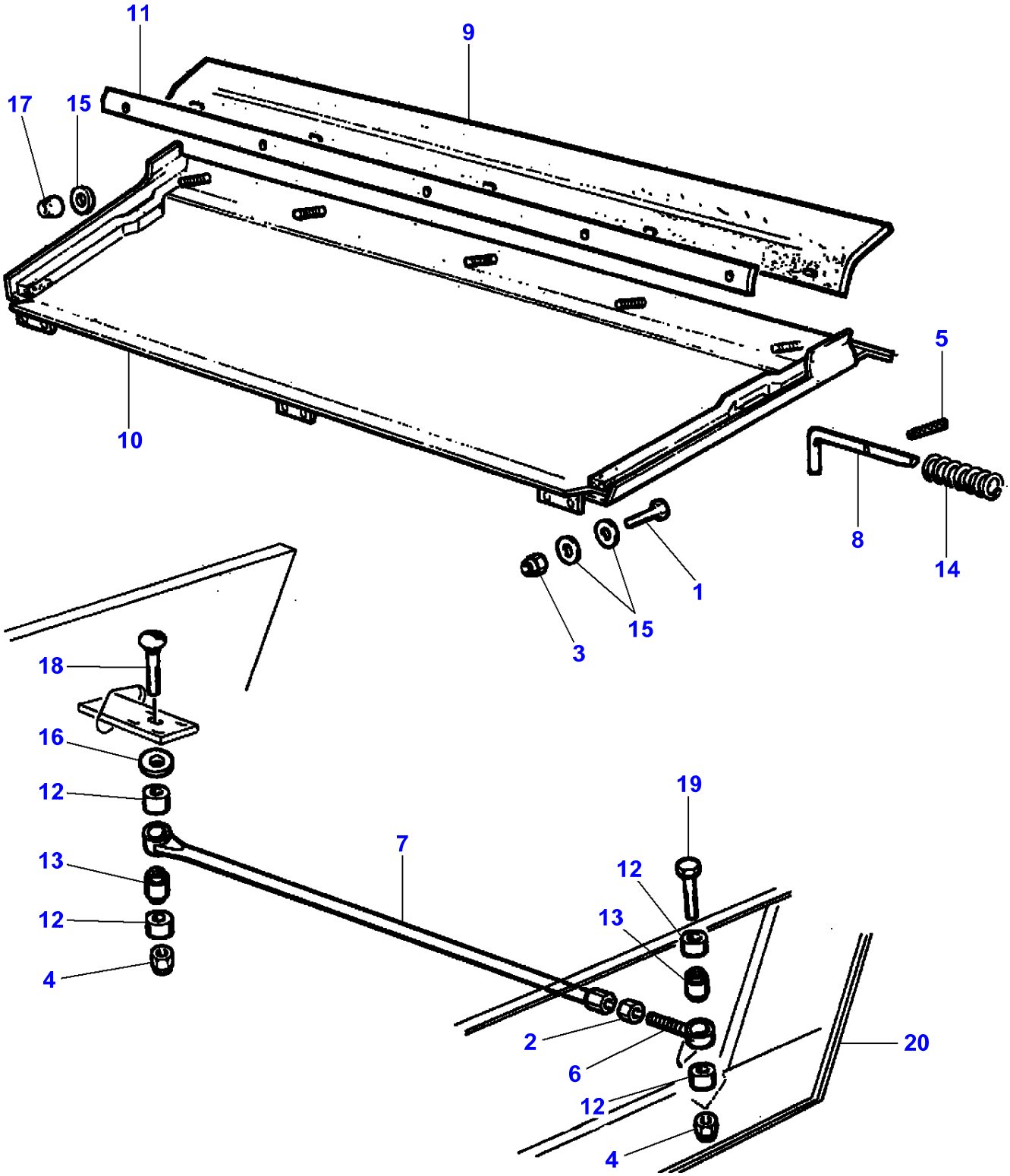

Item	Part Number	Qty	Description	Comments
1	LA10902424	1	Cap Screw	
2	LA11702921	1	Nut	
3	LA12574211	1	Locknut	
4	LA12577311	2	Nut	
5	LA13902570	1	Pin	
6	LA321839950	1	Conrod	
7	LA321840050	1	Arm	
8	LA322115150	1	Latch	
9	LA322115450	1	Canvas	
10	LA322115950	1	Lid	
11	LA322117250	1	Stop	
12	LA340415093	4	Spacer	
13	LA340449005	2	Vibration Mount	
14	LA353561158	1	Spring	
15	LA355500715	7	Flat Washer	
16	LA355531950	1	Washer	
17	LA360653406	5	Nut	
18	LA366001434	1	Carriage Bolt	
19	LA11116421	1	Cap Screw	
20		1	Housing	See Page - Reference Number 070-0020/14

L-LD12-001-A

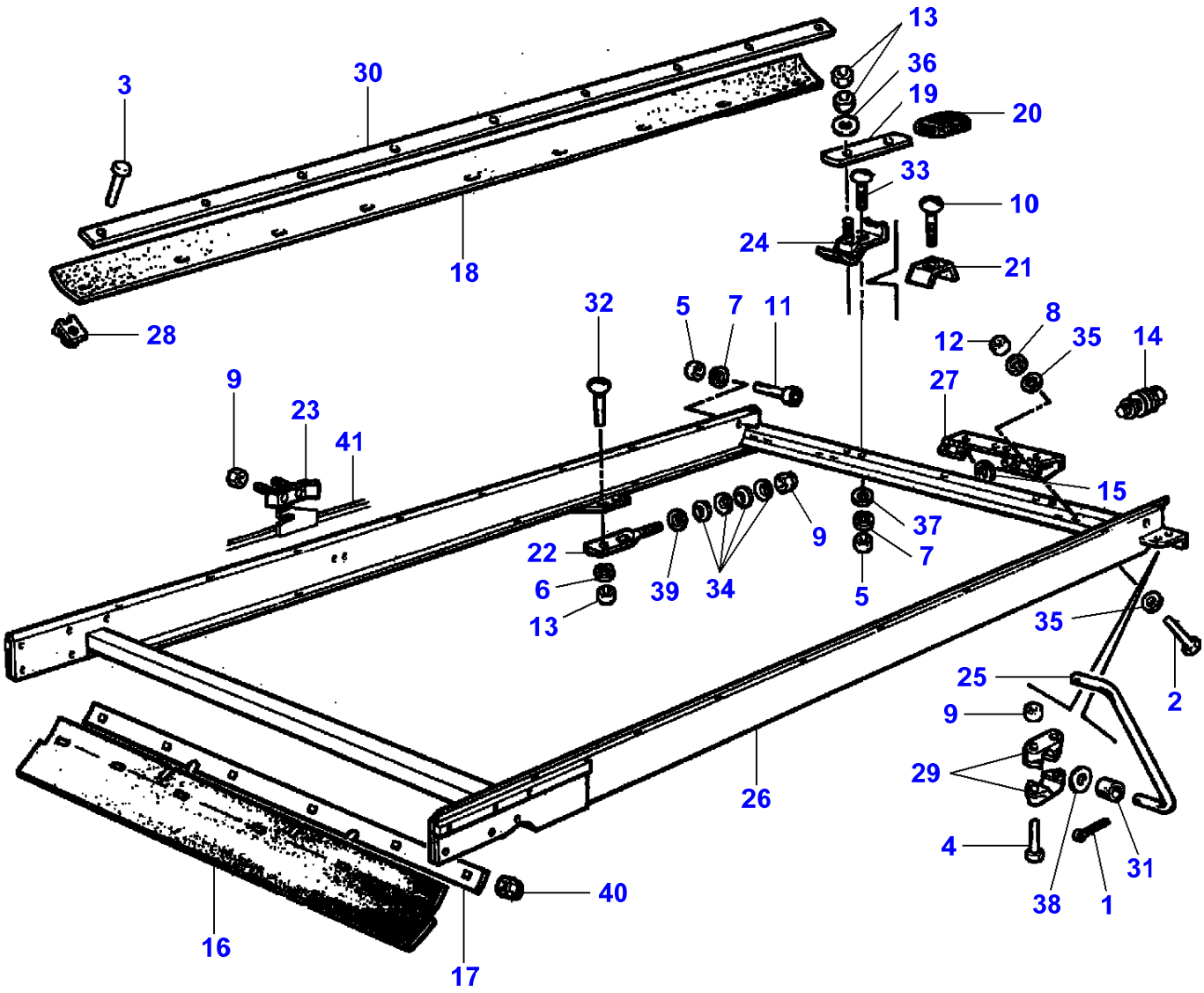
13
36
19
20
3
30
33
10
24
21
18
28
32
5
7
11
8
12
35
14
9
23
41
27
15
37
22
7
9
6
39
34
5
13
35
25
2
9
29
26
4
31
38
1
40
16
17

Item	Part Number	Qty	Description	Comments
1	LA10733801	1	Split Pin	
2	LA10902424	1	Cap Screw	
3	LA10977821	20	Cap Screw	
4	LA11107621	1	Cap Screw	
5	LA11701721	2	Nut	
6	LA12034571	1	Lock Washer	
7	LA12034671	2	Lock Washer	
8	LA12035670	1	Lock Washer	
9	LA12577211	4	Nut	
10	LA13184001	1	Carriage Bolt	
11	LA14301821	1	Hex Socket Screw	
12	LA15896221	1	Nut	
13	LA16100811	3	Nut	
14	LA320797250	1	Screw	
15	LA320899350	1	Lock Washer	
16	LA320972450	1	Canvas	
17	LA320972850	1	Stop	
18	LA321834850	1	Canvas	
19	LA321835350	1	Lever	
20	LA321835450	1	Grip	
21	LA321835550	1	Bracket	
22	LA321836150	1	Tie Rod	
23	LA321839050	1	Clip	
24	LA321861250	1	Support	
25	LA322028450	1	Lever	
26	LA322115750	1	Shoe	
27	LA322120550	1	Support	
28	LA322121950	1	Nut	
29	LA322194750	2	Support	
30	LA322201950	1	Stop	
31	**LA322203650**	1	Bush	
32	LA350342511	1	Carriage Bolt	
33	LA350342525	1	Carriage Bolt	
34	LA350356004	4	Spring	
35	LA355500610	2	Washer	
36	LA355500920	1	Flat Washer	
37	LA355501120	1	Flat Washer	
38	LA355501930	1	Flat Washer	
39	LA355511030	1	Flat Washer	
40	LA360653408	6	Nut	
41		1	Sieve	See Page - Reference Number 070-0175/9

L-LD13-001-B

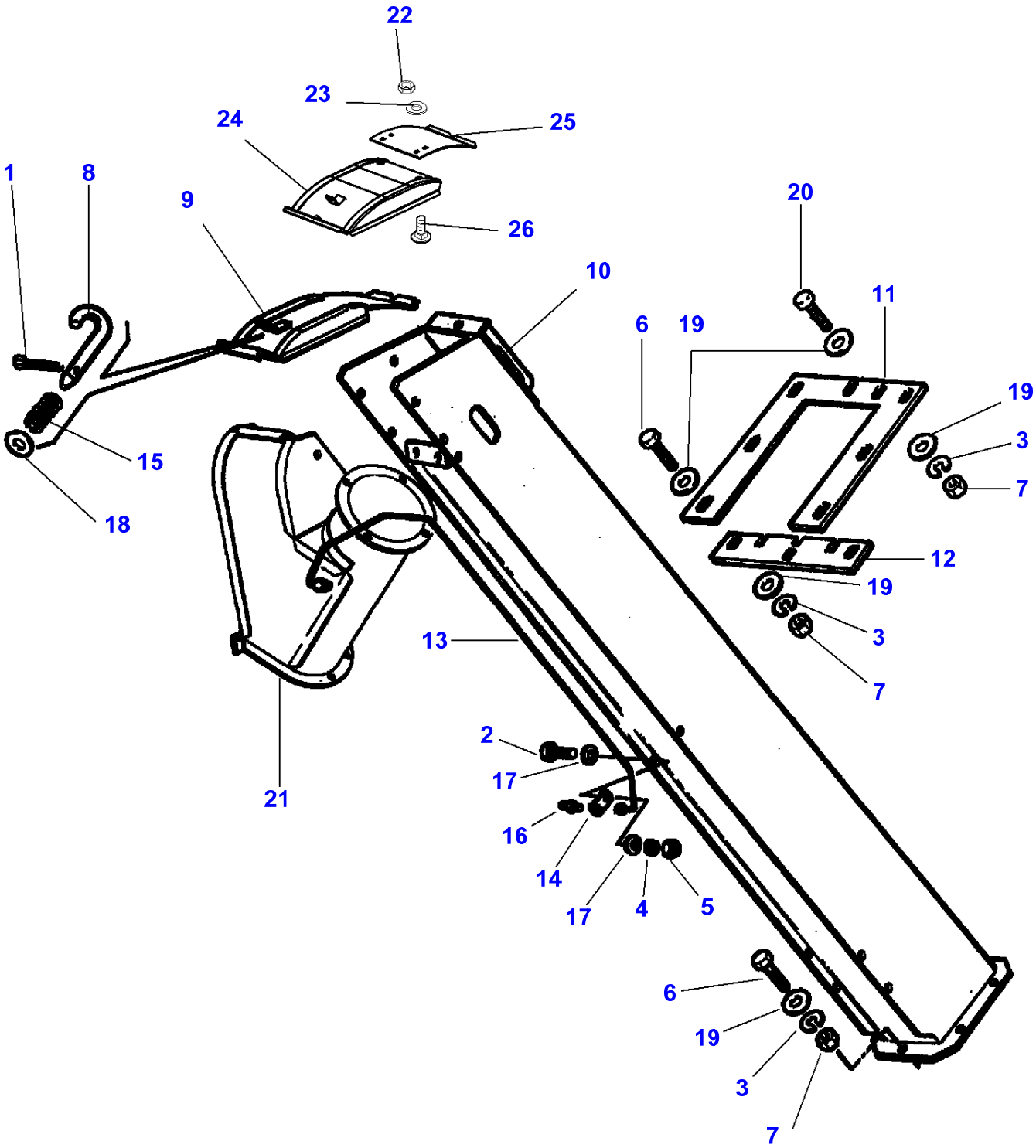
22
23
24
25
1
8
9
26
20
10
11
6
19
19
3
7
15
12
18
19
3
13
7
2
21
17
16
14
17
4
5
6
19
3
7

Item	Part Number	Qty	Description	Comments
1	LA10734301	1	Split Pin	
2	LA10902124	1	Cap Screw	
3	LA12034571	12	Lock Washer	
4	LA12035671	1	Lock Washer	
5	LA15896221	1	Nut	
6	LA16043424	12	Cap Screw	
7	LA16100811	12	Nut	
8	LA300017638	1	Latch	
9	LA321844850	1	Cover	Up to Serial or Engine Number
10	LA321846050	1	Elevator	
11	LA321857350	1	Plate	
12	LA321857450	1	Plate	
13	LA322366450	1	Oil Pipe	
14	LA322366550	1	Plate	
15	LA350356208	1	Spring	
16	LA350357851	1	Grease Fitting	
17	LA355500715	2	Flat Washer	
18	LA355500815	1	Washer	
19	LA355500915	12	Flat Washer	
20	LA16043624	1	Cap Screw	
21		1	Connector	See Page - Reference Number 080-0030/14
22	LA16100811	1	Nut	From Serial or Engine Number
23	LA355520830	1	Flat Washer	From Serial or Engine Number
24	LA323239850	1	Cover	From Serial or Engine Number 551710061
25	LA323239950	1	Plate	From Serial or Engine Number 551710061
26	LA350342510	1	Carriage Bolt	From Serial or Engine Number

L-LD13-002-A

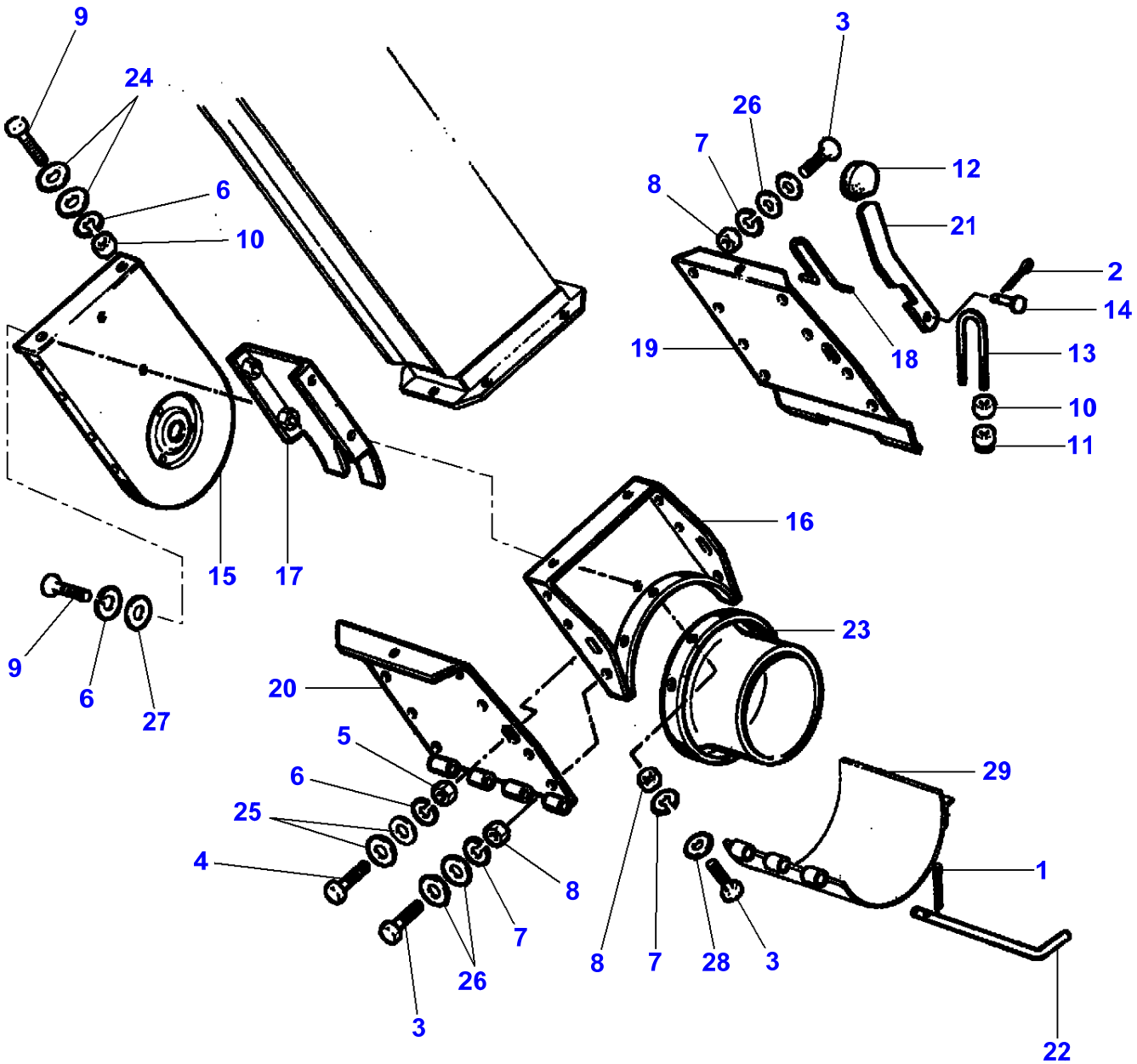
9
24
6
10
15
17
9
6
27
3
26
7
8
12
21
2
14
19
18
13
10
11
16
23
20
5
6
25
4
8
7
26
3
8
7
28
3
29
1
22

Item	Part Number	Qty	Description	Comments
1	LA10733601	1	Split Pin	
2	LA10734401	1	Split Pin	
3	LA10902224	2	Cap Screw	
4	LA11106221	1	Cap Screw	
5	LA11701721	1	Nut	
6	LA12034571	3	Lock Washer	
7	LA12035670	3	Lock Washer	
8	LA15896221	3	Nut	
9	LA16043424	10	Cap Screw	
10	LA16100811	2	Nut	
11	LA16104121	1	Locknut	Repairs and replaces LA16104111
12	LA300063527	1	Knob	
13	LA320694450	1	Collar	
14	LA320694550	1	Pin	
15	LA321825650	1	Lid	
16	LA321825850	1	Shield	
17	LA321825950	1	Lid	
18	LA321826150	1	U Bolt	
19	LA321826350	1	Lid	
20	LA321826450	1	Lid	
21	LA321851050	1	Lever	
22	LA322031550	1	Pin	
23	LA322122250	1	Connector	
24	LA355500920	2	Flat Washer	
25	LA355501120	2	Flat Washer	
26	LA355510615	4	Flat Washer	
27	LA355510820	1	Flat Washer	
28	LA355500715	1	Flat Washer	
29		1	Lid	See Page - Reference Number 060-0035/7

L-LD13-003-A

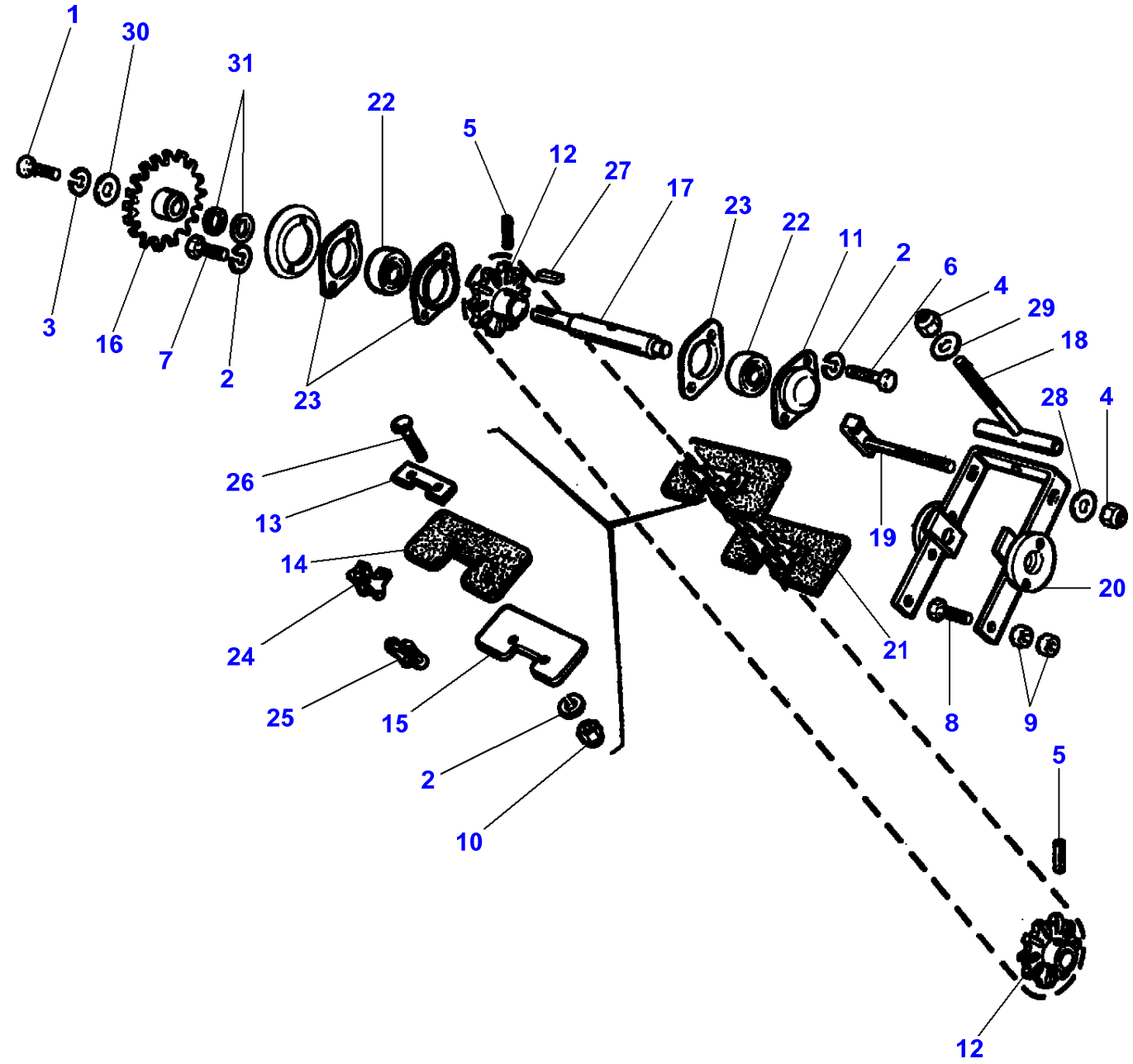
1
30
31
22
5
12
27
17
23
22
11
2
6
4
29
18
28
4
3
16
7
2
23
26
13
14
24
25
15
2
10
19
20
21
8
9
5
12

Item	Part Number	Qty	Description
1	LA11106424	1	Cap Screw
2	LA12034571	3	Lock Washer
3	LA12034671	1	Lock Washer
4	LA12577211	2	Nut
5	LA14610370	2	Roll Pin
6	LA16043224	1	Cap Screw
7	LA16043424	1	Cap Screw
8	LA16043624	1	Cap Screw
9	LA16100811	2	Nut
10	LA16104111	1	Locknut
11	LA300016273	1	Bearing Flange
12	LA300132810	2	Gear
13	**LA321814650**	1	Reinforcement
14	LA321814750	1	Paddle
15	**LA321814850**	1	Reinforcement
16	LA321824550	1	Gear
17	LA321844350	1	Shaft
18	LA321844450	1	Tie Rod
19	LA321844550	1	Tie Rod
20	LA321844750	1	Support
21	**LA321862500**	1	Chain
22	**LA340411236**	2	Bearing Assy
23	LA340411458	3	Bearing Flange
24	**LA344382162**	1	Chain Link
25	**LA344382163**	1	Chain Link
26	LA350342513	1	Carriage Bolt
27	LA350384628	1	Key
28	LA355511030	1	Flat Washer
29	LA355511050	1	Flat Washer
30	LA355521050	1	Flat Washer
31	LA355536210	2	Flat Washer

L-LD13-004-A

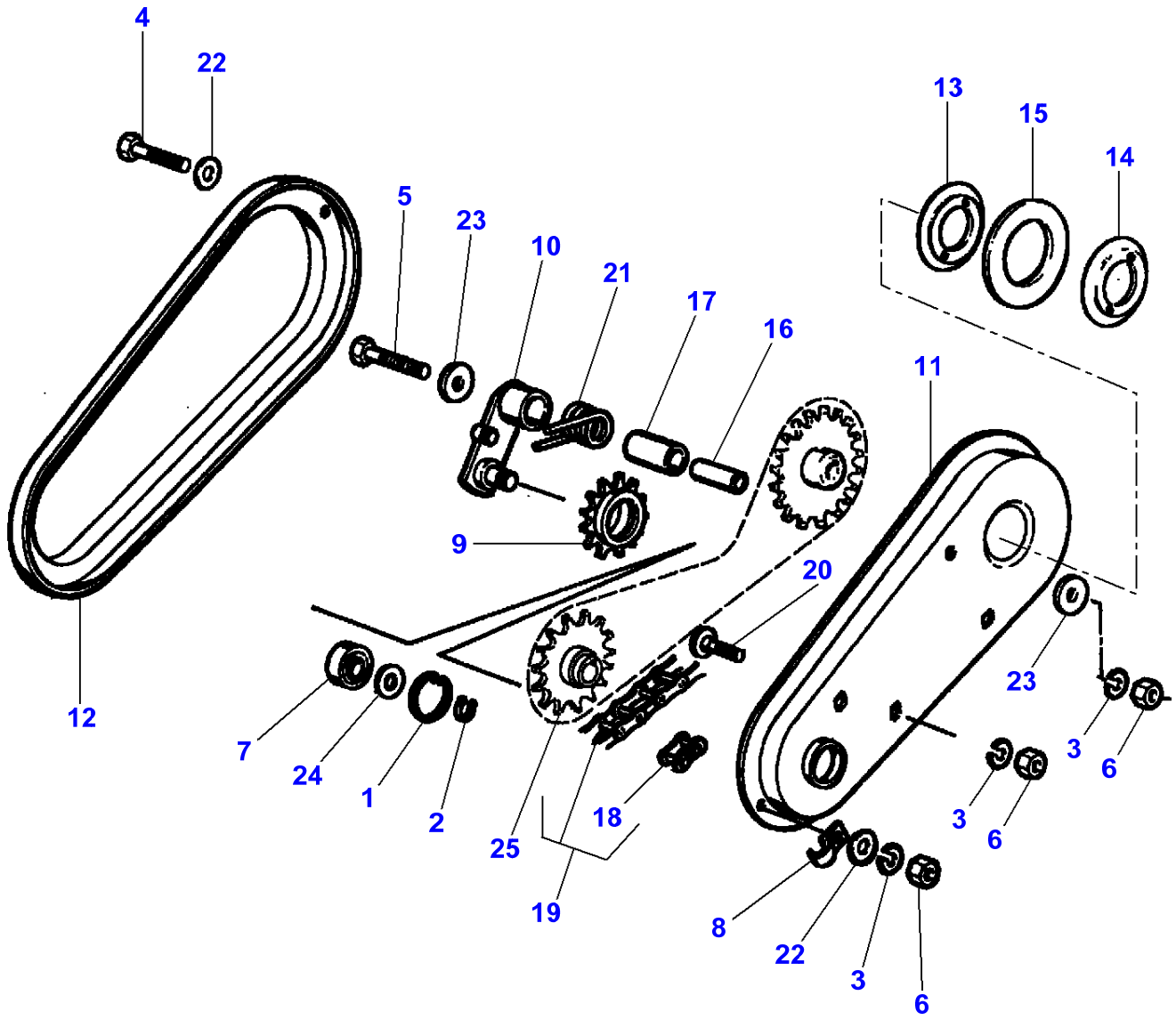

Item	Part Number	Qty	Description	Comments
1	LA11059476	1	Circlip	
2	LA11066876	1	Circlip	
3	LA12034571	3	Lock Washer	
4	LA16043224	1	Cap Screw	
5	LA16044424	1	Cap Screw	
6	LA16100811	3	Nut	
7	**LA28996490**	1	Bearing Assy	
8	LA300015924	1	Collar	
9	LA300121612	1	Gear	
10	LA321844650	1	Arm	
11	LA321844950	1	Shield	
12	LA321845050	1	Shield	
13	LA321845150	1	Disc	
14	LA321845250	1	Disc	
15	LA321845350	1	Gasket	
16	LA321845750	1	Spacer	
17	LA321845850	1	Bush	
18	**LA340437200**	1	Chain Link	(19)
19	**LA340437274**	1	Chain	
20	LA350342510	1	Carriage Bolt	
21	LA350356925	1	Spring	
22	LA355500915	2	Flat Washer	
23	LA355520830	2	Flat Washer	
24	LA355536210	1	Flat Washer	
25		1	Gear	See Page - Reference Number 080-0030/10

L-LD14-001-A

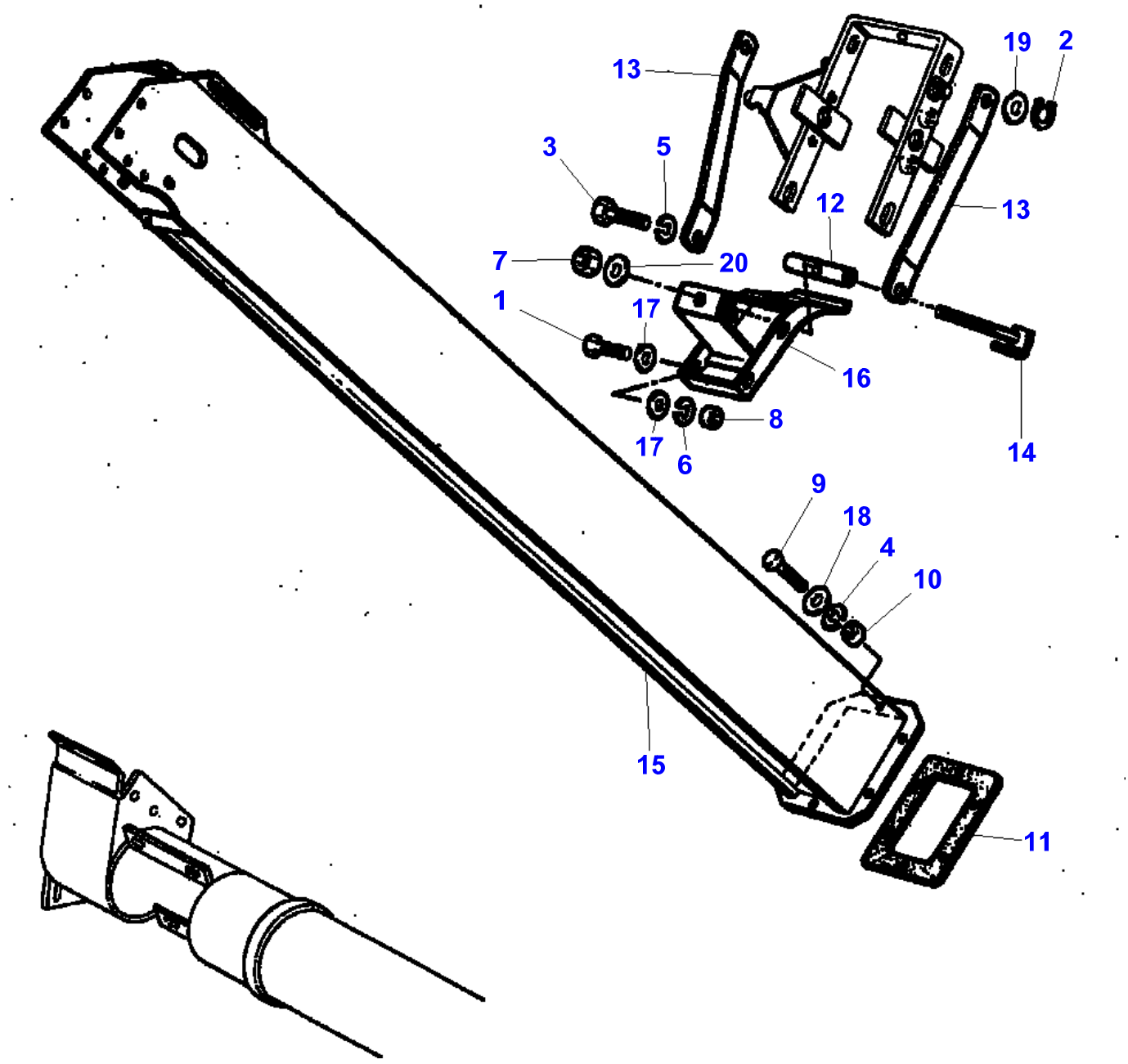

Item	Part Number	Qty	Description
1	LA10902124	1	Cap Screw
2	LA11066676	1	Circlip
3	LA11106021	1	Cap Screw
4	LA12034571	6	Lock Washer
5	LA12034671	1	Lock Washer
6	LA12035670	1	Lock Washer
7	LA12577211	1	Nut
8	LA15896221	1	Nut
9	LA16043424	6	Cap Screw
10	LA16100811	6	Nut
11	LA321861150	1	Shim
12	LA321951850	1	Pin
13	LA321951950	2	Tie Rod
14	LA321952050	1	Tie Rod
15	LA323039750	1	Elevator
16	LA323045450	1	Cover
17	LA355500715	2	Flat Washer
18	LA355500915	6	Flat Washer
19	LA355501920	1	Washer
20	LA355511030	1	Flat Washer

L-LD14-002-A

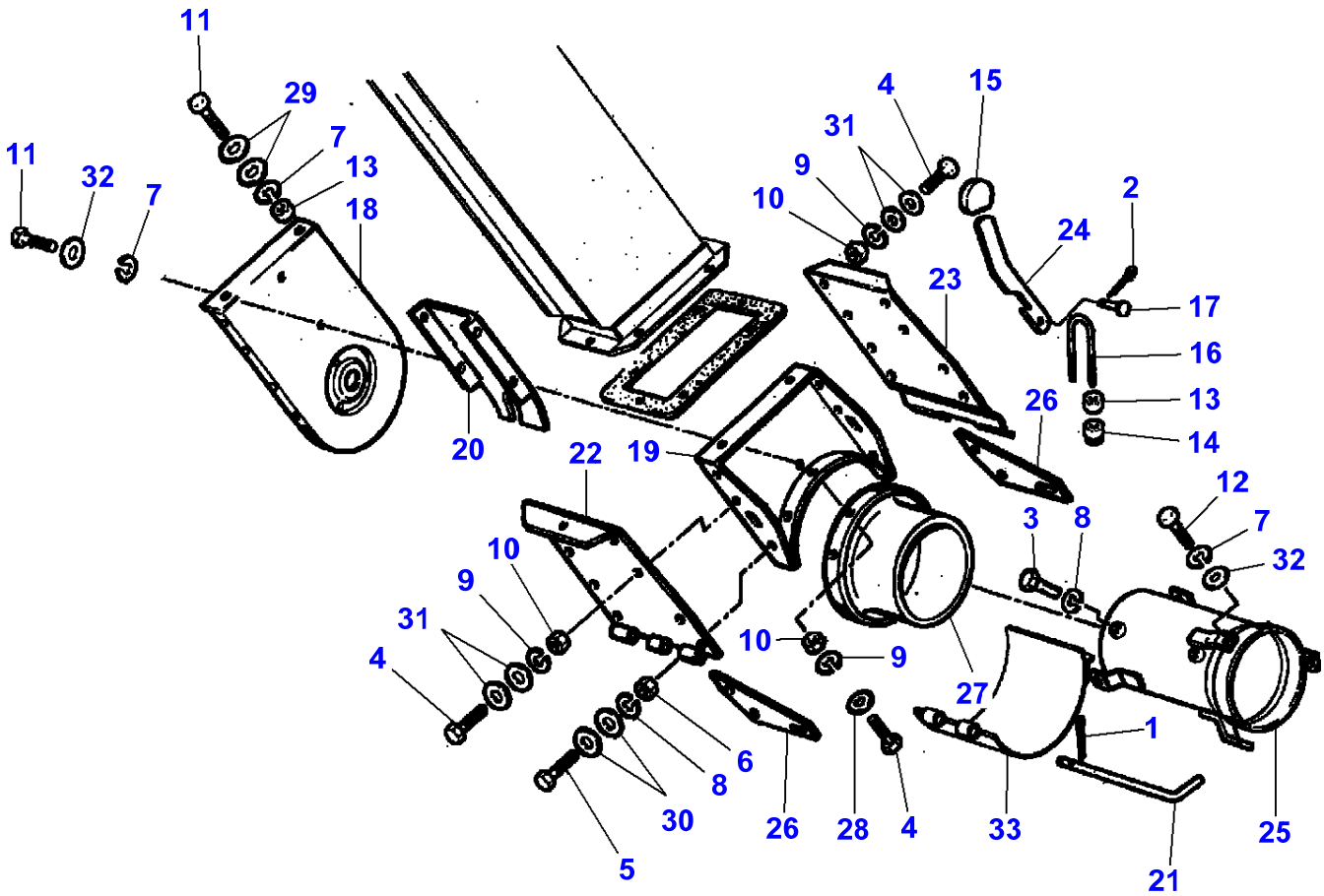
11
29
7
13
18
11
32
7
20
22
19
4
15
31
9
10
2
24
23
17
16
26
13
14
12
3
8
7
32
10
9
31
4
10
9
27
1
6
8
30
5
26
28
4
33
25
21

Item	Part Number	Qty	Description	Comments
1	LA10733601	1	Split Pin	
2	LA10734401	1	Split Pin	
3	LA10857221	1	Cap Screw	
4	LA10902224	3	Cap Screw	
5	LA11106221	1	Cap Screw	
6	LA11701721	1	Nut	
7	LA12034571	3	Lock Washer	
8	LA12034671	2	Lock Washer	
9	LA12035670	3	Lock Washer	
10	LA15896221	3	Nut	
11	LA16043424	6	Cap Screw	
12	LA16043624	1	Cap Screw	
13	LA16100811	2	Nut	
14	LA16104121	1	Locknut	
15	LA300063527	1	Knob	
16	LA320694450	1	Collar	
17	LA320694550	1	Pin	
18	LA321825650	1	Lid	
19	LA321825850	1	Shield	
20	LA321848850	1	Lid	
21	LA321848950	1	Roll Pin	
22	LA321850150	1	Lid	
23	LA321850250	1	Lid	
24	LA321851050	1	Lever	
25	LA321939850	1	Tube	
26	LA321949550	2	Plate	
27	LA322122250	1	Connector	
28	LA355500715	1	Flat Washer	
29	LA355500920	2	Flat Washer	
30	LA355501120	2	Flat Washer	
31	LA355510615	4	Flat Washer	
32	LA355510820	2	Flat Washer	
33		1	Lid	See Page - Reference Number 060-0035

L-LD14-003-A

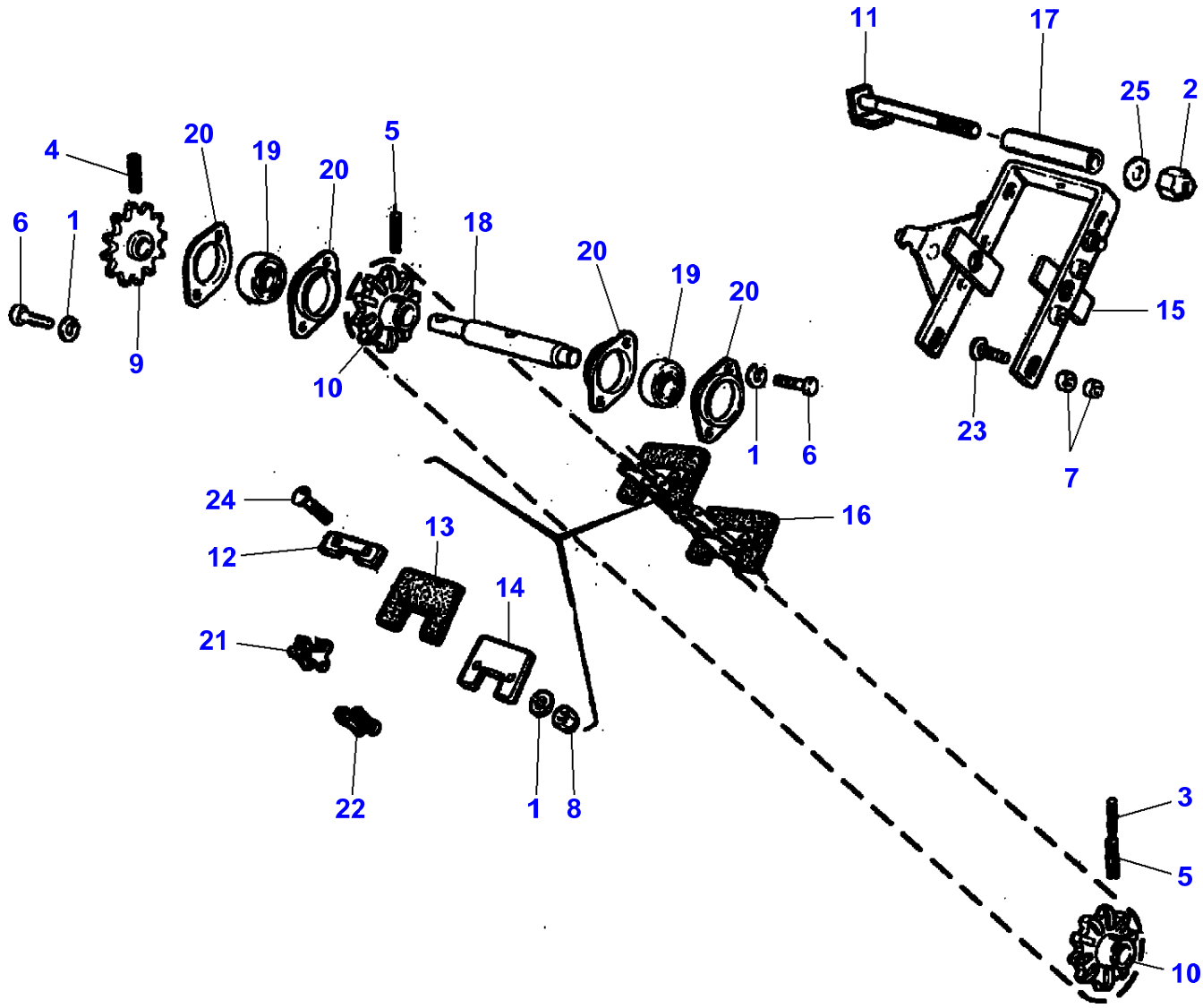
11
17
25
2
4
20
19
20
5
6
1
18
20
19
20
15
9
10
1
6
23
7
24
16
12
13
14
21
22
1
8
3
5
10

Item	Part Number	Qty	Description
1	LA12034571	3	Lock Washer
2	LA12577211	1	Nut
3	LA14604570	1	Pin
4	LA14607270	1	Pin
5	LA14610370	2	Roll Pin
6	LA16043424	2	Cap Screw
7	LA16100811	2	Nut
8	LA16104111	1	Locknut
9	LA300110254	1	Gear
10	LA300132810	2	Gear
11	LA320592250	1	Pin
12	**LA321814650**	1	Reinforcement
13	**LA321821950**	1	Paddle
14	**LA321822050**	1	Reinforcement
15	LA321861050	1	Support
16	**LA321862400**	1	Chain
17	LA321952850	1	Spacer
18	LA322127050	1	Shaft
19	**LA340411236**	2	Bearing Assy
20	LA340411458	4	Bearing Flange
21	**LA344382162**	1	Chain Link
22	**LA344382163**	1	Chain Link
23	LA350342512	1	Carriage Bolt
24	LA350342513	1	Carriage Bolt
25	LA355511050	1	Flat Washer

L-LD14-004-A

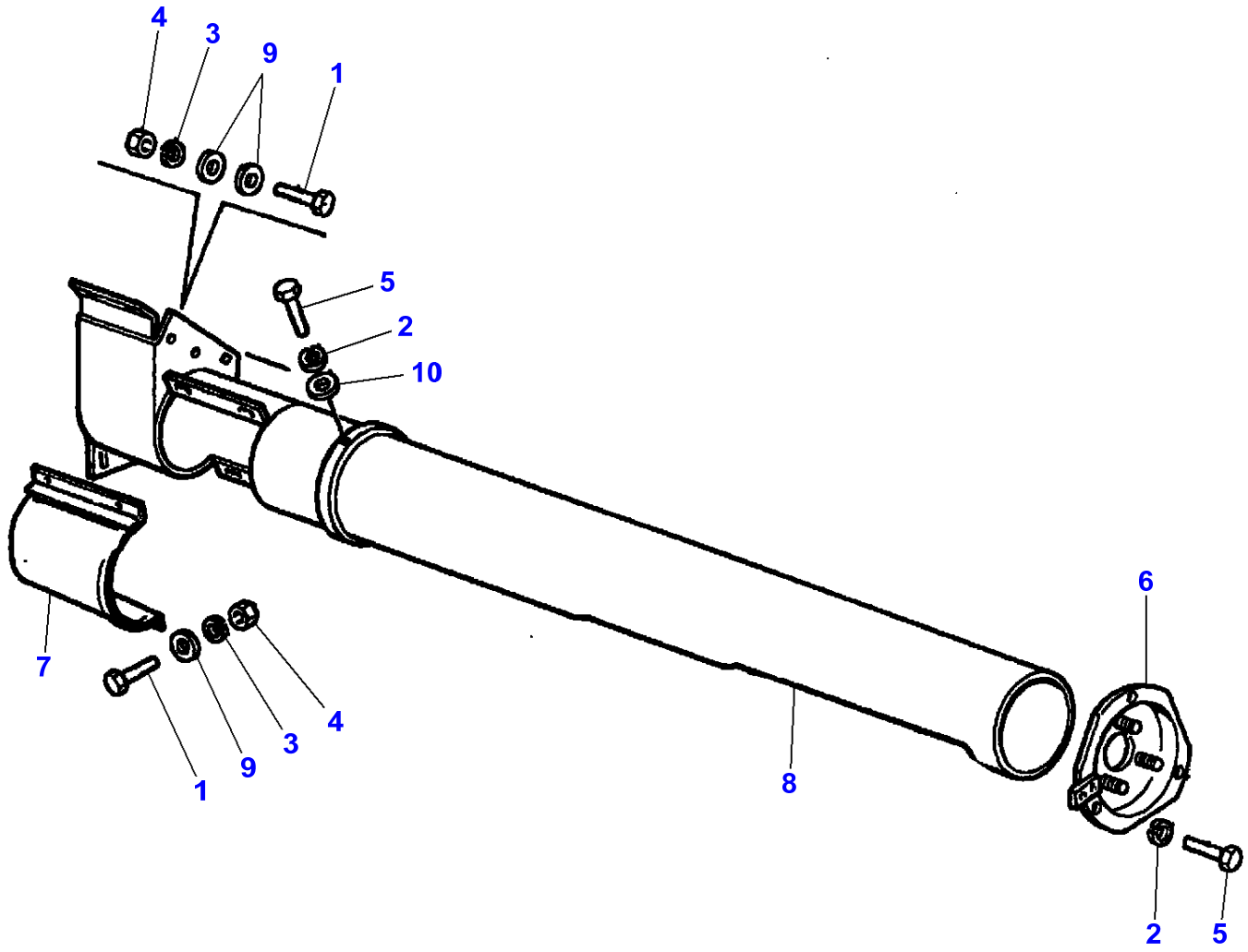

Item	Part Number	Qty	Description
1	LA10902224	2	Cap Screw
2	LA12034571	2	Lock Washer
3	LA12035670	2	Lock Washer
4	LA15896221	2	Nut
5	LA16043224	3	Cap Screw
6	LA322126650	1	Cover
7	LA322857950	1	Lid
8	LA323042050	1	Tube
9	LA355500715	3	Flat Washer
10	LA355510820	1	Flat Washer

L-LD14-005-A

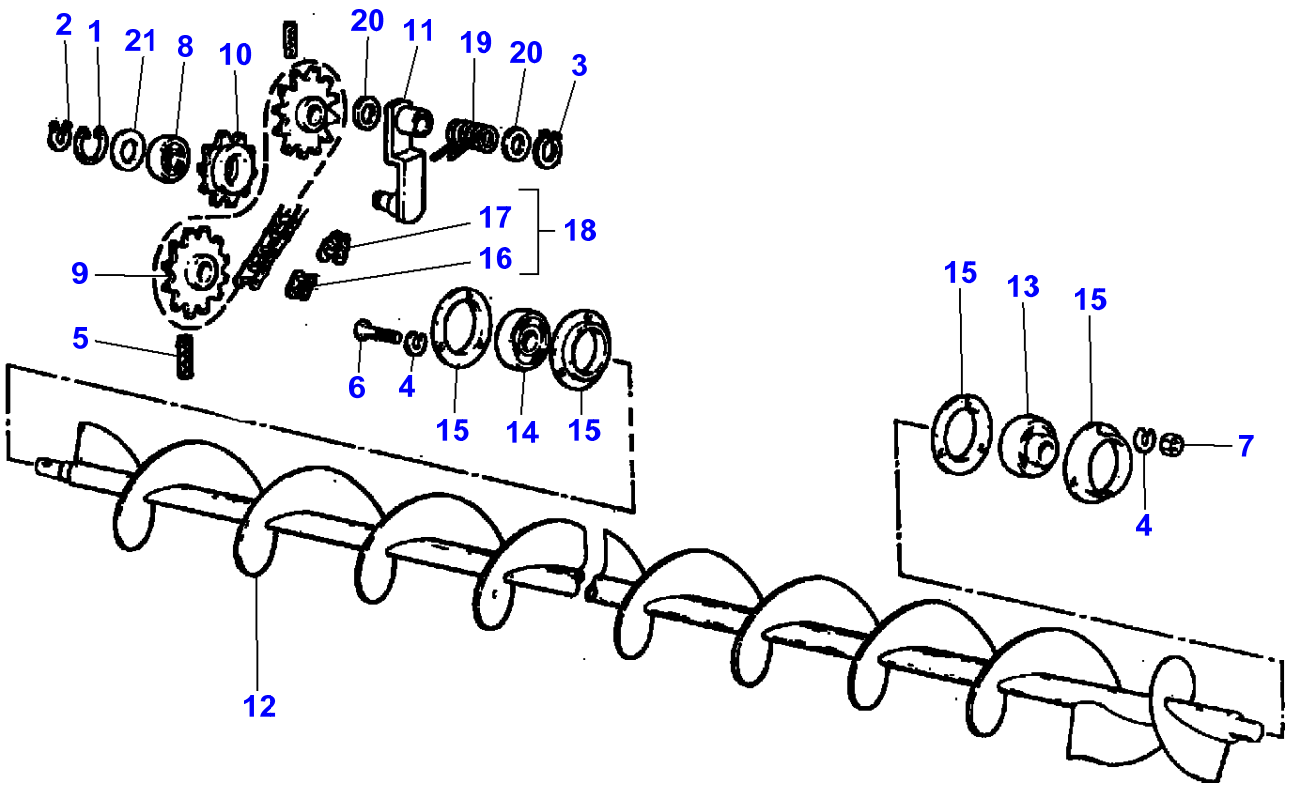

Item	Part Number	Qty	Description	Comments
1	LA11059476	1	Circlip	
2	LA11066376	2	Circlip	
3	LA11066876	1	Circlip	
4	LA12034571	2	Lock Washer	
5	LA14607270	1	Pin	
6	LA16043024	1	Cap Screw	
7	LA16100811	1	Nut	
8	**LA28996490**	1	Bearing Assy	
9	LA300110254	1	Gear	
10	LA300121612	1	Gear	
11	LA321281850	1	Support	
12	LA322126850	1	Auger	
13	**LA340411204**	1	Bearing Assy	
14	**LA340411236**	1	Bearing Assy	
15	LA340411404	4	Bearing Flange	
16	**LA340437200**	1	Chain Link	(18)
17	**LA340437201**	1	Chain Link	(18)
18	**LA340437248**	1	Chain	
19	LA350356925	1	Spring	
20	LA355533810	2	Flat Washer	
21	LA355536210	1	Flat Washer	

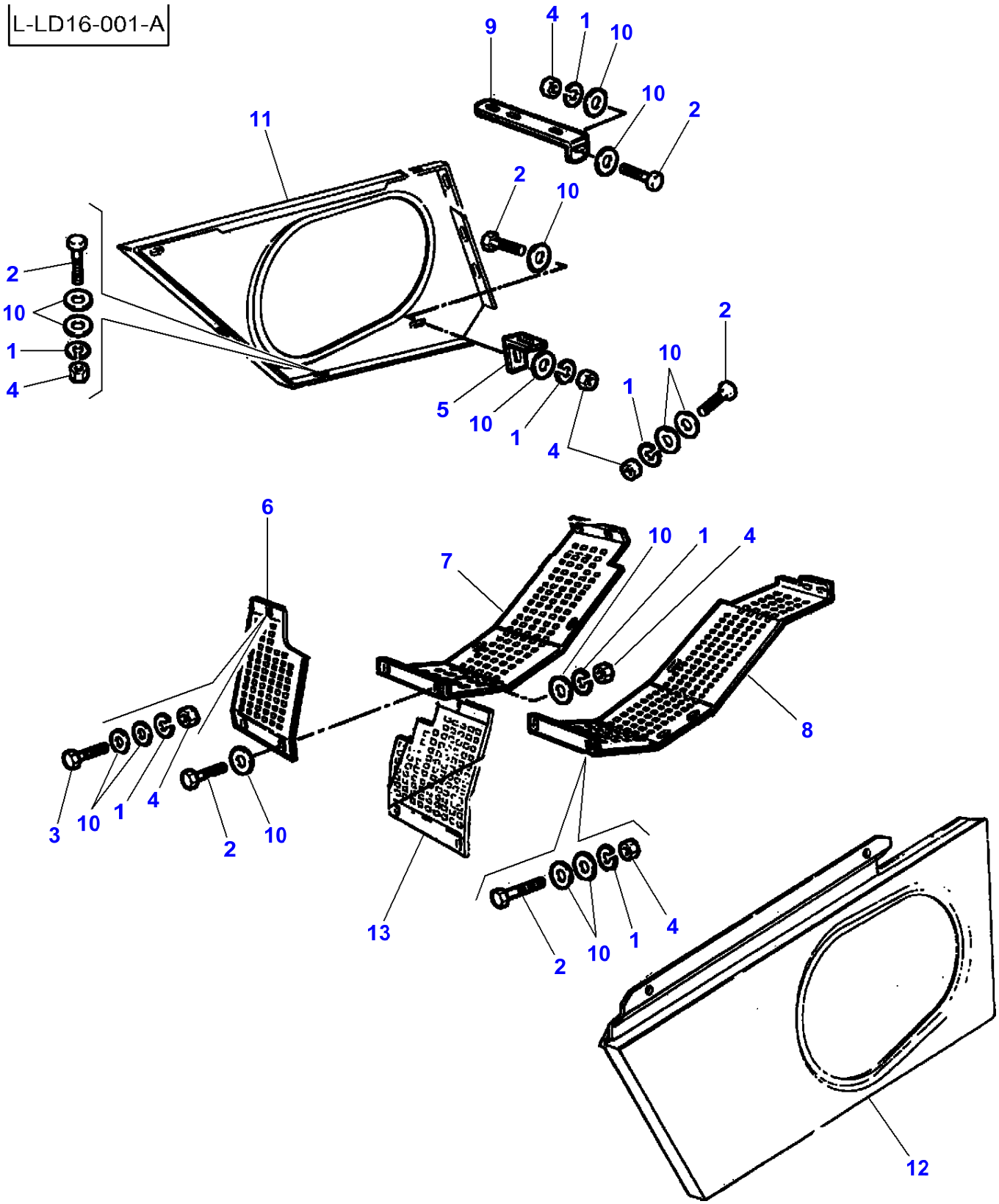
L-LD16-001-A
9
4
1
10
10
2
11
2
10
2
10
1
4
5
10
1
4
1
10
2
6
7
10
1
4
8
3
10
1
4
2
10
13
2
10
1
4
12

Item	Part Number	Qty	Description	Comments
1	LA12034571	7	Lock Washer	
2	LA16043424	8	Cap Screw	
3	LA16043624	1	Cap Screw	
4	LA16100811	7	Nut	
5	LA321289150	1	Bracket	
6	LA321930850	1	Shield	
7	LA321930950	1	Shield	
8	LA321931050	1	Shield	
9	LA321931350	1	Bracket	
10	LA355510820	11	Flat Washer	
11		1	Shield	See Page - Reference Number 090-0010/19
12		1	Shield	See Page - Reference Number 090-0020/10
13		1	Shield	See Page - Reference Number 030-0220/4

L-LD16-006-B

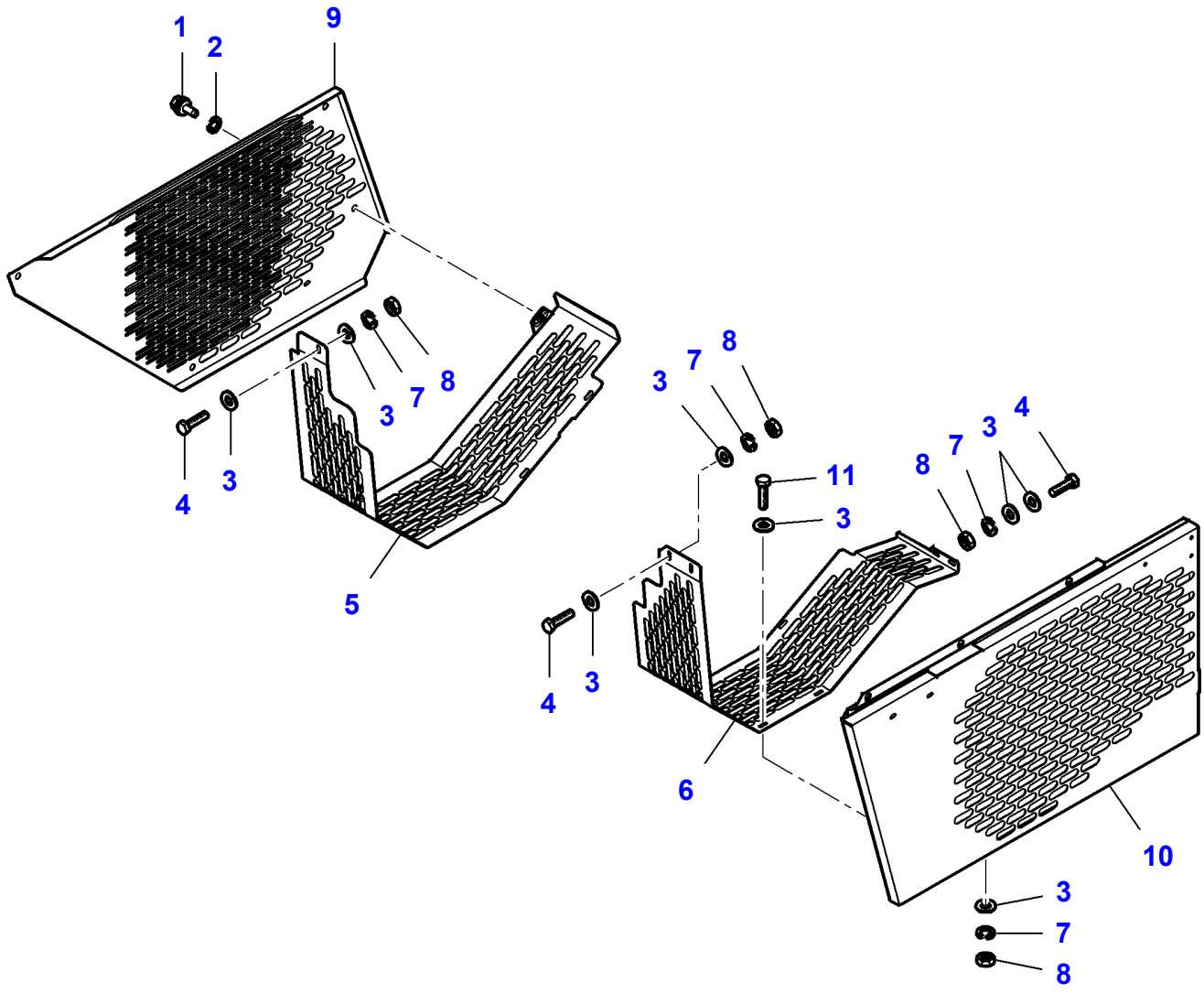

Item	Part Number	Qty	Description	Comments
1	LA321551650	1	Screw Special	
2	LA320899350	1	Lock Washer	
3	LA355510820	X	Flat Washer	
4	LA16043621	X	Cap Screw	
5	LA323183350	1	Shield	
6	LA323183450	1	Shield	
7	LA12034571	X	Lock Washer	
8	LA16100811	X	Nut	
9		1	Shield	See Page - Reference Number 090-0015/19
10		1	Shield	See Page - Reference Number 090-0025/5
11	LA16043421	X	Cap Screw	

L-LD16-002-A

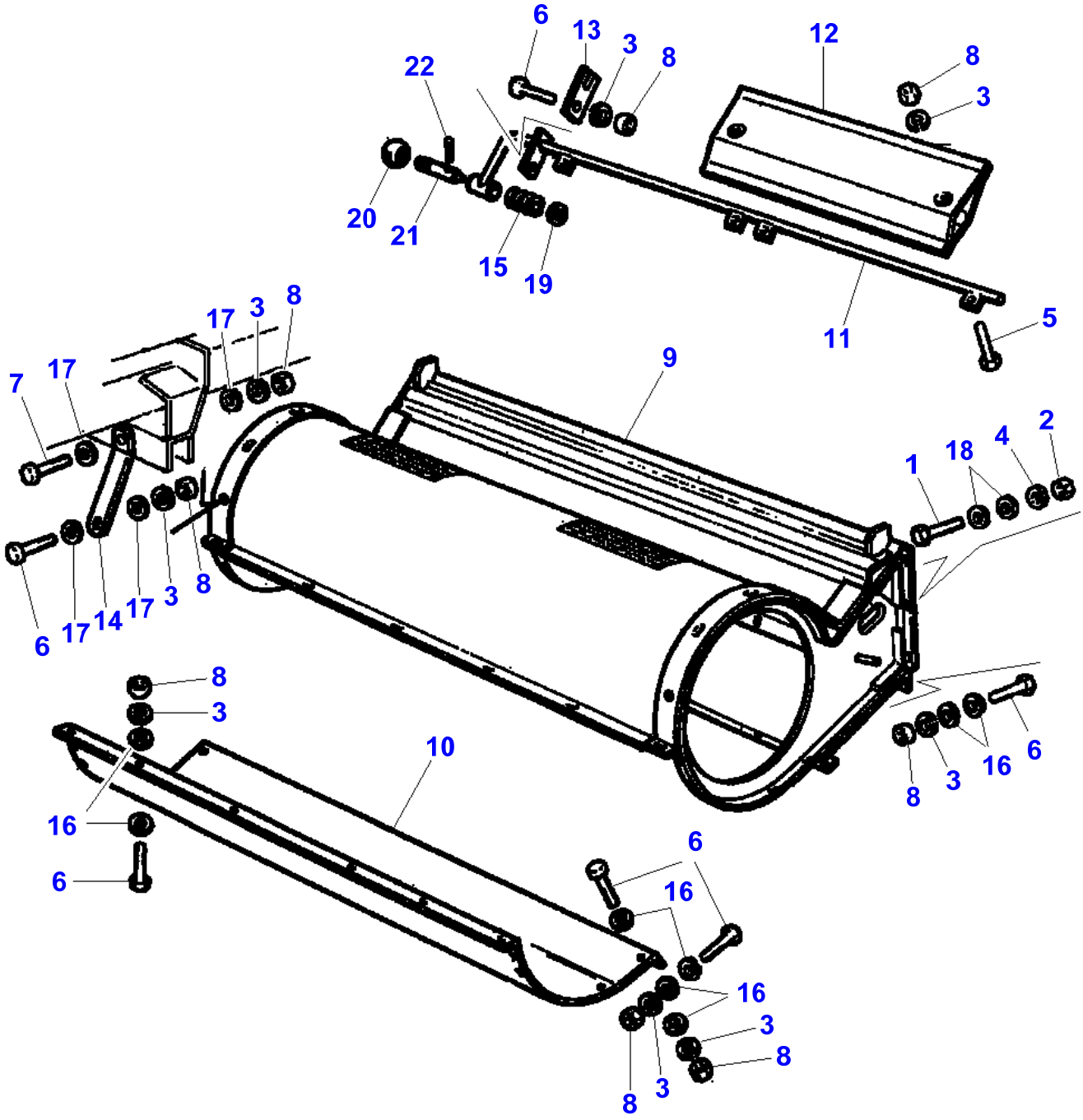
6
13
3
8
22
12
8
3
20
21
15
19
11
5
17
3
8
7
17
9
1
18
4
2
6
17
14
17
3
8
8
3
10
16
6
6
16
16
3
8
8
3
8
3
16
6

Item	Part Number	Qty	Description
1	LA11106221	1	Cap Screw
2	LA11701721	1	Nut
3	LA12034571	8	Lock Washer
4	LA12034671	1	Lock Washer
5	LA16043224	1	Cap Screw
6	LA16043424	5	Cap Screw
7	LA16043624	1	Cap Screw
8	LA16100811	11	Nut
9	LA321827650	1	Housing
10	LA321827850	1	Lid
11	LA321839350	1	Lever
12	LA321839550	1	Deflector
13	LA321839650	1	Plate
14	LA321916550	1	Support
15	LA350356325	1	Spring
16	LA355500915	7	Flat Washer
17	LA355500920	3	Flat Washer
18	LA355511030	2	Flat Washer
19	LA355530220	1	Washer
20	LA340441109	1	Knob
21	LA321839750	1	Pin
22	LA13902070	1	Dowel

L-LD16-003-A

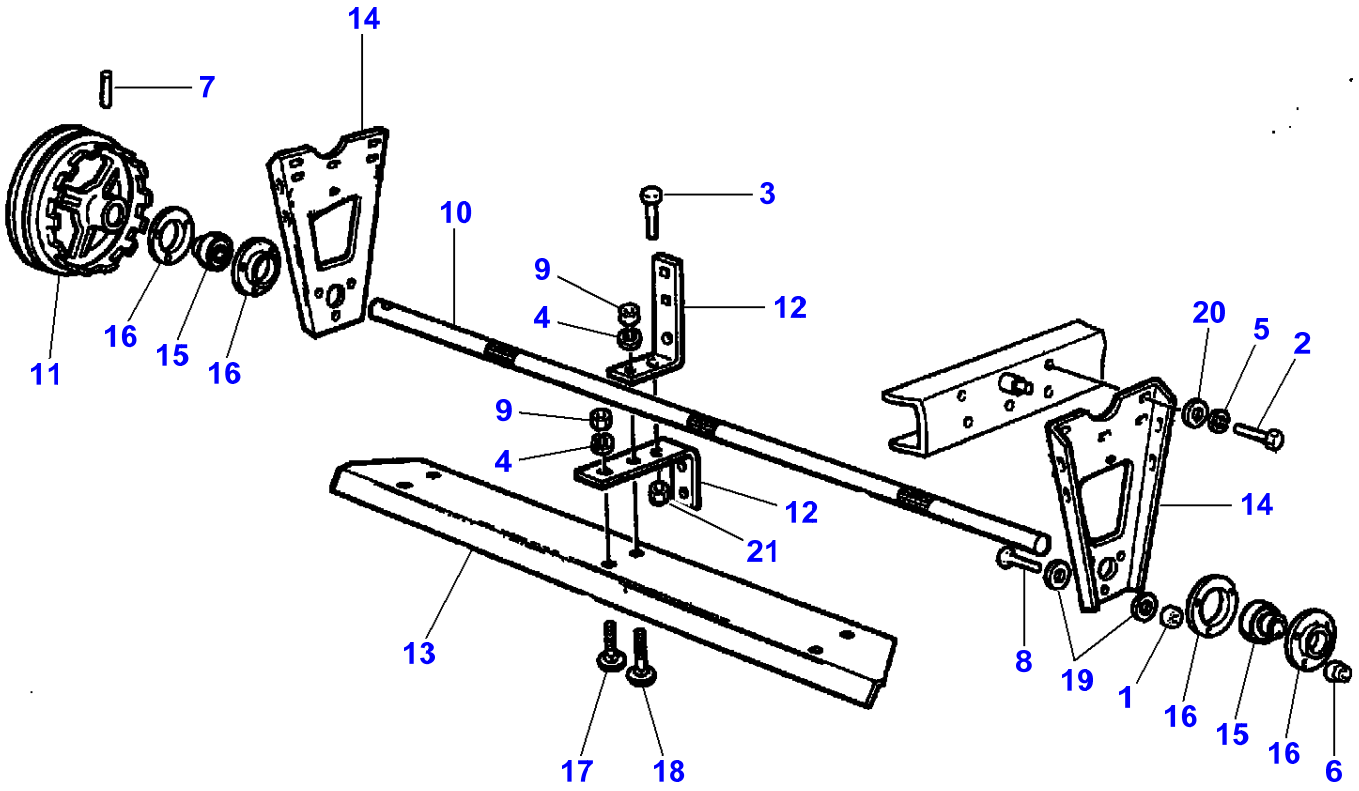

Item	Part Number	Qty	Description
1	LA10788221	1	Nut
2	LA11106624	1	Cap Screw
3	LA11112621	1	Cap Screw
4	LA12034571	2	Lock Washer
5	LA12034671	1	Lock Washer
6	LA12577211	1	Nut
7	LA14610570	1	Roll Pin
8	LA16040821	1	Cap Screw
9	LA16100811	2	Nut
10	LA321837850	1	Shaft
11	LA321837950	1	Pulley
12	LA321838250	2	Spoke
13	LA321838350	1	Blade
14	LA322768250	2	Support
15	LA340411206	2	Bearing Assy
16	LA340411406	4	Bearing Flange
17	LA350342511	1	Carriage Bolt
18	LA350342513	1	Carriage Bolt
19	LA355511020	2	Flat Washer
20	LA355511030	1	Flat Washer
21	LA12577511	1	Cap Nut

L-LD17-001-A

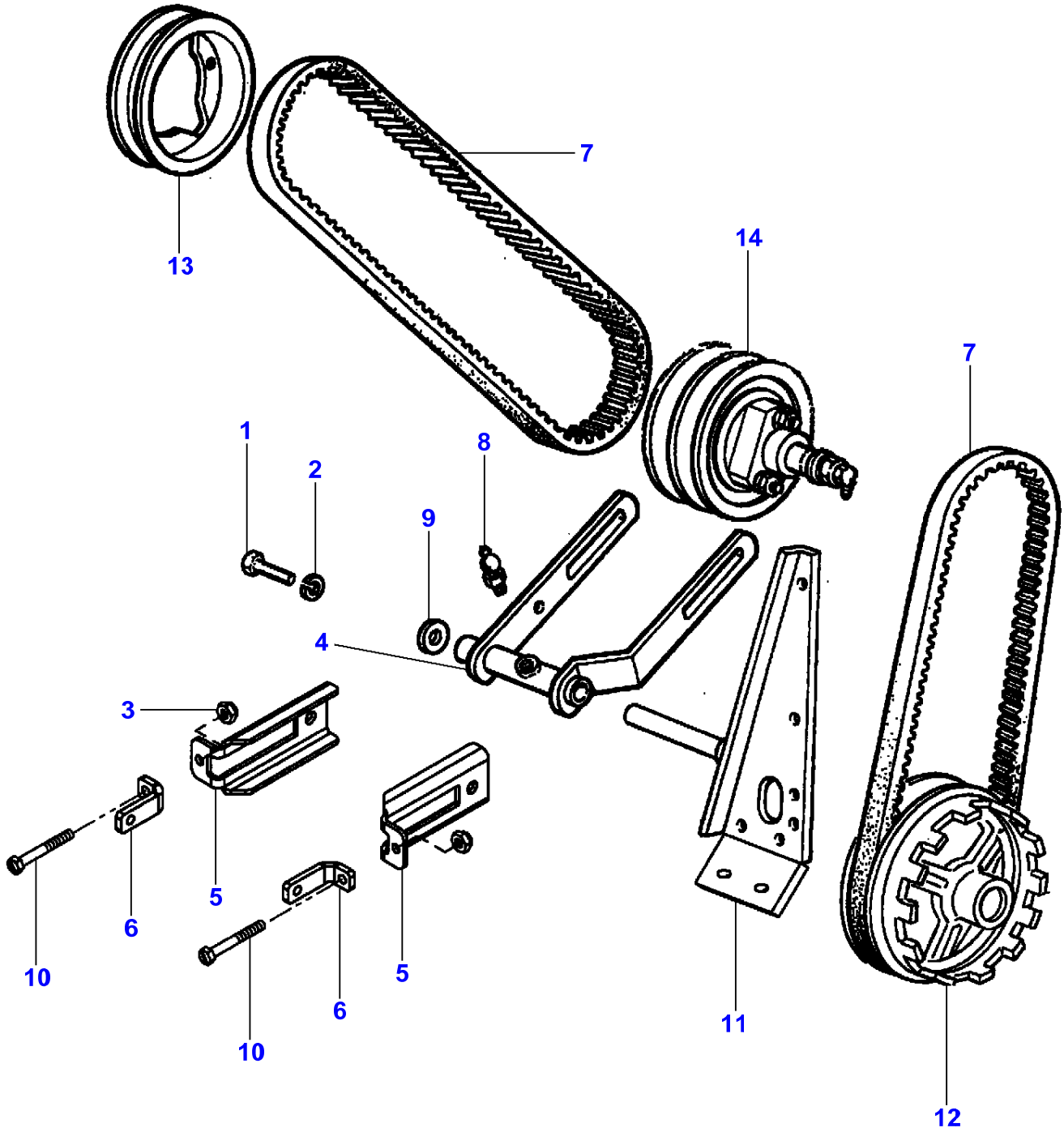

Item	Part Number	Qty	Description	Comments
1	LA11106424	1	Cap Screw	
2	LA12034671	2	Lock Washer	
3	LA12577211	2	Nut	
4	LA321936250	1	Yoke	
5	LA323071550	2	Tensioner	
6	LA323071650	2	Bracket	
7	**LA340435150**	2	Belt	
8	LA350357803	1	Grease Fitting	
9	LA355511030	1	Flat Washer	
10	LA366211050	2	Cap Screw	
11		1	Bracket	See Page - Reference Number 050-0005/15
12		1	Pulley	See Page - Reference Number 070-0110/11
13		1	Pulley	See Page - Reference Number 020-0125/11
14		1	Bearing Assy	See Page - Reference Number 070-0120

L-LD18-001-A

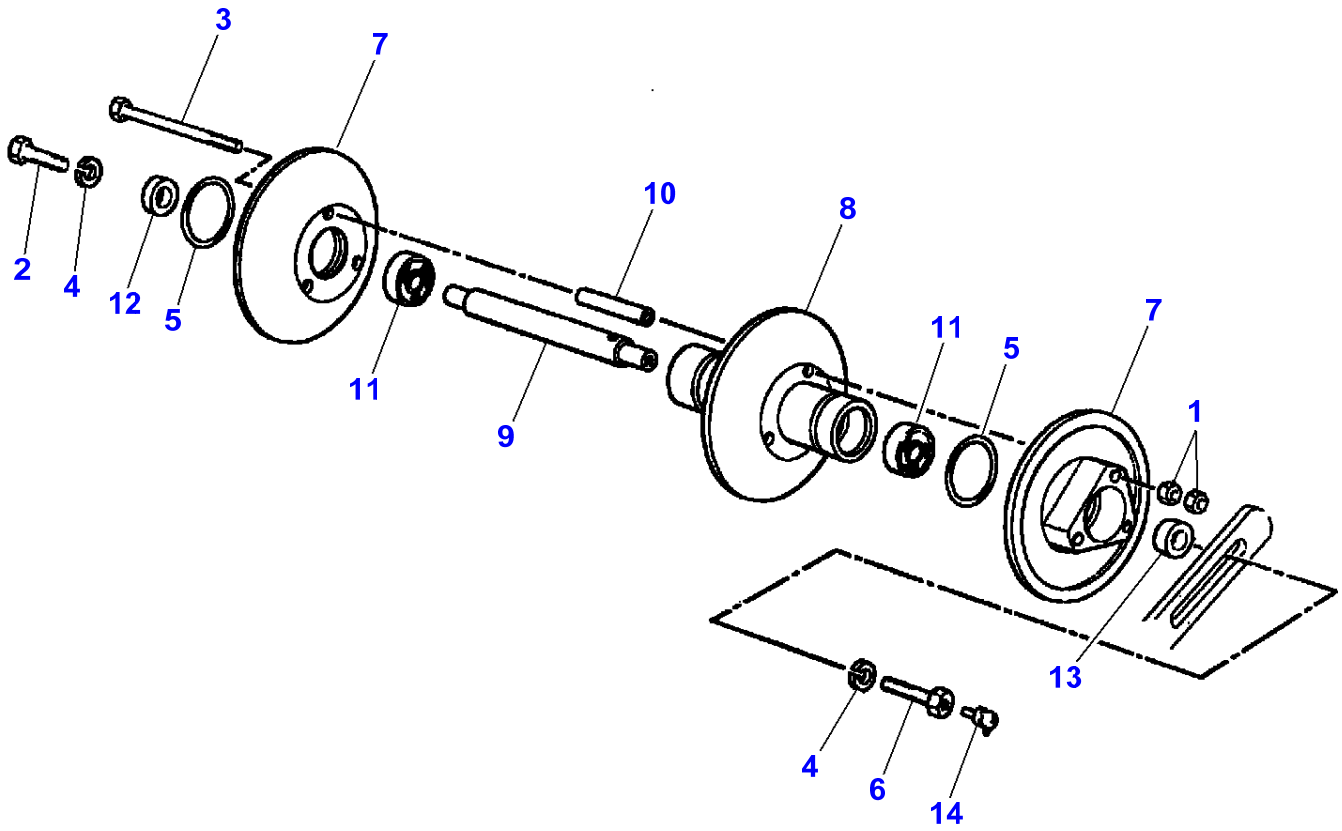

Item	Part Number	Qty	Description
1	LA10788714	2	Nut
2	LA11116021	1	Cap Screw
3	LA11133521	1	Cap Screw
4	LA12035571	2	Lock Washer
5	LA14460380	2	O Ring
6	LA300132078	1	Cap Screw
7	LA321089450	2	Disc
8	LA321089550	1	Disc
9	LA321935950	1	Shaft
10	LA322164850	1	Spacer
11	**LA322638450**	2	Bearing Assy
12	LA340415662	1	Bush
13	LA340415663	1	Spacer
14	LA350357853	1	Grease Fitting

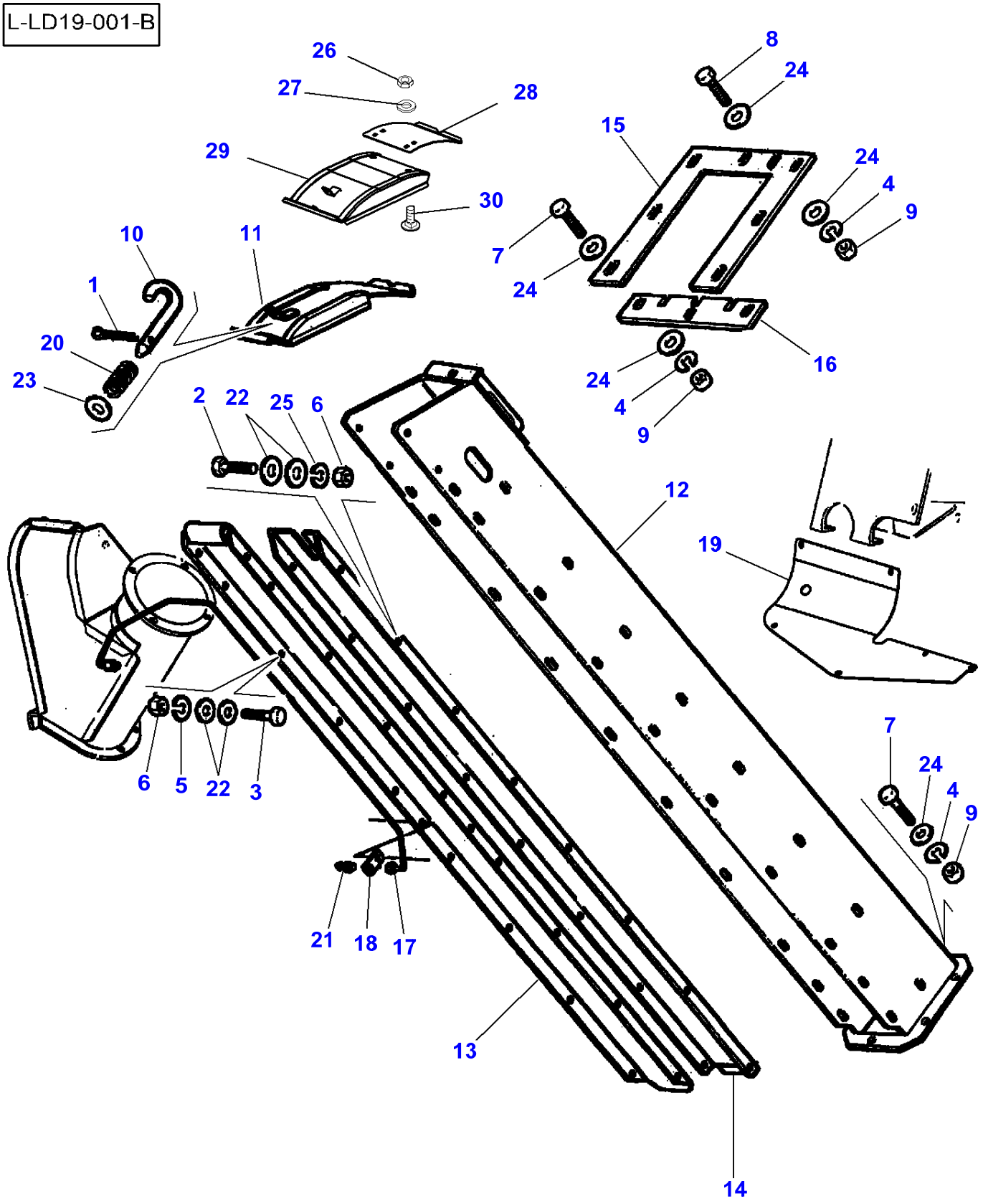
L-LD19-001-B
26
27
28
29
30
8
24
15
24
4
9
7
24
10
11
1
20
23
16
24
4
9
2
22
25
6
12
19
6
5
22
3
7
24
4
9
21
18
17
13
14

Item	Part Number	Qty	Description	Comments
1	LA10734301	1	Split Pin	
2	LA10902021	2	Cap Screw	
3	LA10902124	2	Cap Screw	
4	LA12034571	14	Lock Washer	
5	LA12035670	2	Lock Washer	
6	LA15896221	4	Nut	
7	LA16043424	12	Cap Screw	
8	LA16043624	2	Cap Screw	
9	LA16100811	14	Nut	
10	LA300017638	1	Latch	
11	LA321844850	1	Cover	Up to Serial or Engine Number
12	LA321855550	1	Elevator	
13	LA321855650	1	Cover	
14	LA321855750	1	Wall	
15	LA321857350	1	Plate	
16	LA321857450	1	Plate	
17	LA322998650	1	Oil Pipe	
18	LA322366550	1	Plate	
19	LA323027150	1	Plate	
20	LA350356208	1	Spring	
21	LA350357851	1	Grease Fitting	
22	LA355500715	8	Flat Washer	
23	LA355500815	1	Washer	
24	LA355500915	20	Flat Washer	
25	LA12035671	1	Lock Washer	
26	LA16100811	1	Nut	From Serial or Engine Number
27	LA355520830	1	Flat Washer	From Serial or Engine Number
28	LA323239950	1	Plate	From Serial or Engine Number 551710061
29	LA323239850	1	Cover	From Serial or Engine Number 551710061
30	LA350342510	1	Carriage Bolt	From Serial or Engine Number

L-LD19-002-A

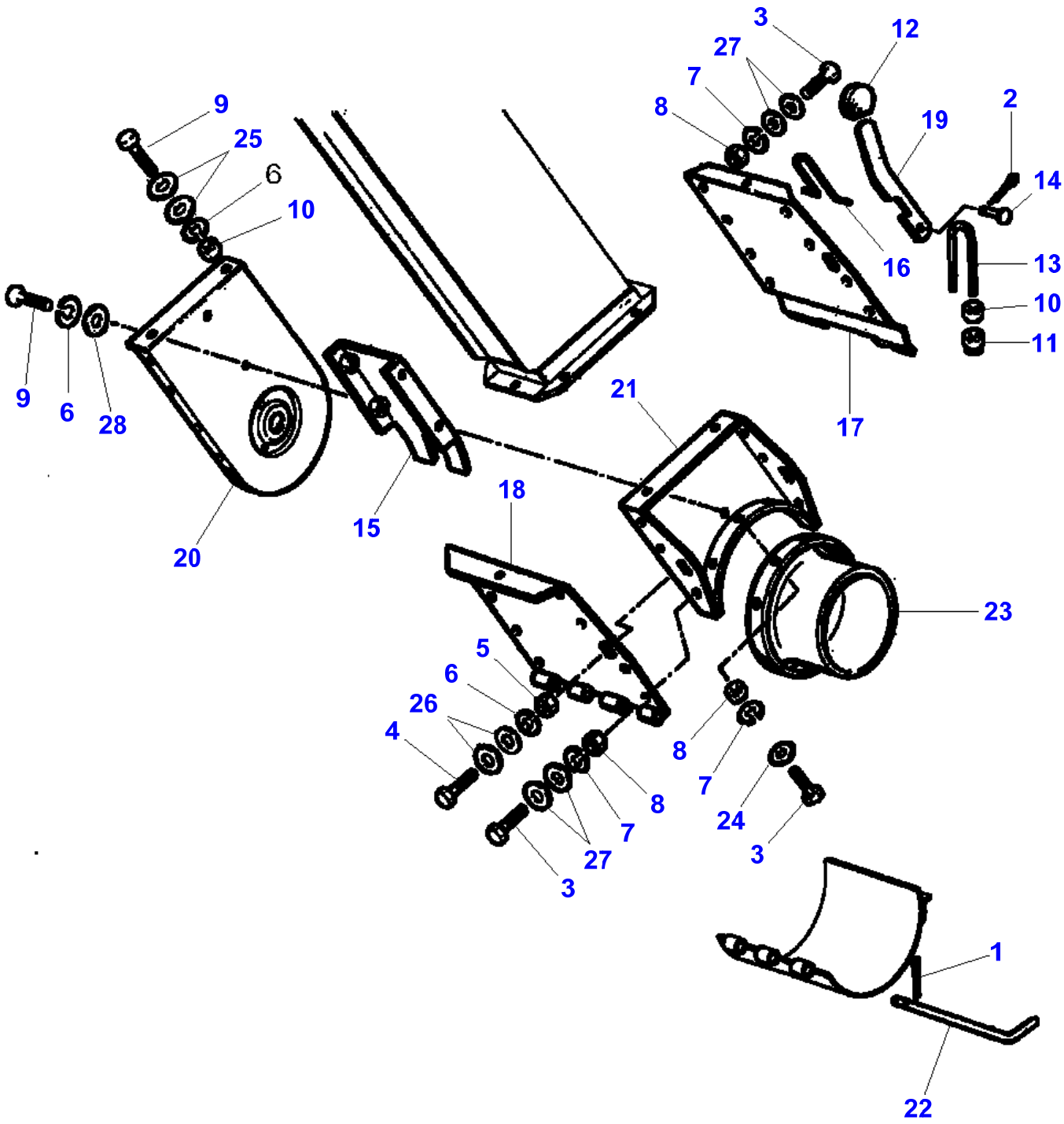
3
12
27
7
8
2
19
14
16
13
10
11
17
9
25
6
10
9
6
28
21
20
15
18
23
5
6
26
4
8
7
24
3
8
7
27
3
1
22

Item	Part Number	Qty	Description
1	LA10733601	1	Split Pin
2	LA10734401	1	Split Pin
3	LA10902224	3	Cap Screw
4	LA11106221	1	Cap Screw
5	LA11701721	1	Nut
6	LA12034571	3	Lock Washer
7	LA12035670	3	Lock Washer
8	LA15896221	3	Nut
9	LA16043424	8	Cap Screw
10	LA16100811	2	Nut
11	LA16104121	1	Locknut
12	LA300063527	1	Knob
13	LA320694450	1	Collar
14	LA320694550	1	Pin
15	LA321825950	1	Lid
16	LA321826150	1	U Bolt
17	LA321826350	1	Lid
18	LA321826450	1	Lid
19	LA321851050	1	Lever
20	LA321851850	1	Lid
21	LA321852050	1	Shield
22	LA322031550	1	Pin
23	LA322125350	1	Connector
24	LA355500715	1	Flat Washer
25	LA355500920	4	Flat Washer
26	LA355501120	2	Flat Washer
27	LA355510615	4	Flat Washer
28	LA355510820	1	Flat Washer

L-LD19-003-A

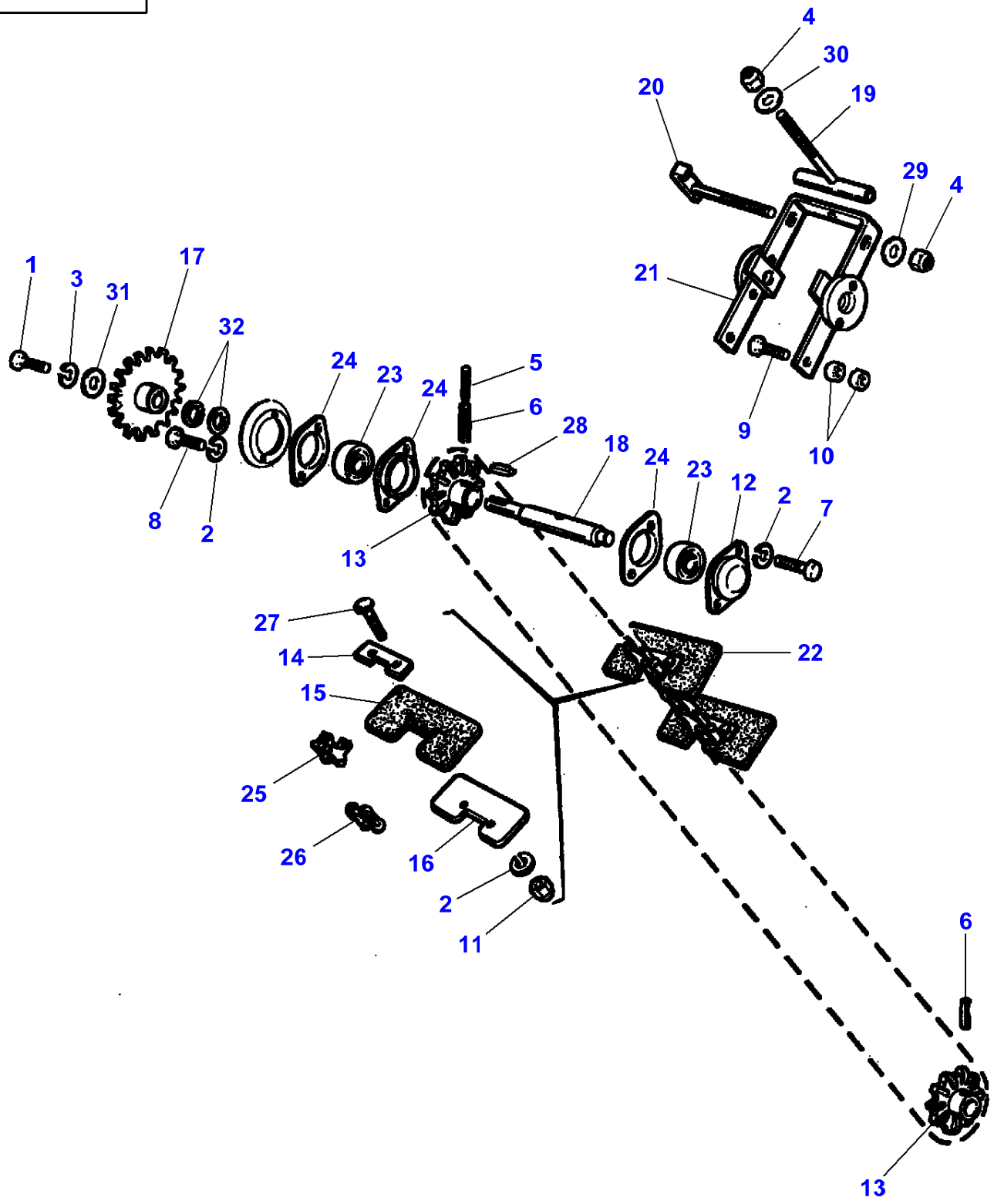
4
30
19
20
29
4
21
1
3
31
17
32
24
23
24
5
6
28
18
24
23
12
2
7
9
10
8
2
13
27
14
15
22
25
26
16
2
11
6
13

Item	Part Number	Qty	Description
1	LA11106424	1	Cap Screw
2	LA12034571	3	Lock Washer
3	LA12034671	1	Lock Washer
4	LA12577211	2	Nut
5	LA14604570	1	Pin
6	LA14610370	2	Roll Pin
7	LA16043224	1	Cap Screw
8	LA16043424	1	Cap Screw
9	LA16043624	1	Cap Screw
10	LA16100811	2	Nut
11	LA16104111	1	Locknut
12	LA300016273	1	Bearing Flange
13	LA300132810	2	Gear
14	**LA321814650**	1	Reinforcement
15	LA321814750	1	Paddle
16	**LA321814850**	1	Reinforcement
17	LA321824550	1	Gear
18	LA321844350	1	Shaft
19	LA321844450	1	Tie Rod
20	LA321844550	1	Tie Rod
21	LA321844750	1	Support
22	**LA321862500**	1	Chain
23	**LA340411236**	2	Bearing Assy
24	LA340411458	3	Bearing Flange
25	**LA344382162**	1	Chain Link
26	**LA344382163**	1	Chain Link
27	LA350342513	1	Carriage Bolt
28	LA350384628	1	Key
29	LA355511030	1	Flat Washer
30	LA355511050	1	Flat Washer
31	LA355521050	1	Flat Washer
32	LA355536210	1	Flat Washer

L-LD19-004-A

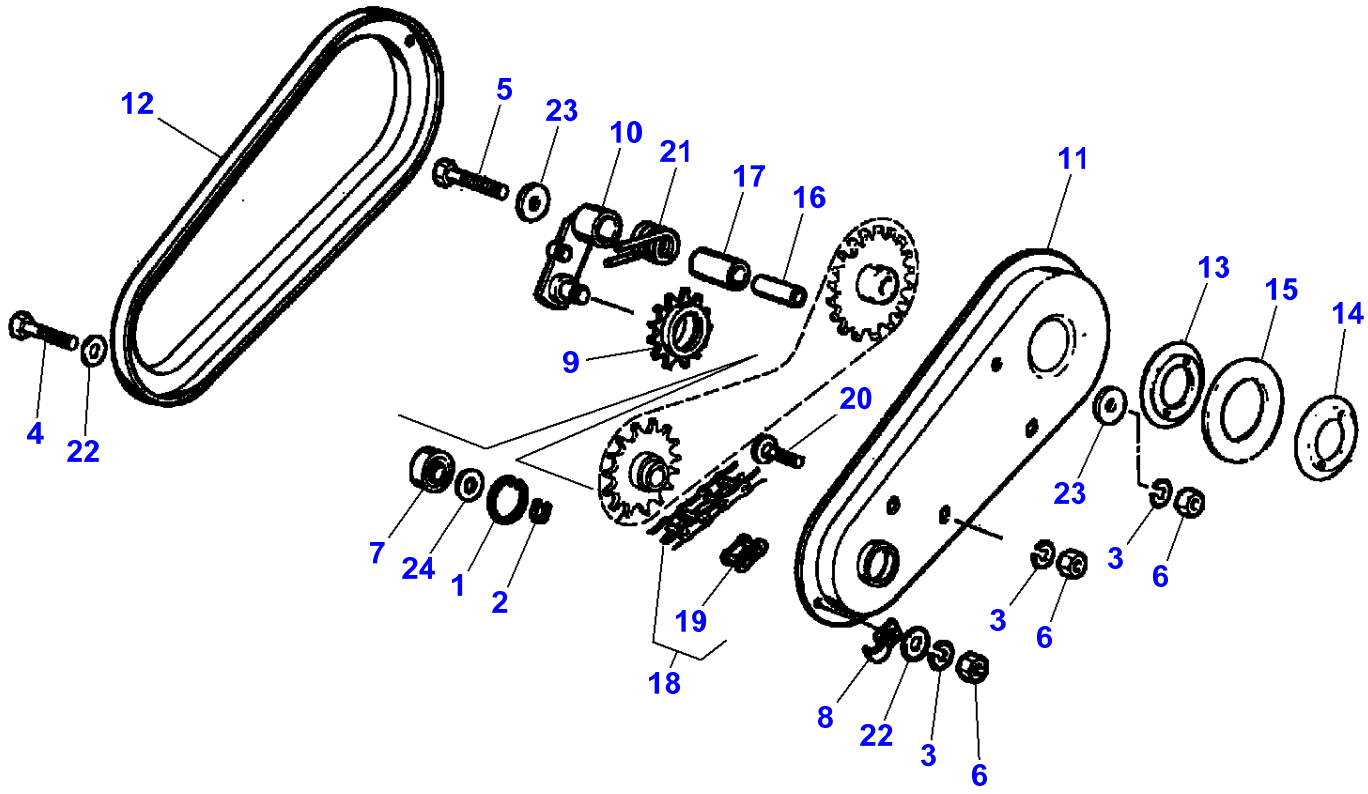

Item	Part Number	Qty	Description	Comments
1	LA11059476	1	Circlip	
2	LA11066876	1	Circlip	
3	LA12034571	3	Lock Washer	
4	LA16043224	1	Cap Screw	
5	LA16044424	1	Cap Screw	
6	LA16100811	3	Nut	
7	**LA28996490**	1	Bearing Assy	
8	LA300015924	1	Collar	
9	LA300121612	1	Gear	
10	LA321844650	1	Arm	
11	LA321844950	1	Shield	
12	LA321845050	1	Shield	
13	LA321845150	1	Disc	
14	LA321845250	1	Disc	
15	LA321845350	1	Gasket	
16	LA321845750	1	Spacer	
17	LA321845850	1	Bush	
18	**LA340437274**	1	Chain	
19	**LA340437200**	1	Chain Link	(18)
20	LA350342510	1	Carriage Bolt	
21	LA350356925	1	Spring	
22	LA355500915	2	Flat Washer	
23	LA355520830	2	Flat Washer	
24	LA355536210	1	Flat Washer	

L-LD20-001-A

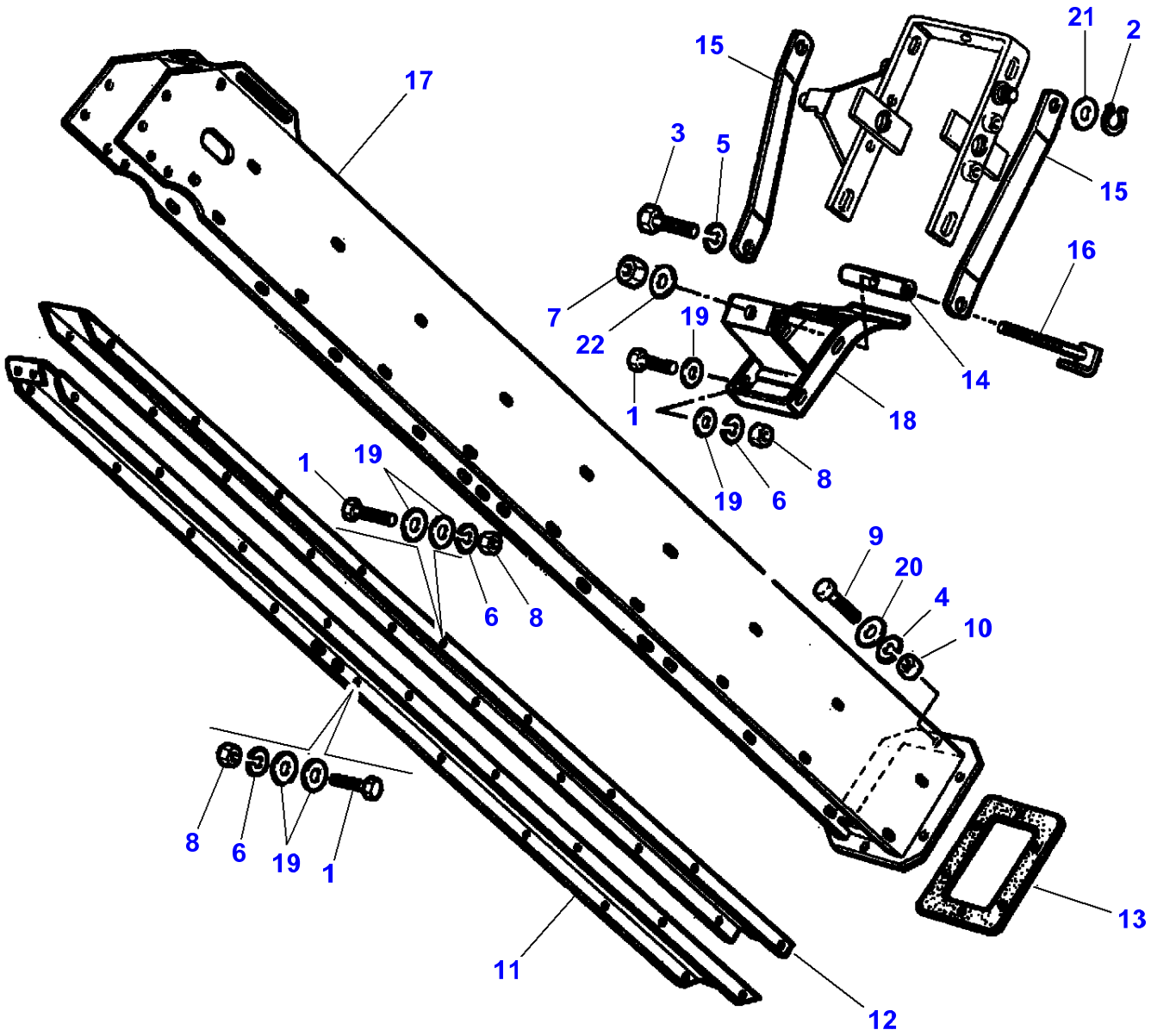

Item	Part Number	Qty	Description
1	LA10902124	3	Cap Screw
2	LA11066676	1	Circlip
3	LA11106021	1	Cap Screw
4	LA12034571	1	Lock Washer
5	LA12034671	1	Lock Washer
6	LA12035670	3	Lock Washer
7	LA12577211	1	Nut
8	LA15896221	3	Nut
9	LA16043424	1	Cap Screw
10	LA16100811	1	Nut
11	LA321855350	1	Cover
12	LA321855450	1	Wall
13	LA321861150	1	Shim
14	LA321951850	1	Pin
15	LA321951950	2	Tie Rod
16	LA321952050	1	Tie Rod
17	LA323039850	1	Elevator
18	LA323045450	1	Cover
19	LA355500715	6	Flat Washer
20	LA355500915	1	Flat Washer
21	LA355501920	1	Washer
22	LA355511030	1	Flat Washer

L-LD20-002-A

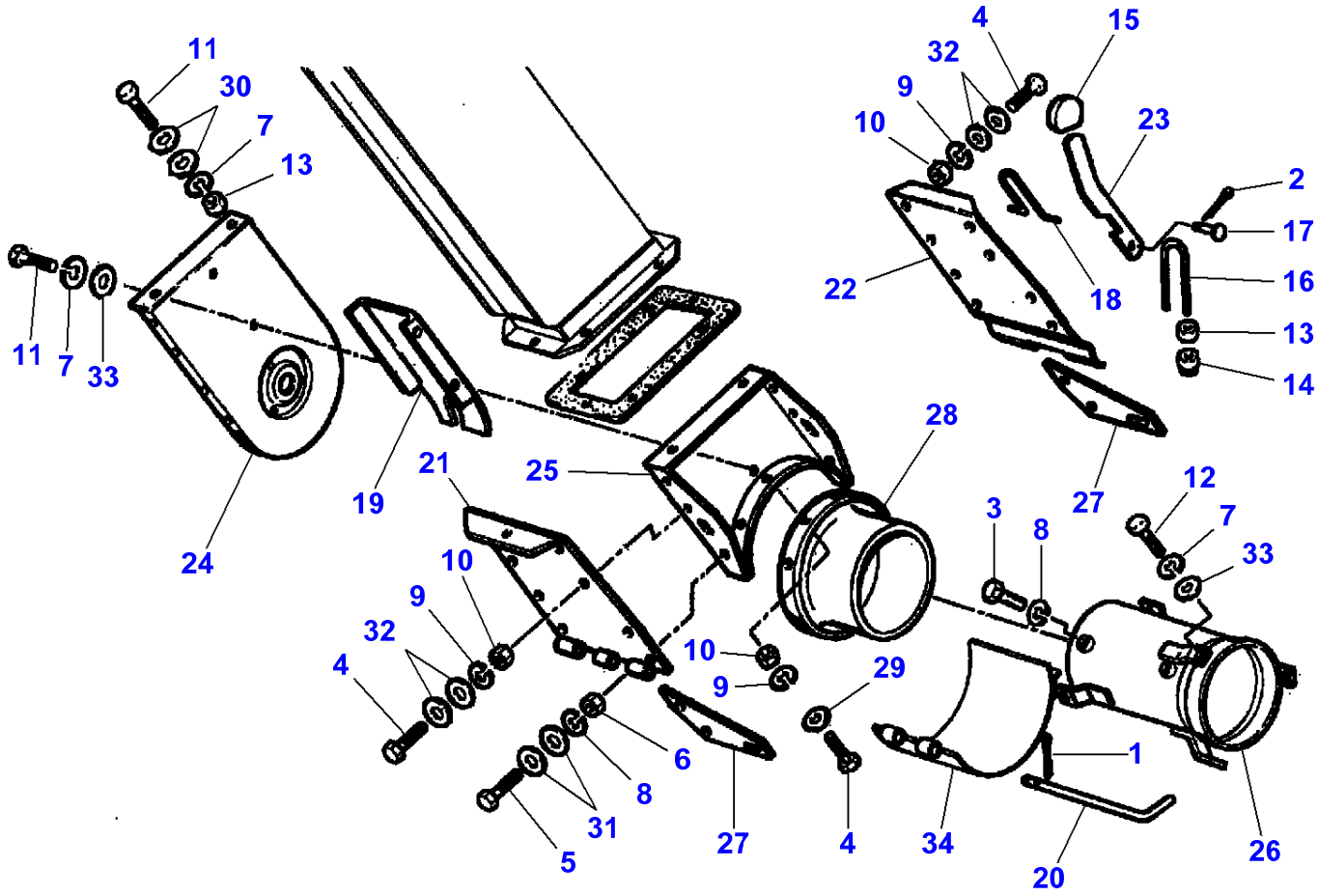
11
30
7
13
11
7
33
24
19
21
25
28
4
32
9
10
15
23
2
17
16
13
14
22
18
27
12
7
33
3
8
10
9
29
4
32
9
10
6
8
31
5
27
4
34
1
20
26

Item	Part Number	Qty	Description	Comments
1	LA10733601	1	Split Pin	
2	LA10734401	1	Split Pin	
3	LA10857221	1	Cap Screw	
4	LA10902224	3	Cap Screw	
5	LA11106221	1	Cap Screw	
6	LA11701721	1	Nut	
7	LA12034571	3	Lock Washer	
8	LA12034671	2	Lock Washer	
9	LA12035670	3	Lock Washer	
10	LA15896221	3	Nut	
11	LA16043424	2	Cap Screw	
12	LA16043624	1	Cap Screw	
13	LA16100811	2	Nut	
14	LA16104121	1	Locknut	
15	LA300063527	1	Knob	
16	LA320694450	1	Collar	
17	LA320694550	1	Pin	
18	LA321826150	1	U Bolt	
19	LA321848850	1	Lid	
20	LA321848950	1	Roll Pin	
21	LA321850150	1	Lid	
22	LA321850250	1	Lid	
23	LA321851050	1	Lever	
24	LA321851850	1	Lid	
25	LA321852050	1	Shield	
26	LA321939850	1	Tube	
27	LA321949550	2	Plate	
28	LA322125350	1	Connector	
29	LA355500715	1	Flat Washer	
30	LA355500920	2	Flat Washer	
31	LA355501120	2	Flat Washer	
32	LA355510615	4	Flat Washer	
33	LA355510820	2	Flat Washer	
34		1	Lid	See Page - Reference Number 060-0035/1

L-LD20-003-A

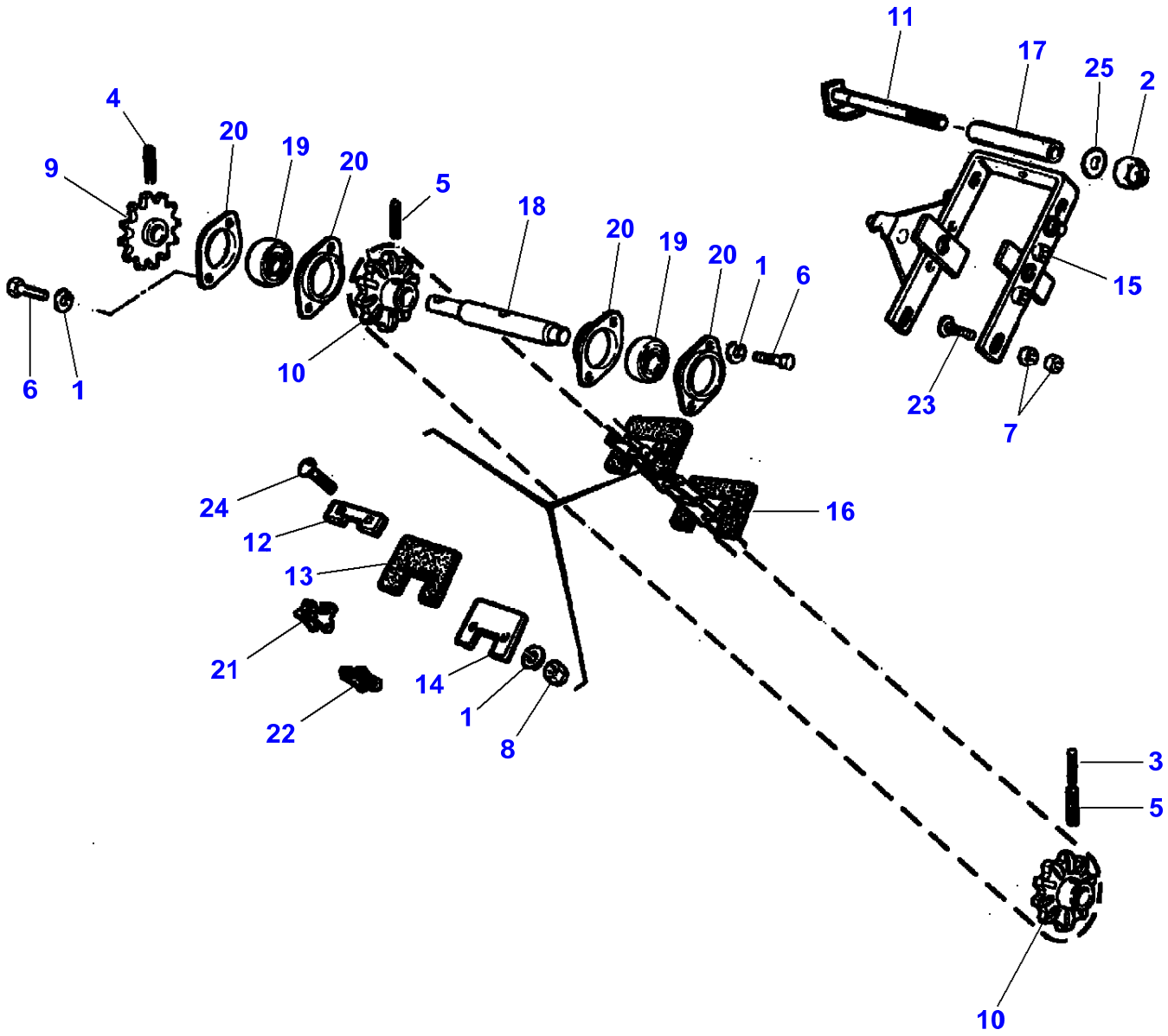
11
17
25
2
4
20
19
20
5
18
20
19
20
1
6
9
15
6
1
10
23
7
24
16
12
13
21
14
1
8
22
3
5
10

Item	Part Number	Qty	Description
1	LA12034571	3	Lock Washer
2	LA12577211	1	Nut
3	LA14604570	1	Pin
4	LA14607270	1	Pin
5	LA14610370	2	Roll Pin
6	LA16043424	2	Cap Screw
7	LA16100811	2	Nut
8	LA16104111	1	Locknut
9	LA300110254	1	Gear
10	LA300132810	2	Gear
11	LA320592250	1	Pin
12	**LA321814650**	1	Reinforcement
13	**LA321821950**	1	Paddle
14	**LA321822050**	1	Reinforcement
15	LA321861050	1	Support
16	**LA321862400**	1	Chain
17	LA321952850	1	Spacer
18	LA322127050	1	Shaft
19	**LA340411236**	2	Bearing Assy
20	LA340411458	4	Bearing Flange
21	**LA344382162**	1	Chain Link
22	**LA344382163**	1	Chain Link
23	LA350342512	1	Carriage Bolt
24	LA350342513	1	Carriage Bolt
25	LA355511050	1	Flat Washer

L-LD20-004-A

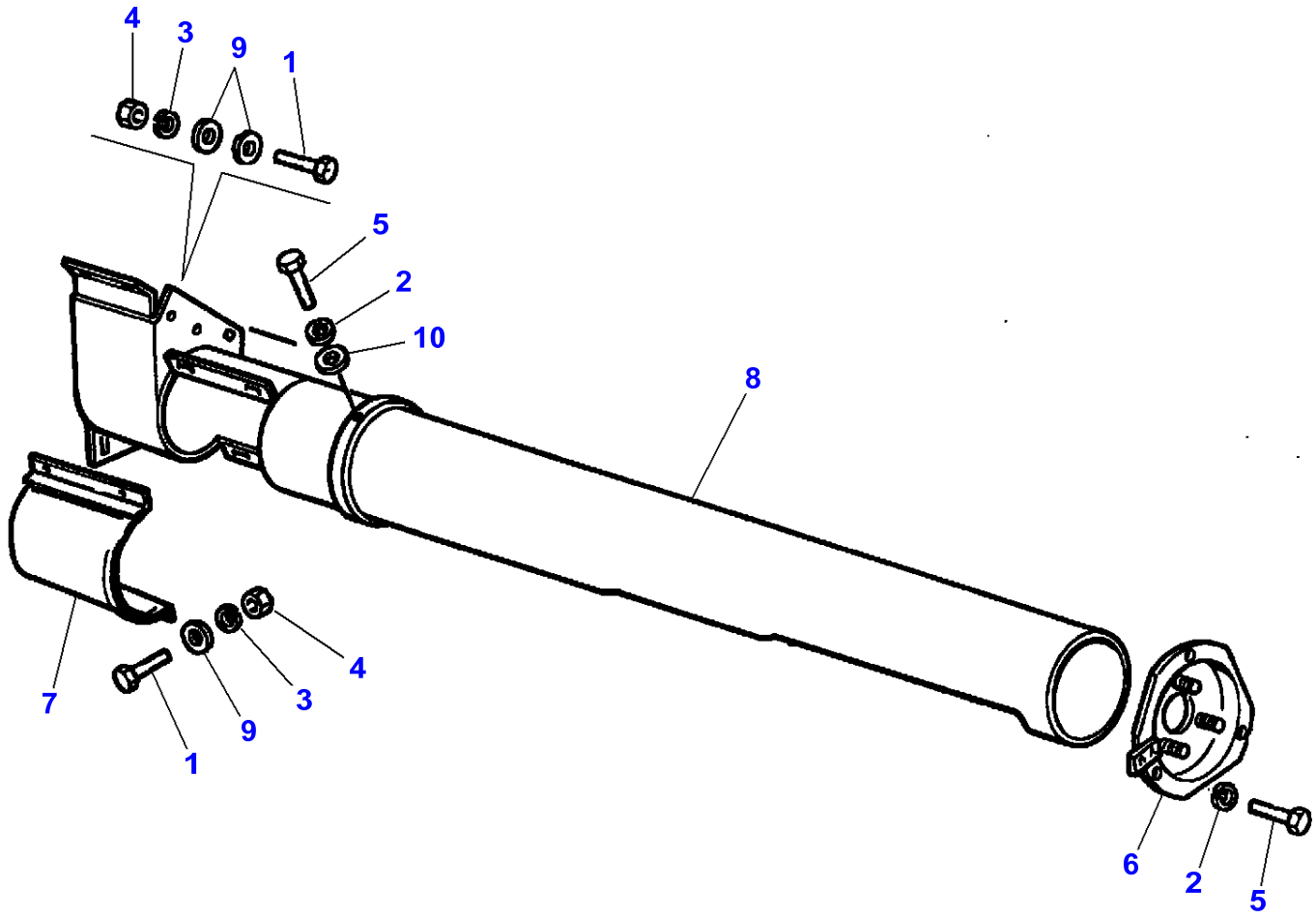

Item	Part Number	Qty	Description
1	LA10902224	2	Cap Screw
2	LA12034571	3	Lock Washer
3	LA12035670	2	Lock Washer
4	LA15896221	2	Nut
5	LA16043224	2	Cap Screw
6	LA322126650	1	Cover
7	LA322857950	1	Lid
8	LA323042050	1	Tube
9	LA355500715	3	Flat Washer
10	LA355510820	1	Flat Washer

L-LD20-005-A

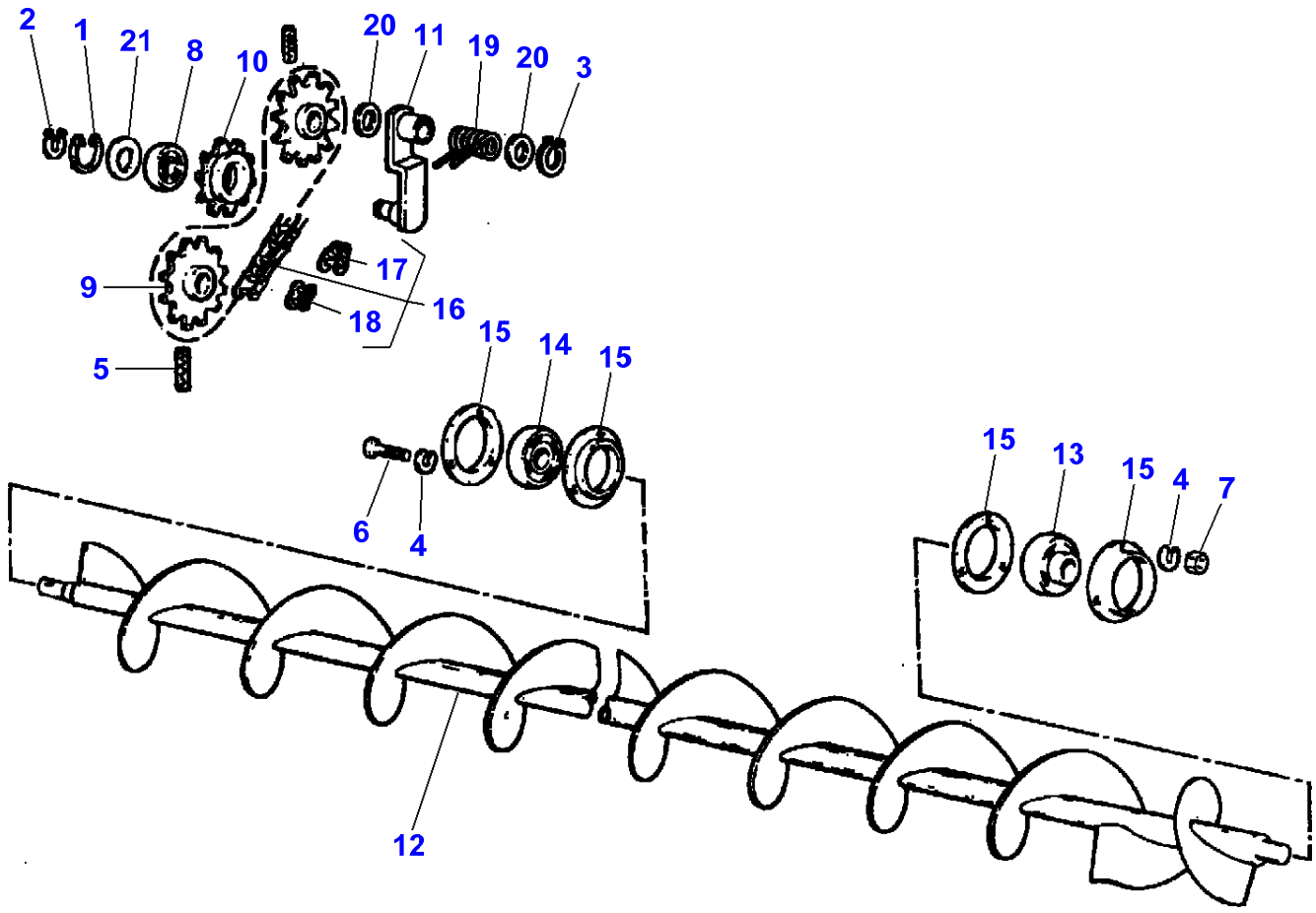

Item	Part Number	Qty	Description	Comments
1	LA11059476	1	Circlip	
2	LA11066376	1	Circlip	
3	LA11066876	1	Circlip	
4	LA12034571	2	Lock Washer	
5	LA14607270	1	Pin	
6	LA16043024	1	Cap Screw	
7	LA16100811	1	Nut	
8	**LA28996490**	1	Bearing Assy	
9	LA300110254	1	Gear	
10	LA300121612	1	Gear	
11	LA321281850	1	Support	
12	LA322126850	1	Auger	
13	**LA340411204**	1	Bearing Assy	
14	**LA340411236**	1	Bearing Assy	
15	LA340411404	4	Bearing Flange	
16	**LA340437248**	1	Chain	
17	**LA340437201**	1	Chain Link	(16)
18	**LA340437200**	1	Chain Link	(16)
19	LA350356925	1	Spring	
20	LA355533810	2	Flat Washer	
21	LA355536210	1	Flat Washer	

L-LD15-001-A

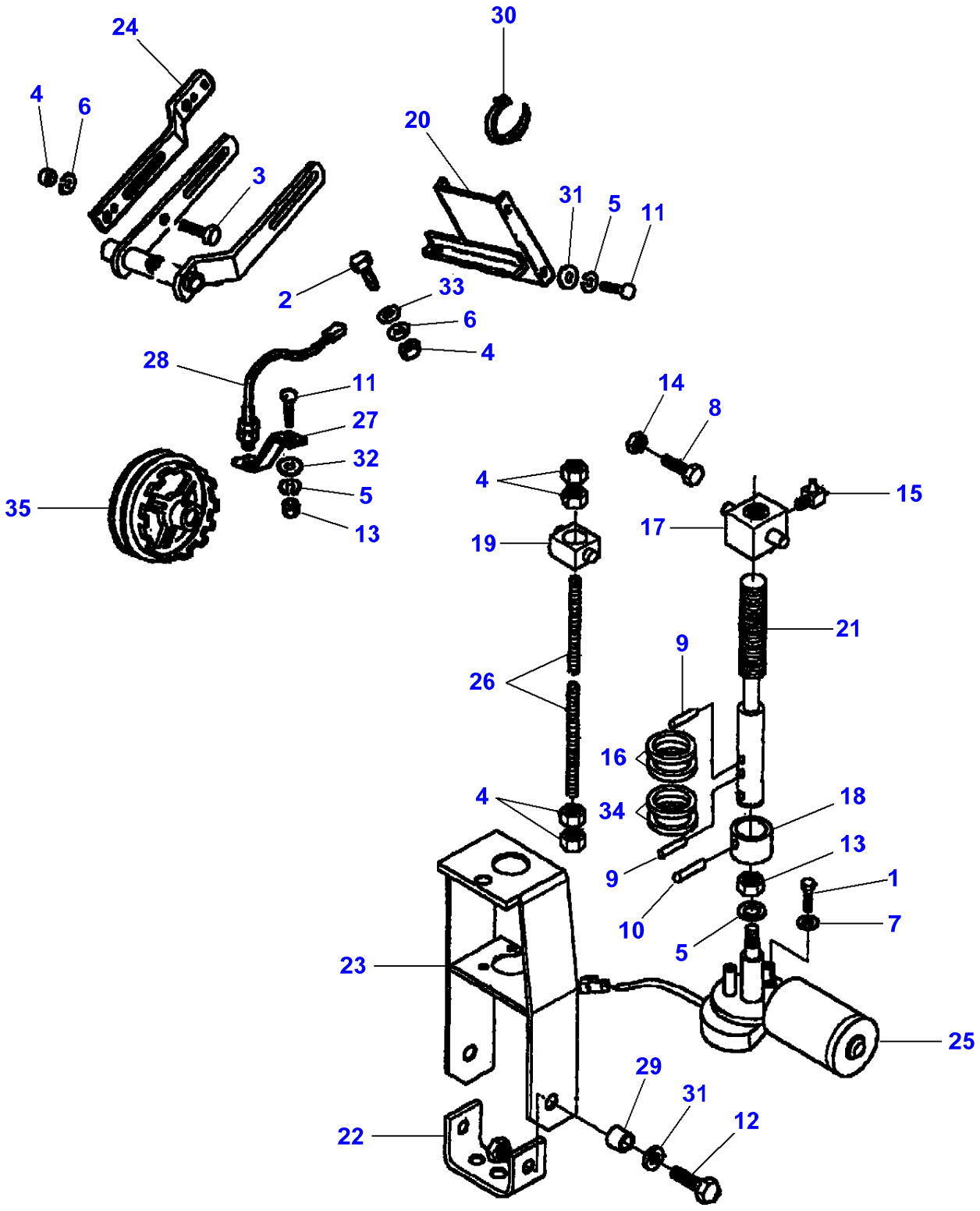
24
4
6
3
30
20
31
5
11
2
33
6
4
28
11
27
32
5
13
35
14
8
4
15
19
17
21
9
26
16
4
34
18
13
9
1
10
7
5
23
25
29
31
22
12

Item	Part Number	Qty	Description	Comments
1	LA10902224	1	Cap Screw	
2	LA11106424	1	Cap Screw	
3	LA11106621	1	Cap Screw	
4	LA11701721	6	Nut	
5	LA12034571	3	Lock Washer	Up to Serial or Engine Number
6	LA12034671	2	Lock Washer	
7	LA12035670	1	Lock Washer	
8	LA13181601	1	Carriage Bolt	
9	LA14604170	2	Roll Pin	
10	LA14604370	1	Roll Pin	Up to Serial or Engine Number
11	LA16043424	2	Cap Screw	Up to Serial or Engine Number
12	LA16043624	1	Cap Screw	
13	LA16100811	2	Nut	
14	LA16104111	1	Locknut	
15	LA80323713	1	Nipple	
16	LA80350606	1	Ring	
17	LA89831500	1	Nut	
18	LA89831501	1	Bush	
19	LA311444161	1	Pin	
20	LA321936350	1	Support	Up to Serial or Engine Number
21	LA322731350	1	Pin	
22	LA322732150	1	Support	
23	LA322732250	1	Support	
24	LA322732350	1	Plate	
25	LA322732400	1	Electric Motor	
26	LA322733250	2	Stud	
27	LA322768350	1	Support	
28	**LA322861400**	1	Sensor	
29	LA340415607	1	Bush	
30	LA340481810	1	Cable Tie	
31	LA355500915	2	Flat Washer	Up to Serial or Engine Number
32	LA355510820	1	Flat Washer	
33	LA355511030	1	Flat Washer	
34	LA355534030	1	Ring	
35		1	Pulley	See Page - Reference Number 070-0110/11

L-LD21-001-A

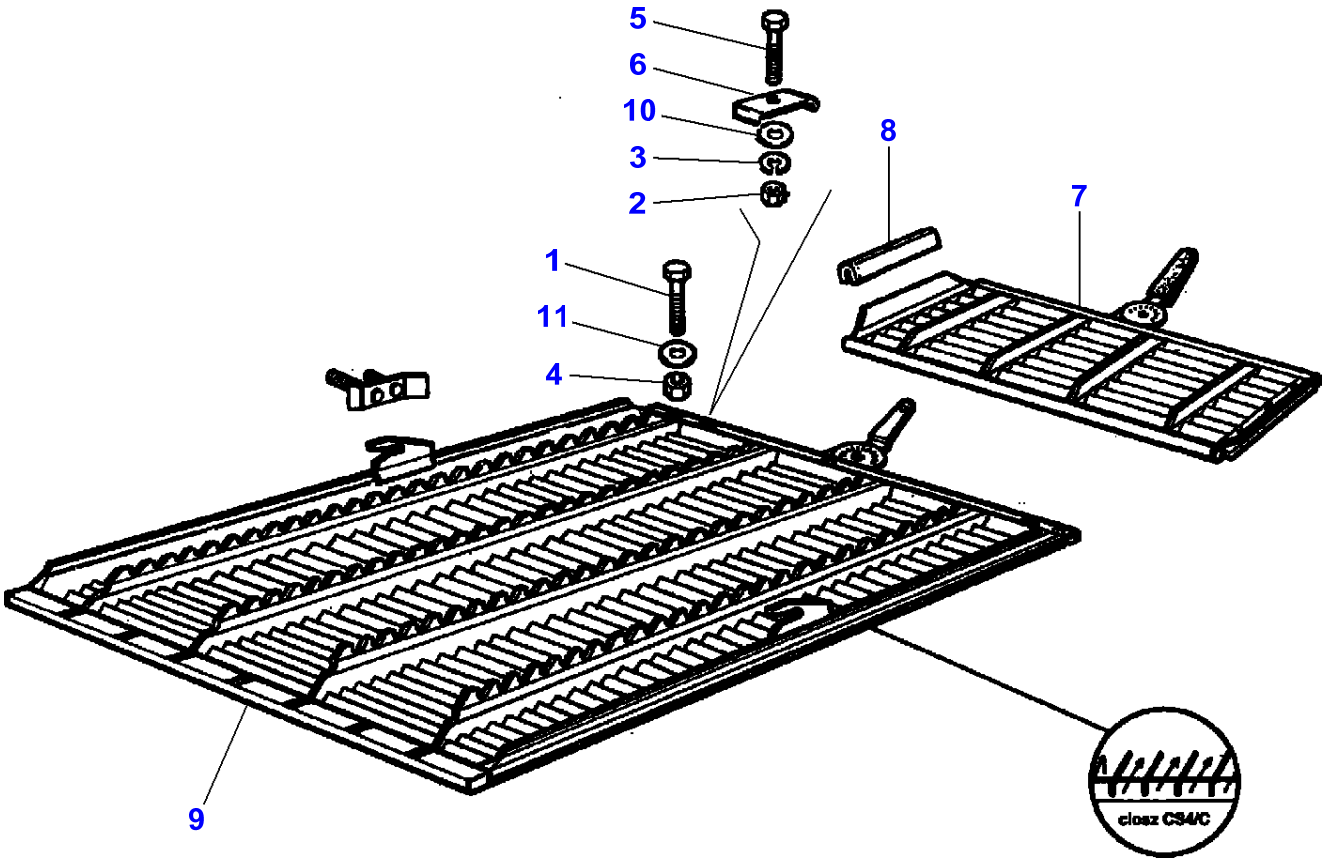

Item	Part Number	Qty	Description	Comments
1	LA11107311	2	Cap Screw	
2	LA11701721	2	Nut	
3	LA12034671	1	Lock Washer	
4	LA12577211	2	Nut	
5	LA16040821	2	Cap Screw	
6	LA321839150	2	Plate	
7	LA322136700	1	Extension	
8	LA322204350	1	Gasket	
9	LA322230400	1	Sieve	CS4/C
10	LA355501120	2	Flat Washer	
11	LA355511030	2	Flat Washer	

L-LD22-001-A

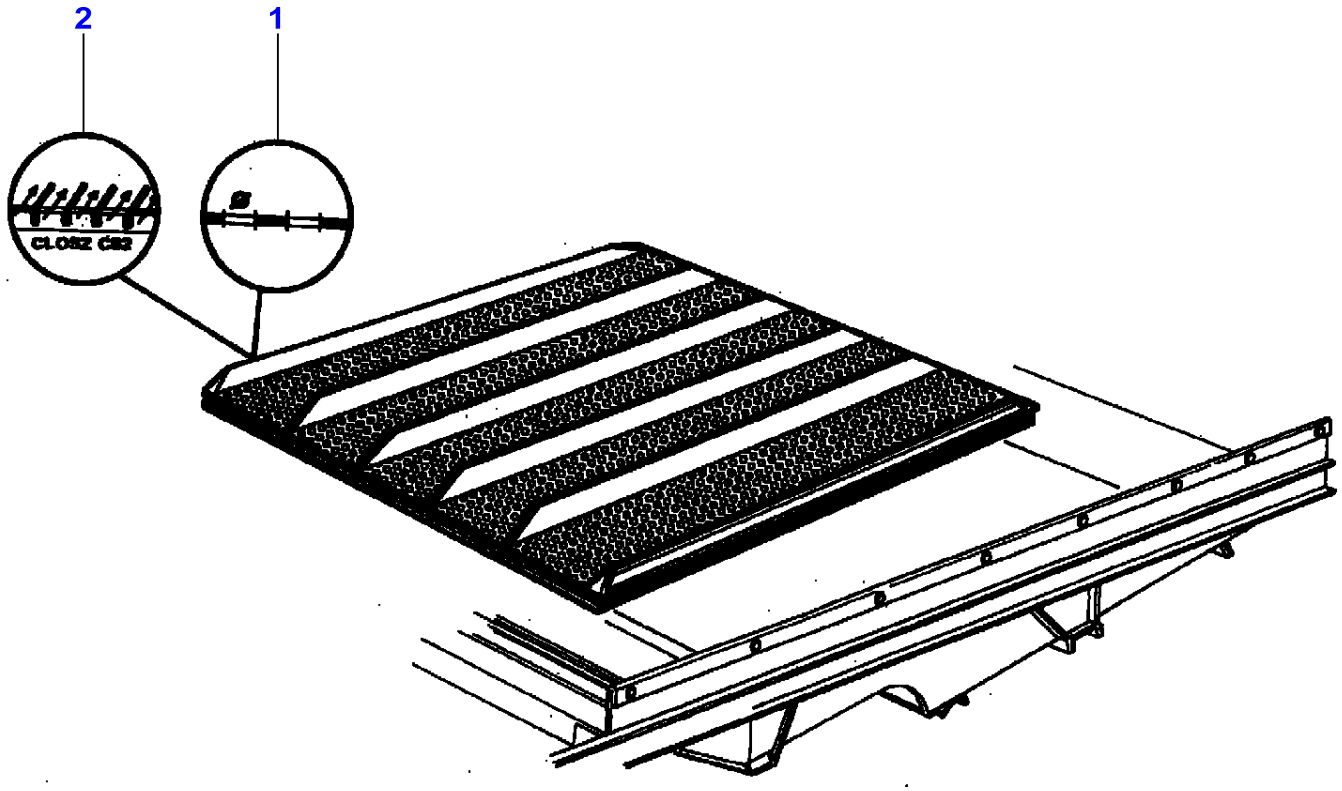

Item	Part Number	Qty	Description	Comments
1	LA320959950	1	Sieve	Diameter 5 mm
	LA320960250	1	Sieve	Diameter 8 mm
	LA320960350	1	Sieve	Diameter 10 mm
	LA320960450	1	Sieve	Diameter 12 mm
	LA320960650	1	Sieve	Diameter 16 mm
	LA320960750	1	Sieve	Diameter 18 mm
	LA320960850	1	Sieve	Diameter 20 mm
2	LA320970000	1	Sieve	

L-LD23-001-B

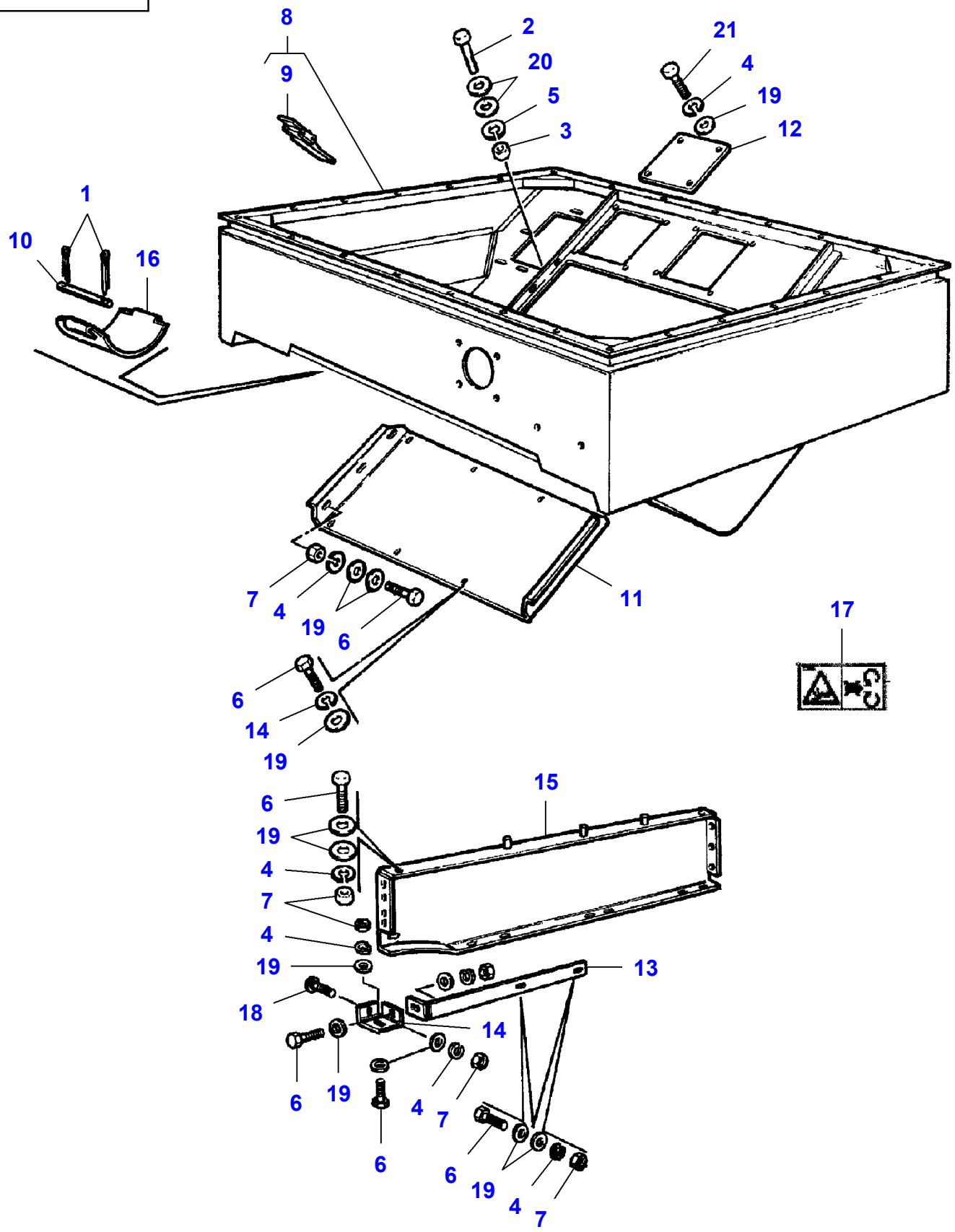
8
9
2
20
5
3
21
4
19
12
1
10
16
11
7
4
19
6
6
14
19
17
15
6
19
4
7
4
19
18
13
14
6
19
4
7
6
6
19
4
7

Item	Part Number	Qty	Description	Comments
1	LA10734401	2	Split Pin	
2	LA11106424	1	Cap Screw	
3	LA11701721	1	Nut	
4	LA12034571	8	Lock Washer	
5	LA12034671	1	Lock Washer	
6	LA16043424	7	Cap Screw	
7	LA16100811	6	Nut	
8	LA323085850	1	Tank	
9	LA300134779	1	Hook	(8)
10	LA320547450	1	Roll Pin	
11	LA321808150	1	Lid	
12	LA322152050	1	Cover	
13	LA322314650	1	Angle.	
14	LA322320150	1	Angle.	
15	LA322802650	1	Plate	
16	LA320547350	1	Lid	
17	LA341000033	1	Decal	
18	LA350342511	1	Carriage Bolt	
19	LA355510820	11	Flat Washer	
20	LA355511030	2	Flat Washer	
21	LA16043224	1	Cap Screw	

L-LD23-002-A

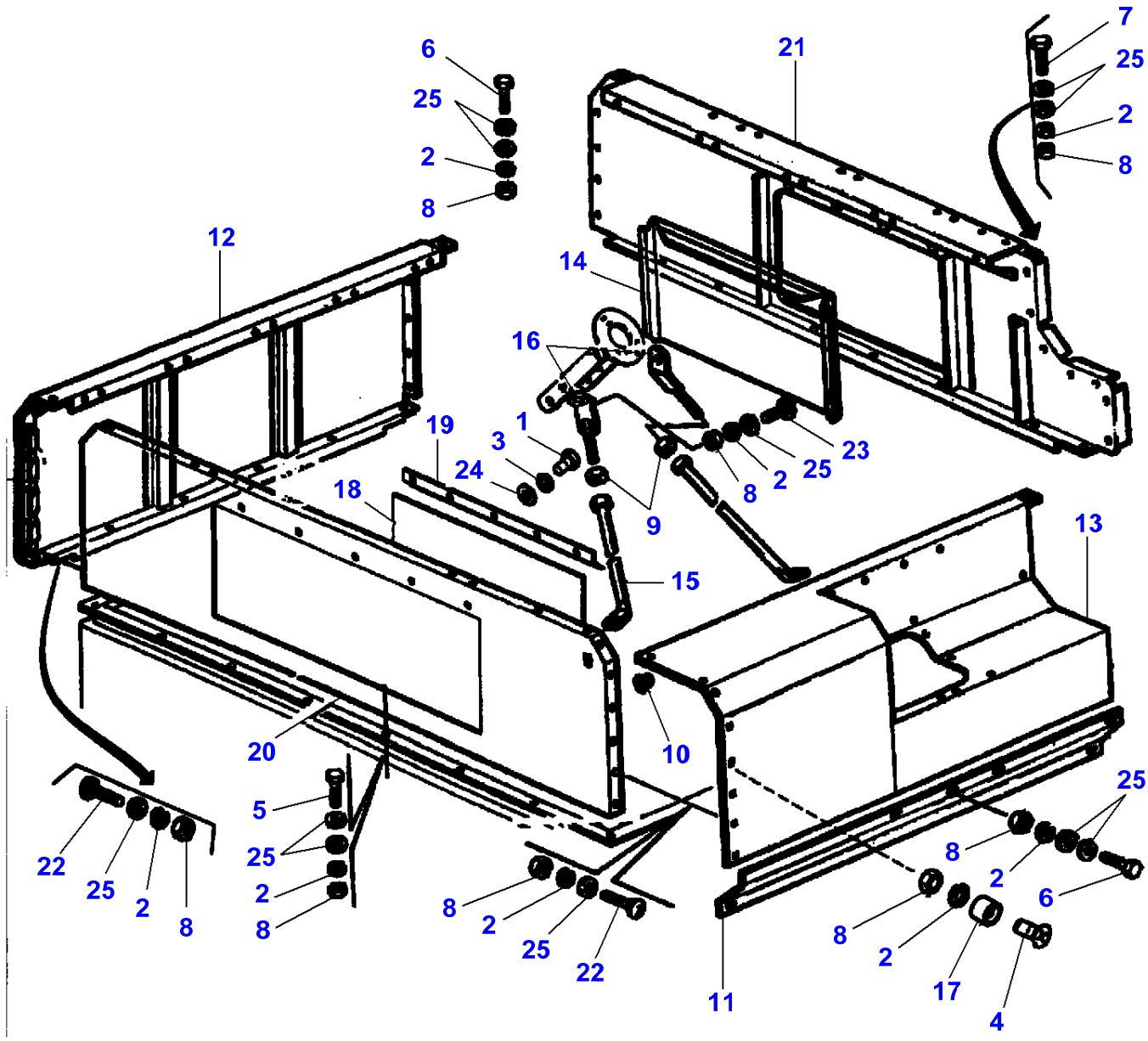
6
25
2
8
21
7
25
2
8
12
14
16
19
1
3
24
18
9
15
23
25
2
8
13
20
10
5
25
2
8
22
25
2
8
8
2
25
22
11
25
8
2
6
8
2
17
4

Item	Part Number	Qty	Description
1	LA10902124	1	Cap Screw
2	LA12034571	8	Lock Washer
3	LA12035674	1	Lock Washer
4	LA14442031	1	Screw
5	LA16043224	1	Cap Screw
6	LA16043424	2	Cap Screw
7	LA16043624	1	Cap Screw
8	LA16100811	8	Nut
9	LA16103611	2	Nut
10	LA300137109	1	Plug
11	LA322601050	1	Extension
12	LA322607850	1	Side
13	LA322626150	1	Side
14	LA322628850	1	Lid
15	LA322793550	2	Stop
16	LA322793650	2	Tie Rod
17	LA322803050	1	Bush
18	LA322846450	1	Glass
19	LA322893650	1	Support
20	LA322952350	1	Wall
21	LA322966450	1	Wall
22	LA350342511	1	Carriage Bolt
23	LA350342512	1	Carriage Bolt
24	LA355500715	1	Flat Washer
25	LA355510820	11	Flat Washer

L-LD23-003-B

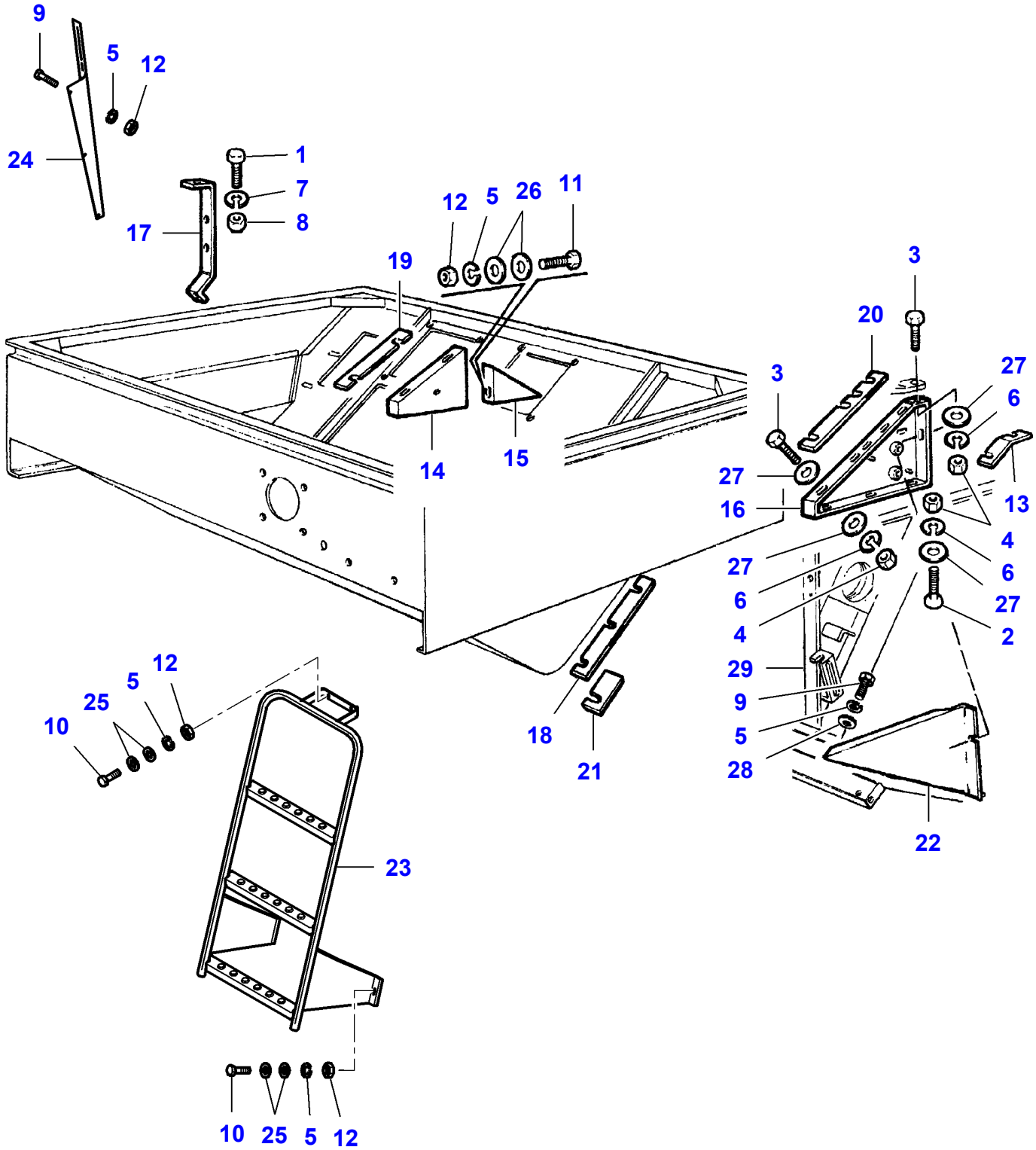
9
5
12
24
1
7
8
17
12
5
26
11
19
14
15
3
20
3
27
6
27
16
13
4
27
6
6
4
27
2
29
9
5
28
22
18
21
12
5
25
10
23
10
25
5
12

Item	Part Number	Qty	Description	Comments
1	LA10902224	1	Cap Screw	
2	LA11106221	1	Cap Screw	
3	LA11106424	2	Cap Screw	
4	LA11701721	2	Nut	
5	LA12034571	6	Lock Washer	
6	LA12034671	3	Lock Washer	
7	LA12035670	1	Lock Washer	
8	LA15896221	1	Nut	
9	LA16043224	1	Cap Screw	
10	LA16043421	4	Cap Screw	
11	LA16043424	1	Cap Screw	
12	LA16100811	5	Nut	
13	LA320720750	1	Shim	
14	LA321805250	1	Plate	
15	LA321809950	1	Plate	
16	LA321851250	1	Guard	
17	LA321962950	1	Support	
18	LA322031350	1	Shim	
19	LA322223450	1	Shim	
20	LA322223550	1	Shim	
21	LA322312850	1	Shim	
22	LA322492350	1	Shield	
23	LA322974050	1	Ladder	
24	LA322989150	1	Support	
25	LA355500915	8	Flat Washer	
26	LA355510820	2	Flat Washer	
27	LA355511030	5	Flat Washer	
28	LA355520820	1	Washer	
29		1	Side	See Page - Reference Number 060-0005/18

L-LC42-001-B

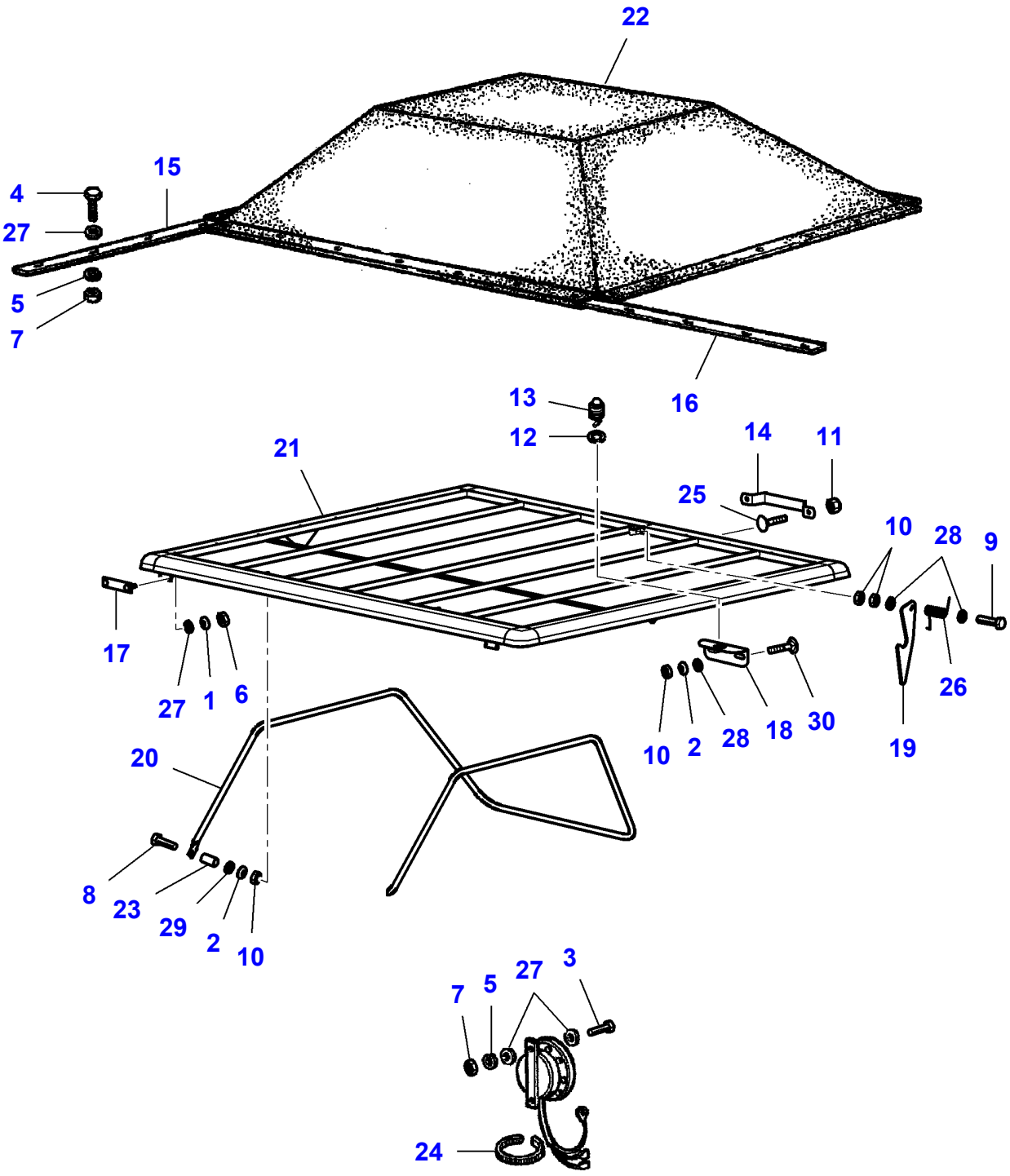
22
15
4
27
5
7
16
13
12
14
11
21
25
10
28
9
17
27
1
6
26
10
2
28
18
30
19
20
8
23
29
2
10
7
5
27
3
24

Item	Part Number	Qty	Description
1	LA322357	1	Lock Washer
2	LA322358	2	Lock Washer
3	LA10902224	1	Cap Screw
4	LA10902424	1	Cap Screw
5	LA12035670	2	Lock Washer
6	LA15896211	1	Nut
7	LA15896221	2	Nut
8	LA16043624	1	Cap Screw
9	LA16044024	1	Cap Screw
10	LA16100811	4	Nut
11	LA16104111	1	Locknut
12	LA320899350	1	Lock Washer
13	LA321551650	1	Screw Special
14	LA321836450	1	Grip
15	LA322601350	1	Reinforcement
16	LA322626050	1	Reinforcement
17	LA322789850	1	Plate
18	LA323058250	1	Plate
19	LA323062550	1	Hook
20	LA323087950	1	Support
21	LA323088050	1	Cover
22	LA323143250	1	Canvas
23	LA340415068	1	Bush
24	LA340481810	1	Cable Tie
25	LA350342510	1	Carriage Bolt
26	LA350356822	1	Spring
27	LA355500715	4	Flat Washer
28	LA355500920	3	Flat Washer
29	LA355510820	1	Flat Washer
30	LA366000614	1	Carriage Bolt

L-LC42-002-B

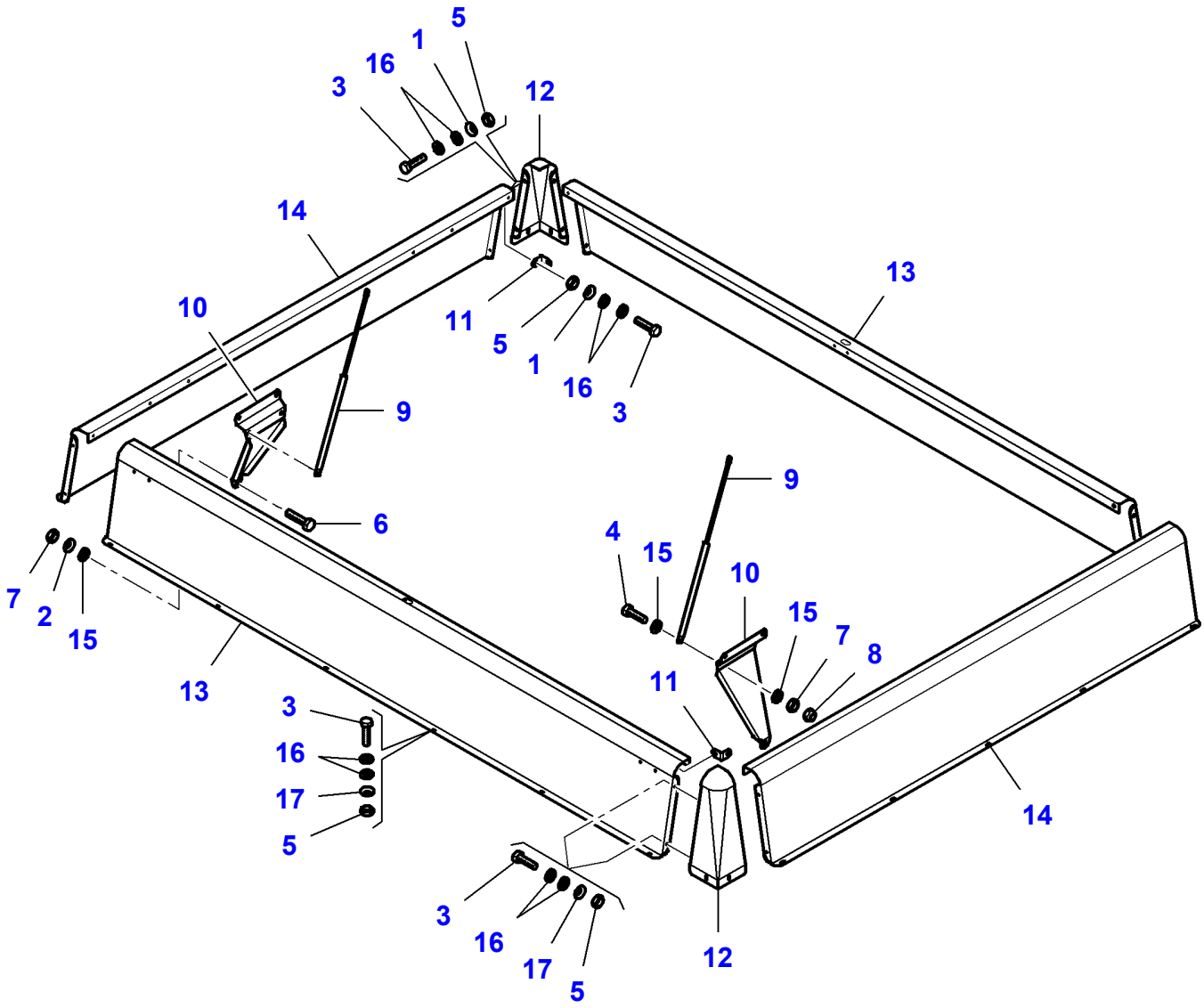
5
1
16
3
12
14
13
10
11
5
1
16
3
9
6
9
4
15
10
15
7
8
11
7
2
15
13
3
16
17
5
14
3
16
17
5
12

Item	Part Number	Qty	Description	Comments
1	LA322357	3	Lock Washer	
2	LA322358	2	Lock Washer	
3	LA10902224	6	Cap Screw	
4	LA15213321	1	Cap Screw	
5	LA15896221	6	Nut	
6	LA16043421	6	Cap Screw	
7	LA16100811	3	Nut	
8	LA16104111	1	Locknut	
9	LA240000018	2	Gas Strut	Repairs and replaces LA322797850
10	LA323059250	2	Support	
11	LA323059350	2	Bracket	
12	LA323063550	2	Angle.	
13	LA323088150	2	Extension	
14	LA323088250	2	Extension	
15	LA355500920	4	Flat Washer	
16	LA355510615	12	Flat Washer	
17	LA322356	3	Washer	

L-LD24-001-A

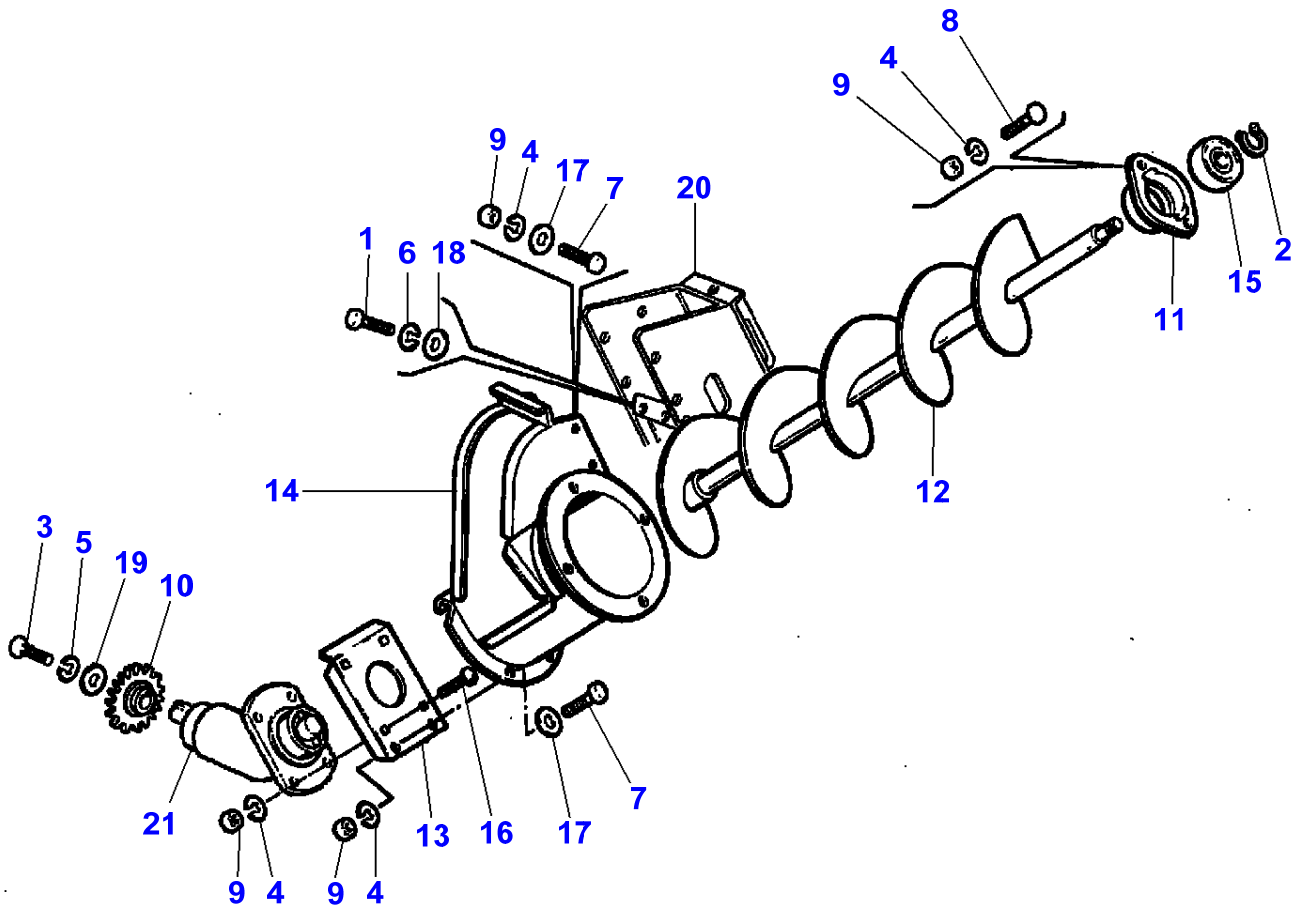

Item	Part Number	Qty	Description	Comments
1	LA10902224	2	Cap Screw	
2	LA11067876	1	Circlip	
3	LA11106221	1	Cap Screw	
4	LA12034571	9	Lock Washer	
5	LA12034671	1	Lock Washer	
6	LA12035670	2	Lock Washer	
7	LA16043224	10	Cap Screw	
8	LA16043624	1	Cap Screw	
9	LA16100811	9	Nut	
10	LA321824650	1	Gear	
11	LA321824950	1	Flange	
12	LA322114850	1	Auger	Up to Serial or Engine Number
	LA323242650	1	Auger	From Serial or Engine Number 551710061
13	LA322116550	1	Support	
14	LA322116650	1	Housing	
15	**LA340411237**	1	Bear. 6206 2rs	
16	LA350342512	4	Carriage Bolt	
17	LA355500915	4	Flat Washer	
18	LA355510720	2	Washer	
19	LA355521050	1	Flat Washer	
20		1	Elevator	See Page - Reference Number 070-0125/12
21		1	Support	See Page - Reference Number 080-0045/12

L-LD24-002-A

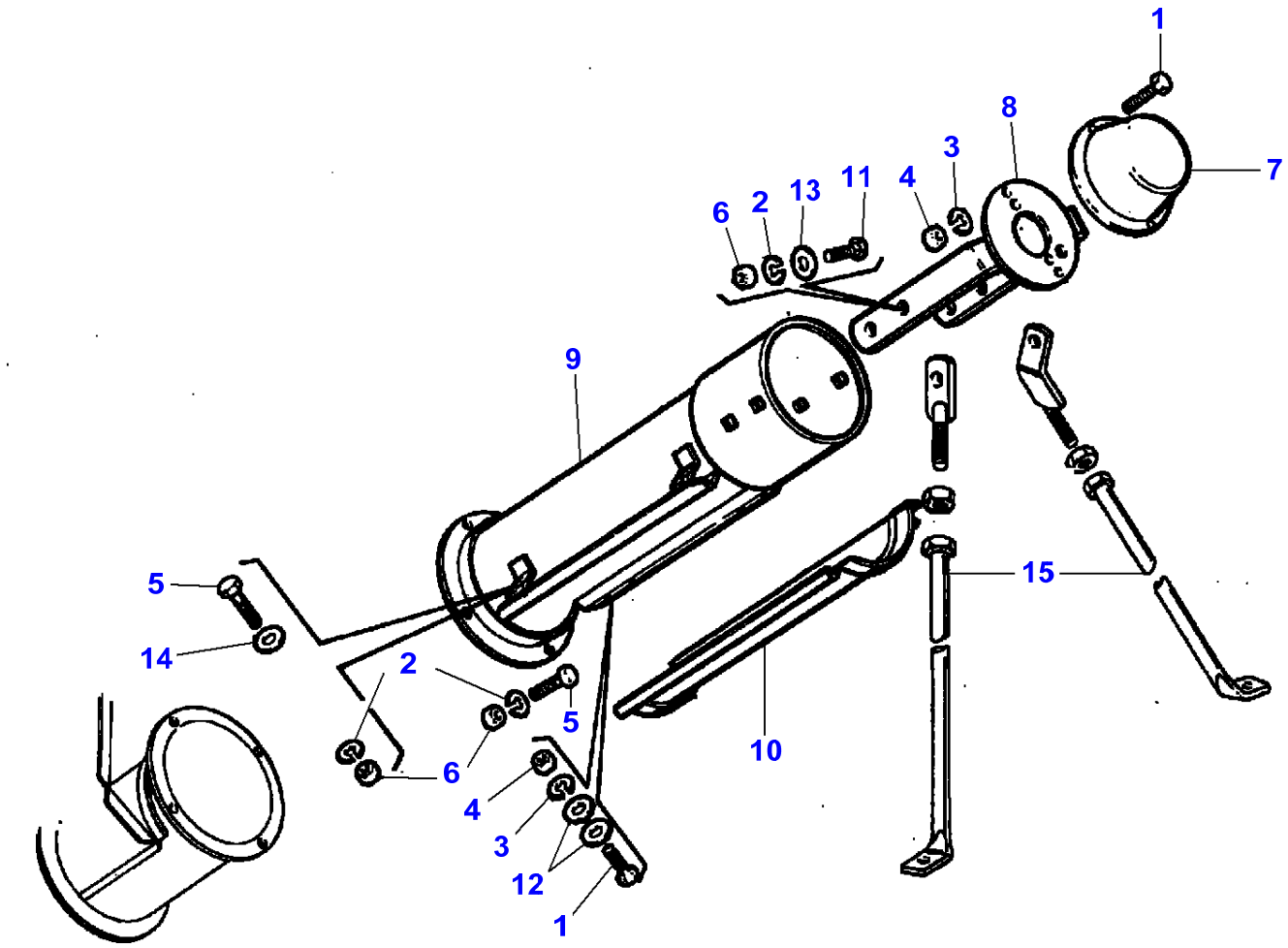

Item	Part Number	Qty	Description	Comments
1	LA10902224	2	Cap Screw	
2	LA12034571	7	Lock Washer	
3	LA12035670	3	Lock Washer	
4	LA15896221	3	Nut	
5	LA16043224	4	Cap Screw	
6	LA16100811	7	Nut	
7	LA321825150	1	Cover	
8	LA321825250	1	Support	
9	LA321851450	1	Tube	
10	LA321851550	1	Lid	
11	LA350342511	2	Carriage Bolt	
12	LA355500715	4	Flat Washer	
13	LA355500915	2	Flat Washer	
14	LA355510820	2	Flat Washer	
15		2	Tie Rod	See Page - Reference Number 080-0010

L-LD24-003-B

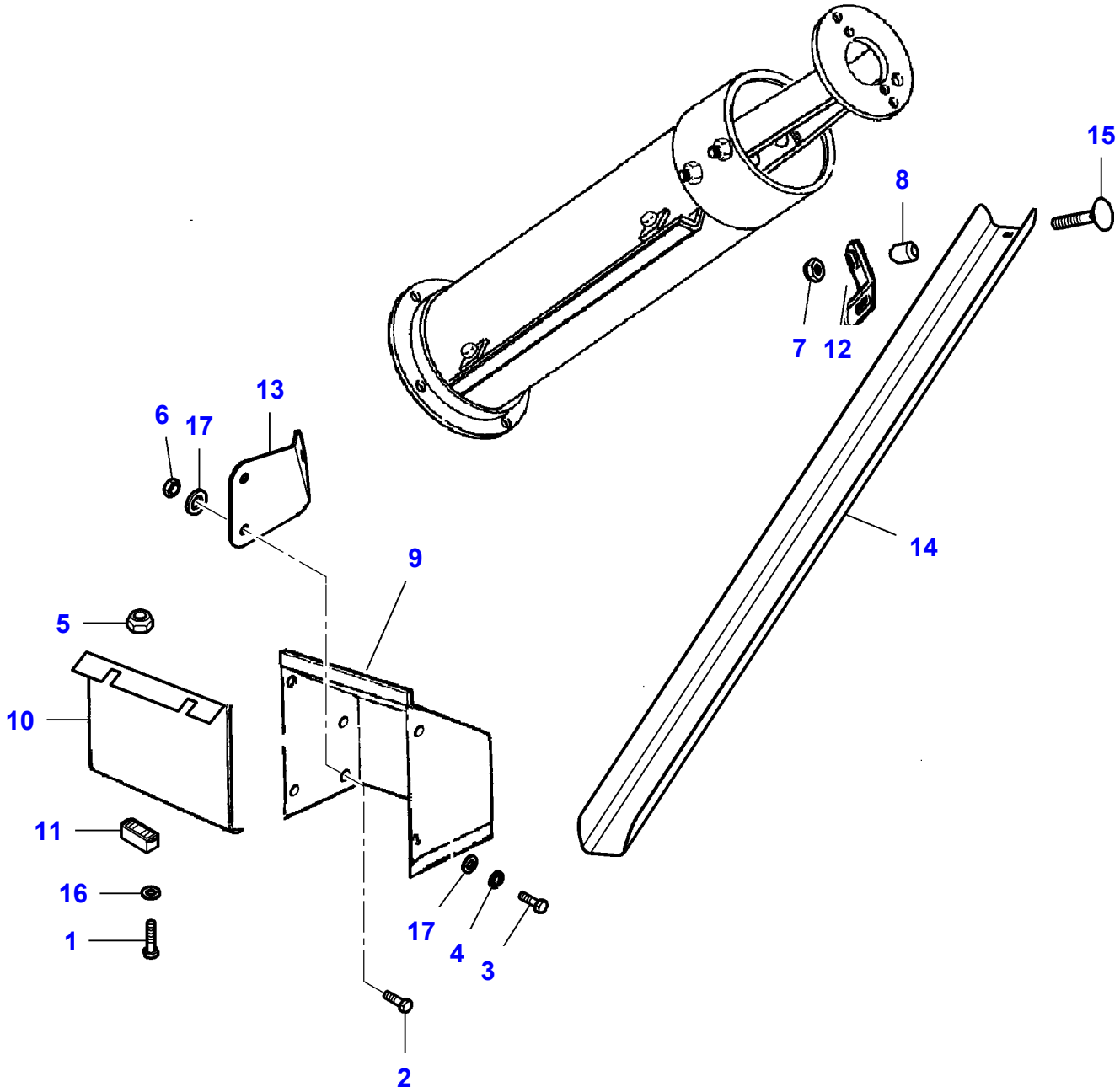

Item	Part Number	Qty	Description
1	LA10444821	1	Cap Screw
2	LA10902221	8	Cap Screw
3	LA10902224	1	Cap Screw
4	LA12035670	1	Lock Washer
5	LA12574011	1	Nut
6	LA15896211	1	Nut
7	LA16104111	1	Locknut
8	LA321295150	1	Support
9	LA322846050	1	Box
10	LA322846150	1	Lid
11	LA322915050	1	Magnet
12	LA323070450	1	Bracket
13	LA323094550	1	Bracket
14	LA323094650	1	Channel
15	LA350342512	1	Carriage Bolt
16	LA355500410	1	Washer
17	LA355500715	2	Flat Washer

L-LD25-001-B

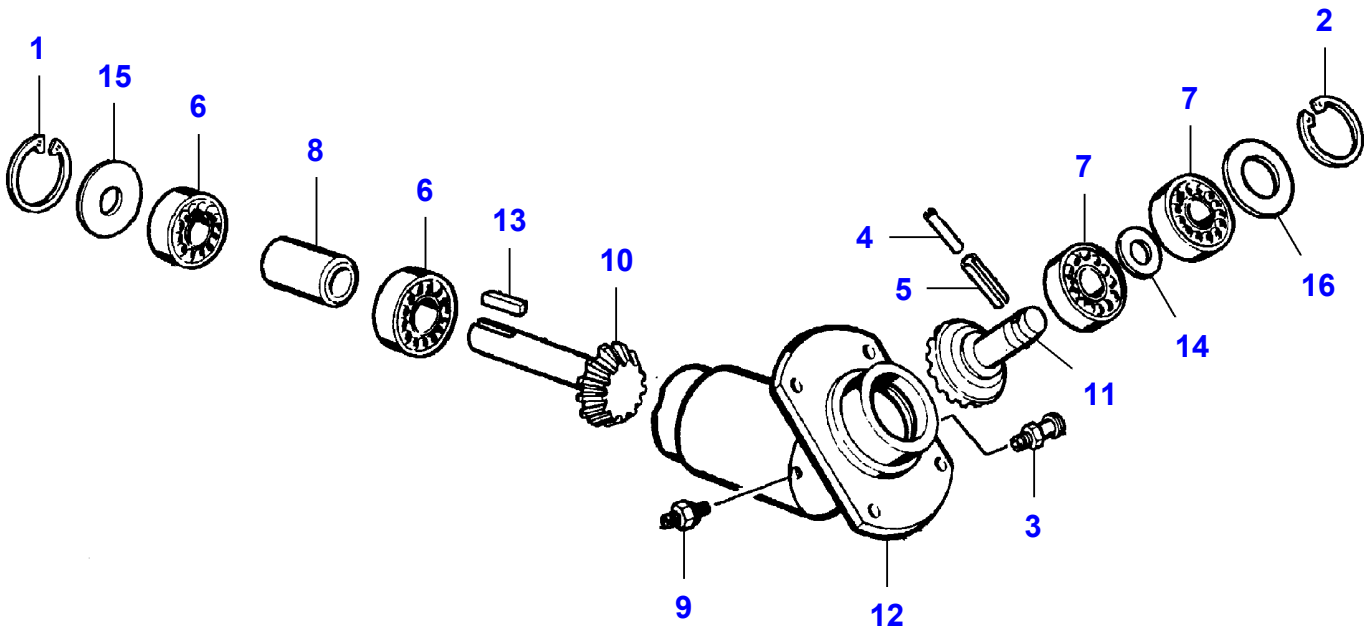

Item	Part Number	Qty	Description	Comments
1	LA11060276	1	Circlip	
2	LA11060676	1	Circlip	
3	LA11697291	1	Grease Fitting	
4	LA14604670	1	Roll Pin	
5	LA14610370	1	Roll Pin	
6	LA24905090	2	Bear. 6005 2rs	
7	**LA24905100**	2	Ball Bearing	
8	LA321824850	1	Spacer	
9	LA322017050	1	Union	
10	LA322116250	1	Bevel Pinion	
11	LA322116350	1	Bevel Pinion	
12	LA322366350	1	Support	
13	LA350384628	1	Key	
14	LA355538704	1	Washer	
15	LA355541404	1	Washer	Thickness 0,40 mm
	LA355541406	1	Washer	Thickness 0,60 mm
16	LA355544606	1	Washer	

L-LD26-001-B

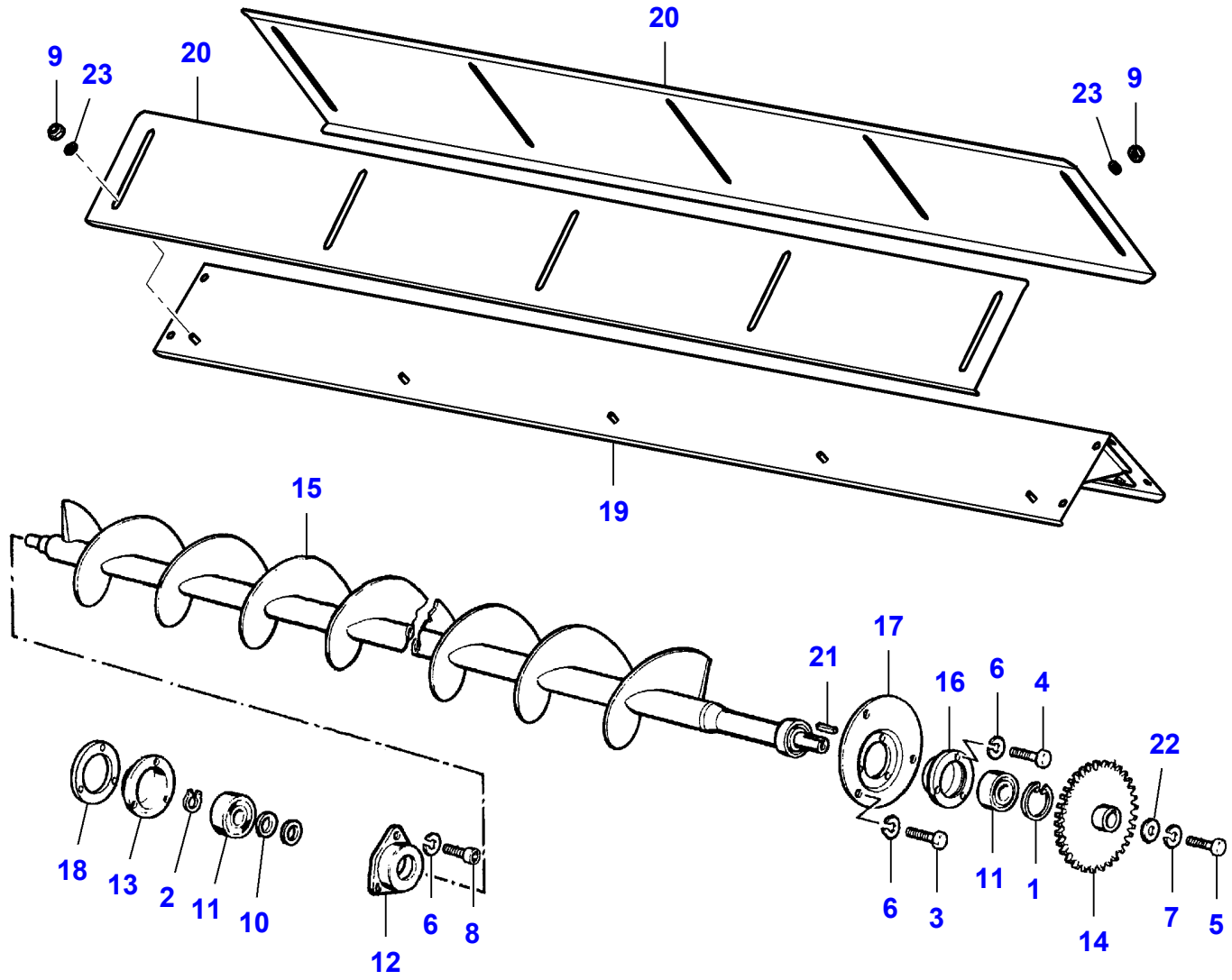

Item	Part Number	Qty	Description	Comments
1	LA11061076	1	Circlip	
2	LA11067876	1	Circlip	
3	LA11106021	1	Cap Screw	
4	LA11106221	1	Cap Screw	
5	LA11112424	1	Cap Screw	
6	LA12034671	3	Lock Washer	
7	LA12034771	1	Lock Washer	
8	LA14420221	1	Hex Socket Screw	
9	LA16104111	1	Locknut	
10	LA355538710	1	Washer	
11	**LA28996530**	2	Bearing Assy	
12	LA300011962	1	Support	
13	LA300112176	1	Cover	
14	LA300128263	1	Gear	
15	LA320603350	1	Auger	
16	LA321853450	1	Support	
17	LA321853550	1	Disc	
18	LA321944750	1	Shim	
19	LA323045950	1	Trough	
20	LA323046150	2	Plate	
21	LA350384428	1	Key	
22	LA355511240	1	Flat Washer	Repairs and replaces LA355511260
23	LA355520830	2	Flat Washer	

L-LD27-001-A

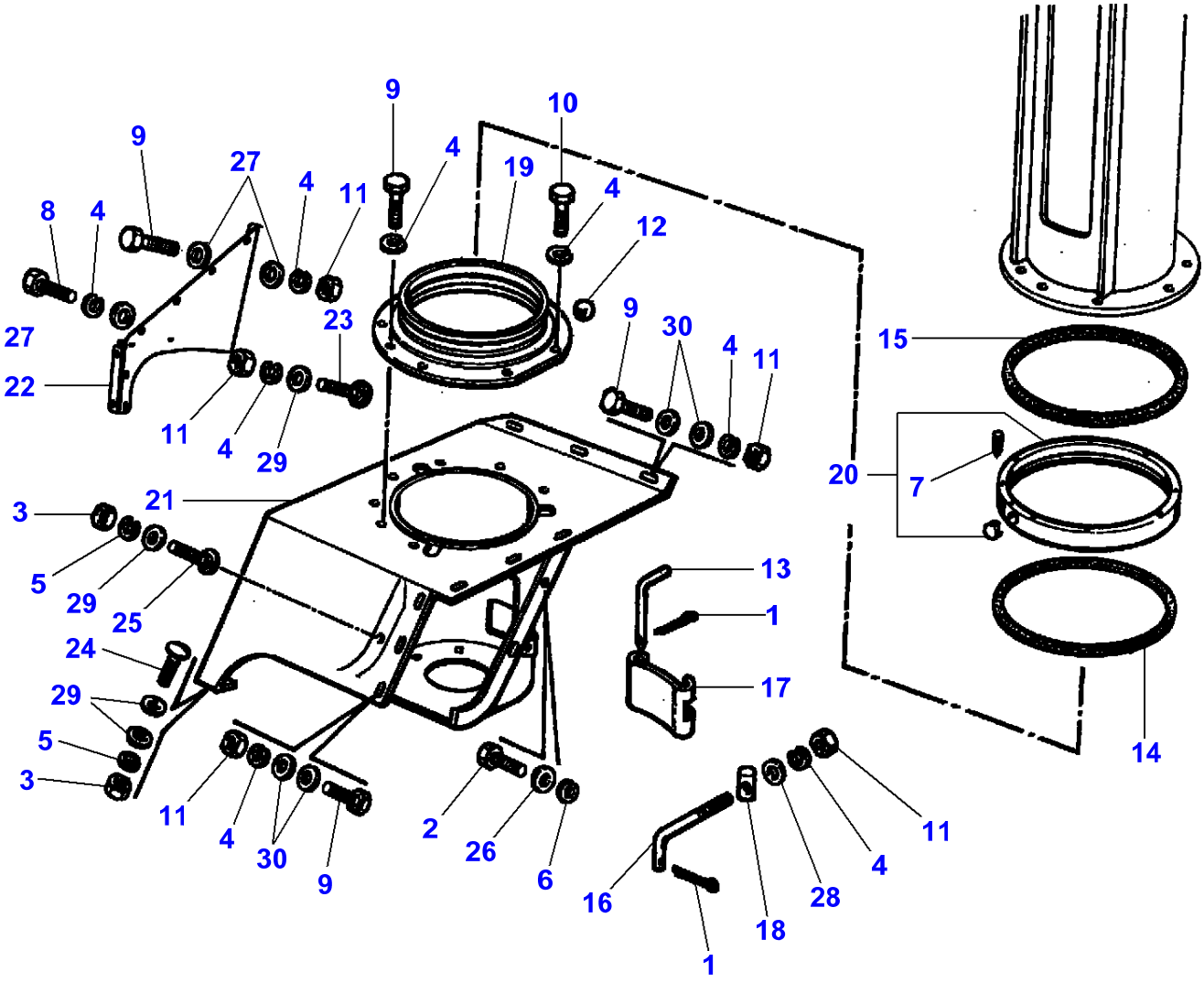
9
10
9
4
27
4
19
4
11
8
4
12
9
30
4
11
23
27
22
11
4
29
15
20
7
3
21
5
29
25
13
1
24
17
29
5
3
11
4
30
9
2
26
6
16
18
28
4
11
1
14

Item	Part Number	Qty	Description	Comments
1	LA10733601	2	Split Pin	
2	LA10979421	1	Cap Screw	
3	LA11701711	2	Nut	
4	LA12034571	8	Lock Washer	
5	LA12034671	2	Lock Washer	
6	LA12035670	1	Lock Washer	
7	LA13798870	1	Grub Screw	(20)
8	LA16043221	1	Cap Screw	
9	LA16043421	3	Cap Screw	
10	LA16043621	2	Cap Screw	
11	LA16100811	7	Nut	
12	LA20063520	1	Ball	
13	LA300018233	1	Latch	
14	LA320405250	1	Gasket	
15	LA320405350	1	Gasket	
16	LA321953650	1	Tie Rod	
17	LA321953750	1	Lid	
18	LA322001750	1	Pin	
19	LA322363750	1	Ring	
20	LA322364800	1	Ring	
21	LA323037850	1	Support	
22	LA323043050	1	Bracket	
23	LA350342511	10	Carriage Bolt	
24	LA350342520	1	Carriage Bolt	
25	LA350342525	1	Carriage Bolt	
26	LA355500715	1	Flat Washer	
27	LA355500915	4	Flat Washer	
28	LA355500930	1	Flat Washer	
29	LA355501120	4	Flat Washer	
30	LA355510820	4	Flat Washer	

L-LD27-002-A

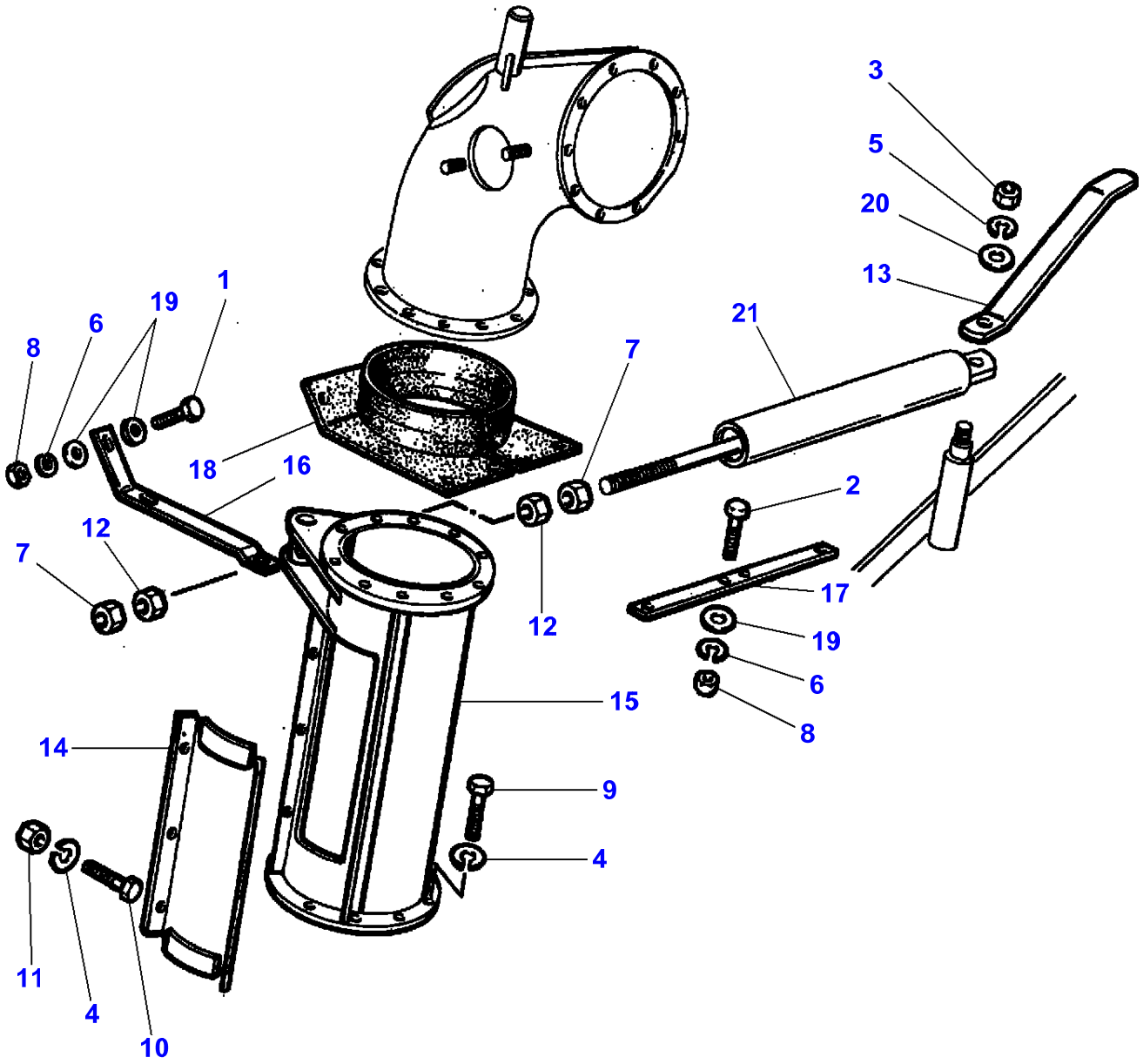

Item	Part Number	Qty	Description	Comments
1	LA10902424	1	Cap Screw	
2	LA10902621	1	Cap Screw	
3	LA11701721	1	Nut	
4	LA12034571	2	Lock Washer	
5	LA12034671	1	Lock Washer	
6	LA12035670	2	Lock Washer	
7	LA12163321	2	Nut	
8	LA15896221	2	Nut	
9	LA16043224	1	Cap Screw	
10	LA16043424	1	Cap Screw	
11	LA16100811	1	Nut	
12	LA300113225	2	Nut	
13	LA300137830	1	Reinforcement	
14	LA322044150	1	Lid	
15	LA322607250	1	Tube	
16	LA322683750	1	Reinforcement	
17	LA322683850	1	Reinforcement	
18	LA323143150	1	Cover	
19	LA355510615	2	Flat Washer	
20	LA355511030	1	Flat Washer	
21		1	Cylinder	See Page - Reference Number 080-0105/12

L-LD27-003-A

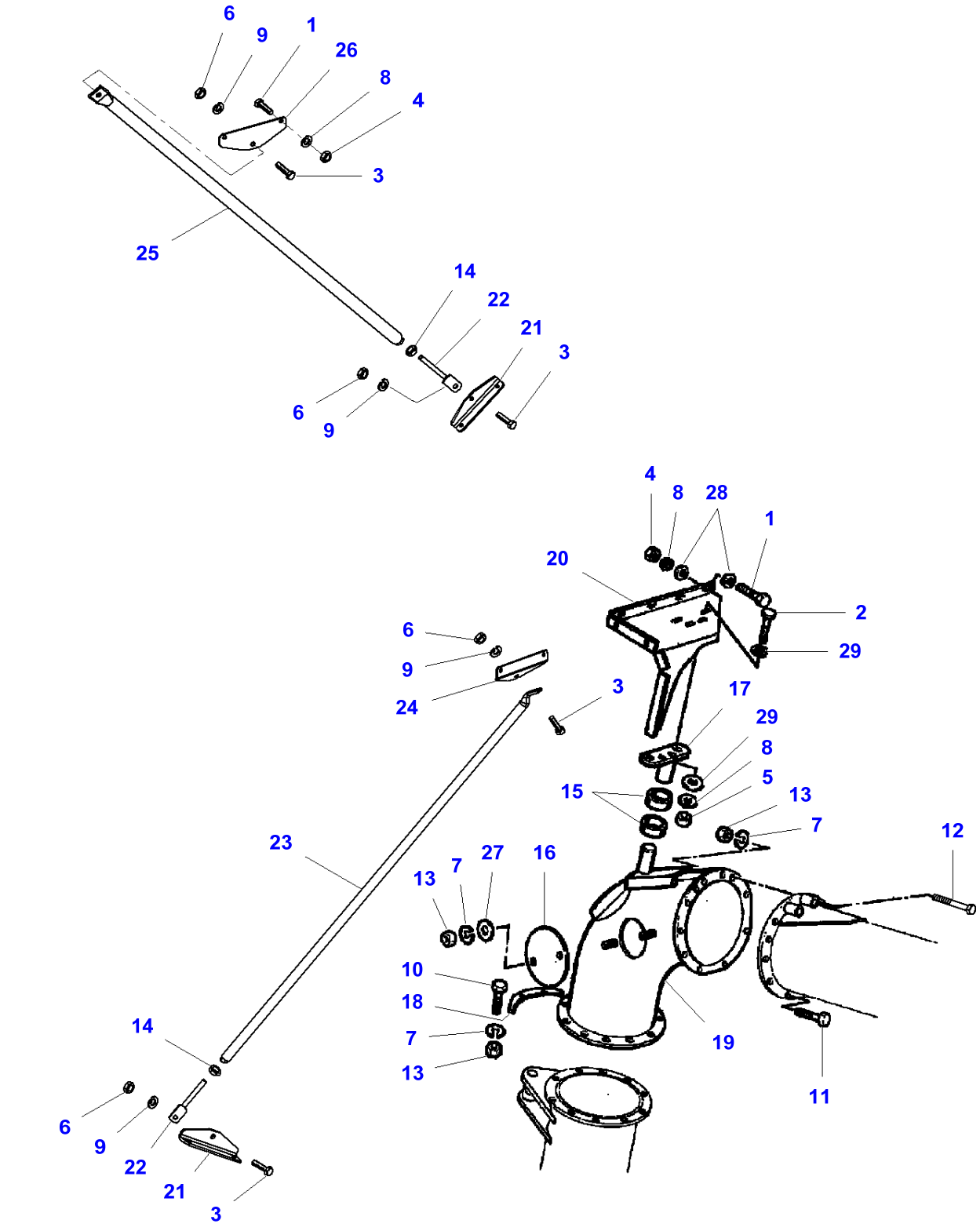
6
9
1
26
8
4
3
25
14
22
21
3
6
9
4
8
28
1
20
2
29
6
9
24
3
17
29
8
5
15
13
7
12
23
7
27
16
13
10
18
7
13
19
14
6
9
22
21
3
11

Item	Part Number	Qty	Description
1	LA11106221	2	Cap Screw
2	LA11106424	1	Cap Screw
3	LA11112221	4	Cap Screw
4	LA11701711	2	Nut
5	LA11701721	1	Nut
6	LA11702911	4	Nut
7	LA12034571	3	Lock Washer
8	LA12034671	3	Lock Washer
9	LA12034771	4	Lock Washer
10	LA16043621	1	Cap Screw
11	LA16043624	1	Cap Screw
12	LA16044424	1	Cap Screw
13	LA16100811	3	Nut
14	LA16101521	2	Nut
15	LA300130273	2	Bush
16	LA320947150	1	Cover
17	LA322141750	1	Support
18	LA322607050	1	Shim
19	LA322607150	1	Tube
20	LA322626850	1	Bracket
21	LA322886450	2	Plate
22	LA323065350	2	Tie Rod
23	LA323106350	1	Stop
24	LA323106450	1	Plate
25	LA323107050	1	Stop
26	LA323107150	1	Plate
27	LA355500915	1	Flat Washer
28	LA355501120	2	Flat Washer
29	LA355511030	2	Flat Washer

L-LD27-004-A

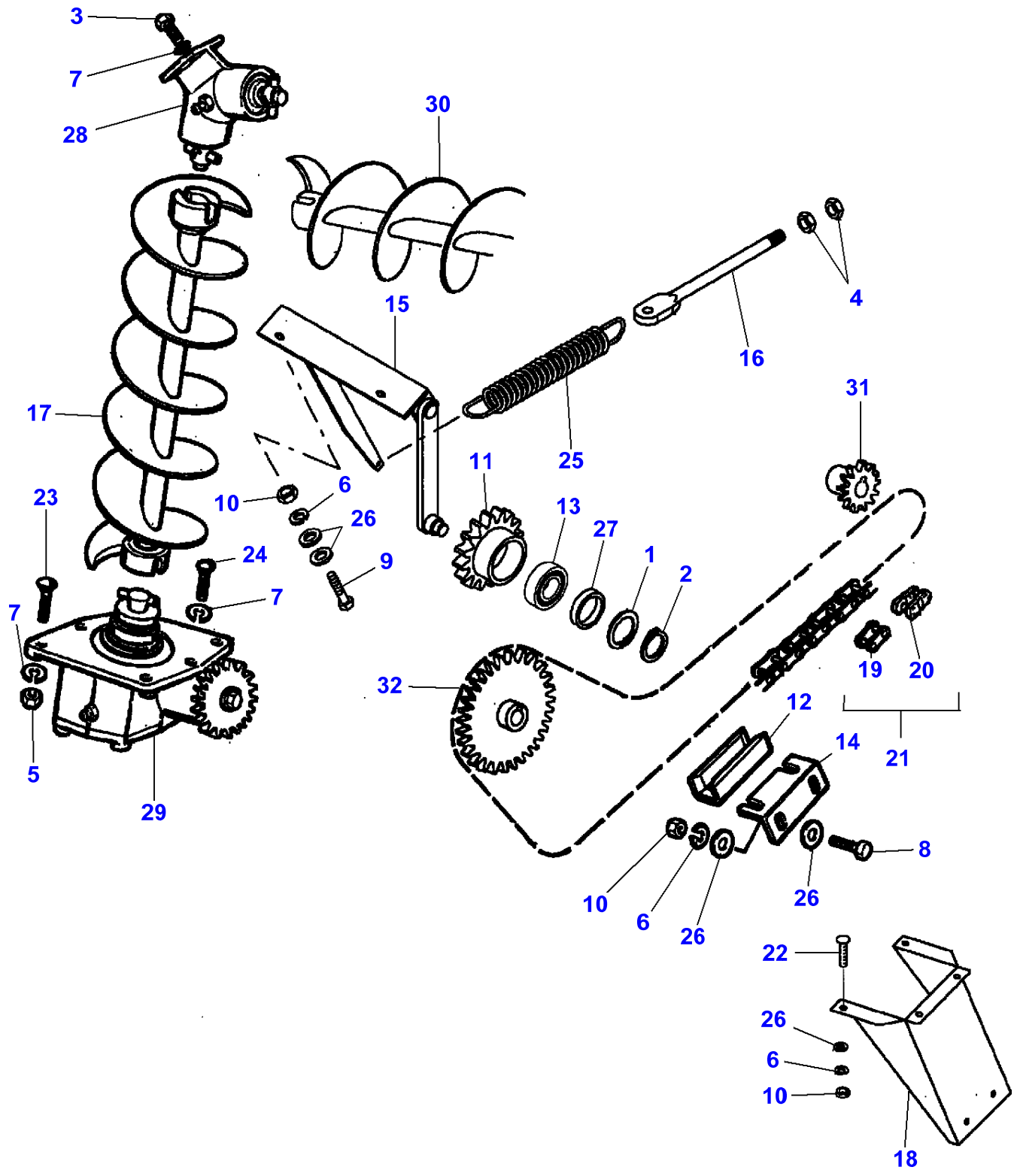
3
7
28
30
15
4
16
17
31
25
11
6
10
26
23
13
27
24
9
1
2
7
7
32
19
20
12
21
14
5
29
10
6
26
26
8
22
26
6
10
18

Item	Part Number	Qty	Description	Comments
1	LA11060576	1	Circlip	
2	LA11067376	1	Circlip	
3	LA11106221	1	Cap Screw	
4	LA11701711	2	Nut	
5	LA11701721	6	Nut	
6	LA12034571	4	Lock Washer	
7	LA12034671	7	Lock Washer	
8	LA16043424	1	Cap Screw	
9	LA16043624	1	Cap Screw	
10	LA16100811	2	Nut	
11	LA300121624	1	Gear	
12	LA321917350	1	Guide	
13	**LA322638450**	1	Bearing Assy	
14	LA322815550	1	Angle.	
15	LA322872550	1	Support	
16	LA322872650	1	Tie Rod	
17	LA322939350	1	Auger	
18	LA323042150	1	Support	
19	**LA340437200**	1	Chain Link	(21)
20	**LA344372101**	1	Chain Link	(21)
21	**LA344372105**	1	Chain	
22	LA350342511	4	Carriage Bolt	
23	LA350342530	6	Screw	
24	LA350342535	1	Screw	
25	LA350356547	1	Spring	
26	LA355510820	6	Flat Washer	
27	LA355541710	1	Washer	
28		1	Angle Drive	See Page - Reference Number 080-0085
29		1	Angle Drive	See Page - Reference Number 080-0080
30		1	Auger	See Page - Reference Number 080-0115/19
31		1	Gear	See Page - Reference Number 080-0100/9
32		1	Chain	See Page - Reference Number 080-0050/14

L-LD27-005-B

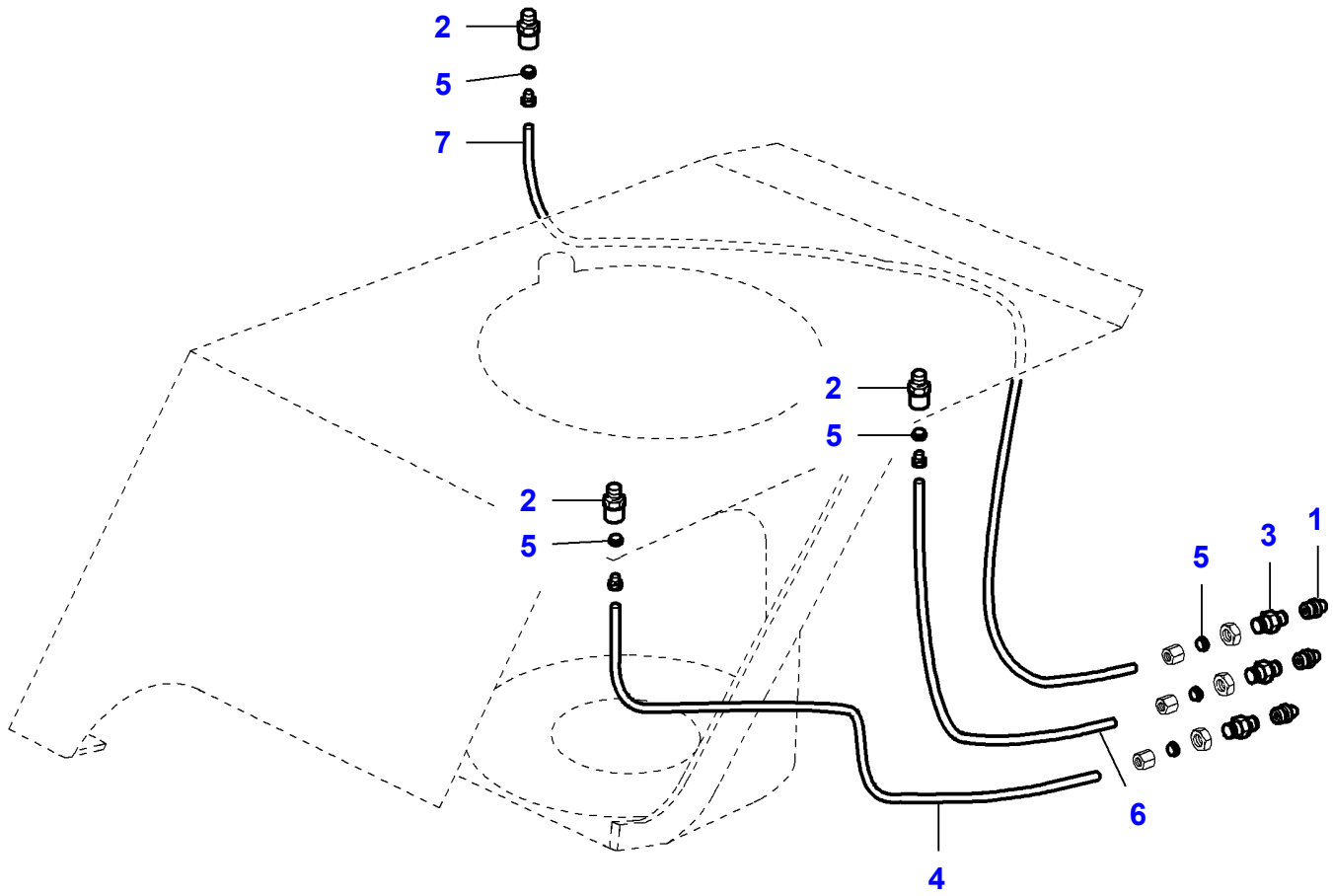

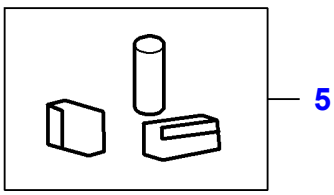

Item	Part Number	Qty	Description
1	LA13407211	1	Grease Fitting
2	LA322881050	3	Grease Fitting
3	LA322881150	1	Union
4	LA322881950	1	Hose
5	LA322930250	1	Kit,Joint/Gasket
6	LA323041850	1	Hose
7	LA323041950	1	Hose

L-LD28-001-A

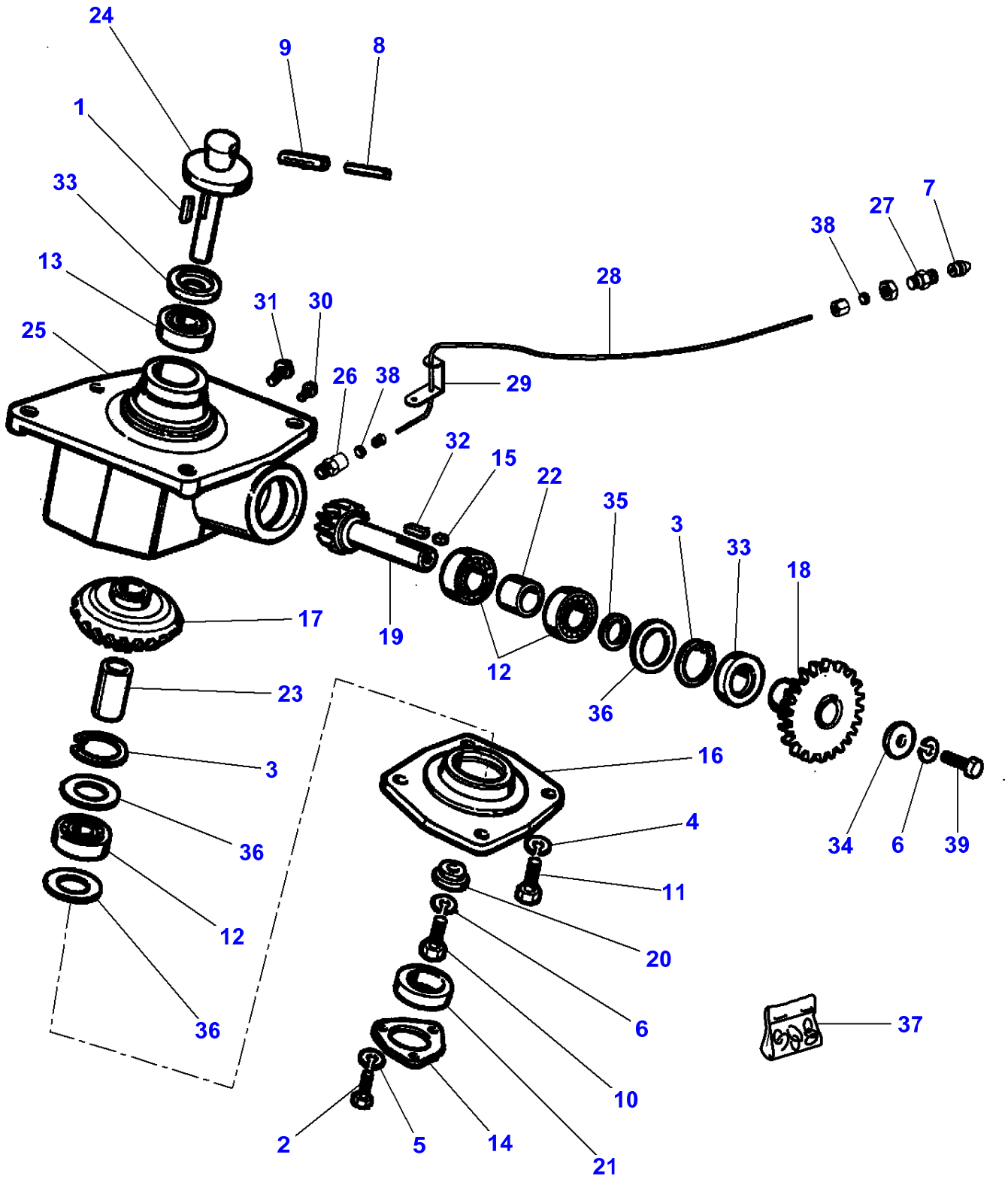
24
9
8
1
33
13
25
31
30
26
38
28
29
7
27
38
32
15
22
35
3
33
18
17
19
12
23
3
36
12
36
16
4
11
20
6
10
2
5
14
21
34
6
39
37

Item	Part Number	Qty	Description	Comments
1	LA10619920	1	Key	
2	LA10979224	3	Cap Screw	
3	LA11061576	2	Circlip	
4	LA12034571	4	Lock Washer	
5	LA12034671	3	Lock Washer	
6	LA12034771	2	Lock Washer	
7	LA13407211	1	Grease Fitting	
8	LA14607970	1	Roll Pin	
9	LA14617170	1	Roll Pin	
10	LA15540521	1	Cap Screw	
11	LA16043824	4	Cap Screw	
12	**LA23111990**	3	Ball Bearing	
13	**LA28996530**	1	Bearing Assy	
14	LA300015238	1	Flange	
15	LA300135448	1	Gasket	
16	LA320947250	1	Cover	
17	LA320947350	1	Bevel Pinion	
18	LA320947850	1	Gear	
19	LA320948350	1	Bevel Pinion	
20	LA320948550	1	Guide Bush	
21	LA320948650	1	Spacer	
22	LA320948850	1	Spacer	
23	LA320948950	1	Spacer	
24	LA320949350	1	Shaft	
25	LA322481550	1	Box	
26	LA322881050	1	Grease Fitting	
27	LA322881150	1	Union	
28	LA323041850	1	Hose	
29	LA323042550	1	Bracket	
30	LA350359400	1	Plug	
31	LA350359405	1	Plug	
32	LA350384636	1	Key	
33	LA353583183	1	Gasket	
34	LA355511260	1	Washer	
35	LA355538710	1	Washer	
36	LA355547104	3	Washer	Thickness 0,40 mm
	LA355547106	3	Washer	Thickness 0,60 mm
37	LA322930250	1	Kit,Joint/Gasket	
38		X	Gasket	(37)
39	LA11112424	1	Cap Screw	

L-LD29-001-A

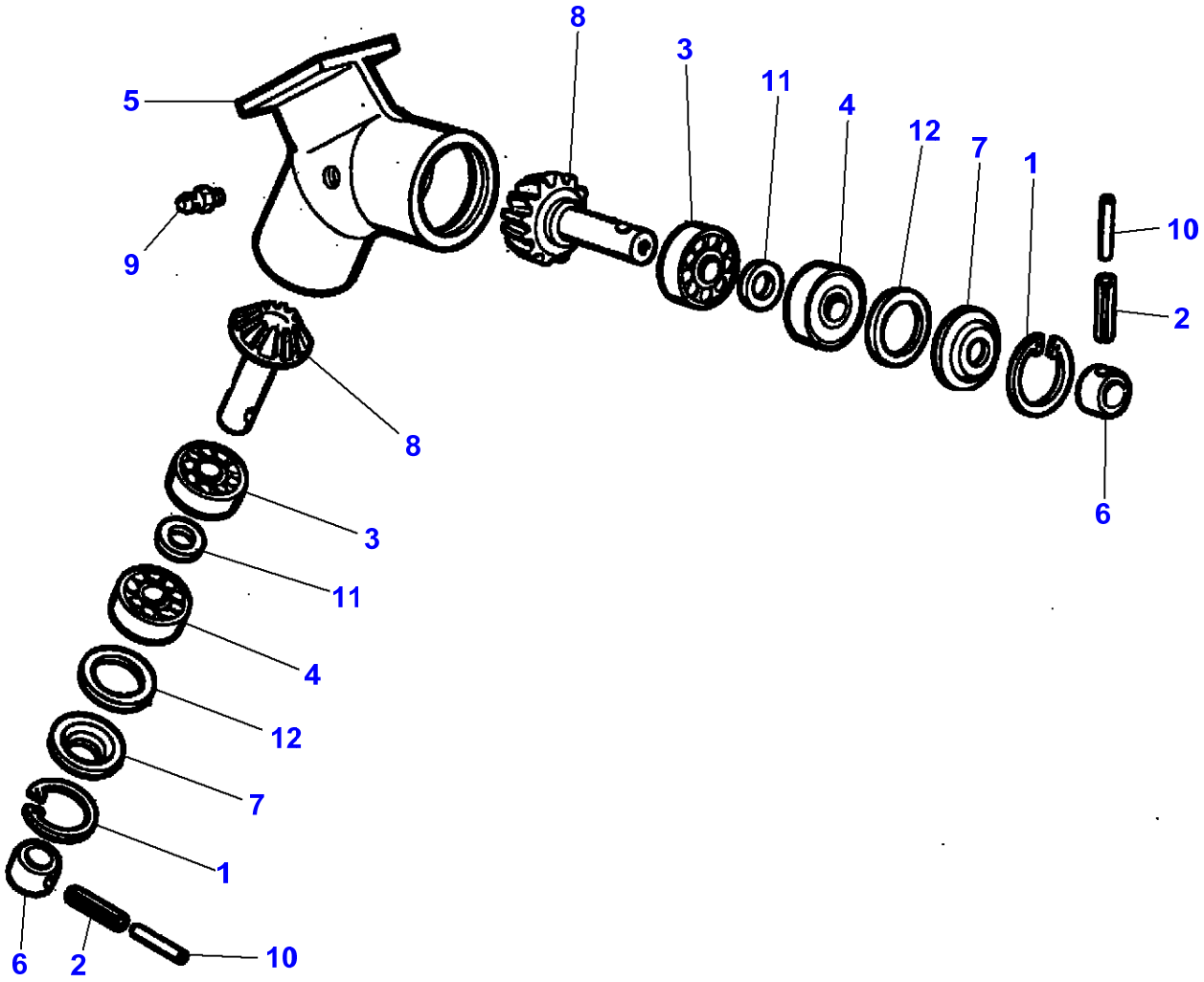

Item	Part Number	Qty	Description	Comments
1	LA11061576	2	Circlip	
2	LA14617170	2	Roll Pin	
3	**LA20705250**	2	Ball Bearing	
4	**LA24905470**	2	Bearing Assy	
5	LA320946950	1	Box	
6	LA320948450	2	Washer	
7	LA320948750	2	Washer	
8	LA320949250	2	Bevel Pinion	
9	LA350357803	1	Grease Fitting	
10	LA350378685	2	Roll Pin	
11	LA355541410	2	Washer	
12	LA355547104	2	Washer	Thickness 0,40 mm
	LA355547106	2	Washer	Thickness 0,60 mm

L-LD30-001-B

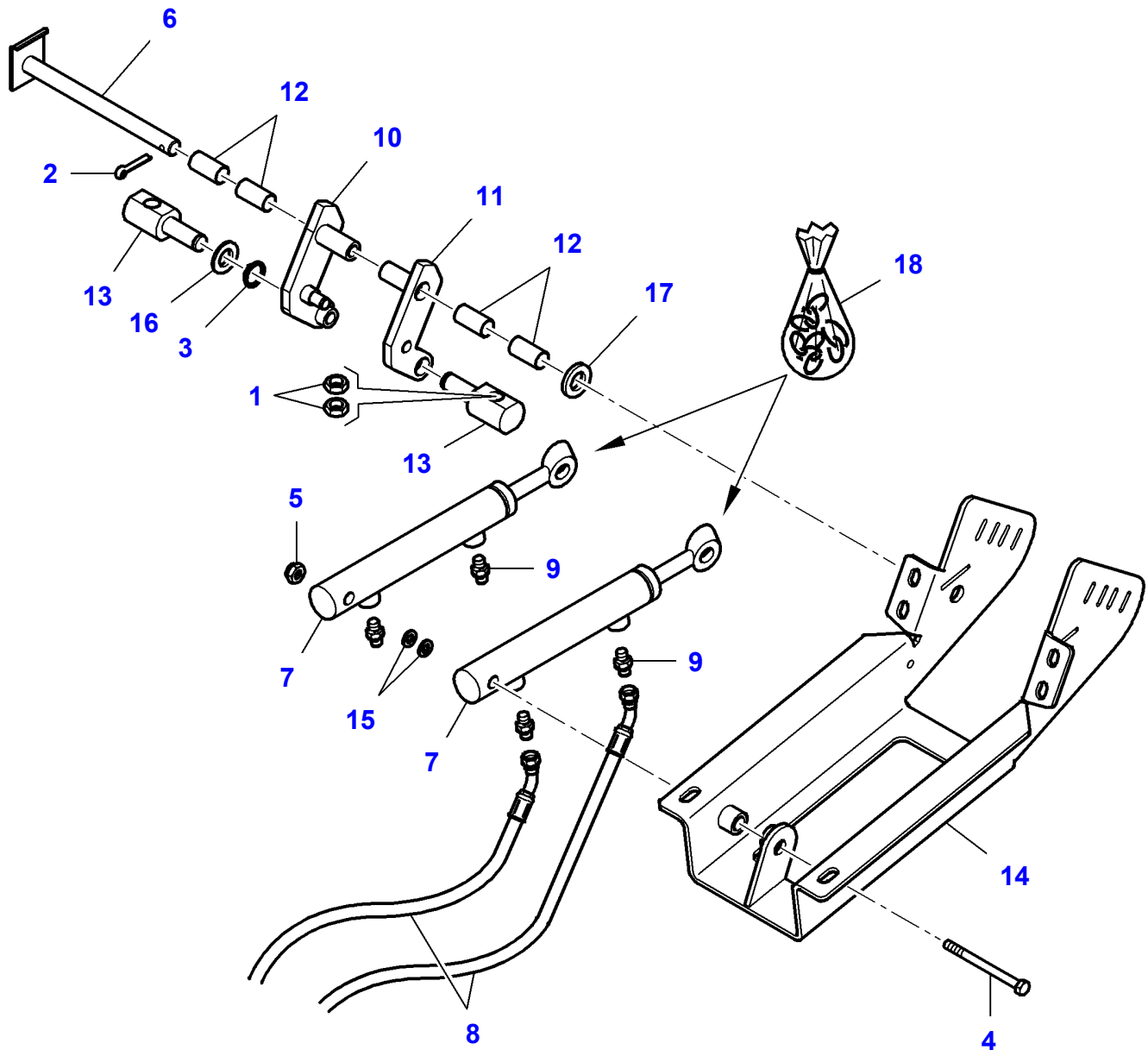

Item	Part Number	Qty	Description	Comments
1	LA10717421	2	Nut	
2	LA10733601	1	Split Pin	
3	LA11066276	1	Circlip	
4	LA11115221	1	Cap Screw	
5	LA12577511	1	Cap Nut	
6	LA300136139	1	Pin	
7	LA322770900	2	Hydraulic, Cylin	
8	LA322780750	2	Hydraulic Hose	
9	LA322788600	4	Union	
10	LA322811750	1	Lever	
11	LA322811850	1	Lever	
12	LA322878750	4	Sleeve	
13	LA322835850	2	Rod	Repairs and replaces LA323007050
14	LA323007650	1	Support	
15	LA355530950	2	Washer	
16	LA355531210	1	Washer	
17	LA355531220	1	Washer	
18	LA322784100	1	Kit, Seal	(7)

L-LD30-002-A

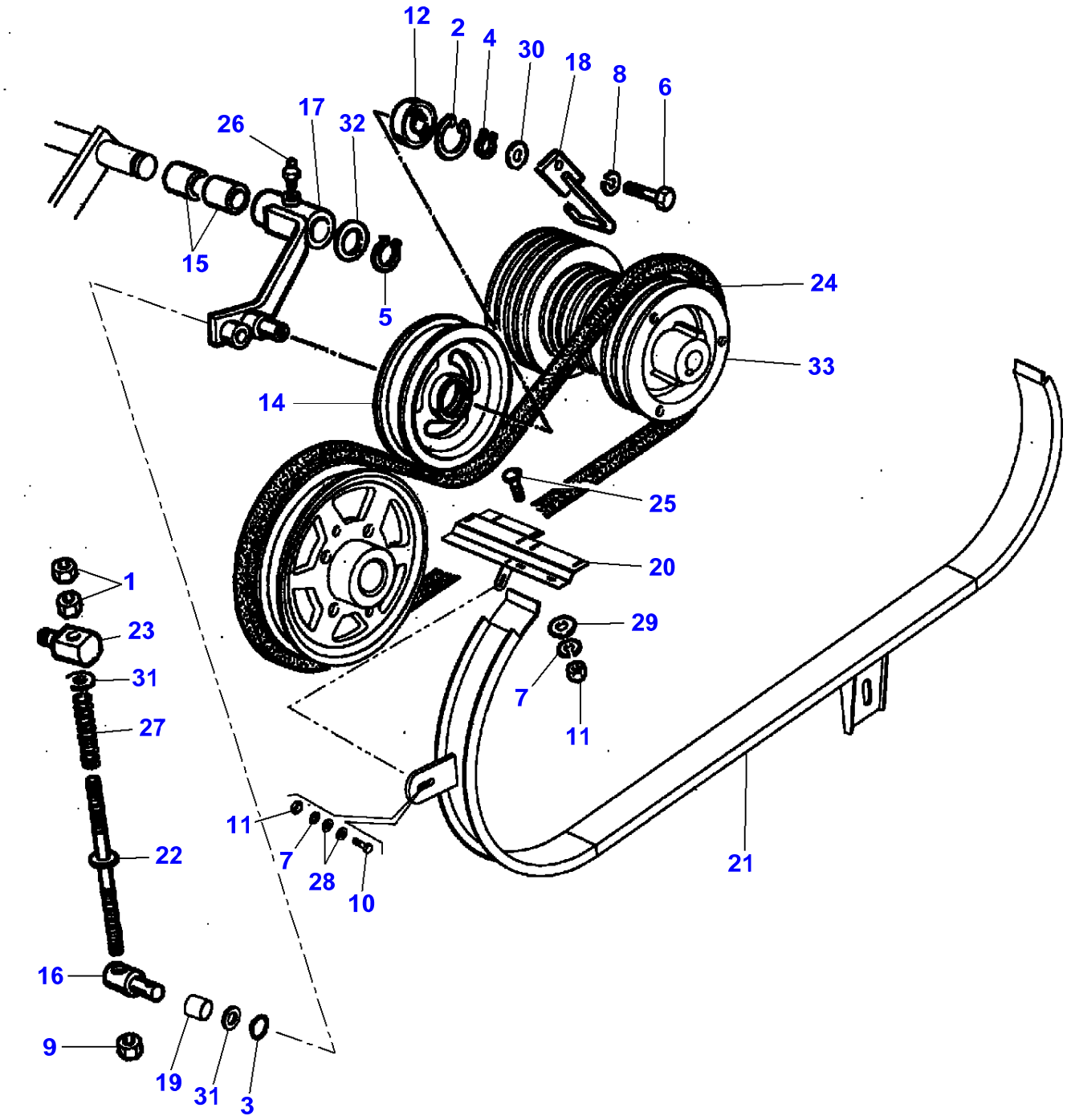
12
2
4
30
18
8
6
17
26
32
15
5
24
33
14
25
20
1
23
31
27
22
16
9
19
31
3
29
7
11
11
7
28
10
21

Item	Part Number	Qty	Description	Comments
1	LA10717421	4	Nut	
2	LA11060576	1	Circlip	
3	LA11066276	1	Circlip	
4	LA11067376	1	Circlip	
5	LA11068376	1	Circlip	
6	LA11106424	1	Cap Screw	
7	LA12034571	2	Lock Washer	
8	LA12034671	1	Lock Washer	
9	LA12163211	1	Nut	
10	LA16043621	1	Cap Screw	
11	LA16100811	2	Nut	
12	**LA28042320**	1	Bearing Assy	
14	LA300015561	1	Pulley	
15	LA322100250	2	Bush	
16	LA322811450	1	Rod	
17	LA322812050	1	Support	
18	LA322812150	1	Support	
19	LA322878750	1	Sleeve	
20	LA322956550	1	Support	
21	LA322962950	1	Skate	
22	LA323006950	1	Tie Rod	
23	LA323007050	1	Rod	
24	**LA344311117**	1	Belt	
25	LA350342511	1	Carriage Bolt	
26	LA350357803	1	Grease Fitting	
27	LA353561139	1	Spring	
28	LA355500920	2	Flat Washer	
29	LA355510820	1	Flat Washer	
30	LA355511050	1	Flat Washer	
31	LA355531220	2	Washer	
32	LA355541410	1	Washer	
33		1	Pulley	See Page - Reference Number 030-0215/27

L-LD30-003-C

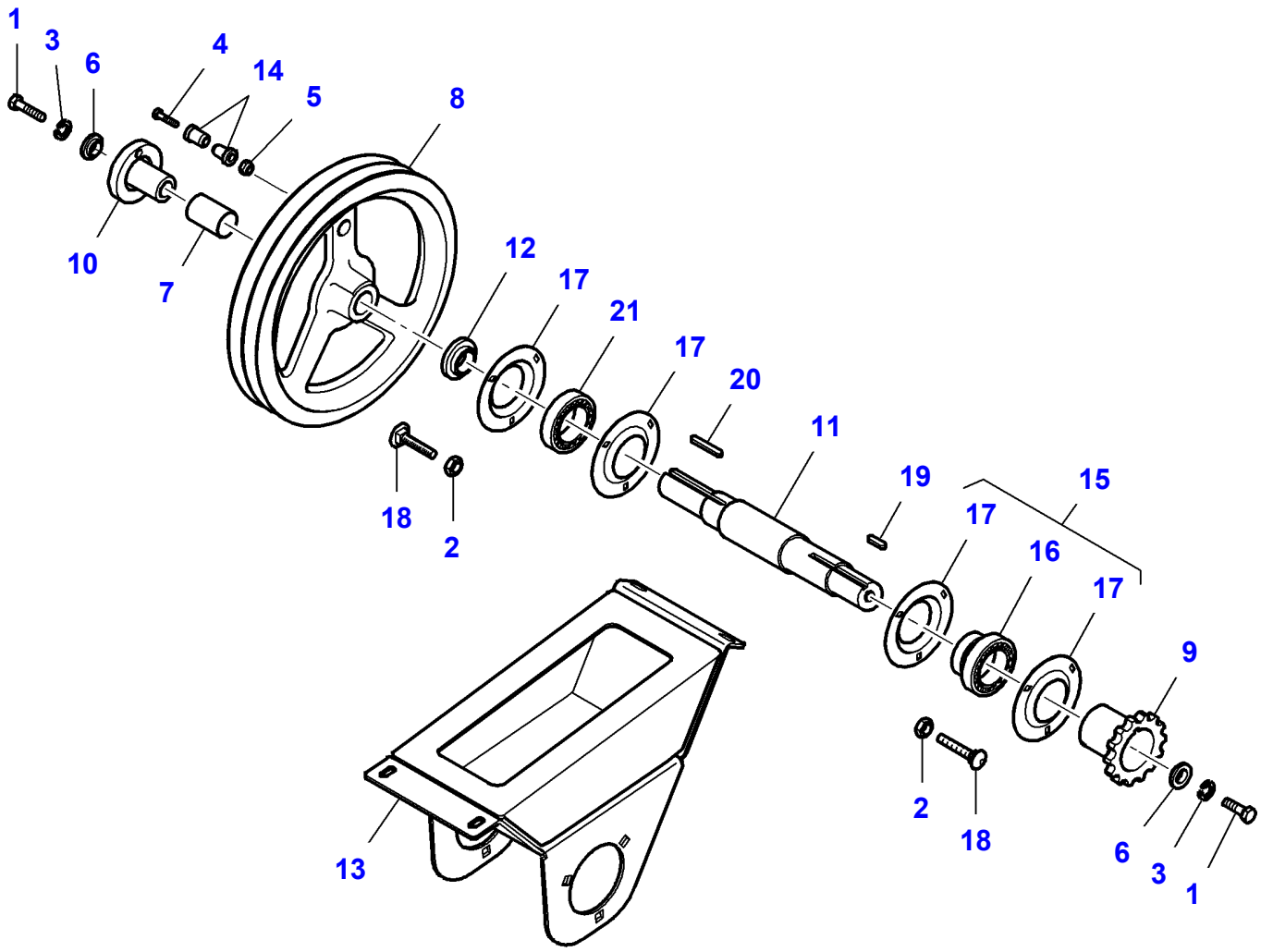

Item	Part Number	Qty	Description	Comments
1	LA11408321	2	Cap Screw	
2	LA11701711	2	Nut	
3	LA12035571	2	Lock Washer	
4	LA10903621	1	Cap Screw	
5	LA12574211	1	Locknut	
6	LA321945650	2	Guide Bush	
7	LA322952150	1	Bush	
8	LA322952250	1	Pulley	
9	LA322953050	1	Gear	
10	LA322953950	1	Hub	
11	LA322954050	1	Shaft	
12	LA322954150	1	Spacer	
13	LA322955550	1	Support	
14	LA323092050	1	Bush	
15	**LA340411010**	1	Kit	
16	**LA340411206**	1	Bearing Assy	(15)
17	LA340411406	4	Bearing Flange	(15)
18	LA350342525	2	Carriage Bolt	
19	LA350384428	1	Key	
20	LA350384465	1	Key	
21	**LA340411238**	1	Bearing Assy	

L-LD31-001-A

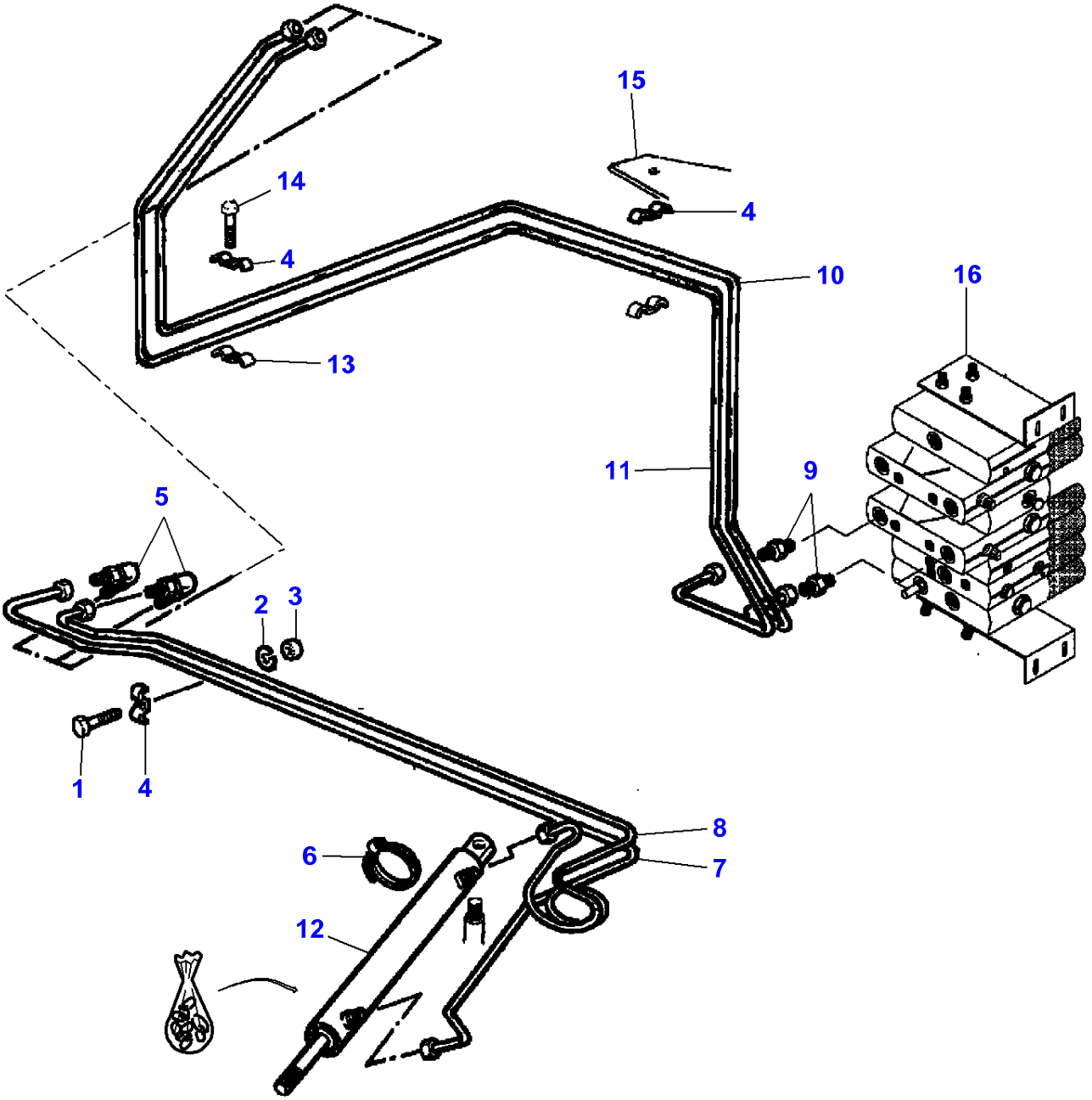

Item	Part Number	Qty	Description	Comments
1	LA10902424	3	Cap Screw	
2	LA12035670	3	Lock Washer	
3	LA15896221	3	Nut	
4	LA300136688	3	Collar	
5	LA321419750	2	Connector	
6	LA350391547	1	Clip	
7	LA321874450	1	Tube	
8	LA321874550	1	Tube	
9	LA322103700	2	Connector	
10	LA322120150	1	Tube	
11	LA322120250	1	Tube	
12	LA322543400	1	Hydraulic, Cylin	
	LA322543600	1	Kit, Seal	
13		1	Clamp	See Page - Reference Number 110-0050
14		1	Screw	See Page - Reference Number 110-0050
15		1	Support	See Page - Reference Number 110-0050/21
16		1	Valve	See Page - Reference Number 110-0015/11

L-LD31-003-B

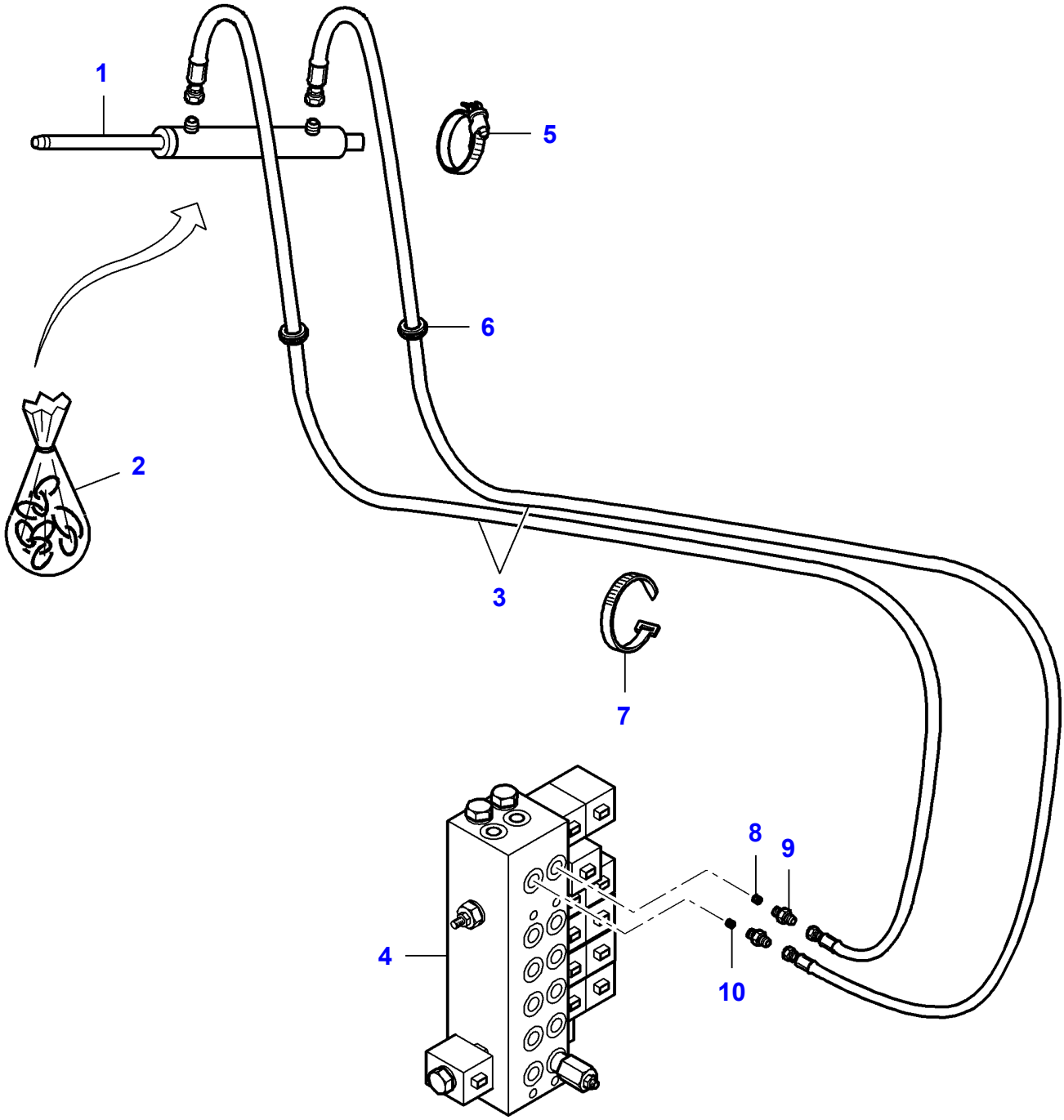

Item	Part Number	Qty	Description	Comments
1	LA322543400	1	Hydraulic, Cylin	
2	LA322543600	1	Kit, Seal	"Panni"
	LA344853121	1	Kit, Seal	"Mita"
3	LA323162150	2	Hydraulic Hose	See Page - Reference Number 030-0270/12
4		1	Block	
5	LA350391547	1	Clip	
6	LA10397580	2	Grommet	
7	LA340481808	1	Cable Tie	
8	LA323162450	1	Centraliser	
9	LA322819000	2	Union	
10	LA323162750	1	Centraliser	

L-LD96-001-A

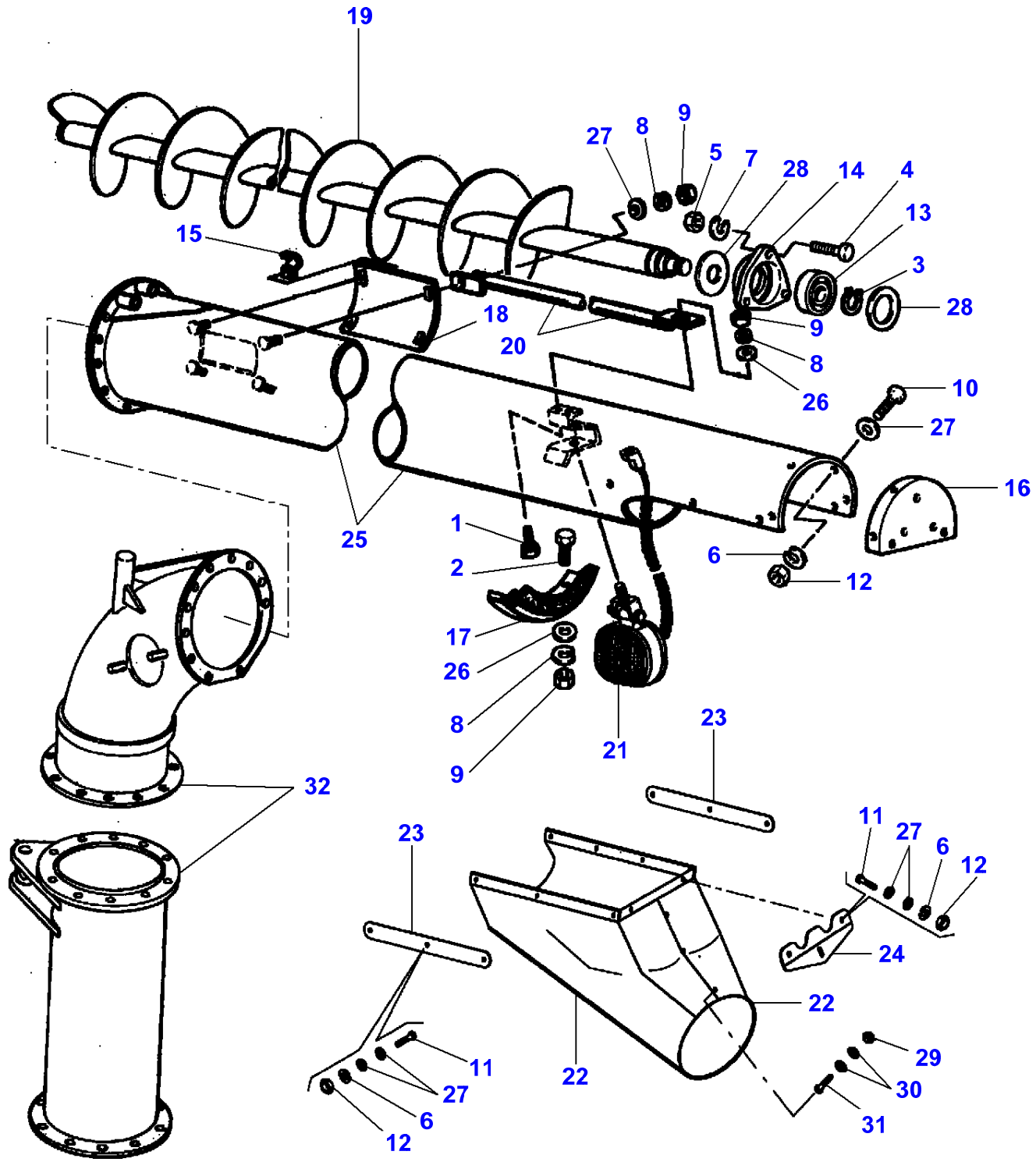
19
27
8
9
5
7
28
14
4
13
3
28
15
18
20
9
8
26
10
27
16
25
1
2
6
12
17
26
8
9
21
23
32
23
11
27
6
12
24
22
22
11
27
6
12
29
30
31

Item	Part Number	Qty	Description	Comments
1	LA10902224	1	Cap Screw	
2	LA10902424	1	Cap Screw	
3	LA11067876	1	Circlip	
4	LA11106221	1	Cap Screw	
5	LA11701721	1	Nut	
6	LA12034571	6	Lock Washer	
7	LA12034671	1	Lock Washer	
8	LA12035670	3	Lock Washer	
9	LA15896221	3	Nut	
10	LA16043224	1	Cap Screw	
11	LA16043421	5	Cap Screw	
12	LA16100811	6	Nut	
13	**LA28996530**	1	Bearing Assy	
14	LA300011962	1	Support	
15	LA300015924	1	Collar	
16	LA320406550	1	Plate	
17	LA320598850	1	Element	
18	LA320688150	1	Lid	
19	LA320949750	1	Auger	
20	LA322680950	1	Tube	
21	LA322684700	1	Head Light	
22	LA322958450	1	Conveyor	
23	LA322960250	2	Bracket	
24	LA322960350	1	Bracket	
25	LA322330150	1	Tube	Repairs and replaces LA322999450
26	LA355500715	2	Flat Washer	
27	LA355500915	12	Flat Washer	
28	LA355546504	2	Washer	Thickness 0,40 mm
	LA355546506	2	Washer	Thickness 0,60 mm
29	LA16104111	1	Locknut	
30	LA355520830	2	Flat Washer	
31	LA16043621	1	Cap Screw	
32		1	Tube	See Page - Reference Number 080-0060

L-LD35-001-A

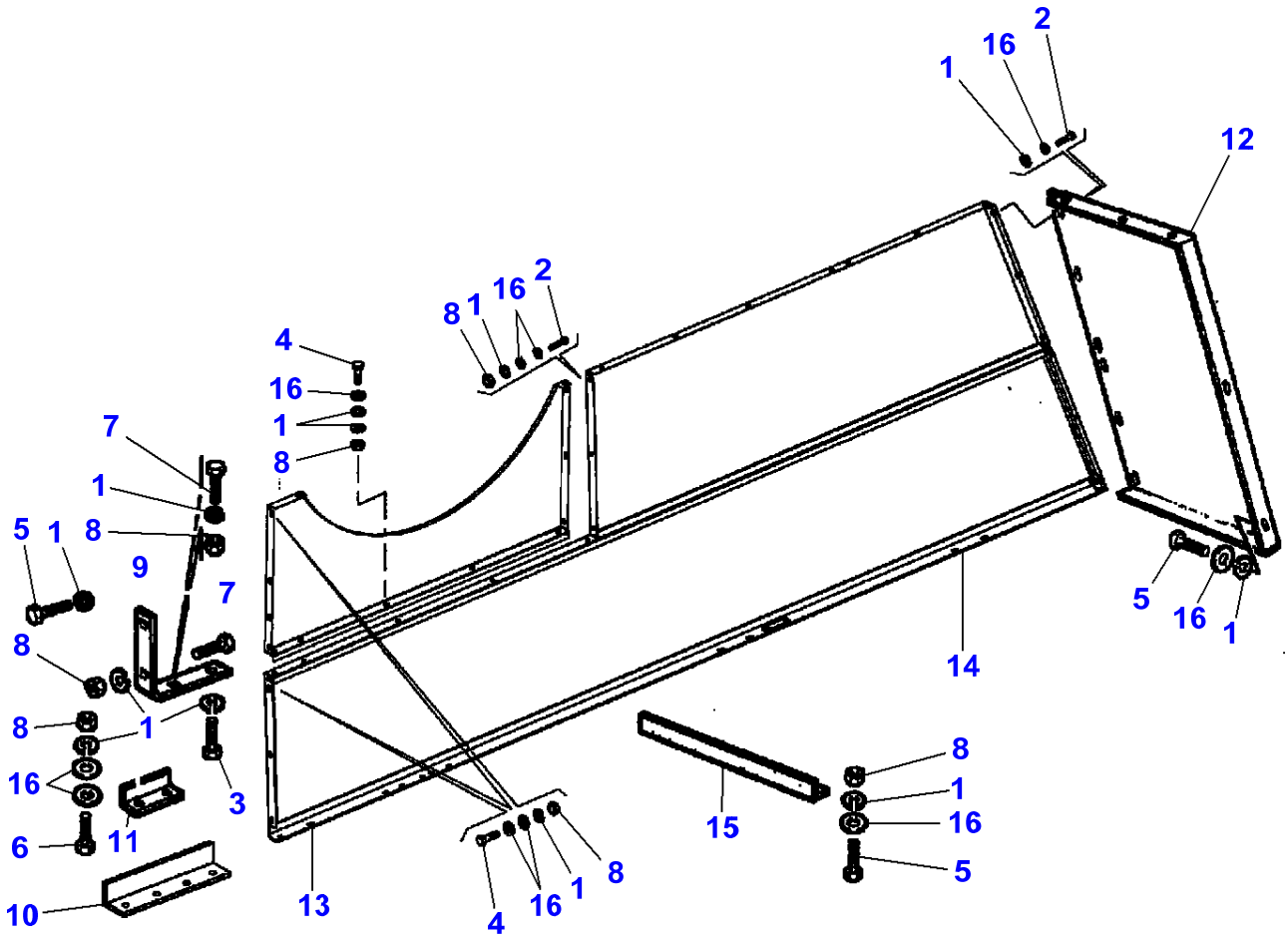
2
16
1
12
8
1
16
2
4
16
1
8
7
1
5
1
8
9
7
8
8
1
16
3
6
11
10
13
4
16
1
8
15
8
1
16
5
14
5
16
1

Item	Part Number	Qty	Description
1	LA12034571	22	Lock Washer
2	LA16043221	9	Cap Screw
3	LA16043224	1	Cap Screw
4	LA16043421	20	Cap Screw
5	LA16043424	3	Cap Screw
6	LA16043624	1	Cap Screw
7	LA16043824	2	Cap Screw
8	LA16100811	20	Nut
9	LA321890250	1	Reinforcement
10	LA321917750	1	Angle.
11	LA321917850	1	Angle.
12	LA322139750	1	Lid
13	LA322941850	1	Shield
14	LA322942550	1	Shield
15	LA323087450	1	Angle.
16	LA355510820	20	Flat Washer

L-LD35-002-B

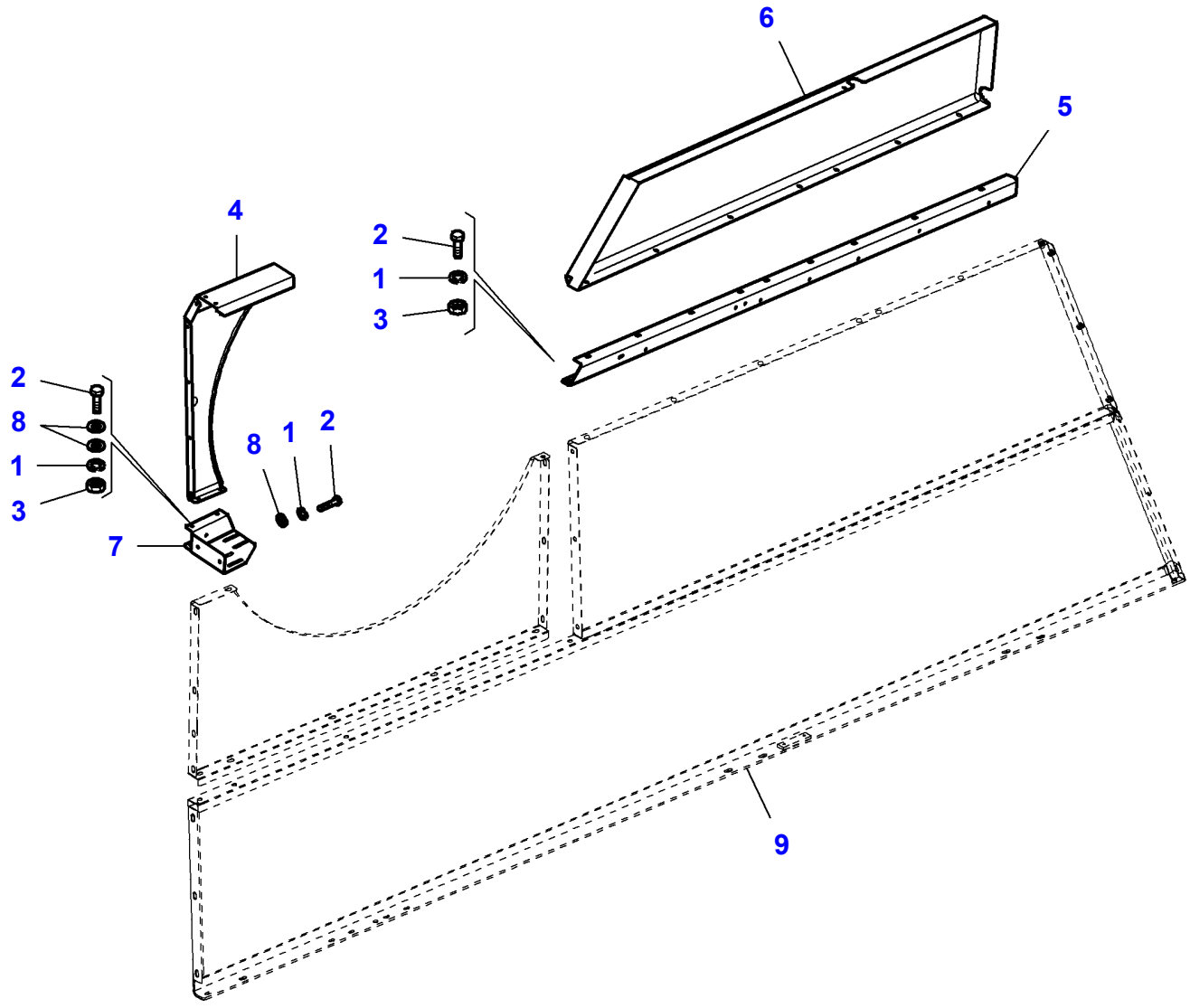

Item	Part Number	Qty	Description	Comments
1	LA12034571	10	Lock Washer	
2	LA16043421	10	Cap Screw	
3	LA16100811	9	Nut	
4	LA322942350	1	Shield	
5	LA322943950	1	Rail	
6	LA322944550	1	Shield	
7	LA322990650	1	Support	
8	LA355510820	3	Flat Washer	
9		1	Side	See Page - Reference Number 080-0120/14

L-LD35-003-B

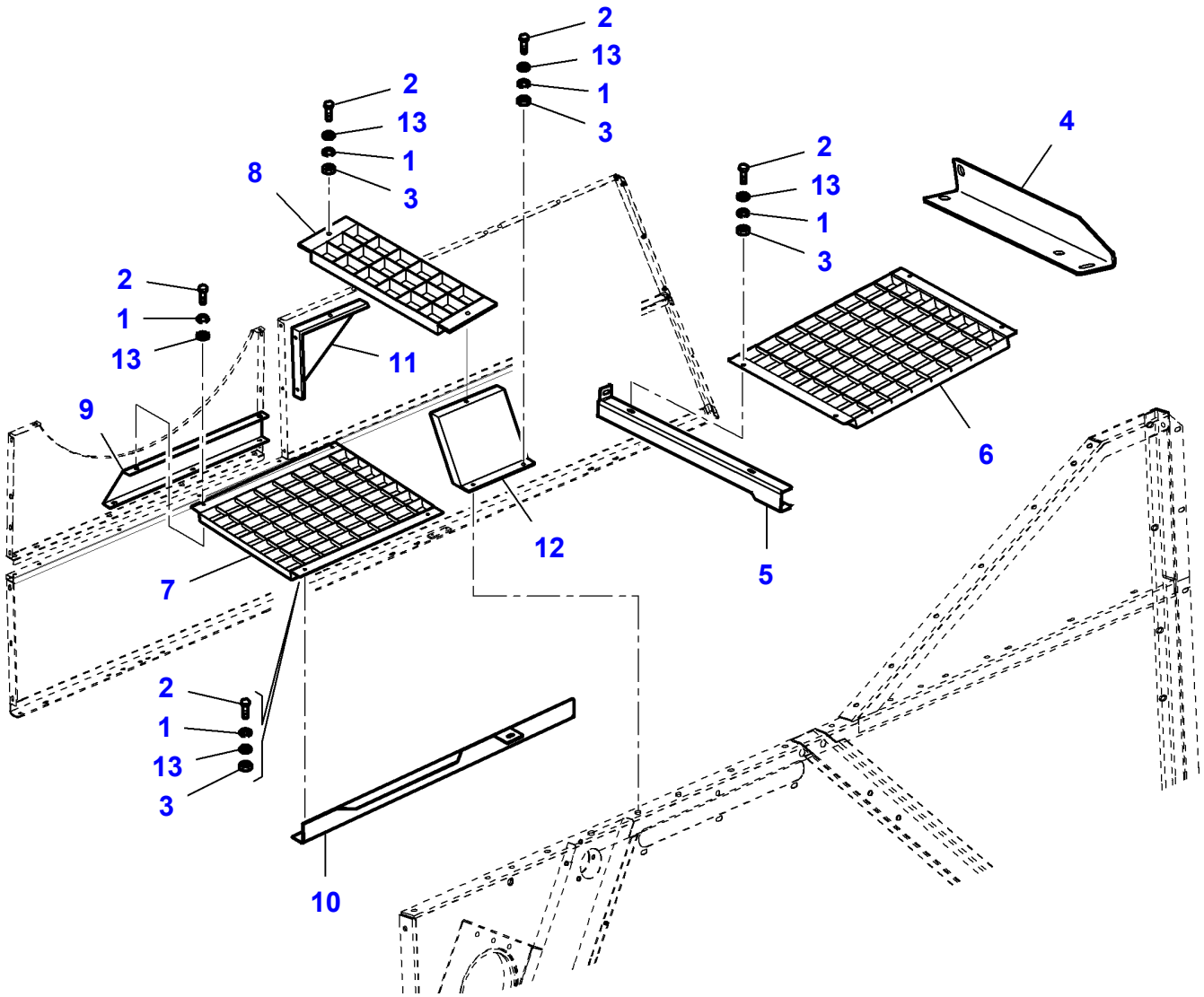

Item	Part Number	Qty	Description
1	LA12034571	10	Lock Washer
2	LA16043421	10	Cap Screw
3	LA16100811	9	Nut
4	LA322948550	1	Support
5	LA322948650	1	Support
6	LA322949050	1	Floor
7	LA322968850	1	Floor
8	LA322798050	1	Floor
9	LA322970450	1	Shield
10	LA322970550	1	Rail
11	LA322970850	1	Support
12	LA322970950	1	Support
13	LA355500920	10	Flat Washer

L-LD35-004-B

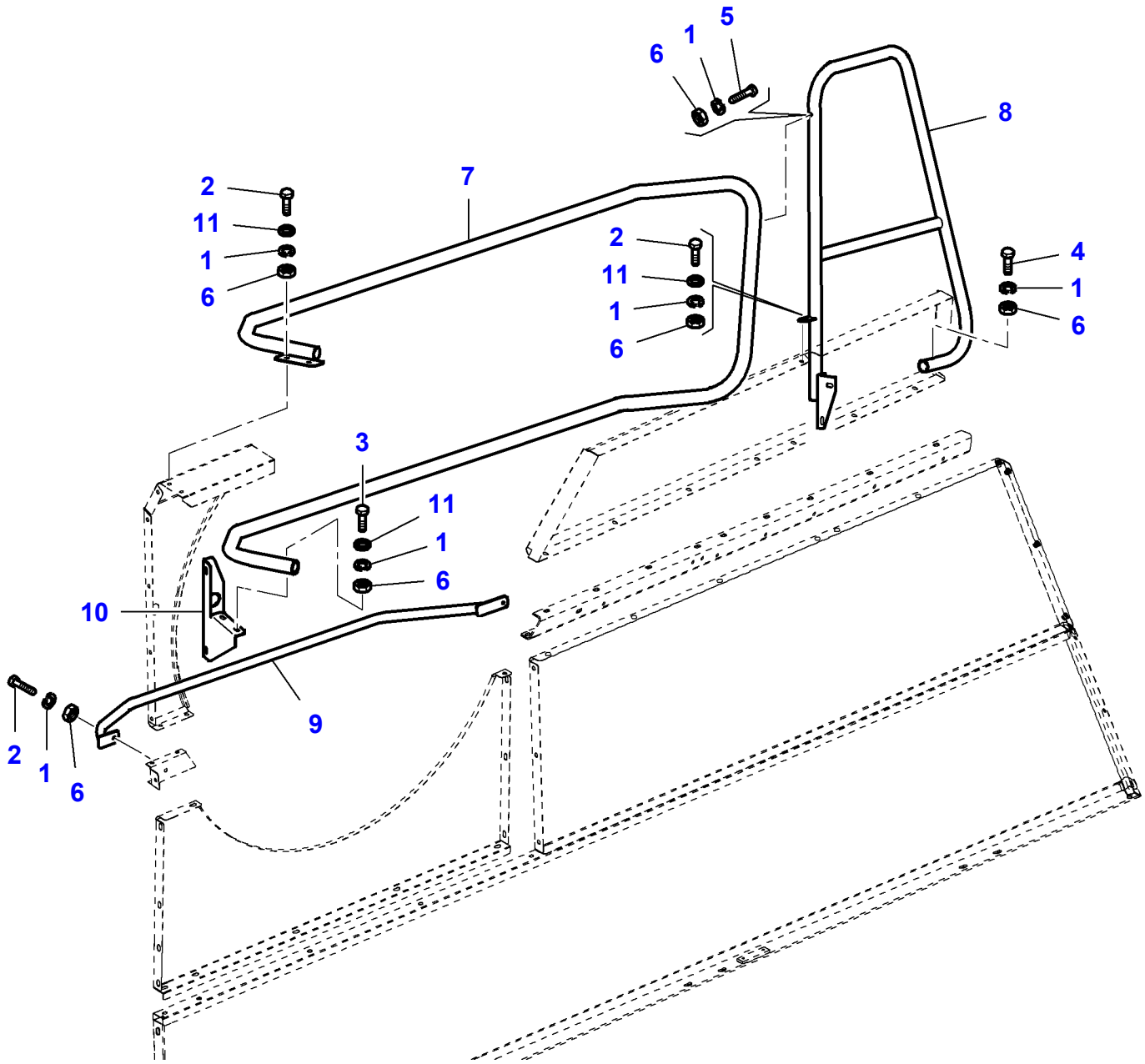

Item	Part Number	Qty	Description
1	LA12034571	8	Lock Washer
2	LA16043421	6	Cap Screw
3	LA16044021	2	Cap Screw
4	LA16044321	1	Cap Screw
5	LA16044521	1	Cap Screw
6	LA16100811	8	Nut
7	LA322944850	1	Shield
8	LA322944950	1	Shield
9	LA322945550	1	Shield
10	LA322945850	1	Bracket
11	LA355500920	5	Flat Washer

L-LD34-001-A

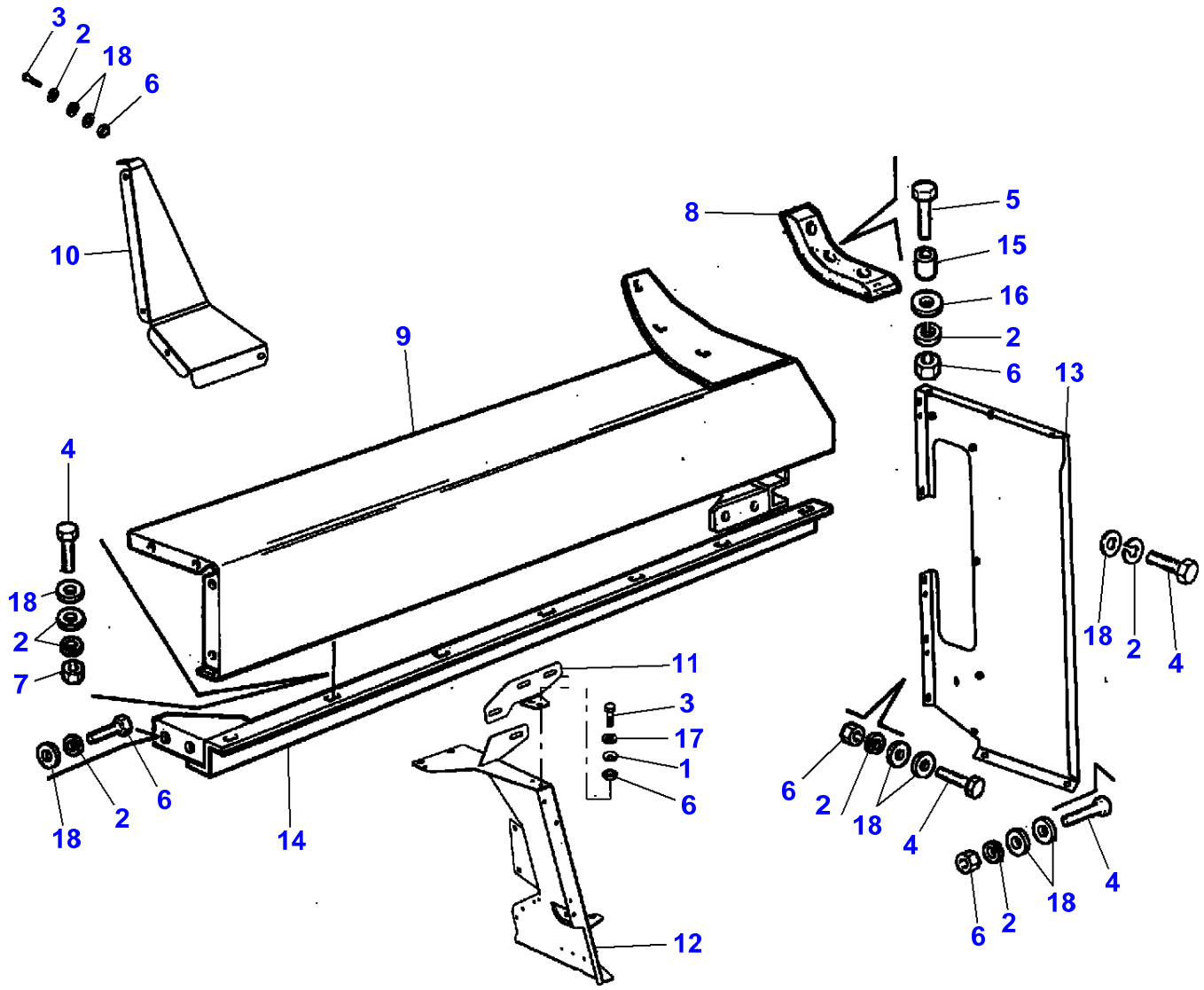
3
2
18
6
10
9
8
5
15
16
2
6
13
4
18
2
7
14
11
3
17
1
6
12
18
2
6
18
2
4
6
2
18
4
18
4
6
2

Item	Part Number	Qty	Description
1	LA322358	4	Lock Washer
2	LA12034571	8	Lock Washer
3	LA16043421	10	Cap Screw
4	LA16043424	4	Cap Screw
5	LA16043624	1	Cap Screw
6	LA16100811	6	Nut
7	LA16100824	1	Nut
8	LA321876350	1	Support
9	LA322950050	1	Shield
10	LA322967150	1	Shield
11	LA323004250	1	Support
12	LA323033150	1	Bracket
13	LA323041250	1	Shield
14	LA323041350	1	Profile
15	LA344158144	1	Bush
16	LA355500915	1	Flat Washer
17	LA355500920	2	Flat Washer
18	LA355510820	12	Flat Washer

L-LD32-001-A

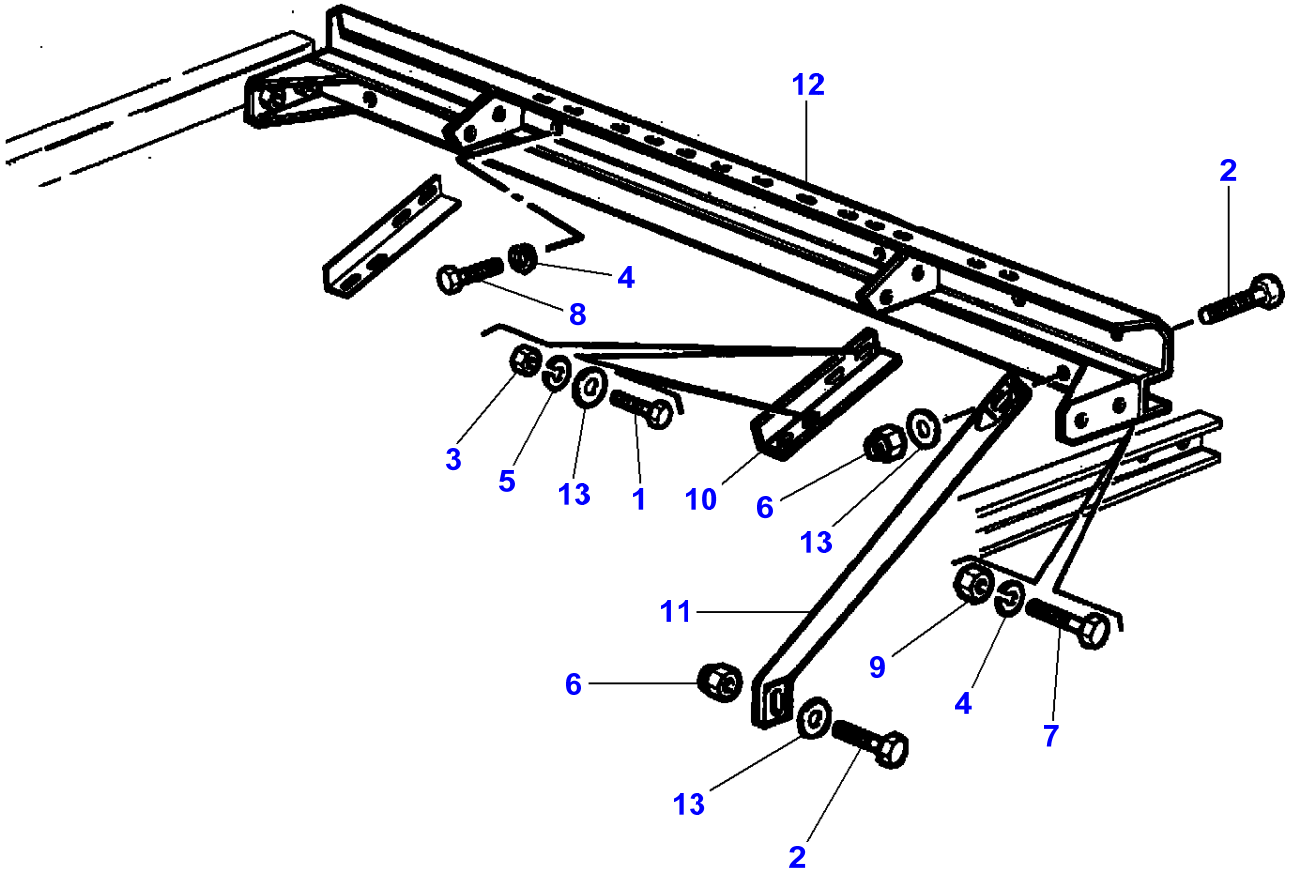

Item	Part Number	Qty	Description
1	LA11106221	2	Cap Screw
2	LA11106624	2	Cap Screw
3	LA11701711	2	Nut
4	LA12034571	4	Lock Washer
5	LA12034671	1	Lock Washer
6	LA12577211	2	Nut
7	LA16043424	1	Cap Screw
8	LA16044021	2	Cap Screw
9	LA16100811	1	Nut
10	LA321865250	1	Angle.
11	LA321924550	1	Stop
12	LA323041650	1	Profile
13	LA355511030	4	Flat Washer

L-LD32-002-B

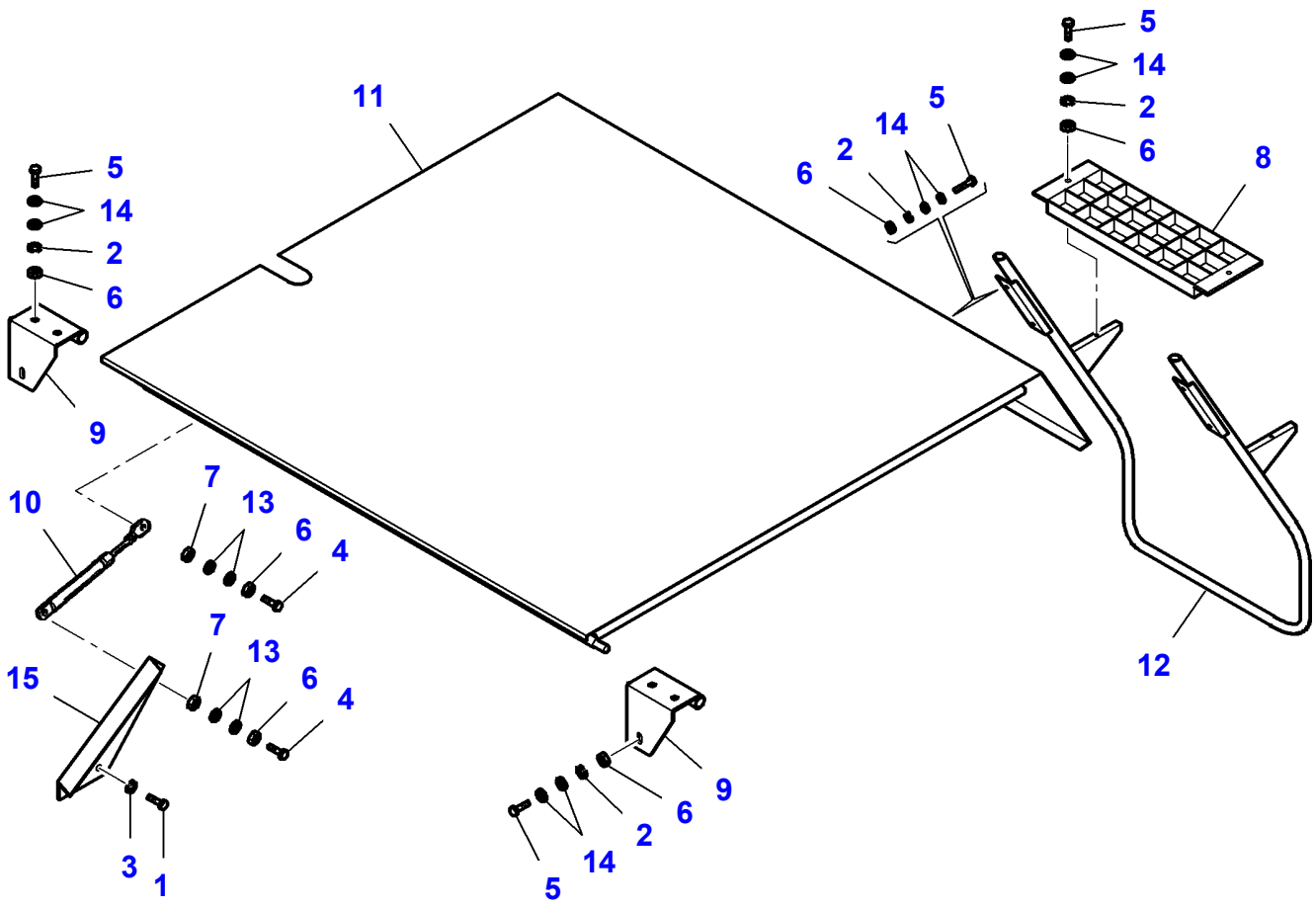

Item	Part Number	Qty	Description	Comments
1	LA11112121	1	Cap Screw	
2	LA12034571	5	Lock Washer	
3	LA12034771	1	Lock Washer	
4	LA15213321	2	Cap Screw	
5	LA16043421	10	Cap Screw	
6	LA16100811	7	Nut	
7	LA16104111	2	Locknut	
8	LA322798050	1	Floor	
9	LA322891050	2	Hinge	
10	**LA322891550**	1	Gas Strut	
11	LA322965650	1	Cover	
12	LA322966750	1	Anchor	
13	LA355500915	4	Flat Washer	
14	LA355510820	10	Flat Washer	
15		1	Support	See Page - Reference Number 020-0035/8

L-LD33-001-B

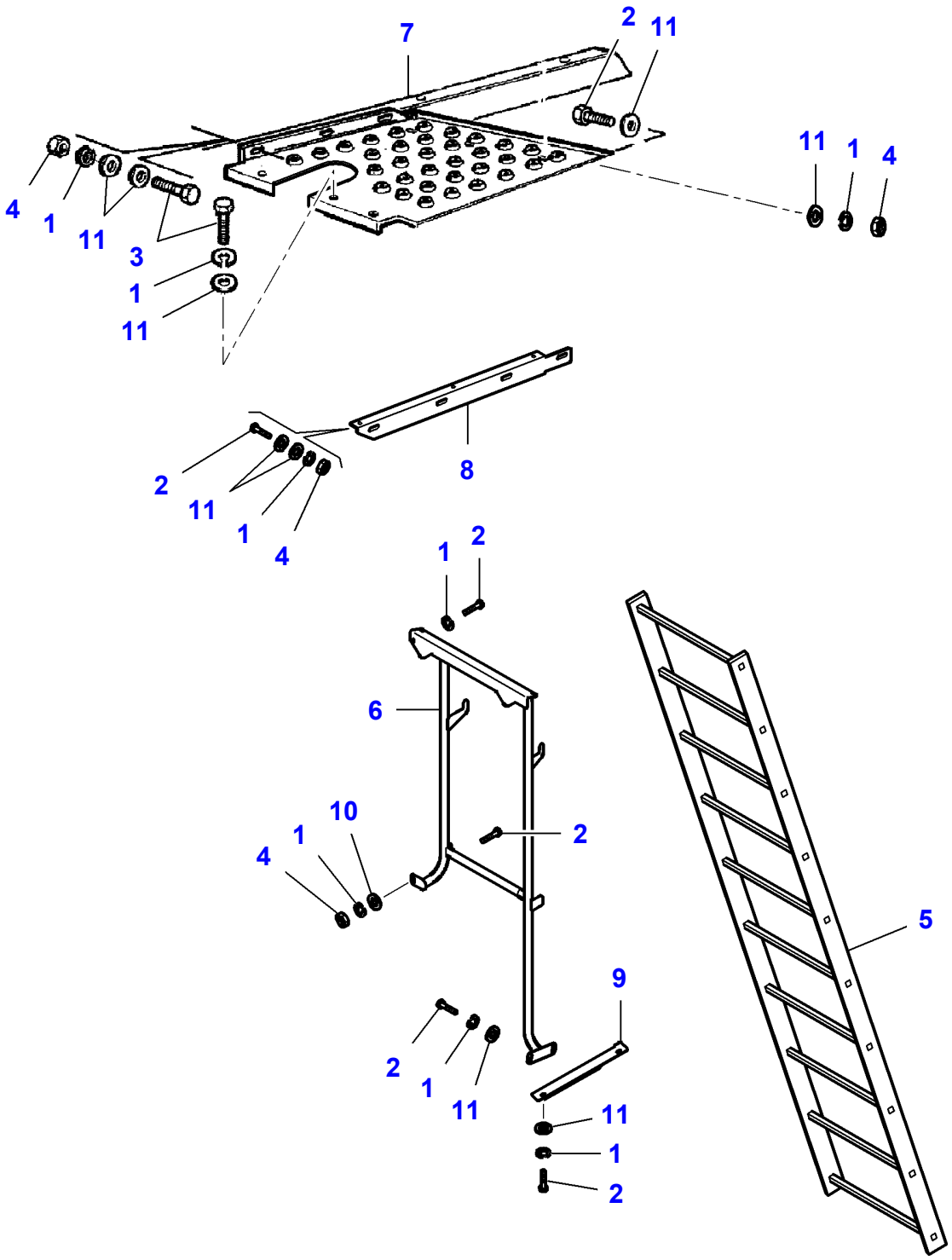

Item	Part Number	Qty	Description
1	LA12034571	8	Lock Washer
2	LA16043421	6	Cap Screw
3	LA16043424	1	Cap Screw
4	LA16100811	4	Nut
5	LA322869550	1	Ladder
6	LA323000750	1	Support
7	LA323005850	1	Floor
8	LA323005950	1	Bracket
9	LA323036650	1	Anchor
10	LA355500915	1	Flat Washer
11	LA355510820	9	Flat Washer

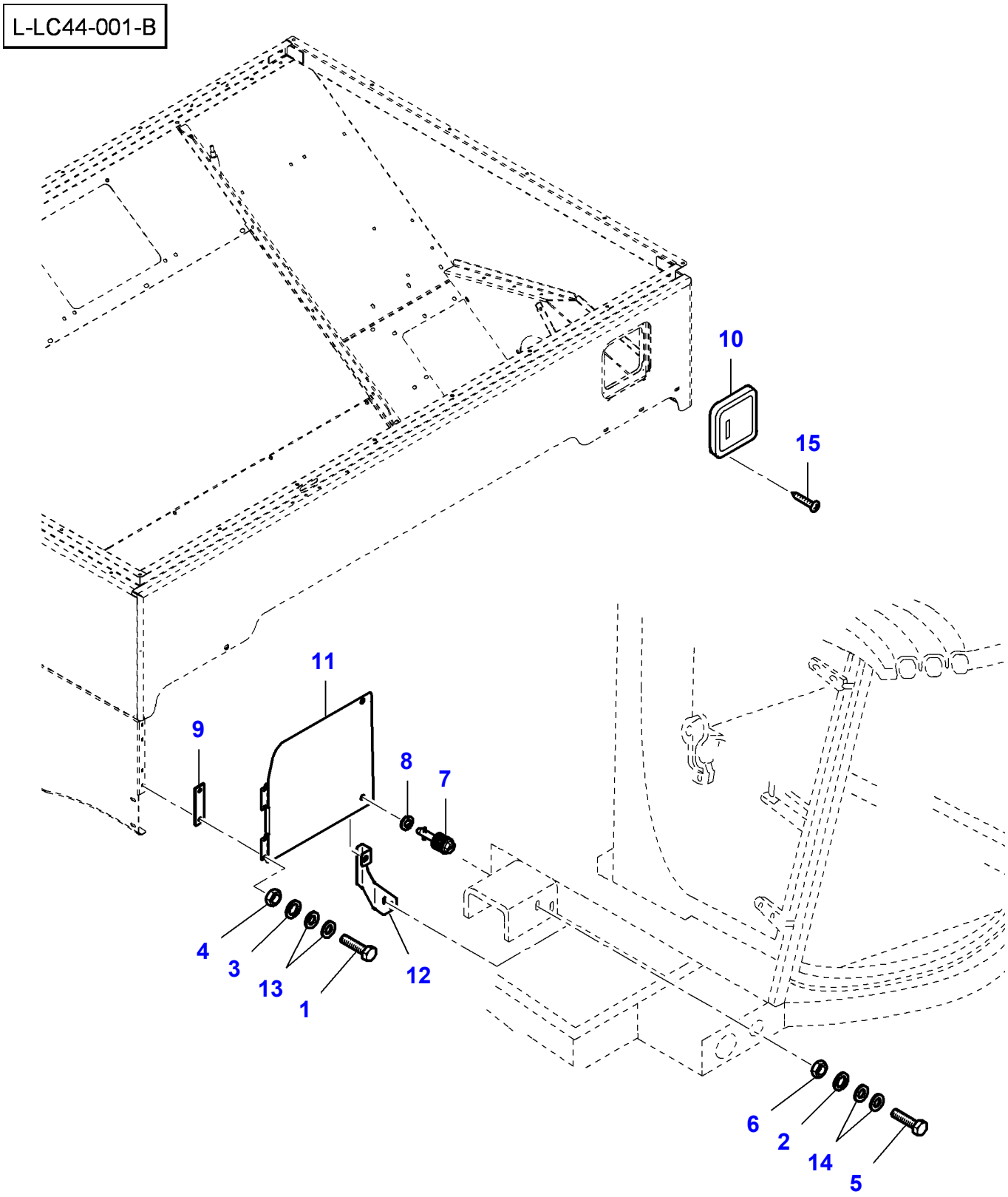
L-LC44-001-B
10
15
11
9
8
7
4
3
13
1
12
6
2
14
5

Item	Part Number	Qty	Description
1	LA10902421	1	Cap Screw
2	LA12034571	1	Lock Washer
3	LA12035671	1	Lock Washer
4	LA15896211	1	Nut
5	LA16043421	1	Cap Screw
6	LA16100811	1	Nut
7	LA320797250	1	Screw
8	LA320899350	1	Lock Washer
9	LA321835050	1	Shim
10	LA322041050	1	Lid
11	LA323085050	1	Lid
12	LA323085150	1	Bracket
13	LA355500715	2	Flat Washer
14	LA355510820	2	Flat Washer
15	LA15687904	4	Screw

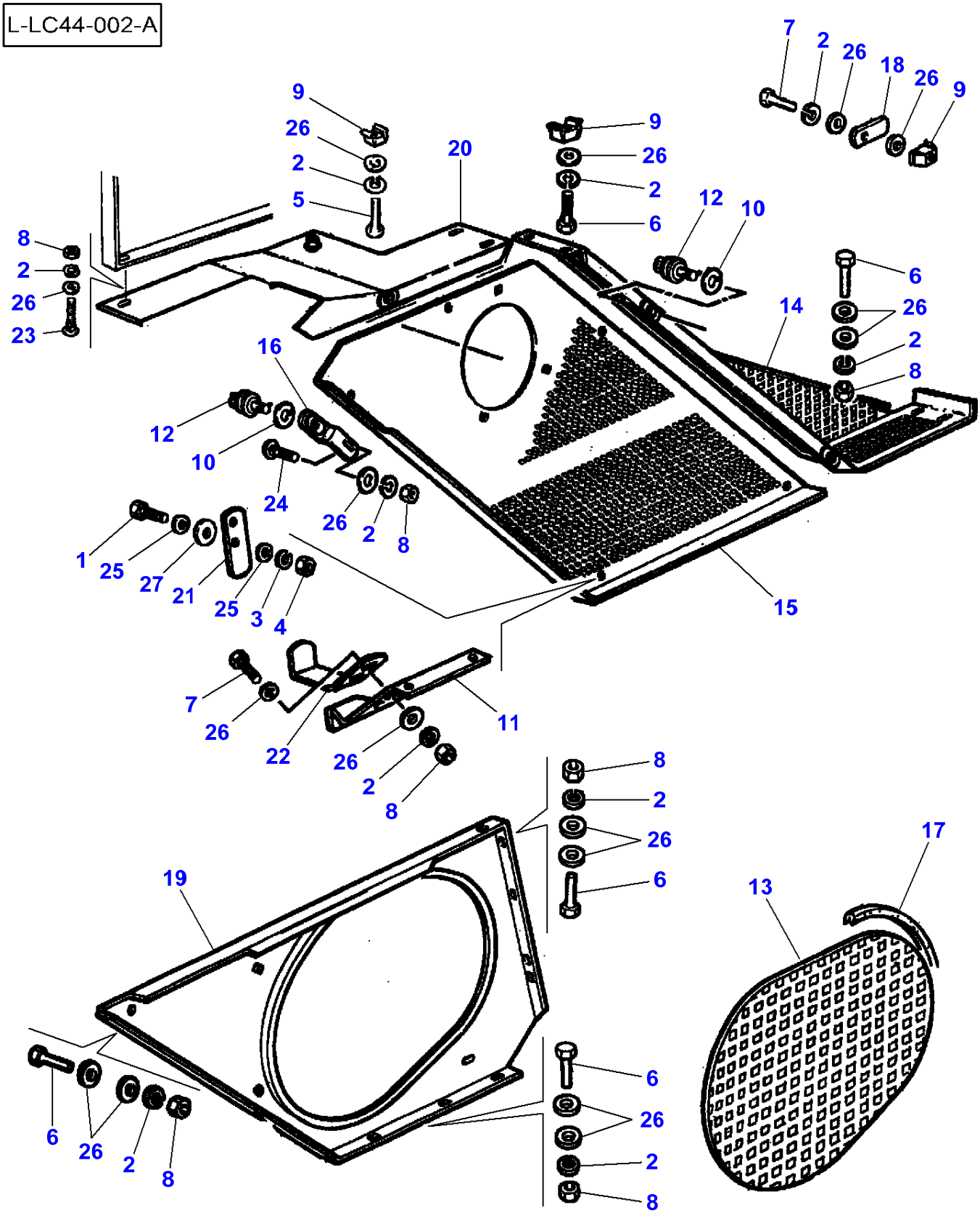
L-LC44-002-A
7
2
26
18
26
9
9
26
2
5
20
9
26
2
6
12
10
8
2
26
23
6
26
2
8
14
16
12
10
24
26
2
8
1
25
27
21
25
3
4
15
7
26
22
26
2
8
11
8
2
26
6
19
17
13
6
26
2
8
6
26
2
8

Item	Part Number	Qty	Description
1	LA10902224	1	Cap Screw
2	LA12034571	10	Lock Washer
3	LA12035670	1	Lock Washer
4	LA15896221	1	Nut
5	LA16043224	1	Cap Screw
6	LA16043424	5	Cap Screw
7	LA16043624	2	Cap Screw
8	LA16100811	10	Nut
9	LA320463950	3	Nut
10	LA320899350	2	Lock Washer
11	LA321283550	1	Bracket
12	LA321551650	1	Screw Special
13	LA321944453	1	Plate
14	LA322219250	1	Shield
15	LA322219550	1	Shield
16	LA322219950	1	Plate
17	LA322220550	1	Profile
18	LA322220650	1	Plate
19	LA322220750	1	Shield
20	LA322319150	1	Shield
21	LA322334950	1	Plate
22	LA322386750	1	Plate
23	LA350342511	1	Carriage Bolt
24	LA350342512	1	Carriage Bolt
25	LA355500715	2	Flat Washer
26	LA355510820	15	Flat Washer
27	LA355520630	1	Washer

L-LC44-008-B

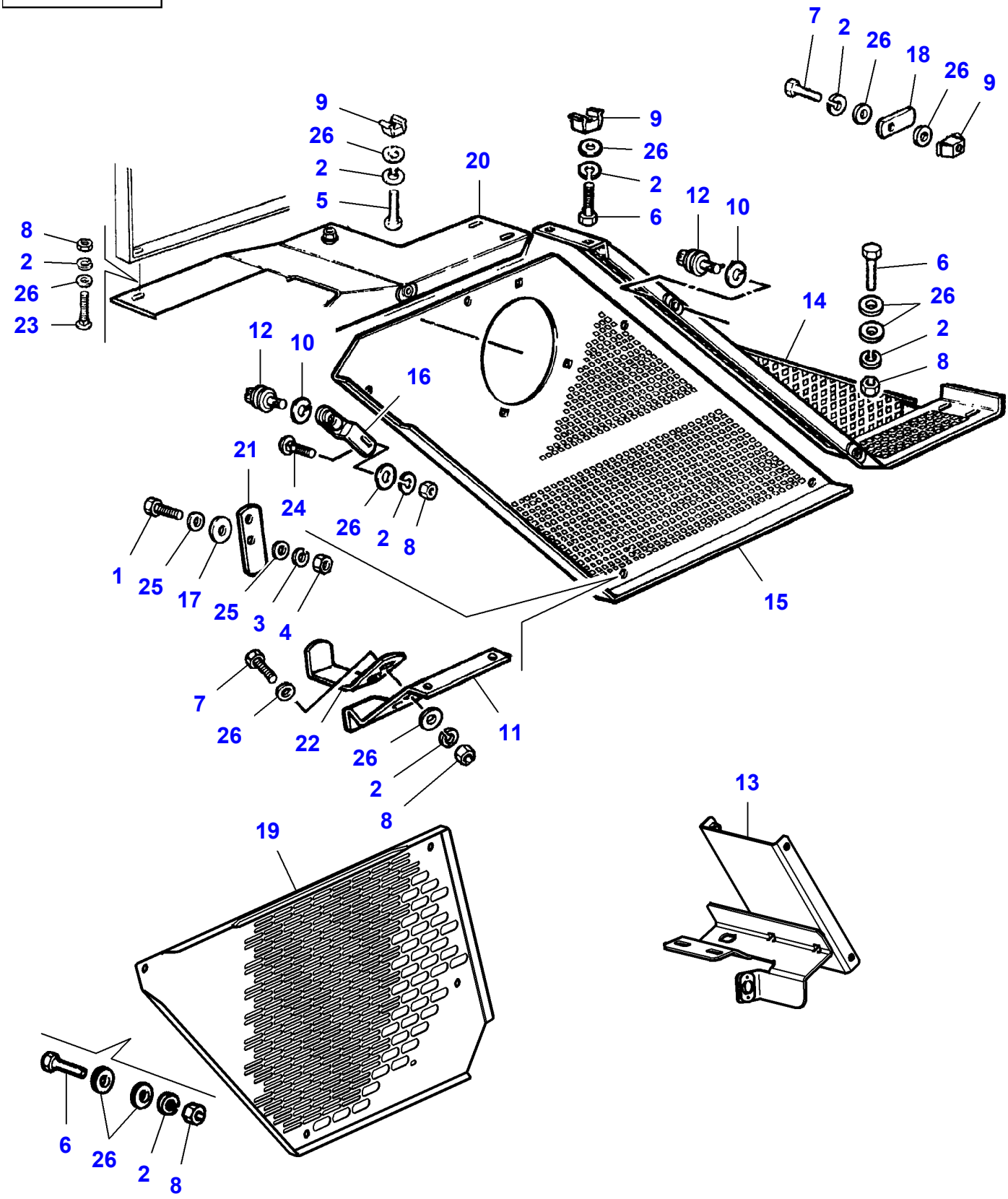
7
2
26
18
26
9
9
26
20
2
5
9
26
2
6
12
10
8
2
26
23
6
26
2
8
14
12
10
16
21
24
26
2
8
1
25
17
25
3
4
15
7
26
22
26
2
8
11
13
19
6
26
2
8

Item	Part Number	Qty	Description
1	LA10902224	1	Cap Screw
2	LA12034571	10	Lock Washer
3	LA12035670	1	Lock Washer
4	LA15896221	1	Nut
5	LA16043224	1	Cap Screw
6	LA16043424	5	Cap Screw
7	LA16043624	2	Cap Screw
8	LA16100811	10	Nut
9	LA320463950	3	Nut
10	LA320899350	2	Lock Washer
11	LA321283550	1	Bracket
12	LA321551650	1	Screw Special
13	LA323184650	1	Support
14	LA322219250	1	Shield
15	LA322219550	1	Shield
16	LA322219950	1	Plate
17	LA355520630	1	Washer
18	LA322220650	1	Plate
19	LA323184050	1	Shield
20	LA322319150	1	Shield
21	LA322334950	1	Plate
22	LA322386750	1	Plate
23	LA350342511	1	Carriage Bolt
24	LA350342512	1	Carriage Bolt
25	LA355500715	2	Flat Washer
26	LA355510820	15	Flat Washer

L-LC43-014-A

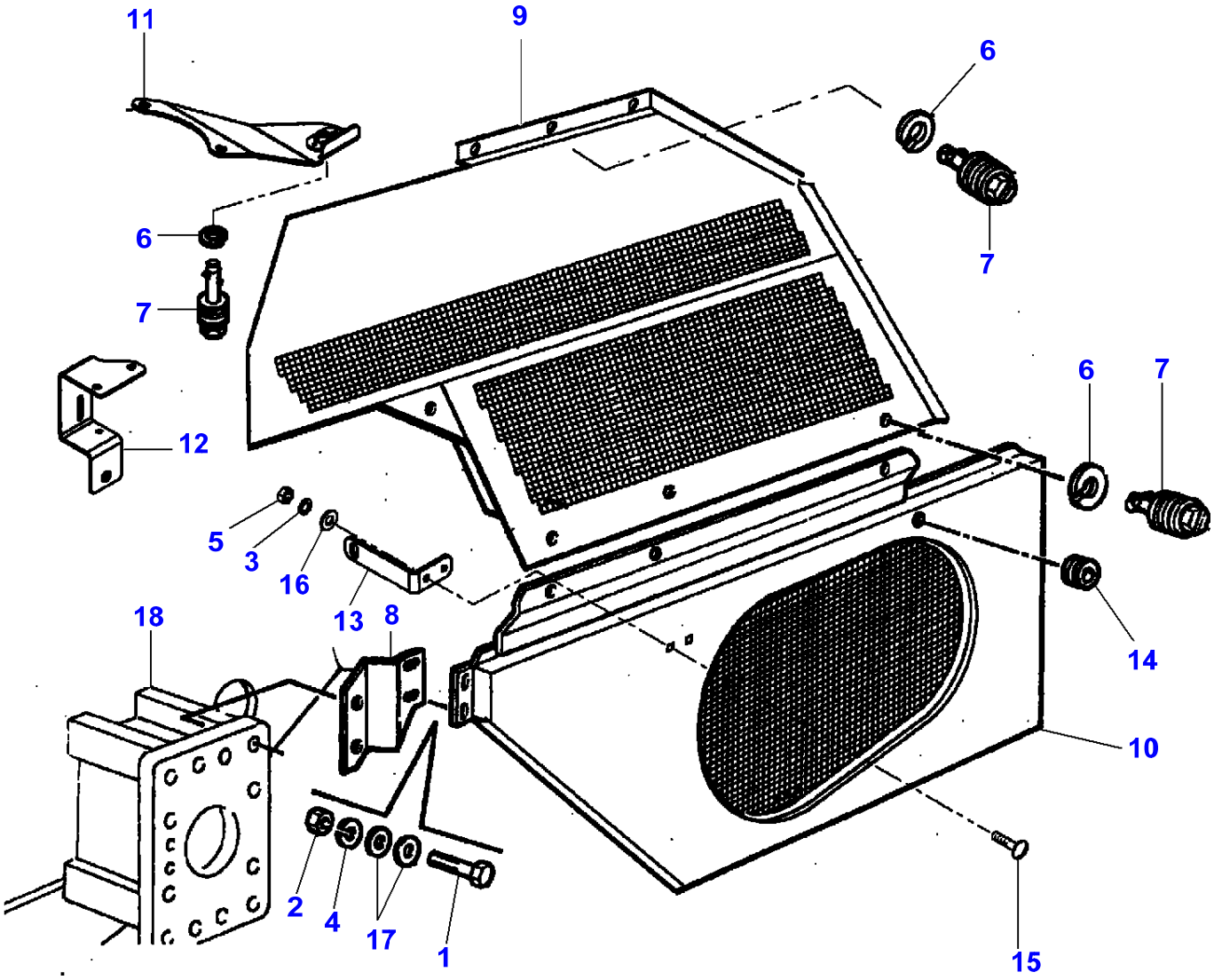

Item	Part Number	Qty	Description	Comments
1	LA11106221	1	Cap Screw	
2	LA11701721	2	Nut	
3	LA12034571	1	Lock Washer	
4	LA12034671	1	Lock Washer	
5	LA16100811	1	Nut	
6	LA320899350	3	Lock Washer	
7	LA321551650	3	Screw Special	
8	LA321930250	1	Plate	
9	LA322892250	1	Shield	
10	LA322892350	1	Shield	
11	LA323072250	1	Plate	
12	LA323072350	1	Plate	
13	LA323087550	1	Anchor	
14	LA340481703	1	Grommet	
15	LA350342511	1	Carriage Bolt	
16	LA355500920	1	Flat Washer	
17	LA355511030	2	Flat Washer	
18		1	Rear Axle	See Page - Reference Number 030-0005

L-LC43-015-B

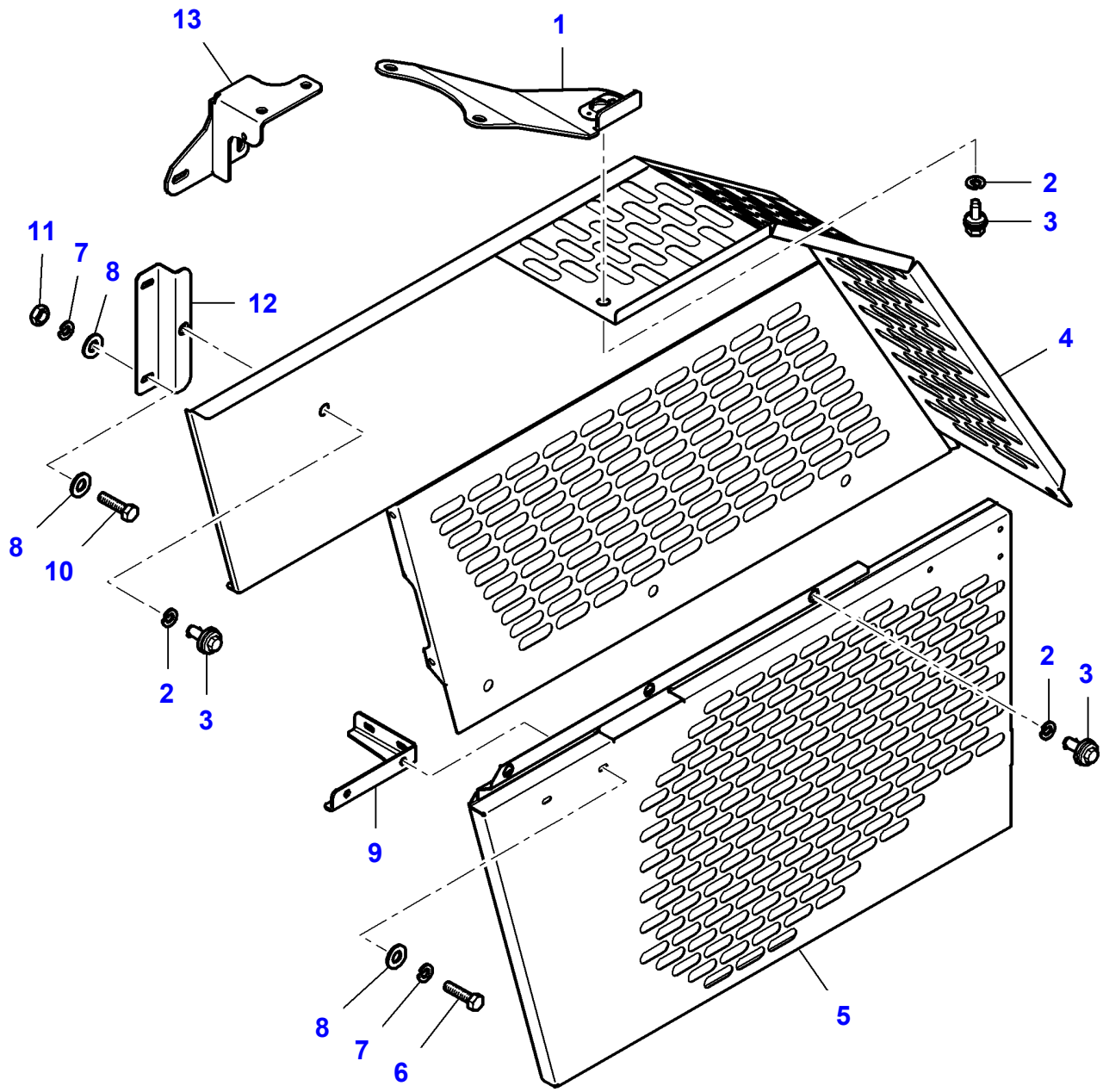

Item	Part Number	Qty	Description
1	LA323186150	1	Support
2	LA320899350	X	Lock Washer
3	LA321551650	X	Screw Special
4	LA323185650	1	Shield
5	LA323183550	1	Shield
6	LA16043421	X	Cap Screw
7	LA12034571	X	Lock Washer
8	LA355510820	X	Flat Washer
9	LA323184450	1	Bracket
10	LA16043421	X	Cap Screw
11	LA16100811	X	Nut
12	LA323184550	1	Bracket
13	LA323186250	1	Bracket

L-LD35-005-A

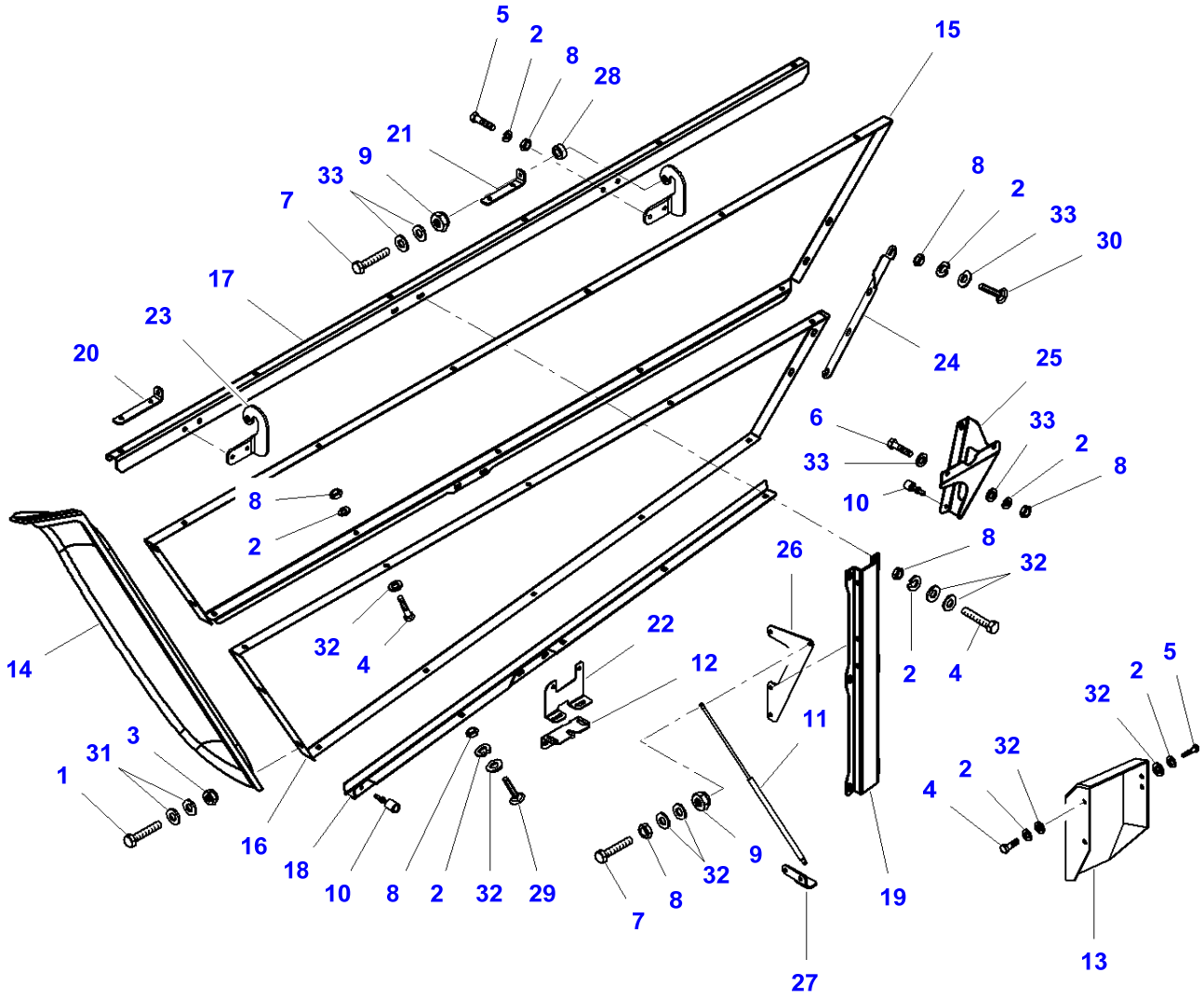
5
2
8
28
15
21
9
33
7
8
2
33
30
17
23
20
24
25
6
33
33
2
8
10
8
2
26
32
32
4
22
12
2
4
14
11
2
5
32
3
31
1
32
4
2
16
18
10
8
2
32
29
9
32
7
8
19
13
27

Item	Part Number	Qty	Description	Comments
1	LA10902221	1	Cap Screw	
2	LA12034571	8	Lock Washer	
3	LA12574211	1	Locknut	
4	LA16043221	2	Cap Screw	
5	LA16043421	1	Cap Screw	
6	LA16043621	1	Cap Screw	
7	LA16043821	2	Cap Screw	
8	LA16100811	22	Nut	
9	LA16104111	10	Locknut	
10	LA201139752	2	Stop	
11	LA240000018	1	Gas Strut	
12	LA322316750	1	Lock	
13	LA322891150	1	Shield	
14	LA323074050	1	Fender	
15	LA323083350	1	Panel	
16	LA323083450	1	Panel	
17	LA323083550	1	Profile	
18	LA323083650	1	Profile	
19	LA323083750	1	Profile	
20	LA323083850	1	Bracket	
21	LA323084550	1	Bracket	
22	LA323084850	1	Plate	
23	LA323085450	2	Plate	
24	LA323086450	1	Collar	
25	LA323086550	1	Bracket	
26	LA323087750	1	Console	
27	LA323087850	1	Plate	Up to Serial or Engine Number
28	LA340415098	1	Bush	
29	LA350342510	1	Carriage Bolt	
30	LA350342511	4	Carriage Bolt	
31	LA355500715	2	Flat Washer	
32	LA355500920	8	Flat Washer	
33	LA355510820	5	Flat Washer	

L-LC43-001-B

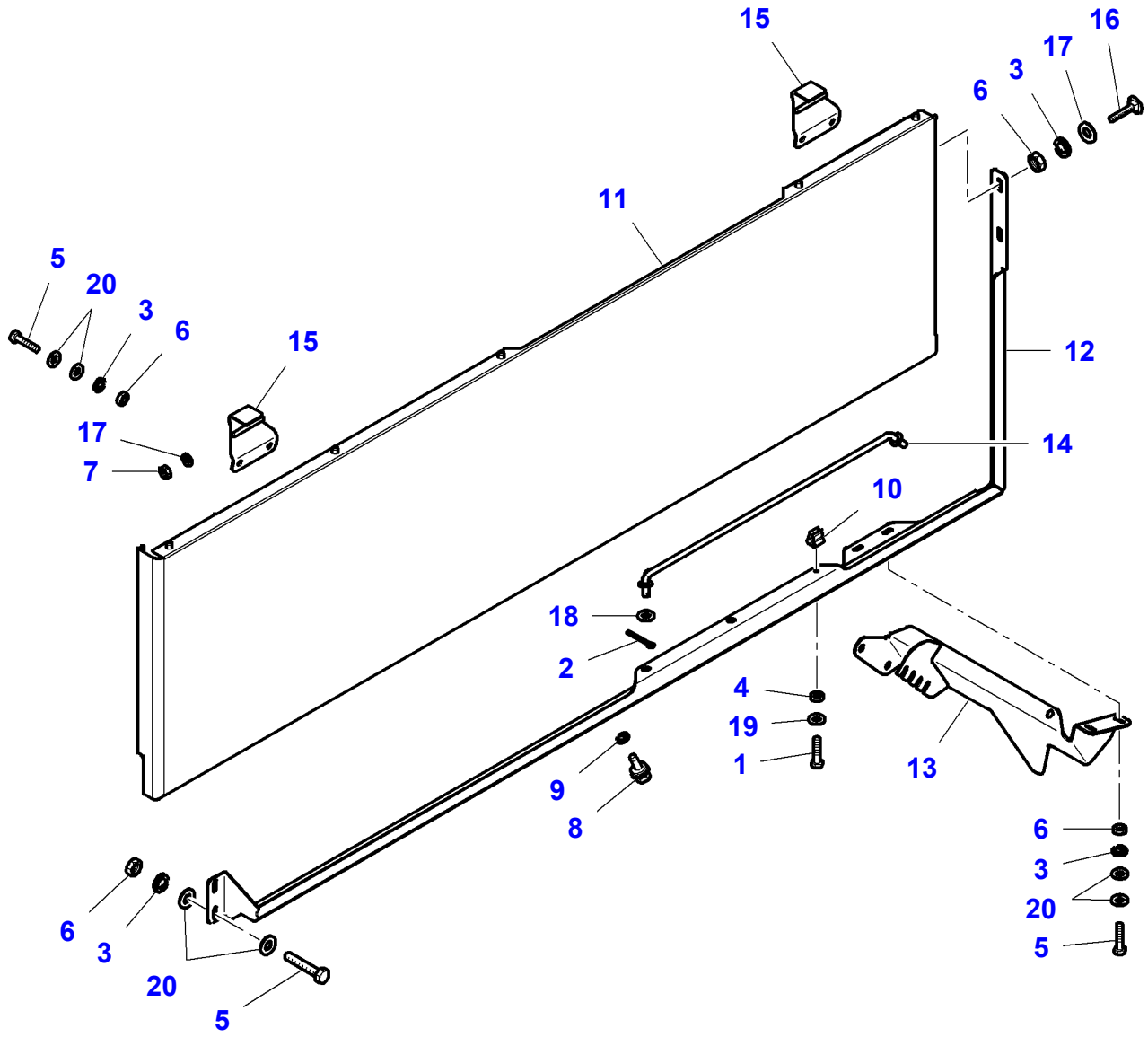

Item	Part Number	Qty	Description
1	LA10375111	2	Cap Screw
2	LA10733601	2	Split Pin
3	LA12034571	17	Lock Washer
4	LA12574011	2	Nut
5	LA16043421	7	Cap Screw
6	LA16100811	14	Nut
7	LA16104111	4	Locknut
8	LA320797250	1	Screw
9	LA320899350	1	Lock Washer
10	LA322294350	1	Clip
11	LA323072450	1	Panel
12	LA323075050	1	Rail
13	LA323075250	1	Anchor
14	LA323087650	1	Rod
15	LA323089050	2	Hinge
16	LA350342510	1	Carriage Bolt
17	LA355500920	2	Flat Washer
18	LA355501115	2	Flat Washer
19	LA355510415	2	Flat Washer
20	LA355510820	6	Flat Washer

L-LC43-002-B

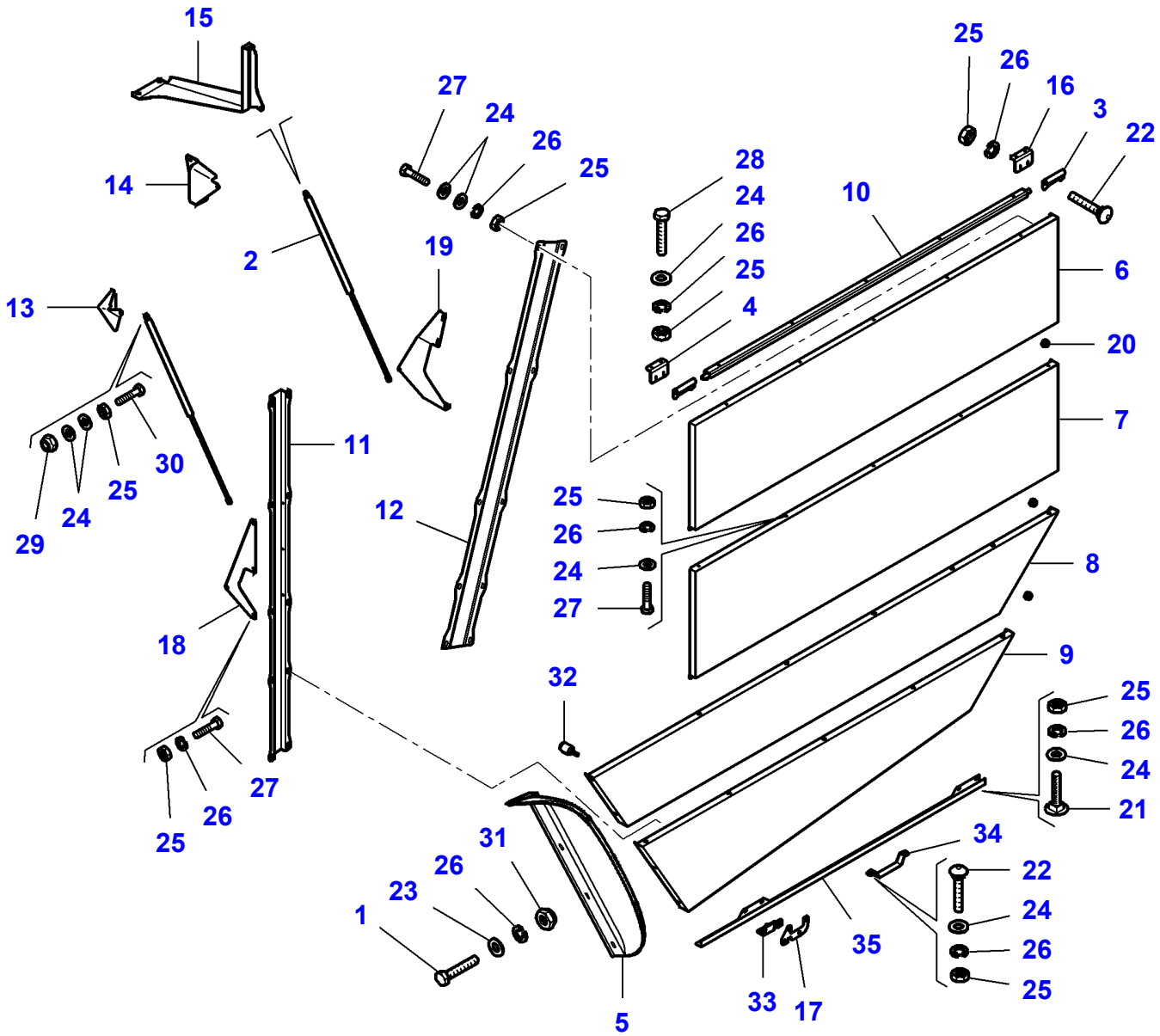
15
14
2
13
29
24
25
30
27
24
26
25
19
12
11
18
25
26
27
28
24
26
25
4
25
26
16
3
22
10
6
20
7
25
26
24
27
8
9
32
25
26
24
21
34
22
24
26
25
35
31
26
23
1
5
33
17

Item	Part Number	Qty	Description	Comments
1	LA10902221	4	Cap Screw	
2	**LA322891550**	1	Gas Strut	
3	LA322980750	1	Hinge	
4	LA323041550	1	Bracket	
5	LA323074150	1	Fender	
6	LA323080850	1	Plate	
7	LA323080950	1	Plate	
8	LA323081050	1	Plate	
9	LA323081150	1	Plate	
10	LA323081250	1	Reinforcement	
11	LA323081450	1	Reinforcement	
12	LA323081550	1	Reinforcement	
13	LA323081850	1	Bracket	
14	LA323081950	1	Bracket	
15	LA323082050	1	Bracket	[A]
16	LA323082150	1	Bracket	
17	LA323083950	1	Plate	
18	LA323087250	1	Holder	
19	LA323087350	1	Holder	
20	LA340481703	1	Grommet	
21	LA350342510	1	Carriage Bolt	
22	LA350342511	2	Carriage Bolt	
23	LA355500615	1	Flat Washer	
24	LA355500920	10	Flat Washer	
25	LA16100811	X	Nut	
26	LA12034571	X	Lock Washer	
27	LA16043221	2	Cap Screw	
28	LA16043421	1	Cap Screw	
29	LA16104111	1	Locknut	
30	LA16043821	1	Cap Screw	
31	LA12574211	1	Locknut	
32	LA201139752	1	Stop	
33	LA322316750	1	Lock	
34	LA321836450	1	Grip	
35	LA323081350	1	Bar	

FOOTNOTE [A] WITHOUT STRAW CHOPPER

L-LC43-003-B

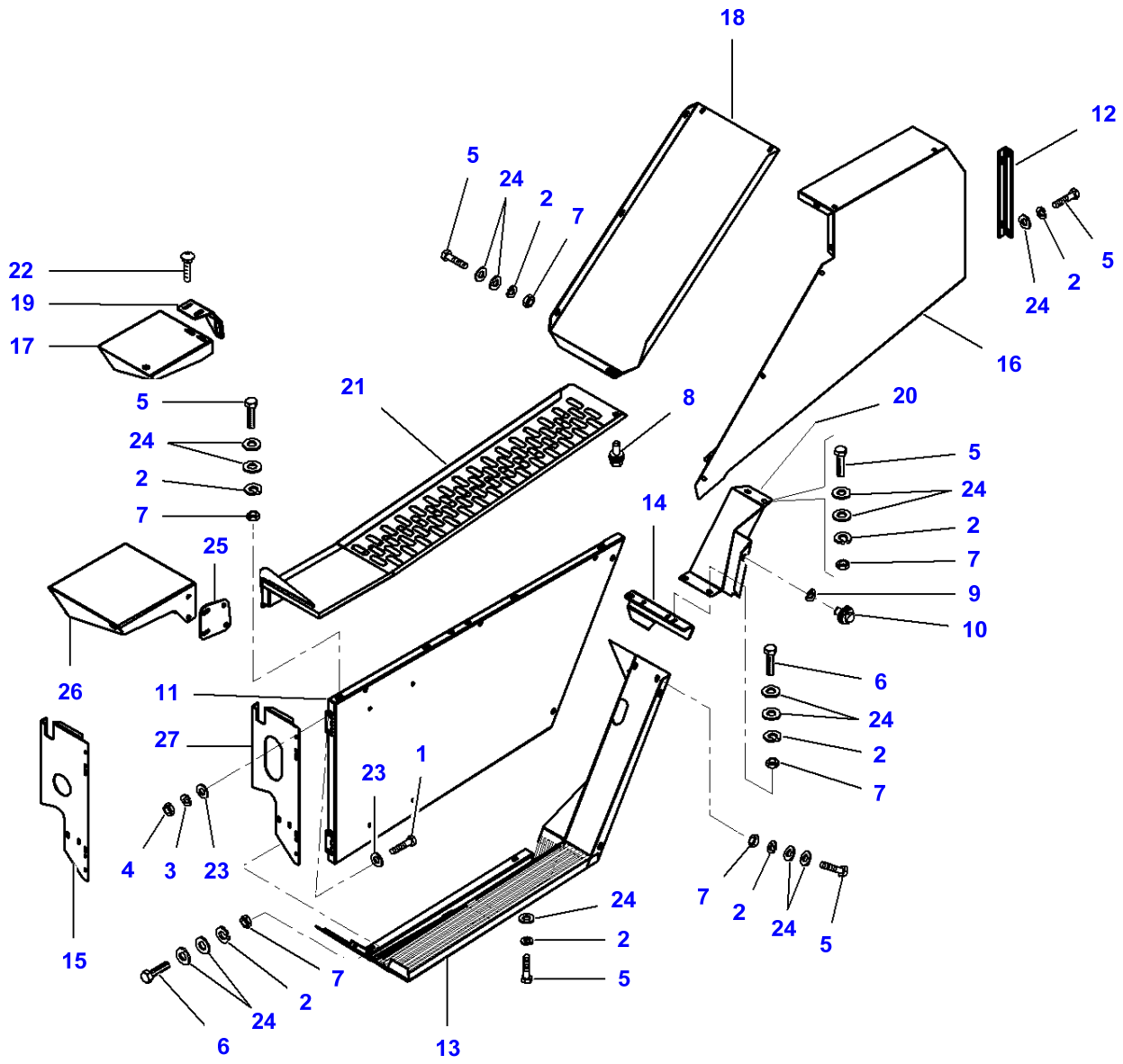
18
12
5
24
2
7
22
19
17
5
24
2
7
21
8
20
5
24
2
7
9
10
14
25
26
11
6
24
2
7
27
23
1
4
3
23
7
2
24
5
24
2
5
15
7
2
24
6
13

Item	Part Number	Qty	Description	Comments
1	LA10902421	2	Cap Screw	
2	LA12034571	7	Lock Washer	
3	LA12035671	4	Lock Washer	
4	LA15896221	1	Nut	
5	LA16043421	5	Cap Screw	
6	LA16043621	2	Cap Screw	
7	LA16100811	10	Nut	
8	LA320797250	1	Screw	
9	LA320899350	4	Lock Washer	
10	LA321551650	4	Screw Special	
11	LA321940350	1	Shield	
12	LA321940650	1	Support	
13	LA321940750	1	Shield	
14	LA321940850	1	Support	
15	LA322106750	1	Support	Up to Serial or Engine Number ...
16	LA323027650	1	Shield	
17	LA323040850	1	Bar	Up to Serial or Engine Number
18	LA323041150	1	Shield	
19	LA323084250	1	Stop	Up to Serial or Engine Number
20	LA323089550	1	Cover	
21	LA323089650	1	Shield	
22	LA350342511	2	Carriage Bolt	Up to Serial or Engine Number
23	LA355500615	4	Flat Washer	
24	LA355510820	10	Flat Washer	
25	LA323186350	1	Plate	From Serial or Engine Number 551710031
26	LA323185750	1	Support	From Serial or Engine Number 551710031
27	LA323183850	1	Support	From Serial or Engine Number 551710031

L-LC45-001-A

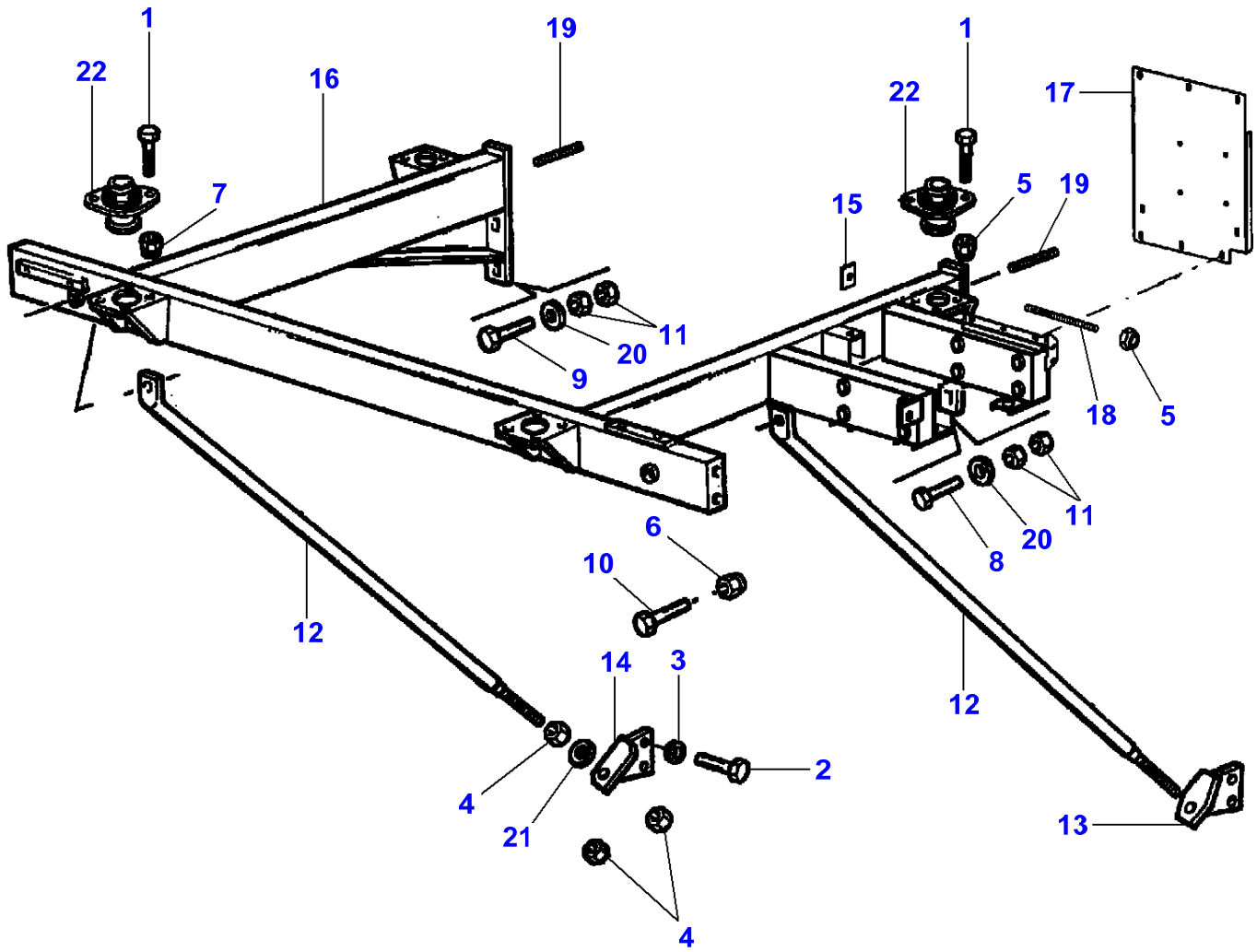

Item	Part Number	Qty	Description	Comments
1	LA11106221	8	Cap Screw	
2	LA11376221	2	Cap Screw	
3	LA12034871	2	Lock Washer	
4	LA12163511	2	Nut	
5	LA12574211	1	Locknut	
6	LA12574921	1	Nut	
7	LA12577211	4	Nut	
8	LA15540924	1	Cap Screw	
9	LA15541024	1	Cap Screw	
10	LA15981324	1	Cap Screw	
11	LA16101521	4	Nut	
12	LA321887450	2	Stop	
13	LA321888050	1	Bracket	
14	LA321983150	1	Bracket	
15	LA322936270	1	Plate	
16	LA322964850	1	Frame	Up to Serial or Engine Number ...
	LA323194850	1	Frame	From Serial or Engine Number 551700030
17	LA323074950	1	Plate	
18	LA323094450	1	Stud	
19	LA323095350	2	Stud	
20	LA355501330	2	Flat Washer	
21	LA355502150	1	Flat Washer	
22		1	Vibration Mount	See Page - Reference Number 100-0100/10

L-LC45-002-A

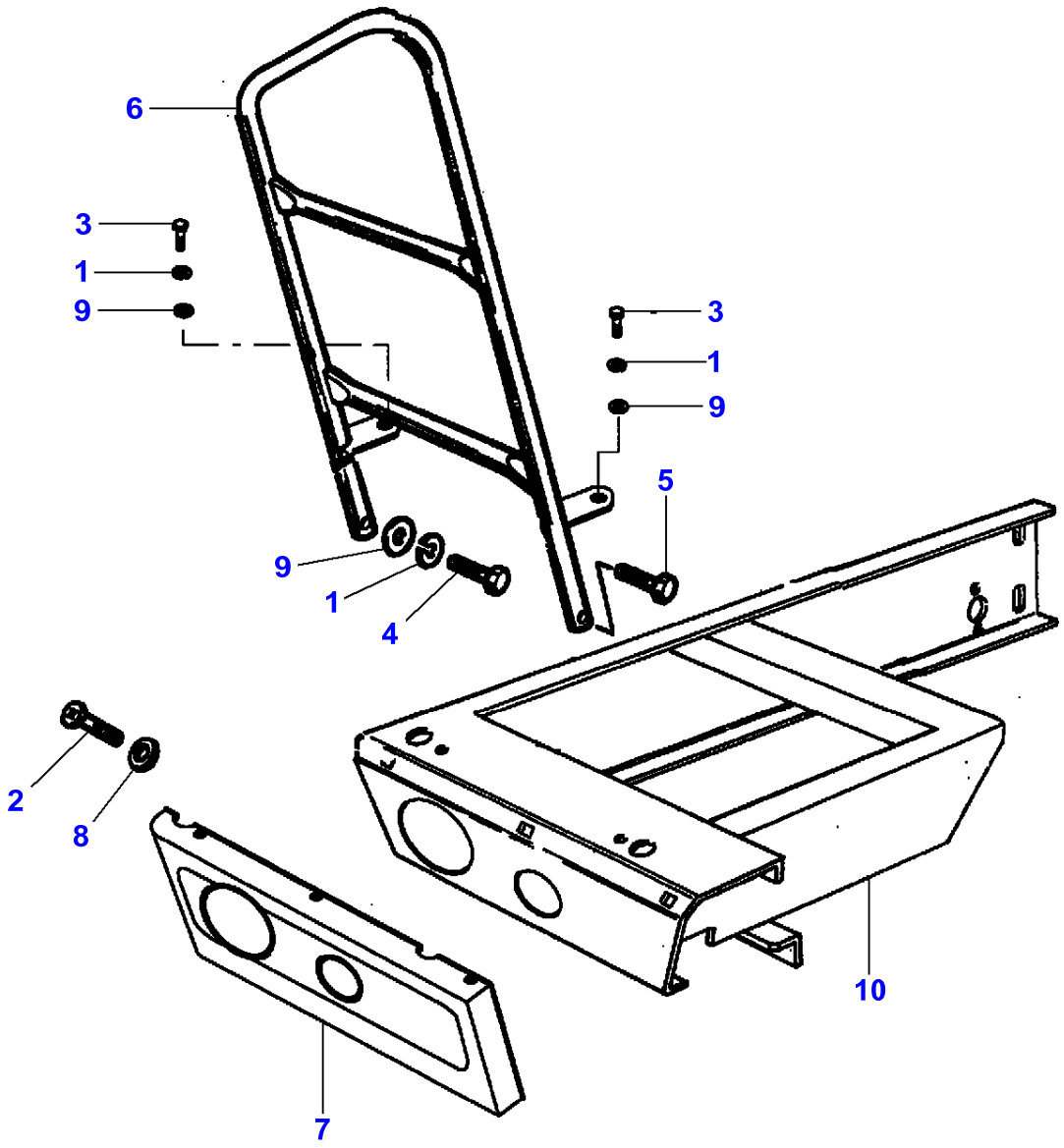

Item	Part Number	Qty	Description	Comments
1	LA12034571	3	Lock Washer	
2	LA13276114	2	Screw	
3	LA16043424	2	Cap Screw	
4	LA16044024	1	Cap Screw	
5	LA16044621	1	Screw	
6	LA322790150	1	Shield	
7	LA322849550	1	Cover	
8	LA355500715	2	Flat Washer	
9	LA355510820	3	Flat Washer	
10		1	Floor	See Page - Reference Number 100-0075/8

L-LC45-009-A

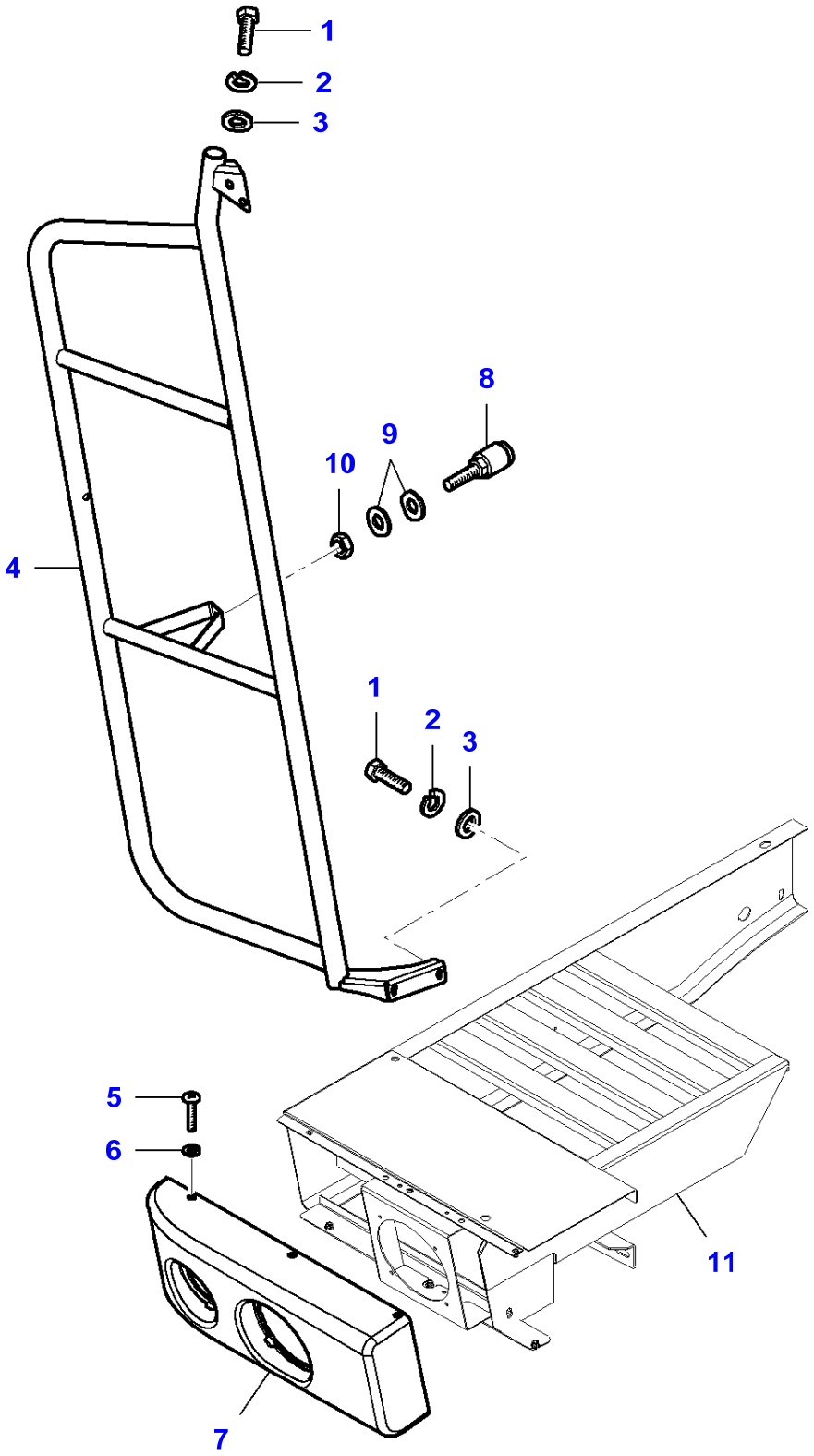

Item	Part Number	Qty	Description	Comments
1	LA16043424	X	Cap Screw	
2	LA12034571	X	Lock Washer	
3	LA355510820	X	Flat Washer	
4	LA323249750	1	Handlebar	
5	LA13276114	X	Screw	
6	LA355500915	X	Flat Washer	
7	LA323200650	1	Cover	
8	LA322340600	1	Stop	
9	LA355500715	1	Flat Washer	
10	LA15896211	1	Nut	
11		1	Floor	See Page - Reference Number 100-0080/8

L-LC11-001-A

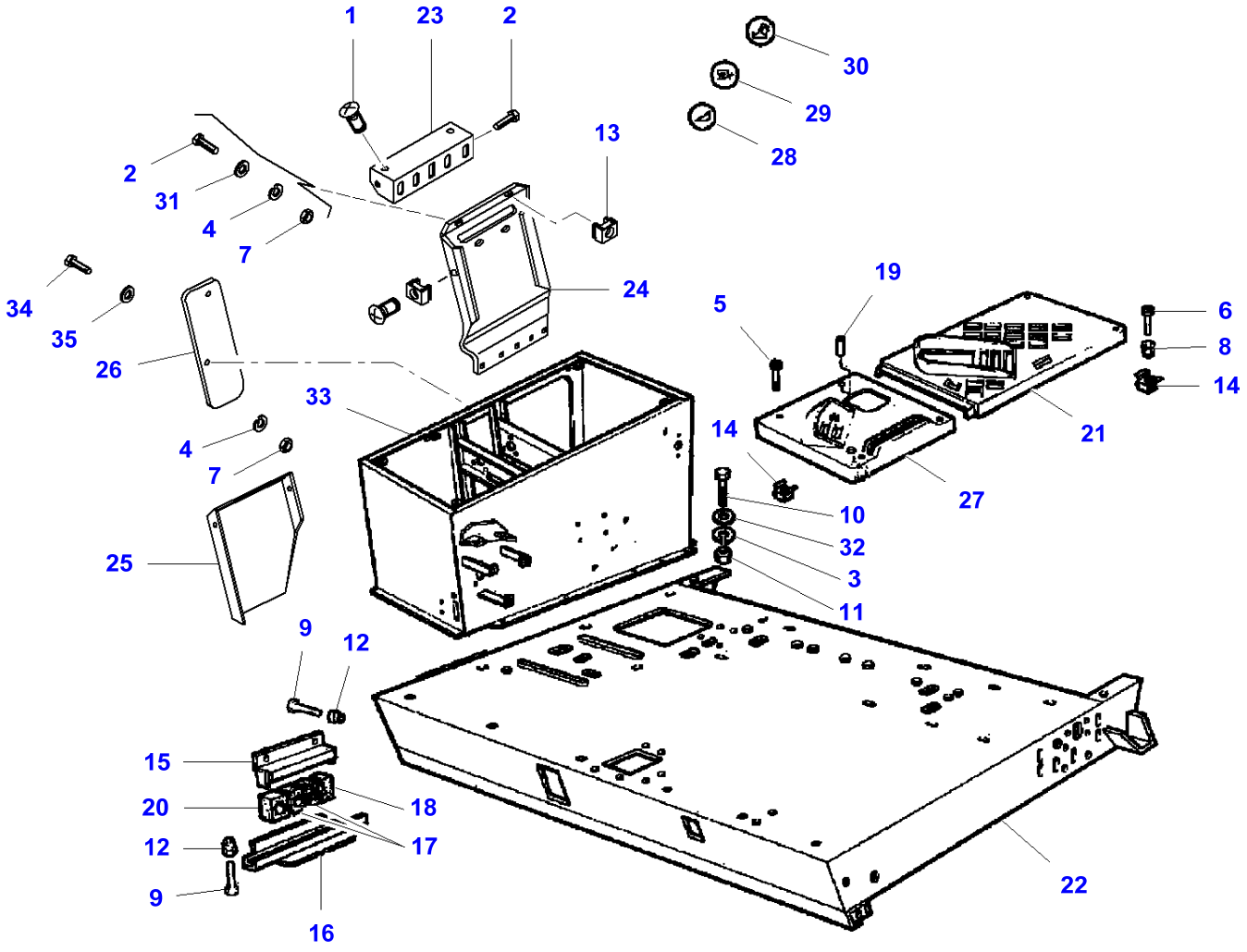
1
23
2
30
29
28
13
2
31
4
7
24
34
35
26
33
4
7
25
19
5
6
8
14
21
14
27
10
32
3
11
9
12
15
20
12
9
18
17
16
22

Item	Part Number	Qty	Description	Comments
1	LA10376714	2	Screw	
2	LA10902424	10	Cap Screw	
3	LA12034571	4	Lock Washer	
4	LA12035671	2	Lock Washer	
5	LA13277101	4	Bracket	
6	LA13277311	4	Bracket	
7	LA15896211	3	Nut	
8	LA15896221	4	Nut	
9	LA16043224	4	Cap Screw	
10	LA16043424	4	Cap Screw	
11	LA16100811	4	Nut	
12	LA16104111	4	Locknut	
13	LA320466350	2	Nut	
14	LA321318950	8	Nut	
15	LA322129350	1	Support	
16	LA322129650	1	Bracket	
17	LA322132950	1	Block	
18	LA322149450	1	Block	
19	LA322185350	4	Spacer	Up to Serial or Engine Number
20	LA322213950	1	Block	
21	LA322579750	1	Panel	
22	LA322796750	1	Plate	
23	LA322802850	1	Support	
24	LA322802950	1	Plate	
25	LA322915150	1	Cover	
26	LA322915250	1	Cover	
27	LA323004000	1	Panel	
28	LA341000100	1	Decal	
29	LA341000101	1	Decal	
30	LA341000102	1	Decal	
31	LA355500720	2	Flat Washer	
32	LA355510820	4	Flat Washer	
33	LA322087850	1	Support	
34	LA10902221	1	Cap Screw	
35	LA355500715	1	Flat Washer	

L-LC11-006-A

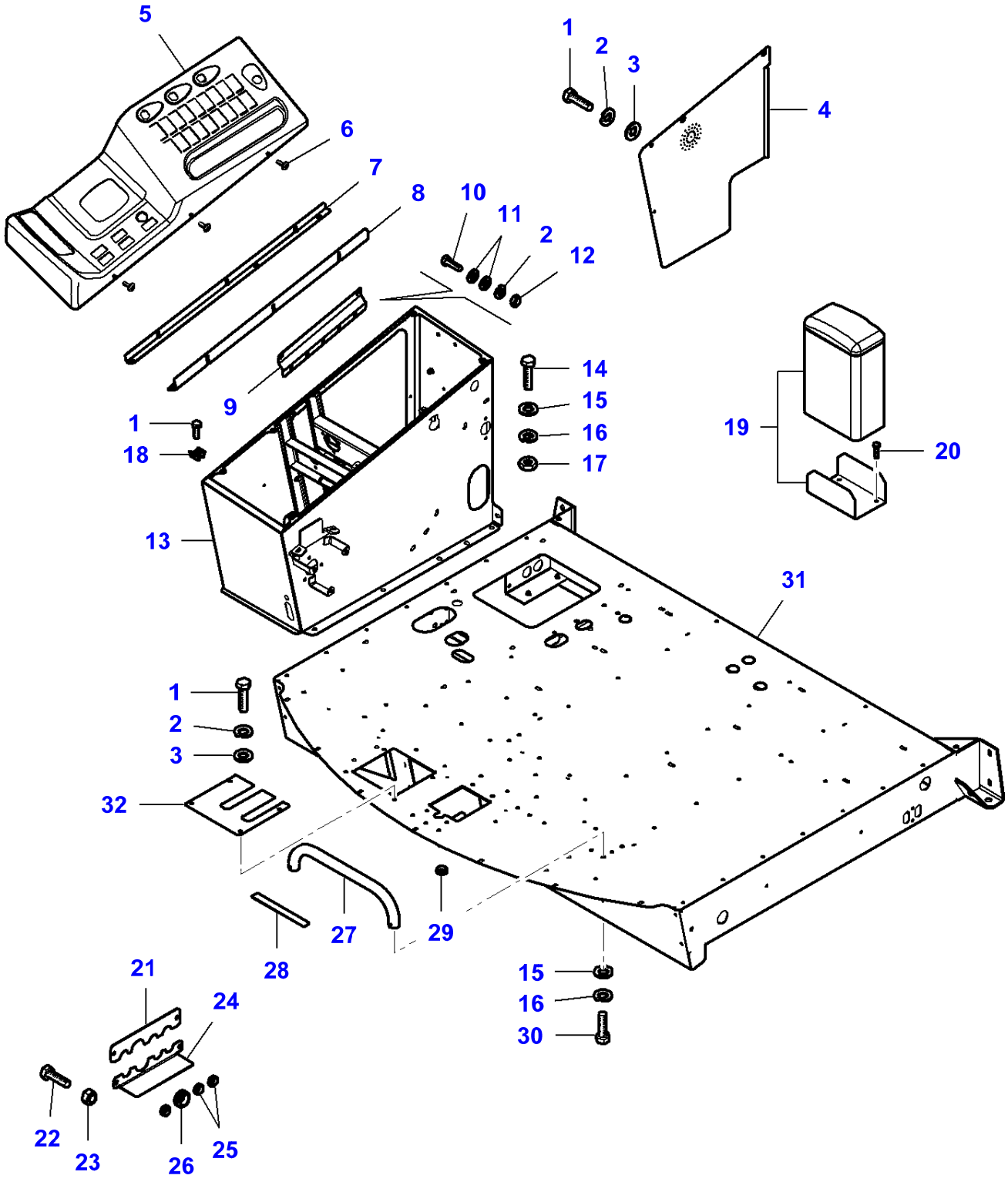
5
6
7
8
10
11
2
12
9
1
18
13
1
2
3
4
14
15
16
17
19
20
31
1
2
3
32
27
29
28
21
24
22
23
26
25
15
16
30

Item	Part Number	Qty	Description
1	LA10902221	1	Cap Screw
2	LA12035671	1	Lock Washer
3	LA355500715	1	Flat Washer
4	LA323198050	1	Panel
5	LA323197150	1	Cladding
6	LA323174850	1	Screw
7	LA323196950	1	Bracket
8	LA323197050	1	Bracket
9	LA323197850	1	Bracket
10	LA10902421	1	Cap Screw
11	LA355500615	1	Flat Washer
12	LA15896211	1	Nut
13	LA322087850	1	Support
14	LA16043424	1	Cap Screw
15	LA355510820	1	Flat Washer
16	LA12034571	1	Lock Washer
17	LA16100811	1	Nut
18	LA321318950	1	Nut
19	LA322903250	1	Cooler
20	LA10902621	1	Cap Screw
21	LA323190550	1	Plate
22	LA16043224	1	Cap Screw
23	LA16104111	1	Locknut
24	LA323190450	1	Support
25	LA10397780	1	Grommet
26	LA10398180	1	Grommet
27	LA323197350	1	Support
28	LA320713450	1	Gasket
29	LA10397580	1	Grommet
30	LA16043421	1	Cap Screw
31	LA323188450	1	Platform
32	LA323207350	1	Support

L-LC11-002-B

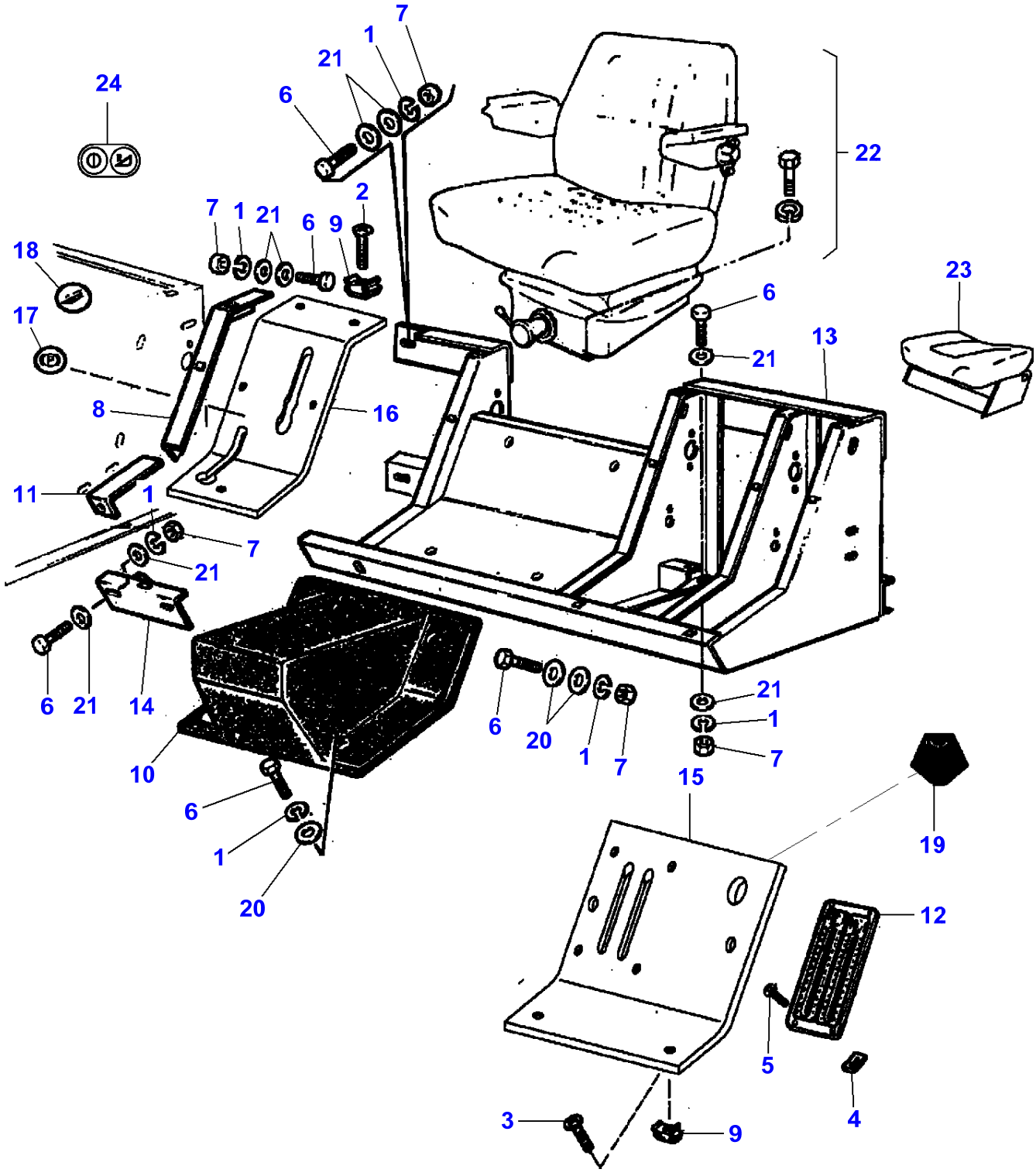
24
7
1
21
6
22
2
7
1
21
6
9
18
17
8
16
11
1
7
21
6
21
14
10
6
1
20
6
20
1
7
21
1
7
15
19
12
5
4
3
9
23
6
21
13

Item	Part Number	Qty	Description	Comments
1	LA12034571	10	Lock Washer	
2	LA13275111	2	Screw	
3	LA13288077	2	Screw	
4	LA14125471	4	Shield	
5	LA15902701	4	Screw	
6	LA16043424	10	Cap Screw	
7	LA16100811	10	Nut	
8	LA321273550	1	Support	
9	LA321284450	2	Nut	
10	LA321959350	1	Support	
11	LA322131450	1	Bracket	
12	LA322164950	1	Frame	
13	LA322251950	1	Frame	
14	LA322797050	1	Profile	
15	LA322802050	1	Frame	
16	LA322802150	1	Frame	
17	LA341000103	1	Decal	
18	LA341000104	1	Decal	Up to Serial or Engine Number
19	LA341000105	1	Decal	
20	LA355500915	4	Flat Washer	
21	LA355510820	15	Flat Washer	
22		1	Seat	See Page - Reference Number 100-0085
23		1	Seat	See Page - Reference Number 100-0085
24	LA341000127	1	Decal	

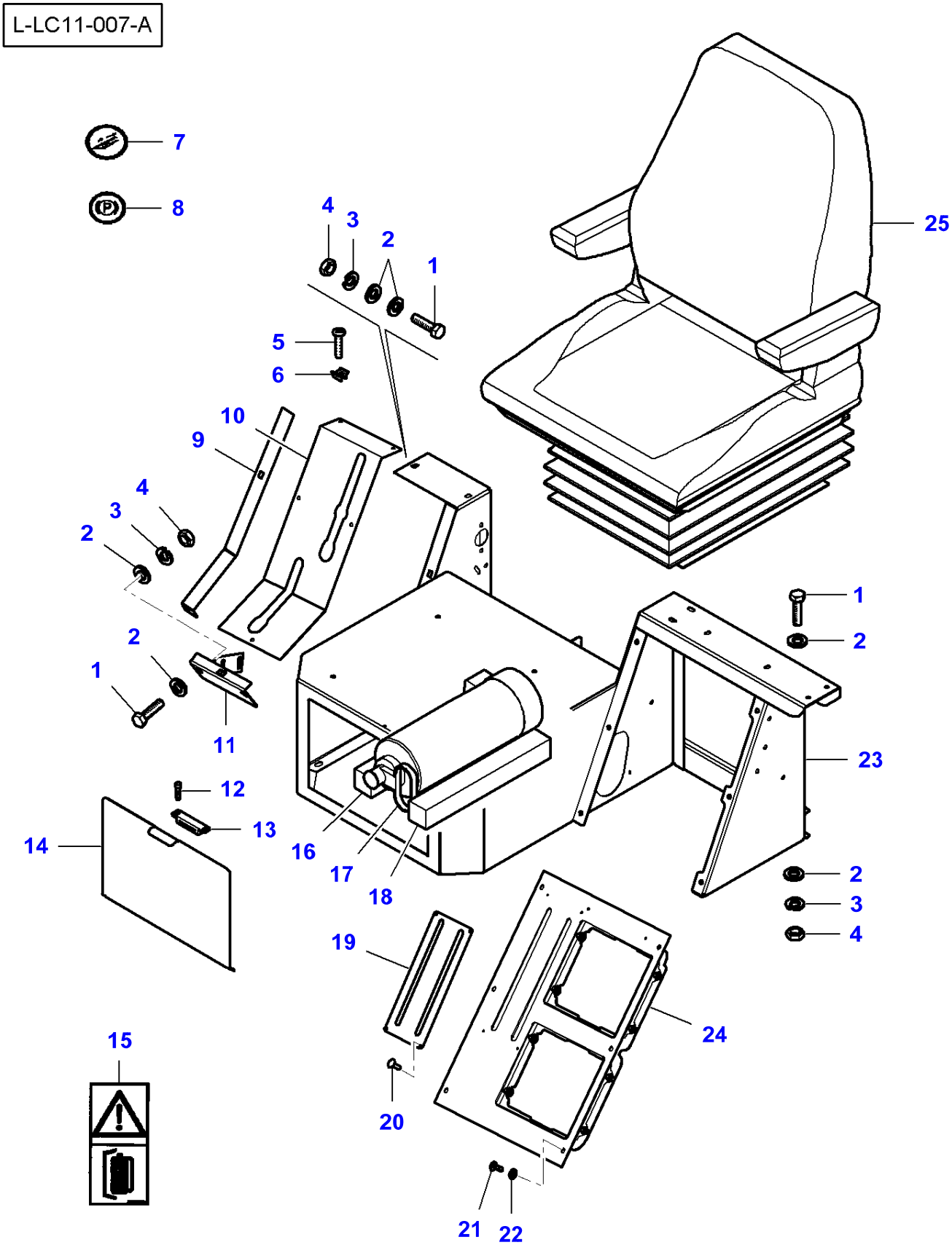
L-LC11-007-A
7
8
4
3
2
1
25
5
6
10
9
4
3
2
2
1
11
1
2
23
12
13
14
16
17
18
2
3
4
19
24
15
20
21
22

Item	Part Number	Qty	Description	Comments
1	LA16043424	1	Cap Screw	
2	LA355510820	1	Flat Washer	
3	LA12034571	1	Lock Washer	
4	LA16100811	1	Nut	
5	LA13275111	1	Screw	
6	LA321284450	1	Nut	
7	LA341000104	1	Decal	
8	LA341000103	1	Decal	
9	LA323189850	1	Plate	
10	LA322802150	1	Frame	
11	LA322797050	1	Profile	
12	LA14303324	1	Hex Socket Screw	
13	LA323080750	1	Magnet	
14	LA323189950	1	Door	
15	LA341000030	1	Decal	
16	LA322999350	1	Support	
17	LA322870450	1	Extinguisher	
18	LA322999350	1	Support	
19	LA322164950	1	Frame	
20	LA14641192	1	Screw	
21	LA13276417	1	Screw	
22	LA355500715	1	Flat Washer	
23	LA323186950	1	Bracket	
24	LA323196350	1	Bracket	
25		1	Seat	See Page - Reference Number 100-0090/1

L-LD39-001-A

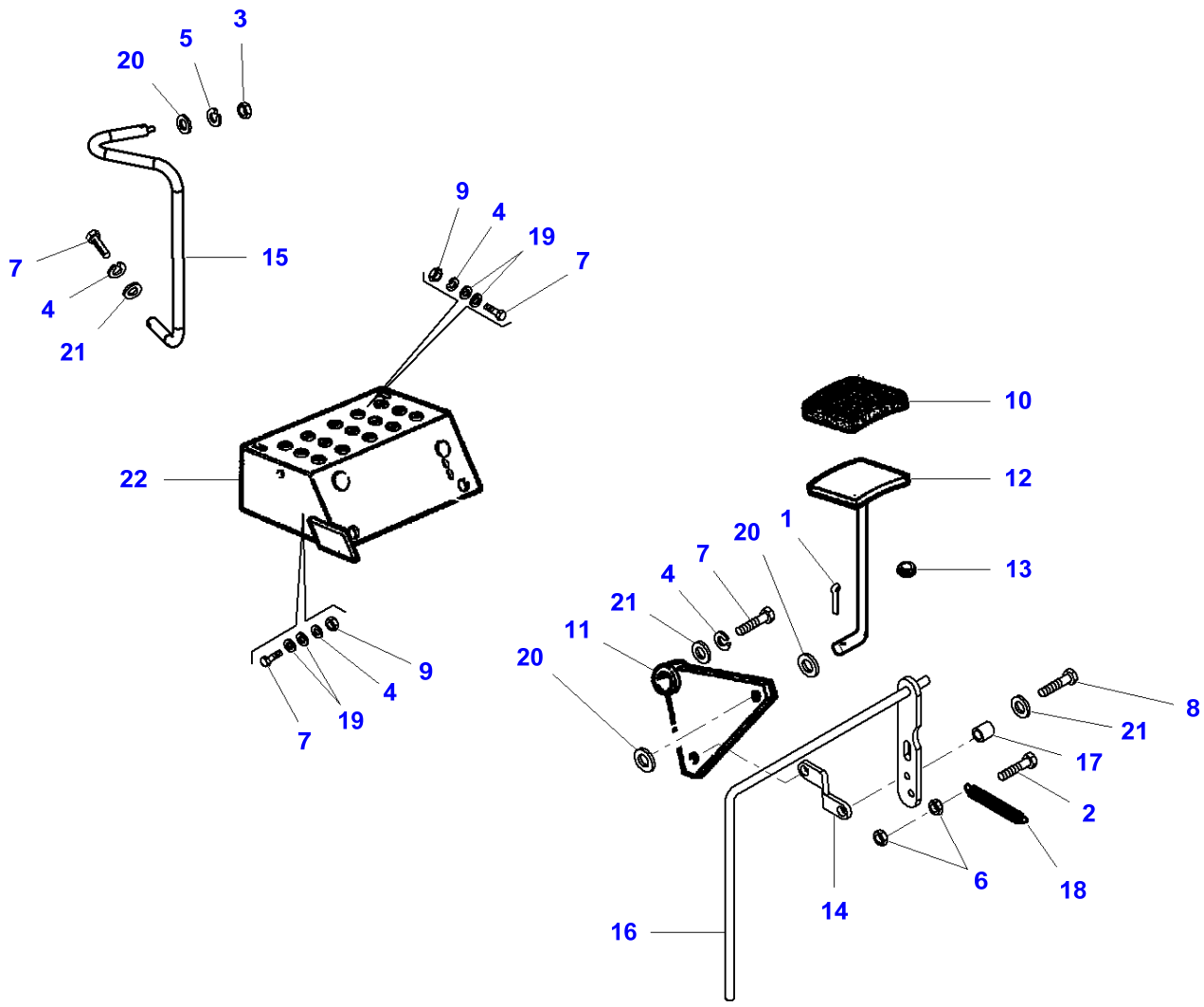
3
5
20
15
7
4
21
9
4
19
7
22
9
4
19
7
10
12
1
20
7
4
21
11
20
13
8
21
17
2
6
18
14
16

Item	Part Number	Qty	Description	Comments
1	LA10733601	1	Split Pin	
2	LA10902621	1	Cap Screw	
3	LA11701711	1	Nut	
4	LA12034571	3	Lock Washer	
5	LA12034671	1	Lock Washer	
6	LA15896211	2	Nut	
7	LA16043421	3	Cap Screw	
8	LA16043624	1	Cap Screw	
9	LA16100811	2	Nut	
10	LA322078850	1	Pad	
11	LA322079450	1	Arm	
12	LA322081450	1	Pedal	
13	LA322255350	1	Bush	
14	LA322941650	1	Tie Rod	
15	LA322991950	1	Shield	
16	LA323079350	1	Lever	
17	LA340415607	1	Bush	
18	LA350356530	1	Spring	
19	LA355500920	4	Flat Washer	
20	LA355501120	2	Flat Washer	
21	LA355510820	2	Flat Washer	
22		1	Support	See Page - Reference Number 100-0055/22

L-LD39-006-A

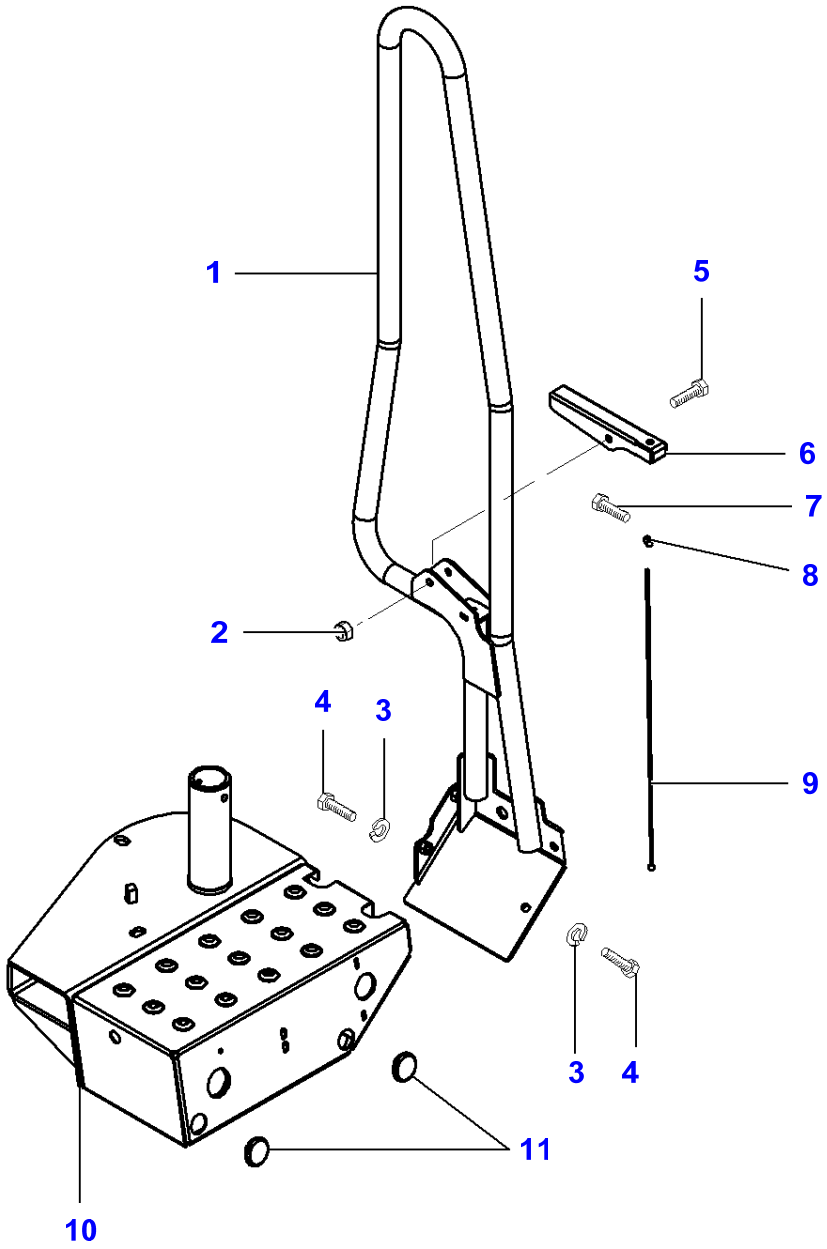

Item	Part Number	Qty	Description
1	LA323180650	1	Handlebar
2	LA16104111	1	Locknut
3	LA322358	X	Lock Washer
4	LA16043621	X	Cap Screw
5	LA16044221	1	Cap Screw
6	LA323187350	1	Lock
7	LA10977521	1	Cap Screw
8	LA323024750	1	Cylinder
9	LA323187550	1	Rod
10	LA323171350	1	Support
11	LA322274450	2	Plug

L-LD39-007-A

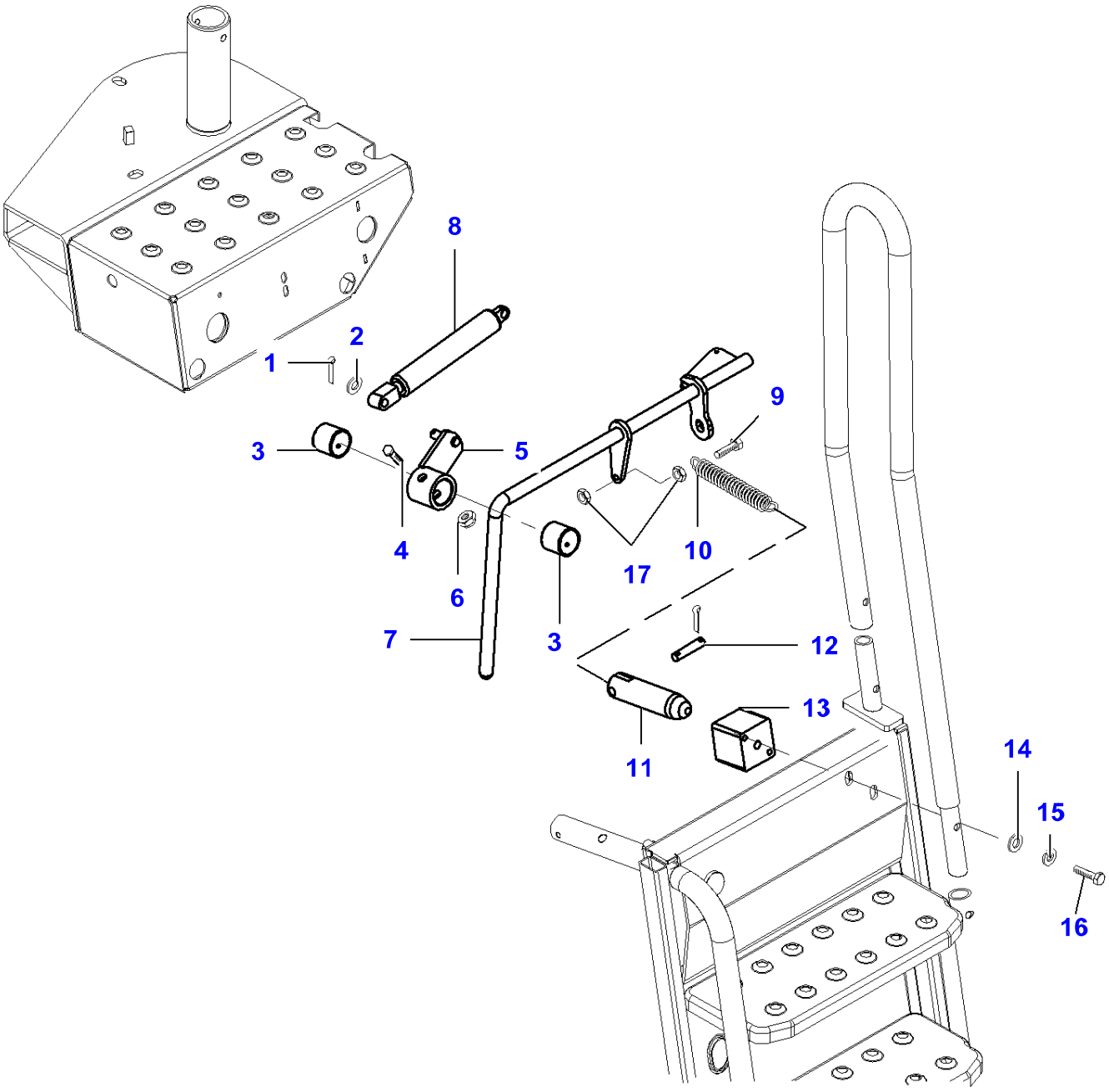

Item	Part Number	Qty	Description
1	LA10734601	X	Split Pin
2	LA355501115	1	Flat Washer
3	LA322002050	1	Bush
4	LA11107421	1	Cap Screw
5	LA322317850	1	Arm
6	LA12577211	1	Nut
7	LA323171250	1	Rod
8	LA322952750	1	Gas Strut
9	LA10902621	X	Cap Screw
10	LA350356530	1	Spring
11	LA323187650	1	Clevis
12	LA350379344	1	Roll Pin
13	LA322317750	1	Plate
14	LA355510820	X	Flat Washer
15	LA12034571	X	Lock Washer
16	LA16043624	X	Cap Screw
17	LA15896211	X	Nut

L-LD63-001-A

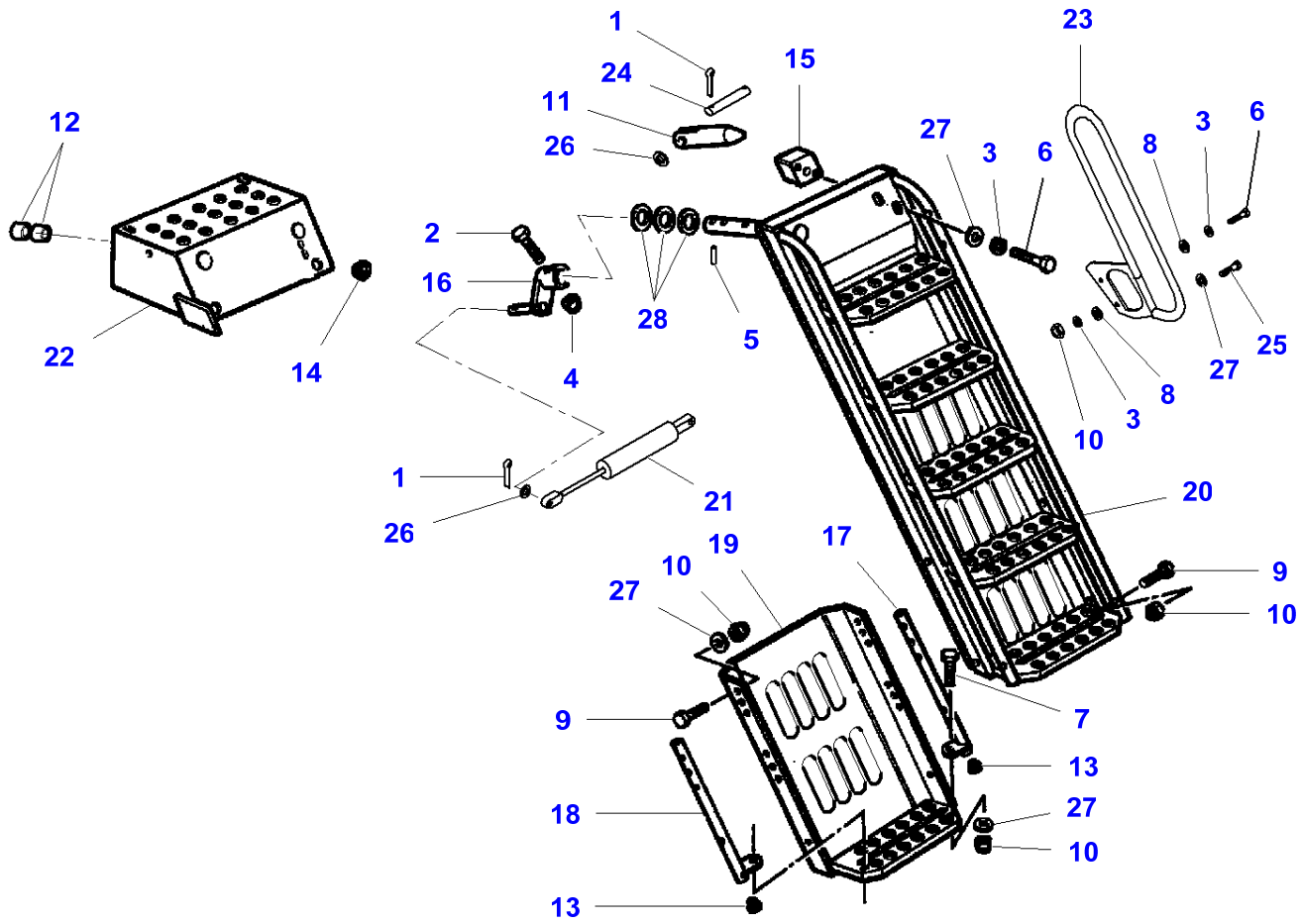
1
24
11
26
15
23
12
2
16
28
5
27
3
6
8
3
6
22
14
4
25
27
8
3
10
1
21
20
26
19
17
10
27
9
10
9
7
13
18
27
10
13

Item	Part Number	Qty	Description
1	LA10734601	3	Split Pin
2	LA11107421	1	Cap Screw
3	LA12034571	2	Lock Washer
4	LA12577211	1	Nut
5	LA14604570	1	Pin
6	LA16043421	2	Cap Screw
7	LA16043424	2	Cap Screw
8	LA355500920	4	Flat Washer
9	LA16044024	14	Cap Screw
10	LA16104111	16	Locknut
11	LA321880350	1	Pin
12	LA322002050	2	Bush
13	LA322106950	2	Plug
14	LA322274450	1	Plug
15	LA322317750	1	Plate
16	LA322317850	1	Arm
17	LA322343550	1	Grip
18	LA322343650	1	Grip
19	LA322826750	1	Extension
20	LA322827150	1	Ladder
21	LA322952750	1	Gas Strut
22	LA323080150	1	Support
23	LA323089750	1	Tube
24	LA350379344	1	Roll Pin
25	LA15213521	1	Cap Screw
26	LA355501115	2	Flat Washer
27	LA355510820	16	Flat Washer
28	LA355538610	3	Washer

L-LD63-003-A

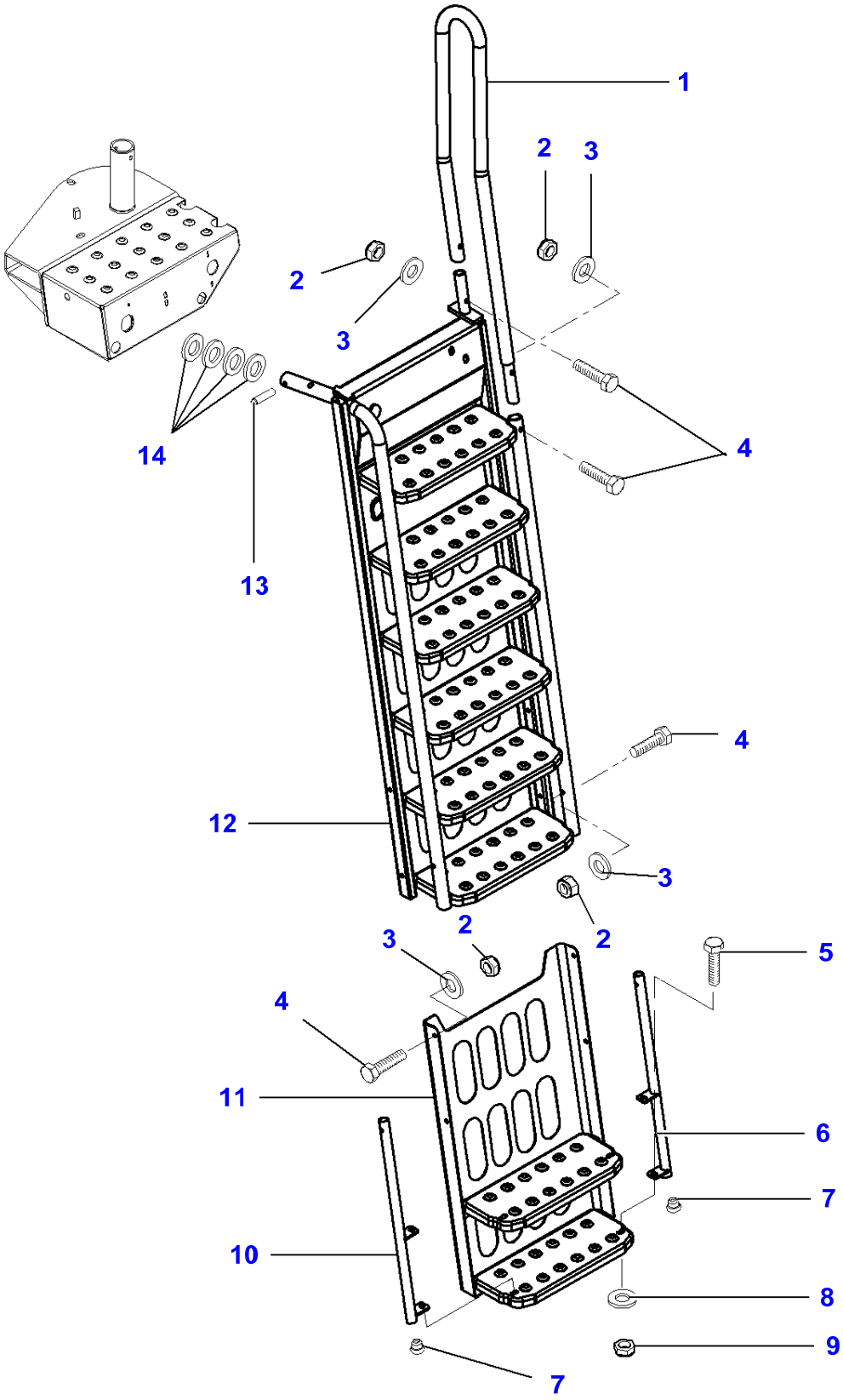

Item	Part Number	Qty	Description
1	LA323194350	1	Handlebar
2	LA12574211	X	Locknut
3	LA355500715	X	Flat Washer
4	LA10903221	X	Cap Screw
5	LA16043424	X	Cap Screw
6	LA323187950	1	Grip
7	LA322106950	X	Plug
8	LA355510820	X	Flat Washer
9	LA16104111	X	Locknut
10	LA323187850	1	Grip
11	LA323187750	1	Step
12	LA323171450	1	Ladder
13	LA14604570	X	Pin
14	LA355538610	X	Washer

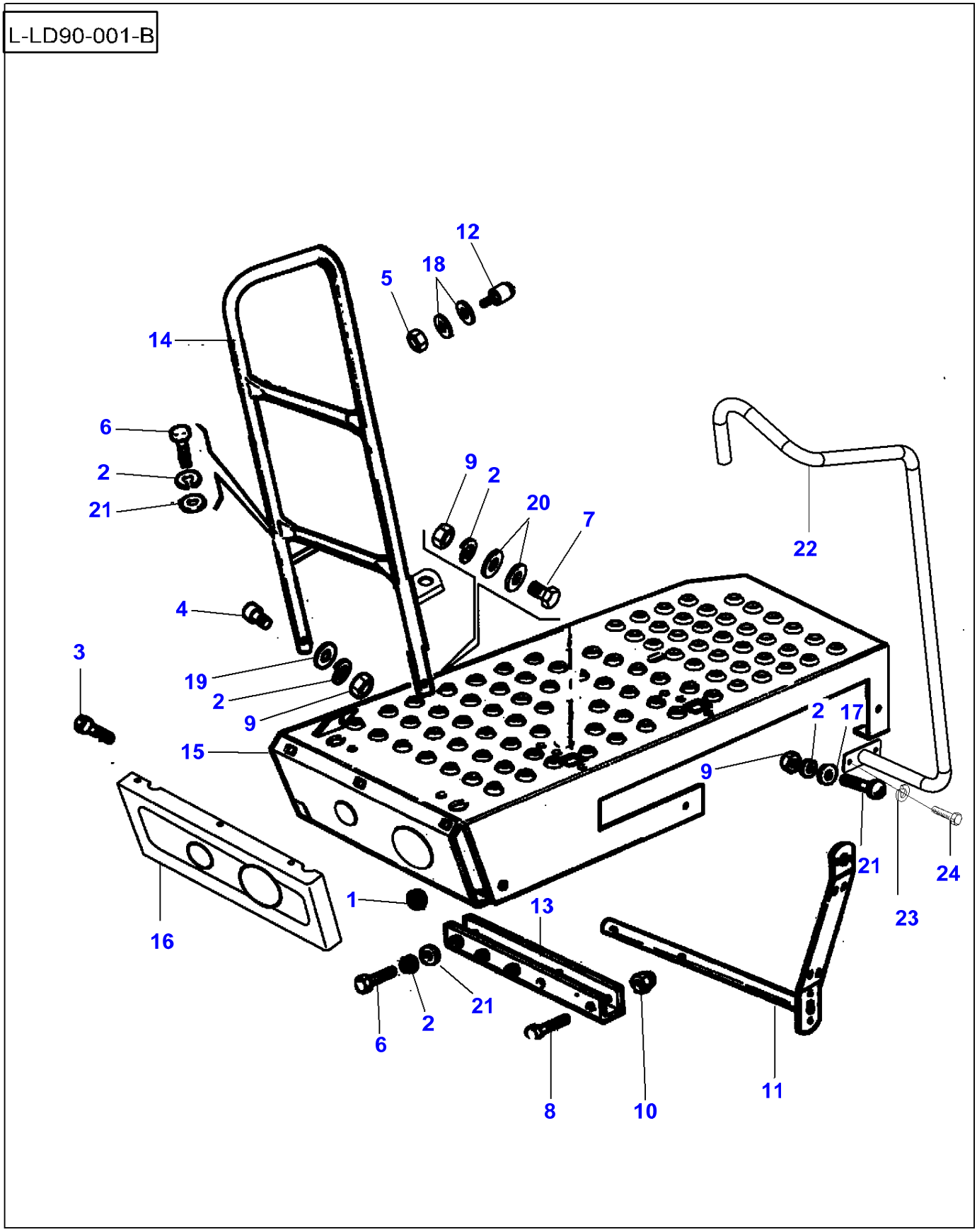
L-LD90-001-B
12
18
5
14
6
2
21
9
2
20
7
22
4
3
19
2
9
15
2
17
9
21
24
23
1
13
16
21
2
6
8
10
11

Item	Part Number	Qty	Description	Comments
1	LA10403180	1	Ring	
2	LA12034571	10	Lock Washer	
3	LA13276114	1	Screw	
4	LA14306424	2	Extension	
5	LA15896211	1	Nut	
6	LA16043424	6	Cap Screw	
7	LA16044221	1	Cap Screw	
8	LA16044224	1	Cap Screw	
9	LA16100811	8	Nut	
10	LA16104111	1	Locknut	
11	LA322304750	1	Arm	
12	LA322340600	1	Stop	
13	LA322371350	1	Support	
14	LA322790050	1	Shield	
15	LA323044250	1	Floor	
16	LA322849450	1	Cover	
17	LA350342511	2	Carriage Bolt	
18	LA355500715	2	Flat Washer	
19	LA355500915	1	Flat Washer	
20	LA355500920	2	Flat Washer	
21	LA355510820	10	Flat Washer	
22	LA322992050	1	Handlebar	From Serial or Engine Number 551710031
23	LA12034571	X	Lock Washer	From Serial or Engine Number 551710031
24	LA16043421	X	Cap Screw	From Serial or Engine Number 551710031

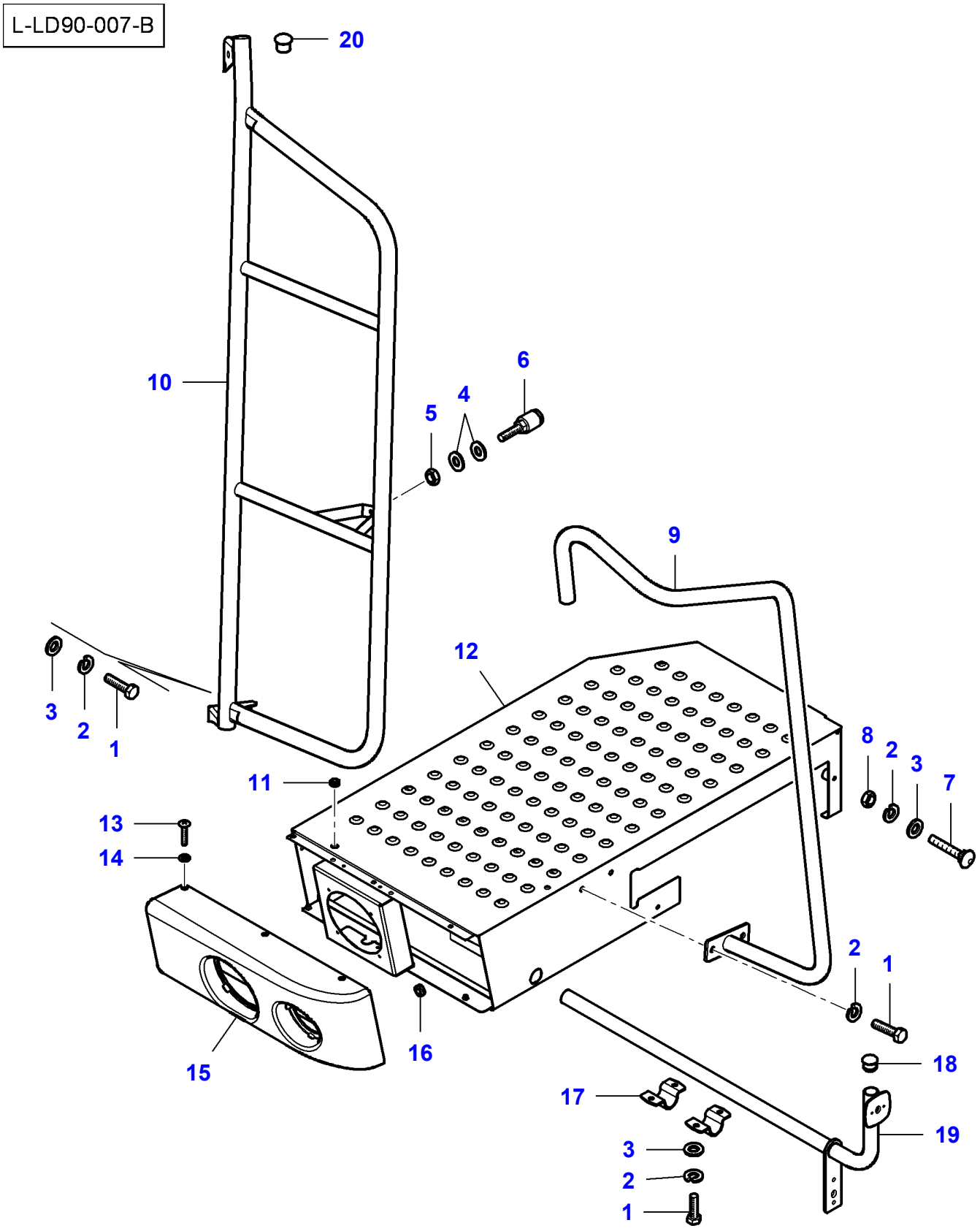
L-LD90-007-B
20
10
6
4
5
9
12
3
2
1
11
8
2
3
7
13
14
2
1
15
16
18
17
19
3
2
1

Item	Part Number	Qty	Description
1	LA16043421	1	Cap Screw
2	LA12034571	1	Lock Washer
3	LA355510820	1	Flat Washer
4	LA355500715	1	Flat Washer
5	LA15896211	1	Nut
6	LA322340600	1	Stop
7	LA350342511	1	Carriage Bolt
8	LA16100811	1	Nut
9	LA322992050	1	Handlebar
10	LA323249650	1	Ladder
11	LA340481703	1	Grommet
12	LA323199250	1	Step
13	LA13276114	1	Screw
14	LA355500915	1	Flat Washer
15	LA323200750	1	Cover
16	LA10403180	1	Ring
17	LA300114165	1	Plate
18	LA321454750	1	Plug
19	LA323199650	1	Rod
20	LA321281650	1	Plug

L-LD90-002-A

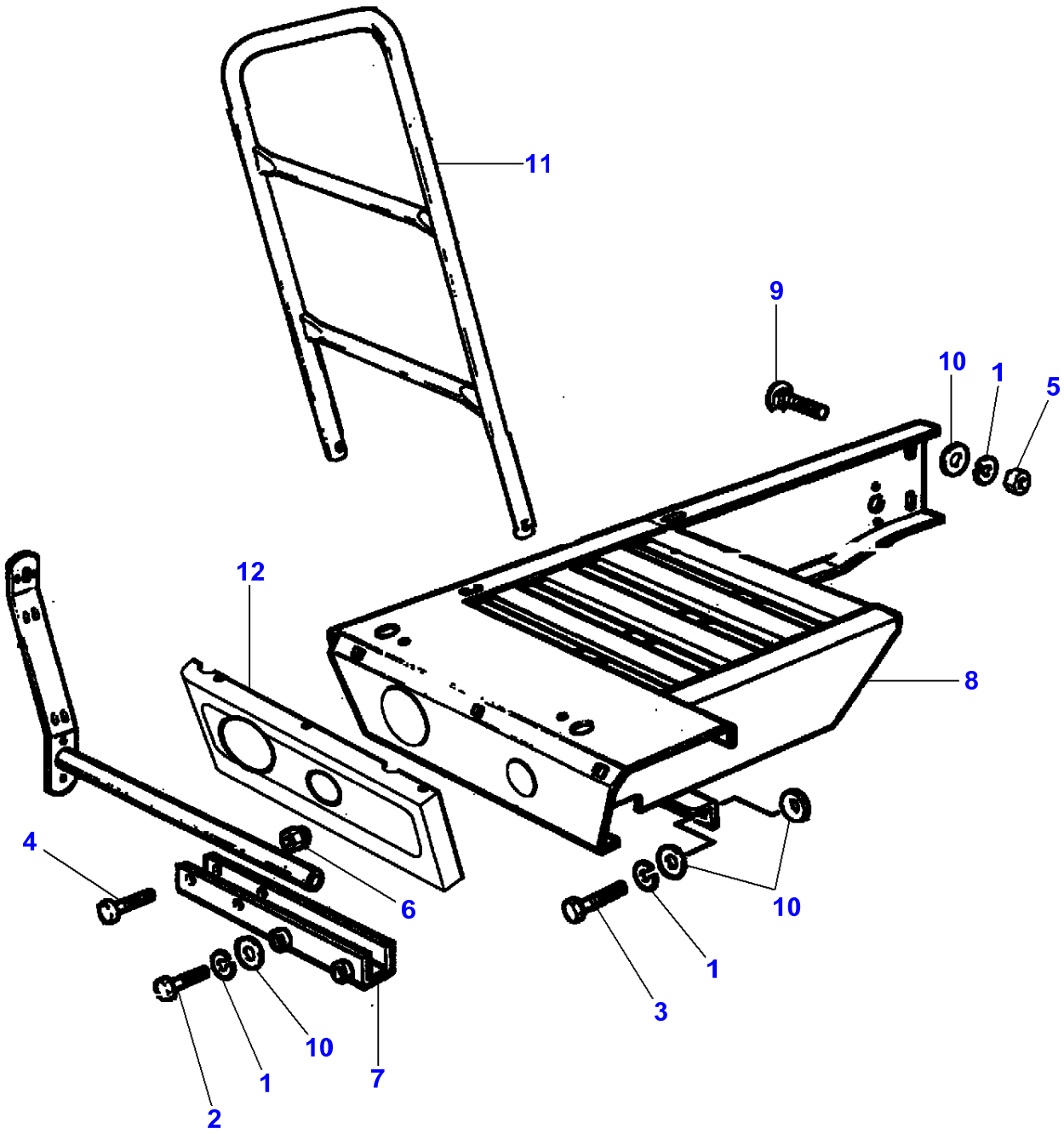

Item	Part Number	Qty	Description	Comments
1	LA12034571	5	Lock Washer	
2	LA16043424	2	Cap Screw	
3	LA16043824	1	Cap Screw	
4	LA16044224	2	Cap Screw	
5	LA16100811	2	Nut	
6	LA16104111	2	Locknut	
7	LA322371350	1	Support	
8	LA322789750	1	Floor	
9	LA350342511	2	Carriage Bolt	
10	LA355510820	6	Flat Washer	
11		1	Shield	See Page - Reference Number 100-0010/6
12		1	Cover	See Page - Reference Number 100-0010/7

L-LD90-008-A

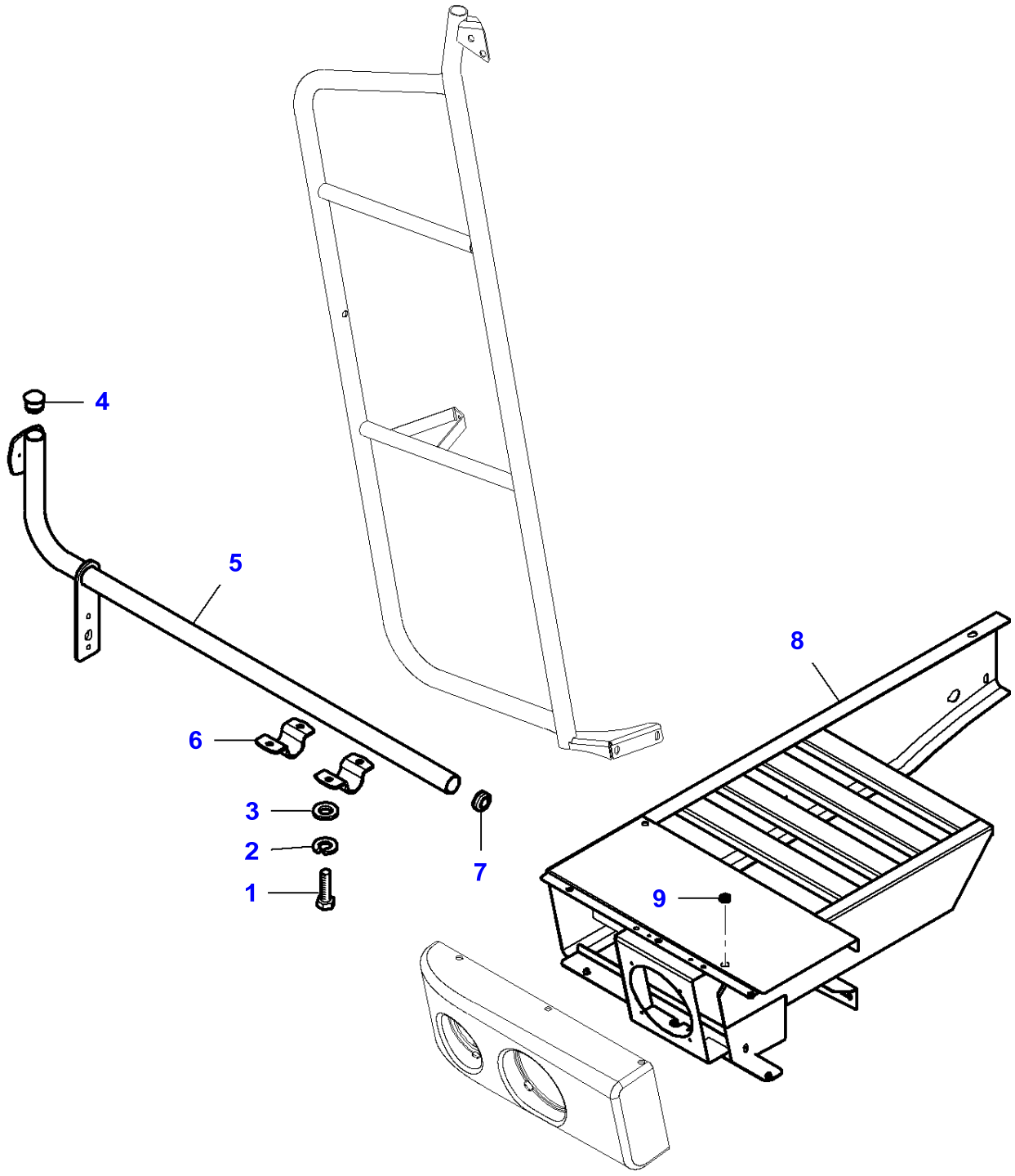

Item	Part Number	Qty	Description
1	LA16043421	1	Cap Screw
2	LA12034571	1	Lock Washer
3	LA355510820	1	Flat Washer
4	LA321454750	1	Plug
5	LA323199650	1	Rod
6	LA300114165	1	Plate
7	LA10397780	1	Grommet
8	LA323200250	1	Step
9	LA340481703	1	Grommet

L-LD38-016-B

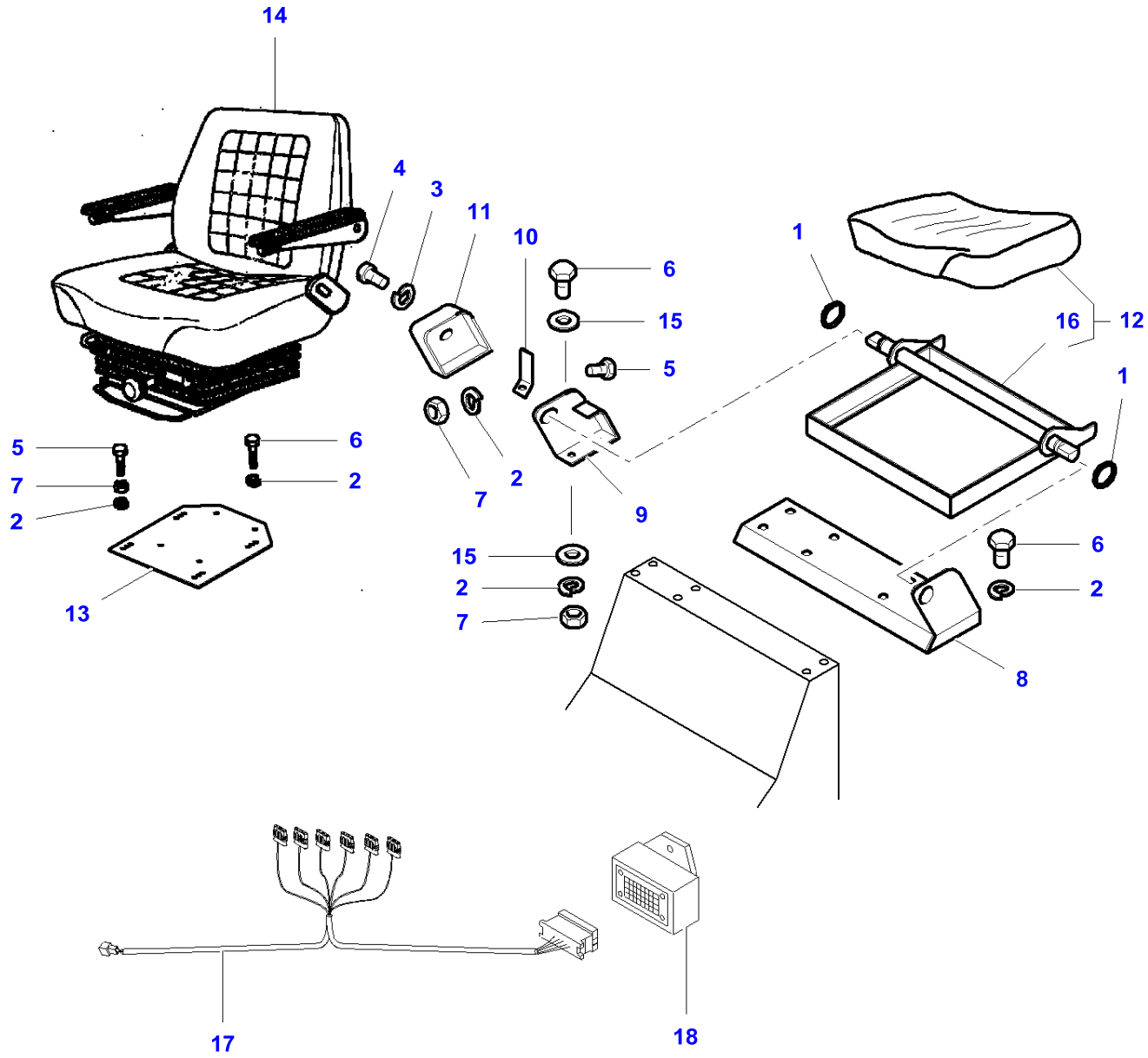

Item	Part Number	Qty	Description	Comments
1	LA11066476	2	Circlip	
2	LA12034571	5	Lock Washer	
3	LA12035471	1	Lock Washer	
4	LA13274211	1	Hex Socket Screw	
5	LA16043424	2	Cap Screw	
6	LA16043624	3	Cap Screw	
7	LA16100811	3	Nut	
8	LA322804250	1	Plate	
9	LA322804350	1	Support	
10	LA322804550	1	Support	
11	LA322805150	1	Shield	
12	LA322955400	1	Seat	
13	LA322970650	1	Plate	Up to Serial or Engine Number
	LA323101650	1	Support	From Serial or Engine Number
14	LA322963750	1	Seat	
15	LA355500820	2	Washer	
16	LA322804450	1	Support	(12)
17	LA323202100	1	Harness	
18	LA323189600	1	Box	

L-LD38-056-A

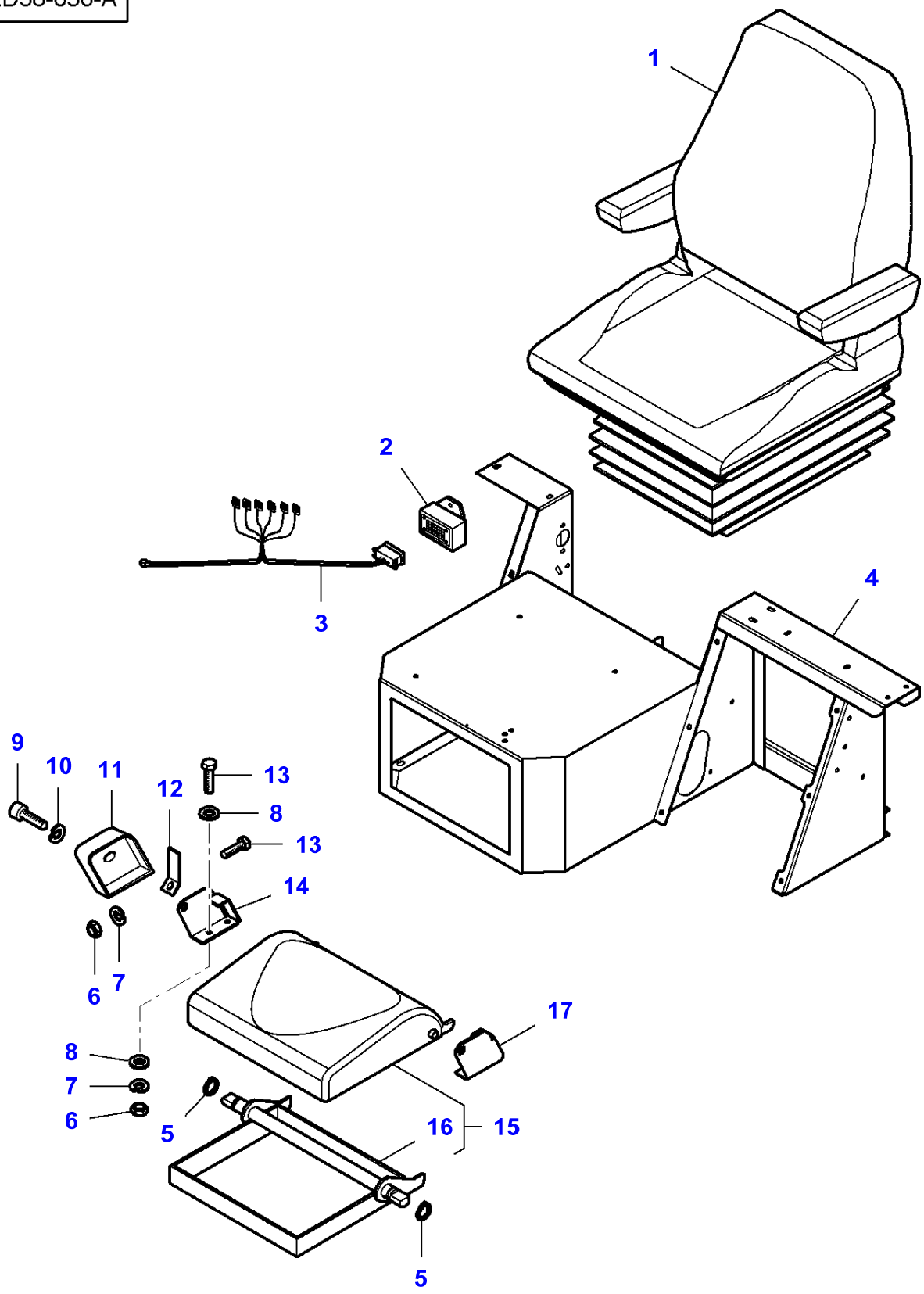

Item	Part Number	Qty	Description	Comments
1	LA322963750	1	Seat	
2	LA323189600	1	Box	
3	LA323202100	1	Harness	
4		1	Support	See Page - Reference Number 100-0035/23
5	LA11066476	2	Circlip	
6	LA16100811	2	Nut	
7	LA12034571	2	Lock Washer	
8	LA355500820	2	Washer	
9	LA13274211	1	Hex Socket Screw	
10	LA12035471	1	Lock Washer	
11	LA322805150	1	Shield	
12	LA322804550	1	Support	
13	LA16043424	2	Cap Screw	
14	LA322804350	1	Support	
15	LA322955400	1	Seat	
16	LA322804450	1	Support	(15)
17	LA323196450	1	Cover	

L-LD38-022-A

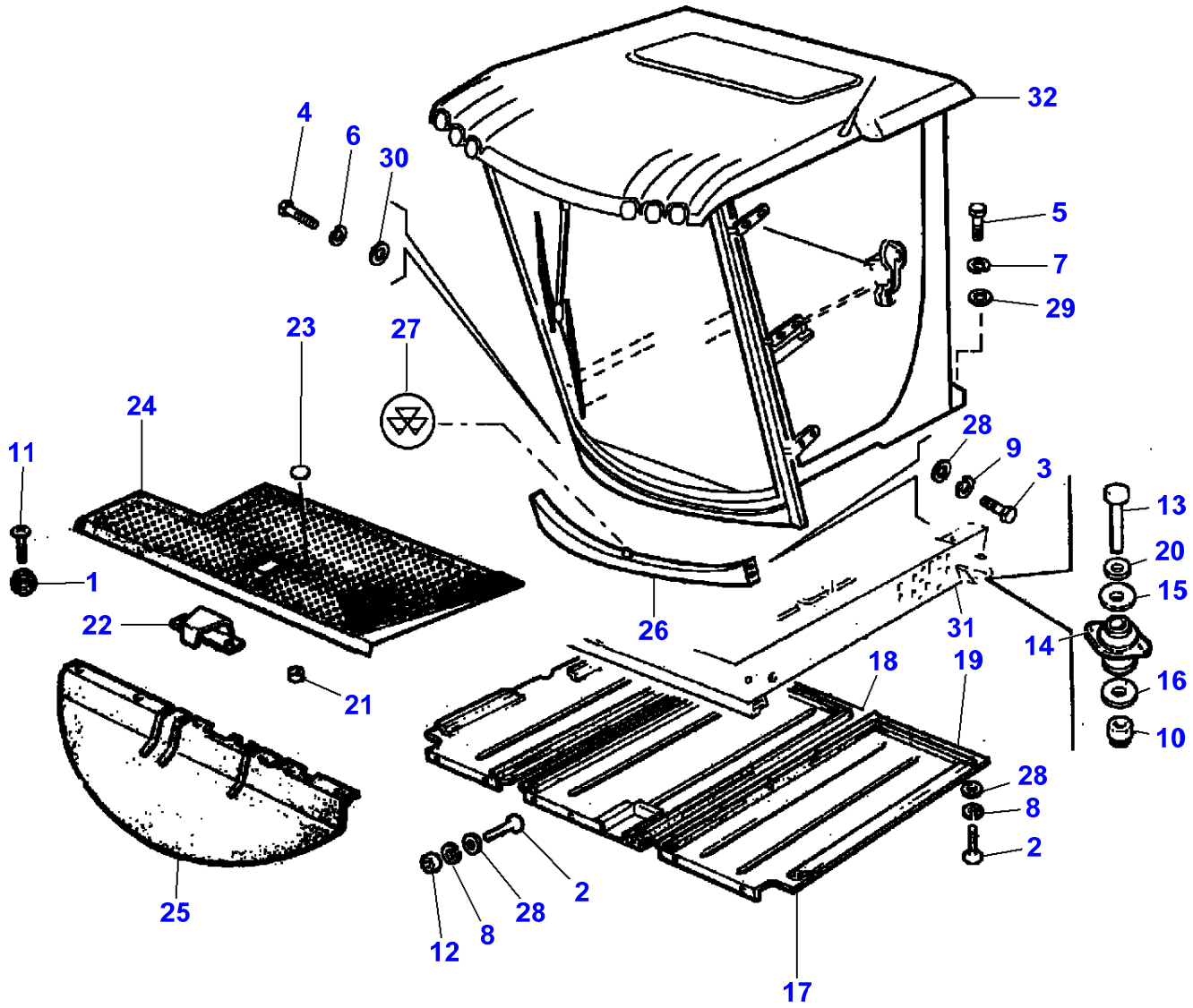
4
6
30
32
5
7
29
23
27
24
11
28
9
3
13
20
15
1
22
26
31
14
16
10
21
18
19
28
8
2
25
2
28
8
12
17

Item	Part Number	Qty	Description	Comments
1	LA4387464	2	Guide Bush	
2	LA10902124	4	Cap Screw	
3	LA10902421	2	Cap Screw	
4	LA11106421	10	Cap Screw	
5	LA11112421	2	Cap Screw	
6	LA12034671	10	Lock Washer	
7	LA12034771	2	Lock Washer	
8	LA12035670	4	Lock Washer	
9	LA12035671	2	Lock Washer	
10	LA12574921	1	Nut	
11	LA13277114	2	Bracket	
12	LA15896221	2	Nut	
13	LA15981524	1	Cap Screw	
14	LA322017250	1	Vibration Mount	
15	LA322017550	1	Washer	
16	LA322017650	1	Washer	
17	LA322128450	1	Plate	
18	LA322128550	1	Plate	
19	LA322128650	1	Plate	
20	LA322133950	1	Washer	
21	LA322150950	1	Bush	
22	LA322258550	1	Plate	
23	LA322511250	1	Cap	
24	LA322796850	1	Mat	
25	LA322796950	1	Shield	
26	LA322788950	1	Cover	
27	LA323156650	1	Decal	
28	LA355500715	8	Flat Washer	
29	LA355501320	2	Flat Washer	
30	LA355511030	10	Flat Washer	
31		1	Plate	See Page - Reference Number 100-0020/22
32		1	Cab	See Page - Reference Number 100-0120/1

L-LD38-057-A

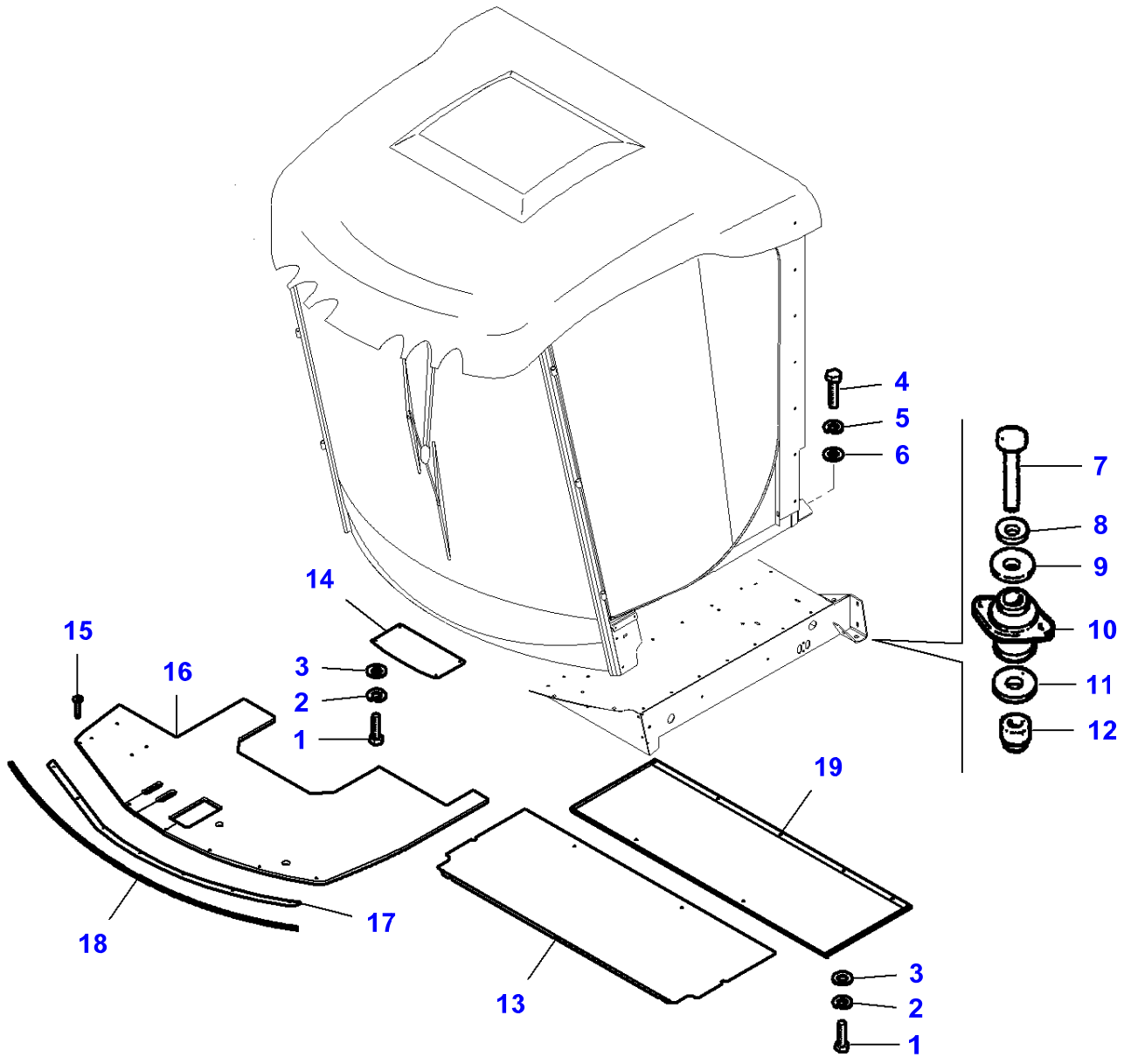

Item	Part Number	Qty	Description
1	LA10902424	1	Cap Screw
2	LA12035671	1	Lock Washer
3	LA355500715	1	Flat Washer
4	LA11112421	1	Cap Screw
5	LA12034771	1	Lock Washer
6	LA355501320	1	Flat Washer
7	LA15981524	1	Cap Screw
8	LA322133950	1	Washer
9	LA322017550	1	Washer
10	LA322017250	1	Vibration Mount
11	LA322017650	1	Washer
12	LA12574921	1	Nut
13	LA323190350	1	Cover
14	LA323212450	1	Cover
15	LA322898250	1	Screw
16	LA323206550	1	Mat
17	LA323206150	1	Cap
18	LA323208150	1	Profile
19	LA323190250	1	Cover

L-LD38-009-A

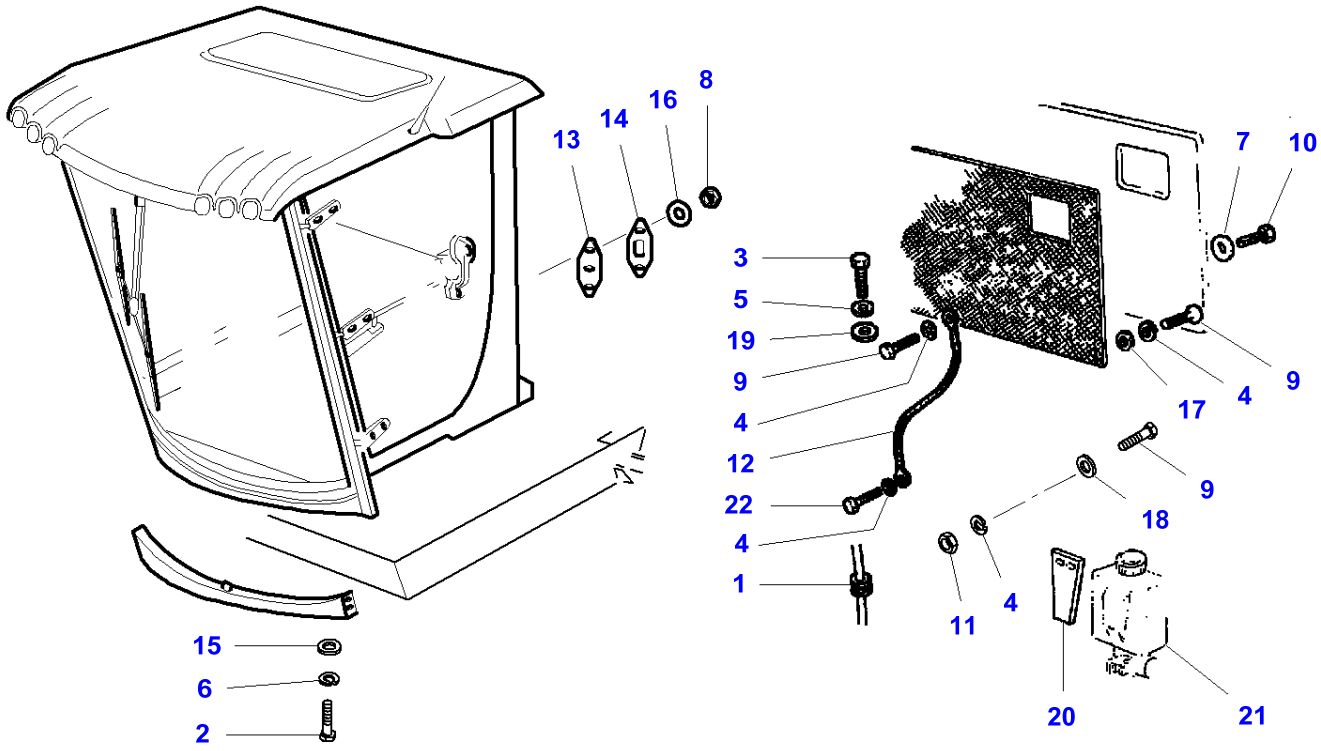

Item	Part Number	Qty	Description	Comments
1	LA10397780	1	Grommet	
2	LA10902424	4	Cap Screw	
3	LA11112424	1	Cap Screw	
4	LA12034571	4	Lock Washer	
5	LA12034771	1	Lock Washer	
6	LA12035671	4	Lock Washer	
7	LA12647031	2	Washer	
8	LA15896211	7	Nut	
9	LA16043424	3	Cap Screw	
10	LA16044321	2	Cap Screw	
11	LA16100811	1	Nut	
12	LA321115350	1	Earth Strap	
13	LA322803950	1	Gasket	
14	LA322804050	1	Plate	
15	LA355500615	4	Flat Washer	
16	LA355500715	7	Flat Washer	
17	LA355500915	4	Flat Washer	
18	LA355500920	1	Flat Washer	
19	LA355501320	1	Flat Washer	
20		1	Bracket	See Page - Reference Number 100-0135
21		1	Panel	See Page - Reference Number 100-0135
22	LA16043224	1	Cap Screw	

L-LD38-058-A

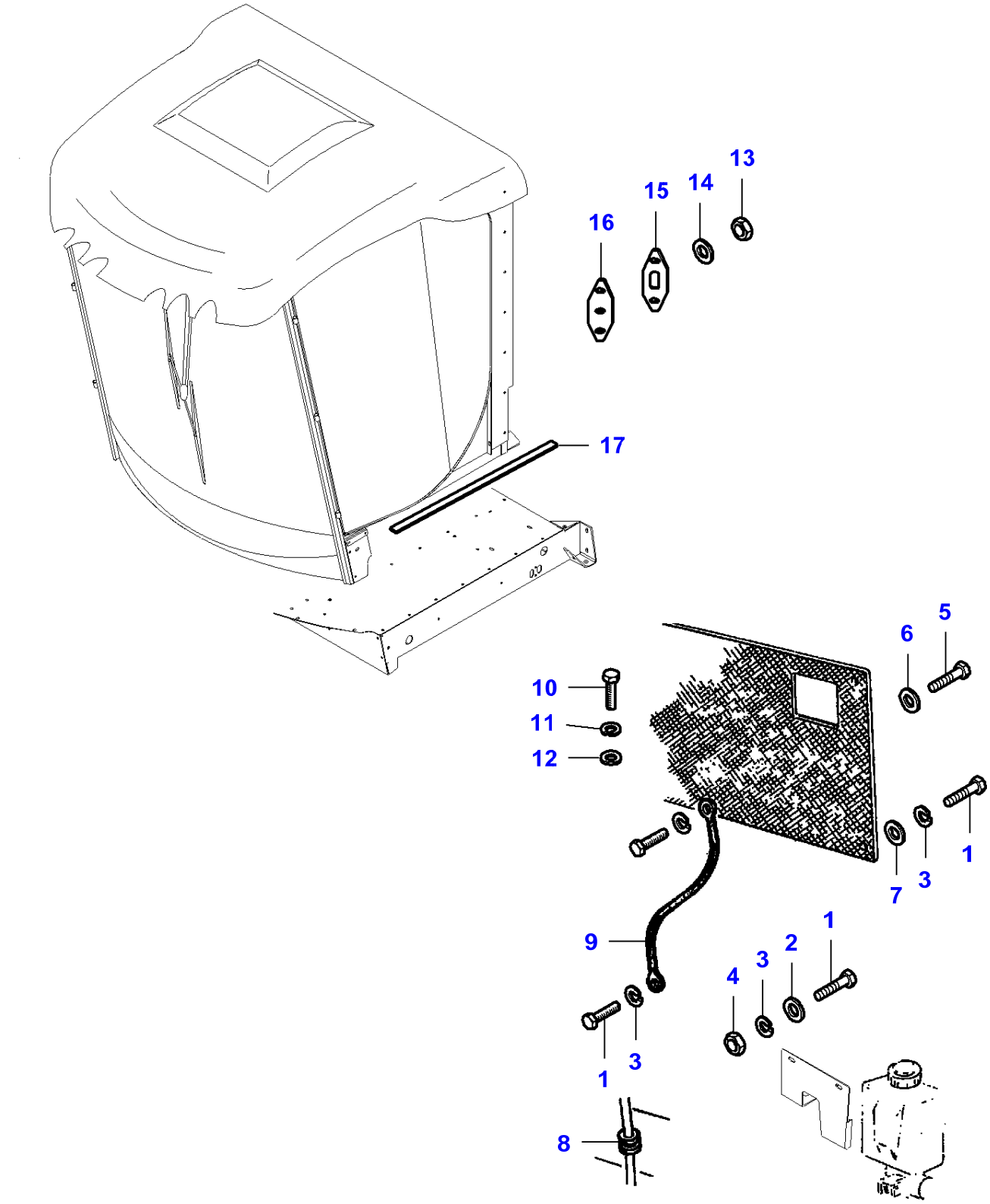

Item	Part Number	Qty	Description
1	LA16043424	1	Cap Screw
2	LA355500920	1	Flat Washer
3	LA12034571	1	Lock Washer
4	LA16100811	1	Nut
5	LA16044321	1	Cap Screw
6	LA12647031	1	Washer
7	LA355500915	1	Flat Washer
8	LA10397780	1	Grommet
9	LA321115350	1	Earth Strap
10	LA11112424	1	Cap Screw
11	LA12034771	1	Lock Washer
12	LA355501320	1	Flat Washer
13	LA15896211	1	Nut
14	LA355500715	1	Flat Washer
15	LA322803950	1	Gasket
16	LA322899350	1	Cover
17	LA321755050	1	Gasket

L-LD38-010-A

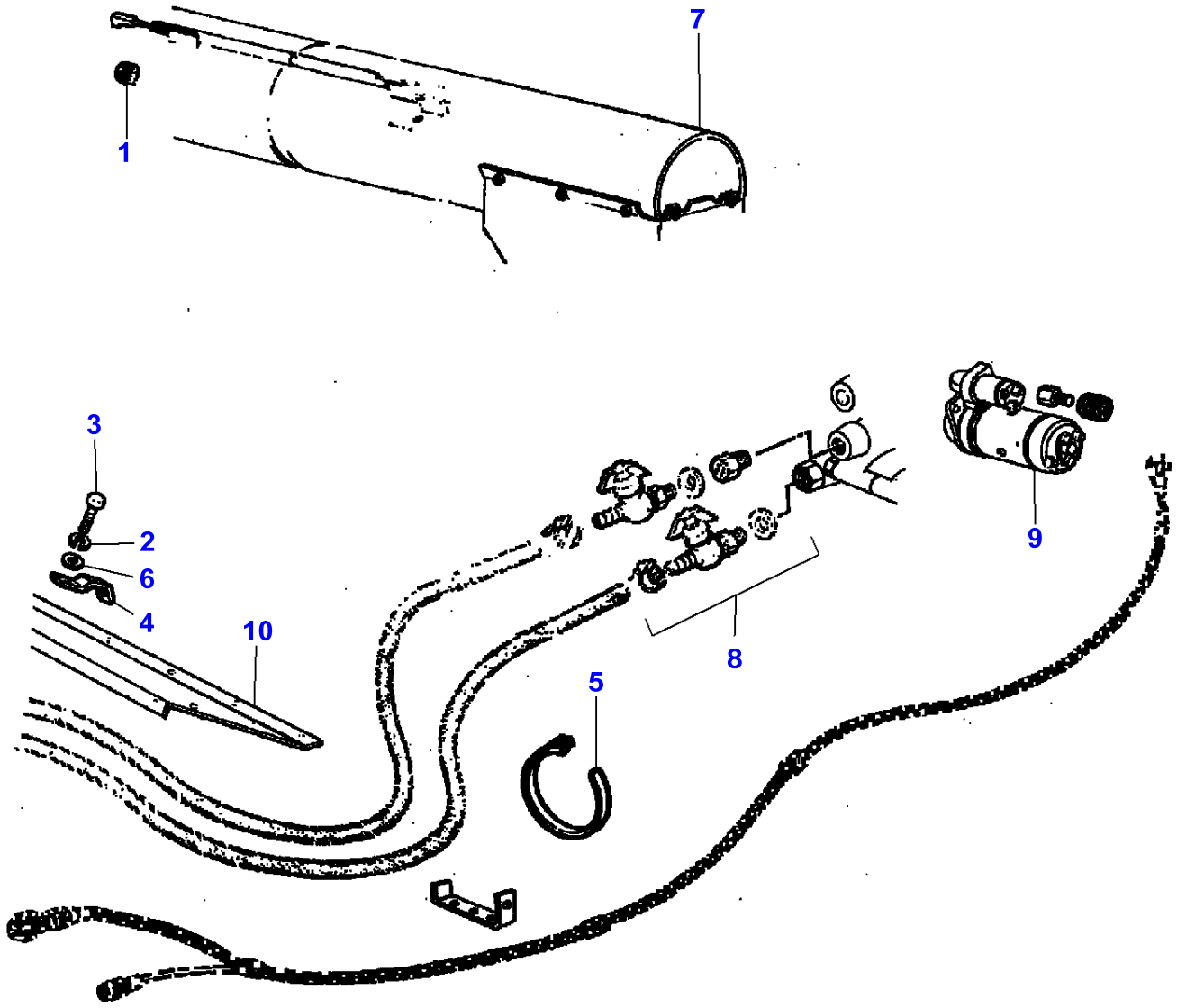

Item	Part Number	Qty	Description	Comments
1	LA10396480	1	Grommet	
2	LA12034571	1	Lock Washer	
3	LA16043424	1	Cap Screw	
4	LA321287050	1	Bracket	
5	LA340481806	1	Cable Tie	Length 180 mm
	LA340481808	1	Cable Tie	Length 260 mm
	LA340481811	1	Cable Tie	Length 508 mm
6	LA355500920	1	Flat Washer	
7		1	Tube	See Page - Reference Number 080-0115/25
8		1	Cock	See Page - Reference Number 020-0015
9		1	Startermotor	See Page - Reference Number 010-0120/1
10		1	Roof	See Page - Reference Number 060-0005/15

L-LD38-011-A

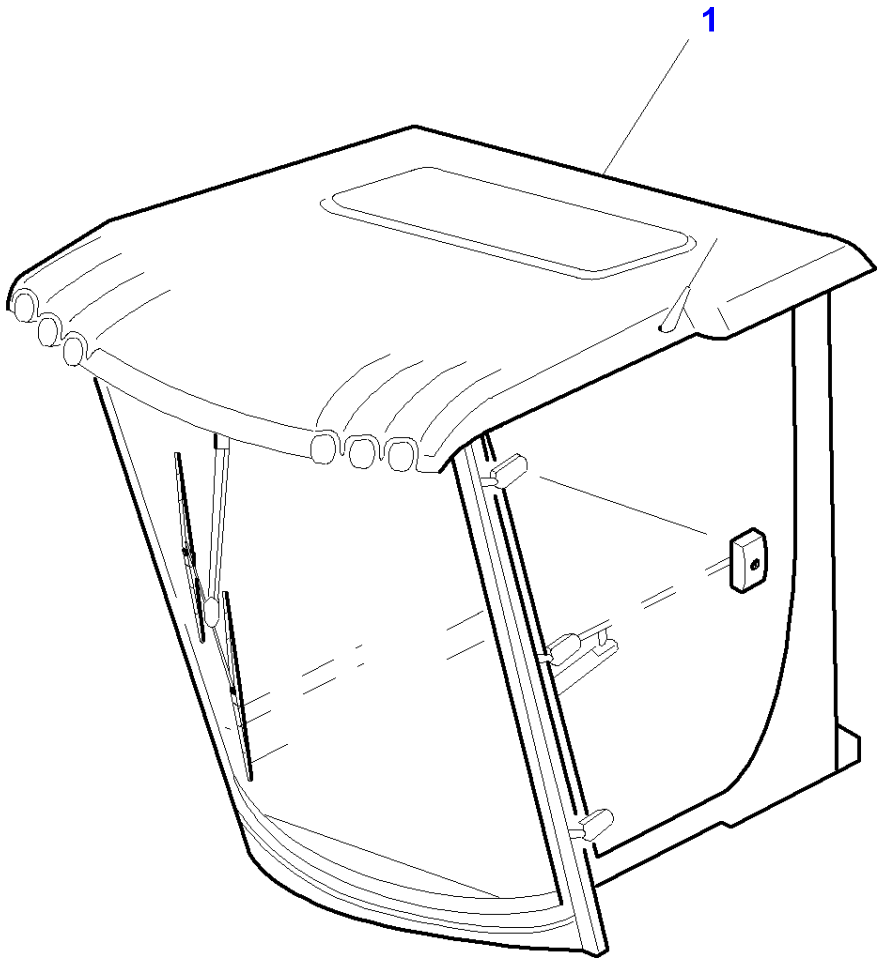

Item	Part Number	Qty	Description
1	LA323158500	1	Cab

L-LD38-059-A

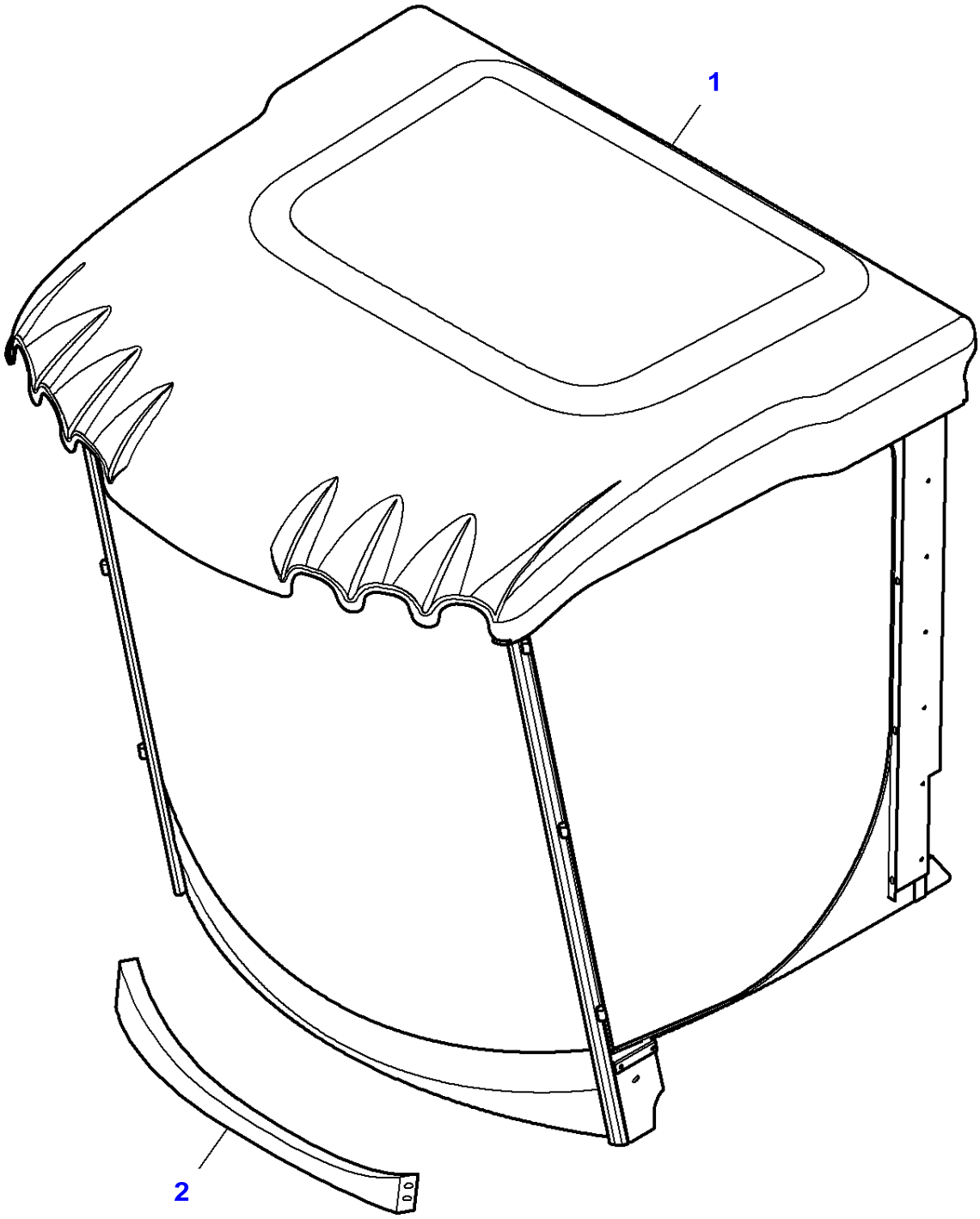

Item	Part Number	Qty	Description
1	LA323250400	1	Cab
2	LA322788950	1	Cover

L-LD38-012-B

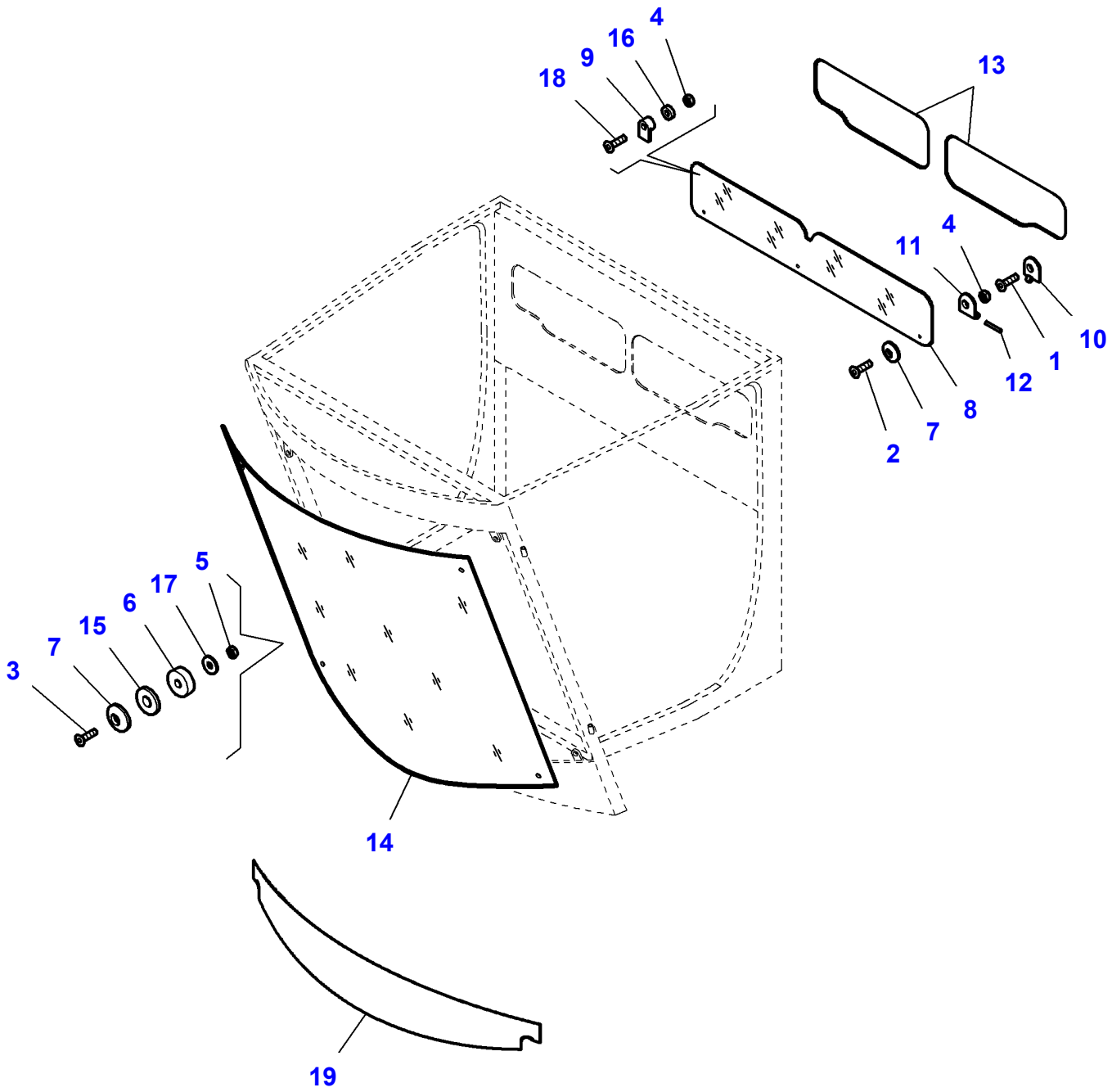

Item	Part Number	Qty	Description
1	LA14441431	3	Screw
2	LA14442031	3	Screw
3	LA14442421	4	Screw
4	LA16102211	7	Nut
5	LA16104111	4	Locknut
6	LA321096850	4	Gasket
7	LA322808651	4	Rubber
8	LA322931250	1	Glass
9	LA322931350	4	Block
10	LA322931450	3	Hinge
11	LA322931550	3	Hinge
12	LA322931650	3	Pin
13	LA322931750	2	Gasket
14	LA323043150	1	Glass
15	LA323043250	4	Washer
16	LA340415509	1	Bush
17	LA355510830	4	Flat Washer
18	LA14442020	1	Screw
19	LA323265450	1	Decal

L-LD38-015-B

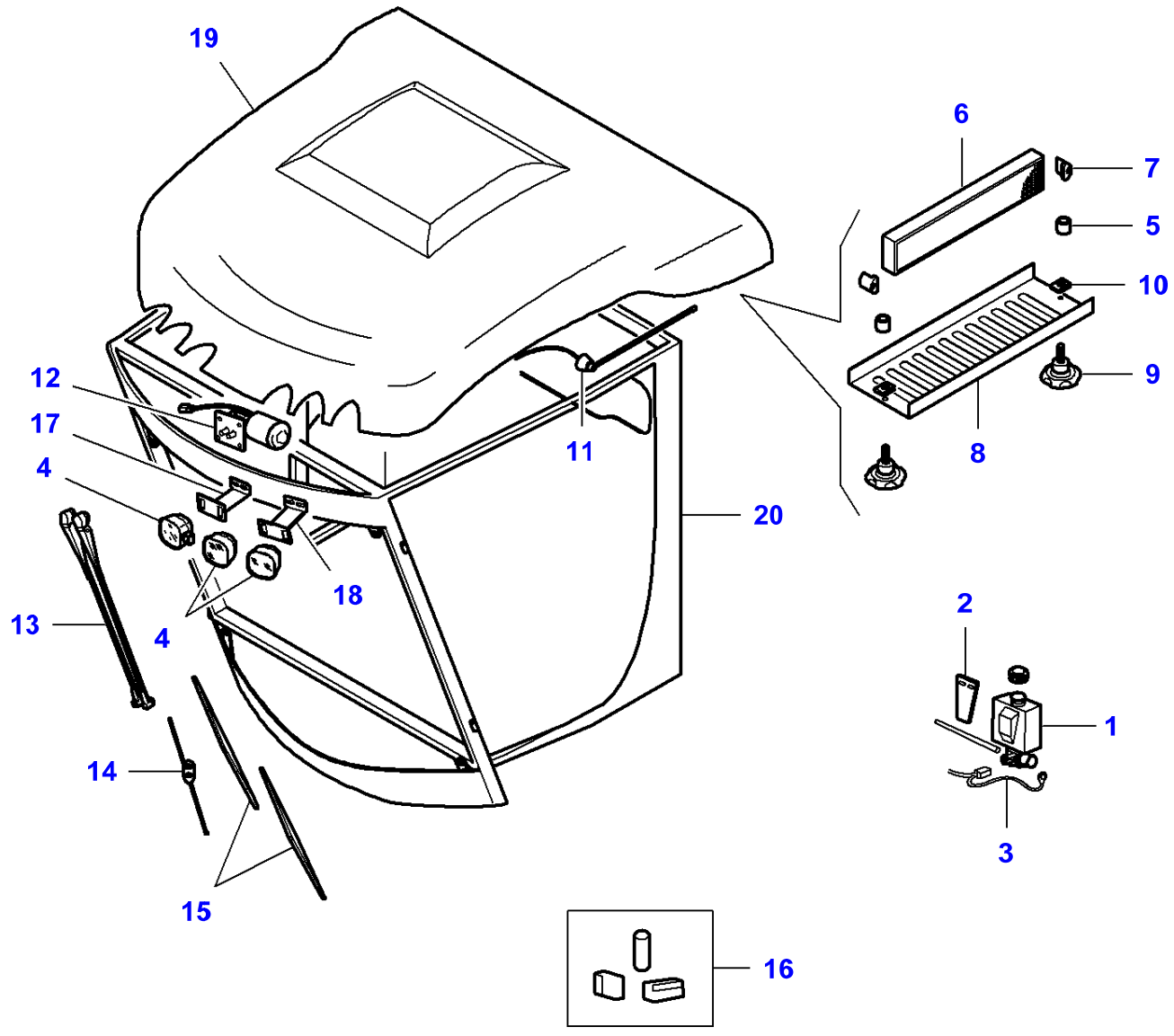

Item	Part Number	Qty	Description	Comments
1	LA300137417	1	Water Tank	
2	LA321206850	1	Bracket	
3	LA322047150	1	Harness	
4	LA322808550	3	Head Light	
5	LA322820151	2	Knob	
6	**LA322820250**	1	Cab Filter	
7	LA322820251	2	Grip	
8	LA322820252	1	Grille	
9	LA322820253	2	Knob	
10	LA322820254	2	Spring	
11	LA322820450	1	Top Aerial	
12	LA322820550	1	Wiper Motor	
13	LA322914250	1	Wiper Arm	
14	LA322914350	1	Arm	
15	LA322914450	2	Wiper Blade	
16	LA322915800	1	Adaptor	
17	LA323043350	1	Support	
18	LA323043450	1	Support	
19	LA323158550	1	Roof	
20		1	Frame Assy	[A]

FOOTNOTE [A] NOT SERVICED

L-LD38-001-B

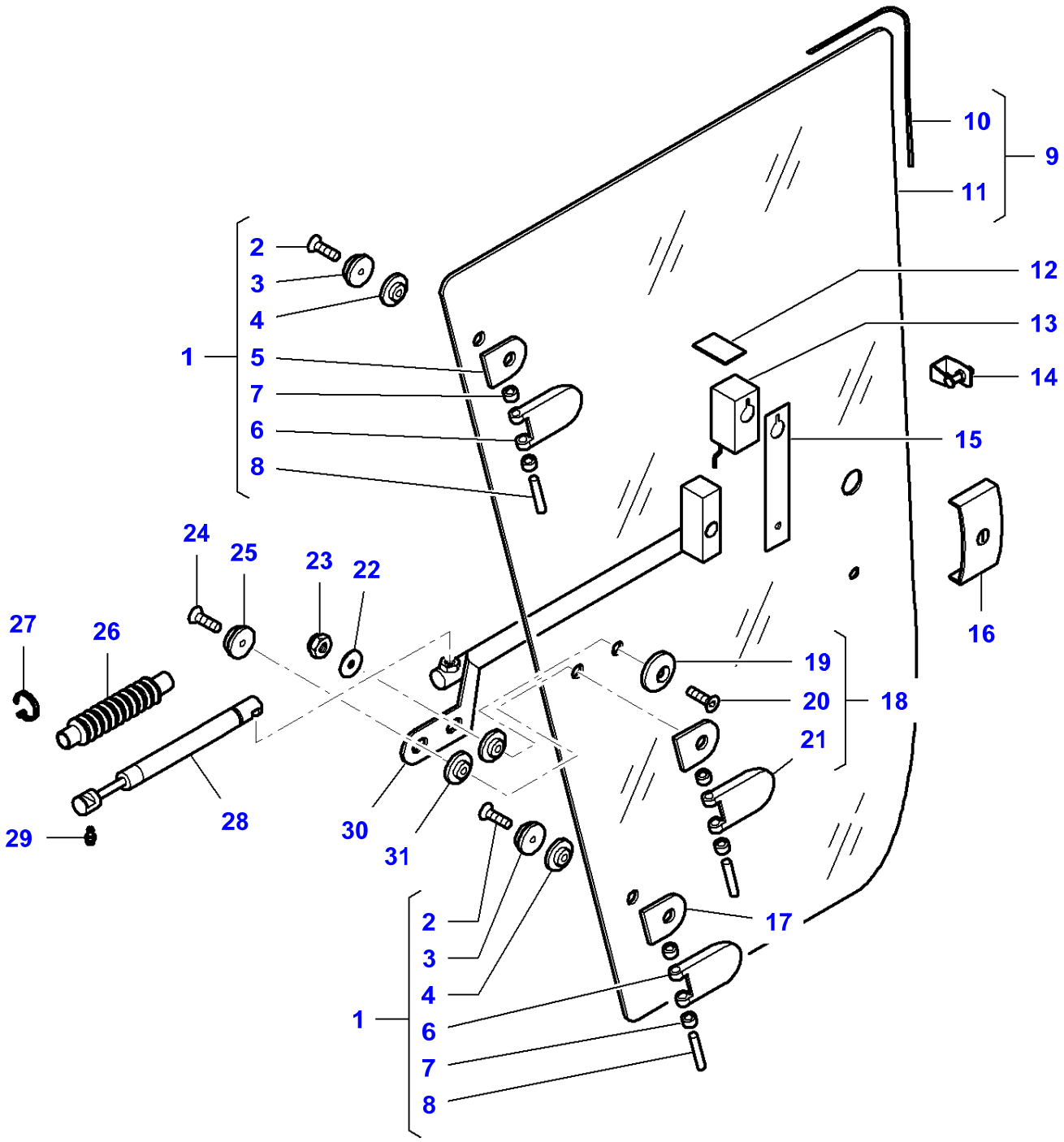
10
9
11
2
3
4
1
5
7
6
8
12
13
14
15
16
24
25
23
22
27
26
19
20
18
21
29
28
30
31
17
2
3
4
1
6
7
8

Item	Part Number	Qty	Description	Comments
1	LA323261050	1	Hinge	
2	LA14442221	1	Screw	(1)
3	LA322808651	1	Rubber	(1)
4	LA323043950	1	Gasket	(1)
5	LA323260950	1	Bracket	(1)
6	LA323043750	1	Hinge	(1)
7	LA323022750	2	Bush	(1)
8	LA323043650	1	Pin	(1)
9	LA322932200	1	Door	
10	LA322979050	1	Gasket	(9)
11	LA323262450	1	Glass	(9)
12	LA322808764	1	Plug	
13	LA322808855	1	Lock	
14	LA322820050	1	Bracket	
15	LA323044050	1	Gasket	
16	LA323044150	1	Lock	
17	LA323043850	1	Bracket	Up to Serial or Engine Number 551710060
	LA323260950	1	Bracket	From Serial or Engine Number 551710061
18	LA323043850	1	Bracket	
19	LA322808651	1	Rubber	(18)
20	LA14442221	1	Screw	(18)
21	LA322932350	1	Hinge	(18)
22	LA355510820	1	Flat Washer	
23	LA16104111	1	Locknut	
24	LA14442221	1	Screw	
25	LA322808651	1	Rubber	
26	LA322932450	1	Protection.	
27	LA340481806	1	Cable Tie	
28	LA322932650	1	Gas Strut	
29	LA322808758	1	Ball Joint	
30	LA323043550	1	Grip	
31	LA322808653	1	Grommet	

L-LD38-002-B

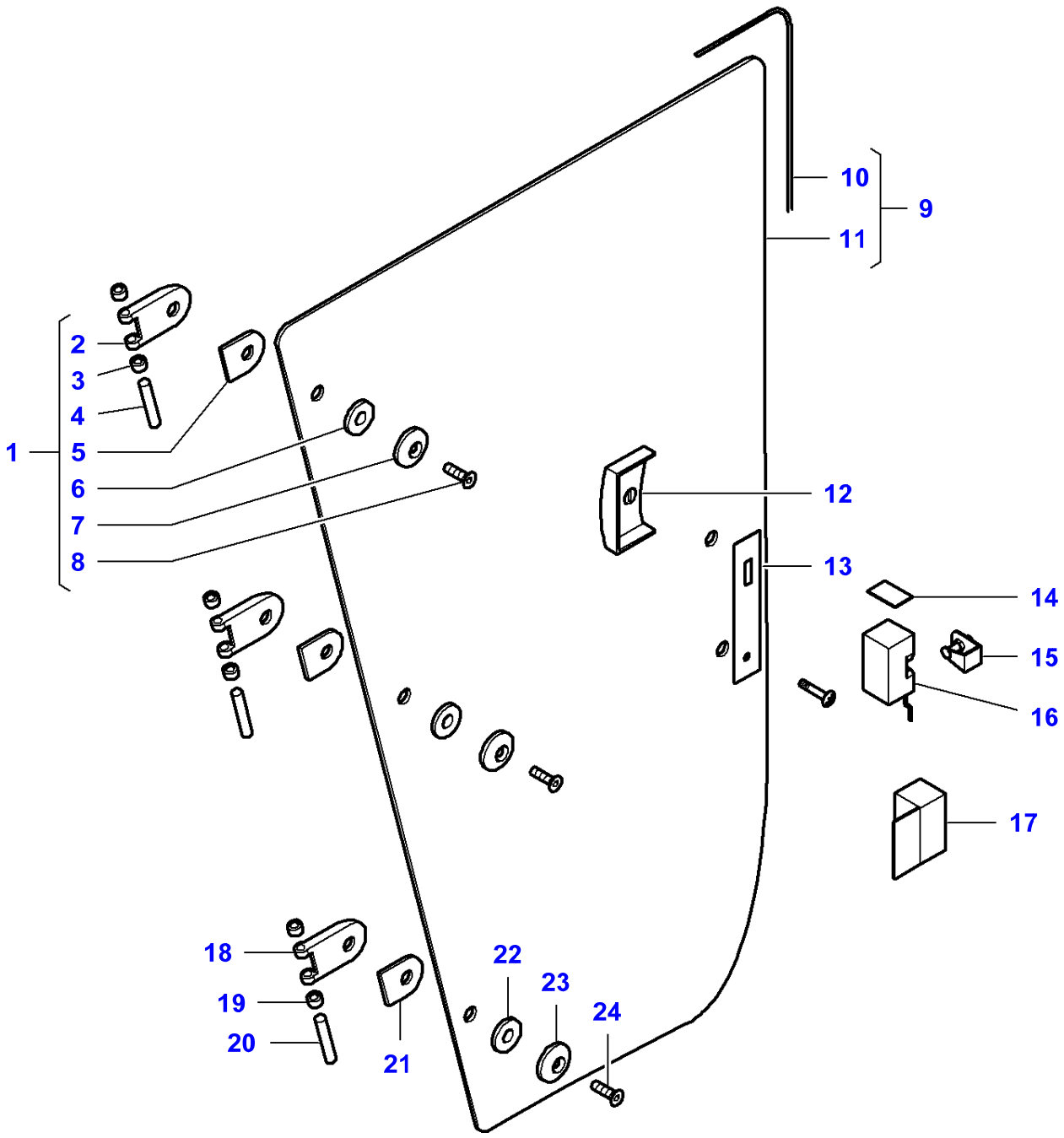

Item	Part Number	Qty	Description	Comments
1	LA323261050	1	Hinge	
2	LA323043750	1	Hinge	(1)
3	LA323022750	2	Bush	(1)
4	LA323043650	1	Pin	(1)
5	LA323260950	1	Bracket	(1)
6	LA323043950	1	Gasket	(1)
7	LA322808651	1	Rubber	(1)
8	LA14442221	1	Screw	(1)
9	LA322933200	1	Glass	
10	LA322979050	1	Gasket	(9)
11	LA323262550	1	Glass	(9)
12	LA323044350	1	Lock	
13	LA323044050	1	Gasket	
14	LA322808764	1	Plug	
15	LA322820050	1	Bracket	
16	LA322808765	1	Lock	
17	LA323206050	1	Part	
18	LA323043750	1	Hinge	
19	LA323022750	1	Bush	
20	LA323043650	1	Pin	
21	LA323043850	1	Bracket	Up to Serial or Engine Number 551710060
	LA323260950	1	Bracket	From Serial or Engine Number 551710061
22	LA323043950	1	Gasket	
23	LA322808651	1	Rubber	
24	LA14442221	1	Screw	

L-LD38-003-A

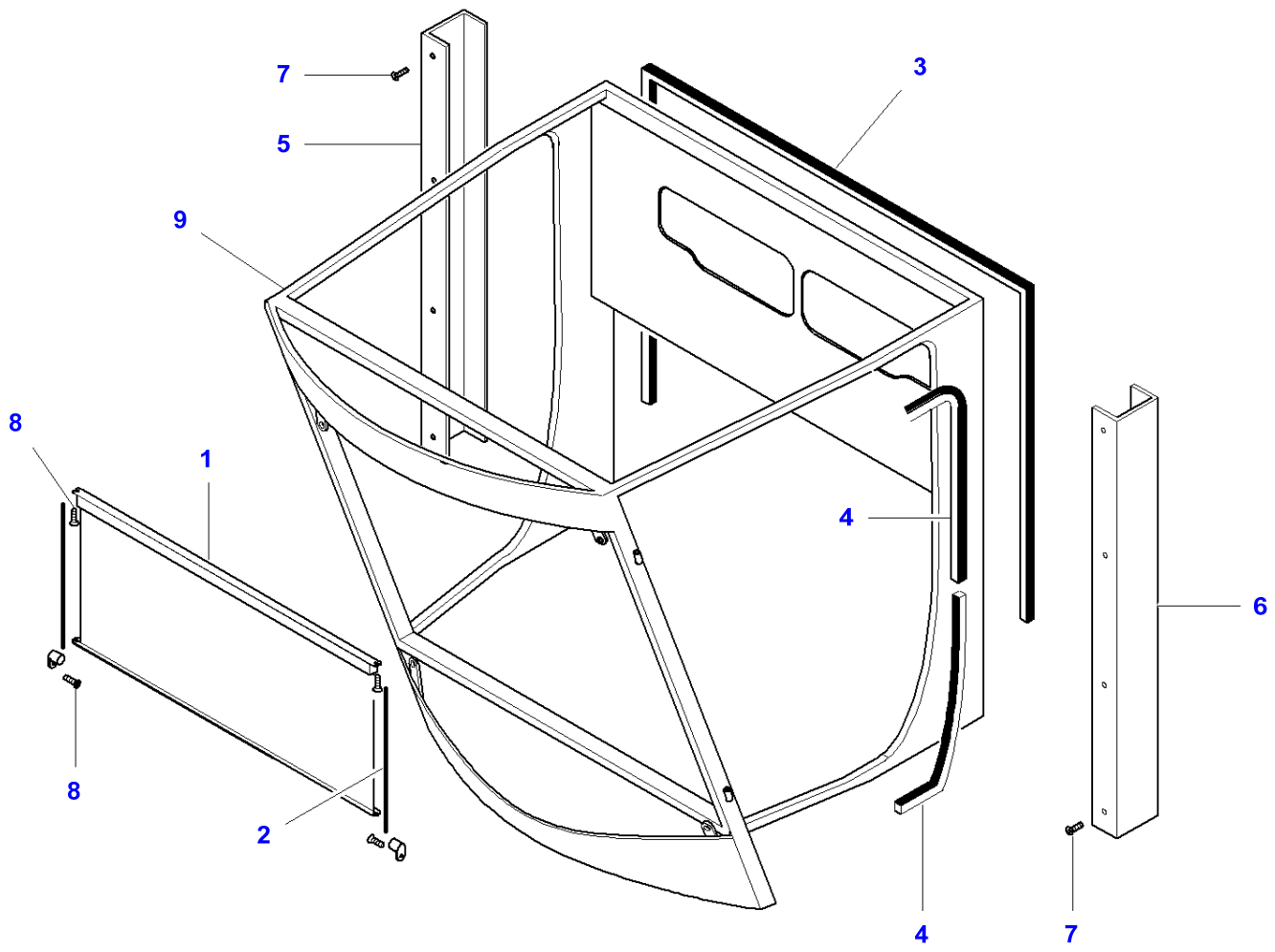

Item	Part Number	Qty	Description	Comments
1	LA322820300	1	Guard	
2	LA322820301	2	Guide	
3	LA322822503	1	Strip	
4	LA322934350	1	Gasket	
5	LA323005150	1	Cover	
6	LA323005250	1	Cover	
7	LA14441531	X	Screw	
8	LA14441427	X	Screw	
9		1	Frame Assy	[A]

FOOTNOTE [A] NOT SERVICED

L-LD38-060-A

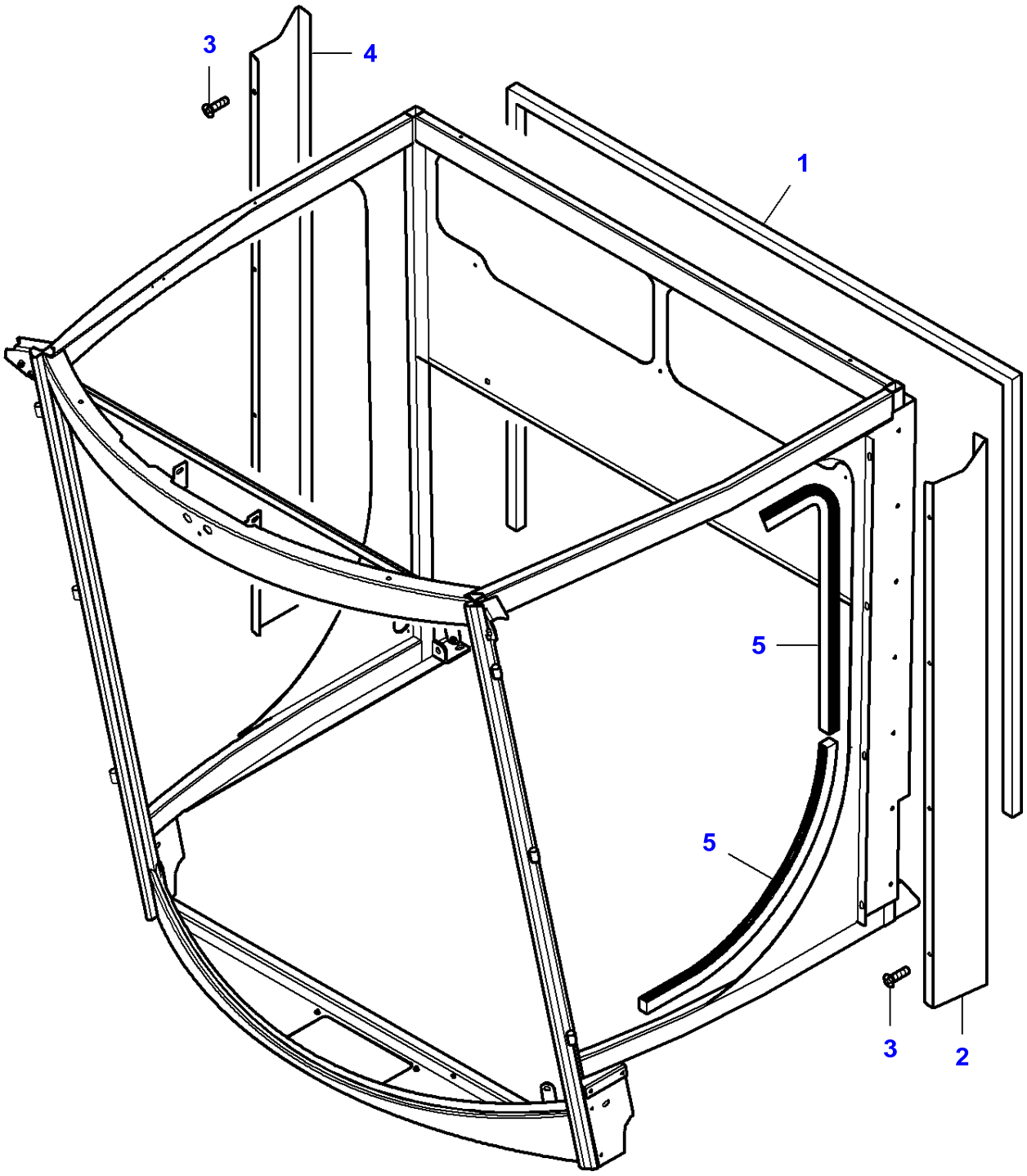

Item	Part Number	Qty	Description	Comments
1	LA322822503	1	Strip	
2	LA323005250	1	Cover	Left Hand
3	LA14441531	1	Screw	
4	LA323005150	1	Cover	Right Hand
5	LA322934350	1	Gasket	

L-LD38-004-A

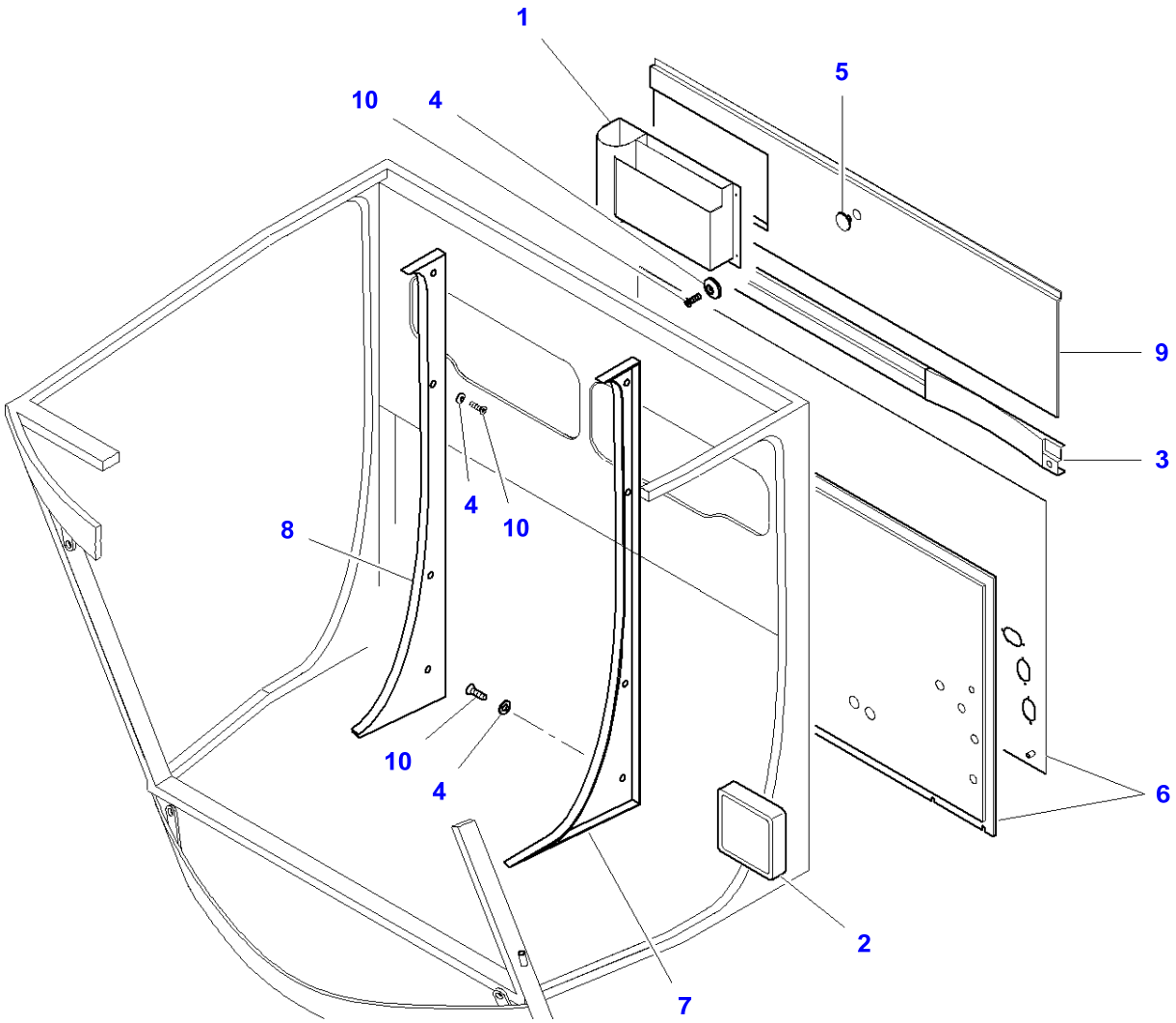

Item	Part Number	Qty	Description
1	LA321755650	1	Case
2	LA322041050	1	Lid
3	LA322816104	1	Cladding
4	LA322816108	12	Ring
5	LA322816110	1	Plug
6	LA322816200	1	Panel
7	LA322934450	1	Cladding
8	LA322934550	1	Cladding
9	LA322934650	1	Cladding
10	LA14441327	X	Screw

L-LD38-007-A

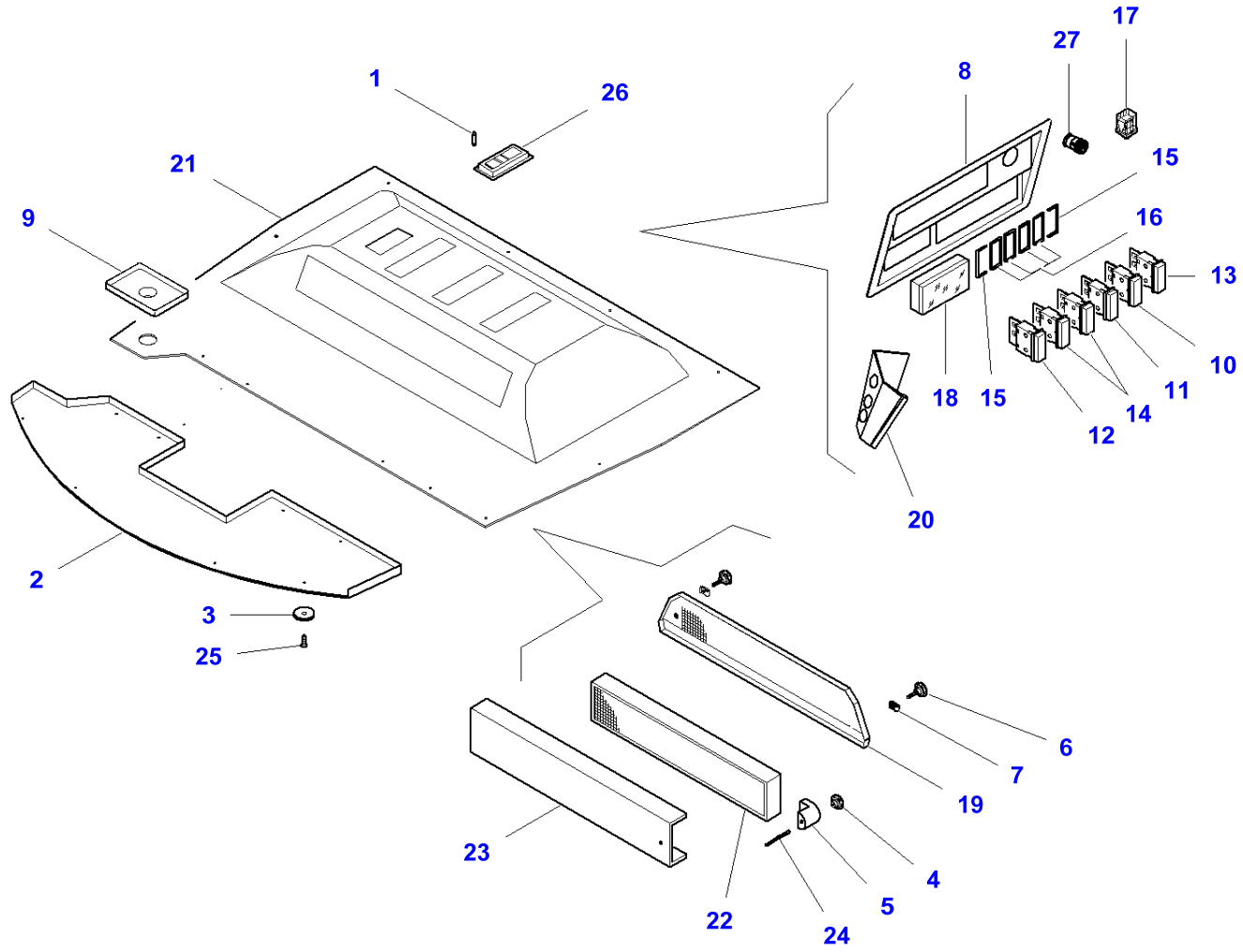

Item	Part Number	Qty	Description	Comments
1	LA10863090	1	Bulb	
2	LA322816101	1	Panel	
3	LA322816108	8	Ring	
4	LA322820151	1	Knob	
5	LA322820251	1	Grip	
6	LA322820253	2	Knob	
7	LA322820254	2	Spring	
8	LA322820950	1	Support	
9	LA322821050	1	Conveyor	
10	LA322821650	1	Switch	[A]
11	LA322821750	1	Switch	[B]
12	LA322821850	1	Switch	[D]
13	LA322821950	1	Switch	
14	LA322822050	2	Switch	[C]
15	LA322822150	2	Cap	
16	LA322822250	4	Cap	
17	LA322822350	1	Switch	
18	LA322822450	1	Box	
19	LA322934850	1	Profile	
20		1	Support	Not serviced,order REF. 21
21	LA322935050	1	Roof	
22	**LA322935250**	1	Cab Filter	
23	LA322935350	1	Support	
24	LA322935450	1	Stud	
25	LA322935550	8	Screw	
26	LA322935650	1	Roof	
27	LA322935750	1	Lighter	

FOOTNOTE [A] ROTATING LIGHT
FOOTNOTE [B] WIPER/WASHER
FOOTNOTE [C] FRONT WORKING LIGHT
FOOTNOTE [D] LIGHT CAB

L-LD38-061-A

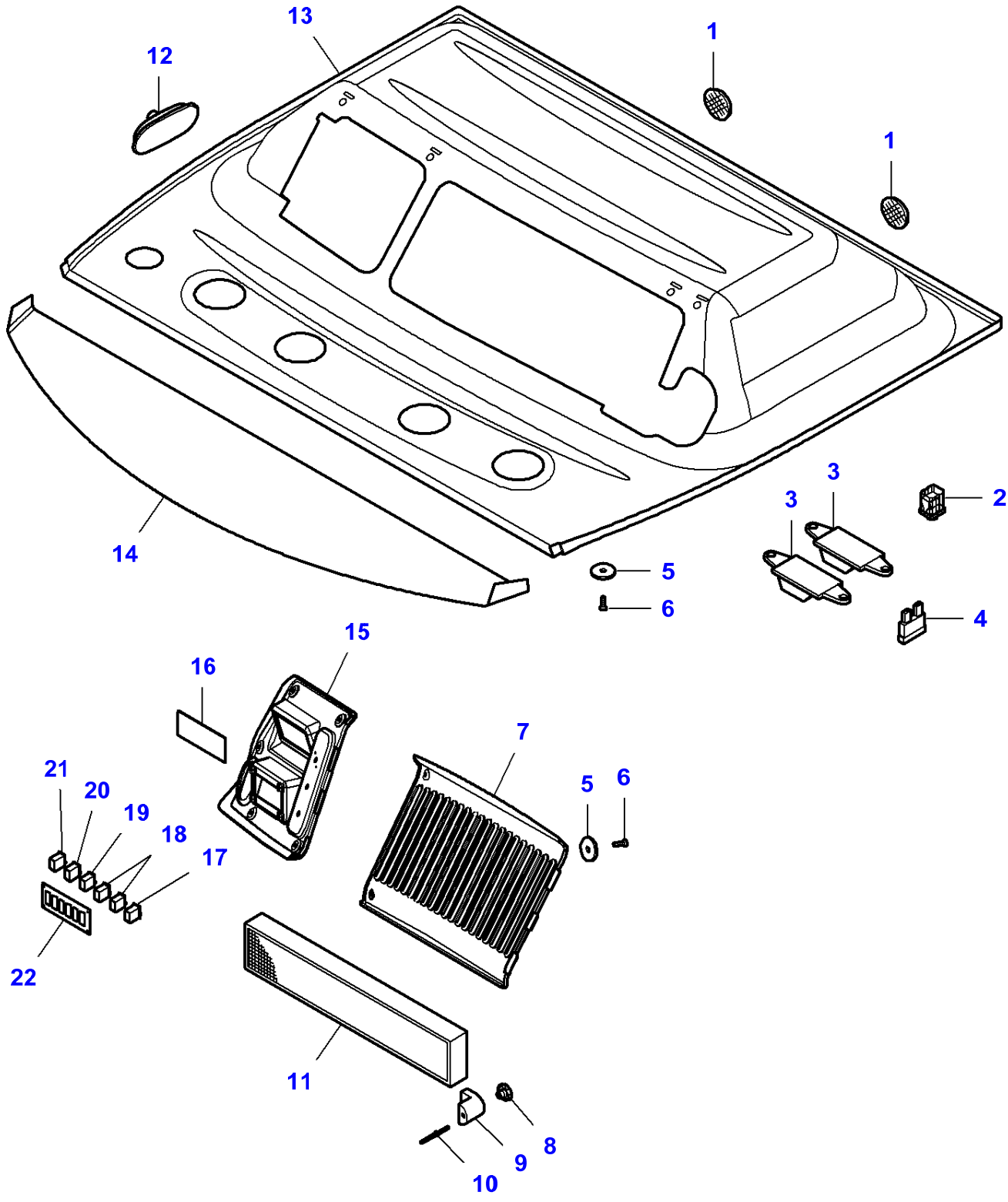

Item	Part Number	Qty	Description	Comments
1	LA323226550	1	Bracket	
2	**LA323090750**	1	Relay	
3	LA322053450	1	Fuse Holder	
4	**LA11054890**	1	Fuse	7,5 Amp
	LA11054990	1	Fuse	10 Amp
	LA11055090	1	Fuse	15 Amp
	LA11055190	1	Fuse	20 Amp
	LA11055290	1	Fuse	25 Amp
5	LA322816108	1	Ring	
6	LA14441327	1	Screw	
7	LA323274950	1	Grille	
8	LA322820151	1	Knob	
9	LA322820251	1	Grip	
10	LA322935450	1	Stud	
11	LA323226350	1	Cab Filter	
12	LA322980500	1	Union	
13	LA323274650	1	Facing	
14	LA323274750	1	Roof	
15	LA323274850	1	Cover	
16	LA323227550	1	Cover	
17	LA322821850	1	Switch	[D]
18	LA322822050	1	Switch	[C]
19	LA322821750	1	Switch	[B]
20	LA323294200	1	Switch	[A]
				Repairs and replaces LA322821650
21	LA322821950	1	Switch	
22	LA323203550	1	Bracket	

FOOTNOTE [A] ROTATING LIGHT
FOOTNOTE [B] WIPER/WASHER
FOOTNOTE [C] FRONT WORKING LIGHT
FOOTNOTE [D] LIGHT CAB

L-LD38-005-A

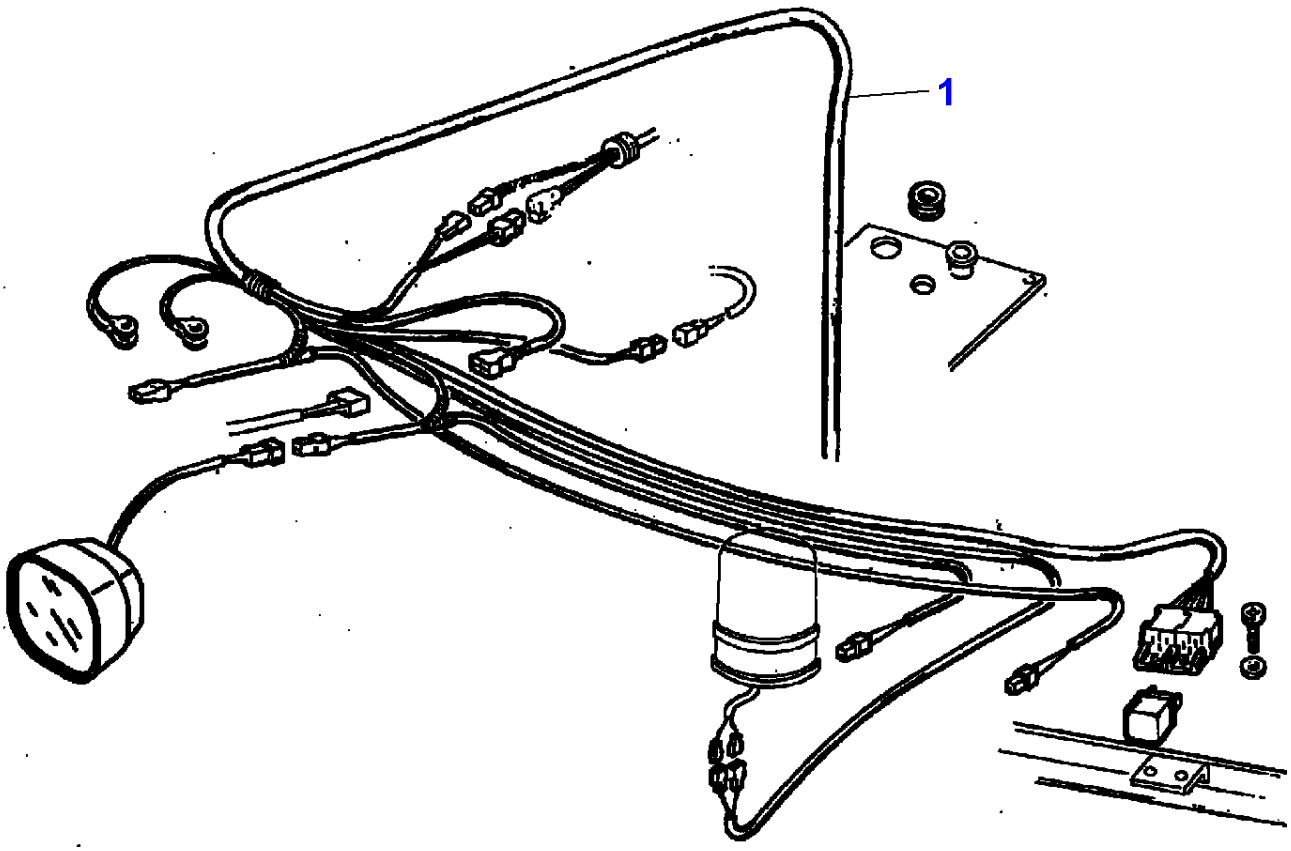

Item	Part Number	Qty	Description	Comments
1	LA322798800	1	Harness	Up to Serial or Engine Number 551710060
	LA323214000	1	Harness	From Serial or Engine Number 551710061

L-LD38-019-A

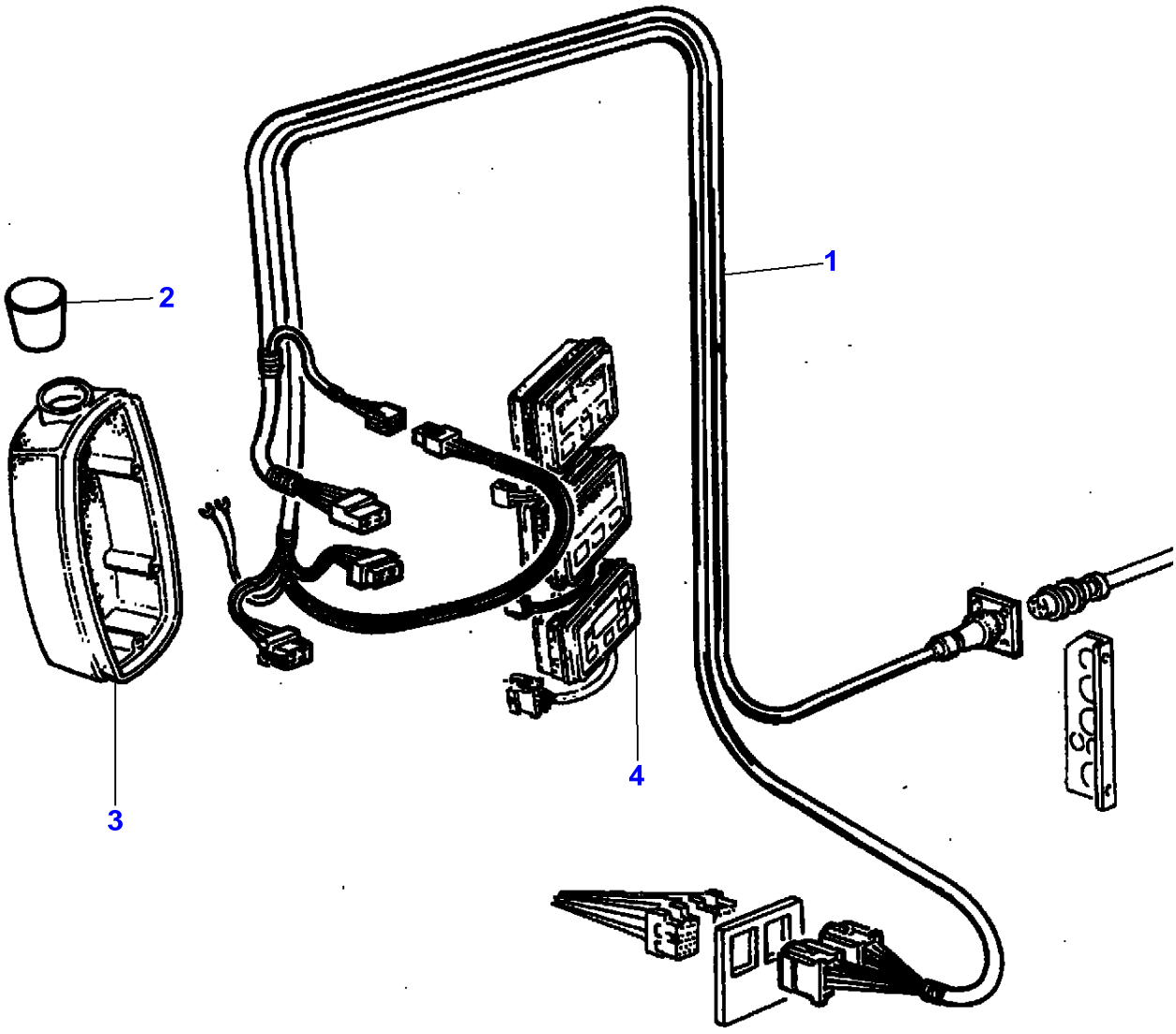

Item	Part Number	Qty	Description	Comments
1	LA322355300	1	Cable	
2	LA322935150	1	Connection	
3		1	Body	See Page - Reference Number 120-0090
4		1	Control Box	See Page - Reference Number 120-0090

L-LD38-068-A

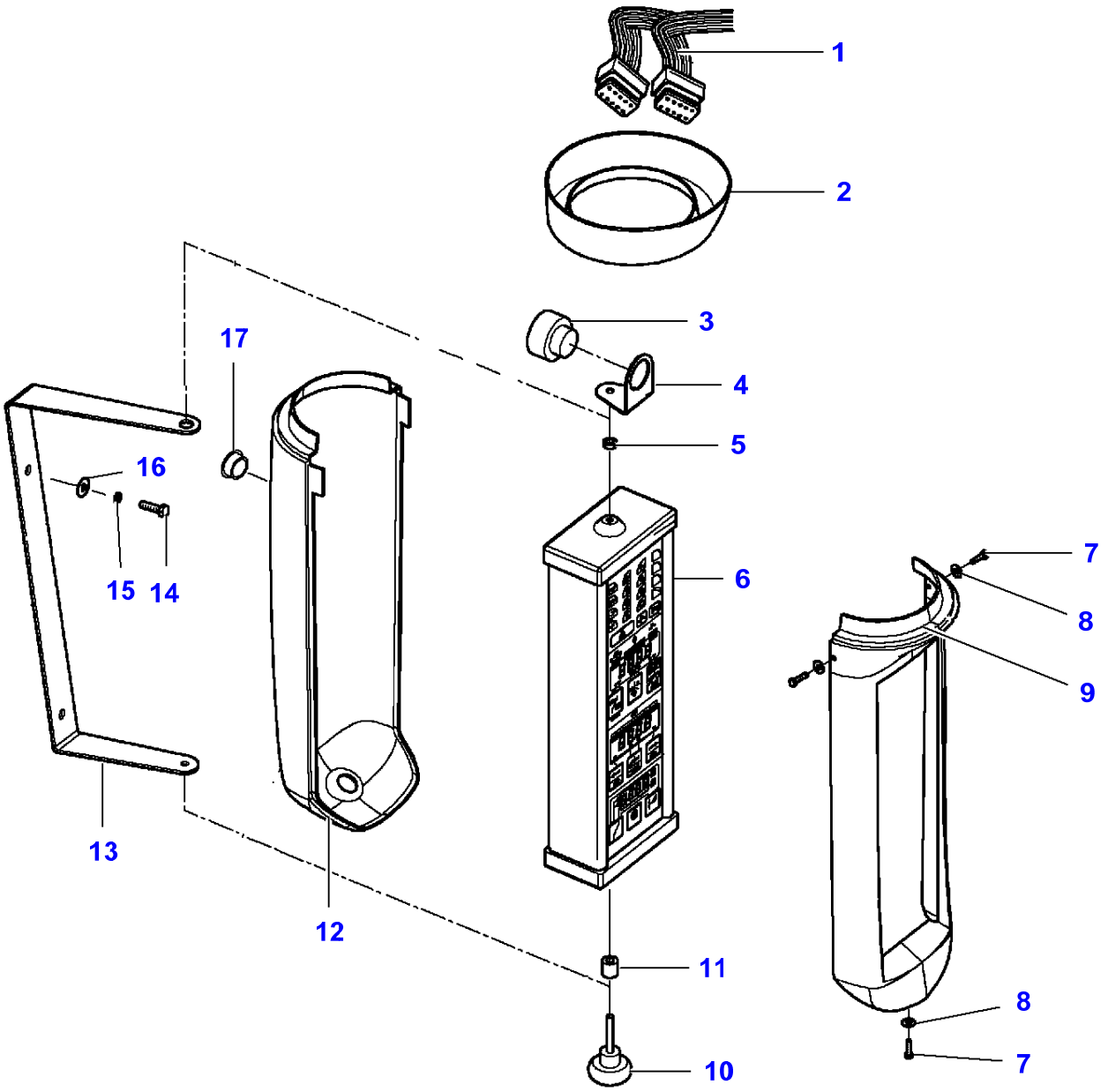

Item	Part Number	Qty	Description
1	LA323253900	1	Harness
2	LA322907350	1	Cover
3	LA322355400	1	Horn
4	LA322988150	1	Bracket
5	LA323000350	1	Bush
6	LA323245000	1	Agritronic Plus
7	LA10444821	1	Cap Screw
8	LA355500510	1	Washer
9	LA322907150	1	Cover
10	LA322987950	1	Handwheel
11	LA322909150	1	Spacer
12	LA323123550	1	Panel
13	LA323203850	1	Bracket
14	LA16043421	2	Cap Screw
15	LA12034571	2	Lock Washer
16	LA355500915	5	Flat Washer
17	LA14507787	1	Plug

L-LD38-020-A

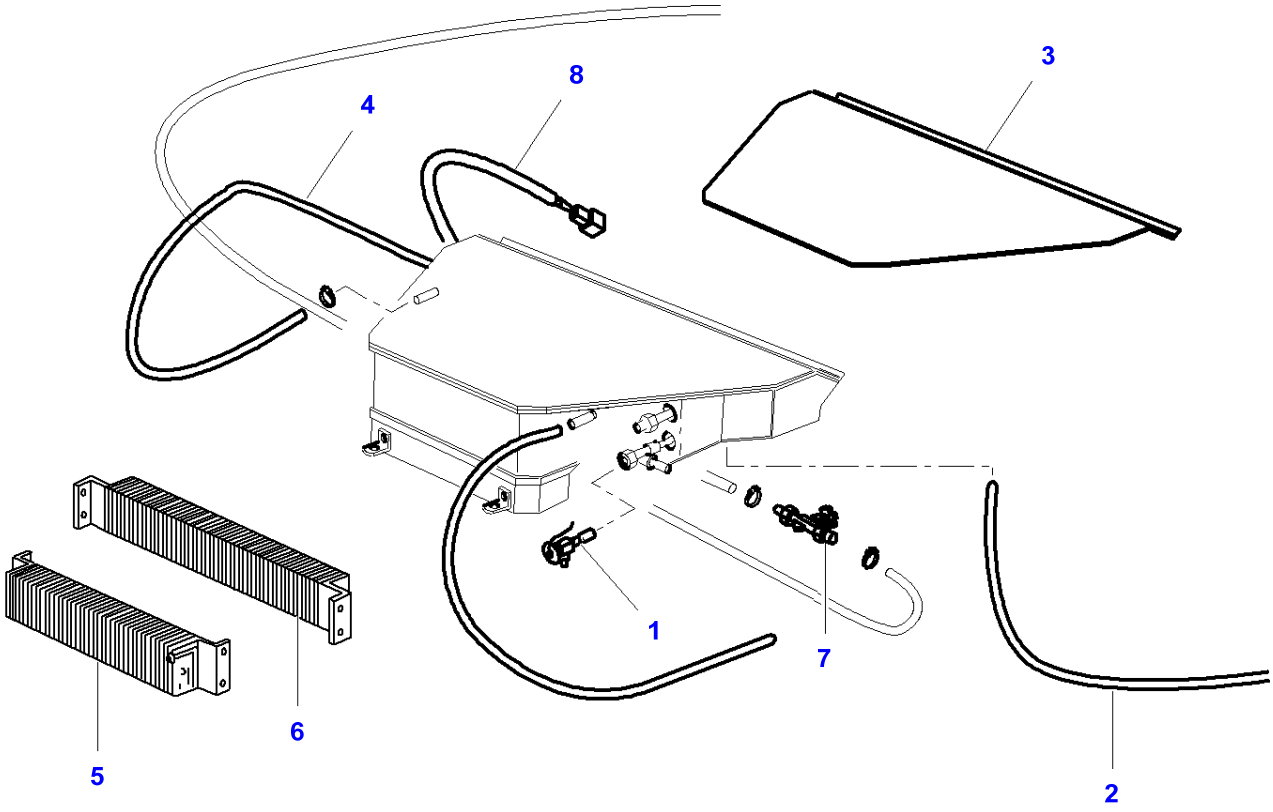

Item	Part Number	Qty	Description
1	LA322794902	1	Valve
2	LA322794905	1	Hose
3	LA322794917	1	Cover
4	LA322794921	1	Sleeve
5	LA322794933	1	Radiator
6	LA322794935	1	Evaporator
7	LA322794939	1	Cock
8	LA322794944	1	Cable

L-LD38-063-A

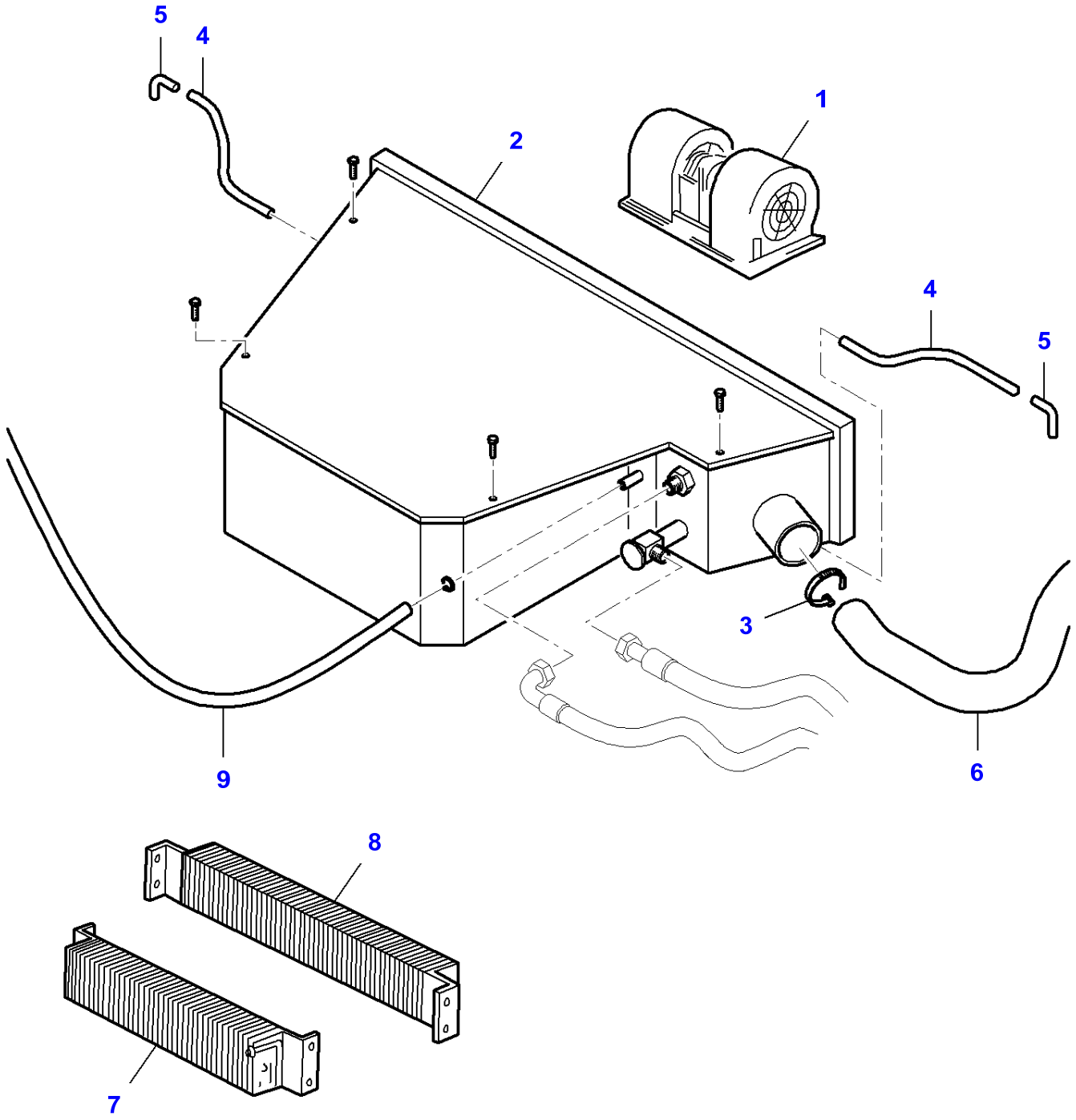

Item	Part Number	Qty	Description
1	LA322794912	1	Fan
2	LA323227650	1	Air Conditioner
3	LA13000790	1	Hose Clip
4	LA323228550	1	Hose
5	LA322794946	1	Connector
6	LA323226750	1	Hose
7	LA322794933	1	Radiator
8	LA322794935	1	Evaporator
9	LA323228750	1	Hose

L-LD38-021-A

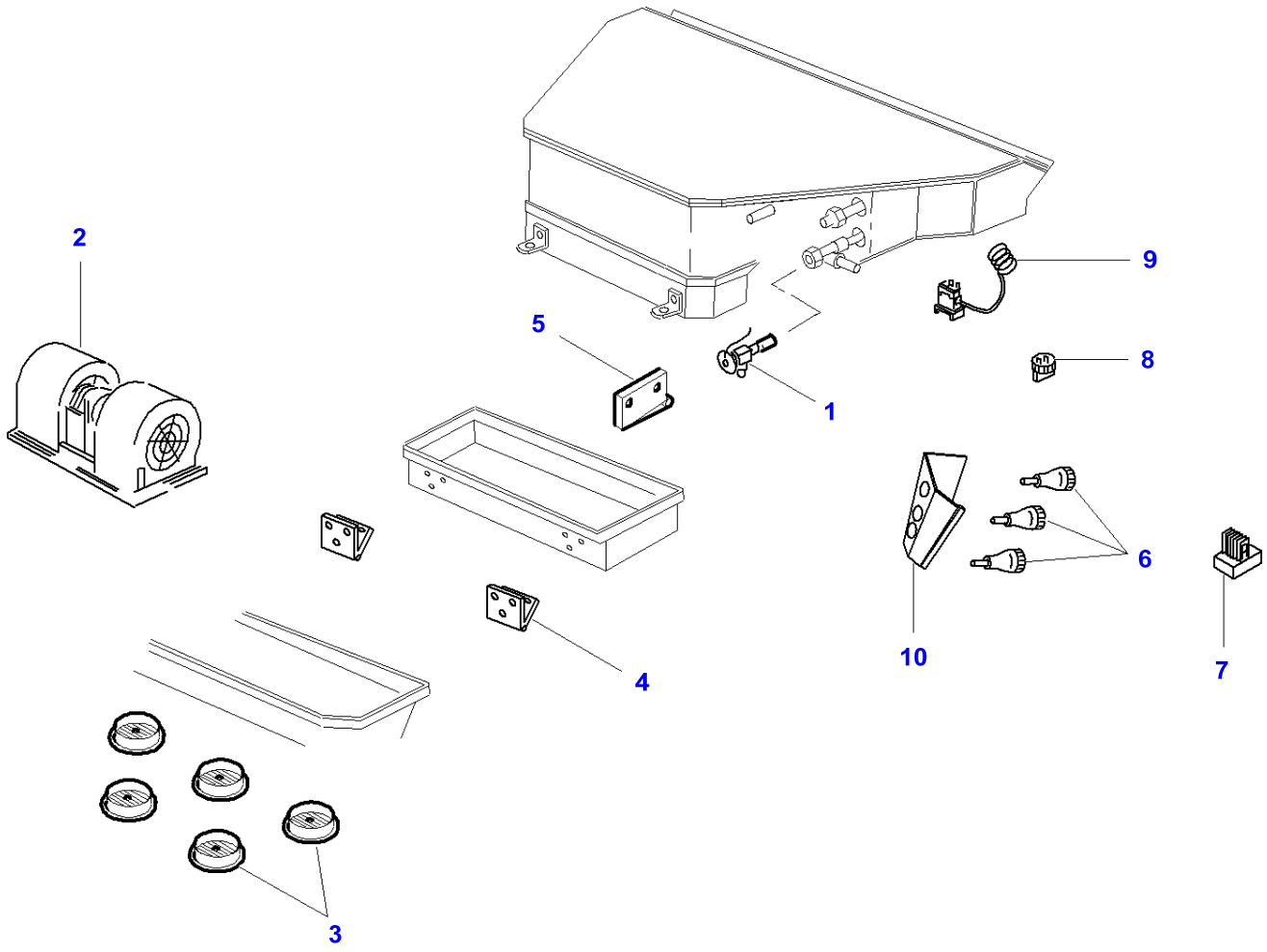

Item	Part Number	Qty	Description	Comments
1	LA322794902	1	Valve	
2	LA322794912	1	Fan	
3	LA322794922	5	Grille	
4	LA322794927	2	Hinge	
5	LA322794930	1	Lock	
6	LA322794936	3	Knob	
7	LA322794938	1	Switch	
8	LA322794941	1	Switch	
9	**LA322794942**	1	Thermostat	
10		1	Support	See Page - Reference Number 100-0165/20

L-LD38-064-A

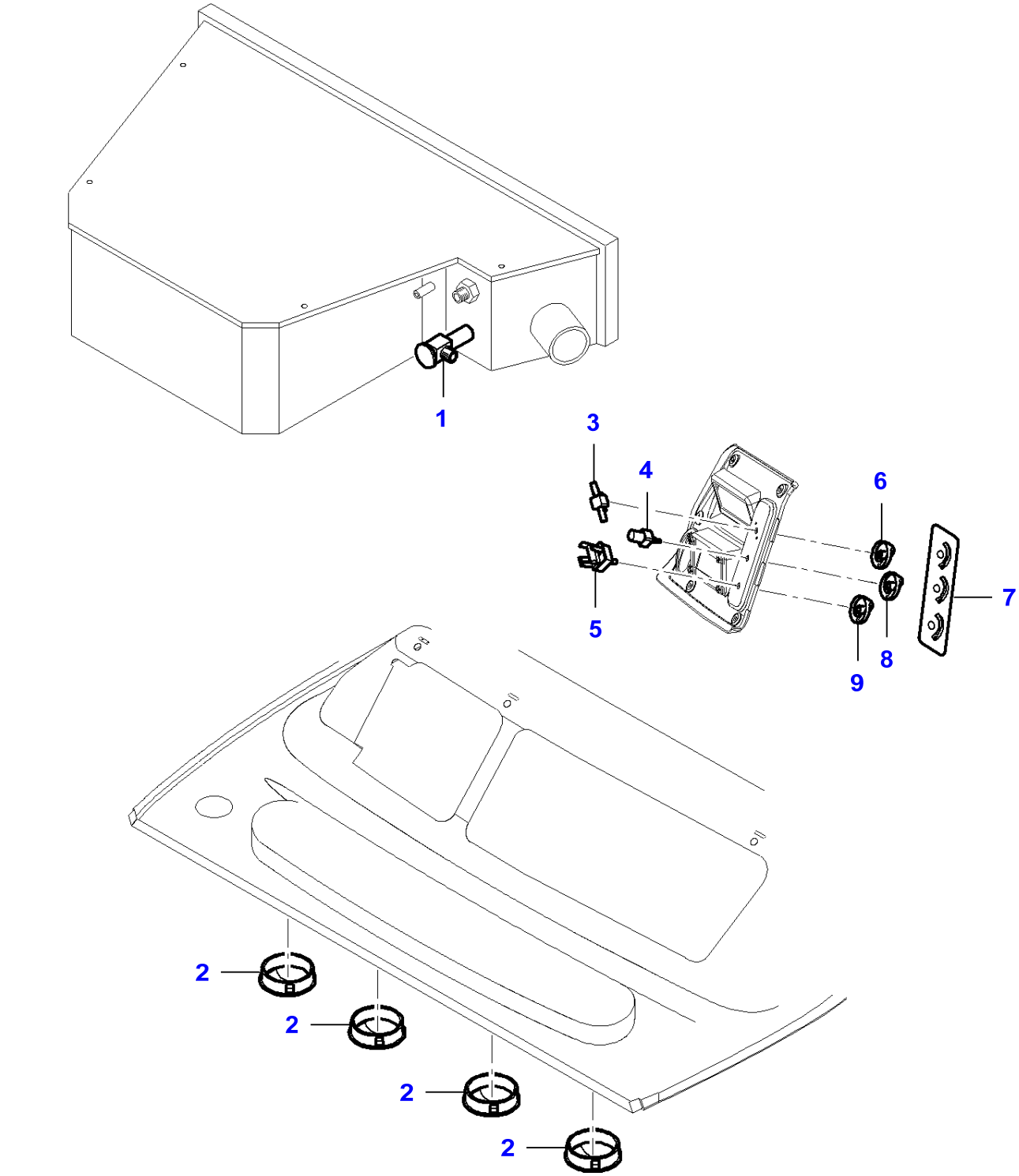

Item	Part Number	Qty	Description
1	LA322794902	1	Valve
2	LA323228250	1	Louvre
3	LA322794939	1	Cock
4	**LA322794942**	1	Thermostat
5	LA322794941	1	Switch
6	LA323077650	1	Button
7	LA323265650	1	Decal
8	LA323077850	1	Button
9	LA323077750	1	Button

L-LD38-013-B

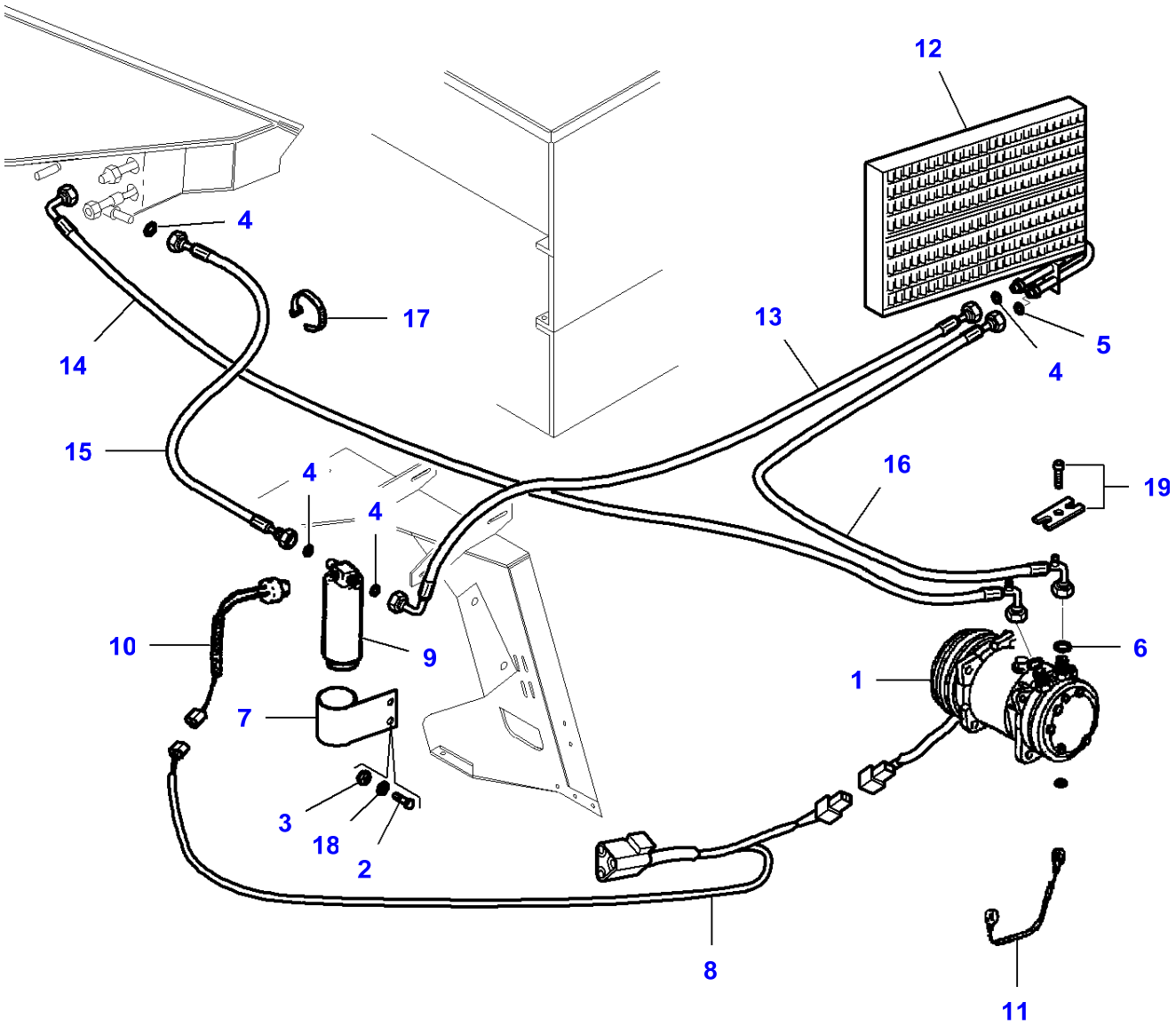

Item	Part Number	Qty	Description	Comments
1	LA323104150	1	Compressor	
2	LA10902621	2	Cap Screw	
3	LA12574211	2	Locknut	
4	LA14452883	4	Washer	
5	LA14453083	1	Washer	
6	LA14453283	2	Gasket	
7	LA321805050	1	Support	
8	LA322794800	1	Harness	Up to Serial or Engine Number 551710060
	LA323108500	1	Harness	From Serial or Engine Number 551710061
9	LA322801050	1	Receiver	
10	LA322801150	1	Transmitter	
11	LA322805550	1	Cable	
12	**LA322895250**	1	Condenser	
13	LA322895400	1	Hydraulic Hose	
14	LA322969600	1	Hydraulic Hose	Up to Serial or Engine Number 551710060
	LA323117300	1	Hydraulic Hose	From Serial or Engine Number 551710061
15	LA322969700	1	Hydraulic Hose	
16	LA322969800	1	Hydraulic Hose	Up to Serial or Engine Number 551710060
	LA323117400	1	Hydraulic Hose	From Serial or Engine Number 551710061
17	LA340481808	1	Cable Tie	
18	LA355510620	1	Flat Washer	
19	LA323256100	1	Clip	From Serial or Engine Number 551710061

L-LD38-014-B

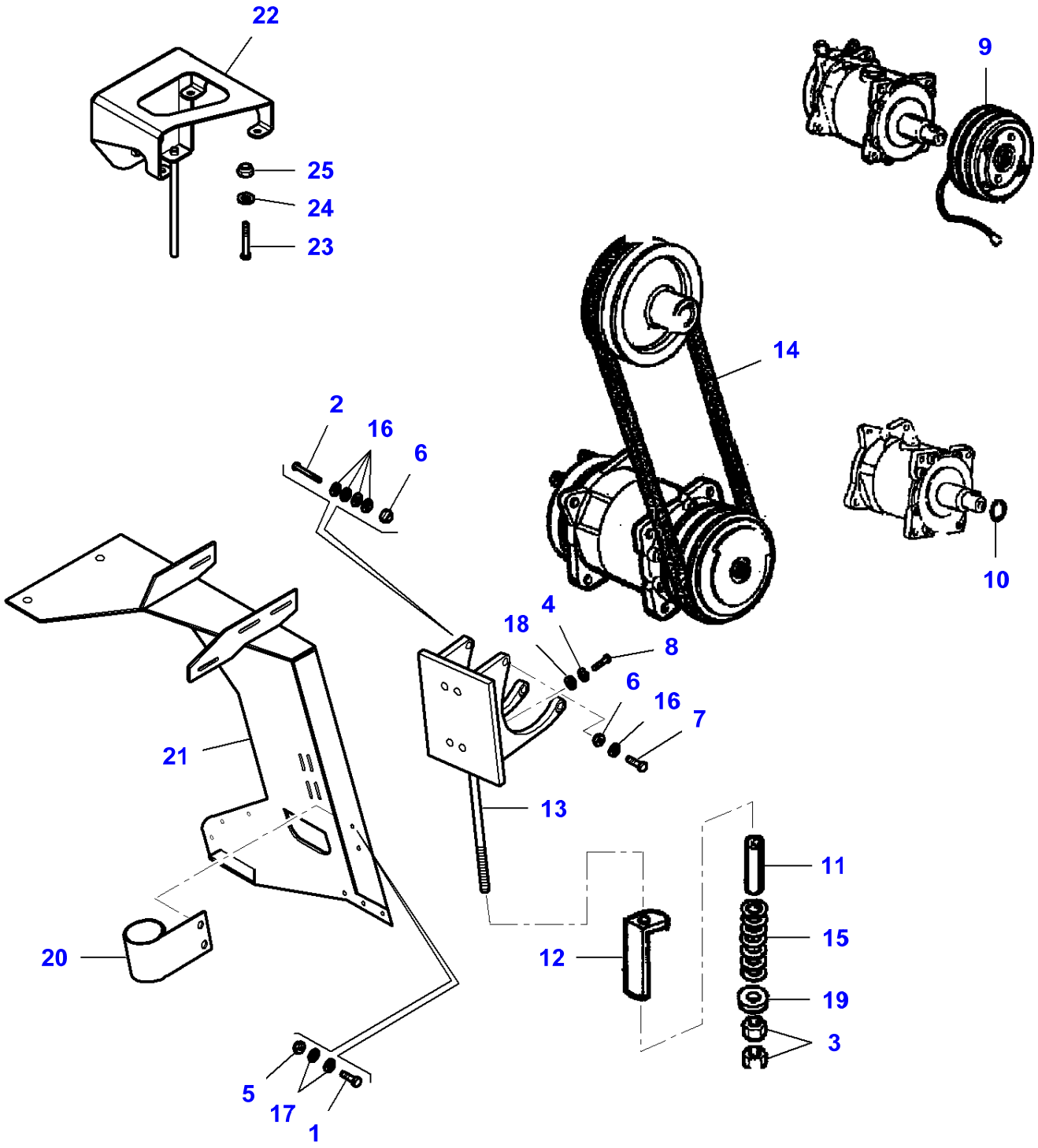

Item	Part Number	Qty	Description	Comments
1	LA10902621	2	Cap Screw	
2	LA11107021	4	Cap Screw	
3	LA11701721	2	Nut	
4	LA12034571	1	Lock Washer	
5	LA12574211	2	Locknut	
6	LA12577211	5	Nut	
7	LA14420421	1	Hex Socket Screw	
8	LA16043621	1	Cap Screw	
9	LA320523100	1	Clutch Magnet	Up to Serial or Engine Number 551510048
	LA323123900	1	Clutch Magnet	From Serial or Engine Number 551710061
10	LA320525550	1	Gasket	
11	LA322024350	1	Spacer	
12	LA322096350	1	Bracket	
13	LA322791650	1	Support	Up to Serial or Engine Number 551710060
14	LA340433154	1	V Belt	
15	LA350356153	1	Spring	
16	LA355501120	18	Flat Washer	
17	LA355510620	4	Flat Washer	
18	LA355510820	1	Flat Washer	
19	LA355511050	1	Flat Washer	
20		1	Support	See Page - Reference Number 100-0210/7
21		1	Bracket	See Page - Reference Number 080-0140/12
22	LA323235850	1	Bracket	From Serial or Engine Number 551710061
23	LA16045021	1	Cap Screw	
24	LA355501120	1	Flat Washer	
25	LA16104111	1	Locknut	

L-LD38-006-C

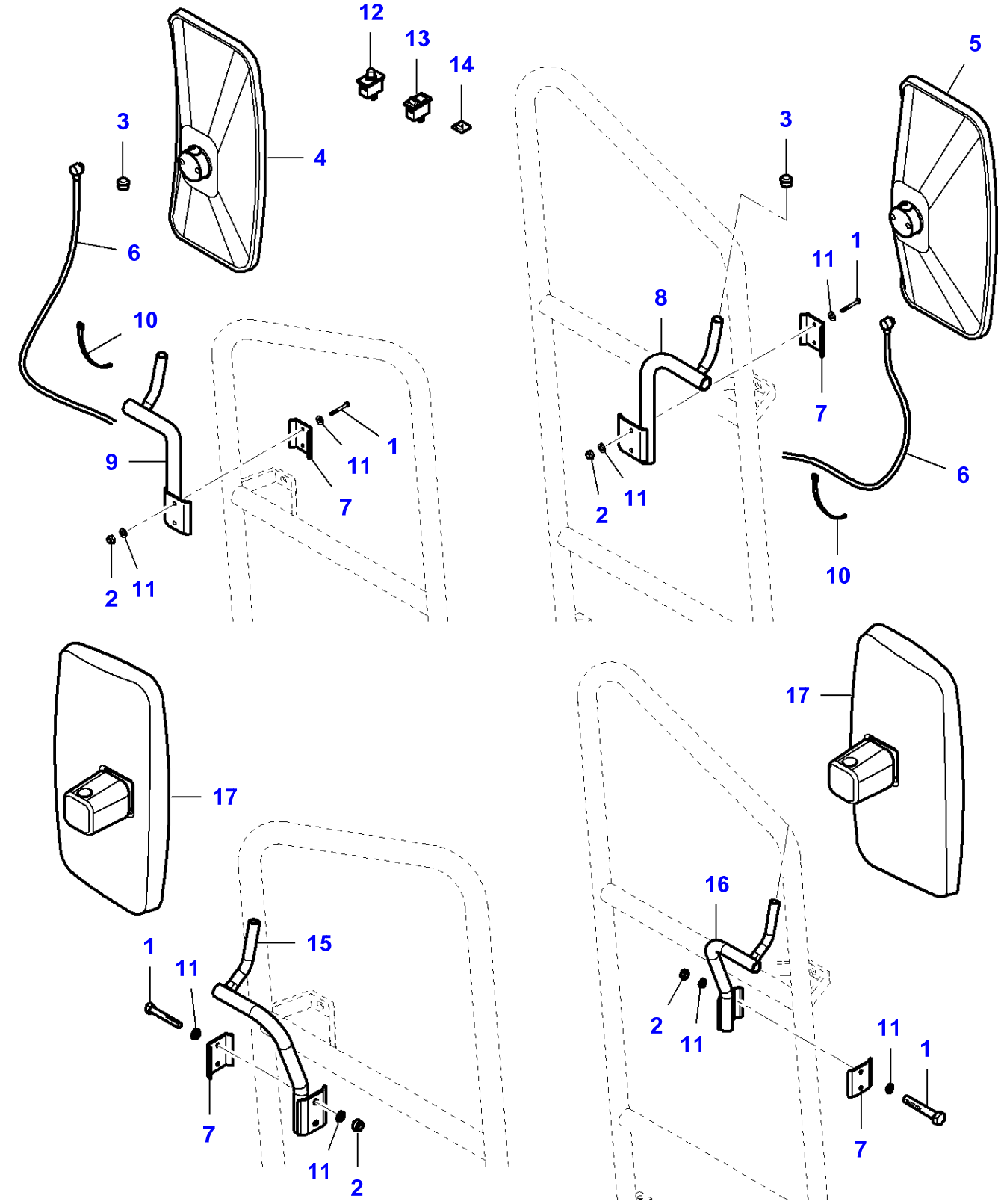
12
13
14
3
4
6
10
9
1
11
7
2
11
5
3
1
11
8
7
6
2
11
10
17
1
11
15
7
11
2
17
16
2
11
11
1
7

Item	Part Number	Qty	Description	Comments
1	LA16044321	2	Cap Screw	
2	LA16104111	2	Locknut	
3	LA321721250	2	Plug	
4	LA322692500	1	Mirror	Up to Serial or Engine Number
5	LA322692600	1	Mirror	Up to Serial or Engine Number
6	LA322700050	2	Harness	
7	LA323003750	2	Collar	
8	LA323004850	1	Support	Up to Serial or Engine Number
9	LA323004950	1	Support	Up to Serial or Engine Number
10	LA340481806	2	Cable Tie	
11	LA355500920	4	Flat Washer	
12	LA9501006	1	Switch	
13	LA322949450	1	Switch	
14	LA322947850	1	Insert	
15	LA323188150	1	Support	From Serial or Engine Number 551710061
16	LA323188050	1	Support	From Serial or Engine Number 551710061
17	LA323254500	2	Mirror	From Serial or Engine Number 551710061

L-LD39-002-A

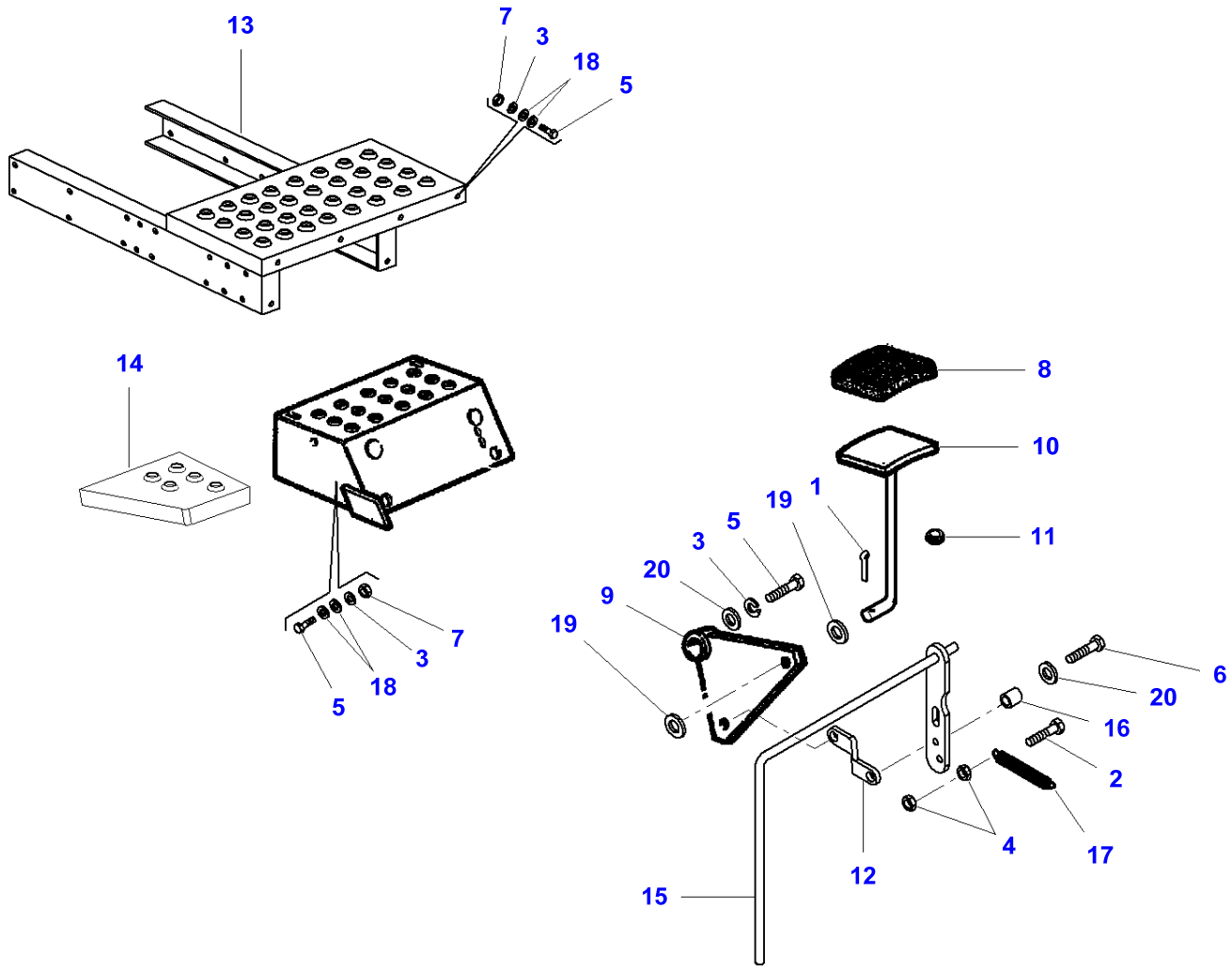

Item	Part Number	Qty	Description
1	LA10733601	1	Split Pin
2	LA10902621	1	Cap Screw
3	LA12034571	7	Lock Washer
4	LA15896211	2	Nut
5	LA16043421	7	Cap Screw
6	LA16043624	1	Cap Screw
7	LA16100811	6	Nut
8	LA322078850	1	Pad
9	LA322079450	1	Arm
10	LA322081450	2	Pedal
11	LA322255350	1	Bush
12	LA322941650	1	Tie Rod
13	LA322989350	1	Floor
14	LA322989550	1	Extension
15	LA323079350	1	Lever
16	LA340415607	1	Bush
17	LA350356530	1	Spring
18	LA355500920	12	Flat Washer
19	LA355501120	4	Flat Washer
20	LA355510820	2	Flat Washer

L-LD39-009-B

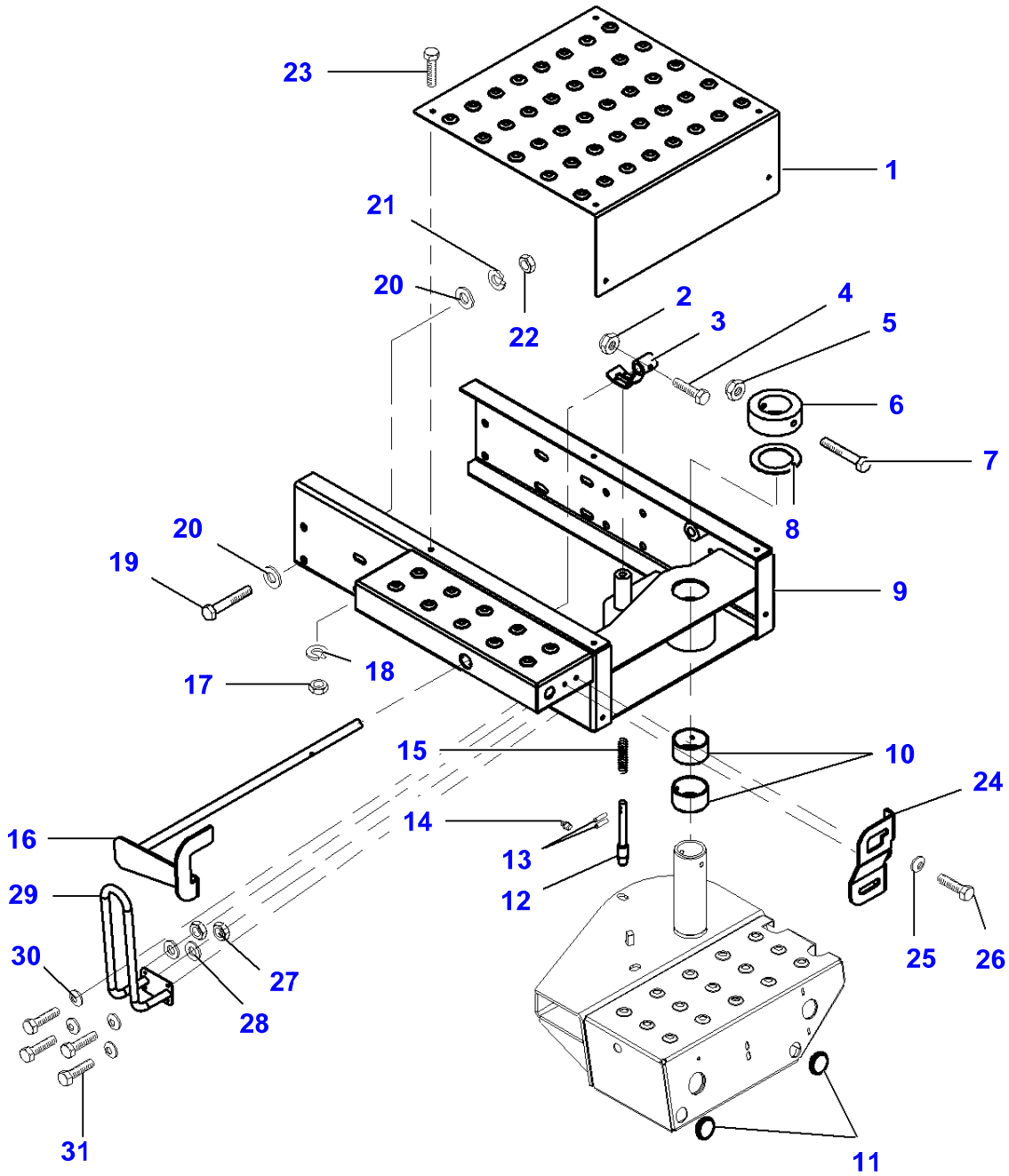
23
1
21
20
22
2
3
4
5
6
7
8
20
19
9
18
17
15
10
24
14
13
12
16
29
30
27
28
31
25
26
11

Item	Part Number	Qty	Description	Comments
1	LA323193150	1	Floor	
2	LA12574211	X	Locknut	
3	LA323171150	1	Support	
4	LA10903021	X	Cap Screw	
5	LA16104111	5	Locknut	
6	LA323171550	1	Bush	
7	LA16046121	X	Screw	
8	LA323171850	1	Shim	
9	LA323180550	1	Support	
10	LA323172250	2	Spacer	
11	LA322274450	2	Plug	
12	LA323177650	1	Pin	
13	LA14164370	2	Pin	
14	LA350357803	1	Grease Fitting	
15	LA350356208	1	Spring	
16	LA323172150	1	Rod Link	
17	LA15896211	X	Nut	
18	LA322357	X	Lock Washer	
19	LA11107621	X	Cap Screw	
20	LA355501130	X	Flat Washer	
21	LA140045	X	Washer	
22	LA11701711	X	Nut	
23	LA10902221	X	Cap Screw	
24	LA323234250	1	Support	From Serial or Engine Number 551710061
25	LA322357	1	Lock Washer	From Serial or Engine Number
26	LA10902221	1	Cap Screw	From Serial or Engine Number
27		1	Not Used	
28		1	Not Used	
29		1	Not Used	
30		1	Not Used	
31		1	Not Used	

L-LD38-017-A

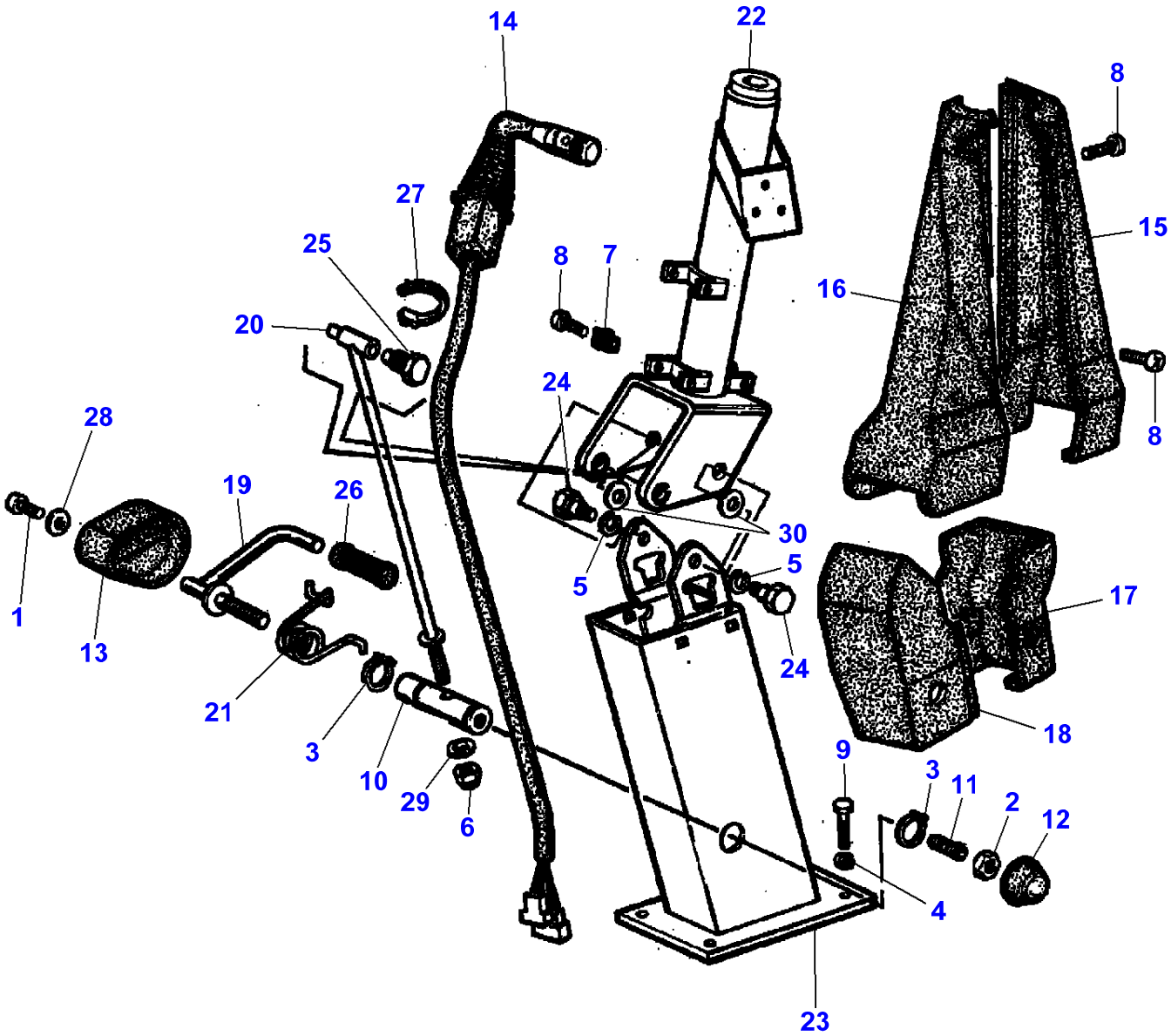
14
22
8
27
15
25
8
7
16
20
24
28
8
19
26
30
5
5
17
1
24
13
18
21
9
3
11
2
12
3
10
29
6
4
23

Item	Part Number	Qty	Description
1	LA10376511	1	Screw
2	LA10717421	1	Nut
3	LA11067676	2	Ring
4	LA12034571	1	Lock Washer
5	LA12034871	2	Lock Washer
6	LA12577311	1	Nut
7	LA14215282	1	Support
8	LA15959207	3	Screw
9	LA16043624	1	Cap Screw
10	LA300137550	1	Bush
11	LA300137551	1	Tie Rod
12	LA321254350	1	Cover
13	LA321277750	1	Shield
14	LA322118100	1	Swiveling Device
15	LA322395150	1	Shield
16	LA322395250	1	Shield
17	LA322395350	1	Shield
18	LA322395450	1	Shield
19	LA322677850	1	Pedal
20	LA322677950	1	Tie Rod
21	LA322678050	1	Spring
22	LA322678150	1	Steering Column
23	LA322678250	1	Steering Column
24	LA322678350	2	Screw
25	LA322678450	1	Screw
26	LA340441012	1	Pad
27	LA340481810	1	Cable Tie
28	LA355510615	1	Flat Washer
29	LA355531830	1	Flat Washer
30	LA355532620	1	Flat Washer

L-LD38-066-B

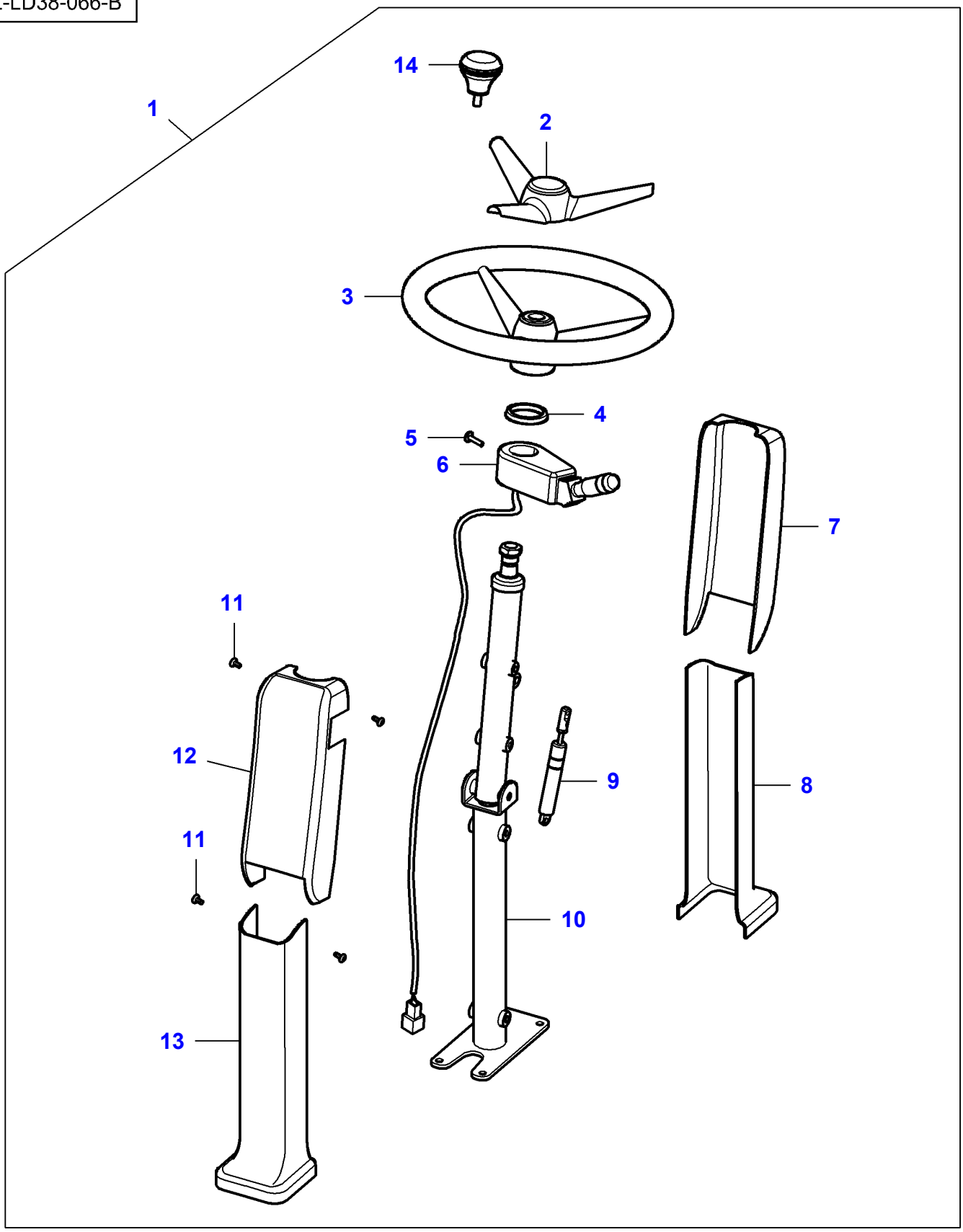

Item	Part Number	Qty	Description	Comments
1	LA323196500	1	Kit, Steering	
2	LA323230050	1	Cover	(1)
3	LA323229950	1	Steering Wheel	(1)
4	LA323230250	1	Cup	(1)
5	LA13309211	1	Screw	(1)
6	LA323230150	1	Part	(1)
7	LA323230450	1	Shield	(1)
8	LA323230650	1	Shield	(1)
9	LA323231750	1	Jack	(1)
10	LA323230750	1	Steering Column	(1)
11	LA323174857	1	Screw	(1)
12	LA323230350	1	Shield	(1)
13	LA323230550	1	Shield	(1)
14	LA323231650	1	Grip	(1)

L-LD38-018-B

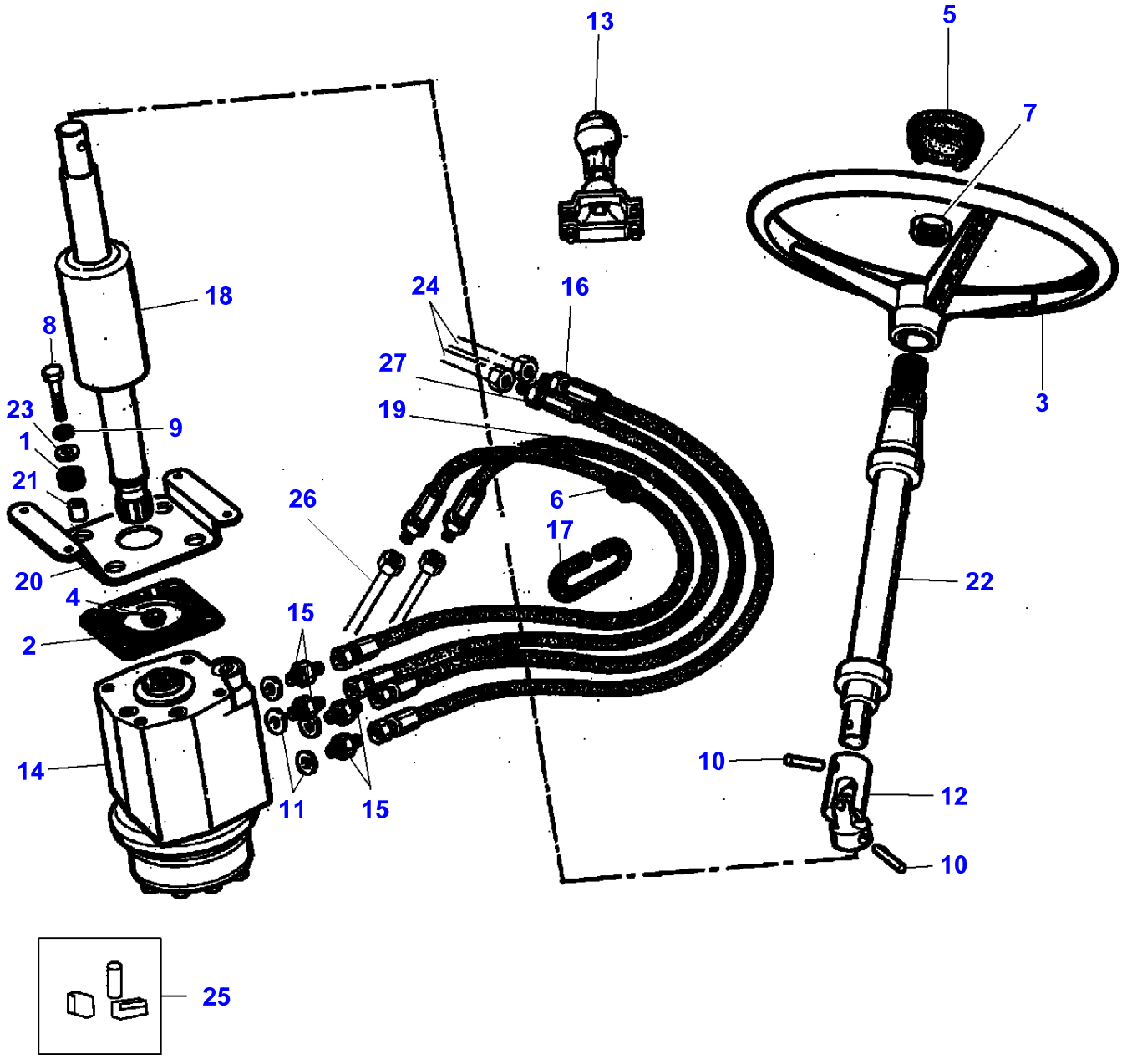

Item	Part Number	Qty	Description	Comments
1	LA5119125	1	Block	
2	LA5124937	1	Spacer	
3	LA5131880	1	Steering Wheel	
4	LA5148063	1	Block	
5	LA323084950	1	Cover	
	LA323147850	1	Decal	MASSEY FERGUSON
6	LA10397780	1	Grommet	
7	LA10726621	1	Nut	
8	LA11106624	1	Cap Screw	
9	LA12605671	1	Washer	
10	LA14604170	2	Roll Pin	
11	LA44019496	4	Seal	
12	LA321078250	1	Gasket	
13	LA321124500	1	Grip	
14	LA321879000	1	Steer. Orbitrol	
15	LA321880800	4	Union	
16	LA321880950	1	Hose	Length 1260
17	LA322012650	1	Strip	
18	LA322087450	1	Shaft	
19	LA322110050	2	Hydraulic Hose	Length 1760
20	LA322257050	1	Support	
21	LA322257150	2	Spacer	
22	LA322678550	1	Shaft	
23	LA355511030	1	Flat Washer	
24		2	Tube	See Page - Reference Number 110-0075/13 See Page - Reference Number 110-0075/14
25	LA45483416	1	Kit, Repair	
26		1	Tube	See Page - Reference Number 110-0080/09 See Page - Reference Number 110-0080/11
27	LA323070250	1	Hydraulic Hose	

L-LD38-067-A

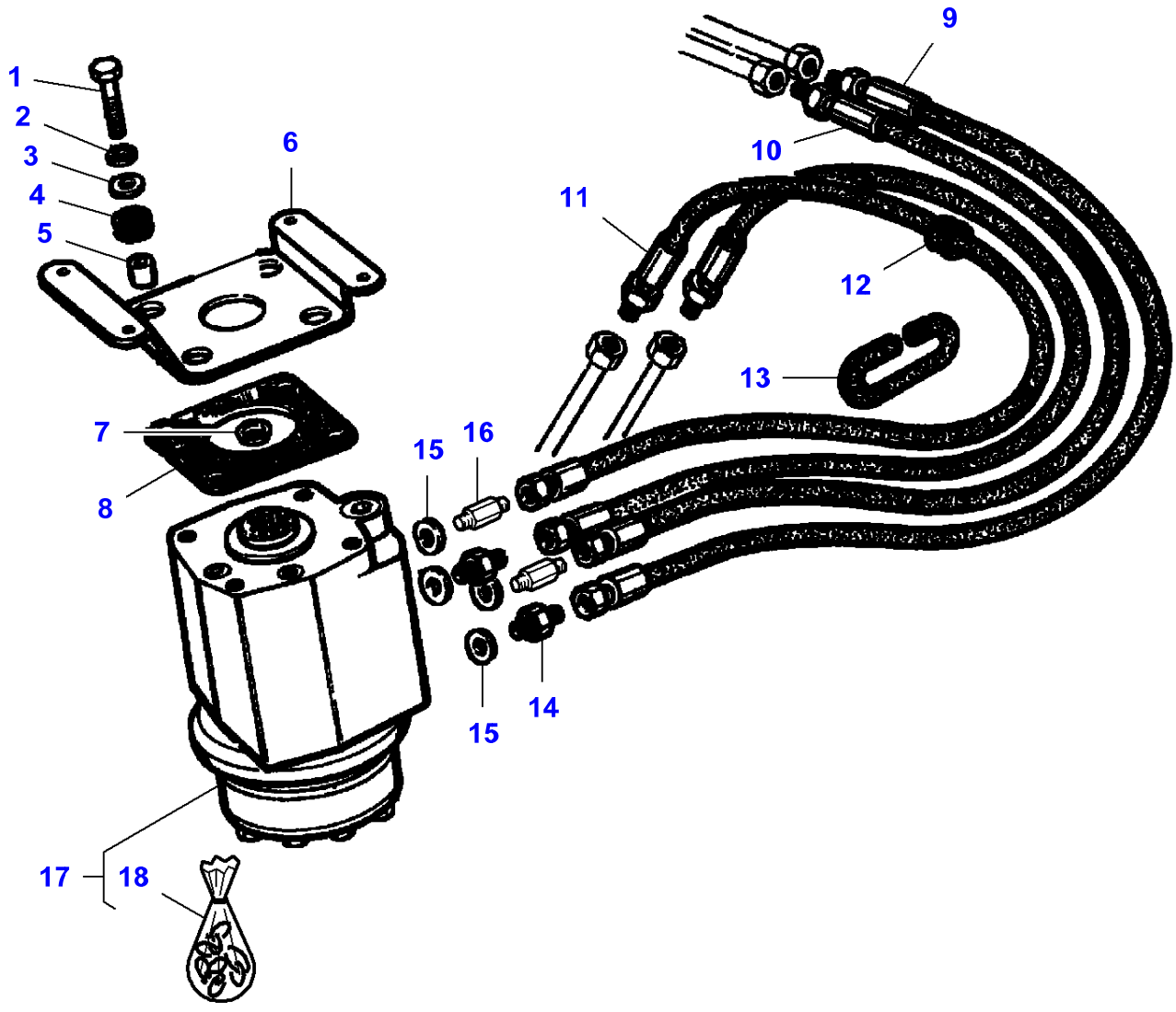

Item	Part Number	Qty	Description	Comments
1	LA11106621	1	Cap Screw	
2	LA12605671	1	Washer	
3	LA355511030	1	Flat Washer	
4	LA5119125	1	Block	
5	LA322257150	1	Spacer	
6	LA323189750	1	Support	
7	LA5148063	1	Block	
8	LA5124937	1	Spacer	
9	LA322110050	1	Hydraulic Hose	Length 1750 mm
10	LA323070250	1	Hydraulic Hose	
11	LA321955550	2	Hydraulic Hose	Length 2050 mm
12	LA10397780	1	Grommet	
13	LA322012650	1	Strip	
14	LA321880800	2	Union	
15	LA44019496	4	Seal	
16	LA321420450	2	Union	
17	LA321879000	1	Steer. Orbitrol	
18	LA45483416	1	Kit, Repair	(17)

L-LC92-001-A

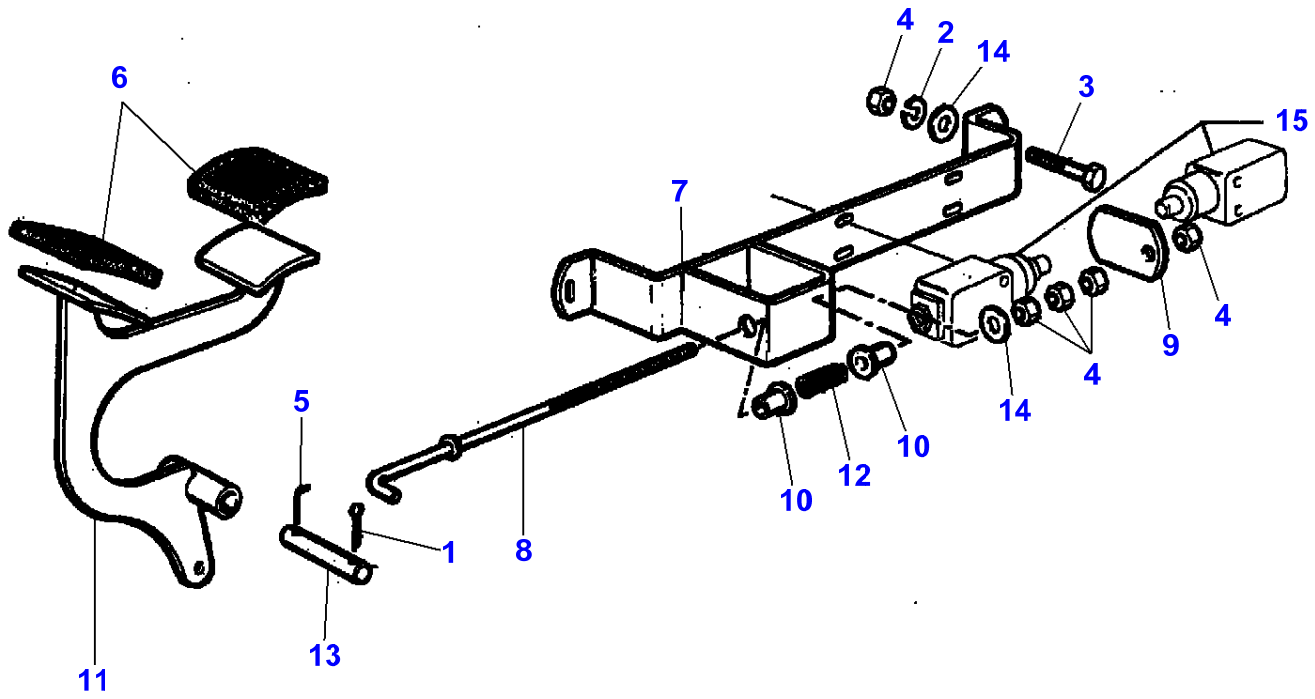

Item	Part Number	Qty	Description	Comments
1	LA10733701	1	Split Pin	
2	LA12034571	1	Lock Washer	
3	LA16043424	1	Cap Screw	
4	LA16100811	5	Nut	
5	LA300136233	1	Roll Pin	
6	LA322078850	2	Pad	
7	LA322109650	1	Support	
8	LA322110650	1	Tie Rod	
9	LA322110750	1	Plate	
10	LA322111050	2	Bush	
11	LA322114350	2	Pedal	
12	LA350356209	1	Spring	
13	LA350379280	1	Roll Pin	
14	LA355510820	2	Flat Washer	
15		1	Switch	See Page - Reference Number 120-0065/7

L-LD40-001-A

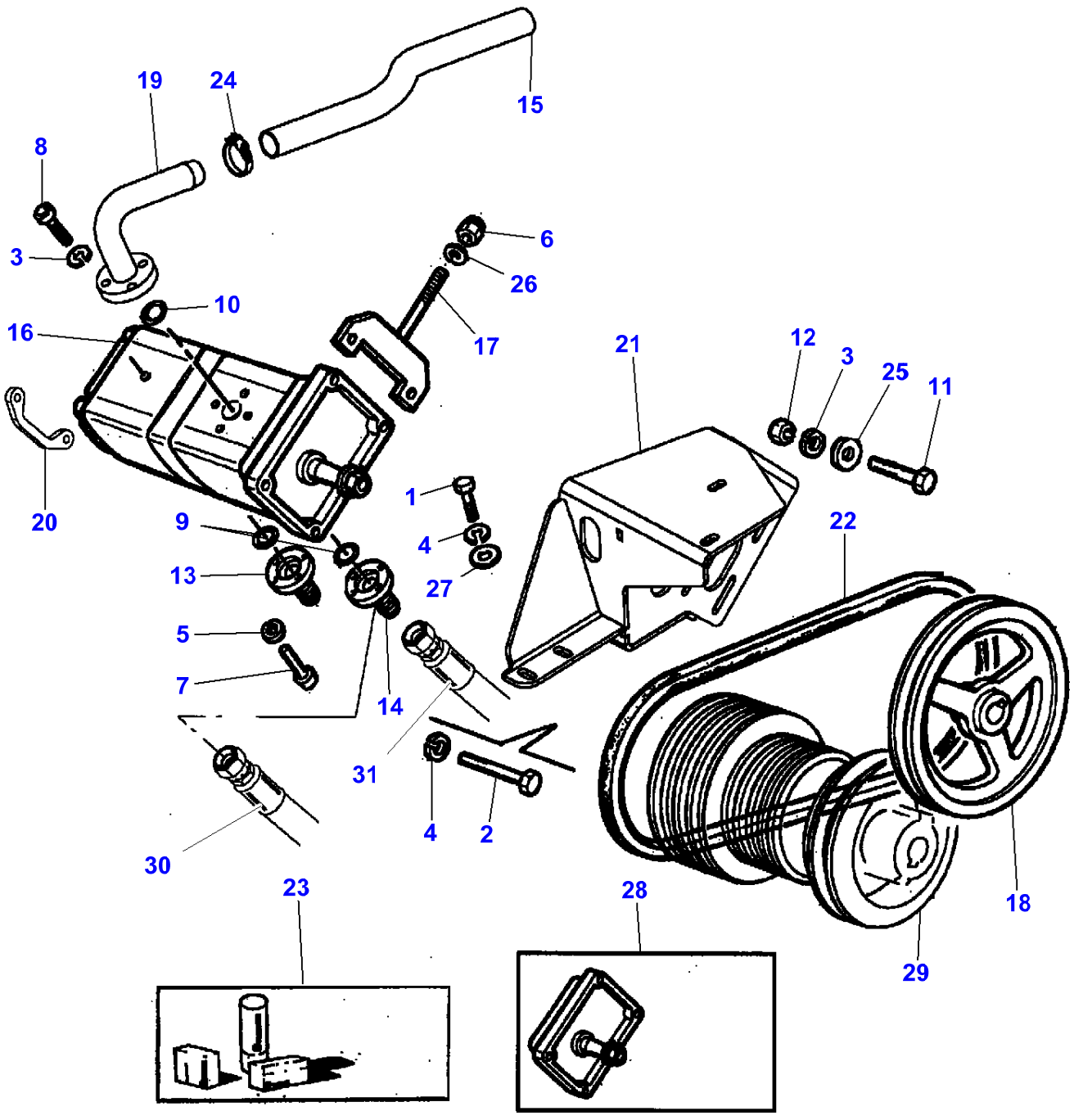
19
24
15
8
3
6
26
10
16
17
21
12
3
25
11
20
1
4
27
9
13
22
5
7
14
31
4
2
30
23
28
18
29

Item	Part Number	Qty	Description	Comments
1	LA11106421	1	Cap Screw	
2	LA11106821	1	Cap Screw	
3	LA12034571	5	Lock Washer	
4	LA12034671	2	Lock Washer	
5	LA12035670	8	Lock Washer	
6	LA12577211	1	Nut	
7	LA14305324	8	Hex Socket Screw	
8	LA14306321	4	Hex Socket Screw	
9	LA14457180	2	O Ring	
10	LA14457780	1	O Ring	
11	LA16043924	1	Cap Screw	
12	LA16100811	1	Nut	
13	LA321409350	1	Flange	
14	LA321409550	1	Flange	
15	LA322005350	1	Hydraulic Hose	
16	LA322049800	1	Pump	
17	LA322387950	1	Tie Rod	
18	LA322388350	1	Pulley	
19	LA322881750	1	Connector	
20	LA323008350	1	Plate	
21	LA323077450	1	Support	
22	**LA340433253**	1	Belt	
23	LA344853126	1	Kit, Seal	
24	LA350391526	1	Hose Clip	
25	LA355500915	1	Flat Washer	
26	LA355501120	2	Flat Washer	
27	LA355511020	1	Flat Washer	
28	LA323124800	1	Support	
29			Pulley	See Page - Reference Number 030-0215/27
30	LA321419850	1	Hydraulic Hose	
31	LA321409650	1	Hydraulic Hose	

L-LD40-005-B

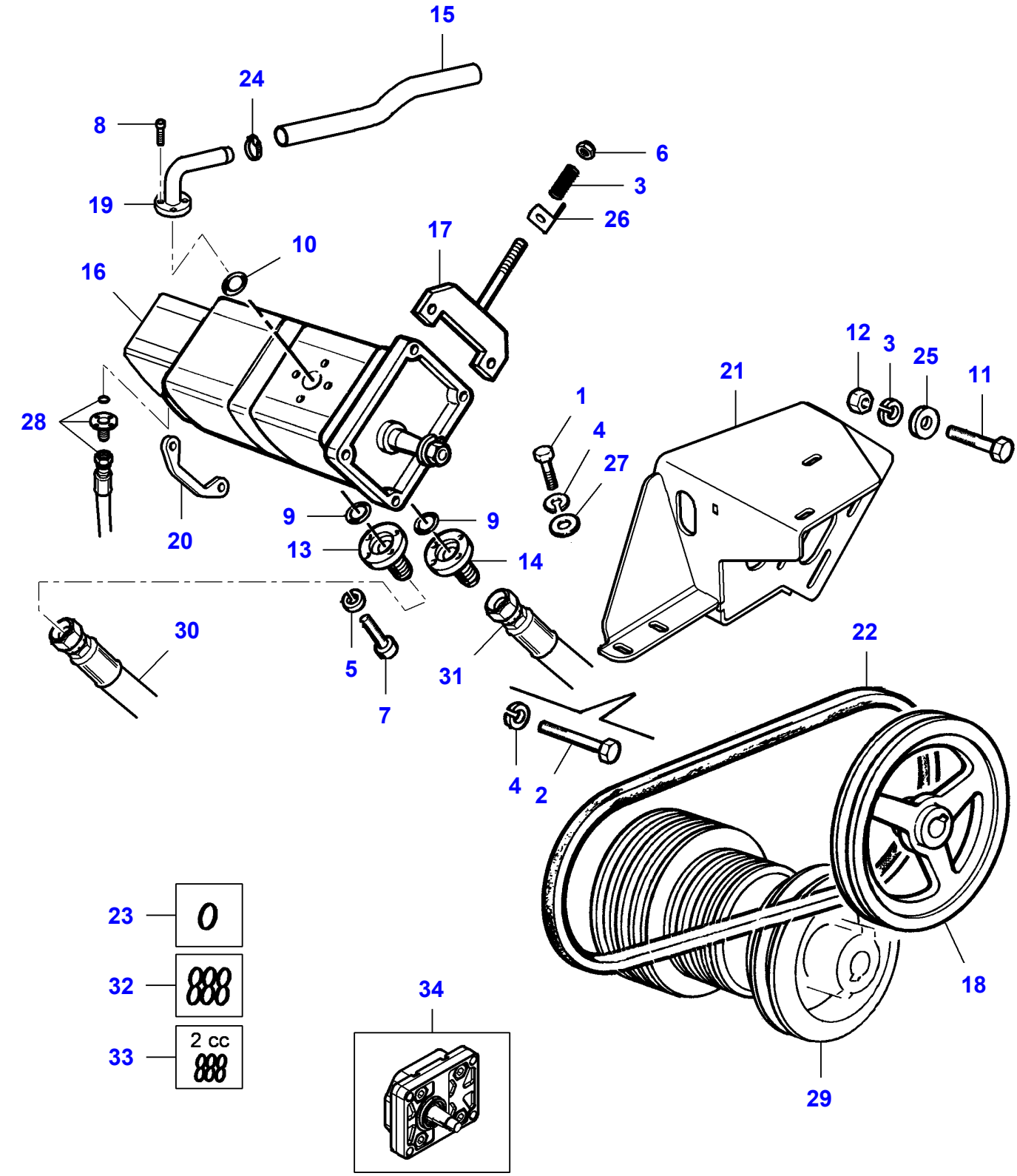
15
24
8
19
6
3
26
17
10
16
28
20
9
9
13
14
1
4
27
21
12
3
25
11
30
5
7
31
22
4
2
18
29
23
0
32
33
2 cc
34

Item	Part Number	Qty	Description	Comments
1	LA11106421	1	Cap Screw	
2	LA11106821	1	Cap Screw	
3	LA350356941	1	Spring	
4	LA12034671	2	Lock Washer	
5	LA12035670	8	Lock Washer	
6	LA12577211	1	Nut	
7	LA14305324	8	Hex Socket Screw	
8	LA14306321	4	Hex Socket Screw	
9	LA14457180	2	O Ring	
10	LA14457780	1	O Ring	
11	LA16043924	1	Cap Screw	
12	LA16100811	1	Nut	
13	LA321409350	1	Flange	
14	LA321409550	1	Flange	
15	LA322005350	1	Hydraulic Hose	
16	LA323160600	1	Hydraulic Pump	
17	LA322387950	1	Tie Rod	
18	LA322388350	1	Pulley	
19	LA322881750	1	Connector	
20	LA323008350	1	Plate	
21	LA323077450	1	Support	
22	**LA340433253**	1	Belt	
23	LA323208950	1	Seal	[A] (16)
24	LA350391526	1	Hose Clip	
25	LA355500915	1	Flat Washer	
26	LA323150850	1	Strap	
27	LA355511020	1	Flat Washer	
28		1	Hose	See Page - Reference Number 030-0270/5
29			Pulley	See Page - Reference Number 030-0215/27
30	LA321419850	1	Hydraulic Hose	
31	LA321409650	1	Hydraulic Hose	
32	LA323209250	1	Kit, Seal	(16)
33	LA323215050	1	Kit, Seal	(16)
34	LA323231300	1	Support	(16)

FOOTNOTE [A] NOT SERVICED

L-LD41-001-A

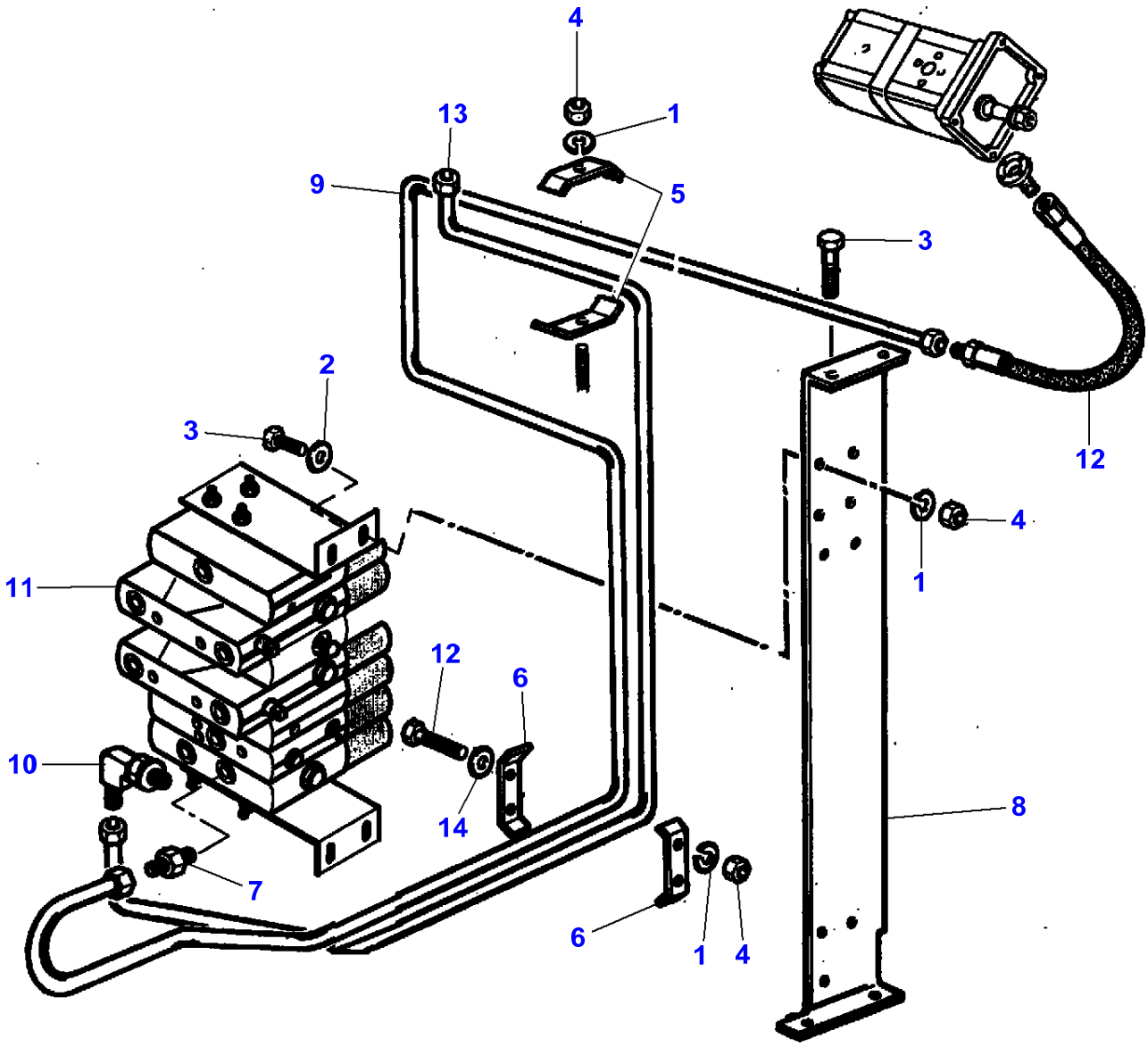

Item	Part Number	Qty	Description	Comments
1	LA12034571	3	Lock Washer	
2	LA355510820	2	Flat Washer	
3	LA16043624	4	Cap Screw	
4	LA16100811	3	Nut	
5	LA300015722	1	Collar	
6	LA321965350	2	Collar	
7	LA322103600	1	Connector	
8	LA322113750	1	Bracket	
9	LA322121550	1	Tube	
10	LA322122300	1	Elbow Union	
11		1	Distributor	See Page - Reference Number 110-0020
12	LA322989850	1	Hydraulic Hose	
13	LA323085550	1	Tube	
14	LA355500915	2	Flat Washer	

L-LD42-001-A

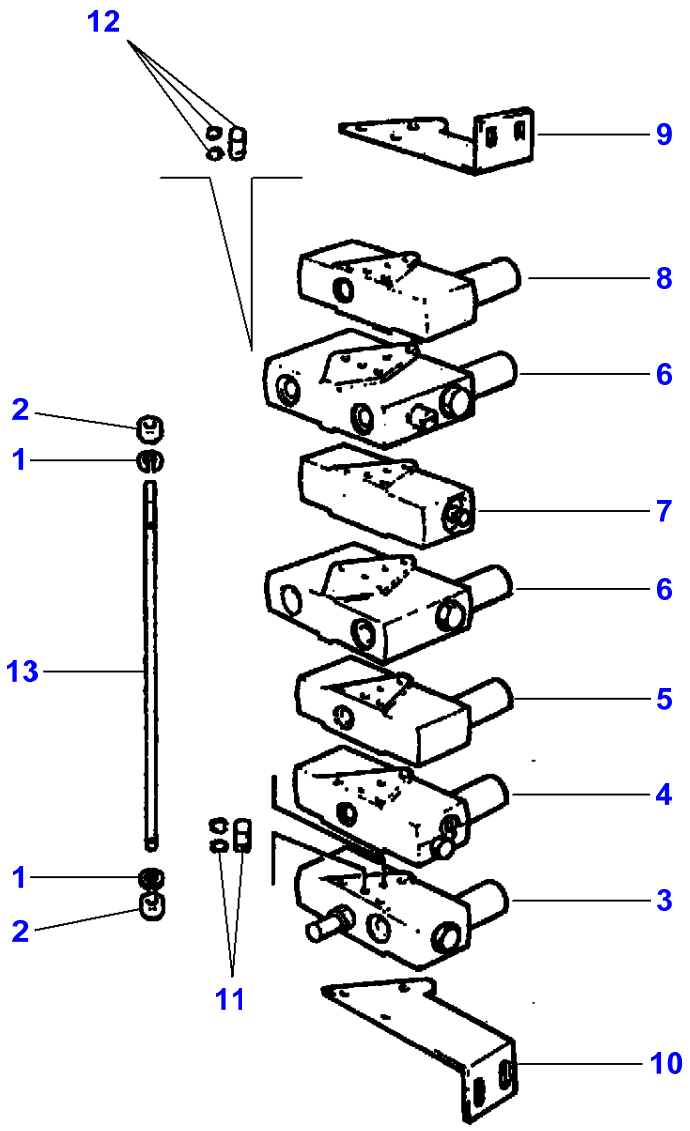

Item	Part Number	Qty	Description
1	LA12035670	2	Lock Washer
2	LA15896221	2	Nut
3	LA322211500	1	Body
4	LA322211600	1	Valve Block
5	LA322211700	1	Valve Block
6	LA322211800	2	Valve Block
7	LA322211900	1	Valve Block
8	LA322212100	1	Valve Block
9	LA322212350	1	Bracket
10	LA322212450	1	Bracket
11	LA322212600	7	Bush
12	LA322212700	7	Bush
13	LA322805750	1	Tie Rod

L-LD42-002-A

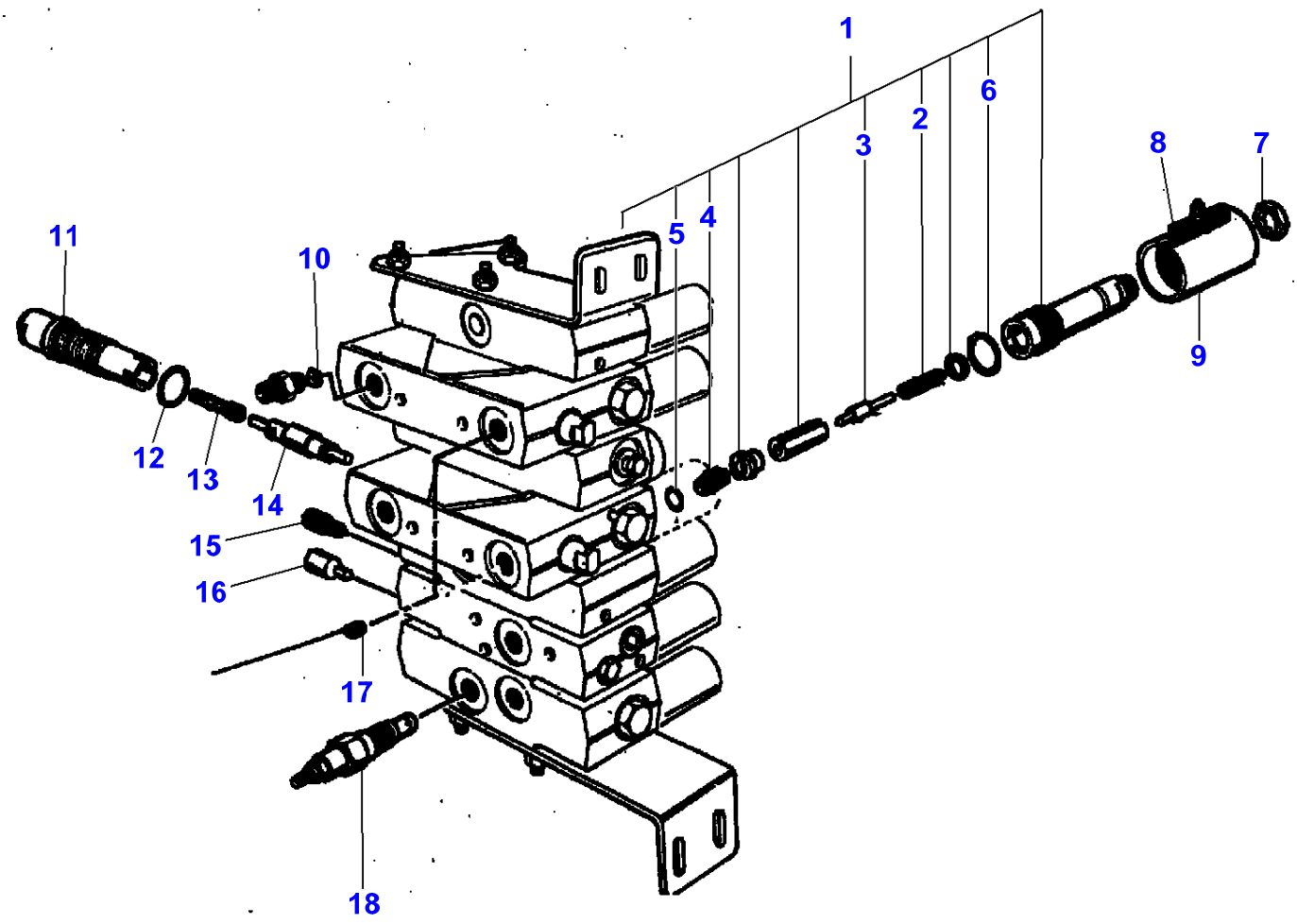

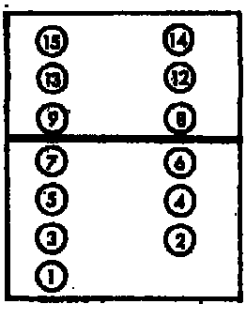

NO 1
NC 3-4-6-7-8-9-14-15
NC 5
NC 13
NC 2
NC 12

Item	Part Number	Qty	Description	Comments
1	LA322249200	1	Valve	NO 1
	LA322249300	1	Valve	NC 3-4-6-7 NC 8-9-14-15 1,02 mm
	LA322249400	1	Valve	NC 5 1,57 mm
	LA322249500	1	Valve	NC 13 1,85 mm
	LA322249600	1	Valve	NC 2 0,79 mm
	LA322249700	1	Valve	NC 12 1,02 mm
2	LA322563550	1	Spring	[A] (1)
3	LA322563450	1	Pin	[A] (1)
	LA322563350	1	Pin	[B] (1)
4	LA322354700	1	Valve	[B] (1)
	LA322563200	1	Valve	[A] (1)
	LA322354800	1	Valve	[C] (1)
5	LA322563650	1	Gasket	(1)
6	LA322564350	1	Gasket	(1)
7	LA322250650	1	Nut	
8	LA322249950	1	Magnet	1 A
	LA322250050	1	Magnet	3 A
9	LA322249850	1	Shield	
10	LA322564450	7	Brake Pedal	
11	LA322702250	1	Protection.	
12	LA322563950	1	Gasket	
13	LA322564050	1	Plunger	
14	LA322702150	1	Plunger	
15	LA322388050	1	Valve	
16	LA322563750	1	Valve	
17	LA322250150	1	Valve	0,51 mm
	LA322250250	1	Valve	1,02 mm
	LA322250350	1	Valve	1,78 mm
	LA322250450	1	Valve	1,07 mm
	LA322250550	1	Valve	1,32 mm
18	LA322563800	1	Valve	

FOOTNOTE [A] INCLUDED IN LA322249600
FOOTNOTE [B] INCLUDED IN LA322249500
FOOTNOTE [C] INCLUDED IN LA322249700

L-LD41-005-A

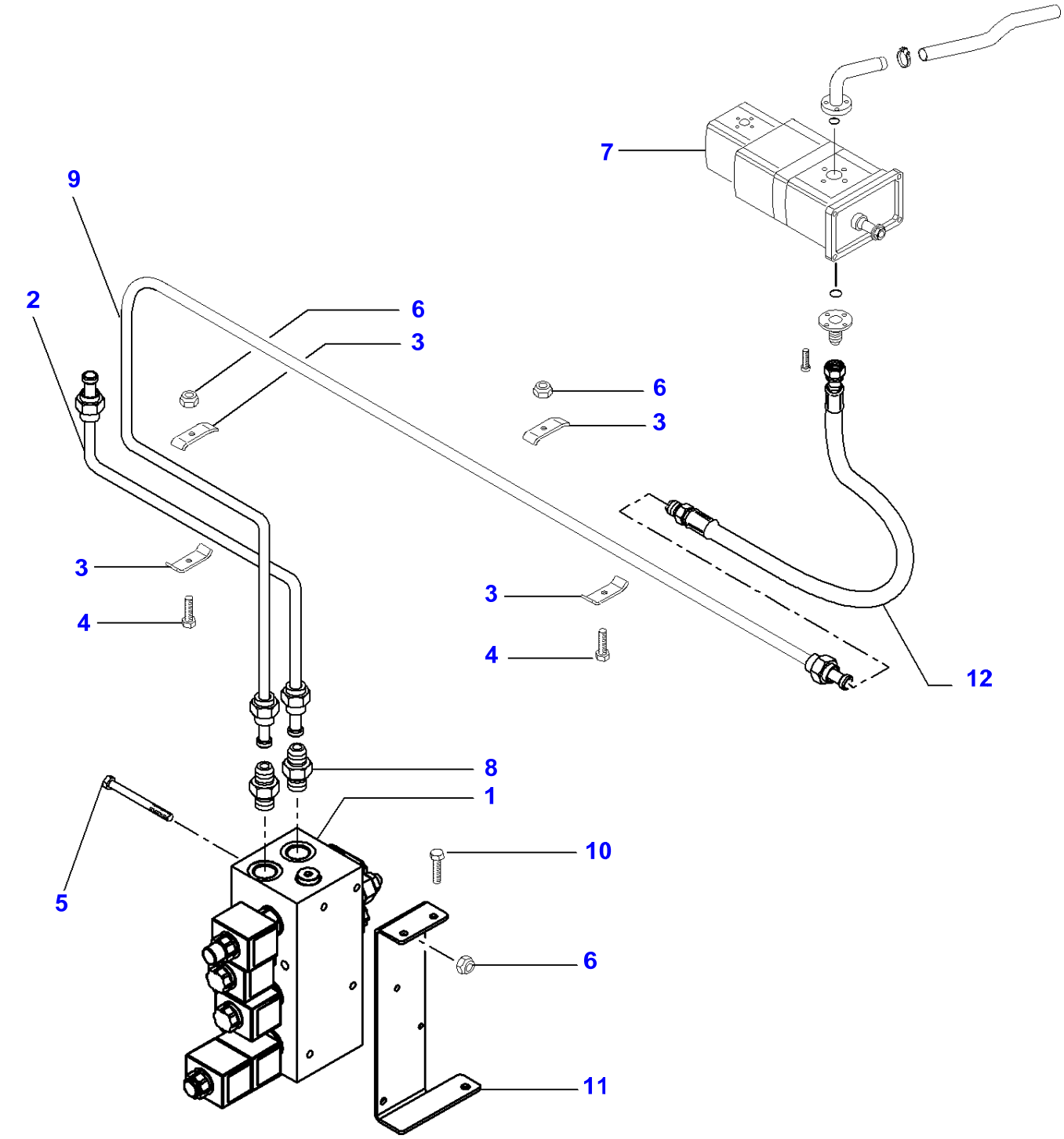

Item	Part Number	Qty	Description	Comments
1	LA323093100	1	Distributor	
2	LA323130250	1	Tube	
3	LA300015722	1	Collar	
4	LA10902421	1	Cap Screw	
5	LA16038521	1	Cap Screw	
6	LA12574211	1	Locknut	
7		1	Pump	See Page - Reference Number 110-0010/16
8	LA322806700	1	Union	
9	LA323130350	1	Tube	
10	LA16043824	1	Cap Screw	
11	LA323127150	1	Support	
12	LA322989850	1	Hydraulic Hose	

L-LD41-007-B

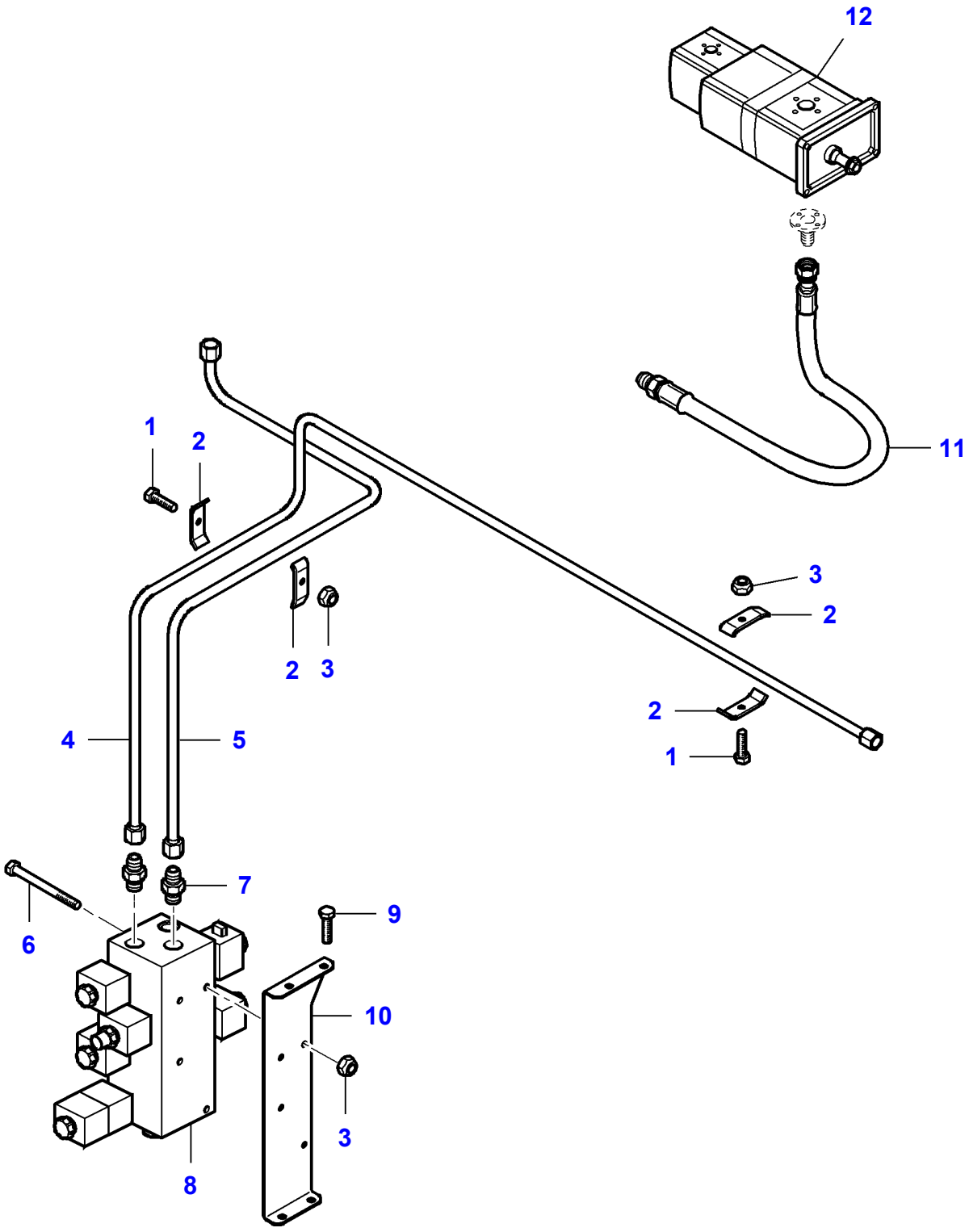

Item	Part Number	Qty	Description	Comments
1	LA10902421	2	Cap Screw	
2	LA300015722	4	Collar	
3	LA12574211	6	Locknut	
4	LA323277850	1	Oil Pipe	
5	LA323277950	1	Oil Pipe	
6	LA16038521	4	Cap Screw	
7	LA322806700	2	Union	
8	LA323266500	1	Distributor	See Page - Reference Number 110-0045/1
9	LA16043621	2	Cap Screw	
10	LA323267750	1	Bracket	
11	LA322989850	1	Hydraulic Hose	
12		1	Hydraulic Pump	See Page - Reference Number 110-0010/16

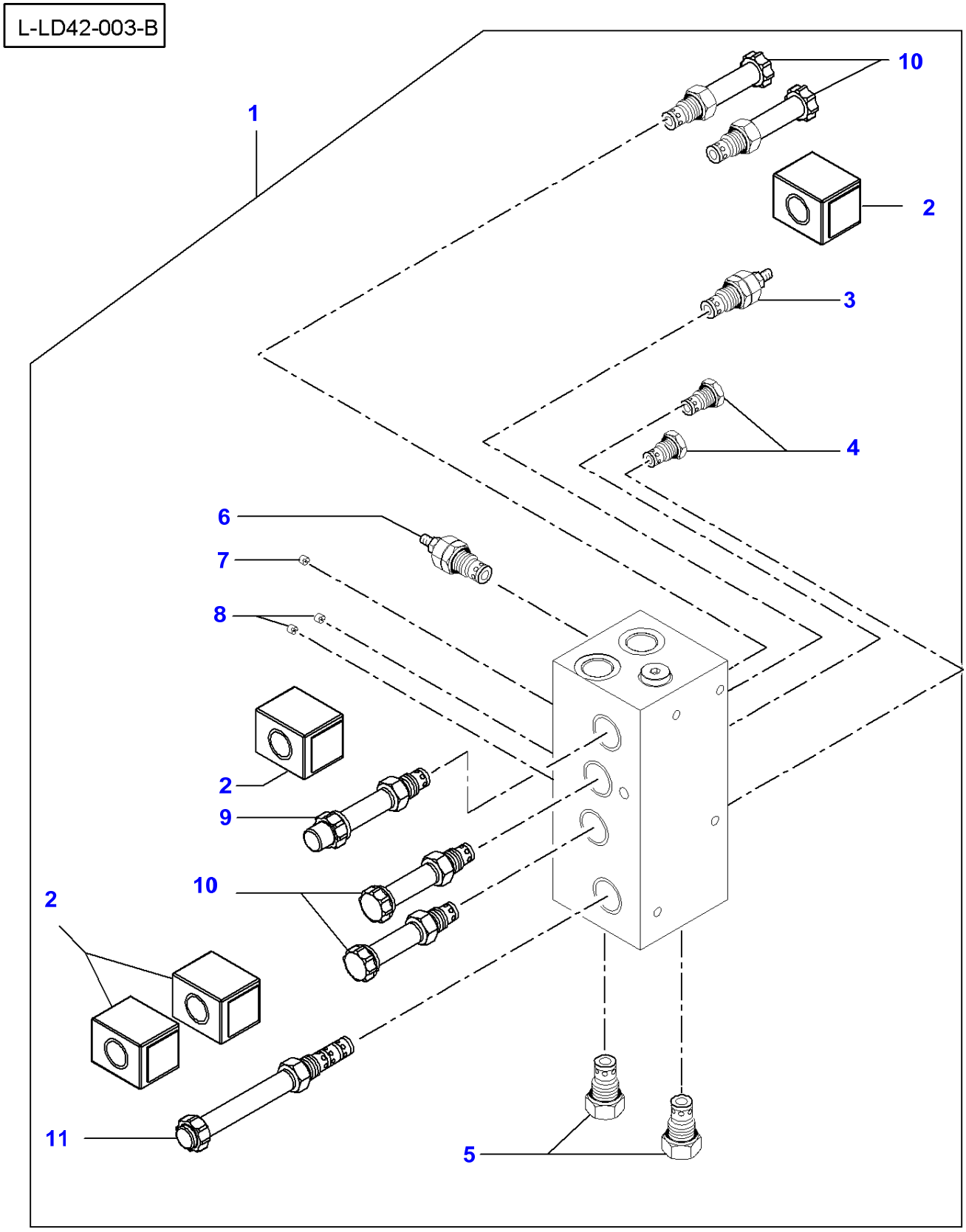
L-LD42-003-B
1
10
2
3
4
6
7
8
2
9
10
2
11
5

Item	Part Number	Qty	Description	Comments
1	LA323093100	1	Distributor	
2	LA323109050	1	Block	(1)
3	LA323165750	1	Valve	(1)
4	LA323165850	1	Banjo Bolt	(1)
5	LA323165950	1	Banjo Bolt	(1)
6	LA323166050	1	Valve	(1)
7	LA323166150	1	Plug	(1)
8	LA323163250	1	Plug	(1)
9	LA323165650	1	Electrovalve	(1)
10	LA322412850	1	Electrovalve	(1)
11	LA322816450	1	Electrovalve	(1)

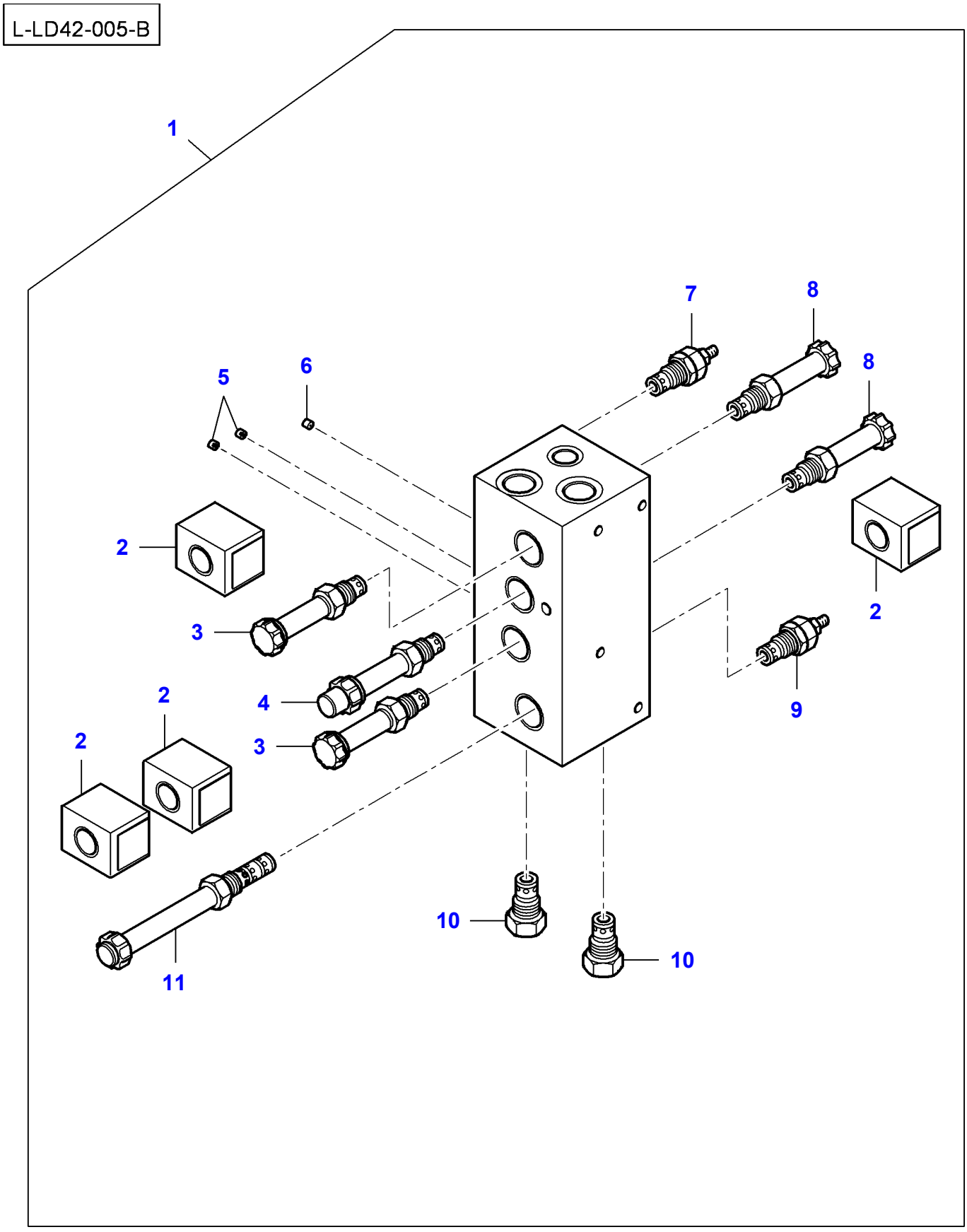
L-LD42-005-B
1
7
8
8
5
6
2
3
4
3
2
2
2
9
10
10
11

Item	Part Number	Qty	Description	Comments
1	LA323266500	1	Distributor	
2	LA323109050	4	Block	(1)
3	LA323170850	2	Valve	(1)
4	LA323165650	1	Electrovalve	(1)
5	LA323163250	2	Plug	(1)
6	LA323267850	1	Diaphragm	(1)
7	LA323166050	1	Valve	(1)
8	LA322412850	2	Electrovalve	(1)
9	LA323267950	1	Valve	(1)
10	LA323165950	2	Banjo Bolt	(1)
11	LA322816450	1	Electrovalve	(1)

L-LC46-001-A

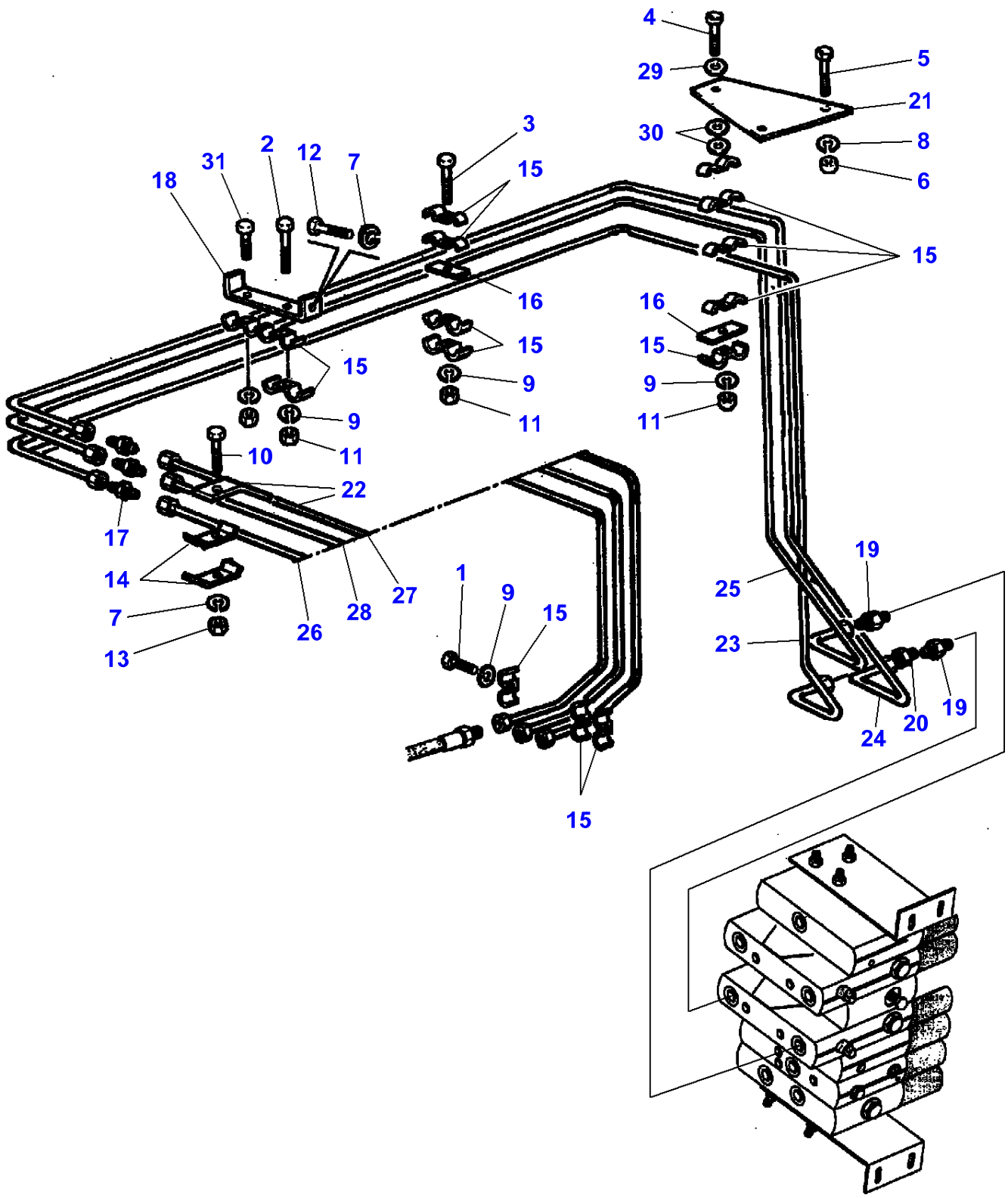
4
29
5
21
30
8
6
3
2
12
7
31
18
15
16
15
9
11
10
22
17
14
7
13
26
28
27
1
9
15
15
16
15
9
11
25
19
23
19
20
24

Item	Part Number	Qty	Description	Comments
1	LA10902824	1	Cap Screw	
2	LA10903424	2	Cap Screw	
3	LA10903921	1	Cap Screw	
4	LA11030421	1	Cap Screw	
5	LA11106221	1	Cap Screw	
6	LA11701721	1	Nut	
7	LA12034571	7	Lock Washer	
8	LA12034671	1	Lock Washer	
9	LA12035670	5	Lock Washer	
10	LA15213521	1	Cap Screw	
11	LA15896221	4	Nut	
12	LA16043424	1	Cap Screw	
13	LA16100811	1	Nut	
14	LA300015722	2	Collar	
15	LA300136688	13	Collar	
16	LA301378460	2	Collar	
17	LA321418450	3	Union	
18	LA321961350	1	Collar	
19	LA322103700	2	Connector	
20	LA322103900	1	Connector	
21	LA322113850	1	Support	
22	LA322113950	1	Support	
23	LA322122550	1	Tube	
24	LA322122650	1	Tube	
25	LA322122750	1	Tube	
26	LA322122950	1	Oil Pipe	
27	LA322123350	1	Oil Pipe	
28	LA322123550	1	Oil Pipe	
29	LA355500715	1	Flat Washer	
30	LA355510820	2	Flat Washer	
31		1	Screw	See Page - Reference Number 110-0075/1

L-LC46-010-A

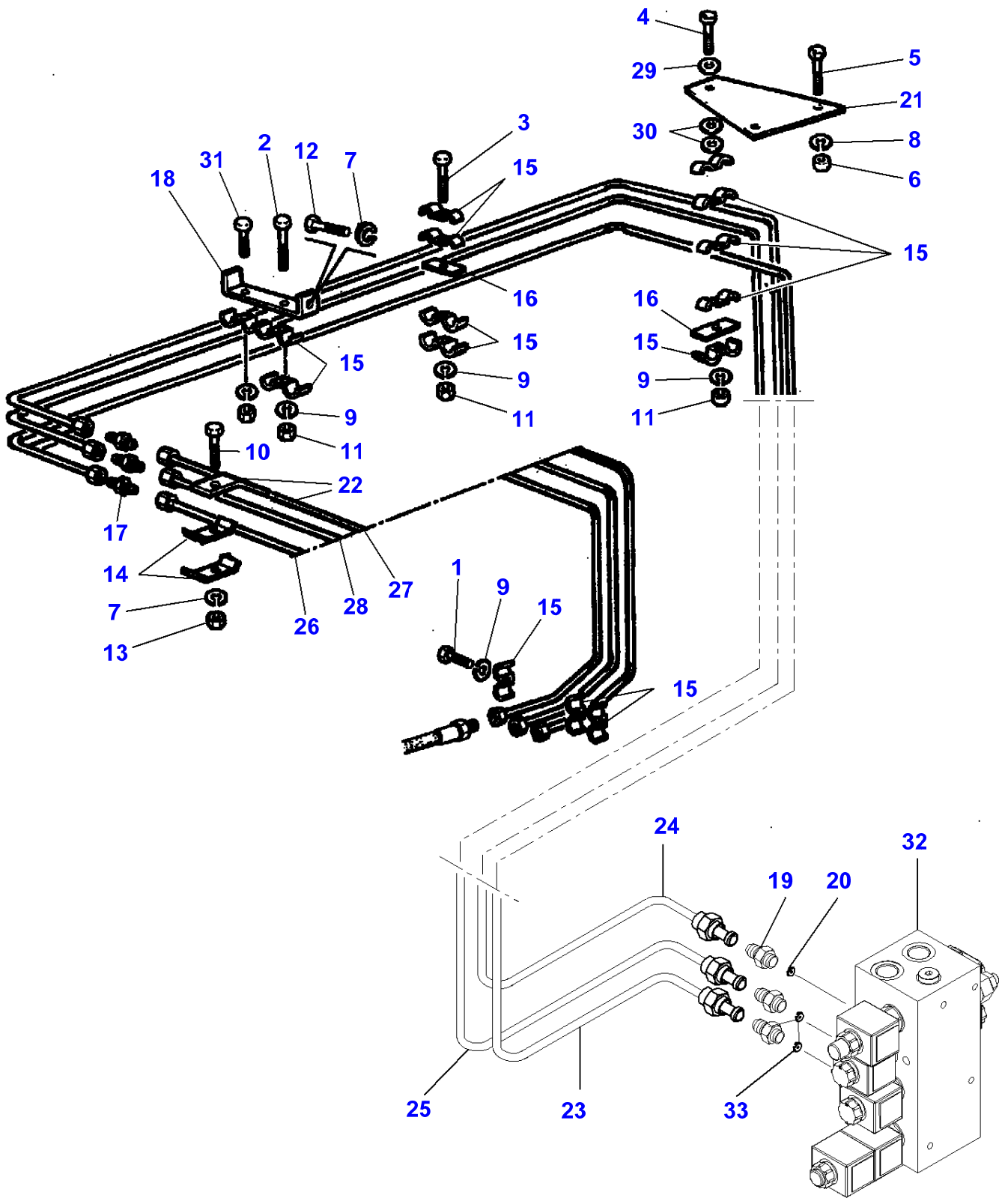
4
29
5
21
30
8
6
3
2
12
7
31
18
15
15
16
16
15
15
9
9
11
11
9
11
10
22
17
14
7
13
26
28
27
1
9
15
15
24
32
19
20
25
23
33

Item	Part Number	Qty	Description	Comments
1	LA10902824	1	Cap Screw	
2	LA10903424	2	Cap Screw	
3	LA10903921	1	Cap Screw	
4	LA11030421	1	Cap Screw	
5	LA11106221	1	Cap Screw	
6	LA11701721	1	Nut	
7	LA12034571	7	Lock Washer	
8	LA12034671	1	Lock Washer	
9	LA12035670	5	Lock Washer	
10	LA15213521	1	Cap Screw	
11	LA15896221	4	Nut	
12	LA16043424	1	Cap Screw	
13	LA16100811	1	Nut	
14	LA300015722	2	Collar	
15	LA300136688	13	Collar	
16	LA301378460	2	Collar	
17	LA321418450	3	Union	
18	LA321961350	1	Collar	
19	LA322819000	2	Union	
20	LA323166150	1	Plug	Diameter 1,00 mm
21	LA322113850	1	Support	
22	LA322113950	1	Support	
23	LA323160950	1	Oil Pipe	
24	LA323161050	1	Oil Pipe	
25	LA323161150	1	Oil Pipe	
26	LA322122950	1	Oil Pipe	
27	LA322123350	1	Oil Pipe	
28	LA322123550	1	Oil Pipe	
29	LA355500715	1	Flat Washer	
30	LA355510820	2	Flat Washer	
31		1	Screw	See Page - Reference Number 110-0075/1
32		1	Distributor	See Page - Reference Number 110-0035/8
33	LA323163250	1	Plug	Diameter 1,25 mm

L-LC46-015-B

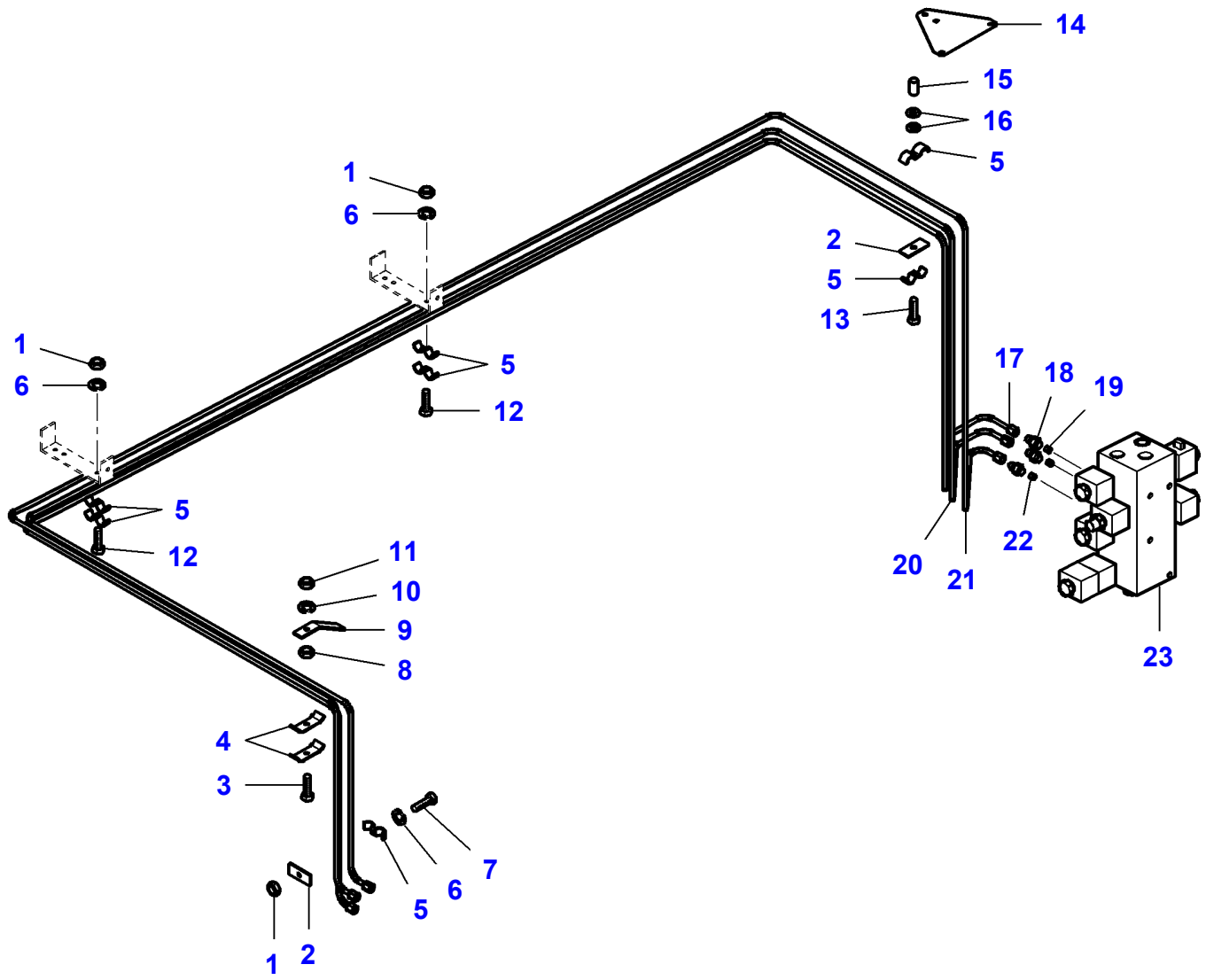

Item	Part Number	Qty	Description	Comments
1	LA15896221	X	Nut	
2	LA301378460	X	Collar	
3	LA16040621	X	Cap Screw	
4	LA300015722	X	Collar	
5	LA300136688	X	Collar	
6	LA12035671	X	Lock Washer	
7	LA10902621	X	Cap Screw	
8	LA16102211	X	Nut	
9	LA322113950	1	Support	
10	LA12034571	X	Lock Washer	
11	LA16100811	X	Nut	
12	LA10903421	X	Cap Screw	
13	LA11030421	X	Cap Screw	
14	LA322113850	1	Support	
15	LA340415223	1	Spacer	
16	LA355510820	2	Flat Washer	
17	LA323277550	1	Tube	
18	LA322819000	3	Union	
19	LA323166150	2	Plug	Diameter 1mm
20	LA323277750	1	Tube	
21	LA323277650	1	Tube	
22	LA323163250	2	Plug	Diameter 1,25mm
23		1	Distributor	See Page - Reference Number 110-0045/1

L-LC46-002-A

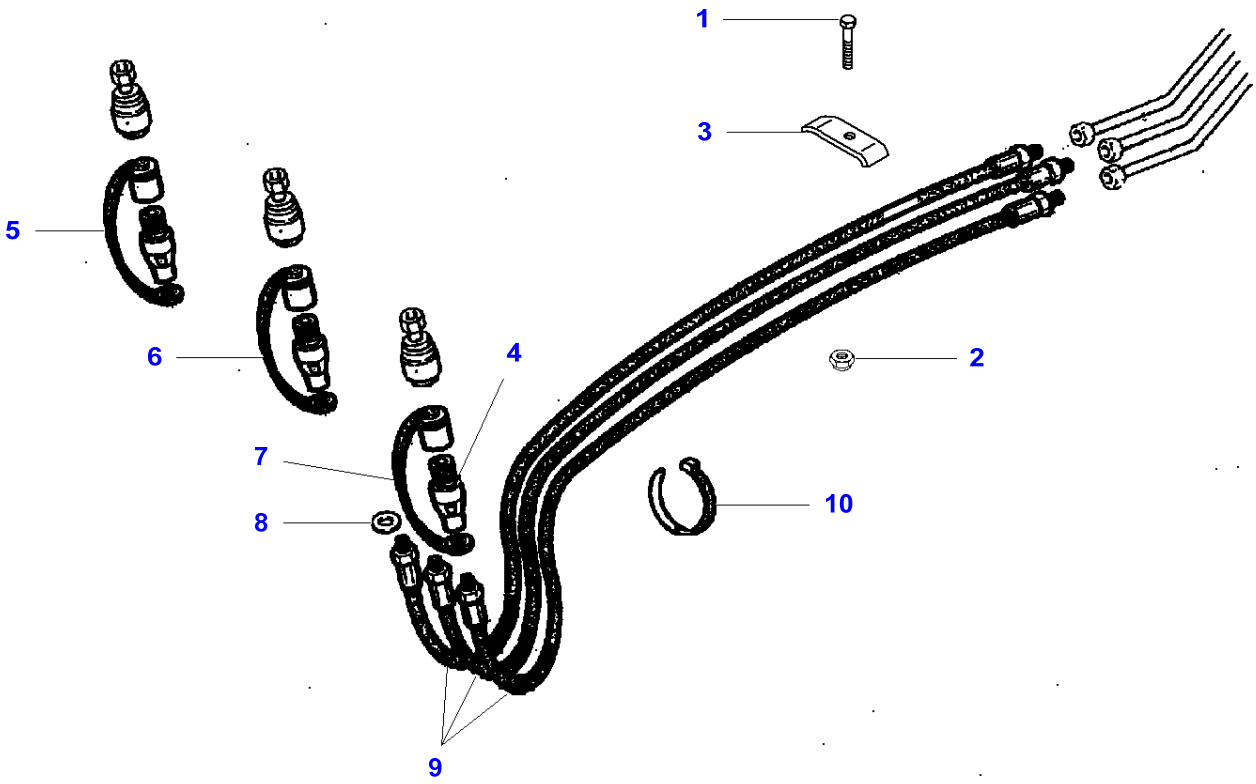

Item	Part Number	Qty	Description
1	LA15213321	1	Cap Screw
2	LA16104111	1	Locknut
3	LA321978550	1	Collar
4	LA322043050	3	Quick Coupler
5	LA322043650	1	Plug
6	LA322043750	1	Plug
7	LA322043850	1	Plug
8	LA322731950	3	Washer
9	LA322853550	3	Hose
10	LA340481808	1	Cable Tie

L-LC46-016-B

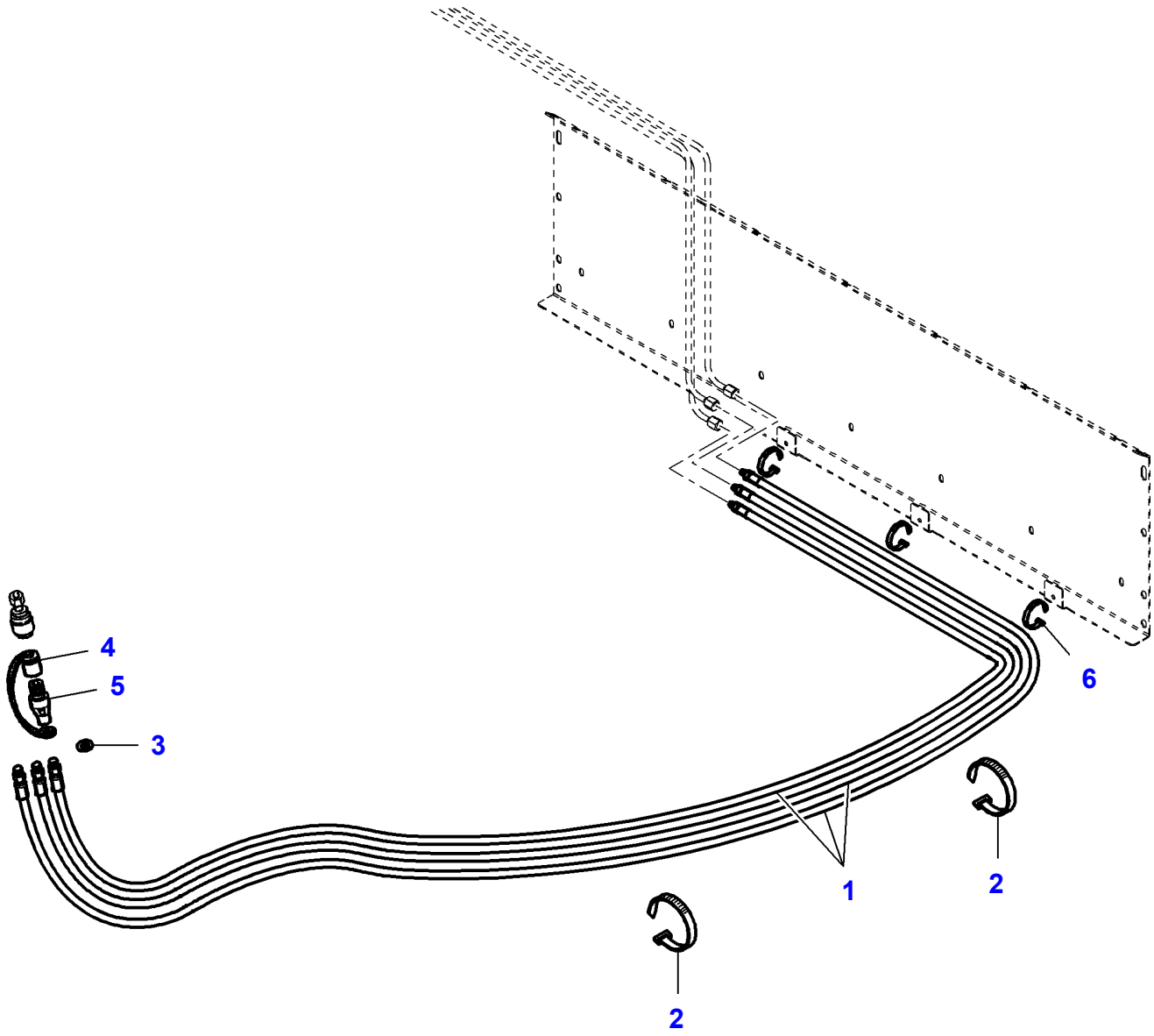

Item	Part Number	Qty	Description
1	LA323243050	3	Hydraulic Hose
2	LA340481808	2	Cable Tie
3	LA322731950	3	Washer
4	LA322043850	3	Plug
5	LA322043050	3	Quick Coupler
6	LA340481806	3	Cable Tie

L-LD43-001-B

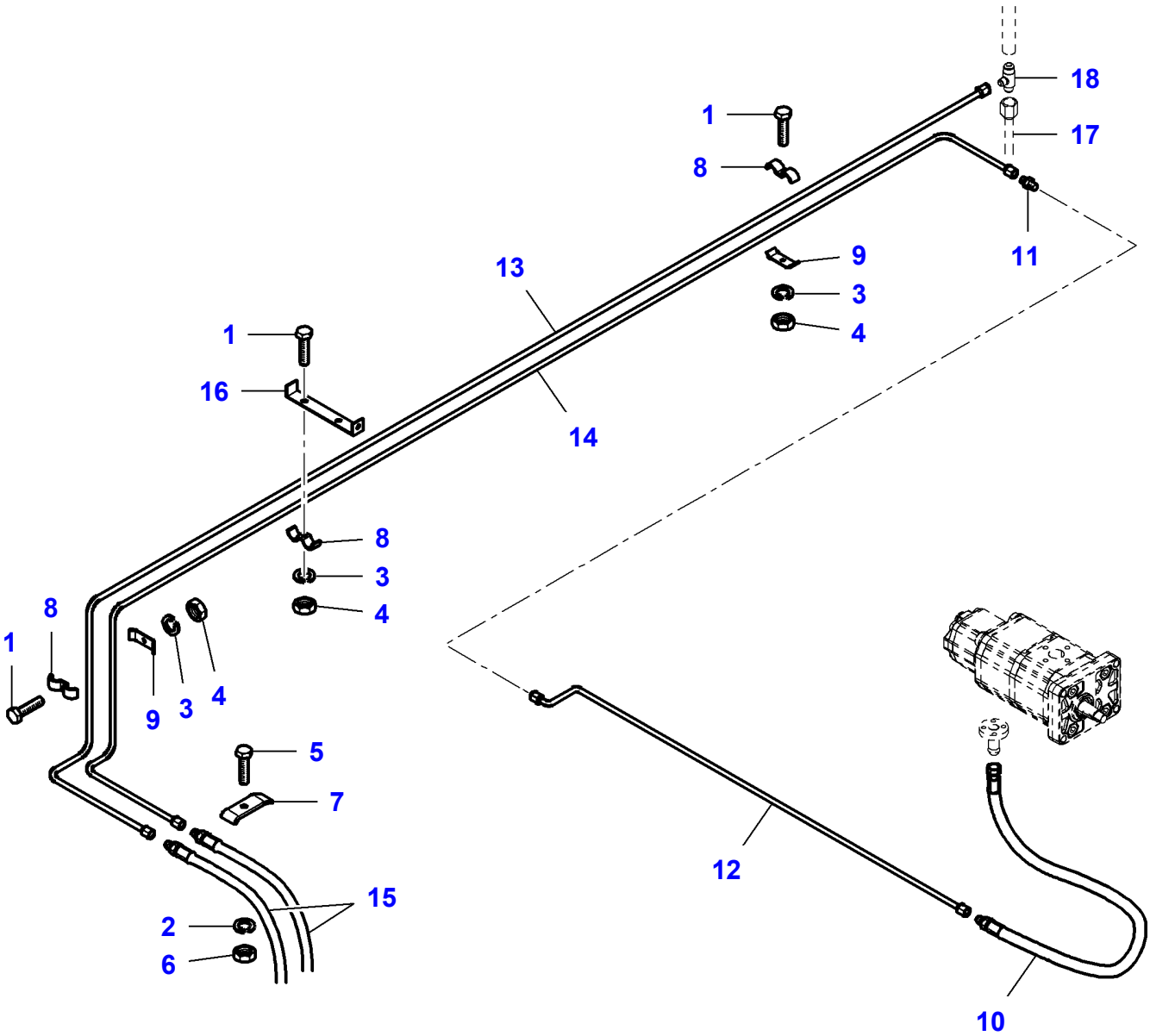

Item	Part Number	Qty	Description	Comments
1	LA10902621	7	Cap Screw	
2	LA12034571	1	Lock Washer	
3	LA12035670	4	Lock Washer	
4	LA15896221	4	Nut	
5	LA16043824	1	Cap Screw	
6	LA16100811	1	Nut	
7	LA300015722	1	Collar	
8	LA300136688	3	Collar	
9	LA301378430	2	Collar	
10	LA321419850	1	Hydraulic Hose	
11	LA321420150	1	Union	
12	LA321880650	1	Oil Pipe	
13	LA322121250	1	Oil Pipe	
14	LA322123750	1	Oil Pipe	
15		2	Hydraulic Hose	See Page - Reference Number 100-0245/16
16		X	Collar	See Page - Reference Number 110-0050/18
17		1	Oil Pipe	See Page - Reference Number 110-0015/13
18		1	T-Piece	See Page - Reference Number 030-0255/23

L-LD43-002-A

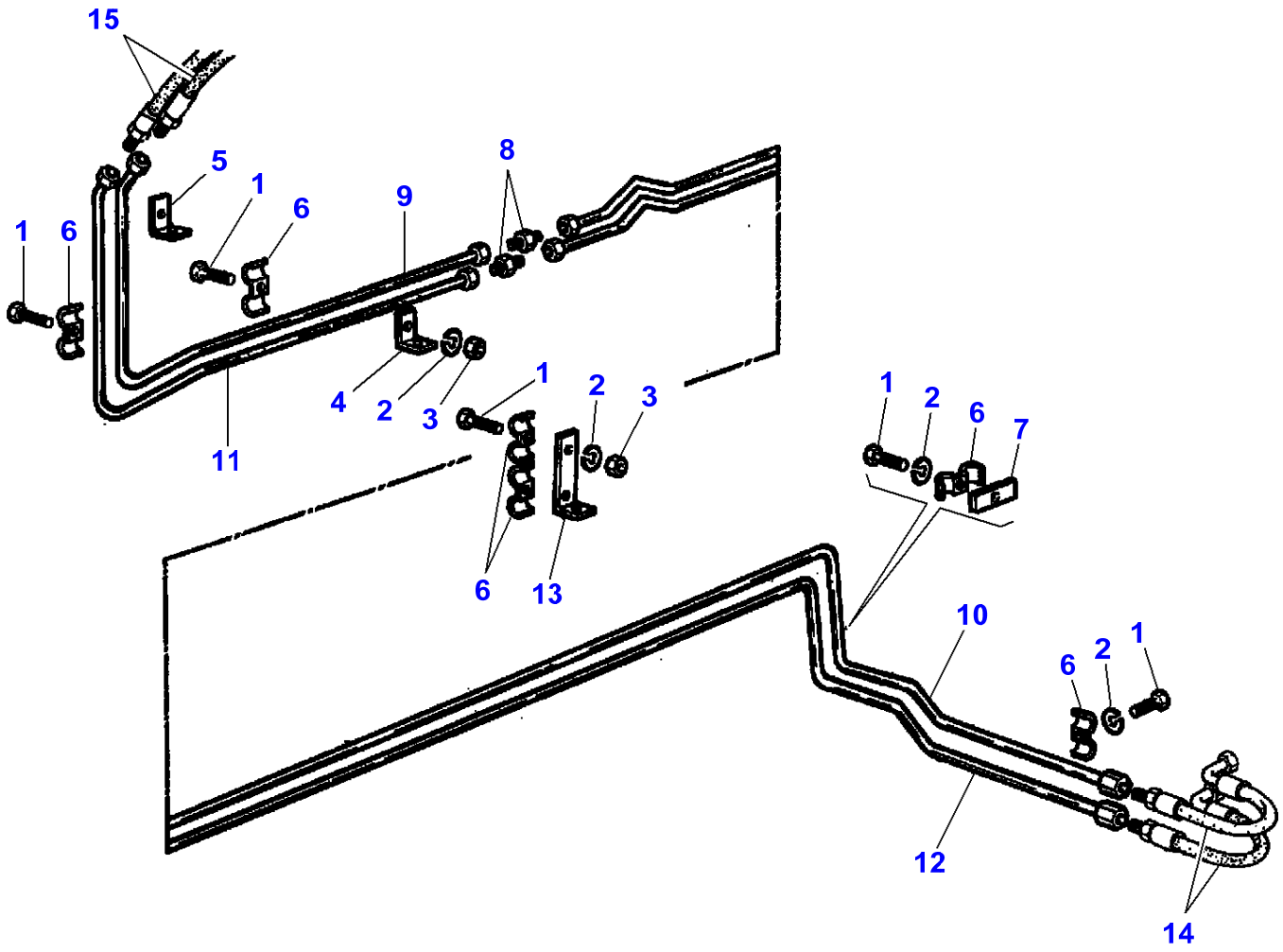

Item	Part Number	Qty	Description	Comments
1	LA10902621	6	Cap Screw	
2	LA12035670	5	Lock Washer	
3	LA15896221	3	Nut	
4	LA300132973	1	Collar	
5	LA300132974	1	Angle.	
6	LA300136688	6	Collar	
7	LA301378460	1	Collar	
8	LA321420150	2	Union	
9	LA321881050	1	Oil Pipe	
10	LA321881150	1	Oil Pipe	
11	LA321881250	1	Oil Pipe	
12	LA321881350	1	Oil Pipe	
13	LA321963750	1	Collar	
14		2	Hose	See Page - Reference Number 030-0050/5
15		2	Hose	See Page - Reference Number 100-0245/19

L-LC49-001-A

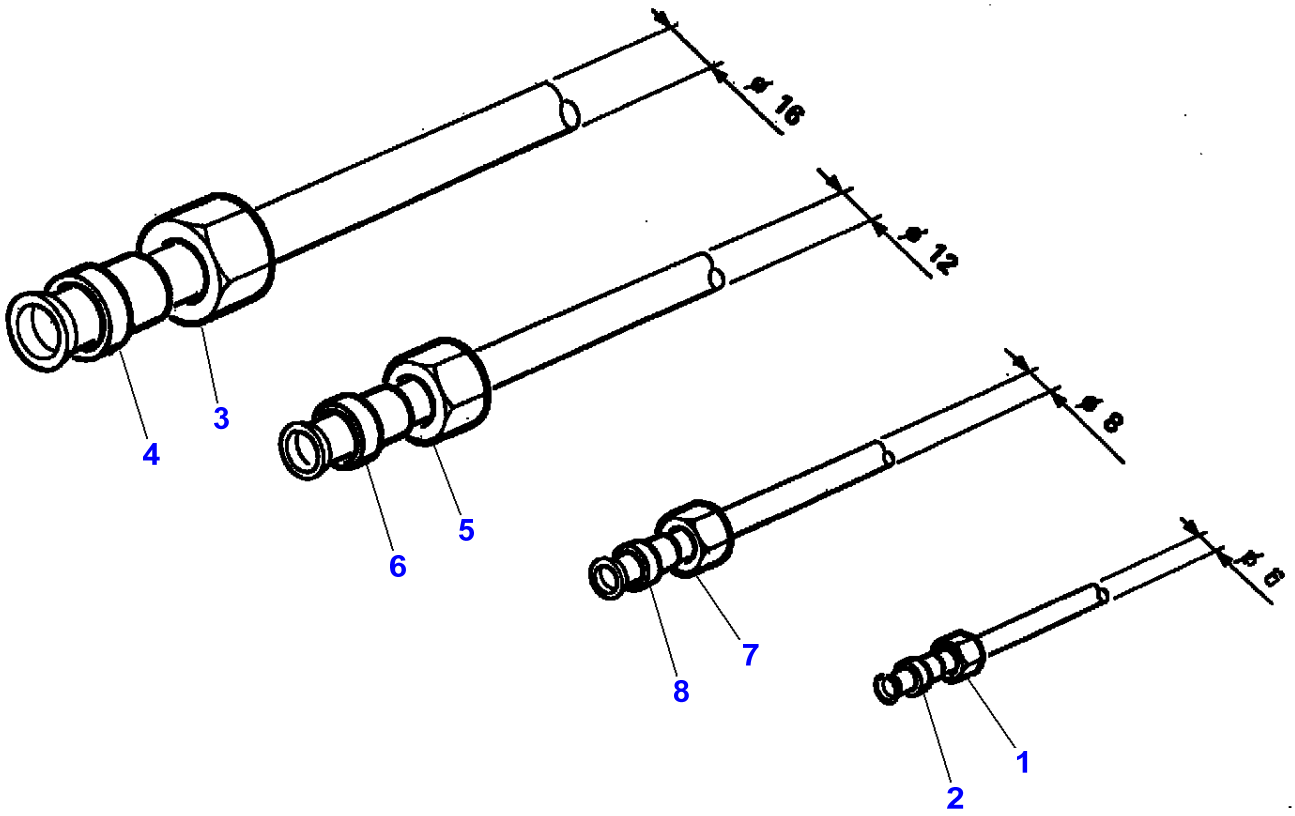

Item	Part Number	Qty	Description	Comments
1	LA313294661	1	Nut	
2	LA313294662	1	Sleeve	Diameter 6 MM
3	LA321428250	1	Nut	
4	LA321428350	12	Sleeve	Diameter 16 MM
5	LA321428450	1	Nut	
6	LA321428550	1	Sleeve	Diameter 12 MM
7	LA321428650	1	Nut	
8	LA321428750	1	Sleeve	Diameter 8 MM

L-LD07-001-A

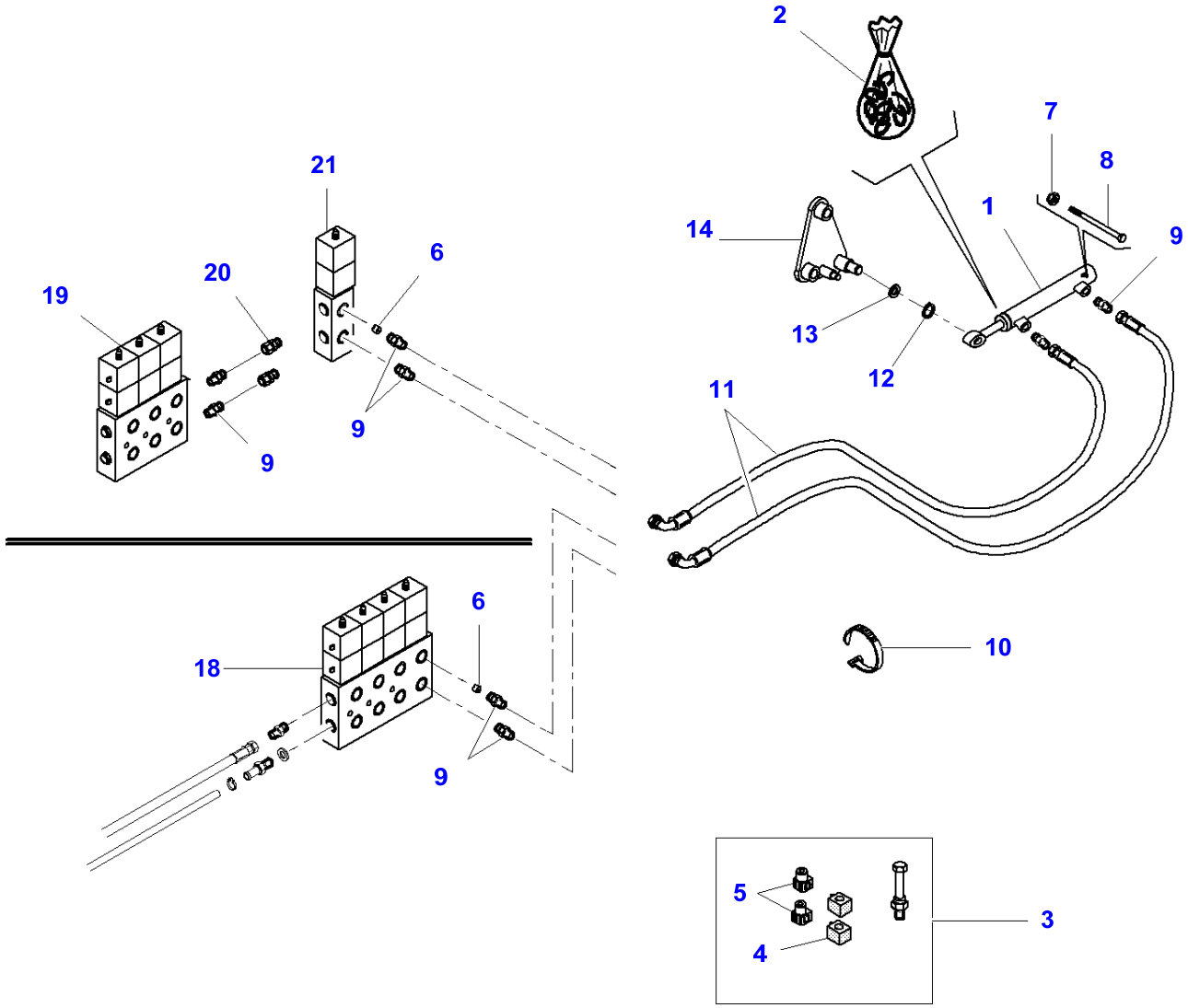

Item	Part Number	Qty	Description	Comments
1	LA322770900	1	Hydraulic, Cylin	
2	LA322784100	1	Kit, Seal	
3	LA322771100	1	Electrovalve	
4	LA322412950	1	Magnet	
5	LA322413000	1	Union	
6	LA322787550	1	Diaphragm	
7	LA12577511	1	Cap Nut	
8	LA11114221	1	Cap Screw	
9	LA322788600	8	Union	
10	LA340481808	1	Cable Tie	
11	LA322771650	2	Hydraulic Hose	
12	LA11066476	1	Circlip	
13	LA355532610	1	Flat Washer	
14		1	Lever	See Page - Reference Number 060-0085/16
18	LA322770800	1	Block	
19		1	Block	See Page - Reference Number 030-0265/9
20	LA322965000	2	Connector	[A]
21	LA322965100	1	Block	[A]

FOOTNOTE [A] WITHOUT STRAW CHOPPER

L-LD07-028-B

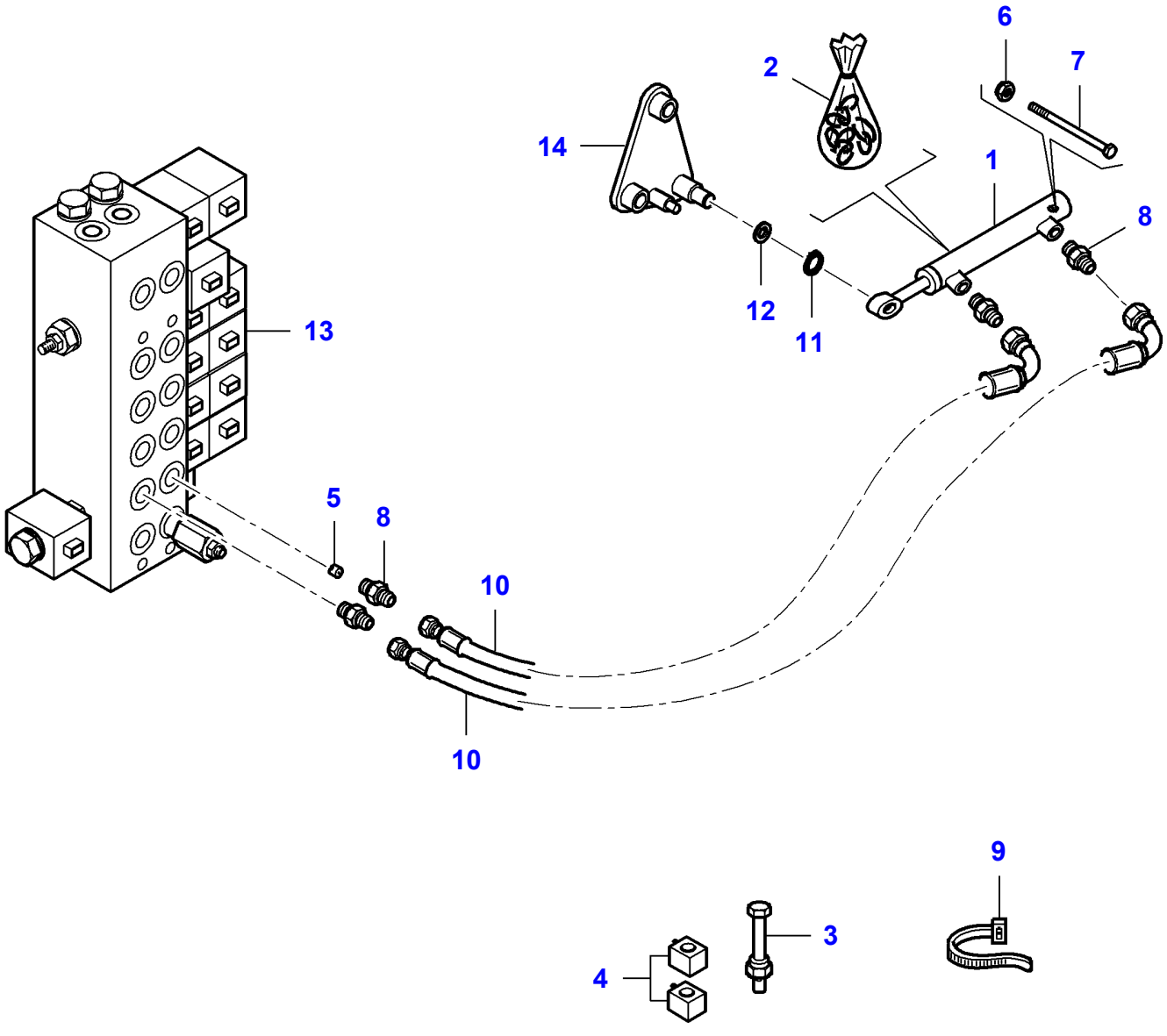

Item	Part Number	Qty	Description	Comments
1	LA322770900	1	Hydraulic, Cylin	
2	LA322784100	1	Kit, Seal	(1)
3	LA322771100	1	Electrovalve	(1)
4	LA323109050	2	Block	(1)
5	LA322787550	1	Diaphragm	
6	LA12577511	1	Cap Nut	
7	LA11114221	1	Cap Screw	
8	LA322788600	4	Union	
9	LA340481808	1	Cable Tie	
10	LA322771650	2	Hydraulic Hose	
11	LA11066476	1	Circlip	
12	LA355532610	1	Flat Washer	
13		1	Block	See Page - Reference Number 030-0270/12
14		1	Lever	See Page - Reference Number 060-0085/16

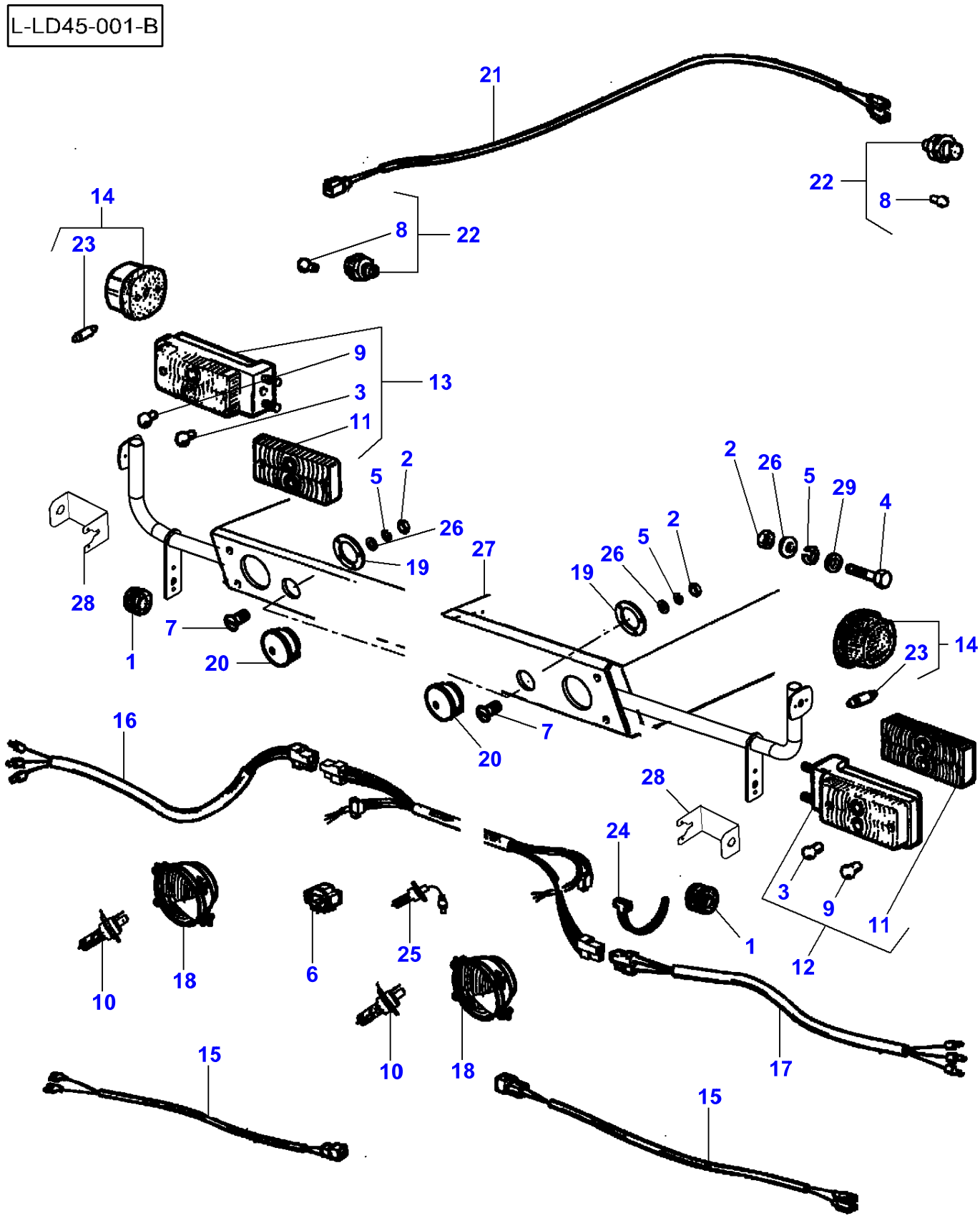
L-LD45-001-B
21
22
8
14
23
8
22
9
13
3
11
2
5
26
19
28
1
7
20
27
2
26
5
29
4
19
26
5
2
14
23
20
7
16
28
24
3
9
11
12
1
10
18
6
25
10
18
15
17
15

Item	Part Number	Qty	Description	Comments
1	LA10397780	2	Grommet	
2	LA10718011	3	Nut	
3	LA10857790	2	Bulb 12v 5w	
4	LA10978221	1	Cap Screw	
5	LA12035471	2	Lock Washer	
6	LA12057980	1	Gasket	
7	LA13274411	2	Screw	
8	LA14144190	2	Bulb	(22)
9	LA14148190	2	Bulb 12v 21w	21W
10	LA14152090	2	Bulb	
11	LA71316700	2	Lens	
12	LA320966500	1	Indicator	
13	LA320966600	1	Indicator	
14	LA321909200	2	Head Light	
15	LA321914950	2	Harness	
16	LA321934400	1	Harness	
17	LA321934500	1	Harness	
18	LA322798550	2	Headlamp	
19	LA322841850	2	Flange	
20	LA322848600	2	Head Light	
21	LA322896400	1	Harness	
22	LA322896600	2	Head Light	
23	LA340481009	2	Bulb	(14)
24	LA340481810	1	Cable Tie	
25	LA344810102	1	Bulb	
26	LA355500615	4	Flat Washer	
27		1	Floor	See Page - Reference Number 100-0065
28	LA323005050	2	Support	
29	LA355510615	1	Flat Washer	

L-LD46-001-A

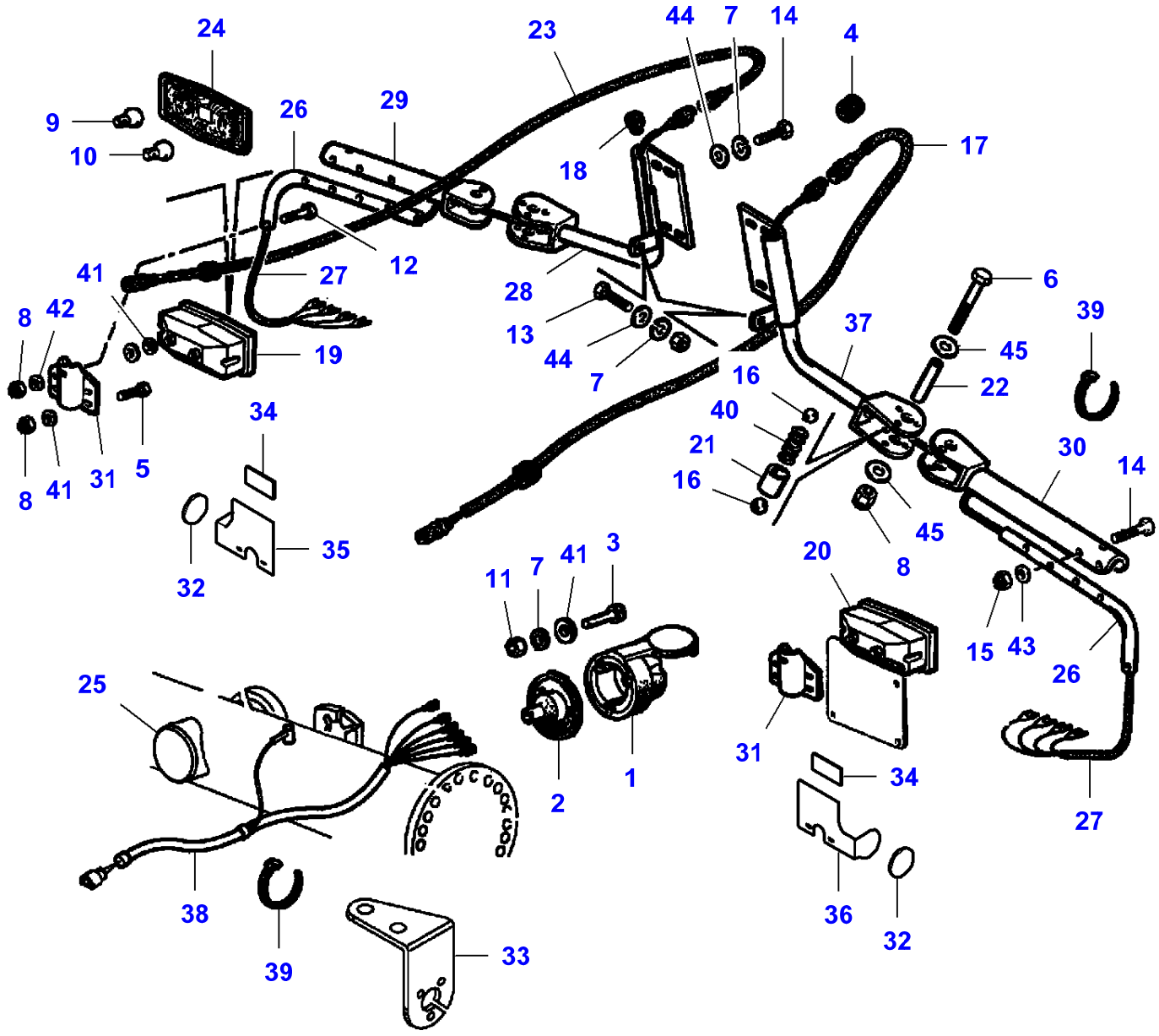
24
23
44
7
14
4
9
10
26
29
18
17
12
41
27
28
6
8
42
13
44
7
37
39
19
16
45
22
40
21
16
30
14
34
8
41
31
5
45
8
35
32
11
7
41
3
20
15
43
26
25
31
34
2
1
38
39
33
36
32
27

Item	Part Number	Qty	Description	Comments
1	LA5102156	1	Socket 7 Pin Sup	
2	LA5102234	1	Protection.	
3	LA10390311	1	Screw	
4	LA10396580	1	Grommet	
5	LA10902424	2	Cap Screw	
6	LA11107811	1	Cap Screw	
7	LA12034571	6	Lock Washer	
8	LA12574211	3	Locknut	
9	LA14148190	2	Bulb 12v 21w	
10	LA14149590	2	Bulb 12v 10w	
11	LA15896421	1	Nut	
12	LA16043224	2	Cap Screw	
13	LA16043424	1	Cap Screw	
14	LA16044224	1	Cap Screw	
15	LA16104111	1	Locknut	
16	LA20063520	2	Ball	
17	LA321908800	1	Harness	
18	LA321923650	1	Grommet	
19	LA321951000	1	Rear Light	
20	LA321951100	1	Rear Light	
21	LA322065450	1	Guide Bush	
22	LA322065550	1	Spacer	
23	LA322142900	1	Harness	
24	LA322191450	1	Lens	Right Hand
	LA322191550	1	Lens	Left Hand
25		1	Support	See Page - Reference Number 030-0040/7
26	LA322371450	2	Arm	
27	LA322393200	2	Harness	
28	LA322885750	1	Arm	
29	LA322396850	1	Arm	
30	LA322396950	1	Arm	
31	LA322489950	2	Support	
32	LA322508750	2	Cat Eye	
33	LA322684450	1	Support	
34	LA322689350	2	Cat Eye	
35	LA322865250	1	Support	
36	LA322865350	1	Support	
37	LA322882150	1	Arm	
38	LA323011900	1	Harness	
39	LA340481810	2	Cable Tie	
40	LA353561151	1	Spring	
41	LA355500615	7	Flat Washer	
42	LA355500715	4	Flat Washer	
43	LA355500915	1	Flat Washer	
44	LA355500920	5	Flat Washer	
45	LA355501130	2	Flat Washer	

L-LC13-001-A

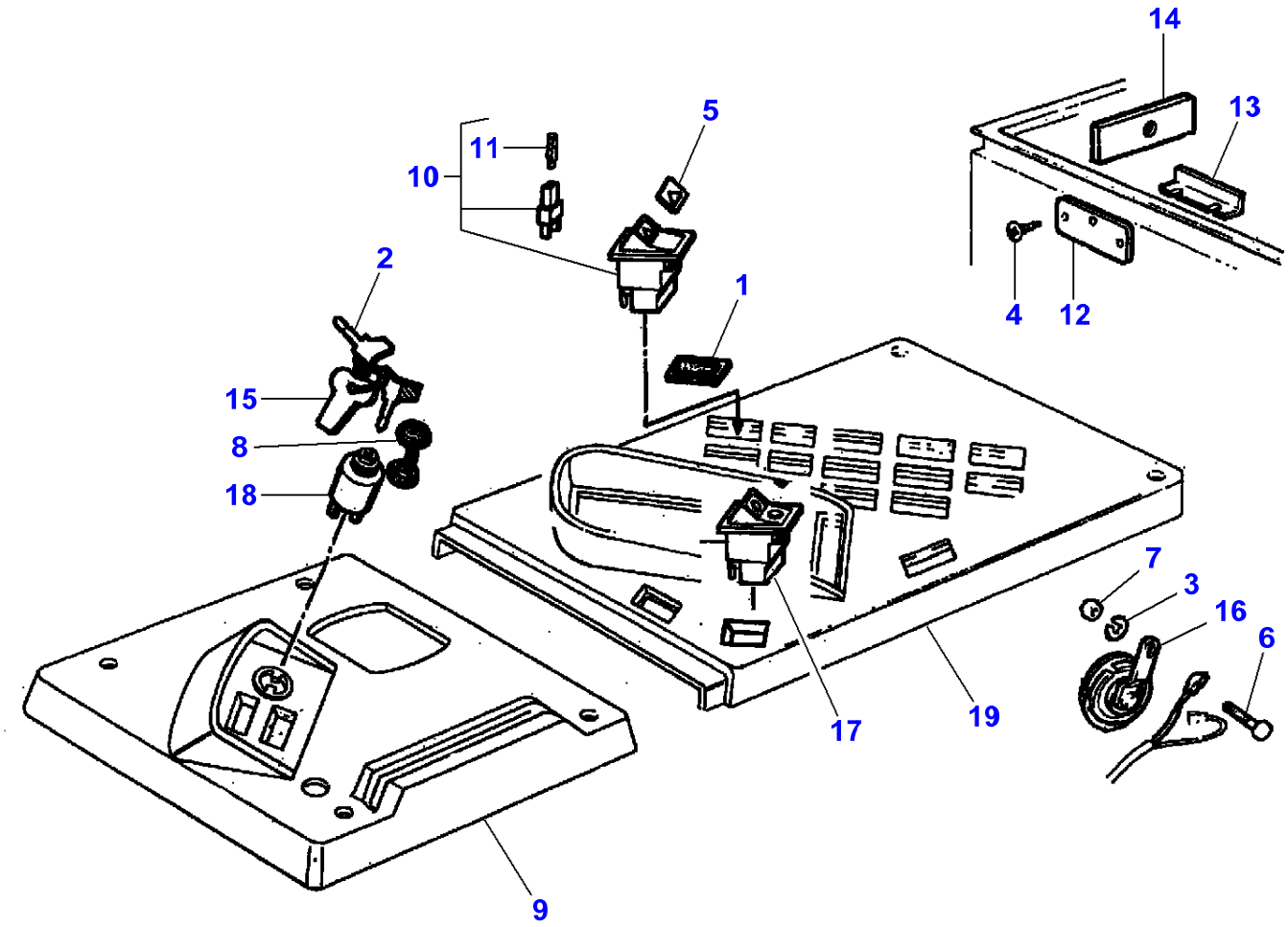

Item	Part Number	Qty	Description	Comments
1	LA5151033	1	Muff	
2	LA5170782	2	Ignition Key	
3	LA12034571	1	Lock Washer	
4	LA13311611	2	Screw	
5	LA320938150	1	Plate	
6	LA16043224	1	Cap Screw	
7	LA16100811	1	Nut	
8	LA44901870	1	Plug	
9		1	Panel	See Page - Reference Number 100-0020/27
10	LA320938000	1	Switch	
11	LA14143790	1	Pin	(10)
12	LA322059650	1	Cover	
13	LA322192450	1	Bracket	
14	LA322193850	1	Plate	
15	LA322318650	1	Ignition Key	
16	LA322692400	1	Horn	
17	LA322982400	1	Button	
18	**LA340480465**	1	Switch, Ignition	
19		1	Panel	See Page - Reference Number 100-0020/21

L-LC13-002-B

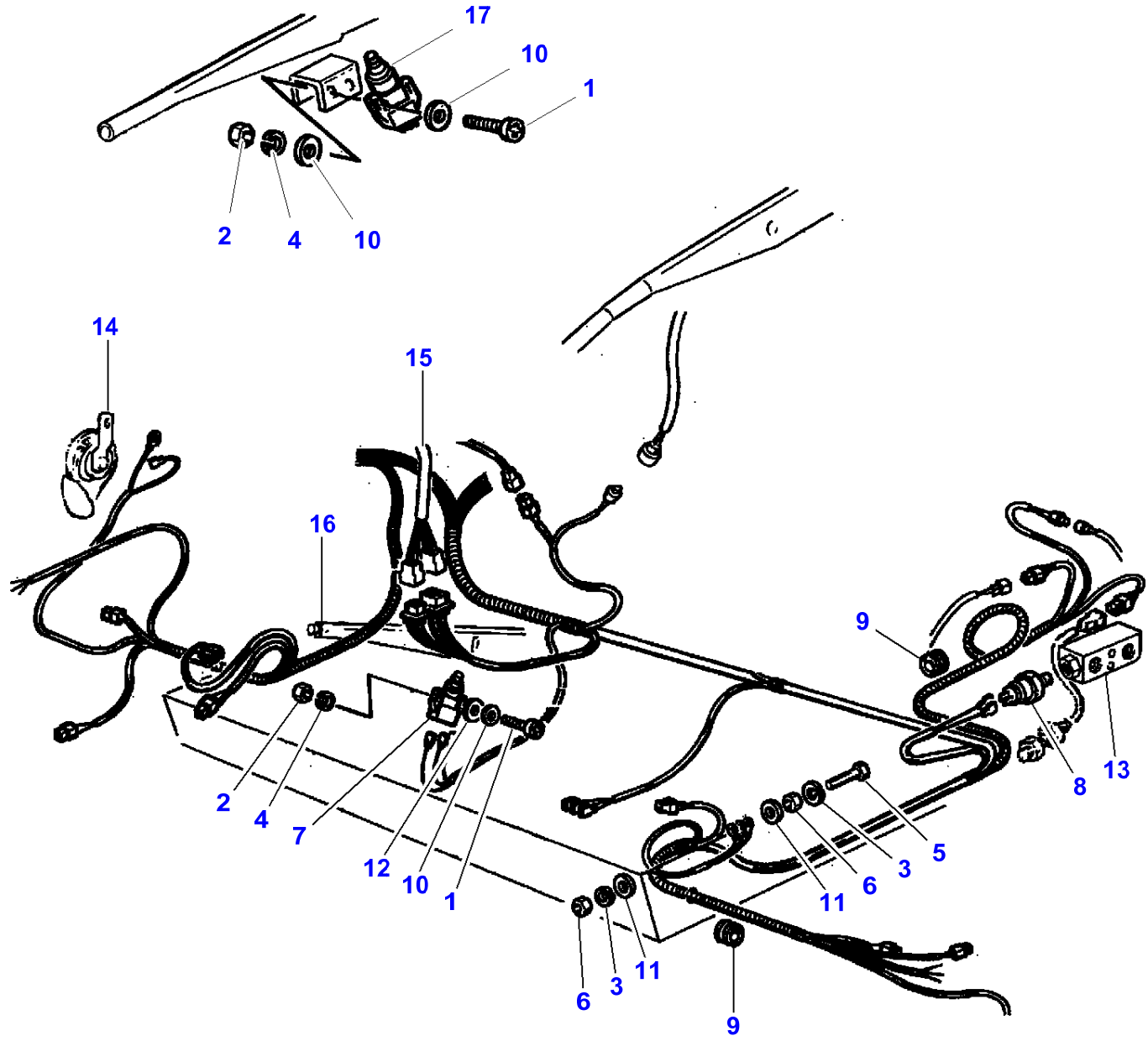

Item	Part Number	Qty	Description	Comments
1	LA10445721	2	Screw	
2	LA10721911	2	Nut	
3	LA12034571	2	Lock Washer	
4	LA12035371	2	Lock Washer	
5	LA15213321	1	Cap Screw	
6	LA16100811	2	Nut	
7	**LA321564850**	2	Switch	
8	**LA321931450**	1	Switch	
9	LA340481703	2	Grommet	
10	LA355500515	3	Flat Washer	
11	LA355500915	2	Flat Washer	
12	LA355510620	1	Flat Washer	
13		1	Valve	See Page - Reference Number 030-0075/24
14		1	Horn	See Page - Reference Number 120-0015/16
15		1	Swiveling Device	See Page - Reference Number 100-0235/14
16		1	Lever	See Page - Reference Number 030-0095/29
17	**LA321564850**	1	Switch	

L-LC13-003-A

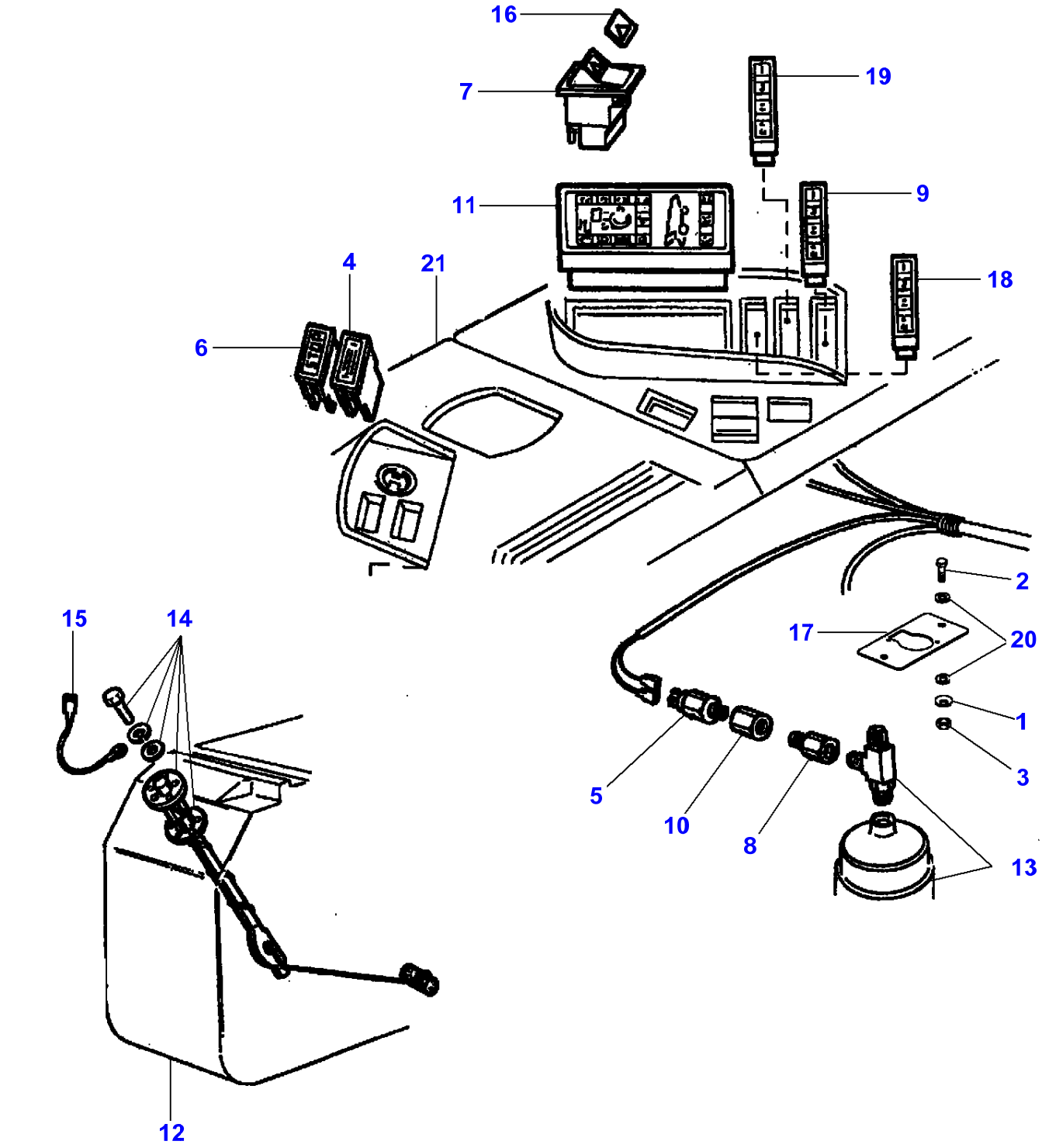

Item	Part Number	Qty	Description	Comments
1	LA322357	2	Lock Washer	
2	LA10902421	2	Cap Screw	
3	LA15896211	2	Nut	
4	LA321711500	1	Indicator	
5	**LA321712050**	1	Pressure Switch	80bar-L480-L540
	LA322108750	1	Pressure Switch	80bar - L420
	LA322120950	1	Pressure Switch	95bar-L600
6	LA321712700	1	Indicator	
7	LA321848100	1	Switch	
8	LA321896550	1	Union	
9	LA321906800	1	Indicator	
10	LA321911550	1	Union Nut	
11	LA322105500	1	Indicator	
12		1	Tank	See Page - Reference Number 020-0050/16
13		1	Accumulator	See Page - Reference Number 040-0070/29
14	LA322161800	1	Gauge	
15	LA322207900	1	Cable	
16	LA322805350	1	Plate	
17	LA322981250	1	Support	
18	LA323001100	1	Indicator	
19	LA323001200	1	Indicator	
20	LA355500615	4	Flat Washer	
21		1	Panel	See Page - Reference Number 100-0020

L-LC13-004-A

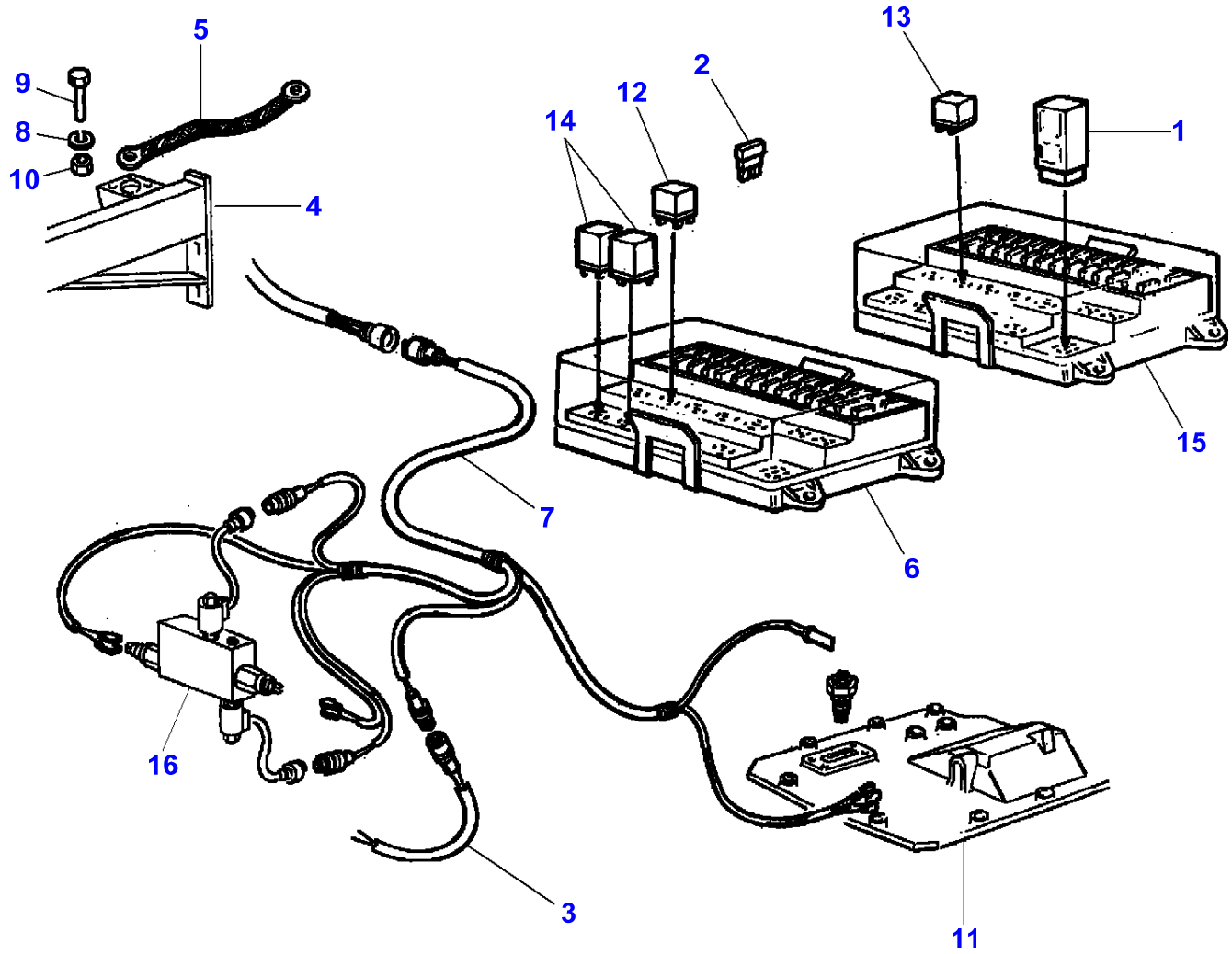

Item	Part Number	Qty	Description	Comments
1	**LA5151491**	1	Blinker	
2	**LA11054590**	1	Fuse	3 Amp
	LA11054890	1	Fuse	7,5 Amp
	LA11054990	1	Fuse	10 Amp
	LA11055090	1	Fuse	15 Amp
	LA11055290	1	Fuse	25 Amp
	LA11055190	1	Fuse	20 Amp
3		1	Cable	See Page - Reference Number 120-0095/12
4		1	Frame	See Page - Reference Number 100-0005/16
5	LA323011350	1	Earth Strap	
6	LA322872900	1	Box	
7	LA322864400	1	Cable	
8	LA12034571	3	Lock Washer	
9	LA16043424	3	Cap Screw	
10	LA16100811	3	Nut	
11		1	Cover	See Page - Reference Number 030-0225
12	**LA321908450**	1	Relay	
13	**LA321908650**	1	Relay	
14	**LA321909150**	2	Relay	
15	LA322166000	1	Fuse Box	
16		1	Electrovalve	See Page - Reference Number 040-0070/25

L-LC13-005-A

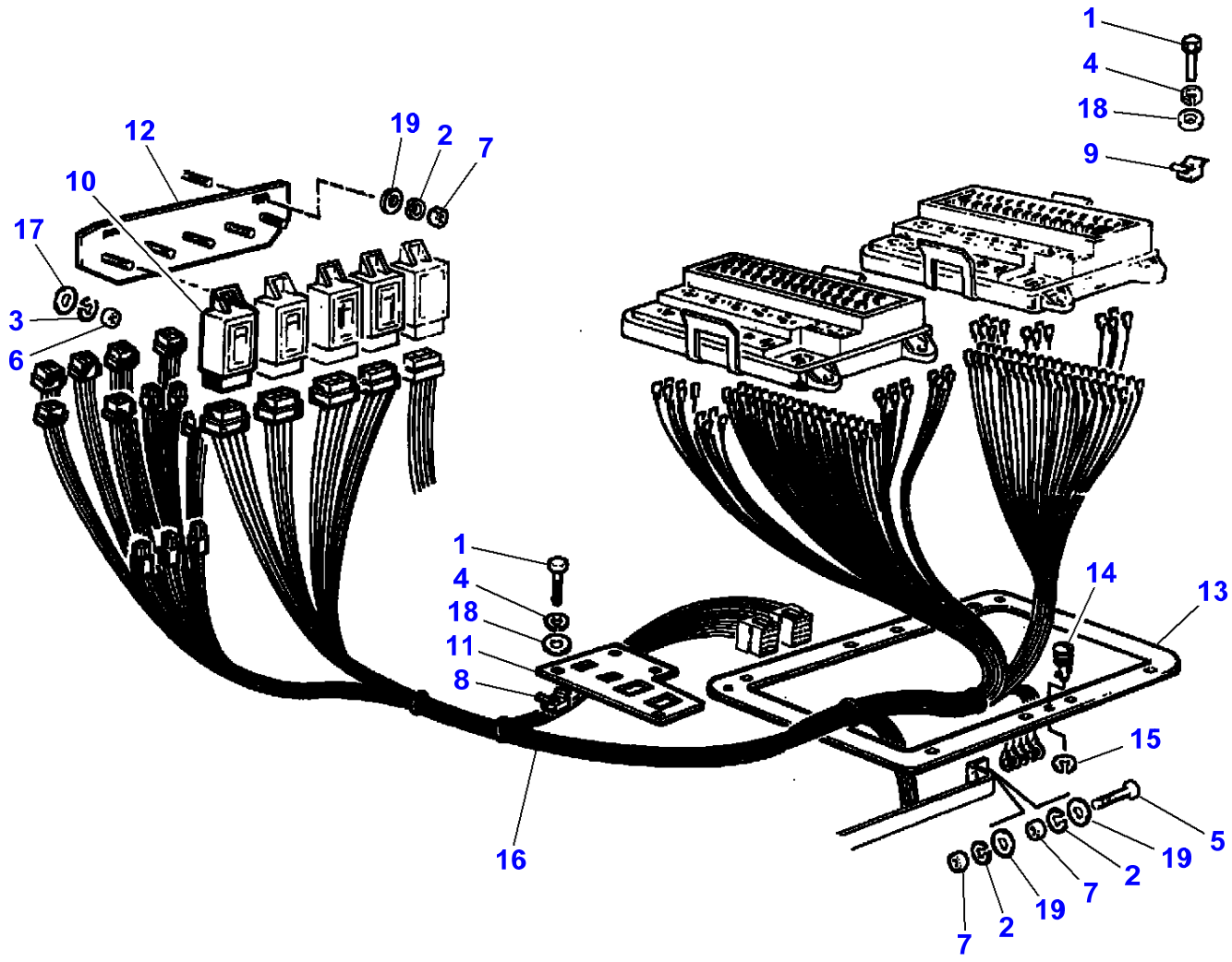

Item	Part Number	Qty	Description	Comments
1	LA10902224	10	Cap Screw	
2	LA12034571	3	Lock Washer	
3	LA12035471	5	Lock Washer	
4	LA12035670	10	Lock Washer	
5	LA15213321	1	Cap Screw	
6	LA15896421	5	Nut	
7	LA16100811	3	Nut	
8	LA320466350	1	Nut	
9	LA321318950	8	Nut	
10	LA321908350	1	Control Box	
11	LA322076650	1	Support	
12	LA322077450	1	Support	
13	LA322077550	1	Support	
14	LA322133250	2	Pin	
15	LA322133350	2	Washer	
16	LA323008800	1	Harness	Up to Serial or Engine Number
	LA323195600	1	Harness	From Serial or Engine Number 551710035
17	LA355500515	5	Flat Washer	
18	LA355500715	10	Flat Washer	
19	LA355500920	3	Flat Washer	

L-LC13-006-B

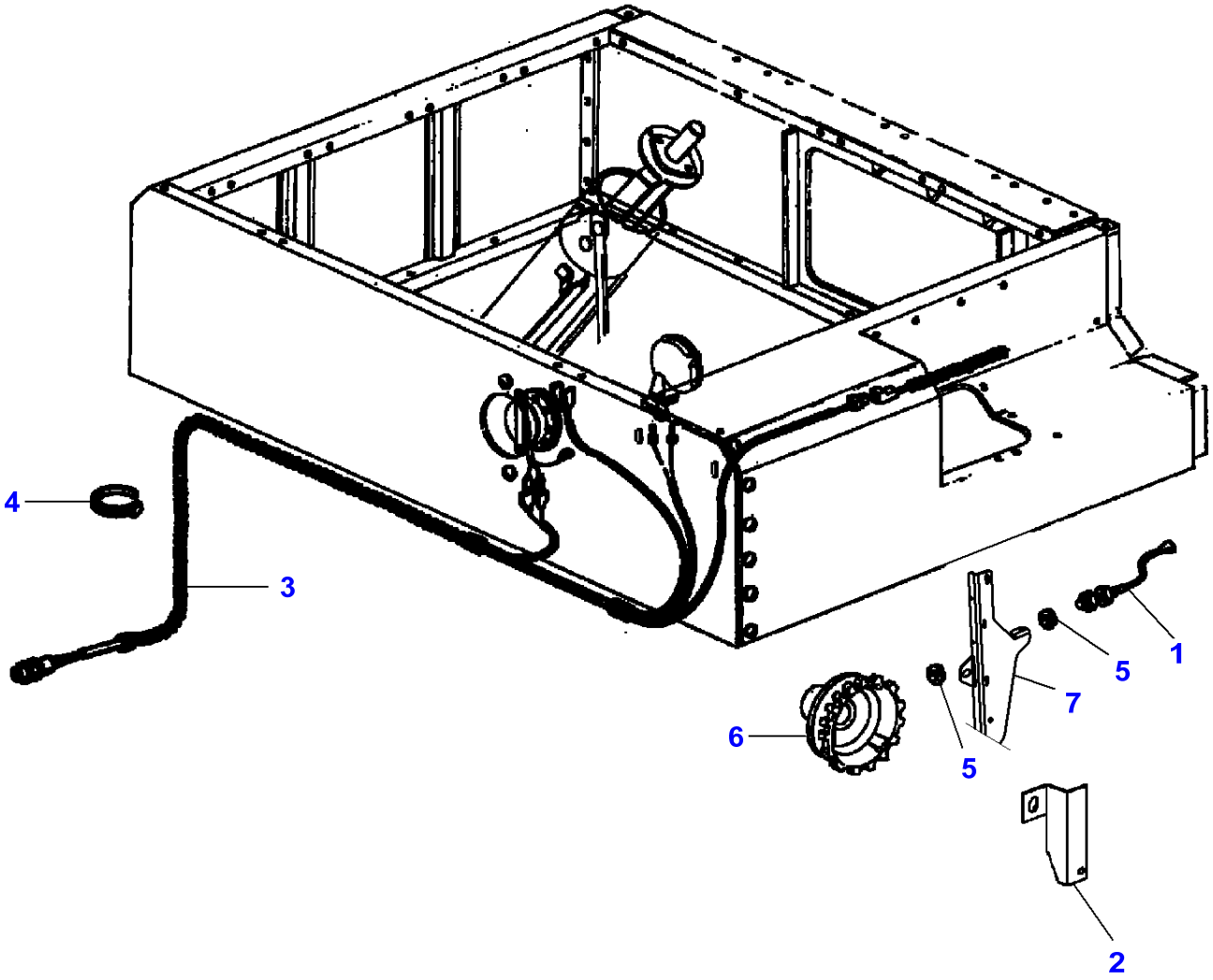

Item	Part Number	Qty	Description	Comments
1	**LA322861400**	1	Sensor	
2	LA322876350	1	Support	Up to Serial or Engine Number
3	LA322877800	1	Cable	
4	LA340481809	10	Cable Tie	
5	LA355533520	1	Washer	
6		1	Pulley	See Page - Reference Number 050-0020/9
7		1	Support	See Page - Reference Number 040-0095/32 From Serial or Engine Number 551710031

L-LC13-007-A

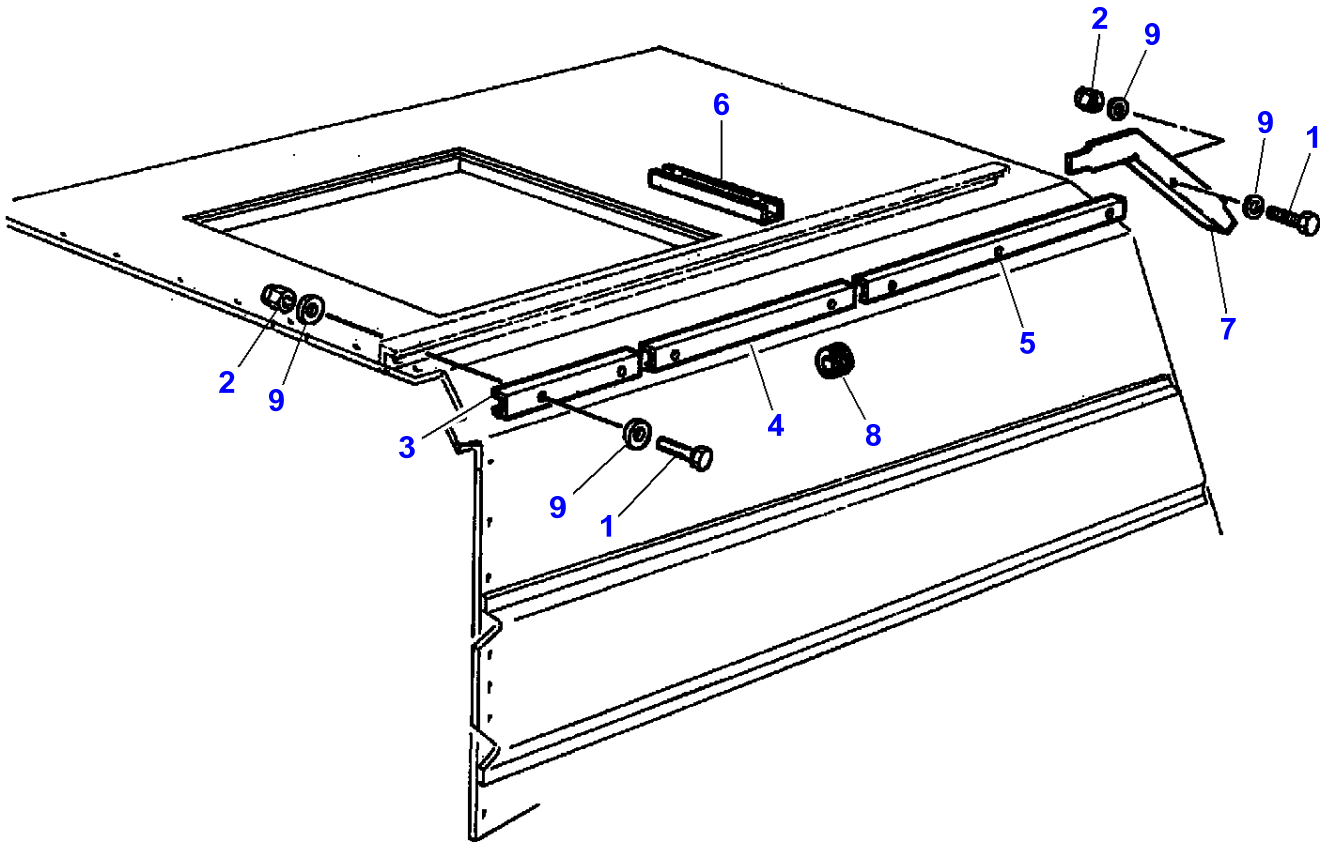

Item	Part Number	Qty	Description
1	LA10903021	8	Cap Screw
2	LA12574221	8	Nut
3	LA321931750	1	Shield
4	LA321931850	1	Shield
5	LA321931950	1	Shield
6	LA321932050	1	Shield
7	LA322329250	1	Shield
8	LA340481703	1	Grommet
9	LA355500715	15	Flat Washer

L-LC13-008-A

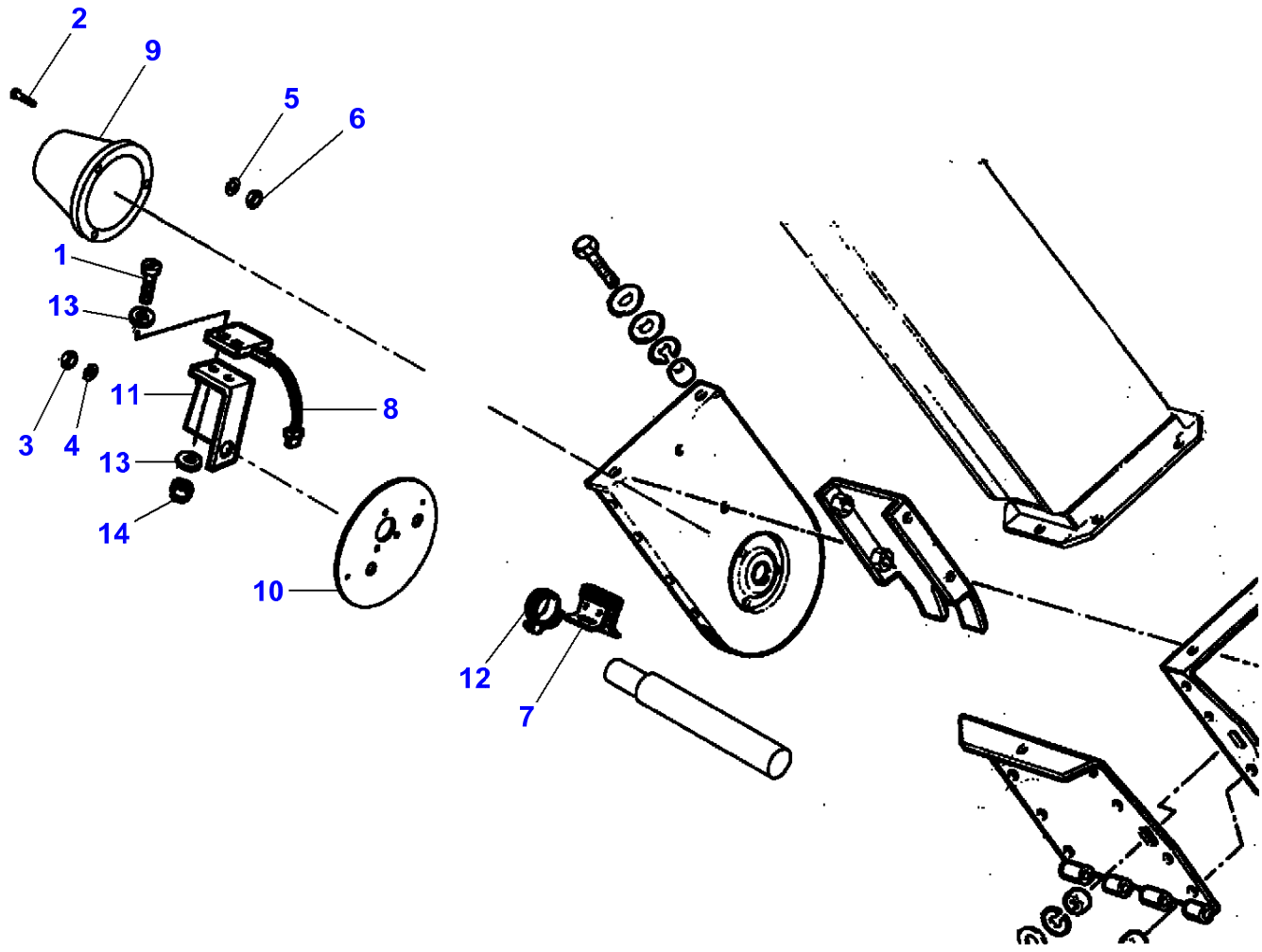

Item	Part Number	Qty	Description
1	LA10373711	2	Screw
2	LA10902221	3	Cap Screw
3	LA11701721	1	Nut
4	LA12034671	1	Lock Washer
5	LA12035671	3	Lock Washer
6	LA15896221	3	Nut
7	LA321221250	1	Magnet
8	**LA321562900**	1	Sensor
9	LA321825150	1	Cover
10	LA322745050	1	Support
11	LA322745150	1	Support
12	LA350391518	1	Clip
13	LA355500410	4	Washer
14	LA360653103	2	Nut

L-LD48-001-C

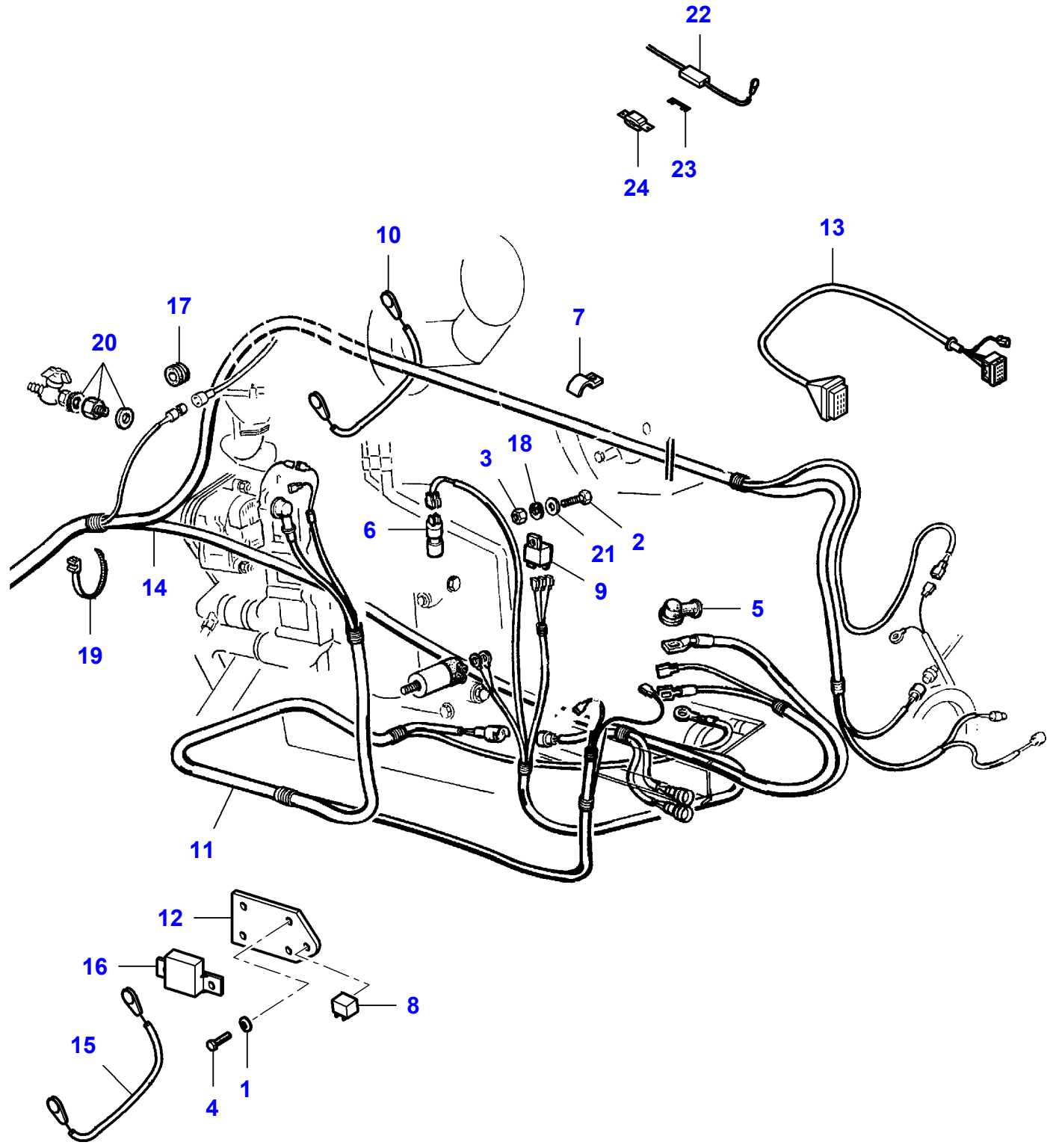

Item	Part Number	Qty	Description	Comments
1	LA322358	1	Lock Washer	
2	LA10902421	1	Cap Screw	
3	LA12574211	1	Locknut	
4	LA16043421	1	Cap Screw	
5	LA300135205	1	Plate	
6	LA300137553	1	Switch	
7	LA301592731	1	Collar	
8	**LA321908450**	1	Relay	
9	**LA321915450**	1	Switch	
10	LA322972350	1	Harness	
11	LA322981900	1	Harness	
12	LA322982650	1	Support	
13	LA323008700	1	Harness	Up to Serial or Engine Number
	LA323195400	1	Harness	From Serial or Engine Number 551710035
14	LA323008800	1	Harness	Up to Serial or Engine Number
	LA323195600	1	Harness	From Serial or Engine Number 551710035
15	LA323035000	1	Harness	
16	LA323041750	1	Relay	
17	LA340481703	1	Grommet	
18	LA340481704	1	Ring	
19	LA340481809	1	Cable Tie	Length 350 mm
	LA340481811	1	Cable Tie	Length 500 mm
20		2	Ring	See Page - Reference Number 020-0015
21	LA355510615	1	Flat Washer	
22	LA322981900	1	Harness	From Serial or Engine Number 551710035
23	LA323116650	1	Fuse	From Serial or Engine Number 551710035
	LA323116650	1	Fuse	
24	LA323193050	1	Fuse	

L-LD48-002-A

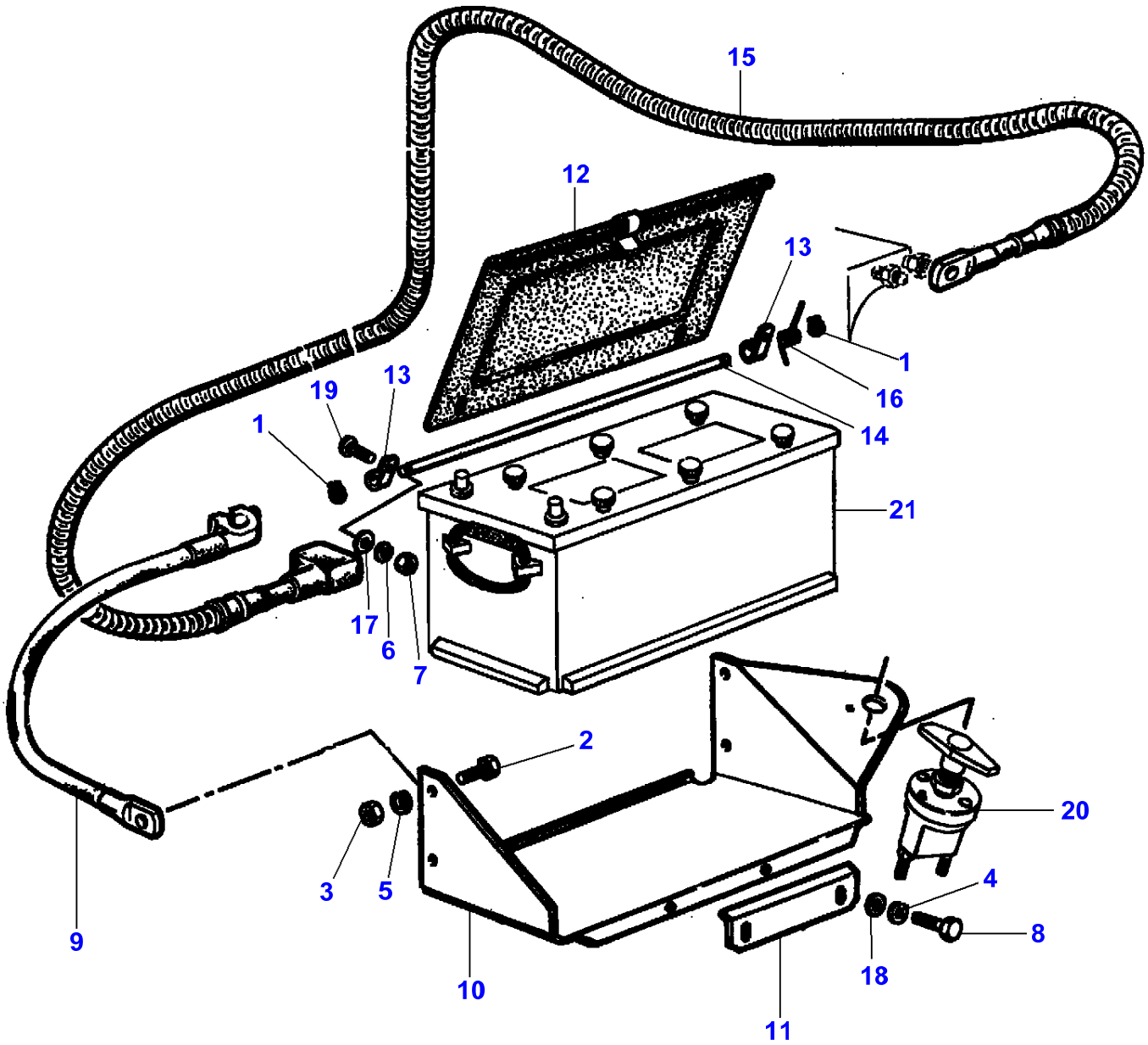

Item	Part Number	Qty	Description	Comments
1	LA11065676	2	Circlip	
2	LA11106424	1	Cap Screw	
3	LA11701721	1	Nut	
4	LA12034571	2	Lock Washer	
5	LA12034671	1	Lock Washer	
6	LA12035670	1	Lock Washer	
7	LA15896211	1	Nut	
8	LA16043421	2	Cap Screw	
9	LA313285900	1	Battery Cable	
10	LA322336150	1	Support	
11	LA322336250	1	Stop	
12	LA322336350	1	Cover	
13	LA322337150	2	Collar	
14	LA322393550	1	Pin	
15	LA322981100	1	Battery Cable	
16	LA350356934	1	Spring	
17	LA355500715	1	Flat Washer	
18	LA355510820	2	Flat Washer	
19	LA366000614	2	Carriage Bolt	
20		1	Switch	See Page - Reference Number 120-0120/1
21		1	Battery	See Page - Reference Number 120-0125/1

L-LD49-001-A

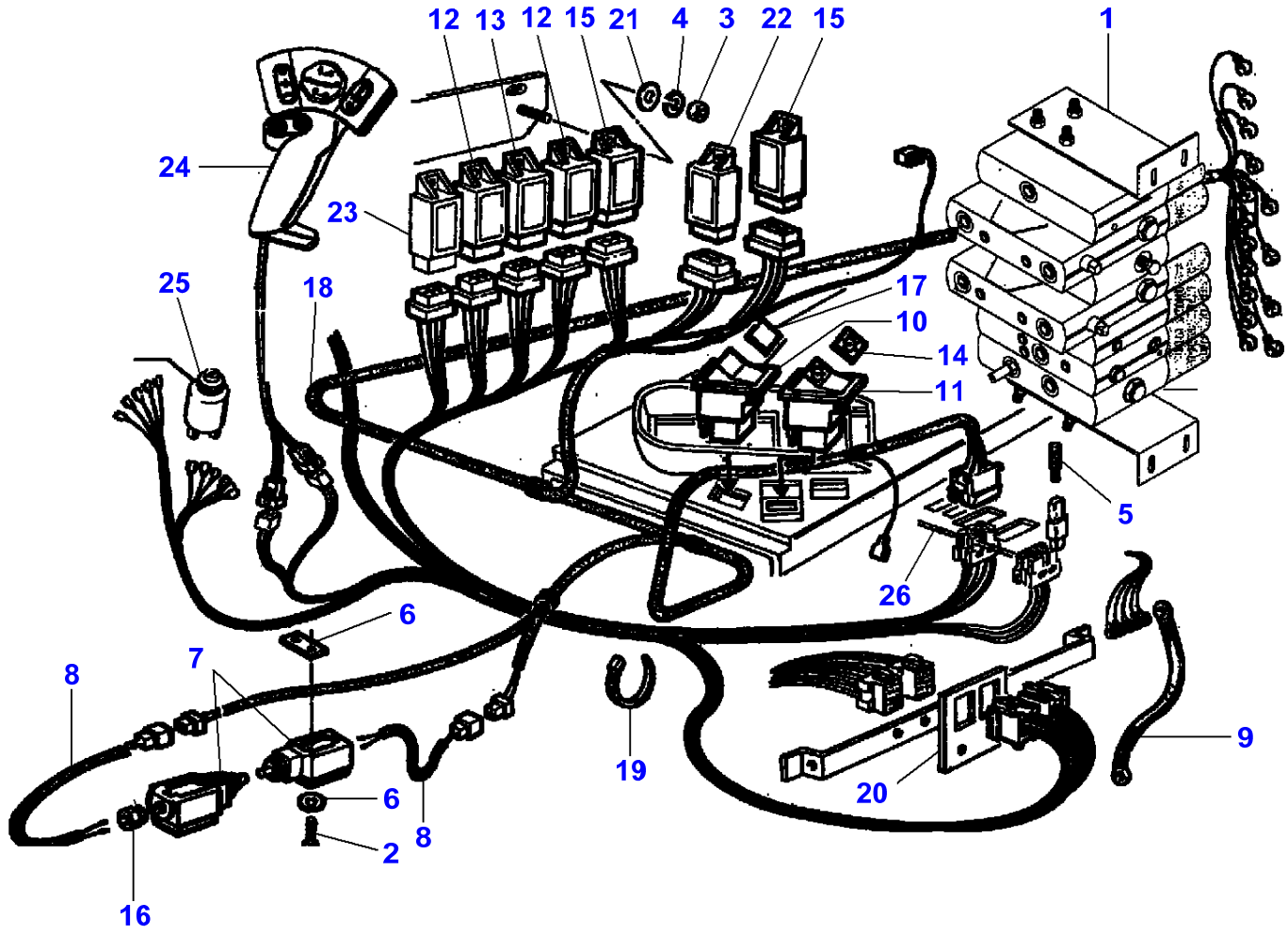

Item	Part Number	Qty	Description	Comments
1		1	Distributor	See Page - Reference Number 110-0015/11
2	LA10390311	2	Screw	
3	LA10718011	1	Nut	
4	LA12035471	3	Lock Washer	
5	LA14143790	1	Pin	
6	LA320555550	1	Plate	
7	**LA320932100**	2	Switch	
8	LA320932200	2	Cable	
9	LA321115350	1	Earth Strap	
10	LA321848200	1	Switch	
11	LA321862800	1	Switch	
12	LA321907550	2	Control Box	
13	LA321907650	1	Control Box	
14	LA322118350	1	Plate	
15	LA322118850	2	Control Box	
16	LA322278600	1	Nut	
17	LA322712350	1	Plate	
18	LA322865400	1	Cable	
19	LA340481809	1	Cable Tie	
20		1	Plate	See Page - Reference Number 120-0090/10
21	LA355500515	1	Flat Washer	
22		1	Control Box	See Page - Reference Number 140-0105/9
23		1	Control Box	See Page - Reference Number 120-0035/10
24		1	Arm	See Page - Reference Number 030-0290/30
25		1	Switch	See Page - Reference Number 120-0015/18
26		1	Panel	See Page - Reference Number 120-0035/11

L-LD49-007-A

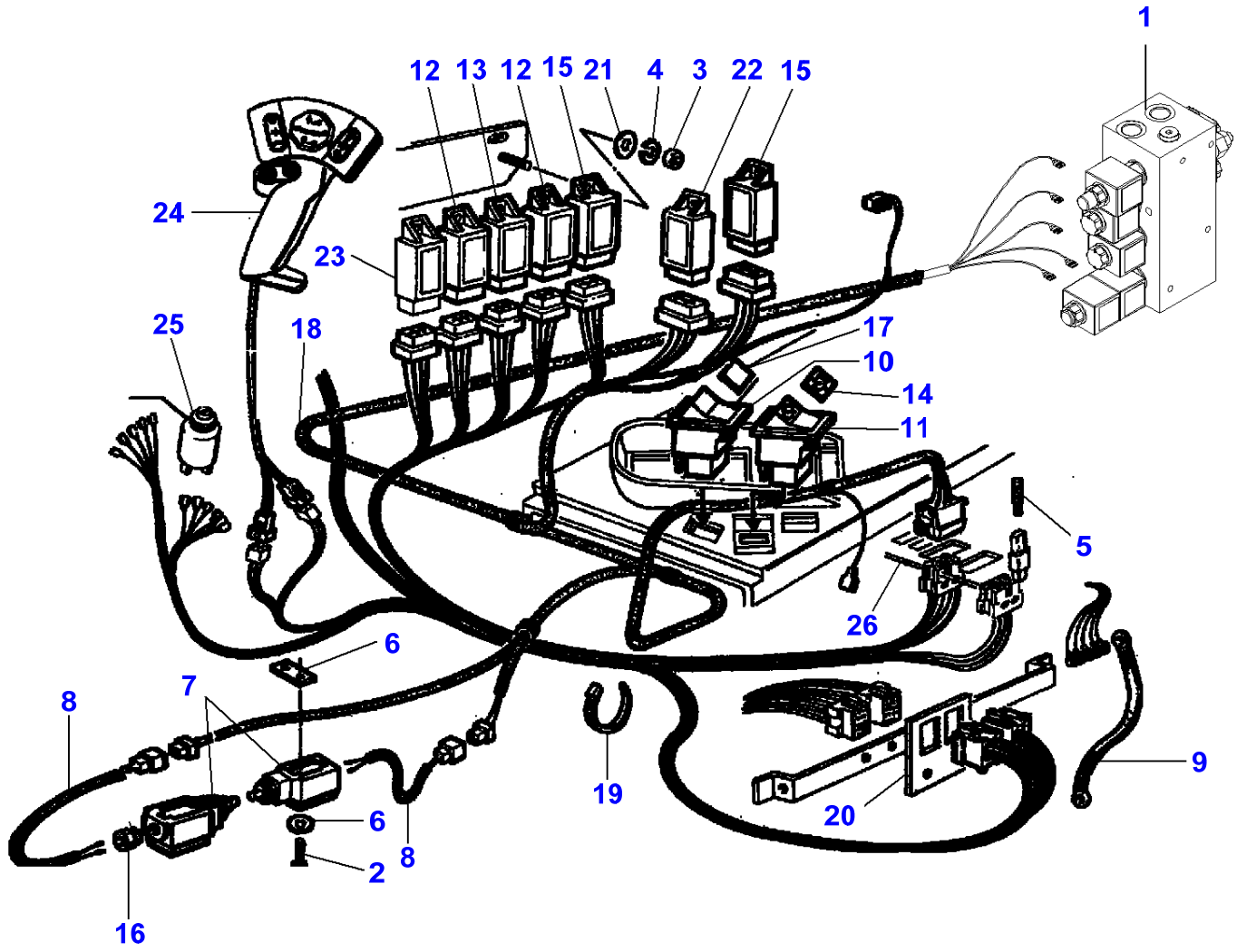

Item	Part Number	Qty	Description	Comments
1		1	Distributor	See Page - Reference Number 030-0270/12
2	LA10390311	2	Screw	
3	LA10718011	1	Nut	
4	LA12035471	3	Lock Washer	
5	LA14143790	1	Pin	
6	LA320555550	1	Plate	
7	**LA320932100**	2	Switch	
8	LA320932200	2	Cable	
9	LA321115350	1	Earth Strap	
10	LA321848200	1	Switch	
11	LA321862800	1	Switch	
12	LA321907550	2	Control Box	
13	LA321907650	1	Control Box	
14	LA322118350	1	Plate	
15	LA322118850	2	Control Box	
16	LA322278600	1	Nut	
17	LA322712350	1	Plate	
18	LA323175000	1	Harness	
19	LA340481809	1	Cable Tie	
20		1	Plate	See Page - Reference Number 120-0090/10
21	LA355500515	1	Flat Washer	
22		1	Control Box	See Page - Reference Number 140-0105/9
23		1	Control Box	See Page - Reference Number 120-0035/10
24		1	Arm	See Page - Reference Number 030-0290/30
25		1	Switch	See Page - Reference Number 120-0015/18
26		1	Panel	See Page - Reference Number 120-0035/11

L-LD49-002-A

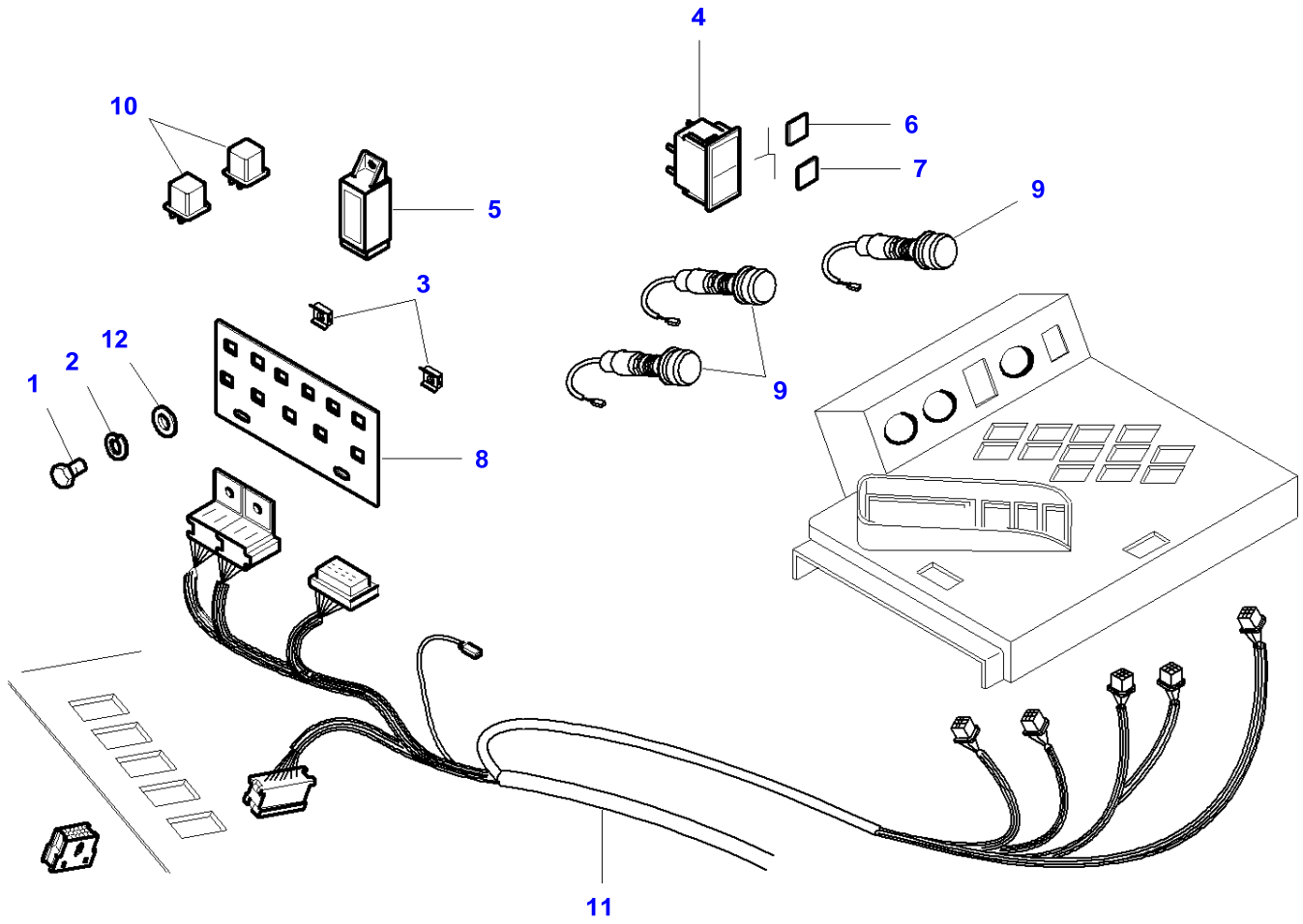

Item	Part Number	Qty	Description	Comments
1	LA10977821	1	Cap Screw	
2	LA12035471	1	Lock Washer	
3	LA321318950	2	Nut	
4	LA321869800	1	Indicator	
5	LA322118850	1	Control Box	
6	LA322794250	1	Plate	
7	LA322805350	1	Plate	
8	LA322861350	1	Support	
9	LA322954400	3	Button	
10	**LA323090750**	2	Relay	
11	LA323090800	1	Cable	Up to Serial or Engine Number
	LA323174900	1	Harness	From Serial or Engine Number 551710035
12	LA355500715	1	Flat Washer	

L-LD49-003-A

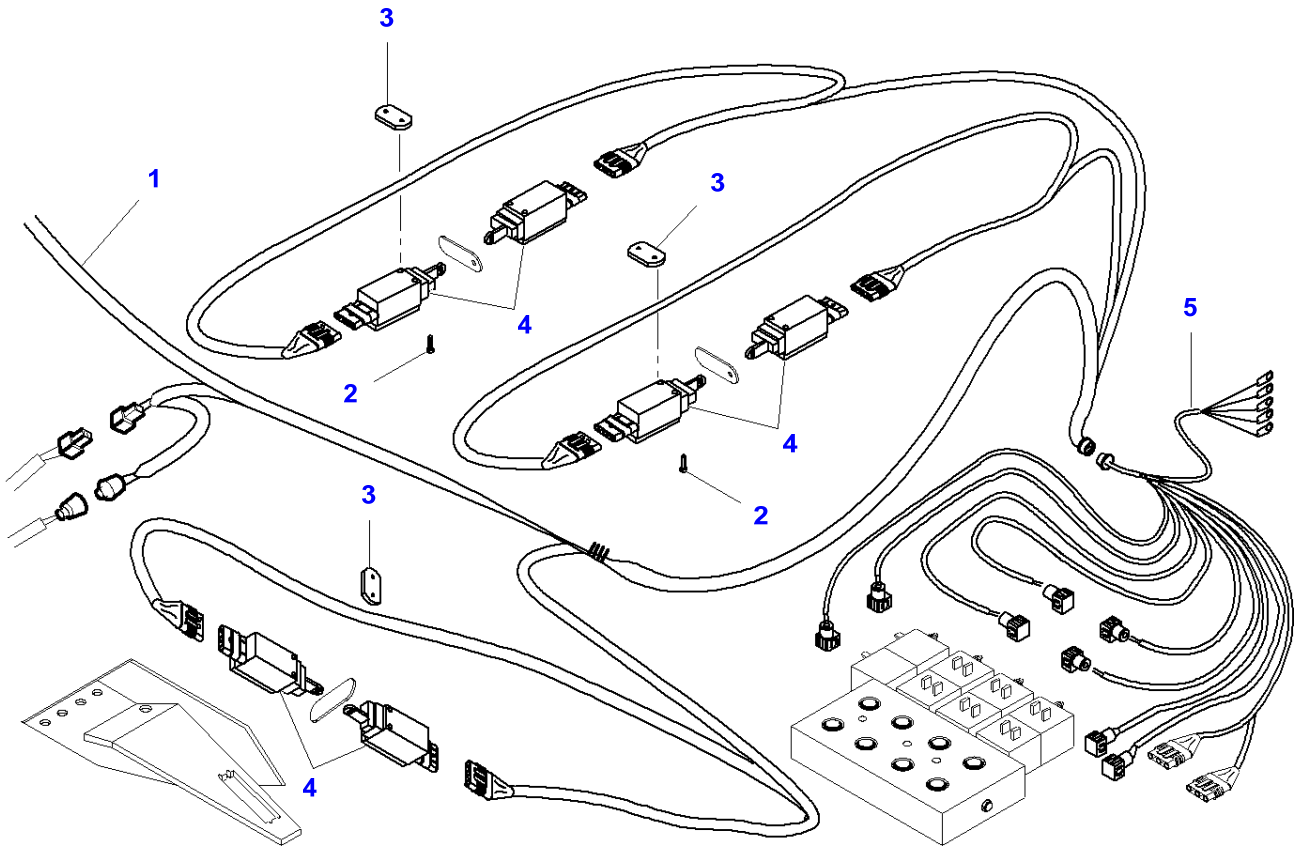

Item	Part Number	Qty	Description
1	LA323090800	1	Cable
2	LA14303421	4	Screw
3	LA322836150	3	Plate
4	**LA322864200**	6	Switch
5	LA323061000	1	Cable

L-LD49-008-A

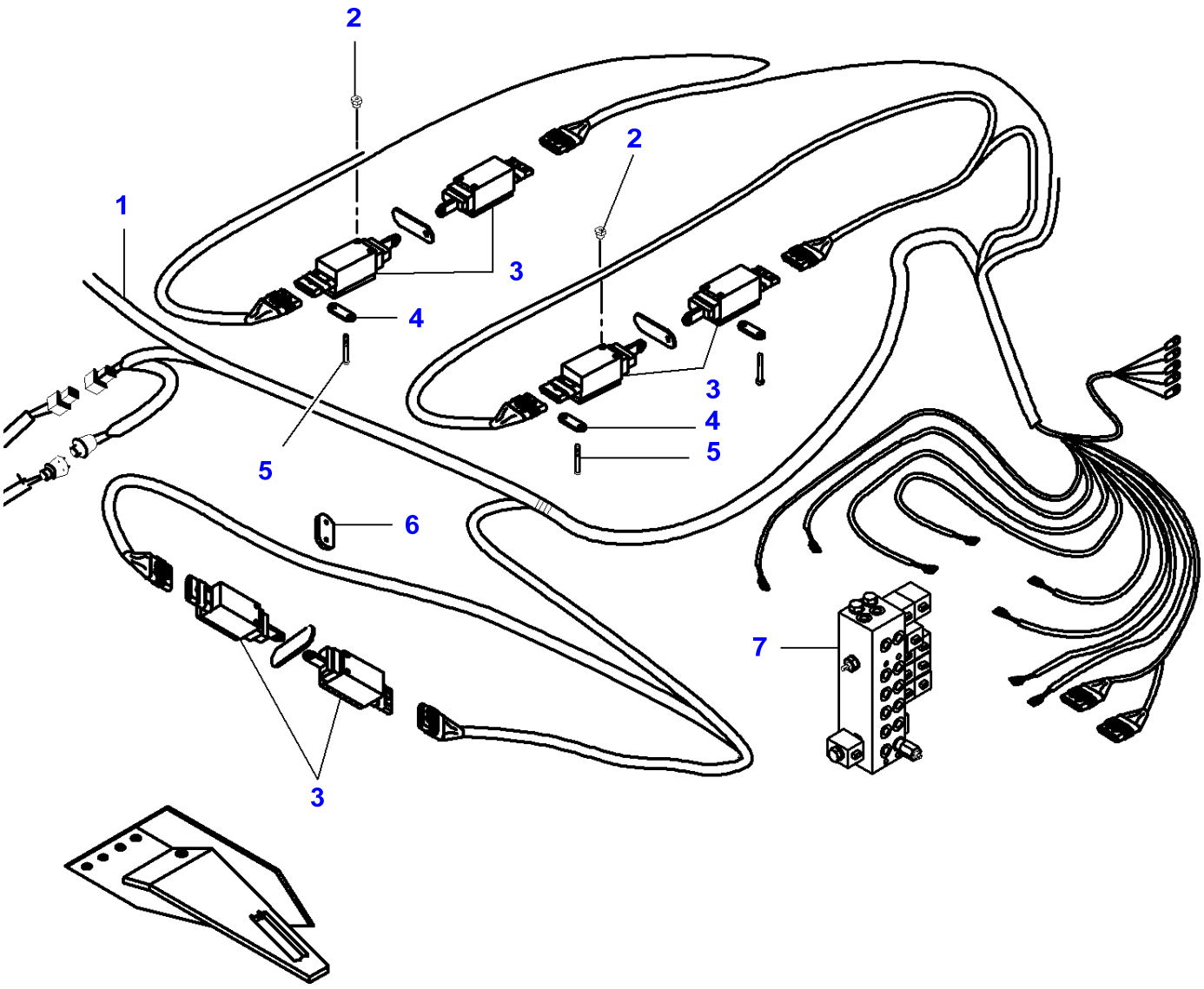

Item	Part Number	Qty	Description	Comments
1	LA323174900	1	Harness	
2	LA323153250	4	Bush	
3	**LA322864200**	2	Switch	
4	LA323070850	2	Plate	
5	LA14303521	2	Hex Socket Screw	
6	LA322836150	1	Plate	
7		1	Block	See Page - Reference Number 030-0270/12

L-LD50-001-A

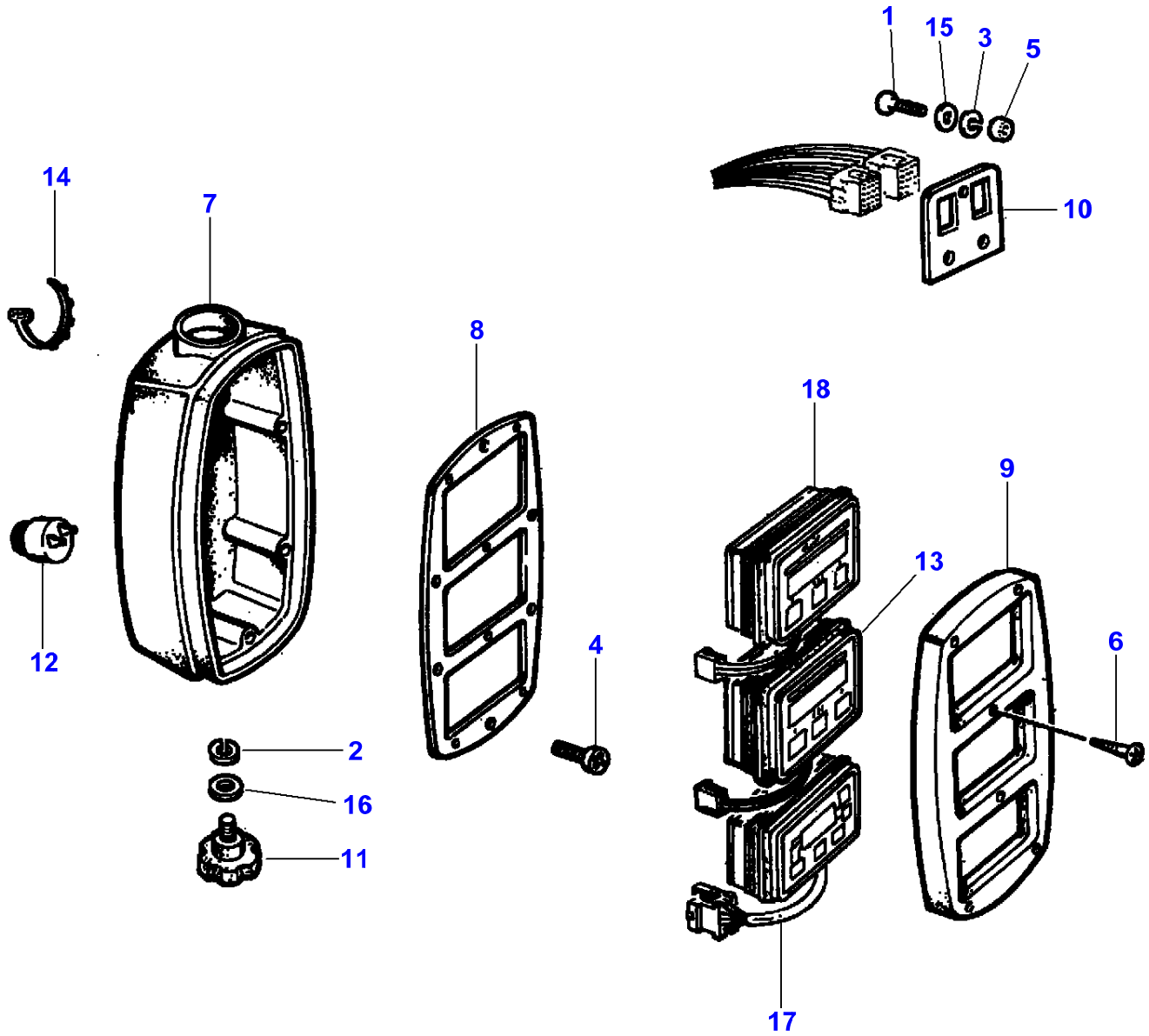

Item	Part Number	Qty	Description	Comments
1	LA10902124	2	Cap Screw	
2	LA12034571	1	Lock Washer	
3	LA12035670	1	Lock Washer	
4	LA13276114	2	Screw	
5	LA15896221	2	Nut	
6	LA15910107	2	Screw	
7	LA322053750	1	Body	
8	LA322054950	1	Flange	
9	LA322055050	1	Cap	
10	LA322076050	1	Plate	
11	LA322079650	1	Knob	
12	LA322355400	1	Horn	
13	LA322854500	2	Control Box	
14	LA340481810	3	Cable Tie	
15	LA355500715	2	Flat Washer	
16	LA355510820	1	Flat Washer	
17		1	Control Box	See Page - Reference Number 040-0080/27
18		1	Monitor	See Page - Reference Number 120-0110/10

L-LD50-002-A

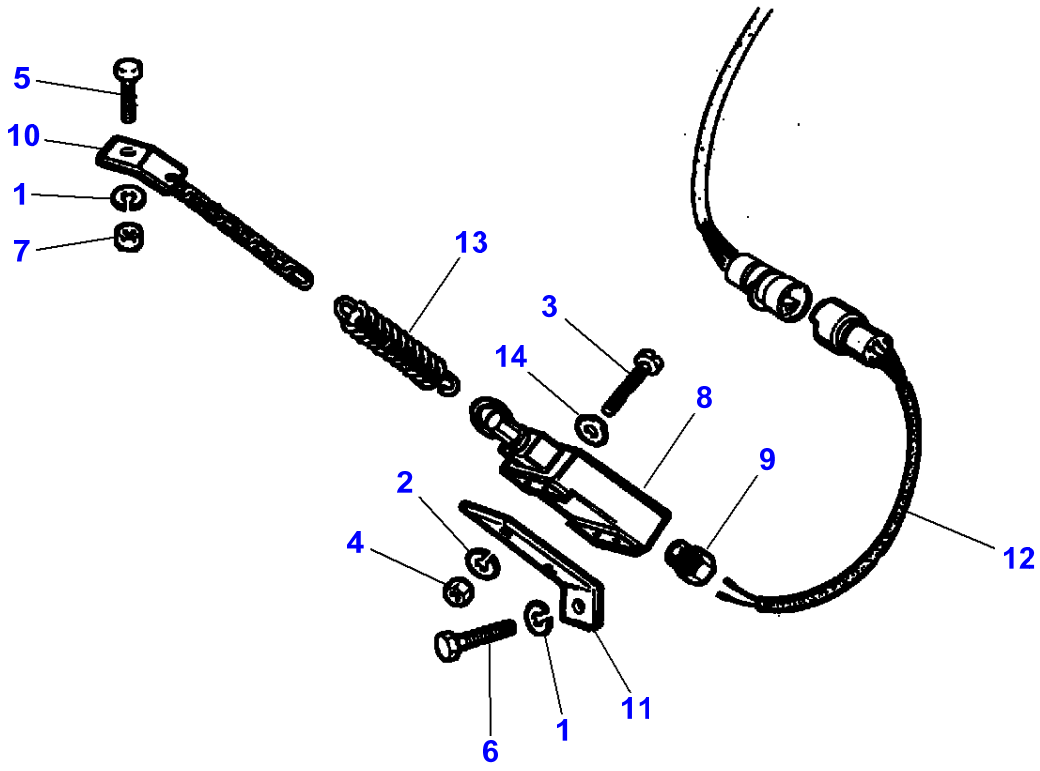

Item	Part Number	Qty	Description
1	LA12034571	2	Lock Washer
2	LA12035471	2	Lock Washer
3	LA14358921	1	Cap Screw
4	LA15896421	2	Nut
5	LA16043424	1	Cap Screw
6	LA16043624	1	Cap Screw
7	LA16100811	1	Nut
8	**LA313573000**	1	Switch
9	LA321115750	1	Nut
10	LA321944550	1	Chain
11	LA321944650	1	Support
12	LA321949900	1	Harness
13	LA350356537	1	Spring
14	LA355500515	1	Flat Washer

L-LD50-003-A

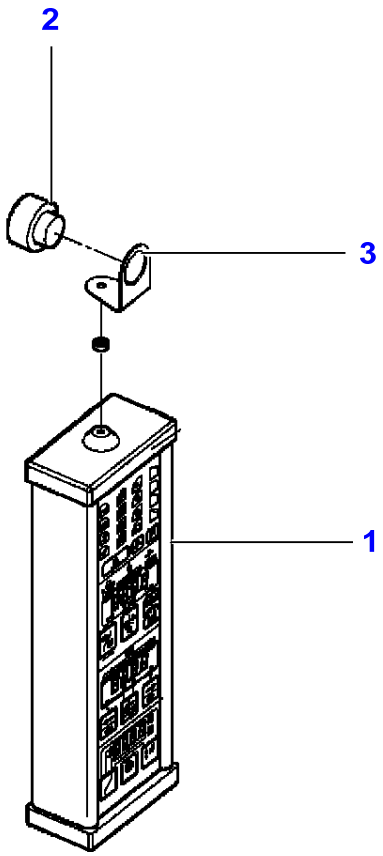

Item	Part Number	Qty	Description	Comments
1	LA323245000	1	Agritronic Plus	See Page - Reference Number 100-0185/6
2	LA322355400	1	Horn	
3	LA322988150	1	Bracket	

L-LD51-001-A

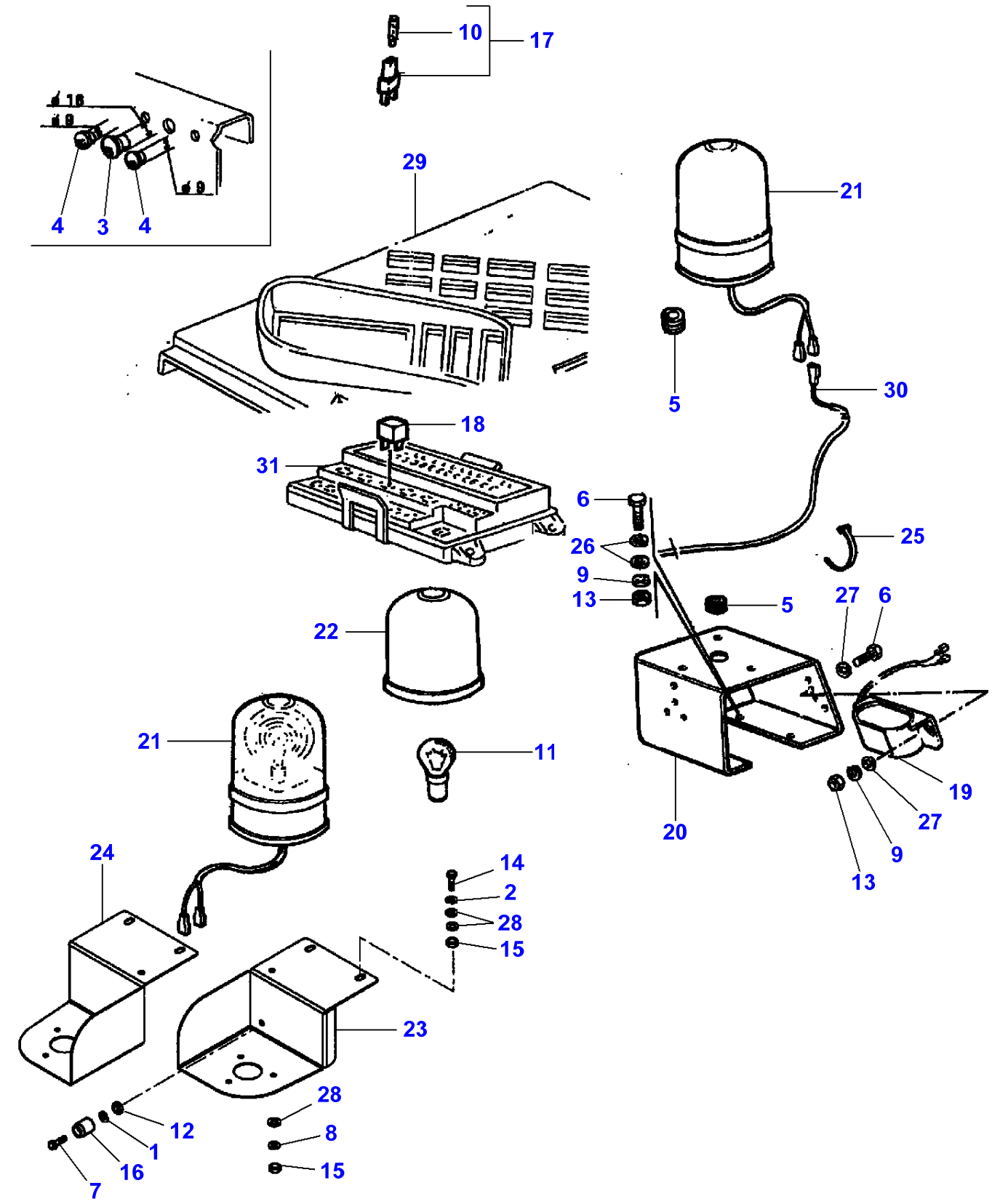
10
17
4
3
4
29
21
5
30
18
31
6
26
9
13
25
5
27
6
22
21
11
19
27
9
13
20
24
14
2
28
15
23
28
12
8
1
15
16
7

Item	Part Number	Qty	Description	Comments
1	LA322357	1	Lock Washer	
2	LA322358	2	Lock Washer	
3	LA5112607	1	Plug	Diameter 16 mm
4	LA5112608	2	Plug	Diameter 9 mm
5	LA10396480	2	Grommet	
6	LA10902224	2	Cap Screw	
7	LA10902621	1	Cap Screw	
8	LA12034571	1	Lock Washer	
9	LA12035670	2	Lock Washer	
10	LA14143790	1	Pin	
11	LA14148190	1	Bulb 12v 21w	
12	LA15896211	1	Nut	
13	LA15896221	2	Nut	
14	LA16043421	2	Cap Screw	
15	LA16100811	3	Nut	
16	LA201139752	1	Stop	
17	LA320980600	1	Switch	
18	**LA321908450**	1	Relay	
19	LA322764100	1	Buzzer	
20	LA322765450	1	Support	
21	LA322798150	1	Worklight	
22	LA322831650	1	Lens	
23	LA323049250	1	Support	
24	LA323049950	1	Support	
25	LA340481806	1	Cable Tie	
26	LA355500715	2	Flat Washer	
27	LA355510615	2	Flat Washer	
28	LA355510820	5	Flat Washer	
29		1	Panel	See Page - Reference Number 100-0020/21
30		1	Harness	See Page - Reference Number 060-0020
31		1	Box	See Page - Reference Number 120-0030

L-LD52-001-A

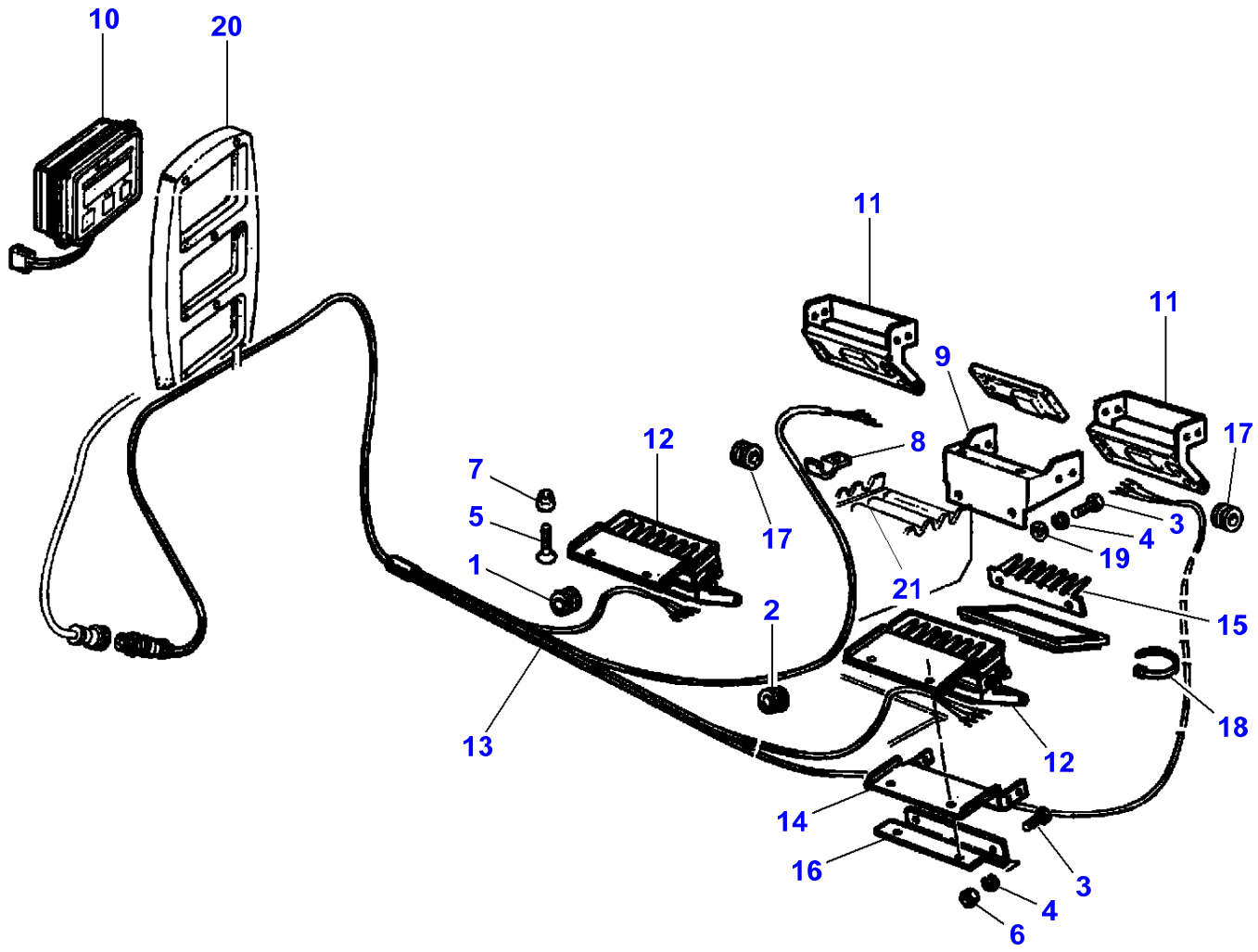

Item	Part Number	Qty	Description	Comments
1	LA10396480	1	Grommet	
2	LA10398280	1	Grommet	
3	LA10902224	2	Cap Screw	
4	LA12035670	2	Lock Washer	
5	LA14442031	1	Screw	
6	LA15896221	1	Nut	
7	LA16104111	1	Locknut	
8	LA300015924	1	Collar	
9	LA322315550	1	Support	
10	LA322332900	1	Monitor	
11	LA322333000	2	Sensor	
12	LA322355100	2	Sensor	
13	LA322355200	1	Harness	
14	LA322355950	1	Console	
15	LA322356050	1	Rake	
16	LA322356150	1	Bracket	
17	LA340481703	2	Grommet	
18	LA340481810	1	Cable Tie	
19	LA355500715	1	Flat Washer	
20		1	Flange	See Page - Reference Number 120-0090/8
21		1	Kit, Straw Walkr	See Page - Reference Number 060-0025/10

L-LD53-001-A

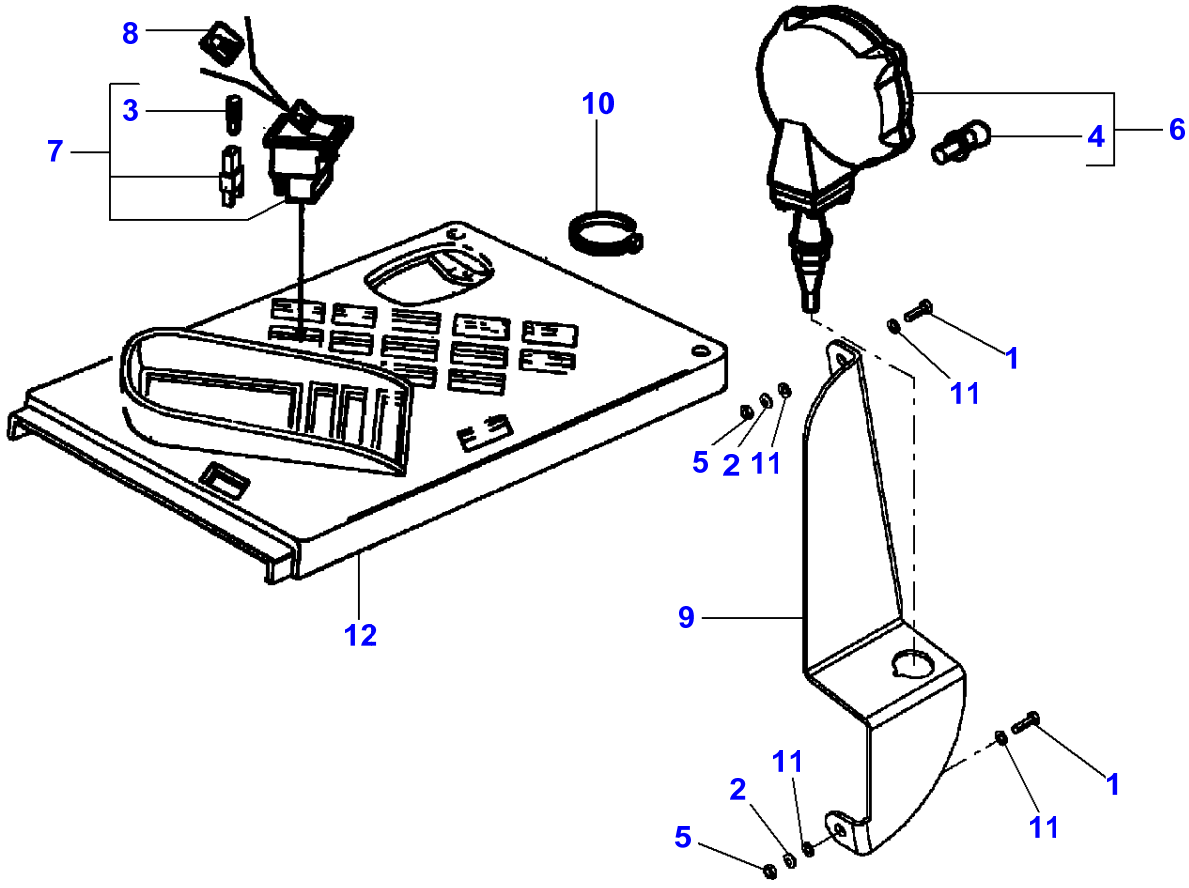

Item	Part Number	Qty	Description	Comments
1	LA10902421	2	Cap Screw	
2	LA12035671	2	Lock Washer	
3	LA14143790	1	Pin	(7)
4	LA14151590	1	Bulb	(6)
5	LA15896221	2	Nut	
6	LA321640600	1	Worklight	
7	LA321848200	1	Switch	
8	LA321932450	1	Plate	
9	LA323062450	1	Support	
10	LA340481810	1	Cable Tie	
11	LA355500715	4	Flat Washer	
12		1	Panel	See Page - Reference Number 100-0020/21

L-LD54-001-A

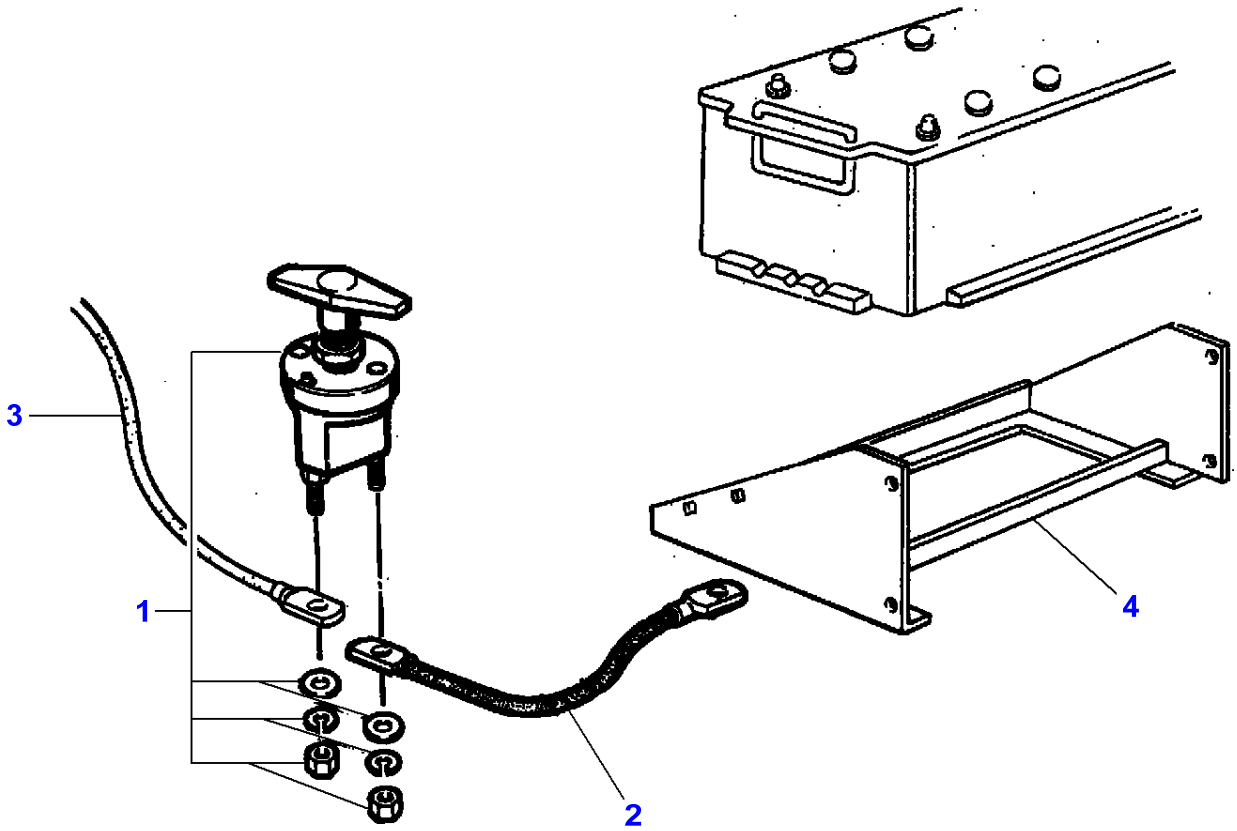

Item	Part Number	Qty	Description	Comments
1	LA322153500	1	Switch	
2	LA323061200	1	Lead	
3		1	Cable	See Page - Reference Number 120-0060/9
4		1	Support	See Page - Reference Number 120-0060/10

L-LD55-001-A

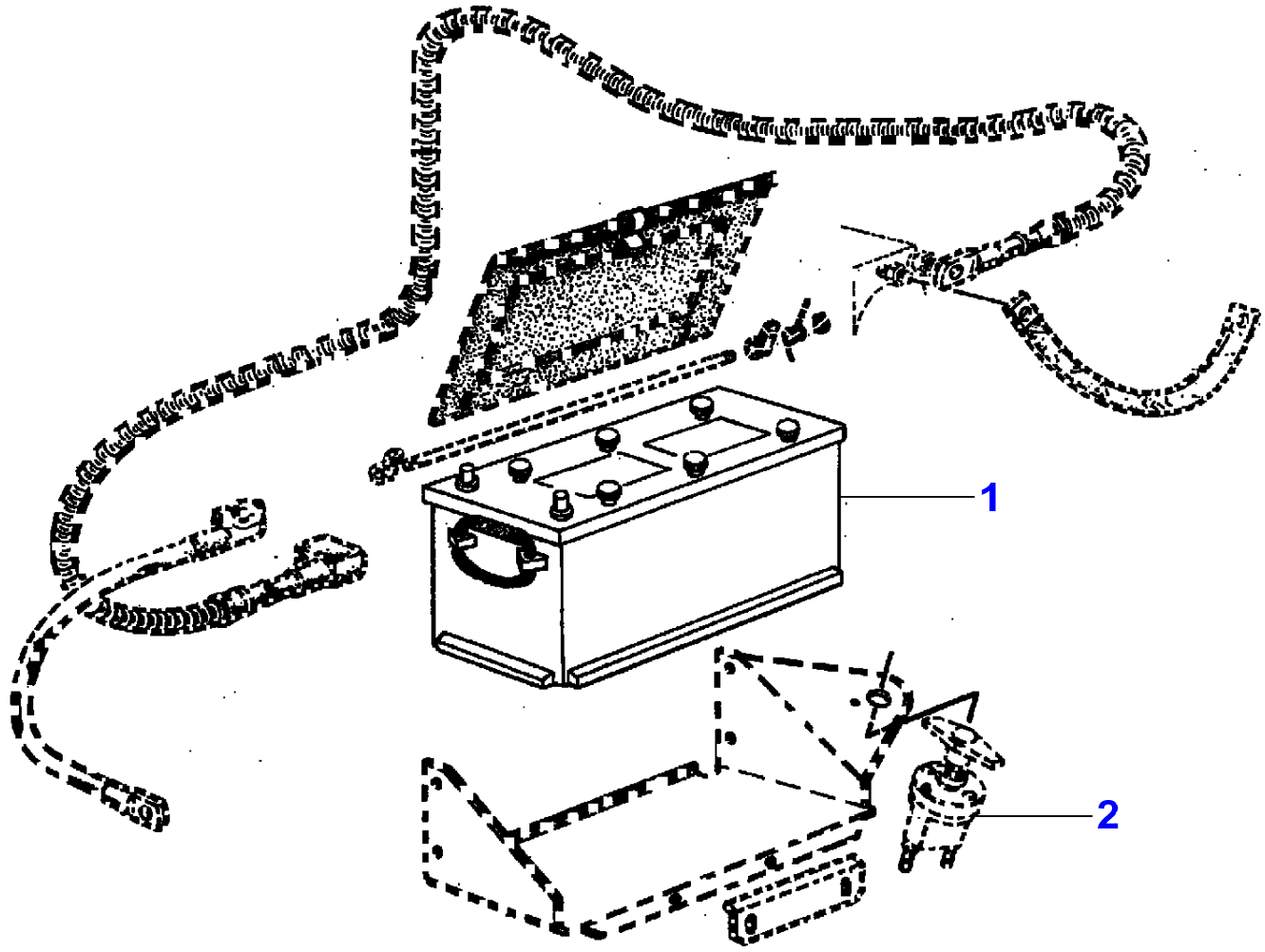

Item	Part Number	Qty	Description	Comments
1	LA320445050	1	Battery	
2		1	Switch	See Page - Reference Number 120-0120/1

L-LD53-002-A

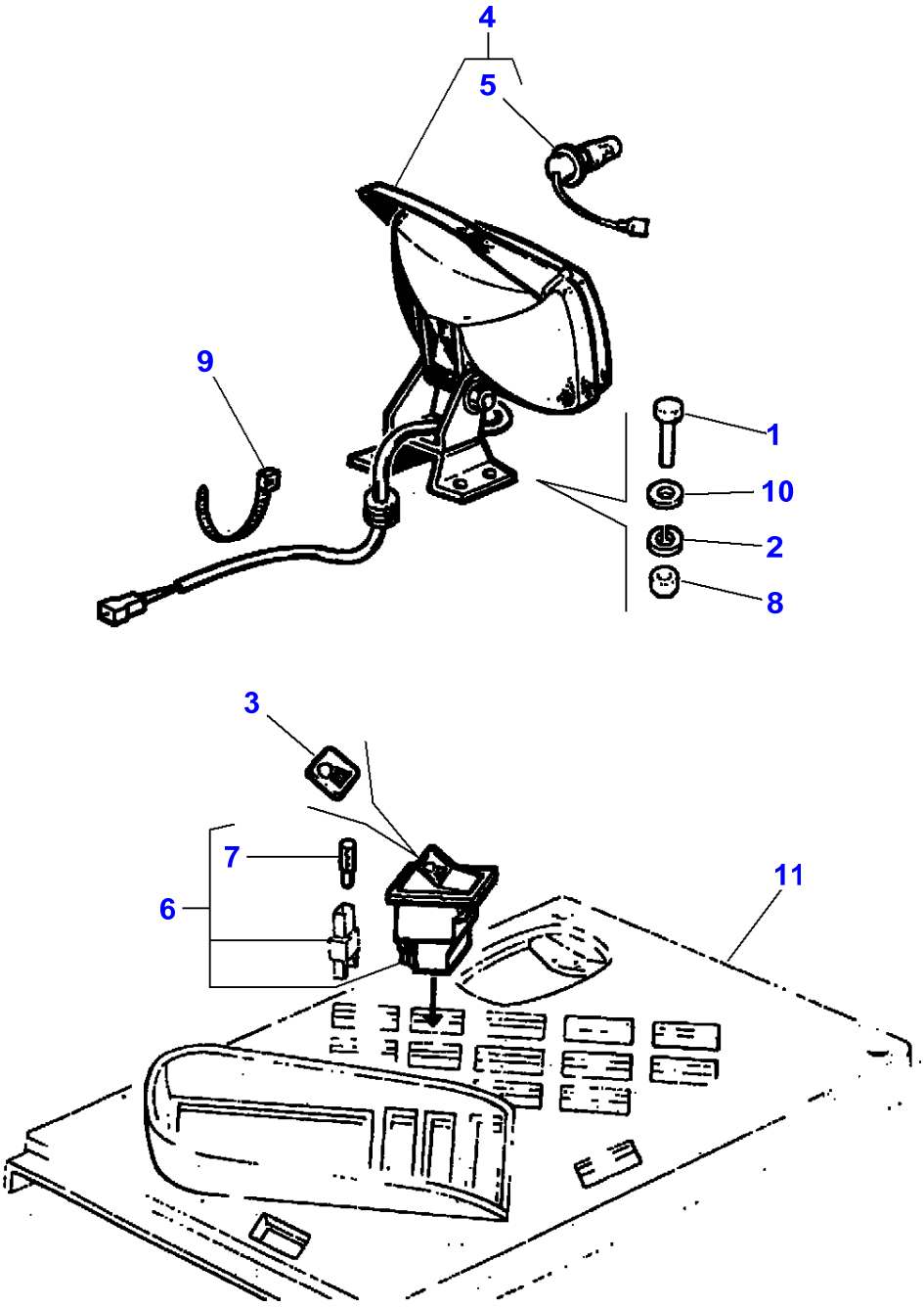

Item	Part Number	Qty	Description	Comments
1	LA10902224	1	Cap Screw	
2	LA12035670	1	Lock Washer	
3	LA321932450	1	Plate	
4	LA321932500	1	Head Light	
5	LA14151590	1	Bulb	(4)
6	LA321848200	1	Switch	
7	LA14143790	1	Pin	(6)
8	LA15896221	1	Nut	
9	LA340481810	1	Cable Tie	
10	LA355510620	1	Flat Washer	
11		1	Panel	See Page - Reference Number 100-0020/21

L-LD56-001-A

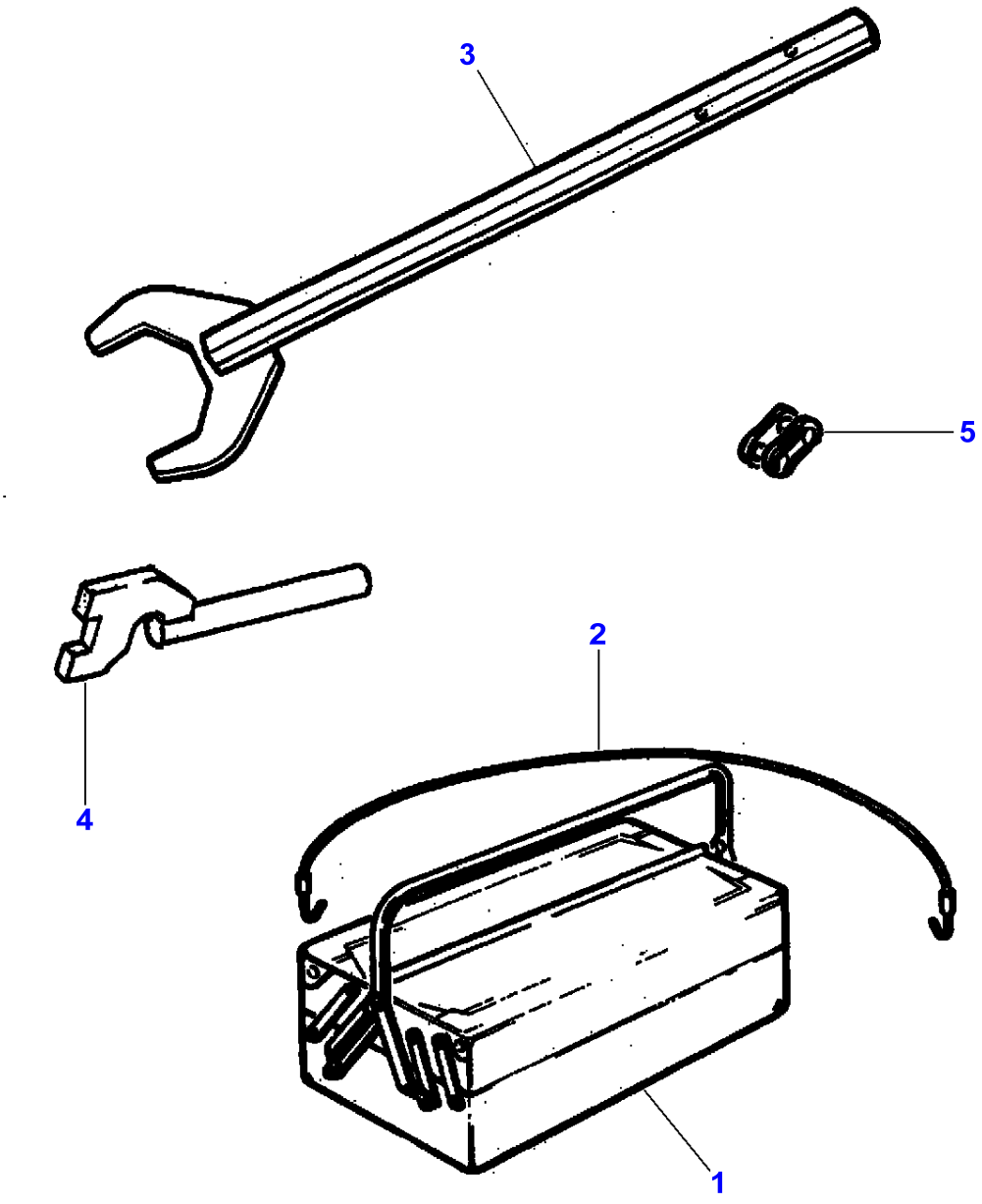

Item	Part Number	Qty	Description	Comments
1	LA300134400	1	Tool Box	Up to Serial or Engine Number
	LA323251500	1	Tool Box	From Serial or Engine Number 551710061
2	LA321123550	1	Tie Rod	
3	LA322301350	1	Lever	
4	LA322373350	1	Winch	
5	**LA344377200**	1	Link	

L-LD57-001-A

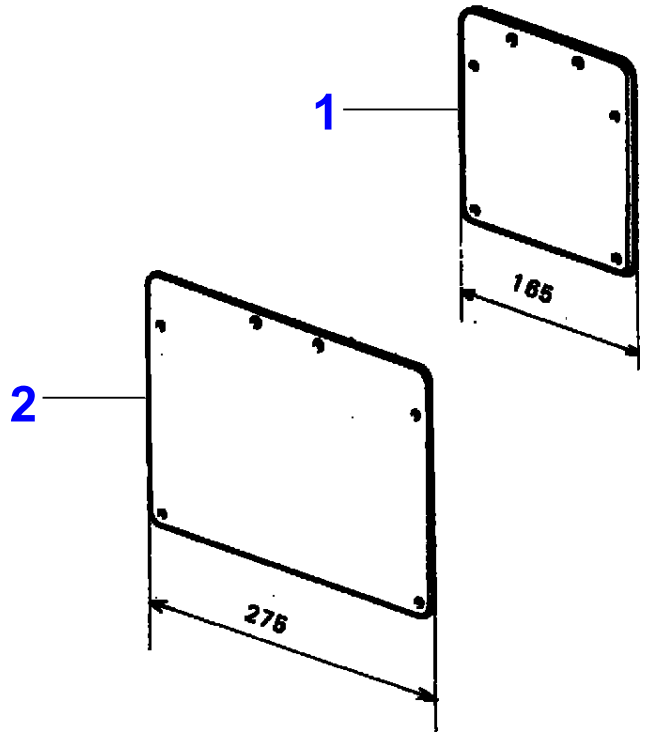

Item	Part Number	Qty	Description	Comments
1	LA322509050	1	Plate	Width 165 MM
2	LA322509150	1	Plate	Width 275 MM

L-LD58-001-A

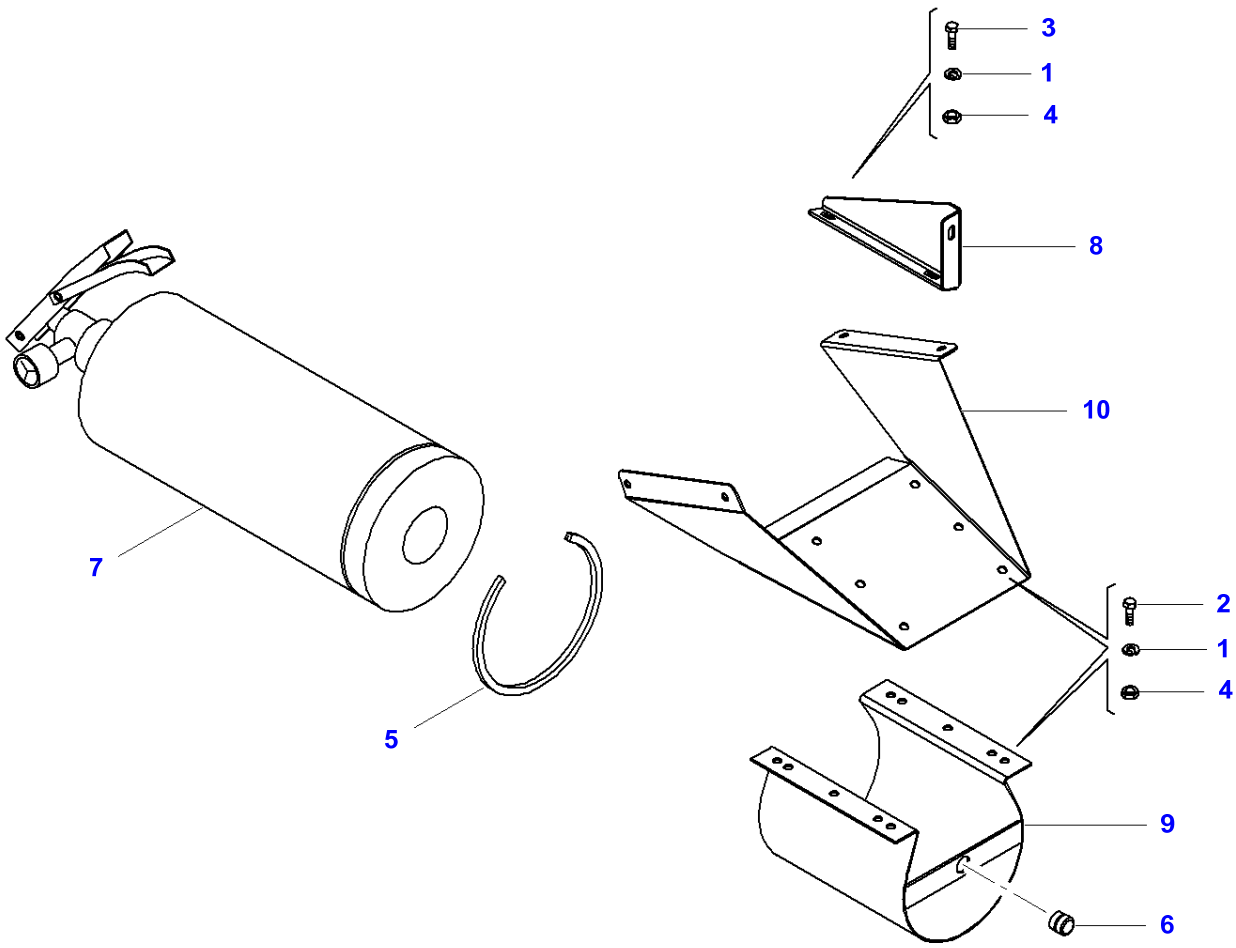

Item	Part Number	Qty	Description	Comments
1	LA12034571	2	Lock Washer	
2	LA16043221	1	Cap Screw	
3	LA16043421	1	Cap Screw	
4	LA16100811	2	Nut	
5	LA300037494	1	Gasket	
6	LA300112779	1	Bush	
7	LA322870450	1	Extinguisher	
8	LA322995350	1	Reinforcement	Up to Serial or Engine Number 551710022
9	LA323065650	1	Support	
10	LA323065750	1	Console	Up to Serial or Engine Number 551710022

L-LD59-001-A

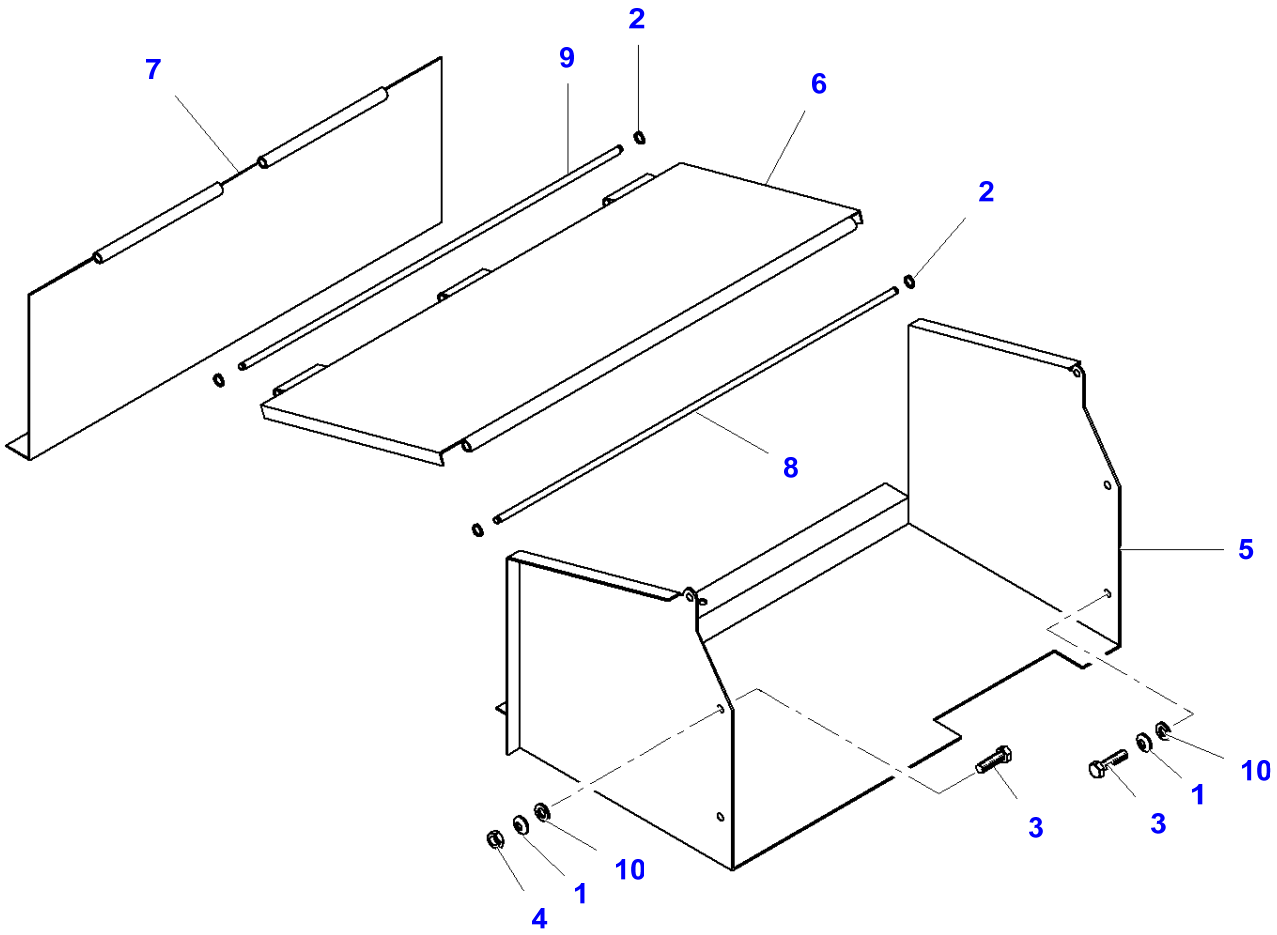

Item	Part Number	Qty	Description
1	LA322358	4	Lock Washer
2	LA11087876	4	Ring
3	LA16043221	4	Cap Screw
4	LA16100811	4	Nut
5	LA322887650	1	Container
6	LA322887750	1	Cover
7	LA322887850	1	Cover
8	LA322887950	1	Roll Pin
9	LA322889150	1	Roll Pin
10	LA355500915	4	Flat Washer

L-LD60-007-A

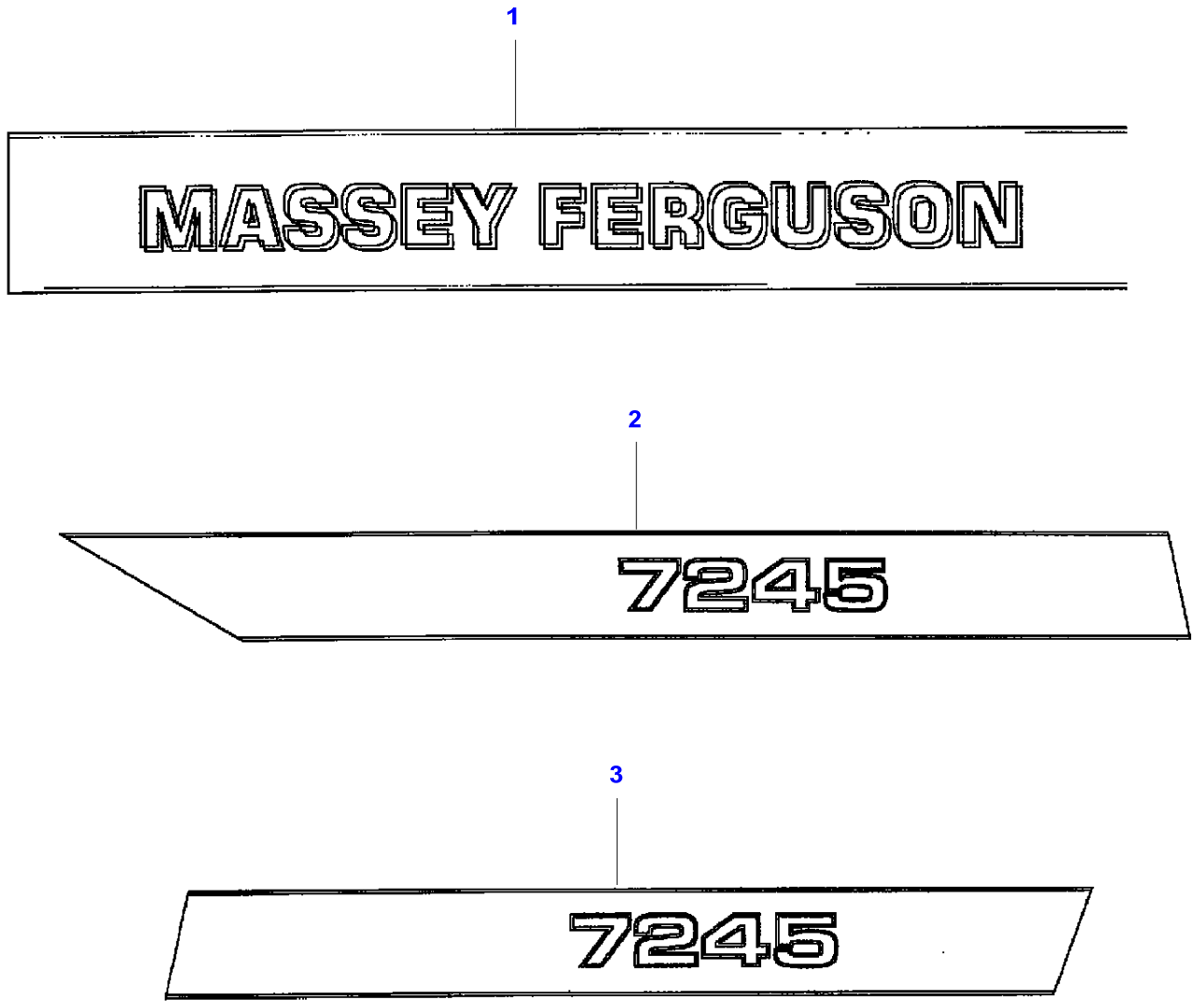

Item	Part Number	Qty	Description
1	LA323156250	1	Decal
2	LA323157150	1	Decal
3	LA323156850	1	Decal

L-LD60-008-A

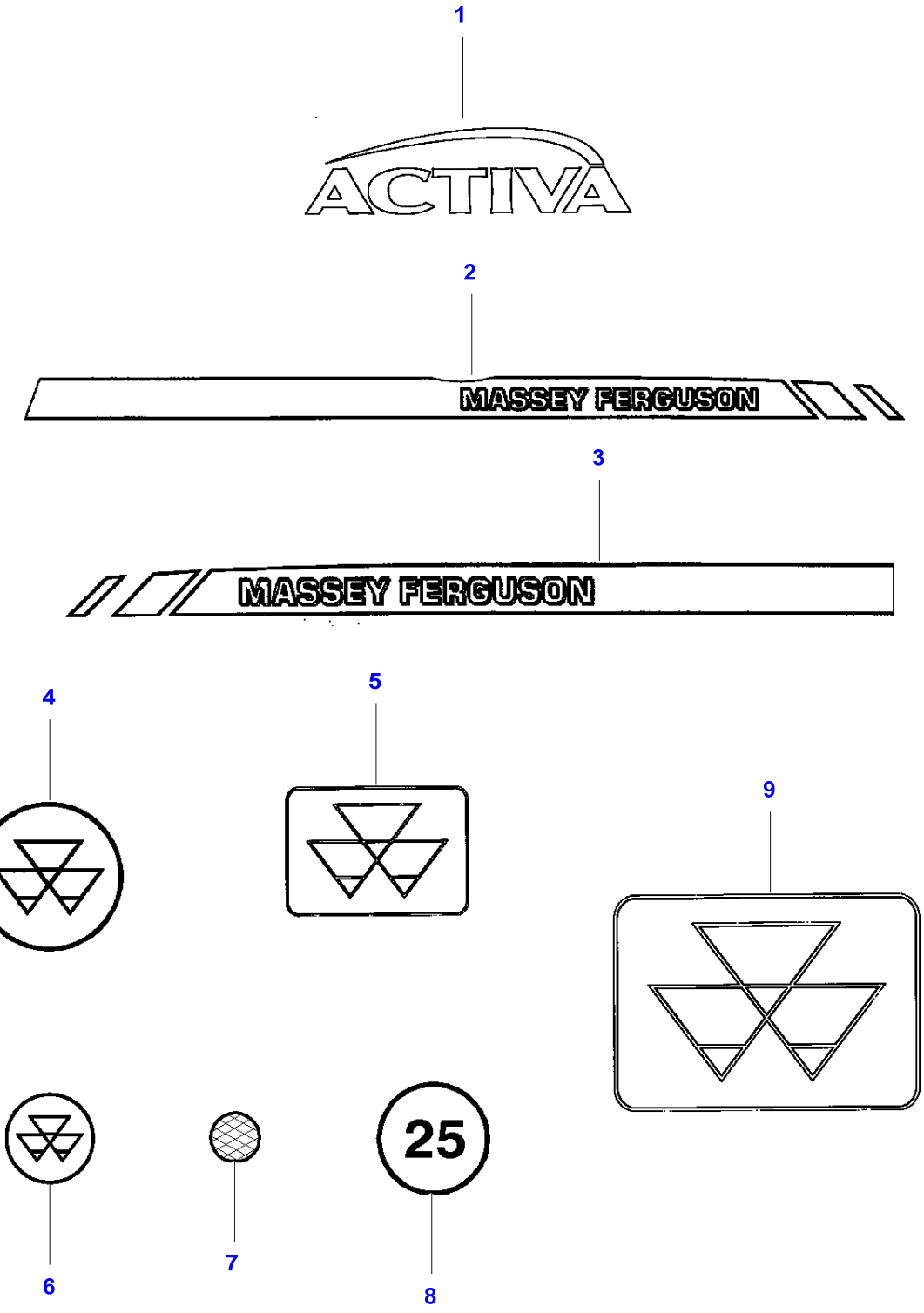

Item	Part Number	Qty	Description
1	LA323156450	1	Decal
2	LA323156050	1	Decal
3	LA323156150	1	Decal
4	LA323156650	1	Decal
5	LA323156550	1	Decal
6	LA323147850	1	Decal
7	LA322508750	1	Cat Eye
8	LA341000095	1	Decal
9	LA323156350	1	Decal

L-LD60-003-B

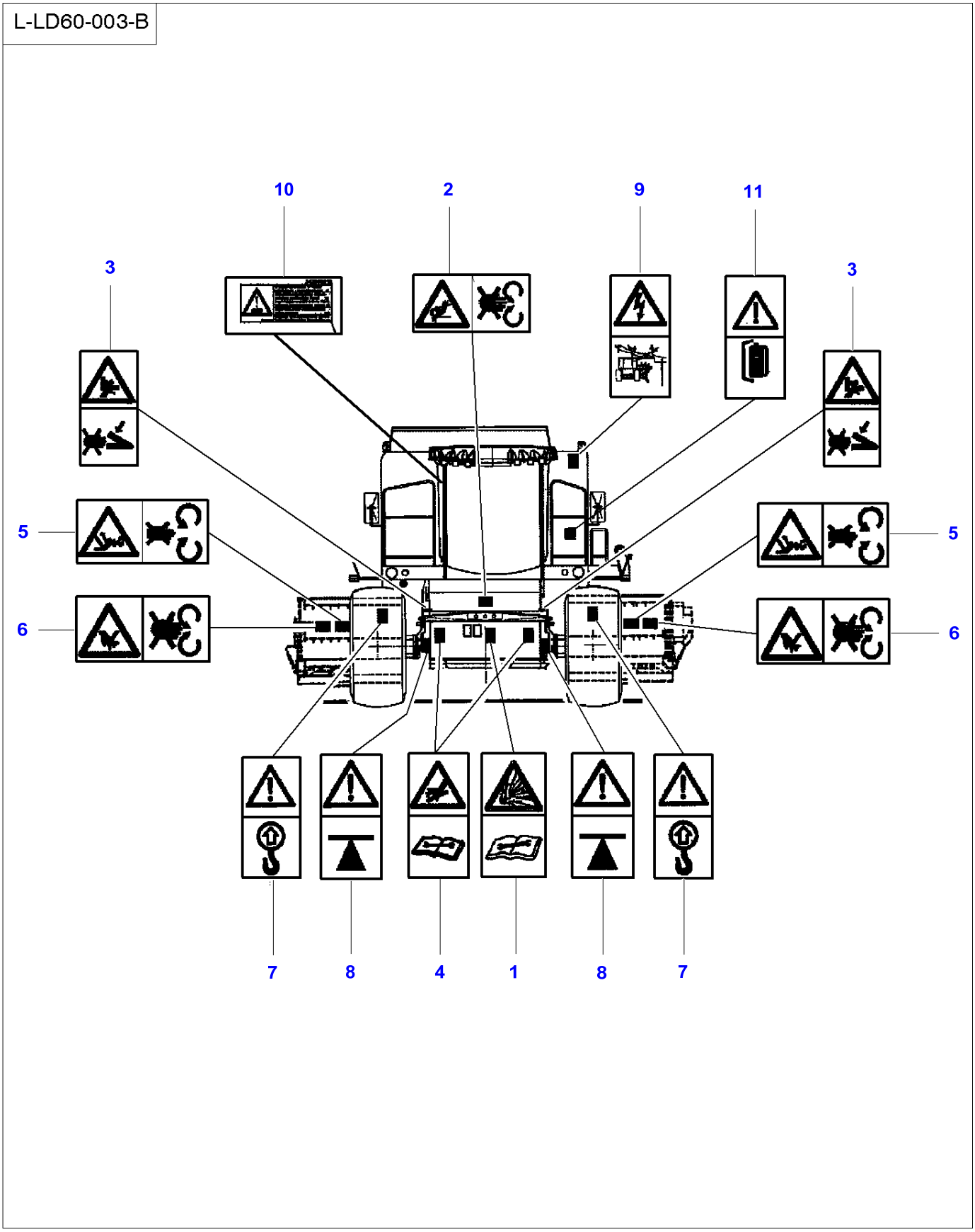

Item	Part Number	Qty	Description	Comments
1	LA341000014	1	Decal	
2	LA341000015	1	Decal	
3	LA341000016	2	Decal	
4	LA341000029	1	Decal	
5	LA341000033	2	Decal	
6	LA341000035	2	Decal	
7	LA341000079	2	Decal	
8	LA341000093	2	Decal	
9	LA341000120	1	Decal	
10	LA342000018	1	Decal	From Serial or Engine Number 551710023
11	LA341000030	1	Decal	From Serial or Engine Number 551710023

L-LD60-004-A

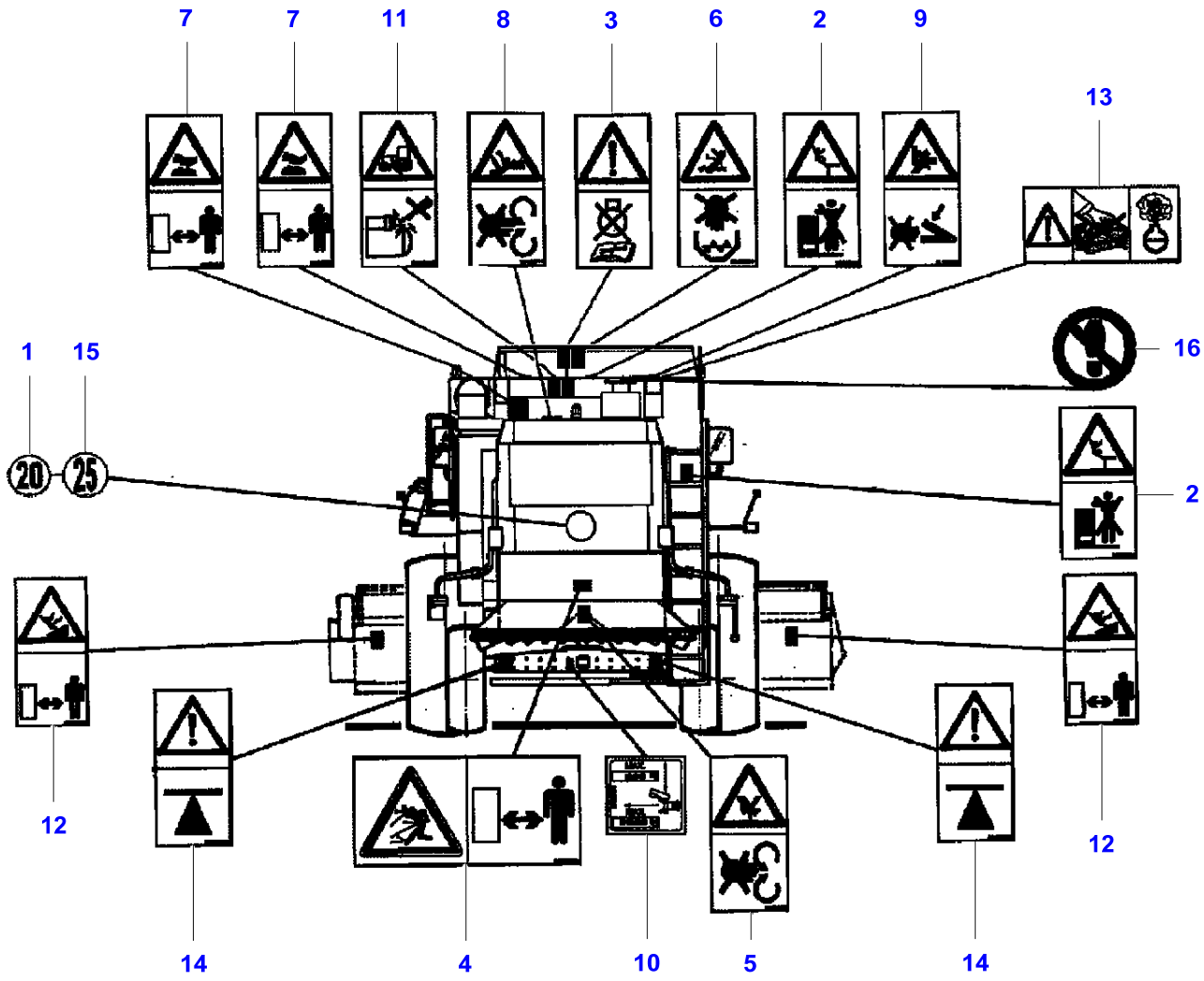

Item	Part Number	Qty	Description	Comments
1	LA321700650	1	Decal	
2	LA341000002	2	Decal	
3	LA341000003	1	Decal	
4	LA341000006	1	Decal	
5	LA341000007	1	Decal	
6	LA341000009	1	Decal	
7	LA341000010	2	Decal	
8	LA341000011	1	Decal	
9	LA341000016	1	Decal	Up to Serial or Engine Number
10	LA341000023	1	Decal	
11	LA341000028	1	Decal	
12	LA341000031	2	Decal	
13	LA341000034	1	Decal	
14	LA341000093	2	Decal	
15	LA341000095	1	Decal	
16	LA341000124	1	Decal	

L-LD60-005-B

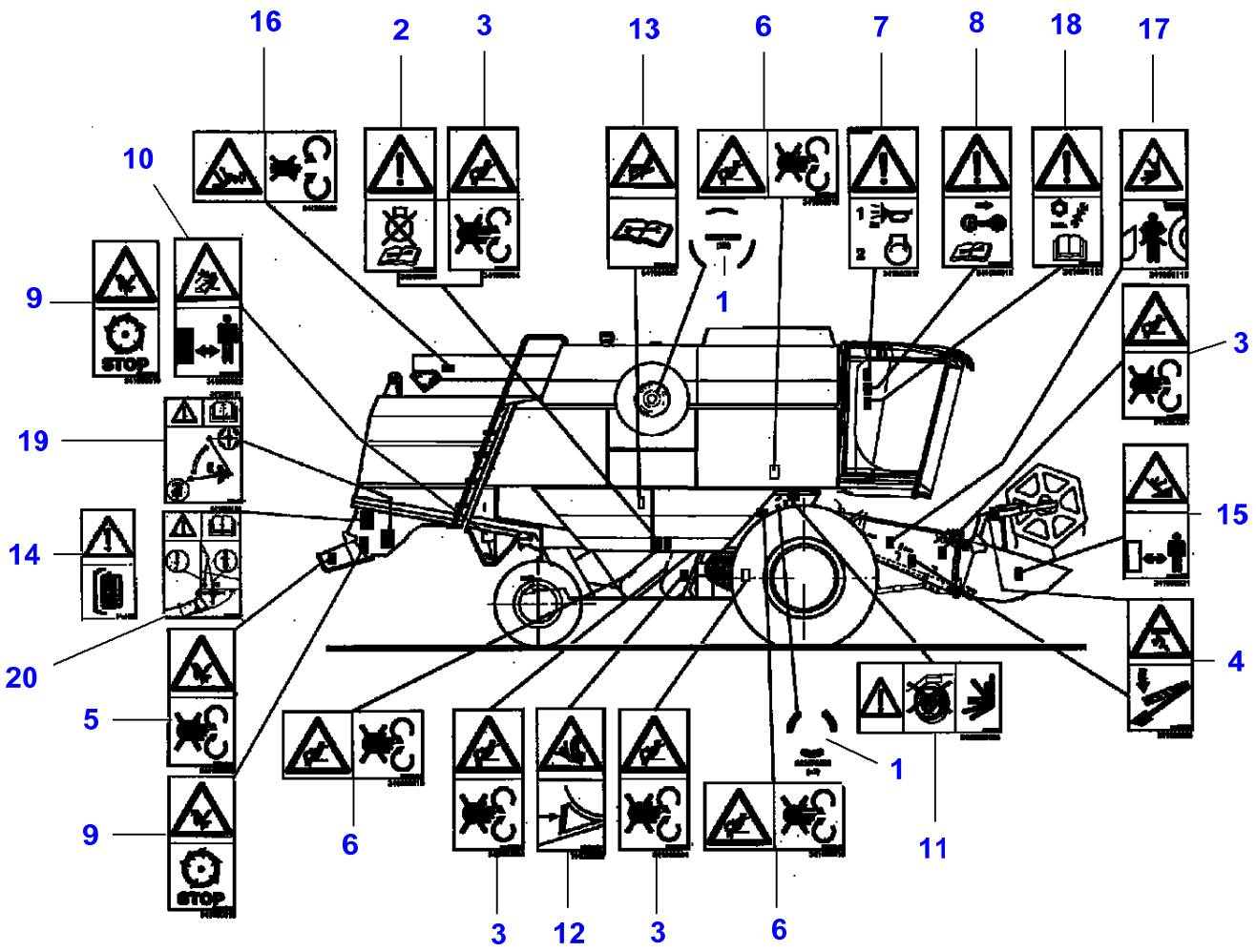

Item	Part Number	Qty	Description	Comments
1	LA322278250	2	Decal	
2	LA341000003	1	Decal	
3	LA341000004	4	Decal	
4	LA341000005	1	Decal	
5	LA341000007	1	Decal	
6	LA341000015	2	Decal	
7	LA341000017	1	Decal	
8	LA341000018	1	Decal	
9	LA341000019	1	Decal	
10	LA341000022	1	Decal	
11	LA341000025	1	Decal	
12	LA341000027	1	Decal	
13	LA341000029	1	Decal	
14	LA341000030	1	Decal	Up to Serial or Engine Number
15	LA341000031	1	Decal	
16	LA341000033	1	Decal	
17	LA341000119	1	Decal	
18	LA341000121	1	Decal	
19	LA341000131	1	Decal	From Serial or Engine Number
20	LA341000130	1	Decal	From Serial or Engine Number

L-LD60-006-B

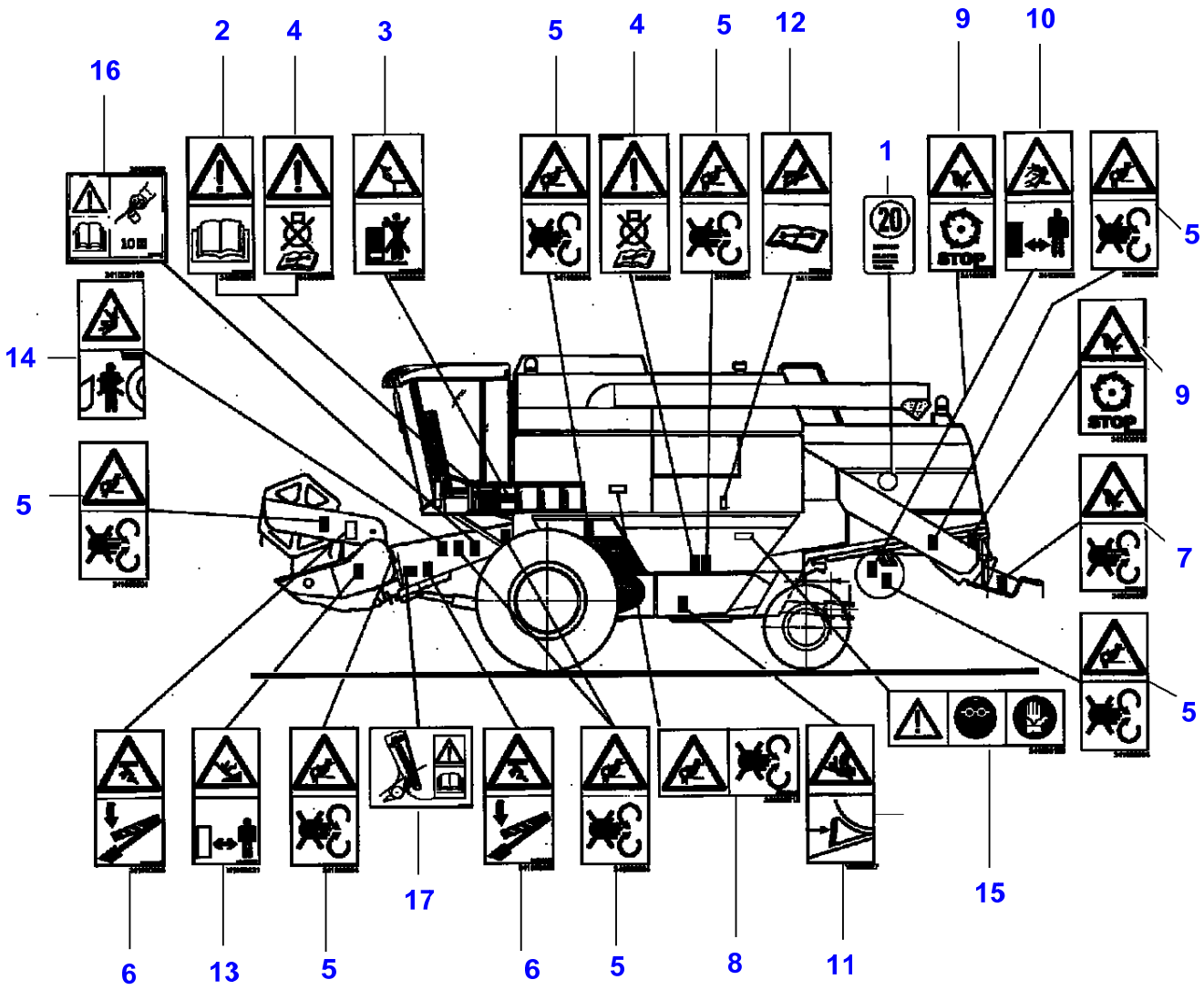

Item	Part Number	Qty	Description
1	LA321700650	1	Decal
2	LA341000001	1	Decal
3	LA341000002	1	Decal
4	LA341000003	2	Decal
5	LA341000004	7	Decal
6	LA341000005	1	Decal
7	LA341000007	1	Decal
8	LA341000015	1	Decal
9	LA341000019	1	Decal
10	LA341000022	1	Decal
11	LA341000027	1	Decal
12	LA341000029	1	Decal
13	LA341000031	1	Decal
14	LA341000119	1	Decal
15	LA341000123	1	Decal
16	LA341000052	1	Decal
17	LA341000128	1	Decal

L-LD61-001-A

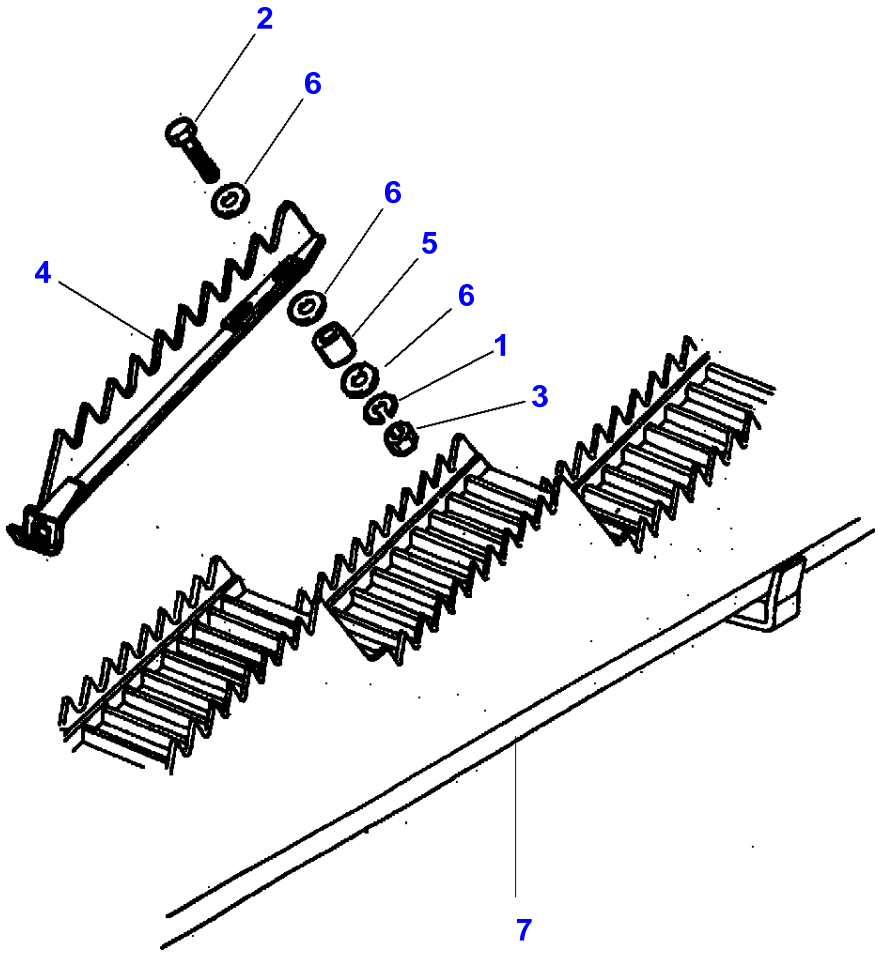

Item	Part Number	Qty	Description	Comments
1	LA12035670	1	Lock Washer	
2	LA15212721	1	Cap Screw	
3	LA15896221	1	Nut	
4	LA321205950	1	Elevator	
5	LA344158136	1	Bush	
6	LA355500715	3	Flat Washer	
7			Kit, Straw Walkr	See Page - Reference Number 060-0025/10

L-LD62-001-A

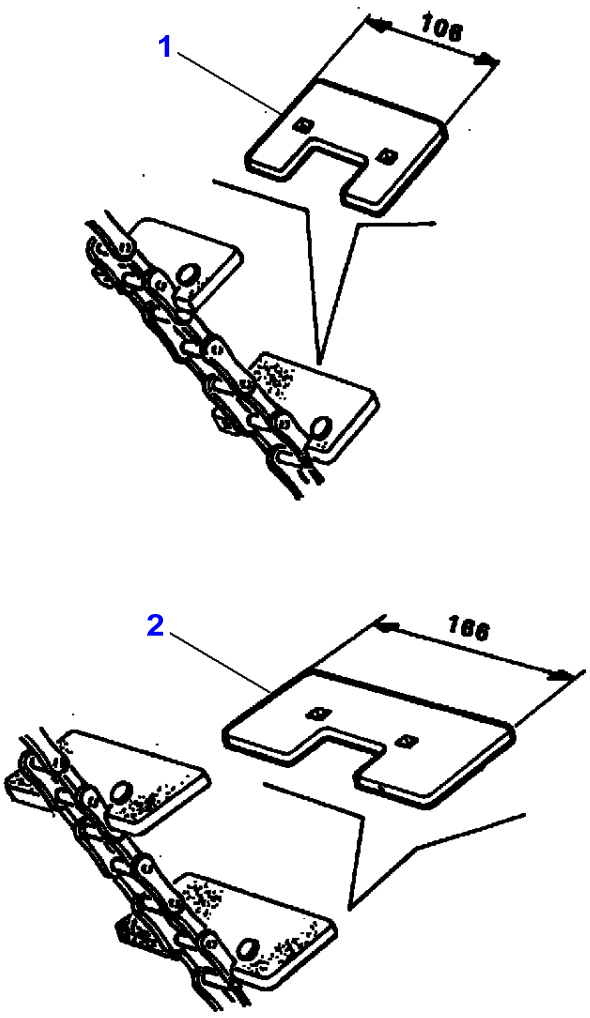

Item	Part Number	Qty	Description	Comments
1	LA321822150	1	Paddle	Width 106 MM
2	LA321822250	1	Paddle	Width 166 MM

L-LC15-001-A

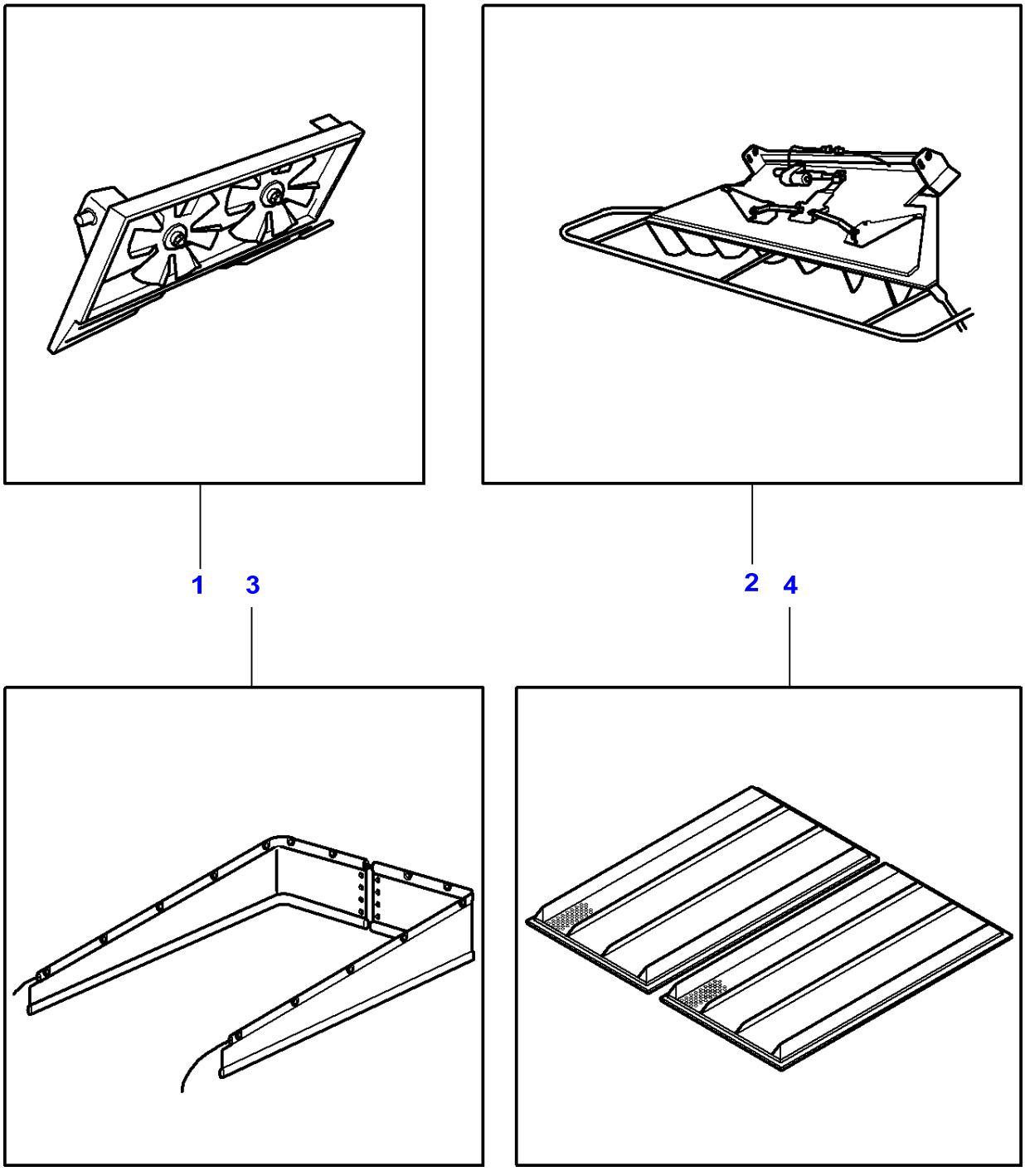

Item	Part Number	Qty	Description	Comments
1	LA711776131	X	Accessory	[A]
2	LA711290131	X	Kit, Deflector	[B]
3	LA711796141	X	Accessory	[C]
4	LA711338139	X	Accessory	[D] Diameter 5mm
	LA711341139	X	Kit	[D] Diameter 8mm
	LA711342139	X	Kit	[D] Diameter 10mm
	LA711343139	X	Kit	[D] Diameter 12mm
	LA711345139	X	Kit	[D] Diameter 16mm
	LA711346139	X	Kit	[D] Diameter 18mm
	LA711347139	X	Kit	[D] Diameter 20mm

FOOTNOTE [A] CHAFF SPREADER
FOOTNOTE [B] ELECTRICAL ADJUSTMENT DEFLECTORS
FOOTNOTE [C] CANVAS
FOOTNOTE [D] ROUND HOLE LOWER SIEVES

L-LC15-002-A

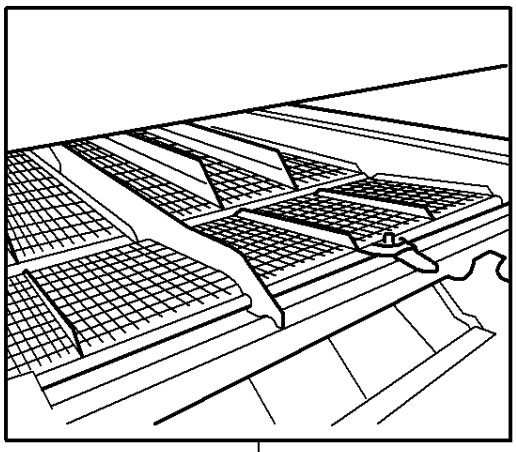

1

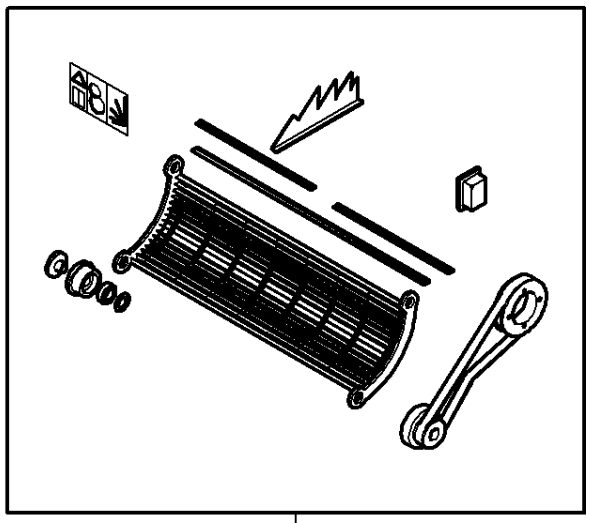

2

3

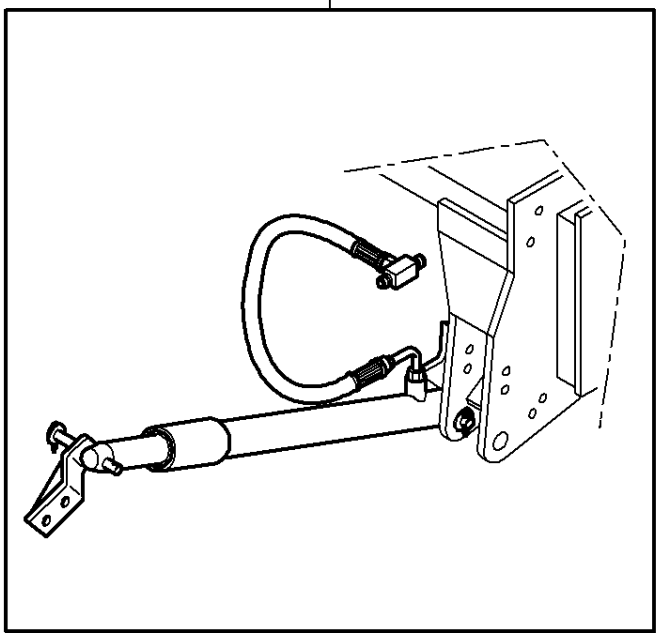

4

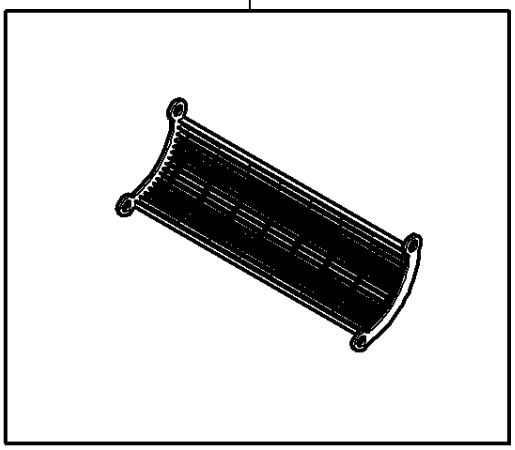

Item	Part Number	Qty	Description	Comments
1	LA711389131	X	Accessory	[A]
2	LA711905501	X	Accessory	[B]
3	LA711962141	X	Accessory	[C]
4		X	Not Used	

FOOTNOTE [A] HIGH PERFORMANCE SIEVE FOR MAIZE
FOOTNOTE [B] MAIZE CONVERSION KIT
FOOTNOTE [C] CUTTER BAR LIFTING ADDITIONAL RAM

L-LC15-003-B

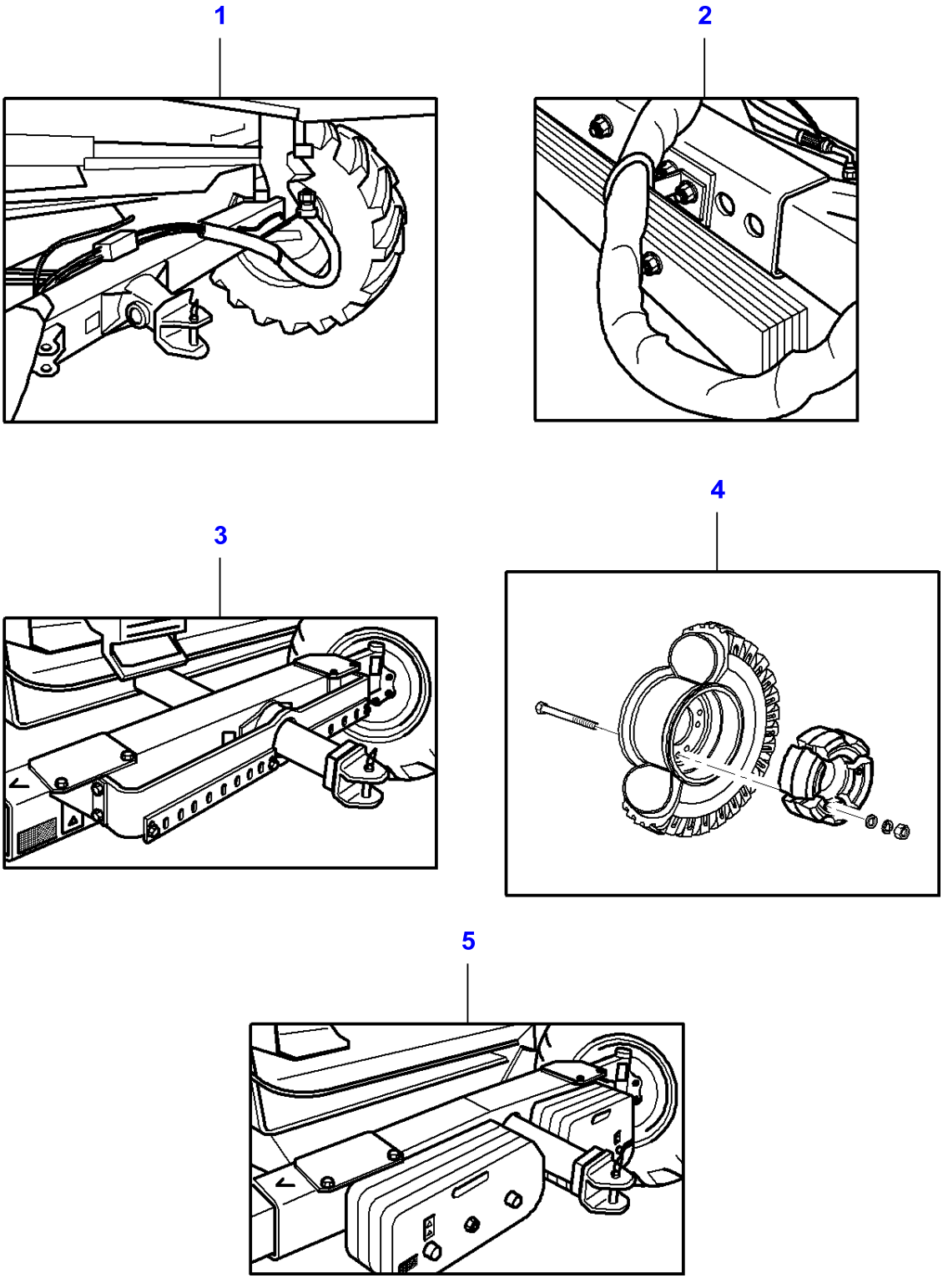

Item	Part Number	Qty	Description	Comments
1	LA711132131	X	Accessory	[A] Four Wheel Drive
2	LA711877141	X	Accessory	[B] Four Wheel Drive
3	LA711878141	X	Accessory	[C]
4	LA711881139	X	Accessory	[D] Two Wheel Drive
5	LA711878001	X	Kit	

FOOTNOTE [A] 4 WD REAR AXLE
FOOTNOTE [B] BALLAST WEIGHTS FOR 4 WD REAR AXLE
FOOTNOTE [C] 2WD REAR AXLE BALLAST FRAME
FOOTNOTE [D] REAR WHEEL WEIGHT

L-LC15-004-A

1

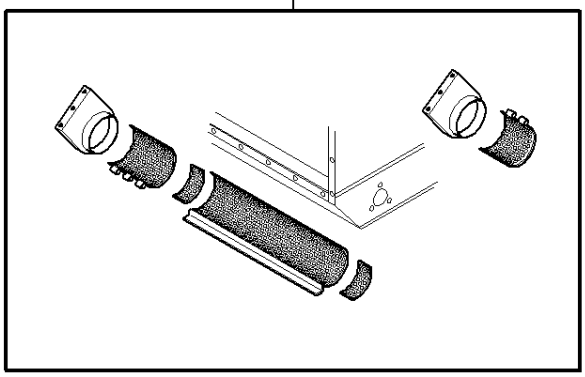

2

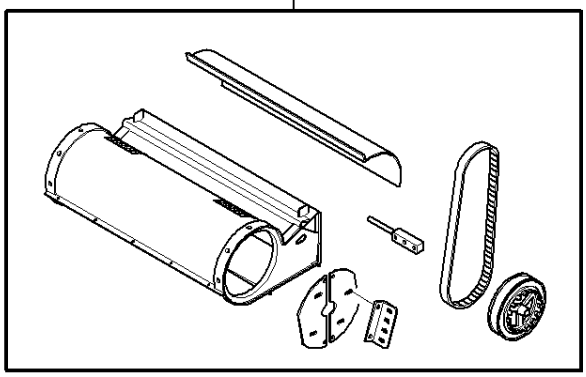

3

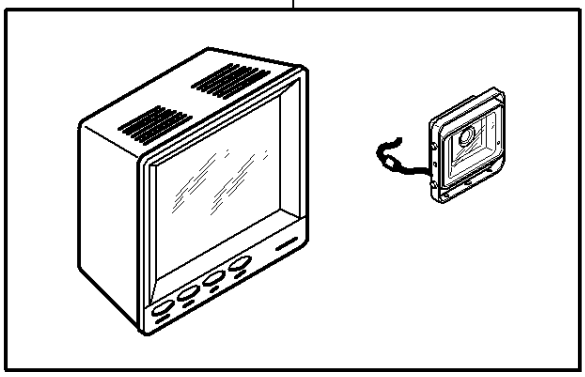

Item	Part Number	Description	Comments
1	LA712954501	Accessory	[A]
2	LA711949139	Accessory	[B]
3	LA322990900	Accessory	[C]

FOOTNOTE [A] PEA AND BEAN HARVEST EQUIPMENT
FOOTNOTE [B] FAN SPEED REDUCTION AND BLANKING PLATES FOR SMALL SEEDS
FOOTNOTE [C] REAR VIEW CAMERA AND MONITOR

L-LC15-005-A

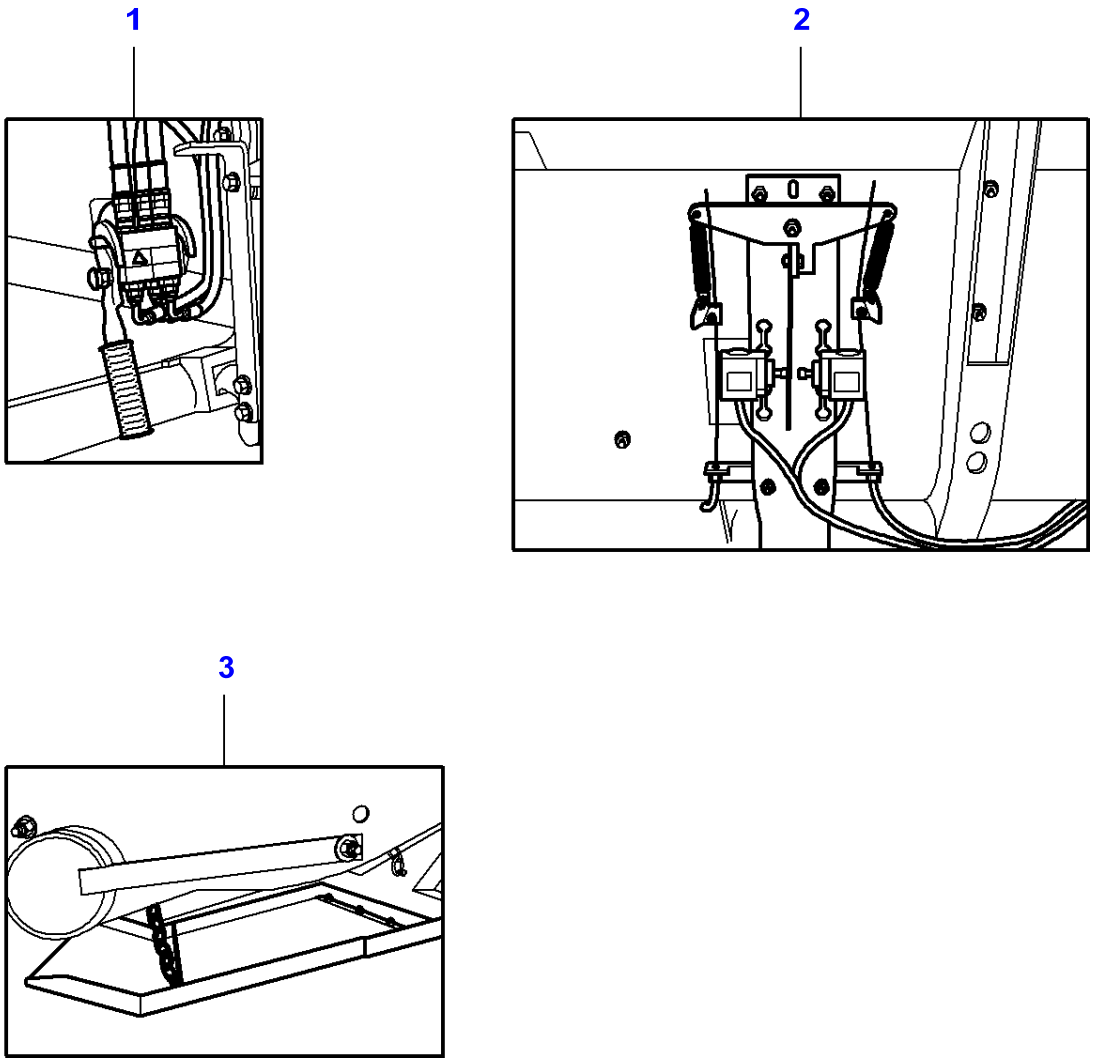

Item	Part Number	Description	Comments
1	LA711613637	Accessory	[A]
2	LA711555637	Kit	[B] AUTOLEVEL KIT 4.20 & 4.80 TAB. See Page - Reference Number 140-0030
	LA711555657	Kit	[B] AUTOLEVEL KIT 5.40m TABLE See Page - Reference Number 140-0030
	LA711555667	Kit	[B] AUTOLEVEL KIT 6.00m TABLE See Page - Reference Number 140-0030
	LA711555677	Accessory	[B] AUTOLEVEL KIT 6.60m TABLE See Page - Reference Number 140-0030
	LA711511151	Drive	[B]
3	LA391600022	Accessory	[C]
4	LA711739001	Kit	[D,E]

FOOTNOTE [A] HYDRAULIC MULTI-COUPLING FOR THE TABLE
FOOTNOTE [B] AUTOLEVEL TABLE KIT
FOOTNOTE [C] AUTOLEVEL TABLE SKID EXTENTIONS
FOOTNOTE [D] AIR COMPRESSOR
FOOTNOTE [E] NOT ILLUSTRATED

L-LC15-006-A

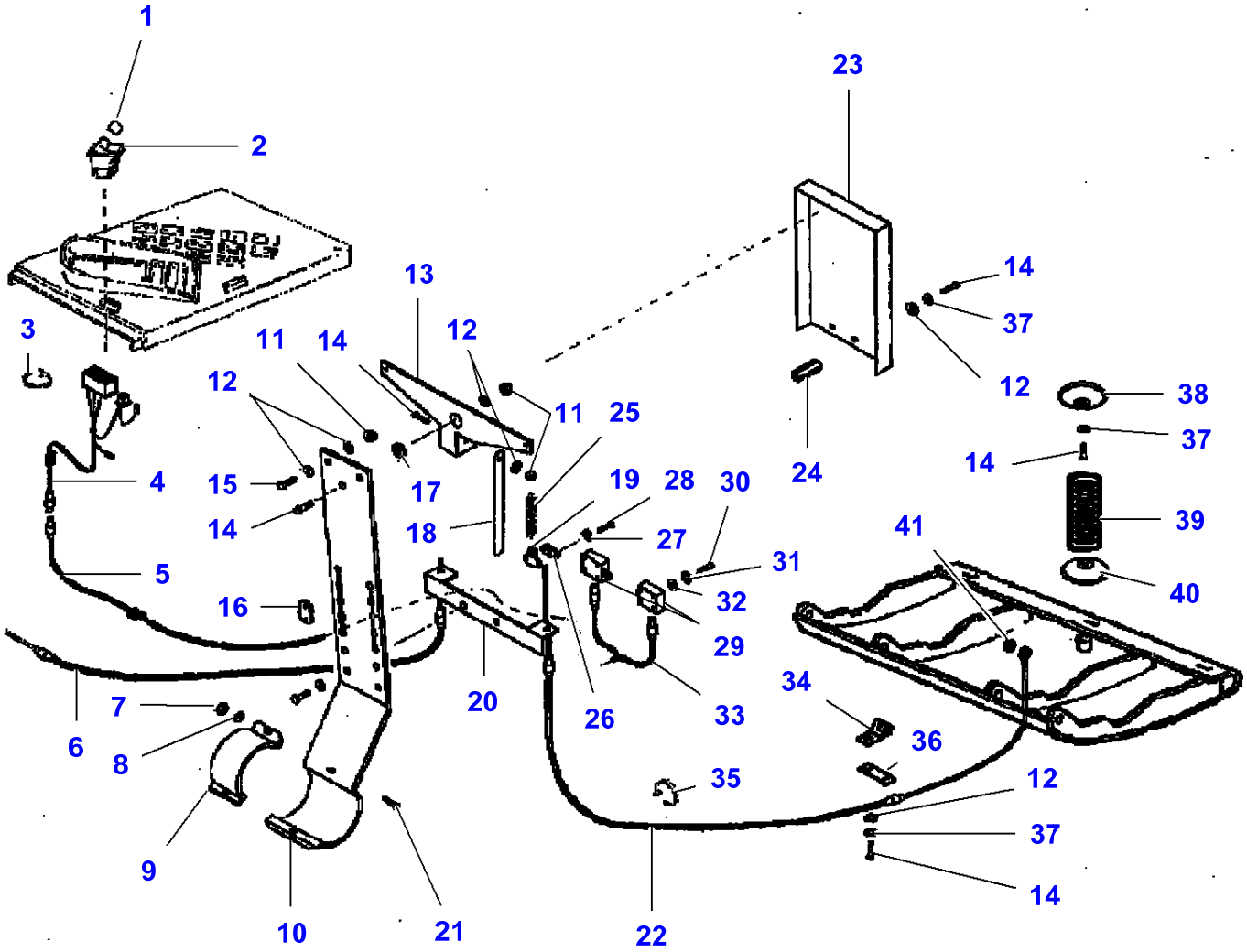
1
2
3
4
5
6
7
8
9
10
11
12
13
14
15
16
17
18
19
20
21
22
23
24
25
26
27
28
29
30
31
32
33
34
35
36
37
38
39
40
41

Item	Part Number	Qty	Description	Comments
1	LA322118450	1	Plate	
2	LA321848200	1	Switch	
3	LA340481806	1	Cable Tie	
4	LA322761100	1	Harness	
5	LA322761200	1	Harness	
6	LA322714400	1	Cable	
7	LA11701711	1	Nut	
8	LA12034671	1	Lock Washer	
9	LA321092950	1	Support	
10	LA322359750	1	Support	
11	LA16104111	2	Locknut	
12	LA355510820	5	Flat Washer	
13	LA322760850	1	Support	
14	LA16043421	4	Cap Screw	
15	LA15213321	1	Cap Screw	
16	LA322226450	1	Plate	
17	LA344158154	1	Washer	
18	LA322760750	1	Strap	
19	LA322760650	1	Clamp	
20	LA322760550	1	Bar	
21	LA11106221	1	Cap Screw	
22	LA322714800	1	Cable	L420 - L480
	LA322714700	1	Cable	L540
	LA322714600	1	Cable	L600
	LA322714500	1	Cable	L660
23	LA322761050	1	Plate	
24	LA322760950	1	Pin	
25	LA350356531	1	Spring	
26	LA300031960	1	Plate	
27	LA12035671	1	Lock Washer	
28	LA10902221	1	Cap Screw	
29	**LA322622400**	1	Switch	
30	LA10375811	1	Screw	
31	LA12035371	1	Lock Washer	
32	LA355500515	1	Flat Washer	
33	LA321910400	1	Nut	
34	LA322760450	1	Support	
35	LA340481811	1	Cable Tie	
36	LA322706850	1	Finger	
37	LA12034571	3	Lock Washer	
38	LA322660350	1	Spring Seat	
39	LA353561173	1	Spring	
40	LA322660350	1	Spring Seat	
41	LA16104111	1	Locknut	

L-LE21-001-A

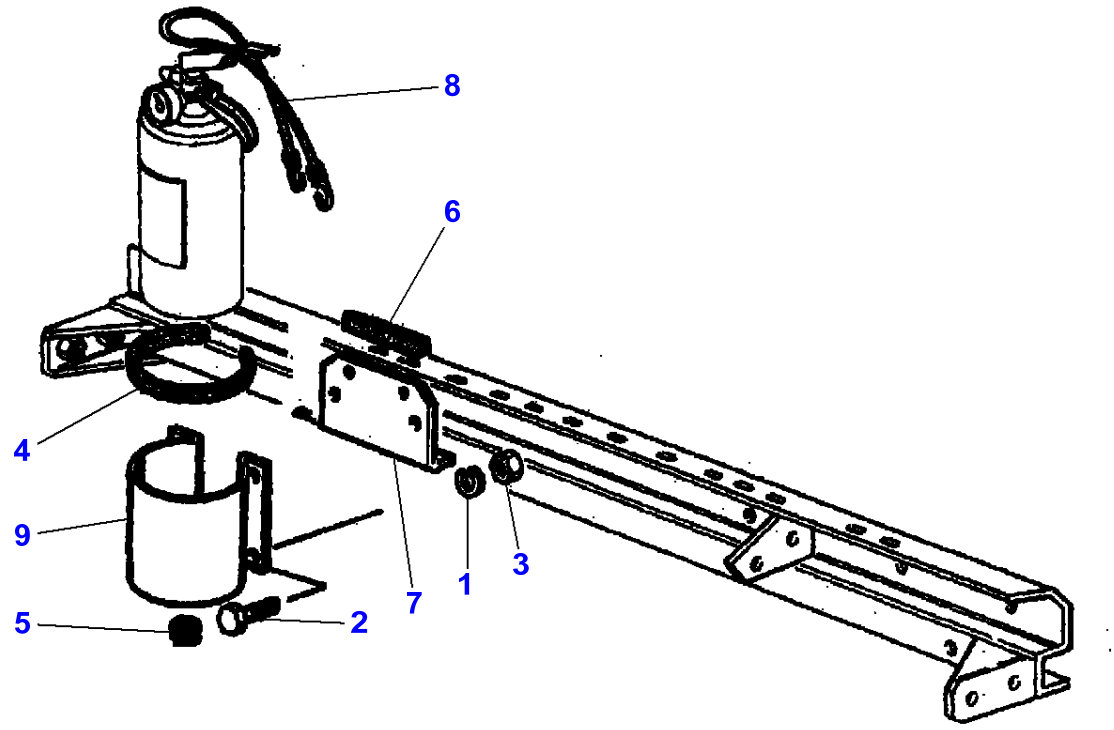

Item	Part Number	Qty	Description
1	LA12034571	4	Lock Washer
2	LA16043224	4	Cap Screw
3	LA16100811	4	Nut
4	LA300037494	1	Gasket
5	LA300112779	1	Bush
6	LA300128967	1	Profile
7	LA322807050	1	Angle.
8	LA322870450	1	Extinguisher
9	LA323065650	1	Support

L-LD64-001-B

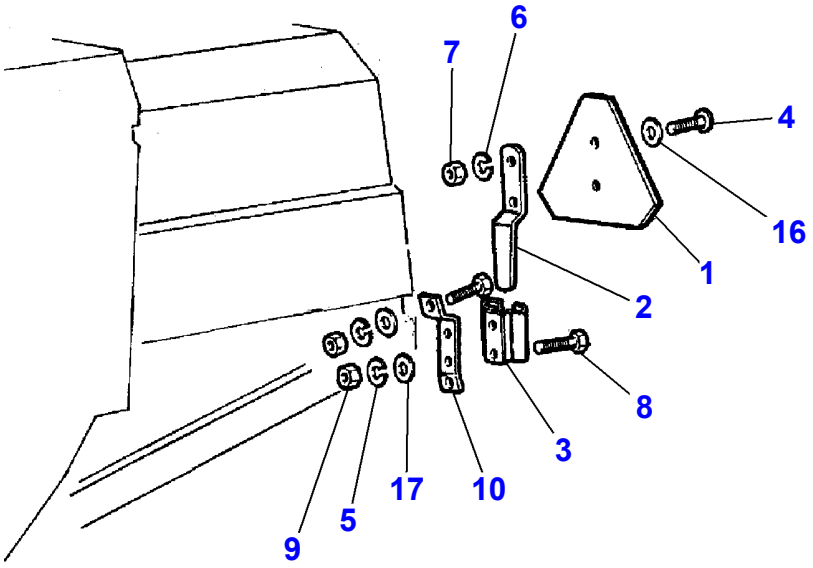
6
7
4
16
1
2
8
3
17
10
5
9

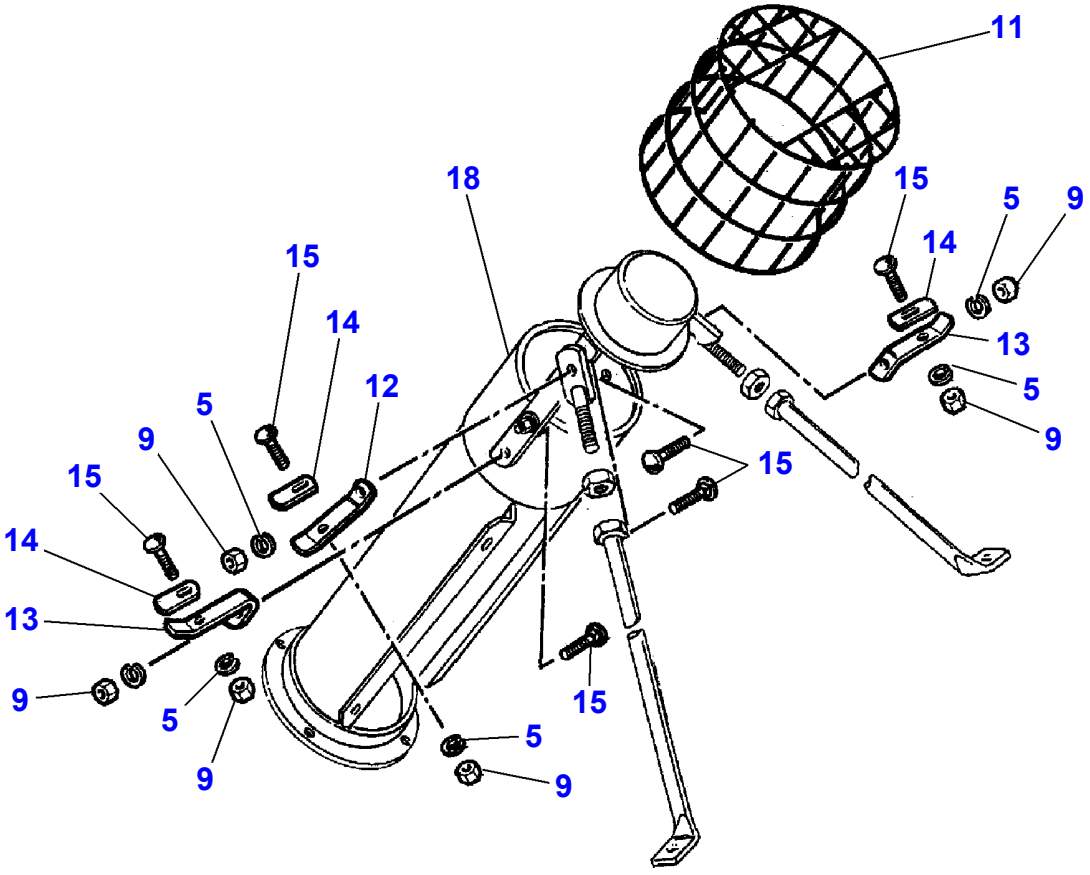
11
18
15
5
9
14
13
5
9
15
15
14
12
5
9
15
14
13
9
5
9
15
5
9

Item	Part Number	Qty	Description
1	LA5144870	1	Cat Eye
2	LA5148516	1	Bracket
3	LA5148517	1	Support
4	LA10377011	2	Screw
5	LA12034571	10	Lock Washer
6	LA12035670	2	Lock Washer
7	LA15896221	2	Nut
8	LA16043224	2	Cap Screw
9	LA16100811	6	Nut
10	LA320874350	1	Support
11	LA322184350	1	Shield
12	LA322184450	1	Bracket
13	LA322184550	2	Bracket
14	LA322184650	3	Plate
15	LA350342512	6	Carriage Bolt
16	LA355510615	2	Flat Washer
17	LA355510820	4	Flat Washer
18		1	Tube

L-LC36-008-A

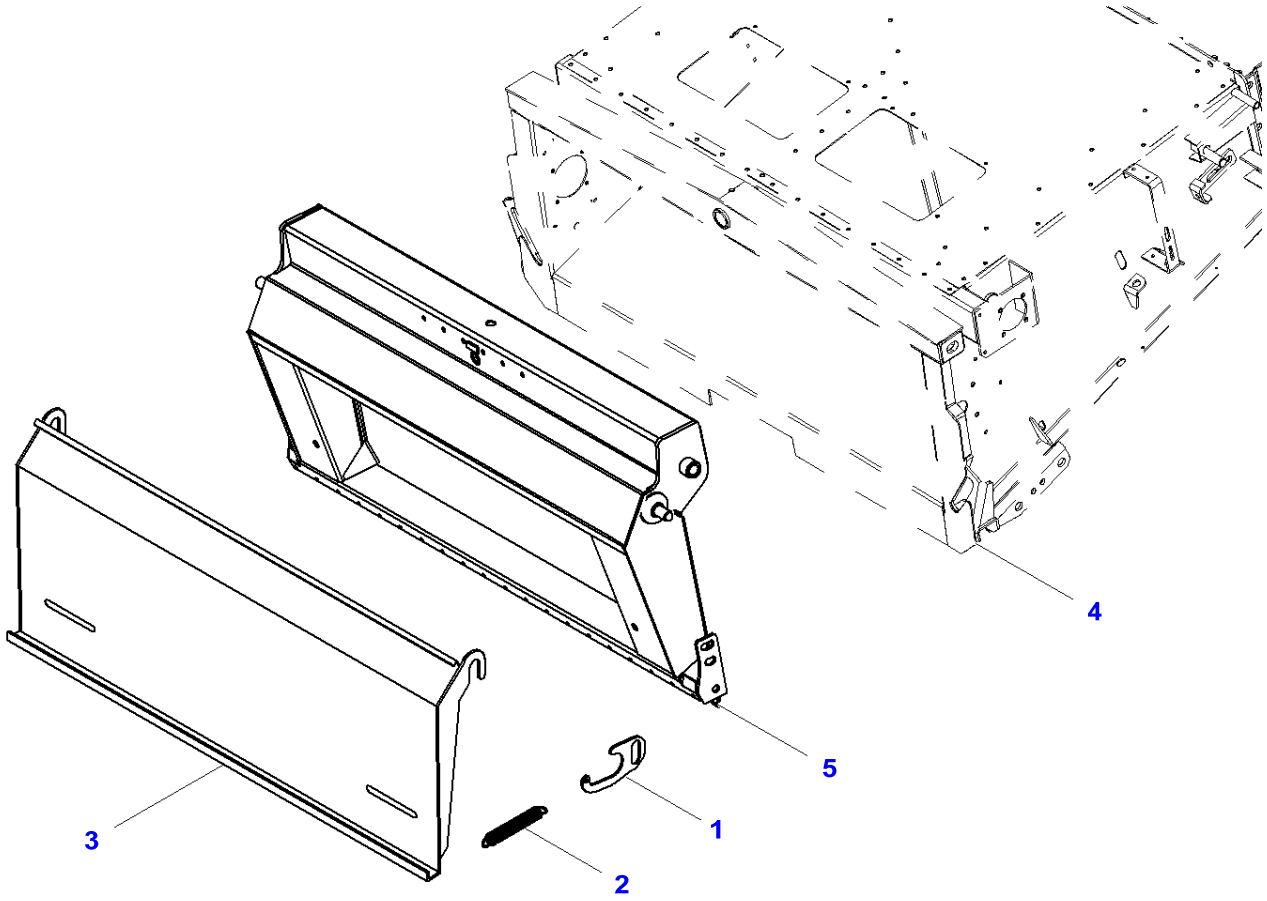

Item	Part Number	Qty	Description	Comments
1	LA322912950	1	Retainer	
2	LA350356530	1	Spring	
3	LA322912850	1	Shield	
4		1	Elevator	See Page - Reference Number 040-0010/16
5		1	Elevator	See Page - Reference Number 040-0055/13

L-LD65-001-B

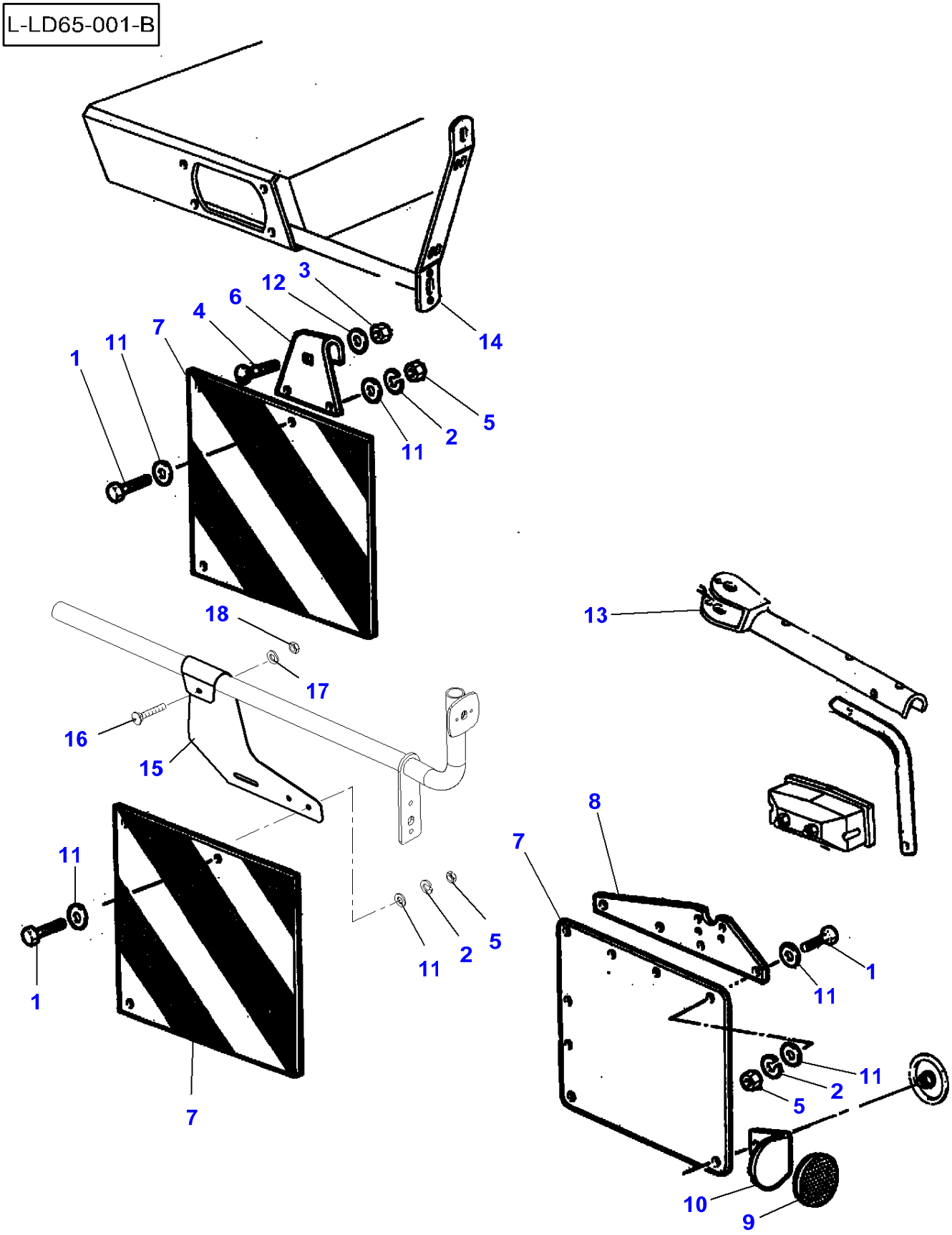

Item	Part Number	Qty	Description	Comments
1	LA10902224	10	Cap Screw	
2	LA12035671	10	Lock Washer	
3	LA12574211	2	Locknut	
4	LA13178601	2	Screw	
5	LA15896211	10	Nut	
6	LA321995150	2	Support	
7	LA321998950	4	Panel	
8	LA322397050	2	Support	
9	LA322508750	8	Cat Eye	
10	LA322508850	2	Support	
11	LA355510615	20	Flat Washer	
12	LA355510620	2	Flat Washer	
13		1	Arm	See Page - Reference Number 120-0010/30
14		1	Arm	See Page - Reference Number 100-0065/11
15	LA323201650	1	Support	From Serial or Engine Number
16	LA13178601	1	Screw	From Serial or Engine Number
17	LA355510620	1	Flat Washer	From Serial or Engine Number
18	LA12574211	1	Locknut	From Serial or Engine Number

L-LD66-001-B

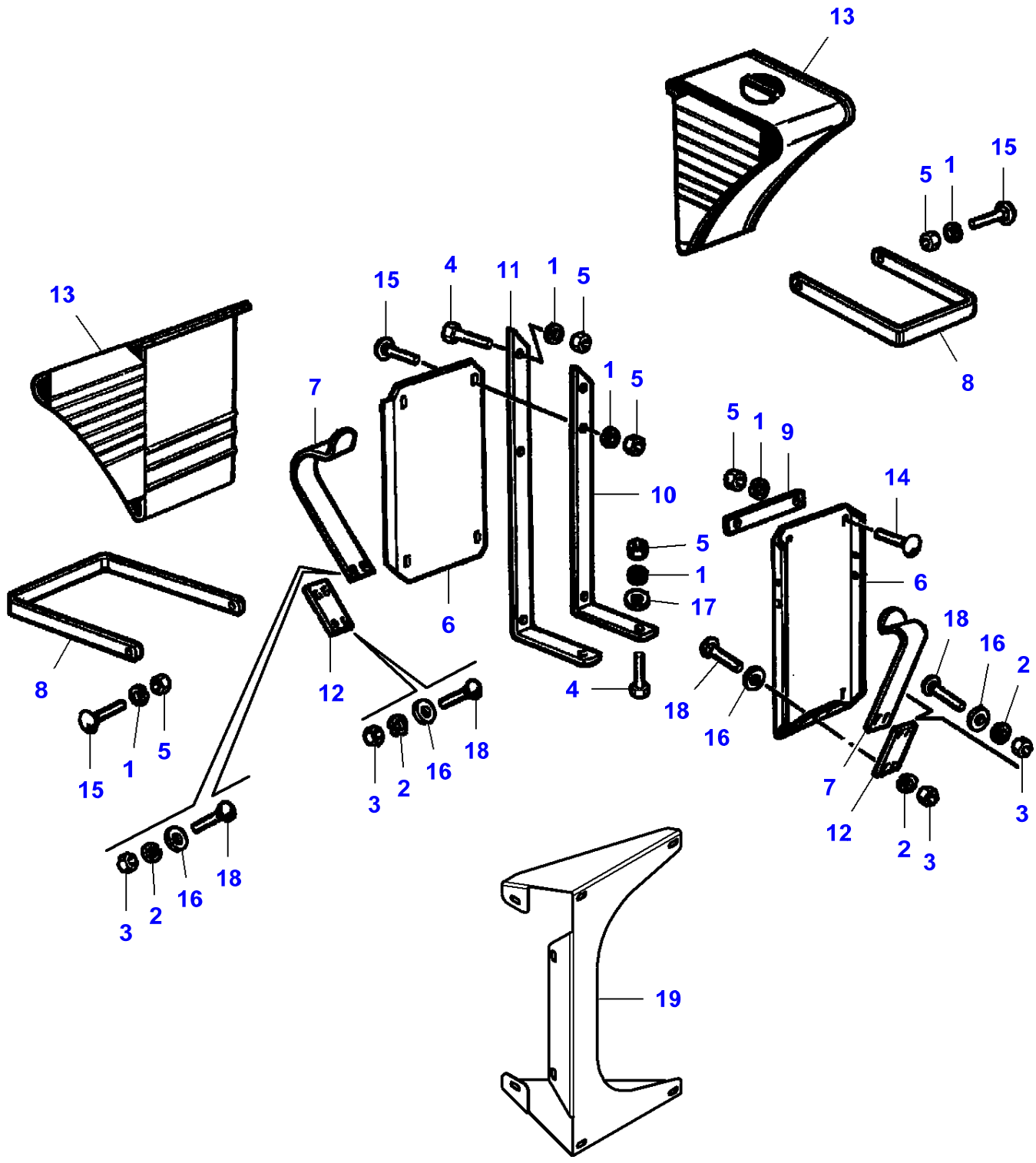
13
15
5
1
8
13
15
4
11
1
5
7
1
5
10
5
1
9
14
6
5
1
17
8
6
18
16
2
12
4
18
16
15
1
5
3
2
16
18
7
12
2
3
3
2
16
18
19

Item	Part Number	Qty	Description	Comments
1	LA12034571	16	Lock Washer	
2	LA12035670	8	Lock Washer	
3	LA15896221	8	Nut	
4	LA16043424	4	Cap Screw	
5	LA16100811	16	Nut	
6	LA320865350	2	Plate	
7	LA320865450	2	Clip	
8	LA320865550	2	Clamp	
9	LA320867150	2	Plate	
10	LA321970250	1	Bracket	Up to Serial or Engine Number
11	LA321970350	1	Bracket	Up to Serial or Engine Number
12	LA322491250	2	Plate	
13	LA322492050	2	Skid	
14	LA350342510	4	Carriage Bolt	
15	LA350342511	8	Carriage Bolt	
16	LA355510620	8	Flat Washer	
17	LA355510820	2	Flat Washer	
18	LA366000612	8	Screw	
19	LA323124550	1	Support	From Serial or Engine Number

L-LD67-001-B

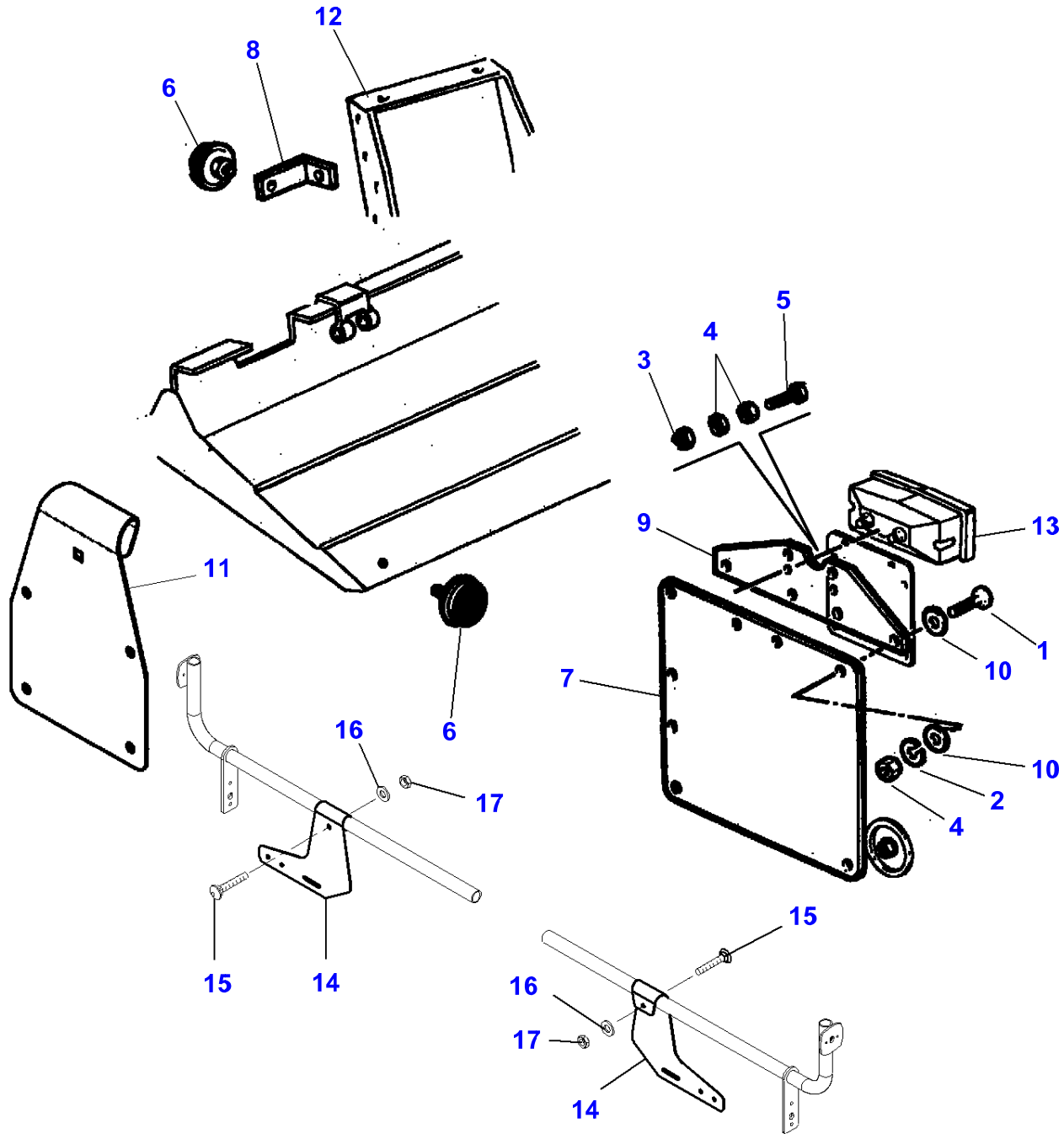

Item	Part Number	Qty	Description	Comments
1	LA10902224	6	Cap Screw	
2	LA12035671	10	Lock Washer	
3	LA12574211	2	Locknut	
4	LA15896211	10	Nut	
5	LA16050621	2	Screw	
6	LA320968900	2	Cat Eye	
7	LA321999050	2	Panel	
8	LA322194950	1	Bracket	
9	LA322397050	1	Support	
10	LA355510615	12	Flat Washer	
11	LA323124650	1	Plate	
12		1	Bracket	See Page - Reference Number 070-0150/25
13		1	Rear Light	See Page - Reference Number 120-0010/19
14	LA323201650	2	Support	From Serial or Engine Number
15	LA13178601	2	Screw	From Serial or Engine Number
16	LA355510620	2	Flat Washer	From Serial or Engine Number
17	LA12574211	2	Locknut	From Serial or Engine Number

L-LC33-001-A

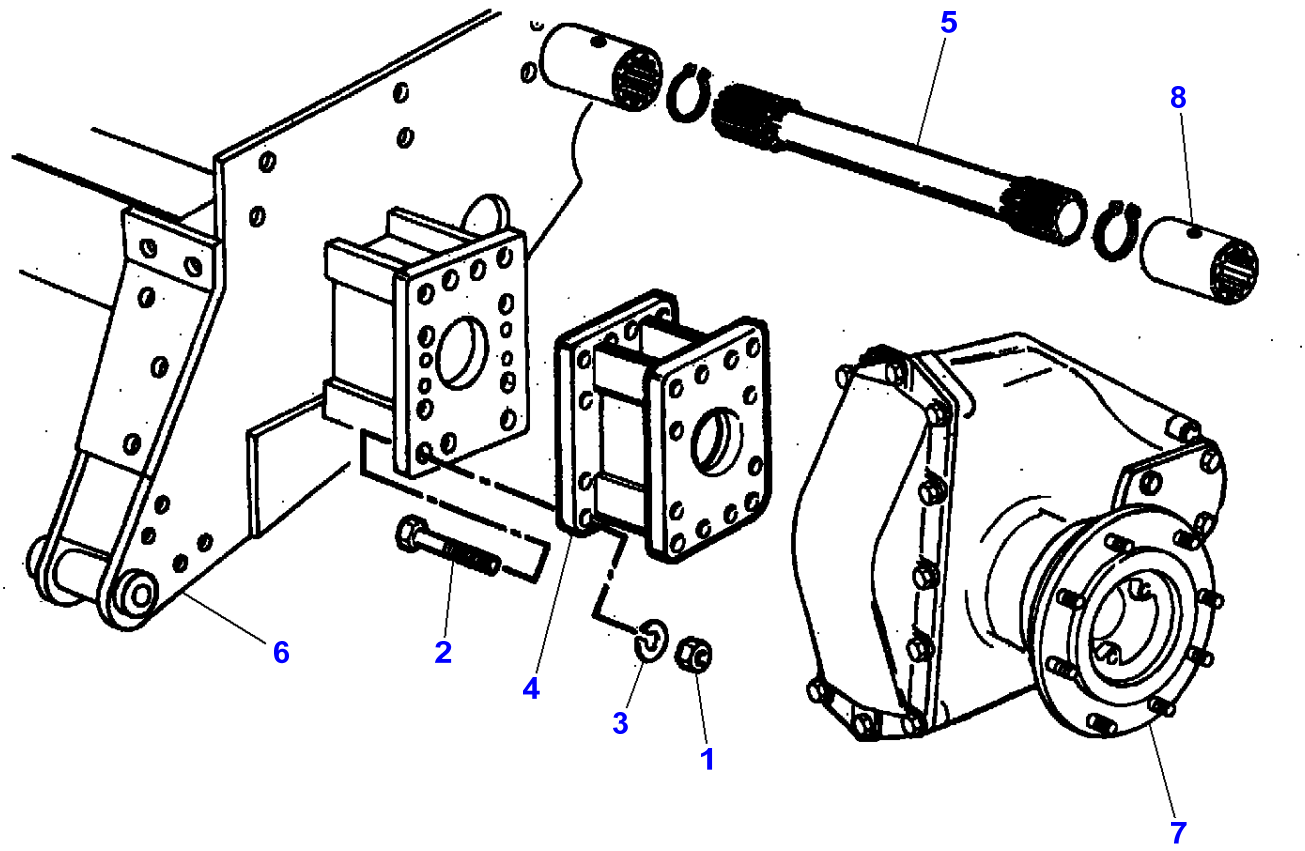

Item	Part Number	Qty	Description	Comments
1	LA10790521	26	Nut	
2	LA11254134	26	Cap Screw	
3	LA12034871	26	Lock Washer	
4	LA320719950	1	Extension	
5	LA321987650	1	Shaft	Length 626 mm
6		1	Front Axle	See Page - Reference Number 030-0005/19
7		1	Gear	See Page - Reference Number 030-0060
8		2	Bush	See Page - Reference Number 030-0010/8

L-LD68-001-A

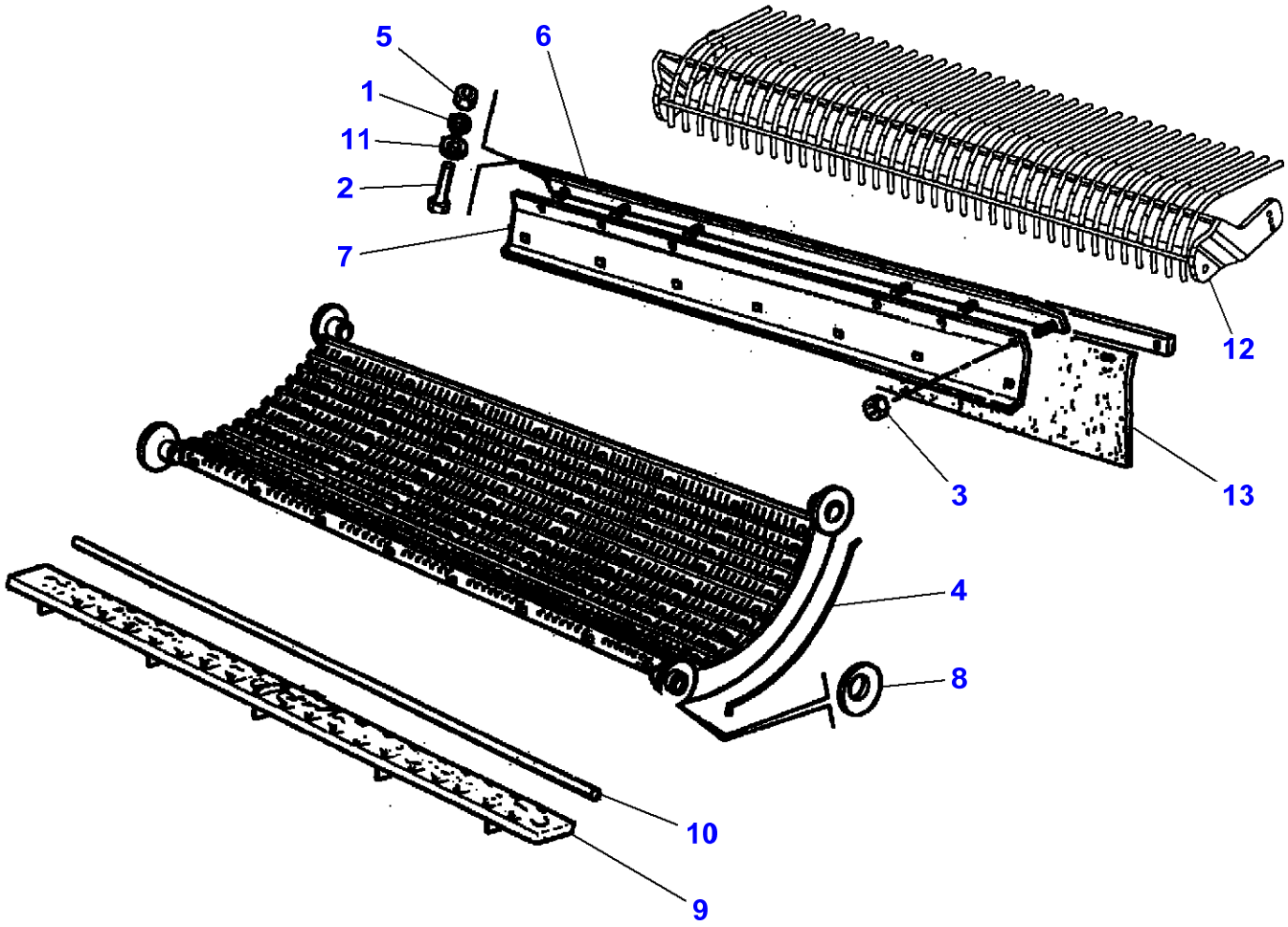

Item	Part Number	Qty	Description	Comments
1	LA12034571	2	Lock Washer	
2	LA16043424	2	Cap Screw	
3	LA16104111	6	Locknut	
4	LA300132830	2	Wire	
5	LA321211250	2	Nut	
6	LA322060750	1	Crossbar	
7	LA322060850	1	Crossbar	
8	LA322622850	4	Washer	
9	LA322792550	1	Bar	
10	LA322792950	1	Tie Rod	
11	LA355510820	2	Flat Washer	
12		1	Frame	See Page - Reference Number 050-0100/14
13		1	Canvas	See Page - Reference Number 050-0100/13

L-LD68-002-A

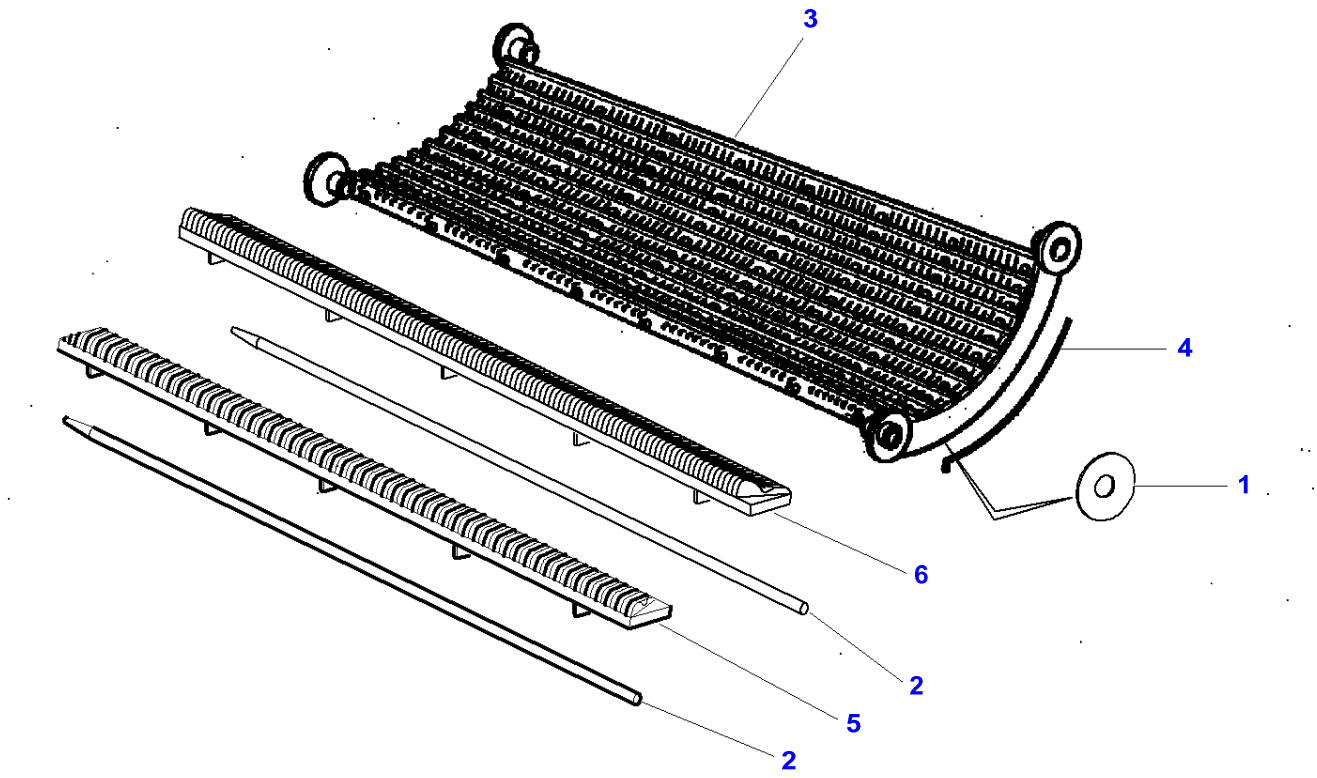

Item	Part Number	Qty	Description
1	LA322622850	4	Washer
2	LA322792950	2	Tie Rod
3	LA322927800	1	Concave
4	LA322928150	1	Wire
5	LA322929450	1	Bar
6	LA322929650	1	Bar

L-LD70-001-A

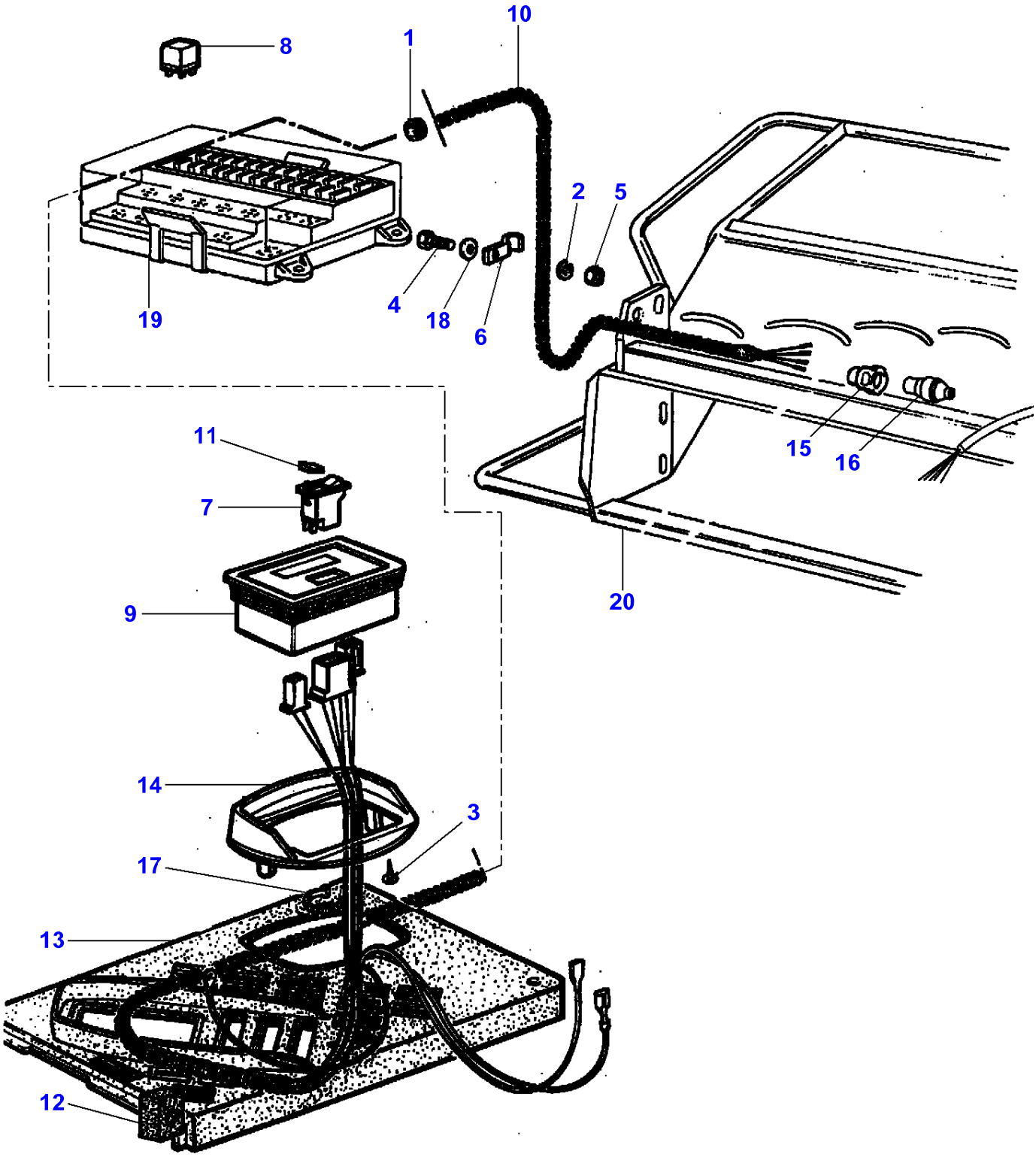

Item	Part Number	Qty	Description	Comments
1	LA10396480	1	Grommet	
2	LA12034571	2	Lock Washer	
3	LA15958807	2	Screw	
4	LA16043424	2	Cap Screw	
5	LA16100811	2	Nut	
6	LA300015924	2	Collar	
7	LA321848400	1	Switch	
8	**LA321908450**	1	Relay	
9	LA322489400	1	Control Box	
10	LA322489500	1	Cable	
11	LA322489650	1	Plate	
12	LA322489750	1	Stop	
13	LA322539750	1	Panel	
14	LA322579950	1	Support	
15	LA323076650	1	Connector	
16	LA323076750	1	Connector	
17	LA340481810	1	Cable Tie	
18	LA355510820	2	Flat Washer	
19		2	Fuse Box	See Page - Reference Number 120-0030
20		1	Diffuser	See Page - Reference Number 060-0120/13

L-LD70-002-B

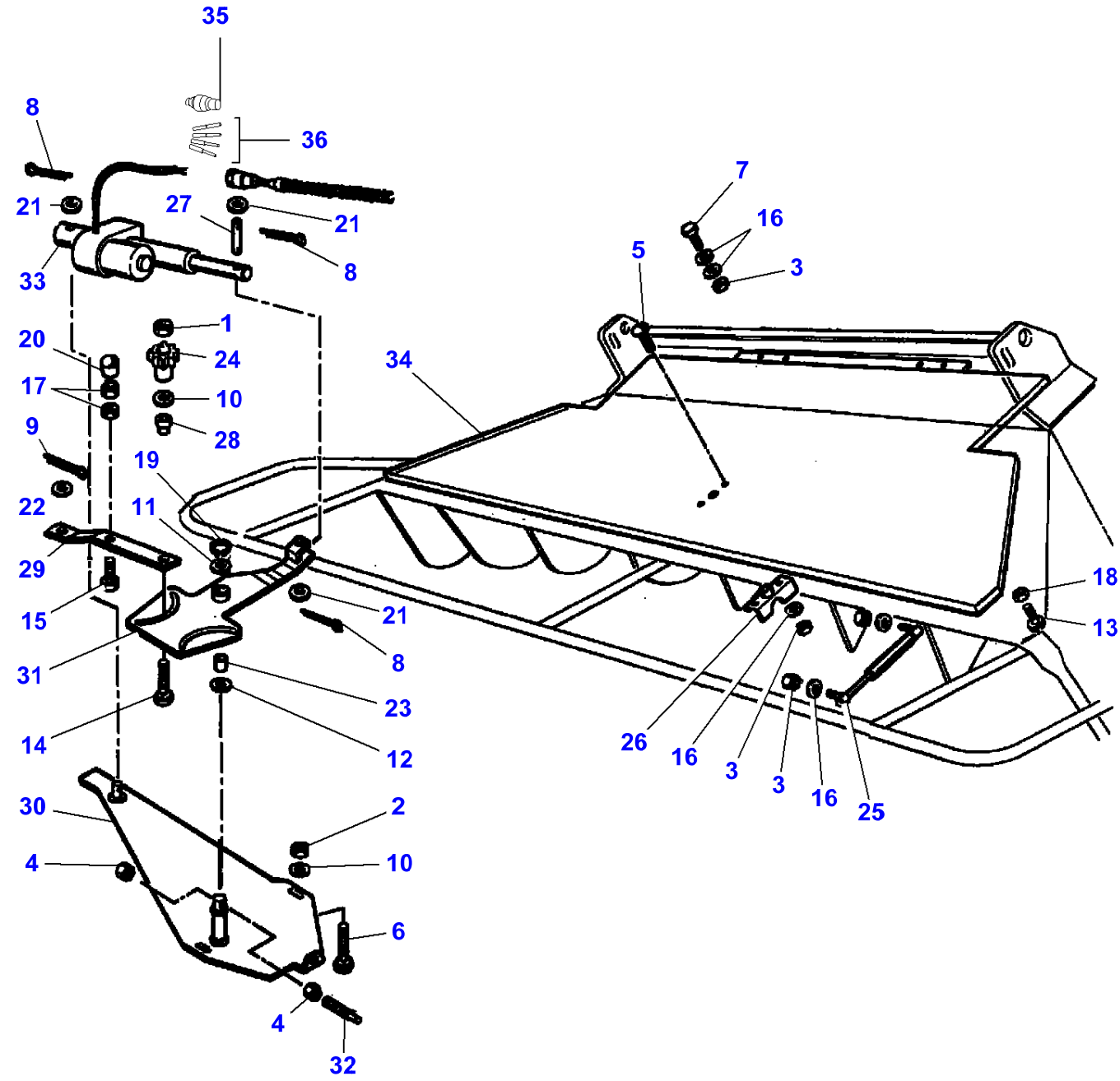
35
8
36
21
27
21
8
33
7
16
5
3
1
20
24
34
17
10
28
9
19
22
11
29
21
15
8
31
23
14
12
26
16
3
3
16
25
18
13
30
2
4
10
6
4
32

Item	Part Number	Qty	Description
1	LA80088902	1	Nut
2	LA80100016	2	Nut
3	LA89706690	2	Nut
4	LA80100016	2	Nut
5	LA80120037	1	Bolt
6	LA80120041	1	Screw
7	LA80120104	1	Screw
8	LA80130003	3	Split Pin
9	LA80130004	1	Split Pin
10	LA80140045	2	Washer
11	LA80140103	1	Washer
12	LA80140103	1	Washer
13	LA80190029	1	Screw
14	LA80280745	1	Bolt
15	LA80300389	1	Screw
16	LA80322358	4	Lock Washer
17	LA80323238	1	Nut
18	LA80354720	1	Nut
19	LA80370002	1	Circlip
20	LA80372783	1	Knob
21	LA80378245	3	Washer
22	LA80378246	1	Washer
23	LA80395589	1	Sleeve
24	LA80703270	1	Pinion
25	LA83963662	1	Regulator
26	LA84015292	1	Lock
27	LA84017216	1	Pin
28	LA84018320	1	Bush
29	LA84018322	1	Pad
30	LA84018323	1	Support
31	LA84018345	1	Lever
32	LA84018597	1	Rod
33	LA84018921	1	Actuator
34	LA84021167	1	Cover
35	LA323076750	1	Connector
36	LA80445521	1	Connectors

L-LD94-001-A

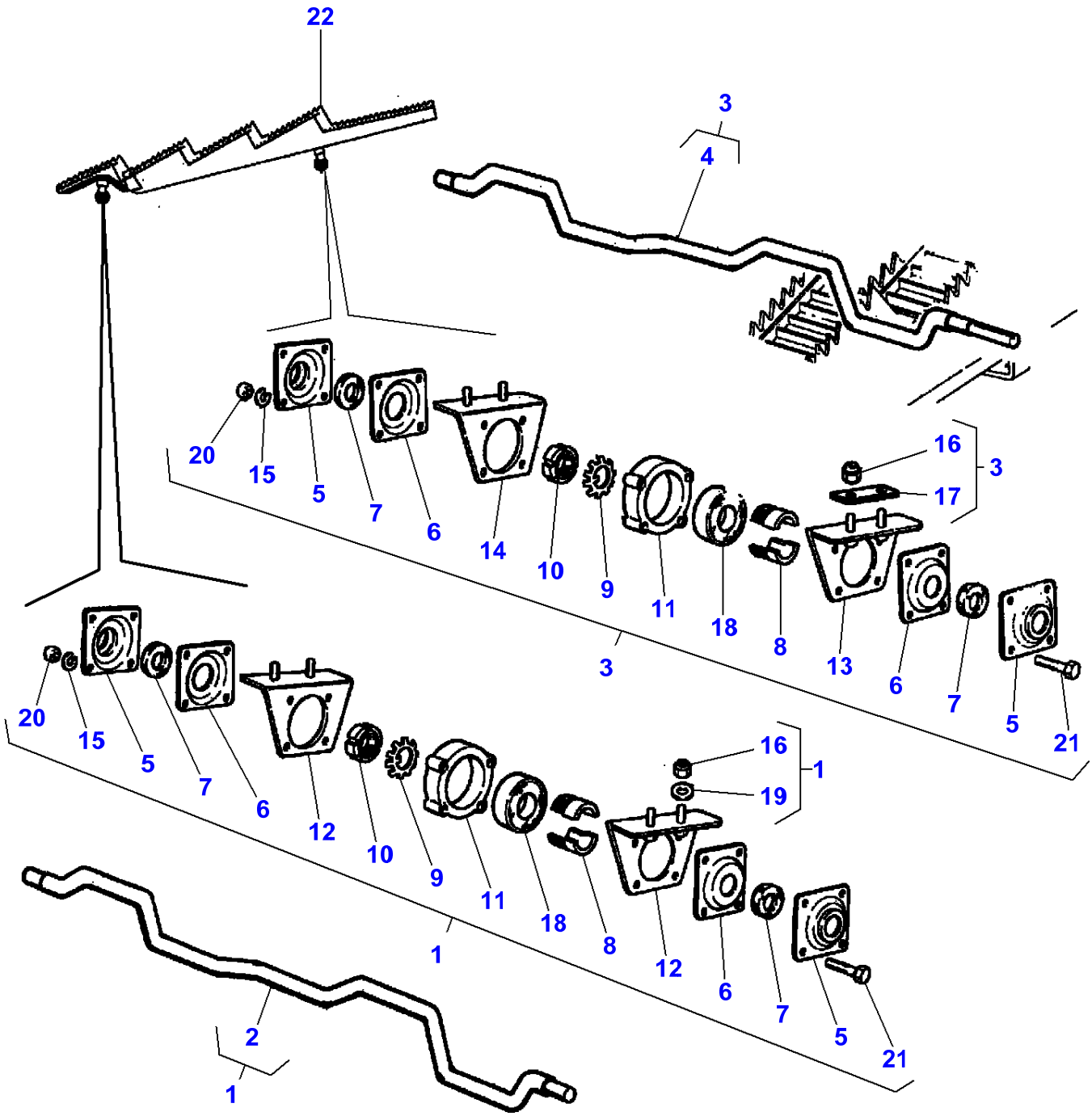
22
3
4
20
15
5
7
6
14
10
9
11
18
8
16
17
3
13
6
7
5
21
3
20
15
5
7
6
12
10
9
11
18
8
12
6
7
5
21
16
19
1
1
2
1

Item	Part Number	Qty	Description	Comments
1	LA391800176	1	Camshaft	
2	LA322125650	1	Camshaft	
3	LA391800177	1	Camshaft	
4	LA322125750	1	Camshaft	
5	LA321128850	4	Support	
6	LA321128950	4	Shield	
7	LA321129050	4	Gasket	
8	LA321129150	2	Sleeve	
9	LA321129250	2	Washer	
10	LA321129350	2	Nut	
11	LA321129450	2	Ring	
12	LA321129550	2	Support	
13	LA321678650	1	Support	
14	LA321678750	1	Support	
15	LA12034571	8	Lock Washer	
16	LA12577211	4	Nut	
17	LA322167550	1	Plate	
18	LA344015145	2	Bearing Assy	
19	LA355501130	2	Flat Washer	
20	LA16100811	8	Nut	
21	LA16044121	8	Cap Screw	
22		1	Kit, Straw Walkr	See Page - Reference Number 060-0025/10

L-LD21-002-A

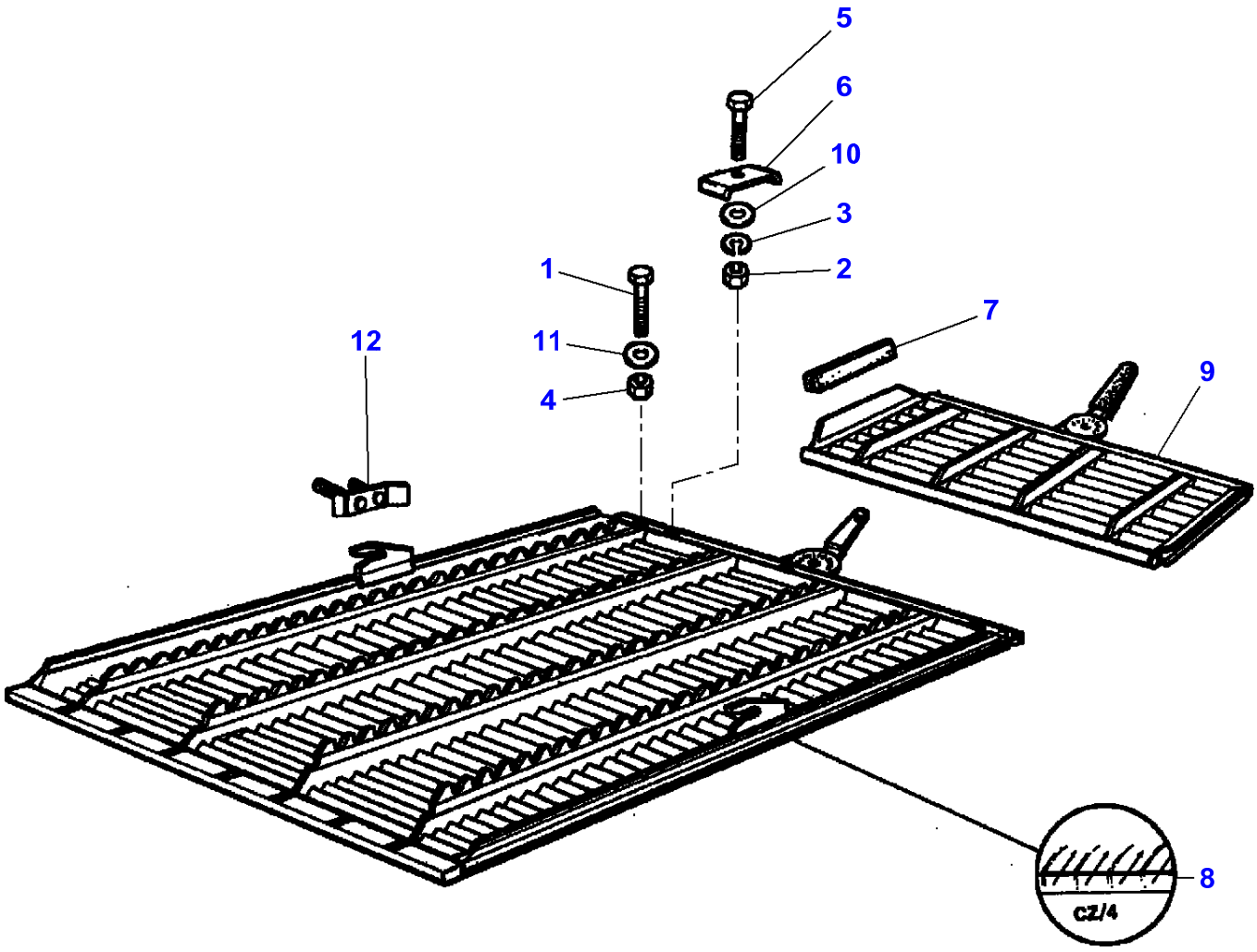

Item	Part Number	Qty	Description	Comments
1	LA11107311	2	Cap Screw	
2	LA11701721	2	Nut	
3	LA12034671	2	Lock Washer	
4	LA12577211	2	Nut	
5	LA16040821	2	Cap Screw	
6	LA321839150	2	Plate	
7	LA322204350	1	Gasket	
8	LA322230200	0	Sieve	CZ/4
9	LA322230600	1	Extension	CZ/4
10	LA355501120	2	Flat Washer	
11	LA355511030	2	Flat Washer	
12		1	Clip	See Page - Reference Number 070-0045/23

L-LD71-001-A

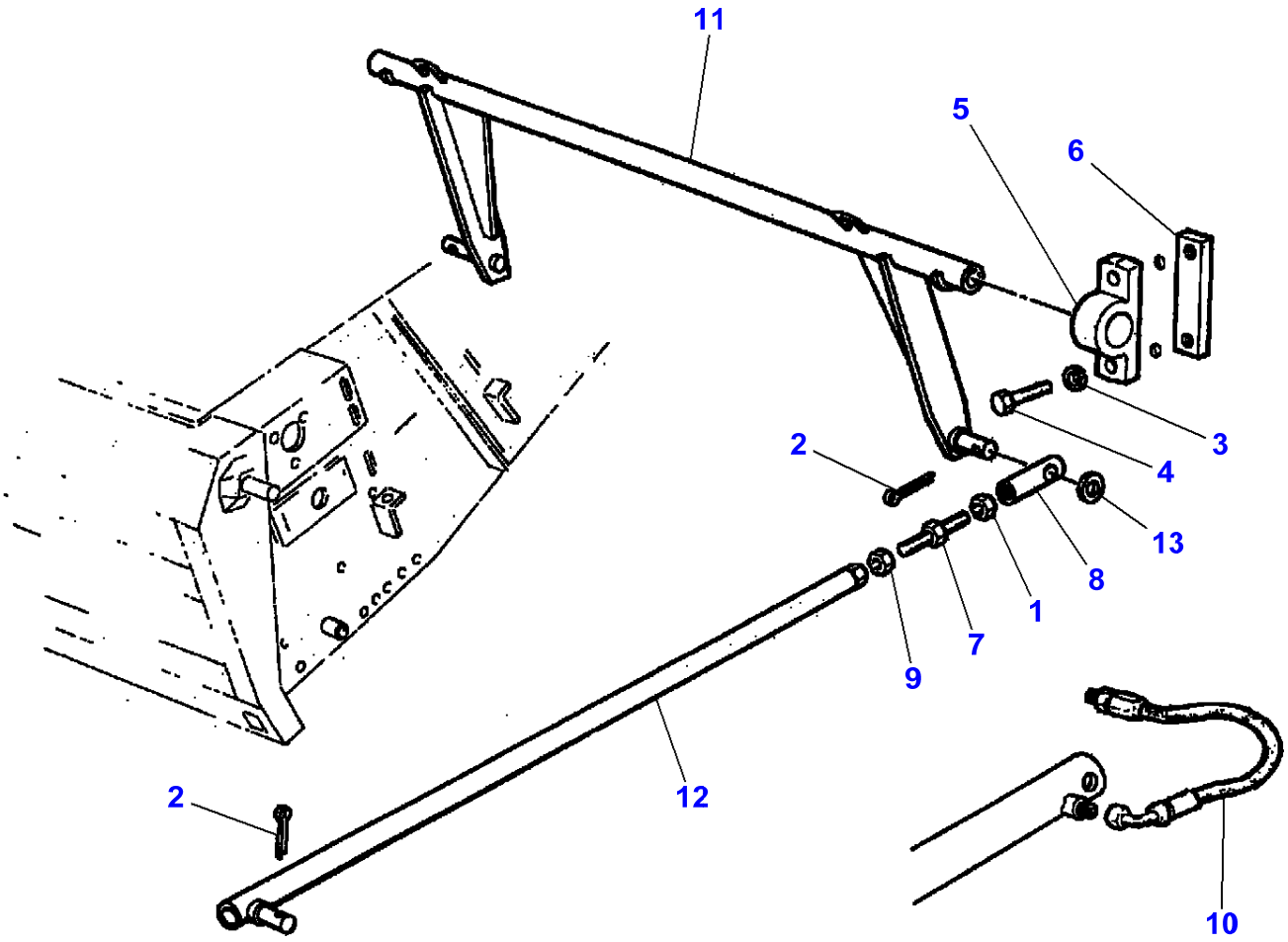

Item	Part Number	Qty	Description
1	LA10726911	1	Nut
2	LA10735001	2	Split Pin
3	LA12035571	2	Lock Washer
4	LA15235021	2	Screw
5	LA320741950	1	Support
6	LA320742450	1	Plate
7	LA320742550	1	Pin
8	LA320742750	1	End
9	LA321054650	1	Nut
10	LA321980550	1	Hydraulic Hose
11	LA322027050	1	Beam
12	LA322027150	1	Tie Rod
13	LA355536430	1	Washer

L-LC48-002-A

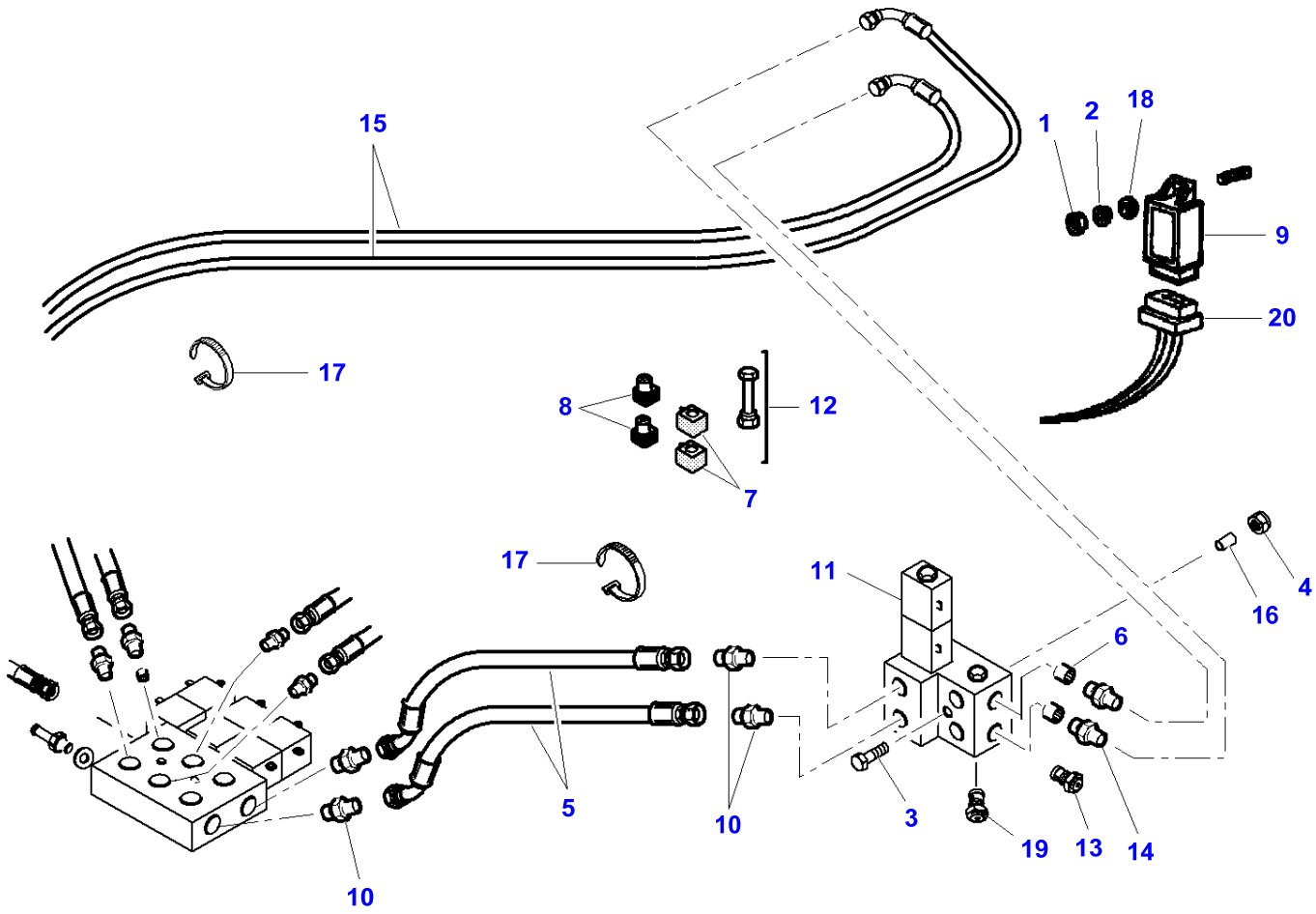

Item	Part Number	Qty	Description	Comments
1	LA10718021	1	Nut	
2	LA12035471	1	Lock Washer	
3	LA16045821	1	Cap Screw	
4	LA16104111	1	Locknut	
5	LA321691650	2	Hydraulic Hose	
6	LA322293950	1	Screw	
7	LA322412950	1	Magnet	
8	LA322413000	1	Union	
9	**LA322638150**	1	Control Box	
10	LA322788600	8	Union	
11	LA322816300	1	Block	
12	LA322816450	1	Electrovalve	
13	LA322816550	1	Valve	
14	LA322819000	2	Union	
15	LA322971050	2	Hose	
16	LA340415002	1	Bush	
17	LA340481808	2	Cable Tie	
18	LA355500515	1	Flat Washer	
19	LA410000185	1	Valve	
20		1	Cable	See Page - Reference Number 120-0055/13

L-LC48-004-B

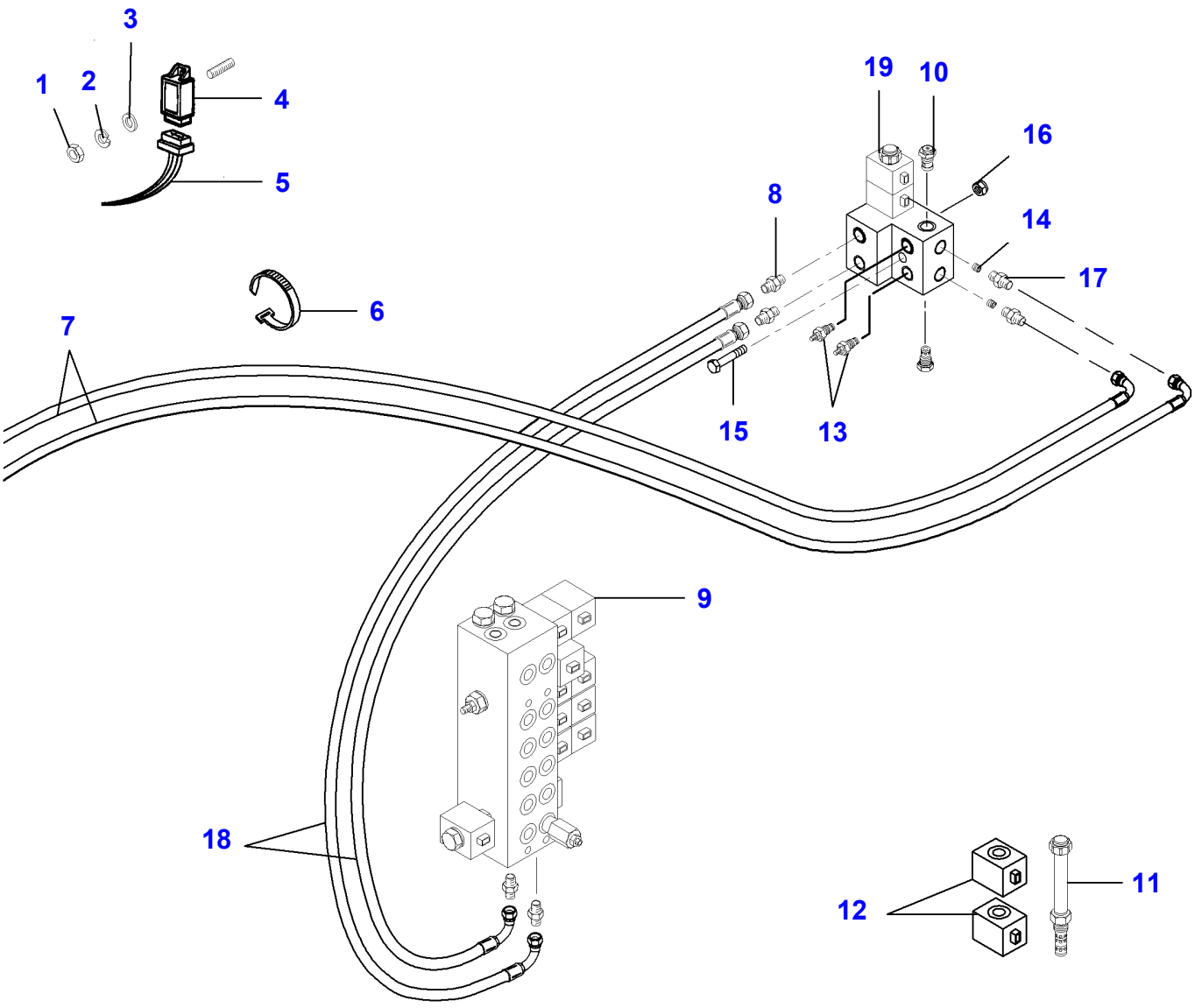

Item	Part Number	Qty	Description	Comments
1	LA10718021	1	Nut	
2	LA12035471	1	Lock Washer	
3	LA355500515	1	Flat Washer	
4	**LA322638150**	1	Control Box	
5		1	Cable	See Page - Reference Number 120-0055/13
6	LA340481808	1	Cable Tie	
7	LA322971050	2	Hose	See Page - Reference Number 140-0115/20
8	LA322788600	4	Union	
9		1	Block	See Page - Reference Number 030-0270/12
10	LA410000185	1	Valve	
11	LA322816450	1	Electrovalve	
12	LA323109050	2	Block	
13	LA322816550	2	Valve	
14	LA322293950	2	Screw	
15	LA16045821	1	Cap Screw	
16	LA16104111	1	Locknut	
17	LA322819000	2	Union	
18	LA321691650	2	Hydraulic Hose	
19	LA323206400	1	Valve	

L-LC48-003-A

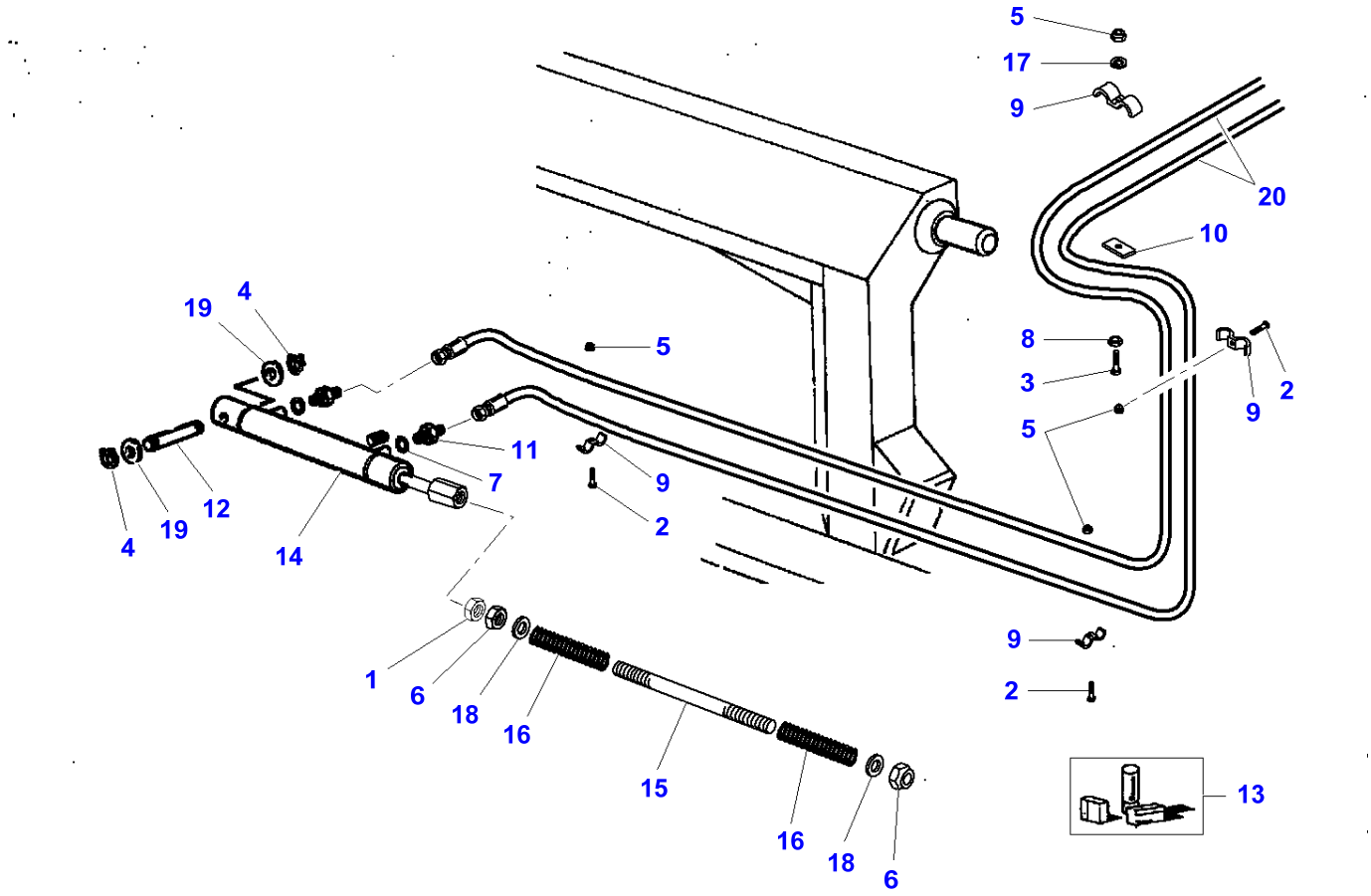

Item	Part Number	Qty	Description	Comments
1	LA10726711	1	Nut	
2	LA10902421	3	Cap Screw	
3	LA10902821	1	Cap Screw	
4	LA11066476	2	Circlip	
5	LA12574211	4	Locknut	
6	LA12575111	2	Locknut	
7	LA14456881	2	O Ring	
8	LA15896211	1	Nut	
9	LA300136688	4	Collar	
10	LA301378460	1	Collar	
11	LA321390950	2	Union	
12	LA322213150	1	Pin	
13	LA322545300	1	Kit, Seal	
14	LA322773900	1	Jack	
15	LA322774350	1	Tie Rod	
16	LA350356938	2	Spring	
17	LA355500720	1	Flat Washer	
18	LA355502140	2	Flat Washer	
19	LA355532620	2	Flat Washer	
20		2	Hose	See Page - Reference Number 140-0105/15 Up to Serial or Engine Number
		2	Hose	From Serial or Engine Number 551710035 See Page - Reference Number 140-0110

L-LD74-001-B

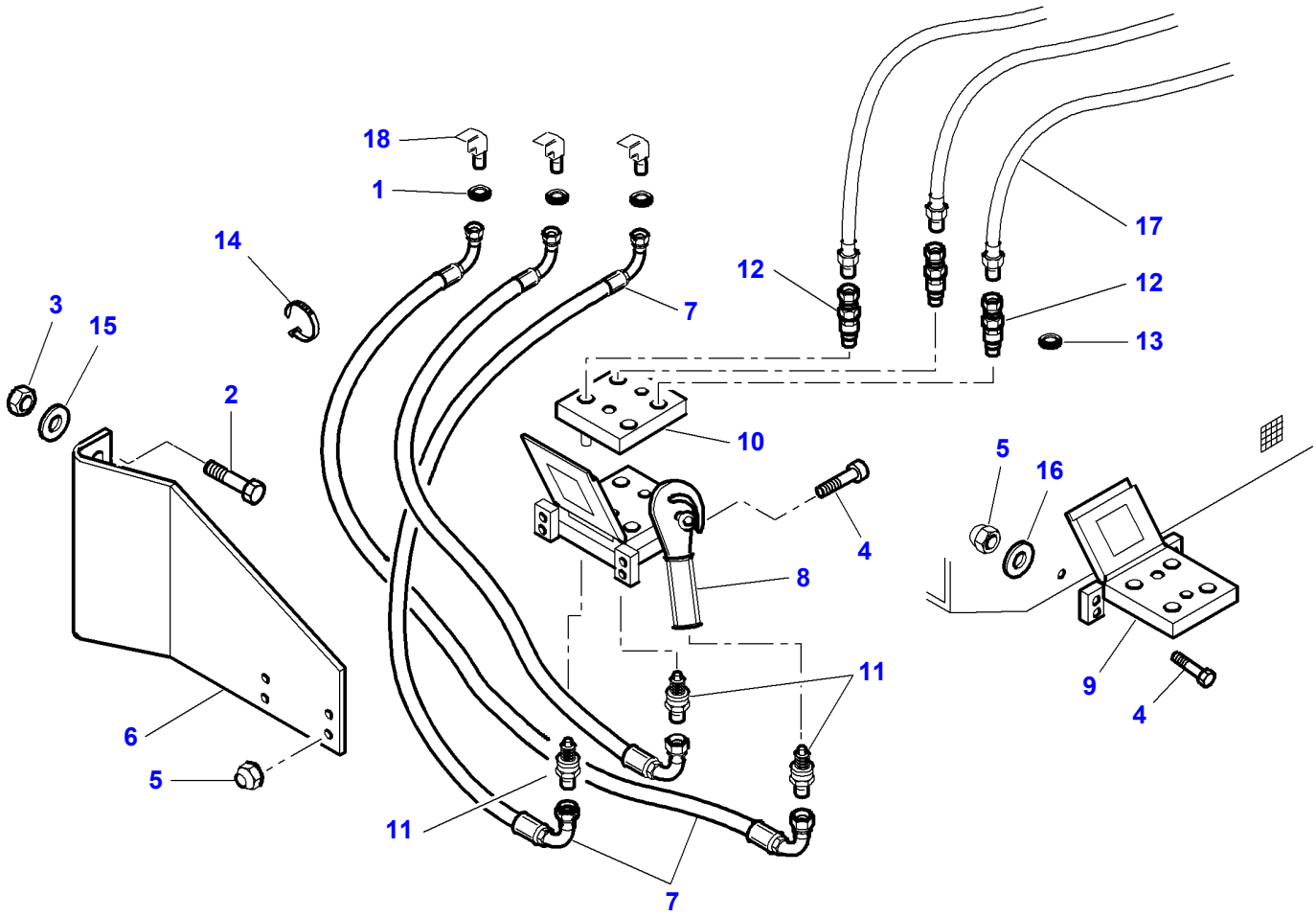

Item	Part Number	Qty	Description	Comments
1	LA4858606	3	Gasket	
2	LA11106221	2	Cap Screw	
3	LA11701711	2	Nut	
4	LA14306321	3	Hex Socket Screw	
5	LA16104111	6	Locknut	
6	LA322791850	1	Support	
7	LA322792250	3	Hose	
8	LA322792300	1	Coupler	
9	LA322792400	1	Support	
10	LA322794000	1	Plate	
11	LA322794450	3	Connector	
12	LA322794550	3	Connector	
13	LA322794650	3	Gasket	
14	LA340481806	7	Cable Tie	
15	LA355501125	2	Washer	
16	LA355510820	2	Flat Washer	
17		3	Hose	See Page - Reference Number 110-0065/9
18	LA321971700	3	Union	

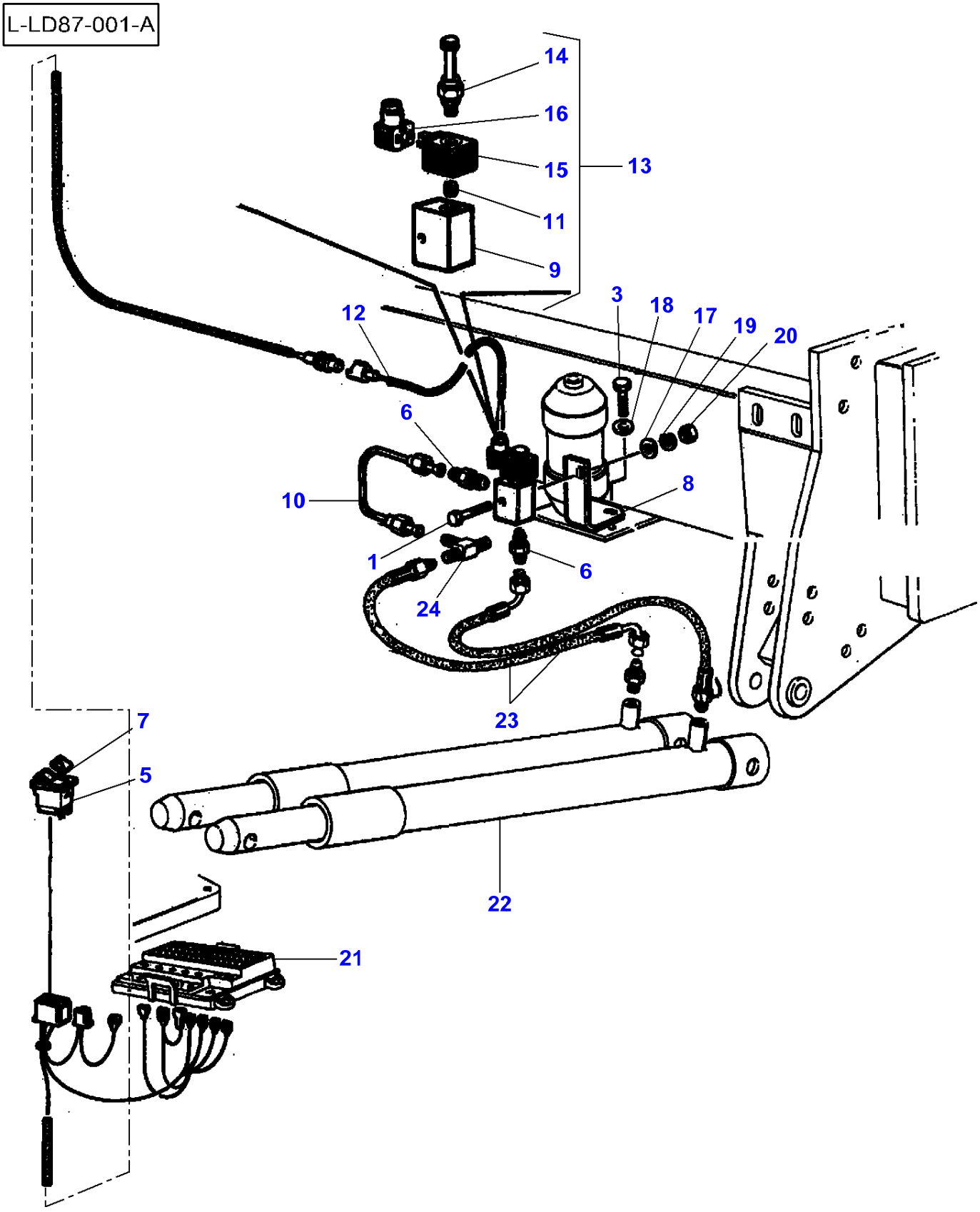
L-LD87-001-A
14
16
15
13
11
9
3
18
17
19
20
12
6
10
8
1
6
24
23
7
5
22
21

Item	Part Number	Qty	Description	Comments
1	LA10903621	1	Cap Screw	
2	LA12035671	1	Lock Washer	[A]
3	LA15213321	1	Cap Screw	
4	LA15896211	1	Nut	[A]
5	LA321848200	1	Switch	
6	LA322113600	2	Union	
7	LA322251050	1	Plate	
8	LA322293150	1	Support	
9	LA322293250	1	Block	(13)
10	LA322293750	1	Tube	
11	LA322293950	1	Screw	(13)
12	LA322411200	1	Cable	
13	LA323075300	1	Electrovalve	Repairs and replaces LA322412700
14	LA322412850	1	Electrovalve	(13)
15	LA322412950	1	Magnet	(13)
16	LA322413000	1	Union	(13)
17	LA355510615	1	Flat Washer	
18	LA355510820	1	Flat Washer	
19	LA12035670	1	Lock Washer	
20	LA15896221	1	Nut	
21		1	Box	See Page - Reference Number 120-0030
22		1	Ram	See Page - Reference Number 140-0260/13
23		1	Hose	See Page - Reference Number 140-0260/7
24		1	Union	See Page - Reference Number 040-0070

FOOTNOTE [A] NOT ILLUSTRATED

L-LD56-002-A

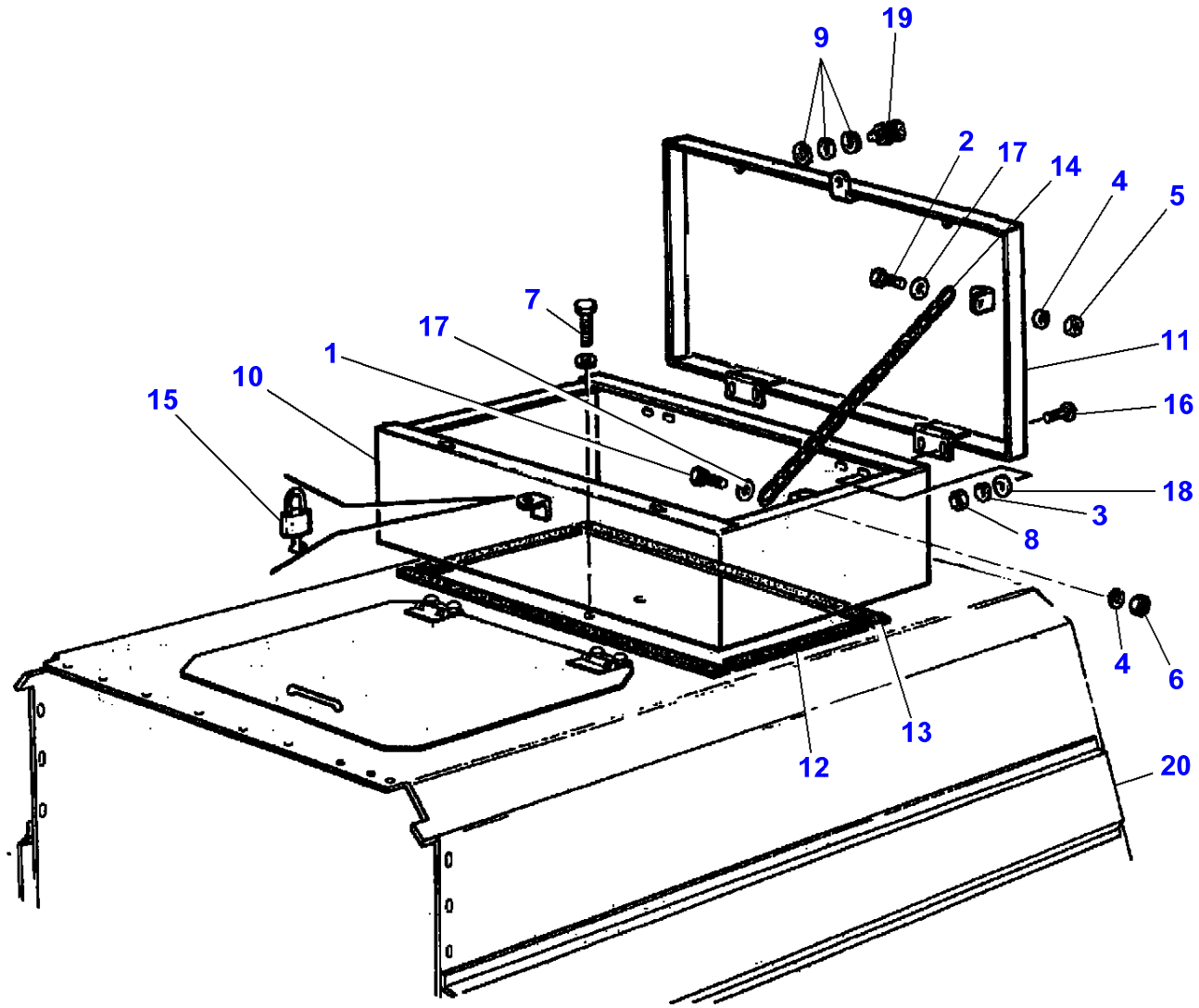

Item	Part Number	Qty	Description	Comments
1	LA10902221	2	Cap Screw	
2	LA10902224	2	Cap Screw	
3	LA12034571	4	Lock Washer	
4	LA12035670	2	Lock Washer	
5	LA15896211	2	Nut	
6	LA15896221	2	Nut	
7	LA16043624	2	Cap Screw	
8	LA16100811	4	Nut	
9	LA320899350	6	Lock Washer	
10	LA322392750	1	Container	
11	LA322392850	1	Cover	
12	LA322393050	2	Gasket	
13	LA322392950	2	Gasket	
14	LA322393150	1	Chain	
15	LA322393850	1	Hasp	
16	LA350342510	4	Carriage Bolt	
17	LA355500820	2	Washer	
18	LA355500920	4	Flat Washer	
19	LA321551650	1	Screw Special	
20		1	Bonnet	See Page - Reference Number 060-0015/17

L-LD72-001-A

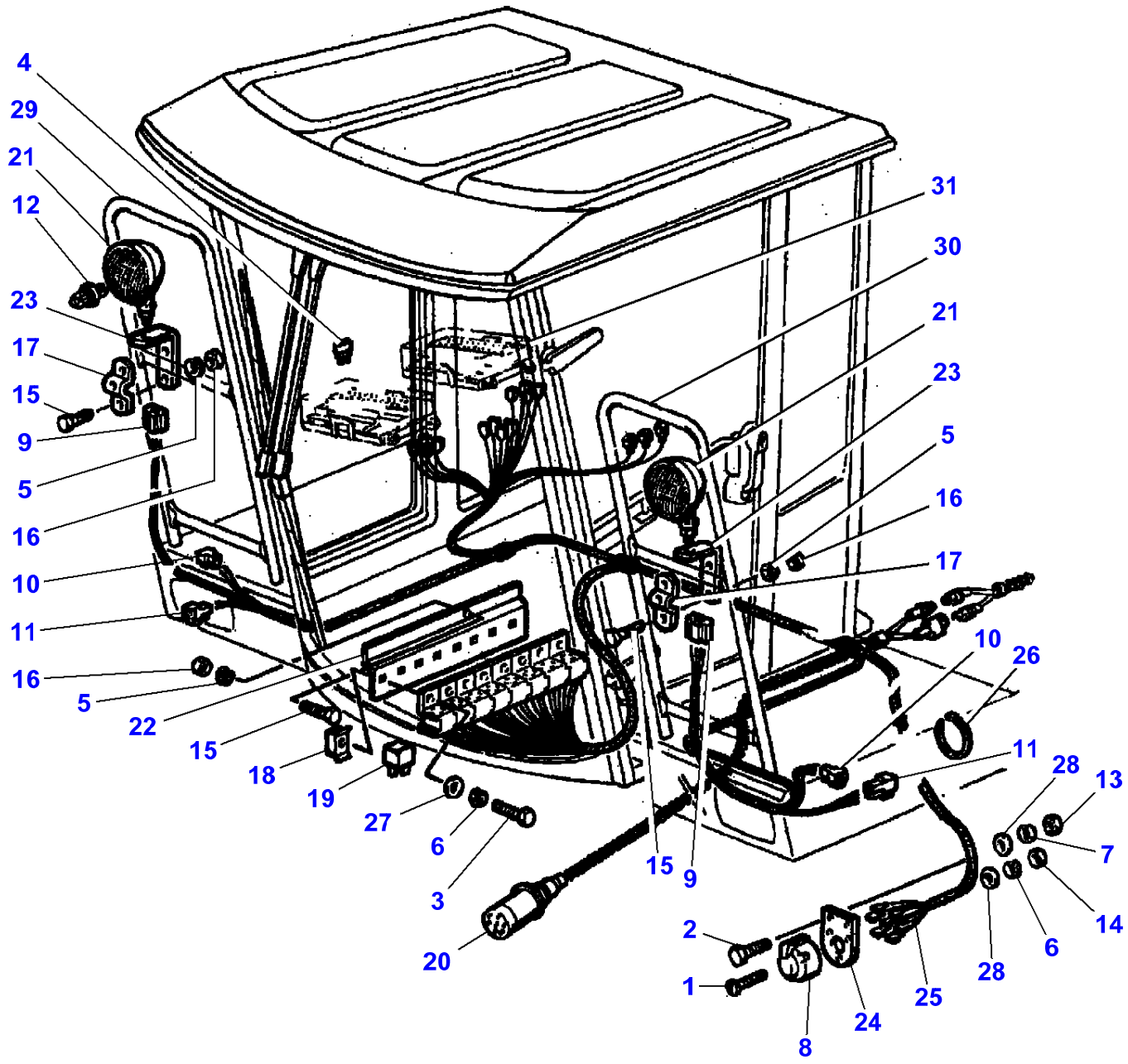
4
29
21
12
23
17
15
9
5
16
10
11
16
5
22
15
18
19
27
6
3
20
15
9
2
1
8
24
25
28
6
14
7
13
28
11
10
26
31
30
21
23
5
16
17

Item	Part Number	Qty	Description	Comments
1	LA10390311	1	Screw	
2	LA10902424	1	Cap Screw	
3	LA10977621	1	Screw	
4	**LA11055190**	1	Fuse	
5	LA12034571	3	Lock Washer	
6	LA12035471	2	Lock Washer	
7	LA12035670	1	Lock Washer	
8	LA12053790	1	Connector	
9	LA12057980	2	Gasket	
10	LA12066780	2	Gasket	
11	LA12066880	2	Gasket	
12	LA14147590	1	Bulb	
13	LA15896221	1	Nut	
14	LA15896421	1	Nut	
15	LA16043424	3	Cap Screw	
16	LA16100811	3	Nut	
17	LA300114165	2	Plate	
18	LA321284450	1	Nut	
19	**LA321908450**	1	Relay	
20	LA322313400	1	Cable	
21	LA322313600	2	Headlamp	
22	LA322516850	1	Support	
23	LA322516950	2	Support	
24	LA322602150	1	Support	
25	LA322602250	1	Cable	
26	LA340481810	1	Cable Tie	
27	LA355500510	1	Washer	
28	LA355510615	2	Flat Washer	
29		1	Handlebar	See Page - Reference Number 100-0010/6
30		1	Handlebar	See Page - Reference Number 100-0065/14
31		1	Fuse Box	See Page - Reference Number 120-0030

L-LC54-003-A

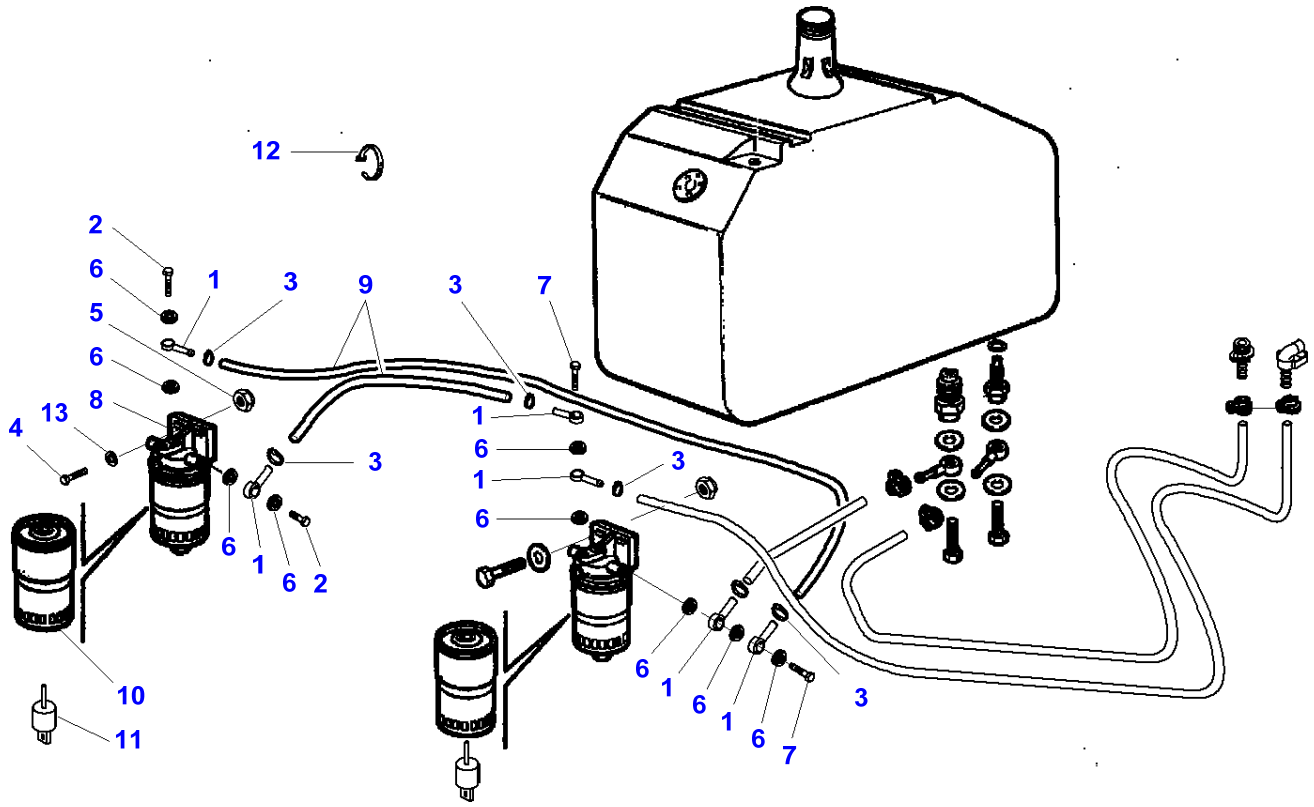

Item	Part Number	Qty	Description
1	LA5150924	6	Union
2	LA10184314	1	Banjo Bolt
3	LA10186790	5	Hose Clip
4	LA16043824	1	Cap Screw
5	LA16104111	1	Locknut
6	LA322325850	9	Washer
7	LA322851750	2	Screw
8	LA323004750	1	Filter
9	LA323006550	1	Hose
10	**LA323007250**	1	Fuel Filter
11	LA323007350	1	Valve
12	LA340481806	7	Cable Tie
13	LA355510820	1	Flat Washer

L-LC54-005-A

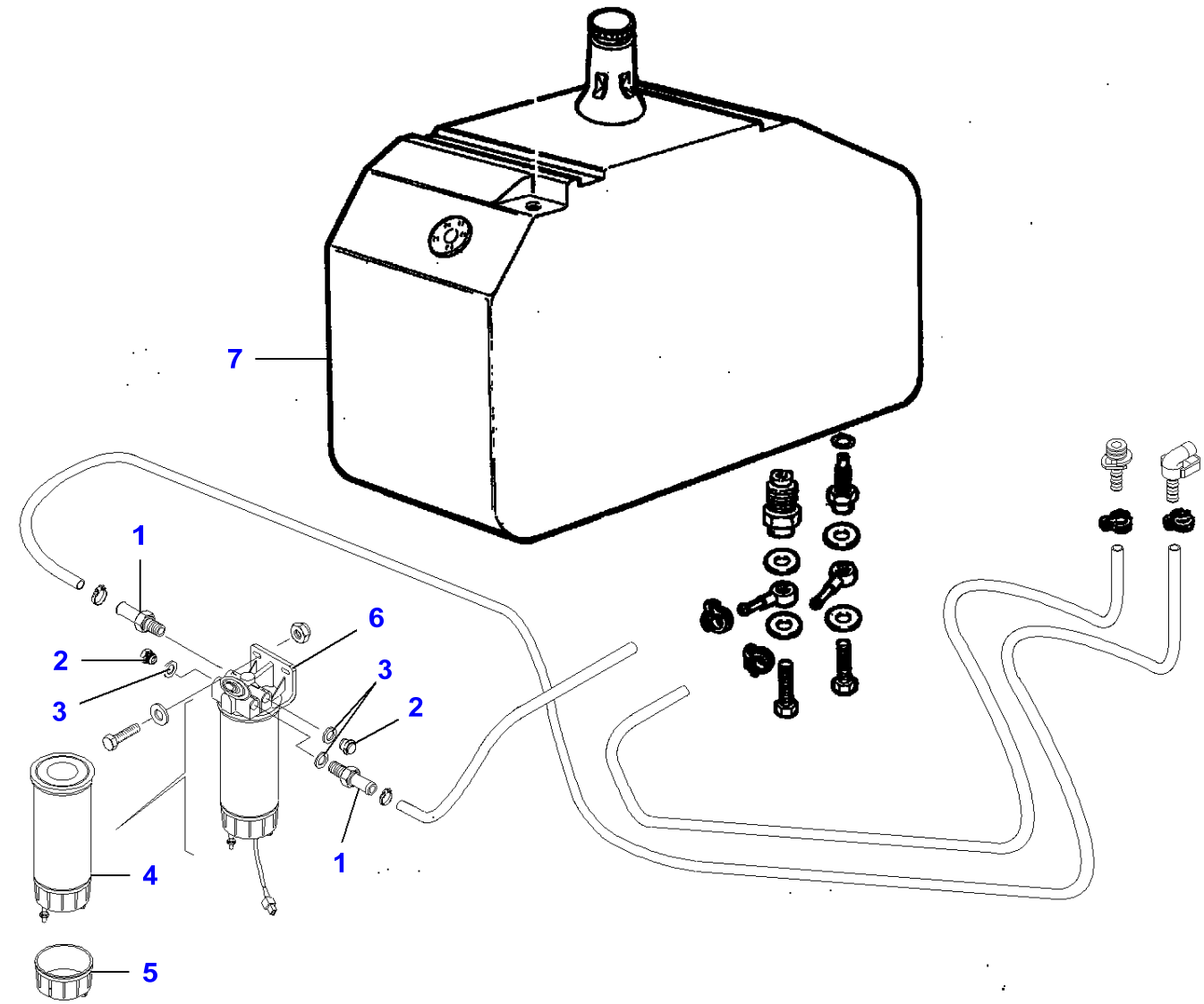

Item	Part Number	Qty	Description	Comments
1	LA323182150	1	Connector	
2	LA10300714	1	Plug	
3	LA322731950	1	Washer	
4	LA323180750	4	Filter	
5	LA323182050	1	Bowl	
6	**LA323180600**	1	Fuel Filter	
7		1	Fuel Tank	See Page - Reference Number 020-0055/16

L-LD73-001-A

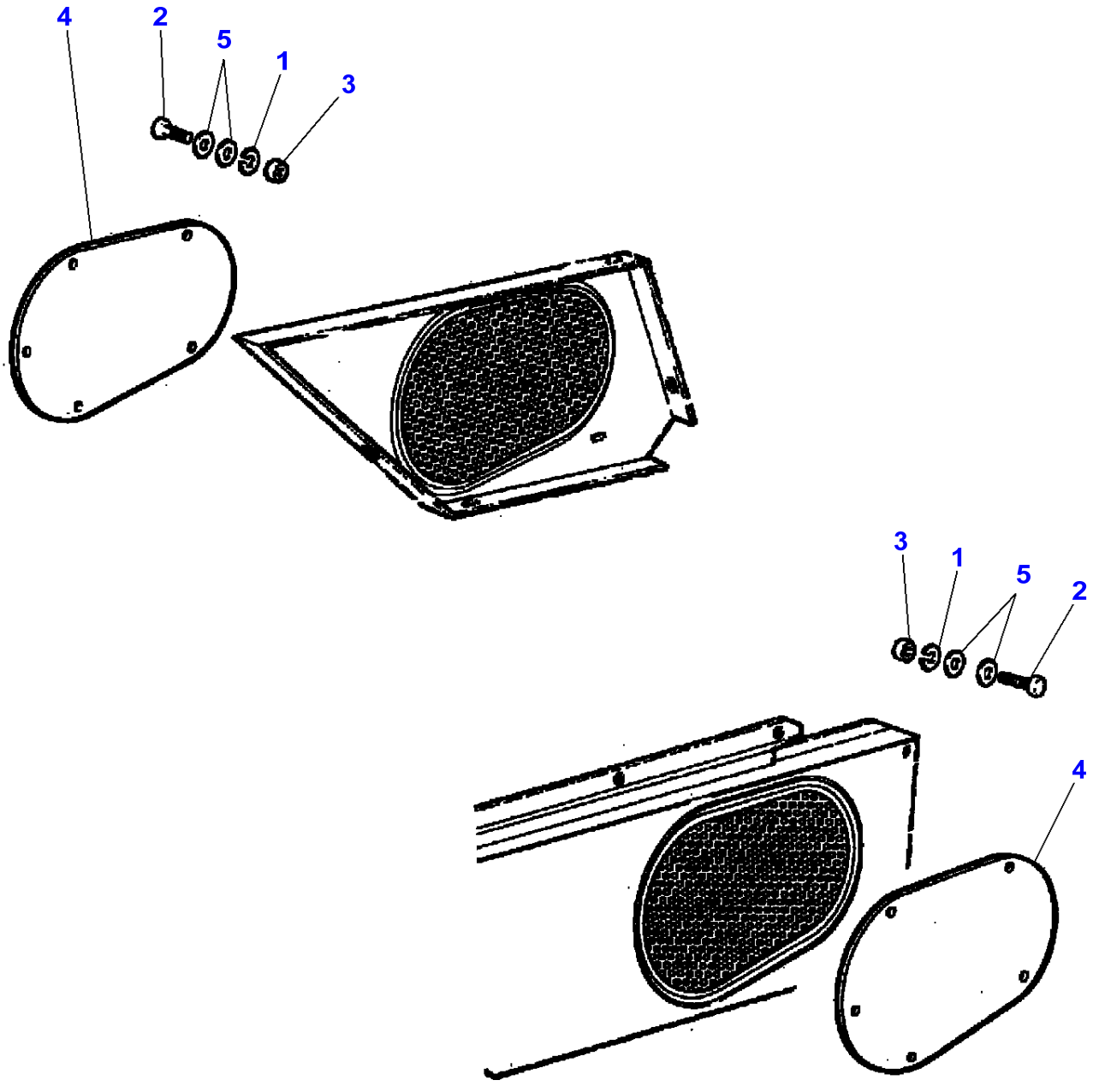

Item	Part Number	Qty	Description
1	LA12034571	10	Lock Washer
2	LA16043224	10	Cap Screw
3	LA16100811	10	Nut
4	LA320852750	2	Plate
5	LA355510820	20	Flat Washer

L-LD75-002-A

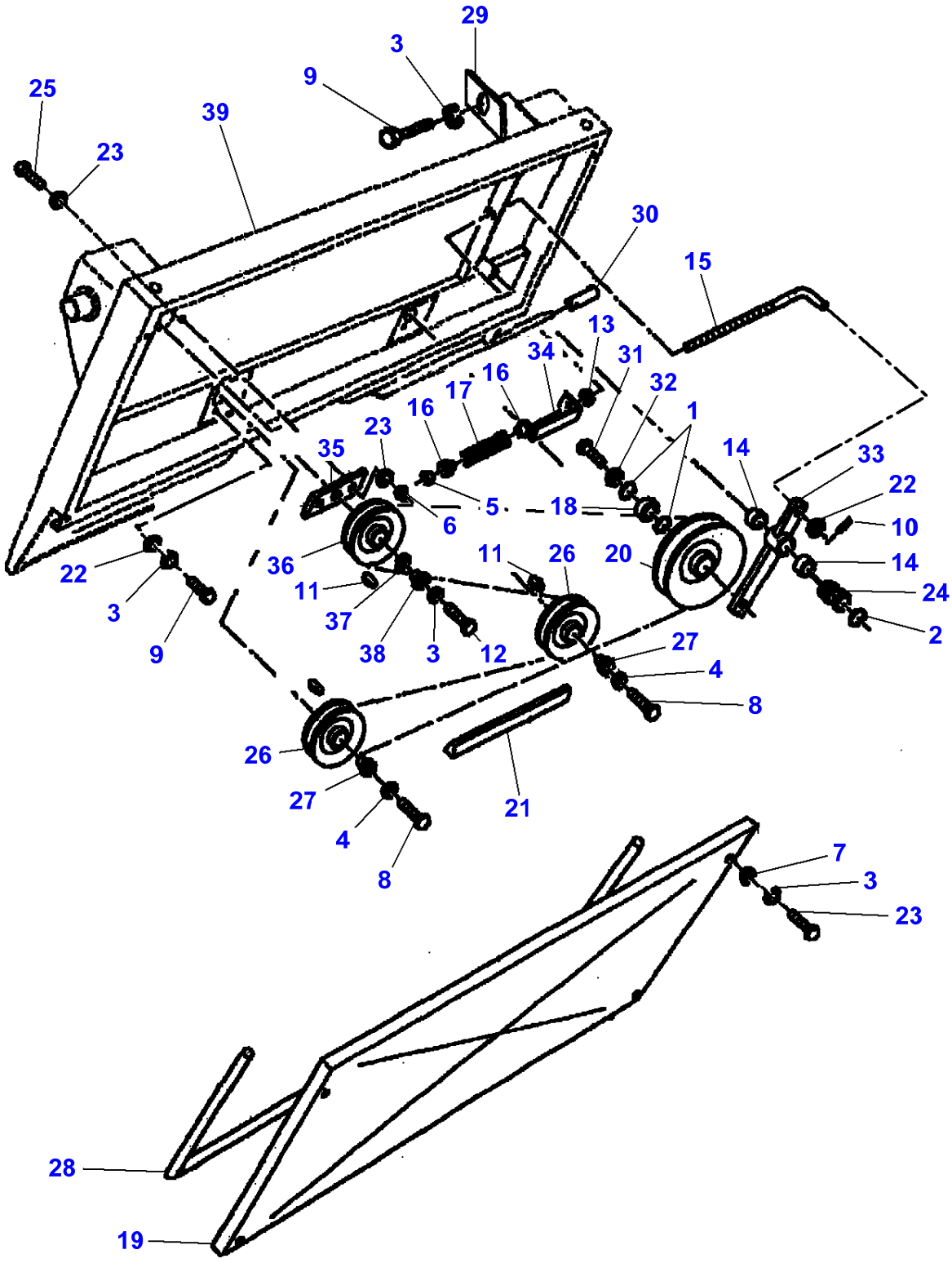
29
3
9
25
39
23
30
15
13
34
31
16
17
32
16
1
23
35
14
33
22
5
18
6
10
22
36
11
26
20
14
24
3
11
37
38
3
12
27
2
9
4
8
26
27
21
4
8
7
3
23
28
19

Item	Part Number	Qty	Description	Comments
1	LA11060576	2	Circlip	
2	LA11067376	1	Circlip	
3	LA12034571	4	Lock Washer	
4	LA12034671	2	Lock Washer	
5	LA12577511	1	Cap Nut	
6	LA16104111	1	Locknut	
7	LA355510820	4	Flat Washer	
8	LA80043140	2	Screw	
9	LA80120104	2	Screw	
10	LA80130004	1	Split Pin	
11	LA80170005	2	Key	
12	LA80300381	1	Screw	
13	LA84043655	1	Nut	
14	LA84056148	2	Bush	
15	LA84056165	1	Tie Rod	
16	LA320998350	2	Bush	
17	LA320998550	1	Spring	
18	**LA322638450**	1	Bearing Assy	
19	LA322739800	1	Cover	
20	LA322740050	1	Pulley	
21	**LA340433985**	1	Belt	
22	LA355501320	1	Flat Washer	
23	LA80043127	1	Screw	
24	LA355536210	1	Flat Washer	
25	LA80336199	1	Screw	
26	LA84074791	2	Pulley	
27	LA84056153	2	Bush	
28	LA84056118	1	Support	
29	LA84056151	1	Plate	
30	LA84056140	1	Spacer	
31	LA89837786	1	Screw	
32	LA84056154	1	Washer	
33	LA84056787	1	Lever	
34	LA84056132	1	Plate	
35	LA84056128	1	Plate	
36	LA84074790	1	Pulley	
37	LA84056134	1	Washer	
38	LA84056137	1	Bush	
39		1	Body	See Page - Reference Number 140-0170/8

L-LD75-005-A

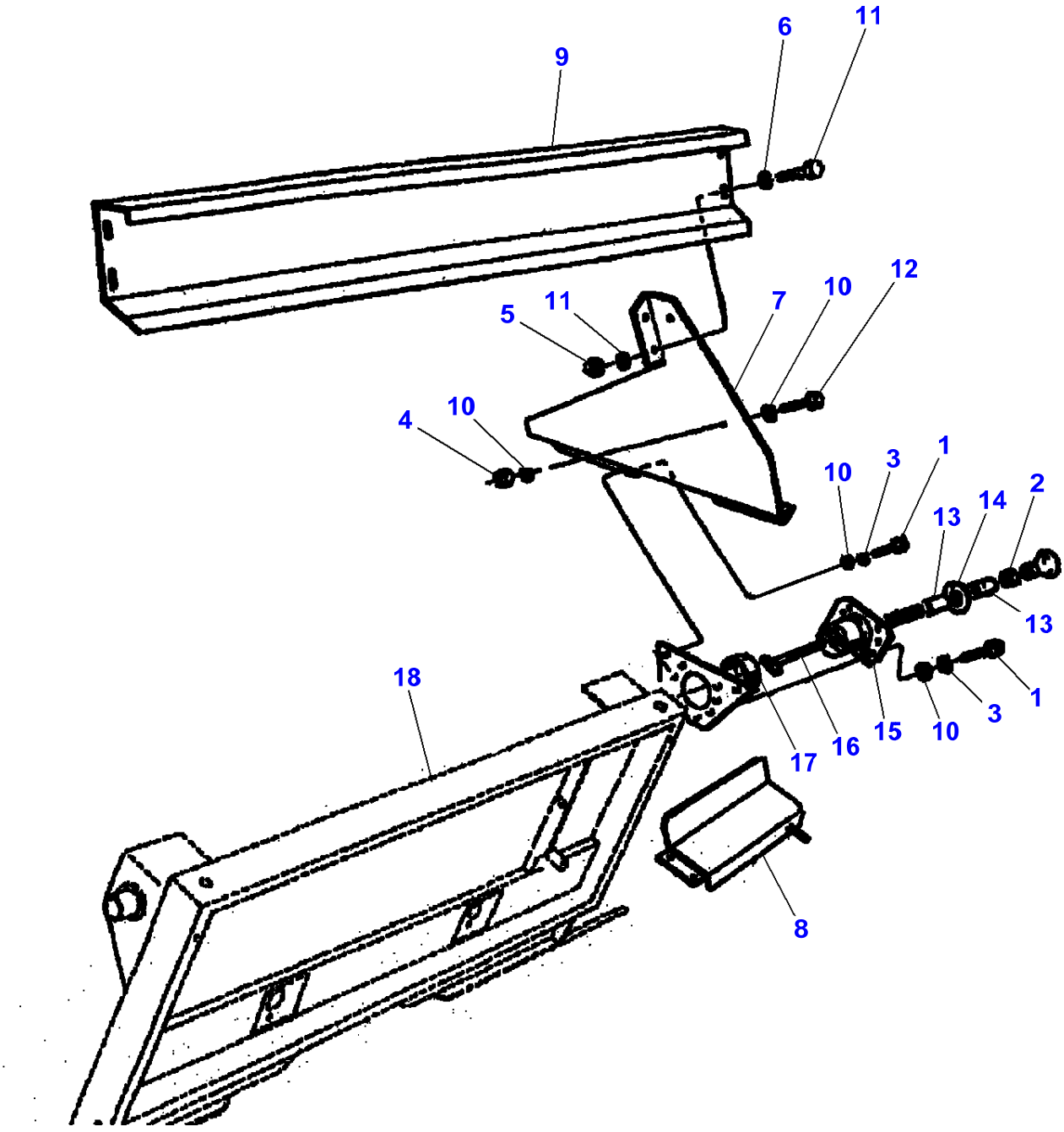

Item	Part Number	Qty	Description	Comments
1	LA11106221	2	Cap Screw	
2	LA11702921	1	Nut	
3	LA12034671	2	Lock Washer	
4	LA12577211	1	Nut	
5	LA16104111	1	Locknut	
6	LA355510820	2	Flat Washer	
7	LA322741050	1	Plate	
8	LA322740550	1	Swiveling Device	
9	LA322740750	1	Crossbar	
10	LA355501120	5	Flat Washer	
11	LA80120104	1	Screw	
12	LA80100109	1	Screw	
13	LA84056127	2	Spacer	
14	LA355511220	1	Washer	
15	LA84056119	1	Support	
16	LA84056126	1	Rod	
17	LA84056131	1	Bush	
18		1	Body	See Page - Reference Number 140-0170/8

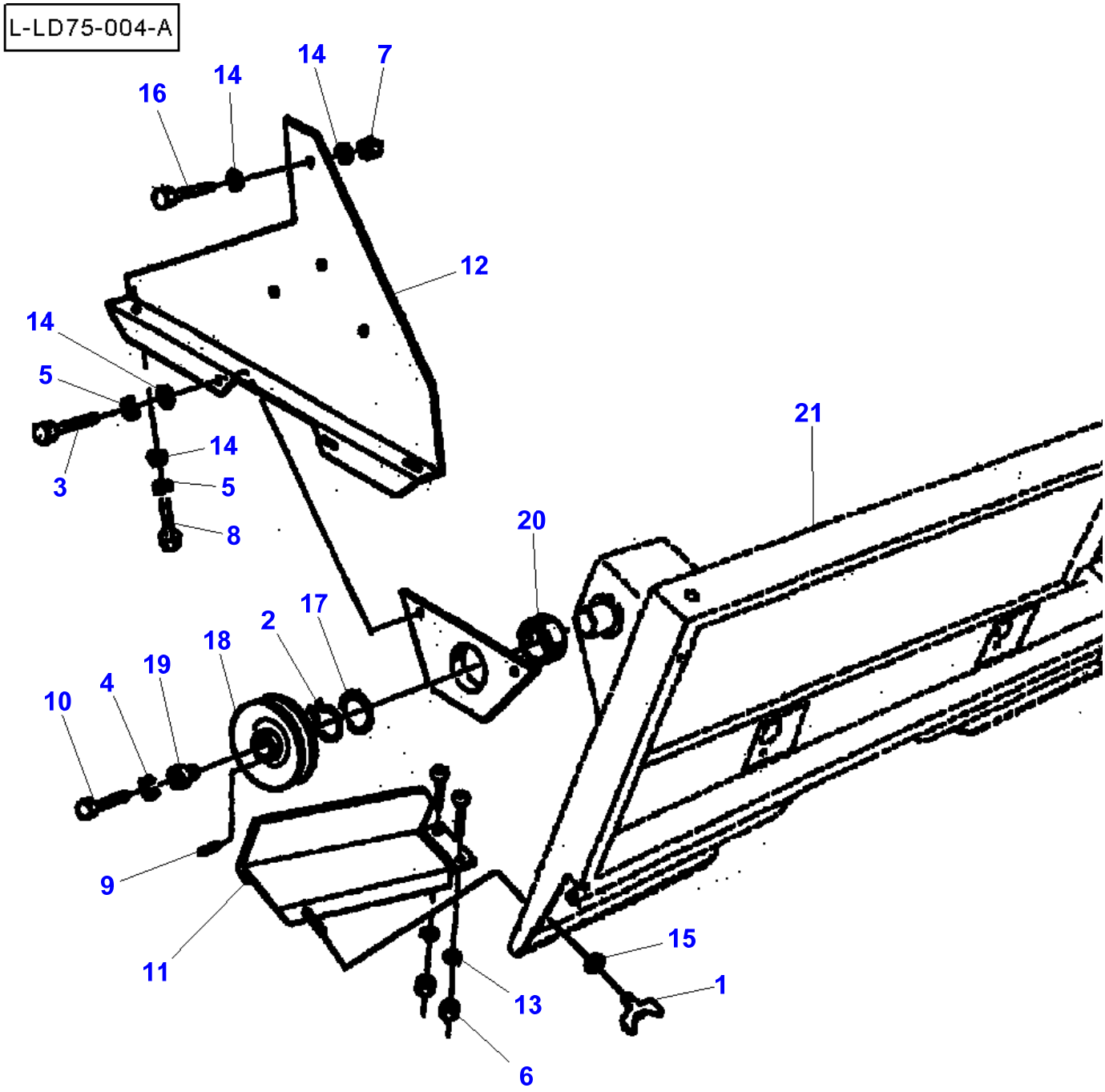
L-LD75-004-A
16
14
14
7
12
14
5
3
14
5
8
21
20
17
2
18
19
4
10
9
11
15
1
13
6

Item	Part Number	Qty	Description	Comments
1	LA10101101	1	Wing Nut	
2	LA11070376	1	Ring	
3	LA11106221	1	Cap Screw	
4	LA12034571	1	Lock Washer	
5	LA12034671	1	Lock Washer	
6	LA12574211	2	Locknut	
7	LA12577211	1	Nut	
8	LA80043140	1	Screw	
9	LA80170005	1	Key	
10	LA80300381	1	Screw	
11	LA322740350	1	Swiveling Device	
12	LA322740950	1	Support	
13	LA355500720	2	Flat Washer	
14	LA355501120	3	Flat Washer	
15	LA355520720	1	Washer	
16	LA80120109	1	Screw	
17	LA84056138	1	Washer	
18	LA84074790	1	Pulley	
19	LA84056137	1	Bush	
20	LA84056131	1	Bush	
21		1	Body	See Page - Reference Number 140-0170/8

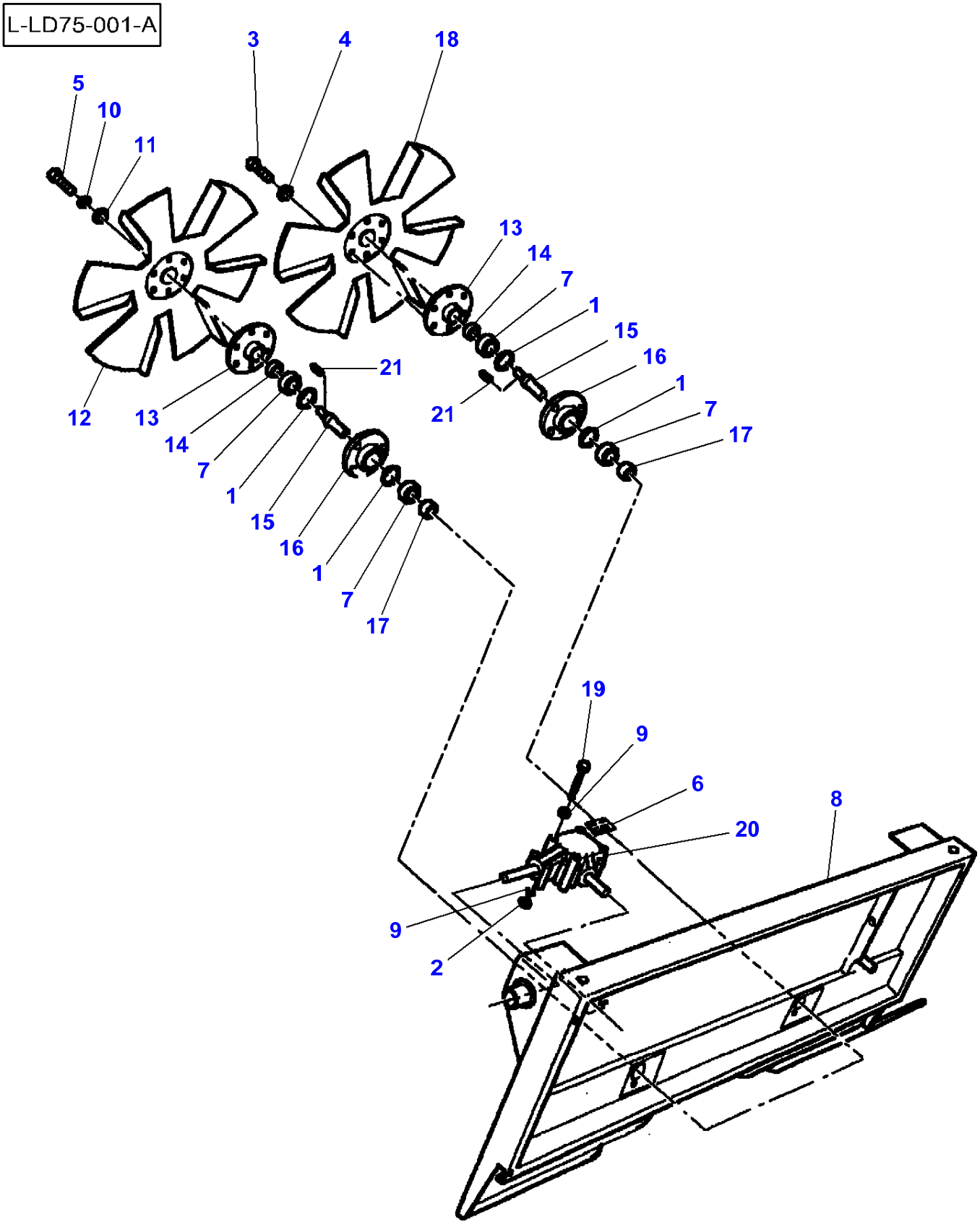
L-LD75-001-A
3
4
18
5
10
11
13
14
7
1
15
16
1
7
17
21
21
12
13
14
7
1
15
16
1
7
17
19
9
6
20
8
9
2

Item	Part Number	Qty	Description
1	LA11060576	4	Circlip
2	LA11701721	1	Nut
3	LA12034571	2	Lock Washer
4	LA16043224	1	Cap Screw
5	LA80043140	1	Screw
6	LA80266580	1	Decal
7	**LA322638450**	3	Bearing Assy
8	LA322740150	1	Body
9	LA355501120	2	Flat Washer
10	LA12034671	1	Lock Washer
11	LA84056152		Washer
12	LA84056145	1	Fan
13	LA84056121	2	Hub
14	LA84056133	2	Bush
15	LA84056123	2	Shaft
16	LA84056122	2	Hub
17	LA84056129	2	Bush
18	LA84056146	1	Fan
19	LA8012007	1	Screw
20	LA84056139	1	Angle Drive
21	LA84056144	2	Key

L-LD75-003-B

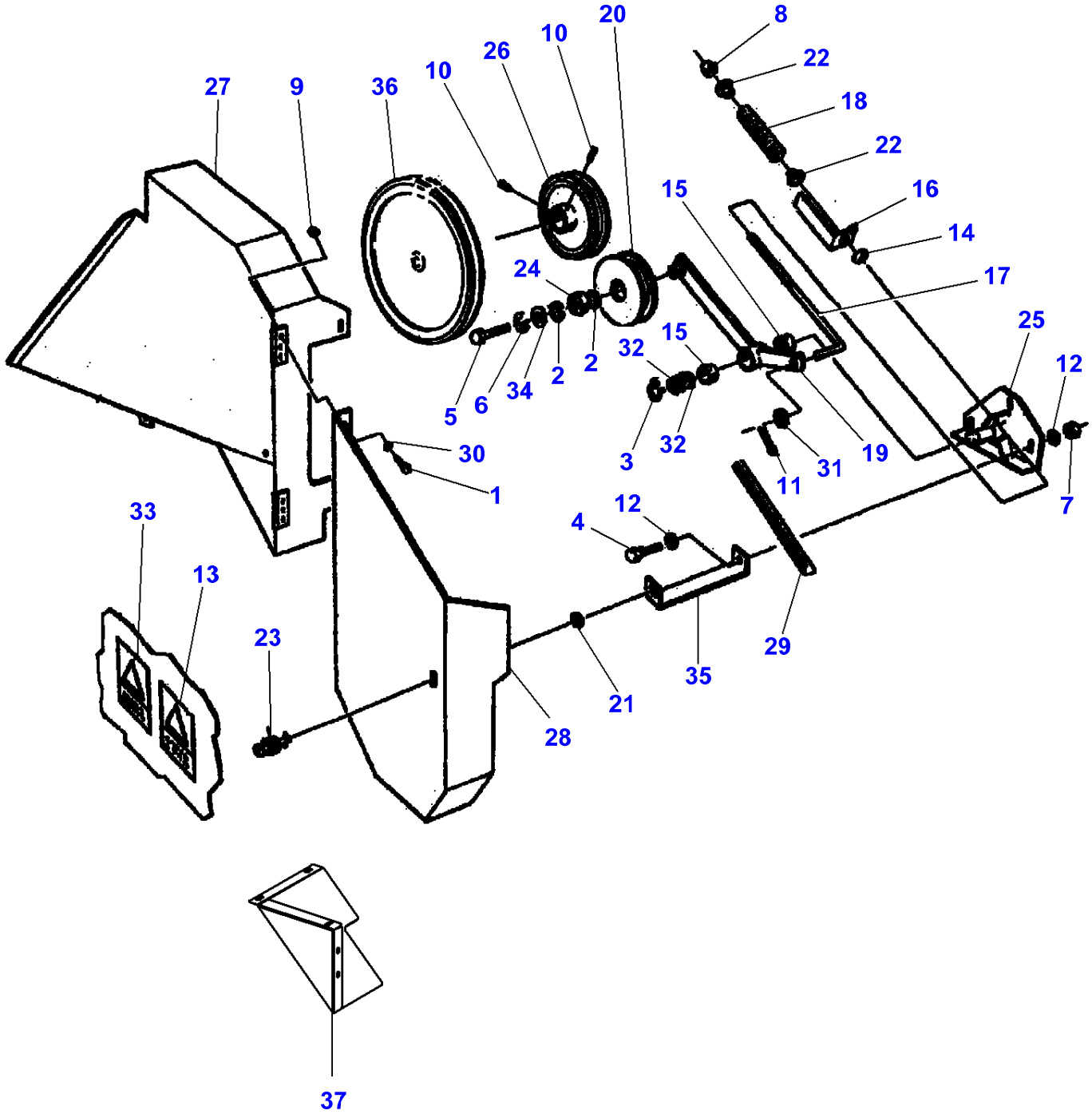
27
9
36
10
26
10
20
8
22
18
22
16
14
15
17
24
25
12
15
32
2
2
34
6
5
30
1
3
32
19
31
11
7
12
4
33
13
23
29
35
21
28
37

Item	Part Number	Qty	Description
1	LA10977524	1	Cap Screw
2	LA11060576	2	Circlip
3	LA11067376	1	Circlip
4	LA11106221	1	Cap Screw
5	LA11112424	1	Cap Screw
6	LA12034771	1	Lock Washer
7	LA12577211	2	Nut
8	LA12577511	1	Cap Nut
9	LA15896421	7	Nut
10	LA80120109	2	Screw
11	LA80130004	1	Split Pin
12	LA80378244	2	Washer
13	LA84014117	1	Decal
14	LA84043655	1	Nut
15	LA84056148	2	Bush
16	LA84056164	1	Support
17	LA84056165	1	Tie Rod
18	LA84056167	1	Spring
19	LA84056789	1	Lever
20	LA84056790	1	Pulley
21	LA320899350	1	Lock Washer
22	LA320998950	2	Guide Bush
23	LA321551650	1	Screw Special
24	**LA322638450**	1	Bearing Assy
25	LA322741150	1	Support
26	LA322741250	1	Pulley
27	LA322741350	1	Shield
28	LA322741450	1	Shield
29	**LA340433264**	1	Belt
30	LA355500715	1	Flat Washer
31	LA355501320	1	Flat Washer
32	LA355536210	2	Flat Washer
33	LA84056170	1	Decal
34	LA84056166	1	Washer
35	LA323096050	1	Strap
36	LA322126250	1	Pulley
37	LA323194550	1	Guard

L-LD76-001-B

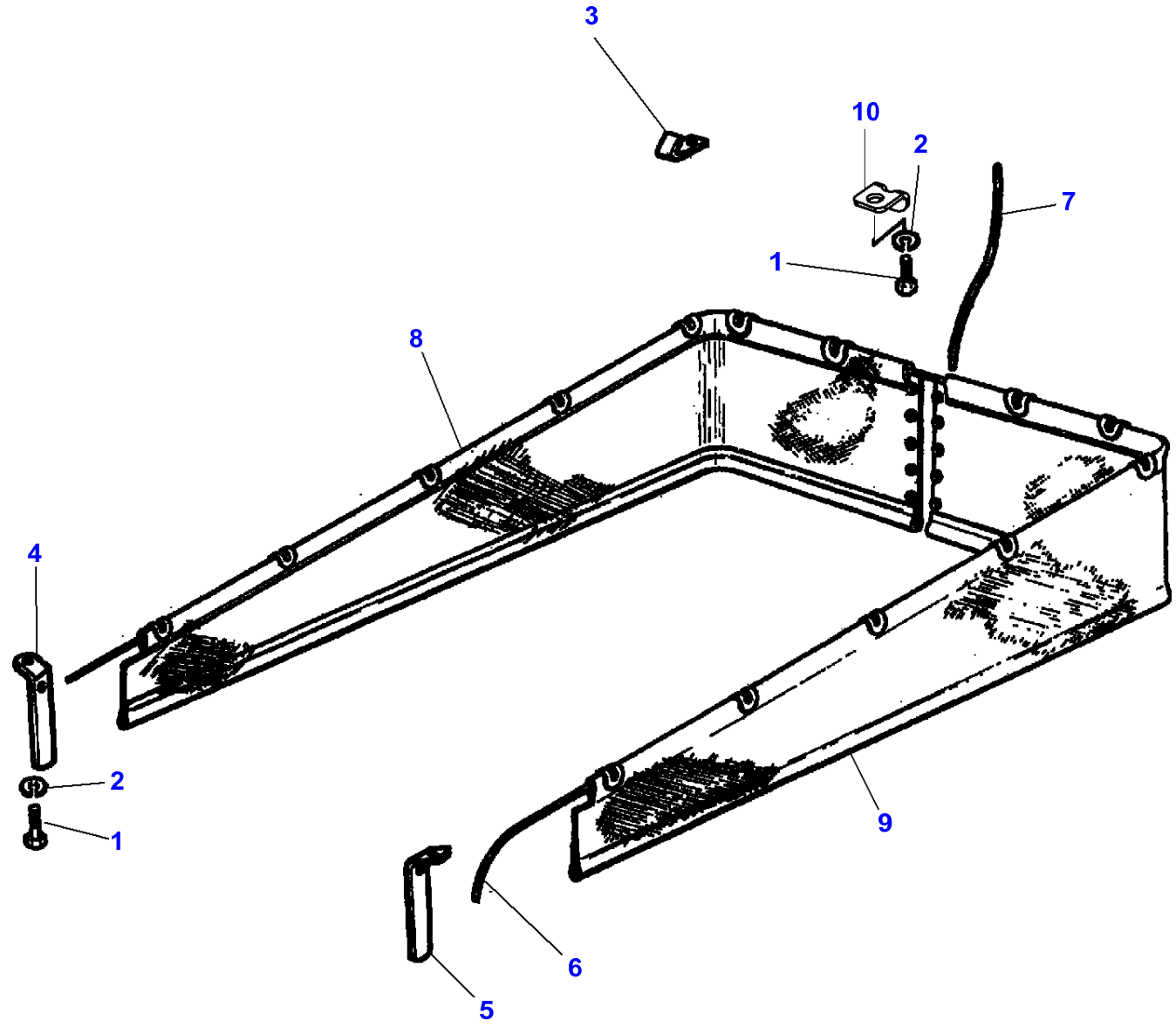

Item	Part Number	Qty	Description	Comments
1	LA11106021	2	Cap Screw	
2	LA12034671	2	Lock Washer	
3	LA321983250	1	Strap	Up to Serial or Engine Number
4	LA321983350	1	Strap	
5	LA321983450	1	Strap	
6	LA321984950	1	String	
7	LA321985150	1	Wire	
8	LA323004350	1	Canvas	
9	LA323004450	1	Canvas	
10	LA323190650	1	Strap	From Serial or Engine Number 551710031

L-LE19-001-A

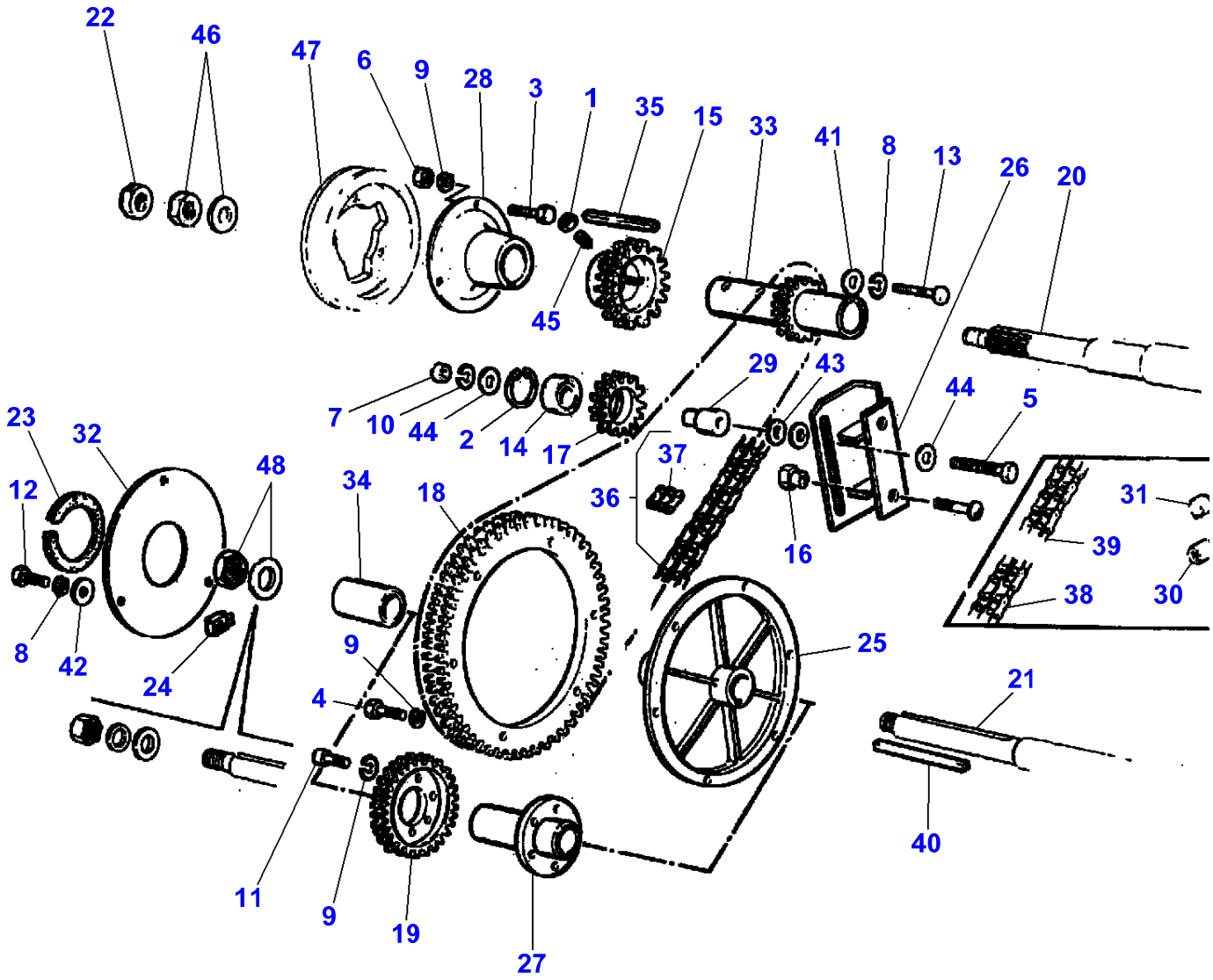
22
46
47
6
9
28
3
1
35
15
33
41
8
13
26
20
45
29
43
44
5
7
10
44
2
14
17
37
36
23
32
48
12
34
18
31
39
16
38
30
8
42
24
9
4
25
21
11
9
19
27
40

Item	Part Number	Qty	Description	Comments
1	LA10717311	1	Nut	
2	LA11061076	1	Circlip	
3	LA11106424	3	Cap Screw	
4	LA11107221	6	Cap Screw	
5	LA11113621	1	Screw	
6	LA11701721	3	Nut	
7	LA11702921	1	Nut	
8	LA12034571	5	Lock Washer	
9	LA12034671	15	Lock Washer	
10	LA12034771	1	Lock Washer	
11	LA14420121	6	Hex Socket Screw	
12	LA16043424	3	Cap Screw	
13	LA16044224	2	Cap Screw	
14	**LA28996530**	1	Bearing Assy	
15	LA300114224	1	Gear	
16	LA300114230	2	Nut	
17	LA300114232	1	Sprocket	
18	LA300114233	1	Gear	
19	LA300117408	1	Gear	Number of teeth/spines 32
	LA300117384	1	Gear	Number of teeth/spines 36
	LA300117407	1	Gear	Number of teeth/spines 40
20		1	Shaft	See Page - Reference Number 050-0045/10
21		1	Shaft	See Page - Reference Number 050-0025/45
22	LA300136457	1	Nut	
23	LA300137641	1	Gasket	
24	LA320463950	3	Nut	
25	LA320854650	1	Hub	
26	LA321130950	1	Support	
27	LA321131050	1	Hub	
28	LA321149250	1	Hub	
29	LA321149450	1	Spacer	
30	LA321473650	1	Plug	
31	LA321629050	1	Plug	
32	LA322368150	1	Cover	
33	LA322368450	1	Sleeve	
34	LA322368850	1	Spacer	
35	LA322374250	1	Key	
36	**LA340437633**	1	Chain	
37	**LA340437624**	1	Link	
38	**LA340437631**	1	Chain	
39	**LA340437628**	1	Chain	
40	LA353847130	1	Key	
41	LA355500920	2	Flat Washer	
42	LA355510820	3	Flat Washer	
43	LA355511210	4	Washer	
44	LA355511230	2	Flat Washer	
45	LA366361218	1	Screw	
46		1	Nut	See Page - Reference Number 050-0025
47		1	Pulley	See Page - Reference Number 070-0115/13
48		1	Nut	See Page - Reference Number 050-0025

L-LD77-001-A

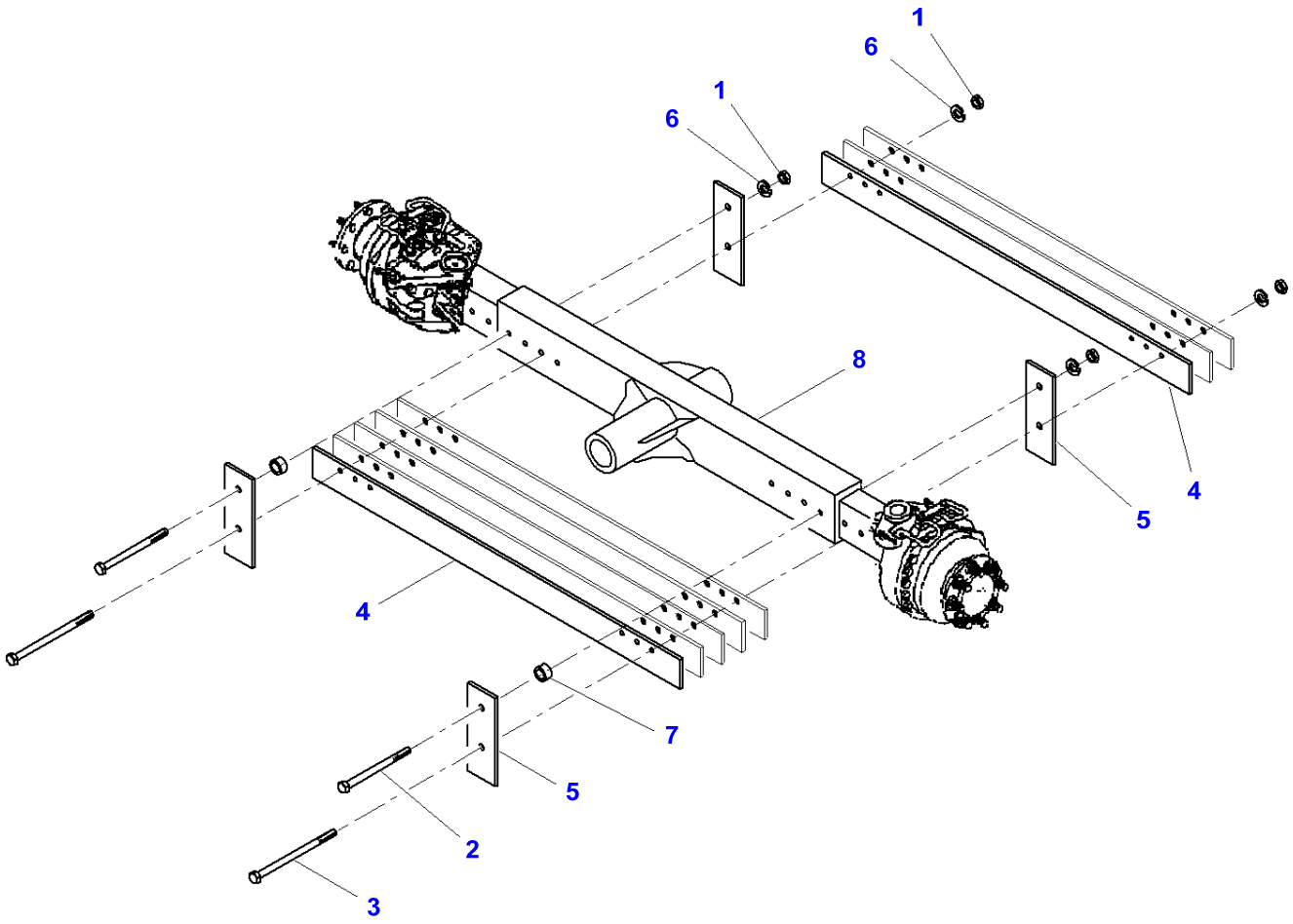

Item	Part Number	Qty	Description	Comments
1	LA12164321	4	Nut	
2	LA15990931	2	Screw	
3	LA15991821	2	Screw	
4	LA322830050	14	Weight	
5	LA322830150	4	Plate	
6	LA400851209	2	Washer	
7	LA322830250	8	Spacer	
8		1	Axle	See Page - Reference Number 030-0020

L-LD77-002-A

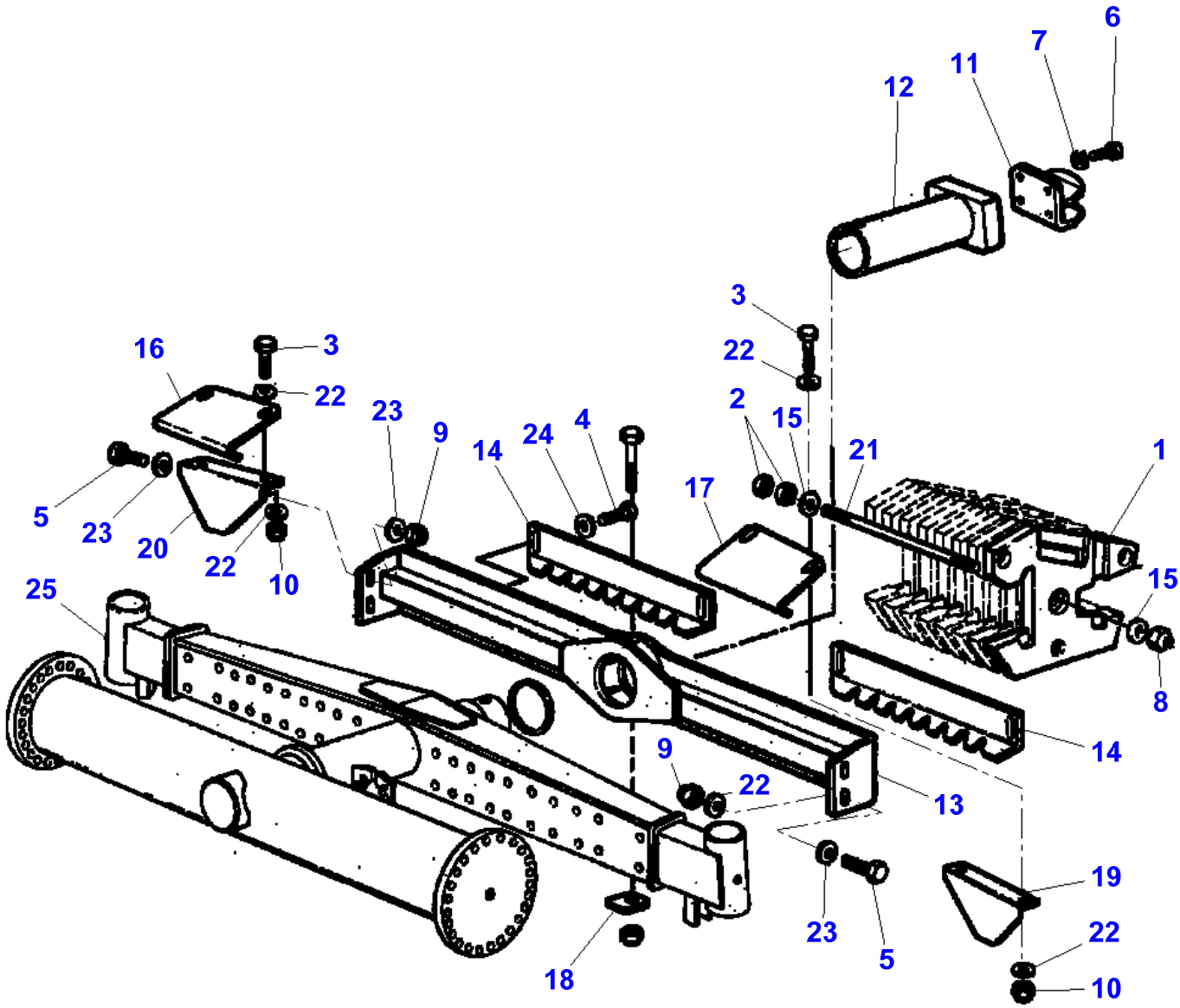
6
7
11
12
3
22
2
15
21
1
16
3
22
23
9
14
24
4
17
5
23
20
22
10
25
15
8
14
9
22
13
19
23
5
22
10
18

Item	Part Number	Qty	Description	Comments
1	LA5163108	1	Weight	
2	LA10791411	2	Nut	
3	LA11112821	4	Cap Screw	
4	LA11113221	2	Cap Screw	
5	LA11116221	4	Cap Screw	
6	LA11408321	4	Cap Screw	
7	LA12035571	4	Lock Washer	
8	LA12574921	1	Nut	
9	LA12577311	4	Nut	
10	LA12577511	4	Cap Nut	
11	LA320841950	1	Hook	
12	LA322798250	1	Extension	
13	LA322298450	1	Frame	
14	LA322299350	2	Plate	
15	LA322299450	2	Washer	
16	LA322299650	1	Bracket	
17	LA322299750	1	Bracket	
18	LA322299850	1	Clip	
19	LA322299950	1	Bracket	
20	LA322300050	1	Bracket	
21	LA322299550	1	Rod	
22	LA355501330	10	Flat Washer	
23	LA355501530	6	Washer	
24	LA355530840	2	Washer	
25		1	End	See Page - Reference Number 030-0045

L-LD77-003-A

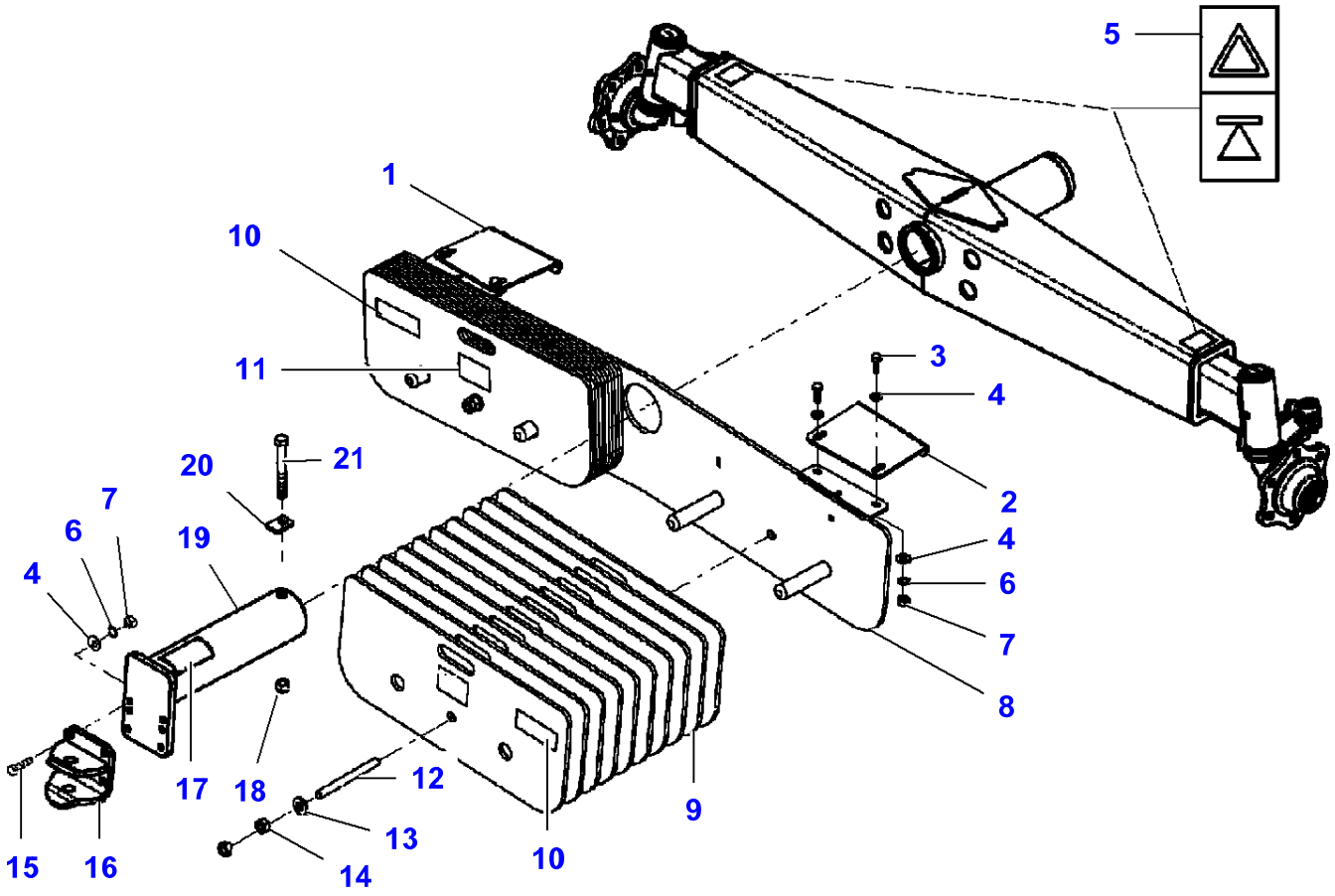

Item	Part Number	Qty	Description
1	LA323281350	1	Bracket
2	LA323281250	1	Bracket
3	LA11115821	4	Screw
4	LA355501530	8	Washer
5	LA341000093	2	Decal
6	LA12035571	8	Lock Washer
7	LA12163211	8	Nut
8	LA323281150	1	Support
9	LA323281850	20	Weight
10	LA322689350	1	Cat Eye
11	LA342000029	2	Decal
12	LA323281750	2	Rod
13	LA355502150	4	Flat Washer
14	LA12163511	8	Nut
15	LA11116421	4	Cap Screw
16	LA320841950	1	Hook
17	LA341000023	1	Decal
18	LA12575121	1	Nut
19	LA323194250	1	Extension
20	LA323281650	1	Plate
21	LA15990531	1	Cap Screw

L-LD78-001-A

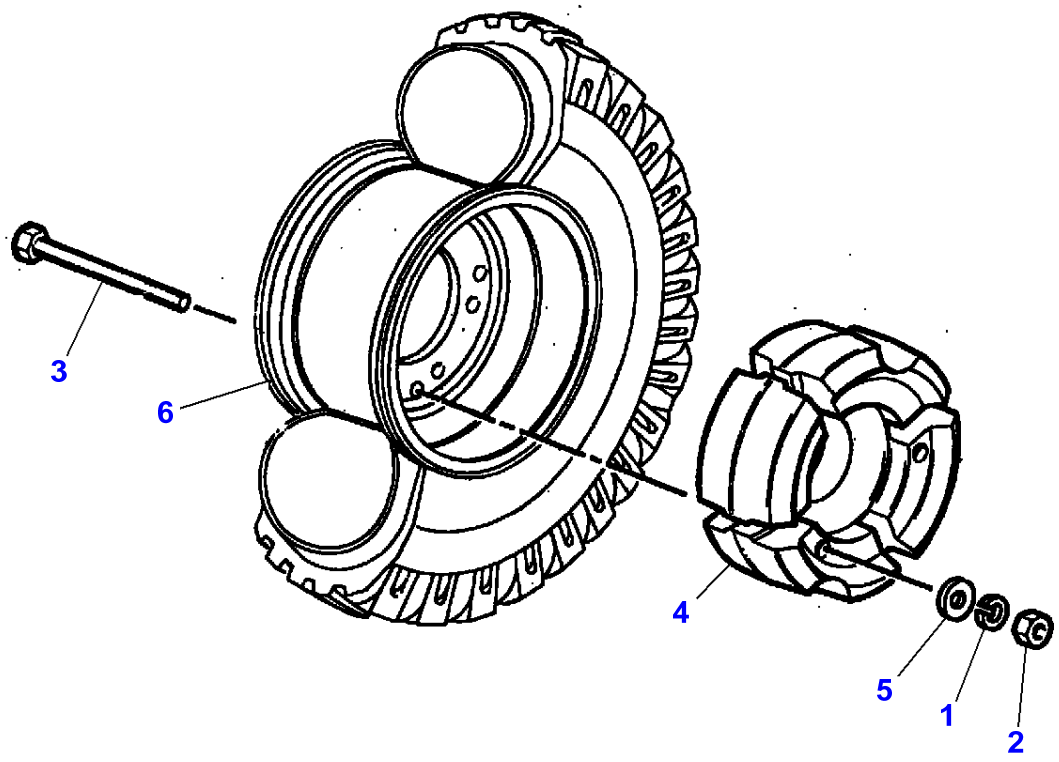

Item	Part Number	Qty	Description	Comments
1	LA12034771	1	Lock Washer	
2	LA12164911	1	Nut	
3	LA300111034	6	Screw	
4	LA300137455	1	Weight	
5	LA355530960	1	Washer	
6		2	Wheel Rim	See Page - Reference Number 140-0265/1

L-LD79-001-A

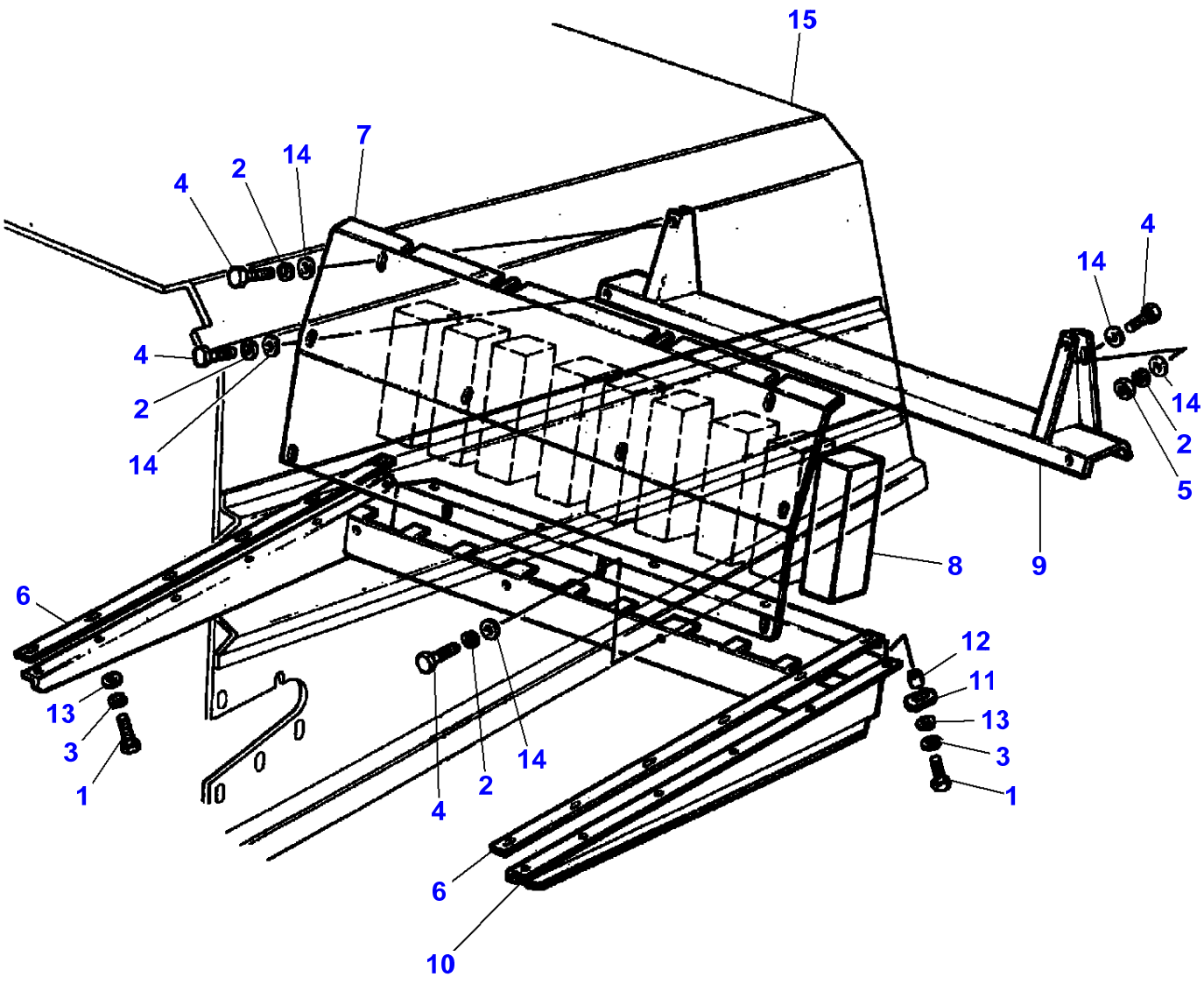

Item	Part Number	Qty	Description	Comments
1	LA11106424	10	Cap Screw	
2	LA12034571	13	Lock Washer	
3	LA12034671	10	Lock Washer	
4	LA16043624	11	Cap Screw	
5	LA16100811	2	Nut	
6	LA322298550	2	Shim	
7	LA322298650	1	Guard	
8	LA322298850	1	Weight	
9	LA322298950	1	Support	
10	LA322299150	1	Frame	
11	LA322313750	10	Plate	
12	LA340415510	10	Bush	
13	LA355501130	10	Flat Washer	
14	LA355510820	14	Flat Washer	
15		1	Bonnet	See Page - Reference Number 060-0015/17

L-LD79-002-A

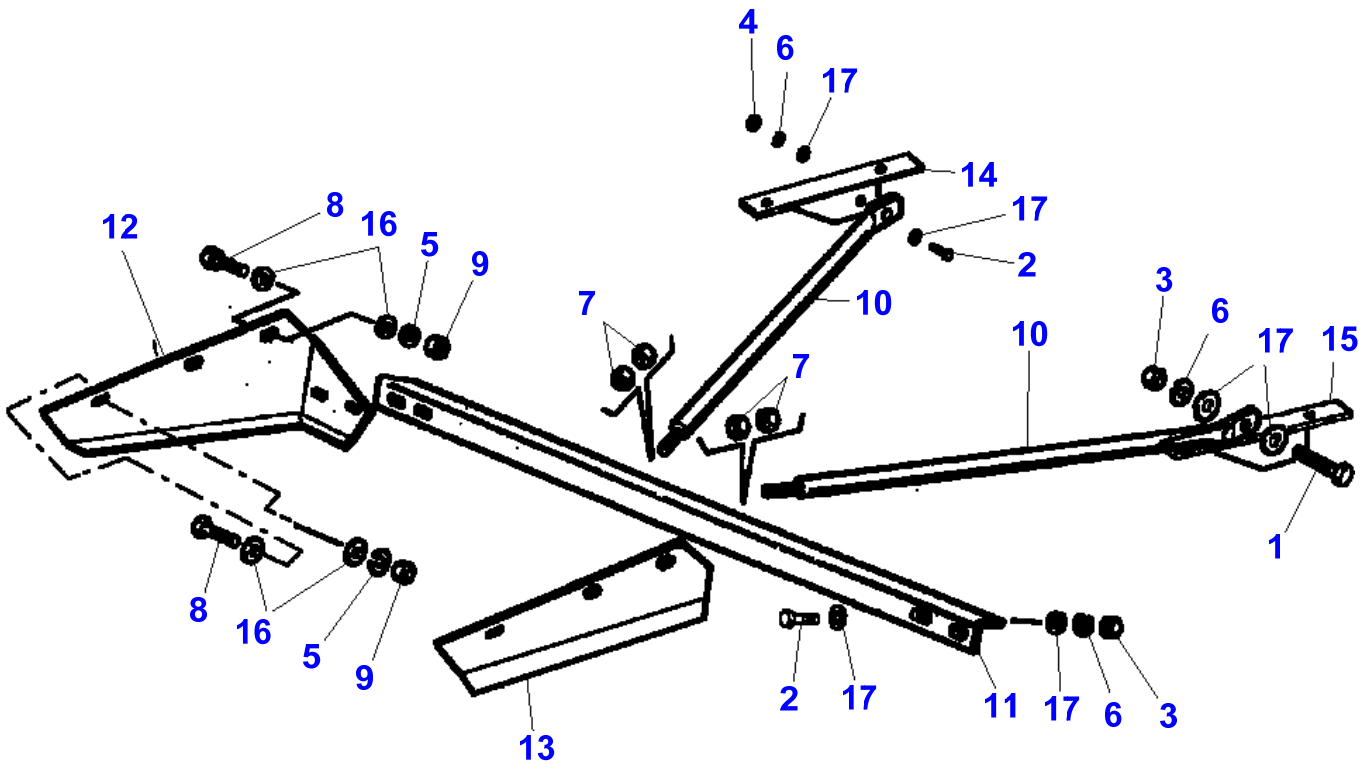

Item	Part Number	Qty	Description
1	LA11106421	1	Cap Screw
2	LA11106424	2	Cap Screw
3	LA11701711	2	Nut
4	LA11701721	1	Nut
5	LA12034571	2	Lock Washer
6	LA12034671	3	Lock Washer
7	LA12164011	4	Nut
8	LA16043621	2	Cap Screw
9	LA16100811	2	Nut
10	LA322349550	2	Tie Rod
11	LA322349750	1	Angle.
12	LA322873250	1	Bracket
13	LA322873350	1	Bracket
14	LA322876450	1	Bracket
15	LA322876550	1	Bracket
16	LA355500920	4	Flat Washer
17	LA355501120	5	Flat Washer

L-LD80-001-A

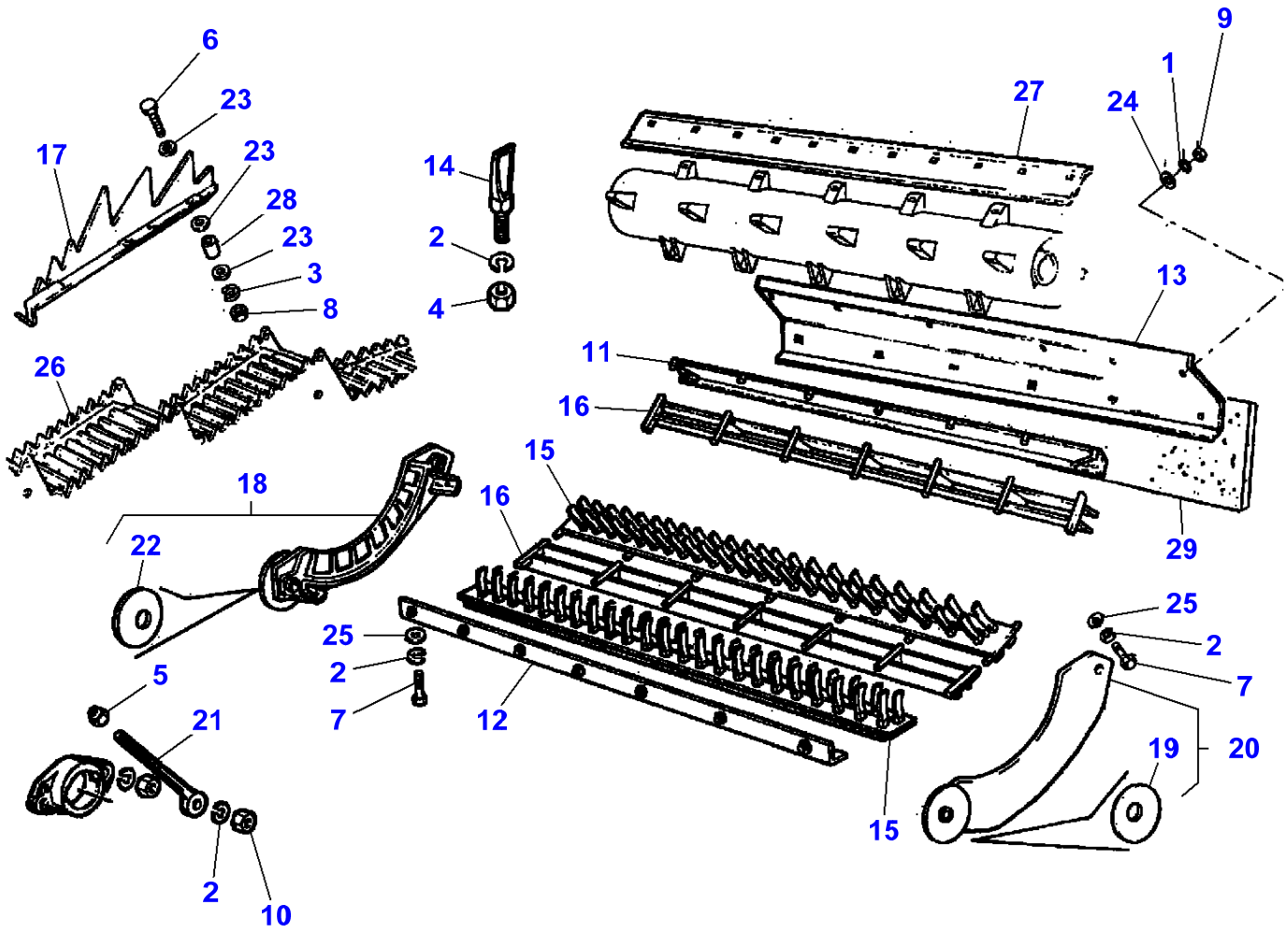
6
23
17
23
28
23
3
8
14
2
4
26
18
22
5
21
2
10
25
2
7
16
15
12
27
24
1
9
13
11
16
29
15
25
2
7
19
20

Item	Part Number	Qty	Description	Comments
1	LA12034571	7	Lock Washer	
2	LA12034771	4	Lock Washer	
3	LA12035670	12	Lock Washer	
4	LA12164911	1	Nut	
5	LA12577211	1	Nut	
6	LA15212721	12	Cap Screw	
7	LA15540321	2	Cap Screw	
8	LA15896221	12	Nut	
9	LA16100811	7	Nut	
10	LA16101511	1	Nut	
11	LA322177450	1	Crossbar	
12	LA300112467	1	Crossbar	
13	LA322177650	1	Crossbar	
14	**LA301172230**	1	Tooth	
15	LA323087000	2	Plate	
16	LA323087150	2	Grille	
17	LA320691950	3	St.Walk.Project.	
18	LA320886350	1	Side	
19	LA322622850	2	Washer	
20	LA320886450	1	Side	
21	LA321811950	1	Tie Rod	
22	LA322622850	1	Washer	
23	LA355500715	12	Flat Washer	
24	LA355500920	7	Flat Washer	
25	LA355501330	4	Flat Washer	
26		1	Kit, Straw Walkr	See Page - Reference Number 060-0025/10
27		1	Beater	See Page - Reference Number 050-0045/15
28	LA344158136	12	Bush	
29		1	Canvas	See Page - Reference Number 050-0100/13

L-LD82-001-A

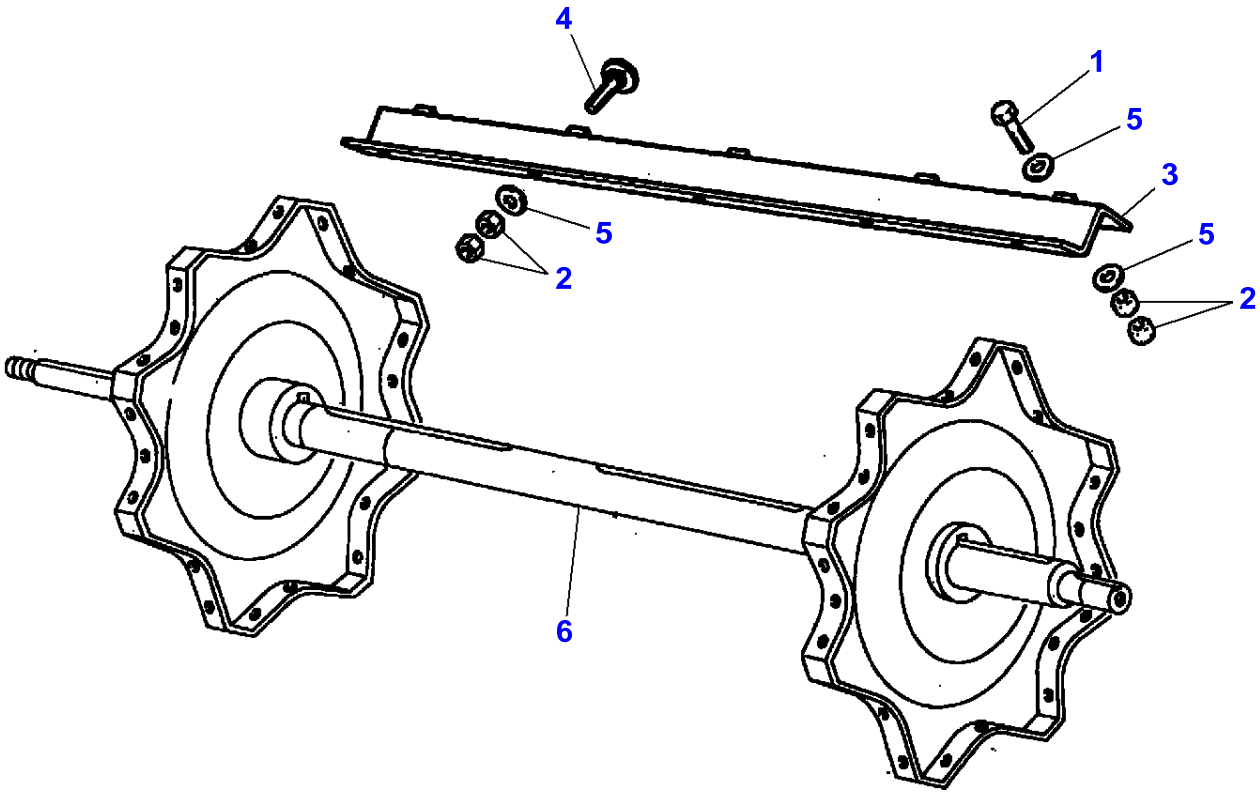

Item	Part Number	Qty	Description	Comments
1	LA11112621	2	Cap Screw	
2	LA11702921	10	Nut	
3	LA300121512	1	Bar	
4	LA300132629	30	Screw	
5	LA355501320	7	Flat Washer	
6		1	Shaft	See Page - Reference Number 050-0035/11

L-LD83-003-A

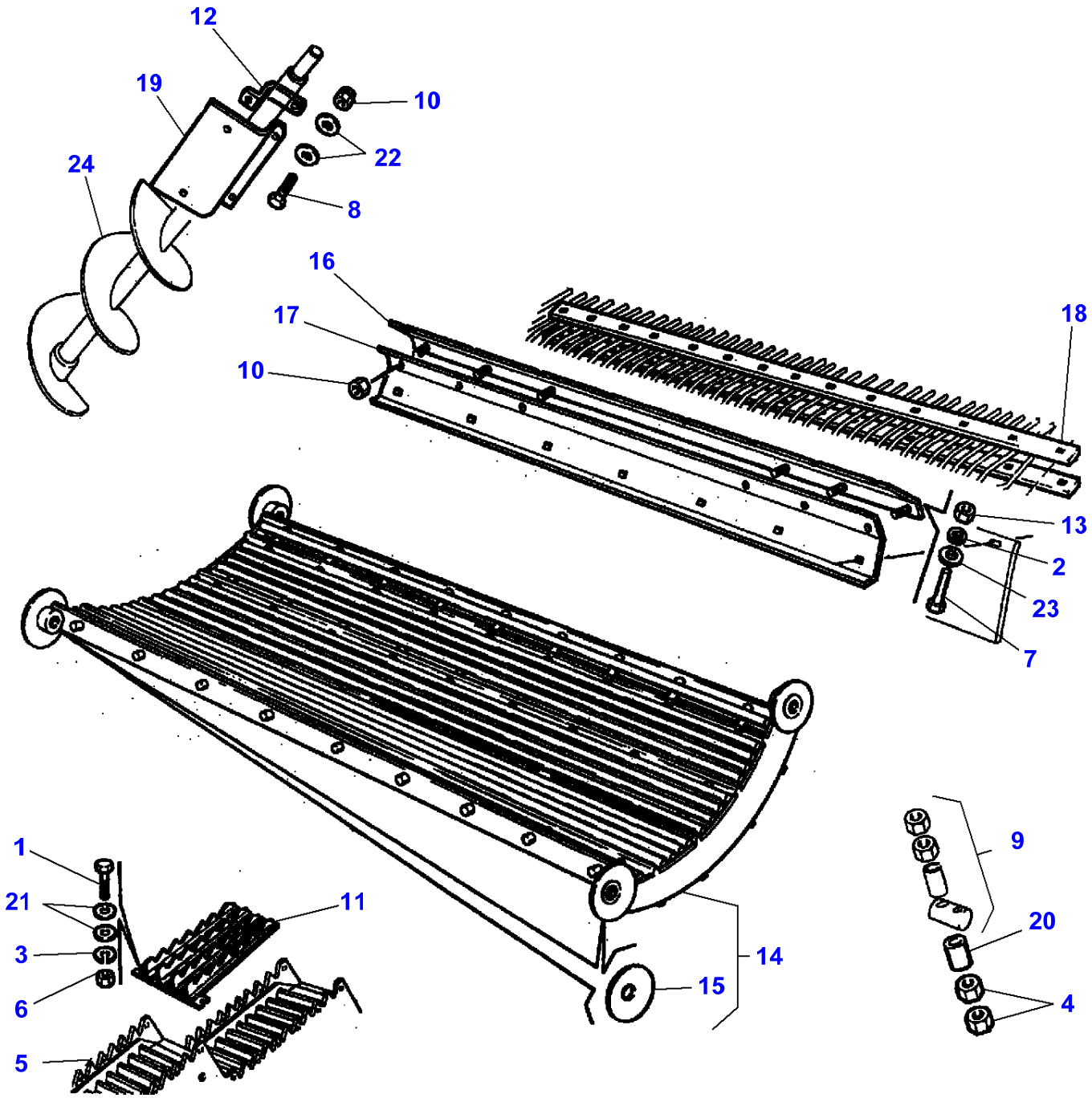

Item	Part Number	Qty	Description	Comments
1	LA10902424	2	Cap Screw	
2	LA12034571	7	Lock Washer	
3	LA12035670	2	Lock Washer	
4	LA12163321	4	Nut	
5		1	Kit, Straw Walkr	See Page - Reference Number 060-0025/10
6	LA15896221	2	Nut	
7	LA16043424	7	Cap Screw	
8	LA16043624	2	Cap Screw	
9		1	Fixing	See Page - Reference Number 050-0060
10	LA16104111	7	Locknut	
11	LA300135593	1	Rake	
12	LA320896650	1	Bracket	
13	LA321211250	7	Nut	
14	LA321252350	1	Concave	
15	LA322622850	4	Washer	(14)
16	LA322060750	1	Crossbar	
17	LA322060850	1	Crossbar	
18	LA322306850	2	Plate	
19	LA321929750	1	Blade	
20	LA340415821	2	Bush	
21	LA355500715	4	Flat Washer	
22	LA355500920	4	Flat Washer	
23	LA355510820	7	Flat Washer	
24		1	Auger	See Page - Reference Number 080-0030/12

L-LD83-004-A

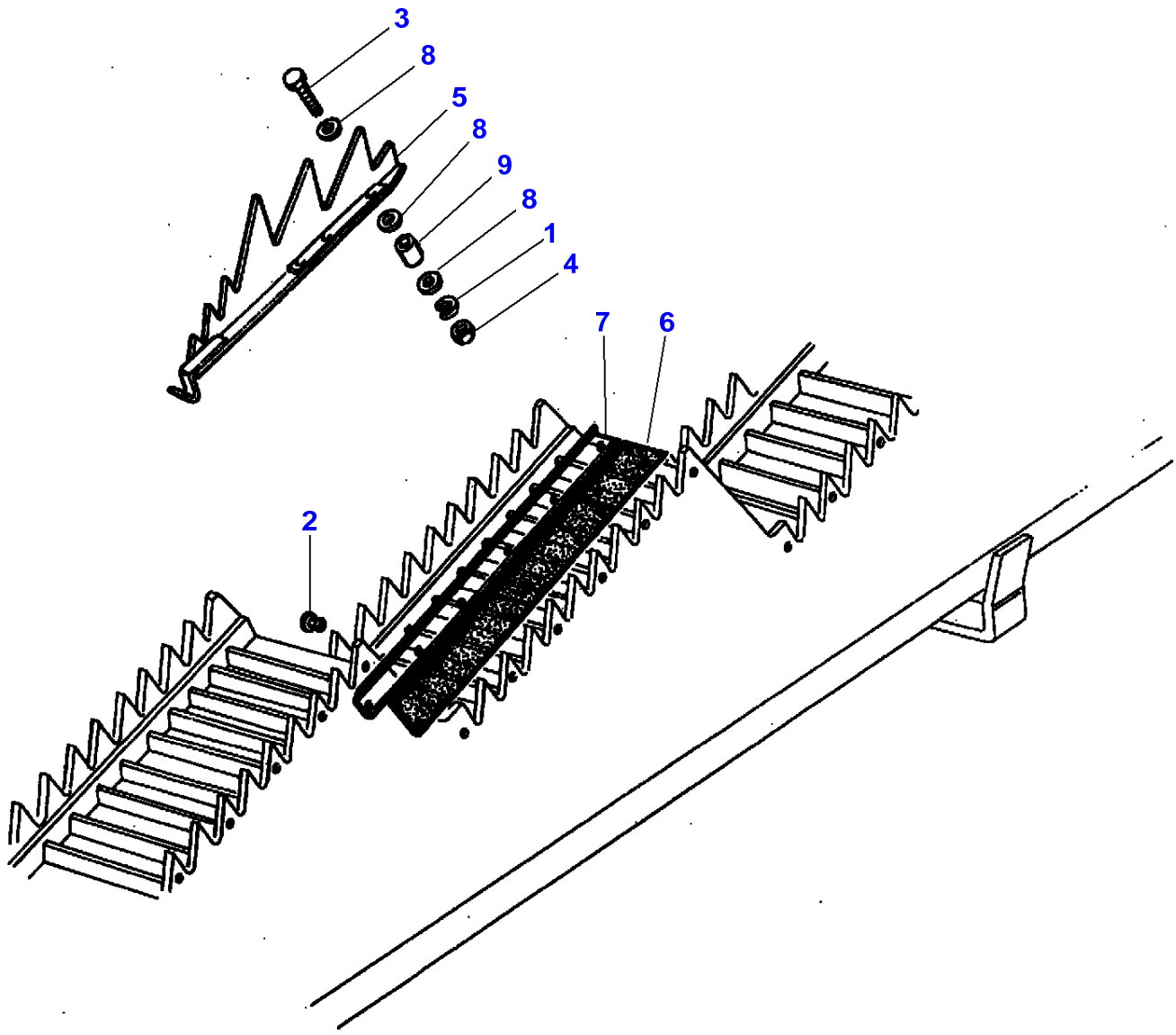

Item	Part Number	Qty	Description	Comments
1	LA12035670	12	Lock Washer	
2	LA14643292	36	Rivet	
3	LA15212721	22	Cap Screw	
4	LA15896221	12	Nut	
5	LA320691950	3	St.Walk.Project.	
6	LA322306250	1	Gasket	
7	LA322306350	1	Stop	Left Hand
	LA322306450	1	Stop	Right Hand
8	LA355500715	12	Flat Washer	
9	LA344158136	12	Bush	

L-LD84-001-A

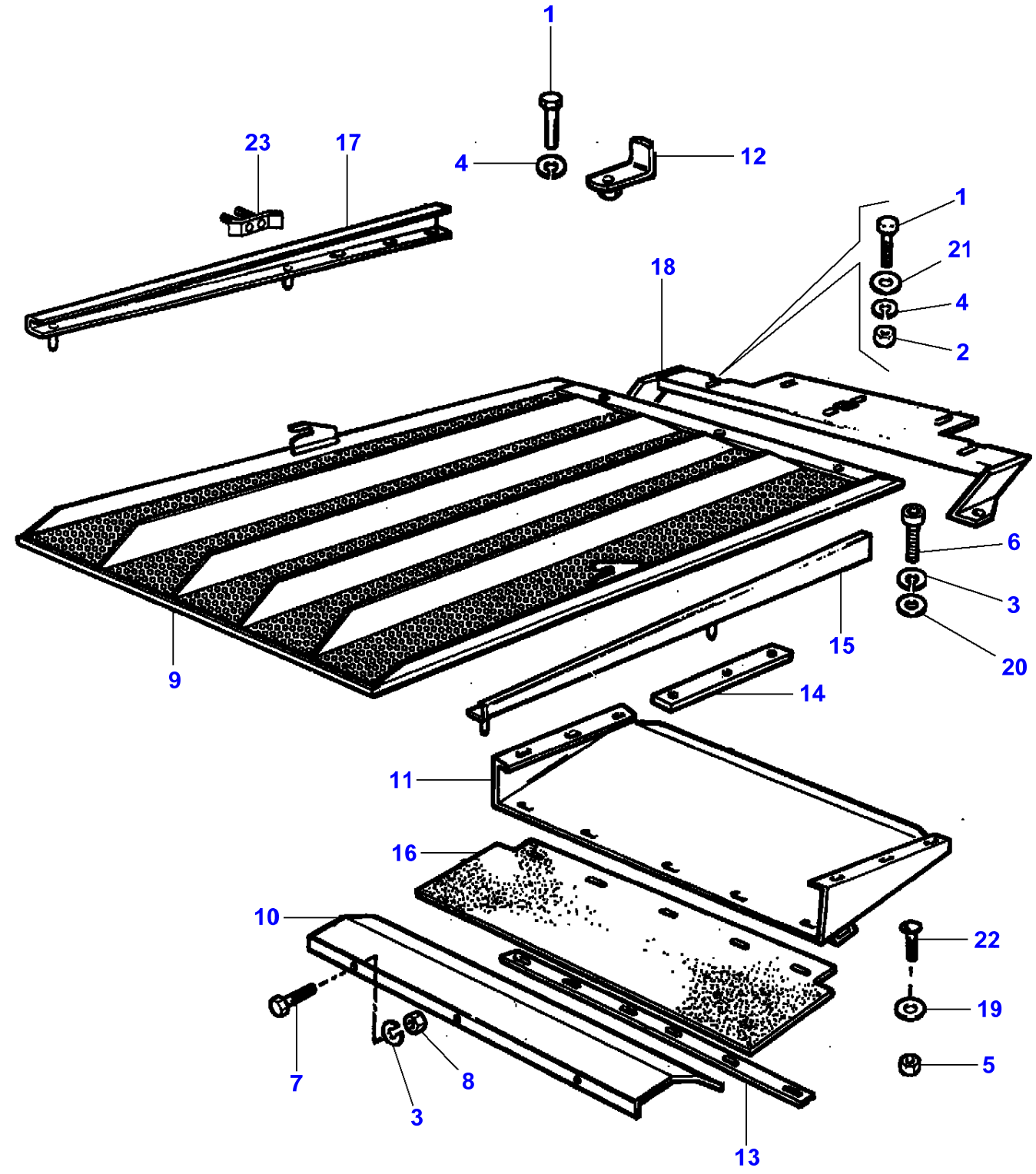

Item	Part Number	Qty	Description	Comments
1	LA11106221	2	Cap Screw	
2	LA11701721	2	Nut	
3	LA12034571	2	Lock Washer	
4	LA12034671	2	Lock Washer	
5	LA12574211	5	Locknut	
6	LA14306324	1	Screw	
7	LA16044224	3	Cap Screw	
8	LA16100811	3	Nut	
9	LA320958450	1	Sieve	
10	LA321832550	1	Plate	
11	LA322143850	1	Chute	
12	LA322143950	1	Bracket	
13	LA322144050	1	Plate	
14	LA322144150	1	Rod	
15	LA322144250	1	Support	
16	LA322144350	1	Canvas	
17	LA322144450	1	Support	
18	LA322144550	1	Support	
19	LA355500715	5	Flat Washer	
20	LA355500920	1	Flat Washer	
21	LA355501120	2	Flat Washer	
22	LA366000614	5	Carriage Bolt	
23		1	Clip	See Page - Reference Number 070-0045/23

L-LE20-001-A

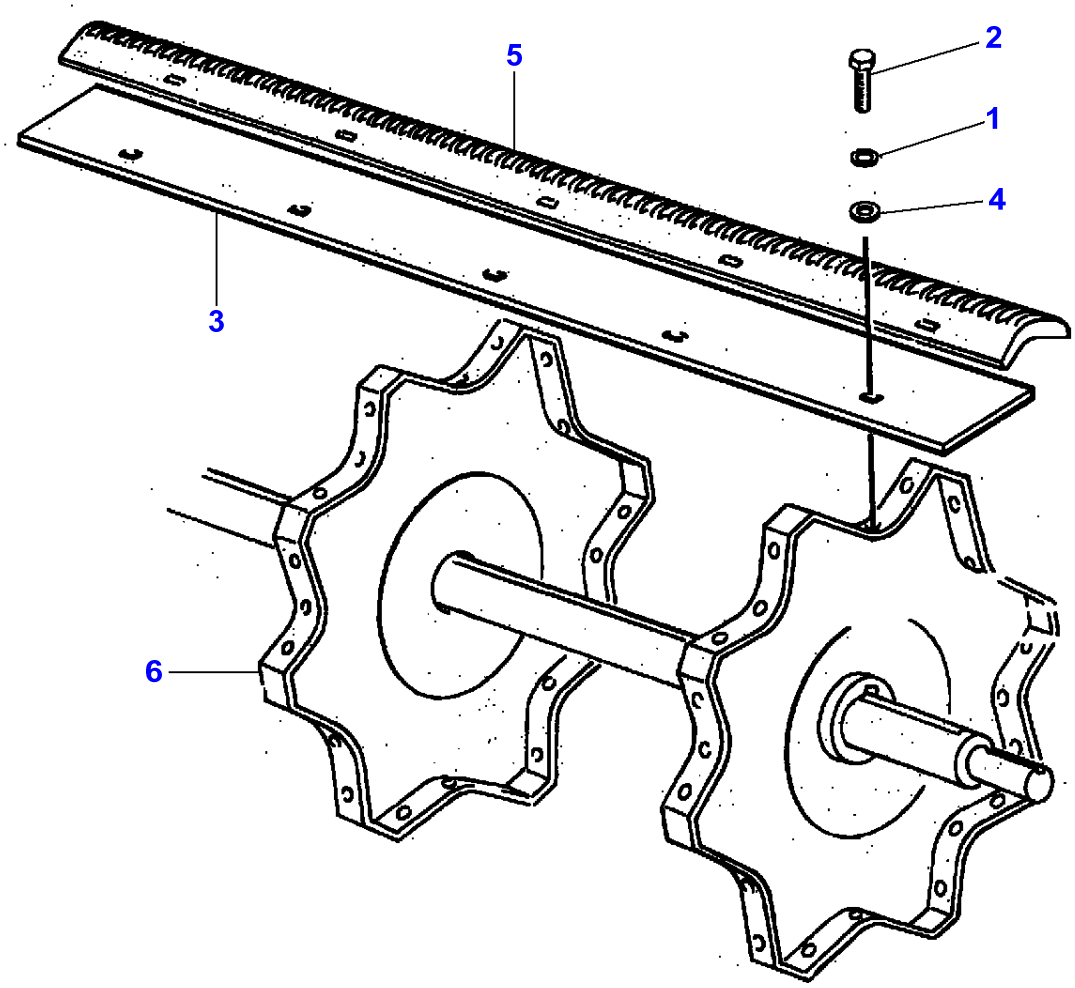

Item	Part Number	Qty	Description	Comments
1	LA140046	5	Washer	
2	LA11112621	5	Cap Screw	
3	LA322805850	1	Guard	
4	LA355501320	5	Flat Washer	
5		1	Bar	See Page - Reference Number 050-0035
6		1	Support	See Page - Reference Number 050-0035

L-LD85-001-A

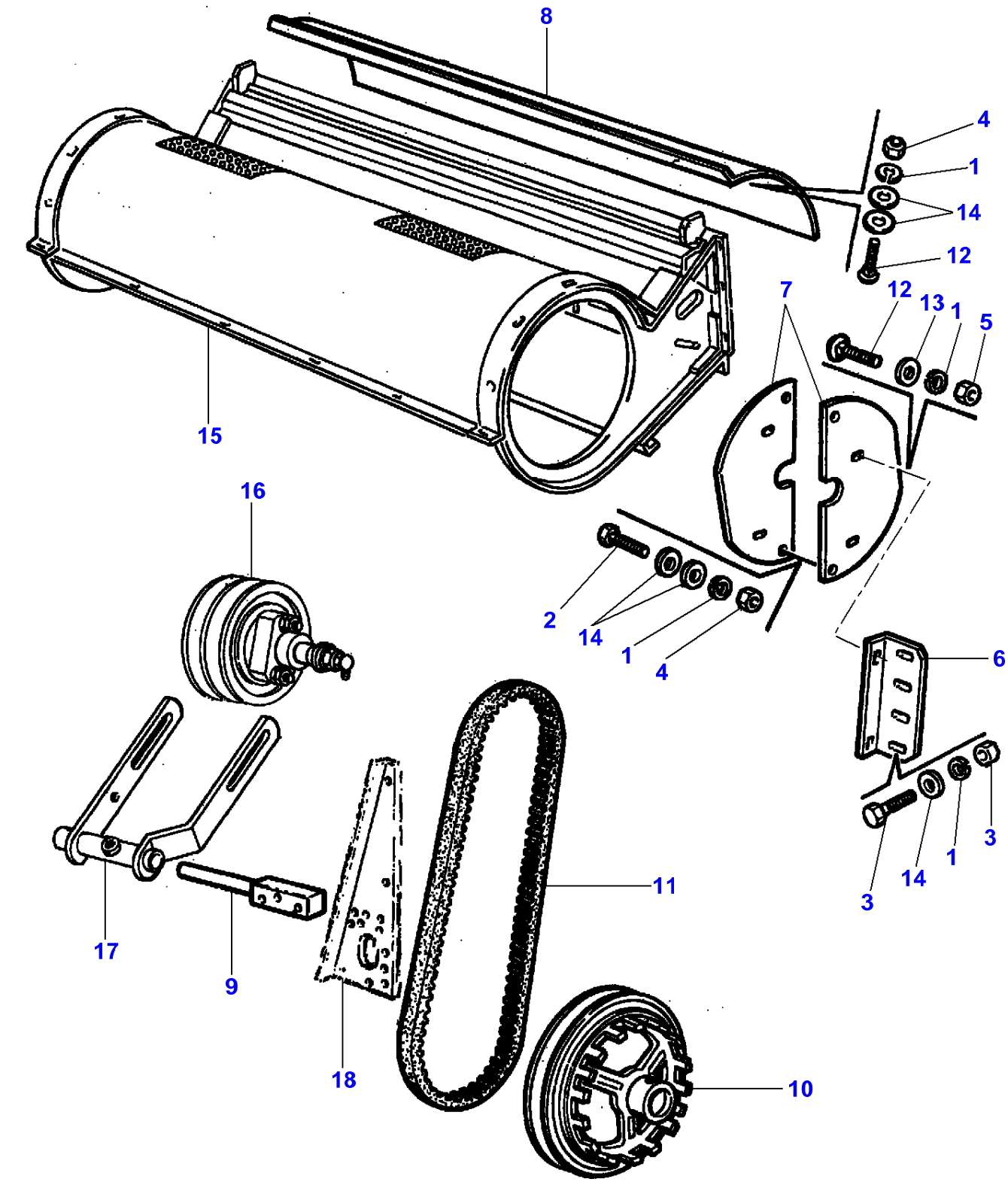

Item	Part Number	Qty	Description	Comments
1	LA12034571	5	Lock Washer	
2	LA16043224	2	Cap Screw	
3	LA16043424	2	Cap Screw	
4	LA16100811	3	Nut	
5	LA16100824	2	Nut	
6	LA321949750	1	Support	
7	LA321949850	2	Cover	
8	LA321968650	1	Shield	
9	LA322164450	1	Pin	
10	LA322164550	1	Pulley	
11	**LA340435153**	1	Belt	
12	LA350342510	2	Carriage Bolt	
13	LA355500915	2	Flat Washer	
14	LA355510820	8	Flat Washer	
15		1	Housing	See Page - Reference Number 070-0105/9
16		1	Bearing Assy	See Page - Reference Number 070-0120
17		1	Yoke	See Page - Reference Number 070-0115/4
18		1	Bracket	See Page - Reference Number 050-0005/15

L-LD86-001-A

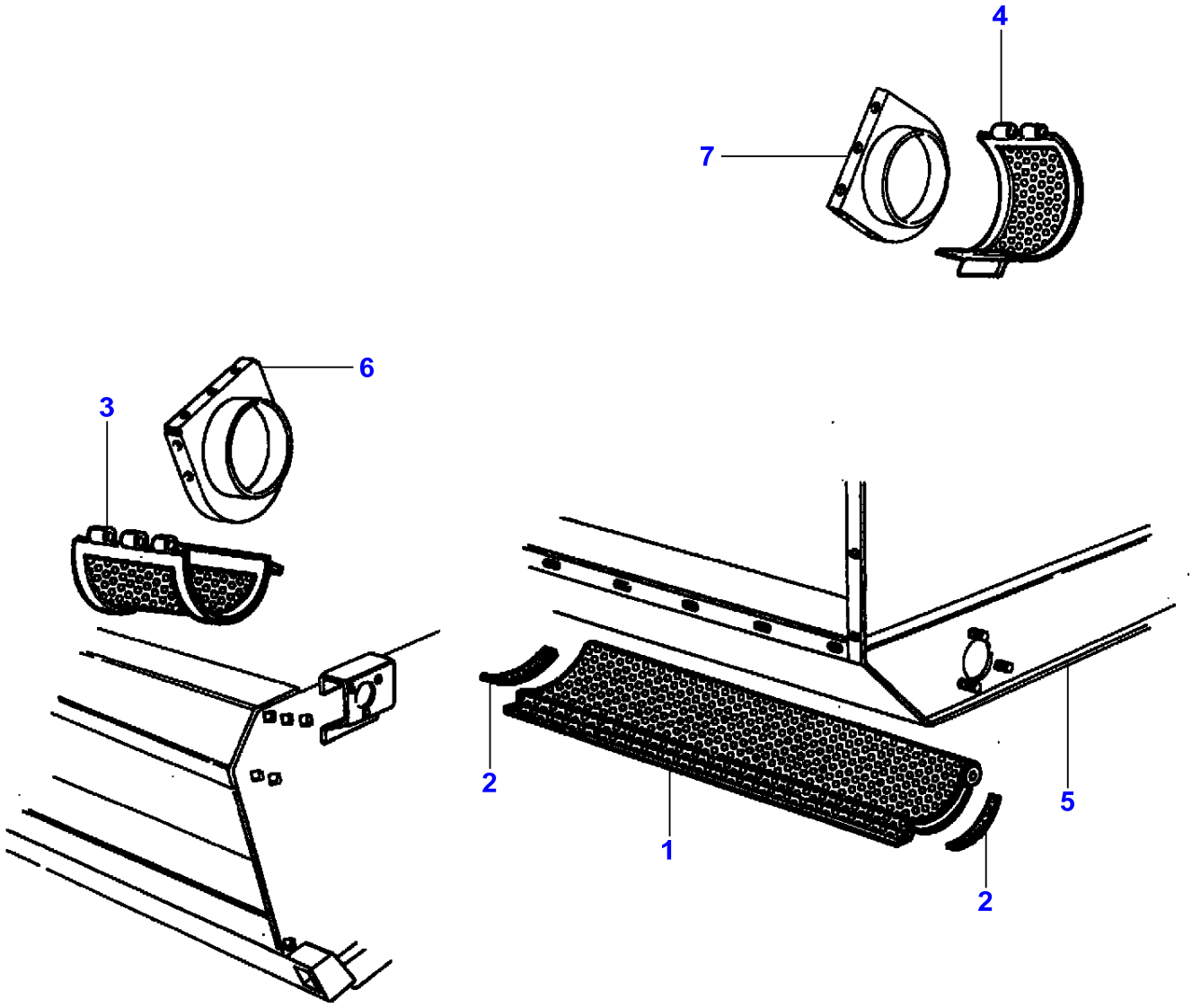

Item	Part Number	Qty	Description	Comments
1	LA321841450	1	Lid	
2	LA321843650	2	Gasket	
3	LA321859050	1	Lid	
4	LA321859150	1	Lid	
5		1	Housing	See Page - Reference Number 070-0020/14
6		1	Shield	See Page - Reference Number 070-0150
7		1	Shield	See Page - Reference Number 070-0130

L-LC52-001-A

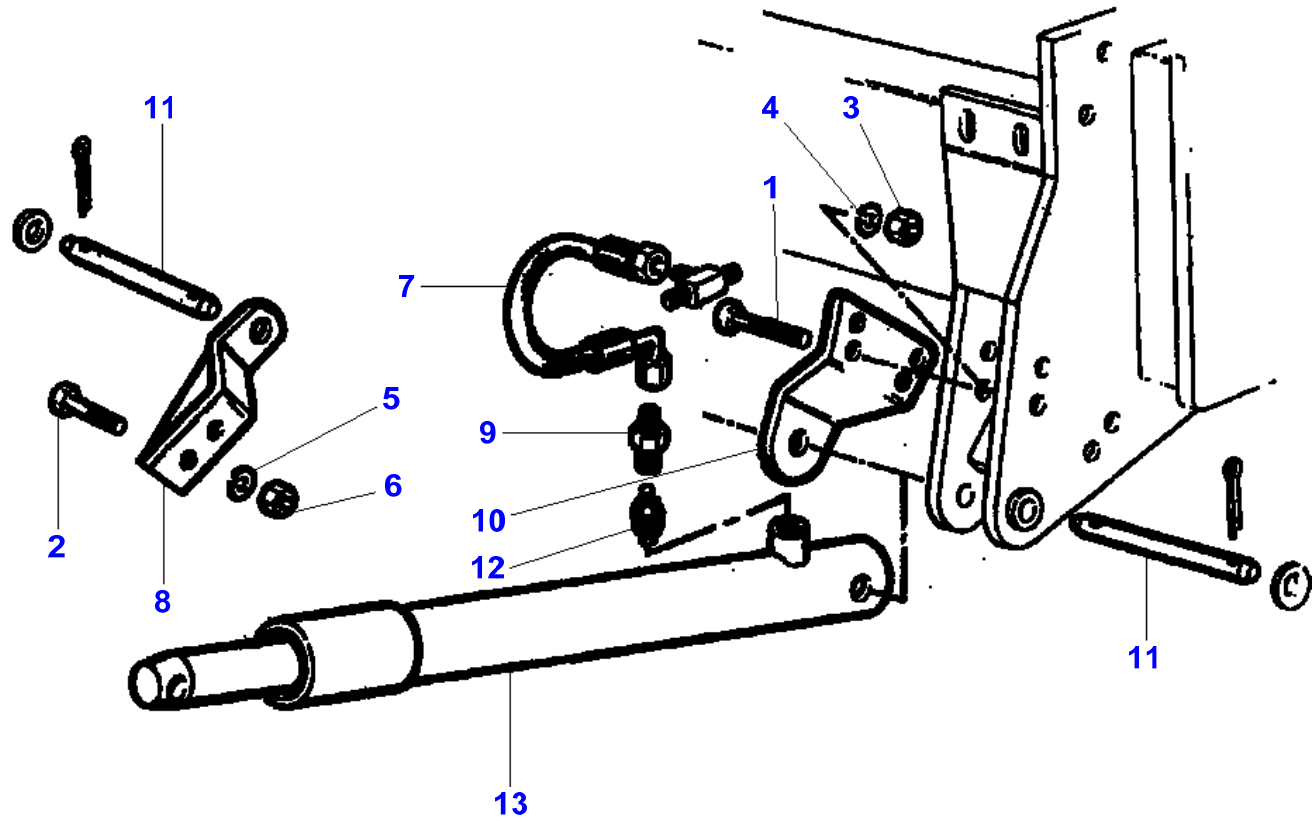

Item	Part Number	Qty	Description	Comments
1	LA11112821	4	Cap Screw	
2	LA11118521	2	Screw	
3	LA11702921	4	Nut	
4	LA12034771	4	Lock Washer	
5	LA12034871	2	Lock Washer	
6	LA12163311	2	Nut	
7	LA321421850	1	Hydraulic Hose	
8	LA322776550	1	Plate	
9	LA321875100	1	Union	
10	LA322003950	1	Bracket	
11	LA322005550	2	Pin	
12	LA322308350	1	Valve	
13	LA322546100	1	Hydraulic, Cylin	
	LA322543700	1	Ram	AUTOLEVEL
14	LA322546300	1	Kit, Seal	[A] (13)
	LA322543900	1	Kit, Seal	[A] (13) AUTOLEVEL

FOOTNOTE [A] NOT ILLUSTRATED

L-LD88-001-A

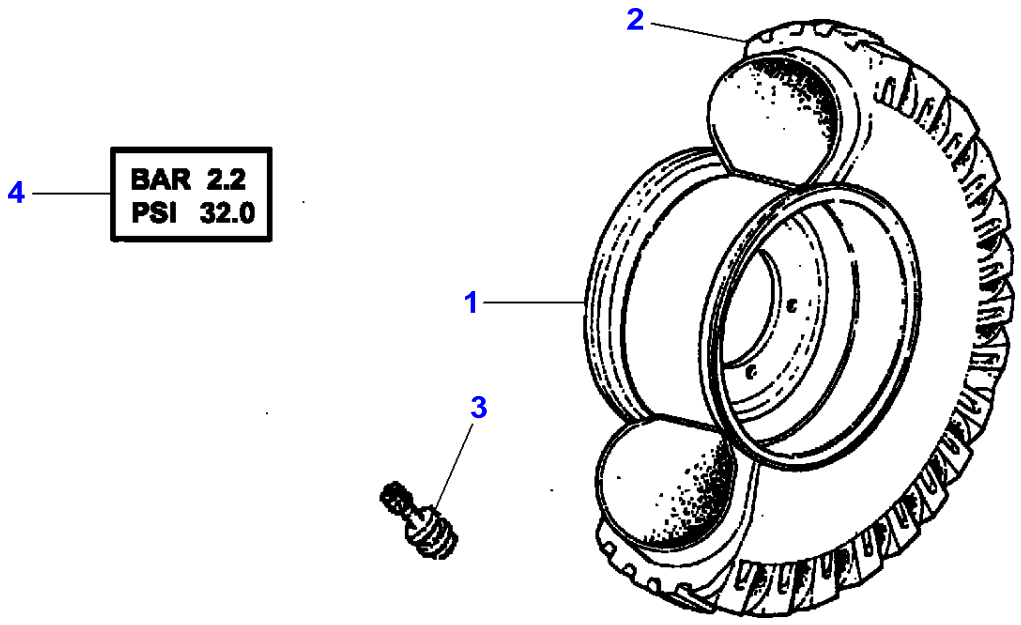

Item	Part Number	Qty	Description	Comments
1	LA323143550	2	Wheel Rim	460/70R24 150A8
	LA323130650	2	Wheel Rim	460/70R24 4WD
2		2	Tyre	[A]
3	LA322206200	2	Valve	
4	LA340478318	2	Decal	

FOOTNOTE [A] PLEASE REFER TO MARKETING CATALOG

L-LD89-001-A

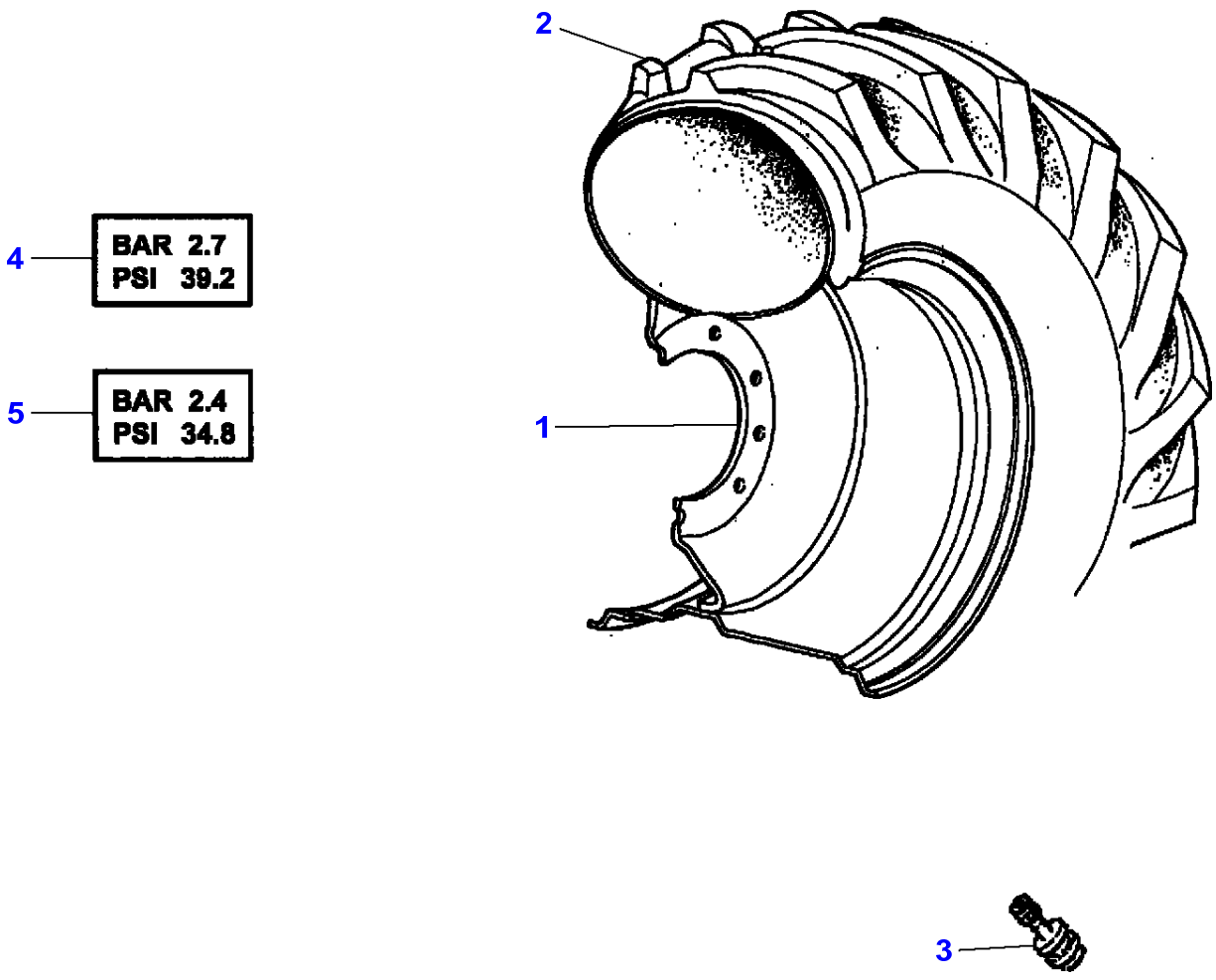

Item	Part Number	Qty	Description	Comments
1	LA323144950	1	Wheel Rim	Left Hand 620/75R34-170A8 BAR 2.7 PSI 39.2
	LA323130850	1	Wheel Rim	Right Hand 650/75R32-172A8 BAR 2.7 PSI 39.2
	LA323192550	1	Wheel Rim	Left Hand 650/75R32-172A8 BAR 2.7 PSI 39.2
	LA323129850	1	Wheel Rim	Right Hand 800/65R32-172A8 BAR 2.4 PSI 34.8
	LA323141250	1	Wheel Rim	Left Hand 800/65R32-172A8 BAR 2.4 PSI 34.8
2		2	Tyre	[A]
3	LA322206200	2	Valve	
4	LA340478321	2	Decal	
5	LA340478339	2	Decal	

FOOTNOTE [A] PLEASE REFER TO MARKETING CATALOG