INTRODUCTION AND CUSTOMER INFORMATION

NOVEMBRO 2002

T196451A -UN-17NOV03

724J LOADER



LEFT SIDE VIEW OF JOHN DEERE 724J LOADER
(MANUFACTURED 2002-)

TO THE CUSTOMER

THE PART NUMBERS IN THIS PARTS CATALOG WERE CORRECT AT THE TIME YOUR CATALOG WAS PUBLISHED. IT IS OUR POLICY TO CONSTANTLY IMPROVE OUR MACHINES, AND, THEREFORE, PART NUMBERS MAY CHANGE. WHEN ORDERING PARTS, VERIFY PART NUMBERS THROUGH YOUR DEALER.

(SPECIFICATIONS AND DESIGN SUBJECT TO CHANGE WITHOUT NOTICE)

COPYRIGHT © 2005 DEERE & COMPANY Moline, Illinois All rights reserved

SERIAL NUMBER LOCATION

EACH 724J LOADER MAY HAVE SIX SERIAL NUMBER PLATES: ONE FOR THE PRODUCT IDENTIFICATION NUMBER, ONE FOR THE TRANSMISSION, ONE FOR THE HYDRAULIC PUMP, ONE FOR THE ENGINE SERIAL NUMBER PLATE AND ONE FOR THE CAB.

THE PRODUCT IDENTIFICATION NUMBER PLATE IS LOCATED ON THE LEFT SIDE OF THE ENGINE FRAME NEAR THE HYDRAULIC OIL RESERVOIR.

THE TRANSMISSION SERIAL NUMBER PLATE IS LOCATED ON THE LOWER RIGHT-HAND SIDE OF THE REAR OF THE TRANSMISSION CASE.

THE HYDRAULIC PUMP SERIAL NUMBER PLATE IS LOCATED ON THE HYDRAULIC PUMP.

THE ENGINE SERIAL NUMBER PLATE IS LOCATED ON THE RIGHT SIDE OF THE ENGINE NEAR THE STARTER.

THE CAB SERIAL NUMBER IS LOCATED UNDER THE FLOORMAT INSIDE THE DOOR OF THE CAB.

THE AXLE SERIAL NUMBER PLATE IS LOCATED ON THE INPUT SIDE OF THE DIFFERENTIAL CASE.

LEFT SIDE AND RIGHT SIDE, FRONT AND REAR OF THE LOADER ARE VIEWED BY FACING IN THE DIRECTION OF LOADER FORWARD TRAVEL.

WHENEVER SERIAL NUMBERS ARE REQUIRED ON WARRANTY CLAIMS OR CORRESPONDENCE PERTAINING TO THIS PRODUCT, IT IS EXTREMELY IMPORTANT THAT ALL CHARACTERS BE FURNISHED. THIS POINT CANNOT BE OVEREMPHASIZED.

PRODUCT IDENTIFICATION NUMBER

T159798 -UN-26SEP02



1. DESIGNATES LOADER MANUFACTURER	DW - JOHN DEERE DAVENPORT WORKS
2. DESIGNATES LOADER MODEL	724J
3. DESIGNATES LOADER CONFIGURATION	X STANDARD LOADER ANYTHING ELSE IS DIFFERENT FROM STANDARD
4. DESIGNATES LOADER SERIAL NUMBER	123456
5. DESIGNATES UNIT TYPE	LOADER

TWO LINE BAR CODED ENGINE SERIAL NUMBER PLATE

(LOCATED ON STARTER SIDE OF ENGINE)

RGP3513 -UN-01JAN94

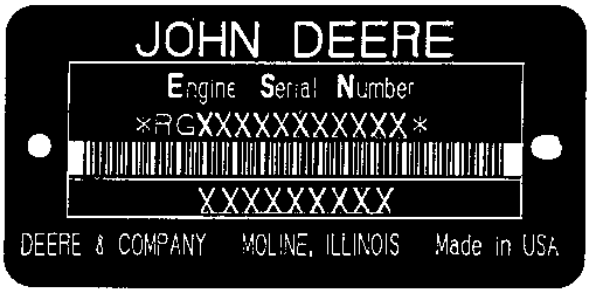

RGP3513

FIRST LINE	DEFINES
RG - WATERLOO ENGINE WORKS	DESIGNATES ENGINE MANUFACTURER
6	DESIGNATES NUMBER OF CYLINDERS
081 (8.1 LITERS)	DESIGNATES LITER DISPLACEMENT
H - AIR-TO-AIR	DESIGNATES TYPE OF AIR INTAKE SYSTEM
XXXXXX	DESIGNATES ENGINE SERIAL NUMBER
SECOND LINE	**APPLICATION**
6081HDW09	724J

SERIAL NUMBER LISTING INFORMATION

SERIAL NUMBER INFORMATION IS LISTED TO SHOW ON WHICH MACHINES EACH PART CAN BE USED; FOR EXAMPLE:

-	THE PART CAN BE USED ON ALL MACHINES.
000000-	THE PART CAN BE USED ON ALL MACHINES BEGINNING WITH THE SERIAL NUMBER LISTED.
-000000	THE PART CAN BE USED ON ALL MACHINES UP TO AND INCLUDING THE SERIAL NUMBER LISTED.
000000-000000	THE PART CAN BE USED ON ALL MACHINES BETWEEN AND INCLUDING THE SERIAL NUMBERS LISTED.

WHEN XXXXXX'S ARE LISTED IN PLACE OF A SERIAL NUMBER, A SERIAL NUMBER CHANGE WAS MADE BUT THE EXACT SERIAL NUMBER WAS NOT AVAILABLE WHEN THE CATALOG WAS PRODUCED.

DIRECTION ARROW

ARROWS ARE USED WITH ILLUSTRATIONS TO INDICATE THE FRONT OF THE UNIT. "RIGHT-HAND" AND "LEFT-HAND" SIDES ARE DETERMINED BY FACING IN THE DIRECTION OF MACHINE FORWARD TRAVEL.

EXCEPTION: FOR ALL BACKHOE PARTS, "RIGHT-HAND" AND "LEFT-HAND" SIDES, "FRONT" AND "REAR" ARE DETERMINED WHEN SEATED FOR BACKHOE OPERATION.

BOX-ENCLOSED ILLUSTRATIONS

A KEY NUMBER, SHOWN IN THE PARTS LIST, IS ASSIGNED TO A BOX ENCLOSING ALL PARTS SOLD AS A SERVICE ASSEMBLY.

COMPLETE GOODS LISTINGS

COMPLETE GOODS ARE LISTED IN BOLD FACE TYPE. ORDER SEPARATELY. DO NOT INCLUDE ON REPLACEMENT PARTS ORDER.

SI UNITS OF MEASURE

METRIC DIMENSIONS ARE GIVEN, WHERE APPLICABLE, THROUGHOUT THIS PARTS CATALOG.

CHANGE INDICATOR LINE

(MICROFICHE CATALOGS ONLY)

CHANGES AFFECTING THE ORDERING OF PARTS ARE IDENTIFIED BY VERTICAL LINES MARKED IN THE LEFT-HAND MARGIN OF REVISED PARTS LISTING IMAGES. A LINE IS ALSO AT THE LEFT-HAND EDGE OF THE SAME PART NUMBER IN THE NUMERICAL INDEX TO SHOW THE LOCATION OF REVISED INFORMATION.

ALPHABETICAL INDEX

GRID		PAGE
	A	
2E2	A/C AND HEATER BLOWER SWITCH	1674 - 35
2E2	A/C AND HEATER BLOWER WIRING HARNESS	1674 - 35
2H23	A/C AND HEATER THERMOSTAT SWITCH	1830 - 3A
2H23	A/C BLOWER MOTOR AND SWITCH	1830 - 3A
2I1	A/C COMPRESSOR	1830 - 4
2I1	A/C COMPRESSOR BRACKET	1830 - 4
2I3	A/C COMPRESSOR COMPONENTS	1830 - 6
2I1	A/C COMPRESSOR DRIVE BELT	1830 - 4
2I5	A/C COMPRESSOR HARDWARE KIT	1830 - 8
2I1	A/C COMPRESSOR HOSES	1830 - 4
2I3	A/C COMPRESSOR MANIFOLD	1830 - 6
2I3	A/C COMPRESSOR REPAIR KIT	1830 - 6
2I6	A/C CONDENSOR	1830 - 10
2I6	A/C CONDENSOR HOSES	1830 - 10
2I6	A/C RECEIVER DRYER	1830 - 10
2I4	A/C SHAFT SEAL KIT	1830 - 7
2F13	ACCESS PANEL	1810 - 10
2H17	ACCESS PLATFORM HANDRAILS	1822 - 4
1K11	ACCUMULATOR, BRAKE	1064 - 6
3E17	ACCUMULATOR,RIDE CONTROL	3160 - 68
3F8	ACTUATOR, RETURN-TO-DIG (SER. NO. -589893)	3166 - 2
3F10	ACTUATOR, RETURN-TO-DIG (SER. NO. 589894-)	3166 - 3A
1H4	ADAPTER, OIL COOLER	0419 - 1
1H5	ADAPTER, OIL COOLER BYPASS	0419 - 2
1G24	ADAPTER, TURBOCHARGER DRAIN LINE	0416 - 2
3E9	ADD JOYSTICK TO JOYSTICK CONVERSION KIT (SER. NO. 590068-)	3160 - 60
2H3	ADJUSTER, LUMBAR	1821 - 3A
1I9	AIR CLEANER	0520 - 2
1I9	AIR CLEANER FILTER	0520 - 2
1I9	AIR CLEANER HOSE	0520 - 2
1I9	AIR CLEANER RESTRICTION SENSOR	0520 - 2
2I1	AIR CONDITIONER FIELD KIT	1830 - 4
2I8	AIR CONDITIONING DUCTS	1830 - 12
1H20	AIR HEATER, ENGINE	0505 - 5
1I9	AIR PRECLEANER	0520 - 2
1I9	AIR PRECLEANER KIT	0520 - 2
2J20	ALARM,BACK-UP	2004 - 6
2C17	ALTERNATOR (55 AMP)	1672 - 2
2C21	ALTERNATOR (80 AMP)	1672 - 6
2D1	ALTERNATOR BELT, HARSH ENVIRONMENT (100 AMP)	1672 - 10
2C17	ALTERNATOR CAPACITOR (55 AMP)	1672 - 2
2C17	ALTERNATOR DRIVE BELT (55 AMP)	1672 - 2
2C21	ALTERNATOR DRIVE BELT (80 AMP)	1672 - 6
2C17	ALTERNATOR MOUNTING BRACKETS (55 AMP)	1672 - 2
2C21	ALTERNATOR MOUNTING BRACKETS (80 AMP)	1672 - 6
2C19	ALTERNATOR REAR COVER (55 AMP)	1672 - 4
2C23	ALTERNATOR REAR COVER (80 AMP)	1672 - 8
2D1	ALTERNATOR, HARSH ENVIRONMENT (100 AMP)	1672 - 10
2J12	ANTENNA, RADIO (SER. NO. -590067)	2001 - 2
2J14	ANTENNA, RADIO (SER.NO. 590068-)	2001 - 3A
2H1	ARM REST	1821 - 2
2G23	ARM REST (SER. NO. 590068-)	1816 - 3A
2G21	ARM REST (USE ONLY WITH TWO-LEVER CONTROLLERS)(SER. NO. -590067)	1816 - 2
2G23	ARM REST, WRIST (SER. NO. 590068-)	1816 - 3A
1F19	ARM, ROCKER	0402 - 4
2G3	ARM, WIPER (FRONT)	1810 - 20
2H1	ARMREST KIT	1821 - 2
2J22	ASH TRAY	2006 - 2
1H10	ASSEMBLY, CLUTCH (STARTER) (24V)	0422 - 2
1B4	ASSEMBLY, FIVE PIECE WHEEL RIM (25 X 17) (25 X 19.5)	0110 - 4
3D23	ASSEMBLY, U-JOINT (SERIAL NO. 590068-)	3160 - 50
3E5	AUX. CONTROLLER (FOR USE WITH SINGLE LEVER CONTROLLER (SER. NO. -590067)	3160 - 56
3E7	AUX. TO TWO LEVER KIT (SER. NO. -590067)	3160 - 58
3D13	AUXILIARY CONTROLLER DETENT KIT	3160 - 40
3B8	AUXILIARY CUTTING EDGE,BUCKET	3102 - 1
3F15	AUXILIARY DRIVE COVER	4151 - 2
3F15	AUXILIARY DRIVE HOUSING	4151 - 2
3F15	AUXILIARY DRIVE OIL LINE	4151 - 2
3E11	AUXILIARY JOY STICK PILOT CONTROLLER COMPONENTS	3160 - 62
3E11	AUXILIARY JOY STICK PILOT CONTROLLER LEVER	3160 - 62
3E11	AUXILIARY JOY STICK PILOT CONTROLLER REPAIR KIT	3160 - 62
3E11	AUXILIARY JOY STICK PILOT CONTROLLER SEAL KIT	3160 - 62
3E7	AUXILIARY SINGLE LEVER CONTROLLER (SER. NO. -590067)	3160 - 58
3E9	AUXILIARY SINGLE LEVER CONTROLLER (SER. NO. 590068-)	3160 - 60
3D13	AUXILIARY SINGLE LEVER CONTROLLER COMPONENTS	3160 - 40
3E9	AUXILIARY SINGLE LEVER CONTROLLER FITTINGS (SER. NO. 590068-)	3160 - 60
3E7	AUXILIARY SINGLE LEVER CONTROLLER HOSE (SER. NO. -590067)	3160 - 58
3E7	AUXILIARY SINGLE LEVER CONTROLLER MOUNTING PLATE(SER. NO. -590067)	3160 - 58
3D13	AUXILIARY SINGLE LEVER CONTROLLER REPAIR KIT	3160 - 40
3E7	AUXILIARY SINGLE LEVER PILOT CONTROLLER FITTINGS (SER. NO. -590067)	3160 - 58
3C11	AUXILIARY VALVE SECTION	3160 - 10
3C13	AUXILIARY VALVE SECTION	3160 - 12
3C13	AUXILIARY VALVE SECTION COMPONENTS	3160 - 12
1C22	AXLE BREATHER KIT	0260 - 7
1D1	AXLE BREATHERS, HOSES AND FITTINGS	0260 - 14
1D3	AXLE COOLER, HOSES AND FITTINGS	0260 - 19A
1I1	AXLE COOLER, HOSES AND FITTINGS	0511 - 4
1C23	AXLE DISCONNECT LINE (SER. NO. -XXXXXX)	0260 - 8
3E24	AXLE DISCONNECT LINE (SERIAL NO. 590068-)	3160 - 76
3E24	AXLE DISCONNECT VALVE (SERIAL NO. 590068-)	3160 - 76
1C9	AXLE HOUSING	0250 - 2
1C11	AXLE HOUSING	0250 - 4
1C15	AXLE INPUT DISCONNECT	0250 - 8
1D3	AXLE OIL COOLER	0260 - 19A
1D3	AXLE OIL COOLER HYDRAULIC HOSES	0260 - 19A
1D7	AXLE OIL RECIRCULATION PUMP AND MOTOR	0260 - 22

ALPHABETICAL INDEX - CONTINUED

GRID		PAGE
1D5	AXLE RECIRCULATION HOSES AND FITTINGS	0260 - 20
1C9	AXLE SHAFT	0250 - 2
1C11	AXLE SHAFT	0250 - 4
1C7	AXLE STOP (9 DEGREE)	0240 - 2
1B12	AXLE, FRONT	0201 - 2
1B12	AXLE, REAR	0201 - 2

B

2J20	BACK-UP ALARM	2004 - 6
2H3	BACK, SEAT	1821 - 3A
2H1	BACKREST CUSHION	1821 - 2
3F4	BARREL, BOOM CYLINDER (SERIAL NO. -XXXXXX)	3165 - 2
3F6	BARREL, BOOM CYLINDER (SERIAL NO. XXXXXX-)	3165 - 3A
3F4	BARREL, BUCKET CYLINDER (SERIAL NO. -XXXXXX)	3165 - 2
3F6	BARREL, BUCKET CYLINDER (SERIAL NO. XXXXXX-)	3165 - 3A
1H8	BASE, FUEL FILTER (ESN 249017-) (W/RE522687 & RE522688)	0420 - 4
1G11	BASE, OIL FILTER	0407 - 6
2C15	BATTERY	1671 - 2
2C15	BATTERY CABLE	1671 - 2
2C15	BATTERY CLAMP	1671 - 2
2I21	BATTERY COVERS	1913 - 4
2C16	BATTERY DISCONNECT CABLE	1671 - 3
2C16	BATTERY DISCONNECT SWITCH	1671 - 3
1I5	BEARING KIT, ENGINE SPEED CONTROL (SERIAL NO. -590067)	0515 - 2
1K14	BEARING, DRIVELINE/PARKING BRAKE	1115 - 2
1F24	BEARING, PISTON CONNECTING ROD	0403 - 1
3B17	BEARING,LOADER FRAME	3140 - 2
1F15	BEARINGS, ENGINE MAIN	0401 - 2
2C17	BELT TENSIONER (55 AMP)	1672 - 2
2C21	BELT TENSIONER (80 AMP)	1672 - 6
2D1	BELT, HARSH ENVIRONMENT ALTERNATOR (100 AMP)	1672 - 10
2G25	BELT, SEAT, REPLACEMENT (THREE INCHES (76MM) WIDE)	1821 - 1
2I1	BELT,A/C COMPRESSOR DRIVE	1830 - 4
2C17	BELT,ALTERNATOR DRIVE (55 AMP)	1672 - 2
2C21	BELT,ALTERNATOR DRIVE (80 AMP)	1672 - 6
1B14	BEVEL DRIVE GEAR	0210 - 2
2G1	BLADE, WIPER	1810 - 18
2G3	BLADE, WIPER (FRONT)	1810 - 20
1I3	BLADE,FAN	0512 - 2
1G1	BLOCK FITTINGS, CYLINDER	0404 - 2
1G3	BLOCK, ENGINE SHORT	0404 - 4
2H23	BLOWER MOTOR AND SWITCH, HEATER AND A/C	1830 - 3A
2E2	BLOWER SWITCH, A/C AND HEATER	1674 - 35
3F6	BOOM CYLINDER (SERIAL NO. XXXXXX-)	3165 - 3A
3F4	BOOM CYLINDER (SERIAL NO. -XXXXXX)	3165 - 2
3F4	BOOM CYLINDER BARREL (SERIAL NO. -XXXXXX)	3165 - 2
3F6	BOOM CYLINDER BARREL (SERIAL NO. XXXXXX-)	3165 - 3A
3C23	BOOM CYLINDER HOSE TO CONTROL VALVE (FOUR SPOOL)	3160 - 26
3C21	BOOM CYLINDER HOSE TO CONTROL VALVE (THREE SPOOL)	3160 - 24
3C19	BOOM CYLINDER HOSE TO CONTROL VALVE (TWO SPOOL)	3160 - 22
3B19	BOOM CYLINDER LOCK	3140 - 4
3B17	BOOM CYLINDER PIN	3140 - 2
3F6	BOOM CYLINDER REPAIR KIT (SERIAL NO. XXXXXX-)	3165 - 3A
3F4	BOOM CYLINDER REPAIR KIT (SERIAL NO. - XXXXXX)	3165 - 2
3F4	BOOM CYLINDER ROD (SERIAL NO. -XXXXXX)	3165 - 2
3F6	BOOM CYLINDER ROD (SERIAL NO. XXXXXX-)	3165 - 3A
3C11	BOOM SECTION VALVE	3160 - 10
3B21	BOOM, LOADER	3140 - 6
3B23	BOOM, WASTE HANDLER LOADER	3140 - 7A
3D23	BOOT (SERIAL NO. 590068-)	3160 - 50
3D5	BOOT, TWO LEVER PILOT CONTROLLER	3160 - 32
2E18	BOTTOM FUEL TANK GUARD	1746 - 4
2E16	BOTTOM GUARD, FRONT	1746 - 2
2E16	BOTTOM GUARD, TRANSMISSION	1746 - 2
2I1	BRACKET.A/C COMPRESSOR	1830 - 4
1K5	BRACKET, BRAKE PEDAL	1062 - 2
2J18	BRACKET, FIRE EXTINGUISHER	2003 - 2
1H6	BRACKET, FUEL FILTER(ESN -249016)	0420 - 2
2B3	BRACKET, LICENSE PLATE	1314 - 1
1I11	BRACKET, MUFFLER	0530 - 2
3F8	BRACKET, RETURN-TO-DIG COMPONENT MOUNTING (SER. NO. -589893)	3166 - 2
1J16	BRACKET, STEERING VALVE	0962 - 4
3C21	BRACKET, THREE SPOOL CONTROL VALVE PLUMBING MOUNTING	3160 - 24
3C19	BRACKET, TWO SPOOL CONTROL VALVE PLUMBING MOUNTING	3160 - 22
2H1	BRACKETS, SEAT	1821 - 2
2G11	BRACKETS, WIPER MOUNTING	1810 - 24
1K11	BRAKE ACCUMULATOR	1064 - 6
1K11	BRAKE ACCUMULATOR HOSES	1064 - 6
1K7	BRAKE LINES (SER. NO. -590067)	1063 - 2
1K9	BRAKE LINES (SER. NO. 590068-)	1063 - 4
1K5	BRAKE PEDAL	1062 - 2
1K5	BRAKE PEDAL BRACKET	1062 - 2
1K4	BRAKE PLATES	1011 - 2
1K5	BRAKE VALVE	1062 - 2
1K5	BRAKE VALVE FITTINGS	1062 - 2
1K7	BRAKE VALVE HYDRAULIC HOSES (SER. NO. -590067)	1063 - 2
1K9	BRAKE VALVE HYDRAULICS (SER. NO. 590068-)	1063 - 4
1K5	BRAKE VALVE SWITCH	1062 - 2
1K14	BRAKE, PARKING	1115 - 2
1K4	BRAKES	1011 - 2
2E4	BREAKER, CIRCUIT (S.N. -590067)	1674 - 37
2K20	BREATHER, REMOTE HYDRAULIC RESERVOIR	2160 - 20
1D1	BREATHERS, AXLES	0260 - 14
3B8	BUCKET AUXILIARY CUTTING EDGE	3102 - 1
3B9	BUCKET CUTTING EDGE	3102 - 2
3B11	BUCKET CUTTING EDGE	3102 - 3A
3B13	BUCKET CUTTING EDGE	3102 - 4
3B15	BUCKET CUTTING EDGE	3102 - 6
3F4	BUCKET CYLINDER (SERIAL NO. -XXXXXX)	3165 - 2
3F6	BUCKET CYLINDER (SERIAL NO. XXXXXX-)	3165 - 3A

ALPHABETICAL INDEX - CONTINUED

GRID		PAGE
3F4	BUCKET CYLINDER BARREL (SERIAL NO. -XXXXXX)	3165 - 2
3F6	BUCKET CYLINDER BARREL SERIAL NO. XXXXXX-)	3165 - 3A
3C23	BUCKET CYLINDER HOSE TO CONTROL VALVE (FOUR SPOOL)	3160 - 26
3C21	BUCKET CYLINDER HOSE TO CONTROL VALVE (THREE SPOOL)	3160 - 24
3C19	BUCKET CYLINDER HOSE TO CONTROL VALVE (TWO SPOOL)	3160 - 22
3B17	BUCKET CYLINDER PIN	3140 - 2
3C1	BUCKET CYLINDER PIN TO LOADER PIVOT LINK	3140 - 8
3F6	BUCKET CYLINDER REPAIR KIT (SERIAL NO. XXXXXX-)	3165 - 3A
3F4	BUCKET CYLINDER REPAIR KIT (SERIAL NO. -XXXXXX)	3165 - 2
3F4	BUCKET CYLINDER ROD (SERIAL NO. -XXXXXX)	3165 - 2
3F6	BUCKET CYLINDER ROD (SERIAL NO. XXXXXX-)	3165 - 3A
3C1	BUCKET LINK PIN TO LOADER PIVOT LINK	3140 - 8
3B13	BUCKET TEETH, LOADER	3102 - 4
3C11	BUCKET VALVE SECTION	3160 - 10
3B11	BUCKET, LOADER (JAGZ)	3102 - 3A
3B15	BUCKET, WASTE HANDLER	3102 - 6
3B9	BUCKETS, LOADER	3102 - 2
1F23	BUSHING, CAMSHAFT	0402 - 8
1H5	BYPASS TUBES, OIL COOLER	0419 - 2
1F5	BYPASS VALVE COMPONENTS, TRANSMISSION THERMAL	0360 - 3A
1F3	BYPASS VALVE LINES, TRANSMISSION	0360 - 2
1G11	BYPASS VALVE, OIL FILTER	0407 - 6

C

2E8	C.C.U. (SER. NO. -590075)	1674 - 61
2F13	CAB	1810 - 10
2F21	CAB BACK PLATE	1810 - 15C
2F15	CAB DOOR	1810 - 12
2F13	CAB DOOR HOLD OPEN LATCH	1810 - 10
2F24	CAB FLOOR MAT	1810 - 17
2F17	CAB GLASS	1810 - 14
2B8	CAB LABELS AND DECALS (S.N. -590067)	1322 - 4
2B10	CAB LABELS AND DECALS (S.N. 590068-)	1322 - 5A
2F7	CAB LEFT SIDE CONSOLE COVER	1810 - 4
2E10	CAB MONITOR	1676 - 1
2I10	CAB MONITOR CONSOLE (SER. NO. -590067)	1830 - 14
2I12	CAB MONITOR CONSOLE (SER. NO. 590068-)	1830 - 15A
2F5	CAB MOUNTS (FRONT AND REAR)	1810 - 2
2F19	CAB PEDESTAL	1810 - 15A
2G19	CAB REAR COVER	1810 - 30
2F23	CAB ROOF, PLASTIC	1810 - 16
2D12	CAB WIRING HARNESS (S.N. -590067)	1674 - 8
2D14	CAB WIRING HARNESS (S.N. 590068-)	1674 - 9A
2C15	CABLE, BATTERY	1671 - 2
2C16	CABLE, BATTERY DISCONNECT	1671 - 3
2H21	CABLE, HEATER CONTROL	1830 - 2
2G13	CABLE, LEFT HAND DOOR HOLD OPEN	1810 - 26
1F23	CAM FOLLOWER	0402 - 8
1F23	CAMSHAFT	0402 - 8
1F23	CAMSHAFT GEAR	0402 - 8
2F19	CANOPY PEDESTAL	1810 - 15A
1I15	CAP, FUEL TANK	0560 - 2
1G1	CAP, MAIN BEARING	0404 - 2
1H23	CAP, RADIATOR	0511 - 2
2F9	CAP, WINDOW WASHER TANK	1810 - 6
2C17	CAPACATIOR,ALTERNATOR (55 AMP)	1672 - 2
1C13	CARRIER, PLANET PINION	0250 - 6
3F12	CARRY, RETURN TO	3166 - 4
1B18	CASE, FRONT, DIFF LOCK, DIFFERENTIAL	0210 - 6
2J12	CASSETTE PLAYER (SER. NO. -590067)	2001 - 2
2J12	CD PLAYER (SER. NO. -590067)	2001 - 2
2J14	CD PLAYER (SER.NO. 590068-)	2001 - 3A
1H23	CHARGE AIR COOLER	0511 - 2
2E8	CHASSIS COMPUTER UNIT (SER. NO. -590075)	1674 - 61
1I11	CHROME EXHAUST PIPE	0530 - 2
2E4	CIRCUIT BREAKERS (S.N. -590067)	1674 - 37
2C15	CLAMP, BATTERY	1671 - 2
1I11	CLAMP, EXHAUST	0530 - 2
1I9	CLEANER,AIR	0520 - 2
1D23	CLUTCH ASSEMBLY (HIGH GEAR FORWARD CLUTCH)	0350 - 10
1E1	CLUTCH ASSEMBLY (LOW RANGE FORWARD CLUTCH)	0350 - 12
1E3	CLUTCH ASSEMBLY (REVERSE CLUTCH)	0350 - 14
1D17	CLUTCH ASSEMBLY (1ST GEAR)	0350 - 4
1D19	CLUTCH ASSEMBLY (2ND GEAR)	0350 - 6
1D21	CLUTCH ASSEMBLY (3RD GEAR)	0350 - 8
1H10	CLUTCH ASSEMBLY (STARTER) (24)	0422 - 2
2F4	COAT HOOK	1810 - 1
1H21	COLD WEATHER STARTIG AID	0505 - 6
1H21	COLD WEATHER STARTING AID SWITCH	0505 - 6
1J16	COLUMN, LOWER STEERING	0962 - 4
1J12	COLUMN, STEERING (SER. NO. -590067)	0962 - 2
1J14	COLUMN, STEERING (SER. NO. 590068-)	0962 - 3A
2D14	COMPARTMENT, LOAD CENTER (S.N. 590068-)	1674 - 9A
2H23	COMPONENTS, HVAC MODULE	1830 - 3A
1J3	COMPONENTS, REVERSE FAN DRIVE SOLENOID	0567 - 12
3D19	COMPONENTS, SINGLE LEVER PILOT CONTROLLER (SER. NO. -590067)	3160 - 46
3D21	COMPONENTS, SINGLE LEVER PILOT (CTD.) CONTROLLER (SER. NO. -590067)	3160 - 48
3F3	COMPONENTS, VALVE, PIN DISCONNECT	3160 - 80
2K16	COMPONENTS,HYDRAULIC OIL PRESSURE REGULATOR VALVE (SERIAL NO. 590068-)	2160 - 16
2I3	COMPRESSOR COMPONENTS, A/C	1830 - 6
2I1	COMPRESSOR, A/C	1830 - 4
2E8	COMPUTER UNIT, CHASSIS (SER. NO. -590075)	1674 - 61
2I6	CONDENSER,A/C	1830 - 10
2C5	CONDITIONER,COOLANT	1369 - 8
2F7	CONSOLE COVER, CAB LEFT SIDE	1810 - 4
2G13	CONSOLE, LEFT HAND	1810 - 26

ALPHABETICAL INDEX - CONTINUED

GRID		PAGE
2I10	CONSOLE, MONITOR (SER. NO. -590067)	1830 - 14
2I12	CONSOLE, MONITOR (SER. NO. 590068-)	1830 - 15A
2G9	CONSOLE, RIGHT SIDE (SER. NO. 590068-)	1810 - 23C
2G7	CONSOLE, RIGHT SIDE (SINGLE LEVER CONTROLLERS)(SERIAL NO. -590067)	1810 - 23A
2G5	CONSOLE, RIGHT SIDE (TWO-LEVER) (SER. NO. -590067)	1810 - 22
3D13	CONTOLLER, AUXILIARY SINGLE LEVER	3160 - 40
2H3	CONTROL KNOB, SEAT	1821 - 3A
2E3	CONTROL KNOB, SPIN CONTROL	1674 - 36
2D14	CONTROL UNIT, TRANSMISSION (S.N. 590068-)	1674 - 9A
2E9	CONTROL UNIT, TRANSMISSION (SER. NO. -590075)	1674 - 62
1E5	CONTROL VALVE TRANSMISSION	0350 - 16
3C7	CONTROL VALVE FITTINGS (4-SPOOL)	3160 - 6
3E15	CONTROL VALVE HOSE TO PILOT CONTROLLER (SERIAL NO. -590067)	3160 - 66
1E8	CONTROL VALVE MANIFOLD, TRANSMISSION	0350 - 19
3C3	CONTROL VALVE, LOADER (2-SPOOL)	3160 - 2
3C5	CONTROL VALVE, LOADER (3-SPOOL)	3160 - 4
3C7	CONTROL VALVE, LOADER (4-SPOOL)	3160 - 6
2K4	CONTROL VALVES,STEERING AND LOADER HYDRAULIC PUMP	2160 - 4
2H21	CONTROL, TEMPERATURE	1830 - 2
2J12	CONTROL,RADIO REMOTE (SER. NO. -590067)	2001 - 2
2J14	CONTROL,RADIO REMOTE (SER.NO. 590068-)	2001 - 3A
3E11	CONTROLLER COMPONENTS, AUXILIARY JOY STICK PILOT	3160 - 62
3E5	CONTROLLER, AUX. (FOR USE WITH SINGLE LEVER CONTROLLER (SER. NO. -590067)	3160 - 56
3E9	CONTROLLER, AUXILIARY SINGLE LEVER (SER. NO. 590068-)	3160 - 60
1G19	CONTROLLER, ENGINE	0413 - 2
1G21	CONTROLLER, ENGINE	0413 - 4
3D23	CONTROLLER, JOYSTICK PILOT (SERIAL NO. 590068-)	3160 - 50
3D11	CONTROLLER, PILOT, TWO LEVER WITH DUAL AUXILIARY CONTROLLERS(SER.NO. -590067)	3160 - 38
3D19	CONTROLLER, SINGLE LEVER (SER. NO. -590067)	3160 - 46
3D21	CONTROLLER, SINGLE LEVER (CONTINUED) (SER. NO. -590067)	3160 - 48
3D5	CONTROLLER, TWO LEVER PILOT	3160 - 32
3D9	CONTROLLER, TWO LEVER PILOT WITH AUX. (SERIAL NO. 590068-)	3160 - 36
3E7	CONTROLLER,AUXILIARY SINGLE LEVER (SER. NO. -590067)	3160 - 58
3E7	CONVERSION KIT, ADD AUX. TO TWO LEVER (SER. NO. -590067)	3160 - 58
3E9	CONVERSION KIT, ADD JOYSTICK TO JOYSTICK (SER. NO. 590068-)	3160 - 60
3E13	CONVERSION KIT, JOYSTICK FNR	3160 - 64
2D17	CONVERTER (24 TO 12 VOLT) (SER. NO. 590067-)(10 AMP)	1674 - 10A
2D18	CONVERTER (24 TO 12 VOLT) (SER. NO. 590068-)(5 AMP)	1674 - 10B
2D16	CONVERTER AND POWER PLUG (24 TO 12 VOLT) (SER. NO. -590067)	1674 - 10
2D17	CONVERTER AND POWER PLUG (24 TO 12 VOLT) (SER. NO. 590068-)(10AMP)	1674 - 10A
2D18	CONVERTER AND POWER PLUG (24 TO 12 VOLT) (SER. NO. 590068-)(5 AMP)	1674 - 10B
2D16	CONVERTER HARNESS (24 TO 12 VOLT) (SER. NO. -590067)	1674 - 10
1E9	CONVERTER RELIEF VALVE	0350 - 20
1E7	CONVERTER, TORQUE	0350 - 18
2C5	COOLANT CONDITIONER	1369 - 8
1H19	COOLANT HEATER, ENGINE	0505 - 2
1H23	COOLANT OVERFLOW RESERVOIR	0511 - 2
2D11	COOLANT TEMPERATURE SENSOR	1674 - 7
1D3	COOLER, AXLE	0260 - 19A
1I1	COOLER, AXLE	0511 - 4
1H23	COOLER, CHARGE AIR	0511 - 2
1H4	COOLER, ENGINE OIL	0419 - 1
2C8	COOLING FLUID, ENGINE	1369 - 11
2C3	COOLSCAN PLUS TEST KIT, FLUID ANALYSIS PRODUCTS	1369 - 6
2E21	COUNTERWEIGHT	1749 - 2
2C7	COVER KIT WITH DUST CAP	1369 - 10
3F15	COVER, AUXILIARY DRIVE	4151 - 2
2F7	COVER, CAB LEFT SIDE CONSOLE	1810 - 4
2G19	COVER, CAB REAR	1810 - 30
1G9	COVER, DIPSTICK	0407 - 4
2G19	COVER, FRESH AIR HOUSING	1810 - 30
2I23	COVER, GRILLE HOUSING	1921 - 2
2G13	COVER, HVAC, LEFT HAND CAB	1810 - 26
1H4	COVER, OIL COOLER	0419 - 1
2C19	COVER, REAR, ALTERNATOR (55 AMP)	1672 - 4
1F17	COVER, ROCKER ARM	0402 - 2
1J18	COVER, STEERING COLUMN	0962 - 6
1F21	COVER, TIMING GEAR	0402 - 6
1E16	COVER, TRANSMISSION	0350 - 29
1F17	COVER, VALVE	0402 - 2
1F1	COVER,DRIVE DAMPER	0350 - 42
1E14	COVER,GEARBOX HOUSING	0350 - 27
1E23	COVER,TORQUE CONVERTER HOUSING	0350 - 40
2I21	COVERS, BATTERY	1913 - 4
1F15	CRANKSHAFT	0401 - 2
1H12	CRANKSHAFT DAMPERS	0429 - 2
1H12	CRANKSHAFT PULLEY AND DAMPERS	0429 - 2
2G7	CUPHOLDER (SINGLE LEVER CONTROLLERS) (SERIAL NO. -590067)	1810 - 23A
2G5	CUPHOLDER (TWO-LEVER) (SER. NO. -590067)	1810 - 22
2G9	CUPHOLDER, RIGHT SIDE CONSOLE (SER. NO. 590068-)	1810 - 23C
2H1	CUSHION, BACKREST	1821 - 2
2H1	CUSHION, SEAT	1821 - 2
2E14	CUSHIONS, STEERING, ENGINE FRAME	1740 - 4
3B13	CUTTING EDGE, BUCKET	3102 - 4
3B15	CUTTING EDGE, BUCKET	3102 - 6
3B11	CUTTING EDGE, INTERLOCKING	3102 - 3A
3B15	CUTTING EDGE, WASTE HANDLER BUCKET	3102 - 6
3B9	CUTTING EDGE,BUCKET	3102 - 2
3B11	CUTTING EDGE,BUCKET	3102 - 3A
3B9	CUTTING EDGE,LOADER EDGE	3102 - 2
3B11	CUTTING EDGE,LOADER EDGE	3102 - 3A
1G1	CYLINDER BLOCK FITTINGS	0404 - 2
1G15	CYLINDER HEAD AND VALVES	0409 - 2
1G15	CYLINDER HEAD GASKET	0409 - 2
1H14	CYLINDER HEAD GASKET KIT	0452 - 2
1F24	CYLINDER LINER	0403 - 1
3B19	CYLINDER LOCK, BOOM	3140 - 4
2E20	CYLINDER-FITTING ROCK GUARD	1746 - 6
3F6	CYLINDER, BOOM (SERIAL NO. XXXXXX-)	3165 - 3A

ALPHABETICAL INDEX - CONTINUED

GRID		PAGE
3F4	CYLINDER, BOOM (SERIAL NO. -XXXXXX)	3165 - 2
3F6	CYLINDER, BUCKET (SERIAL NO. XXXXXX-)	3165 - 3A
1K1	CYLINDER, STEERING	0965 - 10
3F4	CYLINDER,BUCKET (SERIAL NO. -XXXXXX)	3165 - 2

D

1F1	DAMPER,DRIVE	0350 - 42
1H12	DAMPERS, CRANKSHAFT	0429 - 2
2D24	DASH MODULE WIRING (SER. NO. -590067)	1674 - 24
2E1	DASH MODULE WIRING (SER. NO. 590068-)	1674 - 25A
2B4	DECALS AND LABELS (ENGLISH) (S.N. -590067)	1322 - 2
2B6	DECALS AND LABELS (ENGLISH) (S.N. 590068-)	1322 - 3A
2B16	DECALS AND LABELS (FRENCH) (S.N. -590067)	1322 - 8
2B18	DECALS AND LABELS (FRENCH) (S.N. 590068-)	1322 - 9A
2B14	DECALS AND LABELS (SPANISH) (S.N. 590068-)	1322 - 7A
2B12	DECALS AND LABELS(SPANISH) (S.N. -590067)	1322 - 6
2B8	DECALS AND LABELS, CAB (S.N. -590067)	1322 - 4
2B10	DECALS AND LABELS, CAB (S.N. 590068-)	1322 - 5A
2D9	DEFROST SWITCH, FRONT WINDOW (SER. NO. -590067)	1674 - 1
2D9	DEFROST SWITCH, REAR WINDOW (SER. NO. -590067)	1674 - 1
3D13	DETENT KIT, AUXILIARY CONTROLLER	3160 - 40
2C4	DIESELSCAN TEST KIT, FLUID ANALYSIS PRODUCTS	1369 - 7
1B16	DIFF LOCK, OSCILLATING, REAR DIFFERENTIAL CASE	0210 - 4
1B16	DIFFERENTIAL CASE WITH DIFF LOCK, REAR	0210 - 4
1B20	DIFFERENTIAL CASE, STANDARD AND LIMITED SLIP, REAR	0210 - 8
1B22	DIFFERENTIAL CASE, STANDARD, NON-OSCILLATING, FRONT	0210 - 10
1C17	DIFFERENTIAL LOCK LINE, FRONT	0260 - 2
1C19	DIFFERENTIAL LOCK LINES, FRONT AND REAR	0260 - 4
1C21	DIFFERENTIAL LOCK SWITCH	0260 - 6
1B18	DIFFERENTIAL LOCK, FRONT	0210 - 6
1C5	DIFFERENTIAL SUPPORT LUBRICATION LINES	0210 - 18
1C5	DIFFERENTIAL SUPPORTS	0210 - 18
1C1	DIFFERENTIAL, LIMITED SLIP	0210 - 14
1B24	DIFFERENTIAL, STANDARD	0210 - 12
1C3	DIFFERENTIAL, 4 PINION HYD ACTUATED	0210 - 16
2E5	DIODES, VEC (S.N. 590068-)	1674 - 38
1G9	DIPSTICK COVER	0407 - 4
1G8	DIPSTICK, ENGINE OIL	0407 - 3
3F3	DISCONNECT VALVE, PIN	3160 - 80
1C15	DISCONNECT, AXLE INPUT	0250 - 8
1K4	DISKS, BRAKE	1011 - 2
2E10	DISPLAY UNIT, MONITOR	1676 - 1
2D5	DOME LIGHT COMPONENTS	1673 - 5
2F11	DOMELIGHT	1810 - 8
2D19	DOMELIGHT SWITCH, DOOR ACTIVATED	1674 - 11
2F15	DOOR	1810 - 12
2D19	DOOR ACTIVATED DOMELIGHT SWITCH	1674 - 11
2F15	DOOR GLASS	1810 - 12
2D5	DOOR LIGHT SWITCH	1673 - 5
2F13	DOOR, ACCESS	1810 - 10
2I18	DOOR,ENGINE SIDE SHIELD	1910 - 4
2C9	DRAIN KIT, ENVIRONMENTAL	1369 - 12
1G24	DRAINLINE ADAPTER, TURBOCHARGER	0416 - 2
1F1	DRIVE DAMPER	0350 - 42
1F1	DRIVE DAMPER COVER	0350 - 42
1F15	DRIVE GEAR, OIL PUMP	0401 - 2
2D3	DRIVE HI-BEAM LAMP	1673 - 2
1D11	DRIVE SHAFTS, TRANSMISSION TO DIFFERENTIALS(W/WITHOUT DISCONNECT	0325 - 2
1D11	DRIVE SHAFTS, TRANSMISSION TO ENGINE (WITH/WITHOUT DISCONNECT)	0325 - 2
1K14	DRIVELINE BEARNG/PARKING BRAKE	1115 - 2
3E7	DUAL SINGLE LEVER CONTROLLER (SERIAL NO. -590067)	3160 - 58
3E9	DUAL SINGLE LEVER CONTROLLER (SERIAL NO. 590068-)	3160 - 60
3E7	DUAL SINGLE LEVER CONTROLLER FITTINGS (SER. NO. -590067)	3160 - 58
3E9	DUAL SINGLE LEVER CONTROLLER FITTINGS (SER. NO. 590068-)	3160 - 60
3E7	DUAL SINGLE LEVER CONTROLLER MOUNTING PLATE AND HOSES (SER. NO. -590067)	3160 - 58
3E9	DUAL SINGLE LEVER CONTROLLER MOUNTING PLATE AND HOSES (SER. NO. 590068-)	3160 - 60
2H21	DUCT, FRESH AIR	1830 - 2
2I8	DUCTS, HEATING AND AIR CONDITIONING	1830 - 12
2C7	DUST CAP WITH COVER KIT	1369 - 10

E

1G19	ECU	0413 - 2
1G21	ECU	0413 - 4
2E5	ELECTRICAL CENTER, VEHICLE (S.N. 590068-)	1674 - 38
2H21	ELEMENT, A/C FILTER	1830 - 2
1H19	ELEMENT, ENGINE COOLANT HEATER	0505 - 2
2J24	EMBLEM, SLOW MOVING VEHICLE	2008 - 2
2J24	EMBLEM, SMV	2008 - 2
1H20	ENGINE AIR HEATER	0505 - 5
2H19	ENGINE COMPARTMENT STEP	1822 - 5A
1G19	ENGINE CONTROLLER	0413 - 2
1G21	ENGINE CONTROLLER	0413 - 4
1H19	ENGINE COOLANT HEATER	0505 - 2
2D11	ENGINE COOLANT TEMPERATURE SENDER	1674 - 7
2C8	ENGINE COOLING FLUID	1369 - 11
1I21	ENGINE FAN DRIVE HYDRAULIC HOSES (NON-REVERSING)	0567 - 6
2E12	ENGINE FRAME	1740 - 2
2E12	ENGINE FRAME LOCK BAR	1740 - 2
2E12	ENGINE FRAME PIN	1740 - 2
2E14	ENGINE FRAME STEERING CUSHIONS	1740 - 4
2D20	ENGINE FRAME WIRING HARNESS (SER. NO. -590067)	1674 - 22
2D22	ENGINE FRAME WIRING HARNESS (SER. NO. 590068-)	1674 - 23A
1G17	ENGINE LIFT STRAPS	0409 - 4
1I13	ENGINE MOUNTING SUPPORTS	0540 - 2
1H4	ENGINE OIL COOLER	0419 - 1
1G8	ENGINE OIL DIPSTICK	0407 - 3
1G11	ENGINE OIL FILTER	0407 - 6
2D11	ENGINE OIL PRESSURE SENSOR	1674 - 7
1G7	ENGINE OIL PUMP INTAKE	0407 - 2
2B22	ENGINE OIL,TORQ GARD	1369 - 1
1G5	ENGINE OVERHAUL KIT	0404 - 6

ALPHABETICAL INDEX - CONTINUED

GRID		PAGE
1H14	ENGINE REBUILD GASKET KIT	0452 - 2
1G3	ENGINE SHORT BLOCK	0404 - 4
2I18	ENGINE SIDE SHIELD DOOR	1910 - 4
2I18	ENGINE SIDE SHIELD LATCH	1910 - 4
2I18	ENGINE SIDE SHIELD LOCK	1910 - 4
2I18	ENGINE SIDE SHIELD PLATE	1910 - 4
2I18	ENGINE SIDE SHIELDS	1910 - 4
1I7	ENGINE SPEED CONTROL PEDAL (SER. NO. 590076-)	0515 - 4
1I5	ENGINE SPEED CONTROL PEDAL (SERIAL NO. -590067)	0515 - 2
1I7	ENGINE SPEED CONTROL SENSOR (SER. NO. 590076-)	0515 - 4
1I5	ENGINE SPEED CONTROL SENSOR (SERIAL NO. -590067)	0515 - 2
1F22	ENGINE SPEED SENSOR	0402 - 7
1I13	ENGINE SUPPORT ISOLATOR	0540 - 2
1G14	ENGINE VENTILATOR OUTLET HOSE	0408 - 1
2D20	ENGINE WIRING HARNESS (SER. NO. -590067)	1674 - 22
2C9	ENVIRONMENTAL DRAIN KIT	1369 - 12
1H21	ETHER START AID	0505 - 6
1G18	EXHAUST MANIFOLD GASKETS	0410 - 1
1G18	EXHAUST MANIFOLDS	0410 - 1
1I11	EXHAUST PIPE	0530 - 2
1I11	EXHAUST PIPE, CHROME	0530 - 2
1F3	EXTERNAL OIL LINES,TRANSMISSION	0360 - 2
2J18	EXTINGUISHER, FIRE	2003 - 2

F

1I3	FAN BLADE	0512 - 2
1I3	FAN BLADE HUB	0512 - 2
1I3	FAN BLADE HUB SUPPORT	0512 - 2
1I21	FAN DRIVE HOSES (NON-REVERSING)	0567 - 6
1I19	FAN DRIVE HYDRAULIC PUMP (NON-REVERSING)	0567 - 4
1I19	FAN DRIVE MOTOR (NON-REVERSING)	0567 - 4
1I19	FAN DRIVE MOTOR RELIEF VALVE (NON-REVERSING)	0567 - 4
1I19	FAN DRIVE MOTOR SEAL KIT (NON-REVERSING)	0567 - 4
1I19	FAN DRIVE PUMP SEAL KIT (NON-REVERSING)	0567 - 4
1H23	FAN SHROUD	0511 - 2
2J3	FENDERS, FRONT (SERIAL NO. -588861)	1927 - 4
2J7	FENDERS, FRONT (FULL COVERAGE)(GRAY) (SERIAL NO. 588862-)	1927 - 5C
2J5	FENDERS, FRONT(CHARCOAL) (SERIAL NO. XXXXXX-)	1927 - 5A
2J1	FENDERS, REAR	1927 - 2
2J9	FENDERS, REAR FULL COVERAGE (SERIAL NO. XXXXXX-)	1927 - 6
3E14	FIELD	3160 - 65
3E14	FIELD KIT	3160 - 65
1I23	FIELD KIT, REVERSE FAN DRIVE	0567 - 8
3C17	FIFTH FUNCTION VALVE SECTION	3160 - 20
1F7	FILL TUBE, TRANSMISSION	0360 - 6
1I15	FILLER NECK,FUEL TANK	0560 - 2
1H6	FILTER ELEMENT (ESN -249016)	0420 - 2
2K8	FILTER HEAD, HYDRAULIC	2160 - 8
1F9	FILTER HEAD, TRANSMISSION	0360 - 8
1E8	FILTER RESTRICTION SWITCH, TRANSMISSION OIL	0350 - 19
1I9	FILTER, AIR	0520 - 2
1G11	FILTER, ENGINE OIL	0407 - 6
1H6	FILTER, FINAL FUEL (ESN -249016)	0420 - 2
2H21	FILTER, FRESH AIR	1830 - 2
1H6	FILTER, FUEL (ESN -249016)	0420 - 2
2H23	FILTER, HVAC RECIRCULATION	1830 - 3A
2K8	FILTER, HYDRAULIC OIL	2160 - 8
1F9	FILTER, OIL, TRANSMISSION	0360 - 8
1H6	FILTER, PRE- FUEL (ESN -249016)	0420 - 2
1H6	FILTER, PRIMARY FUEL (ESN -249016)	0420 - 2
1I9	FILTER,AIR CLEANER	0520 - 2
1H8	FILTERS AND LINES, FUEL (ESN 249017-) (W/RE522687 & RE522688)	0420 - 4
1C13	FINAL DRIVE SHAFT	0250 - 6
1H6	FINAL FUEL FILTER (ESN -249016)	0420 - 2
2J18	FIRE EXTINGUISHER	2003 - 2
2J18	FIRE EXTINGUISHER BRACKET	2003 - 2
1G1	FITTING, CYLINDER BLOCK	0404 - 2
3E7	FITTINGS, AUXILIARY SINGLE LEVER CONTROLLER (SER. NO. -590067)	3160 - 58
3E9	FITTINGS, AUXILIARY SINGLE LEVER CONTROLLER (SER. NO. 590068-)	3160 - 60
3C7	FITTINGS, CONTROL VALVE (4-SPOOL)	3160 - 6
2K10	FITTINGS, HYDRAULIC OIL PRESSURE REGULATOR VALVE (SER. NO. -590067)	2160 - 10
2K12	FITTINGS, HYDRAULIC OIL PRESSURE REGULATOR VALVE(SER. NO. 590068-)	2160 - 12
3D1	FITTINGS, SINGLE LEVER CONTROLLER (SER. NO. -590067)	3160 - 28
3D15	FITTINGS, SINGLE LEVER CONTROLLER (SER. NO. -590067)	3160 - 42
3D17	FITTINGS, SINGLE LEVER CONTROLLER (SER. NO. 590068-)	3160 - 44
3E1	FITTINGS, SINGLE LEVER CONTROLLER W/AUX (SER. NO. -590067)	3160 - 52
3E3	FITTINGS, SINGLE LEVER CONTROLLER W/AUX (SER. NO. 590068-)	3160 - 54
1J10	FITTINGS, STEERING CYLINDER	0960 - 14
1J20	FITTINGS, STEERING VALVE	0962 - 8
1D15	FITTINGS, TRANSMISSION	0350 - 2
3D3	FITTINGS, TWO LEVER CONTROLLER (SER. NO. 590068-)	3160 - 30
3D7	FITTINGS, TWO LEVER CONTROLLER W/AUX. (SER. NO. -590067)	3160 - 34
3D9	FITTINGS, TWO LEVER PILOT CONTROLLER WITH AUX.(SERIAL NO. 590068-)	3160 - 36
1B4	FIVE PIECE WHEEL RIM ASSEMBLY (25 X 17) (25 X 19.5)	0110 - 4
2E4	FLASHER (S.N. -590067)	1674 - 37
2C6	FLAT FACE O-RING SEAL KIT	1369 - 9
2F24	FLOOR MAT,CAB	1810 - 17
2C3	FLUID ANALYSIS PRODUCTS (COOLSCAN PLUS TEST KIT)	1369 - 6
2C4	FLUID ANALYSIS PRODUCTS (DIESELSCAN TEST KIT)	1369 - 7
2C1	FLUID ANALYSIS PRODUCTS (OILSCAN PLUS TEST KIT)	1369 - 4
2C8	FLUID, ENGINE COOLING	1369 - 11
1H21	FLUID,STARTING AID	0505 - 6
1H13	FLYWHEEL	0433 - 1
1H13	FLYWHEEL RING GEAR	0433 - 1
3E13	FNR CONVERSION KIT	3160 - 64
3E14	FNR CONVERSION KIT	3160 - 65
1F23	FOLLOWER, CAMSHAFT	0402 - 8

ALPHABETICAL INDEX - CONTINUED

GRID		PAGE
3C23	FOUR SPOOL CONTROL VALVE HOSE	3160 - 26
3C23	FOUR SPOOL CONTROL VALVE PLUMBING MOUNTING PLATE	3160 - 26
2E12	FRAME, ENGINE	1740 - 2
3B17	FRAME, LOADER	3140 - 2
2H21	FRESH AIR DUCT	1830 - 2
2H21	FRESH AIR FILTER	1830 - 2
2H21	FRESH AIR FILTER ELEMENT	1830 - 2
2G19	FRESH AIR HOUSING COVER	1810 - 30
2F9	FRONT AND REAR WINDOW WASHER	1810 - 6
2D8	FRONT AND REAR WORK LAMP	1673 - 10
1B12	FRONT AXLE	0201 - 2
3B17	FRONT AXLE MOUNTING	3140 - 2
2E16	FRONT BOTTOM GUARD	1746 - 2
2D24	FRONT CONSOLE HARNESS (SER. NO. -590067)	1674 - 24
2E1	FRONT CONSOLE WIRING HARNESS (SER. NO. 590068-)	1674 - 25A
2D24	FRONT DASH MODULE WIRING HARNESS (SER. NO. -590067)	1674 - 24
1B18	FRONT DIFFERENTIAL CASE WITH DIFF LOCK, NON-OSCILLATING	0210 - 6
1C17	FRONT DIFFERENTIAL LOCK LINE	0260 - 2
1C19	FRONT DIFFERENTIAL LOCK LINE	0260 - 4
2J3	FRONT FENDER SUPPORT (SERIAL NO. -588861)	1927 - 4
2J5	FRONT FENDER SUPPORT (CHARCOAL) (SERIAL NO. XXXXXX-)	1927 - 5A
2J7	FRONT FENDER SUPPORT (FULL COVERAGE) (GRAY)(SERIAL NO. 588862-)	1927 - 5C
2J3	FRONT FENDERS (SERIAL NO. -588861)	1927 - 4
2J5	FRONT FENDERS (CHARCOAL) (SERIAL NO. XXXXXX-)	1927 - 5A
2J7	FRONT FENDERS (FULL COVERAGE) (SERIAL NO. 588862-)	1927 - 5C
2D3	FRONT LIGHT	1673 - 2
1F21	FRONT OIL SEAL	0402 - 6
1B22	FRONT STANDARD DIFFERENTIAL CASE, NON-OS CILLATING	0210 - 10
2D3	FRONT TURN AND MARKER LIGHT	1673 - 2
2D9	FRONT WINDOW DEFROST SWITCH (SER. NO. -590067)	1674 - 1
2G3	FRONT WINDSHIELD WIPER	1810 - 20
1B18	FRONT, DIFF LOCK, DIFFERENTIAL CASE	0210 - 6
2I23	FUEL DOOR COVER	1921 - 2
1I17	FUEL FILL STRAINER	0560 - 4
1H6	FUEL FILTER (ESN -249016)	0420 - 2
1H6	FUEL FILTER BRACKET (ESN -249016)	0420 - 2
1H6	FUEL FILTER LINES (ESN -249016)	0420 - 2
1H8	FUEL FILTERS AND LINES (ESN 249017-)(W/RE522687 & RE522688)	0420 - 4
1I15	FUEL HOSES	0560 - 2
1G19	FUEL INJECTION LINES	0413 - 2
1G21	FUEL INJECTION LINES	0413 - 4
1G19	FUEL INJECTION NOZZLE	0413 - 2
1G21	FUEL INJECTION NOZZLE	0413 - 4
1G19	FUEL INJECTION PUMP CHECK VALVE	0413 - 2
1G21	FUEL INJECTION PUMP CHECK VALVE	0413 - 4
1G19	FUEL INJECTION PUMP FLOW LIMITER VALVE	0413 - 2
1G21	FUEL INJECTION PUMP FLOW LIMITER VALVE	0413 - 4
1G19	FUEL INJECTION PUMP GEAR	0413 - 2
1G21	FUEL INJECTION PUMP GEAR	0413 - 4
1G19	FUEL INJECTION PUMP HAND PRIMER	0413 - 2
1G21	FUEL INJECTION PUMP HAND PRIMER	0413 - 4
1G19	FUEL INJECTION PUMP OVERFLOW VALVE	0413 - 2
1G21	FUEL INJECTION PUMP OVERFLOW VALVE	0413 - 4
1G19	FUEL INJECTION PUMP POSITION SENSOR	0413 - 2
1G21	FUEL INJECTION PUMP POSITION SENSOR	0413 - 4
1G19	FUEL INJECTION PUMP PRESSURE LIMITER VALVE	0413 - 2
1G21	FUEL INJECTION PUMP PRESSURE LIMITER VALVE	0413 - 4
1G19	FUEL INJECTION RAIL	0413 - 2
1G21	FUEL INJECTION RAIL	0413 - 4
1G19	FUEL INJECTION SYSTEM	0413 - 2
1G21	FUEL INJECTION SYSTEM	0413 - 4
1G19	FUEL LEAK-OFF LINE TO RAIL	0413 - 2
1G21	FUEL LEAK-OFF LINE TO RAIL	0413 - 4
1H8	FUEL MOISTURE SENSOR (ESN 249017-) (W/RE522687 & RE522688)	0420 - 4
1G19	FUEL RAIL PRESSURE SENSOR	0413 - 2
1G21	FUEL RAIL PRESSURE SENSOR	0413 - 4
1I15	FUEL TANK	0560 - 2
1I15	FUEL TANK CAP	0560 - 2
1I15	FUEL TANK FILLER HOSE	0560 - 2
1I15	FUEL TANK FILLER NECK	0560 - 2
2E18	FUEL TANK GUARD, BOTTOM	1746 - 4
1I15	FUEL TANK SENDING UNIT	0560 - 2
1H6	FUEL TEMPERATURE SENSOR (ESN -249016)	0420 - 2
1H8	FUEL TEMPERTURE SENSOR (ESN 249017-) (W/RE522687 & RE522688)	0420 - 4
2J7	FULL COVERAGE FENDERS (GRAY) (SERIAL NO. 588862-)	1927 - 5C
2J9	FULL COVERAGE REAR FENDERS (SERIAL NO. XXXXXX-)	1927 - 6
2E4	FUSES (S.N. -590067)	1674 - 37
2E5	FUSES, VEC (S.N. 590068-)	1674 - 38

G

1H14	GASKET KIT, CYLINDER HEAD	0452 - 2
1H14	GASKET KIT, ENGINE REBUILD	0452 - 2
1H14	GASKET KIT, SHORT BLOCK	0452 - 2
1G15	GASKET, CYLINDER HEAD	0409 - 2
1G15	GASKET, HEAD	0409 - 2
1G23	GASKET, INTAKE MANIFOLD	0414 - 1
1G11	GASKET, OIL FILTER HOUSING	0407 - 6
1G9	GASKET, OIL PAN	0407 - 4
1G13	GASKET, OIL PUMP	0407 - 8
1G7	GASKET, OIL PUMP INTAKE	0407 - 2
1F14	GASKET, REAR OIL SEAL	0401 - 1
1F17	GASKET, ROCKER ARM COVER	0402 - 2
1F21	GASKET, TIMING GEAR COVER	0402 - 6
1E16	GASKET, TRANSMISSION	0350 - 29
1G24	GASKET, TURBOCHARGER	0416 - 2
1H3	GASKET, WATER MANIFOLD	0418 - 2
1H1	GASKET, WATER PUMP	0417 - 2
1G18	GASKETS, EXHAUST MANIFOLD	0410 - 1
1E8	GEAR SHIFT SYSTEM	0350 - 19
1F23	GEAR, CAMSHAFT	0402 - 8
1H13	GEAR, FLYWHEEL RING	0433 - 1
1G19	GEAR, FUEL INJECTION PUMP	0413 - 2
1G21	GEAR, FUEL INJECTION PUMP	0413 - 4
1E11	GEAR, INPUT	0350 - 22
1G13	GEAR, OIL PUMP	0407 - 8
1F15	GEAR, OIL PUMP DRIVE	0401 - 2
1B14	GEAR,BEVEL DRIVE	0210 - 2
1E14	GEARBOX HOUSING	0350 - 27
1E14	GEARBOX HOUSING COVER	0350 - 27
1E5	GEARSHIFT SYSTEM, TRANSMISSION	0350 - 16

ALPHABETICAL INDEX - CONTINUED

GRID		PAGE
2F17	GLASS	1810 - 14
2I23	GRILLE	1921 - 2
2I23	GRILLE HOUSING	1921 - 2
2C15	GROUND STRAP	1671 - 2
2E18	GUARD, BOTTOM FUEL TANK	1746 - 4
2E20	GUARD, ROCK, CYLINDER-FITTING	1746 - 6
3B9	GUARD,LOADER BUCKET	3102 - 2
3B11	GUARD,LOADER BUCKET	3102 - 3A
3D23	GUIDE ASSEMBLY (SERIAL NO. 590068-)	3160 - 50

H

3D23	HANDLE, PILOT CONTROLLER (SERIAL NO. 590068-)	3160 - 50
3D5	HANDLE, TWO LEVER PILOT CONTROLLER	3160 - 32
2H17	HANDRAILS	1822 - 4
2D16	HARNESS, CONVERTER (24 TO 12 VOLT) (SER. NO. -590067)	1674 - 10
2D24	HARNESS, FRONT CONSOLE (SER. NO. -590067)	1674 - 24
2D22	HARNESS, MAIN WIRING (SER. NO. 590068-)	1674 - 23A
2D10	HARNESS, PIN DISCONNET	1674 - 6
2E3	HARNESS, SPIN CONTROL	1674 - 36
2D12	HARNESS, WIRING, CAB (S.N. -590067)	1674 - 8
2D12	HARNESS, WIRING, CAB ROOF (S.N. -590067)	1674 - 8
2D12	HARNESS, WIRING, LOAD CENTER (S.N. -590067)	1674 - 8
2D1	HARSH ENVIRONMENT ALTERNATOR (100 AMP)	1672 - 10
1G15	HEAD GASKET	0409 - 2
1G15	HEAD, CYLINDER AND VALVES	0409 - 2
1H8	HEADER, FUEL FILTER (ESN 249017-) (W/RE522687 & RE522688)	0420 - 4
2F11	HEADLINER AND DOMELIGHT	1810 - 8
2H1	HEADREST	1821 - 2
2E2	HEATER AND A/C BLOWER SWITCH	1674 - 35
2E2	HEATER AND A/C BLOWER WIRING HARNESS	1674 - 35
2H23	HEATER BLOWER MOTOR AND SWITCH	1830 - 3A
2H21	HEATER CONTROL CABLE	1830 - 2
2I14	HEATER HOSES	1830 - 16
2I14	HEATER SHUT-OFF VALVE	1830 - 16
1H20	HEATER, ENGINE AIR	0505 - 5
1H19	HEATER, ENGINE COOLANT	0505 - 2
2I8	HEATING DUCTS	1830 - 12
1B4	HEAVY DUTY WHEEL RIM (FIVE PIECE) (25 X 17) (25 X 19.5)	0110 - 4
3B23	HIGH LIFT LABEL	3140 - 7A
3C1	HIGH LIFT LOADER LINK	3140 - 8
2G15	HOLD OPEN LATCH (LEFT HAND DOOR)	1810 - 27A
2G17	HOLD OPEN LATCH (RIGHT HAND DOOR)	1810 - 28
2I17	HOOD	1910 - 2
2F4	HOOK, COAT	1810 - 1
2B20	HOOKS, LIFT	1330 - 4
2J19	HORN	2004 - 1
1J12	HORN SWITCH (SER. NO. -590067)	0962 - 2
1J14	HORN SWITCH (SER. NO. 590068-)	0962 - 3A
1G14	HOSE, ENGINE VENTILATOR OUTLET	0408 - 1
3C23	HOSE, FROM BOOM CYLINDER TO CONTROL VALVE (FOUR SPOOL)	3160 - 26
3C21	HOSE, FROM BOOM CYLINDER TO CONTROL VALVE (THREE SPOOL)	3160 - 24
3C19	HOSE, FROM BOOM CYLINDER TO CONTROL VALVE (TWO SPOOL)	3160 - 22
3C23	HOSE, FROM BUCKET CYLINDER TO CONTROL VALVE (FOUR SPOOL)	3160 - 26
3C21	HOSE, FROM BUCKET CYLINDER TO CONTROL VALVE (THREE SPOOL)	3160 - 24
3C19	HOSE, FROM BUCKET CYLINDER TO CONTROL VALVE(TWO SPOOL)	3160 - 22
3C23	HOSE, FROM CONTROL VALVE TO BOOM CYLINDER (FOUR SPOOL)	3160 - 26
3C21	HOSE, FROM CONTROL VALVE TO BOOM CYLINDER (THREE SPOOL)	3160 - 24
3C19	HOSE, FROM CONTROL VALVE TO BOOM CYLINDER (TWO SPOOL)	3160 - 22
3C23	HOSE, FROM CONTROL VALVE TO BUCKET CYLINDER (FOUR SPOOL)	3160 - 26
3C21	HOSE, FROM CONTROL VALVE TO BUCKET CYLINDER (THREE SPOOL)	3160 - 24
3C19	HOSE, FROM CONTROL VALVE TO BUCKET CYLINDER (TWO SPOOL)	3160 - 22
3E15	HOSE, FROM CONTROL VALVE TO PILOT CONTROLLER (SERIAL NO. -590067)	3160 - 66
3C23	HOSE, FROM FOUR SPOOL CONTROL VALVE	3160 - 26
3C21	HOSE, FROM THREE SPOOL CONTROL VALVE	3160 - 24
3C19	HOSE, FROM TWO SPOOL CONTROL VALVE	3160 - 22
1I15	HOSE, FUEL TANK FILLER	0560 - 2
3E15	HOSE, PILOT CONTROLLER TO CONTROL VALVE (SERIAL NO. -590067)	3160 - 66
3E20	HOSE, QUICK COUPLER PIN DISCONNECT (SER. NO. -590067)	3160 - 72
3E22	HOSE, QUICK COUPLER PIN DISCONNECT (SER. NO. 590068-)	3160 - 74
3E24	HOSE, QUICK COUPLER PIN DISCONNECT (SERIAL NO. 590068-)	3160 - 76
1H23	HOSE, RADIATOR	0511 - 2
1I9	HOSE,AIR CLEANER	0520 - 2
1J24	HOSE,STEERING CYLINDER HYDRAULIC	0963 - 2
2I6	HOSES, A/C CONDENSOR	1830 - 10
1K11	HOSES, BRAKE ACCUMULATOR	1064 - 6
3E7	HOSES, DUAL SINGLE LEVER CONTROLLER (SER. NO. -590067)	3160 - 58
2C9	HOSES, ENVIRONMENTAL DRAIN	1369 - 12
1I15	HOSES, FUEL	0560 - 2
2I14	HOSES, HEATER	1830 - 16
1I1	HOSES, HYDRAULIC, AXLE COOLER	0511 - 4
1I21	HOSES, HYDRAULIC, ENGINE FAN DRIVE (NON-REVERSING)	0567 - 6
3D15	HOSES, HYDRAULIC, SINGLE LEVER CONTROLLER (SER. NO. -590067)	3160 - 42
3D17	HOSES, HYDRAULIC, SINGLE LEVER CONTROLLER (SER. NO. 590068-)	3160 - 44
3E1	HOSES, HYDRAULIC, SINGLE LEVER CONTROLLER W/AUX (SER. NO. -590067)	3160 - 52
3E3	HOSES, HYDRAULIC, SINGLE LEVER CONTROLLER W/AUX (SER. NO. 590068-)	3160 - 54
3D3	HOSES, HYDRAULIC, TWO LEVER CONTROLLER (SER. NO. 590068-)	3160 - 30
3D1	HOSES, HYDRAULIC, TWO LEVER CONTROLLER (SERIAL NO. -590067)	3160 - 28
3D7	HOSES, HYDRAULIC, TWO LEVER CONTROLLER W/AUX (SER. NO. -590067)	3160 - 34
1J10	HOSES, LUBRICATION, STEERING CYLINDER	0960 - 14
3D15	HOSES, SINGLE LEVER CONTROLLER (SER. NO. -590067)	3160 - 42
3D17	HOSES, SINGLE LEVER CONTROLLER (SER. NO. 590068-)	3160 - 44

ALPHABETICAL INDEX - CONTINUED

GRID		PAGE
3E3	HOSES, SINGLE LEVER CONTROLLER W/AUX (SER. NO. 590068-)	3160 - 54
3E1	HOSES, SINGLE LEVER CONTROLLER WITH AUX. (SER. NO. -590067)	3160 - 52
3D1	HOSES, TWO LEVER CONTROLLER (SERIAL NO. -590067)	3160 - 28
3D7	HOSES, TWO LEVER CONTROLLER W/AUX. (SER. NO. -590067)	3160 - 34
3D3	HOSES, TWO LEVER CONTROLLER) (SER. NO. 590068-)	3160 - 30
3D9	HOSES, TWO LEVER PILOT CONTROLLER WITH AUX. (SERIAL NO. 590068-)	3160 - 36
2I1	HOSES,A/C COMPRESSOR	1830 - 4
2F9	HOSES,WINDOW WASHER	1810 - 6
2F9	HOSES,WINDOW WASHER TANK	1810 - 6
3F15	HOUSING, AUXILIARY DRIVE	4151 - 2
1C9	HOUSING, AXLE	0250 - 2
1C11	HOUSING, AXLE	0250 - 4
1E14	HOUSING, GEARBOX	0350 - 27
2I23	HOUSING, GRILLE	1921 - 2
2H23	HOUSING, HVAC	1830 - 3A
1G11	HOUSING, OIL FILTER	0407 - 6
1F14	HOUSING, REAR OIL SEAL	0401 - 1
1H3	HOUSING, THERMOSTAT	0418 - 2
1E23	HOUSING,TORQUE CONVERTER	0350 - 40
1I3	HUB,FAN BLADE	0512 - 2
2H23	HVAC HOUSING	1830 - 3A
2H23	HVAC MODULE COMPONENTS	1830 - 3A
2H23	HVAC RECIRCULATION FILTER	1830 - 3A
2E2	HVAC WIRING	1674 - 35
1C3	HYD ACTUATED 4 PINION DIFFERENTIAL	0210 - 16
2K8	HYDRAULIC FILTER HEAD	2160 - 8
1D3	HYDRAULIC HOSES, AXLE COOLER	0260 - 19A
1I1	HYDRAULIC HOSES, AXLE COOLER	0511 - 4
1I21	HYDRAULIC HOSES, ENGINE FAN DRIVE (NON-REVERSING)	0567 - 6
1J1	HYDRAULIC HOSES, REVERSE FAN DRIVE (FACTORY INSTALLED)	0567 - 10
1I23	HYDRAULIC HOSES, REVERSE FAN DRIVE (FIELD INSTALLED)	0567 - 8
3E17	HYDRAULIC HOSES, RIDE CONTROL	3160 - 68
1K7	HYDRAULIC HOSES,BRAKE VALVE (SER. NO. -590067)	1063 - 2
3E24	HYDRAULIC HOSES,PIN DISCONNECT (SERIAL NO. 590068-)	3160 - 76
2K18	HYDRAULIC LINES	2160 - 18
1K18	HYDRAULIC LINES, PARK BRAKE SOLENOID VALVE	1163 - 2
1H23	HYDRAULIC OIL COOLER	0511 - 2
2K8	HYDRAULIC OIL FILTER	2160 - 8
2K10	HYDRAULIC OIL PRESSURE REGULATOR VALVE FITTINGS (SER. NO. -590067)	2160 - 10
2K12	HYDRAULIC OIL PRESSURE REGULATOR VALVE FITTINGS (SER. NO. 590068-)	2160 - 12
2K16	HYDRAULIC OIL PRESSURE REGULATOR VALVE (SERIAL NO. 590068-)	2160 - 16
2K14	HYDRAULIC OIL PRESSURE REGULATOR VALVE COMPONENTS (SER. NO. -590067)	2160 - 14
2K14	HYDRAULIC OIL PRESSURE REGULATOR VALVE SOLENOID VALVE (SER. NO. -590067)	2160 - 14
2K8	HYDRAULIC OIL RESERVOIR	2160 - 8
1I19	HYDRAULIC PUMP, FAN DRIVE (NON-REVERSING)	0567 - 4
2K2	HYDRAULIC PUMP,LOADER	2160 - 2
2K2	HYDRAULIC PUMP,STEERING	2160 - 2
1K9	HYDRAULICS, BRAKE VALVE (SER. NO. 590068-)	1063 - 4

GRID		PAGE
	I	
2D14	IGNITION SWITCH (S.N. 590068-)	1674 - 9A
2D24	IGNITION SWITCH (SER. NO. -590067)	1674 - 24
1G19	INJECTION FUEL PUMP	0413 - 2
1G21	INJECTION FUEL PUMP	0413 - 4
1G19	INJECTION PUMP LUBE LINE	0413 - 2
1G21	INJECTION PUMP LUBE LINE	0413 - 4
3C9	INLET SECTION VALVE WITH RELIEF VALVE	3160 - 8
3C9	INLET VALVE	3160 - 8
3C9	INLET VALVE SECTION	3160 - 8
1E11	INPUT GEAR	0350 - 22
1E11	INPUT SHAFT	0350 - 22
1B13	INPUT YOKE	0210 - 1
2J17	INSIDE REAR VIEW MIRROR	2002 - 3
1G23	INTAKE MANIFOLD	0414 - 1
1G23	INTAKE MANIFOLD GASKET	0414 - 1
1G7	INTAKE, ENGINE OIL PUMP	0407 - 2
3B11	INTERLOCKING CUTTING EDGE	3102 - 3A
1I13	ISOLATOR,ENGINE SUPPORT	0540 - 2
	J	
3B11	JAGZ LOADER BUCKET	3102 - 3A
3E13	JOYSTICK FNR CONVERSION KIT	3160 - 64
3E14	JOYSTICK FNR CONVERSION KIT	3160 - 65
3E14	JOYSTICK LABEL	3160 - 65
3D23	JOYSTICK PILOT CONTROLLER (SERIAL NO. 590068-)	3160 - 50
3D9	JOYSTICK WITH AUX. TO TWO LEVER WITH AUX. CONVERSION KIT(SER. NO. 590068-)	3160 - 36
	K	
3D5	KICKDOWN SWITCH, TWO LEVER PILOT CONTROLLER	3160 - 32
3F12	KICKOUT,LOADER BOOM	3166 - 4
3E3	KIT, ADD AUX. TO JOYSTICK CONVERSION (SER. NO. 590068-)	3160 - 54
3E3	KIT, ADD AUX. TO SINGLE LEVER CONTROLLER (SER. NO. 590068-)	3160 - 54
3E7	KIT, ADD AUX. TO TWO LEVER (SER. NO. -590067)	3160 - 58
3E9	KIT, ADD JOYSTICK TO JOYSTICK CONVERSION (SER. NO. 590068-)	3160 - 60
3E11	KIT, AUXILIARY JOY STICK PILOT CONTROLLER SEAL	3160 - 62
3F6	KIT, BOOM CYLINDER REPAIR (SERIAL NO. XXXXXX-)	3165 - 3A
3F4	KIT, BOOM CYLINDER REPAIR (SERIAL NO. -XXXXXX)	3165 - 2
1H20	KIT, ENGINE AIR HEATER	0505 - 5
1G5	KIT, ENGINE OVERHAUL	0404 - 6
2C9	KIT, ENVIRONMENTAL DRAIN	1369 - 12
2C6	KIT, FLAT FACE O-RING SEAL	1369 - 9
3D9	KIT, JOYSTICK WITH AUX. TO TWO LEVER WITH AUX. CONVERSION(SER. NO. 590068-)	3160 - 36
2B23	KIT, O-RING	1369 - 2
3C15	KIT, OUTLET SECTION SEAL	3160 - 14
1F24	KIT, PISTON/LINER	0403 - 1
2E7	KIT, PROGRAMMING	1674 - 60
3E20	KIT, QUICK COUPLER PIN DISCONNECT (SER. NO. -590067)	3160 - 72

ALPHABETICAL INDEX - CONTINUED

GRID		PAGE
3E22	KIT, QUICK COUPLER PIN DISCONNECT (SER. NO. 590068-)	3160 - 74
2H1	KIT, RECLINER	1821 - 2
1I23	KIT, REVERSE FAN DRIVE	0567 - 8
2H11	KIT, SEAT MOUNTING PARTS (MECHANICAL SUSPENSION)	1821 - 8
1G3	KIT, SHORT BLOCK	0404 - 4
3D3	KIT, SINGLE LEVER TO TWO LEVER CONVERSION (SER. NO. 590068-)	3160 - 30
1J12	KIT, STEERING COLUMN REPAIR (SER. NO. -590067)	0962 - 2
1J14	KIT, STEERING COLUMN REPAIR (SER. NO. 590068-)	0962 - 3A
1J22	KIT, STEERING VALVE SEAL	0962 - 10
3D17	KIT, TWO LEVER TO SINGLE LEVER CONVERSION (SER. NO. 590068-)	3160 - 44
3E3	KIT, TWO LEVER WITH AUX. TO JOYSTICK WITH AUX. CONVERSION(SER. NO. 590068-)	3160 - 54
1H1	KIT, WATER PUMP SEAL	0417 - 2
2I5	KIT,A/C COMPRESSOR HARDWARE	1830 - 8
2I3	KIT,A/C COMPRESSOR REPAIR	1830 - 6
2I4	KIT,A/C SHAFT SEAL	1830 - 7
3E11	KIT,AUXILIARY JOY STICK REPAIR	3160 - 62
3D13	KIT,AUXILIARY SINGLE LEVER CONTROLLER REPAIR	3160 - 40
1C22	KIT,AXLE BREATHER	0260 - 7
3F6	KIT,BUCKET CYLINDER REPAIR (SERIAL NO. XXXXXX-)	3165 - 3A
3F4	KIT,BUCKET CYLINDER REPAIR (SERIAL NO. -XXXXXX)	3165 - 2
1C22	KIT,PARK BRAKE BREATHER	0260 - 7
3D21	KIT,SINGLE LEVER CONTROLLER REPAIR (CONTINUED)(SER. NO. -590067)	3160 - 48
3D19	KIT,SINGLE LEVER CONTROLLER REPAIR (SER. NO. -590067)	3160 - 46
1K1	KIT,STEERING CYLINDER REPAIR	0965 - 10
2H7	KITM SEAT KNOB (MECHANICAL SUSPENSION)	1821 - 4
2H11	KITS, SEAT SPRING (MECHANICAL SUSPENSION)	1821 - 8
2H7	KITS, SEAT SUSPENSION (MECHANICAL SUSPENSION)	1821 - 4
2H11	KITS, SEAT SUSPENSION (MECHANICAL SUSPENSION)	1821 - 8
2H3	KNOB, CONTROL, SEAT	1821 - 3A
2E3	KNOB, SPIN CONTROL	1674 - 36

L

3B23	LABEL, HIGH LIFT	3140 - 7A
2B4	LABELS AND DECALS (ENGLISH) (S.N. -590067)	1322 - 2
2B6	LABELS AND DECALS (ENGLISH) (S.N. 590068-)	1322 - 3A
2B16	LABELS AND DECALS (FRENCH) (S.N. -590067)	1322 - 8
2B18	LABELS AND DECALS (FRENCH) (S.N. 590068-)	1322 - 9A
2B14	LABELS AND DECALS (SPANISH) (S.N. 590068-)	1322 - 7A
2B4	LABELS AND DECALS(ENGLISH) (S.N. -590067)	1322 - 2
2B12	LABELS AND DECALS(SPANISH) (S.N. -590067)	1322 - 6
2B10	LABELS AND DECALS, CAB (S.N. 590068-)	1322 - 5A
2D3	LAMP, HI-BEAM, DRIVE	1673 - 2
2D6	LAMP, STOP	1673 - 8
2D6	LAMP, TAIL	1673 - 8
2D6	LAMP, TURN	1673 - 8
2G15	LATCH HOLD OPEN (LEFT HAND DOOR)	1810 - 27A
2G17	LATCH HOLD OPEN (RIGHT HAND DOOR)	1810 - 28
2F15	LATCH, DOOR	1810 - 12
2I18	LATCH, ENGINE SIDE SHIELD	1910 - 4
2G13	LATCH, LEFT HAND DOOR HOLD OPEN	1810 - 26
2F13	LATCH,CAB DOOR HOLD-OPEN	1810 - 10
1G19	LEAKOFF LINE TO RAIL	0413 - 2
1G21	LEAKOFF LINE TO RAIL	0413 - 4
2G13	LEFT HAND COVER	1810 - 26
2G13	LEFT HAND DOOR HOLD OPEN CABLE	1810 - 26
2G13	LEFT HAND DOOR HOLD OPEN LATCH	1810 - 26
2G15	LEFT HAND DOOR, HOLD OPEN LATCH	1810 - 27A
3E11	LEVER, AUXILIARY JOY STICK PILOT CONTROLLER	3160 - 62
3D19	LEVER, SINGLE LEVER PILOT CONTROLLER (SER. NO. -590067)	3160 - 46
2H5	LEVER,SEAT SLIDE CONTROL	1821 - 3C
2B3	LICENSE PLATE BRACKET	1314 - 1
2B3	LICENSE PLATE LIGHT	1314 - 1
2D22	LICENSE PLATE LIGHT (SER. NO. 590068-)	1674 - 23A
2B20	LIFT HOOKS	1330 - 4
1G17	LIFT STRAPS, ENGINE	0409 - 4
2D5	LIGHT COMPONENTS, DOME	1673 - 5
2D3	LIGHT, FRONT	1673 - 2
2D6	LIGHT, STOP	1673 - 8
2D6	LIGHT, TURN	1673 - 8
2D3	LIGHT, TURN AND MARKER	1673 - 2
2B3	LIGHT,LICENSE PLATE	1314 - 1
1C1	LIMITED SLIP DIFFERENTIAL	0210 - 14
1B20	LIMITED SLIP DIFFERENTIAL CASE, REAR	0210 - 8
3F15	LINE, AUXILIARY DRIVE OIL	4151 - 2
1C23	LINE, AXLE DISCONNECT (SER. NO. -XXXXXX)	0260 - 8
3E24	LINE, AXLE DISCONNECT (SERIAL NO. 590068-)	3160 - 76
1C17	LINE, DIFFERENTIAL LOCK, FRONT	0260 - 2
1G19	LINE, FUEL LEAK-OFF TO RAIL	0413 - 2
1G21	LINE, FUEL LEAK-OFF TO RAIL	0413 - 4
1G19	LINE, INJECTION PUMP LUBE	0413 - 2
1G21	LINE, INJECTION PUMP LUBE	0413 - 4
1H6	LINE, PRE-FUEL FILTER(ESN -249016)	0420 - 2
3E20	LINE, QUICK COUPLER PIN DISCONNECT OIL (SER. NO. -590067)	3160 - 72
3E22	LINE, QUICK COUPLER PIN DISCONNECT OIL (SER. NO. 590068-)	3160 - 74
1F24	LINER, CYLINDER	0403 - 1
1H8	LINES AND FILTERS, FUEL (ESN 249017-) (W/RE522687 & RE522688)	0420 - 4
1C19	LINES, DIFFERENTIAL LOCK, FRONT AND REAR	0260 - 4
1H6	LINES, FUEL FILTER (ESN -249016)	0420 - 2
1G19	LINES, FUEL INJECTION	0413 - 2
1G21	LINES, FUEL INJECTION	0413 - 4
2K18	LINES, MAIN HYDRAULIC	2160 - 18
3E15	LINES, PILOT (SERIAL NO. -590067)	3160 - 66
3E9	LINES, PILOT, DUAL SINGLE LEVER CONTROLLER (SER. NO. 590068-)	3160 - 60
3D17	LINES, PILOT, SINGLE LEVER CONTROLLER (SER. NO. 590068-)	3160 - 44
3E3	LINES, PILOT, SINGLE LEVER CONTROLLER WITH AUX. (SER. NO. 590068-)	3160 - 54
3D3	LINES, PILOT, TWO LEVER CONTROLLER (SER. NO. 590068-)	3160 - 30

ALPHABETICAL INDEX - CONTINUED

GRID		PAGE
3D9	LINES, PILOT, TWO LEVER CONTROLLER WITH AUX.(SER. NO. 590068-)	3160 - 36
3E24	LINES, PIN DISCONNECT (SERIAL NO. 590068-)	3160 - 76
1F3	LINES, TRANSMISSION EXTERNAL OIL	0360 - 2
1G24	LINES, TURBOCHARGER OIL	0416 - 2
3C1	LINK, LOADER, HIGH LIFT	3140 - 8
1I5	LINKAGE, ENGINE SPEED CONTROL (SERIAL NO. -590067)	0515 - 2
1J12	LINKAGE, STEERING COLUMN (SER. NO. -590067)	0962 - 2
1J14	LINKAGE, STEERING COLUMN (SER. NO. 590068-)	0962 - 3A
2D14	LOAD CENTER COMPARTMENT (S.N. 590068-)	1674 - 9A
2D12	LOAD CENTER WIRING HARNESS (S.N. -590067)	1674 - 8
2D14	LOAD CENTER WIRING HARNESS (S.N. 590068-)	1674 - 9A
3B21	LOADER BOOM	3140 - 6
3F12	LOADER BOOM KICKOUT	3166 - 4
3F12	LOADER BOOM KICKOUT SENSOR	3166 - 4
3B11	LOADER BUCKET (JAGZ)	3102 - 3A
3B9	LOADER BUCKET CUTTING EDGE	3102 - 2
3B11	LOADER BUCKET CUTTING EDGE	3102 - 3A
3B13	LOADER BUCKET CUTTING EDGE	3102 - 4
3B9	LOADER BUCKET GUARD	3102 - 2
3B11	LOADER BUCKET GUARD	3102 - 3A
3B9	LOADER BUCKET PINS	3102 - 2
3B13	LOADER BUCKET SHANKS	3102 - 4
3B13	LOADER BUCKET TEETH	3102 - 4
3B15	LOADER BUCKET, WASTE HANDLER	3102 - 6
3B9	LOADER BUCKETS	3102 - 2
3C3	LOADER CONTROL VALVE (2-SPOOL)	3160 - 2
3C5	LOADER CONTROL VALVE (3-SPOOL)	3160 - 4
3C7	LOADER CONTROL VALVE (4-SPOOL)	3160 - 6
3B17	LOADER FRAME	3140 - 2
3B17	LOADER FRAME BEARING	3140 - 2
3B19	LOADER FRAME LOCK	3140 - 4
3B17	LOADER FRAME PIN	3140 - 2
2D20	LOADER FRAME WIRING HARNESS (SER. NO. -590067)	1674 - 22
2D22	LOADER FRAME WIRING HARNESS (SER. NO. 590068-)	1674 - 23A
2K2	LOADER HYRAULIC PUMP	2160 - 2
3B21	LOADER LINKAGE CENTER PIVOT PIN	3140 - 6
3C1	LOADER PIVOT LINK PIN TO BUCKET CYLINDER	3140 - 8
3C1	LOADER PIVOT LINK PIN TO BUCKET LINK	3140 - 8
2E12	LOCK BAR,ENGINE FRAME	1740 - 2
3B19	LOCK, BOOM CYLINDER	3140 - 4
3B19	LOCK, LOADER FRAME	3140 - 4
2I18	LOCK,ENGINE SIDE SHIELD	1910 - 4
1B6	LOGGER RIM ASSEMBLY (ONE PIECE) (28 X 26)	0110 - 6
2I10	LOUVERS, HEAT AND A/C (SER. NO. -590067)	1830 - 14
2I12	LOUVERS, HEAT AND A/C (SER. NO. 590068-)	1830 - 15A
1J16	LOWER STEERING COLUMN	0962 - 4
1C5	LUBRICATION LINES, DIFFERENTIAL SUPPORTS	0210 - 18
2H3	LUMBAR ADJUSTER AND CONTROL KNOB	1821 - 3A

M

1F22	MAGNETIC PICK-UP SENSOR	0402 - 7
1G1	MAIN BEARING CAPS	0404 - 2
1F15	MAIN BEARINGS, ENGINE	0401 - 2
2E21	MAIN COUNTERWEIGHT	1749 - 2
2K18	MAIN HYDRAULIC LINES	2160 - 18
2D20	MAIN WIRING HARNESS (SER. NO. -590067)	1674 - 22
2D22	MAIN WIRING HARNESS (SER. NO. 590068-)	1674 - 23A
1G23	MANIFOLD, INTAKE	0414 - 1
1E8	MANIFOLD, TRANSMISSION CONTROL VALVE	0350 - 19
1H3	MANIFOLD, WATER, FRONT	0418 - 2
2I3	MANIFOLD,A/C COMPRESSOR	1830 - 6
1G18	MANIFOLDS, EXHAUST	0410 - 1
2J16	MIRROR, OUTSIDE	2002 - 2
2J17	MIRROR, REAR VIEW, INSIDE	2002 - 3
2H23	MODULE, HVAC	1830 - 3A
1H6	MOISTURE SENSOR (ESN -249016)	0420 - 2
2E10	MONITOR DISPLAY UNIT	1676 - 1
2H23	MOTOR AND SWITCH, HEATER AND A/C BLOWER	1830 - 3A
1J1	MOTOR, REVERSE FAN DRIVE (FACTORY INSTALLED)	0567 - 10
1I23	MOTOR, REVERSE FAN DRIVE (FIELD INSTALLED)	0567 - 8
1I19	MOTOR,FAN DRIVE (NON-REVERSING)	0567 - 4
2C17	MOUNTING BRACKETS, ALTERNATOR (55 AMP)	1672 - 2
2C21	MOUNTING BRACKETS, ALTERNATOR (80 AMP)	1672 - 6
2H11	MOUNTING PARTS KIT, SEAT (MECHANICAL SUSPENSION)	1821 - 8
1I13	MOUNTING SUPPORTS, ENGINE	0540 - 2
1D13	MOUNTING SUPPORTS, TRANSMISSION	0342 - 2
3B17	MOUNTING, FRONT AXLE	3140 - 2
2F5	MOUNTS, CAB (FRONT AND REAR)	1810 - 2
1I11	MUFFLER	0530 - 2
1I11	MUFFLER BRACKET	0530 - 2

N

1B18	NON-OSCILLATING,FRONT DIFFERENTIAL CASE WITH DIFF LOCK	0210 - 6
1G19	NOZZLE, FUEL INJECTION	0413 - 2
1G21	NOZZLE, FUEL INJECTION	0413 - 4

O

2B23	O-RING KIT	1369 - 2
1H1	O-RING, WATER PUMP	0417 - 2
1H4	OIL COOLER ADAPTER	0419 - 1
1H5	OIL COOLER BYPASS ADAPTER	0419 - 2
1H5	OIL COOLER BYPASS TUBES	0419 - 2
1H4	OIL COOLER COVER	0419 - 1
1H4	OIL COOLER TUBES	0419 - 1
1D3	OIL COOLER, AXLE	0260 - 19A
1H4	OIL COOLER, ENGINE	0419 - 1
1H23	OIL COOLER,HYDRAULIC	0511 - 2
1H23	OIL COOLER,TRANSMISSION	0511 - 2
1G8	OIL DIPSTICK, ENGINE	0407 - 3
1F7	OIL FILL, TRANSMISSION	0360 - 6
1G11	OIL FILTER BASE	0407 - 6
1G11	OIL FILTER BYPASS VALVE	0407 - 6
1G11	OIL FILTER HOUSING	0407 - 6
1G11	OIL FILTER HOUSING GASKET	0407 - 6

ALPHABETICAL INDEX - CONTINUED

GRID		PAGE
1E8	OIL FILTER RESTRICTION INDICATOR SWITCH TRANSMISSION	0350 - 19
1G11	OIL FILTER, ENGINE	0407 - 6
1F9	OIL FILTER, TRANSMISSION	0360 - 8
3F15	OIL LINE, AUXILIARY DRIVE	4151 - 2
3E20	OIL LINE, QUICK COUPLER PIN DISCONNECT (SER. NO. -590067)	3160 - 72
3E22	OIL LINE, QUICK COUPLER PIN DISCONNECT (SER. NO. 590068-)	3160 - 74
1F3	OIL LINES, TRANMISSION THERMAL BYPASS VALVE	0360 - 2
1F3	OIL LINES, TRANSMISSION EXTERNAL	0360 - 2
1G24	OIL LINES, TURBOCHARGER	0416 - 2
1G9	OIL PAN	0407 - 4
1G11	OIL PRESSURE REGULATING VALVE	0407 - 6
2D11	OIL PRESSURE SENSOR	1674 - 7
2D11	OIL PRESSURE SENSOR, ENGINE	1674 - 7
1G13	OIL PUMP	0407 - 8
1F15	OIL PUMP DRIVE GEAR	0401 - 2
1G13	OIL PUMP GASKET	0407 - 8
1G13	OIL PUMP GEAR	0407 - 8
1G7	OIL PUMP INTAKE	0407 - 2
1G7	OIL PUMP INTAKE GASKET	0407 - 2
1F21	OIL SEAL, FRONT	0402 - 6
1F14	OIL SEAL, REAR	0401 - 1
2C1	OILSCAN PLUS TEST KIT, FLUID ANALYSIS	1369 - 4
2H15	OPERATOR ACCESS PLATFORM AND STEPS	1822 - 2
2H15	OPERATOR ACCESS PLATFORM STEPS	1822 - 2
2F19	OPERATOR STATION FRONT PEDESTAL	1810 - 15A
1C5	OSCILLATING DIFFERENTIAL SUPPORT	0210 - 18
2I8	OUTLET DUCTS	1830 - 12
3C15	OUTLET SECTION	3160 - 14
3C15	OUTLET SECTION COMPONENTS	3160 - 14
3C15	OUTLET SECTION SEAL KIT	3160 - 14
1E17	OUTPUT SHAFT,TRANSMISSION	0350 - 30
2J16	OUTSIDE MIRROR	2002 - 2
1G5	OVERHAUL KIT, ENGINE	0404 - 6

P

1G9	PAN, OIL	0407 - 4
2H3	PAN, SEAT BACK	1821 - 3A
1C22	PARK BRAKE BREATHER KIT	0260 - 7
1K16	PARK BRAKE SOLENOID VALVE	1162 - 2
1K18	PARK BRAKE SOLENOID VALVE HYDRAULIC LINES	1163 - 2
2D24	PARK BRAKE SWITCH (SER. NO. -590067)	1674 - 24
2E1	PARK BRAKE SWITCH (SER. NO. 590068-)	1674 - 25A
1K14	PARKING BRAKE/ DRIVELINE BEARING	1115 - 2
1K5	PEDAL, BRAKE	1062 - 2
1I5	PEDAL,ENGINE CONTROL (SERIAL NO. -590067)	0515 - 2
1I7	PEDAL,ENGINE SPEED CONTROL (SER. NO. 590076-)	0515 - 4
2F19	PEDESTAL, CAB	1810 - 15A
2F19	PEDESTAL, CANOPY	1810 - 15A
2F19	PEDESTAL, OPERATOR STATION FRONT	1810 - 15A
3D23	PILOT CONTROLLER HANDLE (SERIAL NO. 590068-)	3160 - 50
3E15	PILOT CONTROLLER HOSE TO CONTROL VALVE (SERIAL NO. -590067)	3160 - 66
3D9	PILOT CONTROLLER, TWO LEVER WITH AUX. (SERIAL NO. 590068-)	3160 - 36
3D11	PILOT CONTROLLER, TWO LEVER WITH DUAL AUX. CONTROLLERS (SER.NO. -590067)	3160 - 38
3E15	PILOT LINES (SERIAL NO. -590067)	3160 - 66
3E9	PILOT LINES, DUAL SINGLE LEVER CONTROLLER (SER. NO. 590068-)	3160 - 60
3D17	PILOT LINES, SINGLE LEVER CONTROLLER (SER. NO. 590068-)	3160 - 44
3E3	PILOT LINES, SINGLE LEVER CONTROLLER AUX.(SER. NO. 590068-)	3160 - 54
3D3	PILOT LINES, TWO LEVER CONTROLLER (SER. NO. 590068-)	3160 - 30
3D9	PILOT LINES, TWO LEVER CONTROLLER WITH AUX. (SER. NO. 590068-)	3160 - 36
3E15	PILOT PLUMBING (SERIAL NO. -590067)	3160 - 66
2D10	PIN DISCONNECT HARNESS	1674 - 6
3E24	PIN DISCONNECT LINES (SERIAL NO. 590068-)	3160 - 76
3F1	PIN DISCONNECT VALVE (SERIAL NO. - 590067)	3160 - 78
3E24	PIN DISCONNECT VALVE (SERIAL NO. 590068-)	3160 - 76
3F3	PIN DISCONNECT VALVE COMPONENTS	3160 - 80
3F1	PIN DISCONNECT VALVE COMPONENTS (SERIAL NO. - 590067)	3160 - 78
3E24	PIN DISCONNECT VALVE HYDRAULIC HOSES (SERIAL NO. 590068-)	3160 - 76
3F1	PIN DISCONNECT VALVE SOLENOID (SERIAL NO. - 590067)	3160 - 78
3B21	PIN, LOADER LINKAGE CENTER PIVOT	3140 - 6
3C1	PIN, LOADER PIVOT LINK TO BUCKET CYLINDER	3140 - 8
3C1	PIN, LOADER PIVOT LINK TO BUCKET LINK	3140 - 8
3B23	PIN, WASTE HANDLER LINKAGE CENTER PIVOT	3140 - 7A
3B17	PIN,BOOM CYLINDER	3140 - 2
3B17	PIN,BUCKET CYLINDER	3140 - 2
2E12	PIN,ENGINE FRAME	1740 - 2
3B17	PIN,LOADER FRAME	3140 - 2
3B17	PIN,STEERING CYLINDER	3140 - 2
3B9	PINS, LOADER BUCKET	3102 - 2
1I11	PIPE, EXHAUST	0530 - 2
1F24	PISTON	0403 - 1
1F24	PISTON CONNECTING ROD	0403 - 1
1F24	PISTON CONNECTING ROD BEARINGS	0403 - 1
1F24	PISTON RINGS	0403 - 1
1K4	PISTON, BRAKE	1011 - 2
1C13	PLANET PINION CARRIER	0250 - 6
3E7	PLATE, AUXILIARY SINGLE LEVER CNTLR. MTG. (SER. NO. -590067)	3160 - 58
3E9	PLATE, AUXILIARY SINGLE LEVER CONTROLLER MOUNTING (SER. NO. 590068-)	3160 - 60
2I18	PLATE, ENGINE SIDE SHIELD	1910 - 4
3C23	PLATE, FOUR SPOOL CONTROL VALVE PLUMBING MOUNTING	3160 - 26
3D17	PLATE, SINGLE LEVER CONROLLER MOUNTING (SER. NO. 590068-)	3160 - 44
3D15	PLATE, SINGLE LEVER CONTROLLER MOUNTING (SER. NO. -590067)	3160 - 42
3D3	PLATE, SINGLE LEVER CONTROLLER MOUNTING (SER. NO. 590068-)	3160 - 30
3E3	PLATE, SINGLE LEVER CONTROLLER W/AUX MOUNTING (SER. NO. 590068-)	3160 - 54
3E1	PLATE, SINGLE LEVER CONTROLLER W/AUX M MOUNTING (SER. NO. -590067)	3160 - 52
3D19	PLATE, SINGLE LEVER PILOT CONTROLLER (SER. NO. -590067)	3160 - 46

ALPHABETICAL INDEX - CONTINUED

GRID		PAGE
3D21	PLATE, SINGLE LEVER PILOT CONTROLLER MOUNTING (CONTINUED)(SER. NO. -590067)	3160 - 48
3D7	PLATE, TWO LEVER PILOT CONTROLLER MOUNTING(SER. NO. -590067)	3160 - 34
3D9	PLATE, TWO LEVER PILOT CONTROLLER WITH AUX. (SERIAL NO. 590068-)	3160 - 36
3D11	PLATE, TWO LEVER PILOT CONTROLLER WITH DUAL AUX. CONTROLLERS(SER.NO. -590067)	3160 - 38
1K4	PLATES, BRAKE	1011 - 2
2H15	PLATFORM, OPERATOR ACCESS	1822 - 2
1G1	PLUG, CYLINDER BLOCK	0404 - 2
1D5	PLUMBING, AXLE COOLING	0260 - 20
1H6	PNEUMATIC PRESSURE VALVE (ESN -249016)	0420 - 2
2D16	POWER PLUG AND CONVERTER (24 TO 12 VOLT) (SER. NO. -590067)	1674 - 10
2D17	POWER PLUG AND CONVERTER (24 TO 12 VOLT) (SER. NO. 590067-)(10 AMP)	1674 - 10A
2D18	POWER PLUG AND CONVERTER (24 TO 12 VOLT) (SER. NO. 590068-)(5 AMP)	1674 - 10B
1E19	POWER TAKE-OFF SHAFT	0350 - 32
1H6	PRE-FILTER LINE (ESN -249016)	0420 - 2
1H6	PRE-FUEL FILTER (ESN -249016)	0420 - 2
1I9	PRECLEANER	0520 - 2
2K16	PRESSURE REDUCING VALVE, COMPONENTS (SERIAL NO. 590068-)	2160 - 16
2K14	PRESSURE REGULATING VALVE COMPONENTS (SER. NO. -590067)	2160 - 14
2K10	PRESSURE REGULATING VALVE FITTINGS (SER. NO. -590067)	2160 - 10
2K12	PRESSURE REGULATOR VALVE FITTINGS (SER. NO. 590068-)	2160 - 12
2K16	PRESSURE REGULATOR VALVE, HYDRAULIC OIL (SERIAL NO. 590068-)	2160 - 16
2D11	PRESSURE SENSOR, OIL	1674 - 7
2E3	PRESSURE TRANSDUCER, SPIN CONTROL	1674 - 36
1H6	PRIMARY FUEL FILTER (ESN -249016)	0420 - 2
2E7	PROGRAMMING KIT	1674 - 60
2K16	PRV VALVE COMPONENTS (SERIAL NO. 590068-)	2160 - 16
1H12	PULLEY, CRANKSHAFT AND DAMPERS	0429 - 2
1D7	PUMP AND MOTOR RECIRCULATION, AXLE OIL	0260 - 22
1G19	PUMP, FUEL INJECTION	0413 - 2
1G21	PUMP, FUEL INJECTION	0413 - 4
1I19	PUMP, HYDRAULIC, FAN DRIVE (NON-REVERSING)	0567 - 4
1G13	PUMP, OIL	0407 - 8
1J1	PUMP, REVERSE FAN DRIVE (FACTORY INSTALLED)	0567 - 10
1I23	PUMP, REVERSE FAN DRIVE (FIELD INSTALLED)	0567 - 8
1E15	PUMP, TRANSMISSION	0350 - 28
1H1	PUMP, WATER	0417 - 2
2F9	PUMP, WINDOW WASHER	1810 - 6
1J6	PUMP,SECONDARY STEERING (SER. NO. -590067)	0930 - 2
1J8	PUMP,SECONDARY STEERING (SER. NO. 590068-)	0930 - 4
3D23	PUSH PIN ASSEMBLY (SERIAL NO. 590068-)	3160 - 50
1F19	PUSH ROD	0402 - 4

Q

3E20	QUICK COUPLER PIN DISCONNECT HOSE (SER. NO. -590067)	3160 - 72
3E22	QUICK COUPLER PIN DISCONNECT HOSE (SER. NO. 590068-)	3160 - 74
3E24	QUICK COUPLER PIN DISCONNECT HOSE (SERIAL NO. 590068-)	3160 - 76
3E20	QUICK COUPLER PIN DISCONNECT KIT (SER. NO. -590067)	3160 - 72
3E22	QUICK COUPLER PIN DISCONNECT KIT (SER. NO. 590068-)	3160 - 74
3E24	QUICK COUPLER PIN DISCONNECT LINE (SERIAL NO. 590068-)	3160 - 76
3E20	QUICK COUPLER PIN DISCONNECT SWITCH (SER. NO. -590067)	3160 - 72
3E22	QUICK COUPLER PIN DISCONNECT SWITCH (SER. NO. 590068-)	3160 - 74
3E20	QUICK COUPLER PIN DISCONNECT VALVE (SER. NO. -590067)	3160 - 72
3E24	QUICK COUPLER PIN DISCONNECT VALVE (SERIAL NO. 590068-)	3160 - 76

R

1H23	RADIATOR	0511 - 2
1H23	RADIATOR CAP	0511 - 2
1H23	RADIATOR COOLANT LEVEL SENSOR	0511 - 2
1H23	RADIATOR HOSE	0511 - 2
1H23	RADIATOR OVERFLOW TANK	0511 - 2
2J12	RADIO (SER. NO. -590067)	2001 - 2
2J14	RADIO (SER.NO. 590068-)	2001 - 3A
2J12	RADIO ANTENNA (SER. NO. -590067)	2001 - 2
2J14	RADIO ANTENNA (SER.NO. 590068-)	2001 - 3A
2J12	RADIO REMOTE CONTROL (SER. NO. -590067)	2001 - 2
2J14	RADIO REMOTE CONTROL (SER.NO. 590068-)	2001 - 3A
2J12	RADIO SPEAKER (SER. NO. -590067)	2001 - 2
2J14	RADIO SPEAKER (SER.NO. 590068-)	2001 - 3A
1G19	RAIL, FUEL INJECTION	0413 - 2
1G21	RAIL, FUEL INJECTION	0413 - 4
1B12	REAR AXLE	0201 - 2
2C19	REAR COVER, ALTERNATOR (55 AMP)	1672 - 4
2C23	REAR COVER, ALTERNATOR (80 AMP)	1672 - 8
1B16	REAR DIFFERENTIAL CASE WITH DIFF LOCK, OSCILLATING	0210 - 4
1C19	REAR DIFFERENTIAL LOCK LINE	0260 - 4
2J1	REAR FENDERS	1927 - 2
2J9	REAR FENDERS, FULL COVERAGE (SERIAL NO. XXXXXX-)	1927 - 6
2D20	REAR FRAME WIRING HARNESS (SER. NO. -590067)	1674 - 22
2D22	REAR FRAME WIRING HARNESS (SER. NO. 590068-)	1674 - 23A
1F14	REAR OIL SEAL	0401 - 1
1F14	REAR OIL SEAL GASKET	0401 - 1
1F14	REAR OIL SEAL HOUSING	0401 - 1
2D9	REAR WINDOW DEFROST SWITCH (SER. NO. -590067)	1674 - 1
2G1	REAR WINDSHIELD WIPER	1810 - 18
1B20	REAR, STANDARD AND LIMITED SLIP DIFFEREN TIAL CASE	0210 - 8
2I6	RECEIVER DRIER,A/C	1830 - 10
2H23	RECIRCULATION FILTER, HVAC	1830 - 3A
1D7	RECIRCULATION PUMP AND MOTOR, AXLE OIL	0260 - 22
2H1	RECLINER KIT	1821 - 2

ALPHABETICAL INDEX - CONTINUED

GRID		PAGE
2K16	REDUCING VALVE, COMPONENTS (SERIAL NO. 590068-)	2160 - 16
3D23	REGULATING VALVE (SERIAL NO. 590068-)	3160 - 50
2C17	REGULATOR,VOLTAGE (55 AMP)	1672 - 2
2E4	RELAY, TURN SIGNAL FLASHER (S.N. -590067)	1674 - 37
2E4	RELAYS (S.N. -590067)	1674 - 37
2E5	RELAYS, VEC (S.N. 590068-)	1674 - 38
3C9	RELIEF VALVE FOR INLET SECTION VALVE	3160 - 8
1I19	RELIEF VALVE, FAN DRIVE MOTOR (NON-REVERSING)	0567 - 4
1J3	RELIEF VALVE, REVERSE FAN DRIVE	0567 - 12
2K20	REMOTE HYDRAULIC RESERVOIR BREATHER	2160 - 20
2K6	REPAIR KITS, STEERING AND LOADER HYDRAULIC PUMP	2160 - 6
2G25	REPLACEMENT SEAT BELT (THREE INCHES (76MM) WIDE)	1821 - 1
1H23	RESERVOIR, COOLANT OVERFLOW	0511 - 2
2K8	RESERVOIR, HYDRAULIC OIL	2160 - 8
2G23	REST, ARM (SER. NO. 590068-)	1816 - 3A
2G21	REST, ARM (USE ONLY WITH TWO-LEVER CONTROLLERS)(SER. NO. -590067)	1816 - 2
1E8	RESTRICTION INDICATOR SWITCH, TRANSMISSION OIL FILTER	0350 - 19
2K8	RETURN HOSE, RESERVOIR	2160 - 8
3F12	RETURN TO CARRY SENSOR	3166 - 4
3F8	RETURN-TO-DIG ACTUATOR (SER. NO. -589893)	3166 - 2
3F10	RETURN-TO-DIG ACTUATOR (SER. NO. 589894-)	3166 - 3A
3F8	RETURN-TO-DIG COMPONENT MOUNTING BRACKET (SER. NO. -589893)	3166 - 2
3F8	RETURN-TO-DIG SENSOR (SER. NO. -589893)	3166 - 2
3F10	RETURN-TO-DIG SENSOR (SER. NO. 589894-)	3166 - 3A
1J1	REVERSE FAN DRIVE (FACTORY INSTALLED)	0567 - 10
1I23	REVERSE FAN DRIVE FIELD KIT	0567 - 8
1J1	REVERSE FAN DRIVE HYDRAULIC HOSES (FACTORY INSTALLED)	0567 - 10
1I23	REVERSE FAN DRIVE HYDRAULIC HOSES (FIELD INSTALLED)	0567 - 8
1J1	REVERSE FAN DRIVE MOTOR (FACTORY INSTALLED)	0567 - 10
1I23	REVERSE FAN DRIVE MOTOR (FIELD INSTALLED)	0567 - 8
1J1	REVERSE FAN DRIVE PUMP (FACTORY INSTALLED)	0567 - 10
1I23	REVERSE FAN DRIVE PUMP (FIELD INSTALLED)	0567 - 8
1J3	REVERSE FAN DRIVE RELIEF VALVE	0567 - 12
1J1	REVERSE FAN DRIVE SOLENOID VALVE (FACTORY INSTALLED)	0567 - 10
1I23	REVERSE FAN DRIVE SOLENOID VALVE (FIELD INSTALLED)	0567 - 8
1J3	REVERSE FAN DRIVE SOLENOID VALVE COMPONENTS	0567 - 12
3E17	RIDE CONTROL ACCUMULATOR	3160 - 68
3E17	RIDE CONTROL HYDRAULIC HOSES	3160 - 68
3E19	RIDE CONTROL SOLENOID VALVE	3160 - 70
3E17	RIDE CONTROL VALVE	3160 - 68
3E19	RIDE CONTROL VALVE	3160 - 70
2G17	RIGHT HAND DOOR, HOLD OPEN LATCH	1810 - 28
2G9	RIGHT SIDE CONSOLE (SER. NO. 590068-)	1810 - 23C
2G7	RIGHT SIDE CONSOLE (SINGLE LEVER CONTROLLERS)(SERIAL NO. -590067)	1810 - 23A
2G5	RIGHT SIDE CONSOLE (TWO-LEVER) (SER. NO. -590067)	1810 - 22
1B4	RIM ASSEMBLY (FIVE PIECE RIM) (25 X 17) (25 X 19.5)	0110 - 4
1B2	RIM, WHEEL (THREE PIECE RIM) (25 X 22)	0110 - 2
1B6	RIM, WHEEL, LOGGER (ONE PIECE) (28 X 26)	0110 - 6
1H1	RING, WATER PUMP RETAINING	0417 - 2
1F24	RINGS, PISTON	0403 - 1
2E20	ROCK GUARD, CYLINDER-FITTING	1746 - 6
1F19	ROCKER ARM	0402 - 4
1F17	ROCKER ARM COVER	0402 - 2
1F17	ROCKER ARM COVER GASKET	0402 - 2
2D9	ROCKER SWITCHES AND PLUG ASSEMBLY (SER. NO. -590067)	1674 - 1
3F4	ROD, BOOM CYLINDER (SERIAL NO. -XXXXXX)	3165 - 2
3F6	ROD, BOOM CYLINDER (SERIAL NO. XXXXXX-)	3165 - 3A
3F4	ROD, BUCKET CYLINDER (SERIAL NO. -XXXXXX)	3165 - 2
3F6	ROD, BUCKET CYLINDER (SERIAL NO. XXXXXX-)	3165 - 3A
1F24	ROD, PISTON CONNECTING	0403 - 1
1F19	ROD, PUSH	0402 - 4
2F23	ROOF PLASTIC	1810 - 16
2F13	ROPS	1810 - 10
2E3	ROTARY KNOB, SPIN CONTROL	1674 - 36

S

3E11	SEAL KIT, AUXILIARY JOY STICK PILOT CONTROLLER	3160 - 62
1I19	SEAL KIT, FAN DRIVE MOTOR (NON-REVERSING)	0567 - 4
1I19	SEAL KIT, FAN DRIVE PUMP (NON-REVERSING)	0567 - 4
3C15	SEAL KIT, OUTLET SECTION	3160 - 14
1F21	SEAL, FRONT OIL	0402 - 6
1F14	SEAL, REAR OIL	0401 - 1
1H1	SEAL, TUBE	0417 - 2
1H1	SEAL, WATER PUMP OIL	0417 - 2
2H3	SEAT BACK	1821 - 3A
2H3	SEAT BACK PAN	1821 - 3A
2F21	SEAT BASE	1810 - 15C
2G25	SEAT BELT, REPLACEMENT (THREE INCHES (76MM WIDE)	1821 - 1
2H1	SEAT BRACKETS	1821 - 2
2H1	SEAT CUSHION	1821 - 2
2F21	SEAT DECK	1810 - 15C
2H7	SEAT KNOB KIT (MECHANICAL SUSPENSION)	1821 - 4
2H11	SEAT MOUNTING PARTS KIT (MECHANICAL SUSPENSION)	1821 - 8
2H5	SEAT SLIDE ASSEMBLY	1821 - 3C
2H5	SEAT SLIDE CONTROL LEVER	1821 - 3C
2H5	SEAT SLIDE LATCH KIT	1821 - 3C
2H11	SEAT SPRING KITS (MECHANICAL SUSPENSION)	1821 - 8
2H1	SEAT SUSPENSION	1821 - 2

ALPHABETICAL INDEX - CONTINUED

GRID		PAGE
2H13	SEAT SUSPENSION (AIR SUSPENSION)	1821 - 10
2H13	SEAT, SUSPENSION (AIR SUSPENSION)	1821 - 10
2H9	SEAT, SUSPENSION KITS (MECHANICAL SUSPENSION)	1821 - 6
2H11	SEAT, SUSPENSION KITS (MECHANICAL SUSPENSION)	1821 - 8
1J6	SECONDARY STEERING (SER. NO. -590067)	0930 - 2
1J8	SECONDARY STEERING (SER. NO. 590068-)	0930 - 4
1J6	SECONDARY STEERING PUMP (SER. NO. -590067)	0930 - 2
1J8	SECONDARY STEERING PUMP (SER. NO. 590068-)	0930 - 4
1J6	SECONDARY STEERING SWITCH (SER. NO. -590067)	0930 - 2
1J8	SECONDARY STEERING SWITCH (SER. NO. 590068-)	0930 - 4
1J6	SECONDARY STEERING WIRE HARNESS (SER. NO. -590067)	0930 - 2
1J8	SECONDARY STEERING WIRE HARNESS (SER. NO. 590068-)	0930 - 4
3C13	SECTION, AUXILIARY	3160 - 12
3C11	SECTION, VALVE, BOOM	3160 - 10
3C17	SECTION, VALVE, FIFTH FUNCTION	3160 - 20
3C9	SECTION, VALVE, INLET, WITH RELIEF VALVE	3160 - 8
2D11	SENDER, ENGINE COOLANT TEMPERATURE	1674 - 7
1I15	SENDER, FUEL TANK	0560 - 2
2K8	SENDER, TEMPERATURE, HYDRAULIC	2160 - 8
1I9	SENSOR, AIR FILTER RESTRICTION	0520 - 2
1F22	SENSOR, ENGINE SPEED	0402 - 7
1H3	SENSOR, ENGINE TEMPERATURE	0418 - 2
1G19	SENSOR, FUEL INJECTION PUMP POSITION	0413 - 2
1G21	SENSOR, FUEL INJECTION PUMP POSITION	0413 - 4
1H8	SENSOR, FUEL MOISTURE (ESN 249017-) (W/RE522687 & RE522688)	0420 - 4
1G19	SENSOR, FUEL RAIL PRESSURE	0413 - 2
1G21	SENSOR, FUEL RAIL PRESSURE	0413 - 4
1H6	SENSOR, FUEL TEMPERATURE (ESN -249016)	0420 - 2
1H8	SENSOR, FUEL TEMPERTURE (ESN 249017-) (W/RE522687 & RE522688)	0420 - 4
3F12	SENSOR, LOADER BOOM KICKOUT	3166 - 4
1H6	SENSOR, MOISTURE(ESN -249016)	0420 - 2
2D11	SENSOR, OIL PRESSURE	1674 - 7
1F22	SENSOR, PICK-UP, MAGNETIC	0402 - 7
3F12	SENSOR, RETURN TO CARRY	3166 - 4
3F8	SENSOR, RETURN-TO-DIG (SER. NO. -589893)	3166 - 2
3F10	SENSOR, RETURN-TO-DIG (SER. NO. 589894-)	3166 - 3A
1E21	SENSOR, TRANSMISSION SPEED	0350 - 36
1E5	SENSOR, TRANSMISSION TEMPERATURE	0350 - 16
1I7	SENSOR,ENGINE SPEED CONTROL (SER. NO. 590076-)	0515 - 4
1I5	SENSOR,ENGINE SPEED CONTROL (SERIAL NO. -590067)	0515 - 2
1H23	SENSOR,RADIATOR COOLANT LEVEL	0511 - 2
1B14	SHAFT AND SPIRAL BEVEL GEAR, FRONT	0210 - 2
1B15	SHAFT AND SPIRAL BEVEL GEAR, FRONT	0210 - 3
1C13	SHAFT, FINAL DRIVE	0250 - 6
1E11	SHAFT, INPUT	0350 - 22
1E19	SHAFT,POWER TAKE-OFF	0350 - 32
1E23	SHAFT,TORQUE CONVERTER	0350 - 40
1E17	SHAFT,TRANSMISSION OUTPUT	0350 - 30
3B13	SHANKS,LOADER BUCKET	3102 - 4
2I20	SHIELDS, TRANSMISSION	1913 - 3
2D24	SHIFTER ASSEMBLY (SER. NO. -590067)	1674 - 24
3E13	SHIFTER ASSEMBLY TO JOYSTICK FNR CONVERSION KIT	3160 - 64
1H14	SHORT BLOCK GASKET KIT	0452 - 2
1G3	SHORT BLOCK KIT	0404 - 4
1H23	SHROUD,FAN	0511 - 2
2I18	SIDE SHIELDS, ENGINE	1910 - 4
1F7	SIGHT GAUGE, TRANSMISSION	0360 - 6
3D17	SINGLE LEVER CONTROLL MOUNTING PLATE AND HOSES (SER. NO. 590068-)	3160 - 44
3D15	SINGLE LEVER CONTROLLER (SERIAL NO. -590067)	3160 - 42
3D17	SINGLE LEVER CONTROLLER (SERIAL NO. 590068-)	3160 - 44
3D19	SINGLE LEVER CONTROLLER COMPONENTS (SER. NO. -590067)	3160 - 46
3D21	SINGLE LEVER CONTROLLER COMPONENTS (SER. NO. -590067)	3160 - 48
3D15	SINGLE LEVER CONTROLLER FITTINGS (SER. NO. -590067)	3160 - 42
3D17	SINGLE LEVER CONTROLLER FITTINGS (SER. NO. 590068-)	3160 - 44
3D15	SINGLE LEVER CONTROLLER MOUNTING PLATE AND HOSES (SER. NO. -590067)	3160 - 42
3D21	SINGLE LEVER CONTROLLER REPAIR KIT (CONTINUED)(SER. NO. -590067)	3160 - 48
3D19	SINGLE LEVER CONTROLLER REPAIR KIT (SER. NO. -590067)	3160 - 46
3E3	SINGLE LEVER CONTROLLER W/AUX FITTINGS (SER. NO. 590068-)	3160 - 54
3E3	SINGLE LEVER CONTROLLER W/AUX MOUNTING PLATE AND HOSES (SER. NO. 590068-)	3160 - 54
3E1	SINGLE LEVER CONTROLLER W/AUX MTG. PLATE AND HOSES (SER. NO. -590067)	3160 - 52
3E1	SINGLE LEVER CONTROLLER WITH AUX.(SERIAL NO. -590067)	3160 - 52
3E3	SINGLE LEVER CONTROLLER WITH AUX.(SERIAL NO. 590068-)	3160 - 54
3D19	SINGLE LEVER PILOT CONTROLLER LEVER (SER. NO. -590067)	3160 - 46
3D21	SINGLE LEVER PILOT CONTROLLER MOUNTING PLATE (CONTINUED)(SER. NO. -590067)	3160 - 48
3D3	SINGLE LEVER TO TWO LEVER CONVERSION KIT (SER. NO. 590068-)	3160 - 30
3E1	SINGLE-LEVER CONTROLLER WITH AUXILIARY FITTINGS (SER. NO. -590067)	3160 - 52
2H5	SLIDE LATCH KIT, SEAT	1821 - 3C
2H5	SLIDE PUCK KIT,SEAT	1821 - 3C
2H5	SLIDE,SEAT ASSEMBLY	1821 - 3C
2J24	SLOW MOVING VEHICLE EMBLEM	2008 - 2
2J24	SMV EMBLEM	2008 - 2
3D23	SOLENOID ASSEMBLY (SERIAL NO. 590068-)	3160 - 50
1J3	SOLENOID VALVE COMPONENTS, REVERSE FAN DRIVE	0567 - 12
1K18	SOLENOID VALVE LINES TO PARK BRAKE	1163 - 2
1K16	SOLENOID VALVE, PARK BRAKE	1162 - 2
1J1	SOLENOID VALVE, REVERSE FAN DRIVE (FACTORY INSTALLED)	0567 - 10
1I23	SOLENOID VALVE, REVERSE FAN DRIVE (FIELD INSTALLED)	0567 - 8
3E19	SOLENOID VALVE, RIDE CONTROL	3160 - 70
2K14	SOLENOID VALVE,HYDRAULIC OIL PRESSURE REGULATOR VALVE (SER. NO. -590067)	2160 - 14

ALPHABETICAL INDEX - CONTINUED

GRID		PAGE
3F1	SOLENOID, PIN DISCONNECT VALVE (SERIAL NO. - 590067)	3160 - 78
3D5	SOLENOID, TWO LEVER PILOT CONTROLLER	3160 - 32
1B8	SPACER, WHEEL	0110 - 8
2J12	SPEAKER, RADIO (SER. NO. -590067)	2001 - 2
2J14	SPEAKER, RADIO (SER.NO. 590068-)	2001 - 3A
1F22	SPEED SENSOR, ENGINE	0402 - 7
2E3	SPIN CONTROL PRESSURE TRANSDUCER	1674 - 36
2E3	SPIN CONTROL WIRING HARNESS	1674 - 36
1B14	SPIRAL BEVEL GEAR AND SHAFT, FRONT	0210 - 2
1B15	SPIRAL BEVEL GEAR AND SHAFT, FRONT	0210 - 3
2H11	SPRING KITS, SEAT (MECHANICAL SUSPENSION)	1821 - 8
2H7	SPRING SEAT SUSPENSION KIT (MECHANICAL SUSPENSION)	1821 - 4
1B24	STANDARD DIFFERENTIAL	0210 - 12
1B22	STANDARD DIFFERENTIAL CASE, NON-OSCILLATING, FRONT	0210 - 10
1B20	STANDARD DIFFERENTIAL CASE, REAR	0210 - 8
1H21	STARING AID FLUID	0505 - 6
1H21	STARING AID,COLD WEATHER	0505 - 6
1H21	START AID, ETHER	0505 - 6
1H10	STARTER (24V)	0422 - 2
1H10	STARTER SWITCH (24V)	0422 - 2
2K4	STEERING AND LOADER HYDRAULIC PUMP CONTROL VALVES	2160 - 4
2K6	STEERING AND LOADER HYDRAULIC PUMP REPAIR KITS	2160 - 6
1J12	STEERING COLUMN (SER. NO. -590067)	0962 - 2
1J14	STEERING COLUMN (SER. NO. 590068-)	0962 - 3A
2E1	STEERING COLUMN CLAMP AND COVER (SER. NO. 590068-)	1674 - 25A
1J18	STEERING COLUMN COVER	0962 - 6
1J12	STEERING COLUMN LINKAGE (SER. NO. -590067)	0962 - 2
1J14	STEERING COLUMN LINKAGE (SER. NO. 590068-)	0962 - 3A
1J12	STEERING COLUMN REPAIR KIT (SER. NO. -590067)	0962 - 2
1J14	STEERING COLUMN REPAIR KIT (SER. NO. 590068-)	0962 - 3A
1J16	STEERING COLUMN, LOWER	0962 - 4
1K1	STEERING CYLINDER	0965 - 10
1J10	STEERING CYLINDER FITTINGS	0960 - 14
1J24	STEERING CYLINDER HYDRAULIC HOSES	0963 - 2
1J10	STEERING CYLINDER LUBRICATION HOSES	0960 - 14
3B17	STEERING CYLINDER PIN	3140 - 2
1K1	STEERING CYLINDER REPAIR KIT	0965 - 10
2K2	STEERING HYDRAULIC PUMP	2160 - 2
1J20	STEERING VALVE	0962 - 8
1J16	STEERING VALVE BRACKET	0962 - 4
1J20	STEERING VALVE FITTINGS	0962 - 8
1J22	STEERING VALVE SEAL KIT	0962 - 10
1J12	STEERING WHEEL (SER. NO. -590067)	0962 - 2
1J14	STEERING WHEEL (SER. NO. 590068-)	0962 - 3A
1J6	STEERING, SECONDARY (SER. NO. -590067)	0930 - 2
1J8	STEERING, SECONDARY (SER. NO. 590068-)	0930 - 4
2H17	STEP HANDRAILS	1822 - 4
2H19	STEP, ENGINE COMPARTMENT	1822 - 5A
2H15	STEPS,OPERATOR ACCESS PLATFORM	1822 - 2
2D6	STOP LAMP	1673 - 8
2D6	STOP LIGHT	1673 - 8
1C7	STOP, AXLE (9 DEGREE)	0240 - 2
1I17	STRAINER, FUEL FILL	0560 - 4
2C15	STRAP, GROUND	1671 - 2
1G17	STRAPS, ENGINE LIFT	0409 - 4
2J23	SUN VISOR	2007 - 1
1I3	SUPPORT,FAN BLADE HUB	0512 - 2
2J3	SUPPORT,FRONT FENDER (SERIAL NO. -588861)	1927 - 4
2J5	SUPPORT,FRONT FENDER (CHARCOAL) (SERIAL NO. XXXXXX-)	1927 - 5A
2J7	SUPPORT,FRONT FENDER (FULL COVERAGE) (GRAY)(SERIAL NO. 588862-)	1927 - 5C
1C5	SUPPORTS, DIFFERERNTIAL	0210 - 18
1D13	SUPPORTS, MOUNTING, TRANSMISSION	0342 - 2
2H13	SUSPENSION SEAT (AIR SUSPENSION)	1821 - 10
2H9	SUSPENSION SEAT KITS (MECHANICAL SUPENSION)	1821 - 6
2H7	SUSPENSION SEAT KITS (MECHANICAL SUSPENSION)	1821 - 4
2H11	SUSPENSION SEAT KITS (MECHANICAL SUSPENSION)	1821 - 8
2H7	SUSPENSION SEAT SPRING KIT (MECHANICAL SUSPENSION)	1821 - 4
2H1	SUSPENSION, SEAT	1821 - 2
2G11	SWITCH WIPER	1810 - 24
2E2	SWITCH, A/C AND HEATER BLOWER	1674 - 35
2H23	SWITCH, A/C AND HEATER THERMOSTAT	1830 - 3A
2D9	SWITCH, AIR CONDITIONING SHUTOFF (SER. NO. -590067)	1674 - 1
2D9	SWITCH, AUTOMATIC TRANSMISSION (SER. NO. -590067)	1674 - 1
1K5	SWITCH, BRAKE VALVE	1062 - 2
2D9	SWITCH, CAB WORK LIGHT (SER. NO. -590067)	1674 - 1
2D9	SWITCH, CLUTCH CUT-OFF (SER. NO. -590067)	1674 - 1
1C21	SWITCH, DIFFERENTIAL LOCK	0260 - 6
2D19	SWITCH, DOMELIGHT, DOOR ACTIVATED	1674 - 11
2D5	SWITCH, DOOR LIGHT	1673 - 5
2D9	SWITCH, DRIVE LIGHT (SER. NO. -590067)	1674 - 1
2D9	SWITCH, FOUR-WAY FLASHER (SER. NO. -590067)	1674 - 1
2D9	SWITCH, FRONT WINDOW DEFROST (SER. NO. -590067)	1674 - 1
2H23	SWITCH, HEATER AND A/C BLOWER MOTOR	1830 - 3A
1J12	SWITCH, HORN (SER. NO. -590067)	0962 - 2
1J14	SWITCH, HORN (SER. NO. 590068-)	0962 - 3A
2D9	SWITCH, HYDRAULIC PILOT ENABLE/BOOM DOWN (SER. NO. -590067)	1674 - 1
2D14	SWITCH, IGNITION (S.N. 590068-)	1674 - 9A
2D24	SWITCH, IGNITION (SER. NO. -590067)	1674 - 24
3D5	SWITCH, KICKDOWN, TWO LEVER PILOT CONTROLLER	3160 - 32
2D24	SWITCH, PARK BRAKE (SER. NO. -590067)	1674 - 24
2E1	SWITCH, PARK BRAKE (SER. NO. 590068-)	1674 - 25A
2D9	SWITCH, PARK BRAKE RELEASE (SER. NO. -590067)	1674 - 1

ALPHABETICAL INDEX - CONTINUED

GRID		PAGE
2D9	SWITCH, PIN DISCONNECT (SER. NO. -590067)	1674 - 1
3E20	SWITCH, QUICK COUPLER PIN DISCONNECT (SER. NO. -590067)	3160 - 72
3E22	SWITCH, QUICK COUPLER PIN DISCONNECT (SER. NO. 590068-)	3160 - 74
2D9	SWITCH, REAR WINDOW DEFROST (SER. NO. -590067)	1674 - 1
2D9	SWITCH, RETURN TO CARRY (SER. NO. -590067)	1674 - 1
2D9	SWITCH, RIDE CONTROL (SER. NO. -590067)	1674 - 1
2D9	SWITCH, ROTARY BEACON (SER. NO. -590067)	1674 - 1
1J6	SWITCH, SECONDARY STEERING (SER. NO. -590067)	0930 - 2
1J8	SWITCH, SECONDARY STEERING (SER. NO. 590068-)	0930 - 4
2E3	SWITCH, SPIN CONTROL	1674 - 36
2D9	SWITCH, START AID (SER. NO. -590067)	1674 - 1
1H10	SWITCH, STARTER (24V)	0422 - 2
1E8	SWITCH, TRANSMISSION OIL FILTER RESTRICTION INDICATOR	0350 - 19
2C16	SWITCH,BATTERY DISCONNECT	1671 - 3
1H21	SWITCH,COLD WEATHER STARTING AID	0505 - 6
1F9	SWITCH,TRANSMISSION OIL FILTER RESTRICTION INDICATOR	0360 - 8

T

2E9	T.C.U. (SER. NO. -590075)	1674 - 62
1I15	TANK, FUEL	0560 - 2
2F9	TANK, WINDOW WASHER	1810 - 6
1H23	TANK,RADIATOR OVERFLOW	0511 - 2
3B13	TEETH, LOADER BUCKET	3102 - 4
2H21	TEMPERATURE CONTROL	1830 - 2
2K8	TEMPERATURE SENDER, HYDRAULIC	2160 - 8
2D11	TEMPERATURE SENSOR, COOLANT	1674 - 7
1H3	TEMPERATURE SENSOR, ENGINE	0418 - 2
1E5	TEMPERATURE SENSOR, TRANSMISSION	0350 - 16
2C17	TENSIONER,BELT (55 AMP)	1672 - 2
2C21	TENSIONER,BELT (80 AMP)	1672 - 6
2C3	TEST KIT, FLUID ANALYSIS PRODUCTS (COOLSCAN)	1369 - 6
2C4	TEST KIT, FLUID ANALYSIS PRODUCTS (DIESELSCAN)	1369 - 7
2C1	TEST KIT, FLUID ANALYSIS PRODUCTS (OILSCAN)	1369 - 4
1F5	THERMAL BY-PASS VALVE COMPONENTS, TRANSMISSION	0360 - 3A
1F3	THERMAL BYPASS VALVE LINES, TRANSMISSION	0360 - 2
1F3	THERMAL BYPASS VALVE, TRANSMISSION	0360 - 2
1H3	THERMOSTAT	0418 - 2
1H3	THERMOSTAT HOUSING	0418 - 2
2H23	THERMOSTAT, A/C AND HEATER SWITCH	1830 - 3A
3C21	THREE SPOOL CONTROL VALVE HOSE	3160 - 24
3C21	THREE SPOOL CONTROL VALVE PLUMBING MOUNTING BRACKET	3160 - 24
1F21	TIMING GEAR COVER	0402 - 6
1F21	TIMING GEAR COVER GASKET	0402 - 6
2B22	TORQ-GARD ENGINE OIL	1369 - 1
1E7	TORQUE CONVERTER	0350 - 18
1E23	TORQUE CONVERTER DRIVE SHAFT	0350 - 40
1E23	TORQUE CONVERTER HOUSING	0350 - 40
1E23	TORQUE CONVERTER HOUSING COVER	0350 - 40
2E3	TRANSDUCER, SPIN CONTROL PRESSURE	1674 - 36
1D15	TRANSMISSION	0350 - 2
2E16	TRANSMISSION BOTTOM GUARD	1746 - 2
2D14	TRANSMISSION CONTROL UNIT (S.N. 590068-)	1674 - 9A
2E9	TRANSMISSION CONTROL UNIT (SER. NO. -590075)	1674 - 62
1E5	TRANSMISSION CONTROL VALVE	0350 - 16
1E8	TRANSMISSION CONTROL VALVE MANIFOLD	0350 - 19
1E16	TRANSMISSION COVER	0350 - 29
1F3	TRANSMISSION EXTERNAL OIL LINES	0360 - 2
1F9	TRANSMISSION FILTER HEAD	0360 - 8
1D15	TRANSMISSION FITTINGS	0350 - 2
1E16	TRANSMISSION GASKET	0350 - 29
1E5	TRANSMISSION GEARSHIFT SYSTEM	0350 - 16
1E13	TRANSMISSION INTERNAL OIL LINES	0350 - 26
1F3	TRANSMISSION LINES, THERMAL BYPASS VALVE	0360 - 2
1D13	TRANSMISSION MOUNTING SUPPORTS	0342 - 2
1H23	TRANSMISSION OIL COOLER	0511 - 2
1F7	TRANSMISSION OIL FILL	0360 - 6
1F9	TRANSMISSION OIL FILTER	0360 - 8
1E8	TRANSMISSION OIL FILTER RESTRICTION INDICATOR SWITCH	0350 - 19
1F9	TRANSMISSION OIL FILTER RESTRICTION INDICATOR SWITCH	0360 - 8
1E13	TRANSMISSION OIL LINES,INTERNAL	0350 - 26
1E15	TRANSMISSION PUMP	0350 - 28
2I20	TRANSMISSION SHIELDS	1913 - 3
1F7	TRANSMISSION SIGHT GAUGE	0360 - 6
1E21	TRANSMISSION SPEED SENSOR	0350 - 36
1E5	TRANSMISSION TEMPERATURE SENSOR	0350 - 16
1F3	TRANSMISSION THERMAL BYPASS VALVE	0360 - 2
1F5	TRANSMISSION THERMAL BYPASS VALVE COMPONENTS	0360 - 3A
2D20	TRANSMISSION WIRING HARNESS (SER. NO. -590067)	1674 - 22
2D22	TRANSMISSION WIRING HARNESS (SER. NO. 590068-)	1674 - 23A
1D11	TRANSMISSION-TO-DIFFERENTIALS AND ENGINE DRIVE-SHAFTS (WITH/WITHOUT DISCONNECT)	0325 - 2
2J22	TRAY, ASH	2006 - 2
1H1	TUBE SEAL	0417 - 2
1G8	TUBE, ENGINE OIL DIPSTICK	0407 - 3
1H4	TUBES, OIL COOLER	0419 - 1
1H5	TUBES, OIL COOLER BYPASS	0419 - 2
1G24	TURBOCHARGER	0416 - 2
1G24	TURBOCHARGER DRAIN LINE ADAPTER	0416 - 2
1G24	TURBOCHARGER GASKET	0416 - 2
1G24	TURBOCHARGER OIL LINES	0416 - 2
2D3	TURN AND MARKER LIGHT	1673 - 2
2D6	TURN LAMP	1673 - 8
2D6	TURN LIGHT	1673 - 8
2E4	TURN SIGNAL FLASHER RELAY (S.N. -590067)	1674 - 37
3D1	TWO LEVER CONTROLLER (SERIAL NO. - 590067)	3160 - 28
3D3	TWO LEVER CONTROLLER (SERIAL NO. 590068-	3160 - 30
3D1	TWO LEVER CONTROLLER FITTINGS (SER. NO. -590067)	3160 - 28
3D3	TWO LEVER CONTROLLER FITTINGS (SER. NO. 590068-)	3160 - 30
3D7	TWO LEVER CONTROLLER MOUNTING PLATE AND HOSES (SER. NO. -590067)	3160 - 34
3D3	TWO LEVER CONTROLLER MOUNTING PLATE AND HOSES (SER. NO. 590068-)	3160 - 30

ALPHABETICAL INDEX - CONTINUED

GRID		PAGE
3D1	TWO LEVER CONTROLLER MOUTING PLATE AND HOSES (SER. NO. -590067)	3160 - 28
3D7	TWO LEVER CONTROLLER WITH AUX. (SERIAL NO. -590067)	3160 - 34
3D7	TWO LEVER CONTROLLER WITH AUX. FITTINGS (SER. NO. -590067)	3160 - 34
3D9	TWO LEVER CONTROLLER WITH AUX.(SERIAL NO. 590068-)	3160 - 36
3D5	TWO LEVER PILOT CONTROLLER	3160 - 32
3D5	TWO LEVER PILOT CONTROLLER BOOT	3160 - 32
3D5	TWO LEVER PILOT CONTROLLER COMPONENTS	3160 - 32
3D5	TWO LEVER PILOT CONTROLLER SOLENOID	3160 - 32
3D9	TWO LEVER PILOT CONTROLLER WITH AUX. AND HYDRAULIC HOSES (SER. NO. 590068-)	3160 - 36
3D11	TWO LEVER PILOT CONTROLLER WITH DUAL AUX. CONTROLLERS (SER.NO. -590067)	3160 - 38
3D11	TWO LEVER PILOT CONTROLLER WITH DUAL AUX (SER. NO. -590067)	3160 - 38
3D17	TWO LEVER TO SINGLE LEVER CONVERSION KIT (SER. NO. 590068-)	3160 - 44
3E3	TWO LEVER WITH AUX. TO JOYSTICK WITH AUX. CONVERSION KIT (SER. NO. 590068-)	3160 - 54
3C19	TWO SPOOL CONTROL VALVE HOSE	3160 - 22
3C19	TWO SPOOL CONTROL VALVE PLUMBING MOUNTING BRACKET	3160 - 22

U

3D23	U-JOINT ASSEMBLY (SERIAL NO. 590068-)	3160 - 50

V

3C13	VALVE COMPONENTS, AUXILIARY SECTION	3160 - 12
2K14	VALVE COMPONENTS, HYDRAULIC OIL PRESSURE REGULATOR (SER. NO. -590067)	2160 - 14
3F3	VALVE COMPONENTS, PIN DISCONNECT	3160 - 80
3F1	VALVE COMPONENTS, PIN DISCONNECT (SERIAL NO. - 590067)	3160 - 78
1F5	VALVE COMPONENTS, TRANSMISSION THERMAL BYPASS	0360 - 3A
1F17	VALVE COVER	0402 - 2
1F3	VALVE LINES, TRANSMISSION THERMAL BYPASS	0360 - 2
1E8	VALVE MANIFOLD, TRANSMISSION CONTROL	0350 - 19
3C11	VALVE SECTION,AUXILIARY	3160 - 10
3C11	VALVE SECTION,BUCKET	3160 - 10
1B4	VALVE STEM, WHEEL RIM (FIVE PIECE) (25 X 17) (25 X 19.5)	0110 - 4
1B2	VALVE STEM, WHEEL RIM (THREE PIECE RIM) (25 X 22)	0110 - 2
3C13	VALVE, AUXILIARY	3160 - 12
3E24	VALVE, AXLE DISCONNECT (SERIAL NO. 590068-)	3160 - 76
3C11	VALVE, BOOM SECTION	3160 - 10
1K5	VALVE, BRAKE	1062 - 2
3C17	VALVE, FIFTH FUNCTION SECTION	3160 - 20
1G19	VALVE, FUEL INJECTION PUMP CHECK	0413 - 2
1G21	VALVE, FUEL INJECTION PUMP CHECK	0413 - 4
1G19	VALVE, FUEL INJECTION PUMP FLOW LIMITER	0413 - 2
1G21	VALVE, FUEL INJECTION PUMP FLOW LIMITER	0413 - 4
1G19	VALVE, FUEL INJECTION PUMP OVERFLOW	0413 - 2
1G21	VALVE, FUEL INJECTION PUMP OVERFLOW	0413 - 4
1G19	VALVE, FUEL INJECTION PUMP PRESSURE LIMITER	0413 - 2
1G21	VALVE, FUEL INJECTION PUMP PRESSURE LIMITER	0413 - 4
3C9	VALVE, INLET	3160 - 8
3C9	VALVE, INLET SECTION WITH RELIEF VALVE	3160 - 8
3C3	VALVE, LOADER CONTROL (2-SPOOL)	3160 - 2
3C5	VALVE, LOADER CONTROL (3-SPOOL)	3160 - 4
3C7	VALVE, LOADER CONTROL (4-SPOOL)	3160 - 6
1H4	VALVE, OIL COOLER BYPASS	0419 - 1
1G11	VALVE, OIL FILTER BYPASS	0407 - 6
1G11	VALVE, OIL PRESSURE REGULATING	0407 - 6
3E24	VALVE, PIN DISCONNECT (SERIAL NO. 590068-)	3160 - 76
1H6	VALVE, PNEUMATIC PRESSURE (ESN -249016)	0420 - 2
3E20	VALVE, QUICK COUPLER PIN DISCONNECT (SER. NO. -590067)	3160 - 72
3E24	VALVE, QUICK COUPLER PIN DISCONNECT (SERIAL NO. 590068-)	3160 - 76
3D23	VALVE, REGULATING (SERIAL NO. 590068-)	3160 - 50
3E19	VALVE, RIDE CONTROL	3160 - 70
1K16	VALVE, SOLENOID, PARK BRAKE	1162 - 2
1I23	VALVE, SOLENOID, REVERSE FAN DRIVE (FIELD INSTALLED)	0567 - 8
1J20	VALVE, STEERING	0962 - 8
1J16	VALVE, STEERING, BRACKET	0962 - 4
1J22	VALVE, STEERING, KIT	0962 - 10
1F3	VALVE, TRANSMISSION THERMAL BYPASS	0360 - 2
1E9	VALVE,CONVERTER RELIEF	0350 - 20
2I14	VALVE,HEATER SHUT-OFF	1830 - 16
3F1	VALVE,PIN DISCONNECT (SERIAL NO. - 590067)	3160 - 78
3E17	VALVE,RIDE CONTROL	3160 - 68
2C9	VALVES, ENVIRONMENTAL DRAIN	1369 - 12
2E5	VEHICLE ELECTRICAL CENTER (S.N. 590068-)	1674 - 38
1G14	VENTILATING SYSTEM	0408 - 1
1G14	VENTILATOR OUTLET HOSE	0408 - 1
2J23	VISOR, SUN	2007 - 1
2C17	VOLTAGE REGULATOR (55 AMP)	1672 - 2

W

3B15	WASTE HANDLER BUCKET	3102 - 6
3B15	WASTE HANDLER BUCKET CUTTING EDGE	3102 - 6
3B23	WASTE HANDLER LINKAGE CENTER PIVOT PIN	3140 - 7A
3B23	WASTE HANDLER LOADER BOOM	3140 - 7A
1H3	WATER MANIFOLD GASKET	0418 - 2
1H3	WATER MANIFOLD, FRONT	0418 - 2
1H1	WATER PUMP	0417 - 2
1H1	WATER PUMP GASKET	0417 - 2
1H1	WATER PUMP O-RING	0417 - 2
1H1	WATER PUMP OIL SEAL	0417 - 2
1H1	WATER PUMP RETAINING RING	0417 - 2
1H1	WATER PUMP SEAL KIT	0417 - 2
1H3	WATER TEMPERATURE SENSOR, ENGINE	0418 - 2
1B4	WHEEL RIM (FIVE PIECE RIM) (25 X 17) (25 X 19.5)	0110 - 4
1B4	WHEEL RIM ASSEMBLY (FIVE PIECE RIM) (25 X 17) (25 X 19.5)	0110 - 4
1B2	WHEEL RIM ASSSEMBLY (THREE PIECE RIM) (25 X 22)	0110 - 2
1B2	WHEEL RIM VALVE STEM (THREE PIECE RIM) (25 X 22)	0110 - 2
1B4	WHEEL RIM, HEAVY DUTY (FIVE PIECE) (25 X 17) (25 X 19.5)	0110 - 4

ALPHABETICAL INDEX - CONTINUED

GRID		PAGE
1B6	WHEEL RIM, LOGGER (ONE PIECE) (28 X 26)	0110 - 6
1B8	WHEEL SPACER	0110 - 8
1J12	WHEEL, STEERING (SER. NO. -590067)	0962 - 2
1J14	WHEEL, STEERING (SER. NO. 590068-)	0962 - 3A
2F9	WINDOW WASHER PUMP	1810 - 6
2F9	WINDOW WASHER TANK	1810 - 6
2F9	WINDOW WASHER TANK CAP	1810 - 6
2F9	WINDOW WASHER, FRONT AND REAR	1810 - 6
2F17	WINDOWS	1810 - 14
2G3	WINDSHIELD WIPER (FRONT)	1810 - 20
2G1	WINDSHIELD WIPER, REAR	1810 - 18
2G3	WIPER ARM (FRONT)	1810 - 20
2G1	WIPER BLADE	1810 - 18
2G3	WIPER BLADE (FRONT)	1810 - 20
2G11	WIPER MOUNTING BRACKETS	1810 - 24
2G11	WIPER SWITCH	1810 - 24
1J6	WIRE HARNESS,SECONDARY STEERING (SER. NO. -590067)	0930 - 2
1J8	WIRE HARNESS,SECONDARY STEERING (SER. NO. 590068-)	0930 - 4
2D12	WIRING HARNESS, CAB (S.N. -590067)	1674 - 8
2D14	WIRING HARNESS, CAB (S.N. 590068-)	1674 - 9A
2D12	WIRING HARNESS, CAB ROOF (S.N. -590067)	1674 - 8
2D20	WIRING HARNESS, ENGINE (SER. NO. -590067)	1674 - 22
2D22	WIRING HARNESS, ENGINE (SER. NO. 590068-)	1674 - 23A
2D22	WIRING HARNESS, ENGINE FRAME (SER. NO. 590068-)	1674 - 23A
2D24	WIRING HARNESS, FRONT CONSOLE (SER. NO. -590067)	1674 - 24
2E1	WIRING HARNESS, FRONT CONSOLE (SER. NO. 590068-)	1674 - 25A
2D12	WIRING HARNESS, LOAD CENTER (S.N. -590067)	1674 - 8
2D14	WIRING HARNESS, LOAD CENTER (S.N. 590068-)	1674 - 9A
2D20	WIRING HARNESS, LOADER FRAME (SER. NO. -590067)	1674 - 22
2D22	WIRING HARNESS, LOADER FRAME (SER. NO. 590068-)	1674 - 23A
2D20	WIRING HARNESS, MAIN (SER. NO. -590067)	1674 - 22
2D22	WIRING HARNESS, MAIN (SER. NO. 590068-)	1674 - 23A
2D20	WIRING HARNESS, REAR FRAME (SER. NO. -590067)	1674 - 22
2D22	WIRING HARNESS, REAR FRAME (SER. NO. 590068-)	1674 - 23A
2E3	WIRING HARNESS, SPIN CONTROL	1674 - 36
2D20	WIRING HARNESS, TRANSMISSION (SER. NO. -590067)	1674 - 22
2D22	WIRING HARNESS, TRANSMISSION (SER. NO. 590068-)	1674 - 23A
2D20	WIRING HARNESS,ENGINE FRAME (SER. NO. -590067)	1674 - 22
2E2	WIRING, A/C AND HEATER BLOWER	1674 - 35
2E2	WIRING, HVAC	1674 - 35
2D8	WORK LAMP, FRONT AND REAR	1673 - 10
2G23	WRIST ARM REST (SER. NO. 590068-)	1816 - 3A
2G21	WRIST ARM REST (USE ONLY WITH TWO-LEVER CONTROLLERS)(SER. NO. -590067)	1816 - 2

Y

1B13	YOKE, INPUT	0210 - 1

MEMORANDA

WHEEL RIM ASSEMBLY (25 X 22)
(THREE PIECE)

T195552 -UN-21OCT03

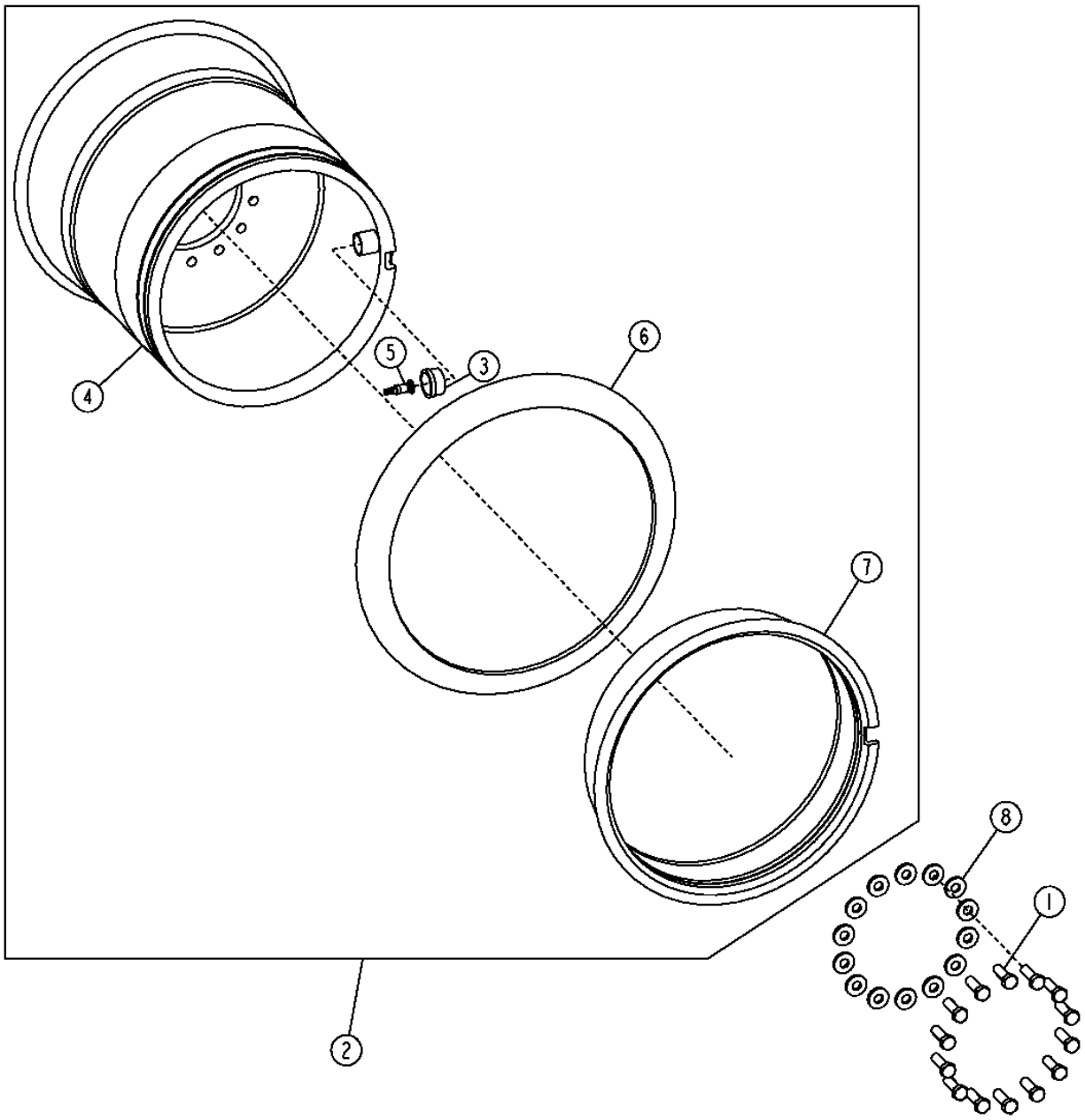

T195552

WHEEL RIM ASSEMBLY (25 X 22)
(THREE PIECE)

KEY	PART NO.	PART NAME	QTY	SERIAL NO.	REMARKS
1	19M8224	CAP SCREW	14		M20 X 60
2	AT300679	WHEEL	1		
3	15H710	FITTING	1		1-1/2"
4	AT300681	RIM	1		(635MM X 559MM) (25 X 22 RIM) (25.5 INCH WIDE TIRE)
5	AT67275	TIRE VALVE STEM	1		
6	R29477	WHEEL RING	1		
7	U43961	WHEEL RING	1		
8	T151797	WASHER	14		0.812" X 1-7/8" X 0.245"

WHEEL RIM ASSEMBLY
(FIVE PIECE)

T204221 -UN-04NOV04

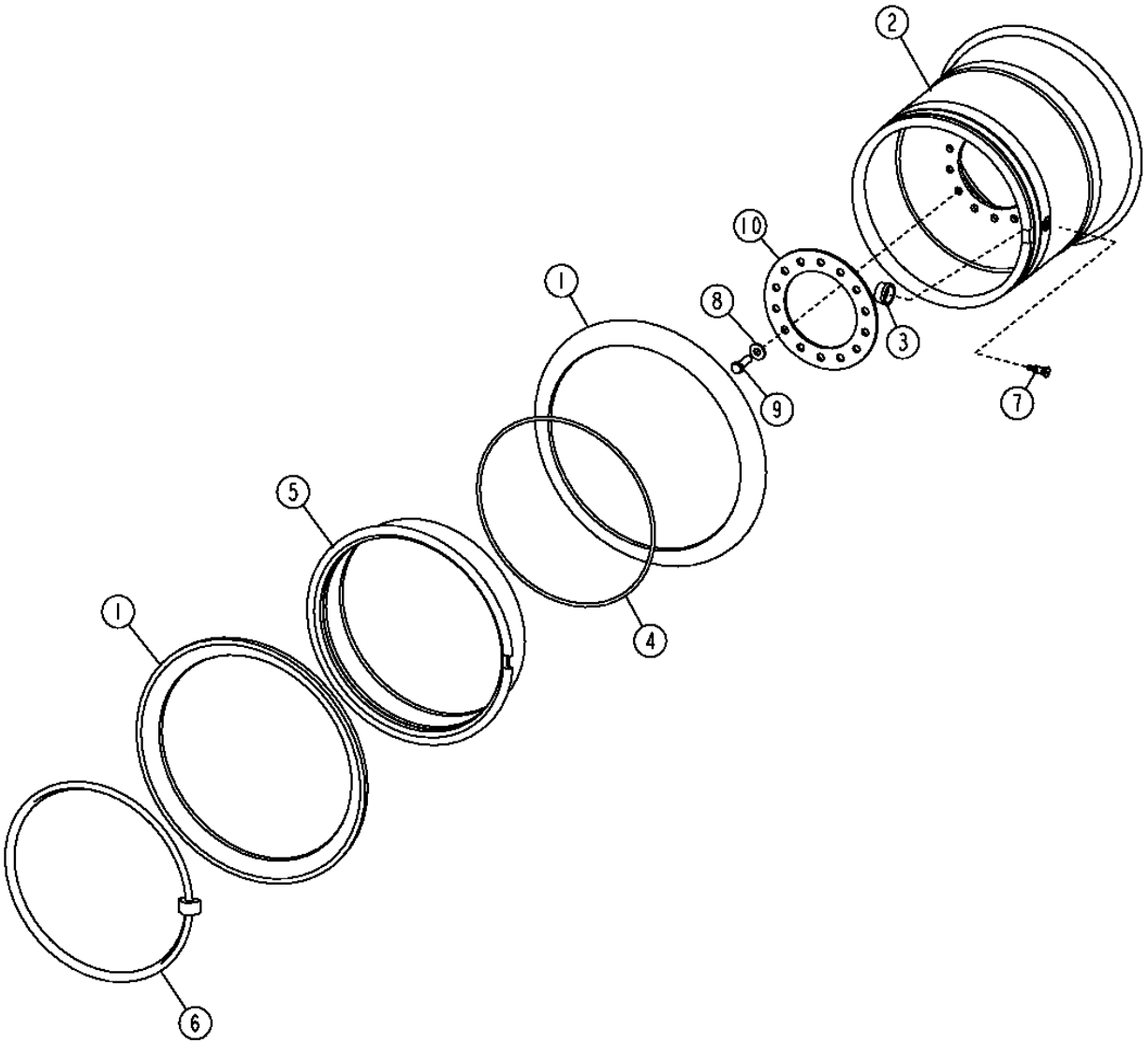

T204221

WHEEL RIM ASSEMBLY
(FIVE PIECE)

KEY	PART NO.	PART NAME	QTY	SERIAL NO.	REMARKS
1	T174997	RING	2		(USE WITH 25"X17"X2.0 MP RIM)
	R29477	WHEEL RING	2		(USE WITH 25"X19.5"X2.5 MP RIM)
2	AT219855	WHEEL	1		(25"X17"X2.0 MP RIM) (20.5 INCH WIDE TIRE)
	AT225170	WHEEL	1		(25"X19.5"X2.5 MP RIM) (23.5 INCH WIDE TIRE) (HEAVY DUTY) (SUB FOR AT208156)
	AT103559	WHEEL	1		26XDW25A RIM YELLOW ENAMEL (29.5 INCH WIDE TIRE)
	AT300679	WHEEL	1		(25"X22"X2.5 MP RIM)
3	15H710	FITTING	1		
4	R29480	O-RING	1		
5	U43961	WHEEL RING	1		(USE WITH 25"X17"X2.0 MP RIM AND 25"X19" X2.5" MP RIM)
6	R29479	WHEEL RING	1		
7	AT25226	TIRE VALVE STEM	1		(USE WITH 25"X17"X2.0 MP RIM)
	AT67275	TIRE VALVE STEM	1		(USE WITH 25"X19.5"X2.5 MP RIM)
8	T151797	WASHER	56		
9	19M8224	CAP SCREW	56		M20 X 60
10	T213146	RING	1		(SUB FOR T181909)

LOGGER RIM ASSEMBLY (28 X 26)
(ONE PIECE)

T195554 -UN-16OCT03

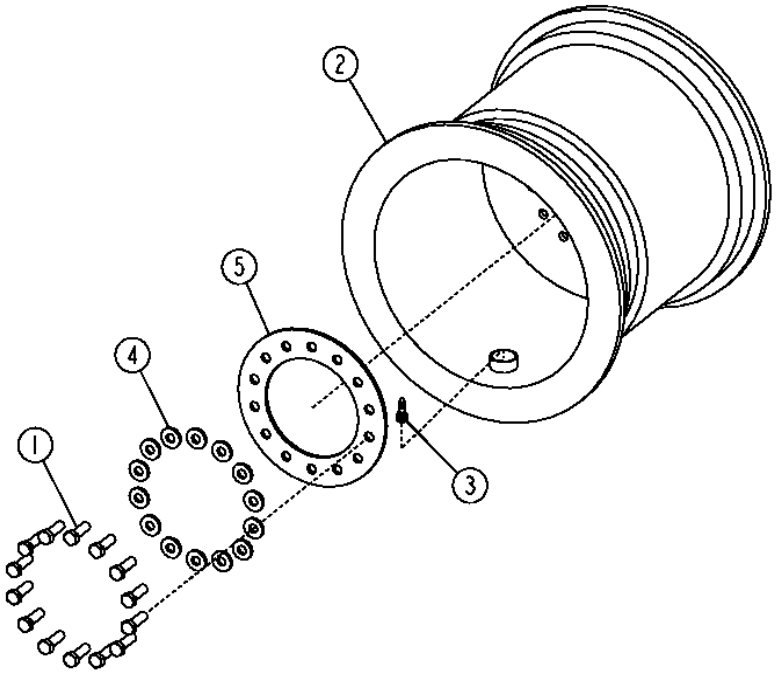

TI95554

LOGGER RIM ASSEMBLY (28 X 26)
(ONE PIECE)

KEY	PART NO.	PART NAME	QTY	SERIAL NO.	REMARKS
1	19M8224	CAP SCREW	14		M20 X 60
2	AT103559	WHEEL	1		(711MM X 660MM) (28 X 26 INCH RIM) (30.5 INCH WIDE TIRE)
3	AT25226	TIRE VALVE STEM	1		
4	T151797	WASHER	14		0.812" X 1-7/8" X 0.245"
5	T213146	RING	1		(SUB FOR T181909)

WHEEL SPACER

TP60706 -UN-06APR99

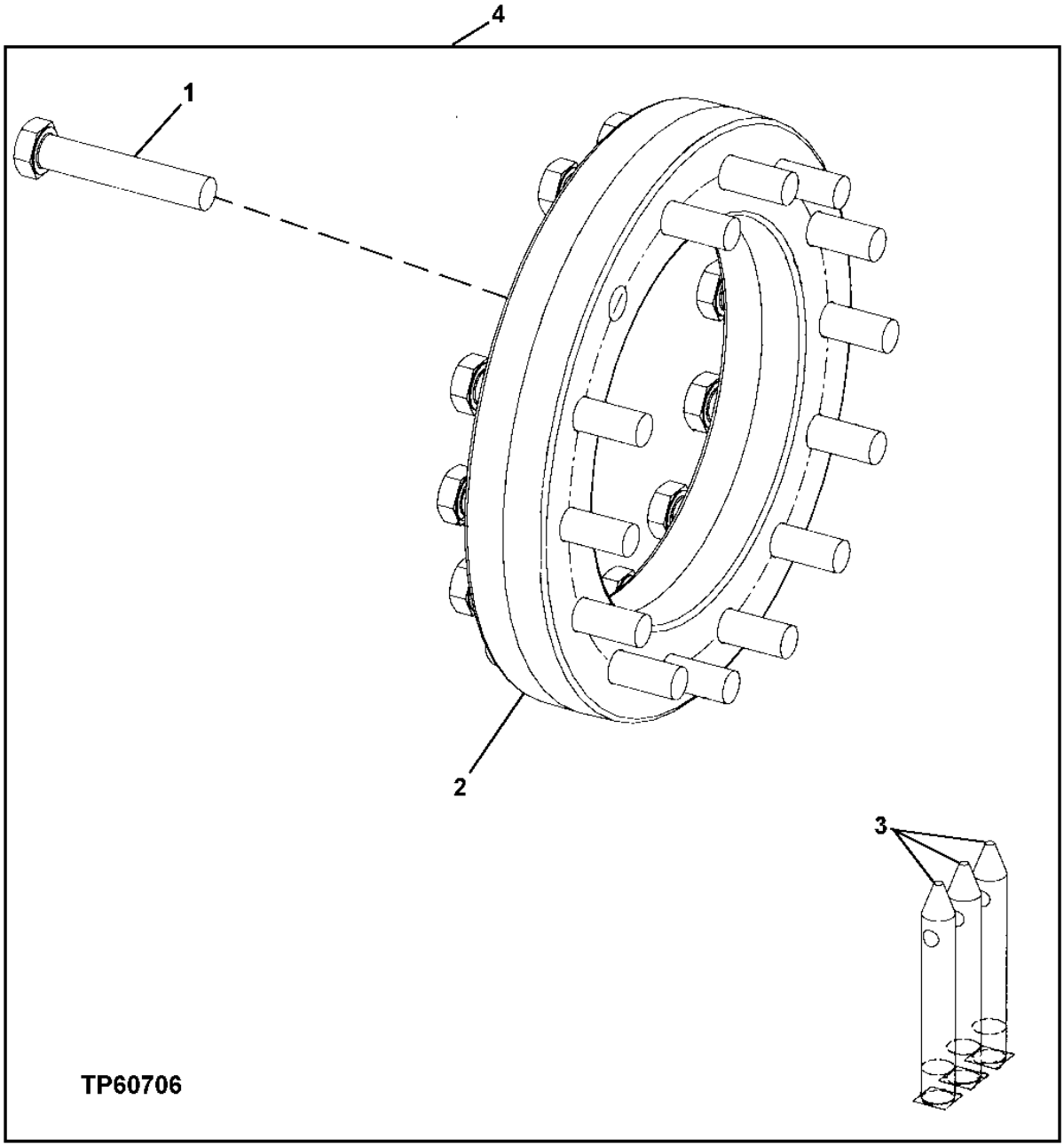

WHEEL SPACER

KEY	PART NO.	PART NAME	QTY	SERIAL NO.	REMARKS
1	19M7969	CAP SCREW	56		M20 X 110
2	T66862	WHEEL	4		
3	T176455	STUD	3		
4	.....	SPACER	1		WHEEL (AT220872 NO LONGER AVAILABLE SUB COMPONENTS)

AXLES

RE029885 -UN-14AUG98

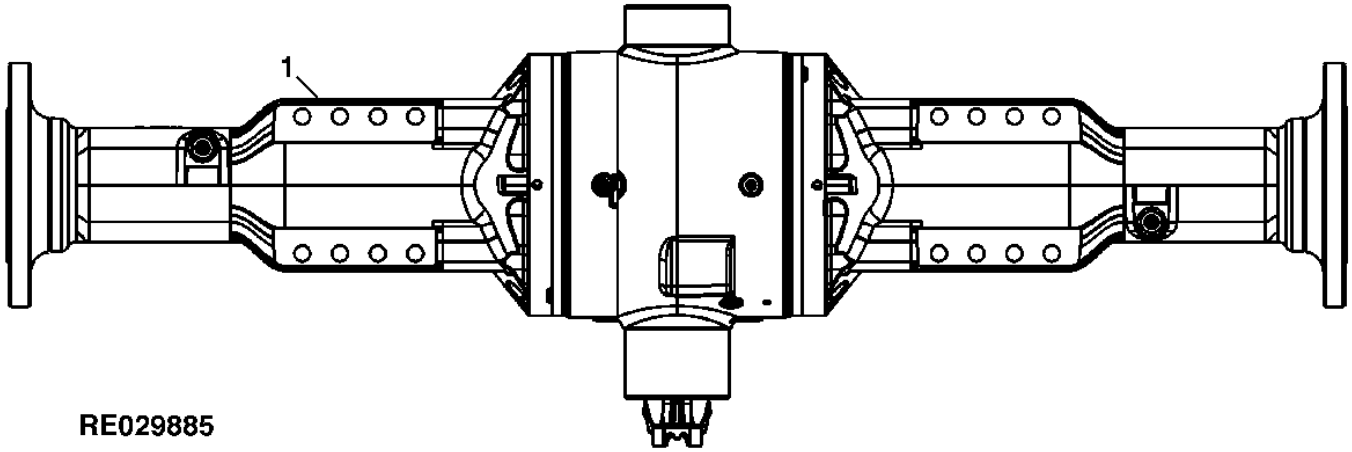

KEY	PART NO.	PART NAME	QTY	AXLE SERIAL NO.	REMARKS
1	**RE160302**	**AXLE WITH DIFFERENTIAL**	**1**		**(HYD. DIFF.-LOCK) (FRONT) (CONVENIENCE ASSEMBLY)**
	RE160305	**AXLE WITH DIFFERENTIAL**	**1**		**(HYD. DIFF.-LOCK) (REAR) (CONVENIENCE ASSEMBLY)**
	RE160303	**AXLE WITH DIFFERENTIAL**	**1**		**(LMTD. SLIP DIFF.) (FRONT) (CONVENIENCE ASSEMBLY)**
	RE160306	**AXLE WITH DIFFERENTIAL**	**1**		**(LMTD. SLIP DIFF.) (REAR) (CONVENIENCE ASSEMBLY)**
	RE160301	**AXLE WITH DIFFERENTIAL**	**1**		**(STD. DIFF.) (FRONT) (CONVENIENCE ASSEMBLY)**
	RE160304	**AXLE WITH DIFFERENTIAL**	**1**		**(STD. DIFF.) (REAR) (CONVENIENCE ASSEMBLY)**

FRONT AND REAR INPUT YOKE

(RE68114)
YZ3909 -UN-09JAN03

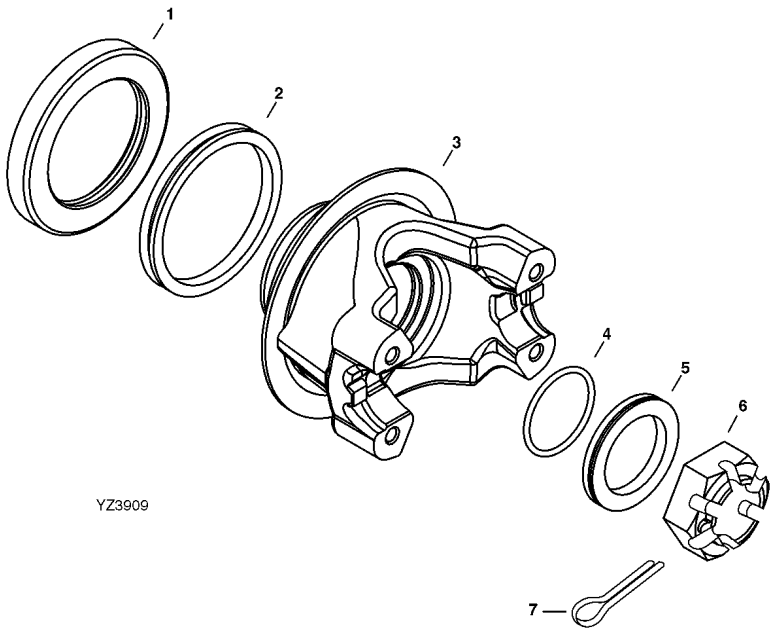

KEY	PART NO.	PART NAME	QTY	AXLE SERIAL NO.	REMARKS
1	RE45315	SEAL KIT	1		(INCLUDES RE33887, R100500, RE39955 AND R72781)
2	R100500	SEAL	1		
3	RE69868	UNIVERSAL JOINT YOKE	1		(MARKED R133686)
4	A4540R	O-RING	1		
5	R48733	WASHER	AR		
	R48734	WASHER	AR		
	R48735	WASHER	AR		
6	R48776	NUT	1		(SUB FOR R151933)
7	11M7032	COTTER PIN	1		

REAR SPIRAL BEVEL INPUT PINION AND RING GEAR SET

(RE68112)
RE027760 -UN-03APR97

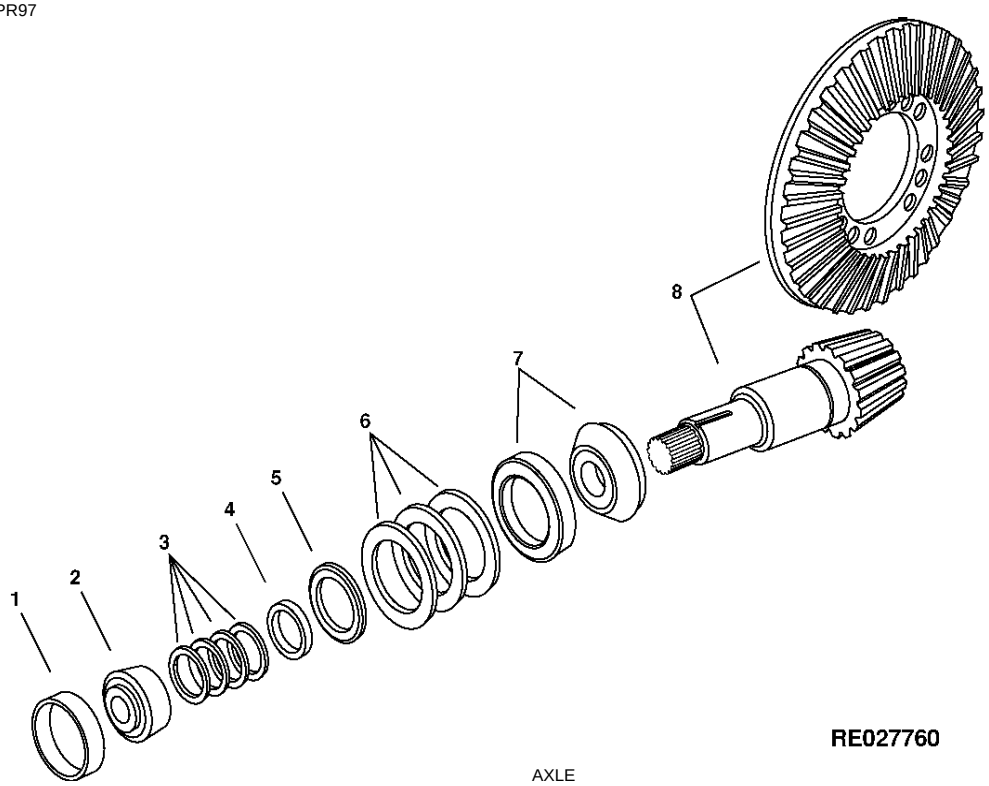

RE027760

KEY	PART NO.	PART NAME	QTY	AXLE SERIAL NO.	REMARKS
1	JD8255	BEARING CUP	1		
2	JD9078	BEARING CONE	1		
3	R51196	SHIM	2		0.178MM(0.007")
	R51197	SHIM	2		0.254MM(0.010")
	R51198	SHIM	2		0.305MM(0.012")
	R51199	SHIM	2		0.381MM(0.015")
4	R56308	WASHER	1		
5	R134215	SLEEVE	1		
6	R152892	SHIM	2		0.076MM(0.003") (SUB FOR R35365)
	R152893	SHIM	2		0.127MM(0.005") (SUB FOR R35366)
	R152894	SHIM	2		0.254MM(0.010") (SUB FOR R35367)
7	RE49486	TAPERED ROLLER BEARING	1		
8	RE68172	BEVEL GEAR DRIVE	1		R.H. ASSEMBLY, (MARKED R133087 AND R133088)

FRONT SPIRAL BEVEL INPUT PINION AND RING GEAR SET

(RE68109)
RE027760 -UN-03APR97

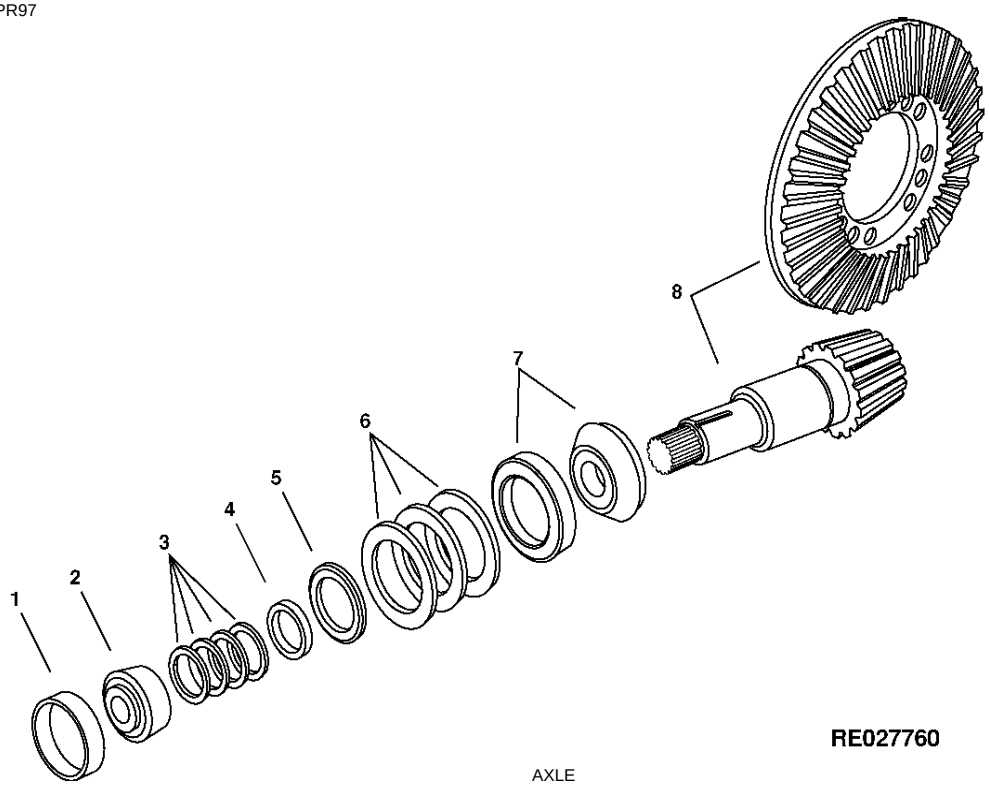

RE027760

KEY	PART NO.	PART NAME	QTY	AXLE SERIAL NO.	REMARKS
1	JD8255	BEARING CUP	1		
2	JD9078	BEARING CONE	1		
3	R51196	SHIM	2		0.178MM(0.007")
	R51197	SHIM	2		0.254MM(0.010")
	R51198	SHIM	2		0.305MM(0.012")
	R51199	SHIM	2		0.381MM(0.015")
4	R56308	WASHER	1		
5	R134215	SLEEVE	1		
6	R152892	SHIM	2		0.076MM(0.003") (SUB FOR R35365)
	R152893	SHIM	2		0.127MM(0.005") (SUB FOR R35366)
	R152894	SHIM	2		0.254MM(0.010") (SUB FOR R35367)
7	RE49486	TAPERED ROLLER BEARING	1		
8	RE68175	BEVEL GEAR DRIVE	1		L.H. ASSEMBLY, (MARKED R133093 AND R133094)

REAR DIFFERENTIAL CASE WITH DIFF LOCK, OSCILLATING

RE68125 AND RE68136
YZ3919A -UN-06JUL04

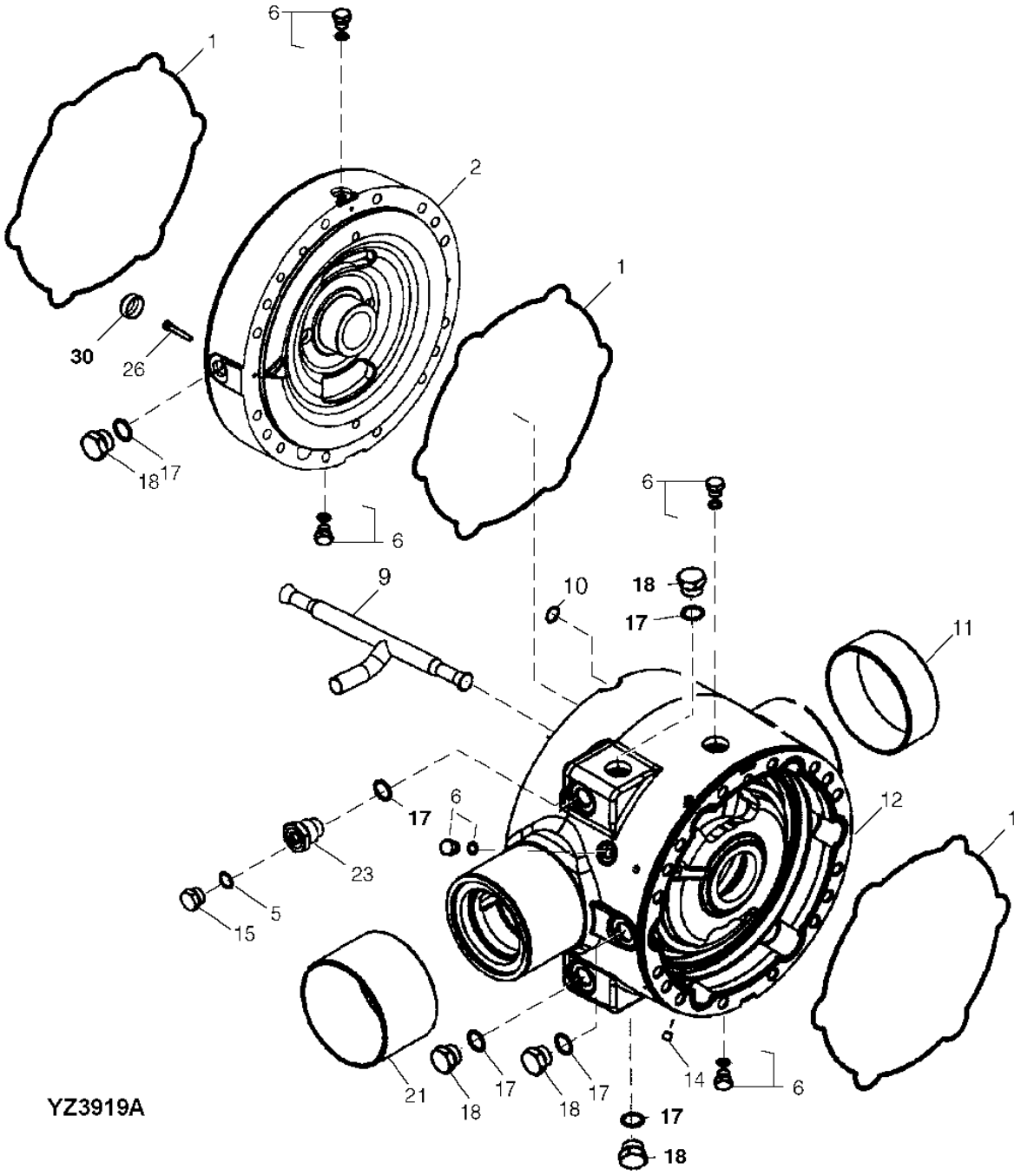

REAR DIFFERENTIAL CASE WITH DIFF LOCK, OSCILLATING

KEY	PART NO.	PART NAME	QTY	AXLE SERIAL NO.	REMARKS
1	R133369	O-RING	3		
2	R133371	COVER	1		
5	R26286	O-RING	1		
6	RE46684	PLUG	1		
9	R159758	TEE FITTING	1		
10	T44604	O-RING	1		
11	R132113	SLEEVE	1		
12	RE164762	CASE	1		(WITH BALLS AND SLEEVES) (MARKED R161397) (INCLUDES R132113 AND R160832, (2) 400R AND 405R) (SUB FOR R157883)
14	15H558	PIPE PLUG	1		
15	R27094	DRAIN PLUG	1		
17	F3171R	O-RING	1		
18	R27175	DRAIN PLUG	1		(SUB FOR R116801)
21	R160832	SLEEVE	1		(SUB FOR R132114)
23	R160699	ADAPTER	1		
26	19M8513	SCREW	2		
30	.....	FITTING	3		(SUB F3171R AND R27175)

FRONT DIFFERENTIAL CASE WITH DIFF LOCK, NON-OSCILLATING

RE68135
RE68135 -UN-06OCT04

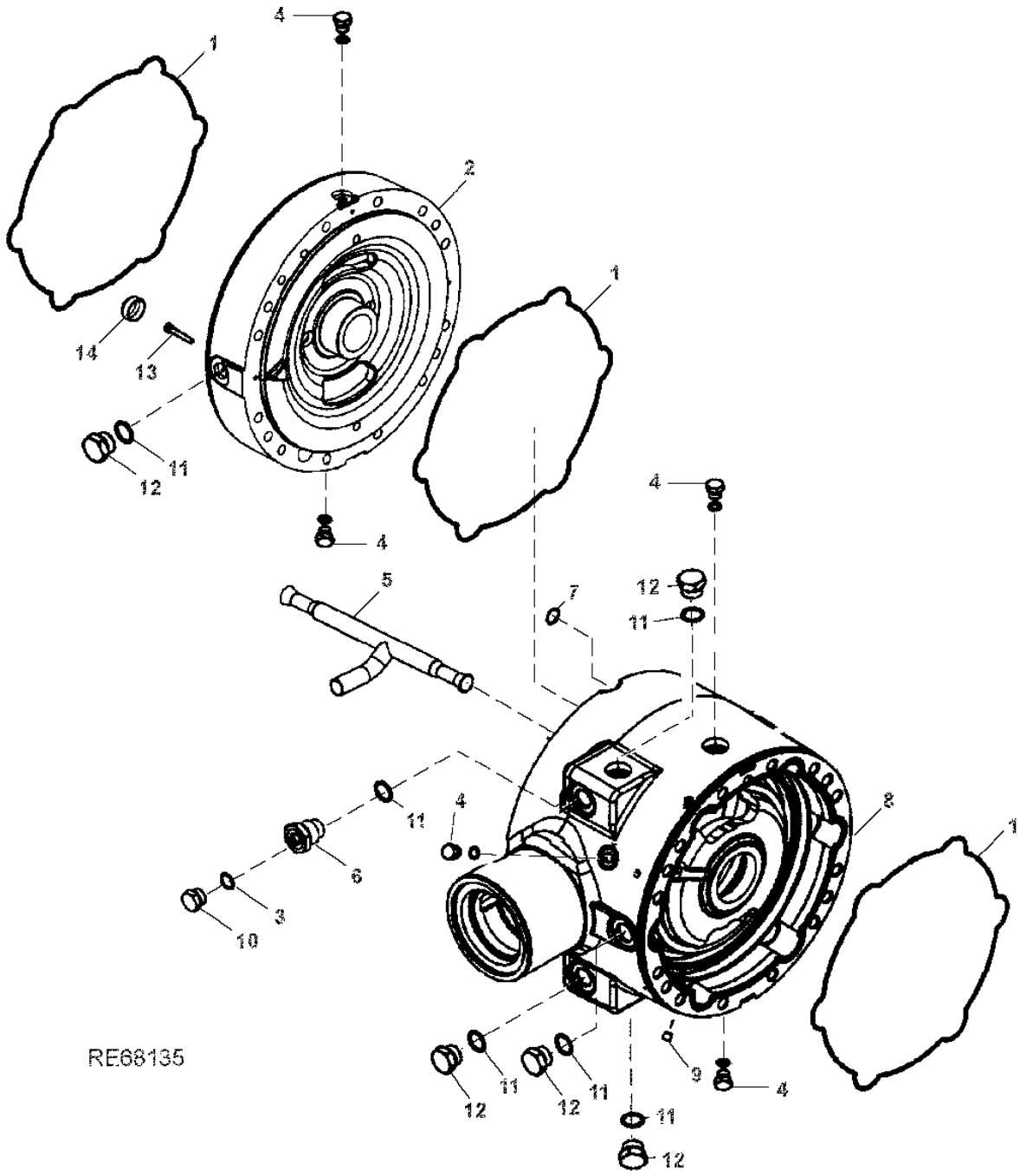

DIFF LOCK DIFFERENTIAL CASE, NON-OSCILLATING

KEY	PART NO.	PART NAME	QTY	AXLE SERIAL NO.	REMARKS
1	R133369	O-RING	3		
2	R133371	COVER	1		
3	R26286	O-RING	1		
4	RE46684	PLUG	5		
5	R159758	TEE FITTING	1		
6	R160699	ADAPTER	5		
7	T44604	O-RING	1		
8	RE164763	CASE	1		(MARKED R161398) (INCLUDES (3) 400R AND 405R) (SUB R157885)
9	15H558	PIPE PLUG	1		
10	R27094	DRAIN PLUG	1		
11	F3171R	O-RING	6		
12	R27175	DRAIN PLUG	5		(SUB FOR R116801)
13	19M8513	SCREW	2		
14	.....	FITTING	3		(SUB F3171R AND R27175)

REAR, STANDARD AND LIMITED SLIP DIFFERENTIAL CASE

RE68125 AND RE68134
YZ3918B -UN-06JUL04

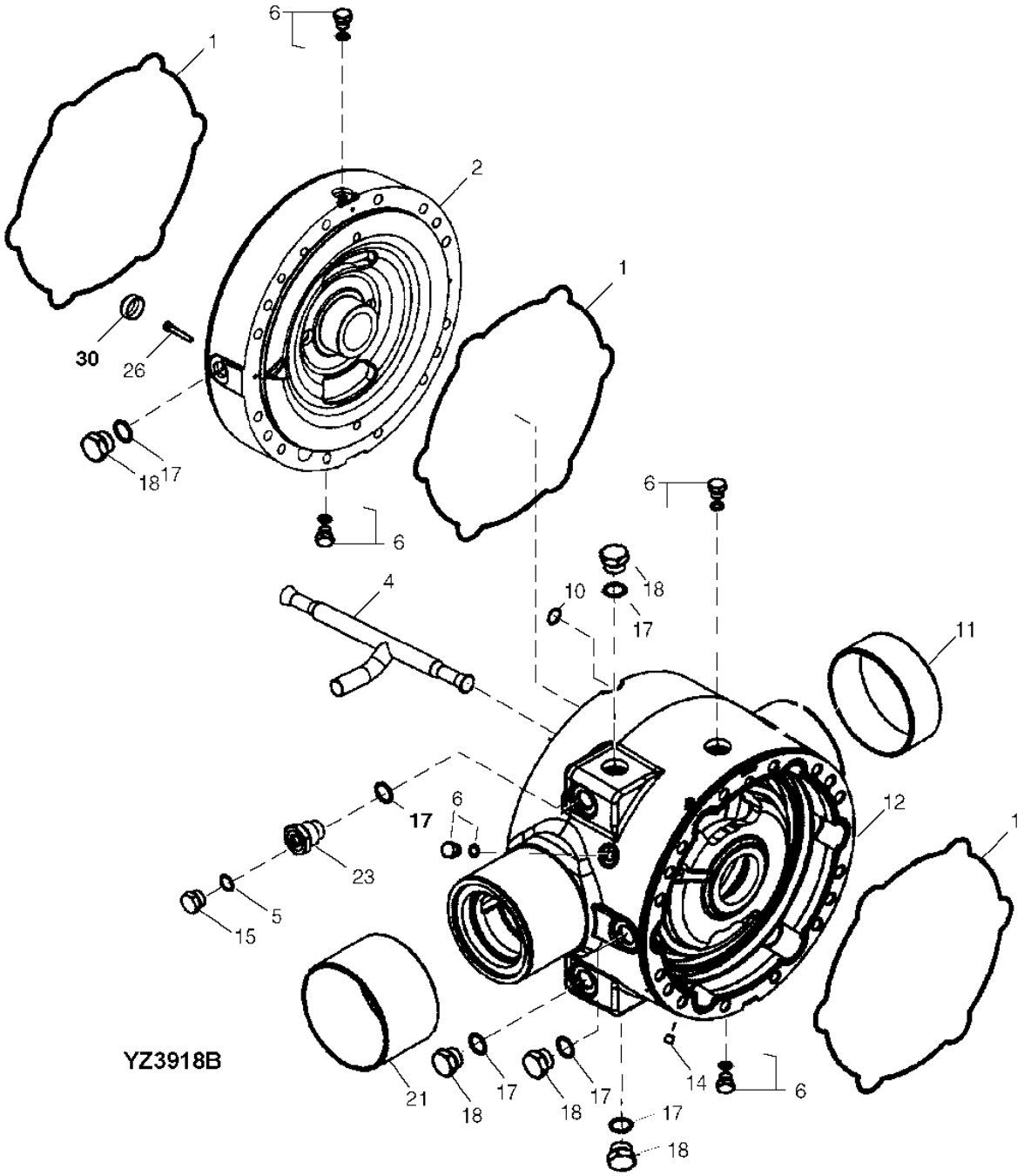

REAR, STANDARD AND LIMITED SLIP DIFFERENTIAL CASE

KEY	PART NO.	PART NAME	QTY	AXLE SERIAL NO.	REMARKS
1	R133369	O-RING	3		
2	R133371	COVER	1		
4	R159758	TEE FITTING	1		
5	R26286	O-RING	1		
6	RE46684	PLUG	4		
10	T44604	O-RING	1		
11	R132113	SLEEVE	1		
12	RE164764	CASE	1		(WITH BALLS AND SLEEVES) (MARKED R161399) (INCLUDES R132113 AND R160832, (3) 400R AND 405R) (SUB FOR R157886)
14	15H558	PIPE PLUG	1		
15	R27094	DRAIN PLUG	1		
17	F3171R	O-RING	1		
18	R27175	DRAIN PLUG	1		(SUB FOR R116801)
21	R160832	SLEEVE	1		(SUB FOR R132114)
23	R160699	ADAPTER	1		
26	19M8513	SCREW	2		
30	.....	FITTING	3		(SUB F3171R AND R27175)

FRONT STANDARD AND LIMITED SLIP DIFFERENTIAL CASE, NON-OSCILLATING

RE68133
YZ3920D -UN-06JUL04

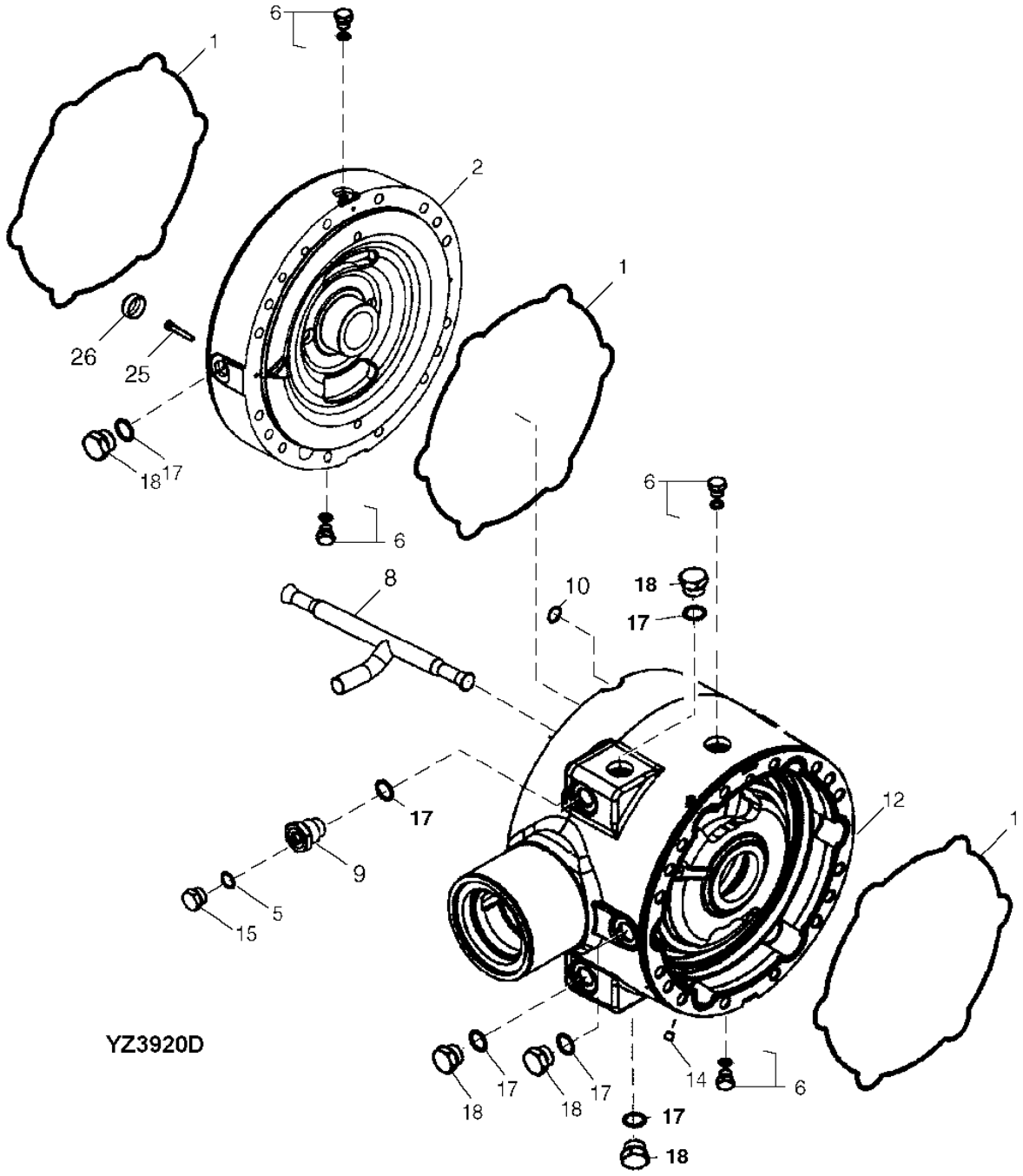

FRONT STANDARD AND LIMITED SLIP DIFFERENTIAL CASE, NON-OSCILLATING

KEY	PART NO.	PART NAME	QTY	AXLE SERIAL NO.	REMARKS
1	R133369	O-RING	3		
2	R133371	COVER	1		
5	R26286	O-RING	1		
6	RE46684	PLUG	4		
8	R159758	TEE FITTING	1		
9	R160699	ADAPTER	1		
10	T44604	O-RING	1		
12	R161400	CASE	1		(SUB FOR R157887)
14	15H558	PIPE PLUG	1		
15	R27094	DRAIN PLUG	1		
17	F3171R	O-RING	1		
18	R27175	DRAIN PLUG	1		(SUB FOR R116801)
25	19M8513	SCREW	2		
26	.....	FITTING	3		(SUB F3171R AND R27175)

STANDARD DIFFERENTIAL, FRONT AND REAR

(RE68130)
RE028203 -UN-14JUL97

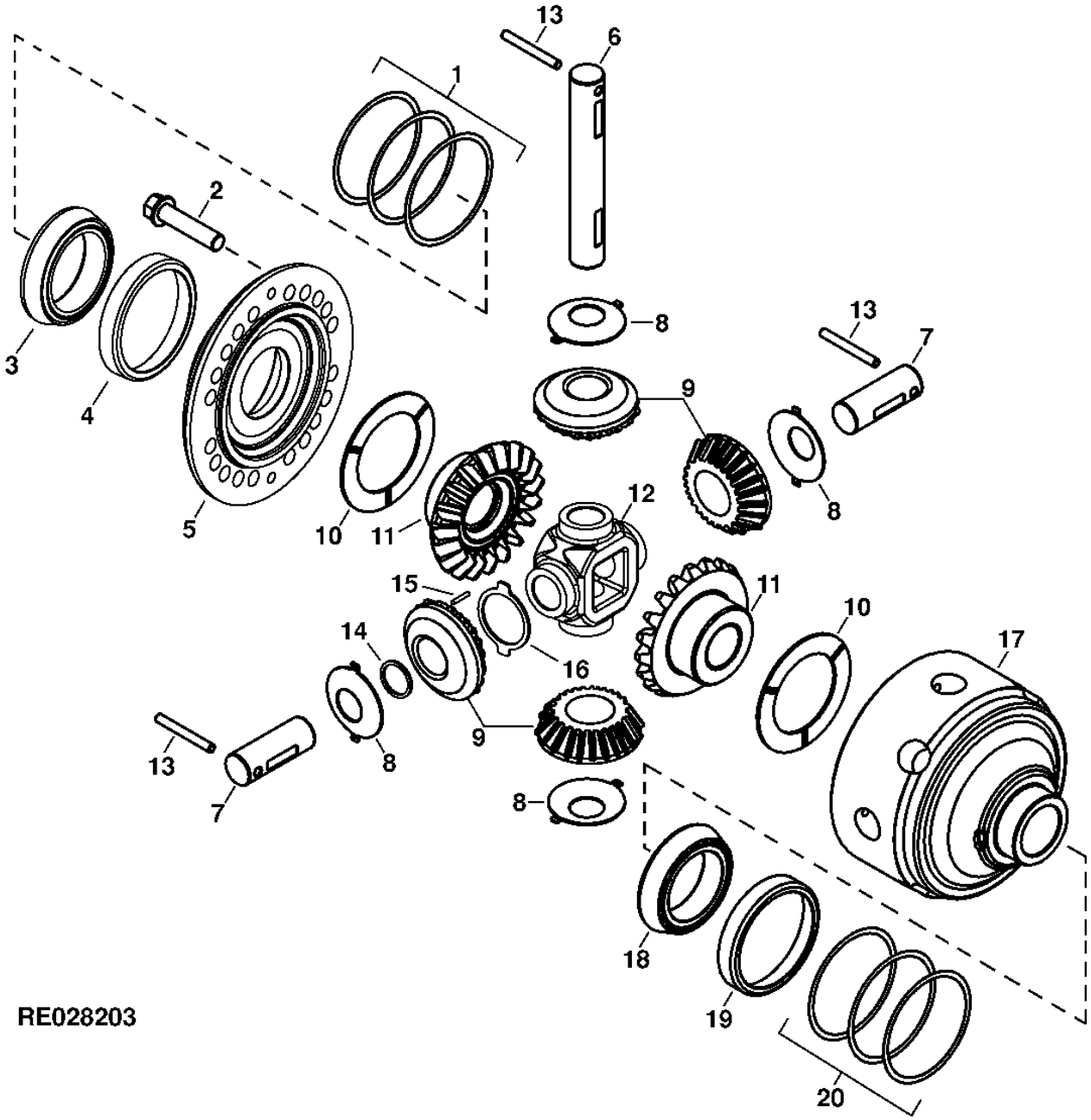

STANDARD DIFFERENTIAL, FRONT AND REAR

KEY	PART NO.	PART NAME	QTY	AXLE SERIAL NO.	REMARKS
1	R134717	SHIM	3		
	R134718	SHIM	3		
	R134719	SHIM	4		
2	R134183	CAP SCREW	20		
3	JD10127	BEARING CONE	1		
4	JD8254	BEARING CUP	1		
5	R134860	COVER	1		
6	R132827	PINION SHAFT	1		
7	R132828	PINION SHAFT	2		
8	R59460	THRUST WASHER	4		
9	R134726	PINION	4		
10	R133719	THRUST WASHER	2		
11	R134861	BEVEL GEAR	2		
12	R132836	HUB	1		
13	R135984	PIN	3		
14	R70112	THRUST WASHER	4		
15	R70115	NEEDLE ROLLER	104		
16	R70113	THRUST WASHER	4		
17	R134859	HOUSING	1		
18	JD8167	BEARING CONE	1		
19	JD8214	BEARING CUP	1		
20	R135532	SHIM	3		
	R135533	SHIM	3		
	R135534	SHIM	3		

LIMITED SLIP DIFFERENTIAL, FRONT AND REAR

(RE68131)
RE68131PCD01 -UN-02JUL04

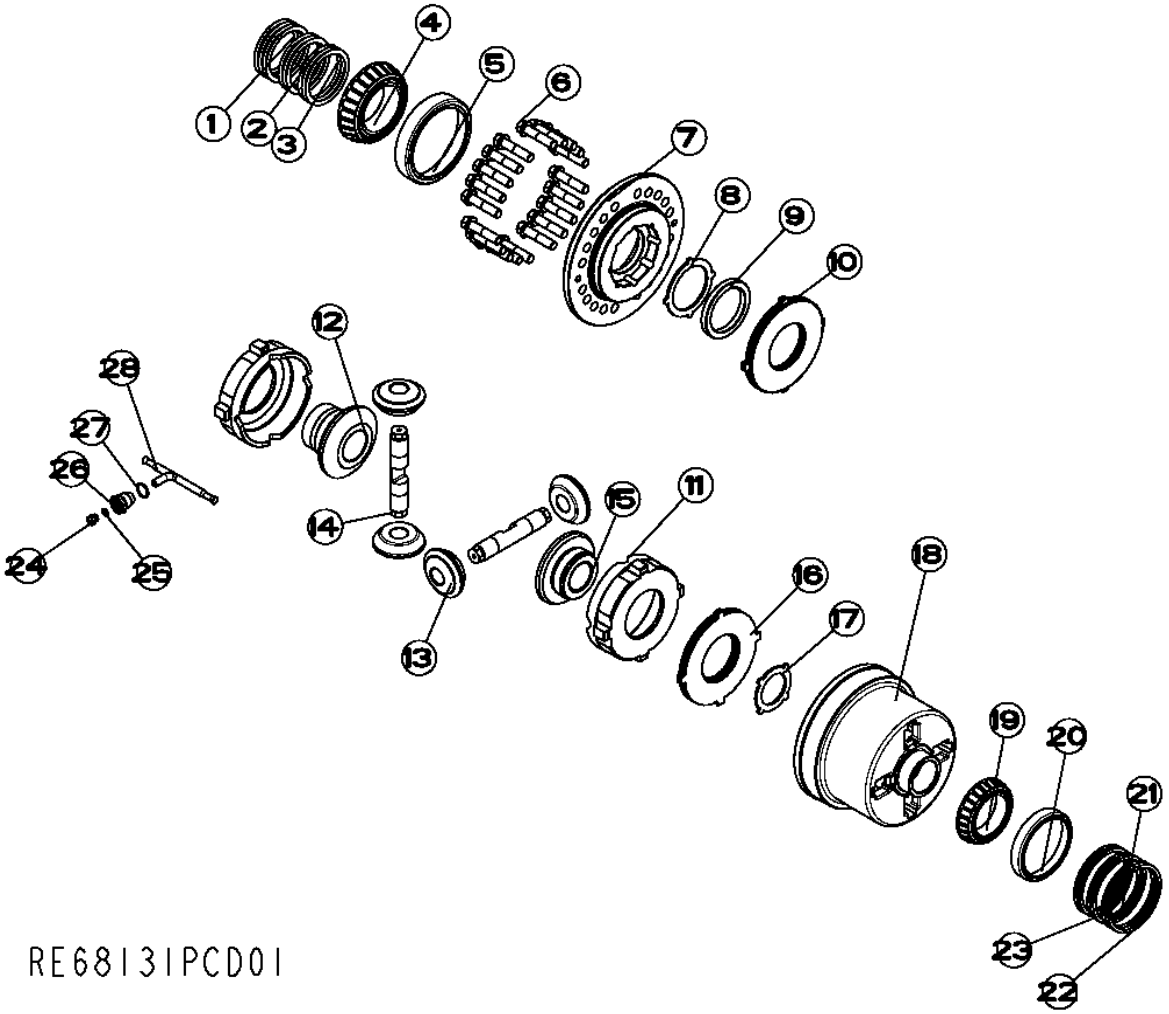

LIMITED SLIP DIFFERENTIAL, FRONT AND REAR

KEY	PART NO.	PART NAME	QTY	AXLE SERIAL NO.	REMARKS
1	R134719	SHIM	4		
2	R134718	SHIM	3		
3	R134717	SHIM	3		
4	JD10127	BEARING CONE	1		
5	JD8254	BEARING CUP	1		
6	R134183	CAP SCREW	20		
7	R152913	COVER	1		
8	R152928	WASHER	1		
9	R152927	SPACER	1		
10	RE152929	PLATE	2		
11	R152916	HOUSING	2		
12	R152923	GEAR	1		
13	R152924	PINION	4		
14	R152925	SHAFT	2		
15	R152922	GEAR	1		
16	RE152930	PLATE	1		
17	R152926	WASHER	1		
18	R152911	HOUSING	1		
19	JD8167	BEARING CONE	1		
20	JD8214	BEARING CUP	1		
21	R135532	SHIM	3		
22	R135534	SHIM	3		
23	R135533	SHIM	3		
24	R27094	DRAIN PLUG	1		
25	R26286	O-RING	1		
26	R160699	ADAPTER	1		
27	F3171R	O-RING	1		
28	R159758	TEE FITTING	1		
30	RE69806	DIFFERENTIAL	1		

4 PINION HYD ACTUATED DIFFERENTIAL, FRONT AND REAR

(RE68132)
RE028124 -UN-14JUL97

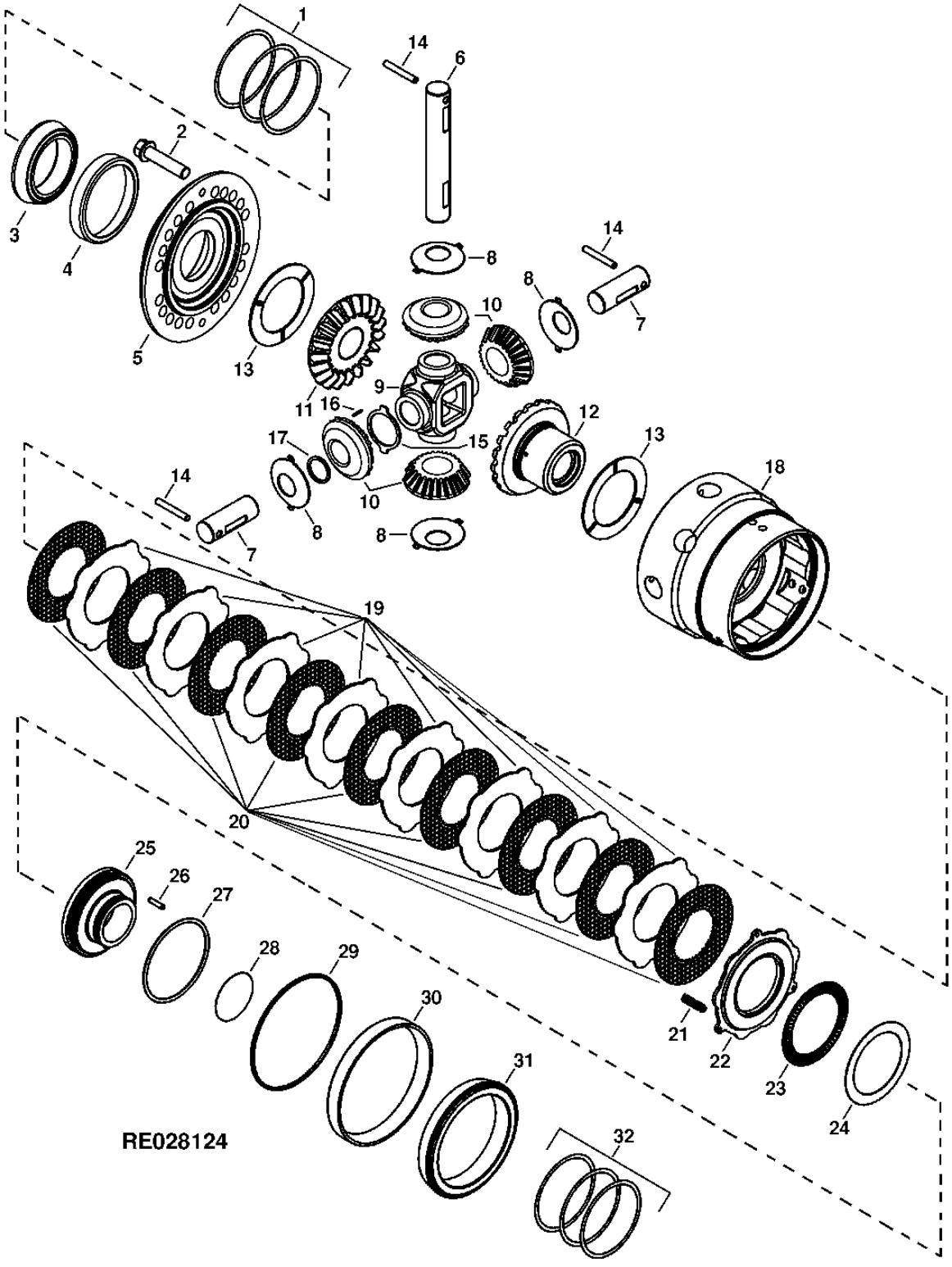

4 PINION HYD ACTUATED DIFFERENTIAL, FRONT AND REAR

KEY	PART NO.	PART NAME	QTY	AXLE SERIAL NO.	REMARKS
1	R134717	SHIM	3		
	R134718	SHIM	3		
	R134719	SHIM	3		
2	R134183	CAP SCREW	20		
3	JD10127	BEARING CONE	1		
4	JD8254	BEARING CUP	1		
5	R133803	COVER	1		
6	R132827	PINION SHAFT	1		
7	R132828	PINION SHAFT	2		
8	R59460	THRUST WASHER	4		
9	R132836	HUB	1		
10	R134726	PINION	4		
11	R133858	BEVEL GEAR	1		
12	R133859	BEVEL GEAR	1		
13	R133719	THRUST WASHER	2		
14	R57254	NEEDLE ROLLER	3		
15	R70113	THRUST WASHER	4		
16	R70115	NEEDLE ROLLER	104		
17	R70112	THRUST WASHER	4		
18	R133798	HOUSING	1		
19	R134016	CLUTCH PLATE	8		
20	RE69025	DISK	9		
21	R120236	SPRING	3		
22	R134017	CLUTCH PLATE	1		
23	RE68730	NEEDLE BEARING	1		
24	R133725	THRUST WASHER	1		
25	RE166221	PISTON	1		(SUB FOR R133740)
26	R109082	NEEDLE ROLLER	1		
27	YZ120622	O-RING	1		(SUB FOR R134270)
28	YZ120623	O-RING	1		(SUB FOR R134269)
29	R133328	SPACER	1		
30	JD9148	BEARING CUP	1		
31	JD9093	BEARING CONE	1		
32	R134720	SHIM	AR		0.076MM(0.003")
	R134721	SHIM	AR		0.127MM(0.005")
	R134722	SHIM	AR		0.254MM(0.010")

DIFFERENTIAL SUPPORTS AND LUBRICATION LINES

TP60236 -UN-03APR98

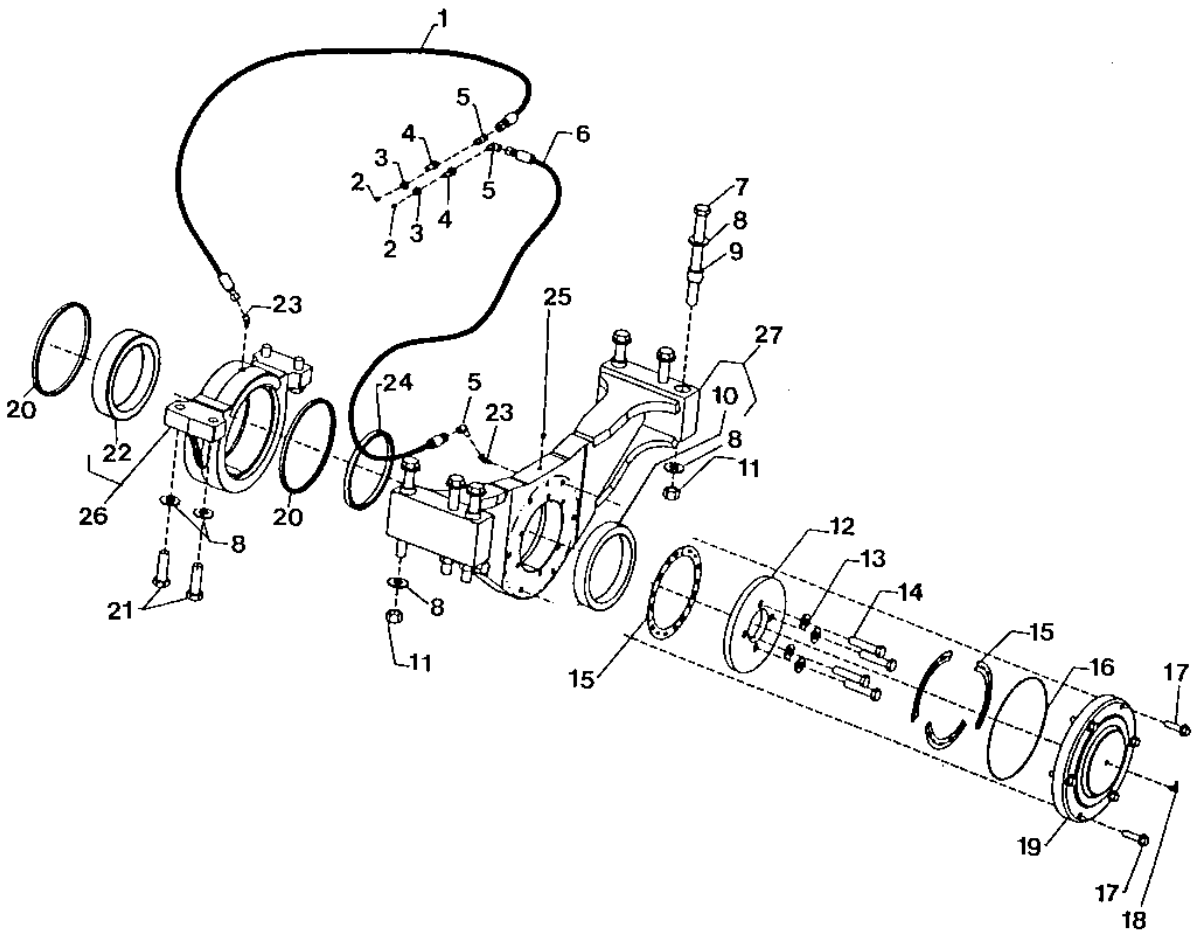

TP60236

DIFFERENTIAL SUPPORTS AND LUBRICATION LINES

KEY	PART NO.	PART NAME	QTY	SERIAL NO.	REMARKS
1	AT207022	HYDRAULIC HOSE	1		
2	JD7842	LUBRICATION FITTING	2		
3	E12379	NUT	2		
4	R36311	FITTING	2		
5	T56112	ELBOW FITTING	3		
6	AT53541	HYDRAULIC HOSE	1		
7	19M7778	CAP SCREW	6		M20 X 220
8	24M7242	WASHER	16		21.400 X 42 X 5 MM
9	T174463	BUSHING	4		
10	T167837	BUSHING	1		
11	14M7277	NUT	6		M20
12	T157055	DISK	1		
13	24M7241	WASHER	4		17 X 34 X 4 MM
14	19M7719	CAP SCREW	4		M16 X 70
15	T167924	THRUST BEARING	6		
16	T169329	O-RING	1		
17	19M7813	SCREW	6		M12 X 45
18	JD7781	LUBRICATION FITTING	1		
19	T157056	COVER	1		
20	AT210022	SEAL	2		
21	19M8638	CAP SCREW	4		M20 X 65
22	T171553	BUSHING	1		
23	M45937	ELBOW FITTING	2		
24	AT206794	SEAL	1		
25	15H558	PIPE PLUG	1		1/8"
26	AT210838	REAR AXLE SUPPORT	1		
27	AT211367	REAR AXLE SUPPORT	1		

AXLE STOP
(9 DEGREE)

TP62689 -UN-28OCT99

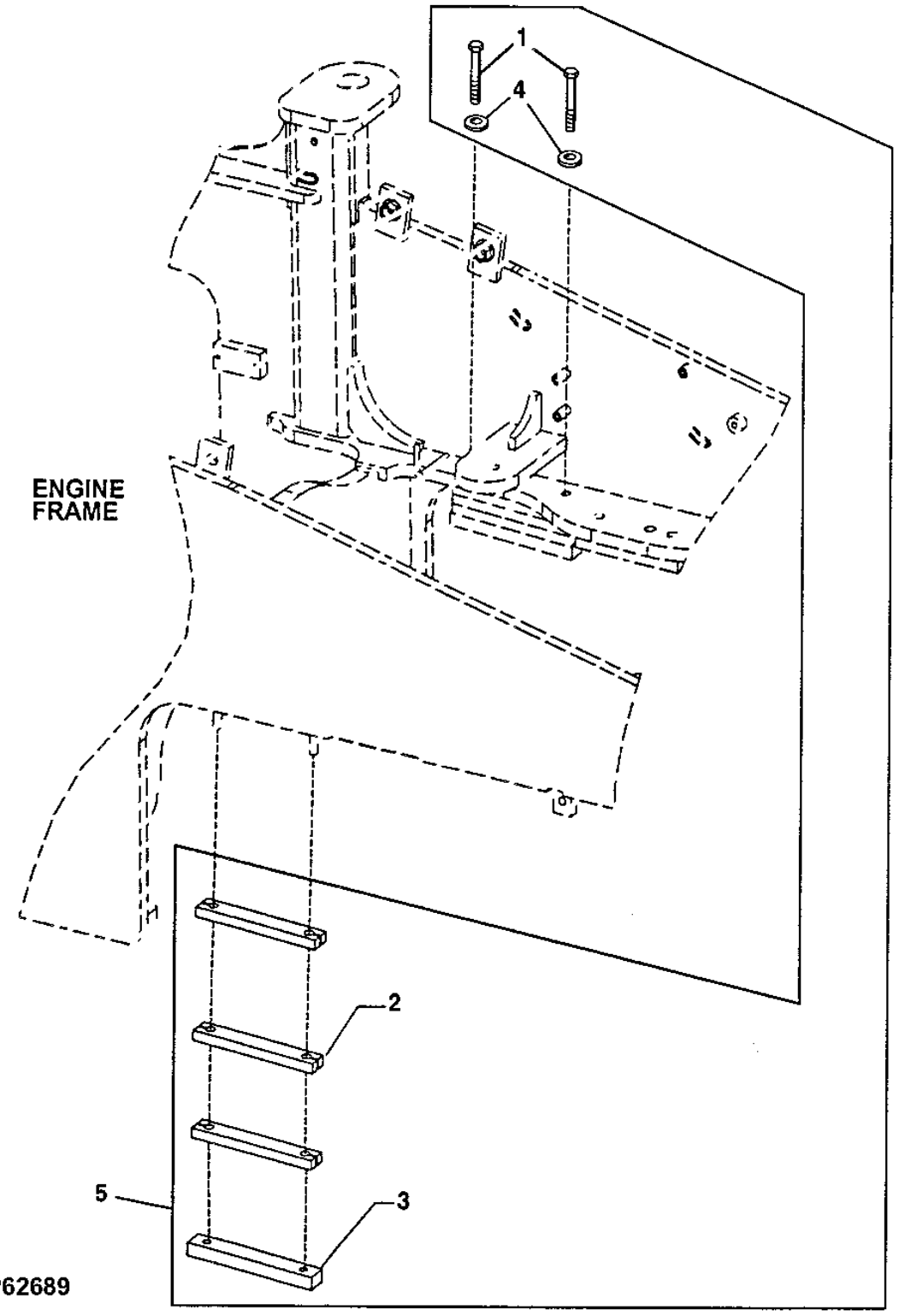

AXLE STOP
(9 DEGREE)

KEY	PART NO.	PART NAME	QTY	SERIAL NO.	REMARKS
1	19M7884	CAP SCREW	4		M16 X 110
2	T168247	STRAP	6		
3	T157315	STRAP	2		TAPPED BLOCK
4	24M7241	WASHER	4		17 X 34 X 4 MM
5	**AT209185**	**STOP**	**1**		**WHOLEGOODS**

AXLE HOUSING AND SHAFT (FRONT)
(RE158447)
RE158447 -UN-01JUL04

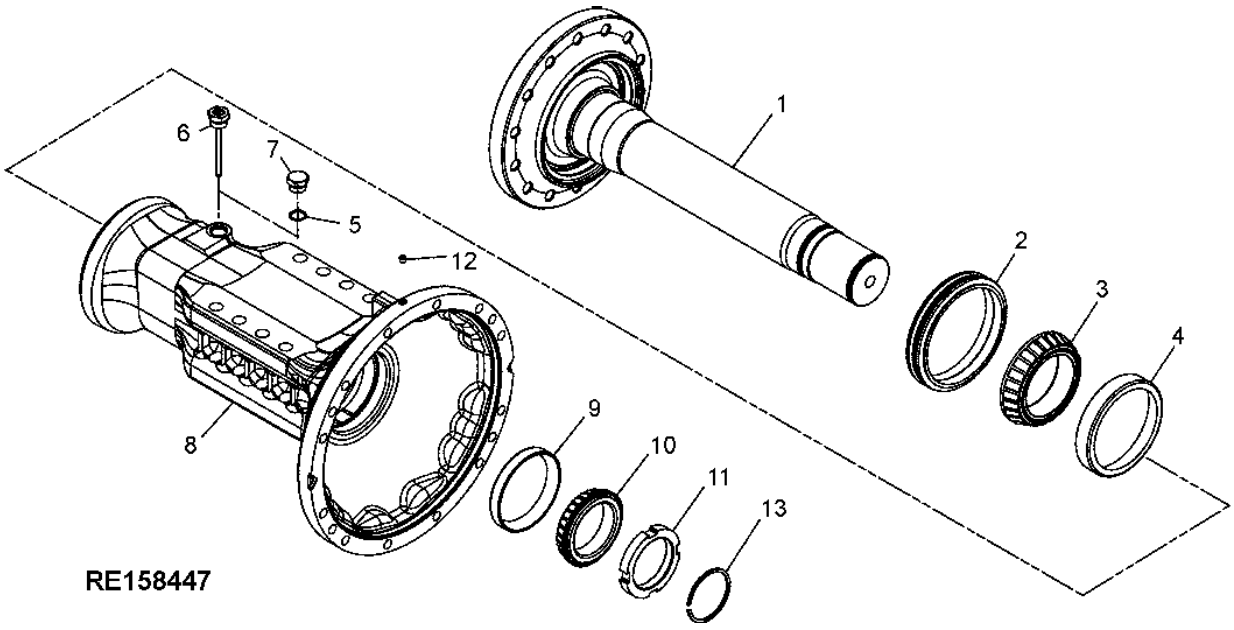

AXLE HOUSING AND SHAFT (FRONT) -CONTINUED

KEY	PART NO.	PART NAME	QTY	AXLE SERIAL NO.	REMARKS
1	YZ120483	HALF AXLE	2		(SUB R151392)
2	YZ120453	SEAL	2		(SUB FOR R134239) (FACE SEAL)
3	JD10315	BEARING CONE	2		
4	JD10316	BEARING CUP	2		
5	F3171R	O-RING	1		
6	RE160141	DIPSTICK	1		(SUB FOR RE68300 OR RE154952)
7	R27175	DRAIN PLUG	1		(SUB FOR R116801)
8	R133165	HOUSING	2		
9	JD8272	BEARING CUP	2		
10	JD8989	BEARING CONE	2		
11	R134172	NUT	2		
12	15H558	PIPE PLUG	1		
13	R133377	SNAP RING	2		

AXLE HOUSING AND SHAFT (REAR)
(RE158448)
RE158448 -UN-01JUL04

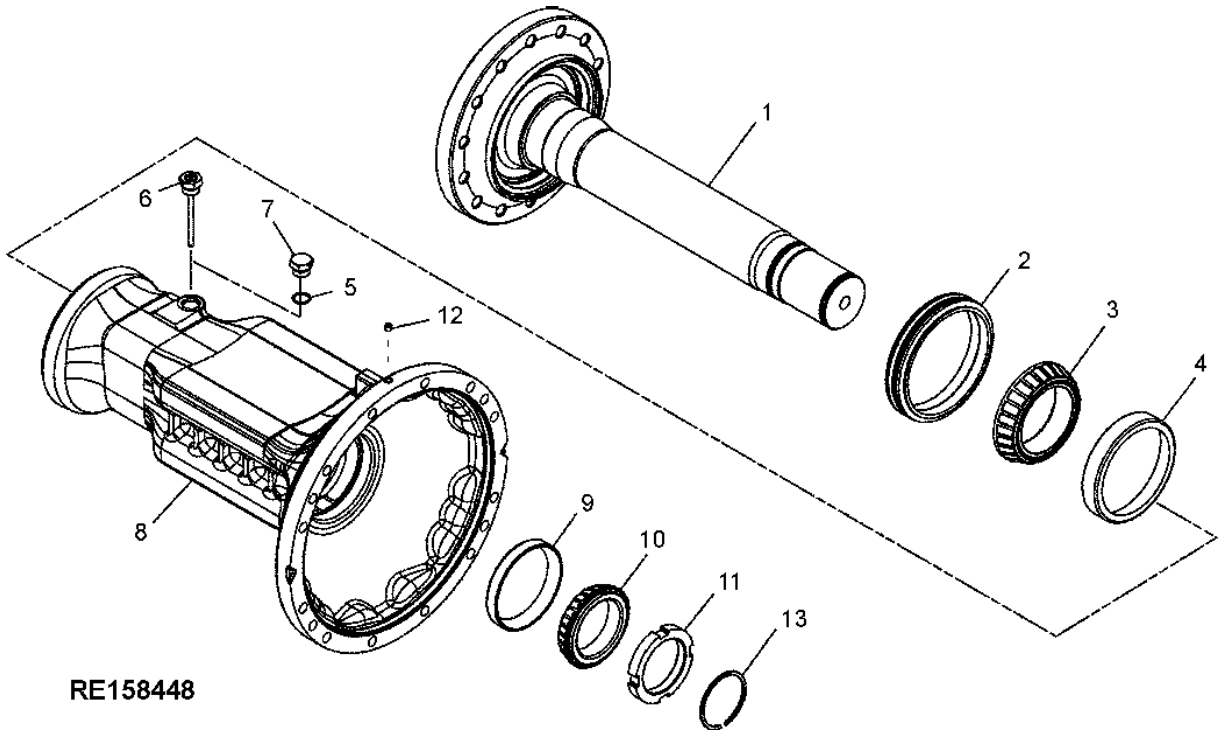

AXLE HOUSING AND SHAFT (REAR) - CONTINUED

KEY	PART NO.	PART NAME	QTY	AXLE SERIAL NO.	REMARKS
1	YZ120483	HALF AXLE	2		(SUB R151392)
2	YZ120453	SEAL	2		(SUB FOR R134239) (FACE SEAL)
3	JD10315	BEARING CONE	2		
4	JD10316	BEARING CUP	2		
5	F3171R	O-RING	1		
6	RE160141	DIPSTICK	1		(SUB FOR RE68300)
7	R27175	DRAIN PLUG	1		(SUB FOR R116801)
8	R134236	HOUSING	2		
9	JD8272	BEARING CUP	2		
10	JD8989	BEARING CONE	2		
11	R134172	NUT	2		
12	15H558	PIPE PLUG	1		
13	R133377	SNAP RING	2		

FRONT AND REAR FINAL DRIVE (RE68139)
RE68139 -UN-01JUL04

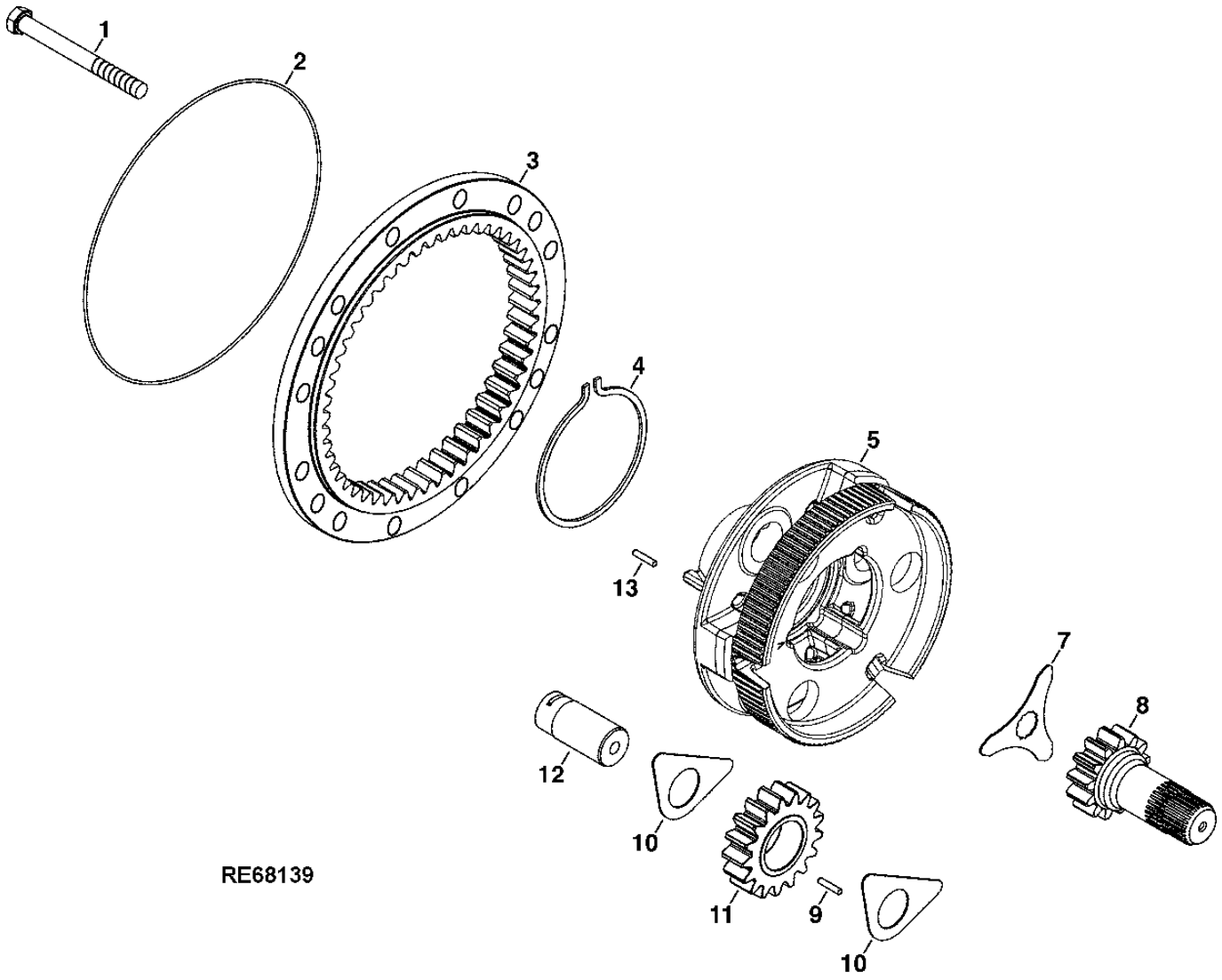

1 1

FRONT AND REAR FINAL DRIVE - CONTINUED

KEY	PART NO.	PART NAME	QTY	AXLE SERIAL NO.	REMARKS
1	19M8486	CAP SCREW	16		M16 X 180, COVER SIDE
	19M8485	CAP SCREW	16		M16 X 90, OPPOSITE SIDE
2	R135953	O-RING	1		
3	R133379	GEAR	1		
4	R133373	SNAP RING	1		
5	R151626	PLANET PINION CARRIER	1		(ALSO ORDER (2) YZ120909)
7	R26012	LOCK PLATE	1		
8	R133378	PINION SHAFT	1		
9	R63575	NEEDLE ROLLER	72		
10	R133368	THRUST WASHER	6		
11	R133367	PLANET PINION	3		
12	R133370	PINION SHAFT	3		
13	34H348	SPRING PIN	1		

DISCONNECT, AXLE INPUT
T202603 -UN-30AUG04

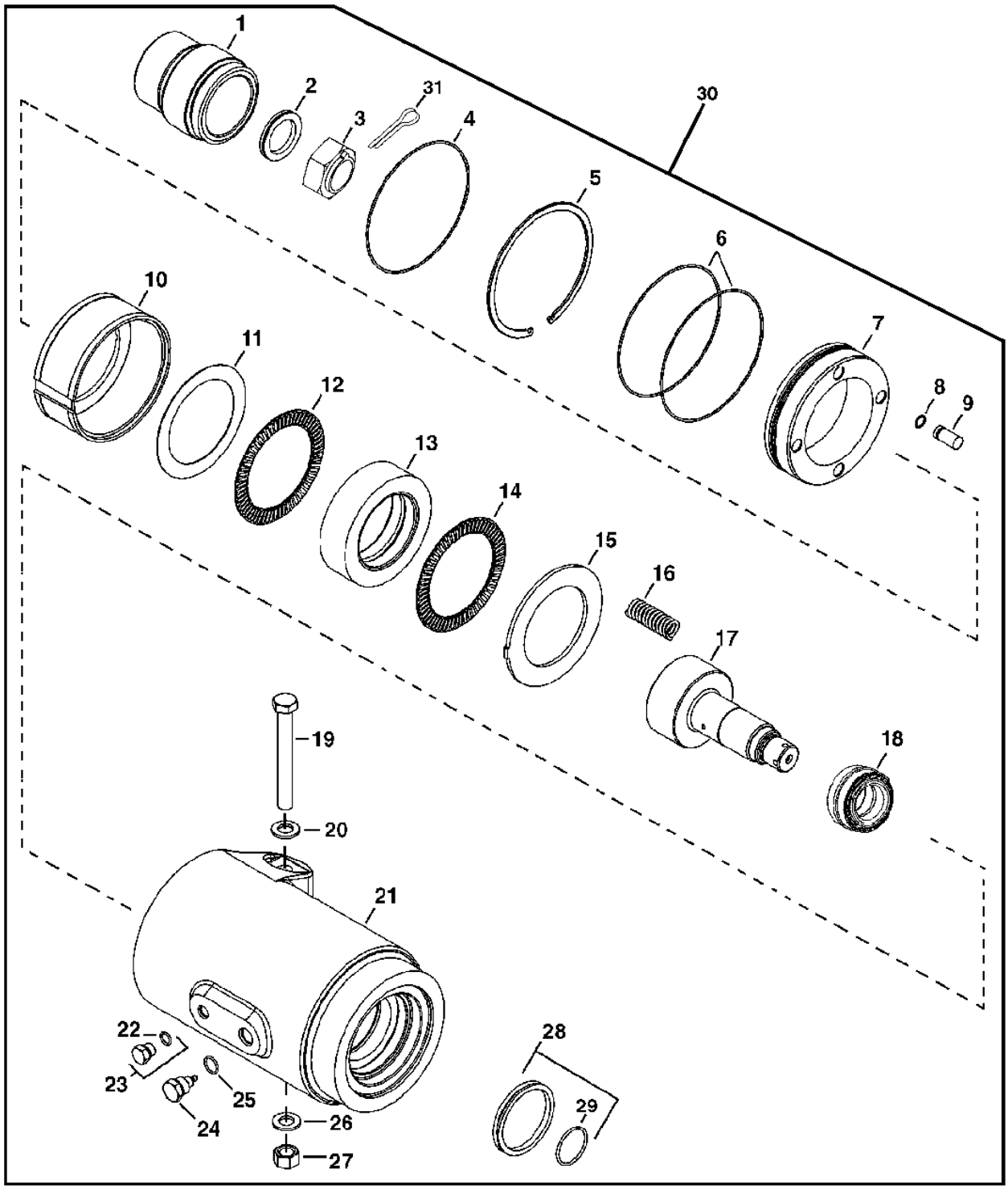

T202603

DISCONNECT, AXLE INPUT - CONTINUED

KEY	PART NO.	PART NAME	QTY	AXLE SERIAL NO.	REMARKS
1	R135344	YOKE	1		
2	R48734	WASHER	1		
3	R151933	NUT	1		
4	T80622	O-RING	1		(SUB FOR R136078)
5	R136077	RING	1		
6	R136078	O-RING	2		
7	R135345	SLEEVE	1		
8	R135118	SEAL	4		
9	R135805	PIN	4		
10	R135346	PISTON	1		
11	R133725	THRUST WASHER	1		
12	RE68730	NEEDLE BEARING	1		
13	R135348	SHIFT COLLAR	1		
14	RE68730	NEEDLE BEARING	1		
15	R135347	PLATE	1		
16	R38185	SPRING	4		
17	R135343	UNIVERSAL DRIVESHAFT	1		
18	F58602	BEARING	1		
19	19M8019	CAP SCREW	1		M16 X 160
20	24M7338	WASHER	1		17 X 30 X 3 MM
21	R135342	HOUSING	1		
22	51M7041	O-RING	1		11.300 X 2.200 MM
23	RE46684	PLUG	1		
24	R36943	FITTING	1		
25	R26375	O-RING	1		
26	24M7338	WASHER	1		17 X 30 X 3 MM
27	14M7276	NUT	1		M16
28	RE45315	SEAL KIT	1		
29	R100500	SEAL	1		
30	RE68117	AXLE	1		FI
31	11M7032	COTTER PIN	1		

FRONT DIFFERENTIAL LOCK LINES

T193419 -UN-09SEP03

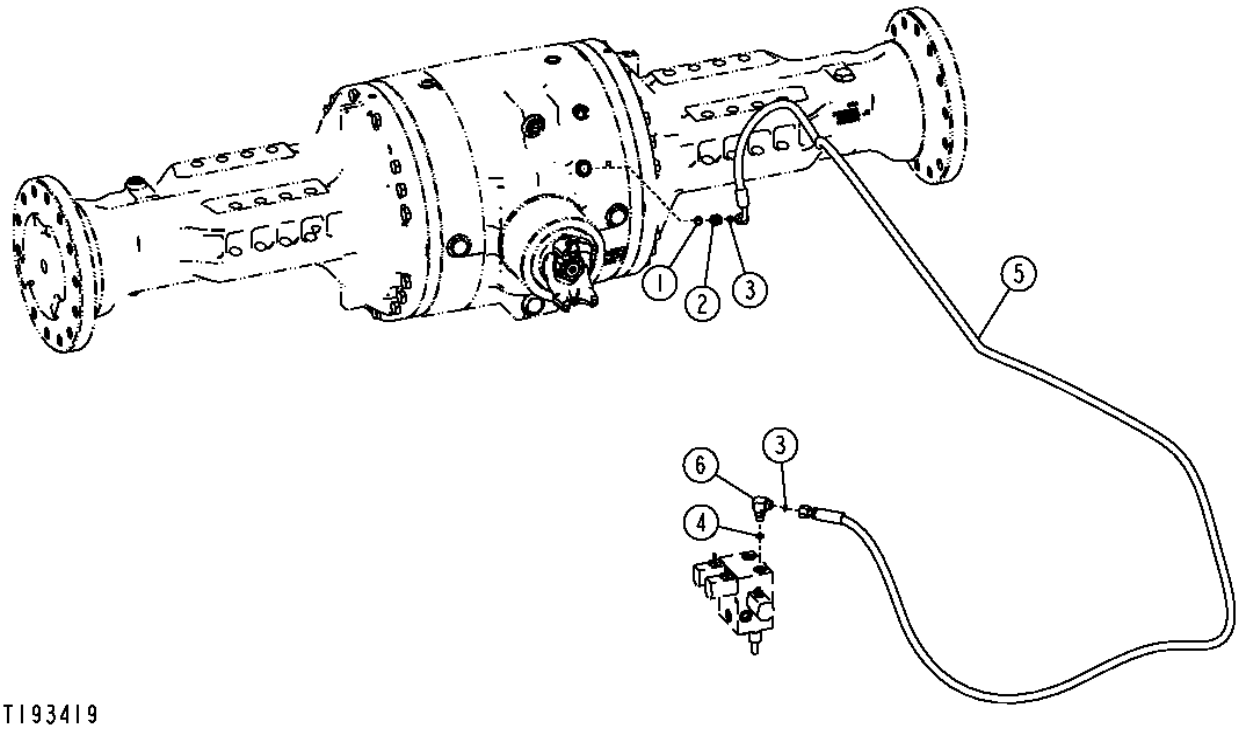

TI93419

FRONT DIFFERENTIAL LOCK LINES

KEY	PART NO.	PART NAME	QTY	SERIAL NO.	REMARKS
1	51M7041	O-RING	1		
2	38H5002	ADAPTER	1		
3	T77613	O-RING	2		
4	R26448	O-RING	1		
5	AT208696	HYDRAULIC HOSE - FABRICATE	1		
6	38H1004	ELBOW FITTING	1	XXXXXX-	

DIFFERENTIAL LOCK LINES (FRONT AND REAR)

TP55546 -UN-12JUN97

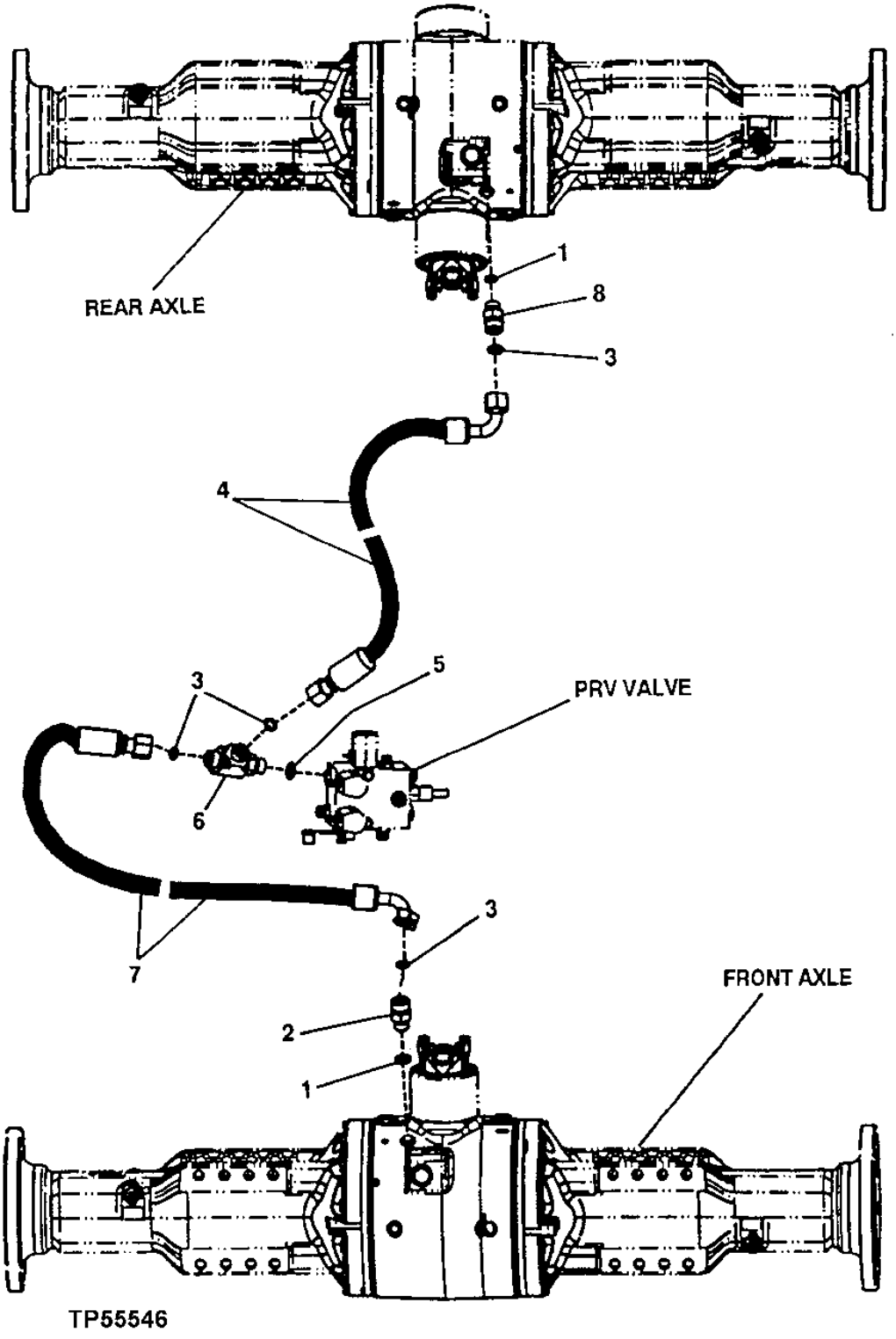

DIFFERENTIAL LOCK LINES (FRONT AND REAR)

KEY	PART NO.	PART NAME	QTY	SERIAL NO.	REMARKS
1	51M7041	O-RING	2		
2	38H5002	ADAPTER	1		
3	T77613	O-RING	4		
4	AT166149	HYDRAULIC HOSE - FABRICATE	1		
5	R26448	O-RING	1		
6	38H1016	TEE FITTING	1		
7	AT208696	HYDRAULIC HOSE - FABRICATE	1		
8	38H5016	ELBOW FITTING	1		

DIFFERENTIAL LOCK SWITCH

TP48545 -UN-07NOV96

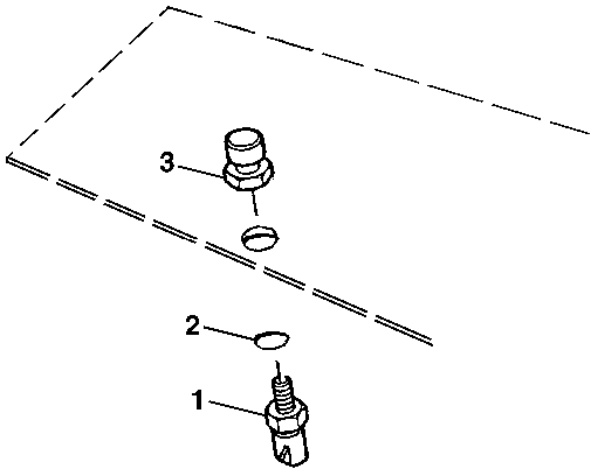

TP48545

KEY	PART NO.	PART NAME	QTY	SERIAL NO.	REMARKS
1	RE46534	SWITCH	1		
2	51M7042	O-RING	1		13.300 X 2.200 MM
3	RE43637	ACTUATOR	1		

AXLE AND PARKING BRAKE BREATHER EXTENSION KIT

TP55822 -UN-26JAN98

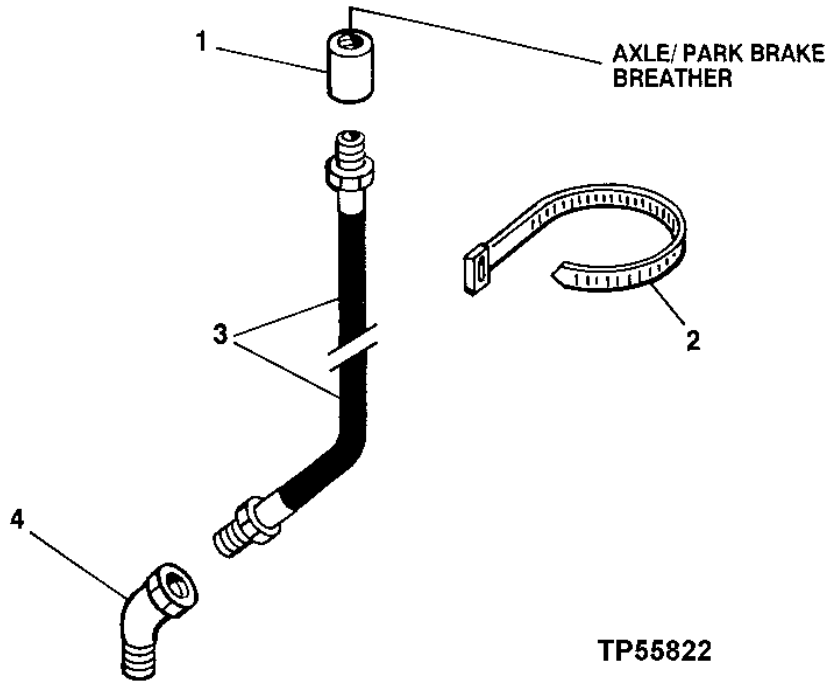

KEY	PART NO.	PART NAME	QTY	SERIAL NO.	REMARKS
1	15H84	COUPLING	3	3.175 MM	
2	H77698	TIE BAND	9		
3	AT207022	HYDRAULIC HOSE	3		
4	M45937	ELBOW FITTING	3		

AXLE DISCONNECT LINE (SERIAL NO. -590067)

TP60708 -UN-01APR99

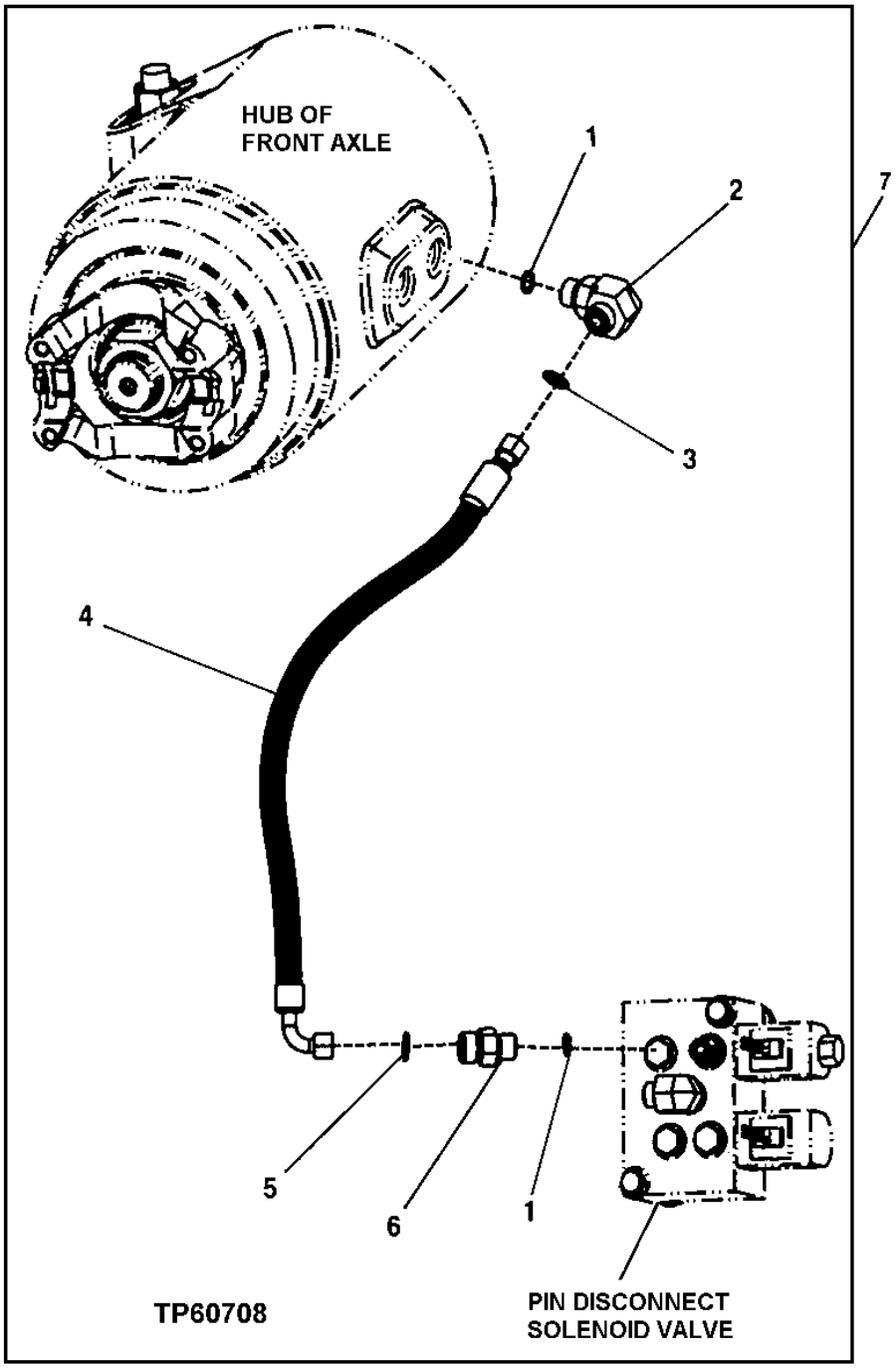

AXLE DISCONNECT LINE (SERIAL NO. -590067)

KEY	PART NO.	PART NAME	QTY	SERIAL NO.	REMARKS
1	T77613	O-RING	2		
2	38H5016	ELBOW FITTING	1		
3	R26448	O-RING	1		
4	AT167553	HYDRAULIC HOSE - FABRICATE	1		
5	51M7041	O-RING	1		
6	38H1160	ADAPTER	1		
7	.....	FIELD INSTALLATION KIT	1		(NO LONGER AVAILABLE)

AXLE BREATHERS, HOSES AND FITTINGS

T193228 -UN-18AUG03

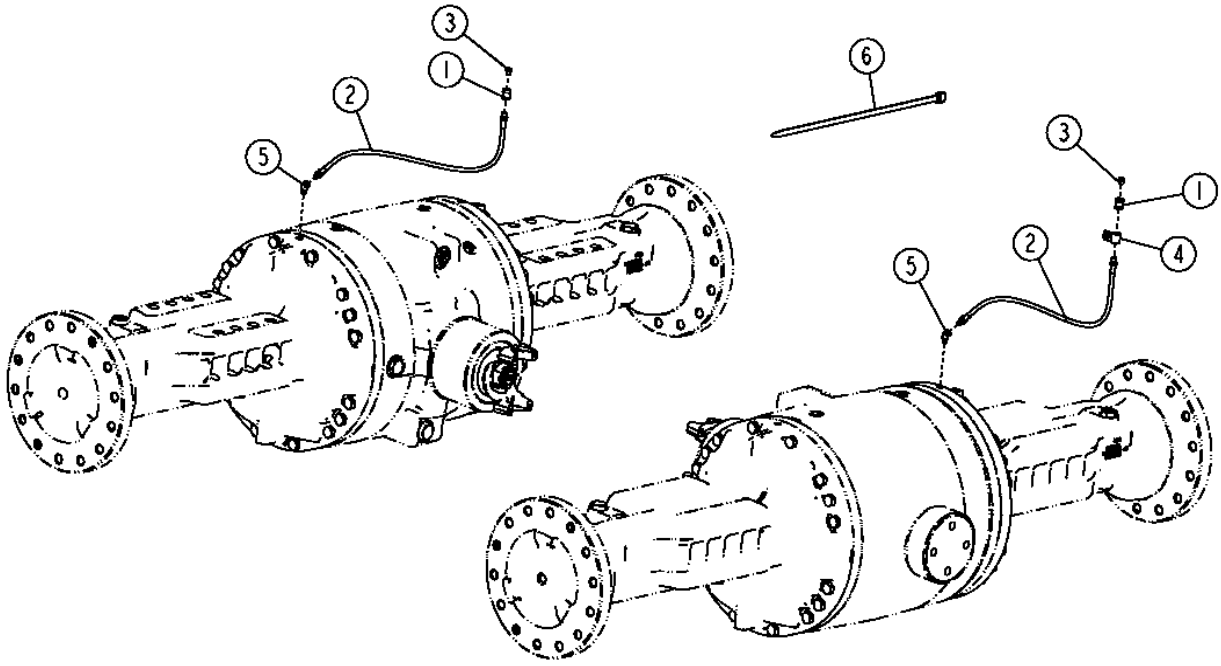

T193228

AXLE BREATHERS, HOSES AND FITTINGS

KEY	PART NO.	PART NAME	QTY	SERIAL NO.	REMARKS
1	15H84	COUPLING	2		1/8"
2	AT207022	HYDRAULIC HOSE	2		1/8" X 900 MM (35-1/2") X 1/8"
3	AT208411	PRESSURE RELIEF VALVE	2		
4	H75541	CLAMP	1		
5	M45937	ELBOW FITTING	2		
6	N189220	TIE BAND	1		

AXLE COOLER, HOSES AND FITTINGS

T157738 -UN-05SEP02

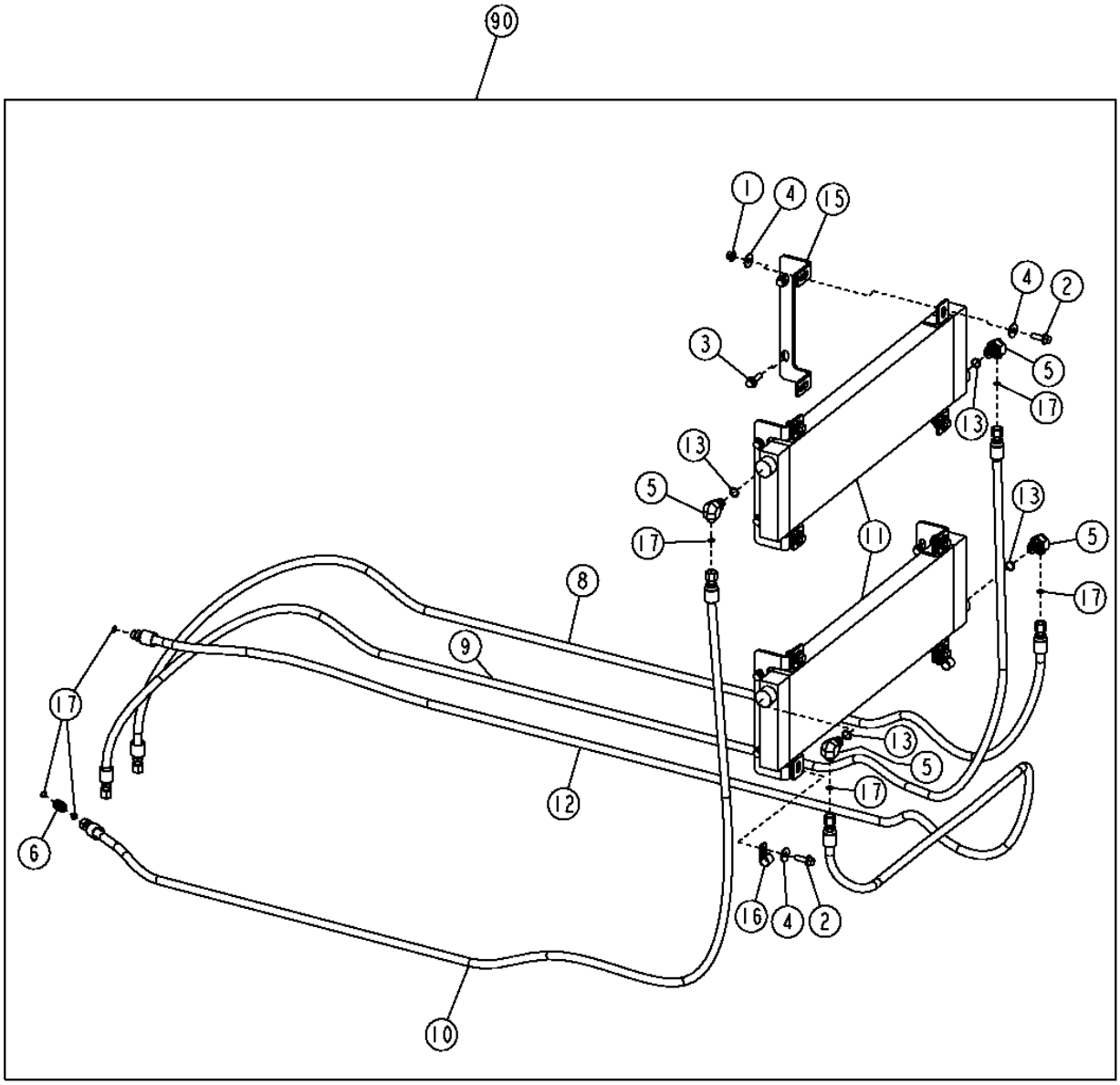

T157738

AXLE COOLER, HOSES AND FITTINGS

KEY	PART NO.	PART NAME	QTY	SERIAL NO.	REMARKS
1	14M7296	FLANGE NUT	9		M10
2	19M7786	SCREW	9		M10 X 30
3	19M7835	SCREW	8		M10 X 35
4	24M7296	WASHER	19		10.500 X 30 X 2.500 MM
5	38H1010	ELBOW FITTING	4		
6	38H1278	UNION FITTING	1		(REQ. FOR FIELD INSTALLED COOLER ONLY)
7	38H1564	ELBOW FITTING	1		
8	AT227008	HYDRAULIC HOSE - FABRICATE	1		
9	AT227009	HYDRAULIC HOSE - FABRICATE	1		
10	AT227010	HYDRAULIC HOSE - FABRICATE	1		
11	AT227487	HEAT EXCHANGER	2		
12	AT227981	HYDRAULIC HOSE - FABRICATE	1		(REQ. FOR FIELD INSTALLED COOLER ONLY)
	AT227011	HYDRAULIC HOSE - FABRICATE	1		(REQ. FOR FACTORY INSTALLED COOLER ONLY)
13	R26375	O-RING	4		
14	R28782	O-RING	1		
15	T196284	BRACKET	4		
16	T74416	CLAMP	2		
17	T77613	O-RING	8		(FIELD INSTALLED)
	T77613	O-RING	5		(FACTORY INSTALLED)
90	AT227552	KIT	1		(WHOLEGOODS)(AXLE COOLER)

AXLE RECIRCULATION HOSES AND FITTINGS

T136479 -UN-27DEC00

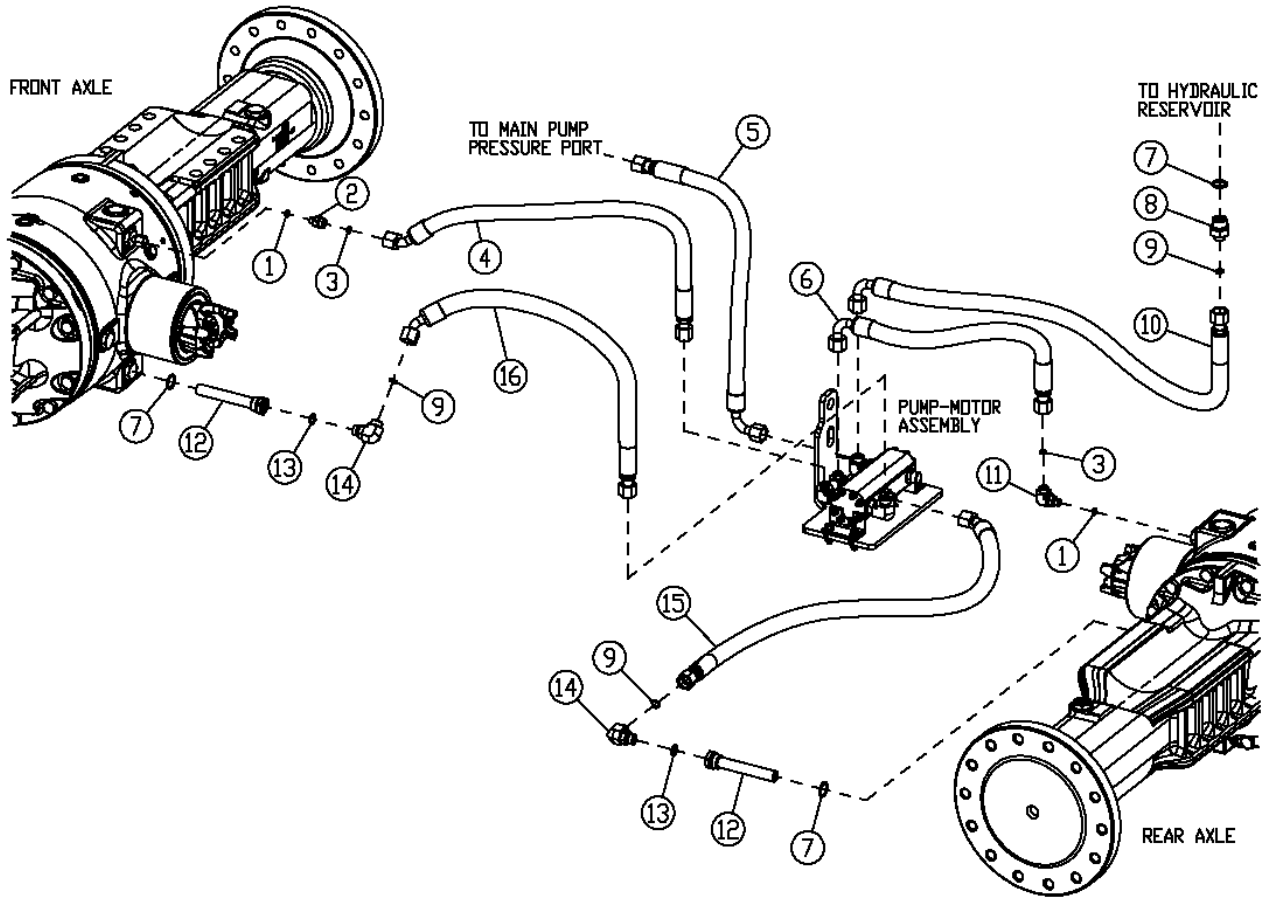

T136479

AXLE RECIRCULATION HOSES AND FITTINGS

KEY	PART NO.	PART NAME	QTY	SERIAL NO.	REMARKS
1	R26286	O-RING	2		
2	38H1170	ADAPTER	1		
3	T77613	O-RING	2		
4	AT227605	HYDRAULIC HOSE - FABRICATE	1		(SUB FOR AT220730)
5	AT166149	HYDRAULIC HOSE - FABRICATE	1	-586149	11/16" X 975 MM (38-1/2") X 11/16"
	AT228617	HYDRAULIC HOSE - FABRICATE	1	586150-	
6	AT227603	HYDRAULIC HOSE - FABRICATE	1		(SUB FOR AT220744)
7	U12547	O-RING	3		
8	38H1175	ADAPTER	1		
9	T77857	O-RING	3		
10	AT220732	HYDRAULIC HOSE - FABRICATE	1		13/16" X 1 400 MM (55") X 13/16"
11	38H1430	ELBOW FITTING	1		
12	AT220925	OIL FILTER	2		
13	R26375	O-RING	2		
14	38H1005	ELBOW FITTING	2		
15	AT220734	HYDRAULIC HOSE - FABRICATE	1		13/16" X 735 MM (29") X 13/16"
16	AT220735	HYDRAULIC HOSE - FABRICATE	1		13/16" X 3 302 MM (130") X 13/16"

AXLE OIL RECIRCULATION PUMP AND MOTOR

T136474 -UN-15DEC00

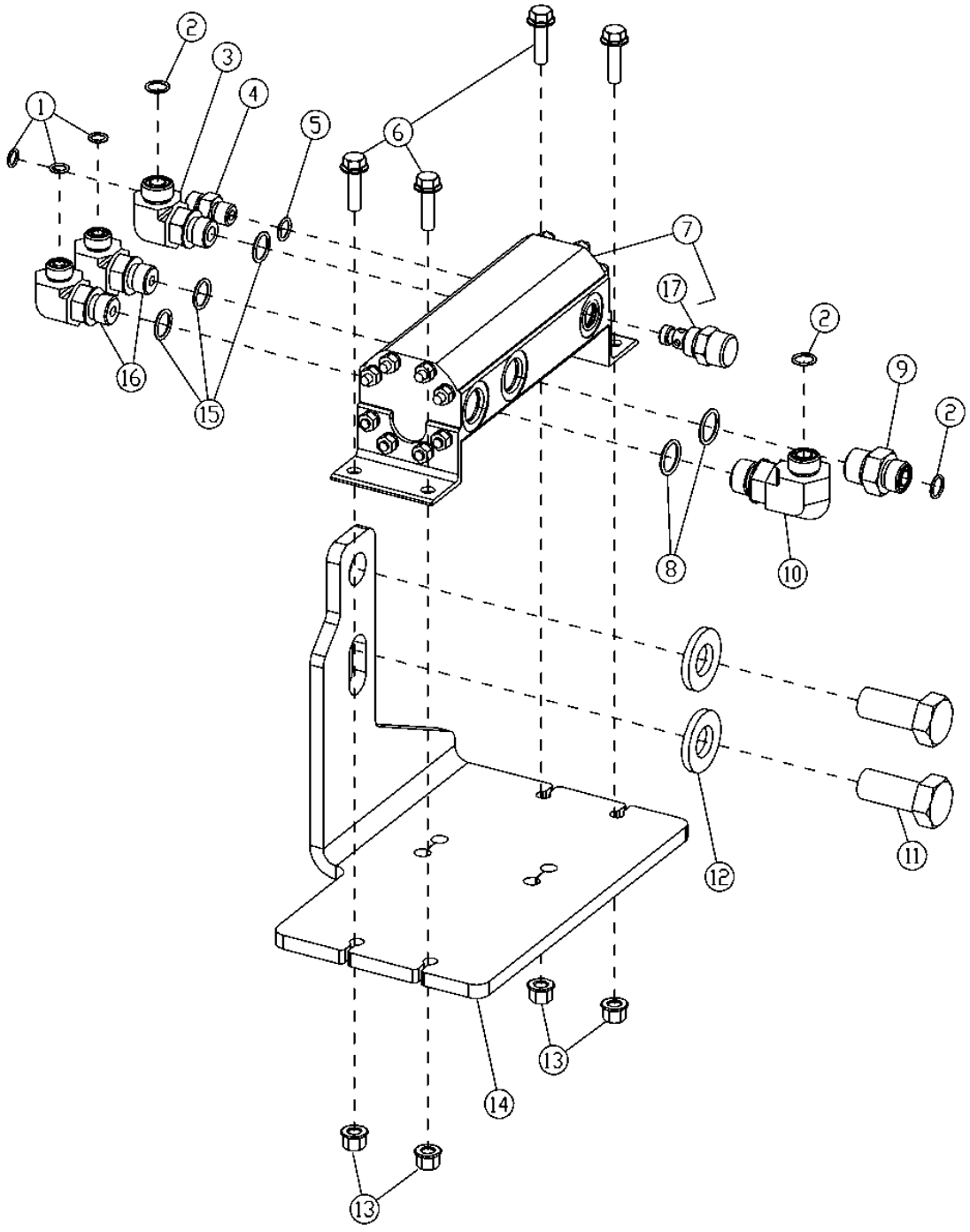

AXLE OIL RECIRCULATION PUMP AND MOTOR

KEY	PART NO.	PART NAME	QTY	SERIAL NO.	REMARKS
1	T77613	O-RING	3		
2	T77857	O-RING	3		
3	38H1005	ELBOW FITTING	1		
4	38H1160	ADAPTER	1		
5	R26448	O-RING	1		
6	19M7868	SCREW	4		M8 X 30
7	AT220832	PUMP	1		
8	R26906	O-RING	2		
9	38H1174	ADAPTER	1		
10	38H1012	ELBOW FITTING	1		
11	19M7950	CAP SCREW	2		M20 X 45
12	24M7242	WASHER	2		21.400 X 42 X 5 MM
13	14M7396	LOCK NUT	4		M8
14	T197061	BRACKET	1		(SUB FOR T176115)
15	R26375	O-RING	4		
16	38H1010	ELBOW FITTING	2		
17	AT223728	CONTROL VALVE	1		FLOW
	AT223805	SEAL KIT	1		

**TRANSMISSION-TO-DIFFERENTIALS AND ENGINE DRIVE-SHAFTS
(WITH AND WITHOUT DISCONNECT)**

TP60368 -UN-28APR98

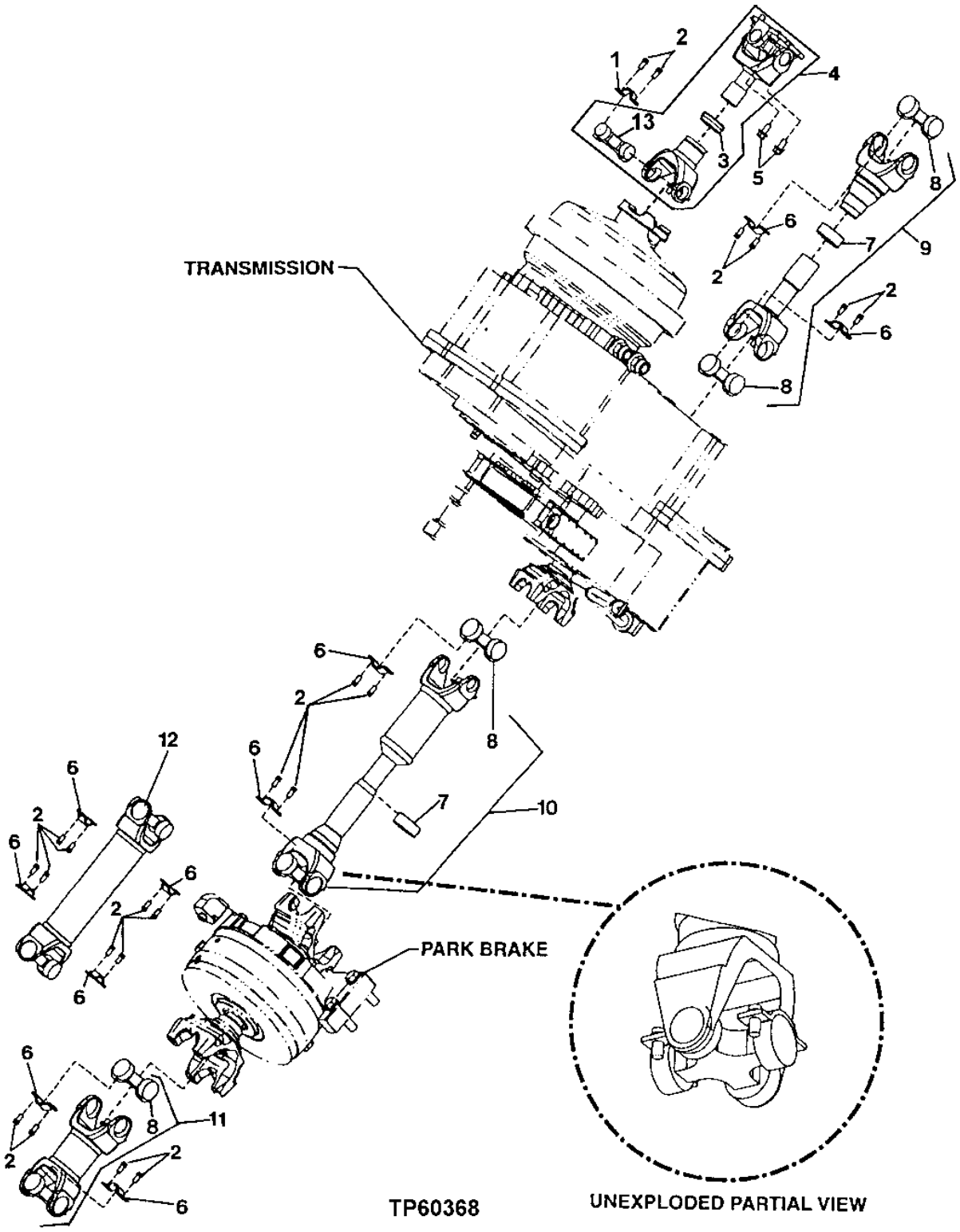

TRANSMISSION-TO-DIFFERENTIALS AND ENGINE DRIVE-SHAFTS (WITH AND WITHOUT DISCONNECT)

KEY	PART NO.	PART NAME	QTY	SERIAL NO.	REMARKS
1	T203475	STRAP	2		(SUB FOR R85168)
2	R85169	SCREW	28		
3	AT210344	CAP	1		
4	AT211475	DRIVE SHAFT	1		(ENGINE/TRANSMISSION SHAFT)
5	19M7789	SCREW	4		M12 X 30
6	T203486	STRAP	12		(SUB FOR T171597)
7	AT211207	CAP	2		
8	AT225137	UNIVERSAL JOINT	6		(UNIVERSAL JOINT)
9	AT225253	DRIVE SHAFT	1		(REAR SHAFT)
10	AT224986	DRIVE SHAFT	1		
11	AT225255	DRIVE SHAFT	1		(FRONT DRIVE SHAFT) (WITH DISCONNECT)
12	AT225252	DRIVE SHAFT	1		(FRONT DRIVE SHAFT) (WITHOUT DISCONNECT)
13	AT207330	UNIVERSAL JOINT	2		

TRANSMISSION MOUNTING SUPPORTS

T155222 -UN-19JUL02

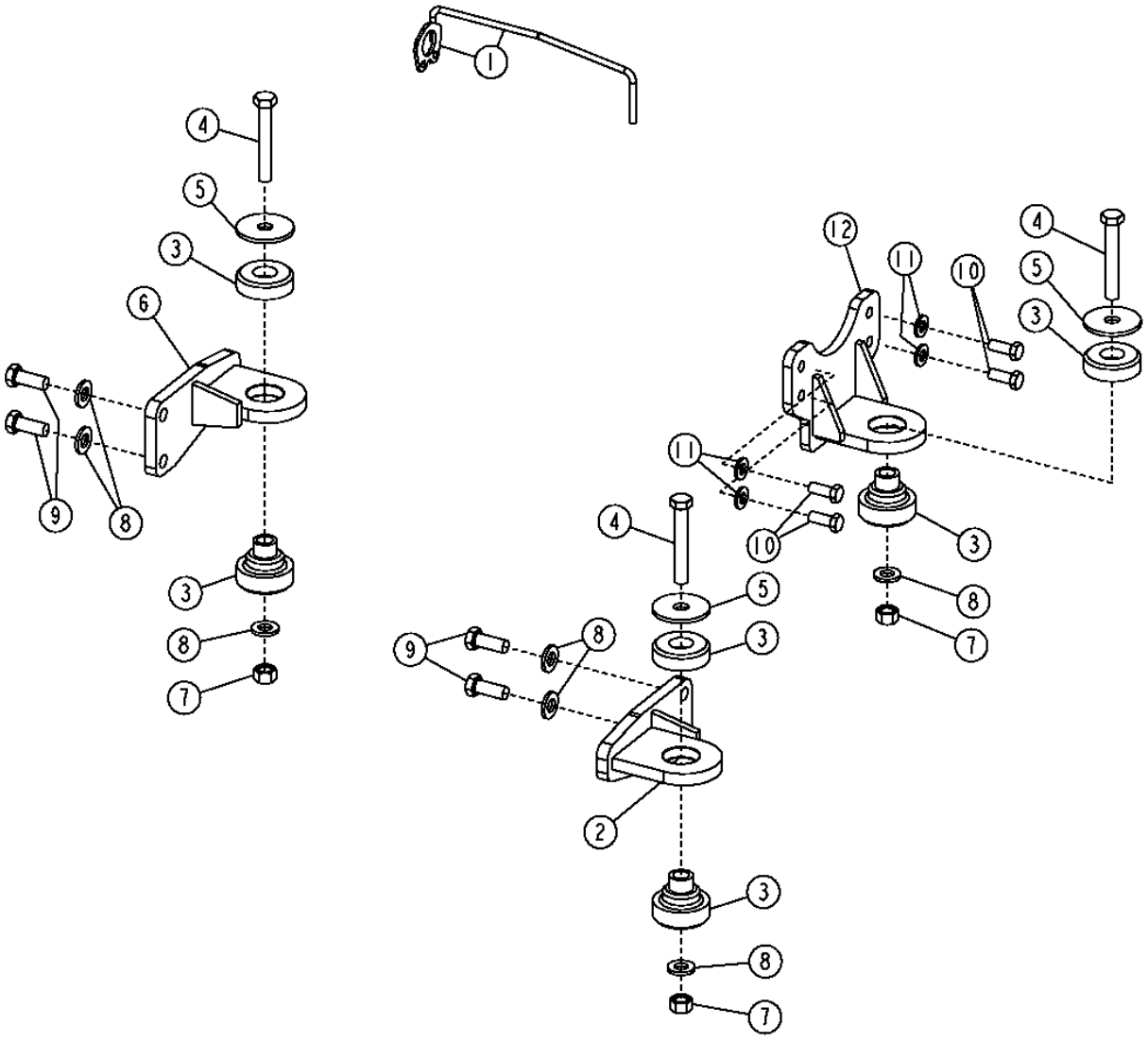

T155222

TRANSMISSION MOUNTING SUPPORTS

KEY	PART NO.	PART NAME	QTY	SERIAL NO.	REMARKS
1	AT222054	GUIDE	1		
2	AT209703	SUPPORT	1		
3	AT165288	ISOLATOR	3		(INCLUDES TWO PIECES, A TOP AND BOTTOM)
4	19M7968	CAP SCREW	3		M20 X 130
5	T42977	WASHER	3		
6	AT209704	SUPPORT	1		
7	14M7277	NUT	3		M20
8	24M7242	WASHER	7		21.400 X 42 X 5 MM
9	19M7487	CAP SCREW	4		M20 X 50
10	19M7488	CAP SCREW	4		M16 X 40
11	24M7241	WASHER	4		17 X 34 X 4 MM
12	AT209221	SUPPORT	1		

TRANSMISSION

T155803 -UN-10JUN02

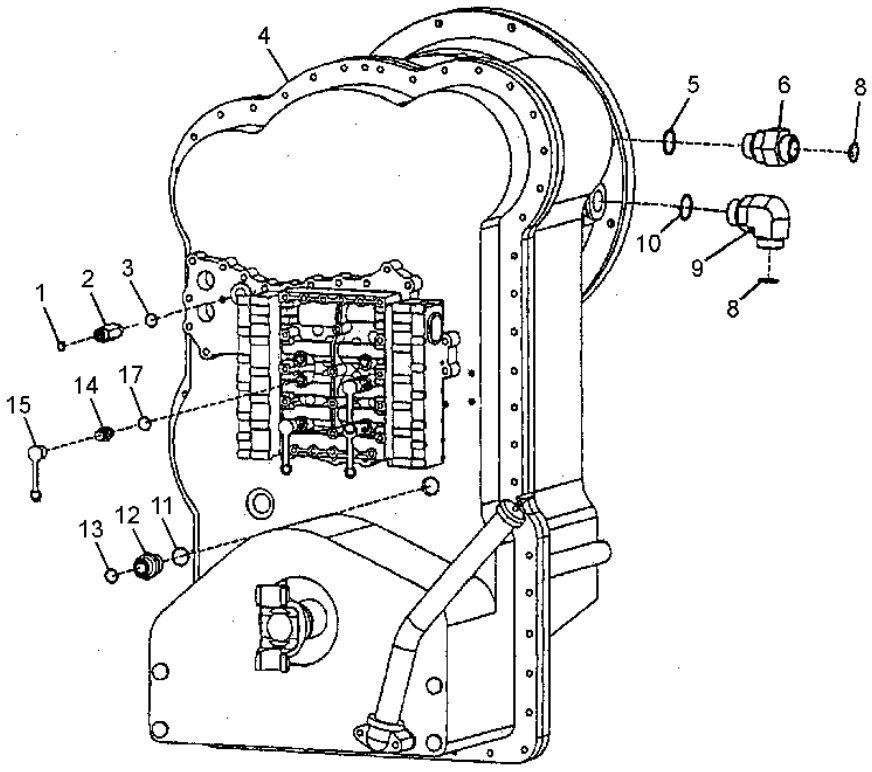

T155803

TRANSMISSION

KEY	PART NO.	PART NAME	QTY	SERIAL NO.	REMARKS
1	T77613	O-RING	1		
2	38H5178	ADAPTER	1		
3	51M7042	O-RING	1		
4	AT307692	TRANSMISSION	1		(REMANUFACTURED) (SUB FOR AT222004)
5	R29936	O-RING	1		
6	38H1164	ADAPTER	1		
8	T76938	O-RING	2		
9	38H1037	ELBOW FITTING	1		
10	51M7048	O-RING	1		
11	T24210	O-RING	1		
12	T172732	ADAPTER	1		
13	T77932	O-RING	1		
14	AT202955	DIAGNOSTIC COUPLING	4		
15	R77175	COVER	4		
17	51M7039	O-RING	4		

CLUTCH ASSEMBLY
(1ST GEAR)

T155375 -UN-31MAY02

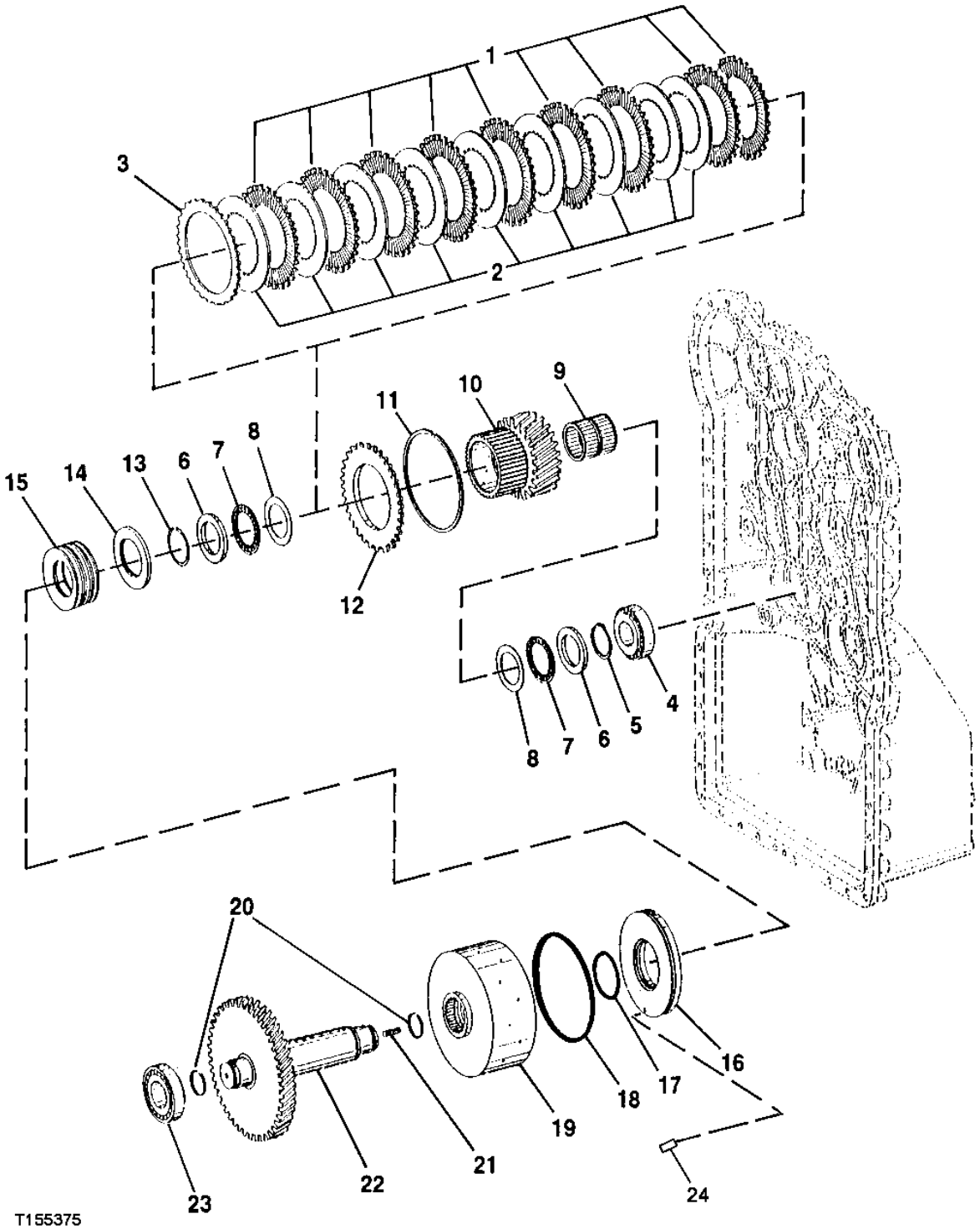

CLUTCH ASSEMBLY (1ST GEAR)

KEY	PART NO.	PART NAME	QTY	SERIAL NO.	REMARKS
1	T173841	CLUTCH DISK	9		
2	T173842	CLUTCH DISK	9		
3	T173840	CLUTCH DISK	1		
4	T173849	BEARING	1		IMPORTANT-HIGH TOLERANCE BEARING REQUIRED IN THIS LOCATION. USE ONLY JOHN DEERE PARTS SOURCED BEARINGS.
5	T173036	SNAP RING	1		
6	T172104	DISK	2		
7	T172129	THRUST BEARING	2		
8	T172130	THRUST WASHER	2		
9	T179935	NEEDLE BEARING	1		
10	T173845	IDLER	AR		
11	T173863	SNAP RING	AR		3.60 MM (.142")
	T173864	SNAP RING	AR		4.20 MM (.165")
	T181881	SNAP RING	AR		2.4 MM (.095")
	T181882	SNAP RING	AR		2.7 MM (.106")
	T181883	SNAP RING	AR		3.0 MM (.118")
	T181884	SNAP RING	AR		3.3 MM (.123")
12	T173844	SOLID SHIM	1		
13	T173067	SNAP RING	1		
14	T173066	SNAP RING	1		
15	T173839	SPRING	7		
16	T174418	PISTON	1		(SUB FOR T174254)
17	T173958	O-RING	1		
18	T174413	O-RING	1		
19	T173837	HOUSING	1		
20	T172115	PISTON RING	2		
21	T171153	STUD	1		
22	T173843	SHAFT	1		
23	T173847	BEARING	1		IMPORTANT-HIGH TOLERANCE BEARING REQUIRED IN THIS LOCATION. DO NOT SUBSTITUTE STANDARD BEARING.
24	T176801	FLOW CONTROL HYD. VALVE	1		

CLUTCH ASSEMBLY
(2ND GEAR)

TP55758 -UN-23DEC97

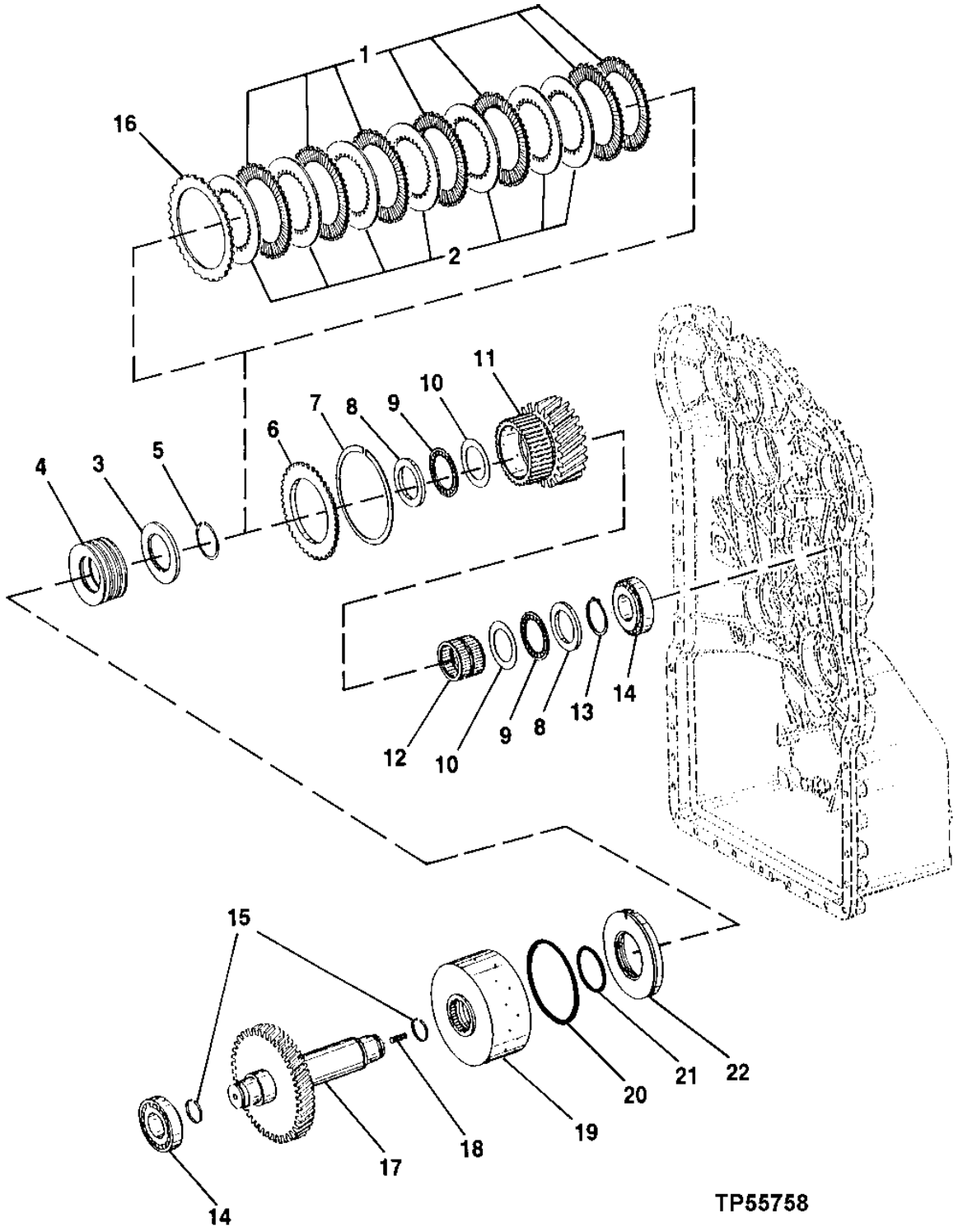

CLUTCH ASSEMBLY (2ND GEAR)

KEY	PART NO.	PART NAME	QTY	SERIAL NO.	REMARKS
1	T173637	DISK WITH OUTER SPLINE	7		
2	T173638	DISK WITH INNER SPLINE	7		
3	T173066	SNAP RING	1		
4	T173839	SPRING	7		
5	T173067	SNAP RING	1		
6	T173639	SOLID SHIM	1		
7	T172247	SNAP RING	AR		3.60 MM (.141")
	T172251	SNAP RING	AR		4.20 MM (.165")
	T181873	SNAP RING	AR		2.4 MM (.095")
	T181874	SNAP RING	AR		2.7 MM (.106")
	T181875	SNAP RING	AR		3.0 MM (.118")
	T181876	SNAP RING	AR		3.3 MM (.123")
8	T172104	DISK	2		
9	T172129	THRUST BEARING	2		
10	T172130	THRUST WASHER	2		
11	T174392	IDLER	1		
12	T179594	NEEDLE BEARING	1		
13	T173036	SNAP RING	1		
14	T173849	BEARING	2		IMPORTANT-HIGH TOLERANCE BEARING REQUIRED IN THIS LOCATION. USE ONLY JOHN DEERE PARTS SOURCED BEARINGS.
15	T172115	PISTON RING	1		
16	T173636	DISK WITH OUTER SPLINE	1		
17	T173851	SHAFT	1		
18	T171153	STUD	1		
19	T173852	HOUSING	1		
20	T173960	O-RING	1		
21	T173958	O-RING	1		
22	T173853	PISTON	1		

CLUTCH ASSEMBLY
(3RD GEAR)

TP55759 -UN-11DEC97

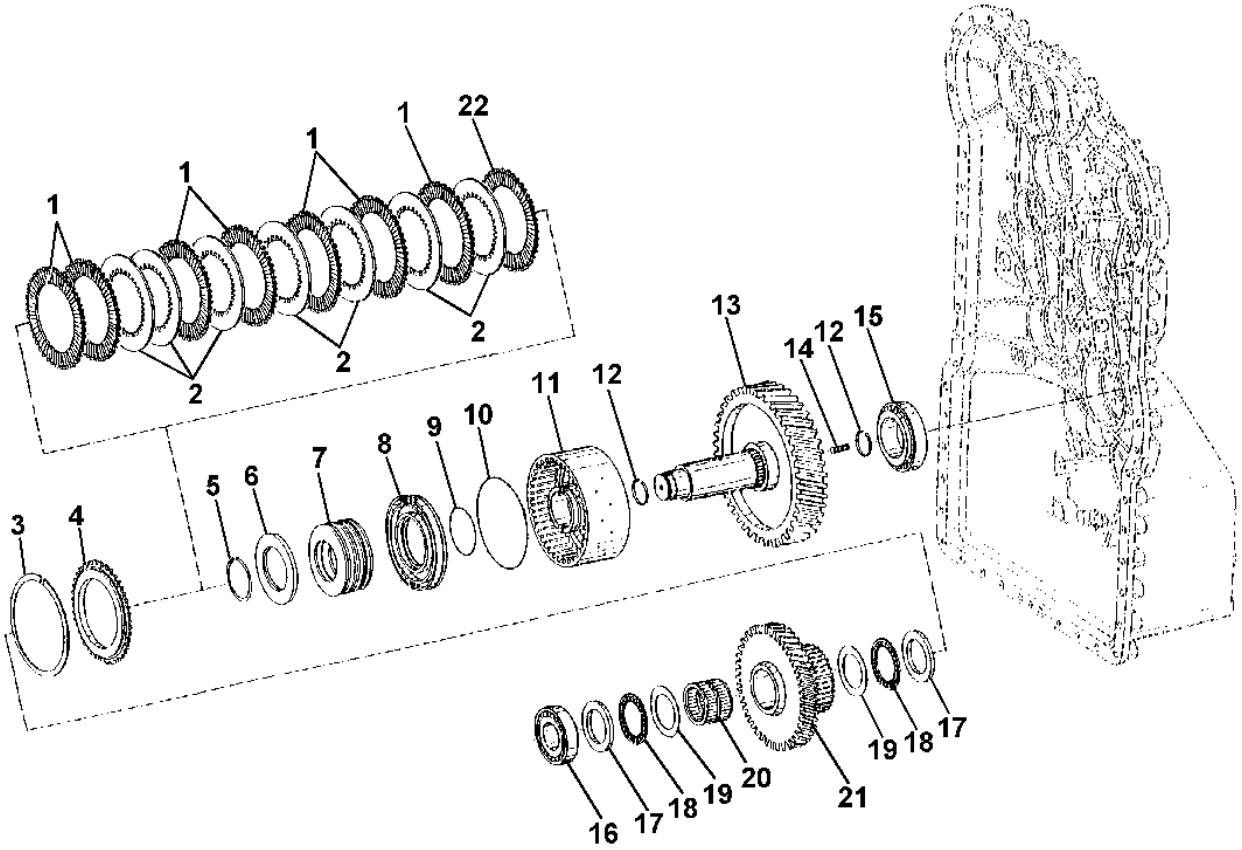

TP55759

CLUTCH ASSEMBLY
(3RD GEAR)

KEY	PART NO.	PART NAME	QTY	SERIAL NO.	REMARKS
1	T173637	DISK WITH OUTER SPLINE	7		
2	T173638	DISK WITH INNER SPLINE	7		
3	T172247	SNAP RING	AR		3.60 MM (.141")
	T172251	SNAP RING	AR		4.20 MM (.165")
	T181873	SNAP RING	AR		2.4 MM(.095")
	T181874	SNAP RING	AR		2.7 MM (.106")
	T181875	SNAP RING	AR		3.0 MM (.118")
	T181876	SNAP RING	AR		3.3 MM (.123")
4	T173639	SOLID SHIM	1		
5	T173067	SNAP RING	1		
6	T173066	SNAP RING	1		
7	T173839	SPRING	7		
8	T173853	PISTON	1		
9	T173958	O-RING	1		
10	T173960	O-RING	1		
11	T173852	HOUSING	1		
12	T172115	PISTON RING	2		
13	T173858	SHAFT	1		
14	T171153	STUD	1		
15	T173847	BEARING	1		IMPORTANT-HIGH TOLERANCE BEARING REQUIRED IN IS LOCATION. USE ONLY JOHN DEERE PARTS SOURCED BEARINGS.
16	T173849	BEARING	1		
17	T172104	DISK	2		
18	T172129	THRUST BEARING	2		
19	T172130	THRUST WASHER	2		
20	T179594	NEEDLE BEARING	1		
21	T173806	IDLER	1		
22	T173636	DISK WITH OUTER SPLINE	1		

CLUTCH ASSEMBLY
(HIGH-RANGE FORWARD CLUTCH)

TP60545 -UN-06NOV98

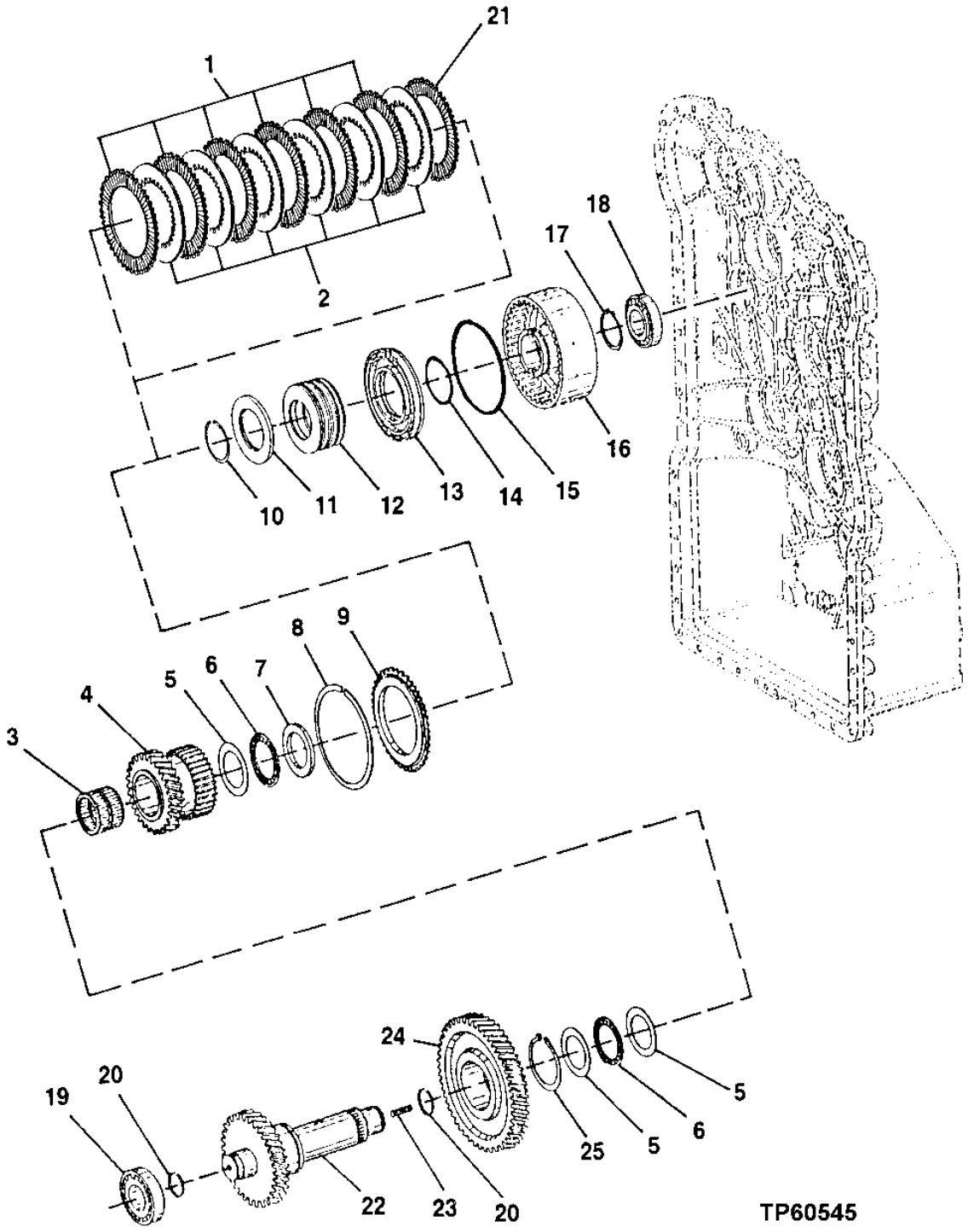

CLUTCH ASSEMBLY
(HIGH-RANGE FORWARD CLUTCH)

KEY	PART NO.	PART NAME	QTY	SERIAL NO.	REMARKS
1	T173637	DISK WITH OUTER SPLINE	6		
2	T173638	DISK WITH INNER SPLINE	6		
3	T179594	NEEDLE BEARING	1		
4	T173855	IDLER	1		
5	T172130	THRUST WASHER	3		
6	T172129	THRUST BEARING	2		
7	T172104	DISK	1		
8	T172247	SNAP RING	AR		3.60MM
	T172251	SNAP RING	AR		4.20MM
	T181873	SNAP RING	AR		2.4MM
	T181874	SNAP RING	AR		2.7MM
	T181875	SNAP RING	AR		3.0MM
	T181876	SNAP RING	AR		3.3MM
9	T173639	SOLID SHIM	1		
10	T173067	SNAP RING	1		
11	T173066	SNAP RING	1		
12	T173839	SPRING	7		
13	T173853	PISTON	1		
14	T173958	O-RING	1		
15	T173960	O-RING	1		
16	T175629	HOUSING	1		
17	T159519	SNAP RING	1		
18	T171156	BEARING	1		IMPORTANT-HIGH TOLERANCE BEARING REQUIRED IN THIS LOCATION. USE ONLY JOHN DEERE PARTS SOURCED BEARINGS.
19	T173849	BEARING	1		IMPORTANT-HIGH TOLERANCE BEARING REQUIRED IN THIS LOCATION. USE ONLY JOHN DEERE PARTS SOURCED BEARINGS.
20	T172115	PISTON RING	2		
21	T173636	DISK WITH OUTER SPLINE	1		
22	T173860	SHAFT	1		
23	T171153	STUD	1		
24	T173859	GEAR	1		
25	T158719	SNAP RING	1		

CLUTCH ASSEMBLY
(LOW-RANGE FORWARD CLUTCH)

TP55761 -UN-23DEC97

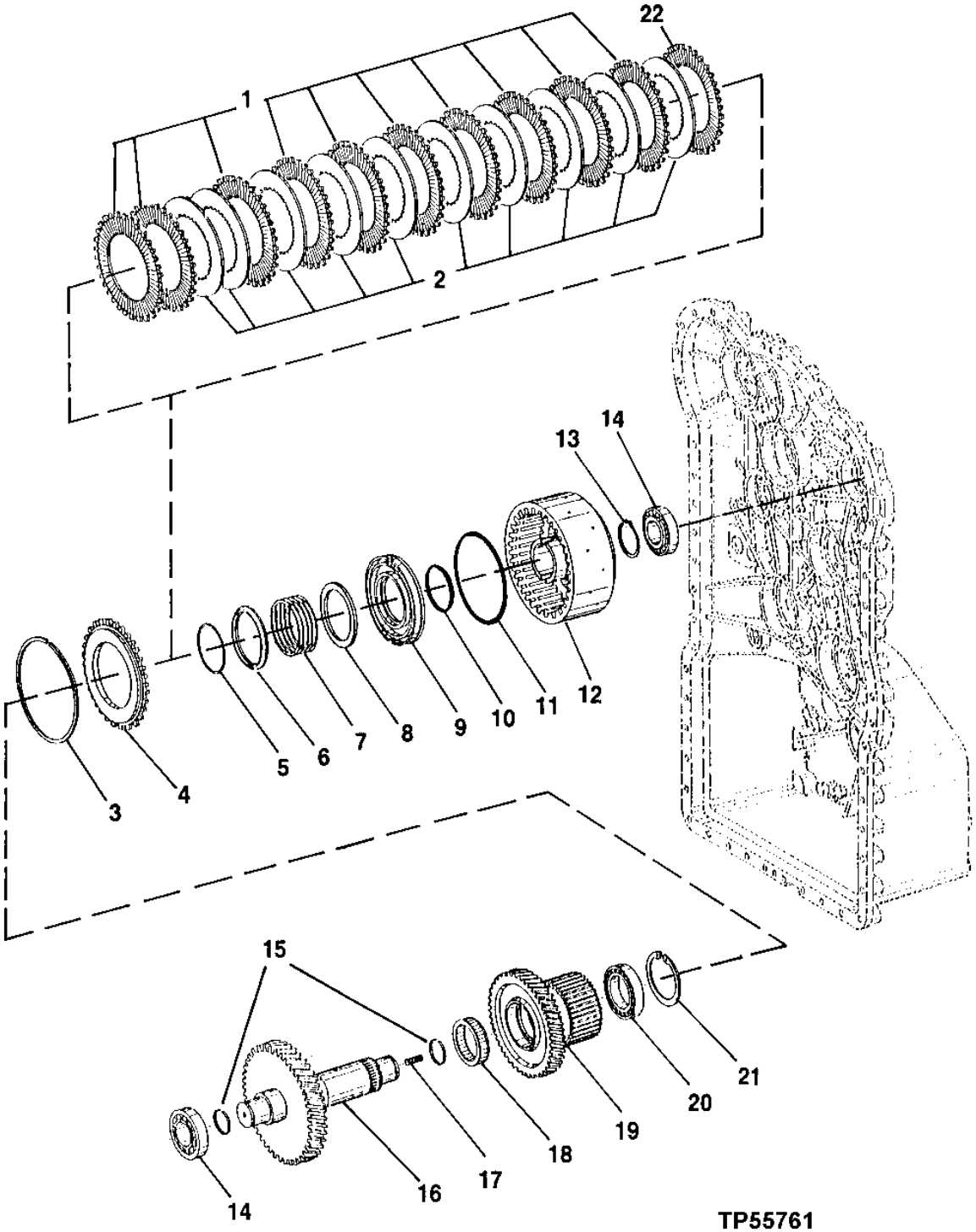

CLUTCH ASSEMBLY
(LOW-RANGE FORWARD CLUTCH)

KEY	PART NO.	PART NAME	QTY	SERIAL NO.	REMARKS
1	T173841	CLUTCH DISK	10		
2	T173842	CLUTCH DISK	10		
3	T173863	SNAP RING	AR		
	T173864	SNAP RING	AR		
	T181881	SNAP RING	AR		2.4 MM (.095")
	T181882	SNAP RING	AR		2.7 MM (.106")
	T181883	SNAP RING	AR		3.0 MM (.118")
	T181884	SNAP RING	AR		3.3 MM (.123")
4	T173844	SOLID SHIM	1		
5	T173067	SNAP RING	1		
6	T173066	SNAP RING	1		
7	T173065	COMPRESSION SPRING	1		
8	T173644	RING	1		
9	T173853	PISTON	1		
10	T173958	O-RING	1		
11	T173960	O-RING	1		
12	T173856	HOUSING	1		
13	T159519	SNAP RING	1		
14	T171156	BEARING	2		IMPORTANT-HIGH TOLERANCE BEARING REQUIRED IN THIS LOCATION. USE ONLY JOHN DEERE PARTS SOURCED BEARINGS.
15	T172115	PISTON RING	2		
16	T173862	SHAFT	1		
17	T171153	STUD	1		
18	T172302	NEEDLE BEARING	1		
19	T173848	IDLER	1		
20	T197553	BALL BEARING	1		(SUB FOR T171218)
21	40M7060	SNAP RING	1		
22	T173840	CLUTCH DISK	1		

CLUTCH ASSEMBLY
(REVERSE CLUTCH)

TP55762 -UN-23DEC97

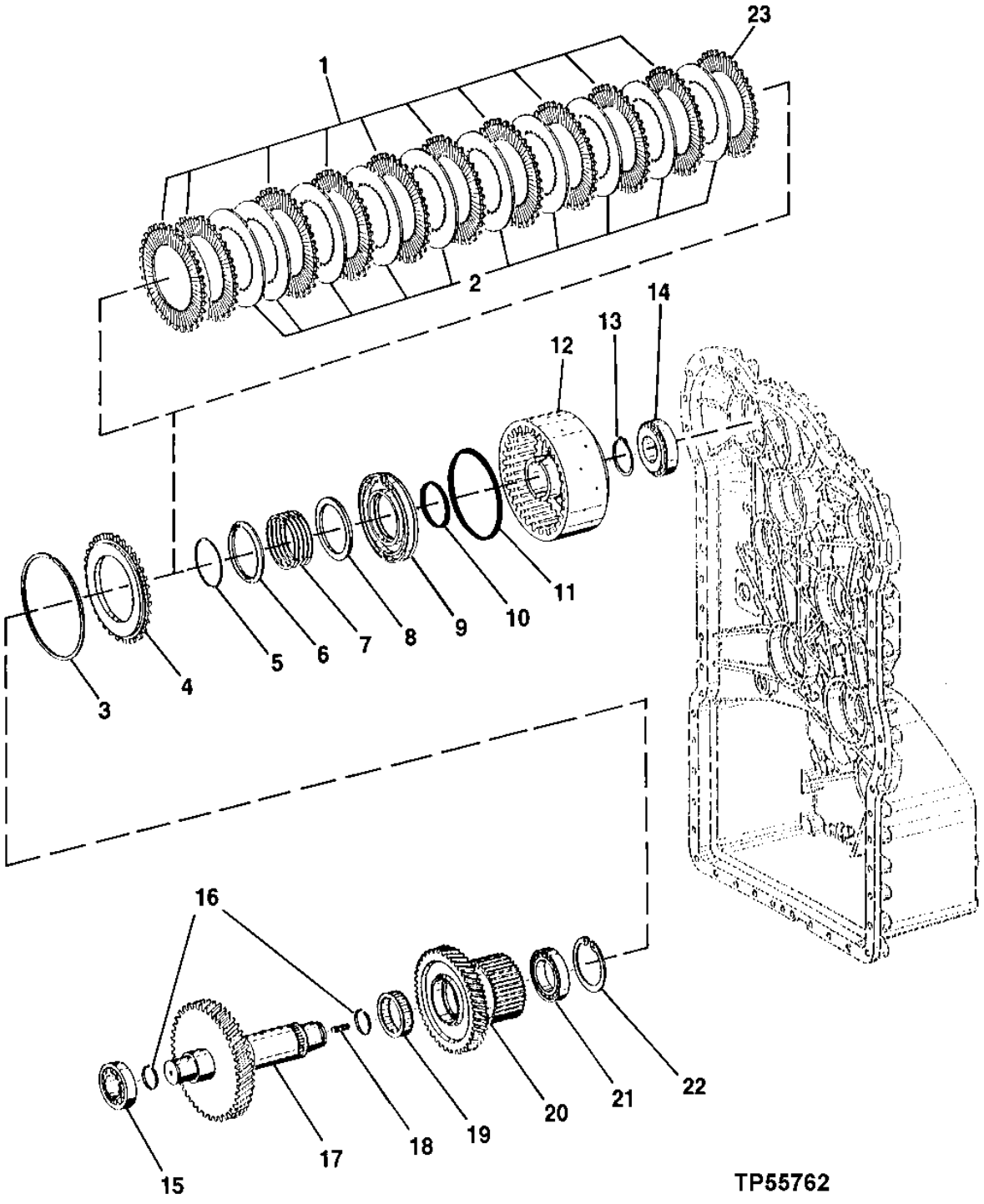

CLUTCH ASSEMBLY (REVERSE CLUTCH)

KEY	PART NO.	PART NAME	QTY	SERIAL NO.	REMARKS
1	T173841	CLUTCH DISK	10		
2	T173842	CLUTCH DISK	10		
3	T173863	SNAP RING	AR		3.60 MM (.141")
	T173864	SNAP RING	AR		4.20 MM (.165")
	T181881	SNAP RING	AR		2.4 MM (.095")
	T181882	SNAP RING	AR		2.7 MM (.106")
	T181883	SNAP RING	AR		3.0 MM (.118")
	T181884	SNAP RING	AR		3.3 MM (.123")
4	T173844	SOLID SHIM	1		
5	T173067	SNAP RING	1		
6	T173066	SNAP RING	1		
7	T173065	COMPRESSION SPRING	1		
8	T173644	RING	1		
9	T173853	PISTON	1		
10	T173958	O-RING	1		
11	T173960	O-RING	1		
12	T173856	HOUSING	1		
13	T159519	SNAP RING	1		
14	T173849	BEARING	1		IMPORTANT-HIGH TOLERANCE BEARING REQUIRED IN THIS LOCATION. USE ONLY JOHN DEERE PARTS SOURCED BEARING.
15	T171156	BEARING	2		IMPORTANT-HIGH TOLERANCE BEARING REQUIRED IN THIS LOCATION. USE ONLY JOHN DEERE PARTS SOURCED BEARING.
16	T172115	PISTON RING	1		
17	T173857	SHAFT	1		
18	T171153	STUD	1		
19	T172302	NEEDLE BEARING	1		
20	T173848	IDLER	1		
21	T197553	BALL BEARING	1		(SUB FOR T171218)
22	40M7060	SNAP RING	1		
23	T173840	CLUTCH DISK	1		

GEARSHIFT SYSTEM
(CONTROL VALVE)

T155488 -UN-03JUN02

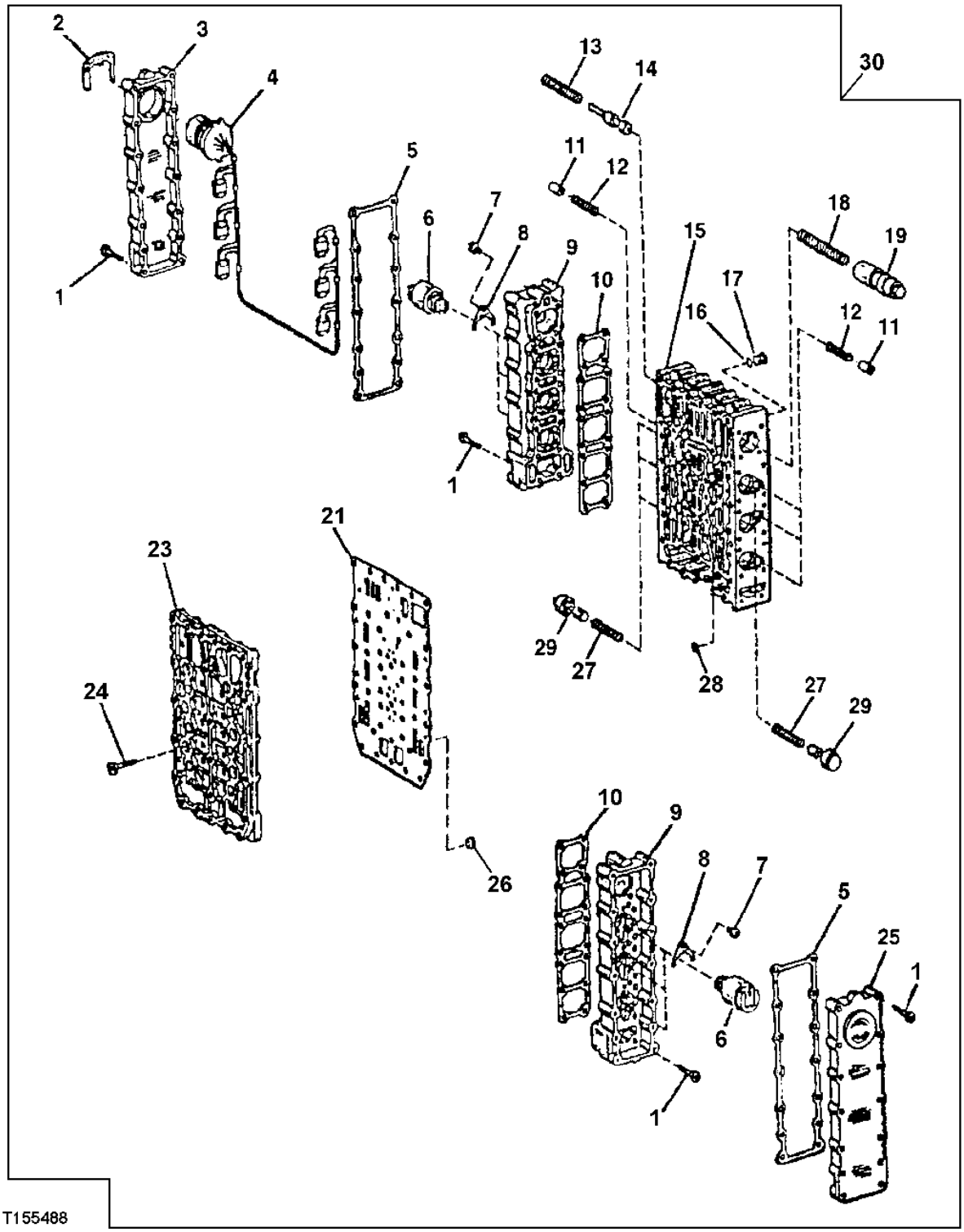

GEARSHIFT SYSTEM (CONTROL VALVE)

KEY	PART NO.	PART NAME	QTY	SERIAL NO.	REMARKS
1	T173131	CAP SCREW	64		
2	T161207	CLAMP	1		
3	T173138	COVER	1		
4	T179721	WIRING HARNESS	1		(INCLUDES TRANSMISSION TEMPERATURE SENSOR)
5	T182254	GASKET	2		
6	T169607	SOLENOID VALVE	6		
	T170196	O-RING	6		
7	T159602	CAP SCREW	6		
8	T144486	PLATE	6		
9	T177221	HOUSING	2		
10	T182196	GASKET	2		
11	T169766	PIN FASTENER	6		
12	T169712	COMPRESSION SPRING	6		
13	T173126	COMPRESSION SPRING	1		
14	T173125	PISTON	1		
15	T177219	FLOW CONTROL HYD. VALVE	1		
16	T116416	O-RING	8		
17	T175862	PLUG	8		
18	T173128	COMPRESSION SPRING	1		
19	T205369	PISTON	1		(SUB FOR T179593)
21	T195052	PLATE	1		
23	T203767	PLATE	1		(SUB FOR T195261)
24	T195275	CAP SCREW	18		
25	T173139	COVER	1		
26	T174396	SCREEN	6		
27	T169711	COMPRESSION SPRING	6		
28	T169707	ORIFICE	6		
29	T173511	PISTON	6		
30	AT220039	HYD ACTUATED CONTROL VALVE	1		

TORQUE CONVERTER

TP55556 -UN-14JUL97

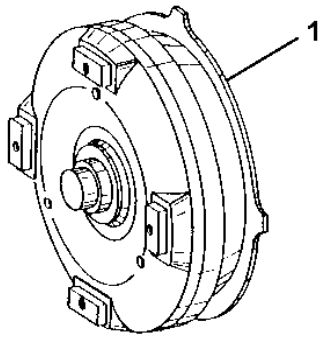

TP55556

KEY	PART NO.	PART NAME	QTY	SERIAL NO.	REMARKS
1	AT225612	TORQUE CONVERTER	1		(SUB FOR AT225655) RE-MANUFACTURED

TRANSMISSION CONTROL VALVE MANIFOLD

T155729 -UN-06JUN02

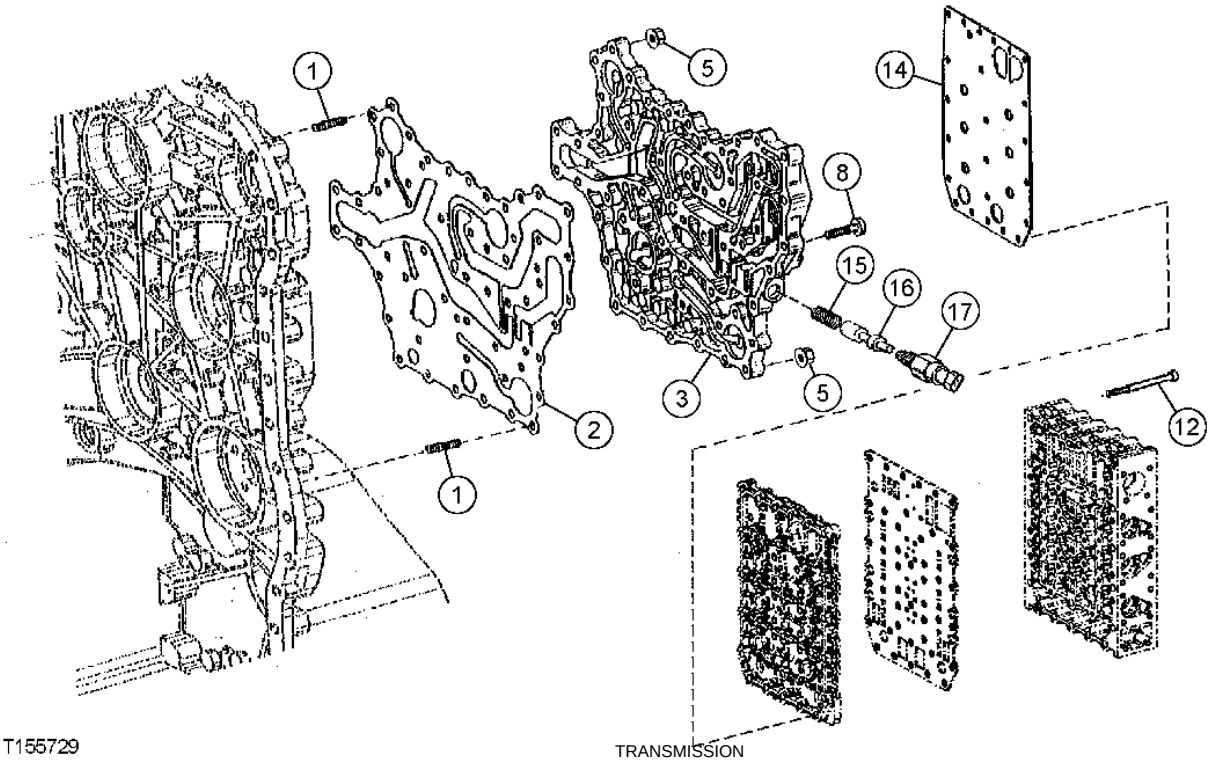

T155729

KEY	PART NO.	PART NAME	QTY	TRANSMISSION SERIAL NO.	REMARKS
1	T180884	STUD	12		
2	T180480	GASKET	1		
3	T180481	MANIFOLD	1		
5	14M7298	FLANGE NUT	14		M8
8	T161208	CAP SCREW	39		
12	T195055	CAP SCREW	23		
14	T195274	GASKET	1		
15	T177979	SPRING	1		
16	T203742	VALVE SPOOL	1		(SUB FOR T177978)
17	T173873	PRESSURE SWITCH	1		(TRANSMISSION OIL FILTER RESTRICTION INDICATOR)

CONVERTER RELIEF AND MINIMUM PRESSURE VALVES

T155456 -UN-03JUN02

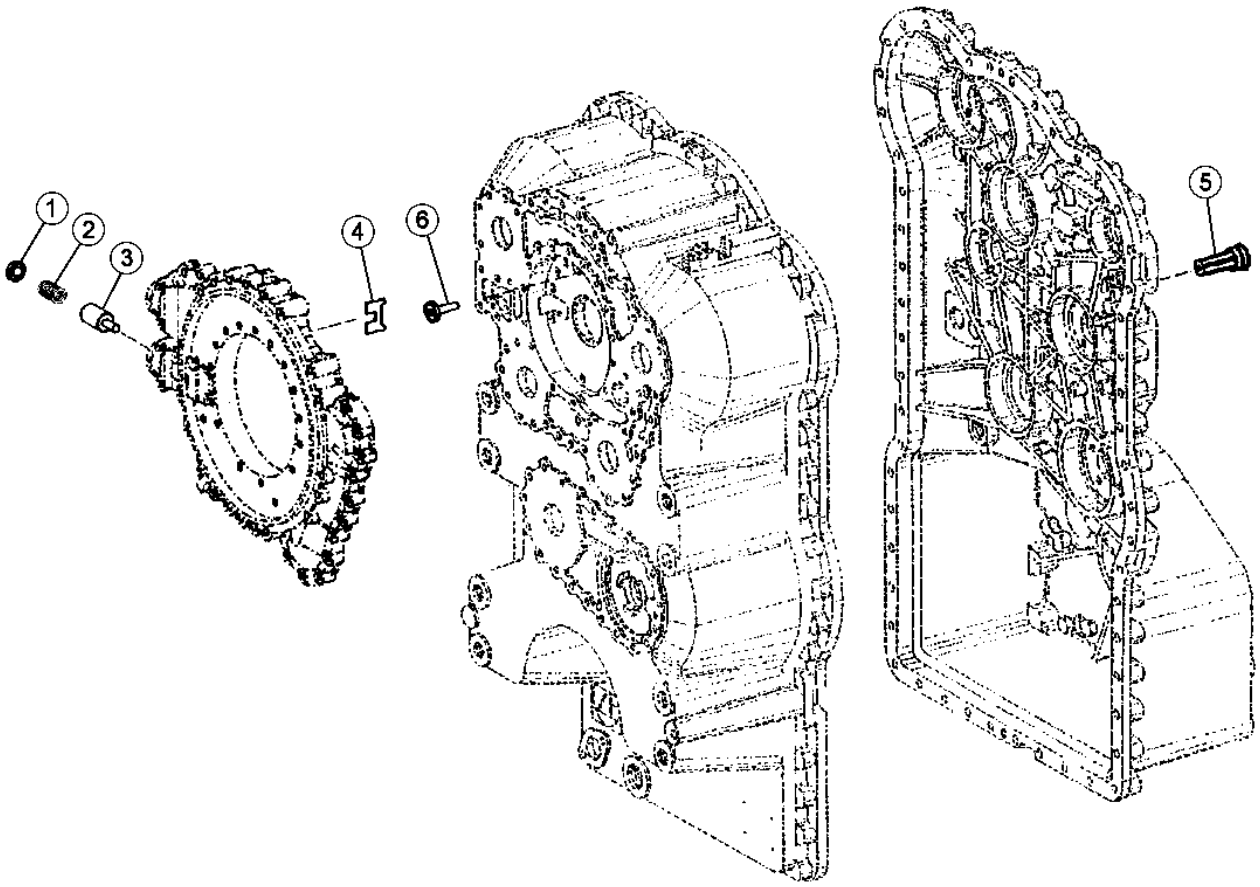

T155456

CONVERTER RELIEF AND MINIMUM PRESSURE VALVES

KEY	PART NO.	PART NAME	QTY	SERIAL NO.	REMARKS
1	T173145	PLATE	1		
2	T176528	COMPRESSION SPRING	1		
3	T176527	PISTON	1		
4	T173146	WASHER	1		
5	T176526	FLOW CONTROL HYD. VALVE	1		
6	T195270	PRESSURE RELIEF FITTING	1		

INPUT SHAFT, GEAR AND BEARINGS

TP48608 -UN-16JAN97

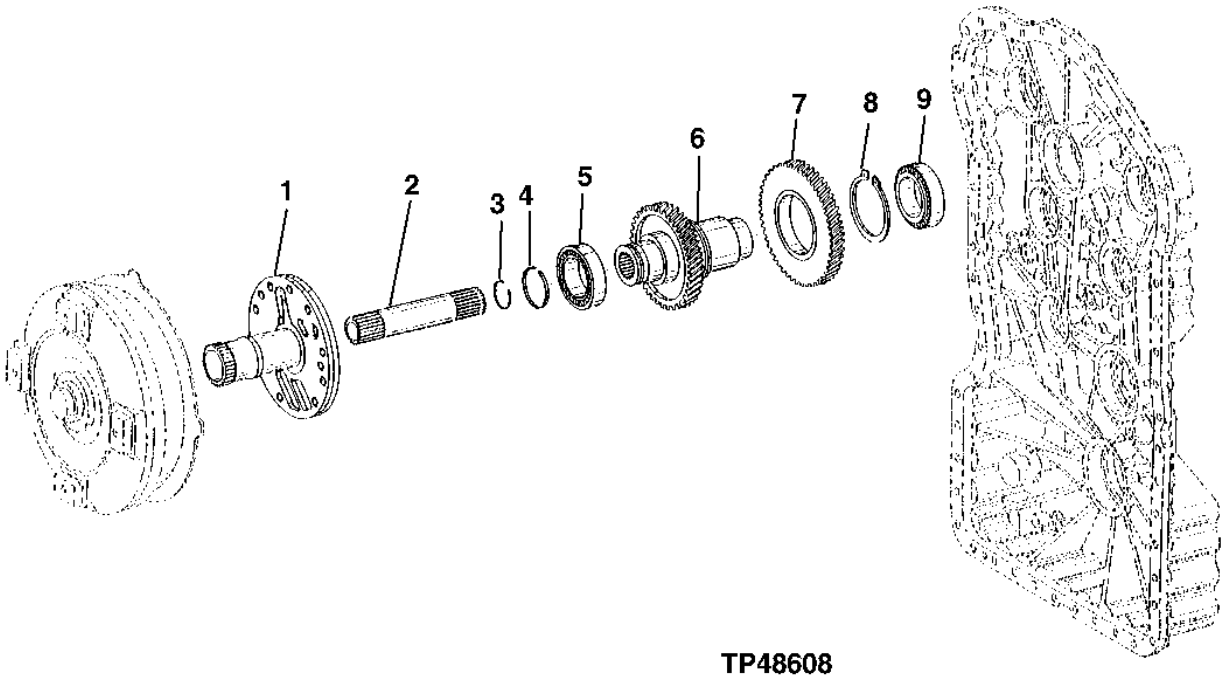

TP48608

INPUT SHAFT, GEAR AMD BEARINGS

KEY	PART NO.	PART NAME	QTY	SERIAL NO.	REMARKS
1	T195207	UNIVERSAL DRIVESHAFT	1		
2	T171114	PINION SHAFT	1		
3	T171178	SNAP RING	1		
4	T181535	PISTON RING	2		
5	T171126	BEARING	1		
6	T173807	SHAFT	1		
7	T173808	GEAR	1		
8	T173809	SNAP RING	1		
9	T171126	BEARING	1		IMPORTANT-HIGH TOLERANCE BEARING REQUIRED IN THIS LOCATION. USE ONLY JOHN DEERE PARTS SOURCED BEARINGS.

TRANSMISSION INTERNAL OIL LINES

T155711 -UN-06JUN02

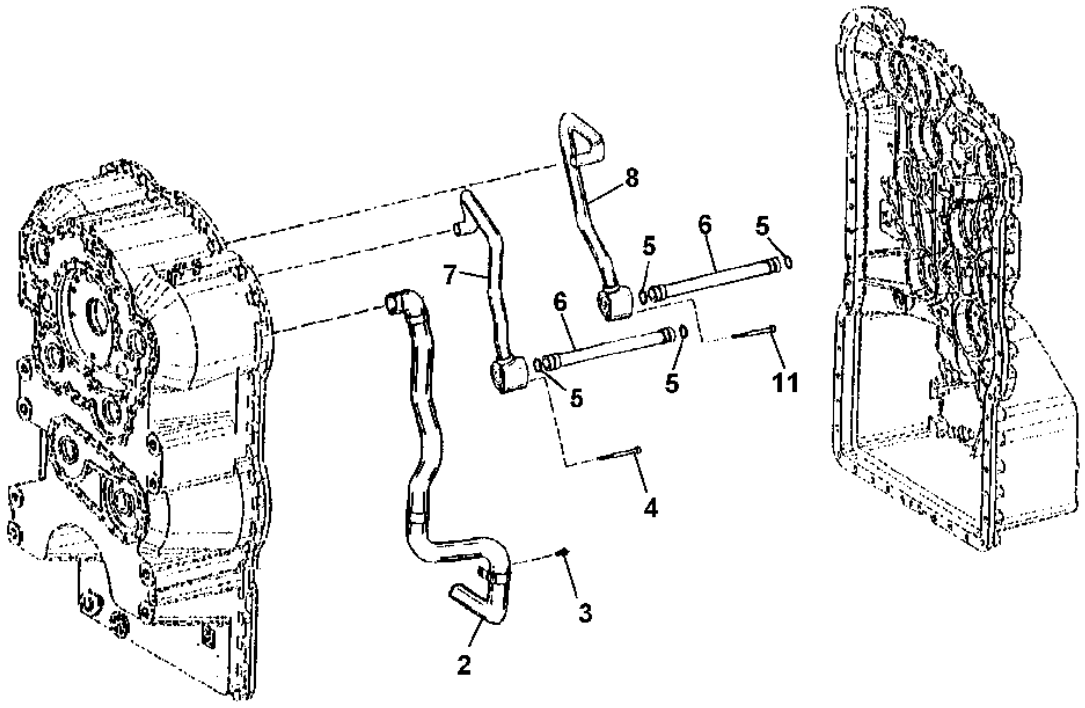

T155711

KEY	PART NO.	PART NAME	QTY	SERIAL NO.	REMARKS
2	T173822	TUBE	1		
3	19M7297	CAP SCREW	1		M8 X 12
4	T181455	CAP SCREW	1		
5	T174234	O-RING	4		
6	T174389	PIPE	2		
7	T174388	PIPE	1		
8	T174423	PIPE	1		
11	T181455	CAP SCREW	1		

GEARBOX HOUSING

T155710 -UN-06JUN02

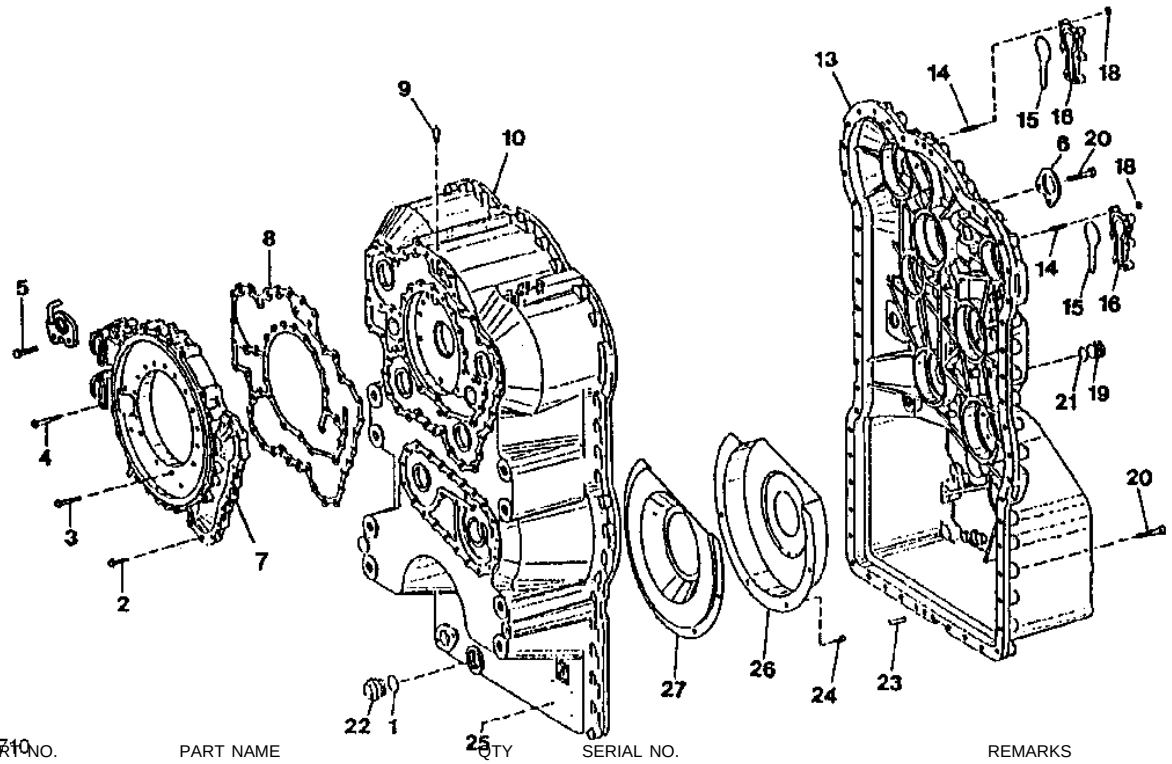

KEY	PART NO.	PART NAME	QTY	SERIAL NO.	REMARKS
1	T174107	O-RING	1		
2	T161208	CAP SCREW	15		
3	19M2972	CAP SCREW	21		
4	T173819	CAP SCREW	4		
5	19M8637	CAP SCREW	2		
6	T171112	PLATE	2		
7	T173063	MANIFOLD	1		
8	T172795	GASKET	1		
9	T116918	BREATHER	1		
10	T195272	TRANSMISSION CASE	1		HOUSING
13	T181615	HOUSING	1		
14	T180884	STUD	12		
15	T174238	O-RING	2		
16	T171111	COVER	2		
18	14M7298	FLANGE NUT	12		M8
19	T173217	FITTING PLUG	1		
20	19M7658	CAP SCREW	53		M10 X 50
21	T174236	O-RING	1		
22	T172094	DRAIN PLUG	1		
23	T179318	PIN	2		
24	19M7964	CAP SCREW	5		M8 X 12
25	25M7021	GROOVE PIN	4		3 X 5 MM
26	T173812	SHROUD	1		
27	T173811	SHROUD	1		

TRANSMISSION PUMP

TP55490 -UN-15APR97

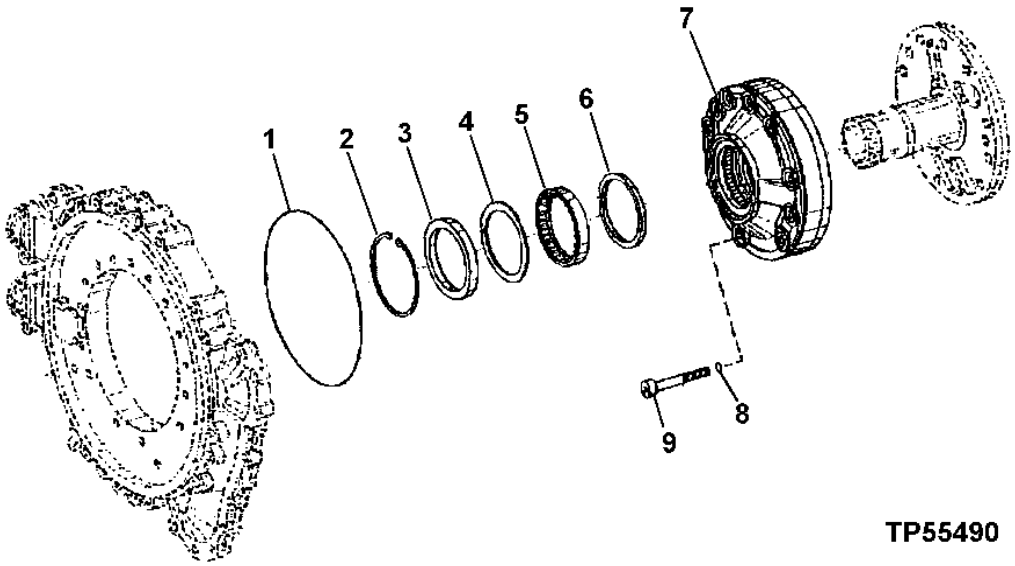

KEY	PART NO.	PART NAME	QTY	SERIAL NO.	REMARKS
1	T174240	O-RING	1		
2	T173400	SNAP RING	1		
3	T173399	SEAL	1		
4	T173397	THRUST WASHER	1		
5	T173398	BEARING	1		
6	T173396	RING	1		
7	T211710	OIL PUMP	1		(SUB FOR T173878)
8	T174239	O-RING	10		
9	T207759	BOLT	10		

TRANSMISSION COVER AND GASKET

TP55579 -UN-14JUL97

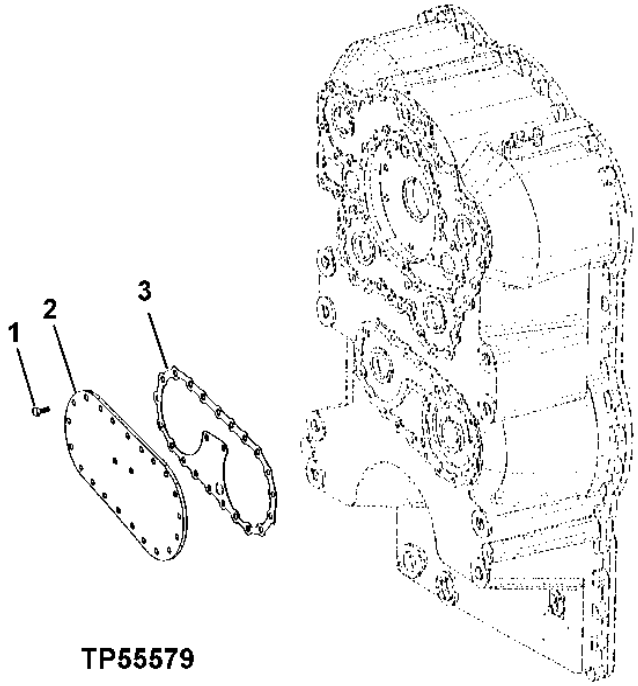

KEY	PART NO.	PART NAME	QTY	SERIAL NO.	REMARKS
1	19M7284	CAP SCREW	23	M8 X 18	
2	T172814	COVER	1		
3	T181474	GASKET	1		

OUTPUT SHAFT

T197911 -UN-20FEB04

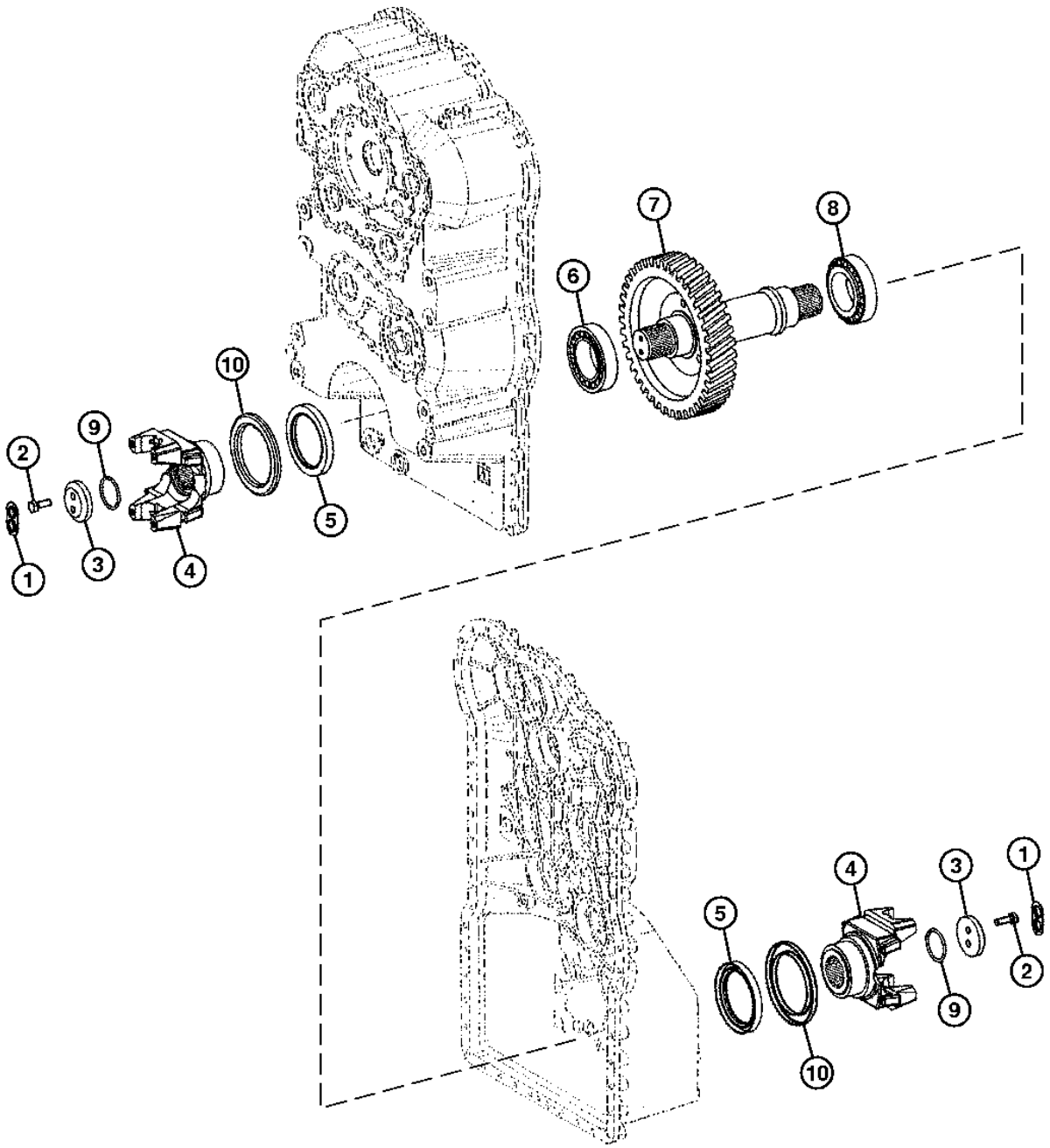

T197911

OUTPUT SHAFT

KEY	PART NO.	PART NAME	QTY	SERIAL NO.	REMARKS
1	T116928	WASHER	2		
2	T164660	SCREW	4		
3	T180957	WASHER	2		
4	T208455	UNIVERSAL JOINT YOKE	2		(SUB FOR T180607)
5	T116915	SEAL	2		
6	T173847	BEARING	1		
7	T173865	SHAFT	1		
8	T173847	BEARING	1		
9	T174237	O-RING	2		
10	T208456	POWERSHAFT SHIELD	2		

POWER TAKE-OFF

TP60302 -UN-08APR98

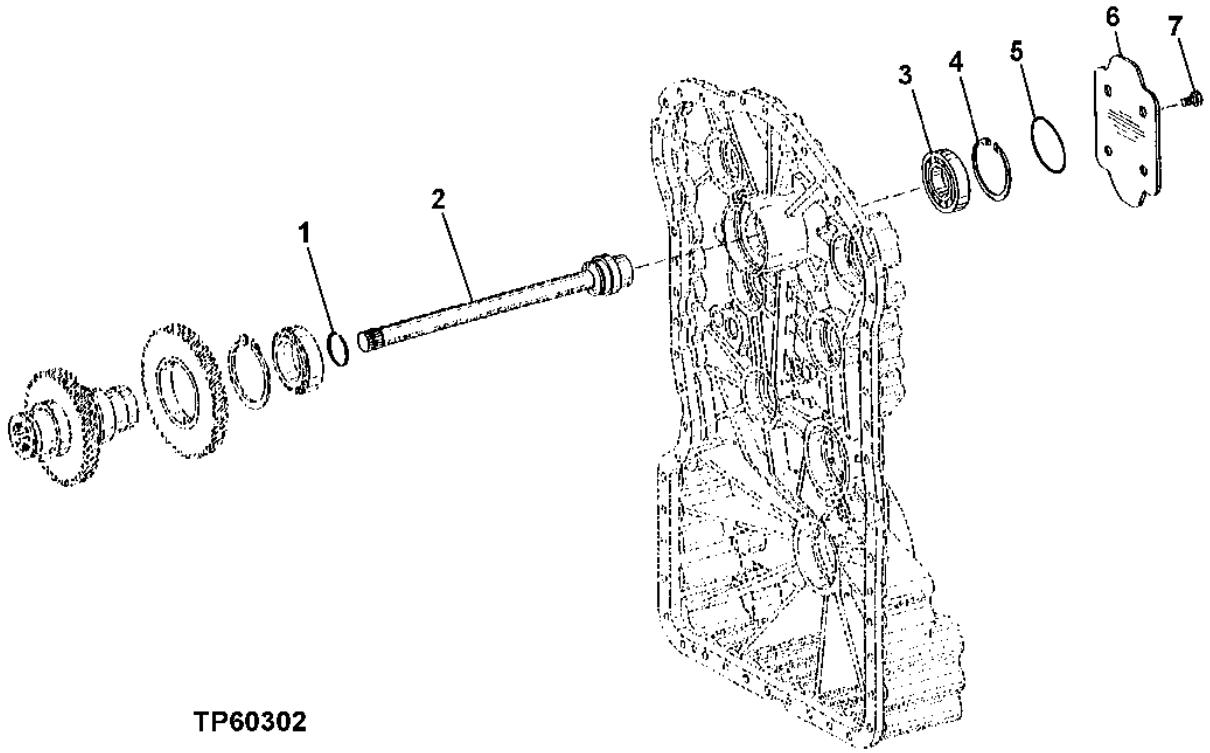

TP60302

POWER TAKE-OFF

KEY	PART NO.	PART NAME	QTY	SERIAL NO.	REMARKS
1	T181535	PISTON RING	1		
2	T175292	SHAFT	1		
3	T171140	BALL BEARING	1		
4	40M1872	SNAP RING	1		
5	T174529	O-RING	1		
6	T174405	PLATE	1		
7	T174407	CAP SCREW	4		

TRANSMISSION SPEED SENSOR

TP62706 -UN-23NOV99

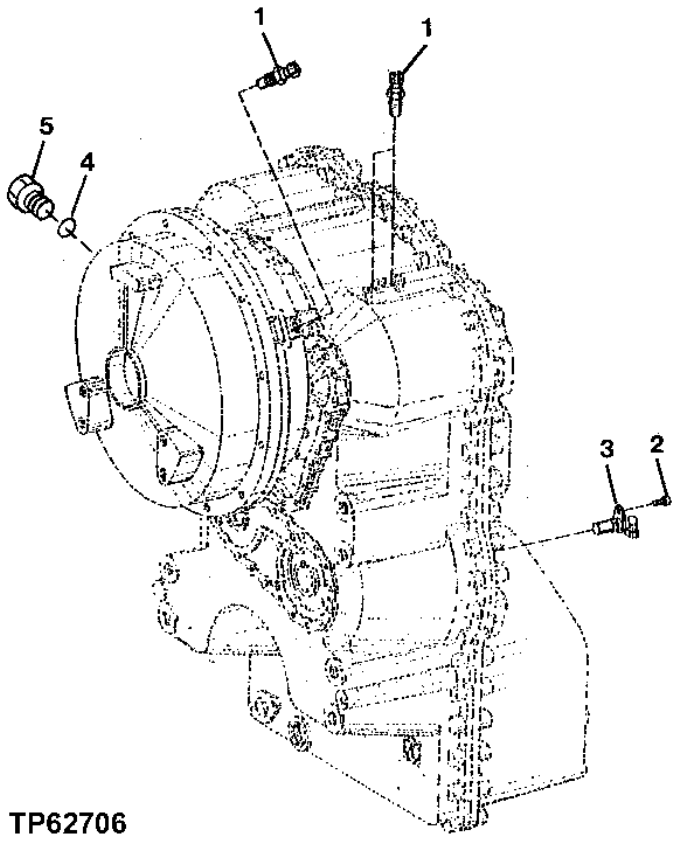

TRANSMISSION SPEED SENSOR

KEY	PART NO.	PART NAME	QTY	SERIAL NO.	REMARKS
1	AT210773	SENSOR	3		
	R104558	O-RING	3		(NOT ILLUSTRATED)
2	19M7162	CAP SCREW	1		M8 X 16
3	T179510	SENSOR	1		
4	T176796	O-RING	1		
5	T108477	PLUG	1		

CONVERTER HOUSING COVERS AND INPUT DRIVE

T144101 -UN-16JUL01

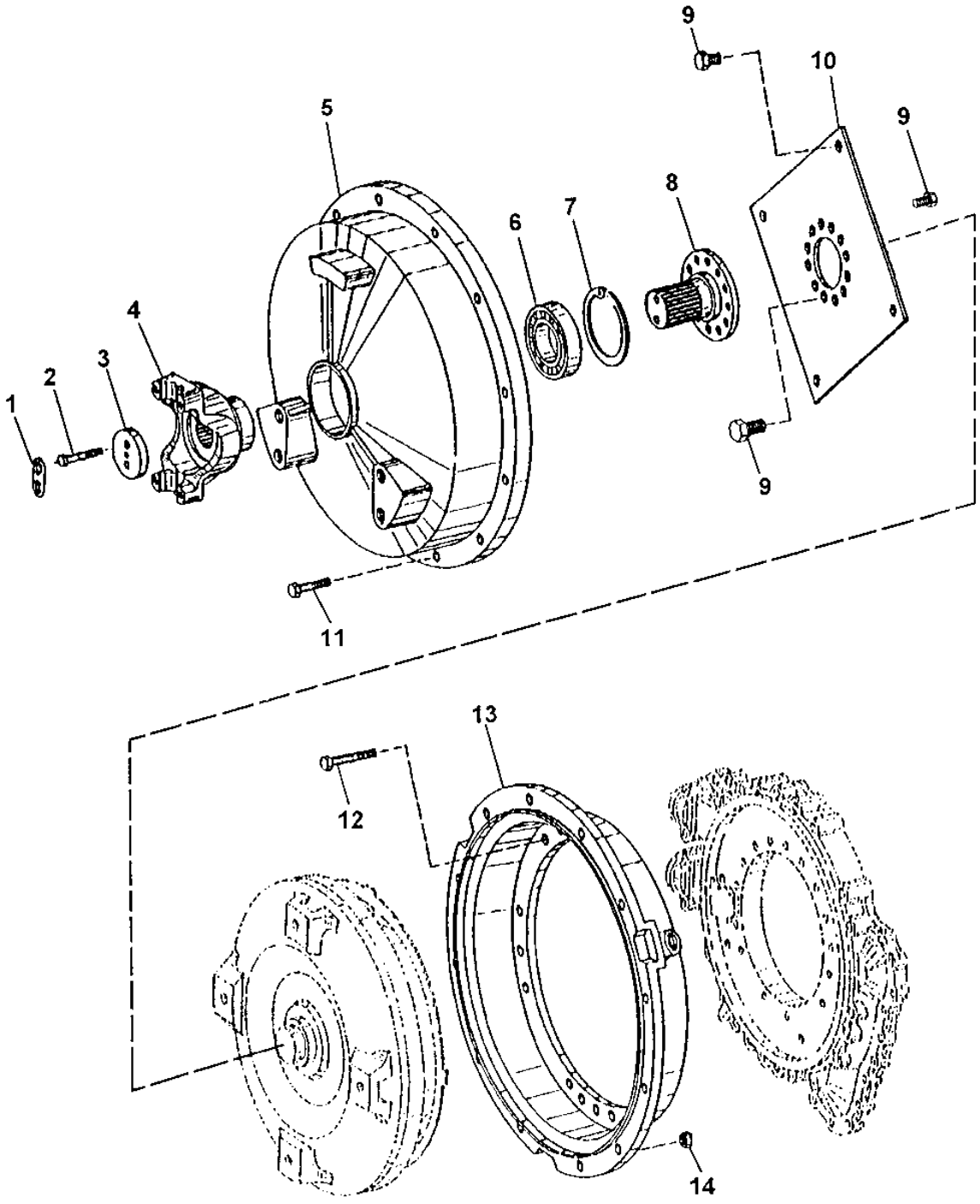

T144101

CONVERTER HOUSING COVERS AMD INPUT DRIVE

KEY	PART NO.	PART NAME	QTY	SERIAL NO.	REMARKS
1	T116613	WASHER	1		
2	19M8397	CAP SCREW	2		M8 X 50
3	T116516	SPACER	1		
4	T171730	YOKE WITH SHAFT	1		
5	T195240	HOUSING	1		(ALSO ORDER T171202, T172801 AND 40M7060)
6	T195242	BALL BEARING	1		
7	T195243	SNAP RING	1		
8	T195241	UNIVERSAL DRIVESHAFT	1		
9	T174407	CAP SCREW	16		
10	T174386	DIAPHRAGM	1		
11	19M7179	CAP SCREW	12		
12	19M7742	CAP SCREW	18		M10 X 65
13	T179276	HOUSING	1		
14	14M7274	NUT	12		

DRIVE DAMPER AND COVER

TP62688 -UN-26OCT99

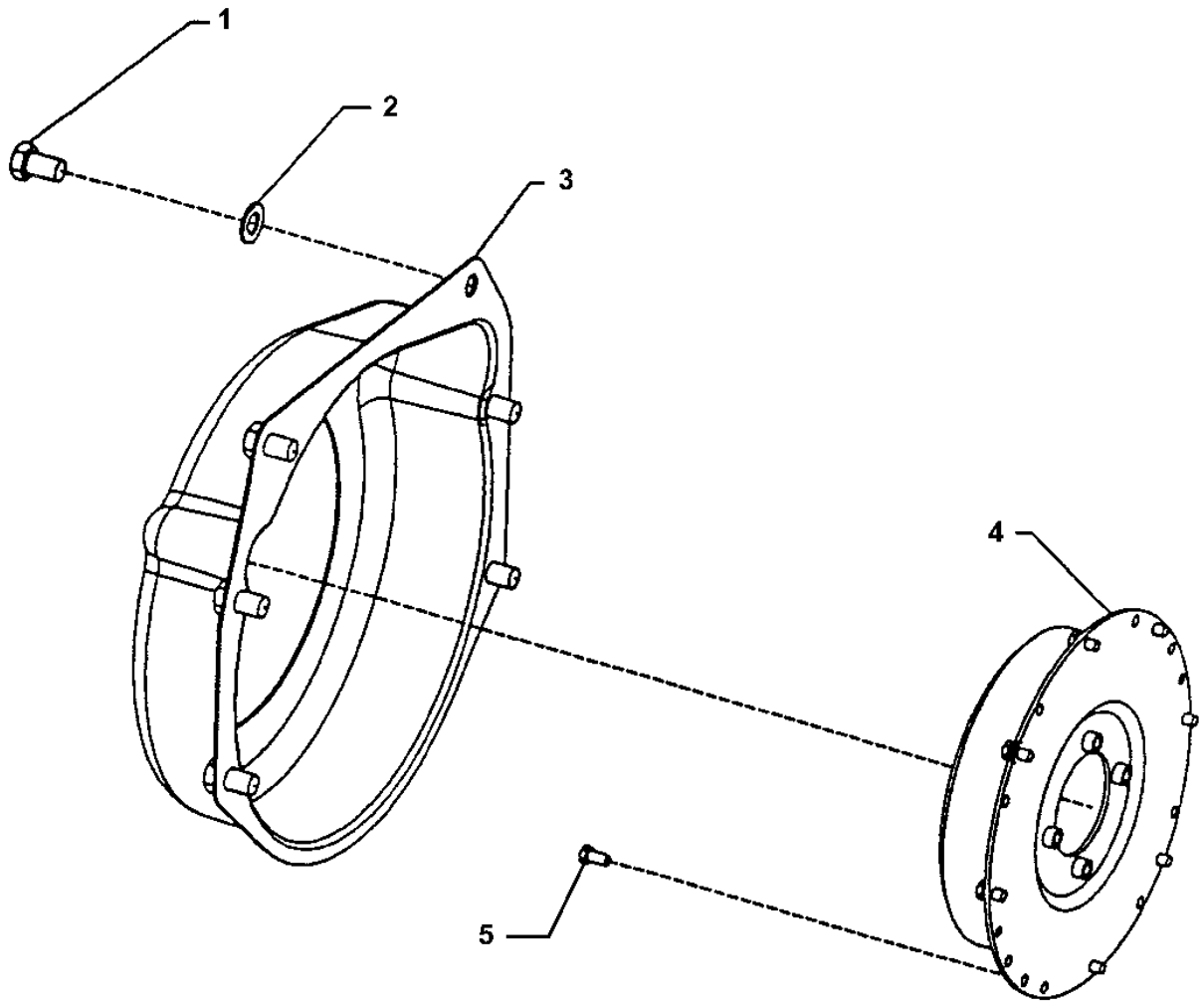

TP62688

DRIVE DAMPER AND COVER

KEY	PART NO.	PART NAME	QTY	SERIAL NO.	REMARKS
1	19H1871	CAP SCREW	6		3/4" X 1-1/4"
2	24M7051	WASHER	5		21 X 37 X 3 MM
3	T134141	COVER	1		
4	AT308994	TORSIONAL DAMPER	1		(SUB FOR AT211477)
5	19M7835	SCREW	8		M10 X 35

TRANSMISSION OIL LINES

T158653 -UN-10SEP02

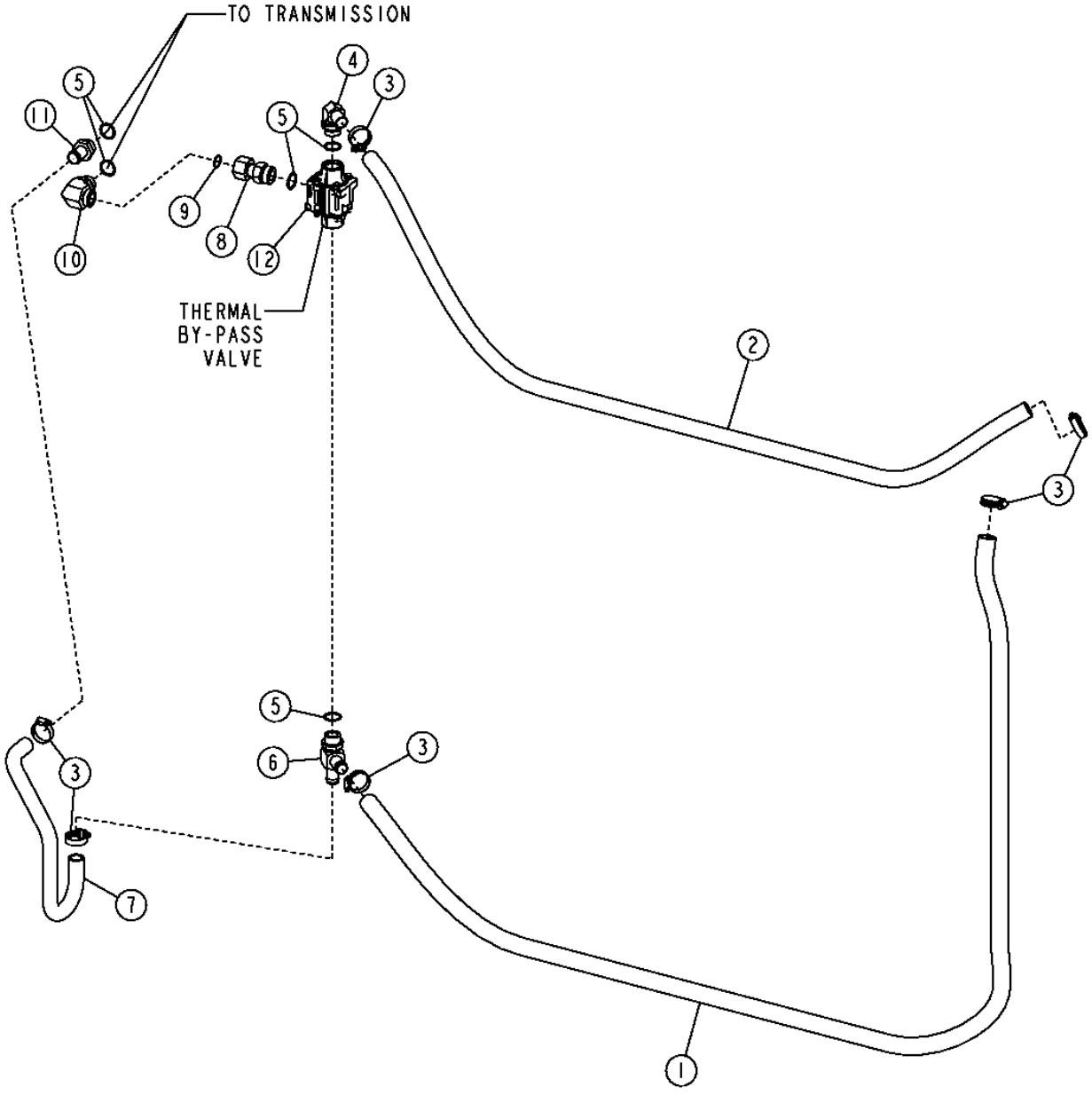

TRANSMISSION OIL LINES

KEY	PART NO.	PART NAME	QTY	SERIAL NO.	REMARKS
1	T180645	HYDRAULIC HOSE - FABRICATE	1		
2	T180646	HYDRAULIC HOSE - FABRICATE	1		
3	AR21839	CLAMP	6		
4	AH75162	FITTING	1		
5	R29936	O-RING	5		
6	AT223584	FITTING	1		
7	T180529	HOSE	1		
8	38H1071	ADAPTER	1		
9	T76938	O-RING	1		
10	38H1037	ELBOW FITTING	1		
11	T29747	HOSE FITTING	1		
12	AT225189	THERMOSTATIC CONTROL VALVE	1		

THERMAL BY-PASS VALVE

T197020 -UN-19DEC03

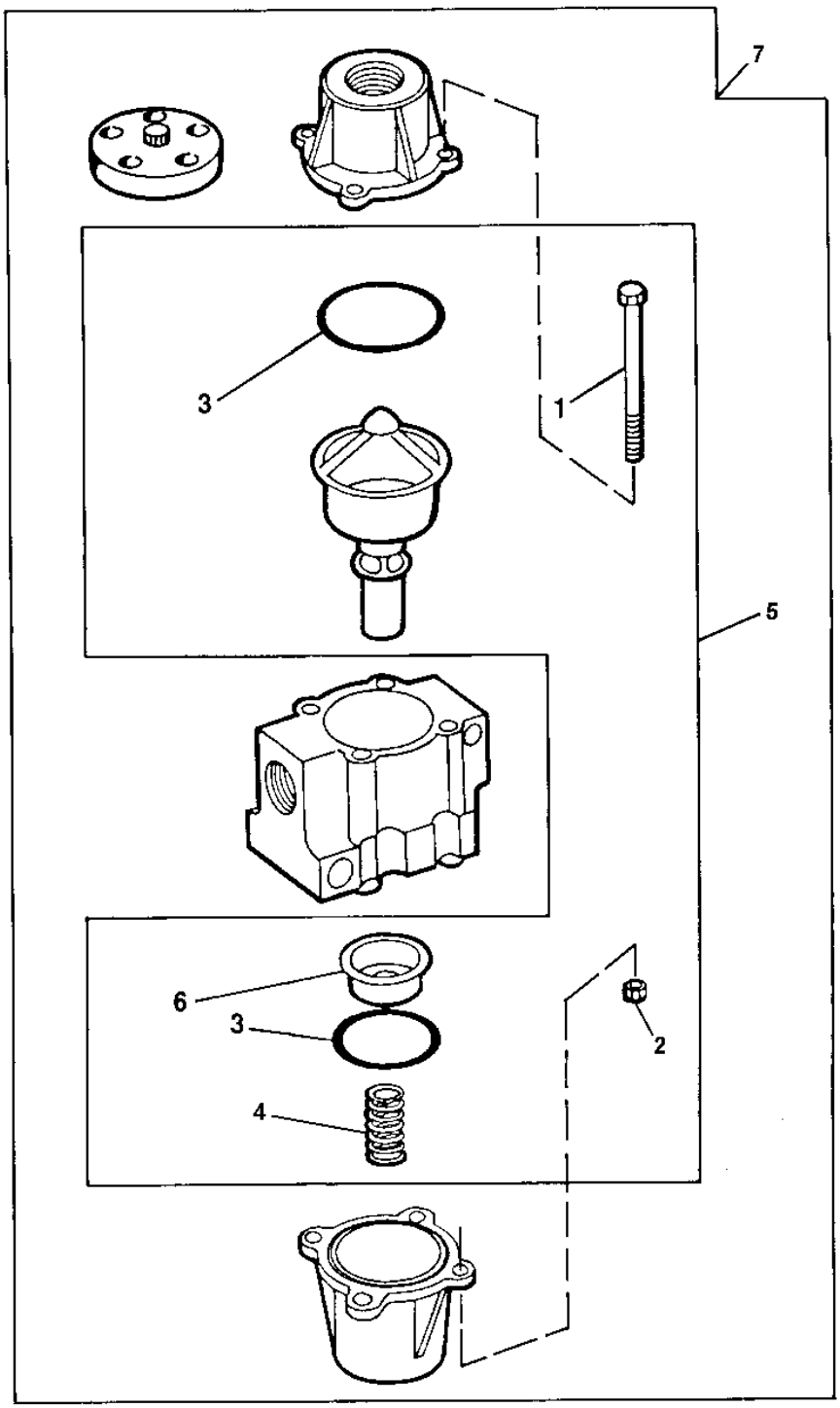

T197020

THERMAL BY-PASS VALVE

KEY	PART NO.	PART NAME	QTY	SERIAL NO.	REMARKS
1	19H2336	CAP SCREW	4		1/4" X 3-1/2"
2	M40333	LOCK NUT	4		1/4"
3	T102419	O-RING	2		
4	T102442	SPRING	1		
5	AT175831	KIT	1		
6	AT103431	SEAL	1		
7	AT228159	THERMOSTATIC CONTROL VALVE	1		

TRANSMISSION OIL FILL

T193211 -UN-21JUL03

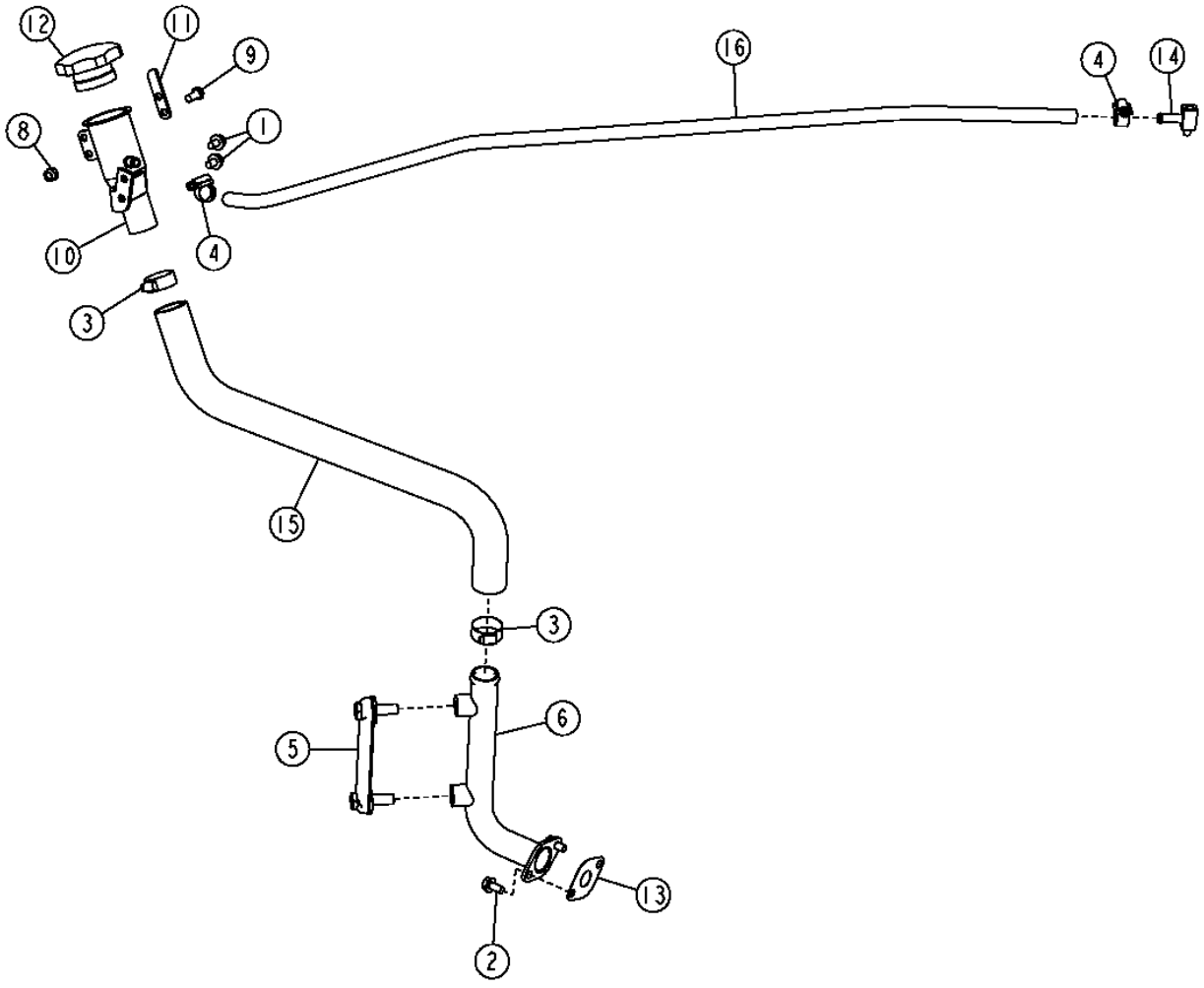

T193211

TRANSMISSION OIL FILL

KEY	PART NO.	PART NAME	QTY	SERIAL NO.	REMARKS
1	19M7864	SCREW	2		
2	19M7865	SCREW	2		
3	AR21839	CLAMP	2		
4	TY22464	CLAMP	2		(SUB FOR AR21836)
5	AT227279	LEVEL GAUGE	1		
6	AT315021	TUBE	1		(SUB FOR AT227651)
8	14M7426	LOCK NUT	1		
9	19M7162	CAP SCREW	1		
10	AT227248	TUBE	1		
11	T196464	STRAP	1		
12	RE500250	FILLER CAP	1		
13	T116604	GASKET	1		
14	T196587	TEE FITTING	1		
15	T196984	HOSE	1		
16	.....	BULK HOSE	1		(FURNISH M87571 BULK MATERIAL, CUT TO 3.9 FT)

TRANSMISSION OIL FILTER

T155731 -UN-06JUN02

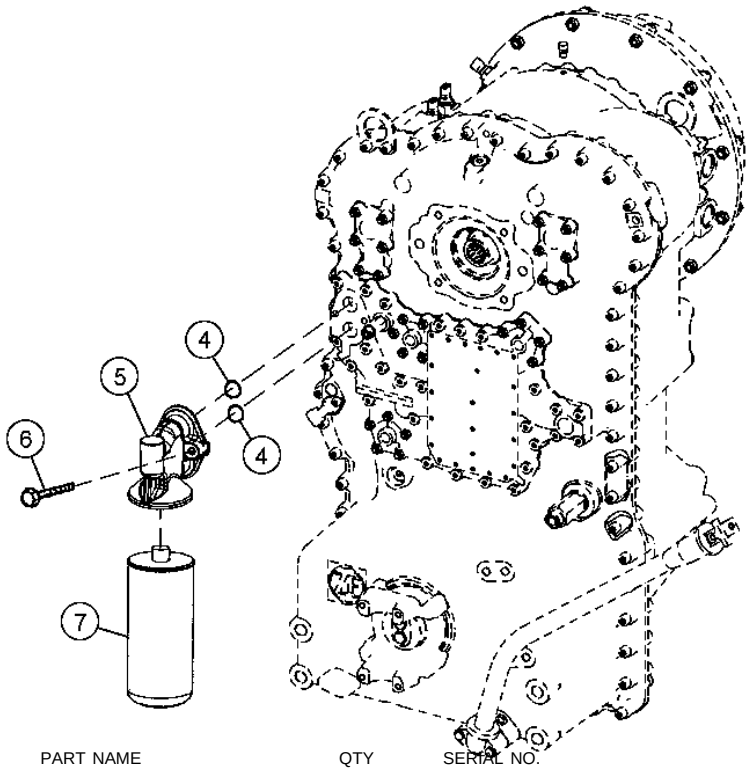

T155731

KEY	PART NO.	PART NAME	QTY	SERIAL NO.	REMARKS
4	T172318	O-RING	2		
5	T177997	FILTER HEAD	1		
6	T173819	CAP SCREW	2		
7	AT222005	FILTER ELEMENT	1		

CRANKSHAFT OIL SEAL AND HOUSING

RGP2382 -UN-01JAN94

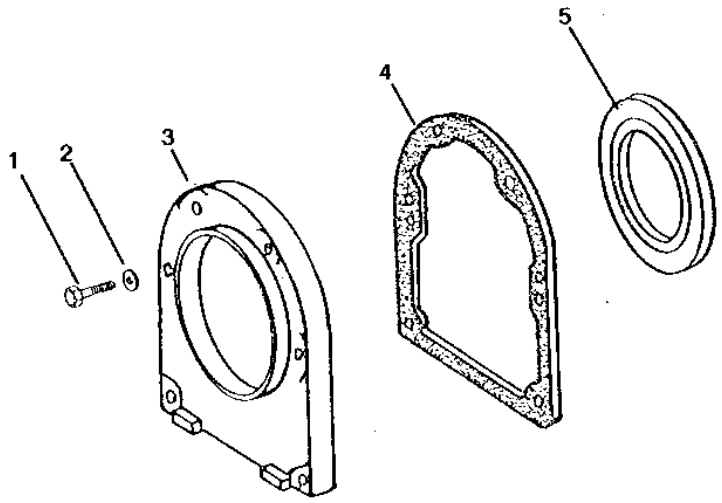

RGP2382

KEY	PART NO.	PART NAME	QTY	ENGINE SERIAL NO.	REMARKS
1	19H2117	CAP SCREW	6		5/16" X 1-1/8"
2	T27860	WASHER	6		
3	R125027	HOUSING	1		
4	R26058	GASKET	1		
5	RE504363	SEAL	1		

CRANKSHAFT AND MAIN BEARINGS

RGP8201 -UN-17SEP01

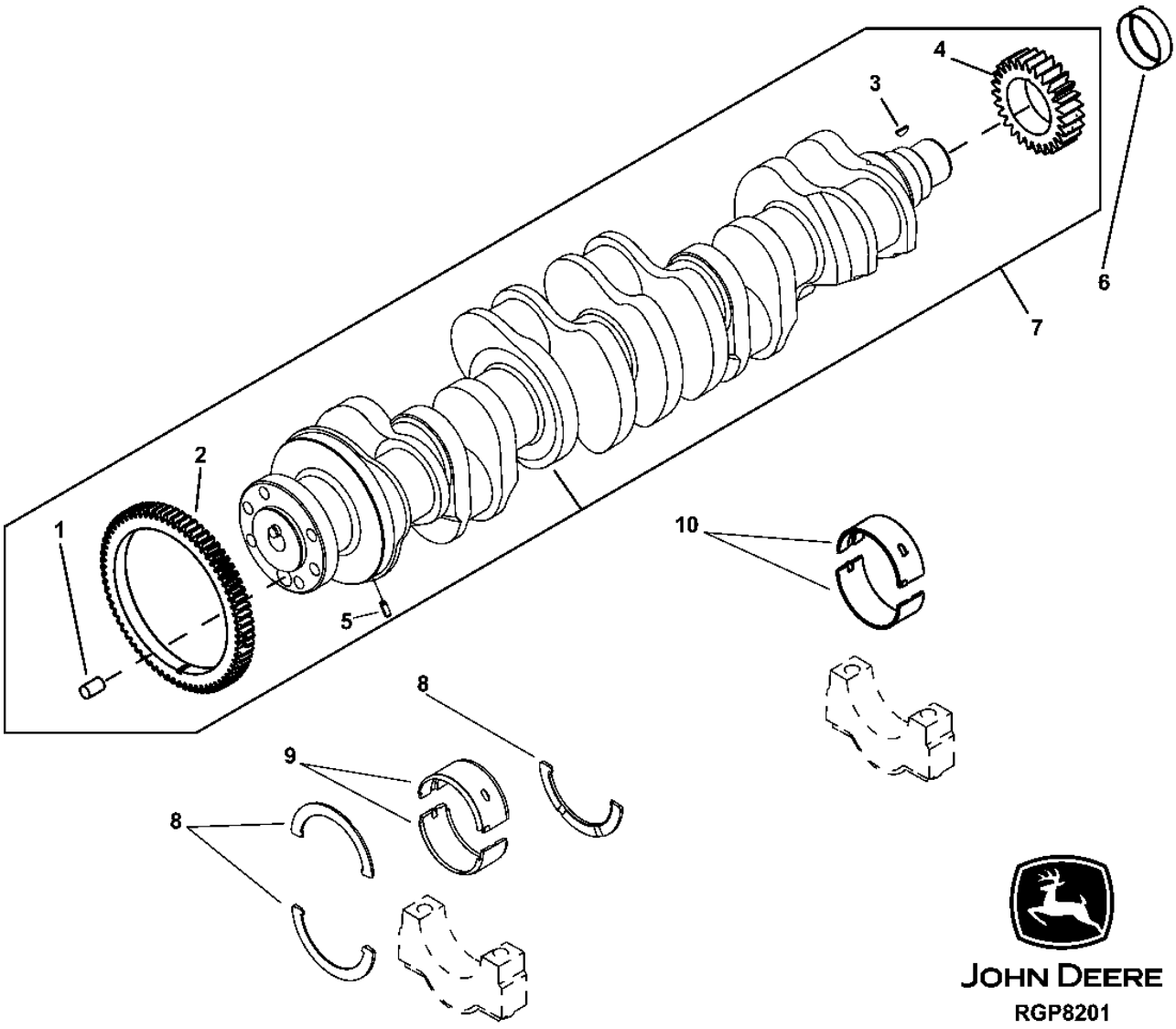

CRANKSHAFT AND MAIN BEARINGS - CONTINUED

KEY	PART NO.	PART NAME	QTY	ENGINE SERIAL NO.	REMARKS
1	R41934	DOWEL PIN	1		
2	.....	GEAR	1		(SUB RE505124)
3	R120752	KEY	1		
4	R104587	GEAR	1		
5	34M7089	DOWEL PIN	1		4 X 12 MM (0.157" X 0.472")
6	R32617	RETAINER	1		
7	RE505124	CRANKSHAFT	1		(MARKED R120030)
8	RE61253	THRUST WASHER	1		STD (PKG (3) R124381)
	RE61851	THRUST WASHER	1		0.18MM (.007) PKG (3) R124842
9	RE504198	THRUST BEARING	1		STD (PKG R502127 AND R502128)
	RE504199	THRUST BEARING	1		.292MM (.011") PKG R502315 AND R502319
	RE504200	THRUST BEARING	1		.522MM (.022") PKG R502316 AND R502320
10	RE504195	BEARING	AR		STD (PKG R502125 AND R502126)
	RE504196	BEARING	AR		.292MM (.011") PKG R502317 AND R502321
	RE504197	BEARING	AR		.552MM (.022") (CONSISTS OF R502318 AND R502322)

ROCKER ARM COVER

RGP9042 -UN-04SEP02

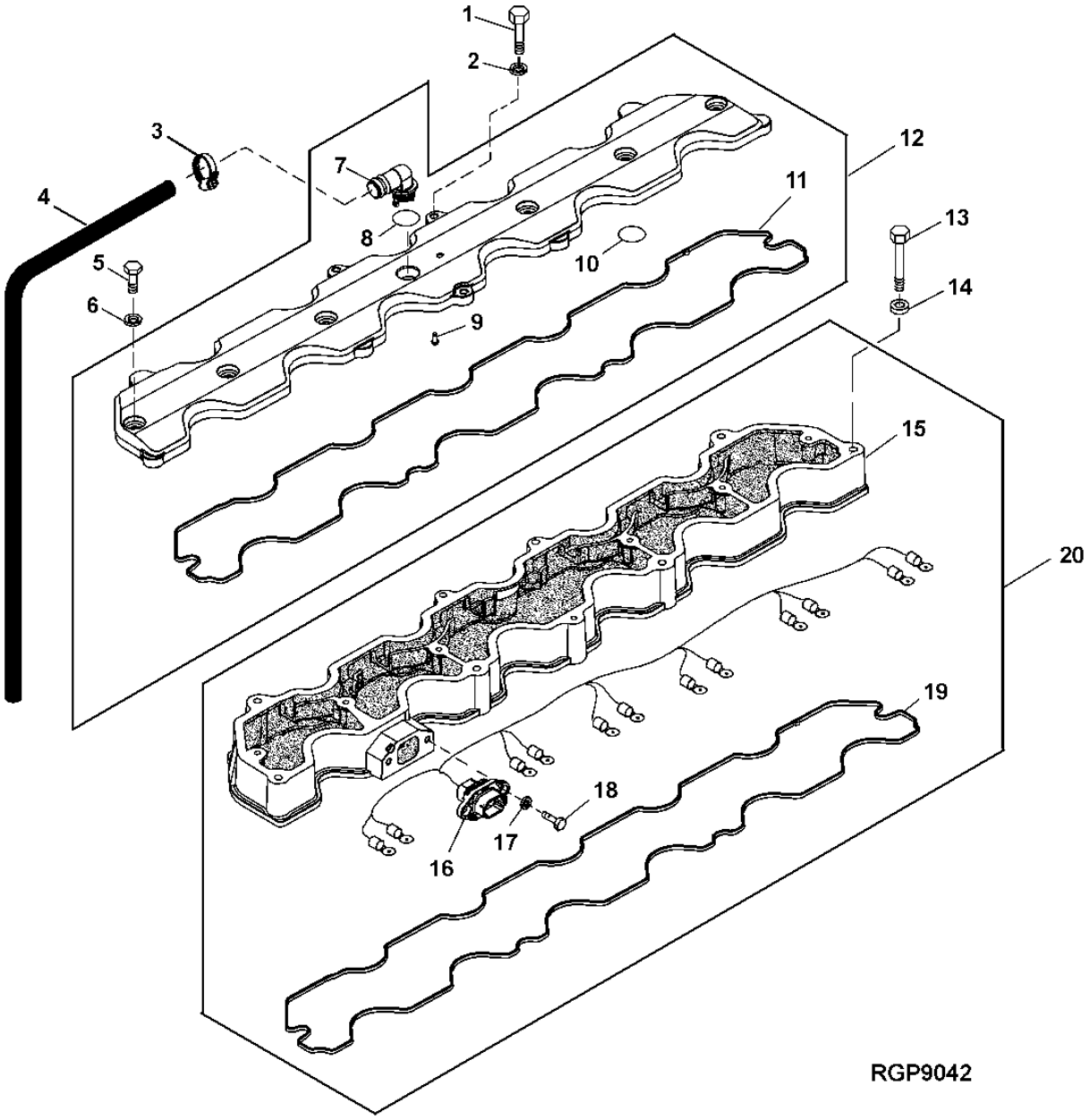

ROCKER ARM COVER - CONTINUED

KEY	PART NO.	PART NAME	QTY	ENGINE SERIAL NO.	REMARKS
1	19H2151	CAP SCREW	2		1/4" X 3"
2	24H1286	WASHER	2		9/32" X 1/2" X 1/16"
3	.....	CLAMP	1		(SEE VENTILATING SYSTEM)
4	.....	HOSE	AR		(SEE VENTILATING SYSTEM)
5	19H1914	CAP SCREW	7		1/4" X 1"
6	24H1286	WASHER	7		9/32" X 1/2" X 1/16"
7	R120467	ELBOW FITTING	1		
8	R72328	O-RING	1		0.737" X 0.103"
9	37H26	SCREW	5		0.116" X 1/4"
10	R504093	SEAL	4		
11	R502598	GASKET	1		
12	RE505094	VALVE COVER	1		
13	19H2334	CAP SCREW	6		1/4" X 2-1/2"
14	24H1286	WASHER	6		9/32" X 1/2" X 1/16"
15	R502695	HOUSING	1		
16	RE509048	WIRING HARNESS	1		(INCLUDES R503576) (ALSO ORDER R520373)
17	24H1287	WASHER	2		9/32" X 5/8" X 0.065"
18	19H2036	CAP SCREW	2		1/4" X 7/8"
19	R502719	SEAL	1		
20	RE509265	HOUSING	1		

ROCKER ARMS, SHAFT AND PUSH RODS

RGP7578 -UN-07MAY01

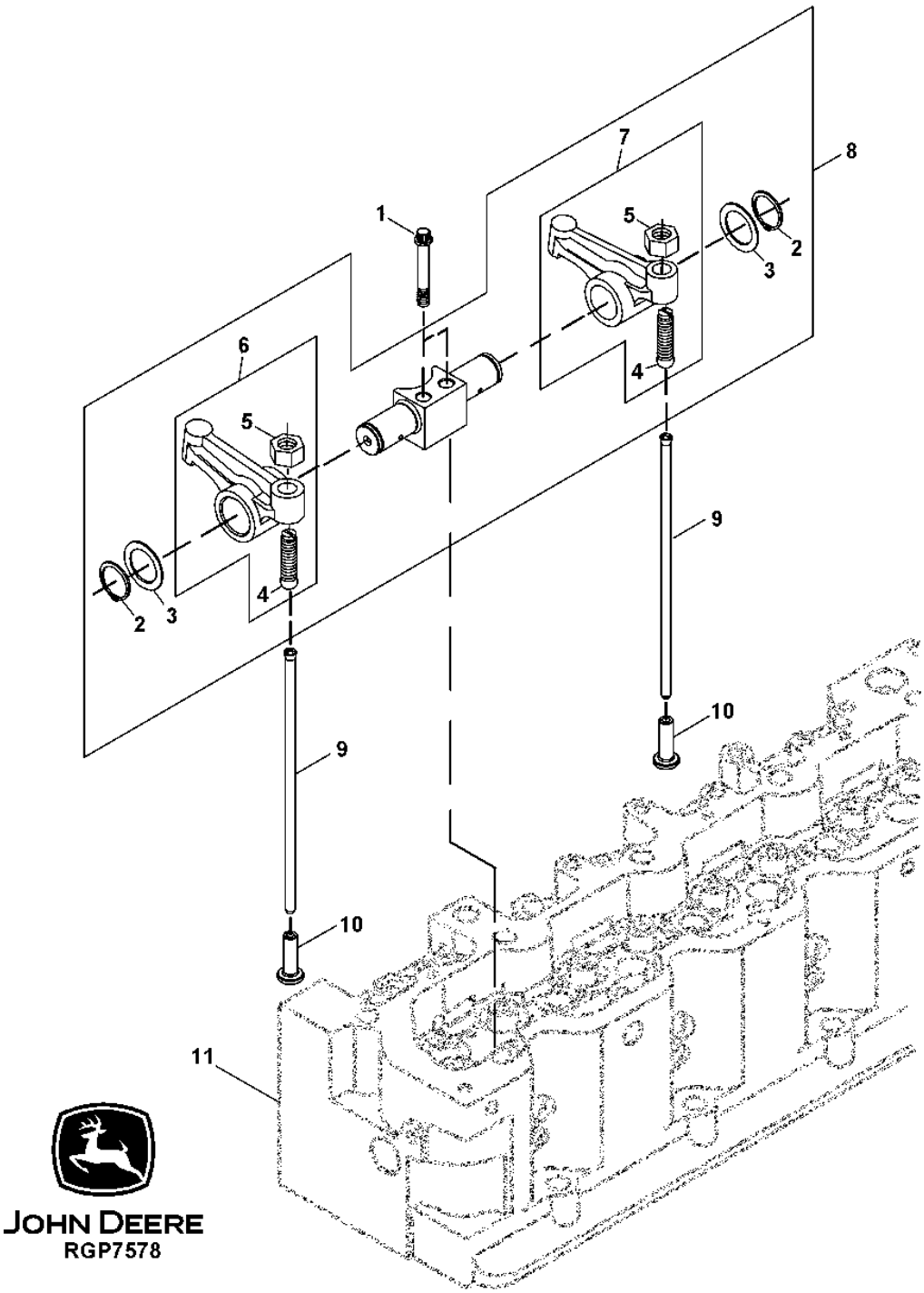

ROCKER ARMS, SHAFT AND PUSH RODS - CONTINUED

KEY	PART NO.	PART NAME	QTY	ENGINE SERIAL NO.	REMARKS
1	19H3833	SCREW	12		5/16" X 1-3/4"
2	.....	SNAP RING	2		(SUB RE505320, THIS APPLICATION)
3	24H1384	WASHER	2		49/64" X 1-1/16" X 0.036"
4	R27443	SET SCREW	2		
5	14H1080	NUT	2		3/8"
6	RE24046	ROCKER ARM	1		(A) (1I, 2E , 3I , 4E, 5I , 6E) (LH)
7	RE24045	ROCKER ARM	1		(A) (1E, 2I , 3E , 4I, 5E , 6I) (RH)
8	RE505320	KIT	6		
9	R85027	PUSH ROD	12		
10	R110126	FOLLOWER	12		
11	.....	CYLINDER BLOCK	1		

(A) - E (EXHAUST VALVE) - I (INTAKE VALVE)

TIMING GEAR COVER AND FRONT OIL SEAL

RGP9026 -UN-19AUG02

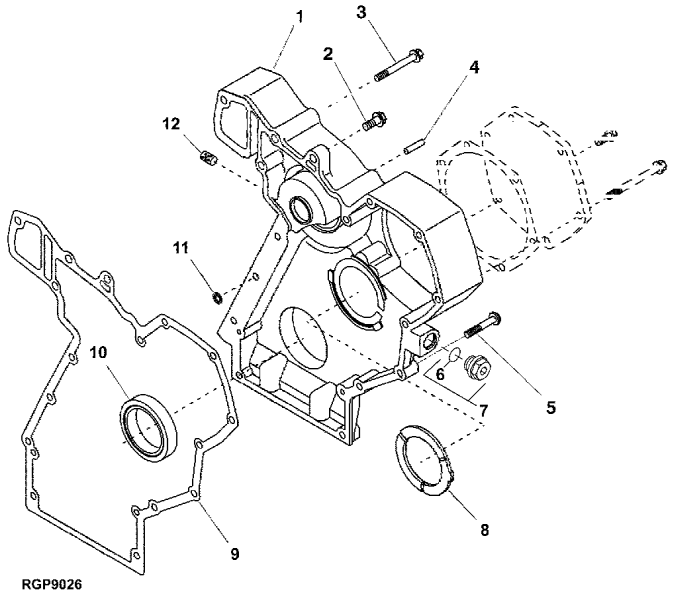

KEY	PART NO.	PART NAME	QTY	ENGINE SERIAL NO.	REMARKS
1	R502083	COVER	1		
2	19H3693	SCREW	1		3/8" X 1-1/4"
	RE517059	WASHER	1		
3	R104859	SCREW	3		(RH)
4	R11086	DOWEL PIN	2		
5	R115129	CAP SCREW	3		(LH)
6	51M7044	O-RING	1		17.300 X 2.200 MM (0.681" X 0.087")
7	RE517370	FITTING PLUG	1		
8	R104656	THRUST WASHER	1		
9	R119384	GASKET	1		
10	AR49025	SEAL	1		(INCLUDES R32617)
	R32617	RETAINER	1		
11	R116022	SEAL	NA		
12	R98527	FILTER	1		
..	19H2284	CAP SCREW	2		3/8" X 7/8", (AUX DRIVE COVER)

MAGNETIC PICK-UP

RGP8972 -UN-19JUL02

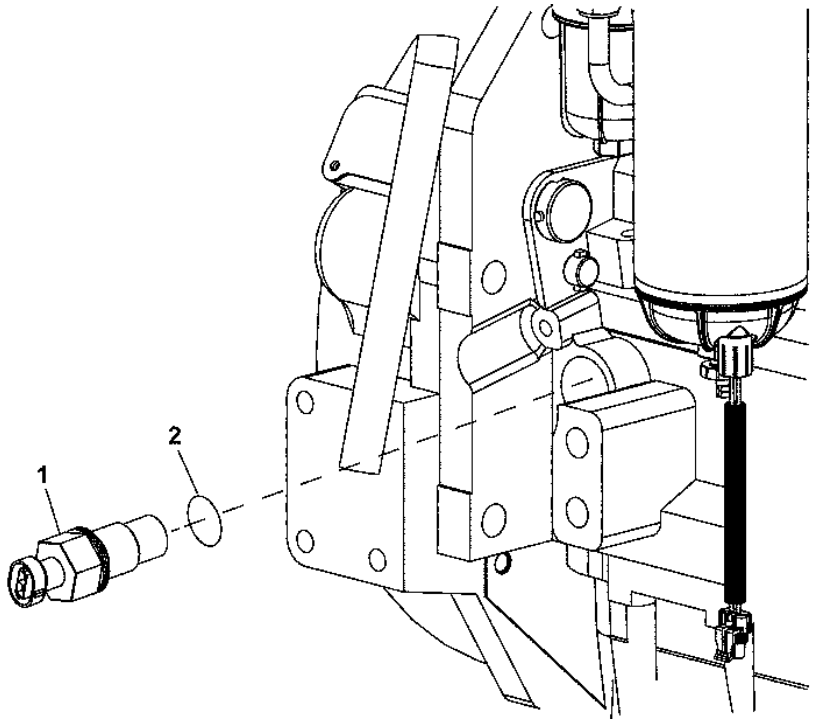

RGP8972

KEY	PART NO.	PART NAME	QTY	ENGINE SERIAL NO.	REMARKS
1	RE519144	SENSOR	1		(SUB FOR RE508195)
2	51M7044	O-RING	1		17.300 X 2.200 MM (0.681" X 0.087")

CAMSHAFT AND GEAR

RGP3752 -UN-01JAN94

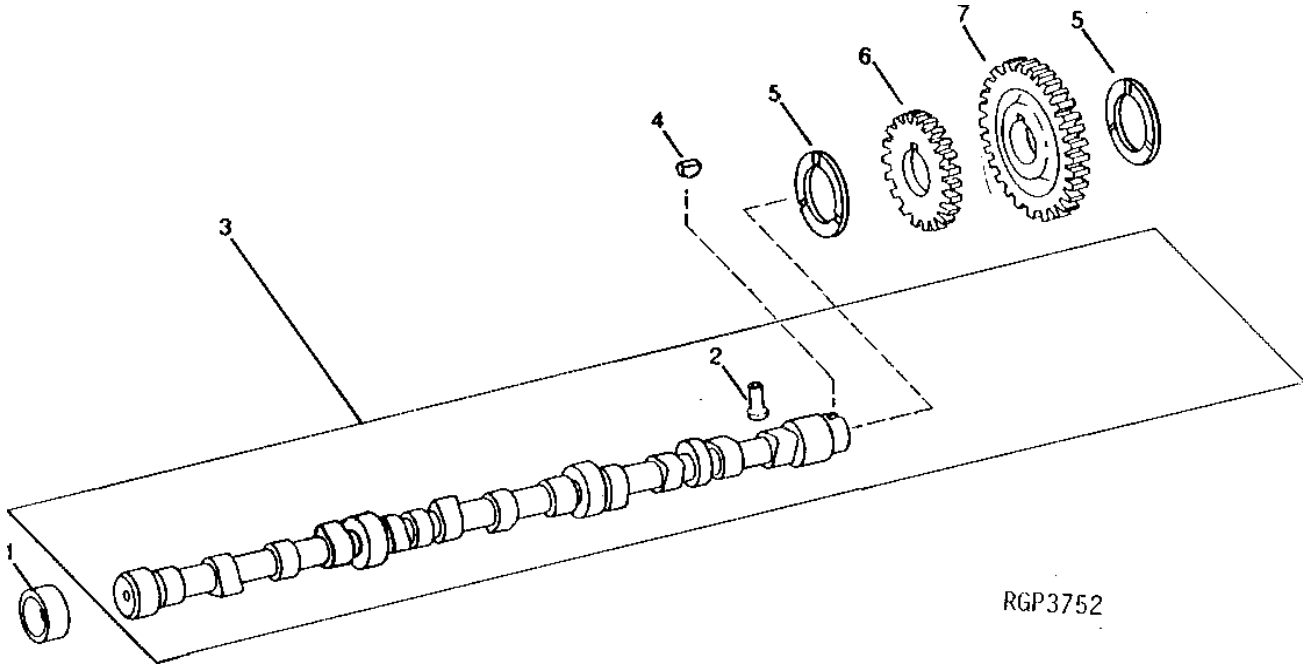

KEY	PART NO.	PART NAME	QTY	ENGINE SERIAL NO.	REMARKS
1	R87561	BUSHING	4		
2	R110126	FOLLOWER	12		
3	RE57054	CAMSHAFT	1		(MARKED R120872)
4	26H91	SHAFT KEY	1		3/16" X 1-1/4"
5	R104656	THRUST WASHER	2		
6	R104589	GEAR	1		
7	R112053	GEAR	1		

PISTON/CONNECTING RODS/CYLINDER LINER

RGP7990 -UN-16JUL01

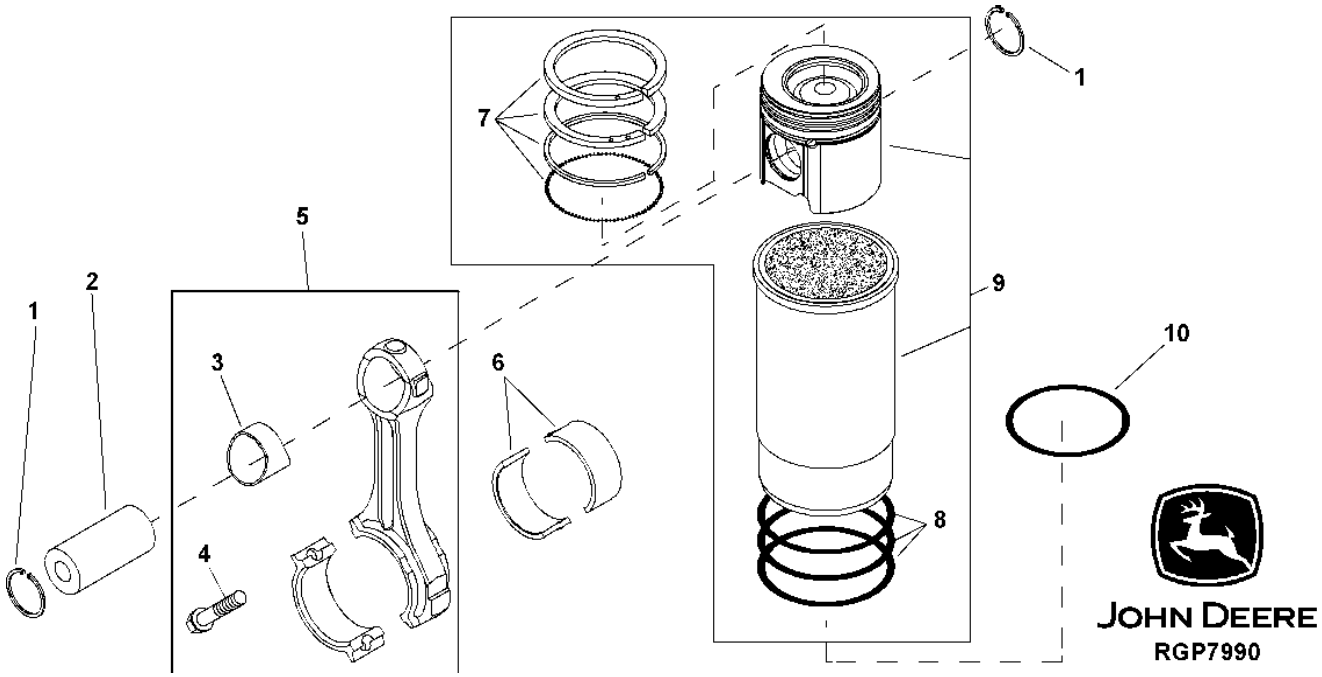

KEY	PART NO.	PART NAME	QTY	ENGINE SERIAL NO.	REMARKS
1	E1343FN	SNAP RING	12		
2	R57771	PISTON PIN	6		
3	R74008	BUSHING	6		
4	R501035	CAP SCREW	12		
5	RE501513	CONNECTING ROD	6		(MARKED R501034)
6	R116081	BEARING	12		STD PKG (2)
	RE57167	BEARING	AR		0.292MM (.011") (UNDERSIZED) (PKG OF (2) R121338)
7	RE503528	PISTON RING	6		
8	AR98850	O-RING KIT	6		
9	RE64509	KIT	6		(A) (MARKED RE70688)
10	R93948	SHIM	2		0.05MM (.002") (MAX.)

(A) HIGH COMPRESSION

CYLINDER BLOCK FITTINGS AND MAIN BEARING CAPS

RGP4339 -UN-01JAN94

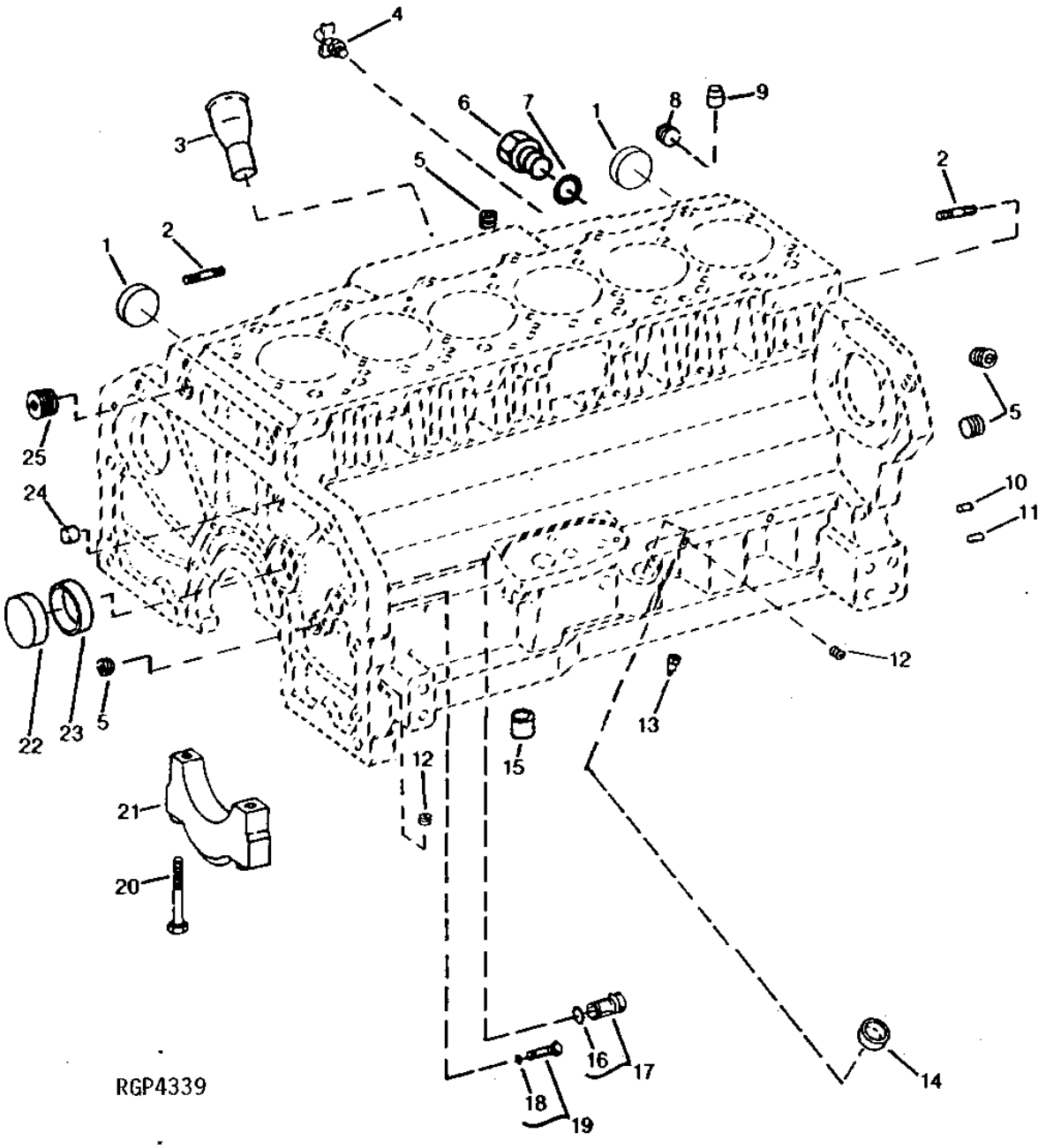

CYLINDER BLOCK FITTINGS AND MAIN BEARING CAPS - CONTINUED

KEY	PART NO.	PART NAME	QTY	ENGINE SERIAL NO.	REMARKS
1	R43409	PLUG	2		
2	R515224	STUD	5		
3	RE517133	TUBE	1		
4	AT13740	DRAIN VALVE	1		
5	RE57836	PIPE PLUG	1		(TIMING SIGHT HOLE)
6	R39741	DRAIN PLUG	1		
7	U13639	O-RING	1		
8	15H690	PIPE PLUG	1		3/4"
9	R42340	BUSHING	2		
10	R1612R	DOWEL PIN	NA		
11	F1743R	DOWEL PIN	2		
12	RE71255	PIPE PLUG	6		
13	R43621	ORIFICE	6		
14	T35390	PLUG	1		(OIL FILL HOLE NOT USED)
15	R500642	BUSHING	2		
16	R27149	O-RING	NA		
17	R121929	PLUG	1		(NOT AS SHOWN)
18	A4365R	O-RING	NA		
19	AR61589	PLUG	NA		
20	R122364	BOLT	14		
21	R120953	BEARING CAP	6		(MAIN)
	R120954	BEARING CAP	1		(THRUST)
22	R82007	PLUG	1		
23	R87561	BUSHING	4		
24	R61288	DOWEL PIN	1		
25	15H686	PIPE PLUG	1		1"
..	RE57836	PIPE PLUG	AR		1/2", (SUB FOR 15H624)

ENGINE SHORT BLOCK

RGP5031 -UN-11MAY98

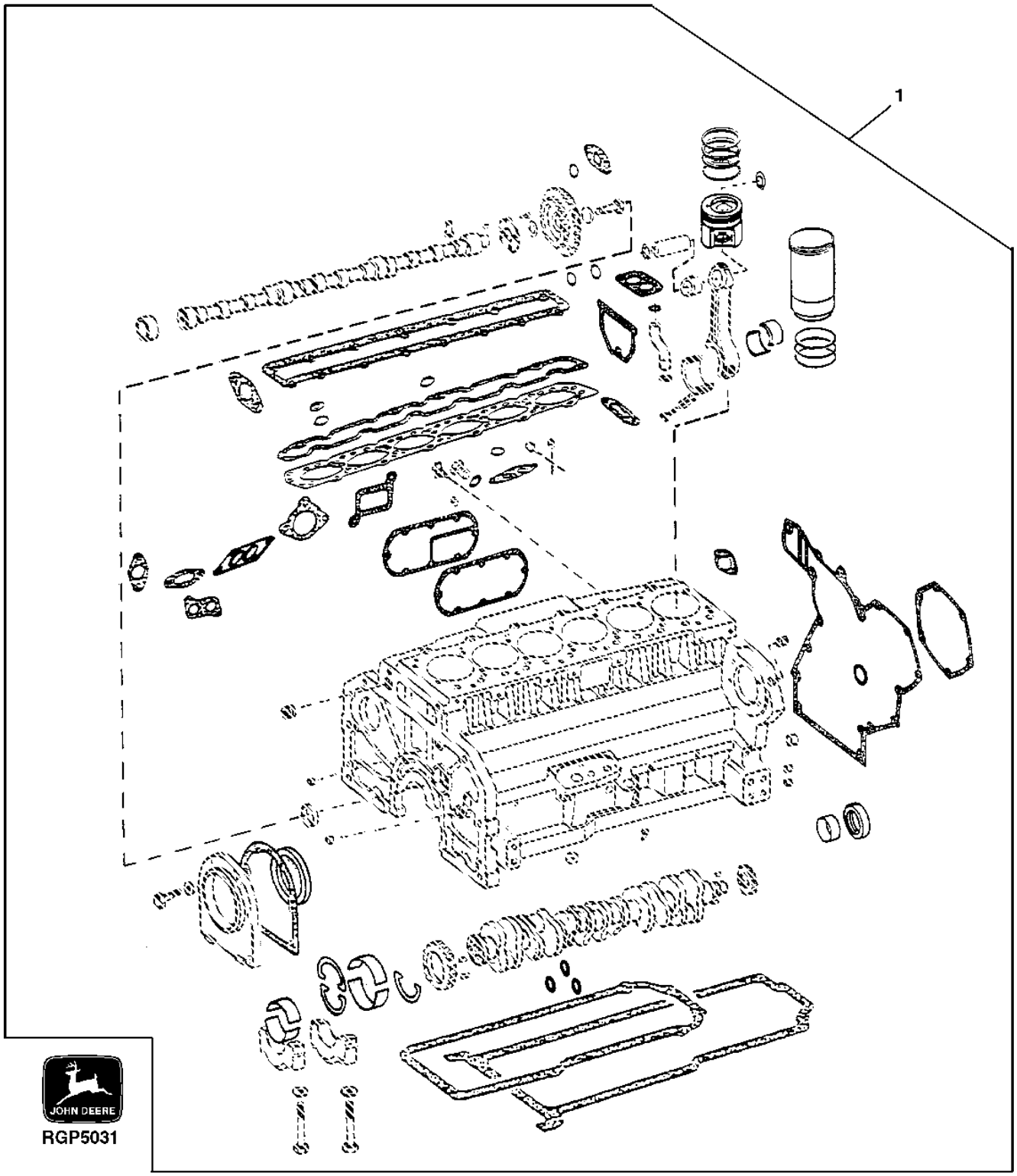

ENGINE SHORT BLOCK - CONTINUED

KEY	PART NO.	PART NAME	QTY	ENGINE SERIAL NO.	REMARKS
1	RE526253	SHORT BLOCK ASSEMBLY	1		(HIGH COMP.) (MARKED R503432) (CONTAINS (6) RE64509 PISTON/LINERS, GASKET KIT, STD BEARINGS, FRONT/REAR SEALS, AND SNAP RINGS)
..	SE501040	COMPLETE BLOCK ASSEMBLY	1		(ALSO ORDER R501035 ROD BOLTS) (CONTAINS PISTONS MARKED RE70688) (REMANUFACTURED) (CALL 888-697-3626 FOR AVAILABILITY)

ENGINE OVERHAUL KIT

RGP4274 -UN-01JAN94

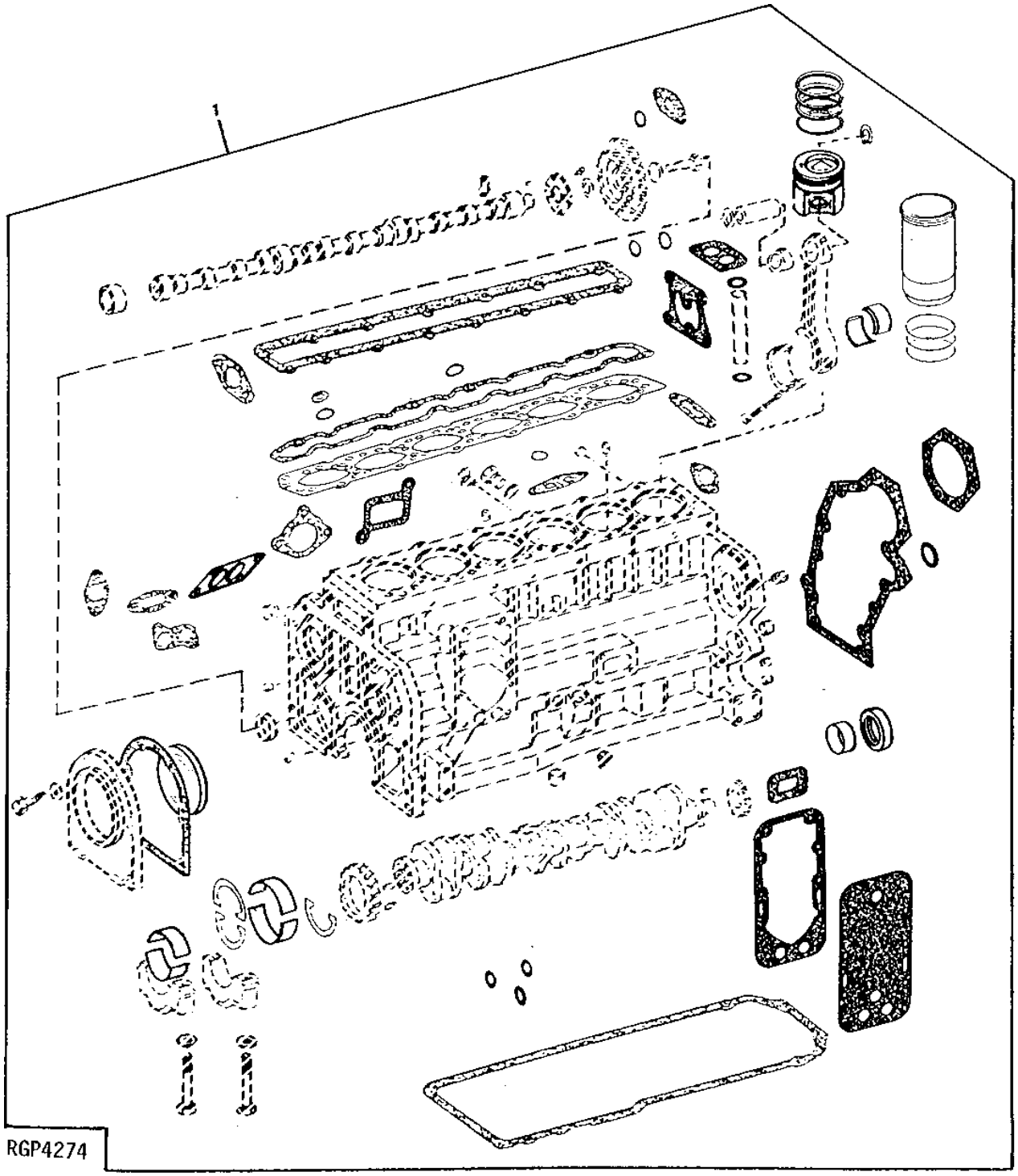

ENGINE OVERHAUL KIT - CONTINUED

KEY	PART NO.	PART NAME	QTY	ENGINE SERIAL NO.	REMARKS
1	RE526962	ENGINE OVERHAUL KIT	1		(ALSO ORDER R501035)

ENGINE OIL PUMP INTAKE

RGP3629 -UN-01JAN94

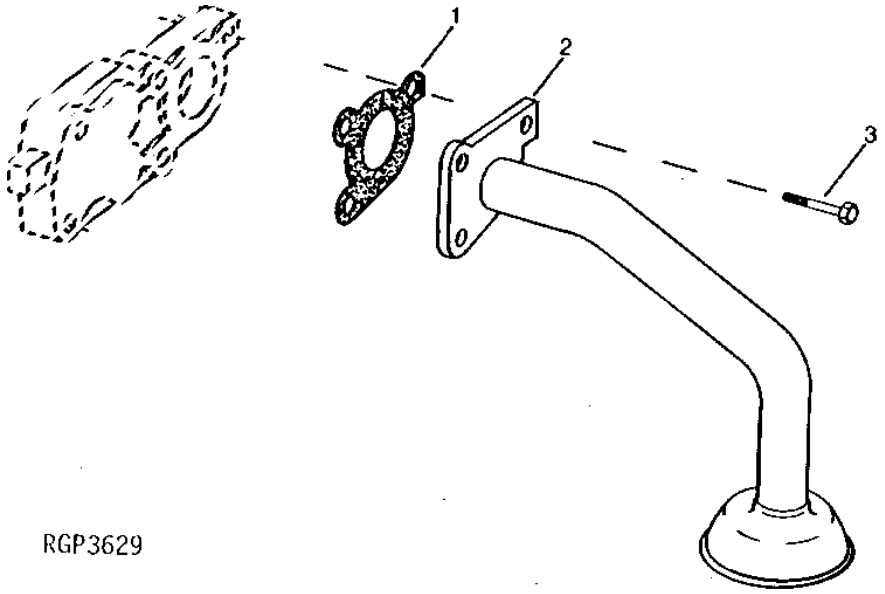

KEY	PART NO.	PART NAME	QTY	ENGINE SERIAL NO.	REMARKS
1	R100569	GASKET	1		
2	RE62144	OIL PUMP INTAKE	1		
3	R104628	SCREW	3		

ENGINE OIL DIPSTICK AND TUBE

RGP4446 -UN-03MAR95

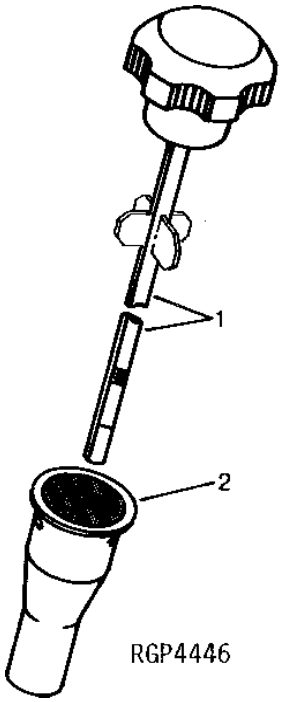

KEY	PART NO.	PART NAME	QTY	ENGINE SERIAL NO.	REMARKS
1	RE500220	DIPSTICK	1		
2	R126352	DIPSTICK TUBE	1		

OIL PAN

RGP9046 -UN-27AUG02

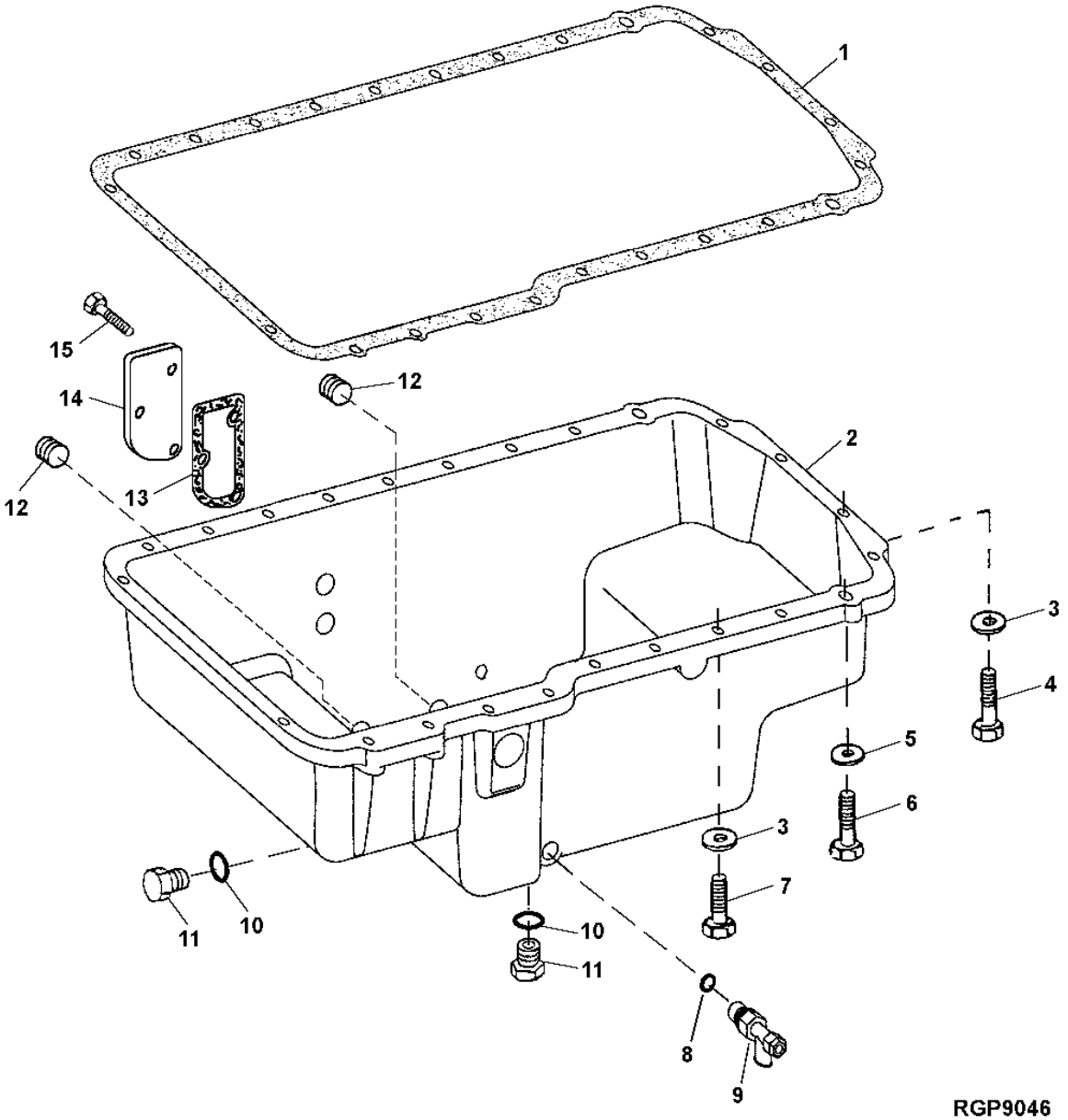

OIL PAN - CONTINUED

KEY	PART NO.	PART NAME	QTY	ENGINE SERIAL NO.	REMARKS
1	RE504822	GASKET	1		
2	RE508040	PAN	1		(MARKED R127394 OR R125195) (INCLUDES (2) 15H690, RE63439, R127873 AND (3) 19H1731)
3	24M7239	WASHER	22		10.700 X 21 X 2.500 MM (0.421" X 0.827" X 0.098")
4	19H3485	CAP SCREW	4		3/8" X 2"
5	R135895	WASHER	2		
6	19H2473	CAP SCREW	2		1/2" X 1-3/4"
7	19H2633	CAP SCREW	18		3/8" X 1-1/2"
8	R26906	O-RING	2		
9	AT152180	DRAIN VALVE	1		
10	F3171R	O-RING	2		0.924" X 0.116"
11	R70534	PIPE PLUG	2		
12	15H690	PIPE PLUG	2		3/4"
13	RE63439	GASKET	1		
14	R127873	COVER	1		
15	19H1731	CAP SCREW	3		3/8" X 1"

ENGINE OIL FILTER AND HOUSING

T197206 -UN-07JAN04

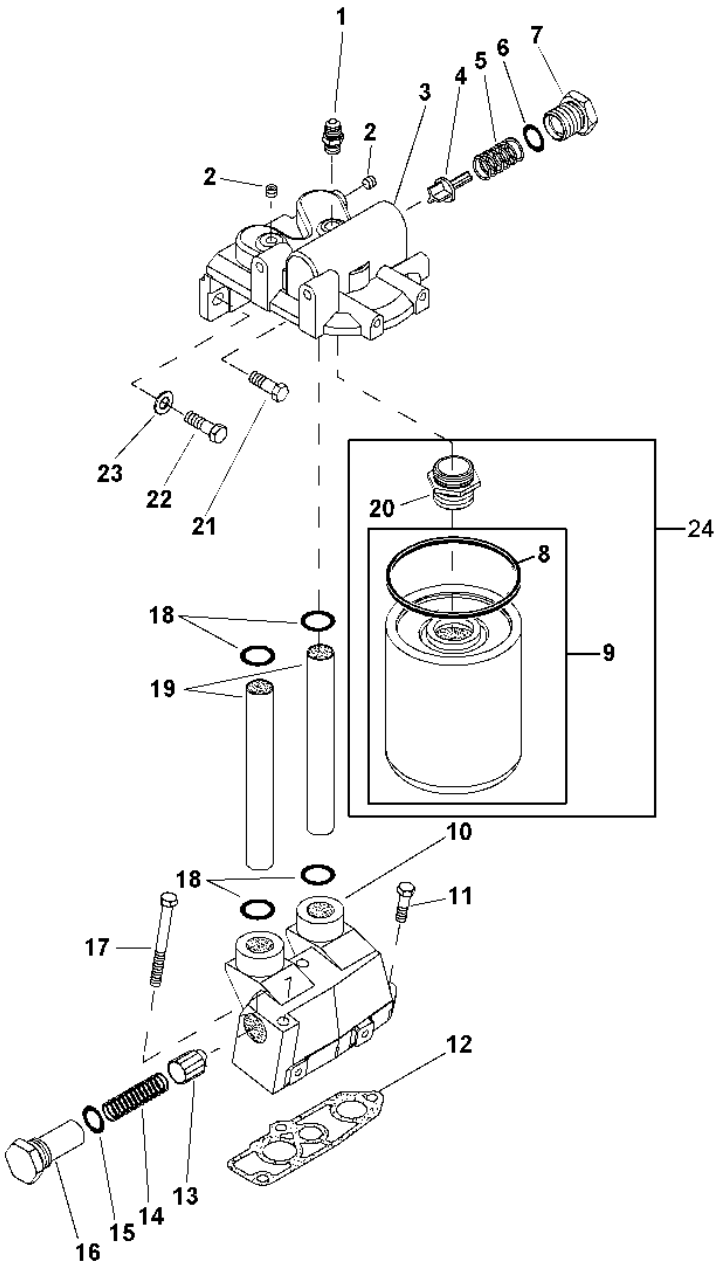

T197206

ENGINE OIL FILTER AND HOUSING - CONTINUED

KEY	PART NO.	PART NAME	QTY	ENGINE SERIAL NO.	REMARKS
1	RE57561	ADAPTER	1		
2	RE71255	PIPE PLUG	2		
3	R128694	BASE	1		
4	R500055	VALVE	1		
5	R98064	SPRING	1		
6	U17409	O-RING	1		
7	R117073	FITTING PLUG	1		
8	R43660	PACKING	1		
9	RE57394	OIL FILTER	1		(250 HR) (MARKED RE57394) (USE ADAPTER R104621)
	RE521420	OIL FILTER	1		(500 HR) (MARKED RE520628) (USE ADAPTER R518382)
10	R129820	HOUSING	1		(USE WITH RE57394 OR RE521420)
11	19H3239	CAP SCREW	1		3/8" X 1-1/4"
12	R119847	GASKET	1		
13	R124186	PRESSURE RELIEF VALVE	1		
14	R500330	SPRING	1		
15	U17409	O-RING	1		
16	R129821	FITTING PLUG	1		
17	19H3445	CAP SCREW	2		3/8" X 3-3/4"
18	R47153	O-RING	4		
19	R86063	TUBE	2		
20	R104621	ADAPTER	1		(250 HR) (USE WITH RE57394)
	R518382	ADAPTER	1		(500 HR) (USE WITH RE521420)
21	19H3104	CAP SCREW	1		7/16" X 1-1/4"
22	19H3205	CAP SCREW	1		7/16" X 1-1/2"
23	24H1886	WASHER	1		15/32" X 1-1/8" X 0.180"
24	AT305166	FIELD INSTALLATION KIT	1		(500 HOUR SPIN ON ENGINE OIL FILTER) (INCLUDES RE521420, R43660 AND R518382)

ENGINE OIL PUMP

RGP8133 -UN-28AUG01

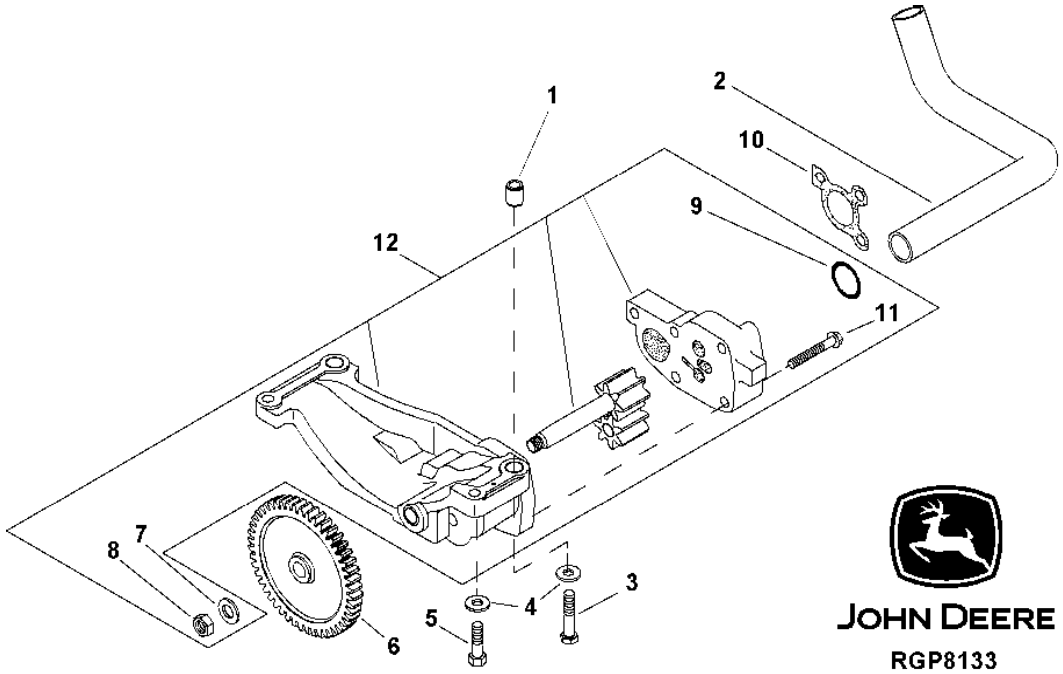

KEY	PART NO.	PART NAME	QTY	ENGINE SERIAL NO.	REMARKS
1	R500642	BUSHING	2		
2	R116718	OIL TUBE	1		
3	19H3759	CAP SCREW	2		3/8" X 1-7/8"
4	R57696	WASHER	4		
5	19H3219	CAP SCREW	2		3/8" X 1-3/8"
6	R502773	GEAR	1		
7	T21242	WASHER	1		
8	14H826	NUT	1		1/2"
9	R71732	O-RING	1		
10	R100569	GASKET	1		
11	R104628	SCREW	5		
12	RE507076	OIL PUMP	1		(SUB SE500877) (MARKED R504028)
	SE500877	OIL PUMP	1		(REMANUFACTURED)

VENTILATING SYSTEM

RGP7089 -UN-07NOV00

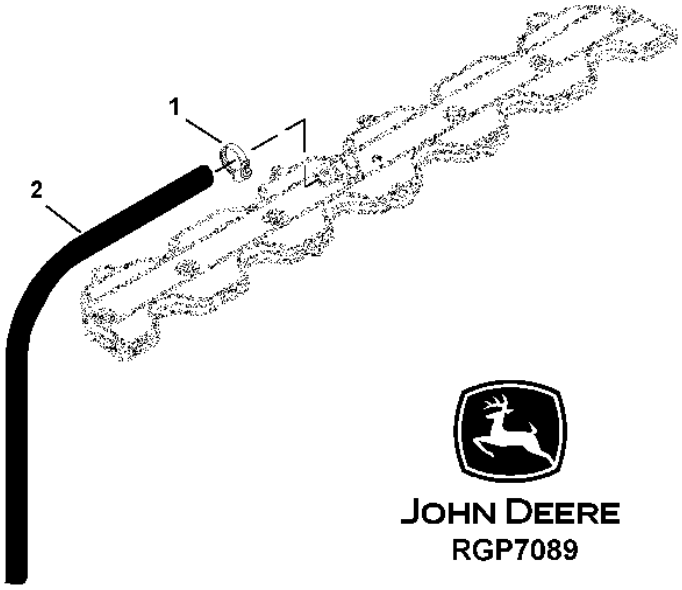

KEY	PART NO.	PART NAME	QTY	ENGINE SERIAL NO.	REMARKS
1	.....	CLAMP	1		(NO LONGER REQUIRED)
2	.....	HOSE	AR		(MAKE FROM TY22505) (1100 MM)

CYLINDER HEAD AND VALVES

RGP11115 -UN-28FEB05

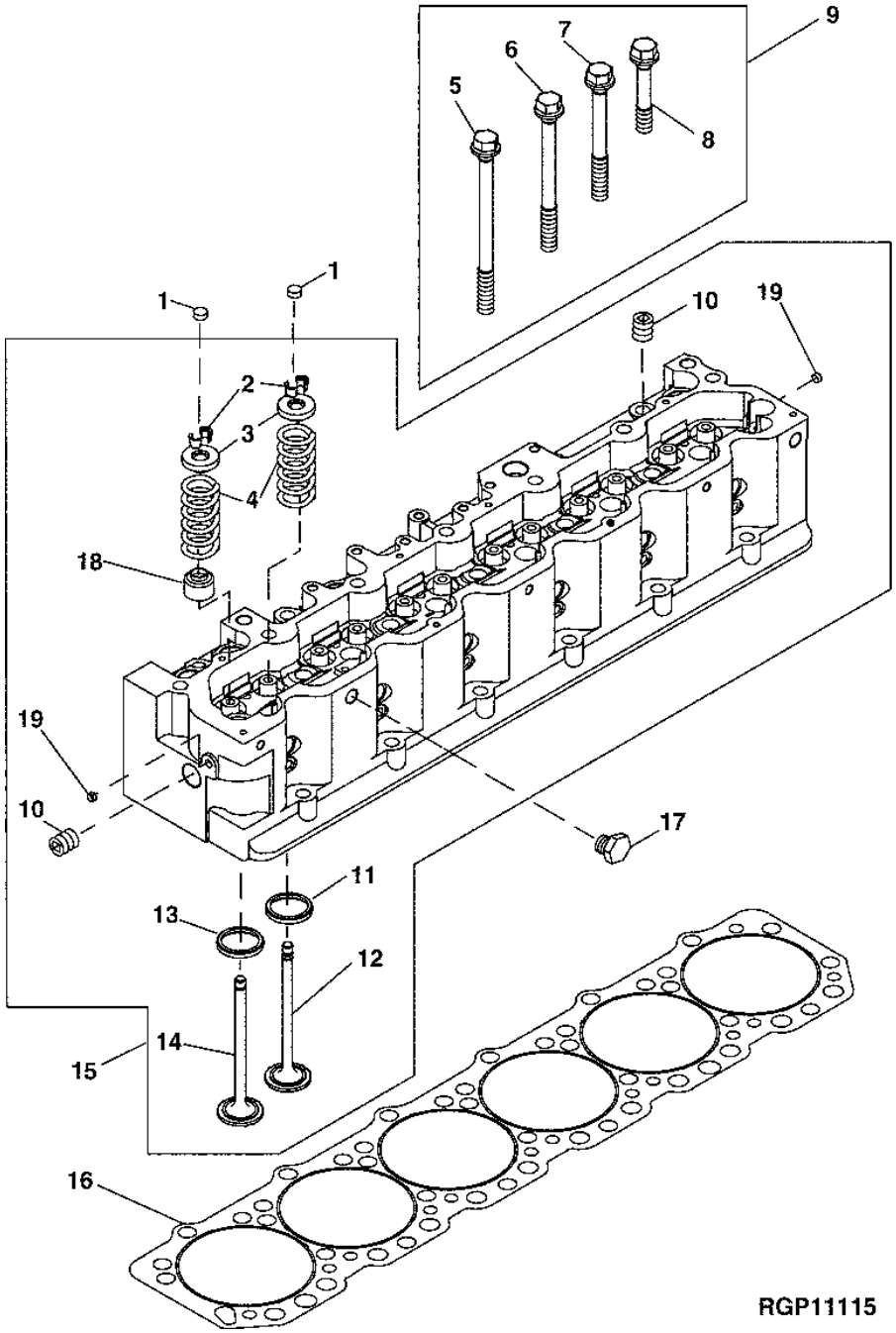

CYLINDER HEAD AND VALVES - CONTINUED

KEY	PART NO.	PART NAME	QTY	ENGINE SERIAL NO.	REMARKS
1	T20129	CAP	12		
2	T20077	RETAINER	24		
3	R500098	CAP	12		
4	R502187	SPRING	12		
5	R121491	CAP SCREW	7		(A) (9/16" X 8.0")
6	R121490	CAP SCREW	8		(A) (9/16" X 6.9")
7	R502911	CAP SCREW	6		(A) (9/16" X 5.3")
8	R502912	CAP SCREW	5		(A) (9/16" X 5.9")
9	RE506501	KIT	1		(A)
10	15H690	PIPE PLUG	11		3/4"
11	R121193	VALVE SEAT INSERT	6		(B) I
	R93350	VALVE SEAT INSERT	6		(B) I 0.25MM (.010") OS
12	R84618	INTAKE VALVE	6		STD
	R93308	INTAKE VALVE	AR		0.08MM (.003") OS
	R93312	INTAKE VALVE	AR		0.38MM (.015") OS
	R93314	INTAKE VALVE	AR		0.76MM (.030") OS
13	R119132	VALVE SEAT INSERT	6		(B) E
	R93349	VALVE SEAT INSERT	6		(B) E 0.25MM (.010") OS
14	R84619	EXHAUST VALVE	6		STD
	R93311	EXHAUST VALVE	AR		0.08MM (.003") OS
	R93313	EXHAUST VALVE	AR		0.38MM (.015) OS
	R93315	EXHAUST VALVE	AR		0.76MM (.030") OS
15	RE506503	CYLINDER HEAD	1		(MARKED R130818)
16	RE55475	ENGINE CYLINDER HEAD GASKET	1		
17	19H2367	CAP SCREW	1		5/8" X 3/4"
18	R501640	SHIELD	6		
19	R515575	PLUG	2		

(A) SPECIAL HEAD BOLTS

(B) E - (EXHAUST VALVE) I - (INTAKE VALVE)

LIFT STRAPS

RG1183 -UN-01JAN94

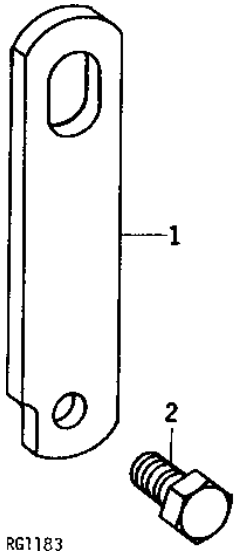

KEY	PART NO.	PART NAME	QTY	ENGINE SERIAL NO.	REMARKS
1	R61497	STRAP	2		
2	19H1756	CAP SCREW	2		15.875 X 38.100 MM (5/8" X 1-1/2")

EXHAUST MANIFOLDS

RGP3877 -UN-01JAN94

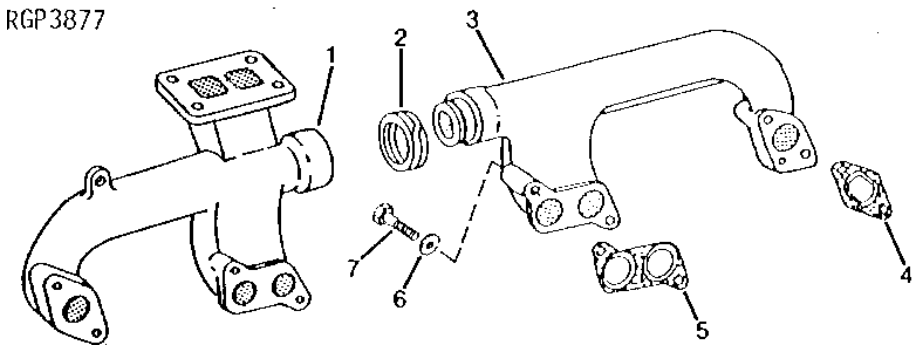

KEY	PART NO.	PART NAME	QTY	ENGINE SERIAL NO.	REMARKS
1	R109693	EXHAUST MANIFOLD	1		
2	R122595	RING	1		
3	R69936	EXHAUST MANIFOLD	1		
4	R521438	GASKET	2		(SUB FOR R83021)
5	R521437	GASKET	2		(SUB FOR R83020)
6	R63845	WASHER	8		
7	19H2458	CAP SCREW	8		3/8" X 3"

FUEL INJECTION PUMP, FUEL LINES AND ENGINE CONTROLLER (ESN 200000-)

RGP9231 -UN-11NOV02

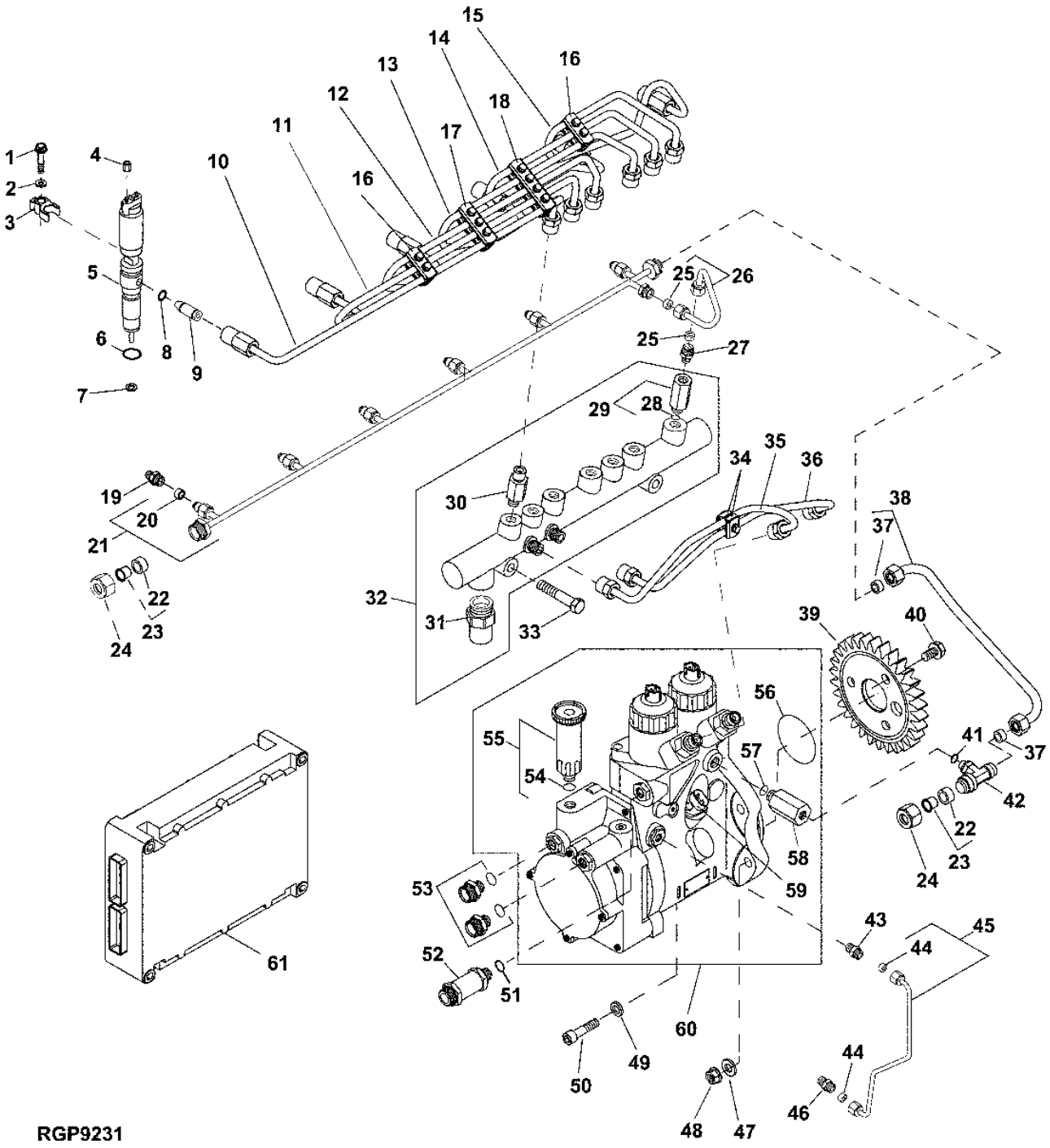

FUEL INJECTION PUMP, FUEL LINES AND ENGINE CONTROLLER (ESN 200000-) - CONTINUED

KEY	PART NO.	PART NAME	QTY	ENGINE SERIAL NO.	REMARKS
1	19H3218	CAP SCREW	6		
2	R63845	WASHER	6		
3	R502602	CLAMP	6		
4	R134920	NUT	12		
5	RE524371	KIT	6	-214656	(SUB FOR RE508825) (INCLUDES RE508825, (2) R134920, R135526, RE509416, R503578 AND R131051)
	RE524363	KIT	6	214657-	(SUB FOR RE518724) (INCLUDES RE518724, (2) R134920, R135526, RE509416, R503578 AND R131051)
6	R503578	PACKING	6		
7	R131051	WASHER	6		
8	R135526	O-RING	6		(SUB FOR R505570)
9	RE509416	FITTING	6		
10	RE515524	FUEL LINE	1		(SUB FOR RE504018) NO.6
11	RE504017	FUEL LINE	1		NO.5
12	RE504016	FUEL LINE	1		NO.4
13	RE504015	FUEL LINE	1		NO.3
14	RE504014	FUEL LINE	1		NO.2
15	RE504013	FUEL LINE	1		NO.1
16	RE502655	CLAMP	2		(ALSO ORDER (2) 12M7064 AND (2) 19M7373)
17	RE509012	CLAMP	1		(ALSO ORDER (2) 12M7064 AND (2) 19M7373)
18	RE509013	CLAMP	1		(ALSO ORDER (2) 12M7064 AND (2) 19M7373)
19	RE502650	FITTING	6		
20	R51936	SEALING WASHER	6		
21	RE506982	FUEL LINE	1		
22	R63551	SEALING WASHER	2		
23	RE507270	PLUG	2		
24	R63552	TUBE NUT	2		
25	R51936	SEALING WASHER	2		
26	RE507003	LINE	1		
27	RE506624	ADAPTER	1		
28	R515454	SHIM	1		
29	RE516335	PRESSURE RELIEF VALVE	1		
30	RE515636	RESTRICTOR	6		
31	RE515635	SENSOR	1		
32	RE516676	RAIL	1		(SUB FOR RE502507)
33	19H2699	CAP SCREW	2		
34	RE502654	CLAMP	1		
35	RE505155	FUEL LINE	1		
36	RE505154	FUEL LINE	1		
37	R67092	SEAL	2		
38	RE509554	FUEL LINE	1		(SUB RE516203)
39	R504089	BEVEL GEAR DRIVE	1		
40	19M7783	SCREW	3		
41	R505570	O-RING	1		
42	RE515821	TEE FITTING	1		(INCLUDES R505570)
43	RE503059	ADAPTER	1		
44	R67264	PACKING	2		
45	RE504156	OIL LINE	1		
46	R76822	FITTING	1		
47	24M7239	WASHER	3		
48	14H1090	NUT	3		
49	24H1652	WASHER	1		
50	19H3124	SCREW	1		
51	51M4238	SEALING RING	1		
52	RE508670	CHECK VALVE	1		
53	RE503058	ADAPTER	1		

FUEL INJECTION PUMP, FUEL LINES AND ENGINE CONTROLLER (ESN 200000-) (CONTINUED)

RGP9231 -UN-11NOV02

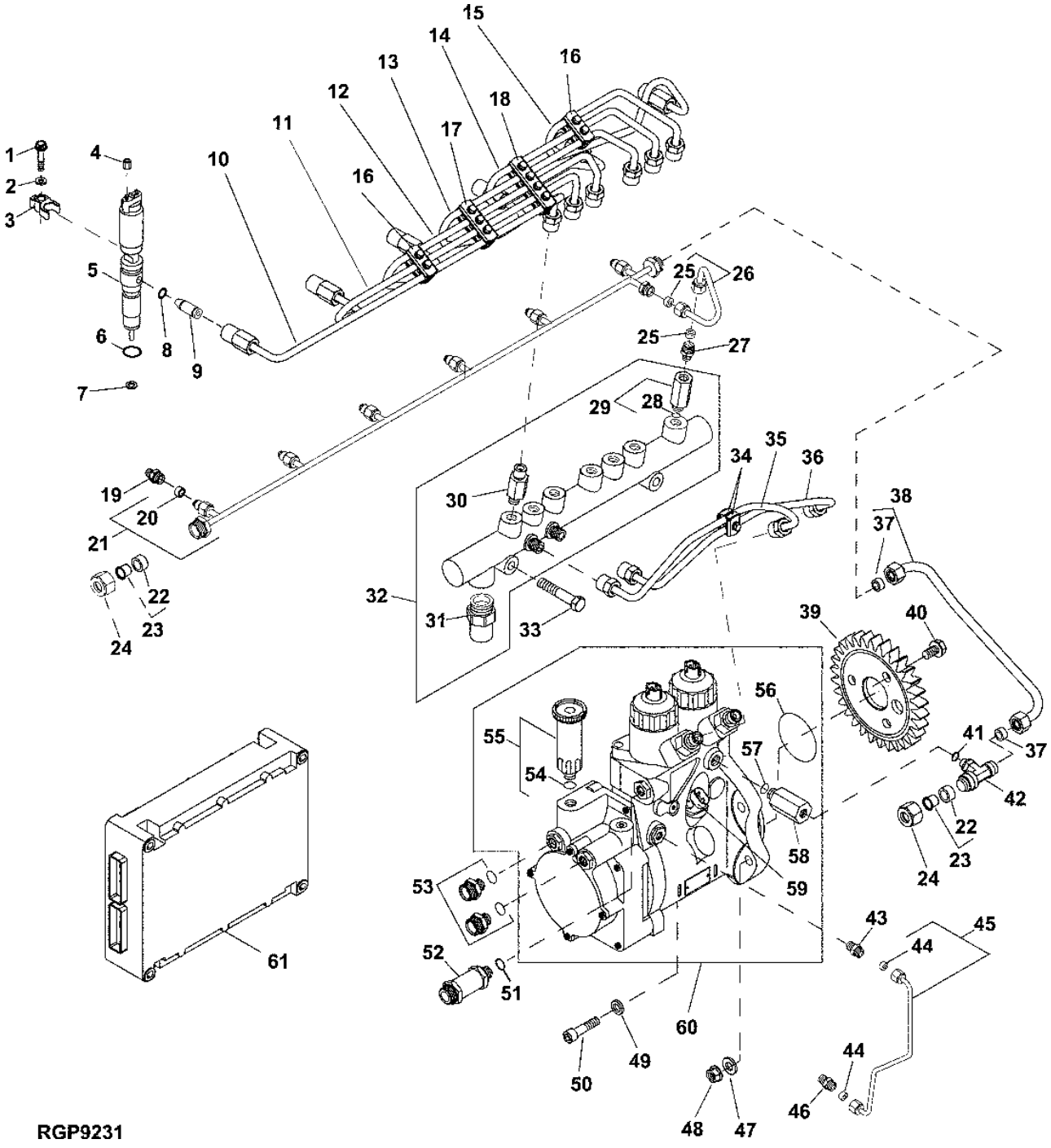

FUEL INJECTION PUMP, FUEL LINES AND ENGINE CONTROLLER (ESN 200000-) - CONTINUED

KEY	PART NO.	PART NAME	QTY	ENGINE SERIAL NO.	REMARKS
54	R515456	WASHER	1		
55	RE515638	HAND PRIMER	1		
56	R515457	O-RING	1		
57	R515455	WASHER	1		(USE WITH RE515637)
	51M7095	O-RING	1		(USE WITH RE518420)
58	RE515637	VALVE	1		(USE WITH RE508233)
	RE518420	VALVE	1		(USE WITH RE518807)
59	.....	SENSOR	1		(ORDER RE508233 OR RE518807)
60	RE518807	FUEL INJECTION PUMP	1		(INCLUDES R515457) (SUB FOR RE508233) (DENSO)HPCR (24V)
61	RE508773	ENGINE CONTROLLER	1	-214656	(MARKED RE508773) (12/24V) (ECU) (ORDER WITH ESN)
	RE522515	ENGINE CONTROLLER	1	214657-	(SUB FOR RE518503) (12/24V) (ECU) (ORDER WITH ESN) (MACHINE SN -592390)
	RE522515	ENGINE CONTROLLER	1		(MACHINE SN 592391-)

MEMORANDA

INTAKE MANIFOLD

RGP7359 -UN-13FEB01

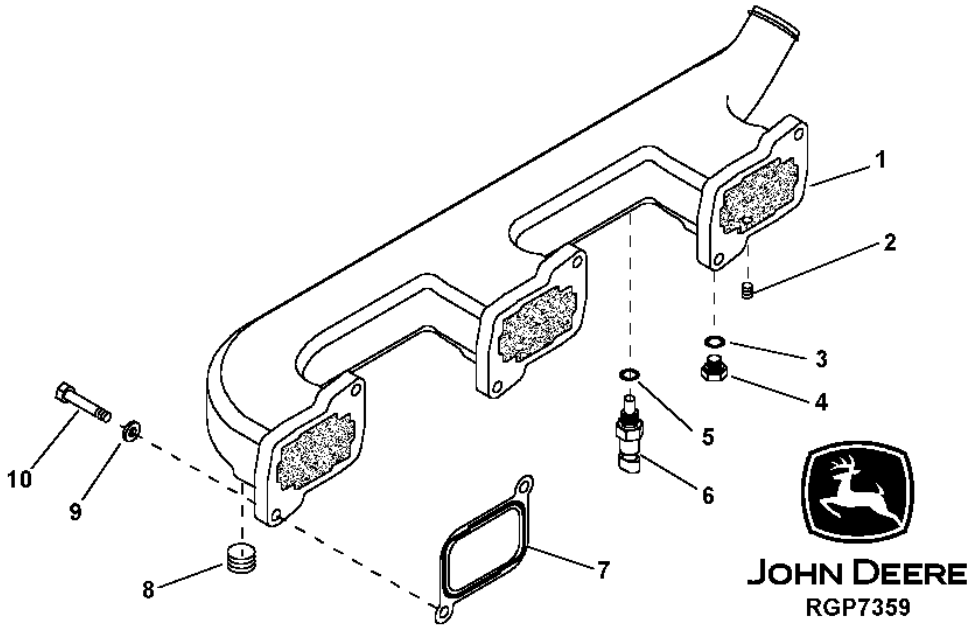

KEY	PART NO.	PART NAME	QTY	ENGINE SERIAL NO.	REMARKS
1	R503926	INTAKE MANIFOLD	1		
2	RE71255	PIPE PLUG	1		
3	51M7041	O-RING	NA		11.300 X 2.200 MM (0.445" X 0.087")
4	RE57836	PIPE PLUG	1		
5	51M7041	O-RING	1		11.300 X 2.200 MM (0.445" X 0.087")
6	RE61812	SENSOR	1		
7	R130573	GASKET	3		
8	15H690	PIPE PLUG	1		3/4"
9	24H1682	WASHER	6		13/32" X 7/8" X 0.120"
10	19H1651	CAP SCREW	6		3/8" X 1-1/2"

TURBOCHARGER AND OIL LINES

RGP11048 -UN-26JAN05

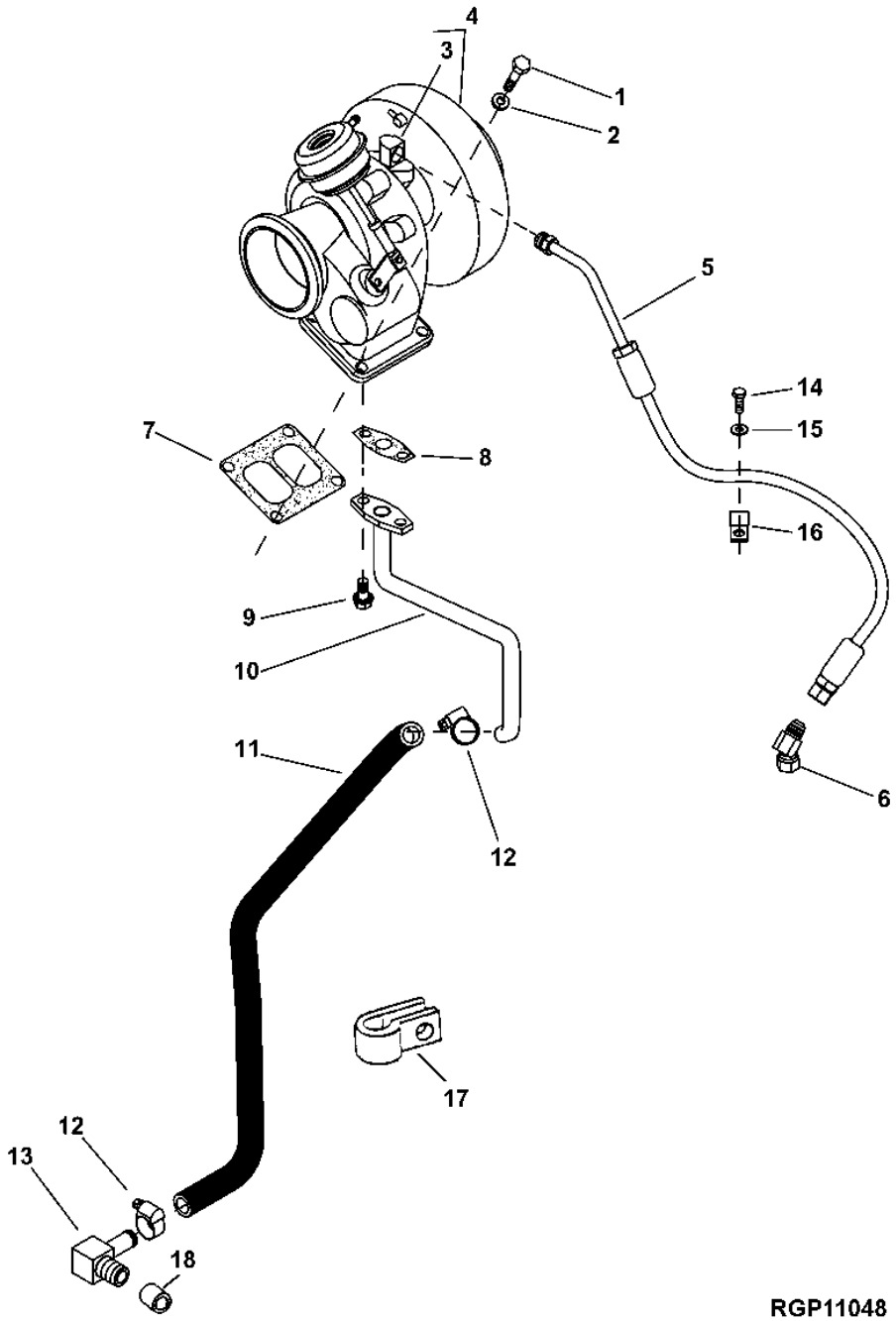

TURBOCHARGER AND OIL LINES - CONTINUED

KEY	PART NO.	PART NAME	QTY	ENGINE SERIAL NO.	REMARKS
1	R54500	SCREW	4		9.525 X 25.400 MM (3/8" X 1")
2	24H1305	WASHER	4		13/32" X 13/16" X 0.065"
3	T11180	ELBOW FITTING	1		
4	RE501051	TURBOCHARGER	1		(MARKED RE71192) (REMANUFACTURED)
5	RE20230	OIL LINE	1		
6	RE504581	ELBOW FITTING	1		
7	R89879	GASKET	1		
8	R105346	GASKET	1		
9	R122618	SCREW	2		
10	RE69384	OIL LINE	1		
11	R500723	HOSE	1		
12	AR21839	CLAMP	2		
13	R126812	ELBOW FITTING	1		
14	19H1948	CAP SCREW	1		1/4" X 3/4"
15	24H753	WASHER	1		9/32" X 5/8" X 0.049"
16	T13814	CLAMP	1		
17	T72853	STRAP	1		
18	RE524764	THREADED NIPPLE	1	256768-	

WATER PUMP

RGP7459 -UN-27MAR01

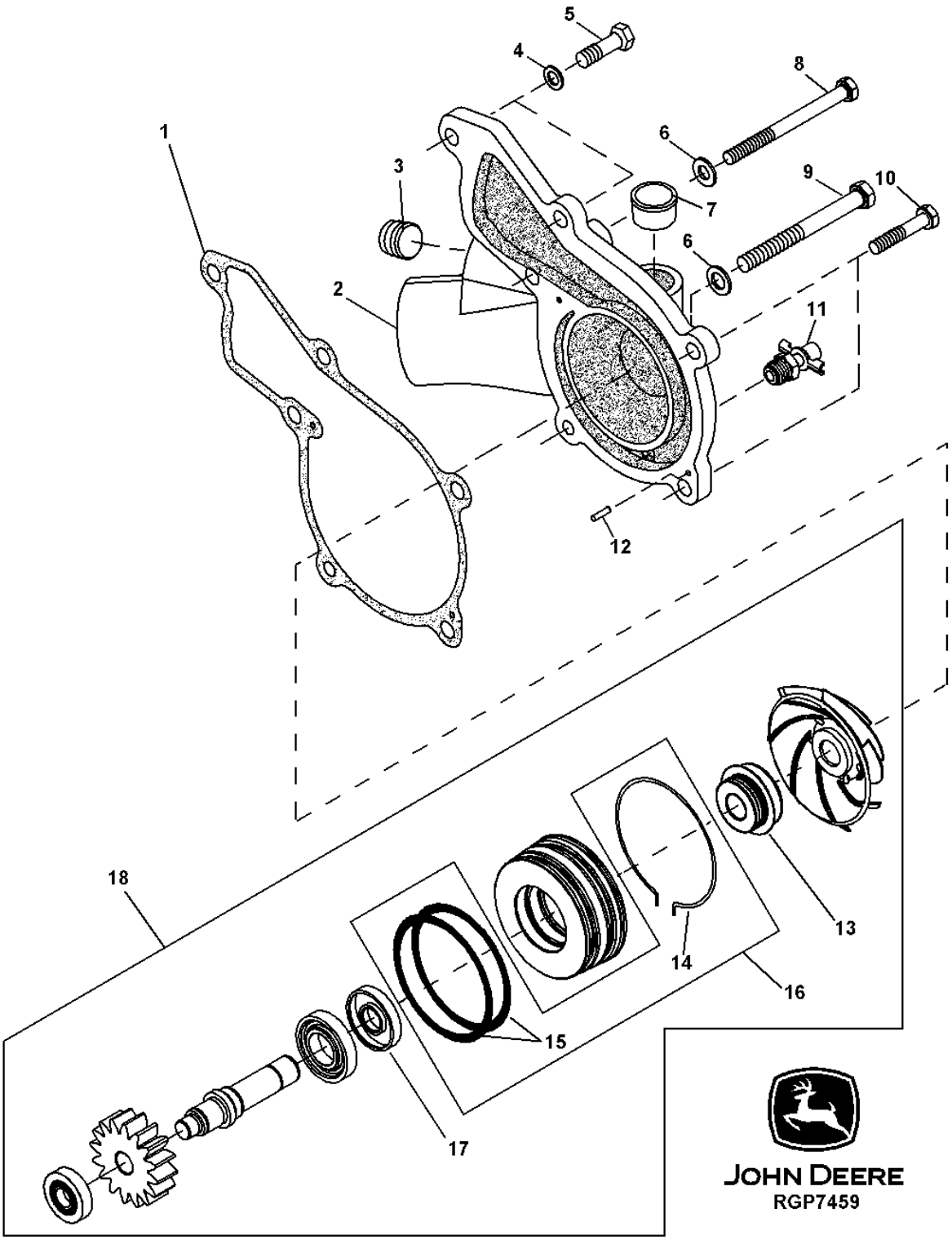

WATER PUMP - CONTINUED

KEY	PART NO.	PART NAME	QTY	ENGINE SERIAL NO.	REMARKS
1	R119383	GASKET	1		
2	R502836	COVER	1		
3	RE57836	PIPE PLUG	1		1/2", (SUB FOR 15H624)
4	24H1136	WASHER	1		11/32" X 11/16" X 0.065"
5	19H3445	CAP SCREW	1		3/8" X 3-3/4"
6	24H1305	WASHER	3		13/32" X 13/16" X 0.065"
7	RE57190	SEAL	1		
8	19H2345	CAP SCREW	1		3/8" X 5-1/2", 3/8" X 1/2"
9	19H2343	CAP SCREW	1		5/16" X 5-1/2", 5/16" X 5-1/2"
10	19H3411	SCREW	2		3/8" X 1-1/8", 3/8" X 1-1/8"
11	AT13740	DRAIN VALVE	1		
12	R11086	DOWEL PIN	2		
13	RE68318	SEAL KIT	1		
14	R121316	RING	1		(RETAINING)
	R26976	O-RING	1		
15	R504778	O-RING	1		(BLUE)
	R504791	O-RING	1		(PINK)
16	RE502154	KIT	1		(WATER PUMP SEAL)
17	RE39134	SEAL	1		(OIL)
18	RE509598	WATER PUMP	1		(MARKED R503501)

WATER MANIFOLD AND THERMOSTAT

RGP9057 -UN-04SEP02

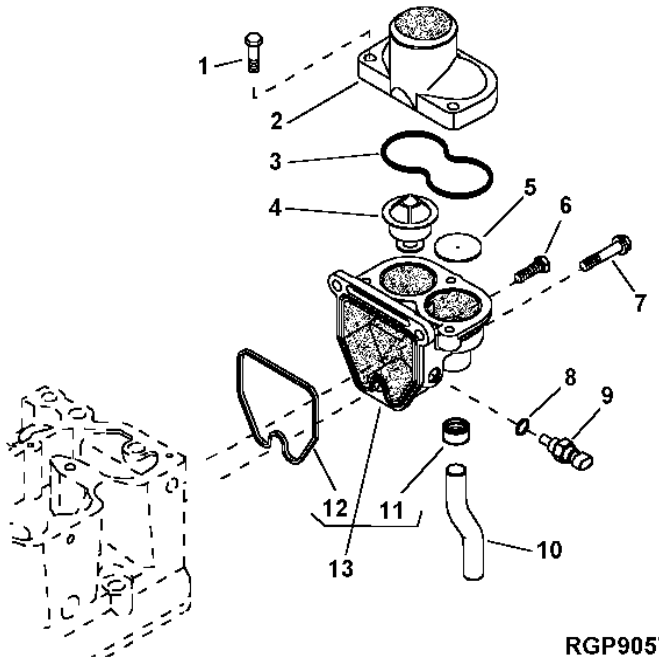

RGP9057

KEY	PART NO.	PART NAME	QTY	ENGINE SERIAL NO.	REMARKS
1	T53268	SCREW	3		
2	RE502570	COVER	1		(INCLUDES R136151)
3	R136151	SEAL	1		
4	AR48675	THERMOSTAT	1		82°C (180°F)
5	R100671	PLUG	1		
6	19H3773	SCREW	1		3/8" X 2"
7	19H3771	SCREW	2		3/8" X 1"
8	51M7041	O-RING	1		11.300 X 2.200 MM (0.445" X 0.087")
9	RE48419	SENSOR	1		(INCLUDES 51M7041)
10	R120022	TUBE	1		
11	RE57190	SEAL	1		
12	R136063	SEAL	1		
13	RE502573	HOUSING	1		

ENGINE OIL COOLER

RGP5010 -UN-15APR98

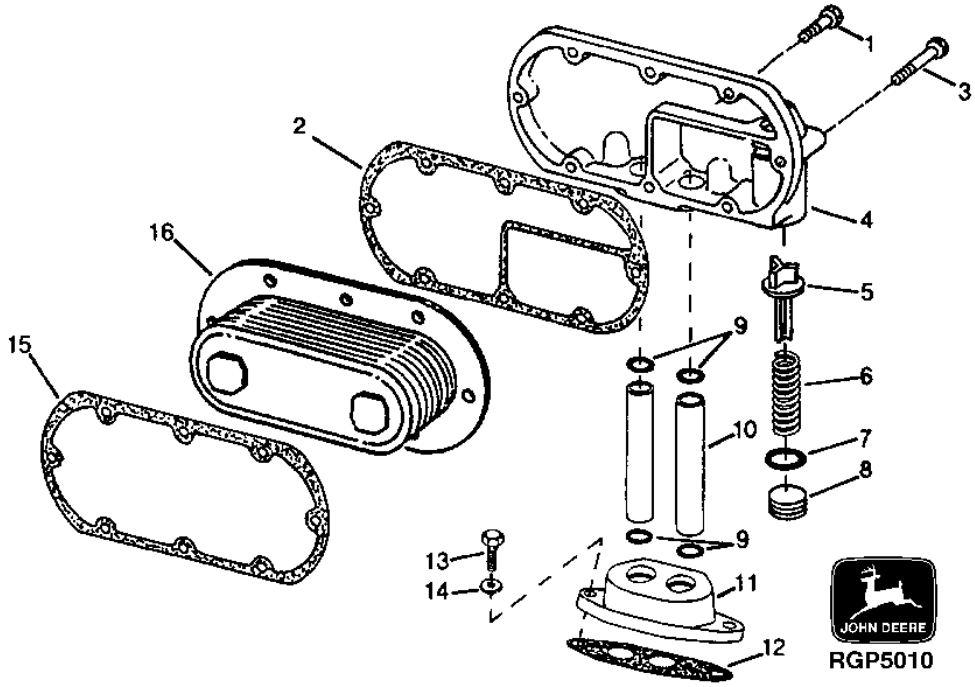

KEY	PART NO.	PART NAME	QTY	ENGINE SERIAL NO.	REMARKS
1	19H3768	SCREW	5		5/16" X 1-3/8"
2	R132396	GASKET	1		
3	19H3769	SCREW	3		5/16" X 2-1/2"
4	R134602	COVER	1		(TIER 1)
	R50209	MOLDING	1		(TIER 2) (ESN 323464-)
5	R500055	VALVE	1		
6	R98064	SPRING	1		
7	U17409	O-RING	1		
8	R121163	DRAIN PLUG	1		
9	R47153	O-RING	4		
10	R51053	OIL TUBE	2		
11	R127297	ADAPTER	1		
12	R50424	GASKET	2		
13	19H3411	SCREW	2		3/8" X 1-1/8"
14	24M7096	WASHER	2		10.500 X 18 X 1.600 MM (0.413" X 0.709" X 0.063")
15	AR58952	GASKET	1		
16	AR55394	OIL COOLER	1		

ENGINE OIL COOLER BYPASS TUBES AND ADAPTER

RGP5009 -UN-15APR98

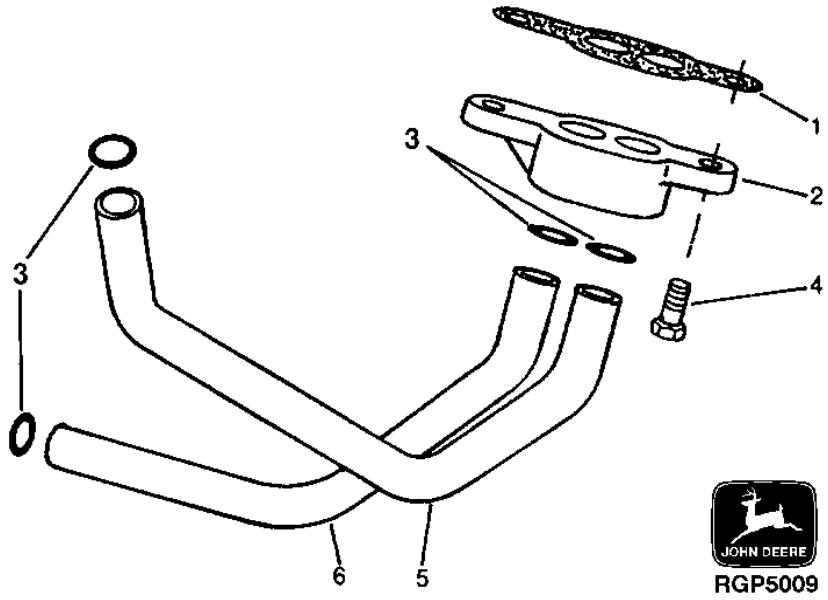

KEY	PART NO.	PART NAME	QTY	ENGINE SERIAL NO.	REMARKS
1	R109625	GASKET	1		
2	R116233	ADAPTER	1		
3	R71732	O-RING	4		31.344 X 3.531 MM (1-15/64" X 0.139")
4	R40236	CAP SCREW	2		11.125 X 28.448 MM (7/16" X 1.120")
5	R126337	OIL TUBE	1		
6	R116718	OIL TUBE	1		

MEMORANDA

FUEL FILTER AND FUEL FILTER FUEL LINES(ESN -249016)

RGP9021 -UN-23AUG02

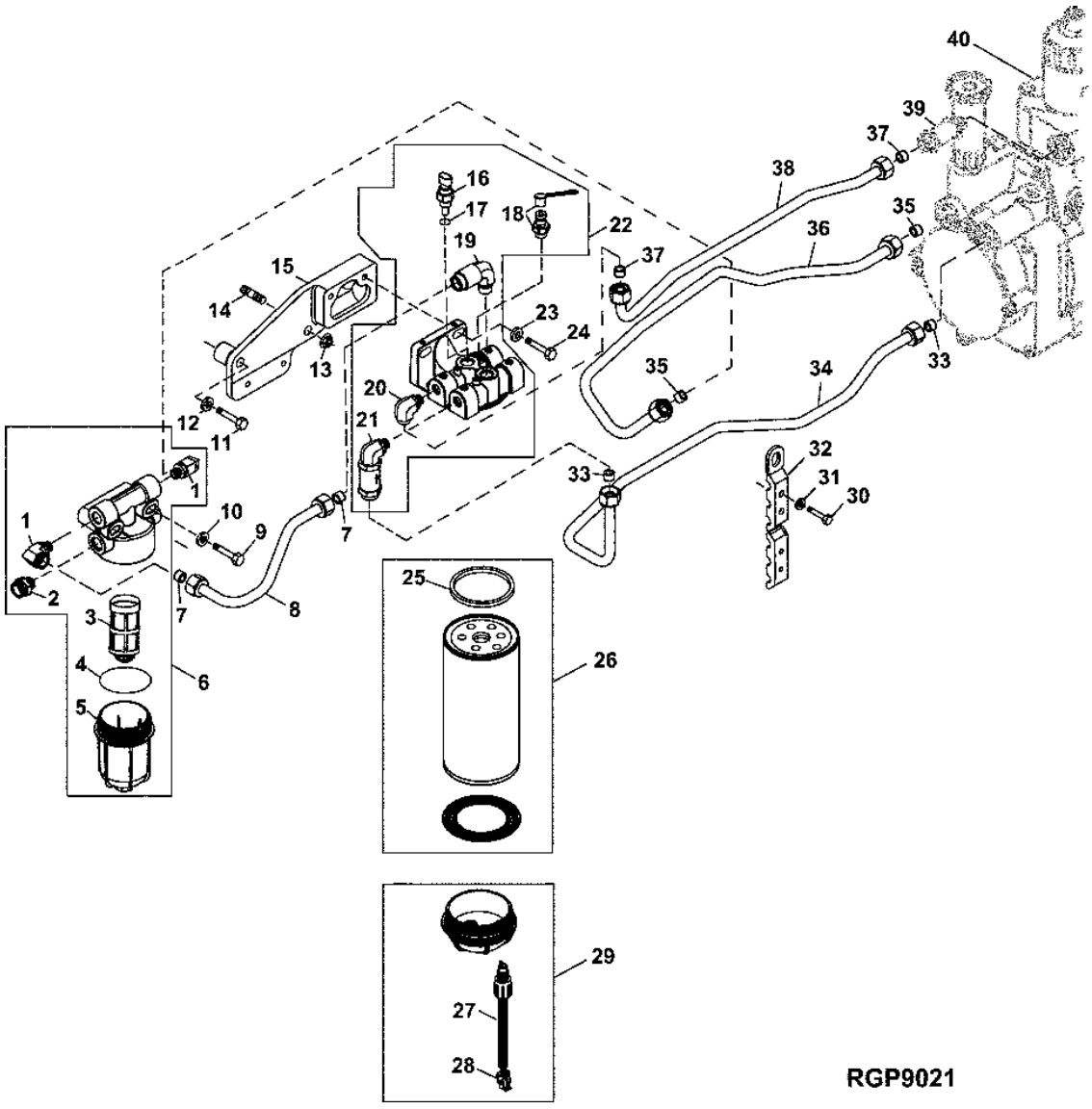

FUEL FILTER AND FUEL FILTER FUEL LINES (ESN -249016)

KEY	PART NO.	PART NAME	QTY	ENGINE SERIAL NO.	REMARKS
1	RE507027	ELBOW FITTING	2		
2	RE503605	ADAPTER	1		
3	R502778	FILTER ELEMENT	1		
4	R101042	O-RING	1		
5	R502777	BOWL	1		
6	RE507011	FUEL FILTER	1		(A)
7	R63551	SEALING WASHER	2		
8	RE515890	HYDRAULIC HOSE	1		
9	19H1907	CAP SCREW	2		5/16" X 2-3/4"
10	24H1136	WASHER	2		11/32" X 11/16" X 0.065"
11	19H2678	CAP SCREW	1		7/16" X 2-1/8"
12	24H1325	WASHER	1		15/32" X 59/64" X 0.065"
13	14H1059	NUT	1		7/16"
14	R504516	STUD	1		
15	R504279	BRACKET	1		
16	RE48419	FUEL TEMPERATURE SENSOR	1		(INCLUDES 51M7041)
17	51M7041	O-RING	1		11.300 X 2.200 MM (0.445" X 0.087")
18	RE190805	DIAGNOSTIC COUPLING	1		(SUB FOR RE12187)
19	RE507029	CHECK VALVE	1		
20	RE507027	ELBOW FITTING	1		
21	RE507028	CHECK VALVE	1		
22	RE522640	FUEL FILTER	1		(SUB FOR RE516346)
23	24H1305	WASHER	5		13/32" X 13/16" X 0.065"
24	19H3239	CAP SCREW	2		3/8" X 1-1/4"
25	R501388	PACKING	1		
26	RE522372	FUEL FILTER	1		(SUB FOR RE509596 OR RE519608) (NOT AS SHOWN)
27	RE503590	MOISTURE SENSOR	1		
28	57M7252	ELEC. CONNECTOR TERMINAL	1		(ALSO ORDER (2) R104846, (2) 57M7258 AND 57M7289)
29	RE507187	FUEL FILTER	1		
30	19H1791	CAP SCREW	2		1/4" X 1-1/4"
31	24H1286	WASHER	2		9/32" X 1/2" X 1/16"
32	RE509668	CLAMP	1		
33	R63551	SEALING WASHER	2		
34	RE506971	FUEL LINE	1		
35	R63551	SEALING WASHER	2		
36	RE506970	FUEL LINE	1		
37	R63551	SEALING WASHER	1		
38	RE509275	FUEL LINE	1		(A)
39	.....	CHECK VALVE	1		(SEE FUEL INJECTION SYSTEM)
	51M4238	SEALING RING	1		
40	.....	FUEL INJECTION PUMP	1		(SEE FUEL INJECTION SYSTEM)

(A) PRE-FUEL FILTER

FUEL FILTERS AND LINES (ESN 249017-)

RGP10933 -UN-03MAR05

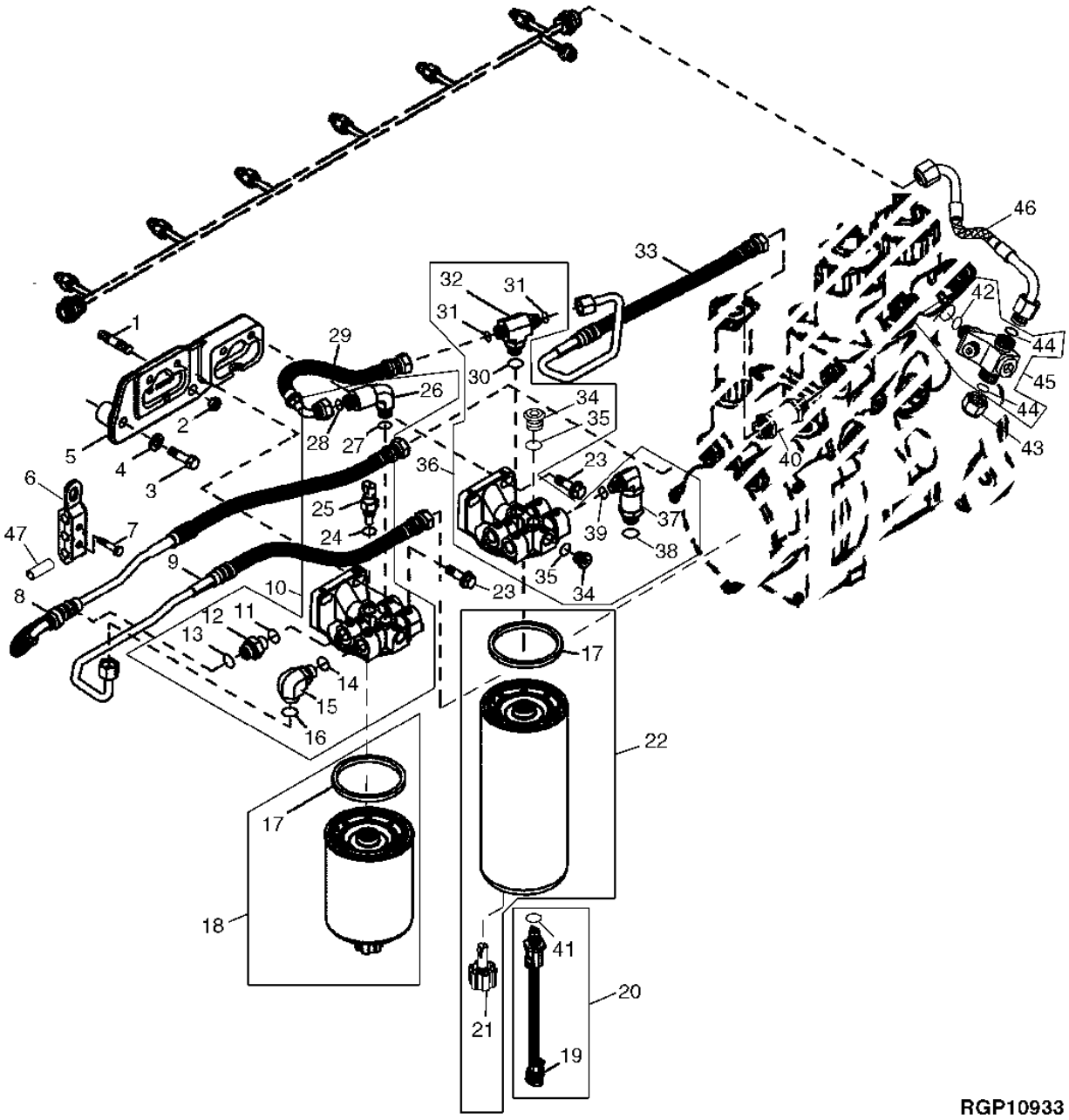

FUEL FILTER AND LINES (ESN 249017-)

KEY	PART NO.	PART NAME	QTY	ENGINE SERIAL NO.	REMARKS
1	R504516	STUD	1		7/16" X 2.638"
2	14H1059	NUT	1		7/16"
3	19H2678	CAP SCREW	1		7/16" X 2-1/8"
4	24H1325	WASHER	1		15/32" X 59/64" X 0.065"
5	R518524	BRACKET	1		
6	RE509668	CLAMP	1		
7	19H1791	CAP SCREW	2		1/4" X 1-1/4"
8	RE520975	FUEL LINE	1		(INCLUDES R518563)
9	RE520981	FUEL LINE	1		(INCLUDES R518563)
10	RE520969	FILTER HEAD	1		FINAL
11	51M7096	O-RING	1		13.300 X 2.200 MM
12	RE522518	FITTING	1		(INCLUDES 51M7096 AND R63548)
13	R63548	O-RING	1		0.364" X 0.070"
14	51M7096	O-RING	1		13.300 X 2.200 MM
15	RE522145	ADAPTER	1		(INCLUDES 51M7096 AND R63548)
16	R63548	O-RING	1		0.364" X 0.070"
17	R519483	PACKING	2		
18	RE522688	FUEL FILTER	1		(2 MICRON) FINAL
19	57M7254	ELECTRICAL CONNECTOR ASSY	1		(ALSO ORDER (2) R104846, 57M7258 AND 57M7289)
20	RE522685	MOISTURE SENSOR	1		
21	RE522686	DRAIN VALVE	1		
22	RE522687	FUEL FILTER	1		(10 MICRON) PRE-FILTER
23	19H3693	SCREW	4		3/8" X 1-1/4"
24	51M7041	O-RING	1		11.300 X 2.200 MM
25	RE48419	SENSOR	1		(INCLUDES 51M7041)
26	RE520971	CONTROL VALVE	1		(INCLUDES 51M7096 AND R63548)
27	51M7096	O-RING	1		13.300 X 2.200 MM
28	R63548	O-RING	1		0.364" X 0.070"
29	RE521473	FUEL LINE	1		
30	R63548	O-RING	1		0.364" X 0.070"
31	51M7096	O-RING	2		13.300 X 2.200 MM
32	RE522143	ADAPTER	1		(INCLUDES (2) 51M7096 AND R63548)
33	RE520972	FUEL LINE	1		(INCLUDES R518563)
34	RE522144	DRAIN PLUG	AR		(INCLUDES 51M7095)
	RE523578	DIAGNOSTIC COUPLING	1	XXXXXX-	(INCLUDES 51M7096)
35	51M7095	O-RING	AR		11.300 X 2.200 MM, (USE WITH RE522144)
	51M7096	O-RING	1	XXXXXX-	13.300 X 2.200 MM, (USE WITH RE523578)
36	RE520967	FILTER HEAD	1		PRE-FILTER
37	RE520968	CHECK VALVE	1		(INCLUDES 51M7096 AND R63548)
38	51M7096	O-RING	1		13.300 X 2.200 MM
39	R63548	O-RING	1		0.364" X 0.070"
40	.....	CHECK VALVE	1		(INCLUDES 51M7095)
41	51M7095	O-RING	1		11.300 X 2.200 MM
42	R519759	O-RING	1		
43	38H1415	FITTING	AR		
44	R63548	O-RING	AR		0.364" X 0.070"
45	RE522834	VALVE	1		(SUB FOR RE521094) (INCLUDES R77175)
	R77175	COVER	1		DUST
46	RE521477	FUEL LINE	1		LEAK-OFF
47	R518563	HOSE GUARD	3		

STARTING MOTOR (24V)
(DENSO NO. 228000-7410)

RGP5018 -UN-15APR98

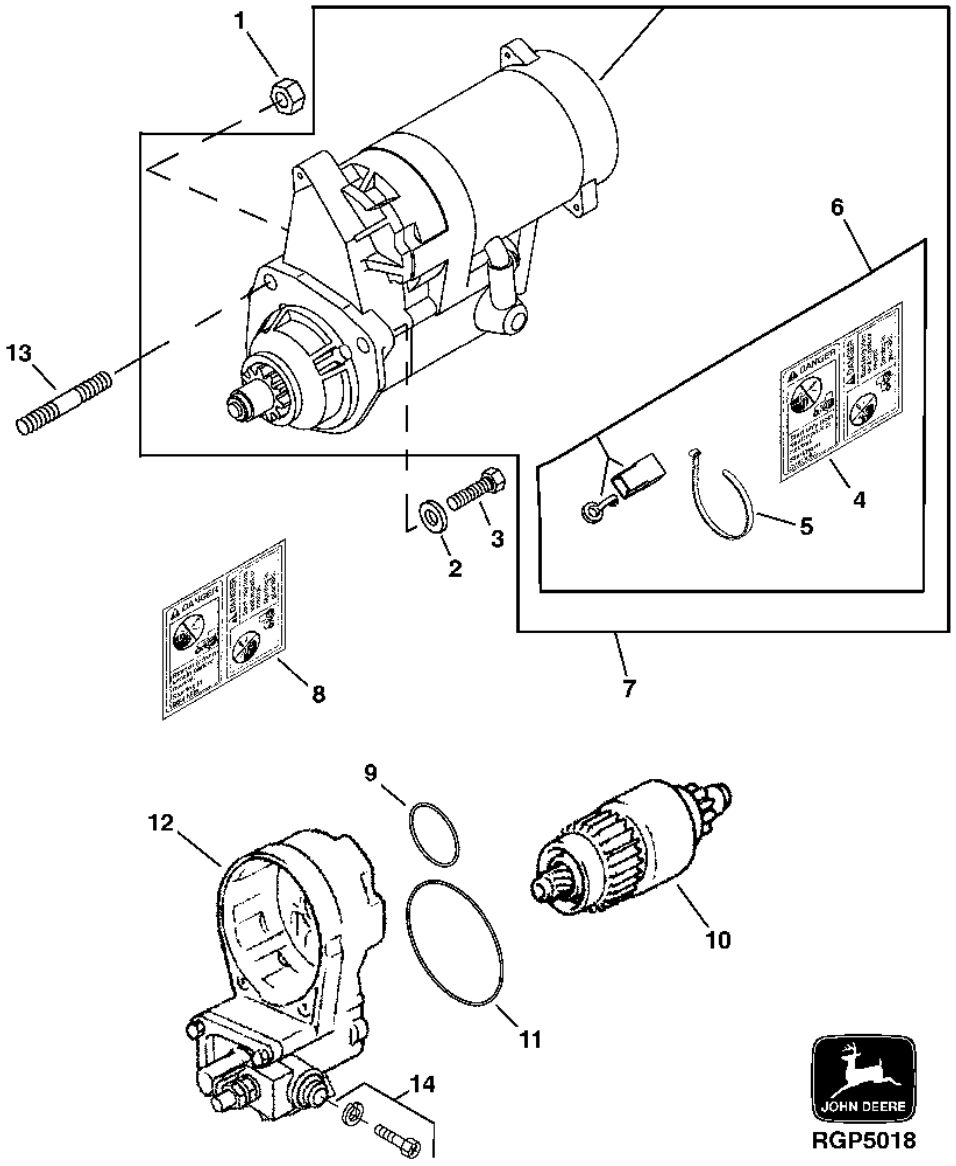

STARTING MOTOR (24V) - CONTINUED
(DENSO NO. 228000-7410)

KEY	PART NO.	PART NAME	QTY	ENGINE SERIAL NO.	REMARKS
1	E55662	FLANGE NUT	1		3/8"
2	24M7096	WASHER	2		10.500 X 18 X 1.600 MM (0.413" X 0.709" X 0.063")
3	19H3219	CAP SCREW	2		3/8" X 1-3/8"
4	T146102	LABEL	1		(ENGLISH)
5	R44302	TIE BAND	1		
6	RE70756	KIT	1		
7	RE501150	STARTER MOTOR KIT	1		(24V) (MARKED RE501060)
	TY24443	STARTER MOTOR	1		(24V) (REMANUFACTURED)
8	T146106	SAFETY SIGN	1		(SPANISH)
	T146104	SAFETY SIGN	1		(FRENCH)
	T146515	SAFETY SIGN	1		(GERMAN)
	T146516	SAFETY SIGN	1		(ITALIAN)
	T146517	SAFETY SIGN	1		(ENGLISH-FRENCH)
9	R135510	O-RING	1		
10	RE70682	CLUTCH	1		
11	R135509	SEAL	1		
12	RE70678	SOLENOID	1		
13	R114130	STUD	1		
14	RE71256	SCREW WITH WASHER	1		

CRANKSHAFT DAMPERS AND PULLEY

RGP5012 -UN-15APR98

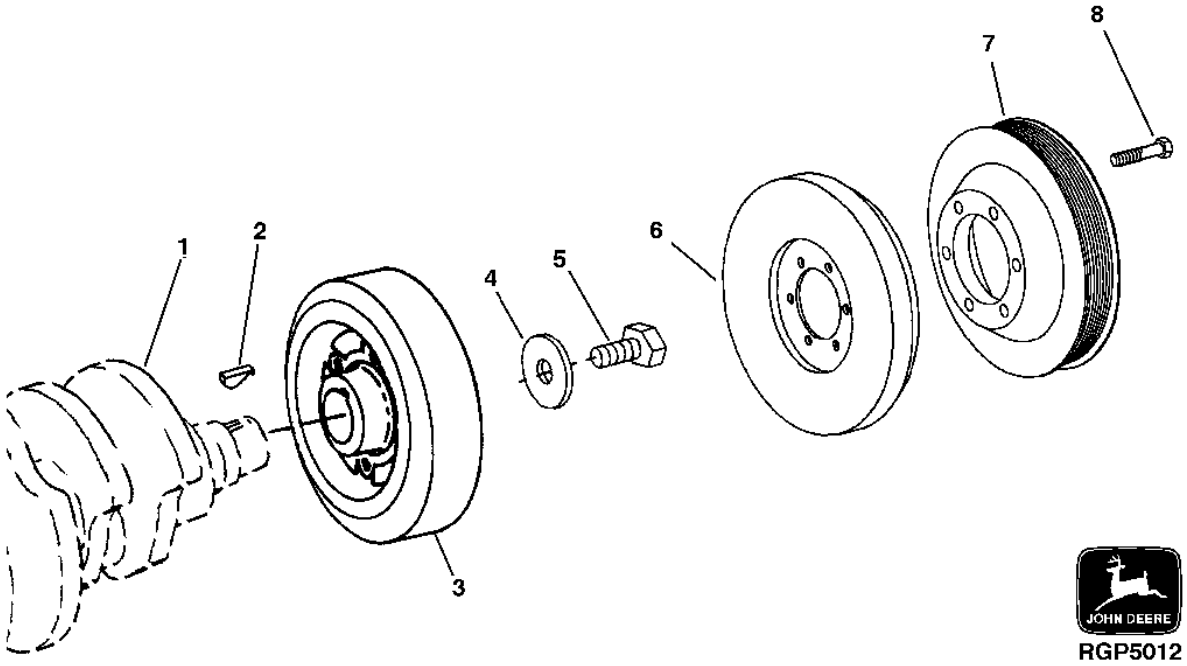

KEY	PART NO.	PART NAME	QTY	ENGINE SERIAL NO.	REMARKS
1	RE55522	CRANKSHAFT	1		
2	R116311	KEY	1		
3	RE500917	TORSIONAL DAMPER	1		
4	R26333	WASHER	1		
5	R79846	CAP SCREW	1		
6	RE57604	TORSIONAL DAMPER	1		
7	R135175	PULLEY	1		
8	19H2633	CAP SCREW	6		3/8" X 1-1/2"

FLYWHEEL

RGP2155 -UN-01JAN94

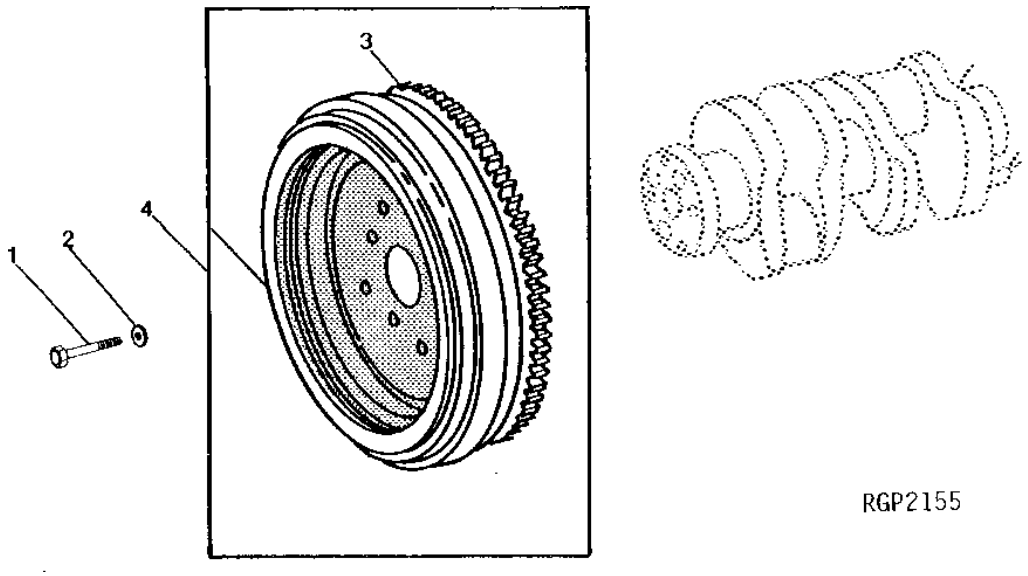

KEY	PART NO.	PART NAME	QTY	ENGINE SERIAL NO.	REMARKS
1	R112884	CAP SCREW	6		
2	T23891	WASHER	6		
3	R28811	RING GEAR	1		
4	RE56779	FLYWHEEL	1		(MARKED R121026)

ENGINE GASKET KITS

RGP4358 -UN-31JUL00

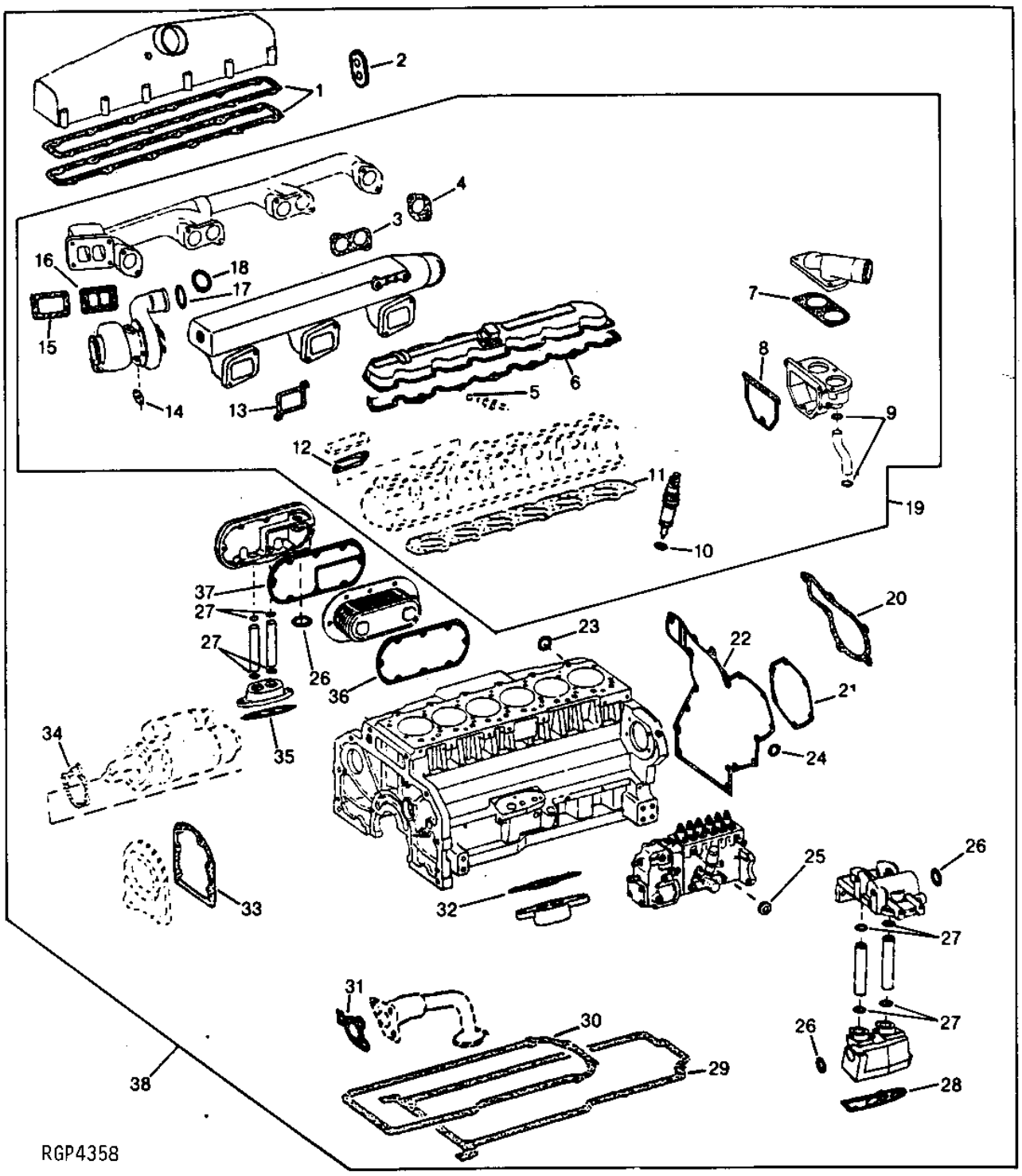

ENGINE GASKET KITS - CONTINUED

KEY	PART NO.	PART NAME	QTY	ENGINE SERIAL NO.	REMARKS
1	R88993	GASKET	1		
2	R100911	SEAL	1		
3	RE62776	GASKET	2		
4	RE62777	GASKET	2		
5	R77551	O-RING	6		
6	R49866	GASKET	1		
7	R124607	GASKET	1		
8	R124211	GASKET	1		
9	R72328	O-RING	1		
10	R84472	WASHER	6		
11	RE55475	ENGINE CYLINDER HEAD GASKET	1		
12	R88397	GASKET	2		
13	R120646	GASKET	3		
	R130573	GASKET	3		
14	R105346	GASKET	1		
15	R92097	GASKET	NA		
16	R123572	GASKET	1		
17	R86743	O-RING	1		
18	R50405	O-RING	1		
19	RE506222	GASKET KIT	1		CYLINDER HEAD
20	R119383	GASKET	1		
21	R502011	GASKET	1		(SUB FOR R50390)
22	R119384	GASKET	1		
23	U13639	O-RING	1		
24	R54856	O-RING	1		
25	R53899	WASHER	NA		(USE WITH R83489)
	51M4237	SEALING RING	NA		(USE WITH R83490) (SUB FOR R53901)
26	U17409	O-RING	3		
27	R47153	O-RING	8		
28	R119847	GASKET	1		
29	R49377	GASKET	1		
30	.....	GASKET	NA		
31	R100569	GASKET	1		
32	R109625	GASKET	1		
33	R26058	GASKET	1		
34	R53108	GASKET	1		
35	R50424	GASKET	1		
36	AR58952	GASKET	1		
37	R132396	GASKET	1		
38	RE506220	GASKET KIT	1		ENGINE REBUILD, (ALSO ORDER R502598, R502719, RE516171, R504885, R136063, RE57190, R515457 AND RE504822)

ENGINE COOLANT HEATER

T194389 -UN-05SEP03

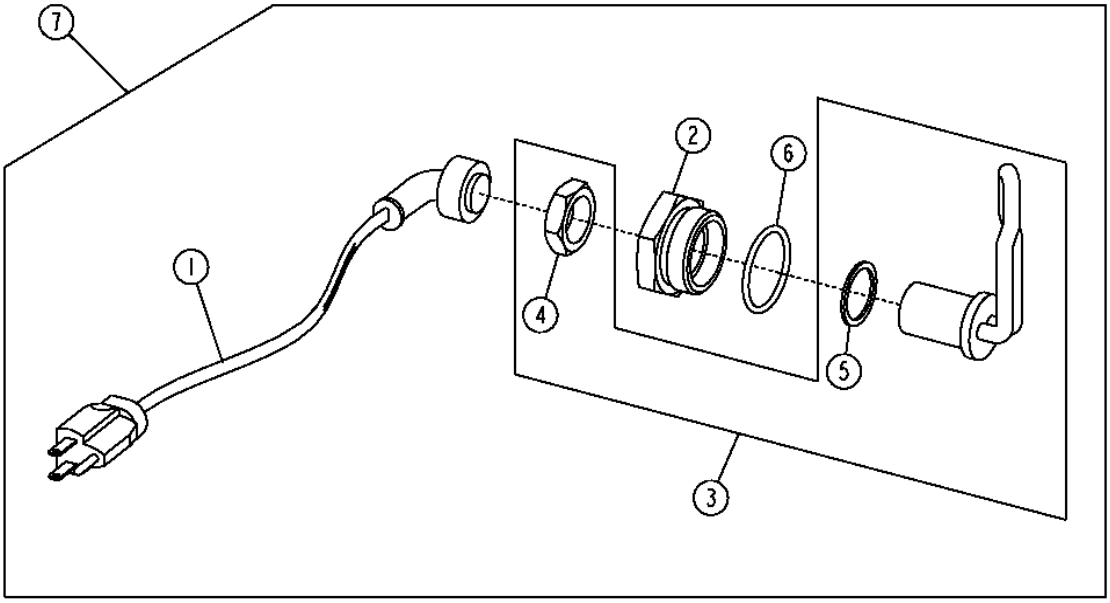

T194389

KEY	PART NO.	PART NAME	QTY	ENGINE SERIAL NO.	REMARKS
1	AR50411	WIRING LEAD	1		
2	R54123	ADAPTER	1		(SUB RE524676)
3	.....	COOLANT HEATER	1		(SUB RE524676)
4	.....	NUT	1		
5	R47693	GASKET	1		
6	U13639	O-RING	1		1.475" X 0.118"
7	RE227949	COOLANT HEATER	1		

1H20

ENGINE AIR HEATER

T195337 -UN-21OCT03

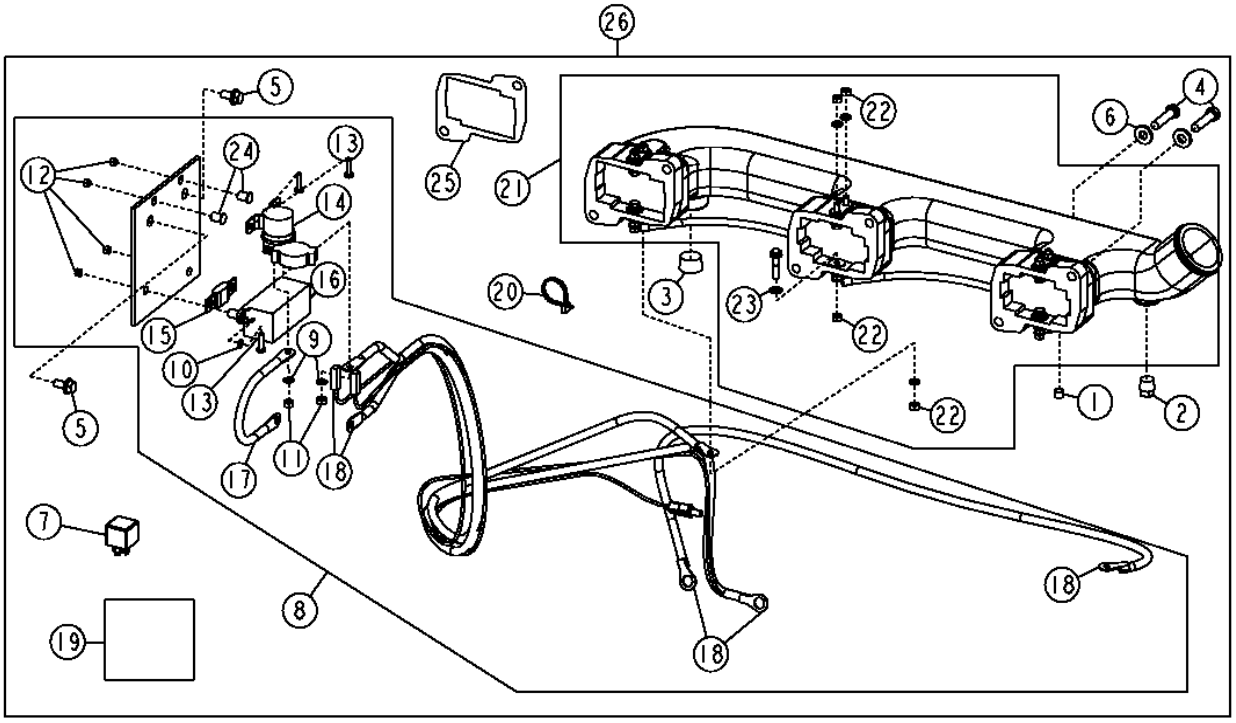

KEY	PART NO.	PART NAME	QTY	SERIAL NO.	REMARKS
1	15H558	PIPE PLUG	1		
2	15H623	PIPE PLUG	1		(SUB FOR 15H666)
3	15H690	PIPE PLUG	1		
4	19H2633	CAP SCREW	6		
5	19M7865	SCREW	2		
6	24H1682	WASHER	6		
7	AT162863	RELAY	1		
8	AT211494	WIRING HARNESS	1		
9	12H297	LOCK WASHER	2		
10	12M7064	LOCK WASHER	2		
11	14M7272	NUT	2		
12	14M7297	NUT	4		
13	21M7022	SCREW	4		
14	AT145341	RELAY	1		
15	AT203566	FUSE	1		
16	AT206818	FUSE HOLDER	1		
17	AT207082	CABLE	1		
18	AT211495	WIRING HARNESS	1		
19	T208085	SAFETY SIGN	1		(SUB FOR T196474)
20	R44302	TIE BAND	2		
21	RE508101	INTAKE MANIFOLD	1		
22	14M7272	NUT	18		
23	24M7293	WASHER	18		(SUB FOR 24M7063) 6.400 X 14 X 1.200 MM
24	T103238	NUT	4		
25	R130573	GASKET	3		
26	**AT210378**	**KIT**	**1**		**(WHOLEGOODS)(ENGINE AIR HEATER)**

STARTING AID, ETHER

T155181 -UN-14AUG02

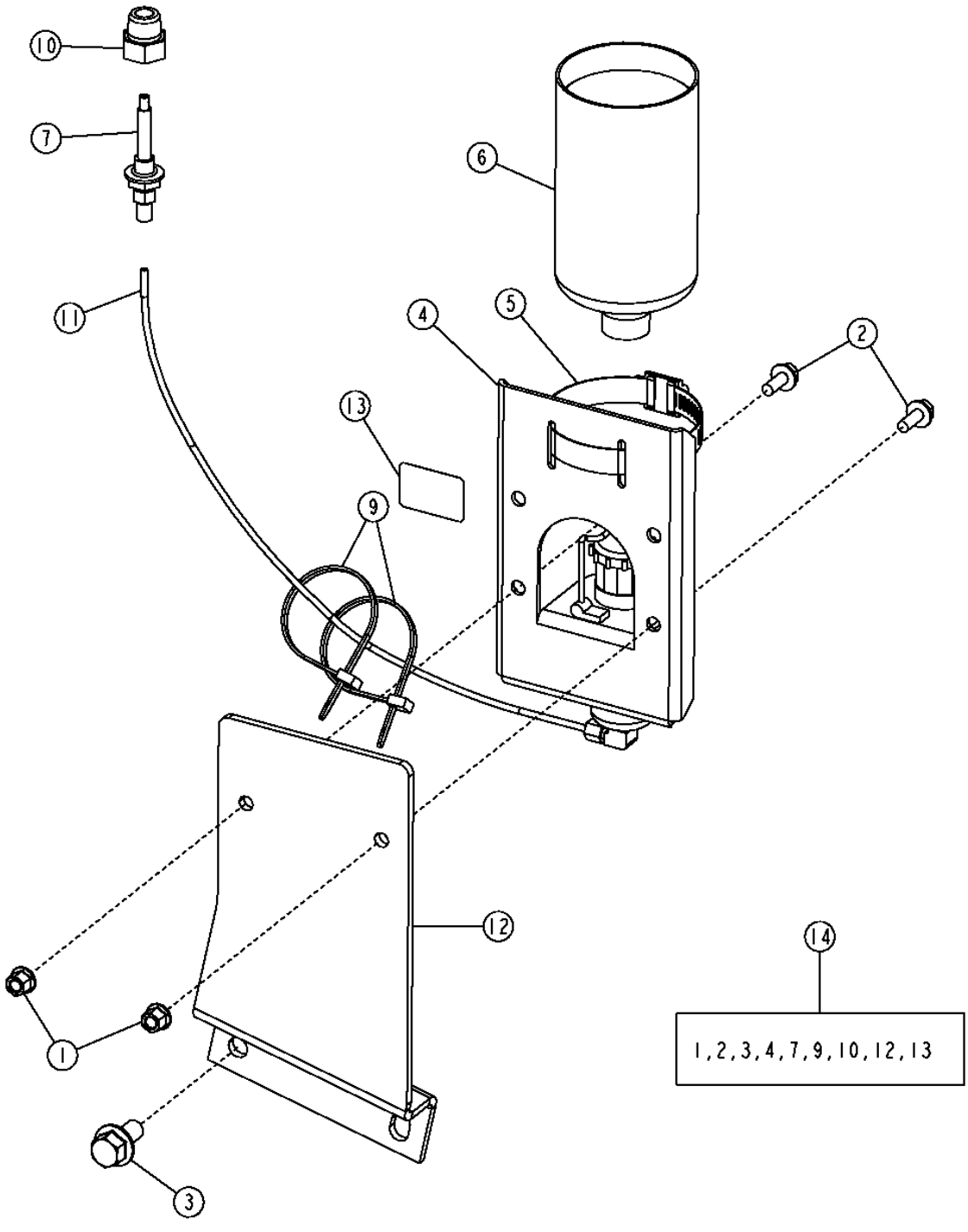

STARTING AID, ETHER

KEY	PART NO.	PART NAME	QTY	SERIAL NO.	REMARKS
1	14M7397	LOCK NUT	2		M6
2	19M7775	SCREW	2		M6 X 16
3	19M7784	SCREW	1		M10 X 20
4	AT170759	SOLENOID	1		(STARTING AID FLUID)
5	AR21999	HOSE CLAMP	1		
6	AT171162	STARTING FLUID	1		
7	AT183222	NOZZLE	1		
9	R44302	TIE BAND	2		
10	T164133	ADAPTER	1		
11	.....	BULK HOSE	1		(FURNISH T78593 BULK MATERIAL, CUT TO LENGTH)
12	T195326	BRACKET	1		
13	T42170	LABEL	1		
14	**AT226739**	**KIT**	**1**		**(WHOLEGOODS)(EITHER START AID)**

RADIATOR, RADIATOR HOSES, OIL COOLER AND FAN SHROUD

T193225 -UN-31JUL03

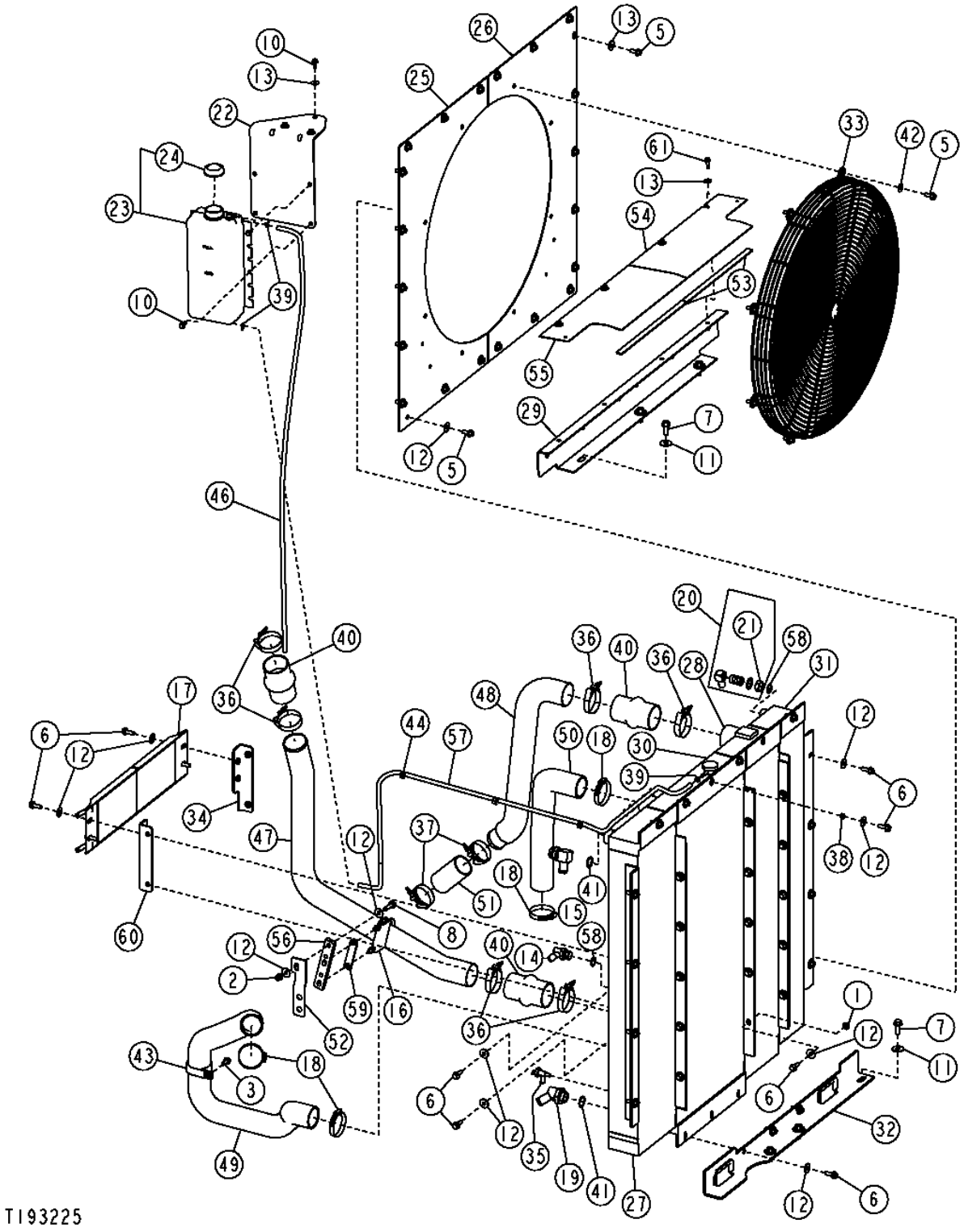

RADIATOR, RADIATOR HOSES, OIL COOLER AND FAN SHROUD

KEY	PART NO.	PART NAME	QTY	SERIAL NO.	REMARKS
1	14M7296	FLANGE NUT	26		M10
2	14M7400	LOCK NUT	1		M10
3	19H3771	SCREW	1		3/8" X 1"
5	19M7785	SCREW	30		M10 X 25
6	19M7786	SCREW	50		M10 X 30
7	19M7790	SCREW	6		M12 X 35
8	19M7804	SCREW	1		M10 X 40
10	19M7866	SCREW	7		M8 X 20
11	24M7180	WASHER	6		13 X 37 X 3 MM
12	24M7296	WASHER	100		10.500 X 30 X 2.500 MM
13	24M7298	WASHER	7		8.400 X 25 X 2 MM
14	AH75159	FITTING	1		
15	AH75162	FITTING	1		
16	AN276328	CLAMP	1		
17	AP35374	HEAT SINK	1		(FUEL COOLER)
18	AR21999	HOSE CLAMP	4		
19	AT209592	ELBOW FITTING	1		
20	AT21574	FITTING	1		
21	R27390	NUT	1		
22	AT222815	BRACKET	1		
23	AT223091	RESERVOIR	1		
24	AT106413	CAP	1		
25	AT224476	SHROUD	1		(LEFT)
26	AT224477	SHROUD	1		(RIGHT)
27	AT224844	OIL COOLER	1		(TRANSMISSION)
	AT300792	OIL COOLER	1		(HARSH ENVIRONMENT COATING)
28	AT224845	AIR COOLER	1		
	AT300793	AIR COOLER	1		(HARSH ENVIRONMENT COATING)
29	AT224861	SUPPORT	1		
30	AT225102	RADIATOR	1		
	AT300773	RADIATOR	1		(HARSH ENVIRONMENT COATING)
31	AT225149	OIL COOLER	1		(HYDRAULIC)
	AT300794	OIL COOLER	1		(HARSH ENVIRONMENT COATING)
32	AT225423	SUPPORT	1		
33	AT225980	GUARD	1		
34	AT226647	BRACKET	1		(LEFT)
35	AT35831	DRAIN VALVE	1		
36	AT37478	HOSE CLAMP	6		
37	AT37693	HOSE CLAMP	2		
38	H2788B	WASHER	3		
39	PT9412	HOSE CLAMP	3		
40	R164193	HOSE	3		
41	R29936	O-RING	2		
42	T105740	WASHER	8		
43	T162575	CLAMP	1		
44	T173168	HOLD-DOWN CLIP	6		
46	.....	BULK HOSE	1		(FURNISH TY22324, CUT TO LENGTH)
47	T181771	TUBE	1		
48	T181774	TUBE	1		
49	T181775	RADIATOR HOSE	1		
50	T181776	RADIATOR HOSE	1		
51	T181778	HOSE	1		
52	T181949	BRACKET	1		
53	.....	ISOLATOR	1		(FURNISH T66419 BULK MATERIAL, CUT TO LENGTH)
54	T182452	SHIELD	1		(RIGHT)
55	T182453	SHIELD	1		(LEFT)
56	T182578	SUPPORT	1		
57	.....	BULK HOSE	1		(FURNISH TY22324, CUT TO LENGTH)
58	U12547	O-RING	2		
59	T151859	STRAP	1		
60	AT227419	BRACKET	1		(RIGHT)
61	19M7867	SCREW	4		

AXLE COOLER, HOSES AND FITTINGS

T157738 -UN-05SEP02

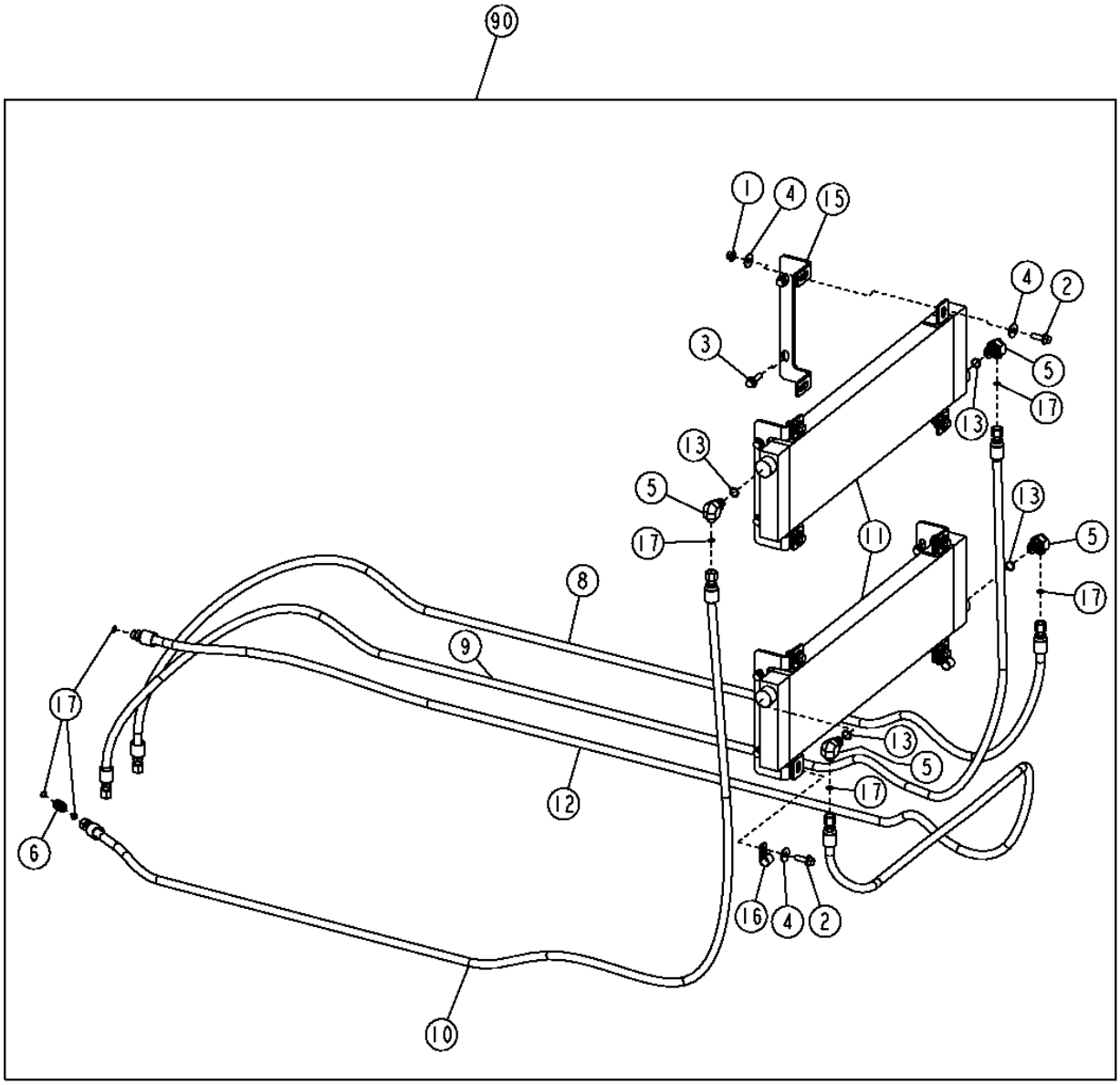

T157738

AXLE COOLER, HOSES AND FITTINGS

KEY	PART NO.	PART NAME	QTY	SERIAL NO.	REMARKS
1	14M7296	FLANGE NUT	9		M10
2	19M7786	SCREW	9		M10 X 30
3	19M7835	SCREW	8		M10 X 35
4	24M7296	WASHER	19		10.500 X 30 X 2.500 MM
5	38H1010	ELBOW FITTING	4		
6	38H1278	UNION FITTING	6		(REQ. FOR FIELD INSTALLED COOLER ONLY)
8	AT227008	HYDRAULIC HOSE - FABRICATE	1		
9	AT227009	HYDRAULIC HOSE - FABRICATE	1		
10	AT227010	HYDRAULIC HOSE - FABRICATE	1		
11	AT227487	HEAT EXCHANGER	2		
12	AT227981	HYDRAULIC HOSE - FABRICATE	1		(REQ. FOR FIELD INSTALLED COOLER ONLY)
	AT227011	HYDRAULIC HOSE - FABRICATE	1		(REQ. FOR FACTORY INSTALLED COOLER ONLY)
13	R26375	O-RING	4		
15	T196284	BRACKET	4		
16	T74416	CLAMP	2		
17	T77613	O-RING	8		(FIELD INSTALLED)
	T77613	O-RING	5		(FACTORY INSTALLED)
90	**AT227552**	**KIT**	**1**		**(WHOLEGOODS)(AXLE COOLER) (CONTAINS ALL PARTS NECESSARY FOR ADDING AXLE COOLER)**

FAN BLADE,FAN HUB AND SUPPORT

T163120 -UN-20DEC02

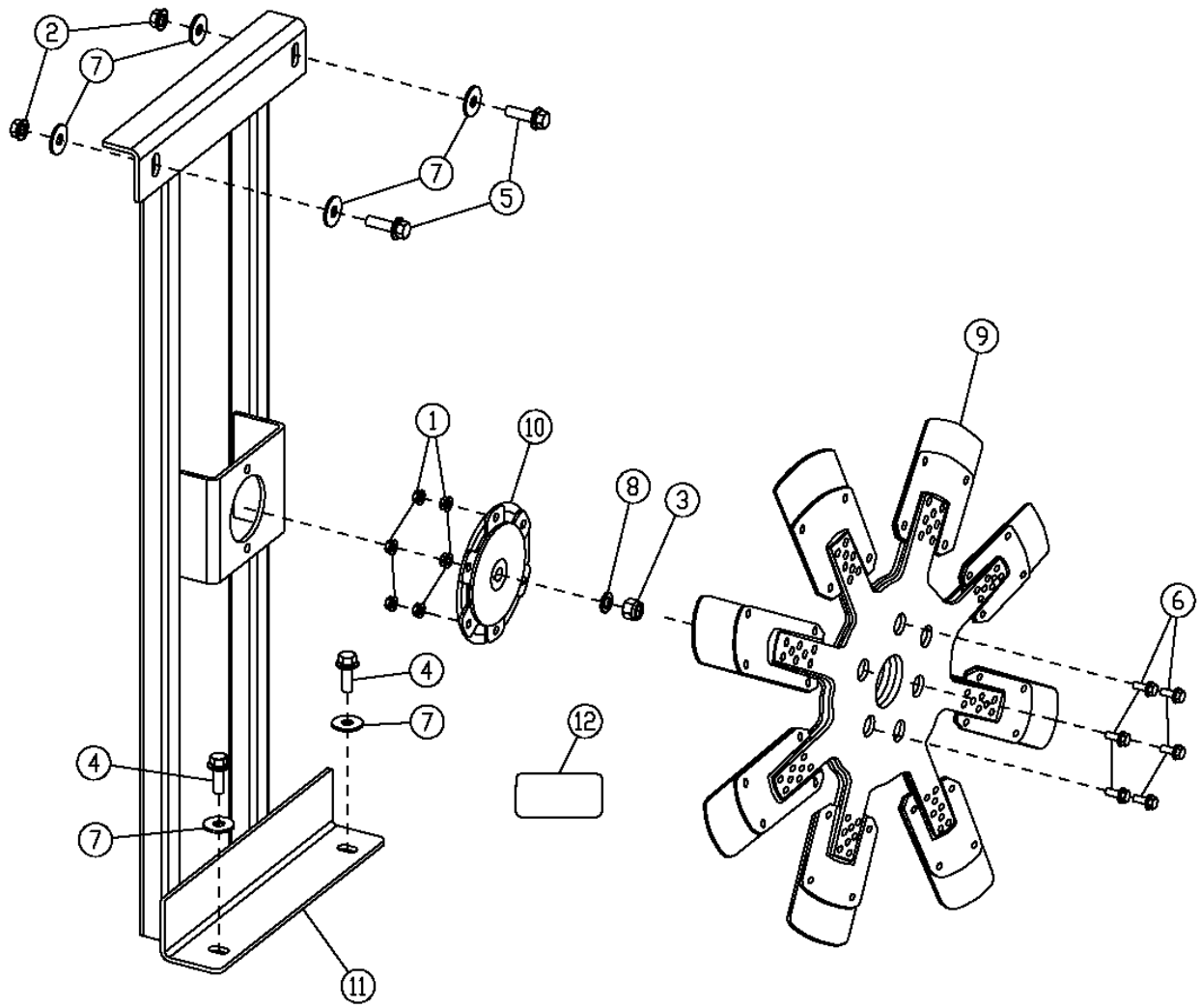

T163120

FAN BLADE,FAN HUB AND SUPPORT

KEY	PART NO.	PART NAME	QTY	SERIAL NO.	REMARKS
1	14M7298	FLANGE NUT	6		M8
2	14M7299	FLANGE NUT	2		M12
3	14M7540	LOCK NUT	1		M14
4	19M7790	SCREW	2		M12 X 35
5	19M7791	BOLT	2		M12 X 40
6	19M7867	SCREW	6		M8 X 25
7	24M7180	WASHER	6		13 X 37 X 3 MM
8	24M7427	WASHER	1		15 X 24 X 2.500 MM
9	AT208006	FAN	1		
10	AT210712	HUB	1		
11	AT226765	SUPPORT	1		
12	T175135	LABEL	1		(FAN TORQUE SPECIFICATIONS)

ENGINE SPEED CONTROL (SERIAL NO. -590067)

T195149 -UN-07OCT03

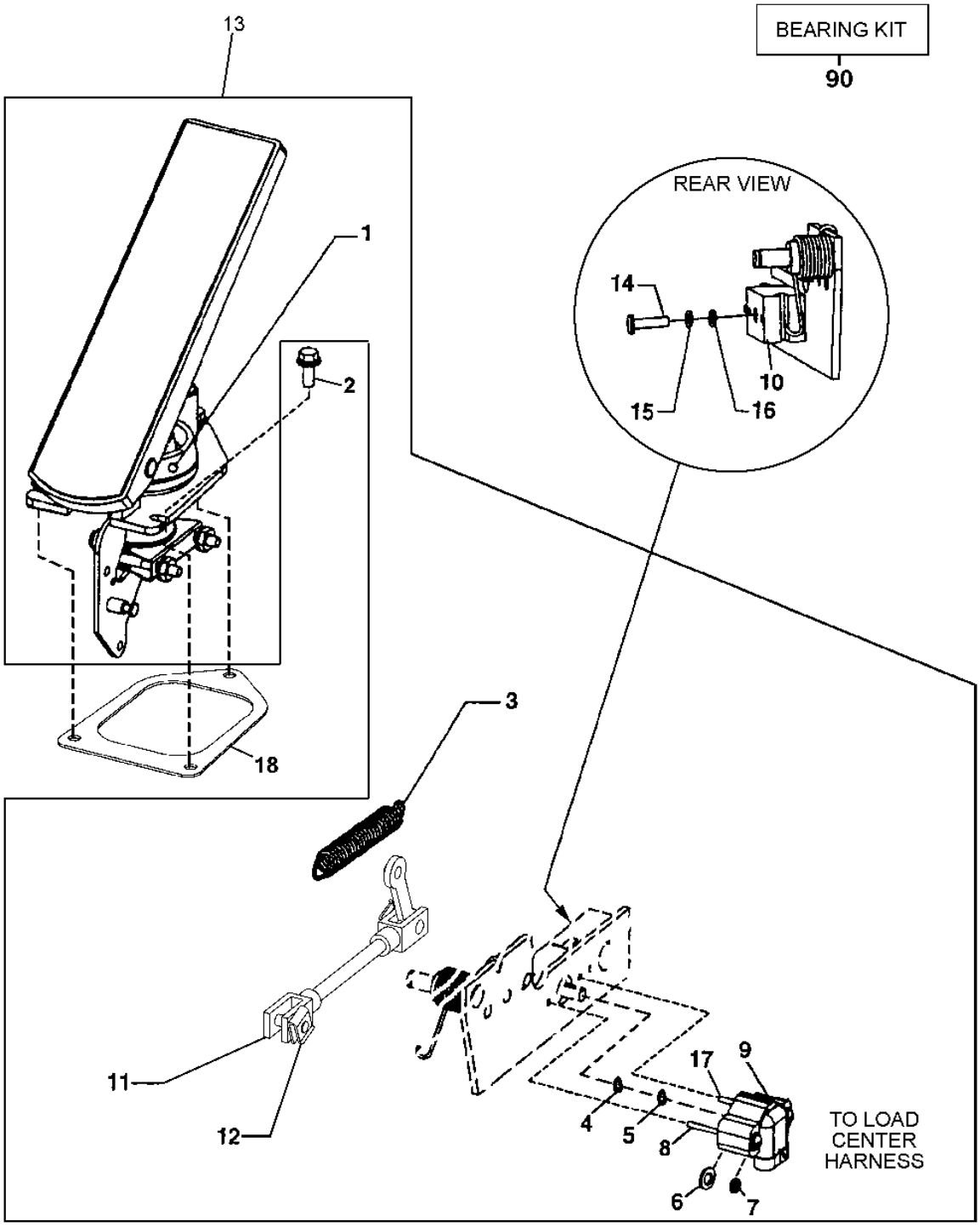

T195149

ENGINE SPEED CONTROL (SERIAL NO. -590067)

KEY	PART NO.	PART NAME	QTY	SERIAL NO.	REMARKS
1	T174634	BOOT	1		(SUB FOR T170938)
2	M113243	SCREW	3		M6 X 16
3	AT226683	KIT	1		THROTTLE SERVICE (INCLUDES SPRING T195691 AND MOUNTING PARTS) (SUB FOR AT224427)
	T195691	EXTENSION SPRING	1		(SUB FOR T181078)
4	L64884	O-RING	2		
5	T45298	O-RING	4		
6	24M7087	WASHER	4		
7	12H246	LOCK WASHER	4		
8	19H3390	SCREW	1		
9	RE30295	SENSOR	2		
10	AT209724	SHAFT	1		BLOCK AND SHAFT ASSEMBLY
11	AT211466	LINKAGE	1		
12	T170939	CLIP	6		
13	.....	ACCELERATOR	1		(AT226776 NO LONGER AVAILABLE) (SUB AT306702)
14	21H1391	SCREW	2		
15	12M7084	LOCK WASHER	2		
16	B1085R	WASHER	2		
17	21H1390	SCREW	3		4.826 X 44.450 MM
18	T172927	GASKET	1		
90	AT156748	BEARING KIT	1		INCLUDES BEARINGS, CLIPS, TORSION SPRING AND PUSH ROD ASSEMBLY (PEDAL ONLY)

ENGINE SPEED CONTROL (SERIAL NO. 590068-)

T195146 -UN-14OCT03

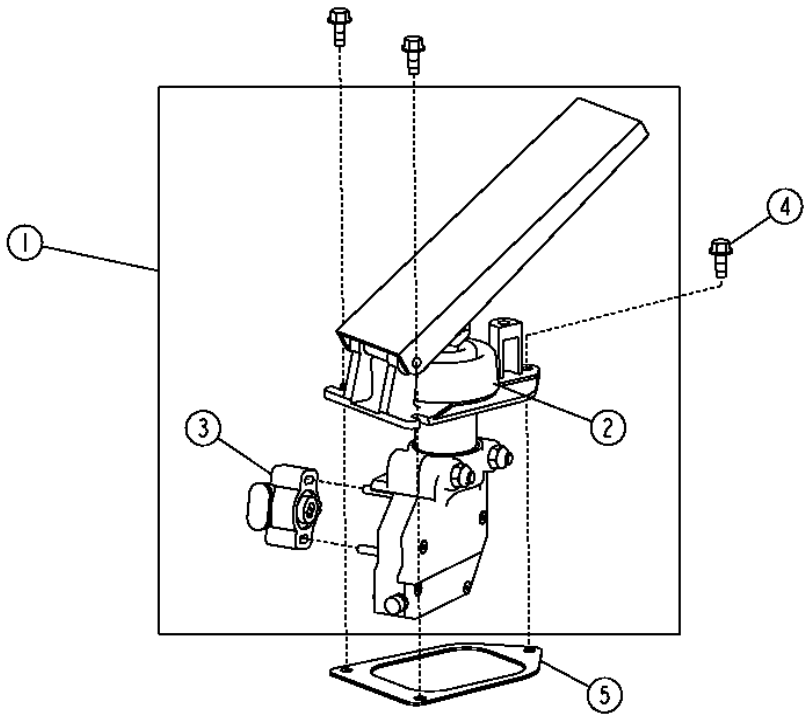

T195146

ENGINE SPEED CONTROL (SERIAL NO. 590068-)

KEY	PART NO.	PART NAME	QTY	SERIAL NO.	REMARKS
1	AT306702	ACCELERATOR	1		
2	T174634	BOOT	1		
3	AT306703	SENSOR	1		
4	M113243	SCREW	3		
5	T172927	GASKET	1		

AIR CLEANER, PRE-CLEANER, FILTERS AND HOSES

T192788 -UN-13AUG03

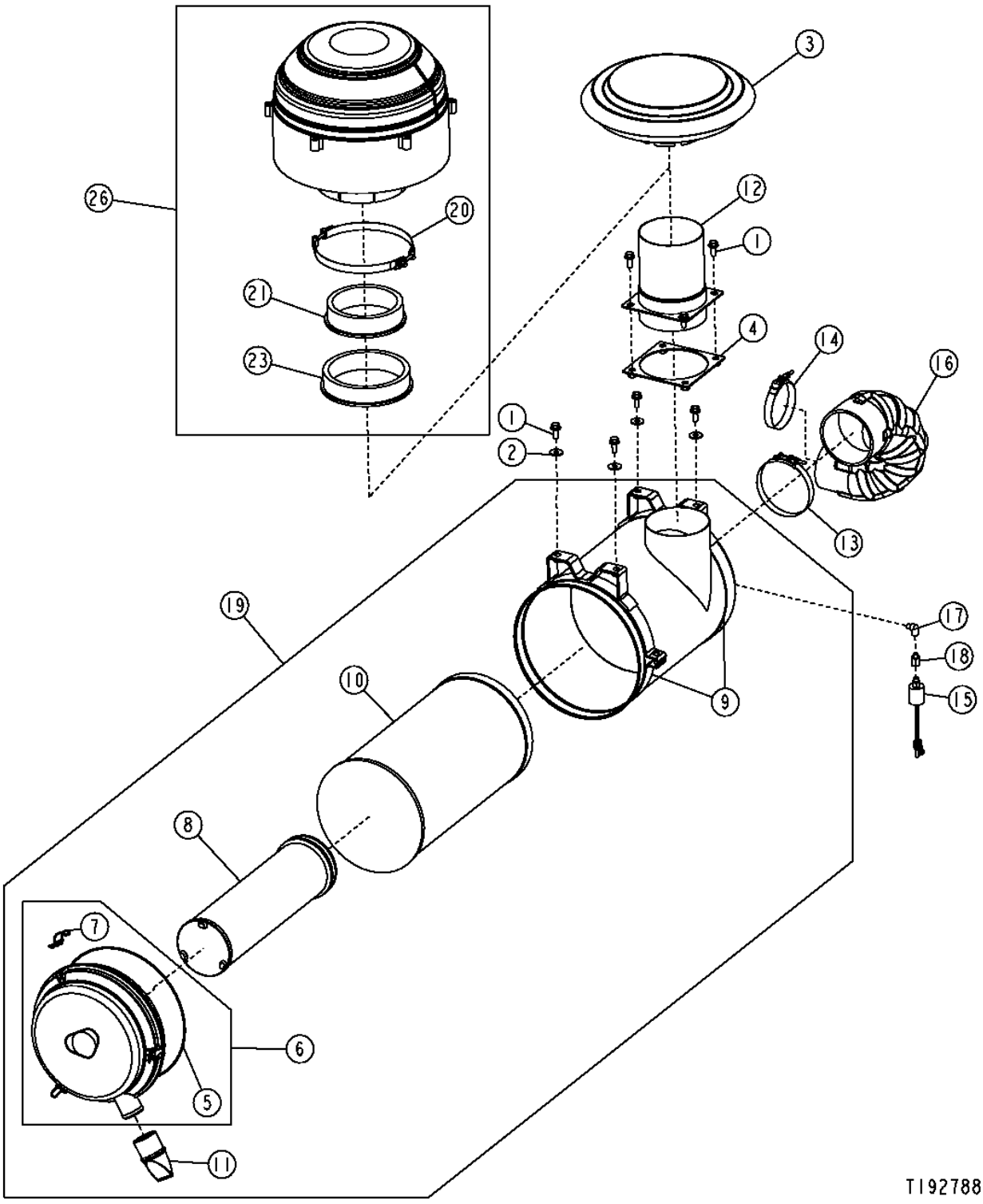

AIR CLEANER, PRE-CLEANER, FILTERS AND HOSES

KEY	PART NO.	PART NAME	QTY	SERIAL NO.	REMARKS
1	19M7785	SCREW	8		M10 X 25
2	24M7296	WASHER	4		10.500 X 30 X 2.500 MM
3	AR70105	CAP	1		
4	AT223810	PLATE	1		
5	T161929	O-RING	1		
6	AT175222	COVER	1		
7	AT180588	HOOK	3		
8	AT175224	FILTER ELEMENT	1		
9	AT209152	BAND	2		
10	AT223226	FILTER ELEMENT	1		
11	T158495	VALVE	1		
12	AT225491	AIR INTAKE STACK	1		
13	AT53439	HOSE CLAMP	1		
14	RE19429	CLAMP	1		
15	RE12176	AIR RESTRICTION SENSOR	1		
16	T181798	HOSE	1		
17	T56112	ELBOW FITTING	1		
18	T82907	ADAPTER	1		
19	AT225114	AIR CLEANER	1		
20	T180869	ADAPTER	1		
21	T181938	BUSHING	1		
23	AT225330	CLAMP	1		
26	AT224833	PRECLEANER	1		

MUFFLER AND EXHAUST PIPE

T154548 -UN-10MAY02

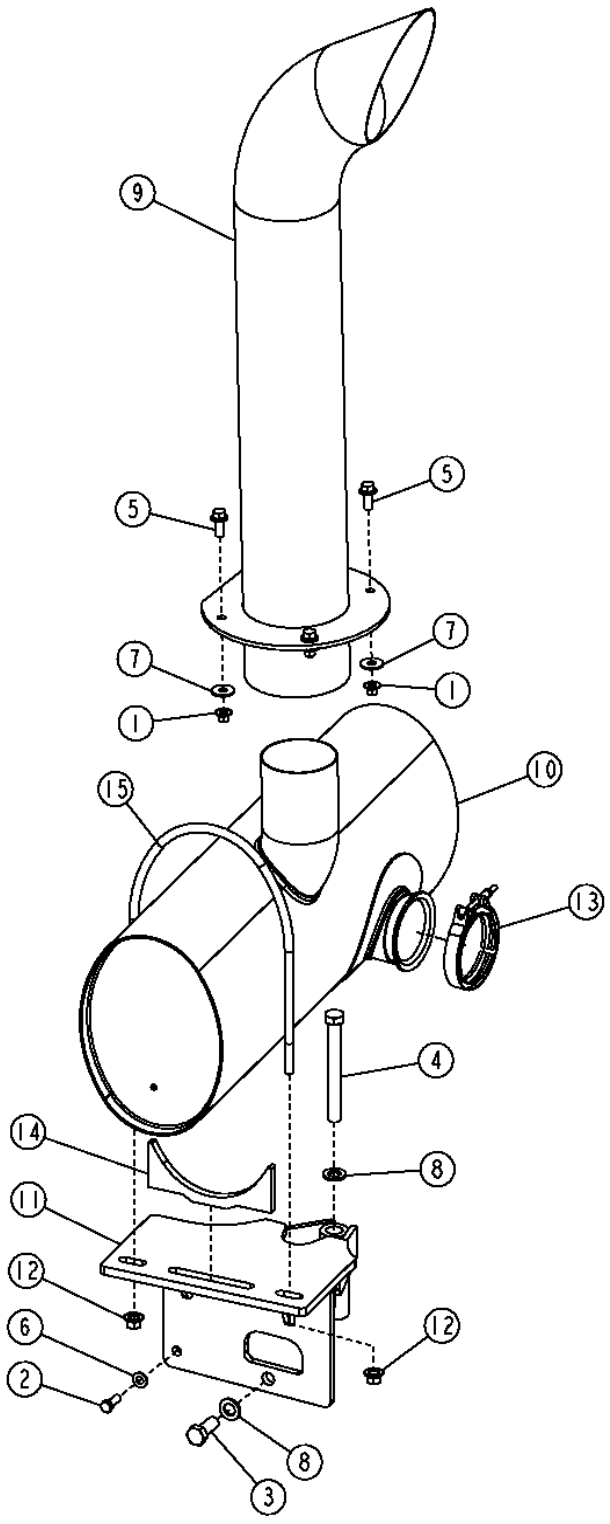

T154548

MUFFLER AND EXHAUST PIPE

KEY	PART NO.	PART NAME	QTY	SERIAL NO.	REMARKS
1	14M7400	LOCK NUT	4		M10
2	19H2676	CAP SCREW	1		3/8" X 1"
3	19H2994	CAP SCREW	1		5/8" X 1-1/2"
4	19H3185	CAP SCREW	1		5/8" X 5-3/4"
5	19M7785	SCREW	4		M10 X 25
6	24M7239	WASHER	1		10.700 X 21 X 2.500 MM
7	24M7296	WASHER	4		10.500 X 30 X 2.500 MM
8	24M7338	WASHER	2		17 X 30 X 3 MM
9	AT320673	EXHAUST PIPE	1		(BLACK) (SUB FOR AT209141)
	AT320674	EXHAUST PIPE	1		(CHROME) (SUB FOR AT220440)
10	AT225054	MUFFLER	1		
11	AT225240	BRACKET	1		
12	E80242	LOCK NUT	2		
13	AT222597	CLAMP	1		
14	T177133	SUPPORT	1		
15	T181842	U-BOLT	1		

ENGINE MOUNTING SUPPORTS

TP60345 -UN-15APR98

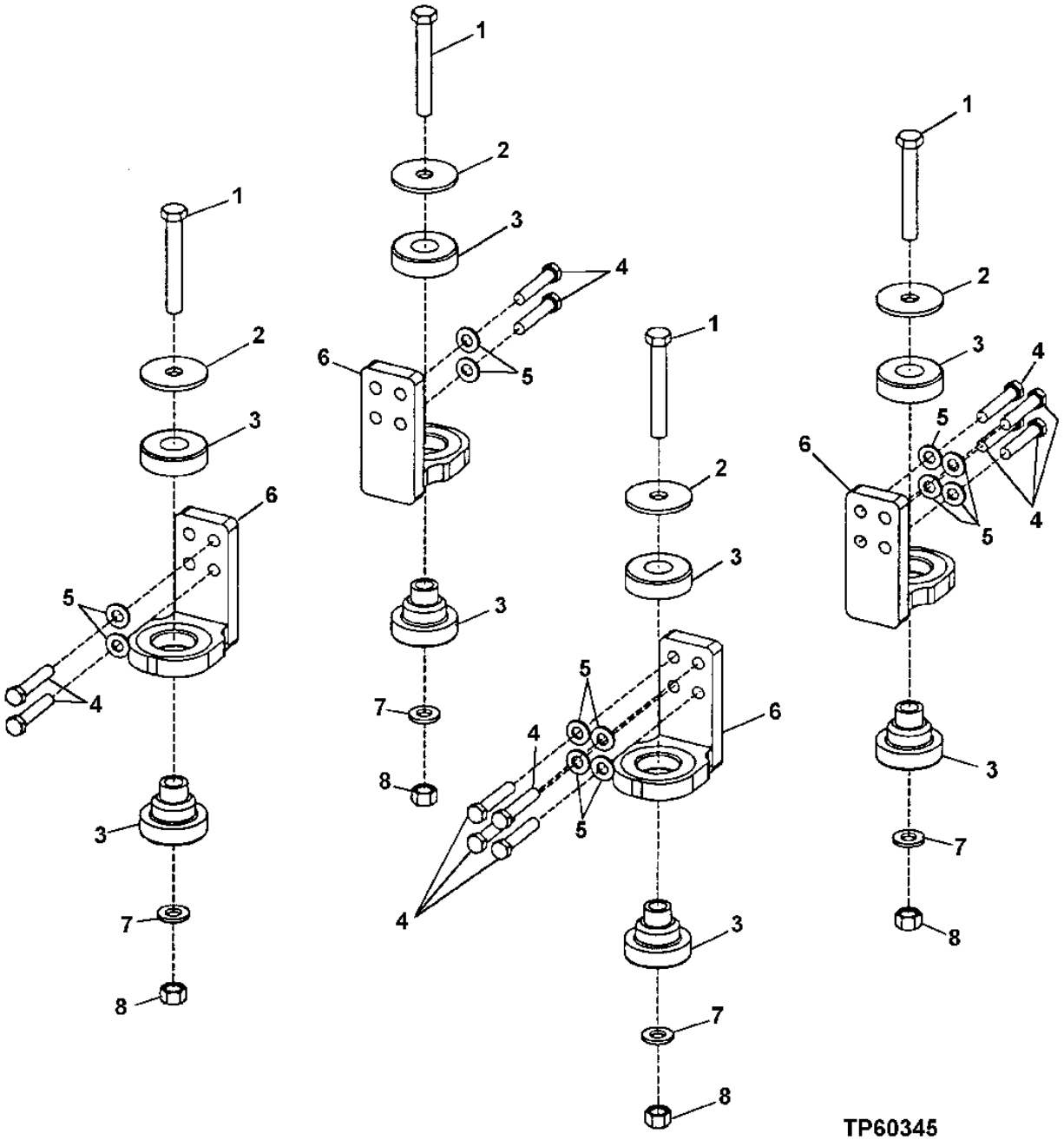

ENGINE MOUNTING SUPPORTS

KEY	PART NO.	PART NAME	QTY	SERIAL NO.	REMARKS
1	19M7907	SCREW	4		M20 X 140
2	T42977	WASHER	4		
3	AT107738	ISOLATOR	4		(TWO PIECES FOR EACH ISOLATOR)
4	19H2641	CAP SCREW	12		5/8" X 3-1/4"
5	24M7241	WASHER	12		0.669" X 1.339" X 0.157"
6	AT209660	SUPPORT	4		
7	24M7242	WASHER	4		
8	14M7277	NUT	4		M20

FUEL TANK AND FUEL TANK HOSES

T200892 -UN-06JUL04

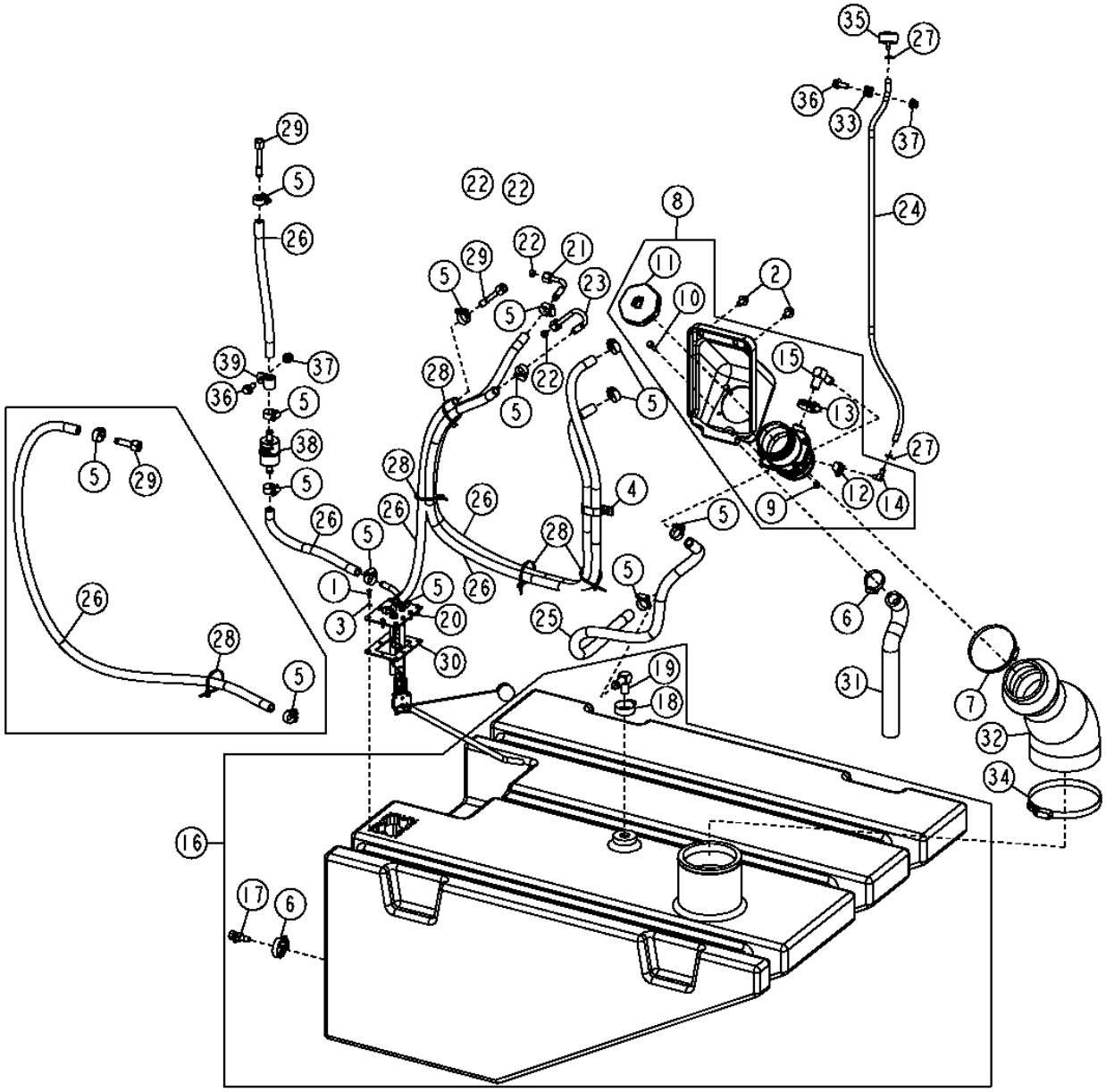

FUEL TANK AND FUEL TANK HOSES

KEY	PART NO.	PART NAME	QTY	SERIAL NO.	REMARKS
1	19M7372	CAP SCREW	9		M5 X 16
2	19M7784	SCREW	2		M10 X 20
3	24M7027	WASHER	9		5.300 X 10 X 1 MM
4	AH77869	CLIP	1		
5	AR21837	CLAMP	10	-593452	
	AR21837	CLAMP	12	593453-	
6	AR21839	CLAMP	2	-594244	
7	AR21842	CLAMP	1		
8	AT221930	HOUSING	1		
9	14M7303	FLANGE NUT	4		M6
10	19M7796	SCREW	4		M6 X 30
11	AMT1274	FILLER CAP	1		
12	AR21836	CLAMP	1		
13	AR21839	CLAMP	1		
14	E48497	HOSE FITTING	1		
15	T167934	ELBOW FITTING	1		
16	AT224813	FUEL TANK	1		
17	AT223133	HAND OPERATED VALVE	1	-594244	
18	RE52034	CLAMP	1		
19	T167934	ELBOW FITTING	1		
20	AT225031	FUEL SENDER	1		
21	AT226756	FUEL LINE	1	-593452	
	AT311982	FUEL LINE	1	593453-	
22	R67092	SEAL	2	-593452	
23	AT226757	FUEL LINE	1	-593452	
	AT311983	FUEL LINE	1	593453-	
24	.....	HOSE	1		(MAKE FROM T79477 BULK MATERIAL, CUT TO LENGTH)
25	.....	HOSE	1		(MAKE FROM T60811 BULK MATERIAL, CUT TO LENGTH)
26	.....	HOSE	1		(MAKE FROM T168383 BULK MATERIAL, CUT TO LENGTH)
27	PT9412	HOSE CLAMP	2		
28	R44302	TIE BAND	5		
29	RE515052	FUEL LINE	2	-593452	
	RE523825	ADAPTER	2	593453-	
30	T179540	GASKET	1		
31	T181470	HOSE	1		
32	T195107	HOSE	1		
33	T75276	CLAMP	1		
34	TY22494	HOSE CLAMP	1		
35	RE52504	BREATHER	1		
36	19M7785	SCREW	1	-593452	M10 X 25
	19M7785	SCREW	2	593453-	
37	14M7400	LOCK NUT	1	-593452	M10
	14M7400	LOCK NUT	2	593453-	
38	AT223493	FUEL FILTER	1	593453-	
39	T70659	CLAMP	1	593453-	

FUEL FILL STRAINER

T145319 -UN-10SEP01

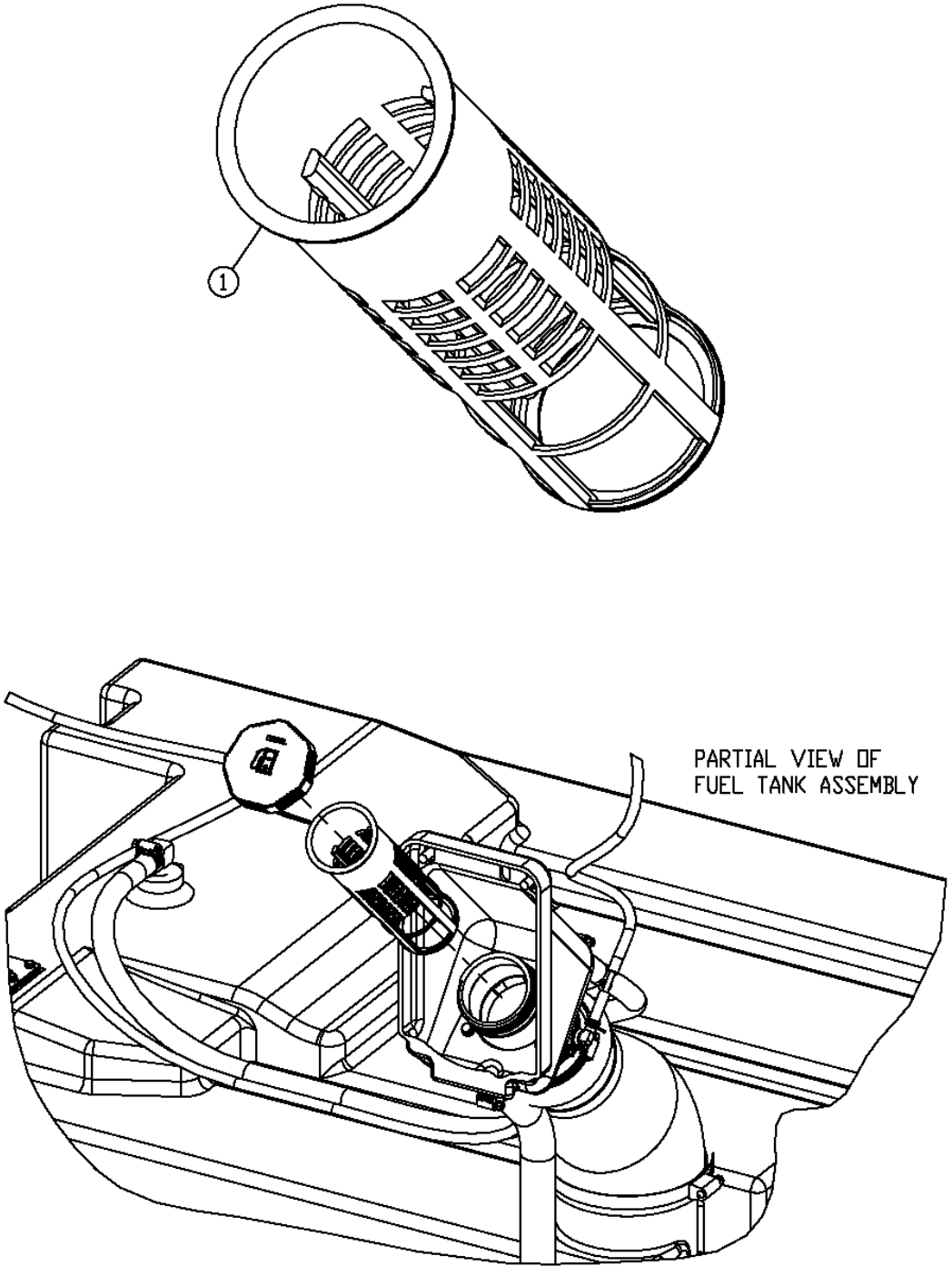

FUEL FILL STRAINER

KEY	PART NO.	PART NAME	QTY	SERIAL NO.	REMARKS
1	AH162914	STRAINER	1		

FAN DRIVE HYDRAULIC PUMP AND MOTOR

T154587 -UN-26JUN02

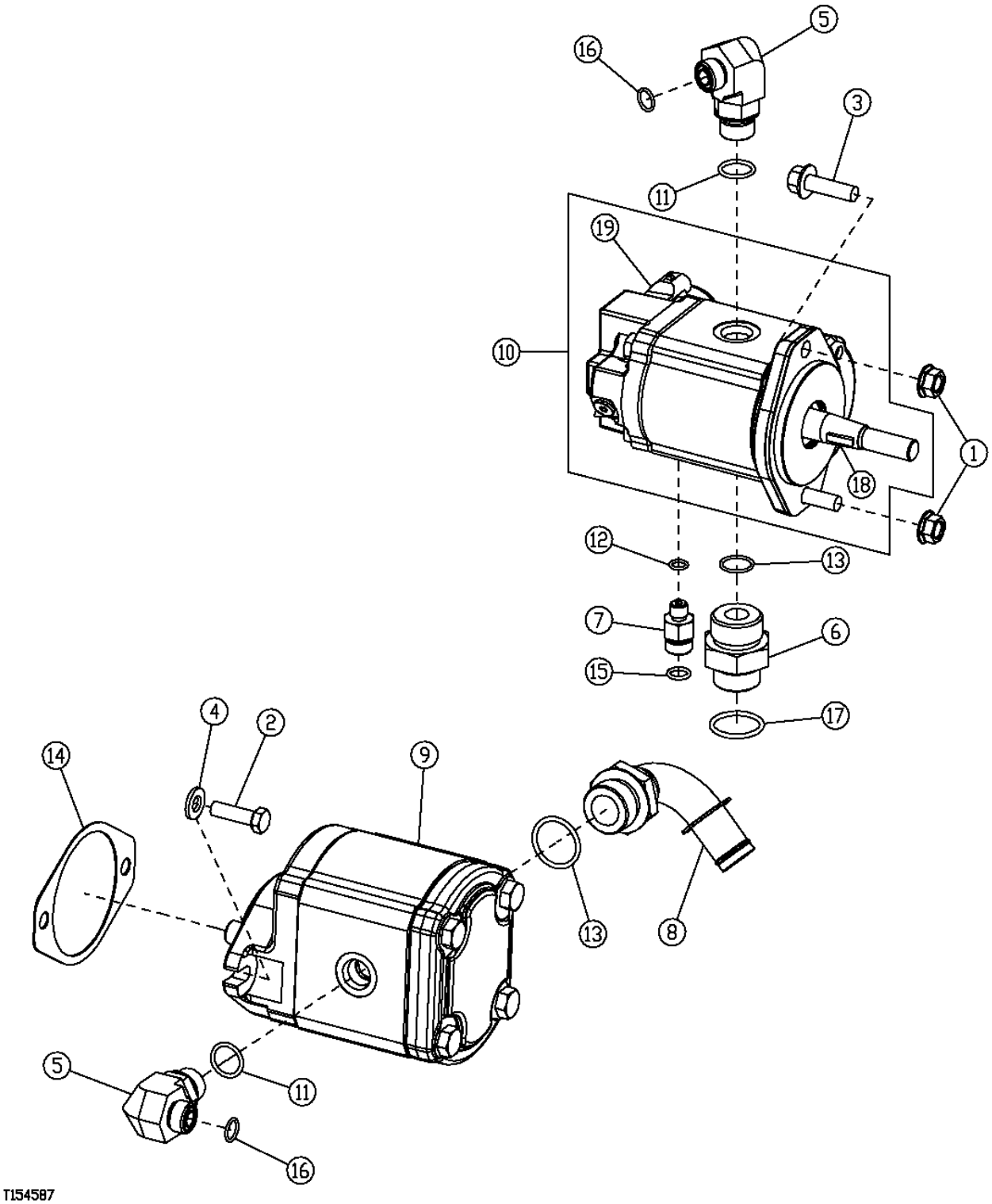

FAN DRIVE HYDRAULIC PUMP AND MOTOR

KEY	PART NO.	PART NAME	QTY	SERIAL NO.	REMARKS
1	14M7296	FLANGE NUT	2		M10
2	19H3239	CAP SCREW	2		3/8" X 1-1/4"
3	19M7835	SCREW	2		M10 X 35
4	24M7239	WASHER	2		10.700 X 21 X 2.500 MM
5	38H1012	ELBOW FITTING	2		
6	38H1194	ADAPTER	1		
7	38H1309	ADAPTER	1		
8	AH96708	ELBOW FITTING	1		
9	AT225504	HYDRAULIC PUMP	1	-595424	
	AT314170	HYDRAULIC PUMP	1	595425-	
	AT309772	SEAL KIT	1		(PUMP SEAL KIT)
10	AT225505	HYDRAULIC MOTOR	1		
	AT211381	SEAL KIT	1		(MOTOR)
11	R26906	O-RING	2		
12	R28782	O-RING	1		
13	R29936	O-RING	2		
14	R96935	GASKET	1		
15	T77613	O-RING	1		
16	T77857	O-RING	2		
17	T77858	O-RING	1		
18	26H77	SHAFT KEY	1		
19	AT227509	RELIEF VALVE	1		
	AT211379	SEAL KIT	1		(RELIEF VALVE)

ENGINE FAN DRIVE HYDRAULIC HOSE

T154589 -UN-15MAY02

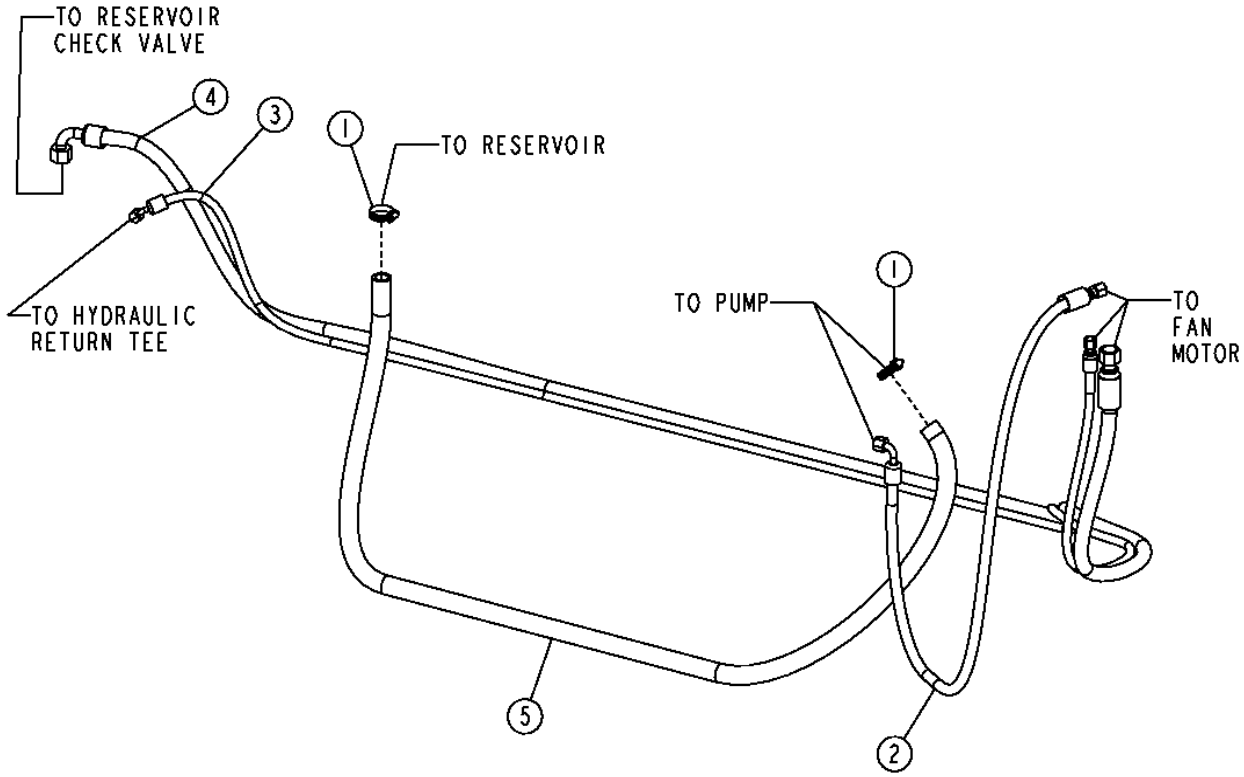

T154589

ENGINE FAN DRIVE HYDRAULIC HOSES

KEY	PART NO.	PART NAME	QTY	SERIAL NO.	REMARKS
1	AR21839	CLAMP	2		
2	AT128889	HYDRAULIC HOSE - FABRICATE	1		13/16" X 1 524 MM (60") X 13/16"
3	AT223949	HYDRAULIC HOSE - FABRICATE	1		11/16" X 2 997 MM (118") X 11/16"
4	AT223950	HYDRAULIC HOSE - FABRICATE	1		1-3/16" X 3 315 MM (130-1/2") X 1-3/16"
5	T174659	HYDRAULIC HOSE - FABRICATE	1		

REVERSE FAN DRIVE FIELD KIT

T188495 -UN-26MAR03

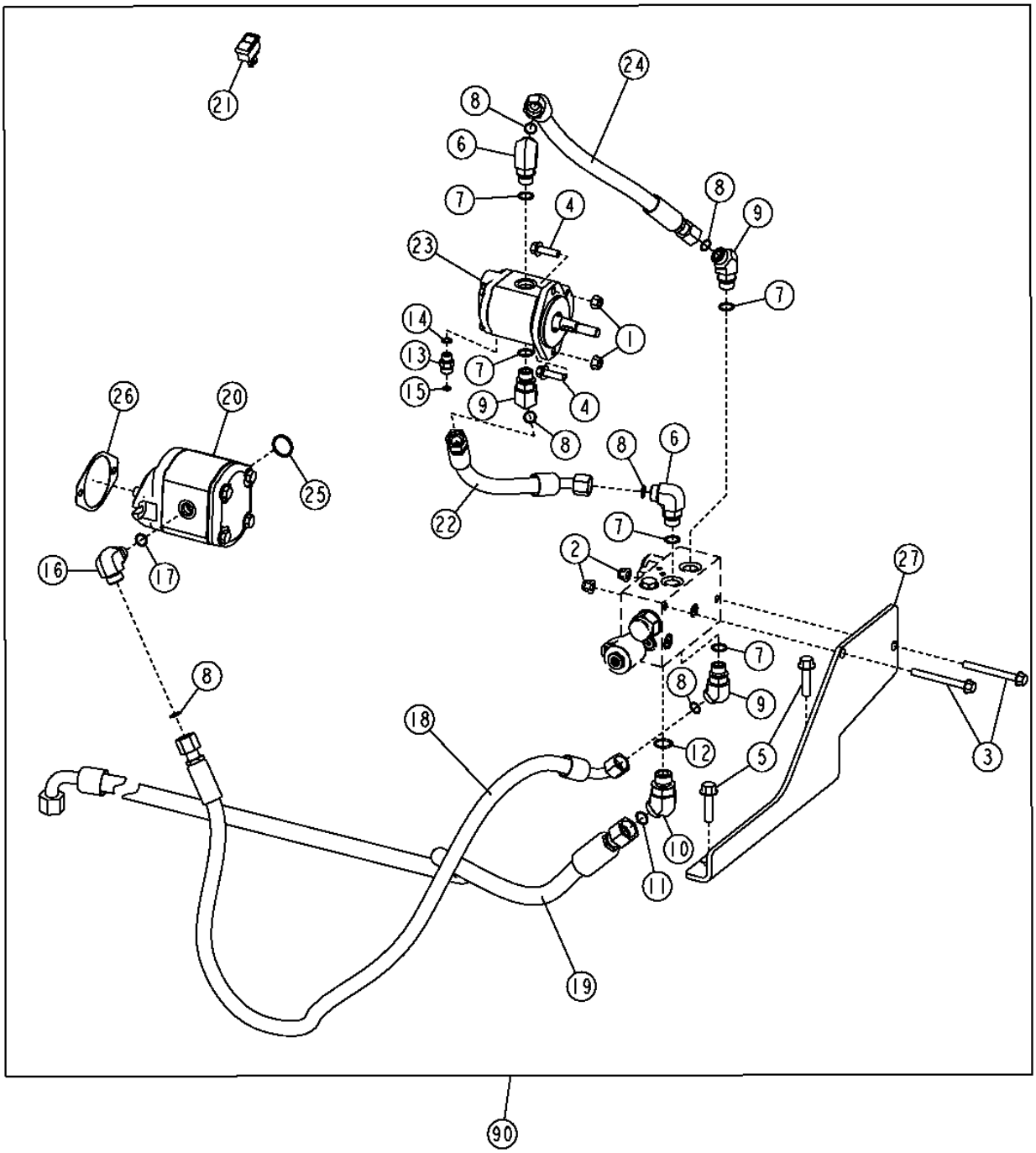

REVERSE FAN DRIVE FIELD KIT

KEY	PART NO.	PART NAME	QTY	SERIAL NO.	REMARKS
1	14M7296	FLANGE NUT	2		
2	14M7400	LOCK NUT	2		
3	19M7812	SCREW	2		
4	19M7835	SCREW	2		
5	19M8306	SCREW	2		
6	38H1006	ELBOW FITTING	2		
7	R26906	O-RING	5		
8	T77932	O-RING	6		
9	38H1047	ELBOW FITTING	3		
10	38H1048	ELBOW FITTING	1		
11	T77858	O-RING	1		
12	U12547	O-RING	1		
13	38H1160	ADAPTER	1		
14	R26448	O-RING	1		
15	T77613	O-RING	1		
16	38H1405	ELBOW FITTING	1		
17	R26375	O-RING	1		
18	AT203181	HYDRAULIC HOSE - FABRICATE	1		
19	AT207869	HYDRAULIC HOSE - FABRICATE	1		
20	AT314170	HYDRAULIC PUMP	1		
	AT309772	SEAL KIT	1		
21	AT225747	TOGGLE/ROCKER SWITCH	1		
22	AT226086	HYDRAULIC HOSE - FABRICATE	1		
23	AT226404	HYDRAULIC MOTOR	1		
	AT317353	SEAL KIT	1		
24	AT301674	HYDRAULIC HOSE - FABRICATE	1		
25	R29936	O-RING	1		
26	R96935	GASKET	1		
27	T182506	BRACKET	1		
90	**AT226026**	**KIT**	**1**		**(WHOLE GOODS) (INCLUDES REVERSE FAN SOLENOID VALVE, COMPONENTS LISTED ON FOLLOWING PAGE)**

REVERSE FAN DRIVE (FACTORY)

T188503 -UN-27MAR03

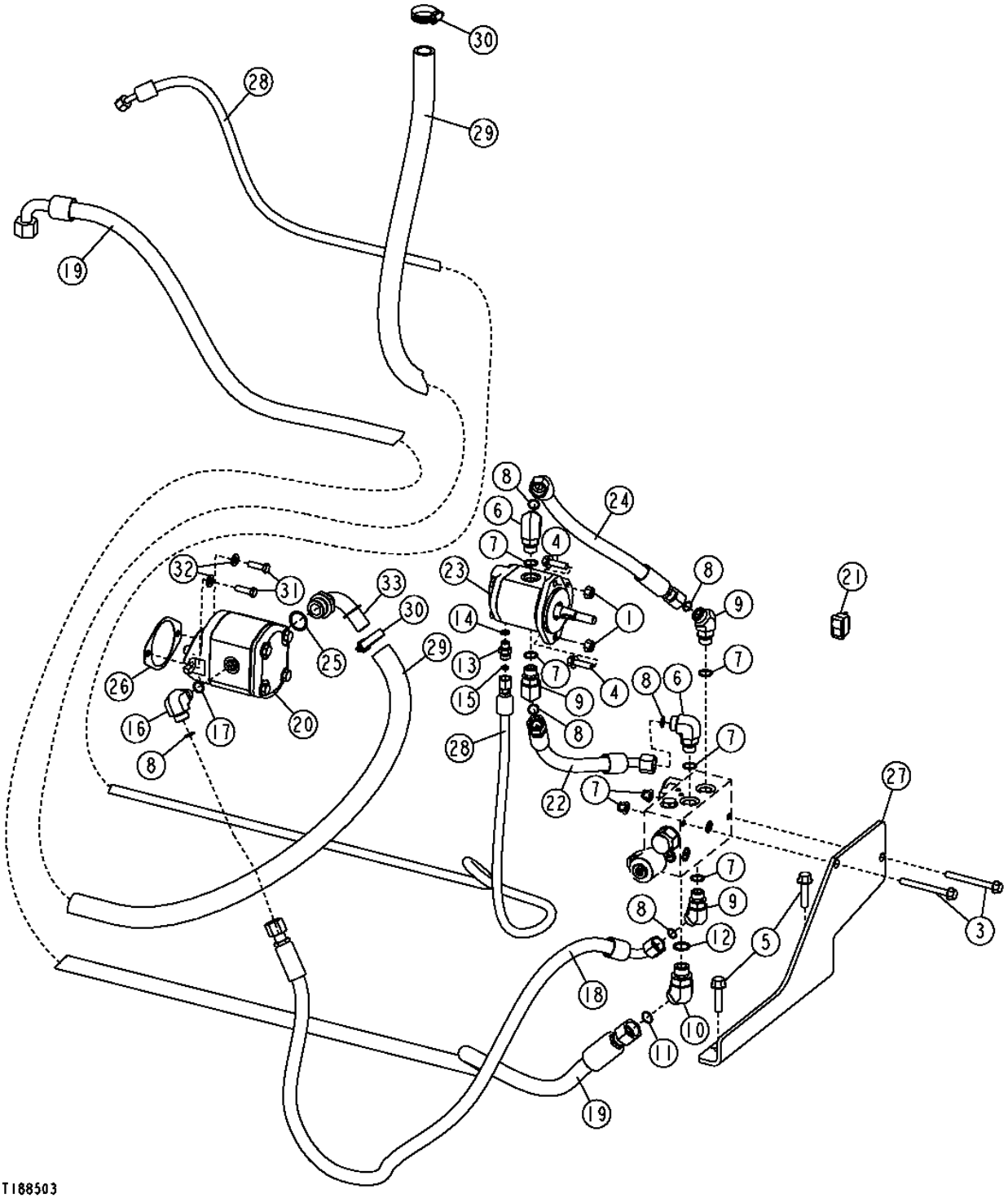

THIS PARTS LISTING IS CONTINUED

REVERSE FAN DRIVE (FACTORY)

KEY	PART NO.	PART NAME	QTY	SERIAL NO.	REMARKS
1	14M7296	FLANGE NUT	2		
2	14M7400	LOCK NUT	2		
3	19M7812	SCREW	2		
4	19M7835	SCREW	2		
5	19M8306	SCREW	2		
6	38H1006	ELBOW FITTING	2		
7	R26906	O-RING	5		
8	T77932	O-RING	6		
9	38H1047	ELBOW FITTING	3		
10	38H1048	ELBOW FITTING	1		
11	T77858	O-RING	1		
12	U12547	O-RING	1		
13	38H1160	ADAPTER	1		
14	R26448	O-RING	1		
15	T77613	O-RING	1		
16	38H1405	ELBOW FITTING	1		
17	R26375	O-RING	1		
18	AT203181	HYDRAULIC HOSE - FABRICATE	1		
19	AT207869	HYDRAULIC HOSE - FABRICATE	1		
20	AT225504	HYDRAULIC PUMP	1		
	AT309772	SEAL KIT	1		
21	AT225747	TOGGLE/ROCKER SWITCH	1		
22	AT226086	HYDRAULIC HOSE - FABRICATE	1		
23	AT226404	HYDRAULIC MOTOR	1		
	AT317353	SEAL KIT	1		
24	AT301674	HYDRAULIC HOSE - FABRICATE	1		
25	R29936	O-RING	1		
26	R96935	GASKET	1		
27	T182506	BRACKET	1		
28	AT223949	HYDRAULIC HOSE - FABRICATE	1		
29	T174659	HYDRAULIC HOSE - FABRICATE	1		
30	AR21839	CLAMP	2		
31	19H3239	CAP SCREW	2		
32	24M7239	WASHER	2		
33	AH96708	ELBOW FITTING	1		
..	.....	SOLENOID VALVE	1		(ALSO INCLUDES SOLENOID AT225805, COMPONENTS LISTED ON FOLLOWING PAGE)

REVERSE FAN DRIVE SOLENOID VALVE

T157977 -UN-29JUL02

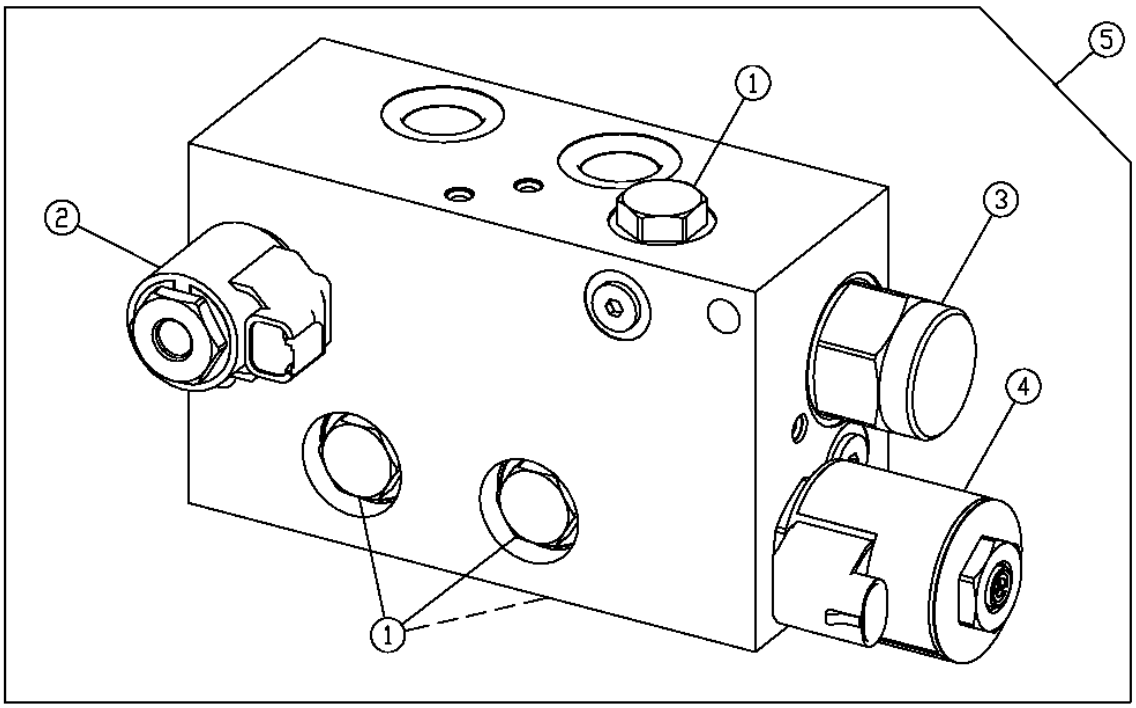

KEY	PART NO.	PART NAME	QTY	SERIAL NO.	REMARKS
1	AT224570	CHECK VALVE	4		
	AT224862	SEAL KIT	1		
2	AT224866	FLOW CONTROL HYD. VALVE	1		
	AT224706	SEAL KIT	1		
	AT224865	SOLENOID VALVE COIL	1		
	T181306	NUT	1		
3	AT226109	SOLENOID HYDRAULIC VALVE	1		
	AT226110	SEAL KIT	1		
4	AT227509	PRESSURE RELIEF VALVE	1		
5	AT225805	SOLENOID VALVE	1		

MEMORANDA

SECONDARY STEERING (SERIAL NO. -590067)

T195369 -UN-03OCT03

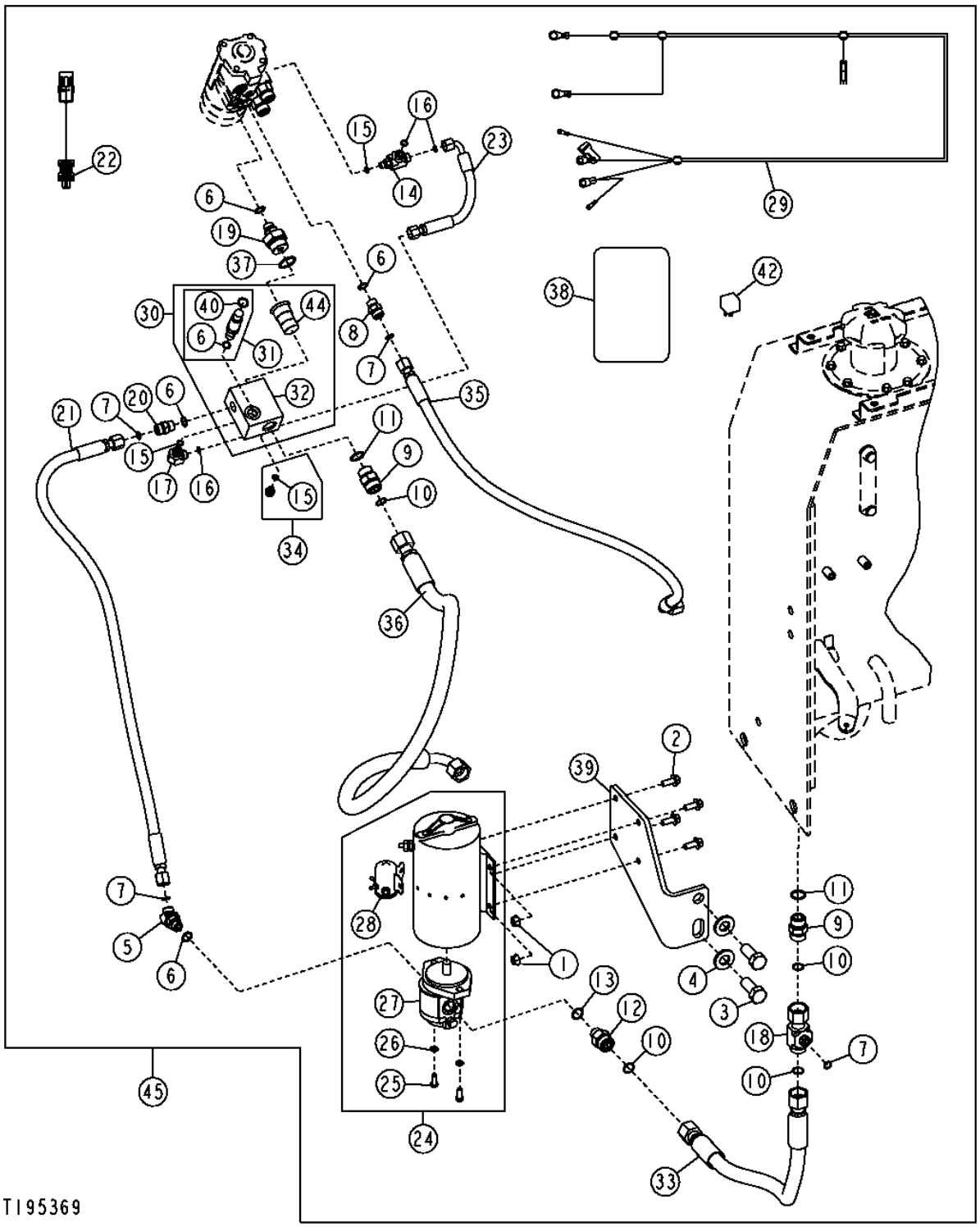

SECONDARY STEERING (SERIAL NO. -590067)

KEY	PART NO.	PART NAME	QTY	SERIAL NO.	REMARKS
1	14M7296	FLANGE NUT	4		M10
2	19M7785	SCREW	4		M10 X 25
3	19M7950	CAP SCREW	2		M20 X 45
4	24M7242	WASHER	2		21.400 X 42 X 5 MM
5	38H1046	ELBOW FITTING	1		
6	R26375	O-RING	4		
7	T77857	O-RING	4		
8	38H1161	ADAPTER	1		
9	38H1163	ADAPTER	2		
10	T77858	O-RING	4		
11	U12547	O-RING	2		
12	38H1193	ADAPTER	1		
13	R26906	O-RING	1		
14	38H1434	TEE FITTING	1		
15	R28782	O-RING	3		
16	T77613	O-RING	3		
17	38H1435	ELBOW FITTING	1		45 DEGREE
18	38H1532	TEE FITTING	1		
19	AT116114	ADAPTER	1		
20	AT141527	CHECK VALVE	1		
21	AT175781	HYDRAULIC HOSE - FABRICATE	1		
22	AT203492	WIRING HARNESS	1		
23	AT208725	HYDRAULIC HOSE - FABRICATE	1		
24	AT209537	PUMP	1		
25	19H1900	CAP SCREW	2		5/16" X 3/4"
26	24M7095	WASHER	2		0.331" X 0.591" X 0.063"
27	AT210092	PUMP	1		
28	AT210093	SOLENOID	1		
29	AT210155	WIRING HARNESS	1		
30	AT210207	SWITCH	1		
31	AT210399	SWITCH	1		
32	T173324	JUNCTION BLOCK	1		
33	AT211417	HYDRAULIC HOSE - FABRICATE	1		
34	AT223648	FITTING	1		
35	AT223963	HYDRAULIC HOSE - FABRICATE	1		
36	AT228191	HYDRAULIC HOSE - FABRICATE	1		
37	R29936	O-RING	1		
38	T146443	SAFETY SIGN	1		
39	T173579	BRACKET	1		
40	R26448	O-RING	1		
42	AT162863	RELAY	1		
44	AT116373	CHECK VALVE	1		
45	**AT207858**	**KIT**	**1**		**(WHOLEGOODS) (SECONDARY STEERING)**

SECONDARY STEERING (SERIAL NO. 590068-)

T198282 -UN-25MAR04

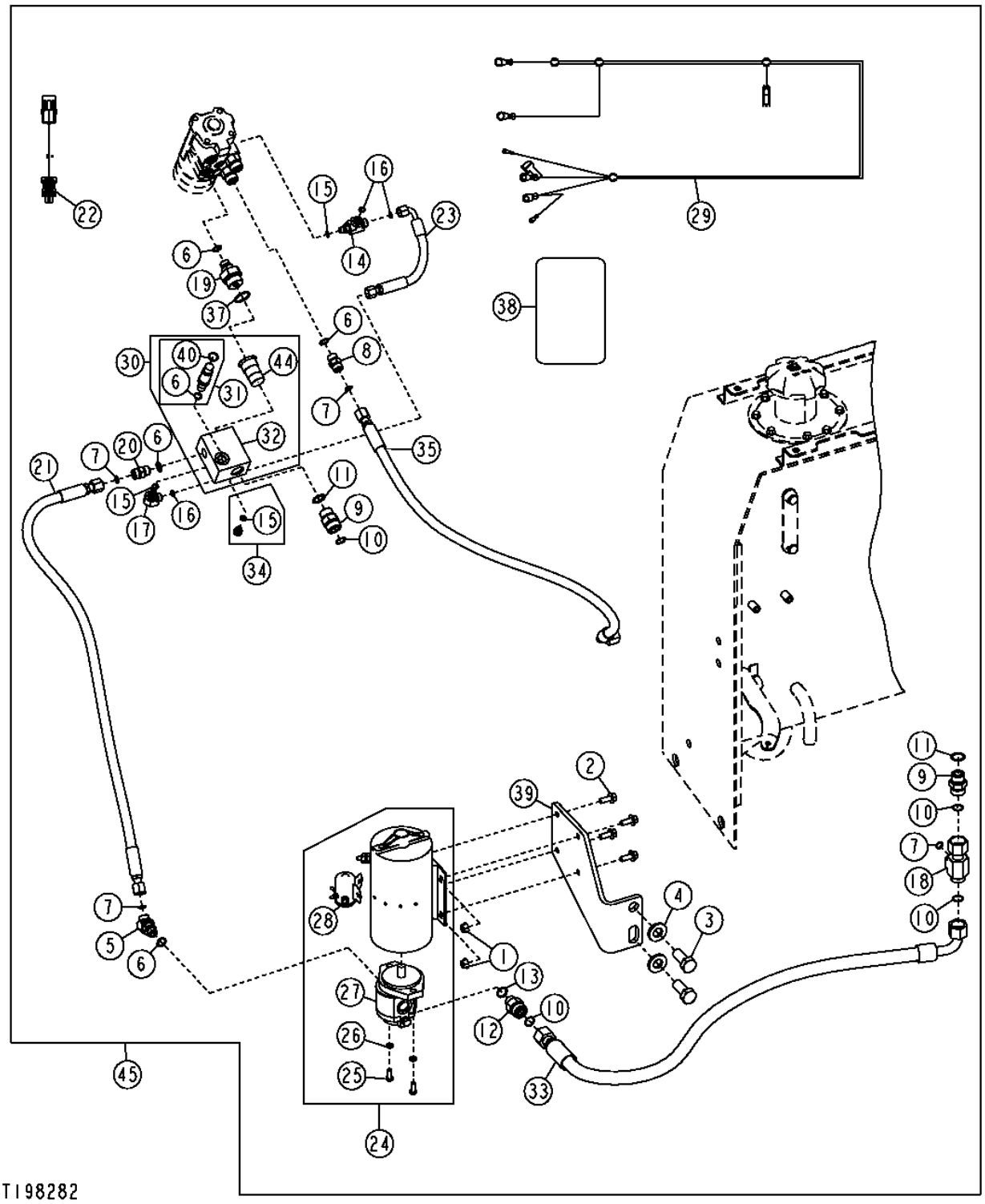

SECONDARY STEERING (SERIAL NO. 590068-)

KEY	PART NO.	PART NAME	QTY	SERIAL NO.	REMARKS
1	14M7296	FLANGE NUT	4		M10
2	19M7785	SCREW	4		M10 X 25
3	19M7950	CAP SCREW	2		M20 X 45
4	24M7242	WASHER	2		21.400 X 42 X 5 MM
5	38H1046	ELBOW FITTING	1		
6	R26375	O-RING	4		
7	T77857	O-RING	4		
8	38H1161	ADAPTER	1		
9	38H1163	ADAPTER	2		
10	T77858	O-RING	4		
11	U12547	O-RING	2		
12	38H1193	ADAPTER	1		
13	R26906	O-RING	1		
14	38H1434	TEE FITTING	1		
15	R28782	O-RING	3		
16	T77613	O-RING	3		
17	38H1435	ELBOW FITTING	1		45 DEGREE
18	38H1532	TEE FITTING	1		
19	AT116114	ADAPTER	1		
20	AT141527	CHECK VALVE	1		
21	AT175781	HYDRAULIC HOSE - FABRICATE	1		
22	AT203492	WIRING HARNESS	1		
23	AT208725	HYDRAULIC HOSE - FABRICATE	1		
24	AT209537	PUMP	1		
25	19H1900	CAP SCREW	2		5/16" X 3/4"
26	24M7095	WASHER	2		0.331" X 0.591" X 0.063"
27	AT210092	PUMP	1		
28	AT210093	SOLENOID	1		
29	AT210155	WIRING HARNESS	1		
30	AT210207	SWITCH	1		
31	AT210399	SWITCH	1		
32	T173324	JUNCTION BLOCK	1		
33	AT211417	HYDRAULIC HOSE - FABRICATE	1		
34	AT223648	FITTING	1		
35	AT223963	HYDRAULIC HOSE - FABRICATE	1		
37	R29936	O-RING	1		
38	T146443	SAFETY SIGN	1		
39	T173579	BRACKET	1		
40	R26448	O-RING	1		
44	AT116373	CHECK VALVE	1		
45	**AT307711**	**KIT**	**1**		**(WHOLEGOODS) (SECONDARY STEERING)**

STEERING CYLINDER FITTINGS AND LUBRICATION HOSES

TP60361 -UN-25APR98

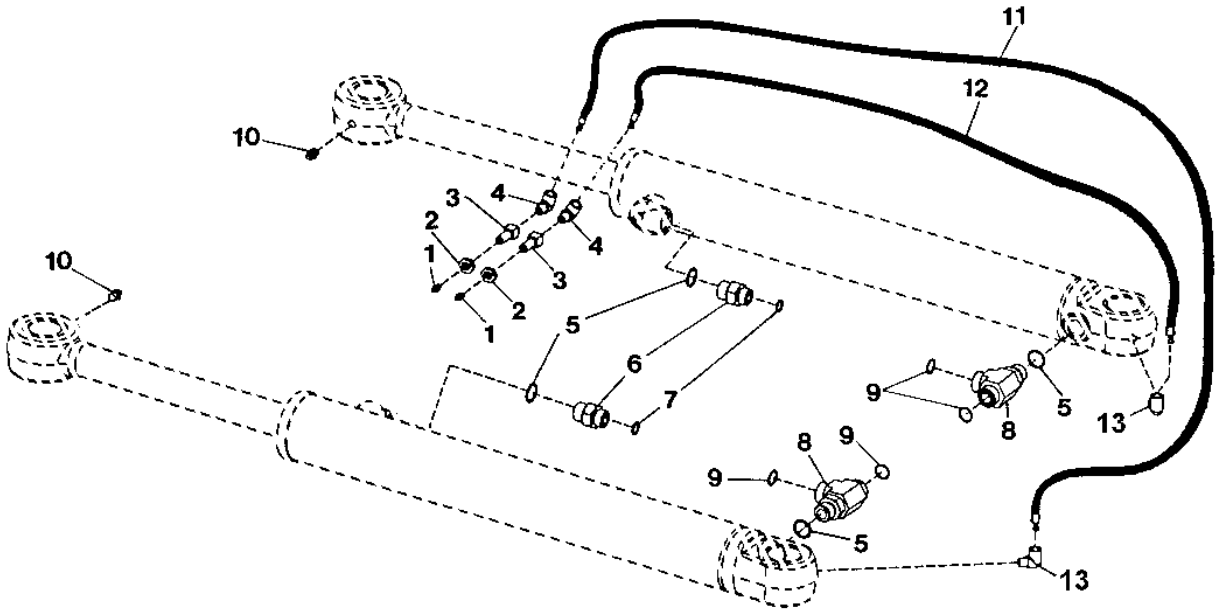

TP60361

STEERING CYLINDER FITTINGS AND LUBRICATION HOSES

KEY	PART NO.	PART NAME	QTY	SERIAL NO.	REMARKS
1	JD7842	LUBRICATION FITTING	2		
2	E12379	NUT	2		
3	R36311	FITTING	2		
4	T56112	ELBOW FITTING	2		
5	R26906	O-RING	4		
6	38H1174	ADAPTER	2		
7	T77857	O-RING	2		
8	38H1025	TEE FITTING	2		
9	T77932	O-RING	4		
10	JD7759	LUBRICATION FITTING	2		
11	AT207022	HYDRAULIC HOSE	1		(SUB FOR AT53932)
12	AT53541	HYDRAULIC HOSE	1		
13	M45937	ELBOW FITTING	2		(45 DEGREE)
14	H77698	TIE BAND	AR		(NOT ILLUSTRATED)

STEERING WHEEL, COLUMN AND LINKAGE (SERIAL NO. -590067)

TP68401 -UN-10SEP99

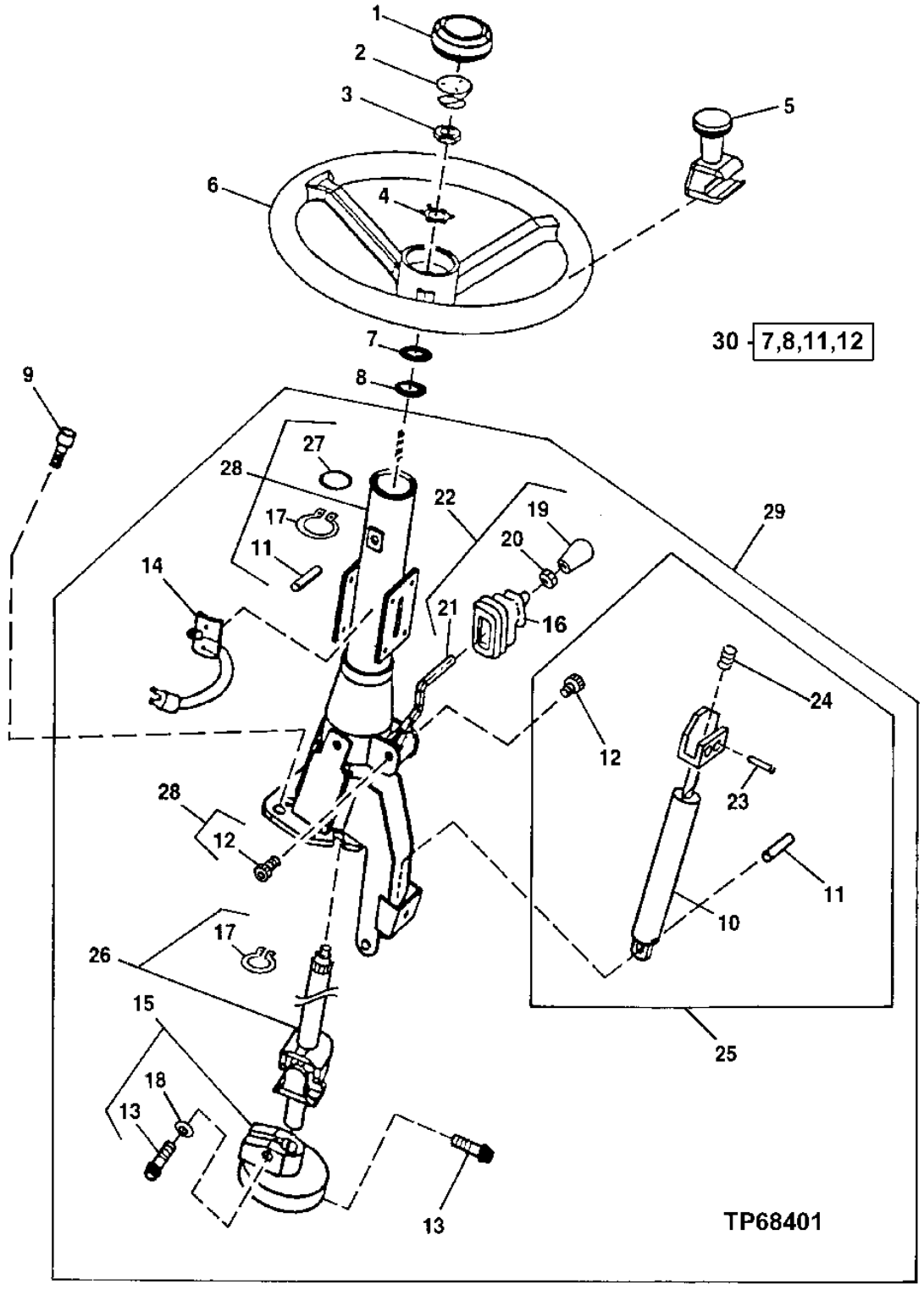

STEERING WHEEL, COLUMN AND LINKAGE (SERIAL NO. -590067)

KEY	PART NO.	PART NAME	QTY	SERIAL NO.	REMARKS
1	T154131	COVER	1		
2	AT222153	SWITCH	1		(HORN)
3	T13630	NUT	1		
4	T17148	LOCK WASHER	2		
5	AT169849	KNOB	1		
6	AT139694	STEERING WHEEL	1		
7	.....	SNAP RING	1		(SUB RE56109)
8	.....	SEAL	1		(SUB RE56109)
9	19M8328	SCREW	4		
10	.....	SPRING	1		(SUB AT160662)
11	.....	DOWEL PIN	1		(SUB RE56109)
12	.....	SCREW	2		(SUB RE56109)
13	T39049	SCREW	2		
14	AT162719	BRUSH SET	1		
15	AT220226	ISOLATOR	1		
16	AT191487	KIT	4		(SUB FOR T145701)
17	.....	SNAP RING	1		(SUB AT220225 OR AT220227)
18	.....	LOCK WASHER	1		(SUB AT220226)
19	AT220223	KIT	1		KNOB
20	.....	NUT	1		(SUB AT220224)
21	.....	LEVER	1		(SUB AT220224)
22	AT220224	KIT	1		TILT LEVER
23	.....	PIN	2		(SUB AT160662)
24	.....	SPRING	1		(SUB AT160662)
25	AT160662	KIT	1		GAS SPRING
26	.....	KIT	1		(SUB AT300524) SHAFT (AT220225 NO LONGER AVAILABLE)
27	.....	O-RING	1		(SUB AT220227)
28	.....	KIT	1		(SUB AT300524) (AT220227 NO LONGER AVAILABLE)
29	.....	STEERING COLUMN	1		(SUB AT300524) (AT202610 NO LONGER AVAILABLE)
30	RE56109	KIT	1		STEERING COLUMN REPAIR

STEERING WHEEL, COLUMN AND LINKAGE (SERIAL NO. 590068-)

T195299 -UN-21OCT03

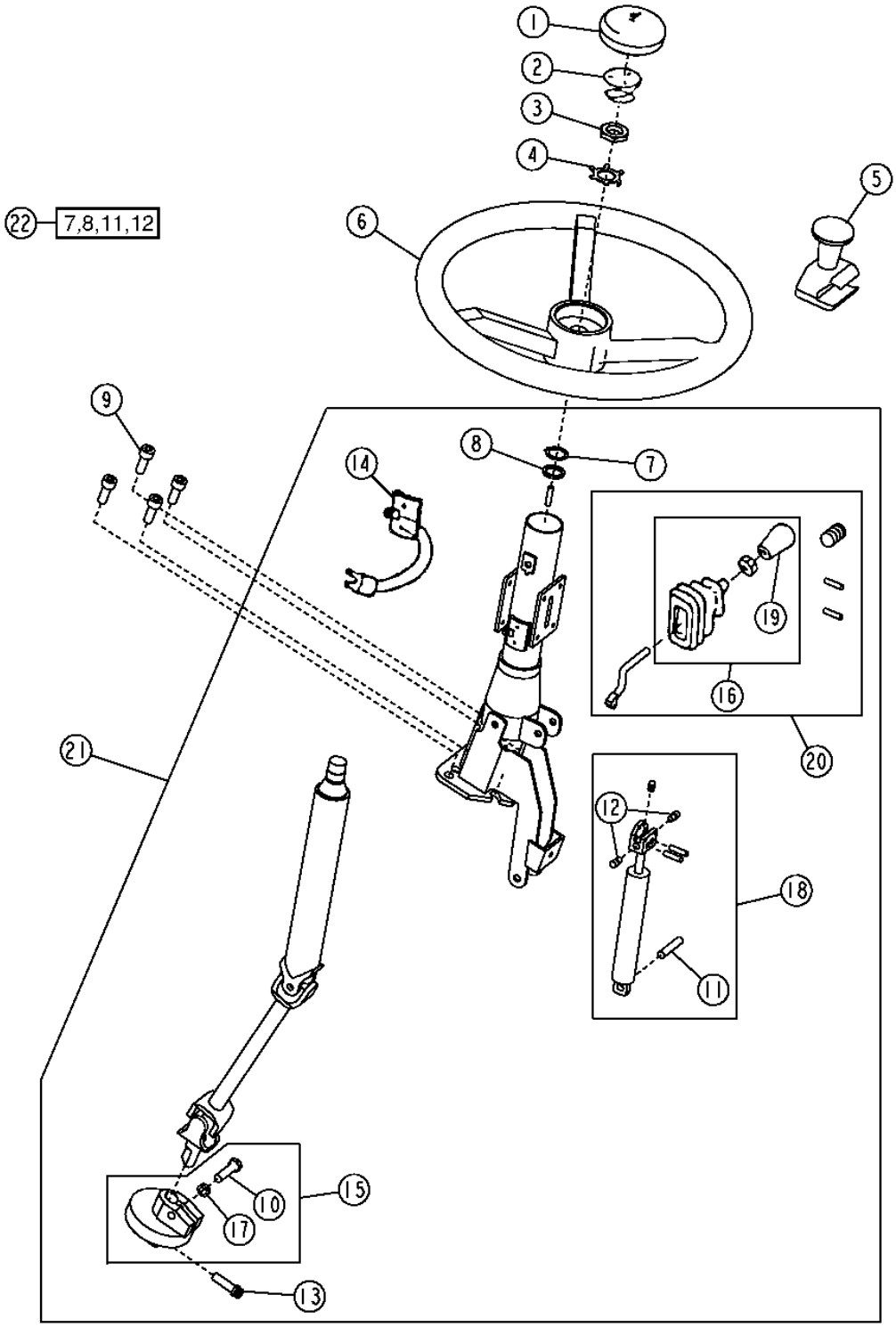

T195299

STEERING WHEEL, COLUMN AND LINKAGE (SERIAL NO. 590076-)

KEY	PART NO.	PART NAME	QTY	SERIAL NO.	REMARKS
1	T154131	COVER	1		
2	AT222153	SWITCH	1		
3	T13630	NUT	1		
4	T17148	LOCK WASHER	2		
5	AT169849	KNOB	1		
6	AT139694	STEERING WHEEL	1		
7	.....	SNAP RING	1		
8	.....	SEALING WASHER	1		
9	19M8328	SCREW	4		M10 X 25
10	19H2544	CAP SCREW	1		
11	.....	DOWEL PIN	1		
12	.....	SCREW	2		
13	T39049	SCREW	1		
14	AT162719	BRUSH SET	1		
15	AT220226	KIT	1		ISOLATOR KIT
16	AT191487	KIT	1		KNOB KIT
17	.....	WASHER	1		
18	AT160662	KIT	1		GAS CYLINDER ASSEMBLY
19	AT220223	KIT	1		KNOB KIT
20	AT220224	KIT	1		TILT LEVER KIT
21	AT300524	STEERING COLUMN	1		
22	RE56109	KIT	1		STEERING COLUMN KIT

LOWER STEERING COLUMN

TP47601 -UN-05SEP96

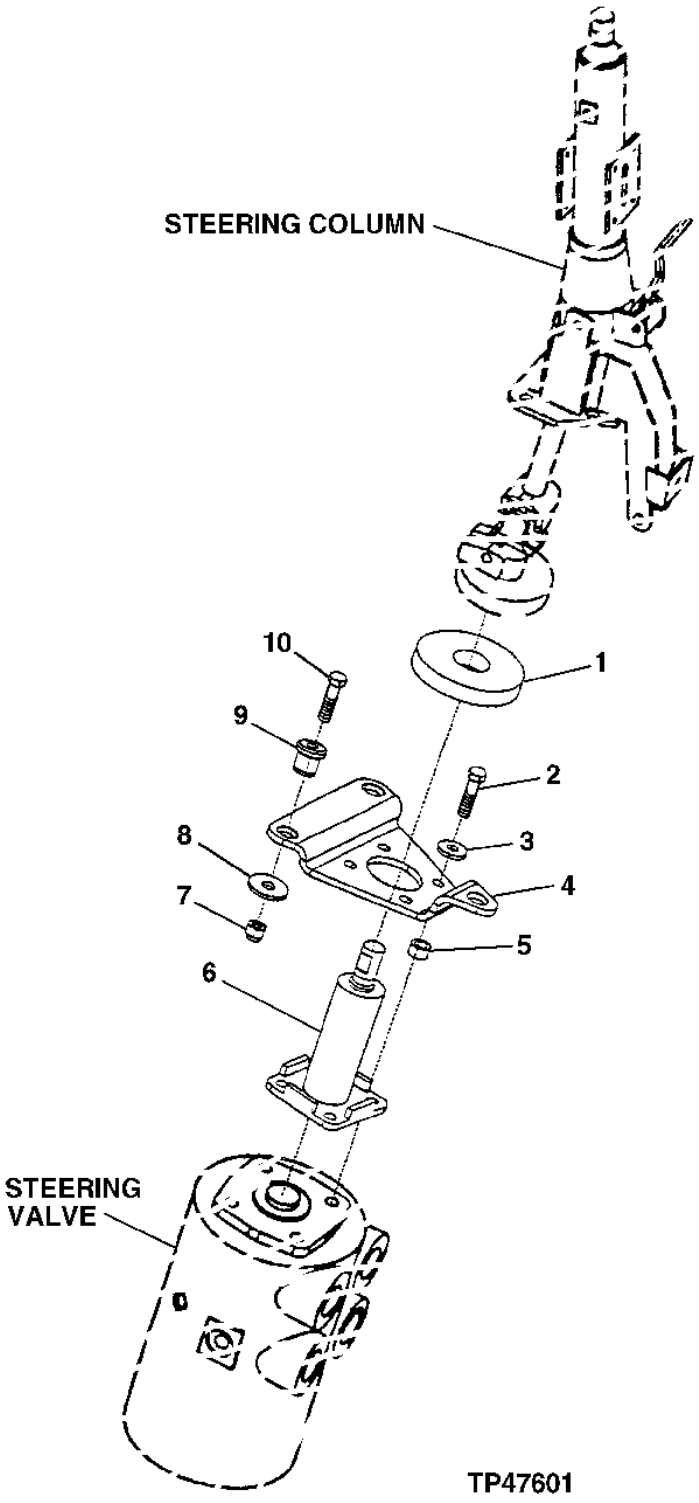

LOWER STEERING COLUMN

KEY	PART NO.	PART NAME	QTY	SERIAL NO.	REMARKS
1	T131980	ISOLATOR	1		
2	19H2633	CAP SCREW	4		3/8" X 1-1/2"
3	24H1308	WASHER	4		13/32" X 1" X 0.134"
4	T168276	BRACKET	1		TO CAB FLOOR
5	28H860	WASHER	4		0.423" X 0.675" X 3/8"
6	AT156896	STEERING COLUMN	1		LOWER
7	T11234	LOCK NUT	3		9.525 MM
8	24M7296	WASHER	3		10.500 X 30 X 2.500 MM
9	AT116162	ISOLATOR	3		
10	19H2633	CAP SCREW	3		3/8" X 1-1/2"

STEERING COLUMN COVERS

TP60362 -UN-27APR98

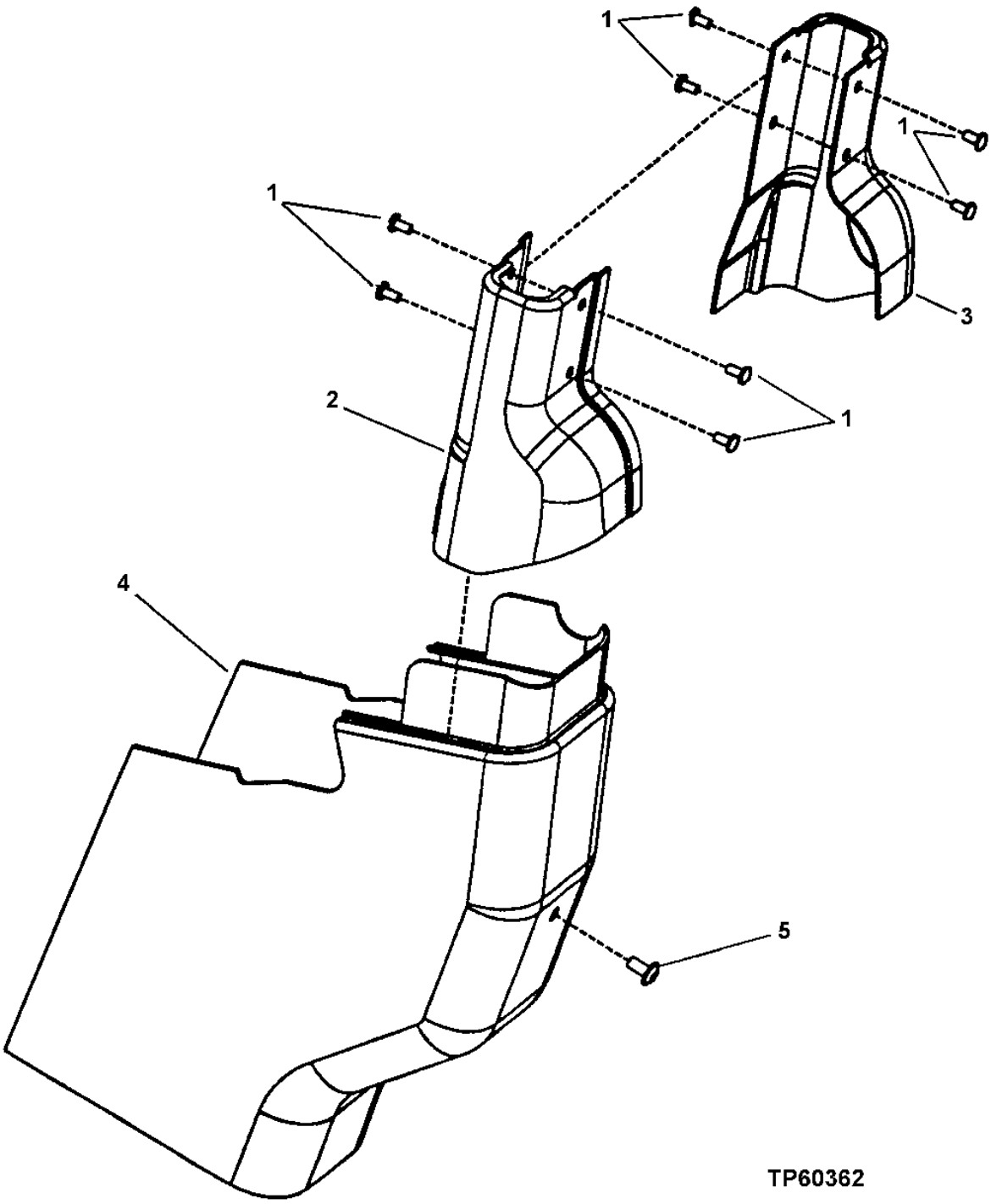

STEERING COLUMN COVERS

KEY	PART NO.	PART NAME	QTY	SERIAL NO.	REMARKS
1	21M7305	SCREW	8		M6 X 12
2	T173100	COVER	1		
	T211353	COVER	1		(FOR USE WITH JOYSTICK MOUNTED FNR)
3	T173099	COVER	1		
4	T156784	COVER	1		
5	19M8675	SCREW	1		M8 X 16

STEERING VALVE AND FITTINGS

TP60360 -UN-25APR98

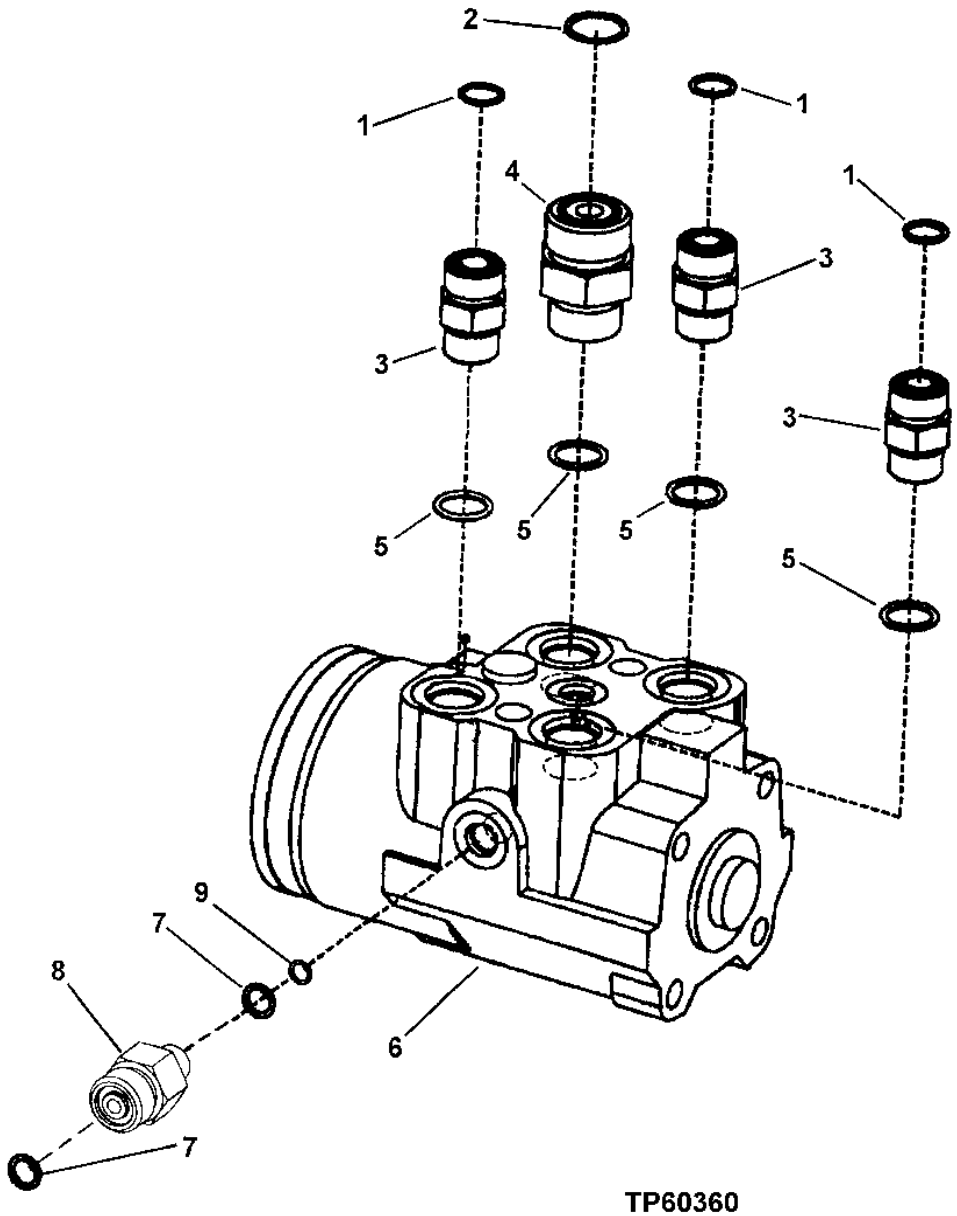

TP60360

STEERING VALVE AND FITTINGS

KEY	PART NO.	PART NAME	QTY	SERIAL NO.	REMARKS
1	T77932	O-RING	3		
2	T77858	O-RING	1		
3	38H1317	FITTING	3		
4	38H1178	ADAPTER	1		
5	R26375	O-RING	4		
6	AT309162	FLOW CONTROL HYD. VALVE	1		(SUB FOR AT223390)
7	R28782	O-RING	2		
8	38H1309	ADAPTER	1		
9	T77613	O-RING	1		

STEERING VALVE SEAL KIT

T160578 -UN-25OCT02

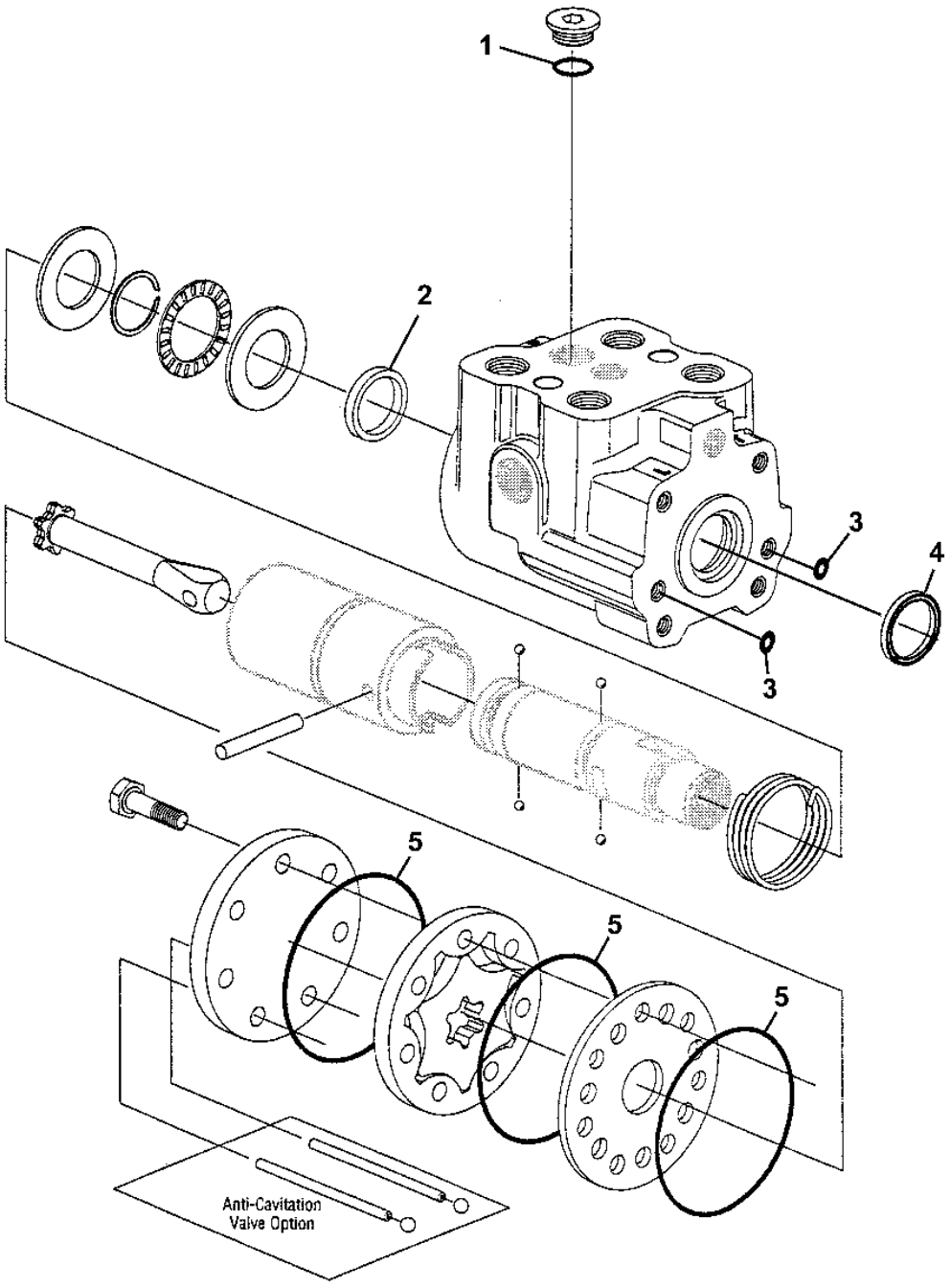

T160578

STEERING VALVE SEAL KIT

KEY	PART NO.	PART NAME	QTY	SERIAL NO.	REMARKS
1	R26375	O-RING	1		
2	T180289	SEAL	1		
3	R10093	O-RING	2		
4	C15104	SEAL	1		
5	T180290	O-RING	3		

STEERING CYLINDER HYDRAULIC HOSES

TP55587 -UN-09SEP97

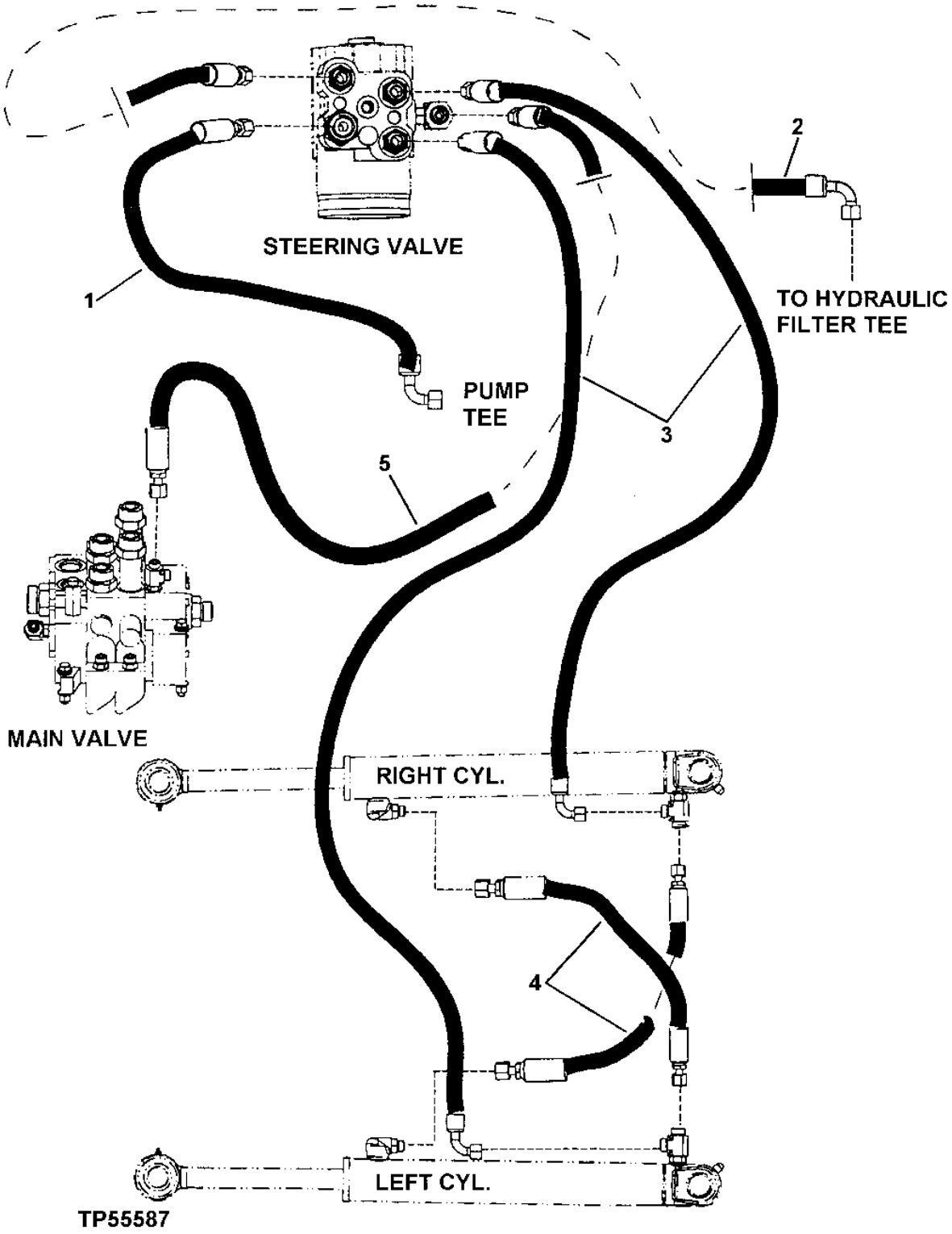

STEERING CYLINDER HYDRAULIC HOSES

KEY	PART NO.	PART NAME	QTY	SERIAL NO.	REMARKS
1	AT228193	HYDRAULIC HOSE - FABRICATE	1		
2	AT208695	HYDRAULIC HOSE - FABRICATE	1		
3	AT203182	HYDRAULIC HOSE - FABRICATE	2		
4	AT208694	HYDRAULIC HOSE - FABRICATE	2		
5	AT169282	HYDRAULIC HOSE - FABRICATE	1		

STEERING CYLINDER

TP68402 -UN-13SEP99

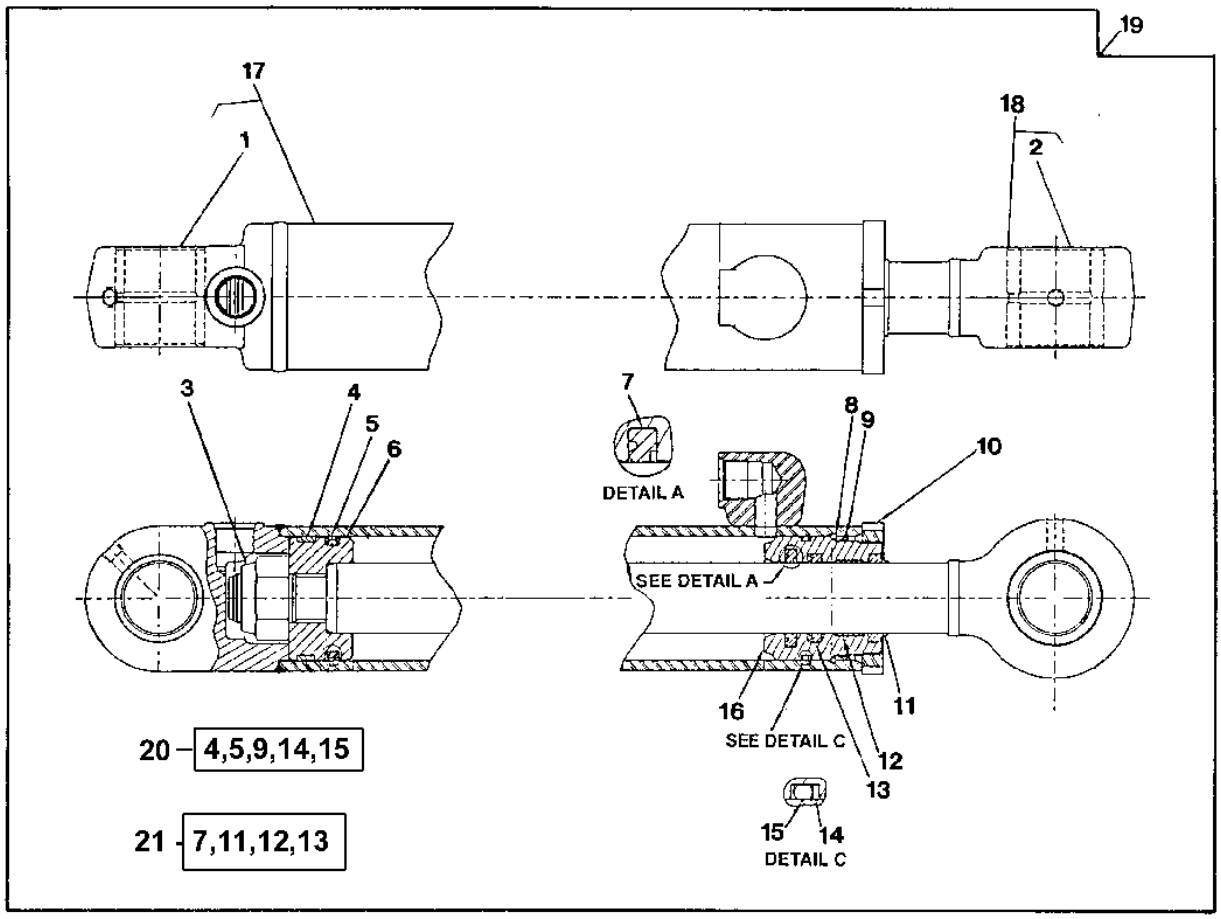

TP68402

STEERING CYLINDER

KEY	PART NO.	PART NAME	QTY	SERIAL NO.	REMARKS
1	R89940	BUSHING	1		
2	R89940	BUSHING	1		
3	R81866	NUT	1		
4	R81777	WEAR RING	1		
5	RE20345	SEAL	1		
6	R86084	PISTON	1		
7	AH146560	SEAL	1		
8	R81789	RING	1		
9	R91729	RING	AR		
10	R81795	NUT	1		
11	AH146556	SEAL	1		
12	H152793	BACK-UP RING	1		
13	H152202	SEAL	1		
14	R81864	BACK-UP RING	1		
15	T12582	O-RING	1		
16	H157510	HYDR. CYLINDER ROD GUIDE	1		
17	AH150703	HYDRAULIC CYLINDER BARREL	1		
18	AH151585	ROD	1		
19	AH150468	HYDRAULIC CYLINDER	1		
20	AH212091	HYDRAULIC CYLINDER KIT	1		(SUB FOR AH149842) (BORE REPAIR KIT)
21	AH149813	HYDRAULIC CYLINDER KIT	1		(ROD REPAIR KIT)

FRONT AND REAR DUAL BRAKE ASSEMBLY
(RE68128)

RXP021925 -UN-04FEB97

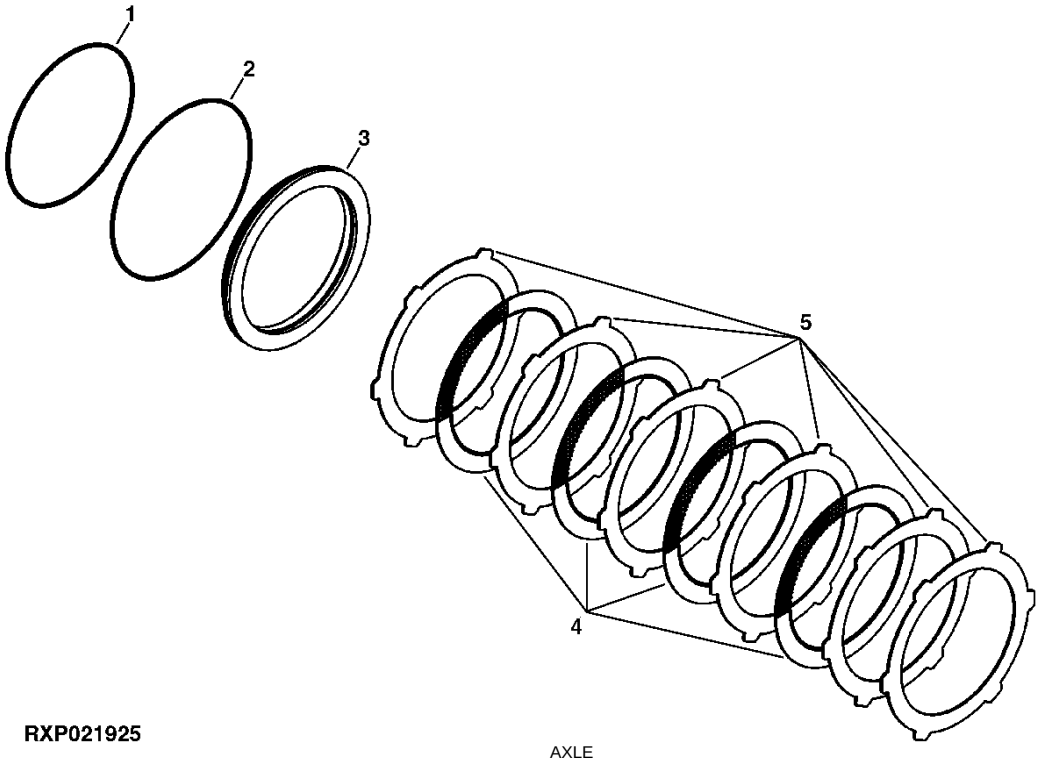

RXP021925

KEY	PART NO.	PART NAME	QTY	AXLE SERIAL NO.	REMARKS
1	R156898	SEAL	1		I.D.
2	R156897	SEAL	1		O.D.
3	R152936	PISTON	1		
4	RE159199	BRAKE DISK	4		
5	R161863	WEAR PLATE	6		

MEMORANDA

BRAKE VALVE, PEDALS AND LINKAGE

T194460 -UN-02SEP03

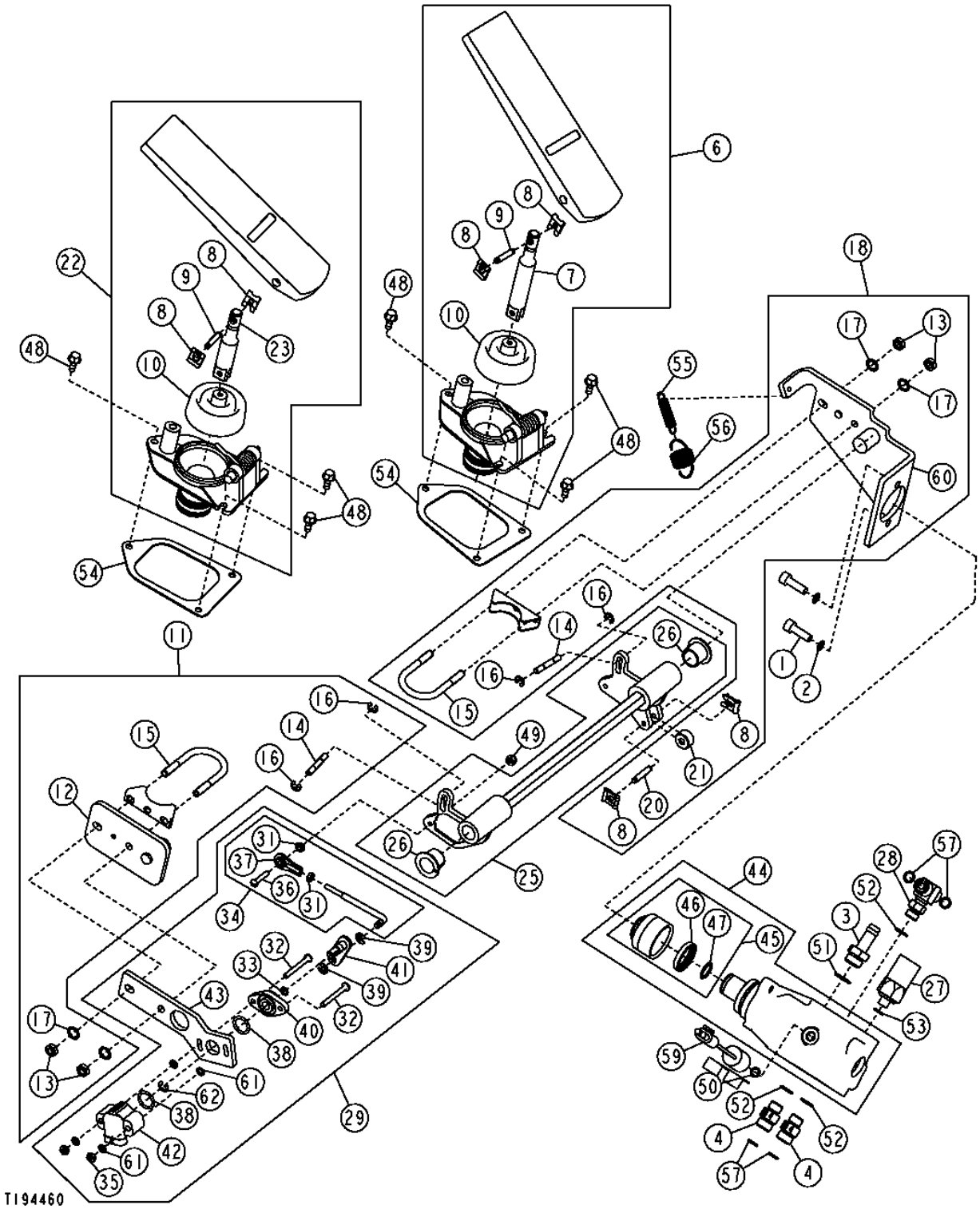

BRAKE VALVE, PEDALS AND LINKAGE

KEY	PART NO.	PART NAME	QTY	SERIAL NO.	REMARKS
1	19M7657	SCREW	2		
2	24M7313	WASHER	2		
3	T38282	HOSE FITTING	1		
4	AT181313	CHECK VALVE	2		
6	AT203457	PEDAL	1		(RIGHT)
7	AT208088	PUSH ROD	1		
8	T157212	CLIP	6		
9	T157258	PIN	2		
10	T174634	BOOT	2		
11	AT208085	KIT	1		(LEFT PEDAL BRACKET)
12	AT314267	SUPPORT	1		(SUB FOR AT208167)
13	R53317	LOCK NUT	4		
14	T157211	PIN	2		
15	T157220	CLAMP	2		
16	T170180	SNAP RING	4		
17	T170181	LOCK WASHER	4		
18	AT208086	KIT	1		(RIGHT PEDAL BRACKET)
20	T157257	PIN	1		
21	T175236	ROLLER	1		
22	AT208087	PEDAL	1		(LEFT)
23	AT208163	PUSH ROD	1		
25	AT208089	ROCKER ARM	1		
26	T157223	BEARING	2		
27	AT206721	SWITCH	1		
	AT222371	SWITCH	1		(HARSH ENVIRONMENT)
28	AT207529	CHECK VALVE	1		
29	AT210291	KIT	1		(CLUTCH CUTOFF)
31	14H631	NUT	2		4.826 MM
32	21H1390	SCREW	2		
33	A4365R	O-RING	1		6.071 X 1.778 MM
34	AT210877	LINKAGE	1		
35	14H631	NUT	2		
36	21H985	SCREW	1		
37	AH108055	LINK END	1		
38	P48347	O-RING	2		
39	R72654	SNAP RING	2		
40	R86457	SUPPORT	1		
41	RE24468	SHAFT	1		
42	RE35704	SENSOR	1		
43	T172274	SUPPORT	1		
44	AT210229	FLOW CONTROL HYD. VALVE	1		
45	AT207948	SEAL KIT	1		
46	AT207947	SEAL	1		
47	R26375	O-RING	1		
48	M113243	SCREW	6		
49	N203905	LOCK NUT	1		
50	R26287	O-RING	1		
51	R26375	O-RING	1		
52	R26448	O-RING	3		
53	R28782	O-RING	1		
54	T172927	GASKET	2		
55	T176108	SPRING	1		
56	T176111	SPRING	1		
57	T77613	O-RING	4		
59	AT223535	PRESSURE SWITCH	1		
	AT222372	SWITCH	1		(HARSH ENVIRONMENT)
60	AT314266	SUPPORT	1		(SUB FOR AT208166)
61	12M7060	WASHER	4		5.300 MM, (SUB FOR 12H295)
62	R72653	SNAP RING	1		

BRAKE VALVE HYDRAULIC HOSES (SERIAL NO. -590067)

T193899 -UN-15AUG03

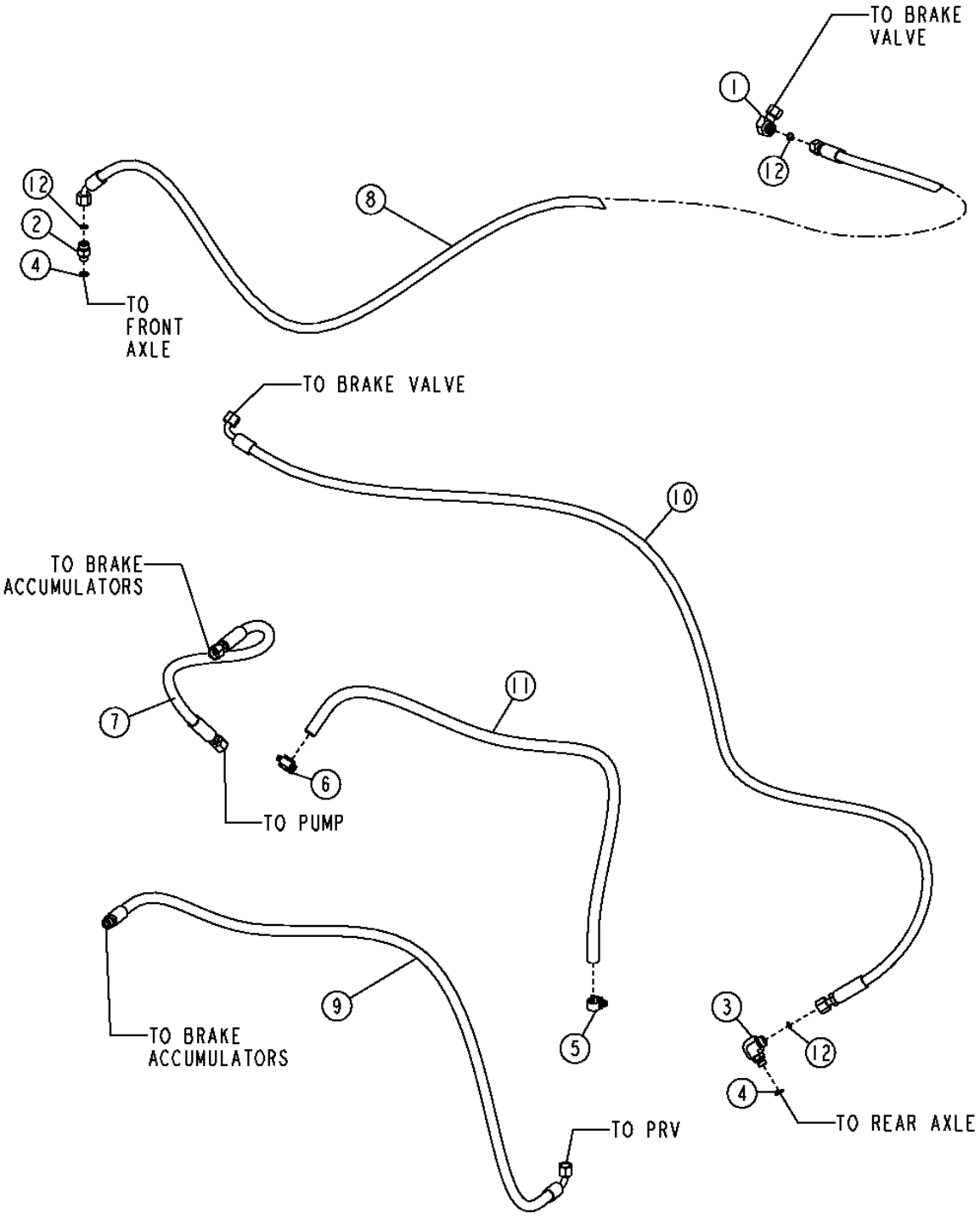

T193899

BRAKE VALVE HYDRAULIC HOSES (SERIAL NO. -590067)

KEY	PART NO.	PART NAME	QTY	SERIAL NO.	REMARKS
1	38H1094	ELBOW FITTING	1		
2	38H5002	ADAPTER	1		
3	38H5016	ELBOW FITTING	1		
4	51M7041	O-RING	2		11.300 X 2.200 MM (0.445" X 0.087")
5	AR21836	CLAMP	1		
6	AR21837	CLAMP	1		
7	AT169886	HYDRAULIC HOSE - FABRICATE	1		
8	AT223949	HYDRAULIC HOSE - FABRICATE	1		(SUB FOR AT207096)
9	AT222413	HYDRAULIC HOSE - FABRICATE	1		
10	AT79576	HYDRAULIC HOSE - FABRICATE	1		
11	.....	BULK HOSE	1		(FURNISH T168383 BULK MATERIAL, CUT TO LENGTH)
12	T77613	O-RING	3		

BRAKE VALVE HYDRAULIC HOSES (SERIAL NO. 590068-)

T204002 -UN-12JAN05

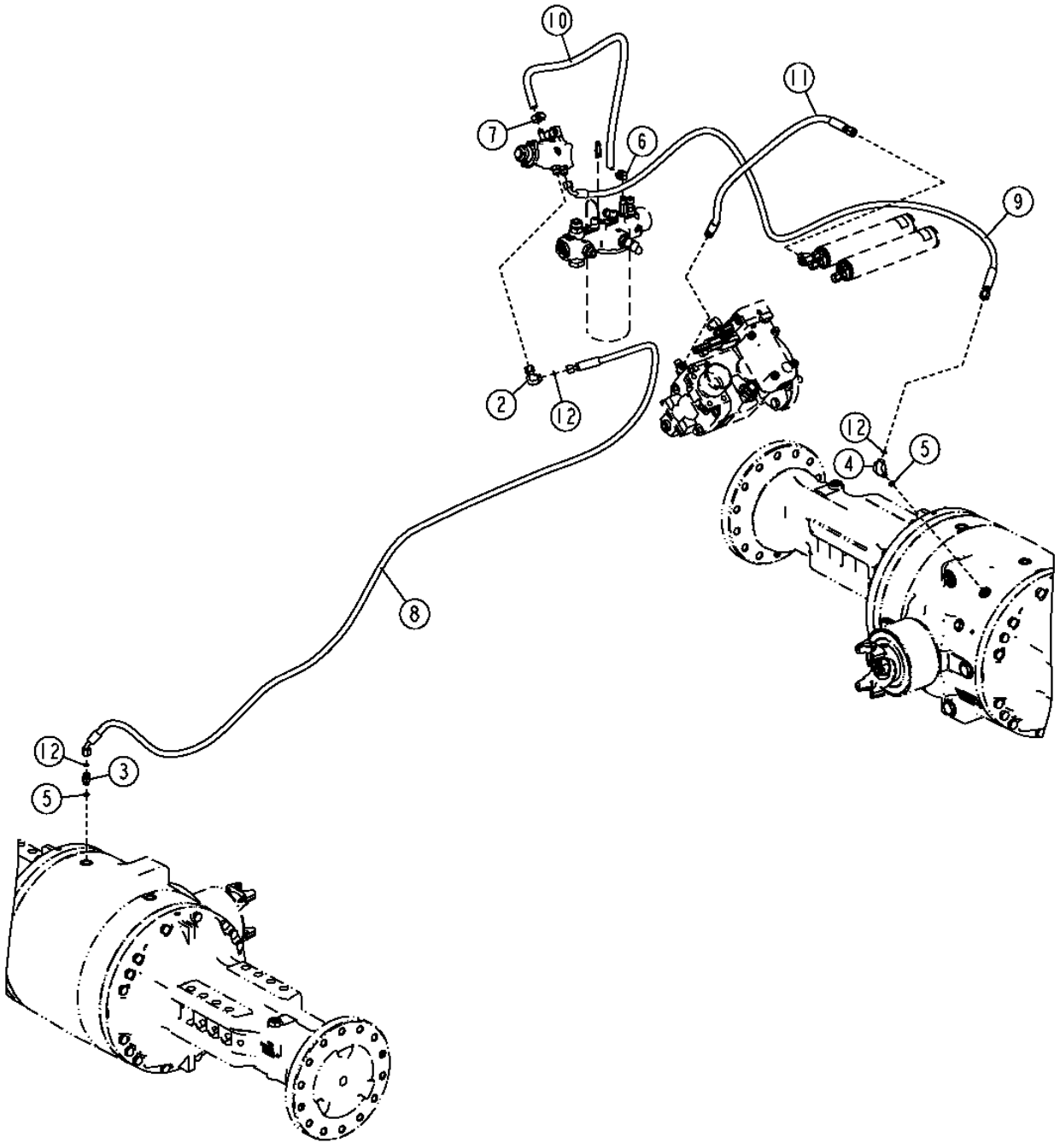

T204002

BRAKE VALVE HYDRAULICS (SERIAL NO. 590068-)

KEY	PART NO.	PART NAME	QTY	SERIAL NO.	REMARKS
2	38H1094	ELBOW FITTING	1		
3	38H5002	ADAPTER	1		
4	38H5016	ELBOW FITTING	1		
5	51M7041	O-RING	2		
6	AR21836	CLAMP	1		
7	AR21837	CLAMP	1		
8	AT223949	HYDRAULIC HOSE - FABRICATE	1		(SUB FOR AT207096)
9	AT79576	HYDRAULIC HOSE - FABRICATE	1		
10	T168383	HYDRAULIC HOSE - FABRICATE	1		
11	AT228618	HYDRAULIC HOSE - FABRICATE	1		
12	T77613	O-RING	2		

BRAKE ACCUMULATOR

T158350 -UN-13AUG02

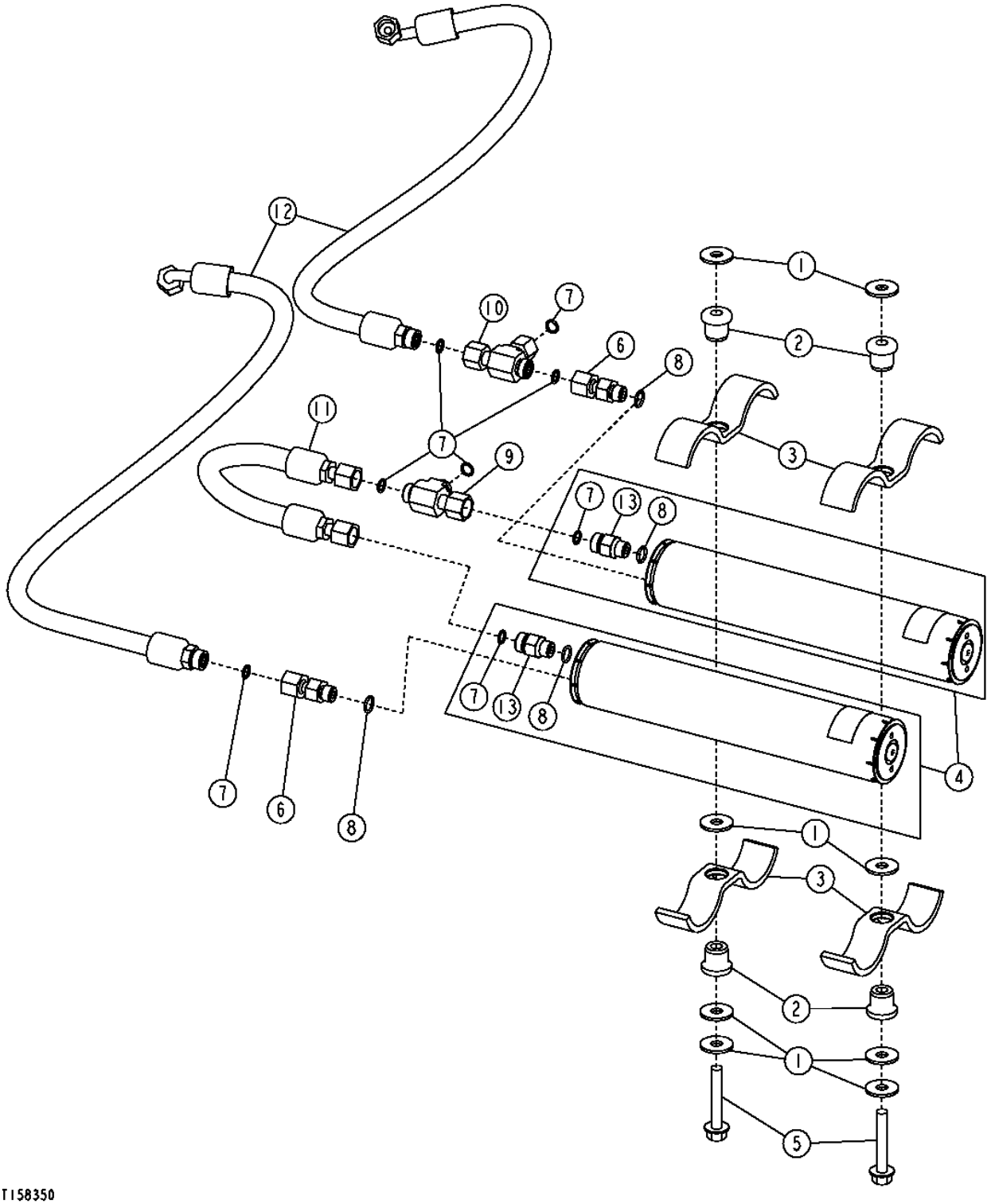

BRAKE ACCUMULATOR

KEY	PART NO.	PART NAME	QTY	SERIAL NO.	REMARKS
1	24M7296	WASHER	8		10.500 X 30 X 2.500 MM (0.413" X 1.181" X 0.098")
2	AT116162	ISOLATOR	4		
3	T168393	CLAMP	4		
4	AT224430	HYDRAULIC ACCUMULATOR	2		
5	19M7807	SCREW	2		M10 X 60
6	38H1067	ADAPTER	2		
7	T77613	O-RING	8	-590067	
	T77613	O-RING	6	590068-	
8	R26448	O-RING	4		
9	38H1030	TEE FITTING	1		
10	AT219792	TEE FITTING	1	-590067	
11	AT223768	HYDRAULIC HOSE - FABRICATE	1		11/16" X 356 MM (14") X 11/16"
12	AT222414	HYDRAULIC HOSE - FABRICATE	2		
13	AT225573	CHECK VALVE	2		

DRIVELINE BEARING AND PARKING BRAKE

T194772 -UN-16OCT03

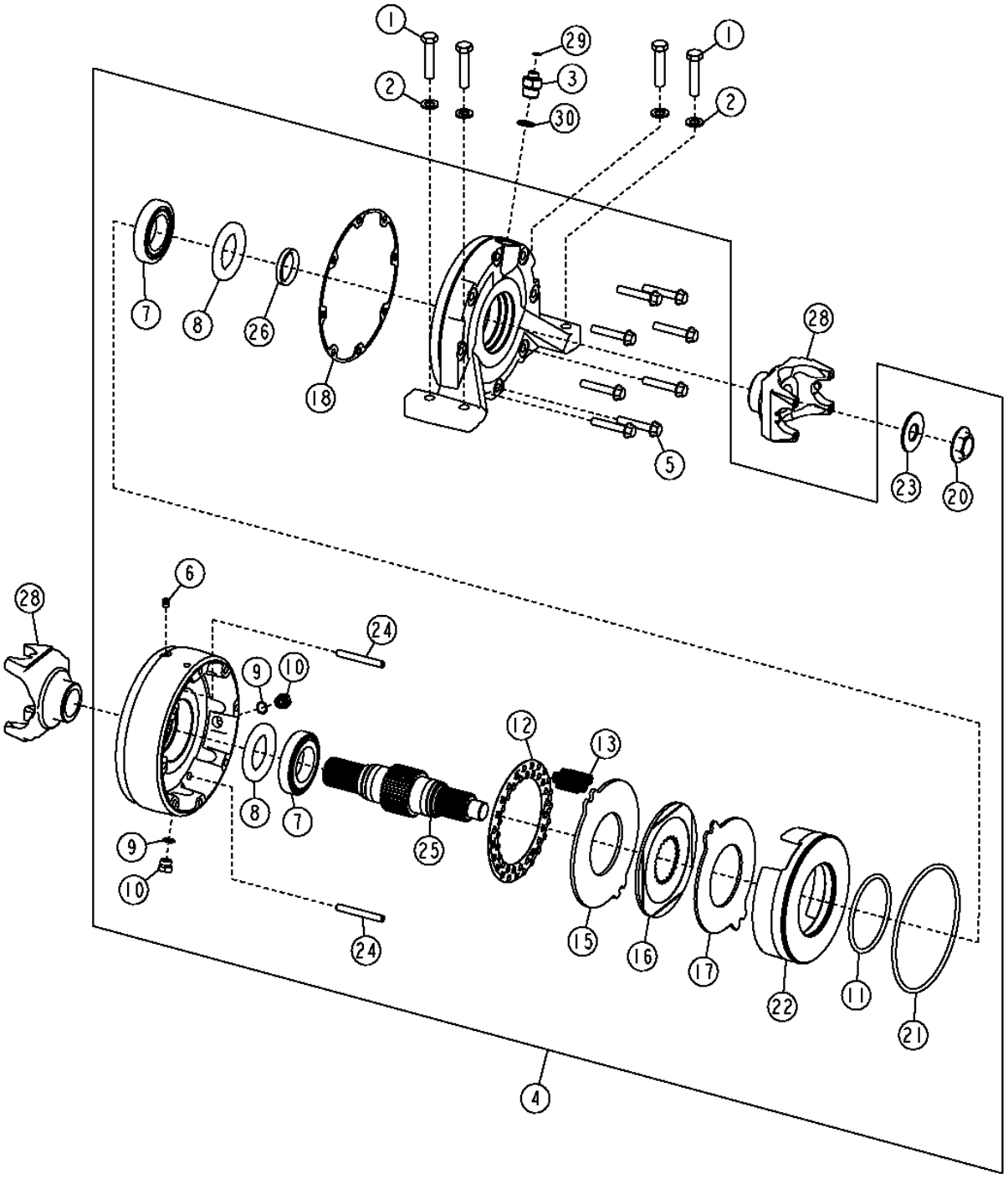

DRIVELINE BEARING AND PARKING BRAKE

KEY	PART NO.	PART NAME	QTY	SERIAL NO.	REMARKS
1	19M7719	CAP SCREW	4		
2	24M7338	WASHER	4		LIP
3	38H1338	ADAPTER	1		FACE
4	**AT208101**	**BRAKE**	**1**		
5	19M7817	SCREW	8		
6	AT208411	PRESSURE RELIEF VALVE	1		
7	AT209495	BEARING	2		
8	AT225728	SEAL	2		
9	R26375	O-RING	2		
10	R39112	FITTING	2		
11	T167845	O-RING	1		
12	T167840	RETAINER	1		
13	T167841	COMPRESSION SPRING	18		
15	T167980	DISK WITH OUTER SPLINE	1		
16	T167981	DISK WITH INNER SPLINE	5		
17	T167982	DISK WITH OUTER SPLINE	5		
18	T167842	GASKET	1		
20	T167848	FLANGE NUT	1		
21	T167843	O-RING	1		
22	T170607	PISTON	1		
23	T170582	WASHER	1		
24	T167943	DOWEL PIN	2		ASSEMBLY
25	T170604	UNIVERSAL DRIVESHAFT	1		
26	T173407	SPACER	1		
28	T175448	UNIVERSAL JOINT YOKE	2		
29	T77613	O-RING	1		
30	U12547	O-RING	1		

PARK BRAKE SOLENOID VALVE

T147496 -UN-29OCT01

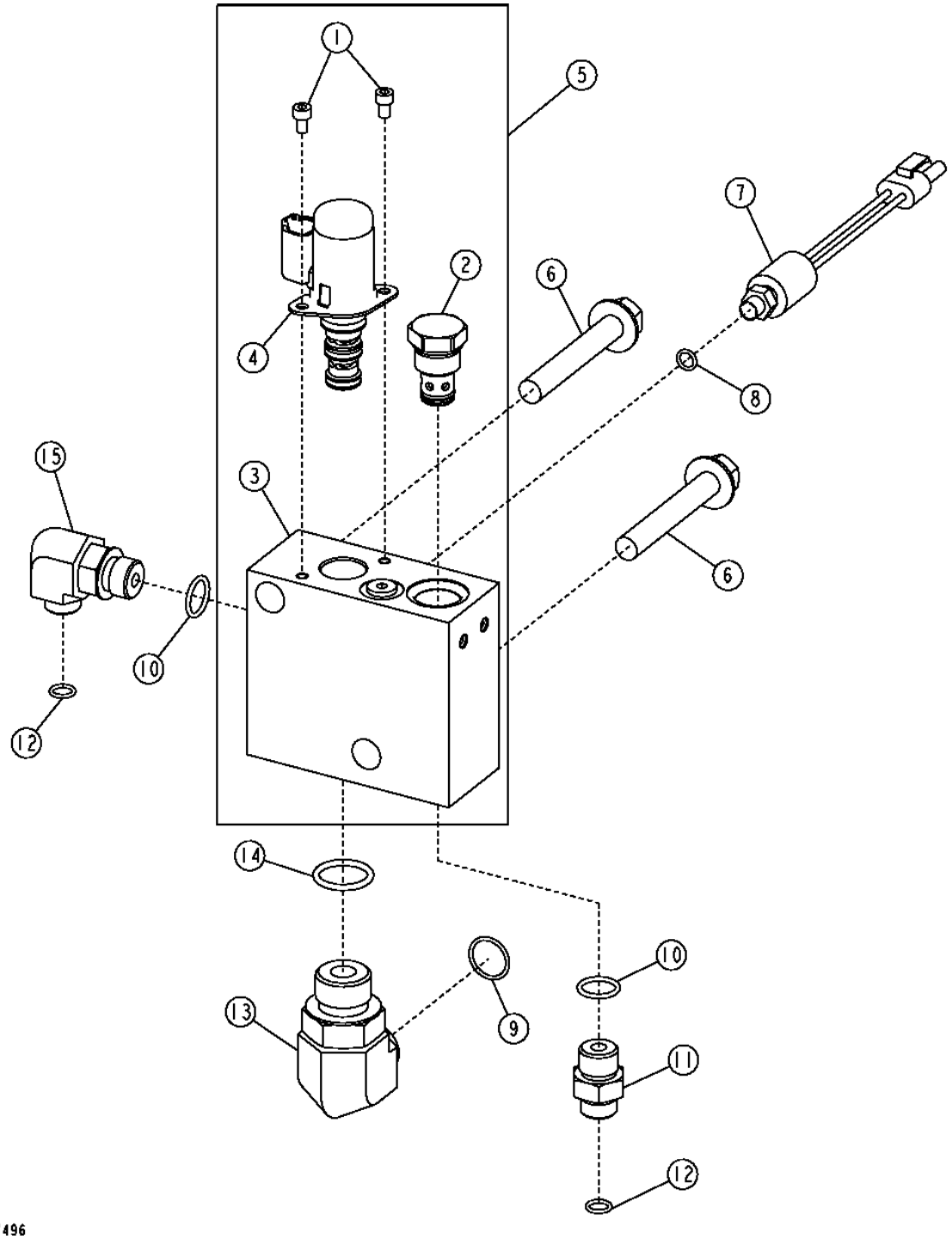

PARK BRAKE SOLENOID VALVE

KEY	PART NO.	PART NAME	QTY	SERIAL NO.	REMARKS
1	19M9150	SCREW	2		
2	AT224863	WASHER	1		
	AT224864	SEAL KIT	1		(NOT ILLUSTRATED)
3	.....	HOUSING	1		(SUB AT224497)
4	AT224576	SOLENOID VALVE	1		
	AT224873	SEAL KIT	1		(NOT ILLUSTRATED)
5	AT224497	FLOW CONTROL HYD. VALVE	1		(PARK BRAKE VALVE)
6	19M7818	SCREW	2		
7	AT223538	PRESSURE SWITCH	1		
	AT222367	SWITCH	1		(HARSH ENVIRONMENT)
8	R26287	O-RING	1		
9	T77858	O-RING	1		
10	R26375	O-RING	2		
11	38H1171	ADAPTER	1		
12	T77613	O-RING	2		
13	38H1404	ELBOW FITTING	1		
14	U12547	O-RING	1		
15	38H1010	ELBOW FITTING	1		

PARK BRAKE SOLENOID VALVE HYDRAULIC LINES

TP60324 -UN-08APR98

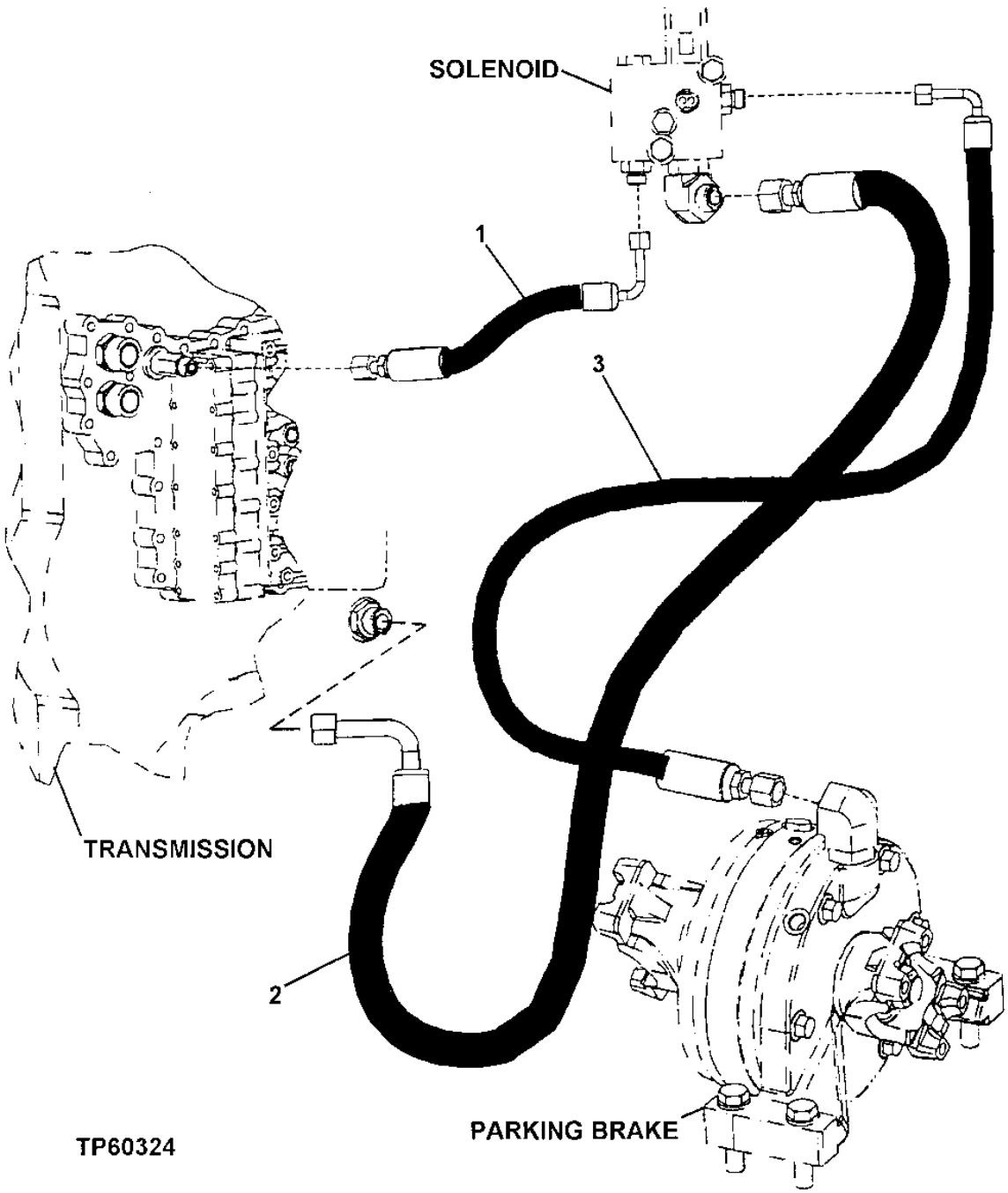

PARK BRAKE SOLENOID VALVE HYDRAULIC LINES

KEY	PART NO.	PART NAME	QTY	SERIAL NO.	REMARKS
1	AT209907	HYDRAULIC HOSE - FABRICATE	1		
2	AT208015	HYDRAULIC HOSE - FABRICATE	1		(SUB FOR AT209003)
3	AT167553	HYDRAULIC HOSE - FABRICATE	1		

MEMORANDA

LICENSE PLATE BRACKET AND LIGHT

TP48344 -UN-22AUG96

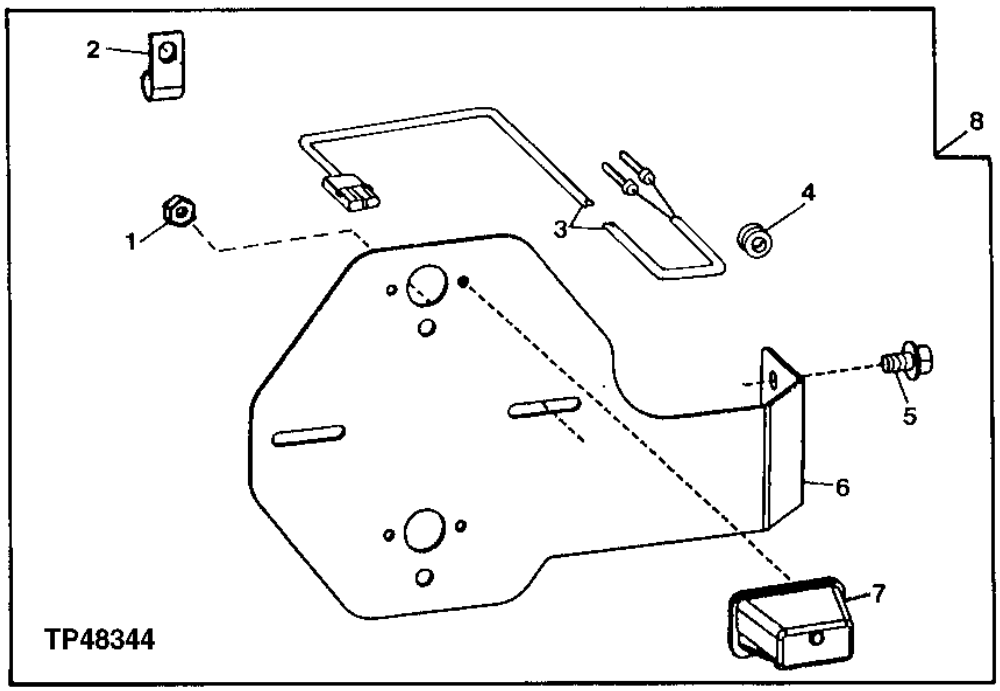

KEY	PART NO.	PART NAME	QTY	SERIAL NO.	REMARKS
1	14H605	NUT	2		0.164"
2	T75197	CLAMP	1		
3	AT203137	WIRING HARNESS	1		
	AT222436	WIRING HARNESS	1		(HARSH ENVIRONMENT)
4	R27583	GROMMET	1		
5	19M7783	SCREW	2		M10 X 16
6	T156693	BRACKET	1		
7	AT202789	LAMP	1		
	AT173354	BULB	1		(NOT ILLUSTRATED)
8	**AT206660**	**KIT**	**1**		**(WHOLEGOODS) (LICENSE PLATE BRACKET AND LIGHT)**

DECALS AND LABELS (S.N -590067)

T156131 -UN-20SEP02

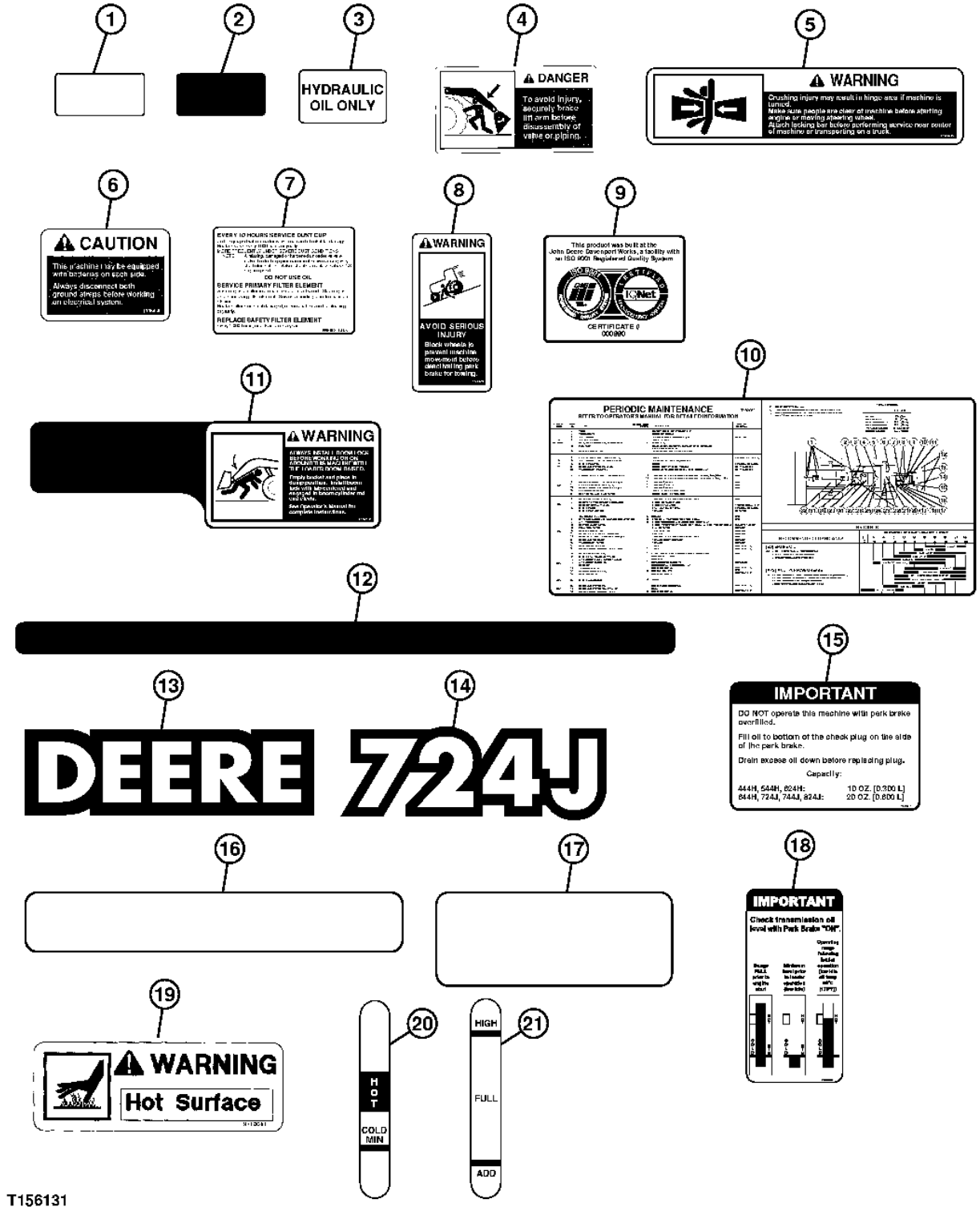

T156131

DECALS AND LABELS (S.N. -590067)

KEY	PART NO.	PART NAME	QTY	SERIAL NO.	REMARKS
1	H21259	MAT	3		OPERATOR'S DECK CLEAT
2	JD5902	REFLECTOR	2		REFLECTIVE RED MARKER
3	T101942	LABEL	1		HYDRAULIC OIL
4	T146175	SAFETY SIGN	1		DANGER, BOOM
5	T146436	SAFETY SIGN	2		ARTICULATION WARNING
6	T146438	SAFETY SIGN	2		CAUTION DUAL BATTERIES
7	T146605	LABEL	1		AIR CLEANER
8	T159028	LABEL	1		PARK BRAKE
9	T175744	LABEL	1		ISO 9000
10	T200024	LABEL	1		PERIODIC MAINTENANCE
11	T182191	LABEL	2		BOOM LOCK
12	T182192	SAFETY SIGN	2		ARTICULATION LOCK WARNING
13	T182409	LABEL	2		DEERE
14	T195150	LABEL	2		724J
15	T207741	LABEL	1		(SUB FOR T195710) PARK BRAKE OVERFILL
16	T196013	STRIP	2		ANTISKID MAT
17	T196130	MAT	2		ANTISKID MAT
18	T200055	LABEL	1		TRANSMISSION OIL CHECK
19	M118611	LABEL	1		
20	T200064	LABEL	1		
21	T197300	LABEL	1		

DECALS AND LABELS (S.N. 590068-)

T195521 -UN-13OCT03

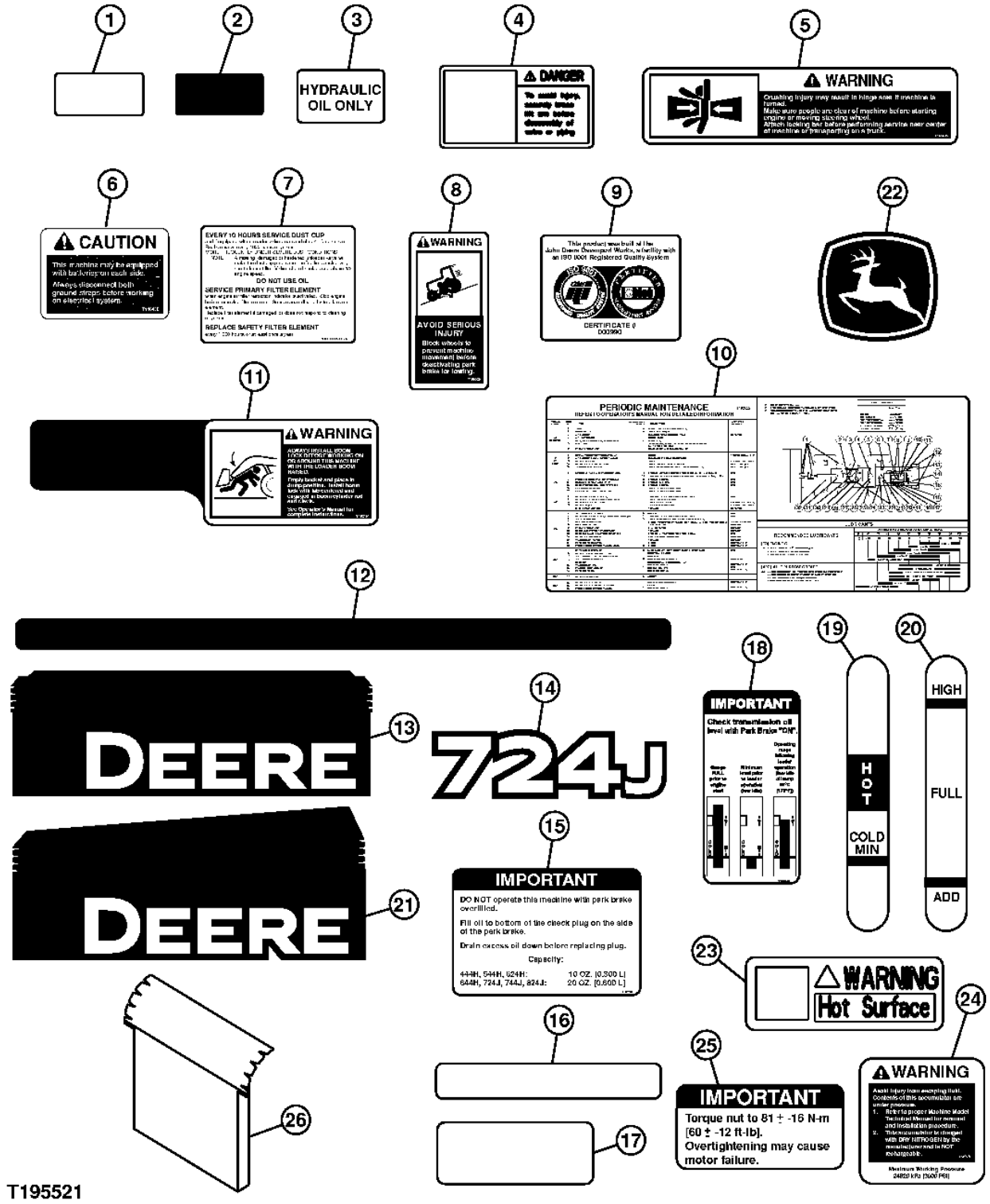

DECALS AND LABELS (S.N. 590068-)

KEY	PART NO.	PART NAME	QTY	SERIAL NO.	REMARKS
1	H21259	MAT	3		(CLEAT - OPERATOR'S DECK)
2	JD5902	REFLECTOR	2		(RED)
3	T101942	LABEL	1		(HYDRAULIC OIL)
4	T146175	SAFETY SIGN	1		(DANGER, BOOM)
5	T146436	SAFETY SIGN	2		(ARTICULATION WARNING)
6	T146438	SAFETY SIGN	2		(CAUTION - DUAL BATTERIES)
7	T146605	LABEL	1		(AIR CLEANER)
8	T159028	LABEL	1		(PARK BRAKE)
9	T175744	LABEL	1		(ISO 9001)
10	T200024	LABEL	1		(PERIODIC MAINTENANCE)
11	T182191	LABEL	2		(BOOM LOCK)
12	T182192	SAFETY SIGN	2		(ARTICULATION LOCK WARNING)
13	T203909	LABEL	1		(DEERE - RIGHT SIDE OF UNIT)
14	T205313	LABEL	2		(MODEL DESIGNATION)
15	T207741	LABEL	1		(PARK BRAKE OVERFILL)
16	T196013	STRIP	2		(ANTI-SKID MAT)
17	T196130	MAT	2		(ANTI-SKID MAT)
18	T200055	LABEL	1		(TRANSMISSION OIL CHECK)
19	T200064	LABEL	1		
20	T197300	LABEL	1		
21	T203810	LABEL	1		(DEERE - LEFT SIDE OF UNIT)
22	JD5749	LABEL	1		(LEAPING DEER)
23	M118611	LABEL	1		(WARNING - HOT SURFACE)
24	T174298	LABEL	1		(WARNING - ACCUMULATOR)
25	T175135	LABEL	1		(WARNING - FAN HUB)
26	T203927	LABEL	2		

LABELS AND DECALS (CAB) (S.N. -590067)

T159217 -UN-13SEP02

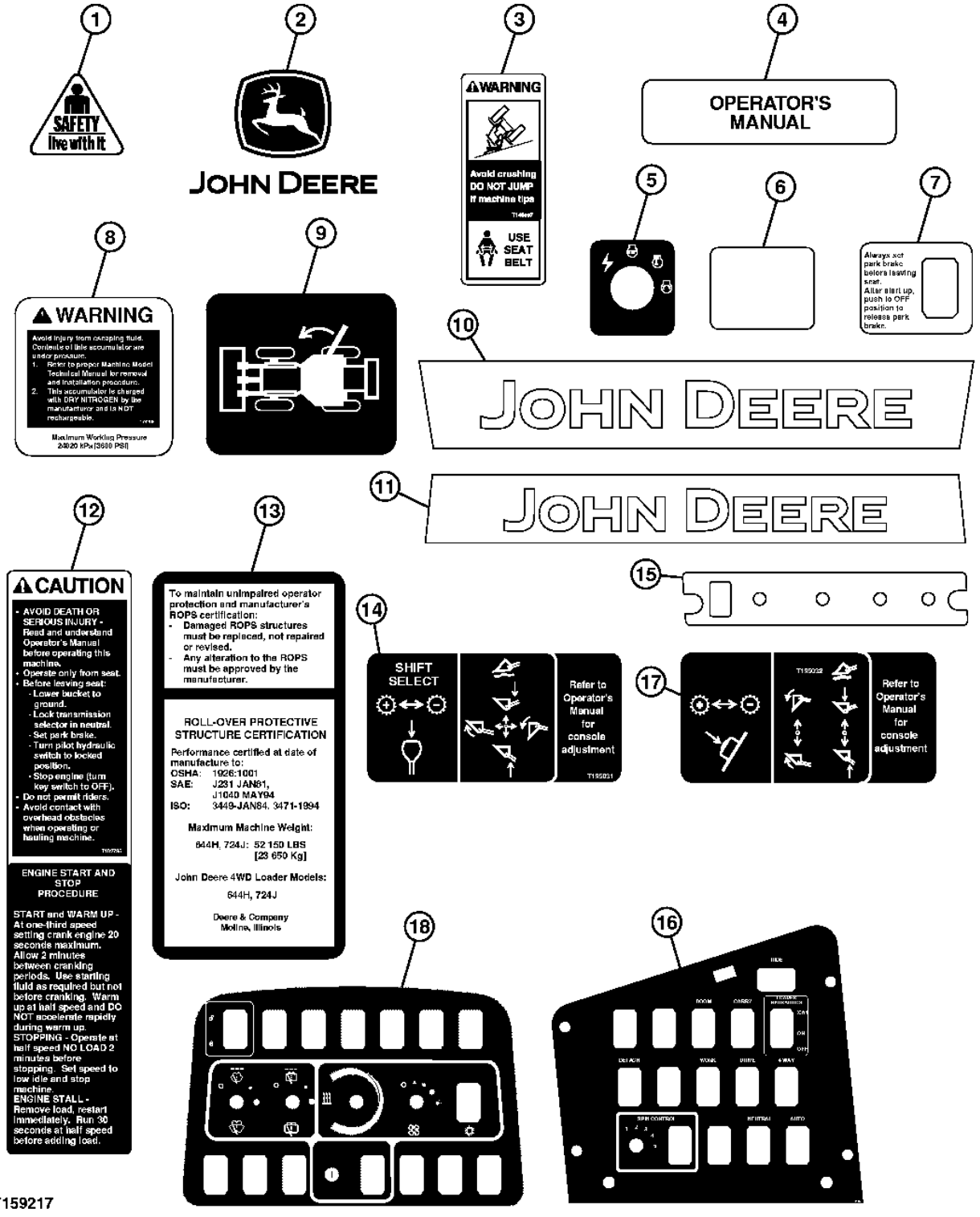

LABELS AND DECALS (CAB) (S.N. -590067)

KEY	PART NO.	PART NAME	QTY	SERIAL NO.	REMARKS
1	H138955	LABEL	1		
2	JD5750	LABEL	2		
3	T146097	LABEL	1		
4	T148083	LABEL	1		
5	T157172	LABEL	1		
6	T171223	LABEL	1		DOOR RELEASE
7	T171228	LABEL	1		
8	T174298	LABEL	2		
9	T174735	LABEL	1		
10	T182183	LABEL	1		
11	T182184	LABEL	1		
12	T182795	SAFETY SIGN	1		
13	T200784	LABEL	1		(SUB FOR T195865) (ROPS)
14	T200729	LABEL	1		(SUB FOR T195031) (FOR USE WITH JOYSTICK CONTROLLER)
15	T182630	LABEL	1		HVAC PANEL (FOR USE WITH DUAL LEVER CONTROLLER)
16	T182734	LABEL	1		(FOR USE WITH DUAL LEVER CONTROLLER)
17	T195032	LABEL	1		(FOR USE WITH DUAL LEVER CONTROLLER)
18	T181852	LABEL	1		(FOR USE WITH JOYSTICK CONTROLLER)

LABELS AND DECALS (CAB) (S.N. 590068-)

T194856 -UN-15OCT03

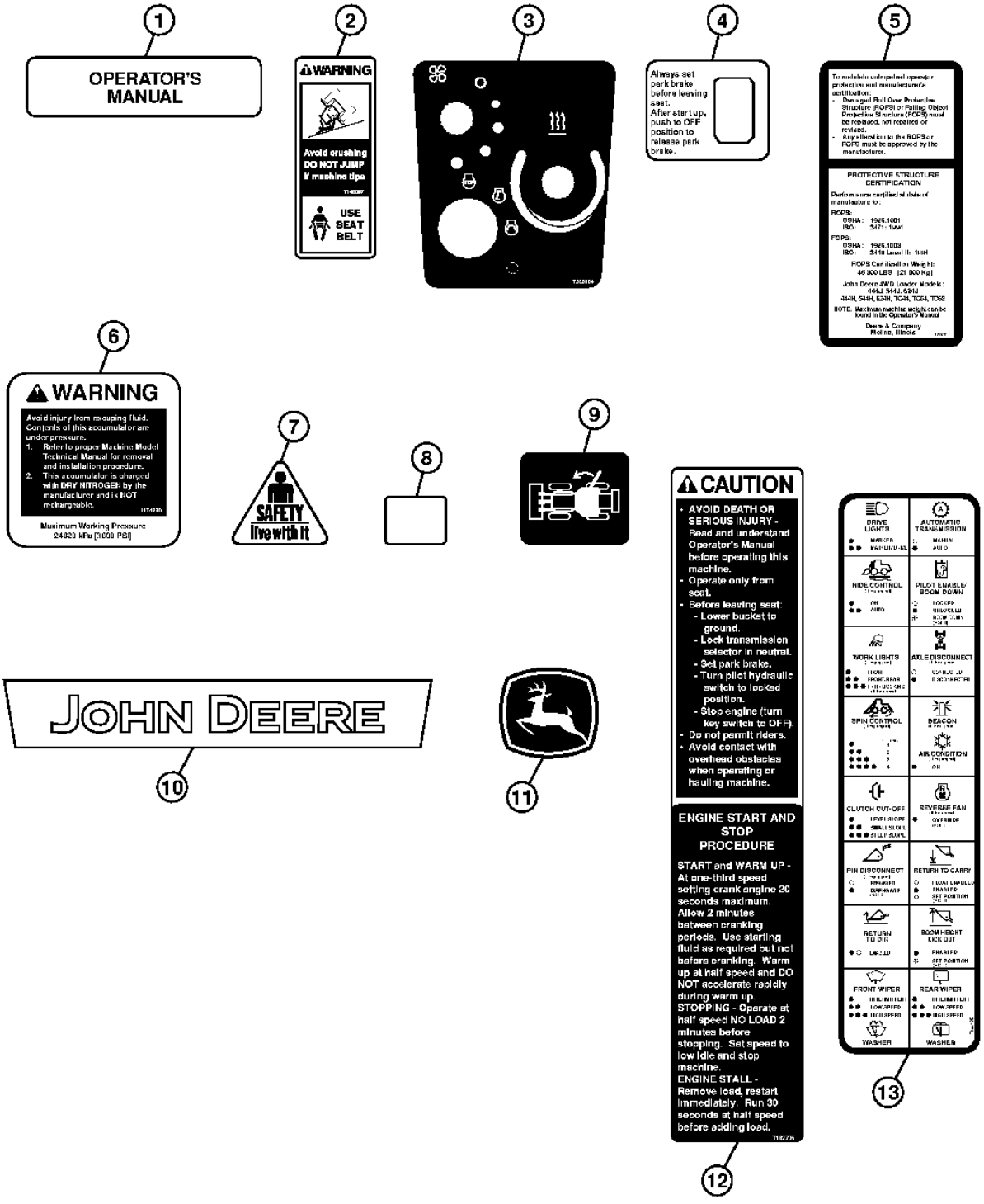

T194856

LABELS AND DECALS (CAB) (S.N. 590068-)

KEY	PART NO.	PART NAME	QTY	SERIAL NO.	REMARKS
1	T148083	LABEL	1		(OPERATOR'S MANUAL)
2	T146097	LABEL	1		(WARNING - USE SEAT BELT)
3	T202884	LABEL	1		(KEY START/HVAC PANEL)
4	T171228	LABEL	1		(ON/OFF PARK BRAKE SWITCH)
5	T200784	LABEL	1		(ROPS)
6	T174298	LABEL	2		(WARNING - ACCUMULATOR)
7	H138955	LABEL	2		(CAUTION)
8	T171223	LABEL	1		(DOOR RELEASE - LEFT SIDE OF UNIT)
9	T174735	LABEL	1		(DOOR RELEASE - RIGHT SIDE OF UNIT)
10	T182183	LABEL	1		(JOHN DEERE)
11	JD5822	LABEL	2		(LEAPING DEER)
12	T182795	SAFETY SIGN	1		(CAUTION - ENGINE START/STOP)
13	T197186	LABEL	1		(SWITCH DESCRIPTION)

DECALS AND LABELS (SPANISH)(S.N. -590067)

T156135 -UN-20SEP02

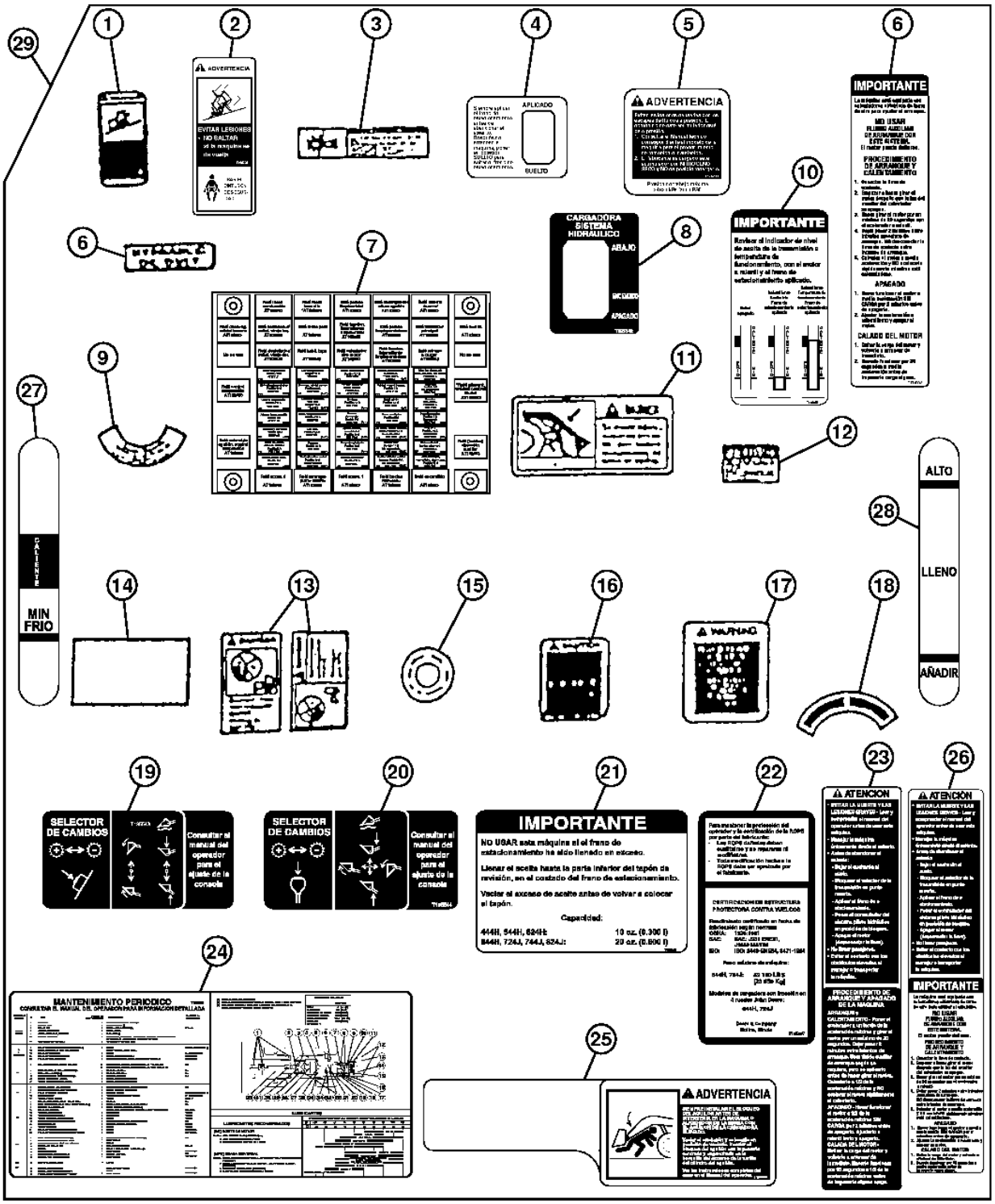

T156135

DECALS AND LABELS (SPANISH)(S.N. -590067)

KEY	PART NO.	PART NAME	QTY	SERIAL NO.	REMARKS
1	T160769	SAFETY SIGN	1		WARNING (PARK BRAKE)
2	T146098	SAFETY SIGN	1		WARNING SEAT BELT
3	T146504	SAFETY SIGN	2		WARNING ARTICULATION
4	T171751	LABEL	1		PARK BRAKE
5	T174299	LABEL	1		BRAKE ACCUMULATOR, (SUB FOR T175911)
6	T102620	LABEL	1		HYDRAULIC OIL
7	T177783	LABEL	1		FUSEBLOCK
8	T195542	LABEL	1		PILOT ENABLE
9	T64217	LABEL	1		OIL FILTER ELEMENT
10	T200057	LABEL	1		TRANSMISSION OIL CHECK
11	T146180	SAFETY SIGN	1		DANGER BOOM
12	T146503	SAFETY SIGN	1		CAUTION DUAL BATTERIES
13	T146106	SAFETY SIGN	1		BYPASS START
14	T146606	LABEL	1		AIR CLEANER UNLOADER VALVE
15	T171757	LABEL	1		RADIATOR CAP
16	T146502	SAFETY SIGN	1		CAUTION, SECONDARY STEERING
17	T146911	LABEL	1		WARNING, ACCUMULATOR
18	T63225	LABEL	1		BATTERY DISCONNECT
19	T195543	LABEL	1		STACKABLE CONTROLS
20	T195544	LABEL	1		JOYSTICK CONTROLS
21	T207751	LABEL	1		(SUB FOR T195760) PARK BRAKE
22	T200815	LABEL	1		(SUB FOR T195867) ROPS
23	T195559	LABEL	2		ENGINE START/STOP
24	T200026	LABEL	1		PERIODIC MAINTINANCE
25	T195858	LABEL	1		BOOM LOCK
26	T208086	SAFETY SIGN	1		(SUB FOR T196475) ENGINE AIR HEATER START/STOP
27	T200066	LABEL	1		
28	T197324	LABEL	1		
29	.....	LABEL KIT	1		(SUB AT226643)

DECALS AND LABELS (SPANISH)(S.N. 590068-)

T194874 -UN-15OCT03

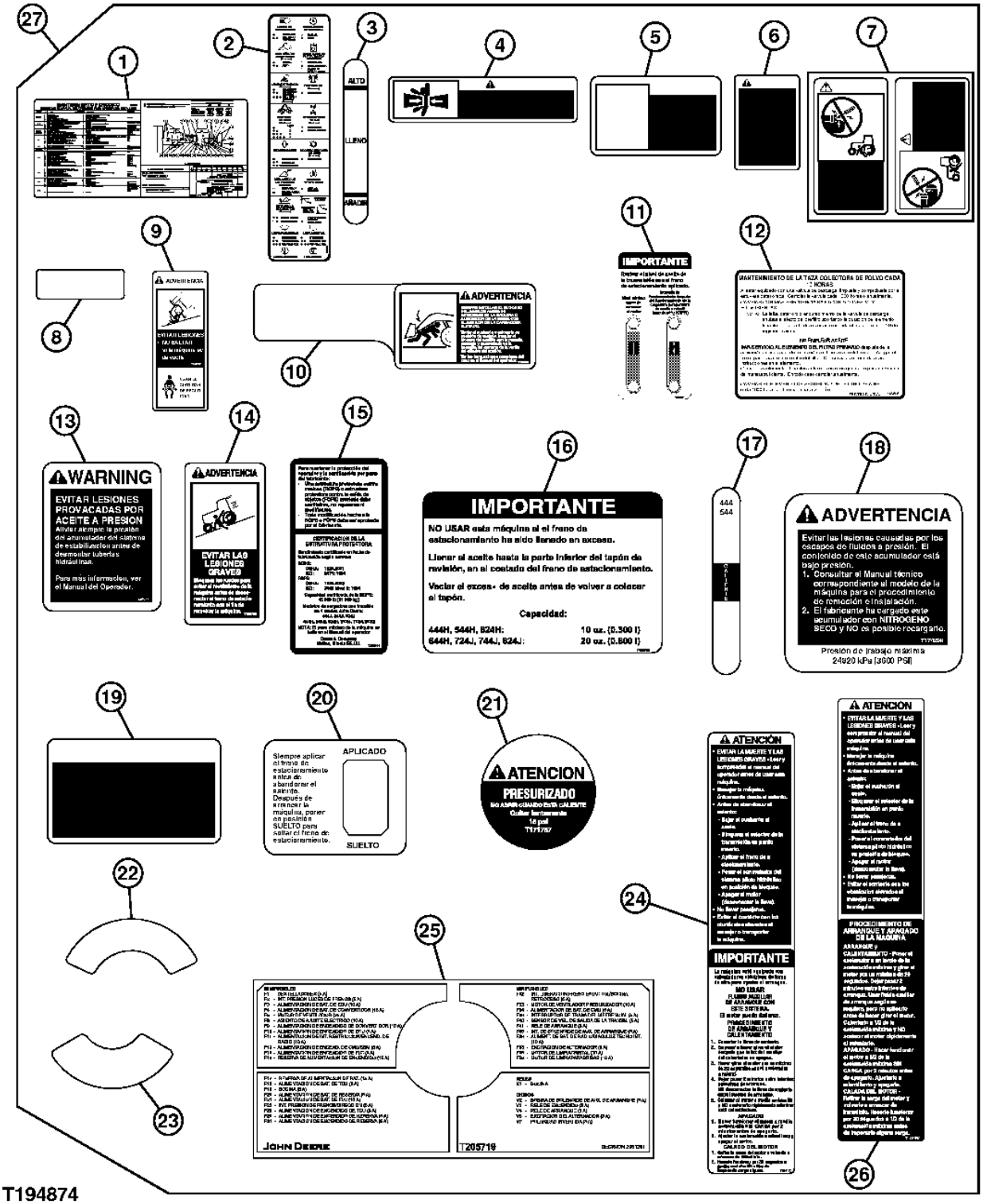

DECALS AND LABELS (SPANISH)(S.N. 590068-)

KEY	PART NO.	PART NAME	QTY	SERIAL NO.	REMARKS
1	T200026	LABEL	1		(PERIODIC MAINTENANCE)
2	T200818	LABEL	1		(START/STOP SWITCH PAD)
3	T197324	LABEL	1		(HYDRAULIC RESERVOIR SIGHT GAUGE)
4	T146504	SAFETY SIGN	1		(WARNING - ARTICULATION JOINT)
5	T146180	SAFETY SIGN	1		(DANGER - BOOM)
6	T146502	SAFETY SIGN	1		(CAUTION - SECONDARY STEERING)
7	T146106	SAFETY SIGN	1		(STARTER BYPASS START)
8	T102620	LABEL	1		(HYDRAULIC OIL)
9	T146098	SAFETY SIGN	1		(WARNING - SEAT BELT)
10	T195858	LABEL	1		(BOOM LOCK)
11	T200057	LABEL	1		(TRANSMISSION OIL CHECK)
12	T146606	LABEL	1		(AIR CLEANER)
13	T146911	LABEL	1		(WARNING - ACCUMULATOR)
14	T160769	SAFETY SIGN	1		(WARNING - PARK BRAKE)
15	T200815	LABEL	1		(ROPS)
16	T207751	LABEL	1		(SUB FOR T195760) (PARK BRAKE OVERFILL)
17	T200066	LABEL	1		(TRANSMISSION SIGHT GAUGE)
18	T174299	LABEL	1		(BRAKE ACCUMULATOR)
19	T146503	SAFETY SIGN	2		(CAUTION - DUAL BATTERIES)
20	T171751	LABEL	1		(PARK BRAKE SWITCH)
21	T171757	LABEL	1		(RADIATOR CAP)
22	T63225	LABEL	1		(BATTERY DISCONNECT)
23	T64217	LABEL	1		(OIL FILTER ELEMENT)
24	T208086	SAFETY SIGN	1		(SUB FOR T196475) (CAUTION - ENGINE AIR HEATER)
25	T205719	LABEL	1		(VEHICLE)
26	T195559	LABEL	1		(ENGINE START-STOP)
27	AT301095	LABEL KIT	1		(SPANISH) (IMPORTANT: MUST ALSO ORDER TRANSLATED OPERATOR'S MANUAL THROUGH YOUR AUTHORIZED DEALER)

DECALS AND LABELS (FRENCH)(S.N. -590067)

T156134 -UN-20SEP02

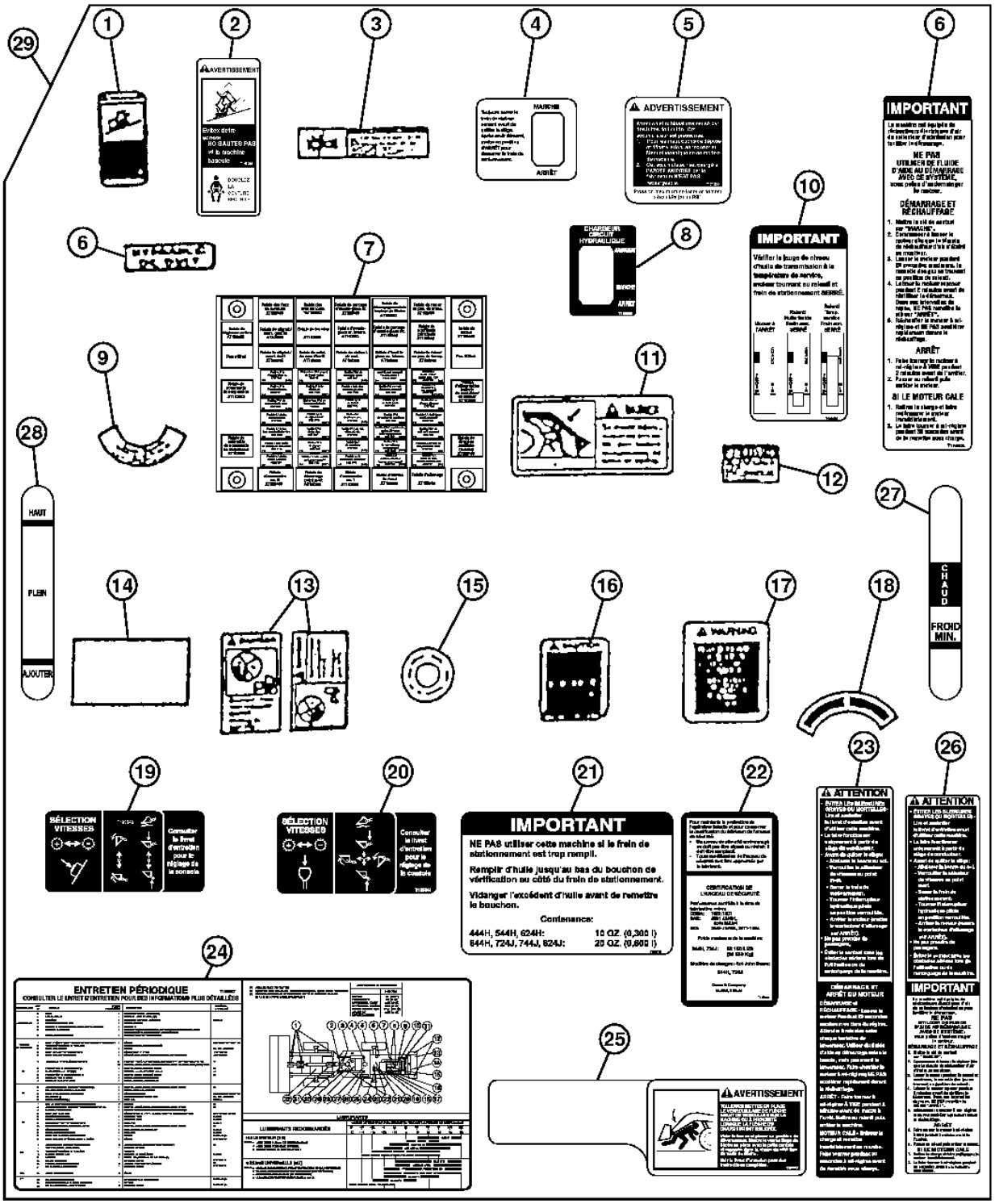

T156134

DECALS AND LABELS (FRENCH)(S.N. -590067)

KEY	PART NO.	PART NAME	QTY	SERIAL NO.	REMARKS
1	T160762	LABEL	1		WARNING (PARK BRAKE)
2	T146099	SAFETY SIGN	1		WARNING SEAT BELT
3	T146496	SAFETY SIGN	2		WARNING ARTICULATION
4	T171750	LABEL	1		PARK BRAKE
5	T174300	LABEL	2		ACCUMULATOR, (SUB FOR T175911)
6	T102618	LABEL	1		HYDRAULIC OIL
7	T177785	LABEL	1		FUSEBLOCK
8	T195539	LABEL	1		PILOT ENABLE
9	CD12569	LABEL	1		OIL FILTER ELEMENT
10	T200056	LABEL	1		TRANSMISSION OIL CHECK
11	T146178	SAFETY SIGN	1		DANGER BOOM
12	T146495	SAFETY SIGN	2		CAUTION DUAL BATTERIES
13	T146104	SAFETY SIGN	1		BYPASS START
14	T146607	LABEL	1		AIR CLEANER UNLOADER VALVE
15	T171756	LABEL	1		RADIATOR CAP
16	T146494	SAFETY SIGN	1		CAUTION, SECONDARY STEERING
17	T146908	SAFETY SIGN	2		WARNING, ACCUMULATOR
18	T63224	LABEL	1		BATTERY DISCONNECT
19	T195540	LABEL	1		STACKABLE CONTROLS
20	T195541	LABEL	1		JOYSTICK CONTROLS
21	T207750	LABEL	1		(SUB FOR T195759) PARK BRAKE OVERFILL
22	T200802	LABEL	1		(SUB FOR T195866) ROPS
23	T195558	LABEL	1		ENGINE STOP/START
24	T200025	LABEL	1		PERIODIC MAINTENANCE
25	T195857	LABEL	2		BOOM LOCK
26	T208087	SAFETY SIGN	1		(SUB FOR T196476) ENGINE AIR HEATER START/STOP
27	T200065	LABEL	1		
28	T197323	LABEL	1		
29	.....	LABEL KIT	1		(SUB AT226634)

DECALS AND LABELS (FRENCH)(S.N. 590068-)

T194861 -UN-15OCT03

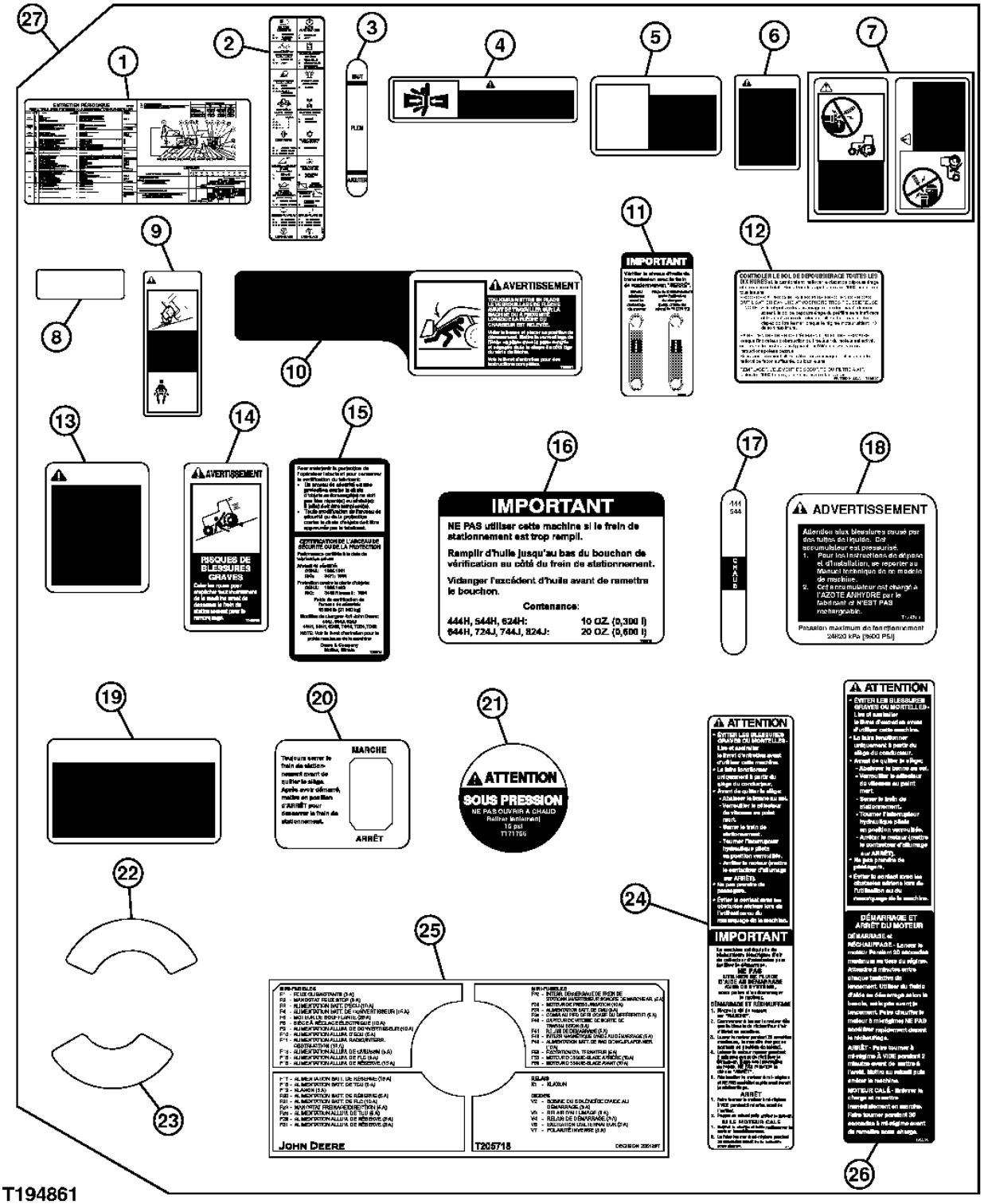

DECALS AND LABELS (FRENCH)(S.N. 590068-)

KEY	PART NO.	PART NAME	QTY	SERIAL NO.	REMARKS
1	T200025	LABEL	1		(PERIODIC MAINTENANCE)
2	T200791	LABEL	1		(START/STOP SWITCH PAD)
3	T197323	LABEL	1		(HYDRAULIC RESERVOIR SIGHT GAUGE)
4	T146496	SAFETY SIGN	2		(WARNING)
5	T146178	SAFETY SIGN	1		(DANGER)
6	T146494	SAFETY SIGN	1		(CAUTION - SECONDARY STEERING)
7	T146104	SAFETY SIGN	1		(BYPASS START)
8	T102618	LABEL	1		(HYDRAULIC OIL)
9	T146099	SAFETY SIGN	1		(WARNING - SEAT BELT)
10	T195857	LABEL	2		(BOOM LOCK)
11	T200056	LABEL	1		(TRANSMISSION OIL CHECK)
12	T146607	LABEL	1		(AIR CLEANER)
13	T146908	SAFETY SIGN	2		(WARNING - RIDE ACCUMULATOR)
14	T160762	LABEL	1		(WARNING - PARK BRAKE)
15	T200802	LABEL	1		(ROPS)
16	T207750	LABEL	1		(SUB FOR T195759) (PARK BRAKE OVERFILL)
17	T200065	LABEL	1		(TRANSMISSION SIGHT GAUGE)
18	T174300	LABEL	2		(ACCUMULATOR)
19	T146495	SAFETY SIGN	2		(CAUTION)
20	T171750	LABEL	1		(PARK BRAKE SWITCH)
21	T171756	LABEL	1		(RADIATOR CAP)
22	T63224	LABEL	1		(DISCONNECT)
23	CD12569	LABEL	1		(OIL FILTER ELEMENT)
24	T208087	SAFETY SIGN	1		(SUB FOR T196476) (CAUTION - ENGINE AIR HEATER)
25	T205718	LABEL	1		(VEHICLE INFORMATION)
26	T195558	LABEL	1		(ENGINE START/STOP)
27	AT301058	LABEL KIT	1		(FRENCH) (IMPORTANT: MUST ALSO ORDER TRANSLATED OPERATOR'S MANUAL THROUGH YOUR AUTHORIZED DEALER)

LIFT HOOKS

TP48560 -UN-15NOV96

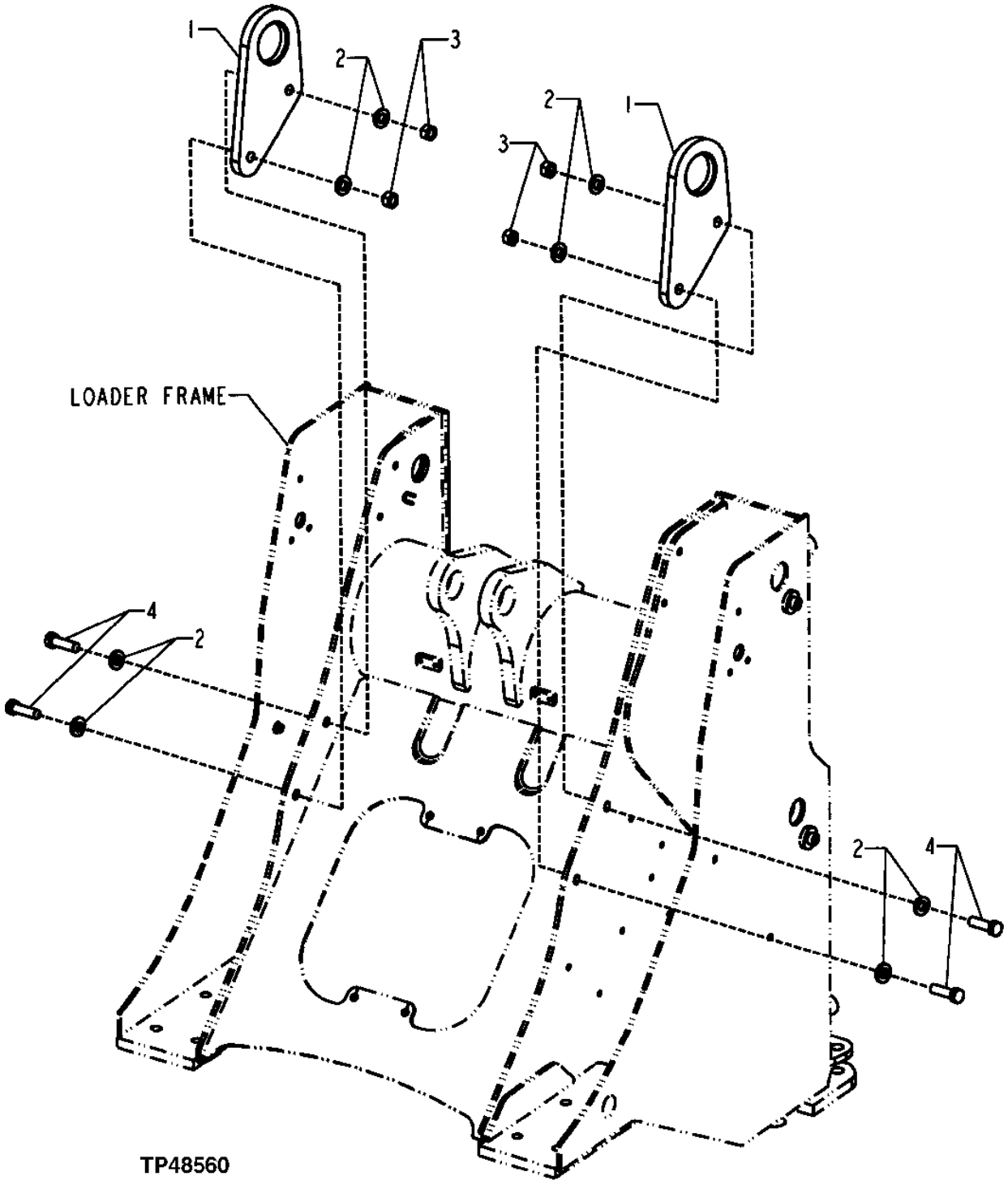

LIFT HOOKS

KEY	PART NO.	PART NAME	QTY	SERIAL NO.	REMARKS
1	T156995	PLATE	2		
2	24M7242	WASHER	8		21.400 X 42 X 5 MM
3	14M7277	NUT	4		M20
4	19M8639	CAP SCREW	4		M20 X 70

MEMORANDA

TORQ-GARD SUPREME AND PLUS-50 ENGINE OIL

RGP3291 -UN-31MAR04

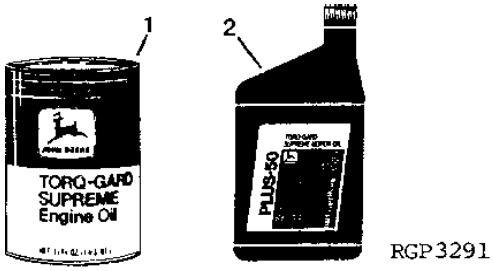

TORQ-GARD SUPREME

KEY	PART NO.	PART NAME	QTY	ENGINE SERIAL NO.	REMARKS
1	TY22064	TORQ-GARD SUPREME TM	1		(SAE 5W/30), 0.9L (1 QUART)
	TY22065	TORQ-GARD SUPREME TM	1		(SAE 5W/30), 19L (5 GALLON)
	TY22066	TORQ-GARD SUPREME TM	1		(SAE 5W/30), 208L (55 GALLON)
	TY6364	OIL	1		(SAE 10W/30), 0.9 L (1 QUART) (BREAKIN)
	TY6389	TORQ-GARD SUPREME PLUS-50TM	1		(SAE 15W/40, 0.9 L (1 QUART)
	TY6390	TORQ-GARD SUPREME PLUS-50TM	1		(SAE 15W/40), 19 L (5 GALLON)
	TY22010	TORQ-GARD SUPREME PLUS-50TM	1		(SAE 15W/40), 114 L (30 GALLON)
	TY6391	TORQ-GARD SUPREME PLUS-50TM	1		(SAE 15W/40), 208 L (55 GALLON)
	TY22067	TORQ-GARD SUPREME TM	1		(SAE 10W), .9L (1 GALLON)
	TY22068	TORQ-GARD SUPREME TM	1		(SAE 10W), 19L (5 GALLON)
	TY22069	TORQ-GARD SUPREME TM	1		(SAE 10W), 208L (55 GALLON)
	TY22070	TORQ-GARD SUPREME TM	1		(SAE 30W), 0.9L (1 GALLON)
	TY22073	TORQ-GARD SUPREME TM	1		(SAE 30W), 19L (5 GALLON)
	TY6280	OIL	1		(SAE 30W), 114 L (30 GALLON)
	TY22074	TORQ-GARD SUPREME TM	1		(SAE 30W), 208L (55 GALLON)

TORQ-GARD PLUS-50

KEY	PART NO.	PART NAME	QTY	ENGINE SERIAL NO.	REMARKS
2	TY6389	TORQ-GARD SUPREME PLUS-50TM	1		(SAE 15W/40), 0.9 L (1 QUART)
	TY22008	TORQ-GARD SUPREME PLUS-50TM	1		(SAE 15W/40), 3.8 L (1 GALLON)
	TY6390	TORQ-GARD SUPREME PLUS-50TM	1		(SAE 15W/40), 19 L (5 GALLON)
	TY22010	TORQ-GARD SUPREME PLUS-50TM	1		(SAE 15W/40), 113.6 L (30 GALLON)
	TY6391	TORQ-GARD SUPREME PLUS-50TM	1		(SAE 15W/40), 208 L (55 GALLON)
	TY6392	OIL	1		(SAE 30W), 0.9 L (1 QUART)
	TY22007	OIL	1		(SAE 30W), 3.8 L (1 GALLON)
	TY6393	OIL	1		(SAE 30W), 19 L (5 GALLON)
	TY22011	OIL	1		(SAE 30W), 113.6 L (30 GALLON)
	TY6394	OIL	1		(SAE 30W), 208 L (55 GALLON)
..	TY22041	ENGINE BREAK-IN OIL	1		(SAE 10W/30), 3.8 L (1 GALLON) (FACTORY SPEC BREAKIN)
..	TY22042	ENGINE BREAK-IN OIL	1		(SAE 10W/30), 208 L (55 GALLON) (FACTORY SPEC. BREAKIN)

O-RING KIT

TP70402 -UN-13JUL00

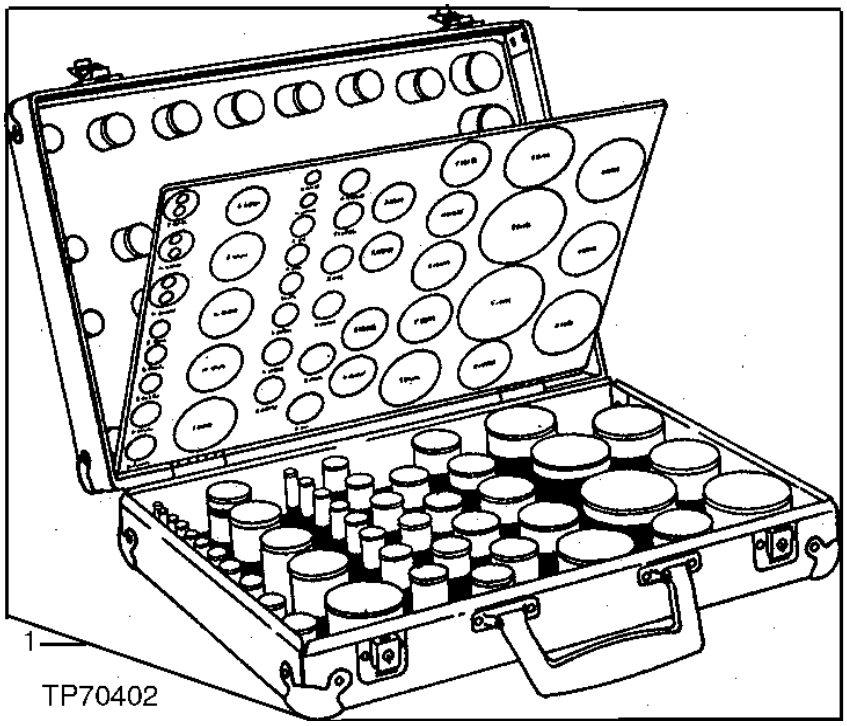

O-RING KIT-CONTINUED

KEY	PART NO.	PART NAME	QTY	SERIAL NO.	REMARKS
1	A3606R	O-RING	1		
	A3917R	O-RING	1		
	A4365R	O-RING	1		
	A4730R	O-RING	1		
	B2762R	O-RING	1		
	B3690R	O-RING	1		
	F1056R	O-RING	1		
	F1870R	O-RING	1		
	U12547	O-RING	1		
	F3353R	O-RING	1		
	H35244	RING	1		
	T78313	O-RING	1		
	M4237T	O-RING	1		
	N131838	O-RING	1		
	P46051	O-RING	1		
	P48403	O-RING	1		
	P50631	O-RING	1		
	R375R	O-RING	1		
	R394R	O-RING	1		
	R459R	O-RING	1		
	R460R	O-RING	1		
	R495R	O-RING	1		
	R10093	O-RING	1		
	R26286	O-RING	1		
	R26287	O-RING	1		
	R26375	O-RING	1		
	R26448	O-RING	1		

FLUID ANALYSIS PRODUCTS (OILSCAN PLUS TEST KIT)

T135474 -UN-15NOV00



T135474

FLUID ANALYSIS PRODUCTS (OILSCAN PLUS TEST KIT)

KEY	PART NO.	PART NAME	QTY	SERIAL NO.	REMARKS
1	.....	KIT	1		STANDARD ENGINE, SELF EXTRACTION (12 PER PACKAGE)(INCLUDES SPECTROCHEMICAL ANALYSIS, VISCOSITY, ° WATER, FUEL DILUTION, GLYCOL, FUEL SOOT) (SUB FOR AT178843) (AT178840 NO LONGER AVAILABLE FOR SERVICE - SUB AT180333)
	AT180333	KIT	1		STANDARD ENGINE, 4 OZ BOTTLE (10 PER PACKAGE) (SAME AS AT178840) (SUB FOR AT180335)
	.....	KIT	1		COMPREHENSIVE ENGINE W/TBN (EXTENDED DRAIN) (12 PER PACKAGE)(SAME AS AT178840 PLUS TBN) (AT178842 NO LONGER AVAILABLE FOR SERVICE - SUB AT180334)
	AT180334	KIT	1		COMPREHENSIVE ENGINE W/TBN (EXTENDED DRAIN) 4 OZ BOTTLE (10 PRT PACKAGE) (SAME AS AT178842)
	AT303189	KIT	1		COMPREHENSIVE HYDRAULIC & HYDROSTATIC SYSTEMS, 4 OZ BOTTLE (10 PER PACKAGE) (REQUIRES USE OF A SAMPLING VALVE FOR ACCURATE RESULTS) (SUB FOR AT178844)
	IPSKIT3	PUMP	1		OIL EXTRACTION (1 PER PACKAGE)(CAN BE USED WITH AT180333, AT180334, AND AT180335 KITS TO EXTRACT OIL SAMPLE)
	DS0345	TUBE	1		500'ROLL (USED WITH IPSKIT3 PUMP TO EXTRACT SAMPLE)
	DS0346	TUBE	1		100' ROLL (USED WITH IPSKIT3 PUMP TO EXTRACT SAMPLE)

FLUID ANALYSIS PRODUCTS (COOLSCAN PLUS TEST KIT)

T135475 -UN-15NOV00



T135475

KEY	PART NO.	PART NAME	QTY	SERIAL NO.	REMARKS
1	AT183016	KIT	1		COOLANT ANALYSIS (6 PER PACKAGE)(TESTS FREEZE POINT, ° ANTIFREEZE, PH, RESERVE ALKALINITY, NITRITE, MOLYBDATE, SILICATE, VISUAL ASSESSMENT & CORROSION METALS (IRON, COPPER, ALUMINUM & LEAD))

FLUID ANALYSIS PRODUCTS (DIESELSCAN TEST KIT)

T135476 -UN-15NOV00



T135476

KEY	PART NO.	PART NAME	QTY	SERIAL NO.	REMARKS
1	AT180344	KIT	1		DIESEL ANALYSIS (6 PER PACKAGE)(USED TO VERIFY TYPE, SUITABILITY FOR COLD TEMPERATURE OPERATIONS, CLEANLINESS, WATER CONTENT AND IF FUEL IS WITHIN ASTM SPECIFICATIONS. CHECKS API GRAVITY, VISCOSITY AT 40C, SULFUR, CETANE INDEX, DISTILLATION, CLOUD POINT, POUR POINT AND COLD FILTER PLUGGING POINT.

COOLANT CONDITIONER AND ENGINE PART LUBRICANTS

RGP4314 -UN-01JAN94

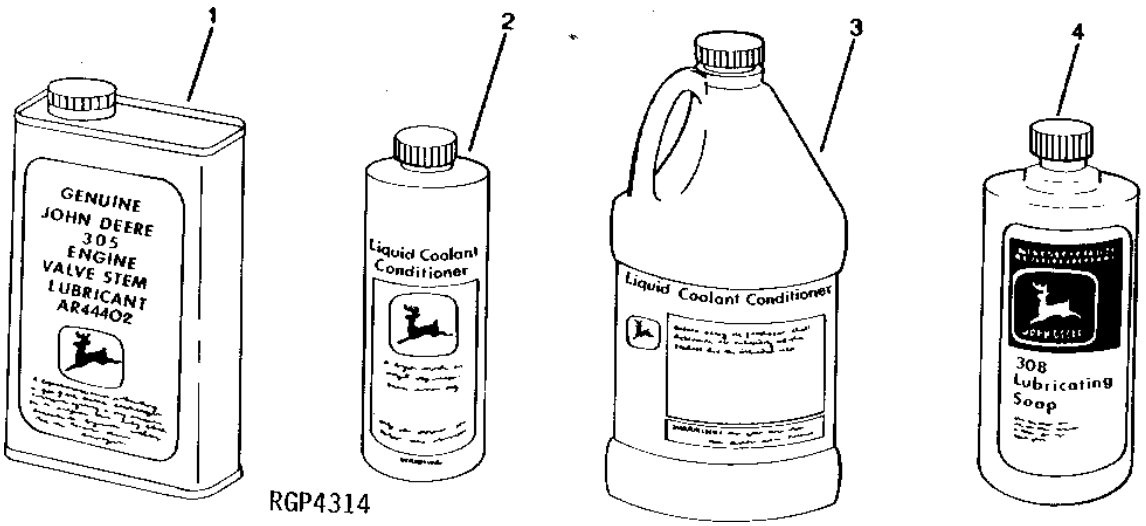

VALVE STEM LUBRICANT

KEY	PART NO.	PART NAME	QTY	SERIAL NO.	REMARKS
1	AR44402	OIL	1		0.9 L (1 QT.)

COOLANT CONDITIONER

KEY	PART NO.	PART NAME	QTY	SERIAL NO.	REMARKS
2	TY16004	ENGINE COOLANT CONDITIONER	1		0.472 L (16 OZ.) (PHOSPHATE - FREE)
3	TY16005	ENGINE COOLANT CONDITIONER	1		1.9 L (1/2 GAL.) (PHOSPHATE - FREE)

OTHER LUBRICANTS

KEY	PART NO.	PART NAME	QTY	ENGINE SERIAL NO.	REMARKS
4	AR54749	LUBRICANT	1		0.9 L (1 QT.)
	AT66865	LUBRICANT	1		(ELECTRICAL CONNECTIONS) (NOT SHOWN)

KITS
(NOT ILLUSTRATED)

KEY	PART NO.	PART NAME	QTY	ENGINE SERIAL NO.	REMARKS
..	AR41785	KIT	1		CONTAINS 0.9 L (1 QT.) (OFF-SEASON STORAGE)
..	AR21969	KIT	1		(DUST CAP/COVER KIT)
..	DS0251	KIT	1		(COOLANT SCAN TEST)
..	IPSKIT1	KIT	1		(OIL SCAN TEST)
..	DS0557	VALVE	1		(SAMPLING SYSTEM)
..	TY16423	LEVEL GAUGE	1		(COOLANT EYE - FILL/FLUSHING)

FLAT FACE O-RING SEAL KIT
(NOT ILLUSTRATED)

KEY	PART NO.	PART NAME	QTY	SERIAL NO.	REMARKS
1	T77814	O-RING	1		(SIZE -4) KIT O-RING QUANTITY 10
2	T77613	O-RING	1		(SIZE -6) KIT O-RING QUANTITY 12
3	T77857	O-RING	1		(SIZE -8) KIT O-RING QUANTITY 12
4	T77932	O-RING	1		(SIZE -10) KIT O-RING QUANTITY 12
5	T77858	O-RING	1		(SIZE -12) KIT O-RING QUANTITY 12
6	T76938	O-RING	1		(SIZE -16) KIT O-RING QUANTITY 12
7	T78612	O-RING	1		(SIZE -20) KIT O-RING QUANTITY 5
8	T78784	O-RING	1		(SIZE -24) KIT O-RING QUANTITY 5
9	AT85197	O-RING KIT	1		INCLUDES ALL O-RINGS LISTED 1-8

DUST CAP WITH COVER KIT
(NOT ILLUSTRATED)

KEY	PART NO.	PART NAME	QTY	ENGINE SERIAL NO.	REMARKS
..	AR21969	KIT	1		

ENGINE COOLING FLUID

TP6956 -UN-01JAN94



KEY	PART NO.	PART NAME	QTY	SERIAL NO.	REMARKS
1	DD14134	FLUID	1		(A) 5L, (1.3 GAL.)
	DD14345	FLUID	1		(A) 20L, (5.3 GAL.)
	DD14136	FLUID	1		(A) 60L, (15.9 GAL.)
	DD14346	FLUID	1		(A) 210L, (52.5 GAL.)

(A) EITHER PART ACCEPTABLE. CHECK LOCAL AVAILABILITY.

ENVIRONMENTAL DRAIN KIT

T202090 -UN-10AUG04

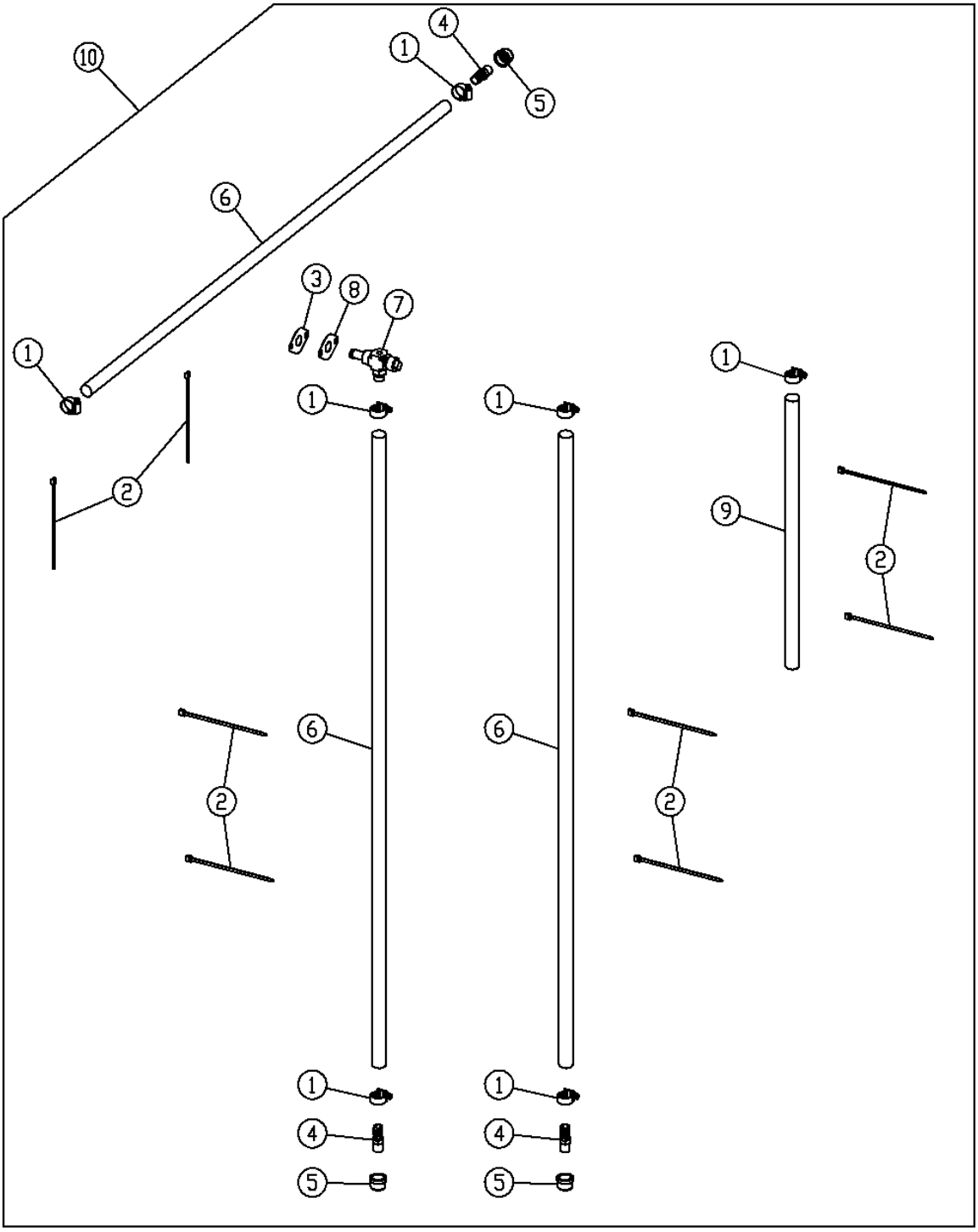

T202090

ENVIRONMENTAL DRAIN KIT

KEY	PART NO.	PART NAME	QTY	SERIAL NO.	REMARKS
1	AR21837	CLAMP	7		
2	R44302	TIE BAND	8		
3	T116604	GASKET	1		
4	H23196	FITTING	3		
5	15H3	FITTING	3		
6	.....	BULK HOSE	1		(MAKE FROM T60811 BULK MATERIAL, CUT TO LENGTH)
7	RE507950	DRAIN VALVE	1		
8	T196749	ADAPTER	1		(ALSO ORDER T116604)
9	.....	BULK HOSE	1		(MAKE FROM M87571 BULK MATERIAL, CUT TO LENGTH)
10	**AT210490**	**KIT**	**1**		**(WHOLEGOODS) (ENVIRONMENTAL DRAIN)**

BATTERIES,BATTERY CABLES AND BATTERY CLAMPS

T192934 -UN-10JUL03

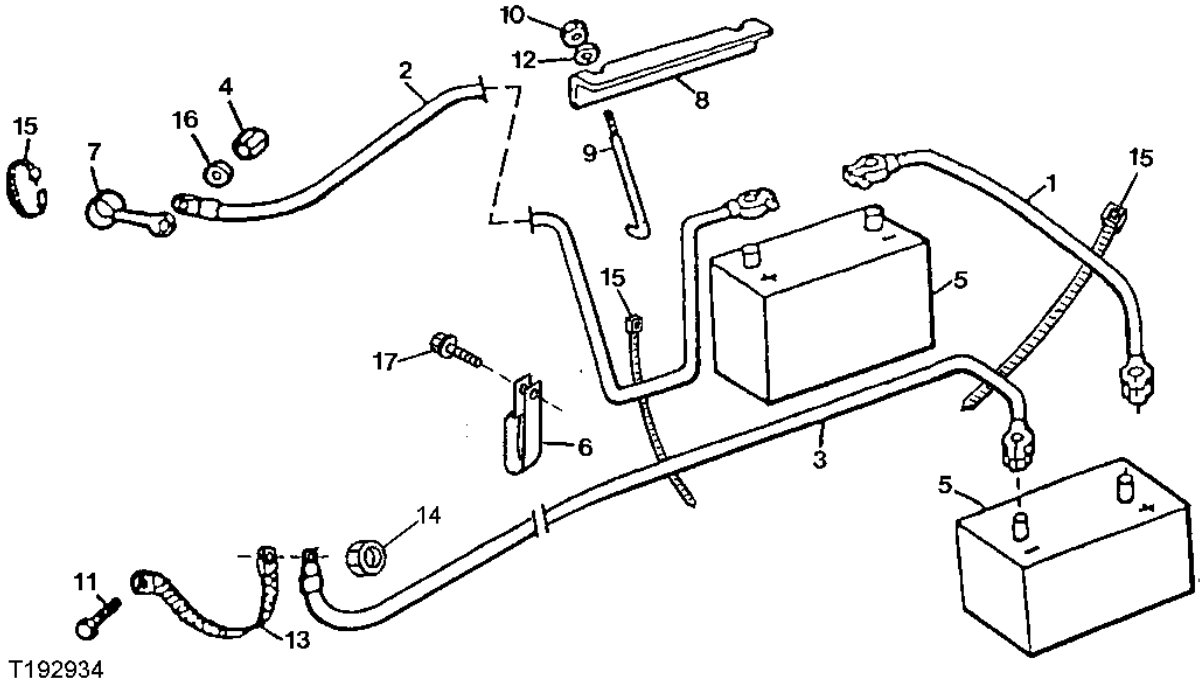

KEY	PART NO.	PART NAME	QTY	SERIAL NO.	REMARKS
1	AT209375	CABLE	1		(1400 CCA) (ALSO ORDER (2) TY15733) (SUB FOR AT202813)
2	AT209421	CABLE	1		(1400 CCA) (ALSO ORDER TY15733) (SUB FOR AT202812)
3	AT209376	CABLE	1		(1400 CCA) (ALSO ORDER TY15733) (SUB FOR AT202814)
4	T174530	NUT	1		
5	TY25803	DRY CHARGED BATTERY	2		(750 CCA) (ALSO ORDER (2) TY15733) (SUB FOR TY21766)
	TY23020	DRY CHARGED BATTERY	2		(1400 CCA) (ALSO ORDER (2) TY15733)
6	AH77869	CLIP	1		
7	T134104	COVER	1		
8	T121288	ANGLE	2		(750 CCA) (SUB FOR T158577)
	T162019	CLAMP	2		(1400 CCA) (SUB FOR T173559)
9	T79471	HOOK BOLT	4		(750 CCA)
	T213611	HOOK BOLT	4		(1400 CCA)
10	14M7396	LOCK NUT	4		M8
11	19M7784	SCREW	3		M10 X 20
12	24M7298	WASHER	4		8.400 X 25 X 2 MM
13	R36545	GROUND CABLE	1		
14	14H1040	NUT	1		1/2", (STARTER STUD)
15	H77698	TIE BAND	3		
16	24M7240	WASHER	1		13 X 25 X 3 MM
17	19H3771	SCREW	1		3/8" X 1"

BATTERY DISCONNECT SWITCH AND CABLE

T193847 -UN-15AUG03

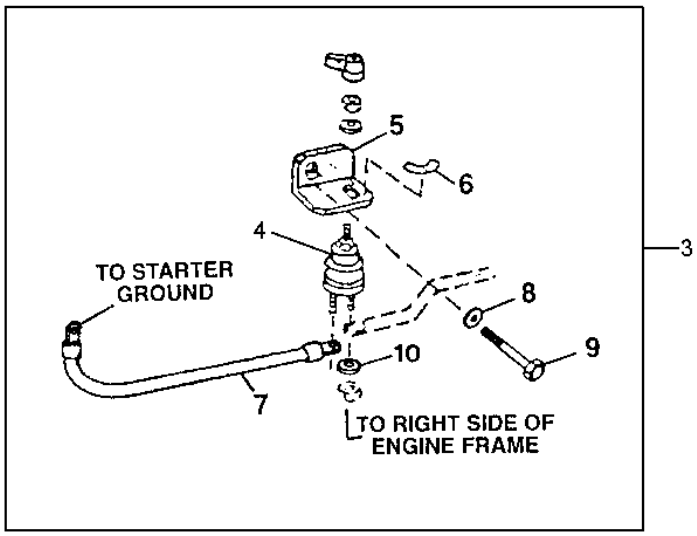

T193847

KEY	PART NO.	PART NAME	QTY	SERIAL NO.	REMARKS
3	AT206980	KIT	1		
4	AT41188	SWITCH	1		
5	T151139	BRACKET	1		
6	T42199	LABEL	1		
7	AT202815	CABLE	1		
8	24M7226	WASHER	1		13 X 35 X 5 MM
9	19M7788	SCREW	1		M12 X 25
10	24M7239	WASHER	2		10.700 X 21 X 2.500 MM

ALTERNATOR, MOUNTING BRACKETS, BELT AND BELT TENSIONER (55 AMP)

T198638 -UN-23APR04

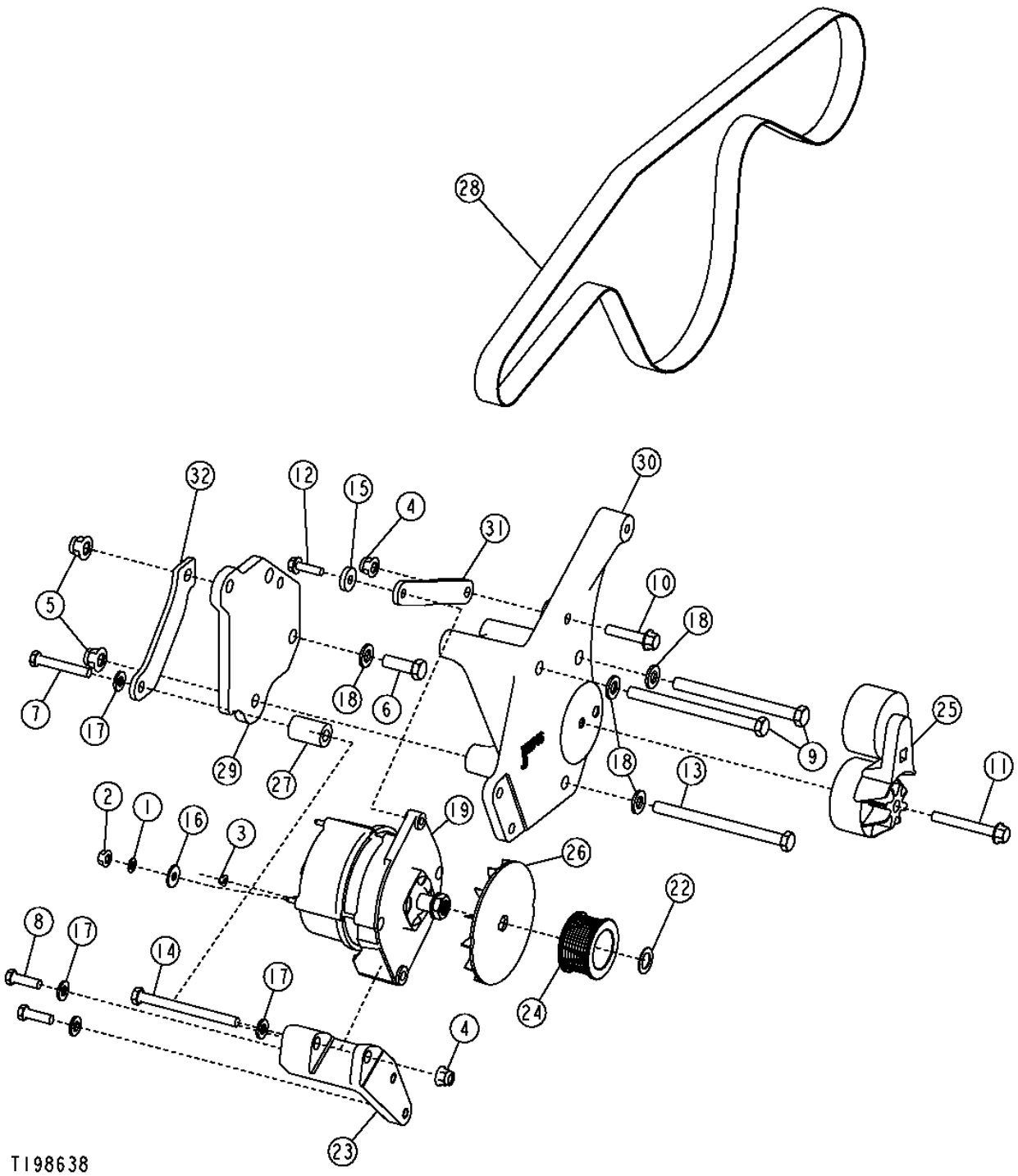

ALTERNATOR, MOUNTING BRACKETS, BELT AND BELT TENSIONER (55 AMP)

KEY	PART NO.	PART NAME	QTY	SERIAL NO.	REMARKS
1	12M7032	LOCK WASHER	1		8.400 MM
2	14M7298	FLANGE NUT	1		M8
3	14M7375	FLANGE NUT	1		
4	14M7400	LOCK NUT	2		M10
5	14M7401	LOCK NUT	2		
6	19H2993	CAP SCREW	1		1/2" X 1-1/2"
7	19H3031	CAP SCREW	1		3/8" X 2-1/2"
8	19H3239	CAP SCREW	2		3/8" X 1-1/4"
9	19H3535	CAP SCREW	2		1/2" X 6"
10	19M7806	SCREW	1		M10 X 50
11	19M7810	SCREW	1		M10 X 80, (SUB FOR 12H291)
12	19M7868	SCREW	1		M8 X 30
13	19M7904	CAP SCREW	2		M12 X 160
14	19M8343	CAP SCREW	1		M10 X 120
15	24H1621	WASHER	1		11/32" X 1" X 0.220"
16	24M7207	WASHER	1		8.400 X 24 X 2 MM
17	24M7239	WASHER	4		10.700 X 21 X 2.500 MM
18	24M7240	WASHER	4		13 X 25 X 3 MM
19	TY26045	ALTERNATOR	1		(REMANUFACTURED) (55AMP) (SUB FOR AT221116, AT228217 AND TY6798) (INCLUDES AT163156 AND H144095)
	AT163156	REGULATOR	1		
	H144095	CAPACITOR	1		
22	R39129	THRUST WASHER	1	-585740	
23	R500607	STRAP	1		
24	R501486	PULLEY	1		
25	RE518097	TIGHTENER	1		(SUB FOR RE70535)
26	T158584	FAN	1		
27	T175670	SPACER	1		
28	T178419	V-BELT	1		(1920 MM LONG)
29	T181745	SUPPORT	1		
30	T181746	BRACKET	1		
31	T181758	BRACKET	1		
32	T182353	STRAP	1		

ALTERNATOR REAR COVER
(55 AMP)

TP60229 -UN-19MAR98

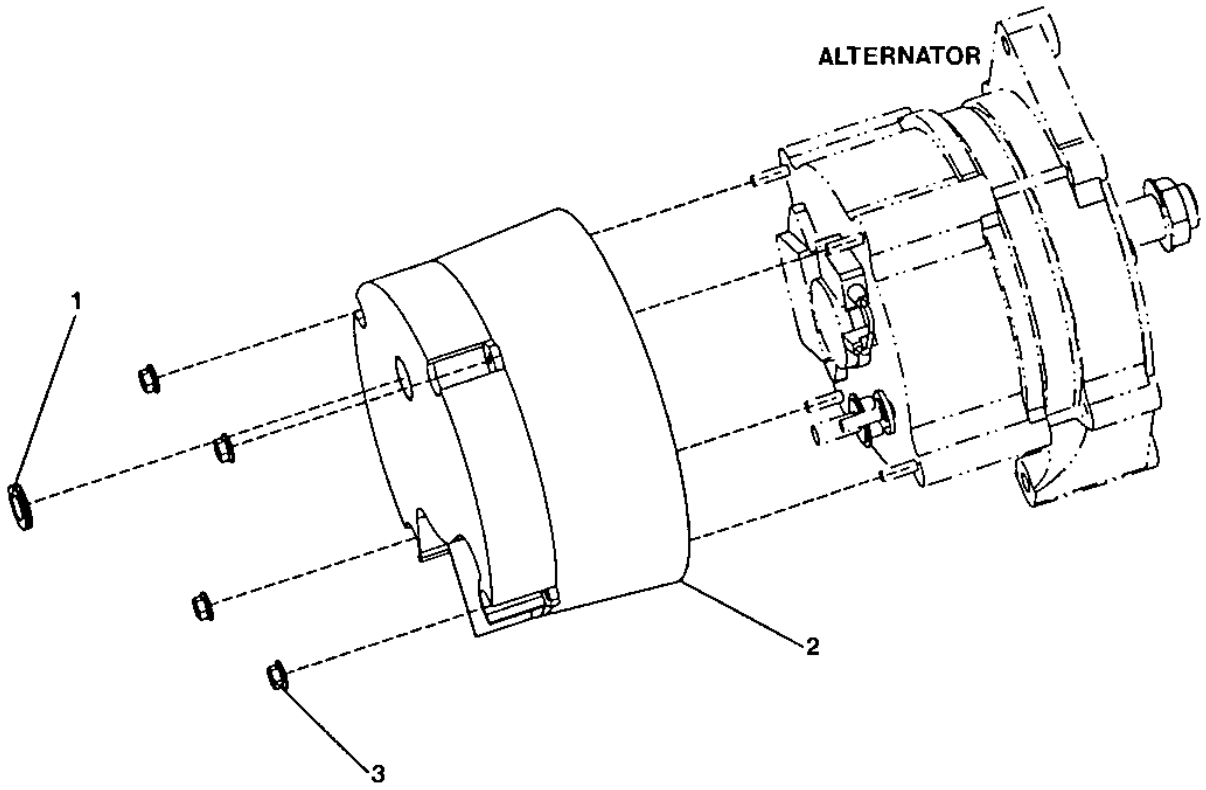

TP60229

ALTERNATOR REAR COVER
(55 AMP)

KEY	PART NO.	PART NAME	QTY	SERIAL NO.	REMARKS
1	R27180	GROMMET	1		
2	AT207952	SCREEN	1		
3	14M7375	FLANGE NUT	4		M5

ALTERNATOR, MOUNTING BRACKETS, BELT AND BELT TENSIONER (80 AMP)

T192085 -UN-16OCT03

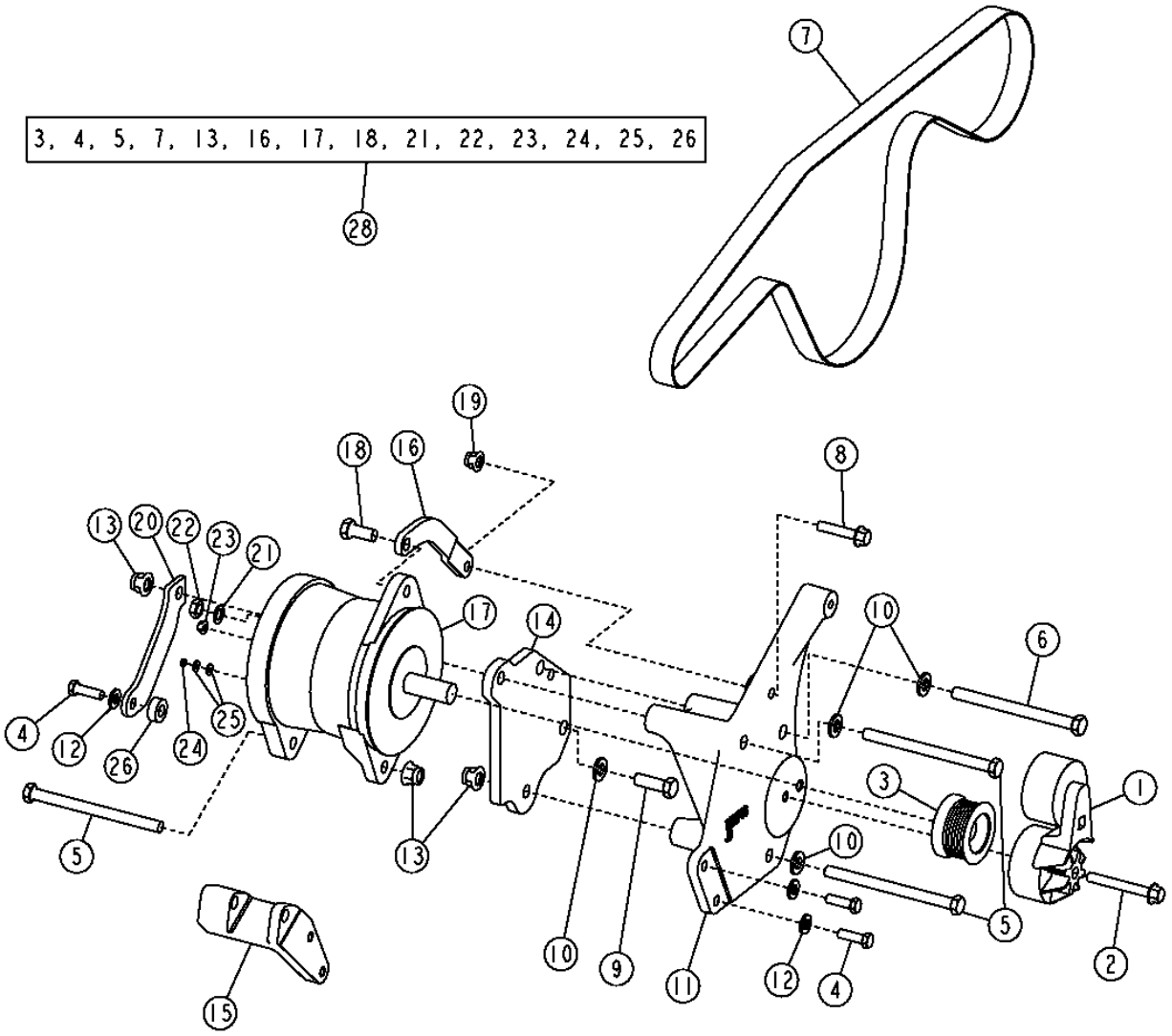

T192085

ALTERNATOR, MOUNTING BRACKETS, BELT AND BELT TENSIONER
(80 AMP)

KEY	PART NO.	PART NAME	QTY	SERIAL NO.	REMARKS
1	RE518097	TIGHTENER	1		(SUB FOR RE70535)
2	19M7810	SCREW	1		
3	T181325	PULLEY	1		
4	19H3239	CAP SCREW	3		3/8" X 1-1/4", (K)
5	19M7904	CAP SCREW	3		M12 X 160
6	19H3535	CAP SCREW	1		1/2" X 6"
7	T178419	V-BELT	1		(1920 MM LONG)
8	19M7806	SCREW	1		M10 X 50
9	19H2993	CAP SCREW	1		1/2" X 1-1/2"
10	24M7240	WASHER	4		13 X 25 X 3 MM
11	T181746	BRACKET	1		
12	24M7239	WASHER	3		10.700 X 21 X 2.500 MM
13	14M7401	LOCK NUT	3		M12
14	T181745	SUPPORT	1		
15	R500607	STRAP	1		
16	T181773	BRACKET	1		
17	TY25955	ALTERNATOR	1		(SUB FOR AT208541 AND TY6794) (REMANUFACTURED)
18	19H3385	CAP SCREW	1		1/2" X 1-1/8"
19	14M7400	LOCK NUT	1		M10
20	T182353	STRAP	1		
21	12H325	LOCK WASHER	1		7/16"
22	14H849	NUT	1		7/16"
23	14M7303	FLANGE NUT	1		M6
24	14M7100	NUT	1		M4
25	24M7146	WASHER	2		4.300 X 12 X 1 MM
26	T175669	SPACER	1		
28	AT226550	KIT	1		(ALTERNATOR AND ATTACHING HARDWARE)

ALTERNATOR REAR COVER
(80 AMP)

TP60231 -UN-11MAR98

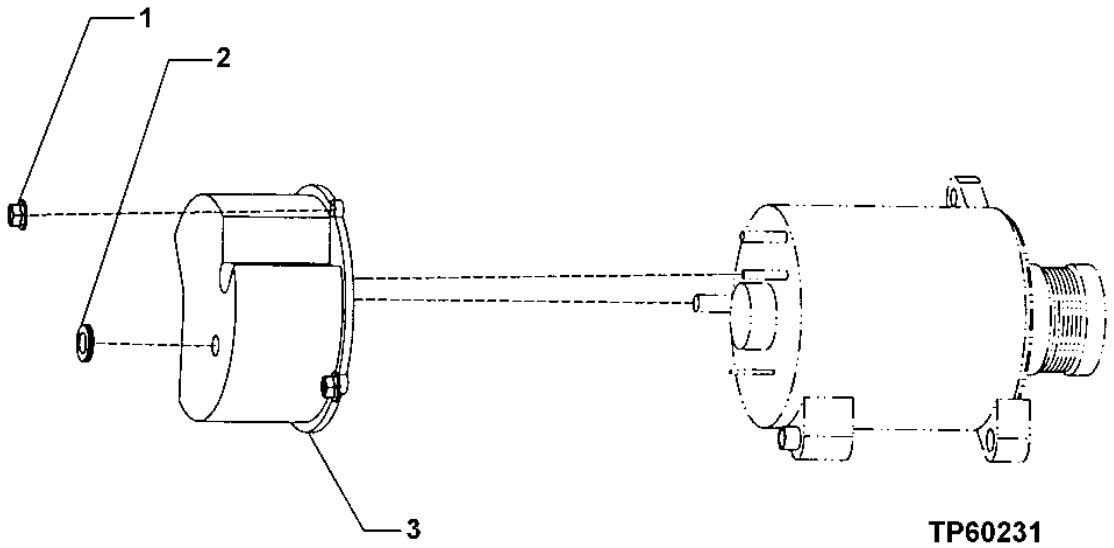

ALTERNATOR REAR COVER
(80 AMP)

KEY	PART NO.	PART NAME	QTY	SERIAL NO.	REMARKS
1	14M7375	FLANGE NUT	4		M5
2	R27180	GROMMET	1		
3	AT160704	SCREEN	1		

HARSH ENVIRONMENT ALTERNATOR (100 AMP)

T194444 -UN-02SEP03

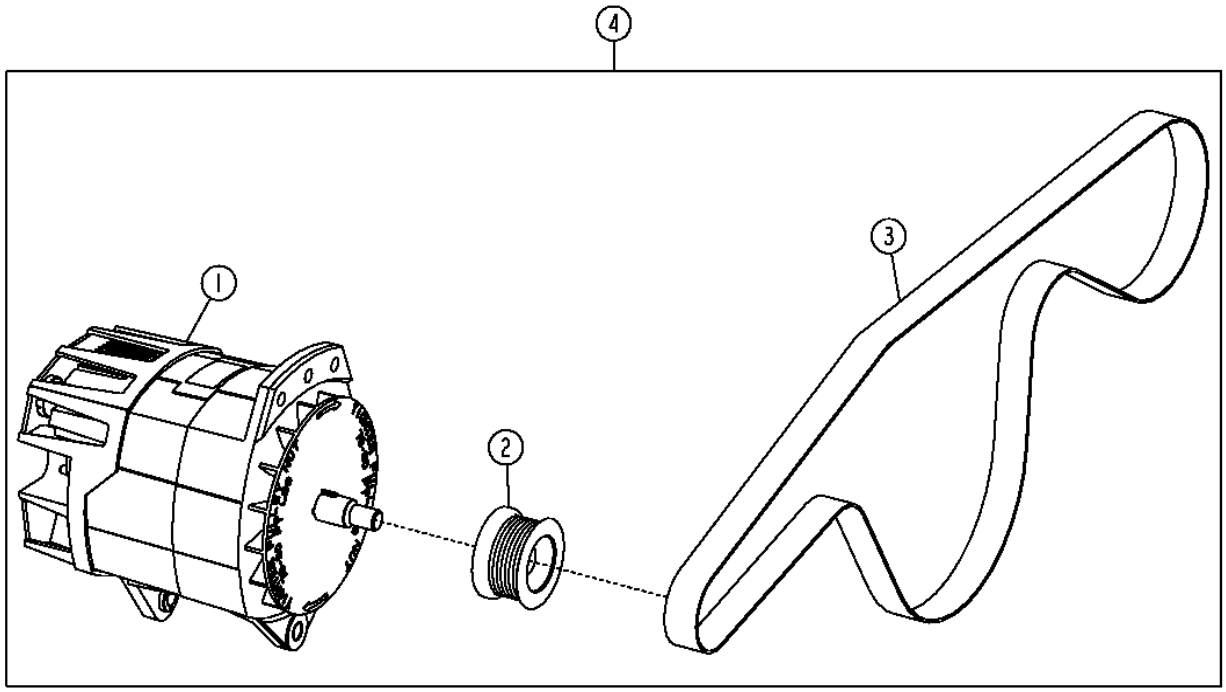

T194444

HARSH ENVIRONMENT ALTERNATOR (100 AMP)

KEY	PART NO.	PART NAME	QTY	SERIAL NO.	REMARKS
1	AT226924	ALTERNATOR	1		
2	R128859	PULLEY	1		
3	R135605	V-BELT	1		(WITH A/C) (SUB FOR R135606)
4	AT303153	ALTERNATOR	1		(HARSH ENVIRONMENT) (WITHOUT A/C)
	AT303154	ALTERNATOR	1		(HARSH ENVIRONMENT) (WITH A/C)

FRONT LIGHTS AND BRACKETS

T210747 -UN-09MAY05

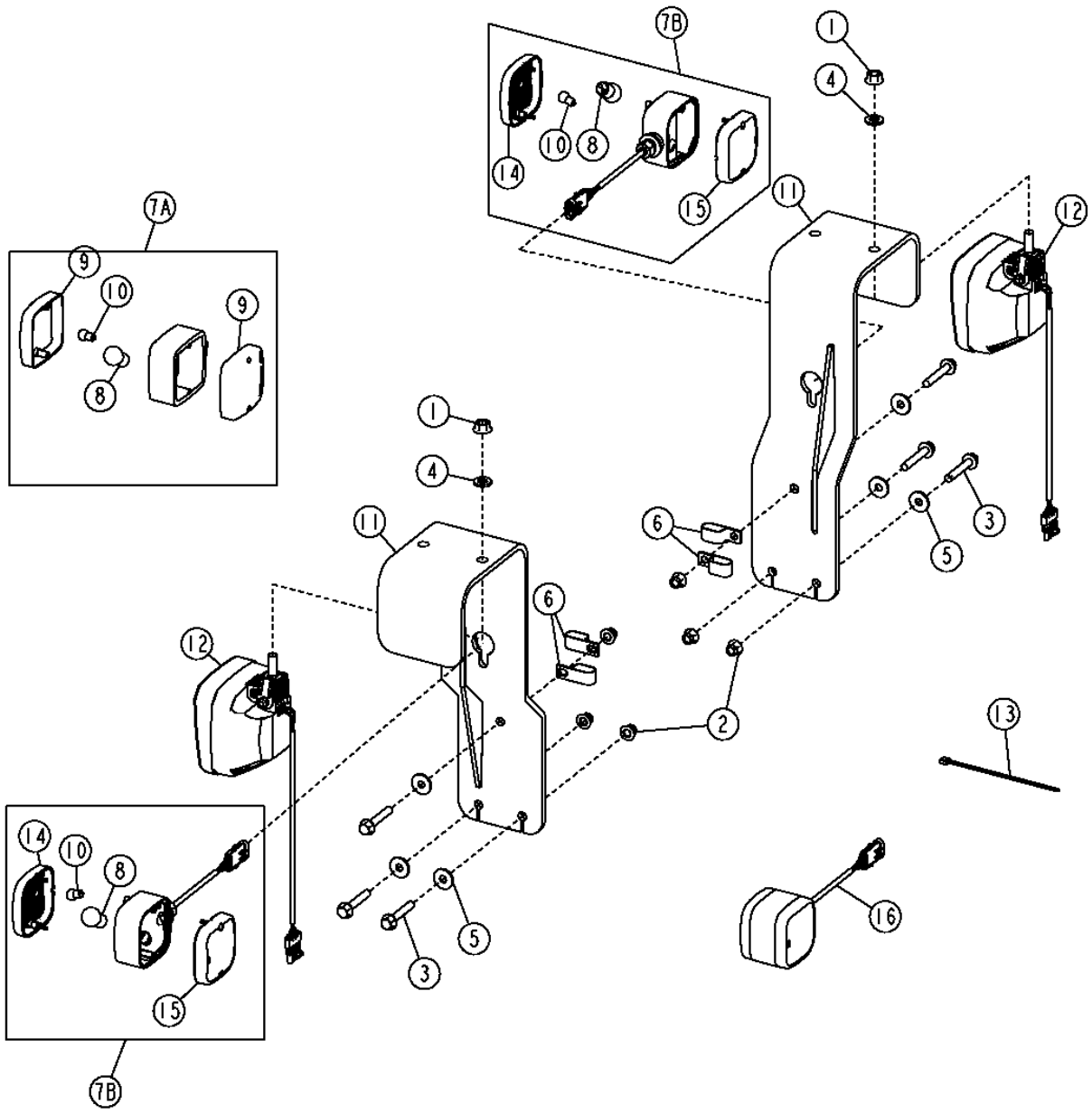

T210747

FRONT LIGHTS AND BRACKETS

KEY	PART NO.	PART NAME	QTY	SERIAL NO.	REMARKS
1	14M7299	FLANGE NUT	2		M12
2	14M7400	LOCK NUT	6		M10
3	19M7806	SCREW	6		M10 X 50
4	24M7240	WASHER	2		13 X 25 X 3 MM
5	24M7296	WASHER	6		10.500 X 30 X 2.500 MM
6	AH97280	CLIP	4		
7A	.....	LAMP	2	-597322	(SUB AT309550) (AT206878 NO LONGER AVAILABLE) (INCANDESCENT)
	AT222365	TURN SIGNAL LAMP	2		(HARSH ENVIRONMENT)
7B	AT309550	LAMP	2	597323-	(INCANDESCENT)
8	AT210333	BULB	1		
9	.....	LENS	2	-597322	(SUB AT309550) (T176372 NO LONGER AVAILABLE)
10	U44537	BULB	1		
11	AT210246	SUPPORT	2		
12	AT227260	SIDE LIGHT	2		(STANDARD)
	AT135758	BULB	2		
	AT225086	LAMP	2		(HARSH ENVIRONMENT)
13	R44302	TIE BAND	5		
14	T208364	LENS	1	597323-	
15	T208365	LENS	1	597323-	
16	AT307090	LAMP	1		(LED)

MEMORANDA

DOME LIGHT AND DOOR LIGHT SWITCH

TP48466 -UN-14SEP96

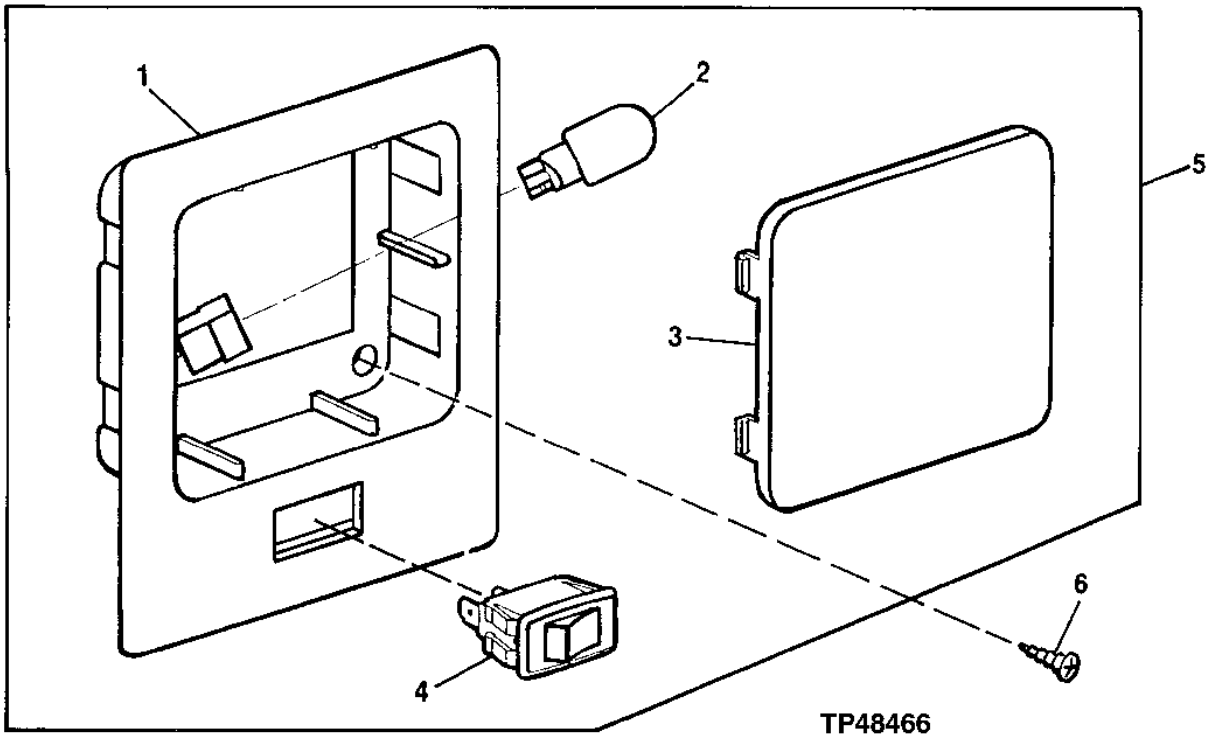

KEY	PART NO.	PART NAME	QTY	SERIAL NO.	REMARKS
1	.....	HOUSING	1		(SUB AT224923)
2	AT173355	BULB	1		
3	.....	LENS	1		(SUB AT224923)
4	RE48838	TOGGLE/ROCKER SWITCH	1		
5	AT224923	LAMP	1		
6	T134895	SELF-LOCKING SCREW	2		(SUB FOR 21M7310)

STOP, TURN AND TAIL LIGHT

T137967 -UN-12FEB01

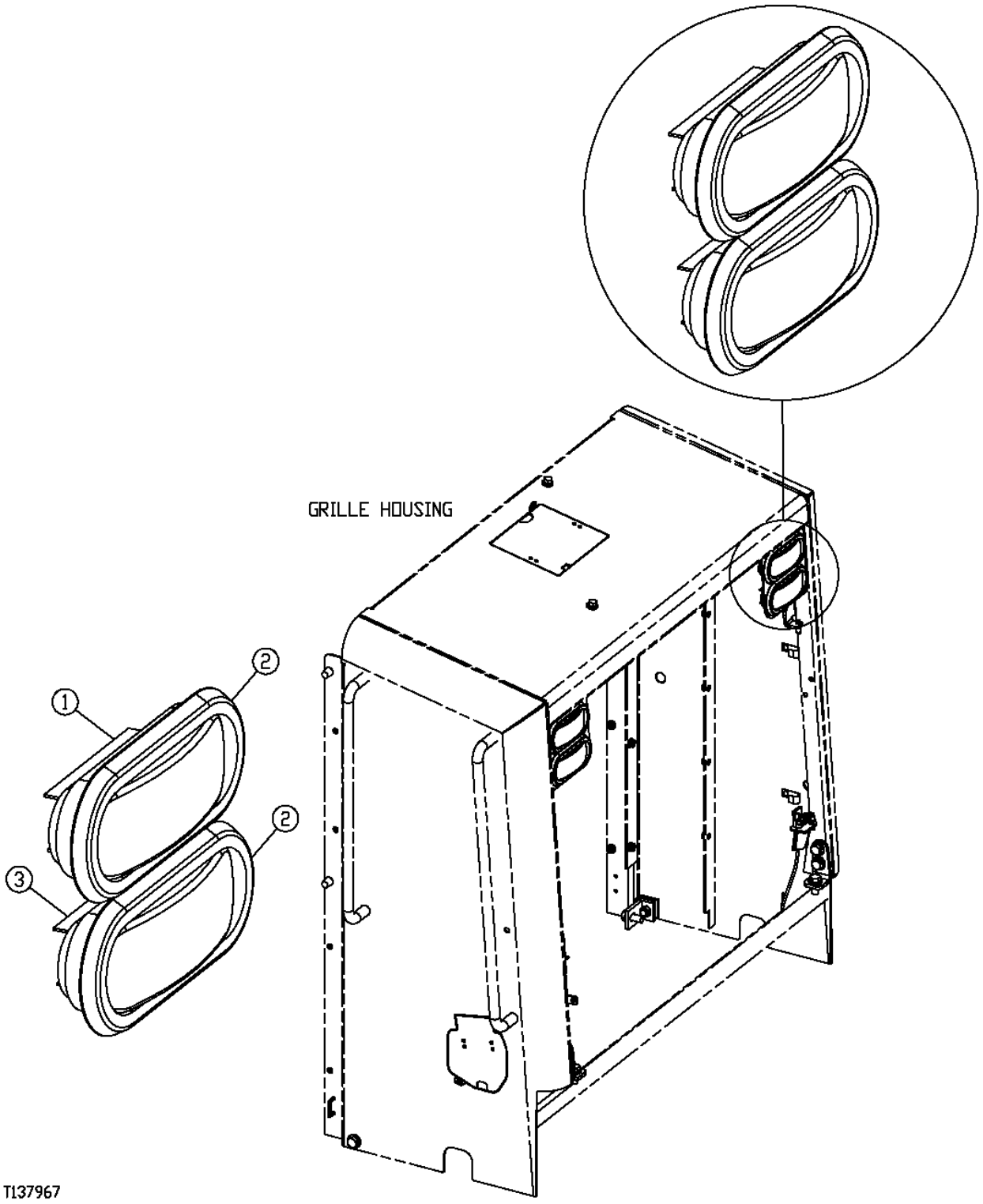

STOP, TURN AND TAIL LIGHT

KEY	PART NO.	PART NAME	QTY	SERIAL NO.	REMARKS
1	T178947	TURN SIGNAL LAMP	2		STANDARD
	T180074	TURN SIGNAL LAMP	2		HEAVY-DUTY (LED)
2	T178948	RETAINER	4		
3	T178946	TAIL LAMP	2		STANDARD, STOP
	T180075	TAIL LAMP	2		HEAVY-DUTY, STOP (LED)
4	AT223807	WIRING HARNESS	1		LED JUMPER (USE WITH HEAVY DUTY) (NOT ILLUSTRATED)

FRONT AND REAR WORK LAMP

TP62820 -UN-08JUN00

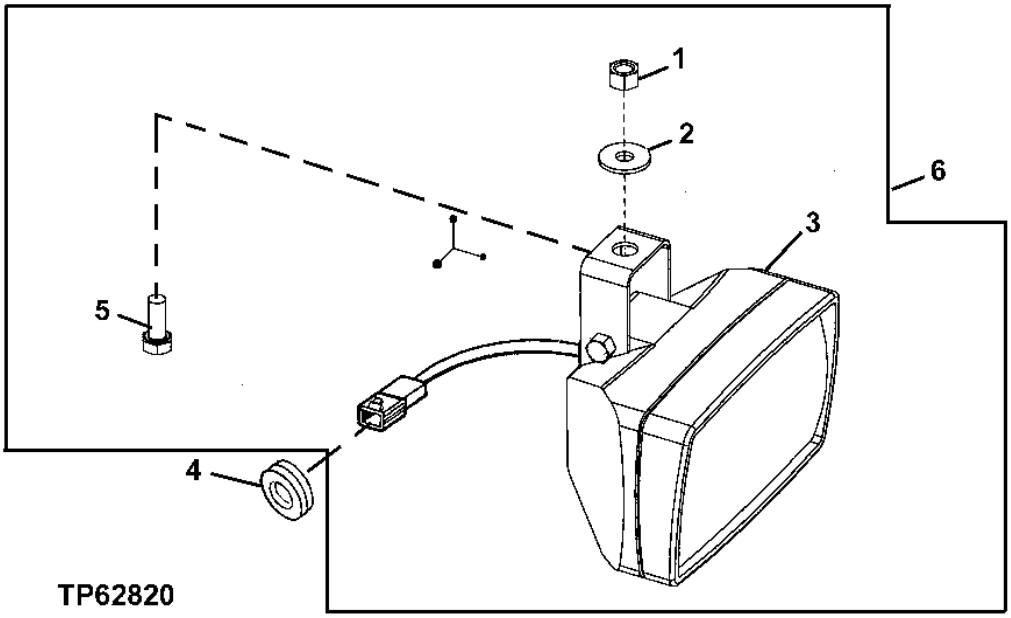

KEY	PART NO.	PART NAME	QTY	SERIAL NO.	REMARKS
1	14M7166	LOCK NUT	1		M8
2	24M7207	WASHER	1		8.400 X 24 X 2 MM
3	.....	LAMP	1		(SUB AT208435)
	AT135758	BULB	1		(NOT ILLUSTRATED)
4	T65643	GROMMET	1		
5	19M7139	CAP SCREW	1		M8 X 20
6	AT208435	LAMP	1		(STANDARD)
	AT226338	FLOODLAMP	1		(HARSH ENVIRONMENT)
7	R44302	TIE BAND	1		(NOT ILLUSTRATED)

ROCKER SWITCHES AND PLUG ASSEMBLY (SERIAL NO. -590067)

TP55870 -UN-20FEB98

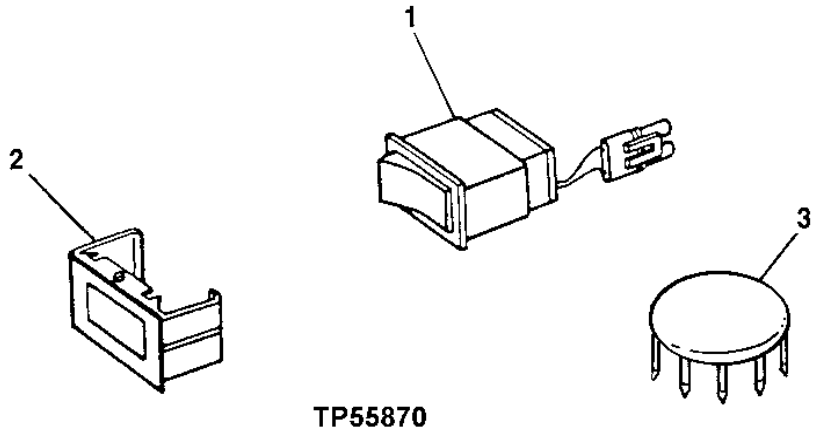

TP55870

KEY	PART NO.	PART NAME	QTY	SERIAL NO.	REMARKS
1	AT203500	TOGGLE/ROCKER SWITCH	1		CAB WORK LIGHT
	AT202786	SWITCH	1		FOUR-WAY FLASHER
	RE55478	TOGGLE/ROCKER SWITCH	1		AIR CONDITIONING SHUTOFF
	AT202787	SWITCH	1		DRIVE LIGHT
	AT208630	SWITCH	1		PARK BRAKE RELEASE
	AT202842	TOGGLE/ROCKER SWITCH	1		START AID
	AT202795	SWITCH	1		BOOM DOWN/PILOT ENABLE
	AT202796	SWITCH	1		CLUTCH CUTOFF
	AT202797	SWITCH	1		AUTOMATIC TRANSMISSION
	AT202940	CUTTING EDGE	1		
	AT202788	SWITCH	1		ROTARY BEACON
	AT225952	TOGGLE/ROCKER SWITCH	1		PIN DISCONNECT
	AT202800	SWITCH	1		
	AT202958	SWITCH	1		AXLE DISCONNECT
	AT207709	SWITCH	1		REAR WINDOW DEFROST
	AT209123	SWITCH	1		FRONT WINDOW DEFROST
	AT220517	SWITCH	1		RIDE CONTROL WITH LIGHT, (SUB FOR AT202798)
	AT222366	SWITCH	1		(HARSH ENVIRONMENT) (BOOM KICKOUT, RETURN TO CARRY, RETURN TO DIG)
2	M115279	PLUG	1		BEZEL AND PLUG ASSEMBLY
3	T152230	PLUG	4		(USED TO PLUG UP HOLES IN CAB ROOF WITHOUT WORKLIGHTS)
	H113924	PLUG	1		(SUB FOR T161380) (USED TO PLUG ROTARY LPM SWITCH HOLE IN RIGHT PANEL)
	T182880	PLUG	1		(USED TO PLUG 12V POWER PLUG HOLE IN RIGHT-PANEL WALL)
4	AT300945	KIT	1		(HARSH ENVIRONMENT HARNESS) (NOT ILLUSTRATED)

PIN DISCONNECT HARNESS

T195055 -UN-09OCT03

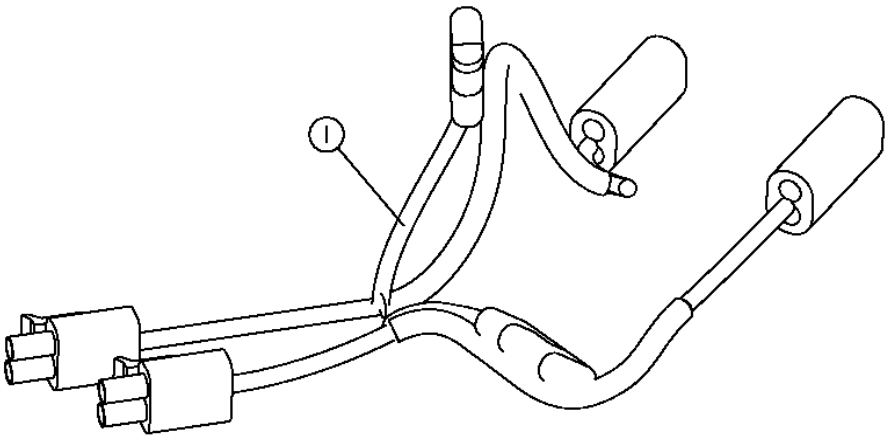

KEY	T195055 PART NO.	PART NAME	QTY	SERIAL NO.	REMARKS
1	AT202824	WIRING HARNESS	1		(INCLUDES AR94101 ONE AMP DIODE)
	AT221629	WIRING HARNESS	1		(HARSH ENVIRONMENT)

ENGINE COOLANT TEMPERATURE SENDER AND ENGINE OIL PRESSURE SENSOR

T157981 -UN-25JUL02

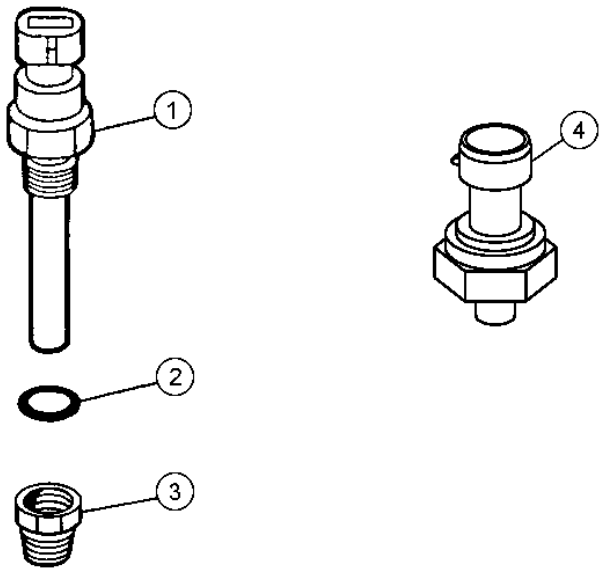

T157981

KEY	PART NO.	PART NAME	QTY	ENGINE SERIAL NO.	REMARKS
1	RE151433	COOLANT TEMPERATURE SENSOR	1		
2	R26286	O-RING	1		
3	R71210	ADAPTER	1		
4	AT222377	TRANSDUCER	1	-590067	(ENGINE OIL PRESSURE SENSOR)
	RE167207	PRESSURE SENSOR	1	590068-	(ENGINE OIL PRESSURE SENSOR)

CAB WIRING HARNESS (S.N. -590067)

T159886 -UN-01OCT02

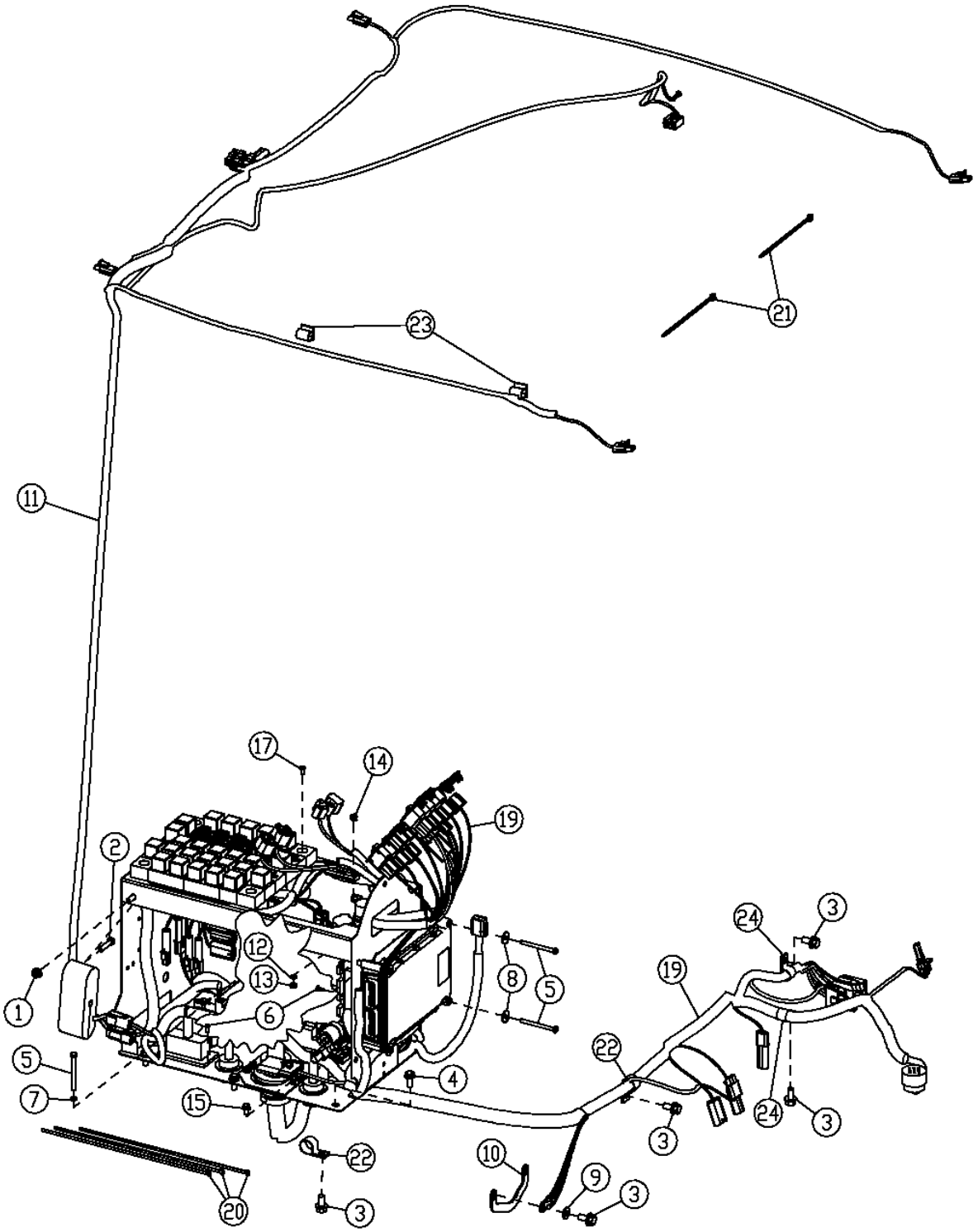

THIS PARTS LISTING IS CONTINUED

CAB WIRING HARNESS (S.N. -590067)

KEY	PART NO.	PART NAME	QTY	SERIAL NO.	REMARKS
1	14M7298	FLANGE NUT	1		M8
2	19M8008	CAP SCREW	1		M8 X 35, (SUB FOR 19M7298)
3	19M7784	SCREW	5		M10 X 20
4	19M7866	SCREW	3		M8 X 20
5	19M8786	SCREW	8		M6 X 70
6	21M7250	SCREW	6		M4 X 12
7	24M7054	WASHER	4		6.400 X 12 X 1.600 MM
8	24M7100	WASHER	4		6.600 X 22 X 2 MM
9	24M7239	WASHER	1		10.700 X 21 X 2.500 MM
10	AP22660	GROUND CABLE	1		
11	AT223869	WIRING HARNESS	1		(CAB ROOF)
	AT226339	CAB WIRING HARNESS	1		(HARSH ENVIRONMENT)
12	12H297	LOCK WASHER	2		1/4"
13	14M7272	NUT	2		M6
14	14M7303	FLANGE NUT	2		M6
15	19M7774	SCREW	4		M6 X 12
17	21M7265	SCREW	4		M5 X 12
19	AT224753	WIRING HARNESS	1		(LOAD CENTER)
	AT224823	WIRING HARNESS	1		(HARSH ENVIRONMENT)
20	H77698	TIE BAND	6		
21	R44302	TIE BAND	4		
22	T102934	CLAMP	2		
23	T182909	CLIP	2		
24	T74416	CLAMP	2		

CAB WIRING HARNESS (S.N. 590068-)

T210760 -UN-27APR05

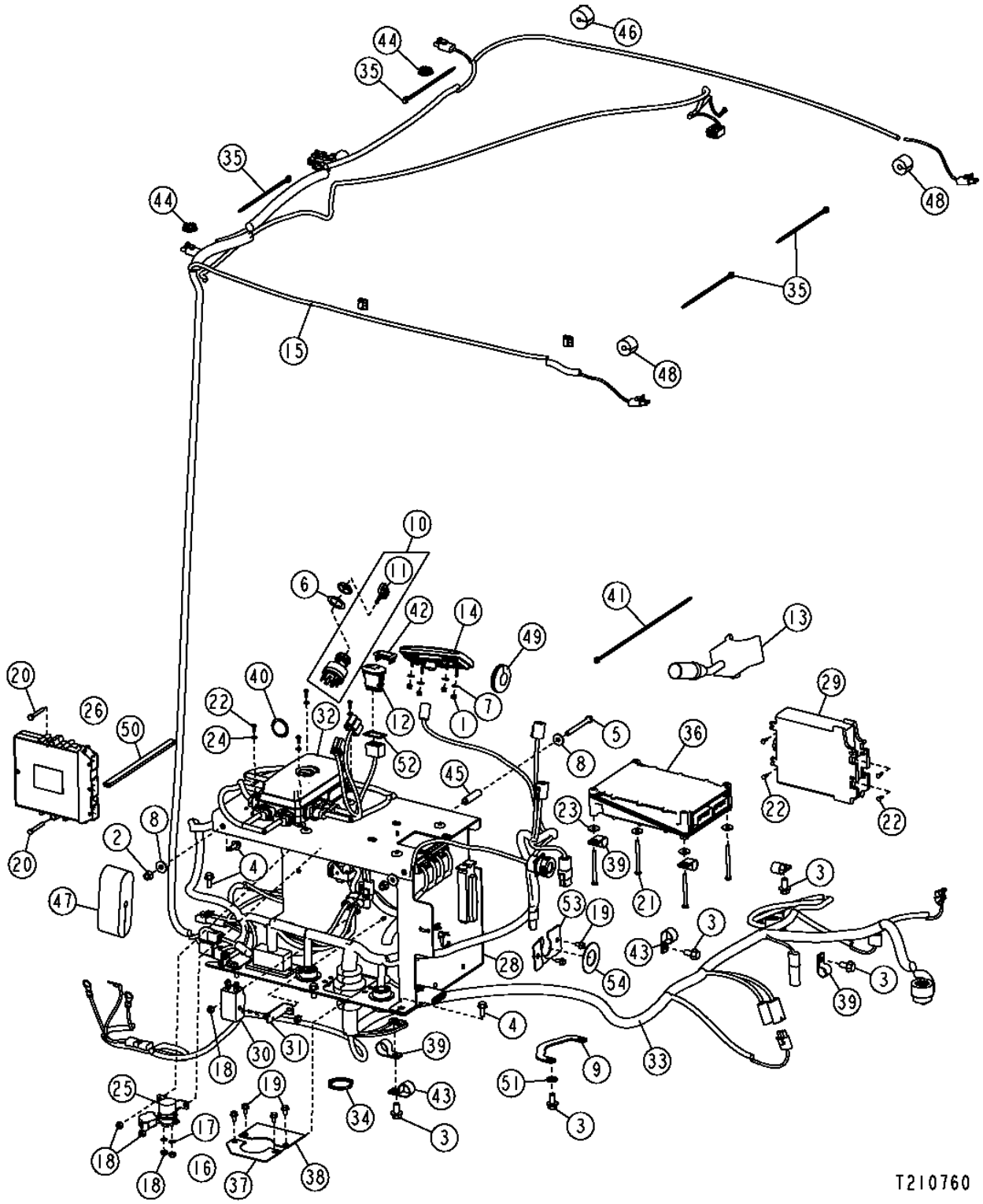

THIS PARTS LISTING IS CONTINUED

CAB WIRING HARNESS (S.N. 590068-)

KEY	PART NO.	PART NAME	QTY	SERIAL NO.	REMARKS
1	14M7360	LOCK NUT	4		M5
2	14M7396	LOCK NUT	2		M8
3	19M7784	SCREW	5		M10 X 20
4	19M7866	SCREW	6		M8 X 20
5	19M8504	CAP SCREW	1		M8 X 80
6	24H1441	WASHER	1		1-1/64" X 1-1/2" X 0.048"
7	24M7054	WASHER	4		6.400 X 12 X 1.600 MM
8	24M7298	WASHER	3		8.400 X 25 X 2 MM
9	AP22660	GROUND CABLE	1		215.900 MM
10	AT195301	SWITCH	1		(IGNITION KEYSWITCH)
11	AT195302	KEY	1		
12	AT202786	SWITCH	1	-593559	(FOUR-WAY FLASHER)
	AT304026	SWITCH	1	593560-	(FOUR-WAY FLASHER)
13	AT210334	SWITCH	1		(TURN SIGNAL SWITCH)
14	AT312110	PUSH SWITCH	1		(SSM) (SUB FOR AT310056)
15	AT300676	WIRING HARNESS	1		(CAB ROOF)
	AT308673	WIRING HARNESS	1		(CAB ROOF) (HARSH ENVIRONMENT)
16	12H297	LOCK WASHER	2		
17	14M7303	FLANGE NUT	2		M6
18	14M7303	FLANGE NUT	4		M6
19	19M7774	SCREW	4		M6 X 12
20	19M8538	CAP SCREW	2		M6 X 45
21	19M8786	SCREW	4		M6 X 70
22	21M7250	SCREW	6		M4 X 12
23	24M7100	WASHER	4		6.600 X 22 X 2 MM
25	AT145341	RELAY	1		(IGNITION RELAY)
26	AT314374	VEHICLE CONTROLLER	1		(FLC CONTROLLER) (SUB FOR AT311902, AT226495)
27	R44342	NUT	1		
28	T196129	BRACKET	1		
	T207717	BRACKET	1		(HARSH ENVIRONMENT)
29	AT316303	TRANSMISSION CONTROLLER	1		(TCU) (SUB FOR AT300098)
30	AT300537	RELAY	1		(STARTER RELAY)
31	T200363	BRACKET	2		
33	AT304790	WIRING HARNESS	1	-593559	(LOAD CENTER)
	AT314323	WIRING HARNESS	1	593560-597797	(LOAD CENTER)
	AT314323	WIRING HARNESS	1	597798-	(ALSO ORDER AT301498 AND 24H1500) (LOAD CENTER)
	AT308677	WIRING HARNESS	1		(HARSH ENVIRONMENT)
34	E73240	NUT	2		
35	R44302	TIE BAND	5		
36	RE522515	ENGINE CONTROLLER	1	-592390	(ECU) (SUB FOR RE518503)
	RE522515	ENGINE CONTROLLER	1	592391-	
37	T181604	PLATE	1		
38	T181605	PLATE	1		
39	T74416	CLAMP	3		
40	T206624	PLUG	2		(SUB FOR GX20510, THIS APPLICATION)
41	H77698	TIE BAND	3		
42	M115279	PLUG	1		
43	T102934	CLAMP	2		
44	T152230	PLUG	2		
45	T167775	BUSHING	1		
46	T182861	PLUG	1		
47	T182862	PLUG	1		
48	T182871	ISOLATOR	2		
49	T46876	GROMMET	1		
50	.....	SEALING TRIM	1		(MAKE FROM T180533 BULK MATERIAL, CUT TO 9.76 INCHES)
51	24M7239	WASHER	1		
52	T211678	SEAL	1	593560-	
53	AT301498	PLATE	1		
54	24H1500	WASHER	1		

CONVERTER, HARNESS, AND POWER PLUG (24 VOLT TO 12 VOLT)(SERIAL NO. -590067)

T158008 -UN-29JUL02

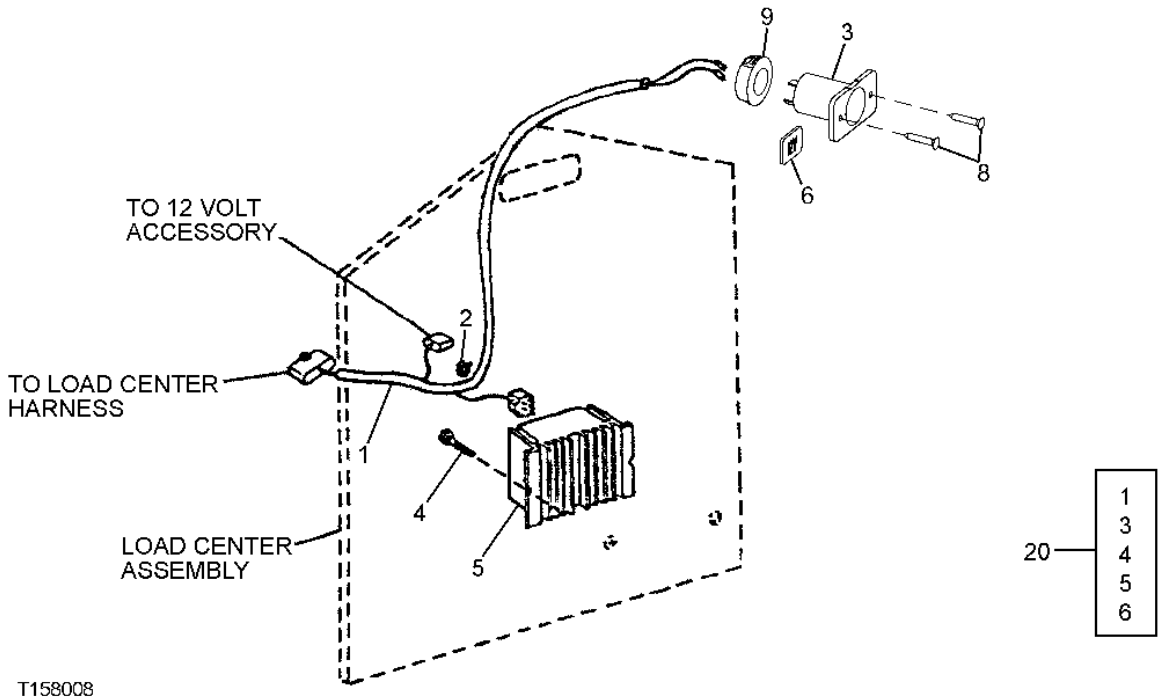

T158008

KEY	PART NO.	PART NAME	QTY	SERIAL NO.	REMARKS
1	AT202935	WIRING HARNESS	1		
2	R44302	TIE BAND	1		
3	AT202831	ELEC. CONNECTOR TERMINAL	1		POWER PLUG
4	21M7250	SCREW	4		M4 X 12
5	AT224894	CONVERTER	1		TEN AMP
	AT224893	CONVERTER	1		FIVE AMP
6	T168160	LABEL	1		TWELVE VOLT
8	37M7030	SCREW	2		
9	T182880	PLUG	1		
20	AT210394	KIT	1		(WHOLEGOODS)(10AMP CONVERTER KIT)

CONVERTER (10 AMP)(24 VOLT TO 12 VOLT)(SERIAL NO. 590068-)

T193985 -UN-22AUG03

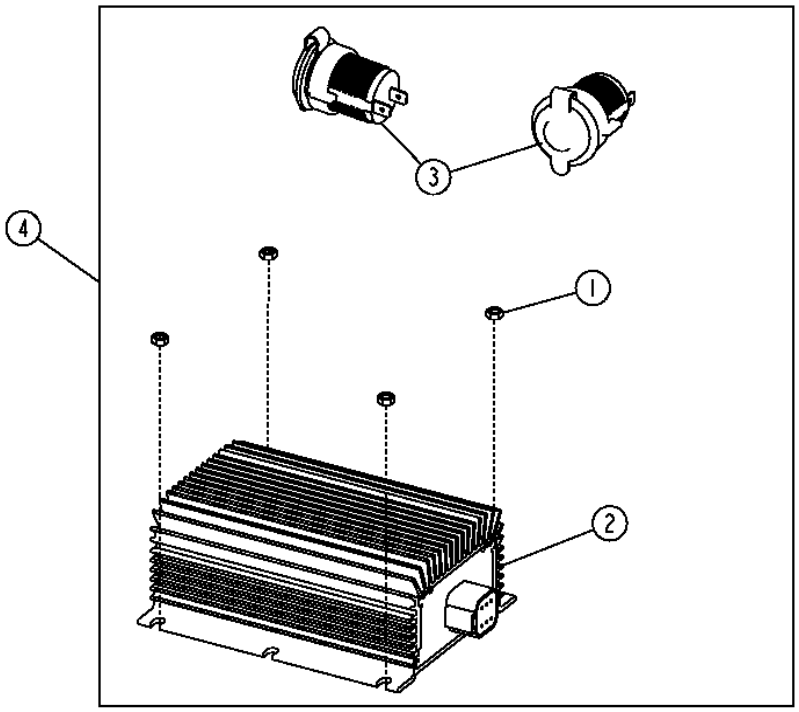

T193985

KEY	PART NO.	PART NAME	QTY	SERIAL NO.	REMARKS
1	14M7100	NUT	4		M4
2	AT224894	CONVERTER	1		(10 AMP)
3	GY20126	SOCKET OUTLET	2		POWER PLUG
4	**AT306828**	**CONVERTER**	**1**		

CONVERTER (5 AMP)(24 VOLT TO 12 VOLT)(SERIAL NO. 590068-)

T193986 -UN-22AUG03

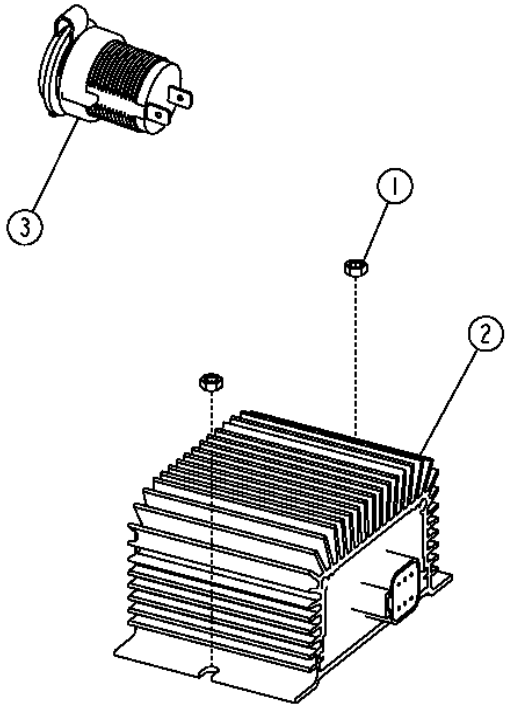

T193986

KEY	PART NO.	PART NAME	QTY	SERIAL NO.	REMARKS
1	14M7100	NUT	2		M4
2	AT224893	CONVERTER	1		(5 AMP)
3	GY20126	SOCKET OUTLET	1		

DOOR-ACTIVATED DOMELIGHT SWITCH

T192974 -UN-13AUG03

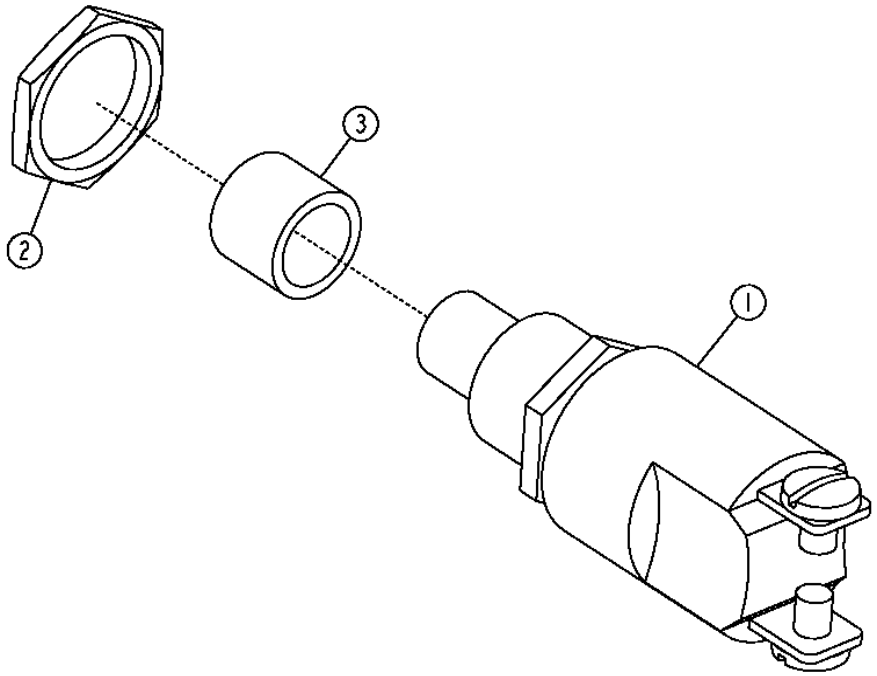

T192974

KEY	PART NO.	PART NAME	QTY	SERIAL NO.	REMARKS
1	RE51234	PUSH SWITCH	1		(CAB ONLY)
2	R44097	NUT	1		
3	T182914	CAP	1		(DOME SWITCH)

MAIN WIRING HARNESS (SERIAL NO. -590067)

T157986 -UN-22AUG02

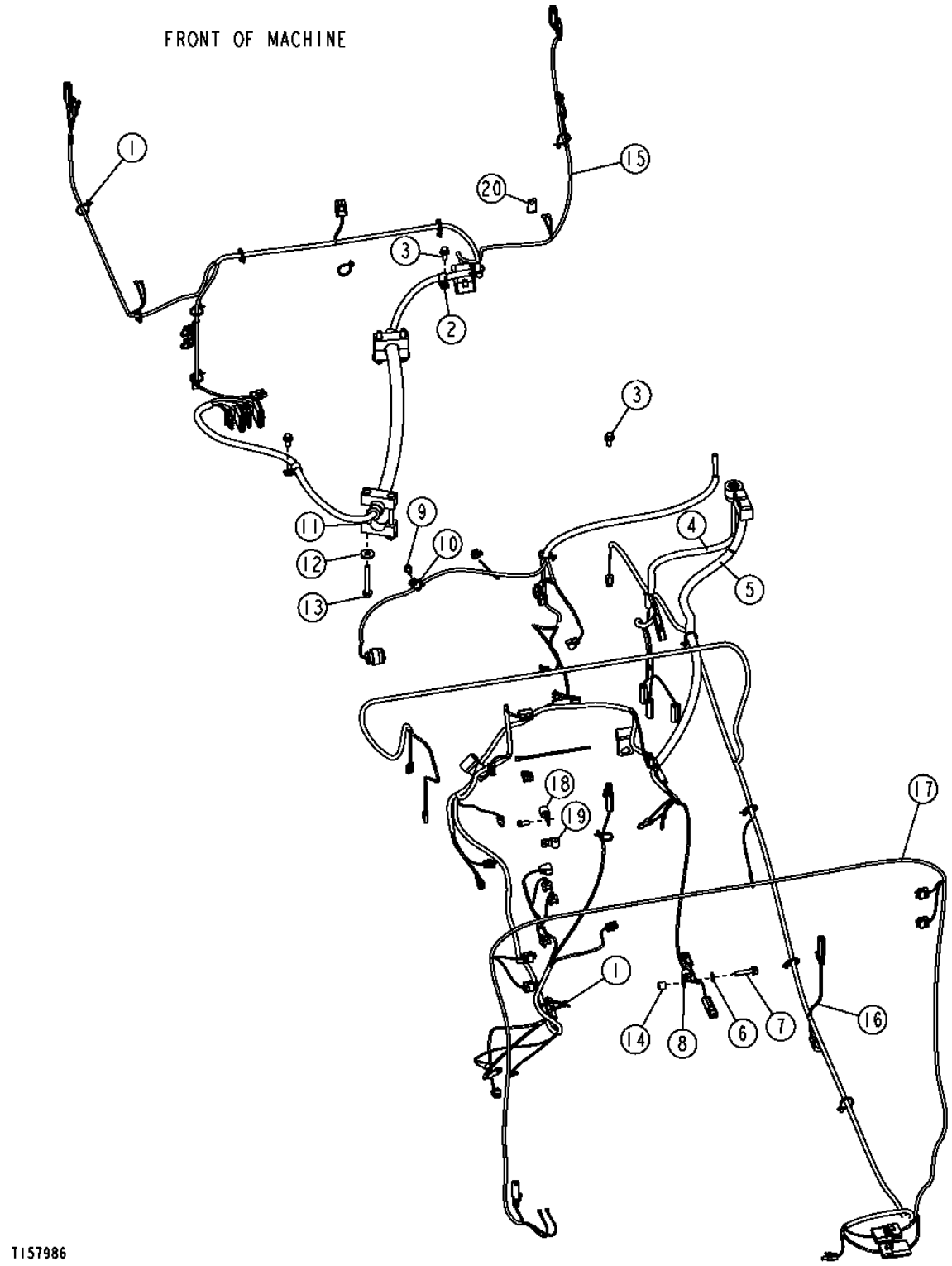

MAIN WIRING HARNESS (SERIAL NO. -590067)

KEY	PART NO.	PART NAME	QTY	SERIAL NO.	REMARKS
1	R44302	TIE BAND	3		
2	T74416	CLAMP	1		(SUB FOR N191985, THIS APPLICATION)
3	19M7784	SCREW	3		M10 X 20
4	AT209463	WIRING HARNESS	1		(TRANSMISSION)
	AT224829	WIRING HARNESS	1		(TRANSMISSION) (HARSH ENVIRONMENT)
5	AT224765	WIRING HARNESS	1		(ENGINE FRAME)
	AT224828	WIRING HARNESS	1		(ENGINE FRAME) (HARSH ENVIRONMENT)
6	24M7239	WASHER	1		10.700 X 21 X 2.500 MM
7	19H3771	SCREW	1		3/8" X 1", (SUB FOR 19H3772, THIS APPLICATION)
8	H75541	CLAMP	1		(SUB FOR R46414, THIS APPLICATION)
9	19M7865	SCREW	1		M8 X 16
10	T75276	CLAMP	3		
11	T67995	CLAMP	4		
12	T29342	WASHER	4		
13	19M7810	SCREW	4		M10 X 80
14	28H3381	SPACER	1		0.493" X 0.675" X 5/8"
15	AT224748	WIRING HARNESS	1		(LOADER FRAME)
	AT301521	WIRING HARNESS	1		(LOADER FRAME) (HARSH ENVIRONMENT)
16	AT228055	WIRING HARNESS	1		(ENGINE)
	AT224826	WIRING HARNESS	1		(ENGINE) (HARSH ENVIRONMENT)
17	AT224879	WIRING HARNESS	1		(REAR FRAME)
	AT304114	WIRING HARNESS	1		(REAR FRAME) (HARSH ENVIRONMENT)
18	T74416	CLAMP	1		
19	T75197	CLAMP	1		
20	AH89557	CLIP	1		
21	T203438	CLAMP	2		(NOT ILLUSTRATED)

MAIN WIRING HARNESS (SERIAL NO. 590068-)

T195083 -UN-15OCT03

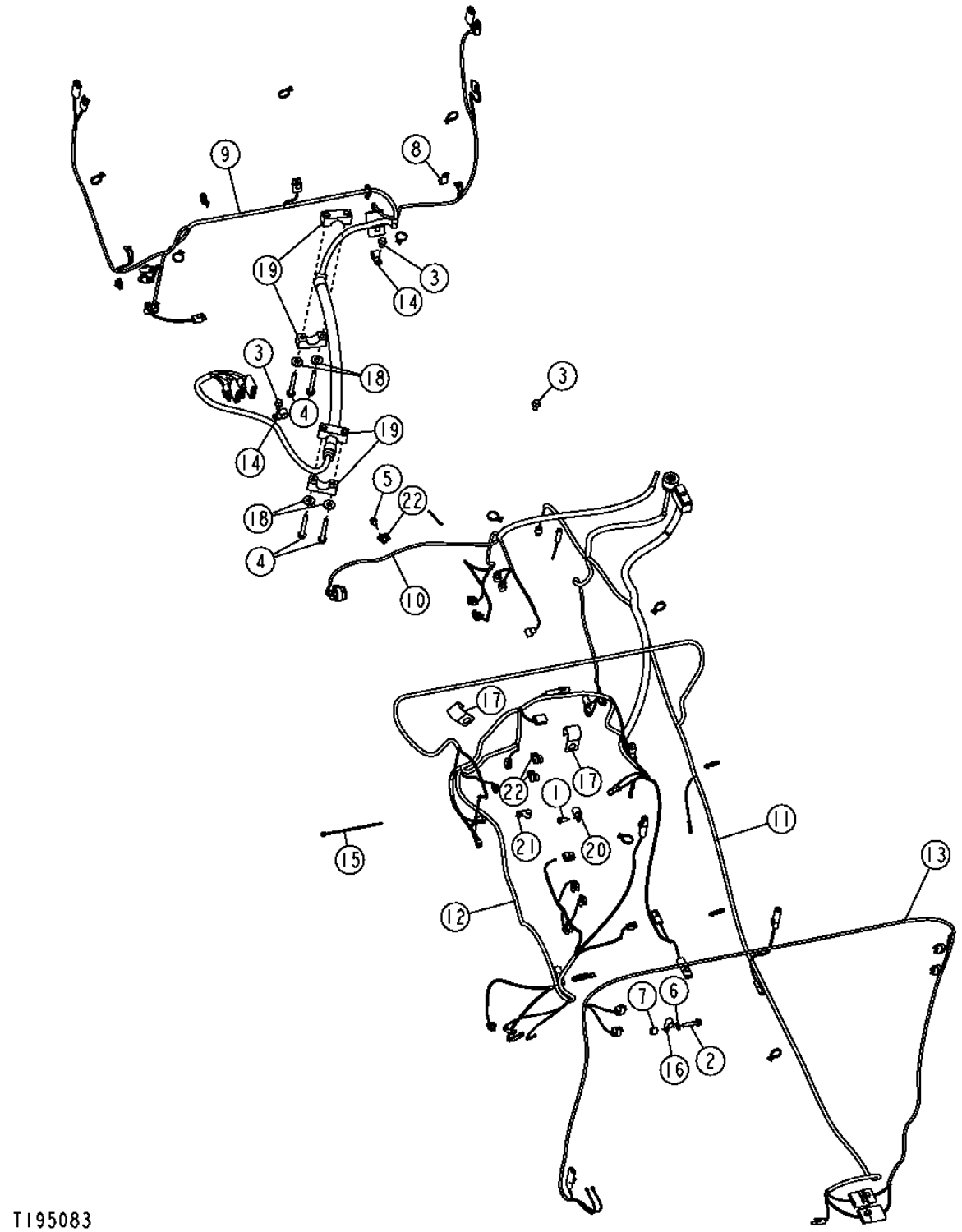

MAIN WIRING HARNESS (SERIAL NO. 590068-)

KEY	PART NO.	PART NAME	QTY	SERIAL NO.	REMARKS
1	19H1900	CAP SCREW	1		5/16" X 3/4", (SUB FOR 19H1936)
2	19H3771	SCREW	1		3/8" X 1", (SUB FOR 19H3772, THIS APPLICATION)
3	19M7784	SCREW	3		M10 X 20
4	19M7810	SCREW	4		M10 X 80
5	19M7865	SCREW	1		M8 X 16
6	24M7239	WASHER	1		10.700 X 21 X 2.500 MM
7	28H3381	SPACER	1		0.493" X 0.675" X 5/8"
8	AH89557	CLIP	1		
9	AT227138	WIRING HARNESS	1		(LOADER FRAME HARNESS)
	AT306641	WIRING HARNESS	1		(LOADER FRAME HARNESS, HARSH ENVIRONMENT)
10	AT301026	WIRING HARNESS	1		(TRANSMISSION HARNESS)
	AT308672	WIRING HARNESS	1		(TRANSMISSION HARNESS) (HARSH ENVIRONMENT)
11	AT304859	WIRING HARNESS	1		(ENGINE FRAME HARNESS)
	AT308678	WIRING HARNESS	1		(ENGINE FRAME HARNESS) (HARSH ENVIRONMENT)
12	AT304922	WIRING HARNESS	1		(ENGINE HARNESS)
	AT308681	WIRING HARNESS	1		(ENGINE HARNESS) (HARSH ENVIRONMENT)
13	AT305037	WIRING HARNESS	1		(REAR FRAME HARNESS)
	AT308680	WIRING HARNESS	1		(REAR FRAME HARNESS) (HARSH ENVIRONMENT)
14	T74416	CLAMP	2		(SUB FOR N191985, THIS APPLICATION)
15	R44302	TIE BAND	3		
16	H75541	CLAMP	1		(SUB FOR R46414, THIS APPLICATION)
17	T203438	CLAMP	2		
18	T29342	WASHER	4		
19	T67995	CLAMP	4		
20	T74416	CLAMP	1		
21	T75197	CLAMP	1		
22	T75276	CLAMP	3		

FRONT DASH MODULE WIRING HARNESS (SERIAL NO. -590067)

T189892 -UN-28APR03

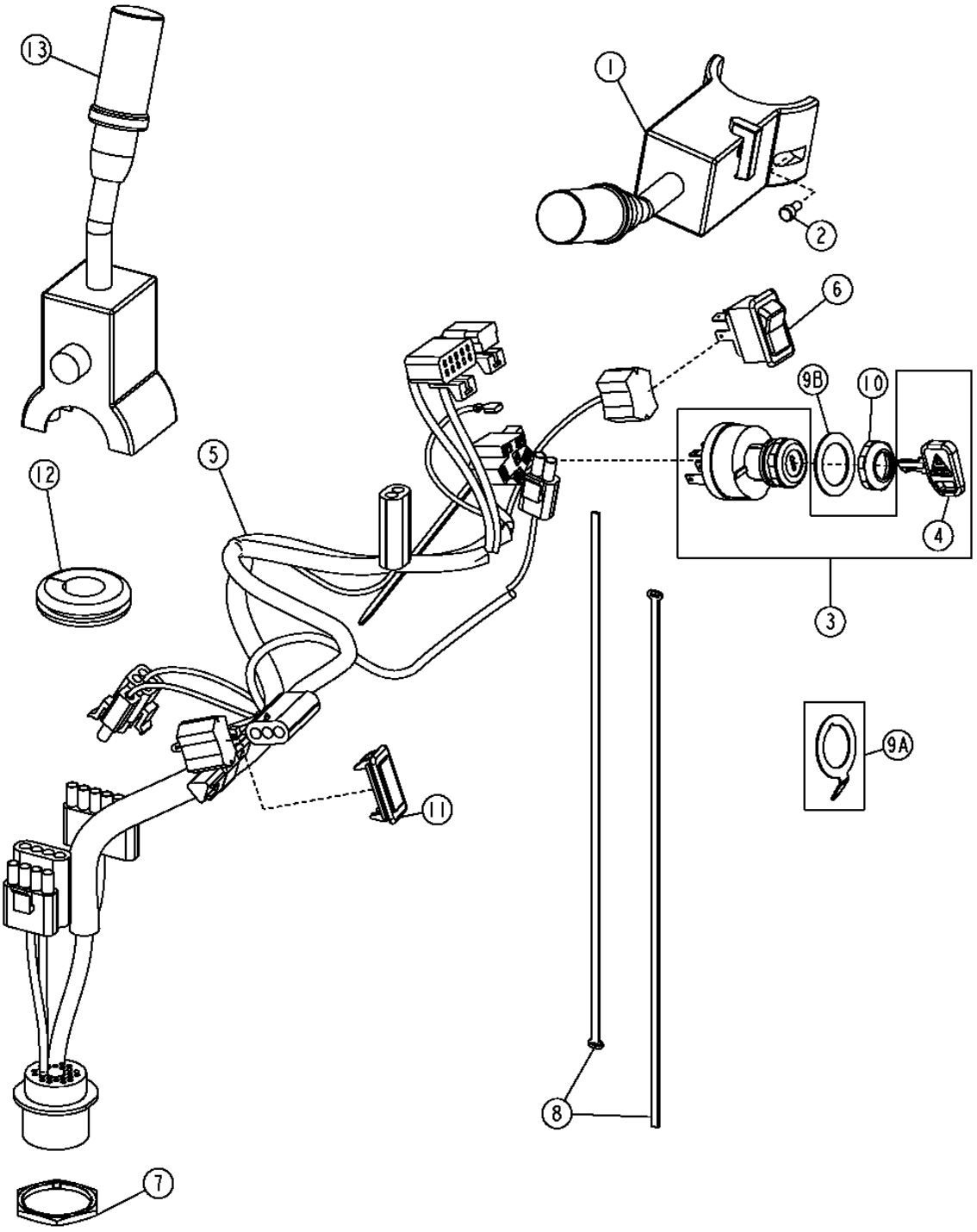

FRONT DASH MODULE WIRING HARNESS (SERIAL NO. -590067)

KEY	PART NO.	PART NAME	QTY	SERIAL NO.	REMARKS
1	AT176801	SWITCH	1		
2	19M8146	SCREW	2		M5 X 16
3	AT195301	SWITCH	1		
4	AT195302	KEY	1		
5	AT203128	WIRING HARNESS	1		
6	AT208630	SWITCH	1		
7	E73240	NUT	1		
8	H77698	TIE BAND	2		
	R44302	TIE BAND	1		
9A	R52725	ELECTRICAL CONNECTOR ASSY	1	-588972	
9B	24H1441	WASHER	1	588973-	
10	R44342	NUT	1		
11	M115279	PLUG	1		
12	T46876	GROMMET	1		
13	AT210334	SWITCH	1		(HIGH BEAM AND TURN SIGNAL)

FRONT DASH MODULE WIRING HARNESS (SERIAL NO. 590068-)

T193989 -UN-02SEP03

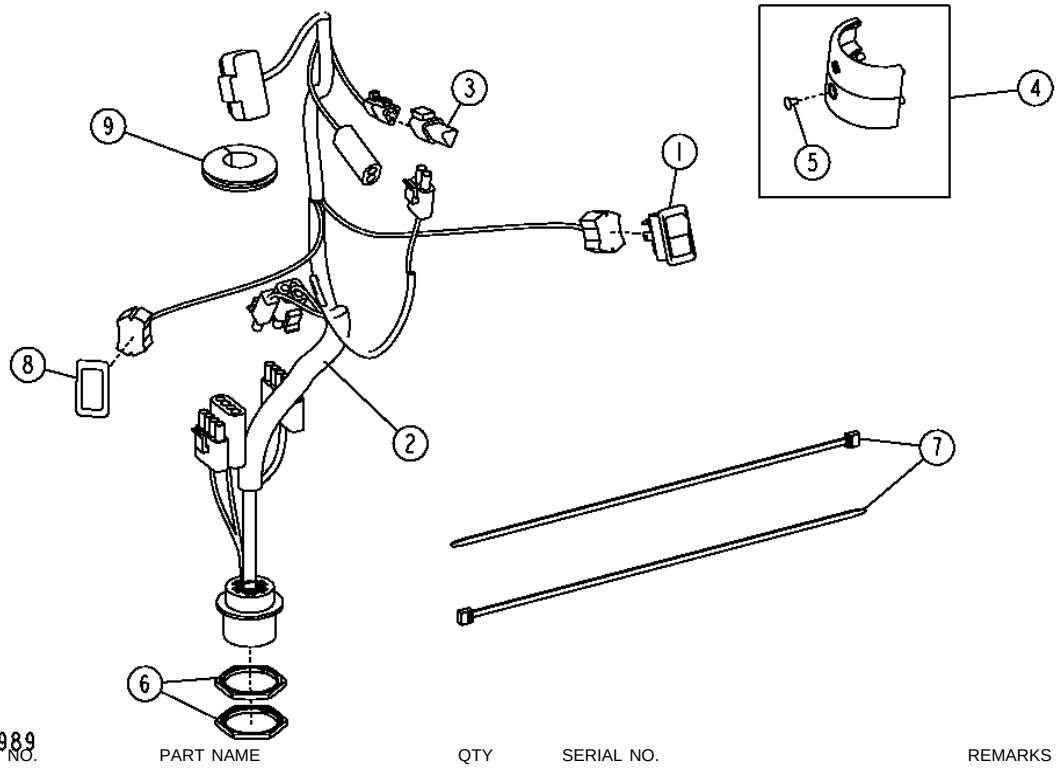

KEY	PART NO.	PART NAME	QTY	SERIAL NO.	REMARKS
1	AT208630	SWITCH	1		
2	AT227134	WIRING HARNESS	1		
3	57M8131	ELEC. CONNECTOR TERMINAL	1		
4	AT300921	KIT	1		(STEERING COLUMN CLAMP & COVER)
5	21M7258	SCREW	1		M4 X 8
6	E73240	NUT	2		
7	H77698	TIE BAND	2		
8	M115279	PLUG	1		
9	T46876	GROMMET	1		

HVAC WIRING

T193988 -UN-18AUG03

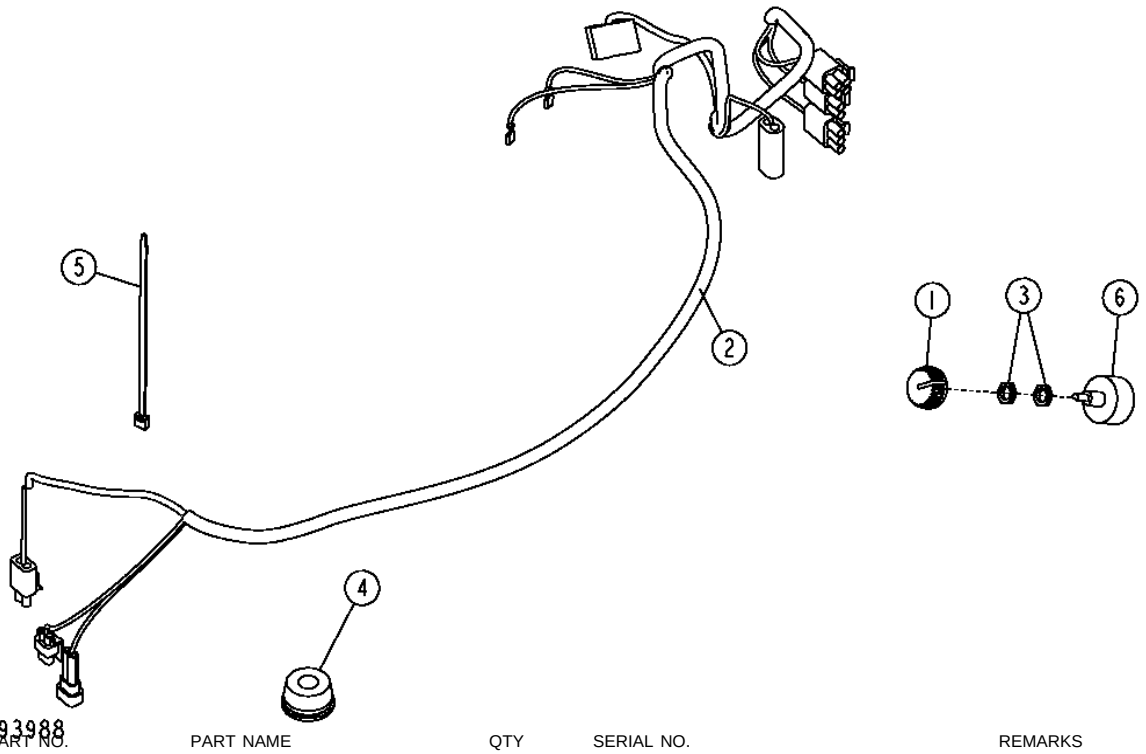

KEY	PART NO.	PART NAME	QTY	SERIAL NO.	REMARKS
1	AL76568	KNOB	1		
2	AT202934	WIRING HARNESS	1		
3	R44165	LOCK NUT	2		
4	T182870	ISOLATOR	1		(SUB FOR N119177)
5	R44302	TIE BAND	1		
6	RE43497	ROTARY SWITCH	1		

SPIN CONTROL WIRING HARNESS AND TRANSDUCER

T203553 -UN-01OCT04

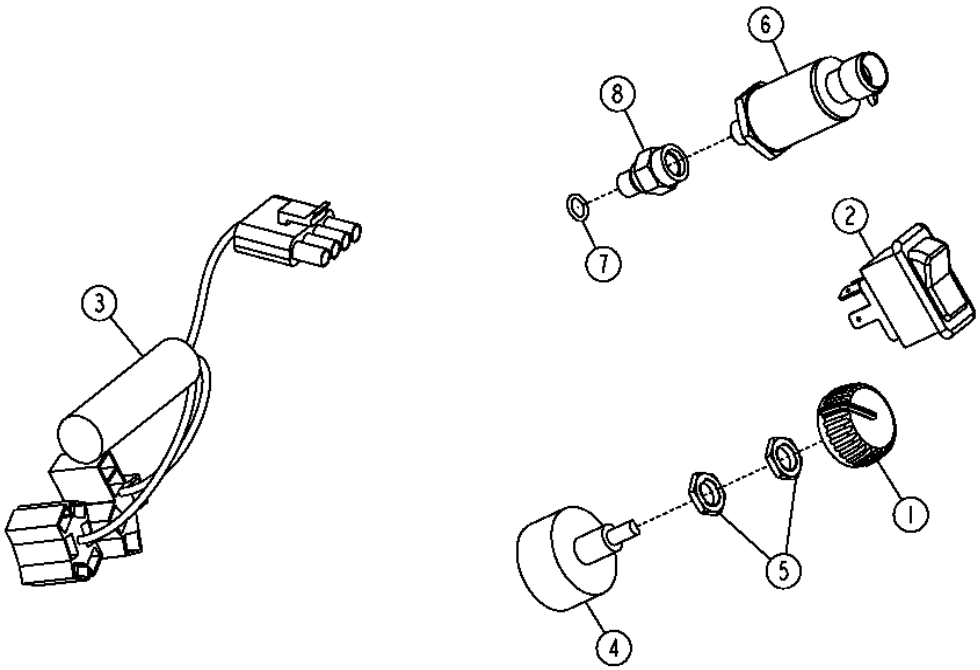

T203553

KEY	PART NO.	PART NAME	QTY	SERIAL NO.	REMARKS
1	AL76568	KNOB	1	-590067	
2	AT202800	SWITCH	1	-590067	
3	AT206912	WIRING HARNESS	1		
4	RE43497	ROTARY SWITCH	1	-590067	
5	R44165	LOCK NUT	2	-590067	
6	AT211362	TRANSDUCER	1		
7	R26287	O-RING	1		
8	T176338	ADAPTER	1		

FUSES, RELAYS AND CIRCUIT BREAKERS (S.N. -590067)

TP48427 -UN-17AUG96

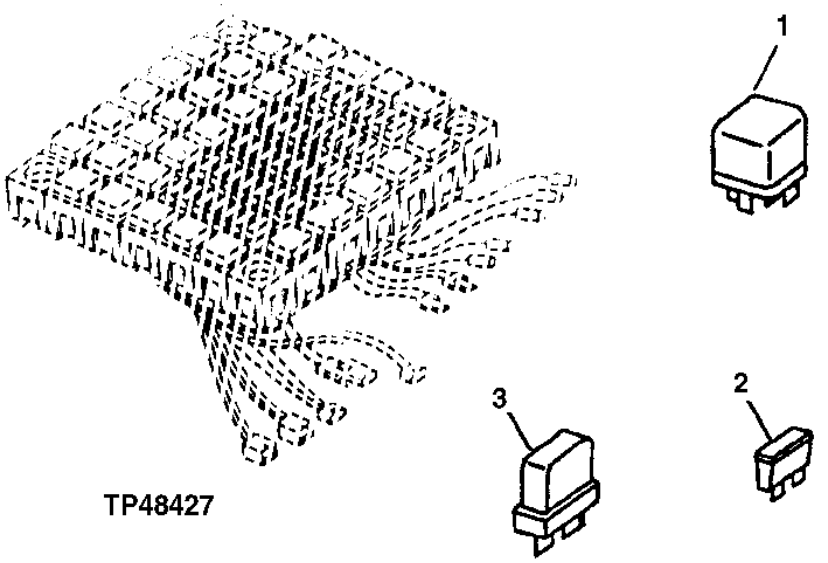

KEY	PART NO.	PART NAME	QTY	SERIAL NO.	REMARKS
1	AT162863	RELAY	24		
	AT206685	RELAY	2		TURN SIGNAL FLASHER
2	57M7125	FUSE	13		5 AMP
	99M7064	FUSE	11		7.5 AMP
	57M7121	FUSE	5		10 AMP
	99M7065	FUSE	3		15 AMP
	57M7120	FUSE	1		20 AMP
	99M7069	FUSE	1		25 AMP
3	T103463	CIRCUIT BREAKER	2		10 AMP CB

VEHICLE ELECTRICAL CENTER (VEC) (S.N. 590068-)

T209740 -UN-01APR05

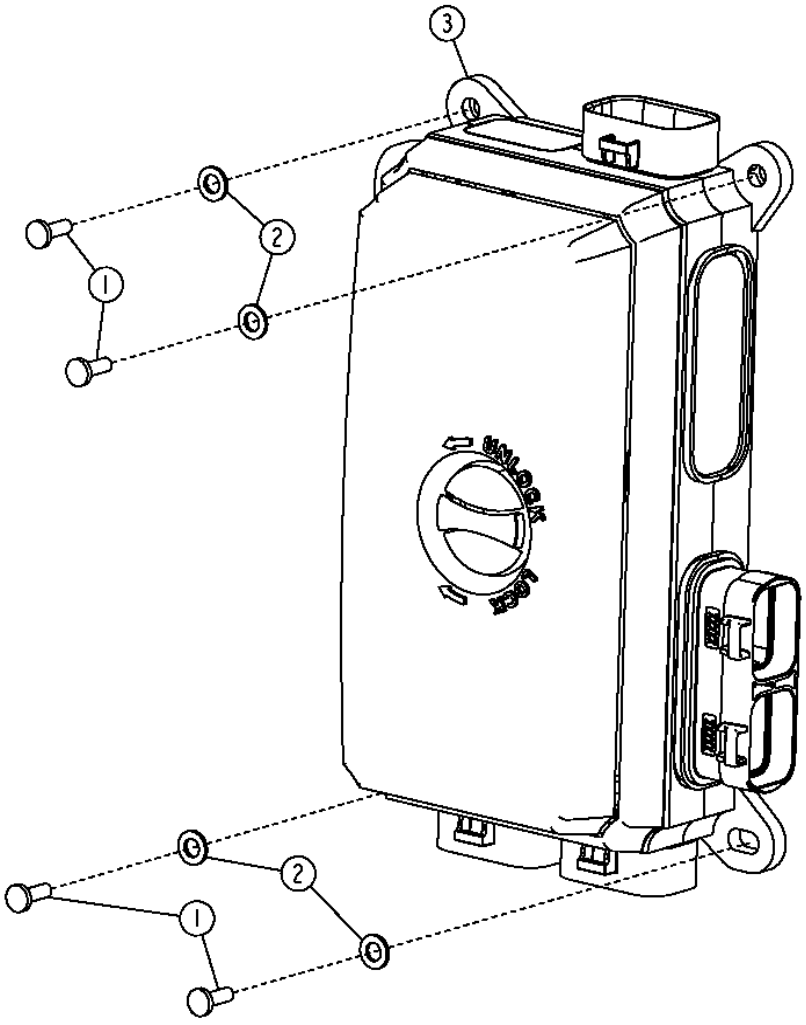

T209740

VEHICLE ELECTRICAL CENTER (VEC) (S.N. 590068-)

KEY	PART NO.	PART NAME	QTY	SERIAL NO.	REMARKS
1	21M7250	SCREW	4		M4 X 12
2	24M7087	WASHER	4		5.500 X 10 X 1 MM
3	AT301777	VEHICLE CONTROLLER	1		(VEC)(INCLUDES ALL FUSES, DIODES, AND RELAYS)
4	57M7688	FUSE	18		(NOT ILLUSTRATED) (5 AMP)
5	57M7689	FUSE	10		(NOT ILLUSTRATED) (10AMP)
6	57M7690	FUSE	3		(NOT ILLUSTRATED) (15AMP)
7	57M8623	FUSE	1		(NOT ILLUSTRATED) (25AMP)
8	57M8640	DIODE	5		(NOT ILLUSTRATED)
9	AT305389	RELAY	1		(NOT ILLUSTRATED) (24 VOLT)

PROGRAMMING KIT

T153485 -UN-03APR02

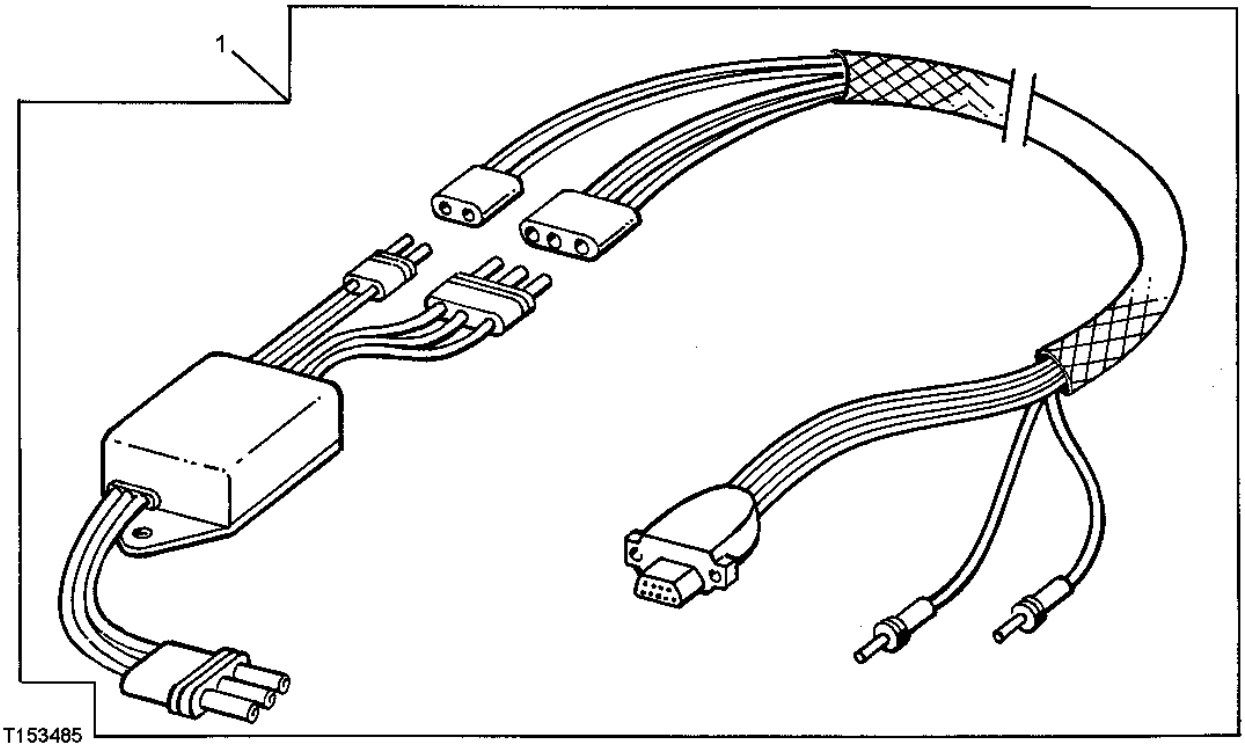

KEY	PART NO.	PART NAME	QTY	SERIAL NO.	REMARKS
1	**AT222678**	**KIT**	**1**		**(WHOLEGOODS)(FIELD PROGRAMMING KIT)**

CHASSIS COMPUTER UNIT (SERIAL NO. -590067)

TP35394 -UN-11SEP96

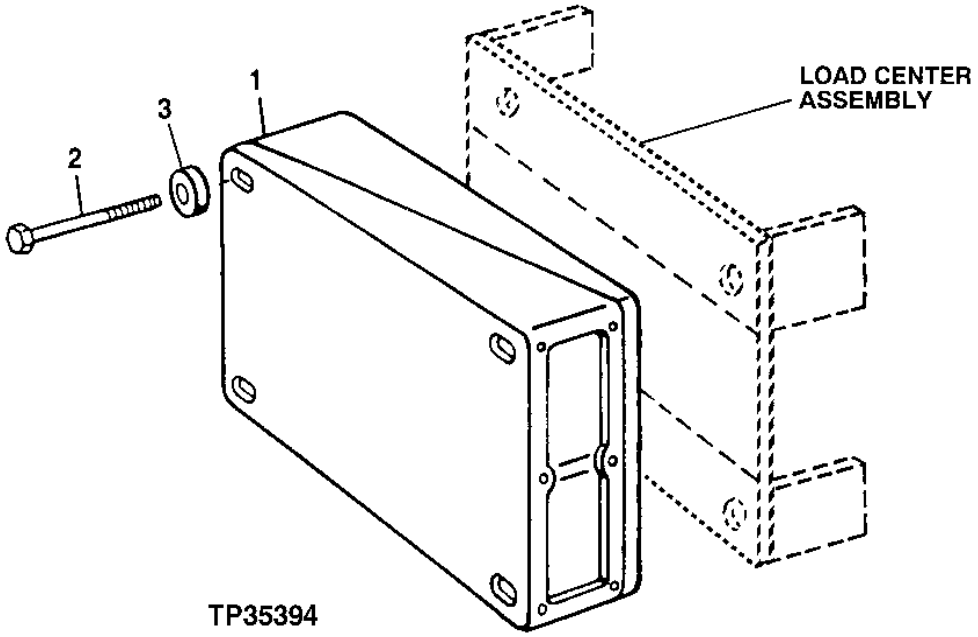

KEY	PART NO.	PART NAME	QTY	SERIAL NO.	REMARKS
1	AT227500	VEHICLE CONTROLLER	1		
2	19M8786	SCREW	4		M6 X 70
3	24M7088	WASHER	4		6.600 X 12 X 1.600 MM

TRANSMISSION CONTROL UNIT (SERIAL NO. -590067)

TP35396 -UN-07AUG96

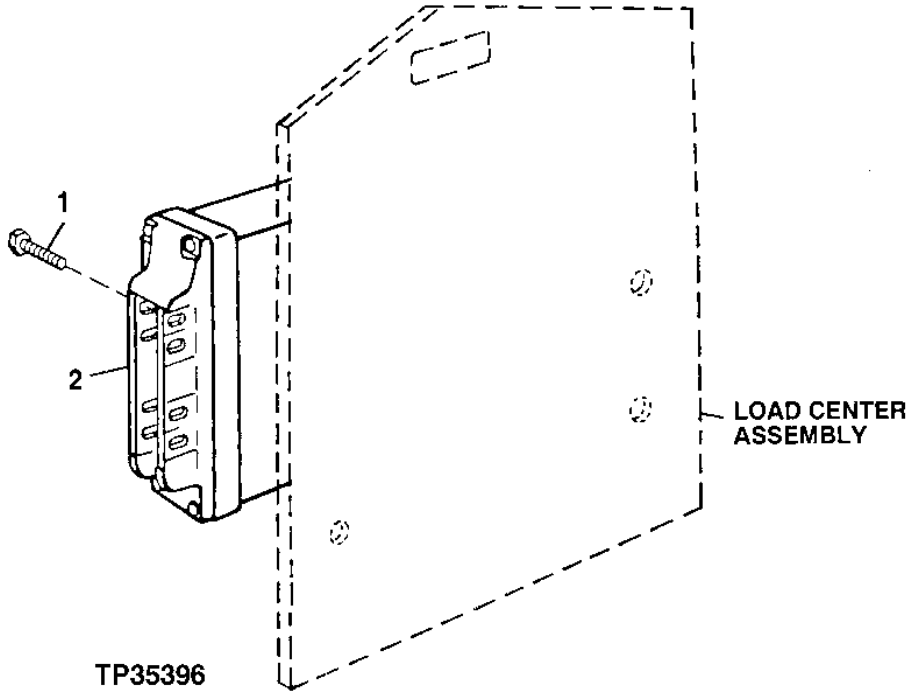

KEY	PART NO.	PART NAME	QTY	SERIAL NO.	REMARKS
1	21M7250	SCREW	4		M4 X 12
2	AT301722	TRANSMISSION CONTROLLER	1		

MONITOR DISPLAY UNIT

T195269 -UN-24OCT03

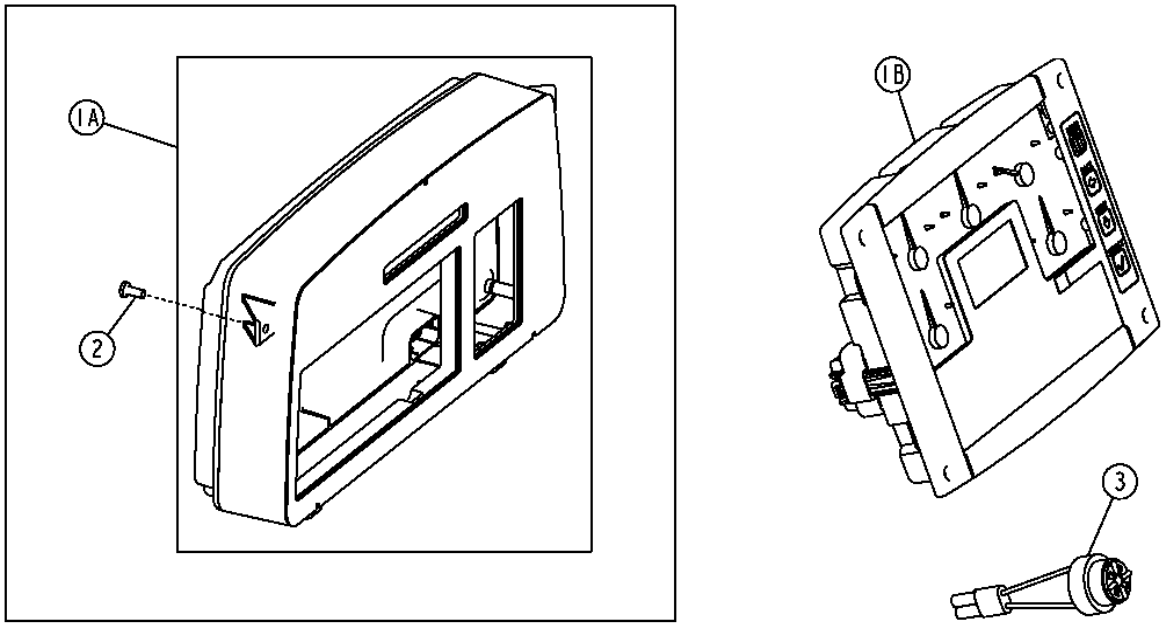

T195269

KEY	PART NO.	PART NAME	QTY	SERIAL NO.	REMARKS
1A	AT226162	MONITOR	1	-590067	
1B	AT313501	MONITOR	1	590068-	(SUB FOR AT226944)
2	21M7265	SCREW	4		M5 X 12, (MONITOR TO FRONT DASH)
3	AT160480	ALARM SYSTEM	1		
4	AT175424	BULB	29	-590067	(NOT ILLUSTRATED) (MONITOR ILLUMINATION)

ENGINE FRAME

T153163 -UN-05APR02

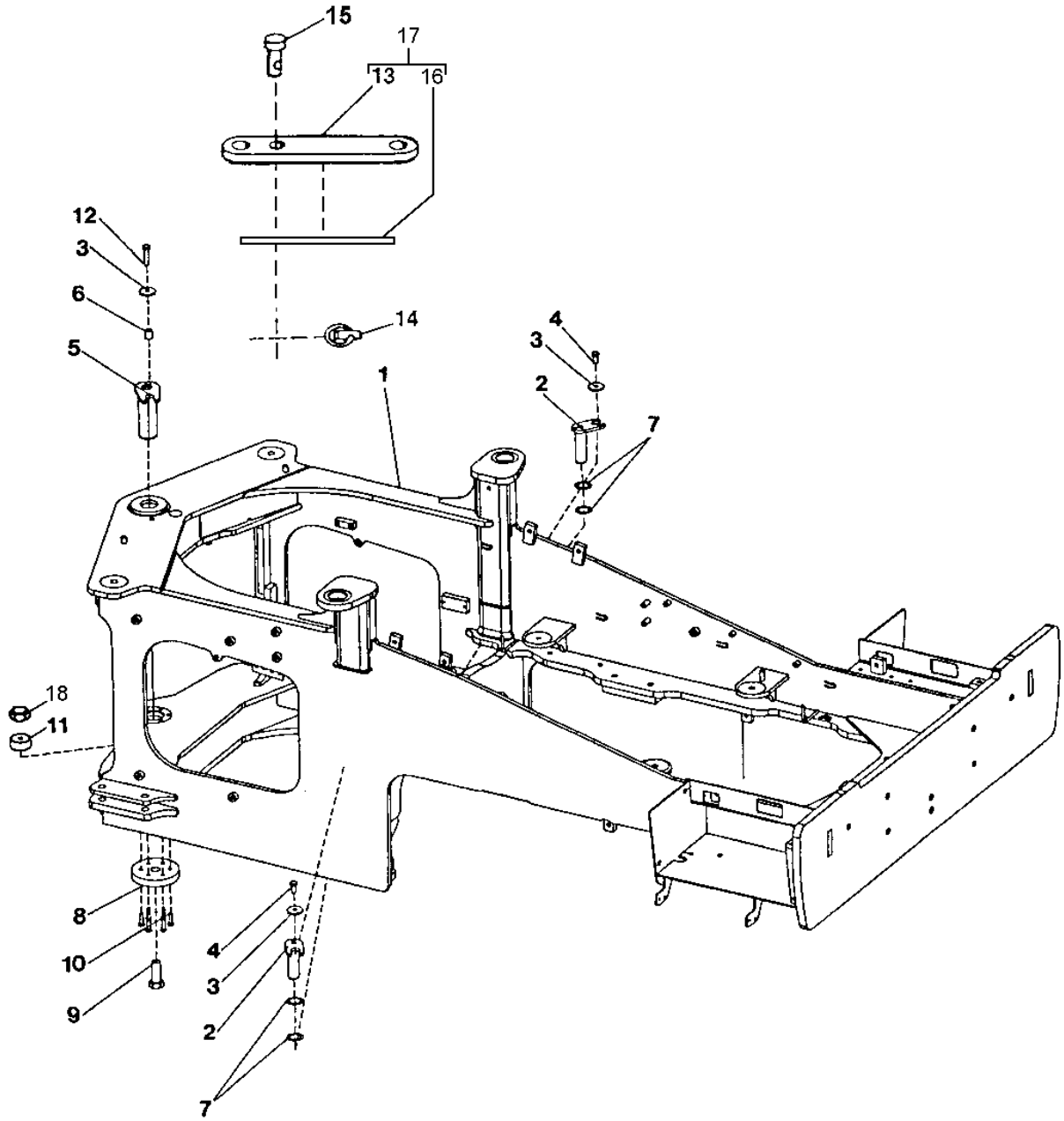

T153163

ENGINE FRAME

KEY	PART NO.	PART NAME	QTY	SERIAL NO.	REMARKS
1	AT225226	FRAME	1		(CONVENIENCE ASSEMBLY)
2	AT157299	PIN FASTENER	2		
3	T146246	WASHER	3		
4	19M8029	CAP SCREW	2		M16 X 30
5	AT206751	PIN	1		
6	28H3452	BUSHING	1		
7	24H1576	WASHER	3		1-13/16" X 2-15/16" X 0.075"
	24H1577	WASHER	4		1-25/32" X 2-7/8" X 0.036"
8	T182446	COVER	1		
9	19M9188	CAP SCREW	1		M30 X 260
10	19M7363	CAP SCREW	6		M12 X 60
11	T182265	BUSHING	1		
12	19M8295	CAP SCREW	1		M16 X 55
13	AT226156	BAR	1		(SUB FOR T156258)
14	AA21292	QUICK LOCK PIN	2		
15	R125450	PIN	2		
16	T182192	SAFETY SIGN	2		
17	AT226156	BAR	1		
18	14M7290	NUT	1		M30

ENGINE FRAME STEERING CUSHIONS

TP48566 -UN-16NOV96

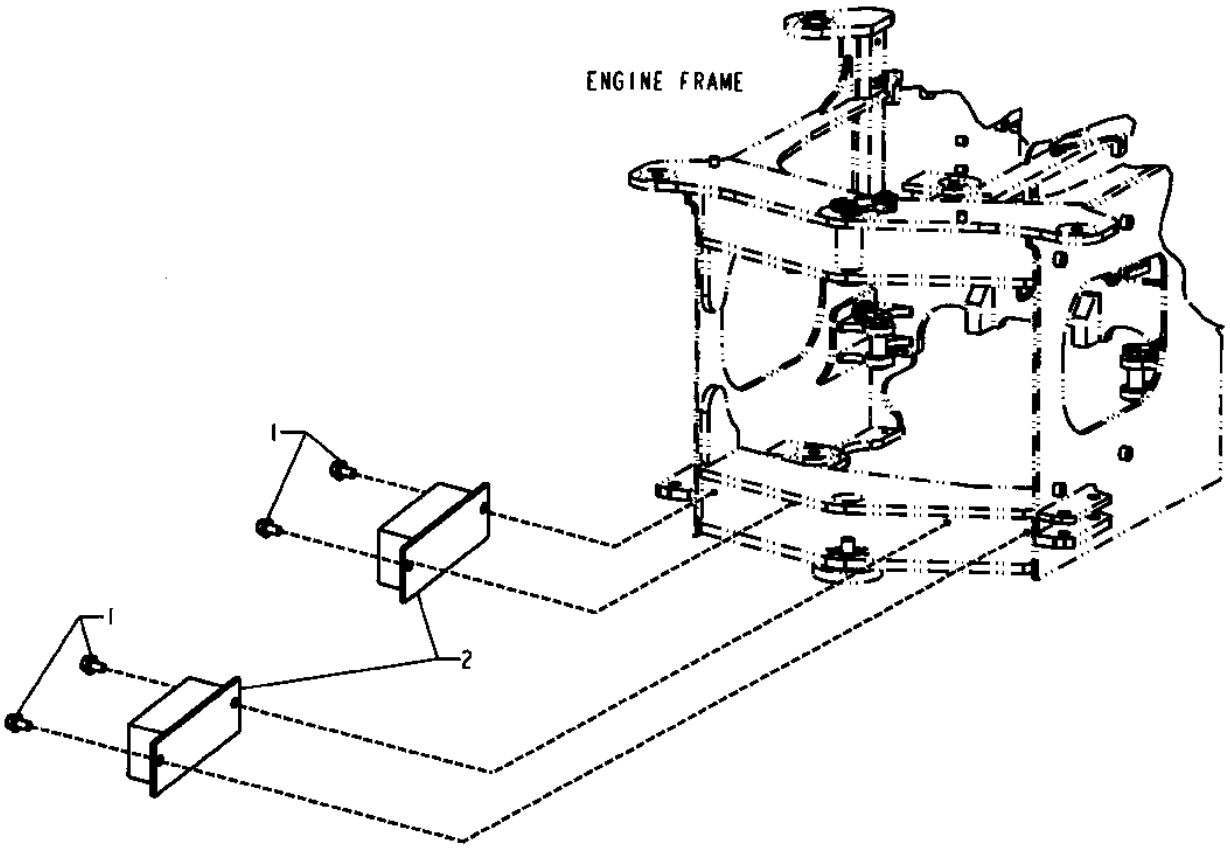

TP48566

ENGINE FRAME STEERING CUSHIONS

KEY	PART NO.	PART NAME	QTY	SERIAL NO.	REMARKS
1	19M7788	SCREW	4		M12 X 25
2	AT143577	BUMPER	2		

TRANSMISSION BOTTOM GUARD AND FRONT BOTTOM GUARD

T204789 -UN-04FEB05

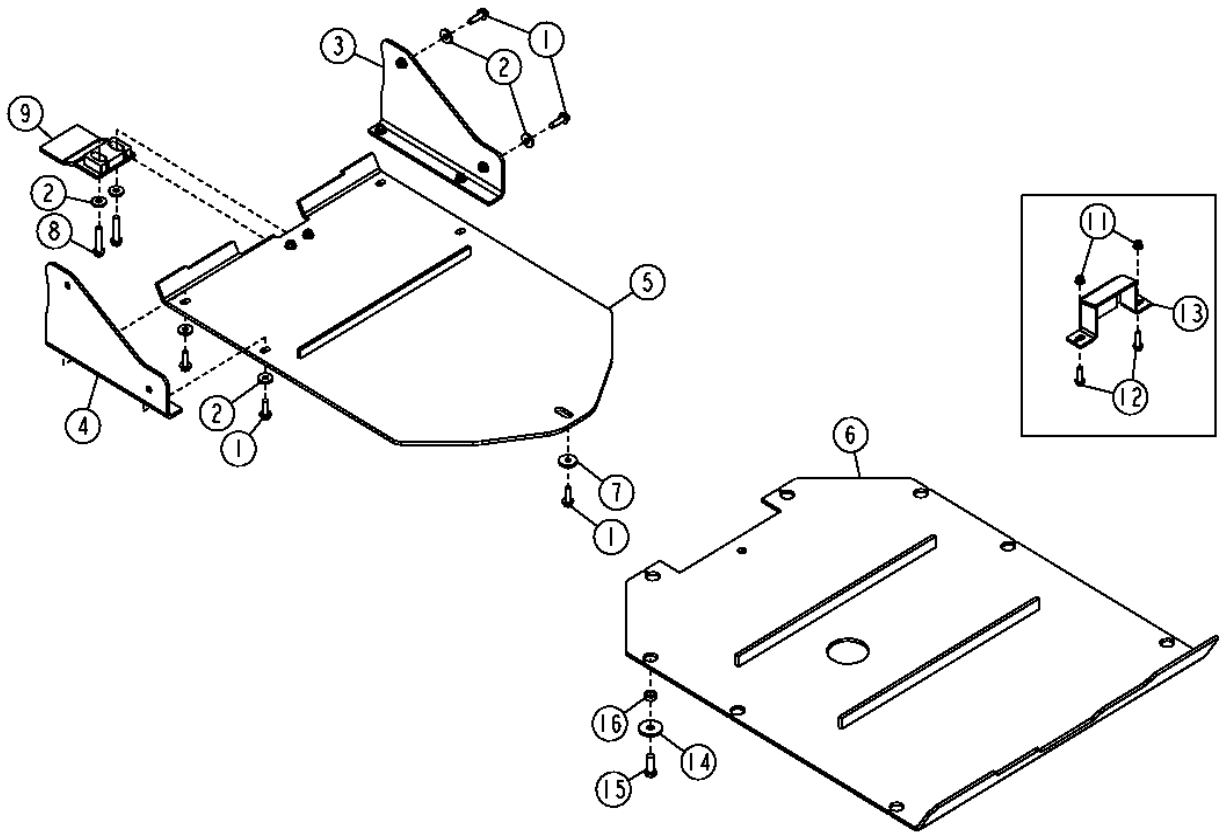

T204789

TRANSMISSION BOTTOM GUARD AND FRONT BOTTOM GUARD

KEY	PART NO.	PART NAME	QTY	SERIAL NO.	REMARKS
1	19M7791	BOLT	9		M12 X 40
2	24M7226	WASHER	10		13 X 35 X 5 MM
3	AT207433	SUPPORT	1		
4	AT207432	SUPPORT	1		
5	AT209083	GUARD	1		FRONT (LOADER FRAME)
6	AT227860	GUARD	1		TRANSMISSION (ENGINE FRAME)
7	T20217	WASHER	1		
8	19M7817	SCREW	2		M12 X 70
9	AT221332	GUARD	1		(EXTENSION)
11	14M7400	LOCK NUT	2		M10
12	19M7804	SCREW	2		M10 X 40
13	T181642	GUARD	1		(DRAIN VALVE GUARD)
14	T146246	WASHER	8		
15	19M7489	CAP SCREW	8		
16	T197569	BUSHING	8		

BOTTOM FUEL TANK GUARD

T158374 -UN-15AUG02

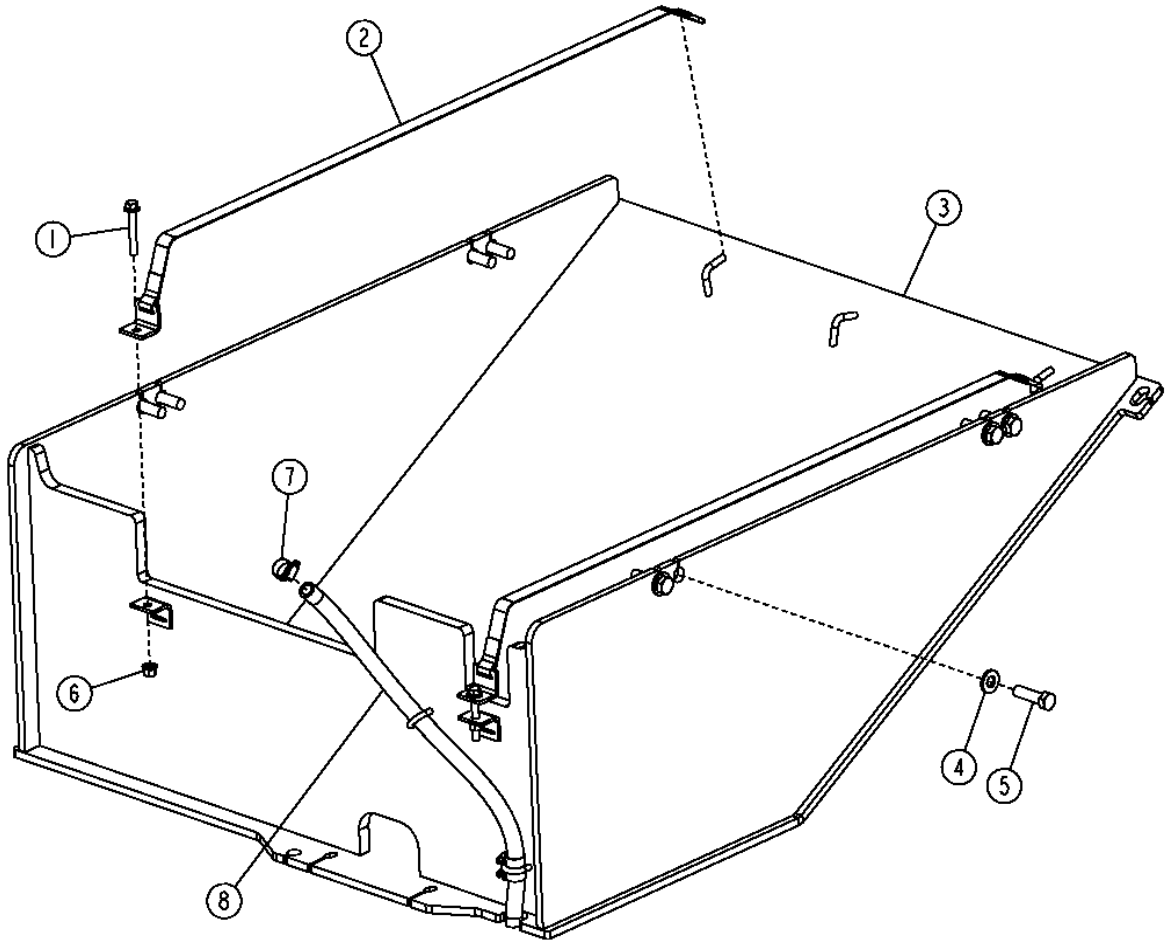

T158374

BOTTOM FUEL TANK GUARD

KEY	PART NO.	PART NAME	QTY	SERIAL NO.	REMARKS
1	19M8114	SCREW	2		M10 X 70
2	AT225049	STRAP	2	-594244	
	AT317593	STRAP	2	594245-	
3	AT224774	GUARD	1	-594244	
	AT318488	GUARD	1	594245-	
4	24M7241	WASHER	8		17 X 34 X 4 MM
5	19M7489	CAP SCREW	8		M16 X 45
6	14M7400	LOCK NUT	2		M10
7	AR21837	CLAMP	3		
8	.....	BULK HOSE	1		(FURNISH BULK HOSE T60811, CUT TO LENGTH)

CYLINDER-FITTING ROCK GUARDS

TP62703 -UN-19NOV99

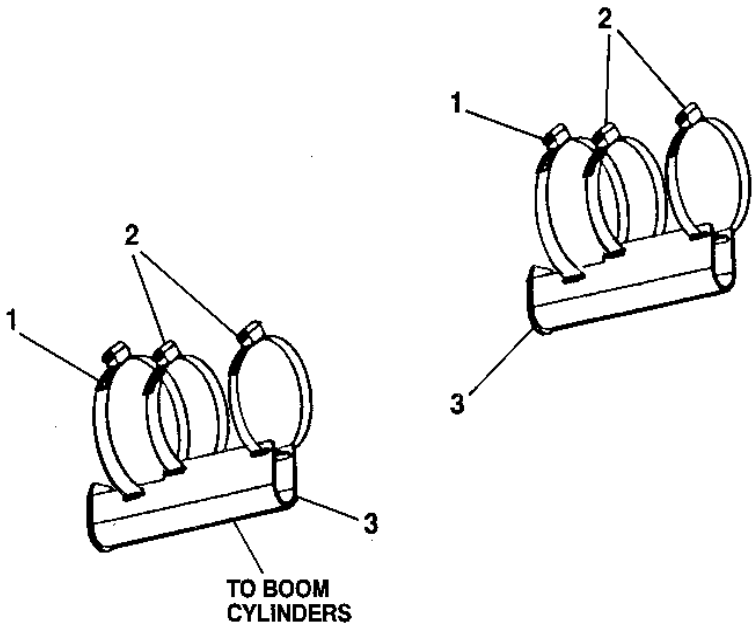

TP62703

KEY	PART NO.	PART NAME	QTY	SERIAL NO.	REMARKS
1	TY22495	HOSE CLAMP	2		(SUB FOR AH130230, THIS APPLICATION)
2	TY22495	HOSE CLAMP	4		(SUB FOR TY22494, THIS APPLICATION)
3	AT222093	COVER	2	-589874	
	AT309401	COVER	2	589875-	

MEMORANDA

COUNTERWEIGHT

T154731 -UN-14MAY02

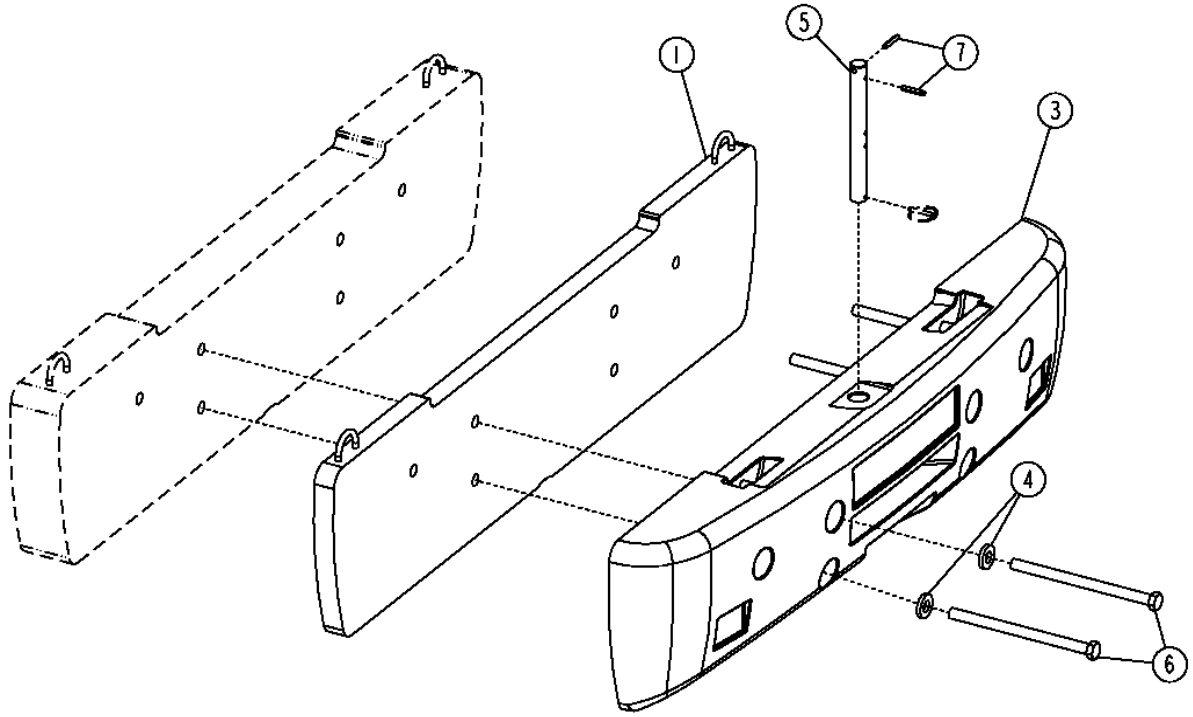

T154731

KEY	PART NO.	PART NAME	QTY	SERIAL NO.	REMARKS
1	AT226114	COUNTERWEIGHT	1		
3	T171239	COUNTERWEIGHT	1		
4	T152076	WASHER	6		
5	T170945	PIN FASTENER	1		
6	19M8961	CAP SCREW	6		M24 X 360
7	34H356	SPRING PIN	3		3/8" X 2-1/4"

COAT HOOK

TP60658 -UN-08MAR99

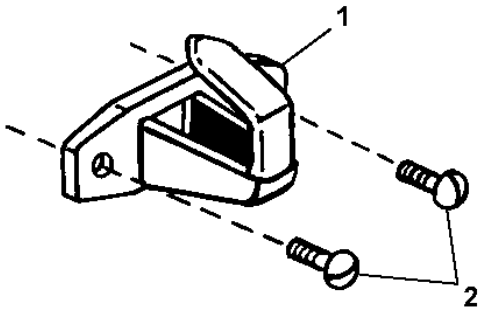

TP60658

KEY	PART NO.	PART NAME	QTY	SERIAL NO.	REMARKS
1	L102023	HOOK	2		
2	21M7305	SCREW	4		M6 X 12

CAB MOUNTS
(FRONT AND REAR)

TP60508 -UN-22SEP98

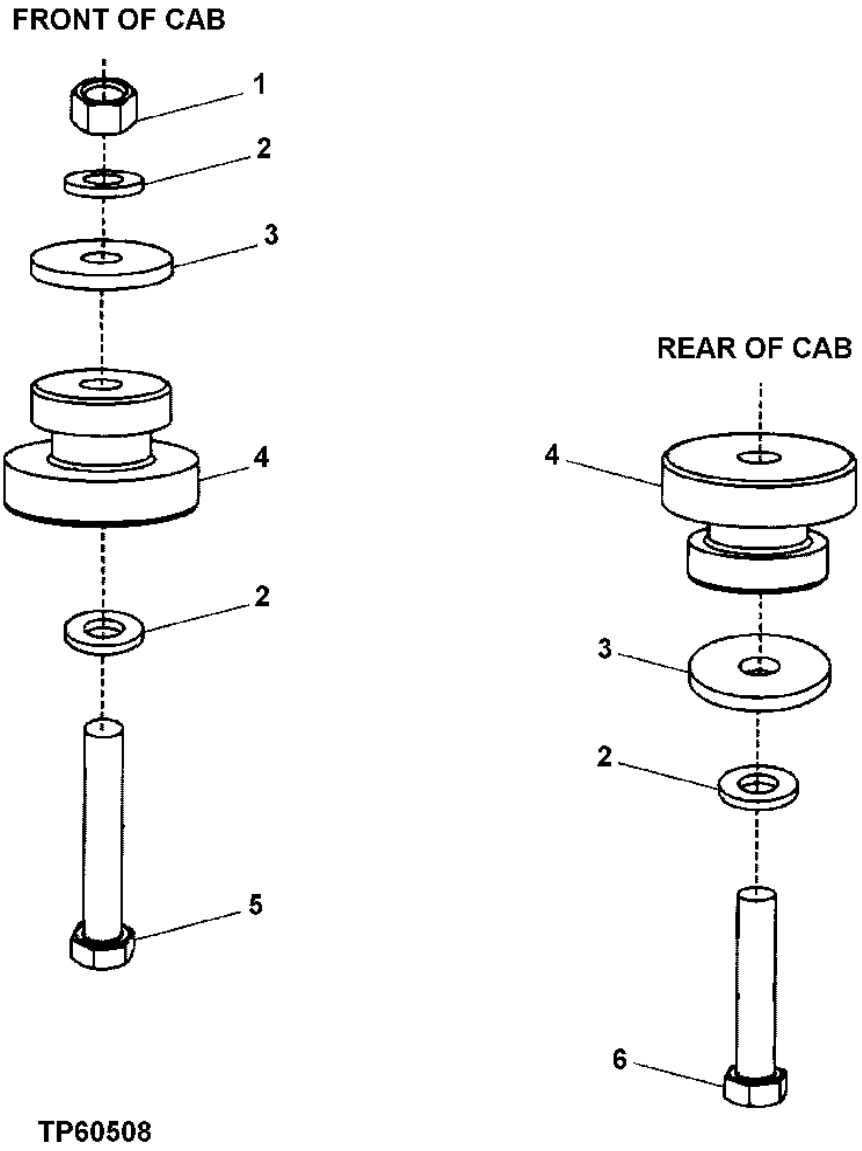

CAB MOUNTS
(FRONT AND REAR)

KEY	PART NO.	PART NAME	QTY	SERIAL NO.	REMARKS
1	14M7278	NUT	2		M24
2	24M7243	WASHER	6		25.400 X 50 X 6 MM
3	T153535	WASHER	4		
4	AT170005	ISOLATOR	4		
5	19M7781	CAP SCREW	2		M24 X 150
6	19M7903	CAP SCREW	2		M24 X 120

CAB LEFT SIDE CONSOLE COVER

T192999 -UN-20AUG03

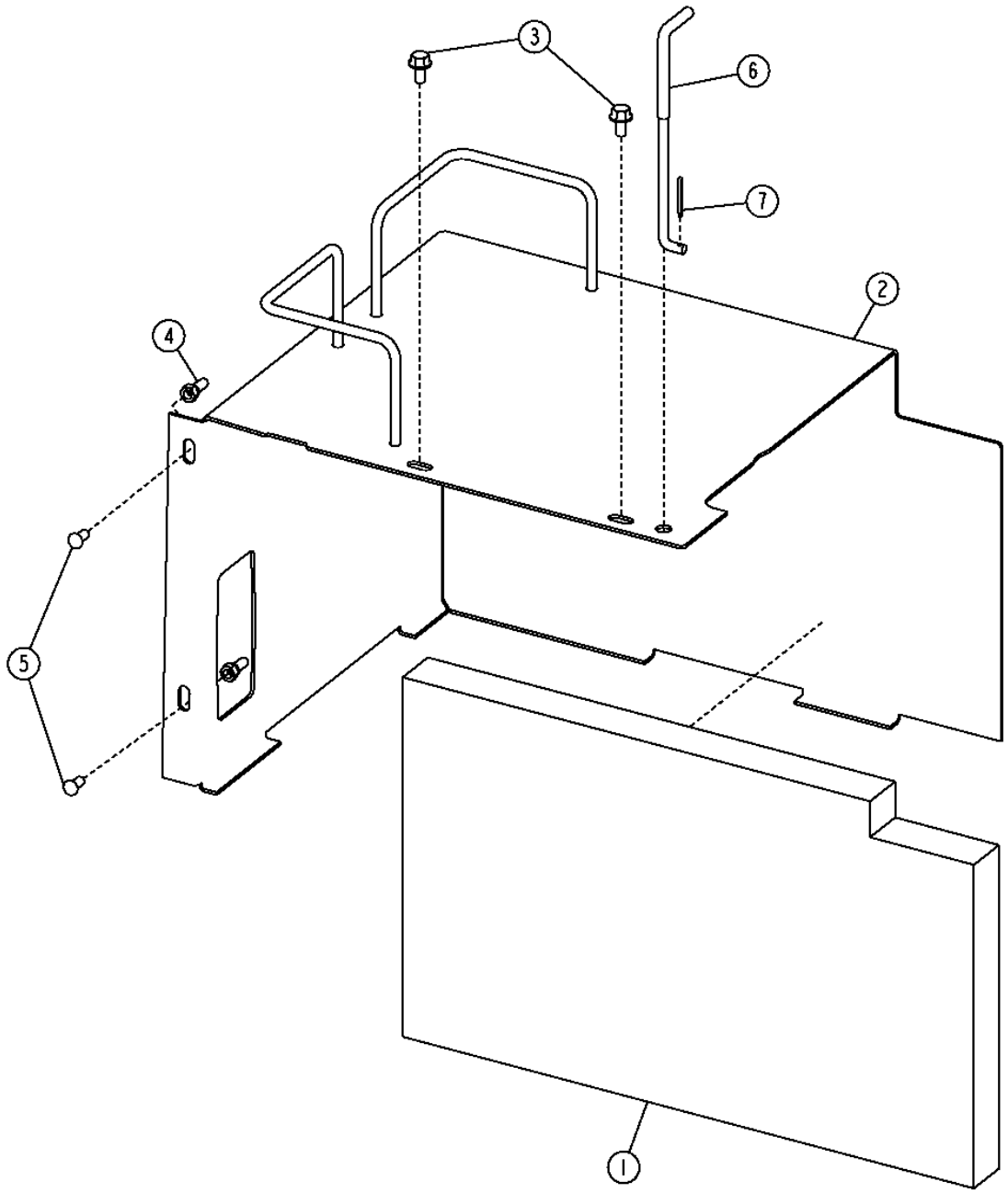

T192999

2F8

CAB LEFT SIDE CONSOLE COVER

KEY	PART NO.	PART NAME	QTY	SERIAL NO.	REMARKS
1	T171849	ISOLATOR	1		
2	AT227549	COVER	1		
3	19M7774	SCREW	2		M6 X 12
4	14M7376	LOCK NUT	2		M6
5	T167593	SCREW	2		
6	T167764	ROD	2		
7	11M7081	COTTER PIN	1		2.500 X 20 MM

FRONT AND REAR WINDOW WASHER AND HOSES

TP60279 -UN-23MAR98

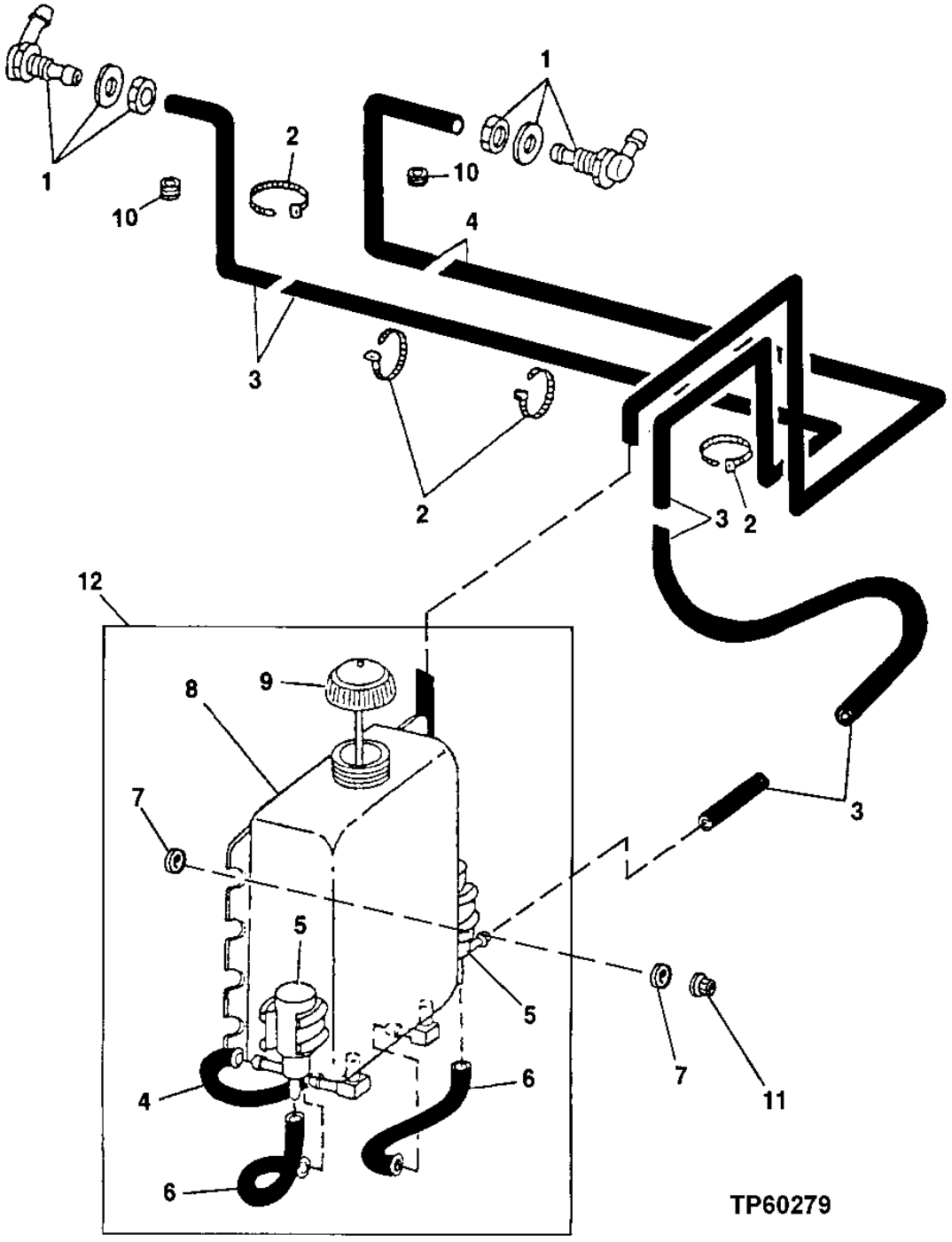

FRONT AND REAR WINDOW WASHER AND HOSES

KEY	PART NO.	PART NAME	QTY	SERIAL NO.	REMARKS
1	AT116970	ELBOW FITTING	2		
2	R44302	TIE BAND	AR		
3	.....	HOSE	AR		(MAKE FROM R120653 BULK MATERIAL, CUT TO LENGTH)
4	.....	HOSE	AR		(MAKE FROM R120653 BULK MATERIAL, CUT TO LENGTH)
5	AT106365	PUMP	2		
6	.....	HOSE	AR		(MAKE FROM R120653 BULK MATERIAL, CUT TO LENGTH)
7	24M7139	WASHER	AR		6.400 X 18 X 1.600 MM, TO BOSSES ON ACCESS DOOR
8	T147618	TANK	1		
9	AT173193	CAP	1		
10	T70154	GROMMET	2		(BOTH CAB AND ROPS)
11	14M7303	FLANGE NUT	4		M6
12	AT209947	TANK	1		(WINDSHIELD WASHER)

HEADLINER AND DOMELIGHT

T192642 -UN-10JUL03

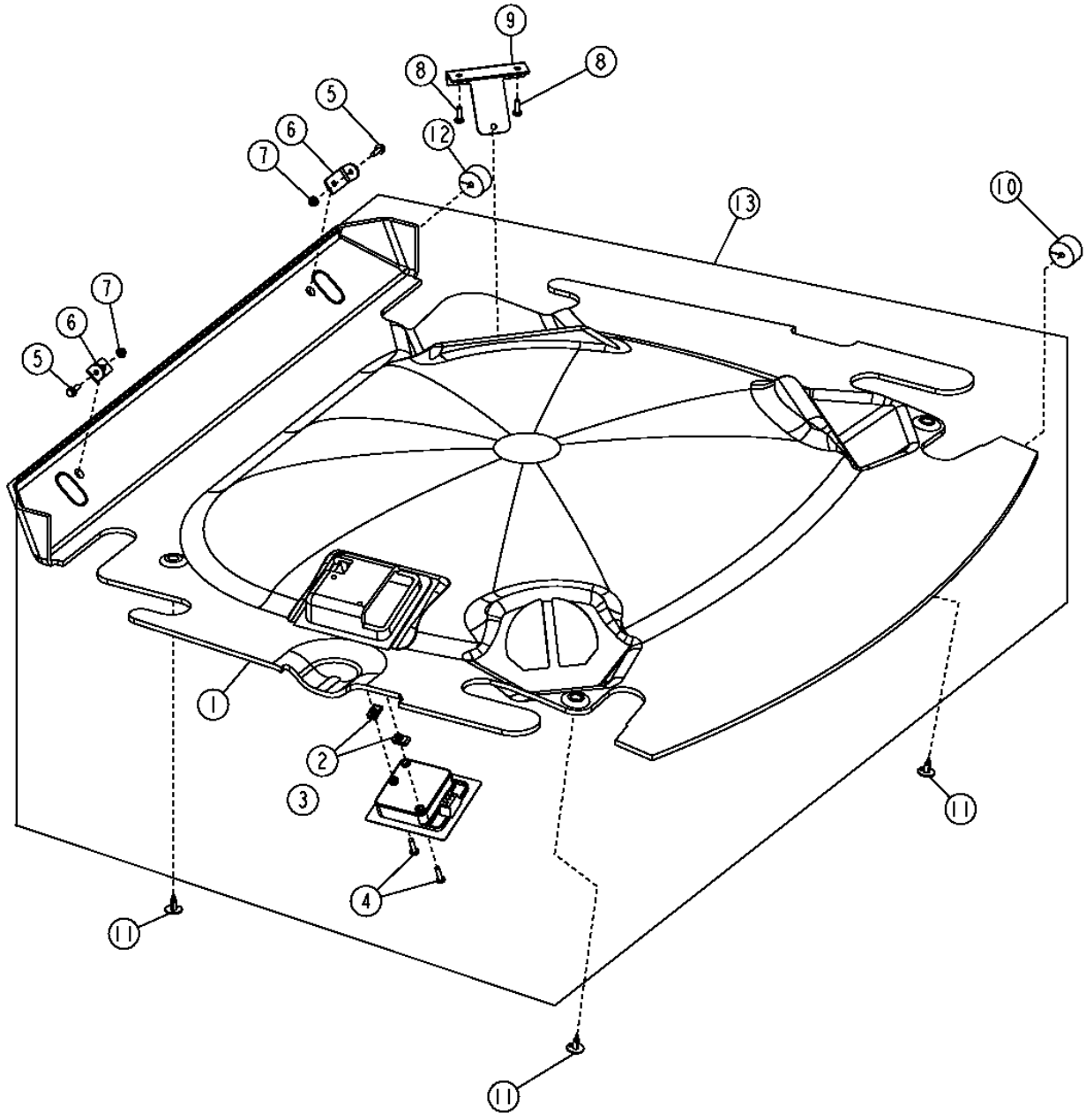

T192642

HEADLINER AND DOMELIGHT

KEY	PART NO.	PART NAME	QTY	SERIAL NO.	REMARKS
1	T181908	HEADLINER	1		WITHOUT RADIO
	T181520	HEADLINER	1		WITH RADIO
2	M84972	NUT	2		
3	AT224923	LAMP	1		
4	T134895	SELF-LOCKING SCREW	2		(SUB FOR 21M7310)
5	19M7862	SCREW	2		
6	T181050	ANGLE	2		
7	14M7303	FLANGE NUT	2		
8	19H1948	CAP SCREW	2		
9	T180418	STRAP	1		(WITHOUT RADIO)
10	T182861	PLUG	1		(WITHOUT RADIO)
	T182870	ISOLATOR	1		(WITH RADIO)
11	T184892	RETAINER	4		
12	T182861	PLUG	1		(WITHOUT RADIO)
	T65643	GROMMET	1		(WITH RADIO) (SUB FOR T182871, THIS APPLICATION)
13	AT224233	HEADLINER	1		WITH RADIO
	AT224234	HEADLINER	1		WITHOUT RADIO

2F13

CAB

T193727 -UN-16OCT03

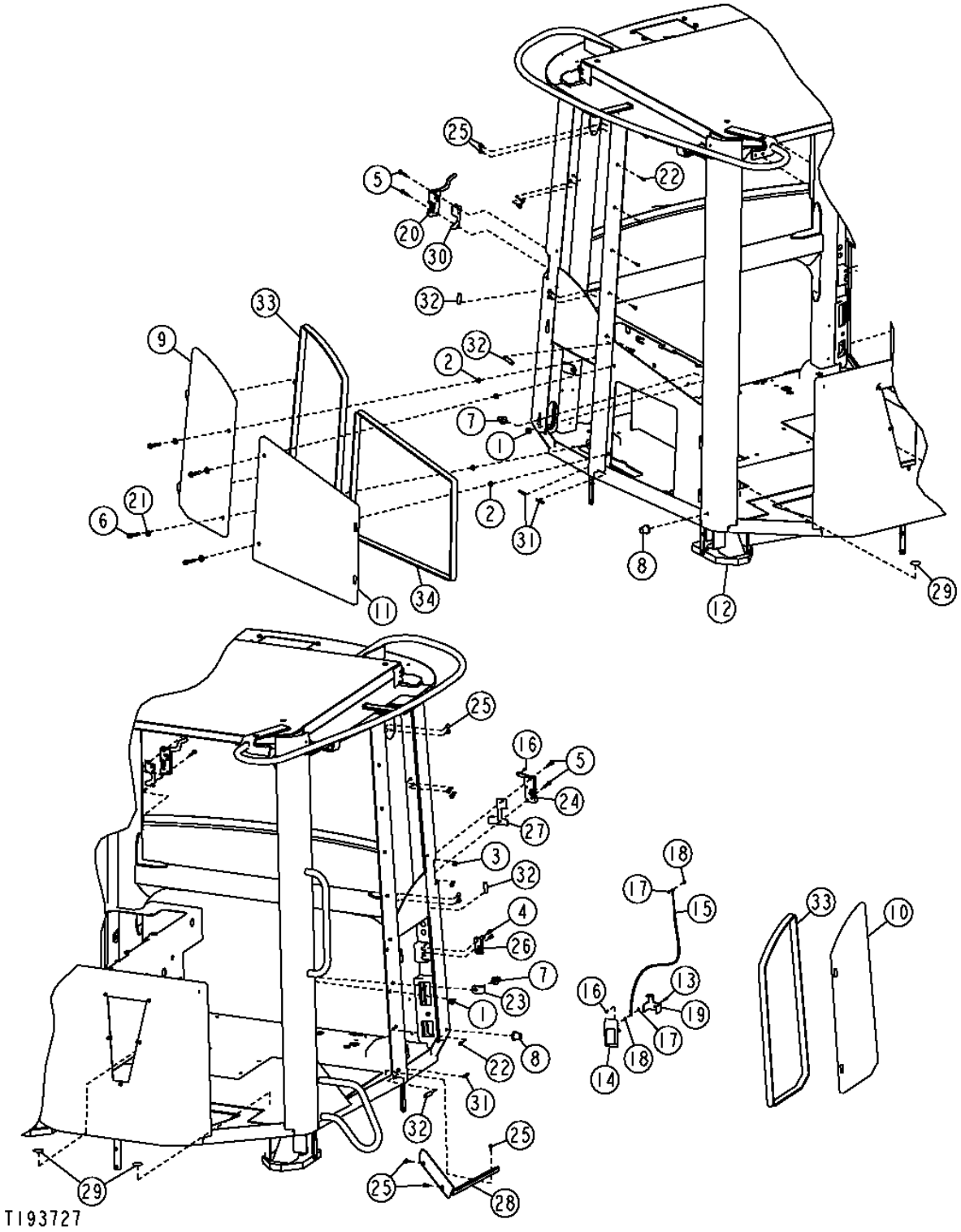

THIS PARTS LISTING IS CONTINUED

CAB

KEY	PART NO.	PART NAME	QTY	SERIAL NO.	REMARKS
1	14H813	NUT	2		7/16"
2	14M7298	FLANGE NUT	4		M8
3	14M7397	LOCK NUT	4		M6
4	19H1948	CAP SCREW	2		1/4" X 3/4"
5	19M7797	SCREW	4		M6 X 40
6	19M8318	SCREW	4		M8 X 45
7	AR91896	STRIKER	2		
8	AT211296	BUMPER	2		
9	AT225843	CAB FRAME	1		
10	AT224990	DOOR	1		
11	AT224991	DOOR	1		
12	AT226385	CAB FRAME	1		
13	19H3370	CAP SCREW	1		0.190" X 5/8"
14	AT227544	LATCH	1		
15	AT227545	PUSH PULL CABLE	1		
16	T178112	PIN FASTENER	2		
17	T178113	CLIP	2		
18	T178114	SPACER	2		
19	T196309	BRACKET	1		
20	.....	LATCH	1	-XXXXXX	(AT303411 NO LONGER AVAILABLE)
	AT315290	LATCH	1	XXXXXX-	
21	H110232	WASHER	4		0.406" X 0.890" X 0.059"
22	M114063	SCREW	15		M6 X 16
23	T135583	GUARD	1		
24	.....	LATCH	1	-XXXXXX	(T167504 NO LONGER AVAILABLE)
	AT310702	LATCH	1	XXXXXX-	
25	TCU14336	SCREW	15		
26	T167658	LATCH	1		
27	T177505	BRACKET	1		
28	T180930	RETAINER	1		
29	T186793	LABEL	3		
30	T201708	PLATE	1		
31	T203614	ISOLATOR	3		
32	T203615	ISOLATOR	4		
33	.....	ISOLATOR	1		(FURNISH AT305130, CUT TO 75.5 IN.(1918 MM))
34	AT305130	ISOLATOR	1		

CAB DOOR

T193726 -UN-30SEP03

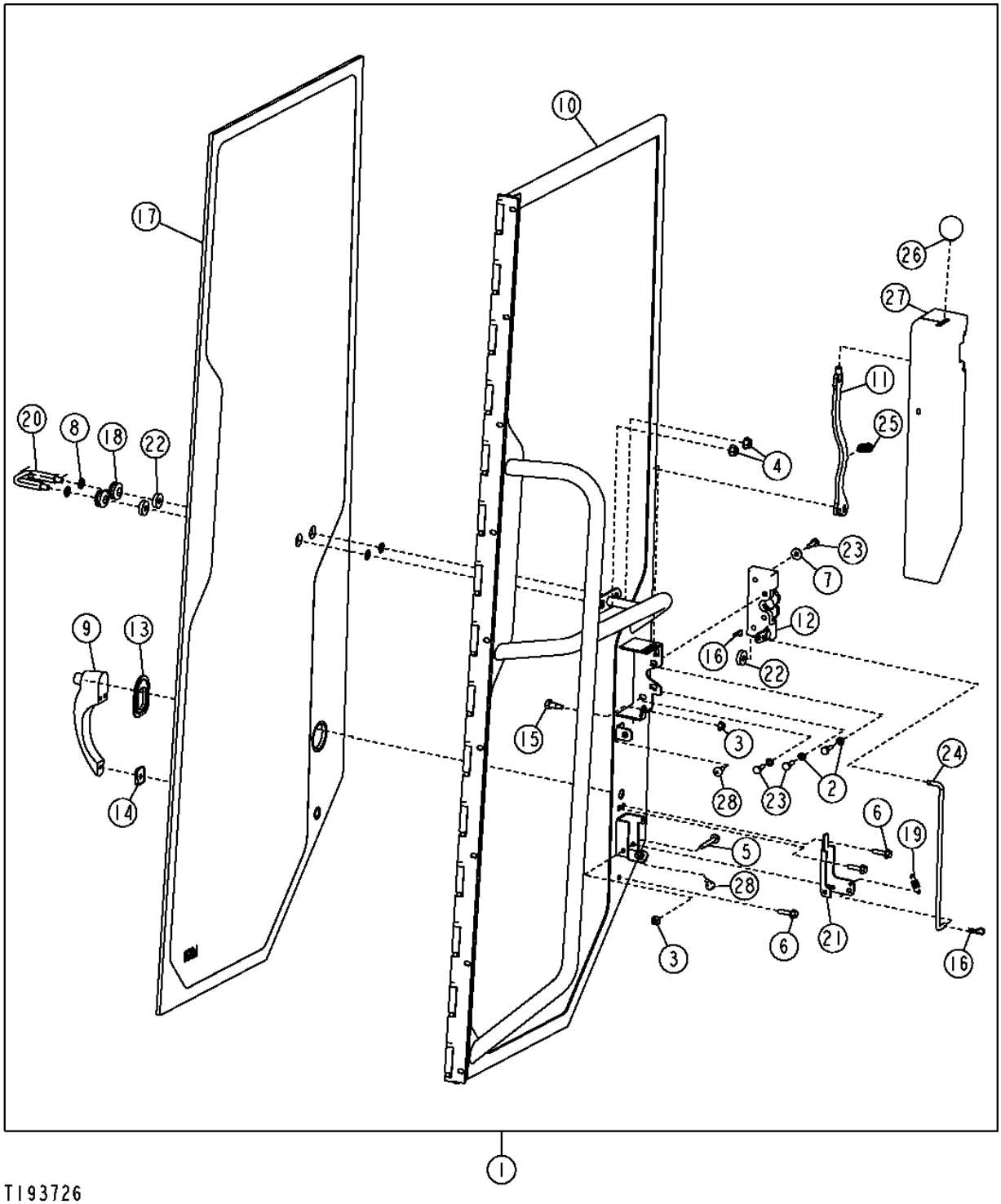

CAB DOOR

KEY	PART NO.	PART NAME	QTY	SERIAL NO.	REMARKS
1	AT224994	DOOR	1		
2	12M7006	LOCK WASHER	3		6 MM
3	14M7303	FLANGE NUT	2		M6
4	14M7424	FLANGE NUT	2		M8
5	19M7834	SCREW	1		M6 X 45
6	19M7863	SCREW	3		M6 X 25
7	24M7251	WASHER	1		6.400 X 18 X 1.600 MM
8	24M7362	WASHER	2		8.400 X 16 X 1.600 MM
9	AH121227	HANDLE	1		
10	AT224995	DOOR	1		
11	AT303493	CONTROL LEVER	1		
12	AT83105	LATCH	1		
13	H126081	BEZEL	1		
14	H126082	BEZEL	1		
15	.....	BOLT	1		(SUB 19M7077 AND T213560) (SUB FOR H131424)
16	H132922	COTTER PIN	2		
17	T167508	WINDOWPANE	1		
18	T167514	GROMMET	2		
19	T167530	SPRING	1		
20	T167546	STRIKER	1		
21	T167618	ARM	1		
22	T182899	WASHER	3		
23	T182963	SCREW	4		
24	T182967	ROD	1		
25	H95874	SPRING	1		
26	T182969	KNOB	1		
27	T182972	COVER	1		
28	TCU14336	SCREW	2		

CAB GLASS

T193725 -UN-30SEP03

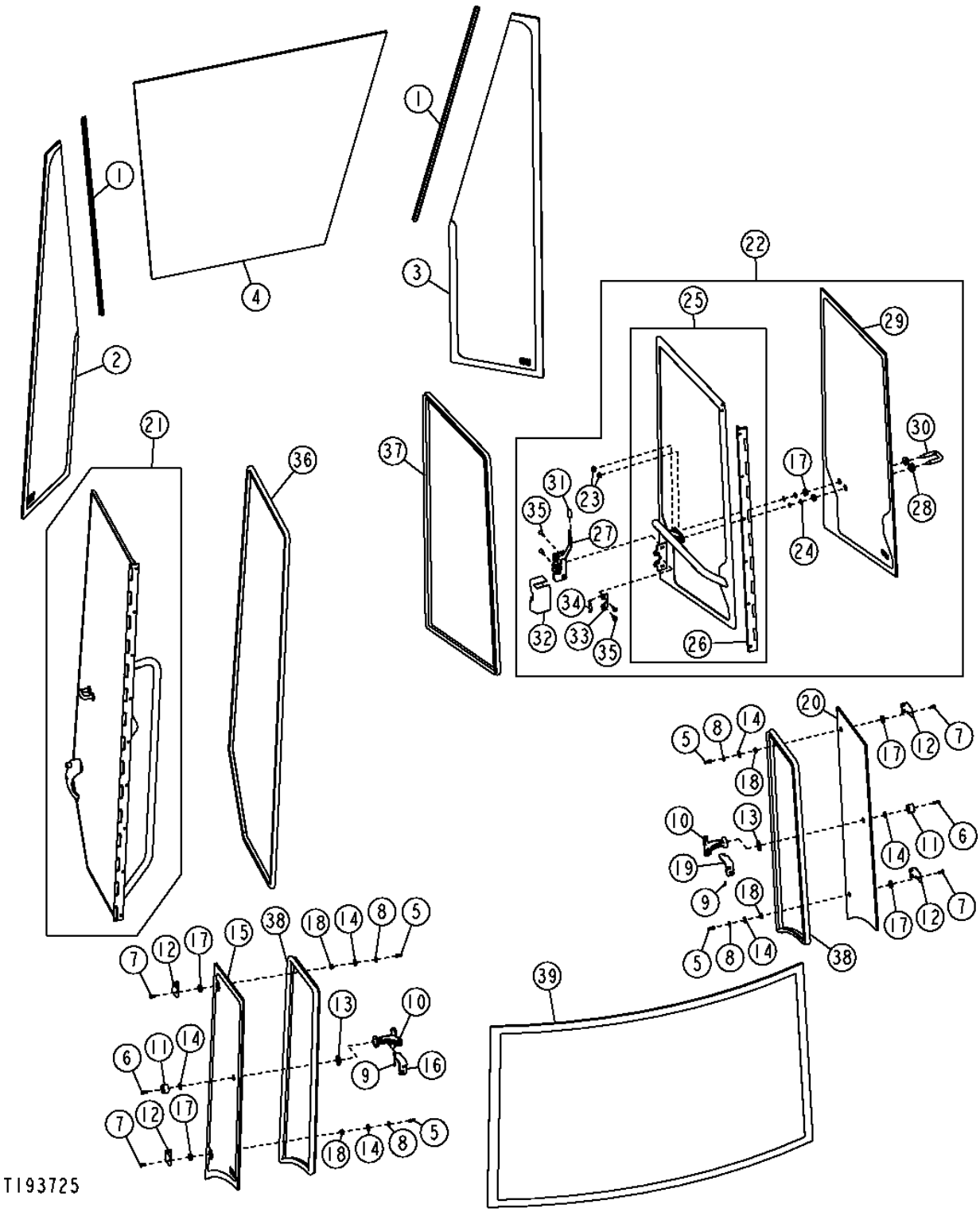

2F18

CAB GLASS

KEY	PART NO.	PART NAME	QTY	SERIAL NO.	REMARKS
1	T182903	SEAL	2		
2	T182927	WINDOWPANE	1		
3	T182928	WINDOWPANE	1		
4	T196237	WINDSHIELD	1		
5	14M7376	LOCK NUT	4		M6
6	19M7768	SCREW	2		M6 X 16
7	19M8648	SCREW	4		M6 X 16
8	24M7251	WASHER	4		6.400 X 18 X 1.600 MM
9	34H275	SPRING PIN	2		3/16" X 1/2"
10	AT226000	LATCH	2		
11	T184135	BUMPER	2		(SUB FOR T101090)
12	T167594	ANGLE	4		
	T167593	SCREW	8		(NOT ILLUSTRATED) (HINGE TO CAB FRAME)
13	T167659	WASHER	2		
14	T167683	WASHER	6		
15	T178221	WINDOWPANE	1		
16	T178534	BRACKET	1		
17	T182899	WASHER	6		
18	T182902	BUSHING	4		
19	T177827	BRACKET	1		
20	T178220	WINDOWPANE	1		
21	AT224994	DOOR	1		
22	AT226151	WINDOW	1		
23	14M7424	FLANGE NUT	2		M8
24	24M7362	WASHER	2		8.400 X 16 X 1.600 MM
25	AT226152	DOOR	1		
26	T167505	HINGE	1		
27	AT226176	LATCH	1		
28	T167514	GROMMET	2		
29	T167527	WINDOWPANE	1		
30	T167546	STRIKER	1		
31	T167630	GRIP	1		
32	T182695	COVER	1		
33	T197455	BRACKET	1		
34	T197456	EXTENSION SPRING	1		
35	TCU14336	SCREW	4		M6 X 16
36	AT305126	ISOLATOR	1		
37	.....	ISOLATOR	1		(FURNISH AT305126, CUT TO 120 IN.(3048 MM))
38	.....	ISOLATOR	1		(FURNISH AT305126, CUT TO 86 IN.(2184 MM))
39	T167519	WINDOW	1		

OPERATOR STATION FRONT PEDESTAL

T193670 -UN-20AUG03

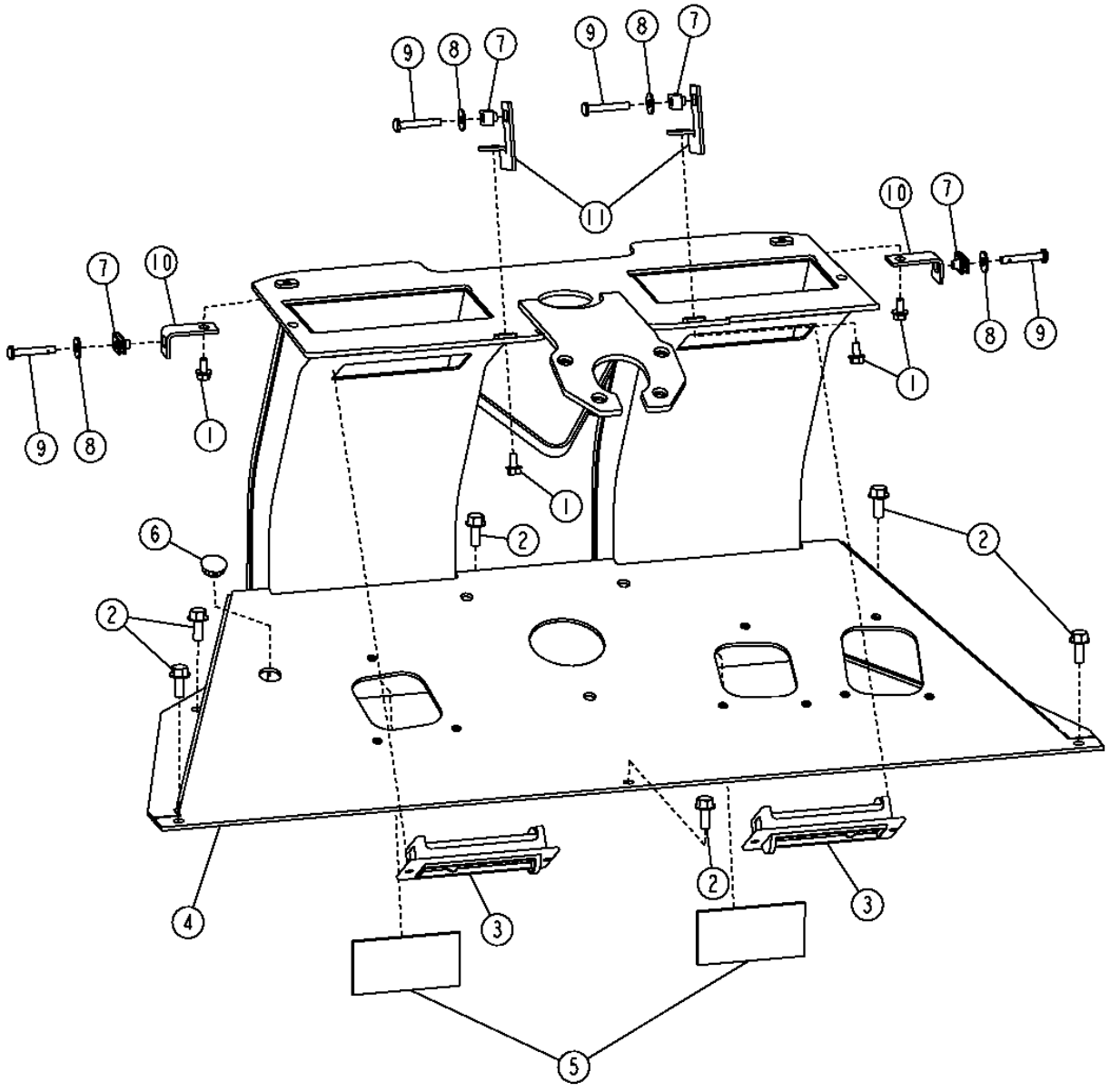

OPERATOR STATION FRONT PEDESTAL

KEY	PART NO.	PART NAME	QTY	SERIAL NO.	REMARKS
1	19M7774	SCREW	4		M6 X 12
2	19M7866	SCREW	6		M8 X 20
3	AH149228	LOUVER	2	-590067	
	AT227668	LOUVER	2	590068-	
4	AT227965	PEDESTAL	1		
5	T66418	ISOLATOR	1		
6	H34597	PLUG	1		
7	M84972	NUT	4		
8	24H1821	WASHER	4	590068-	
9	T134874	SELF-LOCKING SCREW	4	590068-	(SUB FOR 21M7403)
10	T196711	ANGLE	2	590068-	(BACK)
11	T196712	BRACKET	2	590068-	(FRONT)

CAB TRIM AND SEAT BASE

T157489 -UN-11SEP02

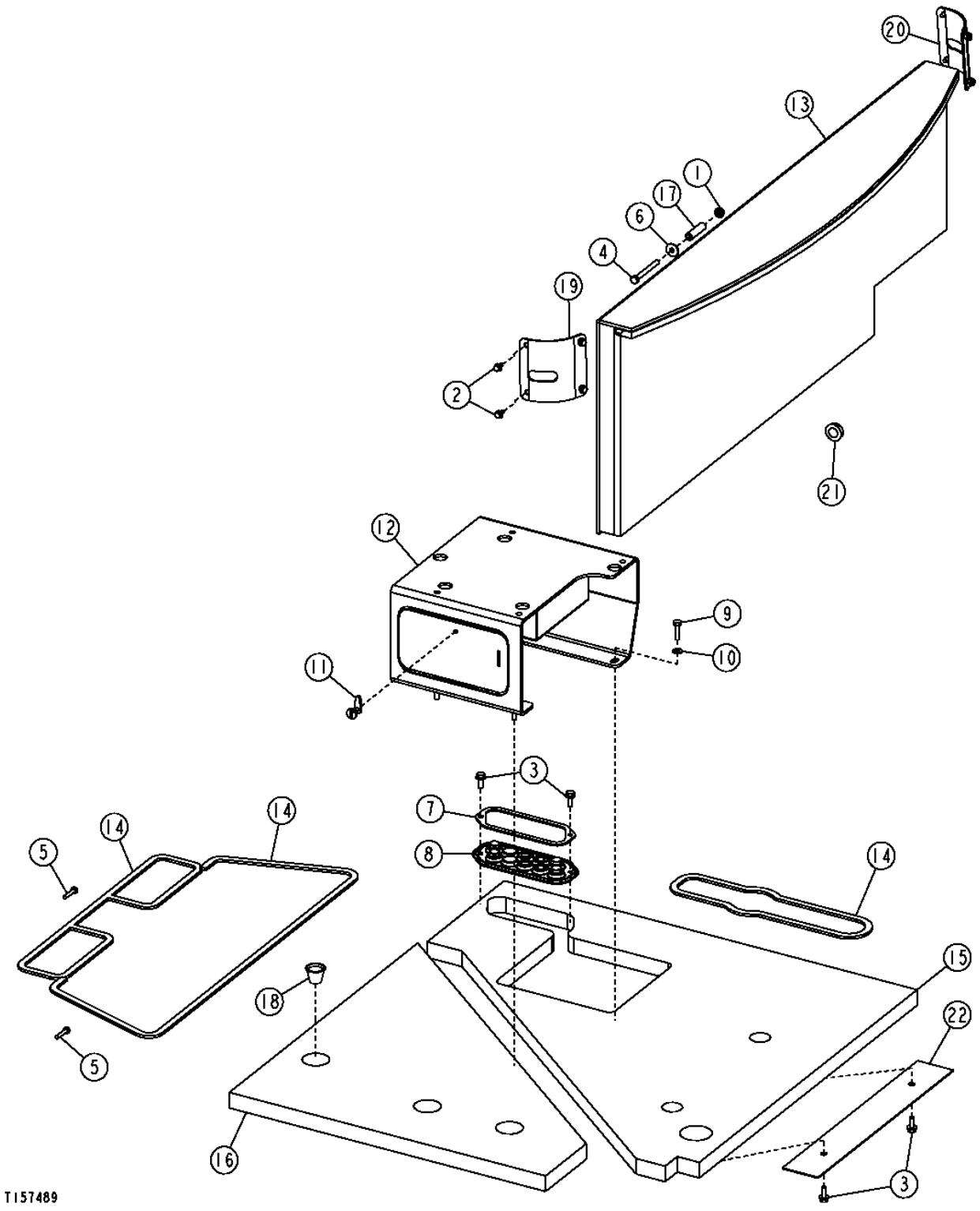

CAB TRIM AND SEAT BASE

KEY	PART NO.	PART NAME	QTY	SERIAL NO.	REMARKS
1	14M7298	FLANGE NUT	1	-590067	M8
2	19M7774	SCREW	8		M6 X 12
3	19M7866	SCREW	4		M8 X 20
4	19M8504	CAP SCREW	1	-590067	M8 X 80
5	21M7247	SCREW	2		M6 X 35
6	24M7298	WASHER	1	-590067	8.400 X 25 X 2 MM
7	T172991	PLATE	1		
8	T172992	GROMMET	1		
9	19M7513	CAP SCREW	5		M8 X 30
10	24M7238	WASHER	5		8.700 X 17 X 2 MM
11	AT151931	LATCH	1		
12	AT224235	FLOOR	1		
13	AT225706	PAD	1		
14	H81330	ISOLATOR	12		
15	T167770	ISOLATOR	1		
16	T167771	ISOLATOR	1		
17	T167775	BUSHING	1	-590067	
18	T180408	PLUG	1		
19	T205472	COVER	1	-590067	(SUB FOR T181603)
20	T205472	COVER	1	-590067	(SUB FOR T182389)
21	T182880	PLUG	1	-590067	
	T182860	ISOLATOR	1		
22	T182906	PLATE	1		

ROOF

T193660 -UN-19AUG03

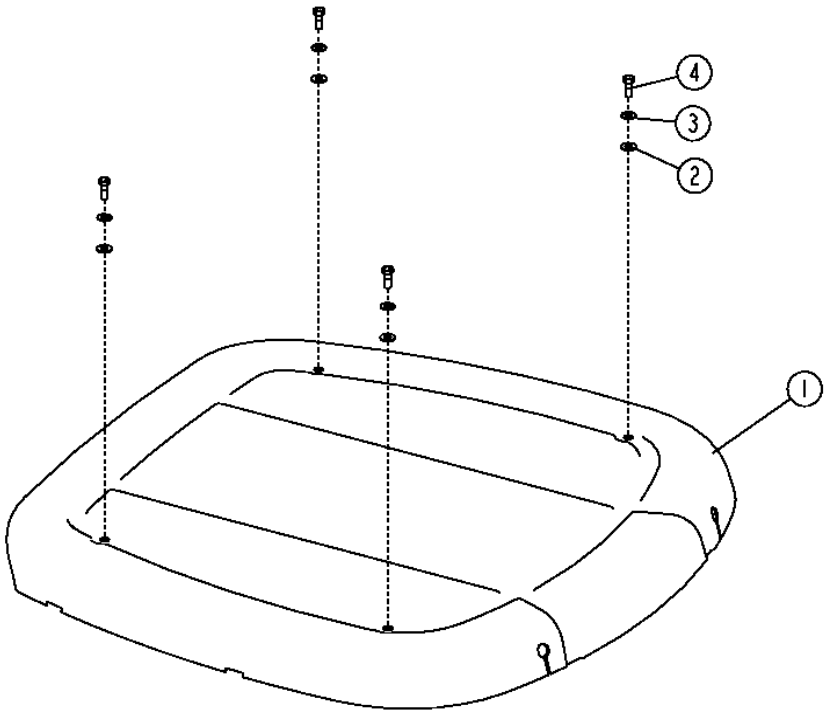

T193660

KEY	PART NO.	PART NAME	QTY	SERIAL NO.	REMARKS
1	AT227013	ROOF	1		(PAINTABLE)
	AT226578	ROOF	1		
2	T167659	WASHER	4		
3	24H1368	WASHER	4		
4	T182920	CAP SCREW	4		

CAB FLOOR MAT

TP55529 -UN-13MAY97

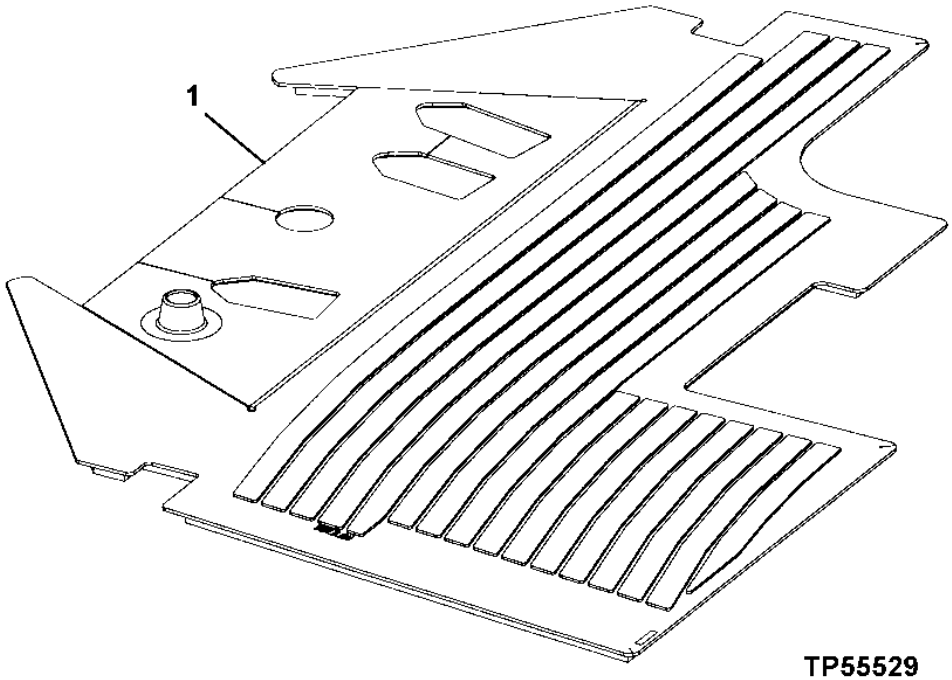

TP55529

KEY	PART NO.	PART NAME	QTY	SERIAL NO.	REMARKS
1	AT207144	MAT	1		FLOOR MAT - CAB AND CANOPY, (SUB FOR AT202732)

REAR WINDSHIELD WIPER

T153602 -UN-28JUN02

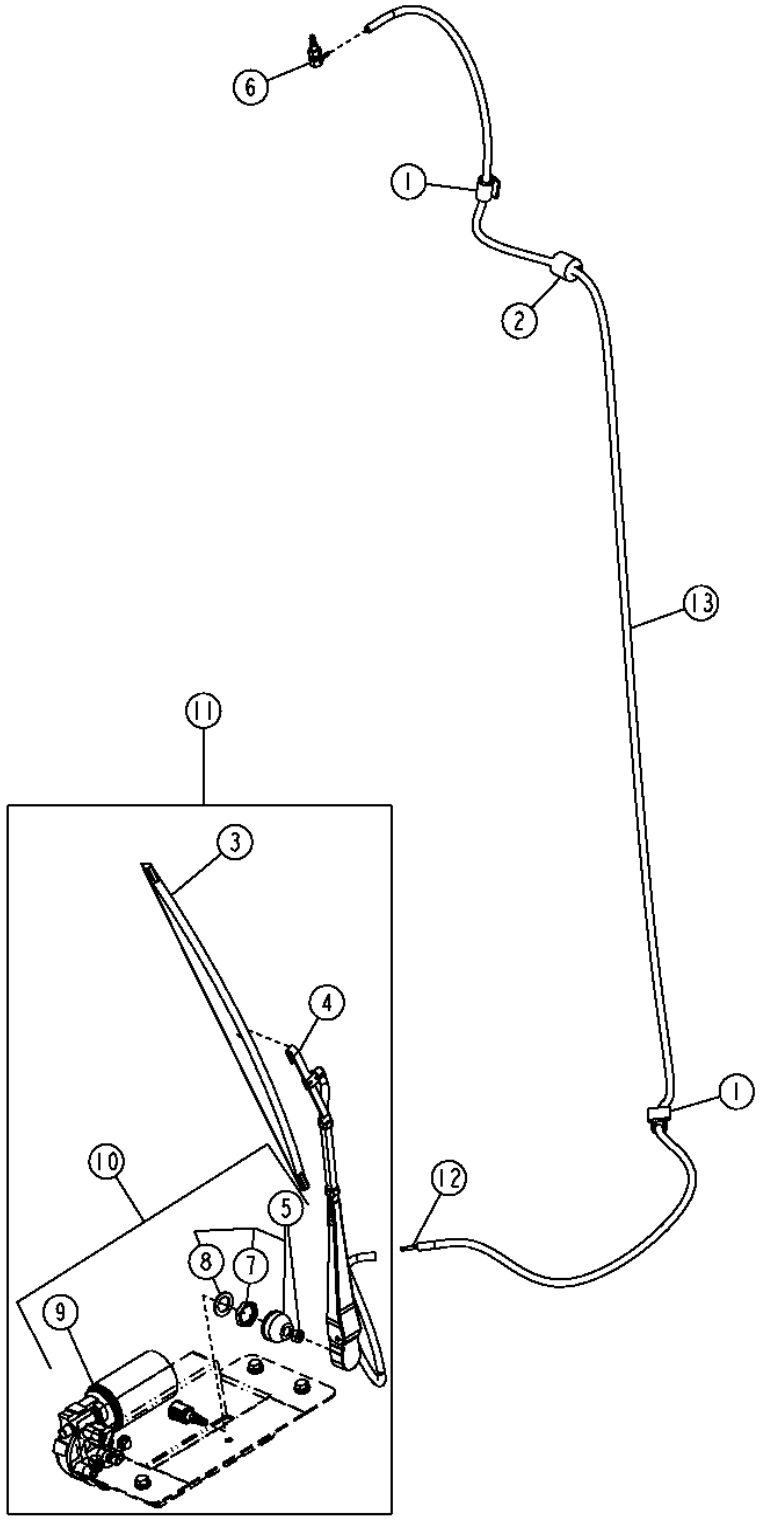

REAR WINDSHIELD WIPER

KEY	PART NO.	PART NAME	QTY	SERIAL NO.	REMARKS
1	T182909	CLIP	1		
2	T182860	ISOLATOR	1		
3	AL153660	WIPER BLADE	1		(SUB FOR AT209912)
4	AT209910	WIPER ARM	1		
5	RE40049	KIT	1		
6	AT116970	ELBOW FITTING	1		
7	AT138180	NUT	1		
8	R63667	WASHER	1		
9	AT209908	WIPER MOTOR	1		
10	AT224217	WIPER MOTOR	1		
11	.....	MOTOR	1		(AT202784 NO LONGER AVAILABLE) (FURNISH COMPONENTS)
12	T182919	FITTING	1		
13	.....	HYDRAULIC HOSE - FABRICATE	1		(MAKE FROM R120653, CUT TO 96 IN.)

FRONT WINDSHIELD WIPER

T153601 -UN-23JUL02

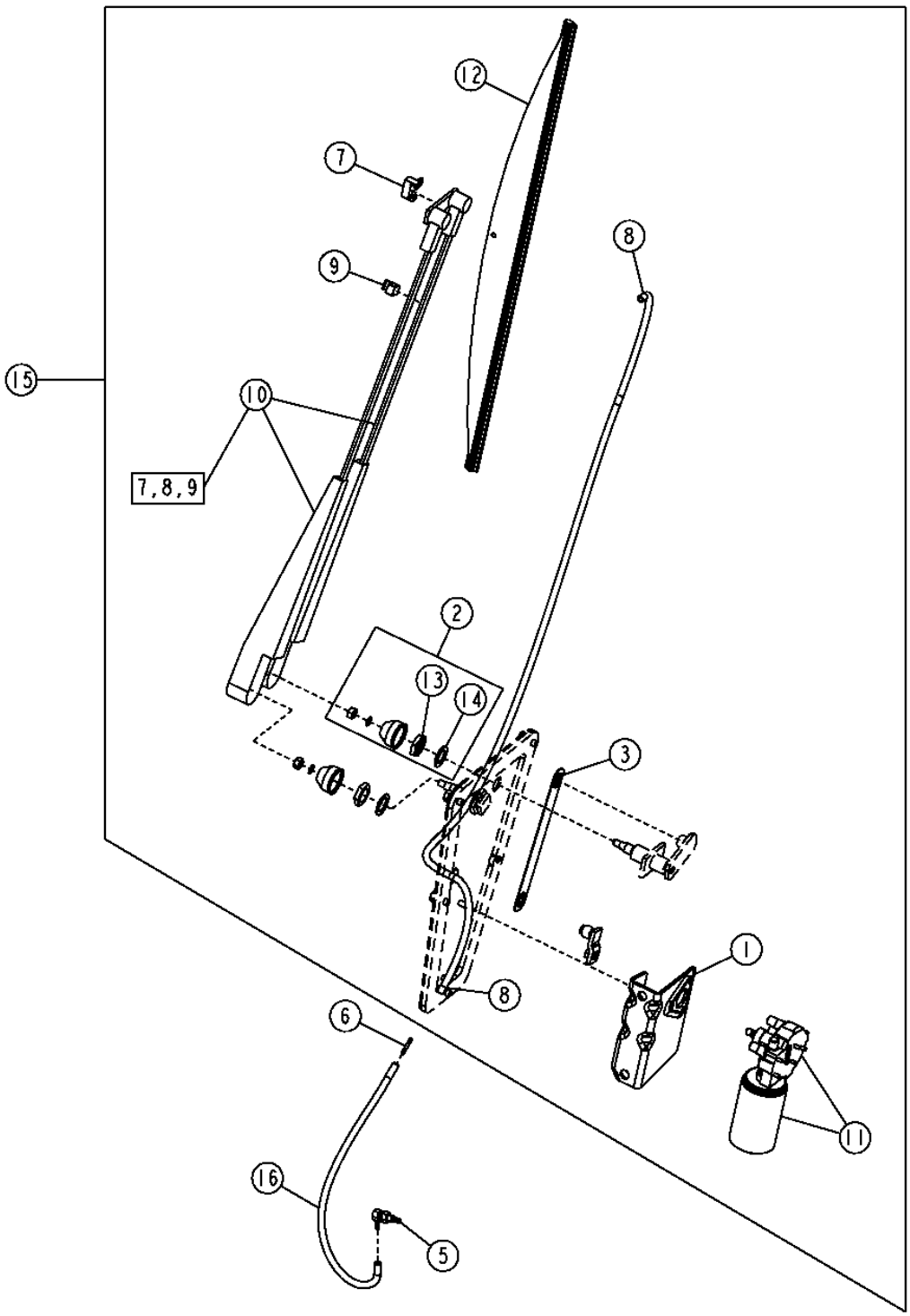

T153601

FRONT WINDSHIELD WIPER

KEY	PART NO.	PART NAME	QTY	SERIAL NO.	REMARKS
1	RE16879	BRACKET	1		
2	RE40049	KIT	2		
3	T172652	LINK	1		
5	AT116970	ELBOW FITTING	1		
6	T182919	FITTING	1		
7	AT137920	WINDSHIELD WASHER	1		
8	R54445	HOSE	1		
9	AT137921	CLIP	1		
10	AT209909	WIPER ARM	1		
11	AT209908	WIPER MOTOR	1		
12	AT138215	WIPER BLADE	1		
13	AT138180	NUT	2		
14	R63667	WASHER	2		
15	AT202726	WINDSHIELD WIPER	1		
16	.....	HYDRAULIC HOSE - FABRICATE	1		(MAKE FROM R120653, CUT TO 15 IN.)

RIGHT SIDE CONSOLE (TWO LEVER CONTROLLERS)(SERIAL NO. -590067)

T195636 -UN-23OCT03

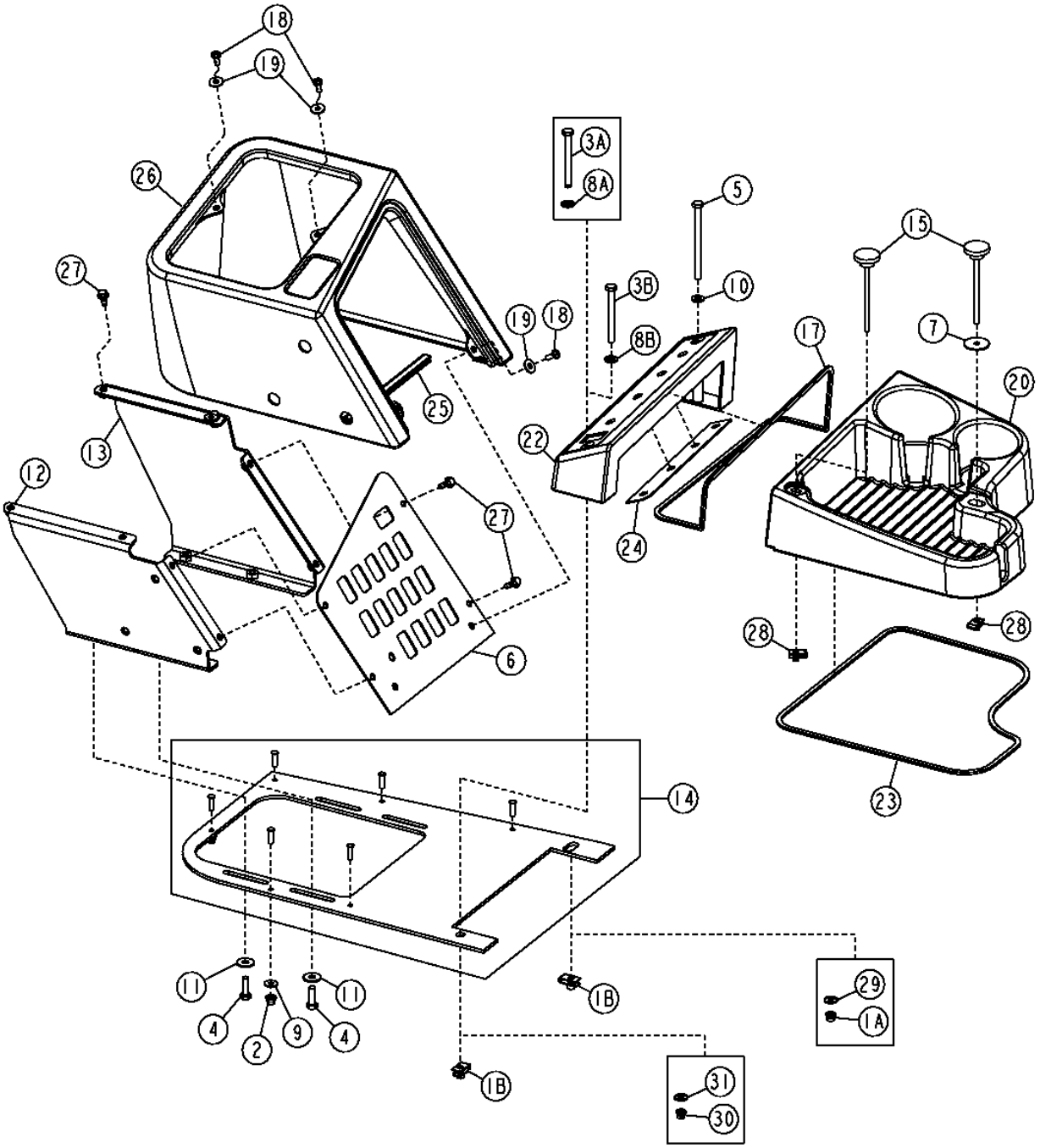

T195636

RIGHT SIDE CONSOLE (TWO LEVER CONTROLLERS)(SERIAL NO. -590067)

KEY	PART NO.	PART NAME	QTY	SERIAL NO.	REMARKS
1A	14M7396	LOCK NUT	1	-XXXXXX	
1B	H156360	NUT	1	XXXXXX-	
2	14M7165	LOCK NUT	6		
3A	19M7689	CAP SCREW	1	-XXXXXX	
3B	19M8504	CAP SCREW	1	XXXXXX-	
4	19M7407	CAP SCREW	4		
5	19M7997	CAP SCREW	1		
6	AT226269	INSTRUMENT PANEL	1		
7	24H1695	WASHER	1		
8A	24M7054	WASHER	1	-XXXXXX	
8B	24M7238	WASHER	1	XXXXXX-	
9	24M7139	WASHER	6		
10	24M7238	WASHER	1		
11	24M7298	WASHER	1		
12	AT226072	BRACKET	1		
13	AT226073	BRACKET	1		
14	AT226263	PLATE	1		
15	AT226334	KNOB	2		
17	.....	ISOLATOR	1		(MAKE FROM BULK MATERIAL T180533, CUT TO LENGTH)
18	T133674	SELF-LOCKING SCREW	4		(SUB FOR 21M7292)
19	24H1821	WASHER	4		
20	T182612	COVER	1		
22	T182609	CONSOLE	1		
23	.....	ISOLATOR	1		(MAKE FROM T182629, CUT TO LENGTH)
24	T197457	PLATE	1		(FURNISH BULK MATERIAL DT5286, CUT TO LENGTH)
25	.....	ISOLATOR	1		(MAKE FROM T180533, CUT TO LENGTH)
26	T182607	COVER	1		
27	M113243	SCREW	1		
28	M84972	NUT	1		
29	24M7298	WASHER	1	-XXXXXX	
30	14M7397	LOCK NUT	1	-XXXXXX	
31	24M7139	WASHER	1	-XXXXXX	

RIGHT SIDE CONSOLE (SINGLE LEVER CONTROLLERS)(SERIAL NO. -590067)

T158501 -UN-11SEP02

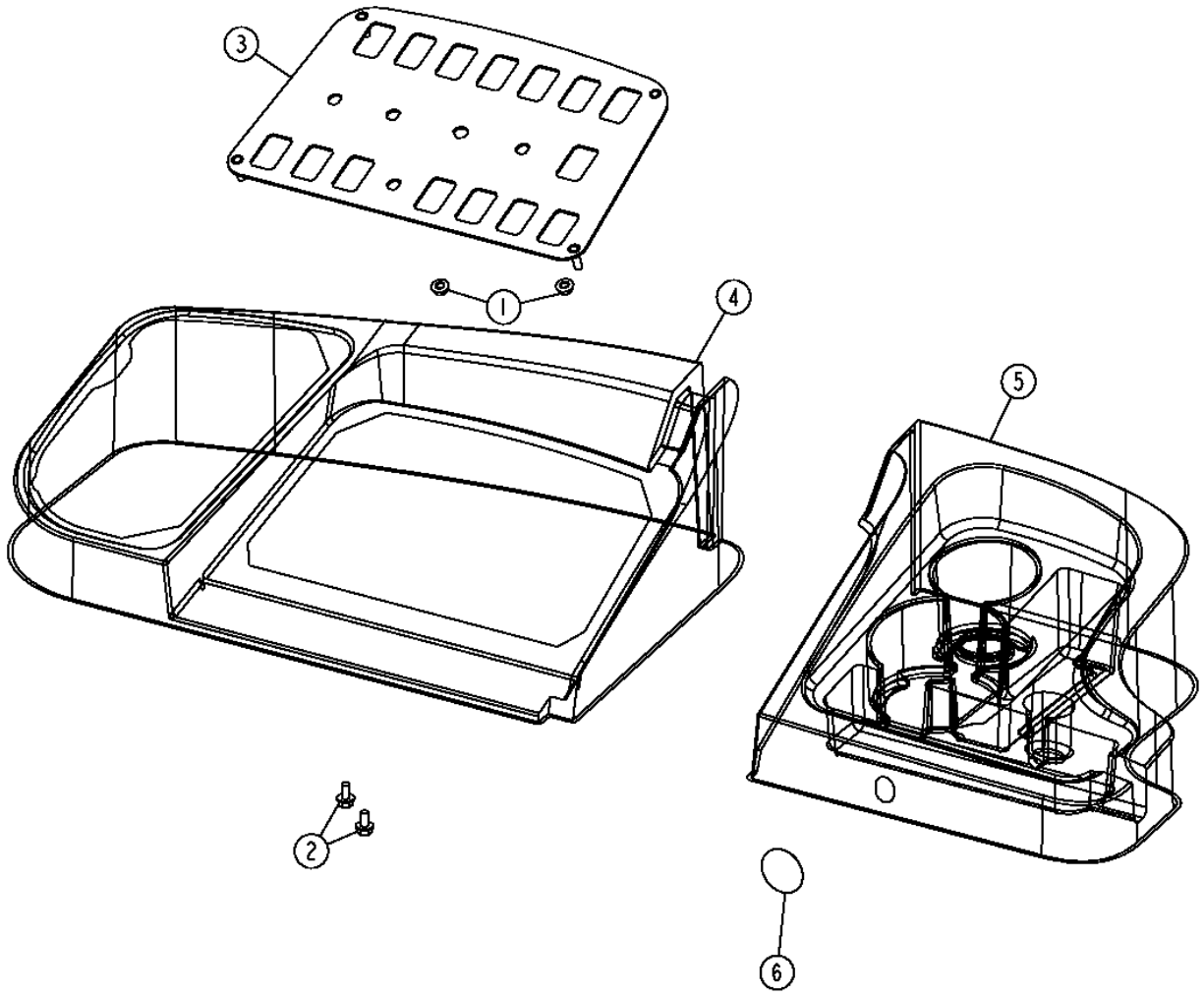

T158501

2G8

RIGHT SIDE CONSOLE (SINGLE LEVER CONTROLLERS)(SERIAL NO. -590067)

KEY	PART NO.	PART NAME	QTY	SERIAL NO.	REMARKS
1	14M7303	FLANGE NUT	4		
2	19M7774	SCREW	4		
3	AT207497	PLATE	1		
4	T180922	CONSOLE	1		
5	T180923	CONSOLE	1		
6	T186793	LABEL	1		

RIGHT SIDE CONSOLE (SERIAL NO. 590068-)

T197047 -UN-05JAN04

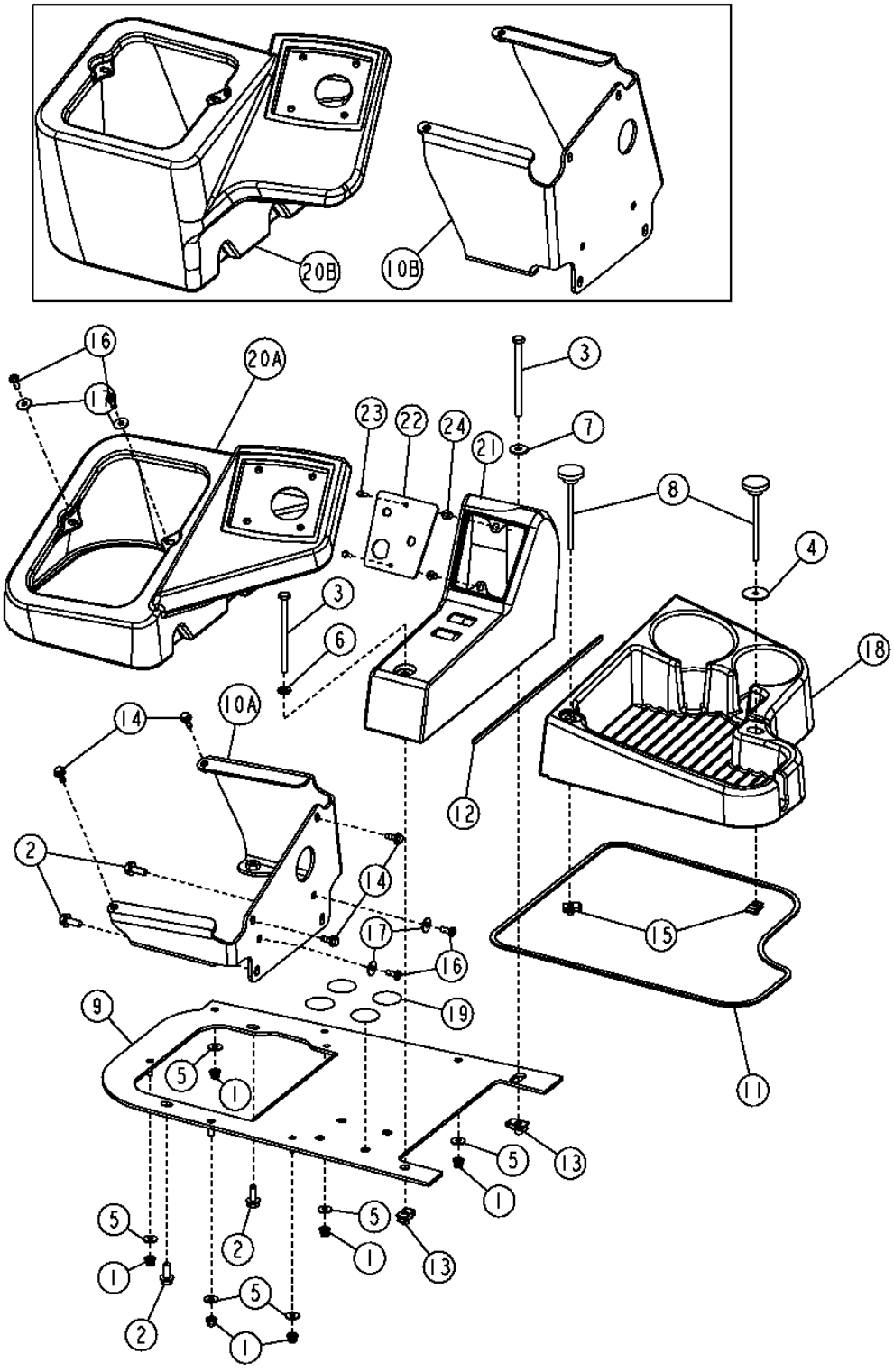

2G10

RIGHT SIDE CONSOLE (SERIAL NO. 590068-)

KEY	PART NO.	PART NAME	QTY	SERIAL NO.	REMARKS
1	14M7165	LOCK NUT	6		M6
2	19M7866	SCREW	4		M8 X 20
3	19M7997	CAP SCREW	2		M8 X 110
4	24H1695	WASHER	1		9/32" X 1-3/8" X 0.065"
5	24M7139	WASHER	6		6.400 X 18 X 1.600 MM
6	24M7238	WASHER	1		8.700 X 17 X 2 MM
7	24M7298	WASHER	1		8.400 X 25 X 2 MM
8	AT226334	KNOB	2		
9	AT310413	PLATE	1		(SUB FOR AT228253)
10A	AT310414	BRACKET	1		(SHORT) (SUB FOR AT300441)
10B	AT310412	BRACKET	1		(TALL) (SUB FOR AT227794)
11	T180533	SEALING TRIM	1		
12	.....	ISOLATOR	1		(FURNISH T207925 BULK MATERIAL, CUT TO 4.25 FT.)
13	H156360	NUT	2		
14	M113243	SCREW	4		
15	M84972	NUT	2		
16	T133674	SELF-LOCKING SCREW	4		(SUB FOR 21M7292)
17	24H1821	WASHER	4		
18	T182612	COVER	1		
19	T186793	LABEL	4		
20A	T200267	COVER	1		(SHORT)
20B	T196622	COVER	1		(TALL)
21	T202883	CONSOLE	1		
22	T203128	PLATE	1		
23	T82791	SCREW	2		
24	T82792	NUT	2		

WIPER MOUNTING BRACKETS AND WIPER SWITCHES

T153330 -UN-28JUN02

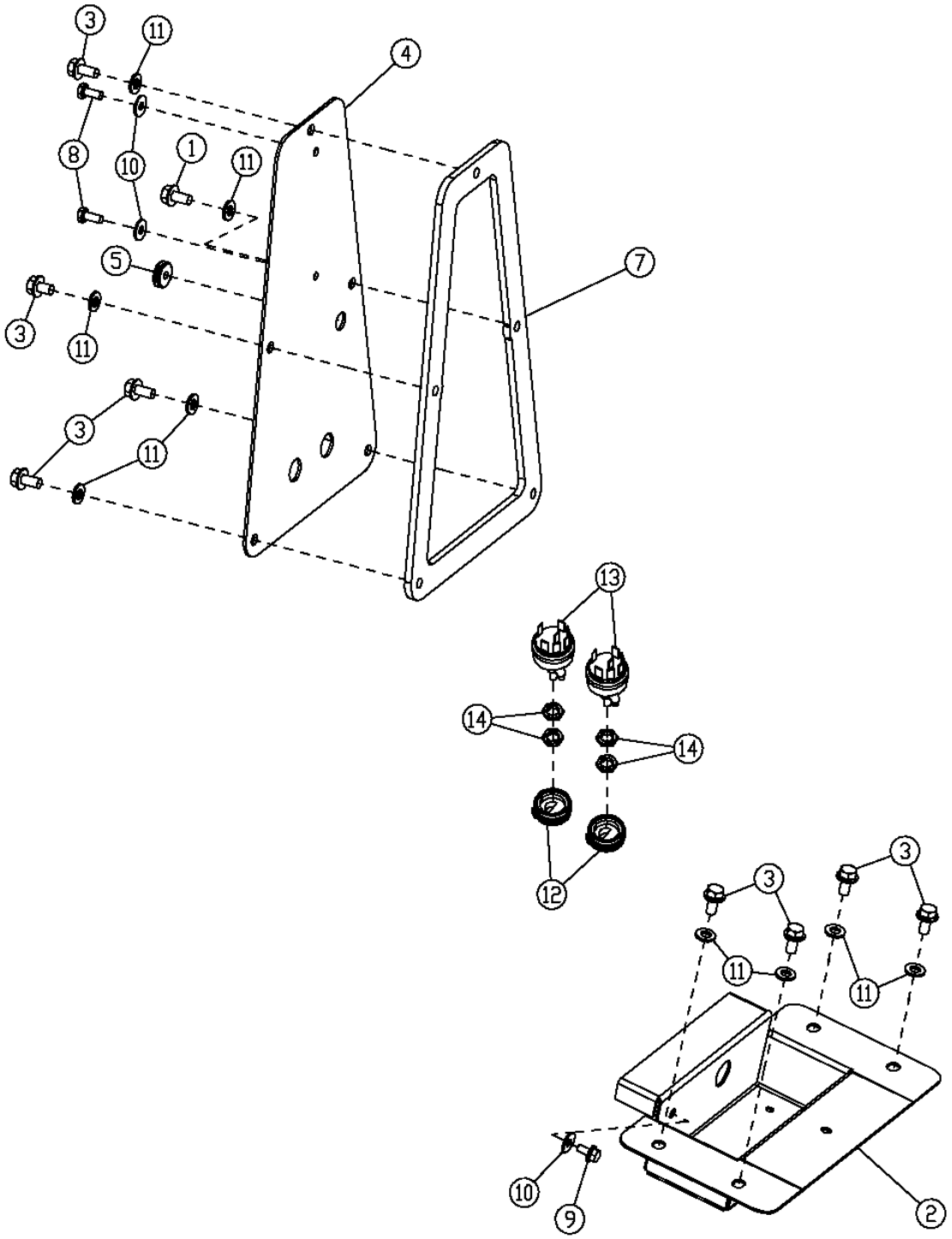

T153330

2G12

WIPER MOUNTING BRACKETS AND WIPER SWITCHES

KEY	PART NO.	PART NAME	QTY	SERIAL NO.	REMARKS
1	19M7865	SCREW	1		M8 X 16
2	T181412	TRAY	1		BRACKET, REAR WIPER MOUNTING
3	19M7865	SCREW	8		M8 X 16
4	T181413	PLATE	1		
5	T182874	GROMMET	1		
7	T167754	SEAL	1		
8	19H3138	CAP SCREW	2		
9	19M7774	SCREW	1		M6 X 12
10	24M7139	WASHER	3		6.400 X 18 X 1.600 MM
11	24M7238	WASHER	9		
12	AL76568	KNOB	2		
13	RE46634	SWITCH	4		
14	R44165	LOCK NUT	2		

2G13

LEFT HAND COVER
(CAB)

T164834 -UN-31JAN03

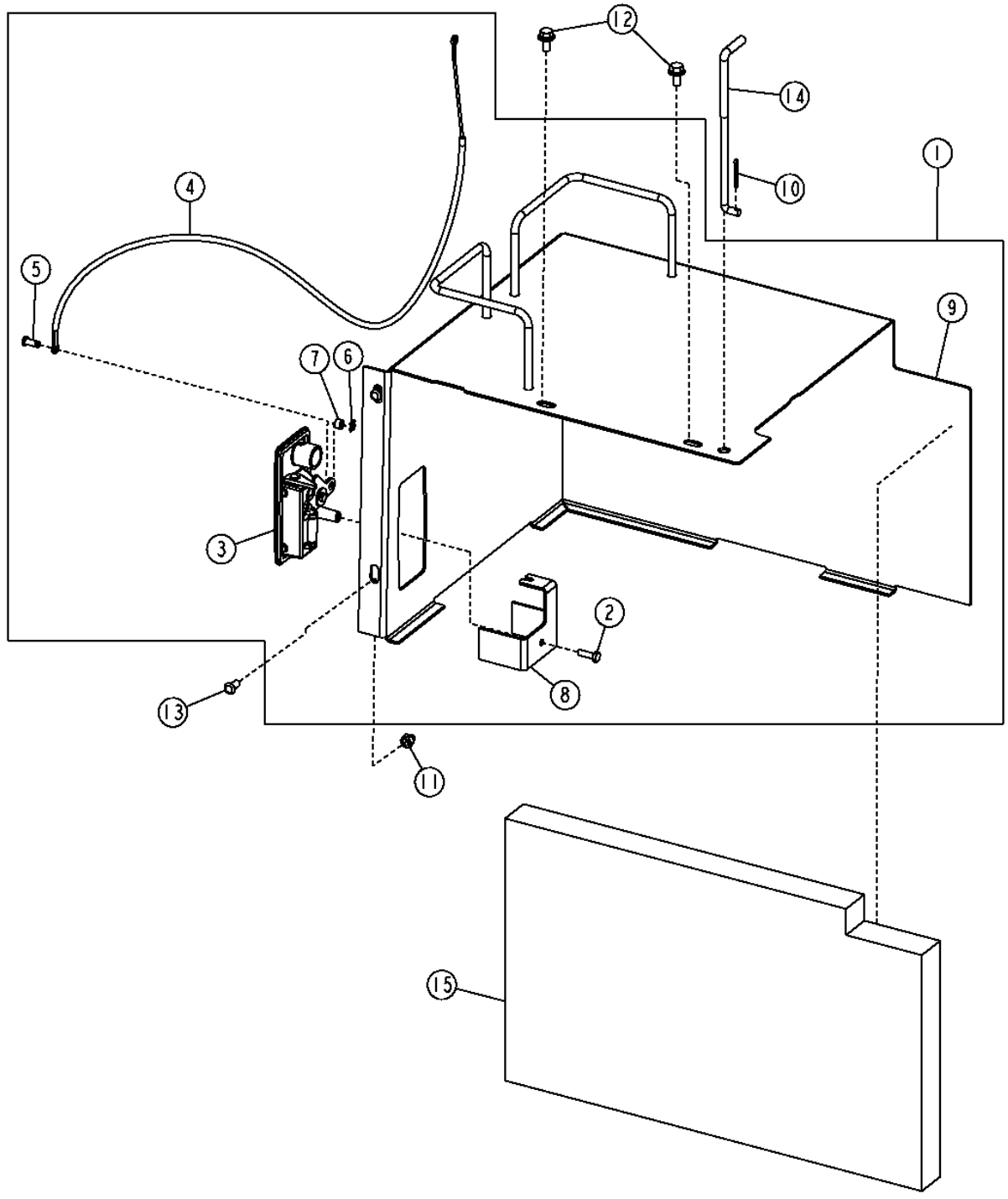

T164834

2G14

LEFT HAND COVER (CAB)

KEY	PART NO.	PART NAME	QTY	SERIAL NO.	REMARKS
1	AT227547	FIELD INSTALLATION KIT	1		
2	19H3370	CAP SCREW	1		
3	AT227544	LATCH	1		
4	AT227545	PUSH PULL CABLE	1		
5	T178112	PIN FASTENER	2		
6	T178113	CLIP	2		
7	T178114	SPACER	2		
8	T196309	BRACKET	1		
9	AT227549	COVER	1		
10	11M7081	COTTER PIN	1		
11	14M7376	LOCK NUT	2		
12	19M7774	SCREW	2		
13	T167593	SCREW	2		
14	T167764	ROD	1		
15	T171849	ISOLATOR	1		

2G15

HOLD OPEN LATCH (LEFT HAND DOOR)

T158691 -UN-03SEP02

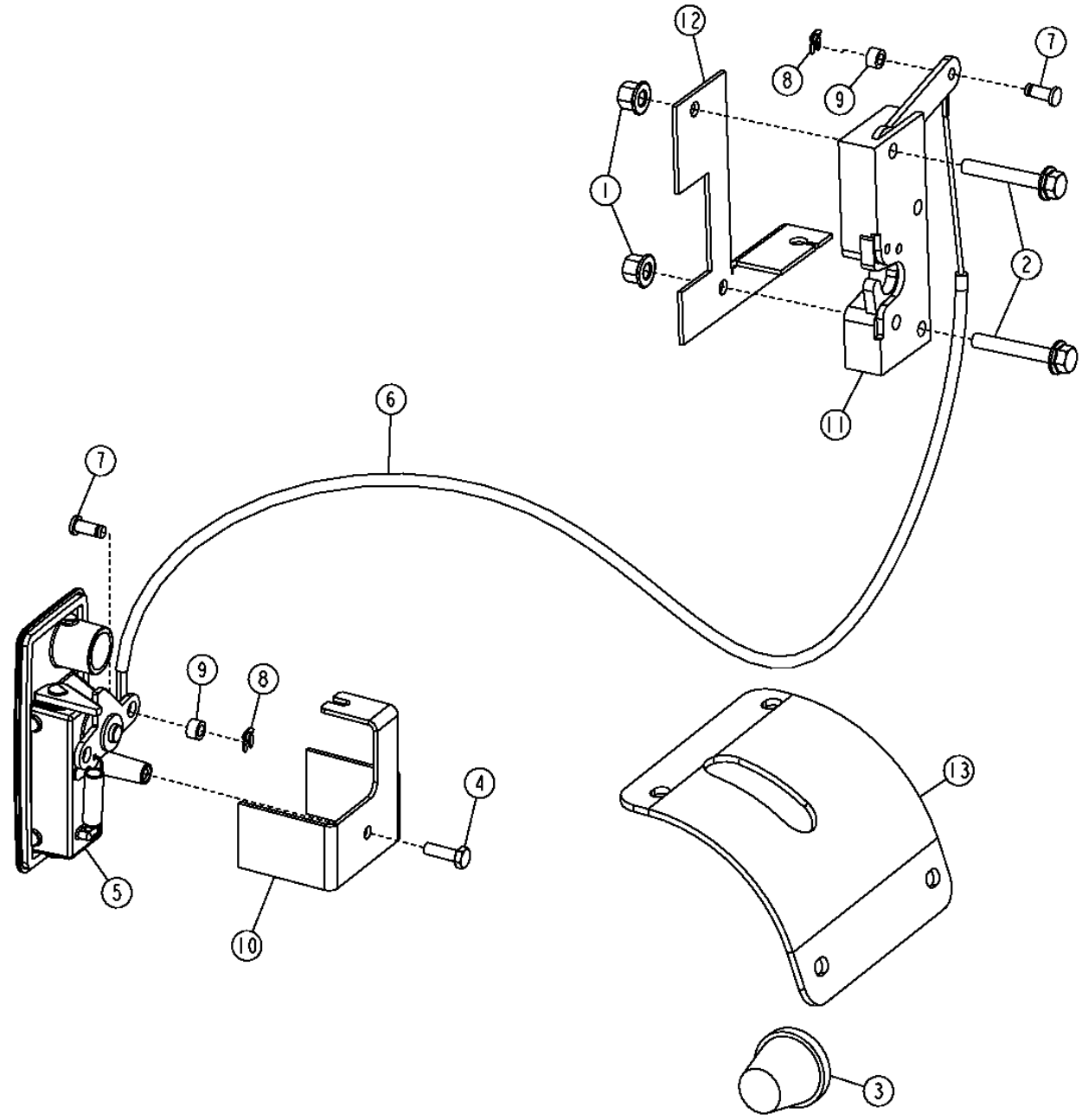

2G16

HOLD OPEN LATCH (LEFT HAND DOOR)

KEY	PART NO.	PART NAME	QTY	SERIAL NO.	REMARKS
1	14M7397	LOCK NUT	2		
2	19M7797	SCREW	2		
3	AT211296	BUMPER	1		
4	21H1463	CAP SCREW	1		
5	AT227544	LATCH	1		
6	AT227545	PUSH PULL CABLE	1		
7	T178112	PIN FASTENER	2		
8	T178114	SPACER	2		
9	T178114	SPACER	2		
10	T196309	BRACKET	1		
11	.....	LATCH	1	-XXXXXX	(T167504 NO LONGER AVAILABLE)
	AT310702	LATCH	1	XXXXXX-	
12	T177505	BRACKET	1		
13	T205472	COVER	1		(SUB FOR T181603)

2G17

HOLD OPEN LATCH (RIGHT HAND DOOR)

T158692 -UN-03SEP02

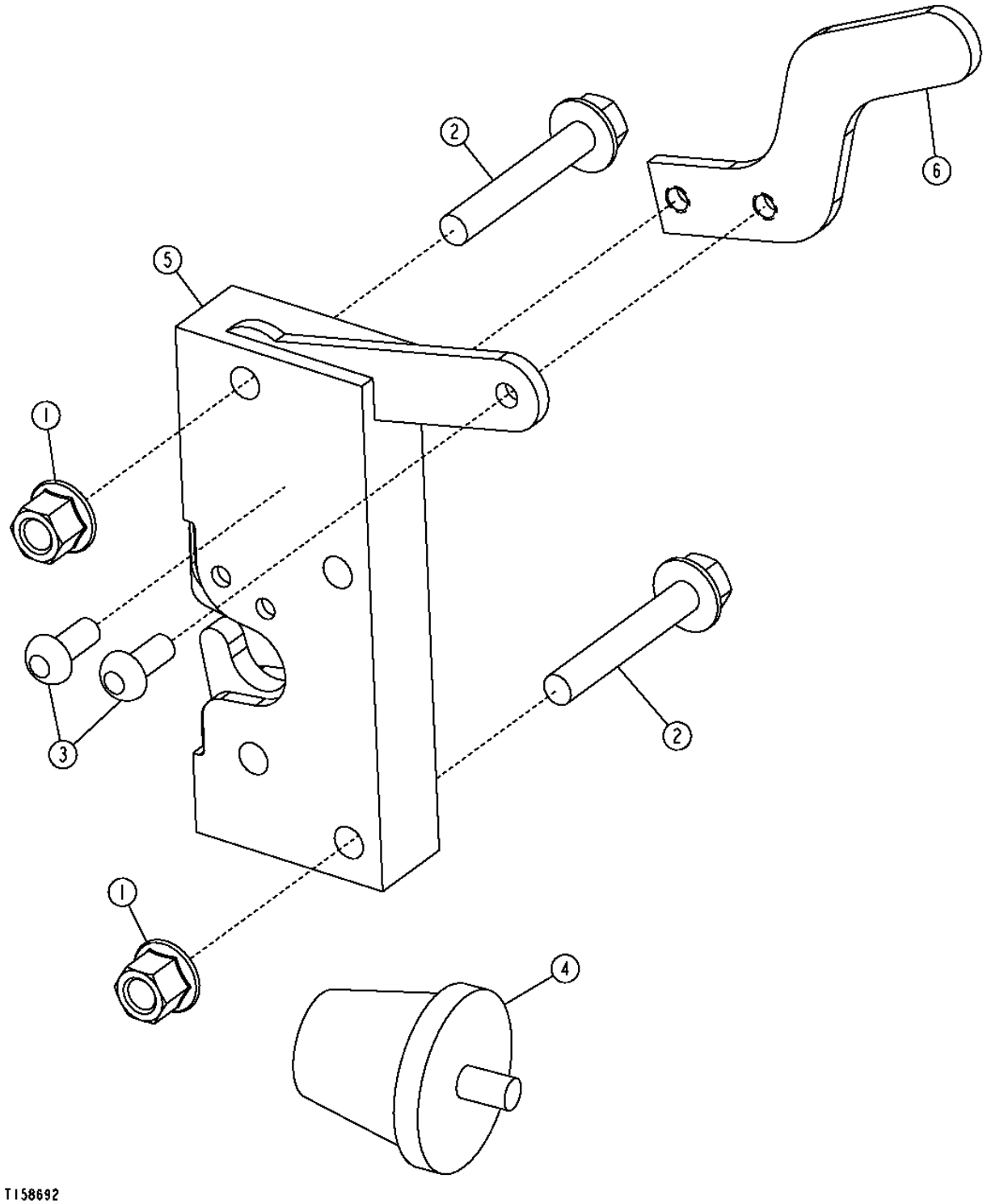

2G18

HOLD OPEN LATCH (RIGHT HAND DOOR)

KEY	PART NO.	PART NAME	QTY	SERIAL NO.	REMARKS
1	14M7397	LOCK NUT	2		
2	19M7797	SCREW	2		
3	21M7265	SCREW	2		
4	AT211296	BUMPER	1		
5	.....	LATCH	1	-XXXXXX	(T167504 NO LONGER AVAILABLE)
	AT310702	LATCH	1	XXXXXX-	
6	T167574	LEVER	1		

CAB REAR COVER

TP60556 -UN-01DEC98

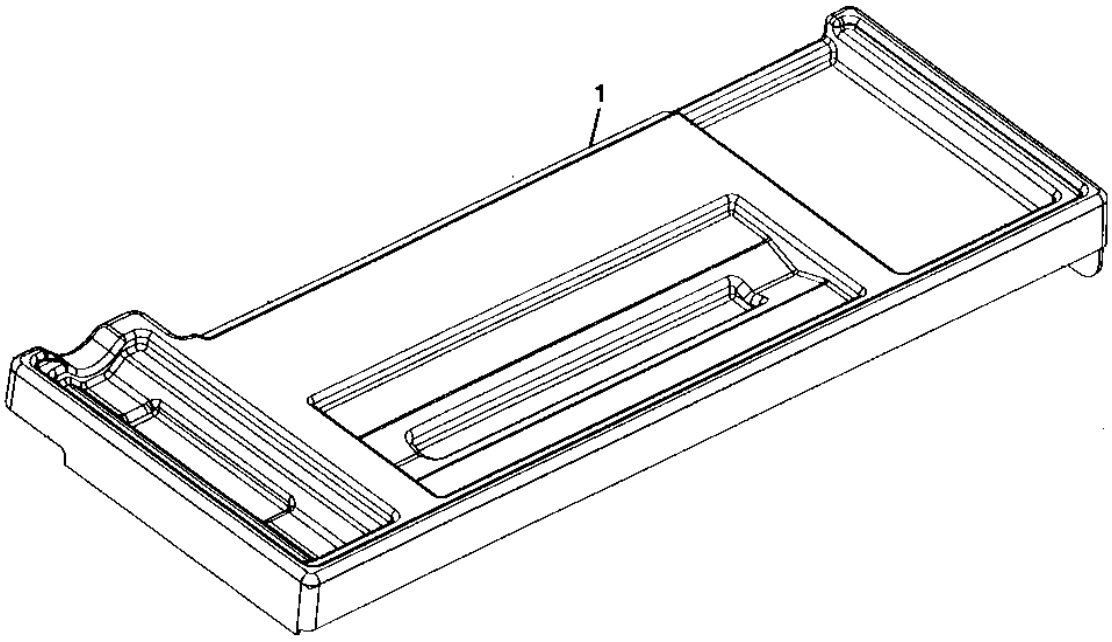

TP60556

2G20

FRESH AIR HOUSING COVER

KEY	PART NO.	PART NAME	QTY	SERIAL NO.	REMARKS
1	AT222402	COVER	1	-592825	
	AT311383	COVER	1	592826-	

2G21

WRIST-ARM REST(FOR USE WITH TWO-LEVER CONTROLLERS)(SERIAL NO. -590067)

T161170 -UN-31OCT02

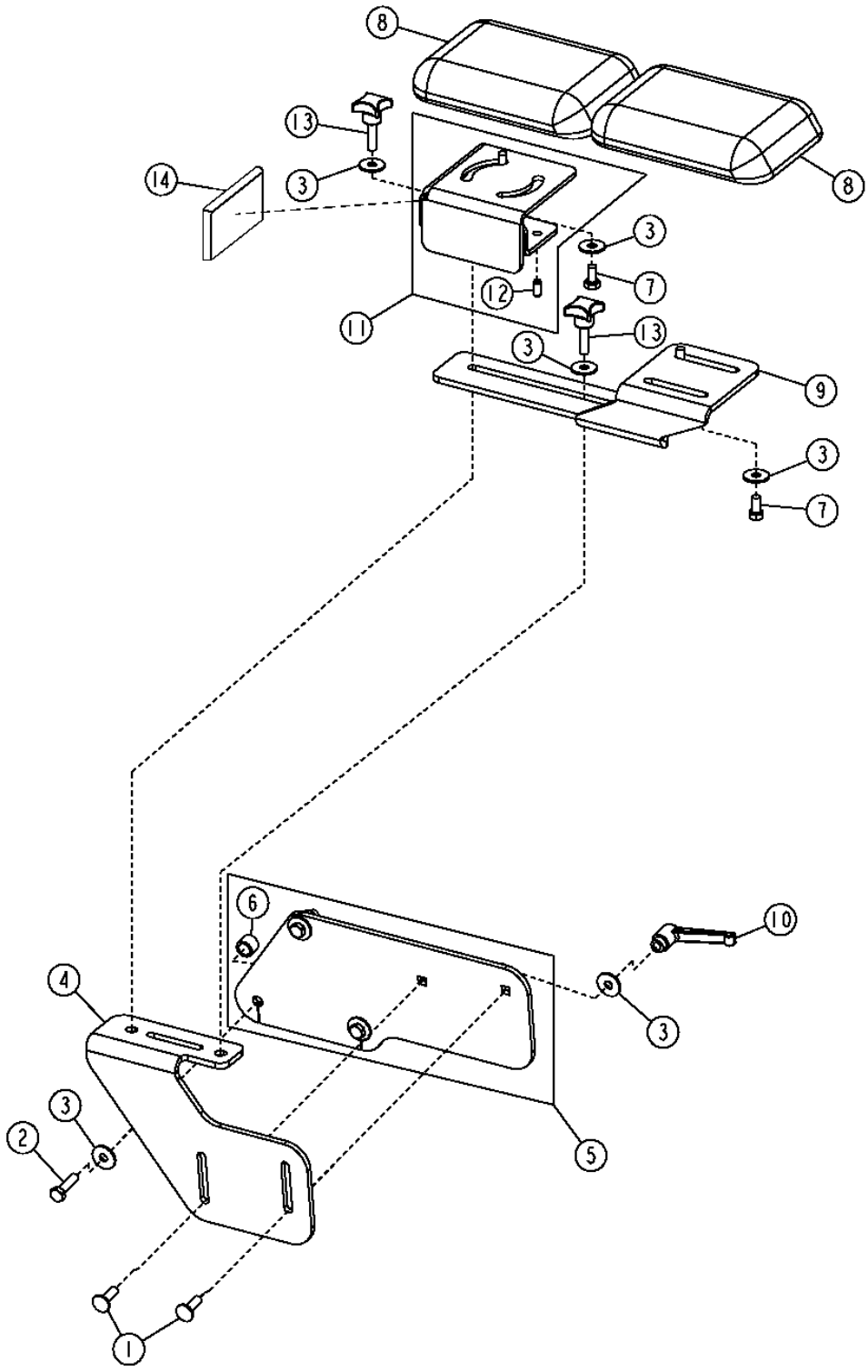

T161170

2G22

WRIST-ARM REST(FOR USE WITH TWO-LEVER CONTROLLERS)(SERIAL NO. -590067)

KEY	PART NO.	PART NAME	QTY	SERIAL NO.	REMARKS
1	03M7185	BOLT	2		
2	19M7513	CAP SCREW	3		M8 X 30
3	24M7298	WASHER	11		8.400 X 25 X 2 MM
4	AT226279	SUPPORT	1		
5	AT226421	SUPPORT	1		
6	28H1884	SPACER	3		
7	19M7932	CAP SCREW	4		M8 X 16
8	AT171679	CUSHION	2		
9	T195929	SUPPORT	1		
10	AT227063	LEVER	2		
11	AT226082	BRACKET	1		
12	44M7027	PIN	1		8 X 16 MM
13	AT227068	KNOB	2		
14	AT300104	MAGNET	1		

WRIST-ARM REST (SERIAL NO. 590068-)

T202072 -UN-10AUG04

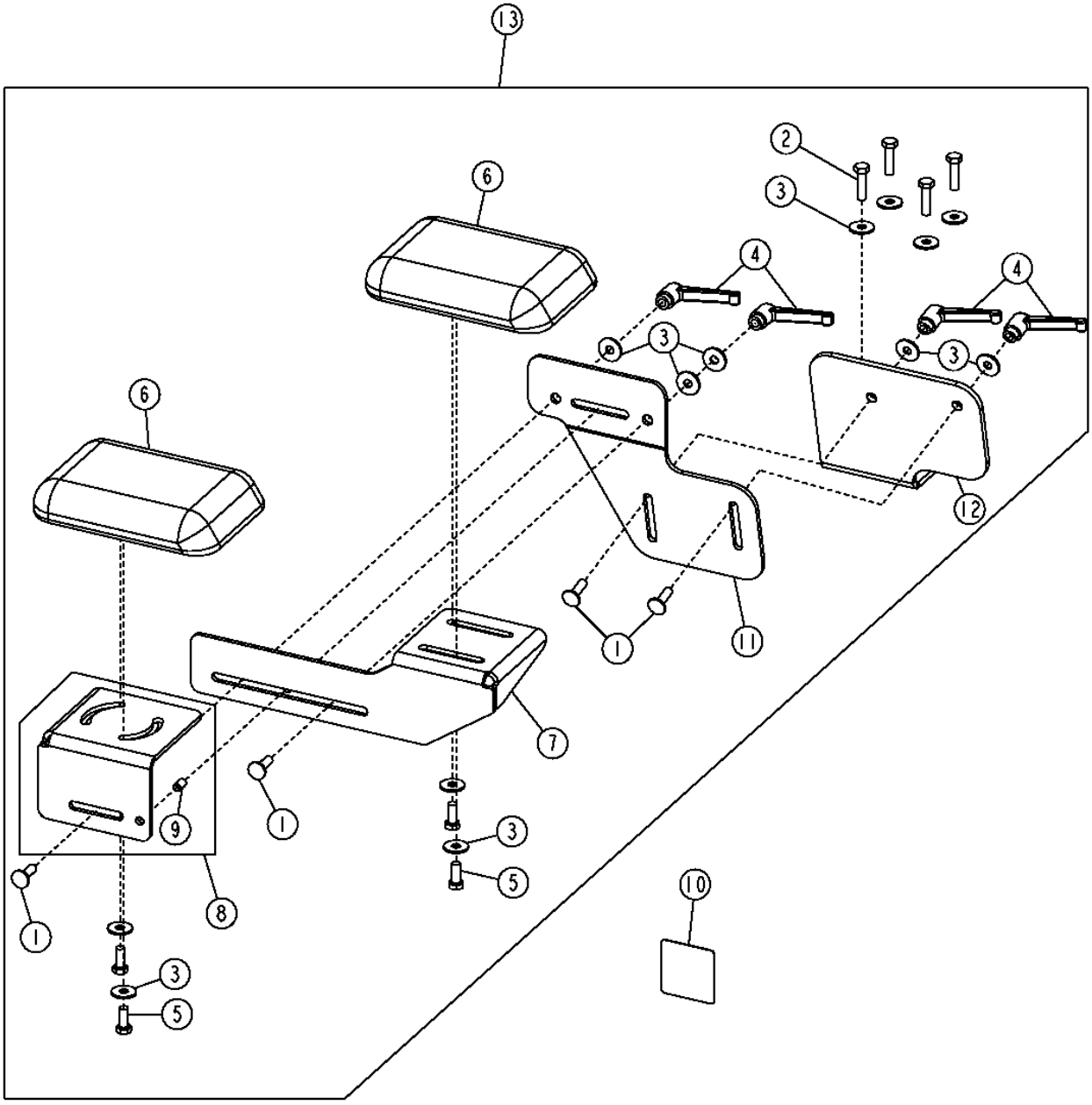

T202072

2G24

WRIST-ARM REST (SERIAL NO. 590068-)

KEY	PART NO.	PART NAME	QTY	SERIAL NO.	REMARKS
1	03M7185	BOLT	4		
2	19M7513	CAP SCREW	4		M8 X 30
3	24M7298	WASHER	13		8.400 X 25 X 2 MM
4	AT227063	LEVER	4		
5	19M7881	SCREW	4		M8 X 20
6	AT171679	CUSHION	2		
7	T200161	SUPPORT	1		
8	AT300115	BRACKET	1		
9	44M7027	PIN	1		8 X 16 MM
10	T200729	LABEL	1		(SUB FOR T195031)
11	T209601	SUPPORT	1		(SUB FOR T200158)
12	T209602	SUPPORT	1		(SUB FOR T200159)
13	**AT312158**	**ARMREST**	**1**		**(FIELD KIT) (WRIST-ARM REST)**

MEMORANDA

REPLACEMENT SEAT BELT
76MM (3 IN.) WIDE

TP62743 -UN-19JAN00

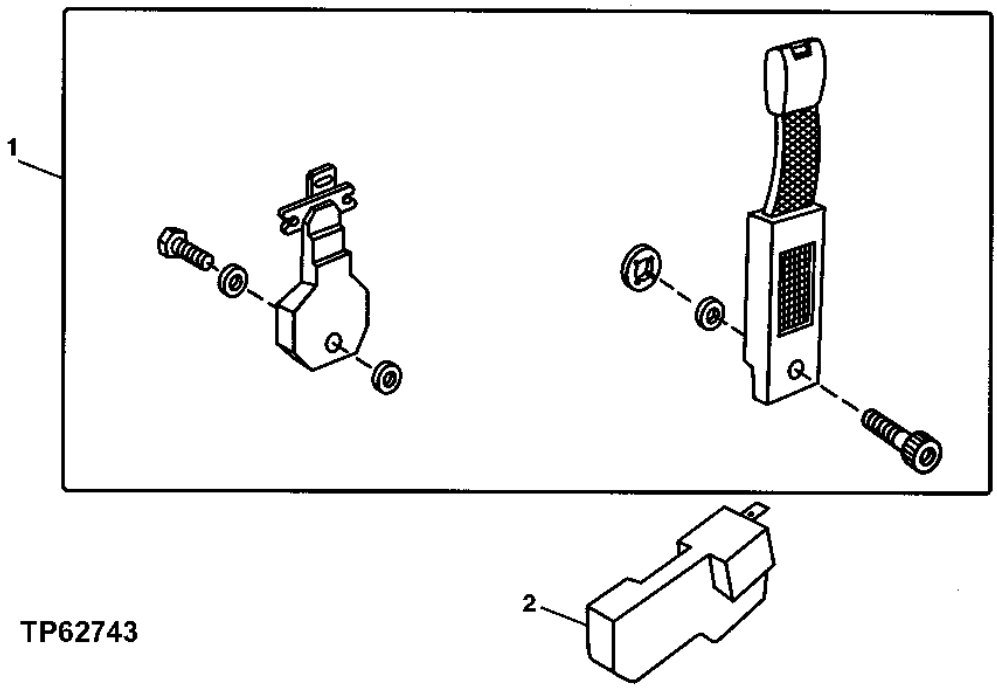

TP62743

KEY	PART NO.	PART NAME	QTY	SERIAL NO.	REMARKS
1	AT308199	SEAT BELT	1		(ALSO ORDER (4) T105740 AND (2) 19H2109) (SUB FOR AT178065)
2	T163962	COVER	1		

SEAT AND SEAT SUSPENSION

T155265 -UN-30MAY02

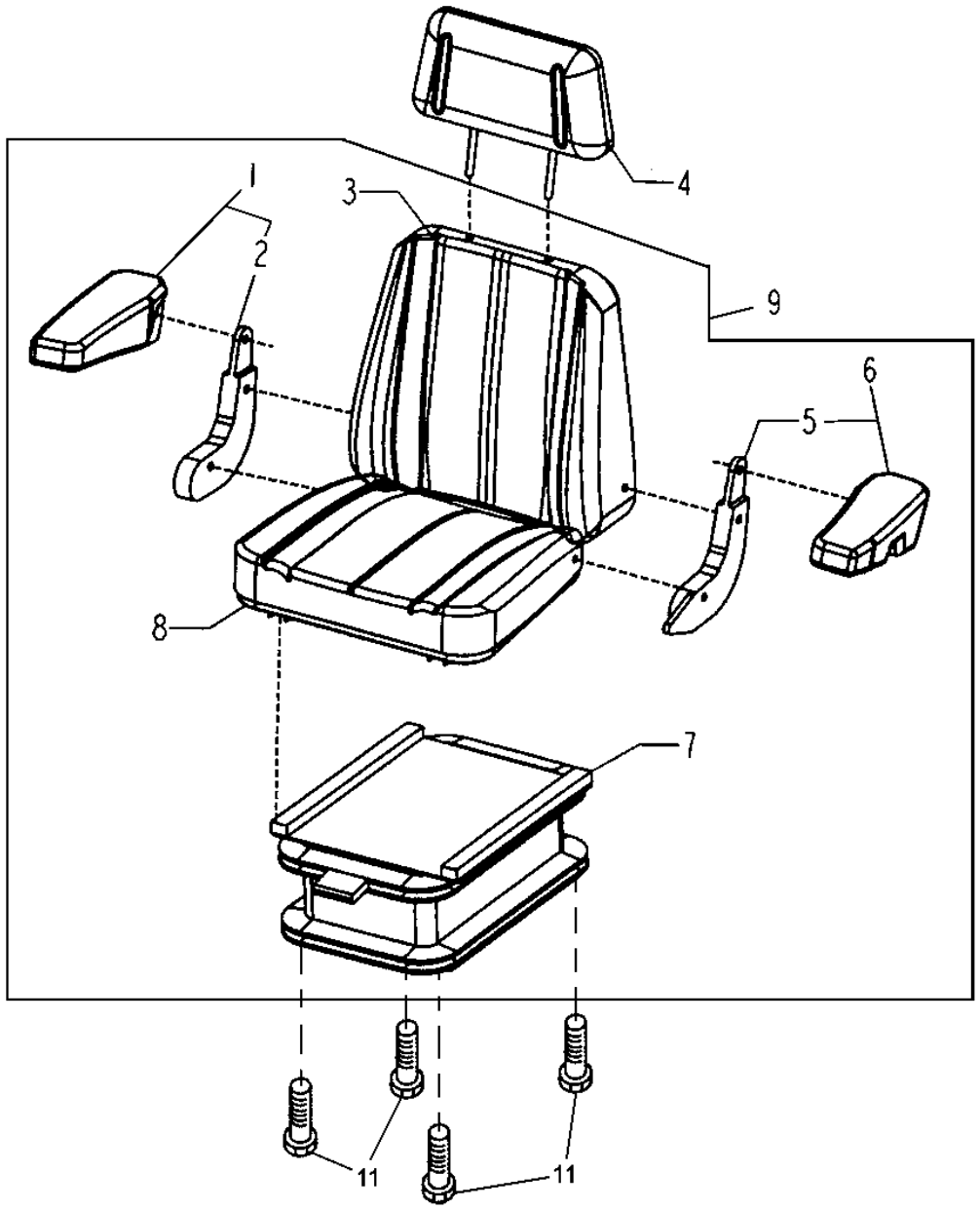

T155265

SEAT AND SEAT SUSPENSION

KEY	PART NO.	PART NAME	QTY	SERIAL NO.	REMARKS
1	AT195441	ARMREST KIT	1		RT. ARM REST (WITH MECHANICAL OR AIR SUSPENSION)
	AT315715	PAD	1		
2	.....	BRACKET	1		RT. BRACKET
3	AT308796	CUSHION	1		(SUB FOR AT221020) BACKREST CUSHION (CLOTH W/AIR OR MECHANICAL SUSPENSION)
4	AT308797	CUSHION	1		HEADREST (CLOTH W/AIR OR MECHANICAL, (SUB FOR AT221021) SUSPENSION)
5	.....	BRACKET	1		LT. BRACKET
6	AT195442	ARMREST KIT	1		LT ARM REST (WITH MECHANICAL OR AIR SUSPENSION
	AT315761	PAD	1		
7	AT208531	SEAT SUSPENSION	1	-592825	AIR SUSPENSION (CLOTH W/AIR SUSPENSION)
	AT311918	SEAT SUSPENSION	1	592826-	AIR SUSPENSION (CLOTH W/AIR SUSPENSION)
	AT209031	SEAT SUSPENSION	1		MECHANICAL SUSPENSION (CLOTH W/MECHANICAL SUSPENSION)
8	AT308795	CUSHION	1		(SUB FOR AT221019) SEAT CUSHION (CLOTH W/AIR OR MECHANICAL SUSPENSION)
9	AT224248	SEAT	1	-592825	GRAY(CLOTH WITH AIR SUSPENSION)
	AT310435	SEAT	1	592826-	(ALSO ORDER AT311383) GRAY(CLOTH WITH AIR SUSPENSION)
	.....	SEAT	1		GRAY(CLOTH WITH MECHANICAL SUSPENSION) (AT224247 NO LONGER AVAILABLE-FURNISH COMPONENTS)
	AT307474	SEAT	1	-592825	(VINYL W/AIR SUSPENSION)
	AT311919	SEAT	1	592826-	(VINYL W/AIR SUSPENSION) (ALSO ORDER AT311383)
10	AT209025	KIT	1		(NOT ILLUSTRATED) (RECLINER KNOB KIT)
	AT209225	KIT	1		(NOT ILLUSTRATED) (RECLINER SERVICE KIT) (INCLUDES (2) 19H1813, (3) 19H1914, (2) 24H1136 AND (6) 24H1287)
11	19M7866	SCREW	4		

LUMBAR ADJUSTER AND CONTROL KNOB

TP60417 -UN-17JUN98

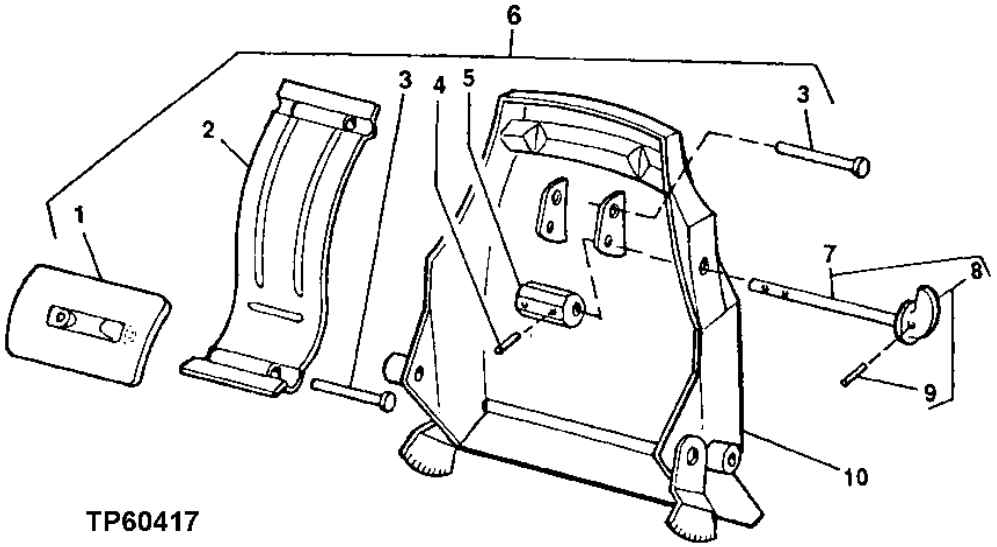

TP60417

LUMBAR ADJUSTER AND CONTROL KNOB

KEY	PART NO.	PART NAME	QTY	SERIAL NO.	REMARKS
1	.....	ISOLATOR	1		
2	.....	SUPPORT	1		
3	.....	NAIL	2		
4	34H387	SPRING PIN	2		3/16" X 3/4"
5	.....	CAM	1		
6	AT209026	KIT	1		(LUMBAR)
7	.....	KNOB	1		AND SHAFT
8	AT209024	KIT	1		(LUMBAR KNOB)
9	34H262	SPRING PIN	1		5/32" X 3/4"
10	AT280583	PAN	1		

SEAT SLIDE AND CONTROL LEVER

TP54391 -UN-19APR99

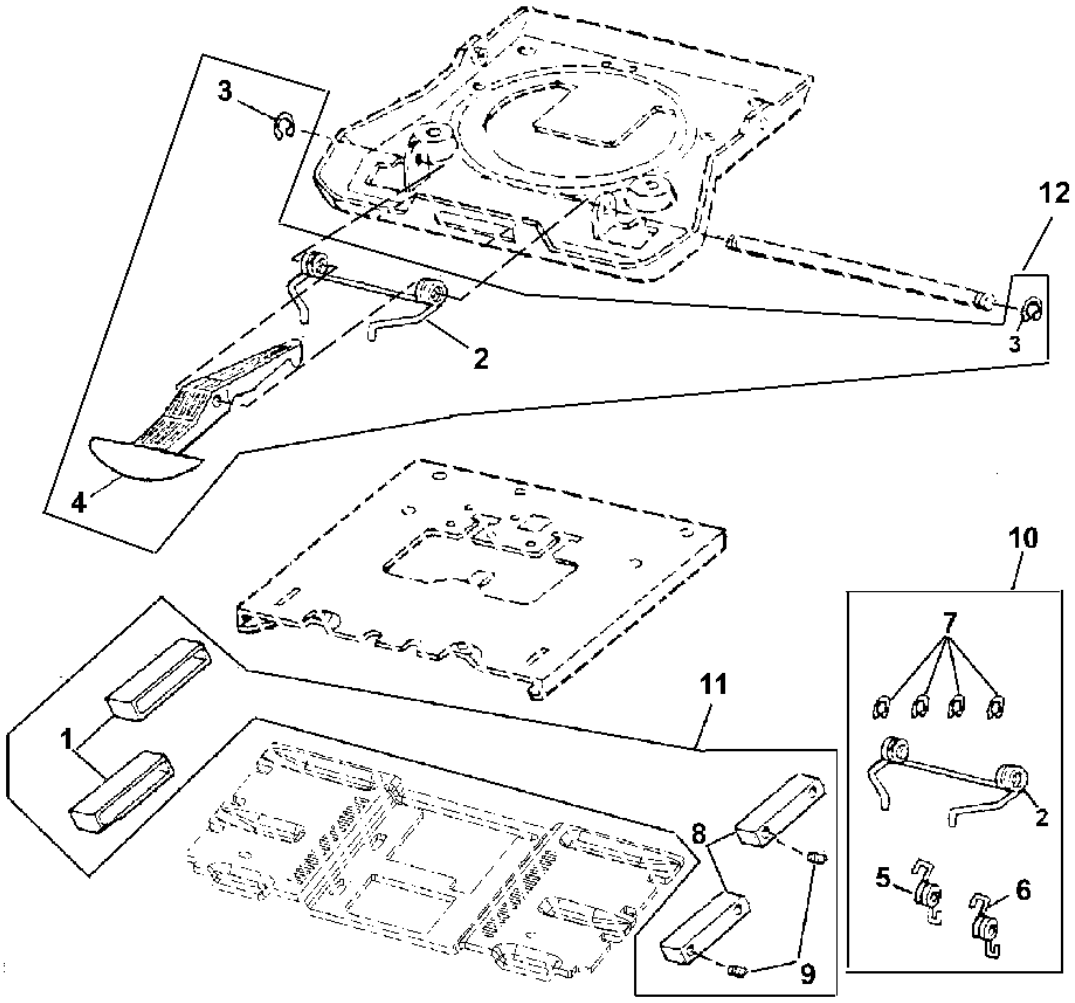

TP54391

SEAT SLIDE AND CONTROL LEVER

KEY	PART NO.	PART NAME	QTY	SERIAL NO.	REMARKS
1	.....	SLIDE SET	2		
2	T163336	TORSION SPRING	2		(DOUBLE TORSION)
3	R72655	SNAP RING	2		
4	.....	CONTROL LEVER	1		(ORDER AT209022) (FORE-AFT)
5	T163334	SPRING	1		SLIDE LATCH (RIGHT)
6	T163335	SPRING	1		SLIDE LATCH (LEFT)
7	R72655	SNAP RING	4		
8	.....	SLIDE SET	2		
9	.....	SET SCREW	4		SOCKET
10	AT209021	KIT	1		(SLIDE LATCH SPRING)
11	AT209020	KIT	1		(SLIDE PUCK)
12	AT209022	KIT	1		(SLIDE CONTROL)

SEAT SUSPENSION KITS
(MECHANICAL SUSPENSION)

T153225 -UN-03OCT02

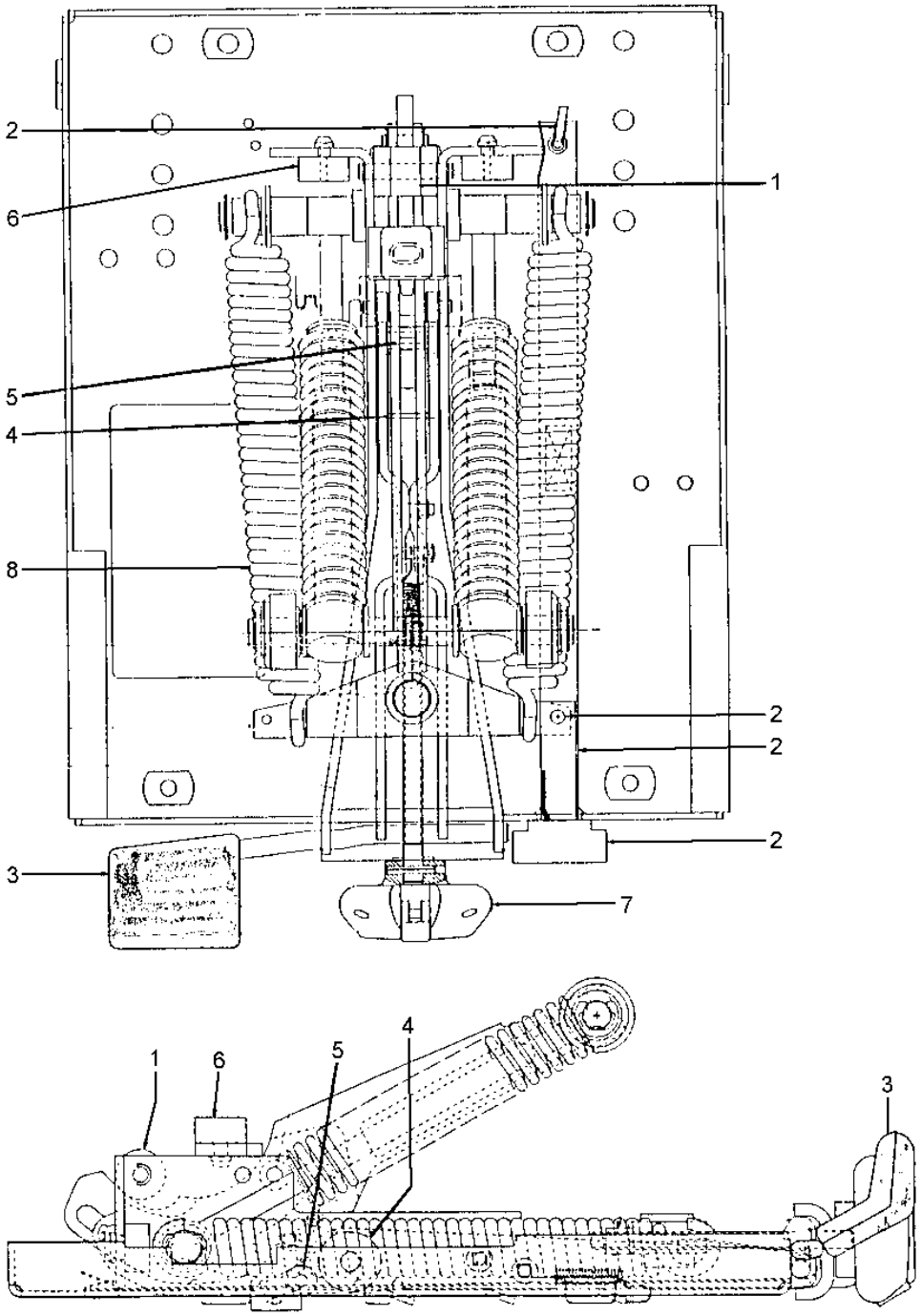

T153225

SEAT SUSPENSION KITS
(MECHANICAL SUSPENSION)

KEY	PART NO.	PART NAME	QTY	SERIAL NO.	REMARKS
1	AT173328	CAM	1		(KIT) (CAM FOLLOWER (SM))
2	AT173325	WEIGHT	1		(KIT) (WEIGHT IND.)
3	AT173323	SEAT KNOB KIT	1		(KIT) (SUSPENSION KNOB)
4	AT173326	CAM	1		(KIT) (CAM FOLLOWER (LG))
5	AT173327	ACTUATOR	1		(KIT) (ACTUATOR BEARING)
6	AT210549	BUMPER	1		(KIT)
7	AT173316	KNOB	1		(KIT) (WEIGHT ADJUSTMENT KNOB)
8	AT173319	SPRING	1		((2)BUSHINGS & (2)SPRINGS) (KIT)

SEAT SUSPENSION KITS
(MECHANICAL SUSPENSION)

T153224 -UN-03APR02

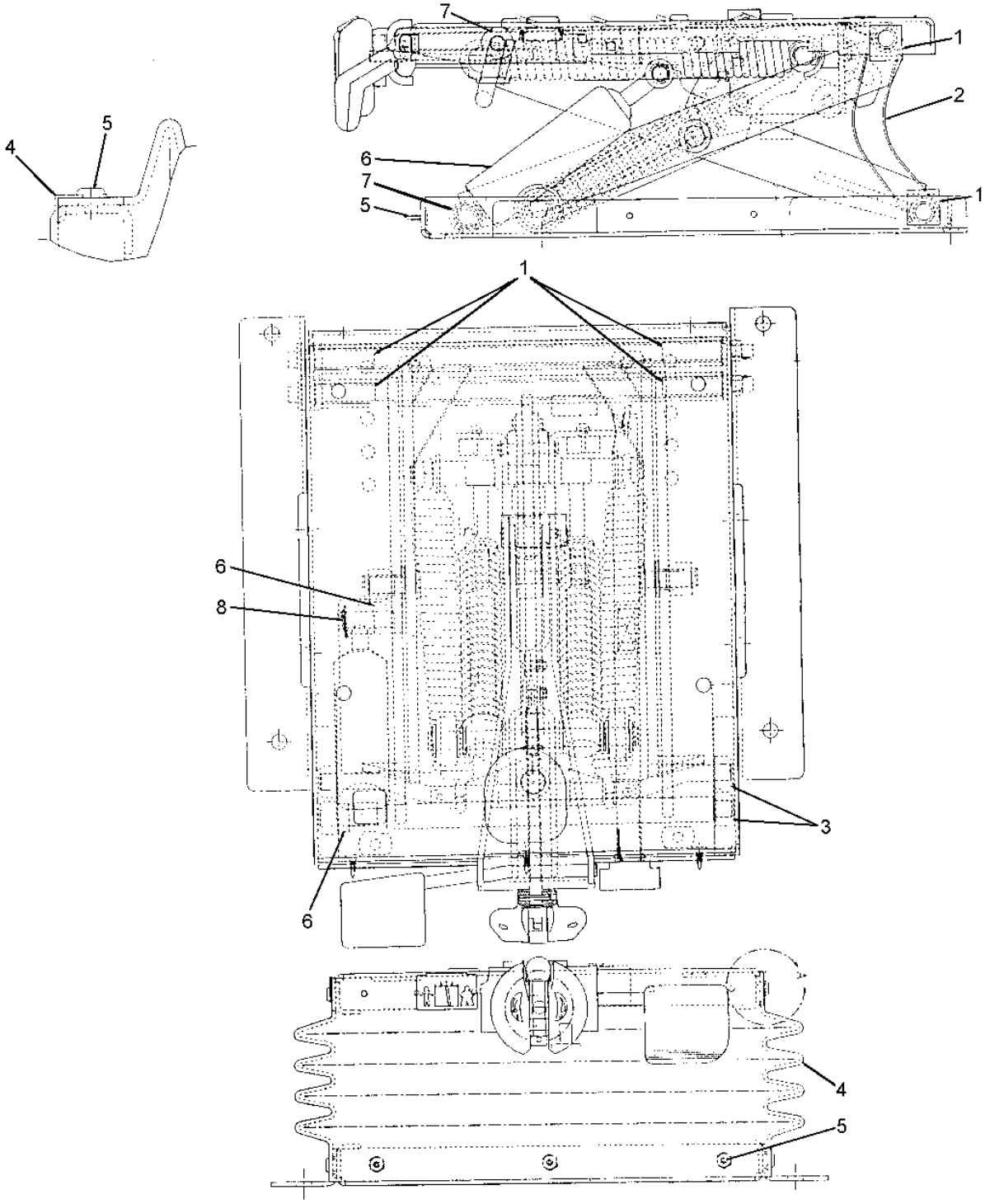

T153224

SEAT SUSPENSION KITS
(MECHANICAL SUSPENSION)

KEY	PART NO.	PART NAME	QTY	SERIAL NO.	REMARKS
1	AT173313	SHAFT	1		(KIT) (SUSPENSION SHAFT)
2	AT173315	KIT	1		(KIT) (TETHER BELT)
3	AT173314	SEAT BEARING ROLLER KIT	1		(KIT) (SUSPENSION ROLLER)
4	AT173317	BOOT	1		(KIT) (SUSPENSION BOOT) (INCLUDES AT173321)
5	AT173321	SEAT SUSPENSION BOOT KIT	1		(KIT)
6	AT173322	MOUNTING PARTS	1		(KIT) (SUSPENSION SHOCK)
8	AT173320	MOUNTING PARTS	1		(KIT) (HEIGHT ADJUSTMENT SPRING)

SEAT SUSPENSION KITS
(MECHANICAL SUSPENSION)

TP47400 -UN-07APR95

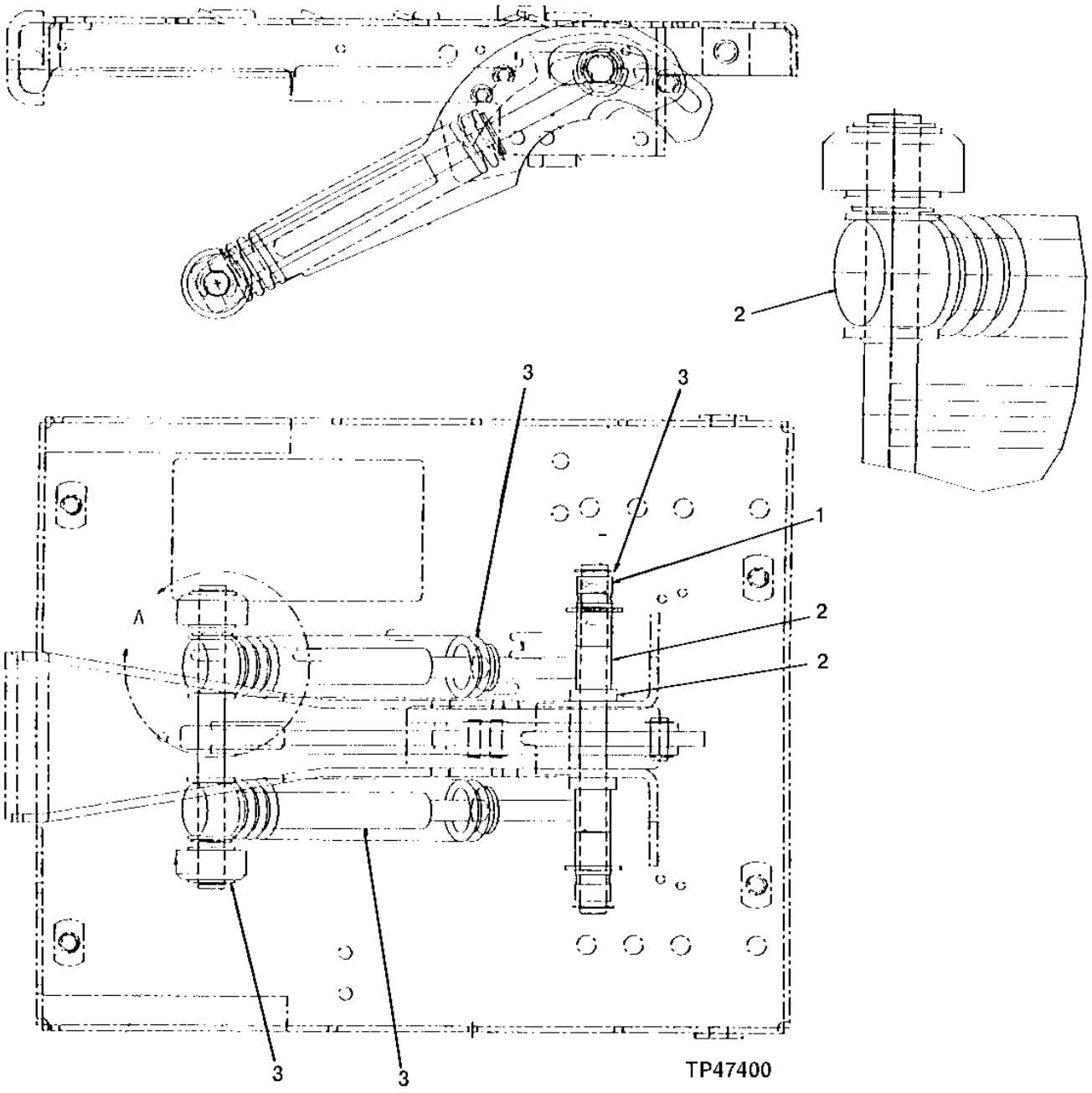

SEAT SUSPENSION KITS
(MECHANICAL SUSPENSION)

KEY	PART NO.	PART NAME	QTY	SERIAL NO.	REMARKS
1	AT173319	SPRING	1		((2)BUSHINGS & (2)SPRINGS) (KIT) (REQUIRES AT226123 INSTALLATION TOOL)
2	AT173318	SPRING	1		((2)BUSHINGS, (2)SPRINGS, (2)WEIGHT ADJUST CASTINGS & (2)SPACERS) (KIT) (REQUIRES AT226123 INSTALLATION TOOL)
3	AT173320	MOUNTING PARTS	1		(KIT) (HEIGHT ADJUSTMENT SPRING)
4	AT226123	SPECIAL SERVICE TOOL	1		SPRING COMPRESSION, (NOT ILLUSTRATED)

2H13

SEAT SUSPENSION

T195125 -UN-25SEP03

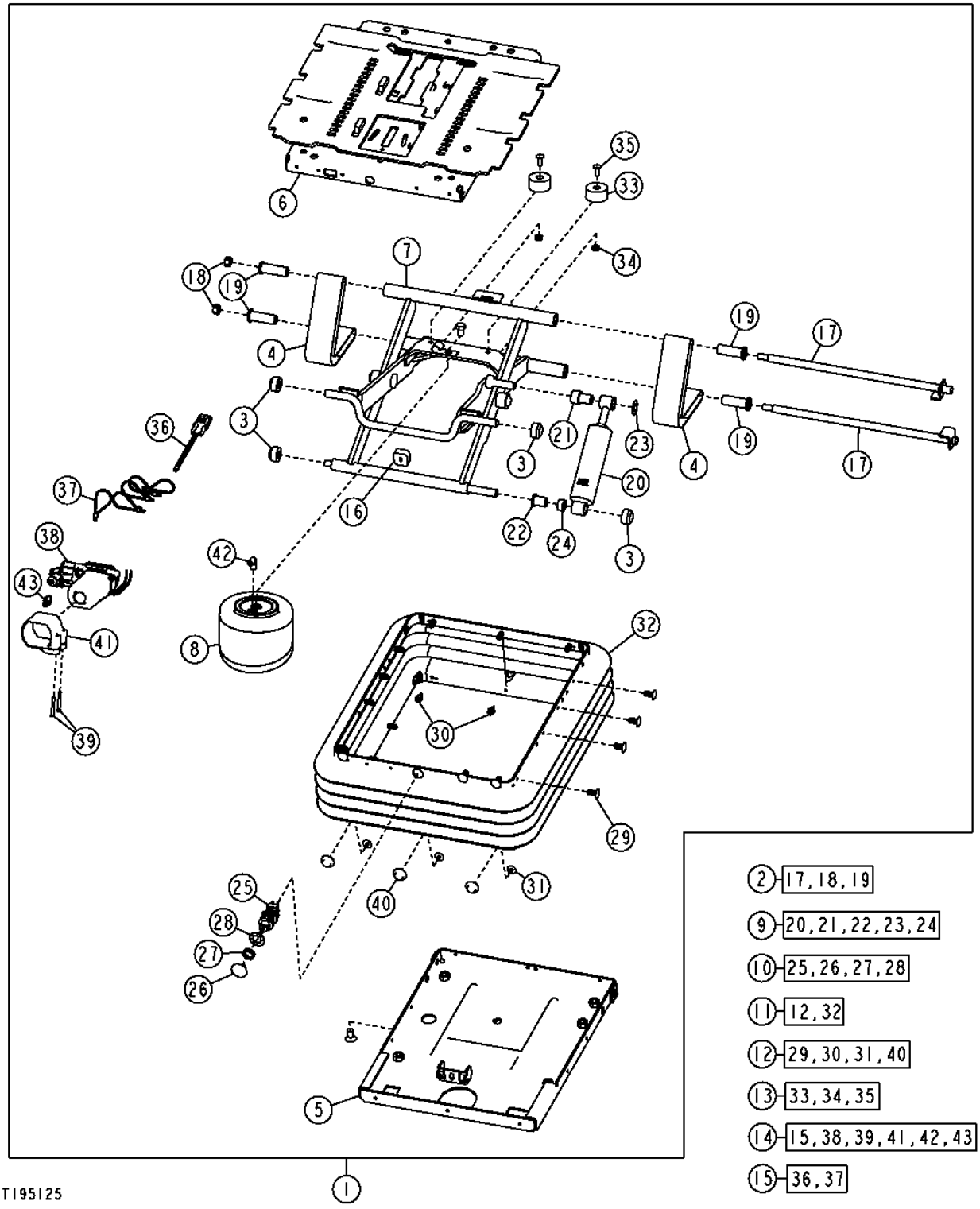

SEAT SUSPENSION

KEY	PART NO.	PART NAME	QTY	SERIAL NO.	REMARKS
1	AT208531	SEAT SUSPENSION	1	-592825	
	AT311918	SEAT SUSPENSION	1	592826-	
2	AT173313	SHAFT	1		
3	AT173314	SEAT BEARING ROLLER KIT	1		
4	AT173315	KIT	1		TETHER BELT SERVICE KIT
5	AT208483	HOUSING	1		
6	AT208484	HOUSING	1	-592825	
	AT313399	HOUSING	1	592826-	
7	AT208485	ARM	1		
8	AT208486	SPRING	1		(AIR BLADDER SPRING)
9	AT208487	KIT	1		SUSPENSION SHOCK SERVICE KIT
10	AT208490	SELECTIVE CONTROL VALVE	1		
11	AT208491	KIT	1		BOOT SERVICE KIT (INCLUDES AT173321)
12	AT173321	SEAT SUSPENSION BOOT KIT	1		
13	AT209469	KIT	1		BUMPER SERVICE KIT
14	AT226676	COMPRESSOR	1		
15	AT208488	WIRING HARNESS	1		
16	T55224	BUMPER	1		
17	.....	SHAFT	2		(SUB AT173313)
18	.....	LOCK NUT	2		(SUB AT173313)
19	.....	BUSHING	4		(SUB AT173313)
20	.....	SHOCK ABSORBER	1		(SUB AT208487)
21	.....	BEARING	1		(SUB AT208487)
22	.....	ECCENTRIC LOCKING COLLAR	1		(SUB AT208487)
23	.....	PUSH NUT	1		(SUB AT208487)
24	.....	SPACER	1		(SUB AT208487)
25	.....	HYD ACTUATED CONTROL VALVE	1		(SUB AT208490)
26	.....	KNOB	1		(SUB AT208490)
27	.....	NUT	1		(SUB AT208490)
28	.....	LOCK WASHER	1		(SUB AT208490)
29	.....	CLIP	23		(SUB AT173321)
30	.....	RIVET	3		(SUB AT173321)
31	.....	RIVET	3		(SUB AT173321)
32	.....	BOOT	1		(SUB AT208491)
33	.....	BUMPER	2		(SUB AT209469)
34	.....	LOCK NUT	2		(SUB AT209469)
35	.....	SCREW	2		(SUB AT209469)
36	.....	WIRING HARNESS	1		(SUB AT208488)
37	.....	TIE BAND	4		(SUB AT208488)
38	.....	COMPRESSOR	1		(SUB AT226676)
39	.....	SPRING PIN	2		(SUB AT226676)
40	.....	RIVET	6		(SUB AT173321)
41	.....	CLAMP	1		(SUB AT226676)
42	.....	PIPE ELBOW	1		(SUB AT226676)
43	.....	TAB CONNECTOR BODY	1		(SUB AT226676)

OPERATOR ACCESS PLATFORM AND STEPS

T155382 -UN-03JUN02

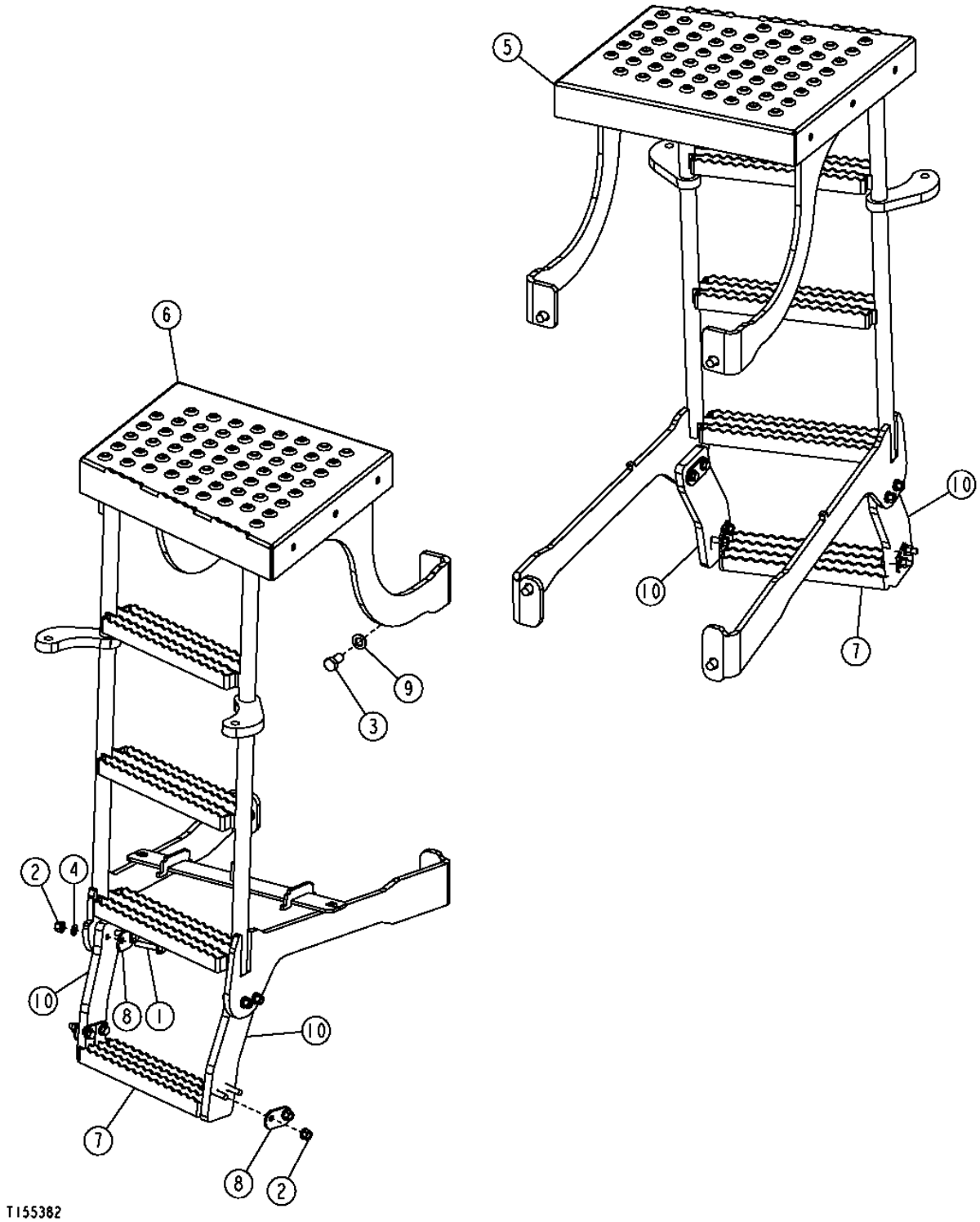

ACCESS PLATFORM AND STEPS

KEY	PART NO.	PART NAME	QTY	SERIAL NO.	REMARKS
1	19M7806	SCREW	16		M10 X 50, (SUB FOR AT211377)
2	14M7400	LOCK NUT	16		M10
3	19M8029	CAP SCREW	8		M16 X 30
4	24M7239	WASHER	8		10.700 X 21 X 2.500 MM
5	AT223271	STEP	1		(RIGHT)
6	AT223381	STEP	1		(LEFT)
7	AT225618	STEP	2		(LOWER)
8	T173779	STRAP	8		
9	24M7338	WASHER	8		17 X 30 X 3 MM
10	T177503	STRAP	4		

HANDRAILS

T153290 -UN-03APR02

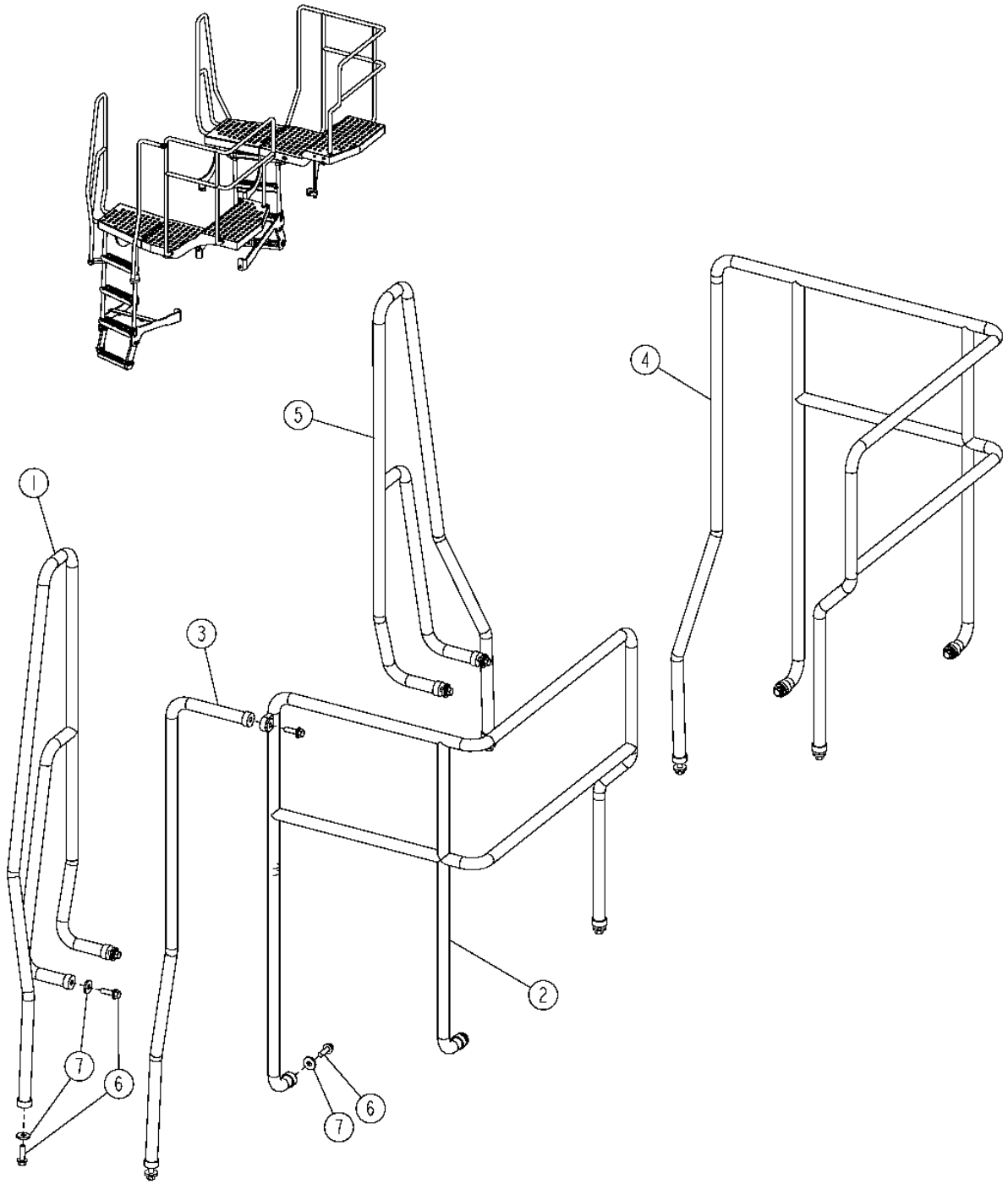

2H18

HANDRAILS

KEY	PART NO.	PART NAME	QTY	SERIAL NO.	REMARKS
1	AT223025	HANDRAIL	1		
2	AT223019	HANDRAIL	1		
3	AT224948	HANDRAIL	1		
4	AT223273	HANDRAIL	1		
5	AT223272	HANDRAIL	1		
6	19M7791	BOLT	15		M12 X 40
7	24M7226	WASHER	15		13 X 35 X 5 MM

ENGINE COMPARTMENT STEP

T153219 -UN-03APR02

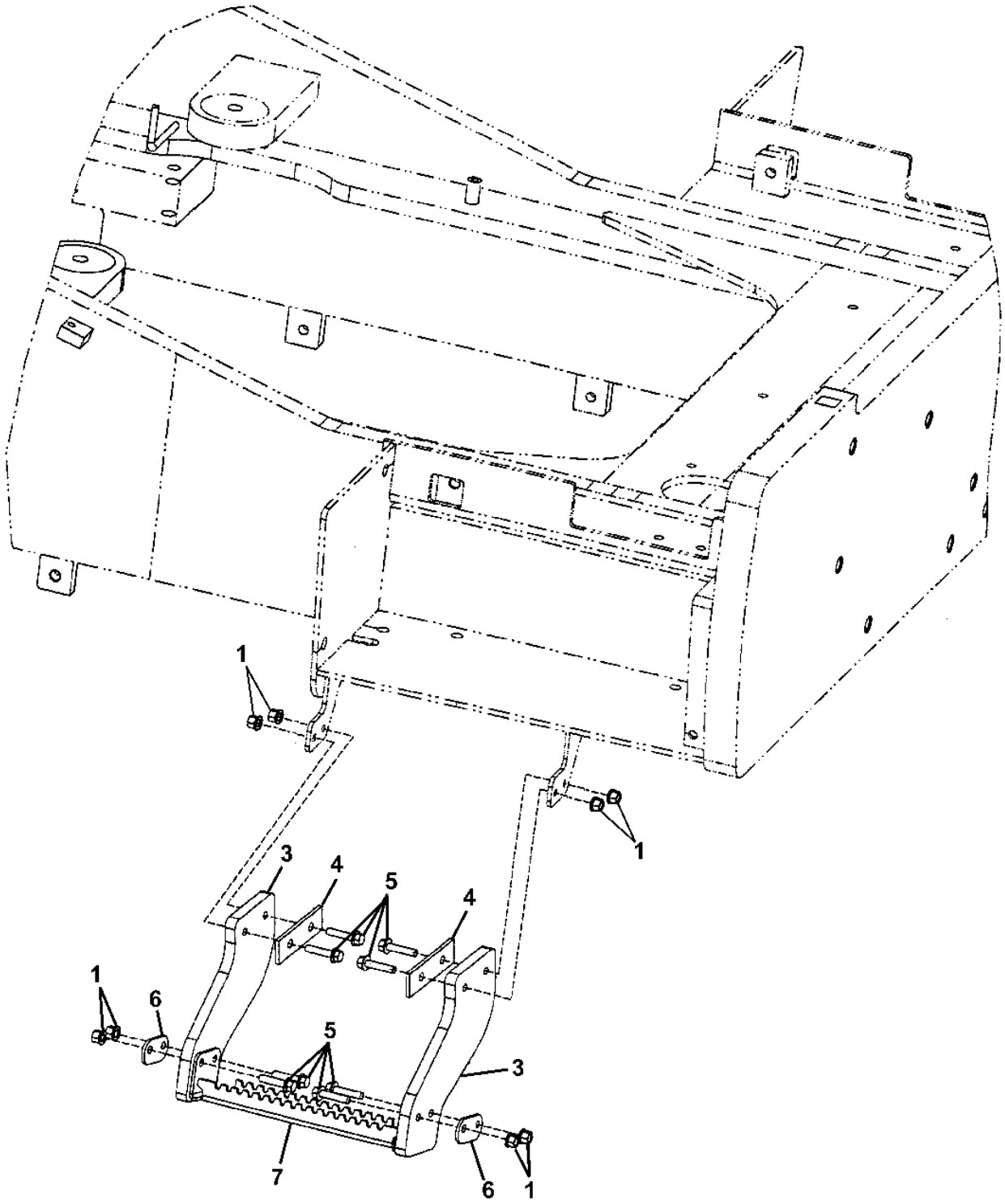

T153219

ENGINE COMPARTMENT STEP

KEY	PART NO.	PART NAME	QTY	SERIAL NO.	REMARKS
1	14M7400	LOCK NUT	8		M10
3	T177756	STRAP	2		(RUBBER)
4	T177753	STRAP	2		
5	19M7805	SCREW	8		M10 X 45
6	T173779	STRAP	2		
7	T176870	STEP	1		

HVAC MODULE

T193582 -UN-21AUG03

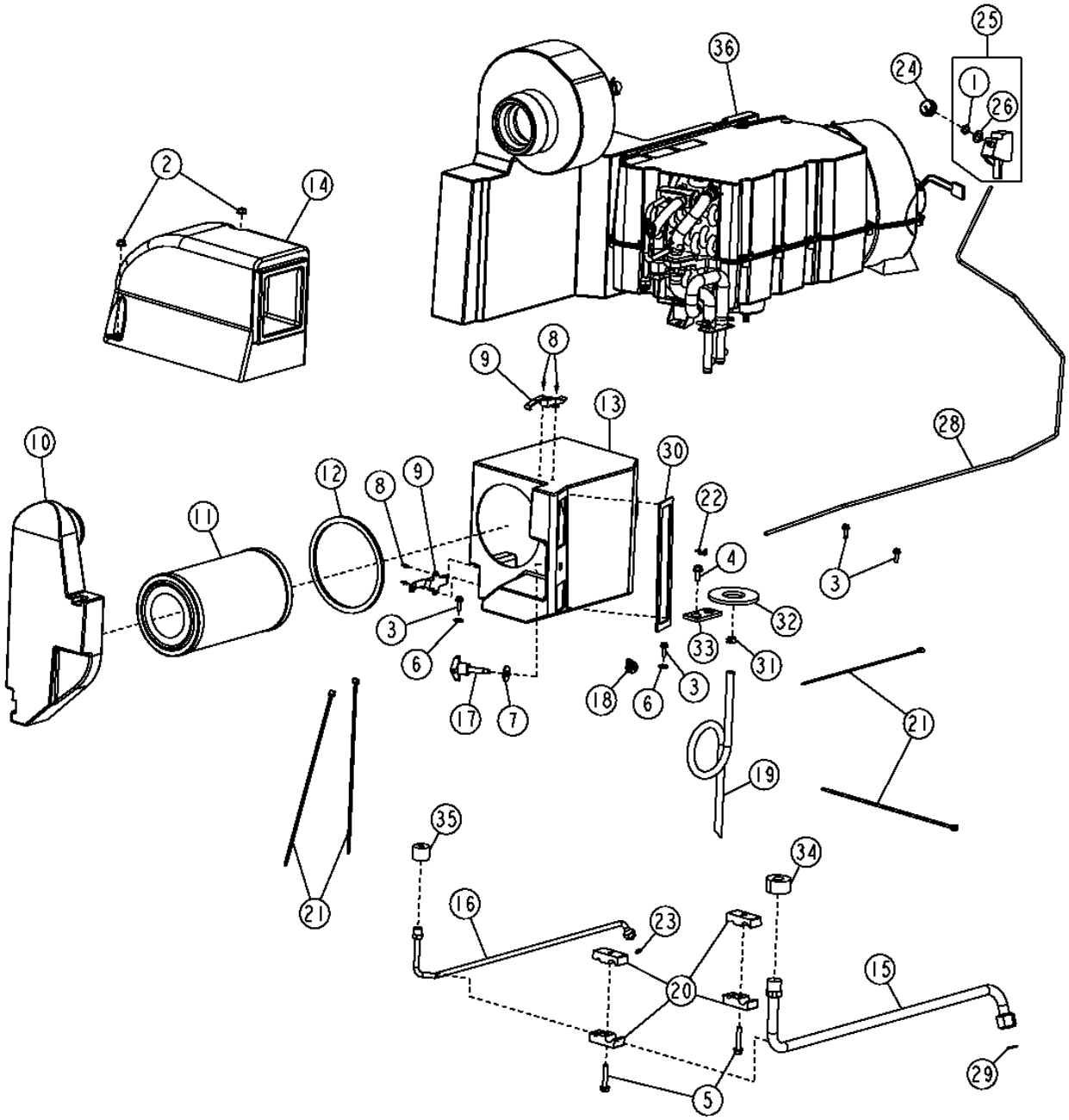

HVAC MODULE

KEY	PART NO.	PART NAME	QTY	SERIAL NO.	REMARKS
1	R203687	NUT	1		
2	14M7298	FLANGE NUT	2		M8
3	19M7862	SCREW	4		M6 X 20
4	19M7866	SCREW	3		M8 X 20
5	19M8318	SCREW	2		M8 X 45
6	24M7139	WASHER	2		6.400 X 18 X 1.600 MM
7	24M7296	WASHER	1		10.500 X 30 X 2.500 MM
8	H86981	RIVET	4		
9	R121465	LATCH	2		
10	T167945	AIR DUCT	1		
11	T168220	AIR FILTER	1		
12	T170053	SEAL	1		
13	T171459	AIR DUCT	1		
14	AT209668	AIR DUCT	1		
15	AT210561	LINE	1		(SUB FOR AT310782 OR AT306912)
16	AT306913	TUBE	1		
17	AT220953	KNOB	1		
18	AT226249	JUMPER	1		
19	Z59685	HOSE	1		(SUB FOR B14604) (4.5 LIN. FT.)
20	H114865	CLAMP	4		
21	H77698	TIE BAND	4		
22	L57881	CLIP	1		
23	R10093	O-RING	1		
24	R111632	KNOB	1	-590067	
	AL76568	KNOB	1	590068-	
25	RE46742	TEMPERATURE SWITCH	1		
26	12H292	LOCK WASHER	1		1/2"
27	14H934	NUT	1		7/16"
28	RE58614	PUSH PULL CABLE	1		
29	T143169	O-RING	1		
30	T167676	SEAL	1		
31	T174427	CLAMP	1		
32	T182852	SEALING WASHER	1		
33	T182858	GASKET	1		
34	T182870	ISOLATOR	1		
35	T182871	ISOLATOR	1		
36	T182906	PLATE	1		

HVAC MODULE COMPONENTS

T207445 -UN-04FEB05

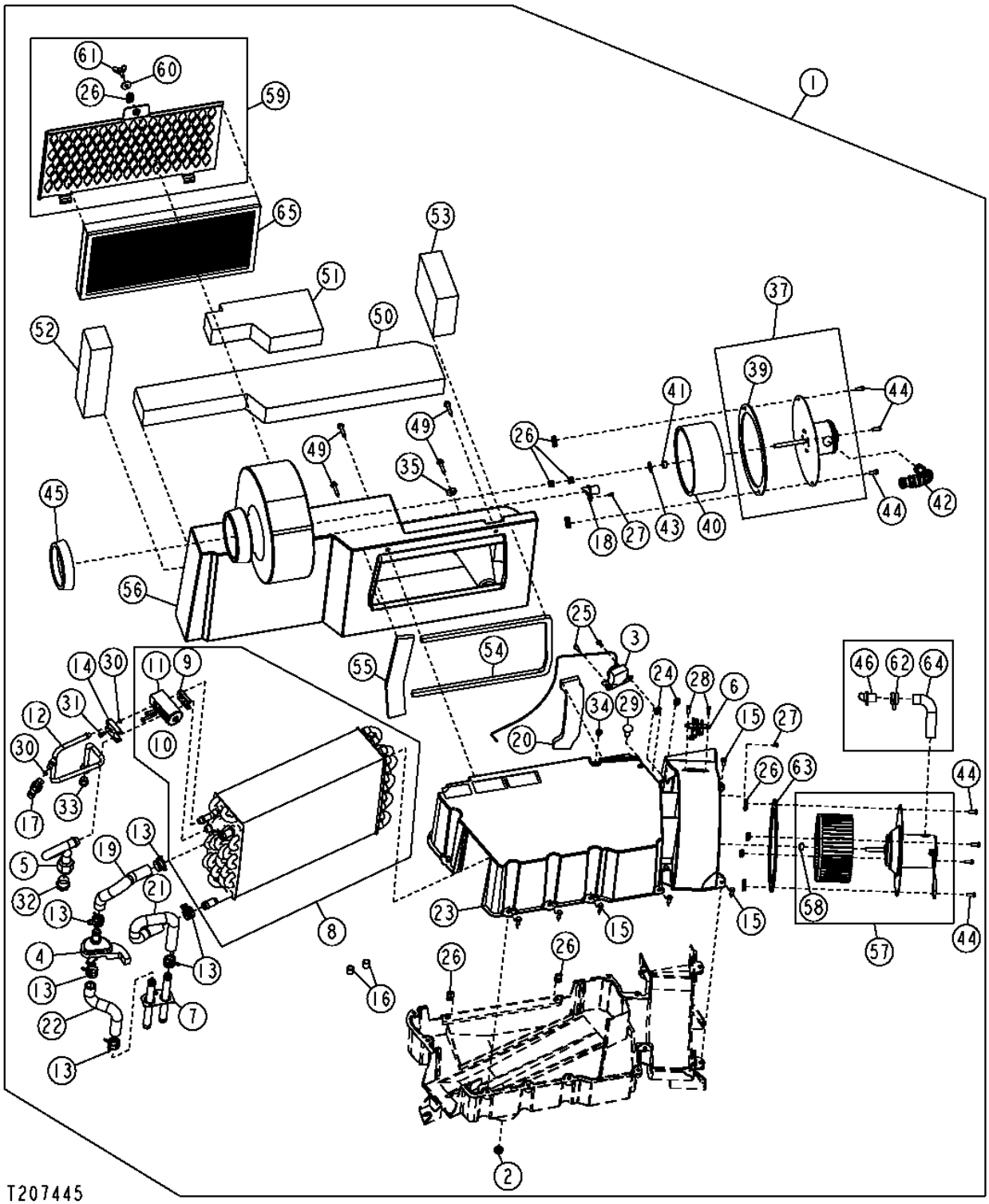

HVAC MODULE COMPONENTS

KEY	PART NO.	PART NAME	QTY	SERIAL NO.	REMARKS
1	AT223531	MODULE	1		
2	14H934	NUT	1		
3	RE198074	TEMPERATURE SWITCH	1		(SUB FOR AH144020)
4	AT193500	HAND OPERATED VALVE	1		
5	AT210086	STRUCTURAL TUBING	1		
6	AT307197	RESISTOR	1		
7	AT219778	HOSE	1		
8	AT225899	HEAT EXCHANGER	1		
9	L77943	PLATE	1		
10	PT11778	BOLT	2		(SUB FOR M67176)
11	RE174764	VALVE	1		
12	AT226309	TUBE	1		
13	R117721	CLAMP	6		
14	R125223	PLATE	1		
15	R129110	SCREW	12		
16	R50770	CAP	2		
17	RE157329	SWITCH	1		
18	RE36133	TUBE	1		
19	T170133	HOSE	1		
20	T59937	ISOLATOR	1		
21	T172933	HOSE	1		
22	T172934	HOSE	1		
23	T174109	HOUSING	1		
24	T178115	CLEVIS	2		
25	T178116	CAP SCREW	2		
26	T178117	CLEVIS	13		
27	T178118	CAP SCREW	1		
28	T178119	CAP SCREW	2		
29	T178120	RIVET	1		
30	T178123	O-RING	2		
31	T178124	SCREW	1		
32	T178125	PLUG	1		
33	T178126	PLUG	1		
34	T178971	GROMMET	1		
35	24H1122	WASHER	1		
37	AT225451	BLOWER MOTOR	1		
38	R117721	CLAMP	1		
39	R121664	SEAL	1		
40	R121666	IMPELLER	1		
41	R97332	CLIP	1		
42	R97336	TUBE	1	-592249	
	T165169	HOSE	1	592250-	
43	T178127	PUSH NUT	1		
44	T178251	CAP SCREW	8		
45	R119171	SEAL	1		
46	RE36133	TUBE	1	-592249	
49	T178130	BOLT	4		
50	T178131	ISOLATOR	1		
51	T178132	ISOLATOR	1		
52	T178133	ISOLATOR	1		
53	T178134	ISOLATOR	1		
54	T178135	ISOLATOR	1		
55	T178136	ISOLATOR	1		
56	T180929	AIR PLENUM	1		
57	.....	KIT	1	-592249	(SUB AT313282) BLOWER SERVICE KIT (AT224930 NO LONGER AVAILABLE)
	AT313282	KIT	1	592250-	
58	R97332	CLIP	1		
59	AT305405	COVER	1		
60	24M7100	WASHER	1		
61	T181524	WING SCREW	1		
62	R117721	CLAMP	1	-592249	
63	R121664	SEAL	1		
64	R97336	TUBE	1	-592249	
65	T156471	AIR FILTER	1		(SUB FOR AT227170)

AIR CONDITIONING COMPRESSOR, BRACKET,HOSES AND DRIVE BELT

T158651 -UN-03OCT02

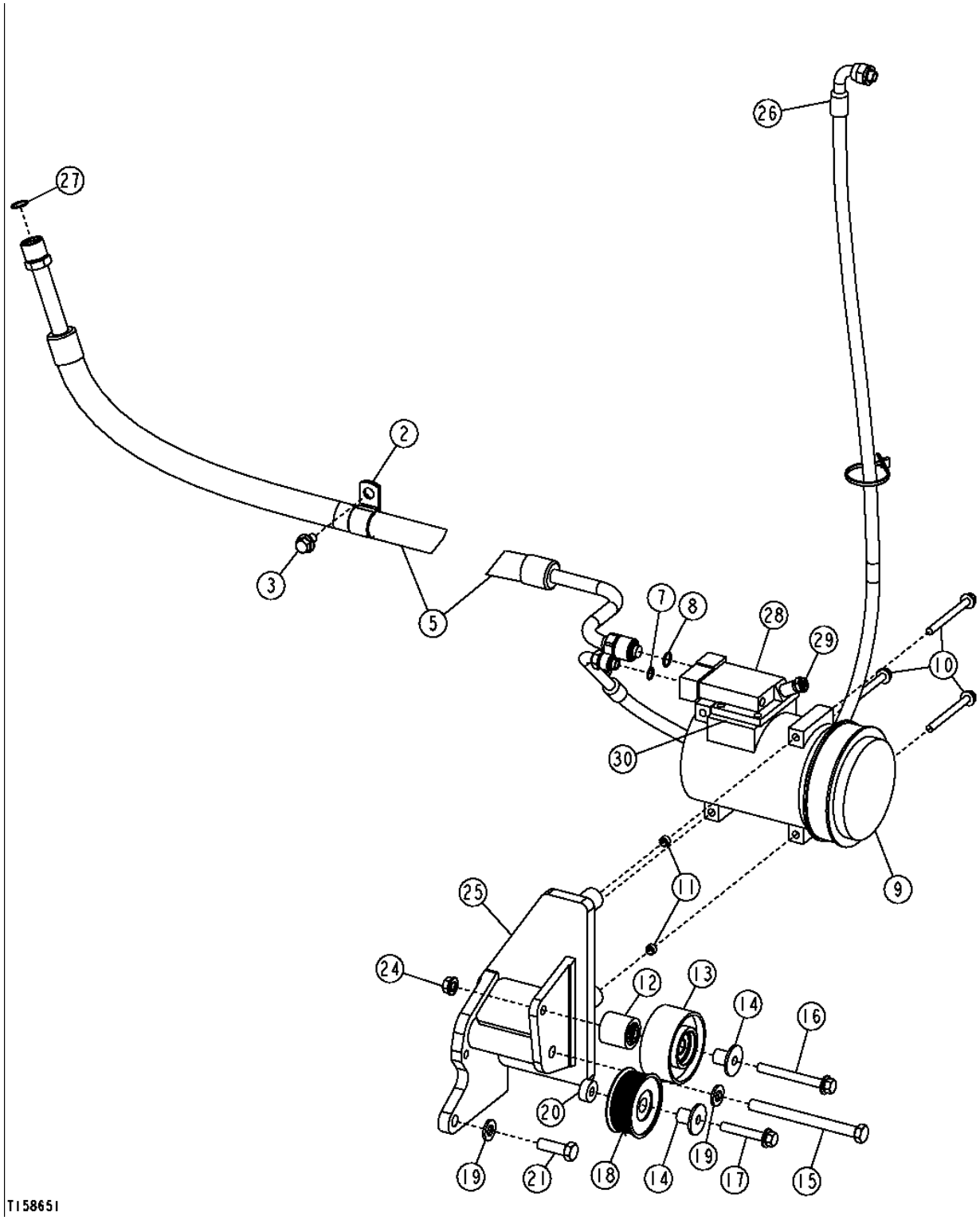

AIR CONDITIONER COMPRESSOR, BRACKET,HOSES AND DRIVE BELT

KEY	PART NO.	PART NAME	QTY	SERIAL NO.	REMARKS
2	R46667	CLAMP	1		
3	19M7783	SCREW	1		M10 X 16
5	AT211480	HOSE	1		
7	R113050	O-RING	1		
8	R33259	O-RING	1		
9	AT226273	COMPRESSOR	1		
10	19M7913	SCREW	3		M8 X 90
11	34M7189	SPRING PIN	2		
12	R123523	SPACER	1		
13	RE505265	IDLER	1		(SUB FOR RE155577)
14	R502079	SLEEVE	2		(SUB FOR R107749)
15	19H3136	CAP SCREW	1		1/2" X 5-3/4"
16	19M7811	SCREW	1		M10 X 90
17	19M7807	SCREW	1		M10 X 60
18	AT211041	IDLER	1		
19	24M7240	WASHER	2		13 X 25 X 3 MM
20	R128892	SPACER	1		
21	19H2993	CAP SCREW	1		1/2" X 1-1/2"
24	14M7296	FLANGE NUT	1		M10
25	AT220236	SUPPORT	1		
26	AT220544	HOSE	1		
27	T143169	O-RING	1		
28	RE55423	MANIFOLD	1		
29	RE52506	FLOW CONTROL HYD. VALVE	1		
30	R115742	SEAL	1		

A/C COMPRESSOR, COMPRESSOR MANIFOLD AND REPAIR KITS

TP34763 -UN-01JAN94

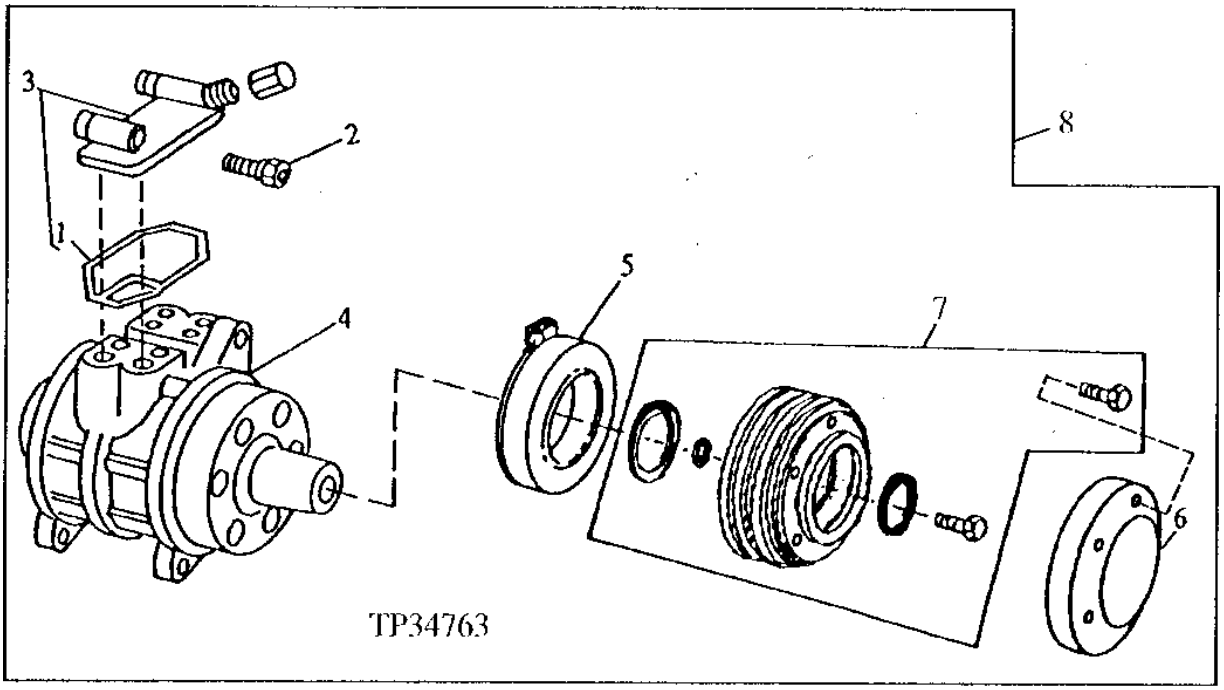

KEY	PART NO.	PART NAME	QTY	SERIAL NO.	REMARKS
1	R115742	SEAL	1		
2	RE52506	FLOW CONTROL HYD. VALVE	1		
3	RE55423	MANIFOLD	1		
4	RE52454	COMPRESSOR	1		(HOUSING)
5	AT163872	KIT	1		
6	R115743	COVER	1		
7	RE52508	KIT	1		COMPRESSOR CLUTCH AND PULLEY
8	AT226273	COMPRESSOR	1		(SUB FOR AT168543)

A/C COMPRESSOR SHAFT SEAL REPAIR KIT

TP34246 -UN-01JAN94

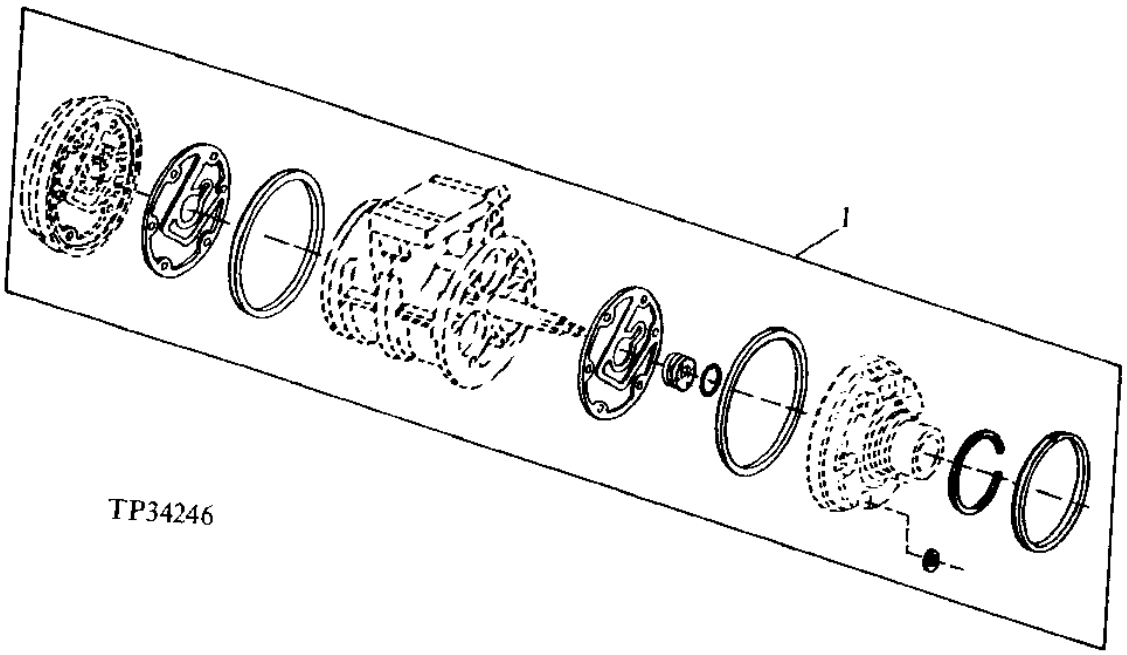

KEY	PART NO.	PART NAME	QTY	SERIAL NO.	REMARKS
1	RE52509	SEAL KIT	1		

A/C COMPRESSOR HARDWARE KIT

TP34247 -UN-01JAN94

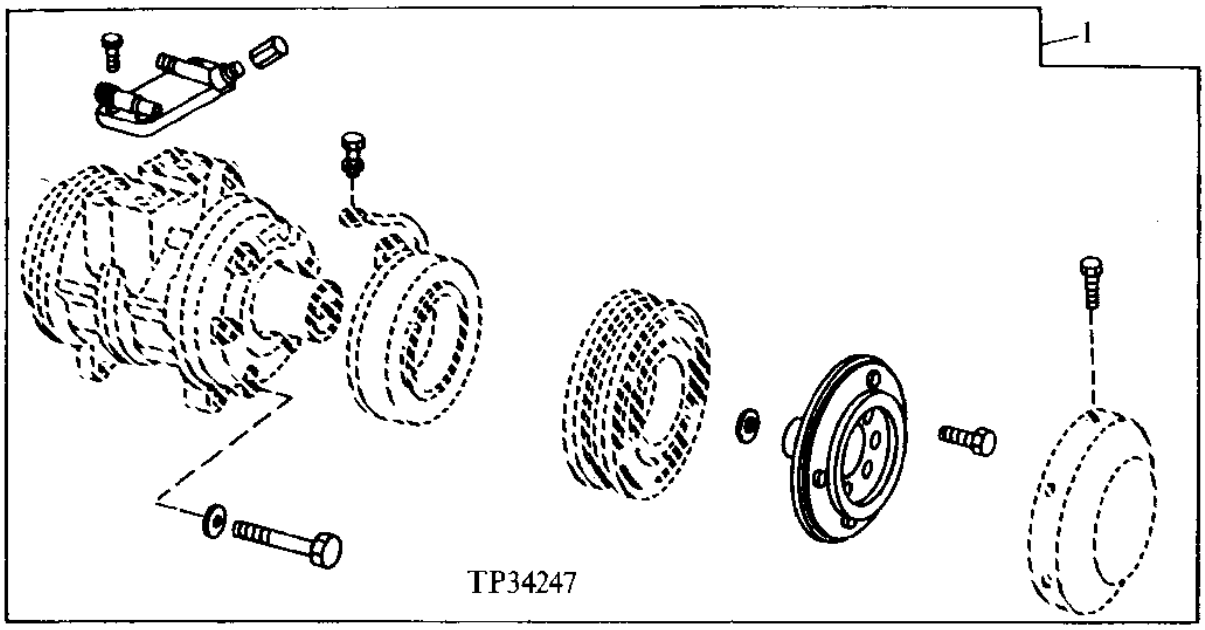

KEY	PART NO.	PART NAME	QTY	SERIAL NO.	REMARKS
1	RE52507	KIT	1		

MEMORANDA

AIR CONDITIONER CONDENSER,RECEIVER-DRIER AND HOSES

T158966 -UN-03SEP02

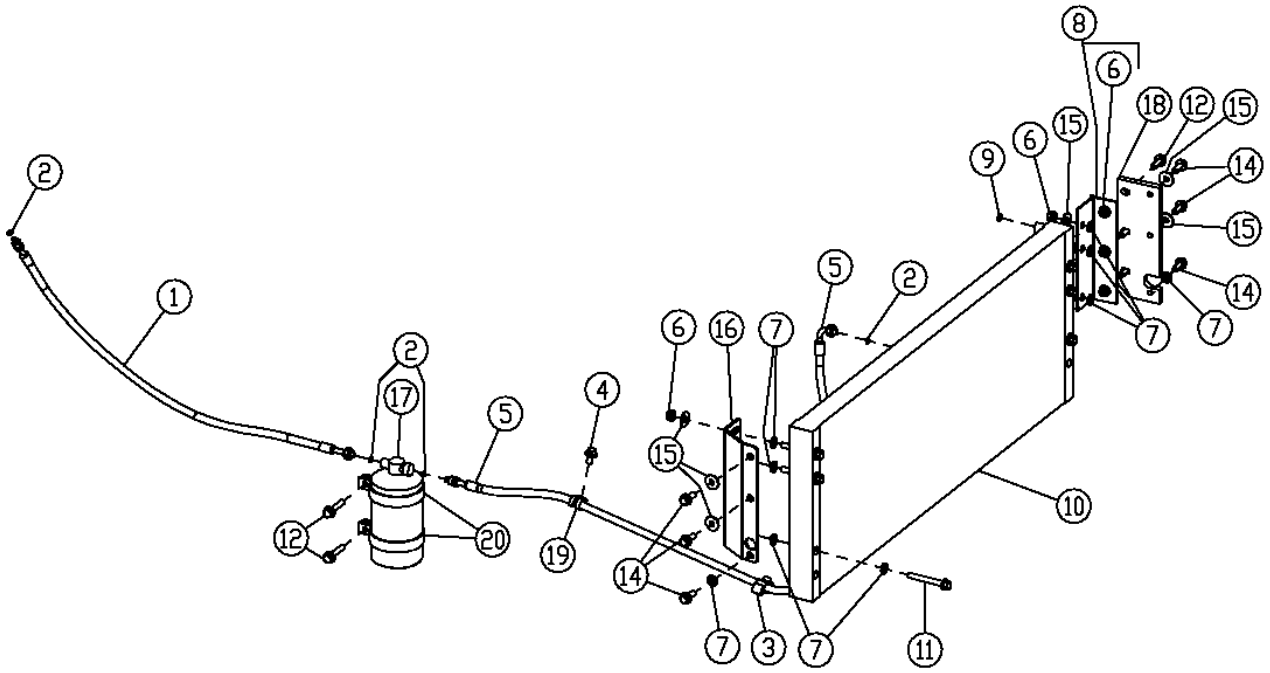

T158966

A/C CONDENSOR,RECEIVER-DRIER AND HOSES

KEY	PART NO.	PART NAME	QTY	SERIAL NO.	REMARKS
1	AT208776	HOSE	1		
2	R10093	O-RING	4		
3	AH97280	CLIP	2		
4	19M7784	SCREW	3		M10 X 20
5	AT210781	HOSE	1		
6	14M7296	FLANGE NUT	12		M10
7	24M7239	WASHER	14		10.700 X 21 X 2.500 MM
8	AT210031	HINGE	1		
9	R113050	O-RING	1		
10	AT208410	HEAT SINK	1		
	AT300646	HEAT SINK	1		(HARSH ENVIRONMENT)
11	19M7810	SCREW	6		M10 X 80
12	19M7786	SCREW	3	-XXXXXX	M10 X 30
	19M7785	SCREW	3	XXXXXX-	
14	19M7785	SCREW	6		M10 X 25
15	24M7296	WASHER	10		10.500 X 30 X 2.500 MM
16	AT223991	BRACKET	1		
17	AT162848	RECEIVER-DRYER	1		
18	AT304734	SPACER	1		(USE WITH (9) 19M7785) (SUB FOR T181207)
19	T76252	CLAMP	1		
20	T190513	CLAMP	2		(SUB FOR T163597)

HEATING AND AIR CONDITIONING OUTLET DUCTS

T158657 -UN-05SEP02

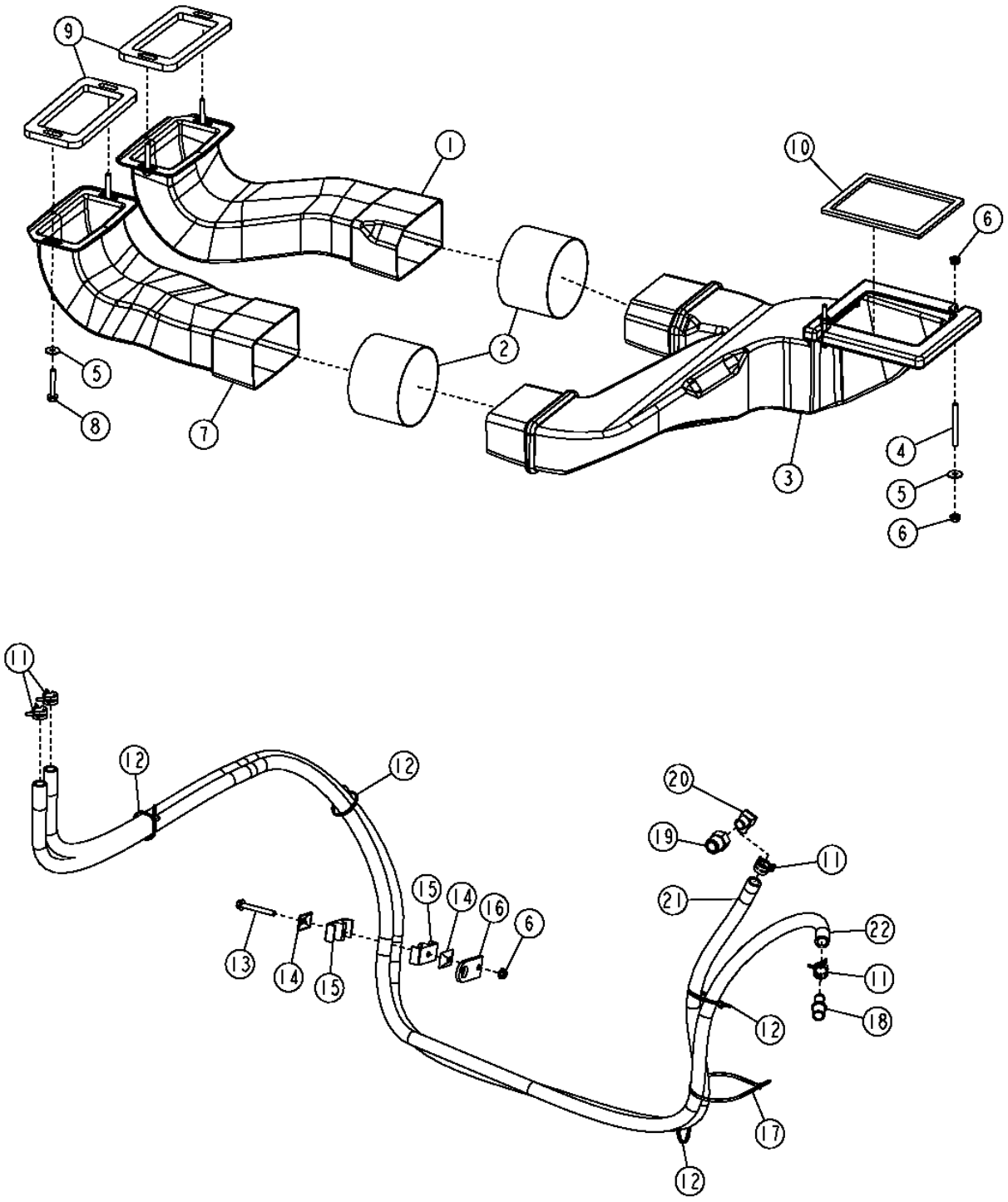

HEATING AND AIR CONDITIONING OUTLET DUCTS

KEY	PART NO.	PART NAME	QTY	SERIAL NO.	REMARKS
1	T173768	AIR DUCT	1		(RIGHT SIDE)
2	T171082	SEAL	2		
3	T175855	AIR DUCT	1		
4	T167759	STUD	2		
5	24M7298	WASHER	6		8.400 X 25 X 2 MM
6	14M7298	FLANGE NUT	5		M8
7	T156256	AIR DUCT	1		(LEFT SIDE)
8	19M7800	SCREW	4		M8 X 50
9	T182872	SEAL	2		
10	H94158	WEATHERSTRIP	1		(SUB FOR T167679)
11	T184924	HOSE CLAMP	4		
12	R44302	TIE BAND	4		
13	19M7802	SCREW	1		
14	H121168	PLATE	2		
15	H115379	CLAMP	2		
16	T196115	STRAP	1		
17	H77698	TIE BAND	1		
18	R41985	FITTING	1		
19	T177861	REDUCER	1		
20	R117310	ELBOW FITTING	1		
21	.....	BULK HOSE	1		(FURNISH T60811 BULK HOSE, CUT TO LENGTH)
22	.....	BULK HOSE	1		(FURNISH T60811 BULK HOSE, CUT TO LENGTH)

CAB MONITOR CONSOLE (SERIAL NO. -590067)

T151632 -UN-19FEB02

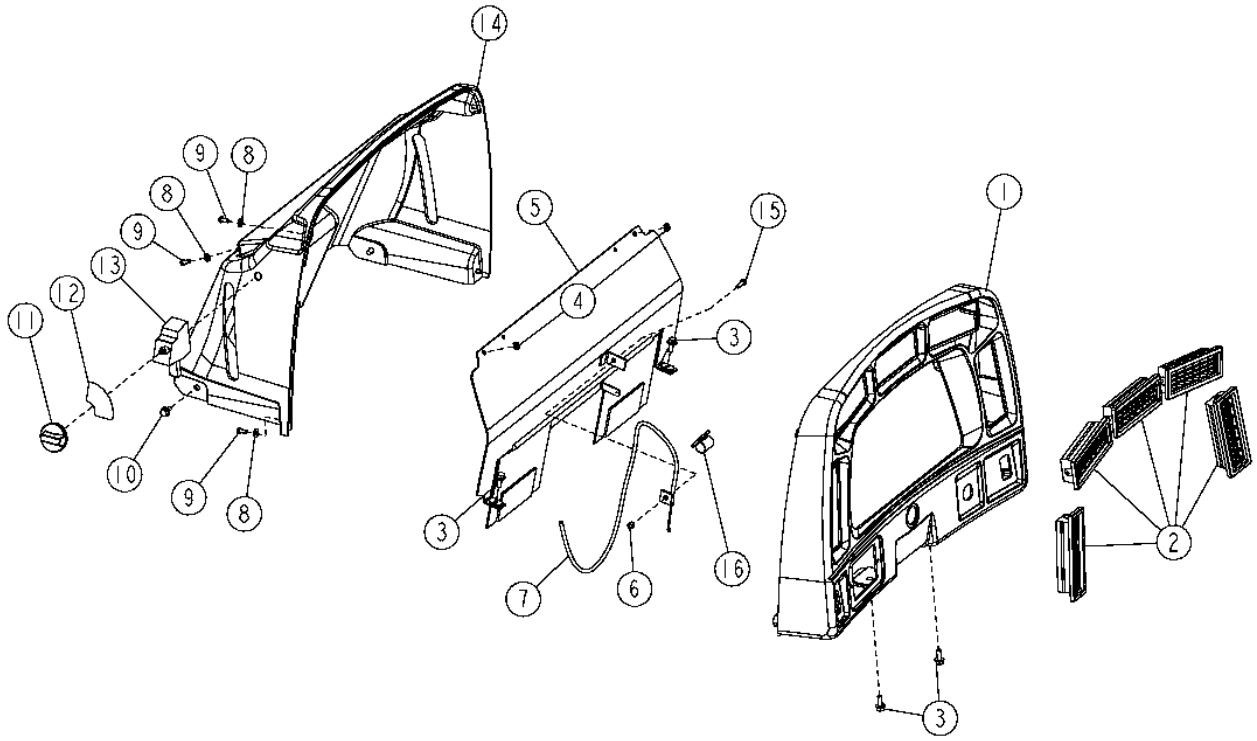

T151632

CAB MONITOR CONSOLE (SERIAL NO. -590067)

KEY	PART NO.	PART NAME	QTY	SERIAL NO.	REMARKS
1	T196729	COWL	1		
2	AH149228	LOUVER	5		
3	19M7775	SCREW	4		M6 X 16
4	14M7442	NUT	2		M5
5	AT223073	PARTITION	1		
6	14M7360	LOCK NUT	1		M5
7	AT223688	CABLE	1		
8	24M7054	WASHER	6		6.400 X 12 X 1.600 MM
9	21M7265	SCREW	6		M5 X 12
10	19M7774	SCREW	2		M6 X 12
11	AT223689	KNOB	1		
12	T182189	LABEL	1		
13	AT223687	CONTROL	1		
14	T180925	HOUSING	1		
15	19M7372	CAP SCREW	1		M5 X 16
16	T182909	CLIP	1		

CAB MONITOR CONSOLE (SERIAL NO. 590068-)

T193669 -UN-24OCT03

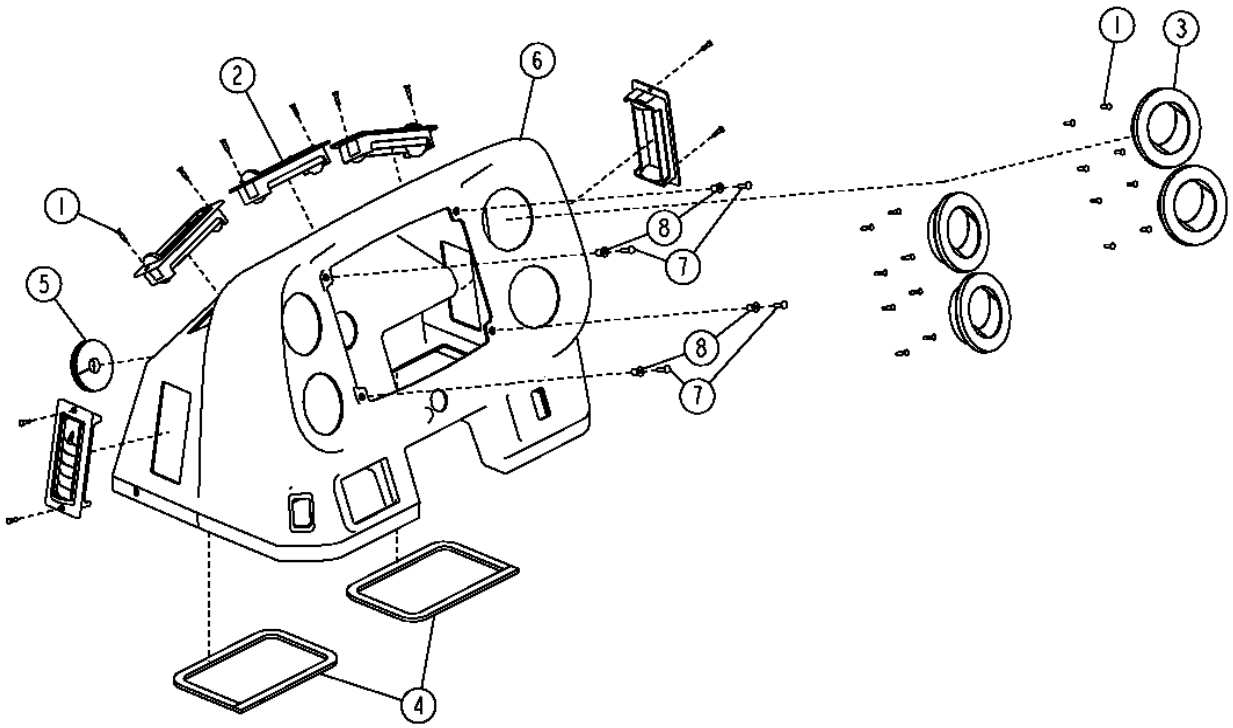

TI93669

CAB MONITOR CONSOLE (SERIAL NO. 590068-)

KEY	PART NO.	PART NAME	QTY	SERIAL NO.	REMARKS
1	37M7333	SCREW	26		
2	AT227668	LOUVER	5		
3	AT227669	LOUVER	4		
4	H81330	ISOLATOR	1		
5	R117845	GROMMET	1		
6	T196471	CONSOLE	1		
7	T82791	SCREW	4		
8	T82792	NUT	4		

HEATER HOSES AND FITTINGS

T157601 -UN-22JUL02

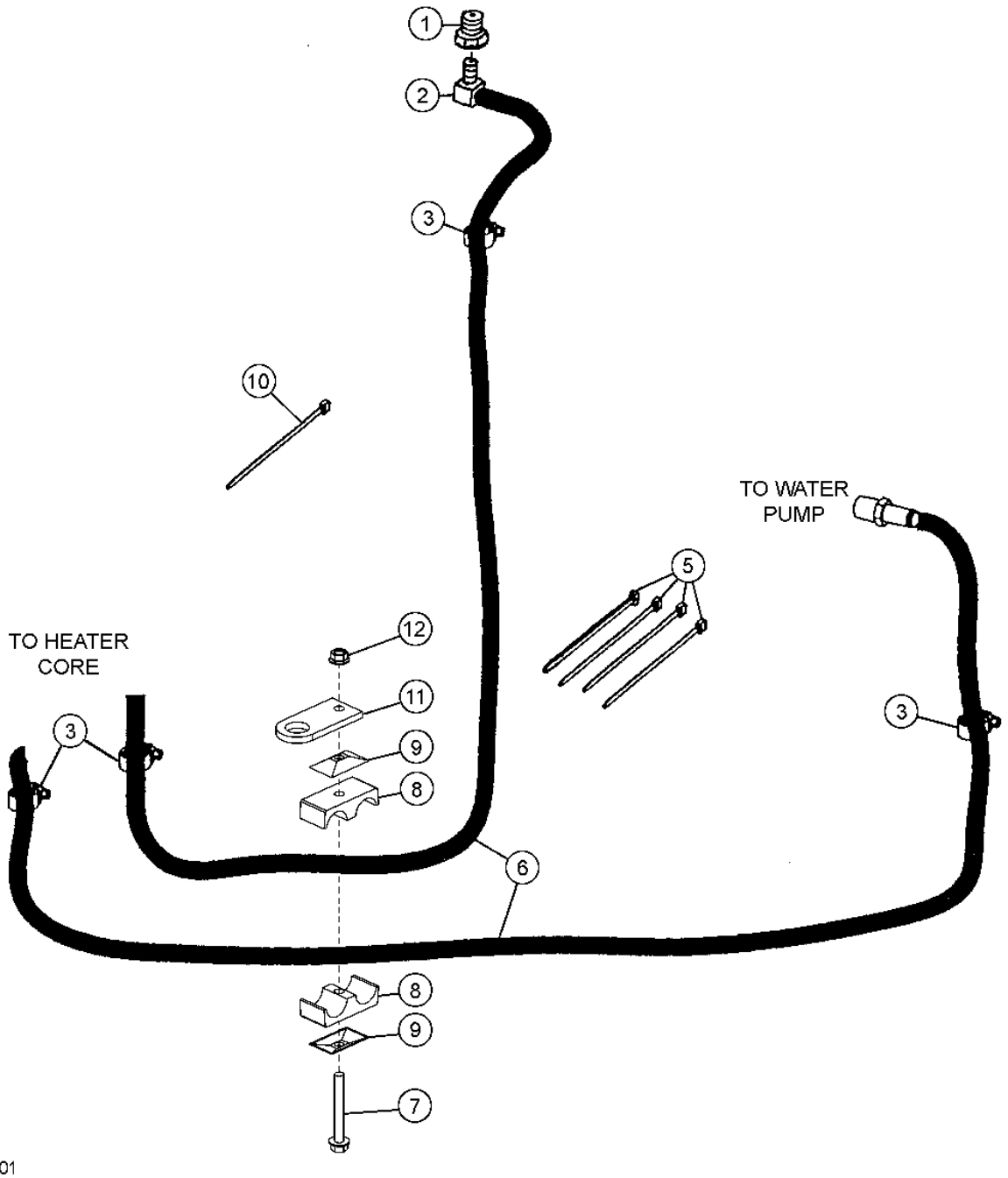

HEATER HOSES AND FITTINGS

KEY	PART NO.	PART NAME	QTY	SERIAL NO.	REMARKS
1	T177861	REDUCER	1		
2	R117310	ELBOW FITTING	1		
3	T184924	HOSE CLAMP	4		(SUB FOR (4) AR21837)
5	R44302	TIE BAND	2		
6	.....	HOSE	2		(MAKE FROM T60811 BULK MATERIAL, CUT TO LENGTH)
7	19M7802	SCREW	1		M8 X 65
8	H115379	CLAMP	2		
9	H121168	PLATE	2		
10	H77698	TIE BAND	1		
11	T196115	STRAP	1		
12	14M7298	FLANGE NUT	1		M8

HOOD

T153146 -UN-01APR02

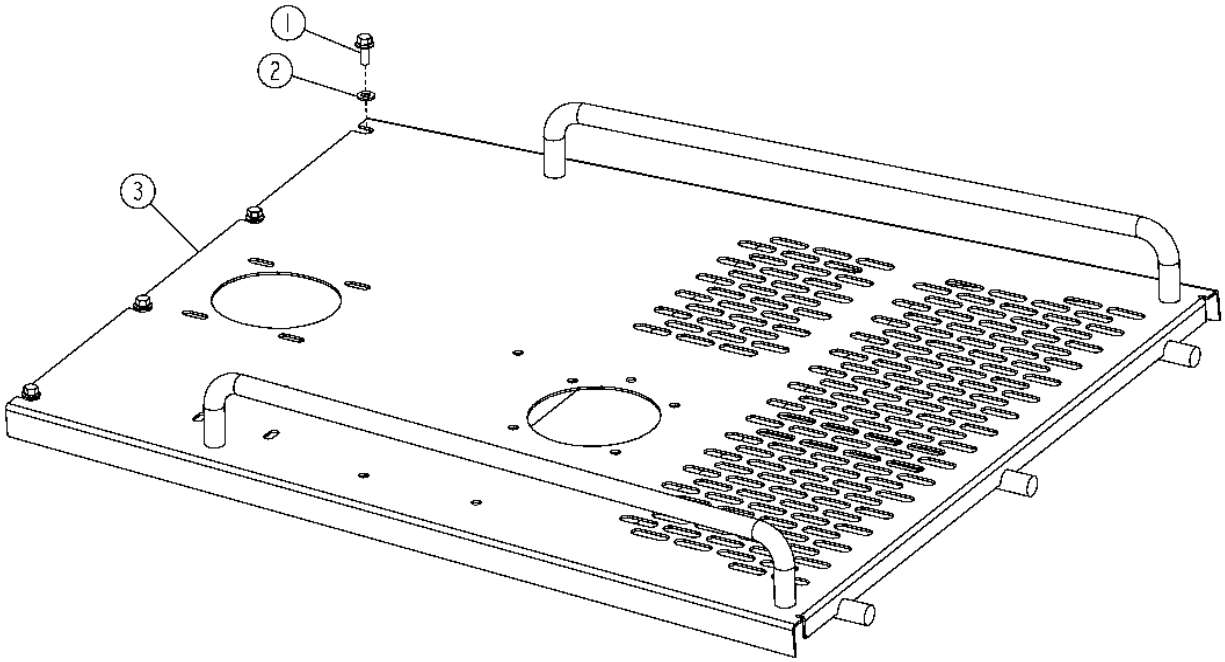

T153146

KEY	PART NO.	PART NAME	QTY	SERIAL NO.	REMARKS
1	19M7785	SCREW	4		M10 X 25
2	24M7239	WASHER	4		10.700 X 21 X 2.500 MM
3	AT225145	HOOD	1	-590067	(YELLOW)
	AT305898	HOOD	1	590068-	(CHARCOAL)

MEMORANDA

ENGINE SIDE SHIELDS

T192812 -UN-10JUL03

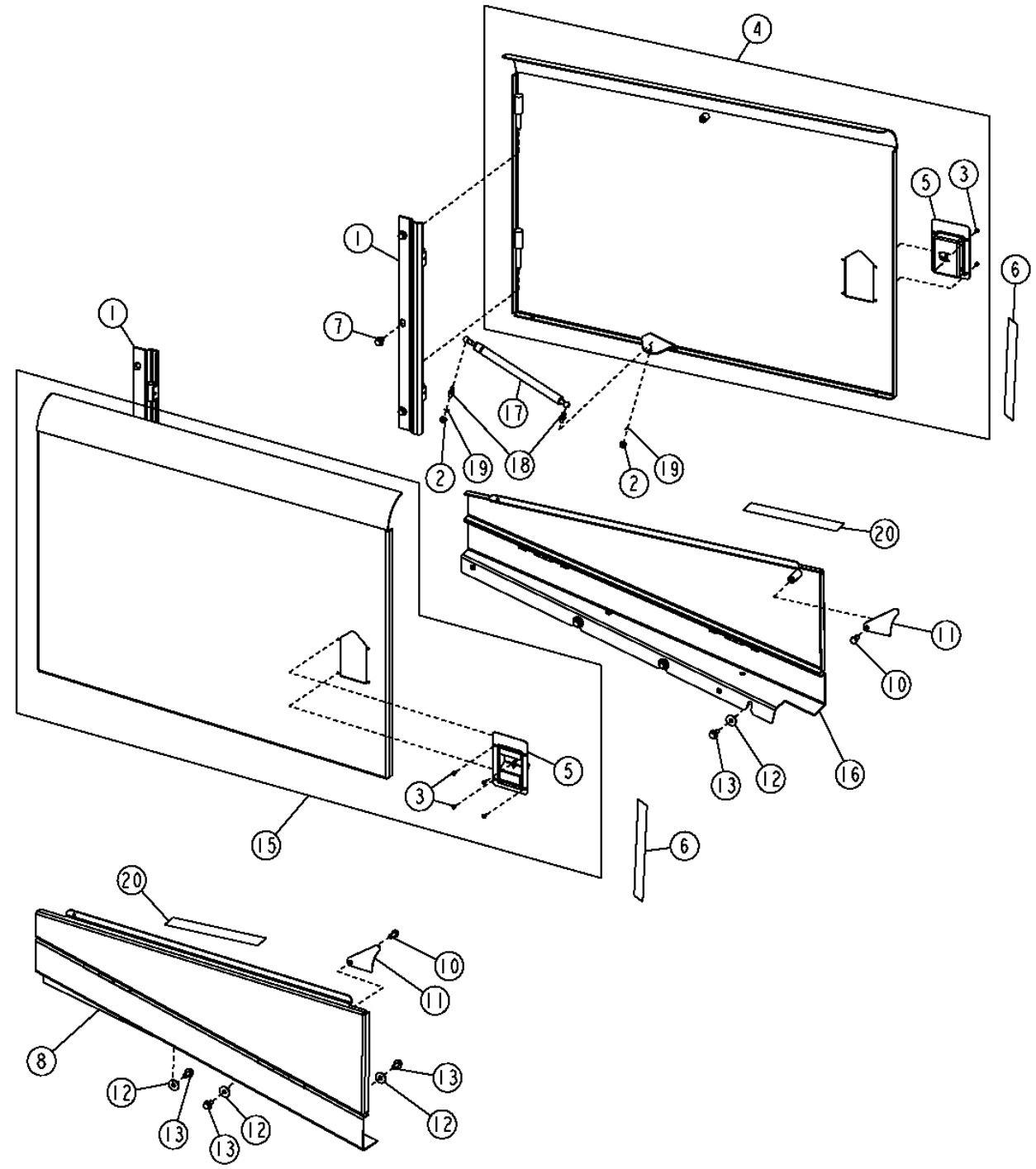

ENGINE SIDE SHIELDS

KEY	PART NO.	PART NAME	QTY	SERIAL NO.	REMARKS
1	AT208159	HINGE	2		
2	14M7298	FLANGE NUT	4		
3	H85233	RIVET	8		
4	AT221967	DOOR	1		RIGHT SIDE DOOR
5	AT221696	LATCH	2		(SUB FOR AT280208)
6	.....	ISOLATOR	AR		(MAKE FROM BULK MATERIAL T59937, CUT TO LENGTH)
7	19M7783	SCREW	6		
8	AT220494	DOOR	1		LEFT SIDE SERVICE DOOR
10	T105891	CAP SCREW	2		M10 X 20
11	T168119	PLATE	2		
12	24M7296	WASHER	6		10.500 X 30 X 2.500 MM
13	19M7784	SCREW	6		M10 X 20
15	AT221754	DOOR	1		LEFT SIDE DOOR
16	AT225629	DOOR	1		RIGHT SIDE SERVICE DOOR
17	AT226229	CYLINDER	2		
18	T177909	BALL STUD	4		
19	T182758	CLIP	4		
20	.....	ISOLATOR	AR		(MAKE FROM BULK MATERIAL T167650 CUT TO LENGTH)

MEMORANDA

TRANSMISSION SHIELDS

T153320 -UN-16JUL02

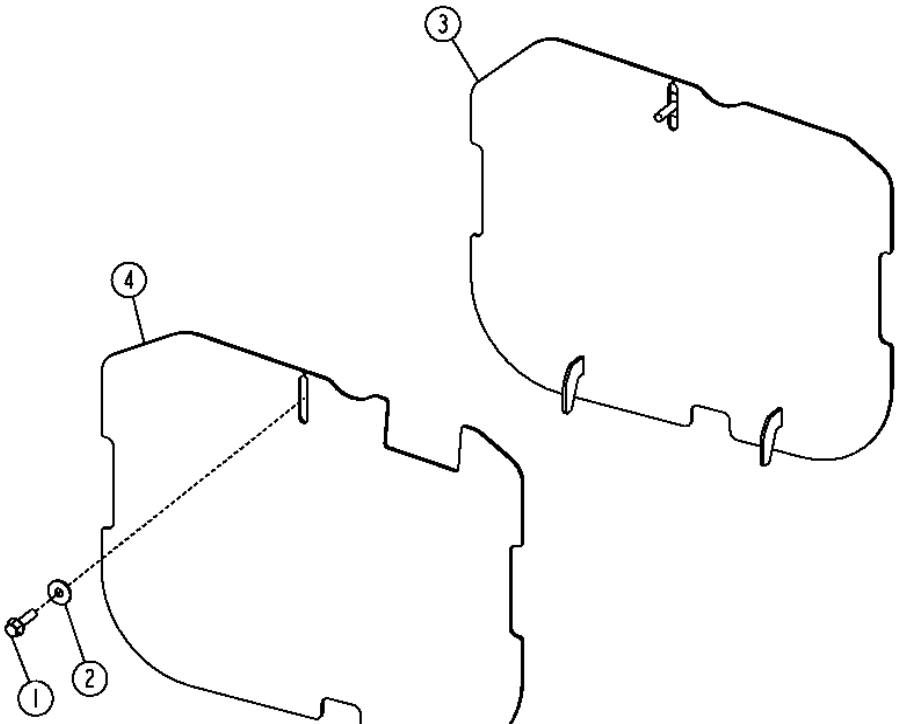

T153320

KEY	PART NO.	PART NAME	QTY	SERIAL NO.	REMARKS
1	19M7814	SCREW	2		M12 X 50
2	24M7180	WASHER	2		13 X 37 X 3 MM
3	AT225983	COVER	1		RIGHT SIDE
4	AT225760	COVER	1		LEFT SIDE

BATTERY COVERS

T145461 -UN-19SEP01

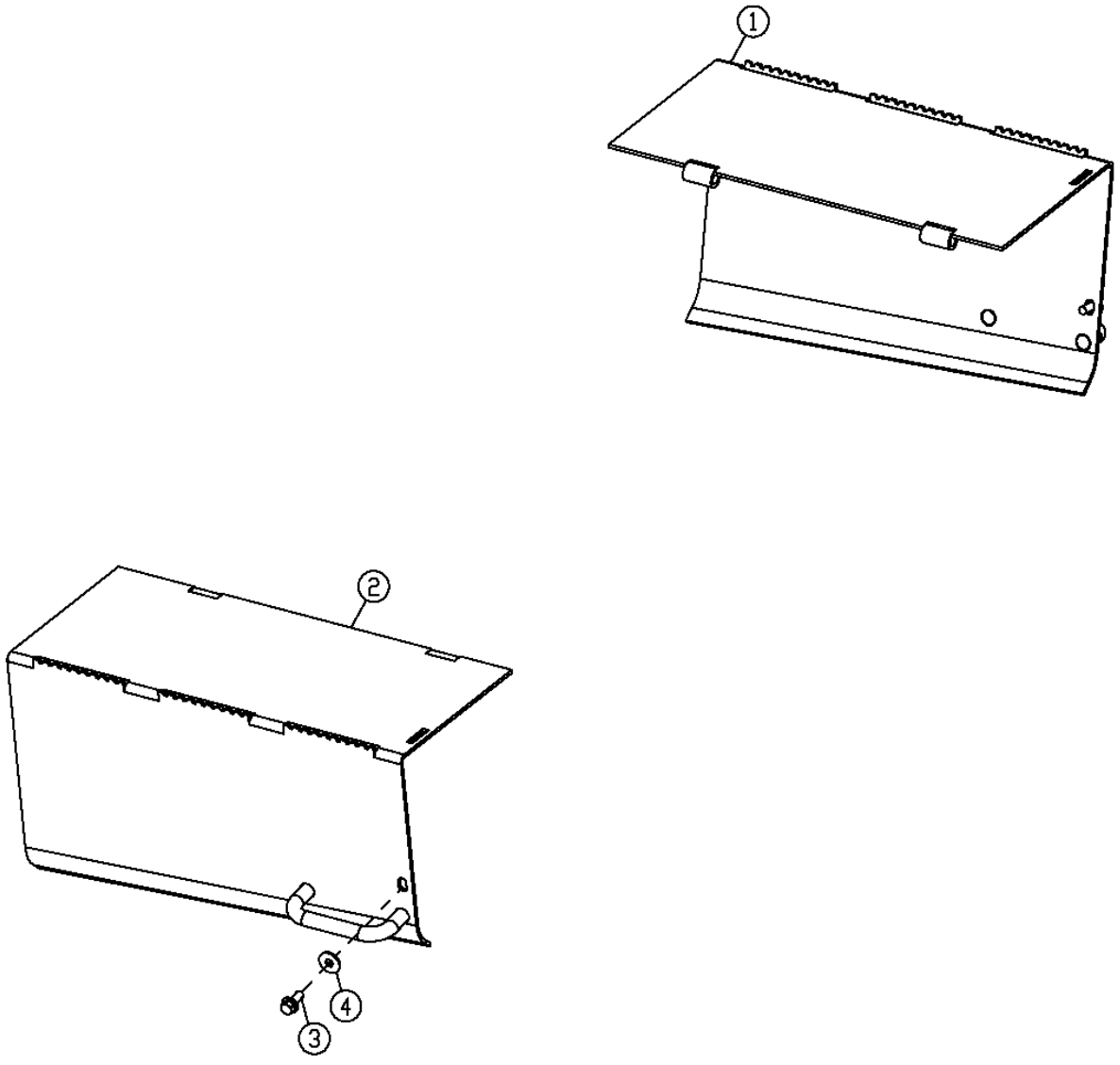

T145461

BATTERY COVERS

KEY	PART NO.	PART NAME	QTY	SERIAL NO.	REMARKS
1	AT302961	COVER	1		RIGHT, (SUB FOR AT222882)
2	AT302960	COVER	1		LEFT, (SUB FOR AT222602)
3	24M7296	WASHER	2		10.500 X 30 X 2.500 MM
4	19M7785	SCREW	2		

GRILLE AND GRILLE HOUSING

T195380 -UN-13OCT03

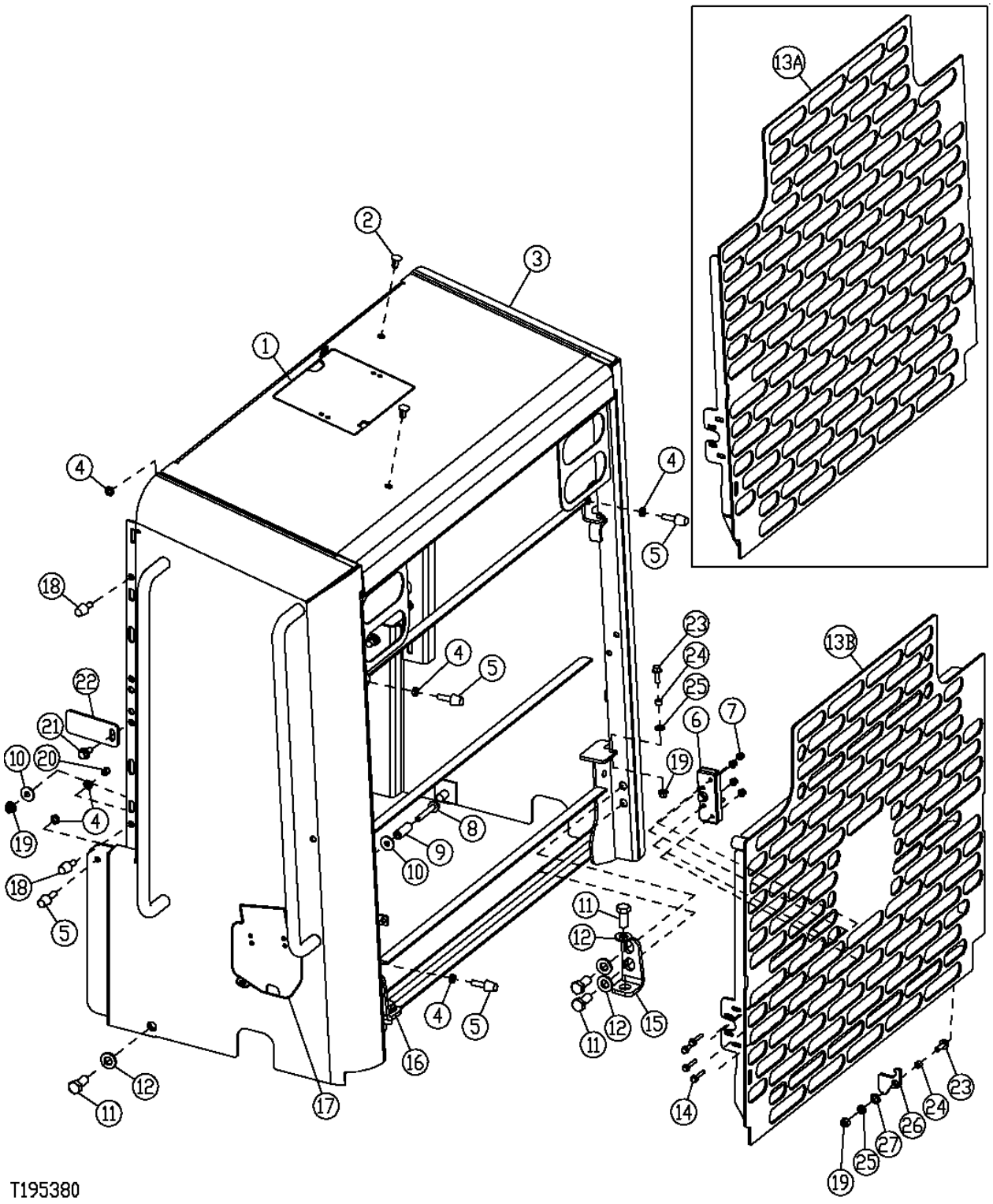

GRILLE AND GRILLE HOUSING

KEY	PART NO.	PART NAME	QTY	SERIAL NO.	REMARKS
1	AT220994	COVER	1		
2	T174271	PLUG	2		
3	AT225182	HOUSING	1		
4	14M7152	NUT	8		M10
5	AT219974	BUMPER	5		
6	AT220015	LATCH	1		
7	14M7397	LOCK NUT	4		M6
8	19M7808	SCREW	1		M10 X 65
9	T101975	BUSHING	1		
10	24M7296	WASHER	2		10.500 X 30 X 2.500 MM
11	19M8035	CAP SCREW	8		M16 X 35
12	24M7241	WASHER	8		17 X 34 X 4 MM
13A	AT223988	DOOR	1	-590067	
13B	AT305777	DOOR	1	590068-	
14	19M7833	SCREW	4		M6 X 35
15	T181489	BRACKET	1		(RIGHT) (SUB FOR T181529)
16	T181488	BRACKET	1		(LEFT) (SUB FOR T181528)
17	AT220993	DOOR	1		
18	AT219974	BUMPER	4		(SUB FOR AT221273)
19	14M7296	FLANGE NUT	3		M10
20	T101955	BUMPER	2		
21	19M7784	SCREW	2		M10 X 20
22	T168135	STRAP	2		
23	19M7786	SCREW	2		
24	Z32264	SPACER	2		
25	24M7239	WASHER	2		
26	T180661	STRAP	1		
27	24M7427	WASHER	1		

REAR FENDERS AND FENDER SUPPORTS

T153328 -UN-02APR02

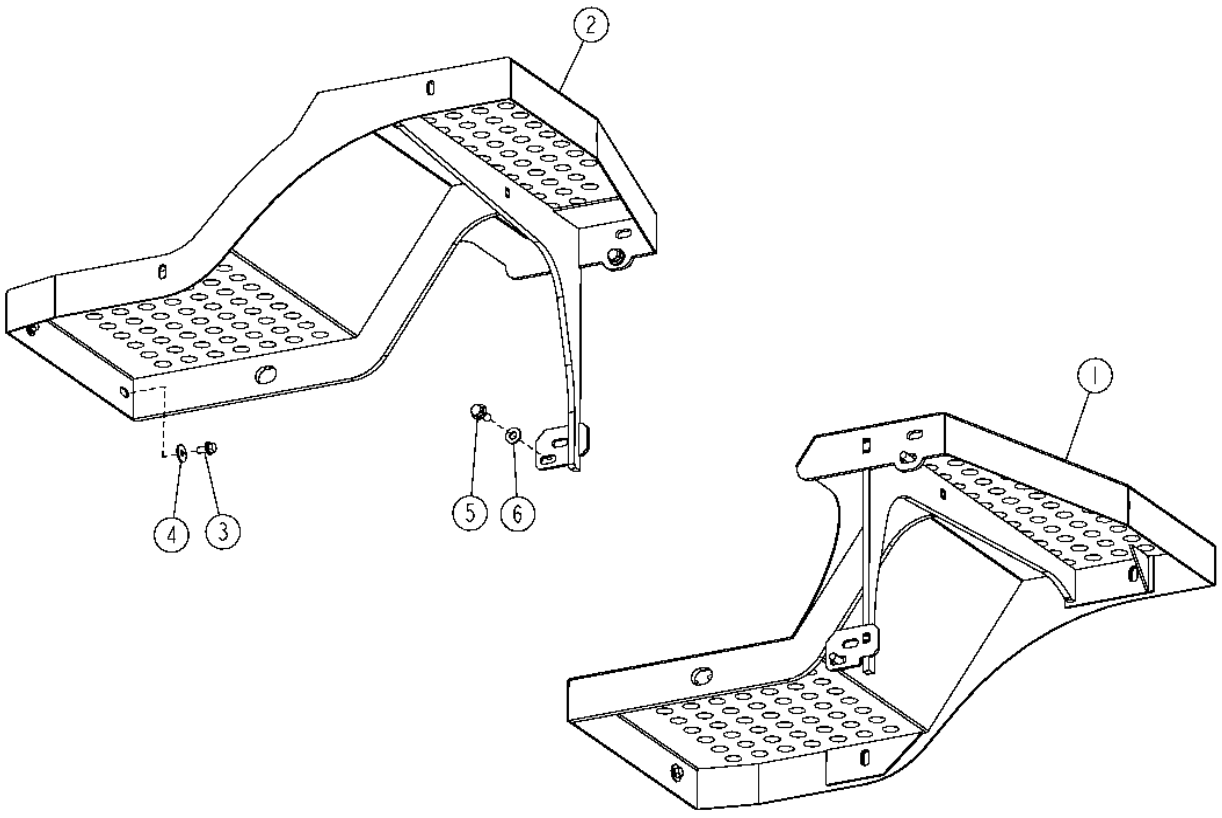

T153328

REAR FENDERS AND FENDER SUPPORTS

KEY	PART NO.	PART NAME	QTY	SERIAL NO.	REMARKS
1	AT310792	FENDER	1		(SUB FOR AT223274) (RIGHT)
2	AT310791	FENDER	1		(SUB FOR AT223011) (LEFT)
3	19M7784	SCREW	6		M10 X 20
4	24M7296	WASHER	6		10.500 X 30 X 2.500 MM
5	19M7789	SCREW	4		M12 X 30
6	T178063	WASHER	4		

FRONT FENDERS AND FENDER SUPPORTS (SERIAL NO. -588861)

T193267 -UN-25JUL03

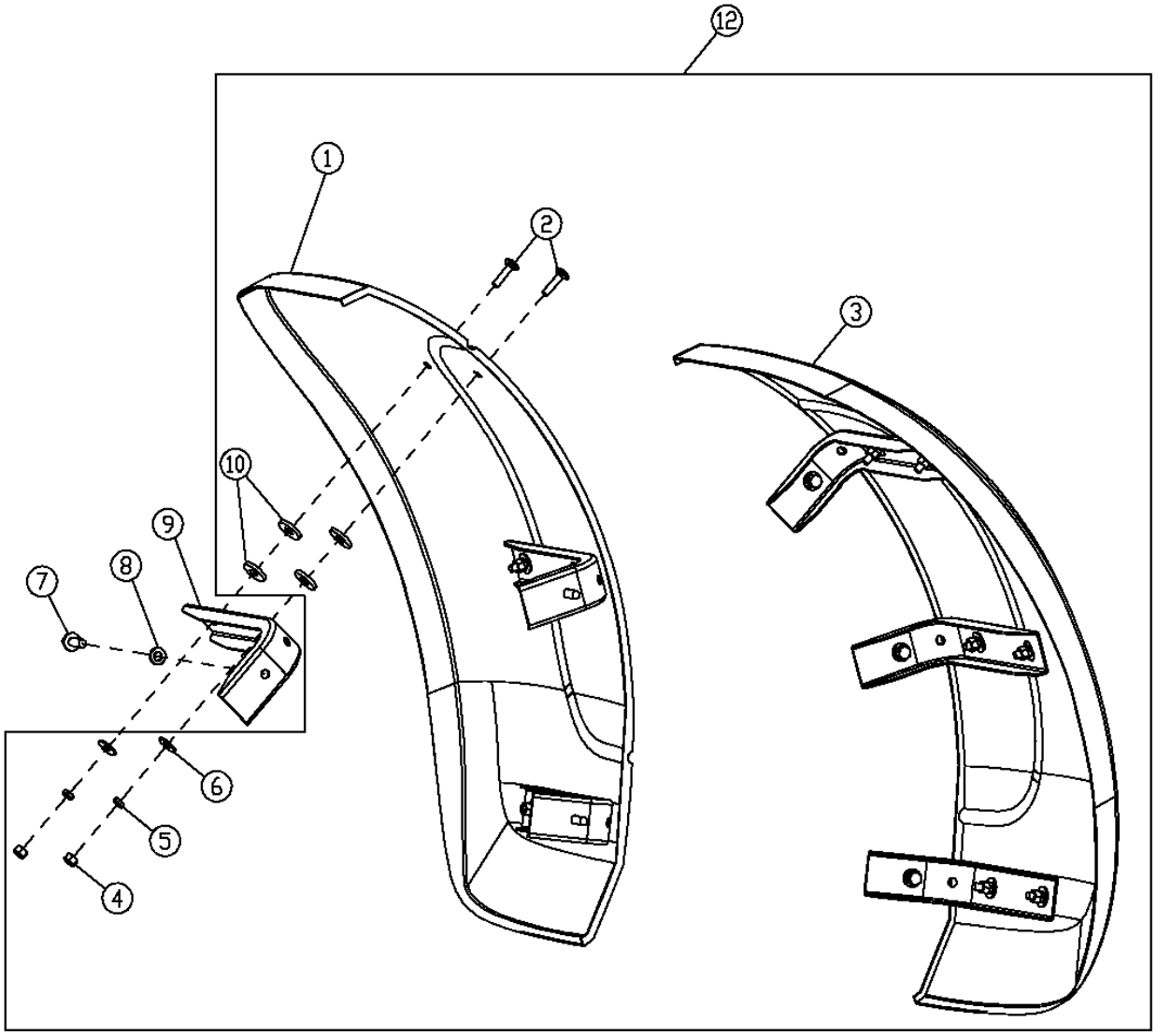

T193267

FRONT FENDERS AND FENDER SUPPORTS (SERIAL NO. -588861)

KEY	PART NO.	PART NAME	QTY	SERIAL NO.	REMARKS
1	.....	FENDER	1	-588815	(RIGHT) (YELLOW) (SUB AT303753)
	T170595	FENDER	1	588816-	(RIGHT) (GRAY)
	T209177	FENDER	1	588816-	(RIGHT) (YELLOW)
2	03M7194	BOLT	12		M10 X 40
3	.....	FENDER	1	-588815	(LEFT) (YELLOW) (SUB AT303753)
	T169118	FENDER	1	588816-	(LEFT) (GRAY)
	T209174	FENDER	1	588816-	(LEFT) (YELLOW)
4	14M7167	LOCK NUT	12		M10
5	14M7152	NUT	12		M10
6	24M7296	WASHER	12		10.500 X 30 X 2.500 MM
7	19M7790	SCREW	6		M12 X 35
8	24M7240	WASHER	6		13 X 25 X 3 MM
9	T178368	SUPPORT	6		
10	T22381	WASHER	24		
11	T174271	PLUG	12		(NOT ILLUSTRATED) (FOR USE WITHOUT FENDERS)
12	.....	KIT	1		(AT303753 NOT AVAILABLE ORDER COMPONENTS)

FRONT FENDERS AND FENDER SUPPORTS (SERIAL NO. 588862-) (GRAY)

T190016 -UN-01MAY03

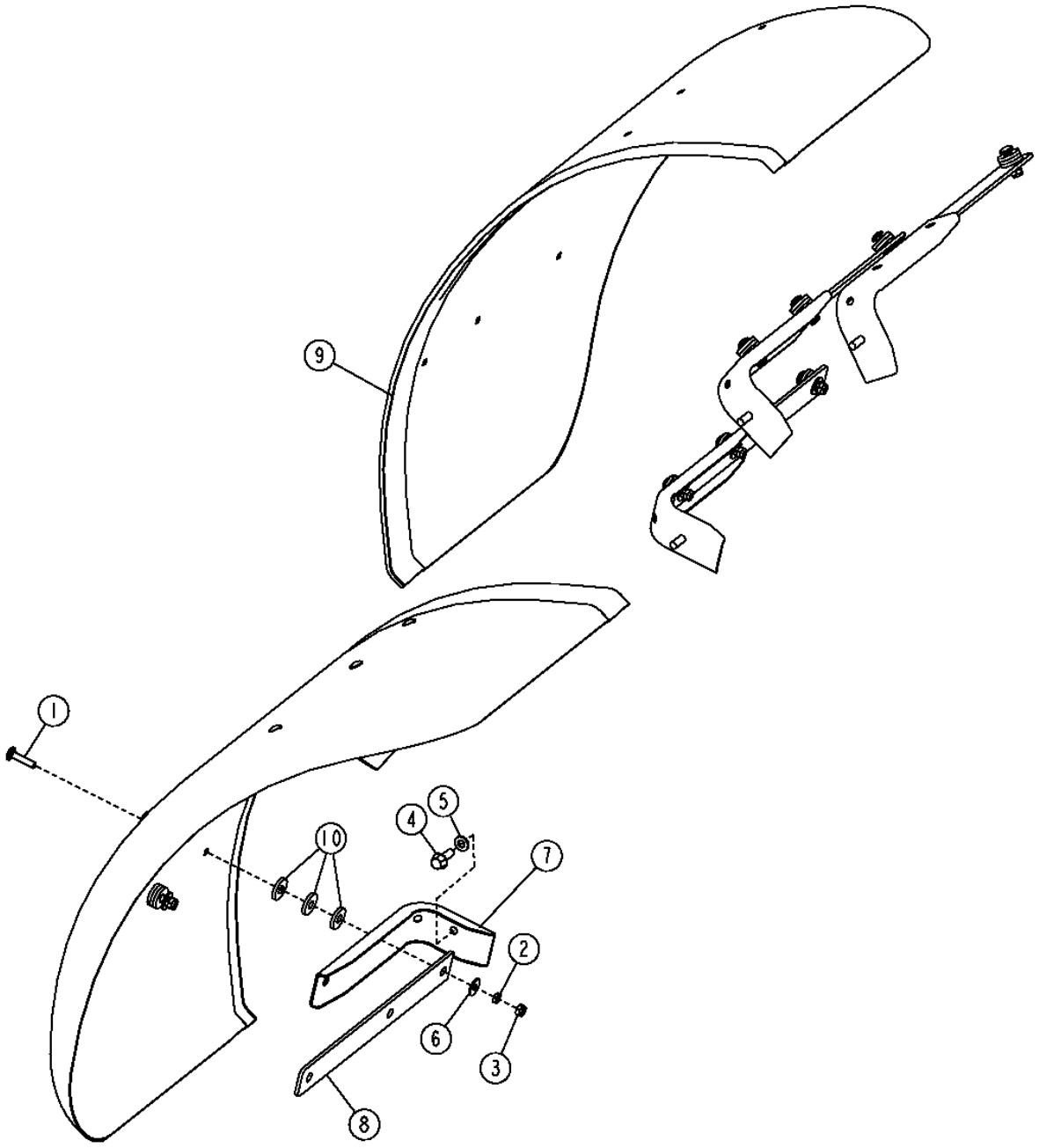

FRONT FENDERS AND FENDER SUPPORTS (SERIAL NO. 588862-) (GRAY)

KEY	PART NO.	PART NAME	QTY	SERIAL NO.	REMARKS
1	03M7194	BOLT	18		M10 X 40, (SUB FOR 03M7195, THIS APPLICATION)
2	14M7152	NUT	18		M10
3	14M7167	LOCK NUT	18		M10
4	19M7790	SCREW	6		M12 X 35
5	24M7240	WASHER	6		13 X 25 X 3 MM
6	24M7296	WASHER	18		10.500 X 30 X 2.500 MM
7	T178368	SUPPORT	6		
8	T200463	PLATE	6		
9	T201020	FENDER	2		
10	T22381	WASHER	54		

FRONT FENDERS AND FENDER SUPPORTS (SERIAL NO. 588862-) (GRAY)(FULL COVERAGE)

T198668 -UN-06APR04

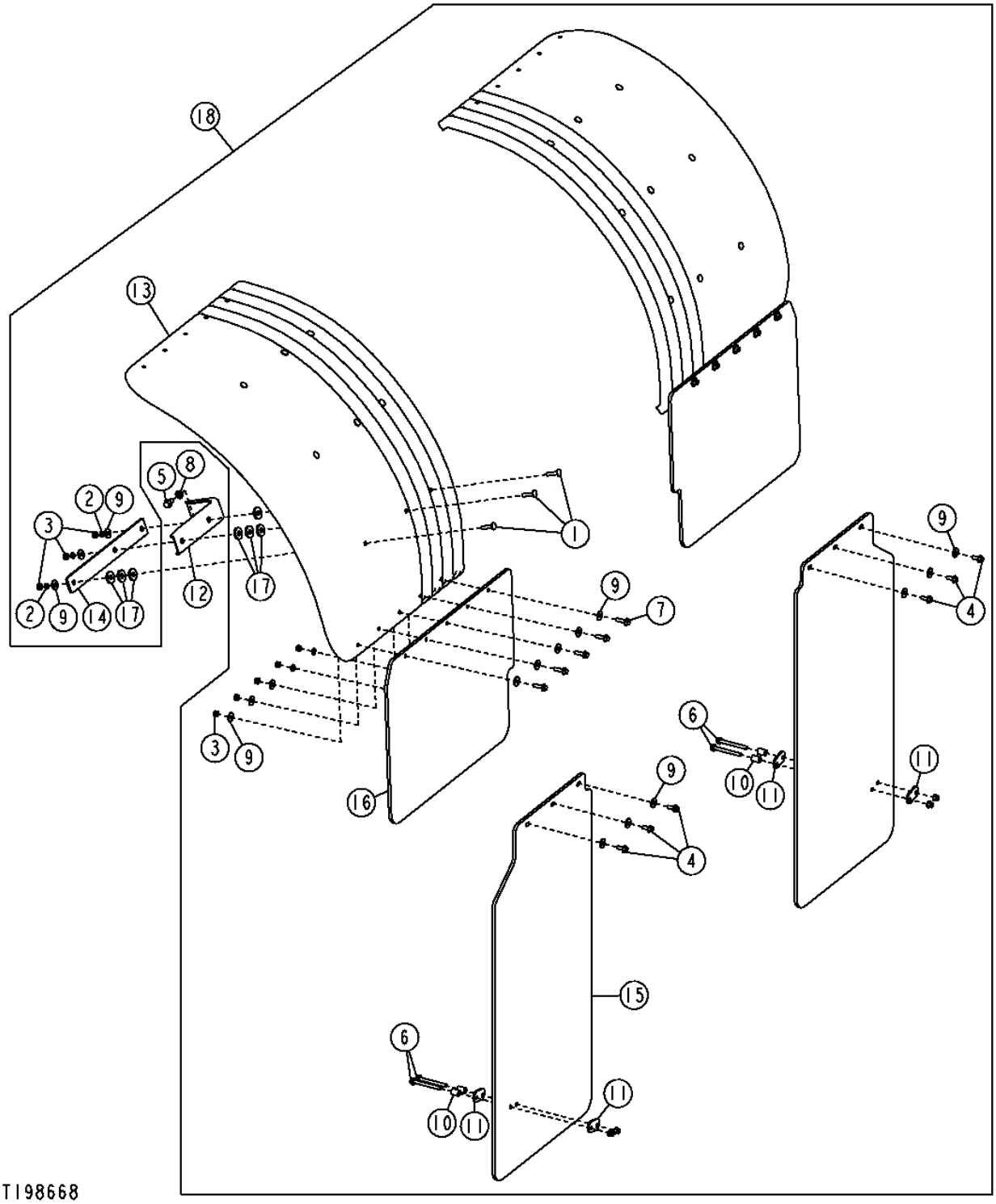

FRONT FENDERS AND FENDER SUPPORTS (SERIAL NO. 588862-) (GRAY)(FULL COVERAGE)

KEY	PART NO.	PART NAME	QTY	SERIAL NO.	REMARKS
1	03M7194	BOLT	18		M10 X 40, (SUB FOR 03M7195, THIS APPLICATION)
2	14M7152	NUT	18		M10
3	14M7167	LOCK NUT	28		M10
4	19M7785	SCREW	6		M10 X 25
5	19M7788	SCREW	6		M12 X 25
6	19M7812	SCREW	4		M10 X 100
7	19M7835	SCREW	10		M10 X 35
8	24M7240	WASHER	6		13 X 25 X 3 MM
9	24M7296	WASHER	40		10.500 X 30 X 2.500 MM
10	T147891	BUSHING	4		
11	T173779	STRAP	4		
12	T178368	SUPPORT	6		
13	T201017	FENDER	2		
14	T200463	PLATE	6		
15	T201375	SPLASH GUARDS	2		
16	T202241	SPLASH GUARDS	2		
17	T22381	WASHER	42		
18	**AT312102**	**FENDER**	**1**		**(WHOLE GOODS) (FULL COVERAGE FRONT FENDERS FIELD KIT)**

FULL COVERAGE REAR FENDERS (SERIAL NO. XXXXXX-)

T198849 -UN-06APR04

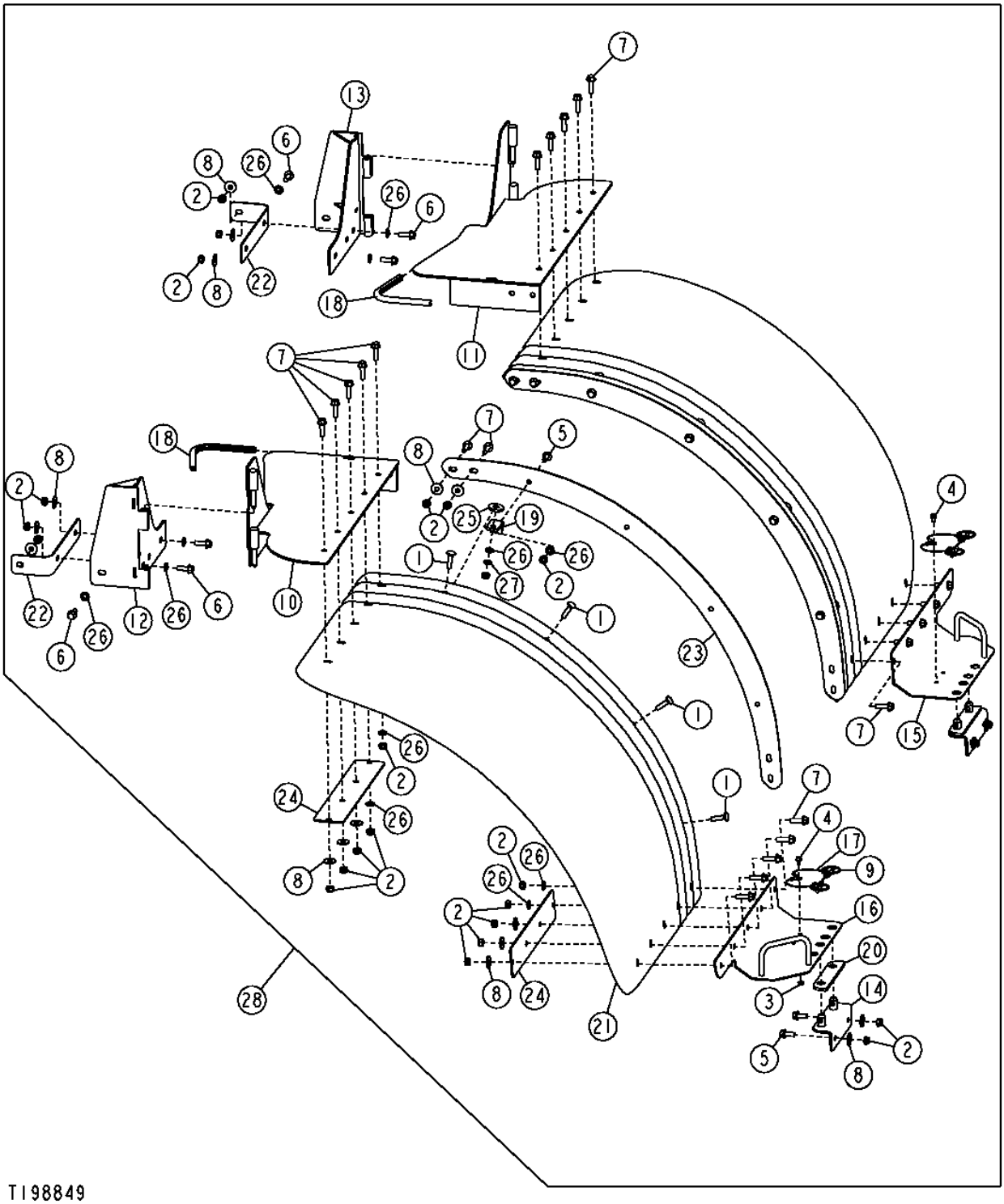

FULL COVERAGE REAR FENDERS (SERIAL NO. XXXXXX-)

KEY	PART NO.	PART NAME	QTY	SERIAL NO.	REMARKS
1	03M7194	BOLT	6		M10 X 40
2	14M7167	LOCK NUT	46		M10
3	14M7303	FLANGE NUT	2		M6
4	19M7774	SCREW	2		M6 X 12
5	19M7785	SCREW	10		M10 X 25
6	19M7786	SCREW	6		M10 X 30
7	19M7835	SCREW	24		M10 X 35
8	24M7296	WASHER	23		10.500 X 30 X 2.500 MM
9	AA21292	QUICK LOCK PIN	4		
10	AT305314	HINGE	1		
11	AT305315	HINGE	1		
12	AT301819	HINGE	1		
13	AT301820	HINGE	1		
14	AT304159	BRACKET	2		
15	AT304160	HANDLE	1		
16	AT304161	HANDLE	1		
17	AT305830	WIRE ROPE	2		
18	.....	ISOLATOR	1		(FURNISH T58056 BULK MATERIAL, CUT TO LENGTH)
19	T176357	BRACKET	6		
20	T201305	PAD	2		
21	T204302	FENDER	2		
22	.....	ANGLE	2		(T201328 NO LONGER AVAILABLE)
23	T203965	PLATE	2		
24	T204644	PLATE	4		
25	T22381	WASHER	6		
26	24M7239	WASHER	34		10.700 X 21 X 2.500 MM
27	14M7152	NUT	6		M10
28	**AT312172**	**KIT**	**1**		**(WHOLE GOODS) (FULL COVERAGE REAR FENDERS FIELD KIT)**

RADIO, RADIO SPEAKERS AND ANTENNA (SERIAL NO. -590067)

T192643 -UN-01JUL03

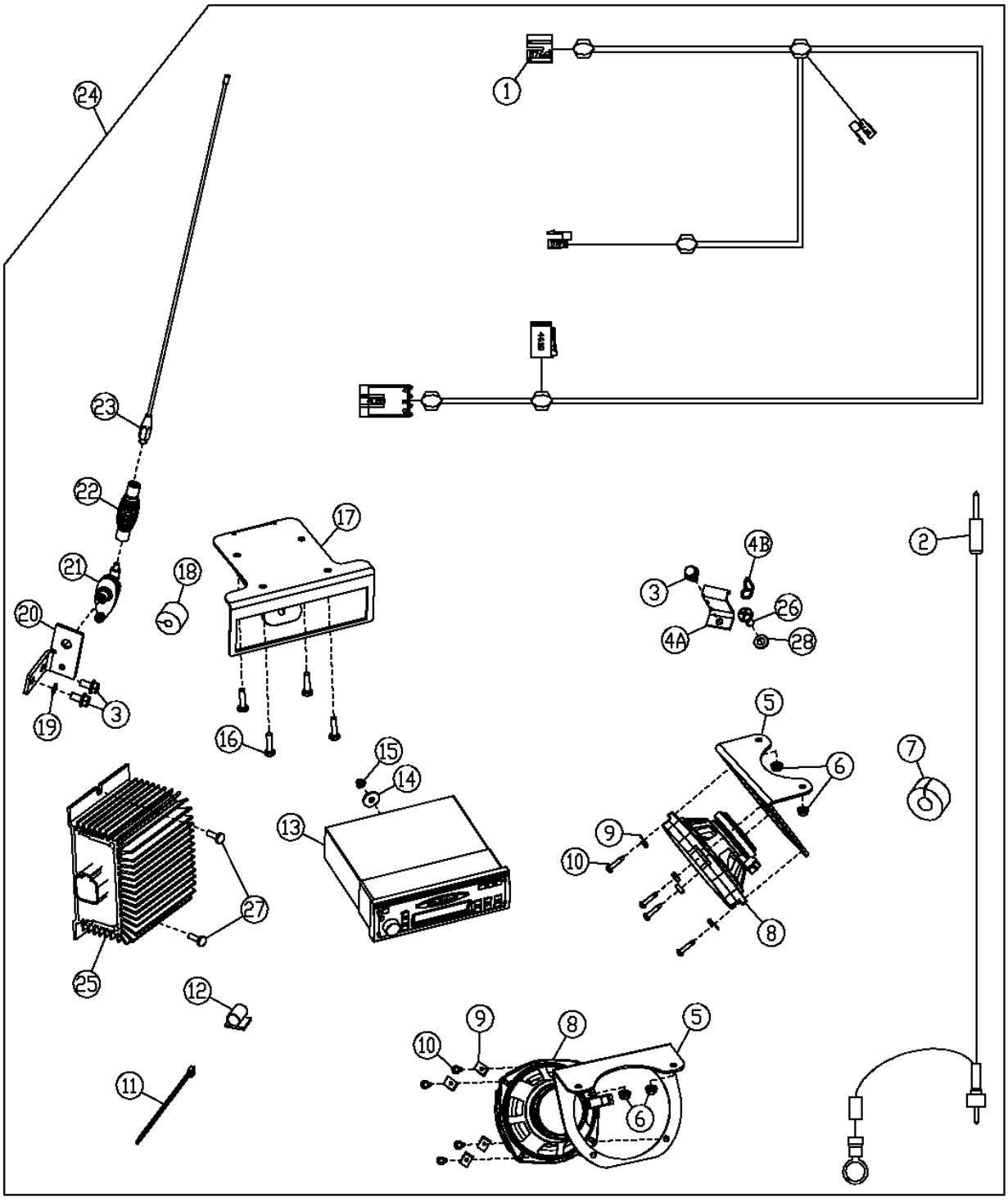

T192643

RADIO, RADIO SPEAKERS AND ANTENNA (SERIAL NO. -590067)

KEY	PART NO.	PART NAME	QTY	SERIAL NO.	REMARKS
1	AT223870	RADIO SPEAKER WRG HARNESS	1		
2	AT223897	CABLE	1		
3	19M7865	SCREW	3		M8 X 16
4A	T180573	BRACKET	1		(USE WITH 19M7865)
4B	R126033	HOOK	1		(USE WITH T133674 AND 24M7054)
5	T180338	BRACKET	2		
6	14M7303	FLANGE NUT	4		M6
7	T182870	ISOLATOR	1		
8	AT188759	SPEAKER	2		
9	R53528	NUT	8		
10	T182888	SCREW	8		(SUB FOR 37M7070)
11	R44302	TIE BAND	1		
12	T182909	CLIP	3		
13	AT192957	RADIO	1		(USE IF AVAILABLE) WITH CASETTE, (SUB RE190140)
	RE190139	RADIO	1		(SUB FOR AT192956)
	RE190140	RADIO	1		WITH CASETTE, (SUB FOR AT192957)
	RE190141	RADIO	1		WITH COMPACT DISC, (SUB FOR AT192958)
14	24M7100	WASHER	1		6.600 X 22 X 2 MM
15	14M7375	FLANGE NUT	1		M5
16	19H1948	CAP SCREW	4		6.350 X 19.050 MM
17	T180420	BRACKET	1		
18	T182871	ISOLATOR	1		
19	12M7032	LOCK WASHER	1		8.400 MM
20	T180487	BRACKET	1		
21	RE168454	BASE	1		ANTENNA
22	RE61651	SPRING	1		
23	AR104516	ANTENNA	1		
24	**AT306829**	**KIT**	**1**		
	AT306830	**KIT**	**1**		**WITH CASSETTE**
	AT306831	**KIT**	**1**		**WITH COMPACT DISC**
25	AT224893	CONVERTER	1		
26	T133674	SELF-LOCKING SCREW	1		(SUB FOR 21M7292)
27	21M7250	SCREW	2		M4 X 12
28	24M7054	WASHER	1		6.400 X 12 X 1.600 MM
29	R76695	NUT	1		

RADIO, RADIO SPEAKERS AND ANTENNA (SER.NO. 590068-)

T193559 -UN-14AUG03

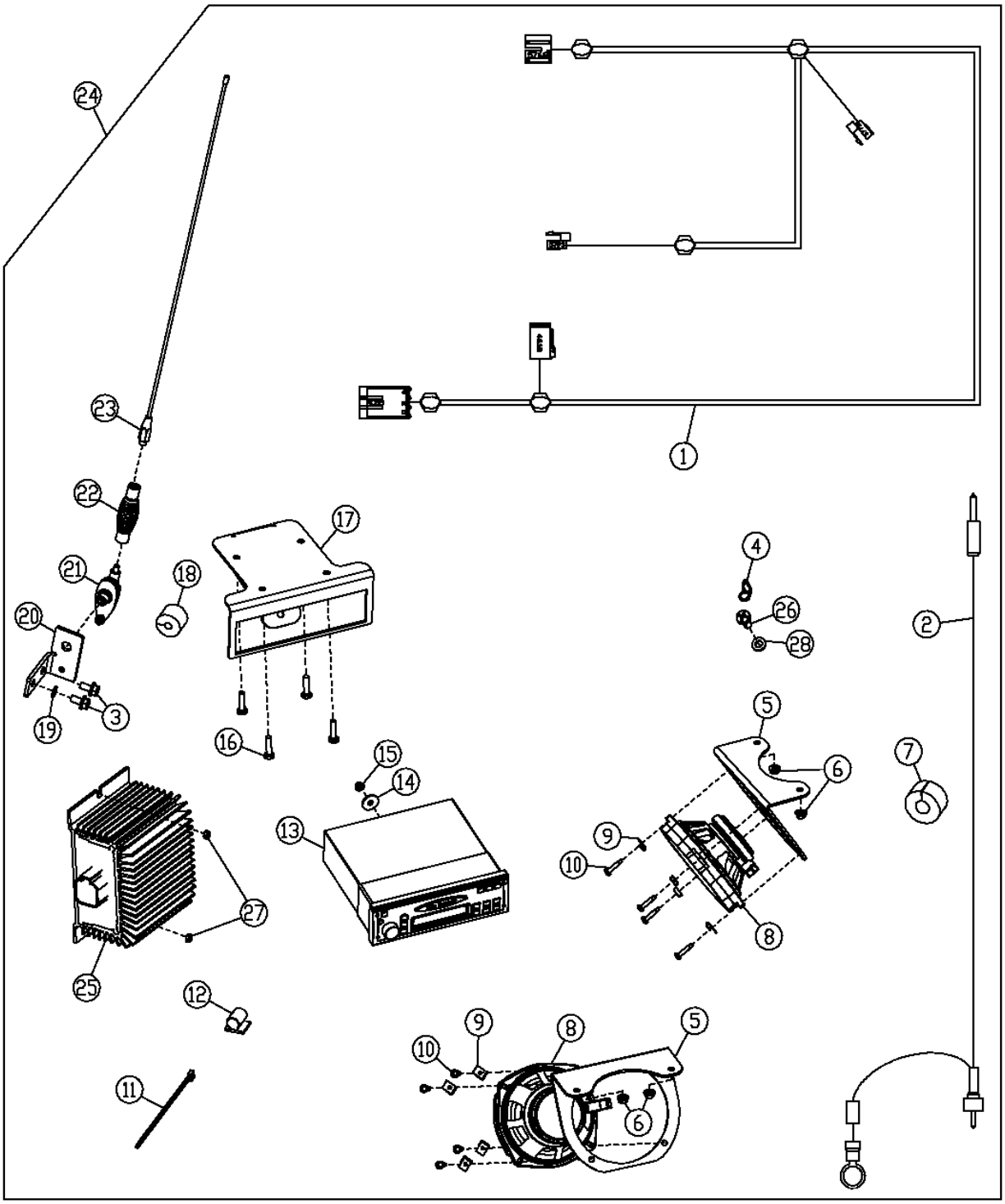

T193559

RADIO, RADIO SPEAKERS AND ANTENNA (SER.NO. 590068-)

KEY	PART NO.	PART NAME	QTY	SERIAL NO.	REMARKS
1	AT223870	RADIO SPEAKER WRG HARNESS	1		
2	AT223897	CABLE	1		
3	19M7865	SCREW	2		M8 X 16
4	R126033	HOOK	1		
5	T180338	BRACKET	2		
6	14M7303	FLANGE NUT	4		M6
7	T182870	ISOLATOR	1		
8	AT188759	SPEAKER	2		
9	R53528	NUT	8		
10	37M7070	SCREW	8		
11	R44302	TIE BAND	1		
12	.....	CLIP	3		
13	RE190139	RADIO	1		
	RE190140	RADIO	1		WITH CASETTE
	RE190141	RADIO	1		WITH COMPACT DISC
14	24M7100	WASHER	1		6.600 X 22 X 2 MM
15	14M7375	FLANGE NUT	1		
16	19H1948	CAP SCREW	4		6.350 X 19.050 MM
17	T180420	BRACKET	1		
18	T182871	ISOLATOR	1		
19	12M7032	LOCK WASHER	1		8.400 MM
20	T180487	BRACKET	1		
21	RE168454	BASE	1		ANTENNA
22	RE61651	SPRING	1		
23	AR104516	ANTENNA	1		
24	**AT306829**	**KIT**	**1**		**WITH WEATHERBAND**
	AT306830	**KIT**	**1**		**WITH CASETTE**
	AT306831	**KIT**	**1**		**WITH COMPACT DISC**
25	AT224893	CONVERTER	1		
26	T133674	SELF-LOCKING SCREW	1		(SUB FOR 21M7292)
27	14M7100	NUT	2		
28	24M7054	WASHER	1		

OUTSIDE MIRROR FOR CAB OR CANOPY

T165043 -UN-11FEB03

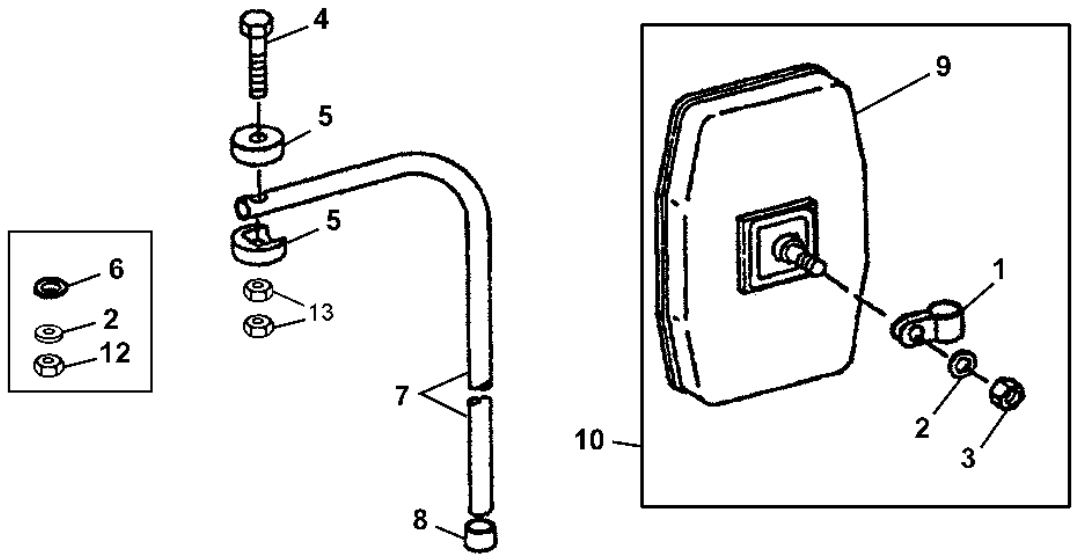

T165043

KEY	PART NO.	PART NAME	QTY	SERIAL NO.	REMARKS
1	T119564	CLAMP	1		
2	24M7239	WASHER	2	-585208	10.700 X 21 X 2.500 MM
	24M7239	WASHER	1	585209-	
3	T11234	LOCK NUT	1		
4	19H2791	CAP SCREW	1		3/8" X 1-3/4"
5	T115030	HALF CLAMP	2		
6	H110232	WASHER	1	-585208	(SUB FOR T60920)
7	T115031	RIB	1		
8	T128437	CAP	1		
9	AT157226	REAR VIEW MIRROR	1		
10	AT103919	REAR VIEW MIRROR	1		
12	U13184	LOCK NUT	1	-585208	3/8"
13	T11234	LOCK NUT	2	585209-	

INSIDE REAR VIEW MIRROR

TP62771 -UN-23FEB00

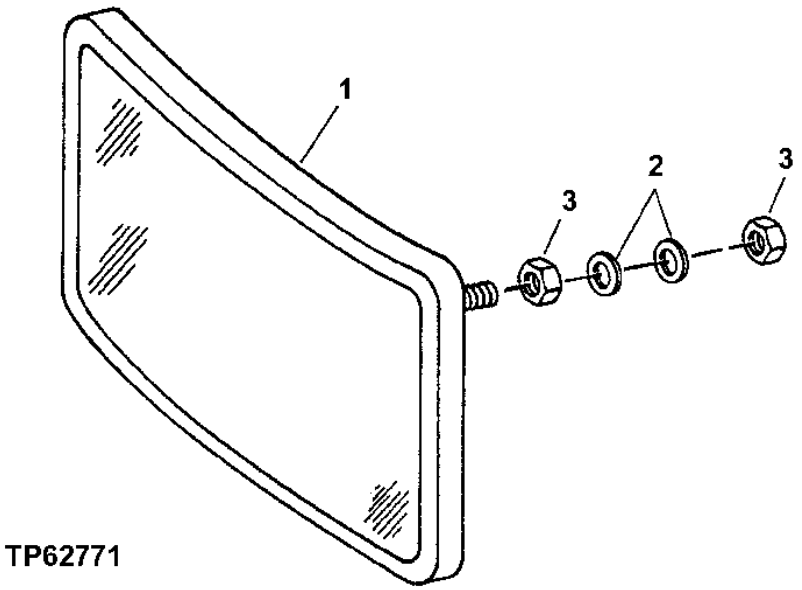

KEY	PART NO.	PART NAME	QTY	SERIAL NO.	REMARKS
1	AT196427	REAR VIEW MIRROR	1		(SUB FOR AT186760)
2	24M7036	WASHER	2		9 X 16 X 1.600 MM
3	14M7273	NUT	2		M8

FIRE EXTINGUISHER AND BRACKET

T155232 -UN-28MAY02

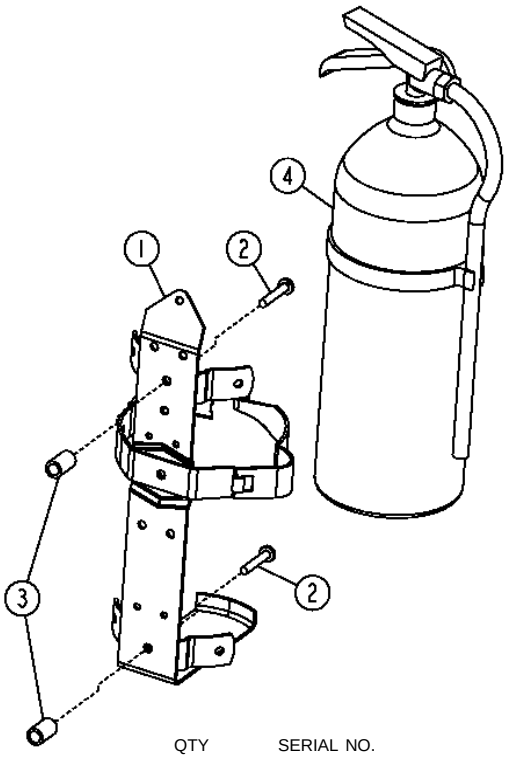

T155232

KEY	PART NO.	PART NAME	QTY	SERIAL NO.	REMARKS
1	AT189390	BRACKET	1		
2	21M7247	SCREW	2		M6 X 35
3	28H3423	BUSHING	2		0.364" X 0.540" X 7/8"
4	AT189487	FIRE EXTINGUISHER	1		

HORN

T153900 -UN-11APR02

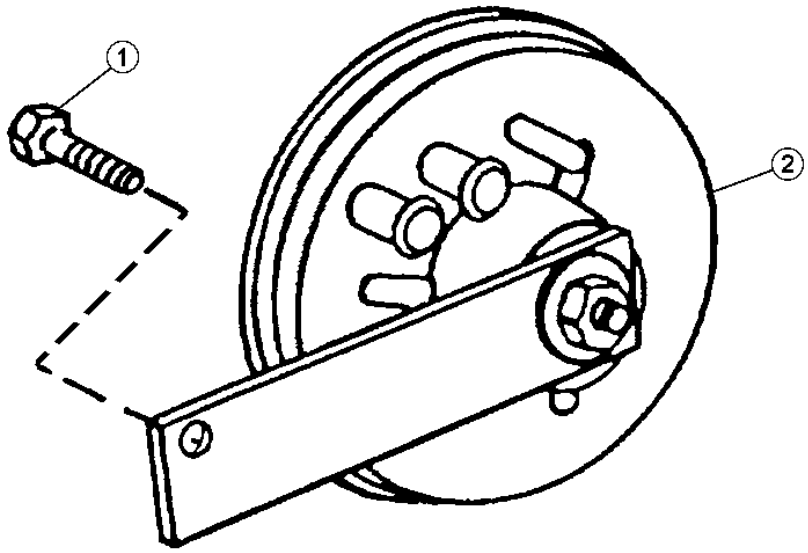

T153900

KEY	PART NO.	PART NAME	QTY	SERIAL NO.	REMARKS
1	19M7864	SCREW	1		M8 X 12
2	AT226282	HORN	1		(SUB FOR AT64237) LOW NOTE

BACK-UP ALARM

T134335 -UN-10OCT00

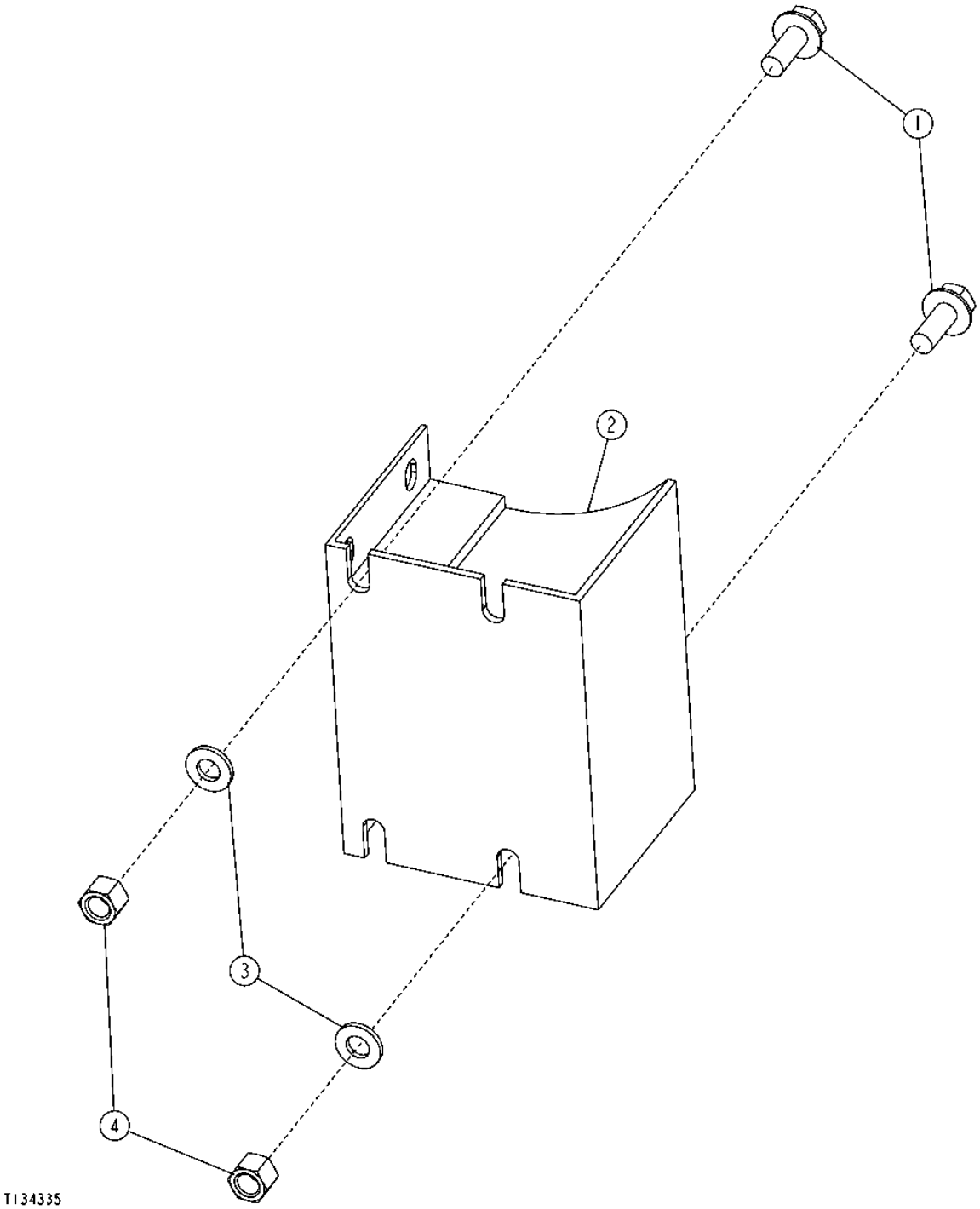

BACK-UP ALARM

KEY	PART NO.	PART NAME	QTY	SERIAL NO.	REMARKS
1	19M7866	SCREW	2		M8 X 20
2	AT120461	TRAVEL WARNING ALARM	1		
3	24M7238	WASHER	2		
4	14M7396	LOCK NUT	2		

ASH TRAY

TP33786 -UN-01JAN94

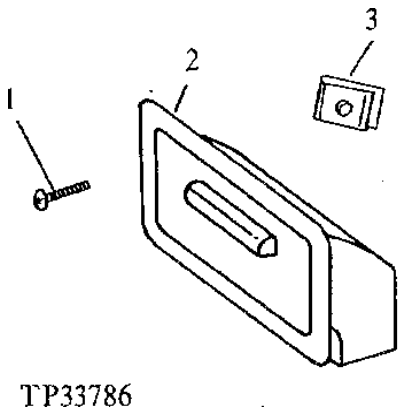

KEY	PART NO.	PART NAME	QTY	SERIAL NO.	REMARKS
1	37M7030	SCREW	2		
2	AT59892	ASHTRAY	1		
3	R53528	NUT	2		

SUN VISOR

T141042 -UN-09APR01

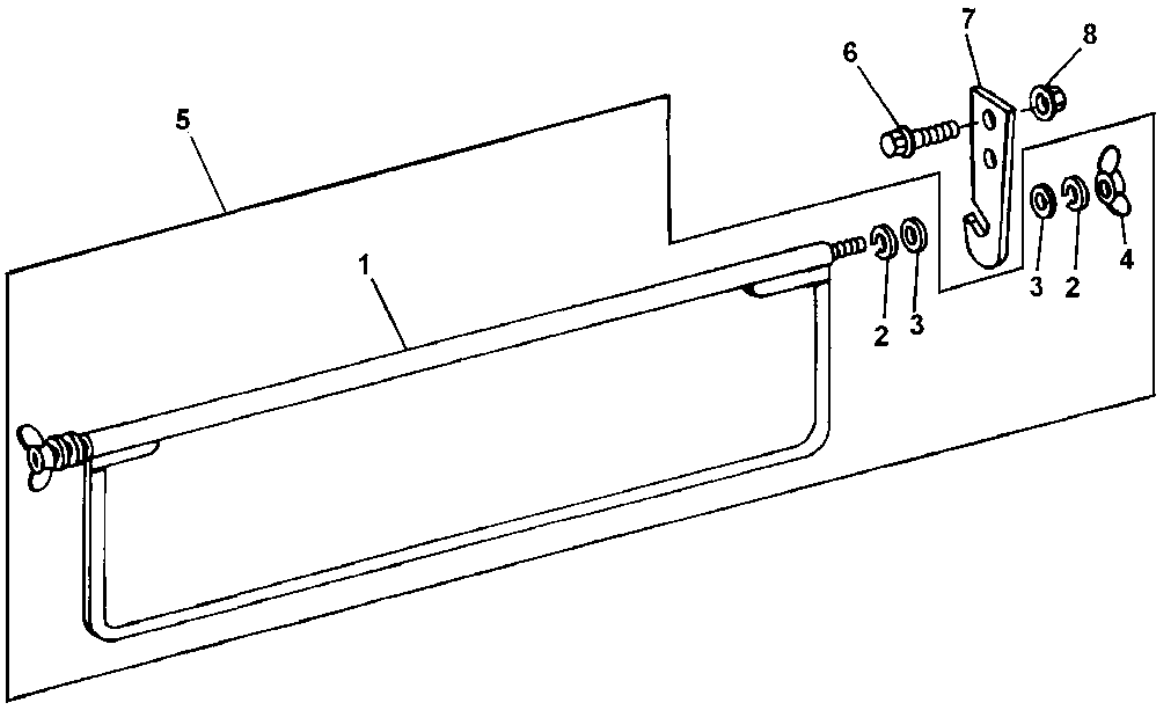

KEY	PART NO. T141042	PART NAME	QTY	SERIAL NO.	REMARKS
1	AT217448	SUN VISOR	1		
2	24H1285	WASHER	4		17/64" X 7/16" X 0.065"
3	N218377	WASHER	4		
4	M47887	WING NUT	2		
5	AT217448	SUN VISOR	1		
6	19M7862	SCREW	2		M6 X 20
7	T181797	BRACKET	2		
8	14M7303	FLANGE NUT	2		M6

SLOW MOVING VEHICLE EMBLEM

T193231 -UN-07AUG03

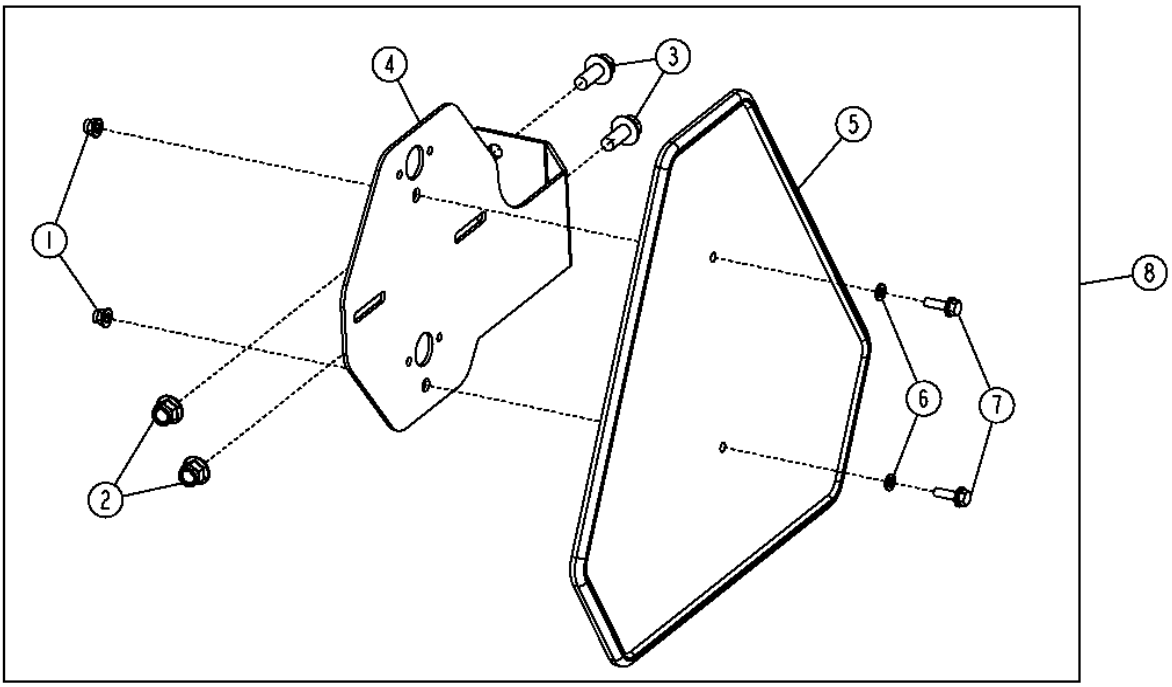

T193231

SLOW MOVING VEHICLE EMBLEM

KEY	PART NO.	PART NAME	QTY	SERIAL NO.	REMARKS
1	14M7397	LOCK NUT	2		M6
2	14M7400	LOCK NUT	2		M10
3	19M7785	SCREW	2		M10 X 25
4	T156693	BRACKET	1		
5	JD5929	SMV EMBLEM	1		
6	24M7088	WASHER	2		6.600 X 12 X 1.600 MM
7	19M7862	SCREW	2		M6 X 20
8	AT206923	SMV EMBLEM	1		

HYDRAULIC PUMP
(STEERING AND LOADER)

T159965 -UN-30SEP02

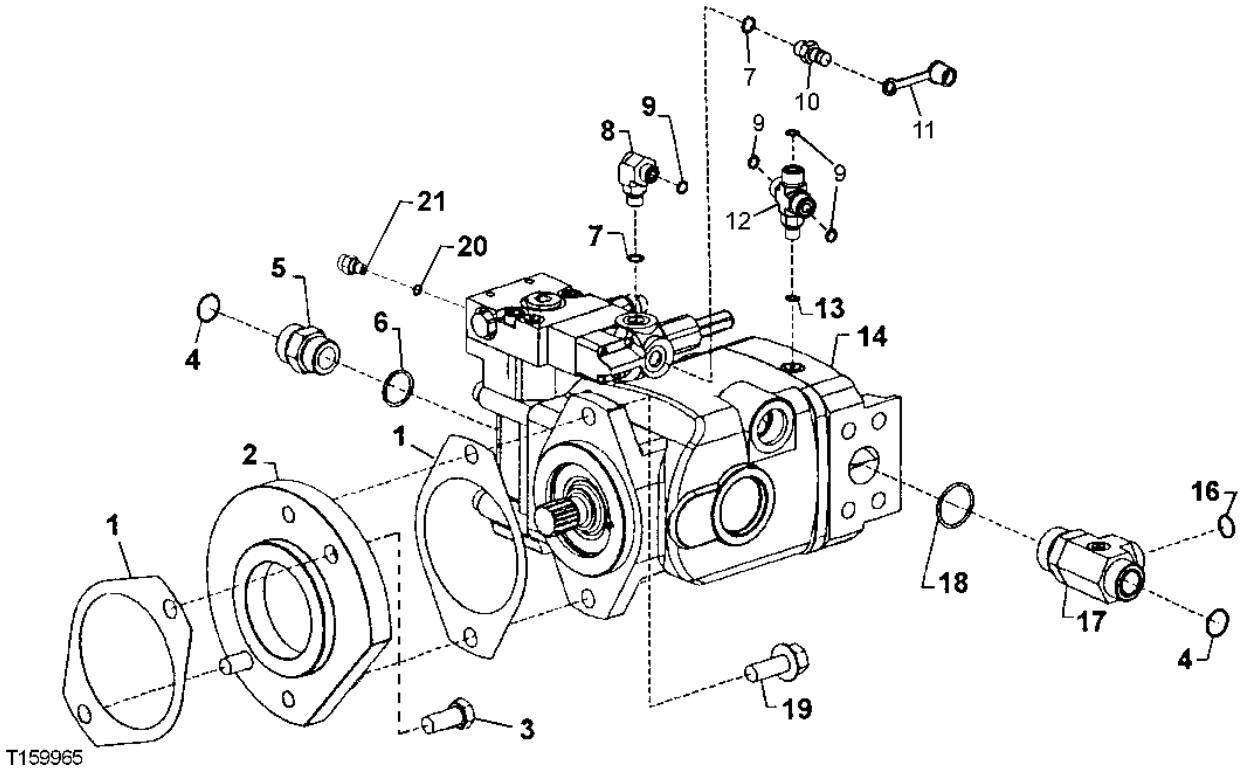

HYDRAULIC PUMP
(STEERING AND LOADER)

KEY	PART NO.	PART NAME	QTY	SERIAL NO.	REMARKS
1	T107883	O-RING	2		(SUB FOR T132071)
2	T214458	SPACER	1		(SUB FOR T171389)
3	19M8035	CAP SCREW	2		M16 X 35
4	T78612	O-RING	1		
5	38H1164	ADAPTER	1		
6	R29936	O-RING	1		
7	R26448	O-RING	2		
8	38H1004	ELBOW FITTING	1		
9	T77613	O-RING	4		
10	AH125760	HYD. QUICK-CONNECT COUPLER	1		
11	R77175	COVER	1		
12	AT227807	FITTING	1		
13	R28782	O-RING	1		
14	AT223265	HYDRAULIC PUMP	1		
16	T77858	O-RING	1		
17	38H1574	TEE FITTING	1		
18	U13639	O-RING	1		
19	19M7793	SCREW	2		M16 X 40
20	R26287	O-RING	1		
21	T176338	ADAPTER	1		

STEERING AND LOADER HYDRAULIC PUMP CONTROL VALVES

T201894 -UN-27JUL04

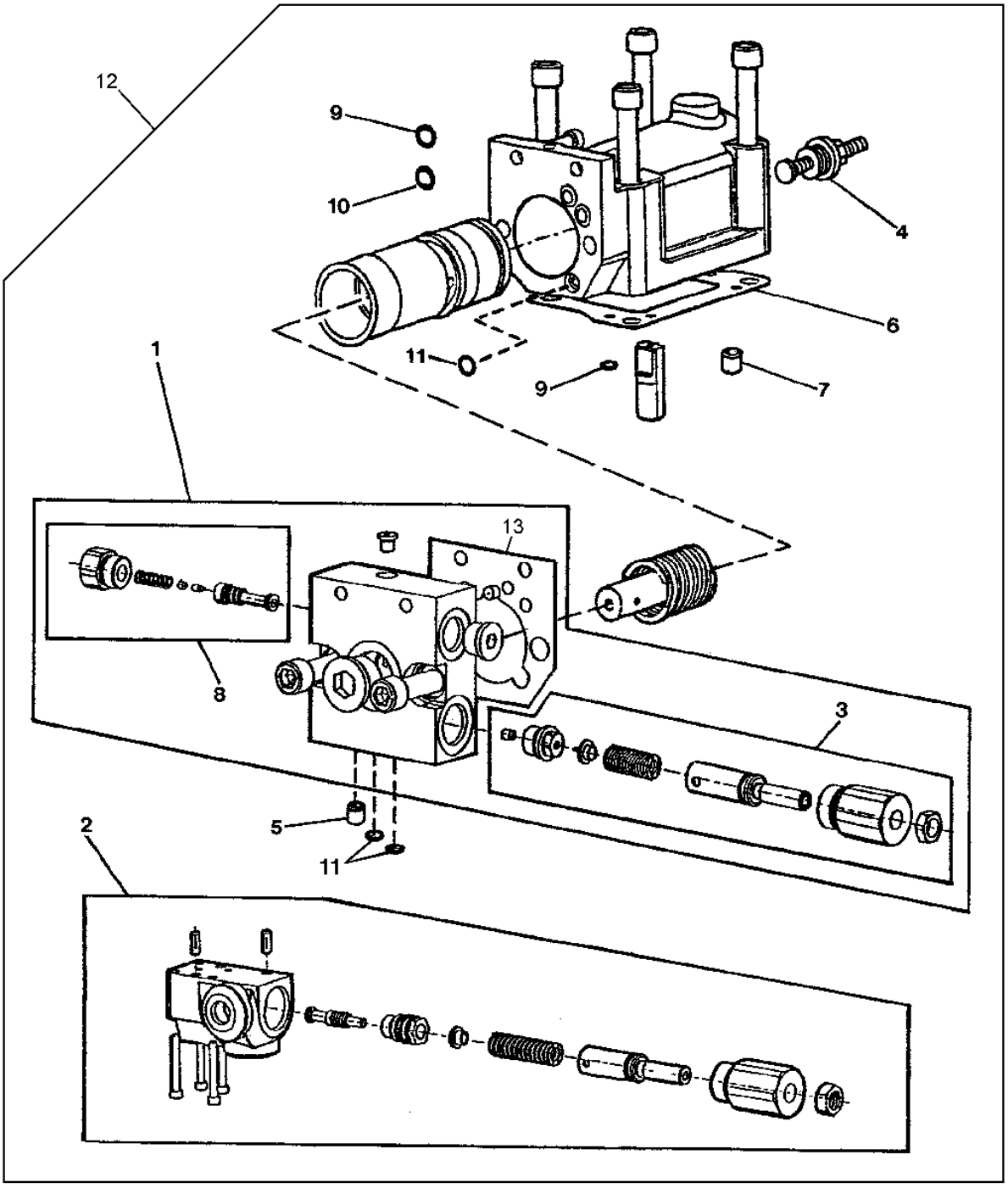

90 Pump Seal Kit

91 Control Valve Seal Kit

T201894

STEERING AND LOADER HYDRAULIC PUMP CONTROL VALVES

KEY	PART NO.	PART NAME	QTY	SERIAL NO.	REMARKS
1	.....	CAP	1		(PUMP CONTROL END CAP) (INCLUDES ALL SEALS, GASKETS AND O-RINGS NEEDED FOR INSTALLATION) (AT211040 NO LONGER AVAILABLE) (SUB AT209879 AND AT186257)
	T118681	O-RING	1		(NOT ILLUSTRATED) (CENTER OF PUMP CONTROL END CAP)
2	AT209878	FLOW CONTROL HYD. VALVE	1		LOAD SENSING VALVE ASSEMBLY) (INCLUDES ALL SEALS, GASKETS, AND O-RINGS NEEDED FOR INSTALLLATION)
3	AT209879	HYD ACTUATED CONTROL VALVE	1		LOAD SENSING PLUS VALVE ASSEMBLY (INCLUDES ALL SEALS, GASKETS AND O-RINGS NEEDED FOR INSTALLATION)
4	AT209881	STOP	1		STROKE LIMITER
5	T166400	ORIFICE	1		
6	T178707	GASKET	1		
7	T178706	ORIFICE	1		
8	AT186257	KIT	1		4-WAY SPOOL
9	T166274	O-RING	2		
10	T40308	O-RING	1		
11	T166275	O-RING	3		
12	AT211039	KIT	1		PUMP CONTROL
13	.....	GASKET	1		(SUB AT208638)
90	AT208633	SEAL KIT	1		PUMP SEAL KIT (ALSO INCLUDES GASKET AND O-RING BETWEEN PUMP AND CONTROL ASSY).
91	AT208638	SEAL KIT	1		CONTROL VALVE SEAL KIT (INCLUDES GASKET AND O-RING BETWEEN PUMP AND CONTROL ASSY).

STEERING AND LOADER HYDRAULIC PUMP REPAIR KITS

T156694 -UN-01JUL02

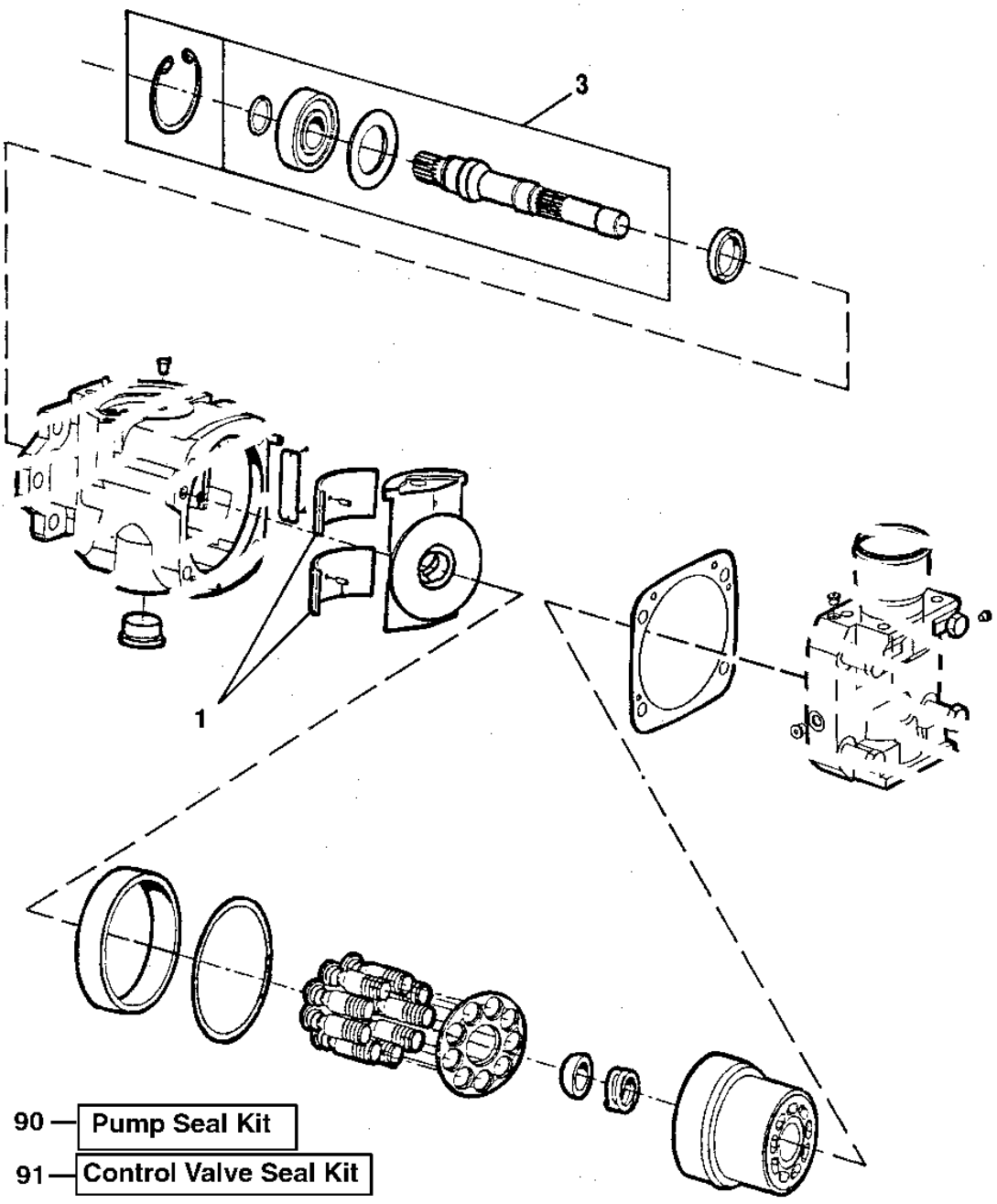

T156694

STEERING AND LOADER HYDRAULIC PUMP REPAIR KITS

KEY	PART NO.	PART NAME	QTY	SERIAL NO.	REMARKS
1	AT180692	BEARING	1		SWASH BLOCK BEARING KIT (LOADER PUMP) (SUB FOR AT208634)
3	AT211038	KIT	1		SHAFT AND BEARING KIT (LOADER PUMP)
90	AT208633	SEAL KIT	1		PUMP SEAL KIT (ALSO INCLUDES GASKET AND O-RING BETWEEN PUMP CONTROL ASSY).
91	AT208638	SEAL KIT	1		CONTROL VALVE SEAL KIT (INCLUDES GASKET AND 0-RING BETWEEN PUMP AND CONTROL ASSY).

HYDRAULIC OIL RESERVOIR

T204756 -UN-15FEB05

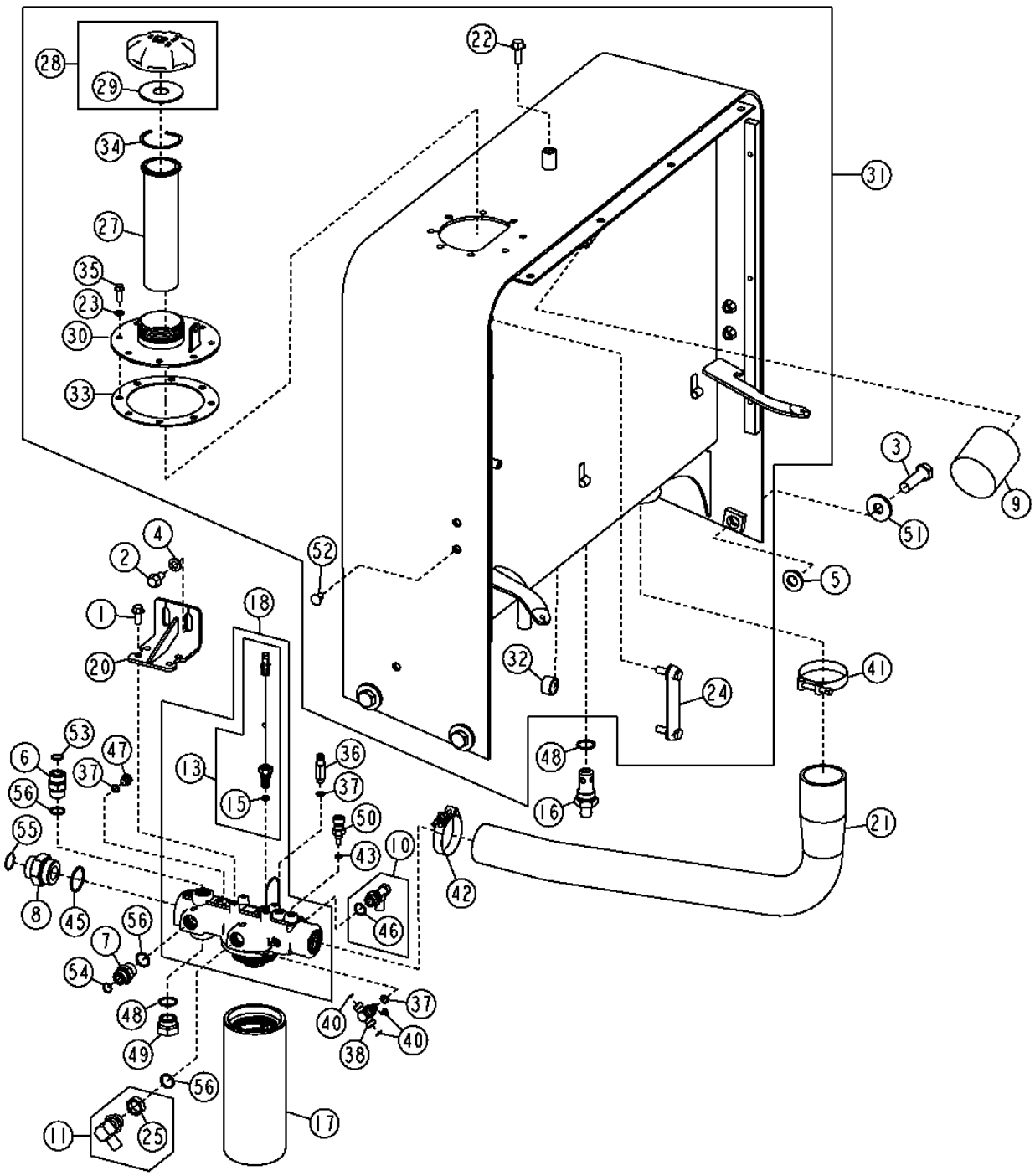

HYDRAULIC OIL RESERVOIR

KEY	PART NO.	PART NAME	QTY	SERIAL NO.	REMARKS
1	19M7785	SCREW	4		M10 X 25
2	19M7788	SCREW	2		M12 X 25
3	19M8639	CAP SCREW	4		M20 X 70
4	24M7240	WASHER	2		13 X 25 X 3 MM
5	24M7242	WASHER	2		21.400 X 42 X 5 MM
6	38H1163	ADAPTER	1		
7	38H1329	ADAPTER	1		
8	38H1595	ADAPTER	1		
9	AM39653	OIL FILTER	1		
10	AT152180	DRAIN VALVE	1		
11	AT21574	FITTING	1		
13	AT307045	PRESSURE SWITCH	1		(SUB FOR AT280924)
14	R26375	O-RING	1		
15	P46051	O-RING	1		
16	AT221897	CHECK VALVE	1		
17	AT310905	OIL FILTER	1		(SUB FOR AT228474)
18	AT224797	FILTER HEAD	1		
20	AT228747	BRACKET	1		
21	AT223658	HOSE	1		
22	19M7790	SCREW	1		M12 X 35
23	24H1136	WASHER	8		11/32" X 11/16" X 0.065"
24	AT227279	LEVEL GAUGE	1		
25	R27390	NUT	1		
27	AT161638	STRAINER	1		
28	AT177950	FILLER CAP	1		
29	H148166	WASHER	1		
30	AT225156	HOUSING	1		
31	AT227583	HYDRAULIC RESERVOIR	1		
32	28H1642	BUSHING	1		
33	T179363	GASKET	1		
34	T39155	SNAP RING	1		
35	T81403	SCREW	8		
36	M72389	ADAPTER	1		
37	R26448	O-RING	3		
38	AT224266	TEE FITTING	1		
40	T77613	O-RING	3		
41	AT37476	HOSE CLAMP	1		
42	AT221359	CLAMP	1		
43	R26286	O-RING	1		
45	R26773	O-RING	1		
46	R26906	O-RING	1		
47	R27218	FITTING PLUG	1		
48	R29936	O-RING	2		
49	R36636	FITTING PLUG	1		
50	RE38310	SENSOR	1		
51	T128096	WASHER	4		
52	T174271	PLUG	2		
53	T77858	O-RING	1		
54	T77932	O-RING	1		
55	T78612	O-RING	1		
56	U12547	O-RING	3		

HYDRAULIC OIL PRESSURE REGULATOR VALVE FITTINGS (SERIAL NO. -590067)

T154665 -UN-08MAY02

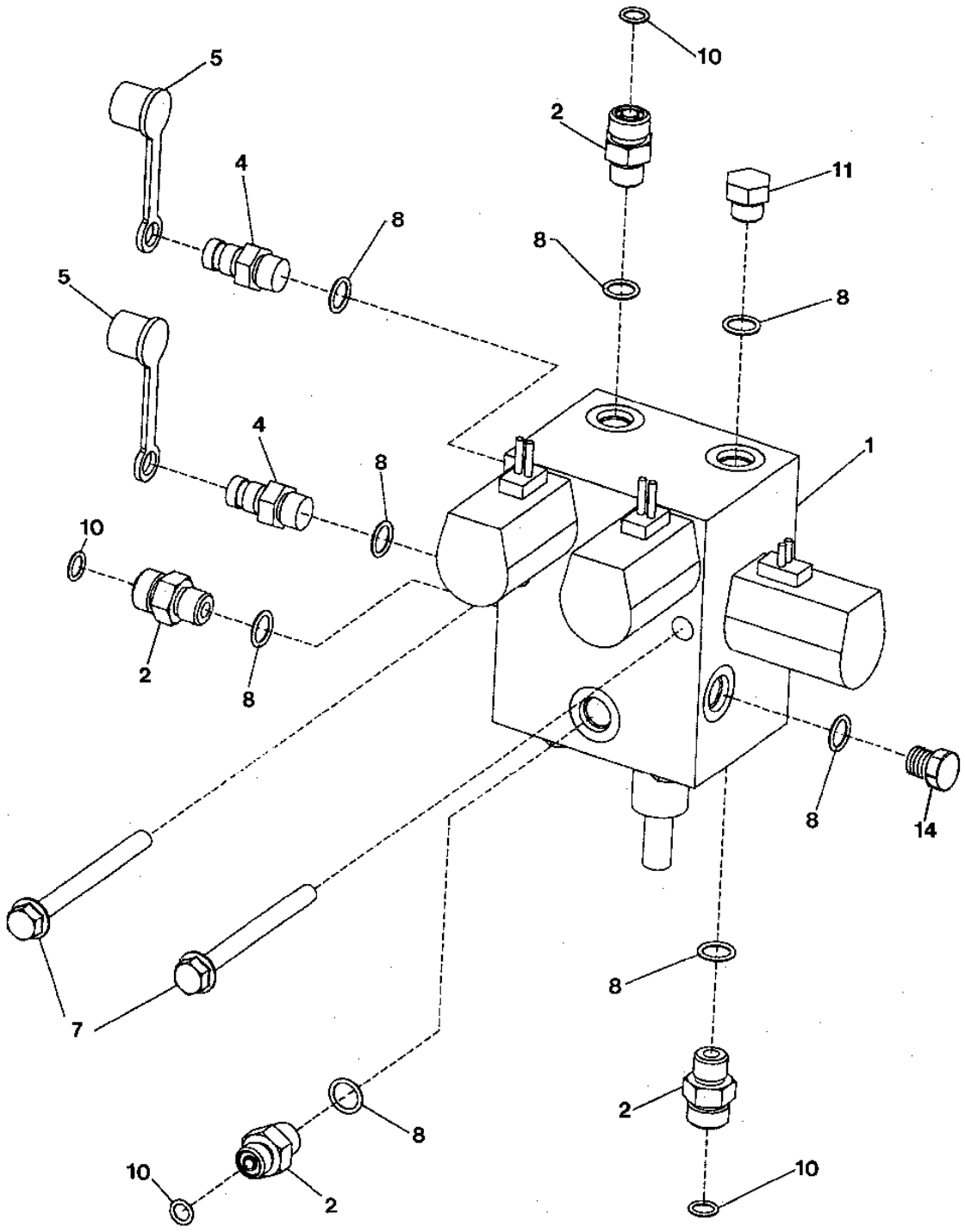

T154665

HYDRAULIC OIL PRESSURE REGULATOR VALVE FITTINGS (SERIAL NO. -590067)

KEY	PART NO.	PART NAME	QTY	SERIAL NO.	REMARKS
1	AT203487	HYD ACTUATED CONTROL VALVE	1		(PRESSURE REDUCING VALVE)
2	38H1160	ADAPTER	4		
4	AH125760	HYD. QUICK-CONNECT COUPLER	2		
5	R77175	COVER	2		
7	19M7913	SCREW	2		M8 X 90
8	R26448	O-RING	8		
10	T77613	O-RING	4		
11	R27218	FITTING PLUG	1		
14	R27218	FITTING PLUG	1		

HYDRAULIC OIL PRESSURE REGULATOR VALVE FITTINGS (SERIAL NO. 590068-)

T195335 -UN-13OCT03

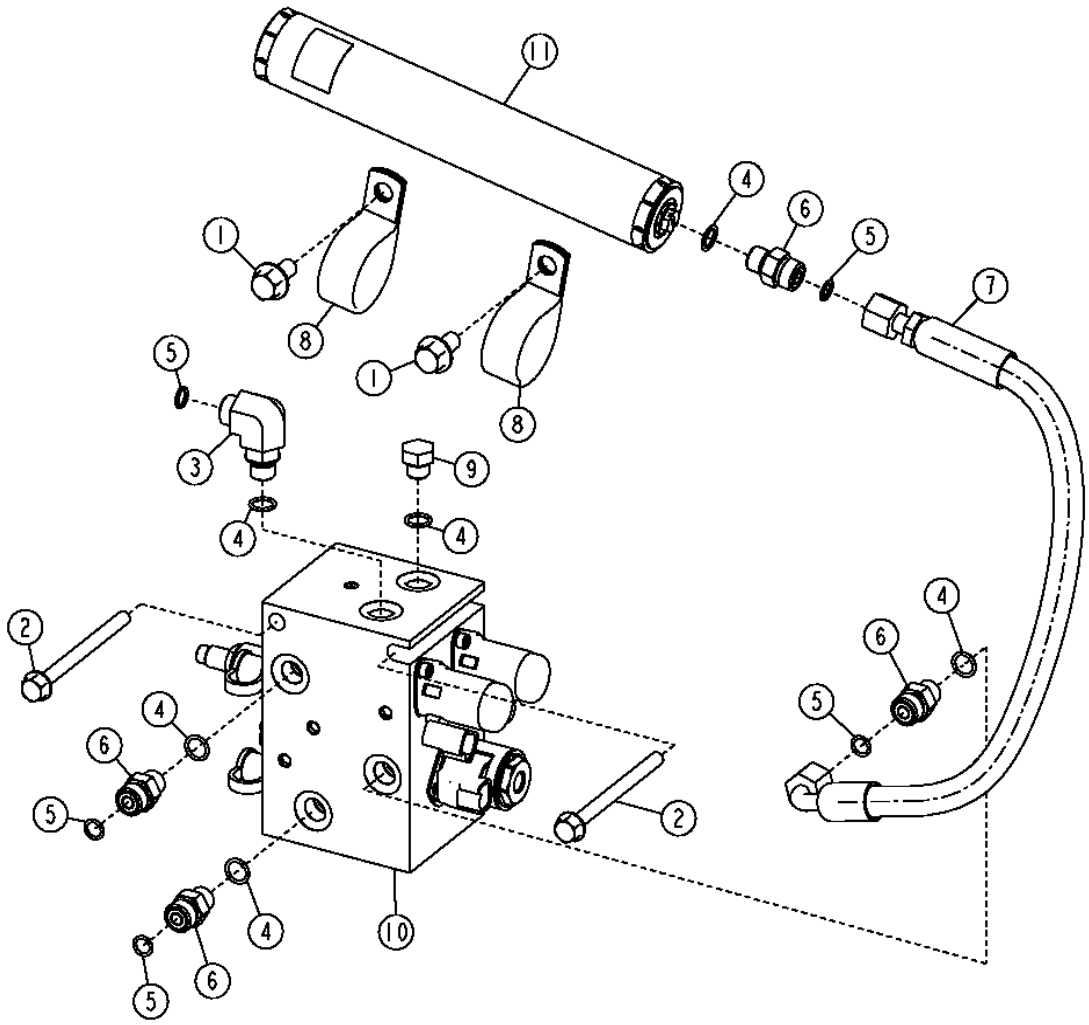

T195335

HYDRAULIC OIL PRESSURE REGULATOR VALVE FITTINGS (SERIAL NO. 590068-)

KEY	PART NO.	PART NAME	QTY	SERIAL NO.	REMARKS
1	19M7784	SCREW	2		M10 X 20
2	19M7970	SCREW	2		M8 X 100
3	38H1004	ELBOW FITTING	1		
4	R26448	O-RING	6		
5	T77613	O-RING	5		
6	38H1160	ADAPTER	4		
7	AT81931	HYDRAULIC HOSE - FABRICATE	1		
8	N205415	CLAMP	2		
9	R27218	FITTING PLUG	1		
10	AT228138	HYD ACTUATED CONTROL VALVE	1		
11	AT225574	HYDRAULIC ACCUMULATOR	1		

HYDRAULIC OIL PRESSURE REGULATOR VALVE COMPONENTS(SERIAL NO. -590067)

TP62896 -UN-08SEP00

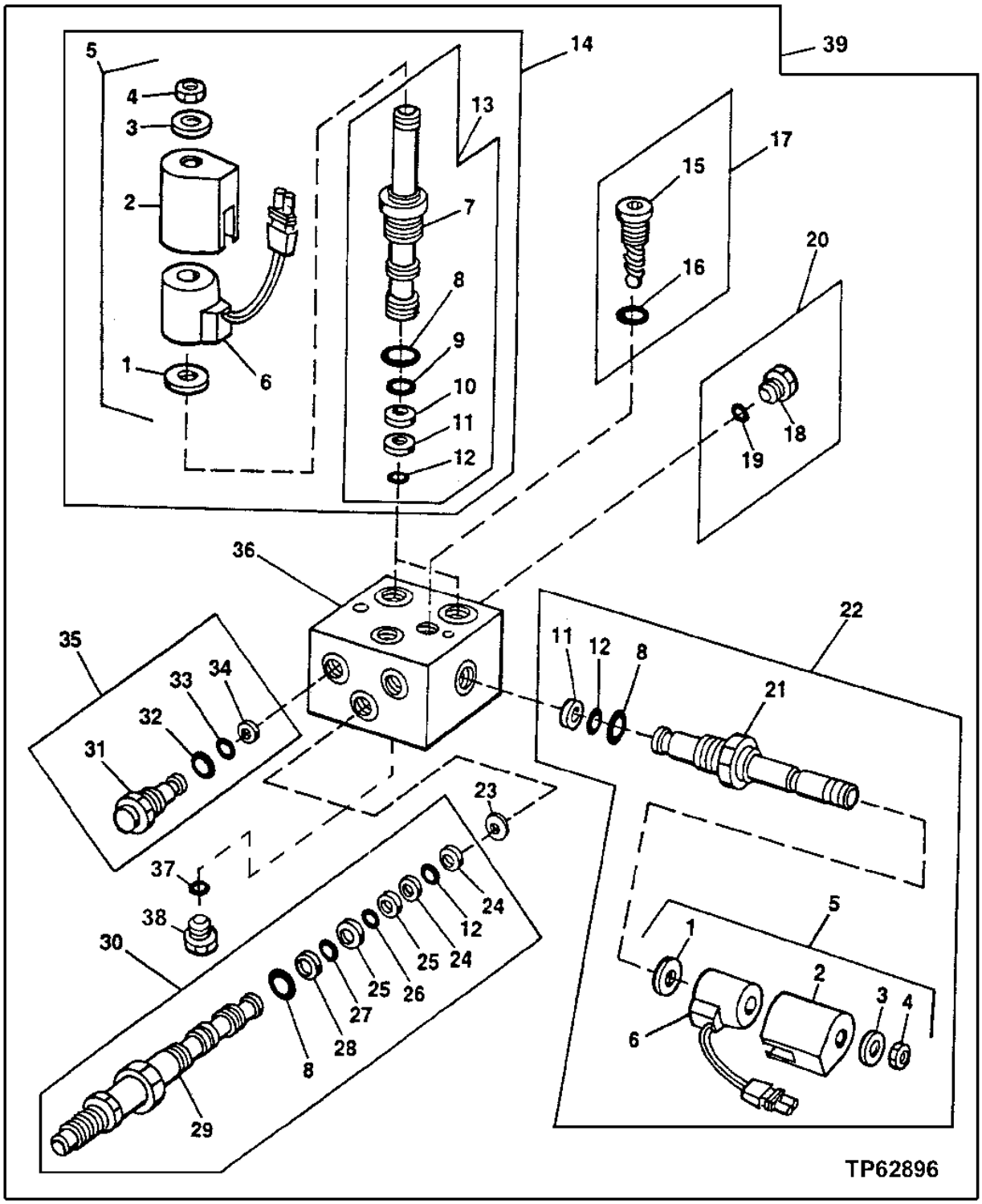

HYDRAULIC OIL PRESSURE REGULATOR VALVE COMPONENTS(SERIAL NO. -590068)

KEY	PART NO.	PART NAME	QTY	SERIAL NO.	REMARKS
1	T130847	PLATE	3		
2	.....	COVER	3		(SUB AT139434)
3	.....	WASHER	3		(SUB AT139434)
4	.....	NUT	3		(SUB AT139434)
5	AT139434	KIT	3		
6	AT139433	ELECTRICAL COIL	3		
7	.....	SPOOL	2		(SUB AT139432)
8	R47151	O-RING	4		
9	R33259	O-RING	2		
10	T81247	BACK-UP RING	2		
11	R42926	BACK-UP RING	3		
12	R28776	O-RING	4		
13	AT139432	HYD ACTUATED CONTROL VALVE	2		
14	AT139431	SOLENOID VALVE	2		
15	.....	PLUG	1		(SUB AT159938)
16	R28782	O-RING	1		
17	AT159938	KIT	1		
18	.....	PLUG	1		(SUB AT49216)
19	R26448	O-RING	1		
20	AT49216	FITTING PLUG	1		(SUB AT208424)
21	.....	SPOOL	1		(SUB AT208424)
22	AT208424	SOLENOID VALVE	1		
23	T170615	WASHER	1		
24	A36431	BACK-UP RING	2		
25	A36432	BACK-UP RING	2		
26	R33259	O-RING	1		
27	R27166	O-RING	1		
28	T35985	BACK-UP RING	1		
29	.....	SPOOL	1		(SUB AT208426)
30	AT208426	HYD ACTUATED CONTROL VALVE	1		
31	.....	CHECK VALVE	2		(SUB AT208425)
32	R47150	O-RING	2		
33	A3917R	O-RING	2		
34	T106208	BACK-UP RING	2		
35	AT208425	CHECK VALVE	2		
36	.....	HOUSING	1		(SUB AT203487)
37	R30903	O-RING	2		
38	AT184869	PLUG	2		
39	AT203487	HYD ACTUATED CONTROL VALVE	1		

PRESSURE REGULATOR VALVE COMPONENTS (SERIAL NO. 590068-)

T196513 -UN-20NOV03

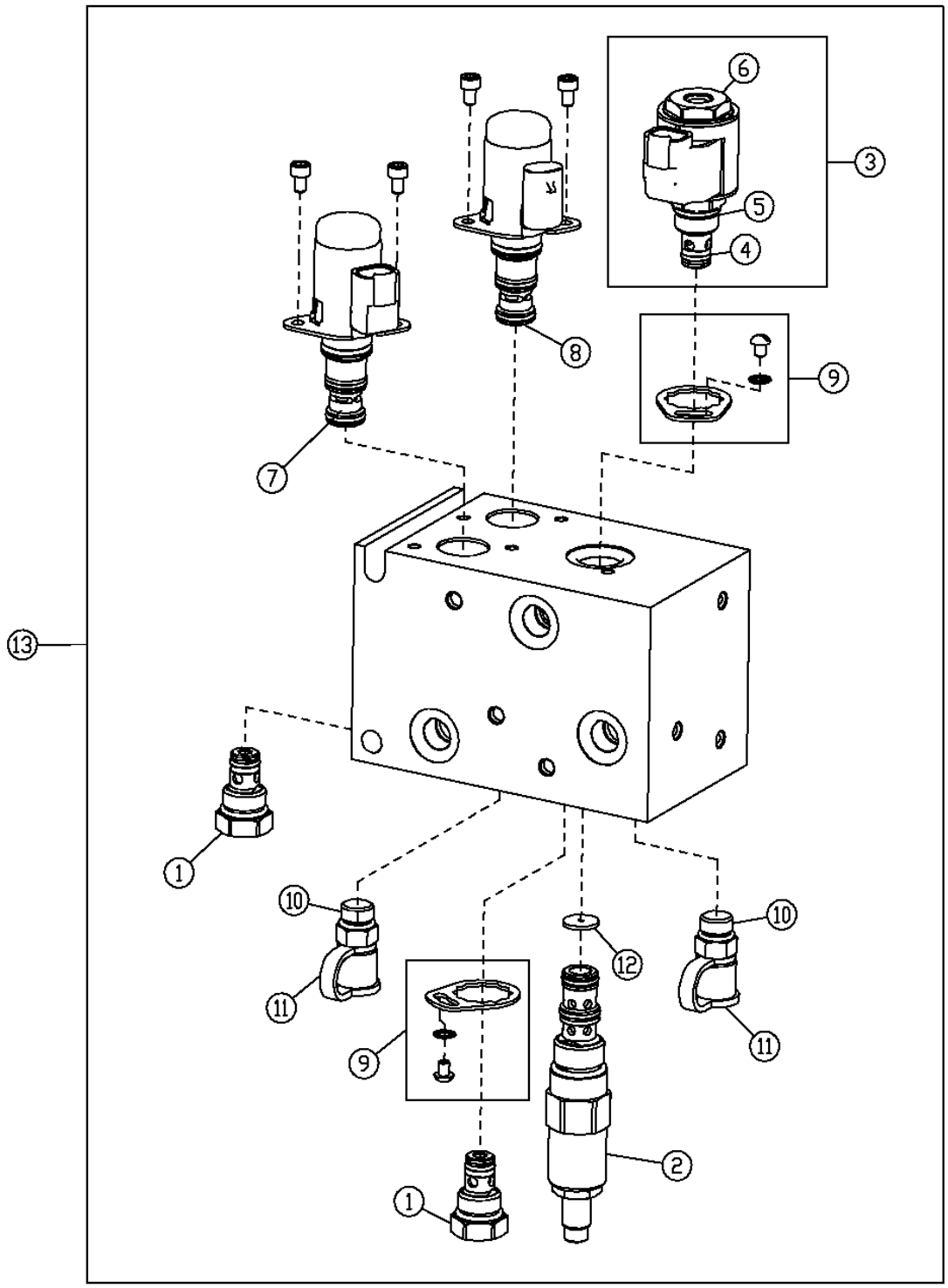

T196513

PRESSURE REGULATOR VALVE COMPONENTS (SERIAL NO. 590068-)

KEY	PART NO.	PART NAME	QTY	SERIAL NO.	REMARKS
1	AT224570	CHECK VALVE	2		
	AT224862	SEAL KIT	1		
2	AT307314	OIL PRESSURE REG. VALVE	1		
	AT196943	SEAL KIT	1		
3	AT309494	SOLENOID VALVE	1		
4	AT307315	SOLENOID VALVE	1		
5	AT224865	SOLENOID VALVE COIL	1		
6	T181306	NUT	1		
7	AT307302	FLOW CONTROL HYD. VALVE	1		(PILOT)
	AT224873	SEAL KIT	1		
8	AT307301	FLOW CONTROL HYD. VALVE	1		(DIFF)
	AT224873	SEAL KIT	1		
9	AT307304	KIT	2		
10	AH125760	HYD. QUICK-CONNECT COUPLER	2		
11	R77175	COVER	2		
12	T205670	ORIFICE	1		
13	AT228138	HYD ACTUATED CONTROL VALVE	1		

MAIN HYDRAULIC LINES

TP60651 -UN-23MAR99

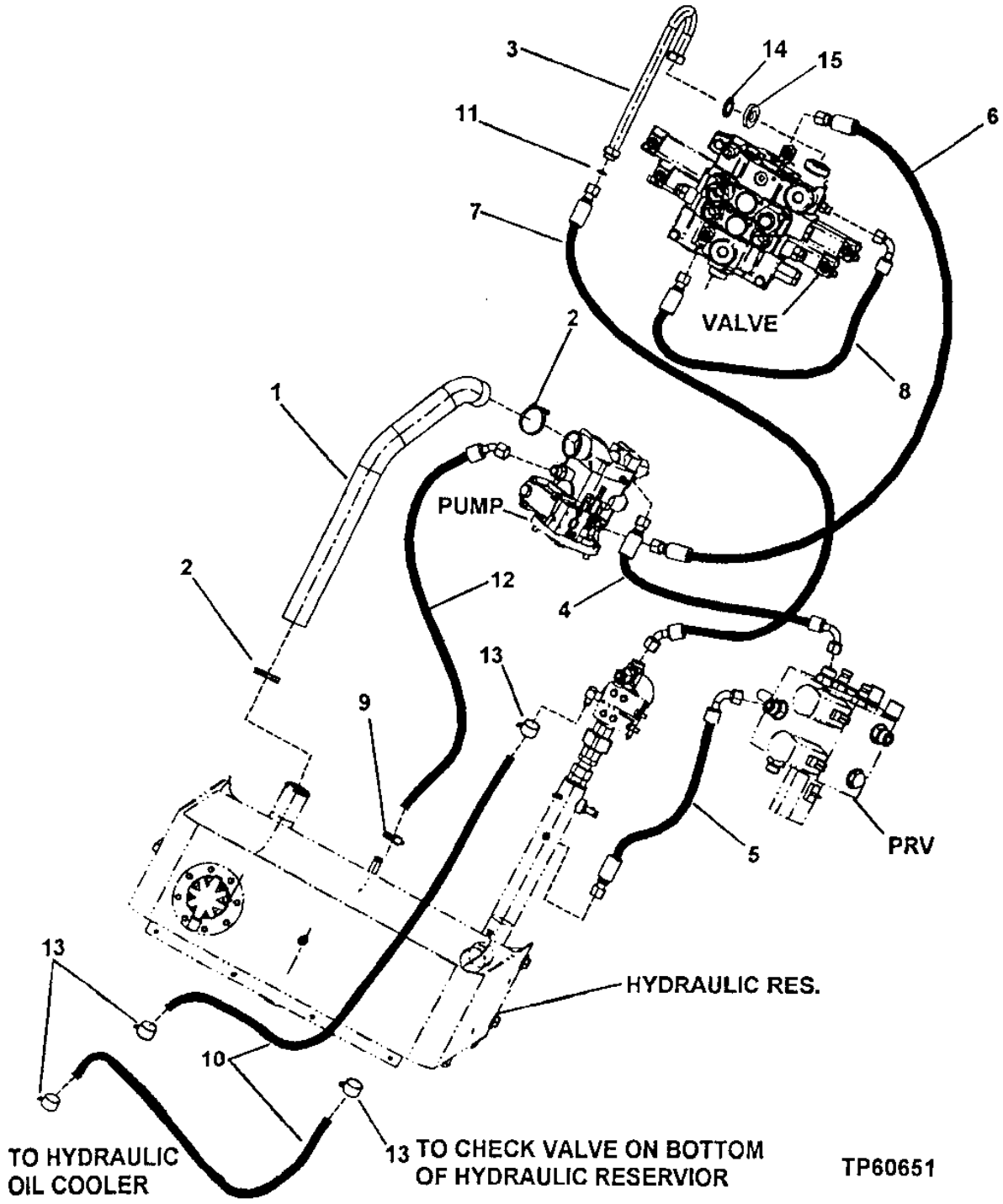

MAIN HYDRAULIC LINES

KEY	PART NO.	PART NAME	QTY	SERIAL NO.	REMARKS
1	AT209112	HOSE	1		
2	RE52702	CLAMP	2		
3	AT209432	OIL LINE	1		
4	AT166149	HYDRAULIC HOSE - FABRICATE	1		
5	AT116449	HYDRAULIC HOSE - FABRICATE	1		(SUB FOR AT223953)
6	AT169939	HYDRAULIC HOSE - FABRICATE	1		
7	AT226087	HYDRAULIC HOSE - FABRICATE	1		
8	AT167553	HYDRAULIC HOSE - FABRICATE	1		
9	AR21839	CLAMP	1		
10	.....	HYDRAULIC HOSE	2		(MAKE FROM T148181 BULK MATERIAL, CUT TO LENGTH)
11	T78612	O-RING	1		
12	AT223173	HYDRAULIC HOSE - FABRICATE	1		
13	TY22466	CLAMP	4		(SUB FOR AT79195)
14	T78784	O-RING	1		
15	T177442	PLATE	1		

REMOTE HYDRAULIC RESERVOIR BREATHER

T154642 -UN-07MAY02

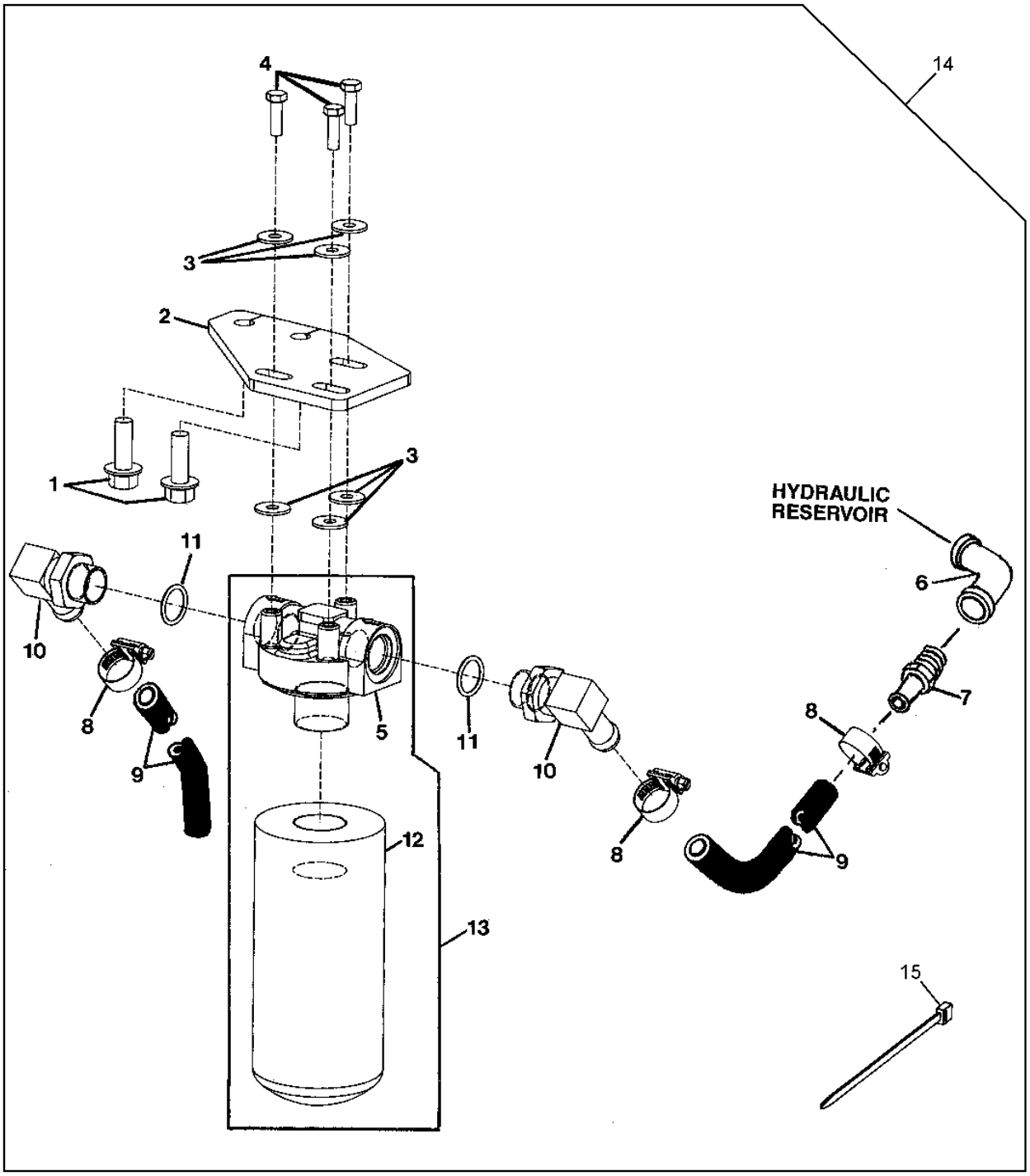

T154642

REMOTE HYDRAULIC RESERVOIR BREATHER

KEY	PART NO.	PART NAME	QTY	SERIAL NO.	REMARKS
1	19M7788	SCREW	2		M12 X 25
2	T177772	BRACKET	1		
3	24M7298	WASHER	6		8.400 X 25 X 2 MM
4	19H1905	CAP SCREW	3		5/16" X 1"
5	AT135906	FILTER HEAD	1		
6	15H577	ELBOW FITTING	1		1/2"
7	R39503	FITTING	1		
8	AR21837	CLAMP	3		
9	.....	HOSE	2		(MAKE FROM T148181 BULK MATERIAL, CUT TO LENGTH)
10	AH61472	HOSE FITTING	2		
11	U12547	O-RING	2		
12	AT120444	OIL FILTER	1		
13	AT135907	FILTER	1		
14	**AT222027**	**KIT**	**1**		**(REMOTE BREATHER)**
15	N189220	TIE BAND	3		

MEMORANDA

BUCKET AUXILIARY CUTTING EDGE

TP55659 -UN-15SEP97

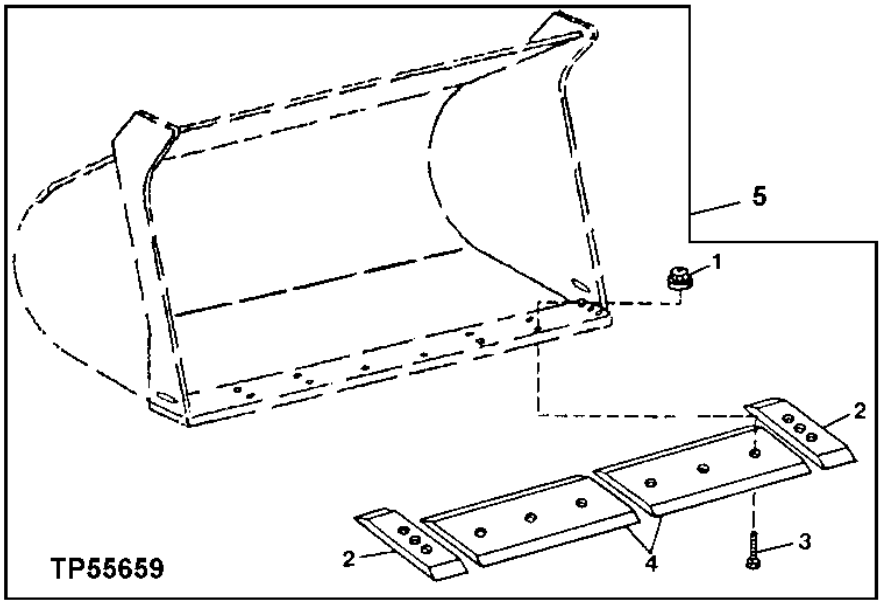

KEY	PART NO.	PART NAME	QTY	SERIAL NO.	REMARKS
1	14H1048	NUT	12		1"
2	T167829	CUTTING EDGE	2		
3	T146933	BOLT	12		
4	T171386	CUTTING EDGE	2		
	T209348	CUTTING EDGE	2		(HEAVY DUTY)
5	**AT209679**	**FIELD INSTALLATION KIT**	**1**		**(WHOLEGOODS) (4.75 YD BUCKET)**
	AT314304	**FIELD INSTALLATION KIT**	**1**		**(WHOLEGOODS) (4.75 YD BUCKET) (HEAVY DUTY)**

LOADER BUCKETS, BUCKET PINS AND CUTTING EDGE

T195389 -UN-06OCT03

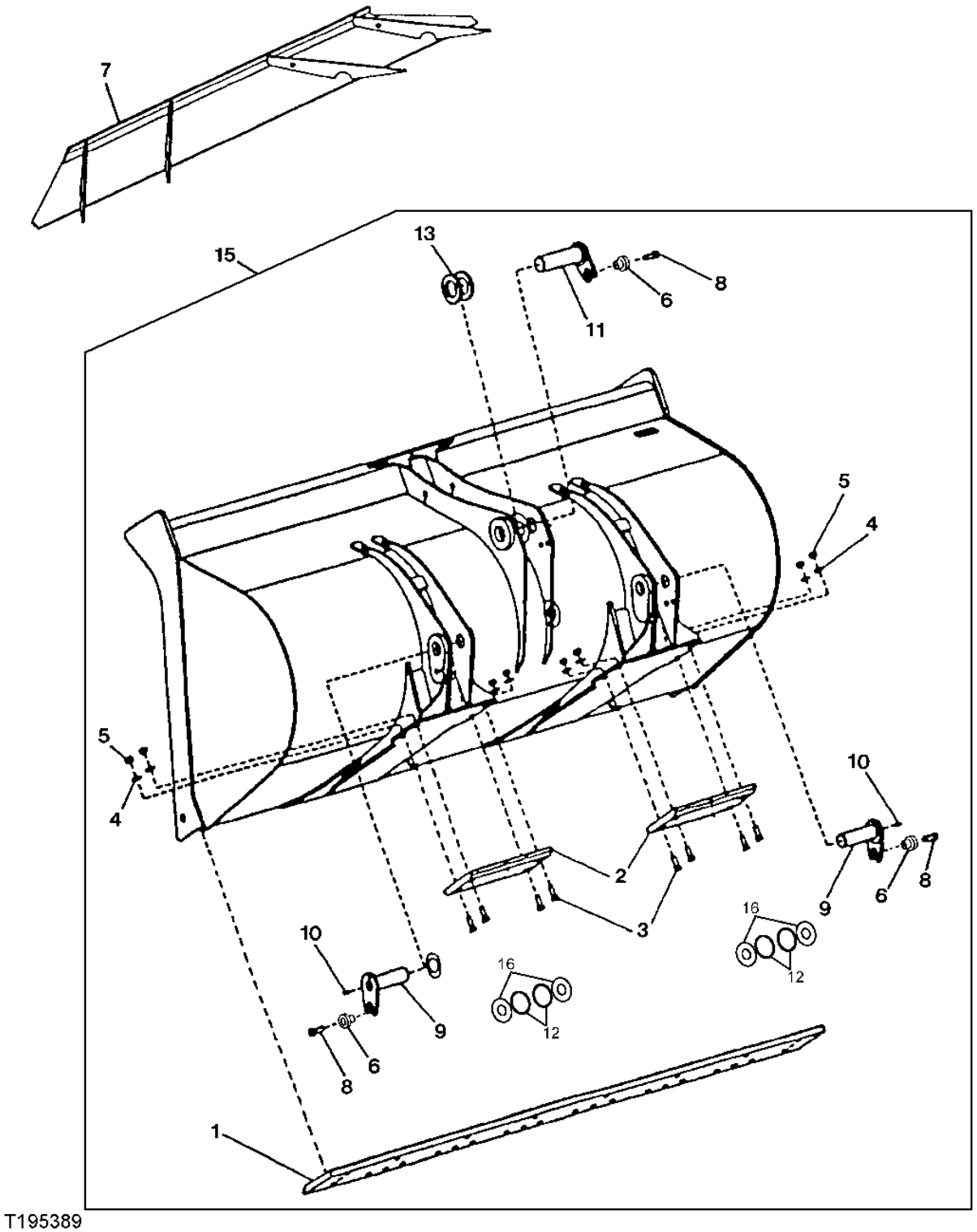

LOADER BUCKETS,BUCKET PINS AND CUTTING EDGE

KEY	PART NO.	PART NAME	QTY	SERIAL NO.	REMARKS
1	T171165	DURA-MAX TM CUTTING EDGE	1		
	T207421	DURA-MAX TM CUTTING EDGE	1		(FOR USE WITH JAGZ BUCKET)
2	T157457	SHOE	2		
3	10H1040	BOLT	8		5/8" X 2"
4	24M7241	WASHER	8		17 X 34 X 4 MM
5	14H1039	NUT	8		5/8"
6	T176064	BUSHING	3		
7	**AT206671**	**PLATE**	**1**		
8	19M7489	CAP SCREW	3		M16 X 45
9	AT208975	PIN	2		
10	JD7759	LUBRICATION FITTING	2		
11	AT219746	PIN	1		
12	AT228894	RING	4		(INCLUDES 24M7027) (INCLUDES O-RING, CAP SCREWS, LOCK NUTS, AND WASHERS)
	24M7027	WASHER	8		5.300 X 10 X 1 MM, (FOR USE WITH AT228894)
13	T101480	WASHER	3		
15	**AT227405**	**LOADER BUCKET**	**1**		**(WHOLEGOODS) (4.75 YD BUCKET)**
16	T196724	WASHER	4		(3MM)
	T198215	WASHER	4		(2MM)
	T198216	WASHER	4		(2.5MM)

LOADER BUCKET (JAGZ) AND CUTTING EDGE

T199797 -UN-11MAY04

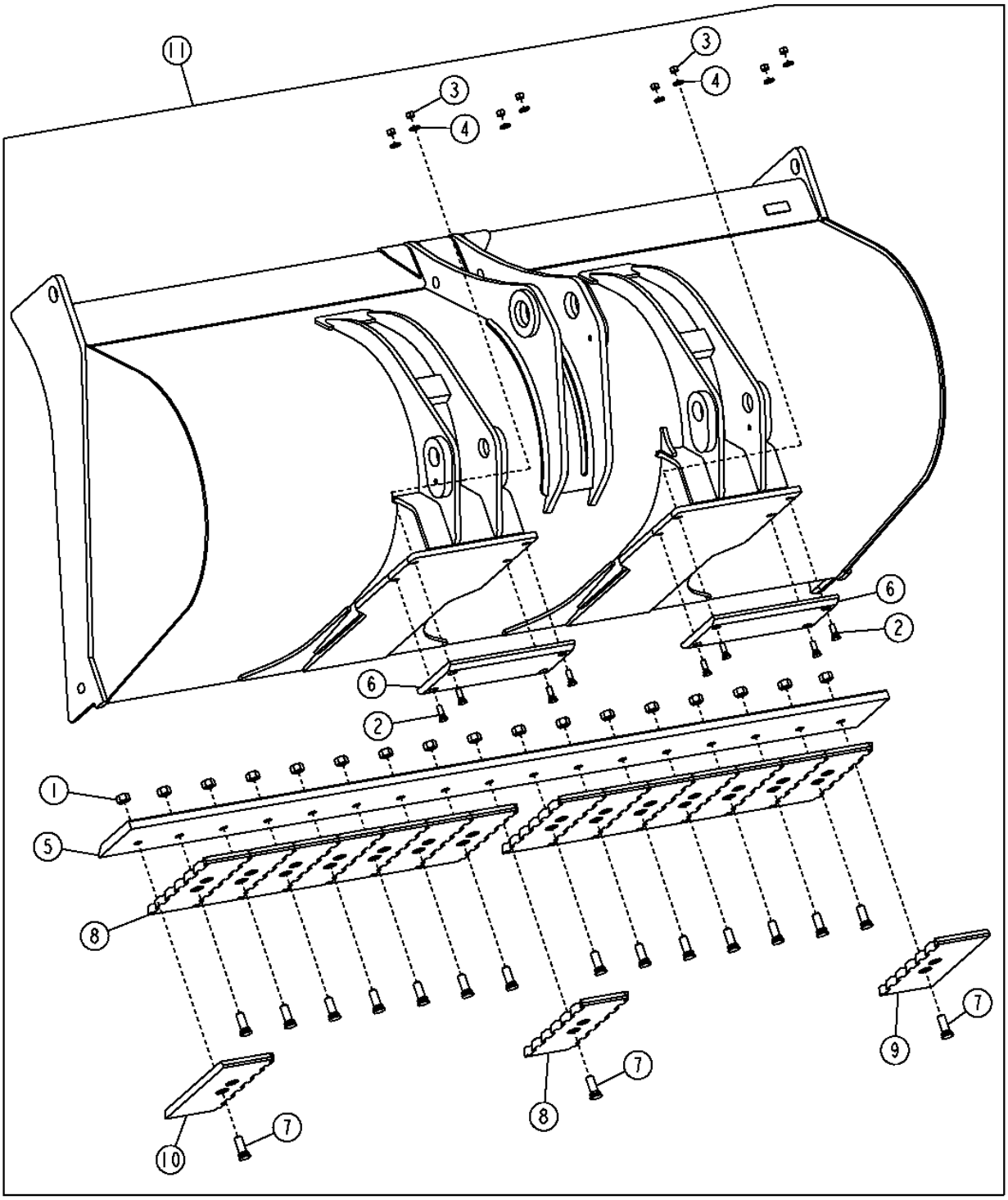

T199797

3B12

LOADER BUCKET (JAGZ) AND CUTTING EDGE

KEY	PART NO.	PART NAME	QTY	SERIAL NO.	REMARKS
1	14H1048	NUT	17		
2	09H1587	BOLT	8		
3	14H1039	NUT	8		
4	24M7241	WASHER	8		
5	T207421	DURA-MAX TM CUTTING EDGE	1		
6	T157457	SHOE	2		
7	T146933	BOLT	17		
8	T825101	CUTTING EDGE	15		
9	T825105	CUTTING EDGE	1		
10	T825106	CUTTING EDGE	1		
11	**AT311837**	**LOADER BUCKET**	**1**		**(WHOLE GOODS) (4.75 YD JAGZ BUCKET)**

LOADER BUCKET TEETH AND SHANKS

TP60337 -UN-13APR98

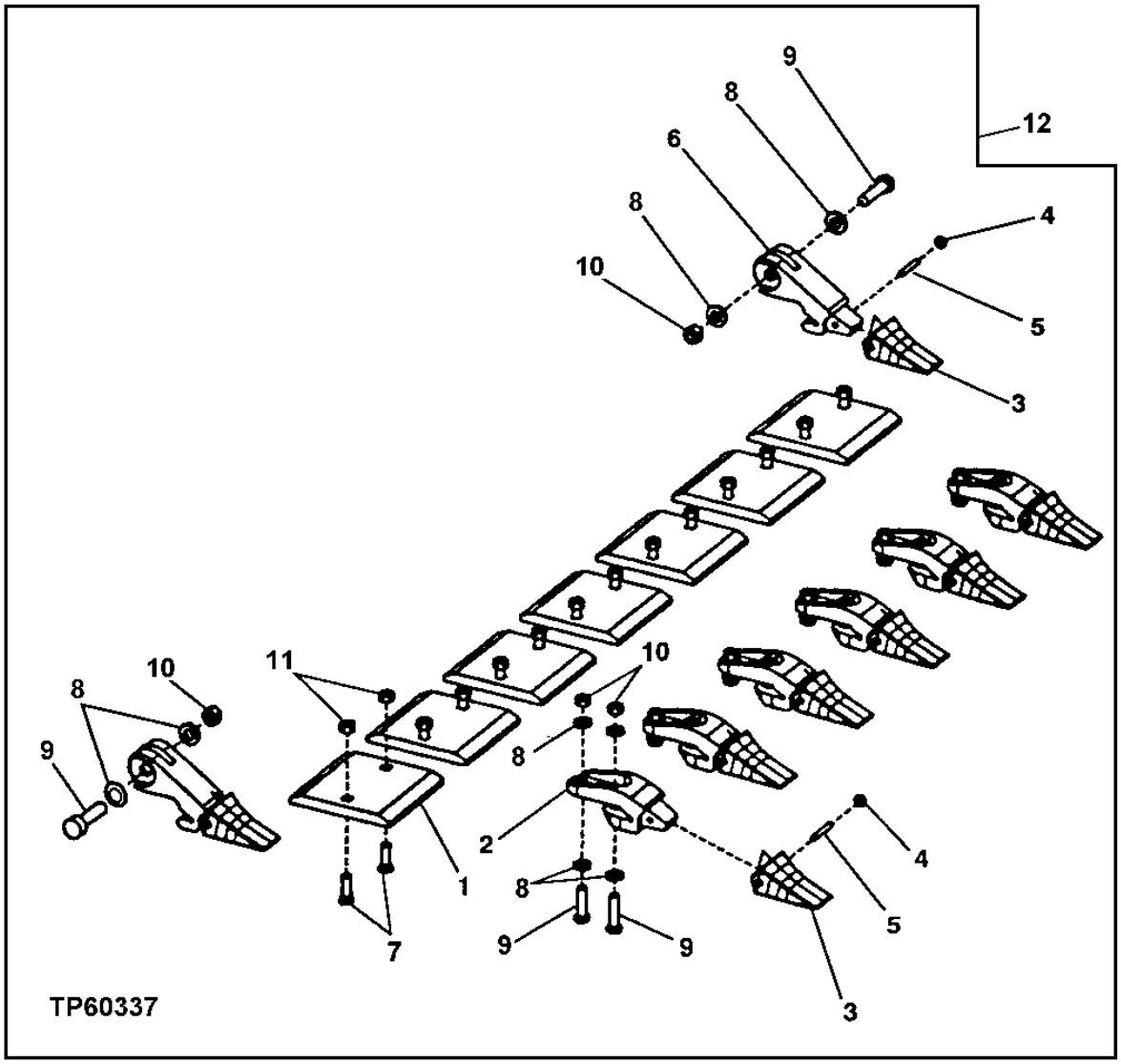

LOADER BUCKET TEETH AND SHANKS

KEY	PART NO.	PART NAME	QTY	SERIAL NO.	REMARKS
1	T167850	CUTTING EDGE	7		
2	T30CA	BUCKET TOOTH ADAPTER	6		
3	TF1U3302L	TOOTH	8		
4	T3G9609	WASHER	8		
5	T9J2308	PIN FASTENER	8		
6	T30EA	BUCKET TOOTH ADAPTER	2		
7	T146933	BOLT	14		
8	24M7243	WASHER	28		25.400 X 50 X 6 MM
9	19M8288	CAP SCREW	14		M24 X 90
10	14M7278	NUT	14		M24
11	14H1048	NUT	14		25.400 MM
12	**AT209677**	**FIELD INSTALLATION KIT**	**1**		**(TEETH AND SEGMENTS KIT) (WHOLEGOODS)**

WASTE HANDLER BUCKET

T196883 -UN-18DEC03

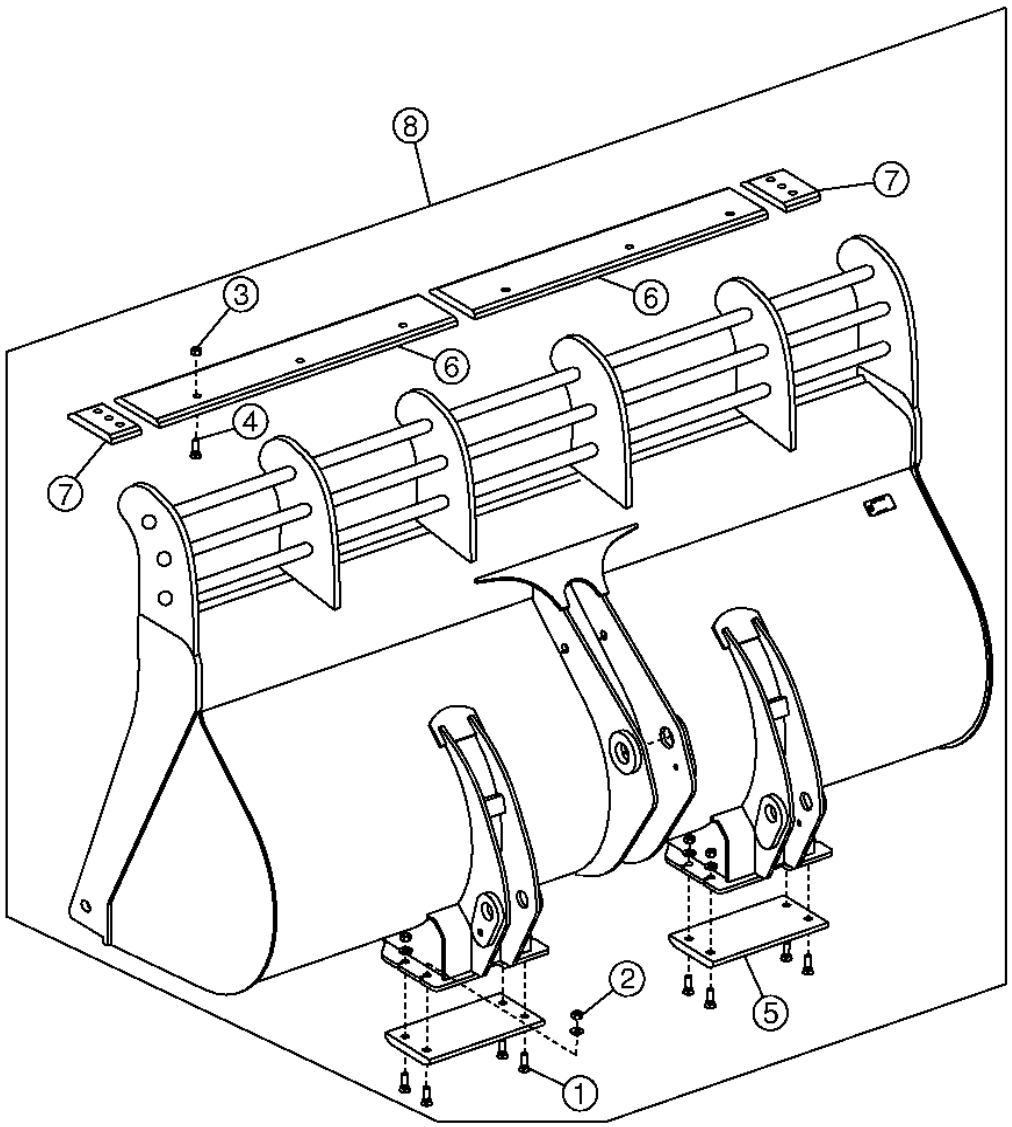

T196883

WASTE HANDLER BUCKET

KEY	PART NO.	PART NAME	QTY	SERIAL NO.	REMARKS
1	10H1081	BOLT	8		5/8" X 2-1/2"
2	14H1039	NUT	8		5/8"
3	14H1048	NUT	12		1"
4	T146933	BOLT	12		1" X 3"
5	T157457	SHOE	2		
6	T167828	CUTTING EDGE	2		(INNER CUTTING EDGE)
7	T167829	CUTTING EDGE	2		(OUTER CUTTING EDGE)
8	.....	LOADER BUCKET	1		(AT309819 NO LONGER AVAILABLE) (5.0 CUBIC YARD, 3.8 CUBIC METER)
	.....	LOADER BUCKET	1		(AT309820 NO LONGER AVAILABLE) (6.0 CUBIC YARD, 4.6 CUBIC METER)
	.....	LOADER BUCKET	1		(AT309821 NO LONGER AVAILABLE) (7.0 CUBIC YARD, 5.3 CUBIC METER)

LOADER FRAME,LOADER FRAME COVER AND PINS

T154617 -UN-09MAY02

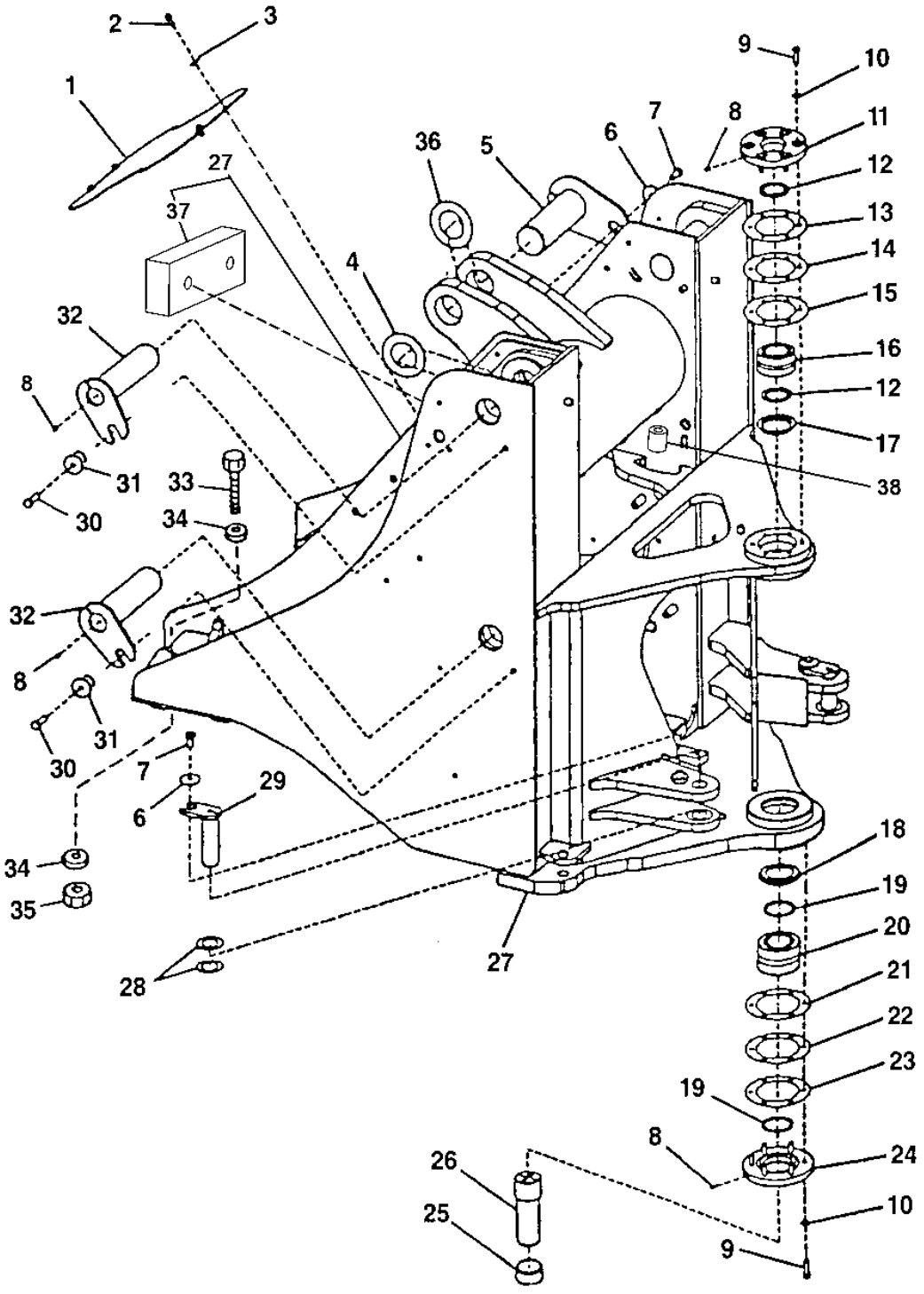

T154617

LOADER FRAME,LOADER FRAME COVER AND PINS

KEY	PART NO.	PART NAME	QTY	SERIAL NO.	REMARKS
1	T157234	COVER	1		
2	19M7786	SCREW	4		M10 X 30
3	24M7296	WASHER	4		10.500 X 30 X 2.500 MM
4	T101480	WASHER	AR		(SUB FOR T171734)
5	AT219746	PIN	1		
6	T146246	WASHER	3		
7	19M8029	CAP SCREW	3		M16 X 30
8	JD7759	LUBRICATION FITTING	6		
9	19M7493	CAP SCREW	12	-588394	M12 X 40
	19M7496	CAP SCREW	12	588395-	
10	24M7240	WASHER	12		13 X 25 X 3 MM
11	.....	COVER	1	-588394	(SUB T200888 AND (6) 19M7496) (T156992 NO LONGER AVAILABLE)
	T200888	COVER	1	588395-	(ALSO ORDER (6) 19M7496)
12	T157029	SEAL	2		
13	T130057	SHIM	AR		0.508MM(0.020")
14	T130058	SHIM	AR		0.254MM(0.010")
15	T130059	SHIM	AR		0.127MM(0.005")
16	AT203483	BEARING	1		
17	T157030	SPACER	1		
18	T157027	SPACER	1		
19	T60752	SEAL	2		
20	AT208123	BEARING	1		
21	T140379	SHIM	AR		
22	T140380	SHIM	AR		
23	T140381	SHIM	AR		
24	.....	COVER	1	-588394	(SUB T200889 AND (6) 19M7496) (T157028 NO LONGER AVAILABLE)
	T200889	COVER	1	588395-	(ALSO ORDER (6) 19M7496)
25	T182265	BUSHING	1		(SUB FOR T156994) (USE T156994 UNTIL SUPPLIES ARE EXAUSTED)
26	T182444	PIN FASTENER	1		
27	AT225469	FRAME	1		(CONVENIENCE ASSEMBLY)
28	24H1576	WASHER	6		1-13/16" X 2-15/16" X 0.075"
	24H1577	WASHER	2		1-25/32" X 2-7/8" X 0.036"
29	AT157299	PIN FASTENER	2		
30	19M7489	CAP SCREW	4		M16 X 45
31	T176064	BUSHING	4		
32	AT318925	PIN	4		(SUB FOR AT207717)
33	19M7779	CAP SCREW	12		M20 X 240
34	24M7242	WASHER	12		21.400 X 42 X 5 MM
35	14M7277	NUT	24		M20
36	T101480	WASHER	AR		
37	T133290	STRAP	3		
38	T72414	BUSHING	5		

BOOM CYLINDER LOCK

T192743 -UN-10JUL03

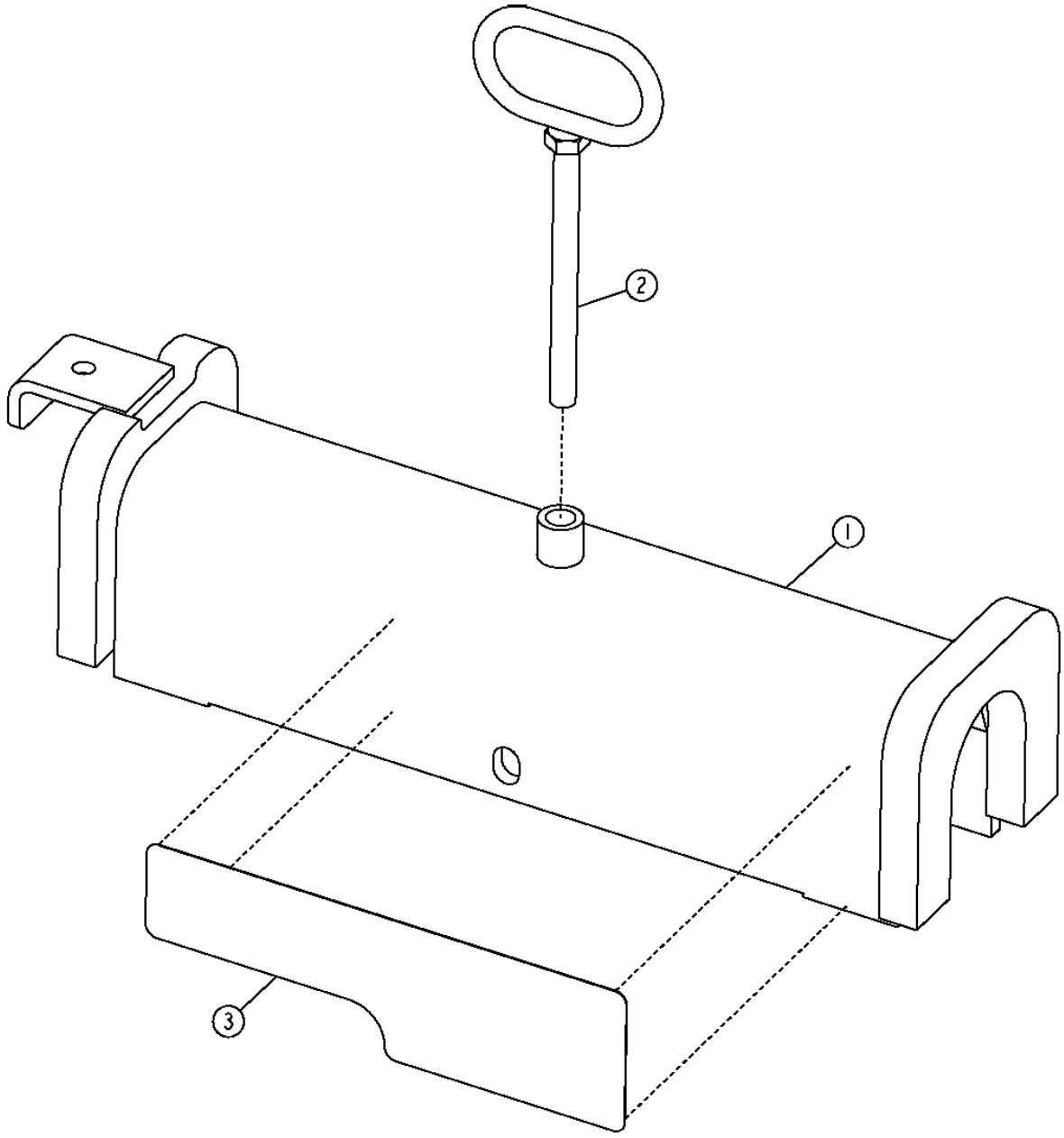

T192743

BOOM CYLINDER LOCK

KEY	PART NO.	PART NAME	QTY	SERIAL NO.	REMARKS
1	AT225825	LOCK	1		BOOM LOCK
2	AT207287	HANDLE	1		
3	T182191	LABEL	2		

LOADER BOOM AND LINKAGE PIN

TP60365 -UN-27APR98

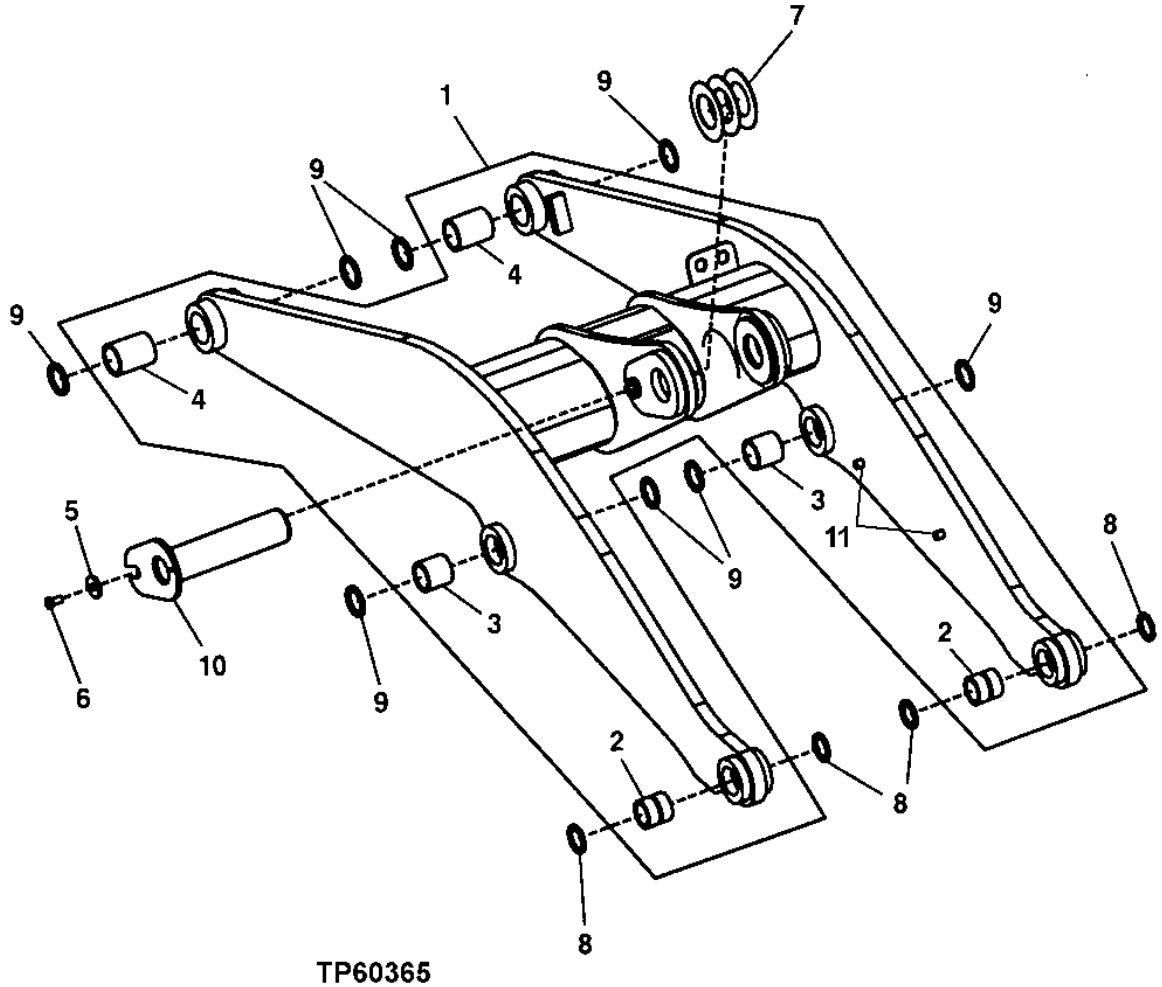

LOADER BOOM AND LINKAGE PIN

KEY	PART NO.	PART NAME	QTY	SERIAL NO.	REMARKS
1	**AT309439**	**LOADER BOOM**	**1**		**(SUB FOR AT227825) (CONVENIENCE ASSEMBLY)**
2	T125535	BUSHING	2		
3	T156059	BUSHING	2		
4	T169284	BUSHING	2		
5	T146246	WASHER	1		
6	19M8029	CAP SCREW	1		M16 X 30
7	T102172	WASHER	4		
8	T102136	SEAL	4		
9	T102137	SEAL	8		
10	AT208622	PIN	1		(LOADER LINKAGE)
11	T72414	BUSHING	6		

WASTE HANDLER LOADER BOOM AND LINKAGE PIN

T195483 -UN-13OCT03

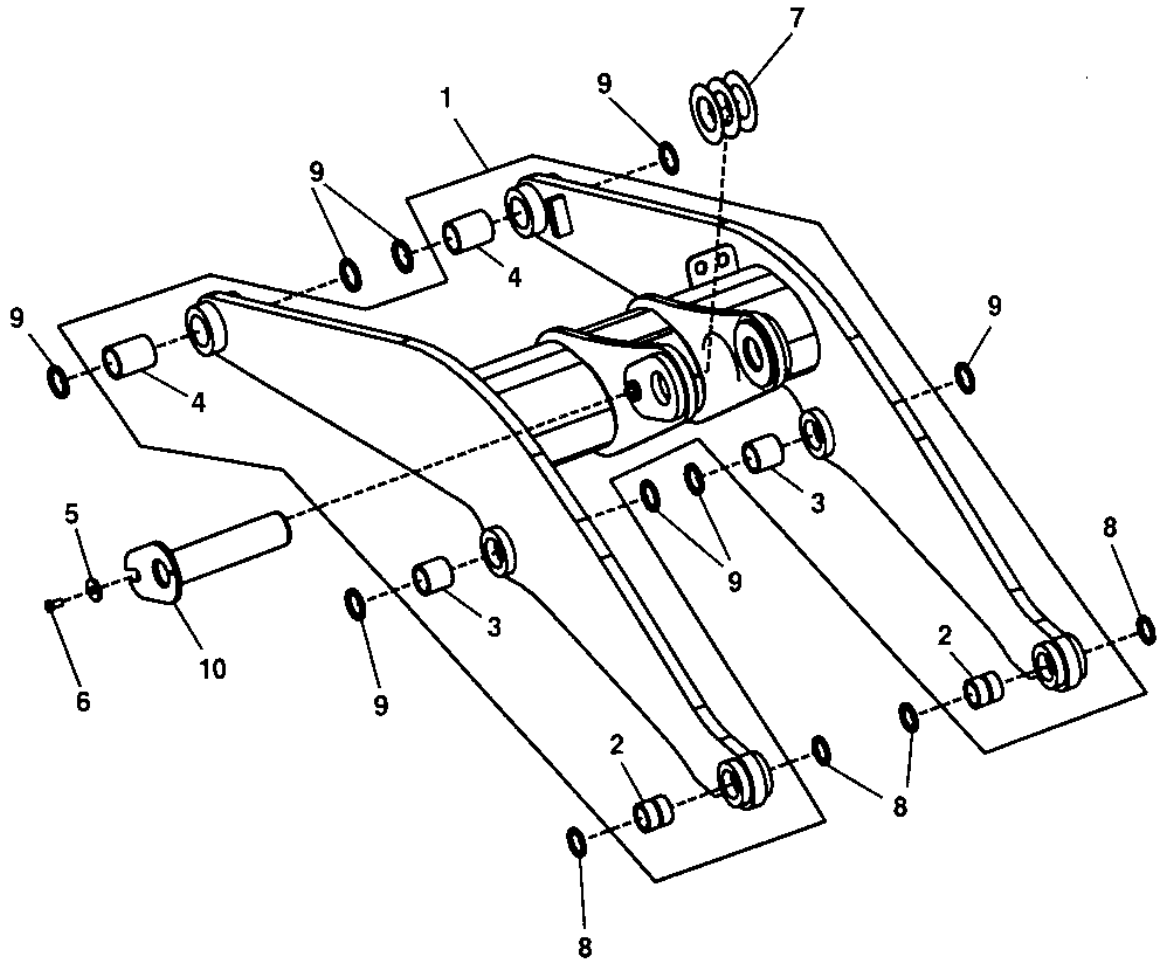

T195483

WASTE HANDLER LOADER BOOM AND LINKAGE PIN

KEY	PART NO.	PART NAME	QTY	SERIAL NO.	REMARKS
1	**AT309439**	**LOADER BOOM**	**1**		**(CONVENIENCE ASSEMBLY) (SUB FOR AT227825)**
	AT309429	**LOADER BOOM**	**1**		**(CONVENIENCE ASSEMBLY) (HIGH LIFT) (SUB FOR AT228896)**
2	T125535	BUSHING	2		
3	T156059	BUSHING	2		
4	T169284	BUSHING	2		
5	T146246	WASHER	1		
6	19M8029	CAP SCREW	1		M16 X 30
7	T102172	WASHER	4		
8	T102136	SEAL	4		
9	T102137	SEAL	8		
10	AT208622	PIN	1		(LOADER LINKAGE)
11	T210796	LABEL	2		NOT ILLUSTRATED, (SUB FOR (2) T179464) (HIGH LIFT)

LOADER LINKAGE AND PINS

TP60479 -UN-25AUG98

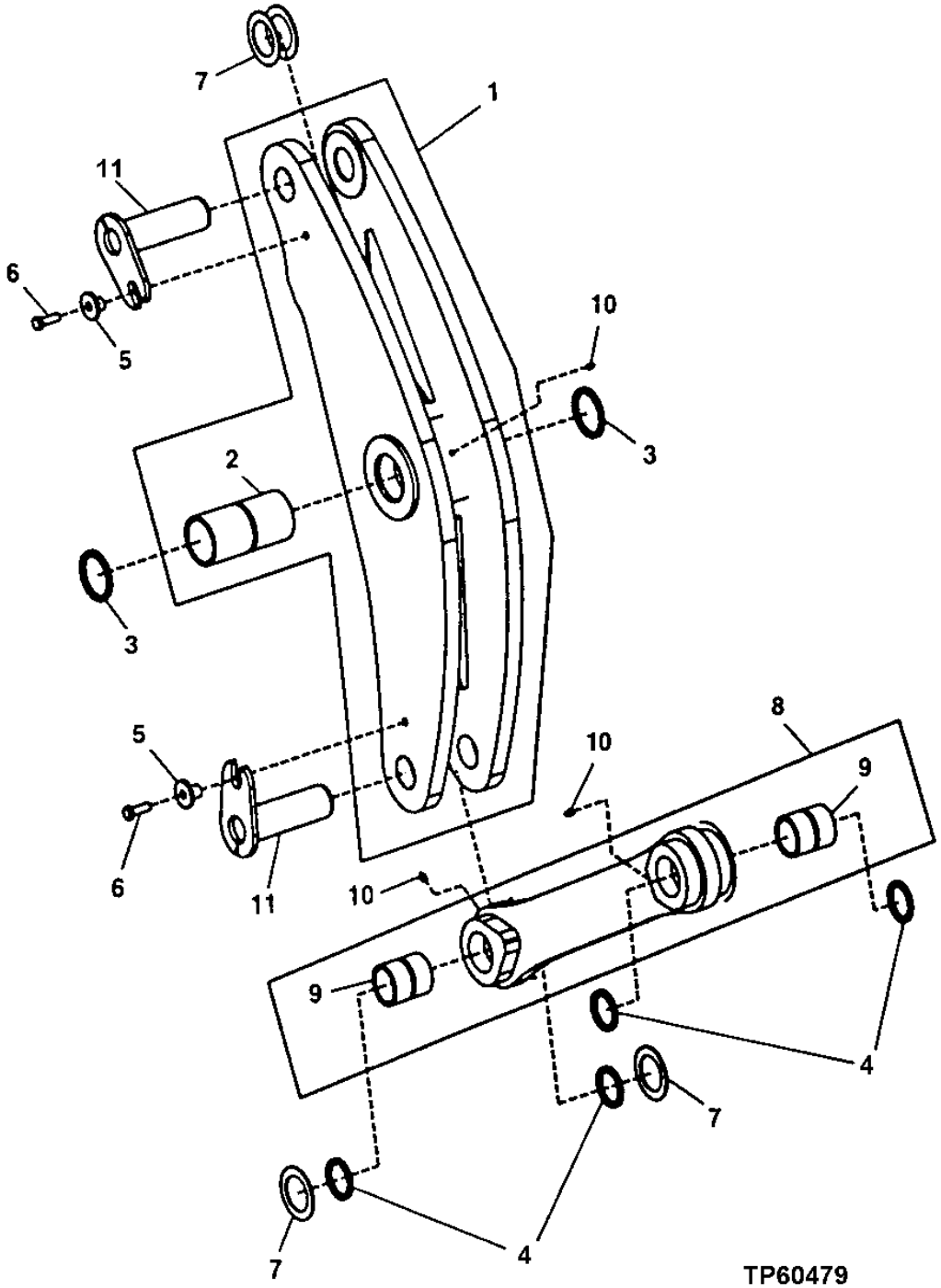

LOADER LINKAGE AND PINS

KEY	PART NO.	PART NAME	QTY	SERIAL NO.	REMARKS
1	AT209082	BELLCRANK	1	-590067	(YELLOW)
	AT307550	BELLCRANK	1	590068-	(CHARCOAL)
2	T177086	BUSHING	2		(SUB FOR T171353)
3	T102140	SEAL	2		
4	T102138	SEAL	4		
5	T176064	BUSHING	2		
6	19M7489	CAP SCREW	2		M16 X 45
7	T101480	WASHER	AR		3.602" X 6.299" X 0.118"
8	AT209081	LINK	1	-590067	(YELLOW)
	AT307549	LINK	1	590068-	(CHARCOAL)
	AT222520	LINK	1		WASTE HANDLER
9	R85556	BUSHING	2		
10	JD7759	LUBRICATION FITTING	3		
11	AT219746	PIN	2		

**LOADER CONTROL VALVE
(TWO-SPOOL)**

T154729 -UN-03OCT02

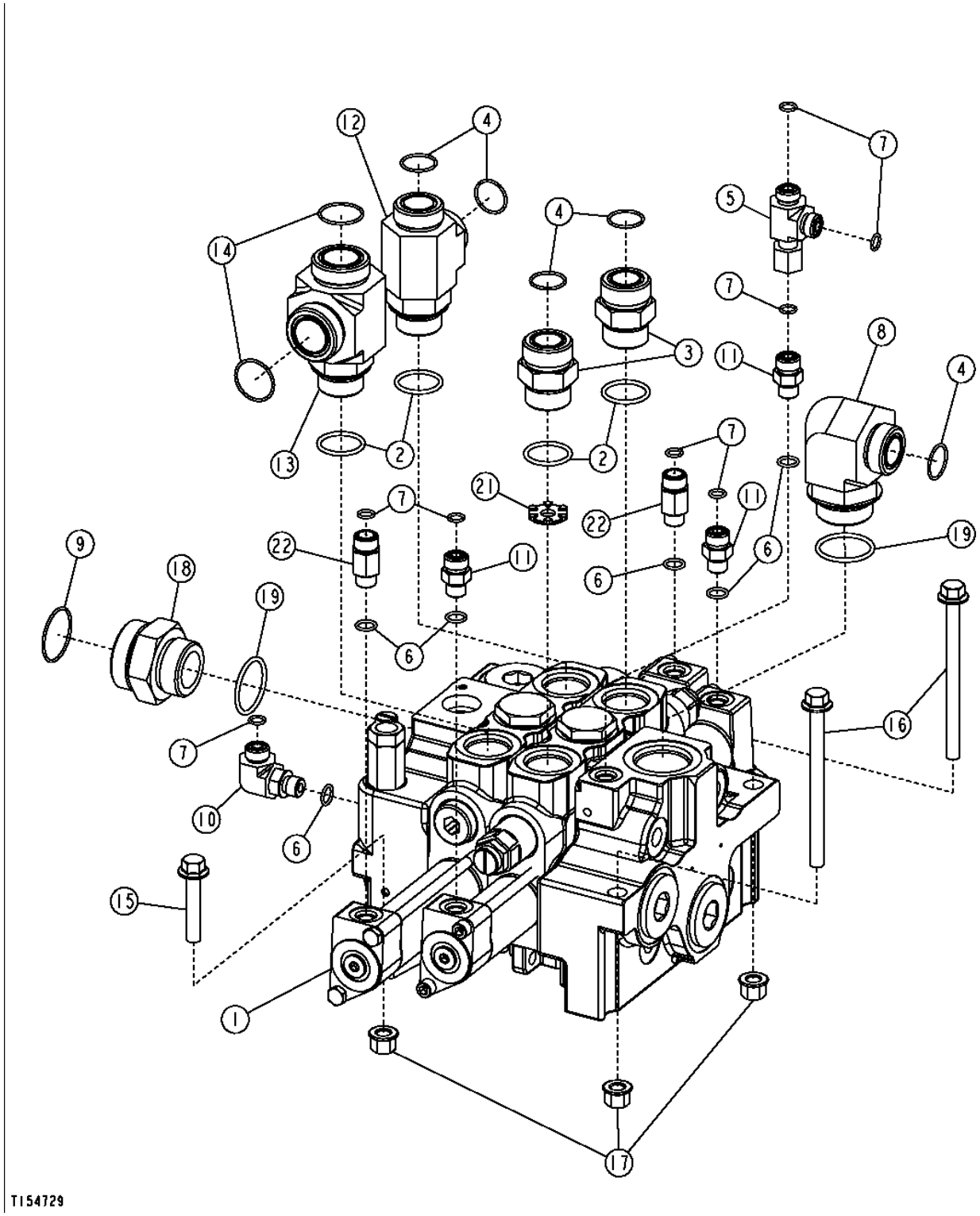

LOADER CONTROL VALVE
(TWO-SPOOL)

KEY	PART NO.	PART NAME	QTY	SERIAL NO.	REMARKS
1	AT225792	HYD ACTUATED CONTROL VALVE	1		
	AT210969	SEAL KIT	1		(INTERFACE SEAL KIT)
2	R29936	O-RING	4		
3	38H1164	ADAPTER	2		
4	T76938	O-RING	5		
5	38H1030	TEE FITTING	1		
6	R26448	O-RING	6		
7	T77613	O-RING	8		
8	38H1325	ELBOW FITTING	1		
9	T78784	O-RING	1		
10	38H1004	ELBOW FITTING	1		
11	38H1160	ADAPTER	3		(BUCKET SECTION) (INLET SECTION)
12	38H1027	TEE FITTING	1		
13	38H1573	TEE FITTING	1		
14	T78612	O-RING	2		
15	19M8528	SCREW	1		M10 X 55
16	19M7898	SCREW	2		M10 X 130
17	14M7400	LOCK NUT	3		M10
18	38H1197	ADAPTER	1		
19	U13639	O-RING	2		
21	T178487	HYDRAULIC RESTRICTOR	1		
22	AT220096	CHECK VALVE	2		(BOOM SECTION)

LOADER CONTROL VALVE (THREE-SPOOL)

T155227 -UN-23MAY02

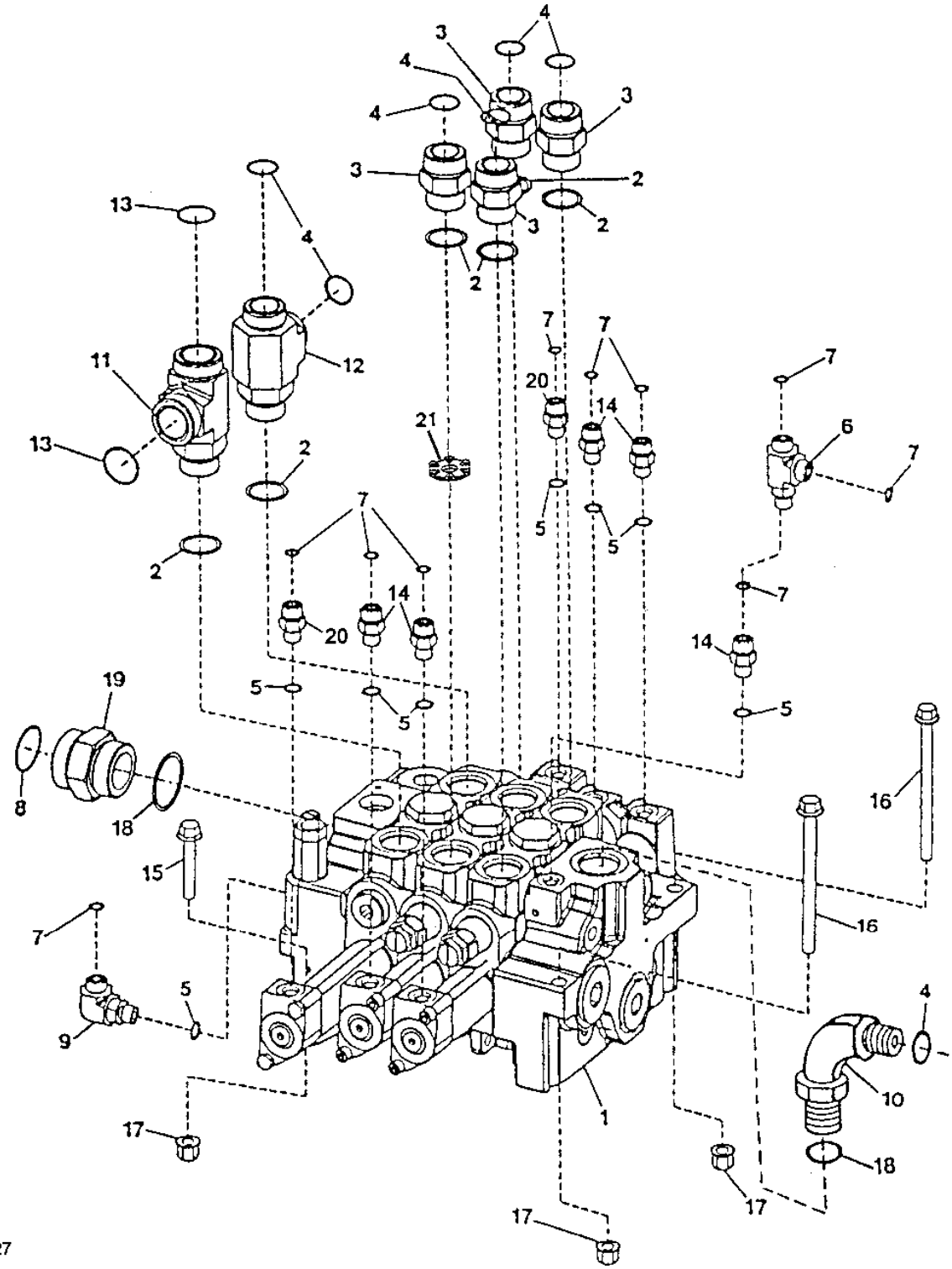

THIS PARTS LISTING IS CONTINUED

LOADER CONTROL VALVE
(THREE-SPOOL)

KEY	PART NO.	PART NAME	QTY	SERIAL NO.	REMARKS
1	AT225793	HYD ACTUATED CONTROL VALVE	1		
	AT210969	SEAL KIT	1		(INTERFACE SEAL KIT)
2	R29936	O-RING	6		
3	38H1164	ADAPTER	4		
4	T76938	O-RING	7		
5	R26448	O-RING	8		
6	38H1030	TEE FITTING	1		
7	T77613	O-RING	10		
8	T78784	O-RING	1		
9	38H1004	ELBOW FITTING	1		
10	38H1325	ELBOW FITTING	1		
11	38H1573	TEE FITTING	1		
12	38H1027	TEE FITTING	1		
13	T78612	O-RING	2		
14	38H1160	ADAPTER	5		(BUCKET AND AUXILIARY SECTION)(INLET SEC)
15	19M8528	SCREW	1		M10 X 55
16	19M7898	SCREW	2		M10 X 130
17	14M7400	LOCK NUT	3		M10
18	U13639	O-RING	2		
19	38H1197	ADAPTER	1		
20	AT220096	CHECK VALVE	2		(BOOM SECTION)
21	T178487	HYDRAULIC RESTRICTOR	1		

LOADER CONTROL VALVE
(FOUR-SPOOL)

T155262 -UN-28MAY02

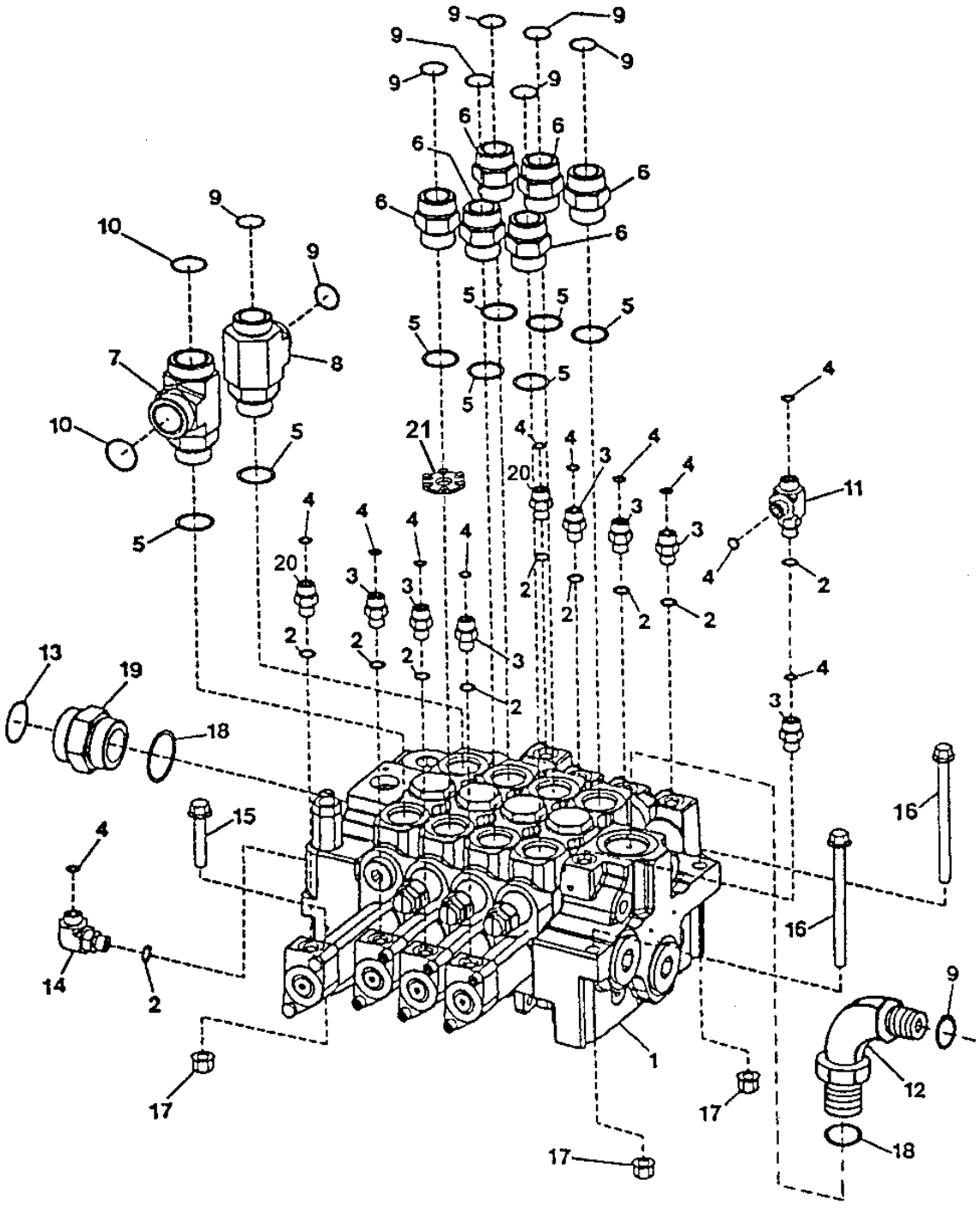

THIS PARTS LISTING IS CONTINUED

LOADER CONTROL VALVE
(FOUR-SPOOL)

KEY	PART NO.	PART NAME	QTY	SERIAL NO.	REMARKS
1	AT225794	HYD ACTUATED CONTROL VALVE	1		
	AT210969	SEAL KIT	1		(INTERFACE SEAL KIT)
2	R26448	O-RING	10		
3	38H1160	ADAPTER	5		(BUCKET AND AUXILIARY SECTION)(INLET SEC)
4	T77613	O-RING	12		
5	R29936	O-RING	8		
6	38H1164	ADAPTER	6		
7	38H1573	TEE FITTING	1		
8	38H1027	TEE FITTING	1		
9	T76938	O-RING	9		
10	T78612	O-RING	2		
11	38H1030	TEE FITTING	1		
12	38H1325	ELBOW FITTING	1		
13	T78784	O-RING	2		
14	38H1004	ELBOW FITTING	1		
15	19M8528	SCREW	1		M10 X 55
16	19M7898	SCREW	2		M10 X 130
17	14M7400	LOCK NUT	3		M10
18	U13639	O-RING	2		
19	38H1197	ADAPTER	1		
20	AT220096	CHECK VALVE	2		(BOOM SECTION)(DO NOT USE WITH T169955)
21	T178487	HYDRAULIC RESTRICTOR	1		

INLET VALVE SECTION WITH RELIEF VALVE

T155280 -UN-24MAY02

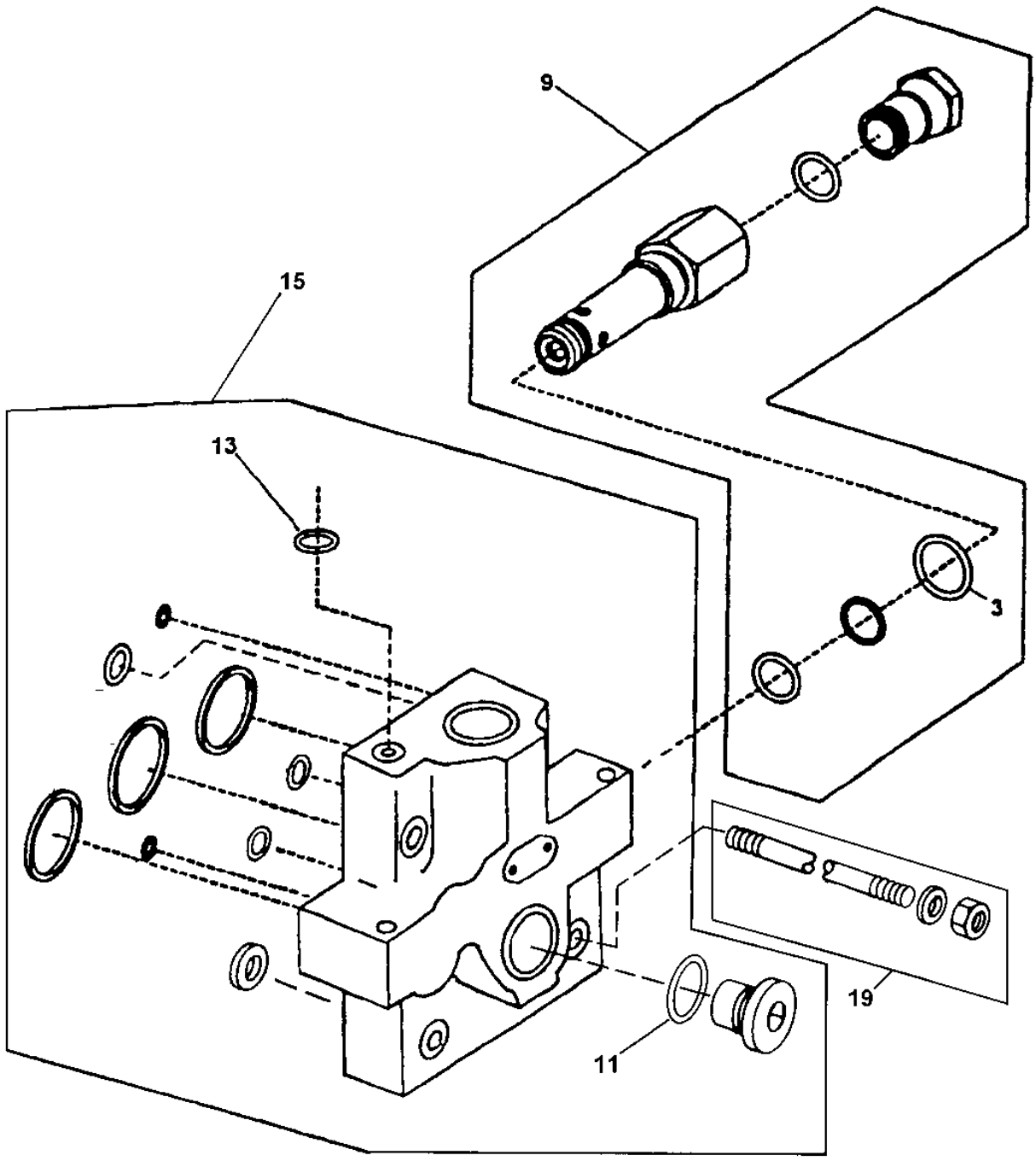

INLET VALVE SECTION WITH RELIEF VALVE

KEY	PART NO.	PART NAME	QTY	SERIAL NO.	REMARKS
3	U12547	O-RING	1		
9	AT209811	PRESSURE RELIEF VALVE	1		VALVE
	AT169157	SEAL KIT	1		(RELIEF VALVE SEAL KIT) (INCLUDES U12547 O-RING)
11	R29936	O-RING	1		
13	R26448	O-RING	1		
15	AT210694	MANIFOLD	1		INLET SECTION
	AT210695	SEAL KIT	1		(INLET SECTION SEAL KIT)
19	AT210950	STUD	4		(TWO SPOOL VALVE)
	AT210951	STUD	4		(THREE-SPOOL VALVE)
	AT210683	STUD	4		(FOUR-SPOOL VALVE)
	AT219895	STUD	4		(FIVE-SPOOL VALVE)

BOOM, BUCKET AND AUXILIARY VALVE SECTIONS

T155370 -UN-31MAY02

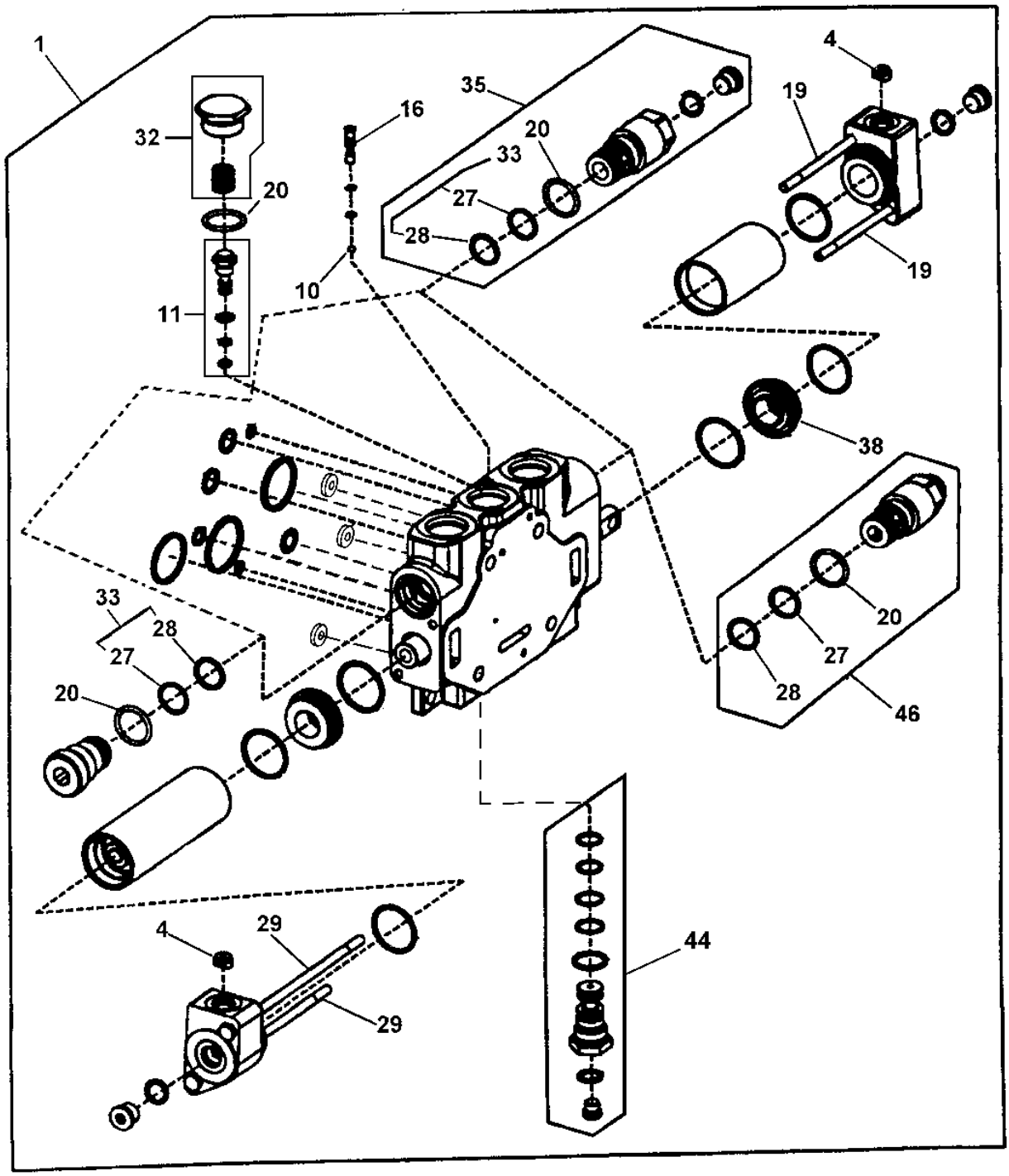

T155370

BOOM, BUCKET AND AUXILIARY VALVE SECTIONS

KEY	PART NO.	PART NAME	QTY	SERIAL NO.	REMARKS
1	AT224770	HYD ACTUATED CONTROL VALVE	1		(BOOM)
	AT222390	SPOOL VALVE	1		(INCLUDES T178487) (BUCKET)
	AT210685	SEAL KIT	1		(FOR BUCKET, BOOM, AND AUXILIARY SECTIONS)
	AT210969	SEAL KIT	1		(INTERFACE SEAL KIT)
4	T169955	ORIFICE	2		(BUCKET AND AUXILIARY SECTION) (DO NOT USE IN BOOM SECTION WHEN USING AT220096 CHECK VALVES IN PLACE OF 38H1160 IN PILOT PORTS)
10	A4742R	BALL	1		
11	AT210687	COMPENSATOR	1		(BOOM AND AUXILIARY)
	AT220829	COMPENSATOR	1		(BUCKET)
16	T172562	CHECK VALVE	1		
19	T174025	CAP SCREW	2		(BOOM, BUCKET AND AUXILIARY SECTIONS)
20	U12547	O-RING	2		
27	T154187	BACK-UP RING	2		
28	AT124574	O-RING	2		
29	19H3782	CAP SCREW	2		5/16" X 6-1/4", (BOOM SECTION)
32	AT220831	KIT	1		(SPRING AND PLUG KIT)
33	AT170991	KIT	2		(BOOM SECTION) (RELIEF EXTERNAL SEAL KIT)
	U12547	O-RING	1		(INCLUDED IN AT170991 KIT)
35	AT209750	PRESSURE RELIEF VALVE	2		(AUXILIARY AND BUCKET)
	AT209748	SEAL KIT	2		(RELIEF VALVE SEAL KIT)
44	AT209758	CHECK VALVE	1		(BUCKET)
	AT210686	CHECK VALVE	1		(AUXILIARY AND BOOM)
46	AT221506	HYD ACTUATED CONTROL VALVE	2		(BBM)

AUXILIARY VALVE SECTION AND COMPONENTS

T155380 -UN-29MAY02

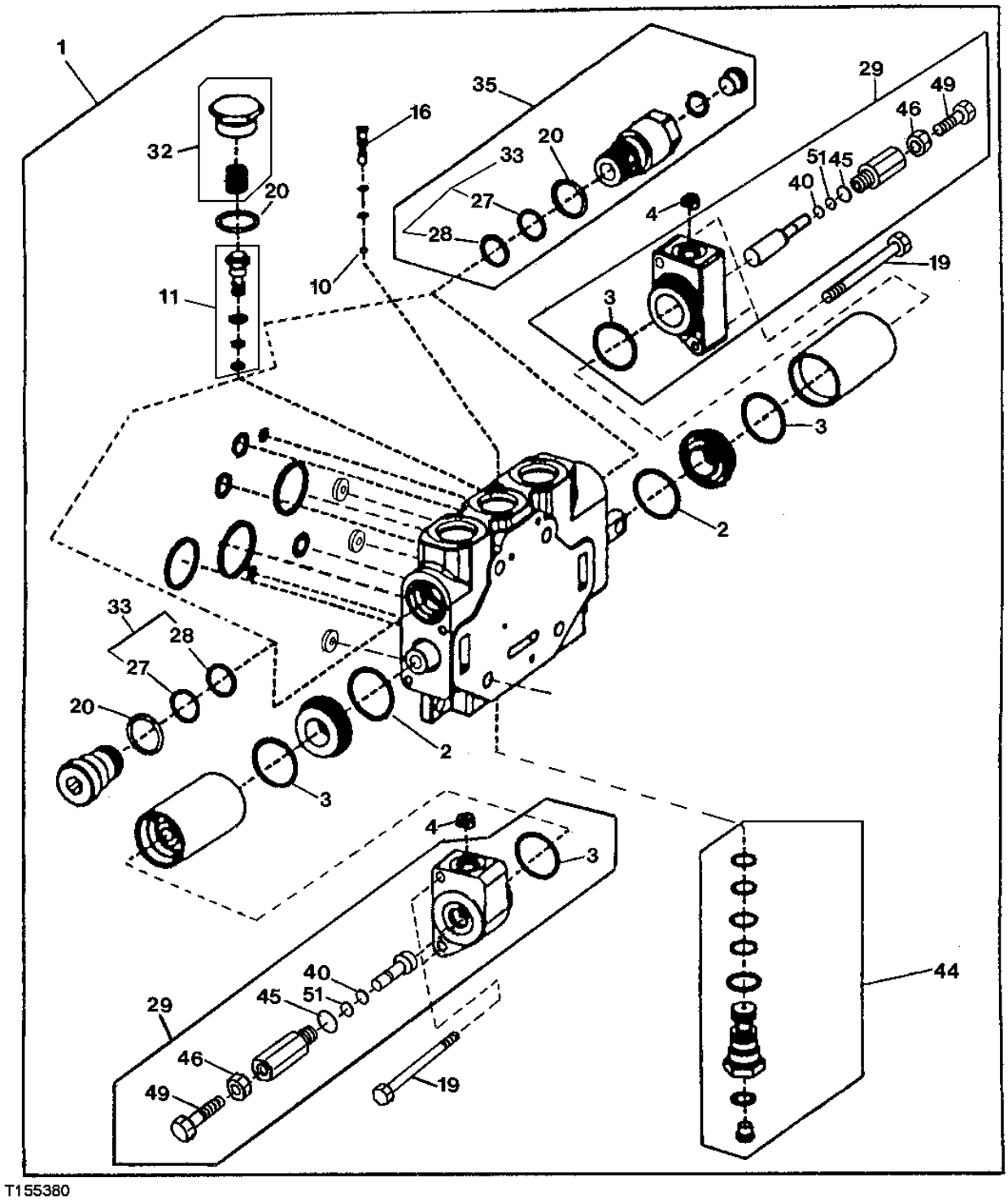

AUXILIARY VALVE SECTION AND COMPONENTS

KEY	PART NO.	PART NAME	QTY	SERIAL NO.	REMARKS
1	AT220174	CAP	1		
2	M4125T	O-RING	2		
3	H84318	O-RING	4		
4	T169955	ORIFICE	2		
10	A4742R	BALL	1		
11	AT220827	COMPENSATOR	1		
16	T172562	CHECK VALVE	1		
19	T174025	CAP SCREW	4		
20	U12547	O-RING	2		
27	T154187	BACK-UP RING	2		
28	AT124574	O-RING	2		
29	AT220036	KIT	1		
32	AT220831	KIT	1		
33	AT170991	KIT	2		
	U12547	O-RING	1		(INCLUDED IN AT170991 KIT)
35	AT209750	PRESSURE RELIEF VALVE	2		
40	T77814	O-RING	2		
44	AT210686	CHECK VALVE	1		
45	R26906	O-RING	2		
46	14H856	NUT	2		1/2", (SUB FOR AT209762)
49	22H1022	SET SCREW	2		
51	R61463	BACK-UP RING	2		

OUTLET SECTION AND COMPONENTS

T155385 -UN-30MAY02

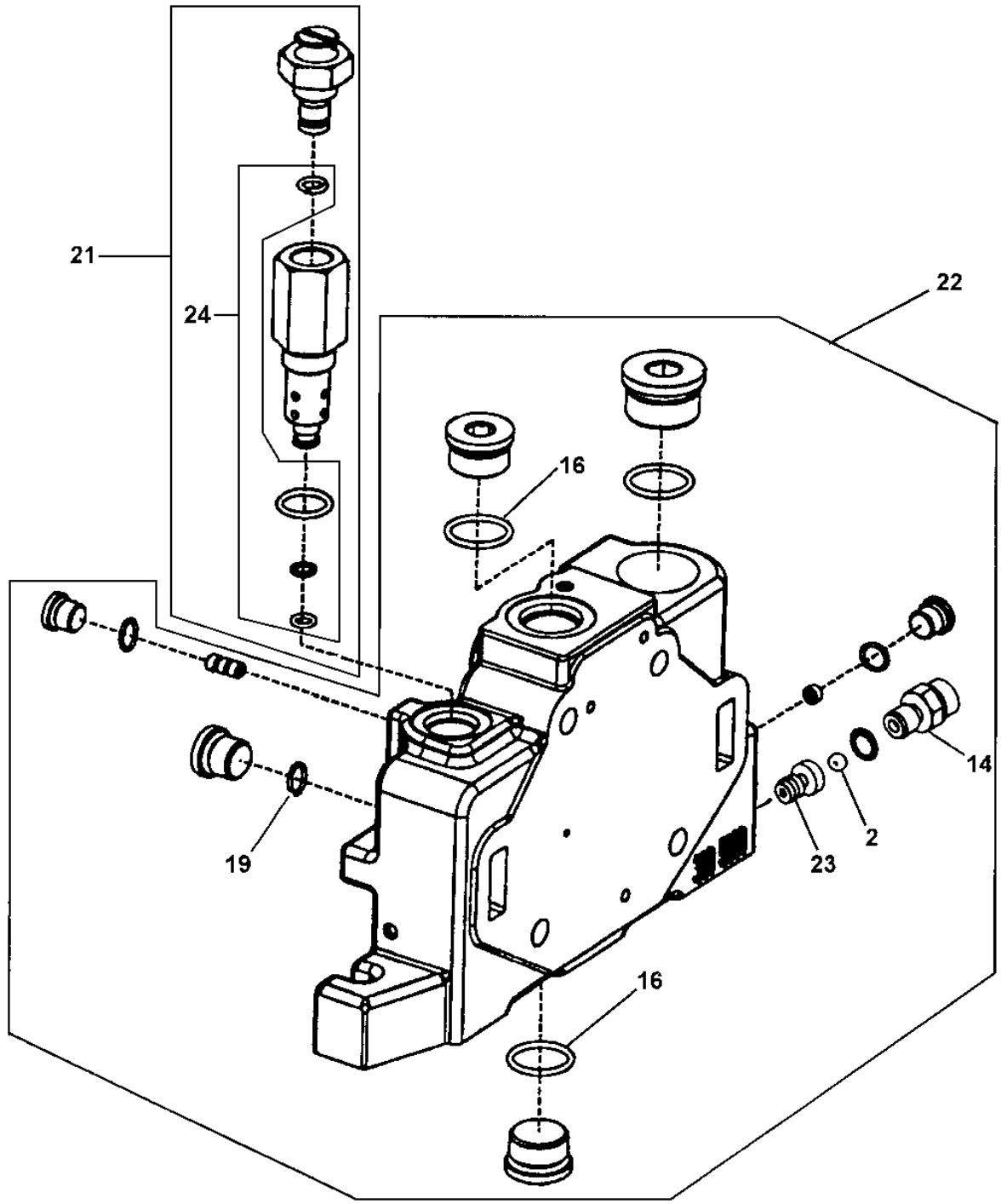

T155385

OUTLET SECTION AND COMPONENTS

KEY	PART NO.	PART NAME	QTY	SERIAL NO.	REMARKS
2	JD38714	BALL	1		
14	T172712	FITTING	1		
16	R29936	O-RING	2		
19	R26448	O-RING	2		
21	AT225800	FLOW CONTROL HYD. VALVE	1		
22	AT225799	FLOW CONTROL HYD. VALVE	1		(OUTLET SECTION)
	AT210697	SEAL KIT	1		(OUTLET SECTION SEAL KIT)
23	T172579	CHECK VALVE	1		
24	AT179935	SEAL KIT	1		LOAD SENSE RELIEF VALVE SEAL KIT

FIFTH FUNCTION VALVE SECTION

TP62889 -UN-31AUG00

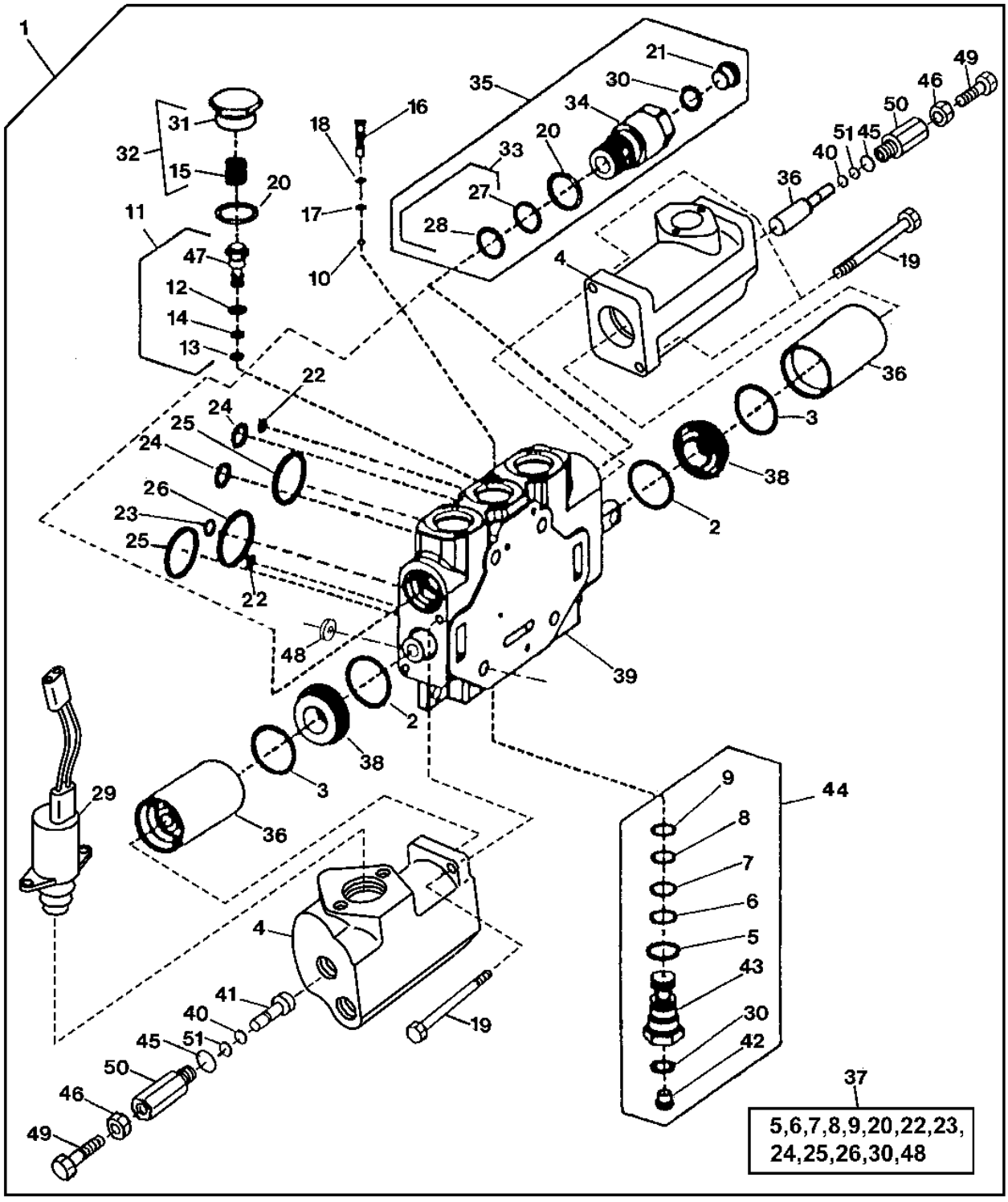

TP62889

FIFTH FUNCTION VALVE SECTION

KEY	PART NO.	PART NAME	QTY	SERIAL NO.	REMARKS
1	AT225143	FLOW CONTROL HYD. VALVE	1		
2	.....	O-RING	2		
3	.....	O-RING	2		
4	.....	CAP	2		(END)
5	.....	O-RING	1		
6	.....	BACK-UP RING	1		
7	.....	O-RING	1		
8	.....	O-RING	1		
9	.....	BACK-UP RING	1		
10	A4742R	BALL	1		
11	AT220827	COMPENSATOR	1		
12	.....	O-RING	1		
13	.....	O-RING	1		
14	.....	BACK-UP RING	1		
15	.....	SPRING	1		
16	T172562	CHECK VALVE	1		
17	.....	O-RING	1		
18	.....	BACK-UP RING	1		
19	T174025	CAP SCREW	4		
20	U12547	O-RING	2		
21	.....	PLUG	1		
22	U40962	O-RING	2		
23	.....	O-RING	1		
24	.....	O-RING	2		
25	.....	O-RING	2		
26	.....	O-RING	1		
27	T154187	BACK-UP RING	2		
28	AT124574	O-RING	2		
29	AT224850	SOLENOID VALVE	2		(INCLUDES WIRING HARNESS, AT300858)
	AT300858	MFWD SOLENOID WRG HARNESS	1		(NOT ILLUSTRATED)
30	R26287	O-RING	2		
31	.....	PLUG	1		
32	AT220831	KIT	1		
33	AT170991	KIT	2		
	U12547	O-RING	1		(INCLUDED IN AT170991 KIT)
34	.....	VALVE	1		
35	AT209750	PRESSURE RELIEF VALVE	2		
36	.....	PLUNGER	2		
	.....	BUSHING	2		
37	AT210685	SEAL KIT	1		
38	.....	STRUCTURAL TUBING	2		
39	AT210684	SPOOL VALVE	1		
40	T77814	O-RING	2		
41	.....	PLUNGER	2		
42	.....	PLUG	1		(SUB AT210686)
43	.....	SPOOL	1		(SUB AT210686)
44	AT210686	CHECK VALVE	1		
45	R26906	O-RING	2		
46	14H856	NUT	2		1/2"
47	.....	COMPENSATOR	4		
48	.....	SHIM	1		(ONE SHIM ON EACH TIE-BOLT)
49	22H1022	SET SCREW	2		
50	.....	RELIEF VALVE	2		(SUB AT220035)
51	R61463	BACK-UP RING	2		
..	AT219893	FIELD INSTALLATION KIT	1	-XXXXXX	(WHOLE GOODS)(FIFTH FUNCTION KIT)(CONTAINS ALL COMPONENTS NECESSARY FOR ADDING FIFTH AUXILIARY FUNCTION)
..	AT307774	FIELD INSTALLATION KIT	1	XXXXXX-	(WHOLE GOODS)(FIFTH FUNCTION KIT)(CONTAINS ALL COMPONENTS NECESSARY FOR ADDING FIFTH AUXILIARY FUNCTION)

TWO SPOOL CONTROL VALVE PLUMBING

T195531 -UN-21OCT03

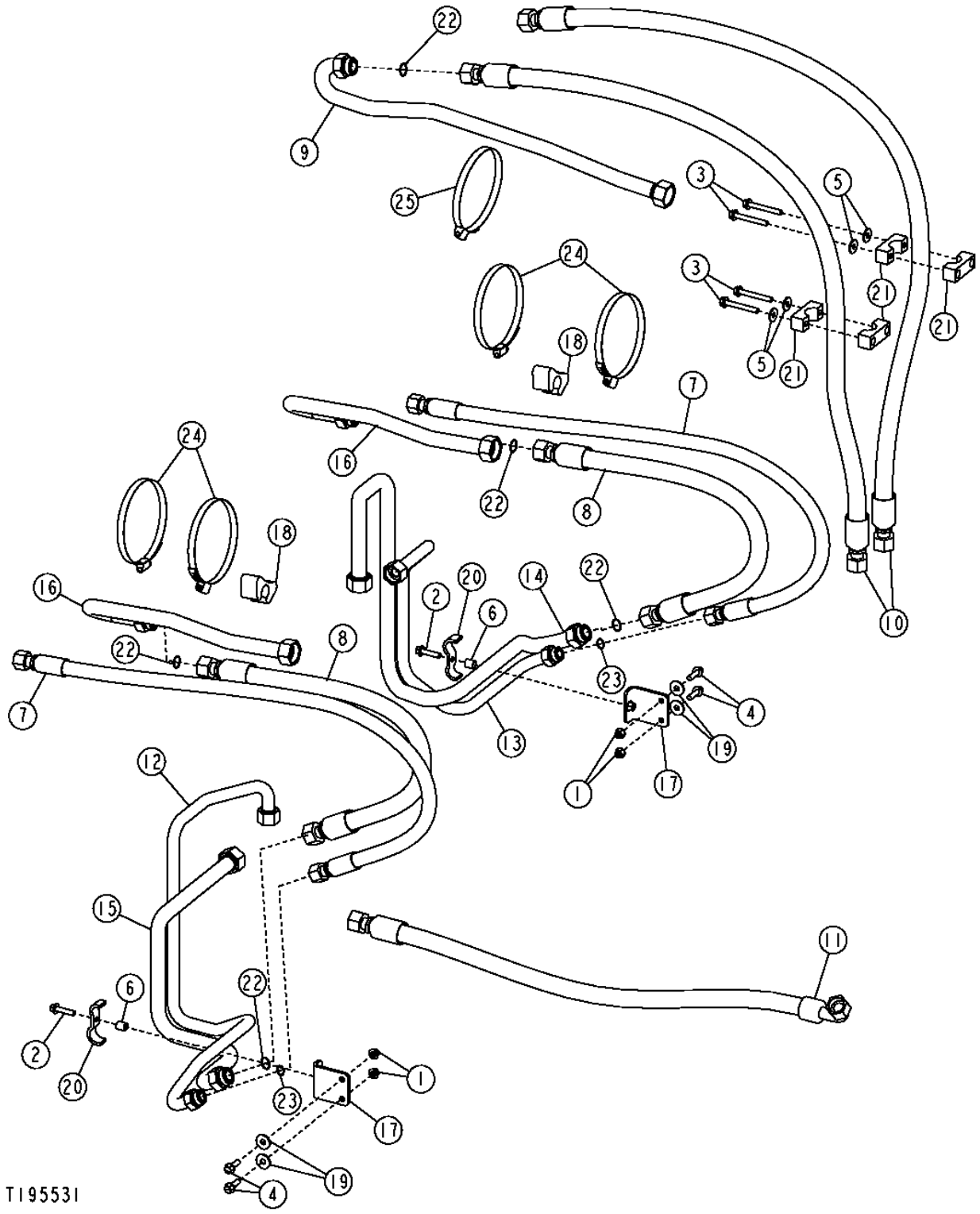

TWO SPOOL CONTROL VALVE PLUMBING

KEY	PART NO.	PART NAME	QTY	SERIAL NO.	REMARKS
1	14M7296	FLANGE NUT	4		M10
2	19M7805	SCREW	2		M10 X 45
3	19M7810	SCREW	4		M10 X 80
4	19M7835	SCREW	4		M10 X 35
5	24M7296	WASHER	4		10.500 X 30 X 2.500 MM
6	28H3383	BUSHING	2		0.493" X 0.675" X 3/4"
7	AT228194	HYDRAULIC HOSE - FABRICATE	2	-XXXXXX	
	AT306812	HYDRAULIC HOSE - FABRICATE	2	XXXXXX-	
8	AT208691	HYDRAULIC HOSE - FABRICATE	2		
9	AT209285	OIL LINE	1	-XXXXXX	(BUCKET CYLINDER)
	AT307065	OIL LINE	1	XXXXXX-	
10	AT210075	HYDRAULIC HOSE - FABRICATE	2	-XXXXXX	
	AT307066	HYDRAULIC HOSE - FABRICATE	2	XXXXXX-	
11	AT210077	HYDRAULIC HOSE - FABRICATE	1		
12	AT210216	OIL LINE	1		
13	AT210217	OIL LINE	1		(WITHOUT RIDE CONTROL)
14	AT210218	OIL LINE	1		(WITHOUT RIDE CONTROL)
15	AT210219	OIL LINE	1		
16	AT210400	OIL LINE	2		(BOOM CYLINDER)
17	AT224318	BRACKET	2		
18	T102005	GUIDE	2		
19	T148712	WASHER	4		
20	T170365	CLAMP	2		
21	T67995	CLAMP	4		
22	T76938	O-RING	5		
23	T77858	O-RING	2		
24	TY22495	HOSE CLAMP	4		
25	AH130230	HOSE CLAMP	1		

THREE SPOOL CONTROL VALVE PLUMBING

T154868 -UN-12SEP02

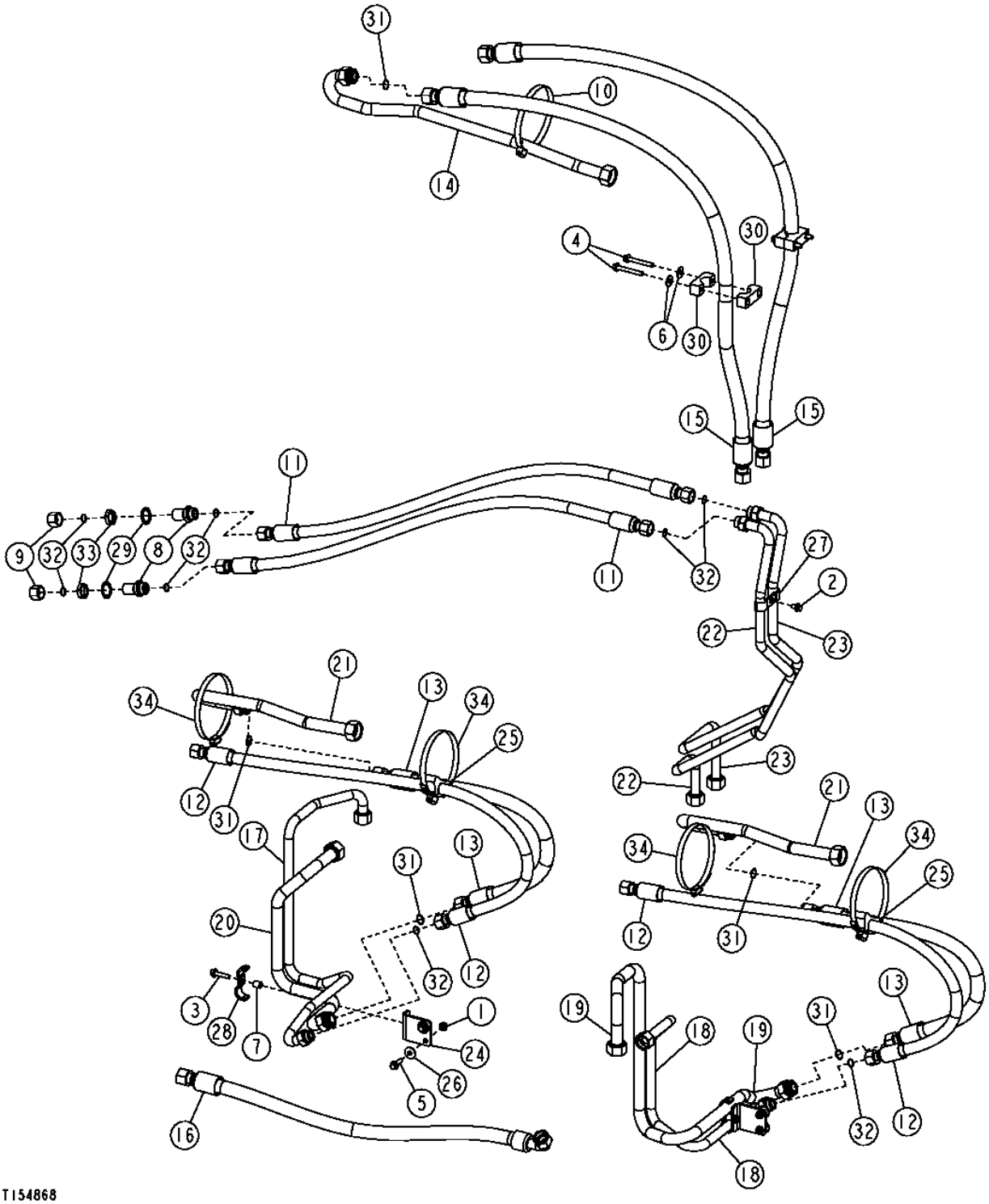

THIS PARTS LISTING IS CONTINUED

THREE SPOOL CONTROL VALVE PLUMBING

KEY	PART NO.	PART NAME	QTY	SERIAL NO.	REMARKS
1	14M7296	FLANGE NUT	4		M10
2	19M7783	SCREW	1		M10 X 16
3	19M7805	SCREW	2		M10 X 45
4	19M7810	SCREW	4		M10 X 80
5	19M7835	SCREW	4		M10 X 35
6	24M7296	WASHER	4		10.500 X 30 X 2.500 MM
7	28H3383	BUSHING	2		0.493" X 0.675" X 3/4"
8	38H1276	ADAPTER	2		
9	38H1418	FITTING	2		
10	AH130230	HOSE CLAMP	1		
11	AT228192	HYDRAULIC HOSE - FABRICATE	2		
12	AT228194	HYDRAULIC HOSE - FABRICATE	2	-XXXXXX	(SUB FOR AT207923)
	AT306812	HYDRAULIC HOSE - FABRICATE	2	XXXXXX-	
13	AT208691	HYDRAULIC HOSE - FABRICATE	2		
14	AT209285	OIL LINE	1	-XXXXXX	(BUCKET CYLINDER)
	AT307065	OIL LINE	1	XXXXXX-	
15	AT210075	HYDRAULIC HOSE - FABRICATE	2	-XXXXXX	
	AT307066	HYDRAULIC HOSE - FABRICATE	2	XXXXXX-	
16	AT210078	HYDRAULIC HOSE - FABRICATE	1		
17	AT210216	OIL LINE	1		
18	AT210217	OIL LINE	1		(WITHOUT RIDE CONTROL)
19	AT210218	OIL LINE	1		(WITHOUT RIDE CONTROL)
20	AT210219	OIL LINE	1		
21	AT210400	OIL LINE	2		(BOOM CYLINDER)
22	AT220957	OIL LINE	1		(THIRD FUNCTION HYDRAULICS)
23	AT220958	OIL LINE	1		(THIRD FUNCTION HYDRAULICS)
24	AT224318	BRACKET	2		
25	T102005	GUIDE	2		
26	T148712	WASHER	4		
27	T167979	CLAMP	1		
28	T170365	CLAMP	2		
29	T174275	LOCK WASHER	2		
30	T67995	CLAMP	4		
31	T76938	O-RING	5		
32	T77858	O-RING	8		
33	T78707	NUT	2		
34	TY22495	HOSE CLAMP	4		

FOUR SPOOL CONTROL VALVE PLUMBING

T195532 -UN-21OCT03

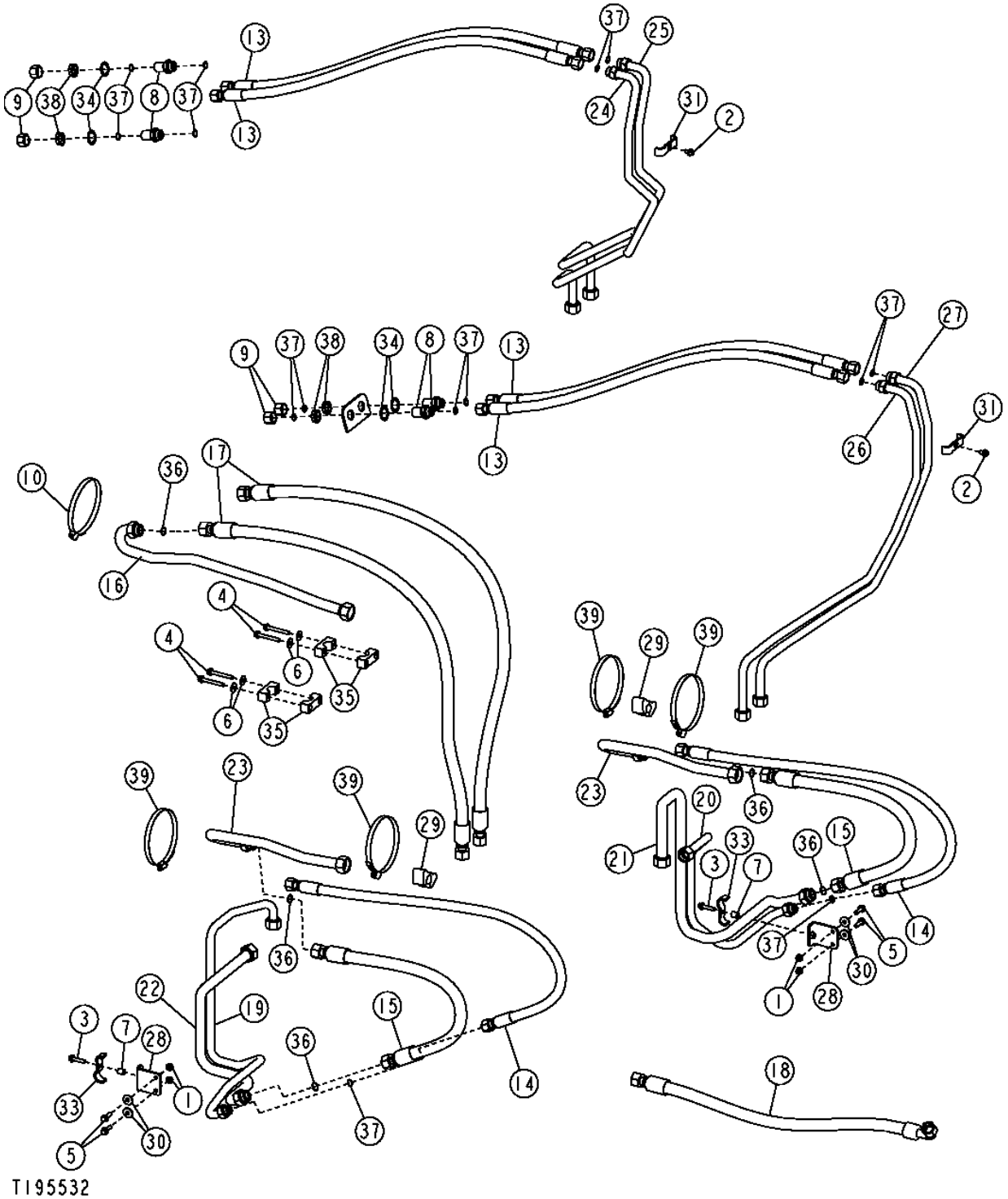

FOUR SPOOL CONTROL VALVE PLUMBING

KEY	PART NO.	PART NAME	QTY	SERIAL NO.	REMARKS
1	14M7296	FLANGE NUT	4		M10
2	19M7783	SCREW	2		M10 X 16
3	19M7805	SCREW	2		M10 X 45
4	19M7810	SCREW	4		M10 X 80
5	19M7835	SCREW	4		M10 X 35
6	24M7296	WASHER	4		10.500 X 30 X 2.500 MM
7	28H3383	BUSHING	2		0.493" X 0.675" X 3/4"
8	38H1276	ADAPTER	4		
9	38H1418	FITTING	4		
10	AH130230	HOSE CLAMP	1		
12	AT169886	HYDRAULIC HOSE - FABRICATE	1		(NOT ILLUSTRATED)
13	AT228192	HYDRAULIC HOSE - FABRICATE	4		
14	AT228194	HYDRAULIC HOSE - FABRICATE	2	-XXXXXX	
	AT306812	HYDRAULIC HOSE - FABRICATE	2	XXXXXX-	
15	AT208691	HYDRAULIC HOSE - FABRICATE	2		
16	AT209285	OIL LINE	1	-XXXXXX	(BUCKET CYLINDER)
	AT307065	OIL LINE	1	XXXXXX-	
17	AT210075	HYDRAULIC HOSE - FABRICATE	2	-XXXXXX	
	AT307066	HYDRAULIC HOSE - FABRICATE	2	XXXXXX-	
18	AT210078	HYDRAULIC HOSE - FABRICATE	1		
19	AT210216	OIL LINE	1		
20	AT210217	OIL LINE	1		(WITHOUT RIDE CONTROL)
21	AT210218	OIL LINE	1		(WITHOUT RIDE CONTROL)
22	AT210219	OIL LINE	1		
23	AT210400	OIL LINE	2		(BOOM CYLINDER)
24	AT220957	OIL LINE	1		(THIRD FUNCTION HYDRAULICS)
25	AT220958	OIL LINE	1		(THIRD FUNCTION HYDRAULICS)
26	AT220959	OIL LINE	1		(FOURTH FUNCTION HYDRAULICS)
27	AT220960	OIL LINE	1		(FOURTH FUNCTION HYDRAULICS)
28	AT224318	BRACKET	2		
29	T102005	GUIDE	2		
30	T148712	WASHER	4		
31	T167979	CLAMP	2		
33	T170365	CLAMP	2		
34	T174275	LOCK WASHER	4		
35	T67995	CLAMP	4		
36	T76938	O-RING	5		
37	T77858	O-RING	14		
38	T78707	NUT	4		
39	TY22495	HOSE CLAMP	4		
40	AT167553	HYDRAULIC HOSE - FABRICATE	1		(NOT ILLUSTRATED)

TWO LEVER CONTROLLER (SERIAL NO. -590067)

T159442 -UN-18SEP02

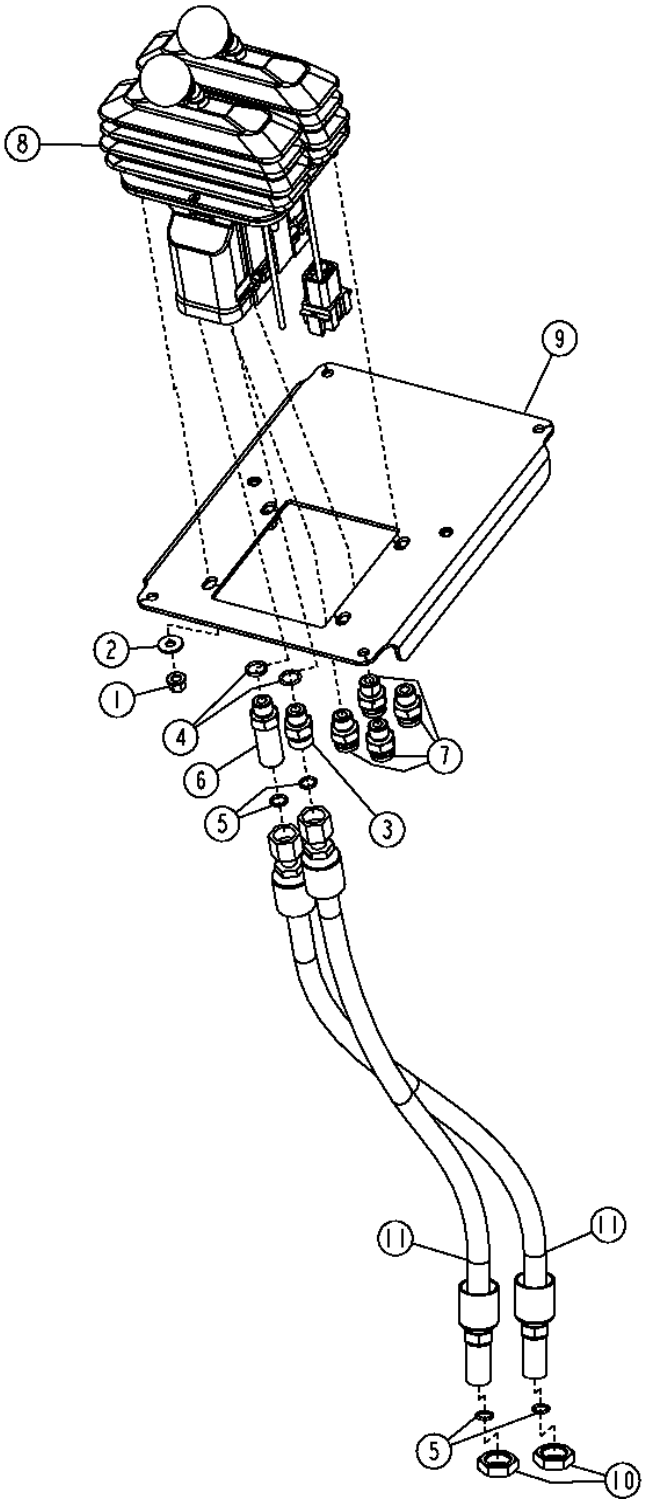

TWO LEVER CONTROLLER (SERIAL NO. -590067)

KEY	PART NO.	PART NAME	QTY	SERIAL NO.	REMARKS
1	14M7397	LOCK NUT	4		M6
2	24M7139	WASHER	4		6.400 X 18 X 1.600 MM
3	38H1160	ADAPTER	1		
4	R26448	O-RING	2		
5	T77613	O-RING	4		
6	38H1212	ADAPTER	1		
7	63H1001	FITTING	4		
8	AT225425	HYDR./PILOT CONTROL VALVE	1		(SERVICE PARTS LISTED ON SEPARATE PAGE)
	AT115146	SEAL KIT	1		PLUNGER PIN, (SUB FOR AT305841)
	AT305842	O-RING	4		BETWEEN STACKABLE SECTIONS (REQUIRES 2 O-RINGS PER CONTROLLER JOINT)
9	AT226302	PLATE	1		
10	T81029	NUT	2		
11	AT226454	HYDRAULIC HOSE - FABRICATE	2		

TWO LEVER CONTROLLER (SERIAL NO. 590068-)

T194468 -UN-22SEP03

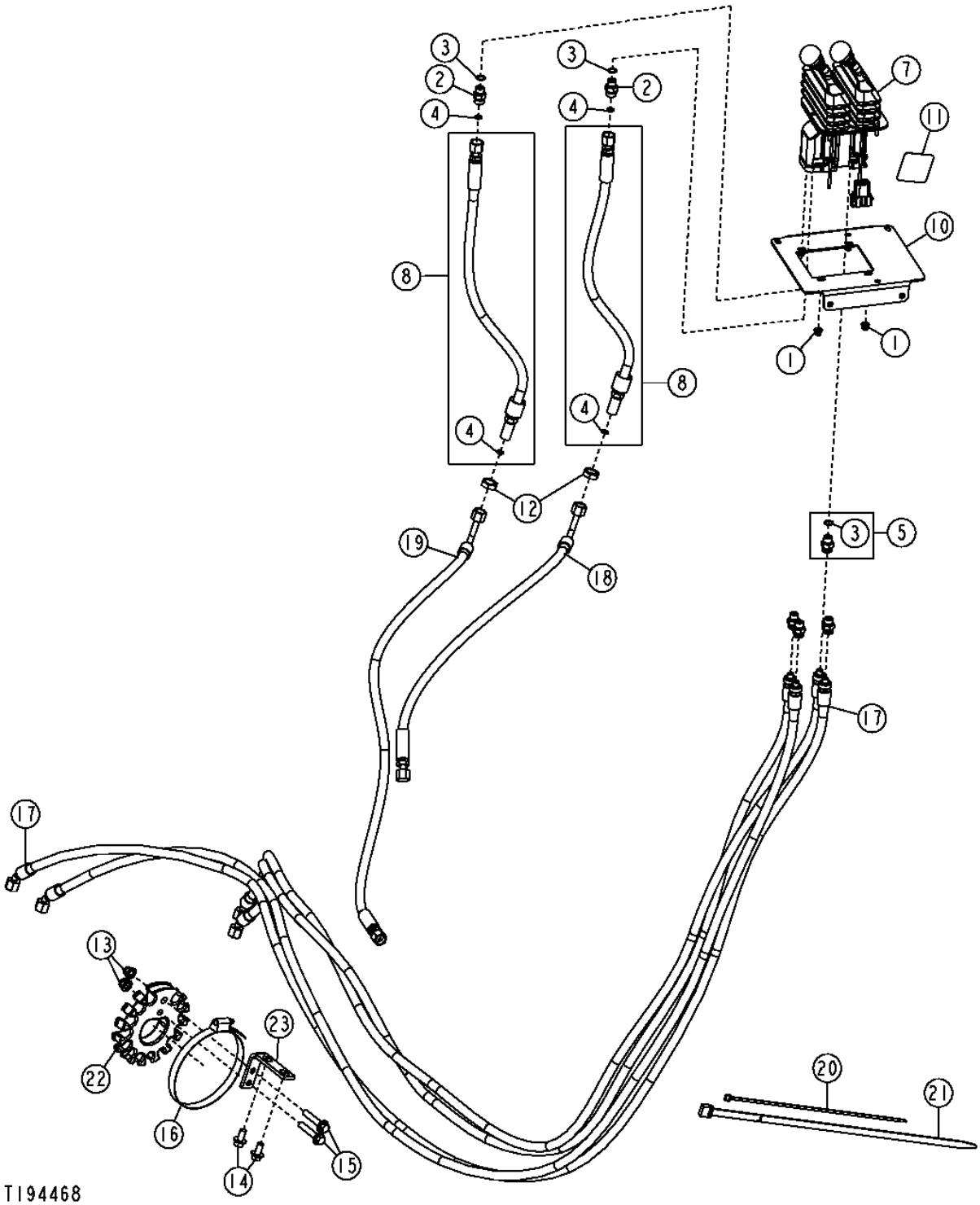

THIS PARTS LISTING IS CONTINUED

TWO LEVER CONTROLLER (SERIAL NO. 590068-)

KEY	PART NO.	PART NAME	QTY	SERIAL NO.	REMARKS
1	14M7397	LOCK NUT	4		M6
2	38H1160	ADAPTER	2		
3	R26448	O-RING	6		
4	T77613	O-RING	4		
5	63H1001	FITTING	4		
7	AT225425	HYDR./PILOT CONTROL VALVE	1		(COMPONENTS ON SEPERATE PAGE)
8	AT226454	HYDRAULIC HOSE - FABRICATE	2		
10	AT300936	PLATE	1		
11	T200729	LABEL	1		
12	T81029	NUT	2		
13	14M7400	LOCK NUT	2		M10
14	19M7784	SCREW	2		M10 X 20
15	19M7806	SCREW	2		M10 X 50
16	TY22493	HOSE CLAMP	1		(SUB FOR AR89602)
17	AT226322	HYDRAULIC HOSE - FABRICATE	4		
18	AT226614	HYDRAULIC HOSE - FABRICATE	1		
19	AT301930	HYDRAULIC HOSE - FABRICATE	1		
20	H77698	TIE BAND	10		
21	N189220	TIE BAND	2		
22	T154342	RETAINER	1		
23	T157443	ANGLE	1		
..	AT305687	FIELD INSTALLATION KIT	1		(JOYSTICK TO TWO LEVER CONVERSION KIT)
..	**AT227951**	**FIELD INSTALLATION KIT**	**1**		**(SINGLE TO TWO LEVER CONVERSION KIT)**

TWO LEVER PILOT CONTROLLER COMPONENTS

T207529 -UN-01FEB05

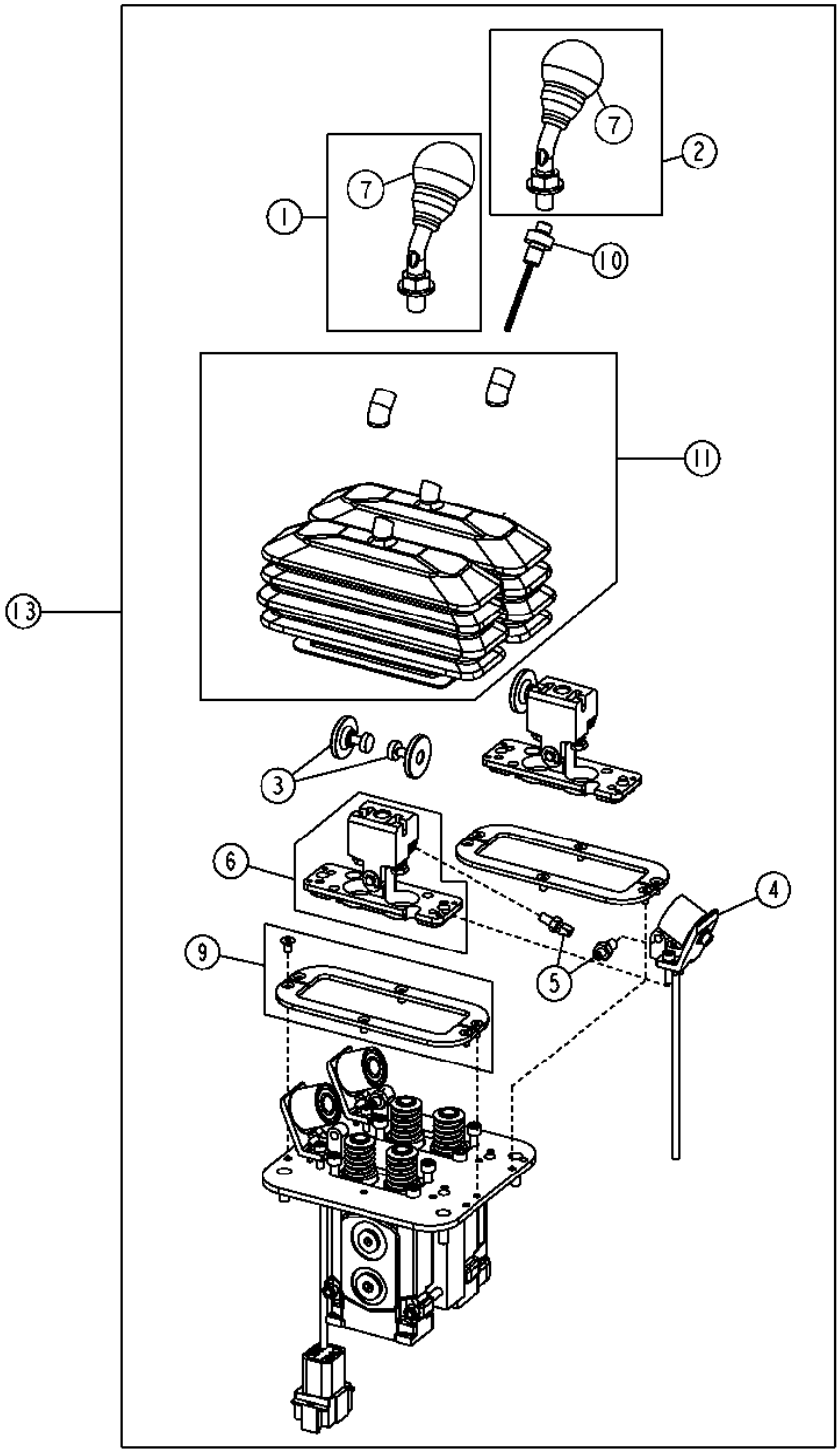

T207529

TWO LEVER PILOT CONTROLLER COMPONENTS

KEY	PART NO.	PART NAME	QTY	SERIAL NO.	REMARKS
1	AT227925	LEVER	1		
2	AT227926	LEVER	1		(FOR USE WITH KICKDOWN SWITCH)
3	AT227928	ARMATURE	2		
4	AT227927	SOLENOID	2		
5	AT227929	HYDR./PILOT CONTROL VALVE	4		
6	AT227930	PLATE	2		
7	AT318123	BOOT	2		(KNOB BOOT)
9	AT227933	PLATE	2		
10	AT226119	SWITCH	1		(KICKDOWN)
11	AT303619	KIT	1		(BOOT ASSEMBLY)
13	AT225425	HYDR./PILOT CONTROL VALVE	1		

TWO LEVER CONTROLLER WITH AUX. (SERIAL NO. -590067)

T158352 -UN-12SEP02

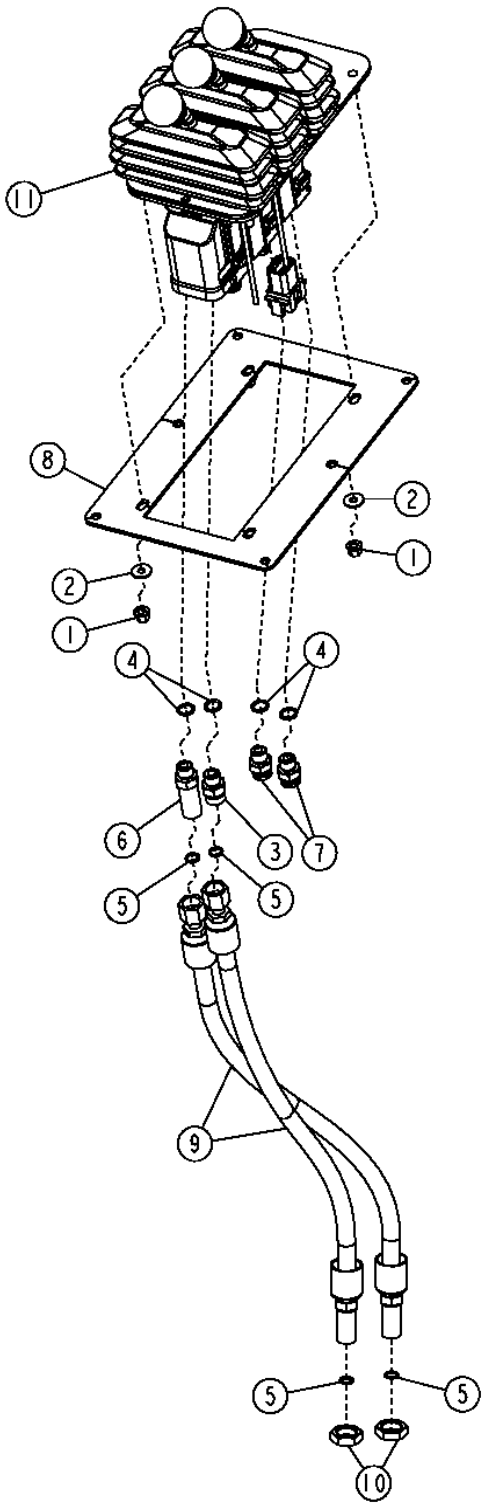

T158352

TWO LEVER CONTROLLER WITH AUX. (SERIAL NO. -590067)

KEY	PART NO.	PART NAME	QTY	SERIAL NO.	REMARKS
1	14M7397	LOCK NUT	4		M6
2	24M7139	WASHER	4		6.400 X 18 X 1.600 MM
3	38H1160	ADAPTER	1		
4	R26448	O-RING	2		
5	T77613	O-RING	4		
6	38H1212	ADAPTER	1		
7	63H1001	FITTING	6		
8	AT226303	PLATE	1		
9	AT226454	HYDRAULIC HOSE - FABRICATE	2		
10	T81029	NUT	2		
11	AT225430	HYDR./PILOT CONTROL VALVE	1		(SERVICE PARTS LISTED ON SEPARATE PAGE)
	AT115146	SEAL KIT	1		PLUNGER PIN, (SUB FOR AT305841)
	AT305842	O-RING	4		BETWEEN STACKABLE SECTIONS (REQUIRES 2 O-RINGS PER CONTROLLER JOINT)
..	**AT227953**	**FIELD INSTALLATION KIT**	**1**		**(SINGLE CONTROLLER WITH AUXILLARY TO THREE LEVER)**

TWO LEVER CONTROLLER WITH AUX.(SERIAL NO. 590068-)

T194479 -UN-19SEP03

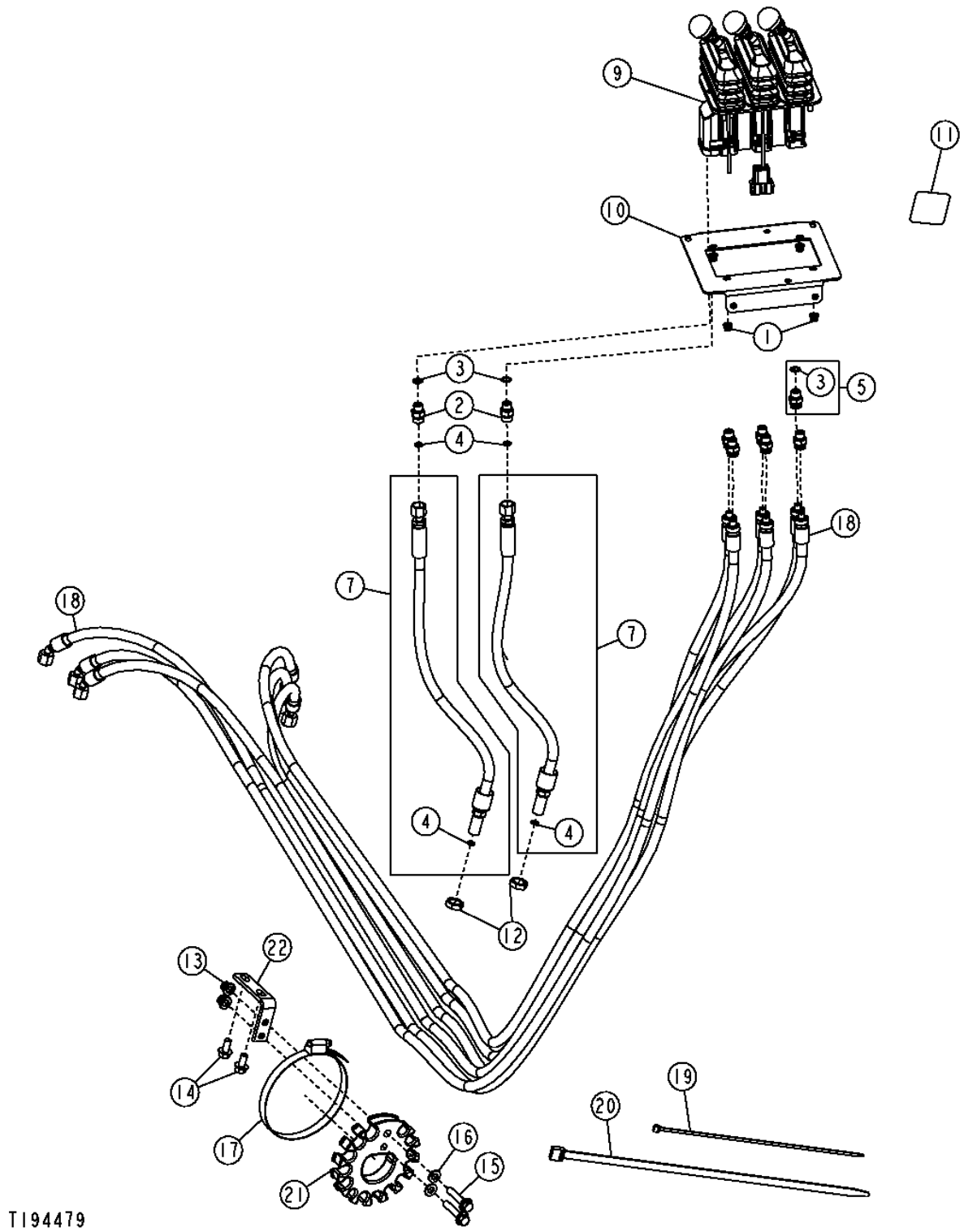

TWO LEVER CONTROLLER WITH AUX.(SERIAL NO. 590068-)

KEY	PART NO.	PART NAME	QTY	SERIAL NO.	REMARKS
1	14M7397	LOCK NUT	4		M6
2	38H1160	ADAPTER	2		
3	R26448	O-RING	8		
4	T77613	O-RING	4		
5	63H1001	FITTING	6		
7	AT226454	HYDRAULIC HOSE - FABRICATE	2		
9	AT300154	HYDR./PILOT CONTROL VALVE	1		(SERVICE PARTS LISTED ON SEPARATE PAGE)
10	AT300156	PLATE	1		
11	T200729	LABEL	1		
12	T81029	NUT	2		
13	14M7400	LOCK NUT	2		M10
14	19M7784	SCREW	2		M10 X 20
15	19M7806	SCREW	2		M10 X 50
16	24M7239	WASHER	2		10.700 X 21 X 2.500 MM
17	TY22493	HOSE CLAMP	1		(SUB FOR AR89602)
18	AT226322	HYDRAULIC HOSE - FABRICATE	6		
19	H77698	TIE BAND	10		
20	N189220	TIE BAND	2		
21	T154342	RETAINER	1		
22	T157443	ANGLE	1		
..	AT305692	FIELD INSTALLATION KIT	1		(JOYSTICK WITH AUX. TO TWO LEVER WITH AUX. CONVERSION KIT)

TWO LEVER PILOT CONTROLLER WITH DUAL AUX. (SERIAL NO. -590067)

T158370 -UN-12SEP02

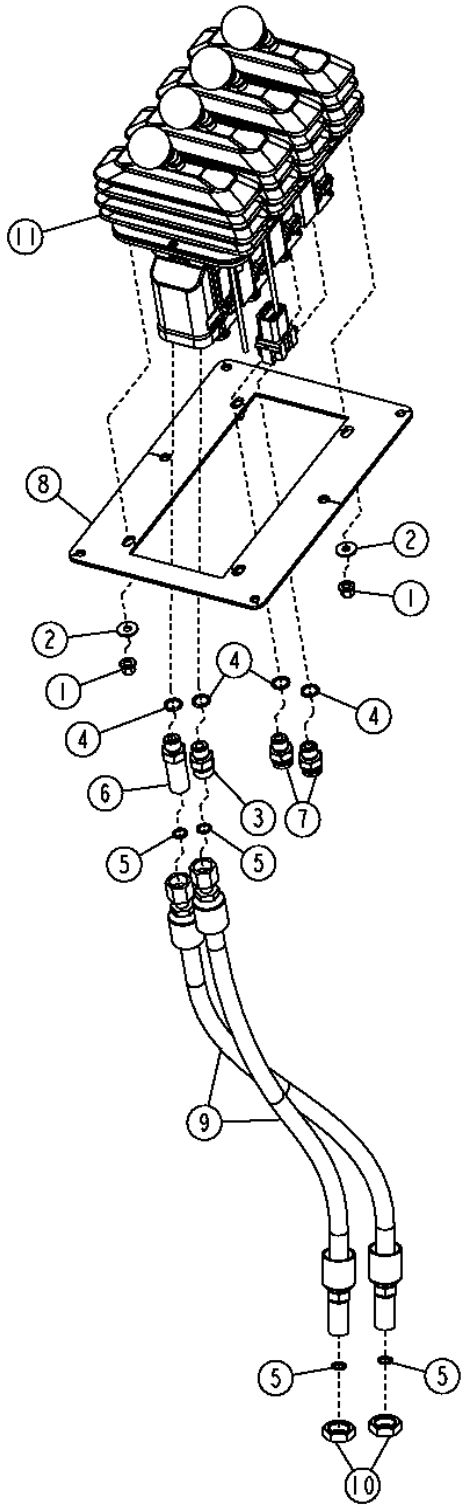

T158370

TWO LEVER PILOT CONTROLLER WITH DUAL AUX. (SERIAL NO. -590067)

KEY	PART NO.	PART NAME	QTY	SERIAL NO.	REMARKS
1	14M7397	LOCK NUT	4		M6
2	24M7139	WASHER	4		6.400 X 18 X 1.600 MM
3	38H1160	ADAPTER	1		
4	R26448	O-RING	10		
5	T77613	O-RING	4		
6	38H1212	ADAPTER	1		
7	63H1001	FITTING	8		
8	AT226303	PLATE	1		
9	AT226454	HYDRAULIC HOSE - FABRICATE	2		
10	T81029	NUT	2		
11	AT225432	HYDR./PILOT CONTROL VALVE	1		(SERVICE PARTS LISTED ON SEPARATE PAGE)
	AT115146	SEAL KIT	1		(SUB FOR AT305841) PLUNGER PIN
	AT305842	O-RING	4		BETWEEN STACKABLE SECTIONS (REQUIRES 2 O-RINGS PER CONTROLLER JOINT)
90	AT227955	FIELD INSTALLATION KIT	1		(WHOLEGOODS) (DUAL SINGLE LEVER CONTROLLER TO FOUR LEVER CONTROLLER)

DUAL AND SINGLE AUXILIARY CONTROLLER COMPONENTS

T193414 -UN-13AUG03

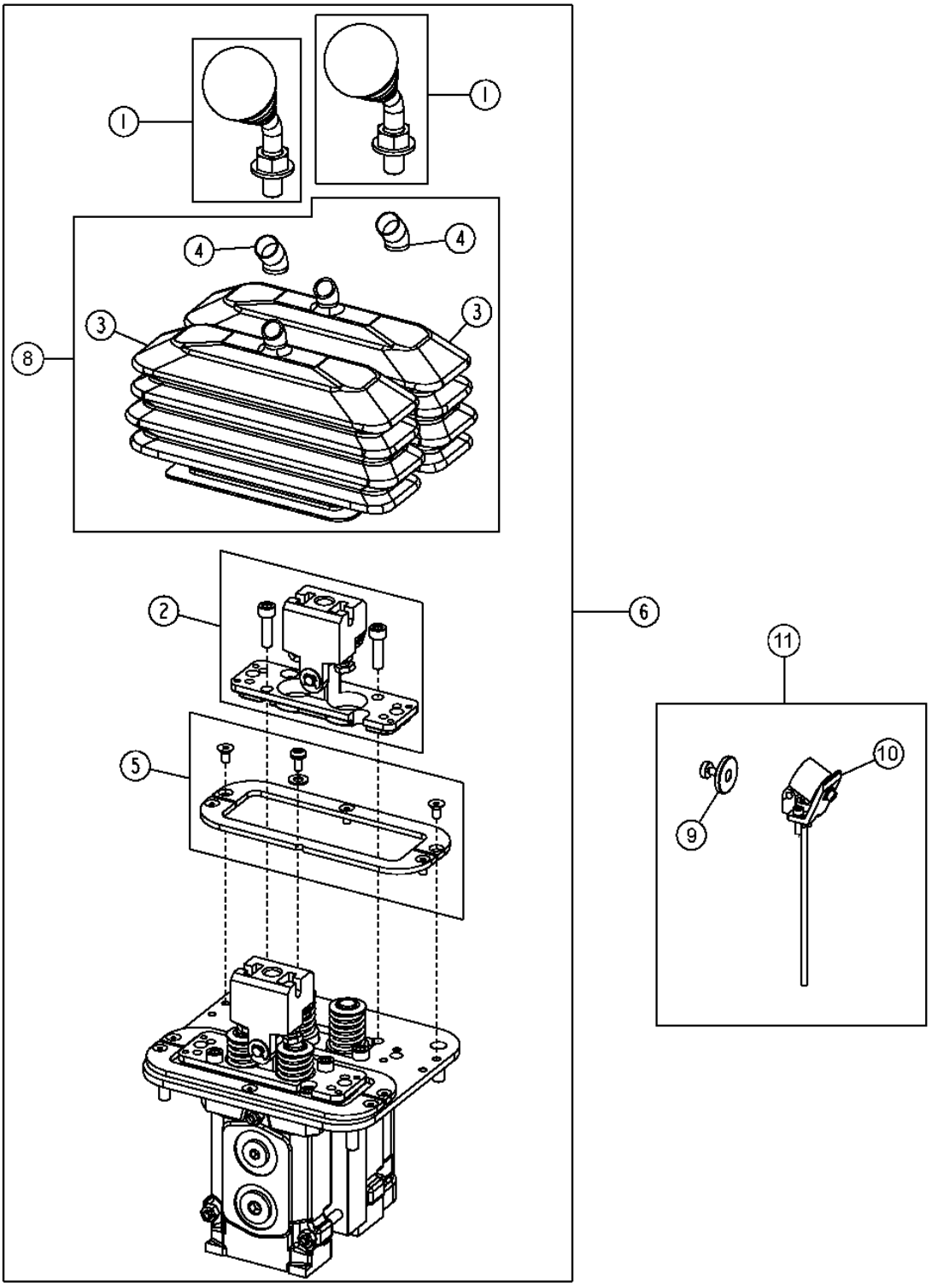

T193414

DUAL AND SINGLE AUXILIARY CONTROLLER COMPONENTS

KEY	PART NO.	PART NAME	QTY	SERIAL NO.	REMARKS
1	AT227925	LEVER	1		
2	AT227930	PLATE	1		
3	.....	BOOT	1		(SUB AT303619) (T196859 NO LONGER AVAILABLE)
4	.....	COVER	1		(SUB AT303619) (T196860 NO LONGER AVAILABLE)
5	AT227933	PLATE	1		
6	AT225426	HYDR./PILOT CONTROL VALVE	1		
	AT226333	HYDR./PILOT CONTROL VALVE	1		
8	AT303619	KIT	1		BOOT ASSEMBLY
9	AT227928	ARMATURE	1		
10	AT227927	SOLENOID	1		
11	.....	KIT	1		AUXILIARY CONTROLLER DETENT KIT (AT305603 NO LONGER AVAILABLE) (FURNISH AT227957)
..	**AT227957**	**FIELD INSTALLATION KIT**	**1**		**(INCLUDES AT227927, AT227928, AT227929 AND AT227930) (ADD DETENTS TO AUXILIARY KIT)**

SINGLE LEVER CONTROLLER (SERIAL NO. -590067)

T159196 -UN-12SEP02

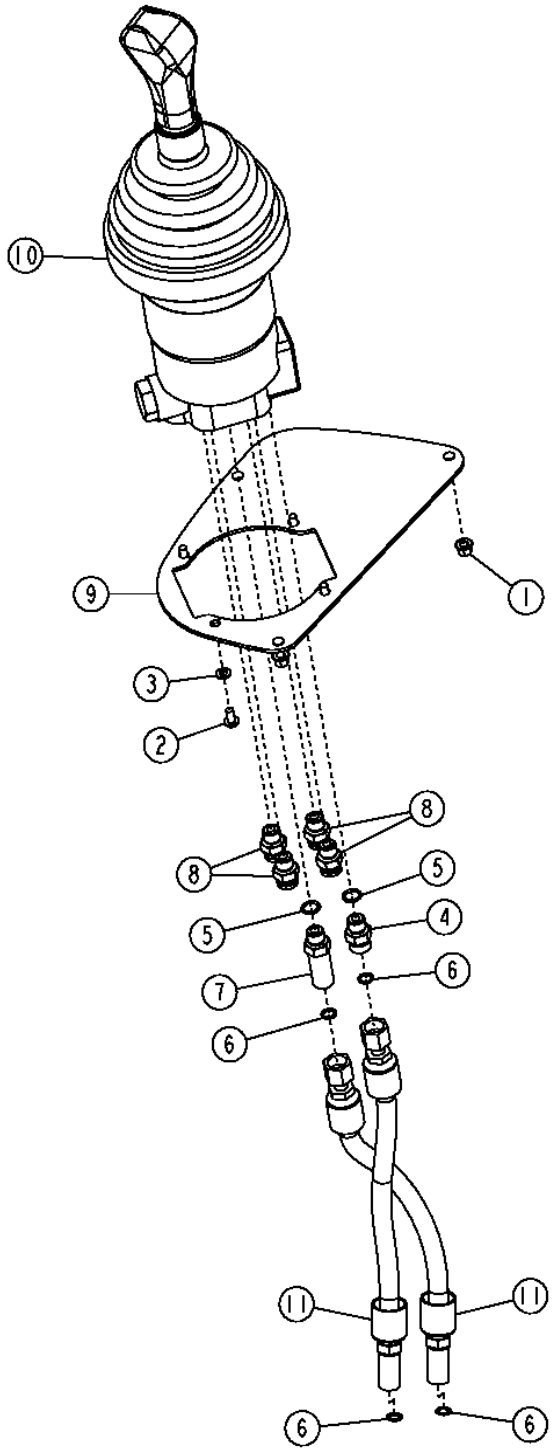

T159196

3D16

SINGLE LEVER CONTROLLER (SERIAL NO. -590067)

KEY	PART NO.	PART NAME	QTY	SERIAL NO.	REMARKS
1	14M7397	LOCK NUT	3		M6
2	21M7285	SCREW	4		M6 X 12, (K1)
3	24M7054	WASHER	4		6.400 X 12 X 1.600 MM
4	38H1160	ADAPTER	1		(K1)
5	R26448	O-RING	2		(ALSO ORDER AT208911)
6	T77613	O-RING	4		
7	38H1212	ADAPTER	1		
8	63H1001	FITTING	4		
9	AT224241	PLATE	1		
10	AT228702	HYDR./PILOT CONTROL VALVE	1		
11	AT228703	HYDRAULIC HOSE - FABRICATE	2		

SINGLE LEVER CONTROLLER (SERIAL NO. 590068-)

T194485 -UN-22SEP03

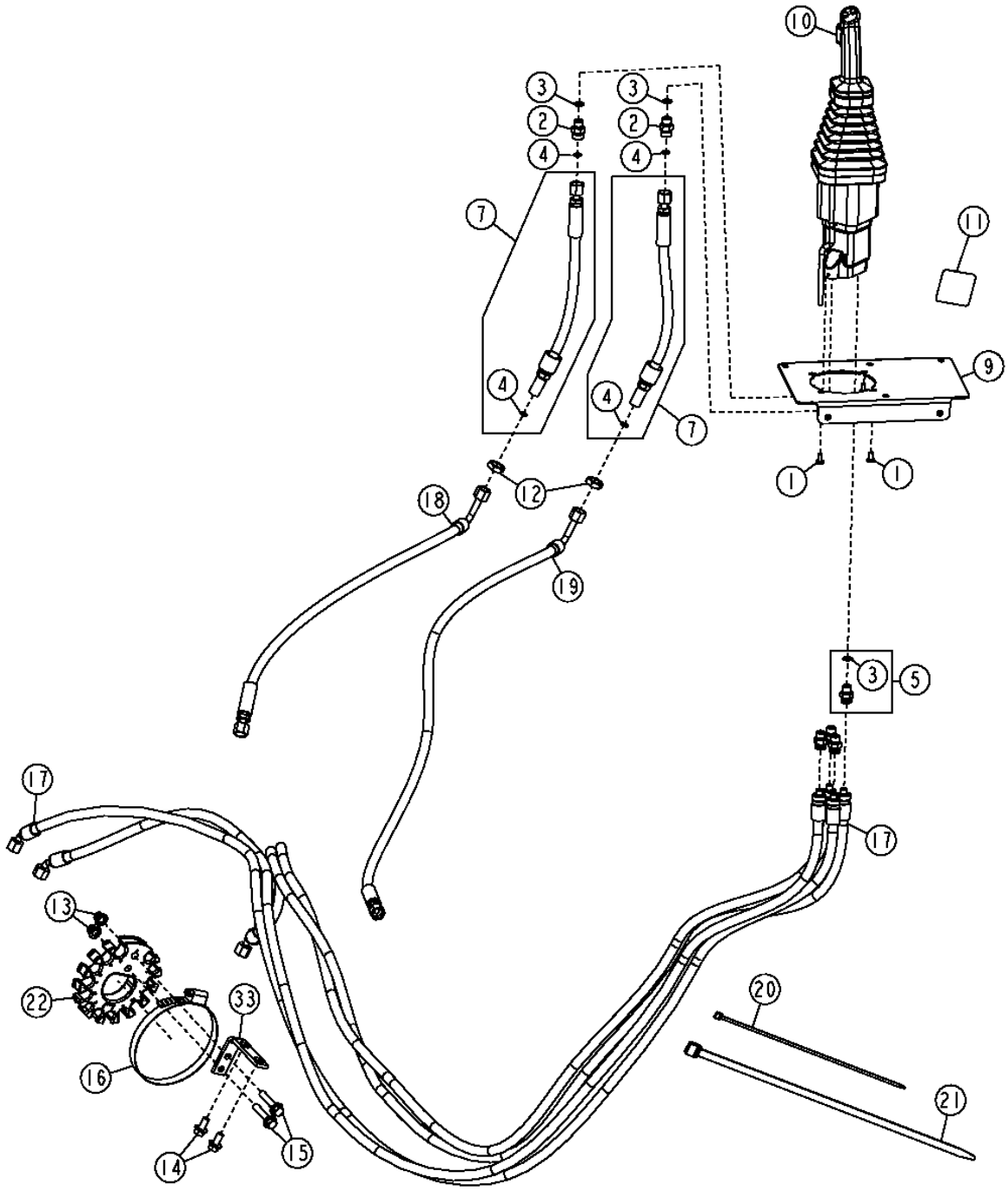

T194485

SINGLE LEVER CONTROLLER (SERIAL NO. 590068-)

KEY	PART NO.	PART NAME	QTY	SERIAL NO.	REMARKS
1	21M7285	SCREW	4		M6 X 12
2	38H1160	ADAPTER	2		
3	R26448	O-RING	6		
4	T77613	O-RING	4		
5	63H1001	FITTING	4		
7	AT228703	HYDRAULIC HOSE - FABRICATE	2		
9	AT300662	PLATE	1		
10	AT315847	HYDR./PILOT CONTROL VALVE	1		(SUB FOR AT301458) (WITHOUT FNR) (COMPONENTS ON SERPERATE PAGE)
	AT315846	HYDR./PILOT CONTROL VALVE	1		(SUB FOR AT300664) (WITH FNR) (COMPONENTS ON SERPERATE PAGE)
11	T203670	LABEL	1		(WITHOUT FNR)
	T197182	LABEL	1		(WITH FNR)
12	T81029	NUT	2		
13	14M7400	LOCK NUT	2		M10
14	19M7784	SCREW	2		M10 X 20
15	19M7806	SCREW	2		M10 X 50
16	TY22493	HOSE CLAMP	1		(SUB FOR AR89602)
17	AT226322	HYDRAULIC HOSE - FABRICATE	4		
18	AT226614	HYDRAULIC HOSE - FABRICATE	1		
19	AT301930	HYDRAULIC HOSE - FABRICATE	1		
20	H77698	TIE BAND	10		
21	N189220	TIE BAND	2		
22	T154342	RETAINER	1		
33	T157443	ANGLE	1		
34	AT309843	WIRING HARNESS	1		(KICKDOWN HARNESS FOR CONTROLLER WITHOUT FNR) (NOT ILLUSTRATED)
..	AT305690	FIELD INSTALLATION KIT	1		(TWO LEVER TO JOYSTICK CONVERSION KIT)

SINGLE LEVER PILOT CONTROLLER COMPONENTS (SERIAL NO. -590067)

T159778 -UN-25SEP02

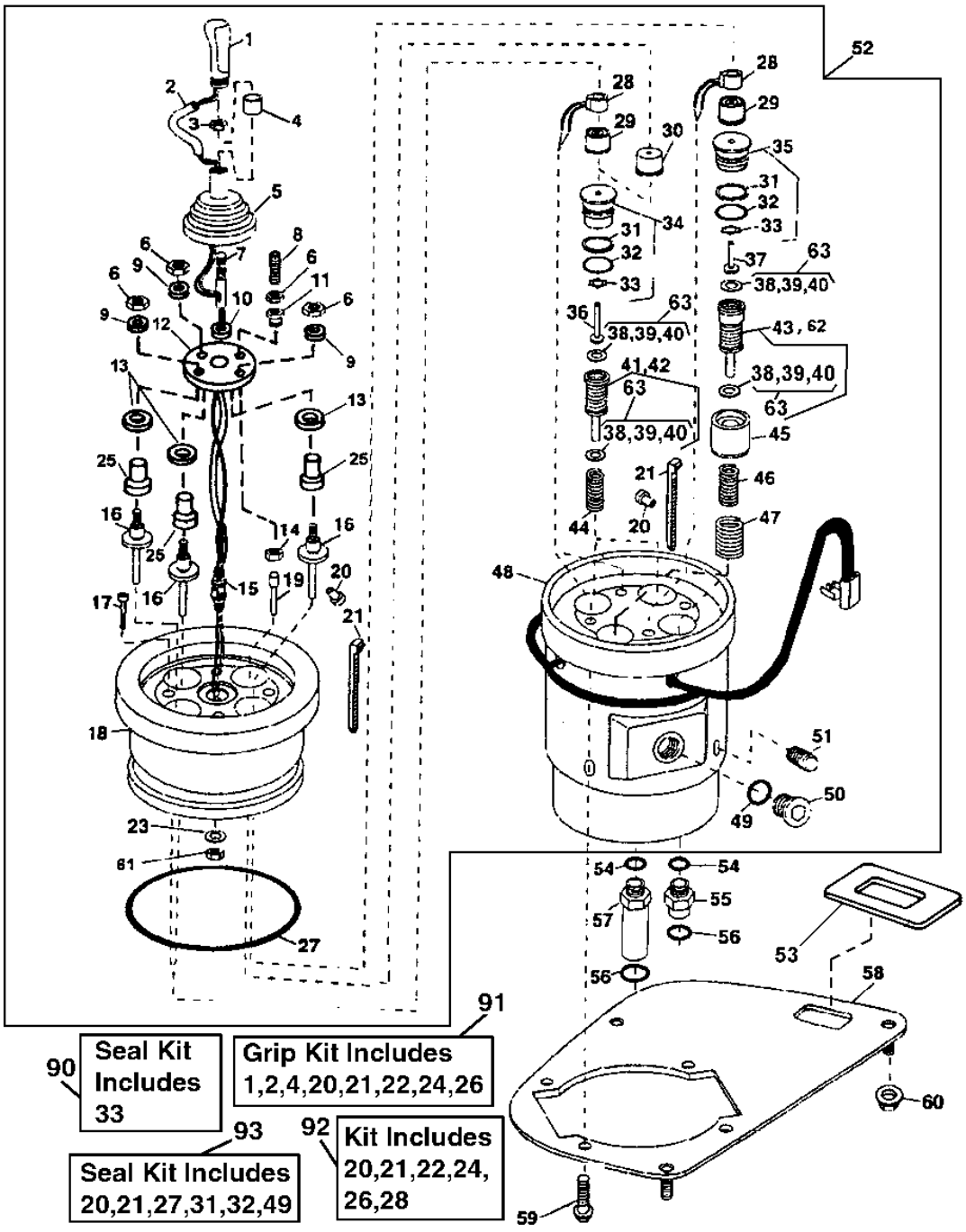

T159778

SINGLE LEVER PILOT CONTROLLER COMPONENTS (SERIAL NO. -590067)

KEY	PART NO.	PART NAME	QTY	SERIAL NO.	REMARKS
1	AT208188	GRIP	1		
2	.....	SLEEVE	1		(K1)
3	T170269	NUT	1		
4	AT208911	RETAINER	1		(K1)
5	T170293	BOOT	1		(ALSO ORDER AT208911)
6	T170275	NUT	4		
7	T173178	LEVER	1		
8	T172523	SET SCREW	1		
9	T173181	WASHER	3		
10	T173205	WASHER	1		
11	T170273	FITTING	1		
12	T173180	PLATE	1		
13	T173182	WASHER	3		
14	T170272	NUT	1		
15	AT210249	POST	1		
16	AT210250	BALL JOINT SOCKET	3		
17	T170263	CAP SCREW	4		
18	.....	HOUSING	1		(SUB AT228702)
19	T170274	PIN	1		
20	T170266	GROMMET	4		(K1) (K2) (K3)
21	H77698	TIE BAND	4		(K1) (K2) (K3)
23	T172522	WASHER	1		
25	T173179	NUT	1		

THIS PARTS LISTING IS CONTINUED

SINGLE LEVER PILOT CONTROLLER COMPONENTS (CONTINUED)(SERIAL NO. -590067)

T159778 -UN-25SEP02

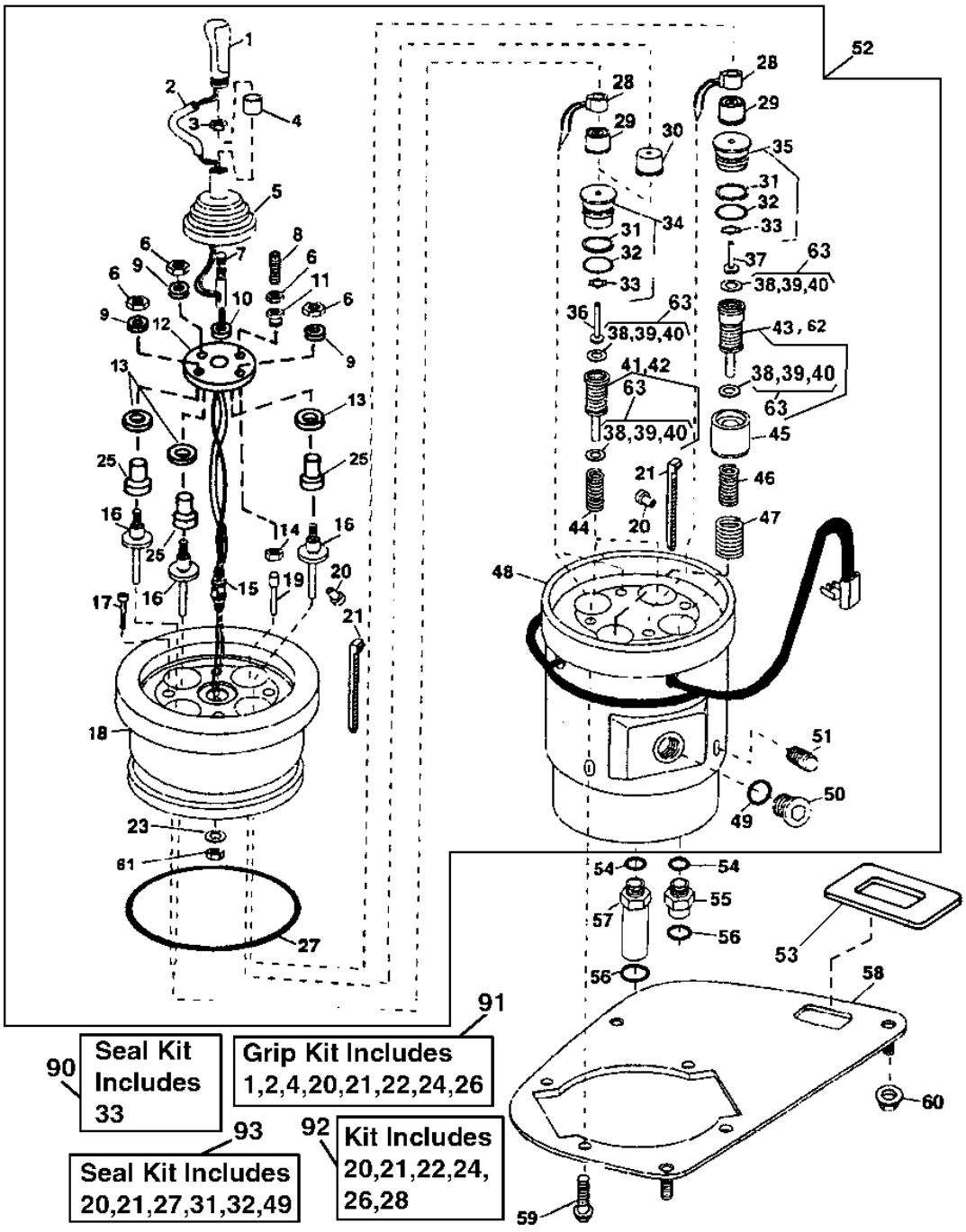

T159778

SINGLE LEVER PILOT CONTROLLER COMPONENTS (CONTINUED)(SERIAL NO. -590067)

KEY	PART NO.	PART NAME	QTY	SERIAL NO.	REMARKS
27	.....	O-RING	1		(SUB AT228702) (K3)
28	T170283	ELECTRICAL COIL	3		(K2)
29	T170284	RETAINER	3		
30	T170278	BUSHING	1		(BUCKET DUMP)
31	T170307	BACK-UP RING	1		(K3)
32	T170306	SEAL	1		(K3)
33	T131617	RING	2		(K)
34	AT208178	RETAINER	2		(BUCKET DUMP AND BOOM RAISE)
35	AT208179	RETAINER	2		(BOOM LOWER AND BUCKET ROLL-BACK)
36	T170285	PLUNGER	2		
37	T170286	PLUNGER	2		
38	T103092	SHIM	AR		0.1 MM (.004")
39	T103093	SHIM	AR		0.2 MM (.007")
40	T103094	SHIM	AR		0.4 MM (.015")
41	AT208182	SPOOL	1		(BUCKET DUMP)
42	AT208181	SPOOL	1		(BOOM RAISE)
43	AT208183	SPOOL	1		(BOOM LOWER)
44	T170288	SPRING	2		
45	AT208180	KIT	2		
46	T170289	SPRING	2		
47	T170287	SPRING	2		
48	.....	HOUSING	1		(SUB AT228702)
49	R26375	O-RING	2		(K3)
50	.....	PLUG	2		(SUB AT228702)
51	.....	PLUG	2		(SUB AT228702)
52	AT228702	HYDR./PILOT CONTROL VALVE	1		
53	T171587	LABEL	1		
54	R26448	O-RING	6		
55	38H1160	ADAPTER	5		
56	T77613	O-RING	6		
57	38H1212	ADAPTER	1		
58	AT224241	PLATE	1		
59	21M7285	SCREW	4		
60	14M7397	LOCK NUT	3		
61	14H849	NUT	1		7/16"
62	AT209789	SPOOL	1		(BUCKET ROLL-BACK(USE WITH TOOL CARRIER AND LOG LOADER)
63	AT210376	KIT	AR		
90	AT104041	SEAL KIT	1		INCLUDES ALL (K) PARTS (ALSO ORDER AT115876 TUBE OF GREASE)
91	AT209784	GRIP	1		INCLUDES ALL (K1) PARTS (GRIP WITH KICKDOWN PLATE)
92	AT209788	KIT	1		INCLUDES ALL (K3) PARTS (COIL)
93	AT209779	SEAL KIT	1		INCLUDES ALL(K4) PARTS(SINGLE LEVER SEAL KIT)

JOYSTICK PILOT CONTROLLER COMPONENTS (SERIAL NO. 590068-)

T196147 -UN-13NOV03

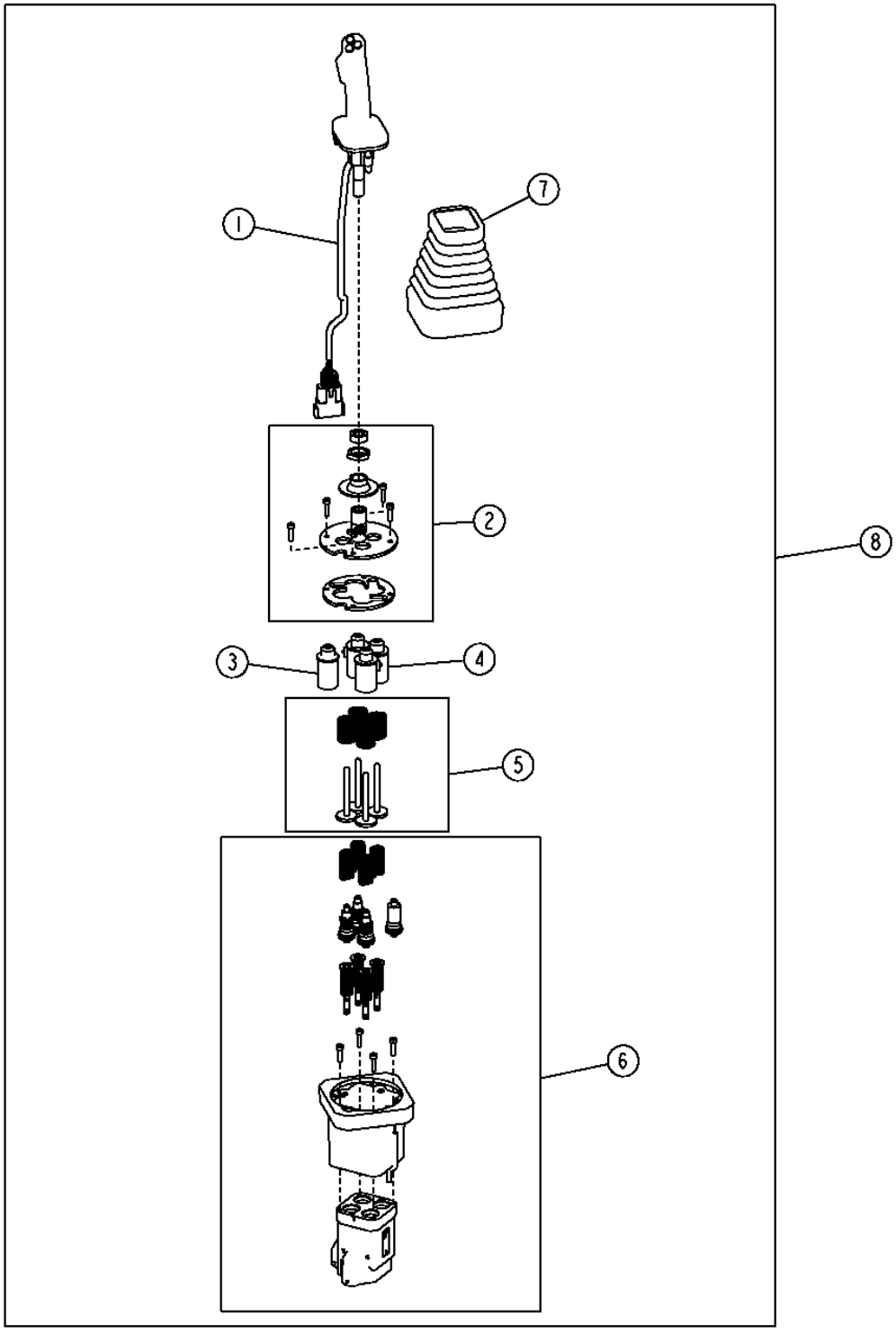

JOYSTICK PILOT CONTROLLER COMPONENTS (SERIAL NO. 590068-)

KEY	PART NO.	PART NAME	QTY	SERIAL NO.	REMARKS
1	AT315458	HANDLE	1		(SUB FOR AT302032) (WITHOUT FNR)
	AT315459	HANDLE	1		(SUB FOR AT302031) (WITH FNR)
2	AT307636	UNIVERSAL JOINT	1		
3	AT307638	GUIDE	1		
4	AT307637	SOLENOID	1		(THREE USES - ORDER AS REQUIRED)
5	AT307640	PIN	1		
6	AT307641	OIL PRESSURE REG. VALVE	1		
7	T205941	BOOT	1		
8	AT315847	HYDR./PILOT CONTROL VALVE	1		(SUB FOR AT301458) (WITHOUT FNR)
	AT315846	HYDR./PILOT CONTROL VALVE	1		(SUB FOR AT300664) (WITH FNR)
9	AT309843	WIRING HARNESS	1		(KICKDOWN HARNESS FOR CONTROLLER WITHOUT FNR) (NOT ILLUSTRATED)

SINGLE LEVER CONTROLLER WITH AUX.(SERIAL NO. -590067)

T159207 -UN-11SEP02

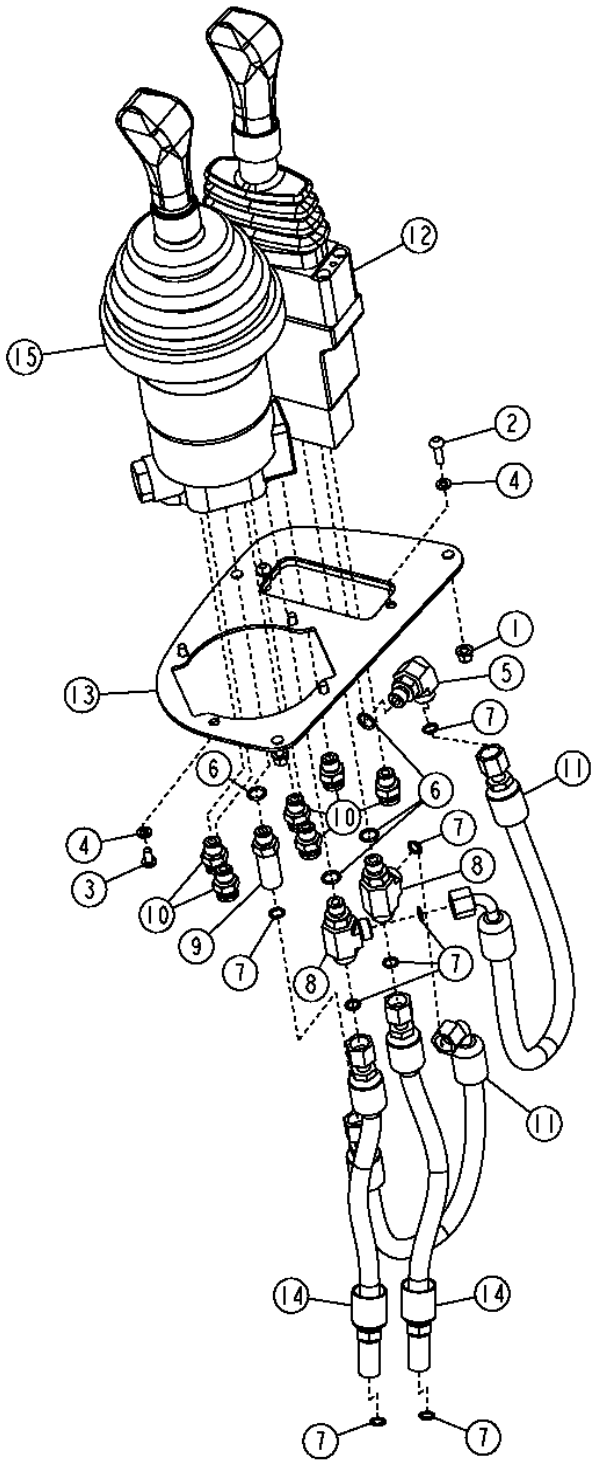

T159207

SINGLE LEVER CONTROLLER WITH AUX.(SERIAL NO. -590067)

KEY	PART NO.	PART NAME	QTY	SERIAL NO.	REMARKS
1	14M7397	LOCK NUT	3		M6
2	21M7267	SCREW	2		M6 X 20
3	21M7285	SCREW	4		M6 X 12
4	24M7054	WASHER	6		6.400 X 12 X 1.600 MM
5	38H1004	ELBOW FITTING	1		
6	R26448	O-RING	10		
7	T77613	O-RING	7		9.246 X 1.778 MM
8	38H1023	TEE FITTING	1		
9	38H1212	ADAPTER	1		
10	63H1001	FITTING	6		
11	AT133590	HYDRAULIC HOSE - FABRICATE	2		
12	AT210213	HYD ACTUATED CONTROL VALVE	2		
13	AT224242	PLATE	1		
14	AT228703	HYDRAULIC HOSE - FABRICATE	2		
15	AT228702	HYDR./PILOT CONTROL VALVE	1		

SINGLE LEVER CONTROLLER WITH AUX.(SERIAL NO. 590068-)

T194487 -UN-23SEP03

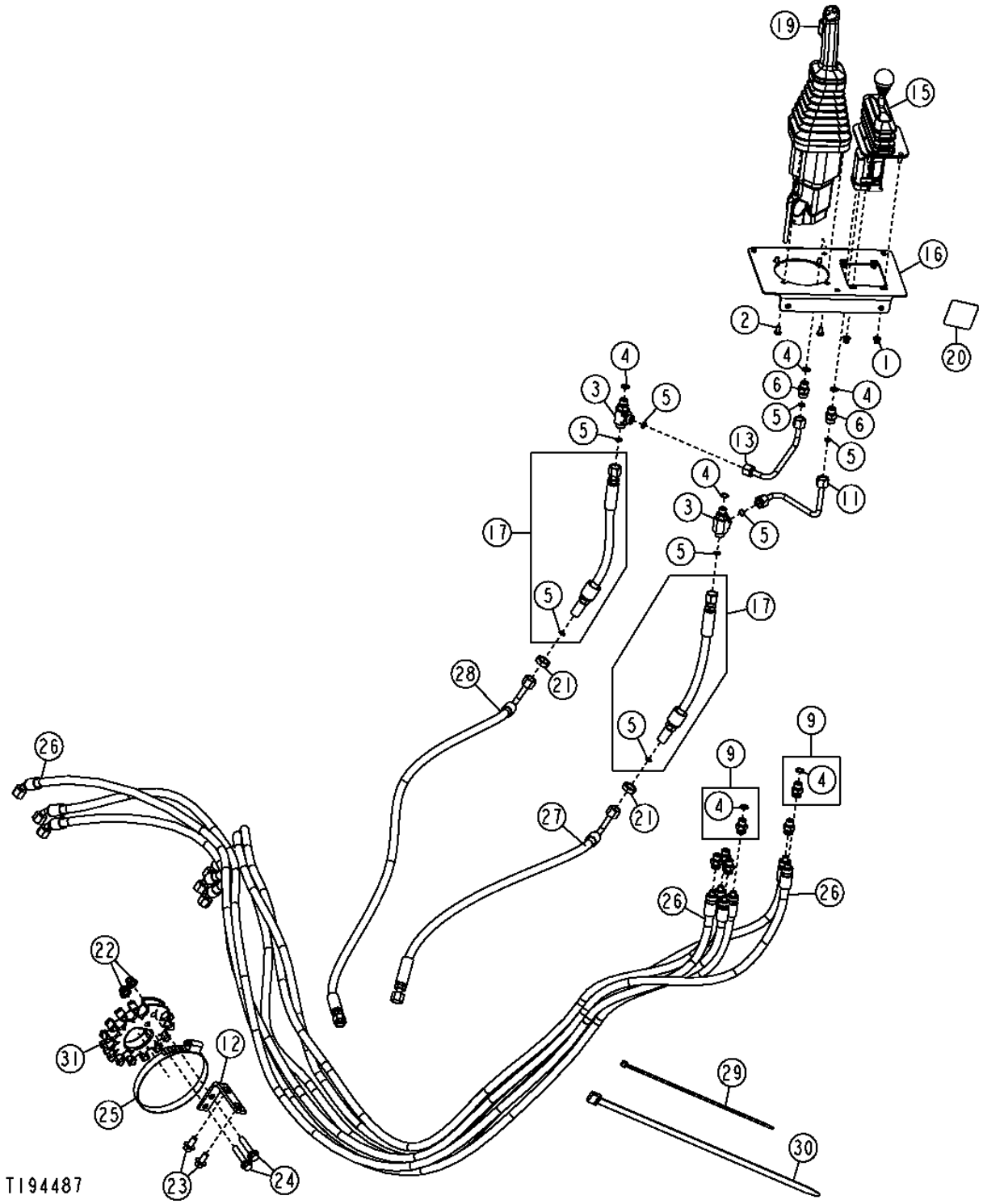

SINGLE LEVER CONTROLLER WITH AUX.(SERIAL NO. 590068-)

KEY	PART NO.	PART NAME	QTY	SERIAL NO.	REMARKS
1	14M7397	LOCK NUT	4		M6
2	21M7285	SCREW	4		M6 X 12
3	38H1023	TEE FITTING	1		
4	R26448	O-RING	10		
5	T77613	O-RING	8		
6	38H1160	ADAPTER	2		
9	63H1001	FITTING	6		
11	AT226132	OIL LINE	1		(ALSO ORDER (2) 38H1353)
12	T157443	ANGLE	1		
13	AT226133	OIL LINE	1		(ALSO ORDER (2) 38H1353)
15	AT228250	HYDR./PILOT CONTROL VALVE	1		(COMPONENTS ON AUXILARY CONTROLLER PAGE)
16	AT228261	PLATE	1		
17	AT228703	HYDRAULIC HOSE - FABRICATE	2		
19	AT315847	HYDR./PILOT CONTROL VALVE	1		(SUB FOR AT301458) (WITHOUT FNR) (COMPONENTS ON JOYSTICK CONTROLLER PAGE)
	AT315846	HYDR./PILOT CONTROL VALVE	1		(SUB FOR AT300664) (WITH FNR) (COMPONENTS ON JOYSTICK CONTROLLER PAGE)
20	T203670	LABEL	1		(WITHOUT FNR)
	T197182	LABEL	1		(WITH FNR)
21	T81029	NUT	2		
22	14M7400	LOCK NUT	2		M10
23	19M7784	SCREW	2		M10 X 20
24	19M7806	SCREW	2		M10 X 50
25	TY22493	HOSE CLAMP	1		(SUB FOR AR89602)
26	AT226322	HYDRAULIC HOSE - FABRICATE	6		
27	AT226614	HYDRAULIC HOSE - FABRICATE	1		
28	AT301930	HYDRAULIC HOSE - FABRICATE	1		
29	H77698	TIE BAND	10		
30	N189220	TIE BAND	2		
31	T154342	RETAINER	1		
32	AT309843	WIRING HARNESS	1		(KICKDOWN HARNESS FOR CONTROLLER WITHOUT FNR) (NOT ILLUSTRATED)
..	**AT305693**	**FIELD INSTALLATION KIT**	**1**		**(WHOLE GOODS) (TWO LEVER WITH AUX. TO JOYSTICK WITH AUX. CONVERSION KIT WITH OUT FNR)**
..	**AT311818**	**FIELD INSTALLATION KIT**	**1**		**(WHOLE GOODS) (TWO LEVER WITH AUX. TO JOYSTICK WITH AUX. CONVERSION KIT WITH FNR)**
..	**AT307690**	**MOUNTING PARTS**	**1**		**(WHOLE GOODS) (ADD AUX. TO JOYSTICK CONVERSION KIT)**
..	**AT307715**	**MOUNTING PARTS**	**1**		**(WHOLEGOODS) (ADDITION OF AUXILIARY TO TWO LEVER KIT)**

AUXILIARY CONTROLLER SECTION (FOR USE WITH SINGLE LEVER CONTROLLER)(SERIAL NO. -590067)

T161049 -UN-29OCT02

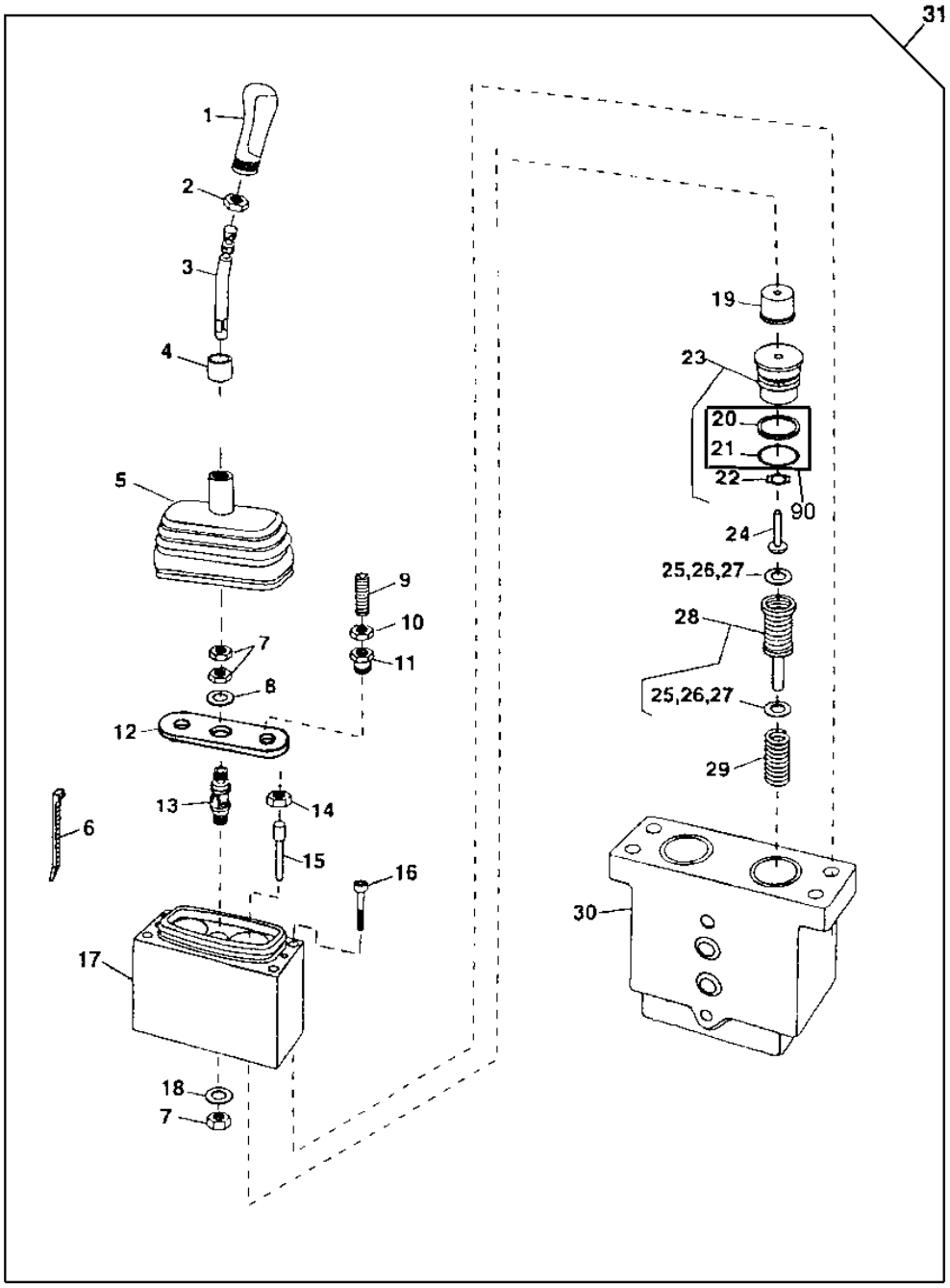

T161049

AUXILIARY CONTROLLER SECTION (FOR USE WITH SINGLE LEVER CONTROLLER)(SERIAL NO. -590067)

KEY	PART NO.	PART NAME	QTY	SERIAL NO.	REMARKS
1	AT172629	GRIP	1		
2	T170269	NUT	1		
3	T173229	LEVER	1		
4	AT208911	RETAINER	1		
5	T170295	BOOT	1		(ALSO ORDER AT208911)
6	H77698	TIE BAND	1		
7	T173219	NUT	3		
8	T173205	WASHER	1		
9	T172523	SET SCREW	2		
10	T170275	NUT	2		
11	T170273	FITTING	2		
12	T173210	PLATE	1		
13	AT210263	UNIVERSAL JOINT	1		
14	T170272	NUT	2		
15	T170274	PIN	2		
16	T170367	CAP SCREW	4		
17	.....	HOUSING	1		(SUB AT210213)
18	T172609	WASHER	1		
19	T170278	BUSHING	2		
20	T170307	BACK-UP RING	1		
21	T170306	SEAL	1		
22	T131617	RING	1		
23	AT208178	RETAINER	2		
24	T170285	PLUNGER	2		
25	T103092	SHIM	AR		0.1 MM (.004")
26	T103093	SHIM	AR		O.2 MM (.007")
27	T103094	SHIM	AR		0.4 MM (.015")
28	AT208182	SPOOL	2		
29	T170288	SPRING	2		
30	.....	HOUSING	1		(SUB AT210213)
31	AT210213	HYD ACTUATED CONTROL VALVE	1		(USE WITH SINGLE LEVER CONTROLLER)
32	T170381	CAP SCREW	2		(USE WITH AT210214)
34	**AT219909**	**KIT**	**1**		**(SUB FOR AT220357) AUXILIARY CONTROLLER DETENT KIT**
90	AT209783	SEAL KIT	1		INCLUDES ALL (K1) PARTS

DUAL SINGLE LEVER CONTROLLER (SERIAL NO. -590067)

T159216 -UN-11SEP02

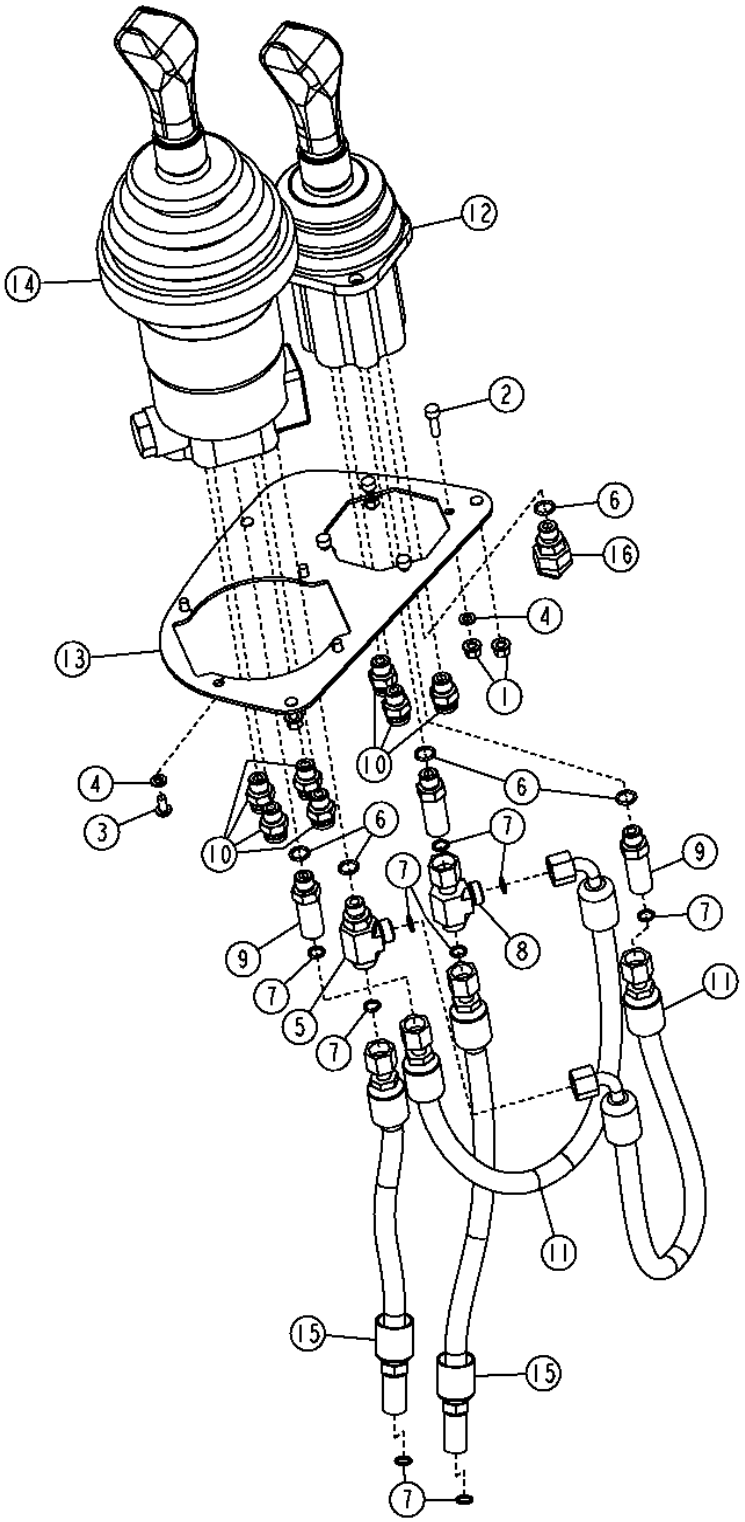

T159216

DUAL SINGLE LEVER CONTROLLER (SERIAL NO. -590067)

KEY	PART NO.	PART NAME	QTY	SERIAL NO.	REMARKS
1	14M7397	LOCK NUT	7		M6
2	19M7603	SCREW	4		M6 X 20
3	21M7285	SCREW	4		M6 X 12
4	24M7054	WASHER	8		6.400 X 12 X 1.600 MM
5	38H1023	TEE FITTING	1		
6	R26448	O-RING	5		
7	T77613	O-RING	9		
8	38H1030	TEE FITTING	1		
9	38H1212	ADAPTER	2		
10	63H1001	FITTING	7		
11	AT133590	HYDRAULIC HOSE - FABRICATE	2		
12	AT208760	ELECTRONIC CONTROL UNIT	1		
13	AT224246	PLATE	1		
14	AT228702	HYDR./PILOT CONTROL VALVE	1		
15	AT228703	HYDRAULIC HOSE - FABRICATE	2		
16	AT226515	FITTING	1		

DUAL SINGLE LEVER CONTROLLER (SERIAL NO. 590068-)

T194489 -UN-13OCT03

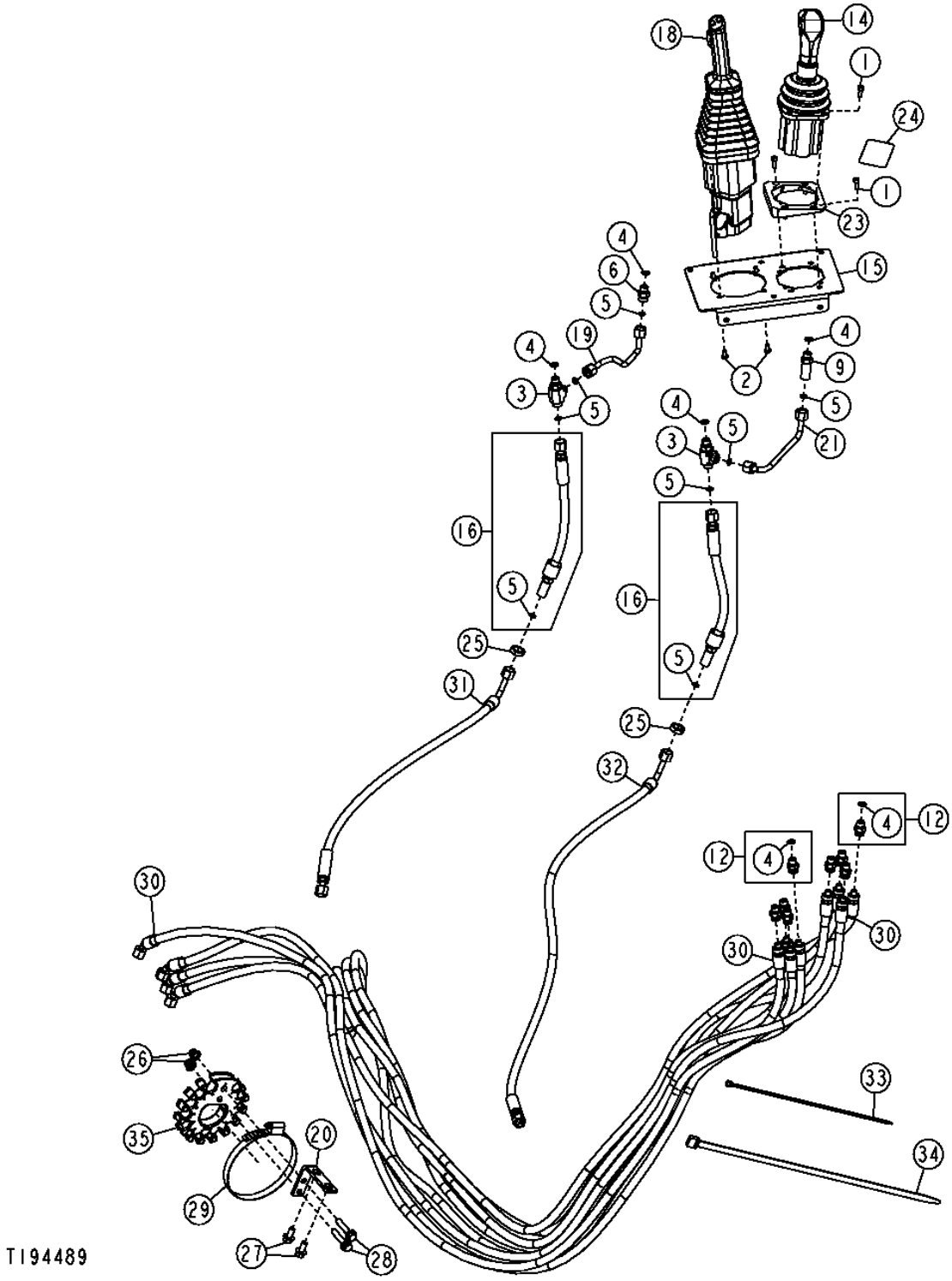

DUAL SINGLE LEVER CONTROLLER (SERIAL NO. 590068-)

KEY	PART NO.	PART NAME	QTY	SERIAL NO.	REMARKS
1	19M8553	SCREW	8		M6 X 16
2	21M7285	SCREW	4		M6 X 12
3	38H1023	TEE FITTING	2		
4	R26448	O-RING	12		
5	T77613	O-RING	8		
6	38H1160	ADAPTER	1		
9	38H1212	ADAPTER	1		
12	63H1001	FITTING	8		
14	AT208760	ELECTRONIC CONTROL UNIT	1		(COMPONENTS ON AUX. JOYSTICK CONTROLLER PAGE)
15	AT228260	PLATE	1		
16	AT228703	HYDRAULIC HOSE - FABRICATE	2		
18	AT315847	HYDR./PILOT CONTROL VALVE	1		(SUB FOR AT301458) (WITHOUT FNR) (COMPONENTS ON JOYSTICK CONTROLLER PAGE)
	AT315846	HYDR./PILOT CONTROL VALVE	1		(SUB FOR AT300664) (WITH FNR) (COMPONENTS ON JOYSTICK CONTROLLER PAGE)
19	AT304880	OIL LINE	1		(ALSO ORDER (2) 38H1353)
20	T157443	ANGLE	1		
21	AT304881	OIL LINE	1		(ALSO ORDER (2) 38H1353)
22	38H1353	TUBE NUT	2		
23	T201887	SPACER	1		
24	T203670	LABEL	1		(WITHOUT FNR)
	T197182	LABEL	1		(WITH FNR)
25	T81029	NUT	2		
26	14M7400	LOCK NUT	2		M10
27	19M7784	SCREW	2		M10 X 20
28	19M7806	SCREW	2		M10 X 50
29	TY22493	HOSE CLAMP	1		(SUB FOR AR89602)
30	AT226322	HYDRAULIC HOSE - FABRICATE	8		
31	AT226614	HYDRAULIC HOSE - FABRICATE	1		
32	AT301930	HYDRAULIC HOSE - FABRICATE	1		
33	H77698	TIE BAND	10		
34	N189220	TIE BAND	2		
35	T154342	RETAINER	1		
36	AT309843	WIRING HARNESS	1		(KICKDOWN HARNESS FOR CONTROLLER WITHOUT FNR) (NOT ILLUSTRATED)
..	**AT307697**	**MOUNTING PARTS**	**1**		**(WHOLE GOODS) (ADD JOYSTICK TO JOYSTICK CONVERSION KIT)**

AUXILIARY SINGLE LEVER JOYSTICK CONTROLLER COMPONENTS

TP70478 -UN-12SEP00

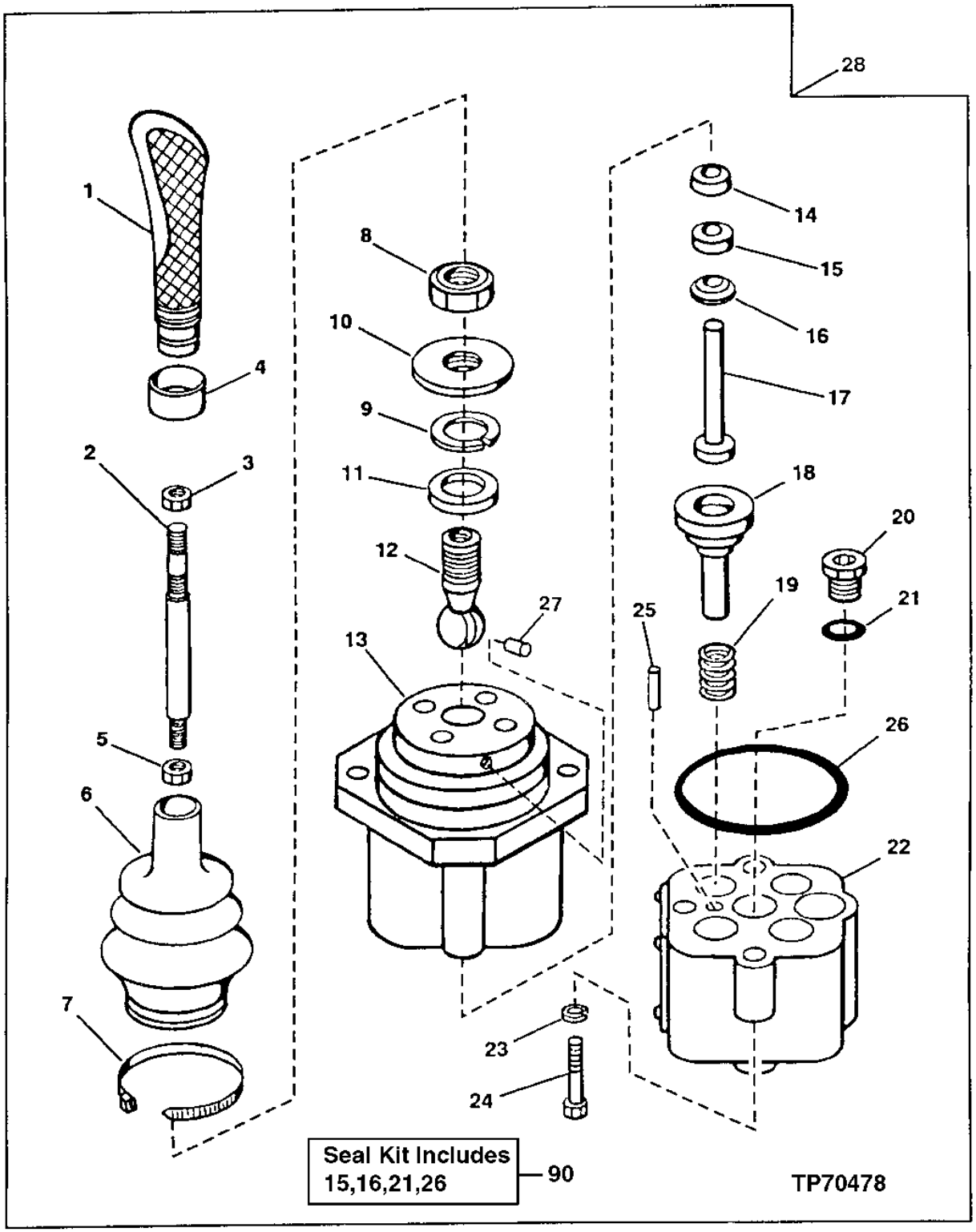

AUXILIARY SINGLE LEVER JOYSTICK CONTROLLER COMPONENTS

KEY	PART NO.	PART NAME	QTY	SERIAL NO.	REMARKS
1	AT172629	GRIP	1		(ALSO ORDER H77698 AND AT208911)
2	AT210145	LEVER	1		
3	T170269	NUT	1		
4	AT208911	RETAINER	1		
5	T172986	NUT	1		
6	T172988	BOOT	1		
7	H77698	TIE BAND	1		
8	T172985	NUT	1		
9	T172987	SNAP RING	1		
10	.....	PLATE	1		(AT119017 NO LONGER AVAILABLE)
11	AT119378	RETAINER	1		
12	.....	BALL	1		(AT119018 NO LONGER AVAILABLE)
13	.....	HOUSING	1		UPPER (SUB AT208760)
14	.....	SEAL	1		
15	.....	RETAINER	1		(K1)
16	.....	RING	1		(K1)
17	T102958	PLUNGER	4		
18	.....	SPOOL	4		(SUB AT208760)
19	T131624	SPRING	4		
20	AT49216	FITTING PLUG	1		
21	.....	O-RING	1		(K1)
22	.....	HOUSING	1		LOWER
23	12M7006	LOCK WASHER	4		6 MM
24	19M7966	SCREW	4		M6 X 25
25	T102961	DOWEL PIN	1		
26	.....	SEAL	1		(K1)
27	T102963	PIN FASTENER	1		ANTI-ROTATION
28	AT208760	ELECTRONIC CONTROL UNIT	2		
90	AT210247	SEAL KIT	1		INCLUDES ALL (K) PARTS (SEAL)

JOYSTICK FNR CONVERSION KIT

T199696 -UN-05MAY04

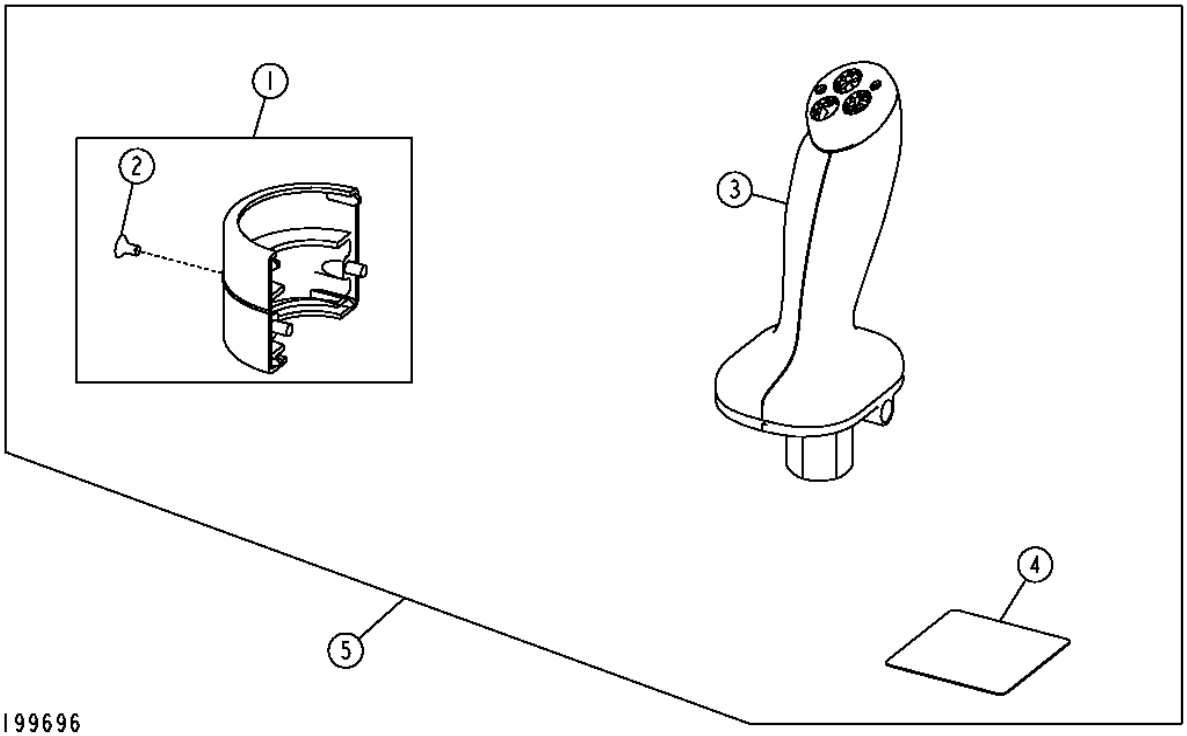

JOYSTICK FNR CONVERSION KIT

KEY	PART NO.	PART NAME	QTY	SERIAL NO.	REMARKS
1	AT300921	CLAMP	1		
2	21M7258	SCREW	1		
3	AT315459	HANDLE	1		(SUB FOR AT302031)
4	T197182	LABEL	1		
5	AT313087	FIELD INSTALLATION KIT	1		

PILOT PLUMBING FROM CONTROLLER TO CONTROL VALVE (SERIAL NO. -590067)

T158172 -UN-01AUG02

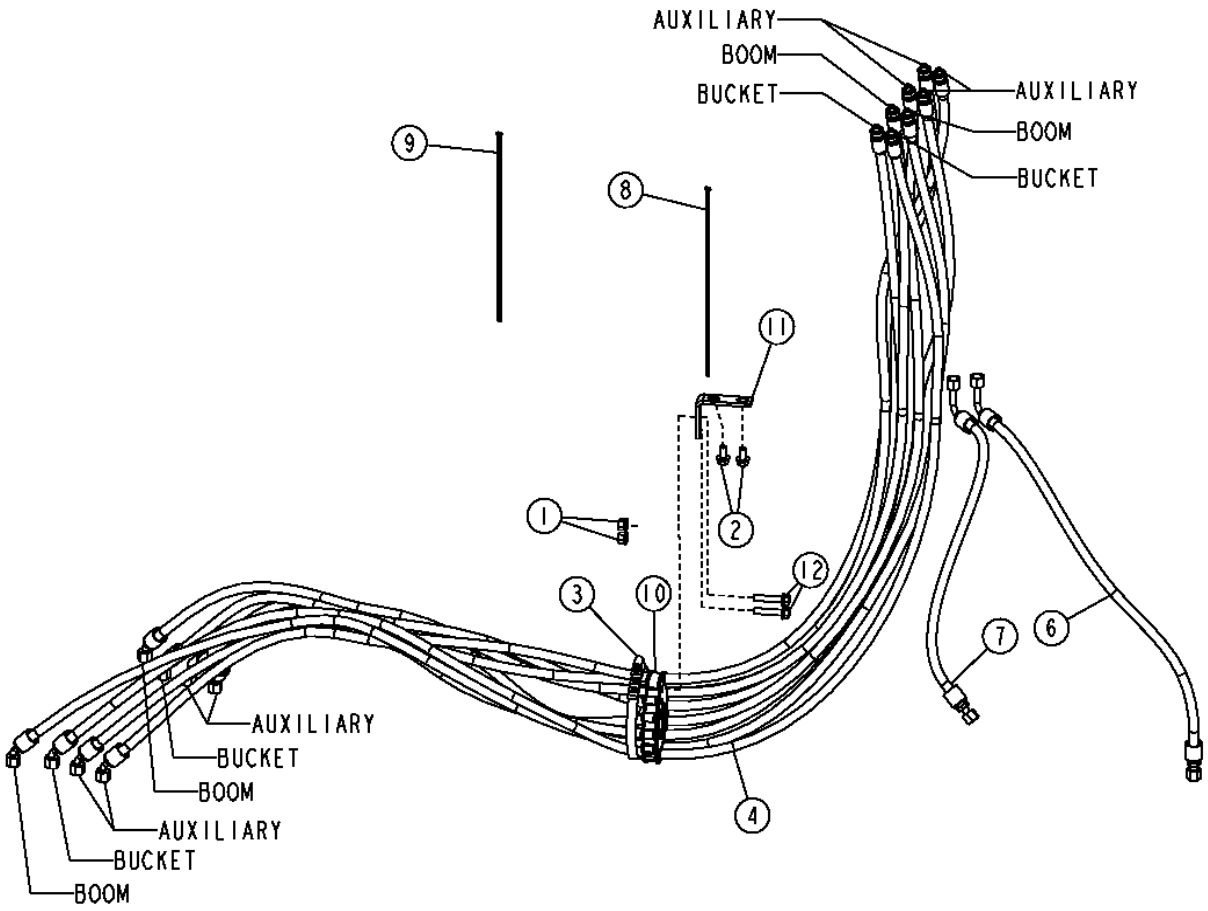

T158172

PILOT PLUMBING FROM CONTROLLER TO CONTROL VALVE (SERIAL NO. -590067)

KEY	PART NO.	PART NAME	QTY	SERIAL NO.	REMARKS
1	14M7400	LOCK NUT	2		M10
2	19M7784	SCREW	2		M10 X 20
3	TY22493	HOSE CLAMP	1		(SUB FOR AR89602)
4	AT226322	HYDRAULIC HOSE - FABRICATE	4		(WITHOUT AUXILIARY HYDRAULICS)
	AT226322	HYDRAULIC HOSE - FABRICATE	6		(WITH AUXILIARY HYDRAULICS)
	AT226322	HYDRAULIC HOSE - FABRICATE	8		(WITH TWO AUXILARY HYDRAULICS)
6	AT301930	HYDRAULIC HOSE - FABRICATE	1		(SUB FOR AT226323 OR (2) AT226613)
7	AT226614	HYDRAULIC HOSE - FABRICATE	1		(SUB FOR AT226324)
8	H77698	TIE BAND	10		
9	N189220	TIE BAND	2		
10	T154342	RETAINER	1		
11	T157443	ANGLE	1		
12	19M7806	SCREW	2		

RIDE CONTROL VALVE, ACCUMULATOR AND HYDRAULIC HOSES

T192991 -UN-18AUG03

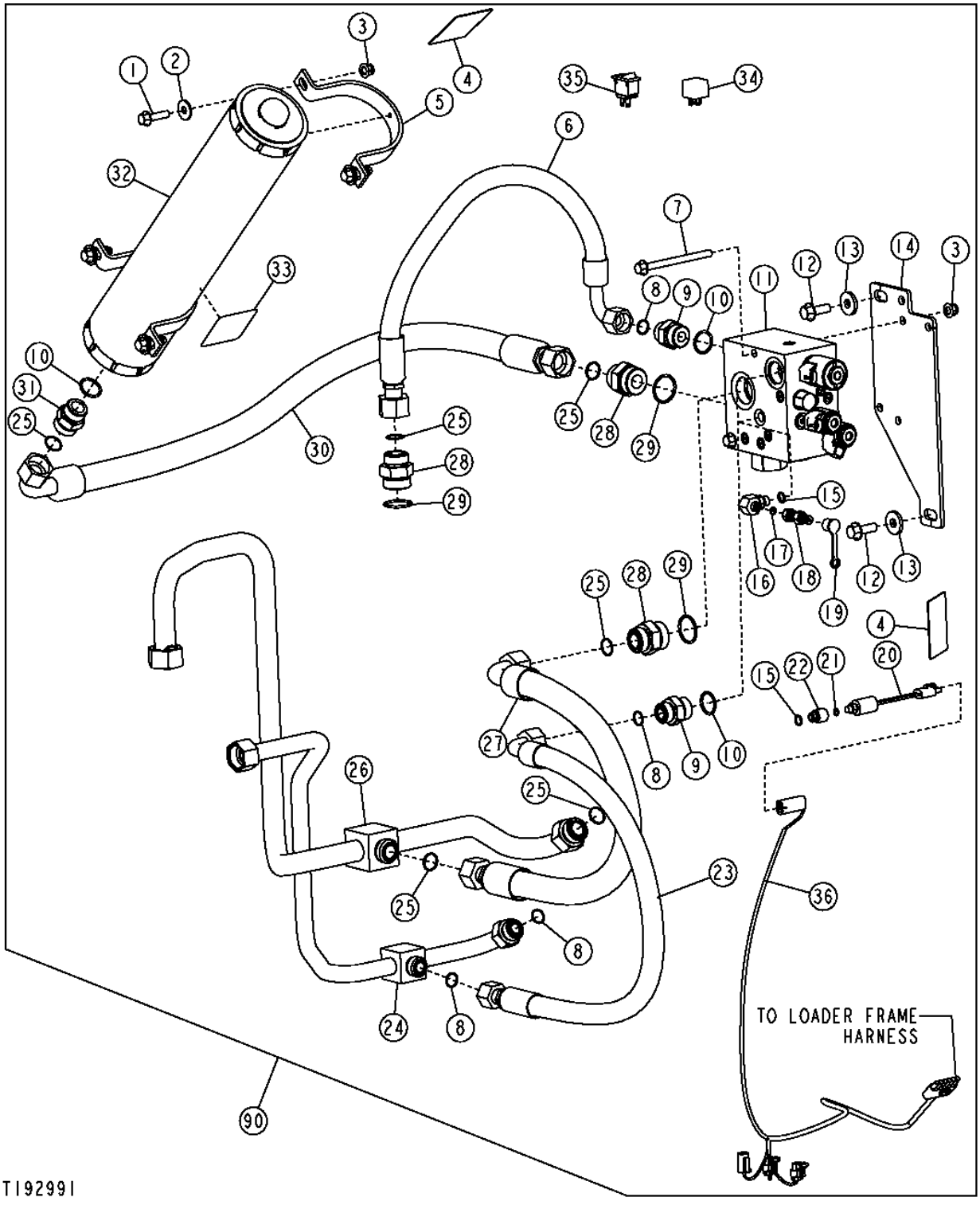

RIDE CONTROL VALVE, ACCUMULATOR AND HYDRAULIC HOSES

KEY	PART NO.	PART NAME	QTY	SERIAL NO.	REMARKS
1	19M7804	SCREW	4		
2	24M7296	WASHER	4		
3	14M7400	LOCK NUT	6		
4	T146792	SAFETY SIGN	2		
5	T146490	CLAMP	2		
6	AT210898	HYDRAULIC HOSE	1		
7	19M7898	SCREW	2		
8	T77858	O-RING	4		18.771 X 1.778 MM
9	38H1194	ADAPTER	2		
10	R29936	O-RING	3		
11	AT223806	HYD ACTUATED CONTROL VALVE	1		
12	19M7790	SCREW	2		
13	24M7226	WASHER	2		
14	T181972	PLATE	1		
15	R26448	O-RING	2		
16	38H1009	ELBOW FITTING	1		
17	T77814	O-RING	1		
18	RE60700	DIAGNOSTIC COUPLING	1		
19	R77175	COVER	1		
20	AT223535	PRESSURE SWITCH	1		(STANDARD)
	AT222372	SWITCH	1		(HARSH ENVIRONMENT)
21	R26287	O-RING	1		7.645 X 1.626 MM
22	T158047	ADAPTER	1		
23	AT228200	HYDRAULIC HOSE - FABRICATE	1		(SUB FOR AT225503)
24	AT210267	OIL LINE	1		
25	T76938	O-RING	6		
26	AT210268	OIL LINE	1		
27	AT223056	HYDRAULIC HOSE - FABRICATE	1		
28	38H1180	ADAPTER	3		
29	U13639	O-RING	3		
30	AT210078	HYDRAULIC HOSE - FABRICATE	1		1-7/16" X 1 219 MM X 1-7/16"
31	38H1164	ADAPTER	1		
32	AT227717	HYDRAULIC ACCUMULATOR	1		(SUB FOR AT158971) (ALSO ORDER T180944 LABEL)
					(PRECHARGE TO 285 PSI)
	AT196760	KIT	1		(ACCUMULATOR VALVE REPAIR)
33	T180944	LABEL	1		
34	AT162863	RELAY	1		
35	AT220517	SWITCH	1	-590067	
36	AT224600	WIRING HARNESS	1		(RIDE CONTROL HARNESS)
	AT225011	WIRING HARNESS	1		(RIDE CONTROL HARNESS) (HARSH ENVIRONMENT)
90	**AT208924**	**KIT**	**1**	**-590067**	**(WHOLEGOODS) (RIDE CONTROL SYSTEM) (WITH ROCKER SWITCH)**
	AT307759	**KIT**	**1**	**590068-**	**(WHOLEGOODS) (RIDE CONTROL SYSTEM) (WITHOUT ROCKER SWITCH)**

RIDE CONTROL VALVE

T195622 -UN-21OCT03

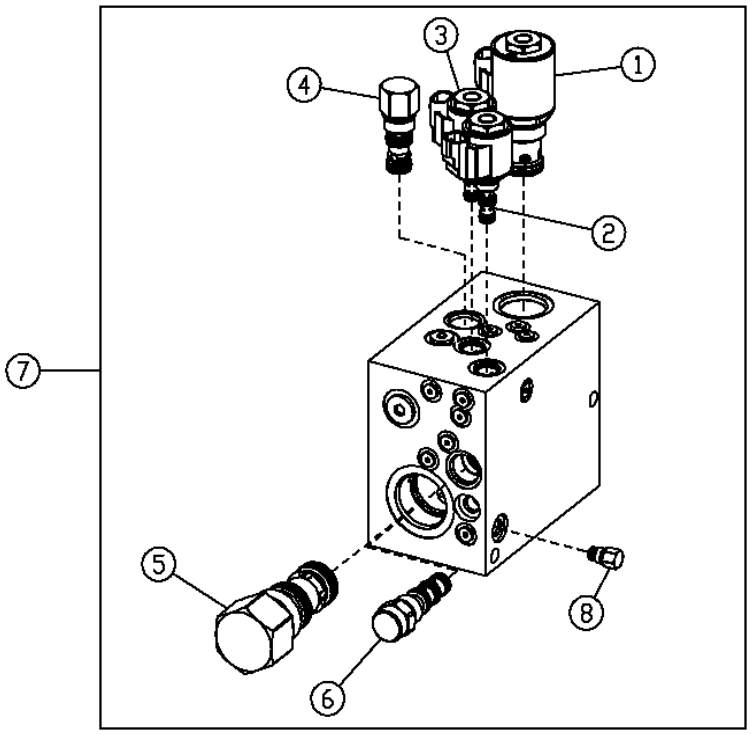

T195622

KEY	PART NO.	PART NAME	QTY	SERIAL NO.	REMARKS
1	AT224701	SOLENOID VALVE	1		
	AT224702	SEAL KIT	1		
	AT224703	SOLENOID VALVE COIL	1		
	T181306	NUT	1		
2	AT224866	FLOW CONTROL HYD. VALVE	3		CARTRIDGE
	AT224706	SEAL KIT	1		
	AT224865	SOLENOID VALVE COIL	1		
	T181306	NUT	1		
3	AT225249	FLOW CONTROL HYD. VALVE	1		
	AT224574	SOLENOID VALVE COIL	1		
	AT224706	SEAL KIT	1		(NOT ILLUSTRATED)
	T181306	NUT	1		
4	AT225084	FLOW CONTROL HYD. VALVE	1		
	AT225085	SEAL KIT	1		(NOT ILLUSTRATED)
5	AT224699	FLOW CONTROL HYD. VALVE	1		
	AT225698	SEAL KIT	1		(NOT ILLUSTRATED)
6	AT225082	FLOW CONTROL HYD. VALVE	1		
	AT225083	SEAL KIT	1		(NOT ILLUSTRATED)
7	AT208924	KIT	1		(RIDE CONTROL SYSTEM) (SUB FOR AT223520 OR AT223806)
8	AN207183	CHECK VALVE	1		(SUB FOR AT307262)
	AT307265	SEAL KIT	1		

MEMORANDA

QUICK COUPLER PIN DISCONNECT KIT (SERIAL NO. -590067)

T154935 -UN-29MAY02

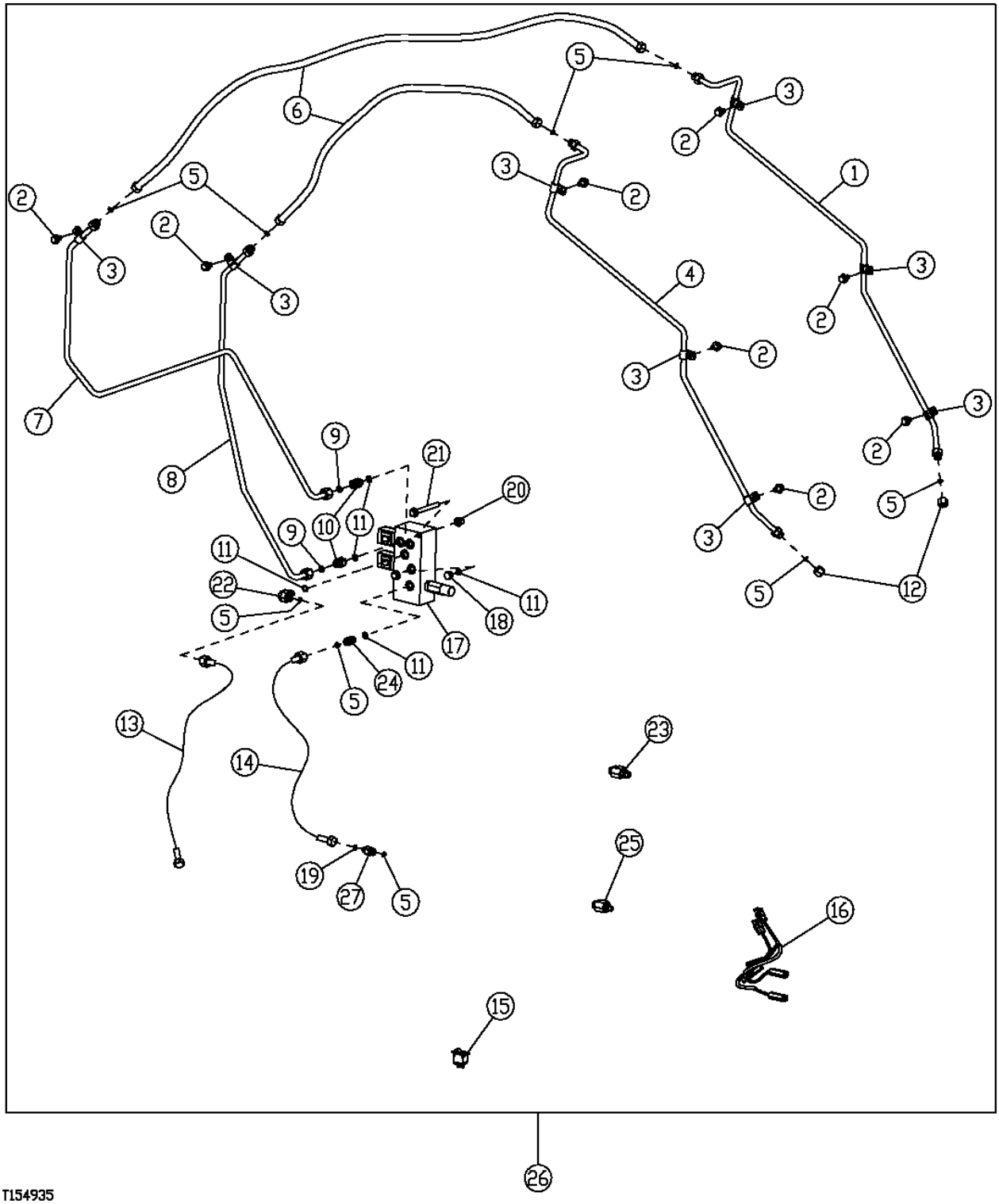

QUICK COUPLER PIN DISCONNECT KIT (SERIAL NO. -590067)

KEY	PART NO.	PART NAME	QTY	SERIAL NO.	REMARKS
1	AT211452	OIL LINE	1		(LEFT BOOM OIL LINE)
2	19M7783	SCREW	8		M10 X 16
3	H75541	CLAMP	8		
4	AT211453	OIL LINE	1		(RIGHT BOOM OIL LINE)
5	T77613	O-RING	6		
6	AT219985	HYDRAULIC HOSE - FABRICATE	2		
7	AT211451	OIL LINE	1		(ON FRONT RIGHT OF LOADER FRAME)
8	AT211450	OIL LINE	1		(LEFT LOADER FRAME OIL LINE)
9	T77857	O-RING	2		
10	38H1173	ADAPTER	2		
11	R26448	O-RING	2		
12	38H1415	FITTING	2		
13	AT167553	HYDRAULIC HOSE - FABRICATE	1		
14	AT169939	HYDRAULIC HOSE - FABRICATE	1		
15	AT202805	SWITCH	1		
16	AT202824	WIRING HARNESS	1		
17	AT220192	HYD ACTUATED CONTROL VALVE	1		(QUICK COUPLER PIN DISCONNECT VALVE)
18	R27218	FITTING PLUG	1		
19	R28782	O-RING	1		
20	14M7400	LOCK NUT	2		M10
21	19M7812	SCREW	2		M10 X 100
22	38H1004	ELBOW FITTING	1		
23	38H1023	TEE FITTING	1		
24	38H1160	ADAPTER	1		
25	38H1434	TEE FITTING	1		
26	**AT208882**	**KIT**	**1**		**WHOLEGOODS (QUICK COUPLER PIN DISCONNECTOR KIT)**
27	38H1309	ADAPTER	1		

QUICK COUPLER PIN DISCONNECT KIT (SERIAL NO. 590068-)

T195562 -UN-23OCT03

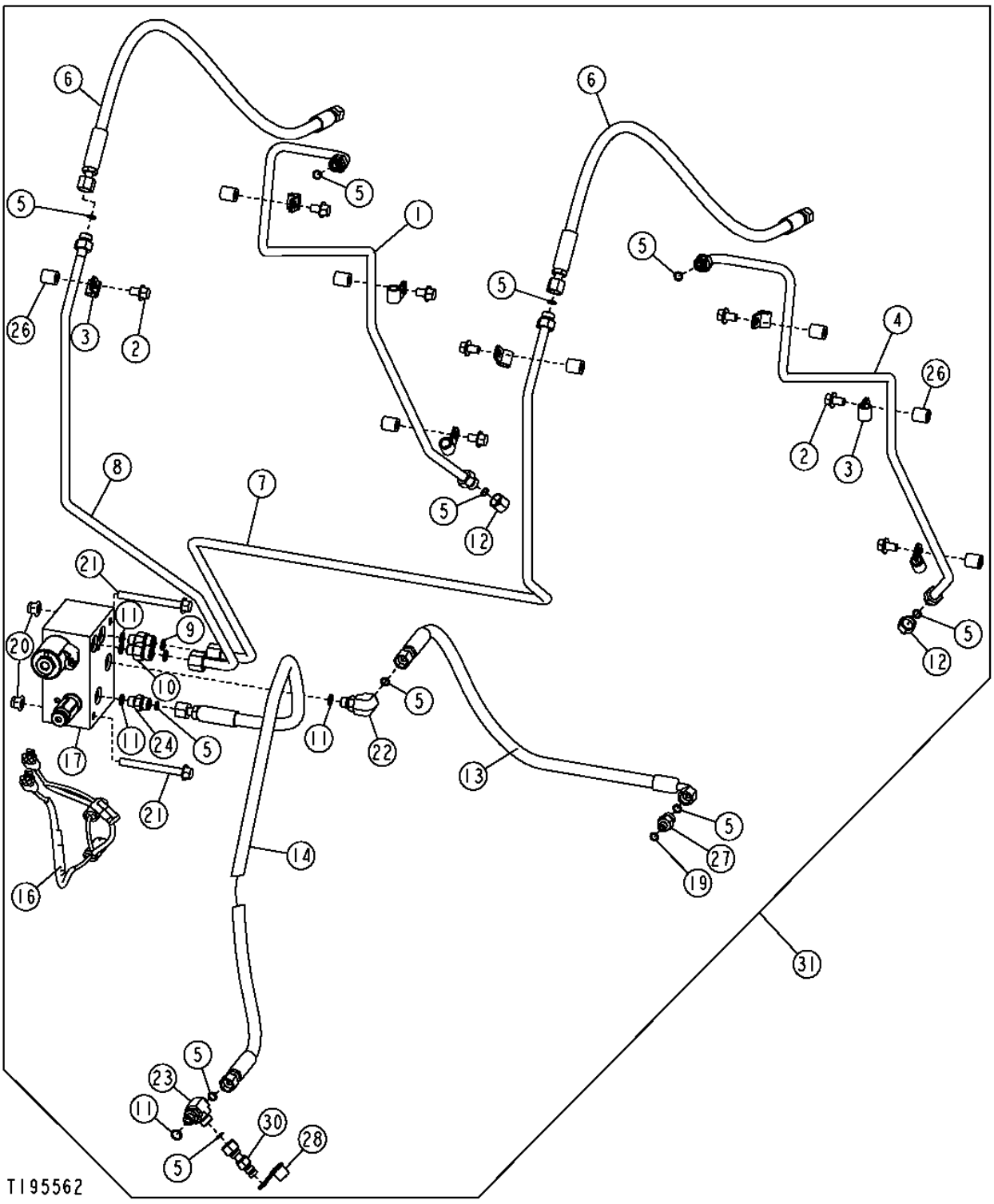

THIS PARTS LISTING IS CONTINUED

QUICK COUPLER PIN DISCONNECT KIT (SERIAL NO. 590068-)

KEY	PART NO.	PART NAME	QTY	SERIAL NO.	REMARKS
1	AT211452	OIL LINE	1		(LEFT BOOM OIL LINE)
2	19M7783	SCREW	8		M10 X 16
3	H75541	CLAMP	8		
4	AT211453	OIL LINE	1		(RIGHT BOOM OIL LINE)
5	T77613	O-RING	11		
6	AT219985	HYDRAULIC HOSE - FABRICATE	2		
7	AT307800	OIL LINE	1		(ON FRONT RIGHT OF LOADER FRAME)
8	AT307799	OIL LINE	1		(LEFT LOADER FRAME OIL LINE)
9	T77857	O-RING	2		
10	38H1173	ADAPTER	2		
11	R26448	O-RING	5		
12	38H1415	FITTING	2		
13	AT167553	HYDRAULIC HOSE - FABRICATE	1		
14	AT169939	HYDRAULIC HOSE - FABRICATE	1		
15	AT202805	SWITCH	1		(NOT ILLUSTRATED)
16	AT202824	WIRING HARNESS	1		
17	AT225530	HYD ACTUATED CONTROL VALVE	1		(QUICK COUPLER PIN DISCONNECT VALVE)
19	R28782	O-RING	1		
20	14M7400	LOCK NUT	2		M10
21	19M7812	SCREW	2		M10 X 100
22	38H1004	ELBOW FITTING	1		
23	38H1023	TEE FITTING	1		
24	38H1160	ADAPTER	1		
26	T72414	BUSHING	8		
27	38H1309	ADAPTER	1		
28	R77175	COVER	1		
29	R78053	ELECTRICAL CONNECTOR ASSY	1		(NOT ILLUSTRATED)
30	RE60701	DIAGNOSTIC COUPLING	1		
31	**AT307820**	**KIT**	**1**		**(WHOLEGOODS) (QUICK COUPLER PIN DISCONNECTOR KIT)**

PIN AND AXLE DISCONNECT VALVE AND HOSES (SERIAL NO. 590068-)

T195556 -UN-21OCT03

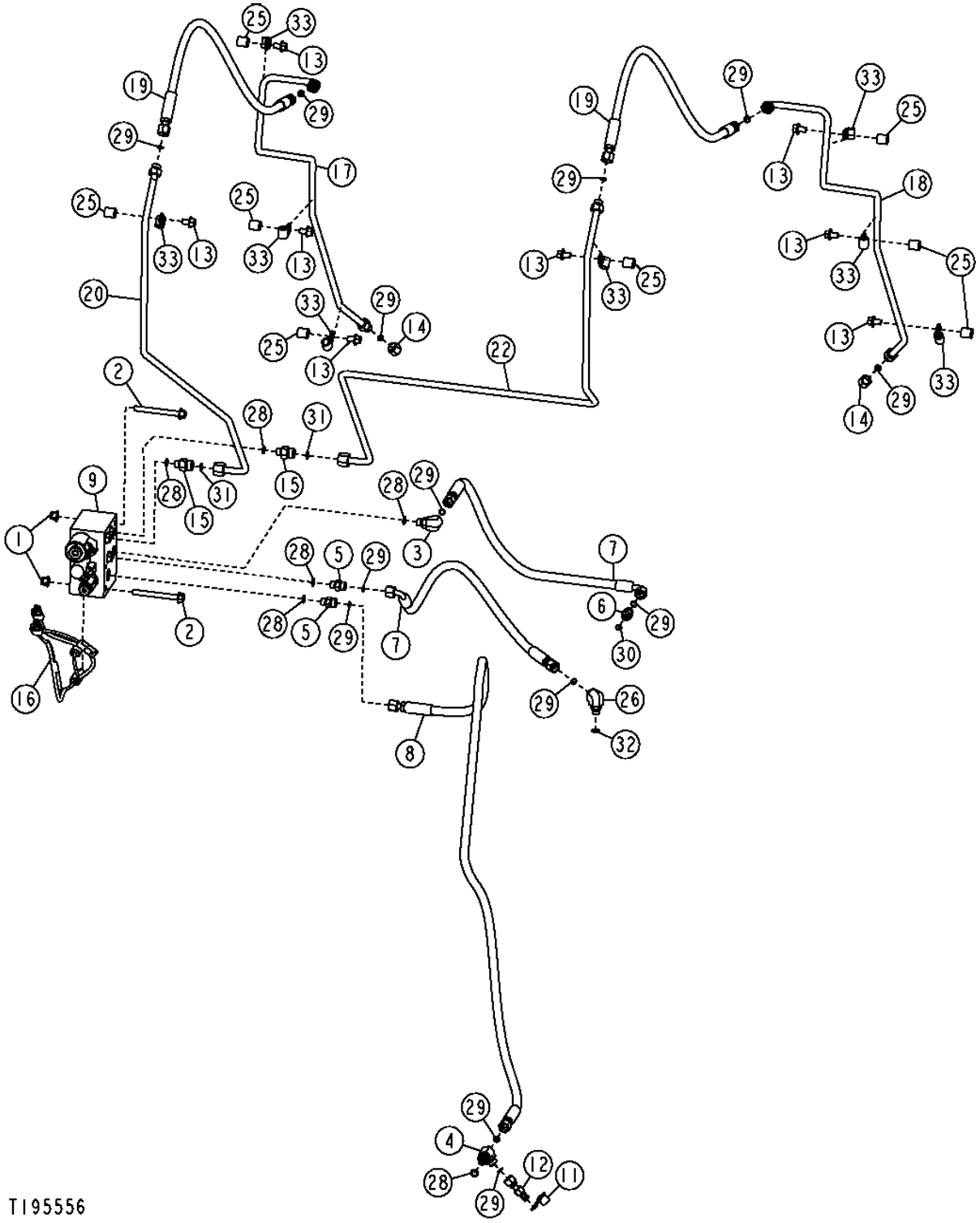

PIN AND AXLE DISCONNECT VALVE AND HOSES (SERIAL NO. 590068-)

KEY	PART NO.	PART NAME	QTY	SERIAL NO.	REMARKS
1	14M7400	LOCK NUT	2		M10
2	19M7812	SCREW	2		M10 X 100
3	38H1004	ELBOW FITTING	1		
4	38H1023	TEE FITTING	1		
5	38H1160	ADAPTER	2		
6	38H1309	ADAPTER	1		
7	AT167553	HYDRAULIC HOSE - FABRICATE	2		
8	AT169939	HYDRAULIC HOSE - FABRICATE	1		11/16" X 2 210 MM (87") X 11/16"
9	AT225530	HYD ACTUATED CONTROL VALVE	1		
11	R77175	COVER	1		
12	RE60701	DIAGNOSTIC COUPLING	1		
13	19M7783	SCREW	8		M10 X 16
14	38H1415	FITTING	2		
15	38H1173	ADAPTER	3		
16	AT202824	WIRING HARNESS	1		
17	AT211452	OIL LINE	1		
18	AT211453	OIL LINE	1		
19	AT219985	HYDRAULIC HOSE - FABRICATE	2		
20	AT307799	OIL LINE	1		
22	AT307800	OIL LINE	1		
23	R27218	FITTING PLUG	2		
24	R78053	ELECTRICAL CONNECTOR ASSY	1		
25	T72414	BUSHING	8		
26	38H5016	ELBOW FITTING	1		
28	R26448	O-RING	8		
29	T77613	O-RING	14		
30	R28782	O-RING	1		
31	T77857	O-RING	3		
32	51M7041	O-RING	2		
33	H75541	CLAMP	1		

PIN DISCONNECT VALVE COMPONENTS (SERIAL NO. - 590067)

T197399 -UN-21JAN04

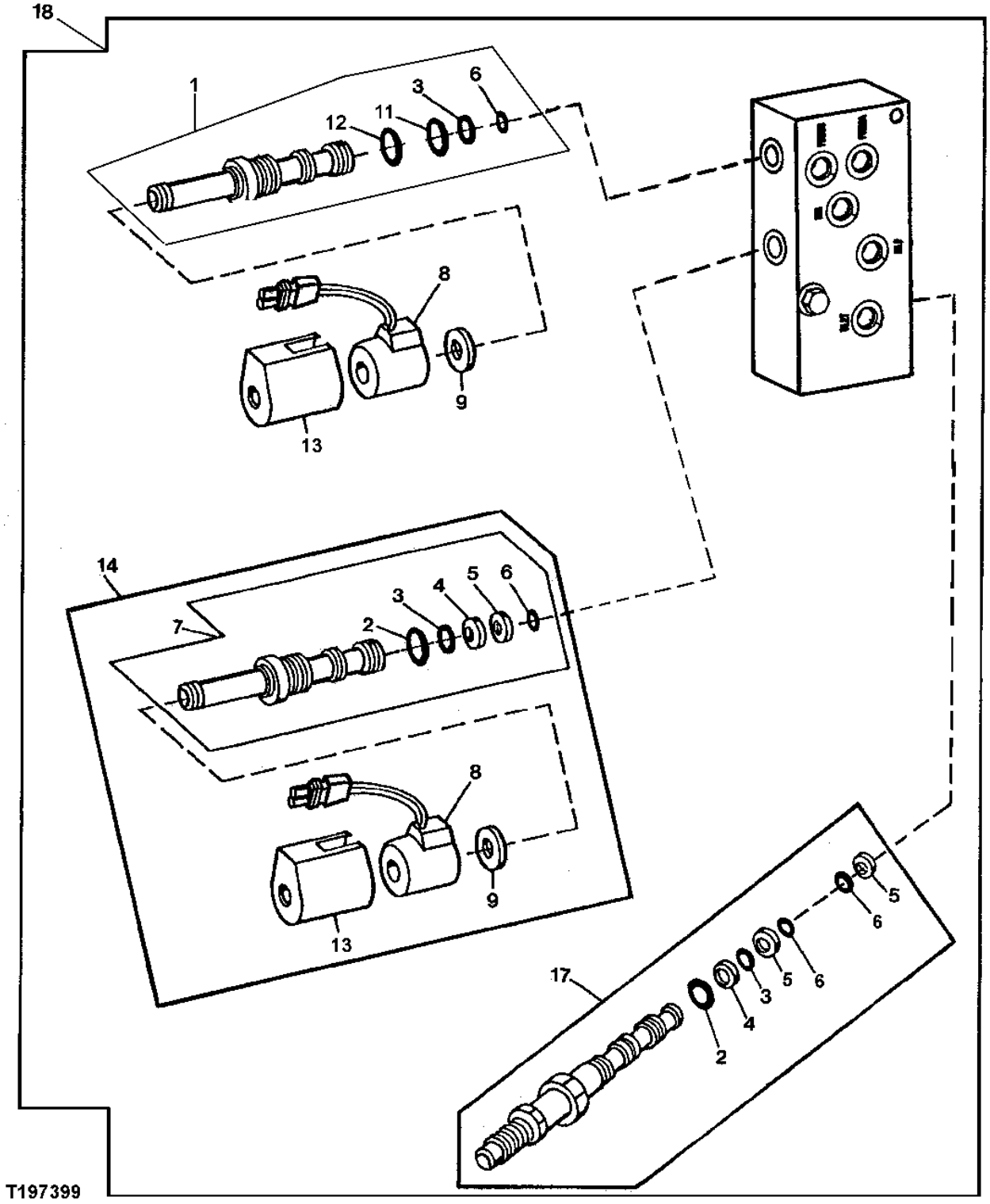

PIN DISCONNECT VALVE COMPONENTS (SERIAL NO. - 590067)

KEY	PART NO.	PART NAME	QTY	SERIAL NO.	REMARKS
1	AN280239	SOLENOID VALVE	1		
2	R47151	O-RING	2		
3	R33259	O-RING	3		
4	T81247	BACK-UP RING	2		
5	R42926	BACK-UP RING	3		
6	R28776	O-RING	4		
7	AT139432	HYD ACTUATED CONTROL VALVE	1		
8	AT139433	ELECTRICAL COIL	2		
9	T130847	PLATE	2		
11	R27166	O-RING	1		
12	R26906	O-RING	1		
13	AT139434	KIT	2		
14	AT139431	SOLENOID VALVE	2		
17	AT220788	PRESSURE RELIEF VALVE	1		
18	AT220192	HYD ACTUATED CONTROL VALVE	1		

PIN DISCONNECT VALVE COMPONENTS (SERIAL NO. 590068-)

T197202 -UN-07JAN04

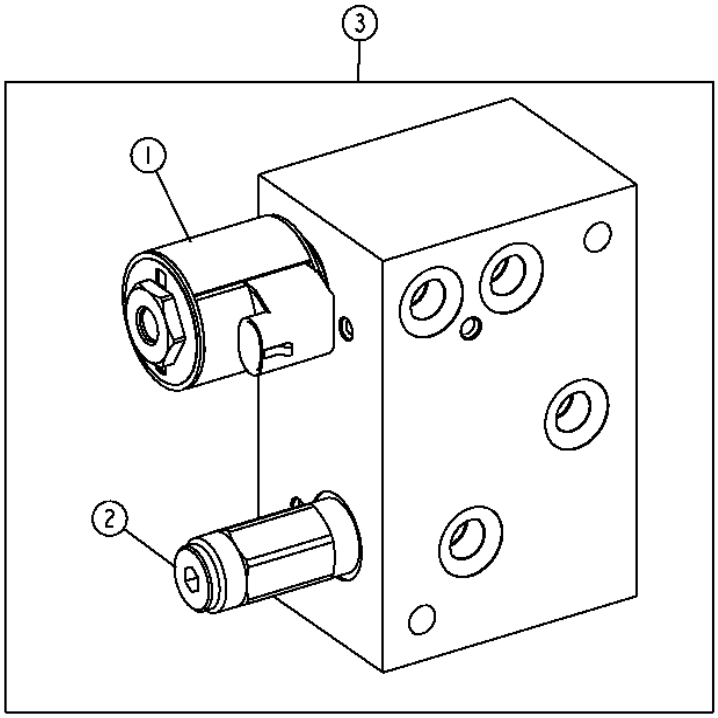

T197202

KEY	PART NO.	PART NAME	QTY	SERIAL NO.	REMARKS
1	AT224703	SOLENOID VALVE COIL	1		
	AT226266	SOLENOID VALVE	1		
	AT225083	SEAL KIT	1		SOLENOID VALVE SEAL KIT
2	AT226265	HYDRAULIC PRESSURE VALVE	1		
	AT225085	SEAL KIT	1		PRESSURE REDUCING VALVE SEAL KIT
3	AT225530	HYD ACTUATED CONTROL VALVE	1		

MEMORANDA

BUCKET AND BOOM CYLINDERS AND REPAIR KITS (SERIAL NO. -XXXXXX)

T155126 -UN-14AUG02

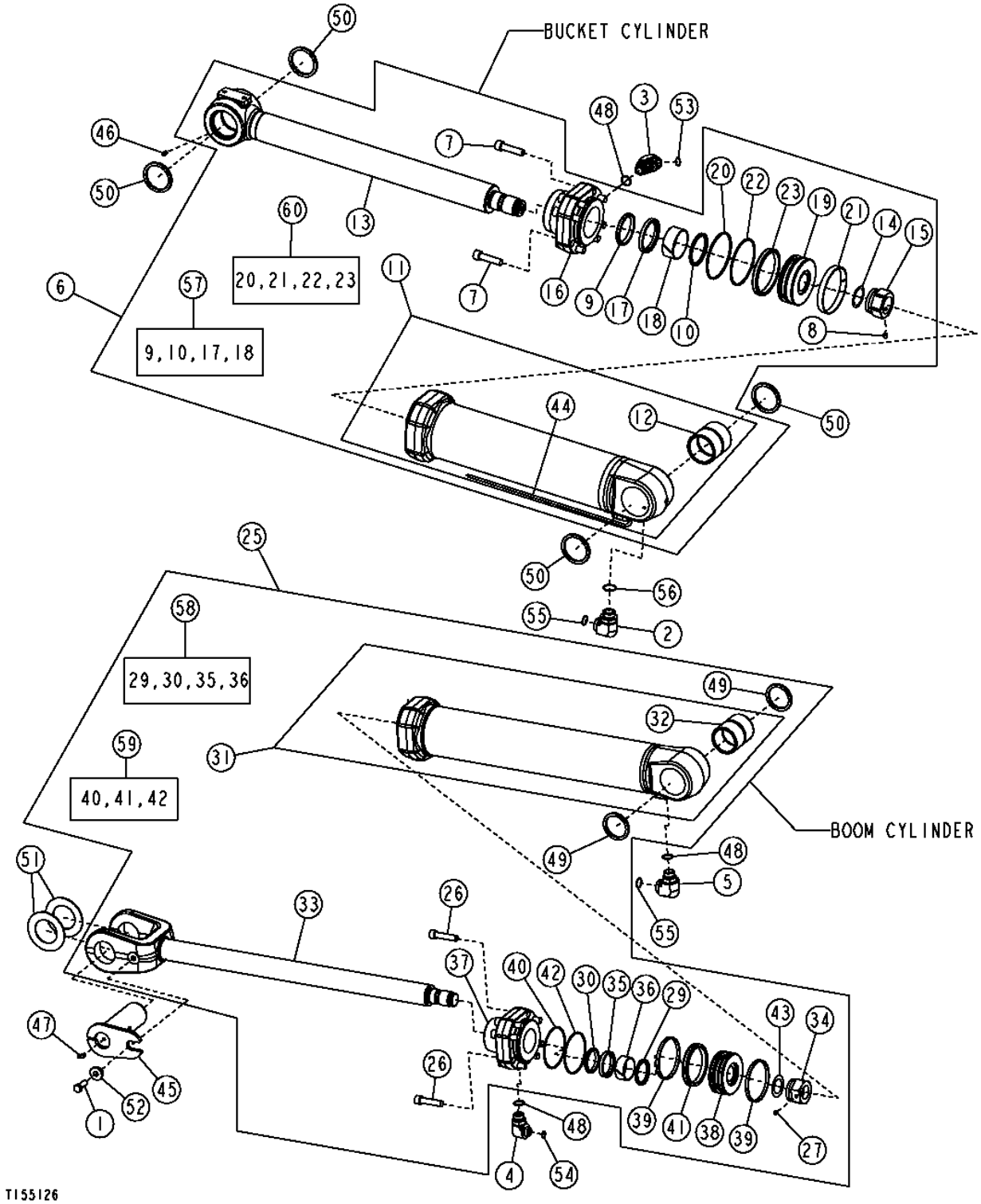

BUCKET AND BOOM CYLINDERS AND REPAIR KITS (SERIAL NO. -XXXXXX)

KEY	PART NO.	PART NAME	QTY	SERIAL NO.	REMARKS
1	19M7489	CAP SCREW	2		M16 X 45
2	38H1008	ELBOW FITTING	1		
3	38H1037	ELBOW FITTING	1		
4	38H1052	ELBOW FITTING	2		
5	38H1053	ELBOW FITTING	2		
6	AH159069	HYDRAULIC CYLINDER	1		(BUCKET CYLINDER)(CYLINDER ASSEMBLY)
7	19M8985	SCREW	8		M20 X 80, (BUCKET CYLINDER)
8	22M7009	SET SCREW	1		M12 X 12, (BUCKET CYLINDER)
	T13624	BALL	1		(BUCKET CYLINDER)
9	AH157291	SEAL	1		(BUCKET CYLINDER)
10	AH157292	SEAL	1		(BUCKET CYLINDER)
11	AH161347	HYDRAULIC CYLINDER BARREL	1		(BUCKET CYLINDER)
12	R85556	BUSHING	1		(BUCKET CYLINDER)
13	AH161349	ROD	1		(BUCKET CYLINDER)
14	AT153937	SHIM	1		(BUCKET CYLINDER)
15	H155879	NUT	1		(BUCKET CYLINDER)
16	H173655	HYDR. CYLINDER ROD GUIDE	1		(BUCKET CYLINDER)
17	H163979	SEAL	1		(BUCKET CYLINDER)
18	H163980	BUSHING	1		(BUCKET CYLINDER)
19	H168220	PISTON	1		(BUCKET CYLINDER)
20	H88900	O-RING	1		(BUCKET CYLINDER)
21	R85228	WEAR RING	1		(BUCKET CYLINDER)
22	R98669	BACK-UP RING	1		(BUCKET CYLINDER)
23	RE25146	SEAL	1		(BUCKET CYLINDER)
25	AH163632	HYDRAULIC CYLINDER	2		(BOOM CYLINDER ASSEMBLY)
26	19M8913	SCREW	18		M18 X 80, (BOOM CYLINDER)
27	22M7139	SET SCREW	1		M10 X 10, (BOOM CYLINDER)
	400R	BALL	1		(BOOM CYLINDER)
29	AH150932	SEAL	2		(BOOM CYLINDER)
30	AH150933	SEAL	2		(BOOM CYLINDER)
31	AH159195	HYDRAULIC CYLINDER BARREL	2		(BOOM CYLINDER)
32	H158397	BUSHING	2		(BOOM CYLINDER)
33	AH159196	ROD	2		(BOOM CYLINDER)
34	H158175	NUT	2		(BOOM CYLINDER)
35	H158436	SEAL	2		(BOOM CYLINDER)
36	H158437	WEAR RING	2		(BOOM CYLINDER)
37	H165481	HYDR. CYLINDER ROD GUIDE	2		(BOOM CYLINDER)
38	H169747	PISTON	2		(BOOM CYLINDER)
39	H169752	WEAR RING	4		(BOOM CYLINDER)
40	R78818	BACK-UP RING	2		(BOOM CYLINDER)
41	RE25102	SEAL	2		(BOOM CYLINDER)
42	T38485	O-RING	2		(BOOM CYLINDER)
43	TH110253	SHIM	2		(BOOM CYLINDER)
44	AT103107	HYDRAULIC HOSE	2		
45	AT206731	PIN FASTENER	4		
46	JD7759	LUBRICATION FITTING	2		
47	JD7763	LUBRICATION FITTING	4		
48	R29936	O-RING	10		
49	T102137	SEAL	8		
50	T102138	SEAL	8		
51	T171734	WASHER	8		
52	T176064	BUSHING	4		
53	T76938	O-RING	2		
54	T77858	O-RING	4		
55	T78612	O-RING	6		
56	U13639	O-RING	2		
57	AH159192	KIT	1		(INCLUDES H165482) (BUCKET CYLINDER ROD REPAIR KIT)
58	AH156466	HYDRAULIC CYLINDER KIT	2		(INCLUDES H163187) (BOOM CYLINDER SEAL REPAIR KIT)
59	AH163673	KIT	2		(INCLUDES H170140) (BOOM CYLINDER BORE REPAIR KIT)
60	AH137210	HYDRAULIC CYLINDER KIT	1		(INCLUDES H142173) (BUCKET CYLINDER BORE REPAIR KIT)

BUCKET AND BOOM CYLINDERS AND REPAIR KITS (SERIAL NO. XXXXXX-)

T155126 -UN-14AUG02

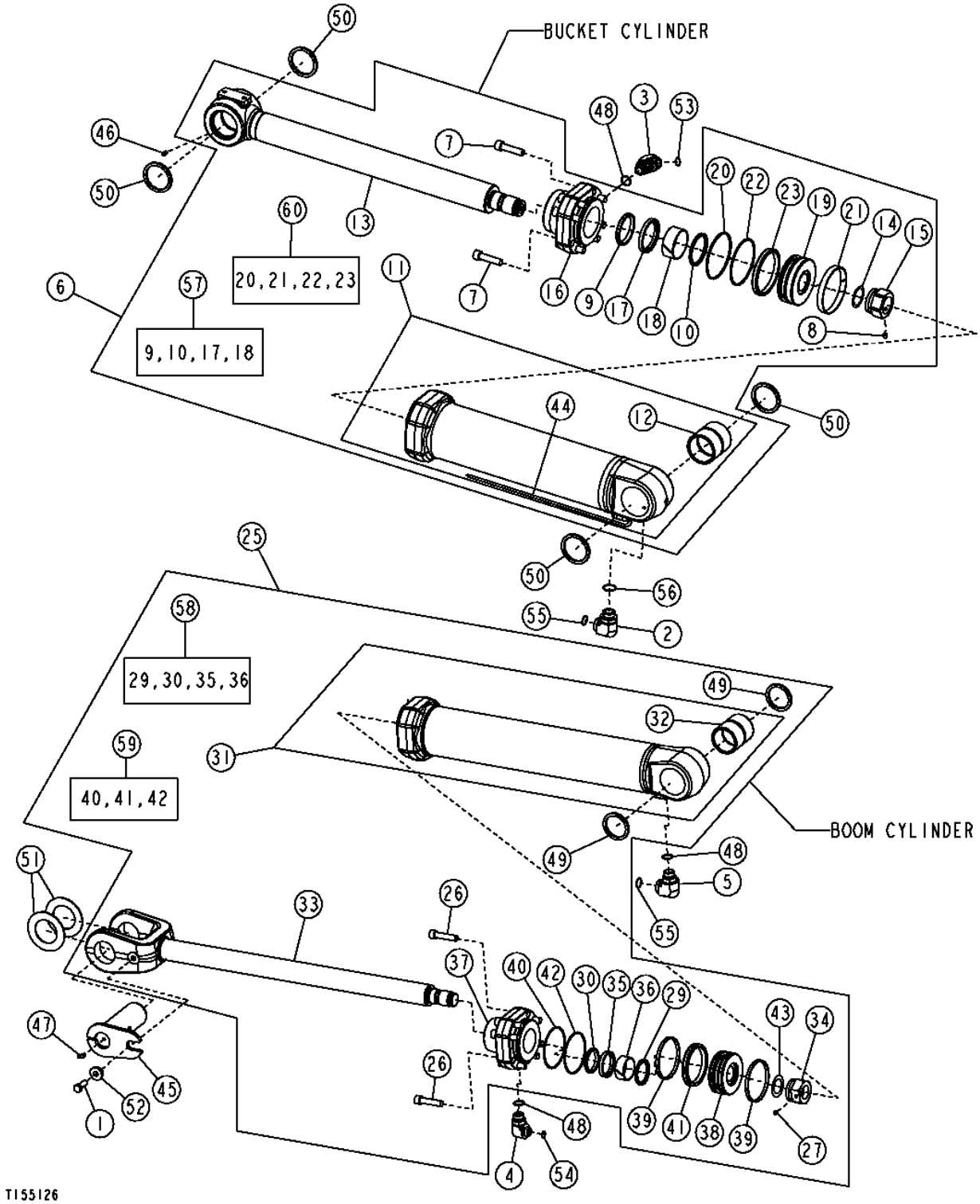

BUCKET AND BOOM CYLINDERS AND REPAIR KITS (SERIAL NO. XXXXXX-)

KEY	PART NO.	PART NAME	QTY	SERIAL NO.	REMARKS
1	19M7489	CAP SCREW	2		M16 X 45
2	38H1008	ELBOW FITTING	1		
3	38H1037	ELBOW FITTING	1		
4	38H1052	ELBOW FITTING	2		
5	38H1053	ELBOW FITTING	2		
6	AH159069	HYDRAULIC CYLINDER	1		(BUCKET CYLINDER)(CYLINDER ASSEMBLY)
7	19M8985	SCREW	8		M20 X 80, (BUCKET CYLINDER)
8	22M7009	SET SCREW	1		M12 X 12, (BUCKET CYLINDER)
	T13624	BALL	1		(BUCKET CYLINDER)
9	AH157291	SEAL	1		(BUCKET CYLINDER)
10	AH157292	SEAL	1		(BUCKET CYLINDER)
11	AH161347	HYDRAULIC CYLINDER BARREL	1		(BUCKET CYLINDER)
12	R85556	BUSHING	1		(BUCKET CYLINDER)
13	AH161349	ROD	1		(BUCKET CYLINDER)
14	AT153937	SHIM	1		(BUCKET CYLINDER)
15	H155879	NUT	1		(BUCKET CYLINDER)
16	H173655	HYDR. CYLINDER ROD GUIDE	1		(BUCKET CYLINDER)
17	H163979	SEAL	1		(BUCKET CYLINDER)
18	H163980	BUSHING	1		(BUCKET CYLINDER)
19	H168220	PISTON	1		(BUCKET CYLINDER)
20	H88900	O-RING	1		(BUCKET CYLINDER)
21	R85228	WEAR RING	1		(BUCKET CYLINDER)
22	R98669	BACK-UP RING	1		(BUCKET CYLINDER)
23	RE25146	SEAL	1		(BUCKET CYLINDER)
25	AH163632	HYDRAULIC CYLINDER	2		(BOOM CYLINDER ASSEMBLY)
26	19M8913	SCREW	18		M18 X 80, (BOOM CYLINDER)
27	22M7139	SET SCREW	1		M10 X 10, (BOOM CYLINDER)
	400R	BALL	1		(BOOM CYLINDER)
29	AH150932	SEAL	2		(BOOM CYLINDER)
30	AH150933	SEAL	2		(BOOM CYLINDER)
31	AH210136	HYDRAULIC CYLINDER BARREL	2		(BOOM CYLINDER)
32	H158397	BUSHING	2		(BOOM CYLINDER)
33	AH159196	ROD	2		(BOOM CYLINDER)
34	H158175	NUT	2		(BOOM CYLINDER)
35	H158436	SEAL	2		(BOOM CYLINDER)
36	H158437	WEAR RING	2		(BOOM CYLINDER)
37	H210640	HYDR. CYLINDER ROD GUIDE	2		(BOOM CYLINDER)
38	H169747	PISTON	2		(BOOM CYLINDER)
39	H169752	WEAR RING	4		(BOOM CYLINDER)
40	R78818	BACK-UP RING	2		(BOOM CYLINDER)
41	RE25102	SEAL	2		(BOOM CYLINDER)
42	T38485	O-RING	2		(BOOM CYLINDER)
43	TH110253	SHIM	2		(BOOM CYLINDER)
44	AT103107	HYDRAULIC HOSE	2		
45	AT206731	PIN FASTENER	4		
46	JD7759	LUBRICATION FITTING	2		
47	JD7763	LUBRICATION FITTING	4		
48	R29936	O-RING	10		
49	T102137	SEAL	8		
50	T102138	SEAL	8		
51	T171734	WASHER	8		
52	T176064	BUSHING	4		
53	T76938	O-RING	2		
54	T77858	O-RING	4		
55	T78612	O-RING	6		
56	U13639	O-RING	2		
57	AH159192	KIT	1		(INCLUDES H165482) (BUCKET CYLINDER ROD REPAIR KIT)
58	AH156466	HYDRAULIC CYLINDER KIT	2		(INCLUDES H163187) (BOOM CYLINDER SEAL REPAIR KIT)
59	AH163673	KIT	2		(INCLUDES H170140) (BOOM CYLINDER BORE REPAIR KIT)
60	AH137210	HYDRAULIC CYLINDER KIT	1		(INCLUDES H142173) (BUCKET CYLINDER BORE REPAIR KIT)

RETURN-TO-DIG ACTUATOR AND SENSOR
(SER. NO. -589893)

T155052 -UN-03OCT02

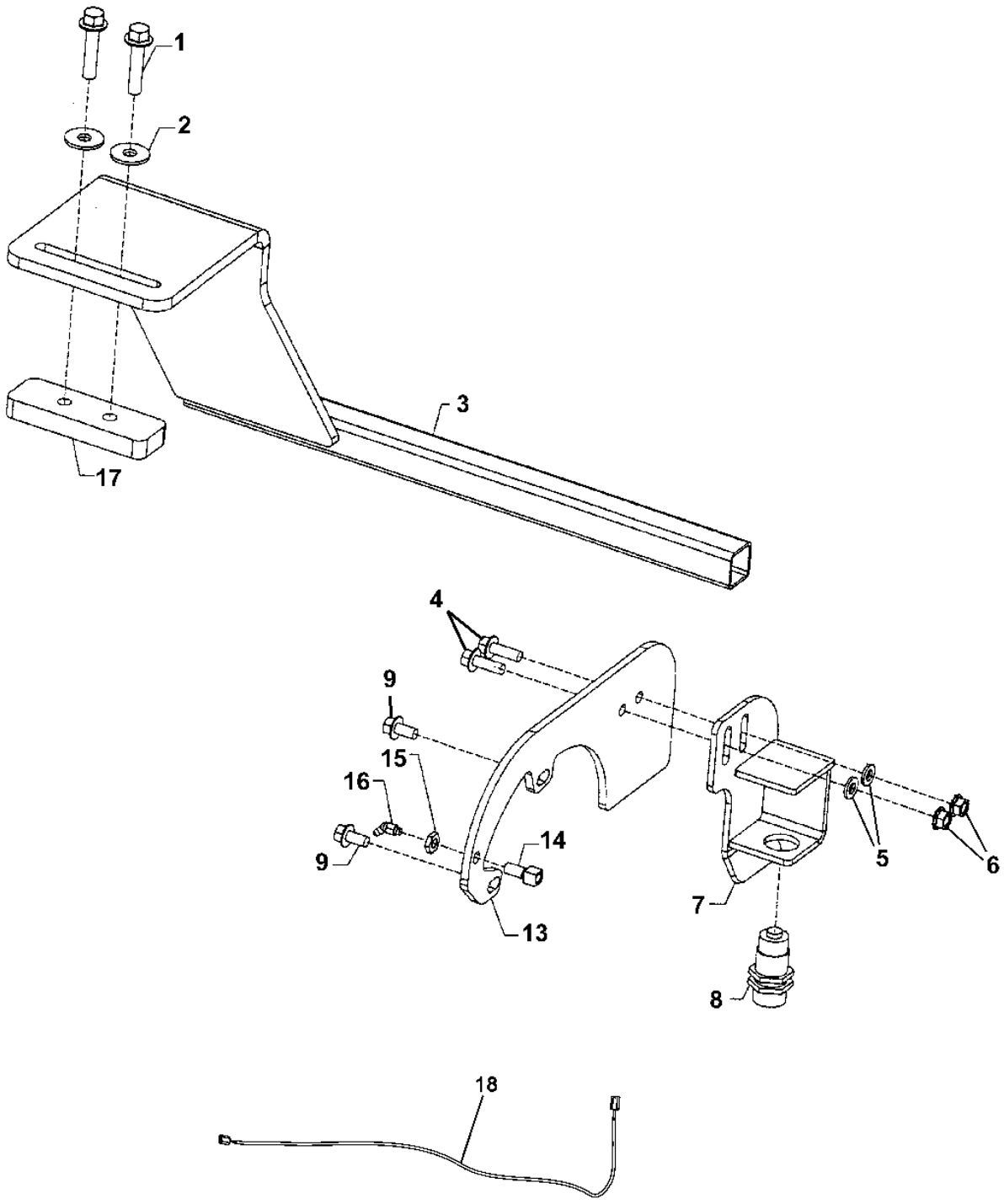

T155052

RETURN-TO-DIG ACTUATOR AND SENSOR
(SER. NO. -589893)

KEY	PART NO.	PART NAME	QTY	SERIAL NO.	REMARKS
1	19M7814	SCREW	2		M12 X 50
2	24M7180	WASHER	2		13 X 37 X 3 MM
3	AT221356	ACTUATOR	1		
4	19M7786	SCREW	2		M10 X 30
5	24M7239	WASHER	2		10.700 X 21 X 2.500 MM
6	14M7296	FLANGE NUT	2		M10
7	AT221350	BRACKET	1		
8	AT203130	SENSOR	1		(STANDARD)
	AT222366	SWITCH	1		(HARSH ENVIRONMENT)
9	19M7784	SCREW	2		M10 X 20
12	R44302	TIE BAND	4		(NOT ILLUSTRATED)
13	T177573	PLATE	1		
14	R36311	FITTING	1		
15	E12379	NUT	1		
16	JD7788	LUBRICATION FITTING	1		
17	T179609	SPACER	1		(HARSH ENVIRONMENT)
18	AT202827	WIRING HARNESS	1		(RETURN-TO-DIG HARNESS)
	AT221628	WIRING HARNESS	1		(RETURN-TO-DIG HARNESS) (HARSH ENVIRONMENT)

RETURN-TO-DIG ACTUATOR AND SENSOR
(SER. NO. 589894-)

T194864 -UN-28OCT03

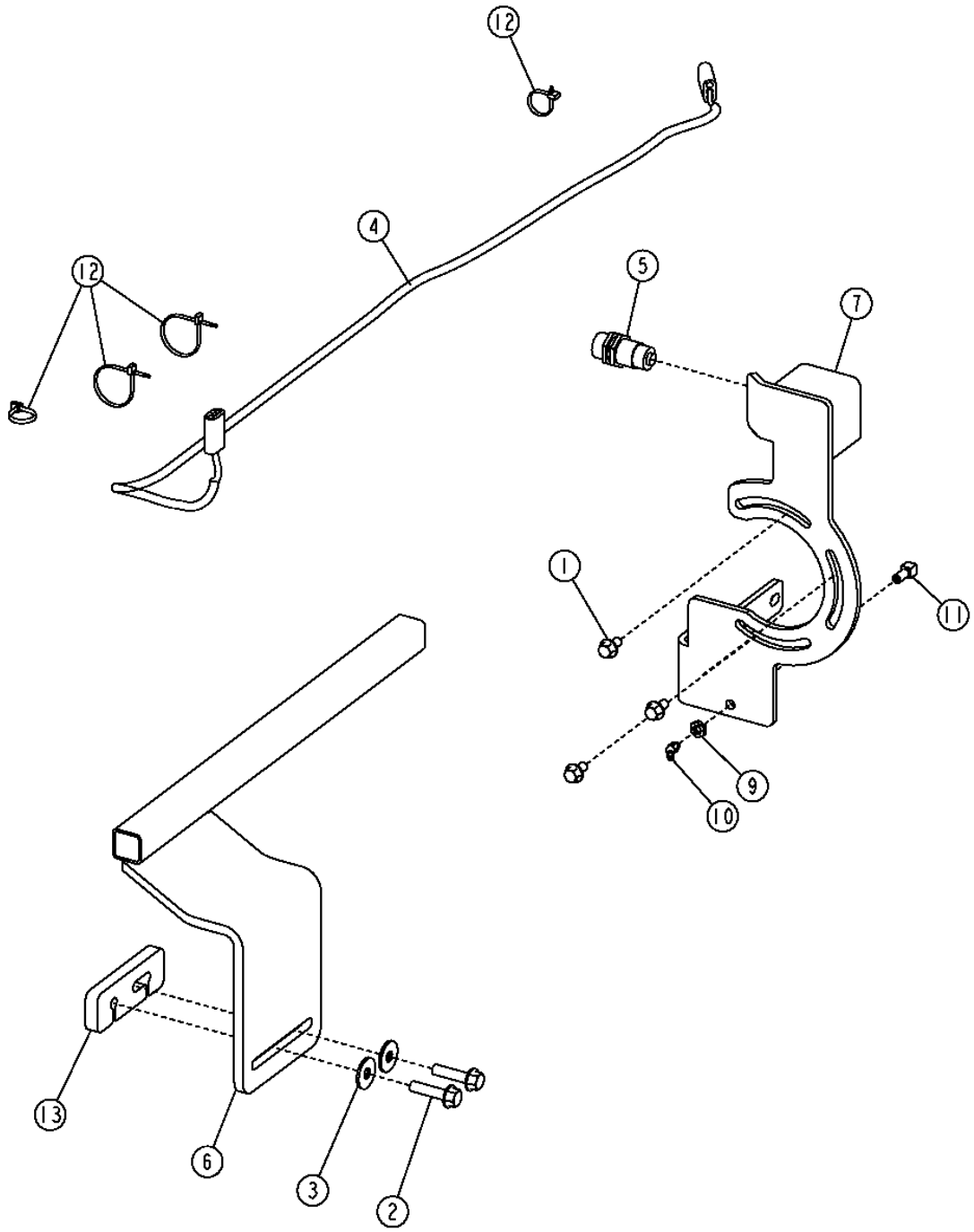

RETURN-TO-DIG ACTUATOR AND SENSOR
(SER. NO. 589894-)

KEY	PART NO.	PART NAME	QTY	SERIAL NO.	REMARKS
1	19M7784	SCREW	3		M10 X 20
2	19M7814	SCREW	2		M12 X 50
3	24M7180	WASHER	2		13 X 37 X 3 MM (0.512" X 1.457" X 0.118")
4	AT202827	WIRING HARNESS	1		(RETURN-TO-DIG HARNESS)
	AT221628	WIRING HARNESS	1		(RETURN-TO-DIG HARNESS) (HARSH ENVIRONMENT)
5	AT203130	SENSOR	1		(STANDARD)
	AT222366	SWITCH	1		(HARSH ENVIRONMENT)
6	AT307897	ACTUATOR	1		
7	AT305042	BRACKET	1		
8	T203546	PLATE	1		
9	E12379	NUT	1		3.175 MM (1/8")
10	JD7788	LUBRICATION FITTING	1		45° X 20.574 MM LONG (0.810" LONG)
11	R36311	FITTING	1		
12	R44302	TIE BAND	4		
13	T179609	SPACER	1		

LOADER BOOM KICK OUT/ RETURN TO CARRY SENSOR

T161373 -UN-08NOV02

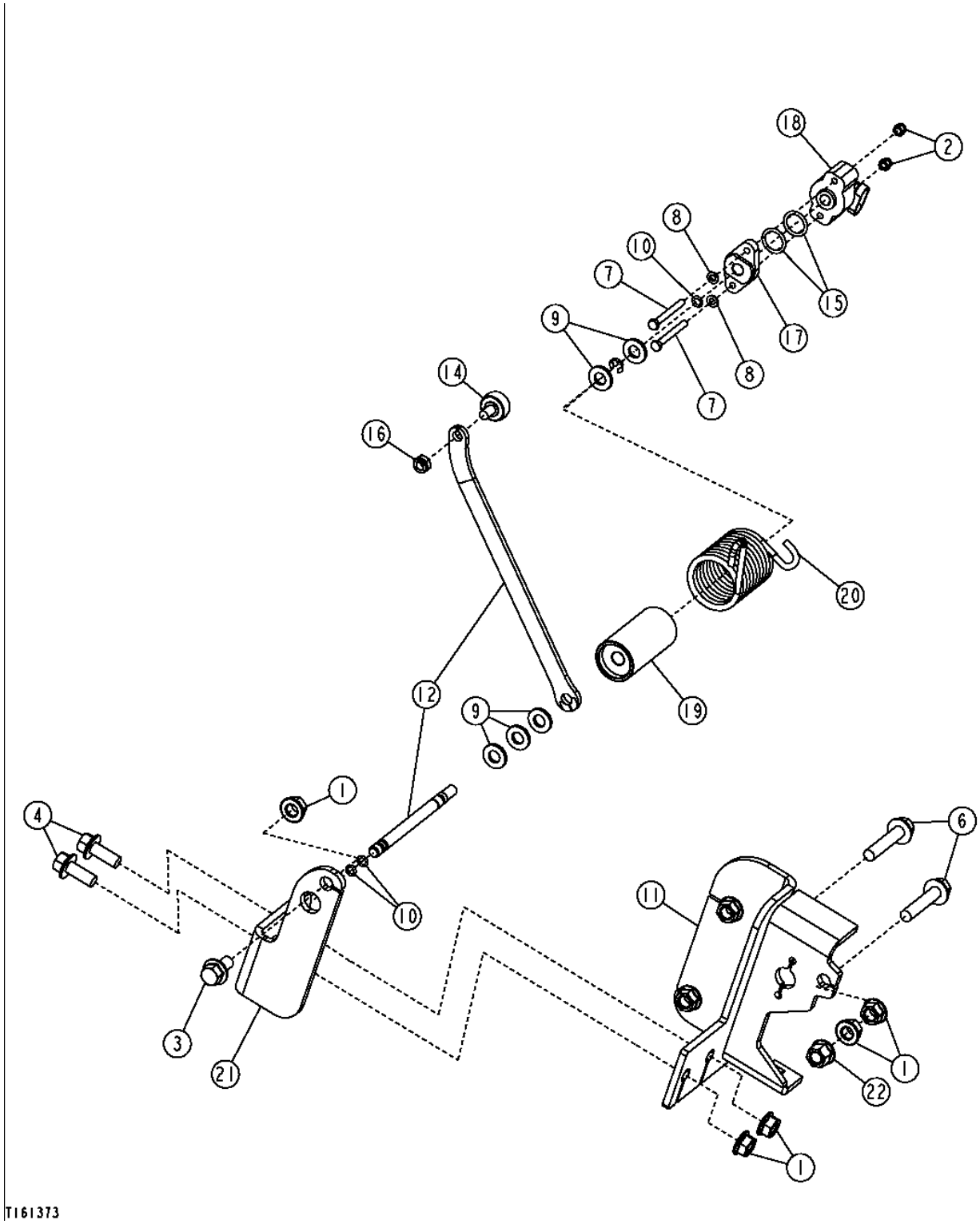

LOADER BOOM KICK OUT/ RETURN TO CARRY SENSOR

KEY	PART NO.	PART NAME	QTY	SERIAL NO.	REMARKS
1	14M7296	FLANGE NUT	5		M10
2	14M7360	LOCK NUT	2		M5, LOADER BOOM KICKOUT
3	19M7784	SCREW	1		M10 X 20
4	19M7785	SCREW	2		M10 X 25, (SUB FOR T170135)
6	19M7806	SCREW	2		(24M7239 NO LONGER REQUIRED)
7	19M8834	CAP SCREW	2		
8	24M7027	WASHER	2		5.300 X 10 X 1 MM
9	24M7239	WASHER	5		10.700 X 21 X 2.500 MM
10	A4365R	O-RING	3		
11	AT226300	BRACKET	1		
12	AT226301	ACTUATOR	1		
13	T82861	BUSHING	1		
14	AT45678	CAM FOLLOWER	1		
15	P48347	O-RING	2		
16	R11151	LOCK NUT	1		
17	R86457	SUPPORT	1		
18	RE56165	POTENTIOMETER	1		
19	T197144	BUSHING	1		(SUB FOR T195134)
20	T195210	TORSION SPRING	1		
21	AT226344	BRACKET	1		
22	14M7400	LOCK NUT	1		

AUXILIARY DRIVE HOUSING AND OIL LINE

RGP5013 -UN-15APR98

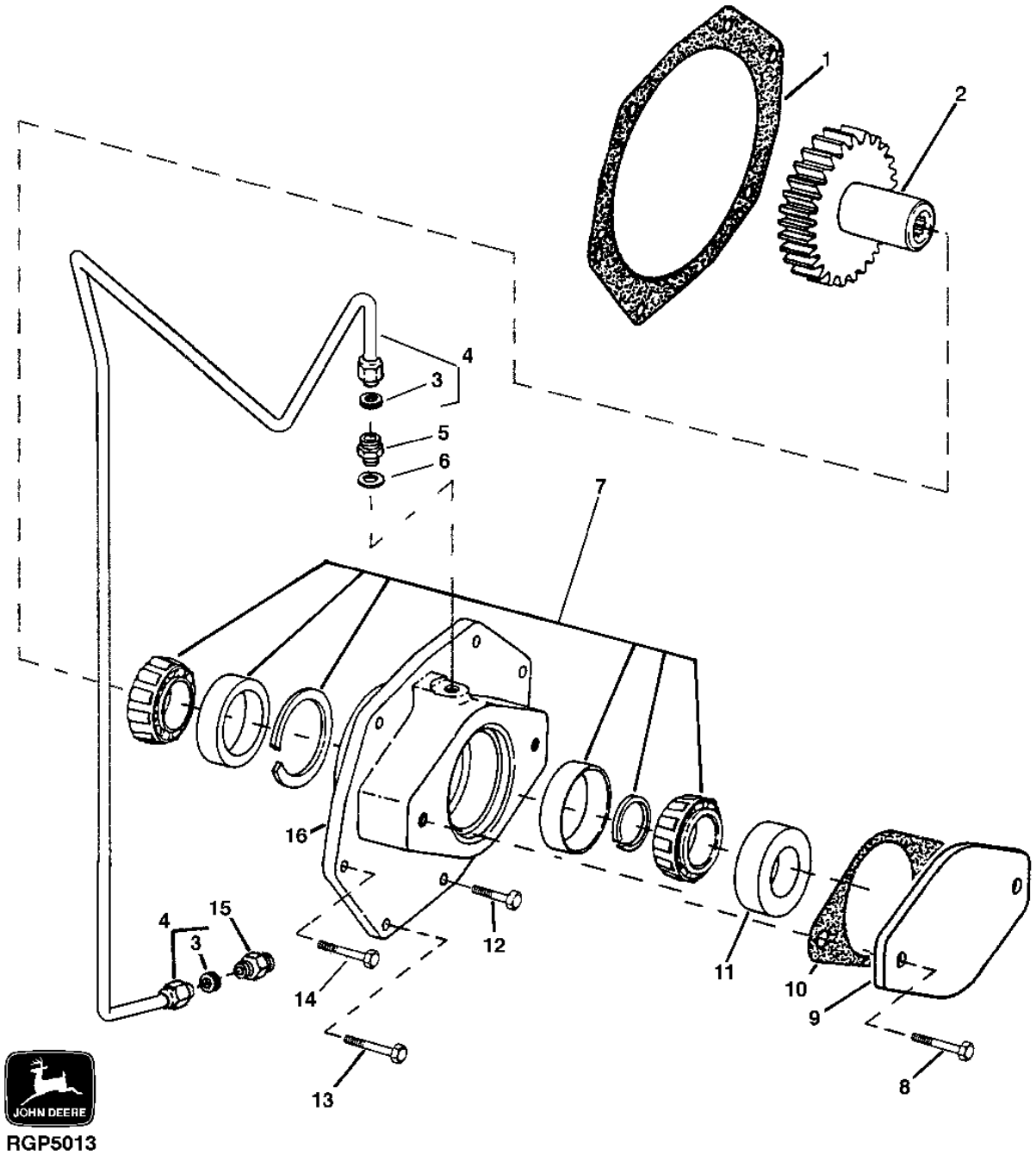

RGP5013

AUXILIARY DRIVE HOUSING AND OIL LINE - CONTINUED

KEY	PART NO.	PART NAME	QTY	ENGINE SERIAL NO.	REMARKS
1	T80123	O-RING	1		
2	R112200	GEAR	1		
3	R51936	SEALING WASHER	2		
4	RE501787	OIL LINE	1		
5	R119653	ADAPTER	1		
6	R48693	WASHER	1		
7	RE22514	CYLINDRICAL ROLLER BEARING	1		
8	19H2284	CAP SCREW	1		3/8" X 7/8"
9	R85145	COVER	1		
10	R96935	GASKET	1		
11	R112203	BUSHING	1		
12	R112268	SCREW	1		(HOUSING TO COVER)
13	19H3300	CAP SCREW	3		5/16" X 3-3/4", (HOUSING TO BLOCK)
	24H1136	WASHER	3		11/32" X 11/16" X 0.065"
14	19H3300	CAP SCREW	2		5/16" X 3-3/4", (HOUSING TO BLOCK)
	24H1136	WASHER	2		11/32" X 11/16" X 0.065"
15	RE502650	FITTING	1		
16	R122722	HOUSING	1		

MEMORANDA

NUMERICAL INDEX

PART NO.	GRID	KEY	PAGE
AA21292	2E13	14	1740 - 3
AA21292	2J10	9	1927 - 7
AH108055	1K6	37	1062 - 3
AH121227	2F16	9	1810 - 13
AH125760	2K3	10	2160 - 3
AH125760	2K11	4	2160 - 11
AH125760	2K17	10	2160 - 17
AH130230	2E20	1	1746 - 6
AH130230	3C20	25	3160 - 23
AH130230	3C22	10	3160 - 25
AH130230	3C24	10	3160 - 27
AH137210	3F5	60	3165 - 3
AH137210	3F7	60	3165 - 3B
AH144020	2H24	3	1830 - 3B
AH146556	1K2	11	0965 - 11
AH146560	1K2	7	0965 - 11
AH149228	2F20	3	1810 - 15B
AH149228	2I11	2	1830 - 15
AH149813	1K2	21	0965 - 11
AH149842	1K2	20	0965 - 11
AH150468	1K2	19	0965 - 11
AH150703	1K2	17	0965 - 11
AH150932	3F5	29	3165 - 3
AH150932	3F7	29	3165 - 3B
AH150933	3F5	30	3165 - 3
AH150933	3F7	30	3165 - 3B
AH151585	1K2	18	0965 - 11
AH156466	3F5	58	3165 - 3
AH156466	3F7	58	3165 - 3B
AH157291	3F5	9	3165 - 3
AH157291	3F7	9	3165 - 3B
AH157292	3F5	10	3165 - 3
AH157292	3F7	10	3165 - 3B
AH159069	3F5	6	3165 - 3
AH159069	3F7	6	3165 - 3B
AH159192	3F5	57	3165 - 3
AH159192	3F7	57	3165 - 3B
AH159195	3F5	31	3165 - 3
AH159196	3F5	33	3165 - 3
AH159196	3F7	33	3165 - 3B
AH161347	3F5	11	3165 - 3
AH161347	3F7	11	3165 - 3B
AH161349	3F5	13	3165 - 3
AH161349	3F7	13	3165 - 3B
AH162914	1I18	1	0560 - 5
AH163632	3F5	25	3165 - 3
AH163632	3F7	25	3165 - 3B
AH163673	3F5	59	3165 - 3
AH163673	3F7	59	3165 - 3B
AH210136	3F7	31	3165 - 3B
AH212091	1K2	20	0965 - 11
AH61472	2K21	10	2160 - 21
AH75159	1H24	14	0511 - 3
AH75162	1F4	4	0360 - 3
AH75162	1H24	15	0511 - 3
AH77869	1I16	4	0560 - 3
AH77869	2C15	6	1671 - 2
AH89557	2D21	20	1674 - 23
AH89557	2D23	8	1674 - 23B
AH96708	1I20	8	0567 - 5
AH96708	1J2	33	0567 - 11
AH97280	2D4	6	1673 - 3
AH97280	2I7	3	1830 - 11
AL153660	2G2	3	1810 - 19
AL76568	2E2	1	1674 - 35
AL76568	2E3	1	1674 - 36
AL76568	2G12	12	1810 - 25
AL76568	2H22	24	1830 - 3
AMT1274	1I16	11	0560 - 3
AM39653	2K9	9	2160 - 9
AN207183	3E19	8	3160 - 70
AN276328	1H24	16	0511 - 3
AN280239	3F2	1	3160 - 79
AP22660	2D13	10	1674 - 9
AP22660	2D15	9	1674 - 9B
AP35374	1H24	17	0511 - 3
AR104516	2J13	23	2001 - 3
AR104516	2J15	23	2001 - 3B
AR21836	1F8	4	0360 - 7
AR21836	1I16	12	0560 - 3
AR21836	1K8	5	1063 - 3
AR21836	1K10	6	1063 - 5
AR21837	1I16	5	0560 - 3
AR21837	1K8	6	1063 - 3
AR21837	1K10	7	1063 - 5
AR21837	2C10	1	1369 - 13
AR21837	2E19	7	1746 - 5
AR21837	2I15	3	1830 - 17
AR21837	2K21	8	2160 - 21
AR21839	1F4	3	0360 - 3
AR21839	1F8	3	0360 - 7
AR21839	1G25	12	0416 - 3
AR21839	1I16	6	0560 - 3
AR21839	1I16	13	0560 - 3
AR21839	1I22	1	0567 - 7
AR21839	1J2	30	0567 - 11
AR21839	2K19	9	2160 - 19
AR21842	1I16	7	0560 - 3
AR21969	2C5	..	1369 - 8
AR21969	2C7	..	1369 - 10
AR21999	1H22	5	0505 - 7
AR21999	1H24	18	0511 - 3
AR41785	2C5	..	1369 - 8
AR44402	2C5	1	1369 - 8
AR48675	1H3	4	0418 - 2
AR49025	1F21	10	0402 - 6
AR50411	1H19	1	0505 - 2
AR54749	2C5	4	1369 - 8
AR55394	1H4	16	0419 - 1
AR58952	1H4	15	0419 - 1
AR58952	1H15	36	0452 - 3
AR61589	1G2	19	0404 - 3
AR70105	1I10	3	0520 - 3
AR89602	3D4	16	3160 - 31
AR89602	3D10	17	3160 - 37
AR89602	3D18	16	3160 - 45
AR89602	3E4	25	3160 - 55
AR89602	3E10	29	3160 - 61
AR89602	3E16	3	3160 - 67
AR91896	2F14	7	1810 - 11
AR94101	2D10	1	1674 - 6
AR98850	1F24	8	0403 - 1
AT103107	3F5	44	3165 - 3
AT103107	3F7	44	3165 - 3B
AT103431	1F6	6	0360 - 3B
AT103559	1B5	2	0110 - 5
AT103559	1B7	2	0110 - 7
AT103919	2J16	10	2002 - 2
AT104041	3D22	90	3160 - 49
AT106365	2F10	5	1810 - 7
AT106413	1H24	24	0511 - 3
AT107738	1I14	3	0540 - 3
AT115146	3D2	8	3160 - 29
AT115146	3D8	11	3160 - 35
AT115146	3D12	11	3160 - 39
AT116114	1J7	19	0930 - 3
AT116114	1J9	19	0930 - 5
AT116162	1J17	9	0962 - 5
AT116162	1K12	2	1064 - 7
AT116373	1J7	44	0930 - 3
AT116373	1J9	44	0930 - 5
AT116449	2K19	5	2160 - 19
AT116970	2F10	1	1810 - 7
AT116970	2G2	6	1810 - 19
AT116970	2G4	5	1810 - 21
AT119017	3E12	10	3160 - 63
AT119018	3E12	12	3160 - 63
AT119378	3E12	11	3160 - 63
AT120444	2K21	12	2160 - 21
AT120461	2J21	2	2004 - 7
AT124574	3C12	28	3160 - 11
AT124574	3C14	28	3160 - 13
AT124574	3C18	28	3160 - 21
AT128889	1I22	2	0567 - 7
AT133590	3E2	11	3160 - 53
AT133590	3E8	11	3160 - 59
AT135758	2D4	12	1673 - 3
AT135758	2D8	3	1673 - 10
AT135906	2K21	5	2160 - 21
AT135907	2K21	13	2160 - 21
AT13740	1G2	4	0404 - 3
AT13740	1H2	11	0417 - 3
AT137920	2G4	7	1810 - 21
AT137921	2G4	9	1810 - 21
AT138180	2G2	7	1810 - 19
AT138180	2G4	13	1810 - 21
AT138215	2G4	12	1810 - 21
AT139431	2K15	14	2160 - 15
AT139431	3F2	14	3160 - 79
AT139432	2K15	7	2160 - 15
AT139432	2K15	13	2160 - 15
AT139432	3F2	7	3160 - 79
AT139433	2K15	6	2160 - 15
AT139433	3F2	8	3160 - 79
AT139434	2K15	2	2160 - 15
AT139434	2K15	3	2160 - 15
AT139434	2K15	4	2160 - 15
AT139434	2K15	5	2160 - 15
AT139434	3F2	13	3160 - 79
AT139694	1J13	6	0962 - 3
AT139694	1J15	6	0962 - 3B
AT141527	1J7	20	0930 - 3
AT141527	1J9	20	0930 - 5
AT143577	2E15	2	1740 - 5
AT145341	1H20	14	0505 - 5
AT145341	2D15	25	1674 - 9B
AT151931	2F22	11	1810 - 15D
AT152180	1G10	9	0407 - 5
AT152180	2K9	10	2160 - 9
AT153937	3F5	14	3165 - 3
AT153937	3F7	14	3165 - 3B
AT156748	1I6	90	0515 - 3
AT156896	1J17	6	0962 - 5
AT157226	2J16	9	2002 - 2
AT157299	2E13	2	1740 - 3
AT157299	3B18	29	3140 - 3
AT158971	3E18	32	3160 - 69
AT159938	2K15	15	2160 - 15
AT159938	2K15	17	2160 - 15
AT160480	2E10	3	1676 - 1
AT160662	1J13	10	0962 - 3

NUMERICAL INDEX - CONTINUED

PART NO.	GRID	KEY	PAGE
AT160662	1J13	23	0962 - 3
AT160662	1J13	24	0962 - 3
AT160662	1J13	25	0962 - 3
AT160662	1J15	18	0962 - 3B
AT160704	2C24	3	1672 - 9
AT161638	2K9	27	2160 - 9
AT162719	1J13	14	0962 - 3
AT162719	1J15	14	0962 - 3B
AT162848	2I7	17	1830 - 11
AT162863	1H20	7	0505 - 5
AT162863	1J7	42	0930 - 3
AT162863	2E4	1	1674 - 37
AT162863	3E18	34	3160 - 69
AT163156	2C18	19	1672 - 3
AT163872	2I3	5	1830 - 6
AT165288	1D14	3	0342 - 3
AT166149	1C20	4	0260 - 5
AT166149	1D6	5	0260 - 21
AT166149	2K19	4	2160 - 19
AT167553	1C24	4	0260 - 9
AT167553	1K19	3	1163 - 3
AT167553	2K19	8	2160 - 19
AT167553	3C24	40	3160 - 27
AT167553	3E21	13	3160 - 73
AT167553	3E23	13	3160 - 75
AT167553	3E25	7	3160 - 77
AT168543	2I3	8	1830 - 6
AT169157	3C10	9	3160 - 9
AT169282	1J25	5	0963 - 3
AT169849	1J13	5	0962 - 3
AT169849	1J15	5	0962 - 3B
AT169886	1K8	7	1063 - 3
AT169886	3C24	12	3160 - 27
AT169939	2K19	6	2160 - 19
AT169939	3E21	14	3160 - 73
AT169939	3E23	14	3160 - 75
AT169939	3E25	8	3160 - 77
AT170005	2F6	4	1810 - 3
AT170759	1H22	4	0505 - 7
AT170991	3C12	33	3160 - 11
AT170991	3C14	33	3160 - 13
AT170991	3C18	33	3160 - 21
AT171162	1H22	6	0505 - 7
AT171679	2G22	8	1816 - 3
AT171679	2G24	6	1816 - 3B
AT172629	3E6	1	3160 - 57
AT172629	3E12	1	3160 - 63
AT173193	2F10	9	1810 - 7
AT173313	2H10	1	1821 - 7
AT173313	2H14	2	1821 - 11
AT173313	2H14	17	1821 - 11
AT173313	2H14	18	1821 - 11
AT173313	2H14	19	1821 - 11
AT173314	2H10	3	1821 - 7
AT173314	2H14	3	1821 - 11
AT173315	2H10	2	1821 - 7
AT173315	2H14	4	1821 - 11
AT173316	2H8	7	1821 - 5
AT173317	2H10	4	1821 - 7
AT173318	2H12	2	1821 - 9
AT173319	2H8	8	1821 - 5
AT173319	2H12	1	1821 - 9
AT173320	2H10	8	1821 - 7
AT173320	2H12	3	1821 - 9
AT173321	2H10	4	1821 - 7
AT173321	2H10	5	1821 - 7
AT173321	2H14	11	1821 - 11
AT173321	2H14	12	1821 - 11
AT173321	2H14	29	1821 - 11
AT173321	2H14	30	1821 - 11
AT173321	2H14	31	1821 - 11
AT173321	2H14	40	1821 - 11
AT173322	2H10	6	1821 - 7
AT173323	2H8	3	1821 - 5
AT173325	2H8	2	1821 - 5
AT173326	2H8	4	1821 - 5
AT173327	2H8	5	1821 - 5
AT173328	2H8	1	1821 - 5
AT173354	2B3	7	1314 - 1
AT173355	2D5	2	1673 - 5
AT175222	1I10	6	0520 - 3
AT175224	1I10	8	0520 - 3
AT175424	2E10	4	1676 - 1
AT175781	1J7	21	0930 - 3
AT175781	1J9	21	0930 - 5
AT175831	1F6	5	0360 - 3B
AT176801	2D25	1	1674 - 25
AT177950	2K9	28	2160 - 9
AT178065	2G25	1	1821 - 1
AT178840	2C2	1	1369 - 5
AT178842	2C2	1	1369 - 5
AT178843	2C2	1	1369 - 5
AT178844	2C2	1	1369 - 5
AT179935	3C16	24	3160 - 15
AT180333	2C2	1	1369 - 5
AT180334	2C2	1	1369 - 5
AT180335	2C2	1	1369 - 5
AT180344	2C4	1	1369 - 7
AT180588	1I10	7	0520 - 3
AT180692	2K7	1	2160 - 7
AT181313	1K6	4	1062 - 3
AT183016	2C3	1	1369 - 6
AT183222	1H22	7	0505 - 7
AT184869	2K15	38	2160 - 15
AT186257	2K5	1	2160 - 5
AT186257	2K5	8	2160 - 5
AT186760	2J17	1	2002 - 3
AT188759	2J13	8	2001 - 3
AT188759	2J15	8	2001 - 3B
AT189390	2J18	1	2003 - 2
AT189487	2J18	4	2003 - 2
AT191487	1J13	16	0962 - 3
AT191487	1J15	16	0962 - 3B
AT192956	2J13	13	2001 - 3
AT192957	2J13	13	2001 - 3
AT192958	2J13	13	2001 - 3
AT193500	2H24	4	1830 - 3B
AT195301	2D15	10	1674 - 9B
AT195301	2D25	3	1674 - 25
AT195302	2D15	11	1674 - 9B
AT195302	2D25	4	1674 - 25
AT195441	2H2	1	1821 - 3
AT195442	2H2	6	1821 - 3
AT196427	2J17	1	2002 - 3
AT196760	3E18	32	3160 - 69
AT196943	2K17	2	2160 - 17
AT202610	1J13	29	0962 - 3
AT202726	2G4	15	1810 - 21
AT202732	2F24	1	1810 - 17
AT202784	2G2	11	1810 - 19
AT202786	2D9	1	1674 - 1
AT202786	2D15	12	1674 - 9B
AT202787	2D9	1	1674 - 1
AT202788	2D9	1	1674 - 1
AT202789	2B3	7	1314 - 1
AT202795	2D9	1	1674 - 1
AT202796	2D9	1	1674 - 1
AT202797	2D9	1	1674 - 1
AT202798	2D9	1	1674 - 1
AT202800	2D9	1	1674 - 1
AT202800	2E3	2	1674 - 36
AT202805	3E21	15	3160 - 73
AT202805	3E23	15	3160 - 75
AT202812	2C15	2	1671 - 2
AT202813	2C15	1	1671 - 2
AT202814	2C15	3	1671 - 2
AT202815	2C16	7	1671 - 3
AT202824	2D10	1	1674 - 6
AT202824	3E21	16	3160 - 73
AT202824	3E23	16	3160 - 75
AT202824	3E25	16	3160 - 77
AT202827	3F9	18	3166 - 3
AT202827	3F11	4	3166 - 3B
AT202831	2D16	3	1674 - 10
AT202842	2D9	1	1674 - 1
AT202934	2E2	2	1674 - 35
AT202935	2D16	1	1674 - 10
AT202940	2D9	1	1674 - 1
AT202955	1D16	14	0350 - 3
AT202958	2D9	1	1674 - 1
AT203128	2D25	5	1674 - 25
AT203130	3F9	8	3166 - 3
AT203130	3F11	5	3166 - 3B
AT203137	2B3	3	1314 - 1
AT203181	1I24	18	0567 - 9
AT203181	1J2	18	0567 - 11
AT203182	1J25	3	0963 - 3
AT203457	1K6	6	1062 - 3
AT203483	3B18	16	3140 - 3
AT203487	2K11	1	2160 - 11
AT203487	2K15	36	2160 - 15
AT203487	2K15	39	2160 - 15
AT203492	1J7	22	0930 - 3
AT203492	1J9	22	0930 - 5
AT203500	2D9	1	1674 - 1
AT203566	1H20	15	0505 - 5
AT206660	2B3	8	1314 - 1
AT206671	3B10	7	3102 - 3
AT206685	2E4	1	1674 - 37
AT206721	1K6	27	1062 - 3
AT206731	3F5	45	3165 - 3
AT206731	3F7	45	3165 - 3B
AT206751	2E13	5	1740 - 3
AT206794	1C6	24	0210 - 19
AT206818	1H20	16	0505 - 5
AT206878	2D4	7A	1673 - 3
AT206912	2E3	3	1674 - 36
AT206923	2J25	8	2008 - 3
AT206980	2C16	3	1671 - 3
AT207022	1C6	1	0210 - 19
AT207022	1C22	3	0260 - 7
AT207022	1D2	2	0260 - 15
AT207022	1J11	11	0960 - 15
AT207082	1H20	17	0505 - 5
AT207096	1K8	8	1063 - 3
AT207096	1K10	8	1063 - 5
AT207144	2F24	1	1810 - 17
AT207287	3B20	2	3140 - 5
AT207330	1D12	13	0325 - 3
AT207432	2E17	4	1746 - 3
AT207433	2E17	3	1746 - 3

NUMERICAL INDEX - CONTINUED

PART NO.	GRID	KEY	PAGE
AT207497	2G8	3	1810 - 23B
AT207529	1K6	28	1062 - 3
AT207709	2D9	1	1674 - 1
AT207717	3B18	32	3140 - 3
AT207858	1J7	45	0930 - 3
AT207869	1I24	19	0567 - 9
AT207869	1J2	19	0567 - 11
AT207923	3C22	12	3160 - 25
AT207947	1K6	46	1062 - 3
AT207948	1K6	45	1062 - 3
AT207952	2C20	2	1672 - 5
AT208006	1I4	9	0512 - 3
AT208015	1K19	2	1163 - 3
AT208085	1K6	11	1062 - 3
AT208086	1K6	18	1062 - 3
AT208087	1K6	22	1062 - 3
AT208088	1K6	7	1062 - 3
AT208089	1K6	25	1062 - 3
AT208101	1K15	4	1115 - 3
AT208123	3B18	20	3140 - 3
AT208156	1B5	2	0110 - 5
AT208159	2I19	1	1910 - 5
AT208163	1K6	23	1062 - 3
AT208166	1K6	60	1062 - 3
AT208167	1K6	12	1062 - 3
AT208178	3D22	34	3160 - 49
AT208178	3E6	23	3160 - 57
AT208179	3D22	35	3160 - 49
AT208180	3D22	45	3160 - 49
AT208181	3D22	42	3160 - 49
AT208182	3D22	41	3160 - 49
AT208182	3E6	28	3160 - 57
AT208183	3D22	43	3160 - 49
AT208188	3D20	1	3160 - 47
AT208410	2I7	10	1830 - 11
AT208411	1D2	3	0260 - 15
AT208411	1K15	6	1115 - 3
AT208424	2K15	20	2160 - 15
AT208424	2K15	21	2160 - 15
AT208424	2K15	22	2160 - 15
AT208425	2K15	31	2160 - 15
AT208425	2K15	35	2160 - 15
AT208426	2K15	29	2160 - 15
AT208426	2K15	30	2160 - 15
AT208435	2D8	3	1673 - 10
AT208435	2D8	6	1673 - 10
AT208483	2H14	5	1821 - 11
AT208484	2H14	6	1821 - 11
AT208485	2H14	7	1821 - 11
AT208486	2H14	8	1821 - 11
AT208487	2H14	9	1821 - 11
AT208487	2H14	20	1821 - 11
AT208487	2H14	21	1821 - 11
AT208487	2H14	22	1821 - 11
AT208487	2H14	23	1821 - 11
AT208487	2H14	24	1821 - 11
AT208488	2H14	15	1821 - 11
AT208488	2H14	36	1821 - 11
AT208488	2H14	37	1821 - 11
AT208490	2H14	10	1821 - 11
AT208490	2H14	25	1821 - 11
AT208490	2H14	26	1821 - 11
AT208490	2H14	27	1821 - 11
AT208490	2H14	28	1821 - 11
AT208491	2H14	11	1821 - 11
AT208491	2H14	32	1821 - 11
AT208531	2H2	7	1821 - 3
AT208531	2H14	1	1821 - 11
AT208541	2C22	17	1672 - 7
AT208622	3B22	10	3140 - 7
AT208622	3B24	10	3140 - 7B
AT208630	2D9	1	1674 - 1
AT208630	2D25	6	1674 - 25
AT208630	2E1	1	1674 - 25A
AT208633	2K5	90	2160 - 5
AT208633	2K7	90	2160 - 7
AT208634	2K7	1	2160 - 7
AT208638	2K5	13	2160 - 5
AT208638	2K5	91	2160 - 5
AT208638	2K7	91	2160 - 7
AT208691	3C20	8	3160 - 23
AT208691	3C22	13	3160 - 25
AT208691	3C24	15	3160 - 27
AT208694	1J25	4	0963 - 3
AT208695	1J25	2	0963 - 3
AT208696	1C18	5	0260 - 3
AT208696	1C20	7	0260 - 5
AT208725	1J7	23	0930 - 3
AT208725	1J9	23	0930 - 5
AT208760	3E8	12	3160 - 59
AT208760	3E10	14	3160 - 61
AT208760	3E12	13	3160 - 63
AT208760	3E12	18	3160 - 63
AT208760	3E12	28	3160 - 63
AT208776	2I7	1	1830 - 11
AT208882	3E21	26	3160 - 73
AT208911	3D16	5	3160 - 43
AT208911	3D20	4	3160 - 47
AT208911	3D20	5	3160 - 47
AT208911	3E6	4	3160 - 57
AT208911	3E6	5	3160 - 57
AT208911	3E12	1	3160 - 63
AT208911	3E12	4	3160 - 63
AT208924	3E18	90	3160 - 69
AT208924	3E19	7	3160 - 70
AT208975	3B10	9	3102 - 3
AT209003	1K19	2	1163 - 3
AT209020	2H6	11	1821 - 3D
AT209021	2H6	10	1821 - 3D
AT209022	2H6	4	1821 - 3D
AT209022	2H6	12	1821 - 3D
AT209024	2H4	8	1821 - 3B
AT209025	2H2	10	1821 - 3
AT209026	2H4	6	1821 - 3B
AT209031	2H2	7	1821 - 3
AT209081	3C2	8	3140 - 9
AT209082	3C2	1	3140 - 9
AT209083	2E17	5	1746 - 3
AT209112	2K19	1	2160 - 19
AT209123	2D9	1	1674 - 1
AT209141	1I12	9	0530 - 3
AT209152	1I10	9	0520 - 3
AT209185	1C8	5	0240 - 3
AT209221	1D14	12	0342 - 3
AT209225	2H2	10	1821 - 3
AT209285	3C20	9	3160 - 23
AT209285	3C22	14	3160 - 25
AT209285	3C24	16	3160 - 27
AT209375	2C15	1	1671 - 2
AT209376	2C15	3	1671 - 2
AT209421	2C15	2	1671 - 2
AT209432	2K19	3	2160 - 19
AT209463	2D21	4	1674 - 23
AT209469	2H14	13	1821 - 11
AT209469	2H14	33	1821 - 11
AT209469	2H14	34	1821 - 11
AT209469	2H14	35	1821 - 11
AT209495	1K15	7	1115 - 3
AT209537	1J7	24	0930 - 3
AT209537	1J9	24	0930 - 5
AT209592	1H24	19	0511 - 3
AT209660	1I14	6	0540 - 3
AT209668	2H22	14	1830 - 3
AT209677	3B14	12	3102 - 5
AT209679	3B8	5	3102 - 1
AT209703	1D14	2	0342 - 3
AT209704	1D14	6	0342 - 3
AT209724	1I6	10	0515 - 3
AT209748	3C12	35	3160 - 11
AT209750	3C12	35	3160 - 11
AT209750	3C14	35	3160 - 13
AT209750	3C18	35	3160 - 21
AT209758	3C12	44	3160 - 11
AT209762	3C14	46	3160 - 13
AT209779	3D22	93	3160 - 49
AT209783	3E6	90	3160 - 57
AT209784	3D22	91	3160 - 49
AT209788	3D22	92	3160 - 49
AT209789	3D22	62	3160 - 49
AT209811	3C10	9	3160 - 9
AT209878	2K5	2	2160 - 5
AT209879	2K5	1	2160 - 5
AT209879	2K5	3	2160 - 5
AT209881	2K5	4	2160 - 5
AT209907	1K19	1	1163 - 3
AT209908	2G2	9	1810 - 19
AT209908	2G4	11	1810 - 21
AT209909	2G4	10	1810 - 21
AT209910	2G2	4	1810 - 19
AT209912	2G2	3	1810 - 19
AT209947	2F10	12	1810 - 7
AT210022	1C6	20	0210 - 19
AT210031	2I7	8	1830 - 11
AT210075	3C20	10	3160 - 23
AT210075	3C22	15	3160 - 25
AT210075	3C24	17	3160 - 27
AT210077	3C20	11	3160 - 23
AT210078	3C22	16	3160 - 25
AT210078	3C24	18	3160 - 27
AT210078	3E18	30	3160 - 69
AT210086	2H24	5	1830 - 3B
AT210092	1J7	27	0930 - 3
AT210092	1J9	27	0930 - 5
AT210093	1J7	28	0930 - 3
AT210093	1J9	28	0930 - 5
AT210145	3E12	2	3160 - 63
AT210155	1J7	29	0930 - 3
AT210155	1J9	29	0930 - 5
AT210207	1J7	30	0930 - 3
AT210207	1J9	30	0930 - 5
AT210213	3E2	12	3160 - 53
AT210213	3E6	17	3160 - 57
AT210213	3E6	30	3160 - 57
AT210213	3E6	31	3160 - 57
AT210214	3E6	32	3160 - 57
AT210216	3C20	12	3160 - 23
AT210216	3C22	17	3160 - 25
AT210216	3C24	19	3160 - 27
AT210217	3C20	13	3160 - 23
AT210217	3C22	18	3160 - 25
AT210217	3C24	20	3160 - 27

NUMERICAL INDEX - CONTINUED

PART NO.	GRID	KEY	PAGE
AT210218	3C20	14	3160 - 23
AT210218	3C22	19	3160 - 25
AT210218	3C24	21	3160 - 27
AT210219	3C20	15	3160 - 23
AT210219	3C22	20	3160 - 25
AT210219	3C24	22	3160 - 27
AT210229	1K6	44	1062 - 3
AT210246	2D4	11	1673 - 3
AT210247	3E12	90	3160 - 63
AT210249	3D20	15	3160 - 47
AT210250	3D20	16	3160 - 47
AT210263	3E6	13	3160 - 57
AT210267	3E18	24	3160 - 69
AT210268	3E18	26	3160 - 69
AT210291	1K6	29	1062 - 3
AT210333	2D4	8	1673 - 3
AT210334	2D15	13	1674 - 9B
AT210334	2D25	13	1674 - 25
AT210344	1D12	3	0325 - 3
AT210376	3D22	63	3160 - 49
AT210378	1H20	26	0505 - 5
AT210394	2D16	20	1674 - 10
AT210399	1J7	31	0930 - 3
AT210399	1J9	31	0930 - 5
AT210400	3C20	16	3160 - 23
AT210400	3C22	21	3160 - 25
AT210400	3C24	23	3160 - 27
AT210490	2C10	10	1369 - 13
AT210549	2H8	6	1821 - 5
AT210561	2H22	15	1830 - 3
AT210683	3C10	19	3160 - 9
AT210684	3C18	39	3160 - 21
AT210685	3C12	1	3160 - 11
AT210685	3C18	37	3160 - 21
AT210686	3C12	44	3160 - 11
AT210686	3C14	44	3160 - 13
AT210686	3C18	42	3160 - 21
AT210686	3C18	43	3160 - 21
AT210686	3C18	44	3160 - 21
AT210687	3C12	11	3160 - 11
AT210694	3C10	15	3160 - 9
AT210695	3C10	15	3160 - 9
AT210697	3C16	22	3160 - 15
AT210712	1I4	10	0512 - 3
AT210773	1E22	1	0350 - 37
AT210781	2I7	5	1830 - 11
AT210838	1C6	26	0210 - 19
AT210877	1K6	34	1062 - 3
AT210898	3E18	6	3160 - 69
AT210950	3C10	19	3160 - 9
AT210951	3C10	19	3160 - 9
AT210969	3C4	1	3160 - 3
AT210969	3C6	1	3160 - 5
AT210969	3C8	1	3160 - 7
AT210969	3C12	1	3160 - 11
AT211038	2K7	3	2160 - 7
AT211039	2K5	12	2160 - 5
AT211040	2K5	1	2160 - 5
AT211041	2I2	18	1830 - 5
AT211207	1D12	7	0325 - 3
AT211296	2F14	8	1810 - 11
AT211296	2G16	3	1810 - 27B
AT211296	2G18	4	1810 - 29
AT211362	2E3	6	1674 - 36
AT211367	1C6	27	0210 - 19
AT211377	2H16	1	1822 - 3
AT211379	1I20	19	0567 - 5
AT211381	1I20	10	0567 - 5
AT211417	1J7	33	0930 - 3
AT211417	1J9	33	0930 - 5
AT211450	3E21	8	3160 - 73
AT211451	3E21	7	3160 - 73
AT211452	3E21	1	3160 - 73
AT211452	3E23	1	3160 - 75
AT211452	3E25	17	3160 - 77
AT211453	3E21	4	3160 - 73
AT211453	3E23	4	3160 - 75
AT211453	3E25	18	3160 - 77
AT211466	1I6	11	0515 - 3
AT211475	1D12	4	0325 - 3
AT211477	1F2	4	0350 - 43
AT211480	2I2	5	1830 - 5
AT211494	1H20	8	0505 - 5
AT211495	1H20	18	0505 - 5
AT21574	1H24	20	0511 - 3
AT21574	2K9	11	2160 - 9
AT217448	2J23	1	2007 - 1
AT217448	2J23	5	2007 - 1
AT219746	3B10	11	3102 - 3
AT219746	3B18	5	3140 - 3
AT219746	3C2	11	3140 - 9
AT219778	2H24	7	1830 - 3B
AT219792	1K12	10	1064 - 7
AT219855	1B5	2	0110 - 5
AT219893	3C18	..	3160 - 21
AT219895	3C10	19	3160 - 9
AT219909	3E6	34	3160 - 57
AT219974	2I24	5	1921 - 3
AT219974	2I24	18	1921 - 3
AT219985	3E21	6	3160 - 73
AT219985	3E23	6	3160 - 75
AT219985	3E25	19	3160 - 77
AT220015	2I24	6	1921 - 3
AT220035	3C18	50	3160 - 21
AT220036	3C14	29	3160 - 13
AT220039	1E6	30	0350 - 17
AT220096	3C4	22	3160 - 3
AT220096	3C6	20	3160 - 5
AT220096	3C8	20	3160 - 7
AT220096	3C12	4	3160 - 11
AT220174	3C14	1	3160 - 13
AT220192	3E21	17	3160 - 73
AT220192	3F2	18	3160 - 79
AT220223	1J13	19	0962 - 3
AT220223	1J15	19	0962 - 3B
AT220224	1J13	20	0962 - 3
AT220224	1J13	21	0962 - 3
AT220224	1J13	22	0962 - 3
AT220224	1J15	20	0962 - 3B
AT220225	1J13	17	0962 - 3
AT220225	1J13	26	0962 - 3
AT220226	1J13	15	0962 - 3
AT220226	1J13	18	0962 - 3
AT220226	1J15	15	0962 - 3B
AT220227	1J13	17	0962 - 3
AT220227	1J13	27	0962 - 3
AT220227	1J13	28	0962 - 3
AT220236	2I2	25	1830 - 5
AT220357	3E6	34	3160 - 57
AT220440	1I12	9	0530 - 3
AT220494	2I19	8	1910 - 5
AT220517	2D9	1	1674 - 1
AT220517	3E18	35	3160 - 69
AT220544	2I2	26	1830 - 5
AT220730	1D6	4	0260 - 21
AT220732	1D6	10	0260 - 21
AT220734	1D6	15	0260 - 21
AT220735	1D6	16	0260 - 21
AT220744	1D6	6	0260 - 21
AT220788	3F2	17	3160 - 79
AT220827	3C14	11	3160 - 13
AT220827	3C18	11	3160 - 21
AT220829	3C12	11	3160 - 11
AT220831	3C12	32	3160 - 11
AT220831	3C14	32	3160 - 13
AT220831	3C18	32	3160 - 21
AT220832	1D8	7	0260 - 23
AT220925	1D6	12	0260 - 21
AT220953	2H22	17	1830 - 3
AT220957	3C22	22	3160 - 25
AT220957	3C24	24	3160 - 27
AT220958	3C22	23	3160 - 25
AT220958	3C24	25	3160 - 27
AT220959	3C24	26	3160 - 27
AT220960	3C24	27	3160 - 27
AT220993	2I24	17	1921 - 3
AT220994	2I24	1	1921 - 3
AT221019	2H2	8	1821 - 3
AT221020	2H2	3	1821 - 3
AT221021	2H2	4	1821 - 3
AT221116	2C18	19	1672 - 3
AT221273	2I24	18	1921 - 3
AT221332	2E17	9	1746 - 3
AT221350	3F9	7	3166 - 3
AT221356	3F9	3	3166 - 3
AT221359	2K9	42	2160 - 9
AT221506	3C12	46	3160 - 11
AT221628	3F9	18	3166 - 3
AT221628	3F11	4	3166 - 3B
AT221629	2D10	1	1674 - 6
AT221696	2I19	5	1910 - 5
AT221754	2I19	15	1910 - 5
AT221897	2K9	16	2160 - 9
AT221930	1I16	8	0560 - 3
AT221967	2I19	4	1910 - 5
AT222004	1D16	4	0350 - 3
AT222005	1F9	7	0360 - 8
AT222027	2K21	14	2160 - 21
AT222054	1D14	1	0342 - 3
AT222093	2E20	3	1746 - 6
AT222153	1J13	2	0962 - 3
AT222153	1J15	2	0962 - 3B
AT222365	2D4	7A	1673 - 3
AT222366	2D9	1	1674 - 1
AT222366	3F9	8	3166 - 3
AT222366	3F11	5	3166 - 3B
AT222367	1K17	7	1162 - 3
AT222371	1K6	27	1062 - 3
AT222372	1K6	59	1062 - 3
AT222372	3E18	20	3160 - 69
AT222377	2D11	4	1674 - 7
AT222390	3C12	1	3160 - 11
AT222402	2G20	1	1810 - 31
AT222413	1K8	9	1063 - 3
AT222414	1K12	12	1064 - 7
AT222436	2B3	3	1314 - 1
AT222520	3C2	8	3140 - 9
AT222597	1I12	13	0530 - 3
AT222602	2I22	2	1913 - 5
AT222678	2E7	1	1674 - 60
AT222815	1H24	22	0511 - 3

NUMERICAL INDEX - CONTINUED

PART NO.	GRID	KEY	PAGE
AT222882	2I22	1	1913 - 5
AT223011	2J2	2	1927 - 3
AT223019	2H18	2	1822 - 5
AT223025	2H18	1	1822 - 5
AT223056	3E18	27	3160 - 69
AT223073	2I11	5	1830 - 15
AT223091	1H24	23	0511 - 3
AT223133	1I16	17	0560 - 3
AT223173	2K19	12	2160 - 19
AT223226	1I10	10	0520 - 3
AT223265	2K3	14	2160 - 3
AT223271	2H16	5	1822 - 3
AT223272	2H18	5	1822 - 5
AT223273	2H18	4	1822 - 5
AT223274	2J2	1	1927 - 3
AT223381	2H16	6	1822 - 3
AT223390	1J21	6	0962 - 9
AT223493	1I16	38	0560 - 3
AT223520	3E19	7	3160 - 70
AT223531	2H24	1	1830 - 3B
AT223535	1K6	59	1062 - 3
AT223535	3E18	20	3160 - 69
AT223538	1K17	7	1162 - 3
AT223584	1F4	6	0360 - 3
AT223648	1J7	34	0930 - 3
AT223648	1J9	34	0930 - 5
AT223658	2K9	21	2160 - 9
AT223687	2I11	13	1830 - 15
AT223688	2I11	7	1830 - 15
AT223689	2I11	11	1830 - 15
AT223728	1D8	17	0260 - 23
AT223768	1K12	11	1064 - 7
AT223805	1D8	17	0260 - 23
AT223806	3E18	11	3160 - 69
AT223806	3E19	7	3160 - 70
AT223807	2D7	4	1673 - 9
AT223810	1I10	4	0520 - 3
AT223869	2D13	11	1674 - 9
AT223870	2J13	1	2001 - 3
AT223870	2J15	1	2001 - 3B
AT223897	2J13	2	2001 - 3
AT223897	2J15	2	2001 - 3B
AT223949	1I22	3	0567 - 7
AT223949	1J2	28	0567 - 11
AT223949	1K8	8	1063 - 3
AT223949	1K10	8	1063 - 5
AT223950	1I22	4	0567 - 7
AT223953	2K19	5	2160 - 19
AT223963	1J7	35	0930 - 3
AT223963	1J9	35	0930 - 5
AT223988	2I24	13A	1921 - 3
AT223991	2I7	16	1830 - 11
AT224217	2G2	10	1810 - 19
AT224233	2F12	13	1810 - 9
AT224234	2F12	13	1810 - 9
AT224235	2F22	12	1810 - 15D
AT224241	3D16	9	3160 - 43
AT224241	3D22	58	3160 - 49
AT224242	3E2	13	3160 - 53
AT224246	3E8	13	3160 - 59
AT224247	2H2	9	1821 - 3
AT224248	2H2	9	1821 - 3
AT224266	2K9	38	2160 - 9
AT224318	3C20	17	3160 - 23
AT224318	3C22	24	3160 - 25
AT224318	3C24	28	3160 - 27
AT224427	1I6	3	0515 - 3
AT224430	1K12	4	1064 - 7
AT224476	1H24	25	0511 - 3
AT224477	1H24	26	0511 - 3
AT224497	1K17	3	1162 - 3
AT224497	1K17	5	1162 - 3
AT224570	1J3	1	0567 - 12
AT224570	2K17	1	2160 - 17
AT224574	3E19	3	3160 - 70
AT224576	1K17	4	1162 - 3
AT224600	3E18	36	3160 - 69
AT224699	3E19	5	3160 - 70
AT224701	3E19	1	3160 - 70
AT224702	3E19	1	3160 - 70
AT224703	3E19	1	3160 - 70
AT224703	3F3	1	3160 - 80
AT224706	1J3	2	0567 - 12
AT224706	3E19	2	3160 - 70
AT224706	3E19	3	3160 - 70
AT224748	2D21	15	1674 - 23
AT224753	2D13	19	1674 - 9
AT224765	2D21	5	1674 - 23
AT224770	3C12	1	3160 - 11
AT224774	2E19	3	1746 - 5
AT224797	2K9	18	2160 - 9
AT224813	1I16	16	0560 - 3
AT224823	2D13	19	1674 - 9
AT224826	2D21	16	1674 - 23
AT224828	2D21	5	1674 - 23
AT224829	2D21	4	1674 - 23
AT224833	1I10	26	0520 - 3
AT224844	1H24	27	0511 - 3
AT224845	1H24	28	0511 - 3
AT224850	3C18	29	3160 - 21
AT224861	1H24	29	0511 - 3
AT224862	1J3	1	0567 - 12
AT224862	2K17	1	2160 - 17
AT224863	1K17	2	1162 - 3
AT224864	1K17	2	1162 - 3
AT224865	1J3	2	0567 - 12
AT224865	2K17	5	2160 - 17
AT224865	3E19	2	3160 - 70
AT224866	1J3	2	0567 - 12
AT224866	3E19	2	3160 - 70
AT224873	1K17	4	1162 - 3
AT224873	2K17	7	2160 - 17
AT224873	2K17	8	2160 - 17
AT224879	2D21	17	1674 - 23
AT224893	2D16	5	1674 - 10
AT224893	2D18	2	1674 - 10B
AT224893	2J13	25	2001 - 3
AT224893	2J15	25	2001 - 3B
AT224894	2D16	5	1674 - 10
AT224894	2D17	2	1674 - 10A
AT224923	2D5	1	1673 - 5
AT224923	2D5	3	1673 - 5
AT224923	2D5	5	1673 - 5
AT224923	2F12	3	1810 - 9
AT224930	2H24	57	1830 - 3B
AT224948	2H18	3	1822 - 5
AT224986	1D12	10	0325 - 3
AT224990	2F14	10	1810 - 11
AT224991	2F14	11	1810 - 11
AT224994	2F16	1	1810 - 13
AT224994	2F18	21	1810 - 15
AT224995	2F16	10	1810 - 13
AT225011	3E18	36	3160 - 69
AT225031	1I16	20	0560 - 3
AT225049	2E19	2	1746 - 5
AT225054	1I12	10	0530 - 3
AT225082	3E19	6	3160 - 70
AT225083	3E19	6	3160 - 70
AT225083	3F3	1	3160 - 80
AT225084	3E19	4	3160 - 70
AT225085	3E19	4	3160 - 70
AT225085	3F3	2	3160 - 80
AT225086	2D4	12	1673 - 3
AT225102	1H24	30	0511 - 3
AT225114	1I10	19	0520 - 3
AT225137	1D12	8	0325 - 3
AT225143	3C18	1	3160 - 21
AT225145	2I17	3	1910 - 2
AT225149	1H24	31	0511 - 3
AT225156	2K9	30	2160 - 9
AT225170	1B5	2	0110 - 5
AT225182	2I24	3	1921 - 3
AT225189	1F4	12	0360 - 3
AT225226	2E13	1	1740 - 3
AT225240	1I12	11	0530 - 3
AT225249	3E19	3	3160 - 70
AT225252	1D12	12	0325 - 3
AT225253	1D12	9	0325 - 3
AT225255	1D12	11	0325 - 3
AT225330	1I10	23	0520 - 3
AT225423	1H24	32	0511 - 3
AT225425	3D2	8	3160 - 29
AT225425	3D4	7	3160 - 31
AT225425	3D6	13	3160 - 33
AT225426	3D14	6	3160 - 41
AT225430	3D8	11	3160 - 35
AT225432	3D12	11	3160 - 39
AT225451	2H24	37	1830 - 3B
AT225469	3B18	27	3140 - 3
AT225491	1I10	12	0520 - 3
AT225503	3E18	23	3160 - 69
AT225504	1I20	9	0567 - 5
AT225504	1J2	20	0567 - 11
AT225505	1I20	10	0567 - 5
AT225530	3E23	17	3160 - 75
AT225530	3E25	9	3160 - 77
AT225530	3F3	3	3160 - 80
AT225573	1K12	13	1064 - 7
AT225574	2K13	11	2160 - 13
AT225612	1E7	1	0350 - 18
AT225618	2H16	7	1822 - 3
AT225629	2I19	16	1910 - 5
AT225655	1E7	1	0350 - 18
AT225698	3E19	5	3160 - 70
AT225706	2F22	13	1810 - 15D
AT225728	1K15	8	1115 - 3
AT225747	1I24	21	0567 - 9
AT225747	1J2	21	0567 - 11
AT225760	2I20	4	1913 - 3
AT225792	3C4	1	3160 - 3
AT225793	3C6	1	3160 - 5
AT225794	3C8	1	3160 - 7
AT225799	3C16	22	3160 - 15
AT225800	3C16	21	3160 - 15
AT225805	1J2	..	0567 - 11
AT225805	1J3	5	0567 - 12
AT225825	3B20	1	3140 - 5
AT225843	2F14	9	1810 - 11
AT225899	2H24	8	1830 - 3B
AT225952	2D9	1	1674 - 1
AT225980	1H24	33	0511 - 3

NUMERICAL INDEX - CONTINUED

PART NO.	GRID	KEY	PAGE
AT225983	2I20	3	1913 - 3
AT226000	2F18	10	1810 - 15
AT226026	1I24	90	0567 - 9
AT226072	2G6	12	1810 - 23
AT226073	2G6	13	1810 - 23
AT226082	2G22	11	1816 - 3
AT226086	1I24	22	0567 - 9
AT226086	1J2	22	0567 - 11
AT226087	2K19	7	2160 - 19
AT226109	1J3	3	0567 - 12
AT226110	1J3	3	0567 - 12
AT226114	2E21	1	1749 - 2
AT226119	3D6	10	3160 - 33
AT226123	2H12	4	1821 - 9
AT226132	3E4	11	3160 - 55
AT226133	3E4	13	3160 - 55
AT226151	2F18	22	1810 - 15
AT226152	2F18	25	1810 - 15
AT226156	2E13	13	1740 - 3
AT226156	2E13	17	1740 - 3
AT226162	2E10	1A	1676 - 1
AT226176	2F18	27	1810 - 15
AT226229	2I19	17	1910 - 5
AT226249	2H22	18	1830 - 3
AT226263	2G6	14	1810 - 23
AT226265	3F3	2	3160 - 80
AT226266	3F3	1	3160 - 80
AT226269	2G6	6	1810 - 23
AT226273	2I2	9	1830 - 5
AT226273	2I3	8	1830 - 6
AT226279	2G22	4	1816 - 3
AT226282	2J19	2	2004 - 1
AT226300	3F13	11	3166 - 5
AT226301	3F13	12	3166 - 5
AT226302	3D2	9	3160 - 29
AT226303	3D8	8	3160 - 35
AT226303	3D12	8	3160 - 39
AT226309	2H24	12	1830 - 3B
AT226322	3D4	17	3160 - 31
AT226322	3D10	18	3160 - 37
AT226322	3D18	17	3160 - 45
AT226322	3E4	26	3160 - 55
AT226322	3E10	30	3160 - 61
AT226322	3E16	4	3160 - 67
AT226323	3E16	6	3160 - 67
AT226324	3E16	7	3160 - 67
AT226333	3D14	6	3160 - 41
AT226334	2G6	15	1810 - 23
AT226334	2G10	8	1810 - 23D
AT226338	2D8	6	1673 - 10
AT226339	2D13	11	1674 - 9
AT226344	3F13	21	3166 - 5
AT226385	2F14	12	1810 - 11
AT226404	1I24	23	0567 - 9
AT226404	1J2	23	0567 - 11
AT226421	2G22	5	1816 - 3
AT226454	3D2	11	3160 - 29
AT226454	3D4	8	3160 - 31
AT226454	3D8	9	3160 - 35
AT226454	3D10	7	3160 - 37
AT226454	3D12	9	3160 - 39
AT226495	2D15	26	1674 - 9B
AT226515	3E8	16	3160 - 59
AT226550	2C22	28	1672 - 7
AT226578	2F23	1	1810 - 16
AT226613	3E16	6	3160 - 67
AT226614	3D4	18	3160 - 31
AT226614	3D18	18	3160 - 45
AT226614	3E4	27	3160 - 55
AT226614	3E10	31	3160 - 61
AT226614	3E16	7	3160 - 67
AT226634	2B17	29	1322 - 9
AT226643	2B13	29	1322 - 7
AT226647	1H24	34	0511 - 3
AT226676	2H14	14	1821 - 11
AT226676	2H14	38	1821 - 11
AT226676	2H14	39	1821 - 11
AT226676	2H14	41	1821 - 11
AT226676	2H14	42	1821 - 11
AT226676	2H14	43	1821 - 11
AT226683	1I6	3	0515 - 3
AT226739	1H22	14	0505 - 7
AT226756	1I16	21	0560 - 3
AT226757	1I16	23	0560 - 3
AT226765	1I4	11	0512 - 3
AT226776	1I6	13	0515 - 3
AT226924	2D2	1	1672 - 11
AT226944	2E10	1B	1676 - 1
AT227008	1D4	8	0260 - 19B
AT227008	1I2	8	0511 - 5
AT227009	1D4	9	0260 - 19B
AT227009	1I2	9	0511 - 5
AT227010	1D4	10	0260 - 19B
AT227010	1I2	10	0511 - 5
AT227011	1D4	12	0260 - 19B
AT227011	1I2	12	0511 - 5
AT227013	2F23	1	1810 - 16
AT227063	2G22	10	1816 - 3
AT227063	2G24	4	1816 - 3B
AT227068	2G22	13	1816 - 3
AT227134	2E1	2	1674 - 25A
AT227138	2D23	9	1674 - 23B
AT227170	2H24	65	1830 - 3B
AT227248	1F8	10	0360 - 7
AT227260	2D4	12	1673 - 3
AT227279	1F8	5	0360 - 7
AT227279	2K9	24	2160 - 9
AT227405	3B10	15	3102 - 3
AT227419	1H24	60	0511 - 3
AT227487	1D4	11	0260 - 19B
AT227487	1I2	11	0511 - 5
AT227500	2E8	1	1674 - 61
AT227509	1I20	19	0567 - 5
AT227509	1J3	4	0567 - 12
AT227544	2F14	14	1810 - 11
AT227544	2G14	3	1810 - 27
AT227544	2G16	5	1810 - 27B
AT227545	2F14	15	1810 - 11
AT227545	2G14	4	1810 - 27
AT227545	2G16	6	1810 - 27B
AT227547	2G14	1	1810 - 27
AT227549	2F8	2	1810 - 5
AT227549	2G14	9	1810 - 27
AT227552	1D4	90	0260 - 19B
AT227552	1I2	90	0511 - 5
AT227583	2K9	31	2160 - 9
AT227603	1D6	6	0260 - 21
AT227605	1D6	4	0260 - 21
AT227651	1F8	6	0360 - 7
AT227668	2F20	3	1810 - 15B
AT227668	2I13	2	1830 - 15B
AT227669	2I13	3	1830 - 15B
AT227717	3E18	32	3160 - 69
AT227794	2G10	10B	1810 - 23D
AT227807	2K3	12	2160 - 3
AT227825	3B22	1	3140 - 7
AT227825	3B24	1	3140 - 7B
AT227860	2E17	6	1746 - 3
AT227925	3D6	1	3160 - 33
AT227925	3D14	1	3160 - 41
AT227926	3D6	2	3160 - 33
AT227927	3D6	4	3160 - 33
AT227927	3D14	10	3160 - 41
AT227927	3D14	..	3160 - 41
AT227928	3D6	3	3160 - 33
AT227928	3D14	9	3160 - 41
AT227928	3D14	..	3160 - 41
AT227929	3D6	5	3160 - 33
AT227929	3D14	..	3160 - 41
AT227930	3D6	6	3160 - 33
AT227930	3D14	2	3160 - 41
AT227930	3D14	..	3160 - 41
AT227933	3D6	9	3160 - 33
AT227933	3D14	5	3160 - 41
AT227951	3D4	..	3160 - 31
AT227953	3D8	..	3160 - 35
AT227955	3D12	90	3160 - 39
AT227957	3D14	11	3160 - 41
AT227957	3D14	..	3160 - 41
AT227965	2F20	4	1810 - 15B
AT227981	1D4	12	0260 - 19B
AT227981	1I2	12	0511 - 5
AT228055	2D21	16	1674 - 23
AT228138	2K13	10	2160 - 13
AT228138	2K17	13	2160 - 17
AT228159	1F6	7	0360 - 3B
AT228191	1J7	36	0930 - 3
AT228192	3C22	11	3160 - 25
AT228192	3C24	13	3160 - 27
AT228193	1J25	1	0963 - 3
AT228194	3C20	7	3160 - 23
AT228194	3C22	12	3160 - 25
AT228194	3C24	14	3160 - 27
AT228200	3E18	23	3160 - 69
AT228217	2C18	19	1672 - 3
AT228250	3E4	15	3160 - 55
AT228253	2G10	9	1810 - 23D
AT228260	3E10	15	3160 - 61
AT228261	3E4	16	3160 - 55
AT228474	2K9	17	2160 - 9
AT228617	1D6	5	0260 - 21
AT228618	1K10	11	1063 - 5
AT228702	3D16	10	3160 - 43
AT228702	3D20	18	3160 - 47
AT228702	3D22	27	3160 - 49
AT228702	3D22	48	3160 - 49
AT228702	3D22	50	3160 - 49
AT228702	3D22	51	3160 - 49
AT228702	3D22	52	3160 - 49
AT228702	3E2	15	3160 - 53
AT228702	3E8	14	3160 - 59
AT228703	3D16	11	3160 - 43
AT228703	3D18	7	3160 - 45
AT228703	3E2	14	3160 - 53
AT228703	3E4	17	3160 - 55
AT228703	3E8	15	3160 - 59
AT228703	3E10	16	3160 - 61
AT228747	2K9	20	2160 - 9
AT228894	3B10	12	3102 - 3
AT228896	3B24	1	3140 - 7B
AT25226	1B5	7	0110 - 5

NUMERICAL INDEX - CONTINUED

PART NO.	GRID	KEY	PAGE
AT25226	1B7	3	0110 - 7
AT280208	2I19	5	1910 - 5
AT280583	2H4	10	1821 - 3B
AT280924	2K9	13	2160 - 9
AT300098	2D15	29	1674 - 9B
AT300104	2G22	14	1816 - 3
AT300115	2G24	8	1816 - 3B
AT300154	3D10	9	3160 - 37
AT300156	3D10	10	3160 - 37
AT300441	2G10	10A	1810 - 23D
AT300524	1J13	26	0962 - 3
AT300524	1J13	28	0962 - 3
AT300524	1J13	29	0962 - 3
AT300524	1J15	21	0962 - 3B
AT300537	2D15	30	1674 - 9B
AT300646	2I7	10	1830 - 11
AT300662	3D18	9	3160 - 45
AT300664	3D18	10	3160 - 45
AT300664	3D24	8	3160 - 51
AT300664	3E4	19	3160 - 55
AT300664	3E10	18	3160 - 61
AT300676	2D15	15	1674 - 9B
AT300679	1B3	2	0110 - 3
AT300679	1B5	2	0110 - 5
AT300681	1B3	4	0110 - 3
AT300773	1H24	30	0511 - 3
AT300792	1H24	27	0511 - 3
AT300793	1H24	28	0511 - 3
AT300794	1H24	31	0511 - 3
AT300858	3C18	29	3160 - 21
AT300921	2E1	4	1674 - 25A
AT300921	3E14	1	3160 - 65
AT300936	3D4	10	3160 - 31
AT300945	2D9	4	1674 - 1
AT301026	2D23	10	1674 - 23B
AT301058	2B19	27	1322 - 9B
AT301095	2B15	27	1322 - 7B
AT301458	3D18	10	3160 - 45
AT301458	3D24	8	3160 - 51
AT301458	3E4	19	3160 - 55
AT301458	3E10	18	3160 - 61
AT301498	2D15	33	1674 - 9B
AT301498	2D15	53	1674 - 9B
AT301521	2D21	15	1674 - 23
AT301674	1I24	24	0567 - 9
AT301674	1J2	24	0567 - 11
AT301722	2E9	2	1674 - 62
AT301777	2E6	3	1674 - 39
AT301819	2J10	12	1927 - 7
AT301820	2J10	13	1927 - 7
AT301930	3D4	19	3160 - 31
AT301930	3D18	19	3160 - 45
AT301930	3E4	28	3160 - 55
AT301930	3E10	32	3160 - 61
AT301930	3E16	6	3160 - 67
AT302031	3D24	1	3160 - 51
AT302031	3E14	3	3160 - 65
AT302032	3D24	1	3160 - 51
AT302960	2I22	2	1913 - 5
AT302961	2I22	1	1913 - 5
AT303153	2D2	4	1672 - 11
AT303154	2D2	4	1672 - 11
AT303189	2C2	1	1369 - 5
AT303411	2F14	20	1810 - 11
AT303493	2F16	11	1810 - 13
AT303619	3D6	11	3160 - 33
AT303619	3D14	3	3160 - 41
AT303619	3D14	4	3160 - 41
AT303619	3D14	8	3160 - 41
AT303753	2J4	1	1927 - 5
AT303753	2J4	3	1927 - 5
AT304026	2D15	12	1674 - 9B
AT304114	2D21	17	1674 - 23
AT304159	2J10	14	1927 - 7
AT304160	2J10	15	1927 - 7
AT304161	2J10	16	1927 - 7
AT304734	2I7	18	1830 - 11
AT304790	2D15	33	1674 - 9B
AT304859	2D23	11	1674 - 23B
AT304880	3E10	19	3160 - 61
AT304881	3E10	21	3160 - 61
AT304922	2D23	12	1674 - 23B
AT305037	2D23	13	1674 - 23B
AT305042	3F11	7	3166 - 3B
AT305126	2F18	36	1810 - 15
AT305126	2F18	37	1810 - 15
AT305126	2F18	38	1810 - 15
AT305130	2F14	33	1810 - 11
AT305130	2F14	34	1810 - 11
AT305166	1G12	24	0407 - 7
AT305314	2J10	10	1927 - 7
AT305315	2J10	11	1927 - 7
AT305389	2E6	9	1674 - 39
AT305405	2H24	59	1830 - 3B
AT305687	3D4	..	3160 - 31
AT305690	3D18	..	3160 - 45
AT305692	3D10	..	3160 - 37
AT305693	3E4	..	3160 - 55
AT305777	2I24	13B	1921 - 3
AT305830	2J10	17	1927 - 7
AT305841	3D2	8	3160 - 29
AT305841	3D8	11	3160 - 35
AT305841	3D12	11	3160 - 39
AT305842	3D2	8	3160 - 29
AT305842	3D8	11	3160 - 35
AT305842	3D12	11	3160 - 39
AT305898	2I17	3	1910 - 2
AT306641	2D23	9	1674 - 23B
AT306702	1I6	13	0515 - 3
AT306702	1I8	1	0515 - 5
AT306703	1I8	3	0515 - 5
AT306812	3C20	7	3160 - 23
AT306812	3C22	12	3160 - 25
AT306812	3C24	14	3160 - 27
AT306828	2D17	4	1674 - 10A
AT306829	2J13	24	2001 - 3
AT306829	2J15	24	2001 - 3B
AT306830	2J13	24	2001 - 3
AT306830	2J15	24	2001 - 3B
AT306831	2J13	24	2001 - 3
AT306831	2J15	24	2001 - 3B
AT306912	2H22	15	1830 - 3
AT306913	2H22	16	1830 - 3
AT307045	2K9	13	2160 - 9
AT307065	3C20	9	3160 - 23
AT307065	3C22	14	3160 - 25
AT307065	3C24	16	3160 - 27
AT307066	3C20	10	3160 - 23
AT307066	3C22	15	3160 - 25
AT307066	3C24	17	3160 - 27
AT307090	2D4	16	1673 - 3
AT307197	2H24	6	1830 - 3B
AT307262	3E19	8	3160 - 70
AT307265	3E19	8	3160 - 70
AT307301	2K17	8	2160 - 17
AT307302	2K17	7	2160 - 17
AT307304	2K17	9	2160 - 17
AT307314	2K17	2	2160 - 17
AT307315	2K17	4	2160 - 17
AT307474	2H2	9	1821 - 3
AT307549	3C2	8	3140 - 9
AT307550	3C2	1	3140 - 9
AT307636	3D24	2	3160 - 51
AT307637	3D24	4	3160 - 51
AT307638	3D24	3	3160 - 51
AT307640	3D24	5	3160 - 51
AT307641	3D24	6	3160 - 51
AT307690	3E4	..	3160 - 55
AT307692	1D16	4	0350 - 3
AT307697	3E10	..	3160 - 61
AT307711	1J9	45	0930 - 5
AT307715	3E4	..	3160 - 55
AT307759	3E18	90	3160 - 69
AT307774	3C18	..	3160 - 21
AT307799	3E23	8	3160 - 75
AT307799	3E25	20	3160 - 77
AT307800	3E23	7	3160 - 75
AT307800	3E25	22	3160 - 77
AT307820	3E23	31	3160 - 75
AT307897	3F11	6	3166 - 3B
AT308199	2G25	1	1821 - 1
AT308672	2D23	10	1674 - 23B
AT308673	2D15	15	1674 - 9B
AT308677	2D15	33	1674 - 9B
AT308678	2D23	11	1674 - 23B
AT308680	2D23	13	1674 - 23B
AT308681	2D23	12	1674 - 23B
AT308795	2H2	8	1821 - 3
AT308796	2H2	3	1821 - 3
AT308797	2H2	4	1821 - 3
AT308994	1F2	4	0350 - 43
AT309162	1J21	6	0962 - 9
AT309401	2E20	3	1746 - 6
AT309429	3B24	1	3140 - 7B
AT309439	3B22	1	3140 - 7
AT309439	3B24	1	3140 - 7B
AT309494	2K17	3	2160 - 17
AT309550	2D4	7A	1673 - 3
AT309550	2D4	7B	1673 - 3
AT309550	2D4	9	1673 - 3
AT309772	1I20	9	0567 - 5
AT309772	1I24	20	0567 - 9
AT309772	1J2	20	0567 - 11
AT309819	3B16	8	3102 - 7
AT309820	3B16	8	3102 - 7
AT309821	3B16	8	3102 - 7
AT309843	3D18	34	3160 - 45
AT309843	3D24	9	3160 - 51
AT309843	3E4	32	3160 - 55
AT309843	3E10	36	3160 - 61
AT310056	2D15	14	1674 - 9B
AT310412	2G10	10B	1810 - 23D
AT310413	2G10	9	1810 - 23D
AT310414	2G10	10A	1810 - 23D
AT310435	2H2	9	1821 - 3
AT310702	2F14	24	1810 - 11
AT310702	2G16	11	1810 - 27B
AT310702	2G18	5	1810 - 29
AT310782	2H22	15	1830 - 3
AT310791	2J2	2	1927 - 3
AT310792	2J2	1	1927 - 3

NUMERICAL INDEX - CONTINUED

PART NO.	GRID	KEY	PAGE
AT310905	2K9	17	2160 - 9
AT311383	2G20	1	1810 - 31
AT311383	2H2	9	1821 - 3
AT311818	3E4	..	3160 - 55
AT311837	3B12	11	3102 - 3B
AT311902	2D15	26	1674 - 9B
AT311918	2H2	7	1821 - 3
AT311918	2H14	1	1821 - 11
AT311919	2H2	9	1821 - 3
AT311982	1I16	21	0560 - 3
AT311983	1I16	23	0560 - 3
AT312102	2J8	18	1927 - 5D
AT312110	2D15	14	1674 - 9B
AT312158	2G24	13	1816 - 3B
AT312172	2J10	28	1927 - 7
AT313087	3E14	5	3160 - 65
AT313282	2H24	57	1830 - 3B
AT313399	2H14	6	1821 - 11
AT313501	2E10	1B	1676 - 1
AT314170	1I20	9	0567 - 5
AT314170	1I24	20	0567 - 9
AT314266	1K6	60	1062 - 3
AT314267	1K6	12	1062 - 3
AT314304	3B8	5	3102 - 1
AT314323	2D15	33	1674 - 9B
AT314374	2D15	26	1674 - 9B
AT315021	1F8	6	0360 - 7
AT315290	2F14	20	1810 - 11
AT315458	3D24	1	3160 - 51
AT315459	3D24	1	3160 - 51
AT315459	3E14	3	3160 - 65
AT315715	2H2	1	1821 - 3
AT315761	2H2	6	1821 - 3
AT315846	3D18	10	3160 - 45
AT315846	3D24	8	3160 - 51
AT315846	3E4	19	3160 - 55
AT315846	3E10	18	3160 - 61
AT315847	3D18	10	3160 - 45
AT315847	3D24	8	3160 - 51
AT315847	3E4	19	3160 - 55
AT315847	3E10	18	3160 - 61
AT316303	2D15	29	1674 - 9B
AT317353	1I24	23	0567 - 9
AT317353	1J2	23	0567 - 11
AT317593	2E19	2	1746 - 5
AT318123	3D6	7	3160 - 33
AT318488	2E19	3	1746 - 5
AT318925	3B18	32	3140 - 3
AT320673	1I12	9	0530 - 3
AT320674	1I12	9	0530 - 3
AT35831	1H24	35	0511 - 3
AT37476	2K9	41	2160 - 9
AT37478	1H24	36	0511 - 3
AT37693	1H24	37	0511 - 3
AT41188	2C16	4	1671 - 3
AT45678	3F13	14	3166 - 5
AT49216	2K15	18	2160 - 15
AT49216	2K15	20	2160 - 15
AT49216	3E12	20	3160 - 63
AT53439	1I10	13	0520 - 3
AT53541	1C6	6	0210 - 19
AT53541	1J11	12	0960 - 15
AT53932	1J11	11	0960 - 15
AT59892	2J22	2	2006 - 2
AT64237	2J19	2	2004 - 1
AT66865	2C5	4	1369 - 8
AT67275	1B3	5	0110 - 3
AT67275	1B5	7	0110 - 5
AT79195	2K19	13	2160 - 19
AT79576	1K8	10	1063 - 3
AT79576	1K10	9	1063 - 5
AT81931	2K13	7	2160 - 13
AT83105	2F16	12	1810 - 13
AT85197	2C6	9	1369 - 9
A3606R	2B24	1	1369 - 3
A36431	2K15	24	2160 - 15
A36432	2K15	25	2160 - 15
A3917R	2B24	1	1369 - 3
A3917R	2K15	33	2160 - 15
A4365R	1G2	18	0404 - 3
A4365R	1K6	33	1062 - 3
A4365R	2B24	1	1369 - 3
A4365R	3F13	10	3166 - 5
A4540R	1B13	4	0210 - 1
A4730R	2B24	1	1369 - 3
A4742R	3C12	10	3160 - 11
A4742R	3C14	10	3160 - 13
A4742R	3C18	10	3160 - 21
B1085R	1I6	16	0515 - 3
B14604	2H22	19	1830 - 3
B2762R	2B24	1	1369 - 3
B3690R	2B24	1	1369 - 3
CD12569	2B17	9	1322 - 9
CD12569	2B19	23	1322 - 9B
C15104	1J23	4	0962 - 11
DD14134	2C8	1	1369 - 11
DD14136	2C8	1	1369 - 11
DD14345	2C8	1	1369 - 11
DD14346	2C8	1	1369 - 11
DS0251	2C5	..	1369 - 8
DS0345	2C2	1	1369 - 5
DS0346	2C2	1	1369 - 5
DS0557	2C5	..	1369 - 8
E12379	1C6	3	0210 - 19
E12379	1J11	2	0960 - 15
E12379	3F9	15	3166 - 3
E12379	3F11	9	3166 - 3B
E1343FN	1F24	1	0403 - 1
E48497	1I16	14	0560 - 3
E55662	1H11	1	0422 - 3
E73240	2D15	34	1674 - 9B
E73240	2D25	7	1674 - 25
E73240	2E1	6	1674 - 25A
E80242	1I12	12	0530 - 3
F1056R	2B24	1	1369 - 3
F1743R	1G2	11	0404 - 3
F1870R	2B24	1	1369 - 3
F3171R	1B17	17	0210 - 5
F3171R	1B17	30	0210 - 5
F3171R	1B19	11	0210 - 7
F3171R	1B19	14	0210 - 7
F3171R	1B21	17	0210 - 9
F3171R	1B21	30	0210 - 9
F3171R	1B23	17	0210 - 11
F3171R	1B23	26	0210 - 11
F3171R	1C2	27	0210 - 15
F3171R	1C10	5	0250 - 3
F3171R	1C12	5	0250 - 5
F3171R	1G10	10	0407 - 5
F3353R	2B24	1	1369 - 3
F58602	1C16	18	0250 - 9
GX20510	2D15	40	1674 - 9B
GY20126	2D17	3	1674 - 10A
GY20126	2D18	3	1674 - 10B
H110232	2F14	21	1810 - 11
H110232	2J16	6	2002 - 2
H113924	2D9	3	1674 - 1
H114865	2H22	20	1830 - 3
H115379	2I9	15	1830 - 13
H115379	2I15	8	1830 - 17
H121168	2I9	14	1830 - 13
H121168	2I15	9	1830 - 17
H126081	2F16	13	1810 - 13
H126082	2F16	14	1810 - 13
H131424	2F16	15	1810 - 13
H132922	2F16	16	1810 - 13
H138955	2B9	1	1322 - 5
H138955	2B11	7	1322 - 5B
H142173	3F5	60	3165 - 3
H142173	3F7	60	3165 - 3B
H144095	2C18	19	1672 - 3
H148166	2K9	29	2160 - 9
H152202	1K2	13	0965 - 11
H152793	1K2	12	0965 - 11
H155879	3F5	15	3165 - 3
H155879	3F7	15	3165 - 3B
H156360	2G6	1B	1810 - 23
H156360	2G10	13	1810 - 23D
H157510	1K2	16	0965 - 11
H158175	3F5	34	3165 - 3
H158175	3F7	34	3165 - 3B
H158397	3F5	32	3165 - 3
H158397	3F7	32	3165 - 3B
H158436	3F5	35	3165 - 3
H158436	3F7	35	3165 - 3B
H158437	3F5	36	3165 - 3
H158437	3F7	36	3165 - 3B
H163187	3F5	58	3165 - 3
H163187	3F7	58	3165 - 3B
H163979	3F5	17	3165 - 3
H163979	3F7	17	3165 - 3B
H163980	3F5	18	3165 - 3
H163980	3F7	18	3165 - 3B
H165481	3F5	37	3165 - 3
H165482	3F5	57	3165 - 3
H165482	3F7	57	3165 - 3B
H168220	3F5	19	3165 - 3
H168220	3F7	19	3165 - 3B
H169747	3F5	38	3165 - 3
H169747	3F7	38	3165 - 3B
H169752	3F5	39	3165 - 3
H169752	3F7	39	3165 - 3B
H170140	3F5	59	3165 - 3
H170140	3F7	59	3165 - 3B
H173655	3F5	16	3165 - 3
H173655	3F7	16	3165 - 3B
H210640	3F7	37	3165 - 3B
H21259	2B5	1	1322 - 3
H21259	2B7	1	1322 - 3B
H23196	2C10	4	1369 - 13
H2788B	1H24	38	0511 - 3
H34597	2F20	6	1810 - 15B
H35244	2B24	1	1369 - 3
H75541	1D2	4	0260 - 15
H75541	2D21	8	1674 - 23
H75541	2D23	16	1674 - 23B
H75541	3E21	3	3160 - 73
H75541	3E23	3	3160 - 75
H75541	3E25	33	3160 - 77
H77698	1C22	2	0260 - 7
H77698	1J11	14	0960 - 15

NUMERICAL INDEX - CONTINUED

PART NO.	GRID	KEY	PAGE
H77698	2C15	15	1671 - 2
H77698	2D13	20	1674 - 9
H77698	2D15	41	1674 - 9B
H77698	2D25	8	1674 - 25
H77698	2E1	7	1674 - 25A
H77698	2H22	21	1830 - 3
H77698	2I9	17	1830 - 13
H77698	2I15	10	1830 - 17
H77698	3D4	20	3160 - 31
H77698	3D10	19	3160 - 37
H77698	3D18	20	3160 - 45
H77698	3D20	21	3160 - 47
H77698	3E4	29	3160 - 55
H77698	3E6	6	3160 - 57
H77698	3E10	33	3160 - 61
H77698	3E12	1	3160 - 63
H77698	3E12	7	3160 - 63
H77698	3E16	8	3160 - 67
H81330	2F22	14	1810 - 15D
H81330	2I13	4	1830 - 15B
H84318	3C14	3	3160 - 13
H85233	2I19	3	1910 - 5
H86981	2H22	8	1830 - 3
H88900	3F5	20	3165 - 3
H88900	3F7	20	3165 - 3B
H94158	2I9	10	1830 - 13
H95874	2F16	25	1810 - 13
IPSKIT1	2C5	..	1369 - 8
IPSKIT3	2C2	1	1369 - 5
JD10127	1B25	3	0210 - 13
JD10127	1C2	4	0210 - 15
JD10127	1C4	3	0210 - 17
JD10315	1C10	3	0250 - 3
JD10315	1C12	3	0250 - 5
JD10316	1C10	4	0250 - 3
JD10316	1C12	4	0250 - 5
JD38714	3C16	2	3160 - 15
JD5749	2B7	22	1322 - 3B
JD5750	2B9	2	1322 - 5
JD5822	2B11	11	1322 - 5B
JD5902	2B5	2	1322 - 3
JD5902	2B7	2	1322 - 3B
JD5929	2J25	5	2008 - 3
JD7759	1J11	10	0960 - 15
JD7759	3B10	10	3102 - 3
JD7759	3B18	8	3140 - 3
JD7759	3C2	10	3140 - 9
JD7759	3F5	46	3165 - 3
JD7759	3F7	46	3165 - 3B
JD7763	3F5	47	3165 - 3
JD7763	3F7	47	3165 - 3B
JD7781	1C6	18	0210 - 19
JD7788	3F9	16	3166 - 3
JD7788	3F11	10	3166 - 3B
JD7842	1C6	2	0210 - 19
JD7842	1J11	1	0960 - 15
JD8167	1B25	18	0210 - 13
JD8167	1C2	19	0210 - 15
JD8214	1B25	19	0210 - 13
JD8214	1C2	20	0210 - 15
JD8254	1B25	4	0210 - 13
JD8254	1C2	5	0210 - 15
JD8254	1C4	4	0210 - 17
JD8255	1B14	1	0210 - 2
JD8255	1B15	1	0210 - 3
JD8272	1C10	9	0250 - 3
JD8272	1C12	9	0250 - 5
JD8989	1C10	10	0250 - 3
JD8989	1C12	10	0250 - 5
JD9078	1B14	2	0210 - 2
JD9078	1B15	2	0210 - 3
JD9093	1C4	31	0210 - 17
JD9148	1C4	30	0210 - 17
L102023	2F4	1	1810 - 1
L57881	2H22	22	1830 - 3
L64884	1I6	4	0515 - 3
L77943	2H24	9	1830 - 3B
M113243	1I6	2	0515 - 3
M113243	1I8	4	0515 - 5
M113243	1K6	48	1062 - 3
M113243	2G6	27	1810 - 23
M113243	2G10	14	1810 - 23D
M114063	2F14	22	1810 - 11
M115279	2D9	2	1674 - 1
M115279	2D15	42	1674 - 9B
M115279	2D25	11	1674 - 25
M115279	2E1	8	1674 - 25A
M118611	2B5	19	1322 - 3
M118611	2B7	23	1322 - 3B
M40333	1F6	2	0360 - 3B
M4125T	3C14	2	3160 - 13
M4237T	2B24	1	1369 - 3
M45937	1C6	23	0210 - 19
M45937	1C22	4	0260 - 7
M45937	1D2	5	0260 - 15
M45937	1J11	13	0960 - 15
M47887	2J23	4	2007 - 1
M67176	2H24	10	1830 - 3B
M72389	2K9	36	2160 - 9
M84972	2F12	2	1810 - 9
M84972	2F20	7	1810 - 15B
M84972	2G6	28	1810 - 23
M84972	2G10	15	1810 - 23D
M87571	1F8	16	0360 - 7
M87571	2C10	9	1369 - 13
N119177	2E2	4	1674 - 35
N131838	2B24	1	1369 - 3
N189220	1D2	6	0260 - 15
N189220	2K21	15	2160 - 21
N189220	3D4	21	3160 - 31
N189220	3D10	20	3160 - 37
N189220	3D18	21	3160 - 45
N189220	3E4	30	3160 - 55
N189220	3E10	34	3160 - 61
N189220	3E16	9	3160 - 67
N191985	2D21	2	1674 - 23
N191985	2D23	14	1674 - 23B
N203905	1K6	49	1062 - 3
N205415	2K13	8	2160 - 13
N218377	2J23	3	2007 - 1
PT11778	2H24	10	1830 - 3B
PT9412	1H24	39	0511 - 3
PT9412	1I16	27	0560 - 3
P46051	2B24	1	1369 - 3
P46051	2K9	15	2160 - 9
P48347	1K6	38	1062 - 3
P48347	3F13	15	3166 - 5
P48403	2B24	1	1369 - 3
P50631	2B24	1	1369 - 3
RE12176	1I10	15	0520 - 3
RE12187	1H7	18	0420 - 3
RE151433	2D11	1	1674 - 7
RE152929	1C2	10	0210 - 15
RE152930	1C2	16	0210 - 15
RE154952	1C10	6	0250 - 3
RE155577	2I2	13	1830 - 5
RE157329	2H24	17	1830 - 3B
RE159199	1K4	4	1011 - 2
RE160141	1C10	6	0250 - 3
RE160141	1C12	6	0250 - 5
RE160301	1B12	1	0201 - 2
RE160302	1B12	1	0201 - 2
RE160303	1B12	1	0201 - 2
RE160304	1B12	1	0201 - 2
RE160305	1B12	1	0201 - 2
RE160306	1B12	1	0201 - 2
RE164762	1B17	12	0210 - 5
RE164763	1B19	8	0210 - 7
RE164764	1B21	12	0210 - 9
RE166221	1C4	25	0210 - 17
RE167207	2D11	4	1674 - 7
RE168454	2J13	21	2001 - 3
RE168454	2J15	21	2001 - 3B
RE16879	2G4	1	1810 - 21
RE174764	2H24	11	1830 - 3B
RE190139	2J13	13	2001 - 3
RE190139	2J15	13	2001 - 3B
RE190140	2J13	13	2001 - 3
RE190140	2J15	13	2001 - 3B
RE190141	2J13	13	2001 - 3
RE190141	2J15	13	2001 - 3B
RE190805	1H7	18	0420 - 3
RE19429	1I10	14	0520 - 3
RE198074	2H24	3	1830 - 3B
RE20230	1G25	5	0416 - 3
RE20345	1K2	5	0965 - 11
RE22514	3F16	7	4151 - 3
RE227949	1H19	7	0505 - 2
RE24045	1F20	7	0402 - 5
RE24046	1F20	6	0402 - 5
RE24468	1K6	41	1062 - 3
RE25102	3F5	41	3165 - 3
RE25102	3F7	41	3165 - 3B
RE25146	3F5	23	3165 - 3
RE25146	3F7	23	3165 - 3B
RE30295	1I6	9	0515 - 3
RE33887	1B13	1	0210 - 1
RE35704	1K6	42	1062 - 3
RE36133	2H24	18	1830 - 3B
RE36133	2H24	46	1830 - 3B
RE38310	2K9	50	2160 - 9
RE39134	1H2	17	0417 - 3
RE39955	1B13	1	0210 - 1
RE40049	2G2	5	1810 - 19
RE40049	2G4	2	1810 - 21
RE43497	2E2	6	1674 - 35
RE43497	2E3	4	1674 - 36
RE43637	1C21	3	0260 - 6
RE45315	1B13	1	0210 - 1
RE45315	1C16	28	0250 - 9
RE46534	1C21	1	0260 - 6
RE46634	2G12	13	1810 - 25
RE46684	1B17	6	0210 - 5
RE46684	1B19	4	0210 - 7
RE46684	1B21	6	0210 - 9
RE46684	1B23	6	0210 - 11
RE46684	1C16	23	0250 - 9
RE46742	2H22	25	1830 - 3
RE48419	1H3	9	0418 - 2
RE48419	1H7	16	0420 - 3
RE48419	1H9	25	0420 - 5

NUMERICAL INDEX - CONTINUED

PART NO.	GRID	KEY	PAGE
RE48838	2D5	4	1673 - 5
RE49486	1B14	7	0210 - 2
RE49486	1B15	7	0210 - 3
RE500220	1G8	1	0407 - 3
RE500250	1F8	12	0360 - 7
RE500917	1H12	3	0429 - 2
RE501051	1G25	4	0416 - 3
RE501060	1H11	7	0422 - 3
RE501150	1H11	7	0422 - 3
RE501513	1F24	5	0403 - 1
RE501787	3F16	4	4151 - 3
RE502154	1H2	16	0417 - 3
RE502507	1G20	32	0413 - 3
RE502570	1H3	2	0418 - 2
RE502573	1H3	13	0418 - 2
RE502650	1G20	19	0413 - 3
RE502650	3F16	15	4151 - 3
RE502654	1G20	34	0413 - 3
RE502655	1G20	16	0413 - 3
RE503058	1G20	53	0413 - 3
RE503059	1G20	43	0413 - 3
RE503528	1F24	7	0403 - 1
RE503590	1H7	27	0420 - 3
RE503605	1H7	2	0420 - 3
RE504013	1G20	15	0413 - 3
RE504014	1G20	14	0413 - 3
RE504015	1G20	13	0413 - 3
RE504016	1G20	12	0413 - 3
RE504017	1G20	11	0413 - 3
RE504018	1G20	10	0413 - 3
RE504156	1G20	45	0413 - 3
RE504195	1F16	10	0401 - 3
RE504196	1F16	10	0401 - 3
RE504197	1F16	10	0401 - 3
RE504198	1F16	9	0401 - 3
RE504199	1F16	9	0401 - 3
RE504200	1F16	9	0401 - 3
RE504363	1F14	5	0401 - 1
RE504581	1G25	6	0416 - 3
RE504822	1G10	1	0407 - 5
RE504822	1H15	38	0452 - 3
RE505094	1F18	12	0402 - 3
RE505124	1F16	2	0401 - 3
RE505124	1F16	7	0401 - 3
RE505154	1G20	36	0413 - 3
RE505155	1G20	35	0413 - 3
RE505265	2I2	13	1830 - 5
RE505320	1F20	2	0402 - 5
RE505320	1F20	8	0402 - 5
RE506220	1H15	38	0452 - 3
RE506222	1H15	19	0452 - 3
RE506501	1G16	9	0409 - 3
RE506503	1G16	15	0409 - 3
RE506624	1G20	27	0413 - 3
RE506970	1H7	36	0420 - 3
RE506971	1H7	34	0420 - 3
RE506982	1G20	21	0413 - 3
RE507003	1G20	26	0413 - 3
RE507011	1H7	6	0420 - 3
RE507027	1H7	1	0420 - 3
RE507027	1H7	20	0420 - 3
RE507028	1H7	21	0420 - 3
RE507029	1H7	19	0420 - 3
RE507076	1G13	12	0407 - 8
RE507187	1H7	29	0420 - 3
RE507270	1G20	23	0413 - 3
RE507950	2C10	7	1369 - 13
RE508040	1G10	2	0407 - 5
RE508101	1H20	21	0505 - 5
RE508195	1F22	1	0402 - 7
RE508233	1G22	58	0413 - 5
RE508233	1G22	59	0413 - 5
RE508233	1G22	60	0413 - 5
RE508670	1G20	52	0413 - 3
RE508773	1G22	61	0413 - 5
RE508825	1G20	5	0413 - 3
RE509012	1G20	17	0413 - 3
RE509013	1G20	18	0413 - 3
RE509048	1F18	16	0402 - 3
RE509265	1F18	20	0402 - 3
RE509275	1H7	38	0420 - 3
RE509416	1G20	5	0413 - 3
RE509416	1G20	9	0413 - 3
RE509554	1G20	38	0413 - 3
RE509596	1H7	26	0420 - 3
RE509598	1H2	18	0417 - 3
RE509668	1H7	32	0420 - 3
RE509668	1H9	6	0420 - 5
RE51234	2D19	1	1674 - 11
RE515052	1I16	29	0560 - 3
RE515524	1G20	10	0413 - 3
RE515635	1G20	31	0413 - 3
RE515636	1G20	30	0413 - 3
RE515637	1G22	57	0413 - 5
RE515637	1G22	58	0413 - 5
RE515638	1G22	55	0413 - 5
RE515821	1G20	42	0413 - 3
RE515890	1H7	8	0420 - 3
RE516171	1H15	38	0452 - 3
RE516203	1G20	38	0413 - 3
RE516335	1G20	29	0413 - 3
RE516346	1H7	22	0420 - 3
RE516676	1G20	32	0413 - 3
RE517059	1F21	2	0402 - 6
RE517133	1G2	3	0404 - 3
RE517370	1F21	7	0402 - 6
RE518097	2C18	25	1672 - 3
RE518097	2C22	1	1672 - 7
RE518420	1G22	57	0413 - 5
RE518420	1G22	58	0413 - 5
RE518503	1G22	61	0413 - 5
RE518503	2D15	36	1674 - 9B
RE518724	1G20	5	0413 - 3
RE518807	1G22	58	0413 - 5
RE518807	1G22	59	0413 - 5
RE518807	1G22	60	0413 - 5
RE519144	1F22	1	0402 - 7
RE519608	1H7	26	0420 - 3
RE52034	1I16	18	0560 - 3
RE520628	1G12	9	0407 - 7
RE520967	1H9	36	0420 - 5
RE520968	1H9	37	0420 - 5
RE520969	1H9	10	0420 - 5
RE520971	1H9	26	0420 - 5
RE520972	1H9	33	0420 - 5
RE520975	1H9	8	0420 - 5
RE520981	1H9	9	0420 - 5
RE521094	1H9	45	0420 - 5
RE521420	1G12	9	0407 - 7
RE521420	1G12	10	0407 - 7
RE521420	1G12	20	0407 - 7
RE521420	1G12	24	0407 - 7
RE521473	1H9	29	0420 - 5
RE521477	1H9	46	0420 - 5
RE522143	1H9	32	0420 - 5
RE522144	1H9	34	0420 - 5
RE522144	1H9	35	0420 - 5
RE522145	1H9	15	0420 - 5
RE522372	1H7	26	0420 - 3
RE522515	1G22	61	0413 - 5
RE522515	2D15	36	1674 - 9B
RE522518	1H9	12	0420 - 5
RE522640	1H7	22	0420 - 3
RE522685	1H9	20	0420 - 5
RE522686	1H9	21	0420 - 5
RE522687	1H9	22	0420 - 5
RE522688	1H9	18	0420 - 5
RE522834	1H9	45	0420 - 5
RE523578	1H9	34	0420 - 5
RE523578	1H9	35	0420 - 5
RE523825	1I16	29	0560 - 3
RE524363	1G20	5	0413 - 3
RE524371	1G20	5	0413 - 3
RE52454	2I3	4	1830 - 6
RE524676	1H19	2	0505 - 2
RE524676	1H19	3	0505 - 2
RE524764	1G25	18	0416 - 3
RE52504	1I16	35	0560 - 3
RE52506	2I2	29	1830 - 5
RE52506	2I3	2	1830 - 6
RE52507	2I5	1	1830 - 8
RE52508	2I3	7	1830 - 6
RE52509	2I4	1	1830 - 7
RE526253	1G4	1	0404 - 5
RE526962	1G6	1	0404 - 7
RE52702	2K19	2	2160 - 19
RE55423	2I2	28	1830 - 5
RE55423	2I3	3	1830 - 6
RE55475	1G16	16	0409 - 3
RE55475	1H15	11	0452 - 3
RE55478	2D9	1	1674 - 1
RE55522	1H12	1	0429 - 2
RE56109	1J13	7	0962 - 3
RE56109	1J13	8	0962 - 3
RE56109	1J13	11	0962 - 3
RE56109	1J13	12	0962 - 3
RE56109	1J13	30	0962 - 3
RE56109	1J15	22	0962 - 3B
RE56165	3F13	18	3166 - 5
RE56779	1H13	4	0433 - 1
RE57054	1F23	3	0402 - 8
RE57167	1F24	6	0403 - 1
RE57190	1H2	7	0417 - 3
RE57190	1H3	11	0418 - 2
RE57190	1H15	38	0452 - 3
RE57394	1G12	9	0407 - 7
RE57394	1G12	10	0407 - 7
RE57394	1G12	20	0407 - 7
RE57561	1G12	1	0407 - 7
RE57604	1H12	6	0429 - 2
RE57836	1G2	5	0404 - 3
RE57836	1G2	..	0404 - 3
RE57836	1G23	4	0414 - 1
RE57836	1H2	3	0417 - 3
RE58614	2H22	28	1830 - 3
RE60700	3E18	18	3160 - 69
RE60701	3E23	30	3160 - 75
RE60701	3E25	12	3160 - 77
RE61253	1F16	8	0401 - 3
RE61651	2J13	22	2001 - 3
RE61651	2J15	22	2001 - 3B

NUMERICAL INDEX - CONTINUED

PART NO.	GRID	KEY	PAGE
RE61812	1G23	6	0414 - 1
RE61851	1F16	8	0401 - 3
RE62144	1G7	2	0407 - 2
RE62776	1H15	3	0452 - 3
RE62777	1H15	4	0452 - 3
RE63439	1G10	2	0407 - 5
RE63439	1G10	13	0407 - 5
RE64509	1F24	9	0403 - 1
RE64509	1G4	1	0404 - 5
RE68117	1C16	30	0250 - 9
RE68172	1B14	8	0210 - 2
RE68175	1B15	8	0210 - 3
RE68300	1C10	6	0250 - 3
RE68300	1C12	6	0250 - 5
RE68318	1H2	13	0417 - 3
RE68730	1C4	23	0210 - 17
RE68730	1C16	12	0250 - 9
RE68730	1C16	14	0250 - 9
RE69025	1C4	20	0210 - 17
RE69384	1G25	10	0416 - 3
RE69806	1C2	30	0210 - 15
RE69868	1B13	3	0210 - 1
RE70535	2C18	25	1672 - 3
RE70535	2C22	1	1672 - 7
RE70678	1H11	12	0422 - 3
RE70682	1H11	10	0422 - 3
RE70688	1F24	9	0403 - 1
RE70688	1G4	1	0404 - 5
RE70756	1H11	6	0422 - 3
RE71192	1G25	4	0416 - 3
RE71255	1G2	12	0404 - 3
RE71255	1G12	2	0407 - 7
RE71255	1G23	2	0414 - 1
RE71256	1H11	14	0422 - 3
R100500	1B13	1	0210 - 1
R100500	1B13	2	0210 - 1
R100500	1C16	29	0250 - 9
R100569	1G7	1	0407 - 2
R100569	1G13	10	0407 - 8
R100569	1H15	31	0452 - 3
R100671	1H3	5	0418 - 2
R100911	1H15	2	0452 - 3
R10093	1J23	3	0962 - 11
R10093	2B24	1	1369 - 3
R10093	2H22	23	1830 - 3
R10093	2I7	2	1830 - 11
R101042	1H7	4	0420 - 3
R104558	1E22	1	0350 - 37
R104587	1F16	4	0401 - 3
R104589	1F23	6	0402 - 8
R104621	1G12	20	0407 - 7
R104628	1G7	3	0407 - 2
R104628	1G13	11	0407 - 8
R104656	1F21	8	0402 - 6
R104656	1F23	5	0402 - 8
R104846	1H7	28	0420 - 3
R104846	1H9	19	0420 - 5
R104859	1F21	3	0402 - 6
R105346	1G25	8	0416 - 3
R105346	1H15	14	0452 - 3
R107749	2I2	14	1830 - 5
R109082	1C4	26	0210 - 17
R109625	1H5	1	0419 - 2
R109625	1H15	32	0452 - 3
R109693	1G18	1	0410 - 1
R110126	1F20	10	0402 - 5
R110126	1F23	2	0402 - 8
R11086	1F21	4	0402 - 6
R11086	1H2	12	0417 - 3
R11151	3F13	16	3166 - 5
R111632	2H22	24	1830 - 3
R112053	1F23	7	0402 - 8
R112200	3F16	2	4151 - 3
R112203	3F16	11	4151 - 3
R112268	3F16	12	4151 - 3
R112884	1H13	1	0433 - 1
R113050	2I2	7	1830 - 5
R113050	2I7	9	1830 - 11
R114130	1H11	13	0422 - 3
R115129	1F21	5	0402 - 6
R115742	2I2	30	1830 - 5
R115742	2I3	1	1830 - 6
R115743	2I3	6	1830 - 6
R116022	1F21	11	0402 - 6
R116081	1F24	6	0403 - 1
R116233	1H5	2	0419 - 2
R116311	1H12	2	0429 - 2
R116718	1G13	2	0407 - 8
R116718	1H5	6	0419 - 2
R116801	1B17	18	0210 - 5
R116801	1B19	12	0210 - 7
R116801	1B21	18	0210 - 9
R116801	1B23	18	0210 - 11
R116801	1C10	7	0250 - 3
R116801	1C12	7	0250 - 5
R117073	1G12	7	0407 - 7
R117310	2I9	20	1830 - 13
R117310	2I15	2	1830 - 17
R117721	2H24	13	1830 - 3B
R117721	2H24	38	1830 - 3B
R117721	2H24	62	1830 - 3B
R117845	2I13	5	1830 - 15B
R119132	1G16	13	0409 - 3
R119171	2H24	45	1830 - 3B
R119383	1H2	1	0417 - 3
R119383	1H15	20	0452 - 3
R119384	1F21	9	0402 - 6
R119384	1H15	22	0452 - 3
R119653	3F16	5	4151 - 3
R119847	1G12	12	0407 - 7
R119847	1H15	28	0452 - 3
R120022	1H3	10	0418 - 2
R120236	1C4	21	0210 - 17
R120467	1F18	7	0402 - 3
R120646	1H15	13	0452 - 3
R120653	2F10	3	1810 - 7
R120653	2F10	4	1810 - 7
R120653	2F10	6	1810 - 7
R120752	1F16	3	0401 - 3
R120872	1F23	3	0402 - 8
R120953	1G2	21	0404 - 3
R120954	1G2	21	0404 - 3
R121026	1H13	4	0433 - 1
R121163	1H4	8	0419 - 1
R121193	1G16	11	0409 - 3
R121316	1H2	14	0417 - 3
R121465	2H22	9	1830 - 3
R121490	1G16	6	0409 - 3
R121491	1G16	5	0409 - 3
R121664	2H24	39	1830 - 3B
R121664	2H24	63	1830 - 3B
R121666	2H24	40	1830 - 3B
R121929	1G2	17	0404 - 3
R122364	1G2	20	0404 - 3
R122595	1G18	2	0410 - 1
R122618	1G25	9	0416 - 3
R122722	3F16	16	4151 - 3
R123523	2I2	12	1830 - 5
R123572	1H15	16	0452 - 3
R124186	1G12	13	0407 - 7
R124211	1H15	8	0452 - 3
R124381	1F16	8	0401 - 3
R124607	1H15	7	0452 - 3
R124842	1F16	8	0401 - 3
R125027	1F14	3	0401 - 1
R125195	1G10	2	0407 - 5
R125223	2H24	14	1830 - 3B
R125450	2E13	15	1740 - 3
R126033	2J13	4B	2001 - 3
R126033	2J15	4	2001 - 3B
R126337	1H5	5	0419 - 2
R126352	1G8	2	0407 - 3
R126812	1G25	13	0416 - 3
R127297	1H4	11	0419 - 1
R127394	1G10	2	0407 - 5
R127873	1G10	2	0407 - 5
R127873	1G10	14	0407 - 5
R128694	1G12	3	0407 - 7
R128859	2D2	2	1672 - 11
R128892	2I2	20	1830 - 5
R129110	2H24	15	1830 - 3B
R129820	1G12	10	0407 - 7
R129821	1G12	16	0407 - 7
R130573	1G23	7	0414 - 1
R130573	1H15	13	0452 - 3
R130573	1H20	25	0505 - 5
R130818	1G16	15	0409 - 3
R131051	1G20	5	0413 - 3
R131051	1G20	7	0413 - 3
R132113	1B17	11	0210 - 5
R132113	1B17	12	0210 - 5
R132113	1B21	11	0210 - 9
R132113	1B21	12	0210 - 9
R132114	1B17	21	0210 - 5
R132114	1B21	21	0210 - 9
R132396	1H4	2	0419 - 1
R132396	1H15	37	0452 - 3
R132827	1B25	6	0210 - 13
R132827	1C4	6	0210 - 17
R132828	1B25	7	0210 - 13
R132828	1C4	7	0210 - 17
R132836	1B25	12	0210 - 13
R132836	1C4	9	0210 - 17
R133087	1B14	8	0210 - 2
R133088	1B14	8	0210 - 2
R133093	1B15	8	0210 - 3
R133094	1B15	8	0210 - 3
R133165	1C10	8	0250 - 3
R133328	1C4	29	0210 - 17
R133367	1C14	11	0250 - 7
R133368	1C14	10	0250 - 7
R133369	1B17	1	0210 - 5
R133369	1B19	1	0210 - 7
R133369	1B21	1	0210 - 9
R133369	1B23	1	0210 - 11
R133370	1C14	12	0250 - 7
R133371	1B17	2	0210 - 5
R133371	1B19	2	0210 - 7
R133371	1B21	2	0210 - 9
R133371	1B23	2	0210 - 11
R133373	1C14	4	0250 - 7

NUMERICAL INDEX - CONTINUED

PART NO.	GRID	KEY	PAGE
R133377	1C10	13	0250 - 3
R133377	1C12	13	0250 - 5
R133378	1C14	8	0250 - 7
R133379	1C14	3	0250 - 7
R133686	1B13	3	0210 - 1
R133719	1B25	10	0210 - 13
R133719	1C4	13	0210 - 17
R133725	1C4	24	0210 - 17
R133725	1C16	11	0250 - 9
R133740	1C4	25	0210 - 17
R133798	1C4	18	0210 - 17
R133803	1C4	5	0210 - 17
R133858	1C4	11	0210 - 17
R133859	1C4	12	0210 - 17
R134016	1C4	19	0210 - 17
R134017	1C4	22	0210 - 17
R134172	1C10	11	0250 - 3
R134172	1C12	11	0250 - 5
R134183	1B25	2	0210 - 13
R134183	1C2	6	0210 - 15
R134183	1C4	2	0210 - 17
R134215	1B14	5	0210 - 2
R134215	1B15	5	0210 - 3
R134236	1C12	8	0250 - 5
R134239	1C10	2	0250 - 3
R134239	1C12	2	0250 - 5
R134269	1C4	28	0210 - 17
R134270	1C4	27	0210 - 17
R134602	1H4	4	0419 - 1
R134717	1B25	1	0210 - 13
R134717	1C2	3	0210 - 15
R134717	1C4	1	0210 - 17
R134718	1B25	1	0210 - 13
R134718	1C2	2	0210 - 15
R134718	1C4	1	0210 - 17
R134719	1B25	1	0210 - 13
R134719	1C2	1	0210 - 15
R134719	1C4	1	0210 - 17
R134720	1C4	32	0210 - 17
R134721	1C4	32	0210 - 17
R134722	1C4	32	0210 - 17
R134726	1B25	9	0210 - 13
R134726	1C4	10	0210 - 17
R134859	1B25	17	0210 - 13
R134860	1B25	5	0210 - 13
R134861	1B25	11	0210 - 13
R134920	1G20	4	0413 - 3
R134920	1G20	5	0413 - 3
R135118	1C16	8	0250 - 9
R135175	1H12	7	0429 - 2
R135342	1C16	21	0250 - 9
R135343	1C16	17	0250 - 9
R135344	1C16	1	0250 - 9
R135345	1C16	7	0250 - 9
R135346	1C16	10	0250 - 9
R135347	1C16	15	0250 - 9
R135348	1C16	13	0250 - 9
R135509	1H11	11	0422 - 3
R135510	1H11	9	0422 - 3
R135526	1G20	5	0413 - 3
R135526	1G20	8	0413 - 3
R135532	1B25	20	0210 - 13
R135532	1C2	21	0210 - 15
R135533	1B25	20	0210 - 13
R135533	1C2	23	0210 - 15
R135534	1B25	20	0210 - 13
R135534	1C2	22	0210 - 15
R135605	2D2	3	1672 - 11
R135606	2D2	3	1672 - 11
R135805	1C16	9	0250 - 9
R135895	1G10	5	0407 - 5
R135953	1C14	2	0250 - 7
R135984	1B25	13	0210 - 13
R136063	1H3	12	0418 - 2
R136063	1H15	38	0452 - 3
R136077	1C16	5	0250 - 9
R136078	1C16	4	0250 - 9
R136078	1C16	6	0250 - 9
R136151	1H3	3	0418 - 2
R151392	1C10	1	0250 - 3
R151392	1C12	1	0250 - 5
R151626	1C14	5	0250 - 7
R151933	1B13	6	0210 - 1
R151933	1C16	3	0250 - 9
R152892	1B14	6	0210 - 2
R152892	1B15	6	0210 - 3
R152893	1B14	6	0210 - 2
R152893	1B15	6	0210 - 3
R152894	1B14	6	0210 - 2
R152894	1B15	6	0210 - 3
R152911	1C2	18	0210 - 15
R152913	1C2	7	0210 - 15
R152916	1C2	11	0210 - 15
R152922	1C2	15	0210 - 15
R152923	1C2	12	0210 - 15
R152924	1C2	13	0210 - 15
R152925	1C2	14	0210 - 15
R152926	1C2	17	0210 - 15
R152927	1C2	9	0210 - 15
R152928	1C2	8	0210 - 15
R152936	1K4	3	1011 - 2
R156897	1K4	2	1011 - 2
R156898	1K4	1	1011 - 2
R157883	1B17	12	0210 - 5
R157885	1B19	8	0210 - 7
R157886	1B21	12	0210 - 9
R157887	1B23	12	0210 - 11
R159758	1B17	9	0210 - 5
R159758	1B19	5	0210 - 7
R159758	1B21	4	0210 - 9
R159758	1B23	8	0210 - 11
R159758	1C2	28	0210 - 15
R160699	1B17	23	0210 - 5
R160699	1B19	6	0210 - 7
R160699	1B21	23	0210 - 9
R160699	1B23	9	0210 - 11
R160699	1C2	26	0210 - 15
R160832	1B17	12	0210 - 5
R160832	1B17	21	0210 - 5
R160832	1B21	12	0210 - 9
R160832	1B21	21	0210 - 9
R1612R	1G2	10	0404 - 3
R161397	1B17	12	0210 - 5
R161398	1B19	8	0210 - 7
R161399	1B21	12	0210 - 9
R161400	1B23	12	0210 - 11
R161863	1K4	5	1011 - 2
R164193	1H24	40	0511 - 3
R203687	2H22	1	1830 - 3
R26012	1C14	7	0250 - 7
R26058	1F14	4	0401 - 1
R26058	1H15	33	0452 - 3
R26286	1B17	5	0210 - 5
R26286	1B19	3	0210 - 7
R26286	1B21	5	0210 - 9
R26286	1B23	5	0210 - 11
R26286	1C2	25	0210 - 15
R26286	1D6	1	0260 - 21
R26286	2B24	1	1369 - 3
R26286	2D11	2	1674 - 7
R26286	2K9	43	2160 - 9
R26287	1K6	50	1062 - 3
R26287	1K17	8	1162 - 3
R26287	2B24	1	1369 - 3
R26287	2E3	7	1674 - 36
R26287	2K3	20	2160 - 3
R26287	3C18	30	3160 - 21
R26287	3E18	21	3160 - 69
R26333	1H12	4	0429 - 2
R26375	1C16	25	0250 - 9
R26375	1D4	13	0260 - 19B
R26375	1D6	13	0260 - 21
R26375	1D8	15	0260 - 23
R26375	1I2	13	0511 - 5
R26375	1I24	17	0567 - 9
R26375	1J2	17	0567 - 11
R26375	1J7	6	0930 - 3
R26375	1J9	6	0930 - 5
R26375	1J21	5	0962 - 9
R26375	1J23	1	0962 - 11
R26375	1K6	47	1062 - 3
R26375	1K6	51	1062 - 3
R26375	1K15	9	1115 - 3
R26375	1K17	10	1162 - 3
R26375	2B24	1	1369 - 3
R26375	2K9	14	2160 - 9
R26375	3D22	49	3160 - 49
R26448	1C18	4	0260 - 3
R26448	1C20	5	0260 - 5
R26448	1C24	3	0260 - 9
R26448	1D8	5	0260 - 23
R26448	1I24	14	0567 - 9
R26448	1J2	14	0567 - 11
R26448	1J7	40	0930 - 3
R26448	1J9	40	0930 - 5
R26448	1K6	52	1062 - 3
R26448	1K12	8	1064 - 7
R26448	2B24	1	1369 - 3
R26448	2K3	7	2160 - 3
R26448	2K9	37	2160 - 9
R26448	2K11	8	2160 - 11
R26448	2K13	4	2160 - 13
R26448	2K15	19	2160 - 15
R26448	3C4	6	3160 - 3
R26448	3C6	5	3160 - 5
R26448	3C8	2	3160 - 7
R26448	3C10	13	3160 - 9
R26448	3C16	19	3160 - 15
R26448	3D2	4	3160 - 29
R26448	3D4	3	3160 - 31
R26448	3D8	4	3160 - 35
R26448	3D10	3	3160 - 37
R26448	3D12	4	3160 - 39
R26448	3D16	5	3160 - 43
R26448	3D18	3	3160 - 45
R26448	3D22	54	3160 - 49
R26448	3E2	6	3160 - 53
R26448	3E4	4	3160 - 55
R26448	3E8	6	3160 - 59
R26448	3E10	4	3160 - 61
R26448	3E18	15	3160 - 69

NUMERICAL INDEX - CONTINUED

PART NO.	GRID	KEY	PAGE
R26448	3E21	11	3160 - 73
R26448	3E23	11	3160 - 75
R26448	3E25	28	3160 - 77
R26773	2K9	45	2160 - 9
R26906	1D8	8	0260 - 23
R26906	1G10	8	0407 - 5
R26906	1I20	11	0567 - 5
R26906	1I24	7	0567 - 9
R26906	1J2	7	0567 - 11
R26906	1J7	13	0930 - 3
R26906	1J9	13	0930 - 5
R26906	1J11	5	0960 - 15
R26906	2K9	46	2160 - 9
R26906	3C14	45	3160 - 13
R26906	3C18	45	3160 - 21
R26906	3F2	12	3160 - 79
R26976	1H2	14	0417 - 3
R27094	1B17	15	0210 - 5
R27094	1B19	10	0210 - 7
R27094	1B21	15	0210 - 9
R27094	1B23	15	0210 - 11
R27094	1C2	24	0210 - 15
R27149	1G2	16	0404 - 3
R27166	2K15	27	2160 - 15
R27166	3F2	11	3160 - 79
R27175	1B17	18	0210 - 5
R27175	1B17	30	0210 - 5
R27175	1B19	12	0210 - 7
R27175	1B19	14	0210 - 7
R27175	1B21	18	0210 - 9
R27175	1B21	30	0210 - 9
R27175	1B23	18	0210 - 11
R27175	1B23	26	0210 - 11
R27175	1C10	7	0250 - 3
R27175	1C12	7	0250 - 5
R27180	2C20	1	1672 - 5
R27180	2C24	2	1672 - 9
R27218	2K9	47	2160 - 9
R27218	2K11	11	2160 - 11
R27218	2K11	14	2160 - 11
R27218	2K13	9	2160 - 13
R27218	3E21	18	3160 - 73
R27218	3E25	23	3160 - 77
R27390	1H24	21	0511 - 3
R27390	2K9	25	2160 - 9
R27443	1F20	4	0402 - 5
R27583	2B3	4	1314 - 1
R28776	2K15	12	2160 - 15
R28776	3F2	6	3160 - 79
R28782	1D4	14	0260 - 19B
R28782	1I20	12	0567 - 5
R28782	1J7	15	0930 - 3
R28782	1J9	15	0930 - 5
R28782	1J21	7	0962 - 9
R28782	1K6	53	1062 - 3
R28782	2K3	13	2160 - 3
R28782	2K15	16	2160 - 15
R28782	3E21	19	3160 - 73
R28782	3E23	19	3160 - 75
R28782	3E25	30	3160 - 77
R28811	1H13	3	0433 - 1
R29477	1B3	6	0110 - 3
R29477	1B5	1	0110 - 5
R29479	1B5	6	0110 - 5
R29480	1B5	4	0110 - 5
R29936	1D16	5	0350 - 3
R29936	1F4	5	0360 - 3
R29936	1H24	41	0511 - 3
R29936	1I20	13	0567 - 5
R29936	1I24	25	0567 - 9
R29936	1J2	25	0567 - 11
R29936	1J7	37	0930 - 3
R29936	1J9	37	0930 - 5
R29936	2K3	6	2160 - 3
R29936	2K9	48	2160 - 9
R29936	3C4	2	3160 - 3
R29936	3C6	2	3160 - 5
R29936	3C8	5	3160 - 7
R29936	3C10	11	3160 - 9
R29936	3C16	16	3160 - 15
R29936	3E18	10	3160 - 69
R29936	3F5	48	3165 - 3
R29936	3F7	48	3165 - 3B
R30903	2K15	37	2160 - 15
R32617	1F16	6	0401 - 3
R32617	1F21	10	0402 - 6
R33259	2I2	8	1830 - 5
R33259	2K15	9	2160 - 15
R33259	2K15	26	2160 - 15
R33259	3F2	3	3160 - 79
R35365	1B14	6	0210 - 2
R35365	1B15	6	0210 - 3
R35366	1B14	6	0210 - 2
R35366	1B15	6	0210 - 3
R35367	1B14	6	0210 - 2
R35367	1B15	6	0210 - 3
R36311	1C6	4	0210 - 19
R36311	1J11	3	0960 - 15
R36311	3F9	14	3166 - 3
R36311	3F11	11	3166 - 3B
R36545	2C15	13	1671 - 2
R36636	2K9	49	2160 - 9
R36943	1C16	24	0250 - 9
R375R	2B24	1	1369 - 3
R38185	1C16	16	0250 - 9
R39112	1K15	10	1115 - 3
R39129	2C18	22	1672 - 3
R394R	2B24	1	1369 - 3
R39503	2K21	7	2160 - 21
R39741	1G2	6	0404 - 3
R40236	1H5	4	0419 - 2
R41934	1F16	1	0401 - 3
R41985	2I9	18	1830 - 13
R42340	1G2	9	0404 - 3
R42926	2K15	11	2160 - 15
R42926	3F2	5	3160 - 79
R43409	1G2	1	0404 - 3
R43621	1G2	13	0404 - 3
R43660	1G12	8	0407 - 7
R43660	1G12	24	0407 - 7
R44097	2D19	2	1674 - 11
R44165	2E2	3	1674 - 35
R44165	2E3	5	1674 - 36
R44165	2G12	14	1810 - 25
R44302	1H11	5	0422 - 3
R44302	1H20	20	0505 - 5
R44302	1H22	9	0505 - 7
R44302	1I16	28	0560 - 3
R44302	2C10	2	1369 - 13
R44302	2D4	13	1673 - 3
R44302	2D8	7	1673 - 10
R44302	2D13	21	1674 - 9
R44302	2D15	35	1674 - 9B
R44302	2D16	2	1674 - 10
R44302	2D21	1	1674 - 23
R44302	2D23	15	1674 - 23B
R44302	2D25	8	1674 - 25
R44302	2E2	5	1674 - 35
R44302	2F10	2	1810 - 7
R44302	2I9	12	1830 - 13
R44302	2I15	5	1830 - 17
R44302	2J13	11	2001 - 3
R44302	2J15	11	2001 - 3B
R44302	3F9	12	3166 - 3
R44302	3F11	12	3166 - 3B
R44342	2D15	27	1674 - 9B
R44342	2D25	10	1674 - 25
R459R	2B24	1	1369 - 3
R460R	2B24	1	1369 - 3
R46414	2D21	8	1674 - 23
R46414	2D23	16	1674 - 23B
R46667	2I2	2	1830 - 5
R47150	2K15	32	2160 - 15
R47151	2K15	8	2160 - 15
R47151	3F2	2	3160 - 79
R47153	1G12	18	0407 - 7
R47153	1H4	9	0419 - 1
R47153	1H15	27	0452 - 3
R47693	1H19	5	0505 - 2
R48693	3F16	6	4151 - 3
R48733	1B13	5	0210 - 1
R48734	1B13	5	0210 - 1
R48734	1C16	2	0250 - 9
R48735	1B13	5	0210 - 1
R48776	1B13	6	0210 - 1
R49377	1H15	29	0452 - 3
R495R	2B24	1	1369 - 3
R49866	1H15	6	0452 - 3
R500055	1G12	4	0407 - 7
R500055	1H4	5	0419 - 1
R500098	1G16	3	0409 - 3
R500330	1G12	14	0407 - 7
R500607	2C18	23	1672 - 3
R500607	2C22	15	1672 - 7
R500642	1G2	15	0404 - 3
R500642	1G13	1	0407 - 8
R500723	1G25	11	0416 - 3
R501034	1F24	5	0403 - 1
R501035	1F24	4	0403 - 1
R501035	1G4	1	0404 - 5
R501035	1G6	1	0404 - 7
R501388	1H7	25	0420 - 3
R501486	2C18	24	1672 - 3
R501640	1G16	18	0409 - 3
R502011	1H15	21	0452 - 3
R502079	2I2	14	1830 - 5
R502083	1F21	1	0402 - 6
R50209	1H4	4	0419 - 1
R502125	1F16	10	0401 - 3
R502126	1F16	10	0401 - 3
R502127	1F16	9	0401 - 3
R502128	1F16	9	0401 - 3
R502187	1G16	4	0409 - 3
R502315	1F16	9	0401 - 3
R502316	1F16	9	0401 - 3
R502317	1F16	10	0401 - 3
R502318	1F16	10	0401 - 3
R502322	1F16	10	0401 - 3
R502598	1F18	11	0402 - 3
R502598	1H15	38	0452 - 3
R502602	1G20	3	0413 - 3

NUMERICAL INDEX - CONTINUED

PART NO.	GRID	KEY	PAGE
R502695	1F18	15	0402 - 3
R502719	1F18	19	0402 - 3
R502719	1H15	38	0452 - 3
R502773	1G13	6	0407 - 8
R502777	1H7	5	0420 - 3
R502778	1H7	3	0420 - 3
R502836	1H2	2	0417 - 3
R502911	1G16	7	0409 - 3
R502912	1G16	8	0409 - 3
R503432	1G4	1	0404 - 5
R503501	1H2	18	0417 - 3
R503576	1F18	16	0402 - 3
R503578	1G20	5	0413 - 3
R503578	1G20	6	0413 - 3
R50390	1H15	21	0452 - 3
R503926	1G23	1	0414 - 1
R50405	1H15	18	0452 - 3
R504089	1G20	39	0413 - 3
R504093	1F18	10	0402 - 3
R50424	1H4	12	0419 - 1
R50424	1H15	35	0452 - 3
R504279	1H7	15	0420 - 3
R504516	1H7	14	0420 - 3
R504516	1H9	1	0420 - 5
R504778	1H2	15	0417 - 3
R504791	1H2	15	0417 - 3
R504885	1H15	38	0452 - 3
R505570	1G20	8	0413 - 3
R505570	1G20	41	0413 - 3
R505570	1G20	42	0413 - 3
R50770	2H24	16	1830 - 3B
R51053	1H4	10	0419 - 1
R51196	1B14	3	0210 - 2
R51196	1B15	3	0210 - 3
R51197	1B14	3	0210 - 2
R51197	1B15	3	0210 - 3
R51198	1B14	3	0210 - 2
R51198	1B15	3	0210 - 3
R51199	1B14	3	0210 - 2
R51199	1B15	3	0210 - 3
R515224	1G2	2	0404 - 3
R515454	1G20	28	0413 - 3
R515455	1G22	57	0413 - 5
R515456	1G22	54	0413 - 5
R515457	1G22	56	0413 - 5
R515457	1G22	60	0413 - 5
R515457	1H15	38	0452 - 3
R515575	1G16	19	0409 - 3
R518382	1G12	20	0407 - 7
R518382	1G12	24	0407 - 7
R518524	1H9	5	0420 - 5
R518563	1H9	8	0420 - 5
R518563	1H9	9	0420 - 5
R518563	1H9	33	0420 - 5
R518563	1H9	47	0420 - 5
R51936	1G20	20	0413 - 3
R51936	1G20	25	0413 - 3
R51936	3F16	3	4151 - 3
R519483	1H9	17	0420 - 5
R519759	1H9	42	0420 - 5
R520373	1F18	16	0402 - 3
R521437	1G18	5	0410 - 1
R521438	1G18	4	0410 - 1
R52725	2D25	9A	1674 - 25
R53108	1H15	34	0452 - 3
R53317	1K6	13	1062 - 3
R53528	2J13	9	2001 - 3
R53528	2J15	9	2001 - 3B
R53528	2J22	3	2006 - 2
R53899	1H15	25	0452 - 3
R53901	1H15	25	0452 - 3
R54123	1H19	2	0505 - 2
R54445	2G4	8	1810 - 21
R54500	1G25	1	0416 - 3
R54856	1H15	24	0452 - 3
R56308	1B14	4	0210 - 2
R56308	1B15	4	0210 - 3
R57254	1C4	14	0210 - 17
R57696	1G13	4	0407 - 8
R57771	1F24	2	0403 - 1
R59460	1B25	8	0210 - 13
R59460	1C4	8	0210 - 17
R61288	1G2	24	0404 - 3
R61463	3C14	51	3160 - 13
R61463	3C18	51	3160 - 21
R61497	1G17	1	0409 - 4
R63548	1H9	12	0420 - 5
R63548	1H9	13	0420 - 5
R63548	1H9	15	0420 - 5
R63548	1H9	16	0420 - 5
R63548	1H9	26	0420 - 5
R63548	1H9	28	0420 - 5
R63548	1H9	30	0420 - 5
R63548	1H9	32	0420 - 5
R63548	1H9	37	0420 - 5
R63548	1H9	39	0420 - 5
R63548	1H9	44	0420 - 5
R63551	1G20	22	0413 - 3
R63551	1H7	7	0420 - 3
R63551	1H7	33	0420 - 3
R63551	1H7	35	0420 - 3
R63551	1H7	37	0420 - 3
R63552	1G20	24	0413 - 3
R63575	1C14	9	0250 - 7
R63667	2G2	8	1810 - 19
R63667	2G4	14	1810 - 21
R63845	1G18	6	0410 - 1
R63845	1G20	2	0413 - 3
R67092	1G20	37	0413 - 3
R67092	1I16	22	0560 - 3
R67264	1G20	44	0413 - 3
R69936	1G18	3	0410 - 1
R70112	1B25	14	0210 - 13
R70112	1C4	17	0210 - 17
R70113	1B25	16	0210 - 13
R70113	1C4	15	0210 - 17
R70115	1B25	15	0210 - 13
R70115	1C4	16	0210 - 17
R70534	1G10	11	0407 - 5
R71210	2D11	3	1674 - 7
R71732	1G13	9	0407 - 8
R71732	1H5	3	0419 - 2
R72328	1F18	8	0402 - 3
R72328	1H15	9	0452 - 3
R72653	1K6	62	1062 - 3
R72654	1K6	39	1062 - 3
R72655	2H6	3	1821 - 3D
R72655	2H6	7	1821 - 3D
R72781	1B13	1	0210 - 1
R74008	1F24	3	0403 - 1
R76695	2J13	29	2001 - 3
R76822	1G20	46	0413 - 3
R77175	1D16	15	0350 - 3
R77175	1H9	45	0420 - 5
R77175	2K3	11	2160 - 3
R77175	2K11	5	2160 - 11
R77175	2K17	11	2160 - 17
R77175	3E18	19	3160 - 69
R77175	3E23	28	3160 - 75
R77175	3E25	11	3160 - 77
R77551	1H15	5	0452 - 3
R78053	3E23	29	3160 - 75
R78053	3E25	24	3160 - 77
R78818	3F5	40	3165 - 3
R78818	3F7	40	3165 - 3B
R79846	1H12	5	0429 - 2
R81777	1K2	4	0965 - 11
R81789	1K2	8	0965 - 11
R81795	1K2	10	0965 - 11
R81864	1K2	14	0965 - 11
R81866	1K2	3	0965 - 11
R82007	1G2	22	0404 - 3
R83020	1G18	5	0410 - 1
R83021	1G18	4	0410 - 1
R83489	1H15	25	0452 - 3
R83490	1H15	25	0452 - 3
R84472	1H15	10	0452 - 3
R84618	1G16	12	0409 - 3
R84619	1G16	14	0409 - 3
R85027	1F20	9	0402 - 5
R85145	3F16	9	4151 - 3
R85168	1D12	1	0325 - 3
R85169	1D12	2	0325 - 3
R85228	3F5	21	3165 - 3
R85228	3F7	21	3165 - 3B
R85556	3C2	9	3140 - 9
R85556	3F5	12	3165 - 3
R85556	3F7	12	3165 - 3B
R86063	1G12	19	0407 - 7
R86084	1K2	6	0965 - 11
R86457	1K6	40	1062 - 3
R86457	3F13	17	3166 - 5
R86743	1H15	17	0452 - 3
R87561	1F23	1	0402 - 8
R87561	1G2	23	0404 - 3
R88397	1H15	12	0452 - 3
R88993	1H15	1	0452 - 3
R89879	1G25	7	0416 - 3
R89940	1K2	1	0965 - 11
R89940	1K2	2	0965 - 11
R91729	1K2	9	0965 - 11
R92097	1H15	15	0452 - 3
R93308	1G16	12	0409 - 3
R93311	1G16	14	0409 - 3
R93312	1G16	12	0409 - 3
R93313	1G16	14	0409 - 3
R93314	1G16	12	0409 - 3
R93315	1G16	14	0409 - 3
R93349	1G16	13	0409 - 3
R93350	1G16	11	0409 - 3
R93948	1F24	10	0403 - 1
R96935	1I20	14	0567 - 5
R96935	1I24	26	0567 - 9
R96935	1J2	26	0567 - 11
R96935	3F16	10	4151 - 3
R97332	2H24	41	1830 - 3B
R97332	2H24	58	1830 - 3B
R97336	2H24	42	1830 - 3B
R97336	2H24	64	1830 - 3B
R98064	1G12	5	0407 - 7
R98064	1H4	6	0419 - 1

NUMERICAL INDEX - CONTINUED

PART NO.	GRID	KEY	PAGE
R98527	1F21	12	0402 - 6
R98669	3F5	22	3165 - 3
R98669	3F7	22	3165 - 3B
SE500877	1G13	12	0407 - 8
SE501040	1G4	..	0404 - 5
TCU14336	2F14	25	1810 - 11
TCU14336	2F16	28	1810 - 13
TCU14336	2F18	35	1810 - 15
TF1U3302L	3B14	3	3102 - 5
TH110253	3F5	43	3165 - 3
TH110253	3F7	43	3165 - 3B
TY15733	2C15	1	1671 - 2
TY15733	2C15	2	1671 - 2
TY15733	2C15	3	1671 - 2
TY15733	2C15	5	1671 - 2
TY16004	2C5	2	1369 - 8
TY16005	2C5	3	1369 - 8
TY16423	2C5	..	1369 - 8
TY21766	2C15	5	1671 - 2
TY22007	2B22	2	1369 - 1
TY22008	2B22	2	1369 - 1
TY22010	2B22	1	1369 - 1
TY22010	2B22	2	1369 - 1
TY22011	2B22	2	1369 - 1
TY22041	2B22	..	1369 - 1
TY22042	2B22	..	1369 - 1
TY22064	2B22	1	1369 - 1
TY22065	2B22	1	1369 - 1
TY22066	2B22	1	1369 - 1
TY22067	2B22	1	1369 - 1
TY22068	2B22	1	1369 - 1
TY22069	2B22	1	1369 - 1
TY22070	2B22	1	1369 - 1
TY22073	2B22	1	1369 - 1
TY22074	2B22	1	1369 - 1
TY22464	1F8	4	0360 - 7
TY22466	2K19	13	2160 - 19
TY22493	3D4	16	3160 - 31
TY22493	3D10	17	3160 - 37
TY22493	3D18	16	3160 - 45
TY22493	3E4	25	3160 - 55
TY22493	3E10	29	3160 - 61
TY22493	3E16	3	3160 - 67
TY22494	1I16	34	0560 - 3
TY22494	2E20	2	1746 - 6
TY22495	2E20	1	1746 - 6
TY22495	2E20	2	1746 - 6
TY22495	3C20	24	3160 - 23
TY22495	3C22	34	3160 - 25
TY22495	3C24	39	3160 - 27
TY22505	1G14	2	0408 - 1
TY23020	2C15	5	1671 - 2
TY24443	1H11	7	0422 - 3
TY25803	2C15	5	1671 - 2
TY25955	2C22	17	1672 - 7
TY26045	2C18	19	1672 - 3
TY6280	2B22	1	1369 - 1
TY6364	2B22	1	1369 - 1
TY6389	2B22	1	1369 - 1
TY6389	2B22	2	1369 - 1
TY6390	2B22	1	1369 - 1
TY6390	2B22	2	1369 - 1
TY6391	2B22	1	1369 - 1
TY6391	2B22	2	1369 - 1
TY6392	2B22	2	1369 - 1
TY6393	2B22	2	1369 - 1
TY6394	2B22	2	1369 - 1
TY6794	2C22	17	1672 - 7
TY6798	2C18	19	1672 - 3
T101090	2F18	11	1810 - 15
T101480	3B10	13	3102 - 3
T101480	3B18	4	3140 - 3
T101480	3B18	36	3140 - 3
T101480	3C2	7	3140 - 9
T101942	2B5	3	1322 - 3
T101942	2B7	3	1322 - 3B
T101955	2I24	20	1921 - 3
T101975	2I24	9	1921 - 3
T102005	3C20	18	3160 - 23
T102005	3C22	25	3160 - 25
T102005	3C24	29	3160 - 27
T102136	3B22	8	3140 - 7
T102136	3B24	8	3140 - 7B
T102137	3B22	9	3140 - 7
T102137	3B24	9	3140 - 7B
T102137	3F5	49	3165 - 3
T102137	3F7	49	3165 - 3B
T102138	3C2	4	3140 - 9
T102138	3F5	50	3165 - 3
T102138	3F7	50	3165 - 3B
T102140	3C2	3	3140 - 9
T102172	3B22	7	3140 - 7
T102172	3B24	7	3140 - 7B
T102419	1F6	3	0360 - 3B
T102442	1F6	4	0360 - 3B
T102618	2B17	6	1322 - 9
T102618	2B19	8	1322 - 9B
T102620	2B13	6	1322 - 7
T102620	2B15	8	1322 - 7B
T102934	2D13	22	1674 - 9
T102934	2D15	43	1674 - 9B
T102958	3E12	17	3160 - 63
T102961	3E12	25	3160 - 63
T102963	3E12	27	3160 - 63
T103092	3D22	38	3160 - 49
T103092	3E6	25	3160 - 57
T103093	3D22	39	3160 - 49
T103093	3E6	26	3160 - 57
T103094	3D22	40	3160 - 49
T103094	3E6	27	3160 - 57
T103238	1H20	24	0505 - 5
T103463	2E4	3	1674 - 37
T105740	1H24	42	0511 - 3
T105740	2G25	1	1821 - 1
T105891	2I19	10	1910 - 5
T106208	2K15	34	2160 - 15
T107883	2K3	1	2160 - 3
T108477	1E22	5	0350 - 37
T11180	1G25	3	0416 - 3
T11234	1J17	7	0962 - 5
T11234	2J16	3	2002 - 2
T11234	2J16	13	2002 - 2
T115030	2J16	5	2002 - 2
T115031	2J16	7	2002 - 2
T116416	1E6	16	0350 - 17
T116516	1E24	3	0350 - 41
T116604	1F8	13	0360 - 7
T116604	2C10	3	1369 - 13
T116604	2C10	8	1369 - 13
T116613	1E24	1	0350 - 41
T116915	1E18	5	0350 - 31
T116918	1E14	9	0350 - 27
T116928	1E18	1	0350 - 31
T118681	2K5	1	2160 - 5
T119564	2J16	1	2002 - 2
T121288	2C15	8	1671 - 2
T125535	3B22	2	3140 - 7
T125535	3B24	2	3140 - 7B
T12582	1K2	15	0965 - 11
T128096	2K9	51	2160 - 9
T128437	2J16	8	2002 - 2
T130057	3B18	13	3140 - 3
T130058	3B18	14	3140 - 3
T130059	3B18	15	3140 - 3
T130847	2K15	1	2160 - 15
T130847	3F2	9	3160 - 79
T131617	3D22	33	3160 - 49
T131617	3E6	22	3160 - 57
T131624	3E12	19	3160 - 63
T131980	1J17	1	0962 - 5
T132071	2K3	1	2160 - 3
T133290	3B18	37	3140 - 3
T133674	2G6	18	1810 - 23
T133674	2G10	16	1810 - 23D
T133674	2J13	4B	2001 - 3
T133674	2J13	26	2001 - 3
T133674	2J15	26	2001 - 3B
T134104	2C15	7	1671 - 2
T134141	1F2	3	0350 - 43
T134874	2F20	9	1810 - 15B
T134895	2D5	6	1673 - 5
T134895	2F12	4	1810 - 9
T135583	2F14	23	1810 - 11
T13624	3F5	8	3165 - 3
T13624	3F7	8	3165 - 3B
T13630	1J13	3	0962 - 3
T13630	1J15	3	0962 - 3B
T13814	1G25	16	0416 - 3
T140379	3B18	21	3140 - 3
T140380	3B18	22	3140 - 3
T140381	3B18	23	3140 - 3
T143169	2H22	29	1830 - 3
T143169	2I2	27	1830 - 5
T144486	1E6	8	0350 - 17
T145701	1J13	16	0962 - 3
T146097	2B9	3	1322 - 5
T146097	2B11	2	1322 - 5B
T146098	2B13	2	1322 - 7
T146098	2B15	9	1322 - 7B
T146099	2B17	2	1322 - 9
T146099	2B19	9	1322 - 9B
T146102	1H11	4	0422 - 3
T146104	1H11	8	0422 - 3
T146104	2B17	13	1322 - 9
T146104	2B19	7	1322 - 9B
T146106	1H11	8	0422 - 3
T146106	2B13	13	1322 - 7
T146106	2B15	7	1322 - 7B
T146175	2B5	4	1322 - 3
T146175	2B7	4	1322 - 3B
T146178	2B17	11	1322 - 9
T146178	2B19	5	1322 - 9B
T146180	2B13	11	1322 - 7
T146180	2B15	5	1322 - 7B
T146246	2E13	3	1740 - 3
T146246	2E17	14	1746 - 3
T146246	3B18	6	3140 - 3
T146246	3B22	5	3140 - 7
T146246	3B24	5	3140 - 7B
T146436	2B5	5	1322 - 3
T146436	2B7	5	1322 - 3B

NUMERICAL INDEX - CONTINUED

PART NO.	GRID	KEY	PAGE
T146438	2B5	6	1322 - 3
T146438	2B7	6	1322 - 3B
T146443	1J7	38	0930 - 3
T146443	1J9	38	0930 - 5
T146490	3E18	5	3160 - 69
T146494	2B17	16	1322 - 9
T146494	2B19	6	1322 - 9B
T146495	2B17	12	1322 - 9
T146495	2B19	19	1322 - 9B
T146496	2B17	3	1322 - 9
T146496	2B19	4	1322 - 9B
T146502	2B13	16	1322 - 7
T146502	2B15	6	1322 - 7B
T146503	2B13	12	1322 - 7
T146503	2B15	19	1322 - 7B
T146504	2B13	3	1322 - 7
T146504	2B15	4	1322 - 7B
T146515	1H11	8	0422 - 3
T146516	1H11	8	0422 - 3
T146517	1H11	8	0422 - 3
T146605	2B5	7	1322 - 3
T146605	2B7	7	1322 - 3B
T146606	2B13	14	1322 - 7
T146606	2B15	12	1322 - 7B
T146607	2B17	14	1322 - 9
T146607	2B19	12	1322 - 9B
T146792	3E18	4	3160 - 69
T146908	2B17	17	1322 - 9
T146908	2B19	13	1322 - 9B
T146911	2B13	17	1322 - 7
T146911	2B15	13	1322 - 7B
T146933	3B8	3	3102 - 1
T146933	3B12	7	3102 - 3B
T146933	3B14	7	3102 - 5
T146933	3B16	4	3102 - 7
T147618	2F10	8	1810 - 7
T147891	2J8	10	1927 - 5D
T148083	2B9	4	1322 - 5
T148083	2B11	1	1322 - 5B
T148181	2K19	10	2160 - 19
T148181	2K21	9	2160 - 21
T148712	3C20	19	3160 - 23
T148712	3C22	26	3160 - 25
T148712	3C24	30	3160 - 27
T151139	2C16	5	1671 - 3
T151797	1B3	8	0110 - 3
T151797	1B5	8	0110 - 5
T151797	1B7	4	0110 - 7
T151859	1H24	59	0511 - 3
T152076	2E21	4	1749 - 2
T152230	2D9	3	1674 - 1
T152230	2D15	44	1674 - 9B
T153535	2F6	3	1810 - 3
T154131	1J13	1	0962 - 3
T154131	1J15	1	0962 - 3B
T154187	3C12	27	3160 - 11
T154187	3C14	27	3160 - 13
T154187	3C18	27	3160 - 21
T154342	3D4	22	3160 - 31
T154342	3D10	21	3160 - 37
T154342	3D18	22	3160 - 45
T154342	3E4	31	3160 - 55
T154342	3E10	35	3160 - 61
T154342	3E16	10	3160 - 67
T156059	3B22	3	3140 - 7
T156059	3B24	3	3140 - 7B
T156256	2I9	7	1830 - 13
T156258	2E13	13	1740 - 3
T156471	2H24	65	1830 - 3B
T156693	2B3	6	1314 - 1
T156693	2J25	4	2008 - 3
T156784	1J19	4	0962 - 7
T156992	3B18	11	3140 - 3
T156994	3B18	25	3140 - 3
T156995	2B21	1	1330 - 5
T157027	3B18	18	3140 - 3
T157028	3B18	24	3140 - 3
T157029	3B18	12	3140 - 3
T157030	3B18	17	3140 - 3
T157055	1C6	12	0210 - 19
T157056	1C6	19	0210 - 19
T157172	2B9	5	1322 - 5
T157211	1K6	14	1062 - 3
T157212	1K6	8	1062 - 3
T157220	1K6	15	1062 - 3
T157223	1K6	26	1062 - 3
T157234	3B18	1	3140 - 3
T157257	1K6	20	1062 - 3
T157258	1K6	9	1062 - 3
T157315	1C8	3	0240 - 3
T157443	3D4	23	3160 - 31
T157443	3D10	22	3160 - 37
T157443	3D18	33	3160 - 45
T157443	3E4	12	3160 - 55
T157443	3E10	20	3160 - 61
T157443	3E16	11	3160 - 67
T157457	3B10	2	3102 - 3
T157457	3B12	6	3102 - 3B
T157457	3B16	5	3102 - 7
T158047	3E18	22	3160 - 69
T158495	1I10	11	0520 - 3
T158577	2C15	8	1671 - 2
T158584	2C18	26	1672 - 3
T158719	1D24	25	0350 - 11
T159028	2B5	8	1322 - 3
T159028	2B7	8	1322 - 3B
T159519	1D24	17	0350 - 11
T159519	1E2	13	0350 - 13
T159519	1E4	13	0350 - 15
T159602	1E6	7	0350 - 17
T160762	2B17	1	1322 - 9
T160762	2B19	14	1322 - 9B
T160769	2B13	1	1322 - 7
T160769	2B15	14	1322 - 7B
T161207	1E6	2	0350 - 17
T161208	1E8	8	0350 - 19
T161208	1E14	2	0350 - 27
T161380	2D9	3	1674 - 1
T161929	1I10	5	0520 - 3
T162019	2C15	8	1671 - 2
T162575	1H24	43	0511 - 3
T163334	2H6	5	1821 - 3D
T163335	2H6	6	1821 - 3D
T163336	2H6	2	1821 - 3D
T163597	2I7	20	1830 - 11
T163962	2G25	2	1821 - 1
T164133	1H22	10	0505 - 7
T164660	1E18	2	0350 - 31
T165169	2H24	42	1830 - 3B
T166274	2K5	9	2160 - 5
T166275	2K5	11	2160 - 5
T166400	2K5	5	2160 - 5
T167504	2F14	24	1810 - 11
T167504	2G16	11	1810 - 27B
T167504	2G18	5	1810 - 29
T167505	2F18	26	1810 - 15
T167508	2F16	17	1810 - 13
T167514	2F16	18	1810 - 13
T167514	2F18	28	1810 - 15
T167519	2F18	39	1810 - 15
T167527	2F18	29	1810 - 15
T167530	2F16	19	1810 - 13
T167546	2F16	20	1810 - 13
T167546	2F18	30	1810 - 15
T167574	2G18	6	1810 - 29
T167593	2F8	5	1810 - 5
T167593	2F18	12	1810 - 15
T167593	2G14	13	1810 - 27
T167594	2F18	12	1810 - 15
T167618	2F16	21	1810 - 13
T167630	2F18	31	1810 - 15
T167658	2F14	26	1810 - 11
T167659	2F18	13	1810 - 15
T167659	2F23	2	1810 - 16
T167676	2H22	30	1830 - 3
T167679	2I9	10	1830 - 13
T167683	2F18	14	1810 - 15
T167754	2G12	7	1810 - 25
T167759	2I9	4	1830 - 13
T167764	2F8	6	1810 - 5
T167764	2G14	14	1810 - 27
T167770	2F22	15	1810 - 15D
T167771	2F22	16	1810 - 15D
T167775	2D15	45	1674 - 9B
T167775	2F22	17	1810 - 15D
T167828	3B16	6	3102 - 7
T167829	3B8	2	3102 - 1
T167829	3B16	7	3102 - 7
T167837	1C6	10	0210 - 19
T167840	1K15	12	1115 - 3
T167841	1K15	13	1115 - 3
T167842	1K15	18	1115 - 3
T167843	1K15	21	1115 - 3
T167845	1K15	11	1115 - 3
T167848	1K15	20	1115 - 3
T167850	3B14	1	3102 - 5
T167924	1C6	15	0210 - 19
T167934	1I16	15	0560 - 3
T167934	1I16	19	0560 - 3
T167943	1K15	24	1115 - 3
T167945	2H22	10	1830 - 3
T167979	3C22	27	3160 - 25
T167979	3C24	31	3160 - 27
T167980	1K15	15	1115 - 3
T167981	1K15	16	1115 - 3
T167982	1K15	17	1115 - 3
T168119	2I19	11	1910 - 5
T168135	2I24	22	1921 - 3
T168160	2D16	6	1674 - 10
T168220	2H22	11	1830 - 3
T168247	1C8	2	0240 - 3
T168276	1J17	4	0962 - 5
T168383	1I16	26	0560 - 3
T168383	1K8	11	1063 - 3
T168383	1K10	10	1063 - 5
T168393	1K12	3	1064 - 7
T169118	2J4	3	1927 - 5
T169284	3B22	4	3140 - 7
T169284	3B24	4	3140 - 7B
T169329	1C6	16	0210 - 19
T169607	1E6	6	0350 - 17

NUMERICAL INDEX - CONTINUED

PART NO.	GRID	KEY	PAGE
T169707	1E6	28	0350 - 17
T169711	1E6	27	0350 - 17
T169712	1E6	12	0350 - 17
T169766	1E6	11	0350 - 17
T169955	3C8	20	3160 - 7
T169955	3C12	4	3160 - 11
T169955	3C14	4	3160 - 13
T170053	2H22	12	1830 - 3
T170133	2H24	19	1830 - 3B
T170135	3F13	4	3166 - 5
T170180	1K6	16	1062 - 3
T170181	1K6	17	1062 - 3
T170196	1E6	6	0350 - 17
T170263	3D20	17	3160 - 47
T170266	3D20	20	3160 - 47
T170269	3D20	3	3160 - 47
T170269	3E6	2	3160 - 57
T170269	3E12	3	3160 - 63
T170272	3D20	14	3160 - 47
T170272	3E6	14	3160 - 57
T170273	3D20	11	3160 - 47
T170273	3E6	11	3160 - 57
T170274	3D20	19	3160 - 47
T170274	3E6	15	3160 - 57
T170275	3D20	6	3160 - 47
T170275	3E6	10	3160 - 57
T170278	3D22	30	3160 - 49
T170278	3E6	19	3160 - 57
T170283	3D22	28	3160 - 49
T170284	3D22	29	3160 - 49
T170285	3D22	36	3160 - 49
T170285	3E6	24	3160 - 57
T170286	3D22	37	3160 - 49
T170287	3D22	47	3160 - 49
T170288	3D22	44	3160 - 49
T170288	3E6	29	3160 - 57
T170289	3D22	46	3160 - 49
T170293	3D20	5	3160 - 47
T170295	3E6	5	3160 - 57
T170306	3D22	32	3160 - 49
T170306	3E6	21	3160 - 57
T170307	3D22	31	3160 - 49
T170307	3E6	20	3160 - 57
T170365	3C20	20	3160 - 23
T170365	3C22	28	3160 - 25
T170365	3C24	33	3160 - 27
T170367	3E6	16	3160 - 57
T170381	3E6	32	3160 - 57
T170582	1K15	23	1115 - 3
T170595	2J4	1	1927 - 5
T170604	1K15	25	1115 - 3
T170607	1K15	22	1115 - 3
T170615	2K15	23	2160 - 15
T170938	1I6	1	0515 - 3
T170939	1I6	12	0515 - 3
T170945	2E21	5	1749 - 2
T171082	2I9	2	1830 - 13
T171111	1E14	16	0350 - 27
T171112	1E14	6	0350 - 27
T171114	1E12	2	0350 - 23
T171126	1E12	5	0350 - 23
T171126	1E12	9	0350 - 23
T171140	1E20	3	0350 - 33
T171153	1D18	21	0350 - 5
T171153	1D20	18	0350 - 7
T171153	1D22	14	0350 - 9
T171153	1D24	23	0350 - 11
T171153	1E2	17	0350 - 13
T171153	1E4	18	0350 - 15
T171156	1D24	18	0350 - 11
T171156	1E2	14	0350 - 13
T171156	1E4	15	0350 - 15
T171165	3B10	1	3102 - 3
T171178	1E12	3	0350 - 23
T171202	1E24	5	0350 - 41
T171218	1E2	20	0350 - 13
T171218	1E4	21	0350 - 15
T171223	2B9	6	1322 - 5
T171223	2B11	8	1322 - 5B
T171228	2B9	7	1322 - 5
T171228	2B11	4	1322 - 5B
T171239	2E21	3	1749 - 2
T171353	3C2	2	3140 - 9
T171386	3B8	4	3102 - 1
T171389	2K3	2	2160 - 3
T171459	2H22	13	1830 - 3
T17148	1J13	4	0962 - 3
T17148	1J15	4	0962 - 3B
T171553	1C6	22	0210 - 19
T171587	3D22	53	3160 - 49
T171597	1D12	6	0325 - 3
T171730	1E24	4	0350 - 41
T171734	3B18	4	3140 - 3
T171734	3F5	51	3165 - 3
T171734	3F7	51	3165 - 3B
T171750	2B17	4	1322 - 9
T171750	2B19	20	1322 - 9B
T171751	2B13	4	1322 - 7
T171751	2B15	20	1322 - 7B
T171756	2B17	15	1322 - 9
T171756	2B19	21	1322 - 9B
T171757	2B13	15	1322 - 7
T171757	2B15	21	1322 - 7B
T171849	2F8	1	1810 - 5
T171849	2G14	15	1810 - 27
T172094	1E14	22	0350 - 27
T172104	1D18	6	0350 - 5
T172104	1D20	8	0350 - 7
T172104	1D22	17	0350 - 9
T172104	1D24	7	0350 - 11
T172115	1D18	20	0350 - 5
T172115	1D20	15	0350 - 7
T172115	1D22	12	0350 - 9
T172115	1D24	20	0350 - 11
T172115	1E2	15	0350 - 13
T172115	1E4	16	0350 - 15
T172129	1D18	7	0350 - 5
T172129	1D20	9	0350 - 7
T172129	1D22	18	0350 - 9
T172129	1D24	6	0350 - 11
T172130	1D18	8	0350 - 5
T172130	1D20	10	0350 - 7
T172130	1D22	19	0350 - 9
T172130	1D24	5	0350 - 11
T172247	1D20	7	0350 - 7
T172247	1D22	3	0350 - 9
T172247	1D24	8	0350 - 11
T172251	1D20	7	0350 - 7
T172251	1D22	3	0350 - 9
T172251	1D24	8	0350 - 11
T172274	1K6	43	1062 - 3
T172302	1E2	18	0350 - 13
T172302	1E4	19	0350 - 15
T172318	1F9	4	0360 - 8
T172522	3D20	23	3160 - 47
T172523	3D20	8	3160 - 47
T172523	3E6	9	3160 - 57
T172562	3C12	16	3160 - 11
T172562	3C14	16	3160 - 13
T172562	3C18	16	3160 - 21
T172579	3C16	23	3160 - 15
T172609	3E6	18	3160 - 57
T172652	2G4	3	1810 - 21
T172712	3C16	14	3160 - 15
T172732	1D16	12	0350 - 3
T172795	1E14	8	0350 - 27
T172801	1E24	5	0350 - 41
T172814	1E16	2	0350 - 29
T172927	1I6	18	0515 - 3
T172927	1I8	5	0515 - 5
T172927	1K6	54	1062 - 3
T172933	2H24	21	1830 - 3B
T172934	2H24	22	1830 - 3B
T172985	3E12	8	3160 - 63
T172986	3E12	5	3160 - 63
T172987	3E12	9	3160 - 63
T172988	3E12	6	3160 - 63
T172991	2F22	7	1810 - 15D
T172992	2F22	8	1810 - 15D
T173036	1D18	5	0350 - 5
T173036	1D20	13	0350 - 7
T173063	1E14	7	0350 - 27
T173065	1E2	7	0350 - 13
T173065	1E4	7	0350 - 15
T173066	1D18	14	0350 - 5
T173066	1D20	3	0350 - 7
T173066	1D22	6	0350 - 9
T173066	1D24	11	0350 - 11
T173066	1E2	6	0350 - 13
T173066	1E4	6	0350 - 15
T173067	1D18	13	0350 - 5
T173067	1D20	5	0350 - 7
T173067	1D22	5	0350 - 9
T173067	1D24	10	0350 - 11
T173067	1E2	5	0350 - 13
T173067	1E4	5	0350 - 15
T173099	1J19	3	0962 - 7
T173100	1J19	2	0962 - 7
T173125	1E6	14	0350 - 17
T173126	1E6	13	0350 - 17
T173128	1E6	18	0350 - 17
T173131	1E6	1	0350 - 17
T173138	1E6	3	0350 - 17
T173139	1E6	25	0350 - 17
T173145	1E10	1	0350 - 21
T173146	1E10	4	0350 - 21
T173168	1H24	44	0511 - 3
T173178	3D20	7	3160 - 47
T173179	3D20	25	3160 - 47
T173180	3D20	12	3160 - 47
T173181	3D20	9	3160 - 47
T173182	3D20	13	3160 - 47
T173205	3D20	10	3160 - 47
T173205	3E6	8	3160 - 57
T173210	3E6	12	3160 - 57
T173217	1E14	19	0350 - 27
T173219	3E6	7	3160 - 57
T173229	3E6	3	3160 - 57
T173324	1J7	32	0930 - 3
T173324	1J9	32	0930 - 5
T173396	1E15	6	0350 - 28

NUMERICAL INDEX - CONTINUED

PART NO.	GRID	KEY	PAGE
T173397	1E15	4	0350 - 28
T173398	1E15	5	0350 - 28
T173399	1E15	3	0350 - 28
T173400	1E15	2	0350 - 28
T173407	1K15	26	1115 - 3
T173511	1E6	29	0350 - 17
T173559	2C15	8	1671 - 2
T173579	1J7	39	0930 - 3
T173579	1J9	39	0930 - 5
T173636	1D20	16	0350 - 7
T173636	1D22	22	0350 - 9
T173636	1D24	21	0350 - 11
T173637	1D20	1	0350 - 7
T173637	1D22	1	0350 - 9
T173637	1D24	1	0350 - 11
T173638	1D20	2	0350 - 7
T173638	1D22	2	0350 - 9
T173638	1D24	2	0350 - 11
T173639	1D20	6	0350 - 7
T173639	1D22	4	0350 - 9
T173639	1D24	9	0350 - 11
T173644	1E2	8	0350 - 13
T173644	1E4	8	0350 - 15
T173768	2I9	1	1830 - 13
T173779	2H16	8	1822 - 3
T173779	2H20	6	1822 - 5B
T173779	2J8	11	1927 - 5D
T173806	1D22	21	0350 - 9
T173807	1E12	6	0350 - 23
T173808	1E12	7	0350 - 23
T173809	1E12	8	0350 - 23
T173811	1E14	27	0350 - 27
T173812	1E14	26	0350 - 27
T173819	1E14	4	0350 - 27
T173819	1F9	6	0360 - 8
T173822	1E13	2	0350 - 26
T173837	1D18	19	0350 - 5
T173839	1D18	15	0350 - 5
T173839	1D20	4	0350 - 7
T173839	1D22	7	0350 - 9
T173839	1D24	12	0350 - 11
T173840	1D18	3	0350 - 5
T173840	1E2	22	0350 - 13
T173840	1E4	23	0350 - 15
T173841	1D18	1	0350 - 5
T173841	1E2	1	0350 - 13
T173841	1E4	1	0350 - 15
T173842	1D18	2	0350 - 5
T173842	1E2	2	0350 - 13
T173842	1E4	2	0350 - 15
T173843	1D18	22	0350 - 5
T173844	1D18	12	0350 - 5
T173844	1E2	4	0350 - 13
T173844	1E4	4	0350 - 15
T173845	1D18	10	0350 - 5
T173847	1D18	23	0350 - 5
T173847	1D22	15	0350 - 9
T173847	1E18	6	0350 - 31
T173847	1E18	8	0350 - 31
T173848	1E2	19	0350 - 13
T173848	1E4	20	0350 - 15
T173849	1D18	4	0350 - 5
T173849	1D20	14	0350 - 7
T173849	1D22	16	0350 - 9
T173849	1D24	19	0350 - 11
T173849	1E4	14	0350 - 15
T173851	1D20	17	0350 - 7
T173852	1D20	19	0350 - 7
T173852	1D22	11	0350 - 9
T173853	1D20	22	0350 - 7
T173853	1D22	8	0350 - 9
T173853	1D24	13	0350 - 11
T173853	1E2	9	0350 - 13
T173853	1E4	9	0350 - 15
T173855	1D24	4	0350 - 11
T173856	1E2	12	0350 - 13
T173856	1E4	12	0350 - 15
T173857	1E4	17	0350 - 15
T173858	1D22	13	0350 - 9
T173859	1D24	24	0350 - 11
T173860	1D24	22	0350 - 11
T173862	1E2	16	0350 - 13
T173863	1D18	11	0350 - 5
T173863	1E2	3	0350 - 13
T173863	1E4	3	0350 - 15
T173864	1D18	11	0350 - 5
T173864	1E2	3	0350 - 13
T173864	1E4	3	0350 - 15
T173865	1E18	7	0350 - 31
T173873	1E8	17	0350 - 19
T173878	1E15	7	0350 - 28
T173958	1D18	17	0350 - 5
T173958	1D20	21	0350 - 7
T173958	1D22	9	0350 - 9
T173958	1D24	14	0350 - 11
T173958	1E2	10	0350 - 13
T173958	1E4	10	0350 - 15
T173960	1D20	20	0350 - 7
T173960	1D22	10	0350 - 9
T173960	1D24	15	0350 - 11
T173960	1E2	11	0350 - 13
T173960	1E4	11	0350 - 15
T174025	3C12	19	3160 - 11
T174025	3C14	19	3160 - 13
T174025	3C18	19	3160 - 21
T174107	1E14	1	0350 - 27
T174109	2H24	23	1830 - 3B
T174234	1E13	5	0350 - 26
T174236	1E14	21	0350 - 27
T174237	1E18	9	0350 - 31
T174238	1E14	15	0350 - 27
T174239	1E15	8	0350 - 28
T174240	1E15	1	0350 - 28
T174254	1D18	16	0350 - 5
T174271	2I24	2	1921 - 3
T174271	2J4	11	1927 - 5
T174271	2K9	52	2160 - 9
T174275	3C22	29	3160 - 25
T174275	3C24	34	3160 - 27
T174298	2B7	24	1322 - 3B
T174298	2B9	8	1322 - 5
T174298	2B11	6	1322 - 5B
T174299	2B13	5	1322 - 7
T174299	2B15	18	1322 - 7B
T174300	2B17	5	1322 - 9
T174300	2B19	18	1322 - 9B
T174386	1E24	10	0350 - 41
T174388	1E13	7	0350 - 26
T174389	1E13	6	0350 - 26
T174392	1D20	11	0350 - 7
T174396	1E6	26	0350 - 17
T174405	1E20	6	0350 - 33
T174407	1E20	7	0350 - 33
T174407	1E24	9	0350 - 41
T174413	1D18	18	0350 - 5
T174418	1D18	16	0350 - 5
T174423	1E13	8	0350 - 26
T174427	2H22	31	1830 - 3
T174463	1C6	9	0210 - 19
T174529	1E20	5	0350 - 33
T174530	2C15	4	1671 - 2
T174634	1I6	1	0515 - 3
T174634	1I8	2	0515 - 5
T174634	1K6	10	1062 - 3
T174659	1I22	5	0567 - 7
T174659	1J2	29	0567 - 11
T174735	2B9	9	1322 - 5
T174735	2B11	9	1322 - 5B
T174997	1B5	1	0110 - 5
T175135	1I4	12	0512 - 3
T175135	2B7	25	1322 - 3B
T175236	1K6	21	1062 - 3
T175292	1E20	2	0350 - 33
T175448	1K15	28	1115 - 3
T175629	1D24	16	0350 - 11
T175669	2C22	26	1672 - 7
T175670	2C18	27	1672 - 3
T175744	2B5	9	1322 - 3
T175744	2B7	9	1322 - 3B
T175855	2I9	3	1830 - 13
T175862	1E6	17	0350 - 17
T175911	2B13	5	1322 - 7
T175911	2B17	5	1322 - 9
T176064	3B10	6	3102 - 3
T176064	3B18	31	3140 - 3
T176064	3C2	5	3140 - 9
T176064	3F5	52	3165 - 3
T176064	3F7	52	3165 - 3B
T176108	1K6	55	1062 - 3
T176111	1K6	56	1062 - 3
T176115	1D8	14	0260 - 23
T176338	2E3	8	1674 - 36
T176338	2K3	21	2160 - 3
T176357	2J10	19	1927 - 7
T176372	2D4	9	1673 - 3
T176455	1B9	3	0110 - 9
T176526	1E10	5	0350 - 21
T176527	1E10	3	0350 - 21
T176528	1E10	2	0350 - 21
T176796	1E22	4	0350 - 37
T176801	1D18	24	0350 - 5
T176870	2H20	7	1822 - 5B
T177086	3C2	2	3140 - 9
T177133	1I12	14	0530 - 3
T177219	1E6	15	0350 - 17
T177221	1E6	9	0350 - 17
T177442	2K19	15	2160 - 19
T177503	2H16	10	1822 - 3
T177505	2F14	27	1810 - 11
T177505	2G16	12	1810 - 27B
T177573	3F9	13	3166 - 3
T177753	2H20	4	1822 - 5B
T177756	2H20	3	1822 - 5B
T177772	2K21	2	2160 - 21
T177783	2B13	7	1322 - 7
T177785	2B17	7	1322 - 9
T177827	2F18	19	1810 - 15
T177861	2I9	19	1830 - 13
T177861	2I15	1	1830 - 17
T177909	2I19	18	1910 - 5
T177978	1E8	16	0350 - 19

NUMERICAL INDEX - CONTINUED

PART NO.	GRID	KEY	PAGE
T177979	1E8	15	0350 - 19
T177997	1F9	5	0360 - 8
T178063	2J2	6	1927 - 3
T178112	2F14	16	1810 - 11
T178112	2G14	5	1810 - 27
T178112	2G16	7	1810 - 27B
T178113	2F14	17	1810 - 11
T178113	2G14	6	1810 - 27
T178114	2F14	18	1810 - 11
T178114	2G14	7	1810 - 27
T178114	2G16	8	1810 - 27B
T178114	2G16	9	1810 - 27B
T178115	2H24	24	1830 - 3B
T178116	2H24	25	1830 - 3B
T178117	2H24	26	1830 - 3B
T178118	2H24	27	1830 - 3B
T178119	2H24	28	1830 - 3B
T178120	2H24	29	1830 - 3B
T178123	2H24	30	1830 - 3B
T178124	2H24	31	1830 - 3B
T178125	2H24	32	1830 - 3B
T178126	2H24	33	1830 - 3B
T178127	2H24	43	1830 - 3B
T178130	2H24	49	1830 - 3B
T178131	2H24	50	1830 - 3B
T178132	2H24	51	1830 - 3B
T178133	2H24	52	1830 - 3B
T178134	2H24	53	1830 - 3B
T178135	2H24	54	1830 - 3B
T178136	2H24	55	1830 - 3B
T178220	2F18	20	1810 - 15
T178221	2F18	15	1810 - 15
T178251	2H24	44	1830 - 3B
T178368	2J4	9	1927 - 5
T178368	2J6	7	1927 - 5B
T178368	2J8	12	1927 - 5D
T178419	2C18	28	1672 - 3
T178419	2C22	7	1672 - 7
T178487	3C4	21	3160 - 3
T178487	3C6	21	3160 - 5
T178487	3C8	21	3160 - 7
T178487	3C12	1	3160 - 11
T178534	2F18	16	1810 - 15
T178706	2K5	7	2160 - 5
T178707	2K5	6	2160 - 5
T178946	2D7	3	1673 - 9
T178947	2D7	1	1673 - 9
T178948	2D7	2	1673 - 9
T178971	2H24	34	1830 - 3B
T179276	1E24	13	0350 - 41
T179318	1E14	23	0350 - 27
T179363	2K9	33	2160 - 9
T179464	3B24	11	3140 - 7B
T179510	1E22	3	0350 - 37
T179540	1I16	30	0560 - 3
T179593	1E6	19	0350 - 17
T179594	1D20	12	0350 - 7
T179594	1D22	20	0350 - 9
T179594	1D24	3	0350 - 11
T179609	3F9	17	3166 - 3
T179609	3F11	13	3166 - 3B
T179721	1E6	4	0350 - 17
T179935	1D18	9	0350 - 5
T180074	2D7	1	1673 - 9
T180075	2D7	3	1673 - 9
T180289	1J23	2	0962 - 11
T180290	1J23	5	0962 - 11
T180338	2J13	5	2001 - 3
T180338	2J15	5	2001 - 3B
T180408	2F22	18	1810 - 15D
T180418	2F12	9	1810 - 9
T180420	2J13	17	2001 - 3
T180420	2J15	17	2001 - 3B
T180480	1E8	2	0350 - 19
T180481	1E8	3	0350 - 19
T180487	2J13	20	2001 - 3
T180487	2J15	20	2001 - 3B
T180529	1F4	7	0360 - 3
T180533	2D15	50	1674 - 9B
T180533	2G6	17	1810 - 23
T180533	2G6	25	1810 - 23
T180533	2G10	11	1810 - 23D
T180573	2J13	4A	2001 - 3
T180607	1E18	4	0350 - 31
T180645	1F4	1	0360 - 3
T180646	1F4	2	0360 - 3
T180661	2I24	26	1921 - 3
T180869	1I10	20	0520 - 3
T180884	1E8	1	0350 - 19
T180884	1E14	14	0350 - 27
T180922	2G8	4	1810 - 23B
T180923	2G8	5	1810 - 23B
T180925	2I11	14	1830 - 15
T180929	2H24	56	1830 - 3B
T180930	2F14	28	1810 - 11
T180944	3E18	32	3160 - 69
T180944	3E18	33	3160 - 69
T180957	1E18	3	0350 - 31
T181050	2F12	6	1810 - 9
T181078	1I6	3	0515 - 3
T181207	2I7	18	1830 - 11
T181306	1J3	2	0567 - 12
T181306	2K17	6	2160 - 17
T181306	3E19	1	3160 - 70
T181306	3E19	2	3160 - 70
T181306	3E19	3	3160 - 70
T181325	2C22	3	1672 - 7
T181412	2G12	2	1810 - 25
T181413	2G12	4	1810 - 25
T181455	1E13	4	0350 - 26
T181455	1E13	11	0350 - 26
T181470	1I16	31	0560 - 3
T181474	1E16	3	0350 - 29
T181488	2I24	16	1921 - 3
T181489	2I24	15	1921 - 3
T181520	2F12	1	1810 - 9
T181524	2H24	61	1830 - 3B
T181528	2I24	16	1921 - 3
T181529	2I24	15	1921 - 3
T181535	1E12	4	0350 - 23
T181535	1E20	1	0350 - 33
T181603	2F22	19	1810 - 15D
T181603	2G16	13	1810 - 27B
T181604	2D15	37	1674 - 9B
T181605	2D15	38	1674 - 9B
T181615	1E14	13	0350 - 27
T181642	2E17	13	1746 - 3
T181745	2C18	29	1672 - 3
T181745	2C22	14	1672 - 7
T181746	2C18	30	1672 - 3
T181746	2C22	11	1672 - 7
T181758	2C18	31	1672 - 3
T181771	1H24	47	0511 - 3
T181773	2C22	16	1672 - 7
T181774	1H24	48	0511 - 3
T181775	1H24	49	0511 - 3
T181776	1H24	50	0511 - 3
T181778	1H24	51	0511 - 3
T181797	2J23	7	2007 - 1
T181798	1I10	16	0520 - 3
T181842	1I12	15	0530 - 3
T181852	2B9	18	1322 - 5
T181873	1D20	7	0350 - 7
T181873	1D22	3	0350 - 9
T181873	1D24	8	0350 - 11
T181874	1D20	7	0350 - 7
T181874	1D22	3	0350 - 9
T181874	1D24	8	0350 - 11
T181875	1D20	7	0350 - 7
T181875	1D22	3	0350 - 9
T181875	1D24	8	0350 - 11
T181876	1D20	7	0350 - 7
T181876	1D22	3	0350 - 9
T181876	1D24	8	0350 - 11
T181881	1D18	11	0350 - 5
T181881	1E2	3	0350 - 13
T181881	1E4	3	0350 - 15
T181882	1D18	11	0350 - 5
T181882	1E2	3	0350 - 13
T181882	1E4	3	0350 - 15
T181883	1D18	11	0350 - 5
T181883	1E2	3	0350 - 13
T181883	1E4	3	0350 - 15
T181884	1D18	11	0350 - 5
T181884	1E2	3	0350 - 13
T181884	1E4	3	0350 - 15
T181908	2F12	1	1810 - 9
T181909	1B5	10	0110 - 5
T181909	1B7	5	0110 - 7
T181938	1I10	21	0520 - 3
T181949	1H24	52	0511 - 3
T181972	3E18	14	3160 - 69
T182183	2B9	10	1322 - 5
T182183	2B11	10	1322 - 5B
T182184	2B9	11	1322 - 5
T182189	2I11	12	1830 - 15
T182191	2B5	11	1322 - 3
T182191	2B7	11	1322 - 3B
T182191	3B20	3	3140 - 5
T182192	2B5	12	1322 - 3
T182192	2B7	12	1322 - 3B
T182192	2E13	16	1740 - 3
T182196	1E6	10	0350 - 17
T182254	1E6	5	0350 - 17
T182265	2E13	11	1740 - 3
T182265	3B18	25	3140 - 3
T182353	2C18	32	1672 - 3
T182353	2C22	20	1672 - 7
T182389	2F22	20	1810 - 15D
T182409	2B5	13	1322 - 3
T182444	3B18	26	3140 - 3
T182446	2E13	8	1740 - 3
T182452	1H24	54	0511 - 3
T182453	1H24	55	0511 - 3
T182506	1I24	27	0567 - 9
T182506	1J2	27	0567 - 11
T182578	1H24	56	0511 - 3
T182607	2G6	26	1810 - 23
T182609	2G6	22	1810 - 23
T182612	2G6	20	1810 - 23
T182612	2G10	18	1810 - 23D

NUMERICAL INDEX - CONTINUED

PART NO.	GRID	KEY	PAGE
T182629	2G6	23	1810 - 23
T182630	2B9	15	1322 - 5
T182695	2F18	32	1810 - 15
T182734	2B9	16	1322 - 5
T182758	2I19	19	1910 - 5
T182795	2B9	12	1322 - 5
T182795	2B11	12	1322 - 5B
T182852	2H22	32	1830 - 3
T182858	2H22	33	1830 - 3
T182860	2F22	21	1810 - 15D
T182860	2G2	2	1810 - 19
T182861	2D15	46	1674 - 9B
T182861	2F12	10	1810 - 9
T182861	2F12	12	1810 - 9
T182862	2D15	47	1674 - 9B
T182870	2E2	4	1674 - 35
T182870	2F12	10	1810 - 9
T182870	2H22	34	1830 - 3
T182870	2J13	7	2001 - 3
T182870	2J15	7	2001 - 3B
T182871	2D15	48	1674 - 9B
T182871	2F12	12	1810 - 9
T182871	2H22	35	1830 - 3
T182871	2J13	18	2001 - 3
T182871	2J15	18	2001 - 3B
T182872	2I9	9	1830 - 13
T182874	2G12	5	1810 - 25
T182880	2D9	3	1674 - 1
T182880	2D16	9	1674 - 10
T182880	2F22	21	1810 - 15D
T182888	2J13	10	2001 - 3
T182899	2F16	22	1810 - 13
T182899	2F18	17	1810 - 15
T182902	2F18	18	1810 - 15
T182903	2F18	1	1810 - 15
T182906	2F22	22	1810 - 15D
T182906	2H22	36	1830 - 3
T182909	2D13	23	1674 - 9
T182909	2G2	1	1810 - 19
T182909	2I11	16	1830 - 15
T182909	2J13	12	2001 - 3
T182914	2D19	3	1674 - 11
T182919	2G2	12	1810 - 19
T182919	2G4	6	1810 - 21
T182920	2F23	4	1810 - 16
T182927	2F18	2	1810 - 15
T182928	2F18	3	1810 - 15
T182963	2F16	23	1810 - 13
T182967	2F16	24	1810 - 13
T182969	2F16	26	1810 - 13
T182972	2F16	27	1810 - 13
T184135	2F18	11	1810 - 15
T184892	2F12	11	1810 - 9
T184924	2I9	11	1830 - 13
T184924	2I15	3	1830 - 17
T186793	2F14	29	1810 - 11
T186793	2G8	6	1810 - 23B
T186793	2G10	19	1810 - 23D
T190513	2I7	20	1830 - 11
T195031	2B9	14	1322 - 5
T195031	2G24	10	1816 - 3B
T195032	2B9	17	1322 - 5
T195052	1E6	21	0350 - 17
T195055	1E8	12	0350 - 19
T195107	1I16	32	0560 - 3
T195134	3F13	19	3166 - 5
T195150	2B5	14	1322 - 3
T195207	1E12	1	0350 - 23
T195210	3F13	20	3166 - 5
T195240	1E24	5	0350 - 41
T195241	1E24	8	0350 - 41
T195242	1E24	6	0350 - 41
T195243	1E24	7	0350 - 41
T195261	1E6	23	0350 - 17
T195270	1E10	6	0350 - 21
T195272	1E14	10	0350 - 27
T195274	1E8	14	0350 - 19
T195275	1E6	24	0350 - 17
T195326	1H22	12	0505 - 7
T195539	2B17	8	1322 - 9
T195540	2B17	19	1322 - 9
T195541	2B17	20	1322 - 9
T195542	2B13	8	1322 - 7
T195543	2B13	19	1322 - 7
T195544	2B13	20	1322 - 7
T195558	2B17	23	1322 - 9
T195558	2B19	26	1322 - 9B
T195559	2B13	23	1322 - 7
T195559	2B15	26	1322 - 7B
T195691	1I6	3	0515 - 3
T195710	2B5	15	1322 - 3
T195759	2B17	21	1322 - 9
T195759	2B19	16	1322 - 9B
T195760	2B13	21	1322 - 7
T195760	2B15	16	1322 - 7B
T195857	2B17	25	1322 - 9
T195857	2B19	10	1322 - 9B
T195858	2B13	25	1322 - 7
T195858	2B15	10	1322 - 7B
T195865	2B9	13	1322 - 5
T195866	2B17	22	1322 - 9
T195867	2B13	22	1322 - 7
T195929	2G22	9	1816 - 3
T196013	2B5	16	1322 - 3
T196013	2B7	16	1322 - 3B
T196115	2I9	16	1830 - 13
T196115	2I15	11	1830 - 17
T196129	2D15	28	1674 - 9B
T196130	2B5	17	1322 - 3
T196130	2B7	17	1322 - 3B
T196237	2F18	4	1810 - 15
T196284	1D4	15	0260 - 19B
T196284	1I2	15	0511 - 5
T196309	2F14	19	1810 - 11
T196309	2G14	8	1810 - 27
T196309	2G16	10	1810 - 27B
T196464	1F8	11	0360 - 7
T196471	2I13	6	1830 - 15B
T196474	1H20	19	0505 - 5
T196475	2B13	26	1322 - 7
T196475	2B15	24	1322 - 7B
T196476	2B17	26	1322 - 9
T196476	2B19	24	1322 - 9B
T196587	1F8	14	0360 - 7
T196622	2G10	20B	1810 - 23D
T196711	2F20	10	1810 - 15B
T196712	2F20	11	1810 - 15B
T196724	3B10	16	3102 - 3
T196729	2I11	1	1830 - 15
T196749	2C10	8	1369 - 13
T196984	1F8	15	0360 - 7
T197061	1D8	14	0260 - 23
T197144	3F13	19	3166 - 5
T197182	3D18	11	3160 - 45
T197182	3E4	20	3160 - 55
T197182	3E10	24	3160 - 61
T197182	3E14	4	3160 - 65
T197186	2B11	13	1322 - 5B
T197300	2B5	21	1322 - 3
T197300	2B7	20	1322 - 3B
T197323	2B17	28	1322 - 9
T197323	2B19	3	1322 - 9B
T197324	2B13	28	1322 - 7
T197324	2B15	3	1322 - 7B
T197455	2F18	33	1810 - 15
T197456	2F18	34	1810 - 15
T197457	2G6	24	1810 - 23
T197553	1E2	20	0350 - 13
T197553	1E4	21	0350 - 15
T197569	2E17	16	1746 - 3
T198215	3B10	16	3102 - 3
T198216	3B10	16	3102 - 3
T200024	2B5	10	1322 - 3
T200024	2B7	10	1322 - 3B
T200025	2B17	24	1322 - 9
T200025	2B19	1	1322 - 9B
T200026	2B13	24	1322 - 7
T200026	2B15	1	1322 - 7B
T200055	2B5	18	1322 - 3
T200055	2B7	18	1322 - 3B
T200056	2B17	10	1322 - 9
T200056	2B19	11	1322 - 9B
T200057	2B13	10	1322 - 7
T200057	2B15	11	1322 - 7B
T200064	2B5	20	1322 - 3
T200064	2B7	19	1322 - 3B
T200065	2B17	27	1322 - 9
T200065	2B19	17	1322 - 9B
T200066	2B13	27	1322 - 7
T200066	2B15	17	1322 - 7B
T200158	2G24	11	1816 - 3B
T200159	2G24	12	1816 - 3B
T200161	2G24	7	1816 - 3B
T200267	2G10	20A	1810 - 23D
T200363	2D15	31	1674 - 9B
T200463	2J6	8	1927 - 5B
T200463	2J8	14	1927 - 5D
T200729	2B9	14	1322 - 5
T200729	2G24	10	1816 - 3B
T200729	3D4	11	3160 - 31
T200729	3D10	11	3160 - 37
T20077	1G16	2	0409 - 3
T200784	2B9	13	1322 - 5
T200784	2B11	5	1322 - 5B
T200791	2B19	2	1322 - 9B
T200802	2B17	22	1322 - 9
T200802	2B19	15	1322 - 9B
T200815	2B13	22	1322 - 7
T200815	2B15	15	1322 - 7B
T200818	2B15	2	1322 - 7B
T200888	3B18	11	3140 - 3
T200889	3B18	24	3140 - 3
T201017	2J8	13	1927 - 5D
T201020	2J6	9	1927 - 5B
T20129	1G16	1	0409 - 3
T201305	2J10	20	1927 - 7
T201328	2J10	22	1927 - 7
T201375	2J8	15	1927 - 5D
T201708	2F14	30	1810 - 11
T201887	3E10	23	3160 - 61
T20217	2E17	7	1746 - 3

NUMERICAL INDEX - CONTINUED

PART NO.	GRID	KEY	PAGE
T202241	2J8	16	1927 - 5D
T202883	2G10	21	1810 - 23D
T202884	2B11	3	1322 - 5B
T203128	2G10	22	1810 - 23D
T203438	2D21	21	1674 - 23
T203438	2D23	17	1674 - 23B
T203475	1D12	1	0325 - 3
T203486	1D12	6	0325 - 3
T203546	3F11	8	3166 - 3B
T203614	2F14	31	1810 - 11
T203615	2F14	32	1810 - 11
T203670	3D18	11	3160 - 45
T203670	3E4	20	3160 - 55
T203670	3E10	24	3160 - 61
T203742	1E8	16	0350 - 19
T203767	1E6	23	0350 - 17
T203810	2B7	21	1322 - 3B
T203909	2B7	13	1322 - 3B
T203927	2B7	26	1322 - 3B
T203965	2J10	23	1927 - 7
T204302	2J10	21	1927 - 7
T204644	2J10	24	1927 - 7
T205313	2B7	14	1322 - 3B
T205369	1E6	19	0350 - 17
T205472	2F22	19	1810 - 15D
T205472	2F22	20	1810 - 15D
T205472	2G16	13	1810 - 27B
T205670	2K17	12	2160 - 17
T205718	2B19	25	1322 - 9B
T205719	2B15	25	1322 - 7B
T205941	3D24	7	3160 - 51
T206624	2D15	40	1674 - 9B
T207421	3B10	1	3102 - 3
T207421	3B12	5	3102 - 3B
T207717	2D15	28	1674 - 9B
T207741	2B5	15	1322 - 3
T207741	2B7	15	1322 - 3B
T207750	2B17	21	1322 - 9
T207750	2B19	16	1322 - 9B
T207751	2B13	21	1322 - 7
T207751	2B15	16	1322 - 7B
T207759	1E15	9	0350 - 28
T207925	2G10	12	1810 - 23D
T208085	1H20	19	0505 - 5
T208086	2B13	26	1322 - 7
T208086	2B15	24	1322 - 7B
T208087	2B17	26	1322 - 9
T208087	2B19	24	1322 - 9B
T208364	2D4	14	1673 - 3
T208365	2D4	15	1673 - 3
T208455	1E18	4	0350 - 31
T208456	1E18	10	0350 - 31
T209174	2J4	3	1927 - 5
T209177	2J4	1	1927 - 5
T209348	3B8	4	3102 - 1
T209601	2G24	11	1816 - 3B
T209602	2G24	12	1816 - 3B
T210796	3B24	11	3140 - 7B
T211353	1J19	2	0962 - 7
T211678	2D15	52	1674 - 9B
T211710	1E15	7	0350 - 28
T21242	1G13	7	0407 - 8
T213146	1B5	10	0110 - 5
T213146	1B7	5	0110 - 7
T213560	2F16	15	1810 - 13
T213611	2C15	9	1671 - 2
T214458	2K3	2	2160 - 3
T22381	2J4	10	1927 - 5
T22381	2J6	10	1927 - 5B
T22381	2J8	17	1927 - 5D
T22381	2J10	25	1927 - 7
T23891	1H13	2	0433 - 1
T24210	1D16	11	0350 - 3
T27860	1F14	2	0401 - 1
T29342	2D21	12	1674 - 23
T29342	2D23	18	1674 - 23B
T29747	1F4	11	0360 - 3
T3G9609	3B14	4	3102 - 5
T30CA	3B14	2	3102 - 5
T30EA	3B14	6	3102 - 5
T35390	1G2	14	0404 - 3
T35985	2K15	28	2160 - 15
T38282	1K6	3	1062 - 3
T38485	3F5	42	3165 - 3
T38485	3F7	42	3165 - 3B
T39049	1J13	13	0962 - 3
T39049	1J15	13	0962 - 3B
T39155	2K9	34	2160 - 9
T40308	2K5	10	2160 - 5
T42170	1H22	13	0505 - 7
T42199	2C16	6	1671 - 3
T42977	1D14	5	0342 - 3
T42977	1I14	2	0540 - 3
T44604	1B17	10	0210 - 5
T44604	1B19	7	0210 - 7
T44604	1B21	10	0210 - 9
T44604	1B23	10	0210 - 11
T45298	1I6	5	0515 - 3
T46876	2D15	49	1674 - 9B
T46876	2D25	12	1674 - 25
T46876	2E1	9	1674 - 25A
T53268	1H3	1	0418 - 2
T55224	2H14	16	1821 - 11
T56112	1C6	5	0210 - 19
T56112	1I10	17	0520 - 3
T56112	1J11	4	0960 - 15
T58056	2J10	18	1927 - 7
T59937	2H24	20	1830 - 3B
T59937	2I19	6	1910 - 5
T60752	3B18	19	3140 - 3
T60811	1I16	25	0560 - 3
T60811	2C10	6	1369 - 13
T60811	2I15	6	1830 - 17
T60920	2J16	6	2002 - 2
T63224	2B17	18	1322 - 9
T63224	2B19	22	1322 - 9B
T63225	2B13	18	1322 - 7
T63225	2B15	22	1322 - 7B
T64217	2B13	9	1322 - 7
T64217	2B15	23	1322 - 7B
T65643	2D8	4	1673 - 10
T65643	2F12	12	1810 - 9
T66418	2F20	5	1810 - 15B
T66419	1H24	53	0511 - 3
T66862	1B9	2	0110 - 9
T67995	2D21	11	1674 - 23
T67995	2D23	19	1674 - 23B
T67995	3C20	21	3160 - 23
T67995	3C22	30	3160 - 25
T67995	3C24	35	3160 - 27
T70154	2F10	10	1810 - 7
T70659	1I16	39	0560 - 3
T72414	3B18	38	3140 - 3
T72414	3B22	11	3140 - 7
T72414	3E23	26	3160 - 75
T72414	3E25	25	3160 - 77
T72853	1G25	17	0416 - 3
T74416	1D4	16	0260 - 19B
T74416	1I2	16	0511 - 5
T74416	2D13	24	1674 - 9
T74416	2D15	39	1674 - 9B
T74416	2D21	2	1674 - 23
T74416	2D21	18	1674 - 23
T74416	2D23	14	1674 - 23B
T74416	2D23	20	1674 - 23B
T75197	2B3	2	1314 - 1
T75197	2D21	19	1674 - 23
T75197	2D23	21	1674 - 23B
T75276	1I16	33	0560 - 3
T75276	2D21	10	1674 - 23
T75276	2D23	22	1674 - 23B
T76252	2I7	19	1830 - 11
T76938	1D16	8	0350 - 3
T76938	1F4	9	0360 - 3
T76938	2C6	6	1369 - 9
T76938	3C4	4	3160 - 3
T76938	3C6	4	3160 - 5
T76938	3C8	9	3160 - 7
T76938	3C20	22	3160 - 23
T76938	3C22	31	3160 - 25
T76938	3C24	36	3160 - 27
T76938	3E18	25	3160 - 69
T76938	3F5	53	3165 - 3
T76938	3F7	53	3165 - 3B
T77613	1C18	3	0260 - 3
T77613	1C20	3	0260 - 5
T77613	1C24	1	0260 - 9
T77613	1D4	17	0260 - 19B
T77613	1D6	3	0260 - 21
T77613	1D8	1	0260 - 23
T77613	1D16	1	0350 - 3
T77613	1I2	17	0511 - 5
T77613	1I20	15	0567 - 5
T77613	1I24	15	0567 - 9
T77613	1J2	15	0567 - 11
T77613	1J7	16	0930 - 3
T77613	1J9	16	0930 - 5
T77613	1J21	9	0962 - 9
T77613	1K6	57	1062 - 3
T77613	1K8	12	1063 - 3
T77613	1K10	12	1063 - 5
T77613	1K12	7	1064 - 7
T77613	1K15	29	1115 - 3
T77613	1K17	12	1162 - 3
T77613	2C6	2	1369 - 9
T77613	2K3	9	2160 - 3
T77613	2K9	40	2160 - 9
T77613	2K11	10	2160 - 11
T77613	2K13	5	2160 - 13
T77613	3C4	7	3160 - 3
T77613	3C6	7	3160 - 5
T77613	3C8	4	3160 - 7
T77613	3D2	5	3160 - 29
T77613	3D4	4	3160 - 31
T77613	3D8	5	3160 - 35
T77613	3D10	4	3160 - 37
T77613	3D12	5	3160 - 39
T77613	3D16	6	3160 - 43
T77613	3D18	4	3160 - 45
T77613	3D22	56	3160 - 49
T77613	3E2	7	3160 - 53

NUMERICAL INDEX - CONTINUED

PART NO.	GRID	KEY	PAGE
T77613	3E4	5	3160 - 55
T77613	3E8	7	3160 - 59
T77613	3E10	5	3160 - 61
T77613	3E21	5	3160 - 73
T77613	3E23	5	3160 - 75
T77613	3E25	29	3160 - 77
T77814	2C6	1	1369 - 9
T77814	3C14	40	3160 - 13
T77814	3C18	40	3160 - 21
T77814	3E18	17	3160 - 69
T77857	1D6	9	0260 - 21
T77857	1D8	2	0260 - 23
T77857	1I20	16	0567 - 5
T77857	1J7	7	0930 - 3
T77857	1J9	7	0930 - 5
T77857	1J11	7	0960 - 15
T77857	2C6	3	1369 - 9
T77857	3E21	9	3160 - 73
T77857	3E23	9	3160 - 75
T77857	3E25	31	3160 - 77
T77858	1I20	17	0567 - 5
T77858	1I24	11	0567 - 9
T77858	1J2	11	0567 - 11
T77858	1J7	10	0930 - 3
T77858	1J9	10	0930 - 5
T77858	1J21	2	0962 - 9
T77858	1K17	9	1162 - 3
T77858	2C6	5	1369 - 9
T77858	2K3	16	2160 - 3
T77858	2K9	53	2160 - 9
T77858	3C20	23	3160 - 23
T77858	3C22	32	3160 - 25
T77858	3C24	37	3160 - 27
T77858	3E18	8	3160 - 69
T77858	3F5	54	3165 - 3
T77858	3F7	54	3165 - 3B
T77932	1D16	13	0350 - 3
T77932	1I24	8	0567 - 9
T77932	1J2	8	0567 - 11
T77932	1J11	9	0960 - 15
T77932	1J21	1	0962 - 9
T77932	2C6	4	1369 - 9
T77932	2K9	54	2160 - 9
T78313	2B24	1	1369 - 3
T78593	1H22	11	0505 - 7
T78612	2C6	7	1369 - 9
T78612	2K3	4	2160 - 3
T78612	2K9	55	2160 - 9
T78612	2K19	11	2160 - 19
T78612	3C4	14	3160 - 3
T78612	3C6	13	3160 - 5
T78612	3C8	10	3160 - 7
T78612	3F5	55	3165 - 3
T78612	3F7	55	3165 - 3B
T78707	3C22	33	3160 - 25
T78707	3C24	38	3160 - 27
T78784	2C6	8	1369 - 9
T78784	2K19	14	2160 - 19
T78784	3C4	9	3160 - 3
T78784	3C6	8	3160 - 5
T78784	3C8	13	3160 - 7
T79471	2C15	9	1671 - 2
T79477	1I16	24	0560 - 3
T80123	3F16	1	4151 - 3
T80622	1C16	4	0250 - 9
T81029	3D2	10	3160 - 29
T81029	3D4	12	3160 - 31
T81029	3D8	10	3160 - 35
T81029	3D10	12	3160 - 37
T81029	3D12	10	3160 - 39
T81029	3D18	12	3160 - 45
T81029	3E4	21	3160 - 55
T81029	3E10	25	3160 - 61
T81247	2K15	10	2160 - 15
T81247	3F2	4	3160 - 79
T81403	2K9	35	2160 - 9
T825101	3B12	8	3102 - 3B
T825105	3B12	9	3102 - 3B
T825106	3B12	10	3102 - 3B
T82791	2G10	23	1810 - 23D
T82791	2I13	7	1830 - 15B
T82792	2G10	24	1810 - 23D
T82792	2I13	8	1830 - 15B
T82861	3F13	13	3166 - 5
T82907	1I10	18	0520 - 3
T9J2308	3B14	5	3102 - 5
U12547	1D6	7	0260 - 21
U12547	1H24	58	0511 - 3
U12547	1I24	12	0567 - 9
U12547	1J2	12	0567 - 11
U12547	1J7	11	0930 - 3
U12547	1J9	11	0930 - 5
U12547	1K15	30	1115 - 3
U12547	1K17	14	1162 - 3
U12547	2B24	1	1369 - 3
U12547	2K9	56	2160 - 9
U12547	2K21	11	2160 - 21
U12547	3C10	3	3160 - 9
U12547	3C10	9	3160 - 9
U12547	3C12	20	3160 - 11
U12547	3C12	33	3160 - 11
U12547	3C14	20	3160 - 13
U12547	3C14	33	3160 - 13
U12547	3C18	20	3160 - 21
U12547	3C18	33	3160 - 21
U13184	2J16	12	2002 - 2
U13639	1G2	7	0404 - 3
U13639	1H15	23	0452 - 3
U13639	1H19	6	0505 - 2
U13639	2K3	18	2160 - 3
U13639	3C4	19	3160 - 3
U13639	3C6	18	3160 - 5
U13639	3C8	18	3160 - 7
U13639	3E18	29	3160 - 69
U13639	3F5	56	3165 - 3
U13639	3F7	56	3165 - 3B
U17409	1G12	6	0407 - 7
U17409	1G12	15	0407 - 7
U17409	1H4	7	0419 - 1
U17409	1H15	26	0452 - 3
U40962	3C18	22	3160 - 21
U43961	1B3	7	0110 - 3
U43961	1B5	5	0110 - 5
U44537	2D4	10	1673 - 3
YZ120453	1C10	2	0250 - 3
YZ120453	1C12	2	0250 - 5
YZ120483	1C10	1	0250 - 3
YZ120483	1C12	1	0250 - 5
YZ120622	1C4	27	0210 - 17
YZ120623	1C4	28	0210 - 17
YZ120909	1C14	5	0250 - 7
Z32264	2I24	24	1921 - 3
Z59685	2H22	19	1830 - 3
400R	1B17	12	0210 - 5
400R	1B19	8	0210 - 7
400R	1B21	12	0210 - 9
400R	3F5	27	3165 - 3
400R	3F7	27	3165 - 3B
405R	1B17	12	0210 - 5
405R	1B19	8	0210 - 7
405R	1B21	12	0210 - 9