CATERPILLAR®

SEBP3136-34
December 2004

RUTHZIL TRATOR COMERCIAL DE PEÇAS LTDA 11 97083-6812 ROLANDO

Parts Manual

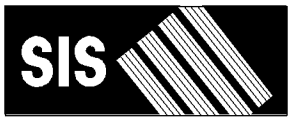

See "General Information" for New Parts Manual Features.

740 Articulated Truck

AXM1-Up (Machine)
BET200-Up (Engine)
4WY500-Up (Transmission)
CJT1-Up (Torque Converter)
A5L1-Up (Output Transfer Gear)
BBJ1-Up (Output Transfer Gear)

Powered By 3406E Engine
This Parts Manual is also available in .PDF Format on Compact Disc(CD-ROM)-Caterpillar Form No. SERP3136-34

Product and Dealer Information

Note: For product identification plate locations, see the section “Product Identification Information” in the Operation and Maintenance Manual.

Delivery Date: _____

Product Information

Model: _____

Product Identification Number: _____

Engine Serial Number: _____

Transmission Serial Number: _____

Generator Serial Number: _____

Attachment Serial Numbers: _____

Attachment Information: _____

Customer Equipment Number: _____

Dealer Equipment Number: _____

Dealer Information

Name: _____ Branch: _____

Address: _____

_____

_____

	Dealer Contact	Phone Number	Hours
Sales:	_____	_____	_____
Parts:	_____	_____	_____
Service:	_____	_____	_____

Informations produit et concessionnaire

Nota: Voir l'emplacement de la plaque signalétique du produit au chapitre "Informations produit" du guide d'utilisation et d'entretien.

Date de livraison: _____

Informations produit

Modèle: _____

Numéro d'identification produit: _____

Numéro de série du moteur: _____

Numéro de série de la boîte de vitesses: _____

Numéro de série de l'alternateur: _____

Numéros de série d'équipement: _____

Informations sur l'équipement: _____

Numéro matériel client: _____

Numéro matériel concessionnaire: _____

Informations concessionnaire

Nom: _____ Agence: _____

Adresse: _____

_____

_____

	Contact concessionnaire	Numéro de téléphone	Heures
Ventes:			
Pièces:			
Service:			

Información del Producto/Distribuidor

Nota: Para saber la ubicación de las placas de identificación del producto, ver la sección “Información sobre identificación del producto” en el Manual de Operación y Mantenimiento.

Fecha de entrega: _____

Información del producto

Modelo: _____

Número de identificación del producto: _____

Número de serie del motor: _____

Número de serie de la transmisión: _____

Número de serie del generador: _____

Números de serie de los accesorios: _____

Información sobre los accesorios: _____

Número del equipo del cliente: _____

Número del equipo del distribuidor: _____

Información del distribuidor

Nombre: _____ Sucursal: _____

Dirección: _____

_____

_____

Comunicación con el distribuidor	Número de teléfono	Horas
Ventas: _____	_____	_____
Piezas: _____	_____	_____
Servicio: _____	_____	_____

Informações Sobre Produto e Revendedor

Nota: Para localizações da placa de identificação do produto, consulte a seção, “Informações Sobre Identificação do Produto” no Manual de Operação e Manutenção.

Data de Entrega: _____

Informações Sobre o Produto

Modelo: _____

Número de Identificação do Produto: _____

Número de Série do Motor: _____

Número de Série da Transmissão: _____

Número de Série do Gerador: _____

Números de Série de Acessórios: _____

Informações Sobre Acessórios: _____

Número do Equipamento do Cliente: _____

Número do Equipamento do Revendedor: _____

Informações Sobre o Revendedor

Nome: _____ Filial: _____

Endereço: _____

_____

_____

	Contato do Revendedor	Telefone	Horas
Vendas:	_____	_____	_____
Peças:	_____	_____	_____
Serviço:	_____	_____	_____

Produkt- und Händlerinformation

Anmerkung: Für die Lage der Produkt-Identnummer und Seriennummern siehe Abschnitt “Produkt-Identinformation” im Betriebs- und Wartungshandbuch.

Lieferdatum: _____

Produkt-Identinformation

Modell: _____

Produkt-Identnummer: _____

Seriennummer des Motors: _____

Seriennummer des Getriebes: _____

Seriennummer des Generators: _____

Seriennummern der Arbeitsgeräte: _____

Arbeitsgeräteinformation: _____

Kundennummer: _____

Händlernummer: _____

Händlerinformation

Name: _____ Niederlassung: _____

Adresse: _____

_____

_____

	Kontaktperson beim Händler	Telefon	Dienststunden
Verkauf:	_____	_____	_____
Ersatzteile:	_____	_____	_____
Service:	_____	_____	_____

MEMORANDA

TABLE OF CONTENTS

Name	Page
GENERAL INFORMATION	A24
SUPPLEMENTAL COOLANT ADDITIVES	A43
MAINTENANCE PARTS	A48
INDEX	A83
MACHINE ARRANGEMENT	1
GENERAL AR	1
INSTALLATION AR-MACHINE	1
ENGINE ARRANGEMENT	3
ENGINE AR-COMPLETE	3
ENGINE AR-CORE	7
BASIC ENGINE	9
ADAPTER GP-PUMP DRIVE	9
BASE GP-VALVE COVER & INJ HARN	10
BELT TENSIONER GP	11
CAMSHAFT GP	12
COVER GP-ACCESSORY DRIVE	13
COVER GP-CYLINDER BLOCK	14
COVER GP-FLYWHEEL HOUSING	17
COVER GP-FRONT HOUSING	18
COVER GP-VALVE MECHANISM	19
CRANKSHAFT GP	20
CYLINDER BLOCK GP	21
CYLINDER HEAD AS	32
CYLINDER HEAD GP	37
DAMPER GP	45
DRIVE GP-ACCESSORY	46
DRIVE GP-PUMP	48
ENGINE BRAKE GP	49
FASTENER GP-FRONT HOUSING	51
FLYWHEEL GP	54
GEAR GP-CAMSHAFT	55
GEAR GP-FRONT	56
GEAR GP-REAR	60
HOUSING GP-ENGINE BRAKE	64
HOUSING GP-FLYWHEEL	68
HOUSING GP-FRONT	70
LIFTING GP-ENGINE	72
MOUNTING GP-ALTERNATOR	74
MOUNTING GP-ENGINE	75
PAN GP-OIL	76
PISTON & ROD GP	77
PLUG GP-CYLINDER BLOCK	79
PLUG GP-CYLINDER HEAD	80
PULLEY GP-CRANKSHAFT	83
ROCKER ARM GP	84
SUPPORT GP-ENGINE	86
VALVE MECHANISM GP	87
LUBRICATION SYSTEM	88
FASTENER GP-OIL PUMP MOUNTING	88
FILTER GP-ENGINE OIL	89
FUMES DISPOSAL GP	92
GAUGE GP-OIL LEVEL (DIPSTICK)	93
LINES GP-ENGINE OIL	94
LINES GP-ENGINE OIL FILTER	95
LINES GP-TURBOCHARGER OIL	96
PUMP GP-ENGINE OIL	97
COOLING SYSTEM	98
COOLER GP-ENGINE OIL	98
COOLING AR	99
FAN GP-SUCTION	100
LINES GP-COOLANT	102
LINES GP-WATER	104
MOTOR & MTG GP-HYDRAULIC FAN	106
PUMP GP-WATER	107
RADIATOR GP	110
SHROUD GP-RADIATOR	118
TANK GP-COOLANT	120
AIR INLET AND EXHAUST SYSTEM	125
AFTERCOOLER GP-AIR	125
AIR CLEANER GP	131
ELBOW GP-EXHAUST	133
LINES GP-AIR	134
MANIFOLD GP-EXHAUST	138
MUFFLER GP	139
PIPE AR-EXHAUST	146
PIPE GP-EXHAUST	147
SHIELD GP-EXHAUST	150
SHIELD GP-MANIFOLD	152
TURBOCHARGER GP	153
FUEL SYSTEM	155
BASE GP-FUEL FILTER	155
CONTROL GP-GOVERNOR	157
FILTER GP-WATER SEP & FUEL	158
INJECTOR GP-FUEL	159
LINES GP-FUEL	160
PUMP & MTG GP-FUEL TRANSFER	171
PUMP GP-FUEL PRM & SEC FILTER	173
TANK & MTG GP-FUEL	174
TANK AR-FUEL	184
TANK GP-FUEL	185
VALVE GP-CHECK	191
VALVE GP-FUEL BYPASS	194
ELECTRICAL AND STARTING SYSTEM	195
ALARM GP	195
ALTERNATOR GP-CHARGING	196
BATTERY & WIRING GP	202
BLOCK GP-JUNCTION	208

TABLE OF CONTENTS

Name	Page
CIRCUIT BREAKER GP	209
CONNECTION GP-ELECTRICAL	214
CONTROL & MTG GP-ENGINE ELEK	215
CONTROL & MTG GP-POWER TRAIN	219
CONTROL GP-ENGINE ELECTRONIC	221
CONTROL GP-UNPROGRAMMED	226
ELECTRONICS GP-MONITOR	228
ELECTRONICS GP-POWER TRAIN	228
LAMP GP-DOME	229
LAMP GP-FLOOD	230
LAMP GP-HEAD	232
LAMP GP-SIGNAL	234
MOTOR GP-ELECTRIC	239
PANEL GP-CIRCUIT BREAKER	240
SENSOR & MTG GP-PRESSURE	244
SENSOR GP-POSITION	245
SENSOR GP-PRESSURE	246
SENSOR GP-SPEED	250
SENSOR GP-TEMPERATURE	251
STARTING AID GP-ETHER	255
STARTING AR-COLD WEATHER	256
STARTING MOTOR GP-ELECTRIC	257
SWITCH GP-DISCONNECT	277
SWITCH GP-MAGNETIC	278
WARNING GP-BACKUP	281
WARNING GP-OPERATOR	287
WIRING GP-CAB	288
WIRING GP-ELECTRONIC CONTROL	299
WIRING GP-FRONT	301
WIRING GP-LIGHTING	308
WIRING GP-REAR	310
WIRING & LIGHTING GP	311
POWER TRAIN	315
ACTUATOR GP-ROTARY	315
AXLE & FRAME AR	317
AXLE AR-CENTER	318
AXLE AR-FRONT	318
AXLE AR-REAR	318
AXLE GP-CENTER	319
AXLE GP-FRONT	325
AXLE GP-REAR	333
BREATHER GP-POWER TRAIN	335
CARRIER GP-DIFFERENTIAL	340
CASE GP-TRANSMISSION	342
CONTROL GP-DIFFERENTIAL LOCK	346
CONTROL GP-TRANSMISSION HYD	356
COOLER GP-BRAKE & TORQUE CONV	363
COVER GP-TORQUE CONVERTER	365
DIFFERENTIAL & BEVEL GEAR GP	366
DIFFERENTIAL GP	371
DRIVE GP-PUMP	372
FILLER GP-POWER TRAIN OIL	376
FILTER GP-OIL	377
GAUGE GP-OIL LEVEL (DIPSTICK)	379
GEAR GP-OUTPUT TRANSFER	380
LINES GP-AXLE OIL COOLER	410
LINES GP-POWER TRAIN COOLER	420
LINES GP-TRANSMISSION OIL	421
MOUNTING GP-TRANSFER GEAR	424
MOUNTING GP-TRANSMISSION	425
PLANETARY GP-TRANSFER GEAR	426
PLANETARY GP-TRANSMISSION	428
POWER TRAIN AR	434
PUMP & MTG GP-TRANSFER GEAR	435
PUMP GP-GEAR	436
PUMP GP-TRANSMISSION	438
RIM GP-DEMOUNTABLE	439
SCREEN GP-MAGNETIC	441
SHAFT GP-DRIVE	442
SHAFT GP-FRONT DRIVE	443
SHAFT GP-HITCH DRIVE	444
SHAFT GP-REAR DRIVE	448
TIRE & RIM AR	449
TIRE & RIM GP	452
TORQUE CONVERTER GP	457
TRANSMISSION AR	460
UNIVERSAL JOINT GP	461
VALVE GP-CONTROL	466
VALVE GP-PRESSURE CONTROL	467
VALVE GP-SELECTOR & PRESS CONT	470
VALVE GP-SOLENOID	473
VALVE GP-SOLENOID & RELIEF	476
WHEEL & FINAL DRIVE GP	477
WHEEL & TIRE AR	479
WHEEL GP-FINAL DRIVE & BRAKE	480
FRAME AND BODY	486
BAFFLE GP-RADIATOR	486
BODY GP-TRUCK	488
BUMPER GP-FRONT	494
EXTENSION GP-FENDER	495
FENDER & SUPPORT GP	496
FRAME AR	499
FRAME GP-FRONT	500
FRAME GP-REAR	501
GUARD GP-BRAKE	503
GUARD GP-BRAKE LINES	504
GUARD GP-CRANKCASE	505
GUARD GP-HYDRAULIC TANK	506
GUARD GP-LINES	510
GUARD GP-MUD	512
GUARD GP-PLATFORM	513
GUARD GP-RADIATOR	517
HITCH GP-OSCILLATING	523
HOOD & GUARD AR	525
HOOD GP-ENGINE	526
LINER GP-BODY	535

TABLE OF CONTENTS

Name	Page
LINES GP-GREASE	536
LINK GP-STEERING FRAME LOCK	542
LUBRICATION AR-AUTOMATIC	544
PIN GP-HITCH	545
STEP GP	546
STOP GP-STEERING	547
SUPPORT GP-HITCH LINES	548
SUPPRESSION AR-SOUND	550
TAILGATE AR	555
TAILGATE GP	556
TILT GP-HOOD	562
WALKWAY GP	565
BRAKING SYSTEM	566
ACCUMULATOR GP-BRAKE	566
ACCUMULATOR GP-HYDRAULIC	567
ACCUMULATOR GP-BRAKE	568
BRAKE GP-PARKING	575
BRAKE GP-SERVICE	577
CONTROL GP-PARKING BRAKE	583
CONTROL GP-SERVICE BRAKE	588
CORE GP-OIL COOLER	605
LINES GP-SERVICE BRAKE	606
PUMP & MTG GP-BRAKE	614
SLACK ADJUSTER GP	615
VALVE GP-BRAKE CONTROL	616
VALVE GP-SHUTTLE	617
VALVE GP-SOLENOID	618
STEERING SYSTEM	619
CONTROL GP-STEERING	619
CYLINDER & MTG GP-STEERING	620
CYLINDER GP-STEERING	623
LINES GP-PUMP	629
LINES GP-STEERING	635
PUMP & MOTOR GP-SEC STEERING	649
PUMP & MTG GP-SECONDARY STEER	650
PUMP & MTG GP-STEERING	651
PUMP GP-GEAR	653
PUMP GP-METERING	655
STEERING COLUMN GP-ADJUSTABLE	656
VALVE GP-CHK & PRESS REDUCING	658
VALVE GP-PRESSURE REDUCING	660
VALVE GP-STEER CHK & COMBINER	661
HYDRAULIC SYSTEM	662
ACTUATOR GP-PILOT CONTROL	662
CONTROL GP-HOIST	664
COOLER & MTG GP-HYDRAULIC OIL	666
COVER GP-TANK	667
CYLINDER & MTG GP-HOIST	669
CYLINDER & MTG GP-TAILGATE	671
CYLINDER GP-HOIST	672
CYLINDER GP-TAILGATE	673
HYDRAULIC AR-MACHINE	675
LINES GP-DRAIN	676
LINES GP-HOIST	677
LINES GP-HYDRAULIC FAN	680
LINES GP-PILOT	692
LINES GP-PRESSURE TEST	700
LINES GP-PUMP	702
LINES GP-RETURN	711
LINES GP-TAILGATE	717
MOTOR GP-GEAR	719
PUMP & MTG GP-HOIST	727
PUMP & MTG GP-HYDRAULIC	728
PUMP & MTG GP-HYDRAULIC FAN	729
PUMP GP-GEAR	730
PUMP GP-PISTON	733
ROTATING GP-PUMP	739
TANK & MTG GP-HYDRAULIC	741
TANK GP-HYDRAULIC	744
VALVE & MTG GP-HOIST CONTROL	754
VALVE & MTG GP-HYDRAULIC FAN	760
VALVE GP-CHECK	761
VALVE GP-COMBINATION	767
VALVE GP-COUNTERBALANCE	768
VALVE GP-DIVERTER	769
VALVE GP-HOIST CONTROL	771
VALVE GP-LOWERING CONTROL	775
VALVE GP-PRESSURE REDUCING	776
VALVE GP-PUMP CONTROL	777
VALVE GP-RELIEF	782
VALVE GP-SOLENOID	785
SUSPENSION SYSTEM	787
ACCUMULATOR & MTG GP-SUSP	787
ACCUMULATOR GP-SUSPENSION	789
CYLINDER & MTG GP-SUSPENSION	795
CYLINDER GP-SUSPENSION	797
FRAME GP-CENTER SUSPENSION	801
FRAME GP-FRONT SUSPENSION	803
FRAME GP-REAR SUSPENSION	805
LINES GP-SUSPENSION	807
SUSPENSION GP-REAR EQUALIZER	811
OPERATOR STATION	812
ADJUSTER GP-SEAT	812
AIR COMPRESSOR GP-SEAT	813
AIR CONDITIONER & MOUNTING GP	815
AIR CONDITIONER GP	819
ARMREST GP	829
CAB AR	832
COMPRESSOR GP-REFRIGERANT	834
CONDENSER & MTG GP-REFRIGERANT	836
CONDENSER GP-REFRIGERANT	837
CONTROL GP-MONITOR	838

TABLE OF CONTENTS

Name	Page	Name	Page
CONTROL GP-TMSN & HOIST	839		
CYLINDER GP-CAB TILT	841		
DOOR GP-CAB	842		
GUARD GP-WINDOW	844		
INSTALLATION GP-RADIO	846		
LINER GP-CAB	847		
LINES GP-AIR CONDITIONER	854		
LINES GP-HEATER	858		
MIRROR GP-REAR VIEW	860		
MODULE GP-QUAD GAUGE	867		
MODULE GP-SPEEDOMETER & TACH	868		
MOUNTING GP-ROPS	869		
PAN GP-BACKREST	873		
PANEL GP-CAB	877		
PANEL GP-INSTRUMENT	878		
RECLINER GP-SEAT	884		
ROPS GP	886		
SEAT & MOUNTING GP	889		
SEAT BELT GP	892		
SEAT GP	893		
SEAT GP-COMPANION	904		
SEAT GP-SUSPENSION	907		
SUSPENSION GP-SEAT	910		
TILT GP-PLATFORM	915		
VISOR GP-CAB	917		
WINDOW GP	919		
WIPER & WASHER GP-WINDOW	923		
SERVICE EQUIPMENT AND SUPPLIES	928		
COVER GP-SHIPPING	928		
PLATE & FILM GP	930		
TOOL GP-HAND	992		
PART NUMBER INDEX	B1		

TABLE DES MATIÈRES

Désignation	Page
GÉNÉRALITÉS	A27
ADDITIFS POUR LIQUIDE DE REFROIDISSEMENT	A44
PIÈCES DE RECHANGE	A54
INDEX	A95
MACHINE COMPLÈTE	1
VUE DU MODÈLE	1
*INSTALLATION AR-MACHINE	1
VERSION DE MONTAGE DE MACHINE	1
*INSTALLATION AR-MACHINE	2
VERSION DE MONTAGE DE MACHINE	2
MOTEUR COMPLET	3
VERSION DE MOTEUR COMPLET	3
MOTEUR - PARTIE CENTRALE (VERSION)	7
MOTEUR DE BASE	9
ADAPTATEUR - ENTRAÎNEMENT DE POMPE (ASS)	9
SUPPORT DE CACHE-SOUPAPE ET FAISC. DE CABL. D'IN.	10
TENDEUR DE COURROIE (ASS)	11
ARBRE A CAMES (ASS)	12
COUVERCLE D'ENTRAINEMENT AUXILIAIRE (ASS)	13
BLOC-CYLINDRES - COUVERCLE (ASS)	14
COUVERCLE DE CARTER DE VOLANT (ASS)	17
COUVERCLE DE CARTER AV (ASS)	18
CACHE-SOUPAPES (ASS)	19
VILEBREQUIN (ASS)	20
BLOC-CYLINDRES (ASS)	21
CULASSE (ENS)	32
CULASSE (ASS)	37
AMORTISSEUR DE VIBRATIONS (ASS)	45
ENTRAÎNEMENT AUXILIAIRE (ASS)	46
ENTRAÎNEMENT DE POMPE (ASS)	48
FREIN MOTEUR (ASS)	49
BOULONNERIE DE CARTER AV (ASS)	51
VOLANT MOTEUR (ASS)	54
PIGNONNERIE D'ARBRE À CAME	55
PIGNONNERIE AV (ASS)	56
PIGNON AR (ASS)	60
CARTER DE FREIN MOTEUR (ASS)	64
CARTER DE VOLANT (ASS)	68
CARTER AV (ASS)	70
OEILLETONS DE LEVAGE MOTEUR (ASS)	72
MONTAGE D'ALTERNATEUR (ASS)	74
MONTAGE DE MOTEUR (ASS)	75
HUILE MOTEUR - CARTER (ASS)	76
PISTON ET BIELLE (ASS)	77
BOUCHON DE BLOC-CYLINDRES (ASS)	79
BOUCHON - CULASSE (ASS)	80
VILEBREQUIN - POULIE (ASS)	83
AXE DE CULBUTEUR (ASS)	84
SUPPORT DE MOTEUR (ASS)	86
CULBUTERIE (ASS)	87
CIRCUIT DE GRAISSAGE	88
BOULONNERIE DE MONTAGE DE LA POMPE A HUILE (ASS)	88
FILTRE À HUILE MOTEUR (ASS)	89
DISPOSITIF D'EVACUATION DES VAPEURS DE CARTER	92
JAUGE D'HUILE MOTEUR (BAIONNETTE) (ASS)	93
CANALISATIONS D'HUILE MOTEUR (ASS)	94
CANALISATIONS - FILTRE À HUILE MOTEUR (ASS)	95
CANALISATIONS D'HUILE DE TURBOCOMPRESSEUR (ASS)	96
POMPE A HUILE MOTEUR (ASS)	97
CIRCUIT DE REFROIDISSEMENT	98
REFROIDISSEUR D'HUILE MOTEUR (ASS)	98
*COOLING AR	99
VENTILATEUR ASPIRANT (ASS)	100
CANALISATIONS DE LIQUIDE DE REFROIDISSEMENT (ASS)	102
CANALISATIONS D'EAU (ASS)	104
MOTEUR ET MONTAGE DE VENTILATEUR HYDRAULIQUE (ASS)	106
POMPE A EAU (ASS)	107
RADIATEUR (ASS)	110
CARÉNAGE DU RADIATEUR (ASS)	118
RÉSERVOIR DU LIQUIDE DE REFROIDISSEMENT (ASS)	120
SYSTÈME D'ÉCHAPPEMENT ET D'ADMISSION D'AIR	125
REFROIDISSEUR D'ADMISSION D'AIR (ASS)	125

* TRADUCTION NON DISPONIBLE AU MOMENT DE LA PUBLICATION

TABLE DES MATIÈRES

Désignation	Page
FILTRE A AIR (ASS)	131
COUDE D'ÉCHAPPEMENT (ASS)	133
CANALISATIONS D'AIR (ASS)	134
COLLECTEUR D'ÉCHAPPEMENT (ASS)	138
SILENCIEUX (ASS)	139
TUYAU D'ÉCHAPPEMENT (VERSION)	146
ECHAPPEMENT - TUYAU (ASS)	147
DEFLECTEUR D'ECHAPPEMENT (ASS)	150
ÉCRAN DE COLLECTEUR (ASS)	152
TURBOCOMPRESSEUR (ASS)	153
CIRCUIT DE CARBURANT	155
BASE DE FILTRE À CARBURANT (ASS)	155
COMMANDE DE RÉGULATEUR (ASS)	157
FILTRE DE SÉPARATEUR D'EAU ET DE CARBURANT (ASS)	158
INJECTEUR DE CARBURANT (ASS)	159
CANALISATIONS DE CARBURANT (ASS)	160
POMPE D'ALIMENTATION ET MONTAGE (ASS)	171
POMPE D'AMORCAGE DE CARBURANT ET FILTRE SECONDAIRE	173
RÉSERVOIR DE CARBURANT ET MONTAGE (ASS)	174
*TANK AR-FUEL	184
VERSION DE RÉSERVOIR DE CARBURANT	184
RÉSERVOIR DE CARBURANT (ASS)	185
CLAPET DE RETENUE (ENS)	191
SOUPAPE DE DÉRIVATION DE CARBURANT (ASS)	194
CIRCUIT ÉLECTRIQUE ET DE DÉMARRAGE	195
AVERTISSEUR (ASS)	195
ALTERNATEUR DE CHARGE (ASS)	196
BATTERIE ET CÂBLAGE	202
BLOC DE BRANCHEMENT (ASS)	208
DISJONCTEUR (ASS)	209
BRANCHEMENT ÉLECTRIQUE (ASS)	214
COMMANDE ET MONTAGE - MOTEUR	215
COMMANDE ET MONTAGE-TRANSMISSION (ASS)	219
COMMANDE ELECTRONIQUE DE MOTEUR (ASS)	221
COMMANDE NON PROGRAMMEE (ASS)	226
ÉLECTRONIQUE-MONITEUR (ASS)	228
ÉLECTRONIQUE DE TRANSMISSION (ASS)	228
PLAFONNIER (ASS)	229
LAMPE - PHARE (ASS)	230
PHARE AV (ASS)	232
LAMPE - CLIGNOTANT DE DIRECTION (ASS)	234
MOTEUR ELECTRIQUE (ASS)	239
DISJONCTEUR DU PANNEAU DE COMMANDE (ASS)	240
CAPTEUR DE PRESSION ET MONTAGE	244
SONDE - CIRCUIT DE CARBURANT	245
CAPTEUR DE PRESSION (ASS)	246
CAPTEUR DE VITESSE (ASS)	250
CAPTEUR DE TEMPERATURE (ASS)	251
AUXILIAIRE DE DÉMARRAGE À L'ÉTHER	255
DÉMARRAGE PAR TEMPS FROID (VERSION)	256
DÉMARREUR ÉLECTRIQUE (ASS)	257
ROBINET DE BATTERIE (ASS)	277
CONTACTEUR MAGNETIQUE (ASS)	278
AVERTISSEUR DE RECUL (ASS)	281
TEMOINS LUMINEUX	287
CABLAGE DE CABINE (ASS)	288
COMMANDE ÉLECTRONIQUE - CABLAGE	299
CABLAGE AV (ASS)	301
CABLAGE D'ÉCLAIRAGE (ASS)	308
CABLAGE AR (ASS)	310
CABLAGE ET ECLAIRAGE (ASS)	311
TRANSMISSION	315
VANNE ROTATIVE (ASS)	315
VERSION D'ESSIEU ET DE BÂTI	317
VERSION D'ESSIEU CENTRAL	318
ESSIEU AV (VERSION)	318
ESSIEU AR (VERSION)	318
ESSIEU CENTRAL (ASS)	319
ESSIEU AV (ASS)	325
ESSIEU AR (ASS)	333
RENIFLARD DE TRANSMISSION (ASS)	335
PORTEUR DE DIFFERENTIEL (ASS)	340
CARTER DE BOITE	342
COMMANDE DE DIFFÉRENTIEL - VERROUILLAGE (ASS)	346
COMMANDE HYDRAULIQUE DE BOÎTE (ASS)	356
FREIN ET REFROIDISSEUR DE CONVERTISSEUR DE COUPLE	363

* TRADUCTION NON DISPONIBLE AU MOMENT DE LA PUBLICATION

TABLE DES MATIÈRES

Désignation	Page
COUVERCLE DE CONVERTISSEUR DE COUPLE (ASS)	365
COURONNE ET DIFFERENTIEL (ASS)	366
DIFFERENTIEL (ASS)	371
ENTRAÎNEMENT DE POMPE (ASS)	372
GOULOTTE DE REMPLISSAGE D'HUILE DE TRANSMISSION	376
FILTRE A HUILE (ASS)	377
*GAUGE GP-OIL LEVEL (DIPSTICK)	379
ENGRENAGE DE TRANSFERT DE RENDEMENT (ASS)	380
CANALISATIONS DE REFROIDISSEUR D'HUILE D'ESSIEU (ASS)	410
CANALISATIONS DE REFROIDIS. DE TRANSMISSION	420
CANALISATIONS D'HUILE DE BOÎTE (ASS)	421
MONTAGE-ENGRENAGES DE TRANSFERT (ASS)	424
REDUCTEUR MARIN - MONTAGE (ASS)	425
PLANÉTAIRE D'ENGRENAGE DE TRANSFERT (ASS)	426
BOÎTE PLANÉTAIRE (ASS)	428
TRANSMISSION (VERSION)	434
POMPE ET MONTAGE-ENGRENAGES DE TRANSFERT (ASS)	435
POMPE A ENGRENAGES (ASS)	436
POMPE DE BOÎTE DE VITESSES (ASS)	438
JANTE DÉMONTABLE (ASS)	439
ÉCRAN MAGNÉTIQUE (ASS)	441
ARBRE D'ENTRAÎNEMENT (ASS)	442
ARBRE D'ENTRAÎNEMENT AVANT (ASS)	443
ARBRE D'ENTRAÎNEMENT D'ATTELAGE (ASS)	444
ARBRE D'ENTRAÎNEMENT ARRIÈRE (ASS)	448
PNEU ET JANTE (VERSION)	449
PNEU ET JANTE (ASS)	452
CONVERTISSEUR DE COUPLE (ASS)	457
BOÎTE DE VITESSES (VERSION)	460
JOINT UNIVERSEL (ASS)	461
DISTRIBUTEUR (ASS)	466
DISTRIBUTEUR DE PRESSION (ASS)	467
SOUPAPE SELECTRICE ET REGULATRICE DE PRESSION	470
SOUPAPE - SOLÉNOÏDE (ASS)	473
SOUPAPE SOLENOIDE ET DE DECHARGE	476
ROUE ET RÉDUCTEURS (ASS)	477
ROUE ET PNEU (VERSION)	479
RÉDUCTEURS, ROUE ET FREIN (ASS)	480
CHÂSSIS ET BENNE	486
DEFLECTEUR - RADIATEUR (ASS)	486
BENNE DE CAMION (ASS)	488
PARE-CHOCS AV (ASS)	494
RALLONGE DE GARDE-BOUE	495
GARDE-BOUE ET SUPPORT (ASS)	496
CHÂSSIS (VERSION)	499
CHÂSSIS AV (ASS)	500
BÂTI AR (ASS)	501
PROTEGE-FREIN (ASS)	503
BLINDAGE DES CANALISATIONS DES FREINS	504
CARTER - BLINDAGE (ASS)	505
BLINDAGE DU RÉSERVOIR HYDRAULIQUE (ASS)	506
PROTECTEUR DES CANALISATIONS (ASS)	510
GARDE-BOUE (ASS)	512
PROTECTION DE PLATE-FORME (ASS)	513
PROTÈGE-RADIATEUR (ASS)	517
ATTELAGE OSCILLANT (ASS)	523
CAPOT ET PROTECTION (VERSION)	525
CAPOT DU MOTEUR (ASS)	526
REVETEMENT INTERIEUR DE BENNE (ASS)	535
CANALISATIONS DE GRAISSAGE (ASS)	536
LIAISON - VERROUILLAGE DE CHÂSSIS DE DIRECTION (ASS)	542
GRAISSAGE AUTOMATIQUE (VERSION)	544
AXE D'ATTELAGE (ASS)	545
MARCHEPIED (ASS)	546
ARRÊT-DIRECTION (ASS)	547
SUPPORT - CANALISATIONS D'ATTELAGE (ASS)	548
INSONORISATION (VERSION)	550
VERSION DE PORTE ARRIÈRE	555
PORTE ARRIÈRE (ASS)	556
*TAILGATE GP	560
INCLINAISON DU CAPOT (ASS)	562
PASSERELLE (ASS)	565
CIRCUIT DE FREINAGE	566
ACCUMULATEUR - FREIN	566
ACCUMULATEUR HYDRAULIQUE (ASS)	567
ACCUMULATEUR - FREIN	568

* TRADUCTION NON DISPONIBLE AU MOMENT DE LA PUBLICATION

TABLE DES MATIÈRES

Désignation	Page
FREIN DE STATIONNEMENT (ASS)	575
FREIN DE MANOEUVRE (ASS)	577
COMMANDE DE FREIN DE STATIONNEMENT (ASS)	583
FREIN DE MANOEUVRE - COMMANDE (ASS)	588
FAISCEAU DU REFROIDISSEUR D'HUILE (ASS)	605
CANALISATIONS DU FREIN DE MANOEUVRE (ASS)	606
POMPE ET MONTAGE - FREIN (ASS)	614
GROUPE DE RATTRAPAGE DE JEU	615
DISTRIBUTEUR DE FREIN (ASS)	616
VANNE PILOTE (ASS)	617
SOUPAPE - SOLÉNOÏDE (ASS)	618
CIRCUIT DE DIRECTION	619
COMMANDE DE DIRECTION (ASS)	619
VERIN DE DIRECTION ET MONTAGE (ASS)	620
VERIN DE DIRECTION (ASS)	623
CANALISATIONS DE POMPE (ASS)	629
CANALISATIONS DE DIRECTION (ASS)	635
POMPE DE DIRECTION AUXILIAIRE ET MONTAGE (ASS)	649
POMPE DE DIRECTION ET MONTAGE (ASS)	651
POMPE A ENGRENAGES (ASS)	653
POMPE DE REGULARISATION DE DEBIT (ASS)	655
COLONNE DE DIRECTION RÉGLABLE	656
CLAPET DE DÉCHARGE ET DE RÉDUCTION DE PRESSION (ASS)	658
SOUPAPE RÉDUCTRICE DE PRESSION (ASS)	660
SOUPAPE DE COMBINAISON ET CLAPET DE RETENUE DE DIRECTION	661
CIRCUIT HYDRAULIQUE	662
COMMANDE DE SYSTÈME PILOTE (ASS)	662
COMMANDE DE RELEVAGE DE BENNE (ASS)	664
REFROIDISSEUR D'HUILE HYDRAULIQUE ET MONTAGE (ASS)	666
COUVERCLE DE RÉSERVOIR (ASS)	667
VERIN DE LEVAGE DE BENNE ET MONTAGE (ASS)	669
VÉRIN ET MONTAGE DE PORTE ARRIÈRE (ASS)	671
VÉRIN DE RELEVAGE DE BENNE (ASS)	672
VÉRIN DE PORTE ARRIÈRE (ASS)	673
HYDRAULIQUE - MACHINE (VERSION)	675
CANALISATIONS DE VIDANGE (ASS)	676
CANALISATIONS DE LEVAGE (ASS)	677
CANALISATIONS HYDRAULIQUES DE VENTILATEUR (ASS)	680
CANALISATIONS A COMMANDE PILOTE (ASS)	692
CANALISATIONS - CONTRÔLE DE PRESSION (ASS)	700
CANALISATIONS DE POMPE (ASS)	702
CANALISATIONS DE RETOUR (ASS)	711
CANALISATIONS DE PORTE ARRIÈRE (ASS)	717
MOTEUR À ENGRENAGES (ASS)	719
POMPE DE RELEVAGE DE BENNE ET MONTAGE (ASS)	727
POMPE ET MONTAGE - HYDRAULIQUE (ASS)	728
POMPE ET MONTAGE-VENTILATEUR HYDRAULIQUE	729
POMPE A ENGRENAGES (ASS)	730
POMPE A PISTONS (ASS)	733
GROUPE DE ROTATION DE POMPE	739
RÉSERVOIR HYDRAULIQUE ET MONTAGE (ASS)	741
RÉSERVOIR HYDRAULIQUE (ASS)	744
SOUPAPE ET MONTAGE - COMMANDE DE RELEVAGE DE BENNE	754
SOUPAPE ET MONTAGE - VENTILATEUR HYDRAULIQUE (ASS)	760
CLAPET DE RETENUE (ENS)	761
SOUPAPE DE COMBINAISON (ASS)	767
SOUPAPE D'ÉQUILIBRE (ASS)	768
SOUPAPE DE DERIVATION (ASS)	769
SOUPAPE DE COMMANDE DE RELEVAGE (ASS)	771
SOUPAPE DE COMMANDE D'ABAISSEMENT (ASS)	775
SOUPAPE RÉDUCTRICE DE PRESSION (ASS)	776
*VALVE GP-PUMP CONTROL	777
DISTRIBUTEUR DE POMPE (ASS)	780
CLAPET DE DECHARGE (ASS)	782
SOUPAPE - SOLÉNOÏDE (ASS)	785
CIRCUIT DE SUSPENSION	787
ACCUMULATEUR ET MONTAGE - SUSPENSION (ASS)	787

* TRADUCTION NON DISPONIBLE AU MOMENT DE LA PUBLICATION

TABLE DES MATIÈRES

Désignation	Page
ACCUMULATEUR-SUSPENSION (ASS)	789
VÉRIN ET MONTAGE - SUSPENSION (ASS)	795
VÉRIN DE SUSPENSION (ASS)	797
BÂTI - SUSPENSION CENTRALE (ASS)	801
BÂTI - SUSPENSION AV (ASS)	803
BÂTI -SUSPENSION AR (ASS)	805
CANALISATIONS - SUSPENSION (ASS)	807
SUSPENSION - BALANCIER AR (ASS)	811
POSTE DE CONDUITE	812
REGLAGE DE SIEGE (ASS)	812
*AIR COMPRESSOR GP-SEAT	813
SIÈGE - COMPRESSEUR D'AIR (ASS)	814
CLIMATISEUR ET MONTAGE (ASS)	815
*AIR CONDITIONER & MOUNTING GP	818
CLIMATISEUR (ASS)	819
ACCOUDOIR (ASS)	829
CABINE (VERSION)	832
COMPRESSEUR DE REFRIGERANT (ASS)	834
CONDENSATEUR ET MONTAGE (RÉFRIGÉRANT)	836
CONDENSEUR DE RÉFRIGÉRANT	837
*CONTROL GP-MONITOR	838
COMMANDE DE TRANSMISSION ET DE BENNE (ASS)	839
VÉRIN D'INCLINAISON DE CABINE (ASS)	841
PORTIÈRE DE CABINE (ASS)	842
PROTECTION DE GLACE (ASS)	844
MONTAGE DE RADIO (ASS)	846
CABINE - REVÊTEMENT (ASS)	847
CANALISATIONS DE CLIMATISEUR (ASS)	854
CANALISATIONS DE CHAUFFAGE (ASS)	858
RÉTROVISEUR (ASS)	860
MODULE - QUATRE INSTRUMENTS (ASS)	867
MODULE D'INDICATEUR DE VITESSE ET COMPTE-TOURS (ASS)	868
MONTAGE DU TOIT ROPS (ASS)	869
COUVERCLE INFÉRIEUR-DOSSIER (ASS)	873
TABLEAU DE BORD (ASS)	877
SIÈGE INCLINABLE (ASS)	884
TOIT ROPS (ASS)	886
SIÈGE ET MONTAGE (ASS)	889
CEINTURE DE SECURITE (ASS)	892
SIÈGE (ASS)	893
SIEGE PASSAGER (ASS)	904
SIÈGE AVEC SUSPENSION (ASS)	907
INCLINAISON - PLATE-FORME (ASS)	915
RETROVISEUR - CABINE (ASS)	917
VITRE (ASS)	919
ESSUIE-GLACE ET LAVE-GLACE	923
MATÉRIEL ET FOURNITURES D'ENTRETIEN	928
COUVERCLES D'EXPEDITION (ASS)	928
PLAQUES SIGNALETIQUES ET AUTOCOLLANTS (ASS)	930
OUTILS (ASS)	992
INDEX DE NUMÉROS DE PIÈCES	B1

* TRADUCTION NON DISPONIBLE AU MOMENT DE LA PUBLICATION

CONTENIDO

Nombre	Página
INFORMACIÓN GENERAL	A31
ADITIVOS DE REFRIGERANTE SUPLEMENTARIOS	A45
PIEZAS DE MANTENIMIENTO	A61
INDICE	A109
CONFIGURACION DE MAQUINA	1
CONFIGURACIÓN GENERAL	1
*INSTALLATION AR-MACHINE	1
CONFIGURACIÓN DE INSTALACIÓN-MAQUINA	1
*INSTALLATION AR-MACHINE	2
CONFIGURACIÓN DE INSTALACIÓN-MAQUINA	2
CONFIGURACION DE MOTOR	3
MOTOR COMPLETO (CONFIG)	3
MOTOR - NÚCLEO (CONFIG)	7
MOTOR BASICO	9
ADAPTADOR DEL MANDO DE LA BOMBA	9
BASE DE LA TAPA DE VÁLVULAS Y MAZO DE CABLES DE INYECTOR (GR)	10
TENSOR DE CORREA (GR)	11
ÁRBOL DE LEVAS (GR)	12
TAPA DEL MANDO DE ACCESORIOS (GR)	13
TAPA DEL BLOQUE MOTOR (GR)	14
TAPA DE LA CAJA DE VOLANTE (GR)	17
TAPA DE LA CAJA DELANTERA (GR)	18
TAPA DEL MECANISMO DE VÁLVULAS (GR)	19
CIGÜEÑAL (GR)	20
BLOQUE MOTOR (GR)	21
CULATA DE CILINDROS (CONJ)	32
CULATA DE CILINDROS (GR)	37
AMORTIGUADOR DE VIBRACIONES (GR)	45
ACCESORIOS - IMPULSOR DE (GR)	46
MANDO DE BOMBA (GR)	48
FRENO DEL MOTOR (GR)	49
CAJA DELANTERA - TORNILLERÍA DE LA (GR)	51
VOLANTE (GR)	54
ENGRANAJE DE ARBOL DE LEVAS (GR)	55
ENGRANAJE DELANTERO (GR)	56
ENGRANAJE TRASERO (GR)	60
CAJA DE FRENO DEL MOTOR (GR)	64
VOLANTE - CAJA DE (GR)	68
CAJA DELANTERA (GR)	70
CÁNCAMOS DE LEVANTAMIENTO DEL MOTOR (GR)	72
MONTAJE DEL ALTERNADOR (GR)	74
MONTAJE DEL MOTOR (GR)	75
CÁRTER - COLECTOR DEL (GR)	76
PISTÓN Y BIELA (GR)	77
TAPÓN DEL BLOQUE MOTOR (GR)	79
TAPÓN DE CULATA (GR)	80
CIGÜEÑAL - POLEA DE (GR)	83
BALANCÍN (GR)	84
MOTOR - SOPORTE DEL (GR)	86
MECANISMO DE VÁLVULAS (GR)	87
SISTEMA DE LUBRICACION	88
TORNILLERÍA DE MONT. DE LA BOMBA DE ACEITE (GR)	88
FILTRO DE ACEITE DEL MOTOR (GR)	89
ESCAPE DE GASES (GR)	92
INDICADOR DEL NIVEL DE ACEITE (VARILLA) (GR)	93
TUBERÍAS DE ACEITE DEL MOTOR (GR)	94
TUBERÍAS DEL FILTRO DE ACEITE DEL MOTOR	95
TURBOCOMPRESOR - TUBERÍAS DE ACEITE DEL (GR)	96
BOMBA DE ACEITE DEL MOTOR (GR)	97
SISTEMA DE ENFRIAMIENTO	98
ENFRIADOR DE ACEITE DEL MOTOR (GR)	98
*COOLING AR	99
SUCCIÓN - VENTILADOR DE (GR)	100
REFRIGERANTE - TUBERÍAS DE (GR)	102
TUBERÍAS DEL AGUA (GR)	104
MOTOR Y MONTAJE DE VENTILADOR HIDRAULICO (GR)	106
BOMBA DE AGUA (GR)	107
RADIADOR (GR)	110
PROTECTOR DE RADIADOR (GR)	118
TANQUE DE REFRIGERANTE (GR)	120
SISTEMA DE ADMISION Y ESCAPE	125
POSENFRIADOR DE AIRE (GR)	125
FILTRO DE AIRE (GR)	131
CODO DE ESCAPE (GR)	133
AIRE - TUBERÍAS DE (GR)	134
MÚLTIPLE DE ESCAPE (GR)	138
SILENCIADOR (GR)	139

* NO HAY TRADUCCION DISPONIBLE EN EL MOMENTO DE LA IMPRESION

CONTENIDO

Nombre	Página
TUBO DE ESCAPE (CONFIG)	146
TUBO DE ESCAPE (GR)	147
PROTECTOR DEL ESCAPE (GR)	150
MULTIPLE - PROTECTOR DEL	152
TURBOCOMPRESOR (GR)	153
SISTEMA DE COMBUSTIBLE	155
BASE DEL FILTRO DE COMBUSTIBLE (GR)	155
CONTROL DE REGULADOR (GR)	157
FILTRO DE COMBUSTIBLE Y SEPARADOR DE AGUA (GR)	158
INYECTOR DE COMBUSTIBLE (GR)	159
TUBERÍAS DE COMBUSTIBLE (GR)	160
BOMBA DE TRANSFERENCIA DE COMBUSTIBLE Y MONTAJE (GR)	171
BOMBA DE CEBADO Y FILTRO SECUNDARIO (GR)	173
TANQUE DE COMBUSTIBLE Y GRUPO DE MONTAJE	174
*TANK AR-FUEL	184
TANQUE DE COMBUSTIBLE (CONFIG)	184
COMBUSTIBLE - TANQUE DE (GR)	185
VÁLVULA DE RETENCIÓN (GR)	191
VALVULA DE DERIVACION DE COMBUSTIBLE (GR)	194
SISTEMA ELECTRICO Y DE ARRANQUE	195
ALARMA (GR)	195
CARGA - ALTERNADOR DE (GR)	196
BATERÍA Y CABLES (GR)	202
BLOQUE DE EMPALME (GR)	208
DISYUNTOR DE CIRCUITO (GR)	209
CONEXIÓN ELÉCTRICA (GR)	214
CONTROL ELECTRÓNICO DEL MOTOR Y MONTAJE	215
CONTROL Y MONTAJE DE TREN DE FUERZA (GR)	219
CONTROL ELECTRÓNICO DEL MOTOR (GR)	221
CONTROL NO PROGRAMADO (GR)	226
ELECTRÓNICA DEL MONITOR	228
TREN DE FUERZA-GRUPO ELECTRÓNICO	228
LÁMPARA DEL TECHO (GR)	229
REFLECTOR (GR)	230
LÁMPARA DE FARO DELANTERO (GR)	232
LUZ DE SEÑAL DE GIRO (GR)	234
MOTOR ELÉCTRICO (GR)	239
PANEL DE DISYUNTORES (GR)	240
SENSOR DE PRESIÓN Y MONTAJE (GR)	244
DETECTOR DE POSICIÓN (SISTEMA DE COMBUST.) (GR)	245
SENSOR DE PRESIÓN (GR)	246
SENSOR DE VELOCIDAD (GR)	250
SENSOR DE TEMPERATURA (GR)	251
AUXILIAR DE ARRANQUE CON ÉTER (GR)	255
ARRANQUE EN TIEMPO FRIO (CONFIG)	256
MOTOR DE ARRANQUE ELÉCTRICO (GR)	257
DISYUNTOR (GR)	277
INTERRUPTOR MAGNÉTICO (GR)	278
RETROCESO - ALARMA DE (GR)	281
ADVERTENCIA PARA EL OPERADOR (GR)	287
CABLES DE LA CABINA (GR)	288
CABLES DEL CONTROL ELECTRÓNICO (GR)	299
CABLES DELANTEROS (GR)	301
CABLES DE LAS LUCES (GR)	308
CABLES POSTERIORES (GR)	310
CABLES Y LUCES (GR)	311
TREN DE FUERZA	315
ACTIVADOR DE ROTACIÓN (GR)	315
EJE Y BASTIDOR (CONFIG)	317
EJE CENTRAL (CONFIG)	318
EJE DE DIRECCION (CONFIG)	318
EJE TRASERO	318
EJE CENTRAL (GR)	319
EJE DELANTERO (GR)	325
EJE TRASERO (GR)	333
RESPIRADERO DE LA TRANSMISIÓN (GR)	335
PORTADOR DE DIFERENCIAL (GR)	340
CAJA DE LA TRANSMISIÓN (GR)	342
CONTROL DE TRABA DEL DIFERENCIAL (GR)	346
CONTROL HIDRÁULICO DE LA TRANSMISIÓN (GR)	356
FRENO Y ENFRIADOR DEL CONVERTIDOR DE PAR (GR)	363
GRUPO DE CUBIERTA DE CONVERTIDOR DE PAR	365
DIFERENCIAL Y CORONA (GR)	366
DIFERENCIAL (GR)	371
MANDO DE BOMBA (GR)	372
TUBO DE LLENADO DE ACEITE DE LA TRANSMISIÓN (GR)	376
FILTRO DE ACEITE (GR)	377

* NO HAY TRADUCCION DISPONIBLE EN EL MOMENTO DE LA IMPRESION

CONTENIDO

Nombre	Página
*GAUGE GP-OIL LEVEL (DIPSTICK)	379
ENGRANAJE DE TRANSFERENCIA DE SALIDA	380
TUBERÍAS DEL ENFRIADOR DE ACEITE DEL EJE (GR)	410
TUBERÍAS DEL ENFRIADOR DEL TREN DE FUERZA (GR)	420
TUBERÍAS DE ACEITE DE LA TRANSMISIÓN (GR)	421
MONTAJE DEL ENGRANAJE DE TRANSFERENCIA (GR)	424
MONTAJE DE LA TRANSMISIÓN (GR)	425
GRUPO PLANETARIO DE ENGRANAJE DE TRANSFERENCIA	426
TRANSMISIÓN PLANETARIA (GR)	428
TREN DE FUERZA (CONFIG)	434
BOMBA Y MONTAJE DE ENGRANAJE DE TRANSFERENCIA (GR)	435
BOMBA DE ENGRANAJES (GR)	436
BOMBA DE LA TRANSMISIÓN (GR)	438
ARO DESMONTABLE (GR)	439
REJILLA MAGNÉTICA (GR)	441
EJE DE MANDO (GR)	442
EJE IMPULSOR DELANTERO (GR)	443
EJE MOTRIZ DEL ENGANCHE (GR)	444
EJE IMPULSOR TRASERO (GR)	448
ARO Y RUEDA	449
ARO Y LLANTA (GR)	452
CONVERTIDOR DE PAR (GR)	457
TRANSMISION (CONFIG)	460
JUNTA UNIVERSAL (GR)	461
VÁLVULA DE CONTROL (GR)	466
PRESIÓN - VÁLVULA DE CONTROL DE (GR)	467
VÁLVULA SELECTORA Y DE CONTROL DE PRESIÓN (GR)	470
VÁLVULA DE SOLENOIDE (GR)	473
VÁLVULA DE ALIVIO Y SOLENOIDE (GR)	476
RUEDA Y MANDOS FINALES	477
RUEDA Y LLANTA (CONFIG)	479
MANDOS FINALES, RUEDA Y FRENO (GR)	480
BASTIDOR Y CAJA	486
DEFLECTOR DEL RADIADOR	486
CAJA DEL CAMIÓN (GR)	488
PARAGOLPES DELANTERO	494
EXTENSIÓN DEL GUARDABARROS (GR)	495
GUARDABARROS Y SOPORTE (GR)	496
CONFIGURACIÓN DE BASTIDOR	499
BASTIDOR DELANTERO (GR)	500
BASTIDOR TRASERO (GR)	501
PROTECTOR DEL FRENO (GR)	503
PROTECTOR DE LAS TUBERÍAS DE LOS FRENOS (GR)	504
CÁRTER - PROTECTOR DEL (GR)	505
PROTECTOR DEL TANQUE HIDRÁULICO (GR)	506
PROTECTOR DE LAS TUBERÍAS (GR)	510
PROTECTOR CONTRA LODO	512
PROTECTOR DE LA PLATAFORMA (GR)	513
PROTECTOR DEL RADIADOR (GR)	517
ENGANCHE OSCILANTE (GR)	523
CAPÓ Y PROTECTOR (CONFIG)	525
CAPÓ DEL MOTOR (GR)	526
REVESTIMIENTO DE LA CAJA (GR)	535
TUBERÍAS DE ENGRASE (GR)	536
TIRANTE DE TRABA DEL BASTIDOR DE DIRECCIÓN (GR)	542
LUBRICACION AUTOMATICA (CONFIG)	544
PASADOR DE ENGANCHE (GR)	545
ESTRIBO DEL OPERADOR (GR)	546
TOPE DE DIRECCION (GR)	547
SOPORTE DE LAS TUBERIAS DE ENGANCHE (GR)	548
INSONORIZADOR (CONFIG)	550
COMPUERTA TRASERA (CONFIG)	555
COMPUERTA TRASERA (GR)	556
*TAILGATE GP	560
INCLINACIÓN DEL CAPÓ (GR)	562
PASARELA (GR)	565
SISTEMA DE FRENOS	566
ACUMULADOR DEL FRENO (GR)	566
ACUMULADOR HIDRAULICO (GR)	567
ACUMULADOR DEL FRENO (GR)	568
FRENO DE ESTACIONAMIENTO (GR)	575
FRENO DE SERVICIO (GR)	577
CONTROL DEL FRENO DE ESTACIONAMIENTO	583
FRENO DE SERVICIO - CONTROL (GR)	588
NÚCLEO DEL ENFRIADOR DE ACEITE (GR)	605
TUBERÍAS DEL FRENO DE SERVICIO (GR)	606
BOMBA Y MONTAJE DEL FRENO (GR)	614
AJUSTADOR DE TENSIÓN (GR)	615
VÁLVULA DE CONTROL DEL FRENO (GR)	616

* NO HAY TRADUCCION DISPONIBLE EN EL MOMENTO DE LA IMPRESION

CONTENIDO

Nombre	Página
VÁLVULA DE LANZADERA (GR)	617
VÁLVULA DE SOLENOIDE (GR)	618
SISTEMA DE DIRECCION	619
CONTROL DE DIRECCIÓN (GR)	619
CILINDRO DE DIRECCIÓN Y MONTAJE (GR)	620
CILINDRO DE DIRECCIÓN (GR)	623
BOMBA - TUBERÍAS DE (GR)	629
TUBERÍAS DE DIRECCIÓN (GR)	635
BOMBA Y MOTOR DE DIRECCION SECUNDARIA (GR)	649
BOMBA Y MONTAJE DE LA DIRECCIÓN SECUNDARIA (GR)	650
BOMBA DE DIRECCIÓN Y MONTAJE (GR)	651
BOMBA DE ENGRANAJES (GR)	653
DOSIFICACIÓN - BOMBA DE (GR)	655
COLUMNA DE DIRECCIÓN AJUSTABLE (GR)	656
VALVULA REDUCTORA DE PRESION Y DE RETENCION (GR)	658
VÁLVULA REDUCTORA DE PRESIÓN (GR)	660
VALVULA DE RETENCION DE DIRECCION Y COMBINADOR (GR)	661
SISTEMA HIDRAULICO	662
ACCIONADOR DE CONTROL PILOTO (GR)	662
CONTROL DE LEVANTAMIENTO DE LA CAJA (GR)	664
ENFRIADOR DE ACEITE HIDRÁULICO Y MONTAJE (GR)	666
TAPA DE TANQUE (GR)	667
CILINDRO DE LEVANTAMIENTO Y MONTAJE	669
CILINDRO Y MONTAJE DE COMPUERTA DE COLA (GR)	671
CILINDRO DE LEVANTAMIENTO (GR)	672
CILINDRO DE LA COMPUERTA (GR)	673
HIDRÁULICA DE LA MÁQUINA (CONFIG)	675
TUBERÍAS DE DRENAJE (GR)	676
TUBERÍAS DE LEVANTAMIENTO (GR)	677
TUBERÍAS HIDRÁULICAS DEL VENTILADOR (GR)	680
TUBERÍAS CON SERVOMANDO (GR)	692
TUBERÍAS DE PRUEBA DE PRESIÓN (GR)	700
BOMBA - TUBERÍAS DE (GR)	702
TUBERÍAS DE RETORNO (GR)	711
TUBERIAS DE LA COMPUERTA TRASERA (GR)	717
MOTOR DE ENGRANAJES (GR)	719
BOMBA Y MONTAJE DE GRUA (GR)	727
BOMBA HIDRÁULICA Y MONTAJE (GR)	728
BOMBA Y MONTAJE DE VENTILADOR HIDRAULICO (GR)	729
BOMBA DE ENGRANAJES (GR)	730
BOMBA DE PISTONES (GR)	733
GRUPO GIRATORIO DE BOMBA	739
TANQUE HIDRÁULICO Y MONTAJE (GR)	741
TANQUE HIDRÁULICO (GR)	744
VALVULA DE CONTROL DE LEVANTAMIENTO Y MONTAJE (GR)	754
VÁLVULA Y MONTAJE DEL VENTILADOR HIDRÁULICO (GR)	760
VÁLVULA DE RETENCIÓN (GR)	761
VÁLVULA DE COMBINACIÓN (GR)	767
VÁLVULA DE COMPENSACIÓN (GR)	768
VÁLVULA DE DERIVACIÓN (GR)	769
VALVULA DE CONTROL DE LEVANTAMIENTO (GR)	771
VÁLVULA DE CONTROL DE BAJADA (GR)	775
VÁLVULA REDUCTORA DE PRESIÓN (GR)	776
*VALVE GP-PUMP CONTROL	777
VALVULA DE CONTROL DE LA BOMBA (GR)	780
VÁLVULA DE ALIVIO (GR)	782
VÁLVULA DE SOLENOIDE (GR)	785
SISTEMA DE SUSPENSION	787
ACUMULADOR Y MONTAJE DE LA SUSPENSION (GR)	787
ACUMULADOR DE SUSPENSION (GR)	789
CILINDRO DE LA SUSPENSION - MONTAJE (GR)	795
CILINDRO DE SUSPENSION (GR)	797
BASTIDOR DE LA SUSPENSION CENTRAL (GR)	801
BASTIDOR DE LA SUSPENSION DELANTERA (GR)	803
BASTIDOR DE LA SUSPENSION TRASERA (GR)	805
TUBERIAS DE LA SUSPENSION (GR)	807
SUSPENSION DE BALANCIN TRASERO (GR)	811

* NO HAY TRADUCCION DISPONIBLE EN EL MOMENTO DE LA IMPRESION

CONTENIDO

Nombre	Página
PUESTO DEL OPERADOR	812
AJUSTADOR DEL ASIENTO (GR)	812
*AIR COMPRESSOR GP-SEAT	813
COMPRESOR DE AIRE DEL ASIENTO (GR)	814
ACONDICIONADOR DE AIRE Y MONTAJE (GR)	815
*AIR CONDITIONER & MOUNTING GP	818
ACONDICIONADOR DE AIRE (GR)	819
POSABRAZOS (GR)	829
CABINA (CONFIG)	832
COMPRESOR DE REFRIGERANTE (GR)	834
CONDENSADOR DEL REFRIGERANTE Y MONTAJE (GR)	836
CONDENSADOR DE REFRIGERANTE (GR)	837
*CONTROL GP-MONITOR	838
GRUPO DE CONTROL DE TRANSMISIÓN Y LEVANTAMIENTO	839
CILINDRO DE INCLINACION DE LA CABINA (GR)	841
PUERTA DE CABINA	842
PROTECTOR DE LA VENTANA	844
INSTALACIÓN DE RADIO (GR)	846
REVESTIMIENTO DE LA CABINA (GR)	847
TUBERÍAS DE ACONDICIONADOR DE AIRE (GR)	854
TUBERÍAS DE LA CALEFACCIÓN (GR)	858
RETROVISOR (GR)	860
MODULO ELECTRÓNICO DE CUATRO INDICADORES (GR)	867
MÓDULO DEL TACÓMETRO Y DEL VELOCÍMETRO (GR)	868
MONTAJE DE LA ESTRUCTURA ROPS (GR)	869
SOPORTE DEL RESPALDO (GR)	873
PANEL DE LA CABINA (GR)	877
TABLERO DE INSTRUMENTOS (GR)	878
RECLINACION DE ASIENTO (GR)	884
ESTRUCTURA ROPS (GR)	886
ASIENTO Y MONTAJE (GR)	889
CINTURÓN DE SEGURIDAD (GR)	892
ASIENTO (GR)	893
ASIENTO PARA ACOMPAÑANTE (GR)	904
SUSPENSIÓN - ASIENTO CON (GR)	907
ASIENTO CON SUSPENSIÓN (GR)	910
PLATAFORMA DE INCLINACIÓN (GR)	915
VISERA (GR)	917
VENTANA (GR)	919
LIMPIA Y LAVAPARABRISAS (GR)	923
EQUIPO DE SERVICIO Y DE SUMINISTRO	928
TAPAS PROTECTORAS DE EMBARQUE (GR)	928
CALCOMANÍAS Y PLACAS DE IDENTIFICACIÓN (GR)	930
HERRAMIENTAS (GR)	992
INDICE DE NUMEROS DE PIEZA	B1

* NO HAY TRADUCCION DISPONIBLE EN EL MOMENTO DE LA IMPRESION

ÍNDICE

Designação	Página
INFORMAÇÃO GERAL	A35
ADITIVOS SUPLEMENTARES DO LÍQUIDO ARREFECEDOR	A46
PEÇAS DE MANUTENÇÃO	A68
ÍNDICE	A123
ARRANJO DA MÁQUINA	1
ARRANJO GERAL	1
*INSTALLATION AR-MACHINE	1
INSTALAÇÃO-MÁQUINA	1
*INSTALLATION AR-MACHINE	2
INSTALAÇÃO-MÁQUINA	2
ARRANJO DO MOTOR	3
MOTOR COMPLETO	3
MOTOR - NÚCLEO	7
MOTOR BÁSICO	9
ADAPTADOR DO COMANDO DA BOMBA	9
GR. BÁSICO - TAMPA DAS VÁLVULAS E CHICOTE DE INJEÇÃO	10
TENSOR DA CORREIA	11
EIXO-COMANDO DE VÁLVULA	12
TAMPA - COMANDO DE ACESSÓRIOS	13
TAMPA - BLOCO DO MOTOR	14
TAMPA - CAIXA DO VOLANTE	17
TAMPA - CAIXA DIANTEIRA	18
TAMPA - MECANISMO DAS VÁLVULAS	19
VIRABREQUIM	20
BLOCO DO MOTOR	21
CABEÇOTE DO MOTOR	32
AMORTECEDOR	45
COMANDO DE ACESSÓRIOS	46
COMANDO DA BOMBA	48
FREIO - MOTOR	49
FIXADORES - CAIXA DIANTEIRA	51
VOLANTE DO MOTOR	54
ENGRENAGEM - EIXO-COMANDO DE VÁLVULAS	55
ENGRENAGENS DE DISTRIBUIÇÃO	56
ENGRENAGENS DE COMANDO TRASEIRO	60
CAIXA - FREIO DO MOTOR	64
CAIXA DO VOLANTE DO MOTOR	68
CAIXA DIANTEIRA	70
LEVANTAMENTO DO MOTOR	72
MONTAGEM - ALTERNADOR	74
MONTAGEM - MOTOR	75
CÁRTER DO ÓLEO DO MOTOR	76
PISTÃO E BIELA	77
BUJÃO DO BLOCO DO CILINDRO	79
BUJÃO - CABEÇA DO CILINDRO	80
POLIA DO VIRABREQUIM	83
BALANCIM	84
SUPORTE DO MOTOR	86
MECANISMO DAS VÁLVULAS	87
SISTEMA DE LUBRIFICAÇÃO	88
FIXADORES - BOMBA DE ÓLEO DO MOTOR	88
FILTRO - ÓLEO DO MOTOR	89
ELIMINAÇÃO DE VAPORES DO CÁRTER	92
INDICADOR - NÍVEL DO ÓLEO (VARETA)	93
TUBOS - ÓLEO DO MOTOR	94
TUBOS - FILTRO DE ÓLEO DO MOTOR	95
TUBOS - ÓLEO DO TURBOALIMENTADOR	96
BOMBA DE ÓLEO - MOTOR	97
SISTEMA DE ARREFECIMENTO	98
ARREFECEDOR - ÓLEO DO MOTOR	98
*COOLING AR	99
VENTILADOR DE SUCÇÃO	100
TUBOS - SISTEMA DE ARREFECIMENTO	102
TUBOS - ÁGUA	104
MOTOR E MONTAGEM - VENTILADOR HIDRÁULICO	106
BOMBA DE ÁGUA	107
RADIADOR	110
DEFLETOR DO RADIADOR	118
TANQUE - LÍQUIDO ARREFECEDOR	120
SISTEMA DE ADMISSÃO DE AR E DE ESCAPE	125
PÓS-ARREFECEDOR DA ADMISSÃO DE AR	125
PURIFICADOR DE AR	131
COTOVELO DE ESCAPE	133
TUBOS - AR	134
COLETOR DE ESCAPE	138
SILENCIADOR	139
CANO DE ESCAPE	146
BLINDAGEM DO COLETOR DE ESCAPE	150
BLINDAGEM DO COLETOR	152
TURBOALIMENTADOR	153

* TRADUÇÃO NÃO DISPONÍVEL NO MOMENTO DA IMPRESSÃO

ÍNDICE

Designação	Página
SISTEMA DE COMBUSTÍVEL	155
BASE DO FILTRO DE COMBUSTÍVEL	155
CONTROLE DO GOVERNADOR	157
FILTRO DE COMBUSTÍVEL E SEPARADOR DE ÁGUA	158
INJETOR DE COMBUSTÍVEL	159
TUBOS - COMBUSTÍVEL	160
BOMBA E MONTAGEM - TRANSFERÊNCIA DE COMBUSTÍVEL	171
BOMBA DO FILTRO SECUNDÁRIO E ESCORVA DO COMBUSTÍVEL	173
TANQUE DE COMBUSTÍVEL E MONTAGEM	174
*TANK AR-FUEL	184
TANQUE DE COMBUSTÍVEL	184
VÁLVULA DE RETENÇÃO	191
VÁLVULA DE DERIVAÇÃO DO COMBUSTÍVEL	194
SISTEMA ELÉTRICO E DE PARTIDA	195
ALARME	195
ALTERNADOR DE CORRENTE	196
BATERIA E CABOS / FIOS ELÉTRICOS	202
BLOCO DE JUNÇÃO	208
INTERRUPTOR - CIRCUITO	209
CONEXÃO - ELÉTRICA	214
CONTROLE ELETRÔNICO E MONTAGEM - MOTOR	215
CONTROLE DO TREM DE FORÇA E MONTAGEM	219
CONTROLE ELETRÔNICO - MOTOR	221
CONTROLE - NÃO PROGRAMADO	226
SISTEMA ELETRÔNICO - MONITOR	228
SISTEMA ELETRÔNICO - TREM DE FORÇA	228
LÂMPADA - TETO	229
LÂMPADA - FAROL	230
FAROL DIANTEIRO	232
LÂMPADA - SINALIZAÇÃO	234
MOTOR ELÉTRICO	239
PAINEL - DISJUNTOR ELÉTRICO AUTOMÁTICO	240
SENSOR DE PRESSÃO E MONTAGEM	244
EMISSOR - POSIÇÃO	245
SENSOR - PRESSÃO	246
SENSOR DE VELOCIDADE	250
SENSOR - TEMPERATURA	251
AUXILIAR DE PARTIDA A ÉTER	255
PARTIDA EM TEMPO FRIO - ARRANJO	256
MOTOR ELÉTRICO DE PARTIDA	257
CHAVE GERAL	277
INTERRUPTOR - MAGNÉTICO	278
ALARME DE MARCHA À RÉ	281
ALARME PARA O OPERADOR	287
CABOS/FIOS ELÉTRICOS - CABINE	288
CABOS/FIOS ELÉTRICOS - CONTROLE ELETRÔNICO	299
CABOS/FIOS ELÉTRICOS - DIANTEIROS	301
CABOS/FIOS ELÉTRICOS DE ILUMINAÇÃO	308
CABOS/FIOS ELÉTRICOS - TRASEIROS	310
CABOS/FIOS ELÉTRICOS E ILUMINAÇÃO	311
TREM DE FORÇA	315
CONJUNTO ACIONADOR ROTATIVO	315
EIXO & CHASSI	317
EIXO-CENTRO	318
EIXO DIANTEIRO	318
EIXO TRASEIRO	318
EIXO CENTRAL	319
EIXO DIANTEIRO	325
SEMI-EIXO TRASEIRO	333
RESPIRO DO TREM DE FORÇA	335
SUPORTE DO DIFERENCIAL	340
CARCAÇA DA TRANSMISSÃO	342
CONTROLE DA TRAVA DO DIFERENCIAL	346
CONTROLE HIDRÁULICO DA TRANSMISSÃO	356
ARREFECEDOR DO FREIO E CONVERSOR DE TORQUE	363
TAMPA - CONVERSOR DE TORQUE	365
DIFERENCIAL E COROA	366
DIFERENCIAL	371
COMANDO DA BOMBA	372
BOCAL DE ENCHIMENTO DE ÓLEO DO TREM DE FORÇA	376
FILTRO - ÓLEO	377
*GAUGE GP-OIL LEVEL (DIPSTICK)	379
ENGRENAGENS DE SAÍDA DE TRANSFERÊNCIA	380
TUBOS - ARREFECEDOR DE ÓLEO DO EIXO	410
TUBOS - ARREFECEDOR DO TREM DE FORÇA	420
TUBOS - ÓLEO DA TRANSMISSÃO	421
MONTAGEM - ENGRENAGEM DE TRANSFERÊNCIA	424
MONTAGEM - TRANSMISSÃO	425

* TRADUÇÃO NÃO DISPONÍVEL NO MOMENTO DA IMPRESSÃO

ÍNDICE

Designação	Página
PLANETÁRIA - ENGRENAGEM DE TRANSFERÊNCIA	426
ENGRENAGENS PLANETÁRIAS - TRANSMISSÃO	428
TREM DE FORÇA	434
BOMBA DE ENGRANAGEM DE TRANSFER. E MONTAGEM	435
BOMBA DE ENGRENAGENS	436
BOMBA DA TRANSMISSÃO	438
ARO DESMONTÁVEL	439
FILTRO - MAGNÉTICO	441
EIXO DE TRANSMISSÃO	442
EIXO - COMANDO DIANTEIRO	443
EIXO - COMANDO DO ENGATE	444
EIXO - COMANDO TRASEIRO	448
PNEU E ARO	449
CONVERSOR DE TORQUE	457
TRANSMISSÃO	460
JUNTA UNIVERSAL	461
VÁLVULA DE CONTROLE	466
VÁLVULA DE CONTROLE DE PRESSÃO	467
VÁLVULA SELETORA E CONTROLE DE PRESSÃO	470
VÁLVULA SOLENÓIDE	473
VÁLVULA SOLENÓIDE DE ALÍVIO	476
RODA E COMANDO FINAL	477
RODA E PNEU	479
RODA - COMANDO FINAL E FREIO	480
CHASSI E CARROCERIA	486
DEFLETOR DO RADIADOR	486
CARROCERIA DE CAMINHÃO	488
PÁRA-CHOQUE DIANTEIRO	494
PÁRA-LAMA-EXTENSÃO	495
PÁRA-LAMA E SUPORTE	496
CHASSI	499
CHASSI DIANTEIRO	500
CHASSI TRASEIRO	501
PROTETOR - FREIOS	503
PROTETOR - TUBOS DO FREIO	504
PROTETOR - CÁRTER DO ÓLEO DO MOTOR	505
PROTETOR - TANQUE HIDRÁULICO	506
PROTETOR - TUBOS	510
PROTETOR CONTRA LAMA	512
PROTETOR - PLATAFORMA	513
PROTETOR - RADIADOR	517
ENGATE OSCILANTE	523
CAPÔ E PROTETOR	525
CAPÔ DO MOTOR	526
REVESTIMENTO DA CARROCERIA	535
TUBOS - GRAXA	536
ELO - TRAVA DA ARMAÇÃO DA DIREÇÃO	542
LUBRIFICAÇÃO - AUTOMÁTICA	544
PINO DO ENGATE	545
DEGRAU	546
BATENTE - DIREÇÃO	547
SUPORTE DOS TUBOS DO ENGATE	548
RUÍDO - ARRANJO PARA SUPRESSÃO	550
COMPORTA TRASEIRA	555
*TAILGATE GP	560
INCLINAÇÃO - CAPÔ	562
PASSADIÇO	565
SISTEMA DE FREIO	566
ACUMULADOR - FREIO	566
ACUMULADOR HIDRÁULICO	567
ACUMULADOR - FREIO	568
FREIO DE ESTACIONAMENTO	575
FREIO DE SERVIÇO	577
CONTROLE DO FREIO DE ESTACIONAMENTO	583
CONTROLE DO FREIO DE SERVIÇO	588
COLMÉIA - ARREFECEDOR DE ÓLEO	605
TUBOS - FREIO DE SERVIÇO	606
BOMBA DO FREIO E MONTAGEM	614
AJUSTADOR DE FOLGA	615
VÁLVULA DE CONTROLE DOS FREIOS	616
VÁLVULA DE SEPARAÇÃO	617
VÁLVULA SOLENÓIDE	618
SISTEMA DE DIREÇÃO	619
CONTROLE DE DIREÇÃO	619
CILINDRO DE DIREÇÃO E MONTAGEM	620
CILINDRO DA DIREÇÃO	623
TUBOS - BOMBA	629
TUBOS - DIREÇÃO	635
BOMBA DE DIREÇÃO SECUNDÁRIA E MOTOR	649
BOMBA DA DIREÇÃO SECUNDÁRIA E MONTAGEM	650
BOMBA E MONTAGEM - DIREÇÃO	651
BOMBA DE ENGRENAGENS	653
BOMBA REGULADORA	655
COLUNA DE DIREÇÃO AJUSTÁVEL	656
VÁLVULA DE REDUÇÃO DE PRESSÃO E DE RETENÇÃO	658
VÁLVULA DE REDUÇÃO DE PRESSÃO	660

* TRADUÇÃO NÃO DISPONÍVEL NO MOMENTO DA IMPRESSÃO

ÍNDICE

Designação	Página
VÁLVULA - RETENÇÃO DA DIREÇÃO E COMBINADORA	661
SISTEMA HIDRÁULICO	662
ACIONADOR DO CONTROLE PILOTO	662
CONTROLE DO CILINDRO DE LEVANTAMENTO	664
ARREFECEDOR DE ÓLEO HIDRÁULICO E MONTAGEM	666
TAMPA - TANQUE	667
CILINDRO DE LEVANTAMENTO E MONTAGEM	669
CILINDRO DA COMPORTA DE DESCARGA E MONTAGEM	671
CILINDRO DE LEVANTAMENTO	672
CILINDRO - COMPORTA DE DESCARGA TRASEIRA	673
SIST. HIDRÁULICO - MÁQUINA	675
TUBOS - DRENAGEM	676
TUBOS - CILINDRO DE LEVANTAMENTO	677
TUBOS - VENTILADOR HIDRÁULICOS	680
TUBOS - CIRCUITO PILOTO	692
TUBOS - TESTE DE PRESSÃO	700
TUBOS - BOMBA	702
TUBOS - RETORNO	711
TUBOS - COMPORTA DE DESCARGA TRASEIRA	717
MOTOR - ENGRENAGENS	719
BOMBA DO CILINDRO DE LEVANTAMENTO E MONTAGEM	727
BOMBA HIDRÁULICA E MONTAGEM	728
BOMBA DO VENTILADOR HIDRÁULICO E MONTAGEM	729
BOMBA DE ENGRENAGENS	730
BOMBA DE PISTÃO	733
GRUPO ROTATIVO DA BOMBA	739
TANQUE DE ÓLEO HIDRÁULICO E MONTAGEM	741
TANQUE HIDRÁULICO	744
VÁLVULA DE CONTROLE DO CILINDRO DE LEVANTAMENTO E MONTAGEM	754
VÁLVULA DO VENTILADOR HIDRÁULICO	760
VÁLVULA DE RETENÇÃO	761
VÁLVULA COMBINADA	767
VÁLVULA DE CONTRABALANÇO	768
VÁLVULA DESVIADORA	769
VÁLVULA DE CONTROLE DO CILINDRO DE LEVANTAMENTO	771
VÁLVULA DE CONTROLE DE ABAIXAMENTO	775
VÁLVULA DE REDUÇÃO DE PRESSÃO	776
*VALVE GP-PUMP CONTROL	777
VÁLVULA DE CONTROLE DA BOMBA	780
VÁLVULA DE ALÍVIO	782
VÁLVULA SOLENÓIDE	785
SISTEMA DE SUSPENSÃO	787
ACUMULADOR - SUSPENSÃO E MONTAGEM	787
ACUMULADOR DA SUSPENSÃO	789
CILINDRO DA SUSPENSÃO E MONTAGEM	795
CILINDRO - SUSPENSÃO	797
ARMAÇÃO - SUSPENSÃO CENTRAL	801
ARMAÇÃO DA SUSPENSÃO DIANTEIRA	803
ARMAÇÃO - SUSPENSÃO TRASEIRA	805
TUBOS DA SUSPENSÃO	807
SUSPENSÃO - EQUALIZADOR TRASEIRO	811
POSTO DO OPERADOR	812
AJUSTADOR DO ASSENTO	812
*AIR COMPRESSOR GP-SEAT	813
COMPRESSOR DE AR - ASSENTO	814
CONDICIONADOR DE AR E MONTAGEM	815
*AIR CONDITIONER & MOUNTING GP	818
CONDICIONADOR DE AR	819
BRAÇO DO ASSENTO	829
CABINE	832
COMPRESSOR DE REFRIGERANTE	834
CONDENSADOR DO REFRIGERANTE E MONTAGEM	836
CONDENSADOR DE REFRIGERANTE	837
*CONTROL GP-MONITOR	838
CONTROLE - TRANSMISSÃO E CILINDRO DE LEVANTAMENTO	839
CILINDRO DE INCLINAÇÃO DA CABINE	841
PORTA DA CABINE	842
PROTETOR - JANELA	844
INSTALAÇÃO DO RÁDIO	846
REVESTIMENTO DA CABINE	847
TUBOS - AR CONDICIONADO	854
TUBOS - AQUECEDOR	858
ESPELHO RETROVISOR	860
MÓDULO ELETRÔNICO DE QUATRO INDICADORES	867

* TRADUÇÃO NÃO DISPONÍVEL NO MOMENTO DA IMPRESSÃO

ÍNDICE

Designação	Página	Designação	Página
MÓDULO - VELOCÍMETRO E TACÔMETRO	868		
MONTAGEM - ESTRUTURA ROPS	869		
FUNDO - ENCOSTO	873		
PAINEL - CABINE	877		
PAINEL DE INSTRUMENTOS	878		
RECLINAÇÃO - ASSENTO	884		
ESTRUTURA ROPS	886		
ASSENTO E MONTAGEM	889		
CINTO DE SEGURANÇA	892		
ASSENTO	893		
ASSENTO DE PASSAGEIRO	904		
ASSENTO COM SUSPENSÃO	907		
SUSPENSÃO - ASSENTO	910		
INCLINAÇÃO - PLATAFORMA	915		
PÁRA-SOL DA CABINE	917		
VIDRO	919		
LIMPADOR E LAVADOR - JANELA	923		
EQUIPAMENTO DE SERVIÇO E SUPRIMENTOS	928		
TAMPA - EMBARQUE	928		
PLACA E DECALQUE	930		
FERRAMENTAS	992		
ÍNDICE DE NÚMERO DE PEÇA	B1		

* TRADUÇÃO NÃO DISPONÍVEL NO MOMENTO DA IMPRESSÃO

INHALTSVERZEICHNIS

Bezeichnung	Seite
ALLGEMEINE HINWEISE	A39
KÜHLMITTELZUSATZ	A47
WARTUNGSTEILE	A76
STICHWORTVERZEICHNIS	A136
MASCHINE	1
GRUNDAUSFÜHRUNG	1
*INSTALLATION AR-MACHINE	1
EINBAUSATZ - MASCHINE	1
*INSTALLATION AR-MACHINE	2
EINBAUSATZ - MASCHINE	2
MOTOR	3
MOTOR, KOMPLETT	3
MOTORKÜHLERBLOCK	7
MOTOR (GRUNDAUSFÜHRUNG)	9
PUMPENANTRIEBSADAPTER	9
SOCKEL FÜR VENTILDECKEL U. EINSPRITZKABELBAUM	10
RIEMENSPANNER	11
NOCKENWELLE	12
STEUERANTRIEBSGEHÄUSE-DECKEL	13
MOTORBLOCKDECKEL	14
SCHWUNGRADGEHÄUSEDECKEL	17
STIRNRADGEHÄUSEDECKEL	18
VENTILDECKEL	19
KURBELWELLE	20
MOTORBLOCK	21
ZYLINDERKOPF	32
DÄMPFER	45
NEBENANTRIEB	46
PUMPENANTRIEB	48
MOTORBREMSE	49
STIRNRADGEHÄUSE-HALTETEILE	51
SCHWUNGRAD	54
NOCKENWELLENZAHNRAD	55
STIRNRAD	56
ZAHNRADVORGELEGE	60
DAUERBREMSGEHÄUSE	64
SCHWUNGRADGEHÄUSE	68
STIRNRADGEHÄUSE	70
MOTORHUBÖSE	72
DREHSTROMGENERATOR - BEFESTIGUNG	74
MOTORAUFLAGER	75
ÖLWANNE	76
PLEUELSTANGE UND KOLBEN	77
ZYLINDERBLOCKSCHRAUBE	79
ZYLINDERKOPFSTOPFEN	80
KURBELWELLEN-RIEMENSCHEIBE	83
VENTILKIPPHEBEL	84
MOTORAUFHÄNGUNG	86
VENTILSTEUERUNG	87
SCHMIERSYSTEM	88
ÖLPUMPEN-BEFESTIGUNGSTEILE	88
ÖLFILTER	89
ENTDUNSTER	92
ÖLMESSSTAB	93
MOTORÖLLEITUNGEN	94
MOTORÖLFILTERLEITUNGEN	95
TURBOLADERÖLLEITUNGEN	96
SCHMIERPUMPE	97
KÜHLSYSTEM	98
MOTORÖLKÜHLER	98
*COOLING AR	99
SAUGLÜFTER	100
KÜHLMITTELLEITUNGEN	102
KÜHLWASSERLEITUNGEN	104
HYDRAULIKKÜHLERMOTOR U. BEFESTIGUNG	106
KÜHLWASSERPUMPE	107
KÜHLER	110
KÜHLERABDECKUNG	118
KÜHLMITTELBEHÄLTER	120
LUFTANSAUG- UND ABGASSYSTEM	125
LADELUFTKÜHLER	125
LUFTREINIGER	131
AUSPUFFBOGEN	133
DRUCKLUFTLEITUNGEN	134
AUSPUFFKRÜMMER	138
SCHALLDÄMPFER	139
AUSPUFFROHR	146
AUSPUFFABSCHIRMUNG	150
KRÜMMERSCHILD	152
TURBOLADER	153
KRAFTSTOFFSYSTEM	155
KRAFTSTOFFILTERSOCKEL	155
REGLERSTEUERUNG	157
WASSERABSCHEIDER- U. KRAFTSTOFFILTER	158
KRAFTSTOFFEINSPRITZDÜSE	159
KRAFTSTOFFLEITUNGEN	160
KRAFTSTOFFÖRDERPUMPE UND BEFESTIGUNGSTEILE	171
KRAFTSTOFFENTLÜFTUNGSPUMPE U. SICHERHEITSFILTER	173

* ÜBERSETZUNG ZUM ZEITPUNKT DER DRUCKLEGUNG NICHT VORHANDEN

INHALTSVERZEICHNIS

Bezeichnung	Seite
KRAFTSTOFFTANK U. BEFESTIGUNG	174
*TANK AR-FUEL	184
KRAFTSTOFFTANK	184
SPERRVENTIL	191
KRAFTSTOFFNEBENSTROMVENTIL	194
ELEKTRISCHE ANLAGE UND STARTSYSTEM	195
WARNVORRICHTUNG	195
DREHSTROMGENERATOR	196
BATTERIE UND VERDRAHTUNG	202
KLEMMLEISTE	208
UNTERBRECHER	209
ANSCHLUSS, ELEKTR.	214
STEUERUNGSEINHEIT, ELEKTRON. FÜR MOTOR UND BEFEST.	215
KRAFTÜBERTRAGUNGSSTEUERUNG UND MONTAGESATZ	219
MOTORSTEUERUNG, ELEKTRON.	221
STEUERUNG - NICHT PROGRAMMIERT	226
ELEKTRONIK - MONITOR	228
KRAFTÜBERTRAGUNGSELEKTRONIK	228
FAHRERHAUSBELEUCHTUNG	229
ARBEITSLEUCHTEN	230
FRONTSCHEINWERFER	232
BLINKLEUCHTE	234
MOTOR, ELEKTR.	239
UNTERBRECHER - INSTRUMENTENTAFEL	240
DRUCKSENSOR UND BEFESTIGUNGSTEILE	244
STELLUNGSSENSOR	245
DRUCKSENSOR	246
DREHZAHLSENSOR	250
TEMPERATURSENSOR	251
ÄTHERSTARTHILFE	255
KALTWETTERSTARTANLAGE	256
STARTERMOTOR	257
TRENNSCHALTER	277
MAGNETSCHALTER	278
RÜCKFAHRWARNHORN	281
WARNSUMMER	287
FAHRERHAUSVERDRAHTUNG	288
VERDRAHTUNG (ELEKTRON. STEUERUNG)	299
VERDRAHTUNG, VORNE	301
BELEUCHTUNGSVERDRAHTUNG	308
VERDRAHTUNG, HINTEN	310
BELEUCHTUNGSANLAGE UND VERDRAHTUNG	311
KRAFTÜBERTRAGUNG	315
DREHSTELLGLIED	315
ACHS- U. RAHMENSATZ	317
MITTELACHSE	318
VORDERACHSE	318
HINTERACHSE	318
MITTELACHSE	319
VORDERACHSE	325
HINTERACHSE	333
GETRIEBEENTLÜFTER	335
DIFFERENTIALTRÄGER	340
GETRIEBEGEHÄUSE	342
DIFFERENTIALSPERRENGESTÄNGE	346
GETRIEBEHYDRAULIK	356
BREMS- UND WANDLERÖLKÜHLER	363
WANDLERDECKEL	365
DIFFERENTIAL UND TELLERRAD	366
DIFFERENTIAL	371
PUMPENANTRIEB	372
GETRIEBEÖLFÜLLSTUTZEN	376
ÖLFILTER	377
*GAUGE GP-OIL LEVEL (DIPSTICK)	379
VERTEILERGETRIEBEANTRIEB	380
ACHSENÖLKÜHLERLEITUNGEN	410
ÖLKÜHLERLEITUNGEN (KRAFTÜBERTRAGUNG)	420
GETRIEBEÖLLEITUNGEN	421
VERTEILERGETRIEBE - BEFESTIGUNG	424
GETRIEBEAUFLAGER	425
PLANETENZWISCHENGETRIEBE	426
PLANETENGETRIEBE	428
KRAFTÜBERTRAGUNG	434
VERTEILERGETRIEBEGEHÄUSEPUMPE U. BEFESTIGUNG	435
ZAHNRADPUMPE	436
GETRIEBEPUMPE	438
FELGE (TEILBAR)	439
MAGNETSIEB	441
ANTRIEBSWELLE	442
ANTRIEBSWELLE, VORNE	443
KNICKGELENKANTRIEBSWELLE	444
ANTRIEBSWELLE, HINTEN	448
REIFEN UND FELGE	449
DREHMOMENTWANDLER	457
GETRIEBE	460
KREUZGELENK	461
STEUERVENTIL	466
DRUCKSTEUERVENTIL	467
VENTIL - SCHALT- UND DRUCKSTEUERUNG	470
MAGNETVENTIL	473

* ÜBERSETZUNG ZUM ZEITPUNKT DER DRUCKLEGUNG NICHT VORHANDEN

INHALTSVERZEICHNIS

Bezeichnung	Seite
MAGNET- UND ÜBERDRUCKVENTIL	476
SEITENANTRIEB UND RAD	477
RAD UND REIFEN	479
SEITENANTRIEB UND RADBREMSE	480
RAHMEN UND FAHRGESTELL	486
KÜHLERLEITPLATTE	486
MULDENKIPPER	488
FRONTSTOSSSTANGE	494
SCHUTZBLECHVERLÄNGERUNG	495
SCHUTZBLECHE UND AUFHÄNGUNG	496
RAHMEN	499
VORDERRAHMEN	500
RAHMEN, HINTEN	501
BREMSVERKLEIDUNG	503
BREMSLEITUNGSVERKLEIDUNG	504
PANZERWANNE	505
HYDRAULIKTANKVERKLEIDUNG	506
LEITUNGSVERKLEIDUNG	510
SCHLAMMSCHUTZ	512
FAHRERPLATTFORMVERKLEIDUNG	513
KÜHLERSCHUTZ	517
KNICKPENDELGELENK	523
MOTORHAUBE U. VERKLEIDUNG	525
MOTORHAUBE	526
MULDENVERSTÄRKUNG	535
SCHMIERLEITUNGEN	536
KNICKGELENKSPERRE	542
SCHMIERSYSTEM, AUTOM.	544
ZUGVORRICHTUNGSBOLZEN	545
STEIGLEITER	546
LENKUNGSANSCHLAG	547
KNICKGELENKSLEITUNGEN - BEFESTIGUNG	548
SCHALLDÄMPFUNG	550
HECKKLAPPE	555
*TAILGATE GP	560
MOTORHAUBEN-KIPPSTELLUNG	562
LAUFSTEG	565
BREMSSYSTEM	566
BREMSDRUCKSPEICHER	566
HYDRAULIKDRUCKSPEICHER	567
BREMSDRUCKSPEICHER	568
FESTSTELLBREMSE	575
BETRIEBSBREMSE	577
FESTSTELLBREMSGESTÄNGE	583
BREMSGESTÄNGE	588
ÖLKÜHLERBLOCK	605
BETRIEBSBREMSLEITUNGEN	606
BREMSPUMPE UND BEFESTIGUNGSTEILE	614
NACHSTELLVORRICHTUNG	615
BREMSSTEUERVENTIL	616
PENDELVENTIL	617
MAGNETVENTIL	618
LENKSYSTEM	619
LENKBETÄTIGUNG	619
LENKZYLINDER UND AUFHÄNGUNG	620
LENKZYLINDER	623
HYDRAULIKPUMPE UND LEITUNGEN	629
LENKÖLLEITUNGEN	635
NOTLENKUNGSPUMPE UND -MOTOR	649
NOTLENKUNGSPUMPE UND BEFESTIGUNGSTEILE	650
LENKPUMPE UND AUFHÄNGUNG	651
ZAHNRADPUMPE	653
ZUMESSPUMPE	655
LENKSÄULE, VERSTELLBAR	656
SPERR- UND DRUCKREDUZIERVENTIL	658
DRUCKREDUZIERVENTIL	660
LENKRÜCKSCHLAG- U. KOMBINATIONSVENTIL	661
HYDRAULIKSYSTEM	662
VORSTEUERSTELLANTRIEB	662
MULDENHYDRAULIK	664
HYDRAULIKÖLKÜHLERBEFESTIGUNG	666
TANKABDECKUNG	667
MULDENZYLINDER UND AUFHÄNGUNG	669
HECKKLAPPENZYLINDER U. BEFESTIGUNG	671
HUBZYLINDER	672
HECKKLAPPENZYLINDER	673
HYDRAULIKANORDNUNG (MASCHINE)	675
ABLASSLEITUNGEN	676
HUBLEITUNGEN	677
HYDRAULIKLÜFTERLEITUNGEN	680
VORSTEUERLEITUNGEN	692
DRUCKTESTLEITUNGEN	700
HYDRAULIKPUMPE UND LEITUNGEN	702
RÜCKLAUFLEITUNG	711
HECKKLAPPENLEITUNGEN	717
MOTORANTRIEB	719
MULDENPUMPE U. BEFESTIGUNGSTEILE	727

* ÜBERSETZUNG ZUM ZEITPUNKT DER DRUCKLEGUNG NICHT VORHANDEN

INHALTSVERZEICHNIS

Bezeichnung	Seite
HYDRAULIKPUMPE UND BEFESTIGUNGS-TEILE	728
HYDRAULIKLÜFTERPUMPE U. BEFESTIGUNG	729
ZAHNRADPUMPE	730
KOLBENPUMPE	733
KOLBENPUMPENUMLAUFSATZ	739
HYDRAULIKTANK UND BEFESTIGUNGS-TEILE	741
HYDRAULIKTANK	744
HUBSTEUERVENTIL UND -BEFESTI-GUNG	754
HYDRAULIKLÜFTERVENTIL U. BEFESTIGUNGSTEILE	760
SPERRVENTIL	761
SAMMELVENTIL	767
AUSGLEICHSVENTIL	768
UMLEITVENTIL	769
HUBSTEUERVENTIL	771
ABSENKSTEUERVENTIL	775
DRUCKREDUZIERVENTIL	776
*VALVE GP-PUMP CONTROL	777
PUMPENSTEUERVENTIL	780
ÜBERDRUCKVENTIL	782
MAGNETVENTIL	785
AUFHÄNGUNG	787
DRUCKSPEICHER U. BEFESTIGUNGSTEILE - AUFHÄNGUNG	787
FEDERUNGSDRUCKSPEICHER	789
AUFHÄNGUNGSZYLINDER U. BEFESTIGUNGSTEILE	795
AUFHÄNGUNGSZYLINDER	797
AUFHÄNGUNG, MITTE - RAHMEN	801
VORDERRADAUFHÄNGUNGSRAH-MEN	803
AUFHÄNGUNG, HINTEN - RAHMEN	805
AUFHÄNGUNGSLEITUNGEN	807
HINTERE AUSGLEICHSAUFHÄN-GUNG	811
FAHRERHAUS	812
FAHRERSITZVERSTELLER	812
*AIR COMPRESSOR GP-SEAT	813
LUFTKOMPRESSORSITZ	814
KLIMAANLAGE UND AUFHÄNGUNG	815
*AIR CONDITIONER & MOUNTING GP	818
KLIMAANLAGE	819
ARMLEHNE	829
FAHRERHAUS	832
KÄLTEMITTELKOMPRESSOR	834
KÄLTEMITTELKONDENSATOR U. BEFESTIGUNGSTEILE	836
KÄLTEMITTELKONDENSATOR	837
*CONTROL GP-MONITOR	838
GETRIEBE- U. MULDENSTEUERUNG	839
FAHRERHAUSKIPPZYLINDER	841
FAHRERHAUSTÜR	842
SCHEIBENSCHUTZ	844
RADIOEINBAUSATZ	846
FAHRERHAUSAUSKLEIDUNG	847
KLIMAANLAGENLEITUNGEN	854
HEIZUNGSLEITUNGEN	858
RÜCKSPIEGEL	860
MODUL - VIER ELEKTRON. ANZEIGEN	867
GESCHWINDIGKEITS- U. DREHZAHLMES-SERMODUL	868
ÜBERROLLSCHUTZAUFLAGER	869
SCHALE - RÜCKENLEHNE	873
VERKLEIDUNG - FAHRERHAUS	877
INSTRUMENTENTAFEL	878
VERSTELLBARER SITZ	884
ÜBERROLLSCHUTZ	886
FAHRERSITZ UND UNTERBAU	889
SICHERHEITSGURT	892
FAHRERSITZ	893
BEIFAHRERSITZ	904
SCHWINGSITZ	907
FAHRERSITZFEDERUNG	910
FAHRERSTAND, SCHWENKBAR	915
FAHRERHAUS, SONNENBLENDE	917
FAHRERHAUSFENSTER	919
SCHEIBENWISCHER UND -WASCHANLA-GE	923
WARTUNGSAUSRÜSTUNG U. -ZUBEHÖR	928
VERSANDDECKEL	928
SCHILD UND AUFKLEBER	930
HANDWERKZEUGE	992
ERSATZTEILNUMMERNINDEX	B1

* ÜBERSETZUNG ZUM ZEITPUNKT DER DRUCKLEGUNG NICHT VORHANDEN

GENERAL INFORMATION

1. MACHINE IDENTIFICATION

Caterpillar machines are identified by Product Identification Numbers (PIN). Some components included in a machine may be identified by Serial Numbers (S/N). Typical components that will be serialized include engines, transmissions, bulldozers, and rippers. The machine and engine are further identified by arrangement numbers and in some cases modification numbers. These numbers are shown on the product identification plate(s) and on the master plate in the operator's compartment.

Caterpillar dealers need all of these numbers to determine accurate parts identification.

SIS ***New Feature***

Effective First Quarter 2001 the Caterpillar Product Identification Number (PIN) changed from 8 to 17 characters. In an effort to provide uniform equipment identification, Caterpillar and other construction equipment manufacturers are moving to comply with the latest version of the product identification numbering standard. Non-road machine PINs are defined by ISO 10261. The new PIN format will apply to all Caterpillar machines and generator sets. The PIN plates and frame marking will display the 17 character PIN. The new format will look like the following:

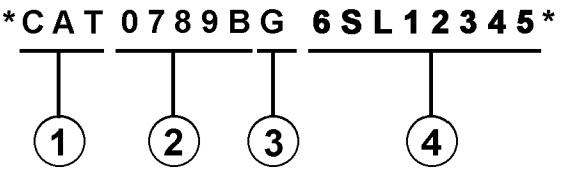

Where:

1. Caterpillar's World Manufacturing Code (characters 1-3)

2. Machine Descriptor (characters 4-8)

3. Check Character (character 9)

4. Machine Indicator Section (MIS) or Product Sequence Number (characters 10-17). These were previously referred to as the Serial Number.

Machines and generator sets produced before First Quarter 2001 will maintain their 8 character PIN format.

Components such as engines, transmissions, axles, etc. and work tools will continue to use an 8 character Serial Number (S/N).

2. ORDERING PARTS

⚠ WARNING

When replacement parts are required for this product Caterpillar recommends using Caterpillar replacement parts or parts with equivalent specifications including, but not limited to, physical dimensions, type, strength and material.

Failure to heed this warning can lead to premature failures, product damage, personal injury or death.

Quality Caterpillar replacement parts are available from Caterpillar dealers throughout the world. Their parts inventories are up to date and include all parts normally required to protect your investment in Caterpillar machines. Dealers may offer repair kits or remanufactured parts to allow selection of the most effective repair alternative for a particular situation. When ordering parts, your order should specify the quantity, part number, part name, and the serial number/product identification number of the machine for which the parts are needed.

3. PARTS MANUAL ORGANIZATION

Product information in this manual is presented as "information elements" that represent all of the components for the specific model. Engine Arrangement and Seat Group are examples of information elements. The information elements are organized alphabetically by part name and secondarily by part number within each major section of the manual.

4. TABLE OF CONTENTS

A table of contents (TOC) is found at the beginning of the manual. The TOC lists each section of the manual with a complete list of all information elements organized as they appear in the manual. Page numbers are provided for quick reference to detailed parts identification illustrations and serviceable consist lists.

5. MAINTENANCE PARTS INDEX

The Maintenance Parts Index, located near the beginning of the manual, references most frequently used maintenance part numbers, providing description, quantity, usage and page number. This information is organized alphabetically by part description.

6. INDEX

The index located near the front of the manual is an alphabetical listing of all information elements included in the manual. Page numbers are provided for quick reference to detailed parts identification illustrations and serviceable consist lists.

7. PART NUMBER INDEX

A numerical index listing all part numbers and the corresponding page number(s) appears at the back of the manual.

8. CAPTIONS

Captions located at the beginning of each information element identify the part number and part name along with additional descriptive information. PIN and S/N information found in each caption should be used to select correct information for a specific machine. Field replacement options, identification of optional attachment components, and where used ("part of") information is also provided.

The first line of a caption is shown in larger type font to indicate the beginning of an information element. Captions for additional pages that may be required to illustrate an information element will be shown in standard type font and will include the term *(contd.)* .

9. NON-SERVICED PARTS

In some instances it is necessary to display non-serviced parts that are a link to a lower level serviceable consist lists. These non-serviced part numbers are shown in *italic* type indicating that they are not available.

10. PARTS LIST REFERENCE NUMBERS

Numbers shown in the Ref No column correspond to numbers used in the associated graphic(s). An alphabetic suffix may be added to a reference number to identify lower level consist items. Numbers shown in the Graphic Ref column refer to the graphic number identifier displayed in the lower left corner of each illustration. The Graphic Ref number may be used in combination with the item Ref No to determine the correct part number. There may be intentional omission of a Ref No in a consist list as information is updated to reflect the latest serviceable part numbers.

11. INDENTED PART NAMES

When a part name is indented in a parts list, it is part of (included in) the group or assembly under which it is indented.

12. ILLUSTRATION REFERENCE LETTERS

When necessary, illustrations contain reference letters (A, B, C etc.) that are intended to track lines and harnesses from one point to another. They are also used to show where to reconnect illustrations that have been separated.

13. ABBREVIATIONS AND SYMBOLS

O.D. – Outside Diameter
I.D. – Inside Diameter
A – Not Part Of This Group
B – Use As Required
C – Change From Previous Type
D – Order By The Meter
E – Order By The Centimeter
F – Not Shown
G – Order By The Inch
I – Refer To Hydraulic Information System
M – Metric Part
R – Remfg Part May Be Available
Y – Separate Illustration
Z – Not Serviced Separately

SIS *New Feature*

14.<END>

This symbol indicates the end of an information element.

NOTE:

Continuing improvement and advancement of product design may cause changes to your machine which may not be included in this publication. Whenever a question arises regarding your caterpillar product or this publication, please consult your caterpillar dealer for the latest available information.

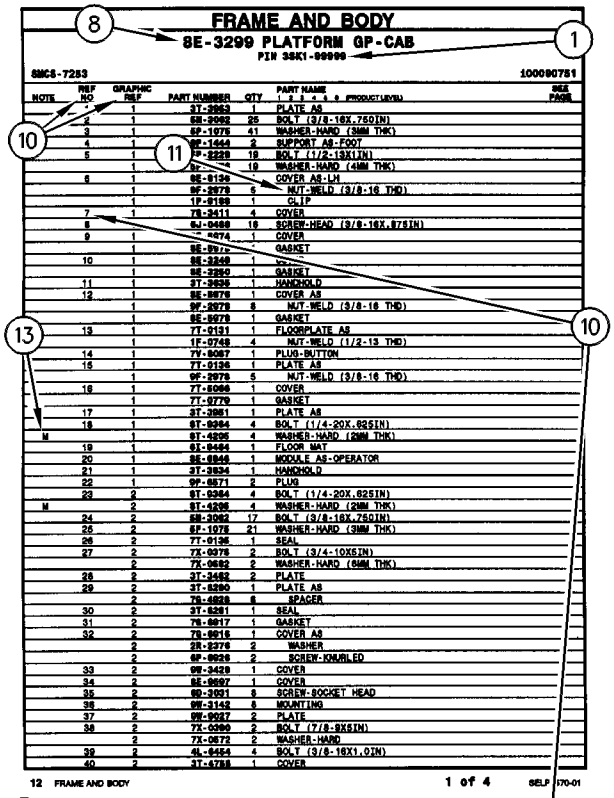

FRAME AND BODY

8E-3299 PLATFORM GP-CAB

PIN 3SK1-99999

SMCS-7283 100090751

NOTE	REF NO	GRAPHIC REF	PART NUMBER	QTY	PART NAME 1 2 3 4 5 6 (PRODUCT LEVEL)	SEE PAGE
	*	1	3T-3963	1	PLATE AS	
	2	1	5M-3062	25	BOLT (3/8-16X.750IN)	
	3	1	6P-1075	41	WASHER-HARD (3MM THK)	
	4	1	9E-1443	2	SUPPORT AS-FOOT	
	5	1	9P-2229	19	BOLT (1/2-13X1IN)	
		1	9P-[illegible]	19	WASHER-HARD (4MM THK)	
	6	1	9E-9136	*	COVER AS-LH	
		1	9F-2979	6	NUT-WELD (3/8-16 THD)	
		1	1P-0189	1	CLIP	
	7	1	7X-3411	4	COVER	
	8	1	6J-0468	18	SCREW-HEAD (3/8-16X.87SIN)	
	9	1	[illegible]-0274	1	COVER	
		1	9E-9976	*	GASKET	
	10	1	9E-3248	1	[illegible]	
		1	9E-3250	1	GASKET	
	11	1	3T-3636	1	HANDHOLD	
	12	1	9E-9976	1	COVER AS	
		1	9F-2979	8	NUT-WELD (3/8-16 THD)	
		1	9E-9978	1	GASKET	
	13	1	7T-9131	1	FLOORPLATE AS	
		1	1F-0748	4	NUT-WELD (1/2-13 THD)	
	14	1	7V-8067	1	PLUG-BUTTON	
	15	1	7T-9136	1	PLATE AS	
		1	9F-2979	5	NUT-WELD (3/8-16 THD)	
	16	1	7T-5066	1	COVER	
		1	7T-9779	1	GASKET	
	17	1	3T-3951	1	PLATE AS	
	18	1	9T-0264	4	BOLT (1/4-20X.62SIN)	
M		1	9T-4296	4	WASHER-HARD (2MM THK)	
	19	1	9I-9454	1	FLOOR MAT	
	20	1	9E-6946	1	MODULE AS-OPERATOR	
	21	1	3T-3934	1	HANDHOLD	
	22	1	9P-0571	2	PLUG	
	23	2	9T-0264	4	BOLT (1/4-20X.62SIN)	
M		2	9T-4296	4	WASHER-HARD (2MM THK)	
	24	2	5M-3062	17	BOLT (3/8-16X.75QIN)	
	25	2	6P-1075	21	WASHER-HARD (3MM THK)	
	26	2	7T-9136	1	SEAL	
	27	2	7X-0075	2	BOLT (3/4-10X5IN)	
		2	7X-0682	2	WASHER-HARD (6MM THK)	
	28	2	3T-3482	2	PLATE	
	29	2	3T-5290	1	PLATE AS	
		2	7S-4828	6	SPACER	
	30	2	3T-5291	1	SEAL	
	31	2	7S-8817	1	GASKET	
	32	2	7S-8816	1	COVER AS	
		2	5R-2276	2	WASHER	
		2	9F-9026	2	SCREW-KNURLED	
	33	2	9W-3429	1	COVER	
	34	2	8E-9697	1	COVER	
	35	2	9D-3031	8	SCREW-SOCKET HEAD	
	36	2	9W-3143	8	MOUNTING	
	37	2	9W-9027	2	PLATE	
	38	2	7X-0360	2	BOLT (7/8-9X5IN)	
		2	7X-0672	2	WASHER-HARD	
	39	2	4L-9454	4	BOLT (3/8-16X1.0IN)	
	40	2	3T-4788	1	COVER	

12 FRAME AND BODY 1 of 4 SELP4570-01

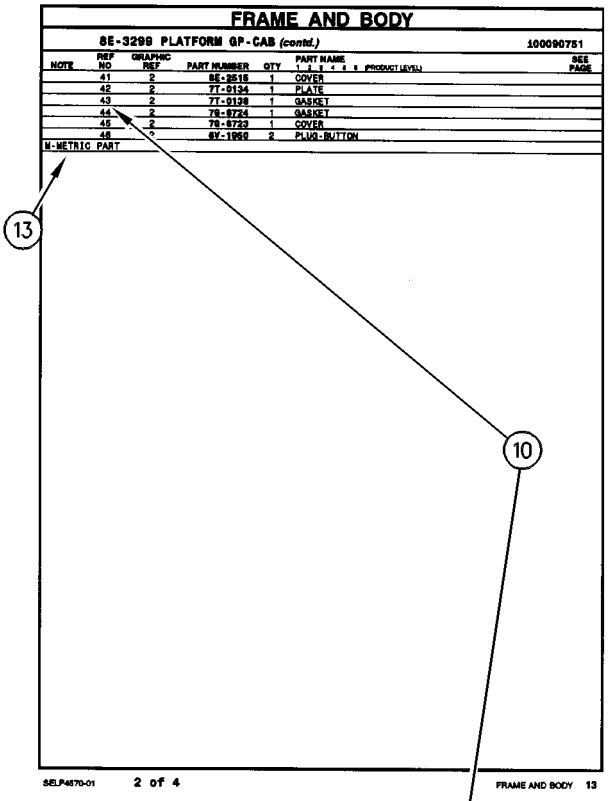

FRAME AND BODY

8E-3299 PLATFORM GP-CAB (contd.) 100090751

NOTE	REF NO	GRAPHIC REF	PART NUMBER	QTY	PART NAME 1 2 3 4 5 6 (PRODUCT LEVEL)	SEE PAGE
	41	2	8E-2515	1	COVER	
	42	2	7T-9134	1	PLATE	
	43	2	7T-9138	1	GASKET	
	44	2	7S-8724	1	GASKET	
	45	2	7S-8723	1	COVER	
	46	*	8Y-1950	2	PLUG-BUTTON	

M-METRIC PART

SELP4570-01 2 of 4 FRAME AND BODY 13

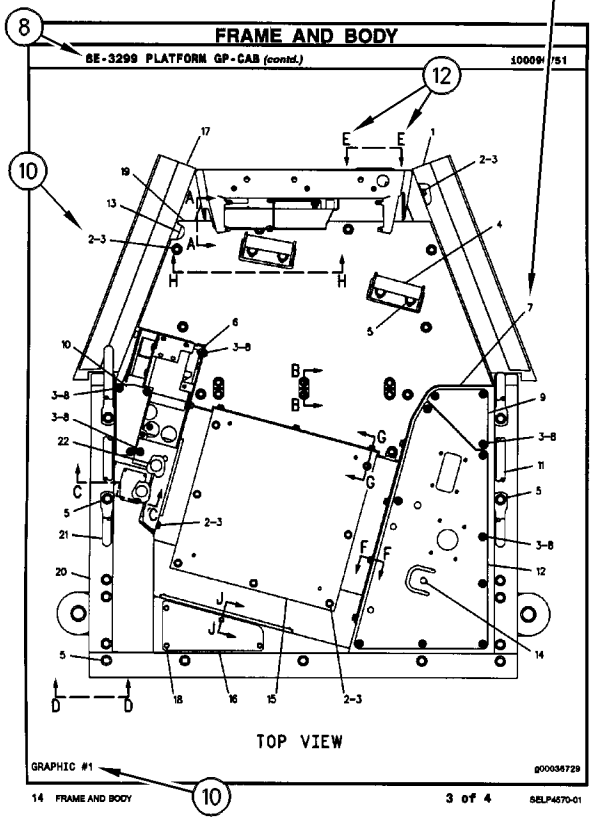

FRAME AND BODY

8E-3299 PLATFORM GP-CAB (contd.) 100090751

TOP VIEW

GRAPHIC #1 g00036729

14 FRAME AND BODY 3 of 4 SELP4570-01

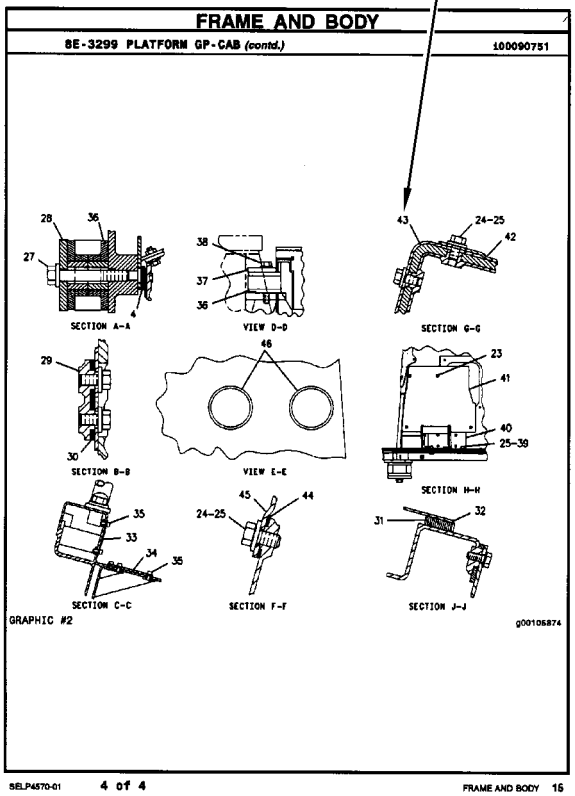

FRAME AND BODY

8E-3299 PLATFORM GP-CAB (contd.) 100090751

SECTION A-A VIEW D-D SECTION G-G

SECTION B-B VIEW E-E SECTION H-H

SECTION C-C SECTION F-F SECTION J-J

GRAPHIC #2 g00105874

SELP4570-01 4 of 4 FRAME AND BODY 15

GÉNÉRALITÉS

1. IDENTIFICATION DE LA MACHINE

Toutes les machines Caterpillar portent un numéro d'identification (PIN). Certains composants des machines peuvent porter des numéros de série (S/N). En général, parmi les composants qui portent des numéros de série il y a les moteurs, les transmissions, les bulldozers et les rippers. En plus, la machine et le moteur peuvent recevoir des numéros de version, et dans certains cas, de modification. Ces numéros figurent sur les plaques de numéro de série et sur la plaque signalétique principale qui se trouve dans le poste de conduite.

Les concessionnaires Caterpillar doivent connaître tous ces numéros pour identifier correctement les pièces.

SIS *Nouvelle Caractéristique*

À partir du premier trimestre 2001, le numéro d'identification produit (PIN) Caterpillar passe de 8 à 17 caractères. Afin de permettre une identification uniforme des matériels, Caterpillar et d'autres constructeurs de machines de travaux publics s'efforcent de se conformer à la norme la plus récente portant sur les numéros d'identification des produits. Les numéros d'identification (PIN) de machines de chantier sont définis par la norme ISO 10261. Le nouveau format du numéro d'identification est valable pour toutes les machines et tous les groupes électrogènes Caterpillar. Le numéro d'identification produit (PIN) figurant sur la plaque et sur le châssis se composera de 17 caractères. Le nouveau format ressemblera à ceci:

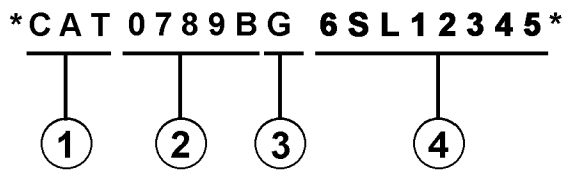

Il se décomposera de la façon suivante:

1. Code international de fabrication de Caterpillar (caractères 1 à 3)

2. Descriptif de la machine (caractères 4 à 8)

3. Contrôle (caractère 9)

4. Indicateur machine (MIS) ou numéro de séquence produit (caractères 10 à 17). Ceux-ci étaient auparavant désignés sous le terme de numéro de série.

Les machines et les groupes électrogènes construits avant le premier trimestre 2001 garderont le format à 8 caractères du numéro d'identification produit (PIN).

Les organes tels que les moteurs, les boîtes de vitesses, les essieux, etc., continueront d'être désignés par un numéro de série (S/N) à 8 caractères.

2. COMMANDE DE PIÈCES

⚠ DANGER

Lorsqu'il faut remplacer des pièces de rechange pour ce produit Caterpillar recommande d'utiliser les pièces de rechange Caterpillar ou les pièces qui ont des spécifications équivalentes dont les dimensions physiques, le type, la force et le matériau. Ces équivalences ne se limitent pas à l'énoncé précédent.

L'inobservation de cette mise en garde peut entraîner des défaillances prématurées, des dommages au produit, des blessures ou même la mort.

Les concessionnaires Caterpillar fournissent dans le monde entier des pièces de rechange de qualité Caterpillar. Leurs stocks de pièces sont constamment réapprovisionnés et comptent toutes les pièces nécessaires pour assurer la bonne marche de vos machines Caterpillar. Certains concessionnaires proposent également des kits de réparation ou des pièces rénovées, ce qui permet de choisir la solution la plus économique dans une situation donnée. Lors des commandes de pièces, mentionner la quantité, le numéro et la désignation des pièces ainsi que le numéro de série ou le numéro d'identification (PIN) de la machine pour laquelle ces pièces sont requises.

3. ORGANISATION DU CATALOGUE DE PIÈCES

Les renseignements sur les produits sont présentés sous forme de "Information element" (élément d'information) représentant tous les composants d'un modèle donné. "Engine Arrangement" (version de moteur) et "Seat Group" (assemblage de siège)" sont des exemples d'éléments d'information. Les éléments d'information sont classés par ordre alphabétique par la désignation standard des pièces et par numéros de pièces dans chaque partie importante du manuel.

4. TABLE DES MATIÈRES

SIS *Nouvelle Caractéristique*

La table des matières se trouve au début du manuel. La table des matières fournit la liste de tous les chapitres du manuel avec une liste complète de tous les éléments d'information classés par ordre d'apparition dans le manuel. Les numéros de page sont fournis afin que l'utilisateur puisse trouver rapidement les illustrations détaillées concernant l'identification des pièces et les listes des pièces d'entretien.

5. INDEX DES PIÈCES D'ENTRETIEN

La rubrique "Index des pièces d'entretien" qui se trouve au début du manuel renvoie aux pièces d'entretien les plus fréquemment utilisées en précisant la désignation, la quantité, là où la pièce est utilisée et le numéro de page. Ces pièces sont classés par ordre alphabétique.

6. INDEX

L'index qui se trouve vers le début du manuel est une liste alphabétique de tous les éléments d'information du manuel. Les numéros de page sont fournis afin que l'utilisateur puisse trouver rapidement les illustrations détaillées concernant l'identification des pièces et les listes des pièces d'entretien.

7. INDEX DES NUMÉROS DE PIÈCES

Une liste numérique de tous les numéros de pièces et des pages correspondantes se trouve à la fin du manuel.

8. LÉGENDES

Les légendes qui se trouvent en haut de chaque page de chaque élément d'information fournissent le numéro de pièce, la désignation ainsi que des renseignements supplémentaires sur les pièces. Les renseignements concernant les numéros de série (S/N) qui se trouvent dans chaque légende doivent être utilisés pour sélectionner les informations correctes pour un moteur donné. Les informations concernant les options de remplacement sur le chantier, l'identification des composants des équipements offerts en option et les lieux d'application sont aussi fournies.

SIS *Nouvelle Caractéristique*

Les lettres de la première ligne d'une légende sont présentées en police plus grande afin d'indiquer le début d'une unité d'information. Les légendes qui pourraient être requises pour des pages supplémentaires afin d'illustrer une unité d'information seront présentées en police standard et comprendront le terme (à suivre).

9. PIÈCES NON FOURNIES

SIS *Nouvelle Caractéristique*

Dans certains cas, il est nécessaire d'indiquer les pièces non fournies qui sont en aval de la liste des pièces d'entretien. Les numéros des pièces non fournies dans la liste des pièces et les légendes seront en italique pour signaler qu'ils ne sont pas disponibles.

10. NUMÉROS DE RÉFÉRENCE DE LA LISTE DES PIÈCES

SIS *Nouvelle Caractéristique*

Les numéros indiqués dans la colonne des numéros de références correspondent aux numéros utilisés dans les illustrations auxquelles ils sont associés. Un suffixe alphabétique peut être ajouté à un numéro de référence pour identifier la liste des articles en aval. Les numéros indiqués dans la colonne de référence de l'illustration renvoient à l'identification du numéro affiché dans le coin inférieur gauche de chaque illustration. Le numéro de référence de l'illustration pourrait être utilisé avec le numéro de référence de l'article pour déterminer le numéro de pièce correct. Il peut y avoir une omission intentionnelle d'un numéro de référence dans une liste de pièces suite à la mise à jour des informations en vue de refléter les numéros de pièces les plus récentes.

11. DÉSIGNATIONS DE PIÈCES EN RETRAIT

Lorsqu'une désignation de pièce est en retrait, cela veut dire que l'article en regard fait partie de l'ensemble sous lequel il figure.

12. LETTRES DE RÉFÉRENCE DES ILLUSTRATIONS

Quand cela est nécessaire, les illustrations comportent des lettres de référence (A, B, C, etc.) pour montrer le trajet des canalisations et faisceaux de câbles d'un point à l'autre. Elles sont utilisées également pour indiquer où relier les illustrations séparées auparavant.

13. ABRÉVIATIONS ET SYMBOLES

O.D. – Diamètre extérieur
I.D. – Diamètre intérieur
A – Ne fait pas partie de ce groupe
B – Utiliser selon besoin
C – Modification
D – Commander par mètre
E – Commander par centimètre
F – Non représenté
G – Commander par pouce
I – Voir "Hydraulic Information System"
M – Pièce métrique
R – Pièce rénovée éventuellement disponible
Y – Illustration séparée
Z – Non fourni séparément

NOTA:

En raison du progrès technique et des améliorations continuelles apportées au matériel, votre machine comporte peut-être des modifications qui n'apparaissent pas dans la présente publication. En cas de doute sur un détail de votre machine Caterpillar ou sur le texte de la présente publication, adressez-vous à votre concessionnaire Caterpillar.

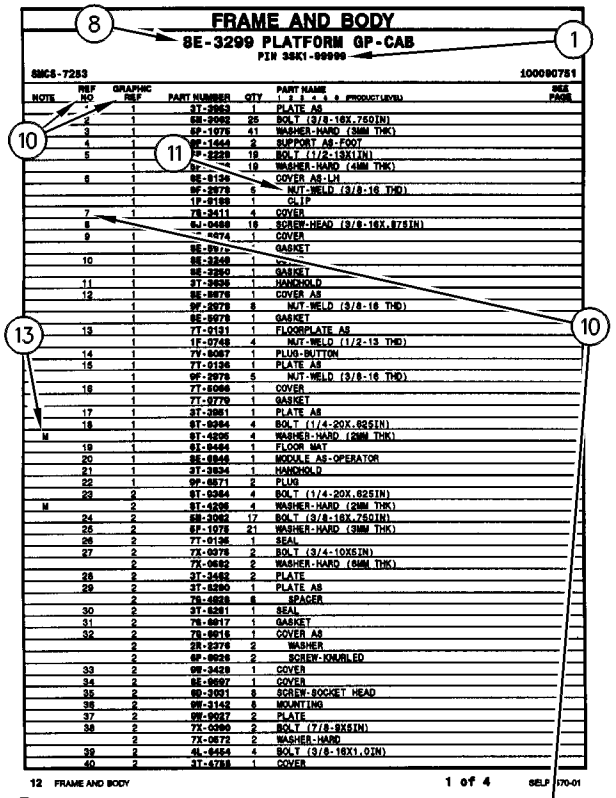
FRAME AND BODY
8E-3299 PLATFORM GP-CAB
PIN 3SK1-99999
SMCS-7283
100090751
1 of 4
SELP4570-01

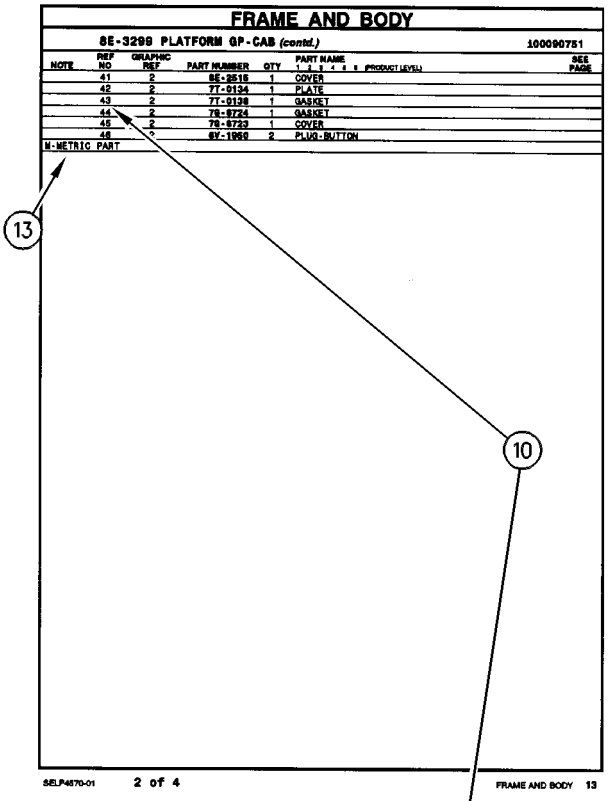
FRAME AND BODY
8E-3299 PLATFORM GP-CAB (contd.)
100090751
2 of 4
SELP4570-01

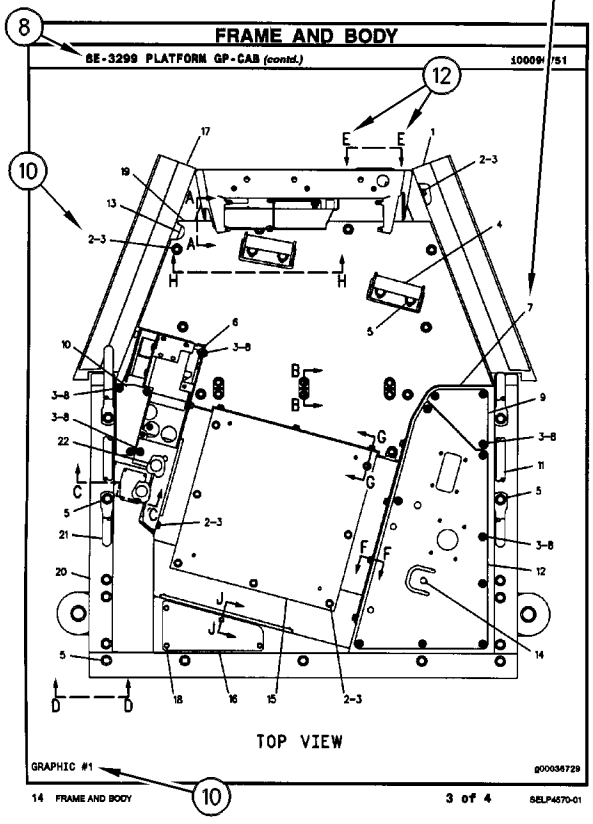
FRAME AND BODY
8E-3299 PLATFORM GP-CAB (contd.)
TOP VIEW
GRAPHIC #1
g00036729
3 of 4
SELP4570-01

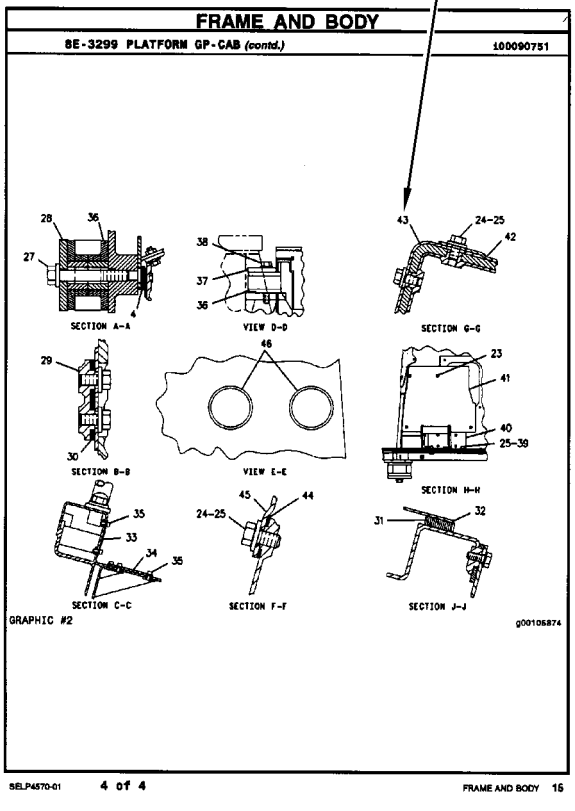
FRAME AND BODY
8E-3299 PLATFORM GP-CAB (contd.)
100090751
SECTION A-A
VIEW D-D
SECTION G-G
SECTION B-B
VIEW E-E
SECTION H-H
SECTION C-C
SECTION F-F
SECTION J-J
GRAPHIC #2
g00105874
4 of 4
SELP4570-01

INFORMACIÓN GENERAL

1. MÁQUINAS

Las máquinas Caterpillar se identifican con Números de Identificación del Producto (PIN). Algunos componentes incluídos en la máquina pueden estar identificados con Números de Serie (N/S). Los componentes que tienen típicamente esta identificación incluyen motores, transmisiones, hojas topadoras y desgarradores. La máquina y el motor se identifican además con Números de Configuración y en algunos casos, Números de Modificación. Estos números están en las placas de identificación del producto o en la placa principal en la cabina del operador.

Los distribuidores Caterpillar necesitan estos números para identificar con exactitud los números de piezas de repuesto.

SIS *Nueva Característica*

A partir del primer trimestre del 2001, el Número de Identificación de Producto (PIN) de Caterpillar cambió de 8 a 17 caracteres. Para hacer más uniforme el método de identificación de equipos, Caterpillar y otros fabricantes de equipo de construcción han tomado medidas para cumplir con la versión más reciente de la norma de numeración de identificación de productos. Los Números de Identificación de Producto para máquinas que no se operan en carreteras son definidos por la norma ISO 10261. El nuevo formato PIN corresponderá a todas las máquinas y grupos electrógenos Caterpillar. Las placas y los caracteres PIN estampados en el bastidor mostrarán el PIN de 17 caracteres. El nuevo formato tendrá la apariencia siguiente:

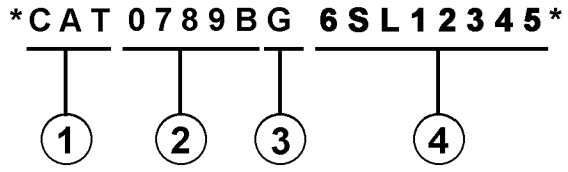

Significado de los caracteres:

1. Código de Fabricación Mundial de Caterpillar (caracteres 1-3)

2. Sección Descriptor de la Máquina (caracteres 4-8)

3. Carácter de Verificación (carácter 9)

4. Sección Indicador de la Máquina (MIS) o Número de Secuencia de Producto (caracteres 10-17). Anteriormente, estos caracteres constituían el Número de Serie.

Las máquinas y grupos electrógenos producidos antes del primer semestre del 2001 mantendrán su formato PIN de 8 caracteres.

Los componentes como motores, transmisiones, ejes, herramientas de trabajo, etc., continuarán usando un Número de Serie (S/N) de 8 caracteres.

2. COMO PEDIR REPUESTOS

⚠ ADVERTENCIA

Cuando se necesiten piezas de repuesto para este producto, Caterpillar recomienda usar piezas de repuesto Caterpillar o piezas que tengan especificaciones equivalentes incluyendo, pero sin estar limitadas a, dimensiones físicas, tipo, fortaleza y material.

El no hacer caso de esta advertencia puede llevar a fallas prematuras, daños al producto y lesiones graves o mortales.

Las piezas de repuesto Caterpillar de calidad están a la disposición de los distribuidores Caterpillar en todo el mundo. Sus existencias actualizadas incluyen todas las piezas normalmente requeridas para proteger su inversión en máquinas Caterpillar. Los distribuidores pueden tener juegos de reparación o piezas remanufacturadas para permitir la selección de la mejor alternativa de reparación en un caso en particular. Al pedir piezas de repuesto, especifique en su pedido la cantidad, el número de pieza, el nombre de la pieza y el número de serie/número de identificación del producto, de la máquina para la cual se necesitan estas piezas.

3. ORGANIZACION DEL MANUAL DE PIEZAS

La información sobre el producto, se presenta en este manual, como "elementos de información" que representan todos los componentes de un modelo específico. Las configuraciones de motores y los grupos de asientos son ejemplos de elementos de información. Los elementos de información están organizados primeramente por nombres de piezas en orden alfabético y en segundo lugar, por el número de pieza dentro de cada sección principal del manual.

4. CONTENIDO

La página de Contenido se encuentra al principio del manual. El Contenido indica cada sección del manual con una lista completa de todos los elementos de información organizados en el orden que aparecen en el manual. Los números de página proporcionan una referencia rápida a las ilustraciones detalladas de identificación de piezas y a las listas de componentes de repuesto de dichas piezas.

5. ÍNDICE DE PIEZAS DE MANTENIMIENTO

Al principio de este catálogo se encuentra un índice de los números de piezas utilizadas más frecuentemente para el mantenimiento, que incluye descripción, cantidad necesaria, lugar de utilización y número de página. Esta información está organizada alfabéticamente, por descripción de la pieza.

6. ÍNDICE

El Índice, ubicado cerca del principio del manual, es una lista en orden alfabético de todos los elementos de información incluídos en el manual. Los números de página proporcionan una referencia rápida a las ilustraciones detalladas de identificación de piezas y a las listas de componentes de repuesto de dichas piezas.

7. INDICE NUMÉRICO DE PIEZAS

Un índice numérico de piezas con el correspondiente número de página aparece al final de este catálogo.

8. TÍTULOS

Los títulos ubicados al principio de cada elemento de información identifican el número y el nombre de la pieza junto con información descriptiva. Se debe usar información sobre los Números de Identificación de Pieza (PIN) y los números de serie (S/N) para seleccionar la información que corresponda a una máquina en particular. También se suministra información sobre las opciones de reparación en el campo, la identificación de componentes de accesorios optativos y el lugar de ubicación de la pieza ("es parte de").

La primera línea del título se muestra con un tipo de letra más grande para indicar el comienzo de un elemento de información. Si se requieren páginas adicionales para ilustrar un elemento de información, los títulos se muestran con un tipo de letra normal y la continuación se indica entre paréntesis.

9. PIEZAS QUE NO SE SUMINISTRAN COMO REPUESTO

En algunos casos es necesario indicar piezas que no se suministran como repuesto pero que pueden estar conectadas a listas de componentes de otras piezas de repuesto. En tal caso, dichas piezas se muestran en cursiva para indicar que no son piezas disponibles.

10. NÚMEROS DE REFERENCIA

Los números en la columna de No. de Referencia corresponden a los números indicados en la ilustración que pertenece a ese número de pieza. Los números que tienen un sufijo alfabético identifican artículos de las listas de componentes de piezas. Los números en la columna de Referencia de la ilustración se identifican en la esquina inferior izquierda de cada ilustración. Para determinar el número de pieza correcto se puede utilizar tanto el No. de Referencia de la ilustración como el No. de Referencia del artículo. A medida que se actualiza la información para indicar los más recientes números de piezas de repuesto, puede omitirse intencionalmente un No. de Referencia en una lista de componentes de piezas.

11. NOMBRES DE PIEZA SANGRADOS

Cuando el nombre de una pieza está sangrado en una lista, significa que esta pieza forma parte del grupo o conjunto del renglón inmediatamente superior.

12. LETRAS DE REFERENCIA DE ILUSTRACIONES

Las ilustraciones contienen algunas veces letras de referencia (A, B, C etc.) cuyo propósito es seguir el trayecto de líneas y mazos de cables de un punto a otro. También se utilizan para mostrar dónde volver a unir ilustraciones que se habían separado.

13. ABREVIATURAS Y SIMBOLOS

O.D. – Diámetro exterior
I.D. – Diámetro interior
A – No es pieza de este grupo
B – Utilizado según la demanda
C – Indica cambio
D – Se pide por metro
E – Se pide por centímetro
F – No se muestra
G – Se pide por pulgada
I – Consulte el sistema de información hidráulica
M – Pieza métrica
R – Puede estar disponible como pieza remanufacturada
Y – Ilustración separada
Z – No se suministra por separado

SIS *Nueva Característica*

14.<END>

Este símbolo indica el final de un elemento de información.

NOTA:

Las contínuas mejoras y adelantos en diseño podrían originar cambios a su máquina que no se incluyen en esta publicación. Cuando tenga alguna pregunta acerca de su producto Caterpillar o de esta publicación, consulte al distribuidor Caterpillar para obtener la información más reciente.

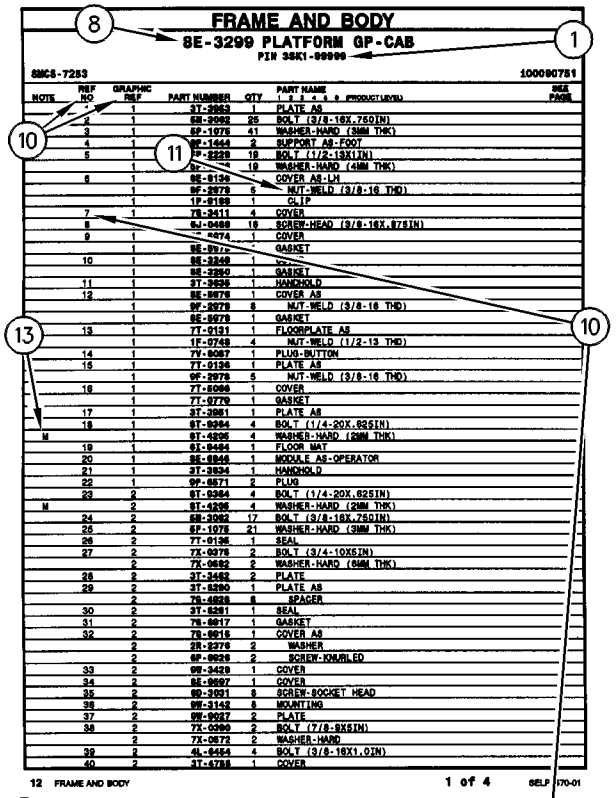

FRAME AND BODY

8E-3299 PLATFORM GP-CAB

PIN 3SK1-99999

SMCS-7283 100090751

NOTE	REF NO	GRAPHIC REF	PART NUMBER	QTY	PART NAME 1 2 3 4 5 6 (PRODUCT LEVEL)	SEE PAGE
	*	1	3T-3963	1	PLATE AS	
	2	1	5M-3062	25	BOLT (3/8-16X.750IN)	
	3	1	6P-1075	41	WASHER-HARD (3MM THK)	
	4	1	9E-1444	2	SUPPORT AS-FOOT	
	5	1	9P-2229	19	BOLT (1/2-13X1IN)	
		1	9P-[illegible]	19	WASHER-HARD (4MM THK)	
	6	1	9E-9136	*	COVER AS-LH	
		1	9F-2979	6	NUT-WELD (3/8-16 THD)	
		1	1P-0189	1	CLIP	
	7	1	7S-2411	4	COVER	
	8	1	6J-0468	18	SCREW-HEAD (3/8-16X.87SIN)	
	9	1	[illegible]-0274	1	COVER	
		1	9E-9976	*	GASKET	
	10	1	9E-3248	1	[illegible]	
		1	9E-2250	1	GASKET	
	11	1	3T-3636	1	HANDHOLD	
	12	1	9E-9976	1	COVER AS	
		1	9F-2979	8	NUT-WELD (3/8-16 THD)	
		1	9E-9978	1	GASKET	
	13	1	7T-9131	1	FLOORPLATE AS	
		1	1F-0748	4	NUT-WELD (1/2-13 THD)	
	14	1	7V-8067	1	PLUG-BUTTON	
	15	1	7T-9136	1	PLATE AS	
		1	9F-2979	5	NUT-WELD (3/8-16 THD)	
	16	1	7T-5066	1	COVER	
		1	7T-9779	1	GASKET	
	17	1	3T-3951	1	PLATE AS	
	18	1	9T-0264	4	BOLT (1/4-20X.62SIN)	
M		1	9T-4296	4	WASHER-HARD (2MM THK)	
	19	1	6I-9464	1	FLOOR MAT	
	20	1	9E-6946	1	MODULE AS-OPERATOR	
	21	1	3T-3934	1	HANDHOLD	
	22	1	9P-0671	2	PLUG	
	23	2	9T-0264	4	BOLT (1/4-20X.62SIN)	
M		2	9T-4296	4	WASHER-HARD (2MM THK)	
	24	2	5M-3062	17	BOLT (3/8-16X.750IN)	
	25	2	6P-1075	21	WASHER-HARD (3MM THK)	
	26	2	7T-9136	1	SEAL	
	27	2	7X-0075	2	BOLT (3/4-10X5IN)	
		2	7X-0682	2	WASHER-HARD (6MM THK)	
	28	2	3T-3482	2	PLATE	
	29	2	3T-5290	1	PLATE AS	
		2	7S-4828	6	SPACER	
	30	2	3T-5291	1	SEAL	
	31	2	7S-8817	1	GASKET	
	32	2	7S-8816	1	COVER AS	
		2	5R-2276	2	WASHER	
		2	9F-9026	2	SCREW-KNURLED	
	33	2	9W-3429	1	COVER	
	34	2	8E-9697	1	COVER	
	35	2	9D-3031	8	SCREW-SOCKET HEAD	
	36	2	9W-3143	8	MOUNTING	
	37	2	9W-9037	2	PLATE	
	38	2	7X-0360	2	BOLT (7/8-9X5IN)	
		2	7X-0672	2	WASHER-HARD	
	39	2	4L-6454	4	BOLT (3/8-16X1.0IN)	
	40	2	3T-4788	1	COVER	

12 FRAME AND BODY 1 of 4 SELP4570-01

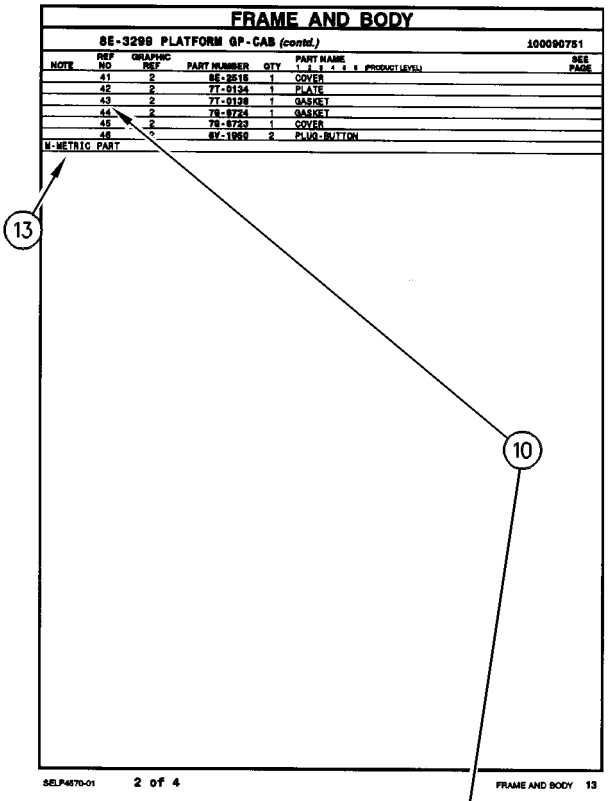

FRAME AND BODY

8E-3299 PLATFORM GP-CAB (contd.) 100090751

NOTE	REF NO	GRAPHIC REF	PART NUMBER	QTY	PART NAME 1 2 3 4 5 6 (PRODUCT LEVEL)	SEE PAGE
	41	2	8E-2515	1	COVER	
	42	2	7T-9134	1	PLATE	
	43	2	7T-9138	1	GASKET	
	44	2	7S-8724	1	GASKET	
	45	2	7S-8723	1	COVER	
	46	*	8Y-1950	2	PLUG-BUTTON	

M-METRIC PART

SELP4570-01 2 of 4 FRAME AND BODY 13

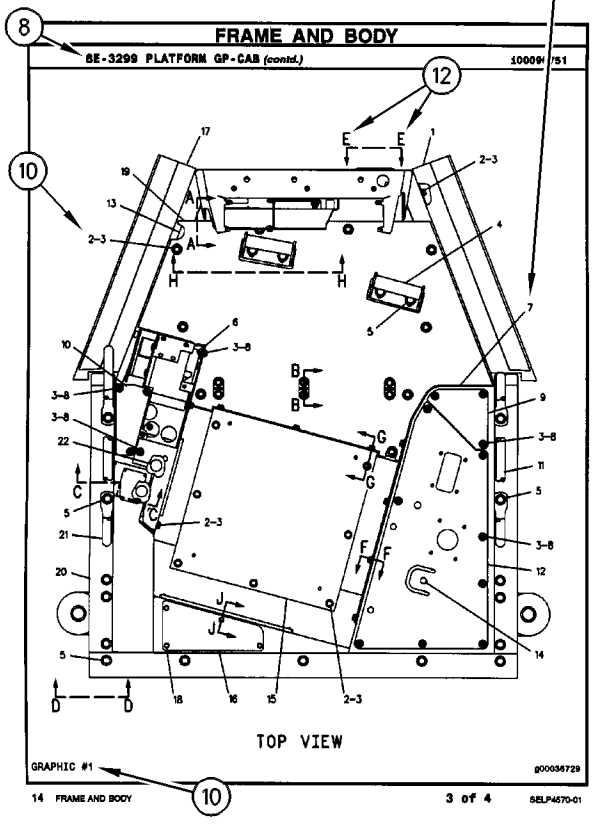

FRAME AND BODY

8E-3299 PLATFORM GP-CAB (contd.) 100090751

TOP VIEW

GRAPHIC #1 g00036729

14 FRAME AND BODY 3 of 4 SELP4570-01

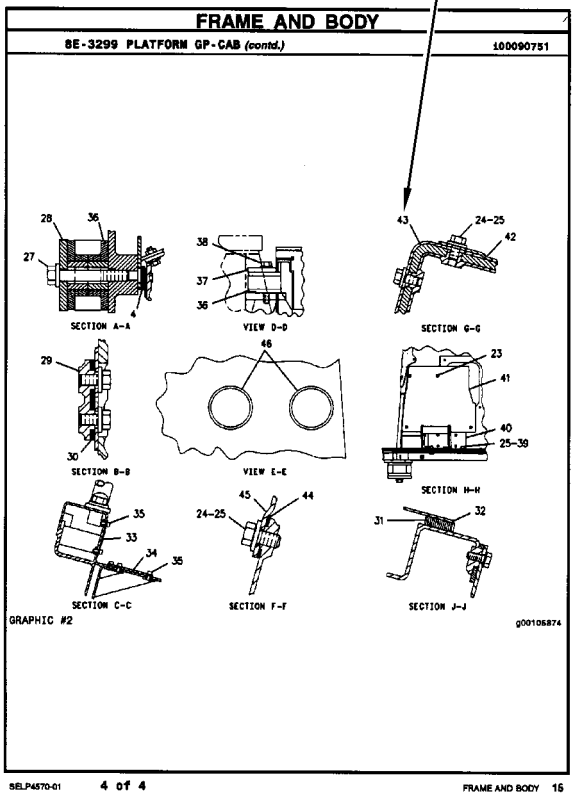

FRAME AND BODY

8E-3299 PLATFORM GP-CAB (contd.) 100090751

SECTION A-A VIEW D-D SECTION G-G

SECTION B-B VIEW E-E SECTION H-H

SECTION C-C SECTION F-F SECTION J-J

GRAPHIC #2 g00105874

SELP4570-01 4 of 4 FRAME AND BODY 15

INFORMAÇÃO GERAL

1. IDENTIFICAÇÃO DA MÁQUINA

As máquinas Caterpillar são identificadas pelos Números de Informação do Produto (PIN). Alguns componentes incluídos numa máquina podem ser identificados por Números de Série (S/N). Componentes típicos que serão enumerados com números de série incluem motores, transmissões, lâminas e ríperes. Além do número de série, a máquina e o motor são ainda identificados por números de arranjo e, em alguns casos, números de modificações. Tais números encontram-se na(s) placa(s) de identificação do produto e na placa mestre no compartimento do operador.

SIS *Novidades*

A partir do primeiro trimestre de 2001 o Número de Identificação de Produto da Caterpillar (PIN) precisa ser mudado de 8 para 17 caracteres. Esforçando-se para fornecer uma identificação uniforme de equipamentos, a Caterpillar e outros fabricantes de equipamento de construção estão mudando para atender a versão mais atualizada do padrão de identificação de produtos. Os números de PIN para produtos de aplicações não rodoviárias são definidos pela ISO 10261. O novo formato de número PIN será adotado em todas as máquinas e grupos geradores Caterpillar. As placas e as marcações do chassi mostrarão os 17 dígitos de PIN. O novo formato terá a seguinte disposição:

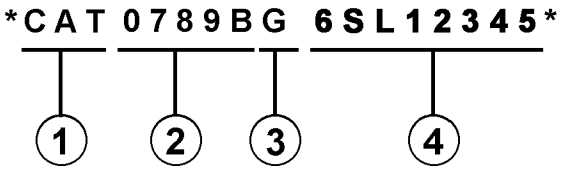

Onde:

1. Código de Fabricação Mundial da Caterpillar (dígitos 1-3)

2. Descrição da Máquina (dígitos 4-8)

3. Dígito de Verificação (dígito 9)

4. Seção de Indicador da Máquina (MIS) ou Número de Seqüência de Produto (dígitos 10-17). Estes eram anteriormente chamados de Número de Série.

Máquinas e grupos geradores produzidos antes do primeiro trimestre de 2001 manterão o formato de 8 caracteres de PIN.

Componentes como motores, transmissões, eixos, ferramentas de trabalho, etc. continuarão a usar Número de Série (S/N) com oito caracteres.

2. COMO OBTER PEÇAS

⚠ CUIDADO

Quando peças de substituição são exigidas para este produto, a Caterpillar recomenda a utilização de peças de substituição Caterpillar ou peças com as especificações equivalentes incluindo, mas não limitadas, à dimensões físicas, tipos, resistência e materiais.

A inobservância desta advertência poderá resultar em falhas prematuras, danos ao produto, ferimentos ou morte.

As Peças de Reposição de Qualidade Caterpillar encontram-se disponíveis nos revendedores Caterpillar no mundo inteiro. Seus estoques de peças são atualizados e incluem todas as peças normalmente necessárias para proteger seu investimento em máquinas Caterpillar. Alguns revendedores podem oferecer jogos de reparo ou peças de troca/remanufaturadas disponíveis como uma opção da alternativa de reparo mais eficaz para uma situação específica. Ao encomendar peças, seu pedido deve especificar a quantidade, o número e o nome da peça e o número de série/número de identificação do produto referentes à máquina para a qual as peças se destinam.

3. ORGANIZAÇÃO DO MANUAL DE PEÇAS

A informação do produto neste manual é apresentada em forma de "elementos de informação" que representam todos os componentes para o modelo específico. Arranjo de Motor e Grupo de Assento são exemplos de elementos de informação. Os elementos de informação são organizados em ordem alfabética por nome de peça ou secundariamente, por número de peça incluído em cada seção principal do manual.

4. LISTA DE CONTEÚDOS

A Lista de Conteúdos (TOC) se encontra no princípio do manual. A Lista de Conteúdos (TOC) relaciona em cada seção do manual uma lista completa com todos os elementos de informação organizados conforme aparecem no manual. Números de página são fornecidos para que se tenha referência rápida de ilustrações de peças detalhadas e listas de conteúdos que podem receber serviço de manutenção.

5. ÍNDICE DE PEÇAS DE MANUTENÇÃO

O Índice de Peças de Manutenção, localizado perto do princípio do manual, faz referência aos números de peça de manutenção usados com maior frequência, fornecendo uma descrição, a quantidade, o uso e o número de página. Esta informação é organizada com a descrição da peça em ordem alfabética.

6. ÍNDICE

O Índice localizado perto do princípio do manual, consiste de uma lista em ordem alfabética de todos os elementos de informação incluídos no manual. Números de página são fornecidos para que se tenha referência rápida de ilustrações de peças detalhadas e listas de conteúdos que podem receber serviço de manutenção.

7. ÍNDICE DE NÚMERO DE PEÇA

Um índice numérico relacionando todos os números de peça e a(s) página(s) correspondentes, aparece no final do manual.

8. LEGENDAS

As legendas localizadas no início de cada elemento de informação identificam o número e o nome de peça, juntamente com informação descritiva adicional. Informações sobre o Número de Informação do Produto (PIN) e o Número de Série (S/N) encontradas em cada legenda devem ser usadas para selecionar a informação correta sobre uma máquina específica. Opções de substituição no campo, identificação de componentes de acessórios opcionais e informações sobre onde são utilizados ("parte de") são também fornecidas.

A primeira linha de uma legenda é indicada em tipo maior para indicar o princípio de um elemento de informação. Legendas para páginas adicionais que podem ser necessárias para ilustrar um elemento de informação serão apresentadas em tipo padrão e incluirão o termo *(continua)* .

9. NÃO DISPONÍVEL SEPARADAMENTE

Em alguns casos, é necessário mostrar peças não disponíveis separadamente que têm uma ligação com listas de conteúdos de nível inferior que podem receber serviço de manutenção. Os números de peça destes componentes não disponíveis aparecerão em *itálico* , a fim de indicar que não estão disponíveis.

10. NÙMEROS DE REFERÊNCIA À LISTA DE PEÇAS

Os números indicados na coluna Ref No (No. de Referência) correspondem-se aos números usados no(s) gráfico(s) correspondente(s). Um sufixo com letras pode ser acrescentado a um número de referência para identificar itens de conteúdo de nível inferior. Os números indicados na coluna Graphic Ref (Referência de Gráfico) referem-se ao identificador de número de gráfico presente no canto esquerdo inferior de cada ilustração. O número de Referência de Gráfico pode ser usado em combinação com o item Ref No para determinar-se o número de peça correto. Poderá haver omissão intencional de um número de referência (Ref No) de uma lista de conteúdos uma vez que as informações são atualizadas para refletir os números de peça mais recentes que podem receber serviço de manutenção.

11. NOMES DE PEÇAS DESALINHADOS

Quando um nome de peça encontra-se desalinhado numa lista de peças, significa que tal item faz parte do (está incluído no) grupo ou conjunto sob o qual está relacionado.

12. LETRAS DE REFERÊNCIA NAS ILUSTRAÇÕES

Quando necessário, as ilustrações contêm letras de referência (A, B, C, etc.) que são utilizadas para seguir tubulações e cabos elétricos de um ponto a outro. Também foram utilizadas para indicar onde se pode reconectar as ilustrações que foram separadas.

13. ABREVIAÇÕES E SÍMBOLOS

O.D. – "Outside Diameter" (Diâmetro Externo)
I.D. – "Inside Diameter" (Diâmetro Interno)
A – Não faz parte deste grupo
B – Use conforme necessário
C – Indica modificação
D – Vendido por metro
E – Vendido por centímetro
F – Não ilustrado
G – Vendido por polegada
I – Consultar o Sistema de Informações Hidráulicas
M – Peça métrica
R – Peça remanufaturada pode estar disponível; consulte o seu revendedor Cat
Y – Ilustração separada
Z – Não disponível separadamente

SIS *Novidades*

14. <END>

Este símbolo indica o final de um elemento de informação.

NOTA:

Os contínuos aperfeiçoamentos e avanços no projeto do produto podem ocasionar modificações em sua máquina que talvez ainda não estejam incluídas nesta publicação. Sempre que surgirem dúvidas quanto a um produto Caterpillar ou quanto à presente publicação, consulte o seu revendedor Caterpillar para obter as informações mais recentes disponíveis.

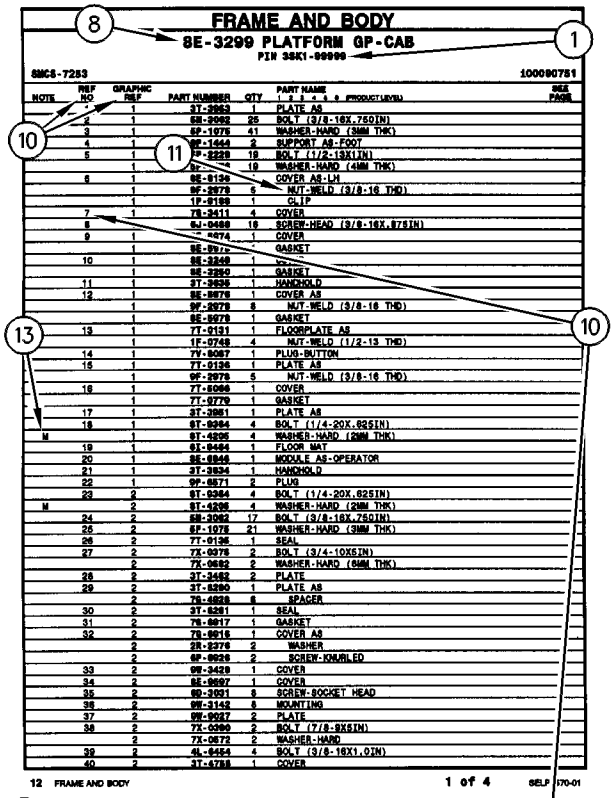

FRAME AND BODY

8E-3299 PLATFORM GP-CAB

PIN 3SK1-99999

SMCS-7283 100090751

NOTE	REF NO	GRAPHIC REF	PART NUMBER	QTY	PART NAME 1 2 3 4 5 6 (PRODUCT LEVEL)	SEE PAGE
	*	1	3T-3963	1	PLATE AS	
	2	1	5B-2062	25	BOLT (3/8-16X.750IN)	
	3	1	6P-1075	41	WASHER-HARD (3MM THK)	
	4	1	9E-1443	2	SUPPORT AS-FOOT	
	5	1	5P-2229	19	BOLT (1/2-13X1IN)	
		1	6P-[illegible]	19	WASHER-HARD (4MM THK)	
	6	1	9E-9136	*	COVER AS-LH	
		1	9F-2979	6	NUT-WELD (3/8-16 THD)	
		1	1P-0189	1	CLIP	
	7	1	7B-3411	4	COVER	
	8	1	6J-0468	18	SCREW-HEAD (3/8-16X.87SIN)	
	9	1	[illegible]-0274	1	COVER	
		1	9E-9[illegible]	*	GASKET	
	10	1	9E-3248	1	[illegible]	
		1	9E-3250	1	GASKET	
	11	1	3T-3636	1	HANDHOLD	
	12	1	9E-9076	1	COVER AS	
		1	9F-2979	8	NUT-WELD (3/8-16 THD)	
		1	9E-9078	1	GASKET	
	13	1	7T-9131	1	FLOORPLATE AS	
		1	1F-0748	4	NUT-WELD (1/2-13 THD)	
	14	1	7V-8067	1	PLUG-BUTTON	
	15	1	7T-9136	1	PLATE AS	
		1	9F-2979	5	NUT-WELD (3/8-16 THD)	
	16	1	7T-5066	1	COVER	
		1	7T-9779	1	GASKET	
	17	1	3T-3951	1	PLATE AS	
	18	1	9T-0264	4	BOLT (1/4-20X.62SIN)	
M		1	9T-4296	4	WASHER-HARD (2MM THK)	
	19	1	9I-9464	1	FLOOR MAT	
	20	1	9E-6946	1	MODULE AS-OPERATOR	
	21	1	3T-3934	1	HANDHOLD	
	22	1	9F-8571	2	PLUG	
	23	2	9T-0264	4	BOLT (1/4-20X.62SIN)	
M		2	9T-4296	4	WASHER-HARD (2MM THK)	
	24	2	5B-2062	17	BOLT (3/8-16X.75QIN)	
	25	2	6P-1075	21	WASHER-HARD (3MM THK)	
	26	2	7T-9136	1	SEAL	
	27	2	7X-0075	2	BOLT (3/4-10X5IN)	
		2	7X-0682	2	WASHER-HARD (6MM THK)	
	28	2	3T-3482	2	PLATE	
	29	2	3T-5290	1	PLATE AS	
		2	7S-4828	6	SPACER	
	30	2	3T-5291	1	SEAL	
	31	2	7S-8817	1	GASKET	
	32	2	7S-8816	1	COVER AS	
		2	5R-2276	2	WASHER	
		2	9F-9026	2	SCREW-KNURLED	
	33	2	9W-3429	1	COVER	
	34	2	9E-9697	1	COVER	
	35	2	9D-3091	8	SCREW-SOCKET HEAD	
	36	2	9W-3143	8	MOUNTING	
	37	2	9W-9027	2	PLATE	
	38	2	7X-0360	2	BOLT (7/8-9X5IN)	
		2	7X-0672	2	WASHER-HARD	
	39	2	4L-6454	4	BOLT (3/8-16X1.0IN)	
	40	2	3T-4788	1	COVER	

12 FRAME AND BODY 1 of 4 SELP4570-01

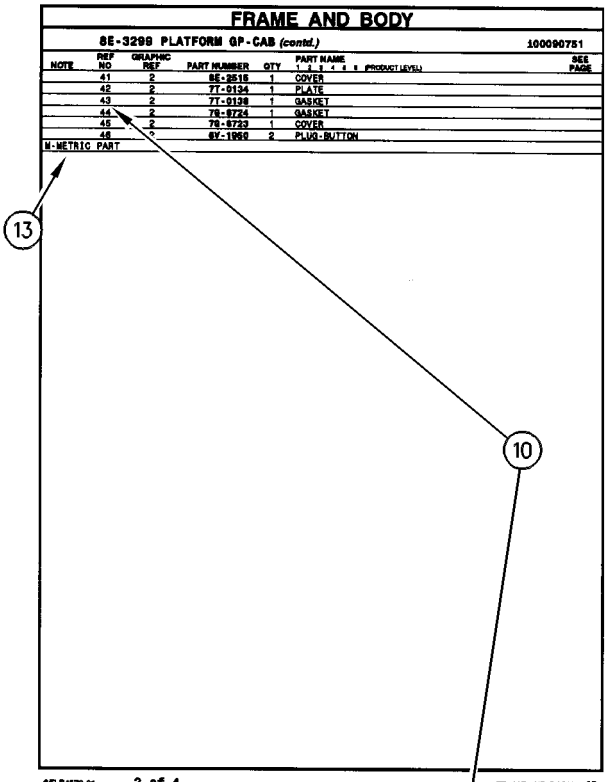

FRAME AND BODY

8E-3299 PLATFORM GP-CAB (contd.) 100090751

NOTE	REF NO	GRAPHIC REF	PART NUMBER	QTY	PART NAME 1 2 3 4 5 6 (PRODUCT LEVEL)	SEE PAGE
	41	2	9E-2515	1	COVER	
	42	2	7T-9134	1	PLATE	
	43	2	7T-9138	1	GASKET	
	44	2	7S-8724	1	GASKET	
	45	2	7S-8723	1	COVER	
	46	*	8Y-1950	2	PLUG-BUTTON	

M-METRIC PART

SELP4570-01 2 of 4 FRAME AND BODY 13

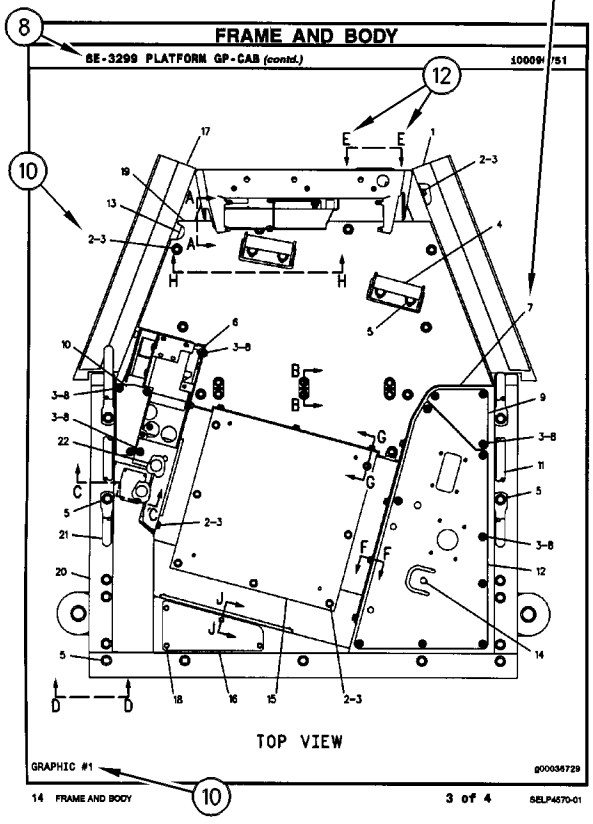

FRAME AND BODY

8E-3299 PLATFORM GP-CAB (contd.) 100090751

TOP VIEW

GRAPHIC #1 g00036729

14 FRAME AND BODY 3 of 4 SELP4570-01

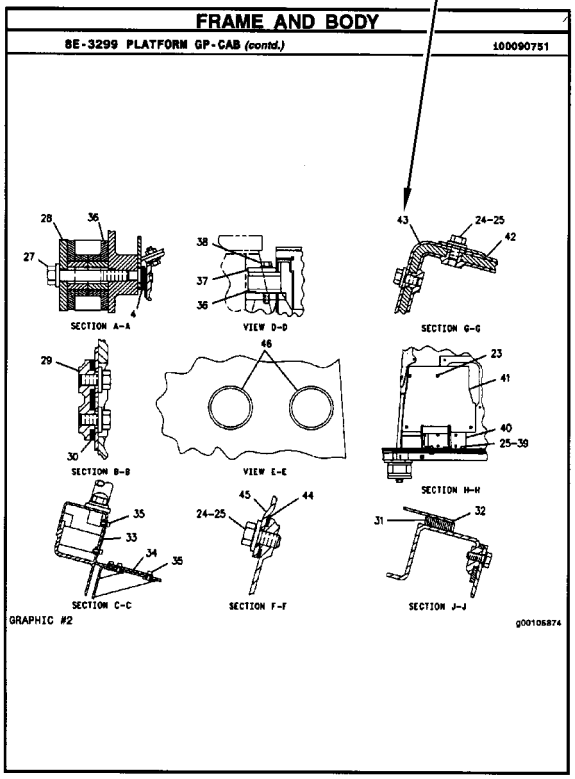

FRAME AND BODY

8E-3299 PLATFORM GP-CAB (contd.) 100090751

SECTION A-A

VIEW D-D

SECTION G-G

SECTION B-B

VIEW E-E

SECTION H-H

SECTION C-C

SECTION F-F

SECTION J-J

GRAPHIC #2 g00105874

SELP4570-01 4 of 4 FRAME AND BODY 15

ALLGEMEINE HINWEISE

1. MASCHINENKENNZEICHNUNG

Caterpillar-Maschinen sind mit PRODUCT IDENTIFICATION NUMBERS (PIN) (Produkt-Identnummern) gekennzeichnet. Einige Baugruppen, z.B. Motoren, Getriebe, Planierschilde und Aufreißer, sind mit SERIAL NUMBERS (S/N) (Seriennummern) gekennzeichnet. An der Maschine und am Motor befinden sich außerdem ARRANGEMENT NUMBERS (Ausrüstungsnummern) sowie in einigen Fällen MODIFICATION NUMBERS (Änderungsnummern). Sie befinden sich auf den PIN-Schildern und auf dem Typenschild im Fahrerhaus.

Bei Ersatzteilbestellungen müssen dem Händler alle diese Nummern zur Verfügung gestellt werden.

SIS *Neu im Parts Manual*

Vom ersten Quartal 2001 ab wurde die Caterpillar Produkt-Identnummer (PIN) von 8 auf 17 Zeichen geändert. Um zur Standardisierung der Produkt-Identnummer beizutragen, sind Caterpillar und andere Baumaschinenhersteller bestrebt, die aktuellste Norm zur Produkt-Identnummerierung einzuführen. Produkt-Identnummern für Baumaschinen sind durch ISO 10261 definiert. Das neue Format der Produkt-Identnummern gilt für alle Caterpillar-Maschinen und -Stromaggregate. Die Produkt-Identschilder und -Identrahmenmarkierung enthalten die aus 17 Zeichen bestehende Identnummer. Das neue Format hat folgende Abschnitte:

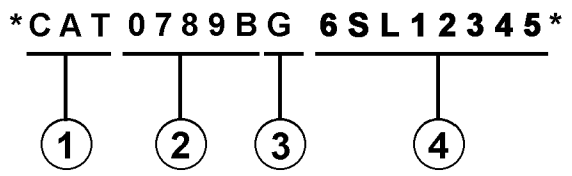

Abschnitte:

1. Caterpillars weltweiter Herstellungscode (Zeichen 1-3)

2. Modell (Zeichen 4-8)

3. Kontrollzeichen (Zeichen 9)

4. Maschinenspezifische Kennung (MIS) oder Produktsequenznummer (Zeichen 10-17). Diese wurde früher als Seriennummer bezeichnet.

Für vor dem ersten Quartal 2001 hergestellte Maschinen und Stromaggregate wird das aus 8 Zeichen bestehende PIN-Format beibehalten.

Bauteile wie z.B. Motoren, Getriebe, Achsen sowie Arbeitsgeräte werden weiterhin eine aus 8 Zeichen bestehende Seriennummer (S/N) aufweisen.

2. BESTELLEN VON ERSATZTEILEN

⚠ WARNUNG

Wenn für diese Maschine Ersatzteile benötigt werden, empfiehlt Caterpillar, ausschließlich Caterpillar-Ersatzteile oder solche zu verwenden, die die gleichen technischen Merkmale hinsichtlich Typ, Festigkeit, Werkzeugeigenschaften und die gleichen Maße aufweisen.

Bei Nichtbeachtung dieser Warnung besteht Verletzungs- oder sogar Lebensgefahr! Ferner kann Nichtbeachtung vorzeitige Ausfälle der Teile und Beschädigung der Maschine zur Folge haben.

Original Caterpillar-Ersatzteile können weltweit bei jedem Caterpillar-Händlern bestellt werden. Die umfangreichen Händlerlager enthalten normalerweise alle Teile, die Sie für Ihre Caterpillar-Maschine benötigen. Einige Händler bieten Reparatursätze, Austausch- oder werküberholte Teile an, so daß Sie eine Auswahl unter verschiedenen Reparaturmöglichkeiten treffen können. Ihre Bestellung muß folgende Angaben enthalten: Anzahl der benötigten Teile, Bestellnummer, Bezeichnung des Teils, Serien-Nr./Produkt-Ident-Nr., Ausrüstungs-Nr. und Änderungs-Nr. der Maschine, für die diese Teile benötigt werden.

3. AUFBAU DES PARTS MANUAL

Die Produktinformationen für alle Komponenten eines bestimmten Modells sind in INFORMATION ELEMENTS (Informationseinheiten) gegliedert. ENGINE ARRANGEMENT (Motorausführung) und SEAT GROUP (Fahrersitz) sind Beispiele für solche Informationseinheiten. Sie sind innerhalb jeder Gruppe alphabetisch, entsprechend der Ersatzteilbezeichnung, und zusätzlich numerisch, entsprechend der Ersatzteilnummer, geordnet.

4. INHALTSVERZEICHNIS

Das Inhaltsverzeichnis befindet sich am Anfang des Buches. Im Inhaltsverzeichnis werden die einzelnen Abschnitte des Buches aufgeführt. Die Abschnitte enthalten eine vollständige Aufstellung aller Informationseinheiten. Diese sind entsprechend ihrem Erscheinen im Buch geordnet. Das Inhaltsverzeichnis enthält Seitenangaben für Schnellverweise auf detaillierte Abbildungen und Teillisten.

ALLGEMEINE HINWEISE

5. INDEX FÜR WARTUNGSTEILE

Der Index für Wartungsteile vorn im Buch enthält die Bestellnummern, Seitenangaben, Mengenangaben und Informationen über den Einsatzbereich für die am häufigsten benötigten Ersatzteile. Die Angaben sind alphabetisch entsprechend der Teilebezeichnung geordnet.

6. INDEX

Der Index vorn im Buch enthält eine alphabetische Liste aller Informationseinheiten. Er enthält Seitenangaben für Schnellverweise auf detaillierte Abbildungen und Teillisten.

7. INDEX FÜR BESTELLNUMMERN

Hinten im Buch befindet sich ein numerischer Index, mit allen Bestellnummern und dem Hinweis auf die Seite, auf der sich die betreffende Abbildung befindet.

8. ÜBERSCHRIFTEN

Die Überschriften, die sich am Anfang jeder der Informationseinheiten befinden, enthalten Bestellnummern, Ersatzteilbezeichnungen und zusätzliche beschreibende Informationen. Produkt-Ident- und Seriennummern in den Überschriften sollten zur Auswahl der richtigen Informationen für die betreffende Maschine verwendet werden. Die Überschriften enthalten außerdem Informationen über möglichen Außendienstersatz, mögliche Baugerätekomponenten und die Baugruppe, zu der das Teil gehört.

Die erste Zeile einer Überschrift erscheint in einer größeren Schriftart, um den Anfang einer Informationseinheit zu kennzeichnen. Überschriften für zusätzliche Seiten, die zur Erläuterung einer Informationseinheit notwendig sind, erscheinen in normaler Schriftart und enthalten den Begriff "(contd.)".

9. NICHT EINZELN LIEFERBARE TEILE

In einigen Fällen ist es notwendig nicht lieferbare Teile, die selbst mit einer eigenen Teilliste im Buch vertreten sind, aufzuführen. Die Bestellnummern dieser nicht einzeln lieferbaren Teile erscheinen kursiv, wodurch angezeigt wird, daß sie nur in Verbindung mit anderen Teilen lieferbar sind.

10. REFERENZNUMMER FÜR ERSATZTEILE

Die Zahlen, die in der Spalte "Ref No" aufgeführt sind, stimmen mit den Zahlen in den beigefügten Abbildungen überein. Ein Buchstaben-Suffix kann zu einer Referenznummer hinzugefügt werden, um zu kennzeichnen, daß das Teil mit einer eigenen Teilliste im Buch aufgeführt ist. Die in der Spalte "Graphic Ref" angeführten Zahlen verweisen auf die Identifikationsnummer der Abbildung, die sich in der linken unteren Ecke der Abbildung befindet. Diese Nummer kann zusammen mit der Referenznummer des Teils angegeben werden, um die richtige Ersatzteilnummer zu ermitteln. Referenznummern können absichtlich weggelassen werden, da die Nummern der lieferbaren Ersatzteile ständig aktualisiert werden.

11. EINGERÜCKTE BEZEICHNUNGEN

Wenn eine Bezeichnung eingerückt ist, wird dadurch angezeigt, daß das Teil zu einer Baugruppe gehört, unter deren Bezeichnung es eingerückt ist.

12. REFERENZBUCHSTABEN

Falls erforderlich sind in den Abbildungen Referenzbuchstaben enthalten (z.B. A, B, C, usw.), die Leitungen und Kabelbäume von einem Punkt zum anderen verfolgen. Außerdem geben sie die Stelle an, an der getrennte Abbildungen fortgesetzt werden.

13. ABKÜRZUNGEN UND SYMBOLE

O.D. – Außendurchmesser
I.D. – Innendurchmesser
A – kein Teil dieser Gruppe
B – nach Bedarf verwenden
C – Hinweis auf eine Änderung
D – in Meter-Länge bestellen
E – in Zentimeter-Länge bestellen
F – nicht gezeigt
G – in Zoll-Länge bestellen
I – siehe Hydraulikinformationssystem
M – metrisches Teil
R – werküberholtes Teil unter Umständen lieferbar
Y – separate Abbildung
Z – nicht einzeln lieferbar

SIS *Neu im Parts Manual*

14. <END>

Dieses Symbol zeigt das Ende eines Informationselements an.

ALLGEMEINE HINWEISE

ANMERKUNG:

Ständig vorgenommene Verbesserungen und Weiterentwicklungen an Ihrer Maschine können Änderungen verursachen, die in der vorliegenden Ausgabe noch nicht berücksichtigt sind. Fragen zu Ihrer Caterpillar-Maschine oder diesem Ersatzteilbuch beantwortet Ihr Caterpillar-Händler.

ALLGEMEINE HINWEISE

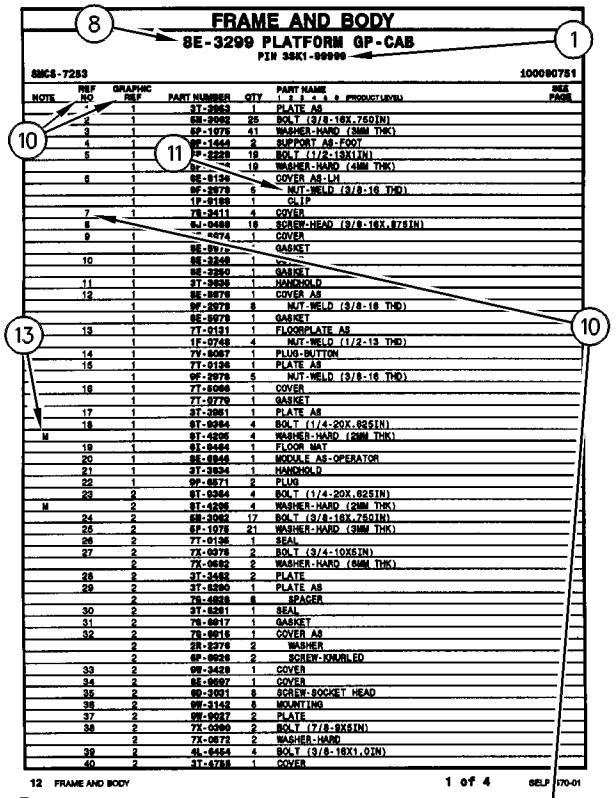

FRAME AND BODY

8E-3299 PLATFORM GP-CAB

PIN 3SK1-99999

SMCS-7283 100090751

NOTE	REF NO	GRAPHIC REF	PART NUMBER	QTY	PART NAME 1 2 3 4 5 6 (PRODUCT LEVEL)	SEE PAGE
	*	1	3T-3963	1	PLATE AS	
	2	1	5M-2062	25	BOLT (3/8-16X.750IN)	
	3	1	6P-1075	41	WASHER-HARD (3MM THK)	
	4	1	9E-1444	2	SUPPORT AS-FOOT	
	5	1	9P-2229	19	BOLT (1/2-13X1IN)	
		1	6P-[illegible]	19	WASHER-HARD (4MM THK)	
	6	1	9E-9136	*	COVER AS-LH	
		1	9F-2979	6	NUT-WELD (3/8-16 THD)	
		1	1P-0189	1	CLIP	
	7	1	7X-3411	4	COVER	
	8	1	9J-0468	18	SCREW-HEAD (3/8-16X.87SIN)	
	9	1	[illegible]074	1	COVER	
		1	9E-9[illegible]	*	GASKET	
	10	1	9E-3248	1	[illegible]	
		1	9E-2950	1	GASKET	
	11	1	3T-3936	1	HANDHOLD	
	12	1	9E-9076	1	COVER AS	
		1	9F-2979	8	NUT-WELD (3/8-16 THD)	
		1	9E-9078	1	GASKET	
	13	1	7T-9131	1	FLOORPLATE AS	
		1	1F-0748	4	NUT-WELD (1/2-13 THD)	
	14	1	7V-8067	1	PLUG-BUTTON	
	15	1	7T-9136	1	PLATE AS	
		1	9F-2979	5	NUT-WELD (3/8-16 THD)	
	16	1	7T-5066	1	COVER	
		1	7T-9779	1	GASKET	
	17	1	3T-3951	1	PLATE AS	
	18	1	9T-0264	4	BOLT (1/4-20X.62SIN)	
M		1	9T-4296	4	WASHER-HARD (2MM THK)	
	19	1	9I-9464	1	FLOOR MAT	
	20	1	9E-6946	1	MODULE AS-OPERATOR	
	21	1	3T-3934	1	HANDHOLD	
	22	1	9P-0671	2	PLUG	
	23	2	9T-0264	4	BOLT (1/4-20X.62SIN)	
M		2	9T-4296	4	WASHER-HARD (2MM THK)	
	24	2	5M-2062	17	BOLT (3/8-16X.750IN)	
	25	2	6P-1075	21	WASHER-HARD (3MM THK)	
	26	2	7T-9136	1	SEAL	
	27	2	7X-0075	2	BOLT (3/4-10X5IN)	
		2	7X-0682	2	WASHER-HARD (6MM THK)	
	28	2	3T-3482	2	PLATE	
	29	2	3T-5290	1	PLATE AS	
		2	7S-4828	6	SPACER	
	30	2	3T-5291	1	SEAL	
	31	2	7S-8817	1	GASKET	
	32	2	7S-8816	1	COVER AS	
		2	5R-2276	2	WASHER	
		2	9F-9026	2	SCREW-KNURLED	
	33	2	9W-3429	1	COVER	
	34	2	8E-9697	1	COVER	
	35	2	9D-3031	8	SCREW-SOCKET HEAD	
	36	2	9W-3143	8	MOUNTING	
	37	2	9W-9037	2	PLATE	
	38	2	7X-0360	2	BOLT (7/8-9X5IN)	
		2	7X-0672	2	WASHER-HARD	
	39	2	4L-6454	4	BOLT (3/8-16X1.0IN)	
	40	2	3T-4788	1	COVER	

12 FRAME AND BODY 1 of 4 SELP4570-01

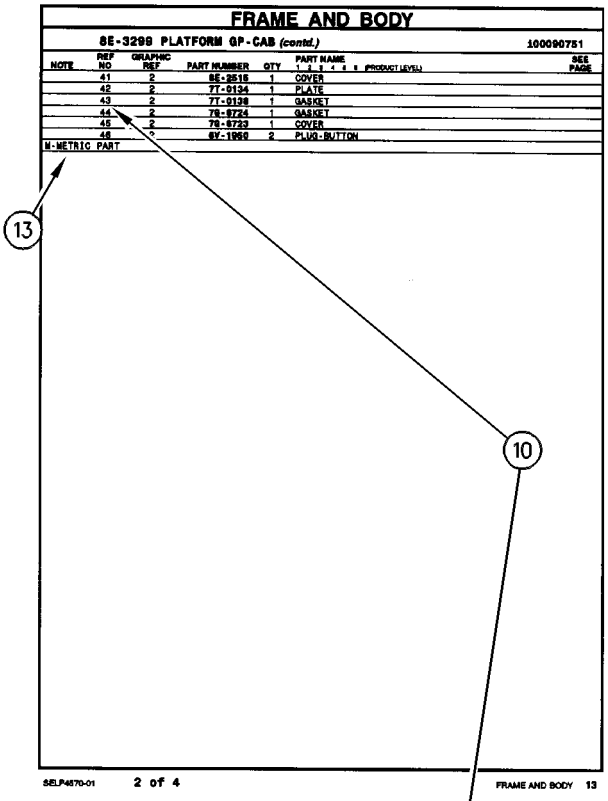

FRAME AND BODY

8E-3299 PLATFORM GP-CAB (contd.) 100090751

NOTE	REF NO	GRAPHIC REF	PART NUMBER	QTY	PART NAME 1 2 3 4 5 6 (PRODUCT LEVEL)	SEE PAGE
	41	2	8E-2515	1	COVER	
	42	2	7T-9134	1	PLATE	
	43	2	7T-9138	1	GASKET	
	44	2	7S-8724	1	GASKET	
	45	2	7S-8723	1	COVER	
	46	*	8Y-1950	2	PLUG-BUTTON	

M-METRIC PART

SELP4570-01 2 of 4 FRAME AND BODY 13

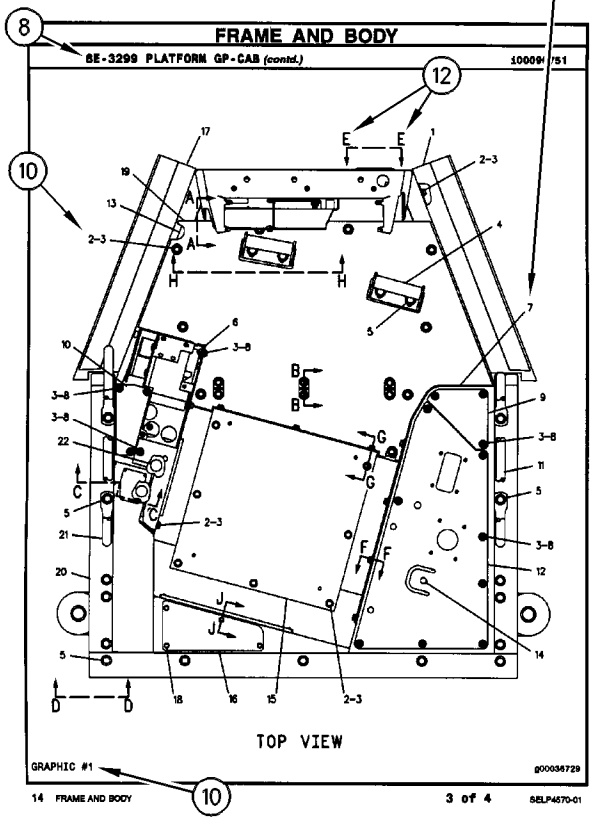

FRAME AND BODY

8E-3299 PLATFORM GP-CAB (contd.) 100090751

TOP VIEW

GRAPHIC #1 g00036729

14 FRAME AND BODY 3 of 4 SELP4570-01

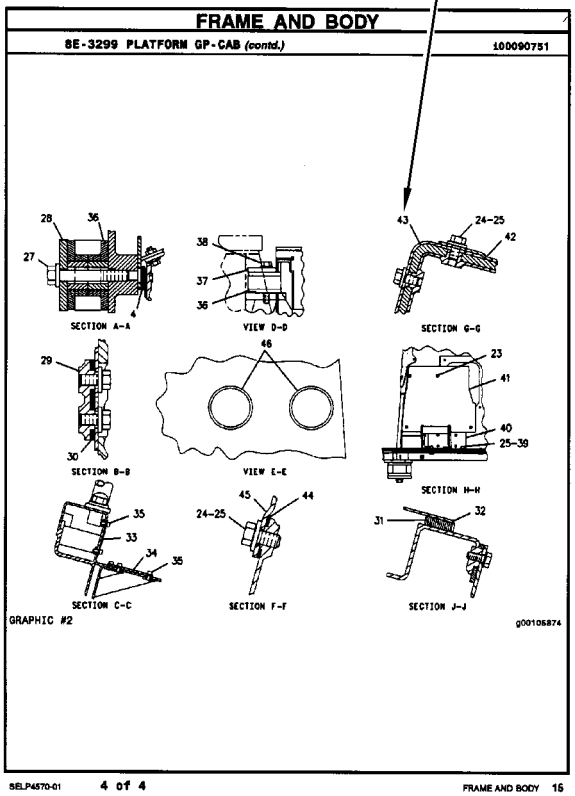

FRAME AND BODY

8E-3299 PLATFORM GP-CAB (contd.) 100090751

SECTION A-A VIEW D-D SECTION G-G

SECTION B-B VIEW E-E SECTION H-H

SECTION C-C SECTION F-F SECTION J-J

GRAPHIC #2 g00105874

SELP4570-01 4 of 4 FRAME AND BODY 15

SUPPLEMENTAL COOLANT ADDITIVES

CUSTOMER BENEFITS:

Protects against cavitation, foam, erosion, corrosion, and scale buildup in cooling systems.

- Provides measured coolant conditioner.

DESCRIPTION:

Additives deplete from the coolant with normal operation. For this reason, Supplemental Coolant Additives (SCA) must be added to all heavy duty coolants at regular intervals. In addition, when not using a fully formulated, pre-charged antifreeze, like Caterpillar's DEAC, an initial charge of SCA must be added to the cooling system. The amount of SCA added to the system is dependent on the capacity of the system.

The SCA for initial fill is provided as a liquid. SCA's for maintenance intervals are available in liquid form and as a spin-on element. (No Spin-on available for 3600 Family of Engines)

NOTE:

The amount of SCA added at initial fill is not the same as the amount added at maintenance intervals.

The coolant additive elements can be used with any ethylene or propylene glycol type antifreeze which meets ASTM D4985 or ASTM D5345 Specifications.

NOTE:

For use with standard heavy duty coolant only, not for use with Extended Life Coolant.

PARTS NEEDED:

Cooling System Capacity		Liquid SCA at Initial Fill	Liquid SCA at Maintenance*	Spin-on SCA Maintenance Element*
Liters	Gallons			
22-30	(6-8)	3P-2044 (1)	6V-3542 (1)	111-2370 (1)
30-38	(8-10)	3P-2044 (1) 6V-3542 (1)	111-2372 (1)	111-2369 (1)
38-49	(10-13)	3P-2044 (1) 8T-1589 (1)	111-2372 (1)	111-2369 (1)
49-64	(13-17)	3P-2044 (2)	8T-1589 (1)	9N-3368 (1)
64-83	(17-22)	3P-2044 (2) 8T-1589 (1)	111-2372 (1) 6V-3542 (1)	111-2371 (1)
83-114	(22-30)	3P-2044 (3) 8T-1589 (1)	3P-2044 (1)	9N-3718 (1)
114-163	(30-43)	3P-2044 (5)	3P-2044 (1) 6V-3542 (1)	111-2371 (2)
163-242	(43-64)	3P-2044 (8)	3P-2044 (2)	9N-3718 (2)

** Normal maintenance period is 250 hrs. See your Operation and Maintenance Manual for complete coolant maintenance instructions.*

( ) Indicates quantity required.

ADDITIFS POUR LIQUIDE DE REFROIDISSEMENT

AVANTAGES POUR LE CLIENT

L'additif protège contre la cavitation, la mousse, l'érosion, la corrosion et l'accumulation de dépôts dans le circuit de refroidissement.

- L'additif complémentaire fournit une quantité mesurée d'additif.

DESCRIPTION:

Les additifs s'épuisent pendant l'utilisation du moteur. C'est pourquoi l'on doit ajouter de l'additif au liquide de refroidissement/antigel pour moteurs diesel à intervalles réguliers. En plus, si l'on n'utilise pas de l'antigel entièrement formulé et pré-chargé comme le liquide de refroidissement/antigel Caterpillar pour moteurs diesel, une quantité initiale d'additif doit être ajoutée au circuit de refroidissement. La quantité d'additif à ajouter au circuit dépend de la contenance du circuit.

L'additif pour le remplissage initial est fourni sous forme liquide. L'additif pour l'entretien ultérieur est disponible sous forme liquide et sous forme d'élément à visser. (Il n'y a pas d'élément à visser pour les moteurs de la famille 3600).

NOTA:

La quantité d'additif à ajouter au remplissage initial diffère de la quantité à ajouter aux intervalles d'entretien.

Les éléments d'additif peuvent être utilisés avec tout antigel de type éthylène ou propylène-glycol conforme à la norme ASTM D4985 ou ASTM D5345.

NOTA:

A utiliser uniquement avec du liquide de refroidissement pour moteurs diesel et non avec le liquide de refroidissement longue durée.

PIÈCES NÉCESSAIRES:

Contenance du circuit de refroidissement		Additif liquide au remplissage initial	Additif liquide aux intervalles d'entretien*	Elément d'additif à visser aux intervalles d'entretien*
Litres	Gallons U.S.			
22-30	(6-8)	3P-2044 (1)	6V-3542 (1)	111-2370 (1)
30-38	(8-10)	3P-2044 (1) 6V-3542 (1)	111-2372 (1)	111-2369 (1)
38-49	(10-13)	3P-2044 (1) 8T-1589 (1)	111-2372 (1)	111-2369 (1)
49-64	(13-17)	3P-2044 (2)	8T-1589 (1)	9N-3368 (1)
64-83	(17-22)	3P-2044 (2) 8T-1589 (1)	111-2372 (1) 6V-3542 (1)	111-2371 (1)
83-114	(22-30)	3P-2044 (3) 8T-1589 (1)	3P-2044 (1)	9N-3718 (1)
114-163	(30-43)	3P-2044 (5)	3P-2044 (1) 6V-3542 (1)	111-2371 (2)
163-242	(43-64)	3P-2044 (8)	3P-2044 (2)	9N-3718 (2)

** L'intervalle d'entretien normal est de 250 heures-service. Voir le Guide d'utilisation et d'entretien pour de plus amples renseignements concernant l'entretien du circuit de refroidissement.*

( ) Indique la quantité exigée.

ADITIVOS DE REFRIGERANTE SUPLEMENTARIOS

VENTAJAS PARA EL USUARIO:

Protegen contra la cavitación, la formación de espuma, la corrosión y la acumulación de escamas en los sistemas de enfriamiento.

- Suministra un acondicionador dosificado de refrigerante.

DESCRIPCIÓN:

Los aditivos en el refrigerante se agotan con la operación normal. Por esta razón, se debe agregar Aditivo de refrigerante suplementario (SCA) a todos los refrigerantes para servicio pesado, a intervalos regulares. Además, cuando no se usa un anticongelante de precarga completo, tal como el DEAC de Caterpillar, es necesario agregar una cantidad de aditivo de refrigerante suplementario inicial al sistema de enfriamiento. La cantidad de aditivo que se debe agregar depende de la capacidad del sistema.

El SCA de llenado inicial es líquido. El que se usa para el mantenimiento está disponible tanto en líquido como en un elemento enroscable. (No hay elemento enroscable disponible para la Familia de Motores 3600).

NOTA:

La cantidad de aditivo de llenado inicial no es la misma que se agrega en los intervalos de mantenimiento.

Los elementos de aditivo de refrigerante se pueden usar con cualquier anticongelante de tipo glicol etilénico o propílico que esté de acuerdo con las especificaciones de las normas ASTM D4985 o ASTM D5345.

NOTA:

Se debe utilizar únicamente con refrigerante estándar para servicio pesado; no se debe usar con Refrigerante de Larga Duración.

PIEZAS NECESARIAS:

Capacidad del Sistema de Enfriamiento		SCA líquido de llenado inicial	SCA líquido de mantenimiento*	Elemento de mantenimiento enroscable*
litros	gal EE.UU.			
22-30	6-8	3P-2044 (1)	6V-3542 (1)	111-2370 (1)
30-38	8-10	3P-2044 (1) 6V-3542 (1)	111-2372 (1)	111-2369 (1)
38-49	10-13	3P-2044 (1) 8T-1589 (1)	111-2372 (1)	111-2369 (1)
49-64	13-17	3P-2044 (2)	8T-1589 (1)	9N-3368 (1)
64-83	17-22	3P-2044 (2) 8T-1589 (1)	111-2372 (1) 6V-3542 (1)	111-2371 (1)
83-114	22-30	3P-2044 (3) 8T-1589 (1)	3P-2044 (1)	9N-3718 (1)
114-163	30-43	3P-2044 (5)	3P-2044 (1) 6V-3542 (1)	111-2371 (2)
163-242	43-64	3P-2044 (8)	3P-2044 (2)	9N-3718 (2)

** El período normal de mantenimiento es de 250 horas. Para ver las instrucciones completas sobre el mantenimiento del refrigerante, consulte el Manual de Operación y Mantenimiento.*

( ) Indica la cantidad necesaria.

ADITIVOS SUPLEMENTARES DO LÍQUIDO ARREFECEDOR

BENEFÍCIOS PARA O CLIENTE:

Protege contra cavitação, espuma, erosão, corrosão e acúmulo de crostas nos sistemas de arrefecimento.

- Fornece uma quantidade pré-determinada de condicionador de arrefecimento.

DESCRIÇÃO:

Com a operação normal, os aditivos se esgotam do líquido arrefecedor. Por isso, Aditivos Suplementares do Líquido Arrefecedor (SCA) devem ser acrescentados a todos os líquidos arrefecedores para serviço pesado em intervalos regulares. Além disso, quando um anticongelante pré-carregado, totalmente formulado não for usado, como o DEAC Caterpillar, uma carga inicial de SCA deve ser acrescentada ao sistema de arrefecimento. A quantidade de SCA acrescentada ao sistema depende da capacidade do sistema.

O SCA para abastecimento inicial é fornecido em forma de líquido. Os aditivos suplementares (SCA) para intervalos de manutenção estão à disposição em forma líquida e como um elemento com roscas. (Exceto os Motores da Família 3600)

NOTA:

A quantidade de SCA adicionada no abastecimento inicial não é a mesma que a acrescentada nos intervalos de manutenção.

Os elementos do aditivo do líquido arrefecedor podem ser usados com qualquer tipo de anticongelante etileno ou propileno que satisfaz as Especificações ASTM D4985 ou ASTM D5345.

NOTA:

Para uso apenas com líquido arrefecedor para serviço pesado padrão, não deve ser usado com Líquido Arrefecedor de Vida Longa.

PEÇAS NECESSÁRIAS:

Capacidade do Sistema de Arrefecimento		Líquido SCA Durante Abastecimento Inicial	Líquido SCA Durante Manutenção*	Elemento de Manutenção de SCA com Roscas*
Litros	Galões			
22-30	6-8	3P-2044 (1)	6V-3542 (1)	111-2370 (1)
30-38	8-10	3P-2044 (1) 6V-3542 (1)	111-2372 (1)	111-2369 (1)
38-49	10-13	3P-2044 (1) 8T-1589 (1)	111-2372 (1)	111-2369 (1)
49-64	13-17	3P-2044 (2)	8T-1589 (1)	9N-3368 (1)
64-83	17-22	3P-2044 (2) 8T-1589 (1)	111-2372 (1) 6V-3542 (1)	111-2371 (1)
83-114	22-30	3P-2044 (3) 8T-1589 (1)	3P-2044 (1)	9N-3718 (1)
114-163	30-43	3P-2044 (5)	3P-2044 (1) 6V-3542 (1)	111-2371 (2)
163-242	43-64	3P-2044 (8)	3P-2044 (2)	9N-3718 (2)

** O período normal de manutenção é de 250 horas. Consulte o Manual de Operação e Manutenção para obter instruções completas quanto à manutenção do líquido arrefecedor.*

( ) Indica a quantidade exigida.

KÜHLMITTELZUSATZ

VORTEILE FÜR DEN KUNDEN:

Schutz gegen Kavitation, Schaumbildung, Erosion, Korrosion und Kesselsteinbildung in Kühlsystemen.

- Richtig dosierter Kühlmittelzusatz

BESCHREIBUNG:

Additive erschöpfen sich während des Motorbetriebs. Deshalb muß allen HD-Kühlmitteln regelmäßig Kühlmittelzusatz beigefügt werden. Wenn bei Erstfüllung kein vollwertiges Fertigkühlmittel, wie das Frostschutz- und Kühlmittel für Dieselmotoren von Caterpiller (DEAC), verwendet wird, muß bei Erstfüllung Kühlmittelzusatz beigefügt werden. Wieviel Kühlmittelzusatz beigefügt werden muß, hängt vom Inhalt des Kühlsystems ab.

Für Erstfüllung ist Kühlmittelzusatz nur in flüssiger Form erhältlich. Für Wartungsintervalle ist Kühlmittelzusatz in flüssiger Form und als Zusatzelement erhältlich. (Für die Motorbaureihe 3600 sind keine Zusatzelemente erhältlich.)

ANMERKUNG:

Die Kühlmittelmenge bei Erstfüllung ist nicht die gleiche Menge, die bei Wartungsintervallen beigefügt werden muß.

Die Kühlmittelzusatzelemente können mit allen Frostschutzmitteln auf Ethylen- oder Propylenglykolbasis verwendet werden, die den Standards nach ASTM D4985 oder ASTM D5345 entsprechen.

ANMERKUNG:

Den Kühlmittelzusatz nicht mit Langzeitkühlmittel (ELC) von Caterpillar verwenden. Der Kühlmittelzusatz ist nur für HD-Kühlmittel bestimmt.

TEILEBEZEICHNUNG:

Kühlsysteminhalt		Kühlmittelzusatz bei Erstfüllung	Flüssiger Kühlmittelzusatz bei Wartung*	Kühlmittelzusatzelement bei Wartung*
Liter	US-Gall.			
22-30	(6-8)	3P-2044 (1)	6V-3542 (1)	111-2370 (1)
30-38	(8-10)	3P-2044 (1) 6V-3542 (1)	111-2372 (1)	111-2369 (1)
38-49	(10-13)	3P-2044 (1) 8T-1589 (1)	111-2372 (1)	111-2369 (1)
49-64	(13-17)	3P-2044 (2)	8T-1589 (1)	9N-3368 (1)
64-83	(17-22)	3P-2044 (2) 8T-1589 (1)	111-2372 (1) 6V-3542 (1)	111-2371 (1)
83-114	(22-30)	3P-2044 (3) 8T-1589 (1)	3P-2044 (1)	9N-3718 (1)
114-163	(30-43)	3P-2044 (5)	3P-2044 (1) 6V-3542 (1)	111-2371 (2)
163-242	(43-64)	3P-2044 (8)	3P-2044 (2)	9N-3718 (2)

** Der normale Wartungsintervall beträgt 250 Betriebsstunden. Für vollständige Anweisungen zur Wartung des Kühlsystems, siehe Betriebs- und Wartungshandbuch.*

( ) Erforderliche Anzahl

MAINTENANCE PARTS

DESCRIPTION	PART NUMBER	QTY	WHERE USED	PAGE
AIR INLET AND EXHAUST SYSTEM				
FILTER ELEMENT AS-PRIMARY AIR	142-1340	1	AIR CLEANER GP	132
FILTER ELEMENT AS-SEC AIR	142-1403	1	AIR CLEANER GP	132
HOSE-AIR INLET	7E-8630	4	LINES GP-AIR	136
BASIC ENGINE				
BREATHER AS (CRANKCASE)	9Y-2988	1	COVER GP-VALVE MECHANISM	19
CAP AS-OIL FILLER	113-4885	1	COVER GP-VALVE MECHANISM	19
PLUG-DRAIN (OIL PAN)	9X-6451	1	PAN GP-OIL	76
	206-7331	1	PAN GP-OIL	76
BRAKING SYSTEM				
CAP	108-8393	2	CONTROL GP-SERVICE BRAKE	592
		2	CONTROL GP-SERVICE BRAKE	597
		2	CONTROL GP-SERVICE BRAKE	602
COOLING SYSTEM				
CAP-RADIATOR (7-PSI)	6L-8617	1	TANK GP-COOLANT	123
		1	TANK GP-COOLANT	124
FILTER-WATER PUMP	136-3742	1	PUMP GP-WATER	108
GASKET-REGULATOR COVER (TEMPERATURE REGULATOR HOUSING)	4N-1156	1	LINES GP-WATER	104
HOSE-ADAPTER	4N-6749	3	LINES GP-COOLANT	102
HOSE-ELBOW	169-5836	1	LINES GP-COOLANT	102
REGULATOR-WATER TEMPERATURE (92-DEG C) (COOLANT)	248-5513	1	LINES GP-WATER	104
SEAL-LIP TYPE (WATER TEMPERATURE REGULATOR)	3S-9643	1	LINES GP-WATER	104
ELECTRICAL AND STARTING SYSTEM				
BATTERY (12-VOLT)	9X-9720	2	BATTERY & WIRING GP	202
		2	BATTERY & WIRING GP	204
	153-5710	2	STARTING AR-COLD WEATHER	256
CIRCUIT BREAKER AS (10-AMPERE)	6T-3642	1	CIRCUIT BREAKER GP	212
CIRCUIT BREAKER AS (10-AMPERE) (KEY)	6T-3642	1	CIRCUIT BREAKER GP	209
CIRCUIT BREAKER AS (15-AMPERE)	3T-2662	1	CIRCUIT BREAKER GP	212
	6T-3643	2	CIRCUIT BREAKER GP	212
CIRCUIT BREAKER AS (15-AMPERE) (ADEM III)	6T-3643	2	CIRCUIT BREAKER GP	209
CIRCUIT BREAKER AS (15-AMPERE) (HEADLAMP)	3T-2662	1	CIRCUIT BREAKER GP	209
CIRCUIT BREAKER GP (20-AMPERE)	6T-3644	1	PANEL GP-CIRCUIT BREAKER	242
CIRCUIT BREAKER GP (20-AMPERE) (HOOD)	6T-3644	1	PANEL GP-CIRCUIT BREAKER	240
CIRCUIT BREAKER GP (80-AMPERE)	9S-4693	2	PANEL GP-CIRCUIT BREAKER	242
CIRCUIT BREAKER GP (80-AMPERE) (MAIN/ALT)	9S-4693	2	PANEL GP-CIRCUIT BREAKER	240
FLASHER AS	8D-6946	1	WIRING GP-CAB	294
		1	WIRING GP-CAB	297
FUSE (10-AMPERE)	9W-1442	15	CIRCUIT BREAKER GP	212
		19	CIRCUIT BREAKER GP	209
FUSE (20-AMPERE)	9W-1446	1	CIRCUIT BREAKER GP	212

MAINTENANCE PARTS

DESCRIPTION	PART NUMBER	QTY	WHERE USED	PAGE
		2	CIRCUIT BREAKER GP	209
KEY (BATTERY DISCONNECT)	8H-5306	1	SWITCH GP-DISCONNECT	277
LAMP GP-DOME (24-VOLT, WITH SWITCH)	3E-6389	1	WIRING GP-CAB	297
LAMP GP-HEAD	171-7213	2	WIRING GP-LIGHTING	308
	171-7214	2	WIRING GP-LIGHTING	308
LAMP GP-HEAD (HIGH BEAM)	171-7214	2	WIRING GP-CAB	288
LAMP GP-HEAD (LOW BEAM)	171-7213	2	WIRING GP-CAB	288
LAMP GP-SIGNAL (24-VOLT)	3E-6466	2	WIRING GP-CAB	288
		2	WIRING GP-LIGHTING	308
	162-5402	2	WIRING GP-CAB	288
		2	WIRING GP-LIGHTING	308
LAMP-HALOGEN (24-VOLT, 65-WATT)	9X-3463	1	LAMP GP-FLOOD	231
		1	LAMP GP-HEAD	232
		1	LAMP GP-HEAD	233
LAMP-HALOGEN (24 VOLT)(65 WATT) (FLOODLIGHT)	9X-3463	1	LAMP GP-FLOOD	230
LAMP (24 VOLT)	9X-4494	1	LAMP GP-SIGNAL	237
LAMP (24-VOLT)	7N-1996	1	WARNING GP-OPERATOR	287
		1	WARNING GP-OPERATOR	288
	7N-9943	1	LAMP GP-DOME	229
	130-3565	1	LAMP GP-SIGNAL	235
		1	LAMP GP-SIGNAL	236
LAMP (24-VOLT, 21-WATT)	9X-4493	1	LAMP GP-SIGNAL	234
		2	LAMP GP-SIGNAL	235
		2	LAMP GP-SIGNAL	236
		1	LAMP GP-SIGNAL	238
LAMP (24-VOLT, 5-WATT)	9X-4492	1	LAMP GP-SIGNAL	238
LENS-AMBER	9X-3066	1	LAMP GP-SIGNAL	234
LENS AS (FLOODLIGHT)	107-5853	1	LAMP GP-FLOOD	230
LENS AS (HIGH BEAM)	9X-7797	1	LAMP GP-HEAD	233
LENS AS (LOW BEAM)	9X-7798	1	LAMP GP-HEAD	232
LENS-CLEAR	9X-3068	1	LAMP GP-SIGNAL	237
LENS (RED)	7N-1995	1	WARNING GP-OPERATOR	287
		1	WARNING GP-OPERATOR	288
LENS (STOP, TAIL, TURN)	134-6750	1	LAMP GP-SIGNAL	235
		1	LAMP GP-SIGNAL	236
	146-2438	1	LAMP GP-SIGNAL	238

MAINTENANCE PARTS

DESCRIPTION	PART NUMBER	QTY	WHERE USED	PAGE
FUEL SYSTEM				
CAP AS-FILLER (FUEL, LOCKING, VENTED)	7X-7700	1	TANK & MTG GP-FUEL	176
		1	TANK & MTG GP-FUEL	178
		1	TANK & MTG GP-FUEL	181
		1	TANK GP-FUEL	185
		1	TANK GP-FUEL	187
		1	TANK GP-FUEL	189
CAP GP-FUEL FILLER (CONVERSION KIT)	171-1590	1	TANK & MTG GP-FUEL	176
		1	TANK GP-FUEL	185
ELEMENT-FILTER (FUEL, WATER SEPARATOR) (PRIMARY)	133-5673	1	FILTER GP-WATER SEP & FUEL	158
FILTER AS-FUEL	1R-0749	1	PUMP GP-FUEL PRM & SEC FILTER	173
GASKET (FUEL PRIMING PUMP)	1P-0436	1	PUMP GP-FUEL PRM & SEC FILTER	173
PLUG-MAGNETIC (FUEL TANK)	5P-4484	1	TANK & MTG GP-FUEL	178
		1	TANK & MTG GP-FUEL	181
		1	TANK GP-FUEL	185
		1	TANK GP-FUEL	187
		1	TANK GP-FUEL	189
		1	TANK & MTG GP-FUEL	176
STRAINER-FUEL	9P-7121	1	TANK & MTG GP-FUEL	176
		1	TANK & MTG GP-FUEL	178
		1	TANK & MTG GP-FUEL	181
		1	TANK GP-FUEL	185
		1	TANK GP-FUEL	187
		1	TANK GP-FUEL	189

MAINTENANCE PARTS

DESCRIPTION	PART NUMBER	QTY	WHERE USED	PAGE
HYDRAULIC SYSTEM				
BREATHER (7-PSI)	157-7911	1	COVER GP-TANK	667
BREATHER (7-PSI) (HYDRAULIC)	157-7911	1	TANK GP-HYDRAULIC	744
		1	TANK GP-HYDRAULIC	748
CAP-FILLER	7H-1447	1	COVER GP-TANK	667
CAP-FILLER (HYDRAULIC OIL)	7H-1447	1	TANK GP-HYDRAULIC	744
		1	TANK GP-HYDRAULIC	748
FILTER ELEMENT AS-OIL (HYDRAULIC)	132-8876	2	COVER GP-TANK	667
		3	TANK GP-HYDRAULIC	744
		3	TANK GP-HYDRAULIC	748
GASKET	9H-6454	1	COVER GP-TANK	667
		1	TANK GP-HYDRAULIC	744
		1	TANK GP-HYDRAULIC	748
KEY	5P-8500	1	TANK GP-HYDRAULIC	744
		1	TANK GP-HYDRAULIC	748
PLUG-DRAIN	4B-7739	1	LINES GP-DRAIN	676
	9J-7031	1	TANK GP-HYDRAULIC	744
		1	TANK GP-HYDRAULIC	748
PLUG-DRAIN (HYDRAULIC TANK)	9J-7031	1	TANK GP-HYDRAULIC	752
SCREEN	6E-5066	2	VALVE GP-COMBINATION	767
	119-4885	1	COVER GP-TANK	667
		1	TANK GP-HYDRAULIC	744
		1	TANK GP-HYDRAULIC	748
SCREEN AS	6J-3795	1	COVER GP-TANK	667
	150-8457	1	TANK GP-HYDRAULIC	744
		1	TANK GP-HYDRAULIC	748
STRAINER AS	5D-7927	1	COVER GP-TANK	667
		1	TANK GP-HYDRAULIC	744
		1	TANK GP-HYDRAULIC	748
LUBRICATION SYSTEM				
FILTER AS-ENGINE OIL	1R-0716	1	FILTER GP-ENGINE OIL	89
		1	FILTER GP-ENGINE OIL	90
HOSE	9Y-5281	1	FUMES DISPOSAL GP	92
	123-9711	1	FUMES DISPOSAL GP	92

MAINTENANCE PARTS

DESCRIPTION	PART NUMBER	QTY	WHERE USED	PAGE
OPERATOR STATION				
ACCUMULATOR GP-REFRIGERANT	186-6189	1	LINES GP-AIR CONDITIONER	856
BLADE AS-WIPER	6V-7419	1	WIPER & WASHER GP-WINDOW	923
		1	WIPER & WASHER GP-WINDOW	927
	130-7034	1	WIPER & WASHER GP-WINDOW	927
BLADE AS-WIPER (REAR)	130-7034	1	WIPER & WASHER GP-WINDOW	925
CAP-VENTED	8E-8292	1	WIPER & WASHER GP-WINDOW	923
FILTER-AIR	119-3355	1	AIR CONDITIONER & MOUNTING GP	818
	174-8145	1	AIR CONDITIONER GP	820
		1	AIR CONDITIONER GP	825
FILTER-AIR (AIR CONDITIONER)	119-3355	1	AIR CONDITIONER & MOUNTING GP	815
	174-8145	1	AIR CONDITIONER GP	822
LAMP (24-VOLT)	3E-8825	2	MIRROR GP-REAR VIEW	860
		2	MIRROR GP-REAR VIEW	862
		2	PANEL GP-INSTRUMENT	881
		2	PANEL GP-INSTRUMENT	882
	7N-5876	2	CONTROL GP-TMSN & HOIST	840
	110-2079	3	PANEL GP-INSTRUMENT	878
		2	PANEL GP-INSTRUMENT	881
LAMP (24-VOLT) (A/C)	3E-8825	2	PANEL GP-INSTRUMENT	879
LAMP (24-VOLT) (CROSS AXLE LOCK)	3E-8825	2	PANEL GP-INSTRUMENT	878
LAMP (24-VOLT) (HAZARD FLASHER)	3E-8825	1	PANEL GP-INSTRUMENT	879
LAMP (24-VOLT) (HEAD/TAIL DASH)	3E-8825	2	PANEL GP-INSTRUMENT	879
LAMP (24-VOLT) (INSTRUMENT PANEL)	107-1983	13	PANEL GP-INSTRUMENT	878
LAMP (24-VOLT) (MONITORING SYSTEM)	3E-8825	1	PANEL GP-INSTRUMENT	878
LAMP (24-VOLT) (REAR WORK)	3E-8825	1	PANEL GP-INSTRUMENT	878
LAMP (24-VOLT) (SECONDARY STEERING)	3E-8825	2	PANEL GP-INSTRUMENT	879
LAMP (24-VOLT) (STARTING AID)	3E-8825	1	PANEL GP-INSTRUMENT	879
SEAT BELT GP	8Y-4030	1	SEAT GP-COMPANION	906
	183-3648	1	SEAT GP	893
	222-0345	1	SEAT GP	894
		1	SEAT GP	903
		1	SEAT GP-COMPANION	905
		1	SEAT GP-SUSPENSION	909

MAINTENANCE PARTS

DESCRIPTION	PART NUMBER	QTY	WHERE USED	PAGE
POWER TRAIN				
BREATHER AS	8X-4575	2	BREATHER GP-POWER TRAIN	338
FILTER ELEMENT AS-OIL (HYDRAULIC)	132-8875	1	FILTER GP-OIL	377
	144-6691	1	FILTER GP-OIL	378
FILTER ELEMENT AS-OIL (HYDRAULIC) (STANDARD EFFICIENCY)	1R-0719	1	FILTER GP-OIL	377
PLUG	5P-4483	1	AXLE GP-CENTER	319
		1	AXLE GP-CENTER	321
	8C-4424	1	GEAR GP-OUTPUT TRANSFER	393
		1	GEAR GP-OUTPUT TRANSFER	400
		1	GEAR GP-OUTPUT TRANSFER	406
	138-1510	1	DRIVE GP-PUMP	372
		1	DRIVE GP-PUMP	374
PLUG-MAGNETIC	5P-4484	1	AXLE GP-CENTER	319
		1	AXLE GP-CENTER	321
		1	AXLE GP-CENTER	323
		1	AXLE GP-FRONT	325
		1	AXLE GP-FRONT	327
		1	GEAR GP-OUTPUT TRANSFER	404
		1	WHEEL & FINAL DRIVE GP	477
		1	WHEEL GP-FINAL DRIVE & BRAKE	484
PLUG-MAGNETIC (AXLE HOUSING)	5P-4484	1	AXLE GP-FRONT	329
		1	AXLE GP-FRONT	331
PLUG-MAGNETIC (DIFFERENTIAL)	5P-4484	1	GEAR GP-OUTPUT TRANSFER	380
		1	GEAR GP-OUTPUT TRANSFER	386
		1	GEAR GP-OUTPUT TRANSFER	392
PLUG-MAGNETIC (DRAIN)	5P-4484	1	GEAR GP-OUTPUT TRANSFER	398
PLUG-MAGNETIC (FINAL DRIVE)	5P-4484	1	WHEEL GP-FINAL DRIVE & BRAKE	480
		1	WHEEL GP-FINAL DRIVE & BRAKE	482
SCREEN-FILTER (TRANSMISSION)	6T-7640	1	VALVE GP-SELECTOR & PRESS CONT	470
SCREEN-SUCTION	3S-3875	1	DRIVE GP-PUMP	372
		1	DRIVE GP-PUMP	374
SCREEN-SUCTION (TRANSMISSION)	3S-3875	1	SCREEN GP-MAGNETIC	441
VALVE AS-RELIEF	6U-1989	1	BREATHER GP-POWER TRAIN	335
		1	BREATHER GP-POWER TRAIN	336
		1	BREATHER GP-POWER TRAIN	337

PIÈCES DE RECHANGE

DESCRIPTION	NUMÉRO DE PIECÈS	QTÉ	DOMAINE D'APPLICATION	PAGE
CIRCUIT DE CARBURANT				
BOUCHON AIMANTÉ (RESERVOIR DE CARBURANT)	5P-4484	1	RÉSERVOIR DE CARBURANT ET MONTAGE (ASS)	176
		1	RÉSERVOIR DE CARBURANT (ASS)	185
		1	RÉSERVOIR DE CARBURANT (ASS)	187
		1	RÉSERVOIR DE CARBURANT (ASS)	189
		1	RÉSERVOIR DE CARBURANT ET MONTAGE (ASS)	178
		1	RÉSERVOIR DE CARBURANT ET MONTAGE (ASS)	181
BOUCHON DE GOULOTTE DE CARBURANT (ASS) (KIT DE TRANSFORMATION)	171-1590	1	RÉSERVOIR DE CARBURANT (ASS)	185
		1	RÉSERVOIR DE CARBURANT ET MONTAGE (ASS)	176
BOUCHON DE GOULOTTE DE REMPLISSAGE (ENS) (CARBURANT, VERROUILLAGE, AÉRÉ)	7X-7700	1	RÉSERVOIR DE CARBURANT ET MONTAGE (ASS)	176
		1	RÉSERVOIR DE CARBURANT (ASS)	185
		1	RÉSERVOIR DE CARBURANT (ASS)	187
		1	RÉSERVOIR DE CARBURANT (ASS)	189
		1	RÉSERVOIR DE CARBURANT ET MONTAGE (ASS)	178
		1	RÉSERVOIR DE CARBURANT ET MONTAGE (ASS)	181
ÉLÉMENT DE FILTRE (SÉPARATEUR D'EAU) (PRINCIPAL)	133-5673	1	FILTRE DE SÉPARATEUR D'EAU ET DE CARBURANT (ASS)	158
FILTRE À CARBURANT	9P-7121	1	RÉSERVOIR DE CARBURANT (ASS)	185
		1	RÉSERVOIR DE CARBURANT (ASS)	187
		1	RÉSERVOIR DE CARBURANT (ASS)	189
		1	RÉSERVOIR DE CARBURANT ET MONTAGE (ASS)	176
		1	RÉSERVOIR DE CARBURANT ET MONTAGE (ASS)	178
		1	RÉSERVOIR DE CARBURANT ET MONTAGE (ASS)	181
FILTRE A CARBURANT (ENS)	1R-0749	1	POMPE D'AMORCAGE DE CARBURANT ET FILTRE SECONDAIRE	173
JOINT PLAT (POMPE D'AMORÇAGE DE CARBURANT)	1P-0436	1	POMPE D'AMORCAGE DE CARBURANT ET FILTRE SECONDAIRE	173
CIRCUIT DE FREINAGE				
CHAPEAU	108-8393	2	FREIN DE MANOEUVRE - COMMANDE (ASS)	592
		2	FREIN DE MANOEUVRE - COMMANDE (ASS)	597
		2	FREIN DE MANOEUVRE - COMMANDE (ASS)	602

* TRADUCTION NON DISPONIBLE AU MOMENT DE LA PUBLICATION

PIÈCES DE RECHANGE

DESCRIPTION	NUMÉRO DE PIECÈS	QTÉ	DOMAINE D'APPLICATION	PAGE
CIRCUIT DE GRAISSAGE				
FILTRE A HUILE MOTEUR (ENS)	1R-0716	1	FILTRE À HUILE MOTEUR (ASS)	89
		1	FILTRE À HUILE MOTEUR (ASS)	90
FLEXIBLE	9Y-5281	1	DISPOSITIF D'EVACUATION DES VAPEURS DE CARTER	92
	123-9711	1	DISPOSITIF D'EVACUATION DES VAPEURS DE CARTER	92
CIRCUIT DE REFROIDISSEMENT				
CHAPEAU - RADIATEUR (7-PSI)	6L-8617	1	RÉSERVOIR DU LIQUIDE DE REFROIDISSEMENT (ASS)	123
		1	RÉSERVOIR DU LIQUIDE DE REFROIDISSEMENT (ASS)	124
COUDE DE FLEXIBLE	169-5836	1	CANALISATIONS DE LIQUIDE DE REFROIDISSEMENT (ASS)	102
FILTRE DE POMPE À EAU	136-3742	1	POMPE A EAU (ASS)	108
JOINT DE COUVERCLE DE RÉGULATEUR (BOÎTIER DE RÉGULATEUR DE TEMPÉRATURE)	4N-1156	1	CANALISATIONS D'EAU (ASS)	104
RACCORD DE FLEXIBLE	4N-6749	3	CANALISATIONS DE LIQUIDE DE REFROIDISSEMENT (ASS)	102
THERMOSTAT-TEMPÉRATURE D'EAU (92-DEG C) (LIQUIDE DE REFROIDISSEMENT)	248-5513	1	CANALISATIONS D'EAU (ASS)	104
TYPE LÈVRE À JOINT (RÉGULATEUR DE TEMPÉRATURE D'EAU)	3S-9643	1	CANALISATIONS D'EAU (ASS)	104
CIRCUIT ÉLECTRIQUE ET DE DÉMARRAGE				
AMPOULE (24 VOLTS)	7N-1996	1	TEMOINS LUMINEUX	287
	7N-9943	1	PLAFONNIER (ASS)	229
	9X-4494	1	LAMPE - CLIGNOTANT DE DIRECTION (ASS)	237
	130-3565	1	LAMPE - CLIGNOTANT DE DIRECTION (ASS)	235
	7N-1996	1	TEMOINS LUMINEUX	288
	130-3565	1	LAMPE - CLIGNOTANT DE DIRECTION (ASS)	236
AMPOULE (24V, 21W)	9X-4493	1	LAMPE - CLIGNOTANT DE DIRECTION (ASS)	234
		2	LAMPE - CLIGNOTANT DE DIRECTION (ASS)	235
		1	LAMPE - CLIGNOTANT DE DIRECTION (ASS)	238
		2	LAMPE - CLIGNOTANT DE DIRECTION (ASS)	236
AMPOULE (24V, 5W)	9X-4492	1	LAMPE - CLIGNOTANT DE DIRECTION (ASS)	238
BATTERIE (12 VOLTS)	9X-9720	2	BATTERIE ET CÂBLAGE	202
		2	BATTERIE ET CÂBLAGE	204
	153-5710	2	DÉMARRAGE PAR TEMPS FROID (VERSION)	256
CLÉ (COUPE-BATTERIE)	8H-5306	1	ROBINET DE BATTERIE (ASS)	277

* TRADUCTION NON DISPONIBLE AU MOMENT DE LA PUBLICATION

PIÈCES DE RECHANGE

DESCRIPTION	NUMÉRO DE PIECÈS	QTÉ	DOMAINE D'APPLICATION	PAGE
CLIGNOTANT (ENS)	8D-6946	1	CABLAGE DE CABINE (ASS)	294
		1	CABLAGE DE CABINE (ASS)	297
DISJONCTEUR (ASS) (20A)	6T-3644	1	DISJONCTEUR DU PANNEAU DE COMMANDE (ASS)	242
DISJONCTEUR (ASS) (20A) (CAPOT)	6T-3644	1	DISJONCTEUR DU PANNEAU DE COMMANDE (ASS)	240
DISJONCTEUR (ASS) (80A)	9S-4693	2	DISJONCTEUR DU PANNEAU DE COMMANDE (ASS)	242
DISJONCTEUR (ASS) (80A) (PRINCIPAL/ D'ALTERNATEUR)	9S-4693	2	DISJONCTEUR DU PANNEAU DE COMMANDE (ASS)	240
DISJONCTEUR (ENS) (10A)	6T-3642	1	DISJONCTEUR (ASS)	212
DISJONCTEUR (ENS) (10A) (CLÉ)	6T-3642	1	DISJONCTEUR (ASS)	209
DISJONCTEUR (ENS) (15A)	3T-2662	1	DISJONCTEUR (ASS)	212
	6T-3643	2	DISJONCTEUR (ASS)	212
DISJONCTEUR (ENS) (15A) (ADEM III)	6T-3643	2	DISJONCTEUR (ASS)	209
DISJONCTEUR (ENS) (15A) (PHARE AVANT)	3T-2662	1	DISJONCTEUR (ASS)	209
FUSIBLE (10A)	9W-1442	15	DISJONCTEUR (ASS)	212
		19	DISJONCTEUR (ASS)	209
FUSIBLE (20A)	9W-1446	1	DISJONCTEUR (ASS)	212
		2	DISJONCTEUR (ASS)	209
*LAMP-HALOGEN (*24-VOLT, 65-WATT)	9X-3463	1	PHARE AV (ASS)	233
LAMPE - CLIGNOTANT DE DIRECTION (ASS) (24 VOLTS)	3E-6466	2	CABLAGE DE CABINE (ASS)	288
		2	CABLAGE D'ÉCLAIRAGE (ASS)	308
	162-5402	2	CABLAGE DE CABINE (ASS)	288
		2	CABLAGE D'ÉCLAIRAGE (ASS)	308
LAMPE HALOGÈNE (*24-VOLT, 65-WATT)	9X-3463	1	PHARE AV (ASS)	232
LAMPE HALOGÈNE (24 VOLTS)(65 WATTS) (PROJECTEUR)	9X-3463	1	LAMPE - PHARE (ASS)	230
LAMPE HALOGÈNE (24V, 65W)	9X-3463	1	LAMPE - PHARE (ASS)	231
LENTILLE - PROPRE	9X-3068	1	LAMPE - CLIGNOTANT DE DIRECTION (ASS)	237
LENTILLE (ENS) (FEUX DE CROISEMENT)	9X-7798	1	PHARE AV (ASS)	232
LENTILLE (ENS) (FEUX DE ROUTE)	9X-7797	1	PHARE AV (ASS)	233
LENTILLE (ENS) (PLAFONNIER)	107-5853	1	LAMPE - PHARE (ASS)	230
LENTILLE ORANGE	9X-3066	1	LAMPE - CLIGNOTANT DE DIRECTION (ASS)	234
LENTILLE (ROUGE)	7N-1995	1	TEMOINS LUMINEUX	287
		1	TEMOINS LUMINEUX	288
LENTILLE (STOP, ARRIÈRE, CLIGNOTANT)	134-6750	1	LAMPE - CLIGNOTANT DE DIRECTION (ASS)	235
		1	LAMPE - CLIGNOTANT DE DIRECTION (ASS)	236
	146-2438	1	LAMPE - CLIGNOTANT DE DIRECTION (ASS)	238
PHARE AV (ASS)	171-7213	2	CABLAGE D'ÉCLAIRAGE (ASS)	308
	171-7214	2	CABLAGE D'ÉCLAIRAGE (ASS)	308

* TRADUCTION NON DISPONIBLE AU MOMENT DE LA PUBLICATION

PIÈCES DE RECHANGE

DESCRIPTION	NUMÉRO DE PIECÈS	QTÉ	DOMAINE D'APPLICATION	PAGE
PHARE AV (ASS) (FEUX DE CROISEMENT)	171-7213	2	CABLAGE DE CABINE (ASS)	288
PHARE AV (ASS) (FEUX DE ROUTE)	171-7214	2	CABLAGE DE CABINE (ASS)	288
PLAFONNIER (ASS) (24V, AVEC CONTACTEUR)	3E-6389	1	CABLAGE DE CABINE (ASS)	297
CIRCUIT HYDRAULIQUE				
BOUCHON DE GOULOTTE DE REMPLISSAGE	7H-1447	1	COUVERCLE DE RÉSERVOIR (ASS)	667
BOUCHON DE GOULOTTE DE REMPLISSAGE (HUILE HYDRAULIQUE)	7H-1447	1	RÉSERVOIR HYDRAULIQUE (ASS)	744
		1	RÉSERVOIR HYDRAULIQUE (ASS)	748
BOUCHON DE VIDANGE	4B-7739	1	CANALISATIONS DE VIDANGE (ASS)	676
	9J-7031	1	RÉSERVOIR HYDRAULIQUE (ASS)	744
		1	RÉSERVOIR HYDRAULIQUE (ASS)	748
BOUCHON DE VIDANGE (RÉSERVOIR HYDRAULIQUE)	9J-7031	1	RÉSERVOIR HYDRAULIQUE (ASS)	752
CLÉ	5P-8500	1	RÉSERVOIR HYDRAULIQUE (ASS)	744
		1	RÉSERVOIR HYDRAULIQUE (ASS)	748
CREPINE (ENS)	5D-7927	1	COUVERCLE DE RÉSERVOIR (ASS)	667
		1	RÉSERVOIR HYDRAULIQUE (ASS)	744
		1	RÉSERVOIR HYDRAULIQUE (ASS)	748
ÉCRAN	6E-5066	2	SOUPAPE DE COMBINAISON (ASS)	767
	119-4885	1	COUVERCLE DE RÉSERVOIR (ASS)	667
		1	RÉSERVOIR HYDRAULIQUE (ASS)	744
		1	RÉSERVOIR HYDRAULIQUE (ASS)	748
ÉCRAN (ENS)	6J-3795	1	COUVERCLE DE RÉSERVOIR (ASS)	667
	150-8457	1	RÉSERVOIR HYDRAULIQUE (ASS)	744
		1	RÉSERVOIR HYDRAULIQUE (ASS)	748
ÉLÉMENT DE FILTRE À HUILE (ENS) (HYDRAULIQUE)	132-8876	2	COUVERCLE DE RÉSERVOIR (ASS)	667
		3	RÉSERVOIR HYDRAULIQUE (ASS)	744
		3	RÉSERVOIR HYDRAULIQUE (ASS)	748
JOINT PLAT	9H-6454	1	COUVERCLE DE RÉSERVOIR (ASS)	667
		1	RÉSERVOIR HYDRAULIQUE (ASS)	744
		1	RÉSERVOIR HYDRAULIQUE (ASS)	748
RENIFLARD (7-PSI)	157-7911	1	COUVERCLE DE RÉSERVOIR (ASS)	667
RENIFLARD (7-PSI) (HYDRAULIQUE)	157-7911	1	RÉSERVOIR HYDRAULIQUE (ASS)	744
		1	RÉSERVOIR HYDRAULIQUE (ASS)	748
MOTEUR DE BASE				
BOUCHON DE GOULOTTE DE REMPLISSAGE D'HUILE MOTEUR	113-4885	1	CACHE-SOUPAPES (ASS)	19
BOUCHON DE VIDANGE (CARTER D'HUILE)	9X-6451	1	HUILE MOTEUR - CARTER (ASS)	76
	206-7331	1	HUILE MOTEUR - CARTER (ASS)	76
RENIFLARD (ENS) (CARTER)	9Y-2988	1	CACHE-SOUPAPES (ASS)	19

* TRADUCTION NON DISPONIBLE AU MOMENT DE LA PUBLICATION

PIÈCES DE RECHANGE

DESCRIPTION	NUMÉRO DE PIECÈS	QTÉ	DOMAINE D'APPLICATION	PAGE
POSTE DE CONDUITE				
ACCUMULATEUR - CLIMATISEUR (ASS)	186-6189	1	CANALISATIONS DE CLIMATISEUR (ASS)	856
AMPOULE (*24-VOLT)	3E-8825	2	RÉTROVISEUR (ASS)	860
AMPOULE (24 VOLTS)	3E-8825	2	RÉTROVISEUR (ASS)	862
		2	TABLEAU DE BORD (ASS)	881
		2	TABLEAU DE BORD (ASS)	882
	7N-5876	2	COMMANDE DE TRANSMISSION ET DE BENNE (ASS)	840
	110-2079	3	TABLEAU DE BORD (ASS)	878
		2	TABLEAU DE BORD (ASS)	881
AMPOULE (24 VOLTS) (AUXILIAIRE DE DÉMARRAGE)	3E-8825	1	TABLEAU DE BORD (ASS)	879
AMPOULE (24 VOLTS) (CENTRALE DE SURVEILLANCE)	3E-8825	1	TABLEAU DE BORD (ASS)	878
AMPOULE (24 VOLTS) (CLIGNOTANT DE DÉTRESSE)	3E-8825	1	TABLEAU DE BORD (ASS)	879
AMPOULE (24 VOLTS) (CLIMATISEUR)	3E-8825	2	TABLEAU DE BORD (ASS)	879
AMPOULE (24 VOLTS) (DIRECTION AUXILIAIRE)	3E-8825	2	TABLEAU DE BORD (ASS)	879
AMPOULE (24 VOLTS) (FEUX AVANT/ ARRIÈRE, VOYANTS DU TABLEAU DE BORD)	3E-8825	2	TABLEAU DE BORD (ASS)	879
AMPOULE (24 VOLTS) (PROJECTEUR ARRIÈRE)	3E-8825	1	TABLEAU DE BORD (ASS)	878
AMPOULE (24 VOLTS) (TABLEAU DE BORD)	107-1983	13	TABLEAU DE BORD (ASS)	878
AMPOULE (24 VOLTS) (VERROUILLAGE DE DIFFÉRENTIEL)	3E-8825	2	TABLEAU DE BORD (ASS)	878
BALAI D'ESSUIE-GLACE (ENS)	6V-7419	1	ESSUIE-GLACE ET LAVE-GLACE	923
		1	ESSUIE-GLACE ET LAVE-GLACE	927
	130-7034	1	ESSUIE-GLACE ET LAVE-GLACE	927
BALAI D'ESSUIE-GLACE (ENS) (ARRIÈRE)	130-7034	1	ESSUIE-GLACE ET LAVE-GLACE	925
BOUCHON À ÉVENT	8E-8292	1	ESSUIE-GLACE ET LAVE-GLACE	923
CEINTURE DE SECURITE (ASS)	8Y-4030	1	SIEGE PASSAGER (ASS)	906
	183-3648	1	SIÈGE (ASS)	893
	222-0345	1	SIÈGE (ASS)	894
		1	SIÈGE (ASS)	903
		1	SIÈGE AVEC SUSPENSION (ASS)	909
		1	SIEGE PASSAGER (ASS)	905
FILTRE À AIR	119-3355	1	*AIR CONDITIONER & MOUNTING GP	818
	174-8145	1	CLIMATISEUR (ASS)	820
		1	CLIMATISEUR (ASS)	825
FILTRE À AIR (CLIMATISEUR)	119-3355	1	CLIMATISEUR ET MONTAGE (ASS)	815
	174-8145	1	CLIMATISEUR (ASS)	822

* TRADUCTION NON DISPONIBLE AU MOMENT DE LA PUBLICATION

PIÈCES DE RECHANGE

DESCRIPTION	NUMÉRO DE PIECÈS	QTÉ	DOMAINE D'APPLICATION	PAGE
SYSTÈME D'ÉCHAPPEMENT ET D'ADMISSION D'AIR				
ÉLÉMENT DE FILTRE À AIR PRIMAIRE (ENS)	142-1340	1	FILTRE A AIR (ASS)	132
ÉLÉMENT DE FILTRE À AIR SECONDAIRE (ENS)	142-1403	1	FILTRE A AIR (ASS)	132
*HOSE-AIR INLET	7E-8630	4	CANALISATIONS D'AIR (ASS)	136

* TRADUCTION NON DISPONIBLE AU MOMENT DE LA PUBLICATION

PIÈCES DE RECHANGE

DESCRIPTION	NUMÉRO DE PIECÈS	QTÉ	DOMAINE D'APPLICATION	PAGE
TRANSMISSION				
BOUCHON AIMANTÉ	5P-4484	1	ENGRENAGE DE TRANSFERT DE RENDEMENT (ASS)	404
		1	ESSIEU AV (ASS)	325
		1	ESSIEU AV (ASS)	327
		1	ESSIEU CENTRAL (ASS)	319
		1	ESSIEU CENTRAL (ASS)	321
		1	ESSIEU CENTRAL (ASS)	323
		1	RÉDUCTEURS, ROUE ET FREIN (ASS)	484
		1	ROUE ET RÉDUCTEURS (ASS)	477
BOUCHON AIMANTÉ (BOÎTIER D'ESSIEU)	5P-4484	1	ESSIEU AV (ASS)	329
		1	ESSIEU AV (ASS)	331
BOUCHON AIMANTÉ (DIFFÉRENTIEL)	5P-4484	1	ENGRENAGE DE TRANSFERT DE RENDEMENT (ASS)	380
		1	ENGRENAGE DE TRANSFERT DE RENDEMENT (ASS)	386
		1	ENGRENAGE DE TRANSFERT DE RENDEMENT (ASS)	392
BOUCHON AIMANTÉ (RÉDUCTEUR)	5P-4484	1	RÉDUCTEURS, ROUE ET FREIN (ASS)	480
		1	RÉDUCTEURS, ROUE ET FREIN (ASS)	482
BOUCHON AIMANTÉ (VIDANGE)	5P-4484	1	ENGRENAGE DE TRANSFERT DE RENDEMENT (ASS)	398
BOUCHON FILETÉ	5P-4483	1	ESSIEU CENTRAL (ASS)	319
		1	ESSIEU CENTRAL (ASS)	321
	8C-4424	1	ENGRENAGE DE TRANSFERT DE RENDEMENT (ASS)	393
		1	ENGRENAGE DE TRANSFERT DE RENDEMENT (ASS)	400
		1	ENGRENAGE DE TRANSFERT DE RENDEMENT (ASS)	406
	138-1510	1	ENTRAÎNEMENT DE POMPE (ASS)	372
		1	ENTRAÎNEMENT DE POMPE (ASS)	374
CLAPET DE DECHARGE	6U-1989	1	RENIFLARD DE TRANSMISSION (ASS)	335
		1	RENIFLARD DE TRANSMISSION (ASS)	336
		1	RENIFLARD DE TRANSMISSION (ASS)	337
ÉLÉMENT DE FILTRE À HUILE (ENS) (HYDRAULIQUE)	132-8875	1	FILTRE A HUILE (ASS)	377
	144-6691	1	FILTRE A HUILE (ASS)	378
ÉLÉMENT DE FILTRE À HUILE (ENS) (HYDRAULIQUE) (EFFICACITÉ NORMALE)	1R-0719	1	FILTRE A HUILE (ASS)	377
FILTRE (BOîTE DE VITESSES)	6T-7640	1	SOUPAPE SELECTRICE ET REGULATRICE DE PRESSION	470
RENIFLARD (ENS)	8X-4575	2	RENIFLARD DE TRANSMISSION (ASS)	338
TAMIS D'ASPIRATION	3S-3875	1	ENTRAÎNEMENT DE POMPE (ASS)	372
		1	ENTRAÎNEMENT DE POMPE (ASS)	374
TAMIS D'ASPIRATION (BOîTE DE VITESSES)	3S-3875	1	ÉCRAN MAGNÉTIQUE (ASS)	441

* TRADUCTION NON DISPONIBLE AU MOMENT DE LA PUBLICATION

PIEZAS DE MANTENIMIENTO

DESCRIPCION	NUMERO DE PIEZA	CANT	SE UTILIZA EN	PAGINA
MOTOR BASICO				
RESPIRADERO (CONJ) (CÁRTER DEL MOTOR)	9Y-2988	1	TAPA DEL MECANISMO DE VÁLVULAS (GR)	19
TAPA DEL TUBO DE LLENADO DE ACEITE (CONJ)	113-4885	1	TAPA DEL MECANISMO DE VÁLVULAS (GR)	19
TAPÓN DE DRENAJE (COLECTOR DE ACEITE)	9X-6451	1	CÁRTER - COLECTOR DEL (GR)	76
	206-7331	1	CÁRTER - COLECTOR DEL (GR)	76

* NO HAY TRADUCCION DISPONIBLE EN EL MOMENTO DE LA IMPRESION

PIEZAS DE MANTENIMIENTO

DESCRIPCION	NUMERO DE PIEZA	CANT	SE UTILIZA EN	PAGINA
PUESTO DEL OPERADOR				
ACUMULADOR DEL ACONDICIONADOR DE AIRE (GR)	186-6189	1	TUBERÍAS DE ACONDICIONADOR DE AIRE (GR)	856
CINTURÓN DE SEGURIDAD (GR)	8Y-4030	1	ASIENTO PARA ACOMPAÑANTE (GR)	906
	183-3648	1	ASIENTO (GR)	893
	222-0345	1	ASIENTO (GR)	894
		1	ASIENTO (GR)	903
		1	ASIENTO PARA ACOMPAÑANTE (GR)	905
		1	SUSPENSIÓN - ASIENTO CON (GR)	909
FILTRO DE AIRE	119-3355	1	*AIR CONDITIONER & MOUNTING GP	818
	174-8145	1	ACONDICIONADOR DE AIRE (GR)	820
		1	ACONDICIONADOR DE AIRE (GR)	825
FILTRO DE AIRE (AIRE ACONDICIONADO)	119-3355	1	ACONDICIONADOR DE AIRE Y MONTAJE (GR)	815
	174-8145	1	ACONDICIONADOR DE AIRE (GR)	822
HOJA DE LIMPIAPARABRISAS (CONJ)	6V-7419	1	LIMPIA Y LAVAPARABRISAS (GR)	923
		1	LIMPIA Y LAVAPARABRISAS (GR)	927
	130-7034	1	LIMPIA Y LAVAPARABRISAS (GR)	927
HOJA DE LIMPIAPARABRISAS (CONJ) (PARTE TRASERA)	130-7034	1	LIMPIA Y LAVAPARABRISAS (GR)	925
LÁMPARA (*24-VOLT)	3E-8825	2	RETROVISOR (GR)	860
LÁMPARA (24 VOLTIOS)	3E-8825	2	RETROVISOR (GR)	862
		2	TABLERO DE INSTRUMENTOS (GR)	881
		1	TABLERO DE INSTRUMENTOS (GR)	882
	7N-5876	2	GRUPO DE CONTROL DE TRANSMISIÓN Y LEVANTAMIENTO	840
	110-2079	3	TABLERO DE INSTRUMENTOS (GR)	878
		2	TABLERO DE INSTRUMENTOS (GR)	881
LÁMPARA (24 VOLTIOS) (A/A)	3E-8825	2	TABLERO DE INSTRUMENTOS (GR)	879
LÁMPARA (24 VOLTIOS) (AUXILIAR DE ARRANQUE)	3E-8825	1	TABLERO DE INSTRUMENTOS (GR)	879
LÁMPARA (24 VOLTIOS) (DESTELLADOR DE PELIGRO)	3E-8825	1	TABLERO DE INSTRUMENTOS (GR)	879
LÁMPARA (24 VOLTIOS) (DIRECCIÓN SECUNDARIA)	3E-8825	2	TABLERO DE INSTRUMENTOS (GR)	879
LÁMPARA (24 VOLTIOS) (SISTEMA MONITOREADO)	3E-8825	1	TABLERO DE INSTRUMENTOS (GR)	878
LÁMPARA (24 VOLTIOS) (TABLERO DE INSTRUMENTOS)	107-1983	13	TABLERO DE INSTRUMENTOS (GR)	878
LÁMPARA (24 VOLTIOS) (TABLERO DELANTERO/COLA)	3E-8825	2	TABLERO DE INSTRUMENTOS (GR)	879
LÁMPARA (24 VOLTIOS) (TRABA DE EJE TRANSVERSAL)	3E-8825	2	TABLERO DE INSTRUMENTOS (GR)	878
LÁMPARA (24 VOLTIOS) (TRABAJO TRASERO)	3E-8825	1	TABLERO DE INSTRUMENTOS (GR)	878
TAPA CON RESPIRADERO	8E-8292	1	LIMPIA Y LAVAPARABRISAS (GR)	923

* NO HAY TRADUCCION DISPONIBLE EN EL MOMENTO DE LA IMPRESION

PIEZAS DE MANTENIMIENTO

DESCRIPCION	NUMERO DE PIEZA	CANT	SE UTILIZA EN	PAGINA
SISTEMA DE ADMISION Y ESCAPE				
ELEMENTO PRIMARIO DEL FILTRO DE AIRE (CONJ)	142-1340	1	FILTRO DE AIRE (GR)	132
ELEMENTO SECUNDARIO DEL FILTRO DE AIRE (CONJ)	142-1403	1	FILTRO DE AIRE (GR)	132
*HOSE-AIR INLET	7E-8630	4	AIRE - TUBERÍAS DE (GR)	136
SISTEMA DE COMBUSTIBLE				
COLADOR DE COMBUSTIBLE	9P-7121	1	COMBUSTIBLE - TANQUE DE (GR)	185
		1	COMBUSTIBLE - TANQUE DE (GR)	187
		1	COMBUSTIBLE - TANQUE DE (GR)	189
		1	TANQUE DE COMBUSTIBLE Y GRUPO DE MONTAJE	176
		1	TANQUE DE COMBUSTIBLE Y GRUPO DE MONTAJE	178
		1	TANQUE DE COMBUSTIBLE Y GRUPO DE MONTAJE	181
ELEMENTO DE FILTRO (SEPARADOR DE COMBUSTIBLE, AGUA) (PRIMARIO)	133-5673	1	FILTRO DE COMBUSTIBLE Y SEPARADOR DE AGUA (GR)	158
EMPAQUETADURA (BOMBA DE CEBADO DE COMBUSTIBLE)	1P-0436	1	BOMBA DE CEBADO Y FILTRO SECUNDARIO (GR)	173
FILTRO DE COMBUSTIBLE (CONJ)	1R-0749	1	BOMBA DE CEBADO Y FILTRO SECUNDARIO (GR)	173
TAPA DE LLENADO (CONJ) (COMBUSTIBLE, TRABA, VENTILACIÓN)	7X-7700	1	TANQUE DE COMBUSTIBLE Y GRUPO DE MONTAJE	176
		1	COMBUSTIBLE - TANQUE DE (GR)	185
		1	COMBUSTIBLE - TANQUE DE (GR)	187
		1	COMBUSTIBLE - TANQUE DE (GR)	189
		1	TANQUE DE COMBUSTIBLE Y GRUPO DE MONTAJE	178
		1	TANQUE DE COMBUSTIBLE Y GRUPO DE MONTAJE	181
TAPA DEL TUBO DE LLENADO DE COMBUSTIBLE (GR) (JUEGO DE CONVERSIÓN)	171-1590	1	COMBUSTIBLE - TANQUE DE (GR)	185
		1	TANQUE DE COMBUSTIBLE Y GRUPO DE MONTAJE	176
TAPÓN MAGNÉTICO (TANQUE DE COMBUSTIBLE)	5P-4484	1	COMBUSTIBLE - TANQUE DE (GR)	185
		1	COMBUSTIBLE - TANQUE DE (GR)	189
		1	TANQUE DE COMBUSTIBLE Y GRUPO DE MONTAJE	176
		1	TANQUE DE COMBUSTIBLE Y GRUPO DE MONTAJE	181
		1	COMBUSTIBLE - TANQUE DE (GR)	187
		1	TANQUE DE COMBUSTIBLE Y GRUPO DE MONTAJE	178

* NO HAY TRADUCCION DISPONIBLE EN EL MOMENTO DE LA IMPRESION

PIEZAS DE MANTENIMIENTO

DESCRIPCION	NUMERO DE PIEZA	CANT	SE UTILIZA EN	PAGINA
SISTEMA DE ENFRIAMIENTO				
ADAPTADOR-MANGUERA	4N-6749	3	REFRIGERANTE - TUBERÍAS DE (GR)	102
EMPAQUETADURA, TAPA DE REGULADOR (CAJA DEL REGULADOR DE TEMPERATURA)	4N-1156	1	TUBERÍAS DEL AGUA (GR)	104
FILTRO DE LA BOMBA DE AGUA	136-3742	1	BOMBA DE AGUA (GR)	108
MANGUERA-CODO	169-5836	1	REFRIGERANTE - TUBERÍAS DE (GR)	102
REGULADOR DE TEMPERATURA DEL AGUA (92 GRADOS CENTÍGRADOS) (REFRIGERANTE)	248-5513	1	TUBERÍAS DEL AGUA (GR)	104
SELLO DE LABIO (REGULADOR DE TEMPERATURA DEL AGUA)	3S-9643	1	TUBERÍAS DEL AGUA (GR)	104
TAPA DEL RADIADOR (7 LB/PULG2)	6L-8617	1	TANQUE DE REFRIGERANTE (GR)	123
		1	TANQUE DE REFRIGERANTE (GR)	124
SISTEMA DE FRENOS				
TAPA	108-8393	2	FRENO DE SERVICIO - CONTROL (GR)	592
		2	FRENO DE SERVICIO - CONTROL (GR)	597
		2	FRENO DE SERVICIO - CONTROL (GR)	602
SISTEMA DE LUBRICACION				
FILTRO DE ACEITE DEL MOTOR (CONJ)	1R-0716	1	FILTRO DE ACEITE DEL MOTOR (GR)	89
		1	FILTRO DE ACEITE DEL MOTOR (GR)	90
MANGUERA	9Y-5281	1	ESCAPE DE GASES (GR)	92
	123-9711	1	ESCAPE DE GASES (GR)	92
SISTEMA ELECTRICO Y DE ARRANQUE				
BATERÍA (12 VOLTIOS)	9X-9720	2	BATERÍA Y CABLES (GR)	202
		2	BATERÍA Y CABLES (GR)	204
	153-5710	2	ARRANQUE EN TIEMPO FRIO (CONFIG)	256
CONJUNTO DE DESTELLADOR	8D-6946	1	CABLES DE LA CABINA (GR)	294
		1	CABLES DE LA CABINA (GR)	297
CRISTAL (PARADA, COLA, GIRO)	134-6750	1	LUZ DE SEÑAL DE GIRO (GR)	235
		1	LUZ DE SEÑAL DE GIRO (GR)	236
	146-2438	1	LUZ DE SEÑAL DE GIRO (GR)	238
CRISTAL (ROJO)	7N-1995	1	ADVERTENCIA PARA EL OPERADOR (GR)	287
		1	ADVERTENCIA PARA EL OPERADOR (GR)	288
DISYUNTOR (CONJ) (10-AMPERIOS)	6T-3642	1	DISYUNTOR DE CIRCUITO (GR)	212
DISYUNTOR (CONJ) (10-AMPERIOS) (LLAVE)	6T-3642	1	DISYUNTOR DE CIRCUITO (GR)	209
DISYUNTOR (CONJ) (15 AMPERIOS)	3T-2662	1	DISYUNTOR DE CIRCUITO (GR)	212
	6T-3643	2	DISYUNTOR DE CIRCUITO (GR)	212
DISYUNTOR (CONJ) (15 AMPERIOS) (ADEM III)	6T-3643	2	DISYUNTOR DE CIRCUITO (GR)	209
DISYUNTOR (CONJ) (15 AMPERIOS) (FARO DELANTERO - LÁMPARA DE)	3T-2662	1	DISYUNTOR DE CIRCUITO (GR)	209

* NO HAY TRADUCCION DISPONIBLE EN EL MOMENTO DE LA IMPRESION

PIEZAS DE MANTENIMIENTO

DESCRIPCION	NUMERO DE PIEZA	CANT	SE UTILIZA EN	PAGINA
DISYUNTOR DE CIRCUITO (GR) (20-AMPERIOS)	6T-3644	1	PANEL DE DISYUNTORES (GR)	242
DISYUNTOR DE CIRCUITO (GR) (20-AMPERIOS) (CAPÓ)	6T-3644	1	PANEL DE DISYUNTORES (GR)	240
DISYUNTOR DE CIRCUITO (GR) (80 AMPERIOS)	9S-4693	2	PANEL DE DISYUNTORES (GR)	242
DISYUNTOR DE CIRCUITO (GR) (80 AMPERIOS) (PRINCIPAL/ALTERNATIVO)	9S-4693	2	PANEL DE DISYUNTORES (GR)	240
FUSIBLE (10-AMPERIOS)	9W-1442	15	DISYUNTOR DE CIRCUITO (GR)	212
		19	DISYUNTOR DE CIRCUITO (GR)	209
FUSIBLE (20-AMPERIOS)	9W-1446	1	DISYUNTOR DE CIRCUITO (GR)	212
		2	DISYUNTOR DE CIRCUITO (GR)	209
*LAMP-HALOGEN (*24-VOLT, 65-WATT)	9X-3463	1	LÁMPARA DE FARO DELANTERO (GR)	233
LÁMPARA DE FARO DELANTERO (GR)	171-7213	2	CABLES DE LAS LUCES (GR)	308
	171-7214	2	CABLES DE LAS LUCES (GR)	308
LÁMPARA DE FARO DELANTERO (GR) (LUZ BAJA)	171-7213	2	CABLES DE LA CABINA (GR)	288
LÁMPARA DE FARO DELANTERO (GR) (VIGA ALTA)	171-7214	2	CABLES DE LA CABINA (GR)	288
LÁMPARA DEL TECHO (GR) (24 VOLTIOS, CON INTERRUPTOR)	3E-6389	1	CABLES DE LA CABINA (GR)	297
LÁMPARA (24 VOLTIOS)	7N-1996	1	ADVERTENCIA PARA EL OPERADOR (GR)	287
		1	ADVERTENCIA PARA EL OPERADOR (GR)	288
	9X-4494	1	LUZ DE SEÑAL DE GIRO (GR)	237
	130-3565	1	LUZ DE SEÑAL DE GIRO (GR)	235
		1	LUZ DE SEÑAL DE GIRO (GR)	236
	7N-9943	1	LÁMPARA DEL TECHO (GR)	229
LÁMPARA (24-VOLTIOS, 21 VATIOS)	9X-4493	1	LUZ DE SEÑAL DE GIRO (GR)	234
		2	LUZ DE SEÑAL DE GIRO (GR)	235
		2	LUZ DE SEÑAL DE GIRO (GR)	236
		1	LUZ DE SEÑAL DE GIRO (GR)	238
LÁMPARA (24 VOLTIOS, 5 VATIOS)	9X-4492	1	LUZ DE SEÑAL DE GIRO (GR)	238
LENTE AMBAR	9X-3066	1	LUZ DE SEÑAL DE GIRO (GR)	234
LENTE-CLARO	9X-3068	1	LUZ DE SEÑAL DE GIRO (GR)	237
LLAVE (DESCONECTAR BATERIA)	8H-5306	1	DISYUNTOR (GR)	277
LUCES DE ALÓGENO (*24-VOLT, 65-WATT)	9X-3463	1	LÁMPARA DE FARO DELANTERO (GR)	232
LUCES DE ALÓGENO (24 VOLTIOS, 65 VATIOS)	9X-3463	1	REFLECTOR (GR)	231
LUCES DE ALÓGENO (24 VOLTIOS)(65 VATIOS) (REFLECTOR)	9X-3463	1	REFLECTOR (GR)	230
LUZ DE SEÑAL DE GIRO (GR) (24 VOLTIOS)	3E-6466	2	CABLES DE LA CABINA (GR)	288
		2	CABLES DE LAS LUCES (GR)	308
	162-5402	2	CABLES DE LA CABINA (GR)	288
		2	CABLES DE LAS LUCES (GR)	308
VIDRIO (CONJ) (LUZ BAJA)	9X-7798	1	LÁMPARA DE FARO DELANTERO (GR)	232
VIDRIO (CONJ) (REFLECTOR)	107-5853	1	REFLECTOR (GR)	230

* NO HAY TRADUCCION DISPONIBLE EN EL MOMENTO DE LA IMPRESION

PIEZAS DE MANTENIMIENTO

DESCRIPCION	NUMERO DE PIEZA	CANT	SE UTILIZA EN	PAGINA
VIDRIO (CONJ) (VIGA ALTA)	9X-7797	1	LÁMPARA DE FARO DELANTERO (GR)	233
SISTEMA HIDRAULICO				
COLADOR (CONJ)	5D-7927	1	TANQUE HIDRÁULICO (GR)	744
		1	TANQUE HIDRÁULICO (GR)	748
		1	TAPA DE TANQUE (GR)	667
ELEMENTO DE FILTRO DE ACEITE (CONJ) (HIDRAULICO)	132-8876	3	TANQUE HIDRÁULICO (GR)	744
		3	TANQUE HIDRÁULICO (GR)	748
		2	TAPA DE TANQUE (GR)	667
EMPAQUETADURA	9H-6454	1	TANQUE HIDRÁULICO (GR)	744
		1	TANQUE HIDRÁULICO (GR)	748
		1	TAPA DE TANQUE (GR)	667
LLAVE	5P-8500	1	TANQUE HIDRÁULICO (GR)	744
		1	TANQUE HIDRÁULICO (GR)	748
PANTALLA (CONJ)	150-8457	1	TANQUE HIDRÁULICO (GR)	744
		1	TANQUE HIDRÁULICO (GR)	748
	6J-3795	1	TAPA DE TANQUE (GR)	667
REJILLA	6E-5066	2	VÁLVULA DE COMBINACIÓN (GR)	767
	119-4885	1	TANQUE HIDRÁULICO (GR)	744
		1	TANQUE HIDRÁULICO (GR)	748
		1	TAPA DE TANQUE (GR)	667
RESPIRADERO (7 LB/PULG2)	157-7911	1	TAPA DE TANQUE (GR)	667
RESPIRADERO (7 LB/PULG2) (HIDRÁULICO)	157-7911	1	TANQUE HIDRÁULICO (GR)	744
		1	TANQUE HIDRÁULICO (GR)	748
TAPA DEL TUBO DE LLENADO	7H-1447	1	TAPA DE TANQUE (GR)	667
TAPA DEL TUBO DE LLENADO (ACEITE HIDRAULICO)	7H-1447	1	TANQUE HIDRÁULICO (GR)	744
		1	TANQUE HIDRÁULICO (GR)	748
TAPÓN DE DRENAJE	4B-7739	1	TUBERÍAS DE DRENAJE (GR)	676
	9J-7031	1	TANQUE HIDRÁULICO (GR)	744
		1	TANQUE HIDRÁULICO (GR)	748
TAPÓN DE DRENAJE (TANQUE HIDRÁULICO)	9J-7031	1	TANQUE HIDRÁULICO (GR)	752
TREN DE FUERZA				
ELEMENTO DE FILTRO DE ACEITE (CONJ) (HIDRAULICO)	132-8875	1	FILTRO DE ACEITE (GR)	377
	144-6691	1	FILTRO DE ACEITE (GR)	378
ELEMENTO DE FILTRO DE ACEITE (CONJ) (HIDRAULICO) (EFICIENCIA ESTANDAR)	1R-0719	1	FILTRO DE ACEITE (GR)	377
REJILLA DE FILTRO (TRANSMISION)	6T-7640	1	VÁLVULA SELECTORA Y DE CONTROL DE PRESIÓN (GR)	470
REJILLA DE SUCCIÓN	3S-3875	1	MANDO DE BOMBA (GR)	372
		1	MANDO DE BOMBA (GR)	374
REJILLA DE SUCCIÓN (TRANSMISION)	3S-3875	1	REJILLA MAGNÉTICA (GR)	441
RESPIRADERO (CONJ)	8X-4575	2	RESPIRADERO DE LA TRANSMISIÓN (GR)	338
TAPÓN	5P-4483	1	EJE CENTRAL (GR)	319
		1	EJE CENTRAL (GR)	321

* NO HAY TRADUCCION DISPONIBLE EN EL MOMENTO DE LA IMPRESION

PIEZAS DE MANTENIMIENTO

DESCRIPCION	NUMERO DE PIEZA	CANT	SE UTILIZA EN	PAGINA
	8C-4424	1	ENGRANAJE DE TRANSFERENCIA DE SALIDA	393
		1	ENGRANAJE DE TRANSFERENCIA DE SALIDA	400
		1	ENGRANAJE DE TRANSFERENCIA DE SALIDA	406
	138-1510	1	MANDO DE BOMBA (GR)	372
		1	MANDO DE BOMBA (GR)	374
TAPÓN MAGNÉTICO	5P-4484	1	EJE CENTRAL (GR)	319
		1	EJE CENTRAL (GR)	321
		1	EJE CENTRAL (GR)	323
		1	EJE DELANTERO (GR)	325
		1	EJE DELANTERO (GR)	327
		1	ENGRANAJE DE TRANSFERENCIA DE SALIDA	404
		1	MANDOS FINALES, RUEDA Y FRENO (GR)	484
		1	RUEDA Y MANDOS FINALES	477
TAPÓN MAGNÉTICO (CAJA DEL EJE)	5P-4484	1	EJE DELANTERO (GR)	329
		1	EJE DELANTERO (GR)	331
TAPÓN MAGNÉTICO (DIFERENCIAL)	5P-4484	1	ENGRANAJE DE TRANSFERENCIA DE SALIDA	380
		1	ENGRANAJE DE TRANSFERENCIA DE SALIDA	386
		1	ENGRANAJE DE TRANSFERENCIA DE SALIDA	392
TAPÓN MAGNÉTICO (DRENAJE)	5P-4484	1	ENGRANAJE DE TRANSFERENCIA DE SALIDA	398
TAPÓN MAGNÉTICO (MANDO FINAL)	5P-4484	1	MANDOS FINALES, RUEDA Y FRENO (GR)	480
		1	MANDOS FINALES, RUEDA Y FRENO (GR)	482
VALVULA	6U-1989	1	RESPIRADERO DE LA TRANSMISIÓN (GR)	335
		1	RESPIRADERO DE LA TRANSMISIÓN (GR)	336
		1	RESPIRADERO DE LA TRANSMISIÓN (GR)	337

* NO HAY TRADUCCION DISPONIBLE EN EL MOMENTO DE LA IMPRESION

PEÇAS DE MANUTENÇÃO

DESCRIÇÃO	NÚMERO DE PEÇA	QUANT	UTILIZADA EM	PÁGINA
MOTOR BÁSICO				
BUJÃO DO DRENO (RESERVATÓRIO DE ÓLEO)	9X-6451	1	CÁRTER DO ÓLEO DO MOTOR	76
	206-7331	1	CÁRTER DO ÓLEO DO MOTOR	76
RESPIRO (CÁRTER DO MOTOR)	9Y-2988	1	TAMPA - MECANISMO DAS VÁLVULAS	19
TAMPA - BOCAL DE ENCHIMENTO DE ÓLEO	113-4885	1	TAMPA - MECANISMO DAS VÁLVULAS	19

* TRADUÇÃO NÃO DISPONÍVEL NO MOMENTO DA IMPRESSÃO

PEÇAS DE MANUTENÇÃO

DESCRIÇÃO	NÚMERO DE PEÇA	QUANT	UTILIZADA EM	PÁGINA
POSTO DO OPERADOR				
ACUMULADOR - AR CONDICIONADO	186-6189	1	TUBOS - AR CONDICIONADO	856
CINTO DE SEGURANÇA	8Y-4030	1	ASSENTO DE PASSAGEIRO	906
	183-3648	1	ASSENTO	893
	222-0345	1	ASSENTO	894
		1	ASSENTO	903
		1	ASSENTO COM SUSPENSÃO	909
		1	ASSENTO DE PASSAGEIRO	905
FILTRO - AR	119-3355	1	*AIR CONDITIONER & MOUNTING GP	818
	174-8145	1	CONDICIONADOR DE AR	820
		1	CONDICIONADOR DE AR	825
FILTRO - AR (AR CONDICIONADO)	119-3355	1	CONDICIONADOR DE AR E MONTAGEM	815
	174-8145	1	CONDICIONADOR DE AR	822
LÂMINA DO LIMPADOR DE PÁRA-BRISA	6V-7419	1	LIMPADOR E LAVADOR - JANELA	923
		1	LIMPADOR E LAVADOR - JANELA	927
	130-7034	1	LIMPADOR E LAVADOR - JANELA	927
LÂMINA DO LIMPADOR DE PÁRA-BRISA (TRASEIRO)	130-7034	1	LIMPADOR E LAVADOR - JANELA	925
LÂMPADA (*24-VOLT)	3E-8825	2	ESPELHO RETROVISOR	860
LÂMPADA (24 VOLTS)	3E-8825	2	ESPELHO RETROVISOR	862
		1	PAINEL DE INSTRUMENTOS	881
		1	PAINEL DE INSTRUMENTOS	882
	7N-5876	2	CONTROLE - TRANSMISSÃO E CILINDRO DE LEVANTAMENTO	840
	110-2079	3	PAINEL DE INSTRUMENTOS	878
		2	PAINEL DE INSTRUMENTOS	881
LÂMPADA (24 VOLTS) (AR CONDICIONADO)	3E-8825	2	PAINEL DE INSTRUMENTOS	879
LÂMPADA (24 VOLTS) (AUXILIAR DE PARTIDA)	3E-8825	1	PAINEL DE INSTRUMENTOS	879
LÂMPADA (24 VOLTS) (DIREÇÃO SECUNDÁRIA)	3E-8825	2	PAINEL DE INSTRUMENTOS	879
LÂMPADA (24 VOLTS) (PAINEL DE INSTRUMENTOS)	107-1983	13	PAINEL DE INSTRUMENTOS	878
LÂMPADA (24 VOLTS) (PAINEL DE INSTRUMENTOS DIANTEIRO / TRASEIRO)	3E-8825	2	PAINEL DE INSTRUMENTOS	879
LÂMPADA (24 VOLTS) (PISCA-PISCA DE PERIGO)	3E-8825	1	PAINEL DE INSTRUMENTOS	879
LÂMPADA (24 VOLTS) (SISTEMA DE MONITORIZACÃO)	3E-8825	1	PAINEL DE INSTRUMENTOS	878
LÂMPADA (24 VOLTS) (TRABALHO TRASEIRO)	3E-8825	1	PAINEL DE INSTRUMENTOS	878
LÂMPADA (24 VOLTS) (TRAVA DO EIXO TRANSVERSAL)	3E-8825	2	PAINEL DE INSTRUMENTOS	878
TAMPA COM RESPIRO	8E-8292	1	LIMPADOR E LAVADOR - JANELA	923

* TRADUÇÃO NÃO DISPONÍVEL NO MOMENTO DA IMPRESSÃO

PEÇAS DE MANUTENÇÃO

DESCRIÇÃO	NÚMERO DE PEÇA	QUANT	UTILIZADA EM	PÁGINA
SISTEMA DE ADMISSÃO DE AR E DE ESCAPE				
ELEMENTO DO FILTRO PRIMÁRIO DE AR	142-1340	1	PURIFICADOR DE AR	132
ELEMENTO DO FILTRO SECUNDÁRIO DE AR	142-1403	1	PURIFICADOR DE AR	132
*HOSE-AIR INLET	7E-8630	4	TUBOS - AR	136
SISTEMA DE ARREFECIMENTO				
FILTRO - BOMBA DE ÁGUA	136-3742	1	BOMBA DE ÁGUA	108
JUNTA - TAMPA DO REGULADOR (ALOJAMENTO DO REGULADOR DE TEMPERATURA)	4N-1156	1	TUBOS - ÁGUA	104
MANGUEIRA - COTOVELO	169-5836	1	TUBOS - SISTEMA DE ARREFECIMENTO	102
MANGUEIRA-ADAPTADOR	4N-6749	3	TUBOS - SISTEMA DE ARREFECIMENTO	102
REGULADOR DE TEMPERATURA DA ÁGUA (92 GRAUS C) (LÍQUIDO ARREFECEDOR)	248-5513	1	TUBOS - ÁGUA	104
TAMPA - RADIADOR (7 PSI)	6L-8617	1	TANQUE - LÍQUIDO ARREFECEDOR	123
		1	TANQUE - LÍQUIDO ARREFECEDOR	124
VEDADOR TIPO LABIO (REGULADOR DA TEMPERATURA DA ÁGUA)	3S-9643	1	TUBOS - ÁGUA	104

* TRADUÇÃO NÃO DISPONÍVEL NO MOMENTO DA IMPRESSÃO

PEÇAS DE MANUTENÇÃO

DESCRIÇÃO	NÚMERO DE PEÇA	QUANT	UTILIZADA EM	PÁGINA
SISTEMA DE COMBUSTÍVEL				
BUJÃO MAGNÉTICO (TANQUE DE COMBUSTÍVEL)	5P-4484	1	TANQUE DE COMBUSTÍVEL	185
		1	TANQUE DE COMBUSTÍVEL	187
		1	TANQUE DE COMBUSTÍVEL	189
		1	TANQUE DE COMBUSTÍVEL E MONTAGEM	176
		1	TANQUE DE COMBUSTÍVEL E MONTAGEM	178
		1	TANQUE DE COMBUSTÍVEL E MONTAGEM	181
ELEMENTO - FILTRANTE (SEPARADOR DE ÁGUA E COMBUSTÍVEL) (PRIMÁRIO)	133-5673	1	FILTRO DE COMBUSTÍVEL E SEPARADOR DE ÁGUA	158
FILTRO - COMBUSTÍVEL	1R-0749	1	BOMBA DO FILTRO SECUNDÁRIO E ESCORVA DO COMBUSTÍVEL	173
	9P-7121	1	TANQUE DE COMBUSTÍVEL	185
		1	TANQUE DE COMBUSTÍVEL	187
		1	TANQUE DE COMBUSTÍVEL	189
		1	TANQUE DE COMBUSTÍVEL E MONTAGEM	176
		1	TANQUE DE COMBUSTÍVEL E MONTAGEM	178
		1	TANQUE DE COMBUSTÍVEL E MONTAGEM	181
JUNTA (BOMBA DE ESCORVA DE COMBUSTÍVEL)	1P-0436	1	BOMBA DO FILTRO SECUNDÁRIO E ESCORVA DO COMBUSTÍVEL	173
TAMPA - BOCAL DE ENCHIMENTO (COMBUSTÍVEL, TRAVA, COM RESPIRO)	7X-7700	1	TANQUE DE COMBUSTÍVEL	185
		1	TANQUE DE COMBUSTÍVEL	187
		1	TANQUE DE COMBUSTÍVEL	189
		1	TANQUE DE COMBUSTÍVEL E MONTAGEM	176
		1	TANQUE DE COMBUSTÍVEL E MONTAGEM	178
		1	TANQUE DE COMBUSTÍVEL E MONTAGEM	181
TAMPA - BOCAL DE ENCHIMENTO DE COMBUSTÍVEL (JOGO DE CONVERSÃO)	171-1590	1	TANQUE DE COMBUSTÍVEL	185
		1	TANQUE DE COMBUSTÍVEL E MONTAGEM	176
SISTEMA DE FREIO				
TAMPA	108-8393	2	CONTROLE DO FREIO DE SERVIÇO	592
		2	CONTROLE DO FREIO DE SERVIÇO	597
		2	CONTROLE DO FREIO DE SERVIÇO	602

* TRADUÇÃO NÃO DISPONÍVEL NO MOMENTO DA IMPRESSÃO

PEÇAS DE MANUTENÇÃO

DESCRIÇÃO	NÚMERO DE PEÇA	QUANT	UTILIZADA EM	PÁGINA
SISTEMA DE LUBRIFICAÇÃO				
FILTRO - ÓLEO DO MOTOR	1R-0716	1	FILTRO - ÓLEO DO MOTOR	89
		1	FILTRO - ÓLEO DO MOTOR	90
MANGUEIRA	9Y-5281	1	ELIMINAÇÃO DE VAPORES DO CÁRTER	92
	123-9711	1	ELIMINAÇÃO DE VAPORES DO CÁRTER	92
SISTEMA ELÉTRICO E DE PARTIDA				
BATERIA (12-VOLTS)	9X-9720	2	BATERIA E CABOS / FIOS ELÉTRICOS	202
		2	BATERIA E CABOS / FIOS ELÉTRICOS	204
	153-5710	2	PARTIDA EM TEMPO FRIO - ARRANJO	256
CHAVE (DESCONECTAR A BATERIA)	8H-5306	1	CHAVE GERAL	277
DISJUNTOR AUTOMÁTICO DE CIRCUITO (10 AMPERES)	6T-3642	1	INTERRUPTOR - CIRCUITO	212
DISJUNTOR AUTOMÁTICO DE CIRCUITO (10 AMPERES) (CHAVE)	6T-3642	1	INTERRUPTOR - CIRCUITO	209
DISJUNTOR AUTOMÁTICO DE CIRCUITO (15 AMPERES)	3T-2662	1	INTERRUPTOR - CIRCUITO	212
	6T-3643	2	INTERRUPTOR - CIRCUITO	212
DISJUNTOR AUTOMÁTICO DE CIRCUITO (15 AMPERES) (ADEM III)	6T-3643	2	INTERRUPTOR - CIRCUITO	209
DISJUNTOR AUTOMÁTICO DE CIRCUITO (15 AMPERES) (FAROL DIANTEIRO)	3T-2662	1	INTERRUPTOR - CIRCUITO	209
FAROL DIANTEIRO	171-7213	2	CABOS/FIOS ELÉTRICOS DE ILUMINAÇÃO	308
	171-7214	2	CABOS/FIOS ELÉTRICOS DE ILUMINAÇÃO	308
FAROL DIANTEIRO (FAROL BAIXO)	171-7213	2	CABOS/FIOS ELÉTRICOS - CABINE	288
FAROL DIANTEIRO (LUZ ALTA)	171-7214	2	CABOS/FIOS ELÉTRICOS - CABINE	288
FUSÍVEL (10 AMPERES)	9W-1442	19	INTERRUPTOR - CIRCUITO	209
		15	INTERRUPTOR - CIRCUITO	212
FUSÍVEL (20-AMPERES)	9W-1446	2	INTERRUPTOR - CIRCUITO	209
		1	INTERRUPTOR - CIRCUITO	212
INTERRUPTOR - CIRCUITO (20-AMPERES)	6T-3644	1	PAINEL - DISJUNTOR ELÉTRICO AUTOMÁTICO	242
INTERRUPTOR - CIRCUITO (20-AMPERES) (CAPÔ)	6T-3644	1	PAINEL - DISJUNTOR ELÉTRICO AUTOMÁTICO	240
INTERRUPTOR - CIRCUITO (80 AMPERES)	9S-4693	2	PAINEL - DISJUNTOR ELÉTRICO AUTOMÁTICO	242
INTERRUPTOR - CIRCUITO (80 AMPERES) (PRINCIPAL/ALTERNATIVO)	9S-4693	2	PAINEL - DISJUNTOR ELÉTRICO AUTOMÁTICO	240
*LAMP-HALOGEN (*24-VOLT, 65-WATT)	9X-3463	1	FAROL DIANTEIRO	233
LÂMPADA - HALOGÊNEO (*24-VOLT, 65-WATT)	9X-3463	1	FAROL DIANTEIRO	232
LÂMPADA - HALOGÊNEO (24 VOLTS, 65 WATTS)	9X-3463	1	LÂMPADA - FAROL	231
LÂMPADA - HALOGÊNEO (24 VOLTS)(65 WATTS) (FAROL)	9X-3463	1	LÂMPADA - FAROL	230
LÂMPADA - SINALIZAÇÃO (24 VOLTS)	3E-6466	2	CABOS/FIOS ELÉTRICOS - CABINE	288

* TRADUÇÃO NÃO DISPONÍVEL NO MOMENTO DA IMPRESSÃO

PEÇAS DE MANUTENÇÃO

DESCRIÇÃO	NÚMERO DE PEÇA	QUANT	UTILIZADA EM	PÁGINA
		2	CABOS/FIOS ELÉTRICOS DE ILUMINAÇÃO	308
	162-5402	2	CABOS/FIOS ELÉTRICOS - CABINE	288
		2	CABOS/FIOS ELÉTRICOS DE ILUMINAÇÃO	308
LÂMPADA - TETO (24 VOLTS, COM INTERRUPTOR)	3E-6389	1	CABOS/FIOS ELÉTRICOS - CABINE	297
LÂMPADA (24 V)	9X-4494	1	LÂMPADA - SINALIZAÇÃO	237
LÂMPADA (24 VOLTS)	7N-1996	1	ALARME PARA O OPERADOR	287
		1	ALARME PARA O OPERADOR	288
	7N-9943	1	LÂMPADA - TETO	229
	130-3565	1	LÂMPADA - SINALIZAÇÃO	235
		1	LÂMPADA - SINALIZAÇÃO	236
LÂMPADA (24 VOLTS, 21 WATTS)	9X-4493	1	LÂMPADA - SINALIZAÇÃO	234
		2	LÂMPADA - SINALIZAÇÃO	235
		2	LÂMPADA - SINALIZAÇÃO	236
		1	LÂMPADA - SINALIZAÇÃO	238
LÂMPADA (24 VOLTS, 5 WATTS)	9X-4492	1	LÂMPADA - SINALIZAÇÃO	238
LENTE ÂMBAR	9X-3066	1	LÂMPADA - SINALIZAÇÃO	234
LENTE (COR VERMELHA)	7N-1995	1	ALARME PARA O OPERADOR	287
		1	ALARME PARA O OPERADOR	288
LENTE (FAROL BAIXO)	9X-7798	1	FAROL DIANTEIRO	232
LENTE (HOLOFOTE)	107-5853	1	LÂMPADA - FAROL	230
LENTE (LUZ ALTA)	9X-7797	1	FAROL DIANTEIRO	233
LENTE (LUZ DO FREIO, TRASEIRA, SETA DE DIREÇÃO)	134-6750	1	LÂMPADA - SINALIZAÇÃO	235
		1	LÂMPADA - SINALIZAÇÃO	236
	146-2438	1	LÂMPADA - SINALIZAÇÃO	238
LENTES CLARAS	9X-3068	1	LÂMPADA - SINALIZAÇÃO	237
LUZ INTERMITENTE	8D-6946	1	CABOS/FIOS ELÉTRICOS - CABINE	294
		1	CABOS/FIOS ELÉTRICOS - CABINE	297

* TRADUÇÃO NÃO DISPONÍVEL NO MOMENTO DA IMPRESSÃO

PEÇAS DE MANUTENÇÃO

DESCRIÇÃO	NÚMERO DE PEÇA	QUANT	UTILIZADA EM	PÁGINA
SISTEMA HIDRÁULICO				
BUJÃO DO DRENO	4B-7739	1	TUBOS - DRENAGEM	676
	9J-7031	1	TANQUE HIDRÁULICO	744
		1	TANQUE HIDRÁULICO	748
BUJÃO DO DRENO (TANQUE HIDRÁULICO)	9J-7031	1	TANQUE HIDRÁULICO	752
CHAVE	5P-8500	1	TANQUE HIDRÁULICO	744
		1	TANQUE HIDRÁULICO	748
ELEMENTO FILTRANTE - ÓLEO (HIDRÁULICO)	132-8876	2	TAMPA - TANQUE	667
		3	TANQUE HIDRÁULICO	744
		3	TANQUE HIDRÁULICO	748
JUNTA	9H-6454	1	TAMPA - TANQUE	667
		1	TANQUE HIDRÁULICO	744
		1	TANQUE HIDRÁULICO	748
RESPIRO (7 PSI)	157-7911	1	TAMPA - TANQUE	667
RESPIRO (7 PSI) (HIDRÁULICO)	157-7911	1	TANQUE HIDRÁULICO	744
		1	TANQUE HIDRÁULICO	748
TAMPA - BOCAL DE ENCHIMENTO	7H-1447	1	TAMPA - TANQUE	667
TAMPA - BOCAL DE ENCHIMENTO (ÓLEO HIDRÁULICO)	7H-1447	1	TANQUE HIDRÁULICO	744
		1	TANQUE HIDRÁULICO	748
TELA FILTRANTE	5D-7927	1	TAMPA - TANQUE	667
		1	TANQUE HIDRÁULICO	744
		1	TANQUE HIDRÁULICO	748
	6E-5066	2	VÁLVULA COMBINADA	767
	6J-3795	1	TAMPA - TANQUE	667
	119-4885	1	TAMPA - TANQUE	667
		1	TANQUE HIDRÁULICO	744
		1	TANQUE HIDRÁULICO	748
	150-8457	1	TANQUE HIDRÁULICO	744
		1	TANQUE HIDRÁULICO	748

* TRADUÇÃO NÃO DISPONÍVEL NO MOMENTO DA IMPRESSÃO

PEÇAS DE MANUTENÇÃO

DESCRIÇÃO	NÚMERO DE PEÇA	QUANT	UTILIZADA EM	PÁGINA
TREM DE FORÇA				
BUJÃO MAGNÉTICO	5P-4484	1	EIXO CENTRAL	319
		1	EIXO CENTRAL	321
		1	EIXO CENTRAL	323
		1	EIXO DIANTEIRO	325
		1	EIXO DIANTEIRO	327
		1	ENGRENAGENS DE SAÍDA DE TRANSFERÊNCIA	404
		1	RODA - COMANDO FINAL E FREIO	484
		1	RODA E COMANDO FINAL	477
BUJÃO MAGNÉTICO (ALOJAMENTO DO EIXO)	5P-4484	1	EIXO DIANTEIRO	329
		1	EIXO DIANTEIRO	331
BUJÃO MAGNÉTICO (COMANDO FINAL)	5P-4484	1	RODA - COMANDO FINAL E FREIO	480
		1	RODA - COMANDO FINAL E FREIO	482
BUJÃO MAGNÉTICO (DIFERENCIAL)	5P-4484	1	ENGRENAGENS DE SAÍDA DE TRANSFERÊNCIA	380
		1	ENGRENAGENS DE SAÍDA DE TRANSFERÊNCIA	386
		1	ENGRENAGENS DE SAÍDA DE TRANSFERÊNCIA	392
BUJÃO MAGNÉTICO (DRENO)	5P-4484	1	ENGRENAGENS DE SAÍDA DE TRANSFERÊNCIA	398
ELEMENTO FILTRANTE - ÓLEO (HIDRÁULICO)	132-8875	1	FILTRO - ÓLEO	377
	144-6691	1	FILTRO - ÓLEO	378
ELEMENTO FILTRANTE - ÓLEO (HIDRÁULICO) (EFICIÊNCIA PADRÃO)	1R-0719	1	FILTRO - ÓLEO	377
RESPIRO	8X-4575	2	RESPIRO DO TREM DE FORÇA	338
TAMPÃO	5P-4483	1	EIXO CENTRAL	319
		1	EIXO CENTRAL	321
	8C-4424	1	ENGRENAGENS DE SAÍDA DE TRANSFERÊNCIA	393
		1	ENGRENAGENS DE SAÍDA DE TRANSFERÊNCIA	400
		1	ENGRENAGENS DE SAÍDA DE TRANSFERÊNCIA	406
	138-1510	1	COMANDO DA BOMBA	372
		1	COMANDO DA BOMBA	374
TELA - FILTRO (TRANSMISSÃO)	6T-7640	1	VÁLVULA SELETORA E CONTROLE DE PRESSÃO	470
TELA DE SUCÇÃO	3S-3875	1	COMANDO DA BOMBA	372
		1	COMANDO DA BOMBA	374
TELA DE SUCÇÃO (TRANSMISSÃO)	3S-3875	1	FILTRO - MAGNÉTICO	441
VÁLVULA DE ALÍVIO	6U-1989	1	RESPIRO DO TREM DE FORÇA	335
		1	RESPIRO DO TREM DE FORÇA	336
		1	RESPIRO DO TREM DE FORÇA	337

* TRADUÇÃO NÃO DISPONÍVEL NO MOMENTO DA IMPRESSÃO

WARTUNGSTEILE

BESCHREIBUNG	ERSATZTEIL-NUMMER	MENGE	VERWENDET IN	SEITE
BREMSSYSTEM				
KAPPE	108-8393	2	BREMSGESTÄNGE	592
		2	BREMSGESTÄNGE	597
		2	BREMSGESTÄNGE	602
ELEKTRISCHE ANLAGE UND STARTSYSTEM				
ABDECKGLAS (ABBLENDLICHT)	9X-7798	1	FRONTSCHEINWERFER	232
ABDECKGLAS (ARBEITSSCHEIN-WERFER)	107-5853	1	ARBEITSLEUCHTEN	230
ABDECKGLAS (BREMSLICHT, HECKLEUCHTE, RICHTUNGSBLINKER)	134-6750	1	BLINKLEUCHTE	235
		1	BLINKLEUCHTE	236
	146-2438	1	BLINKLEUCHTE	238
ABDECKGLAS (FERNLICHT)	9X-7797	1	FRONTSCHEINWERFER	233
ABDECKGLAS (GELB)	9X-3066	1	BLINKLEUCHTE	234
ABDECKGLAS, KLAR	9X-3068	1	BLINKLEUCHTE	237
ABDECKGLAS (ROT)	7N-1995	1	WARNSUMMER	287
		1	WARNSUMMER	288
BATTERIE (12 V)	9X-9720	2	BATTERIE UND VERDRAHTUNG	202
		2	BATTERIE UND VERDRAHTUNG	204
	153-5710	2	KALTWETTERSTARTANLAGE	256
BLINKER	8D-6946	1	FAHRERHAUSVERDRAHTUNG	294
		1	FAHRERHAUSVERDRAHTUNG	297
BLINKLEUCHTE (24 V)	3E-6466	2	BELEUCHTUNGSVERDRAHTUNG	308
		2	FAHRERHAUSVERDRAHTUNG	288
	162-5402	2	BELEUCHTUNGSVERDRAHTUNG	308
		2	FAHRERHAUSVERDRAHTUNG	288
FAHRERHAUSBELEUCHTUNG (24 V, MIT SCHALTER)	3E-6389	1	FAHRERHAUSVERDRAHTUNG	297
FRONTSCHEINWERFER	171-7213	2	BELEUCHTUNGSVERDRAHTUNG	308
	171-7214	2	BELEUCHTUNGSVERDRAHTUNG	308
FRONTSCHEINWERFER (ABBLENDLICHT)	171-7213	2	FAHRERHAUSVERDRAHTUNG	288
FRONTSCHEINWERFER (FERNLICHT)	171-7214	2	FAHRERHAUSVERDRAHTUNG	288
HALOGENSCHINWERFER (*24-VOLT, 65-WATT)	9X-3463	1	FRONTSCHEINWERFER	232
HALOGENSCHINWERFER (24 V)(65 W) (ARBEITSSCHEINWERFER)	9X-3463	1	ARBEITSLEUCHTEN	230
HALOGENSCHINWERFER (24V)(65W)	9X-3463	1	ARBEITSLEUCHTEN	231
*LAMP-HALOGEN (*24-VOLT, 65-WATT)	9X-3463	1	FRONTSCHEINWERFER	233
LEUCHTE (24 V)	7N-1996	1	WARNSUMMER	287
		1	WARNSUMMER	288
	7N-9943	1	FAHRERHAUSBELEUCHTUNG	229
	9X-4494	1	BLINKLEUCHTE	237
	130-3565	1	BLINKLEUCHTE	235
		1	BLINKLEUCHTE	236
LEUCHTE (24 V, 5 W)	9X-4492	1	BLINKLEUCHTE	238
LEUCHTE (24V, 21W)	9X-4493	1	BLINKLEUCHTE	234
		2	BLINKLEUCHTE	235
		2	BLINKLEUCHTE	236
		1	BLINKLEUCHTE	238

* ÜBERSETZUNG ZUM ZEITPUNKT DER DRUCKLEGUNG NICHT VORHANDEN

WARTUNGSTEILE

BESCHREIBUNG	ERSATZTEIL-NUMMER	MENGE	VERWENDET IN	SEITE
SCHLÜSSEL (HAUPTSCHALTER)	8H-5306	1	TRENNSCHALTER	277
SICHERUNG (10 A)	9W-1442	19	UNTERBRECHER	209
		15	UNTERBRECHER	212
SICHERUNG (20 A)	9W-1446	2	UNTERBRECHER	209
		1	UNTERBRECHER	212
UNTERBRECHER (10 A)	6T-3642	1	UNTERBRECHER	212
UNTERBRECHER (10 A) (SCHLÜSSEL)	6T-3642	1	UNTERBRECHER	209
UNTERBRECHER (15 A)	3T-2662	1	UNTERBRECHER	212
	6T-3643	2	UNTERBRECHER	212
UNTERBRECHER (15 A) (ADEM III)	6T-3643	2	UNTERBRECHER	209
UNTERBRECHER (15 A) (SCHEINWERFER)	3T-2662	1	UNTERBRECHER	209
UNTERBRECHER (20 A)	6T-3644	1	UNTERBRECHER - INSTRUMENTENTAFEL	242
UNTERBRECHER (20 A) (HAUBE)	6T-3644	1	UNTERBRECHER - INSTRUMENTENTAFEL	240
UNTERBRECHER (80 A)	9S-4693	2	UNTERBRECHER - INSTRUMENTENTAFEL	242
UNTERBRECHER (80 A) (HAUPT/ALT)	9S-4693	2	UNTERBRECHER - INSTRUMENTENTAFEL	240

* ÜBERSETZUNG ZUM ZEITPUNKT DER DRUCKLEGUNG NICHT VORHANDEN

WARTUNGSTEILE

BESCHREIBUNG	ERSATZTEIL-NUMMER	MENGE	VERWENDET IN	SEITE
FAHRERHAUS				
KAPPE MIT ENTLÜFTER	8E-8292	1	SCHEIBENWISCHER UND -WASCHANLAGE	923
KLIMAANLAGENDRUCKSPEICHER	186-6189	1	KLIMAANLAGENLEITUNGEN	856
LEUCHTE (24 V)	3E-8825	2	INSTRUMENTENTAFEL	881
		1	INSTRUMENTENTAFEL	882
		2	RÜCKSPIEGEL	862
	7N-5876	2	GETRIEBE- U. MULDENSTEUERUNG	840
	110-2079	3	INSTRUMENTENTAFEL	878
		2	INSTRUMENTENTAFEL	881
LEUCHTE (24 V) (A/C)	3E-8825	2	INSTRUMENTENTAFEL	879
LEUCHTE (24 V) (ARBEIT HINTEN)	3E-8825	1	INSTRUMENTENTAFEL	878
LEUCHTE (24 V) (FRONT/HECK/ INSTRUMENTENBRETT)	3E-8825	2	INSTRUMENTENTAFEL	879
LEUCHTE (24 V) (INSTRUMENTENTAFEL)	107-1983	13	INSTRUMENTENTAFEL	878
LEUCHTE (24 V) (NOTLENKUNG)	3E-8825	2	INSTRUMENTENTAFEL	879
LEUCHTE (24 V) (QUERACHSENSPERRE)	3E-8825	2	INSTRUMENTENTAFEL	878
LEUCHTE (24 V) (STARTHILFE)	3E-8825	1	INSTRUMENTENTAFEL	879
LEUCHTE (24 V) (ÜBERWACHUNGSSYSTEM)	3E-8825	1	INSTRUMENTENTAFEL	878
LEUCHTE (24 V) (WARNBLINKLEUCHTE)	3E-8825	1	INSTRUMENTENTAFEL	879
LEUCHTE (*24-VOLT)	3E-8825	2	RÜCKSPIEGEL	860
LUFTFILTER	119-3355	1	*AIR CONDITIONER & MOUNTING GP	818
	174-8145	1	KLIMAANLAGE	820
		1	KLIMAANLAGE	825
LUFTFILTER (KLIMAANLAGE)	119-3355	1	KLIMAANLAGE UND AUFHÄNGUNG	815
	174-8145	1	KLIMAANLAGE	822
SCHEIBENWISCHERBLATT	6V-7419	1	SCHEIBENWISCHER UND -WASCHANLAGE	923
		1	SCHEIBENWISCHER UND -WASCHANLAGE	927
	130-7034	1	SCHEIBENWISCHER UND -WASCHANLAGE	927
SCHEIBENWISCHERBLATT (HINTEN)	130-7034	1	SCHEIBENWISCHER UND -WASCHANLAGE	925
SICHERHEITSGURT	8Y-4030	1	BEIFAHRERSITZ	906
	183-3648	1	FAHRERSITZ	893
	222-0345	1	BEIFAHRERSITZ	905
		1	FAHRERSITZ	894
		1	FAHRERSITZ	903
		1	SCHWINGSITZ	909

* ÜBERSETZUNG ZUM ZEITPUNKT DER DRUCKLEGUNG NICHT VORHANDEN

WARTUNGSTEILE

BESCHREIBUNG	ERSATZTEIL-NUMMER	MENGE	VERWENDET IN	SEITE
HYDRAULIKSYSTEM				
ABLASSSTOPFEN	4B-7739	1	ABLASSLEITUNGEN	676
	9J-7031	1	HYDRAULIKTANK	744
		1	HYDRAULIKTANK	748
ABLASSSTOPFEN (HYDRAULIKTANK)	9J-7031	1	HYDRAULIKTANK	752
DICHTUNG	9H-6454	1	HYDRAULIKTANK	744
		1	HYDRAULIKTANK	748
		1	TANKABDECKUNG	667
EINFÜLLSTUTZENKAPPE	7H-1447	1	TANKABDECKUNG	667
EINFÜLLSTUTZENKAPPE (HYDRAULIKÖL)	7H-1447	1	HYDRAULIKTANK	744
		1	HYDRAULIKTANK	748
ENTLÜFTER (7 PSI)	157-7911	1	TANKABDECKUNG	667
ENTLÜFTER (7 PSI) (HYDRAULIK)	157-7911	1	HYDRAULIKTANK	744
		1	HYDRAULIKTANK	748
FILTERSIEB	5D-7927	1	HYDRAULIKTANK	744
		1	HYDRAULIKTANK	748
		1	TANKABDECKUNG	667
ÖLFILTERELEMENT (HYDRAULISCH)	132-8876	3	HYDRAULIKTANK	744
		3	HYDRAULIKTANK	748
		2	TANKABDECKUNG	667
SCHLÜSSEL	5P-8500	1	HYDRAULIKTANK	744
		1	HYDRAULIKTANK	748
SCREEN	6E-5066	2	SAMMELVENTIL	767
	119-4885	1	HYDRAULIKTANK	744
		1	HYDRAULIKTANK	748
		1	TANKABDECKUNG	667
SIEB	6J-3795	1	TANKABDECKUNG	667
	150-8457	1	HYDRAULIKTANK	744
		1	HYDRAULIKTANK	748

* ÜBERSETZUNG ZUM ZEITPUNKT DER DRUCKLEGUNG NICHT VORHANDEN

WARTUNGSTEILE

BESCHREIBUNG	ERSATZTEIL-NUMMER	MENGE	VERWENDET IN	SEITE
KRAFTSTOFFSYSTEM				
DICHTUNG (KRAFTSTOFFENTLÜFTUNGSPUMPE)	1P-0436	1	KRAFTSTOFFENTLÜFTUNGSPUMPE U. SICHERHEITSFILTER	173
EINFÜLLKAPPE (KRAFTSTOFF, SPERRUNG, LÜFTUNG)	7X-7700	1	KRAFTSTOFFTANK	185
		1	KRAFTSTOFFTANK	187
		1	KRAFTSTOFFTANK	189
		1	KRAFTSTOFFTANK U. BEFESTIGUNG	176
		1	KRAFTSTOFFTANK U. BEFESTIGUNG	178
		1	KRAFTSTOFFTANK U. BEFESTIGUNG	181
FILTER (KRAFTSTOFF, WASSERABSCHEIDER) (HAUPTELEMENT)	133-5673	1	WASSERABSCHEIDER- U. KRAFTSTOFFILTER	158
KRAFTSTOFFFILTERKAPPE (UMRÜSTSATZ)	171-1590	1	KRAFTSTOFFTANK	185
		1	KRAFTSTOFFTANK U. BEFESTIGUNG	176
KRAFTSTOFFILTER	1R-0749	1	KRAFTSTOFFENTLÜFTUNGSPUMPE U. SICHERHEITSFILTER	173
KRAFTSTOFFSIEB	9P-7121	1	KRAFTSTOFFTANK	185
		1	KRAFTSTOFFTANK	187
		1	KRAFTSTOFFTANK	189
		1	KRAFTSTOFFTANK U. BEFESTIGUNG	176
		1	KRAFTSTOFFTANK U. BEFESTIGUNG	178
		1	KRAFTSTOFFTANK U. BEFESTIGUNG	181
MAGNETSTOPFEN (KRAFTSTOFFTANK)	5P-4484	1	KRAFTSTOFFTANK	185
		1	KRAFTSTOFFTANK	187
		1	KRAFTSTOFFTANK	189
		1	KRAFTSTOFFTANK U. BEFESTIGUNG	176
		1	KRAFTSTOFFTANK U. BEFESTIGUNG	178
		1	KRAFTSTOFFTANK U. BEFESTIGUNG	181

* ÜBERSETZUNG ZUM ZEITPUNKT DER DRUCKLEGUNG NICHT VORHANDEN

WARTUNGSTEILE

BESCHREIBUNG	ERSATZTEIL-NUMMER	MENGE	VERWENDET IN	SEITE
KRAFTÜBERTRAGUNG				
ANSAUGSIEB	3S-3875	1	PUMPENANTRIEB	372
		1	PUMPENANTRIEB	374
ANSAUGSIEB (GETRIEBE)	3S-3875	1	MAGNETSIEB	441
DRUCKBEGRENZUNGSVENTIL	6U-1989	1	GETRIEBEENTLÜFTER	335
		1	GETRIEBEENTLÜFTER	336
		1	GETRIEBEENTLÜFTER	337
ENTLÜFTER	8X-4575	2	GETRIEBEENTLÜFTER	338
FILTERSIEB (GETRIEBE)	6T-7640	1	VENTIL - SCHALT- UND DRUCKSTEUERUNG	470
MAGNETSTOPFEN	5P-4484	1	MITTELACHSE	319
		1	MITTELACHSE	321
		1	MITTELACHSE	323
		1	SEITENANTRIEB UND RAD	477
		1	SEITENANTRIEB UND RADBREMSE	484
		1	VERTEILERGETRIEBEANTRIEB	404
		1	VORDERACHSE	325
		1	VORDERACHSE	327
MAGNETSTOPFEN (ABLASSEN)	5P-4484	1	VERTEILERGETRIEBEANTRIEB	398
MAGNETSTOPFEN (ACHSGEHÄUSE)	5P-4484	1	VORDERACHSE	329
		1	VORDERACHSE	331
MAGNETSTOPFEN (DIFFERENTIAL)	5P-4484	1	VERTEILERGETRIEBEANTRIEB	380
		1	VERTEILERGETRIEBEANTRIEB	386
		1	VERTEILERGETRIEBEANTRIEB	392
MAGNETSTOPFEN (SEITENANTRIEB)	5P-4484	1	SEITENANTRIEB UND RADBREMSE	480
		1	SEITENANTRIEB UND RADBREMSE	482
ÖLFILTERELEMENT (HYDRAULISCH)	132-8875	1	ÖLFILTER	377
	144-6691	1	ÖLFILTER	378
ÖLFILTERELEMENT (HYDRAULISCH) (STANDARD EFFIZIENZ)	1R-0719	1	ÖLFILTER	377
SCHRAUBE	5P-4483	1	MITTELACHSE	319
		1	MITTELACHSE	321
	8C-4424	1	VERTEILERGETRIEBEANTRIEB	393
		1	VERTEILERGETRIEBEANTRIEB	400
		1	VERTEILERGETRIEBEANTRIEB	406
	138-1510	1	PUMPENANTRIEB	372
		1	PUMPENANTRIEB	374
KÜHLSYSTEM				
DICHTUNG - THERMOSTATABDECKUNG (TEMPERATURREGELGEHÄUSE)	4N-1156	1	KÜHLWASSERLEITUNGEN	104
KÜHLERKAPPE (7 PSI)	6L-8617	1	KÜHLMITTELBEHÄLTER	123
		1	KÜHLMITTELBEHÄLTER	124
LIPPENDICHTUNG (KÜHLWASSERTHERMOSTAT)	3S-9643	1	KÜHLWASSERLEITUNGEN	104
SCHLAUCH - ADAPTER	4N-6749	3	KÜHLMITTELLEITUNGEN	102
SCHLAUCH - KNIESTÜCK	169-5836	1	KÜHLMITTELLEITUNGEN	102
WASSERPUMPENFILTER	136-3742	1	KÜHLWASSERPUMPE	108
WASSERTEMPERATURREGLER (92 GRAD) (KÜHLMITTEL)	248-5513	1	KÜHLWASSERLEITUNGEN	104

* ÜBERSETZUNG ZUM ZEITPUNKT DER DRUCKLEGUNG NICHT VORHANDEN

WARTUNGSTEILE

BESCHREIBUNG	ERSATZTEIL-NUMMER	MENGE	VERWENDET IN	SEITE
LUFTANSAUG- UND ABGASSYSTEM				
HAUPTFILTER	142-1340	1	LUFTREINIGER	132
*HOSE-AIR INLET	7E-8630	4	DRUCKLUFTLEITUNGEN	136
SICHERHEITSFILTER	142-1403	1	LUFTREINIGER	132
MOTOR (GRUNDAUSFÜHRUNG)				
ABLASSSTOPFEN (ÖLWANNE)	9X-6451	1	ÖLWANNE	76
	206-7331	1	ÖLWANNE	76
ENTLÜFTER (KURBELGEHÄUSE)	9Y-2988	1	VENTILDECKEL	19
ÖLEINFÜLLSTUTZEN	113-4885	1	VENTILDECKEL	19
SCHMIERSYSTEM				
ÖLFILTER	1R-0716	1	ÖLFILTER	89
		1	ÖLFILTER	90
SCHLAUCHLEITUNG	9Y-5281	1	ENTDUNSTER	92
	123-9711	1	ENTDUNSTER	92

* ÜBERSETZUNG ZUM ZEITPUNKT DER DRUCKLEGUNG NICHT VORHANDEN

INDEX

Name	Page
A	
ACCUMULATOR & MTG GP-SUSP	787, 788
ACCUMULATOR GP-BRAKE	570, 571, 574
ACCUMULATOR GP-BRAKE–CHARGED	566, 569, 572
ACCUMULATOR GP-BRAKE–UNCHARGED	568, 573
ACCUMULATOR GP-HYDRAULIC–UNCHARGED	567
ACCUMULATOR GP-REFRIGERANT	856
ACCUMULATOR GP-SUSPENSION–CHARGED	789, 791, 793
ACCUMULATOR GP-SUSPENSION–UNCHARGED	790, 792, 794
ACTUATOR GP-PILOT CONTROL	662, 663
ACTUATOR GP-ROTARY–TRANSMISSION CONTROL	315
ADAPTER GP-PUMP DRIVE	9
ADJUSTER GP-SEAT	812
AFTERCOOLER GP-AIR	125, 127, 129
AIR CLEANER GP	131, 132
AIR COMPRESSOR GP-SEAT	813, 814
AIR CONDITIONER & MOUNTING GP	815, 818
AIR CONDITIONER GP	819, 822, 825
ALARM GP	195
ALTERNATOR GP-CHARGING	196, 198, 200, 201
ARMREST GP	829
ARMREST GP–LH	830
ARMREST GP–RH	831
ASHTRAY AS	852
ATOMIZER AS-ETHER	255
AXLE & FRAME AR	317
AXLE & FRAME AR–REAR	317
AXLE AR-CENTER	318
AXLE AR-FRONT	318
AXLE AR-REAR	318
AXLE GP-CENTER	319, 321, 323
AXLE GP-FRONT	325, 327, 329, 331
AXLE GP-REAR	333
B	
BAFFLE GP-RADIATOR	486
BASE GP-FUEL FILTER	155, 156
BASE GP-VALVE COVER & INJ HARN	10
BATTERY & WIRING GP	202, 204
BATTERY (12-VOLT)	202, 204, 256
BEARING	523
BELT TENSIONER GP	11
BLADE AS-WIPER	923, 927
BLADE AS-WIPER (REAR)	925
BLOCK GP-JUNCTION	208
BODY GP-TRUCK	488, 490, 492
BRAKE GP-PARKING	575, 576
BRAKE GP-SERVICE	577, 579, 581
BREATHER AS	338
BREATHER AS (CRANKCASE)	19
BREATHER GP-POWER TRAIN	338
BREATHER GP-POWER TRAIN–CENTER	336
BREATHER GP-POWER TRAIN–FRONT	335
BREATHER GP-POWER TRAIN–REAR	337
BREATHER (7-PSI)	667
BREATHER (7-PSI) (HYDRAULIC)	744, 748
BUMPER GP-FRONT	494
C	
CAB AR	832, 833
CAMSHAFT GP	12
CAP	592, 597, 602
CAP AS-FILLER (FUEL, LOCKING, VENTED)	176

INDEX

Name	Page
	178
	181
	185
	187
	189
CAP AS-OIL FILLER	19
CAP-FILLER	380
	386
	398
	404
	667
CAP-FILLER (HYDRAULIC OIL)	744
	748
CAP GP-FUEL FILLER (CONVERSION KIT)	176
	185
CAP-RADIATOR (7-PSI)	123
	124
CAP-VENTED	923
CARRIER GP-DIFFERENTIAL	341
CARRIER GP-DIFFERENTIAL–FRONT	340
CASE GP-TRANSMISSION	342
	344
CIRCUIT BREAKER AS (10-AMPERE)	212
CIRCUIT BREAKER AS (10-AMPERE) (KEY)	209
CIRCUIT BREAKER AS (15-AMPERE)	212
CIRCUIT BREAKER AS (15-AMPERE) (ADEM III)	209
CIRCUIT BREAKER AS (15-AMPERE) (HEADLAMP)	209
CIRCUIT BREAKER GP	209
	212
CIRCUIT BREAKER GP (20-AMPERE)	242
CIRCUIT BREAKER GP (20-AMPERE) (HOOD)	240
CIRCUIT BREAKER GP (80-AMPERE)	242
CIRCUIT BREAKER GP (80-AMPERE) (MAIN/ALT)	240
CLAMP GP	501
COMPRESSOR GP-REFRIGERANT	834
	835
CONDENSER & MTG GP-REFRIGERANT	836
CONDENSER GP-REFRIGERANT	837
CONNECTION GP-ELECTRICAL	214
CONTROL & MTG GP-ENGINE ELEK	215
	217
CONTROL & MTG GP-POWER TRAIN	219
	220
CONTROL GP-DIFFERENTIAL LOCK	346
	348
	352
CONTROL GP-ELECTROHYDRAULIC (HOIST)	840
CONTROL GP-ELECTROHYDRAULIC (TRANSMISSION)	840
CONTROL GP-ENGINE ELECTRONIC	221
	222
	223
	224
	225
CONTROL GP-GOVERNOR	157
CONTROL GP-HOIST	664
CONTROL GP-MONITOR	292
CONTROL GP-MONITOR–DIMMER	838
CONTROL GP-PARKING BRAKE	583
	585
CONTROL GP-SERVICE BRAKE	588
	590
	592
	597
	602
CONTROL GP-STEERING	619
CONTROL GP-TMSN & HOIST	839
CONTROL GP-TMSN & HOIST–ELECTRONIC	840
CONTROL GP-TRANSMISSION HYD	356
	359
CONTROL GP-UNPROGRAMMED	219
	227
	228
CONTROL GP-UNPROGRAMMED–POWER TRAIN	226
CONTROL GP-UNPROGRAMMED (ELECTRONIC MONITORING SYSTEM)	878
CONTROL GP-UNPROGRAMMED (MACHINE)	228
CONVERTER GP-ELECTRICAL (24-VOLT TO 12-VOLT)	297
CONVERTER GP-ELECTRICAL (24-VOLT TO 12-VOLT) (AIR CONDITIONER)	822
COOLANT HEATER LINES	858
COOLER & MTG GP-HYDRAULIC OIL	666
COOLER GP-BRAKE & TORQUE CONV	363
COOLER GP-ENGINE OIL	98
COOLING AR	99
CORE AS (ENGINE OIL COOLER)	98
CORE GP-OIL COOLER–TRANSMISSION	605
CORE GP-OIL COOLER (TRANSMISSION)	605
COVER GP-ACCESSORY DRIVE	13
COVER GP-CYLINDER BLOCK	14
	15
	16
COVER GP-FLYWHEEL HOUSING	17
COVER GP-FRONT HOUSING	18
COVER GP-SHIPPING	928
COVER GP-TANK	667
COVER GP-TORQUE CONVERTER	365
COVER GP-VALVE MECHANISM	19
CRANKSHAFT GP	20
CYLINDER & MTG GP-HOIST	669

INDEX

Name	Page
CYLINDER & MTG GP-STEERING	620, 621, 622
CYLINDER & MTG GP-SUSPENSION	795, 796
CYLINDER & MTG GP-TAILGATE	671
CYLINDER AS-ETHER	255
CYLINDER BLOCK GP	21, 22, 23, 24, 26, 28, 30, 31
CYLINDER GP-CAB TILT	841
CYLINDER GP-HOIST	672
CYLINDER GP-STEERING	627
CYLINDER GP-STEERING–LH	625
CYLINDER GP-STEERING–RH	623
CYLINDER GP-SUSPENSION	797, 799
CYLINDER GP-TAILGATE	673
CYLINDER HEAD AS	32, 33, 34
CYLINDER HEAD GP	37, 39, 41, 42, 43
D	
DAMPER GP	45
DIFFERENTIAL & BEVEL GEAR GP–CENTER AXLE	368
DIFFERENTIAL & BEVEL GEAR GP–FRONT	366
DIFFERENTIAL GP	371
DOOR GP-CAB	842
DRIVE GP-ACCESSORY	46, 47
DRIVE GP-PUMP	48, 372, 374
E	
ELBOW GP-EXHAUST	133
ELECTRONICS GP-MONITOR	228
ELECTRONICS GP-POWER TRAIN	228
ELEMENT-FILTER (FUEL, WATER SEPARATOR) (PRIMARY)	158
ENGINE AR-COMPLETE	3, 5
ENGINE AR-CORE	7, 8
ENGINE BRAKE GP	49, 50
EXTENSION GP-BACKREST	893, 894
EXTENSION GP-FENDER	495
F	
FAN GP-SUCTION	100, 101
FASTENER GP-CYLINDER HEAD	37
FASTENER GP-FRONT HOUSING	51, 52, 53
FASTENER GP-OIL PUMP MOUNTING–ENGINE	88
FENDER & SUPPORT GP	496
FILLER GP-POWER TRAIN OIL	376
FILM (HYDRAULIC ACCUMULATOR)	789, 790, 791, 792, 794
FILM-IDENTIFICATION (FUSE)	209
FILM-IDENTIFICATION (FUSE, CIRCUIT BREAKER)	209
FILM-IDENTIFICATION (GROUP NUMBER)	825
FILM-IDENTIFICATION (GROUP NUMBER) (AIR CONDITIONER)	822
FILM-IDENTIFICATION (12V/24V)	212
FILM-IDENTIFICATION (12V/24V)	209
FILM-INSTRUCTION (SEAT ADJUSTMENT)	910, 912
FILM (INSTRUMENT PANEL)	881
FILM (PLATE-NAME)	789
FILM (SEAT CUSHION IDENTIFICATION)	874, 875
FILM-TRANSMISSION OIL	287, 288
FILM-WARNING (HIGH PRESSURE CYLINDER)	799
FILM-WARNING (NO WELD)	886
FILM-WARNING (RECOIL SPRING)	930, 933, 936
FILTER-AIR	818, 820, 825
FILTER-AIR (AIR CONDITIONER)	815, 822
FILTER AS-ENGINE OIL	89, 90
FILTER AS-FUEL	173

INDEX

Name	Page
FILTER ELEMENT AS-OIL (HYDRAULIC)	377, 378, 667, 744, 748
FILTER ELEMENT AS-OIL (HYDRAULIC) (STANDARD EFFICIENCY)	377
FILTER ELEMENT AS-PRIMARY AIR	132
FILTER ELEMENT AS-SEC AIR	132
FILTER GP-ENGINE OIL	89, 90
FILTER GP-OIL	377, 378
FILTER GP-WATER SEP & FUEL–PRIMARY	158
FILTER-SECONDARY	173
FILTER-WATER PUMP	108
FINAL DRIVE & WHEEL	477, 480, 482, 484
FLASHER AS	294, 297
FLOOR MAT	850
FLYWHEEL GP	54
FRAME AR	499
FRAME GP-CENTER SUSPENSION	801
FRAME GP-FRONT	500
FRAME GP-FRONT SUSPENSION	803
FRAME GP-REAR	501
FRAME GP-REAR SUSPENSION	805
FUMES DISPOSAL GP	92
FUSE (10-AMPERE)	209, 212
FUSE (20-AMPERE)	209, 212

G

Name	Page
GASKET	667, 744, 748
GASKET (FUEL PRIMING PUMP)	173
GASKET-REGULATOR COVER (TEMPERATURE REGULATOR HOUSING)	104
GAUGE GP-FEELER	992
GAUGE GP-OIL LEVEL (DIPSTICK)	93, 379
GAUGE-LIQUID LEVEL (FUEL)	176, 185
GAUGE-LIQUID LEVEL (FUEL)	178, 187, 189
GAUGE-LIQUID LEVEL (FUEL)	181
GEAR GP-CAM (96-TEETH)	56
GEAR GP-CAMSHAFT	55
GEAR GP-FRONT	56, 58
GEAR GP-OUTPUT TRANSFER	380, 386, 392, 398, 404
GEAR GP-REAR	60, 62
GENERAL AR	1
GUARD GP-BRAKE–FRONT AXLE	503
GUARD GP-BRAKE LINES–CENTER AXLE	504
GUARD GP-CRANKCASE	505
GUARD GP-HYDRAULIC TANK	506, 508
GUARD GP-LINES	510, 511
GUARD GP-MUD	512
GUARD GP-PLATFORM	513, 515
GUARD GP-RADIATOR	517, 519, 521, 522
GUARD GP-WINDOW	844, 845

H

Name	Page
HANDLE GP-MODULAR (HOIST)	840
HANDLE GP-MODULAR (TRANSMISSION)	840
HARNESS AS-CHASSIS	825
HARNESS AS-ENGINE	299
HARNESS AS-HEATER & AIR COND	819, 822, 823
HARNESS AS-HEATER & AIR COND (POWER)	825
HARNESS AS-POWER	823
HARNESS AS-TRANSMISSION	356, 359
HARNESS AS-VALVE (SEAT AIR COMPRESSOR)	912
HARNESS AS-WIRING (ELECTRONIC UNIT INJECTOR)	10
HEATER GP-FUEL (WATER SEPARATOR, 12-VOLT)	158
HITCH GP-OSCILLATING	523
HOOD & GUARD AR	525
HOOD GP-ENGINE	526, 529, 532
HORN AS (24-VOLT, HIGH TONE)	290, 308
HOSE	92

INDEX

Name	Page
HOSE-ADAPTER	102
HOSE-AIR INLET	136
HOSE-ELBOW	102
HOUSING GP-ENGINE BRAKE	64
	66
HOUSING GP-FLYWHEEL	68
HOUSING GP-FRONT	70
HYDRAULIC AR-MACHINE	675

I

INJECTOR GP-FUEL	159
INSTALLATION AR-MACHINE	1
	2
INSTALLATION GP-RADIO	846

K

KEY	744
	748
KEY (BATTERY DISCONNECT)	277
KIT-ADJUSTER (ARMREST)	829
KIT-AIR COMPRESSOR	910
KIT-AIR VALVE	912
KIT-ALTERNATOR TERMINAL	196
KIT-BEARING (ALTERNATOR)	198
KIT-BEARING (STARTING MOTOR)	262
KIT-BRUSH (STARTING MOTOR)	262
	266
	271
KIT-BUSHING (STARTING MOTOR)	266
	271
KIT-CAP FILTER (FUEL TANK)	176
	178
	182
	185
	187
	189
KIT-COLUMN (STEERING COLUMN)	656
KIT-CUSHION (ARMREST)	829
KIT-DIAL SENSOR	176
	178
	182
	185
	187
KIT-FASTENER	910
KIT-FUEL FILTER & WATER SEP	158
KIT-GAS STRUT (STEERING COLUMN TILT)	656
KIT-HARDWARE (ALTERNATOR)	198
KIT-HARDWARE (STARTING MOTOR)	262
KIT-INDICATOR (RIDE)	910
KIT-INSULATOR (STARTING MOTOR)	266
	271
KIT-LEVER (STARTING MOTOR)	266
	271
KIT-PISTON	615
KIT-PIVOT	656
KIT-RECEPTACLE (2 PIN)	230
	237
KIT-RELAY TERMINAL (ALTERNATOR)	196
KIT-RETAINER (ENGINE BRAKE HOUSING)	64
KIT-ROLLER	910
KIT-SEAL	474
	653
	658
	659
	673
	721
	723
	789
	791
	792
	793
KIT-SEAL (CHECK VALVE)	767
KIT-SEAL (CHECK VALVE) (HYDRAULIC FAN, REVERSING)	762
KIT-SEAL (DIVERTER VALVE)	767
	769
	770
KIT-SEAL (GEAR MOTOR)	725
KIT-SEAL (RELIEF VALVE)	767
KIT-SEAL (SHUTTLE VALVE)	767
KIT-SEAL (SOLENOID VALVE)	473
	475
	618
KIT-SHAFT (STEERING COLUMN)	656
KIT-SLIDER BLOCK	907
KIT-SLIDER BLOCK (SEAT)	908
KIT-SPRING	840
KIT-STARTING MOTOR PIN	262
KIT-STARTING MOTOR SEAL	262
KIT-TERMINAL (ALTERNATOR)	198
KIT-TERMINAL (STARTING MOTOR)	258
KIT-TERMINAL (STARTING MOTOR)	274
KIT-TETHER	910
	912
KIT-TILT LEVER (STEERING COLUMN)	656
KIT-WASHER (STARTING MOTOR)	262

L

LAMP GP-DOME	229
LAMP GP-DOME (24-VOLT, WITH SWITCH)	297
LAMP GP-FLOOD–CAB	230
	231
LAMP GP-FLOOD (24-VOLT)	292
LAMP GP-HEAD	308
LAMP GP-HEAD–HIGH BEAM	233
LAMP GP-HEAD–LOW BEAM	232
LAMP GP-HEAD (HIGH BEAM)	288

INDEX

Name	Page
LAMP GP-HEAD (LOW BEAM)	288
LAMP GP-SIGNAL–FRONT	237
LAMP GP-SIGNAL–FRONT TURN	234
LAMP GP-SIGNAL–LH–REAR	236
LAMP GP-SIGNAL–RH–REAR	235
LAMP GP-SIGNAL–STOP, TAIL, TURN	238
LAMP GP-SIGNAL (24-VOLT)	288
	308
LAMP-HALOGEN (24-VOLT, 65-WATT)	231
	232
	233
LAMP-HALOGEN (24 VOLT)(65 WATT) (FLOODLIGHT)	230
LAMP (24 VOLT)	237
LAMP (24-VOLT)	229
	235
	236
	287
	288
	840
	860
	862
	878
	881
	882
LAMP (24-VOLT) (A/C)	879
LAMP (24-VOLT) (CROSS AXLE LOCK)	878
LAMP (24-VOLT) (HAZARD FLASHER)	879
LAMP (24-VOLT) (HEAD/TAIL DASH)	879
LAMP (24-VOLT) (INSTRUMENT PANEL)	878
LAMP (24-VOLT) (MONITORING SYSTEM)	878
LAMP (24-VOLT) (REAR WORK)	878
LAMP (24-VOLT) (SECONDARY STEERING)	879
LAMP (24-VOLT) (STARTING AID)	879
LAMP (24-VOLT, 21-WATT)	234
	235
	236
	238
LAMP (24-VOLT, 5-WATT)	238
LENS-AMBER	234
LENS AS (FLOODLIGHT)	230
LENS AS (HIGH BEAM)	233
LENS AS (LOW BEAM)	232
LENS-CLEAR	237
LENS (RED)	287
	288
LENS (STOP, TAIL, TURN)	235
	236
	238
LEVER GP-STEERING COLUMN	292
LIFTING GP-ENGINE	72
	73
LIGHTER AS (CIGAR, 24-VOLT)	878
	881
LINER GP-BODY	535
LINER GP-CAB	847
	852
LINER GP-CAB–SOUND SUPPRESSION	850
LINES GP-AIR	134
	135
	136
	137
LINES GP-AIR CONDITIONER	854
	856
LINES GP-AXLE OIL COOLER	410
	412
	416
LINES GP-COOLANT	102
LINES GP-DRAIN	676
LINES GP-ENGINE OIL	94
LINES GP-ENGINE OIL FILTER	95
LINES GP-FUEL	160
	162
	164
	166
LINES GP-FUEL–FUEL	168
LINES GP-GREASE	536
	538
	540
LINES GP-HEATER	858
LINES GP-HOIST	677
	679
LINES GP-HYDRAULIC FAN	680
	683
	687
LINES GP-PILOT	692
	696
	698
LINES GP-POWER TRAIN COOLER	420
LINES GP-PRESSURE TEST	700
LINES GP-PUMP	705
LINES GP-PUMP–BRAKE CONTROL	629
	632
LINES GP-PUMP–HYDRAULIC FAN	702
LINES GP-PUMP–RADIATOR FAN	707
	709
LINES GP-RETURN–HOIST PILOT	711
	713
	715
LINES GP-SERVICE BRAKE–CENTER AXLE	606
	612
LINES GP-SERVICE BRAKE–FRONT AXLE	608
	610
LINES GP-STEERING	635
	637
	639
	641
	644
	646
LINES GP-SUSPENSION	807

INDEX

Name	Page
LINES GP-TAILGATE	717
LINES GP-TRANSMISSION OIL	421
LINES GP-TURBOCHARGER OIL	96
LINES GP-WATER	104
LINK GP-STEERING FRAME LOCK	542
	543
LUBRICATION AR-AUTOMATIC	544
M	
MANIFOLD GP-EXHAUST	138
MIRROR GP-REAR VIEW	863
	865
	866
MIRROR GP-REAR VIEW–HEATED	860
	862
MODULE AS (INTERMITTENT WIPER)	298
MODULE GP-INSTRUMENT PANEL	881
MODULE GP-QUAD GAUGE	867
MODULE GP-SPEEDOMETER & TACH	868
MOTOR & MTG GP-HYDRAULIC FAN	106
MOTOR GP-ELECTRIC– SECONDARY STEERING	239
MOTOR GP-GEAR– AIR-TO-AIR AFTERCOOLER	721
	723
	725
MOTOR GP-GEAR–HYDRAULIC FAN	719
	720
MOTOR GP-WINDOW WIPER	923
	925
	927
MOUNTING GP-ALTERNATOR	74
MOUNTING GP-ENGINE	75
MOUNTING GP-ROPS	869
	871
MOUNTING GP-TRANSFER GEAR	424
MOUNTING GP-TRANSMISSION	425
MUFFLER GP	139
	143
P	
PAN GP-BACKREST	873
	874
	875
	876
PAN GP-OIL	76
PANEL GP-CAB	877
PANEL GP-CIRCUIT BREAKER	240
	242
PANEL GP-INSTRUMENT	878
	881
PIN GP-HITCH	545
PIPE AR-EXHAUST	146
PIPE GP-EXHAUST–FRONT	147
PIPE GP-EXHAUST–REAR	148
	149
PIPE GP-EXHAUST (INCLUDES PIPE AND CLAMP)	139
PISTON & ROD GP	77
PLANETARY GP-TRANSFER GEAR	426
PLANETARY GP-TRANSMISSION	428
PLATE & FILM GP	930
	933
	936
	991
PLATE & FILM GP–ARABIC	939
	941
PLATE & FILM GP–DANISH	975
	977
PLATE & FILM GP–DUTCH	951
	953
PLATE & FILM GP–FINNISH	987
	989
PLATE & FILM GP–FRENCH	971
	973
PLATE & FILM GP–GERMAN	955
	957
PLATE & FILM GP–GREEK	947
	949
PLATE & FILM GP–ITALIAN	943
	945
PLATE & FILM GP–JAPANESE	983
	985
PLATE & FILM GP–NORWEGIAN	979
	981
PLATE & FILM GP–PORTUGUESE	959
	961
PLATE & FILM GP–SPANISH	963
	965
PLATE & FILM GP–SWEDISH	967
	969
PLATE-INSTRUCTION (A/C)	930
	933
	936
PLATE-SERIAL NUMBER (TRANSMISSION)	429
PLATE-WARNING (READ OPERATION MANUAL)	930
	933
	936
PLUG	319
	321
	372
	374
	393
	400
	406
PLUG-DRAIN	676
	744

INDEX

Name	Page
	748
PLUG-DRAIN (HYDRAULIC TANK)	752
PLUG-DRAIN (OIL PAN)	76
PLUG GP-CYLINDER BLOCK	79
PLUG GP-CYLINDER HEAD	80
	81
	82
PLUG-MAGNETIC	319
	321
	323
	325
	327
	404
	477
	484
PLUG-MAGNETIC (AXLE HOUSING)	329
	331
PLUG-MAGNETIC (DIFFERENTIAL)	380
	386
	392
PLUG-MAGNETIC (DRAIN)	398
PLUG-MAGNETIC (FINAL DRIVE)	480
	482
PLUG-MAGNETIC (FUEL TANK)	176
	178
	181
	187
PLUG-MAGNETIC (FUEL TANK)	185
	189
POWER TRAIN AR	434
PULLEY GP-CRANKSHAFT	83
PUMP & MOTOR GP-SEC STEERING	649
PUMP & MTG GP-BRAKE	614
PUMP & MTG GP-FUEL TRANSFER	171
	172
PUMP & MTG GP-HOIST	727
PUMP & MTG GP-HYDRAULIC	728
PUMP & MTG GP-HYDRAULIC FAN	729
PUMP & MTG GP-SECONDARY STEER	650
PUMP & MTG GP-STEERING	651
	652
PUMP & MTG GP-TRANSFER GEAR	435
PUMP GP-ENGINE OIL	97
PUMP GP-FUEL PRIMING	173
PUMP GP-FUEL PRM & SEC FILTER	173
PUMP GP-FUEL TRANSFER	171
	172
PUMP GP-GEAR	436
	731
PUMP GP-GEAR–HOIST	730
PUMP GP-GEAR–HYDRAULIC FAN	732
PUMP GP-GEAR–SEC STEERING	653
PUMP GP-METERING	655
PUMP GP-PISTON–BRAKE	735
PUMP GP-PISTON–STEERING	733
	737
PUMP GP-TRANSMISSION	438
PUMP GP-WATER	107
	108

R

RADIATOR GP	110
	112
	114
	116
RECEIVER-DRYER GP (AIR CONDITIONER)	856
RECLINER GP-SEAT	884
	885
REDUCER GP	717
REGULATOR AS-VOLTAGE (24-VOLT)	196
REGULATOR AS-VOLTAGE (24-VOLT) (ALTERNATOR)	198
REGULATOR-WATER TEMPERATURE (92-DEG C) (COOLANT)	104
RELAY AS (24-VOLT)	290
RELAY AS (24-VOLT)	298
RELAY AS (24-VOLT) (BACKUP ALARM)	292
RELAY AS (24-VOLT) (HEADLAMP)	292
RELAY AS (24-VOLT) (HORN)	292
RELAY AS (24-VOLT) (INTERMITTENT WIPER)	292
RELAY AS (24-VOLT) (SECONDARY STEERING)	292
RELAY AS (24-VOLT) (START)	301
RELAY AS (24-VOLT) (START AID)	292
RIM GP-DEMOUNTABLE	439
	440
ROCKER ARM GP	84
ROPS GP	886
ROTATING GP-PUMP–BRAKE	740
ROTATING GP-PUMP–STEERING	739

S

SCREEN	667
	744
	748
	767
SCREEN AS	667
	744
	748
SCREEN-FILTER (TRANSMISSION)	470
SCREEN GP-MAGNETIC–DIFFERENTIAL LOCK	441
SCREEN-SUCTION	372
	374
SCREEN-SUCTION (TRANSMISSION)	441
SEAL GP	108
SEAL GP-CRANKSHAFT	68

INDEX

Name	Page
SEAL GP-CRANKSHAFT (FRONT)	20
SEAL-LIP TYPE (WATER TEMPERATURE REGULATOR)	104
SEAT & MOUNTING GP	889 890 891
SEAT BELT GP	892 893 894 903 905 906 909
SEAT GP	893 894 895 897 899 901 903
SEAT GP-COMPANION	904 905 906
SEAT GP-SUSPENSION	907 908 909
SENDER AS-FUEL LEVEL	176 178 181 185 187 189
SENSOR & MTG GP-PRESSURE	244
SENSOR AS-POSITION	840
SENSOR GP-POSITION	840
SENSOR GP-POSITION–TRANSMISSION SPEED	245
SENSOR GP-POSITION (ROTARY)	157
SENSOR GP-PRESSURE	246 247 248 249
SENSOR GP-PRESSURE (ENGINE OIL)	28
SENSOR GP-PRESSURE (FUEL)	155 156
SENSOR GP-PRESSURE (TURBOCHARGER INLET)	290 301
SENSOR GP-SPEED–ENGINE–TRANSMISSION INPUT	250
SENSOR GP-SPEED (CAMSHAFT/TIMING)	70
SENSOR GP-SPEED (CRANKSHAFT/TIMING)	70
SENSOR GP-SPEED (ENGINE)	290 301
SENSOR GP-SPEED (TRANSMISSION OUTPUT)	430
SENSOR GP-TEMPERATURE	253 254
SENSOR GP-TEMPERATURE–TORQUE CONVERTER OIL	251 252
SENSOR GP-TEMPERATURE (COOLANT)	254
SENSOR GP-TEMPERATURE (TORQUE CONVERTER OIL)	288 301
SERVICE GP-MONITOR (CATERPILLAR MONITORING SYSTEM)	228
SERVICE GP-POWER TRAIN	228
SHAFT GP-DRIVE	442
SHAFT GP-FRONT DRIVE	443
SHAFT GP-HITCH DRIVE	444 446
SHAFT GP-REAR DRIVE	448
SHIELD GP-EXHAUST	150
SHIELD GP-MANIFOLD	152
SHROUD GP-RADIATOR	118
SLACK ADJUSTER GP	615
SOFTWARE GP-MONITOR (CATERPILLAR MONITORING SYSTEM)	228
SOFTWARE GP-POWER TRAIN	228
SOLENOID AS (24-VOLT) (STARTING MOTOR)	262 266 271
SOLENOID AS (24-VOLT, STARTING MOTOR)	258 274
SOLENOID (24 VOLT) (ENGINE BRAKE)	64 66
SPIDER & BEARING AS	464
STARTING AID GP-ETHER	255
STARTING AR-COLD WEATHER	256
STARTING MOTOR GP-ELECTRIC	257 260 261 262 264 265 266 268 269 270 271 273
STEERING COLUMN GP-ADJUSTABLE	656
STEP GP	546
STOP GP-STEERING	547
STRAINER AS	667 744

INDEX

Name	Page
	748
STRAINER-FUEL	176
	178
	181
	185
	187
	189
SUN VISOR	917
	918
SUPPORT GP-ENGINE	86
SUPPORT GP-HITCH LINES	548
	549
SUPPRESSION AR-SOUND	550
SUSPENSION GP-REAR EQUALIZER	811
SUSPENSION GP-SEAT	910
	914
SUSPENSION GP-SEAT–AIR	912
SWITCH AS	293
	298
SWITCH AS (A/C)	879
SWITCH AS (AIR CONDITIONER SELECTION)	881
SWITCH AS (DOOR DOME LAMP)	292
SWITCH AS-FOOT (DIFFERENTIAL LOCK)	298
SWITCH AS-FOOT (DIFFERENTIAL LOCK)	292
SWITCH AS (HAZARD FLASHER)	879
SWITCH AS (HAZARDS)	881
SWITCH AS (HEATED MIRROR)	860
	862
SWITCH AS-PRESSURE (LOW OIL)	378
SWITCH AS-PRESSURE (PRIMARY STEERING OIL)	301
SWITCH AS-PRESSURE (REFRIGERANT) (A/C COMPRESSOR)	301
SWITCH AS-PRESSURE (REFRIGERANT) (AIR CONDITIONER)	290
SWITCH AS-PRESSURE (STEERING OIL)	290
SWITCH AS (REAR FLOOD)	881
SWITCH AS (REAR WORK LAMP)	878
SWITCH AS-ROCKER (AIR CONDITIONER SELECTION)	881
SWITCH AS-ROCKER (CROSS AXLE LOCK)	878
	881
SWITCH AS-ROCKER (DIFFERENTIAL LOCK) (CROSS AXLE LOCK)	881
SWITCH AS-ROCKER (HAZARDS)	881
SWITCH AS-ROCKER (HEAD/TAIL DASH LAMP)	879
SWITCH AS-ROCKER (HEATED MIRROR)	860
	862
SWITCH AS-ROCKER (LIGHTING)	882
SWITCH AS-ROCKER (REAR FLOOD)	881
SWITCH AS-ROCKER (SECONDARY STEERING)	881
SWITCH AS-ROCKER (START AID)	882
SWITCH AS-ROTARY (FAN SPEED)	878
SWITCH AS-ROTARY (FAN SPEED)	881
SWITCH AS-ROTARY (24-VOLT) (REAR WIPER)	881
SWITCH AS-ROTARY (24-VOLT) (WIPER/WASHER)	925
SWITCH AS (SECONDARY STEERING)	879
	881
SWITCH AS (START AID)	882
SWITCH AS (STARTING AID)	879
SWITCH AS-TEMPERATURE (OIL, OUTPUT TRANSFER GEAR)	301
SWITCH AS-TEMPERATURE (OUTPUT TRANSFER GEAR)	290
SWITCH AS-TEMPERATURE (THERMOSTAT) (AIR CONDITIONER)	819
	822
	825
SWITCH AS-TOGGLE (ENGINE SHUTDOWN)	240
SWITCH AS-TOGGLE (GROUND LEVEL SHUTDOWN)	242
SWITCH AS (24-VOLT) (MONITORING SYSTEM)	878
SWITCH GP-DISCONNECT–BATTERY	277
SWITCH GP-MAGNETIC	204
	278
	279
	280
SWITCH GP-MAGNETIC (24-VOLT)	290
SWITCH GP-MAGNETIC (24-VOLT) (STARTER RELAY)	301
SWITCH GP-MULTIFUNCTION (TURN SIGNAL, WIPER, WASHER)	298
SWITCH GP-MULTIFUNCTION (WIPE/WASH/TURN/FLASH)	293
SWITCH GP-PARKING BRAKE	293
	298
SWITCH GP-PRESSURE	290
	298
	310
	378
SWITCH GP-PRESSURE (OIL PRESSURE)	302
SWITCH GP-PRESSURE (PARKING BRAKE)	311
	313
SWITCH GP-PRESSURE (SERVICE BRAKE)	293
SWITCH GP-PRESSURE (STOP LAMP)	293
SWITCH GP-ROCKER (SERVICE)	209
SWITCH GP-START (KEY)	881
SWITCH GP-START (KEY)	878
SWITCH GP-TEMPERATURE	287
	288
	290
	310

INDEX

Name	Page
SWITCH GP-TEMPERATURE (OIL, FRONT BRAKE)	301
SWITCH GP-TEMPERATURE (PARKING BRAKE OIL)	311 313
SWITCH GP-TOGGLE (HOOD LOCKING)	240 242

T

TAILGATE AR	555
TAILGATE GP	556
TAILGATE GP–SCISSOR	558
TAILGATE GP–SCISSORS	560
TANK & MTG GP-FUEL	174
TANK & MTG GP-FUEL–FAST FILL	176 178 181
TANK & MTG GP-HYDRAULIC–HOIST	741 742
TANK & MTG GP-HYDRAULIC–STEERING	743
TANK AR-FUEL–FAST FILL	184
TANK GP-COOLANT	120 121 122 123 124
TANK GP-FUEL	185 187 189
TANK GP-HYDRAULIC	744 748 752
TANK GP-WINDOW WASHER	927
TILT GP-HOOD	562
TILT GP-HOOD–LH	564
TILT GP-HOOD–RH	563
TILT GP-PLATFORM	915
TIRE & RIM AR	449 450 451
TIRE & RIM GP	452 453 454 455 456
TOOL GP-HAND	992 993
TORQUE CONVERTER GP	457
TRANSMISSION AR	460
TURBOCHARGER GP	153 154

U

UNIVERSAL JOINT GP	464
UNIVERSAL JOINT GP–CENTER	461
UNIVERSAL JOINT GP–FRONT	463
UNIVERSAL JOINT GP–HITCH DRIVE	465
UNIVERSAL JOINT GP–REAR	462

V

VALVE & MTG GP-HOIST CONTROL	754 756 758
VALVE & MTG GP-HYDRAULIC FAN	760
VALVE AS-DRAIN	102
VALVE AS-RELIEF	335 336 337
VALVE AS-SOLENOID (ETHER START, 24-VOLT)	255
VALVE AS-TANK (FAST FILL FUEL)	178 181
VALVE GP	783
VALVE GP-BRAKE	592 597 602
VALVE GP-BRAKE CONTROL	616
VALVE GP-CHECK	641 644 646 661 761
VALVE GP-CHECK–FUEL FILTER	191 192 193
VALVE GP-CHECK–HOIST	764
VALVE GP-CHECK–HYDRAULIC FAN–MAIN CONTROL VALVE	763
VALVE GP-CHECK–MAIN CONTROL VALVE	762 766
VALVE GP-CHECK–STEERING PUMP	765
VALVE GP-CHK & PRESS REDUCING	658 659
VALVE GP-COMBINATION	767
VALVE GP-CONTROL	466
VALVE GP-COUNTERBALANCE	768
VALVE GP-DIVERTER	769 770
VALVE GP-FLOW CONTROL (WATER)	825
VALVE GP-FLOW CONTROL (WATER) (AIR CONDITIONER)	822
VALVE GP-FLUID SAMPLING	421 667 744 748

INDEX

Name	Page
VALVE GP-FLUID SAMPLING (COOLANT)	102
VALVE GP-FUEL BYPASS	194
VALVE GP-HOIST CONTROL	771
	773
VALVE GP (HYDRAULIC CYLINDER)	799
VALVE GP-LOWERING CONTROL–HOIST	775
VALVE GP-PRESSURE CONTROL	467
VALVE GP-PRESSURE REDUCING	660
VALVE GP-PRESSURE REDUCING–MAIN CONTROL	776
VALVE GP-PUMP CONTROL–PRESSURE, FLOW COMPENSATOR	777
VALVE GP-PUMP CONTROL–PRESSURE, FLOW COMPENSATOR–BRAKE	780
VALVE GP-PUMP CONTROL–PRESSURE, FLOW COMPENSATOR–STEERING	778
VALVE GP-PUMP CONTROL (PRESSURE COMPENSATION)	653
VALVE GP-RELIEF	623
	625
VALVE GP-RELIEF–HOIST CONTROL	782
	783
VALVE GP-RELIEF (HOIST CONTROL)	773
VALVE GP-RELIEF (REFRIGERANT)	835
VALVE GP-SELECTOR & PRESS CONT	470
VALVE GP-SHUTTLE	617
	692
VALVE GP-SOLENOID	473
	474
	475
	618
VALVE GP-SOLENOID–FAN DRIVE	785
VALVE GP-SOLENOID–IMPLEMENT, STEERING	786
VALVE GP-SOLENOID & RELIEF–OUTPUT TRANSFER GEAR	476
VALVE GP-STEER CHK & COMBINER	661
VALVE MECHANISM GP	87
VISOR GP-CAB	917
	918

W

Name	Page
WALKWAY GP	565
WARNING GP-BACKUP	281
	283
	285
WARNING GP-OPERATOR	287
	288
WHEEL & FINAL DRIVE GP	477
WHEEL & TIRE AR	479
WHEEL GP-FINAL DRIVE & BRAKE	480
	482
	484
WINDOW GP	919
WINDOW GP–RH SLIDING	921
WINDOW GP–VENTILATION	922
WIPER & WASHER GP-WINDOW	927
WIPER & WASHER GP-WINDOW–FRONT	923
WIPER & WASHER GP-WINDOW–REAR	925
WIRING & LIGHTING GP	311
	313
WIRING GP-CAB	288
	292
	297
WIRING GP-ELECTRONIC CONTROL	299
WIRING GP-FRONT	301
WIRING GP-LIGHTING	308
WIRING GP-REAR	310

INDEX

Désignation	Page
A	
ACCOUDOIR (ASS)	829, 830, 831
ACCUMULATEUR - CLIMATISEUR (ASS)	856
ACCUMULATEUR - FREIN	566, 568, 569, 570, 571, 572, 573, 574
ACCUMULATEUR ET MONTAGE - SUSPENSION (ASS)	787, 788
ACCUMULATEUR HYDRAULIQUE (ASS)	567
ACCUMULATEUR-SUSPENSION (ASS)	789, 790, 791, 792, 793, 794
ADAPTATEUR - ENTRAÎNEMENT DE POMPE (ASS)	9
*AIR COMPRESSOR GP-SEAT	813
*AIR CONDITIONER & MOUNTING GP	818
ALLUME-CIGARE (ENS) (CIGARE, 24V)	878, 881
ALTERNATEUR DE CHARGE (ASS)	196, 198, 200, 201
AMORTISSEUR DE VIBRATIONS (ASS)	45
AMPOULE (*24-VOLT)	860
AMPOULE (24 VOLTS)	229, 237, 287, 288, 840, 862, 881, 882
AMPOULE (24 VOLTS)	881
AMPOULE (24 VOLTS)	235, 236, 878, 881
AMPOULE (24 VOLTS) (AUXILIAIRE DE DÉMARRAGE)	879
AMPOULE (24 VOLTS) (CENTRALE DE SURVEILLANCE)	878
AMPOULE (24 VOLTS) (CLIGNOTANT DE DÉTRESSE)	879
AMPOULE (24 VOLTS) (CLIMATISEUR)	879
AMPOULE (24 VOLTS) (DIRECTION AUXILIAIRE)	879
AMPOULE (24 VOLTS) (FEUX AVANT/ ARRIÈRE, VOYANTS DU TABLEAU DE BORD)	879
AMPOULE (24 VOLTS) (PROJECTEUR ARRIÈRE)	878
AMPOULE (24 VOLTS) (TABLEAU DE BORD)	878
AMPOULE (24 VOLTS) (VERROUILLAGE DE DIFFÉRENTIEL)	878
AMPOULE (24V, 21W)	234, 235, 236, 238
AMPOULE (24V, 5W)	238
ARBRE A CAMES (ASS)	12
ARBRE D'ENTRAÎNEMENT ARRIÈRE (ASS)	448
ARBRE D'ENTRAÎNEMENT (ASS)	442
ARBRE D'ENTRAÎNEMENT AVANT (ASS)	443
ARBRE D'ENTRAÎNEMENT D'ATTELAGE (ASS)	444, 446
ARRÊT-DIRECTION (ASS)	547
ATTELAGE OSCILLANT (ASS)	523
AUTOCOLLANT (ACCUMULATEUR HYDRAULIQUE)	789, 790, 791, 792, 794
AUTOCOLLANT DE MISE EN GARDE (PAS DE SOUDAGE)	886
AUTOCOLLANT DE MISE EN GARDE (RESSORT AMORTISSEUR)	930, 933, 936
AUTOCOLLANT DE MISE EN GARDE (VÉRIN HAUTE PRESSION)	799
AUTOCOLLANT D'HUILE DE TRANSMISSION	287, 288
AUTOCOLLANT D'IDENTIFICATION (*FUSE, CIRCUIT BREAKER)	209
AUTOCOLLANT D'IDENTIFICATION (FUSIBLE)	209
AUTOCOLLANT D'IDENTIFICATION (NUMÉRO D'ASSEMBLAGE)	825
AUTOCOLLANT D'IDENTIFICATION (NUMÉRO D'ASSEMBLAGE) (CLIMATISEUR)	822

* TRADUCTION NON DISPONIBLE AU MOMENT DE LA PUBLICATION

INDEX

Désignation	Page
AUTOCOLLANT D'IDENTIFICATION (12V/24V)	209
AUTOCOLLANT D'IDENTIFICATION (12V/24V)	212
AUTOCOLLANT (IDENTIFICATION DU COUSSIN DE SIÈGE)	874 875
AUTOCOLLANT (PLAQUE-NOM)	789
AUTOCOLLANT (TABLEAU DE BORD)	881
AUXILIAIRE DE DÉMARRAGE À L'ÉTHER	255
AVERTISSEUR (ASS)	195
AVERTISSEUR DE RECUL (ASS)	281 283 285
AXE D'ATTELAGE (ASS)	545
AXE DE CULBUTEUR (ASS)	84

B

BALAI D'ESSUIE-GLACE (ENS)	923 927
BALAI D'ESSUIE-GLACE (ENS) (ARRIÈRE)	925
BASE DE FILTRE À CARBURANT (ASS)	155
BASE DE FILTRE À CARBURANT (ASS)	156
BÂTI - SUSPENSION AV (ASS)	803
BÂTI - SUSPENSION CENTRALE (ASS)	801
BÂTI -SUSPENSION AR (ASS)	805
BÂTI AR (ASS)	501
BATTERIE ET CÂBLAGE	202 204
BATTERIE (12 VOLTS)	202 204 256
BENNE DE CAMION (ASS)	488 490 492
BLINDAGE DES CANALISATIONS DES FREINS	504
BLINDAGE DU RÉSERVOIR HYDRAULIQUE (ASS)	506 508
BLOC-CYLINDRES - COUVERCLE (ASS)	14 15 16
BLOC-CYLINDRES (ASS)	21 22 23 24 26 28 30 31
BLOC DE BRANCHEMENT (ASS)	208
BOÎTE DE VITESSES (VERSION)	460
BOÎTE PLANÉTAIRE (ASS)	428
BOUCHON - CULASSE (ASS)	80 81 82
BOUCHON À ÉVENT	923
BOUCHON AIMANTÉ	319 321 323 325 327 404 477 484
BOUCHON AIMANTÉ (BOÎTIER D'ESSIEU)	329 331
BOUCHON AIMANTÉ (DIFFÉRENTIEL)	380 386 392
BOUCHON AIMANTÉ (RÉDUCTEUR)	480 482
BOUCHON AIMANTÉ (RESERVOIR DE CARBURANT)	176 181 185 189
BOUCHON AIMANTÉ (RESERVOIR DE CARBURANT)	178 187
BOUCHON AIMANTÉ (VIDANGE)	398
BOUCHON DE BLOC-CYLINDRES (ASS)	79
BOUCHON DE GOULOTTE DE CARBURANT (ASS) (KIT DE TRANSFORMATION)	176 185
BOUCHON DE GOULOTTE DE REMPLISSAGE	380 386 398 404 667
BOUCHON DE GOULOTTE DE REMPLISSAGE D'HUILE MOTEUR	19
BOUCHON DE GOULOTTE DE REMPLISSAGE (ENS) (CARBURANT, VERROUILLAGE, AÉRÉ)	176 181 185 189
BOUCHON DE GOULOTTE DE REMPLISSAGE (ENS) (CARBURANT, VERROUILLAGE, AÉRÉ)	178 187

* TRADUCTION NON DISPONIBLE AU MOMENT DE LA PUBLICATION

INDEX

Désignation	Page
BOUCHON DE GOULOTTE DE REMPLISSAGE (HUILE HYDRAULIQUE)	744, 748
BOUCHON DE VIDANGE	676, 744, 748
BOUCHON DE VIDANGE (CARTER D'HUILE)	76
BOUCHON DE VIDANGE (RÉSERVOIR HYDRAULIQUE)	752
BOUCHON FILETÉ	319, 321, 372, 374, 393, 400, 406
BOULONNERIE DE CARTER AV (ASS)	51, 52, 53
BOULONNERIE DE LA CULASSE (ASS)	37
BOULONNERIE DE MONTAGE DE LA POMPE A HUILE (ASS)	88
BOUTON DE TEMPÉRATURE	287, 288, 290, 310
BOUTON DE TEMPÉRATURE (HUILE DE FREIN DE STATIONNEMENT)	311, 313
BOUTON DE TEMPÉRATURE (HUILE, FREIN AVANT)	301
BRANCHEMENT ÉLECTRIQUE (ASS)	214

C

Désignation	Page
CABINE - REVÊTEMENT (ASS)	847, 850, 852
CABINE (VERSION)	832, 833
CABLAGE AR (ASS)	310
CABLAGE AV (ASS)	301
CABLAGE DE CABINE (ASS)	288, 292, 297
CABLAGE D'ÉCLAIRAGE (ASS)	308
CABLAGE ET ECLAIRAGE (ASS)	313
CABLAGE ET ECLAIRAGE (ASS)	311
CACHE-SOUPAPES (ASS)	19
CANALISATIONS - CONTRÔLE DE PRESSION (ASS)	700
CANALISATIONS - FILTRE À HUILE MOTEUR (ASS)	95
CANALISATIONS - SUSPENSION (ASS)	807
CANALISATIONS A COMMANDE PILOTE (ASS)	692, 696, 698
CANALISATIONS D'AIR (ASS)	134, 135, 136, 137
CANALISATIONS DE CARBURANT (ASS)	160, 162, 164, 166, 168
CANALISATIONS DE CHAUFFAGE (ASS)	858
CANALISATIONS DE CLIMATISEUR (ASS)	854, 856
CANALISATIONS DE DIRECTION (ASS)	635, 637, 639, 641, 644, 646
CANALISATIONS DE GRAISSAGE (ASS)	536, 538, 540
CANALISATIONS DE LEVAGE (ASS)	677, 679
CANALISATIONS DE LIQUIDE DE REFROIDISSEMENT (ASS)	102
CANALISATIONS DE POMPE (ASS)	702, 705, 707, 709
CANALISATIONS DE POMPE (ASS)	629, 632
CANALISATIONS DE PORTE ARRIÈRE (ASS)	717
CANALISATIONS DE RÉCHAUFFEUR DE LIQUIDE DE REFROIDISSEMENT	858
CANALISATIONS DE REFROIDIS. DE TRANSMISSION	420
CANALISATIONS DE REFROIDISSEUR D'HUILE D'ESSIEU (ASS)	410, 412, 416
CANALISATIONS DE RETOUR (ASS)	711, 713, 715
CANALISATIONS DE VIDANGE (ASS)	676
CANALISATIONS D'EAU (ASS)	104
CANALISATIONS D'HUILE DE BOÎTE (ASS)	421

* TRADUCTION NON DISPONIBLE AU MOMENT DE LA PUBLICATION

INDEX

Désignation	Page
CANALISATIONS D'HUILE DE TURBOCOMPRESSEUR (ASS)	96
CANALISATIONS D'HUILE MOTEUR (ASS)	94
CANALISATIONS DU FREIN DE MANOEUVRE (ASS)	606
	608
	610
	612
CANALISATIONS HYDRAULIQUES DE VENTILATEUR (ASS)	680
	683
	687
CAPOT DU MOTEUR (ASS)	526
	529
	532
CAPOT ET PROTECTION (VERSION)	525
CAPTEUR DE POSITION (ENS)	840
CAPTEUR DE PRESSION (ASS)	246
	247
	248
	249
CAPTEUR DE PRESSION (ASS) (ADMISSION DE TURBOCOMPRESSEUR)	290
	301
CAPTEUR DE PRESSION (ASS) (CARBURANT)	155
	156
CAPTEUR DE PRESSION (ASS) (HUILE MOTEUR)	28
CAPTEUR DE PRESSION ET MONTAGE	244
CAPTEUR DE TEMPERATURE (ASS)	251
	252
	253
	254
CAPTEUR DE TEMPERATURE (ASS) (HUILE DU CONV. DE COUPLE)	301
CAPTEUR DE TEMPERATURE (ASS) (HUILE DU CONV. DE COUPLE)	288
CAPTEUR DE TEMPERATURE (ASS) (LIQUIDE DE REFROIDISSEMENT)	254
CAPTEUR DE VITESSE (ASS)	250
CAPTEUR DE VITESSE (ASS) (ARBRE A CAMES/CALAGE)	70
CAPTEUR DE VITESSE (ASS) (MOTEUR)	301
CAPTEUR DE VITESSE (ASS) (MOTEUR)	290
CAPTEUR DE VITESSE (ASS) (SORTIE DE BOÎTE DE VITESSES)	430
CAPTEUR DE VITESSE (ASS) (VILEBREQUIN/CALAGE)	70
CARÉNAGE DU RADIATEUR (ASS)	118
CARTER - BLINDAGE (ASS)	505
CARTER AV (ASS)	70
CARTER DE BOITE	342
	344
CARTER DE FREIN MOTEUR (ASS)	64
	66
CARTER DE VOLANT (ASS)	68
CEINTURE DE SECURITE (ASS)	893
	894
	903
	905
	906
CEINTURE DE SECURITE (ASS)	909
CEINTURE DE SECURITE (ASS)	892
CENDRIER (ENS)	852
CHAPEAU	592
	597
	602
CHAPEAU - RADIATEUR (7-PSI)	123
	124
CHÂSSIS AV (ASS)	500
CHÂSSIS (VERSION)	499
CLAPET (ASS)	783
CLAPET (ASS) (VÉRIN HYDRAULIQUE)	799
CLAPET DE DECHARGE	335
	336
	337
CLAPET DE DECHARGE (ASS)	623
	625
	782
	783
CLAPET DE DECHARGE (ASS) (COMMANDE DE LEVAGE)	773
CLAPET DE DECHARGE (ASS) (RÉFRIGÉRANT)	835
CLAPET DE DÉCHARGE ET DE RÉDUCTION DE PRESSION (ASS)	658
	659
CLAPET DE RETENUE (ENS)	191
	192
	193
	641
	644
	646
	661
	761
	762
	763
	764
	765
	766
CLÉ	744
	748
CLÉ (COUPE-BATTERIE)	277
CLIGNOTANT (ENS)	294
	297

* TRADUCTION NON DISPONIBLE AU MOMENT DE LA PUBLICATION

INDEX

Désignation	Page
CLIMATISEUR (ASS)	819, 822, 825
CLIMATISEUR ET MONTAGE (ASS)	815
COLLECTEUR D'ÉCHAPPEMENT (ASS)	138
COLLIER (ASS)	501
COLONNE DE DIRECTION RÉGLABLE	656
COMMANDE DE DIFFÉRENTIEL - VERROUILLAGE (ASS)	346, 348, 352
COMMANDE DE DIRECTION (ASS)	619
COMMANDE DE FREIN DE STATIONNEMENT (ASS)	583, 585
COMMANDE DE RÉGULATEUR (ASS)	157
COMMANDE DE RELEVAGE DE BENNE (ASS)	664
COMMANDE DE SYSTÈME PILOTE (ASS)	662, 663
COMMANDE DE TRANSMISSION ET DE BENNE (ASS)	839, 840
COMMANDE ÉLECTROHYDRAULIQUE (ASS) (BOITE DE VITESSE)	840
COMMANDE ÉLECTROHYDRAULIQUE (ASS) (LEVAGE)	840
COMMANDE ÉLECTRONIQUE - CABLAGE	299
COMMANDE ELECTRONIQUE DE MOTEUR (ASS)	221, 222, 223, 224, 225
COMMANDE ET MONTAGE - MOTEUR	215, 217
COMMANDE ET MONTAGE-TRANSMISSION (ASS)	219, 220
COMMANDE HYDRAULIQUE DE BOÎTE (ASS)	356, 359
COMMANDE NON PROGRAMMEE (ASS)	219, 226, 227
COMMANDE NON PROGRAMMEE (ASS)	228
COMMANDE NON PROGRAMMEE (ASS) (ÉLECTROMODULE DE SURVEILLANCE)	878
COMMANDE NON PROGRAMMEE (ASS) (MACHINE)	228
COMPRESSEUR DE REFRIGERANT (ASS)	834, 835
CONDENSATEUR ET MONTAGE (RÉFRIGÉRANT)	836
CONDENSEUR DE RÉFRIGÉRANT	837
CONTACTEUR DE FREIN DE STATIONNEMENT (ASS)	293, 298
CONTACTEUR (ENS)	293
CONTACTEUR (ENS)	298
CONTACTEUR (ENS) (AUXILIAIRE DE DÉMARRAGE)	882
CONTACTEUR (ENS) (AUXILIAIRE DE DÉMARRAGE)	879
CONTACTEUR (ENS) (CLIGNOTANT DE DÉTRESSE)	879
CONTACTEUR (ENS) (CLIMATISEUR)	879
CONTACTEUR (ENS) (DANGERS)	881
CONTACTEUR (ENS) (DIRECTION AUXILIAIRE)	879, 881
CONTACTEUR (ENS) (MIROIR CHAUFFÉ)	862
CONTACTEUR (ENS) (MIROIR CHAUFFÉ)	860
CONTACTEUR (ENS) (PLAFONNIER)	292
CONTACTEUR (ENS) (PROJECTEUR ARRIÈRE)	881
CONTACTEUR (ENS) (PROJECTEUR DE TRAVAIL ARRIÈRE)	878
CONTACTEUR (ENS) (SÉLECTEUR DE CLIMATISATION)	881
CONTACTEUR (ENS) (24 VOLTS) (CENTRALE DE SURVEILLANCE)	878
CONTACTEUR MAGNETIQUE (ASS)	204, 278, 279, 280
CONTACTEUR MAGNETIQUE (ASS) (24 VOLTS)	290
CONTACTEUR MAGNETIQUE (ASS) (24 VOLTS) (RELAIS DE DÉMARREUR)	301
CONTACTEUR MULTIFONCTION (ASS) (CLIGNOTANT, ESSUIE-GLACE, LAVE-GLACE)	298
CONTACTEUR MULTIFONCTION (ASS) (ESSUIE-GLACE/ LAVE-GLACE/ CLIGNOTANT/ CLIGNOTANT)	293
*CONTROL GP-MONITOR	292, 838
CONVERTISSEUR DE COUPLE (ASS)	457
*COOLING AR	99
COUDE DE FLEXIBLE	102
COUDE D'ÉCHAPPEMENT (ASS)	133
COURONNE ET DIFFERENTIEL (ASS)	366, 368
COUSSINET	523

* TRADUCTION NON DISPONIBLE AU MOMENT DE LA PUBLICATION

INDEX

Désignation	Page
COUVERCLE DE CARTER AV (ASS)	18
COUVERCLE DE CARTER DE VOLANT (ASS)	17
COUVERCLE DE CONVERTISSEUR DE COUPLE (ASS)	365
COUVERCLE DE RÉSERVOIR (ASS)	667
COUVERCLE D'ENTRAINEMENT AUXILIAIRE (ASS)	13
COUVERCLE INFÉRIEUR-DOSSIER (ASS)	873
	874
	875
	876
COUVERCLES D'EXPEDITION (ASS)	928
CREPINE (ENS)	667
	744
	748
CROISILLON ET COUSSINET (ENS)	464
CULASSE (ASS)	37
	39
	41
	42
	43
CULASSE (ENS)	32
	33
	34
CULBUTERIE (ASS)	87
CYLINDRE D'ETHER (ENS)	255

D

DEFLECTEUR - RADIATEUR (ASS)	486
DEFLECTEUR D'ECHAPPEMENT (ASS)	150
DÉMARRAGE PAR TEMPS FROID (VERSION)	256
DÉMARREUR ÉLECTRIQUE (ASS)	257
	260
	261
	262
	268
	269
	270
	271
	273
DÉMARREUR ÉLECTRIQUE (ASS)	264
	265
	266
DIFFERENTIEL (ASS)	371
DISJONCTEUR (ASS)	209
	212
DISJONCTEUR (ASS) (20A)	242
DISJONCTEUR (ASS) (20A) (CAPOT)	240
DISJONCTEUR (ASS) (80A)	242
DISJONCTEUR (ASS) (80A) (PRINCIPAL/ D'ALTERNATEUR)	240
DISJONCTEUR DU PANNEAU DE COMMANDE (ASS)	242
DISJONCTEUR DU PANNEAU DE COMMANDE (ASS)	240
DISJONCTEUR (ENS) (10A)	212
DISJONCTEUR (ENS) (10A) (CLÉ)	209
DISJONCTEUR (ENS) (15A)	212
DISJONCTEUR (ENS) (15A) (ADEM III)	209
DISJONCTEUR (ENS) (15A) (PHARE AVANT)	209
DISPOSITIF D'EVACUATION DES VAPEURS DE CARTER	92
DISTRIBUTEUR (ASS)	466
DISTRIBUTEUR DE DÉBIT (ASS) (EAU)	825
DISTRIBUTEUR DE DÉBIT (ASS) (EAU) (CLIMATISEUR)	822
DISTRIBUTEUR DE FREIN (ASS)	616
DISTRIBUTEUR DE POMPE (ASS)	780
DISTRIBUTEUR DE POMPE (ASS) (COMPENSATION DE PRESSION)	653
DISTRIBUTEUR DE PRESSION (ASS)	467
DISTRIBUTEUR DES FREINS (ASS)	592
	597
	602

E

ECHAPPEMENT - TUYAU (ASS)	147
	148
	149
ECHAPPEMENT - TUYAU (ASS) (*INCLUDES PIPE AND CLAMP)	139
ÉCRAN	667
	744
	748
	767
ÉCRAN DE COLLECTEUR (ASS)	152
ÉCRAN (ENS)	667
	744
	748
ÉCRAN MAGNÉTIQUE (ASS)	441
ELECTRO-VANNE (ENS) (DÉMARRAGE À L'ÉTHER, 24V)	255
ÉLECTRONIQUE DE TRANSMISSION (ASS)	228
ÉLECTRONIQUE-MONITEUR (ASS)	228
ÉLÉMENT DE FILTRE À AIR PRIMAIRE (ENS)	132
ÉLÉMENT DE FILTRE À AIR SECONDAIRE (ENS)	132
ÉLÉMENT DE FILTRE À HUILE (ENS) (HYDRAULIQUE)	377
	378

* TRADUCTION NON DISPONIBLE AU MOMENT DE LA PUBLICATION

INDEX

Désignation	Page
	667
ÉLÉMENT DE FILTRE À HUILE (ENS) (HYDRAULIQUE)	744
	748
ÉLÉMENT DE FILTRE À HUILE (ENS) (HYDRAULIQUE) (EFFICACITÉ NORMALE)	377
ÉLÉMENT DE FILTRE (SÉPARATEUR D'EAU) (PRINCIPAL)	158
ENGRENAGE DE TRANSFERT DE RENDEMENT (ASS)	380
	386
	392
	398
	404
ENTRAÎNEMENT AUXILIAIRE (ASS)	46
	47
ENTRAÎNEMENT DE POMPE (ASS)	48
	372
	374
ENTRETIEN DE LA TRANSMISSION (ASS)	228
ENTRETIEN DU MONITEUR (ASS) (SYSTÈME DE SURVEILLANCE CATERPILLAR)	228
ESSIEU AR (ASS)	333
ESSIEU AR (VERSION)	318
ESSIEU AV (ASS)	325
	327
	329
ESSIEU AV (ASS)	331
ESSIEU AV (VERSION)	318
ESSIEU CENTRAL (ASS)	319
	321
	323
ESSUIE-GLACE ET LAVE-GLACE	923
	925
	927

F

FAISCEAU-BOÎTE DE TRANSMISSION	356
	359
FAISCEAU DE CABLES (ENS) (INJECTEUR-POMPE ÉLECTRONIQUE)	10
FAISCEAU DE CHÂSSIS (ENS)	825
FAISCEAU DE CHAUFFAGE ET CLIMATISATION	819
	822
	823
FAISCEAU DE CHAUFFAGE ET CLIMATISATION (PUISSANCE)	825
FAISCEAU DE SOUPAPE (ENS) (COMPRESSEUR PNEUMATIQUE DE SIÈGE)	912
FAISCEAU DU REFROIDISSEUR D'HUILE (ASS)	605
FAISCEAU DU REFROIDISSEUR D'HUILE (ASS) (BOÎTE DE VITESSES)	605
FAISCEAU (ENS) (REFROIDISSEUR D'HUILE MOTEUR)	98
FILTRE À AIR	818
	820
	825
FILTRE A AIR (ASS)	131
	132
FILTRE À AIR (CLIMATISEUR)	815
	822
FILTRE À CARBURANT	176
	178
	181
	185
	187
	189
FILTRE A CARBURANT (ENS)	173
FILTRE A HUILE (ASS)	377
	378
FILTRE À HUILE MOTEUR (ASS)	89
	90
FILTRE A HUILE MOTEUR (ENS)	89
	90
FILTRE (BOÎTE DE VITESSES)	470
FILTRE DE POMPE À EAU	108
FILTRE DE SÉPARATEUR D'EAU ET DE CARBURANT (ASS)	158
FILTRE SECONDAIRE	173
FLEXIBLE	92
FREIN DE MANOEUVRE - COMMANDE (ASS)	588
	590
	592
	597
	602
FREIN DE MANOEUVRE (ASS)	577
	579
	581
FREIN DE STATIONNEMENT (ASS)	575
	576
FREIN ET REFROIDISSEUR DE CONVERTISSEUR DE COUPLE	363
FREIN MOTEUR (ASS)	49
	50
FUSIBLE (10A)	209
	212
FUSIBLE (20A)	209
	212

* TRADUCTION NON DISPONIBLE AU MOMENT DE LA PUBLICATION

INDEX

Désignation	Page

G

GARDE-BOUE (ASS)	512
GARDE-BOUE ET SUPPORT (ASS)	496
*GAUGE GP-FEELER	992
*GAUGE GP-OIL LEVEL (DIPSTICK)	379
*GEAR GP-CAM (*96-TEETH)	56
GICLEUR-ÉTHER (ENS)	255
GOULOTTE DE REMPLISSAGE D'HUILE DE TRANSMISSION	376
GRAISSAGE AUTOMATIQUE (VERSION)	544
GROUPE DE RATTRAPAGE DE JEU	615
GROUPE DE ROTATION DE POMPE	739 740

H

*HARNESS AS-ENGINE	299
*HOSE-AIR INLET	136
HUILE MOTEUR - CARTER (ASS)	76
HYDRAULIQUE - MACHINE (VERSION)	675

I

INCLINAISON - PLATE-FORME (ASS)	915
INCLINAISON DU CAPOT (ASS)	562 563 564
INJECTEUR DE CARBURANT (ASS)	159
INSONORISATION (VERSION)	550
*INSTALLATION AR-MACHINE	1 2
INTERRUPTEUR À BASCULE (ASS) (ENTRETIEN)	209
INTERRUPTEUR À BASCULE (ASS) (VERROUILLAGE DU CAPOT)	240 242
INTERRUPTEUR À BASCULE (ENS) (ARRÊT DEPUIS LE SOL)	242
INTERRUPTEUR À BASCULE (ENS) (ARRÊT DU MOTEUR)	240
INTERRUPTEUR A PEDALE (ENS) (VERROUILLAGE DE DIFFÉRENTIEL)	298
INTERRUPTEUR A PEDALE (ENS) (VERROUILLAGE DE DIFFÉRENTIEL)	292
INTERRUPTEUR BALANCIER (ENS) (AUXILIAIRE DE DÉMARRAGE)	882
INTERRUPTEUR BALANCIER (ENS) (DANGERS)	881
INTERRUPTEUR BALANCIER (ENS) (DIRECTION AUXILIAIRE)	881
INTERRUPTEUR BALANCIER (ENS) (ÉCLAIRAGE)	882
INTERRUPTEUR BALANCIER (ENS) (MIROIR CHAUFFÉ)	862
INTERRUPTEUR BALANCIER (ENS) (PROJECTEUR ARRIÈRE)	881
INTERRUPTEUR BALANCIER (ENS) (SÉLECTEUR DE CLIMATISATION)	881
INTERRUPTEUR BALANCIER (ENS) (TÉMOIN FEUX AV/AR DU TABLEAU DE BORD)	879
INTERRUPTEUR BALANCIER (ENS) (VERROUILLAGE DE DIFFÉRENTIEL)	878 881
INTERRUPTEUR BALANCIER (ENS) (VERROUILLAGE DE DIFFÉRENTIEL) (VERROUILLAGE DE DIFFÉRENTIEL)	881
INTERRUPTEUR DE DÉMARRAGE (ASS) (CLAVETTE)	878 881
INTERRUPTEUR ROTATIF (ENS) (VITESSE DU VENTILATEUR)	878 881
INTERRUPTEUR ROTATIF (ENS) (*24-VOLT) (ESSUIE-GLACE/LAVE-GLACE)	925
INTERRUPTEUR ROTATIF (ENS) (24 VOLTS) (ESSUIE-GLACE ARRIÈRE)	881

J

JANTE DÉMONTABLE (ASS)	439 440
JAUGE DE NIVEAU D'HUILE (CARBURANT)	176 178 181 185 187 189
JAUGE D'HUILE MOTEUR (BAIONNETTE) (ASS)	93
JOINT (ASS)	108
JOINT DE COUVERCLE DE RÉGULATEUR (BOÎTIER DE RÉGULATEUR DE TEMPÉRATURE)	104
JOINT DE VILEBREQUIN (ASS)	68
JOINT DE VILEBREQUIN (ASS) (AVANT)	20
JOINT PLAT	667 744 748
JOINT PLAT (POMPE D'AMORÇAGE DE CARBURANT)	173
JOINT UNIVERSEL (ASS)	461 462 463 464 465

* TRADUCTION NON DISPONIBLE AU MOMENT DE LA PUBLICATION

INDEX

Désignation	Page
K	
KIT - COUSSIN (ACCOUDOIR)	829
KIT D'ARBRE DE CULBUTEURS (COLONNE DE DIRECTION)	656
KIT D'ARTICULATION	656
KIT D'ATTACHE	910, 912
KIT DE BAGUE (DÉMARREUR)	266, 271
KIT DE BALAIS (DÉMARREUR)	262, 271
KIT DE BALAIS (DÉMARREUR)	266
KIT DE BLOC COULISSANT	907
KIT DE BLOC COULISSANT (SIÈGE)	908
KIT DE BORNE (ALTERNATEUR)	198
KIT DE BORNE D'ALTERNATEUR	196
KIT DE BORNE DE RELAIS (ALTERNATEUR)	196
KIT DE BORNE (DÉMARREUR)	258, 274
KIT DE BOULONNERIE	910
KIT DE BOULONNERIE (ALTERNATEUR)	198
KIT DE BOULONNERIE (DÉMARREUR)	262
KIT DE BROCHE DE DÉMARREUR	262
KIT DE CAPTEUR À CADRAN	176, 178, 182, 185, 187
KIT DE CHAPEAU DE FILTRE (RÉSERVOIR DE CARBURANT)	176, 178, 185, 187, 189
KIT DE CHAPEAU DE FILTRE (RÉSERVOIR DE CARBURANT)	182
KIT DE COLONNE (COLONNE DE DIRECTION)	656
KIT DE COMPRESSEUR D'AIR	910
KIT DE COUSSINET (ALTERNATEUR)	198
KIT DE COUSSINET (DÉMARREUR)	262
KIT DE FILTRE DE SÉPARATEUR D'EAU ET DE CARBURANT	158
KIT DE FIXATION (CARTER DE FREIN MOTEUR)	64
KIT DE JAMBE DE FORCE À GAZ (INCLINAISON DE COLONNE DE DIRECTION)	656
KIT DE JOINT DE DÉMARREUR	262
KIT DE JOINTS	474, 653, 658, 659, 673, 721, 723, 789, 791, 792, 793
KIT DE JOINTS (CLAPET DE DÉCHARGE)	767
KIT DE JOINTS (CLAPET DE RETENUE)	767
KIT DE JOINTS (CLAPET DE RETENUE) (INVERSION DE ROTATION DU VENTILATEUR HYDRAULIQUE)	762
KIT DE JOINTS (ÉLECTROVANNE)	473, 475, 618
KIT DE JOINTS (MOTEUR À ENGRENAGES)	725
KIT DE JOINTS (SOUPAPE DE DÉRIVATION)	767, 769, 770
KIT DE JOINTS (VANNE-PILOTE)	767
KIT DE LEVIER (DÉMARREUR)	266
KIT DE LEVIER (DÉMARREUR)	271
KIT DE LEVIER D'INCLINAISON (COLONNE DE DIRECTION)	656
KIT DE PISTON	615
KIT DE PRISE FEMELLE (2 BROCHES)	230, 237
KIT DE REGLAGE (ACCOUDOIR)	829
KIT DE RESSORTS	840
KIT DE RONDELLE (DÉMARREUR)	262
KIT DE ROULEAU	910
KIT DE SOUPAPE PNEUMATIQUE	912
KIT D'INDICATEUR (DOUCEUR DE MARCHE)	910
KIT D'ISOLANT (DÉMARREUR)	266, 271
KLAXON (ENS) (24V, FORT)	308
KLAXON (ENS) (24V, FORT)	290
L	
*LAMP-HALOGEN (*24-VOLT, 65-WATT)	233
LAMPE - CLIGNOTANT DE DIRECTION (ASS)	234, 235
LAMPE - CLIGNOTANT DE DIRECTION (ASS)	236, 237, 238
LAMPE - CLIGNOTANT DE DIRECTION (ASS) (24 VOLTS)	288, 308
LAMPE - PHARE (ASS)	230, 231

* TRADUCTION NON DISPONIBLE AU MOMENT DE LA PUBLICATION

INDEX

Désignation	Page
LAMPE - PHARE (ASS) (24 VOLTS)	292
LAMPE HALOGÈNE (*24-VOLT, 65-WATT)	232
LAMPE HALOGÈNE (24 VOLTS)(65 WATTS) (PROJECTEUR)	230
LAMPE HALOGÈNE (24V, 65W)	231
LENTILLE - PROPRE	237
LENTILLE (ENS) (FEUX DE CROISEMENT)	232
LENTILLE (ENS) (FEUX DE ROUTE)	233
LENTILLE (ENS) (PLAFONNIER)	230
LENTILLE ORANGE	234
LENTILLE (ROUGE)	287 288
LENTILLE (STOP, ARRIÈRE, CLIGNOTANT)	235 236 238
LEVIER DE COLONNE DE DIRECTION (ASS)	292
LIAISON - VERROUILLAGE DE CHÂSSIS DE DIRECTION (ASS)	542 543
LOGICIEL - ÉLECTROMODULE (ASS) (SYSTÈME DE SURVEILLANCE CATERPILLAR)	228
LOGICIEL - TRANSMISSION (ENS)	228

M

MANOCONTACT	290 298 310 378
MANOCONTACT (ENS) (FAIBLE NIVEAU D'HUILE)	378
MANOCONTACT (ENS) (HUILE DE DIRECTION)	290
MANOCONTACT (ENS) (HUILE DE DIRECTION PRINCIPALE)	301
MANOCONTACT (ENS) (RÉFRIGÉRANT) (CLIMATISEUR)	290
MANOCONTACT (ENS) (RÉFRIGÉRANT) (COMPRESSEUR DE CLIMATISEUR)	301
MANOCONTACT (FEU D'ARRÊT)	293
MANOCONTACT (FREIN DE MANOEUVRE)	293
MANOCONTACT (FREIN DE STATIONNEMENT)	311 313
MANOCONTACT (PRESSION D'HUILE)	302
MARCHEPIED (ASS)	546
MODULE - QUATRE INSTRUMENTS (ASS)	867
MODULE DE TABLEAU DE BORD (ASS)	881
MODULE D'INDICATEUR DE VITESSE ET COMPTE-TOURS (ASS)	868
MODULE (ENS) (ESSUIE-GLACE INTERMITTENT)	298
MONTAGE D'ALTERNATEUR (ASS)	74
MONTAGE DE MOTEUR (ASS)	75
MONTAGE DE RADIO (ASS)	846
MONTAGE DU TOIT ROPS (ASS)	869 871
MONTAGE-ENGRENAGES DE TRANSFERT (ASS)	424
MOTEUR - PARTIE CENTRALE (VERSION)	7 8
MOTEUR À ENGRENAGES (ASS)	719 720 721 723 725
MOTEUR D'ESSUIE-GLACE (ASS)	923 927
MOTEUR ELECTRIQUE (ASS)	239
MOTEUR ET MONTAGE DE VENTILATEUR HYDRAULIQUE (ASS)	106
*MOTOR GP-WINDOW WIPER	925

O

OEILLETONS DE LEVAGE MOTEUR (ASS)	72 73
OUTILS (ASS)	992 993

P

PARE-CHOCS AV (ASS)	494
PARE-SOLEIL	917 918
PASSERELLE (ASS)	565
PHARE AV (ASS)	308
PHARE AV (ASS)	232 233
PHARE AV (ASS) (FEUX DE CROISEMENT)	288
PHARE AV (ASS) (FEUX DE ROUTE)	288
PIGNON AR (ASS)	60 62
PIGNONNERIE AV (ASS)	56 58
PIGNONNERIE D'ARBRE À CAME	55
PISTON ET BIELLE (ASS)	77
PLAFONNIER (ASS)	229
PLAFONNIER (ASS) (24V, AVEC CONTACTEUR)	297
PLANÉTAIRE D'ENGRENAGE DE TRANSFERT (ASS)	426
PLAQUE - AVERTISSEMENT (LIRE LE GUIDE D'UTILISATION)	930 933

* TRADUCTION NON DISPONIBLE AU MOMENT DE LA PUBLICATION

INDEX

Désignation	Page
	936
PLAQUE DE NUMÉRO DE SÉRIE (BOITE DE VITESSE)	429
PLAQUE D'INSTRUCTIONS (CLIMATISEUR)	930
	933
	936
PLAQUES SIGNALETIQUES ET AUTOCOLLANTS (ASS)	933
	936
	939
	941
	943
	945
	947
	949
	951
	953
	955
	957
	959
	961
	963
	965
	967
	969
	971
	973
	975
	977
	979
	981
	983
	985
	987
	989
	991
PLAQUES SIGNALETIQUES ET AUTOCOLLANTS (ASS)	930
PNEU ET JANTE (ASS)	452
	453
	454
	455
	456
PNEU ET JANTE (VERSION)	449
	450
	451
POIGNÉE MODULAIRE (ASS) (BOÎTE DE VITESSES)	840
POIGNÉE MODULAIRE (ASS) (TREUIL)	840
POMPE A EAU (ASS)	107
	108
POMPE A ENGRENAGES (ASS)	436
	653
	730
	731
	732
POMPE A HUILE MOTEUR (ASS)	97
POMPE A PISTONS (ASS)	733
	735
	737
POMPE D'ALIMENTATION EN CARBURANT (ASS)	171
	172
POMPE D'ALIMENTATION ET MONTAGE (ASS)	171
	172
POMPE D'AMORÇAGE DE CARBURANT (ASS)	173
POMPE D'AMORCAGE DE CARBURANT ET FILTRE SECONDAIRE	173
POMPE DE BOÎTE DE VITESSES (ASS)	438
POMPE DE DIRECTION AUXILIAIRE ET MONTAGE (ASS)	649
	650
POMPE DE DIRECTION ET MONTAGE (ASS)	651
	652
POMPE DE REGULARISATION DE DEBIT (ASS)	655
POMPE DE RELEVAGE DE BENNE ET MONTAGE (ASS)	727
POMPE ET MONTAGE - FREIN (ASS)	614
POMPE ET MONTAGE - HYDRAULIQUE (ASS)	728
POMPE ET MONTAGE-ENGRENAGES DE TRANSFERT (ASS)	435
POMPE ET MONTAGE-VENTILATEUR HYDRAULIQUE	729
PORTE ARRIÈRE (ASS)	556
	558
PORTEUR DE DIFFERENTIEL (ASS)	340
	341
PORTIÈRE DE CABINE (ASS)	842
PROTECTEUR DES CANALISATIONS (ASS)	510
	511
PROTECTION DE GLACE (ASS)	844
	845
PROTECTION DE PLATE-FORME (ASS)	513
	515
PROTEGE-FREIN (ASS)	503
PROTÈGE-RADIATEUR (ASS)	517
	519
	521
	522
PUISSANCE DE FAISCEAU (ENS)	823

* TRADUCTION NON DISPONIBLE AU MOMENT DE LA PUBLICATION

INDEX

Désignation	Page
R	
RACCORD DE FLEXIBLE	102
RADIATEUR (ASS)	110
	112
	114
	116
RALLONGE DE GARDE-BOUE	495
RALLONGE DU DOSSIER DE SIEGE	893
	894
RÉCEPTEUR-DÉSHYDRATEUR (ASS) (CLIMATISEUR)	856
RECHAUFFEUR DE CARBURANT (ASS) (SÉPARATEUR D'EAU, 12V)	158
REDUCTEUR (ASS)	717
RÉDUCTEUR ET ROUE	477
	480
	482
	484
REDUCTEUR MARIN - MONTAGE (ASS)	425
RÉDUCTEURS, ROUE ET FREIN (ASS)	480
	482
	484
REFROIDISSEUR D'ADMISSION D'AIR (ASS)	125
	127
	129
REFROIDISSEUR D'HUILE HYDRAULIQUE ET MONTAGE (ASS)	666
REFROIDISSEUR D'HUILE MOTEUR (ASS)	98
REGLAGE DE SIEGE (ASS)	812
REGULATEUR DE LA TENSION (ENS) (24 VOLTS)	196
REGULATEUR DE LA TENSION (ENS) (24 VOLTS) (ALTERNATEUR)	198
RELAIS (ENS) (24 VOLTS)	290
RELAIS (ENS) (24 VOLTS)	298
RELAIS (ENS) (24 VOLTS) (AUXILIAIRE DE DÉMARRAGE)	292
RELAIS (ENS) (24 VOLTS) (AVERTISSEUR DE RECUL)	292
RELAIS (ENS) (24 VOLTS) (DÉMARRAGE)	301
RELAIS (ENS) (24 VOLTS) (DIRECTION AUXILIAIRE)	292
RELAIS (ENS) (24 VOLTS) (ESSUIE-GLACE INTERMITTENT)	292
RELAIS (ENS) (24 VOLTS) (KLAXON)	292
RELAIS (ENS) (24 VOLTS) (PHARE AVANT)	292
RENIFLARD DE TRANSMISSION (ASS)	335
	336
	337
	338
RENIFLARD (ENS)	338
RENIFLARD (ENS) (CARTER)	19
RENIFLARD (7-PSI)	667
RENIFLARD (7-PSI) (HYDRAULIQUE)	744
	748
RÉSERVOIR - LAVE-GLACE (ASS)	927
RÉSERVOIR DE CARBURANT (ASS)	185
	187
	189
RÉSERVOIR DE CARBURANT ET MONTAGE (ASS)	174
	176
	178
	181
RÉSERVOIR DU LIQUIDE DE REFROIDISSEMENT (ASS)	120
	121
	122
	123
	124
RÉSERVOIR HYDRAULIQUE (ASS)	744
	748
	752
RÉSERVOIR HYDRAULIQUE ET MONTAGE (ASS)	741
	742
	743
RETROVISEUR - CABINE (ASS)	917
	918
RÉTROVISEUR (ASS)	860
	862
	863
	865
	866
REVETEMENT INTERIEUR DE BENNE (ASS)	535
ROBINET DE BATTERIE (ASS)	277
ROBINET DE VIDANGE (ENS)	102
ROBINET-PRÉLÈVEMENT D'ÉCHANTILLON DE LIQUIDE (ASS)	421
ROBINET-PRÉLÈVEMENT D'ÉCHANTILLON DE LIQUIDE (ASS)	667
	744
	748
ROBINET-PRÉLÈVEMENT D'ÉCHANTILLON DE LIQUIDE (ASS) (LIQUIDE DE REFROIDISSEMENT)	102
ROTATION DE LA ROUE DU VENTILATEUR SOUFFLANT (RÉGLAGE DU SIÈGE)	910
	912
ROUE ET PNEU (VERSION)	479
ROUE ET RÉDUCTEURS (ASS)	477

* TRADUCTION NON DISPONIBLE AU MOMENT DE LA PUBLICATION

INDEX

Désignation	Page
S	
SIÈGE - COMPRESSEUR D'AIR (ASS)	814
SIÈGE (ASS)	893
	894
	895
	897
	899
	901
	903
SIÈGE AVEC SUSPENSION (ASS)	907
	908
	910
	912
SIÈGE AVEC SUSPENSION (ASS)	914
SIÈGE AVEC SUSPENSION (ASS)	909
SIÈGE ET MONTAGE (ASS)	889
	890
	891
SIÈGE INCLINABLE (ASS)	884
	885
SIEGE PASSAGER (ASS)	904
	905
	906
SILENCIEUX (ASS)	143
SILENCIEUX (ASS)	139
SOLÉNOÏDE (ENS) (24 VOLTS) (DÉMARREUR)	262
	266
	271
SOLÉNOÏDE (ENS) (24V, DÉMARREUR)	258
	274
SOLÉNOÏDE (24 VOLTS) (FREIN MOTEUR)	64
	66
SONDE - CIRCUIT DE CARBURANT	245
	840
SONDE - CIRCUIT DE CARBURANT (ROTATIF)	157
SONDE - NIVEAU DE CARBURANT (ENS)	176
	178
	181
	185
	187
	189
SOUPAPE - SOLÉNOÏDE (ASS)	474
	475
	618
	785
	786
SOUPAPE - SOLÉNOÏDE (ASS)	473
SOUPAPE DE COMBINAISON (ASS)	767
SOUPAPE DE COMBINAISON ET CLAPET DE RETENUE DE DIRECTION	661
SOUPAPE DE COMMANDE D'ABAISSEMENT (ASS)	775
SOUPAPE DE COMMANDE DE RELEVAGE (ASS)	771
	773
SOUPAPE DE DERIVATION (ASS)	770
SOUPAPE DE DERIVATION (ASS)	769
SOUPAPE DE DÉRIVATION DE CARBURANT (ASS)	194
SOUPAPE DE RESERVOIR (ENS) (REMPLISSAGE RAPIDE DE CARBURANT)	178
	181
SOUPAPE D'ÉQUILIBRE (ASS)	768
SOUPAPE ET MONTAGE - COMMANDE DE RELEVAGE DE BENNE	754
	756
	758
SOUPAPE ET MONTAGE - VENTILATEUR HYDRAULIQUE (ASS)	760
SOUPAPE RÉDUCTRICE DE PRESSION (ASS)	660
	776
SOUPAPE SELECTRICE ET REGULATRICE DE PRESSION	470
SOUPAPE SOLENOIDE ET DE DECHARGE	476
SUPPORT - CANALISATIONS D'ATTELAGE (ASS)	548
	549
SUPPORT DE CACHE-SOUPAPE ET FAISC. DE CABL. D'IN.	10
SUPPORT DE MOTEUR (ASS)	86
SUSPENSION - BALANCIER AR (ASS)	811
*SWITCH AS-ROCKER (MIROIR CHAUFFÉ)	860
T	
TABLEAU DE BORD (ASS)	877
	878
	881
*TAILGATE GP	560
TAMIS D'ASPIRATION	372
	374
TAMIS D'ASPIRATION (BOÎTE DE VITESSES)	441
*TANK AR-FUEL	184
TAPIS DE PLANCHER	850
TEMOINS LUMINEUX	287
	288
TENDEUR DE COURROIE (ASS)	11
THERMOCONTACT (ENS) (ENGRENAGE DE TRANSFERT DE SORTIE)	290

* TRADUCTION NON DISPONIBLE AU MOMENT DE LA PUBLICATION

INDEX

Désignation	Page
THERMOCONTACT (ENS) (HUILE, ENGRENAGE DE TRANSFERT DE SORTIE)	301
THERMOCONTACT (ENS) (THERMOSTAT) (CLIMATISEUR)	819 822
THERMOCONTACT (ENS) (THERMOSTAT) (CLIMATISEUR)	825
THERMOSTAT-TEMPÉRATURE D'EAU (92-DEG C) (LIQUIDE DE REFROIDISSEMENT)	104
TOIT ROPS (ASS)	886
TRANSFORMATION ELECTRIQUE (ASS) (24-VOLTS À 12-VOLTS)	297
TRANSFORMATION ELECTRIQUE (ASS) (24-VOLTS À 12-VOLTS) (CLIMATISEUR)	822
TRANSMISSION (VERSION)	434
TURBOCOMPRESSEUR (ASS)	153 154
TUYAU D'ÉCHAPPEMENT (VERSION)	146
TYPE LÈVRE À JOINT (RÉGULATEUR DE TEMPÉRATURE D'EAU)	104

V

Désignation	Page
*VALVE GP-PUMP CONTROL	777 778
VANNE PILOTE (ASS)	617 692
VANNE ROTATIVE (ASS)	315
VENTILATEUR ASPIRANT (ASS)	100 101
VERIN DE DIRECTION (ASS)	623 625 627
VERIN DE DIRECTION ET MONTAGE (ASS)	620 621 622
VERIN DE LEVAGE DE BENNE ET MONTAGE (ASS)	669
VÉRIN DE PORTE ARRIÈRE (ASS)	673
VÉRIN DE RELEVAGE DE BENNE (ASS)	672
VÉRIN DE SUSPENSION (ASS)	797 799
VÉRIN D'INCLINAISON DE CABINE (ASS)	841
VÉRIN ET MONTAGE - SUSPENSION (ASS)	795 796
VÉRIN ET MONTAGE DE PORTE ARRIÈRE (ASS)	671
VERSION DE MONTAGE DE MACHINE	1 2
VERSION DE MOTEUR COMPLET	3 5
VERSION DE PORTE ARRIÈRE	555
VERSION DE RÉSERVOIR DE CARBURANT	184
VERSION D'ESSIEU CENTRAL	318
VERSION D'ESSIEU ET DE BÂTI	317
VILEBREQUIN - POULIE (ASS)	83
VILEBREQUIN (ASS)	20
VITRE (ASS)	919 921 922
VOLANT MOTEUR (ASS)	54
VUE DU MODÈLE	1

* TRADUCTION NON DISPONIBLE AU MOMENT DE LA PUBLICATION

INDICE

Nombre	Página
A	
ACCESORIOS - IMPULSOR DE (GR)	46, 47
ACCIONADOR DE CONTROL PILOTO (GR)	662, 663
ACONDICIONADOR DE AIRE (GR)	819, 822, 825
ACONDICIONADOR DE AIRE Y MONTAJE (GR)	815
ACTIVADOR DE ROTACIÓN (GR)	315
ACUMULADOR DE SUSPENSION (GR)	789, 790, 791, 792, 793, 794
ACUMULADOR DEL ACONDICIONADOR DE AIRE (GR)	856
ACUMULADOR DEL FRENO (GR)	568, 569, 570, 571, 572, 573, 574
ACUMULADOR DEL FRENO (GR)	566
ACUMULADOR HIDRAULICO (GR)	567
ACUMULADOR Y MONTAJE DE LA SUSPENSION (GR)	787, 788
ADAPTADOR DEL MANDO DE LA BOMBA	9
ADAPTADOR-MANGUERA	102
ADVERTENCIA PARA EL OPERADOR (GR)	287, 288
*AIR COMPRESSOR GP-SEAT	813
*AIR CONDITIONER & MOUNTING GP	818
AIRE - TUBERÍAS DE (GR)	134, 135, 136, 137
AJUSTADOR DE TENSIÓN (GR)	615
AJUSTADOR DEL ASIENTO (GR)	812
ALARMA (GR)	195
ALFOMBRILLA DEL PISO	850
AMORTIGUADOR DE VIBRACIONES (GR)	45
ÁRBOL DE LEVAS (GR)	12
ARO DESMONTABLE (GR)	439, 440
ARO Y LLANTA (GR)	452, 453, 454, 455, 456
ARO Y RUEDA	449, 450, 451
ARRANQUE - INTERRUPTOR DE (GR) (LLAVE)	878, 881
ARRANQUE EN TIEMPO FRIO (CONFIG)	256
ASIENTO CON SUSPENSIÓN (GR)	910, 912, 914
ASIENTO (GR)	893, 894, 895, 897, 899, 901, 903
ASIENTO PARA ACOMPAÑANTE (GR)	904, 905, 906
ASIENTO Y MONTAJE (GR)	889, 890, 891
ATOMIZADOR DE ETER (CONJ)	255
AUXILIAR DE ARRANQUE CON ÉTER (GR)	255
B	
BALANCÍN (GR)	84
BASE DE LA TAPA DE VÁLVULAS Y MAZO DE CABLES DE INYECTOR (GR)	10
BASE DEL FILTRO DE COMBUSTIBLE (GR)	155, 156
BASTIDOR DE LA SUSPENSION CENTRAL (GR)	801
BASTIDOR DE LA SUSPENSION DELANTERA (GR)	803
BASTIDOR DE LA SUSPENSION TRASERA (GR)	805
BASTIDOR DELANTERO (GR)	500
BASTIDOR TRASERO (GR)	501
BATERÍA Y CABLES (GR)	202, 204
BATERÍA (12 VOLTIOS)	204, 256
BATERÍA (12 VOLTIOS)	202
BLOQUE DE EMPALME (GR)	208
BLOQUE DESLIZANTE-JUEGO	907
BLOQUE DESLIZANTE-JUEGO (ASIENTO)	908
BLOQUE MOTOR (GR)	21, 22, 23

* NO HAY TRADUCCION DISPONIBLE EN EL MOMENTO DE LA IMPRESION

INDICE

Nombre	Página
	24
	26
	28
	30
	31
BOCINA (CONJ) (24-VOLTIOS, TONO ALTO)	308
BOCINA (CONJ) (24-VOLTIOS, TONO ALTO)	290
BOMBA - TUBERÍAS DE (GR)	629
	632
	702
	705
	707
	709
BOMBA DE ACEITE DEL MOTOR (GR)	97
BOMBA DE AGUA (GR)	107
	108
BOMBA DE CEBADO DE COMBUSTIBLE (GR)	173
BOMBA DE CEBADO Y FILTRO SECUNDARIO (GR)	173
BOMBA DE DIRECCIÓN Y MONTAJE (GR)	651
	652
BOMBA DE ENGRANAJES (GR)	436
	653
	730
	731
	732
BOMBA DE LA TRANSMISIÓN (GR)	438
BOMBA DE PISTONES (GR)	733
	735
	737
BOMBA DE TRANSFERENCIA DE COMBUSTIBLE (GR)	171
	172
BOMBA DE TRANSFERENCIA DE COMBUSTIBLE Y MONTAJE (GR)	171
	172
BOMBA HIDRÁULICA Y MONTAJE (GR)	728
BOMBA Y MONTAJE DE ENGRANAJE DE TRANSFERENCIA (GR)	435
BOMBA Y MONTAJE DE GRUA (GR)	727
BOMBA Y MONTAJE DE LA DIRECCIÓN SECUNDARIA (GR)	650
BOMBA Y MONTAJE DE VENTILADOR HIDRAULICO (GR)	729
BOMBA Y MONTAJE DEL FRENO (GR)	614
BOMBA Y MOTOR DE DIRECCION SECUNDARIA (GR)	649

C

Nombre	Página
CABINA (CONFIG)	832
	833
CABLES DE LA CABINA (GR)	288
	292
	297
CABLES DE LAS LUCES (GR)	308
CABLES DEL CONTROL ELECTRÓNICO (GR)	299
CABLES DELANTEROS (GR)	301
CABLES POSTERIORES (GR)	310
CABLES Y LUCES (GR)	311
	313
CAJA DE FRENO DEL MOTOR (GR)	64
CAJA DE FRENO DEL MOTOR (GR)	66
CAJA DE LA TRANSMISIÓN (GR)	342
	344
CAJA DEL CAMIÓN (GR)	488
	490
	492
CAJA DELANTERA - TORNILLERÍA DE LA (GR)	51
	52
	53
CAJA DELANTERA (GR)	70
CALCOMANIA-ACEITE DE TRANSMISION	287
	288
CALCOMANÍA (ACUMULADOR HIDRAULICO)	789
	790
	791
	792
	794
CALCOMANÍA DE ADVERTENCIA (ASIENTO AJUSTABLE)	910
	912
CALCOMANÍA DE ADVERTENCIA (CILINDRO PARA ALTA PRESION)	799
CALCOMANÍA DE ADVERTENCIA (NO SUELDE)	886
CALCOMANÍA DE ADVERTENCIA (RESORTE DE AMORTIGUACION)	930
	933
	936
CALCOMANÍA DE IDENTIFICACIÓN (*FUSE, CIRCUIT BREAKER)	209
CALCOMANÍA DE IDENTIFICACIÓN (FUSIBLE)	209
CALCOMANÍA DE IDENTIFICACIÓN (NOMBRE DE GRUPO)	825
CALCOMANÍA DE IDENTIFICACIÓN (NOMBRE DE GRUPO) (AIRE ACONDICIONADO)	822
CALCOMANÍA DE IDENTIFICACIÓN (12V/24V)	209
	212

* NO HAY TRADUCCION DISPONIBLE EN EL MOMENTO DE LA IMPRESION

INDICE

Nombre	Página
CALCOMANÍA (IDENTIFICACION DE COJIN DE ASIENTO)	874
	875
CALCOMANÍA (PLACA, NOMBRE)	789
CALCOMANÍA (TABLERO DE INSTRUMENTOS)	881
CALCOMANÍAS Y PLACAS DE IDENTIFICACIÓN (GR)	930
	933
	936
	939
	941
	943
	945
	947
	949
	951
	953
	955
	957
	959
	961
	963
	965
	967
	969
	971
	973
	975
	977
	979
	981
	983
	985
	987
	989
	991
CALENTADOR DEL COMBUSTIBLE (GR) (SEPARADOR DE AGUA, 12-VOLTIOS)	158
CÁNCAMOS DE LEVANTAMIENTO DEL MOTOR (GR)	72
	73
CAPÓ DEL MOTOR (GR)	526
	529
	532
CAPÓ Y PROTECTOR (CONFIG)	525
CARGA - ALTERNADOR DE (GR)	196
	198
	200
	201
CÁRTER - COLECTOR DEL (GR)	76
CÁRTER - PROTECTOR DEL (GR)	505
CENICERO (CONJ)	852
CIGÜEÑAL - POLEA DE (GR)	83
CIGÜEÑAL (GR)	20
CILINDRO DE DIRECCIÓN (GR)	623
	625
	627
CILINDRO DE DIRECCIÓN Y MONTAJE (GR)	620
	621
	622
CILINDRO DE ÉTER (CONJ)	255
CILINDRO DE INCLINACION DE LA CABINA (GR)	841
CILINDRO DE LA COMPUERTA (GR)	673
CILINDRO DE LA SUSPENSION - MONTAJE (GR)	795
	796
CILINDRO DE LEVANTAMIENTO (GR)	672
CILINDRO DE LEVANTAMIENTO Y MONTAJE	669
CILINDRO DE SUSPENSION (GR)	797
	799
CILINDRO Y MONTAJE DE COMPUERTA DE COLA (GR)	671
CINTURÓN DE SEGURIDAD (GR)	905
	906
	909
CINTURÓN DE SEGURIDAD (GR)	892
CINTURÓN DE SEGURIDAD (GR)	893
	894
	903
CODO DE ESCAPE (GR)	133
COJINETE	523
COLADOR (CONJ)	744
	748
COLADOR (CONJ)	667
COLADOR DE COMBUSTIBLE	176
	178
	181
	185
	187
	189
COLUMNA DE DIRECCIÓN AJUSTABLE (GR)	656
COMBUSTIBLE - TANQUE DE (GR)	185
COMBUSTIBLE - TANQUE DE (GR)	187
	189
COMPRESOR DE AIRE DEL ASIENTO (GR)	814
COMPRESOR DE REFRIGERANTE (GR)	834
	835
COMPUERTA TRASERA (CONFIG)	555
COMPUERTA TRASERA (GR)	556
	558
CONDENSADOR DE REFRIGERANTE (GR)	837

* NO HAY TRADUCCION DISPONIBLE EN EL MOMENTO DE LA IMPRESION

INDICE

Nombre	Página
CONDENSADOR DEL REFRIGERANTE Y MONTAJE (GR)	836
CONEXIÓN ELÉCTRICA (GR)	214
CONFIGURACIÓN DE BASTIDOR	499
CONFIGURACIÓN DE CABLERIA, CALENTADOR Y ACONDICIONADOR DE AIRE	819
	822
	823
CONFIGURACIÓN DE CABLERIA, CALENTADOR Y ACONDICIONADOR DE AIRE (POTENCIA)	825
CONFIGURACIÓN DE INSTALACIÓN-MAQUINA	1
	2
CONFIGURACIÓN GENERAL	1
CONJUNTO DE CABLES, VÁLVULA (COMPRESOR DE AIRE DEL ASIENTO)	912
CONJUNTO DE DESTELLADOR	294
	297
CONJUNTO DE NÚCLEO (ENFRIADOR DE ACEITE DE MOTOR)	98
CONTROL DE DIRECCIÓN (GR)	619
CONTROL DE LEVANTAMIENTO DE LA CAJA (GR)	664
CONTROL DE REGULADOR (GR)	157
CONTROL DE TRABA DEL DIFERENCIAL (GR)	346
	348
	352
CONTROL DEL FRENO DE ESTACIONAMIENTO	583
	585
CONTROL ELECTROHIDRAULICO (GR) (LEVANTAMIENTO)	840
CONTROL ELECTROHIDRAULICO (GR) (TRANSMISION)	840
CONTROL ELECTRÓNICO DEL MOTOR (GR)	221
	222
	223
	224
	225
CONTROL ELECTRÓNICO DEL MOTOR Y MONTAJE	215
	217
*CONTROL GP-MONITOR	292
	838
CONTROL HIDRÁULICO DE LA TRANSMISIÓN (GR)	356
	359
CONTROL NO PROGRAMADO (GR)	219
	226
	227
	228
CONTROL NO PROGRAMADO (GR) (MAQUINA)	228
CONTROL NO PROGRAMADO (GR) (SIST. MONITOR ELECTRONICO)	878
CONTROL Y MONTAJE DE TREN DE FUERZA (GR)	219
	220
CONVERTIDOR DE PAR (GR)	457
CONVERTIDOR ELÉCTRICO (GR) (24 VOLTIOS A 12 VOLTIOS)	297
CONVERTIDOR ELÉCTRICO (GR) (24 VOLTIOS A 12 VOLTIOS) (AIRE ACONDICIONADO)	822
*COOLING AR	99
CRISTAL (PARADA, COLA, GIRO)	235
	236
	238
CRISTAL (ROJO)	287
	288
CRUCETA Y COJINETE (CONJ)	464
CULATA DE CILINDROS - TORNILLERÍA DE LA (GR)	37
CULATA DE CILINDROS (CONJ)	32
	33
	34
CULATA DE CILINDROS (GR)	37
	39
	41
	42
	43

D

DEFLECTOR DEL RADIADOR	486
DETECTOR DE NIVEL DEL COMBUSTIBLE	176
	178
	181
	185
	187
	189
DETECTOR DE POSICIÓN (SISTEMA DE COMBUST.) (GR)	840
DETECTOR DE POSICIÓN (SISTEMA DE COMBUST.) (GR)	245
DETECTOR DE POSICIÓN (SISTEMA DE COMBUST.) (GR) (ROTATORIO)	157
DIFERENCIAL (GR)	371
DIFERENCIAL Y CORONA (GR)	366
	368
DISYUNTOR (CONJ) (10-AMPERIOS)	212

* NO HAY TRADUCCION DISPONIBLE EN EL MOMENTO DE LA IMPRESION

INDICE

Nombre	Página
DISYUNTOR (CONJ) (10-AMPERIOS) (LLAVE)	209
DISYUNTOR (CONJ) (15 AMPERIOS)	212
DISYUNTOR (CONJ) (15 AMPERIOS) (ADEM III)	209
DISYUNTOR (CONJ) (15 AMPERIOS) (FARO DELANTERO - LÁMPARA DE)	209
DISYUNTOR DE CIRCUITO (GR)	209 212
DISYUNTOR DE CIRCUITO (GR) (20-AMPERIOS)	242
DISYUNTOR DE CIRCUITO (GR) (20-AMPERIOS) (CAPÓ)	240
DISYUNTOR DE CIRCUITO (GR) (80 AMPERIOS)	242
DISYUNTOR DE CIRCUITO (GR) (80 AMPERIOS) (PRINCIPAL/ALTERNATIVO)	240
DISYUNTOR (GR)	277
DOSIFICACIÓN - BOMBA DE (GR)	655

E

EJE CENTRAL (CONFIG)	318
EJE CENTRAL (GR)	319 321 323
EJE DE DIRECCION (CONFIG)	318
EJE DE MANDO (GR)	442
EJE DELANTERO (GR)	325 327 329 331
EJE IMPULSOR DELANTERO (GR)	443
EJE IMPULSOR TRASERO (GR)	448
EJE MOTRIZ DEL ENGANCHE (GR)	444 446
EJE TRASERO	318
EJE TRASERO (GR)	333
EJE Y BASTIDOR (CONFIG)	317
ELECTRÓNICA DEL MONITOR	228
ELEMENTO DE FILTRO DE ACEITE (CONJ) (HIDRAULICO)	377 378
ELEMENTO DE FILTRO DE ACEITE (CONJ) (HIDRAULICO)	667 744 748
ELEMENTO DE FILTRO DE ACEITE (CONJ) (HIDRAULICO) (EFICIENCIA ESTANDAR)	377
ELEMENTO DE FILTRO (SEPARADOR DE COMBUSTIBLE, AGUA) (PRIMARIO)	158
ELEMENTO PRIMARIO DEL FILTRO DE AIRE (CONJ)	132
ELEMENTO SECUNDARIO DEL FILTRO DE AIRE (CONJ)	132
EMPAQUETADURA	667 744 748
EMPAQUETADURA (BOMBA DE CEBADO DE COMBUSTIBLE)	173
EMPAQUETADURA, TAPA DE REGULADOR (CAJA DEL REGULADOR DE TEMPERATURA)	104
ENCENDEDOR (CONJ) (ENCENDEDOR, 24 VOLTIOS)	878 881
ENFRIADOR DE ACEITE DEL MOTOR (GR)	98
ENFRIADOR DE ACEITE HIDRÁULICO Y MONTAJE (GR)	666
ENGANCHE OSCILANTE (GR)	523
ENGRANAJE DE ARBOL DE LEVAS (GR)	55
ENGRANAJE DE TRANSFERENCIA DE SALIDA	380 386 392 398 404
ENGRANAJE DELANTERO (GR)	56 58
ENGRANAJE TRASERO (GR)	60 62
ESCAPE DE GASES (GR)	92
ESTRIBO DEL OPERADOR (GR)	546
ESTRUCTURA ROPS (GR)	886
EXTENSIÓN DEL GUARDABARROS (GR)	495
EXTENSIÓN DEL RESPALDO (GR)	893 894

F

FILTRO DE ACEITE DEL MOTOR (CONJ)	89 90
FILTRO DE ACEITE DEL MOTOR (GR)	89 90
FILTRO DE ACEITE (GR)	377 378
FILTRO DE AIRE	818 820 825
FILTRO DE AIRE (AIRE ACONDICIONADO)	815 822
FILTRO DE AIRE (GR)	131 132
FILTRO DE COMBUSTIBLE (CONJ)	173

* NO HAY TRADUCCION DISPONIBLE EN EL MOMENTO DE LA IMPRESION

INDICE

Nombre	Página
FILTRO DE COMBUSTIBLE Y SEPARADOR DE AGUA (GR)	158
FILTRO DE LA BOMBA DE AGUA	108
FILTRO SECUNDARIO	173
FRENO DE ESTACIONAMIENTO (GR)	575 576
FRENO DE SERVICIO - CONTROL (GR)	588 590 592 597 602
FRENO DE SERVICIO (GR)	577 579 581
FRENO DEL MOTOR (GR)	49 50
FRENO Y ENFRIADOR DEL CONVERTIDOR DE PAR (GR)	363
FUSIBLE (10-AMPERIOS)	212
FUSIBLE (10-AMPERIOS)	209
FUSIBLE (20-AMPERIOS)	212
FUSIBLE (20-AMPERIOS)	209

G

*GAUGE GP-FEELER	992
*GAUGE GP-OIL LEVEL (DIPSTICK)	379
*GEAR GP-CAM (*96-TEETH)	56
GRUPO ABRAZADERA	501
GRUPO DE CONTROL DE TRANSMISIÓN Y LEVANTAMIENTO	839 840
GRUPO DE CUBIERTA DE CONVERTIDOR DE PAR	365
GRUPO DE INTERRUPTOR, FUNCIONES MULTIPLES (LIMPIPARABRISAS/LAVADO/GIRO/ DESTELLADOR)	293
GRUPO DE INTERRUPTOR, FUNCIONES MULTIPLES (SEÑAL DE GIRO, LIMPIAPARABRISAS, ARANDELA)	298
GRUPO DE PALANCA-SERVODIRECCION	292
GRUPO DE SELLO	108
GRUPO DE VÁLVULAS	783
GRUPO DE VÁLVULAS (CILINDRO HIDRÁULICO)	799
GRUPO GIRATORIO DE BOMBA	739 740
GRUPO PLANETARIO DE ENGRANAJE DE TRANSFERENCIA	426
GUARDABARROS Y SOPORTE (GR)	496

H

*HARNESS AS-ENGINE	299
HERRAMIENTAS (GR)	992 993
HIDRÁULICA DE LA MÁQUINA (CONFIG)	675
HOJA DE LIMPIAPARABRISAS (CONJ)	923 927
HOJA DE LIMPIAPARABRISAS (CONJ) (PARTE TRASERA)	925
*HOSE-AIR INLET	136

I

INCLINACIÓN DEL CAPÓ (GR)	562 563 564
INDICADOR DEL NIVEL DE ACEITE (VARILLA) (GR)	93
INSONORIZADOR (CONFIG)	550
INSTALACIÓN DE RADIO (GR)	846
*INSTALLATION AR-MACHINE	1 2
INTERRUPTOR (CONJ)	293 298
INTERRUPTOR (CONJ) (A/A)	879
INTERRUPTOR (CONJ) (AUXILIAR DE ARRANQUE)	879 882
INTERRUPTOR (CONJ) (DESTELLADOR DE PELIGRO)	879
INTERRUPTOR (CONJ) (DIRECCIÓN SECUNDARIA)	879 881
INTERRUPTOR (CONJ) (LÁMPARA DEL TECHO DE LA PUERTA)	292
INTERRUPTOR (CONJ) (LUZ DE TRABAJO TRASERA)	878
INTERRUPTOR (CONJ) (PELIGROS)	881
INTERRUPTOR (CONJ) (REFLECTOR TRASERO)	881
INTERRUPTOR (CONJ) (RETROVISOR DELANTERO)	860 862
INTERRUPTOR (CONJ) (SELECCIÓN DE ACONDICIONADOR DE AIRE)	881
INTERRUPTOR (CONJ) (24 VOLTIOS) (SISTEMA MONITOREADO)	878
INTERRUPTOR DE FRENOS DE ESTACIONAMIENTO(GR)	293 298
INTERRUPTOR DE PEDAL (CONFIG) (TRABA DE DIFERENCIAL)	292

* NO HAY TRADUCCION DISPONIBLE EN EL MOMENTO DE LA IMPRESION

INDICE

Nombre	Página
INTERRUPTOR DE PEDAL (CONFIG) (TRABA DE DIFERENCIAL)	298
INTERRUPTOR DE PRESIÓN (CONJ) (ACEITE BAJO)	378
INTERRUPTOR DE PRESIÓN (CONJ) (ACEITE DE LA DIRECCIÓN)	290
INTERRUPTOR DE PRESIÓN (CONJ) (ACEITE DE LA DIRECCION PRIMARIA)	301
INTERRUPTOR DE PRESIÓN (CONJ) (REFRIGERANTE) (AIRE ACONDICIONADO)	290
INTERRUPTOR DE PRESIÓN (CONJ) (REFRIGERANTE) (COMPRESOR DEL ACONDICIONADOR DE AIRE)	301
INTERRUPTOR DE PRESIÓN (GR)	290 298 310 378
INTERRUPTOR DE PRESIÓN (GR) (FRENO DE ESTACIONAMIENTO)	311 313
INTERRUPTOR DE PRESIÓN (GR) (FRENO DE SERVICIO)	293
INTERRUPTOR DE PRESIÓN (GR) (LUZ DE PARADA)	293
INTERRUPTOR DE PRESIÓN (GR) (PRESIÓN DEL ACEITE)	302
INTERRUPTOR DE TEMPERATURA (CONJ) (ACEITE, ENGRANAJE DE TRANSFERENCIA DE SALIDA)	301
INTERRUPTOR DE TEMPERATURA (CONJ) (ENGRANAJE DE TRANSFERENCIA DE SALIDA)	290
INTERRUPTOR DE TEMPERATURA (CONJ) (*THERMOSTAT) (AIRE ACONDICIONADO)	822 825
INTERRUPTOR DE TEMPERATURA (CONJ) (*THERMOSTAT) (AIRE ACONDICIONADO)	819
INTERRUPTOR DE VOLQUETE (CONJ) (APAGADO A NIVEL DEL SUELO)	242
INTERRUPTOR DE VOLQUETE (CONJ) (AUXILIAR DE ARRANQUE)	882
INTERRUPTOR DE VOLQUETE (CONJ) (DIRECCIÓN SECUNDARIA)	881
INTERRUPTOR DE VOLQUETE (CONJ) (LAMPARA DE TABLERO DELANTERA/TRASERA)	879
INTERRUPTOR DE VOLQUETE (CONJ) (LUCES)	882
INTERRUPTOR DE VOLQUETE (CONJ) (PARADA DEL MOTOR)	240
INTERRUPTOR DE VOLQUETE (CONJ) (PELIGROS)	881
INTERRUPTOR DE VOLQUETE (CONJ) (REFLECTOR TRASERO)	881
INTERRUPTOR DE VOLQUETE (CONJ) (RETROVISOR DELANTERO)	862
INTERRUPTOR DE VOLQUETE (CONJ) (SELECCIÓN DE ACONDICIONADOR DE AIRE)	881
INTERRUPTOR DE VOLQUETE (CONJ) (TRABA DE DIFERENCIAL) (TRABA DE EJE TRANSVERSAL)	881
INTERRUPTOR DE VOLQUETE (CONJ) (TRABA DE EJE TRANSVERSAL)	878 881
INTERRUPTOR DE VOLQUETE (GR) (SERVICIO)	209
INTERRUPTOR DE VOLQUETE (GR) (TRABA DEL CAPÓ)	240 242
INTERRUPTOR MAGNÉTICO (GR)	204
INTERRUPTOR MAGNÉTICO (GR)	278 279 280
INTERRUPTOR MAGNÉTICO (GR) (24 VOLTIOS)	290
INTERRUPTOR MAGNÉTICO (GR) (24 VOLTIOS) (RELE DE ARRANQUE)	301
INTERRUPTOR PARA LA TEMPERATURA (GR)	290 310
INTERRUPTOR PARA LA TEMPERATURA (GR)	287 288
INTERRUPTOR PARA LA TEMPERATURA (GR) (ACEITE DE FRENO DE ESTACIONAMIENTO)	313
INTERRUPTOR PARA LA TEMPERATURA (GR) (ACEITE DE FRENO DE ESTACIONAMIENTO)	311
INTERRUPTOR PARA LA TEMPERATURA (GR) (ACEITE, FRENO FRONTAL)	301
INTERRUPTOR ROTATIVO (CONJ) (VELOCIDAD DEL VENTILADOR)	881
INTERRUPTOR ROTATIVO (CONJ) (VELOCIDAD DEL VENTILADOR)	878
INTERRUPTOR ROTATIVO (CONJ) (*24-VOLT) (LIMPIA/LAVAPARABRISAS)	925
INTERRUPTOR ROTATIVO (CONJ) (24 VOLTIOS) (LIMPIAPARABRISAS TRASERO)	881
INYECTOR DE COMBUSTIBLE (GR)	159

* NO HAY TRADUCCION DISPONIBLE EN EL MOMENTO DE LA IMPRESION

INDICE

Nombre	Página
J	
JUEGO (AISLADOR) (MOTOR DE ARRANQUE)	271
JUEGO (AISLADOR) (MOTOR DE ARRANQUE)	266
JUEGO DE AJUSTE DEL ASIENTO (POSABRAZO)	829
JUEGO DE AMORTIGUADOR (POSABRAZO)	829
JUEGO DE ARANDELA (MOTOR DE ARRANQUE)	262
JUEGO DE ATADURA	910 912
JUEGO DE BUJES (MOTOR DE ARRANQUE)	266 271
JUEGO DE COJINETES (ALTERNADOR)	198
JUEGO DE COJINETES (MOTOR DE ARRANQUE)	262
JUEGO DE COLUMNA (COLUMNA DE LA DIRECCION)	656
JUEGO DE EJE (COLUMNA DE LA DIRECCION)	656
JUEGO DE ESCOBILLAS (MOTOR DE ARRANQUE)	262 266 271
JUEGO DE FILTRO DE COMBUSTIBLE Y SEPARADOR DE AGUA	158
JUEGO DE FILTRO DE TAPA (TANQUE DE COMBUSTIBLE)	176 178 185 187 189
JUEGO DE FILTRO DE TAPA (TANQUE DE COMBUSTIBLE)	182
JUEGO DE INDICADOR (SUSPENSION)	910
JUEGO DE MONTANTE CON GAS (INCLINACIÓN DE COLUMNA DE DIRECCIÓN)	656
JUEGO DE PALANCA DE INCLINACIÓN (COLUMNA DE LA DIRECCION)	656
JUEGO DE PALANCA (MOTOR DE ARRANQUE)	266 271
JUEGO DE PASADOR DEL MOTOR DE ARRANQUE	262
JUEGO DE PISTÓN	615
JUEGO DE RECEPTÁCULO (2 CLAVIJAS)	230 237
JUEGO DE RESORTES	840
JUEGO DE RETENEDOR (LOCALIDAD DE FRENO DEL MOTOR)	64
JUEGO DE RODILLO	910
JUEGO DE SELLO DEL MOTOR DE ARRANQUE	262
JUEGO DE SELLOS	474 653 658 659 673 721 723 789 791 792 793
JUEGO DE SELLOS (MOTOR DE ENGRANAJE)	725
JUEGO DE SELLOS (VALVULA DE ALIVIO)	767
JUEGO DE SELLOS (VÁLVULA DE DERIVADOR)	767 769 770
JUEGO DE SELLOS (VÁLVULA DE LANZADERA)	767
JUEGO DE SELLOS (VÁLVULA DE RETENCIÓN)	767
JUEGO DE SELLOS (VÁLVULA DE RETENCIÓN) (VENTILADOR HIDRAULICO, REVERSA)	762
JUEGO DE SELLOS (VALVULA DE SOLENOIDE)	473 475 618
JUEGO DE SENSOR DE DIAL	176 178 182 185 187
JUEGO DE TERMINAL (ALTERNADOR)	198
JUEGO DE TERMINAL DE ALTERNADOR	196
JUEGO DE TERMINAL DE RELÉ (ALTERNADOR)	196
JUEGO DE TERMINAL (MOTOR DE ARRANQUE)	258
JUEGO DE TERMINAL (MOTOR DE ARRANQUE)	274
JUEGO DE TORNILLERÍA	910
JUEGO DE TORNILLERÍA (ALTERNADOR)	198
JUEGO DE TORNILLERÍA (MOTOR DE ARRANQUE)	262
JUEGO DE VALVULA DE AIRE	912
JUEGO DEL COMPRESOR DE AIRE	910
JUEGO-PIVOTE	656
JUNTA UNIVERSAL (GR)	461 462 463

* NO HAY TRADUCCION DISPONIBLE EN EL MOMENTO DE LA IMPRESION

INDICE

Nombre	Página
	464
	465

L

Nombre	Página
*LAMP-HALOGEN (*24-VOLT, 65-WATT)	233
LÁMPARA DE FARO DELANTERO (GR)	232
	233
	308
LÁMPARA DE FARO DELANTERO (GR) (LUZ BAJA)	288
LÁMPARA DE FARO DELANTERO (GR) (VIGA ALTA)	288
LÁMPARA DEL TECHO (GR)	229
LÁMPARA DEL TECHO (GR) (24 VOLTIOS, CON INTERRUPTOR)	297
LÁMPARA (*24-VOLT)	860
LÁMPARA (24 VOLTIOS)	229
	287
	288
	840
	862
	878
	881
	882
LÁMPARA (24 VOLTIOS)	235
	236
	237
	881
LÁMPARA (24 VOLTIOS) (A/A)	879
LÁMPARA (24 VOLTIOS) (AUXILIAR DE ARRANQUE)	879
LÁMPARA (24 VOLTIOS) (DESTELLADOR DE PELIGRO)	879
LÁMPARA (24 VOLTIOS) (DIRECCIÓN SECUNDARIA)	879
LÁMPARA (24 VOLTIOS) (SISTEMA MONITOREADO)	878
LÁMPARA (24 VOLTIOS) (TABLERO DE INSTRUMENTOS)	878
LÁMPARA (24 VOLTIOS) (TABLERO DELANTERO/COLA)	879
LÁMPARA (24 VOLTIOS) (TRABA DE EJE TRANSVERSAL)	878
LÁMPARA (24 VOLTIOS) (TRABAJO TRASERO)	878
LÁMPARA (24-VOLTIOS, 21 VATIOS)	234
	235
	236
LÁMPARA (24-VOLTIOS, 21 VATIOS)	238
LÁMPARA (24 VOLTIOS, 5 VATIOS)	238
LENTE AMBAR	234
LENTE-CLARO	237
LIMPIA Y LAVAPARABRISAS (GR)	923
	925
LIMPIA Y LAVAPARABRISAS (GR)	927
LLAVE	744
	748
LLAVE (DESCONECTAR BATERIA)	277
LUBRICACION AUTOMATICA (CONFIG)	544
LUCES DE ALÓGENO (*24-VOLT, 65-WATT)	232
LUCES DE ALÓGENO (24 VOLTIOS, 65 VATIOS)	231
LUCES DE ALÓGENO (24 VOLTIOS)(65 VATIOS) (REFLECTOR)	230
LUZ DE SEÑAL DE GIRO (GR)	235
	236
	237
	238
LUZ DE SEÑAL DE GIRO (GR)	234
LUZ DE SEÑAL DE GIRO (GR) (24 VOLTIOS)	308
LUZ DE SEÑAL DE GIRO (GR) (24 VOLTIOS)	288

M

Nombre	Página
MANDO DE BOMBA (GR)	48
	374
MANDO DE BOMBA (GR)	372
MANDOS FINALES, RUEDA Y FRENO (GR)	482
	484
MANDOS FINALES, RUEDA Y FRENO (GR)	480
MANGUERA	92
MANGUERA-CODO	102
MANIJA MODULAR (GR) (LEVANTAMIENTO)	840
MANIJA MODULAR (GR) (TRANSMISION)	840
MAZO DE CABLES (CONJ) (UNIDAD ELECTRONICA DE INYECTOR)	10
MAZO DE CABLES DE LA TRANSMISION	356
	359
MAZO DE CABLES DE POTENCIA (CONJ)	823
MAZO DE CABLES DEL CHASIS (CONJ)	825
MECANISMO DE VÁLVULAS (GR)	87
MEDIDOR DEL NIVEL DE LÍQUIDO (COMBUSTIBLE)	176
	178
	181
	185
	187
	189
MÓDULO (CONJ) (LIMPIAPARABRISAS INTERMITENTE)	298
MODULO DEL TABLERO DE INSTRUMENTOS (GR)	881
MÓDULO DEL TACÓMETRO Y DEL VELOCÍMETRO (GR)	868

* NO HAY TRADUCCION DISPONIBLE EN EL MOMENTO DE LA IMPRESION

INDICE

Nombre	Página
MODULO ELECTRÓNICO DE CUATRO INDICADORES (GR)	867
MONTAJE DE LA ESTRUCTURA ROPS (GR)	869
	871
MONTAJE DE LA TRANSMISIÓN (GR)	425
MONTAJE DEL ALTERNADOR (GR)	74
MONTAJE DEL ENGRANAJE DE TRANSFERENCIA (GR)	424
MONTAJE DEL MOTOR (GR)	75
MOTOR - NÚCLEO (CONFIG)	7
	8
MOTOR - SOPORTE DEL (GR)	86
MOTOR COMPLETO (CONFIG)	3
	5
MOTOR DE ARRANQUE ELÉCTRICO (GR)	257
	260
	261
	262
	264
	265
	266
	268
	269
	270
	271
	273
MOTOR DE ENGRANAJES (GR)	719
	720
	721
	723
	725
MOTOR ELÉCTRICO (GR)	239
*MOTOR GP-WINDOW WIPER	925
MOTOR-LIMPIAPARABRISAS (GR)	923
	927
MOTOR Y MONTAJE DE VENTILADOR HIDRAULICO (GR)	106
MULTIPLE - PROTECTOR DEL	152
MÚLTIPLE DE ESCAPE (GR)	138

N

NÚCLEO DEL ENFRIADOR DE ACEITE (GR)	605
NÚCLEO DEL ENFRIADOR DE ACEITE (GR) (TRANSMISION)	605

P

PANEL DE DISYUNTORES (GR)	240
	242
PANEL DE LA CABINA (GR)	877
PANTALLA (CONJ)	667
	744
	748
PARAGOLPES DELANTERO	494
PASADOR DE ENGANCHE (GR)	545
PASARELA (GR)	565
PISTÓN Y BIELA (GR)	77
PLACA DE ADVERTENCIA (LEER EL MANUAL DE OPERACIÓN)	930
	933
	936
PLACA DE INSTRUCCIONES (ACONDICIONADOR DE AIRE)	930
	933
	936
PLACA DEL NÚMERO DE SERIE (TRANSMISION)	429
PLATAFORMA DE INCLINACIÓN (GR)	915
PORTADOR DE DIFERENCIAL (GR)	340
	341
POSABRAZOS (GR)	829
	830
	831
POSENFRIADOR DE AIRE (GR)	125
	127
	129
POSICIÓN DEL SENSOR (CONJ)	840
PRESIÓN - VÁLVULA DE CONTROL DE (GR)	467
PROTECTOR CONTRA LODO	512
PROTECTOR DE LA PLATAFORMA (GR)	513
	515
PROTECTOR DE LA VENTANA	844
	845
PROTECTOR DE LAS TUBERÍAS DE LOS FRENOS (GR)	504
PROTECTOR DE LAS TUBERÍAS (GR)	510
	511
PROTECTOR DE RADIADOR (GR)	118
PROTECTOR DEL ESCAPE (GR)	150
PROTECTOR DEL FRENO (GR)	503
PROTECTOR DEL RADIADOR (GR)	517
	519
	521
	522
PROTECTOR DEL TANQUE HIDRÁULICO (GR)	506
	508
PUERTA DE CABINA	842

R

RADIADOR (GR)	110
	112
	114
	116

* NO HAY TRADUCCION DISPONIBLE EN EL MOMENTO DE LA IMPRESION

INDICE

Nombre	Página
RECEPTOR-SECADOR (GR) (ACONDICIONADOR DE AIRE)	856
RECLINACION DE ASIENTO (GR)	884 885
REDUCTOR (GR)	717
REFLECTOR (GR)	230 231
REFLECTOR (GR) (24 VOLTIOS)	292
REFRIGERANTE - TUBERÍAS DE (GR)	102
REGULADOR DE TEMPERATURA DEL AGUA (92 GRADOS CENTÍGRADOS) (REFRIGERANTE)	104
REGULADOR DE VOLTAJE (24 VOLTIOS)	196
REGULADOR DE VOLTAJE (24 VOLTIOS) (ALTERNADOR)	198
REJILLA	667 744 748 767
REJILLA DE FILTRO (TRANSMISION)	470
REJILLA DE SUCCIÓN	372 374
REJILLA DE SUCCIÓN (TRANSMISION)	441
REJILLA MAGNÉTICA (GR)	441
RELÉ (CONJ) (24 VOLTIOS)	290 298
RELÉ (CONJ) (24 VOLTIOS) (ALARMA DE RETROCESO)	292
RELÉ (CONJ) (24 VOLTIOS) (ARRANQUE)	301
RELÉ (CONJ) (24 VOLTIOS) (AUXILIAR DE ARRANQUE)	292
RELÉ (CONJ) (24 VOLTIOS) (BOCINA)	292
RELÉ (CONJ) (24 VOLTIOS) (DIRECCIÓN SECUNDARIA)	292
RELÉ (CONJ) (24 VOLTIOS) (FARO DELANTERO - LÁMPARA DE)	292
RELÉ (CONJ) (24 VOLTIOS) (LIMPIAPARABRISAS INTERMITENTE)	292
RESPIRADERO (CONJ)	338
RESPIRADERO (CONJ) (CÁRTER DEL MOTOR)	19
RESPIRADERO DE LA TRANSMISIÓN (GR)	335 336 337 338
RESPIRADERO (7 LB/PULG2)	667
RESPIRADERO (7 LB/PULG2) (HIDRÁULICO)	744 748
RETROCESO - ALARMA DE (GR)	281 283 285
RETROVISOR (GR)	860 862 863 865 866
REVESTIMIENTO DE LA CABINA (GR)	847 850 852
REVESTIMIENTO DE LA CAJA (GR)	535
RUEDA Y LLANTA (CONFIG)	479
RUEDA Y MANDOS FINALES	477 480 482 484

S

SELLO DE CIGÜEÑAL (GR)	68
SELLO DE CIGÜEÑAL (GR) (DELANTERO)	20
SELLO DE LABIO (REGULADOR DE TEMPERATURA DEL AGUA)	104
SENSOR DE PRESIÓN (GR)	246 247 248 249
SENSOR DE PRESIÓN (GR) (ACEITE DEL MOTOR)	28
SENSOR DE PRESIÓN (GR) (COMBUSTIBLE)	155 156
SENSOR DE PRESIÓN (GR) (ENTRADA DE TURBOALIMENTADOR)	301
SENSOR DE PRESIÓN (GR) (ENTRADA DE TURBOALIMENTADOR)	290
SENSOR DE PRESIÓN Y MONTAJE (GR)	244
SENSOR DE TEMPERATURA (GR)	251 252 253 254
SENSOR DE TEMPERATURA (GR) (ACEITE DE CONVERTIDOR DE PAR)	288
SENSOR DE TEMPERATURA (GR) (ACEITE DE CONVERTIDOR DE PAR)	301
SENSOR DE TEMPERATURA (GR) (REFRIGERANTE)	254
SENSOR DE VELOCIDAD (GR)	250
SENSOR DE VELOCIDAD (GR) (ARBOL DE LEVAS/SINCRONIZACION)	70
SENSOR DE VELOCIDAD (GR) (CIGÜEÑAL/SINCRONIZACION)	70
SENSOR DE VELOCIDAD (GR) (MOTOR)	301
SENSOR DE VELOCIDAD (GR) (MOTOR)	290
SENSOR DE VELOCIDAD (GR) (SALIDA DE LA TRANSMISION)	430

* NO HAY TRADUCCION DISPONIBLE EN EL MOMENTO DE LA IMPRESION

INDICE

Nombre	Página
SERVICIO DE MONITOR (GR) (SISTEMA MONITOR CATERPILLAR)	228
SERVICIO DE TREN DE FUERZA (GR)	228
SILENCIADOR (GR)	139
	143
SOFTWARE DEL MONITOR (GR) (SISTEMA MONITOR CATERPILLAR)	228
SOFTWARE DEL TREN DE FUERZA (GR)	228
SOLENOIDE (CONJ) (24 VOLTIOS) (MOTOR DE ARRANQUE)	262
	266
	271
SOLENOIDE (CONJ) (24 VOLTIOS, MOTOR DE ARRANQUE)	274
SOLENOIDE (CONJ) (24-VOLTIOS, MOTOR DE ARRANQUE)	258
SOLENOIDE (24 VOLTIOS) (FRENO DEL MOTOR)	64
	66
SOPORTE DE LAS TUBERIAS DE ENGANCHE (GR)	548
	549
SOPORTE DEL RESPALDO (GR)	873
	874
	875
	876
SUCCIÓN - VENTILADOR DE (GR)	100
	101
SUSPENSIÓN - ASIENTO CON (GR)	909
SUSPENSIÓN - ASIENTO CON (GR)	907
	908
SUSPENSION DE BALANCIN TRASERO (GR)	811
*SWITCH AS-ROCKER (RETROVISOR DELANTERO)	860

T

Nombre	Página
TABLERO DE INSTRUMENTOS (GR)	881
TABLERO DE INSTRUMENTOS (GR)	878
*TAILGATE GP	560
*TANK AR-FUEL	184
TANQUE DE COMBUSTIBLE (CONFIG)	184
TANQUE DE COMBUSTIBLE Y GRUPO DE MONTAJE	174
	176
	178
	181
TANQUE DE REFRIGERANTE (GR)	120
	121
	122
	123
TANQUE DE REFRIGERANTE (GR)	124
TANQUE DEL LAVAPARABRISAS (GR)	927
TANQUE HIDRÁULICO (GR)	744
	748
	752
TANQUE HIDRÁULICO Y MONTAJE (GR)	741
	742
	743
TAPA	592
	597
	602
TAPA CON RESPIRADERO	923
TAPA DE LA CAJA DE VOLANTE (GR)	17
TAPA DE LA CAJA DELANTERA (GR)	18
TAPA DE LLENADO (CONJ) (COMBUSTIBLE, TRABA, VENTILACIÓN)	176
TAPA DE LLENADO (CONJ) (COMBUSTIBLE, TRABA, VENTILACIÓN)	178
	187
TAPA DE LLENADO (CONJ) (COMBUSTIBLE, TRABA, VENTILACIÓN)	181
	185
	189
TAPA DE TANQUE (GR)	667
TAPA DEL BLOQUE MOTOR (GR)	14
	15
	16
TAPA DEL MANDO DE ACCESORIOS (GR)	13
TAPA DEL MECANISMO DE VÁLVULAS (GR)	19
TAPA DEL RADIADOR (7 LB/PULG2)	123
	124
TAPA DEL TUBO DE LLENADO	380
	386
	398
	404
	667
TAPA DEL TUBO DE LLENADO (ACEITE HIDRAULICO)	748
TAPA DEL TUBO DE LLENADO (ACEITE HIDRAULICO)	744
TAPA DEL TUBO DE LLENADO DE ACEITE (CONJ)	19
TAPA DEL TUBO DE LLENADO DE COMBUSTIBLE (GR) (JUEGO DE CONVERSIÓN)	176
	185
TAPAS PROTECTORAS DE EMBARQUE (GR)	928
TAPÓN	319
	321
	372
	374
	393
	400

* NO HAY TRADUCCION DISPONIBLE EN EL MOMENTO DE LA IMPRESION

INDICE

Nombre	Página
	406
TAPÓN DE CULATA (GR)	80
	81
	82
TAPÓN DE DRENAJE	676
	744
	748
TAPÓN DE DRENAJE (COLECTOR DE ACEITE)	76
TAPÓN DE DRENAJE (TANQUE HIDRÁULICO)	752
TAPÓN DEL BLOQUE MOTOR (GR)	79
TAPÓN MAGNÉTICO	319
	321
	323
	325
	327
	404
	477
	484
TAPÓN MAGNÉTICO (CAJA DEL EJE)	329
	331
TAPÓN MAGNÉTICO (DIFERENCIAL)	380
	386
	392
TAPÓN MAGNÉTICO (DRENAJE)	398
TAPÓN MAGNÉTICO (MANDO FINAL)	480
	482
TAPÓN MAGNÉTICO (TANQUE DE COMBUSTIBLE)	176
	178
	181
	185
	187
	189
TENSOR DE CORREA (GR)	11
TIRANTE DE TRABA DEL BASTIDOR DE DIRECCIÓN (GR)	542
	543
TOPE DE DIRECCION (GR)	547
TORNILLERÍA DE MONT. DE LA BOMBA DE ACEITE (GR)	88
TRANSMISION (CONFIG)	460
TRANSMISIÓN PLANETARIA (GR)	428
TREN DE FUERZA (CONFIG)	434
TREN DE FUERZA-GRUPO ELECTRÓNICO	228
TUBERÍAS CON SERVOMANDO (GR)	692
TUBERÍAS CON SERVOMANDO (GR)	696
	698
TUBERÍAS DE ACEITE DE LA TRANSMISIÓN (GR)	421
TUBERÍAS DE ACEITE DEL MOTOR (GR)	94
TUBERÍAS DE ACONDICIONADOR DE AIRE (GR)	854
	856
TUBERIAS DE CALEFACCION	858
TUBERÍAS DE COMBUSTIBLE (GR)	160
	162
	164
	166
	168
TUBERÍAS DE DIRECCIÓN (GR)	635
	637
	639
	641
	644
	646
TUBERÍAS DE DRENAJE (GR)	676
TUBERÍAS DE ENGRASE (GR)	536
	538
	540
TUBERÍAS DE LA CALEFACCIÓN (GR)	858
TUBERIAS DE LA COMPUERTA TRASERA (GR)	717
TUBERIAS DE LA SUSPENSION (GR)	807
TUBERÍAS DE LEVANTAMIENTO (GR)	677
	679
TUBERÍAS DE PRUEBA DE PRESIÓN (GR)	700
TUBERÍAS DE RETORNO (GR)	711
	713
	715
TUBERÍAS DEL AGUA (GR)	104
TUBERÍAS DEL ENFRIADOR DE ACEITE DEL EJE (GR)	410
	412
	416
TUBERÍAS DEL ENFRIADOR DEL TREN DE FUERZA (GR)	420
TUBERÍAS DEL FILTRO DE ACEITE DEL MOTOR	95
TUBERÍAS DEL FRENO DE SERVICIO (GR)	606
	608
	610
	612
TUBERÍAS HIDRÁULICAS DEL VENTILADOR (GR)	680
	683
	687
TUBO DE ESCAPE (CONFIG)	146
TUBO DE ESCAPE (GR)	147
	148
	149
TUBO DE ESCAPE (GR) (*INCLUDES PIPE AND CLAMP)	139

* NO HAY TRADUCCION DISPONIBLE EN EL MOMENTO DE LA IMPRESION

INDICE

Nombre	Página
TUBO DE LLENADO DE ACEITE DE LA TRANSMISIÓN (GR)	376
TURBOCOMPRESOR - TUBERÍAS DE ACEITE DEL (GR)	96
TURBOCOMPRESOR (GR)	153
	154

V

*VALVE GP-PUMP CONTROL	777
	778
VALVULA	335
	336
	337
VÁLVULA DE ALIVIO (GR)	623
	625
	782
	783
VÁLVULA DE ALIVIO (GR) (CONTROL DE LEVANTAMIENTO)	773
VÁLVULA DE ALIVIO (GR) (REFRIGERANTE)	835
VÁLVULA DE ALIVIO Y SOLENOIDE (GR)	476
VÁLVULA DE COMBINACIÓN (GR)	767
VÁLVULA DE COMPENSACIÓN (GR)	768
VÁLVULA DE CONTROL DE BAJADA (GR)	775
VÁLVULA DE CONTROL DE FLUJO (GR) (AGUA)	825
VÁLVULA DE CONTROL DE FLUJO (GR) (AGUA) (AIRE ACONDICIONADO)	822
VALVULA DE CONTROL DE LA BOMBA (GR)	780
VALVULA DE CONTROL DE LA BOMBA (GR) (COMPENSACIÓN DE PRESIÓN)	653
VALVULA DE CONTROL DE LEVANTAMIENTO (GR)	771
	773
VALVULA DE CONTROL DE LEVANTAMIENTO Y MONTAJE (GR)	754
	756
	758
VÁLVULA DE CONTROL DEL FRENO (GR)	616
VÁLVULA DE CONTROL (GR)	466
VALVULA DE DERIVACION DE COMBUSTIBLE (GR)	194
VÁLVULA DE DERIVACIÓN (GR)	769
	770
VALVULA DE DRENAJE (CONJ)	102
VÁLVULA DE FRENO (GR)	592
	597
	602
VÁLVULA DE LANZADERA (GR)	617
	692
VÁLVULA DE MUESTREO (GR)	421
VÁLVULA DE MUESTREO (GR)	667
	744
	748
VÁLVULA DE MUESTREO (GR) (REFRIGERANTE)	102
VALVULA DE RETENCION DE DIRECCION Y COMBINADOR (GR)	661
VÁLVULA DE RETENCIÓN (GR)	191
	192
	193
	661
	761
	762
	763
	764
	765
	766
VÁLVULA DE RETENCIÓN (GR)	641
	644
	646
VÁLVULA DE SOLENOIDE (CONJ) (ARRANQUE CON ETER, 24-VOLTIOS)	255
VÁLVULA DE SOLENOIDE (GR)	473
	474
	475
	618
VÁLVULA DE SOLENOIDE (GR)	785
	786
VALVULA DEL TANQUE (CONJ) (*FAST FILL FUEL)	178
	181
VÁLVULA REDUCTORA DE PRESIÓN (GR)	660
	776
VALVULA REDUCTORA DE PRESION Y DE RETENCION (GR)	658
	659
VÁLVULA SELECTORA Y DE CONTROL DE PRESIÓN (GR)	470
VÁLVULA Y MONTAJE DEL VENTILADOR HIDRÁULICO (GR)	760
VENTANA (GR)	919
	921
	922
VIDRIO (CONJ) (LUZ BAJA)	232
VIDRIO (CONJ) (REFLECTOR)	230
VIDRIO (CONJ) (VIGA ALTA)	233
VISERA	917
	918
VISERA (GR)	917
	918
VOLANTE - CAJA DE (GR)	68
VOLANTE (GR)	54

* NO HAY TRADUCCION DISPONIBLE EN EL MOMENTO DE LA IMPRESION

ÍNDICE

Designação	Página

A

ACENDEDOR (CIGARROS, 24 VOLTS) 878, 881
ACIONADOR DO CONTROLE PILOTO 662, 663
ACUMULADOR - AR CONDICIONADO 856
ACUMULADOR - FREIO 566, 568, 569, 570, 571, 572, 573, 574
ACUMULADOR - SUSPENSÃO E MONTAGEM 787, 788
ACUMULADOR DA SUSPENSÃO 789, 790, 791, 792, 793, 794
ACUMULADOR HIDRÁULICO 567
ADAPTADOR DO COMANDO DA BOMBA 9
ADESIVO-ÓLEO DA TRANSMISSÃO 287, 288
*AIR COMPRESSOR GP-SEAT 813
*AIR CONDITIONER & MOUNTING GP 818
AJUSTADOR DE FOLGA 615
AJUSTADOR DO ASSENTO 812
ALARME 195
ALARME DE MARCHA À RÉ 281, 283, 285
ALARME PARA O OPERADOR 287, 288
ALAVANCA-COLUNA DA DIREÇÃO 292
ALAVANCA DE CONTROLE - MODULAR (CILINDRO DE LEVANTAMENTO) 840
ALAVANCA DE CONTROLE - MODULAR (TRANSMISSÃO) 840
ALTERNADOR DE CORRENTE 196, 198, 200, 201
AMORTECEDOR 45
AQUECEDOR DO COMBUSTÍVEL (SEPARADOR DE ÁGUA, 12 VOLTS) 158
ARMAÇÃO - SUSPENSÃO CENTRAL 801
ARMAÇÃO - SUSPENSÃO TRASEIRA 805
ARMAÇÃO DA SUSPENSÃO DIANTEIRA 803
ARO DESMONTÁVEL 439, 440
ARRANJO GERAL 1
ARREFECEDOR - ÓLEO DO MOTOR 98
ARREFECEDOR DE ÓLEO HIDRÁULICO E MONTAGEM 666
ARREFECEDOR DO FREIO E CONVERSOR DE TORQUE 363
ASSENTO 893, 894, 895, 897, 899, 901, 903
ASSENTO COM SUSPENSÃO 907, 908, 909
ASSENTO DE PASSAGEIRO 904, 905, 906
ASSENTO E MONTAGEM 889, 890, 891
ATOMIZADOR - ÉTER 255
AUXILIAR DE PARTIDA A ÉTER 255

B

BALANCIM 84
BASE DO FILTRO DE COMBUSTÍVEL 155, 156
BATENTE - DIREÇÃO 547
BATERIA E CABOS / FIOS ELÉTRICOS 202, 204
BATERIA (12-VOLTS) 202, 204, 256
BLINDAGEM DO COLETOR 152
BLINDAGEM DO COLETOR DE ESCAPE 150
BLOCO DE JUNÇÃO 208
BLOCO DO MOTOR 21, 22, 23, 24, 26, 28, 30, 31
BOCAL DE ENCHIMENTO DE ÓLEO DO TREM DE FORÇA 376
BOMBA DA DIREÇÃO SECUNDÁRIA E MONTAGEM 650
BOMBA DA TRANSMISSÃO 438

* TRADUÇÃO NÃO DISPONÍVEL NO MOMENTO DA IMPRESSÃO

ÍNDICE

Designação	Página
BOMBA DE ÁGUA	107
	108
BOMBA DE DIREÇÃO SECUNDÁRIA E MOTOR	649
BOMBA DE ENGRANAGEM DE TRANSFER. E MONTAGEM	435
BOMBA DE ENGRENAGENS	436
	653
	730
	731
	732
BOMBA DE ESCORVA DO COMBUSTÍVEL	173
BOMBA DE ÓLEO - MOTOR	97
BOMBA DE PISTÃO	733
	735
	737
BOMBA DE TRANSFERÊNCIA DO COMBUSTÍVEL	171
	172
BOMBA DO CILINDRO DE LEVANTAMENTO E MONTAGEM	727
BOMBA DO FILTRO SECUNDÁRIO E ESCORVA DO COMBUSTÍVEL	173
BOMBA DO FREIO E MONTAGEM	614
BOMBA DO VENTILADOR HIDRÁULICO E MONTAGEM	729
BOMBA E MONTAGEM - DIREÇÃO	651
	652
BOMBA E MONTAGEM - TRANSFERÊNCIA DE COMBUSTÍVEL	171
	172
BOMBA HIDRÁULICA E MONTAGEM	728
BOMBA REGULADORA	655
BRAÇADEIRA	501
BRAÇO DO ASSENTO	829
	830
	831
BUJÃO - CABEÇA DO CILINDRO	80
	81
	82
BUJÃO DO BLOCO DO CILINDRO	79
BUJÃO DO DRENO	676
	744
	748
BUJÃO DO DRENO (RESERVATÓRIO DE ÓLEO)	76
BUJÃO DO DRENO (TANQUE HIDRÁULICO)	752
BUJÃO MAGNÉTICO	319
	321
	323
	325
	327
	404
	477
	484
BUJÃO MAGNÉTICO (ALOJAMENTO DO EIXO)	329
	331
BUJÃO MAGNÉTICO (COMANDO FINAL)	480
	482
BUJÃO MAGNÉTICO (DIFERENCIAL)	380
	386
	392
BUJÃO MAGNÉTICO (DRENO)	398
BUJÃO MAGNÉTICO (TANQUE DE COMBUSTÍVEL)	176
	178
	181
	185
	187
	189
BUZINA (24 VOLTS, TOM ALTO)	290
	308

C

CABEÇOTE DO MOTOR	32
	33
	34
	37
	39
	41
	42
	43
CABINE	832
	833
CABOS/FIOS ELÉTRICOS - CABINE	288
	292
	297
CABOS/FIOS ELÉTRICOS - CONTROLE ELETRÔNICO	299
CABOS/FIOS ELÉTRICOS - DIANTEIROS	301
CABOS/FIOS ELÉTRICOS - TRASEIROS	310
CABOS/FIOS ELÉTRICOS DE ILUMINAÇÃO	308
CABOS/FIOS ELÉTRICOS E ILUMINAÇÃO	311
	313
CAIXA - FREIO DO MOTOR	64
	66
CAIXA DIANTEIRA	70
CAIXA DO VOLANTE DO MOTOR	68
CANO DE ESCAPE	146
	147
	148
	149
CANO DE ESCAPE (*INCLUDES PIPE AND CLAMP)	139

* TRADUÇÃO NÃO DISPONÍVEL NO MOMENTO DA IMPRESSÃO

ÍNDICE

Designação	Página
CAPÔ DO MOTOR	526
	529
	532
CAPÔ E PROTETOR	525
CARCAÇA DA TRANSMISSÃO	342
	344
CARROCERIA DE CAMINHÃO	488
	490
	492
CÁRTER DO ÓLEO DO MOTOR	76
CHASSI	499
CHASSI DIANTEIRO	500
CHASSI TRASEIRO	501
CHAVE	744
	748
CHAVE (DESCONECTAR A BATERIA)	277
CHAVE GERAL	277
CHICOTE - CABOS ELÉTRICOS (UNIDADE ELETRÔNICA INJETORA)	10
CHICOTE - CHASSI	825
CHICOTE - TRANSMISSÃO	356
	359
CHICOTE - VÁLVULA (COMPRESSOR DE AR DO ASSENTO)	912
CILINDRO - COMPORTA DE DESCARGA TRASEIRA	673
CILINDRO - SUSPENSÃO	797
	799
CILINDRO DA COMPORTA DE DESCARGA E MONTAGEM	671
CILINDRO DA DIREÇÃO	623
	625
	627
CILINDRO DA SUSPENSÃO E MONTAGEM	795
	796
CILINDRO DE DIREÇÃO E MONTAGEM	620
	621
	622
CILINDRO DE ÉTER	255
CILINDRO DE INCLINAÇÃO DA CABINE	841
CILINDRO DE LEVANTAMENTO	672
CILINDRO DE LEVANTAMENTO E MONTAGEM	669
CINTO DE SEGURANÇA	892
	893
	894
	903
	905
	906
	909
CINZEIRO	852
COLETOR DE ESCAPE	138
COLMÉIA - ARREFECEDOR DE ÓLEO	605
COLMÉIA - ARREFECEDOR DE ÓLEO (TRANSMISSÃO)	605
COLMÉIA (ARREFECEDOR DE ÓLEO DE MOTOR)	98
COLUNA DE DIREÇÃO AJUSTÁVEL	656
COMANDO DA BOMBA	48
	372
	374
COMANDO DE ACESSÓRIOS	46
	47
COMANDO FINAL E RODA	477
	480
	482
	484
COMPORTA TRASEIRA	555
	556
	558
COMPRESSOR DE AR - ASSENTO	814
COMPRESSOR DE REFRIGERANTE	834
	835
CONDENSADOR DE REFRIGERANTE	837
CONDENSADOR DO REFRIGERANTE E MONTAGEM	836
CONDICIONADOR DE AR	819
	822
	825
CONDICIONADOR DE AR E MONTAGEM	815
CONEXÃO - ELÉTRICA	214
CONJUNTO ACIONADOR ROTATIVO	315
*CONTROL GP-MONITOR	292
	838
CONTROLE - NÃO PROGRAMADO	219
	226
	227
	228
CONTROLE - NÃO PROGRAMADO (MÁQUINA)	228
CONTROLE - NÃO PROGRAMADO (SISTEMA DE MONITORIZAÇÃO ELETRÔNICO)	878
CONTROLE - TRANSMISSÃO E CILINDRO DE LEVANTAMENTO	839
	840
CONTROLE DA TRAVA DO DIFERENCIAL	346
	348
	352
CONTROLE DE DIREÇÃO	619
CONTROLE DO CILINDRO DE LEVANTAMENTO	664
CONTROLE DO FREIO DE ESTACIONAMENTO	583
	585
CONTROLE DO FREIO DE SERVIÇO	588
	590

* TRADUÇÃO NÃO DISPONÍVEL NO MOMENTO DA IMPRESSÃO

ÍNDICE

Designação	Página
	592
	597
	602
CONTROLE DO GOVERNADOR	157
CONTROLE DO TREM DE FORÇA E MONTAGEM	219
	220
CONTROLE-ELETROIDRÁULICO (CILINDRO DE LEVANTAMENTO)	840
CONTROLE-ELETROIDRÁULICO (TRANSMISSÃO)	840
CONTROLE ELETRÔNICO - MOTOR	221
	222
	223
	224
	225
CONTROLE ELETRÔNICO E MONTAGEM - MOTOR	215
	217
CONTROLE HIDRÁULICO DA TRANSMISSÃO	356
	359
CONVERSOR DE TORQUE	457
CONVERSOR ELÉTRICO (24-VOLTS A 12-VOLTS)	297
CONVERSOR ELÉTRICO (24-VOLTS A 12-VOLTS) (AR CONDICIONADO)	822
*COOLING AR	99
COTOVELO DE ESCAPE	133
CRUZETA E MANCAL	464

D

DECALQUE - ADVERTÊNCIA (CILINDRO DE ALTA PRESSÃO)	799
DECALQUE - ADVERTÊNCIA (MOLA TENSORA)	930
	933
	936
DECALQUE - ADVERTÊNCIA (NÃO SOLDE)	886
DECALQUE - IDENTIFICAÇÃO (*FUSE, CIRCUIT BREAKER)	209
DECALQUE - IDENTIFICAÇÃO (FUSÍVEL)	209
DECALQUE - IDENTIFICAÇÃO (NÚMERO DE GRUPO)	825
DECALQUE - IDENTIFICAÇÃO (NÚMERO DE GRUPO) (AR CONDICIONADO)	822
DECALQUE - IDENTIFICAÇÃO (12V/24V)	209
	212
DECALQUE - INSTRUÇÃO (AJUSTE DO ASSENTO)	910
	912
DECALQUE (ACUMULADOR HIDRÁULICO)	789
	790
	791
	792
	794
DECALQUE (ALMOFADA DO ASSENTO - IDENTIFICAÇÃO)	874
	875
DECALQUE (PAINEL DE INSTRUMENTOS)	881
DECALQUE (PLACA - NOME)	789
DEFLETOR DO RADIADOR	118
	486
DEGRAU	546
DIFERENCIAL	371
DIFERENCIAL E COROA	366
	368
DISJUNTOR AUTOMÁTICO DE CIRCUITO (10 AMPERES)	212
DISJUNTOR AUTOMÁTICO DE CIRCUITO (10 AMPERES) (CHAVE)	209
DISJUNTOR AUTOMÁTICO DE CIRCUITO (15 AMPERES)	212
DISJUNTOR AUTOMÁTICO DE CIRCUITO (15 AMPERES) (ADEM III)	209
DISJUNTOR AUTOMÁTICO DE CIRCUITO (15 AMPERES) (FAROL DIANTEIRO)	209

E

EIXO - COMANDO DIANTEIRO	443
EIXO - COMANDO DO ENGATE	444
	446
EIXO - COMANDO TRASEIRO	448
EIXO & CHASSI	317
EIXO CENTRAL	319
	321
	323
EIXO-CENTRO	318
EIXO-COMANDO DE VÁLVULA	12
EIXO DE TRANSMISSÃO	442
EIXO DIANTEIRO	318
	325
	327
	329
	331
EIXO TRASEIRO	318
ELEMENTO - FILTRANTE (SEPARADOR DE ÁGUA E COMBUSTÍVEL) (PRIMÁRIO)	158
ELEMENTO DO FILTRO PRIMÁRIO DE AR	132
ELEMENTO DO FILTRO SECUNDÁRIO DE AR	132

* TRADUÇÃO NÃO DISPONÍVEL NO MOMENTO DA IMPRESSÃO

ÍNDICE

Designação	Página
ELEMENTO FILTRANTE - ÓLEO (HIDRÁULICO)	377, 378, 667, 744, 748
ELEMENTO FILTRANTE - ÓLEO (HIDRÁULICO) (EFICIÊNCIA PADRÃO)	377
ELIMINAÇÃO DE VAPORES DO CÁRTER	92
ELO - TRAVA DA ARMAÇÃO DA DIREÇÃO	542, 543
EMISSOR - NÍVEL DO COMBUSTÍVEL	176, 178, 181, 185, 187, 189
EMISSOR - POSIÇÃO	245, 840
EMISSOR - POSIÇÃO (GIRATÓRIO)	157
ENGATE OSCILANTE	523
ENGRENAGEM - EIXO-COMANDO DE VÁLVULAS	55
ENGRENAGENS DE COMANDO TRASEIRO	60, 62
ENGRENAGENS DE DISTRIBUIÇÃO	56, 58
ENGRENAGENS DE SAÍDA DE TRANSFERÊNCIA	380, 386, 392, 398, 404
ENGRENAGENS PLANETÁRIAS - TRANSMISSÃO	428
ESPELHO RETROVISOR	860, 862, 863, 865, 866
ESTRUTURA ROPS	886
EXTENSÃO - ENCOSTO	893, 894

F

FAROL DIANTEIRO	232, 233, 308
FAROL DIANTEIRO (FAROL BAIXO)	288
FAROL DIANTEIRO (LUZ ALTA)	288
FERRAMENTAS	992, 993
FIAÇÃO - AQUECEDOR E AR CONDICIONADO	819, 822, 823
FIAÇÃO - AQUECEDOR E AR CONDICIONADO (FORÇA)	825
FIAÇÃO ELÉTRICA	823
FILTRO - AR	818, 820, 825
FILTRO - AR (AR CONDICIONADO)	815, 822
FILTRO - BOMBA DE ÁGUA	108
FILTRO - COMBUSTÍVEL	173, 176, 178, 181, 185, 187, 189
FILTRO - MAGNÉTICO	441
FILTRO - ÓLEO	377, 378
FILTRO - ÓLEO DO MOTOR	89, 90
FILTRO DE COMBUSTÍVEL E SEPARADOR DE ÁGUA	158
FILTRO SECUNDÁRIO	173
FIXADORES - BOMBA DE ÓLEO DO MOTOR	88
FIXADORES - CABEÇOTE DO MOTOR	37
FIXADORES - CAIXA DIANTEIRA	51, 52, 53
FREIO - MOTOR	49, 50
FREIO DE ESTACIONAMENTO	575, 576
FREIO DE SERVIÇO	577, 579, 581
FUNDO - ENCOSTO	873, 874, 875, 876
FUSÍVEL (10 AMPERES)	209, 212
FUSÍVEL (20-AMPERES)	209, 212

G

*GAUGE GP-FEELER	992
*GAUGE GP-OIL LEVEL (DIPSTICK)	379

* TRADUÇÃO NÃO DISPONÍVEL NO MOMENTO DA IMPRESSÃO

ÍNDICE

Designação	Página
*GEAR GP-CAM (*96-TEETH)	56
GR. BÁSICO - TAMPA DAS VÁLVULAS E CHICOTE DE INJEÇÃO	10
GR. DE SERVICO - TREM DE FORÇA	228
GRUPO ROTATIVO DA BOMBA	739 740
H	
*HARNESS AS-ENGINE	299
*HOSE-AIR INLET	136
I	
INCLINAÇÃO - CAPÔ	562 563 564
INCLINAÇÃO - PLATAFORMA	915
INDICADOR - NÍVEL DE LÍQUIDO (COMBUSTÍVEL)	178 181 187 189
INDICADOR - NÍVEL DE LÍQUIDO (COMBUSTÍVEL)	176 185
INDICADOR - NÍVEL DO ÓLEO (VARETA)	93
INJETOR DE COMBUSTÍVEL	159
INSTALAÇÃO DO RÁDIO	846
INSTALAÇÃO-MÁQUINA	1 2
*INSTALLATION AR-MACHINE	1 2
INTERRUPTOR	293 298
INTERRUPTOR - BALANCIM (AUXILIAR DE PARTIDA)	882
INTERRUPTOR - BALANCIM (DIREÇÃO SECUNDÁRIA)	881
INTERRUPTOR - BALANCIM (ESPELHO AQUECIDO)	862
INTERRUPTOR - BALANCIM (FAROL TRASEIRO)	881
INTERRUPTOR - BALANCIM (ILUMINAÇÃO)	882
INTERRUPTOR - BALANCIM (LÂMPADA DO PAINEL DIANTEIRA/TRASEIRA)	879
INTERRUPTOR - BALANCIM (PARADA A NÍVEL DO SOLO)	242
INTERRUPTOR - BALANCIM (PARADA DO MOTOR)	240
INTERRUPTOR - BALANCIM (PERIGOS)	881
INTERRUPTOR - BALANCIM (SELEÇÃO DE AR CONDICIONADO)	881
INTERRUPTOR - BALANCIM (SERVIÇO)	209
INTERRUPTOR - BALANCIM (TRAVA DE DIFERENCIAL) (TRAVA DO EIXO TRANSVERSAL)	881
INTERRUPTOR - BALANCIM (TRAVA DO EIXO TRANSVERSAL)	878 881
INTERRUPTOR - BALANCIM (TRAVAMENTO DO CAPÔ)	240 242
INTERRUPTOR - CIRCUITO	209 212
INTERRUPTOR - CIRCUITO (20-AMPERES)	242
INTERRUPTOR - CIRCUITO (20-AMPERES) (CAPÔ)	240
INTERRUPTOR - CIRCUITO (80 AMPERES)	242
INTERRUPTOR - CIRCUITO (80 AMPERES) (PRINCIPAL/ALTERNATIVO)	240
INTERRUPTOR - MAGNÉTICO	204 278 279 280
INTERRUPTOR - MAGNÉTICO (24 VOLTS)	290
INTERRUPTOR - MAGNÉTICO (24 VOLTS) (RELÉ DO MOTOR DE PARTIDA)	301
INTERRUPTOR - MÚLTIPLAS FUNÇÕES (LIMPAR-LAVAR-VIRAR-PISCAR)	293
INTERRUPTOR - MÚLTIPLAS FUNÇÕES (SETA DE DIREÇÃO, LIMPADOR, LAVADOR)	298
INTERRUPTOR - PARTIDA (CHAVE)	878 881
INTERRUPTOR - PEDAL (TRAVA DO DIFERENCIAL)	292
INTERRUPTOR - PEDAL (TRAVA DO DIFERENCIAL)	298
INTERRUPTOR - PRESSÃO	290 298 310 378
INTERRUPTOR - PRESSÃO (BAIXO NÍVEL DE ÓLEO)	378
INTERRUPTOR - PRESSÃO (FREIO DE ESTACIONAMENTO)	311 313
INTERRUPTOR - PRESSÃO (FREIO DE SERVIÇO)	293
INTERRUPTOR - PRESSÃO (LUZ DO FREIO)	293
INTERRUPTOR - PRESSÃO (ÓLEO DA DIREÇÃO)	290
INTERRUPTOR - PRESSÃO (ÓLEO DA DIREÇÃO PRIMÁRIA)	301
INTERRUPTOR - PRESSÃO (PRESSÃO DO ÓLEO)	302

* TRADUÇÃO NÃO DISPONÍVEL NO MOMENTO DA IMPRESSÃO

ÍNDICE

Designação	Página
INTERRUPTOR - PRESSÃO (REFRIGERANTE) (AR CONDICIONADO)	290
INTERRUPTOR - PRESSÃO (REFRIGERANTE) (COMPRESSOR DO CONDICIONADOR DE AR)	301
INTERRUPTOR - ROTATIVO (VELOCIDADE DO VENTILADOR)	878 881
INTERRUPTOR - ROTATIVO (*24-VOLT) (LIMPADOR / LAVADOR)	925
INTERRUPTOR - ROTATIVO (24 VOLTS) (LIMPADOR TRASEIRO)	881
INTERRUPTOR - TEMPERATURA	287 288 290 310
INTERRUPTOR - TEMPERATURA (ENGRENAGEM DE TRANSFERÊNCIA DE SAÍDA)	290
INTERRUPTOR - TEMPERATURA (ÓLEO DO FREIO DE ESTACIONAMENTO)	311 313
INTERRUPTOR - TEMPERATURA (ÓLEO, ENGREANGEM DE TRANSFERÊNCIA DE SAÍDA)	301
INTERRUPTOR - TEMPERATURA (ÓLEO, FREIO DIANTEIRO)	301
INTERRUPTOR - TEMPERATURA (TERMOSTATO) (AR CONDICIONADO)	819 822 825
INTERRUPTOR (AR CONDICIONADO)	879
INTERRUPTOR (AUXILIAR DE PARTIDA)	879 882
INTERRUPTOR (DIREÇÃO SECUNDÁRIA)	879 881
INTERRUPTOR DO FREIO DE ESTACIONAMENTO	293 298
INTERRUPTOR (ESPELHO AQUECIDO)	860 862
INTERRUPTOR (FAROL TRASEIRO)	881
INTERRUPTOR (LUZ DO TETO DA PORTA)	292
INTERRUPTOR (LUZ TRAZEIRO DE TRABALHO)	878
INTERRUPTOR (PERIGOS)	881
INTERRUPTOR (PISCA-PISCA DE PERIGO)	879
INTERRUPTOR (SELEÇÃO DE AR CONDICIONADO)	881
INTERRUPTOR (24 VOLTS) (SISTEMA DE MONITORIZACÃO)	878

J

Designação	Página
JOGO - COLUNA (COLUNA DA DIREÇÃO)	656
JOGO - ESTEIO DE GÁS (INCLINAÇÃO DA COLUNA DA DIREÇÃO)	656
JOGO-ARTICULAÇÃO	656
JOGO DE AJUSTADOR (ENCOSTO DO BRAÇO)	829
JOGO DE ALAVANCA DE INCLINAÇÃO (COLUNA DA DIREÇÃO)	656
JOGO DE ALAVANCA (MOTOR DE PARTIDA)	266 271
JOGO DE ALMOFADA (ENCOSTO DO BRAÇO)	829
JOGO DE ARRUELA (MOTOR DE PARTIDA)	262
JOGO DE BLOCO DESLIZADOR	907
JOGO DE BLOCO DESLIZADOR (ASSENTO)	908
JOGO DE BUCHA (MOTOR DE PARTIDA)	271
JOGO DE BUCHA (MOTOR DE PARTIDA)	266
JOGO DE COMPRESSOR DE AR	910
JOGO DE CORDÃO	910 912
JOGO DE EIXO (COLUNA DA DIREÇÃO)	656
JOGO DE ESCOVA (MOTOR DE PARTIDA)	262 266 271
JOGO DE FILTRO DA TAMPA (TANQUE DE COMBUSTÍVEL)	176 178 182 185 187 189
JOGO DE FILTRO DE COMBUSTÍVEL E SEPARADOR DE ÁGUA	158
JOGO DE FIXADORES	910
JOGO DE FIXADORES (ALTERNADOR)	198
JOGO DE FIXADORES (MOTOR DE PARTIDA)	262
JOGO DE INDICADOR (SUSPENSÃO)	910
JOGO DE ISOLADOR (MOTOR DE PARTIDA)	266 271
JOGO DE MANCAL (ALTERNADOR)	198
JOGO DE MANCAL (MOTOR DE PARTIDA)	262
JOGO DE MOLA	840
JOGO DE PINO DO MOTOR DE PARTIDA	262
JOGO DE PISTÃO	615
JOGO DE RECEPTÁCULO (2 PINOS)	237
JOGO DE RECEPTÁCULO (2 PINOS)	230
JOGO DE RETENTOR	474 653 658 659 673

* TRADUÇÃO NÃO DISPONÍVEL NO MOMENTO DA IMPRESSÃO

ÍNDICE

Designação	Página
	721
	723
	789
	791
	792
	793
JOGO DE RETENTOR (ALOJAMENTO DO FREIO DO MOTOR)	64
JOGO DE RETENTOR DO MOTOR DE PARTIDA	262
JOGO DE RETENTOR (MOTOR DE ENGRENAGEM)	725
JOGO DE RETENTOR (VALVULA DE ALIVIO)	767
JOGO DE RETENTOR (VÁLVULA DE DESVIO)	767
	769
	770
JOGO DE RETENTOR (VÁLVULA DE RETENÇÃO)	767
JOGO DE RETENTOR (VÁLVULA DE RETENÇÃO) (VENTILADOR HIDRÁULICO, INVERSÃO)	762
JOGO DE RETENTOR (VÁLVULA DE VAIVÉM)	767
JOGO DE RETENTOR (VÁLVULA SOLENÓIDE)	473
	475
	618
JOGO DE ROLO	910
JOGO DE SENSOR DE DIAL	176
	178
	182
	185
	187
JOGO DE TERMINAL ALTERNADOR	196
JOGO DE TERMINAL (ALTERNADOR)	198
JOGO DE TERMINAL (MOTOR DE PARTIDA)	258
	274
JOGO DE TERMINAL RELÉ (ALTERNADOR)	196
JOGO DE VÁLVULA DE AR	912
JUNTA	667
	744
	748
JUNTA - TAMPA DO REGULADOR (ALOJAMENTO DO REGULADOR DE TEMPERATURA)	104
JUNTA (BOMBA DE ESCORVA DE COMBUSTÍVEL)	173
JUNTA UNIVERSAL	461
	462
	463
	464
	465

L

Designação	Página
LÂMINA DO LIMPADOR DE PÁRA-BRISA	923
	927
LÂMINA DO LIMPADOR DE PÁRA-BRISA (TRASEIRO)	925
*LAMP-HALOGEN (*24-VOLT, 65-WATT)	233
LÂMPADA - FAROL	230
	231
LÂMPADA - FAROL (24 VOLTS)	292
LÂMPADA - HALOGÊNEO (*24-VOLT, 65-WATT)	232
LÂMPADA - HALOGÊNEO (24 VOLTS, 65 WATTS)	231
LÂMPADA - HALOGÊNEO (24 VOLTS)(65 WATTS) (FAROL)	230
LÂMPADA - SINALIZAÇÃO	234
	235
	236
	237
	238
LÂMPADA - SINALIZAÇÃO (24 VOLTS)	288
	308
LÂMPADA - TETO	229
LÂMPADA - TETO (24 VOLTS, COM INTERRUPTOR)	297
LÂMPADA (24 V)	237
LÂMPADA (*24-VOLT)	860
LÂMPADA (24 VOLTS)	229
	235
	236
	287
	288
	840
	862
	878
	881
	882
LÂMPADA (24 VOLTS) (AR CONDICIONADO)	879
LÂMPADA (24 VOLTS) (AUXILIAR DE PARTIDA)	879
LÂMPADA (24 VOLTS) (DIREÇÃO SECUNDÁRIA)	879
LÂMPADA (24 VOLTS) (PAINEL DE INSTRUMENTOS)	878
LÂMPADA (24 VOLTS) (PAINEL DE INSTRUMENTOS DIANTEIRO / TRASEIRO)	879
LÂMPADA (24 VOLTS) (PISCA-PISCA DE PERIGO)	879
LÂMPADA (24 VOLTS) (SISTEMA DE MONITORIZACÃO)	878
LÂMPADA (24 VOLTS) (TRABALHO TRASEIRO)	878

* TRADUÇÃO NÃO DISPONÍVEL NO MOMENTO DA IMPRESSÃO

ÍNDICE

Designação	Página
LÂMPADA (24 VOLTS) (TRAVA DO EIXO TRANSVERSAL)	878
LÂMPADA (24 VOLTS, 21 WATTS)	234 235 236 238
LÂMPADA (24 VOLTS, 5 WATTS)	238
LENTE ÂMBAR	234
LENTE (COR VERMELHA)	287 288
LENTE (FAROL BAIXO)	232
LENTE (HOLOFOTE)	230
LENTE (LUZ ALTA)	233
LENTE (LUZ DO FREIO, TRASEIRA, SETA DE DIREÇÃO)	235 236 238
LENTES CLARAS	237
LEVANTAMENTO DO MOTOR	72 73
LIMPADOR E LAVADOR - JANELA	923 925 927
LUBRIFICAÇÃO - AUTOMÁTICA	544
LUZ INTERMITENTE	294 297

M

MANCAL	523
MANGUEIRA	92
MANGUEIRA - COTOVELO	102
MANGUEIRA-ADAPTADOR	102
MECANISMO DAS VÁLVULAS	87
MÓDULO - VELOCÍMETRO E TACÔMETRO	868
MÓDULO DO PAINEL DE INSTRUMENTO	881
MÓDULO ELETRÔNICO DE QUATRO INDICADORES	867
MÓDULO (LIMPADOR INTERMITENTE)	298
MONITOR DE SERVIÇO (SISTEMA DE MONITORIZAÇÃO CATERPILLAR)	228
MONTAGEM - ALTERNADOR	74
MONTAGEM - ENGRENAGEM DE TRANSFERÊNCIA	424
MONTAGEM - ESTRUTURA ROPS	869 871
MONTAGEM - MOTOR	75
MONTAGEM - TRANSMISSÃO	425
MOTOR - ENGRENAGENS	719 720 721 723 725
MOTOR - LIMPADOR DO VIDRO	923 927
MOTOR - NÚCLEO	7 8
MOTOR COMPLETO	3 5
MOTOR E MONTAGEM - VENTILADOR HIDRÁULICO	106
MOTOR ELÉTRICO	239
MOTOR ELÉTRICO DE PARTIDA	257 260 261 262 264 265 266 268 269 270 271 273
*MOTOR GP-WINDOW WIPER	925

P

PAINEL - CABINE	877
PAINEL - DISJUNTOR ELÉTRICO AUTOMÁTICO	240 242
PAINEL DE INSTRUMENTOS	878 881
PÁRA-CHOQUE DIANTEIRO	494
PÁRA-LAMA E SUPORTE	496
PÁRA-LAMA-EXTENSÃO	495
PÁRA-SOL	917 918
PÁRA-SOL DA CABINE	917 918
PARTIDA EM TEMPO FRIO - ARRANJO	256
PASSADIÇO	565
PINO DO ENGATE	545
PISTÃO E BIELA	77
PLACA - NÚMERO DE SÉRIE (TRANSMISSÃO)	429
PLACA DE ADVERTÊNCIA (LER MANUAL DE OPERAÇÃO)	930 933 936
PLACA DE INSTRUÇÃO (AR CONDICIONADO)	930 933 936
PLACA E DECALQUE	930

* TRADUÇÃO NÃO DISPONÍVEL NO MOMENTO DA IMPRESSÃO

ÍNDICE

Designação	Página
	933
	936
	939
	941
	943
	945
	947
	949
	951
	953
	955
	957
	959
	961
	963
	965
	967
	969
	971
	973
	975
	977
	979
	981
	983
	985
	987
	989
	991
PLANETÁRIA - ENGRENAGEM DE TRANSFERÊNCIA	426
PNEU E ARO	449
	450
	451
	452
	453
	454
	455
	456
POLIA DO VIRABREQUIM	83
PORTA DA CABINE	842
PÓS-ARREFECEDOR DA ADMISSÃO DE AR	125
	127
	129
POSIÇÃO DO SENSOR	840
PROTETOR - CÁRTER DO ÓLEO DO MOTOR	505
PROTETOR - FREIOS	503
PROTETOR - JANELA	844
	845
PROTETOR - PLATAFORMA	513
	515
PROTETOR - RADIADOR	517
	519
	521
	522
PROTETOR - TANQUE HIDRÁULICO	506
	508
PROTETOR - TUBOS	510
	511
PROTETOR - TUBOS DO FREIO	504
PROTETOR CONTRA LAMA	512
PURIFICADOR DE AR	131
	132

R

RADIADOR	110
	112
	114
	116
RECEPTOR - SECADOR (CONDICIONADOR DE AR)	856
RECLINAÇÃO - ASSENTO	884
	885
REDUTOR	717
REGULADOR DE TEMPERATURA DA ÁGUA (92 GRAUS C) (LÍQUIDO ARREFECEDOR)	104
REGULADOR DE VOLTAGEM (24 VOLTS)	196
REGULADOR DE VOLTAGEM (24 VOLTS) (ALTERNADOR)	198
RELÉ (CONJ) (24 VOLTS)	290
	298
RELÉ (CONJ) (24 VOLTS) (ALARME DE MARCHA-À-RÉ)	292
RELÉ (CONJ) (24 VOLTS) (AUXILIAR DE PARTIDA)	292
RELÉ (CONJ) (24 VOLTS) (BUZINA)	292
RELÉ (CONJ) (24 VOLTS) (DIREÇÃO SECUNDÁRIA)	292
RELÉ (CONJ) (24 VOLTS) (FAROL DIANTEIRO)	292
RELÉ (CONJ) (24 VOLTS) (LIMPADOR INTERMITENTE)	292
RELÉ (CONJ) (24 VOLTS) (PARTIDA)	301
RESPIRO	338
RESPIRO (CÁRTER DO MOTOR)	19
RESPIRO DO TREM DE FORÇA	335
	336
	337
	338
RESPIRO (7 PSI)	667
RESPIRO (7 PSI) (HIDRÁULICO)	744
	748
RETENTOR DO VIRABREQUIM	68

* TRADUÇÃO NÃO DISPONÍVEL NO MOMENTO DA IMPRESSÃO

ÍNDICE

Designação	Página
RETENTOR DO VIRABREQUIM (DIANTEIRO)	20
REVESTIMENTO DA CABINE	847 850 852
REVESTIMENTO DA CARROCERIA	535
RODA - COMANDO FINAL E FREIO	480 482 484
RODA E COMANDO FINAL	477
RODA E PNEU	479
RUÍDO - ARRANJO PARA SUPRESSÃO	550
S	
SEMI-EIXO TRASEIRO	333
SENSOR - PRESSÃO	246 247 248 249
SENSOR - PRESSÃO (ADMISSÃO DO TURBOALIMENTADOR)	290 301
SENSOR - PRESSÃO (COMBUSTÍVEL)	155 156
SENSOR - PRESSÃO (ÓLEO DO MOTOR)	28
SENSOR - TEMPERATURA	251 252 253 254
SENSOR - TEMPERATURA (LÍQUIDO ARREFECEDOR)	254
SENSOR - TEMPERATURA (ÓLEO DO CONVERSOR DE TORQUE)	301
SENSOR - TEMPERATURA (ÓLEO DO CONVERSOR DE TORQUE)	288
SENSOR DE PRESSÃO E MONTAGEM	244
SENSOR DE VELOCIDADE	250
SENSOR DE VELOCIDADE (EIXO-COMANDO DE VÁLVULAS - REGULAGEM)	70
SENSOR DE VELOCIDADE (MOTOR)	290 301
SENSOR DE VELOCIDADE (SAÍDA DA TRANSMISSÃO)	430
SENSOR DE VELOCIDADE (VIRABREQUIM - REGULAGEM)	70
SILENCIADOR	139 143
SIST. HIDRÁULICO - MÁQUINA	675
SISTEMA ELETRÔNICO - MONITOR	228
SISTEMA ELETRÔNICO - TREM DE FORÇA	228
SOFTWARE - MONITOR (SISTEMA DE MONITORIZAÇÃO CATERPILLAR)	228
SOFTWARE - TREM DE FORÇA	228
SOLENÓIDE (24 V) (FREIO DO MOTOR)	66
SOLENÓIDE (24 V) (FREIO DO MOTOR)	64
SOLENÓIDE (24 VOLTS) (MOTOR DE PARTIDA)	262 266 271
SOLENÓIDE (24 VOLTS, MOTOR DE PARTIDA)	258 274
SUPORTE DO DIFERENCIAL	340 341
SUPORTE DO MOTOR	86
SUPORTE DOS TUBOS DO ENGATE	548 549
SUSPENSÃO - ASSENTO	910 912 914
SUSPENSÃO - EQUALIZADOR TRASEIRO	811
*SWITCH AS-ROCKER (ESPELHO AQUECIDO)	860
T	
*TAILGATE GP	560
TAMPA	592 597 602
TAMPA - BLOCO DO MOTOR	14 15 16
TAMPA - BOCAL DE ENCHIMENTO	380 386 398 404 667
TAMPA - BOCAL DE ENCHIMENTO (COMBUSTÍVEL, TRAVA, COM RESPIRO)	176 181 185
TAMPA - BOCAL DE ENCHIMENTO (COMBUSTÍVEL, TRAVA, COM RESPIRO)	178 187 189
TAMPA - BOCAL DE ENCHIMENTO DE COMBUSTÍVEL (JOGO DE CONVERSÃO)	176 185
TAMPA - BOCAL DE ENCHIMENTO DE ÓLEO	19
TAMPA - BOCAL DE ENCHIMENTO (ÓLEO HIDRÁULICO)	744 748
TAMPA - CAIXA DIANTEIRA	18

* TRADUÇÃO NÃO DISPONÍVEL NO MOMENTO DA IMPRESSÃO

ÍNDICE

Designação	Página
TAMPA - CAIXA DO VOLANTE	17
TAMPA - COMANDO DE ACESSÓRIOS	13
TAMPA - CONVERSOR DE TORQUE	365
TAMPA - EMBARQUE	928
TAMPA - MECANISMO DAS VÁLVULAS	19
TAMPA - RADIADOR (7 PSI)	123
	124
TAMPA - TANQUE	667
TAMPA COM RESPIRO	923
TAMPÃO	319
	321
	372
	374
	393
	400
	406
*TANK AR-FUEL	184
TANQUE - LAVADOR DE JANELA	927
TANQUE - LÍQUIDO ARREFECEDOR	120
	121
	122
	123
	124
TANQUE DE COMBUSTÍVEL	184
	185
	187
	189
TANQUE DE COMBUSTÍVEL E MONTAGEM	174
	176
	178
	181
TANQUE DE ÓLEO HIDRÁULICO E MONTAGEM	741
	742
	743
TANQUE HIDRÁULICO	744
	748
	752
TAPETE	850
TELA - FILTRO (TRANSMISSÃO)	470
TELA DE SUCÇÃO	372
	374
TELA DE SUCÇÃO (TRANSMISSÃO)	441
TELA FILTRANTE	667
	744
	748
	767
TENSOR DA CORREIA	11
TRANSMISSÃO	460
TREM DE FORÇA	434
TUBOS - ÁGUA	104
TUBOS - AQUECEDOR	858
TUBOS - AR	134
	135
	136
	137
TUBOS - AR CONDICIONADO	854
	856
TUBOS - ARREFECEDOR DE ÓLEO DO EIXO	410
	412
	416
TUBOS - ARREFECEDOR DO TREM DE FORÇA	420
TUBOS - BOMBA	629
	632
	702
	705
	707
	709
TUBOS - CILINDRO DE LEVANTAMENTO	677
	679
TUBOS - CIRCUITO PILOTO	692
	696
	698
TUBOS - COMBUSTÍVEL	160
	162
	164
	166
	168
TUBOS - COMPORTA DE DESCARGA TRASEIRA	717
TUBOS - DIREÇÃO	635
	637
	639
	641
	644
	646
TUBOS - DRENAGEM	676
TUBOS - FILTRO DE ÓLEO DO MOTOR	95
TUBOS - FREIO DE SERVIÇO	606
	608
	610
	612
TUBOS - GRAXA	536
	538
	540
TUBOS - ÓLEO DA TRANSMISSÃO	421
TUBOS - ÓLEO DO MOTOR	94
TUBOS - ÓLEO DO TURBOALIMENTADOR	96
TUBOS - RETORNO	711
	713
	715
TUBOS - SISTEMA DE ARREFECIMENTO	102
TUBOS - TESTE DE PRESSÃO	700
TUBOS - VENTILADOR HIDRÁULICOS	680

* TRADUÇÃO NÃO DISPONÍVEL NO MOMENTO DA IMPRESSÃO

ÍNDICE

Designação	Página
	683
	687
TUBOS DA SUSPENSÃO	807
TUBOS DO AQUECEDOR	858
TURBOALIMENTADOR	153
	154
V	
*VALVE GP-PUMP CONTROL	777
	778
VÁLVULA	783
VÁLVULA - RETENÇÃO DA DIREÇÃO E COMBINADORA	661
VÁLVULA - TANQUE (ENCHIMENTO RÁPIDO DE COMBUSTÍVEL)	178
	181
VÁLVULA (CILINDRO HIDRÁULICO)	799
VÁLVULA COMBINADA	767
VÁLVULA DE ALÍVIO	335
	336
	337
	623
	625
	782
	783
VÁLVULA DE ALÍVIO (CONTROLE DE LEVANTAMENTO)	773
VÁLVULA DE ALÍVIO (REFRIGERANTE)	835
VÁLVULA DE CONTRABALANÇO	768
VÁLVULA DE CONTROLE	466
VÁLVULA DE CONTROLE - FLUXO (ÁGUA)	825
VÁLVULA DE CONTROLE - FLUXO (ÁGUA) (AR CONDICIONADO)	822
VÁLVULA DE CONTROLE DA BOMBA	780
VÁLVULA DE CONTROLE DA BOMBA (COMPENSAÇÃO DA PRESSÃO)	653
VÁLVULA DE CONTROLE DE ABAIXAMENTO	775
VÁLVULA DE CONTROLE DE PRESSÃO	467
VÁLVULA DE CONTROLE DO CILINDRO DE LEVANTAMENTO	771
	773
VÁLVULA DE CONTROLE DO CILINDRO DE LEVANTAMENTO E MONTAGEM	754
	756
	758
VÁLVULA DE CONTROLE DOS FREIOS	616
VÁLVULA DE DERIVAÇÃO DO COMBUSTÍVEL	194
VÁLVULA DE DRENAGEM	102
VÁLVULA DE REDUÇÃO DE PRESSÃO	660
	776
VÁLVULA DE REDUÇÃO DE PRESSÃO E DE RETENÇÃO	658
	659
VÁLVULA DE RETENÇÃO	191
	192
	193
	641
	644
	646
	661
	761
	762
	763
	764
	765
	766
VÁLVULA DE SEPARAÇÃO	617
	692
VÁLVULA DESVIADORA	769
	770
VÁLVULA DO FREIO	592
	597
	602
VÁLVULA DO VENTILADOR HIDRÁULICO	760
VÁLVULA PARA TIRAR AMOSTRAS DE FLUIDOS	421
	667
	744
	748
VÁLVULA PARA TIRAR AMOSTRAS DE FLUIDOS (LÍQUIDO ARREFECEDOR)	102
VÁLVULA SELETORA E CONTROLE DE PRESSÃO	470
VÁLVULA SOLENÓIDE	473
	474
	475
	618
	785
	786
VÁLVULA SOLENÓIDE DE ALÍVIO	476
VÁLVULA SOLENÓIDE (PARTIDA A ÉTER, 24 VOLTS)	255
VEDADOR	108
VEDADOR TIPO LABIO (REGULADOR DA TEMPERATURA DA ÁGUA)	104
VENTILADOR DE SUCÇÃO	100
	101
VIDRO	919
	921
	922
VIRABREQUIM	20
VOLANTE DO MOTOR	54

* TRADUÇÃO NÃO DISPONÍVEL NO MOMENTO DA IMPRESSÃO

STICHWORTVERZEICHNIS

Bezeichnung	Seite
A	
ABDECKGLAS (ABBLENDLICHT)	232
ABDECKGLAS (ARBEITSSCHEINWERFER)	230
ABDECKGLAS (BREMSLICHT, HECKLEUCHTE, RICHTUNGSBLINKER)	235 236
ABDECKGLAS (BREMSLICHT, HECKLEUCHTE, RICHTUNGSBLINKER)	238
ABDECKGLAS (FERNLICHT)	233
ABDECKGLAS (GELB)	234
ABDECKGLAS, KLAR	237
ABDECKGLAS (ROT)	287 288
ABLASSLEITUNGEN	676
ABLASSSTOPFEN	676 744 748
ABLASSSTOPFEN (HYDRAULIKTANK)	752
ABLASSSTOPFEN (ÖLWANNE)	76
ABLASSVENTIL	102
ABSENKSTEUERVENTIL	775
ACHS- U. RAHMENSATZ	317
ACHSENÖLKÜHLERLEITUNGEN	410 412 416
*AIR COMPRESSOR GP-SEAT	813
*AIR CONDITIONER & MOUNTING GP	818
ANSAUGSIEB	372 374
ANSAUGSIEB (GETRIEBE)	441
ANSCHLUSS, ELEKTR.	214
ANSCHLUSSKLEMMENSATZ (DREHSTROM-GENERATOR)	198
ANSCHLUSSKLEMMENSATZ (STARTERMO-TOR)	258 274
ANTRIEBSSTRANG-WARTUNGSSATZ	228
ANTRIEBSWELLE	442
ANTRIEBSWELLE, HINTEN	448
ANTRIEBSWELLE, VORNE	443
ANZEIGEN-EINBAUSATZ (FAHRVERHAL-TEN)	910
ANZUGSLEINE	910 912
ARBEITSLEUCHTEN	230 231
ARBEITSLEUCHTEN (24 V)	292
ARMLEHNE	829 830 831
ASCHENBECHER	852
ÄTHERSPRÜHGERÄT	255
ÄTHERSTARTHILFE	255
ÄTHERSTARTHILFEZYLINDER	255
AUFHÄNGUNG, HINTEN - RAHMEN	805
AUFHÄNGUNG, MITTE - RAHMEN	801
AUFHÄNGUNGSLEITUNGEN	807
AUFHÄNGUNGSZYLINDER	797 799
AUFHÄNGUNGSZYLINDER U. BEFESTI-GUNGSTEILE	795 796
AUFKLEBER - GETRIEBEÖL	287 288
AUFKLEBER (HYDR. DRUCKSPEICHER)	789 790 791 792 794
AUFKLEBER (INSTRUMENTENTAFEL)	881
AUFKLEBER (NAMENSSCHILD)	789
AUFKLEBER (SITZKISSENKENNUNG)	874 875
AUSGLEICHSVENTIL	768
AUSPUFFABSCHIRMUNG	150
AUSPUFFBOGEN	133
AUSPUFFKRÜMMER	138
AUSPUFFROHR	146 147 148 149
AUSPUFFROHR (*INCLUDES PIPE AND CLAMP)	139
B	
BATTERIE UND VERDRAHTUNG	202 204
BATTERIE (12 V)	202 204 256
BEFESTIGUNGSTEILE (DREHSTROMGENE-RATOR)	198
BEFESTIGUNGSTEILE (STARTERMOTOR)	262
BEIFAHRERSITZ	904 905 906
BEILAGSCHEIBEN-SATZ (STARTERMO-TOR)	262
BELEUCHTUNGSANLAGE UND VERDRAHTUNG	311 313
BELEUCHTUNGSVERDRAHTUNG	308
BETRIEBSBREMSE	577 579 581

* ÜBERSETZUNG ZUM ZEITPUNKT DER DRUCKLEGUNG NICHT VORHANDEN

STICHWORTVERZEICHNIS

Bezeichnung	Seite
BETRIEBSBREMSLEITUNGEN	606, 608, 610, 612
BLINKER	294, 297
BLINKLEUCHTE	234, 235, 236, 237, 238
BLINKLEUCHTE (24 V)	288, 308
BLOCK (MOTORÖLKÜHLER)	98
BREMS- UND WANDLERÖLKÜHLER	363
BREMSDRUCKSPEICHER	566, 568, 569, 570, 571, 572, 573, 574
BREMSGESTÄNGE	588, 590, 592, 597, 602
BREMSLEITUNGSVERKLEIDUNG	504
BREMSPUMPE UND BEFESTIGUNGSTEILE	614
BREMSSTEUERVENTIL	616
BREMSVENTIL	592, 597, 602
BREMSVERKLEIDUNG	503
BUCHSEN-EINBAUSATZ (STARTERMOTOR)	266, 271
BÜRSTEN-EINBAUSATZ (STARTERMOTOR)	262, 266, 271

C

*CONTROL GP-MONITOR	292, 838
*COOLING AR	99

D

DÄMPFER	45
DAUERBREMSGEHÄUSE	64, 66
DICHTUNG	108, 667, 744, 748
DICHTUNG - THERMOSTATABDECKUNG (TEMPERATURREGELGEHÄUSE)	104
DICHTUNG (KRAFTSTOFFENTLÜFTUNGS-PUMPE)	173
DICHTUNGSSATZ	474, 653, 658, 659, 673, 721, 723, 789, 791, 792, 793
DICHTUNGSSATZ (AUSGELEICHSVENTIL)	767
DICHTUNGSSATZ (GETRIEBEMOTOR)	725
DICHTUNGSSATZ (RÜCKSCHLAGVENTIL)	767
DICHTUNGSSATZ (RÜCKSCHLAGVENTIL) (HYDRAULIKFILTER, UMKEHRUNG)	762
DICHTUNGSSATZ (SOLENOIDVENTIL)	473, 475, 618
DICHTUNGSSATZ (VERTEILERVENTIL)	769, 770
DICHTUNGSSATZ (VERTEILERVENTIL)	767
DICHTUNGSSATZ (WECHSELVENTIL)	767
DIFFERENTIAL	371
DIFFERENTIAL UND TELLERRAD	366, 368
DIFFERENTIALSPERRENGESTÄNGE	346, 348, 352
DIFFERENTIALTRÄGER	340, 341
DREHKNOPFSCHALTER (GEBLÄSEGE-SCHWINDIGKEIT)	878, 881
DREHKNOPFSCHALTER (24 V) (HINTERER SCHEIBENWISCHER)	881
DREHKNOPFSCHALTER (*24-VOLT) (SCHEI-BENWISCHER UND -WASCHANLAGE)	925
DREHMOMENTWANDLER	457
DREHSTELLGLIED	315
DREHSTROMGENERATOR	196, 198, 200, 201
DREHSTROMGENERATOR - AN-SCHLUSSKLEMMENSATZ	196

* ÜBERSETZUNG ZUM ZEITPUNKT DER DRUCKLEGUNG NICHT VORHANDEN

STICHWORTVERZEICHNIS

Bezeichnung	Seite
DREHSTROMGENERATOR - BEFESTIGUNG	74
DREHZAHLSENSOR	250
DREHZAHLSENSOR (GETRIEBEAUSGANG)	430
DREHZAHLSENSOR (KURBELWELLE/ ZÜNDZEITPUNKT)	70
DREHZAHLSENSOR (MOTOR)	290
DREHZAHLSENSOR (MOTOR)	301
DREHZAHLSENSOR (NOCKENWELLE/ ZÜNDZEITPUNKT)	70
DRUCKBEGRENZUNGSVENTIL	335
	336
	337
DRUCKLUFTLEITUNGEN	134
	135
	136
	137
DRUCKLUFTVENTILSATZ	912
DRUCKREDUZIERVENTIL	660
	776
DRUCKSCHALTER	290
	298
	310
	378
DRUCKSCHALTER (BETRIEBSBREMSE)	293
DRUCKSCHALTER (BREMSLEUCHTE)	293
DRUCKSCHALTER (FESTSTELLBREMSE)	311
	313
DRUCKSCHALTER (HAUPTLENKUNGSÖL)	301
DRUCKSCHALTER (KÜHLMITTEL) (KLIMAANLAGE)	290
DRUCKSCHALTER (KÜHLMITTEL) (KLIMAANLAGEN-KOMPRESSOR)	301
DRUCKSCHALTER (LENKUNGSÖL)	290
DRUCKSCHALTER (NIEDRIGER ÖLDRUCK)	378
DRUCKSCHALTER (ÖLDRUCK)	302
DRUCKSENSOR	246
	247
	248
	249
DRUCKSENSOR (KRAFTSTOFF)	155
	156
DRUCKSENSOR (MOTORÖL)	28
DRUCKSENSOR (TURBILADEREINLASS)	301
DRUCKSENSOR (TURBILADEREINLASS)	290
DRUCKSENSOR UND BEFESTIGUNGSTEILE	244
DRUCKSPEICHER U. BEFESTIGUNGSTEILE - AUFHÄNGUNG	787
	788
DRUCKSTEUERVENTIL	467
DRUCKTESTLEITUNGEN	700

E

Bezeichnung	Seite
EINBAUSATZ - KRAFTSTOFFILTER UND WASSERABSCHEIDER	158
EINBAUSATZ - MASCHINE	1
	2
EINFÜLLKAPPE (KRAFTSTOFF, SPERRUNG, LÜFTUNG)	178
	181
	185
	187
	189
EINFÜLLKAPPE (KRAFTSTOFF, SPERRUNG, LÜFTUNG)	176
EINFÜLLSTUTZENKAPPE	380
	386
	398
	404
	667
EINFÜLLSTUTZENKAPPE (HYDRAULIKÖL)	744
	748
EINSTELLER-EINBAUSATZ (ARMLEHNE)	829
ELEKTR. UMFORMER (24V - 24V)	297
ELEKTR. UMFORMER (24V - 24V) (KLIMAANLAGE)	822
ELEKTROHYDRAULISCHE STEUERUNG (GETRIEBE)	840
ELEKTROHYDRAULISCHE STEUERUNG (MULDE)	840
ELEKTRONIK - MONITOR	228
ENTDUNSTER	92
ENTLÜFTER	338
ENTLÜFTER (KURBELGEHÄUSE)	19
ENTLÜFTER (7 PSI)	667
ENTLÜFTER (7 PSI) (HYDRAULIK)	744
	748

F

Bezeichnung	Seite
FAHRERHAUS	832
	833
FAHRERHAUS, SONNENBLENDE	918
FAHRERHAUS, SONNENBLENDE	917
FAHRERHAUSAUSKLEIDUNG	847
	850
	852
FAHRERHAUSBELEUCHTUNG	229
FAHRERHAUSBELEUCHTUNG (24 V, MIT SCHALTER)	297
FAHRERHAUSFENSTER	919
	921
	922
FAHRERHAUSKIPPZYLINDER	841
FAHRERHAUSTÜR	842

* ÜBERSETZUNG ZUM ZEITPUNKT DER DRUCKLEGUNG NICHT VORHANDEN

STICHWORTVERZEICHNIS

Bezeichnung	Seite
FAHRERHAUSVERDRAHTUNG	288, 292, 297
FAHRERPLATTFORMVERKLEIDUNG	513, 515
FAHRERSITZ	893, 894, 895, 897, 899, 901, 903
FAHRERSITZ UND UNTERBAU	889, 890, 891
FAHRERSITZFEDERUNG	910, 912, 914
FAHRERSITZVERSTELLER	812
FAHRERSTAND, SCHWENKBAR	915
FAHRWERK-KABELBAUM	825
FEDER-EINBAUSATZ	840
FEDERUNGSDRUCKSPEICHER	789, 790, 791, 792, 793, 794
FELGE (TEILBAR)	439, 440
FESTSTELLBREMSE	575, 576
FESTSTELLBREMSGESTÄNGE	583, 585
FESTSTELLBREMSSCHALTER	293, 298
FILTER (KRAFTSTOFF, WASSERABSCHEIDER) (HAUPTELEMENT)	158
FILTERSIEB	667, 744, 748
FILTERSIEB (GETRIEBE)	470
FRONTSCHEINWERFER	232, 233, 308
FRONTSCHEINWERFER (ABBLENDLICHT)	288
FRONTSCHEINWERFER (FERNLICHT)	288
FRONTSTOSSSTANGE	494
FUSSMATTE	850

G

Bezeichnung	Seite
GASSTOSSDÄMPFER-EINBAUSATZ (LENKSÄULENNEIGUNG)	656
*GAUGE GP-FEELER	992
*GAUGE GP-OIL LEVEL (DIPSTICK)	379
*GEAR GP-CAM (*96-TEETH)	56
GESCHWINDIGKEITS- U. DREHZAHLMESSER-MODUL	868
GETRIEBE	460
GETRIEBE- U. MULDENSTEUERUNG	839, 840
GETRIEBE-KABELBAUM	356, 359
GETRIEBEAUFLAGER	425
GETRIEBEENTLÜFTER	335, 336, 337, 338
GETRIEBEGEHÄUSE	342, 344
GETRIEBEHYDRAULIK	356, 359
GETRIEBEÖLFÜLLSTUTZEN	376
GETRIEBEÖLLEITUNGEN	421
GETRIEBEPUMPE	438
GLEITSCHIENENBLOCK-EINBAUSATZ	907
GLEITSCHIENENBLOCK-EINBAUSATZ (SITZ)	908
GRUNDAUSFÜHRUNG	1

H

Bezeichnung	Seite
HALOGENSCHINWERFER (*24-VOLT, 65-WATT)	232
HALOGENSCHINWERFER (24 V)(65 W) (ARBEITSSCHEINWERFER)	230
HALOGENSCHINWERFER (24V)(65W)	231
HALTERUNGSSATZ (MOTORBREMSGEHÄUSE)	64
HALTETEILESATZ	910
HANDWERKZEUGE	992, 993
*HARNESS AS-ENGINE	299
HAUPTFILTER	132
HEBEL-EINBAUSATZ (STARTERMOTOR)	266
HEBEL-EINBAUSATZ (STARTERMOTOR)	271
HECKKLAPPE	555, 556, 558
HECKKLAPPENLEITUNGEN	717
HECKKLAPPENZYLINDER	673
HECKKLAPPENZYLINDER U. BEFESTIGUNG	671

* ÜBERSETZUNG ZUM ZEITPUNKT DER DRUCKLEGUNG NICHT VORHANDEN

STICHWORTVERZEICHNIS

Bezeichnung	Seite
HEIZUNGSLEITUNGEN	858
HINTERACHSE	318
	333
HINTERE AUSGLEICHSAUFHÄNGUNG	811
*HOSE-AIR INLET	136
HUBLEITUNGEN	677
	679
HUBSTEUERVENTIL	771
	773
HUBSTEUERVENTIL UND -BEFESTIGUNG	754
	756
	758
HUBZYLINDER	672
HYDRAULIKANORDNUNG (MASCHINE)	675
HYDRAULIKDRUCKSPEICHER	567
HYDRAULIKKÜHLERMOTOR U. BEFESTIGUNG	106
HYDRAULIKLÜFTERLEITUNGEN	680
	683
	687
HYDRAULIKLÜFTERPUMPE U. BEFESTIGUNG	729
HYDRAULIKLÜFTERVENTIL U. BEFESTIGUNGSTEILE	760
HYDRAULIKÖLKÜHLERBEFESTIGUNG	666
HYDRAULIKPUMPE UND BEFESTIGUNGSTEILE	728
HYDRAULIKPUMPE UND LEITUNGEN	629
	632
	702
	705
	707
	709
HYDRAULIKTANK	744
	748
	752
HYDRAULIKTANK UND BEFESTIGUNGSTEILE	741
	742
	743
HYDRAULIKTANKVERKLEIDUNG	506
	508

I

IDENTIFIZIERUNGS-AUFKLEBER (*FUSE, CIRCUIT BREAKER)	209
IDENTIFIZIERUNGS-AUFKLEBER (GRUPPENNUMMER)	825
IDENTIFIZIERUNGS-AUFKLEBER (GRUPPENNUMMER) (KLIMAANLAGE)	822
IDENTIFIZIERUNGS-AUFKLEBER (SICHERUNG)	209
IDENTIFIZIERUNGS-AUFKLEBER (12V/24V)	209
IDENTIFIZIERUNGS-AUFKLEBER (12V/24V)	212
*INSTALLATION AR-MACHINE	1
	2
INSTRUKTIONS-AUFKLEBER (FÜR SITZVERSTELLUNG)	910
	912
INSTRUKTONSSCHILD (KLIMAANLAGE)	930
	933
	936
INSTRUMENTENTAFEL	878
	881
INSTRUMENTENTAFELMODUL	881
ISOLATOR-EINBAUSATZ (STARTERMOTOR)	266
	271

K

KABELSTRANG	823
KABELSTRANG - HEIZUNG U. KLIMAANLAGE	819
	822
	823
KABELSTRANG - HEIZUNG U. KLIMAANLAGE (STROM)	825
KÄLTEMITTELKOMPRESSOR	834
	835
KÄLTEMITTELKONDENSATOR	837
KÄLTEMITTELKONDENSATOR U. BEFESTIGUNGSTEILE	836
KÄLTEMITTELTROCKNER (KLIMAANLAGE)	856
KALTWETTERSTARTANLAGE	256
KAPPE	592
	597
	602
KAPPE MIT ENTLÜFTER	923
KAPPENFILTERSATZ (KRAFTSTOFFTANK)	176
	178
	182
	185
	187
	189
KIPPHEBELSATZ (LENKSÄULE)	656
KIPPSCHALTER (ABSTELLUNG AUF STANDEBENE)	242
KIPPSCHALTER (BEHEIZTER SPIEGEL)	862
KIPPSCHALTER (BELEUCHTUNG)	882
KIPPSCHALTER (DIFFERENTIALSPERRE) (QUERACHSENSPERRE)	881
KIPPSCHALTER (FRONTLEUCHTE/RÜCKLEUCHTE INSTRUMENTENBRETTLEUCHTE)	879

* ÜBERSETZUNG ZUM ZEITPUNKT DER DRUCKLEGUNG NICHT VORHANDEN

STICHWORTVERZEICHNIS

Bezeichnung	Seite
KIPPSCHALTER (GEFAHR)	881
KIPPSCHALTER (HAUBENSPERRVORRICHTUNG)	242
KIPPSCHALTER (HAUBENSPERRVORRICHTUNG)	240
KIPPSCHALTER (HINTERE ARBEITSLEUCHTE)	881
KIPPSCHALTER (KLIMAANLAGENWAHL)	881
KIPPSCHALTER (MOTORABSTELLUNG)	240
KIPPSCHALTER (NOTLENKUNG)	881
KIPPSCHALTER (QUERACHSENSPERRE)	878
KIPPSCHALTER (QUERACHSENSPERRE)	881
KIPPSCHALTER (SERVICE)	209
KIPPSCHALTER (STARTHILFE)	882
KLEMMLEISTE	208
KLEMNME	501
KLIMAANLAGE	819
	822
	825
KLIMAANLAGE UND AUFHÄNGUNG	815
KLIMAANLAGENDRUCKSPEICHER	856
KLIMAANLAGENLEITUNGEN	854
	856
KNICKGELENKANTRIEBSWELLE	444
	446
KNICKGELENKSLEITUNGEN - BEFESTIGUNG	548
	549
KNICKGELENKSPERRE	542
	543
KNICKPENDELGELENK	523
KOLBENPUMPE	733
	735
	737
KOLBENPUMPENUMLAUFSATZ	739
	740
KOLBENSATZ	615
KOMBISCHALTER (RICHTUNGSBLINKER, WISCHER, WASCHER)	298
KOMBISCHALTER (WISCHER/WASCHER/BLINKER)	293
KRAFTSTOFF-ENTLÜFTUNGSPUMPE	173
KRAFTSTOFFEINSPRITZDÜSE	159
KRAFTSTOFFENTLÜFTUNGSPUMPE U. SICHERHEITSFILTER	173
KRAFTSTOFFFILTERKAPPE (UMRÜSTSATZ)	176
	185
KRAFTSTOFFHEIZUNG (WASSERABSCHEIDER, 12 V)	158
KRAFTSTOFFILTER	173
KRAFTSTOFFILTERSOCKEL	155
	156
KRAFTSTOFFLEITUNGEN	160
	162
	164
	166
	168
KRAFTSTOFFNEBENSTROMVENTIL	194
KRAFTSTOFFÖRDERPUMPE	171
	172
KRAFTSTOFFÖRDERPUMPE UND BEFESTIGUNGSTEILE	171
	172
KRAFTSTOFFSIEB	176
	178
	181
	185
	187
	189
KRAFTSTOFFSTANDGEBER	176
	178
	181
	185
	187
	189
KRAFTSTOFFTANK	184
	185
	187
	189
KRAFTSTOFFTANK U. BEFESTIGUNG	174
	176
	178
	181
KRAFTÜBERTRAGUNG	434
KRAFTÜBERTRAGUNGSELEKTRONIK	228
KRAFTÜBERTRAGUNGSSTEUERUNG UND MONTAGESATZ	219
	220
KREUZGELENK	461
	462
	463
	464
	465
KREUZGELENK UND LAGER	464
KRÜMMERSCHILD	152
KÜHLER	110
	112
	114
	116
KÜHLERABDECKUNG	118
KÜHLERKAPPE (7 PSI)	123
	124
KÜHLERLEITPLATTE	486
KÜHLERSCHUTZ	517
	519

* ÜBERSETZUNG ZUM ZEITPUNKT DER DRUCKLEGUNG NICHT VORHANDEN

STICHWORTVERZEICHNIS

Bezeichnung	Seite
	521
	522
KÜHLMITTELBEHÄLTER	120
	121
	122
	123
	124
KÜHLMITTELLEITUNGEN	102
KÜHLWASSERLEITUNGEN	104
KÜHLWASSERPUMPE	107
	108
KURBELWELLE	20
KURBELWELLEN-RIEMENSCHEIBE	83
KURBELWELLENDICHTUNG	68
KURBELWELLENDICHTUNG (VORNE)	20

L

LADELUFTKÜHLER	125
	127
	129
LAGER	523
LAGERSATZ (DREHSTROMGENERATOR)	198
LAGERSATZ (STARTERMOTOR)	262
*LAMP-HALOGEN (*24-VOLT, 65-WATT)	233
LAUFSTEG	565
LEITUNGSVERKLEIDUNG	510
	511
LENKBETÄTIGUNG	619
LENKÖLLEITUNGEN	635
	637
	639
	641
	644
	646
LENKPUMPE UND AUFHÄNGUNG	651
	652
LENKRÜCKSCHLAG- U. KOMBINATIONSVENTIL	661
LENKSÄULE, VERSTELLBAR	656
LENKSÄULEN-EINBAUSATZ (LENKSÄULE)	656
LENKSÄULENHEBEL	292
LENKUNGSANSCHLAG	547
LENKZYLINDER	623
	625
	627
LENKZYLINDER UND AUFHÄNGUNG	620
	621
	622
LEUCHTE (24 V)	229
	235
	236
	237
	287
	288
	840
	862
	878
	881
	882
LEUCHTE (24 V)	881
LEUCHTE (24 V) (A/C)	879
LEUCHTE (24 V) (ARBEIT HINTEN)	878
LEUCHTE (24 V) (FRONT/HECK/INSTRUMENTENBRETT)	879
LEUCHTE (24 V) (INSTRUMENTENTAFEL)	878
LEUCHTE (24 V) (NOTLENKUNG)	879
LEUCHTE (24 V) (QUERACHSENSPERRE)	878
LEUCHTE (24 V) (STARTHILFE)	879
LEUCHTE (24 V) (ÜBERWACHUNGSSYSTEM)	878
LEUCHTE (24 V) (WARNBLINKLEUCHTE)	879
LEUCHTE (24 V, 5 W)	238
LEUCHTE (*24-VOLT)	860
LEUCHTE (24V, 21W)	234
	235
	236
LEUCHTE (24V, 21W)	238
LIPPENDICHTUNG (KÜHLWASSERTHERMOSTAT)	104
LUFTFILTER	818
	820
	825
LUFTFILTER (KLIMAANLAGE)	815
	822
LUFTKOMPRESSOR-EINBAUSATZ	910
LUFTKOMPRESSORSITZ	814
LUFTREINIGER	131
	132

M

MAGNET- UND ÜBERDRUCKVENTIL	476
MAGNETSCHALTER	204
	278
	279
	280
MAGNETSCHALTER (24 V)	290
MAGNETSCHALTER (24 V) (STARTERRELAIS)	301
MAGNETSIEB	441
MAGNETSPULE (24 V) (STARTERMOTOR)	262
	266
	271
MAGNETSPULE (24 V, STARTERMOTOR)	258
	274

* ÜBERSETZUNG ZUM ZEITPUNKT DER DRUCKLEGUNG NICHT VORHANDEN

STICHWORTVERZEICHNIS

Bezeichnung	Seite
MAGNETSTOPFEN	319
	321
	323
	325
	327
	404
	477
	484
MAGNETSTOPFEN (ABLASSEN)	398
MAGNETSTOPFEN (ACHSGEHÄUSE)	329
	331
MAGNETSTOPFEN (DIFFERENTIAL)	380
	386
	392
MAGNETSTOPFEN (KRAFTSTOFFTANK)	176
	178
	181
	185
	187
	189
MAGNETSTOPFEN (SEITENANTRIEB)	480
	482
MAGNETVENTIL	473
	474
	475
	618
	785
	786
MAGNETVENTIL (ÄTHERSTART, 24 V)	255
MITTELACHSE	318
	319
	321
	323
MODUL - VIER ELEKTRON. ANZEIGEN	867
MODUL (INTERVALL WISCHER)	298
MODULARHEBEL (GETRIEBE)	840
MODULARHEBEL (HUBVORRICHTUNG)	840
MONITOR - SERVICE (CATERPILLAR ÜBERWACHUNGSSYSTEM)	228
MONITOR - SOFTWARE (CATERPILLAR ÜBERWACHUNGSSYSTEM)	228
MOTOR, ELEKTR.	239
*MOTOR GP-WINDOW WIPER	925
MOTOR, KOMPLETT	3
	5
MOTORANTRIEB	719
	720
	721
	723
	725
MOTORAUFHÄNGUNG	86
MOTORAUFLAGER	75
MOTORBLOCK	21
	22
	23
	24
	26
	28
	30
	31
MOTORBLOCKDECKEL	14
	15
	16
MOTORBREMSE	49
	50
MOTORHAUBE	526
	529
	532
MOTORHAUBE U. VERKLEIDUNG	525
MOTORHAUBEN-KIPPSTELLUNG	562
	563
	564
MOTORHUBÖSE	72
	73
MOTORKÜHLERBLOCK	7
	8
MOTORÖLFILTERLEITUNGEN	95
MOTORÖLKÜHLER	98
MOTORÖLLEITUNGEN	94
MOTORSTEUERUNG, ELEKTRON.	221
	222
	223
	224
	225
MULDENHYDRAULIK	664
MULDENKIPPER	488
	490
	492
MULDENPUMPE U. BEFESTIGUNGSTEILE	727
MULDENVERSTÄRKUNG	535
MULDENZYLINDER UND AUFHÄNGUNG	669

N

NACHSTELLVORRICHTUNG	615
NEBENANTRIEB	46
	47
NOCKENWELLE	12
NOCKENWELLENZAHNRAD	55
NOTLENKUNGSPUMPE UND -MOTOR	649
NOTLENKUNGSPUMPE UND BEFESTIGUNGS-TEILE	650

O

ÖLEINFÜLLSTUTZEN	19

* ÜBERSETZUNG ZUM ZEITPUNKT DER DRUCKLEGUNG NICHT VORHANDEN

STICHWORTVERZEICHNIS

Bezeichnung	Seite
ÖLFILTER	89
	90
	377
	378
ÖLFILTERELEMENT (HYDRAULISCH)	377
	378
	667
	744
	748
ÖLFILTERELEMENT (HYDRAULISCH) (STANDARD EFFIZIENZ)	377
ÖLKÜHLERBLOCK	605
ÖLKÜHLERBLOCK (GETRIEBE)	605
ÖLKÜHLERLEITUNGEN (KRAFTÜBERTRAGUNG)	420
ÖLMESSSTAB	93
ÖLPUMPEN-BEFESTIGUNGSTEILE	88
ÖLWANNE	76

P

PANZERWANNE	505
PENDELVENTIL	617
	692
PLANETENGETRIEBE	428
PLANETENZWISCHENGETRIEBE	426
PLEUELSTANGE UND KOLBEN	77
POLSTEREINBAUSATZ (ARMLEHNE)	829
PROBEENTNAHMEVENTIL	421
	667
	744
	748
PROBEENTNAHMEVENTIL (KÜHLMITTEL)	102
PUMPENANTRIEB	48
	372
	374
PUMPENANTRIEBSADAPTER	9
PUMPENSTEUERVENTIL	780
PUMPENSTEUERVENTIL (DRUCKAUSGLEICH)	653

R

RAD UND REIFEN	479
RADIOEINBAUSATZ	846
RAHMEN	499
RAHMEN, HINTEN	501
REDUZIERER	717
REGLERSTEUERUNG	157
REIFEN UND FELGE	449
	450
	451
	452
	453
	454
	455
	456
RELAIS (24 V)	290
	298
RELAIS (24 V) (HUPE)	292
RELAIS (24 V) (NOTLENKUNG)	292
RELAIS (24 V) (RÜCKFAHRALARM)	292
RELAIS (24 V) (SCHEIBENWISCHER-INTERVALLSCHALTUNG)	292
RELAIS (24 V) (SCHEINWERFER)	292
RELAIS (24 V) (STARTEN)	301
RELAIS (24 V) (STARTHILFE)	292
RELAISANSCHLUSSKLEMMENSATZ (DREHSTROMGENERATOR)	196
RIEMENSPANNER	11
ROLLENSATZ	910
RÜCKFAHRWARNHORN	281
	283
	285
RÜCKLAUFLEITUNG	711
	713
	715
RÜCKLEHNENVERLÄNGERUNG	893
	894
RÜCKSPIEGEL	860
	862
	863
	865
	866

S

SAMMELVENTIL	767
SAUGLÜFTER	100
	101
SCHALE - RÜCKENLEHNE	873
	874
	875
	876
SCHALLDÄMPFER	139
	143
SCHALLDÄMPFUNG	550
SCHALTER	293
	298
SCHALTER (A/C)	879
SCHALTER (BEHEIZTER SPIEGEL)	860
	862
SCHALTER, FUSSBETÄTIGT (DIFFERENTIALSPERRE)	292
SCHALTER, FUSSBETÄTIGT (DIFFERENTIALSPERRE)	298

* ÜBERSETZUNG ZUM ZEITPUNKT DER DRUCKLEGUNG NICHT VORHANDEN

STICHWORTVERZEICHNIS

Bezeichnung	Seite
SCHALTER (GEFAHR)	881
SCHALTER (HINTERE ARBEITSLEUCHTE)	881
SCHALTER (HINTERER ARBEITSSCHEINWERFER)	878
SCHALTER (IN DER TÜR FÜR FAHRERHAUSBELEUCHTUNG)	292
SCHALTER (KLIMAANLAGENWAHL)	881
SCHALTER (NOTLENKUNG)	879
	881
SCHALTER (STARTHILFE)	879
	882
SCHALTER (WARNBLINKLEUCHTE)	879
SCHALTER (24 V) (ÜBERWACHUNGSSYSTEM)	878
SCHAUGLAS - FLÜSSIGKEITSSTAND (KRAFTSTOFF)	176
	178
	181
	185
	187
	189
SCHEIBENSCHUTZ	844
	845
SCHEIBENWASCHMITTELBEHÄLTER	927
SCHEIBENWISCHER UND -WASCHANLAGE	923
	925
	927
SCHEIBENWISCHERBLATT	923
	927
SCHEIBENWISCHERBLATT (HINTEN)	925
SCHEIBENWISCHERMOTOR	923
	927
SCHILD UND AUFKLEBER	930
	933
	936
	939
	941
	943
	945
	947
	949
	951
	953
	955
	957
	959
	961
	963
	965
	967
	969
	971
	973
	975
	977
	979
	981
	983
	985
	987
	989
	991
SCHLAMMSCHUTZ	512
SCHLAUCH - ADAPTER	102
SCHLAUCH - KNIESTÜCK	102
SCHLAUCHLEITUNG	92
SCHLÜSSEL	744
	748
SCHLÜSSEL (HAUPTSCHALTER)	277
SCHMIERLEITUNGEN	536
	538
	540
SCHMIERPUMPE	97
SCHMIERSYSTEM, AUTOM.	544
SCHRAUBE	319
	321
	372
	374
	393
	400
	406
SCHUTZBLECHE UND AUFHÄNGUNG	496
SCHUTZBLECHVERLÄNGERUNG	495
SCHWINGSITZ	907
	908
	909
SCHWUNGRAD	54
SCHWUNGRADGEHÄUSE	68
SCHWUNGRADGEHÄUSEDECKEL	17
SCREEN	667
	744
	748
	767
SEITENANTRIEB U. RAD	477
	480
	482
	484
SEITENANTRIEB UND RAD	477
SEITENANTRIEB UND RADBREMSE	480
	482
	484
SERIENNUMMERNSCHILD (GETRIEBE)	429
SICHERHEITSFILTER	132
	173
SICHERHEITSGURT	892
	893

* ÜBERSETZUNG ZUM ZEITPUNKT DER DRUCKLEGUNG NICHT VORHANDEN

STICHWORTVERZEICHNIS

Bezeichnung	Seite
	894
	903
	905
	906
	909
SICHERUNG (10 A)	209
	212
SICHERUNG (20 A)	209
	212
SIEB	667
	744
	748
SOCKEL FÜR VENTILDECKEL U. EINSPRITZKABELBAUM	10
SOFTWARE - KRAFTÜBERTRAGUNG	228
SOLENOID (24 V) (MOTORBREMSE)	64
	66
SONNENBLENDE	917
	918
SPANNUNGSREGLER (24 V)	196
SPANNUNGSREGLER (24 V) (DREHSTROMGENERATOR)	198
SPERR- UND DRUCKREDUZIERVENTIL	658
	659
SPERRVENTIL	191
	192
	193
	641
	644
	646
	661
	761
	762
	763
	764
	765
	766
STARTERMOTOR	257
	260
	261
	262
	264
	265
	266
	268
	269
	270
	271
	273
STARTERMOTOR-DICHTUNGSSATZ	262
STARTERMOTOR-STIFTEINBAUSATZ	262
STARTSCHALTER (TASTE)	878
	881
STECKDOSEN - EINBAUSATZ (2POLIG)	237
STECKDOSEN - EINBAUSATZ (2POLIG)	230
STEIGLEITER	546
STELLUNGSSENSOR	245
	840
STELLUNGSSENSOR (ROTIEREND)	157
STEUERANTRIEBSGEHÄUSEDECKEL	13
STEUERUNG - NICHT PROGRAMMIERT	219
	226
	227
	228
STEUERUNG - NICHT PROGRAMMIERT (ELEKTRONISCHES ÜBERWACHUNGSSYSTEM)	878
STEUERUNG - NICHT PROGRAMMIERT (MASCHINE)	228
STEUERUNGSEINHEIT, ELEKTRON. FÜR MOTOR UND BEFEST.	215
	217
STEUERVENTIL	466
STIRNRAD	56
	58
STIRNRADGEHÄUSE	70
STIRNRADGEHÄUSE-HALTETEILE	51
	52
	53
STIRNRADGEHÄUSEDECKEL	18
*SWITCH AS-ROCKER (BEHEIZTER SPIEGEL)	860

T

*TAILGATE GP	560
*TANK AR-FUEL	184
TANKABDECKUNG	667
TANKVENTIL (SCHNELLBETANKUNG)	178
	181
TEMPERATURSCHALTER	287
	288
	290
	310
TEMPERATURSCHALTER (AUSGANGSVERTEILERGETRIEBE)	290
TEMPERATURSCHALTER (FESTSTELLBREMSÖL)	311
	313
TEMPERATURSCHALTER (ÖL, AUSGANG - VERTEILERGETRIEBE)	301
TEMPERATURSCHALTER (ÖL, VORDERBREMSE)	301
TEMPERATURSCHALTER (THEMRMOSTAT) (KLIMAANLAGE)	822
	825

* ÜBERSETZUNG ZUM ZEITPUNKT DER DRUCKLEGUNG NICHT VORHANDEN

STICHWORTVERZEICHNIS

Bezeichnung	Seite
TEMPERATURSCHALTER (THEMRMOSTAT) (KLIMAANLAGE)	819
TEMPERATURSENSOR	251 252 253 254
TEMPERATURSENSOR (DREHMOMENT-WANDLERÖL)	288
TEMPERATURSENSOR (DREHMOMENT-WANDLERÖL)	301
TEMPERATURSENSOR (KÜHLMITTEL)	254
TRENNSCHALTER	277
TURBOLADER	153 154
TURBOLADERÖLLEITUNGEN	96

U

ÜBERDRUCKVENTIL	623 625 782 783
ÜBERDRUCKVENTIL (KÜHLMITTEL)	835
ÜBERDRUCKVENTIL (MULDENSTEUE-RUNG)	773
ÜBERROLLSCHUTZ	886
ÜBERROLLSCHUTZAUFLAGER	869 871
UMLEITVENTIL	769 770
UNTERBRECHER	209 212
UNTERBRECHER - INSTRUMENTENTAFEL	240 242
UNTERBRECHER (10 A)	212
UNTERBRECHER (10 A) (SCHLÜSSEL)	209
UNTERBRECHER (15 A)	212
UNTERBRECHER (15 A) (ADEM III)	209
UNTERBRECHER (15 A) (SCHEINWERFER)	209
UNTERBRECHER (20 A)	242
UNTERBRECHER (20 A) (HAUBE)	240
UNTERBRECHER (80 A)	242
UNTERBRECHER (80 A) (HAUPT/ALT)	240

V

*VALVE GP-PUMP CONTROL	777 778
VENTIL	783
VENTIL - SCHALT- UND DRUCKSTEUE-RUNG	470
VENTIL (HYDRAULIKZYLINDER)	799
VENTILDECKEL	19
VENTILKABELSTRANG (SITZ LUFTKOMPRES-SOR)	912
VENTILKIPPHEBEL	84
VENTILSTEUERUNG	87
VERDRAHTUNG (ELEKTRON. STEUE-RUNG)	299
VERDRAHTUNG, HINTEN	310
VERDRAHTUNG, VORNE	301
VERDRAHTUNGSKABELBAUM (ELEKTRONISCHE PUMPENDÜSE)	10
VERKLEIDUNG - FAHRERHAUS	877
VERSANDDECKEL	928
VERSTELLBARER SITZ	884 885
VERTEILERGETRIEBE - BEFESTIGUNG	424
VERTEILERGETRIEBEANTRIEB	380 386 392 398 404
VERTEILERGETRIEBEGEHÄUSEPUMPE U. BEFESTIGUNG	435
VORDERACHSE	318 325 327 329 331
VORDERRADAUFHÄNGUNGSRAHMEN	803
VORDERRAHMEN	500
VORSTEUERLEITUNGEN	692 696 698
VORSTEUERSTELLANTRIEB	662 663
VORSTEUERUNGSSATZ	656

W

WÄHLSENSOR	176 178 182 185 187
WANDLERDECKEL	365
WARNAUFKLEBER (HOCHDRUCKZYLIN-DER)	799
WARNAUFKLEBER (KETTENSPANNFEDER)	930 933 936
WARNAUFKLEBER (NICHT SCHWEISSEN)	886
WARNHORN (24 V, HOHER TON)	290 308
WARNSCHILD (HANDBUCH LESEN)	930

* ÜBERSETZUNG ZUM ZEITPUNKT DER DRUCKLEGUNG NICHT VORHANDEN

STICHWORTVERZEICHNIS

Bezeichnung	Seite
	933
	936
WARNSUMMER	287
	288
WARNVORRICHTUNG	195
WASSERABSCHEIDER- U. KRAFTSTOFFILTER	158
WASSERPUMPENFILTER	108
WASSERTEMPERATURREGLER (92 GRAD) (KÜHLMITTEL)	104
WELLENEINBAUSATZ (LENKSÄULE)	656

Z

ZAHNRADPUMPE	436
	653
	730
	731
	732
ZAHNRADVORGELEGE	60
	62
ZIGARETTENANZÜNDER (ZIGARETENANZÜNDER, 24 V)	878
	881
ZUFLUSSREGULIERVENTIL (WASSER)	825
ZUFLUSSREGULIERVENTIL (WASSER) (KLIMAANLAGE)	822
ZUGVORRICHTUNGSBOLZEN	545
ZUMESSPUMPE	655
ZYLINDERBLOCKSCHRAUBE	79
ZYLINDERKOPF	32
	33
	34
	37
	39
	41
	42
	43
ZYLINDERKOPF-HALTETEILE	37
ZYLINDERKOPFSTOPFEN	80
	81
	82

* ÜBERSETZUNG ZUM ZEITPUNKT DER DRUCKLEGUNG NICHT VORHANDEN

MACHINE ARRANGEMENT

141-6849 GENERAL AR

S/N: AXM1-UP

SMCS-7000 **i01549817**

NOTE	PART NUMBER	QTY	PART NAME 1 2 3 4 5 6 (PRODUCT LEVEL)	SEE PAGE
Y	*152-6921*	1	AXLE & FRAME AR	317
Y	*152-6919*	1	AXLE & FRAME AR	317
Y	*152-6923*	1	HOOD & GUARD AR	525
Y	*152-6922*	1	HYDRAULIC AR-MACHINE	675
Y	*152-6920*	1	INSTALLATION AR-MACHINE	1
Y	*152-6924*	1	INSTALLATION AR-MACHINE	1
Y	*152-6926*	1	INSTALLATION AR-MACHINE	2
Y	*152-6927*	1	INSTALLATION AR-MACHINE	2
Y-SEPARATE ILLUSTRATION				

<END>

152-6920 INSTALLATION AR-MACHINE

S/N: AXM1-UP

PART OF 141-6849 GENERAL AR

SMCS-7000 **i01443625**

NOTE	PART NUMBER	QTY	PART NAME 1 2 3 4 5 6 (PRODUCT LEVEL)	SEE PAGE
Y	*152-6939*	1	CONTROL GP-PARKING BRAKE	583
Y	*152-6941*	1	CONTROL GP-SERVICE BRAKE	588
Y	*152-6943*	1	POWER TRAIN AR	434
Y	*152-6944*	1	COOLING AR	99
Y	*152-6938*	1	SHAFT GP-DRIVE	442
Y-SEPARATE ILLUSTRATION				

<END>

152-6924 INSTALLATION AR-MACHINE

S/N: AXM1-UP

PART OF 141-6849 GENERAL AR

SMCS-7000 **i02084207**

NOTE	PART NUMBER	QTY	PART NAME 1 2 3 4 5 6 (PRODUCT LEVEL)	SEE PAGE
Y	*152-7040*	1	CONTROL GP-HOIST	664
Y	*164-9855*	1	CYLINDER & MTG GP-HOIST	669
Y	*212-9872*	1	ELECTRONICS GP-MONITOR (CATERPILLAR MONITORING SYSTEM)	228
			S/N: AXM1-1376	
Y	*153-9628*	1	ELECTRONICS GP-POWER TRAIN (TRANSMISSION)	228
			S/N: AXM1-1376	
Y	*237-5514*	1	ELECTRONICS GP-POWER TRAIN (TRANSMISSION)	228
			S/N: AXM1377-UP	
Y	*153-8030*	1	TIRE & RIM AR	449
Y-SEPARATE ILLUSTRATION				

<END>

MACHINE ARRANGEMENT

152-6926 INSTALLATION AR-MACHINE

S/N: AXM1-UP

PART OF 141-6849 GENERAL AR

SMCS-7000 **i01443627**

NOTE	PART NUMBER	QTY	PART NAME 1 2 3 4 5 6 (PRODUCT LEVEL)	SEE PAGE
Y	*141-6863*	1	BODY GP-TRUCK	488
Y	*170-1673*	1	GUARD GP-MUD	512
Y-SEPARATE ILLUSTRATION				

<END>

152-6927 INSTALLATION AR-MACHINE

S/N: AXM1-UP

PART OF 141-6849 GENERAL AR

SMCS-7000 **i02046436**

NOTE	PART NUMBER	QTY	PART NAME 1 2 3 4 5 6 (PRODUCT LEVEL)	SEE PAGE
Y	*184-7102*	1	BUMPER GP-FRONT	494
Y	*152-7048*	1	GUARD GP-CRANKCASE	505
Y	*139-1031*	1	LINK GP-STEERING FRAME LOCK	542
			S/N: AXM1-822	
Y	*236-4389*	1	LINK GP-STEERING FRAME LOCK	543
			S/N: AXM823-UP	
Y	*211-7978*	1	MIRROR GP-REAR VIEW	863
Y	*229-5263*	1	PANEL GP-CAB	877
Y	*152-7049*	1	PIN GP-HITCH	545
Y	*152-7050*	1	PLATE & FILM GP	930
Y	*180-9407*	1	STOP GP-STEERING	547
Y-SEPARATE ILLUSTRATION				

<END>

ENGINE ARRANGEMENT

153-7076 ENGINE AR-COMPLETE

S/N: BET200-8002

294 BRAKE KW (394 BHP) AT 2100 RPM. 24 VOLT JAKE BRAKE

PART OF 152-6943 POWER TRAIN AR

SMCS-1000 **i02005167**

NOTE	PART NUMBER	QTY	PART NAME 1 2 3 4 5 6 (PRODUCT LEVEL)	SEE PAGE
Y	*187-9076*	1	ALTERNATOR GP-CHARGING	200
Y	*190-6562*	1	BELT TENSIONER GP	11
Y	*172-1248*	1	COMPRESSOR GP-REFRIGERANT	834
Y	*159-9107*	1	CONNECTION GP-ELECTRICAL (HEAD)	214
Y	*173-7072*	1	CONTROL & MTG GP-ENGINE ELEK	215
Y	*168-8312*	1	COOLER GP-BRAKE & TORQUE CONV	363
Y	*7W-2206*	1	COOLER GP-ENGINE OIL	98
Y	*8N-4266*	1	COVER GP-ACCESSORY DRIVE	13
Y	*107-6736*	1	COVER GP-CYLINDER BLOCK (TURBOCHARGER DRAIN COVER)	14
Y	*107-6737*	1	COVER GP-CYLINDER BLOCK	15
Y	*109-7423*	1	COVER GP-CYLINDER BLOCK	16
Y	*1W-8341*	1	COVER GP-FLYWHEEL HOUSING	17
Y	*150-4278*	1	COVER GP-FRONT HOUSING (ACCESS)	18
Y	*6I-4683*	1	COVER GP-VALVE MECHANISM	19
Y	*4P-5893*	1	DAMPER GP	45
Y	*145-5012*	1	DRIVE GP-ACCESSORY	46
			S/N: BET200-827	
Y	*207-8799*	1	DRIVE GP-ACCESSORY	47
			S/N: BET828-8002	
Y	*153-7078*	1	ENGINE AR-CORE	7
Y	*148-7486*	1	ENGINE BRAKE GP	49
Y	*112-2644*	1	FASTENER GP-FRONT HOUSING	52
Y	*150-3345*	1	FASTENER GP-FRONT HOUSING	53
Y	*119-7834*	1	FILTER GP-ENGINE OIL	89
			S/N: BET200-6171	
Y	*227-5372*	1	FILTER GP-ENGINE OIL	90
			S/N: BET6172-8002	
Y	*173-7043*	1	FLYWHEEL GP	54
Y	*183-6195*	1	FUMES DISPOSAL GP	92
Y	*183-2996*	1	GAUGE GP-OIL LEVEL (DIPSTICK)	93
Y	*188-9134*	1	GEAR GP-REAR	60
Y	*144-3527*	1	HOUSING GP-FLYWHEEL	68
Y	*124-6822*	1	HOUSING GP-FRONT	70
Y	*111-2088*	1	LIFTING GP-ENGINE (REAR)	72
Y	*112-2418*	1	LIFTING GP-ENGINE (FRONT)	73
Y	*127-9039*	1	LINES GP-AIR	134
Y	*187-9077*	1	LINES GP-AIR	137
Y	*4N-1128*	1	LINES GP-ENGINE OIL	94
Y	*188-9138*	1	LINES GP-FUEL	164
Y	*183-2770*	1	LINES GP-TURBOCHARGER OIL	96
Y	*143-9161*	1	LINES GP-WATER	104
Y	*140-8644*	1	MANIFOLD GP-EXHAUST	138
Y	*175-4859*	1	MOUNTING GP-ALTERNATOR	74
Y	*4N-0756*	1	PAN GP-OIL	76
Y	*145-6851*	1	PLUG GP-CYLINDER BLOCK	79
Y	*170-1757*	1	PULLEY GP-CRANKSHAFT	83
Y	*150-4279*	1	PUMP & MTG GP-FUEL TRANSFER	171
Y	*205-0347*	1	PUMP GP-FUEL PRM & SEC FILTER	173
Y	*100-9347*	1	PUMP GP-WATER	107
Y	*102-7664*	1	SENSOR & MTG GP-PRESSURE	244
Y	*188-9395*	1	SENSOR GP-TEMPERATURE	253
Y	*9L-6671*	1	SHIELD GP-MANIFOLD	152
Y	*137-9427*	1	STARTING MOTOR GP-ELECTRIC	268
Y	*185-6278*	1	SUPPORT GP-ENGINE	86

ENGINE ARRANGEMENT

153-7076 ENGINE AR-COMPLETE *(contd.)* i02005167

NOTE	PART NUMBER	QTY	PART NAME 1 2 3 4 5 6 (PRODUCT LEVEL)	SEE PAGE
Y	*194-4025*	1	WIRING GP-ELECTRONIC CONTROL	299
			GASKET KITS WILL BE PROVIDED WHEN AVAILABLE	

Y-SEPARATE ILLUSTRATION

ENGINE ARRANGEMENT

235-4689 ENGINE AR-COMPLETE

S/N: BET8003-UP
24 VOLT JAKE BRAKE, EXHAUST FRONT
PART OF 152-6943 POWER TRAIN AR

SMCS-1000 **i02186427**

NOTE	PART NUMBER	QTY	PART NAME 1 2 3 4 5 6 (PRODUCT LEVEL)	SEE PAGE
Y	*187-9076*	1	ALTERNATOR GP-CHARGING	200
Y	*190-6562*	1	BELT TENSIONER GP	11
Y	*172-1248*	1	COMPRESSOR GP-REFRIGERANT	834
Y	*159-9107*	1	CONNECTION GP-ELECTRICAL (HEAD)	214
Y	*173-7072*	1	CONTROL & MTG GP-ENGINE ELEK	215
			S/N: BET8003-10459	
Y	*240-8855*	1	CONTROL & MTG GP-ENGINE ELEK	217
			S/N: BET10460-UP	
Y	*168-8312*	1	COOLER GP-BRAKE & TORQUE CONV	363
Y	*7W-2206*	1	COOLER GP-ENGINE OIL	98
Y	*8N-4266*	1	COVER GP-ACCESSORY DRIVE	13
Y	*107-6736*	1	COVER GP-CYLINDER BLOCK (TURBOCHARGER DRAIN COVER)	14
Y	*107-6737*	1	COVER GP-CYLINDER BLOCK	15
Y	*109-7423*	1	COVER GP-CYLINDER BLOCK (BREATHER)	16
Y	*1W-8341*	1	COVER GP-FLYWHEEL HOUSING	17
Y	*150-4278*	1	COVER GP-FRONT HOUSING (ACCESS)	18
Y	*6I-4683*	1	COVER GP-VALVE MECHANISM	19
Y	*4P-5893*	1	DAMPER GP	45
Y	*207-8799*	1	DRIVE GP-ACCESSORY	47
Y	*235-3472*	1	ENGINE AR-CORE	8
Y	*148-7486*	1	ENGINE BRAKE GP	49
Y	*112-2644*	1	FASTENER GP-FRONT HOUSING	52
Y	*150-3345*	1	FASTENER GP-FRONT HOUSING	53
Y	*227-5372*	1	FILTER GP-ENGINE OIL	90
Y	*173-7043*	1	FLYWHEEL GP	54
Y	*183-6195*	1	FUMES DISPOSAL GP	92
Y	*183-2996*	1	GAUGE GP-OIL LEVEL (DIPSTICK)	93
Y	*188-9134*	1	GEAR GP-REAR	60
Y	*144-3527*	1	HOUSING GP-FLYWHEEL	68
Y	*124-6822*	1	HOUSING GP-FRONT	70
Y	*111-2088*	1	LIFTING GP-ENGINE (REAR)	72
Y	*112-2418*	1	LIFTING GP-ENGINE (FRONT)	73
Y	*127-9039*	1	LINES GP-AIR (INLET)	134
Y	*187-9077*	1	LINES GP-AIR (EXHAUST)	137
Y	*4N-1128*	1	LINES GP-ENGINE OIL	94
Y	*188-9138*	1	LINES GP-FUEL	164
			S/N: BET8003-10459	
Y	*240-8854*	1	LINES GP-FUEL	168
			S/N: BET10460-UP	
Y	*183-2770*	1	LINES GP-TURBOCHARGER OIL	96
Y	*143-9161*	1	LINES GP-WATER	104
Y	*140-8644*	1	MANIFOLD GP-EXHAUST	138
Y	*175-4859*	1	MOUNTING GP-ALTERNATOR	74
Y	*4N-0756*	1	PAN GP-OIL	76
Y	*234-5996*	1	PLUG GP-CYLINDER HEAD	81
Y	*235-3174*	1	PLUG GP-CYLINDER HEAD	82
			S/N: BET8003-10459	
Y	*229-6711*	1	PLUG GP-CYLINDER HEAD	80
			S/N: BET10460-UP	
Y	*170-1757*	1	PULLEY GP-CRANKSHAFT	83
Y	*150-4279*	1	PUMP & MTG GP-FUEL TRANSFER	171
Y	*205-0347*	1	PUMP GP-FUEL PRM & SEC FILTER	173
Y	*100-9347*	1	PUMP GP-WATER	107
Y	*102-7664*	1	SENSOR & MTG GP-PRESSURE	244

ENGINE ARRANGEMENT

235-4689 ENGINE AR-COMPLETE *(contd.)* i02186427

NOTE	PART NUMBER	QTY	PART NAME 1 2 3 4 5 6 (PRODUCT LEVEL)	SEE PAGE
Y	*236-2247*	1	SENSOR GP-TEMPERATURE	254
Y	*9L-6671*	1	SHIELD GP-MANIFOLD	152
Y	*137-9427*	1	STARTING MOTOR GP-ELECTRIC	268
Y	*185-6278*	1	SUPPORT GP-ENGINE	86
Y	*194-4025*	1	WIRING GP-ELECTRONIC CONTROL	299
			GASKET KITS WILL BE PROVIDED WHEN AVAILABLE	

Y-SEPARATE ILLUSTRATION

ENGINE ARRANGEMENT

153-7078 ENGINE AR-CORE

S/N: BET200-8002

PART OF 153-7076 ENGINE AR-COMPLETE

SMCS-1000 **i01768086**

NOTE	PART NUMBER	QTY	PART NAME 1 2 3 4 5 6 (PRODUCT LEVEL)	SEE PAGE
Y	*122-1248*	1	BASE GP-VALVE COVER & INJ HARN	10
Y	*185-9699*	1	CAMSHAFT GP	12
Y	*132-9771*	1	CRANKSHAFT GP	20
Y	*146-2741*	1	CYLINDER BLOCK GP	26
Y	*173-8807*	1	CYLINDER HEAD GP	37
Y	*6I-3638*	1	DRIVE GP-PUMP	48
	190-4134	1	ELECTRONICS GP-ENGINE RATINGS	
Y	*4P-6846*	1	FASTENER GP-FRONT HOUSING	51
Y	*4N-2481*	1	FASTENER GP-OIL PUMP MOUNTING	88
Y	*124-6818*	1	GEAR GP-FRONT	56
Y	*128-8510*	6	INJECTOR GP-FUEL	159
Y	*176-5745*	6	PISTON & ROD GP	77
YR	**161-4113**	1	PUMP GP-ENGINE OIL	97
Y	*208-2378*	1	TURBOCHARGER GP	154
Y	*148-7482*	1	VALVE MECHANISM GP	87

R-REMFG PART MAY BE AVAILABLE
Y-SEPARATE ILLUSTRATION

ENGINE ARRANGEMENT

235-3472 ENGINE AR-CORE

S/N: BET8003-UP
24 VOLT JAKE BRAKE, EXHAUSTS FRONT
PART OF 235-4689 ENGINE AR-COMPLETE

SMCS-1000 **i02005025**

NOTE	PART NUMBER	QTY	PART NAME 1 2 3 4 5 6 (PRODUCT LEVEL)	SEE PAGE
Y	*122-1248*	1	BASE GP-VALVE COVER & INJ HARN	10
Y	*185-9699*	1	CAMSHAFT GP	12
Y	*132-9771*	1	CRANKSHAFT GP	20
Y	*146-2741*	1	CYLINDER BLOCK GP	26
Y	*235-3177*	1	CYLINDER HEAD GP	43
Y	*6I-3638*	1	DRIVE GP-PUMP	48
	246-7992	1	ELECTRONICS GP-ENGINE RATINGS	
Y	*4P-6846*	1	FASTENER GP-FRONT HOUSING	51
Y	*4N-2481*	1	FASTENER GP-OIL PUMP MOUNTING	88
Y	*124-6818*	1	GEAR GP-FRONT	56
Y	*128-8510*	6	INJECTOR GP-FUEL	159
Y	*176-5745*	6	PISTON & ROD GP	77
YR	**161-4113**	1	PUMP GP-ENGINE OIL	97
Y	*208-2378*	1	TURBOCHARGER GP	154
Y	*148-7482*	1	VALVE MECHANISM GP	87

R-REMFG PART MAY BE AVAILABLE
Y-SEPARATE ILLUSTRATION

133-9907 ADAPTER GP-PUMP DRIVE

S/N: BET200-UP

PART OF 6I-3638 DRIVE GP-PUMP

SMCS-3108 **i01152889**

NOTE	REF NO	GRAPHIC REF	PART NUMBER	QTY	PART NAME 1 2 3 4 5 6 (PRODUCT LEVEL)	SEE PAGE
	1	1	**1B-3867**	2	BALL BEARING	
	2	1	**4F-7957**	3	BOLT (1/4-20X.875IN)	
	3	1	**6I-4575**	1	GEAR (34 TEETH)	
	4	1	**9X-2038**	3	WASHER (2MM THK)	
	5	1	**133-9906**	1	ADAPTER	
	6	1	**1H-8647**	1	RING-SNAP	

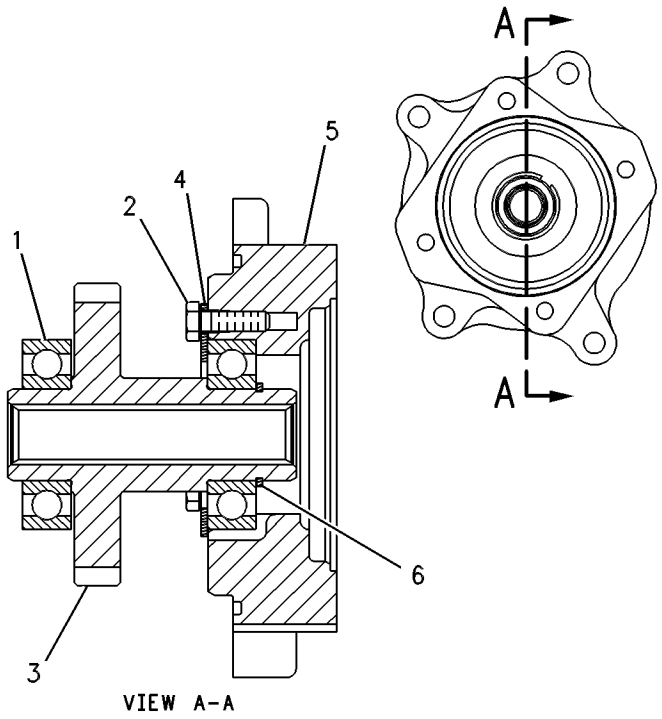

GRAPHIC #1 **<END>** g00263602

BASIC ENGINE

122-1248 BASE GP-VALVE COVER & INJ HARN

S/N: BET200-UP

PART OF 153-7078, 235-3472 ENGINE AR-CORE

SMCS-1120, 1408 **i02087727**

NOTE	REF NO	GRAPHIC REF	PART NUMBER	QTY	PART NAME 1 2 3 4 5 6 (PRODUCT LEVEL)	SEE PAGE
	1	1	**8H-3127**	6	BOLT (1/4-20X3/4-IN)	
	2	1	**4F-7957**	2	BOLT (1/4-20X0.875-IN)	
	3	1	**5P-0537**	8	WASHER-HARD (7.2X14.5X2-MM THK)	
	4	1	**7E-6508**	6	CAP AS (UNIT INJECTOR)	
	5	1	**122-1486**	1	HARNESS AS-WIRING (ELECTRONIC UNIT INJECTOR)	
		1	**103-8134**	1	KIT-RECEPTACLE (12-PIN)	
					(INCLUDES RECEPTACLE AS AND WEDGE)	
	6	1	**100-5218**	3	CLIP	
	7	1	**100-5219**	3	CLIP	
	8	1	**177-4152**	1	BASE-VALVE COVER	
	9	1	**9L-8925**	14	BOLT (5/16-18X1.25-IN)	
D	10	1	**5P-5678**		SEAL (2.9-M)	
	11	1	**122-1472**	1	BOLT	
	12	1	**6V-0128**	1	SEAL-CONNECTOR	
	13	1	**123-3202**	2	STRAP-CABLE	

D-ORDER BY THE METER

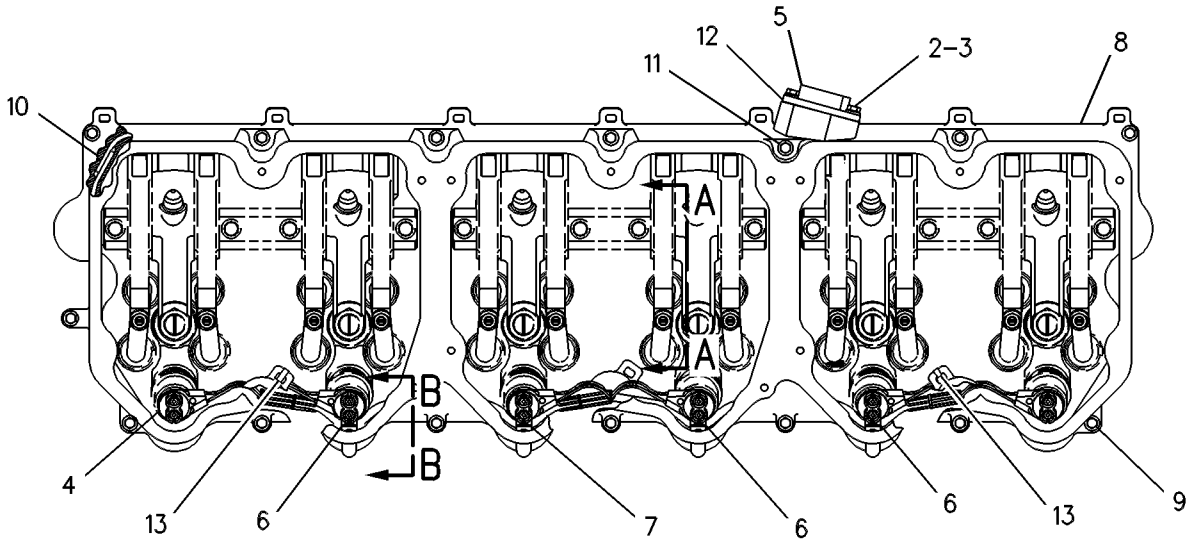

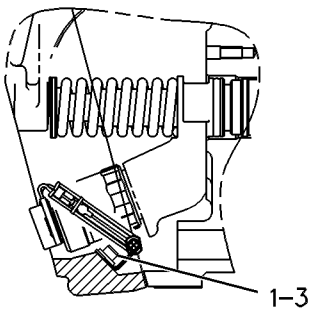

SECTION B-B

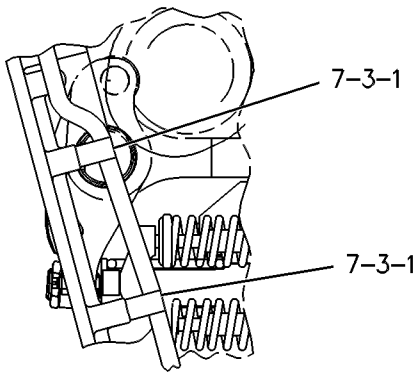

VIEW A-A

GRAPHIC #1 **<END>** g00257337

190-6562 BELT TENSIONER GP

S/N: BET200-UP
PART OF 153-7076, 235-4689 ENGINE AR-COMPLETE
FOR USE WITH 68.5MM DIAMETER PULLEY

SMCS-1358 **i02188127**

NOTE	REF NO	GRAPHIC REF	PART NUMBER	QTY	PART NAME 1 2 3 4 5 6 (PRODUCT LEVEL)	SEE PAGE
	1	1	**164-4599**	1	BELT (ALTERNATOR)	
	2	1	**217-8938**	1	TENSIONER AS-BELT	
	3	1	**8T-4121**	1	WASHER-HARD (11X21X2.5-MM THK)	
M	4	1	**8T-4178**	1	BOLT (M10X1.5X90-MM)	

M-METRIC PART

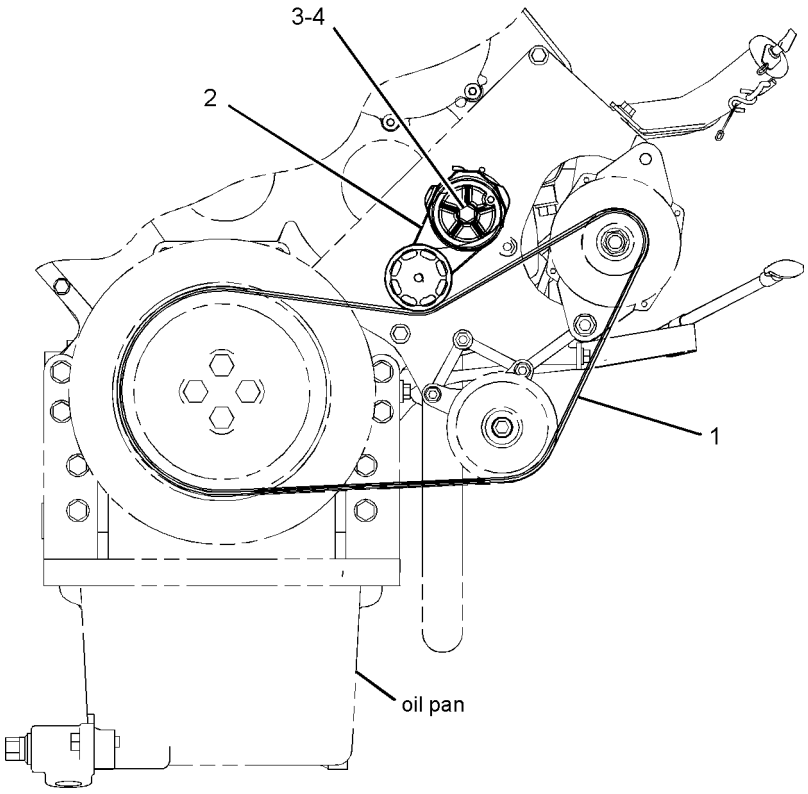

FRONT VIEW

GRAPHIC #1

<END>

g01054556

BASIC ENGINE

185-9699 CAMSHAFT GP

S/N: BET200-UP

PART OF 153-7078, 235-3472 ENGINE AR-CORE

SMCS-1210 **i01949808**

NOTE	REF NO	GRAPHIC REF	PART NUMBER	QTY	PART NAME 1 2 3 4 5 6 (PRODUCT LEVEL)	SEE PAGE
	1	1	**102-9089**	1	COVER	
	2	1	**119-0036**	3	SCREW-FLAT HEAD	
R	3	1	**185-6349**	1	CAMSHAFT	
	4	1	**6V-1197**	1	SEAL-O-RING	

R-REMFG PART MAY BE AVAILABLE

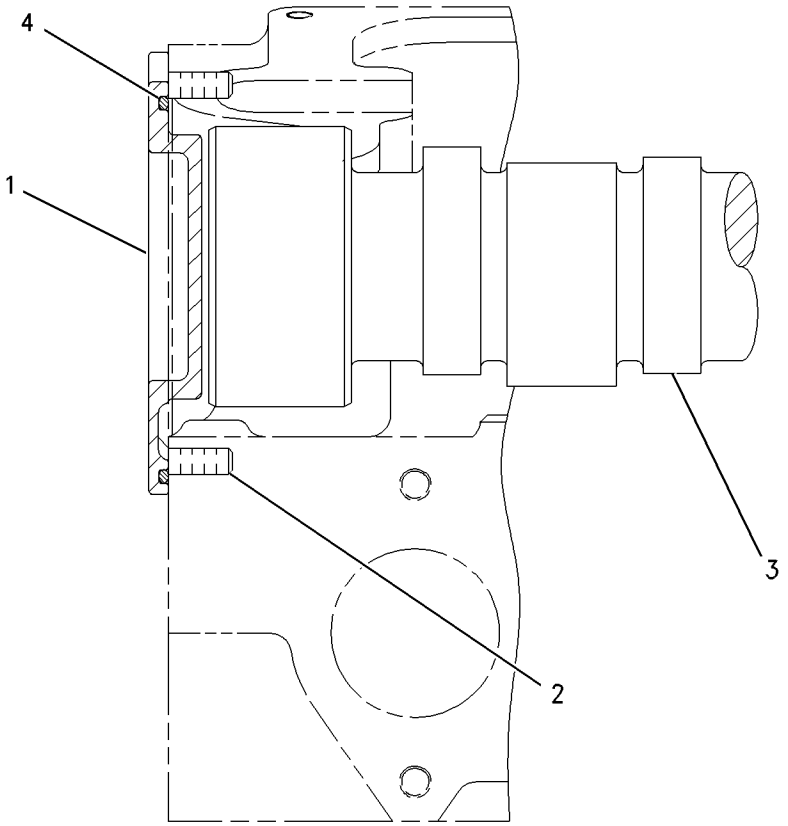

RIGHT SIDE VIEW

GRAPHIC #1 **<END>** g00687973

8N-4266 COVER GP-ACCESSORY DRIVE

S/N: BET200-UP
RH-FRONT
PART OF 153-7076, 235-4689 ENGINE AR-COMPLETE

SMCS-1207 **i01964759**

NOTE	REF NO	GRAPHIC REF	PART NUMBER	QTY	PART NAME 1 2 3 4 5 6 (PRODUCT LEVEL)	SEE PAGE
	1	1	**9X-7371**	1	SEAL-O-RING	
	2	1	**7N-8374**	1	COVER-ACCESS	
	3	1	**0S-1592**	2	BOLT (5/8-11X1.25 IN)	
	4	1	**5P-8247**	2	WASHER-HARD (17X32X3.5MM THK)	

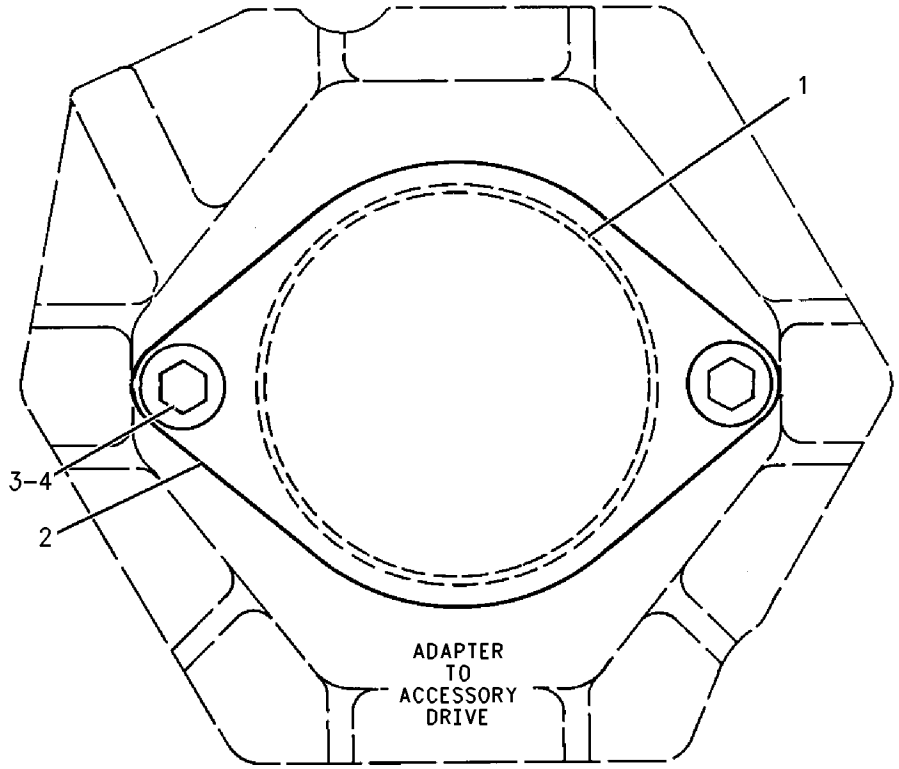

GRAPHIC #1 **<END>** g00696063

107-6736 COVER GP-CYLINDER BLOCK

S/N: BET200-UP
PART OF 153-7076, 235-4689 ENGINE AR-COMPLETE
FOR USE WITH MID MOUNTED TURBO AND/OR RH OIL FILL

SMCS-1201 **i00670739**

NOTE	REF NO	GRAPHIC REF	PART NUMBER	QTY	PART NAME 1 2 3 4 5 6 (PRODUCT LEVEL)	SEE PAGE
	1	1	**0S-1594**	2	BOLT (3/8-16X1IN)	
	2	1	**5M-2894**	2	WASHER (2.5MM THK)	
	3	1	**4W-9890**	1	COVER	
	4	1	**4N-0699**	1	GASKET	

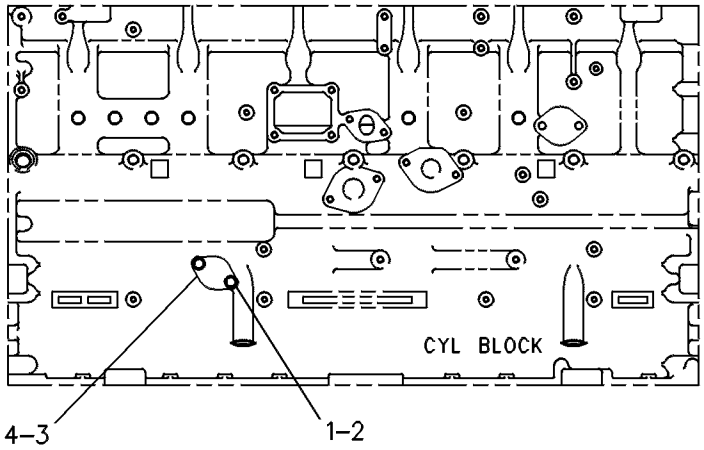

LEFT SIDE VIEW

GRAPHIC #1 **<END>** g00244599

107-6737 COVER GP-CYLINDER BLOCK

S/N: BET200-UP
PART OF 153-7076, 235-4689 ENGINE AR-COMPLETE
CANNOT BE USED WITH RIGHT SIDE OIL FILLER

SMCS-1201 **i01847626**

NOTE	REF NO	GRAPHIC REF	PART NUMBER	QTY	PART NAME 1 2 3 4 5 6 (PRODUCT LEVEL)	SEE PAGE
	1	1	**0S-1594**	2	BOLT (3/8-16X1 IN)	
	2	1	**5M-2894**	2	WASHER-HARD (10.2X18.5X2.5MM THK)	
	4	1	**4N-0699**	1	GASKET	
	5	1	**4W-9890**	1	COVER	

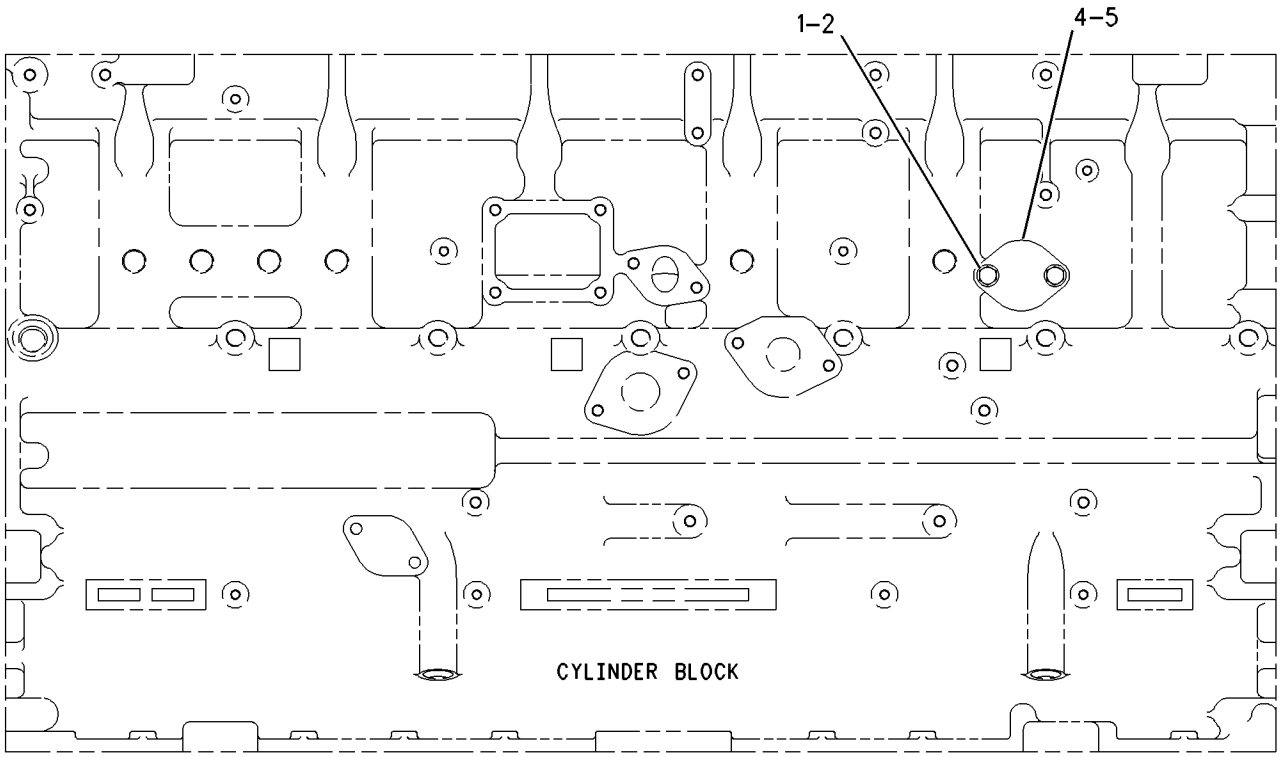

LEFT SIDE VIEW

GRAPHIC #1 **<END>** g00942208

109-7423 COVER GP-CYLINDER BLOCK

S/N: BET200-UP

PART OF 153-7076, 235-4689 ENGINE AR-COMPLETE

FOR USE WITH RH SERVICE ENGINES. CANNOT BE USED WITH BLOCK MOUNTED BREATHERS

SMCS-1201 **i00831603**

NOTE	REF NO	GRAPHIC REF	PART NUMBER	QTY	PART NAME 1 2 3 4 5 6 (PRODUCT LEVEL)	SEE PAGE
	1	1	**109-7424**	1	COVER-CYLINDER BLOCK	
	2	1	**5M-2894**	1	WASHER-HARD (10.2X18.5X2.5-MM THK)	
	3	1	**0S-1591**	1	BOLT (3/8-16X1.5-IN)	
	4	1	**109-7425**	1	SEAL-COVER	

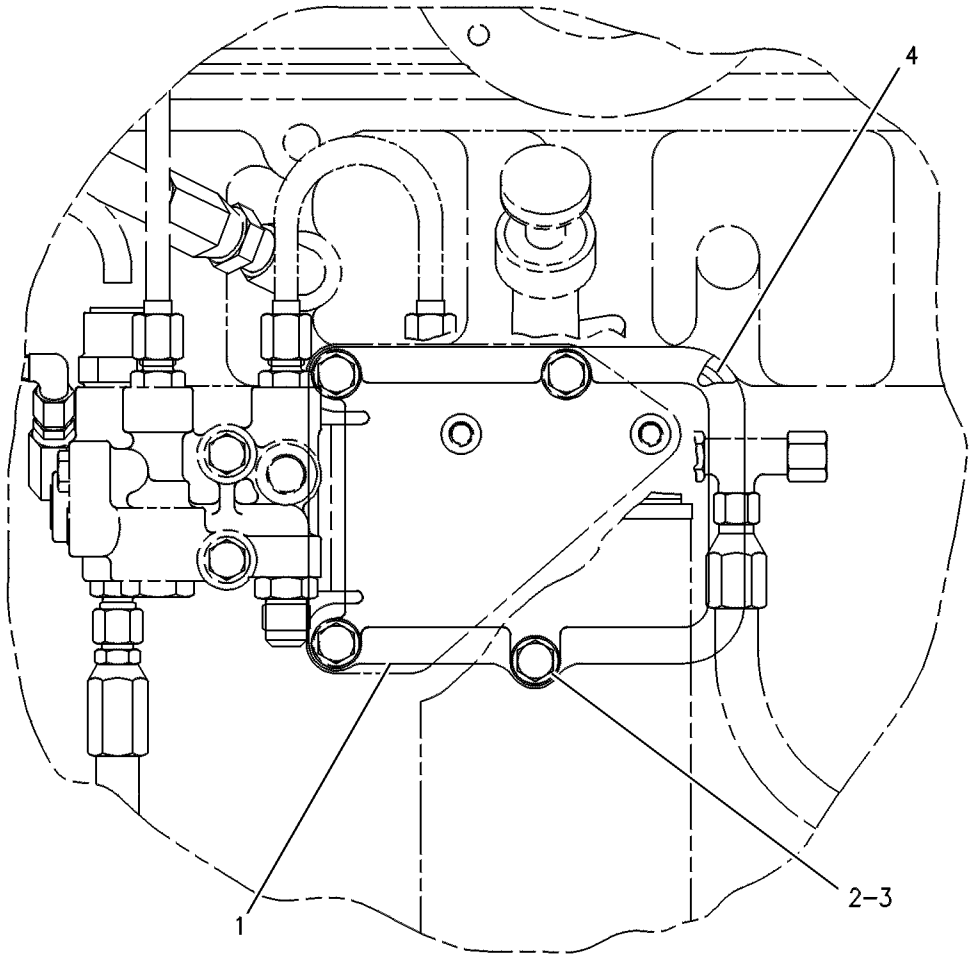

LEFT SIDE VIEW

GRAPHIC #1 **<END>** g00238347

1W-8341 COVER GP-FLYWHEEL HOUSING

S/N: BET200-UP
PART OF 153-7076, 235-4689 ENGINE AR-COMPLETE
FOR USE WITH SAE NO. 1 FLYWHEEL HOUSING

SMCS-1157 **i00640351**

NOTE	REF NO	GRAPHIC REF	PART NUMBER	QTY	PART NAME 1 2 3 4 5 6 (PRODUCT LEVEL)	SEE PAGE
	1	1	**4M-6480**	1	GASKET	
	2	1	**1M-0130**	1	COVER	
	3	1	**0S-1594**	2	BOLT (3/8-16X1IN)	
		1	**5M-2894**	2	WASHER (2.5MM THK)	

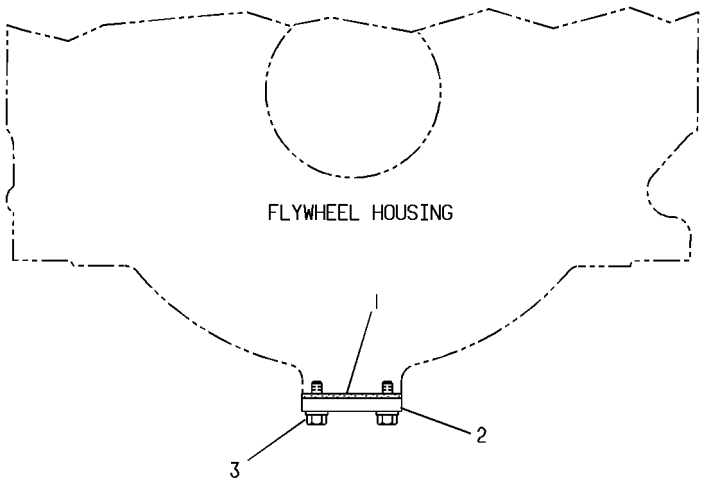

GRAPHIC #1 **<END>** g00152051

BASIC ENGINE

150-4278 COVER GP-FRONT HOUSING

S/N: BET200-UP

PART OF 153-7076, 235-4689 ENGINE AR-COMPLETE

SMCS-1151, 1166 **i00984724**

NOTE	REF NO	GRAPHIC REF	PART NUMBER	QTY	PART NAME 1 2 3 4 5 6 (PRODUCT LEVEL)	SEE PAGE
	1	1	**146-2601**	1	COVER	
	2	1	**2B-2695**	3	BOLT (5/16-18X.875IN)	
	3	1	**9M-1974**	5	WASHER-HARD (2MM THK)	
	4	1	**146-8438**	3	SCREW-BUTTON HEAD	
	5	1	**103-6045**	1	SEAL-ACCESSORY COVER	
	6	1	**5S-0003**	2	NUT-FULL (5/16-18 THD)	
	7	1	**3K-6175**	2	STUD	
	8	1	**4B-3388**	2	BOLT (5/16-18X1.125IN)	
	9	1	**3E-4352**	2	WASHER-HARD (2.5MM THK)	

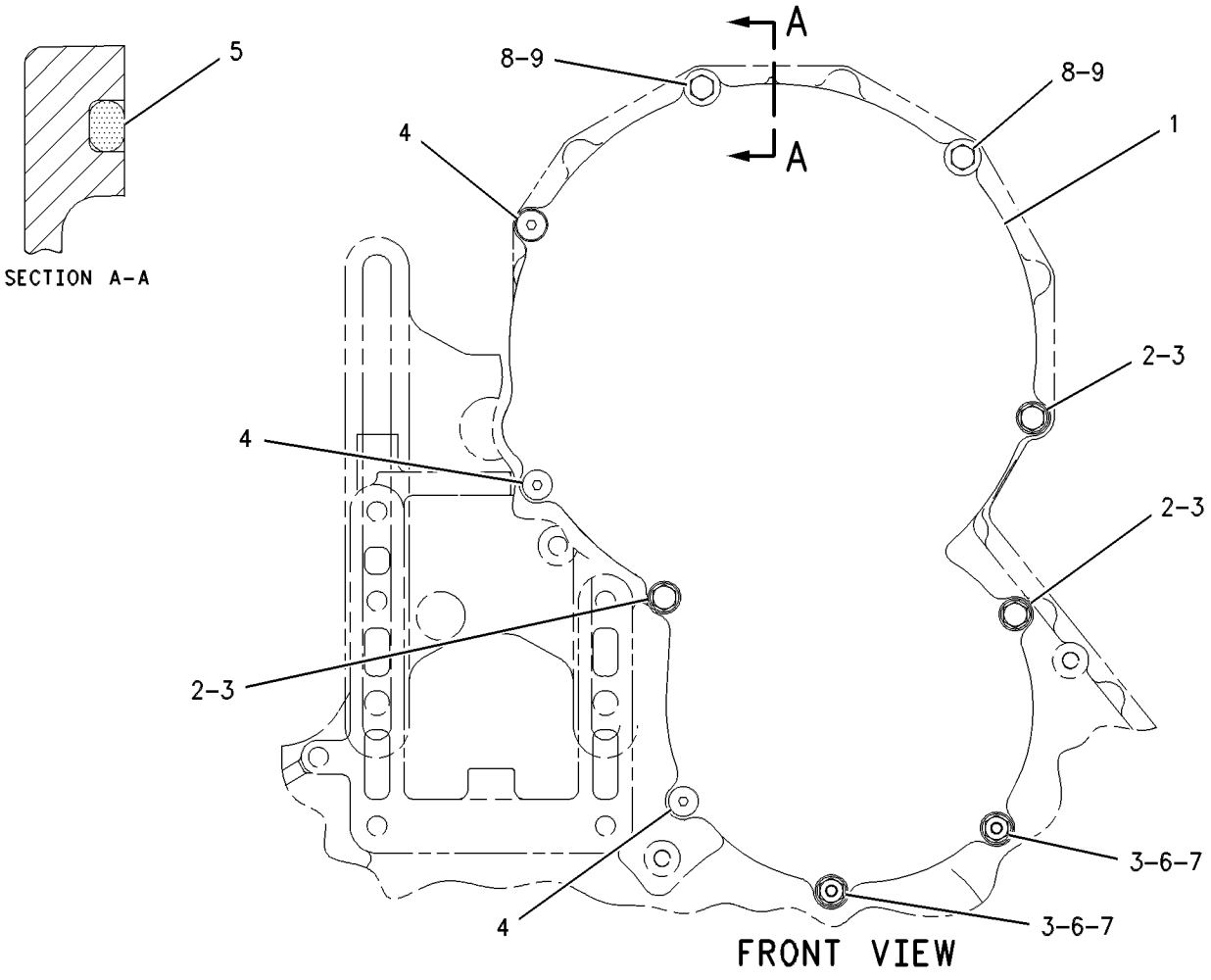

GRAPHIC #1 **<END>** g00311762

BASIC ENGINE

6I-4683 COVER GP-VALVE MECHANISM

S/N: BET200-UP
MID MOUNTED OIL FILL, FRONT MOUNTED BREATHER
PART OF 153-7076, 235-4689 ENGINE AR-COMPLETE

SMCS-1107, 1120 **i01933084**

NOTE	REF NO	GRAPHIC REF	PART NUMBER	QTY	PART NAME 1 2 3 4 5 6 (PRODUCT LEVEL)	SEE PAGE
	1	1	**102-8633**	1	COVER-VALVE MECHANISM	
	2	1	**4F-7390**	1	SEAL-O-RING	
	3	1	**9L-8925**	18	BOLT (5/16-18X1.25-IN)	
BD	4	1	**5P-5678**		SEAL	
	5	1	**113-4885**	1	CAP AS-OIL FILLER	
	6	1	**103-1271**	2	COVER AS-VALVE	
					(EACH INCLUDES)	
	7	1	**6V-5100**	1	SEAL-O-RING	
	8	1	**7C-6514**	1	ADAPTER	
	9	1	**9Y-2988**	1	BREATHER AS (CRANKCASE)	
	10	1	**2N-8109**	1	CLAMP	

B-USE AS REQUIRED
D-ORDER BY THE METER

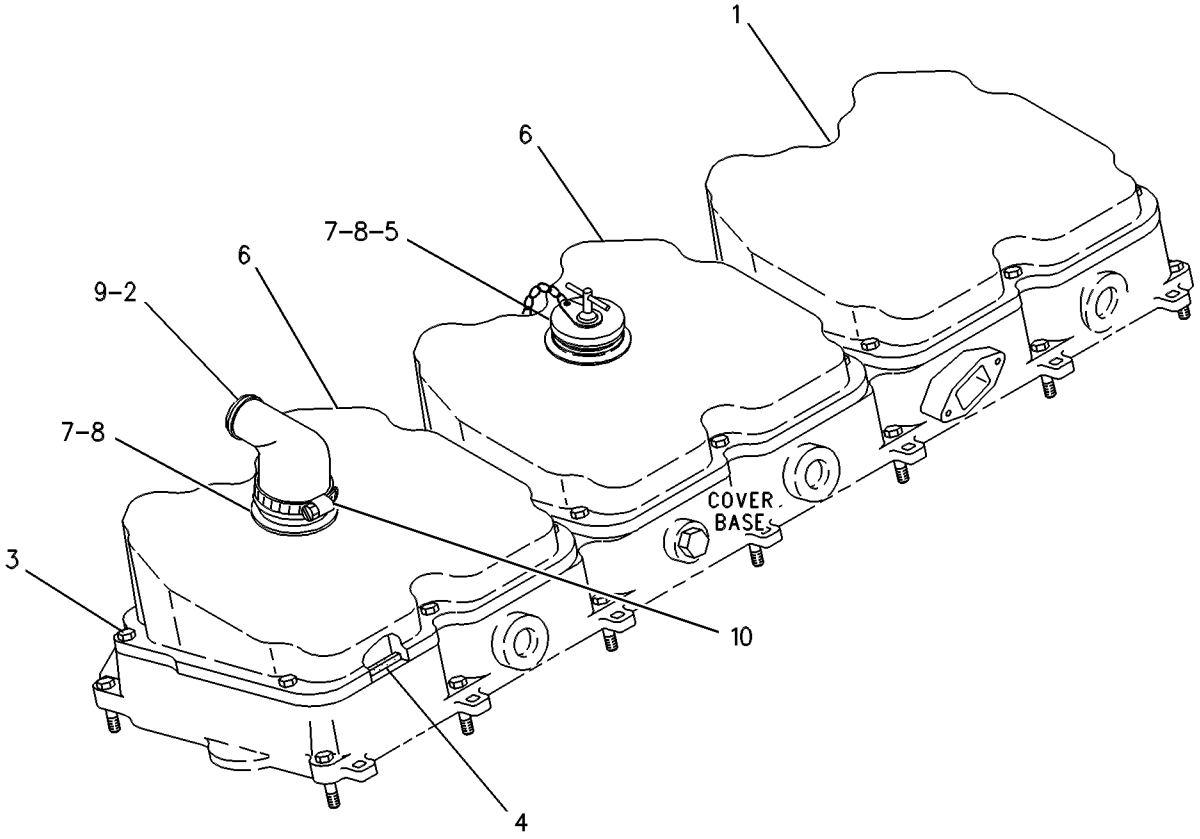

GRAPHIC #1 **<END>** g00252083

BASIC ENGINE

132-9771 CRANKSHAFT GP

S/N: BET200-UP

PART OF 153-7078, 235-3472 ENGINE AR-CORE

SMCS-1202 **i02148340**

NOTE	REF NO	GRAPHIC REF	PART NUMBER	QTY	PART NAME 1 2 3 4 5 6 (PRODUCT LEVEL)	SEE PAGE
	1	1	**7E-9262**	2	PLATE-THRUST	
	2	1	**142-5867**	1	SEAL GP-CRANKSHAFT (FRONT)	
	3	1	**211-0592**	7	BEARING-MAIN (STANDARD) (STANDARD)	
AB		1	**4W-5698**		BEARING-MAIN (0.63-MM US)	
AB		1	**4W-5699**		BEARING-MAIN (1.27-MM US)	
AB		1	**4W-5700**		BEARING-MAIN (0.63-MM OS)	
AB		1	**4W-5701**		BEARING-MAIN (0.63-MM US, 0.63-MM OS)	
R	4	1	**136-8882**	1	CRANKSHAFT AS	
	4A	1	**136-8605**	1	GEAR-CRANKSHAFT (80 TEETH)	
	4B	1	**7S-5005**	1	DOWEL	
	4C	1	**4N-0684**	1	DOWEL	

A-NOT PART OF THIS GROUP
B-USE AS REQUIRED
R-REMFG PART MAY BE AVAILABLE

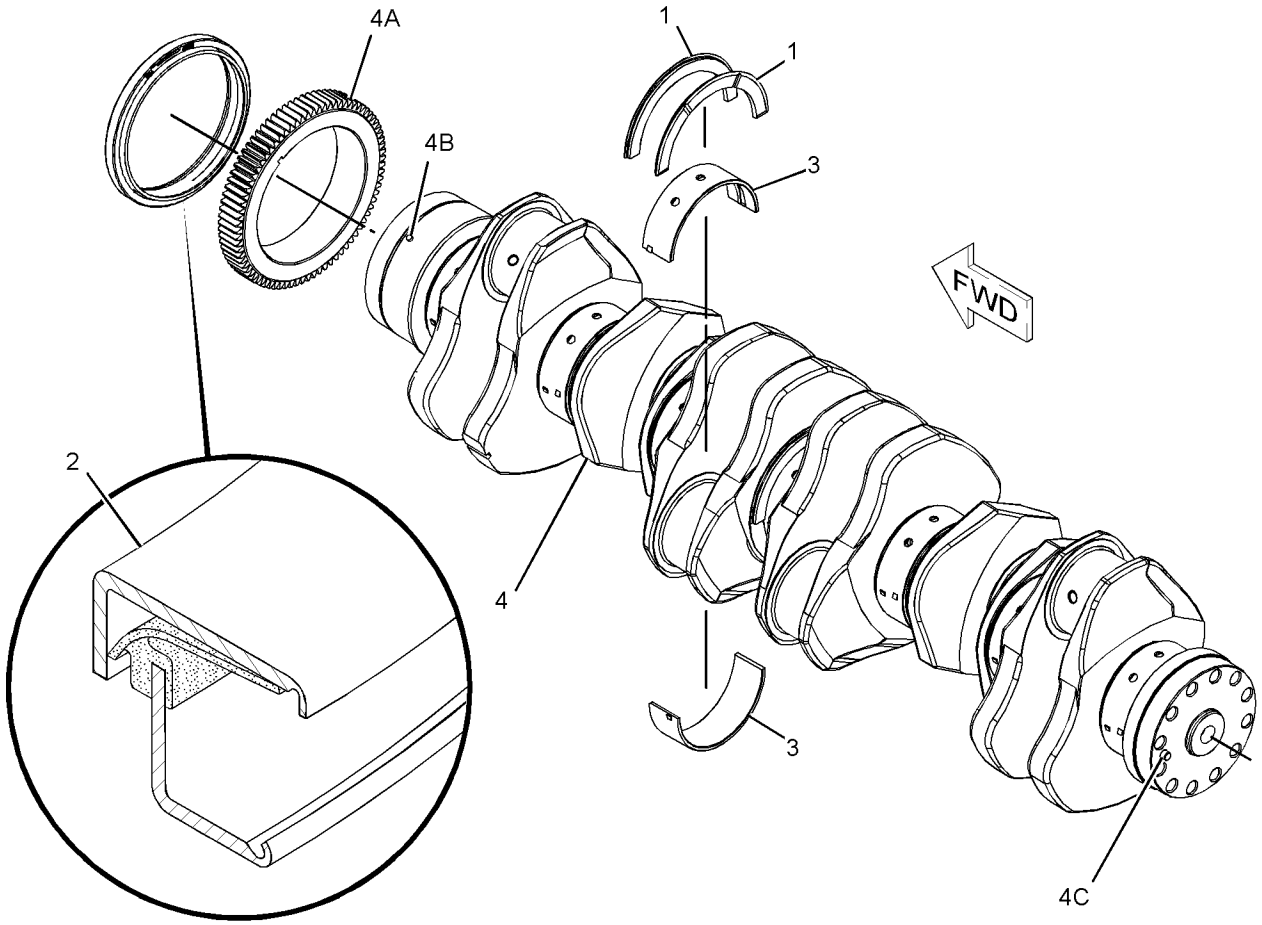

GRAPHIC #1 **<END>** g01090909

137-8467 CYLINDER BLOCK GP

S/N: BET200-523

PART OF 146-2741 CYLINDER BLOCK GP

SMCS-1201 **i01747483**

NOTE	REF NO	GRAPHIC REF	PART NUMBER	QTY	PART NAME 1 2 3 4 5 6 (PRODUCT LEVEL)	SEE PAGE
	1	1	**2W-6000**	6	LINER-CYLINDER	
	2	1	**9L-5854**	6	BAND-FILLER (130.2-MM ID)	
	3	1	**110-2220**	6	SEAL-LINER (141-MM ID)	
	4	1	**3P-1323**	14	BOLT (BEARING CAP)	
	5	1	**9H-1031**	14	WASHER-HARD (24X41.5X6-MM THK)	
	6	1	**4N-5857**	7	CAP-CRANKSHAFT BEARING	
	7	1	**142-7072**	6	SEAL-LINER (140.2-MM ID)	
	8	1	**142-6217**	6	SEAL-O-RING (140.2-MM ID) (140.20MM ID)	

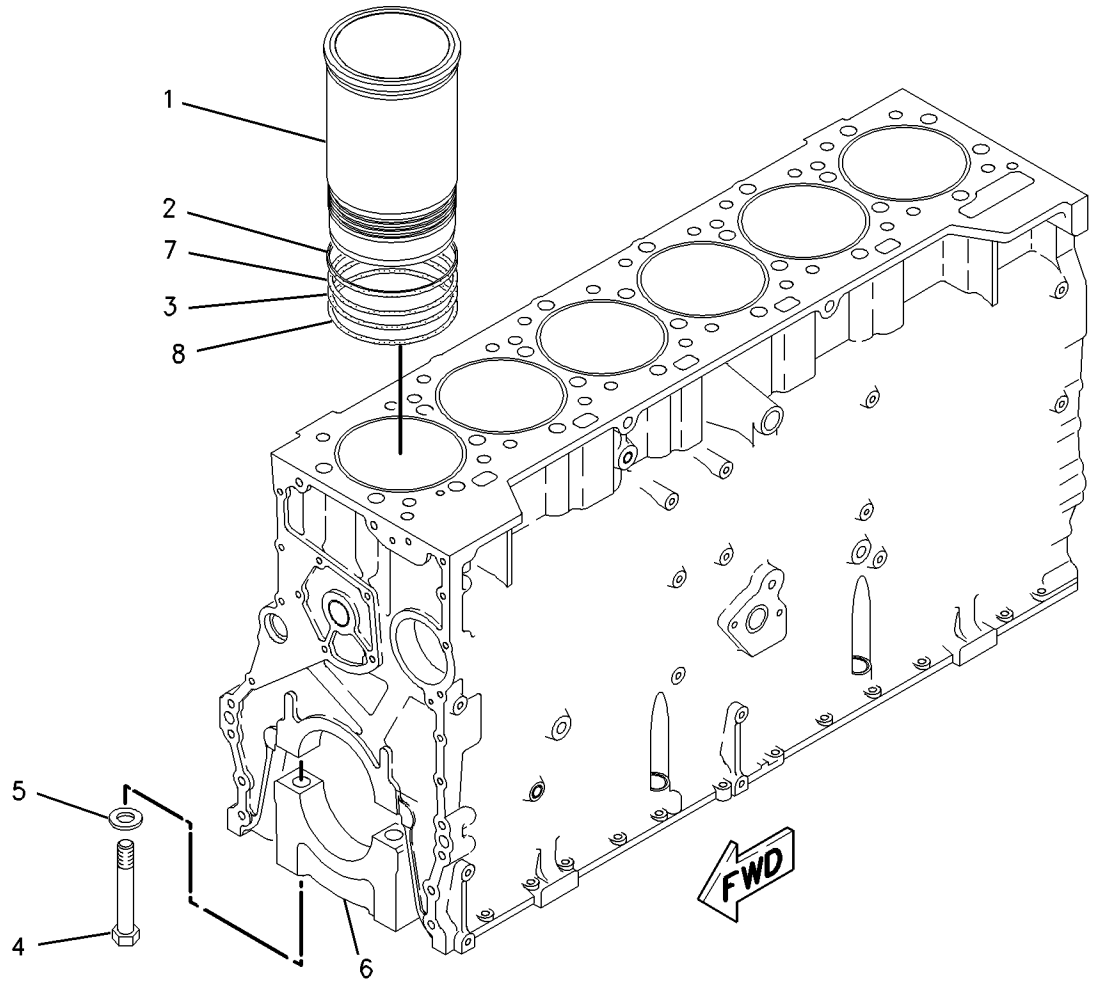

GRAPHIC #1 **<END>** g00844047

BASIC ENGINE

137-8468 CYLINDER BLOCK GP

S/N: BET200-523

PART OF 137-8469 CYLINDER BLOCK GP

SMCS-1201 **i01628556**

NOTE	REF NO	GRAPHIC REF	PART NUMBER	QTY	PART NAME 1 2 3 4 5 6 (PRODUCT LEVEL)	SEE PAGE
	1	1	**3P-1323**	14	BOLT (BEARING CAP)	
	2	1	**9H-1031**	14	WASHER-HARD (24X41.5X6MM THK)	
	3	1	**4N-5857**	7	CAP-CRANKSHAFT BEARING	

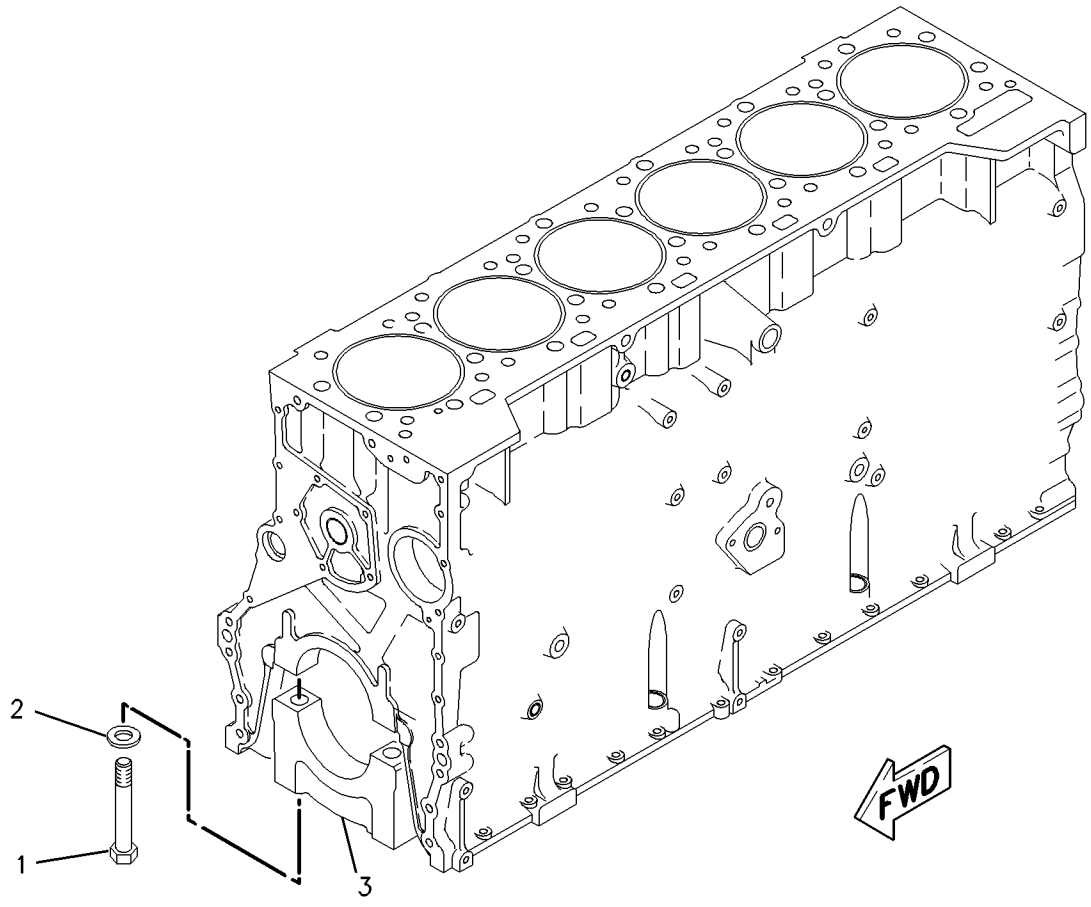

GRAPHIC #1 **<END>** g00844055

BASIC ENGINE

137-8469 CYLINDER BLOCK GP

S/N: BET200-523

FIELD REPLACEMENT FOR 146-2741—PAGE 26

SMCS-1201 **i01628563**

NOTE	REF NO	GRAPHIC REF	PART NUMBER	QTY	PART NAME 1 2 3 4 5 6 (PRODUCT LEVEL)	SEE PAGE
	1	1	**8T-6757**	1	PLUG-PIPE	
	2	1	**3E-6747**	2	SEAL-O-RING	
	3	1	**7W-6492**	4	PLUG-PIPE	
	4	1	**8S-9094**	1	PLUG-ORIFICE	
	5	1	**9S-4190**	1	PLUG	
	6	1	**114-4427**	1	SEAL-O-RING	
	7	1	**7X-7732**	6	PLUG-PIPE	
	8	1	**9S-4182**	1	PLUG	
	9	1	**9X-7378**	1	SEAL-O-RING	
	10	1	**100-7399**	2	PLUG	
Y	11	1	*137-8468*	1	CYLINDER BLOCK GP	22

Y-SEPARATE ILLUSTRATION

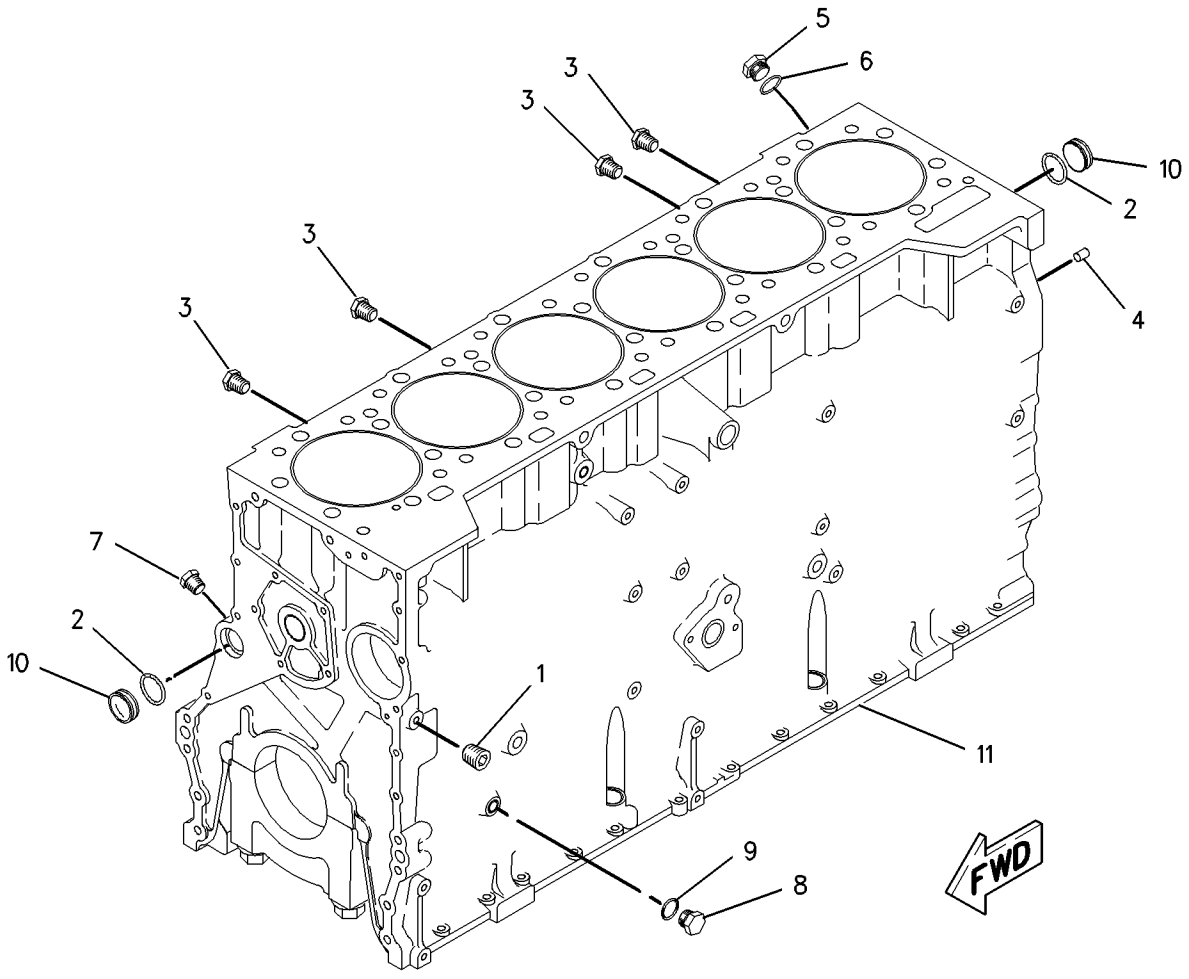

GRAPHIC #1 **<END>** g00844062

BASIC ENGINE

137-8469 CYLINDER BLOCK GP

S/N: BET524-UP

FIELD REPLACEMENT FOR 146-2741—PAGE 26

SMCS-1201 **i02089969**

NOTE	REF NO	GRAPHIC REF	PART NUMBER	QTY	PART NAME 1 2 3 4 5 6 (PRODUCT LEVEL)	SEE PAGE
	1	1	**8T-6757**	1	PLUG-PIPE	
CY	2	1	**202-1254**	1	CYLINDER BLOCK GP	30
	3	1	**7W-6492**	4	PLUG-PIPE	
	4	1	**8S-9094**	1	PLUG-ORIFICE	
	5	1	**9S-4190**	1	PLUG	
	6	1	**114-4427**	1	SEAL-O-RING	
	7	1	**7X-7732**	6	PLUG-PIPE	
	8	1	**9S-4182**	1	PLUG	
	9	1	**9X-7378**	1	SEAL-O-RING	
	10	1	**100-7399**	2	PLUG	
	11	1	**250-0466**	2	SEAL-O-RING	

C-CHANGE FROM PREVIOUS TYPE
Y-SEPARATE ILLUSTRATION

137-8469 CYLINDER BLOCK GP *(contd.)* **i02089969**

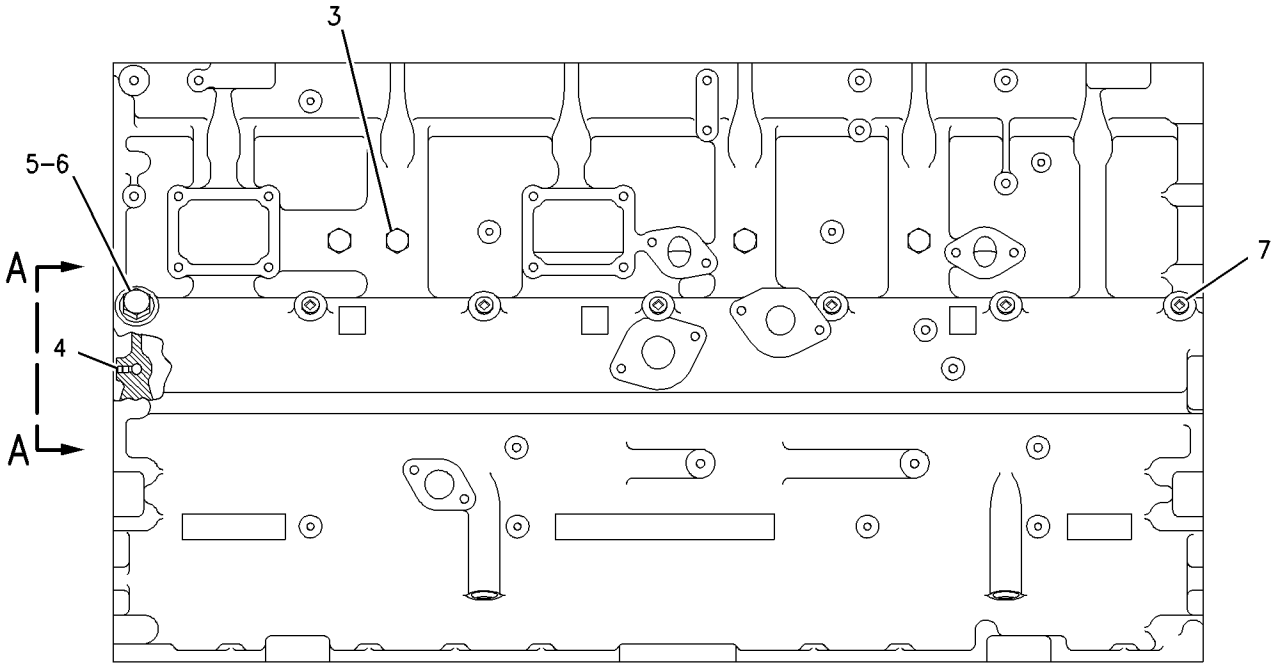

RIGHT SIDE VIEW

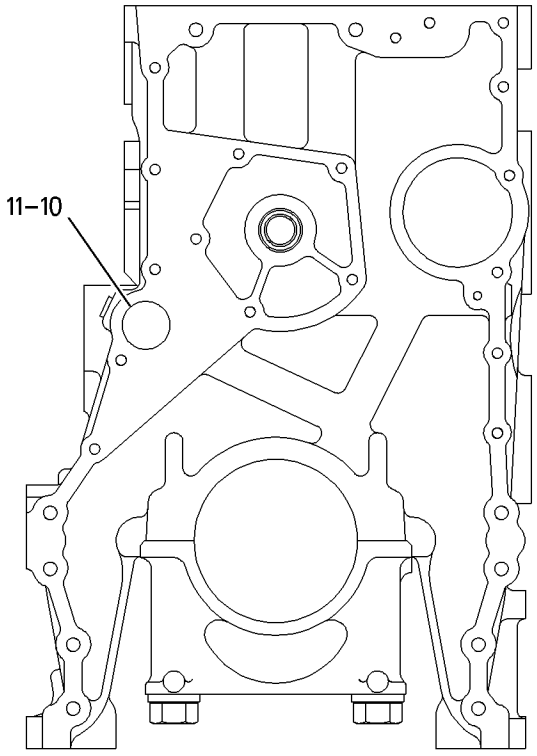

FRONT VIEW

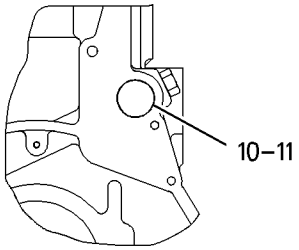

VIEW A-A

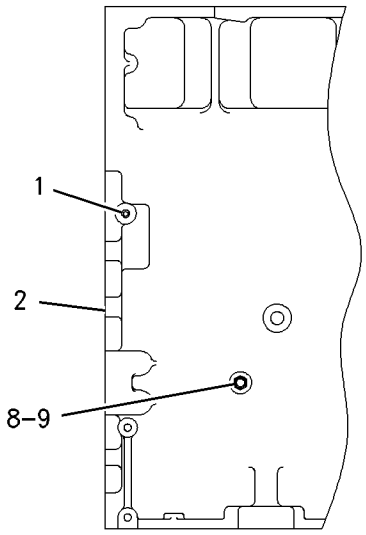

LEFT SIDE VIEW

GRAPHIC #1 **<END>** g00790121

BASIC ENGINE

146-2741 CYLINDER BLOCK GP

S/N: BET200-523
PART OF 153-7078 ENGINE AR-CORE
FIELD REPLACEMENT ORDER 137-8469—PAGE 23

SMCS-1201 **i01950416**

NOTE	REF NO	GRAPHIC REF	PART NUMBER	QTY	PART NAME 1 2 3 4 5 6 (PRODUCT LEVEL)	SEE PAGE
	1	1	**142-2329**	1	SEAL	
Y	2	1	**137-8467**	1	CYLINDER BLOCK GP	21
	3	1	**1S-9540**	1	DOWEL	
	4	1	**5P-0840**	1	SEAL-O-RING	
	5	1	**7W-6492**	4	PLUG-PIPE	
	6	1	**6I-1055**	1	DOWEL	
	7	1	**4N-0683**	4	DOWEL	
	8	1	**4N-1650**	1	DOWEL	
	9	1	**6I-4421**	1	PLATE-SPACER	
	10	1	**180-5734**	1	GASKET-PLATE	
	11	1	**8S-9094**	1	PLUG-ORIFICE	
	12	1	**9S-4190**	1	PLUG	
	13	1	**114-4427**	1	SEAL-O-RING	
	14	1	**7X-7732**	5	PLUG-PIPE	
	15	1	**3E-6747**	2	SEAL-O-RING	
Y	16	1	**161-9931**	1	SENSOR GP-PRESSURE (ENGINE OIL)	246
	17	1	**100-7399**	2	PLUG	
	18	1	**9X-7378**	1	SEAL-O-RING	
	19	1	**6V-5048**	1	SEAL-O-RING	
	20	1	**9S-4182**	1	PLUG	
	21	1	**3E-7448**	1	CONNECTOR	

Y-SEPARATE ILLUSTRATION

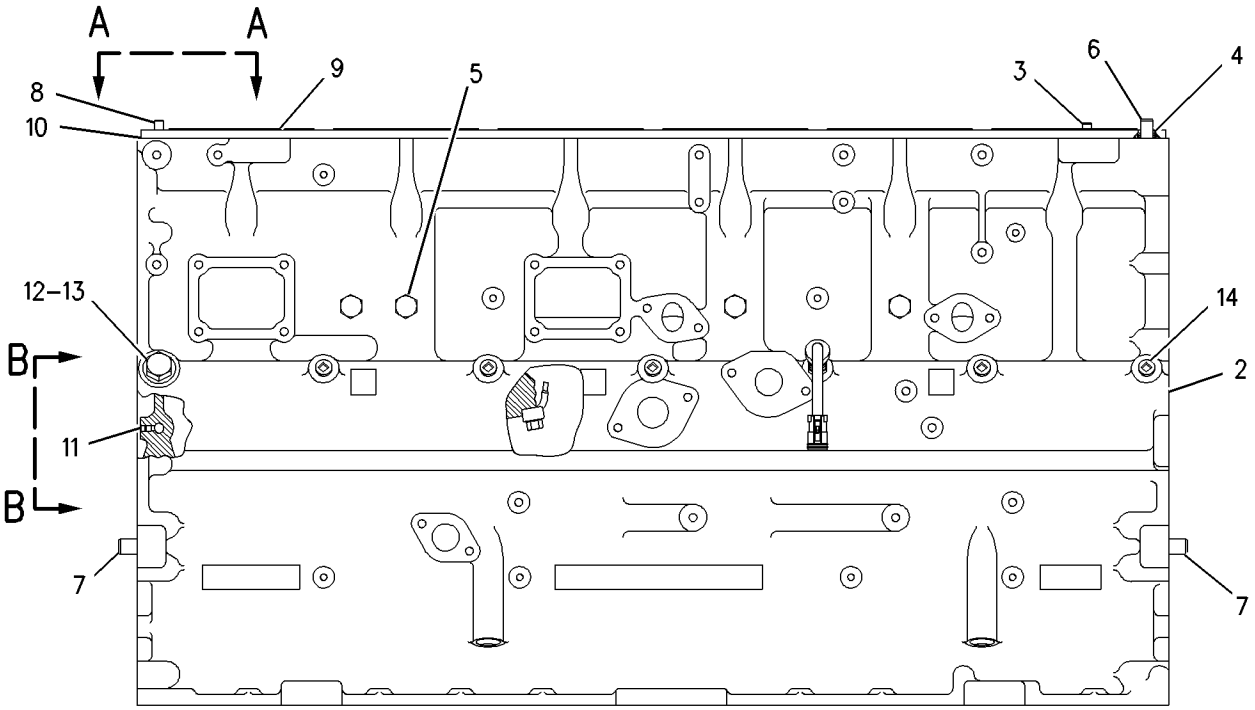

RIGHT SIDE VIEW

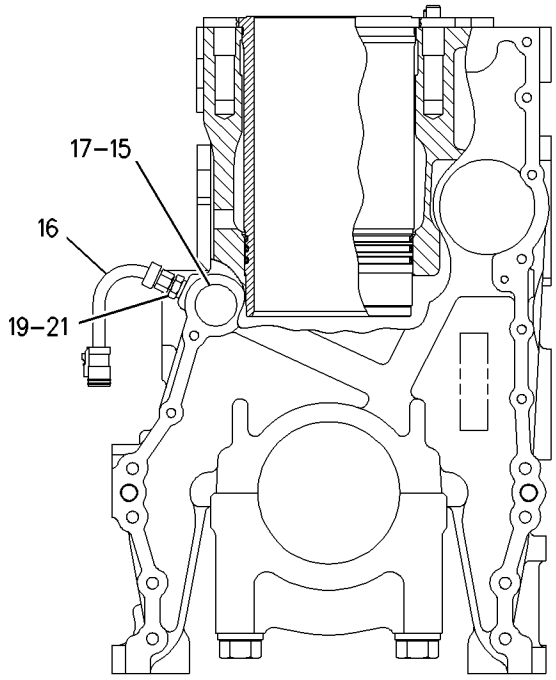

FRONT VIEW

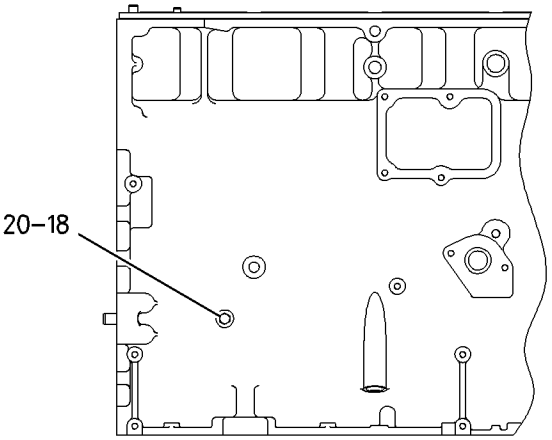

LEFT SIDE VIEW

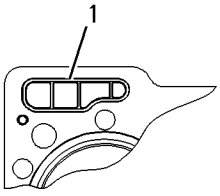

VIEW A-A

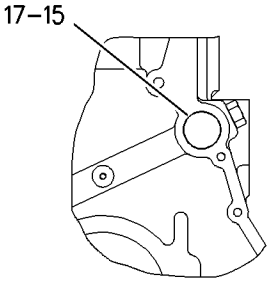

VIEW B-B

GRAPHIC #1 **<END>** g00752462

BASIC ENGINE

146-2741 CYLINDER BLOCK GP

S/N: BET524-UP
PART OF 153-7078, 235-3472 ENGINE AR-CORE
FIELD REPLACEMENT ORDER 137-8469—PAGE 23

SMCS-1201 **i02089980**

NOTE	REF NO	GRAPHIC REF	PART NUMBER	QTY	PART NAME 1 2 3 4 5 6 (PRODUCT LEVEL)	SEE PAGE
	1	1	**142-2329**	1	SEAL	
CY	2	1	**202-1261**	1	CYLINDER BLOCK GP	31
	3	1	**1S-9540**	1	DOWEL	
	4	1	**5P-0840**	1	SEAL-O-RING	
	5	1	**7W-6492**	4	PLUG-PIPE	
	6	1	**6I-1055**	1	DOWEL	
	7	1	**4N-0683**	4	DOWEL	
	8	1	**4N-1650**	1	DOWEL	
	9	1	**6I-4421**	1	PLATE-SPACER	
	10	1	**227-1204**	1	GASKET	
	11	1	**8S-9094**	1	PLUG-ORIFICE	
	12	1	**9S-4190**	1	PLUG	
	13	1	**114-4427**	1	SEAL-O-RING	
	14	1	**7X-7732**	5	PLUG-PIPE	
	15	1	**250-0466**	2	SEAL-O-RING	
CY	16	1	**194-6725**	1	SENSOR GP-PRESSURE (ENGINE OIL)	249
	17	1	**100-7399**	2	PLUG	
	18	1	**9X-7378**	1	SEAL-O-RING	
	19	1	**6V-5048**	1	SEAL-O-RING	
	20	1	**9S-4182**	1	PLUG	
	21	1	**3E-7448**	1	CONNECTOR	

C-CHANGE FROM PREVIOUS TYPE
Y-SEPARATE ILLUSTRATION

146-2741 **CYLINDER BLOCK GP** *(contd.)* **i02089980**

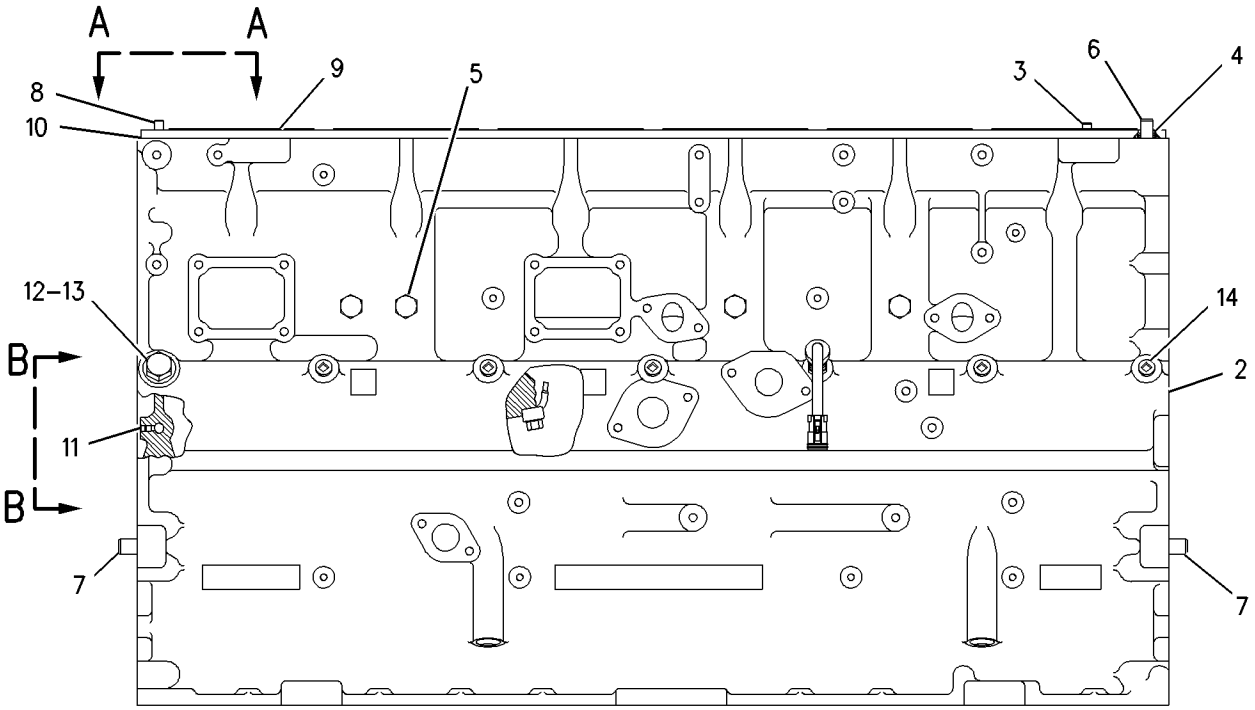

RIGHT SIDE VIEW

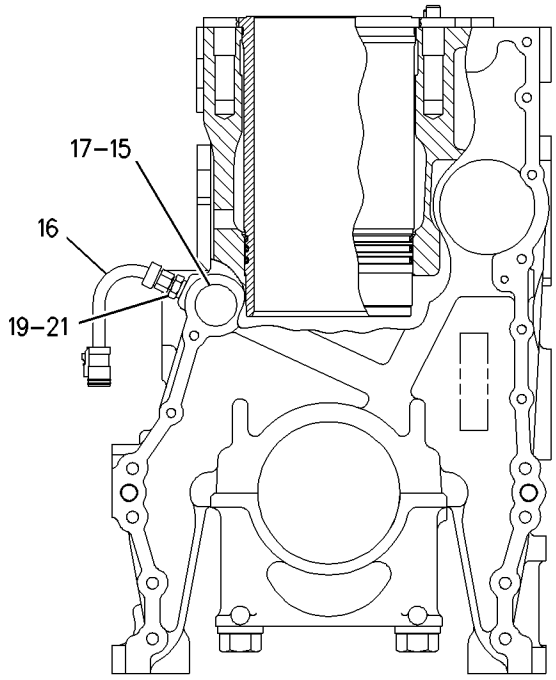

FRONT VIEW

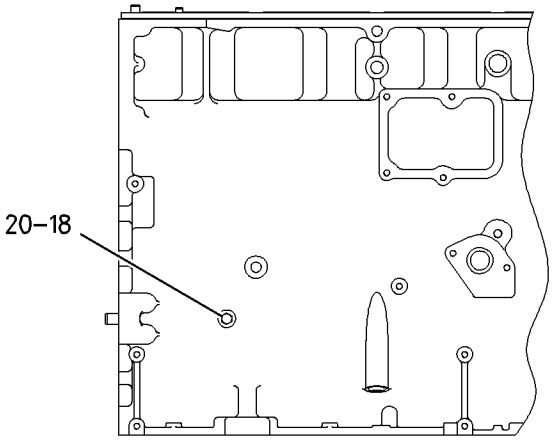

LEFT SIDE VIEW

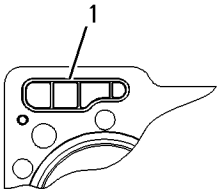

VIEW A-A

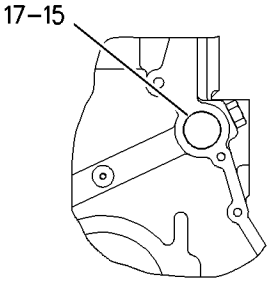

VIEW B-B

GRAPHIC #1 **<END>** g00799491

BASIC ENGINE

202-1254 CYLINDER BLOCK GP

S/N: BET524-UP

PART OF 137-8469 CYLINDER BLOCK GP

SMCS-1201 **i01520135**

NOTE	REF NO	GRAPHIC REF	PART NUMBER	QTY	PART NAME 1 2 3 4 5 6 (PRODUCT LEVEL)	SEE PAGE
	1	1	**167-8083**	14	BOLT (7/8-14X7.5-IN)	
	2	1	**9H-1031**	14	WASHER-HARD (24X41.5X6-MM THK)	
	3	1	**167-8081**	7	CAP-CRANKSHAFT BEARING	

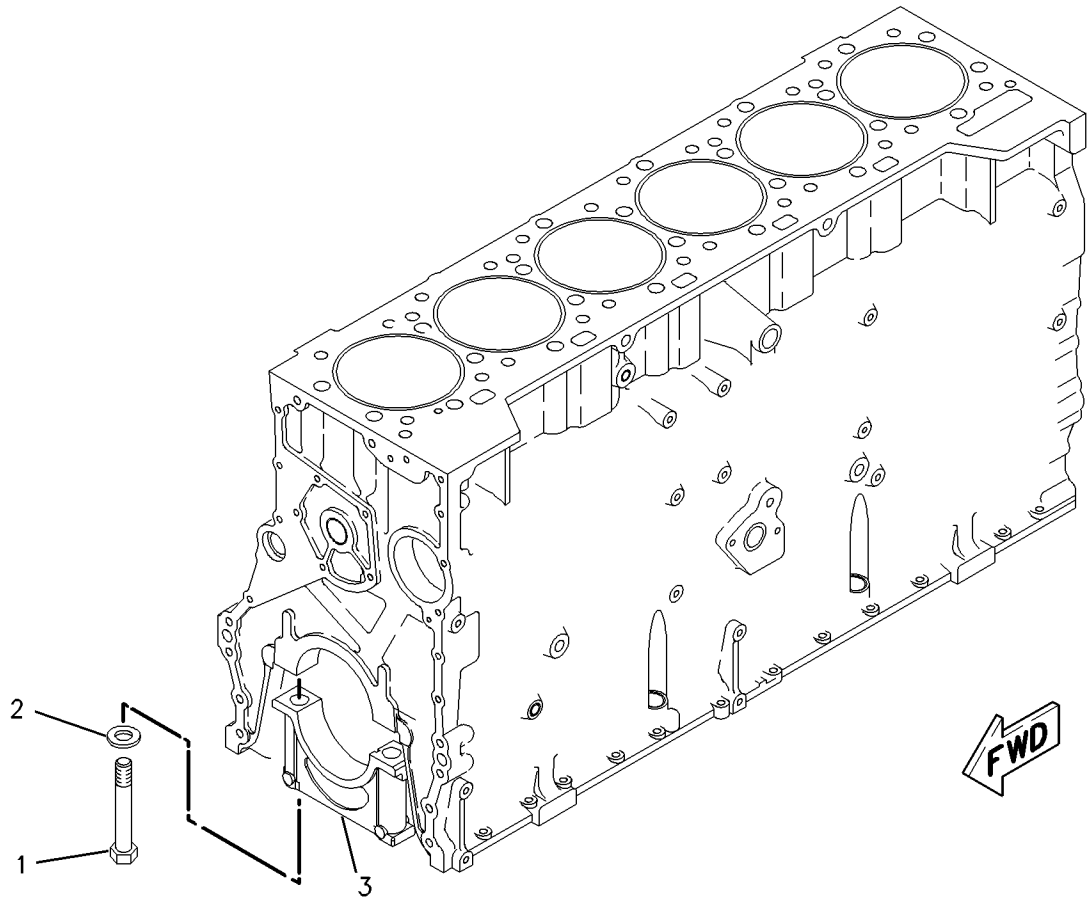

GRAPHIC #1 **<END>** g00784674

202-1261 CYLINDER BLOCK GP

S/N: BET524-UP

PART OF 146-2741 CYLINDER BLOCK GP

SMCS-1201 **i01748304**

NOTE	REF NO	GRAPHIC REF	PART NUMBER	QTY	PART NAME 1 2 3 4 5 6 (PRODUCT LEVEL)	SEE PAGE
	1	1	**197-9322**	6	LINER-CYLINDER	
	2	1	**9L-5854**	6	BAND-FILLER (130.2-MM ID)	
	3	1	**110-2220**	6	SEAL-LINER (141-MM ID)	
	4	1	**167-8083**	14	BOLT (7/8-14X7.5-IN)	
	5	1	**9H-1031**	14	WASHER-HARD (24X41.5X6-MM THK)	
	6	1	**167-8081**	7	CAP-CRANKSHAFT BEARING	
	7	1	**142-7072**	6	SEAL-LINER (140.2-MM ID)	
	8	1	**142-6217**	6	SEAL-O-RING (140.2-MM ID)	

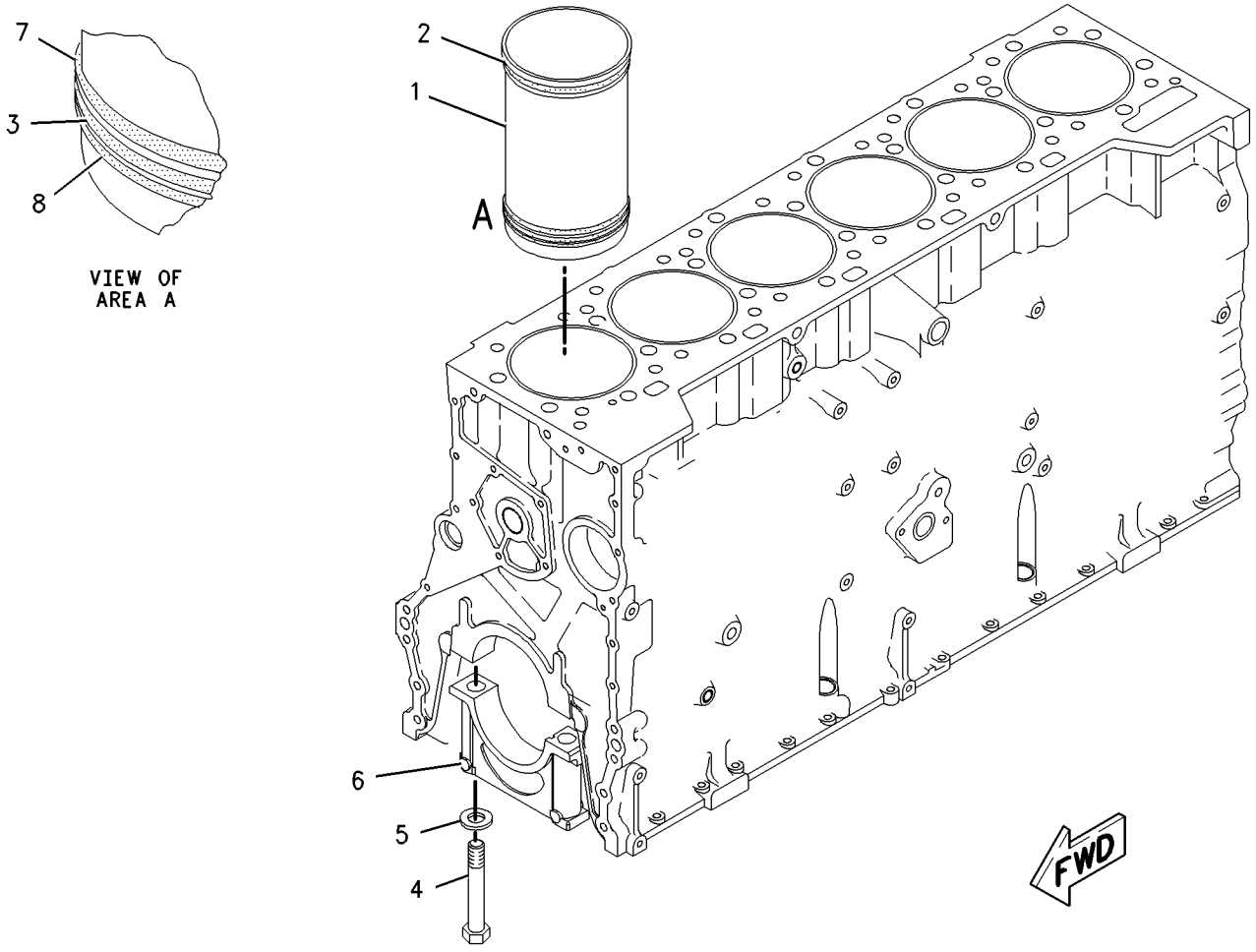

GRAPHIC #1 **<END>** g00801948

BASIC ENGINE

223-7263 CYLINDER HEAD AS

S/N: BET8003-UP
WITH PRE-FINISHED VALVE SEAT INSERTS
PART OF 243-6741 CYLINDER HEAD AS

SMCS-1100, 1101 **i02118405**

NOTE	REF NO	GRAPHIC REF	PART NUMBER	QTY	PART NAME 1 2 3 4 5 6 (PRODUCT LEVEL)	SEE PAGE
	1	1	**122-7375**	24	GUIDE-VALVE	
B	2	1	**216-5582**	7	BEARING-SLEEVE	
AB		1	**217-0751**		BEARING-SLEEVE (0.254-MM OS)	
AB		1	**217-0752**		BEARING-SLEEVE (0.762-MM OS)	
	3	1	**222-1982**	1	CYLINDER HEAD	
		1	**224-3983**	12	INSERT-SEAT (INLET)	
		1	**226-5561**	12	INSERT-VALVE (EXHAUST)	
	4	1	**227-4239**	1	SLEEVE-INJECTOR	
	5	1	**166-2903**	6	SEAL-O-RING	
	6	1	**166-2904**	6	SEAL-O-RING	
	7	1	**3B-0623**	17	PLUG-CUP	
	8	1	**3B-0645**	20	PLUG-CUP	
	9	1	**8T-6757**	3	PLUG-PIPE	
	10	1	**9X-7430**	6	SEAL-O-RING	

A-NOT PART OF THIS GROUP
B-USE AS REQUIRED

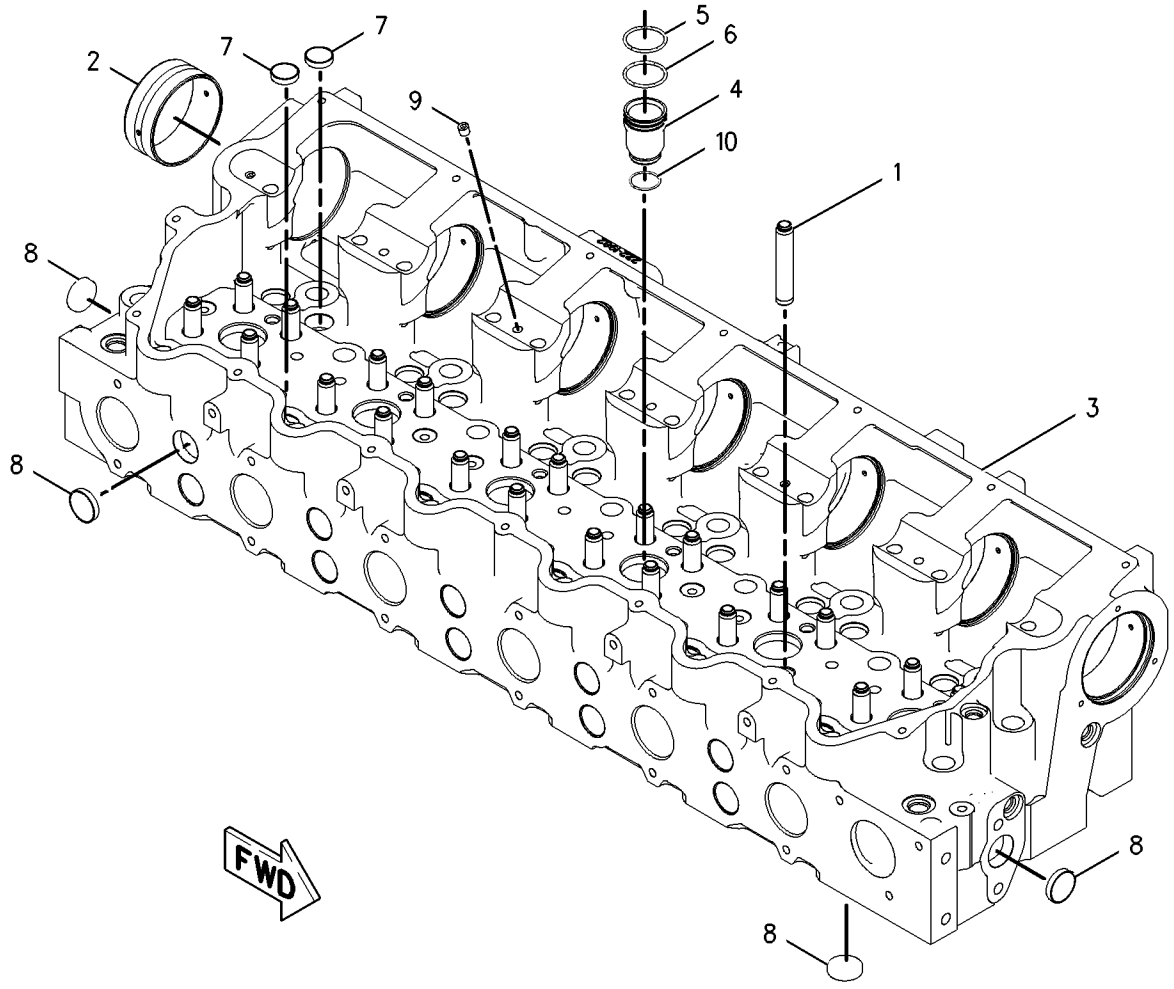

GRAPHIC #1 **<END>** g00956436

243-0943 CYLINDER HEAD AS

S/N: BET8003-UP

PART OF 243-6741 CYLINDER HEAD AS

SMCS-1100, 1101 **i01983776**

NOTE	REF NO	GRAPHIC REF	PART NUMBER	QTY	PART NAME 1 2 3 4 5 6 (PRODUCT LEVEL)	SEE PAGE
	1	1	**152-7582**	12	INSERT-VALVE SEAT (EXHAUST) (STANDARD)	
AB		1	**167-0642**		INSERT-VALVE SEAT (0.76 MM O.S.)	
AB		1	**170-4737**		INSERT-VALVE SEAT (0.51 MM O.S.)	
	2	1	**175-3617**	12	INSERT-VALVE SEAT (INLET) (STANDARD)	
AB		1	**167-0643**		INSERT-VALVE SEAT (0.76 MM O.S.)	
AB		1	**170-4738**		INSERT-VALVE SEAT (0.51 MM O.S.)	

A-NOT PART OF THIS GROUP
B-USE AS REQUIRED

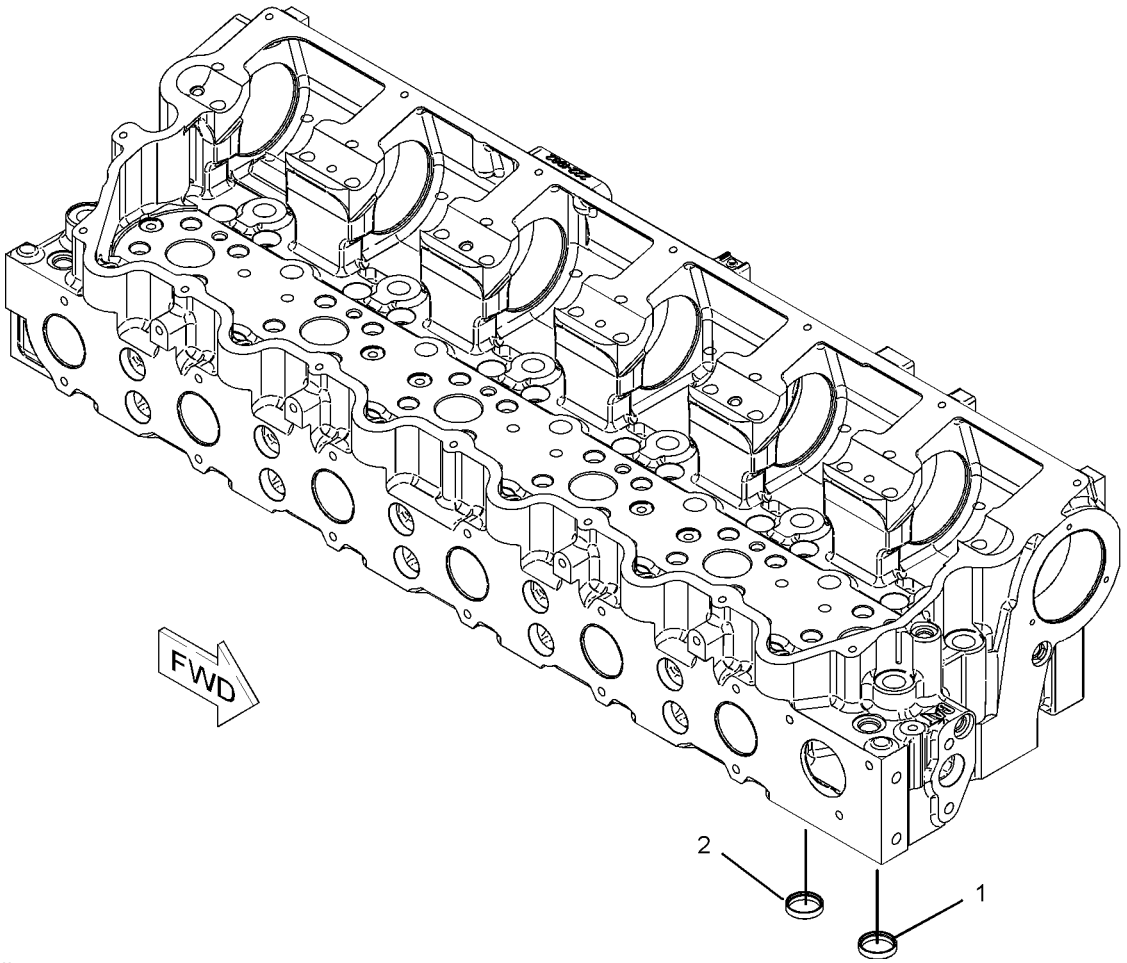

GRAPHIC #1 **<END>** g01028691

243-6741 CYLINDER HEAD AS

S/N: BET8003-UP
WITH MACHINE IN PLACE VALVE SEAT INSERTS
PART OF 223-9250 CYLINDER HEAD GP

SMCS-1100, 1101 **i01983686**

NOTE	REF NO	GRAPHIC REF	PART NUMBER	QTY	PART NAME 1 2 3 4 5 6 (PRODUCT LEVEL)	SEE PAGE
	1	2	**122-7375**	24	GUIDE-VALVE (STANDARD)	
AB		2	**122-0447**		GUIDE-VALVE (0.51-MM OS)	
AB		2	**122-8612**		GUIDE-VALVE (0.13-MM OS)	
	2	1	**216-5582**	7	BEARING-SLEEVE (STANDARD)	
AB		1	**217-0751**		BEARING-SLEEVE (0.254-MM OS)	
AB		1	**217-0752**		BEARING-SLEEVE (0.762-MM OS)	
	3	2	**227-4239**	6	SLEEVE-INJECTOR	
Y	4	1	**243-0943**	1	CYLINDER HEAD AS	33
					—OR—	
Y		1	**223-7263**	1	CYLINDER HEAD AS	32
	5	2	**166-2903**	6	SEAL-O-RING	
	6	2	**166-2904**	6	SEAL-O-RING	
	7	1	**3B-0623**	17	PLUG-CUP	
	8	1,2	**3B-0645**	20	PLUG-CUP	
	9	2	**8T-6757**	3	PLUG-PIPE	
	10	2	**9X-7430**	6	SEAL-O-RING	

A-NOT PART OF THIS GROUP
B-USE AS REQUIRED
Y-SEPARATE ILLUSTRATION

243-6741 **CYLINDER HEAD AS** *(contd.)* **i01983686**

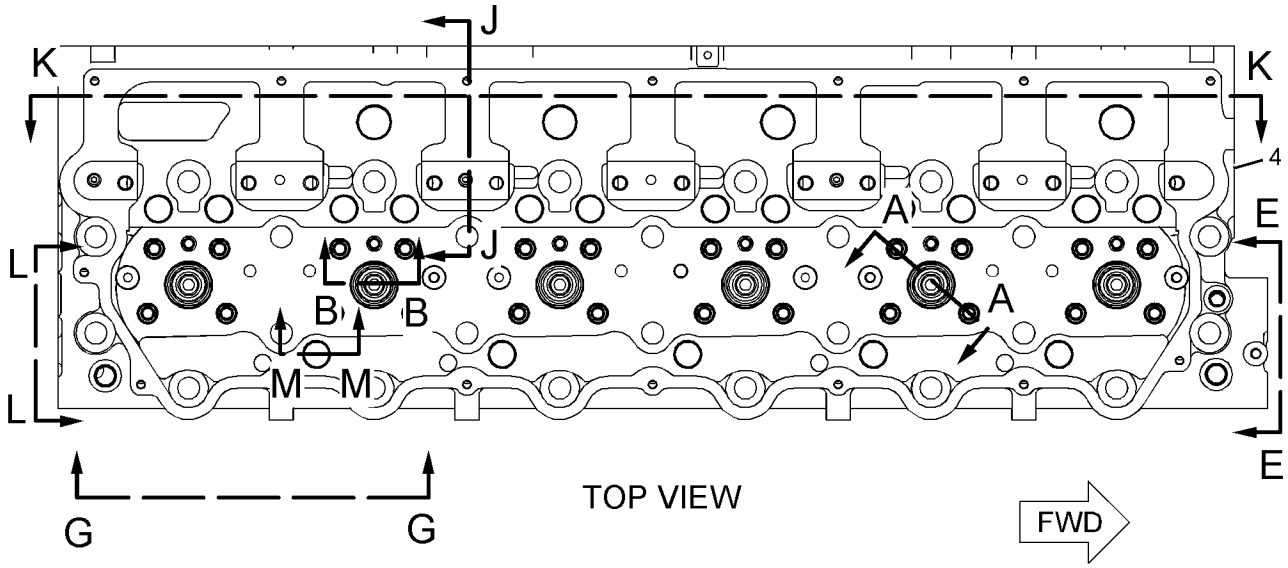

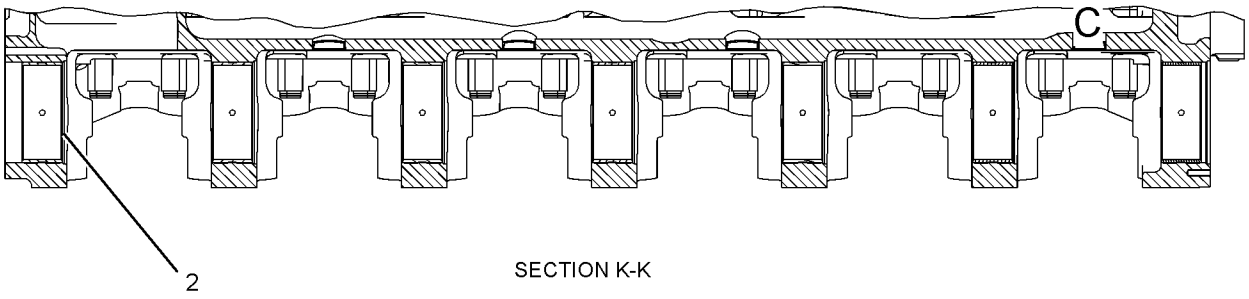

SECTION K-K

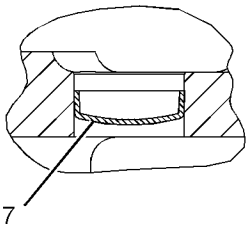

SECTION D-D

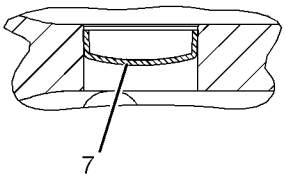

SECTION M-M

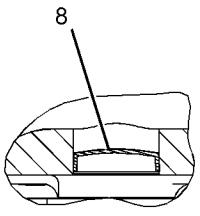

VIEW OF AREA C

REFER TO ALL ILLUSTRATIONS OF
THIS GROUP FOR AUXILIARY VIEWS

GRAPHIC #1

g01029133

243-6741 **CYLINDER HEAD AS** *(contd.)* **i01983686**

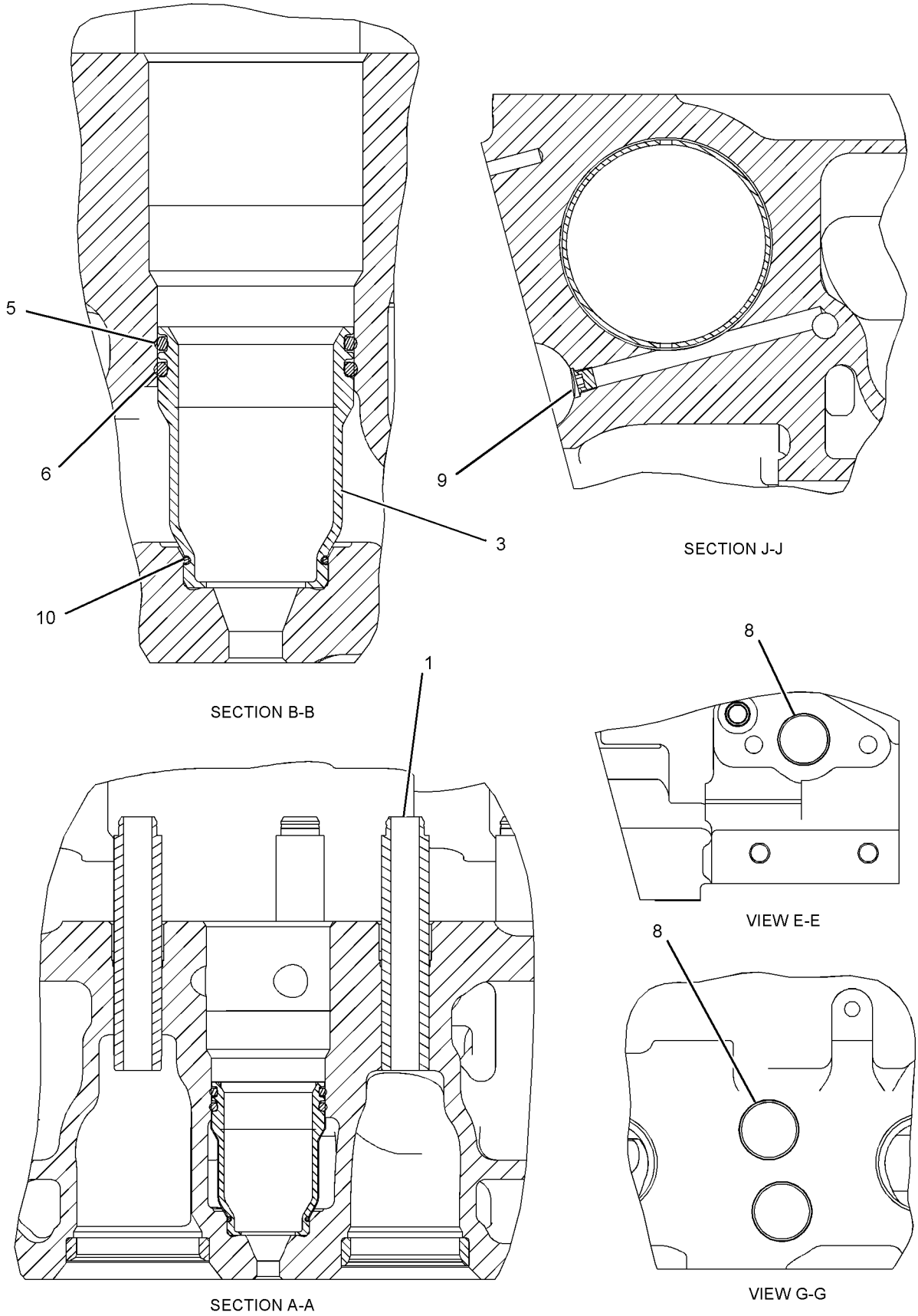

GRAPHIC #2 **<END>** g01029134

173-8807 CYLINDER HEAD GP

S/N: BET200-8002

PART OF 153-7078 ENGINE AR-CORE

SMCS-1100 **i02023613**

NOTE	REF NO	GRAPHIC REF	PART NUMBER	QTY	PART NAME 1 2 3 4 5 6 (PRODUCT LEVEL)	SEE PAGE
	1	1	**130-9811**	1	SENSOR GP-TEMPERATURE (INLET AIR)	
Y	2	1	**194-6724**	1	SENSOR GP-PRESSURE (TURBO OUTLET)	248
	3	1	**8T-6763**	1	PLUG-PIPE	
	4	1	**224-5122**	1	GASKET	
YR	5	1	**183-5296**	1	CYLINDER HEAD GP	41
	6	1	**194-8124**	6	SLEEVE AS (EXHAUST PORT)	
	7	1	**3E-6772**	24	SEAL	
	8	1	*6I-4025*	16	FASTENER GP-CYLINDER HEAD	
					(EACH INCLUDES)	
		1	**5H-1504**	1	WASHER-HARD (20X33.5X5-MM THK)	
		1	**124-1854**	1	BOLT-12 POINT HEAD (3/4-16X216-MM)	
	9	1	**6V-5048**	1	SEAL-O-RING	
	10	1	**6V-5049**	5	SEAL-O-RING	
	11	1	*106-5673*	10	FASTENER GP-CYLINDER HEAD	
					(EACH INCLUDES)	
		1	**5H-1504**	1	WASHER-HARD (20X33.5X5-MM THK)	
		1	**124-1854**	1	BOLT-12 POINT HEAD (3/4-16X216-MM)	
	12	1	**2B-0858**	2	PLUG-PIPE	
	13	1	**8L-2786**	1	SEAL-O-RING	
	14	1	**2P-8421**	1	ADAPTER-O-RING	
	15	1	**3E-2332**	1	ELBOW	
	16	1	**9S-8004**	3	PLUG	
	17	1	**5P-0840**	1	SEAL-O-RING	
	18	1	**3D-2824**	1	SEAL-O-RING	
	19	1	**8T-6765**	2	PLUG-PIPE	
	20	1	**9S-4191**	1	PLUG	
	21	1	**9S-4190**	1	PLUG	
	22	1	**2M-9780**	1	SEAL-O-RING	

R-REMFG PART MAY BE AVAILABLE
Y-SEPARATE ILLUSTRATION

173-8807 **CYLINDER HEAD GP** *(contd.)* **i02023613**

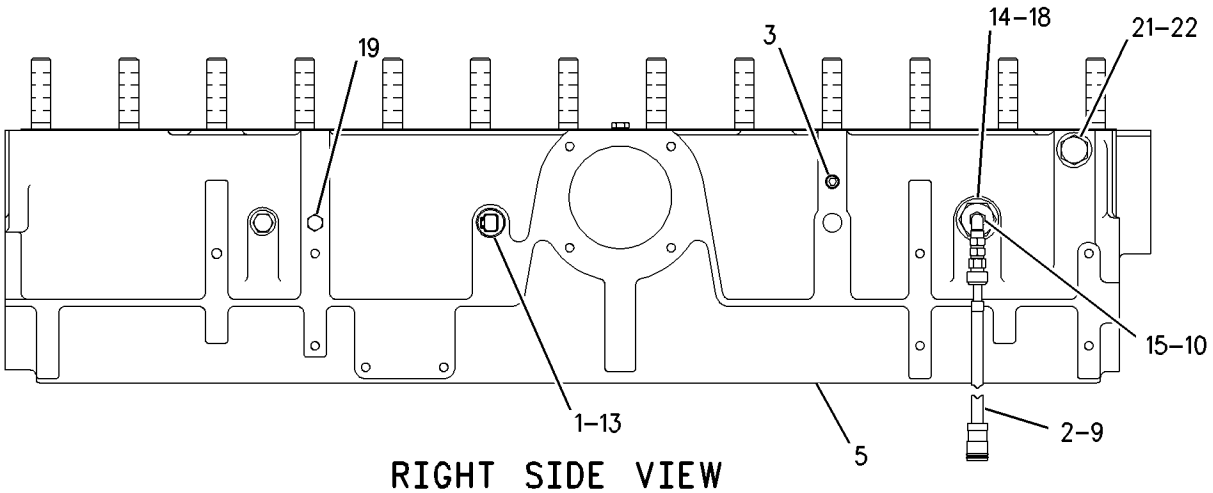

RIGHT SIDE VIEW

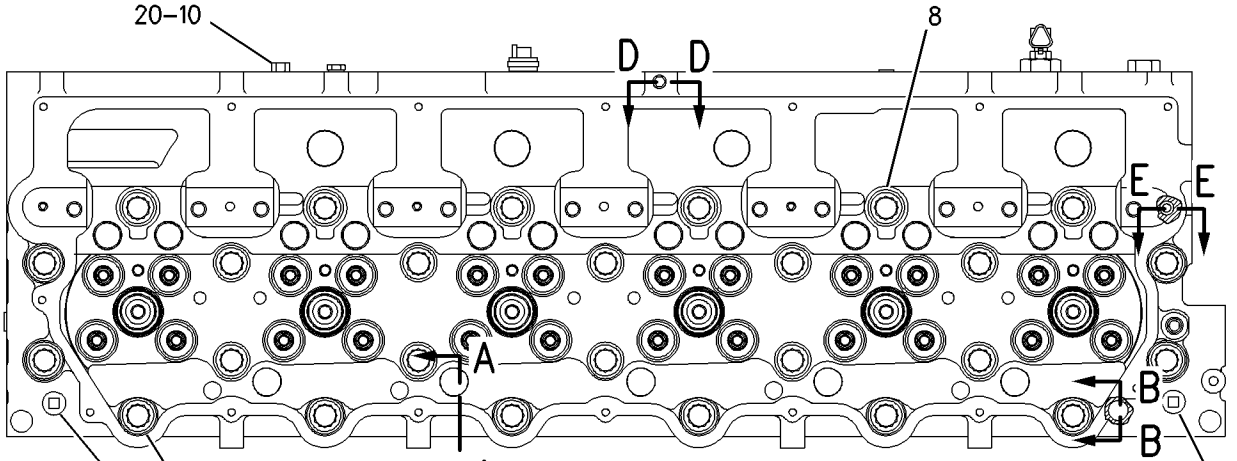

TOP VIEW

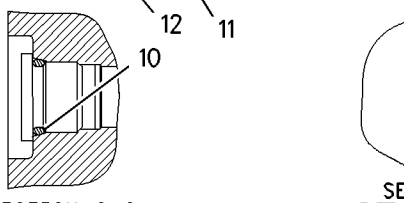

SECTION C-C

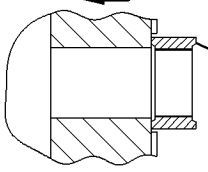

SECTION B-B

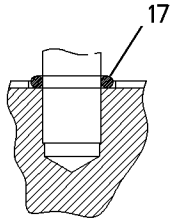

SECTION E-E

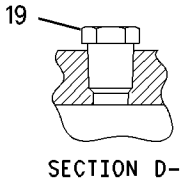

SECTION D-D

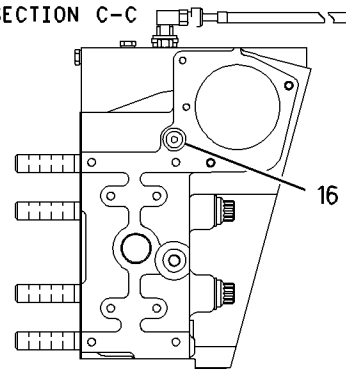

FRONT VIEW

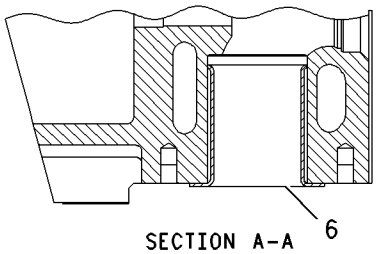

SECTION A-A

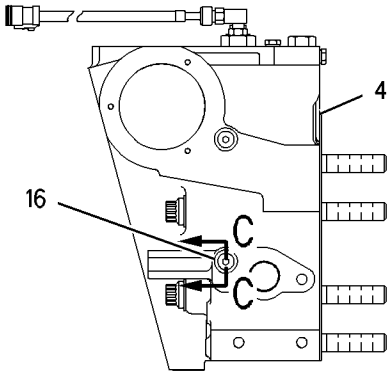

REAR VIEW

GRAPHIC #1 **<END>** g00712200

176-9918 CYLINDER HEAD GP*R

S/N: BET200-UP

PART OF 183-5296 CYLINDER HEAD GP

SMCS-1100 **i01950429**

NOTE	REF NO	GRAPHIC REF	PART NUMBER	QTY	PART NAME 1 2 3 4 5 6 (PRODUCT LEVEL)	SEE PAGE
	1	1	**8T-6757**	3	PLUG-PIPE	
	2	1	**216-5582**	7	BEARING-SLEEVE (STANDARD)	
AB		1	**217-0751**		BEARING-SLEEVE (0.254-MM OS)	
AB		1	**217-0752**		BEARING-SLEEVE (0.762-MM OS)	
	3	1	**227-4239**	6	SLEEVE-INJECTOR	
	4	1	**3B-0645**	20	PLUG-CUP	
	5	1	**3B-0623**	17	PLUG-CUP	
	6	1	**122-7375**	24	GUIDE-VALVE (STANDARD)	
AB		1	**122-8612**		GUIDE-VALVE (0.13-MM OS)	
AB		1	**122-0447**		GUIDE-VALVE (0.51-MM OS)	
	7	1	**166-2903**	6	SEAL-O-RING	
	8	1	**166-2904**	6	SEAL-O-RING	
	9	1	**9X-7430**	6	SEAL-O-RING	
	10	1	**152-7582**	12	INSERT-VALVE SEAT (EXHAUST) (STANDARD)	
AB		1	**167-0642**		INSERT-VALVE SEAT (0.76-MM OS)	
AB		1	**170-4737**		INSERT-VALVE SEAT (0.51-MM OS)	
	11	1	**175-3617**	12	INSERT-VALVE SEAT (INLET) (STANDARD)	
AB		1	**167-0643**		INSERT-VALVE SEAT (0.76-MM OS)	
AB		1	**170-4738**		INSERT-VALVE SEAT (0.51-MM OS)	

A-NOT PART OF THIS GROUP
B-USE AS REQUIRED

176-9918 CYLINDER HEAD GP *(contd.)* i01950429

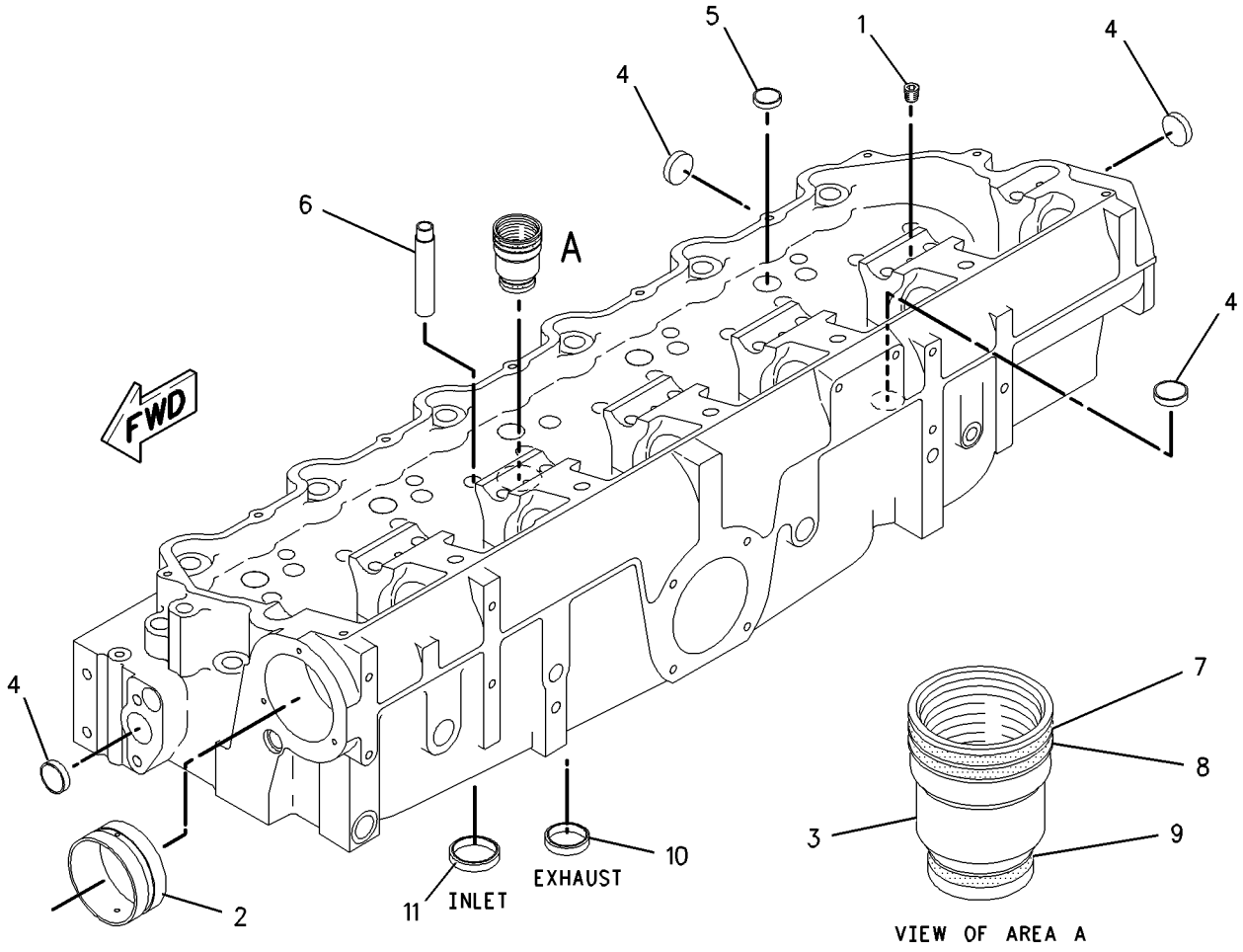

GRAPHIC #1 **<END>** g00828905

183-5296 CYLINDER HEAD GP*R

S/N: BET200-UP

PART OF 173-8807 CYLINDER HEAD GP

SMCS-1100 **i01901469**

NOTE	REF NO	GRAPHIC REF	PART NUMBER	QTY	PART NAME 1 2 3 4 5 6 (PRODUCT LEVEL)	SEE PAGE
YR	1	1	**176-9918**	1	CYLINDER HEAD GP	39
	2	1	**153-7023**	12	VALVE-INLET	
	3	1	**153-7024**	12	VALVE-EXHAUST	
	4	1	**6I-0928**	24	WASHER	
	5	1	**186-2001**	24	ROTOCOIL AS	
	6	1	**211-3123**	24	SPRING-VALVE (OUTER)	
	7	1	**2A-4429**	48	LOCK-RETAINER	
	8	1	**163-2478**	24	SEAL-VALVE STEM	
	9	1	**211-3122**	24	SPRING-VALVE (INNER)	

R-REMFG PART MAY BE AVAILABLE
Y-SEPARATE ILLUSTRATION

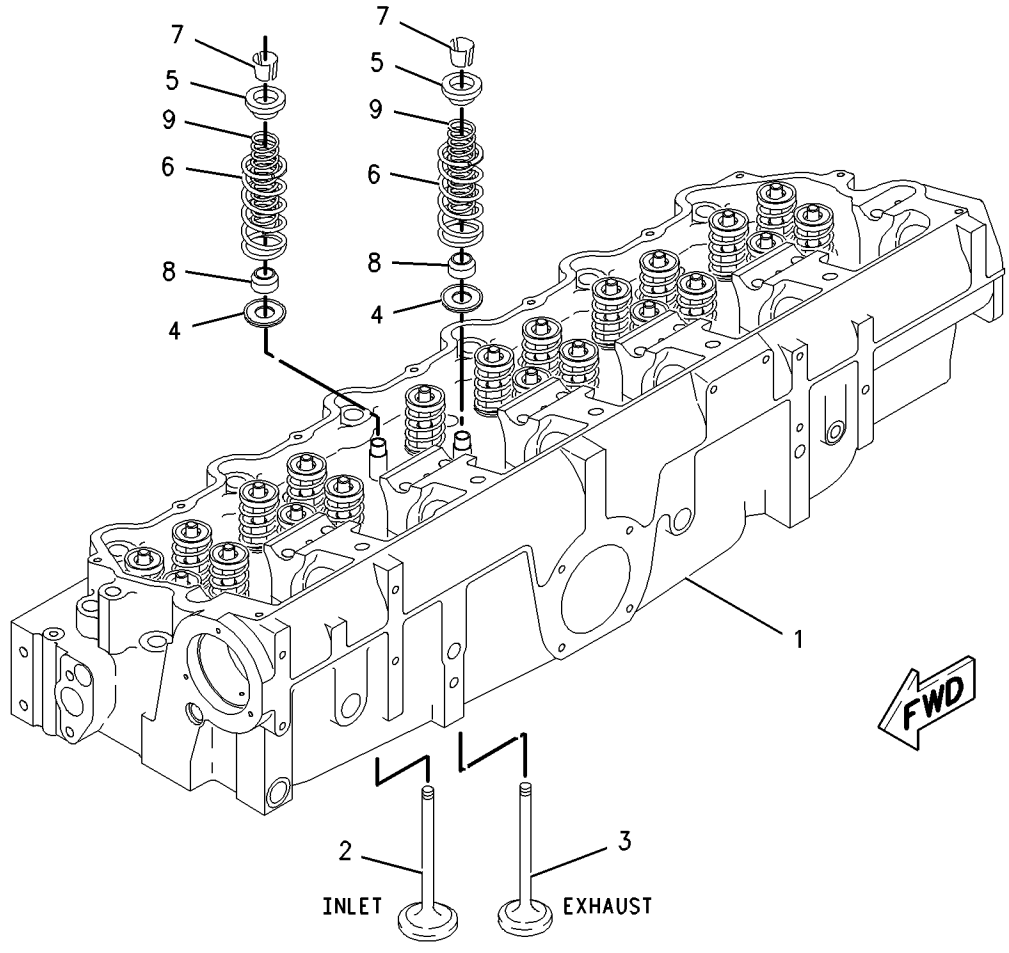

GRAPHIC #1 **<END>** g00979904

223-9250 CYLINDER HEAD GP

S/N: BET8003-UP

PART OF 235-3177 CYLINDER HEAD GP

SMCS-1100 **i02011745**

NOTE	REF NO	GRAPHIC REF	PART NUMBER	QTY	PART NAME 1 2 3 4 5 6 (PRODUCT LEVEL)	SEE PAGE
	1	1	**2A-4429**	48	LOCK-RETAINER	
	2	1	**6I-0928**	24	WASHER	
	3	1	**153-7023**	12	VALVE-INLET	
	4	1	**153-7024**	12	VALVE-EXHAUST	
	5	1	**163-2478**	24	SEAL-VALVE STEM	
	6	1	**211-3123**	24	SPRING-VALVE	
CY	7	1	**243-6741**	1	CYLINDER HEAD AS	34
	8	1	**186-2001**	24	ROTOCOIL AS	
	9	1	**211-3122**	24	SPRING-VALVE	

C-CHANGE FROM PREVIOUS TYPE
Y-SEPARATE ILLUSTRATION

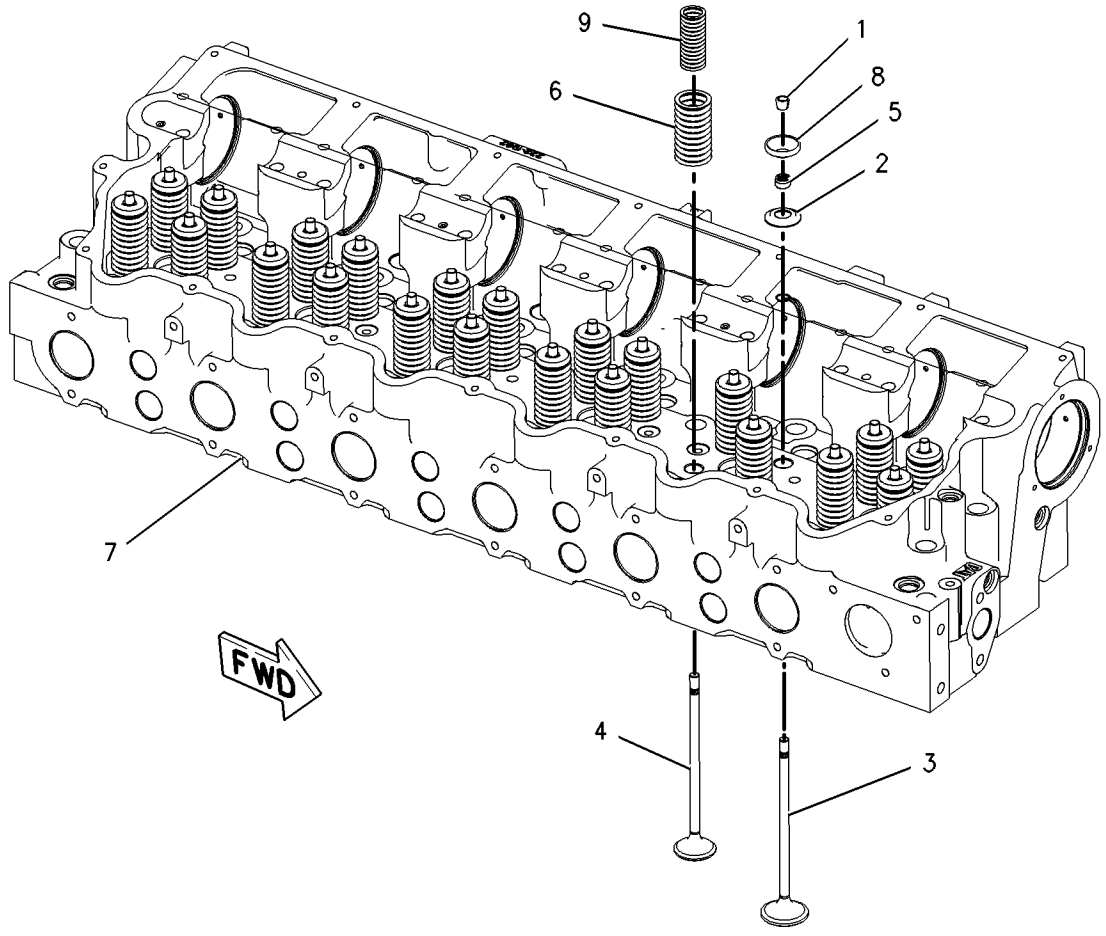

GRAPHIC #1 **<END>** g00955632

BASIC ENGINE

235-3177 CYLINDER HEAD GP

S/N: BET8003-UP

PART OF 235-3472 ENGINE AR-CORE

SMCS-1100 **i02107718**

NOTE	REF NO	GRAPHIC REF	PART NUMBER	QTY	PART NAME 1 2 3 4 5 6 (PRODUCT LEVEL)	SEE PAGE
	1	1	**3E-6772**	24	SEAL	
	2	1	**124-1855**	16	BOLT-12 POINT HEAD (3/4-16X194-MM)	
	2A	1	**5H-1504**	16	WASHER-HARD (20X33.5X5-MM THK)	
	3	1	**124-1854**	10	BOLT-12 POINT HEAD (3/4-16X216-MM)	
	3A	1	**5H-1504**	10	WASHER-HARD (20X33.5X5-MM THK)	
	4	1	**130-9811**	1	SENSOR GP-TEMPERATURE (INLET AIR)	
	5	1	**194-8124**	6	SLEEVE AS (EXHAUST PORT)	
YR	6	1	**223-9250**	1	CYLINDER HEAD GP	42
	7	1	**241-6186**	1	ELBOW	
	8	1	**6V-5049**	3	SEAL-O-RING	
	8A	1	**9S-8004**	3	PLUG	
Y	9	1	**194-6724**	1	SENSOR GP-PRESSURE (INLET MANIFOLD AIR)	248
	10	1	**224-5122**	1	GASKET	
	11	1	**5P-0840**	1	SEAL-O-RING	
	12	1	**6V-5048**	1	SEAL-O-RING	
	13	1	**6V-5049**	1	SEAL-O-RING	
	14	1	**8L-2786**	1	SEAL-O-RING	

R-REMFG PART MAY BE AVAILABLE
Y-SEPARATE ILLUSTRATION

235-3177 **CYLINDER HEAD GP** *(contd.)* **i02107718**

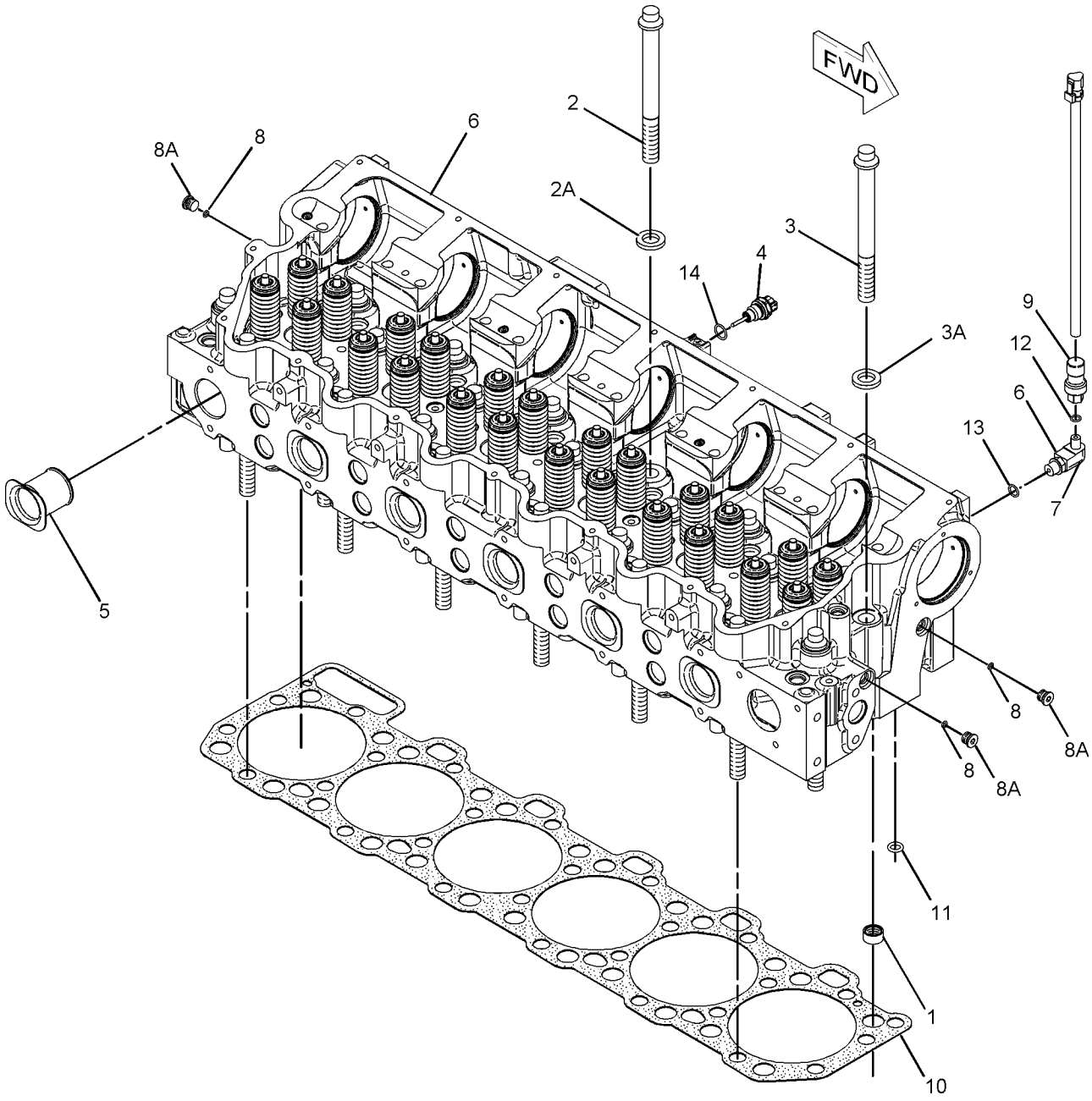

GRAPHIC #1 **<END>** g01066865

BASIC ENGINE

4P-5893 DAMPER GP

S/N: BET200-UP

PART OF 153-7076, 235-4689 ENGINE AR-COMPLETE

SMCS-1205 **i01203695**

NOTE	REF NO	GRAPHIC REF	PART NUMBER	QTY	PART NAME 1 2 3 4 5 6 (PRODUCT LEVEL)	SEE PAGE
	1	1	**167-8126**	1	DAMPER AS	
	2	1	**1A-3203**	6	BOLT (5/8-18X4.75IN)	
	3	1	**4N-2109**	1	ADAPTER-DAMPER	
	4	1	**168-2100**	1	SPACER	

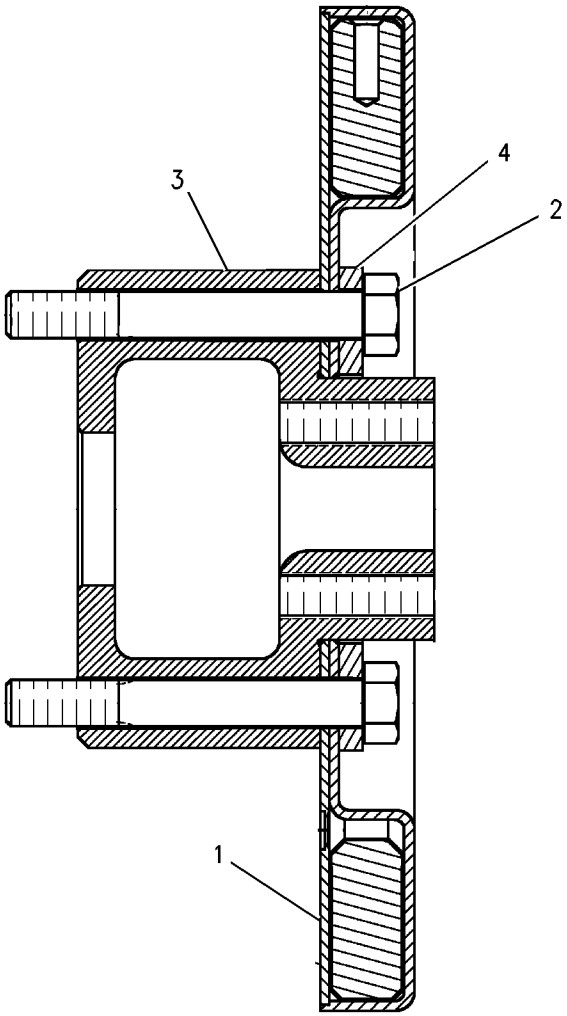

GRAPHIC #1 **<END>** g00643655

145-5012 DRIVE GP-ACCESSORY

S/N: BET200-827
LH FRONT
PART OF 153-7076 ENGINE AR-COMPLETE

SMCS-1207 **i01461478**

NOTE	REF NO	GRAPHIC REF	PART NUMBER	QTY	PART NAME 1 2 3 4 5 6 (PRODUCT LEVEL)	SEE PAGE
	1	1	**143-9732**	1	GEAR (40-TEETH)	
	2	1	**143-8971**	1	BEARING-DRIVE	
	3	1	**6V-8188**	3	NUT (1/2-13-THD)	
	4	1	**8T-4223**	3	WASHER-HARD (13.5X25.5X3-MM THK)	
	5	1	**144-6142**	1	SEAL-INTEGRAL	
	6	1	**1N-3974**	1	COUPLING	
	7	1	**030-7946**	1	ELBOW	
I	8	1	**101-6596**	1	HOSE AS	
	9	1	**8L-6557**	1	CONNECTOR	
	10	1	**3J-7354**	1	SEAL-O-RING	

I-REFER TO HYDRAULIC INFORMATION SYSTEM

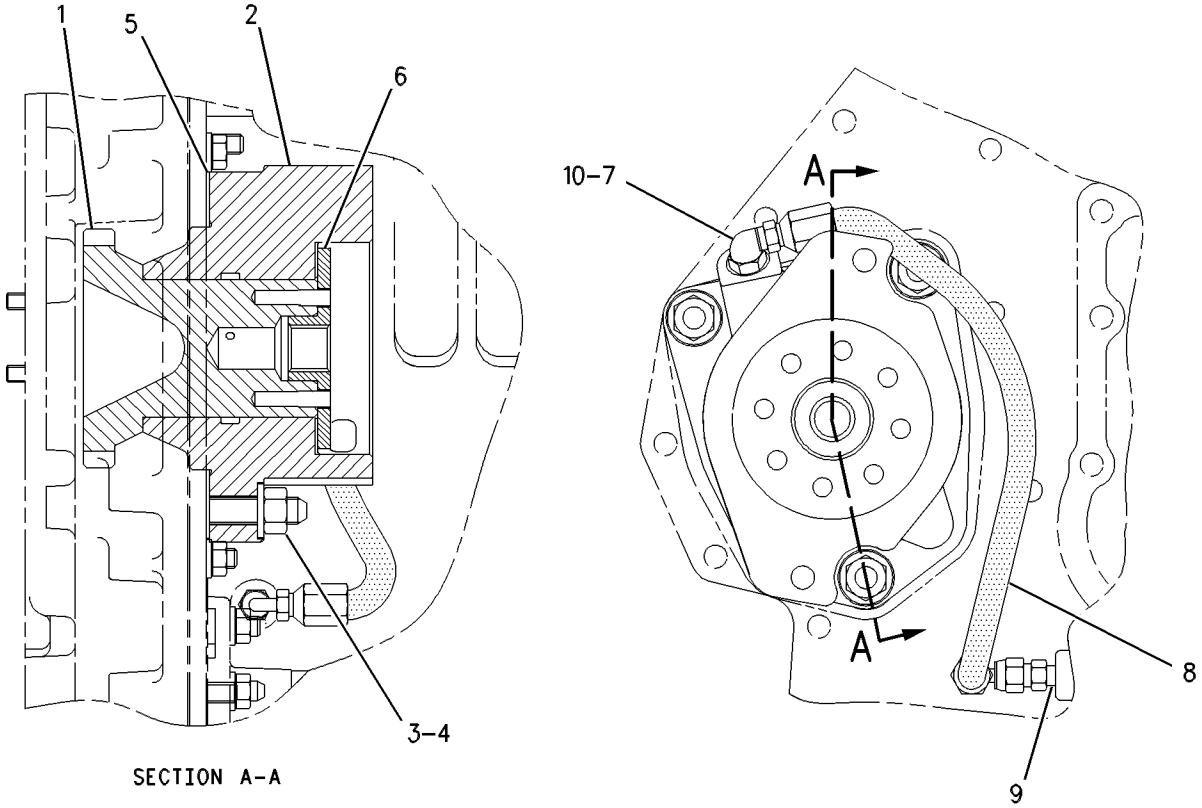

GRAPHIC #1 **<END>** g00504324

207-8799 DRIVE GP-ACCESSORY

S/N: BET828-UP
HAS AN SOS PORT FOR SAMPLING ENGINE OIL
PART OF 153-7076, 235-4689 ENGINE AR-COMPLETE

SMCS-1207 **i01939073**

NOTE	REF NO	GRAPHIC REF	PART NUMBER	QTY	PART NAME 1 2 3 4 5 6 (PRODUCT LEVEL)	SEE PAGE
	1	1	**1N-3974**	1	COUPLING	
	3	1	**8C-3445**	1	CAP-DUST (ENGINE OIL)	
	5	1	**8T-3313**	1	TEE-O-RING	
I	6	1	**133-2223**	1	HOSE AS	
	7	1	**143-8971**	1	BEARING-DRIVE	
	8	1	**143-9732**	1	GEAR (40-TEETH)	
	9	1	**144-6142**	1	SEAL-INTEGRAL	
	10	1	*148-8320*	1	CONNECTOR AS	
		1	**8C-6865**	1	CONNECTOR	
		1	**4J-5477**	1	SEAL-O-RING	
	12	1	**3J-1907**	1	SEAL-O-RING	
	13	1	**3J-7354**	2	SEAL-O-RING	
	14	1	**4J-5477**	1	SEAL-O-RING	
	16	1	**5P-9617**	1	ADAPTER	
	17	1	**6V-8188**	3	NUT (1/2-13-THD)	
	18	1	**8C-3446**	1	VALVE AS-FLUID SAMPLING	
	19	1	**8T-4223**	3	WASHER-HARD (13.5X25.5X3-MM THK)	

I-REFER TO HYDRAULIC INFORMATION SYSTEM

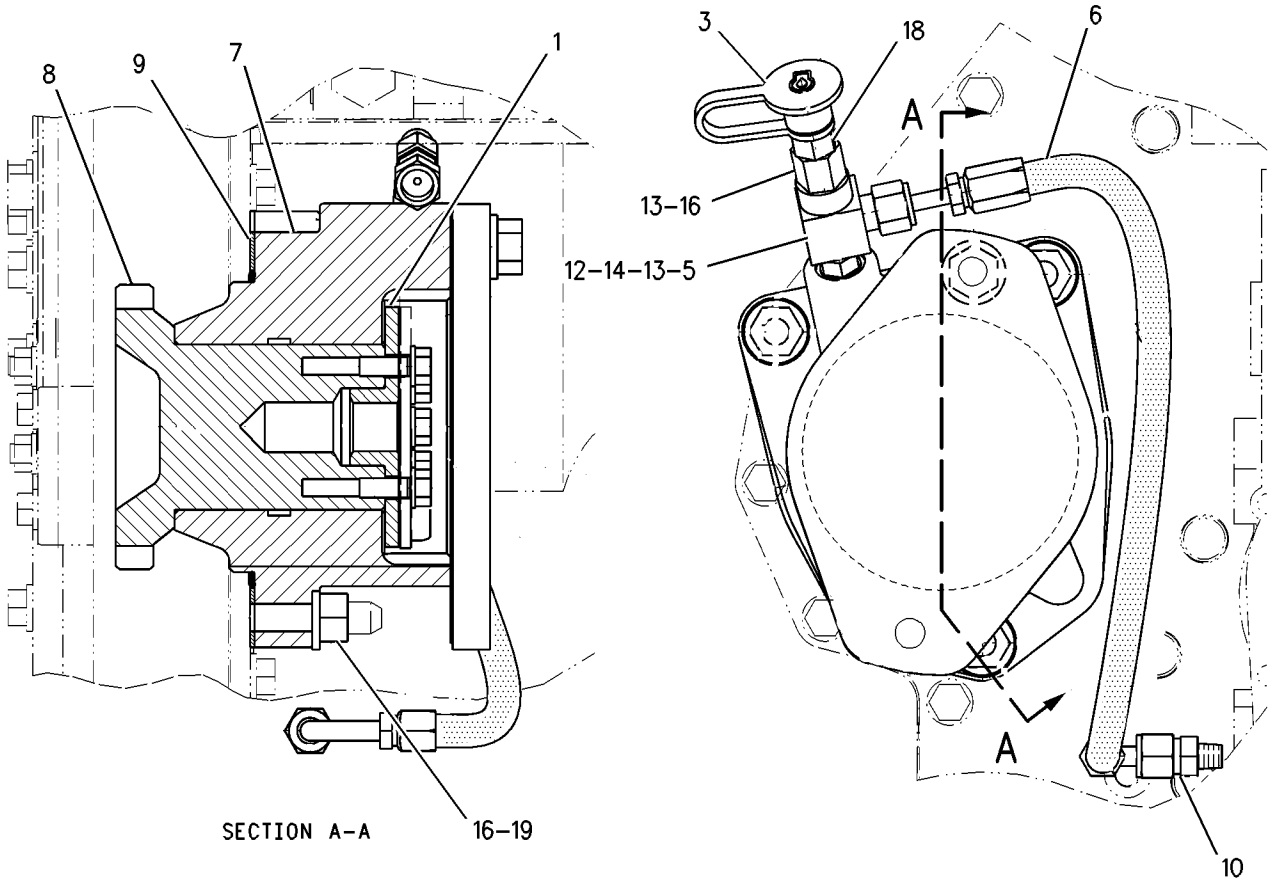

GRAPHIC #1 **<END>** g00858724

6I-3638 DRIVE GP-PUMP

S/N: BET200-UP
LEFT HAND REARWARD FACING SAE 2 BOLT FLANGE WITH SPLINE DRIVE
PART OF 153-7078, 235-3472 ENGINE AR-CORE
FOR USE WITH THE 2.5 BASE MODULE LARGE CAM GEAR TRAIN, CUSTOMER SUPPLIED SAE "A" PUMP WITH 11 TOOTH 16/32 DEPTH SPLINE

SMCS-1017, 3108 **i01949792**

NOTE	REF NO	GRAPHIC REF	PART NUMBER	QTY	PART NAME 1 2 3 4 5 6 (PRODUCT LEVEL)	SEE PAGE
	1	1	**0S-1590**	3	BOLT (3/8-16X2-IN)	
	2	1	**8T-9527**	1	SEAL-O-RING	
YC	3	1	*133-9907*	1	ADAPTER GP-PUMP DRIVE	9
	4	1	**5M-2894**	4	WASHER-HARD (10.2X18.5X2.5-MM THK)	
	5	1	**9S-8752**	1	NUT-FULL (3/8-16-THD)	

C-CHANGE FROM PREVIOUS TYPE
Y-SEPARATE ILLUSTRATION

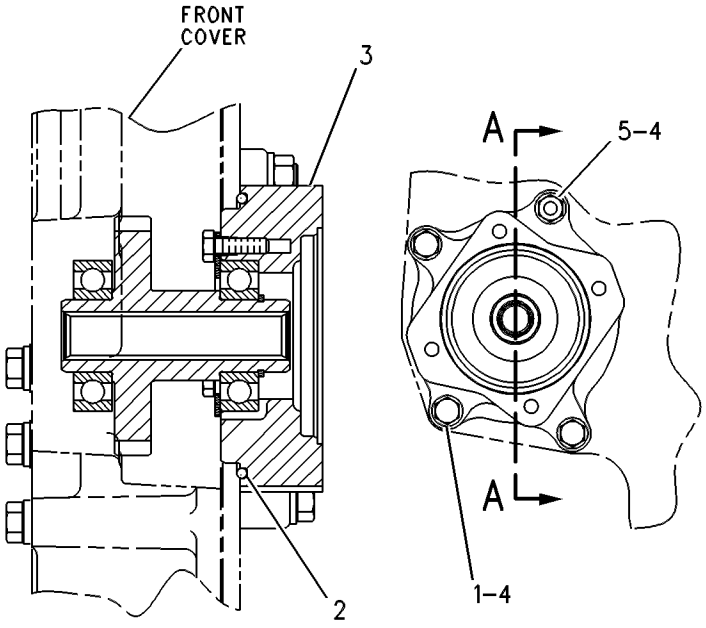

VIEW A-A

GRAPHIC #1 **<END>** g00263601

148-7486 ENGINE BRAKE GP

S/N: BET200-UP
24-VOLT
PART OF 153-7076 ENGINE AR-COMPLETE
TYPE 1

SMCS-1119 **i01396011**

NOTE	REF NO	GRAPHIC REF	PART NUMBER	QTY	PART NAME 1 2 3 4 5 6 (PRODUCT LEVEL)	SEE PAGE
	1	1	**141-1497**	3	NUT	
	2	1	**6I-1483**	3	SUPPORT-BRAKE	
	3	1	**8T-7062**	3	STUD-TAPERLOCK	
CY	4	1	**189-5950**	3	HOUSING GP-ENGINE BRAKE	64
	5	1	**167-0867**	12	BOLT-12 POINT HEAD	
	6	1	**3H-7654**	12	WASHER-HARD (13.5X22.5X3MM THK)	

C-CHANGE FROM PREVIOUS TYPE
Y-SEPARATE ILLUSTRATION

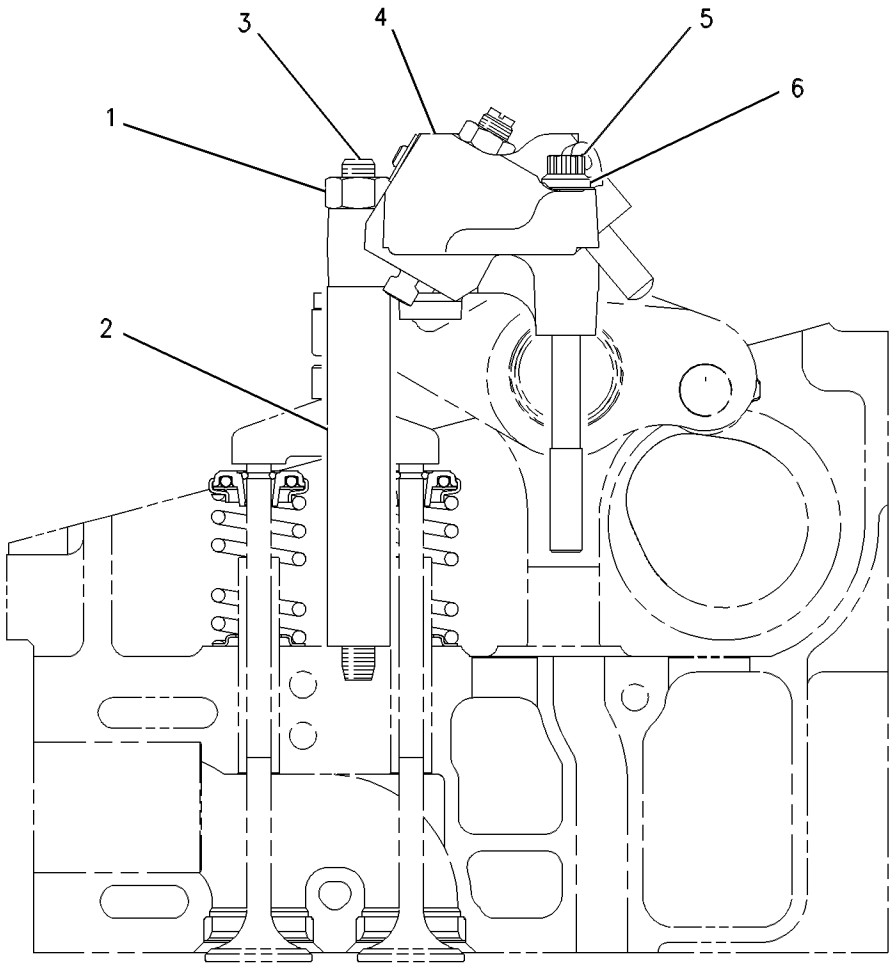

GRAPHIC #1 **<END>** g00293256

148-7486 ENGINE BRAKE GP

S/N: BET200-UP
24-VOLT
PART OF 153-7076, 235-4689 ENGINE AR-COMPLETE
TYPE 2

SMCS-1119 **i02127628**

NOTE	REF NO	GRAPHIC REF	PART NUMBER	QTY	PART NAME 1 2 3 4 5 6 (PRODUCT LEVEL)	SEE PAGE
	1	1	**6I-1483**	3	SUPPORT-BRAKE	
	2	1	**141-1497**	3	NUT	
CY	3	1	**221-1197**	3	HOUSING GP-ENGINE BRAKE	66
	4	1	**167-0867**	3	BOLT-12 POINT HEAD (1/2-13X146.05-MM)	
	5	1	**3H-7654**	12	WASHER-HARD (13.5X22.5X3-MM THK)	
	6	1	**8T-7062**	3	STUD-TAPERLOCK	
	7	1	**257-2122**	9	BOLT (1/2-13X5.75-IN)	

C-CHANGE FROM PREVIOUS TYPE
Y-SEPARATE ILLUSTRATION

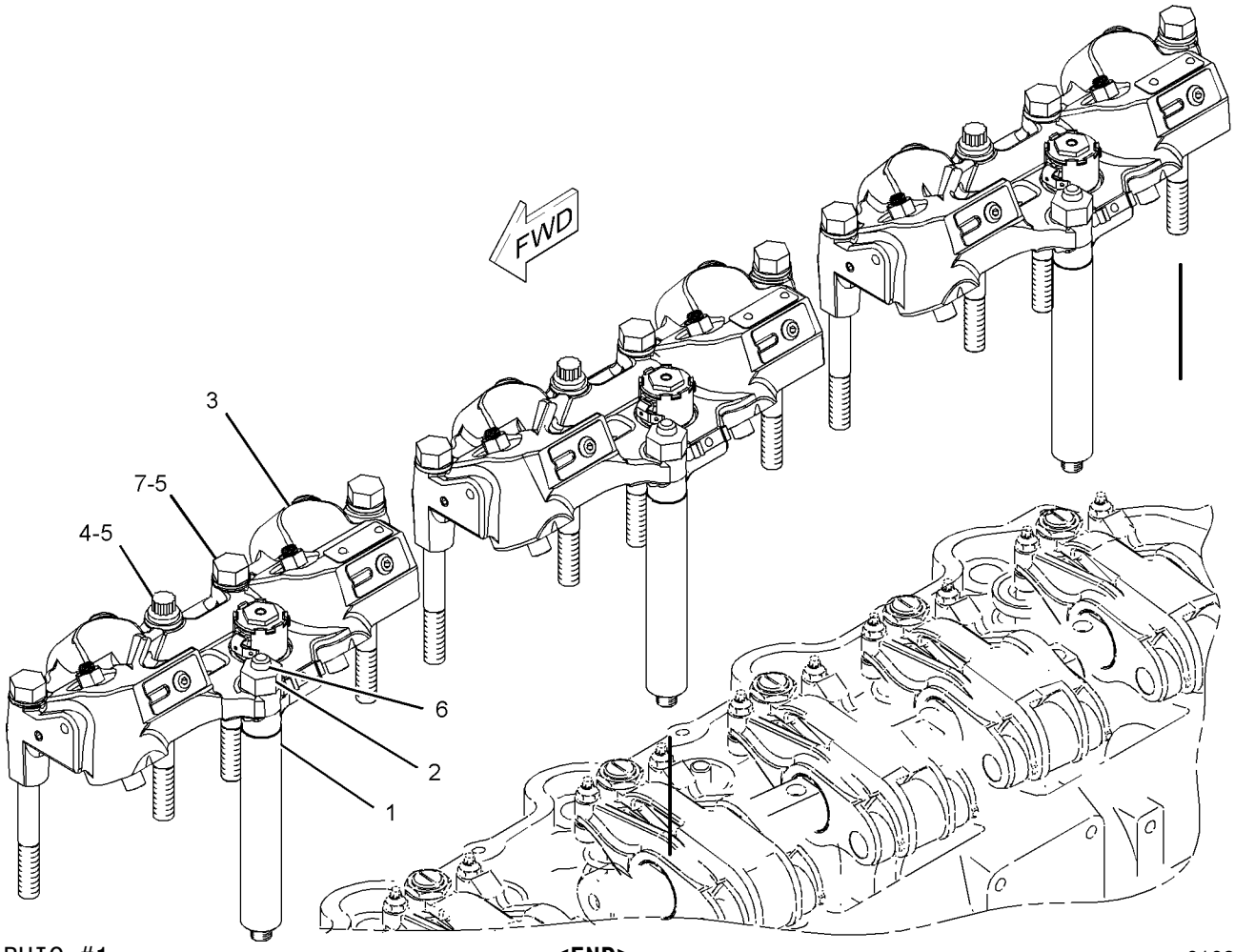

GRAPHIC #1 **<END>** g01083334

4P-6846 FASTENER GP-FRONT HOUSING

S/N: BET200-UP

PART OF 153-7078, 235-3472 ENGINE AR-CORE

SMCS-1151 **i00670557**

NOTE	REF NO	GRAPHIC REF	PART NUMBER	QTY	PART NAME 1 2 3 4 5 6 (PRODUCT LEVEL)	SEE PAGE
	1	1	**7N-0452**	1	PLATE	
	2	1	**0S-1594**	2	BOLT (3/8-16X1IN)	
	3	1	**5M-2894**	2	WASHER (2.5MM THK)	

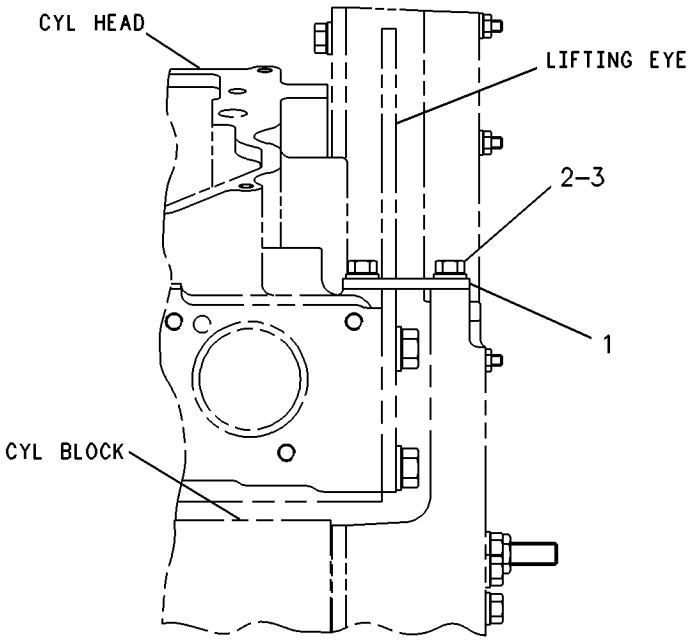

RIGHT SIDE VIEW

GRAPHIC #1 **<END>** g00231021

112-2644 FASTENER GP-FRONT HOUSING

S/N: BET200-UP
PROVIDES 125 MM LONG FAN DRIVE MOUNTING STUDS
PART OF 153-7076, 235-4689 ENGINE AR-COMPLETE

SMCS-1151 **i00833402**

NOTE	REF NO	GRAPHIC REF	PART NUMBER	QTY	PART NAME 1 2 3 4 5 6 (PRODUCT LEVEL)	SEE PAGE
	1	1	**1F-7958**	2	NUT-FULL (1/2-13 THD)	
	2	1	**5P-8245**	2	WASHER (3MM THK)	
	3	1	**149-5267**	2	STUD-TAPERLOCK	

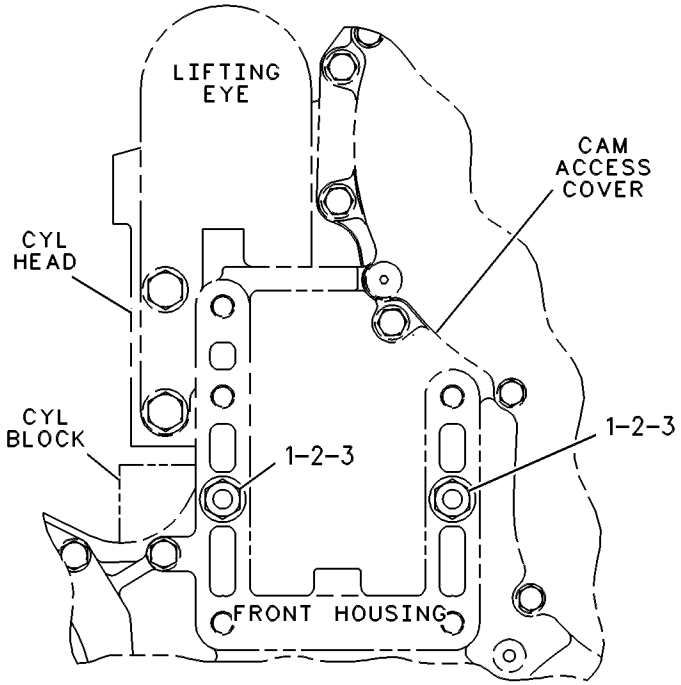

FRONT VIEW

GRAPHIC #1 **<END>** g00260177

150-3345 FASTENER GP-FRONT HOUSING

S/N: BET200-UP

PART OF 153-7076, 235-4689 ENGINE AR-COMPLETE

SMCS-1151 **i00984722**

NOTE	REF NO	GRAPHIC REF	PART NUMBER	QTY	PART NAME 1 2 3 4 5 6 (PRODUCT LEVEL)	SEE PAGE
	1	1	**5M-3062**	1	BOLT (3/8-16X.75IN)	
	2	1	**8T-4896**	1	WASHER-HARD (2.5MM THK)	

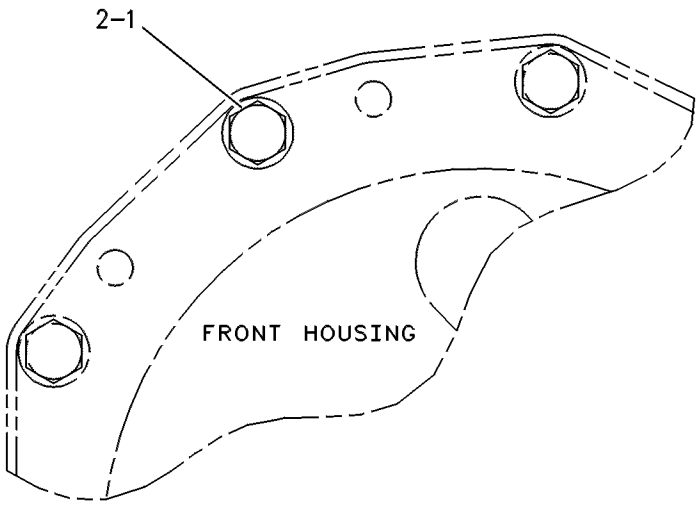

FRONT VIEW

GRAPHIC #1 **<END>** g00238155

BASIC ENGINE

173-7043 FLYWHEEL GP

S/N: BET200-UP

PART OF 153-7076, 235-4689 ENGINE AR-COMPLETE

SMCS-1156 **i01464153**

NOTE	REF NO	GRAPHIC REF	PART NUMBER	QTY	PART NAME 1 2 3 4 5 6 (PRODUCT LEVEL)	SEE PAGE
	1	1	*173-7042*	1	FLYWHEEL AS	
		1	**4N-2514**	1	GEAR (113 TEETH)	
	2	1	**0S-1602**	12	BOLT (5/8-18X3.5IN)	
	3	1	**4D-3704**	12	WASHER-HARD (17X30X5MM THK)	

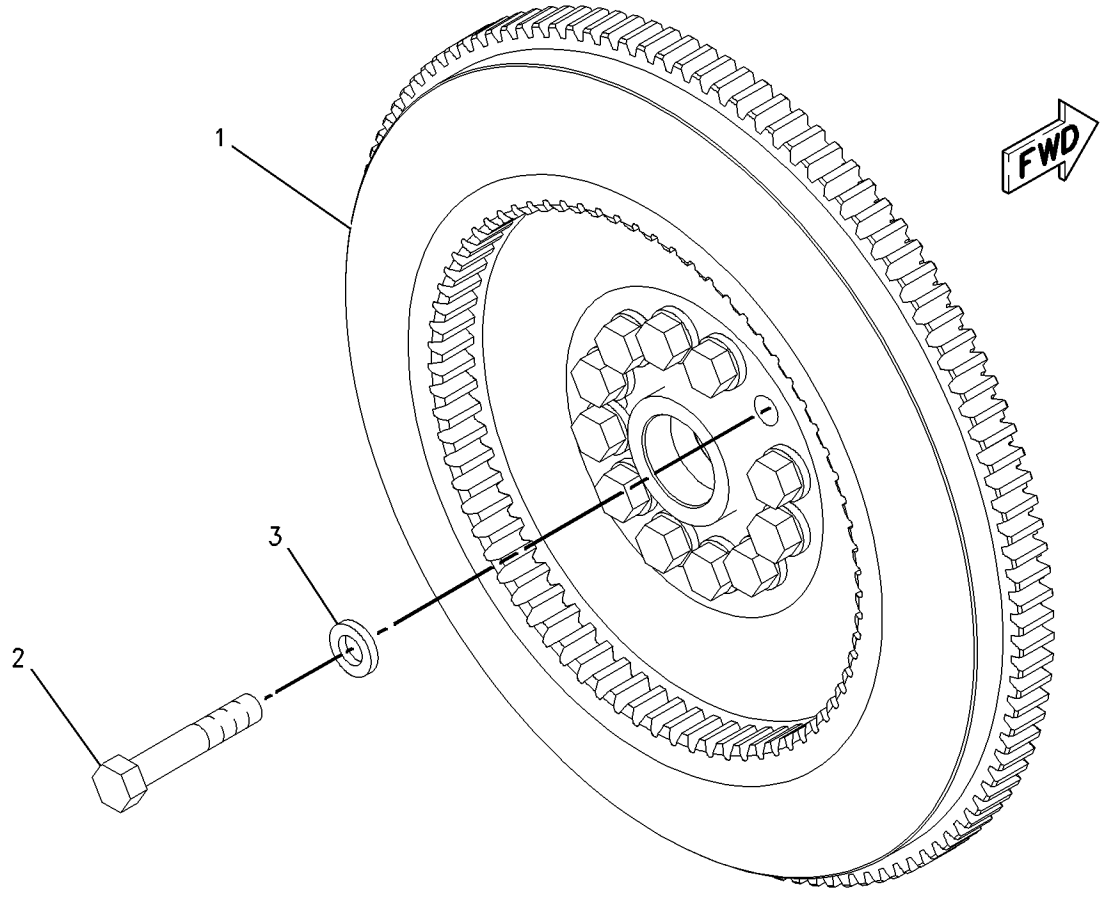

GRAPHIC #1 **<END>** g00766538

204-9316 GEAR GP-CAMSHAFT

S/N: BET1177-UP

PART OF 124-6818 GEAR GP-FRONT

SMCS-1212 **i01549424**

NOTE	REF NO	GRAPHIC REF	PART NUMBER	QTY	PART NAME 1 2 3 4 5 6 (PRODUCT LEVEL)	SEE PAGE
	1	1	**9X-8872**	16	BOLT-LOCKING (3/8-16X0.875 IN)	

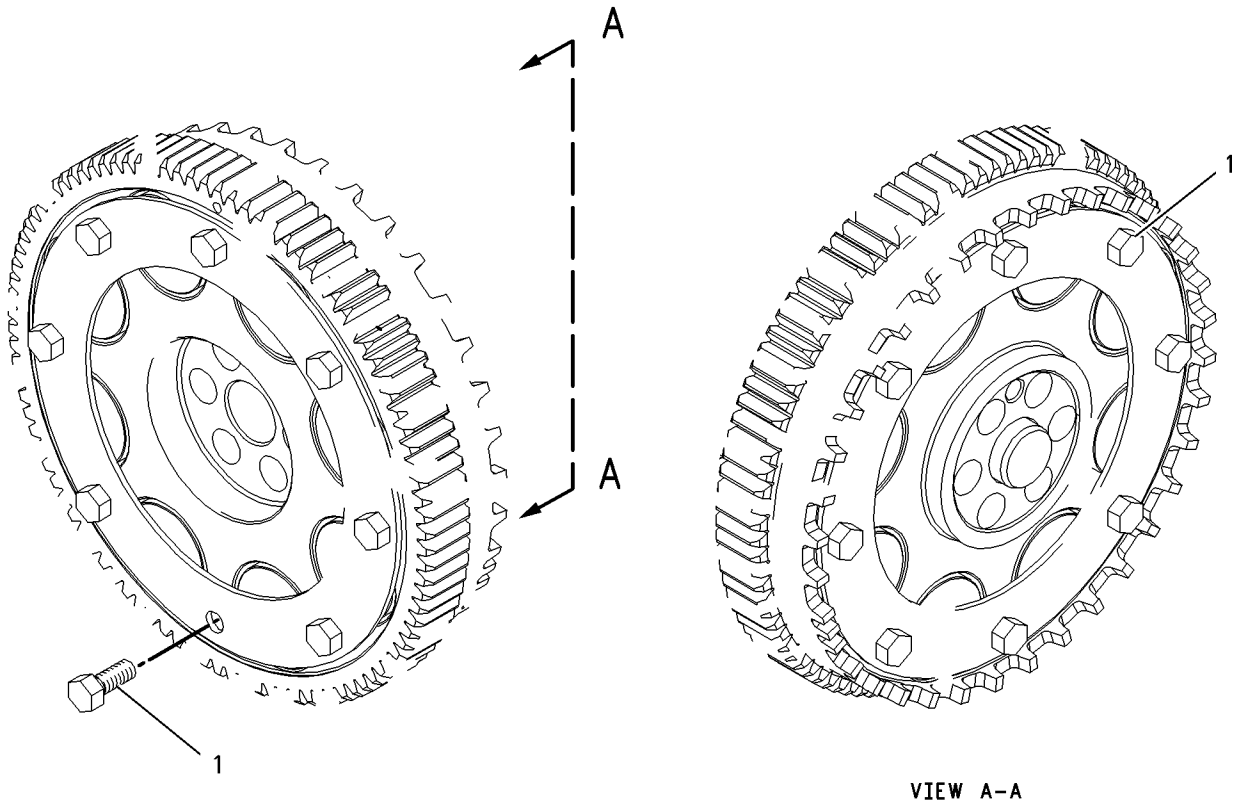

GRAPHIC #1 **<END>** g00809033

BASIC ENGINE

124-6818 GEAR GP-FRONT

S/N: BET200-1176

PART OF 153-7078 ENGINE AR-CORE

SMCS-1206 **i01747009**

NOTE	REF NO	GRAPHIC REF	PART NUMBER	QTY	PART NAME 1 2 3 4 5 6 (PRODUCT LEVEL)	SEE PAGE
	1	1	**0S-1571**	1	BOLT (3/8-16X1.75-IN)	
	2	1	**2J-3118**	5	BOLT-LOCKING (3/8-16X1.25-IN)	
	3	1	**5P-4142**	2	BOLT-LOCKING (3/8-16X1.5-IN) (3/8-16X1.5IN)	
	4	1	**1B-8705**	1	KEY-WOODRUFF	
	5	1	**1P-7346**	1	WASHER-HARD (10.2X35X6-MM THK)	
	6	1	**126-1756**	10	BOLT-LOCKING (5/16-18X22.22-MM) (5/16-18X7/8IN)	
	7	1	**112-9217**	1	PLATE-THRUST	
	8	1	**130-4701**	1	GEAR AS (56-TEETH)	
		1	**130-4698**	1	BEARING-SLEEVE	
	9	1	**151-5966**	1	SHAFT AS-STUB	
		1	**6I-3623**	1	DOWEL	
	10	1	**6I-3624**	2	PLATE-THRUST	
	11	1	**6I-3625**	1	GEAR AS (71-TEETH)	
		1	**101-8468**	1	BEARING-SLEEVE	
	12	1	**128-2659**	1	GEAR AS (105, 63-TEETH)	
		1	**1B-8705**	1	KEY-WOODRUFF	
		1	**131-7123**	1	BEARING-SLEEVE	
	13	1	**6I-3632**	1	SHAFT-STUB (CLUSTER)	
	14	1	**158-3416**	1	SHAFT-STUB	
	15	1	**031-3185**	6	BOLT-12 POINT HEAD (5/8-11X76.2-MM)	
	16	1	**7E-5661**	1	GEAR-OIL PUMP DRIVE (69-TEETH)	
	17	1	**9S-8752**	10	NUT-FULL (3/8-16-THD)	
	18	1	**9X-6458**	12	WASHER-HARD (10.2X22.5X3-MM THK)	
	19	1	**117-8801**	1	SEAL-O-RING	
	20	1	**5E-8771**	1	SEAL-O-RING	
	21	1	**117-8557**	1	PLATE-SEAL	
	22	1	**128-8853**	1	ADAPTER AS	
		1	**6V-3677**	1	DOWEL	
	23	1	**102-5861**	1	PLATE-THRUST	
	24	1	**107-0583**	3	BOLT-LOCKING (1/4-20X0.87-IN)	
	25	1	**136-8884**	1	GEAR GP-CAM (96-TEETH)	
		1	**9X-8872**	8	BOLT-LOCKING (3/8-16X0.875-IN)	

124-6818 **GEAR GP-FRONT** *(contd.)* **i01747009**

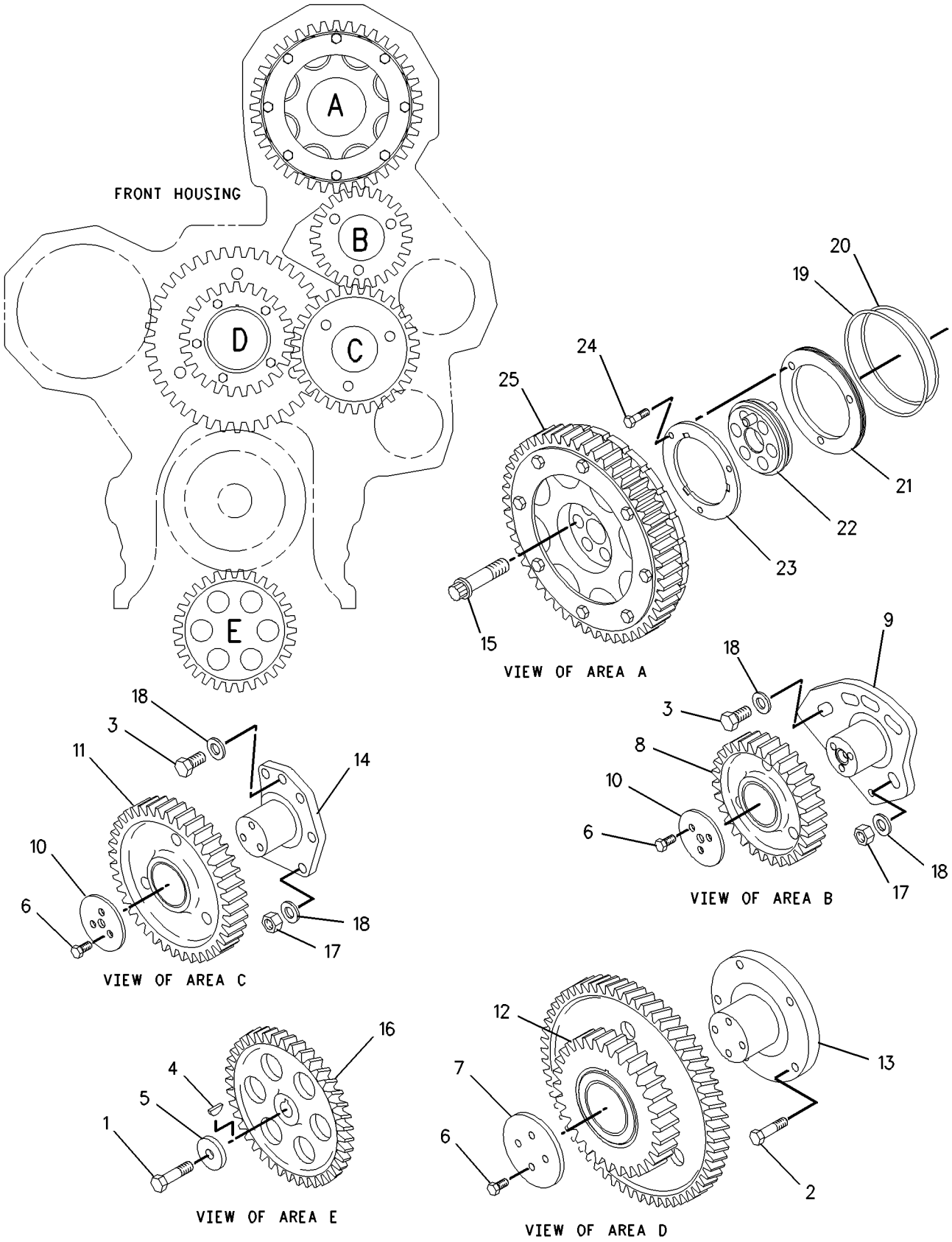

GRAPHIC #1 **<END>** g00677815

BASIC ENGINE

124-6818 GEAR GP-FRONT

S/N: BET1177-UP

PART OF 153-7078, 235-3472 ENGINE AR-CORE

SMCS-1206 **i02079310**

NOTE	REF NO	GRAPHIC REF	PART NUMBER	QTY	PART NAME 1 2 3 4 5 6 (PRODUCT LEVEL)	SEE PAGE
	1	1	**0S-1571**	1	BOLT (3/8-16X1.75-IN)	
	2	1	**2J-3118**	5	BOLT-LOCKING (3/8-16X1.25-IN)	
	3	1	**5P-4142**	2	BOLT-LOCKING (3/8-16X1.5-IN)	
	4	1	**1B-8705**	1	KEY-WOODRUFF	
	5	1	**1P-7346**	1	WASHER-HARD (10.2X35X6-MM THK)	
	6	1	**126-1756**	10	BOLT-LOCKING (5/16-18X22.22-MM)	
	7	1	**112-9217**	1	PLATE-THRUST	
	8	1	**130-4701**	1	GEAR AS (56-TEETH)	
		1	**130-4698**	1	BEARING-SLEEVE	
	9	1	**151-5966**	1	SHAFT AS-STUB	
		1	**6I-3623**	1	DOWEL	
	10	1	**6I-3624**	2	PLATE-THRUST	
	11	1	**6I-3625**	1	GEAR AS (71-TEETH)	
		1	**101-8468**	1	BEARING-SLEEVE	
	12	1	**128-2659**	1	GEAR AS (105, 63-TEETH)	
		1	**1B-8705**	1	KEY-WOODRUFF	
		1	**131-7123**	1	BEARING-SLEEVE	
	13	1	**248-3008**	1	SHAFT-STUB (CLUSTER)	
	14	1	**158-3416**	1	SHAFT-STUB	
	15	1	**031-3185**	6	BOLT-12 POINT HEAD (5/8-11X76.2-MM)	
	16	1	**7E-5661**	1	GEAR-OIL PUMP DRIVE (69-TEETH)	
	17	1	**9S-8752**	10	NUT-FULL (3/8-16-THD)	
	18	1	**9X-6458**	12	WASHER-HARD (10.2X22.5X3-MM THK)	
	19	1	**117-8801**	1	SEAL-O-RING	
	20	1	**5E-8771**	1	SEAL-O-RING	
	21	1	**117-8557**	1	PLATE-SEAL	
	22	1	**128-8853**	1	ADAPTER AS	
		1	**6V-3677**	1	DOWEL	
	23	1	**102-5861**	1	PLATE-THRUST	
	24	1	**107-0583**	3	BOLT-LOCKING (1/4-20X0.87-IN)	
CY	25	1	**204-9316**	1	GEAR GP-CAMSHAFT	55

C-CHANGE FROM PREVIOUS TYPE
Y-SEPARATE ILLUSTRATION

124-6818 **GEAR GP-FRONT** *(contd.)* **i02079310**

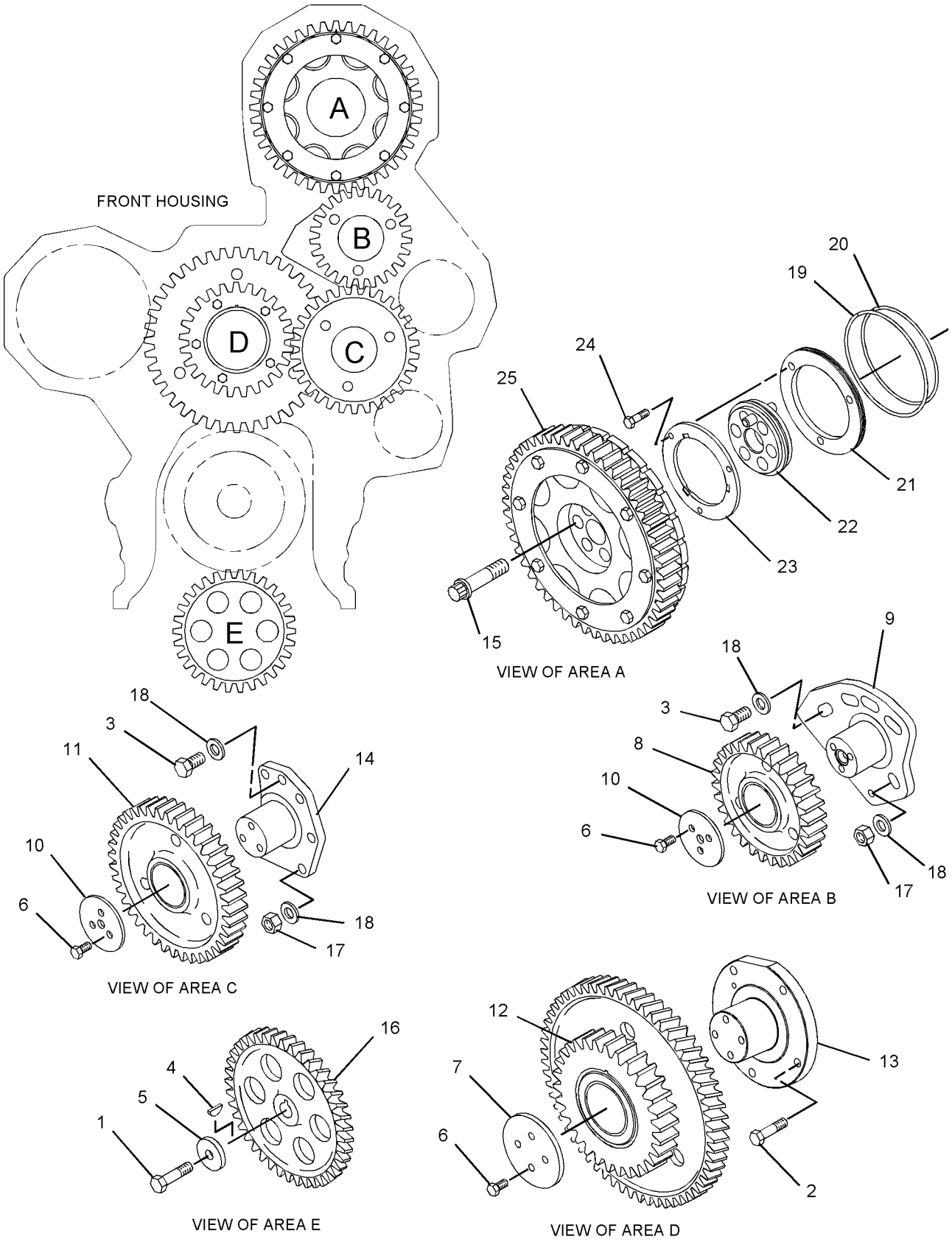

GRAPHIC #1 **<END>** g01068351

BASIC ENGINE

188-9134 GEAR GP-REAR

S/N: BET200-3099

PART OF 153-7076 ENGINE AR-COMPLETE

SMCS-1206 **i01564271**

NOTE	REF NO	GRAPHIC REF	PART NUMBER	QTY	PART NAME 1 2 3 4 5 6 (PRODUCT LEVEL)	SEE PAGE
	1	1	**9Y-2094**	1	GEAR AS-CRANKSHAFT (68 TEETH)	
	2	1	**9Y-1981**	1	GEAR AS-IDLER (78 TEETH)	
	3	1	**131-8674**	1	GEAR AS-DRIVE (57 TEETH)	
	4	1	**9Y-1985**	1	GEAR AS-IDLER (55 TEETH)	
	5	1	**9Y-5618**	1	GEAR AS-DRIVE (68 TEETH)	
	6	1	**188-9529**	1	ADAPTER AS-PUMP	
		1	**8M-9315**	1	BEARING-SLEEVE	
	7	1	**188-9528**	1	ADAPTER AS-PUMP	
		1	**8M-9315**	1	BEARING-SLEEVE	
	8	1	**9Y-2092**	2	RETAINER-IDLER	
	9	1	**3F-1547**	1	SEAL-O-RING	
	10	1	**6V-5141**	1	SEAL-O-RING	
	11	1	**1A-1460**	6	BOLT (1/2-13X2 IN)	
	12	1	**3B-1915**	12	BOLT (3/8-16X1.37 IN)	

188-9134 **GEAR GP-REAR** *(contd.)* **i01564271**

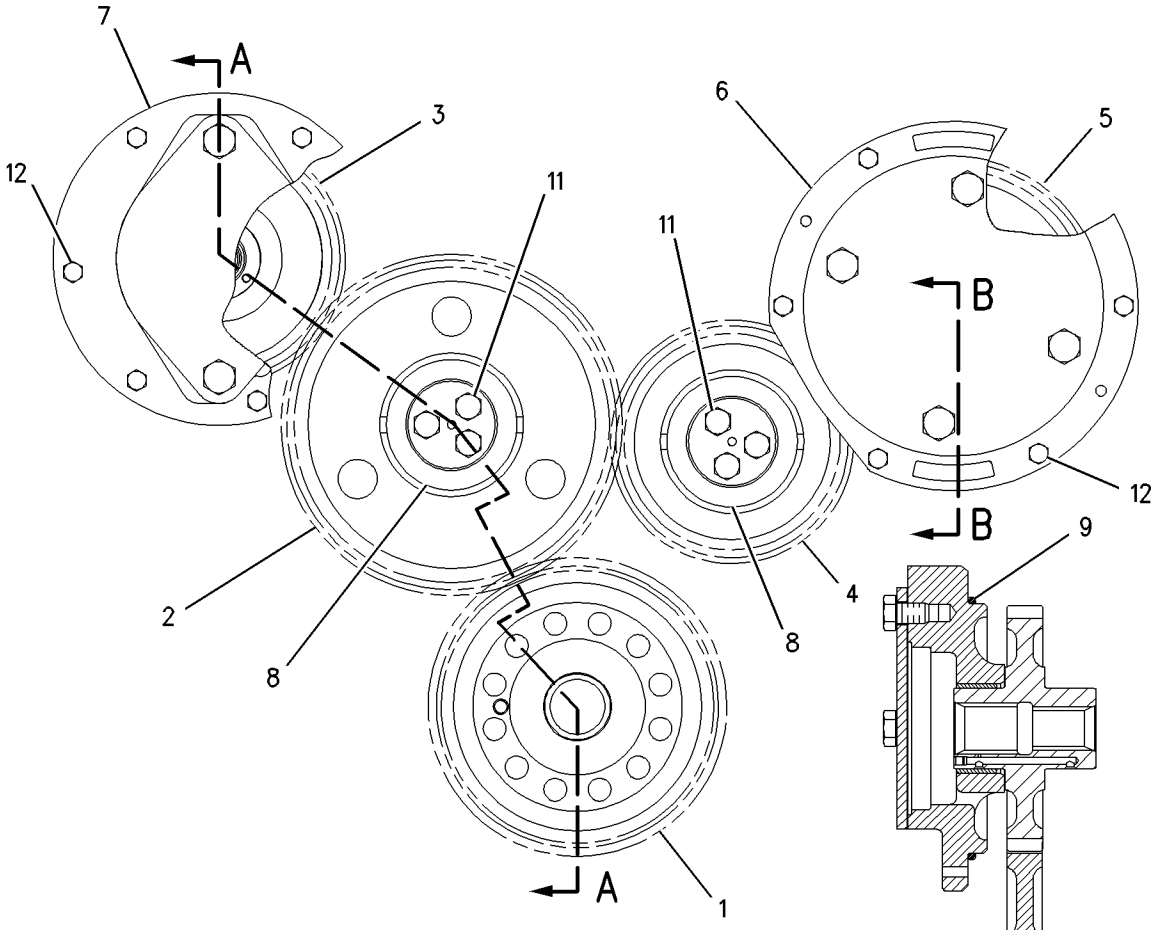

REAR VIEW

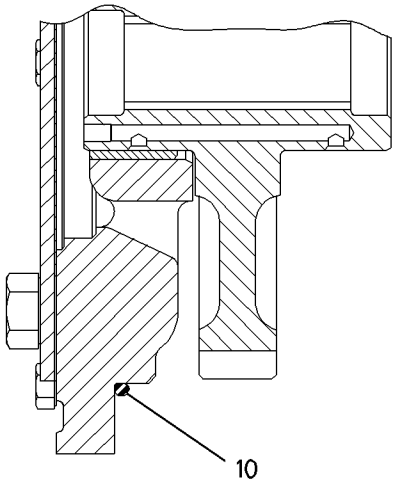

SECTION B-B

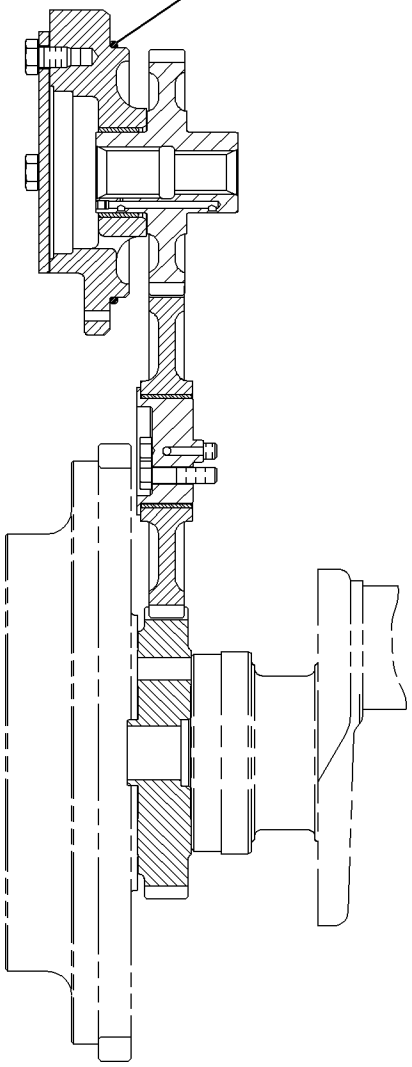

SECTION A-A

GRAPHIC #1 **<END>** g00766502

BASIC ENGINE

188-9134 GEAR GP-REAR

S/N: BET3100-UP

PART OF 153-7076, 235-4689 ENGINE AR-COMPLETE

SMCS-1206 **i01786440**

NOTE	REF NO	GRAPHIC REF	PART NUMBER	QTY	PART NAME 1 2 3 4 5 6 (PRODUCT LEVEL)	SEE PAGE
	1	1	**9Y-2094**	1	GEAR AS-CRANKSHAFT (68 TEETH)	
	2	1	**9Y-1981**	1	GEAR AS-IDLER (78 TEETH)	
C	3	1	**187-8197**	1	GEAR AS (57 TEETH)	
	4	1	**9Y-1985**	1	GEAR AS-IDLER (55 TEETH)	
C	5	1	**187-8196**	1	GEAR AS (68 TEETH)	
C	6	1	**222-1832**	1	ADAPTER AS	
		1	**160-8184**	1	BEARING-SLEEVE	
C	7	1	**222-1833**	1	ADAPTER AS	
		1	**160-8184**	1	BEARING-SLEEVE	
	8	1	**9Y-2092**	2	RETAINER-IDLER	
	9	1	**3F-1547**	1	SEAL-O-RING (189.86MM ID)	
	10	1	**6V-5141**	1	SEAL-O-RING (221.62MM ID)	
	11	1	**1A-1460**	6	BOLT (1/2-13X2 IN)	
	12	1	**3B-1915**	12	BOLT (3/8-16X1.37 IN)	

C-CHANGE FROM PREVIOUS TYPE

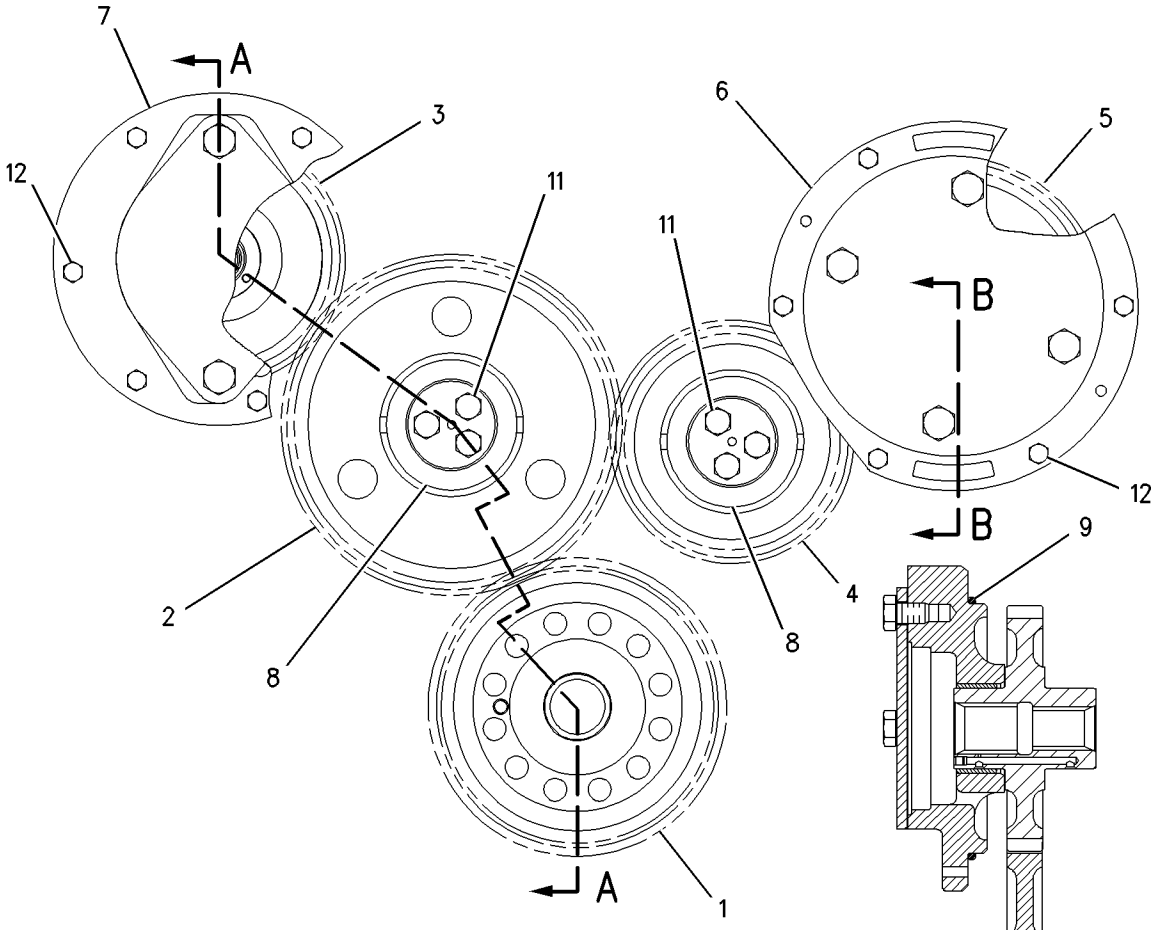

REAR VIEW

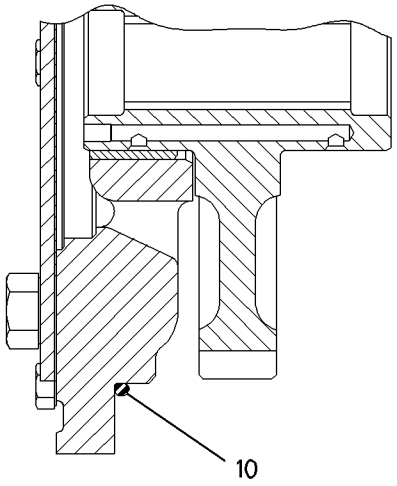

SECTION B-B

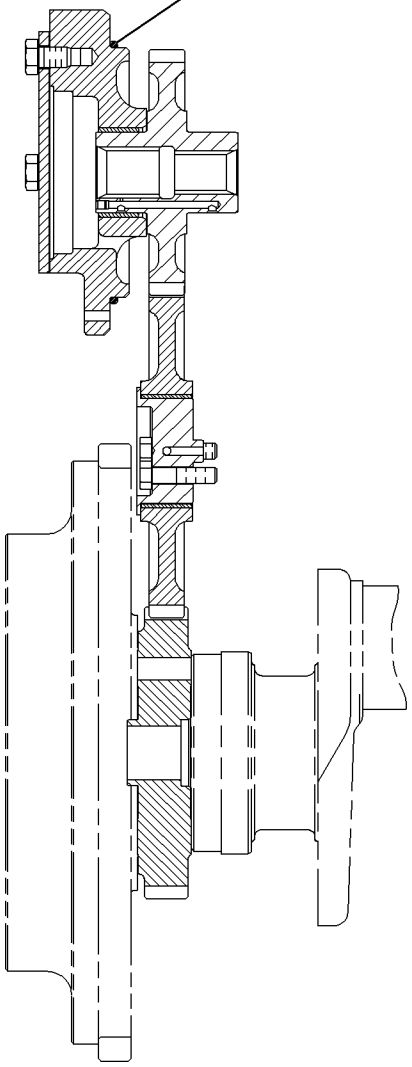

SECTION A-A

GRAPHIC #1 **<END>** g00766502

BASIC ENGINE

189-5950 HOUSING GP-ENGINE BRAKE

S/N: BET200-UP

PART OF 148-7486 ENGINE BRAKE GP

SMCS-1119 **i01931512**

NOTE	REF NO	GRAPHIC REF	PART NUMBER	QTY	PART NAME 1 2 3 4 5 6 (PRODUCT LEVEL)	SEE PAGE
	1	1	**143-6580**	2	PISTON	
	2	1	**2U-1493**	1	SEAL	
	3	1	**2U-1492**	1	SEAL	
	4	1	**143-2536**	2	SPRING	
	5	1	**143-2596**	2	SPRING (OUTER)	
	6	1	**143-6589**	2	COVER	
	7	1	**143-6679**	2	RING-RETAINING	
	8	1	**1Q-9551**	2	SCREW-BUTTON HEAD	
	9	1	**143-6581**	2	SPRING (OUTER)	
	10	1	**143-6588**	2	WASHER (12.7X36.1X1.07MM THK)	
	11	1	**143-6561**	2	RING-RETAINING	
	12	1	**192-5501**	2	PUSHROD AS	
	13	1	**143-6582**	2	SPRING (INNER)	
	14	1	**192-5502**	2	SCREW AS-ADJUSTING	
	15	1	**6B-6684**	2	NUT-FULL (1/2-20 THD)	
	16	1	**143-6579**	1	CLIP-HARNESS	
	17	1	**143-6583**	2	PISTON	
	18	1	**143-6584**	2	SPRING	
	19	1	**164-2025**	2	KIT-RETAINER (ENGINE BRAKE HOUSING)	
					(EACH INCLUDES RETAINER WASHERS)	
	20	1	**143-6585**	2	PUSHROD	
	21	1	**102-8780**	2	SPOOL AS-VALVE	
	22	1	**163-1553**	1	SOLENOID (24 VOLT) (ENGINE BRAKE)	
	23	1	**143-6680**	1	SCREW-DRIVE	
	24	1	**143-6642**	1	SEAL	

189-5950 HOUSING GP-ENGINE BRAKE *(contd.)* **i01931512**

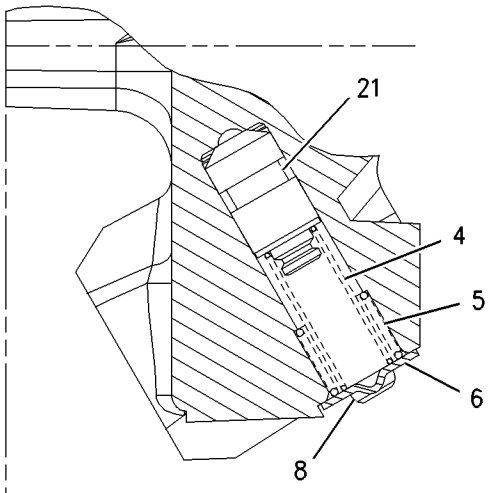

SECTION D-D

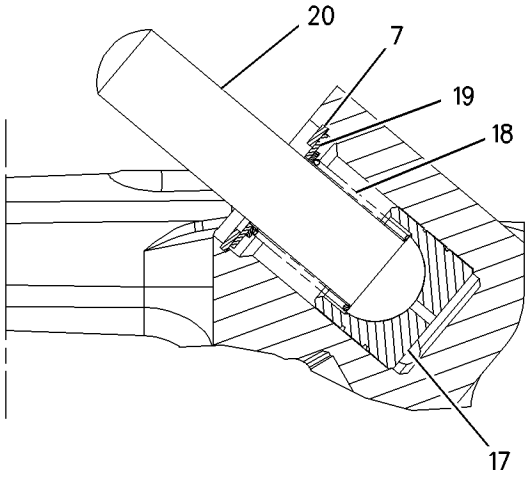

SECTION A-A

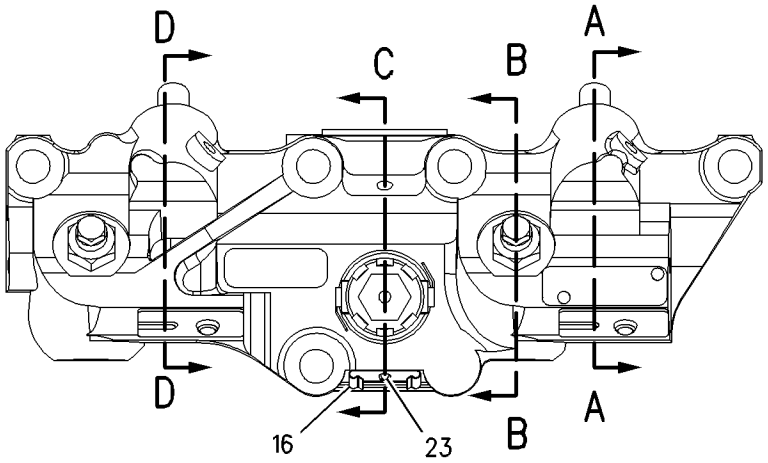

C

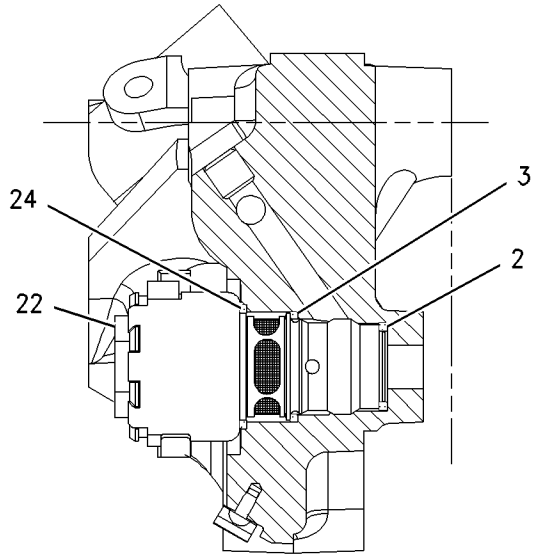

SECTION C-C

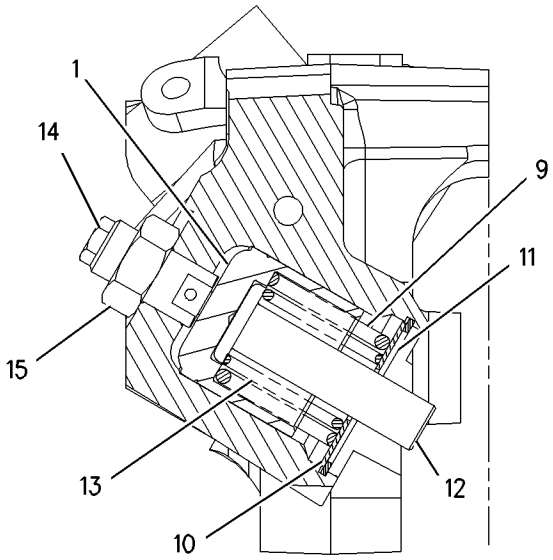

SECTION B-B

GRAPHIC #1 **<END>** g00737464

221-1197 HOUSING GP-ENGINE BRAKE

S/N: BET200-UP
24-VOLT
PART OF 148-7486 ENGINE BRAKE GP

SMCS-1119 **i01936495**

NOTE	REF NO	GRAPHIC REF	PART NUMBER	QTY	PART NAME 1 2 3 4 5 6 (PRODUCT LEVEL)	SEE PAGE
	1	1	**1Q-9551**	2	SCREW-BUTTON HEAD	
	2	1	**2U-1492**	1	SEAL	
	3	1	**102-8780**	2	SPOOL AS-VALVE	
	4	1	**143-2536**	2	SPRING (INNER)	
	5	1	**143-2596**	2	SPRING (OUTER)	
	6	1	**143-6561**	2	RING-RETAINING	
	7	1	**143-6575**	2	WASHER (12.7X20.2X.66MM THK)	
	8	1	**143-6579**	1	CLIP-HARNESS	
	9	1	**143-6581**	2	SPRING (OUTER)	
	10	1	**143-6582**	2	SPRING (INNER)	
	11	1	**143-6584**	2	SPRING (MASTER PISTON)	
	12	1	**143-6585**	2	PUSHROD (MASTER PISTON)	
	13	1	**143-6588**	2	WASHER (12.7X36.1X1.07MM THK)	
	14	1	**143-6589**	2	COVER	
	15	1	**143-6642**	1	SEAL	
	16	1	**143-6680**	3	SCREW-DRIVE	
	17	1	**163-1553**	1	SOLENOID (24 VOLT) (ENGINE BRAKE)	
	18	1	**192-5501**	2	PUSHROD AS (SLAVE PISTON)	
	19	1	**221-1190**	2	PISTON	
	20	1	**221-1191**	2	SCREW	
	21	1	**221-1192**	2	NUT (3/8-24 THD)	
	22	1	**221-1193**	2	PISTON	
	23	1	**221-1194**	2	WASHER	
	24	1	**221-1195**	2	RING-RETAINING	

221-1197 HOUSING GP-ENGINE BRAKE *(contd.)* **i01936495**

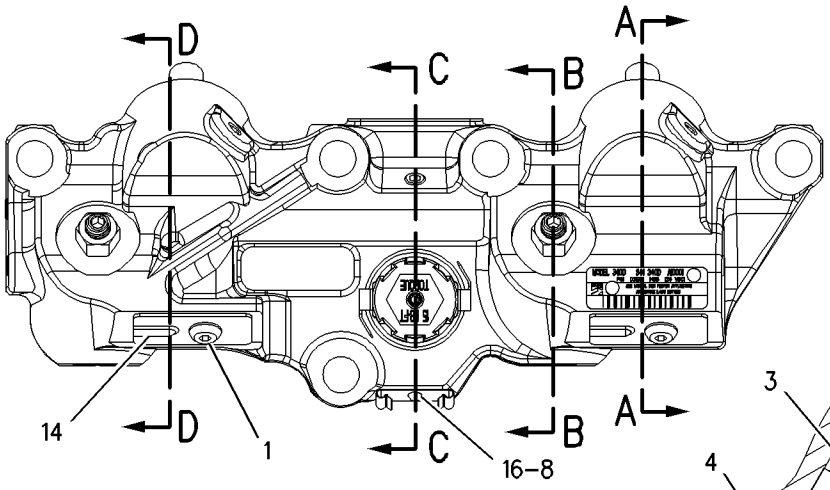

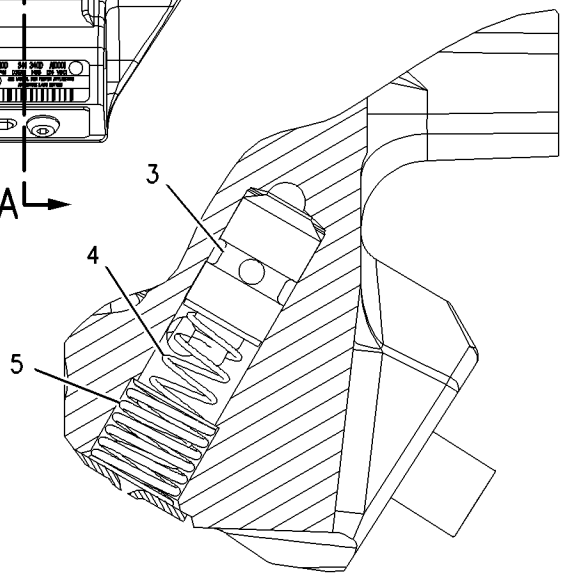

SECTION D-D

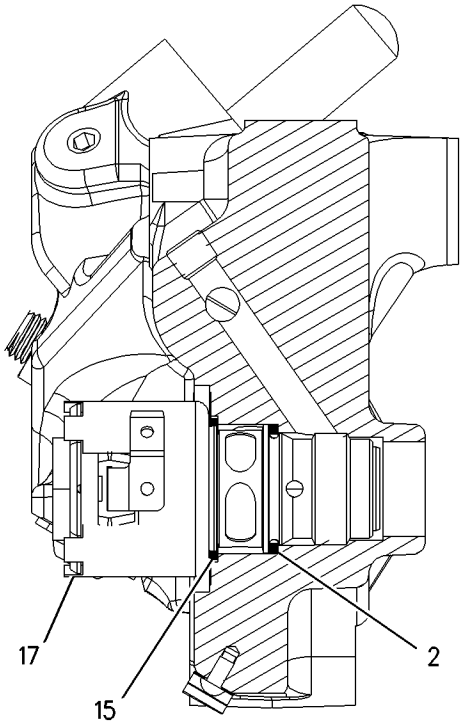

SECTION C-C

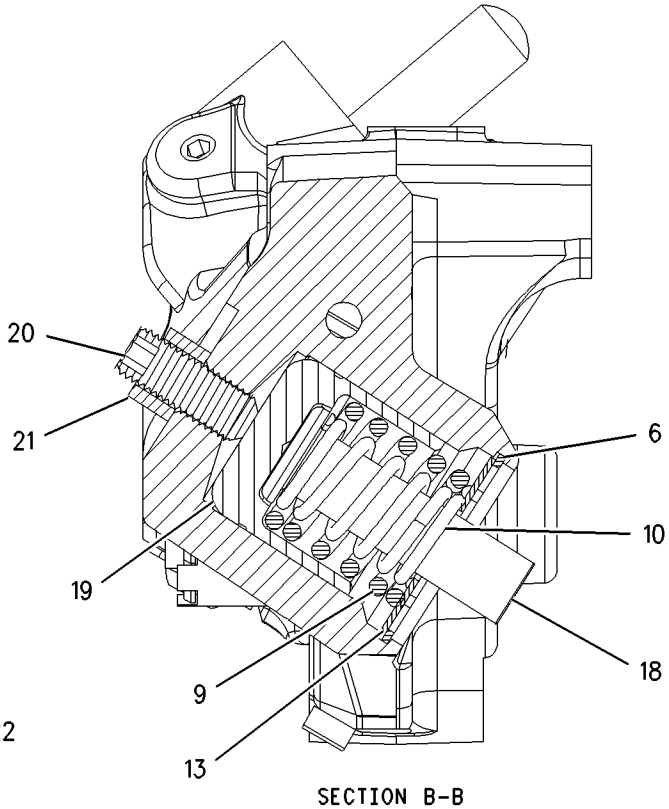

SECTION B-B

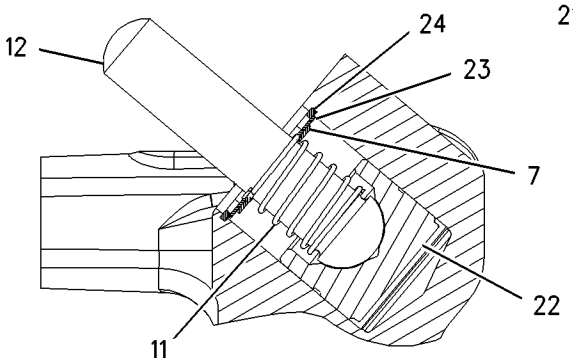

SECTION A-A

GRAPHIC #1 **<END>** g00918048

BASIC ENGINE

144-3527 HOUSING GP-FLYWHEEL

S/N: BET200-UP

PART OF 153-7076, 235-4689 ENGINE AR-COMPLETE

SMCS-1157 **i01880959**

NOTE	REF NO	GRAPHIC REF	PART NUMBER	QTY	PART NAME 1 2 3 4 5 6 (PRODUCT LEVEL)	SEE PAGE
	1	1	**100-2878**	1	HOUSING AS-FLYWHEEL	
	2	1	**8M-9315**	2	BEARING-SLEEVE	
	3	1	**9S-8005**	2	PLUG	
	4	1	**8L-2786**	4	SEAL-O-RING	
	5	1	**8T-6765**	2	PLUG-PIPE	
	6	1	**9S-4182**	4	PLUG	
	7	1	**6V-5048**	4	SEAL-O-RING	
	8	1	**9S-4185**	2	PLUG	
	9	1	**1W-3136**	1	BAFFLE	
	10	1	**5M-2894**	2	WASHER-HARD (10.2X18.5X2.5-MM THK)	
	11	1	**0S-1594**	1	BOLT (3/8-16X1-IN)	
	12	1	**9K-7290**	8	BOLT-12 POINT HEAD	
	13	1	**155-5619**	1	GASKET	
	14	1	**165-3930**	6	BOLT (3/8-16X1.625-IN)	
	15	1	**165-3932**	5	BOLT	
	16	1	**5J-5793**	1	BOLT-12 POINT HEAD (1/2-13X1.75-IN)	
	17	1	**165-3936**	2	BOLT (3/8-16X4.5-IN)	
	18	1	**4M-0189**	1	SEAL-O-RING	
	19	1	**116-3046**	1	COVER	
	20	1	**0S-1585**	2	BOLT (1/2-13X1.5-IN)	
M	21	1	**5P-8245**	11	WASHER-HARD (13.5X25.5X3-MM THK)	
	22	1	**2P-2772**	1	COVER	
	23	1	**4N-0933**	1	GASKET	
	24	1	**0S-1619**	1	BOLT (3/8-16X3-IN)	
	25	1	**2A-1162**	1	GASKET	
	26	1	**5F-0304**	1	PLUG (FLYWHEEL HOUSING)	
	27	1	**142-5868**	1	SEAL GP-CRANKSHAFT	

M-METRIC PART

144-3527 **HOUSING GP-FLYWHEEL** *(contd.)* **i01880959**

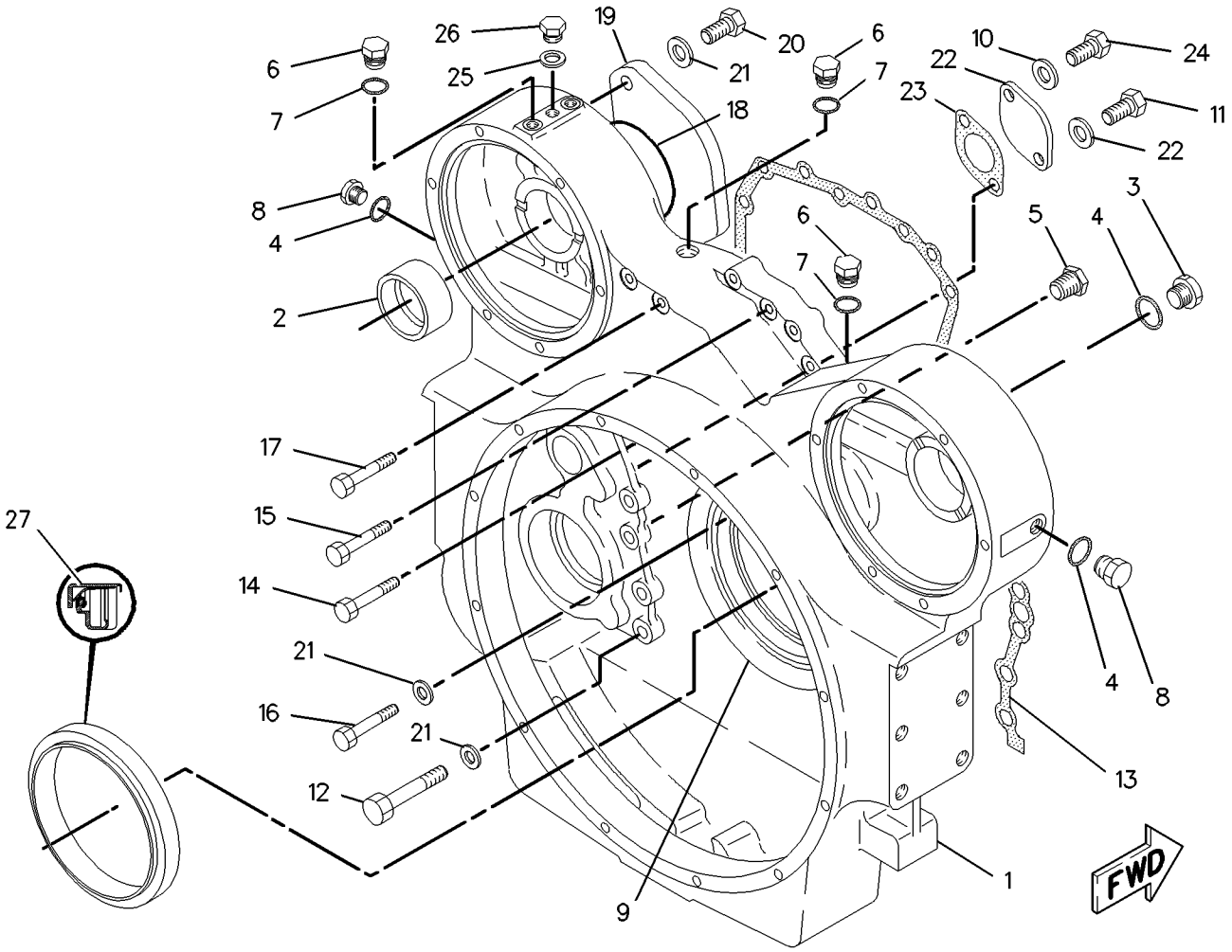

GRAPHIC #1 **<END>** g00977591

BASIC ENGINE

124-6822 HOUSING GP-FRONT

S/N: BET200-UP
NO SOUND SUPPRESSION
PART OF 153-7076, 235-4689 ENGINE AR-COMPLETE
CANNOT BE USED WITH OIL FILLER, BELT TIGHTENER, BELT TIGHTENER FASTENERS, ALTERNATOR MOUNTING

SMCS-1151, 1162 **i02187967**

NOTE	REF NO	GRAPHIC REF	PART NUMBER	QTY	PART NAME 1 2 3 4 5 6 (PRODUCT LEVEL)	SEE PAGE
	1	1	**124-7340**	1	HOUSING AS-FRONT	
	2	1	**3E-8044**	1	STUD	
	3	1	**7C-1445**	1	COVER	
	4	1	**2B-2695**	2	BOLT (5/16-18X0.875-IN)	
	5	1	**9M-1974**	4	WASHER-HARD (8.8X16X2-MM THK)	
	6	1	**5P-4255**	8	BOLT-LOCKING (3/8-16X1-IN)	
	7	1	**5M-2894**	29	WASHER-HARD (10.2X18.5X2.5-MM THK)	
	8	1	**061-9455**	1	SEAL-O-RING	
	9	1	**0S-1588**	11	BOLT (3/8-16X1.25-IN)	
	10	1	**8S-9191**	1	BOLT (3/8-16X4-IN)	
	11	1	**9X-6458**	8	WASHER-HARD (10.2X22.5X3-MM THK)	
	12	1	**120-9243**	2	STUD	
	13	1	**155-3629**	1	GASKET	
	14	1	**7X-4805**	2	SEAL-O-RING	
	15	1	**155-9819**	1	PLATE AS	
		1	**153-1025**	2	DOWEL	
	16	1	**166-9144**	1	GASKET	
	17	1	**0L-2070**	1	BOLT (3/8-16X2.25-IN)	
	18	1	**0T-0055**	9	BOLT (3/8-16X4.25-IN)	
	19	1	**9S-8752**	2	NUT-FULL (3/8-16-THD)	
	20	1	**126-1757**	12	WASHER (10.85X19.3X1.27-MM THK)	
	21	1	**129-5428**	12	STUD	
	22	1	**129-5427**	2	WASHER (14X27X1.27-MM THK)	
	23	1	**6I-3968**	1	BRACKET-SUPPORT	
	24	1	**0S-1591**	3	BOLT (3/8-16X1.5-IN)	
	25	1	**0S-1571**	2	BOLT (3/8-16X1.75-IN)	
	26	1	**101-3120**	2	SPACER (10.5X25X20-MM THK)	
	27	1	**189-9266**	1	SENSOR GP-SPEED (CRANKSHAFT/TIMING)	
	29	1	**2H-3755**	2	BOLT (5/16-18X0.62-IN)	
	30	1	**132-9770**	1	SPACER AS	
	31	1	**1W-6448**	2	DOWEL	
	32	1	**203-3940**	2	SEAL-O-RING	
	33	1	**188-7513**	1	SENSOR GP-SPEED (CAMSHAFT/TIMING)	
	35	1	**3P-1155**	1	SEAL-O-RING	

124-6822 **HOUSING GP-FRONT** *(contd.)* **i02187967**

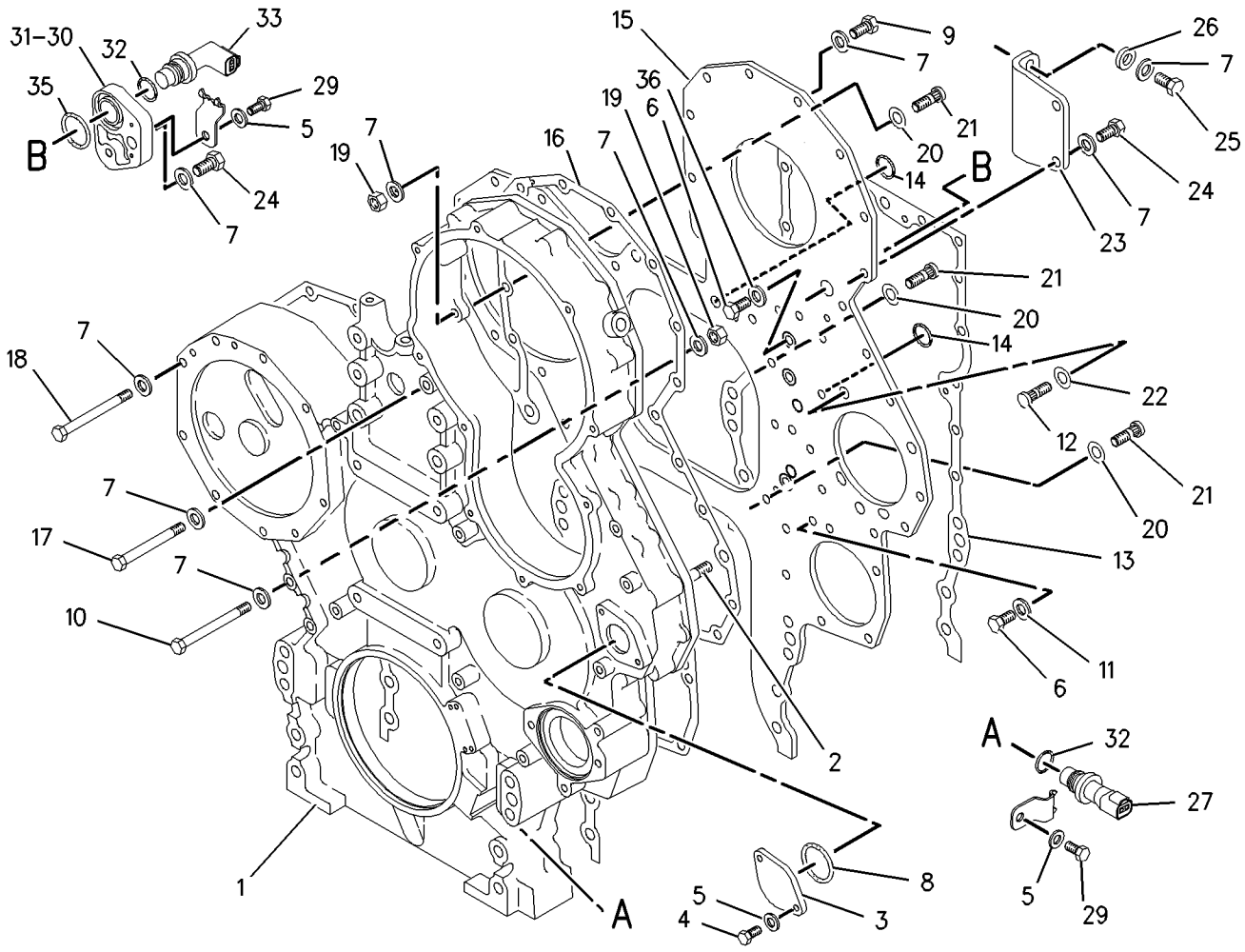

GRAPHIC #1 **<END>** g00658433

111-2088 LIFTING GP-ENGINE

S/N: BET200-UP

REAR, LOW PROFILE LIFTING EYE

PART OF 153-7076, 235-4689 ENGINE AR-COMPLETE

SMCS-1122 **i00702749**

NOTE	REF NO	GRAPHIC REF	PART NUMBER	QTY	PART NAME 1 2 3 4 5 6 (PRODUCT LEVEL)	SEE PAGE
	1	1	**109-9985**	1	EYE-LIFTING	
	2	1	**0S-1594**	8	BOLT (3/8-16X1IN)	
	3	1	**5M-2894**	8	WASHER (2.5MM THK)	

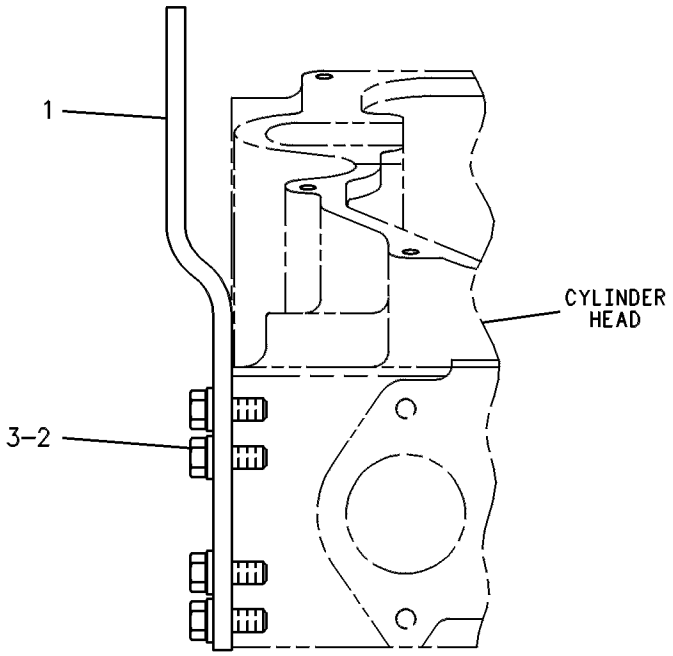

GRAPHIC #1 **<END>** g00238183

112-2418 LIFTING GP-ENGINE

S/N: BET200-UP
FRONT LIFTING EYE
PART OF 153-7076, 235-4689 ENGINE AR-COMPLETE
CANNOT BE USED WITH ALTERNATOR MOUNTING

SMCS-1122 **i01518114**

NOTE	REF NO	GRAPHIC REF	PART NUMBER	QTY	PART NAME 1 2 3 4 5 6 (PRODUCT LEVEL)	SEE PAGE
	1	1	**104-8586**	1	EYE-LIFTING	
	2	1	**0S-1595**	4	BOLT (1/2-13X1.25 IN)	
	3	1	**5P-8245**	4	WASHER-HARD (13.5X25.5X3MM THK)	

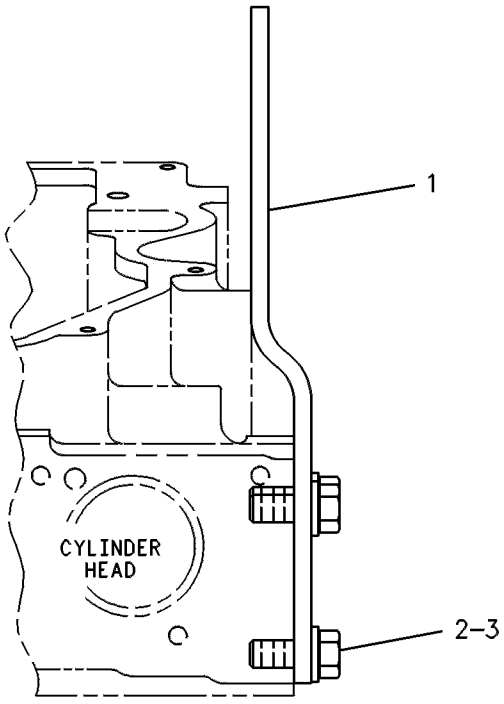

GRAPHIC #1 **<END>** g00238168

175-4859 MOUNTING GP-ALTERNATOR

S/N: BET200-UP

PART OF 153-7076, 235-4689 ENGINE AR-COMPLETE

SMCS-1405 **i01642062**

NOTE	REF NO	GRAPHIC REF	PART NUMBER	QTY	PART NAME 1 2 3 4 5 6 (PRODUCT LEVEL)	SEE PAGE
	1	1	**173-1584**	1	SUPPORT	
	2	1	**0S-1608**	2	BOLT (3/8-16X3.75-IN)	
	3	1	**0T-0573**	2	BOLT (3/8-16X2.75-IN)	
	4	1	**2P-1974**	2	STUD-TAPERLOCK (3/8-16X4.2-IN OAL)	
	5	1	**5M-2894**	6	WASHER-HARD (10.2X18.5X2.5-MM THK)	
	6	1	**9S-8752**	2	NUT-FULL (3/8-16-THD)	

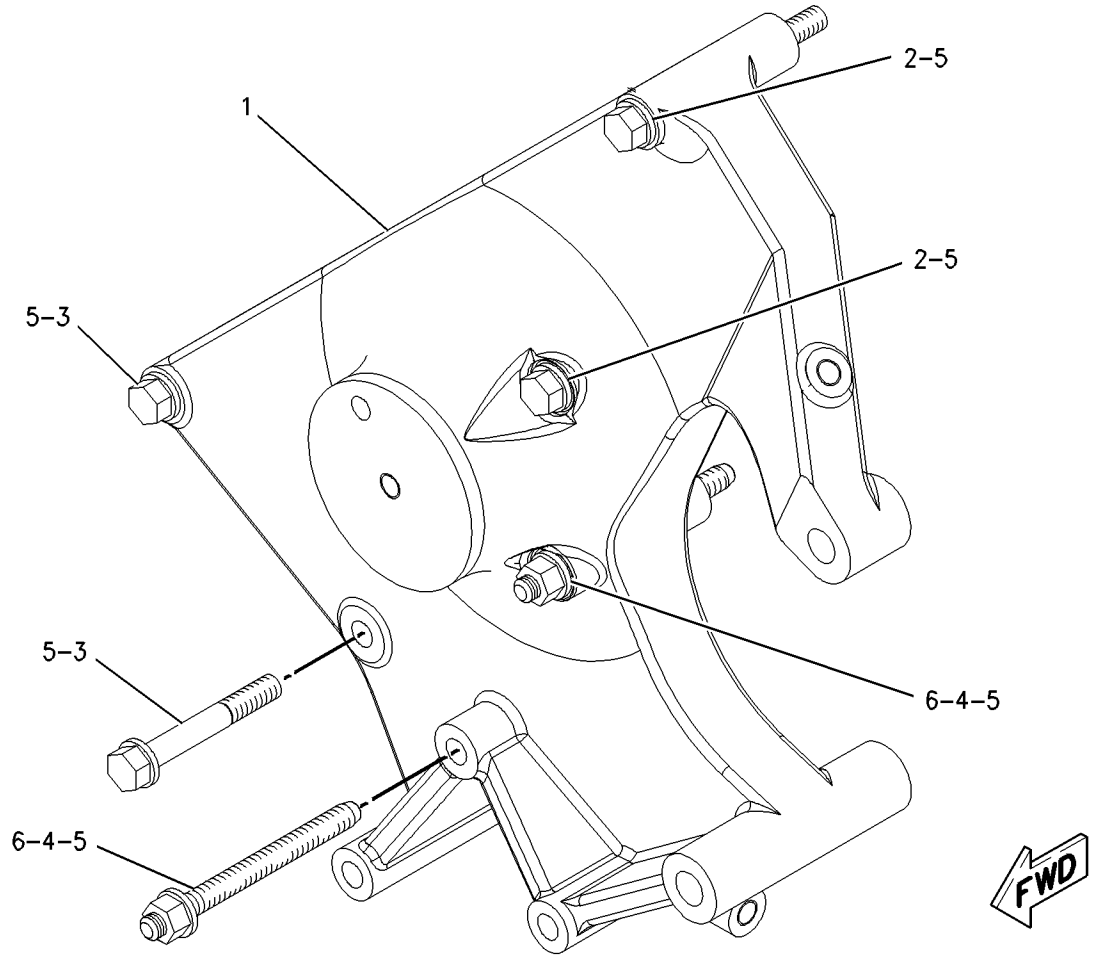

GRAPHIC #1 **<END>** g00848877

BASIC ENGINE

152-6958 MOUNTING GP-ENGINE

S/N: AXM1-UP

PART OF 152-6943 POWER TRAIN AR

SMCS-1154 **i01633546**

NOTE	REF NO	GRAPHIC REF	PART NUMBER	QTY	PART NAME 1 2 3 4 5 6 (PRODUCT LEVEL)	SEE PAGE
	1	1	**9W-6582**	6	SLEEVE	
	2	1	**9W-6584**	6	WASHER (20.5X114X10-MM THK)	
	3	1	**9W-9930**	6	MOUNT AS	
	4	1	**127-7122**	8	SPACER (17X32X22.5-MM THK)	
	5	1	**188-3445**	2	BRACKET AS	
					(EACH INCLUDES)	
		1	**1A-2223**	2	DOWEL	
		1	**188-3446**	1	BRACKET-MOUNTING	
	6	1	**7X-0349**	8	BOLT (5/8-11X3-IN)	
M	7	1	**7X-2532**	4	BOLT (M20X2.5X130-MM)	
M	8	1	**8C-8478**	2	BOLT (M20X2.5X140-MM)	
	9	1	**8T-4123**	12	WASHER-PLATED (22X35X3.5-MM THK)	
M	10	1	**8T-4131**	6	NUT (M20X2.5-THD)	

M-METRIC PART

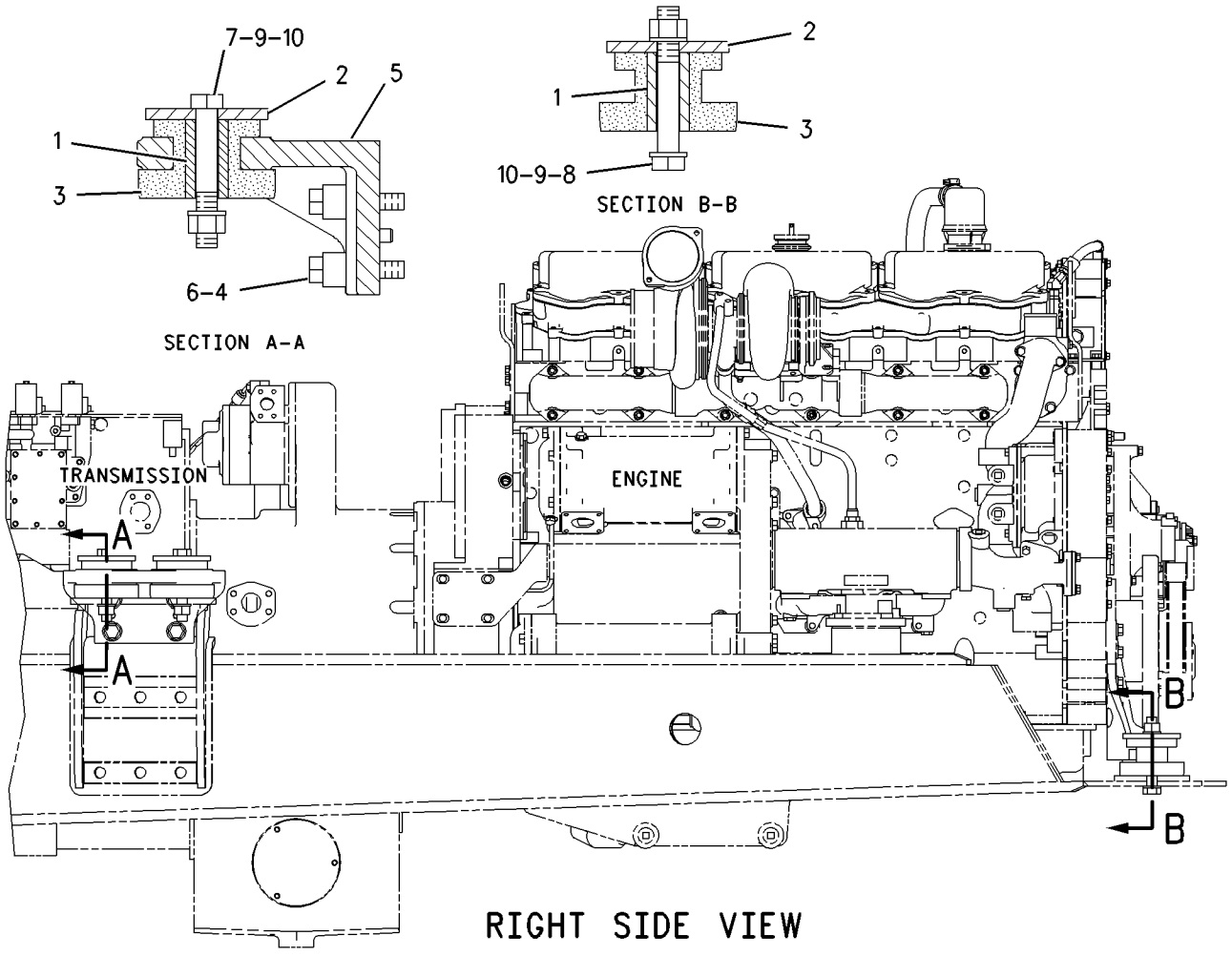

RIGHT SIDE VIEW

GRAPHIC #1 **<END>** g00763902

4N-0756 PAN GP-OIL

S/N: BET200-UP

PART OF 153-7076, 235-4689 ENGINE AR-COMPLETE

SMCS-1302 **i02000738**

NOTE	REF NO	GRAPHIC REF	PART NUMBER	QTY	PART NAME 1 2 3 4 5 6 (PRODUCT LEVEL)	SEE PAGE
	1	1	**2P-3203**	40	BOLT-WASHER HEAD (3/8-16X1.25-IN)	
	2	1	**4N-1151**	1	GASKET (OIL PAN)	
J	3	1	**9X-6451**	1	PLUG-DRAIN (OIL PAN)	
					(27.41MM ID GROOVE FOR SEAL)	
					—OR—	
L		1	**206-7331**	1	PLUG-DRAIN (OIL PAN)	
					(28.60MM ID GROOVE FOR SEAL)	
	4	1	**150-4637**	1	PAN-OIL	
J	5	1	**121-0145**	1	SEAL-O-RING (28.17MM ID)	
					—OR—	
L		1	**5P-8210**	1	SEAL-O-RING (31.34MM ID)	
	6	1	**8T-6761**	3	PLUG-PIPE	

J-PARTS MARKED J TO BE USED TOGETHER
L-PARTS MARKED L TO BE USED TOGETHER

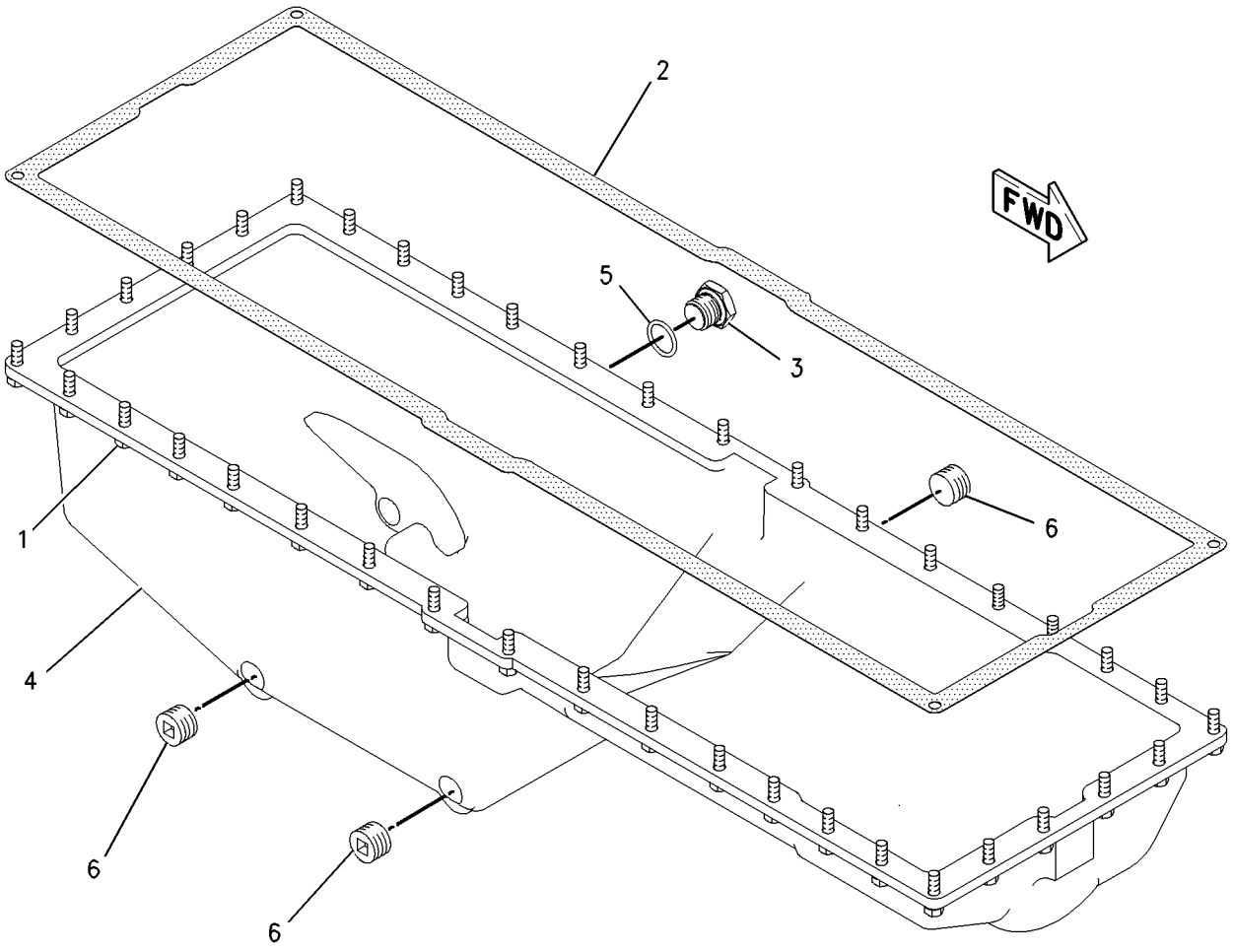

GRAPHIC #1 **<END>** g00760209

176-5745 PISTON & ROD GP

S/N: BET200-UP
16.25:1 RATIO
PART OF 153-7078, 235-3472 ENGINE AR-CORE

SMCS-1225 **i01950220**

NOTE	REF NO	GRAPHIC REF	PART NUMBER	QTY	PART NAME 1 2 3 4 5 6 (PRODUCT LEVEL)	SEE PAGE
	1	1	**221-2305**	1	CROWN AS-PISTON	
	2	1	**132-6663**	1	SKIRT-PISTON	
	3	1	**168-7246**	1	PIN-PISTON	
	4	1	**7E-1177**	2	RETAINER-PIN	
R	5	1	**9Y-6054**	1	ROD AS-CONNECTING	
M	5A	1	**7E-4195**	2	BOLT-CONNECTING ROD	
	5B	1	**7N-2043**	2	DOWEL	
	5C	1	**4P-7377**	1	BEARING-SLEEVE	
	6	1	**9Y-7735**	1	BEARING-CONNECTING ROD (STANDARD)	
AB		1	**7E-0558**		BEARING-CONNECTING ROD (.635 MM US)	
AB		1	**7E-0559**		BEARING-CONNECTING ROD (1.27 MM US)	
	7	1	**134-3761**	1	RING-PISTON (TOP)	
	8	1	**176-5749**	1	RING-PISTON (INTERMEDIATE)	
	9	1	**189-9771**	1	RING-PISTON (OIL CONTROL)	
	10	1	**197-9336**	1	JET AS-PISTON COOLING	
	11	1	**151-5925**	1	BOLT-OIL JET	

A-NOT PART OF THIS GROUP
B-USE AS REQUIRED
M-METRIC PART
R-REMFG PART MAY BE AVAILABLE

176-5745 **PISTON & ROD GP** *(contd.)* **i01950220**

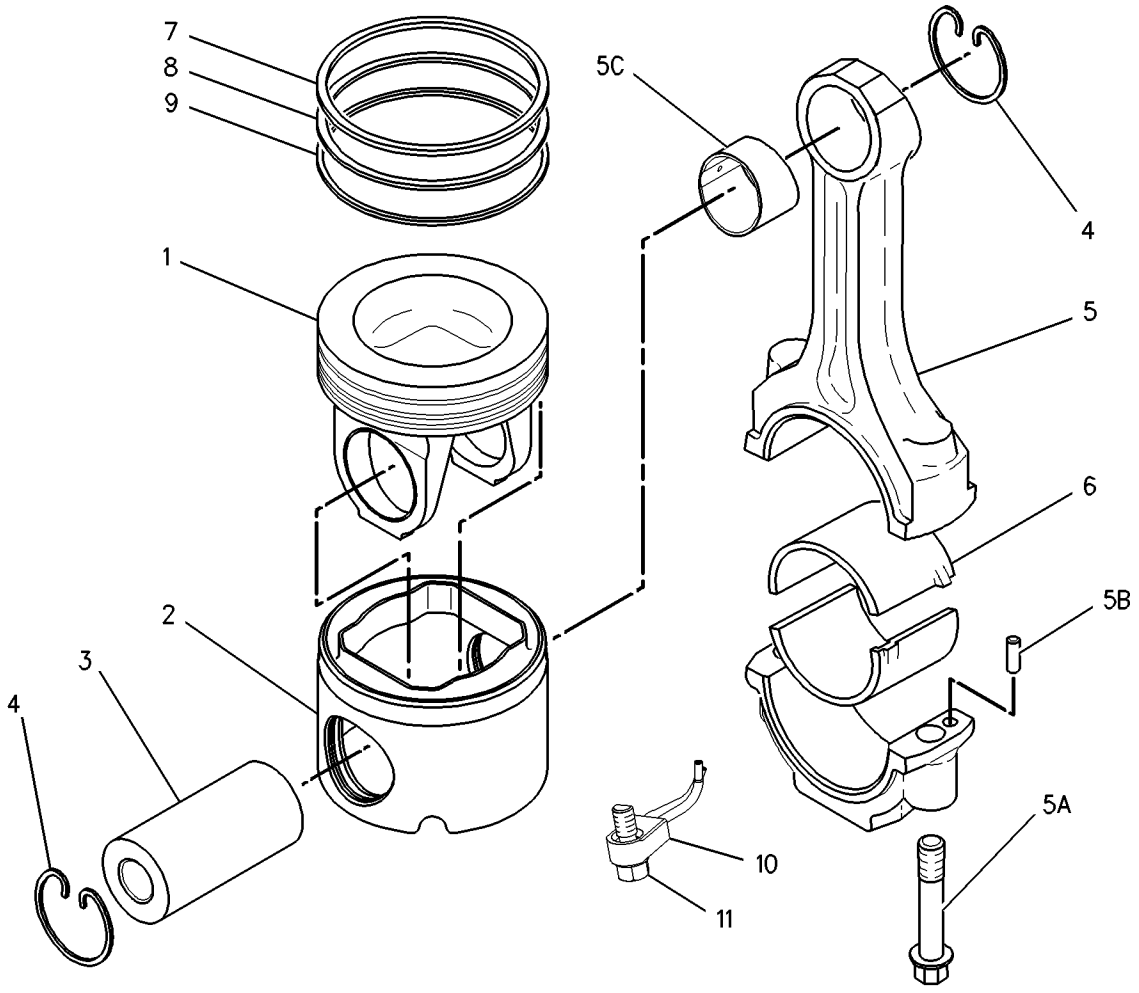

GRAPHIC #1 **<END>** g00679535

145-6851 PLUG GP-CYLINDER BLOCK

S/N: BET200-8002

PART OF 153-7076 ENGINE AR-COMPLETE

CANNOT BE USED WITH AIR COMPRESSOR OR PUMP DRIVE

SMCS-1201 **i01328017**

NOTE	REF NO	GRAPHIC REF	PART NUMBER	QTY	PART NAME 1 2 3 4 5 6 (PRODUCT LEVEL)	SEE PAGE
	1	1	**7W-6492**	1	PLUG-PIPE (1/2-14 NPTF THD)	
	2	1	**8T-6767**	1	PLUG-PIPE (3/8-18 NPTF THD)	

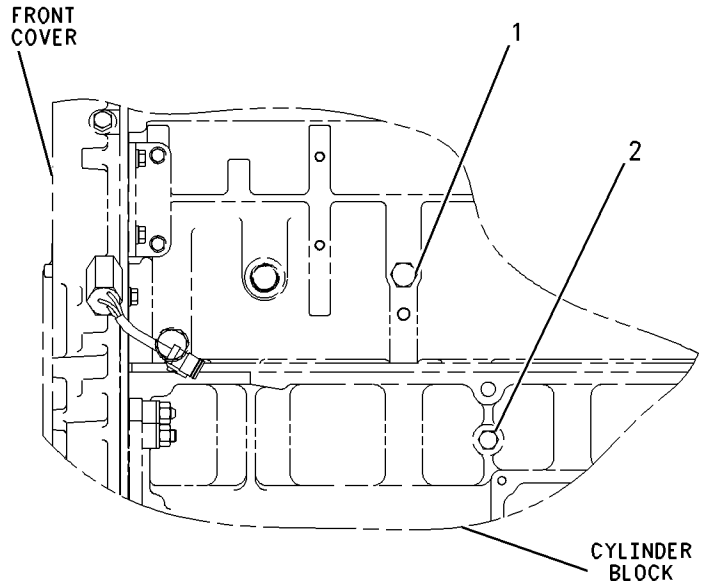

LEFT SIDE VIEW

GRAPHIC #1 **<END>** g00702666

229-6711 PLUG GP-CYLINDER HEAD

S/N: BET10460-UP

PART OF 235-4689 ENGINE AR-COMPLETE

FOR USE WITH AIR COMPRESSOR COVER GROUP IF NO AIR COMPRESSOR

SMCS-1100, 1101 **i02001323**

NOTE	REF NO	GRAPHIC REF	PART NUMBER	QTY	PART NAME 1 2 3 4 5 6 (PRODUCT LEVEL)	SEE PAGE
	1	1	**6V-6609**	1	SEAL-O-RING	
	2	1	*183-3408*	4	PLUG AS	
					(EACH INCLUDES)	
	2A	1	**9S-8004**	1	PLUG	
	2B	1	**153-4906**	1	SEAL-O-RING	
	3	1	**6V-3251**	1	SEAL-O-RING	
	4	1	**9S-8006**	1	PLUG	
	5	1	**9S-8005**	1	PLUG	

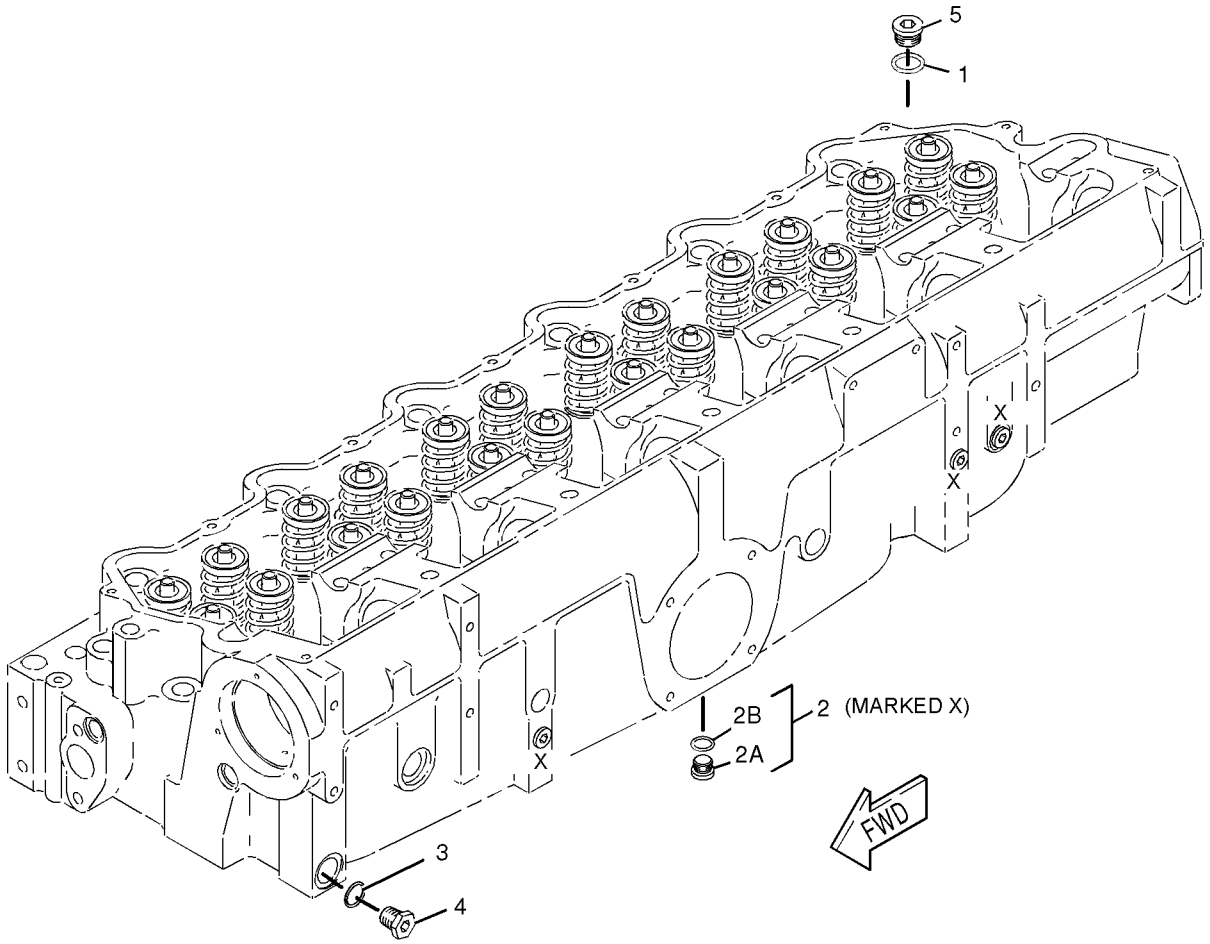

GRAPHIC #1 **<END>** g01037658

234-5996 PLUG GP-CYLINDER HEAD

S/N: BET8003-UP

PART OF 235-4689 ENGINE AR-COMPLETE

SMCS-1100, 1101 **i01940511**

NOTE	REF NO	GRAPHIC REF	PART NUMBER	QTY	PART NAME 1 2 3 4 5 6 (PRODUCT LEVEL)	SEE PAGE
	1	1	**9S-8005**	1	PLUG	
	2	1	**8T-6767**	1	PLUG-PIPE	
	3	1	**8L-2786**	1	SEAL-O-RING	

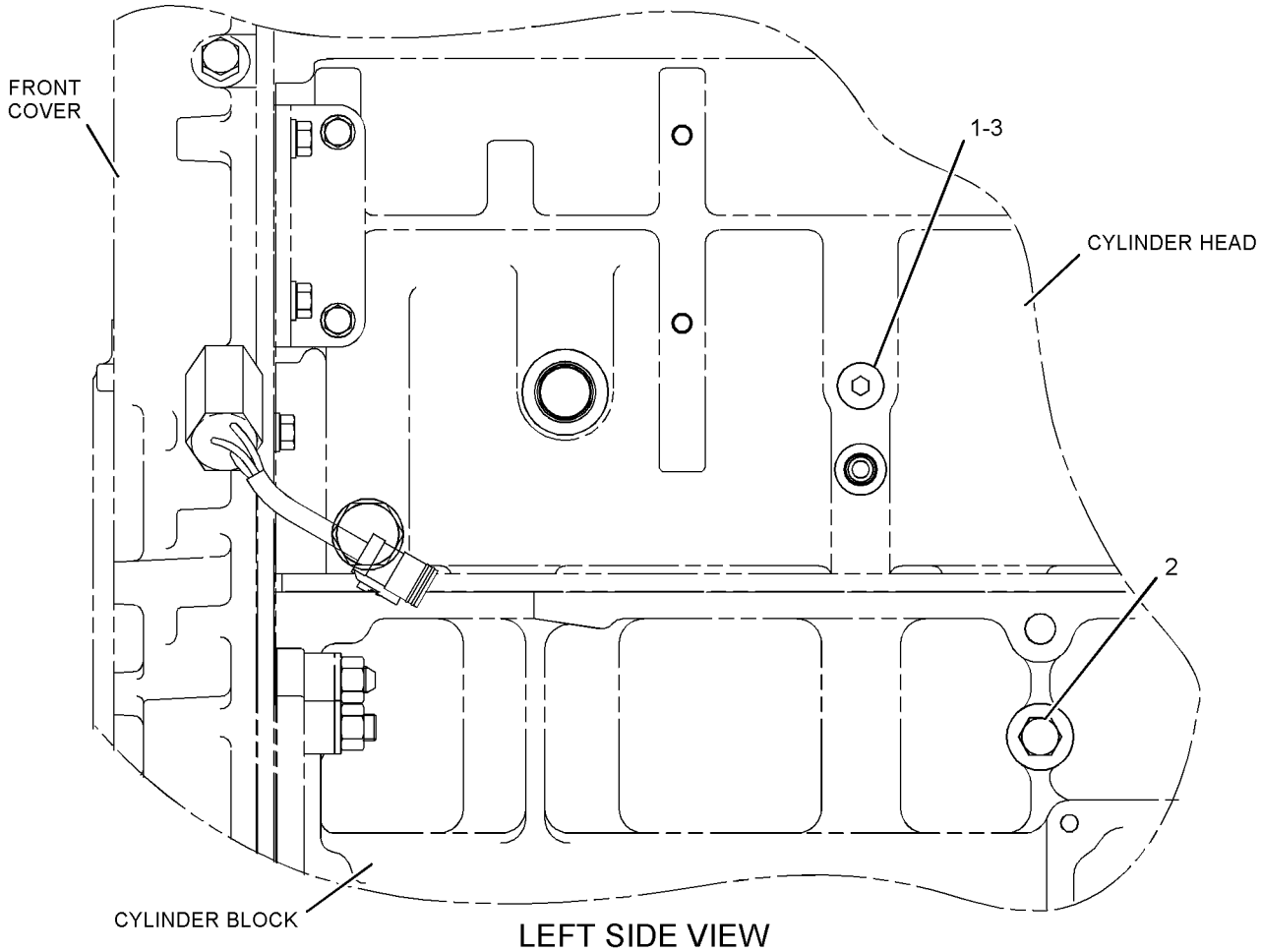

LEFT SIDE VIEW

GRAPHIC #1

<END>

g01010456

235-3174 PLUG GP-CYLINDER HEAD

S/N: BET8003-10459
PART OF 235-4689 ENGINE AR-COMPLETE
FOR USE WITH ACERT HEAD

SMCS-1100, 1101 **i02004179**

NOTE	REF NO	GRAPHIC REF	PART NUMBER	QTY	PART NAME 1 2 3 4 5 6 (PRODUCT LEVEL)	SEE PAGE
	1	1	**6V-6609**	2	SEAL-O-RING	
	2	1	*183-3408*	4	PLUG AS	
					(EACH INCLUDES)	
	2A	1	**9S-8004**	1	PLUG	
	2B	1	**153-4906**	1	SEAL-O-RING	
	3	1	**6V-3251**	1	SEAL-O-RING	
	4	1	**9S-8006**	1	PLUG	
	5	1	**9S-8005**	2	PLUG	

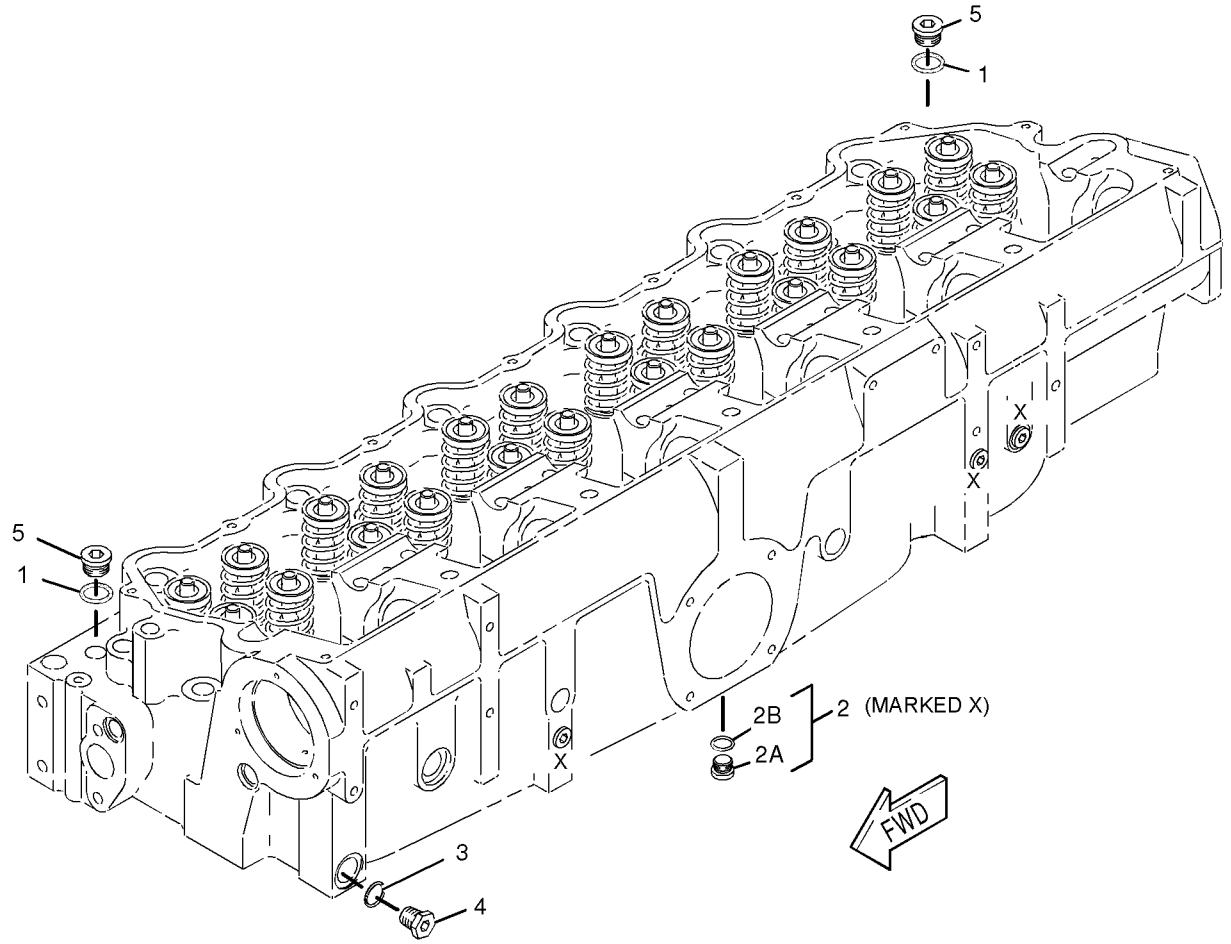

GRAPHIC #1 **<END>** g01043893

170-1757 PULLEY GP-CRANKSHAFT

S/N: BET200-UP

PART OF 153-7076, 235-4689 ENGINE AR-COMPLETE

SMCS-1205 **i01288019**

NOTE	REF NO	GRAPHIC REF	PART NUMBER	QTY	PART NAME 1 2 3 4 5 6 (PRODUCT LEVEL)	SEE PAGE
	1	1	**172-4848**	1	PULLEY (8 GROOVE)	
	2	1	**7X-0345**	4	BOLT (5/8-11X1.75IN)	

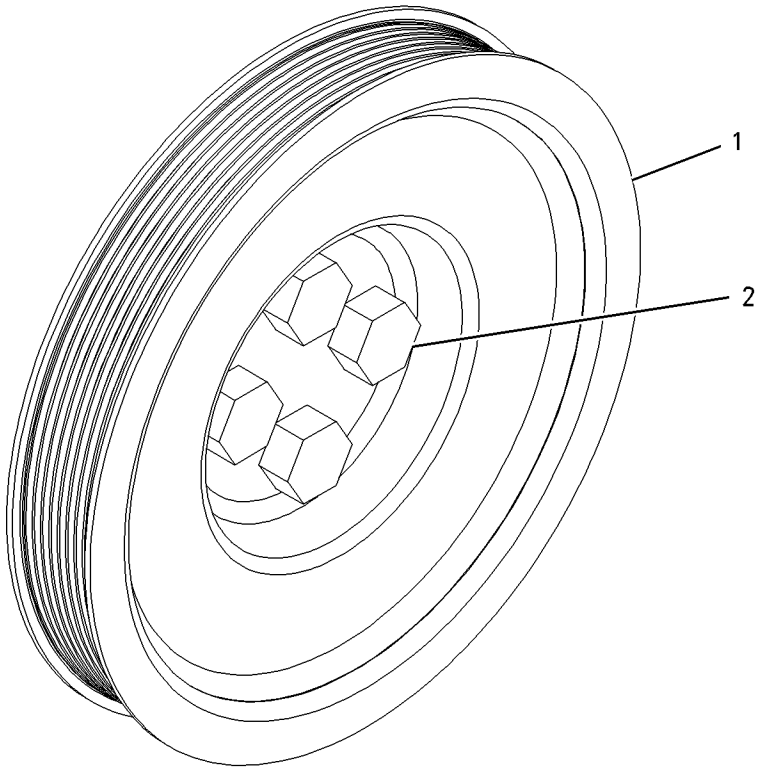

GRAPHIC #1 **<END>** g00684206

BASIC ENGINE

198-9898 ROCKER ARM GP

S/N: BET200-UP

PART OF 148-7482 VALVE MECHANISM GP

SMCS-1102, 1123 **i02034566**

NOTE	REF NO	GRAPHIC REF	PART NUMBER	QTY	PART NAME 1 2 3 4 5 6 (PRODUCT LEVEL)	SEE PAGE
	1	1	**6I-0901**	1	SHAFT AS-ROCKER ARM	
		1	**4B-9782**	2	BALL	
	2	1	**9L-7712**	4	NUT (3/8-24-THD)	
	3	1	**104-9270**	4	BUTTON	
W	4	1	**192-4151**	2	BUTTON (24MM ID)	
					—OR—	
J		1	**4P-7371**	2	INSERT (14.75MM ID)	
W	5	1	**196-5069**	2	SCREW (9/16-18 THD)	
					—OR—	
J		1	**4P-4278**	2	SCREW-UNIT INJ ADJUSTMENT (7/8-18 THD)	
W	6	1	**196-5070**	2	NUT-JAM (9/16-18-THD)	
					—OR—	
J		1	**4P-4279**	2	NUT-JAM (7/8-18 THD)	
	7	1	**232-0253**	4	SCREW	
R	8	1	**203-8822**	2	ROCKER ARM AS (EXHAUST VALVE ROCKER)	
R	9	1	**203-8824**	2	ROCKER ARM AS (INLET VALVE ROCKER)	
R	10	1	**207-5248**	2	ROCKER ARM AS (UNIT INJECTOR ROCKER)	
W	11	1	**061-8639**	2	SEAL-O-RING (15.54MM ID)	
					—OR—	
J		1	**032-9313**	2	SEAL-O-RING (12.37MM ID)	
	12	1	**8L-2777**	4	SEAL-O-RING (10.77MM ID)	

J-PARTS MARKED J MUST BE USED TOGETHER ON OLDER ROCKER ARM ASSEMBLIES
R-REMFG PART MAY BE AVAILABLE
W-PARTS MARKED W MUST BE USED TOGETHER ON NEWER ROCKER ARM ASSEMBLIES

198-9898 **ROCKER ARM GP** *(contd.)* **i02034566**

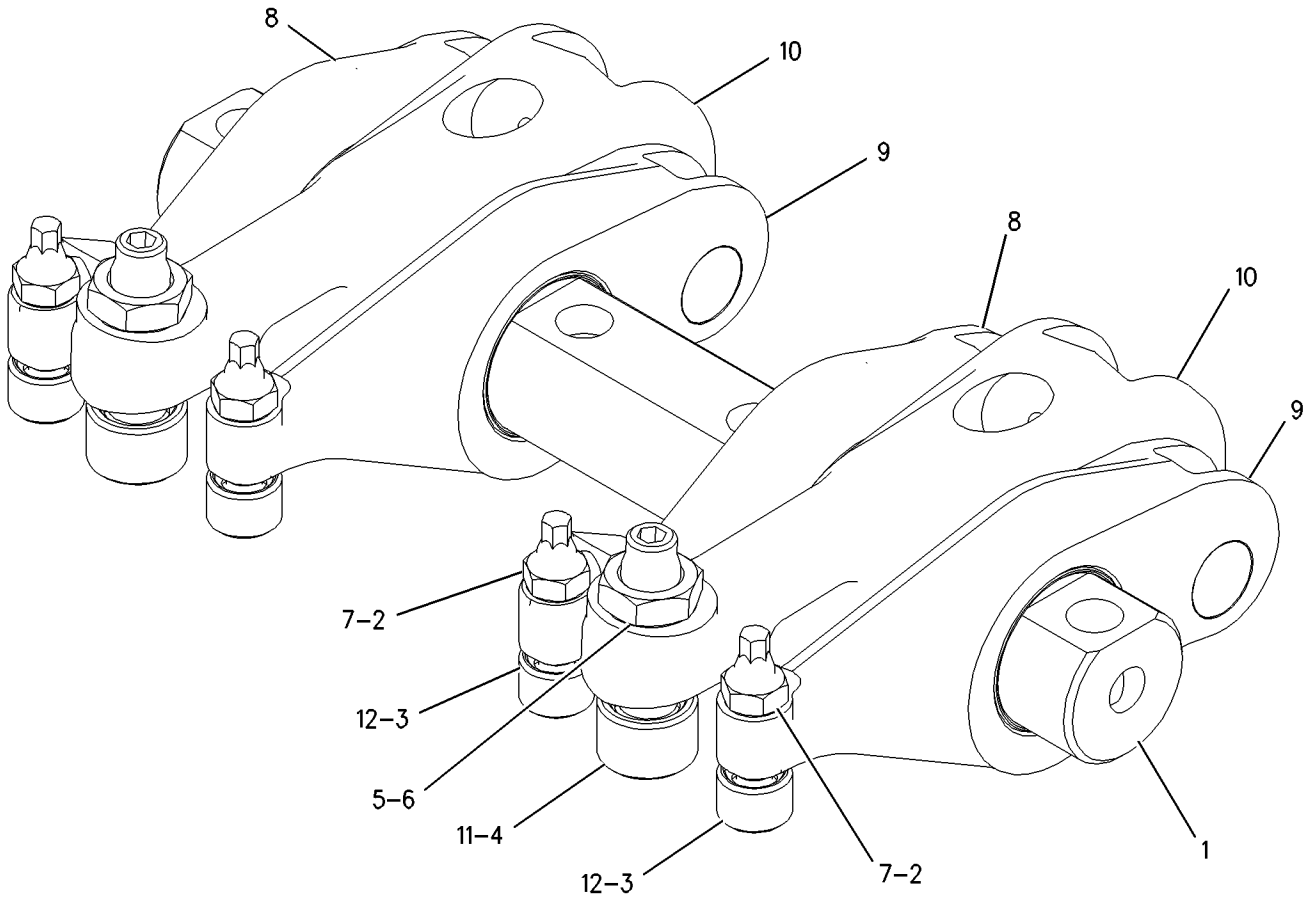

GRAPHIC #1 **<END>** g00905507

BASIC ENGINE

185-6278 SUPPORT GP-ENGINE

S/N: BET200-UP

PART OF 153-7076, 235-4689 ENGINE AR-COMPLETE

SMCS-1154 **i02047053**

NOTE	REF NO	GRAPHIC REF	PART NUMBER	QTY	PART NAME 1 2 3 4 5 6 (PRODUCT LEVEL)	SEE PAGE
	1	1	**227-3872**	1	SUPPORT-ENGINE	
	2	1	**5P-8245**	8	WASHER-HARD (13.5X25.5X3-MM THK)	
	3	1	**9X-8878**	8	BOLT (1/2-13-THDX5.25-IN)	

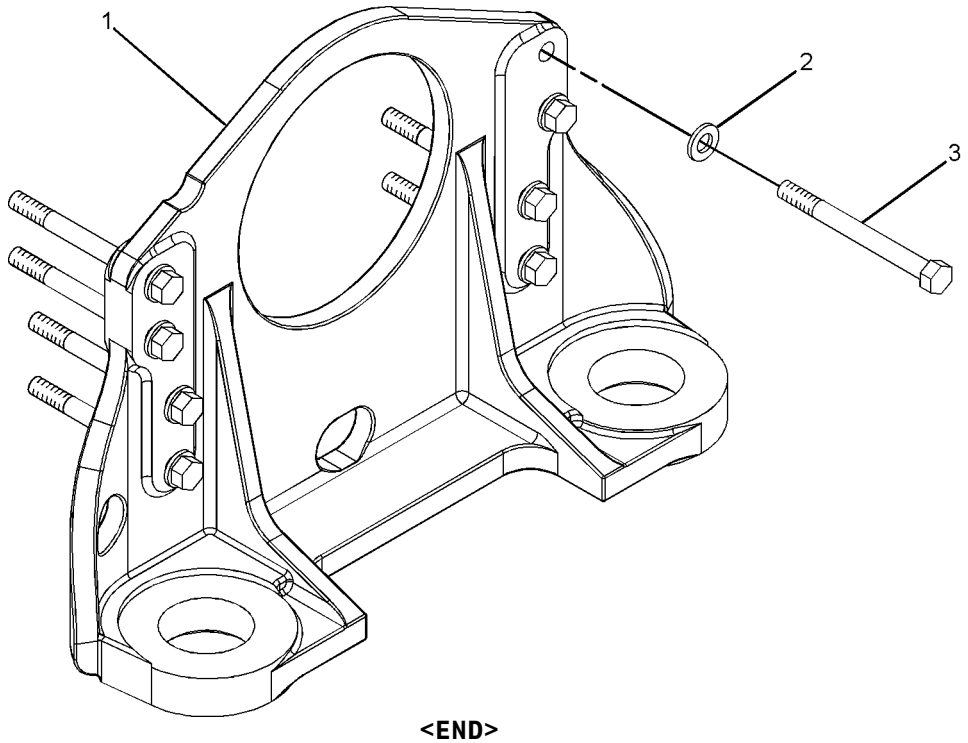

GRAPHIC #1 **<END>** g01054554

BASIC ENGINE

148-7482 VALVE MECHANISM GP

S/N: BET200-UP

PART OF 153-7078, 235-3472 ENGINE AR-CORE

SMCS-1102, 1121, 1123 **i01768605**

NOTE	REF NO	GRAPHIC REF	PART NUMBER	QTY	PART NAME 1 2 3 4 5 6 (PRODUCT LEVEL)	SEE PAGE
CY	1	1	*198-9898*	3	ROCKER ARM GP	84
	2	1	**6I-1458**	12	BRIDGE-VALVE	

C-CHANGE FROM PREVIOUS TYPE
Y-SEPARATE ILLUSTRATION

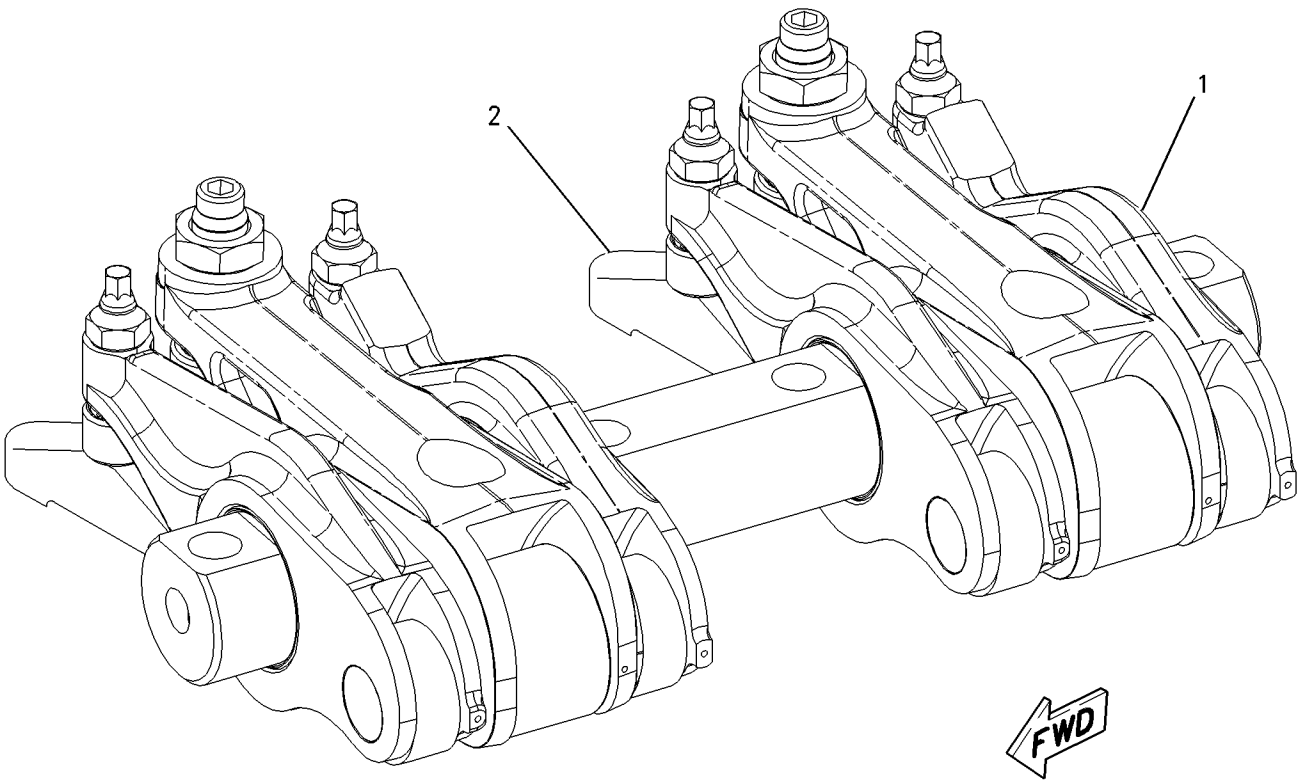

GRAPHIC #1 **<END>** g00905240

4N-2481 FASTENER GP-OIL PUMP MOUNTING–ENGINE

S/N: BET200-UP

PART OF 153-7078, 235-3472 ENGINE AR-CORE

SMCS-1304 **i01446823**

NOTE	REF NO	GRAPHIC REF	PART NUMBER	QTY	PART NAME 1 2 3 4 5 6 (PRODUCT LEVEL)	SEE PAGE
	1	1	**0L-1143**	2	BOLT (3/8-16X2.50 IN)	
	2	1	**0S-1590**	1	BOLT (3/8-16X2 IN)	
	3	1	**5M-2894**	3	WASHER-HARD (10.2X18.5X2.5MM THK)	

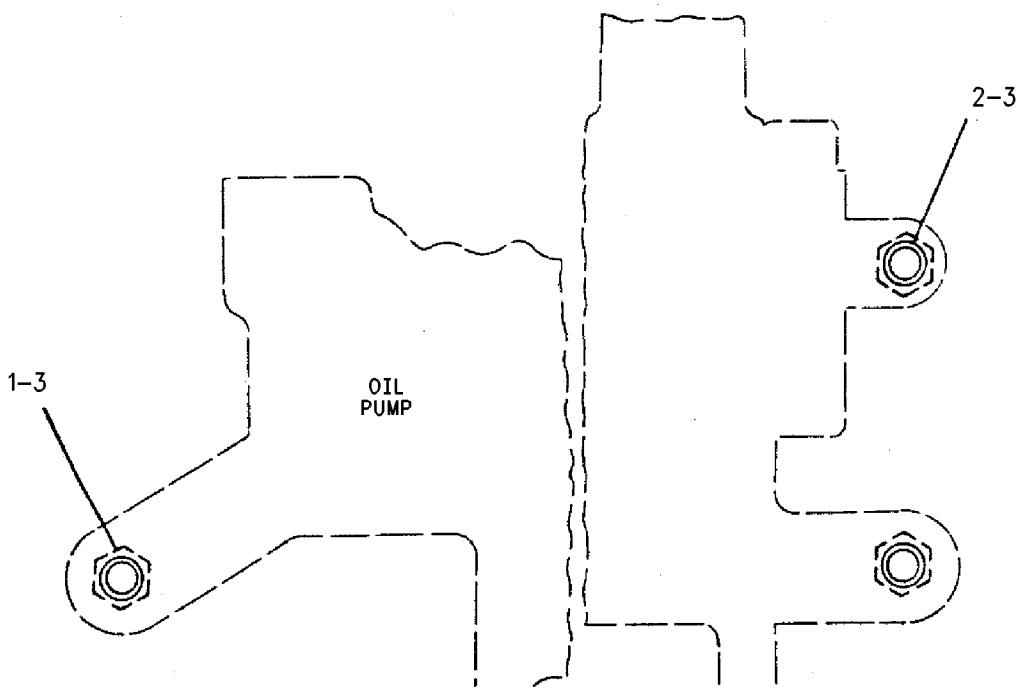

GRAPHIC #1 **<END>** g00604525

119-7834 FILTER GP-ENGINE OIL

S/N: BET200-6171

PART OF 153-7076 ENGINE AR-COMPLETE

SMCS-1308 **i01111668**

NOTE	REF NO	GRAPHIC REF	PART NUMBER	QTY	PART NAME 1 2 3 4 5 6 (PRODUCT LEVEL)	SEE PAGE
	1	1	**1P-1367**	2	PLUNGER	
	2	1	**4N-8150**	2	SPRING	
	3	1	**2P-3761**	2	COVER	
	4	1	**2P-3760**	2	GASKET	
	5	1	**0S-1594**	11	BOLT (3/8-16X1-IN)	
	6	1	**3P-0650**	2	SEAL-O-RING	
	7	1	**0L-2070**	1	BOLT (3/8-16X2.25-IN)	
	8	1	**1R-0716**	1	FILTER AS-ENGINE OIL	
	9	1	**0T-0065**	2	BOLT (3/8-16X3.5-IN)	
	10	1	**4B-4161**	4	SCREW-DRIVE (NO.6X3/8)	
	11	1	**4N-6276**	1	SHIELD	
	12	1	**8C-5230**	2	SEAL-O-RING	
	13	1	**5M-2894**	4	WASHER-HARD (10.2X18.5X2.5-MM THK)	
	14	1	**7N-3451**	1	BASE AS-OIL FILTER	
	15	1	**2P-4304**	1	STUD-TAPERLOCK	
	16	1	**5M-6213**	2	PLUG-PIPE	

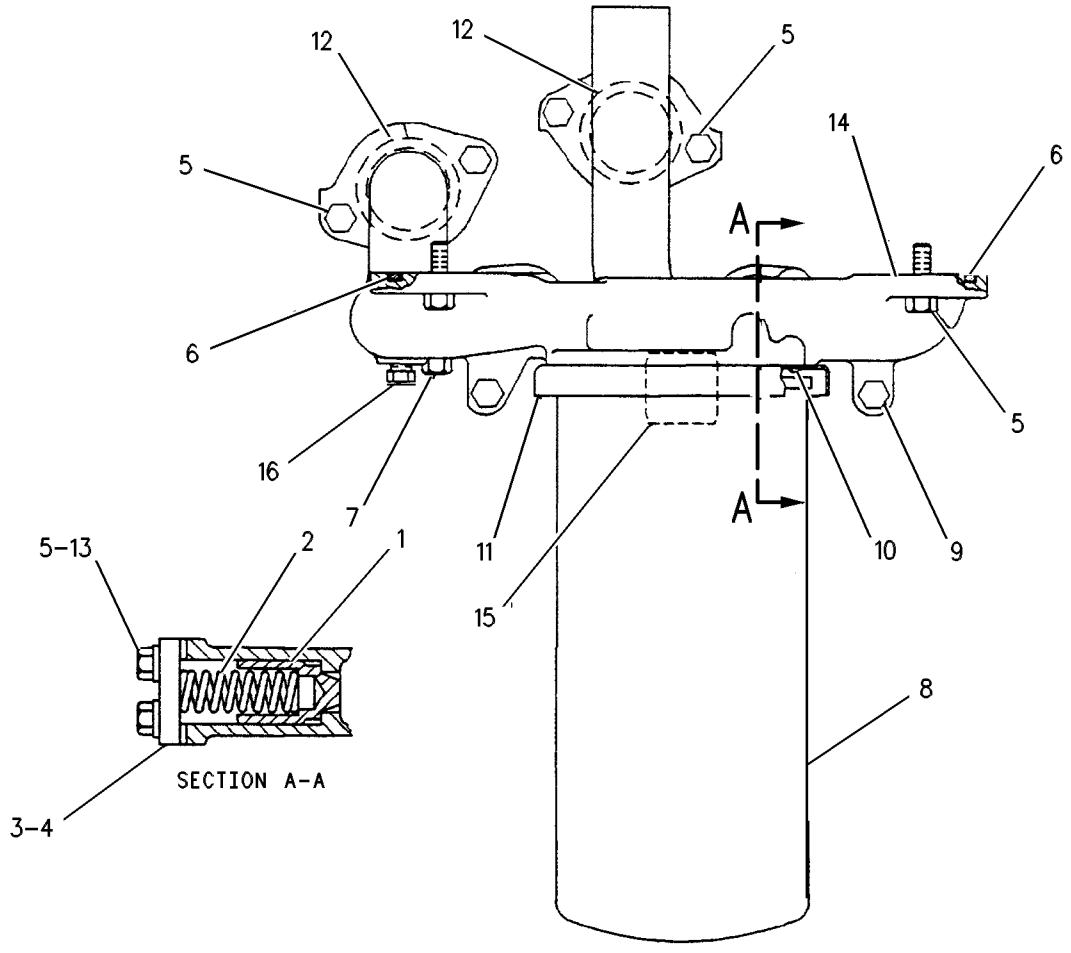

GRAPHIC #1 **<END>** g00263866

LUBRICATION SYSTEM

227-5372 FILTER GP-ENGINE OIL

S/N: BET6172-UP

PART OF 153-7076, 235-4689 ENGINE AR-COMPLETE

SMCS-1308 **i02163643**

NOTE	REF NO	GRAPHIC REF	PART NUMBER	QTY	PART NAME 1 2 3 4 5 6 (PRODUCT LEVEL)	SEE PAGE
	1	1	**1R-0716**	1	FILTER AS-ENGINE OIL	
	2	1	**2P-3760**	2	GASKET	
	3	1	**4N-8150**	2	SPRING	
	4	1	**7N-3451**	1	BASE AS-OIL FILTER	
		1	**2P-4304**	1	STUD-TAPERLOCK	
		1	**5M-6213**	2	PLUG-PIPE	
	5	1	**8C-3445**	1	CAP-DUST (OIL SAMPLING VALVE)	
	6	1	**1P-1367**	2	PLUNGER (RELIEF VALVE)	
	7	1	**102-5828**	1	COVER	
	8	1	**102-5829**	1	ADAPTER	
	9	1	**104-7995**	1	BASE GP-OIL FILTER	
		1	**2P-4304**	1	STUD-TAPERLOCK	
	10	1	*164-5596*	1	TEE AS	
		1	**8C-6515**	1	TEE	
	10A	1	**5K-9090**	1	SEAL-O-RING	
	10B	1	**7M-8485**	1	SEAL-O-RING	
	11	1	**183-7264**	1	VALVE AS-FLUID SAMPLING (ENGINE OIL)	
I	12	1	**214-5860**	1	HOSE AS	
I	13	1	**214-5861**	1	HOSE AS	
	14	1	**229-2702**	1	BRACKET	
	15	1	**0L-2070**	1	BOLT (3/8-16X2.25-IN)	
	16	1	**0S-1585**	3	BOLT (1/2-13X1.5-IN)	
	17	1	**0S-1594**	11	BOLT (3/8-16X1-IN)	
	18	1	**0T-0065**	2	BOLT (3/8-16X3.5-IN)	
	19	1	*148-8335*	1	CONNECTOR AS	
		1	**5K-9090**	1	SEAL-O-RING	
		1	**7M-8485**	1	SEAL-O-RING	
	20	1	**148-8357**	2	ELBOW AS	
					(EACH INCLUDES)	
		1	**6V-9008**	1	ELBOW	
	20A	1	**5K-9090**	1	SEAL-O-RING	
	20B	1	**7M-8485**	1	SEAL-O-RING	
	21	1	**2P-3761**	2	COVER	
	22	1	**3P-0650**	2	SEAL-O-RING	
	23	1	**5M-2894**	4	WASHER-HARD (10.2X18.5X2.5-MM THK)	
M	24	1	**5P-8245**	3	WASHER-HARD (13.5X25.5X3-MM THK)	
	25	1	**6V-3908**	2	SEAL-O-RING	
	26	1	**6V-5839**	4	WASHER (11X21X2.5-MM THK)	
	27	1	**8C-5230**	2	SEAL-O-RING	
M	28	1	**8T-4133**	4	NUT (M10X1.5-THD)	
M	29	1	**8T-4195**	4	BOLT (M10X1.5X30-MM)	

I-REFER TO HYDRAULIC INFORMATION SYSTEM
M-METRIC PART

227-5372 **FILTER GP-ENGINE OIL** *(contd.)* **i02163643**

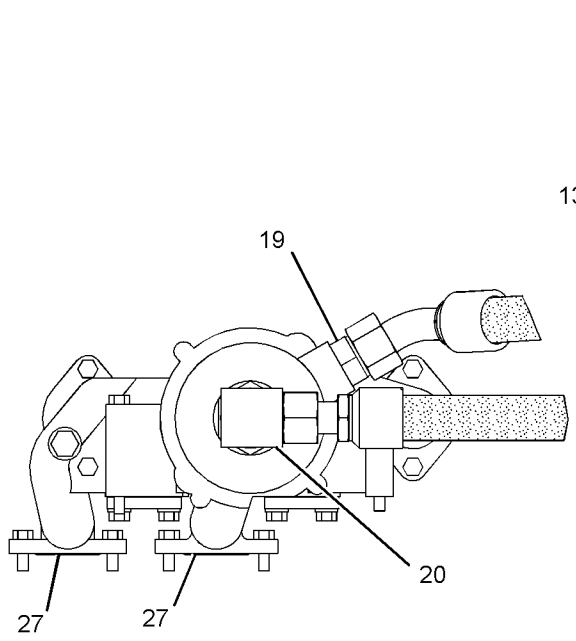

VIEW B-B

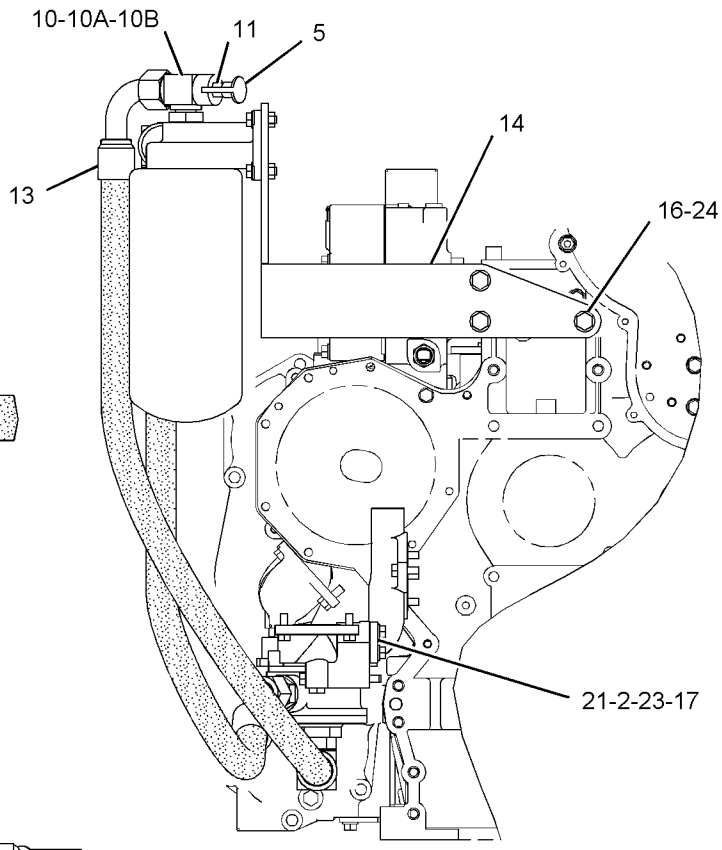

FRONT VIEW

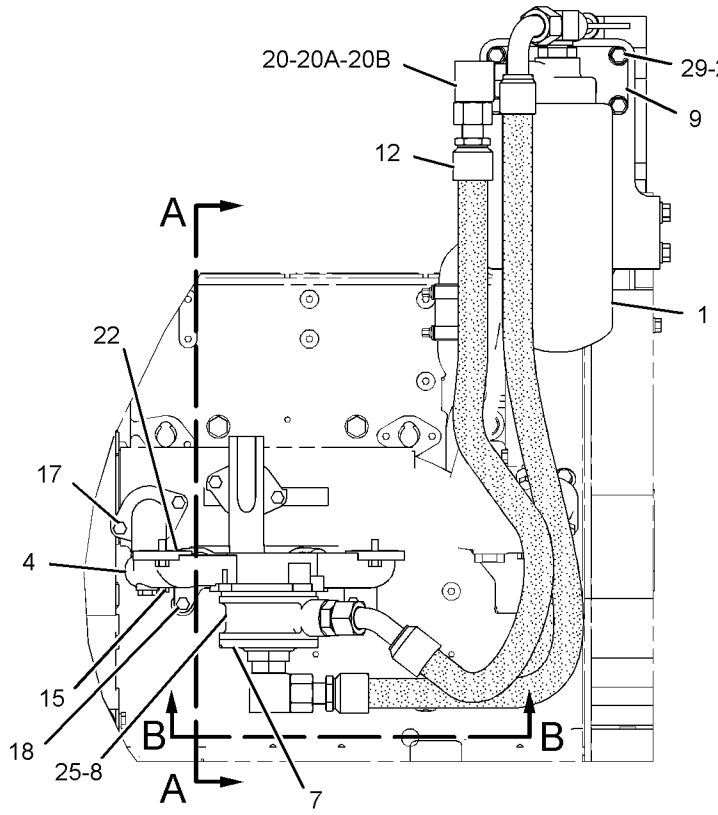

RIGHT SIDE VIEW

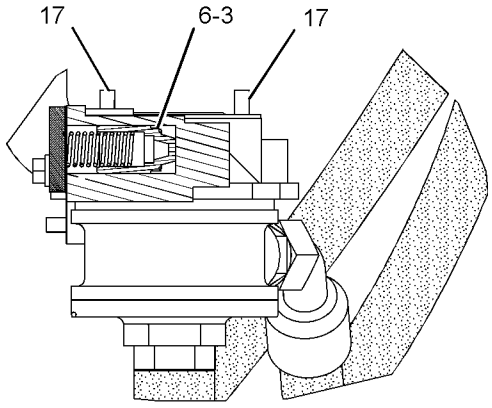

SECTION A-A

GRAPHIC #1 **<END>** g01100936

LUBRICATION SYSTEM

183-6195 FUMES DISPOSAL GP

S/N: BET200-UP

PART OF 153-7076, 235-4689 ENGINE AR-COMPLETE

SMCS-1317 **i01464159**

NOTE	REF NO	GRAPHIC REF	PART NUMBER	QTY	PART NAME 1 2 3 4 5 6 (PRODUCT LEVEL)	SEE PAGE
	1	1	**4N-5264**	1	BRACKET AS	
	2	1	**4N-6162**	1	BRACKET	
	3	1	**4S-5719**	1	SPACER (10.31X25X12.7MM THK)	
	4	1	**9M-2904**	4	CLAMP-HOSE	
	5	1	**9Y-5281**	1	HOSE	
	6	1	**123-9711**	1	HOSE	
	7	1	**123-9817**	1	TUBE	
	8	1	**189-9312**	1	TUBE	
	9	1	**0S-0509**	2	BOLT (3/8-16X0.75 IN)	
	10	1	**2S-2053**	1	CLIP	
	11	1	**3B-1915**	1	BOLT (3/8-16X1.37 IN)	
	12	1	**5M-2894**	4	WASHER-HARD (10.2X18.5X2.5MM THK)	
	13	1	**7L-6326**	1	CLIP	
	14	1	**9S-8752**	1	NUT-FULL (3/8-16 THD)	

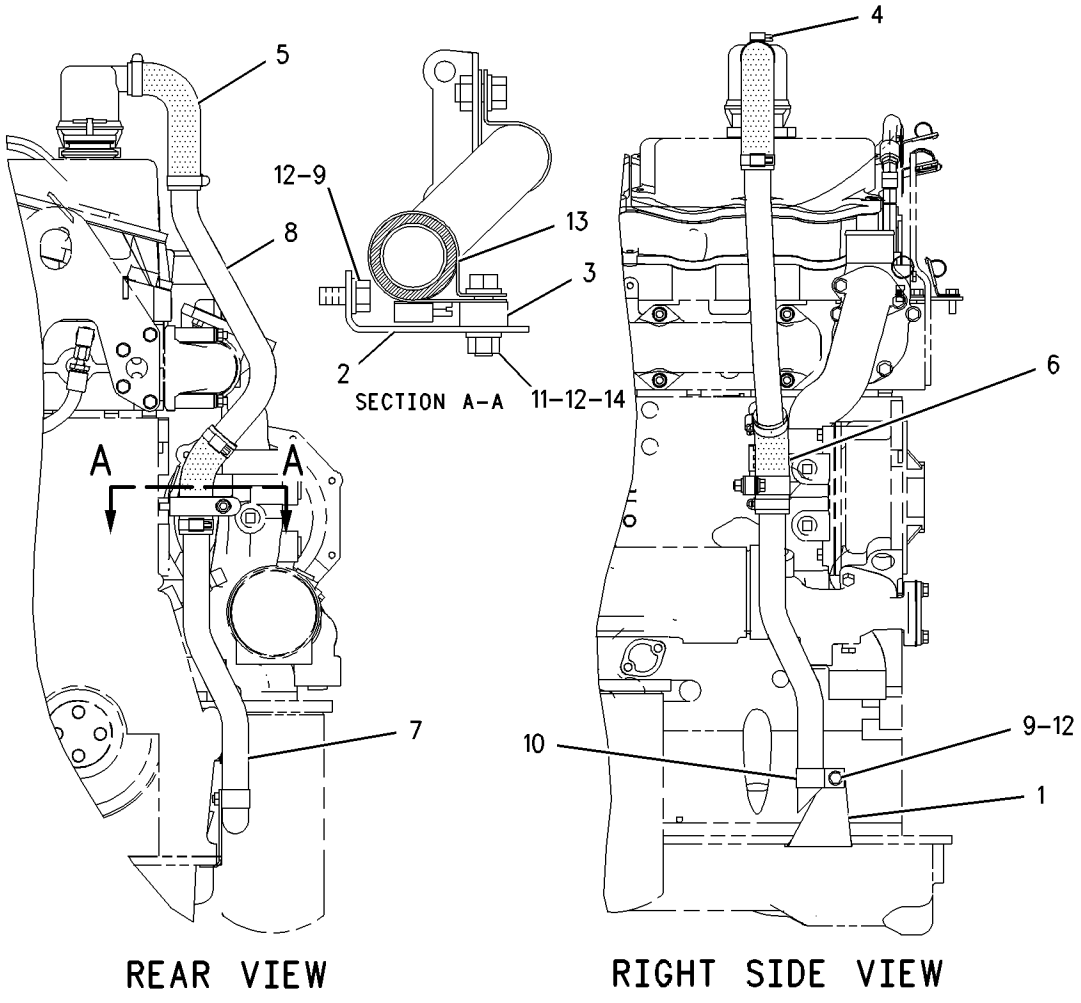

GRAPHIC #1 **<END>** g00766540

183-2996 GAUGE GP-OIL LEVEL (DIPSTICK)

S/N: BET200-UP

PART OF 153-7076, 235-4689 ENGINE AR-COMPLETE

SMCS-1326 **i01565905**

NOTE	REF NO	GRAPHIC REF	PART NUMBER	QTY	PART NAME 1 2 3 4 5 6 (PRODUCT LEVEL)	SEE PAGE
J	1	1	**165-6170**	3	PLUG	
	2	1	**188-9132**	1	TUBE AS	
	3	1	**188-9133**	1	BRACKET	
	4	1	**0S-0509**	2	BOLT (3/8-16X0.75 IN)	
	5	1	**118-5068**	1	SEAL-O-RING	
	6	1	**5M-2894**	2	WASHER-HARD (10.2X18.5X2.5MM THK)	
J-USE TO PLUG OPTIONAL DIPSTICK LOCATIONS						

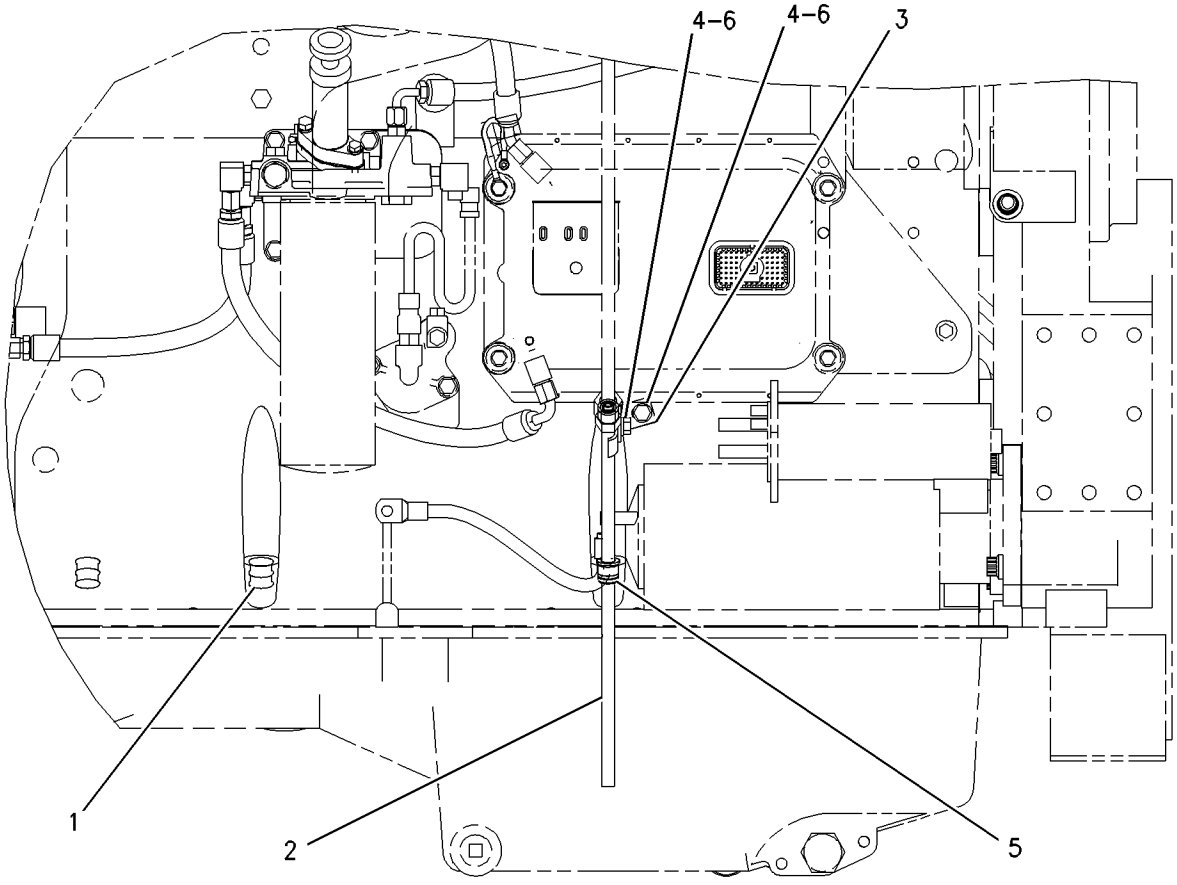

LEFT SIDE VIEW

GRAPHIC #1 **<END>** g00766446

LUBRICATION SYSTEM

4N-1128 LINES GP-ENGINE OIL

S/N: BET200-UP
PART OF 153-7076, 235-4689 ENGINE AR-COMPLETE
FOR USE WITH DEEP SUMP OIL PAN

SMCS-1307 **i02240590**

NOTE	REF NO	GRAPHIC REF	PART NUMBER	QTY	PART NAME 1 2 3 4 5 6 (PRODUCT LEVEL)	SEE PAGE
	1	1	**4N-0913**	1	SCREEN AS (ENGINE OIL SUMP)	
	2	1	**1A-2029**	2	BOLT (3/8-16X1.125-IN)	
C	3	1	**0S-1591**	2	BOLT (3/8-16X1.5-IN)	
	4	1	**4N-0995**	1	TUBE AS	
	5	1	**109-0078**	1	SEAL-O-RING	
C	6	1	**109-0072**	1	SEAL-O-RING	
C	7	1	**0L-1351**	3	BOLT (3/8-16X0.875-IN)	
	8	1	**9N-5124**	1	TUBE AS-PUMP SUCTION	
	9	1	**9X-6458**	5	WASHER-HARD (10.2X22.5X3-MM THK)	
	10	1	**4N-0914**	1	CLIP	
	11	1	**6N-7249**	1	SUPPORT-SUCTION BELL	
	12	1	**8N-2104**	1	BELL AS-SUCTION	

C-CHANGE FROM PREVIOUS TYPE

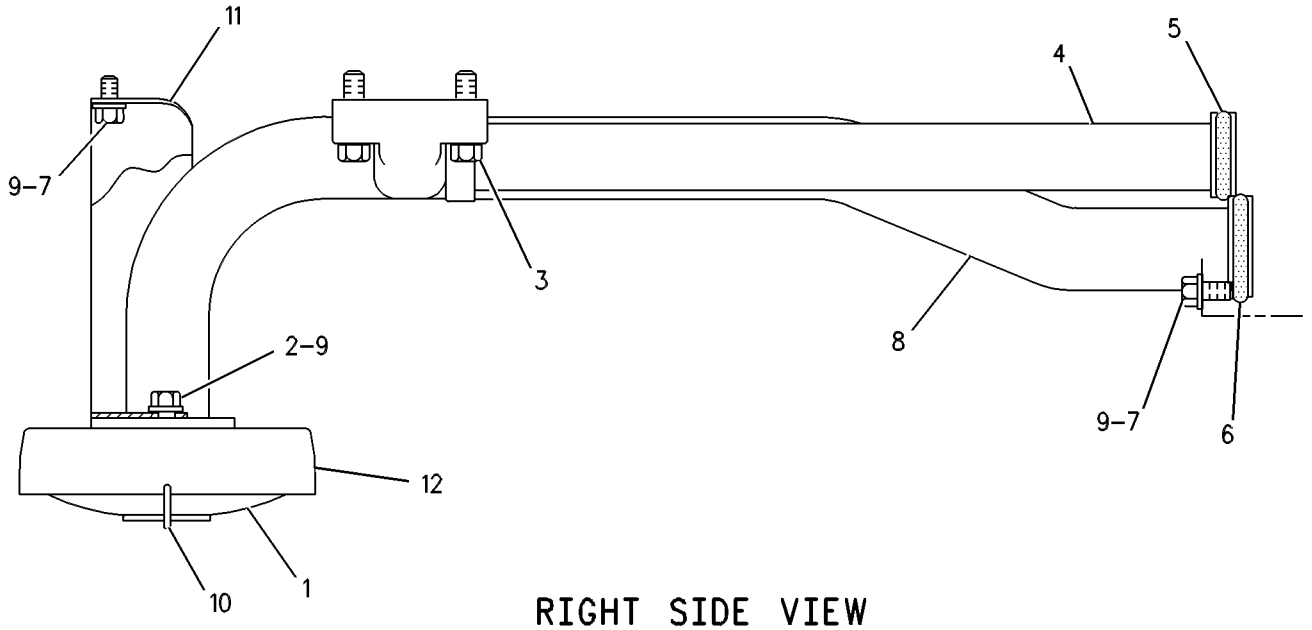

RIGHT SIDE VIEW

GRAPHIC #1 **<END>** g00260084

214-7413 LINES GP-ENGINE OIL FILTER

S/N: AXM1-UP

PART OF 152-6943 POWER TRAIN AR

SMCS-1307, 1308 **i02091073**

NOTE	REF NO	GRAPHIC REF	PART NUMBER	QTY	PART NAME 1 2 3 4 5 6 (PRODUCT LEVEL)	SEE PAGE
	1	1	**6H-7062**	2	SPACER (13.5X25X19-MM THK)	
	2	1	**5P-7468**	2	CLIP (SLOT)	
	3	1	**5P-7469**	2	CLIP (TAB)	
	4	1	**5P-8444**	2	GROMMET	
	5	1	**8T-4121**	8	WASHER-HARD (11X21X2.5-MM THK)	
	6	1	**8T-4223**	2	WASHER-HARD (13.5X25.5X3-MM THK)	
M	7	1	**8T-4244**	1	NUT (M12X1.75-THD)	
M	8	1	**8T-6868**	1	BOLT (M12X1.75X80-MM)	

M-METRIC PART

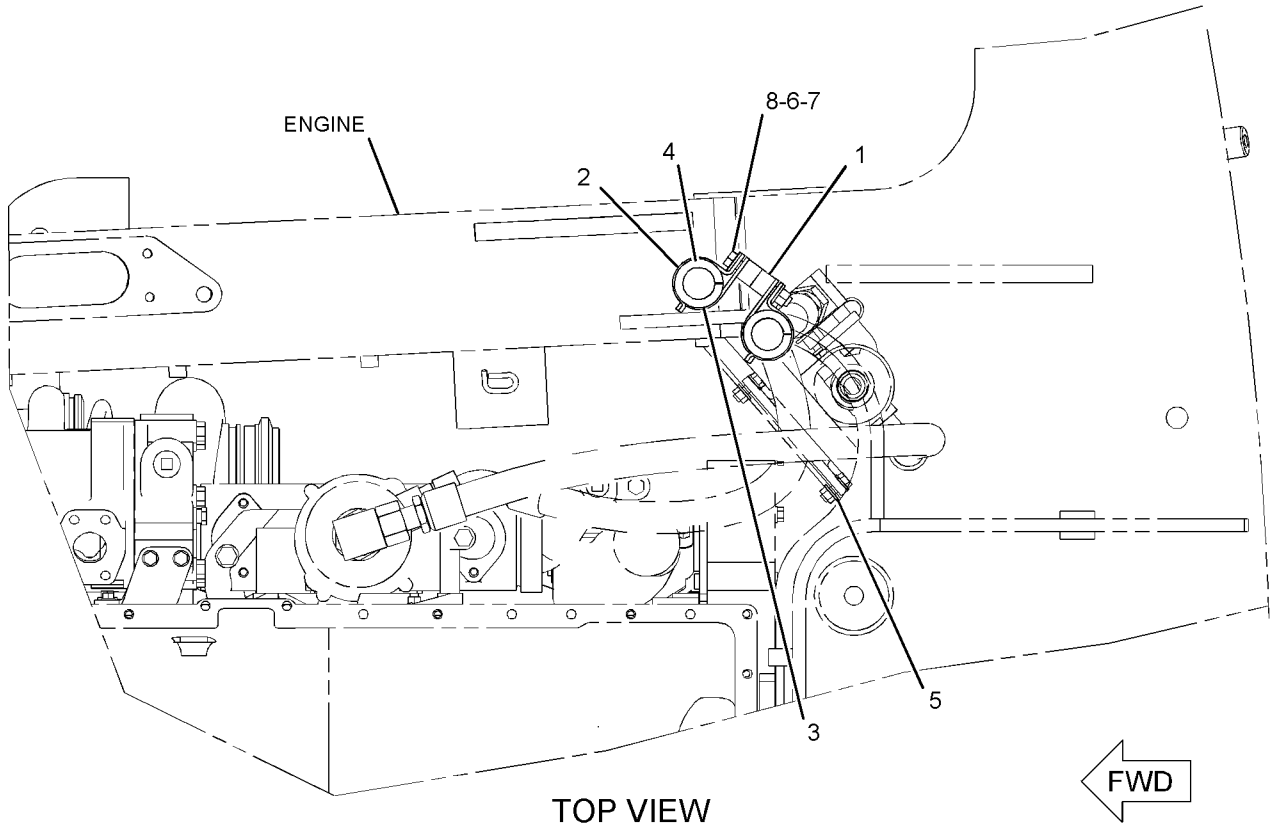

TOP VIEW

GRAPHIC #1 **<END>** g01089086

LUBRICATION SYSTEM

183-2770 LINES GP-TURBOCHARGER OIL

S/N: BET200-UP

PART OF 153-7076, 235-4689 ENGINE AR-COMPLETE

SMCS-1052, 1307 **i01463883**

NOTE	REF NO	GRAPHIC REF	PART NUMBER	QTY	PART NAME 1 2 3 4 5 6 (PRODUCT LEVEL)	SEE PAGE
	1	1	**4N-2040**	1	ELBOW-DRAIN	
	2	1	**9M-7540**	2	CLAMP-TUBE	
	3	1	**126-2702**	1	SEAL-INTEGRAL	
	4	1	**126-2704**	1	SEAL-INTEGRAL	
	5	1	**183-2994**	1	TUBE AS	
	6	1	**183-2995**	1	TUBE AS	
	7	1	**0S-1571**	3	BOLT (3/8-16X1.75 IN)	
	8	1	**0S-1619**	1	BOLT (3/8-16X3 IN)	
	9	1	**114-2687**	1	SEAL-O-RING	
	10	1	**114-4427**	1	SEAL-O-RING	
	11	1	**1A-2029**	3	BOLT (3/8-16X1.125 IN)	
	12	1	**4N-0699**	1	GASKET	
	13	1	**5M-2894**	4	WASHER-HARD (10.2X18.5X2.5MM THK)	
	14	1	**9M-4584**	1	CONNECTOR-FLARED	
	15	1	**9M-6527**	1	WASHER-HARD (10.2X25.5X5MM THK)	
	16	1	**9S-8752**	1	NUT-FULL (3/8-16 THD)	

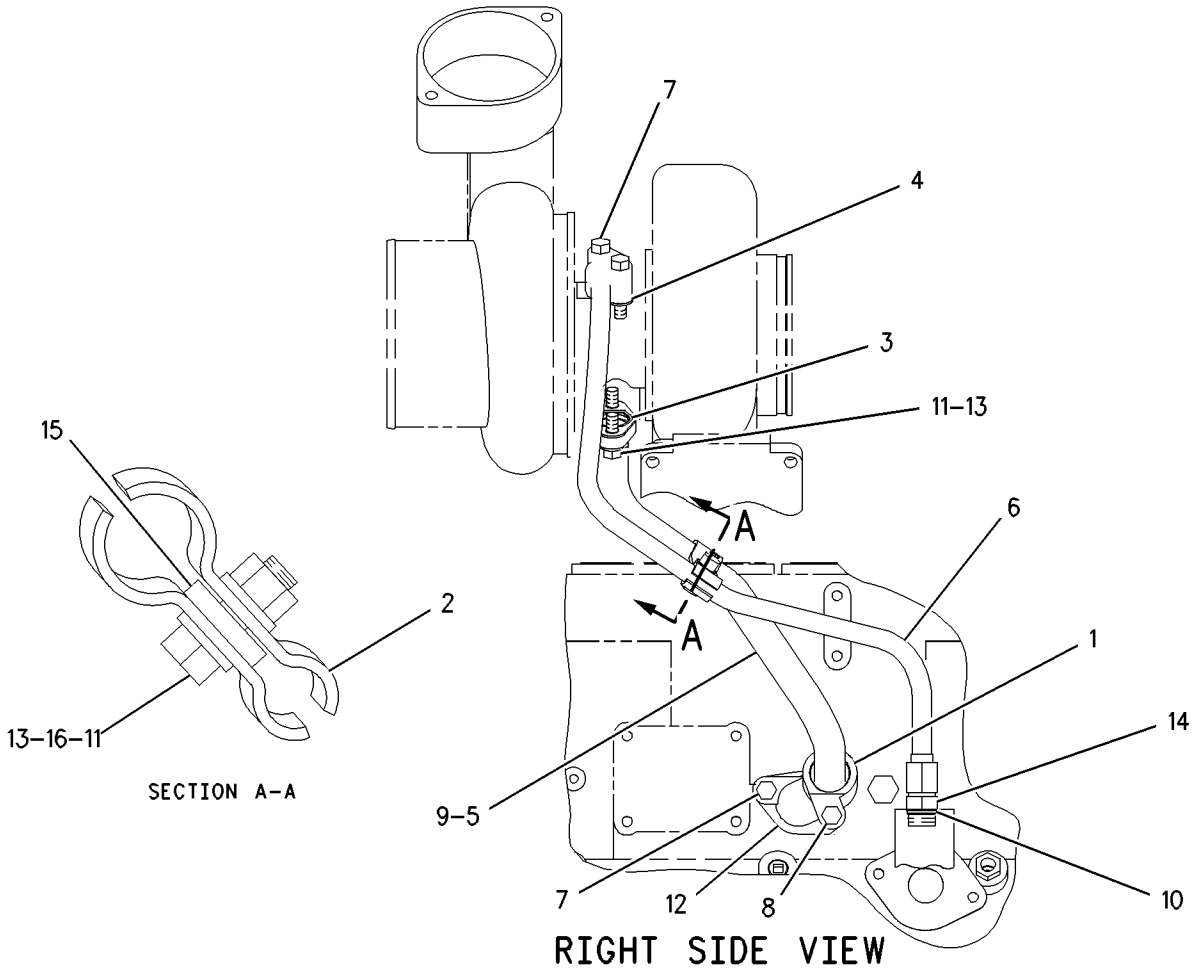

GRAPHIC #1 **<END>** g00766454

LUBRICATION SYSTEM

161-4113 PUMP GP-ENGINE OIL*R

S/N: BET200-UP

PART OF 153-7078, 235-3472 ENGINE AR-CORE

SMCS-1304, 1315 **i02086285**

NOTE	REF NO	GRAPHIC REF	PART NUMBER	QTY	PART NAME 1 2 3 4 5 6 (PRODUCT LEVEL)	SEE PAGE
	1	1	**1W-7238**	1	SHAFT AS-PUMP DRIVE	
	2	1	**1W-7239**	1	SHAFT AS-IDLER	
	3	1	**2P-3205**	4	BOLT-WASHER HEAD (3/8-16X44.45-MM)	
	4	1	**2S-2760**	1	SPRING	
	5	1	**6N-1931**	1	PLUNGER-RELIEF	
	6	1	**9Y-1792**	1	RETAINER	
	7	1	**235-1587**	1	BODY AS	
		1	**7N-2156**	2	BEARING-SLEEVE	
		1	**8M-8489**	2	DOWEL	
	8	1	**127-6356**	1	COVER AS-PUMP	
		1	**8S-6511**	2	BEARING-SLEEVE	
	9	1	**1M-0644**	2	BOLT (3/8-16X2-1/4-IN)	
	10	1	**2S-7905**	1	PLUG-PIPE	
	11	1	**5M-2894**	2	WASHER-HARD (10.2X18.5X2.5-MM THK)	

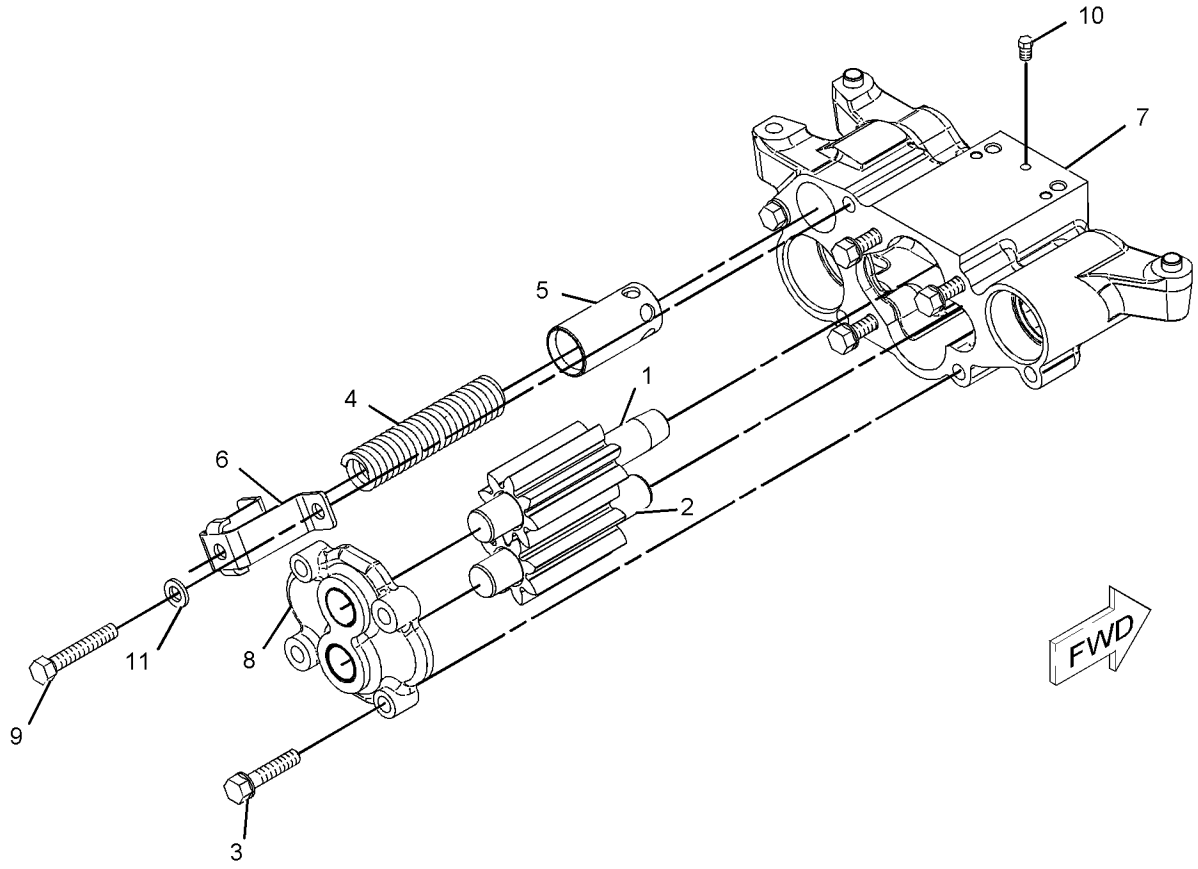

GRAPHIC #1 **<END>** g01066948

7W-2206 COOLER GP-ENGINE OIL

S/N: BET200-UP

PART OF 153-7076, 235-4689 ENGINE AR-COMPLETE

SMCS-1378 **i01768700**

NOTE	REF NO	GRAPHIC REF	PART NUMBER	QTY	PART NAME 1 2 3 4 5 6 (PRODUCT LEVEL)	SEE PAGE
R	1	1	**7C-3039**	1	CORE AS (ENGINE OIL COOLER)	
	2	1	**109-0077**	2	SEAL-O-RING	

R-REMFG PART MAY BE AVAILABLE

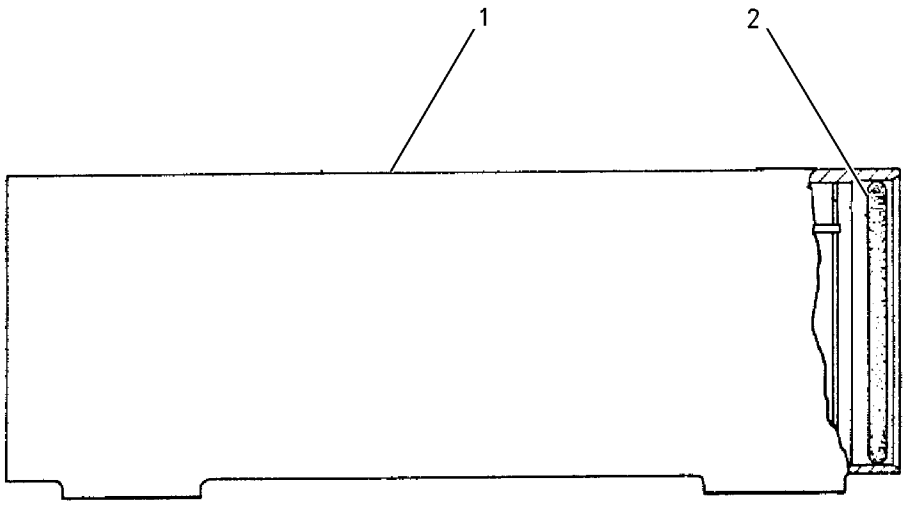

GRAPHIC #1 **<END>** g00604532

COOLING SYSTEM

152-6944 COOLING AR

S/N: AXM1-UP

PART OF 152-6920 INSTALLATION AR-MACHINE

SMCS-1350, 1353, 5057 **i01533605**

NOTE	PART NUMBER	QTY	PART NAME 1 2 3 4 5 6 (PRODUCT LEVEL)	SEE PAGE
Y	*139-5320*	1	TANK GP-COOLANT	120
Y	*139-5324*	1	FAN GP-SUCTION	100
Y	*152-6945*	1	MOTOR & MTG GP-HYDRAULIC FAN	106
Y	*152-6947*	1	CONDENSER GP-REFRIGERANT	837
Y	*171-1961*	1	COOLER & MTG GP-HYDRAULIC OIL	666
Y	*185-1350*	1	RADIATOR GP	110
Y	*185-3941*	1	SHROUD GP-RADIATOR	118
Y	*196-8527*	1	BAFFLE GP-RADIATOR	486

Y-SEPARATE ILLUSTRATION

<END>

COOLING SYSTEM

139-5324 FAN GP-SUCTION

S/N: AXM1-370

PART OF 152-6944 COOLING AR

SMCS-1356 **i02246887**

NOTE	REF NO	GRAPHIC REF	PART NUMBER	QTY	PART NAME 1 2 3 4 5 6 (PRODUCT LEVEL)	SEE PAGE
	1	1	**4N-2572**	1	SPIDER AS-FAN (6-BLADE)	
	2	1	**166-3297**	1	BOSS	
	3	1	**173-8210**	1	SUPPORT AS-FAN	
	4	1	**193-3795**	1	GUARD AS-FAN	
	5	1	**2K-4821**	1	LOCKNUT (5/8-18-THD)	
M	6	1	**6V-9189**	2	LOCKNUT (M8X1.25-THD)	
	7	1	**8T-4122**	1	WASHER-HARD (17X32X3.5-MM THK)	
M	8	1	**8T-4183**	4	BOLT (M12X1.75X40-MM)	
	9	1	**8T-4223**	8	WASHER-HARD (13.5X25.5X3-MM THK)	
	10	1	**8T-4224**	2	WASHER-HARD (8.8X16X2-MM THK)	
M	11	1	**8T-4244**	4	NUT (M12X1.75-THD)	
	12	1	**8T-4896**	6	WASHER-HARD (10.2X18.5X2.5-MM THK)	
M	13	1	**8T-4908**	2	BOLT (M8X1.25X25-MM)	
	14	1	**9B-7237**	6	BOLT (3/8-16X1.25-IN)	

M-METRIC PART

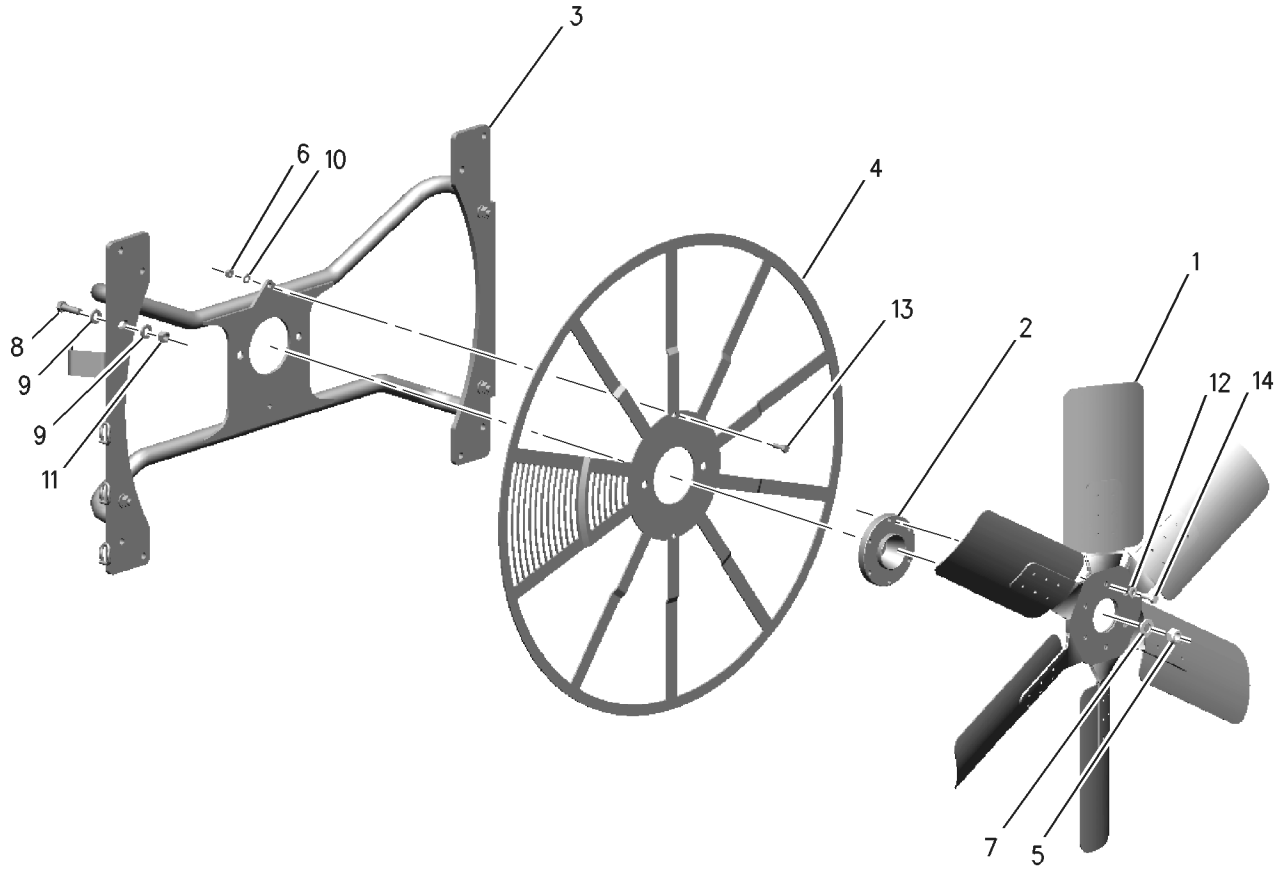

GRAPHIC #1 **<END>** g00677630

COOLING SYSTEM

139-5324 FAN GP-SUCTION

S/N: AXM371-UP

PART OF 152-6944 COOLING AR

SMCS-1356 **i02246878**

NOTE	REF NO	GRAPHIC REF	PART NUMBER	QTY	PART NAME 1 2 3 4 5 6 (PRODUCT LEVEL)	SEE PAGE
	1	1	**4N-2572**	1	SPIDER AS-FAN (6-BLADE)	
	2	1	**166-3297**	1	BOSS	
	3	1	**193-3795**	1	GUARD AS-FAN	
	4	1	**1U-6605**	1	TAPE-REFLECTIVE	
C	5	1	**214-5859**	1	SUPPORT AS	
	6	1	**2K-4821**	1	LOCKNUT (5/8-18-THD)	
M	7	1	**6V-9189**	2	LOCKNUT (M8X1.25-THD)	
	8	1	**8T-4122**	1	WASHER-HARD (17X32X3.5-MM THK)	
M	9	1	**8T-4183**	4	BOLT (M12X1.75X40-MM)	
	10	1	**8T-4223**	8	WASHER-HARD (13.5X25.5X3-MM THK)	
	11	1	**8T-4224**	2	WASHER-HARD (8.8X16X2-MM THK)	
M	12	1	**8T-4244**	4	NUT (M12X1.75-THD)	
	13	1	**8T-4896**	6	WASHER-HARD (10.2X18.5X2.5-MM THK)	
M	14	1	**8T-4908**	2	BOLT (M8X1.25X25-MM)	
	15	1	**9B-7237**	6	BOLT (3/8-16X1.25-IN)	

C-CHANGE FROM PREVIOUS TYPE
M-METRIC PART

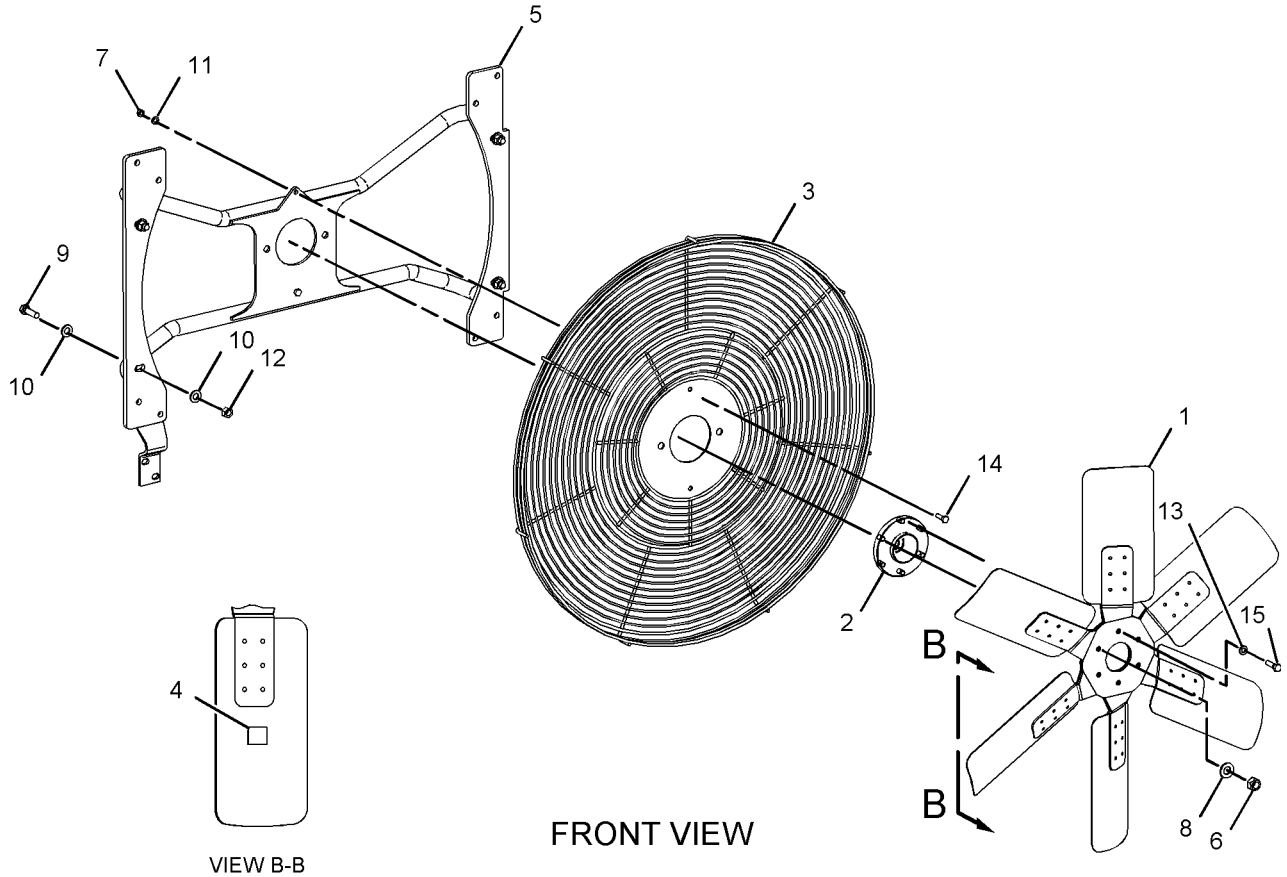

GRAPHIC #1

<END>

g01056753

COOLING SYSTEM

141-6886 LINES GP-COOLANT

S/N: AXM1-UP

PART OF 152-6919 AXLE & FRAME AR

SMCS-1380 **i02254059**

NOTE	REF NO	GRAPHIC REF	PART NUMBER	QTY	PART NAME 1 2 3 4 5 6 (PRODUCT LEVEL)	SEE PAGE
	1	1	**4N-6749**	3	HOSE-ADAPTER	
D	2	1	**4U-7962**		HOSE-HEATER (1M)	
	3	1	**5D-1026**	3	CLAMP-HOSE	
	4	1	**5U-5922**	3	HOSE	
M	5	1	**8T-4244**	1	NUT (M12X1.75-THD)	
	6	1	**8D-8259**	4	CLIP	
	7	1	**228-6978**	2	CLAMP	
	8	1	**209-4573**	8	CLAMP	
	9	1	**209-4578**	8	CLAMP	
	10	1	**003-2143**	1	ELBOW	
	11	1	**005-7889**	1	VALVE AS-DRAIN	
	12	1	**157-0670**	1	CAP-DUST (FLUID SAMPLING VALVE) (COOLANT)	
	13	1	**169-5836**	1	HOSE-ELBOW	
	14	1	**176-0569**	1	ADAPTER	
	15	1	**185-6924**	1	TUBE	
	16	1	**185-6925**	1	TUBE	
	17	1	**185-6929**	1	TUBE	
	18	1	**185-6932**	1	TUBE AS	
	19	1	**191-9556**	1	ELBOW	
E	20	1	**9X-2133**		HOSE (38-CM)	
	21	1	**199-6167**	1	TUBE AS	
	22	1	**199-6169**	1	TUBE AS	
E	23	1	**5P-1253**		HOSE (150CM)	
	24	1	**154-9024**	1	VALVE GP-FLUID SAMPLING (COOLANT)	
	25	1	**5P-1076**	4	WASHER-HARD (13.5X30X4-MM THK)	
	26	1	**5P-7468**	1	CLIP (SLOT)	
	27	1	**5P-7469**	1	CLIP (TAB)	
	28	1	**6V-0545**	1	GROMMET	
	29	1	**6V-1867**	4	CLIP (SLOT)	
	30	1	**6V-1868**	4	CLIP (TAB)	
	31	1	**193-2120**	4	GROMMET	
	32	1	**8T-1889**	1	CLIP (SLOT)	
	33	1	**8T-1890**	1	CLIP (TAB)	
	34	1	**8T-4121**	2	WASHER-HARD (11X21X2.5-MM THK)	
M	35	1	**8T-4133**	1	NUT (M10X1.5-THD)	
M	36	1	**8T-4139**	6	BOLT (M12X1.75X30-MM)	
M	37	1	**8T-4196**	1	BOLT (M10X1.5X35-MM)	
	38	1	**8T-4223**	5	WASHER-HARD (13.5X25.5X3-MM THK)	
M	39	1	**8T-4183**	1	BOLT (M12X1.75X40-MM)	
M	40	1	**8T-4956**	1	BOLT (M12X1.75X35-MM)	

D-ORDER BY THE METER
E-ORDER BY THE CENTIMETER
M-METRIC PART

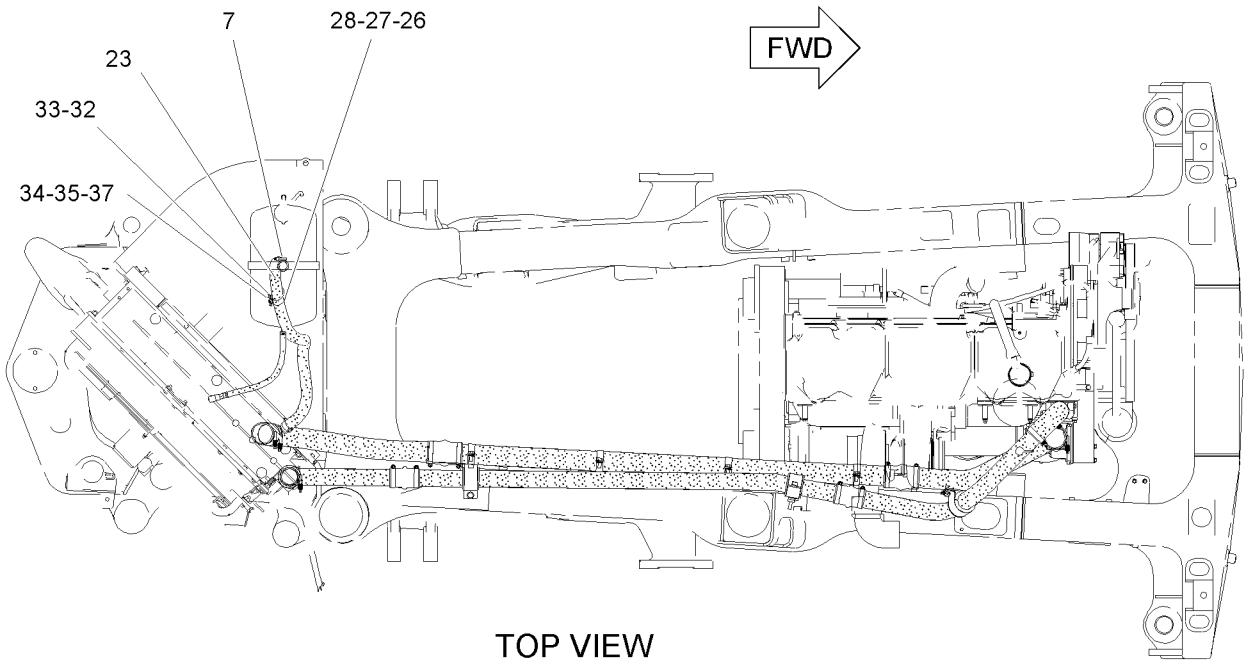

TOP VIEW

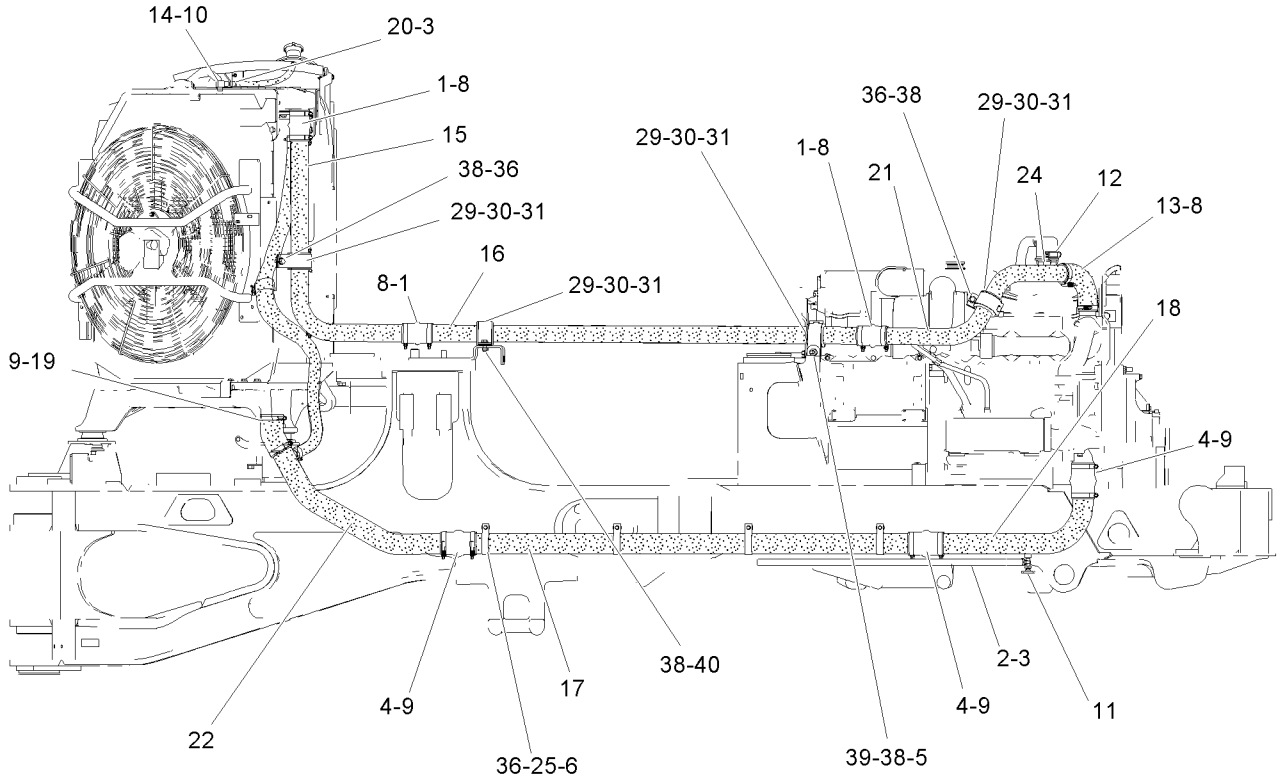

RIGHT SIDE VIEW

GRAPHIC #1

<END>

g01135380

COOLING SYSTEM

143-9161 LINES GP-WATER

S/N: BET200-UP

PART OF 153-7076, 235-4689 ENGINE AR-COMPLETE

SMCS-1380 **i02188038**

NOTE	REF NO	GRAPHIC REF	PART NUMBER	QTY	PART NAME 1 2 3 4 5 6 (PRODUCT LEVEL)	SEE PAGE
	1	1	**139-0170**	1	BONNET-OIL COOLER	
	2	1	**8T-6761**	1	PLUG-PIPE	
	3	1	**4N-3002**	1	ELBOW	
	4	1	**4N-0362**	1	COVER AS-REGULATOR	
	4A	1	**2H-1193**	1	FERRULE	
	4B	1	**3S-9643**	1	SEAL-LIP TYPE (WATER TEMPERATURE REGULATOR)	
	4C	1	**5M-6213**	1	PLUG-PIPE	
	5	1	**0S-1594**	10	BOLT (3/8-16X1-IN)	
	6	1	**0S-1619**	2	BOLT (3/8-16X3-IN)	
	7	1	**1W-2636**	1	GASKET	
	8	1	**7N-1572**	1	COVER-WATER PUMP	
	9	1	**8T-6767**	2	PLUG-PIPE	
	10	1	**7X-7731**	5	PLUG-PIPE	
	11	1	**6N-0367**	1	BONNET-OIL COOLER	
	12	1	**109-0077**	1	SEAL-O-RING	
	13	1	**4N-6257**	1	ADAPTER	
	14	1	**109-0076**	2	SEAL-O-RING	
	15	1	**0S-1591**	4	BOLT (3/8-16X1.5-IN)	
	16	1	**7C-0307**	1	GASKET	
	17	1	**248-5513**	1	REGULATOR-WATER TEMPERATURE (92-DEG C) (COOLANT)	
	18	1	**4N-1156**	1	GASKET-REGULATOR COVER (TEMPERATURE REGULATOR HOUSING)	
	19	1	**0L-1352**	2	BOLT (3/8-16X3.25-IN)	
	20	1	**4N-0641**	2	GASKET	
	21	1	**139-0166**	1	TUBE AS	
	22	1	**9M-1974**	1	WASHER-HARD (8.8X16X2-MM THK)	
	23	1	**2B-2695**	1	BOLT (5/16-18X0.875-IN)	
	24	1	**5M-2894**	4	WASHER-HARD (10.2X18.5X2.5-MM THK)	
	25	1	**139-4727**	1	BRACKET	
	26	1	**3B-1915**	1	BOLT (3/8-16X1.75-IN)	
	27	1	**114-5785**	1	SPACER (10.5X19X11.5-MM THK)	
	28	1	**9X-6458**	1	WASHER-HARD (10.2X22.5X3-MM THK)	
	29	1	**0L-1351**	2	BOLT (3/8-16X0.875-IN)	
	30	1	**0T-0573**	2	BOLT (3/8-16X2.75-IN)	
	31	1	**4N-0933**	1	GASKET	
	32	1	**2P-2772**	1	COVER	
	33	1	**0T-0065**	1	BOLT (3/8-16X3.5-IN)	
	34	1	**091-0081**	1	SPACER (10.5X20X10-MM THK)	

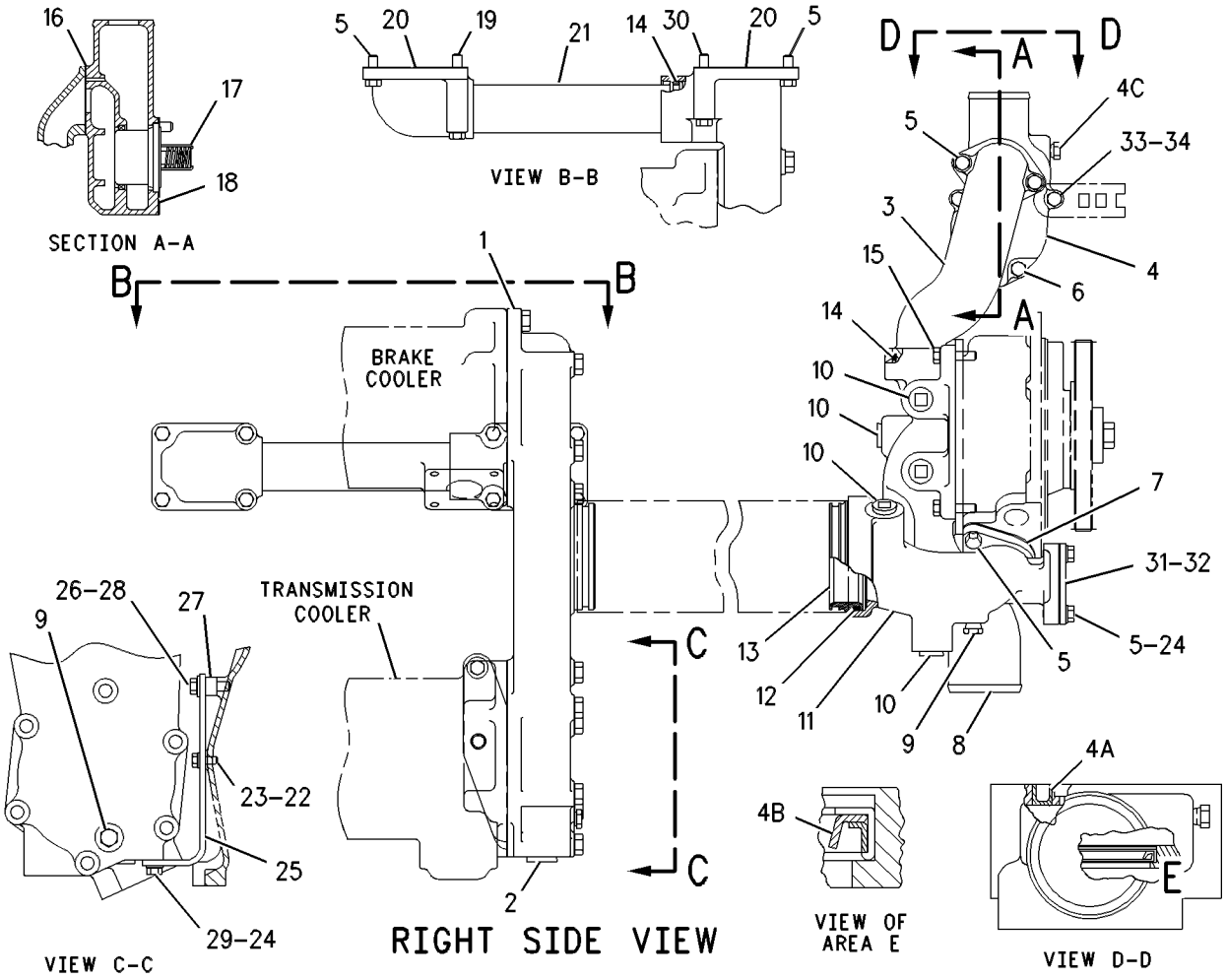

GRAPHIC #1 **<END>** g00589550

COOLING SYSTEM

152-6945 MOTOR & MTG GP-HYDRAULIC FAN

S/N: AXM1-UP

PART OF 152-6944 COOLING AR

SMCS-1386 **i01574070**

NOTE	REF NO	GRAPHIC REF	PART NUMBER	QTY	PART NAME 1 2 3 4 5 6 (PRODUCT LEVEL)	SEE PAGE
Y	1	1	**170-4734**	1	MOTOR GP-GEAR (HYDRAULIC FAN)	719
M	2	1	**8T-4183**	2	BOLT (M12X1.75X40-MM)	
	3	1	**8T-4223**	2	WASHER-HARD (13.5X25.5X3-MM THK)	
M	4	1	**8T-4244**	2	NUT (M12X1.75-THD)	

M-METRIC PART
Y-SEPARATE ILLUSTRATION

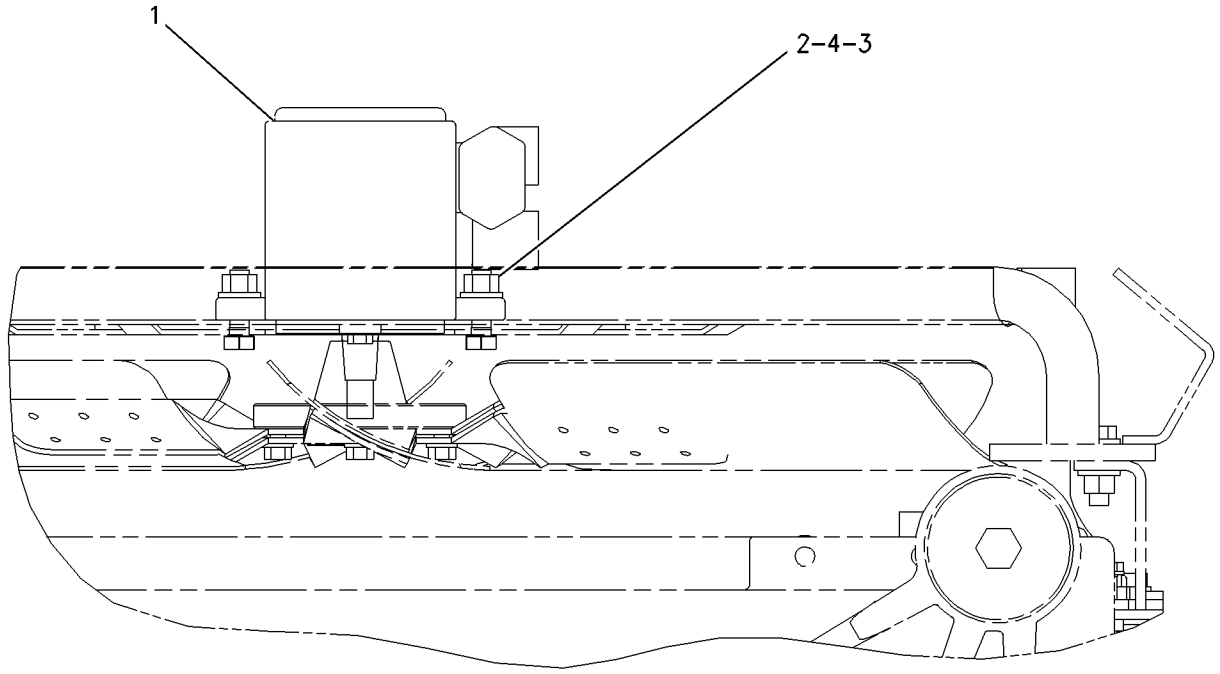

TOP VIEW

GRAPHIC #1 **<END>** g00724893

100-9347 PUMP GP-WATER

S/N: BET200-UP
PROVIDES CAST IRON ADAPTER
PART OF 153-7076, 235-4689 ENGINE AR-COMPLETE

SMCS-1361 **i01950593**

NOTE	REF NO	GRAPHIC REF	PART NUMBER	QTY	PART NAME 1 2 3 4 5 6 (PRODUCT LEVEL)	SEE PAGE
YCR	1	1	**135-4925**	1	PUMP GP-WATER	108
	2	1	**4P-2383**	1	ADAPTER	
	3	1	**9M-3786**	1	SEAL-O-RING	
	4	1	**122-3772**	1	SEAL-O-RING	
	5	1	**109-0077**	1	SEAL-O-RING	

C-CHANGE FROM PREVIOUS TYPE
R-REMFG PART MAY BE AVAILABLE
Y-SEPARATE ILLUSTRATION

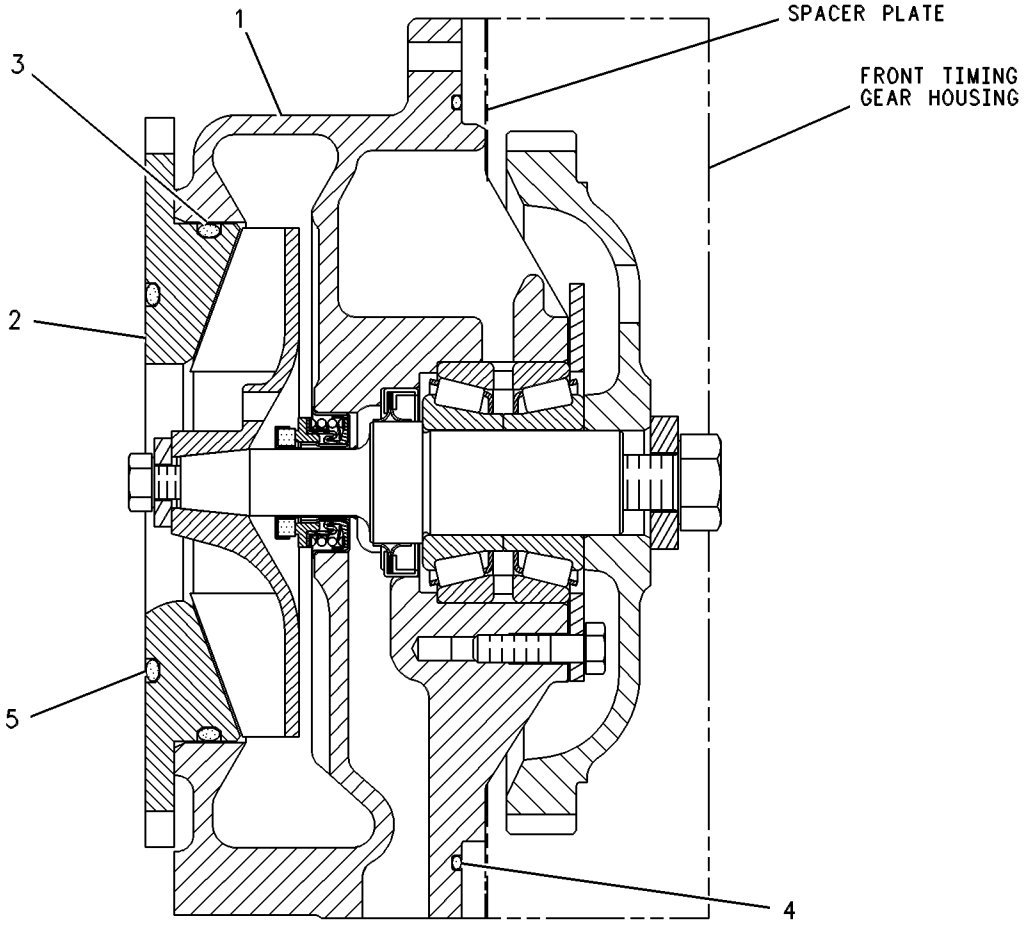

GRAPHIC #1 **<END>** g00263504

COOLING SYSTEM

135-4925 PUMP GP-WATER*R

S/N: BET200-UP

PART OF 100-9347 PUMP GP-WATER

SMCS-1361 **i02139838**

NOTE	REF NO	GRAPHIC REF	PART NUMBER	QTY	PART NAME 1 2 3 4 5 6 (PRODUCT LEVEL)	SEE PAGE
	1	1	**135-4918**	1	HOUSING-WATER PUMP	
	2	1	**129-9907**	1	IMPELLER-PUMP	
W	3	1	**9M-6527**	1	WASHER-HARD (10.2X25.5X5-MM THK)	
	4	1	**0S-1591**	1	BOLT (3/8-16X1.5-IN)	
	5	1	**1A-1135**	1	BOLT (5/8-11X2-IN)	
W	6	1	**128-0317**	1	SEAL GP	
	7	1	**6I-3643**	1	GEAR (74-TEETH)	
W	8	1	**153-1256**	1	SEAL-LIP TYPE	
W	9	1	**135-4928**	1	SHAFT-WATER PUMP	
W	10	1	**5S-0581**	1	WASHER-HARD (17X38X8-MM THK)	
	11	1	**1B-7182**	4	BOLT (5/16-18X1.25-IN)	
W	12	1	**108-7930**	1	BEARING AS-ROLLER	
W	13	1	**136-1107**	1	RETAINER	
W	14	1	**136-3742**	1	FILTER-WATER PUMP	
					AVAILABLE REPAIR KIT(S):	
W			**138-6744**	1	KIT-PUMP REBUILD (WATER)	
			128-2922	1	KIT-GASKET (WATER PUMP)	
					(ALSO INCLUDES O-RINGS)	

W-KIT(S) MARKED W INCLUDES PART(S) MARKED W

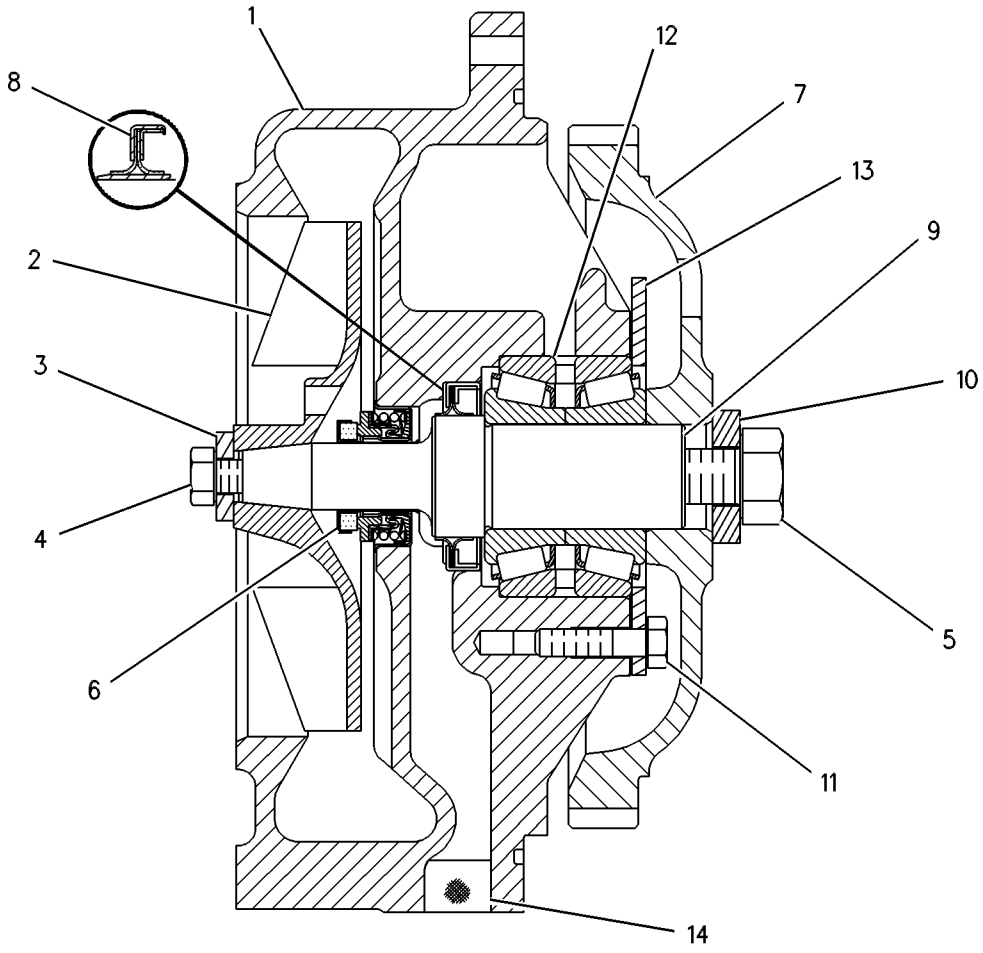

GRAPHIC #1 **<END>** g00263499

COOLING SYSTEM

185-1350 RADIATOR GP

S/N: AXM1-442

PART OF 152-6944 COOLING AR

SMCS-1353, 1377 **i01777405**

NOTE	REF NO	GRAPHIC REF	PART NUMBER	QTY	PART NAME 1 2 3 4 5 6 (PRODUCT LEVEL)	SEE PAGE
	1	1	**7U-8704**	2	WASHER (17X65X5-MM THK)	
	2	1	**8G-0841**	2	MOUNTING	
	3	1	**9R-4760**	2	ROD END	
	4	1	**9W-9915**	2	MOUNT AS	
	5	1	**9W-9952**	2	WASHER (16.75X86X8-MM THK)	
	6	1	**9W-9953**	2	SLEEVE	
	7	1	**174-6793**	1	BRACKET	
Y	8	1	**185-1351**	1	RADIATOR GP	116
	9	1	**188-6084**	2	SPACER (16.5X30X3.2-MM THK)	
	10	1	**188-6399**	1	PLATE	
	11	1	**189-3545**	2	BAR AS	
					(EACH INCLUDES)	
		1	**6U-2097**	1	BUSHING	
	12	1	**192-3640**	1	BRACKET AS-MOUNTING	
	13	1	**193-3794**	1	SHROUD-FAN	
	14	1	**209-9104**	1	STRIP-RUBBER	
	15	1	**209-9105**	1	PLATE-MOUNTING	
	16	1	**3E-9411**	2	WASHER-HARD (17.5X38X6-MM THK)	
M	17	1	**5C-7261**	4	NUT (M8X1.25-THD)	
	18	1	**5P-4116**	8	WASHER-HARD (8.8X20.5X2-MM THK)	
	19	1	**7X-0579**	11	WASHER-HARD (8.8X25.5X2-MM THK)	
M	20	1	**7X-2475**	2	BOLT (M16X2X130-MM)	
M	21	1	**7X-2553**	4	BOLT (M16X2X40-MM)	
M	22	1	**7X-2554**	2	BOLT (M16X2X70-MM)	
M	23	1	**8T-4132**	8	NUT (M16X2-THD)	
M	24	1	**8T-4140**	2	BOLT (M16X2X60-MM)	
M	25	1	**8T-4175**	2	BOLT (M16X2X90-MM)	
M	26	1	**8T-4183**	2	BOLT (M12X1.75X40-MM)	
M	27	1	**8T-4197**	7	BOLT (M8X1.25X40-MM)	
	28	1	**8T-4223**	4	WASHER-HARD (13.5X25.5X3-MM THK)	
M	29	1	**8T-4244**	2	NUT (M12X1.75-THD)	
M	30	1	**8T-4908**	4	BOLT (M8X1.25X25-MM)	
M	31	1	**8T-7547**	4	BOLT (M8X1.25X30-MM)	
	32	1	**9X-8257**	14	WASHER (17.5X30X3.5-MM THK)	

M-METRIC PART
Y-SEPARATE ILLUSTRATION

185 - 1350 **RADIATOR GP** *(contd.)* **i01777405**

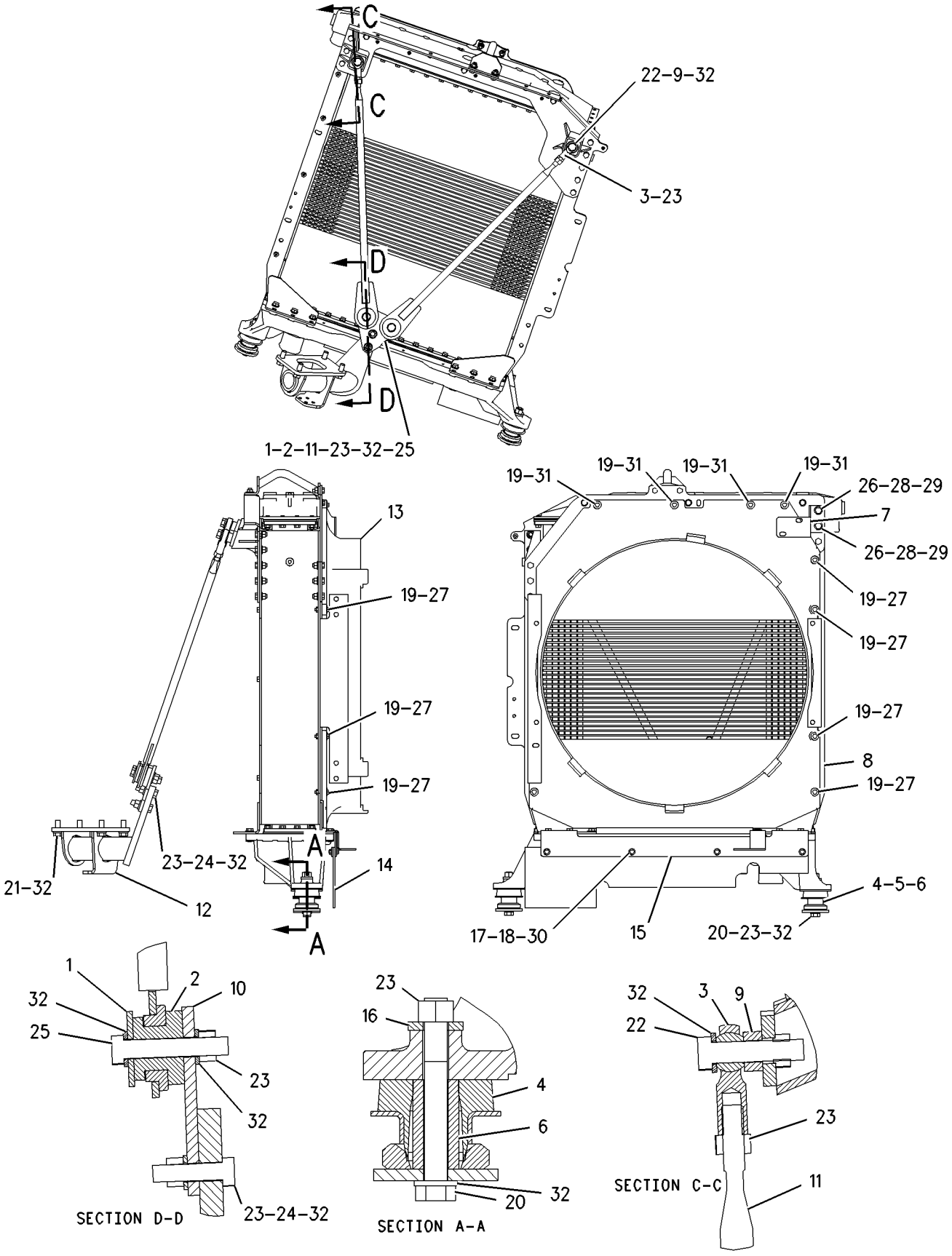

GRAPHIC #1 **<END>** g00908725

COOLING SYSTEM

185-1350 RADIATOR GP

S/N: AXM443-995

PART OF 152-6944 COOLING AR

SMCS-1353, 1377 **i01756565**

NOTE	REF NO	GRAPHIC REF	PART NUMBER	QTY	PART NAME 1 2 3 4 5 6 (PRODUCT LEVEL)	SEE PAGE
	1	1	**7U-8704**	2	WASHER (17X65X5-MM THK)	
	2	1	**8G-0841**	2	MOUNTING	
	3	1	**9R-4760**	2	ROD END	
	4	1	**9W-9915**	2	MOUNT AS	
	5	1	**9W-9952**	2	WASHER (16.75X86X8-MM THK)	
	6	1	**9W-9953**	2	SLEEVE	
	7	1	**174-6793**	1	BRACKET	
Y	8	1	**185-1351**	1	RADIATOR GP	116
	9	1	**188-6084**	2	SPACER (16.5X30X3.2-MM THK)	
	10	1	**188-6399**	1	PLATE	
	11	1	**189-3545**	2	BAR AS	
					(EACH INCLUDES)	
		1	**6U-2097**	1	BUSHING	
	12	1	**192-3640**	1	BRACKET AS-MOUNTING	
	13	1	**209-9104**	1	STRIP-RUBBER	
	14	1	**209-9105**	1	PLATE-MOUNTING	
C	15	1	**211-7979**	2	PLATE-RETAINING	
C	16	1	**213-1676**	1	SHROUD AS-FAN	
	17	1	**3E-9411**	2	WASHER-HARD (17.5X38X6-MM THK)	
M	18	1	**5C-7261**	4	NUT (M8X1.25-THD)	
	19	1	**5P-4116**	8	WASHER-HARD (8.8X20.5X2-MM THK)	
	20	1	**7X-0579**	11	WASHER-HARD (8.8X25.5X2-MM THK)	
M	21	1	**7X-2475**	2	BOLT (M16X2X130-MM)	
M	22	1	**7X-2553**	4	BOLT (M16X2X40-MM)	
M	23	1	**7X-2554**	2	BOLT (M16X2X70-MM)	
M	24	1	**8T-4132**	8	NUT (M16X2-THD)	
M	25	1	**8T-4140**	2	BOLT (M16X2X60-MM)	
M	26	1	**8T-4175**	2	BOLT (M16X2X90-MM)	
M	27	1	**8T-4183**	2	BOLT (M12X1.75X40-MM)	
M	28	1	**8T-4197**	7	BOLT (M8X1.25X40-MM)	
	29	1	**8T-4223**	4	WASHER-HARD (13.5X25.5X3-MM THK)	
M	30	1	**8T-4244**	2	NUT (M12X1.75-THD)	
CM	31	1	**8T-7547**	8	BOLT (M8X1.25X30-MM)	
	32	1	**9X-8257**	14	WASHER (17.5X30X3.5-MM THK)	

C-CHANGE FROM PREVIOUS TYPE
M-METRIC PART
Y-SEPARATE ILLUSTRATION

185 - 1350 **RADIATOR GP** *(contd.)* **i01756565**

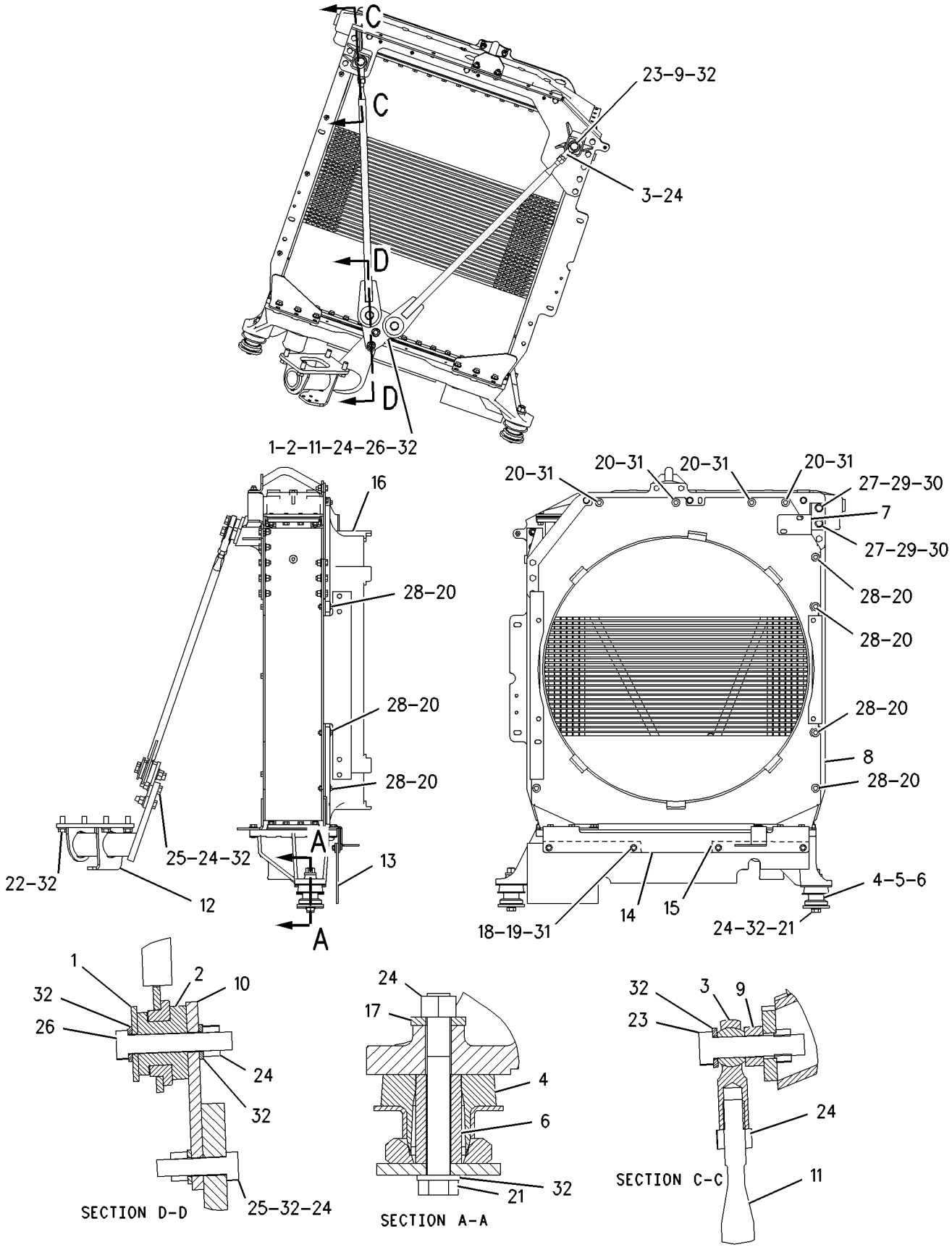

GRAPHIC #1 **<END>** g00898574

COOLING SYSTEM

185-1350 RADIATOR GP

S/N: AXM996-UP

PART OF 152-6944 COOLING AR

SMCS-1353, 1377 **i02189590**

NOTE	REF NO	GRAPHIC REF	PART NUMBER	QTY	PART NAME 1 2 3 4 5 6 (PRODUCT LEVEL)	SEE PAGE
	1	1	**7U-8704**	2	WASHER (17X65X5-MM THK)	
	2	1	**8G-0841**	2	MOUNTING	
	3	1	**9R-4760**	2	ROD END	
	4	1	**9W-9915**	2	MOUNT AS	
	5	1	**9W-9952**	2	WASHER (16.75X86X8-MM THK)	
	6	1	**9W-9953**	2	SLEEVE	
	7	1	**174-6793**	1	BRACKET	
Y	8	1	**185-1351**	1	RADIATOR GP	116
	9	1	**188-6084**	2	SPACER (16.5X30X3.2-MM THK)	
	10	1	**253-4861**	1	PLATE	
	11	1	**189-3545**	2	BAR AS	
					(EACH INCLUDES)	
		1	**6U-2097**	1	BUSHING	
	13	1	**209-9104**	1	STRIP-RUBBER	
	14	1	**209-9105**	1	PLATE-MOUNTING	
	15	1	**211-7979**	2	PLATE-RETAINING	
	16	1	**213-1676**	1	SHROUD AS-FAN	
	17	1	**3E-9411**	2	WASHER-HARD (17.5X38X6-MM THK)	
M	18	1	**5C-7261**	4	NUT (M8X1.25-THD)	
	19	1	**5P-4116**	8	WASHER-HARD (8.8X20.5X2-MM THK)	
	20	1	**7X-0579**	11	WASHER-HARD (8.8X25.5X2-MM THK)	
M	21	1	**7X-2475**	2	BOLT (M16X2X130-MM)	
M	23	1	**7X-2554**	2	BOLT (M16X2X70-MM)	
M	24	1	**8T-4132**	8	NUT (M16X2-THD)	
M	25	1	**8T-4140**	2	BOLT (M16X2X60-MM)	
M	26	1	**8T-4175**	2	BOLT (M16X2X90-MM)	
M	27	1	**8T-4183**	2	BOLT (M12X1.75X40-MM)	
M	28	1	**8T-4197**	7	BOLT (M8X1.25X40-MM)	
	29	1	**8T-4223**	4	WASHER-HARD (13.5X25.5X3-MM THK)	
M	30	1	**8T-4244**	2	NUT (M12X1.75-THD)	
M	31	1	**8T-7547**	8	BOLT (M8X1.25X30-MM)	
C	32	1	**9X-8257**	10	WASHER (17.5X30X3.5-MM THK)	

C-CHANGE FROM PREVIOUS TYPE
M-METRIC PART
Y-SEPARATE ILLUSTRATION

185 - 1350 **RADIATOR GP** *(contd.)* **i02189590**

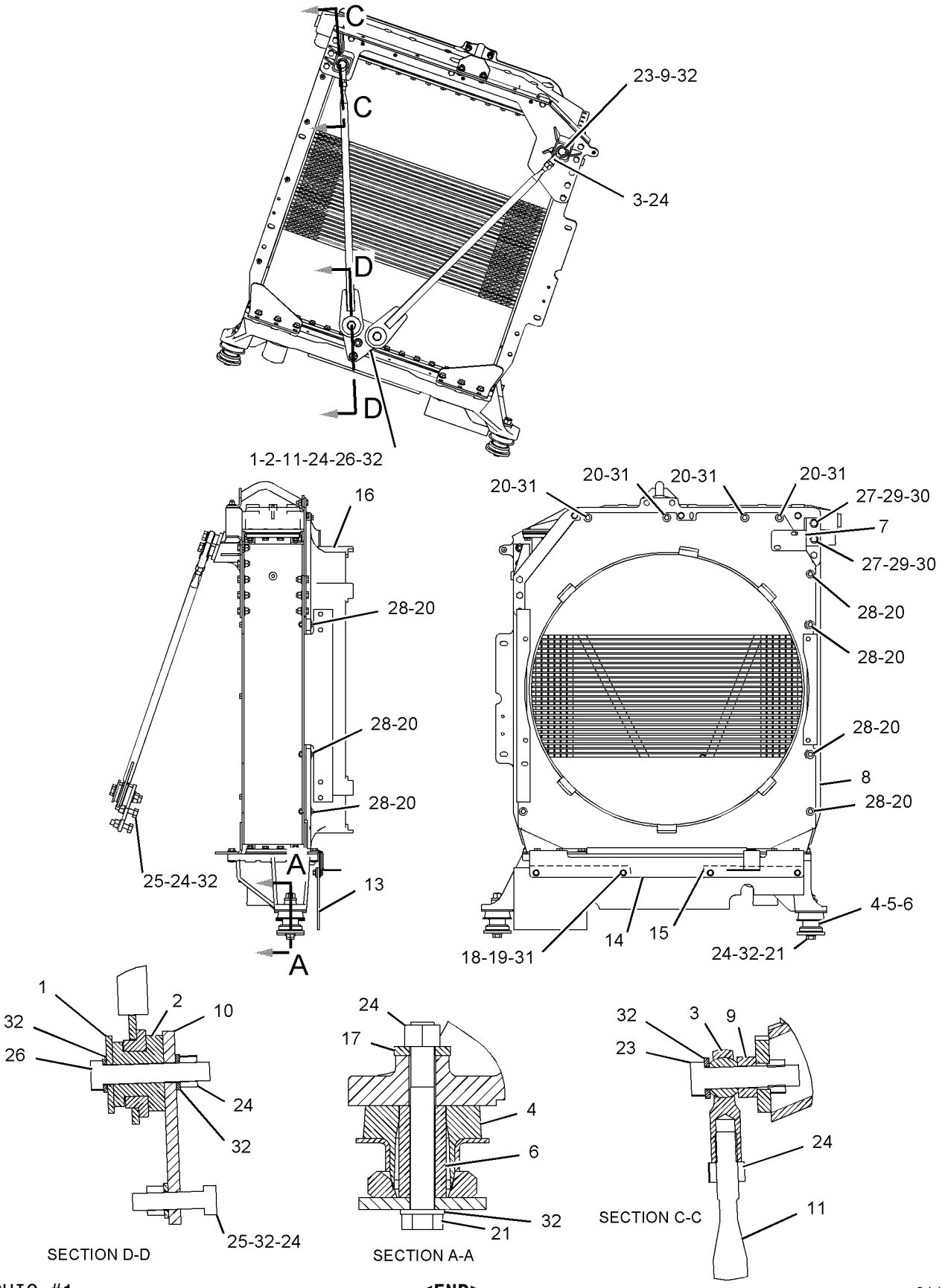

GRAPHIC #1 **<END>** g01107100

COOLING SYSTEM

185-1351 RADIATOR GP

S/N: AXM1-UP

PART OF 185-1350 RADIATOR GP

SMCS-1353, 1377 **i02261944**

NOTE	REF NO	GRAPHIC REF	PART NUMBER	QTY	PART NAME 1 2 3 4 5 6 (PRODUCT LEVEL)	SEE PAGE
	1	1	**166-6974**	1	CORE	
	2	1	**166-6975**	1	SUPPORT AS	
		1	**9R-3572**	1	BOSS (M12X20-MM)	
	3	1	**167-1129**	4	STRIP-STIFFENING	
	4	1	**167-1130**	4	STRIP-STIFFENING	
	5	1	**191-9264**	1	SUPPORT AS-FRONT	
	6	1	**191-9268**	1	SUPPORT AS (LH)	
	7	1	**191-9270**	1	SUPPORT AS-REAR	
	8	1	**192-3192**	2	GASKET	
	9	1	**197-1547**	1	BRACKET AS	
	10	1	**197-6793**	1	TANK AS-RADIATOR TOP	
		1	**197-0070**	4	STUD-TAPERLOCK	
	11	1	**200-2163**	1	BRACKET	
	12	1	**201-8901**	1	TANK AS-RADIATOR	
		1	**197-0070**	4	STUD-TAPERLOCK	
	13	1	**7X-7729**	2	WASHER (11X25X3-MM THK)	
	14	1	**8T-4121**	86	WASHER-HARD (11X21X2.5-MM THK)	
M	15	1	**8T-4133**	12	NUT (M10X1.5-THD)	
M	16	1	**8T-4136**	6	BOLT (M10X1.5X25-MM)	
M	17	1	**8T-4139**	12	BOLT (M12X1.75X30-MM)	
M	18	1	**8T-4195**	8	BOLT (M10X1.5X30-MM)	
M	19	1	**8T-4196**	64	BOLT (M10X1.5X35-MM)	
	20	1	**8T-4223**	24	WASHER-HARD (13.5X25.5X3-MM THK)	
M	21	1	**8T-4244**	12	NUT (M12X1.75-THD)	
M	22	1	**8T-4956**	12	BOLT (M12X1.75X35-MM)	
BD	23	1	**5P-5727**		SEAL	

B-USE AS REQUIRED
D-ORDER BY THE METER
M-METRIC PART

185-1351 RADIATOR GP *(contd.)* **i02261944**

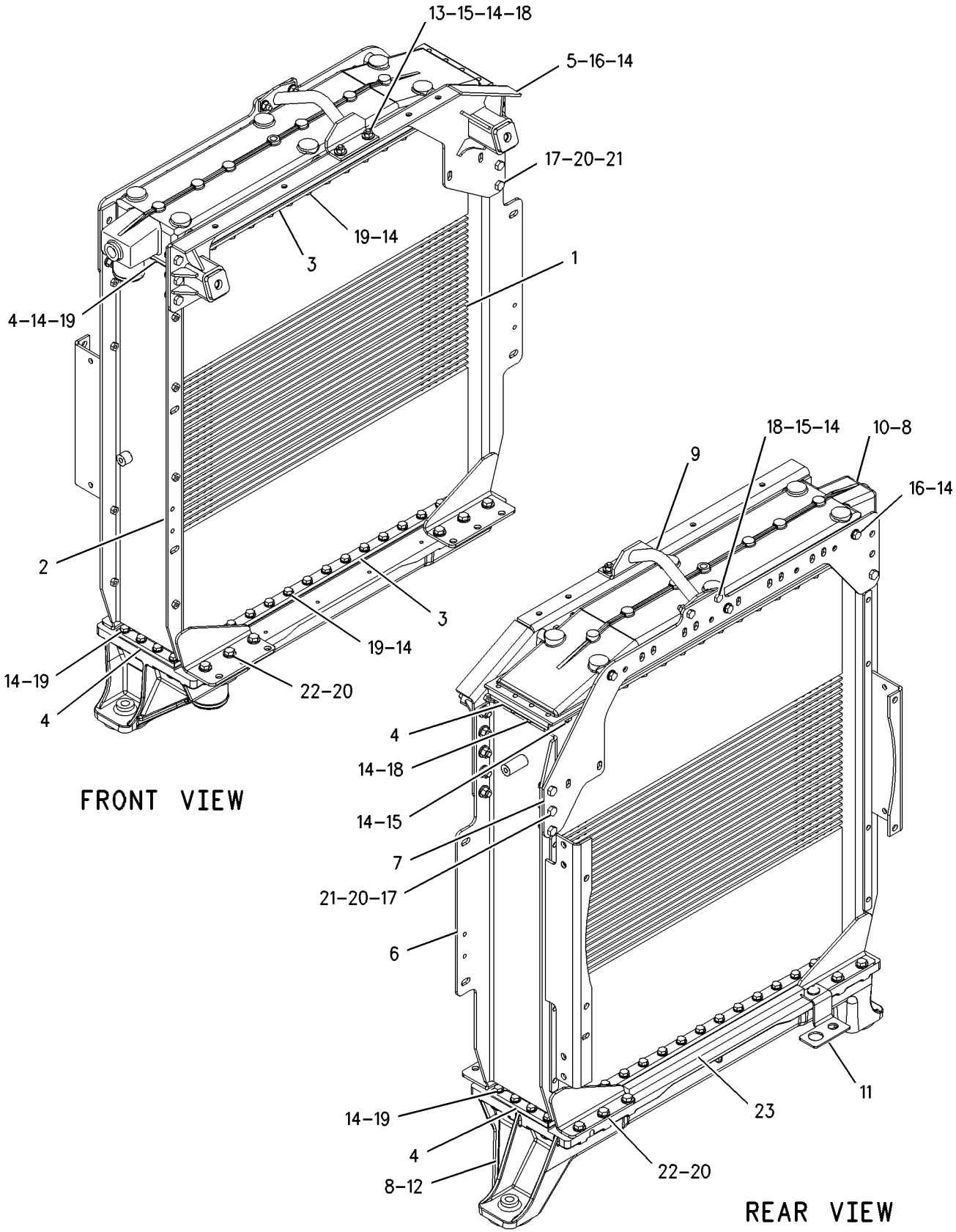

GRAPHIC #1 **<END>** g00796200

COOLING SYSTEM

185-3941 SHROUD GP-RADIATOR

S/N: AXM1-UP

PART OF 152-6944 COOLING AR

SMCS-7272 **i02117337**

NOTE	REF NO	GRAPHIC REF	PART NUMBER	QTY	PART NAME 1 2 3 4 5 6 (PRODUCT LEVEL)	SEE PAGE
	1	1	**176-6279**	1	BUSHING-RUBBER	
	2	1	**176-6404**	1	BUSHING-RUBBER	
	3	1	**209-6148**	1	COVER	
	4	1	**209-6149**	1	PLATE	
	5	1	**209-7533**	1	COVER	
	6	1	**209-7534**	2	PLATE	
	7	1	**209-7535**	2	PLATE	
	8	1	**212-7961**	1	PLATE	
	9	1	**185-5673**	1	DUCT	
M	10	1	**5C-7261**	7	NUT (M8X1.25-THD)	
	11	1	**5P-1076**	6	WASHER-HARD (13.5X30X4-MM THK)	
	12	1	**5P-4116**	3	WASHER-HARD (8.8X20.5X2-MM THK)	
	13	1	**6P-6641**	2	GROMMET	
	14	1	**7X-0579**	13	WASHER-HARD (8.8X25.5X2-MM THK)	
	15	1	**7Y-3196**	1	GROMMET	
	16	1	**8T-4223**	6	WASHER-HARD (13.5X25.5X3-MM THK)	
	17	1	**8T-4224**	3	WASHER-HARD (8.8X16X2-MM THK)	
M	18	1	**8T-4244**	6	NUT (M12X1.75-THD)	
M	19	1	**8T-4908**	13	BOLT (M8X1.25X25-MM)	
M	20	1	**8T-4956**	6	BOLT (M12X1.75X35-MM)	
M	21	1	**8T-7547**	7	BOLT (M8X1.25X30-MM)	

M-METRIC PART

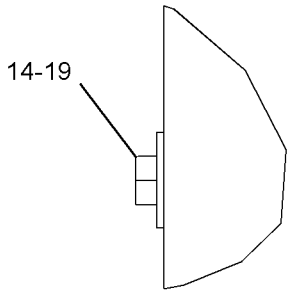

VIEW OF AREA D

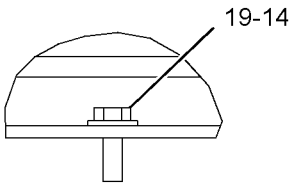

VIEW OF AREA E

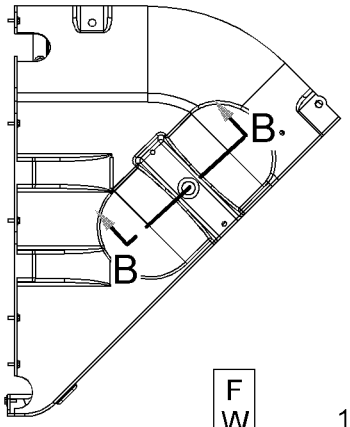

TOP VIEW

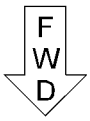

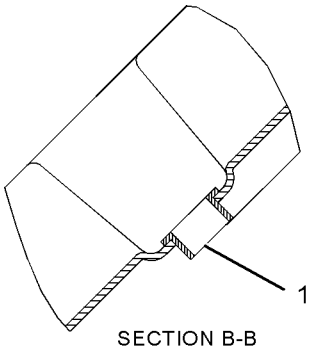

SECTION B-B

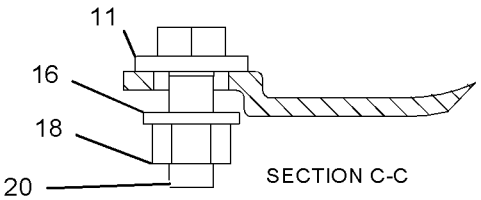

SECTION C-C

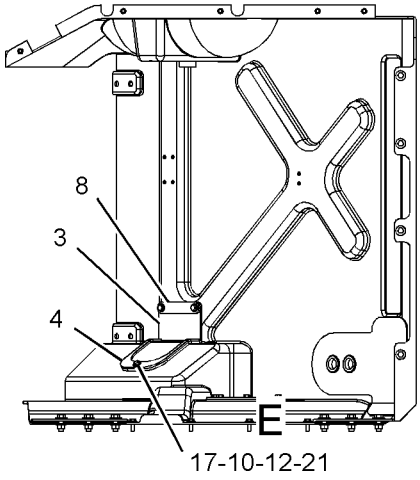

RIGHT SIDE VIEW

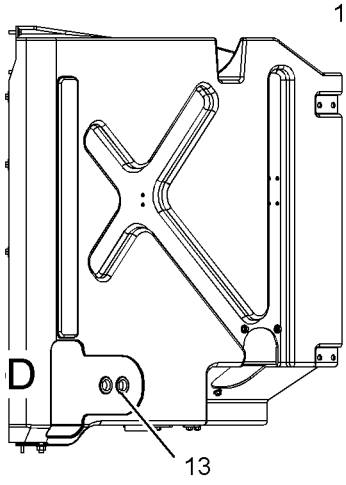

FRONT VIEW

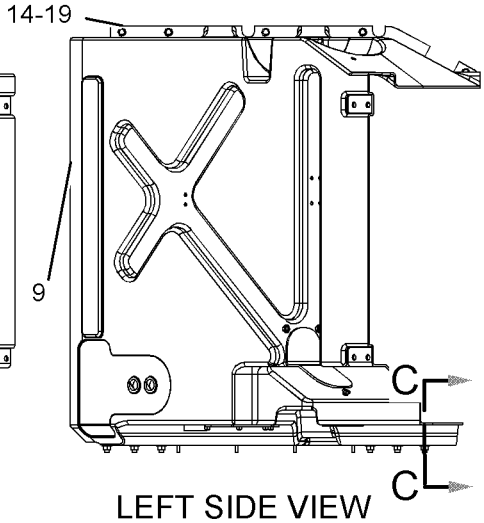

LEFT SIDE VIEW

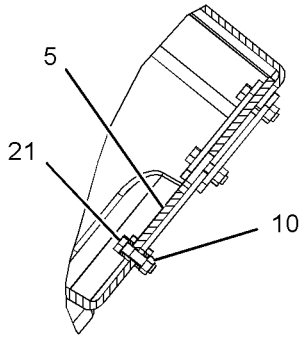

SECTION F-F

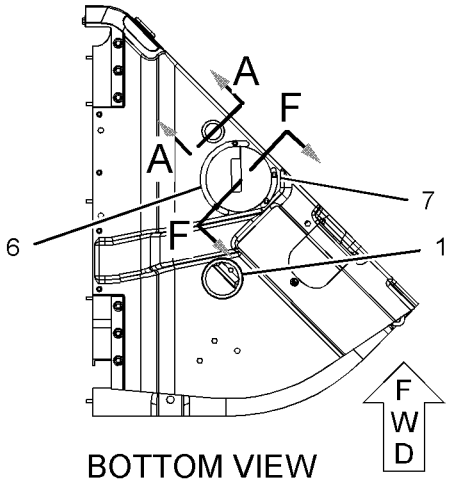

BOTTOM VIEW

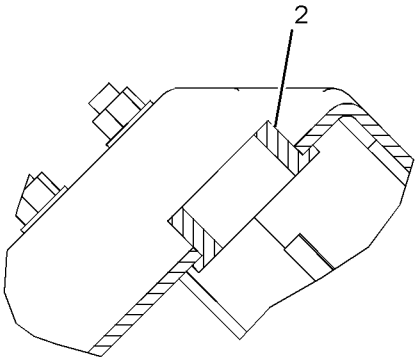

SECTION A-A

GRAPHIC #1

<END>

g01078422

COOLING SYSTEM

139-5320 TANK GP-COOLANT

S/N: AXM1-763

PART OF 152-6944 COOLING AR

SMCS-1354, 1377 **i01568885**

NOTE	REF NO	GRAPHIC REF	PART NUMBER	QTY	PART NAME 1 2 3 4 5 6 (PRODUCT LEVEL)	SEE PAGE
E	1	1	**8C-3681**		HOSE (160CM)	
M	2	1	**8T-4133**	2	NUT (M10X1.5-THD)	
	3	1	**174-5592**	1	STRAP	
Y	4	1	**199-7495**	1	TANK GP-COOLANT	122
	5	1	**8T-4121**	2	WASHER-HARD (11X21X2.5-MM THK)	

E-ORDER BY THE CENTIMETER
M-METRIC PART
Y-SEPARATE ILLUSTRATION

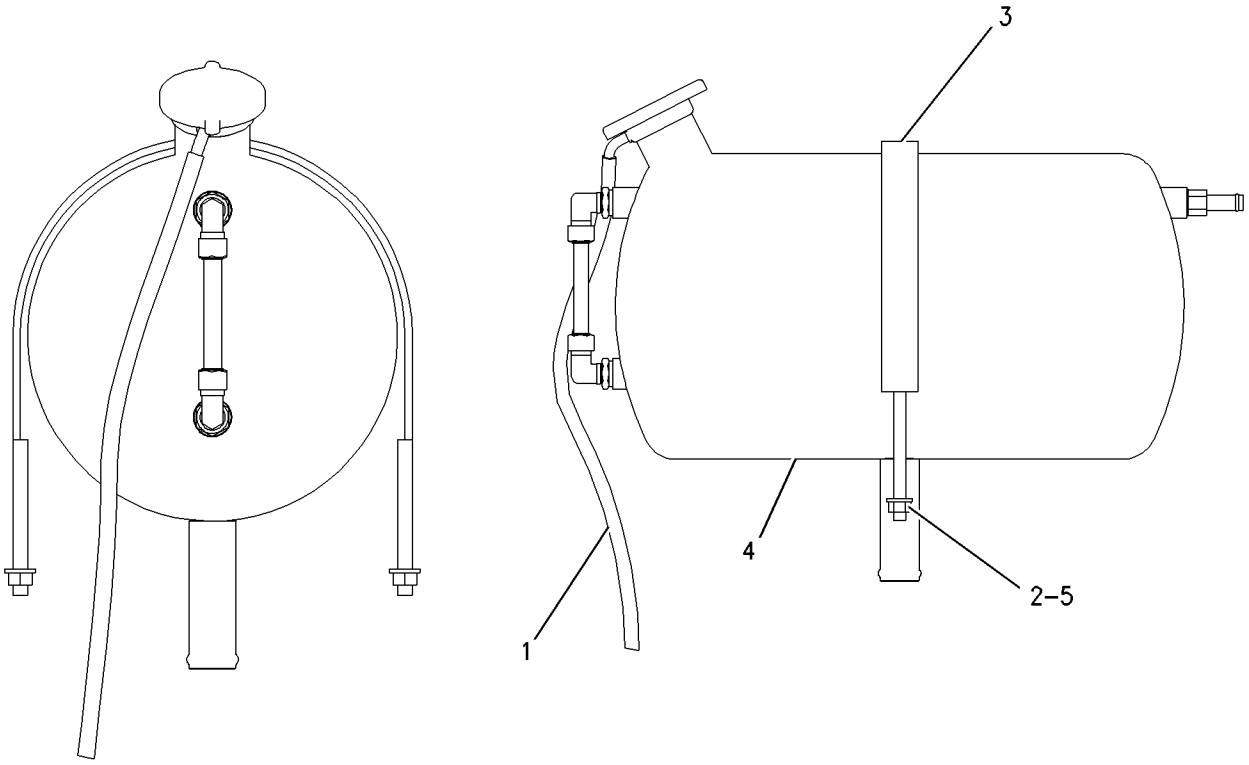

GRAPHIC #1 **<END>** g00793041

139-5320 TANK GP-COOLANT

S/N: AXM764-UP

PART OF 152-6944 COOLING AR

SMCS-1354, 1377 **i02091072**

NOTE	REF NO	GRAPHIC REF	PART NUMBER	QTY	PART NAME 1 2 3 4 5 6 (PRODUCT LEVEL)	SEE PAGE
	1	1	**211-5735**	1	HOSE	
M	2	1	**8T-4133**	2	NUT (M10X1.5-THD)	
	3	1	**174-5592**	1	STRAP	
Y	4	1	*228-4975*	1	TANK GP-COOLANT	124
	5	1	**7X-0578**	2	WASHER-HARD (10.2X32X2.5-MM THK)	

M-METRIC PART
Y-SEPARATE ILLUSTRATION

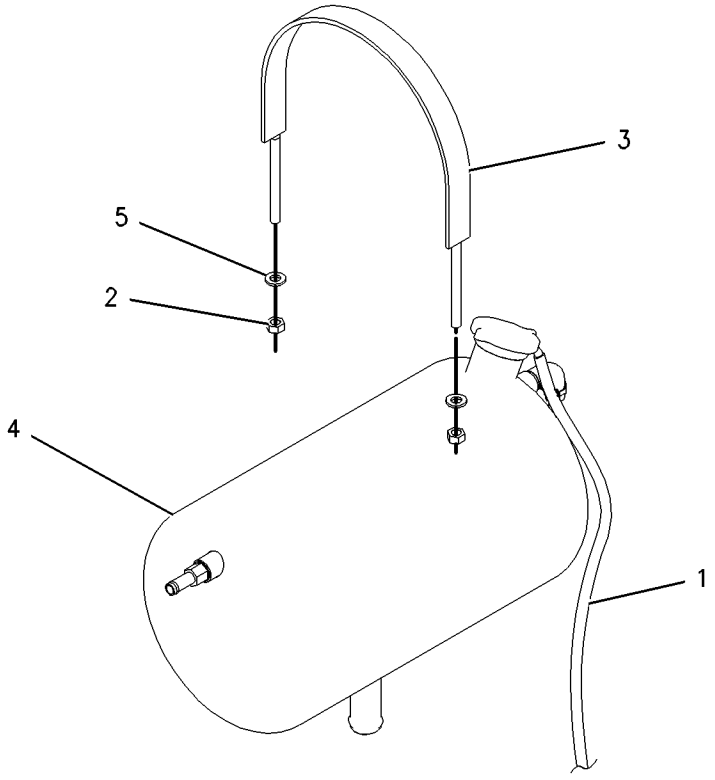

GRAPHIC #1 **<END>** g00945915

COOLING SYSTEM

199-7495 TANK GP-COOLANT

S/N: AXM1-260

PART OF 139-5320 TANK GP-COOLANT

SMCS-1354, 1377 **i01622916**

NOTE	REF NO	GRAPHIC REF	PART NUMBER	QTY	PART NAME 1 2 3 4 5 6 (PRODUCT LEVEL)	SEE PAGE
	1	1	**174-5602**	1	TANK AS-COOLANT	
	2	1	**197-3599**	2	ELBOW-ADJUSTABLE	
	3	1	**197-3601**	1	TUBE	
	4	1	**197-3610**	1	RING-RETAINER	
	5	1	**8F-9206**	2	SEAL-O-RING	
	6	1	**8T-6850**	1	SEAL-O-RING	

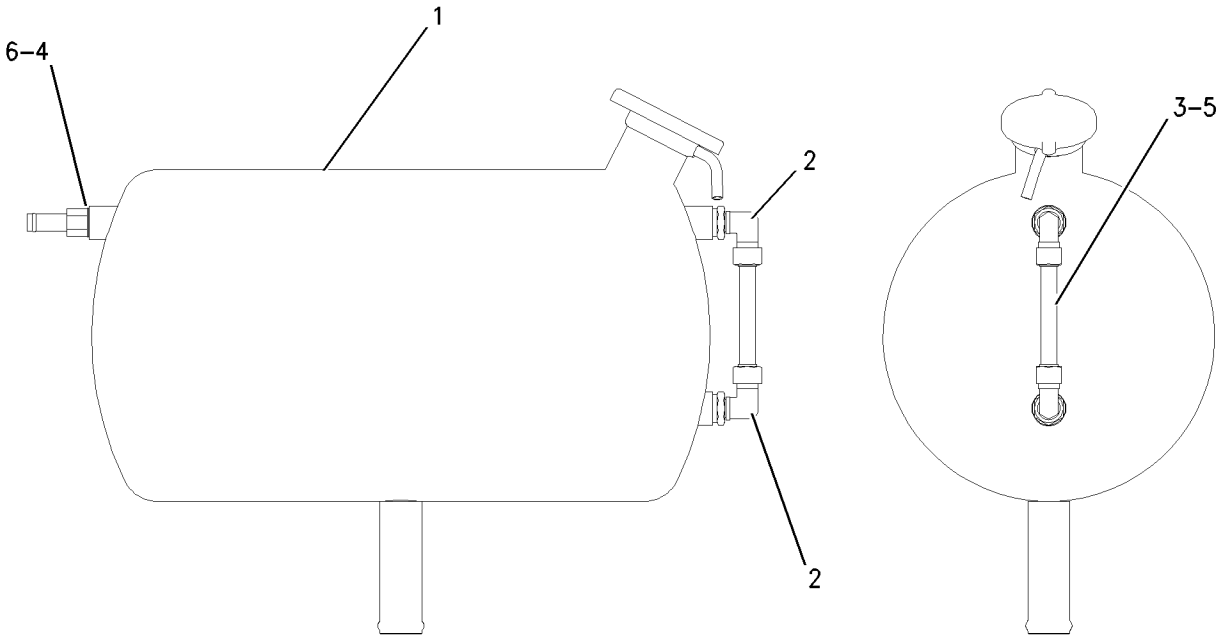

GRAPHIC #1 **<END>** g00839849

199-7495 TANK GP-COOLANT

S/N: AXM261-763

PART OF 139-5320 TANK GP-COOLANT

SMCS-1354, 1377 **i01622913**

NOTE	REF NO	GRAPHIC REF	PART NUMBER	QTY	PART NAME 1 2 3 4 5 6 (PRODUCT LEVEL)	SEE PAGE
	1	1	**6L-8617**	1	CAP-RADIATOR (7-PSI)	
	2	1	**174-5602**	1	TANK AS-COOLANT	
	3	1	**197-3601**	1	TUBE	
	4	1	**197-3610**	1	RING-RETAINER	
	5	1	**206-0836**	2	INSERT	
	6	1	**206-0837**	2	ELBOW	
					(EACH INCLUDES)	
		1	**8T-6850**	1	SEAL-O-RING	
	7	1	**8T-6850**	1	SEAL-O-RING	

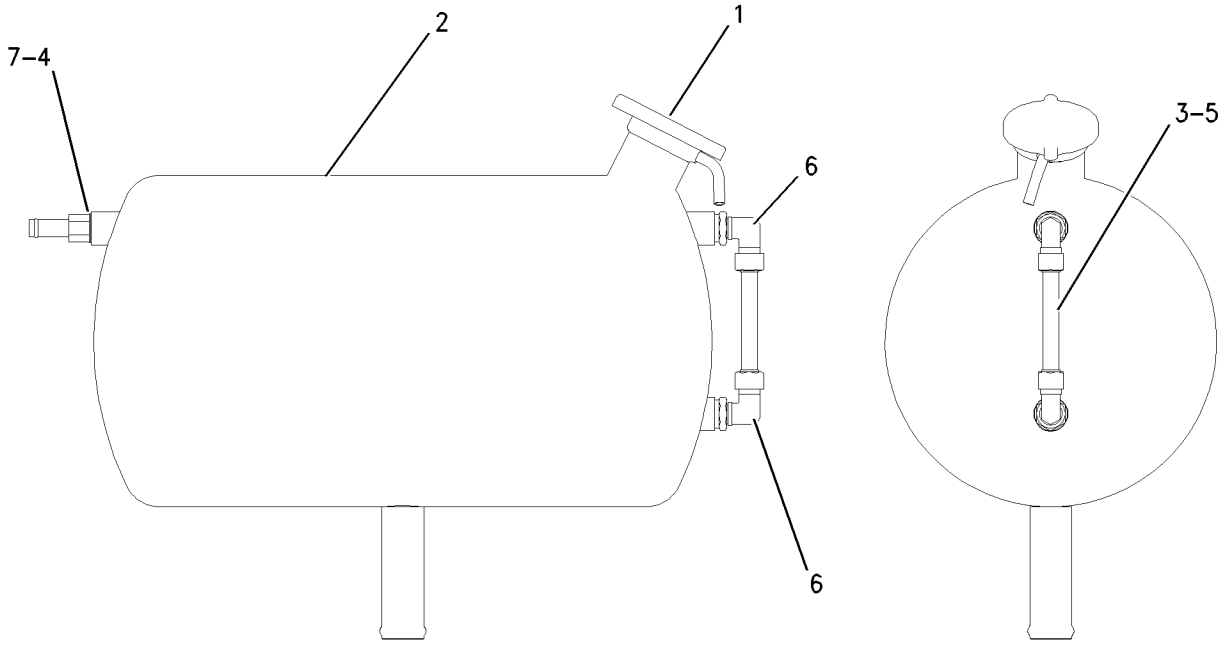

GRAPHIC #1 **<END>** g00793998

228-4975 TANK GP-COOLANT

S/N: AXM764-UP

PART OF 139-5320 TANK GP-COOLANT

SMCS-1354, 1377 **i01850059**

NOTE	REF NO	GRAPHIC REF	PART NUMBER	QTY	PART NAME 1 2 3 4 5 6 (PRODUCT LEVEL)	SEE PAGE
	1	1	**6L-8617**	1	CAP-RADIATOR (7-PSI)	
	2	1	**197-3601**	1	TUBE	
	3	1	**197-3610**	1	RING-RETAINER	
	4	1	**226-7167**	2	HOSE-ELBOW	
	5	1	**228-4976**	1	TANK AS-COOLANT	
		1	**8N-8846**	1	NECK-FILLER	
	6	1	**228-4977**	4	CLAMP	
	7	1	**8T-6850**	1	SEAL-O-RING	

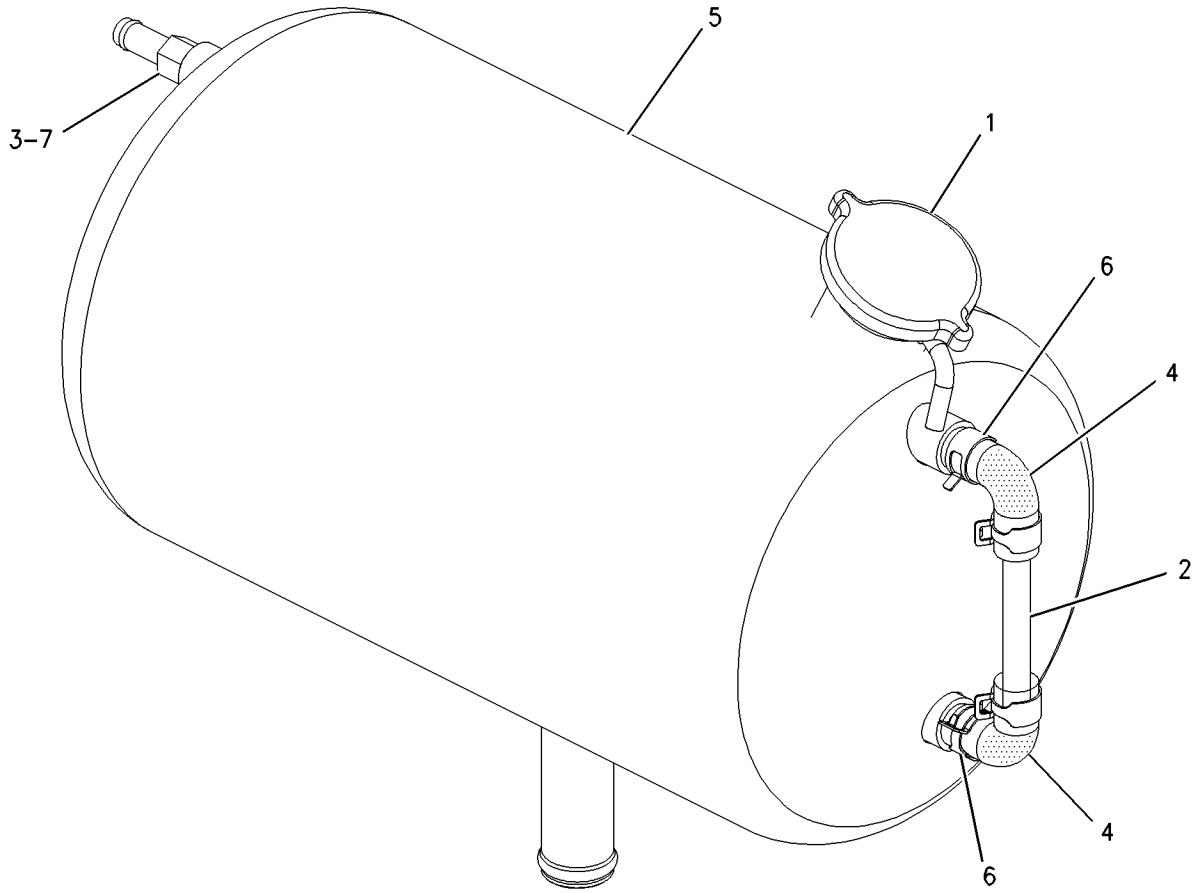

GRAPHIC #1 **<END>** g00945614

AIR INLET AND EXHAUST SYSTEM

165-0234 AFTERCOOLER GP-AIR

S/N: AXM1-399

PART OF 152-6943 POWER TRAIN AR

SMCS-1063 **i01683467**

NOTE	REF NO	GRAPHIC REF	PART NUMBER	QTY	PART NAME 1 2 3 4 5 6 (PRODUCT LEVEL)	SEE PAGE
	1	1	**7T-8331**	4	MOUNTING	
	2	1	**125-7484**	3	SPACER (25X11X36-MM THK)	
	3	1	**188-3471**	1	AFTERCOOLER AS	
	4	1	**188-4921**	5	SPACER (5X18X0.5-MM THK)	
	5	1	**190-7618**	1	SPIDER AS-FAN	
Y	6	1	**206-2543**	1	MOTOR GP-GEAR	721
	7	1	**214-7409**	1	SUPPORT AS	
	8	1	**191-8163**	1	GUARD AS-FAN	
	9	1	**191-8164**	1	SHROUD-FAN	
	10	1	**209-3526**	1	BAFFLE	
	11	1	**191-8166**	1	STRIP-FOAM	
	12	1	**191-8167**	1	STRIP-FOAM	
	13	1	**217-5994**	1	PLATE	
	14	1	**206-9381**	2	STRIP-FOAM	
	15	1	**7D-1649**	6	WASHER-HARD (13.5X32X5-MM THK)	
	16	1	**7X-0590**	4	WASHER-HARD (13.5X44.5X6-MM THK)	
M	17	1	**7X-2539**	4	BOLT (M8X1.25X110-MM)	
	18	1	**8T-4121**	27	WASHER-HARD (11X21X2.5-MM THK)	
M	19	1	**8T-4133**	11	NUT (M10X1.5-THD)	
M	20	1	**8T-4136**	4	BOLT (M10X1.5X25-MM)	
M	21	1	**8T-4195**	9	BOLT (M10X1.5X30-MM)	
	22	1	**8T-4223**	4	WASHER-HARD (13.5X25.5X3-MM THK)	
	23	1	**8T-4224**	4	WASHER-HARD (8.8X16X2-MM THK)	
M	24	1	**8T-4910**	4	BOLT (M12X1.75X60-MM)	
M	25	1	**8T-4956**	2	BOLT (M12X1.75X35-MM)	
M	26	1	**8T-6466**	3	BOLT (M10X1.5X60-MM)	
M	27	1	**8T-4183**	4	BOLT (M12X1.75X40-MM)	

M-METRIC PART
Y-SEPARATE ILLUSTRATION

165-0234 **AFTERCOOLER GP-AIR** *(contd.)* **i01683467**

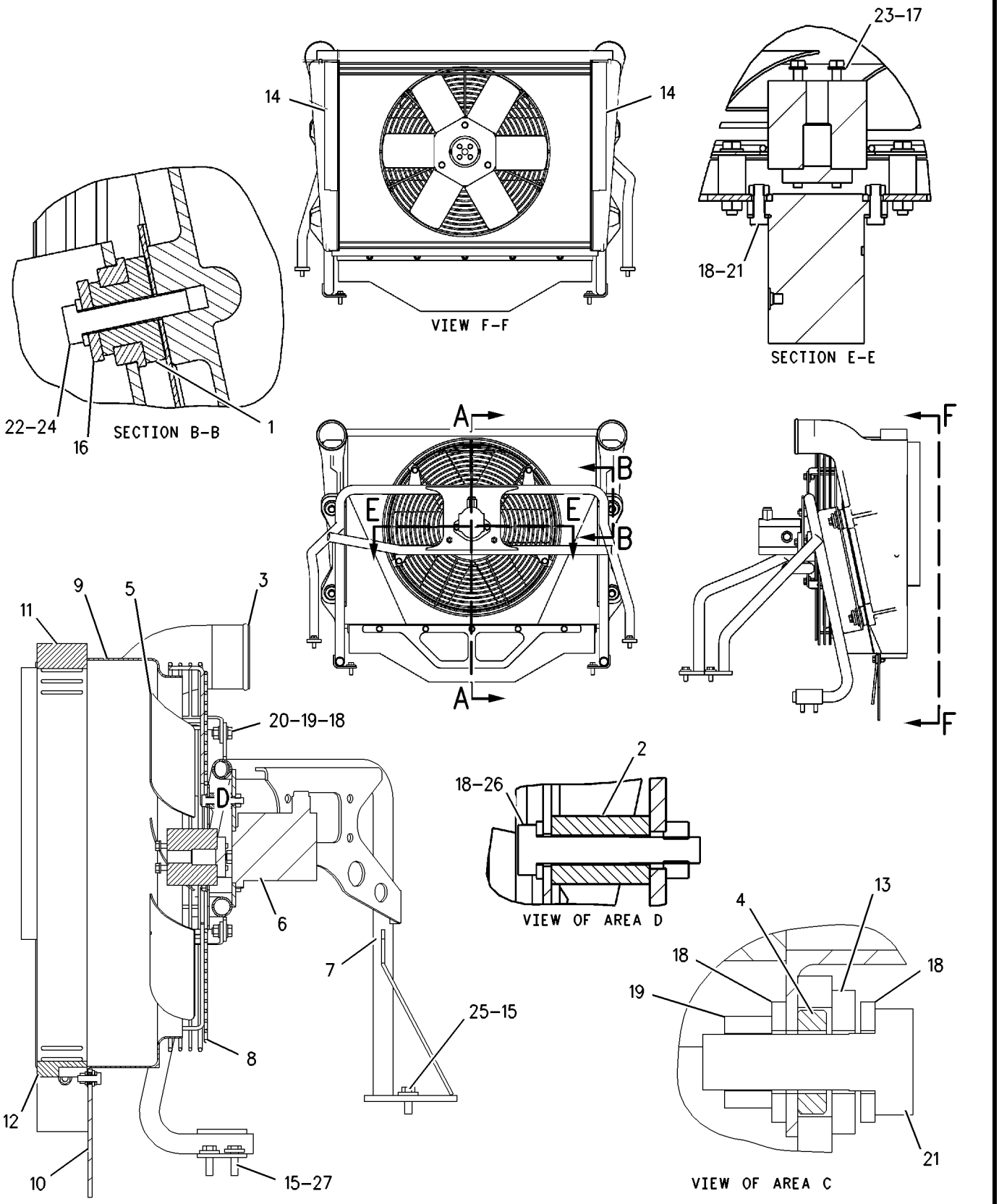

GRAPHIC #1 **<END>** g00867924

AIR INLET AND EXHAUST SYSTEM

165-0234 AFTERCOOLER GP-AIR

S/N: AXM400-1248

PART OF 152-6943 POWER TRAIN AR

SMCS-1063 **i01830888**

NOTE	REF NO	GRAPHIC REF	PART NUMBER	QTY	PART NAME 1 2 3 4 5 6 (PRODUCT LEVEL)	SEE PAGE
	1	1	**7T-8331**	4	MOUNTING	
	2	1	**125-7484**	3	SPACER (25X11X36-MM THK)	
	3	1	**188-3471**	1	AFTERCOOLER AS	
	4	1	**188-4921**	5	SPACER (5X18X0.5-MM THK)	
	5	1	**190-7618**	1	SPIDER AS-FAN	
	6	1	**191-8163**	1	GUARD AS-FAN	
	7	1	**191-8164**	1	SHROUD-FAN	
	8	1	**191-8166**	1	STRIP-FOAM	
	9	1	**191-8167**	1	STRIP-FOAM	
	10	1	**206-9381**	2	STRIP-FOAM	
	11	1	**209-3526**	1	BAFFLE	
	12	1	**214-7409**	1	SUPPORT AS	
	13	1	**217-5994**	1	PLATE	
CY	14	1	**220-2290**	1	MOTOR GP-GEAR	723
	15	1	**7D-1649**	6	WASHER-HARD (13.5X32X5-MM THK)	
	16	1	**7X-0590**	4	WASHER-HARD (13.5X44.5X6-MM THK)	
M	17	1	**7X-2539**	4	BOLT (M8X1.25X110-MM)	
	18	1	**8T-4121**	27	WASHER-HARD (11X21X2.5-MM THK)	
M	19	1	**8T-4133**	11	NUT (M10X1.5-THD)	
M	20	1	**8T-4136**	4	BOLT (M10X1.5X25-MM)	
M	21	1	**8T-4183**	4	BOLT (M12X1.75X40-MM)	
M	22	1	**8T-4195**	9	BOLT (M10X1.5X30-MM)	
	23	1	**8T-4223**	4	WASHER-HARD (13.5X25.5X3-MM THK)	
	24	1	**8T-4224**	4	WASHER-HARD (8.8X16X2-MM THK)	
M	25	1	**8T-4910**	4	BOLT (M12X1.75X60-MM)	
M	26	1	**8T-4956**	2	BOLT (M12X1.75X35-MM)	
M	27	1	**8T-6466**	3	BOLT (M10X1.5X60-MM)	

C-CHANGE FROM PREVIOUS TYPE
M-METRIC PART
Y-SEPARATE ILLUSTRATION

165-0234 **AFTERCOOLER GP-AIR** *(contd.)* **i01830888**

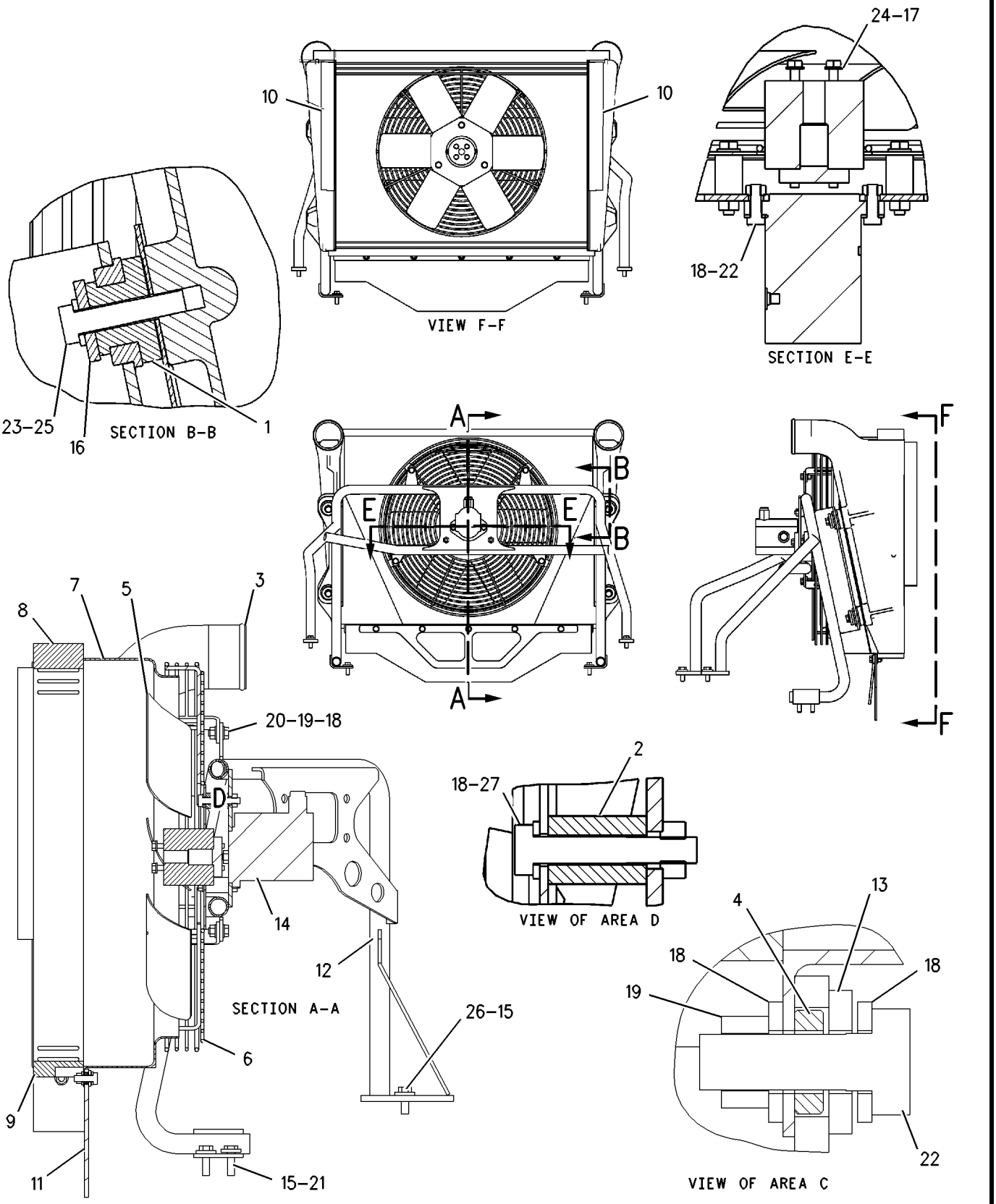

GRAPHIC #1 **<END>** g00906801

AIR INLET AND EXHAUST SYSTEM

165-0234 AFTERCOOLER GP-AIR

S/N: AXM1249-UP

PART OF 152-6943 POWER TRAIN AR

SMCS-1063 **i02194196**

NOTE	REF NO	GRAPHIC REF	PART NUMBER	QTY	PART NAME 1 2 3 4 5 6 (PRODUCT LEVEL)	SEE PAGE
	1	1	**7T-8331**	4	MOUNTING	
	2	1	**125-7484**	3	SPACER (25X11X36-MM THK)	
	3	1	**188-3471**	1	AFTERCOOLER AS	
	4	1	**188-4921**	5	SPACER (5X18X0.5-MM THK)	
	5	1	**190-7618**	1	SPIDER AS-FAN	
	6	1	**191-8163**	1	GUARD AS-FAN	
	7	1	**191-8164**	1	SHROUD-FAN	
	8	1	**255-6169**	1	STRIP-FOAM	
	9	1	**255-6170**	1	STRIP-FOAM	
C	10	1	**1U-6605**	1	TAPE-REFLECTIVE	
	11	1	**255-6171**	2	STRIP-FOAM	
	12	1	**209-3526**	1	BAFFLE	
	13	1	**214-7409**	1	SUPPORT AS	
	14	1	**217-5994**	1	PLATE	
CY	15	1	**242-0431**	1	MOTOR GP-GEAR	725
	16	1	**7D-1649**	6	WASHER-HARD (13.5X32X5-MM THK)	
	17	1	**7X-0590**	4	WASHER-HARD (13.5X44.5X6-MM THK)	
M	18	1	**7X-2539**	4	BOLT (M8X1.25X110-MM)	
	19	1	**8T-4121**	27	WASHER-HARD (11X21X2.5-MM THK)	
M	20	1	**8T-4133**	11	NUT (M10X1.5-THD)	
M	21	1	**8T-4136**	4	BOLT (M10X1.5X25-MM)	
M	22	1	**8T-4183**	4	BOLT (M12X1.75X40-MM)	
M	23	1	**8T-4195**	9	BOLT (M10X1.5X30-MM)	
	24	1	**8T-4223**	4	WASHER-HARD (13.5X25.5X3-MM THK)	
	25	1	**8T-4224**	4	WASHER-HARD (8.8X16X2-MM THK)	
M	26	1	**8T-4910**	4	BOLT (M12X1.75X60-MM)	
M	27	1	**8T-4956**	2	BOLT (M12X1.75X35-MM)	
M	28	1	**8T-6466**	3	BOLT (M10X1.5X60-MM)	

C-CHANGE FROM PREVIOUS TYPE
M-METRIC PART
Y-SEPARATE ILLUSTRATION

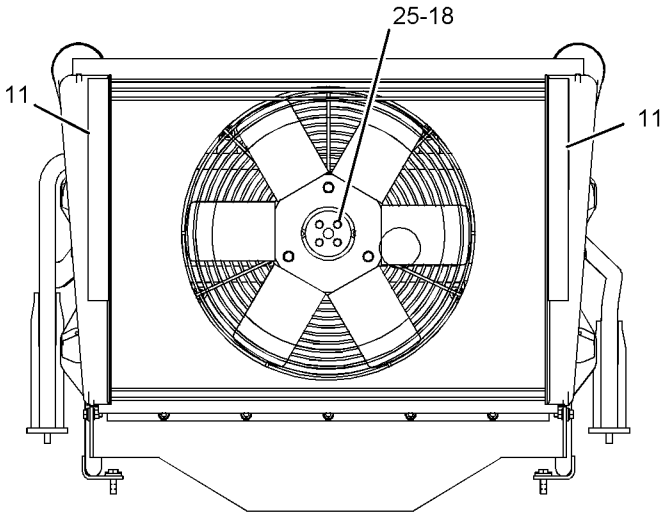

FRONT VIEW

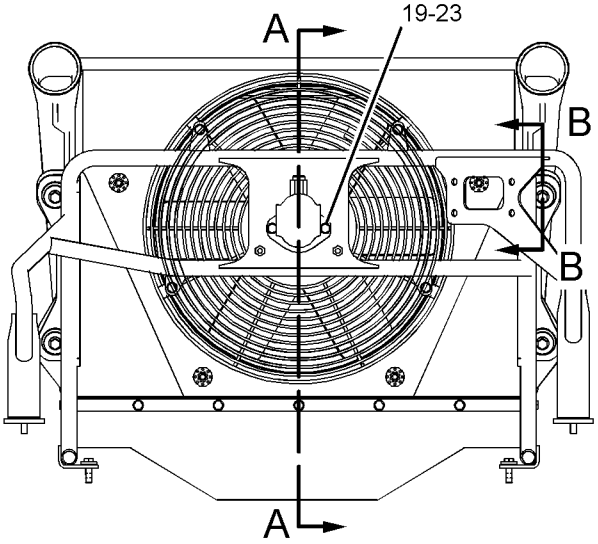

REAR VIEW

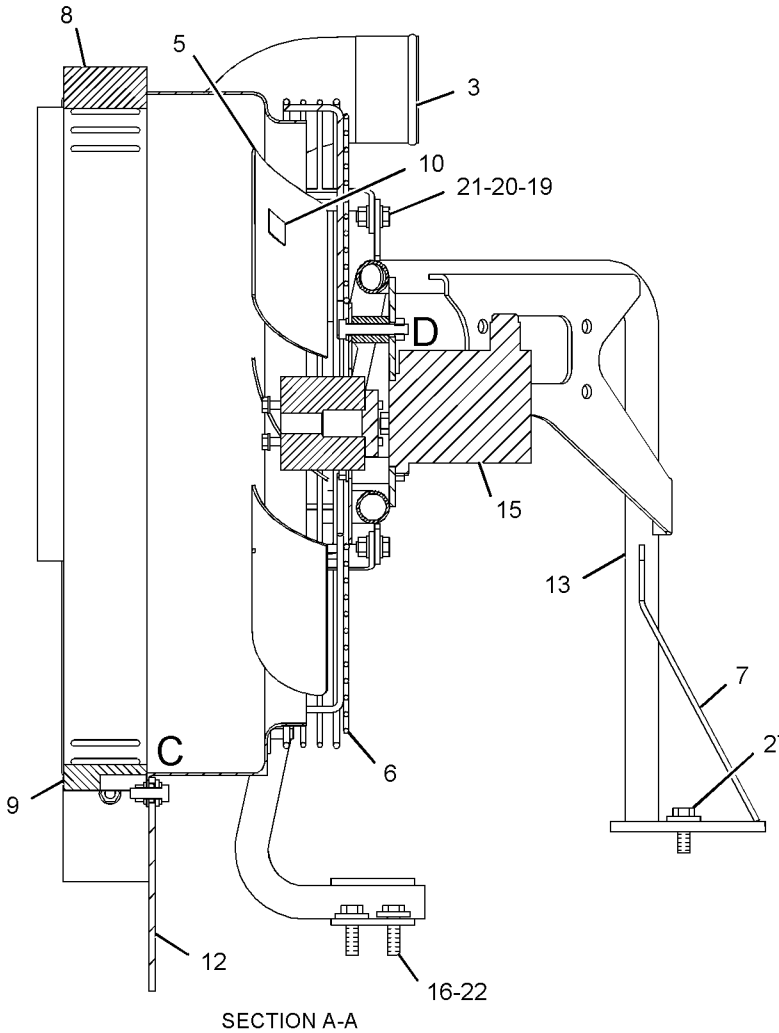

SECTION A-A

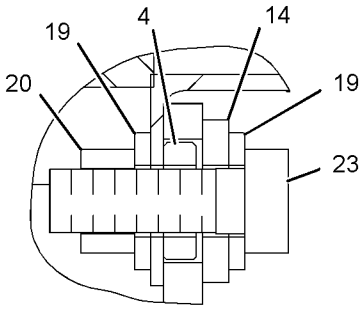

VIEW OF AREA C

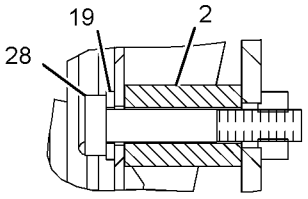

VIEW OF AREA D

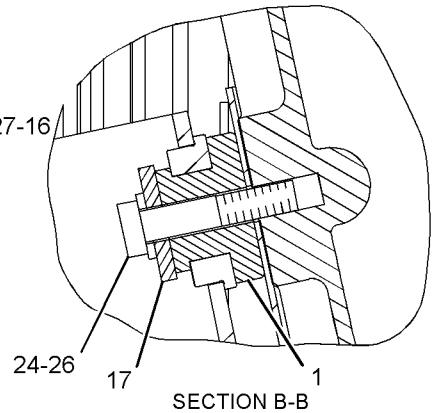

SECTION B-B

GRAPHIC #1 **<END>** g01060183

AIR INLET AND EXHAUST SYSTEM

141-6876 AIR CLEANER GP

S/N: AXM1-UP

PART OF 152-6943 POWER TRAIN AR

SMCS-1051, 1054 **i01822421**

NOTE	REF NO	GRAPHIC REF	PART NUMBER	QTY	PART NAME 1 2 3 4 5 6 (PRODUCT LEVEL)	SEE PAGE
	1	1	**124-2732**	1	CLAMP-HOSE	
	2	1	**187-6227**	1	BRACKET AS	
		1	**7T-1099**	2	LINK	
Y	3	1	**187-6467**	1	AIR CLEANER GP	132
	4	1	**220-8497**	1	SEAL-AIR CLEANER	
	5	1	**4L-6454**	1	BOLT (3/8-16X1 IN)	
	6	1	**7X-0618**	4	WASHER-HARD (13.5X40X5MM THK)	
	7	1	**8T-2502**	2	BOLT (3/8-16X1.125 IN)	
M	8	1	**8T-4139**	4	BOLT (M12X1.75X30MM)	
	9	1	**8T-4896**	3	WASHER-HARD (10.2X18.5X2.5MM THK)	

M-METRIC PART
Y-SEPARATE ILLUSTRATION

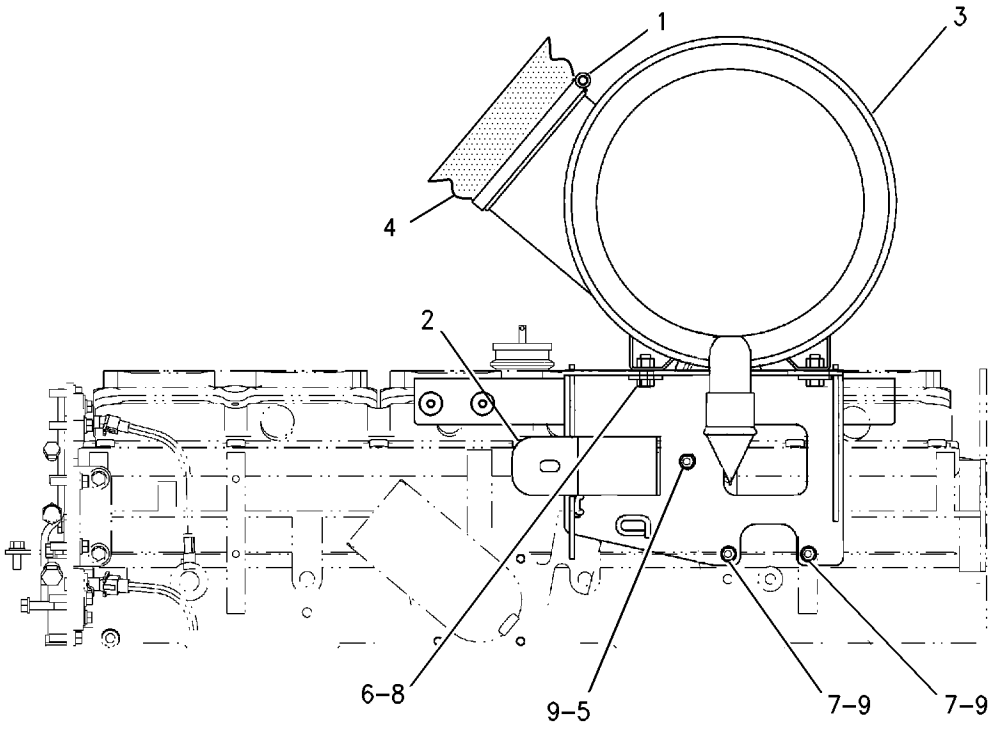

LEFT SIDE VIEW

GRAPHIC #1 **<END>** g00935782

AIR INLET AND EXHAUST SYSTEM

187-6467 AIR CLEANER GP

S/N: AXM1-UP

PART OF 141-6876 AIR CLEANER GP

SMCS-1051, 1054 **i01575891**

NOTE	REF NO	GRAPHIC REF	PART NUMBER	QTY	PART NAME 1 2 3 4 5 6 (PRODUCT LEVEL)	SEE PAGE
	1	1	**131-8829**	1	VALVE-VACUATOR	
	2	1	**139-8883**	1	COVER AS	
		1	**139-8794**	6	LATCH	
	3	1	**142-1340**	1	FILTER ELEMENT AS-PRIMARY AIR	
	4	1	**142-1403**	1	FILTER ELEMENT AS-SEC AIR	

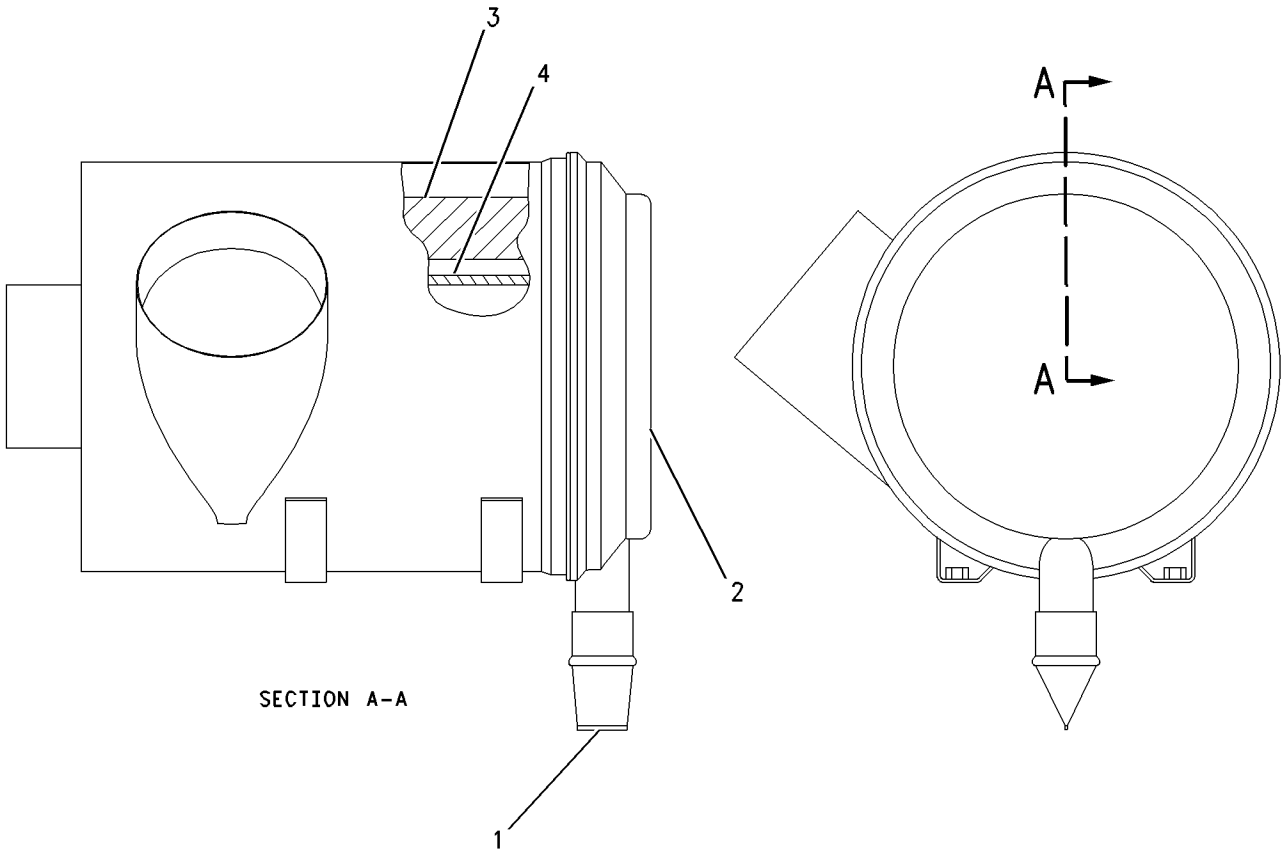

GRAPHIC #1 **<END>** g00820460

AIR INLET AND EXHAUST SYSTEM

161-2173 ELBOW GP-EXHAUST

S/N: AXM1-UP
PART OF 152-7076 PIPE GP-EXHAUST
AN ATTACHMENT

SMCS-1061 **i02095535**

NOTE	REF NO	GRAPHIC REF	PART NUMBER	QTY	PART NAME 1 2 3 4 5 6 (PRODUCT LEVEL)	SEE PAGE
	1	1	**2V-7248**	6	SPRING	
	2	1	**7E-6455**	1	CLAMP	
	3	1	**7U-6645**	6	PIN	
	4	1	**106-1767**	1	PLATE AS	
	5	1	**151-5555**	1	MOUNTING AS	
	6	1	**187-1919**	1	CONNECTOR	
M	7	1	**6V-7744**	6	LOCKNUT (M10X1.5-THD)	
	8	1	**7X-7729**	6	WASHER (11X25X3-MM THK)	
M	9	1	**8T-7586**	6	BOLT (M10X1.5X100-MM)	

M-METRIC PART

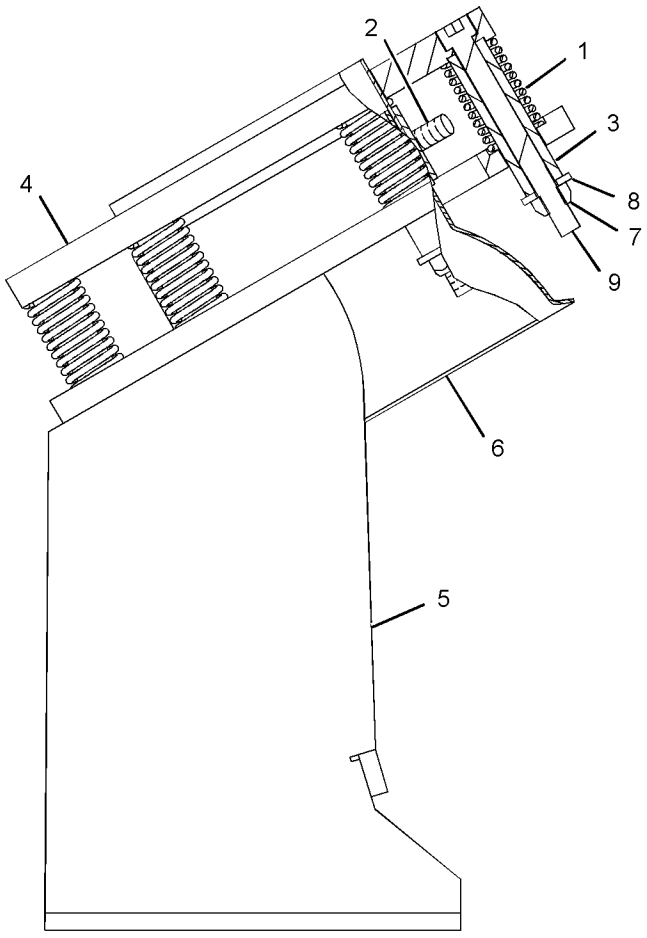

RIGHT SIDE VIEW

GRAPHIC #1 **<END>** g01068341

AIR INLET AND EXHAUST SYSTEM

127-9039 LINES GP-AIR

S/N: BET200-UP

PART OF 153-7076, 235-4689 ENGINE AR-COMPLETE

SMCS-1071 **i01551812**

NOTE	REF NO	GRAPHIC REF	PART NUMBER	QTY	PART NAME 1 2 3 4 5 6 (PRODUCT LEVEL)	SEE PAGE
	1	1	**0S-1588**	4	BOLT (3/8-16X1.25 IN)	
	2	1	**5M-2894**	4	WASHER-HARD (10.2X18.5X2.5MM THK)	
	3	1	**8T-6765**	1	PLUG-PIPE	
	4	1	**101-3125**	1	GASKET (AIR INLET MANIFOLD)	
	5	1	**125-5032**	1	ELBOW-AIR INLET	

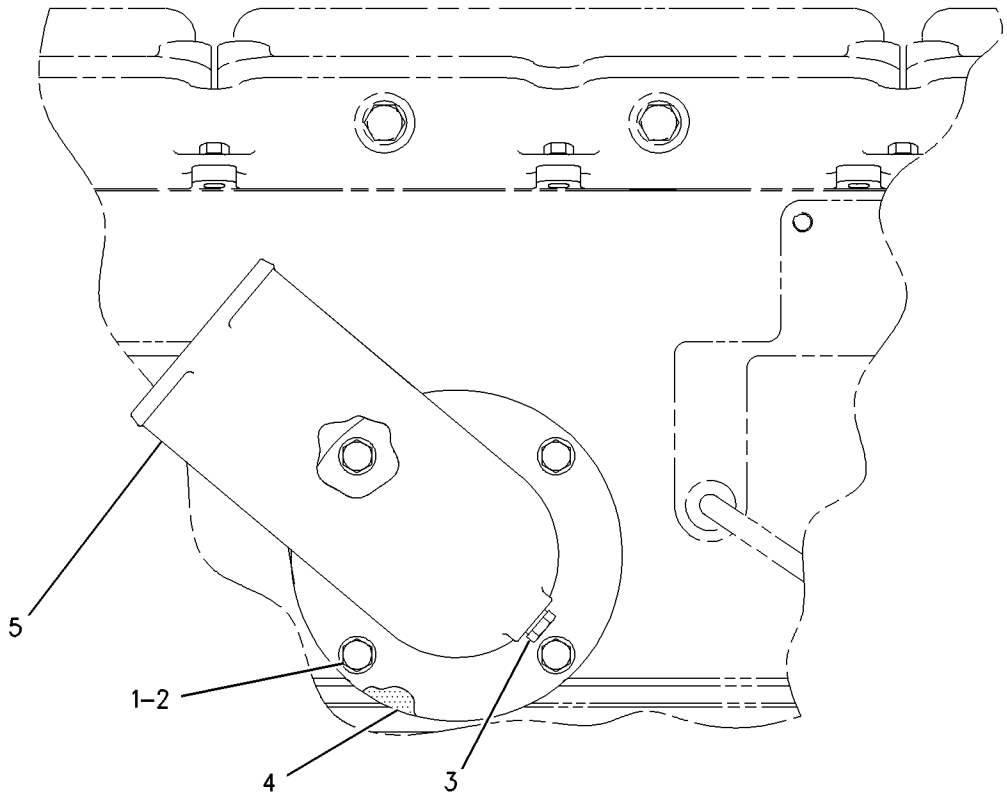

LEFT SIDE VIEW

GRAPHIC #1 **<END>** g00806909

AIR INLET AND EXHAUST SYSTEM

141-6875 LINES GP-AIR

S/N: AXM1-UP

PART OF 152-6943 POWER TRAIN AR

SMCS-1071 **i01538137**

NOTE	REF NO	GRAPHIC REF	PART NUMBER	QTY	PART NAME 1 2 3 4 5 6 (PRODUCT LEVEL)	SEE PAGE
	1	1	**2U-2146**	1	ELBOW-AIR INLET	
	2	1	**3E-7424**	4	CLAMP-HOSE	
	3	1	**162-2177**	1	HOSE	
	4	1	**187-3440**	1	TUBE AS	

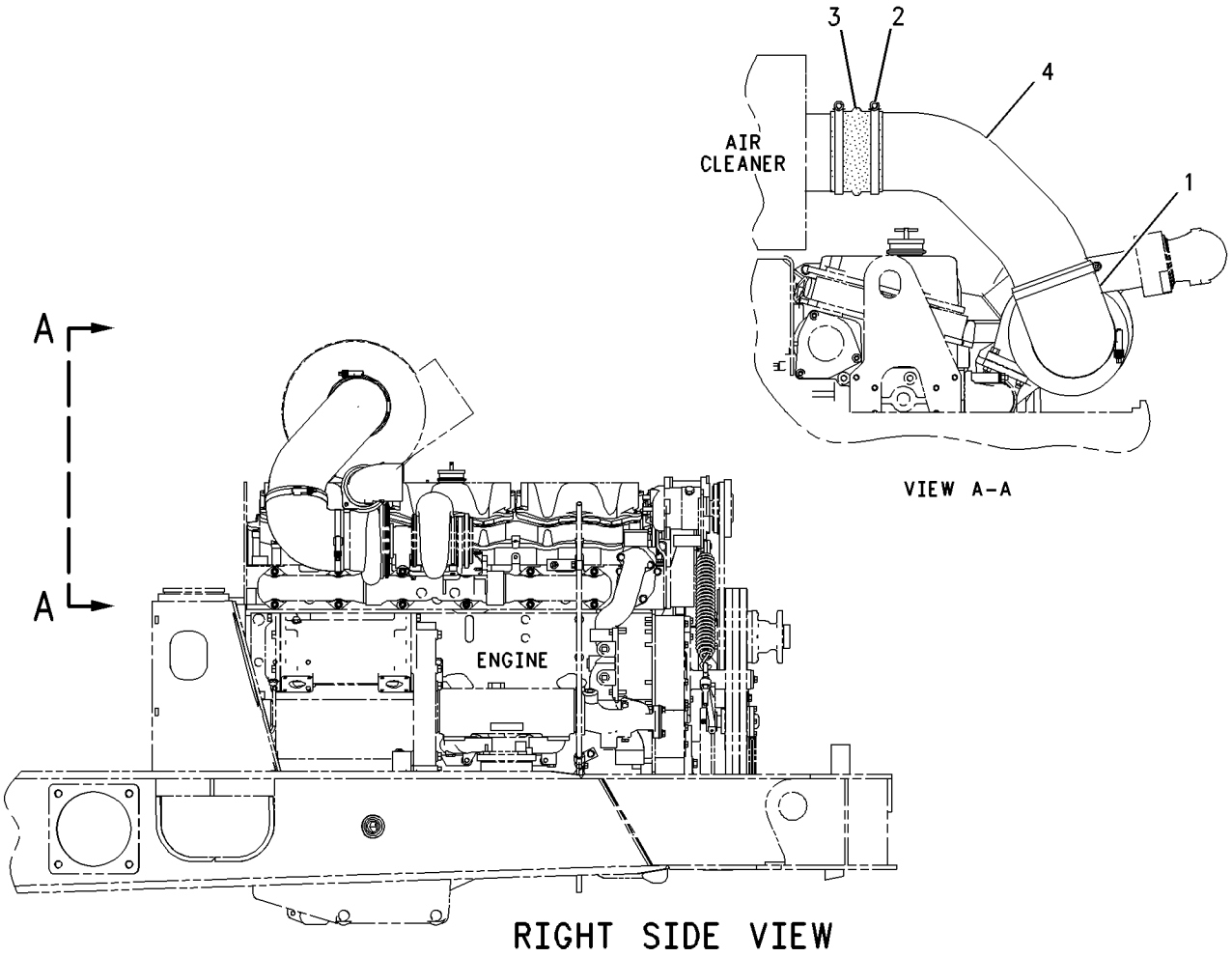

VIEW A-A

RIGHT SIDE VIEW

GRAPHIC #1 **<END>** g00764654

AIR INLET AND EXHAUST SYSTEM

162-5127 LINES GP-AIR

S/N: AXM1-UP

PART OF 152-6943 POWER TRAIN AR

SMCS-1071 **i01636641**

NOTE	REF NO	GRAPHIC REF	PART NUMBER	QTY	PART NAME 1 2 3 4 5 6 (PRODUCT LEVEL)	SEE PAGE
	1	1	**7E-8630**	4	HOSE-AIR INLET	
	2	1	**9X-2201**	16	CLAMP-HOSE	
	3	1	**216-6817**	1	TUBE	
	4	1	**216-6818**	1	TUBE	

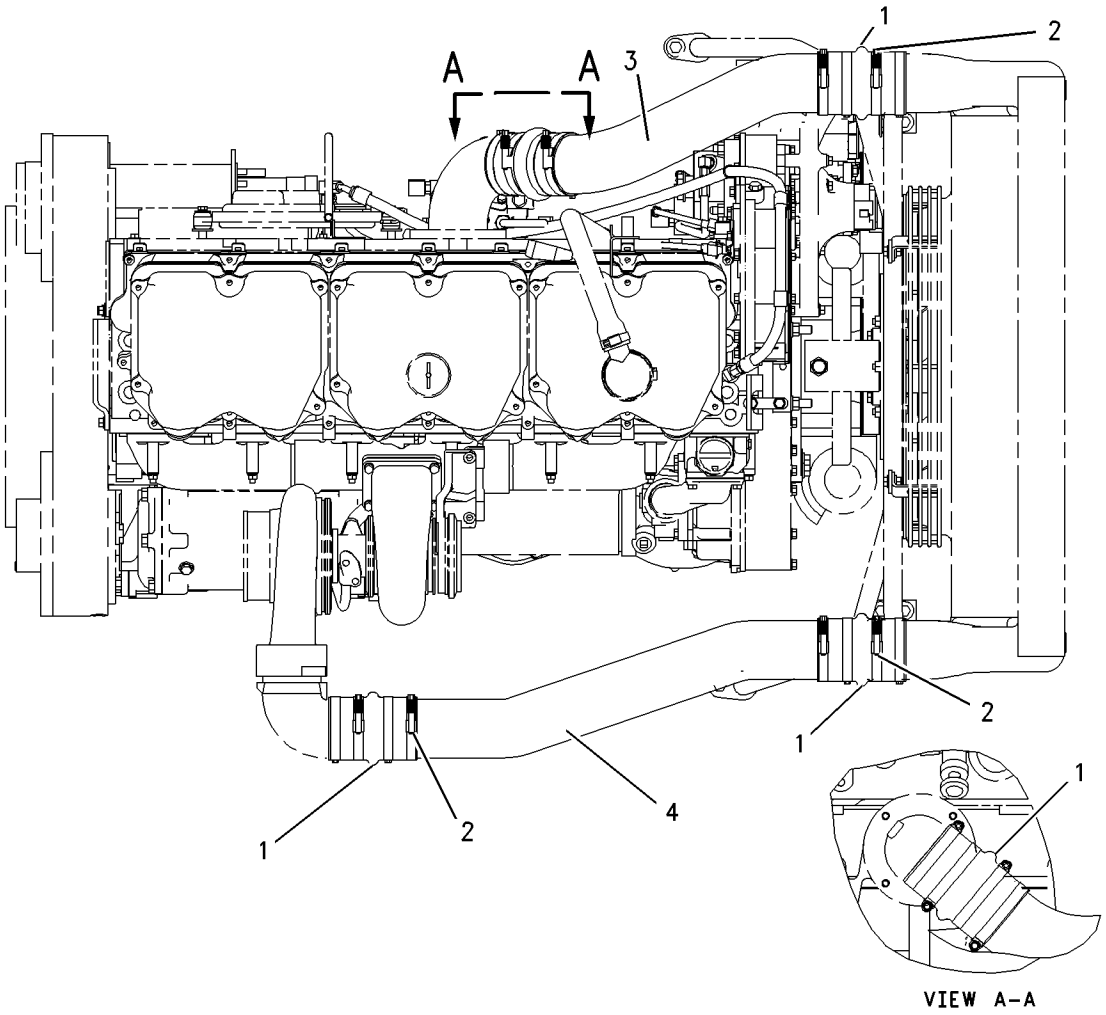

GRAPHIC #1 **<END>** g00847699

AIR INLET AND EXHAUST SYSTEM

187-9077 LINES GP-AIR

S/N: BET200-UP

PART OF 153-7076, 235-4689 ENGINE AR-COMPLETE

SMCS-1071 **i01464142**

NOTE	REF NO	GRAPHIC REF	PART NUMBER	QTY	PART NAME 1 2 3 4 5 6 (PRODUCT LEVEL)	SEE PAGE
	1	1	**2N-2765**	2	BOLT-HIGH TEMPERATURE (3/8-16X1.75 IN)	
	2	1	**2N-2766**	2	LOCKNUT	
	3	1	**5L-8854**	2	RING-SEALING	
	4	1	**7C-5665**	1	ELBOW	
	5	1	**7W-3145**	2	PLATE	
	6	1	**9L-5839**	1	COUPLING-EXHAUST	
	7	1	**9N-2699**	1	SUPPORT-EXHAUST PIPE	
	8	1	**0S-1594**	2	BOLT (3/8-16X1 IN)	
	9	1	**5H-7704**	2	SEAL-O-RING	
	10	1	**5M-2894**	2	WASHER-HARD (10.2X18.5X2.5MM THK)	
	11	1	**8T-6757**	1	PLUG-PIPE	

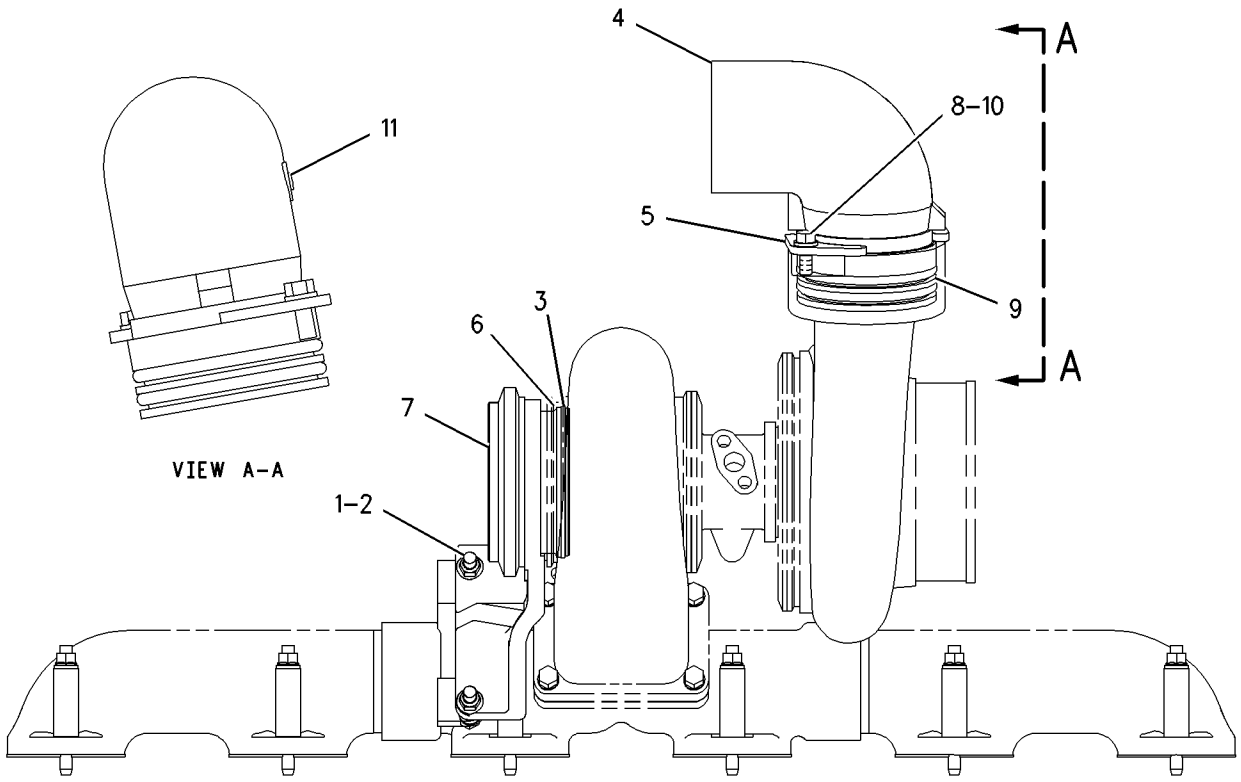

TOP VIEW

GRAPHIC #1 **<END>** g00765747

AIR INLET AND EXHAUST SYSTEM

140-8644 MANIFOLD GP-EXHAUST

S/N: BET200-UP
PART OF 153-7076, 235-4689 ENGINE AR-COMPLETE
FOR USE WITH TURBOCHARGER OIL LINES

SMCS-1059 **i01939157**

NOTE	REF NO	GRAPHIC REF	PART NUMBER	QTY	PART NAME 1 2 3 4 5 6 (PRODUCT LEVEL)	SEE PAGE
	1	1	**102-8502**	1	MANIFOLD-EXHAUST	
	2	1	**101-7352**	2	MANIFOLD-EXHAUST (END)	
	3	1	**2N-2766**	12	LOCKNUT	
	4	1	**5M-2894**	12	WASHER-HARD (10.2X18.5X2.5MM THK)	
	5	1	**108-3612**	11	SPACER (11.13X19.05X53MM THK)	
	6	1	**129-9452**	6	GASKET-EXHAUST MANIFOLD	
	7	1	**2S-3770**	1	SPACER (11X19X33.5MM THK)	
	8	1	**106-1792**	11	STUD-TAPERLOCK	
	9	1	**4S-6137**	1	STUD-TAPERLOCK (3/8-16X3.1IN)	

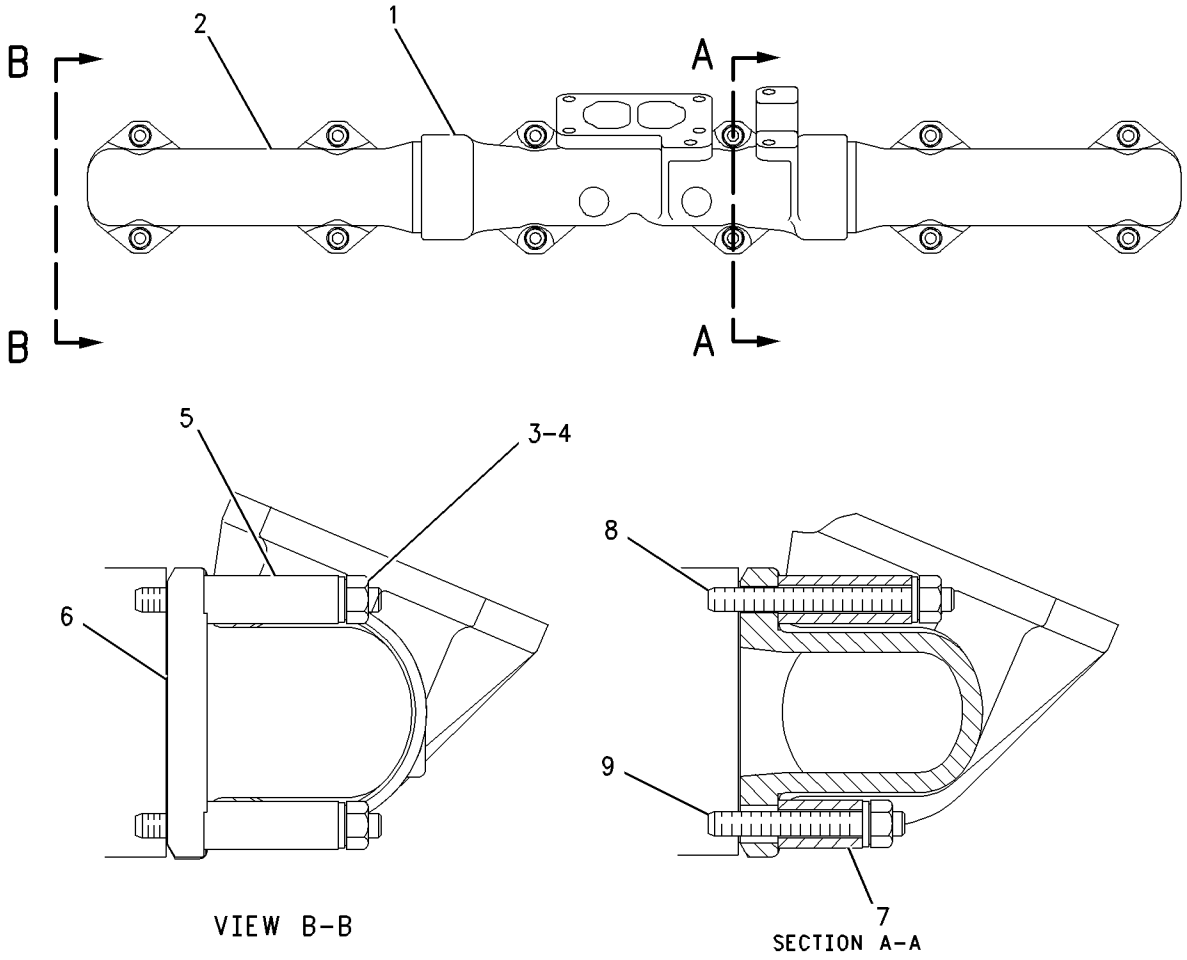

GRAPHIC #1 **<END>** g00891188

AIR INLET AND EXHAUST SYSTEM

152-7109 MUFFLER GP

S/N: AXM1-518

PART OF 152-6922 HYDRAULIC AR-MACHINE

SMCS-1062 **i01831430**

NOTE	REF NO	GRAPHIC REF	PART NUMBER	QTY	PART NAME 1 2 3 4 5 6 (PRODUCT LEVEL)	SEE PAGE
	1	2	**2T-2897**	2	WASHER-SPRING	
B	2	1	**4B-5272**	3	WASHER (12.7X31.7X2-MM THK)	
	3	1,2	**6U-5219**	2	U-CLAMP AS	
					(EACH INCLUDES)	
		1,2	**5P-1075**	1	WASHER-HARD (10.2X22.5X3-MM THK)	
		1,2	**6V-8801**	1	NUT (3/8-16-THD)	
	4	2	**8T-6431**	2	ROD END	
	5	1	**9N-1941**	1	CLAMP-V-BAND	
		1	**8T-0122**	1	NUT-FULL (1/4-28-THD)	
M	6	2	**142-0485**	2	NUT-THIN (M10X1.5-THD)	
	7	2	**216-9945**	1	PIPE GP-EXHAUST (INCLUDES PIPE AND CLAMP)	
	9	1	**174-9205**	1	SUPPORT AS-EXHAUST	
	10	1	**174-9246**	1	PIPE AS	
	11	1	**175-3380**	2	PLATE	
	12	2	**175-4780**	1	PLATE AS	
	13	2	**175-9076**	2	MOUNTING	
	14	2	**175-9077**	1	PLATE	
	15	2	**175-9078**	1	PLATE	
M	16	2	**175-9079**	1	ROD-LINK	
	17	1	**176-8102**	1	CLAMP	
	18	1	**176-8234**	2	CLAMP	
	19	1	**176-8237**	1	CLAMP	
	20	1	**189-8606**	1	PIPE AS	
	21	1	**189-8607**	1	PIPE AS	
	22	1	**189-8608**	1	PIPE AS	
	23	1	**189-8609**	1	PIPE AS	
	24	1	**190-2281**	1	BRACKET	
	25	1	**190-3381**	1	SHIELD-EXHAUST	
	26	1	**190-5341**	1	CLAMP	
	27	2	**191-2779**	1	SUPPORT AS	
	28	1	**193-9085**	1	MUFFLER	
	29	2	**197-4834**	1	SEAL	
	30	2	**197-4835**	1	PLATE-RETAINER	
	31	1	**199-1261**	1	PLATE	
	32	1	**202-1838**	1	CLAMP-V-BAND	
	33	1	**202-1839**	2	CLAMP-V-BAND	
	34	2	**205-3625**	1	PLATE AS	
M		2	**8T-3490**	2	NUT-WELD (M10X1.5-THD)	
	35	1	**211-4635**	1	PIPE-EXHAUST	
M	36	1,2	**5C-7261**	14	NUT (M8X1.25-THD)	
B	37	1,2	**5P-1076**	11	WASHER-HARD (13.5X30X4-MM THK)	
M	38	2	**6V-7687**	1	LOCKNUT (M12X1.75-THD)	
M	39	2	**6V-7744**	1	LOCKNUT (M10X1.5-THD)	
	40	1,2	**6V-8801**	6	NUT (3/8-16-THD)	
M	41	2	**7X-2537**	2	BOLT (M8X1.25X35-MM)	
M	42	2	**7X-2550**	1	BOLT (M12X1.75X110-MM)	
	43	1,2	**7X-7729**	8	WASHER (11X25X3-MM THK)	
	44	2	**8T-4121**	2	WASHER-HARD (11X21X2.5-MM THK)	
M	45	1,2	**8T-4133**	2	NUT (M10X1.5-THD)	
M	46	1,2	**8T-4139**	8	BOLT (M12X1.75X30-MM)	
M	47	1	**8T-4186**	2	BOLT (M10X1.5X40-MM)	
M	48	2	**8T-4189**	8	BOLT (M8X1.25X20-MM)	
M	49	2	**8T-4195**	2	BOLT (M10X1.5X30-MM)	
M	50	1	**8T-4199**	4	BOLT (M8X1.25X12-MM)	
	51	2	**8T-4223**	2	WASHER-HARD (13.5X25.5X3-MM THK)	
B	52	1,2	**8T-4224**	28	WASHER-HARD (8.8X16X2-MM THK)	

152-7109 **MUFFLER GP** *(contd.)* **i01831430**

NOTE	REF NO	GRAPHIC REF	PART NUMBER	QTY	PART NAME 1 2 3 4 5 6 (PRODUCT LEVEL)	SEE PAGE
M	53	1	**8T-4648**	3	BOLT (M12X1.75X70-MM)	
M	54	2	**8T-6685**	1	BOLT (M10X1.5X110-MM)	

B-USE AS REQUIRED
M-METRIC PART

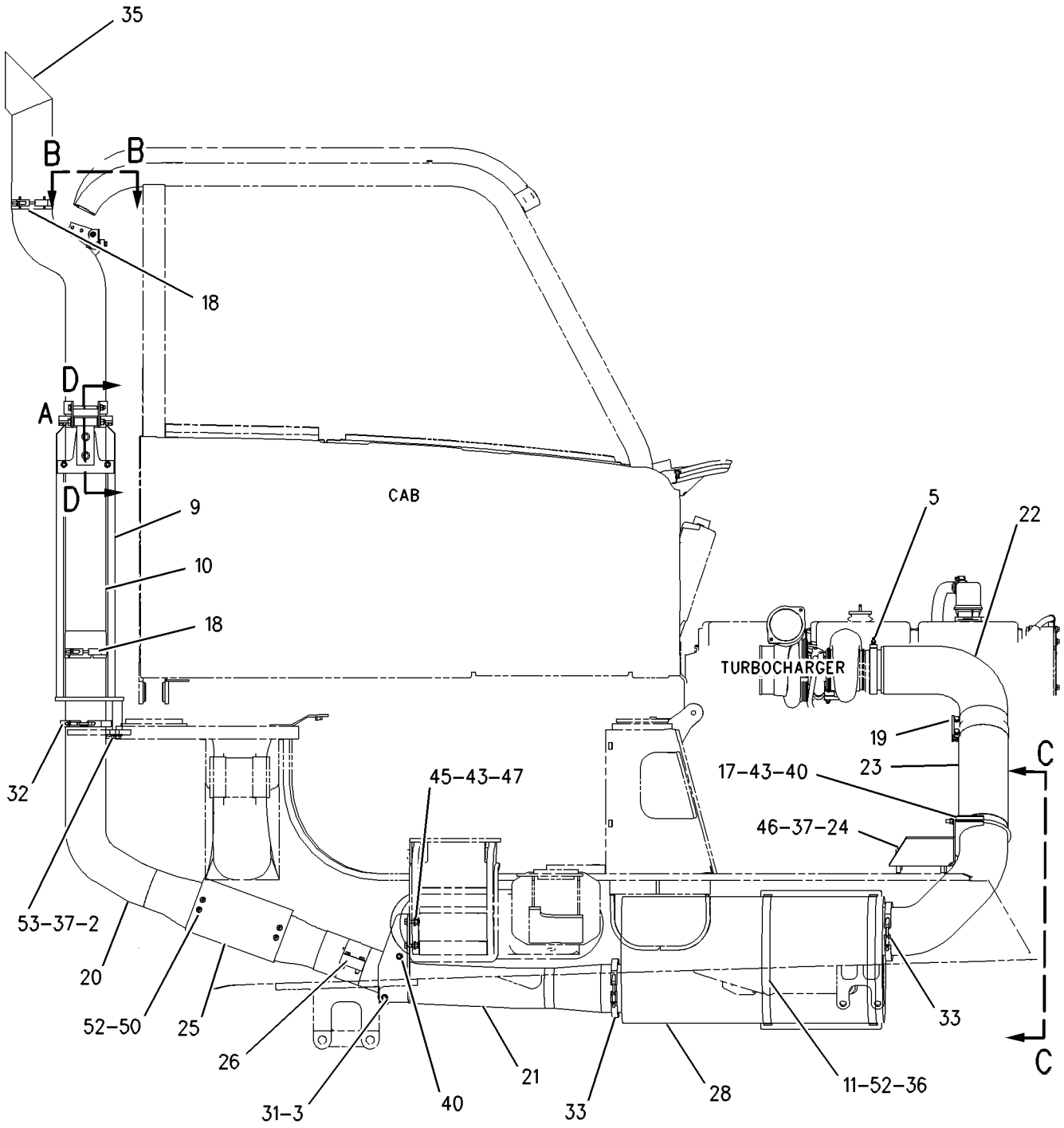

RIGHT SIDE VIEW

GRAPHIC #1 g00935379

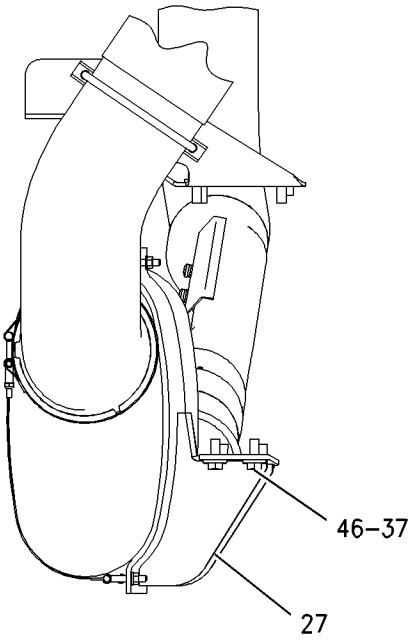

VIEW C-C

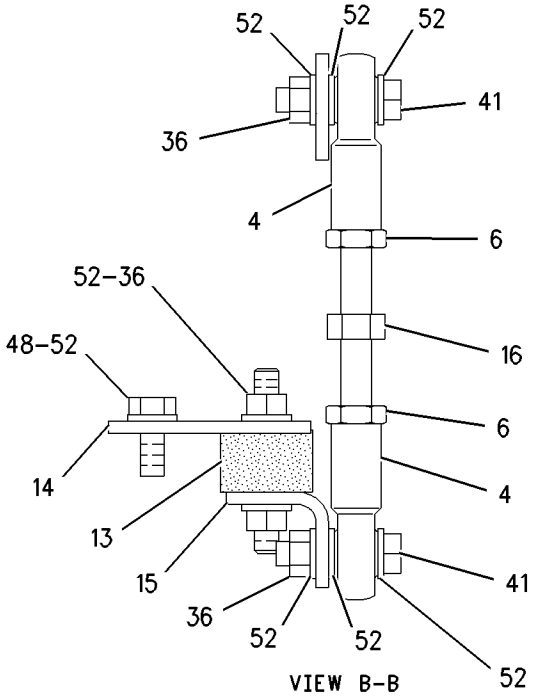

VIEW B-B

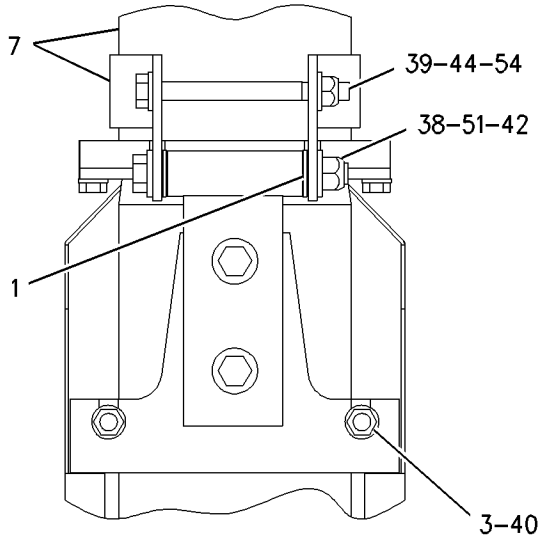

VIEW OF AREA A

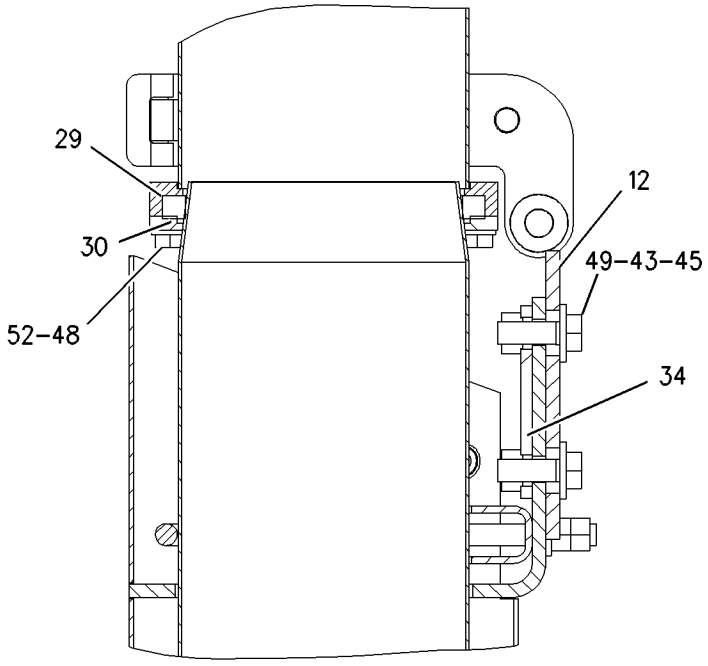

SECTION D-D

GRAPHIC #2 **<END>** g00935380

AIR INLET AND EXHAUST SYSTEM

152-7109 MUFFLER GP

S/N: AXM519-UP

PART OF 152-6922 HYDRAULIC AR-MACHINE

SMCS-1062 **i02098599**

NOTE	REF NO	GRAPHIC REF	PART NUMBER	QTY	PART NAME 1 2 3 4 5 6 (PRODUCT LEVEL)	SEE PAGE
B	1	1	**4B-5272**	3	WASHER (12.7X31.7X2-MM THK)	
B	2	2	**226-2659**	2	WASHER	
	3	1,2	**6U-5219**	2	U-CLAMP AS	
	4	2	**8T-6431**	2	ROD END	
	5	1	**9N-1941**	1	CLAMP-V-BAND	
M	6	2	**142-0485**	2	NUT-THIN (M10X1.5-THD)	
	7	2	**173-2329**	1	CLAMP-TUBE	
	8	1	**173-2330**	1	PIPE AS	
	9	1	**174-9246**	1	PIPE AS	
	10	1	**175-3380**	2	PLATE	
	11	2	**175-4780**	1	PLATE AS	
	12	2	**175-9076**	2	MOUNTING	
	13	2	**175-9077**	1	PLATE	
	14	2	**175-9078**	1	PLATE	
M	15	2	**175-9079**	1	ROD-LINK	
	16	1	**176-8102**	1	CLAMP	
	17	1	**176-8234**	2	CLAMP	
	18	1	**176-8237**	1	CLAMP	
	19	1	**189-8606**	1	PIPE AS	
	20	1	**189-8607**	1	PIPE AS	
	21	1	**189-8608**	1	PIPE AS	
	22	1	**189-8609**	1	PIPE AS	
	23	1	**190-2281**	1	BRACKET	
	24	1	**190-3381**	1	SHIELD-EXHAUST	
	25	1	**190-5341**	1	CLAMP	
	26	2	**191-2779**	1	SUPPORT AS	
	27	1	**193-9085**	1	MUFFLER	
	28	2	**197-4834**	1	SEAL	
	29	2	**197-4835**	1	PLATE-RETAINER	
	30	1	**199-1261**	1	PLATE	
	31	1	**202-1838**	1	CLAMP-V-BAND	
	32	1	**202-1839**	2	CLAMP-V-BAND	
	33	2	**205-3625**	1	PLATE AS	
M		2	**8T-3490**	2	NUT-WELD (M10X1.5-THD)	
C	34	1	**211-2326**	3	BOSS	
	35	1	**211-4635**	1	PIPE-EXHAUST	
C	36	1	**216-0612**	1	SUPPORT AS	
M	37	1,2	**5C-7261**	10	NUT (M8X1.25-THD)	
BC	38	1,2	**5P-1076**	11	WASHER-HARD (13.5X30X4-MM THK)	
M	39	2	**6V-7687**	1	LOCKNUT (M12X1.75-THD)	
M	40	2	**6V-7744**	1	LOCKNUT (M10X1.5-THD)	
	41	1,2	**6V-8801**	6	NUT (3/8-16-THD)	
M	42	2	**7X-2537**	2	BOLT (M8X1.25X35-MM)	
M	43	2	**7X-2550**	1	BOLT (M12X1.75X110-MM)	
	44	1,2	**7X-7729**	8	WASHER (11X25X3-MM THK)	
	45	2	**8T-4121**	2	WASHER-HARD (11X21X2.5-MM THK)	
M	46	1	**8T-4133**	2	NUT (M10X1.5-THD)	
M	47	1,2	**8T-4139**	8	BOLT (M12X1.75X30-MM)	
CM	48	1	**8T-4184**	6	BOLT (M12X1.75X45-MM)	
M	49	1	**8T-4186**	2	BOLT (M10X1.5X40-MM)	
M	50	2	**8T-4189**	8	BOLT (M8X1.25X20-MM)	
M	51	2	**8T-4195**	2	BOLT (M10X1.5X30-MM)	
M	52	1	**8T-4199**	4	BOLT (M8X1.25X12-MM)	
C	53	1,2	**8T-4223**	5	WASHER-HARD (13.5X25.5X3-MM THK)	
B	54	1,2	**8T-4224**	24	WASHER-HARD (8.8X16X2-MM THK)	
M	55	2	**8T-6685**	1	BOLT (M10X1.5X110-MM)	

152-7109 **MUFFLER GP** *(contd.)* **i02098599**

NOTE	REF NO	GRAPHIC REF	PART NUMBER	QTY	PART NAME 1 2 3 4 5 6 (PRODUCT LEVEL)	SEE PAGE
B	56	1	**249-2844**	3	WASHER (12.7X31.7X1-MM THK)	

B-USE AS REQUIRED
C-CHANGE FROM PREVIOUS TYPE
M-METRIC PART

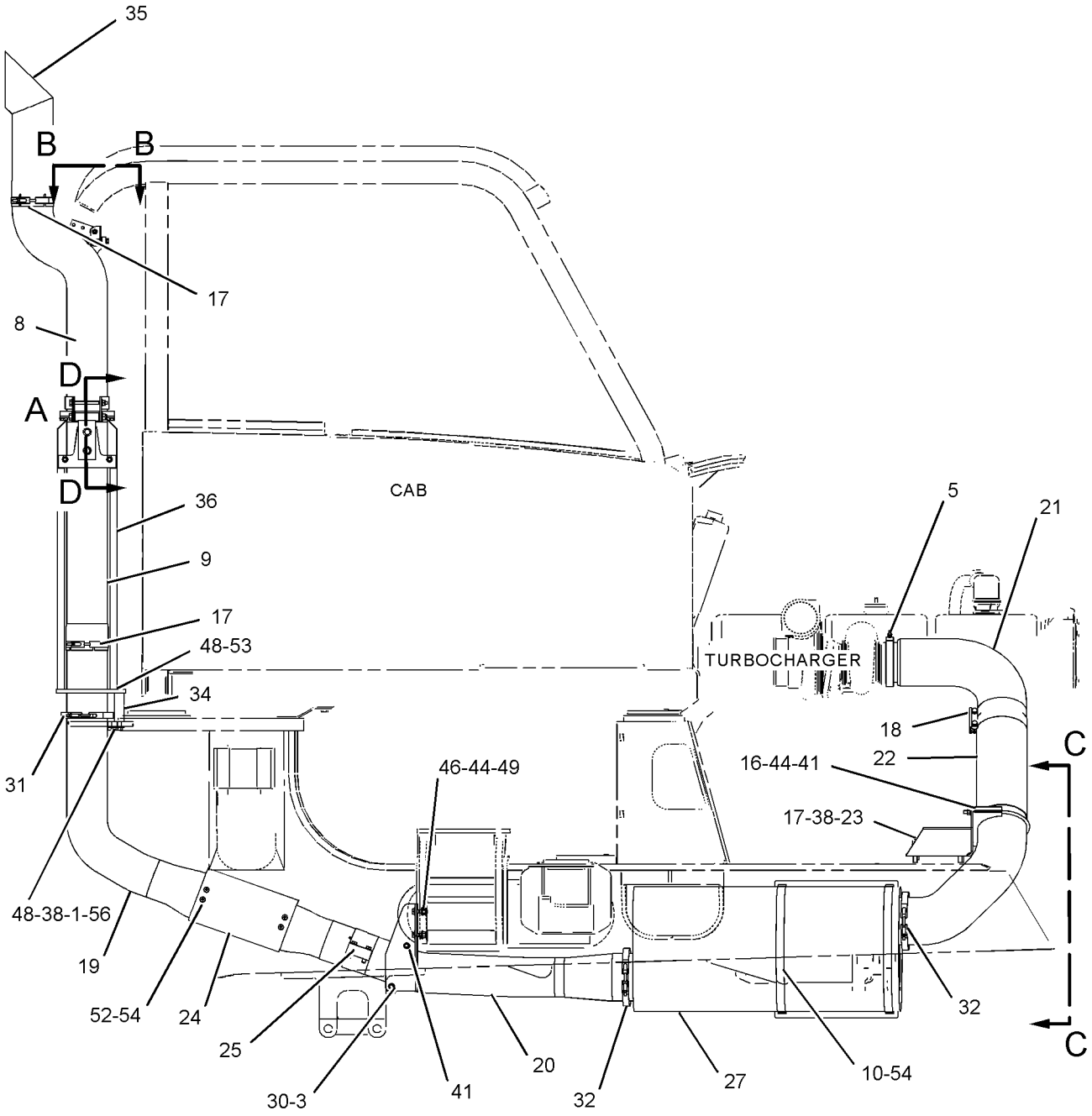

RIGHT SIDE VIEW

GRAPHIC #1

g01071200

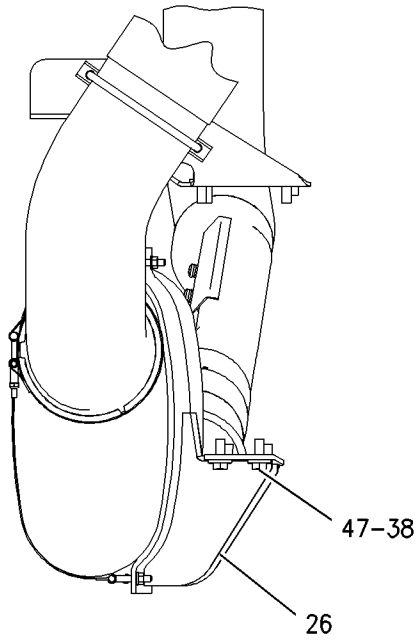

VIEW C-C

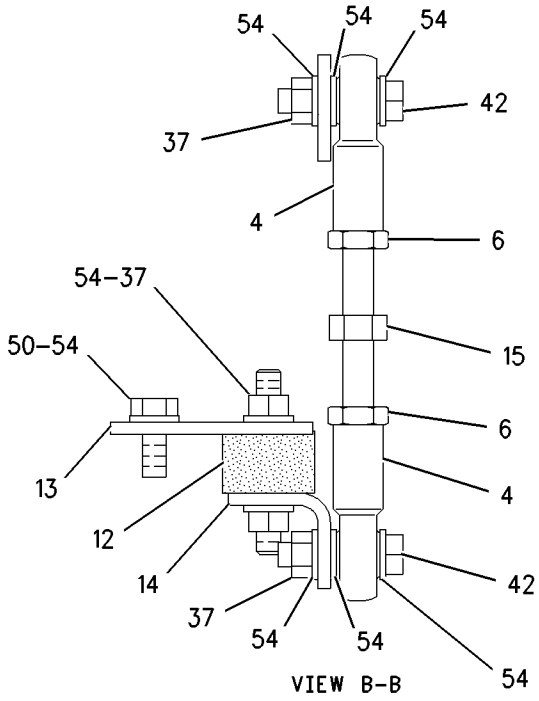

VIEW B-B

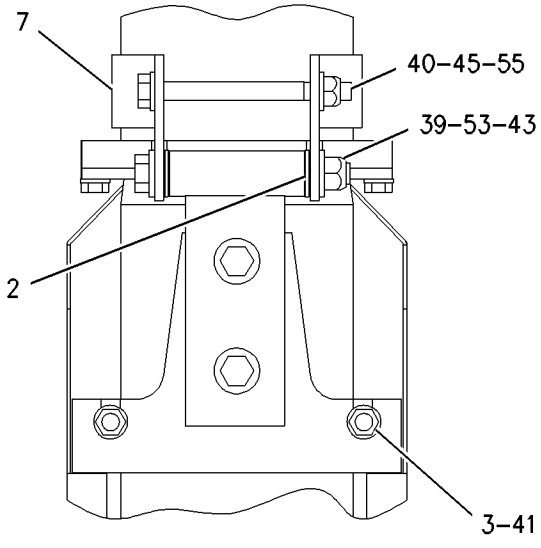

VIEW OF AREA A

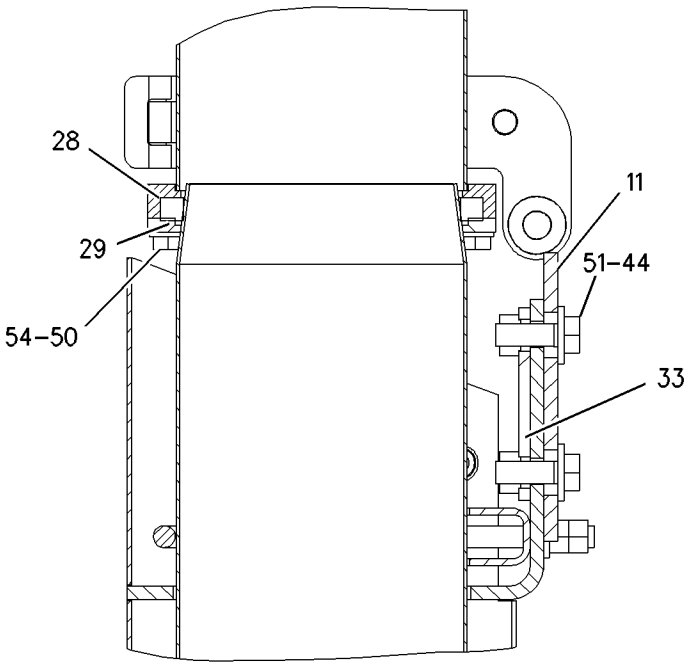

SECTION D-D

GRAPHIC #2 **<END>** g00852902

AIR INLET AND EXHAUST SYSTEM

208-5116 PIPE AR-EXHAUST

S/N: AXM1-UP

AN ATTACHMENT

SMCS-1061 **i01549756**

NOTE	PART NUMBER	QTY	PART NAME 1 2 3 4 5 6 (PRODUCT LEVEL)	SEE PAGE
Y	*152-7072*	1	PIPE GP-EXHAUST (FRONT)	147
Y	*152-7076*	1	PIPE GP-EXHAUST (REAR)	148

Y-SEPARATE ILLUSTRATION

<END>

152-7072 PIPE GP-EXHAUST–FRONT

S/N: AXM1-UP
PART OF 208-5116 PIPE AR-EXHAUST
AN ATTACHMENT

SMCS-1061 **i01624767**

NOTE	REF NO	GRAPHIC REF	PART NUMBER	QTY	PART NAME 1 2 3 4 5 6 (PRODUCT LEVEL)	SEE PAGE
	1	1	**1W-2431**	1	CLAMP-BAND	
	2	1	**2U-7477**	1	SEAL	
	3	1	**9X-2201**	4	CLAMP-HOSE	
	4	1	**186-5065**	2	CLAMP	
	5	1	**190-5938**	1	TUBE-FLEXIBLE	
	6	1	**190-7317**	1	PIPE AS	
	7	1	**202-2035**	1	TUBE AS	
	8	1	**202-2036**	1	PIPE AS	
	9	1	**202-2042**	1	PLATE AS	
	10	1	**202-2165**	2	DUCT AS	
		1	**186-2225**	1	RING-RETAINER	
	11	1	**202-4122**	1	CLAMP-V-BAND	
	12	1	**206-3419**	1	BRACKET AS	
	13	1	**7X-7729**	2	WASHER (11X25X3-MM THK)	
	14	1	**8T-4121**	4	WASHER-HARD (11X21X2.5-MM THK)	
M	15	1	**8T-4133**	2	NUT (M10X1.5-THD)	
M	16	1	**8T-4136**	4	BOLT (M10X1.5X25-MM)	

M-METRIC PART

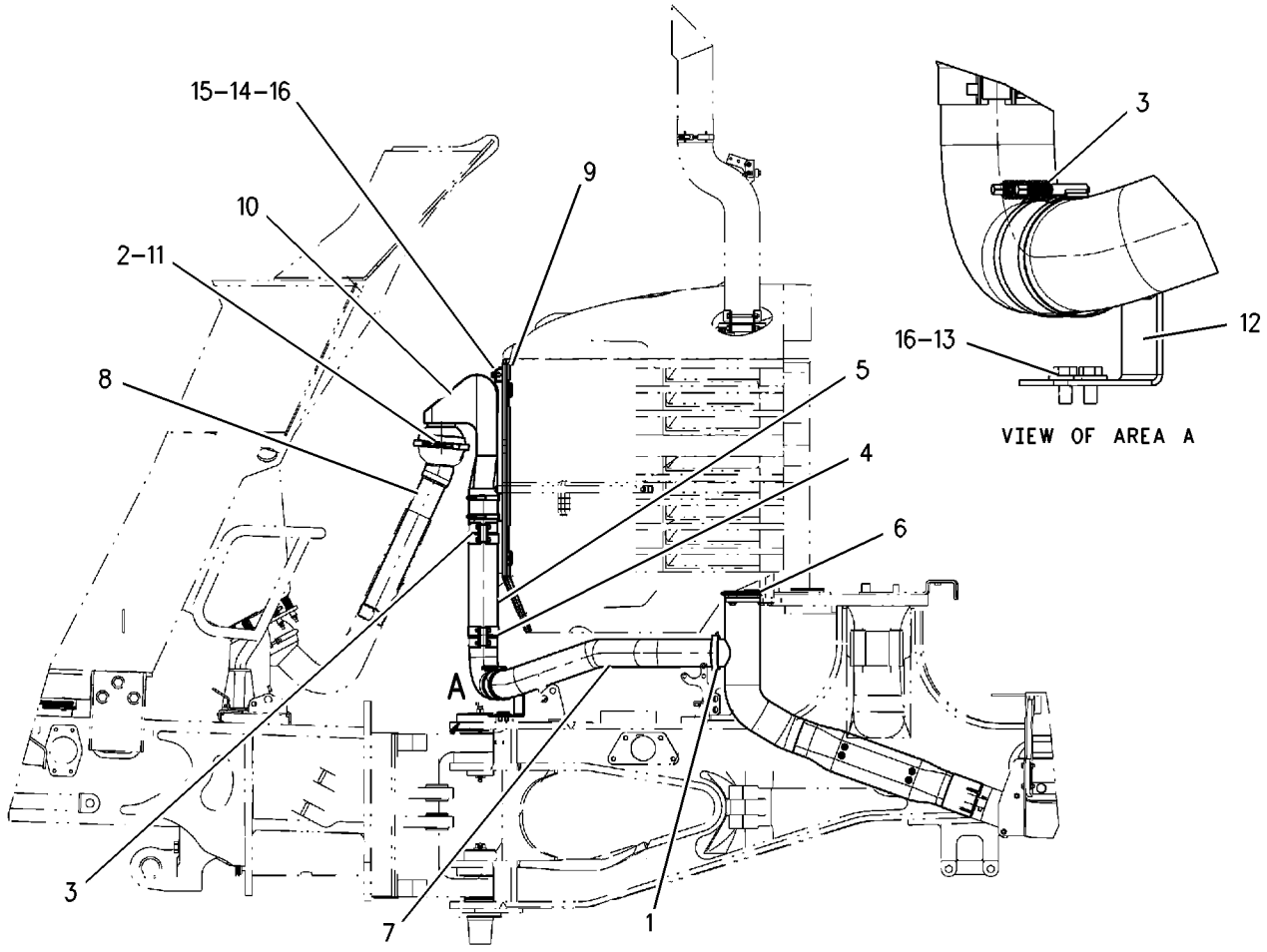

GRAPHIC #1 **<END>** g00841052

AIR INLET AND EXHAUST SYSTEM

152-7076 PIPE GP-EXHAUST—REAR

S/N: AXM1-1255
PART OF 208-5116 PIPE AR-EXHAUST
AN ATTACHMENT

SMCS-1061 **i01983654**

NOTE	REF NO	GRAPHIC REF	PART NUMBER	QTY	PART NAME 1 2 3 4 5 6 (PRODUCT LEVEL)	SEE PAGE
	1	1	**2U-7477**	1	SEAL	
B	2	1	**130-2336**	2	SHIM	
	3	1	**145-7755**	8	BUFFER-RUBBER	
B	4	1	**146-3027**	8	SHIM (6-MM THK)	
	5	1	**147-6322**	1	PLATE-CLAMP	
	6	1	**147-6514**	16	GASKET	
Y	7	1	**161-2173**	1	ELBOW GP-EXHAUST	133
	8	1	**202-4122**	1	CLAMP-V-BAND	
	9	1	**186-2225**	1	RING-RETAINER	
	10	1	**202-2038**	1	PIPE AS	
	11	1	**8T-4223**	3	WASHER-HARD (13.5X25.5X3-MM THK)	
M	12	1	**8T-4194**	3	BOLT (M12X1.75X50-MM)	
	13	1	**147-6513**	32	SPACER (5.6-MM THK)	
	14	1	**142-0534**	8	SHIM (3-MM THK)	
	15	1	**142-0535**	8	SHIM (8-MM THK)	
	16	1	**8T-4121**	32	WASHER-HARD (11X21X2.5-MM THK)	
M	17	1	**8T-4186**	32	BOLT (M10X1.5X40-MM)	

B-USE AS REQUIRED
M-METRIC PART
Y-SEPARATE ILLUSTRATION

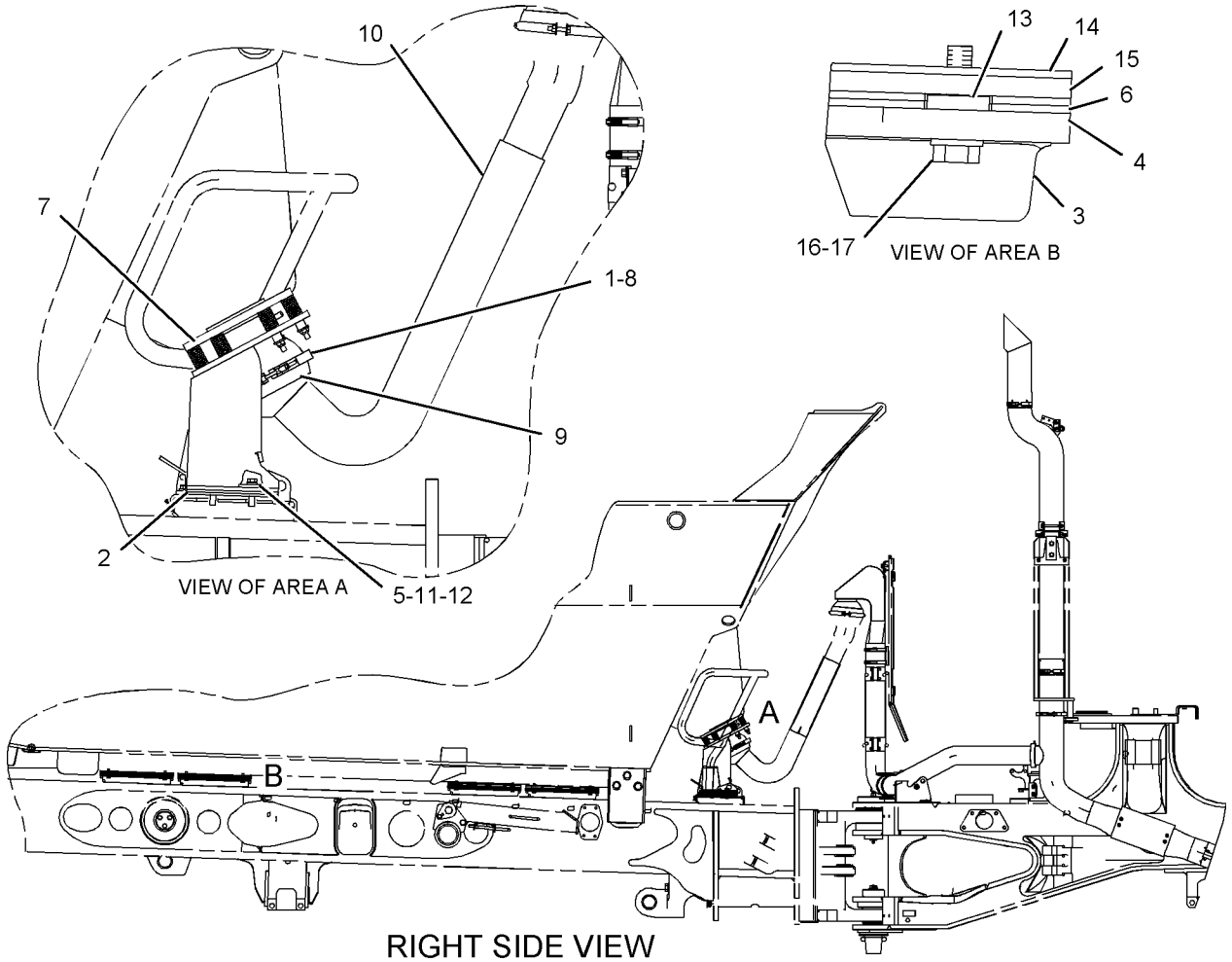

GRAPHIC #1

<END>

g01045818

152-7076 PIPE GP-EXHAUST–REAR

S/N: AXM1256-UP
PART OF 208-5116 PIPE AR-EXHAUST
AN ATTACHMENT

SMCS-1061 **i02026452**

NOTE	REF NO	GRAPHIC REF	PART NUMBER	QTY	PART NAME 1 2 3 4 5 6 (PRODUCT LEVEL)	SEE PAGE
	1	1	**2U-7477**	1	SEAL	
B	2	1	**130-2336**	2	SHIM	
	3	1	**145-7755**	8	BUFFER-RUBBER	
	4	1	**8T-4121**	32	WASHER-HARD (11X21X2.5-MM THK)	
	5	1	**147-6322**	1	PLATE-CLAMP	
CM	6	1	**8T-4136**	32	BOLT (M10X1.5X25-MM)	
Y	7	1	**161-2173**	1	ELBOW GP-EXHAUST	133
	8	1	**202-4122**	1	CLAMP-V-BAND	
	9	1	**186-2225**	1	RING-RETAINER	
	10	1	**202-2038**	1	PIPE AS	
	11	1	**8T-4223**	3	WASHER-HARD (13.5X25.5X3-MM THK)	
M	12	1	**8T-4194**	3	BOLT (M12X1.75X50-MM)	
	13	1	**142-0534**	8	SHIM (3-MM THK)	

B-USE AS REQUIRED
C-CHANGE FROM PREVIOUS TYPE
M-METRIC PART
Y-SEPARATE ILLUSTRATION

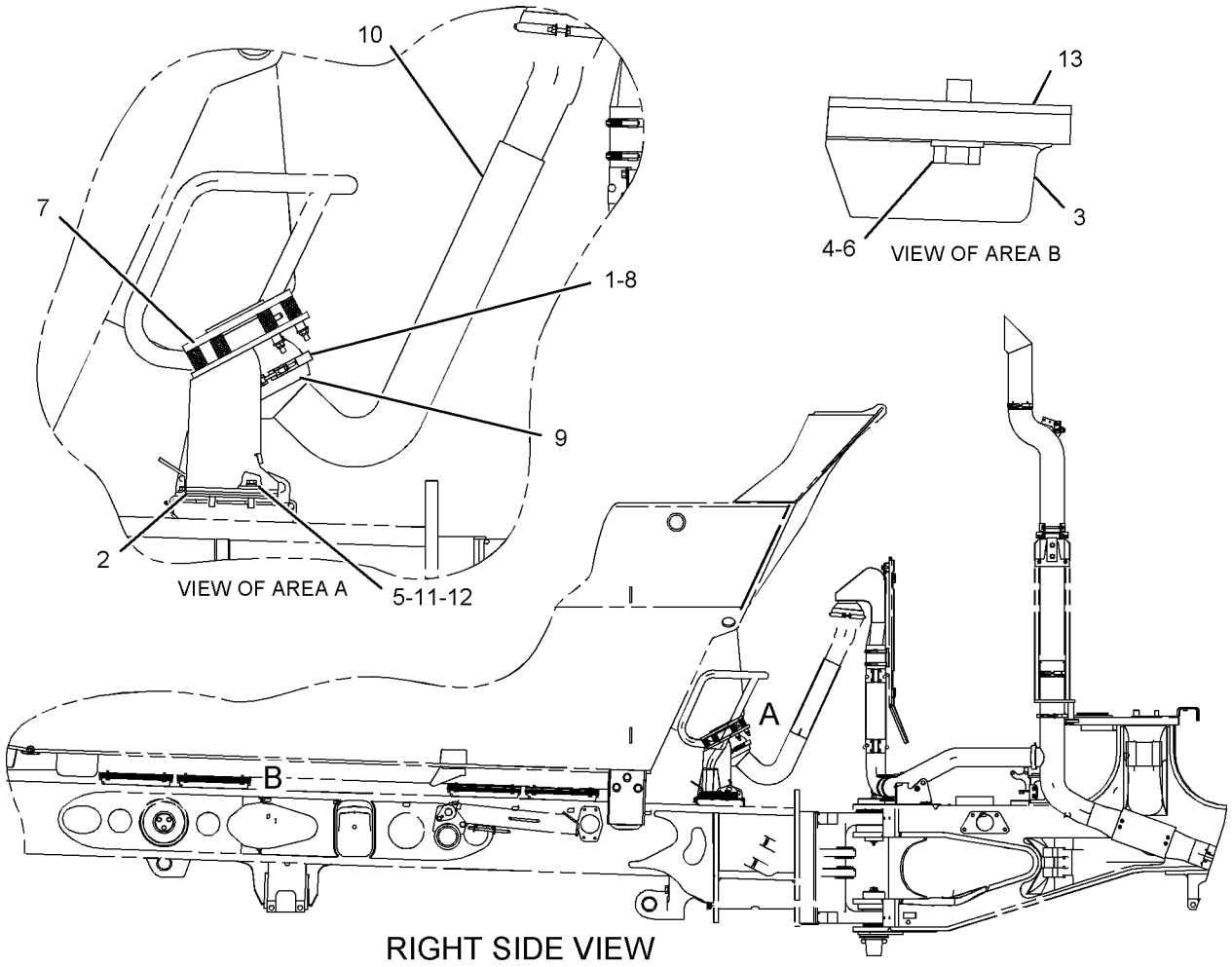

RIGHT SIDE VIEW

GRAPHIC #1 **<END>** g01046962

AIR INLET AND EXHAUST SYSTEM

208-0701 SHIELD GP-EXHAUST

S/N: AXM1-UP

PART OF 152-6922 HYDRAULIC AR-MACHINE

SMCS-1067 **i01538748**

NOTE	REF NO	GRAPHIC REF	PART NUMBER	QTY	PART NAME 1 2 3 4 5 6 (PRODUCT LEVEL)	SEE PAGE
	1	1	**191-0993**	1	BRACKET AS	
	2	1	**202-7224**	1	BRACKET AS	
M		1	**8T-3490**	3	NUT-WELD (M10X1.5-THD)	
	3	1	**203-0865**	1	GUARD-TURBOCHARGER	
	4	1	**203-0869**	1	BRACKET AS	
M		1	**8T-3490**	3	NUT-WELD (M10X1.5-THD)	
M		1	**8T-3597**	1	NUT-WELD (M12X1.75-THD)	
	5	1	**6B-2882**	2	SPACER (0.406X0.75X0.312-IN THK)	
	6	1	**6V-4432**	2	BOLT (1/2-13X4-IN)	
	7	1	**7X-7729**	4	WASHER (11X25X3-MM THK)	
M	8	1	**8T-4136**	6	BOLT (M10X1.5X25-MM)	
M	9	1	**8T-4195**	2	BOLT (M10X1.5X30-MM)	
	10	1	**8T-4223**	2	WASHER-HARD (13.5X25.5X3-MM THK)	
	11	1	**8T-4226**	6	WASHER-PLATED (10.5X45X3-MM THK)	
	12	1	**9B-7237**	2	BOLT (3/8-16X1.25-IN)	

M-METRIC PART

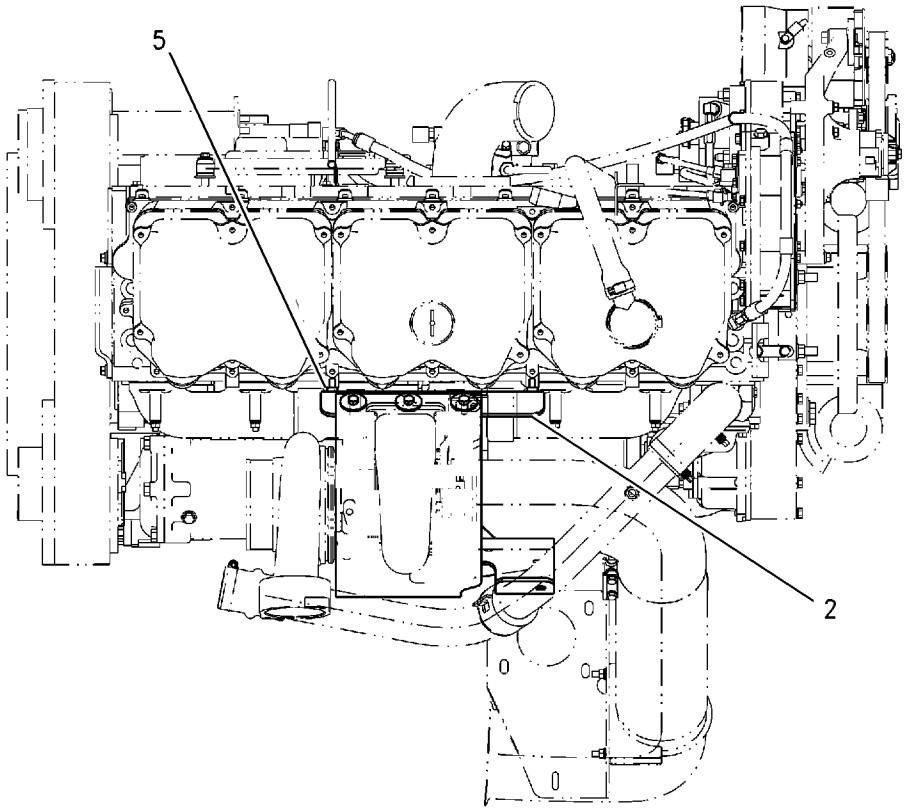

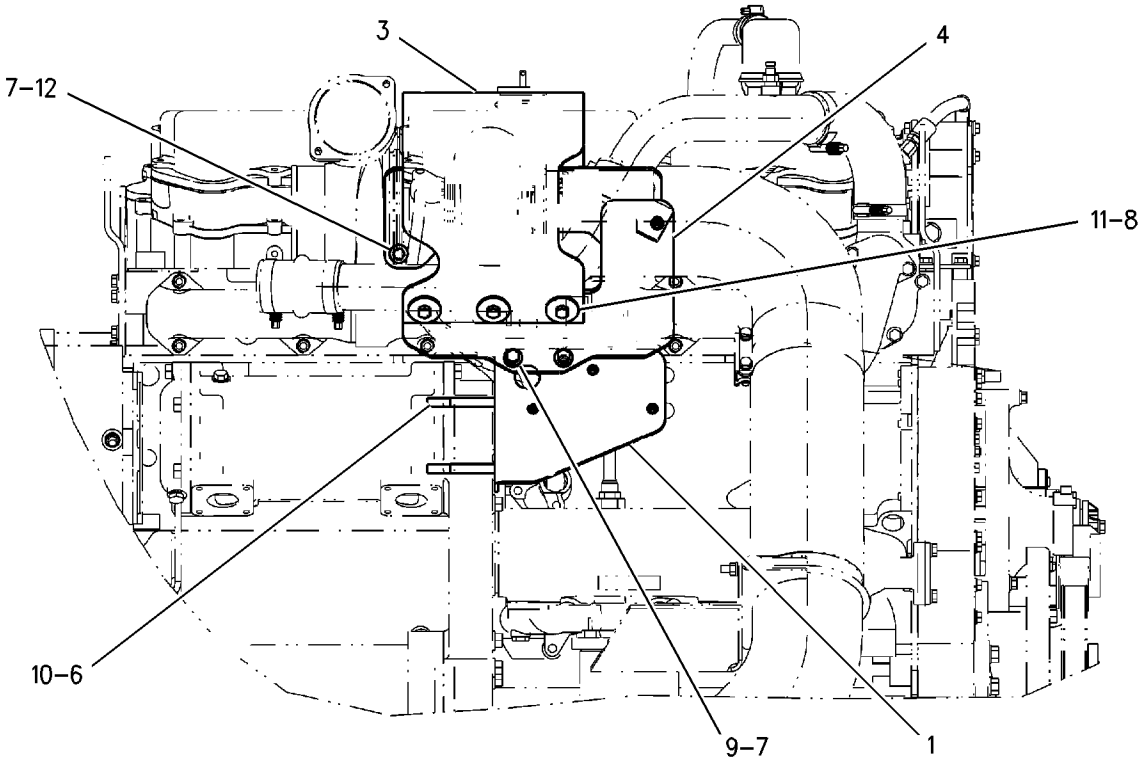

GRAPHIC #1 **<END>** g00799415

AIR INLET AND EXHAUST SYSTEM

9L-6671 SHIELD GP-MANIFOLD

S/N: BET200-UP

PART OF 153-7076, 235-4689 ENGINE AR-COMPLETE

SMCS-1059, 1067 **i01801879**

NOTE	REF NO	GRAPHIC REF	PART NUMBER	QTY	PART NAME 1 2 3 4 5 6 (PRODUCT LEVEL)	SEE PAGE
	1	1	**0S-1591**	2	BOLT (3/8-16X1.5 IN)	
	2	1	**9S-8752**	2	NUT-FULL (3/8-16 THD)	
	3	1	**9N-1008**	1	SHIELD AS	
	4	1	**1S-4577**	1	CLAMP	

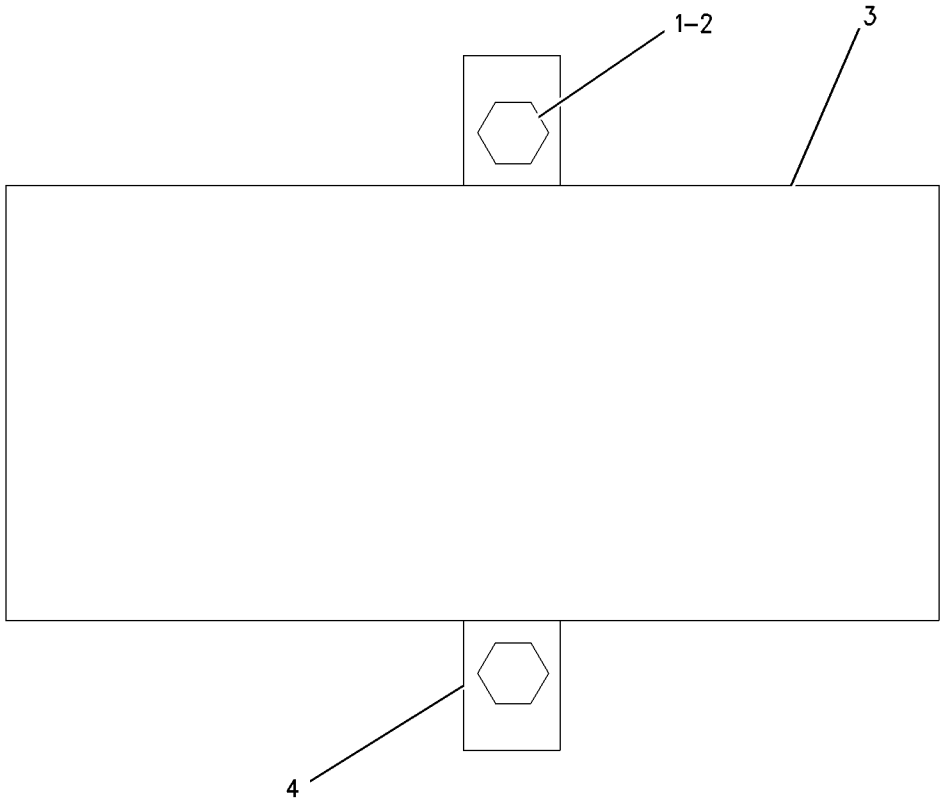

GRAPHIC #1 **<END>** g00923090

AIR INLET AND EXHAUST SYSTEM

208-0037 TURBOCHARGER GP

S/N: BET200-UP

PART OF 208-2378 TURBOCHARGER GP

SMCS-1052, 1053 **i01844461**

NOTE	REF NO	GRAPHIC REF	PART NUMBER	QTY	PART NAME 1 2 3 4 5 6 (PRODUCT LEVEL)	SEE PAGE
	1	1	**207-8201**	1	COVER AS-COMPRESSOR	
	2	1	**9N-2038**	1	CLAMP AS (TURBINE)	
	3	1	**137-4550**	1	CLAMP AS-COMPRESSOR	
	4	1	**207-8197**	1	CARTRIDGE GP-TURBOCHARGER	
	5	1	**148-9104**	1	HOUSING-TURBINE	

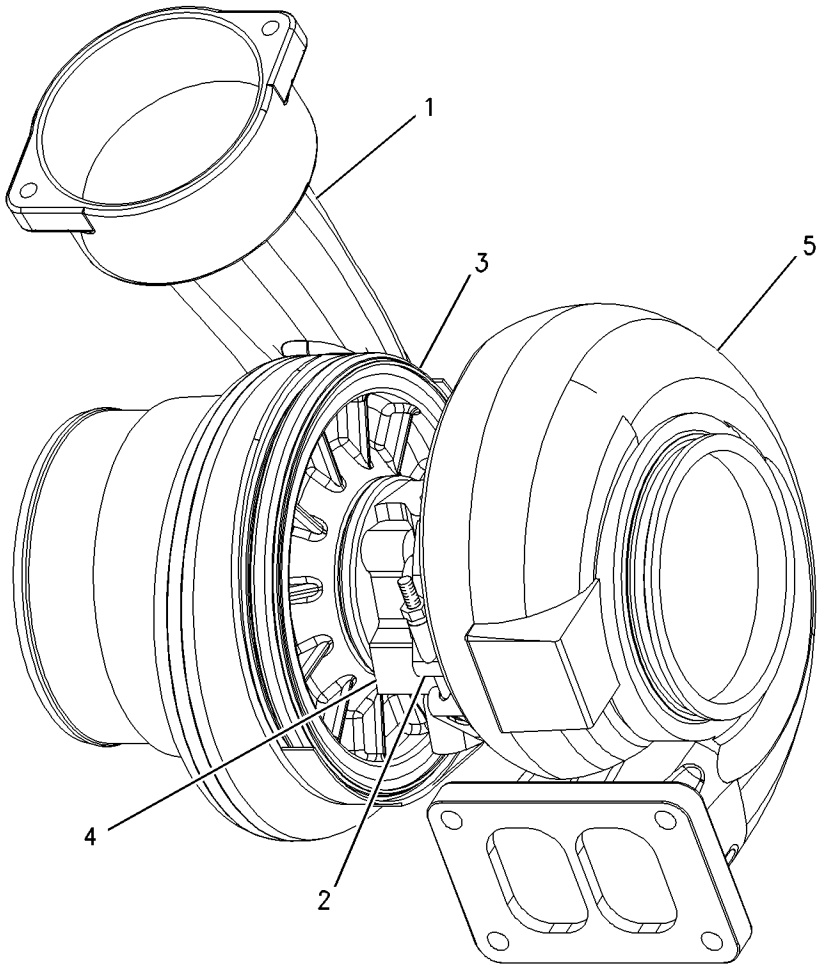

GRAPHIC #1 **<END>** g00665679

AIR INLET AND EXHAUST SYSTEM

208-2378 TURBOCHARGER GP

S/N: BET200-UP

PART OF 153-7078, 235-3472 ENGINE AR-CORE

SMCS-1052, 1053 **i01629789**

NOTE	REF NO	GRAPHIC REF	PART NUMBER	QTY	PART NAME 1 2 3 4 5 6 (PRODUCT LEVEL)	SEE PAGE
	1	1	**1S-4295**	1	GASKET-TURBOCHARGER	
	2	1	**2N-2765**	4	BOLT-HIGH TEMPERATURE (3/8-16X1.75 IN)	
	3	1	**2N-2766**	4	LOCKNUT	
Y	4	1	*208-0037*	1	TURBOCHARGER GP	153

Y-SEPARATE ILLUSTRATION

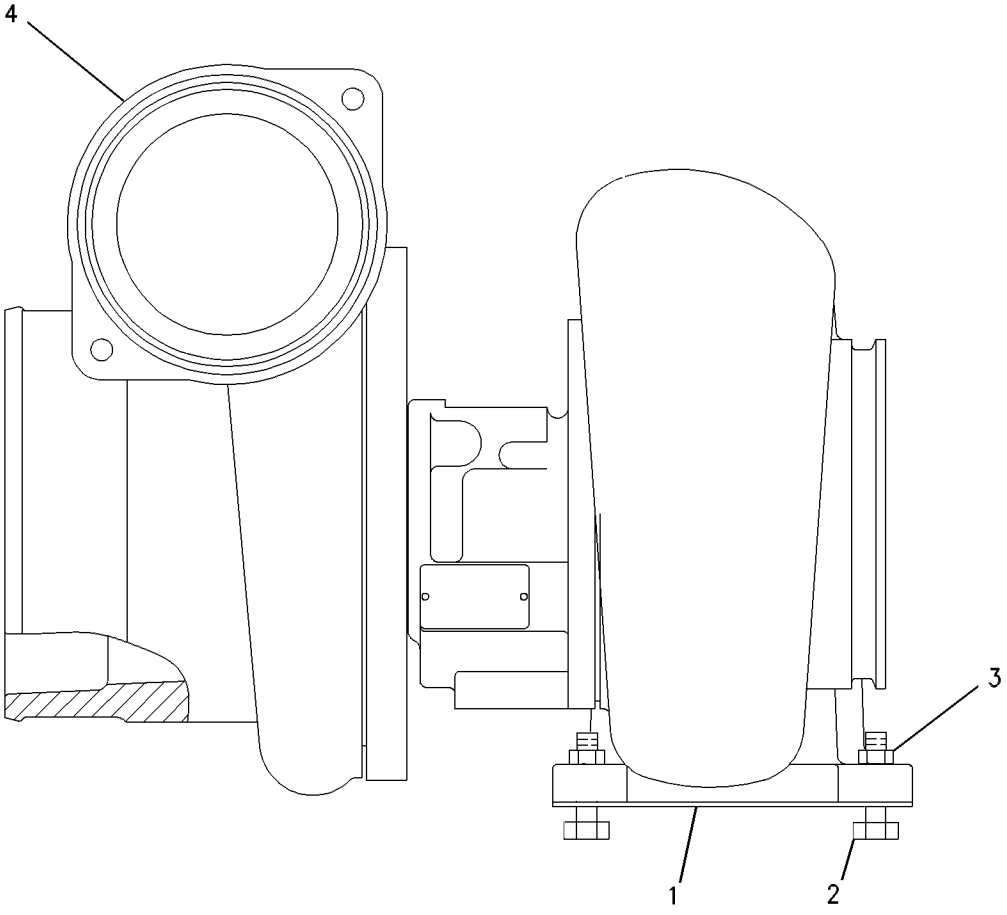

GRAPHIC #1 **<END>** g00417819

205-0349 BASE GP-FUEL FILTER

S/N: BET200-6091

PART OF 205-0347 PUMP GP-FUEL PRM & SEC FILTER

SMCS-1262 **i01526661**

NOTE	REF NO	GRAPHIC REF	PART NUMBER	QTY	PART NAME 1 2 3 4 5 6 (PRODUCT LEVEL)	SEE PAGE
	1	1	**130-9811**	1	SENSOR GP-TEMPERATURE (FUEL)	
	2	1	**136-5017**	1	BASE AS-FUEL FILTER	
	2A	1	**9S-4167**	1	STUD-HOLLOW	
Y	3	1	**139-6873**	1	VALVE GP-FUEL BYPASS	194
	4	1	**143-2933**	1	FITTING	
Y	5	1	**156-5783**	1	VALVE GP-CHECK	191
Y	6	1	**194-6725**	1	SENSOR GP-PRESSURE (FUEL)	249
	7	1	**6V-4589**	2	SEAL-O-RING	
	8	1	**6V-5048**	1	SEAL-O-RING	
	9	1	**6V-5049**	1	SEAL-O-RING	
	10	1	**8L-2779**	1	SEAL-O-RING	
	11	1	**8L-2786**	2	SEAL-O-RING	
	12	1	**9X-0261**	1	ADAPTER	

Y-SEPARATE ILLUSTRATION

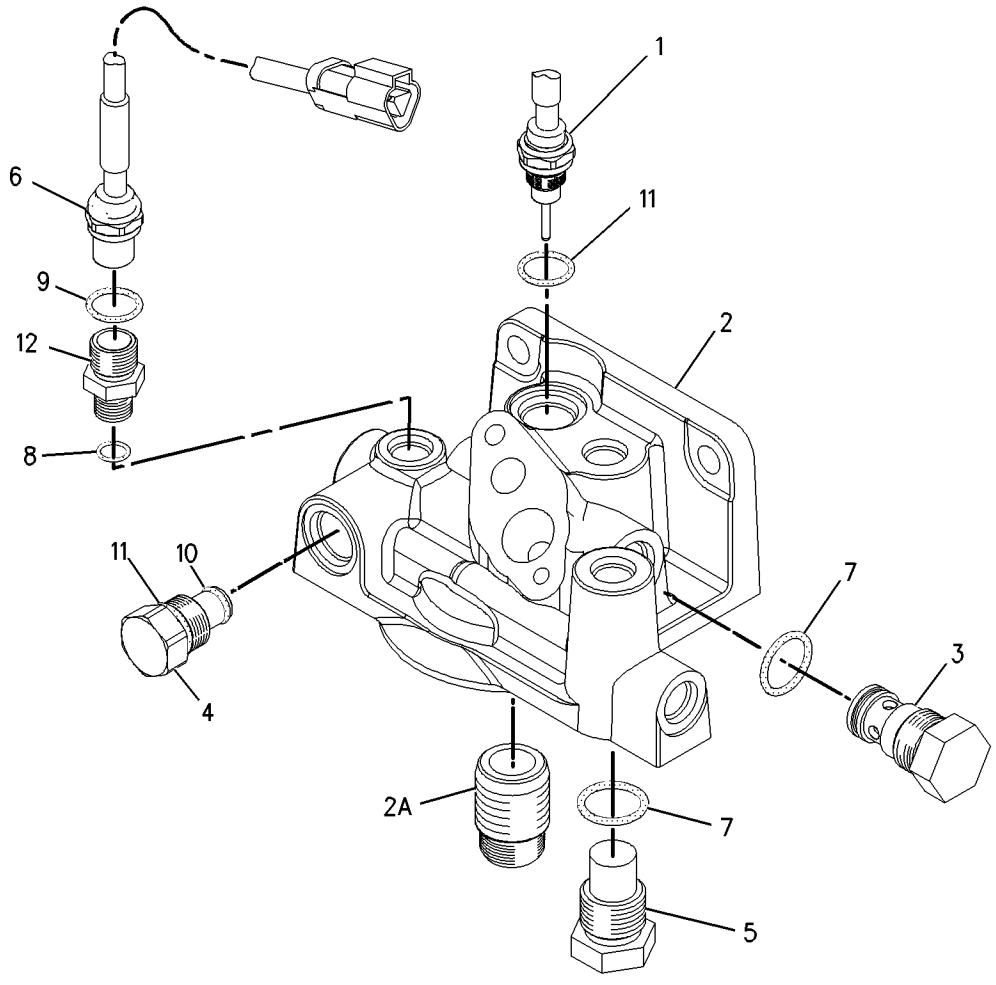

GRAPHIC #1 **<END>** g00794425

205-0349 BASE GP-FUEL FILTER

S/N: BET6092-UP

PART OF 205-0347 PUMP GP-FUEL PRM & SEC FILTER

SMCS-1262 **i01989492**

NOTE	REF NO	GRAPHIC REF	PART NUMBER	QTY	PART NAME 1 2 3 4 5 6 (PRODUCT LEVEL)	SEE PAGE
	1	1	**130-9811**	1	SENSOR GP-TEMPERATURE (FUEL)	
	2	1	**136-5017**	1	BASE AS-FUEL FILTER	
	2A	1	**9S-4167**	1	STUD-HOLLOW	
Y	3	1	**139-6873**	1	VALVE GP-FUEL BYPASS	194
	4	1	**143-2933**	1	FITTING	
Y	5	1	**194-6725**	1	SENSOR GP-PRESSURE (FUEL)	249
CY	6	1	*233-6742*	1	VALVE GP-CHECK (FUEL) (FUEL FILTER)	192
C	7	1	**6V-4589**	1	SEAL-O-RING	
	8	1	**6V-5048**	1	SEAL-O-RING	
	9	1	**6V-5049**	1	SEAL-O-RING	
	10	1	**8L-2779**	1	SEAL-O-RING	
	11	1	**8L-2786**	2	SEAL-O-RING	
	12	1	**9X-0261**	1	ADAPTER	

C-CHANGE FROM PREVIOUS TYPE
Y-SEPARATE ILLUSTRATION

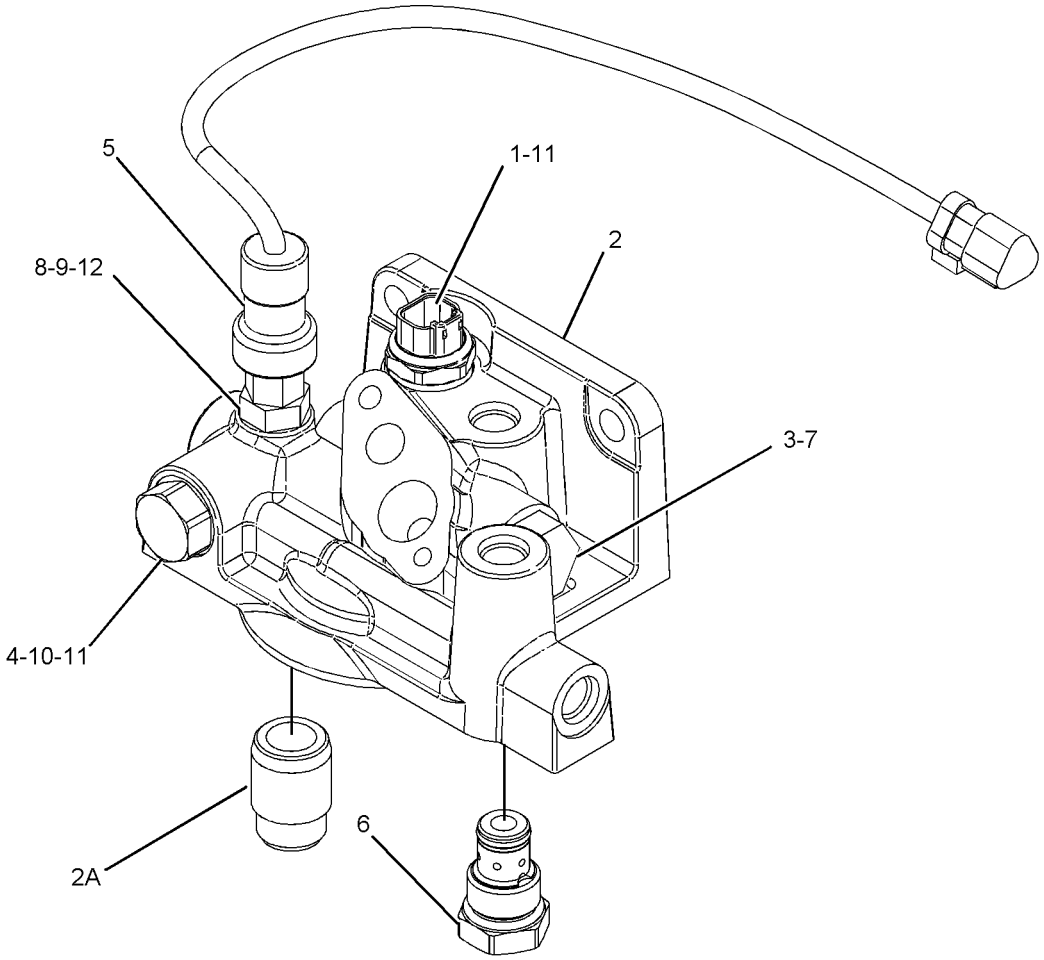

GRAPHIC #1 **<END>** g01047523

149-0086 CONTROL GP-GOVERNOR

S/N: AXM1-UP

PART OF 153-5485, 229-8087 CAB AR

SMCS-1265, 1276 **i02144806**

NOTE	REF NO	GRAPHIC REF	PART NUMBER	QTY	PART NAME 1 2 3 4 5 6 (PRODUCT LEVEL)	SEE PAGE
	1	1	**168-9092**	1	PEDAL GP-GOVERNOR	
		1	**160-2443**	1	SENSOR GP-POSITION (ROTARY)	
		1	**102-8803**	1	KIT-RECEPTACLE (3-PIN)	
					(INCLUDES RECEPTACLE AS & WEDGE)	
		1	**3E-3371**	1	WEDGE-RECEPTACLE LOCK (3-PIN)	
		1	**186-3735**	3	PIN-CONNECTOR	
		1	**112-8728**	2	SCREW (10-32X1.25-IN)	
	2	1	**162-9112**	1	GROMMET-SPLIT	
M	3	1	**5C-9553**	2	BOLT (M6X1X16-MM)	
	4	1	**9X-8256**	2	WASHER (6.6X12X2-MM THK)	

M-METRIC PART

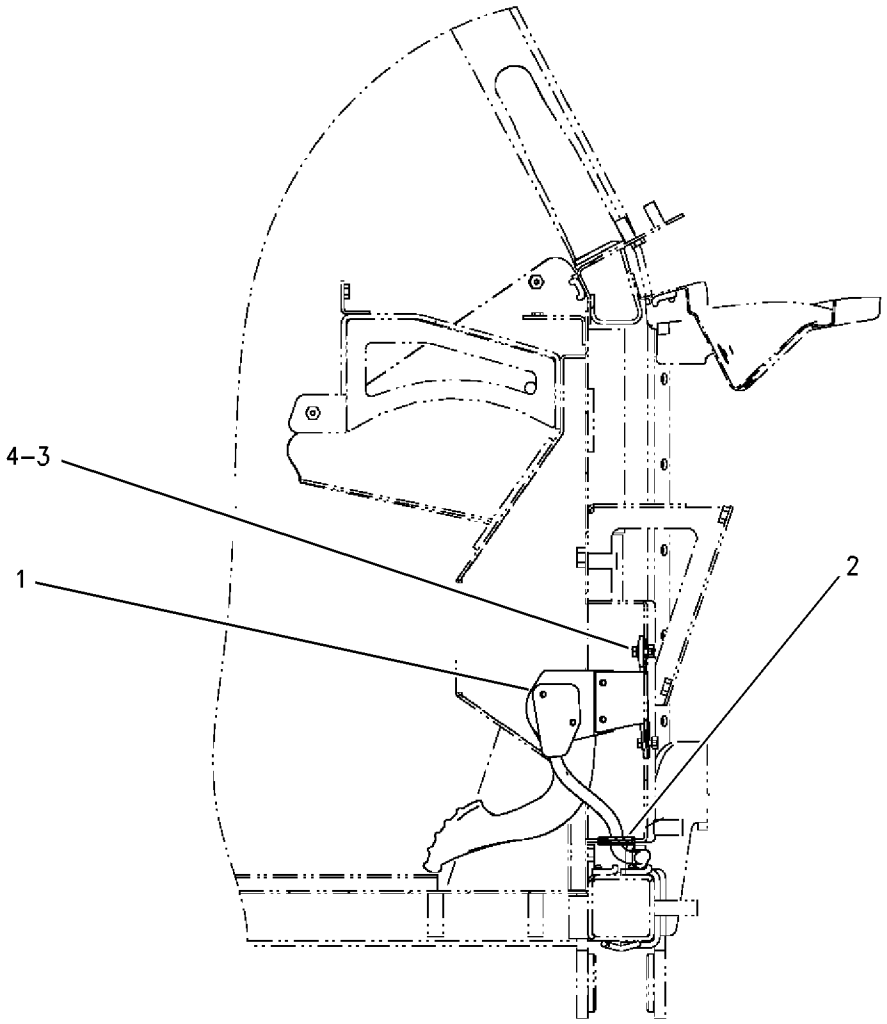

GRAPHIC #1 **<END>** g00753389

133-5671 FILTER GP-WATER SEP & FUEL–PRIMARY

S/N: AXM1-UP

PART OF 152-7113 LINES GP-FUEL

SMCS-1261, 1263 **i02139837**

NOTE	REF NO	GRAPHIC REF	PART NUMBER	QTY	PART NAME 1 2 3 4 5 6 (PRODUCT LEVEL)	SEE PAGE
	1	1	**137-4367**	1	BASE AS	
	2	1	**133-5673**	1	ELEMENT-FILTER (FUEL, WATER SEPARATOR) (PRIMARY)	
	3	1	**129-0375**	1	BOWL AS-WATER COLLECTION	
AB			**155-2629**	1	HEATER GP-FUEL (WATER SEPARATOR, 12-VOLT)	
AB			**157-1206**	1	BOWL AS-WATER COLLECTION (24-VOLT HEATER)	
ABF			**141-0284**	1	KIT-FUEL FILTER & WATER SEP	
					(INCLUDES SEALS AND GASKETS)	
					(THIS KIT PROVIDES REPLACEMENT SEALS FOR THOSE DAMAGED DURING INSTALLATION OF REPLACEMENT ELEMENT AND/OR BOWL)	

A-NOT PART OF THIS GROUP
B-USE AS REQUIRED
F-NOT SHOWN

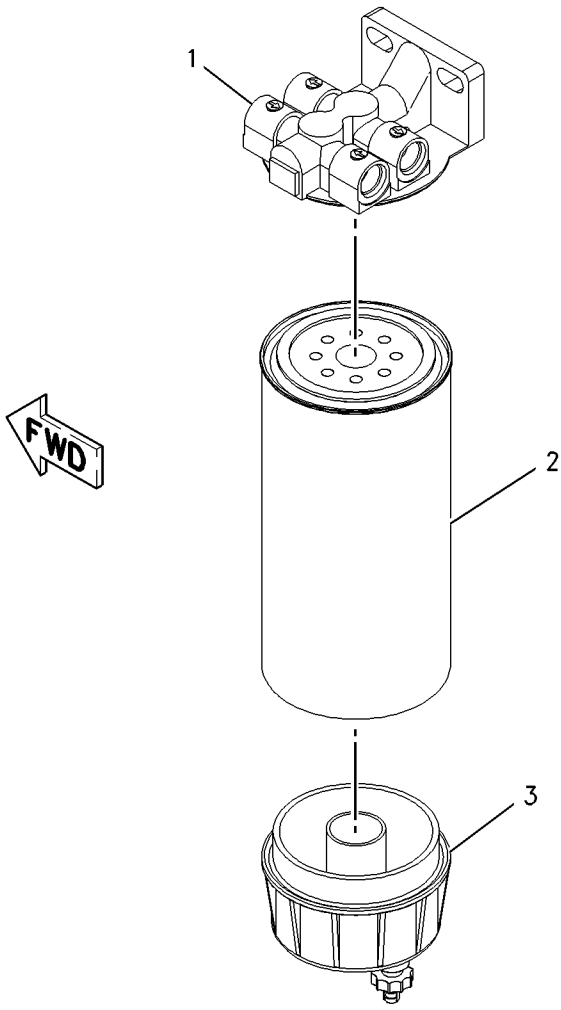

GRAPHIC #1 **<END>** g00986128

128-8510 INJECTOR GP-FUEL

S/N: BET200-UP

PART OF 153-7078, 235-3472 ENGINE AR-CORE

SMCS-1251, 1254, 1290, 1713 **i02055433**

NOTE	REF NO	GRAPHIC REF	PART NUMBER	QTY	PART NAME 1 2 3 4 5 6 (PRODUCT LEVEL)	SEE PAGE
	1	1	**6I-0213**	1	CLAMP	
	2	1	**8S-9191**	1	BOLT (3/8-16X4-IN)	
	3	1	**100-5072**	1	SPACER (9.8X15.85X37.6-MM THK)	
R	4	1	**211-3025**	1	INJECTOR GP-FUEL	
	4A	1	**9X-7317**	1	SEAL-O-RING	
	4B	1	**230-3728**	1	SEAL-O-RING	
	4C	1	**230-3775**	1	SEAL-O-RING	

R-REMFG PART MAY BE AVAILABLE

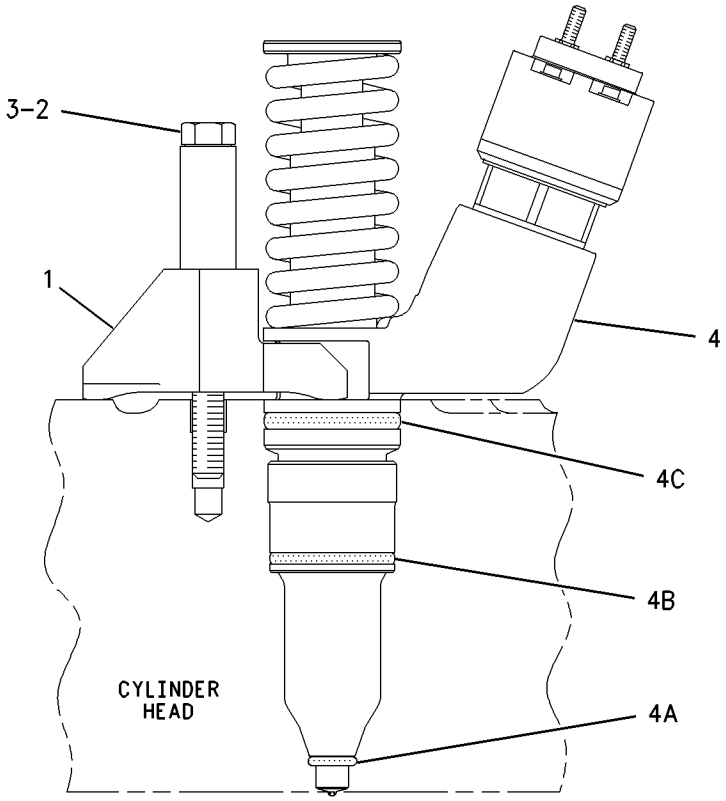

REAR VIEW

GRAPHIC #1 **<END>** g00665501

FUEL SYSTEM

152-7113 LINES GP-FUEL

S/N: AXM1-228

PART OF 152-6922 HYDRAULIC AR-MACHINE

SMCS-1274 **i01858737**

NOTE	REF NO	GRAPHIC REF	PART NUMBER	QTY	PART NAME 1 2 3 4 5 6 (PRODUCT LEVEL)	SEE PAGE
	1	1	**4U-6354**	3	BOSS	
	2	1	**6U-3890**	1	CLIP	
Y	3	1	**133-5671**	1	FILTER GP-WATER SEP & FUEL	158
I	4	1	**136-9354**	1	HOSE AS	
	5	1	*148-8395*	2	PLUG AS	
					(EACH INCLUDES)	
		1	**9S-8005**	1	PLUG	
		1	**3K-0360**	1	SEAL-O-RING	
I	6	1	**200-7743**	1	HOSE AS	
E	7	1	**8C-3681**		HOSE (50CM)	
I	8	1	**207-9506**	1	HOSE AS	
	9	1	*148-8336*	1	CONNECTOR AS	
		1	**6V-8636**	1	CONNECTOR	
		1	**3J-1907**	1	SEAL-O-RING	
		1	**6V-8397**	1	SEAL-O-RING	
	10	1	*148-8340*	2	CONNECTOR AS	
					(EACH INCLUDES)	
		1	**6V-8639**	1	CONNECTOR	
		1	**3K-0360**	1	SEAL-O-RING	
		1	**6V-8398**	1	SEAL-O-RING	
	11	1	*148-8364*	1	ELBOW AS	
		1	**6V-8625**	1	ELBOW	
		1	**3K-0360**	1	SEAL-O-RING	
		1	**6V-8398**	1	SEAL-O-RING	
	12	1	*148-8378*	1	ELBOW AS	
		1	**6V-8724**	1	ELBOW	
		1	**6V-8397**	1	SEAL-O-RING	
		1	**3J-1907**	1	SEAL-O-RING	
	13	1	**3U-2753**	4	CLIP	
	14	1	**3U-2754**	4	CLIP	
	15	1	**8T-4121**	9	WASHER-HARD (11X21X2.5-MM THK)	
M	16	1	**8T-4133**	3	NUT (M10X1.5-THD)	
M	17	1	**8T-4195**	1	BOLT (M10X1.5X30-MM)	
M	18	1	**8T-4196**	2	BOLT (M10X1.5X35-MM)	
M	19	1	**8T-6466**	3	BOLT (M10X1.5X60-MM)	
	20	1	**6U-0456**	2	STRAP	

E-ORDER BY THE CENTIMETER
I-REFER TO HYDRAULIC INFORMATION SYSTEM
M-METRIC PART
Y-SEPARATE ILLUSTRATION

152-7113 **LINES GP-FUEL** *(contd.)* **i01858737**

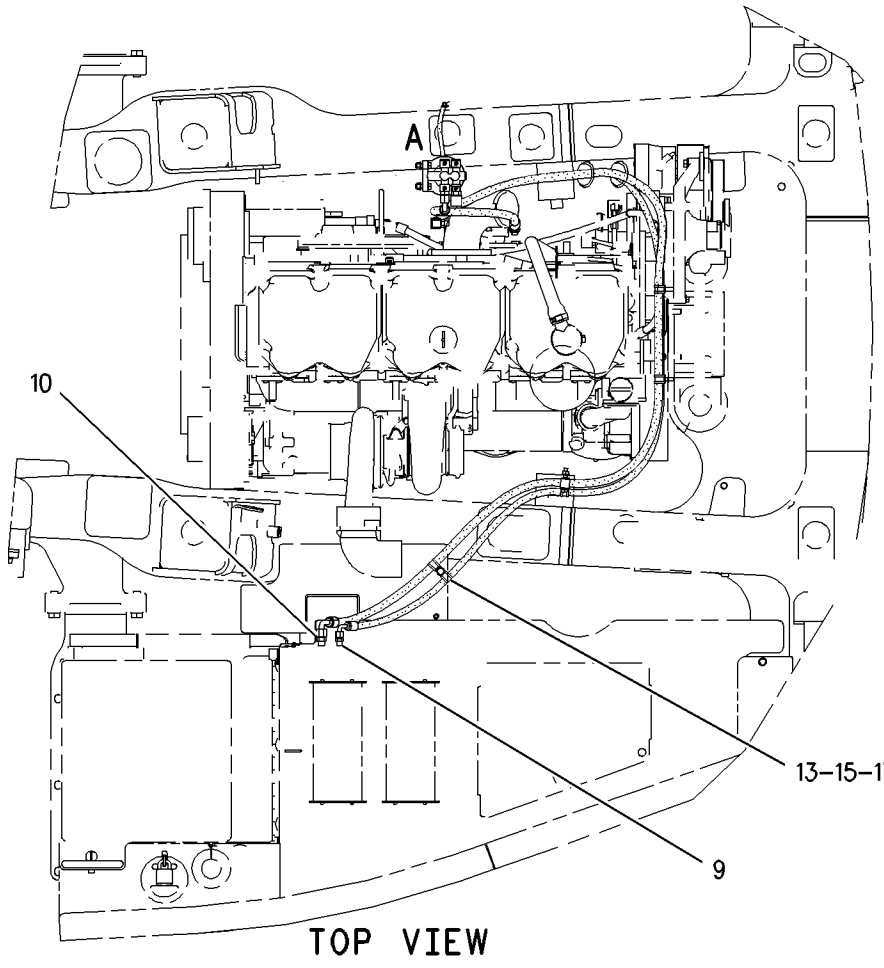

TOP VIEW

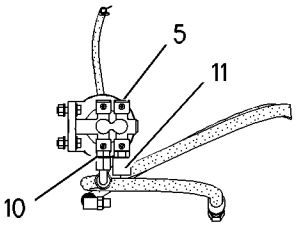

VIEW OF AREA A

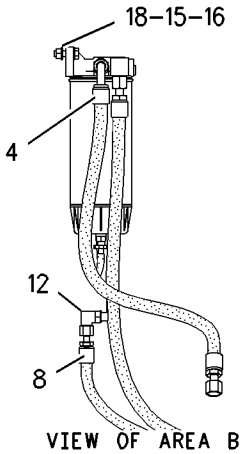

VIEW OF AREA B

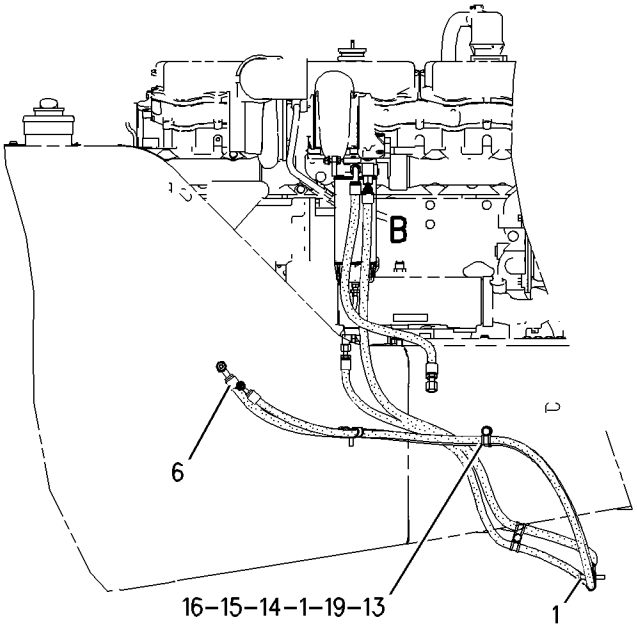

RIGHT SIDE VIEW

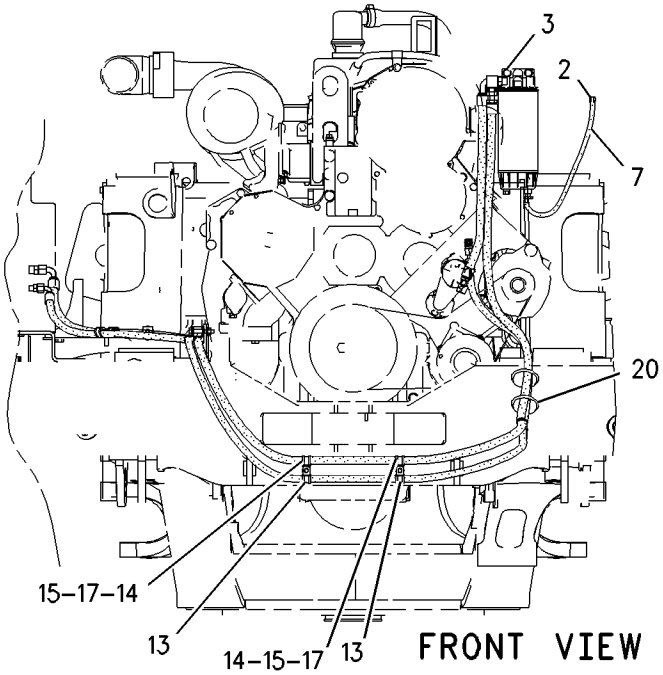

FRONT VIEW

GRAPHIC #1 **<END>** g00833903

FUEL SYSTEM

152-7113 LINES GP-FUEL

S/N: AXM229-UP

PART OF 152-6922 HYDRAULIC AR-MACHINE

SMCS-1274 **i01834359**

NOTE	REF NO	GRAPHIC REF	PART NUMBER	QTY	PART NAME 1 2 3 4 5 6 (PRODUCT LEVEL)	SEE PAGE
	1	1	**4U-6354**	1	BOSS	
	2	1	**6U-0455**	1	STRAP	
	3	1	**6U-0456**	3	STRAP	
	4	1	**6U-3890**	1	CLIP	
Y	5	1	**133-5671**	1	FILTER GP-WATER SEP & FUEL	158
	6	1	*148-8395*	2	PLUG AS	
					(EACH INCLUDES)	
		1	**9S-8005**	1	PLUG	
		1	**3K-0360**	1	SEAL-O-RING	
I	7	1	**200-7743**	1	HOSE AS	
E	8	1	**8C-3681**		HOSE (50CM)	
I	9	1	**207-9506**	1	HOSE AS	
CI	10	1	**210-3215**	1	HOSE AS	
	11	1	*148-8336*	1	CONNECTOR AS	
		1	**6V-8636**	1	CONNECTOR	
		1	**3J-1907**	1	SEAL-O-RING	
		1	**6V-8397**	1	SEAL-O-RING	
	12	1	*148-8340*	2	CONNECTOR AS	
					(EACH INCLUDES)	
		1	**6V-8639**	1	CONNECTOR	
		1	**3K-0360**	1	SEAL-O-RING	
		1	**6V-8398**	1	SEAL-O-RING	
	13	1	*148-8364*	1	ELBOW AS	
		1	**6V-8625**	1	ELBOW	
		1	**3K-0360**	1	SEAL-O-RING	
		1	**6V-8398**	1	SEAL-O-RING	
	14	1	*148-8378*	1	ELBOW AS	
		1	**6V-8724**	1	ELBOW	
		1	**6V-8397**	1	SEAL-O-RING	
		1	**3J-1907**	1	SEAL-O-RING	
	15	1	**3U-2753**	4	CLIP	
	16	1	**3U-2754**	4	CLIP	
	17	1	**8T-4121**	10	WASHER-HARD (11X21X2.5-MM THK)	
M	18	1	**8T-4133**	4	NUT (M10X1.5-THD)	
M	19	1	**8T-4186**	2	BOLT (M10X1.5X40-MM)	
M	20	1	**8T-4195**	1	BOLT (M10X1.5X30-MM)	
M	21	1	**8T-4196**	2	BOLT (M10X1.5X35-MM)	
M	22	1	**8T-6466**	1	BOLT (M10X1.5X60-MM)	

C-CHANGE FROM PREVIOUS TYPE
E-ORDER BY THE CENTIMETER
I-REFER TO HYDRAULIC INFORMATION SYSTEM
M-METRIC PART
Y-SEPARATE ILLUSTRATION

152-7113 **LINES GP-FUEL** *(contd.)* **i01834359**

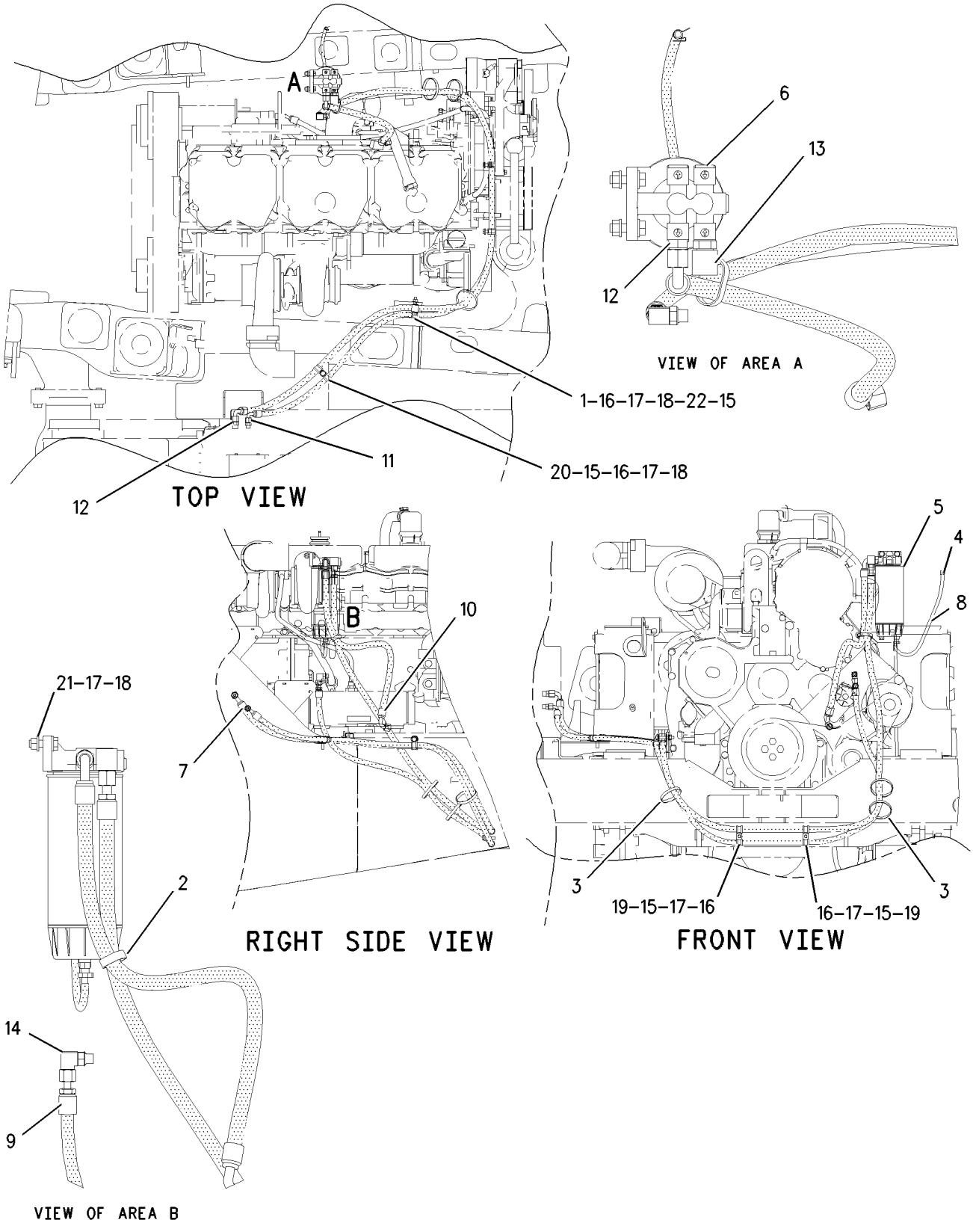

GRAPHIC #1 **<END>** g00870295

FUEL SYSTEM

188-9138 LINES GP-FUEL

S/N: BET200-10441

PART OF 153-7076, 235-4689 ENGINE AR-COMPLETE

SMCS-1274 **i01464148**

NOTE	REF NO	GRAPHIC REF	PART NUMBER	QTY	PART NAME 1 2 3 4 5 6 (PRODUCT LEVEL)	SEE PAGE
I	1	1	**4P-0902**	1	HOSE AS	
	2	1	**8N-4326**	1	BRACE	
I	3	1	**113-9002**	1	HOSE AS	
I	4	1	**136-9141**	1	HOSE AS-FUEL	
I	5	1	**136-9497**	1	HOSE AS	
	6	1	**189-1917**	1	PLATE	
	7	1	**030-7937**	1	CONNECTOR-PORT	
	8	1	**030-7947**	4	ELBOW	
	9	1	**030-7962**	1	ELBOW	
	10	1	**033-6042**	8	SEAL-O-RING	
	11	1	**0L-1351**	1	BOLT (3/8-16X0.875-IN)	
	12	1	**0L-2070**	2	BOLT (3/8-16X2.25-IN)	
	13	1	**0S-1571**	1	BOLT (3/8-16X1.75-IN)	
	14	1	**0S-1591**	1	BOLT (3/8-16X1.5-IN)	
	15	1	**2A-2677**	1	SPACER (0.75-IN THK)	
	16	1	**2R-6806**	1	CONNECTOR	
	17	1	**4D-7735**	5	CLIP	
	18	1	**5M-2894**	6	WASHER-HARD (10.2X18.5X2.5-MM THK)	
	19	1	**6K-9194**	2	ELBOW	
	20	1	**6V-8625**	1	ELBOW	
	21	1	**6V-8627**	1	ELBOW	
	22	1	**8L-2786**	1	SEAL-O-RING	
	23	1	**9S-4191**	1	PLUG	
	24	1	**9S-8752**	1	NUT-FULL (3/8-16-THD)	

I-REFER TO HYDRAULIC INFORMATION SYSTEM

188-9138 **LINES GP-FUEL** *(contd.)* **i01464148**

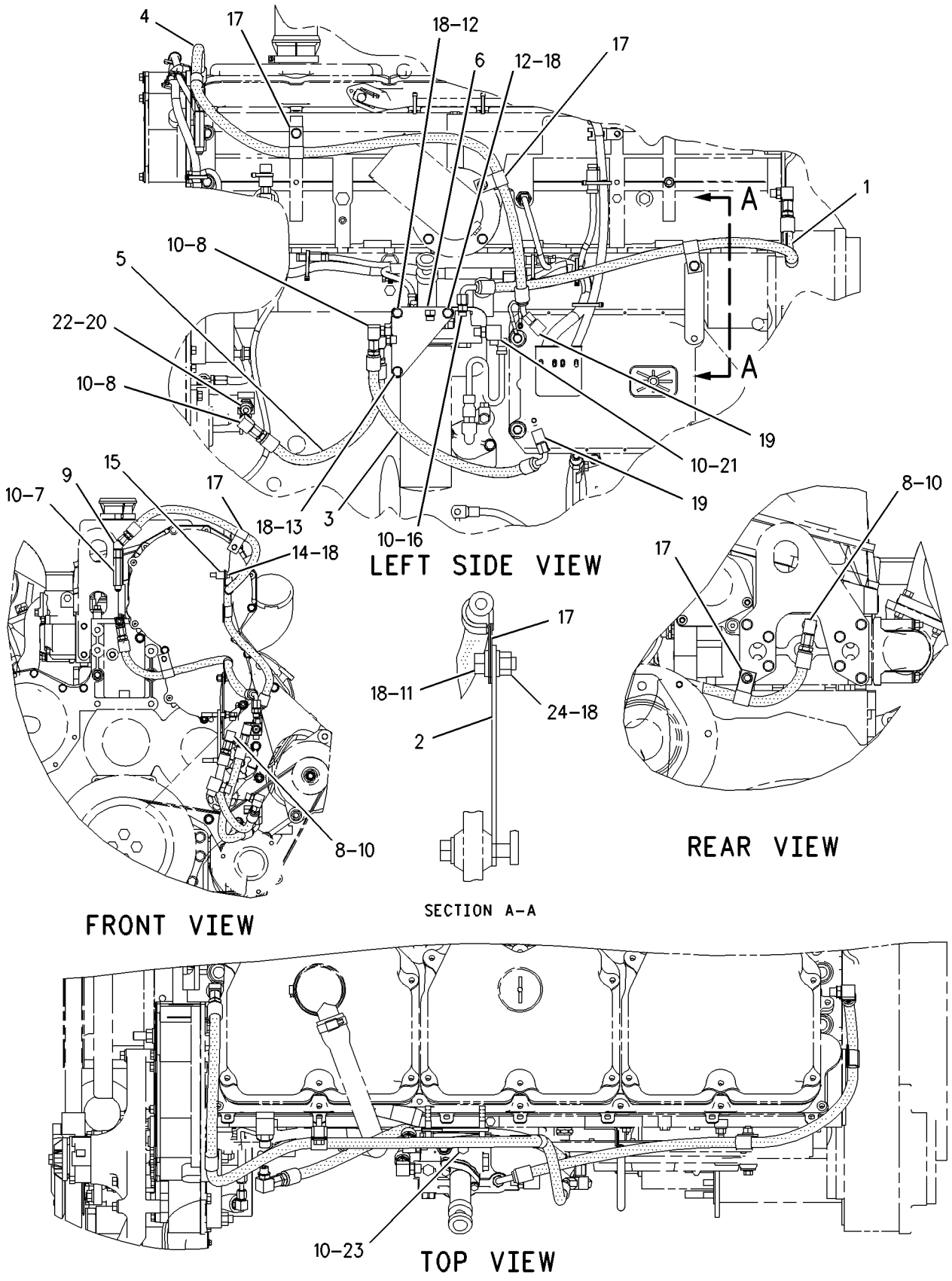

GRAPHIC #1 **<END>** g00770443

FUEL SYSTEM

188-9138 LINES GP-FUEL

S/N: BET10442-10459

PART OF 235-4689 ENGINE AR-COMPLETE

SMCS-1274 **i02160033**

NOTE	REF NO	GRAPHIC REF	PART NUMBER	QTY	PART NAME 1 2 3 4 5 6 (PRODUCT LEVEL)	SEE PAGE
I	1	1	**4P-0902**	1	HOSE AS	
	2	1	**8N-4326**	1	BRACE	
I	3	1	**113-9002**	1	HOSE AS	
CI	4	1	**172-3445**	1	HOSE AS	
I	5	1	**136-9497**	1	HOSE AS	
	6	1	**189-1917**	1	PLATE	
	7	1	**030-7937**	1	CONNECTOR-PORT	
	8	1	**030-7947**	4	ELBOW	
	9	1	**030-7962**	1	ELBOW	
	10	1	**033-6042**	8	SEAL-O-RING	
	11	1	**0L-1351**	1	BOLT (3/8-16X0.875-IN)	
	12	1	**0L-2070**	2	BOLT (3/8-16X2.25-IN)	
	13	1	**0S-1571**	1	BOLT (3/8-16X1.75-IN)	
	14	1	**0S-1591**	1	BOLT (3/8-16X1.5-IN)	
	15	1	**2A-2677**	1	SPACER (0.75-IN THK)	
	16	1	**2R-6806**	1	CONNECTOR	
C	17	1	**067-2551**	5	CLIP	
	18	1	**5M-2894**	6	WASHER-HARD (10.2X18.5X2.5-MM THK)	
	19	1	**6K-9194**	2	ELBOW	
	20	1	**6V-8625**	1	ELBOW	
	21	1	**6V-8627**	1	ELBOW	
	22	1	**8L-2786**	1	SEAL-O-RING	
	23	1	**9S-4191**	1	PLUG	
	24	1	**9S-8752**	1	NUT-FULL (3/8-16-THD)	

C-CHANGE FROM PREVIOUS TYPE
I-REFER TO HYDRAULIC INFORMATION SYSTEM

188-9138 **LINES GP-FUEL** *(contd.)* **i02160033**

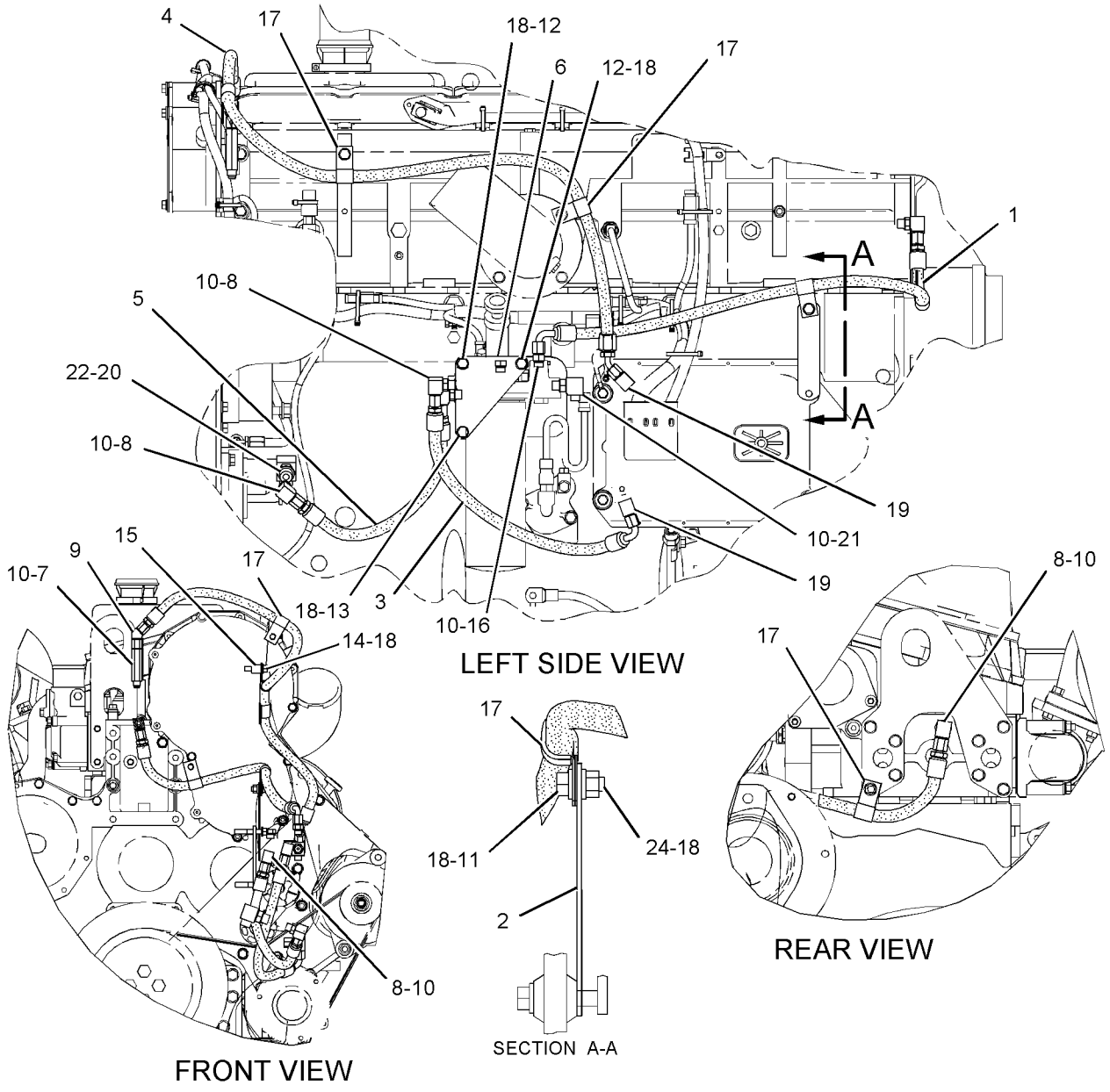

GRAPHIC #1

<END>

g01096794

240-8854 LINES GP-FUEL–FUEL

S/N: BET10460-UP

PART OF 235-4689 ENGINE AR-COMPLETE

SMCS-1274 **i02186482**

NOTE	REF NO	GRAPHIC REF	PART NUMBER	QTY	PART NAME 1 2 3 4 5 6 (PRODUCT LEVEL)	SEE PAGE
I	1	1	**4P-0902**	1	HOSE AS	
	2	1	**8N-4326**	1	BRACE	
I	3	1	**136-9497**	1	HOSE AS	
I	4	1	**172-3446**	1	HOSE AS	
	5	1	**189-1917**	1	PLATE	
	6	2	**030-7937**	1	CONNECTOR-PORT	
	7	1,2	**030-7947**	4	ELBOW	
	8	2	**030-7962**	1	ELBOW	
	9	1,2	**033-6042**	8	SEAL-O-RING	
	10	1,2	**067-2551**	5	CLIP	
	11	1	**0L-1351**	1	BOLT (3/8-16X0.875-IN)	
	12	1	**0L-2070**	2	BOLT (3/8-16X2.25-IN)	
	13	1	**0S-1571**	1	BOLT (3/8-16X1.75-IN)	
	14	2	**0S-1591**	1	BOLT (3/8-16X1.5-IN)	
	15	2	**2A-2677**	1	SPACER (0.75-IN THK)	
	16	1	**2R-6806**	1	CONNECTOR	
	17	1,2	**5M-2894**	6	WASHER-HARD (10.2X18.5X2.5-MM THK)	
	18	1	**6V-8625**	1	ELBOW	
	19	1	**6V-8627**	1	ELBOW	
	20	1	**8L-2786**	1	SEAL-O-RING	
	21	1	**9S-4191**	1	PLUG	
	22	1	**9S-8752**	1	NUT-FULL (3/8-16-THD)	

I-REFER TO HYDRAULIC INFORMATION SYSTEM

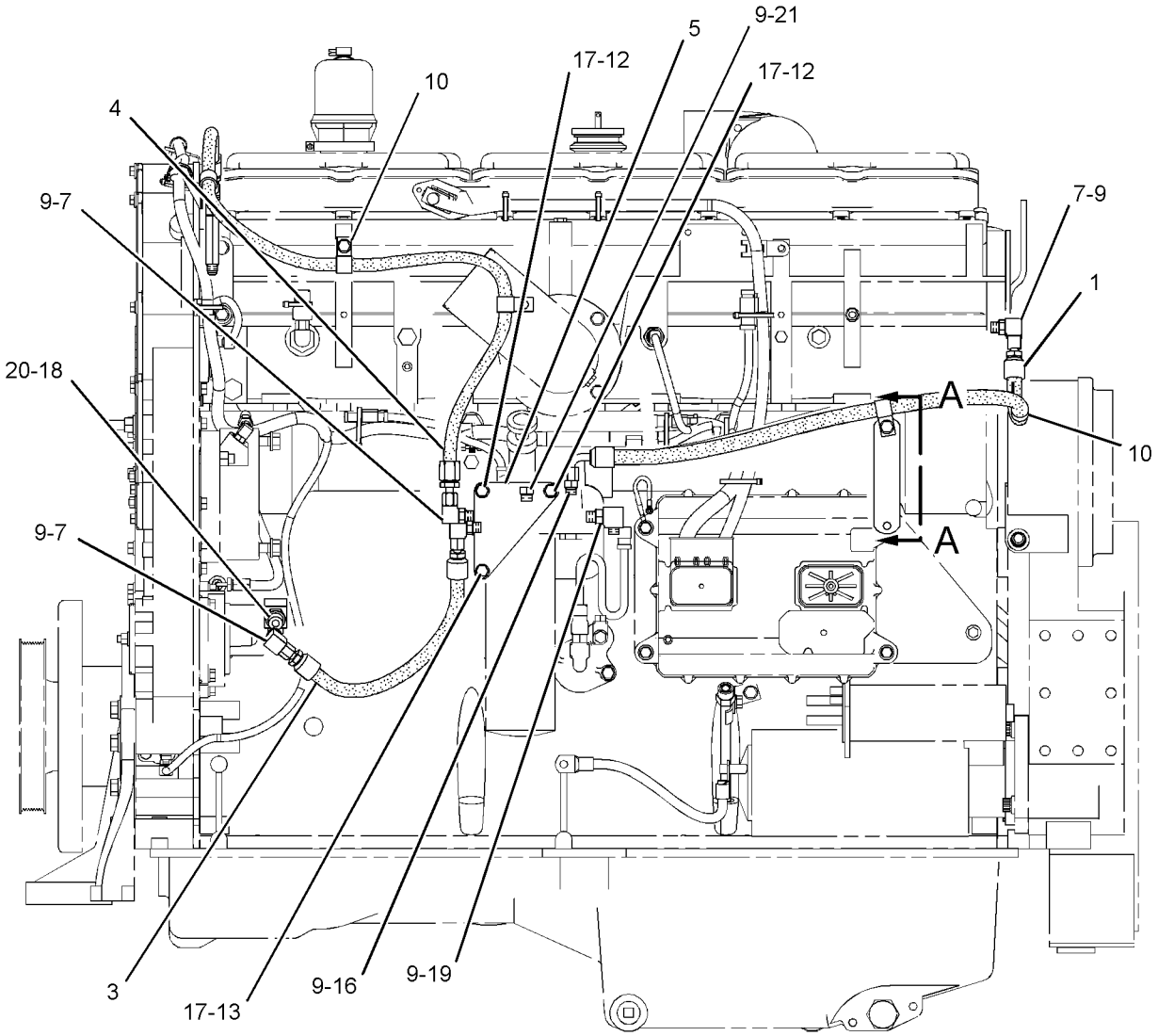

LEFT SIDE VIEW

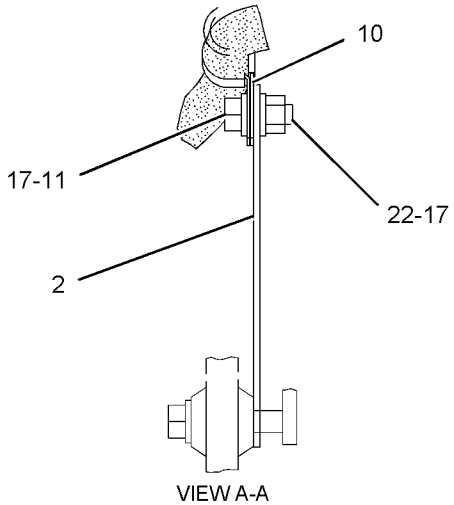

VIEW A-A

GRAPHIC #1

g01106804

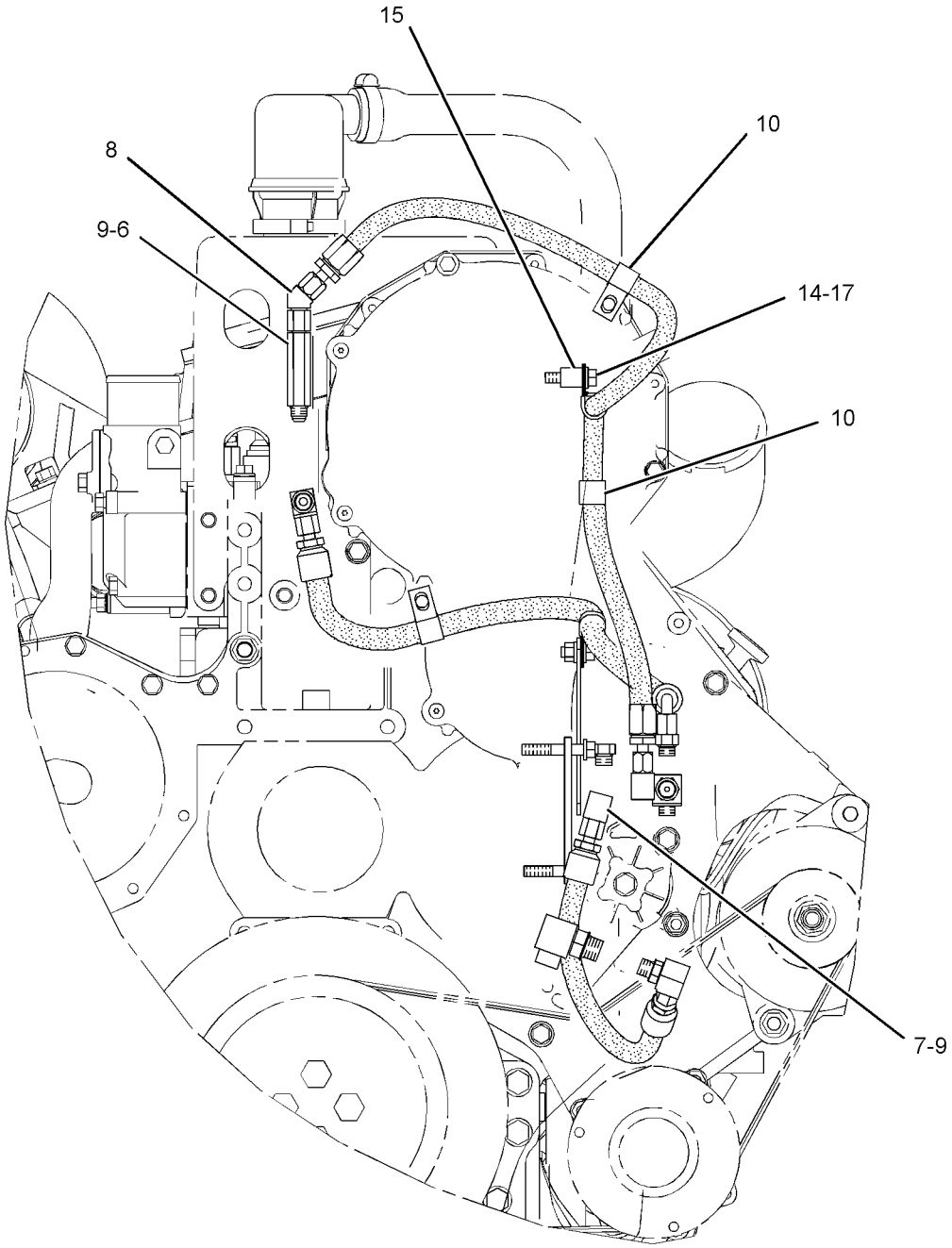

FRONT VIEW

GRAPHIC #2

<END>

g01106805

150-4279 PUMP & MTG GP-FUEL TRANSFER

S/N: BET200-366
ALLOWS USE OF FRONT MOUNTED PUMP EXCEPT WHEN LH MOUNTING GP-ALTERNATOR IS PROVIDED
PART OF 153-7076 ENGINE AR-COMPLETE

SMCS-1256 **i01932172**

NOTE	REF NO	GRAPHIC REF	PART NUMBER	QTY	PART NAME 1 2 3 4 5 6 (PRODUCT LEVEL)	SEE PAGE
	1	1	**139-6180**	1	PUMP GP-FUEL TRANSFER	
	2	1	**1T-0765**	2	BOLT (3/8-16X1 IN)	
	3	1	**5M-2894**	2	WASHER-HARD (10.2X18.5X2.5MM THK)	
	4	1	**107-5769**	2	SEAL-O-RING	
	5	1	**0S-0699**	2	STUD	
	6	1	**9S-8752**	2	NUT-FULL (3/8-16 THD)	
	7	1	**133-9116**	1	COVER	

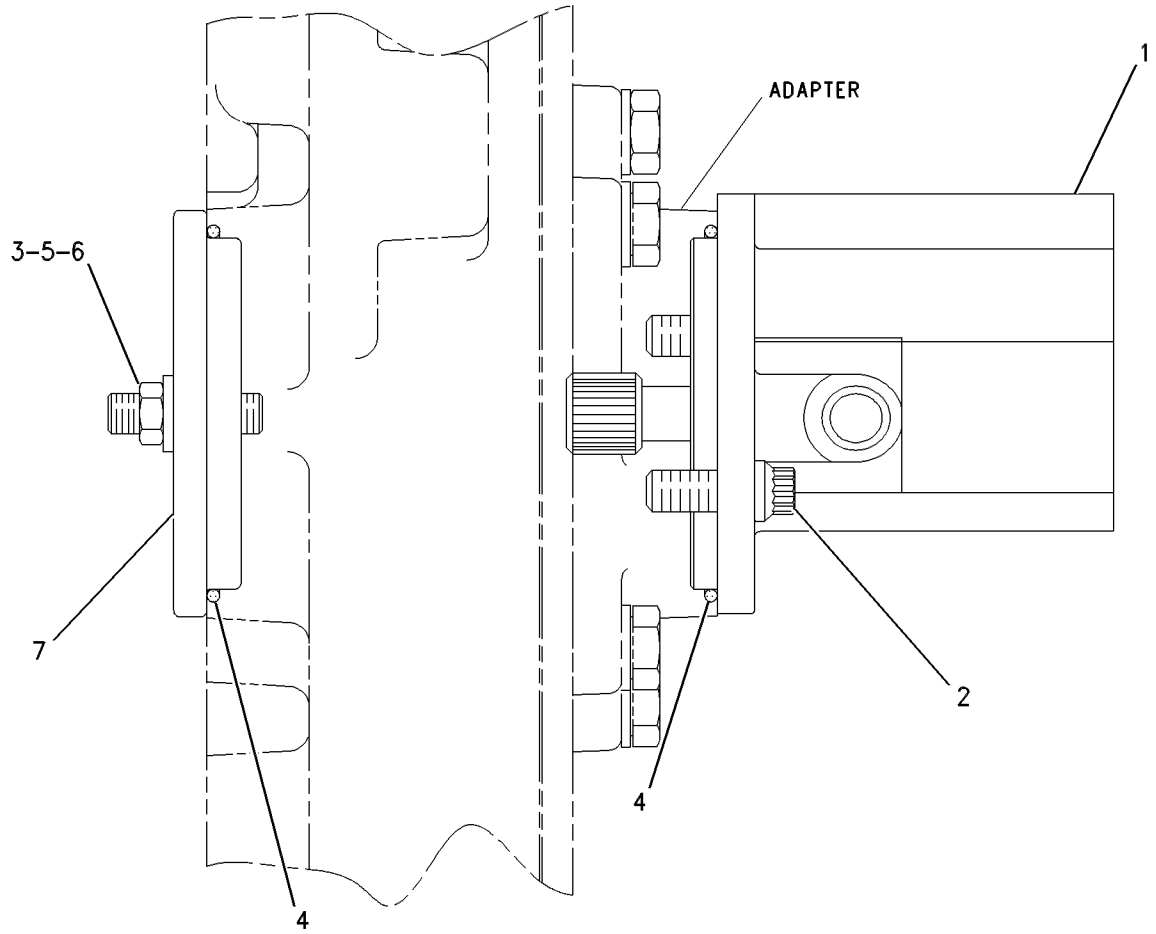

LEFT SIDE VIEW

GRAPHIC #1 **<END>** g00311761

150-4279 PUMP & MTG GP-FUEL TRANSFER

S/N: BET367-UP

ALLOWS USE OF FRONT MOUNTED PUMP EXCEPT WHEN LH MOUNTING GP-ALTERNATOR IS PROVIDED

PART OF 153-7076, 235-4689 ENGINE AR-COMPLETE

SMCS-1256 **i01932174**

NOTE	REF NO	GRAPHIC REF	PART NUMBER	QTY	PART NAME 1 2 3 4 5 6 (PRODUCT LEVEL)	SEE PAGE
C	1	1	**190-3443**	1	PUMP GP-FUEL TRANSFER	
	2	1	**1T-0765**	2	BOLT (3/8-16X1 IN)	
	3	1	**5M-2894**	2	WASHER-HARD (10.2X18.5X2.5MM THK)	
	4	1	**107-5769**	2	SEAL-O-RING	
	5	1	**0S-0699**	2	STUD	
	6	1	**9S-8752**	2	NUT-FULL (3/8-16 THD)	
	7	1	**133-9116**	1	COVER	

C-CHANGE FROM PREVIOUS TYPE

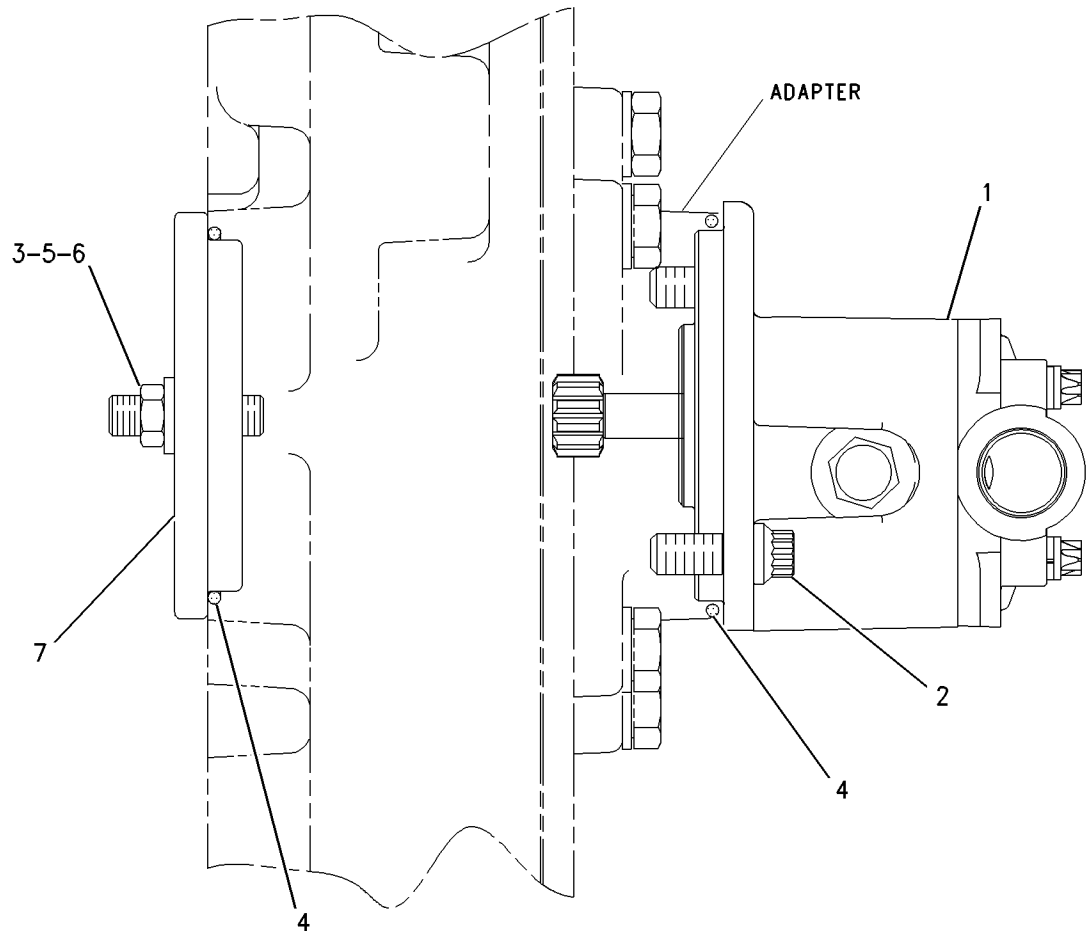

LEFT SIDE VIEW

GRAPHIC #1 **<END>** g00762253

205-0347 PUMP GP-FUEL PRM & SEC FILTER

S/N: BET200-UP

PART OF 153-7076, 235-4689 ENGINE AR-COMPLETE

SMCS-1258, 1261 **i01740203**

NOTE	REF NO	GRAPHIC REF	PART NUMBER	QTY	PART NAME 1 2 3 4 5 6 (PRODUCT LEVEL)	SEE PAGE
	1	1	**1P-0436**	1	GASKET (FUEL PRIMING PUMP)	
	2	1	**1R-0749**	1	FILTER AS-FUEL	
	3	1	**137-5541**	1	PUMP GP-FUEL PRIMING	
Y	4	1	*205-0349*	1	BASE GP-FUEL FILTER	155
	5	1	**1B-7182**	1	BOLT (5/16-18X1.25 IN)	
	6	1	**5P-0537**	1	WASHER-HARD (7.2X14.5X2MM THK)	
	7	1	**7B-2742**	1	BOLT (1/4-20X1.25 IN)	
	8	1	**9M-1974**	1	WASHER-HARD (8.8X16X2MM THK)	

Y-SEPARATE ILLUSTRATION

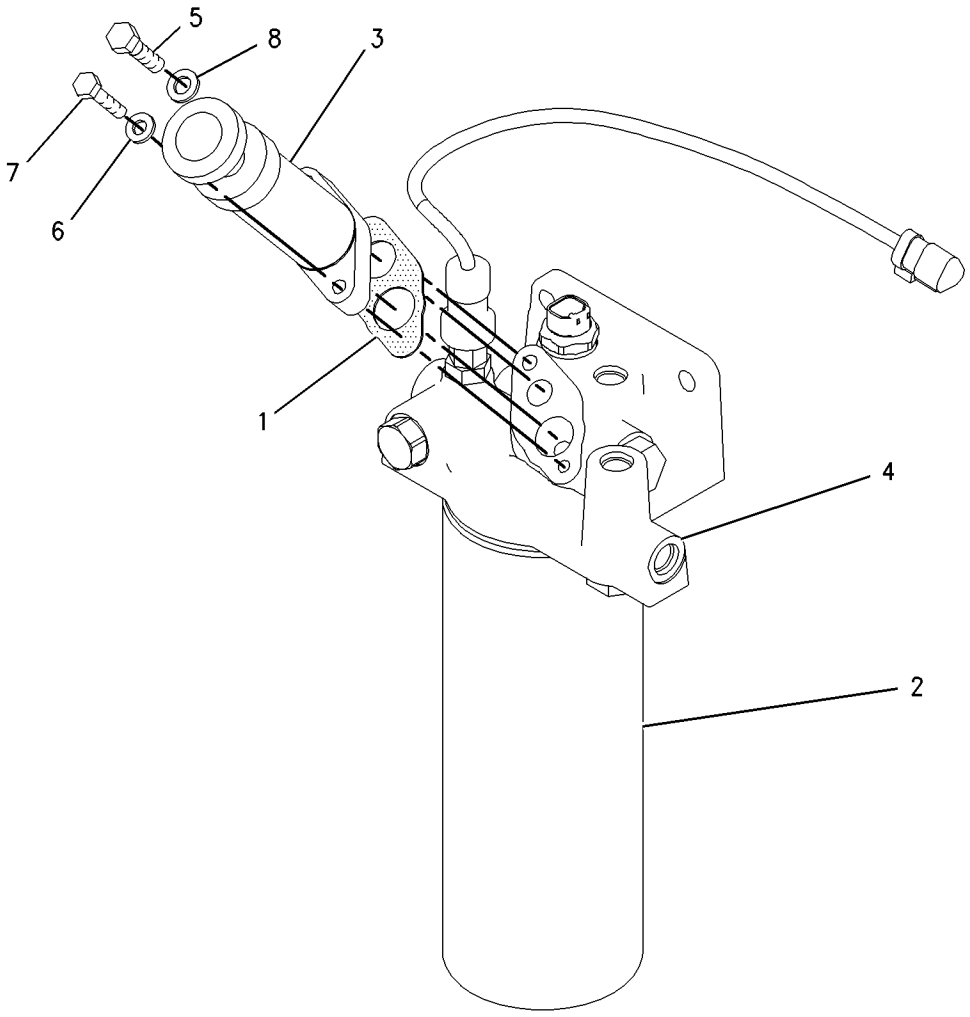

GRAPHIC #1 **<END>** g00800365

FUEL SYSTEM

141-6878 TANK & MTG GP-FUEL

S/N: AXM1-UP

PART OF 152-6922 HYDRAULIC AR-MACHINE

SMCS-1273 **i02015435**

NOTE	REF NO	GRAPHIC REF	PART NUMBER	QTY	PART NAME 1 2 3 4 5 6 (PRODUCT LEVEL)	SEE PAGE
	1	1	**9W-6582**	3	SLEEVE	
	2	1	**9W-6584**	3	WASHER (20.5X114X10-MM THK)	
	3	1	**9W-9920**	3	MOUNT AS	
	4	1	**205-3984**	3	WASHER-SPECIAL (22X125X10-MM THK)	
Y	5	1	*185-1747*	1	TANK GP-FUEL	185
	6	1	**197-3820**	3	WASHER	
M	7	1	**8T-4170**	3	BOLT (M20X2.5X150-MM)	
M	8	1	**8T-4131**	3	NUT (M20X2.5-THD)	
	9	1	**8T-5439**	3	WASHER (21.5X45X6-MM THK)	
	10	1	**7U-4105**	3	SHIM (2-MM THK)	

M-METRIC PART
Y-SEPARATE ILLUSTRATION

141-6878 **TANK & MTG GP-FUEL** *(contd.)* **i02015435**

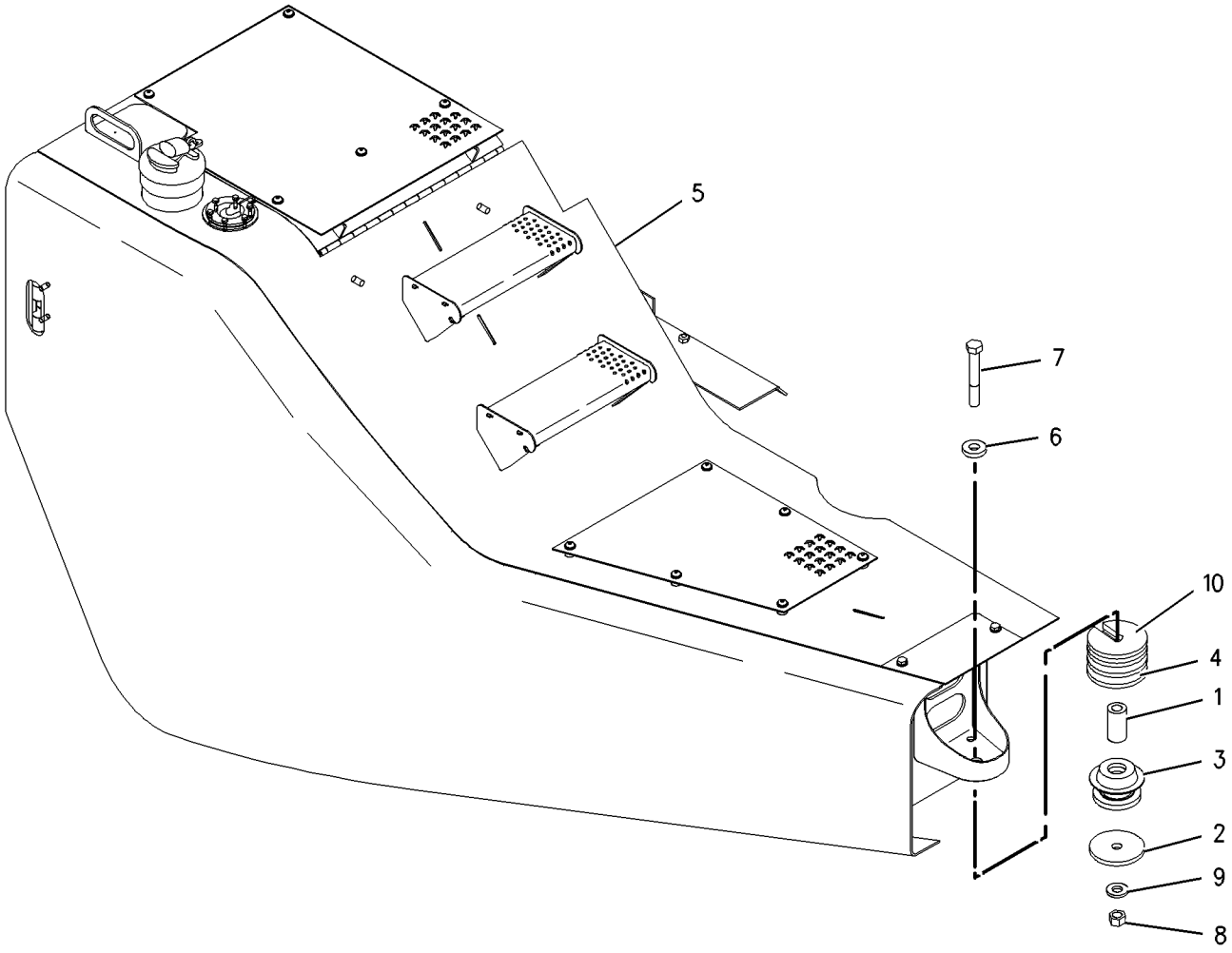

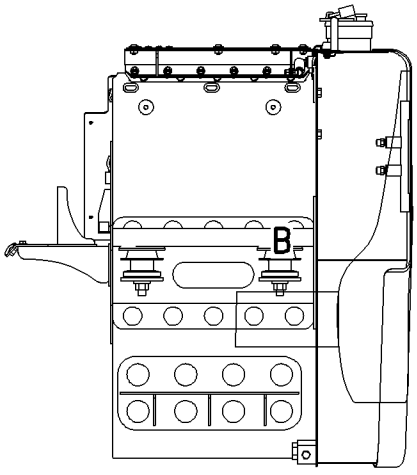

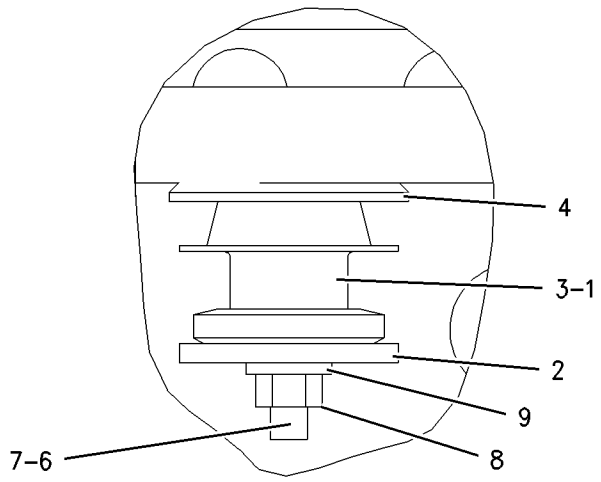

VIEW OF AREA B

GRAPHIC #1 **<END>** g00847584

212-1335 TANK & MTG GP-FUEL–FAST FILL

S/N: AXM1-890
PART OF 212-1334 TANK AR-FUEL
AN ATTACHMENT

SMCS-1273 **i02270450**

NOTE	REF NO	GRAPHIC REF	PART NUMBER	QTY	PART NAME 1 2 3 4 5 6 (PRODUCT LEVEL)	SEE PAGE
	1	1	**1H-8306**	1	SCREW-PURGE (1/2-20X1.625-IN)	
	2	1	**2U-5283**	2	ROD END	
	3	1	**5P-4484**	1	PLUG-MAGNETIC (FUEL TANK)	
	4	1	**5U-6733**	1	STRUT	
	5	1	**7X-7700**	1	CAP AS-FILLER (FUEL, LOCKING, VENTED)	
		1	**9X-2205**	1	KIT-CAP FILTER (FUEL TANK)	
					(INCLUDES FILTER AS, SCREWS, GASKETS, AND VALVE)	
		1	**9X-8600**	1	SEAL-O-RING	
	6	1	**9P-7121**	1	STRAINER-FUEL	
	7	1	**157-8859**	1	SENDER AS-FUEL LEVEL	
		1	**169-3506**	1	KIT-DIAL SENSOR	
					(INCLUDES SENSOR AS, SCREWS, RECEPTACLE KIT AND PIN)	
	8	1	**171-1590**	1	CAP GP-FUEL FILLER (CONVERSION KIT)	
	9	1	**187-6156**	1	LATCH AS	
	10	1	**191-2206**	1	COVER AS	
M		1	**8T-3490**	6	NUT-WELD (M10X1.5-THD)	
	11	1	**191-2214**	1	PLATE-TREAD	
	12	1	**191-2215**	1	PLATE-TREAD	
	13	1	**191-8104**	1	HINGE AS	
	14	1	**192-6998**	1	PLATE	
	15	1	**192-7619**	1	GAUGE-LIQUID LEVEL (FUEL)	
	16	1	**193-0249**	1	PLATE (LIQUID LEVEL)	
	17	1	**193-5676**	1	SHIELD AS	
		1	**7T-1099**	1	LINK	
M		1	**8T-3490**	3	NUT-WELD (M10X1.5-THD)	
	18	1	**201-1379**	2	SHIM (1-MM THK)	
	19	1	**212-1337**	1	TANK AS-FUEL	
	20	1	**6V-9872**	1	CONNECTOR	
		1	**3J-7354**	1	SEAL-O-RING	
		1	**6V-8397**	1	SEAL-O-RING	
	21	1	**173-5549**	4	SEAL-O-RING	
	22	1	**2F-8616**	1	LOCKNUT (3/8-24-THD)	
	23	1	**6C-3060**	1	GASKET	
	24	1	**7M-8485**	1	SEAL-O-RING	
	25	1	**7X-0578**	2	WASHER-HARD (10.2X32X2.5-MM THK)	
M	26	1	**7X-2621**	5	BOLT (M10X1.5X12-MM)	
	27	1	**7X-7729**	13	WASHER (11X25X3-MM THK)	
M	28	1	**8C-8585**	12	SCREW-BUTTON HEAD (M10X1.5X20-MM)	
	29	1	**8T-4121**	23	WASHER-HARD (11X21X2.5-MM THK)	
M	30	1	**8T-4133**	6	NUT (M10X1.5-THD)	
M	31	1	**8T-4136**	6	BOLT (M10X1.5X25-MM)	
M	32	1	**8T-4137**	6	BOLT (M10X1.5X20-MM)	
M	33	1	**8T-4138**	6	BOLT (M6X1X20-MM)	
M	34	1	**8T-4199**	1	BOLT (M8X1.25X12-MM)	
	35	1	**8T-4224**	1	WASHER-HARD (8.8X16X2-MM THK)	
	36	1	**9X-8256**	6	WASHER (6.6X12X2-MM THK)	

M-METRIC PART

212-1335 **TANK & MTG GP-FUEL** *(contd.)* **i02270450**

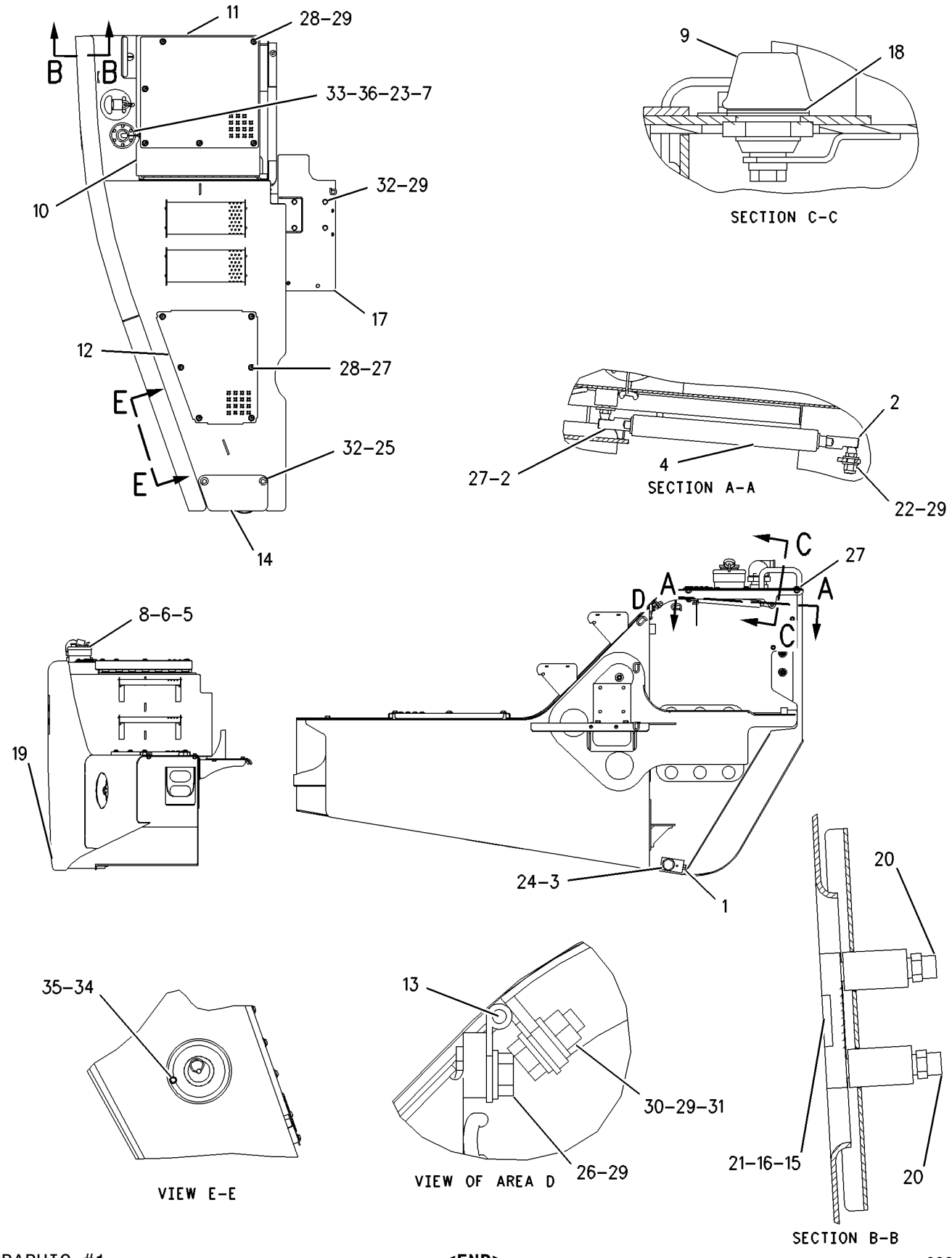

GRAPHIC #1 **<END>** g00937055

FUEL SYSTEM

226-4138 TANK & MTG GP-FUEL–FAST FILL

S/N: AXM891-1376
PART OF 226-4180 TANK AR-FUEL
AN ATTACHMENT

SMCS-1273 **i02270447**

NOTE	REF NO	GRAPHIC REF	PART NUMBER	QTY	PART NAME 1 2 3 4 5 6 (PRODUCT LEVEL)	SEE PAGE
	1	1	**1H-8306**	1	SCREW-PURGE (1/2-20X1.625-IN)	
	2	1	**2U-5283**	2	ROD END	
	3	1	**5P-4484**	1	PLUG-MAGNETIC (FUEL TANK)	
	4	1	**5U-6733**	1	STRUT	
	5	1	**7X-7700**	1	CAP AS-FILLER (FUEL, LOCKING, VENTED)	
		1	**9X-2205**	1	KIT-CAP FILTER (FUEL TANK)	
					(INCLUDES FILTER AS, SCREENS, GASKETS, & VALVE)	
		1	**9X-8600**	1	SEAL-O-RING	
	6	1	**9D-0630**	1	CAP-DUST	
	7	1	**9P-7121**	1	STRAINER-FUEL	
	8	1	**157-8859**	1	SENDER AS-FUEL LEVEL	
		1	**169-3506**	1	KIT-DIAL SENSOR	
		1	**9X-3401**	1	PIN-CONNECTOR	
		1	**102-8802**	1	KIT-RECEPTACLE (2-PIN)	
					(INCLUDES RECEPTACLE AS & WEDGE)	
	9	1	**187-6156**	1	LATCH AS	
	10	1	**191-2214**	1	PLATE-TREAD	
	11	1	**191-2215**	1	PLATE-TREAD	
	12	1	**191-8104**	1	HINGE AS	
	13	1	**192-7619**	1	GAUGE-LIQUID LEVEL (FUEL)	
	14	1	**193-0249**	1	PLATE (LIQUID LEVEL)	
	15	1	**193-5676**	1	SHIELD AS	
		1	**7T-1099**	1	LINK	
M		1	**8T-3490**	3	NUT-WELD (M10X1.5-THD)	
	16	1	**201-1379**	2	SHIM (1-MM THK)	
	17	1	**217-5703**	1	VALVE AS-TANK (FAST FILL FUEL)	
	18	1	**221-7693**	1	VALVE (FAST FILL FUEL)	
	19	1	**223-1404**	1	HOSE AS	
	20	1	**223-7420**	1	COVER AS	
M		1	**8T-3490**	6	NUT-WELD (M10X1.5-THD)	
	21	1	**223-7479**	1	TANK AS	
	22	1	**224-2988**	1	VENT AS	
	23	1	**225-0556**	1	ADAPTER	
	24	1	**232-1106**	1	PLATE-COVER	
M	25	1	**095-0670**	4	BOLT (M12X1.75X45-MM)	
	26	1	*148-8326*	2	CONNECTOR AS	
					(EACH INCLUDES)	
		1	**3J-7354**	1	SEAL-O-RING	
		1	**6V-8397**	1	SEAL-O-RING	
		1	**6V-9872**	1	CONNECTOR	
	27	1	**173-5549**	4	SEAL-O-RING	
	28	1	**1H-8128**	1	SEAL-O-RING	
	29	1	**1J-9671**	2	SEAL-O-RING	
	30	1	**2F-8616**	1	LOCKNUT (3/8-24-THD)	
	31	1	**4J-0527**	1	SEAL-O-RING	
	32	1	**5H-6734**	1	SEAL-O-RING	
	33	1	**5P-2618**	2	CONNECTOR	
	34	1	**5P-4116**	12	WASHER-HARD (8.8X20.5X2-MM THK)	
	35	1	**6C-3060**	1	GASKET	
	36	1	**7M-8485**	1	SEAL-O-RING	
	37	1	**7X-0578**	2	WASHER-HARD (10.2X32X2.5-MM THK)	
M	38	1	**7X-2621**	5	BOLT (M10X1.5X12-MM)	
	39	1	**7X-7729**	13	WASHER (11X25X3-MM THK)	
M	40	1	**8C-8585**	12	SCREW-BUTTON HEAD (M10X1.5X20-MM)	

226-4138 TANK & MTG GP-FUEL *(contd.)* i02270447

NOTE	REF NO	GRAPHIC REF	PART NUMBER	QTY	PART NAME 1 2 3 4 5 6 (PRODUCT LEVEL)	SEE PAGE
	41	1	**8T-4121**	23	WASHER-HARD (11X21X2.5-MM THK)	
M	42	1	**8T-4133**	6	NUT (M10X1.5-THD)	
M	43	1	**8T-4136**	6	BOLT (M10X1.5X25-MM)	
M	44	1	**8T-4137**	6	BOLT (M10X1.5X20-MM)	
M	45	1	**8T-4138**	6	BOLT (M6X1X20-MM)	
M	46	1	**8T-4908**	12	BOLT (M8X1.25X25-MM)	
	47	1	**9X-8256**	6	WASHER (6.6X12X2-MM THK)	

M-METRIC PART

226-4138 **TANK & MTG GP-FUEL** *(contd.)* **i02270447**

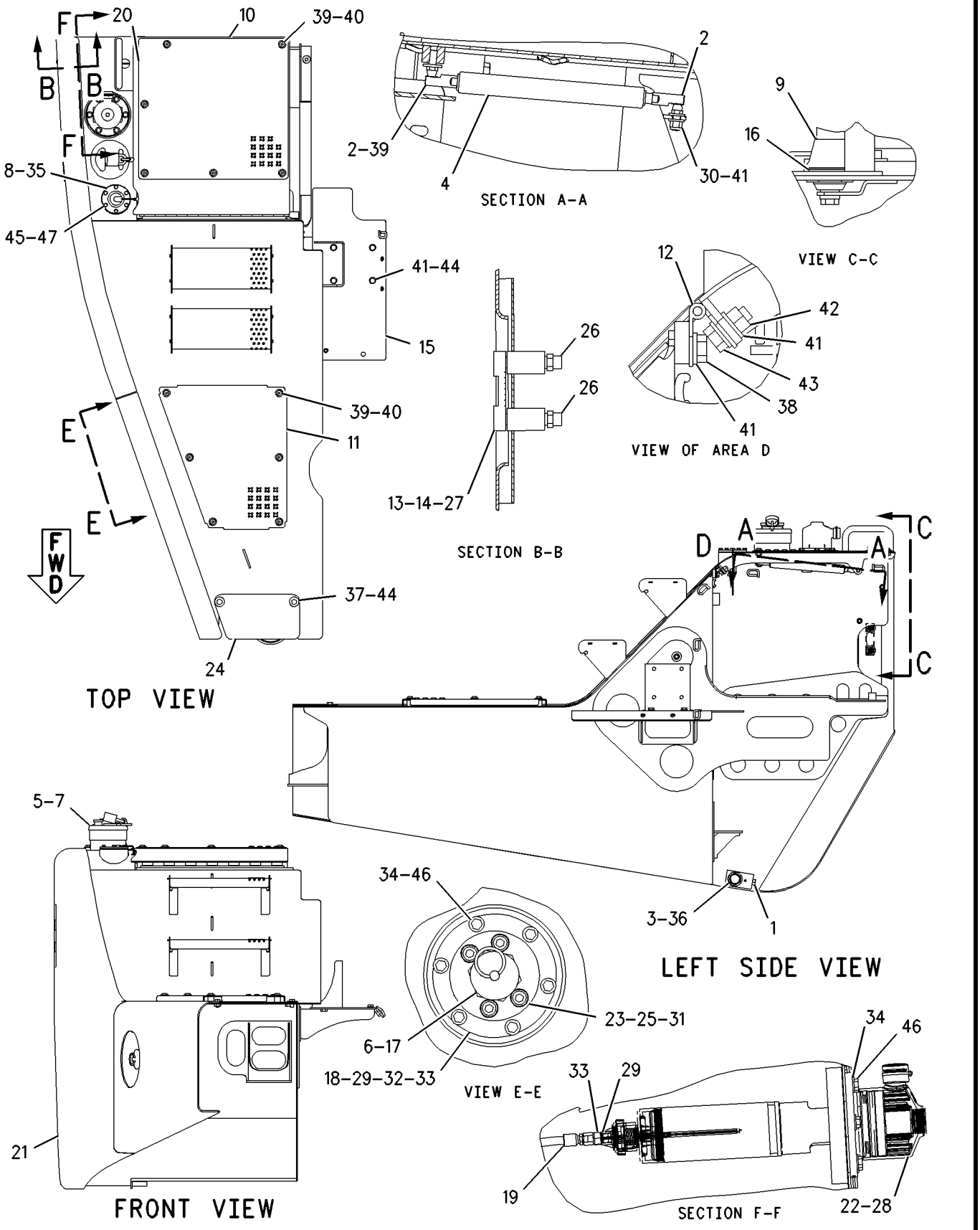

GRAPHIC #1 **<END>** g00993909

226-4138 TANK & MTG GP-FUEL—FAST FILL

S/N: AXM1377-UP
PART OF 226-4180 TANK AR-FUEL
AN ATTACHMENT

SMCS-1273 **i02270446**

NOTE	REF NO	GRAPHIC REF	PART NUMBER	QTY	PART NAME 1 2 3 4 5 6 (PRODUCT LEVEL)	SEE PAGE
	1	1	**1H-8306**	1	SCREW-PURGE (1/2-20X1.625-IN)	
	2	1	**3K-4290**	2	BALL JOINT AS	
	3	1	**5P-4484**	1	PLUG-MAGNETIC (FUEL TANK)	
	4	1	**5U-6733**	1	STRUT	
J	5	1	**7X-7700**	1	CAP AS-FILLER (FUEL, LOCKING, VENTED)	
		1	**9X-8600**	1	SEAL-O-RING	
	6	1	**9D-0630**	1	CAP-DUST	
	7	1	**9P-7121**	1	STRAINER-FUEL	
CL	8	1	**244-1943**	1	SENDER AS-FUEL LEVEL	
	9	1	**187-6156**	1	LATCH AS	
	10	1	**191-2214**	1	PLATE-TREAD	
	11	1	**191-2215**	1	PLATE-TREAD	
	12	1	**191-8104**	1	HINGE AS	
	13	1	**192-7619**	1	GAUGE-LIQUID LEVEL (FUEL)	
	14	1	**193-0249**	1	PLATE (LIQUID LEVEL)	
	15	1	**193-5676**	1	SHIELD AS	
		1	**7T-1099**	1	LINK	
M		1	**8T-3490**	3	NUT-WELD (M10X1.5-THD)	
	16	1	**201-1379**	2	SHIM (1-MM THK)	
	17	1	**217-5703**	1	VALVE AS-TANK (FAST FILL FUEL)	
	18	1	**221-7693**	1	VALVE (FAST FILL FUEL)	
	19	1	**223-1404**	1	HOSE AS	
	20	1	**223-7420**	1	COVER AS	
M		1	**8T-3490**	6	NUT-WELD (M10X1.5-THD)	
	21	1	**223-7479**	1	TANK AS	
	22	1	**224-2988**	1	VENT AS	
	23	1	**225-0556**	1	ADAPTER	
	24	1	**232-1106**	1	PLATE-COVER	
M	25	1	**095-0670**	4	BOLT (M12X1.75X45-MM)	
	26	1	*148-8326*	2	CONNECTOR AS	
					(EACH INCLUDES)	
		1	**3J-7354**	1	SEAL-O-RING	
		1	**6V-8397**	1	SEAL-O-RING	
		1	**6V-9872**	1	CONNECTOR	
	27	1	**173-5549**	4	SEAL-O-RING	
	28	1	**1H-8128**	1	SEAL-O-RING	
	29	1	**1J-9671**	2	SEAL-O-RING	
	30	1	**2F-8616**	1	LOCKNUT (3/8-24-THD)	
	31	1	**4J-0527**	1	SEAL-O-RING	
	32	1	**5H-6734**	1	SEAL-O-RING	
	33	1	**5P-2618**	2	CONNECTOR	
	34	1	**5P-4116**	12	WASHER-HARD (8.8X20.5X2-MM THK)	
	35	1	**6C-3060**	1	GASKET	
	36	1	**7M-8485**	1	SEAL-O-RING	
	37	1	**7X-0578**	2	WASHER-HARD (10.2X32X2.5-MM THK)	
M	38	1	**7X-2621**	5	BOLT (M10X1.5X12-MM)	
	39	1	**7X-7729**	21	WASHER (11X25X3-MM THK)	
M	40	1	**8C-8585**	12	SCREW-BUTTON HEAD (M10X1.5X20-MM)	
	41	1	**8T-4121**	23	WASHER-HARD (11X21X2.5-MM THK)	
M	42	1	**8T-4133**	6	NUT (M10X1.5-THD)	
M	43	1	**8T-4136**	14	BOLT (M10X1.5X25-MM)	
M	44	1	**8T-4137**	6	BOLT (M10X1.5X20-MM)	
M	45	1	**8T-4138**	6	BOLT (M6X1X20-MM)	
M	46	1	**8T-4908**	12	BOLT (M8X1.25X25-MM)	
	47	1	**9X-8256**	6	WASHER (6.6X12X2-MM THK)	

226-4138 TANK & MTG GP-FUEL *(contd.)* i02270446

NOTE	REF NO	GRAPHIC REF	PART NUMBER	QTY	PART NAME 1 2 3 4 5 6 (PRODUCT LEVEL)	SEE PAGE
	48	1	**239-5015**	2	STEP	
					AVAILABLE REPAIR KIT(S):	
J			**9X-2205**	1	KIT-CAP FILTER (FUEL TANK)	
					(INCLUDES FILTER AS, SCREWS, GASKETS, & VALVE)	
L			**169-3506**	1	KIT-DIAL SENSOR	
					(INCLUDES SENSOR AS & SCREWS)	

C-CHANGE FROM PREVIOUS TYPE
J-KIT MARKED J AVAILABLE FOR PART(S) MARKED J
L-KITS MARKED L AVAILABLE FOR PART(S) MARKED L
M-METRIC PART

226-4138 **TANK & MTG GP-FUEL** *(contd.)* **i02270446**

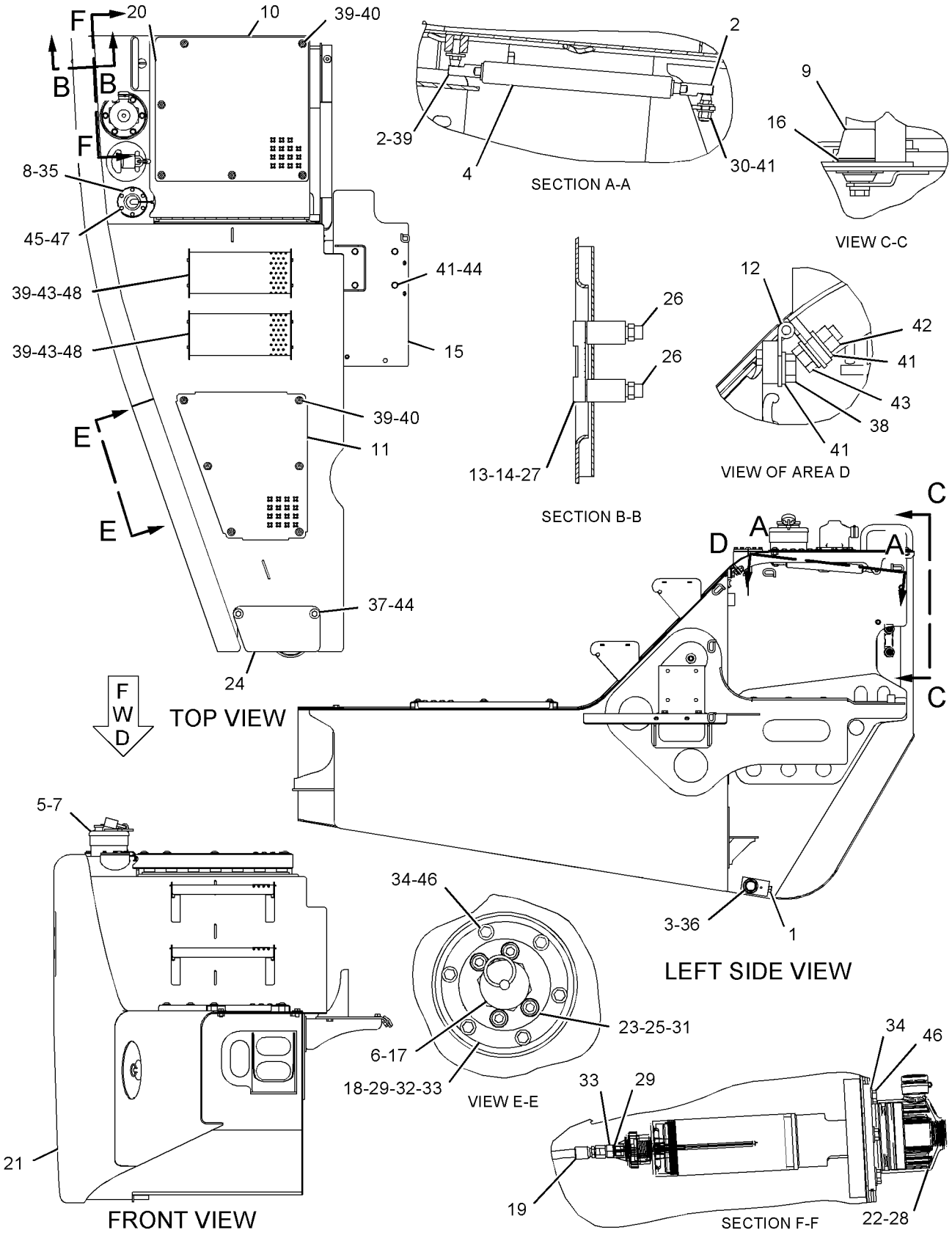

GRAPHIC #1 **<END>** g01130679

212-1334 TANK AR-FUEL–FAST FILL

S/N: AXM1-890
AN ATTACHMENT

SMCS-1273 **i02247365**

NOTE	PART NUMBER	QTY	PART NAME 1 2 3 4 5 6 (PRODUCT LEVEL)	SEE PAGE
Y	*212-1335*	1	TANK & MTG GP-FUEL (FAST FILL)	176

Y-SEPARATE ILLUSTRATION

<END>

226-4180 TANK AR-FUEL–FAST FILL

S/N: AXM891-UP
AN ATTACHMENT

SMCS-1273 **i01906311**

NOTE	PART NUMBER	QTY	PART NAME 1 2 3 4 5 6 (PRODUCT LEVEL)	SEE PAGE
Y	*226-4138*	1	TANK & MTG GP-FUEL (FAST FILL)	178

Y-SEPARATE ILLUSTRATION

<END>

FUEL SYSTEM

185-1747 TANK GP-FUEL

S/N: AXM1-890

PART OF 141-6878 TANK & MTG GP-FUEL

SMCS-1273 **i02270449**

NOTE	REF NO	GRAPHIC REF	PART NUMBER	QTY	PART NAME 1 2 3 4 5 6 (PRODUCT LEVEL)	SEE PAGE
	1	1	**1H-8306**	1	SCREW-PURGE (1/2-20X1.625-IN)	
	2	1	**2U-5283**	2	ROD END	
	3	1	**5P-4484**	1	PLUG-MAGNETIC (FUEL TANK)	
	4	1	**5U-6733**	1	STRUT	
	5	1	**7X-7700**	1	CAP AS-FILLER (FUEL, LOCKING, VENTED)	
		1	**9X-2205**	1	KIT-CAP FILTER (FUEL TANK)	
					(INCLUDES FILTER AS,SCREWS,GASKETS AND VALVE)	
		1	**9X-8600**	1	SEAL-O-RING	
	6	1	**9P-7121**	1	STRAINER-FUEL	
	7	1	**157-8859**	1	SENDER AS-FUEL LEVEL	
		1	**169-3506**	1	KIT-DIAL SENSOR	
					(INCLUDES RECEPTACLE KIT, WEDGE AND PIN)	
	8	1	**171-1590**	1	CAP GP-FUEL FILLER (CONVERSION KIT)	
	9	1	**185-1352**	1	TANK AS-FUEL	
	10	1	**187-6156**	1	LATCH AS	
	11	1	**191-2206**	1	COVER AS	
M		1	**8T-3490**	6	NUT-WELD (M10X1.5-THD)	
	12	1	**191-2214**	1	PLATE-TREAD	
	13	1	**191-2215**	1	PLATE-TREAD	
	14	1	**191-8104**	1	HINGE AS	
	15	1	**192-6998**	1	PLATE	
	16	1	**192-7619**	1	GAUGE-LIQUID LEVEL (FUEL)	
	17	1	**193-0249**	1	PLATE (LIQUID LEVEL)	
	18	1	**193-5676**	1	SHIELD AS	
		1	**7T-1099**	1	LINK	
M		1	**8T-3490**	3	NUT-WELD (M10X1.5-THD)	
B	19	1	**201-1379**	2	SHIM (1-MM THK)	
	20	1	*148-8326*	2	CONNECTOR AS	
					(EACH INCLUDES)	
		1	**6V-9872**	1	CONNECTOR	
		1	**3J-7354**	1	SEAL-O-RING	
		1	**6V-8397**	1	SEAL-O-RING	
	21	1	**173-5549**	4	SEAL-O-RING	
	22	1	**2F-8616**	1	LOCKNUT (3/8-24-THD)	
	23	1	**6C-3060**	1	GASKET	
	24	1	**7M-8485**	1	SEAL-O-RING	
	25	1	**7X-0578**	2	WASHER-HARD (10.2X32X2.5-MM THK)	
M	26	1	**7X-2621**	5	BOLT (M10X1.5X12-MM)	
	27	1	**7X-7729**	13	WASHER (11X25X3-MM THK)	
M	28	1	**8C-8585**	12	SCREW-BUTTON HEAD (M10X1.5X20-MM)	
	29	1	**8T-4121**	23	WASHER-HARD (11X21X2.5-MM THK)	
M	30	1	**8T-4133**	6	NUT (M10X1.5-THD)	
M	31	1	**8T-4136**	6	BOLT (M10X1.5X25-MM)	
M	32	1	**8T-4137**	6	BOLT (M10X1.5X20-MM)	
M	33	1	**8T-4138**	6	BOLT (M6X1X20-MM)	
	34	1	**9X-8256**	6	WASHER (6.6X12X2-MM THK)	

B-USE AS REQUIRED
M-METRIC PART

185-1747 **TANK GP-FUEL** *(contd.)* **i02270449**

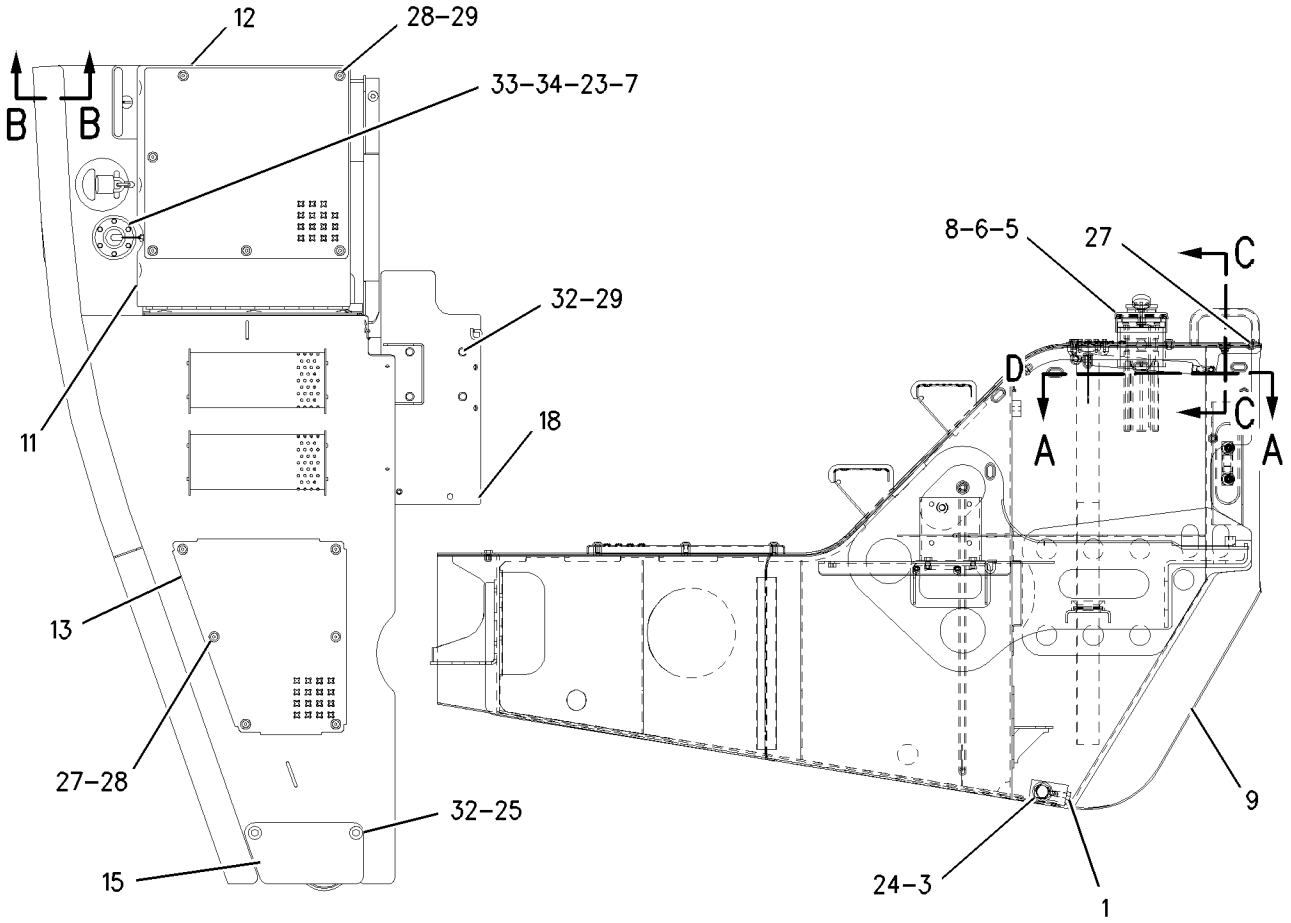

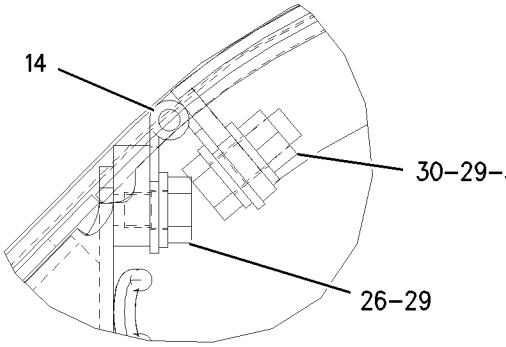

VIEW OF AREA D

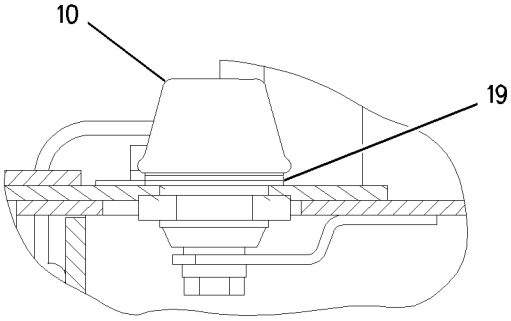

SECTION C-C

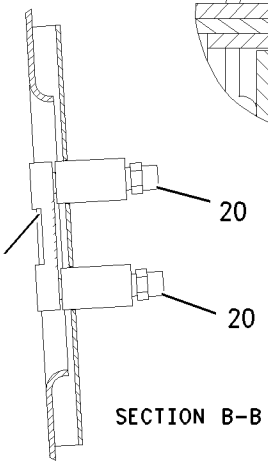

SECTION B-B

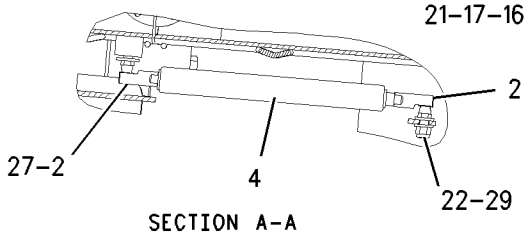

SECTION A-A

GRAPHIC #1 **<END>** g00850454

FUEL SYSTEM

185-1747 TANK GP-FUEL

S/N: AXM891-1376

PART OF 141-6878 TANK & MTG GP-FUEL

SMCS-1273 **i02270448**

NOTE	REF NO	GRAPHIC REF	PART NUMBER	QTY	PART NAME 1 2 3 4 5 6 (PRODUCT LEVEL)	SEE PAGE
	1	1	**1H-8306**	1	SCREW-PURGE (1/2-20X1.625-IN)	
	2	1	**2U-5283**	2	ROD END	
	3	1	**5P-4484**	1	PLUG-MAGNETIC (FUEL TANK)	
	4	1	**5U-6733**	1	STRUT	
	5	1	**7X-7700**	1	CAP AS-FILLER (FUEL, LOCKING, VENTED)	
		1	**9X-2205**	1	KIT-CAP FILTER (FUEL TANK)	
					(INCLUDES FILTER AS,SCREWS,GASKETS AND VALVE)	
		1	**9X-8600**	1	SEAL-O-RING	
	6	1	**9P-7121**	1	STRAINER-FUEL	
	7	1	**157-8859**	1	SENDER AS-FUEL LEVEL	
		1	**169-3506**	1	KIT-DIAL SENSOR	
					(INCLUDES RECEPTACLE KIT, WEDGE AND PIN)	
	9	1	**185-1352**	1	TANK AS-FUEL	
	10	1	**187-6156**	1	LATCH AS	
C	11	1	**223-7420**	1	COVER AS	
M		1	**8T-3490**	6	NUT-WELD (M10X1.5-THD)	
	12	1	**191-2214**	1	PLATE-TREAD	
	13	1	**191-2215**	1	PLATE-TREAD	
	14	1	**191-8104**	1	HINGE AS	
C	15	1	**232-1106**	1	PLATE-COVER	
	16	1	**192-7619**	1	GAUGE-LIQUID LEVEL (FUEL)	
	17	1	**193-0249**	1	PLATE (LIQUID LEVEL)	
	18	1	**193-5676**	1	SHIELD AS	
		1	**7T-1099**	1	LINK	
M		1	**8T-3490**	3	NUT-WELD (M10X1.5-THD)	
B	19	1	**201-1379**	2	SHIM (1-MM THK)	
	20	1	*148-8326*	2	CONNECTOR AS	
					(EACH INCLUDES)	
		1	**6V-9872**	1	CONNECTOR	
		1	**3J-7354**	1	SEAL-O-RING	
		1	**6V-8397**	1	SEAL-O-RING	
	21	1	**173-5549**	4	SEAL-O-RING	
	22	1	**2F-8616**	1	LOCKNUT (3/8-24-THD)	
	23	1	**6C-3060**	1	GASKET	
	24	1	**7M-8485**	1	SEAL-O-RING	
	25	1	**7X-0578**	2	WASHER-HARD (10.2X32X2.5-MM THK)	
M	26	1	**7X-2621**	5	BOLT (M10X1.5X12-MM)	
	27	1	**7X-7729**	13	WASHER (11X25X3-MM THK)	
M	28	1	**8C-8585**	12	SCREW-BUTTON HEAD (M10X1.5X20-MM)	
	29	1	**8T-4121**	23	WASHER-HARD (11X21X2.5-MM THK)	
M	30	1	**8T-4133**	6	NUT (M10X1.5-THD)	
M	31	1	**8T-4136**	6	BOLT (M10X1.5X25-MM)	
M	32	1	**8T-4137**	6	BOLT (M10X1.5X20-MM)	
M	33	1	**8T-4138**	6	BOLT (M6X1X20-MM)	
	34	1	**9X-8256**	6	WASHER (6.6X12X2-MM THK)	

B-USE AS REQUIRED
C-CHANGE FROM PREVIOUS TYPE
M-METRIC PART

185-1747 **TANK GP-FUEL** *(contd.)* **i02270448**

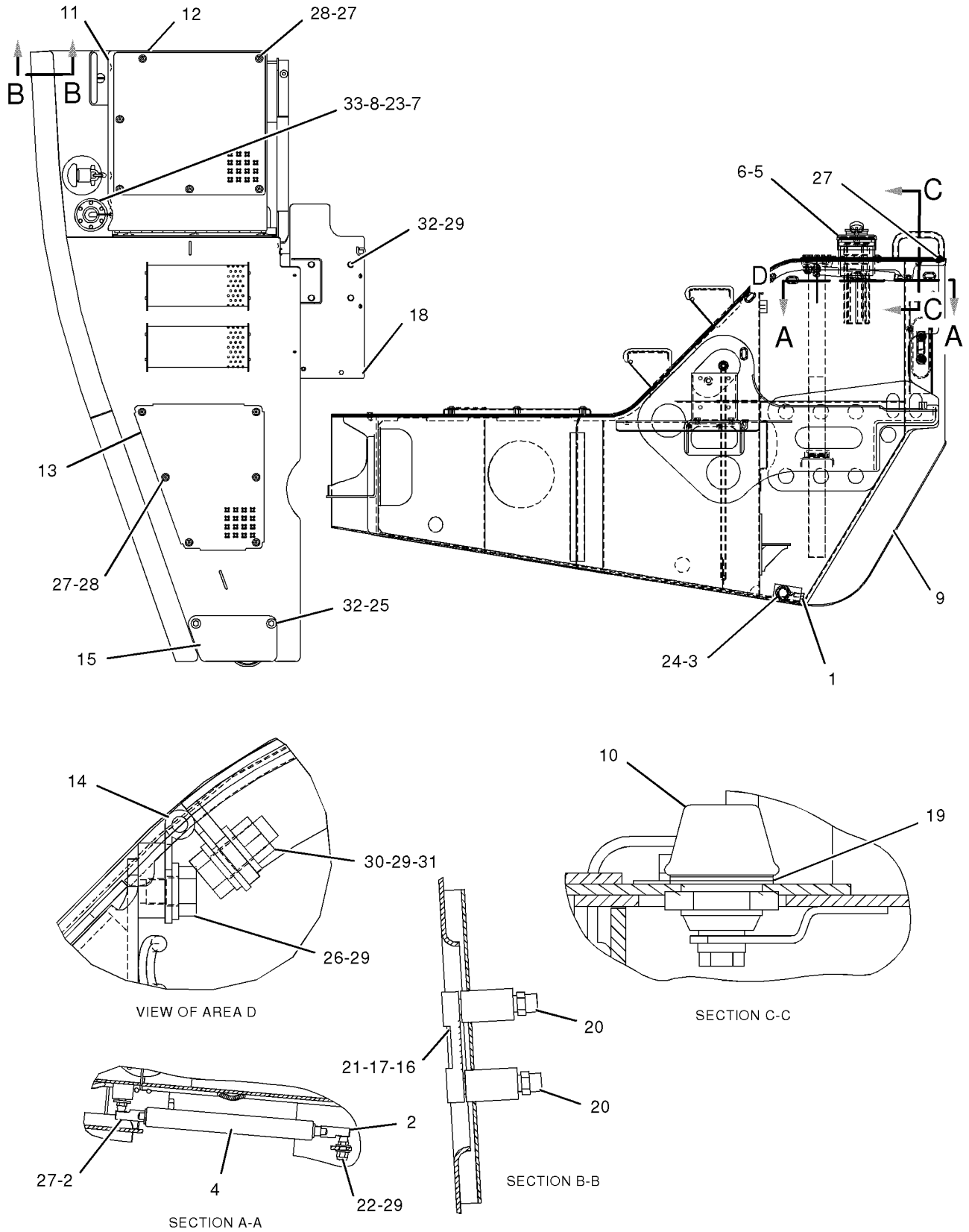

GRAPHIC #1 **<END>** g01046885

FUEL SYSTEM

185-1747 TANK GP-FUEL

S/N: AXM1377-UP

PART OF 141-6878 TANK & MTG GP-FUEL

SMCS-1273 **i02270445**

NOTE	REF NO	GRAPHIC REF	PART NUMBER	QTY	PART NAME 1 2 3 4 5 6 (PRODUCT LEVEL)	SEE PAGE
	1	1	**1H-8306**	1	SCREW-PURGE (1/2-20X1.625-IN)	
C	2	1	**3K-4290**	2	BALL JOINT AS	
	3	1	**5P-4484**	1	PLUG-MAGNETIC (FUEL TANK)	
	4	1	**5U-6733**	1	STRUT	
	5	1	**7X-7700**	1	CAP AS-FILLER (FUEL, LOCKING, VENTED)	
		1	**9X-2205**	1	KIT-CAP FILTER (FUEL TANK)	
					(INCLUDES FILTER AS,SCREWS,GASKETS & VALVE)	
		1	**9X-8600**	1	SEAL-O-RING	
	6	1	**9P-7121**	1	STRAINER-FUEL	
C	7	1	**244-1943**	1	SENDER AS-FUEL LEVEL	
		1	**246-1526**	1	KIT-SENSOR (FUEL LEVEL)	
					(INCLUDES RECEPTACLE KIT, WEDGE & PIN)	
	8	1	**239-5015**	2	STEP	
	9	1	**185-1352**	1	TANK AS-FUEL	
	10	1	**187-6156**	1	LATCH AS	
	11	1	**223-7420**	1	COVER AS	
M		1	**8T-3490**	6	NUT-WELD (M10X1.5-THD)	
	12	1	**191-2214**	1	PLATE-TREAD	
	13	1	**191-2215**	1	PLATE-TREAD	
	14	1	**191-8104**	1	HINGE AS	
	15	1	**232-1106**	1	PLATE-COVER	
	16	1	**192-7619**	1	GAUGE-LIQUID LEVEL (FUEL)	
	17	1	**193-0249**	1	PLATE (LIQUID LEVEL)	
	18	1	**193-5676**	1	SHIELD AS	
		1	**7T-1099**	1	LINK	
M		1	**8T-3490**	3	NUT-WELD (M10X1.5-THD)	
B	19	1	**201-1379**	2	SHIM (1-MM THK)	
	20	1	*148-8326*	2	CONNECTOR AS	
					(EACH INCLUDES)	
		1	**6V-9872**	1	CONNECTOR	
		1	**3J-7354**	1	SEAL-O-RING	
		1	**6V-8397**	1	SEAL-O-RING	
	21	1	**173-5549**	4	SEAL-O-RING	
	22	1	**2F-8616**	1	LOCKNUT (3/8-24-THD)	
	23	1	**6C-3060**	1	GASKET	
	24	1	**7M-8485**	1	SEAL-O-RING	
	25	1	**7X-0578**	2	WASHER-HARD (10.2X32X2.5-MM THK)	
M	26	1	**7X-2621**	5	BOLT (M10X1.5X12-MM)	
	27	1	**7X-7729**	21	WASHER (11X25X3-MM THK)	
M	28	1	**8C-8585**	12	SCREW-BUTTON HEAD (M10X1.5X20-MM)	
	29	1	**8T-4121**	23	WASHER-HARD (11X21X2.5-MM THK)	
M	30	1	**8T-4133**	6	NUT (M10X1.5-THD)	
M	31	1	**8T-4136**	14	BOLT (M10X1.5X25-MM)	
M	32	1	**8T-4137**	6	BOLT (M10X1.5X20-MM)	
M	33	1	**8T-4138**	6	BOLT (M6X1X20-MM)	
	34	1	**9X-8256**	6	WASHER (6.6X12X2-MM THK)	

B-USE AS REQUIRED
C-CHANGE FROM PREVIOUS TYPE
M-METRIC PART

185-1747 **TANK GP-FUEL** *(contd.)* **i02270445**

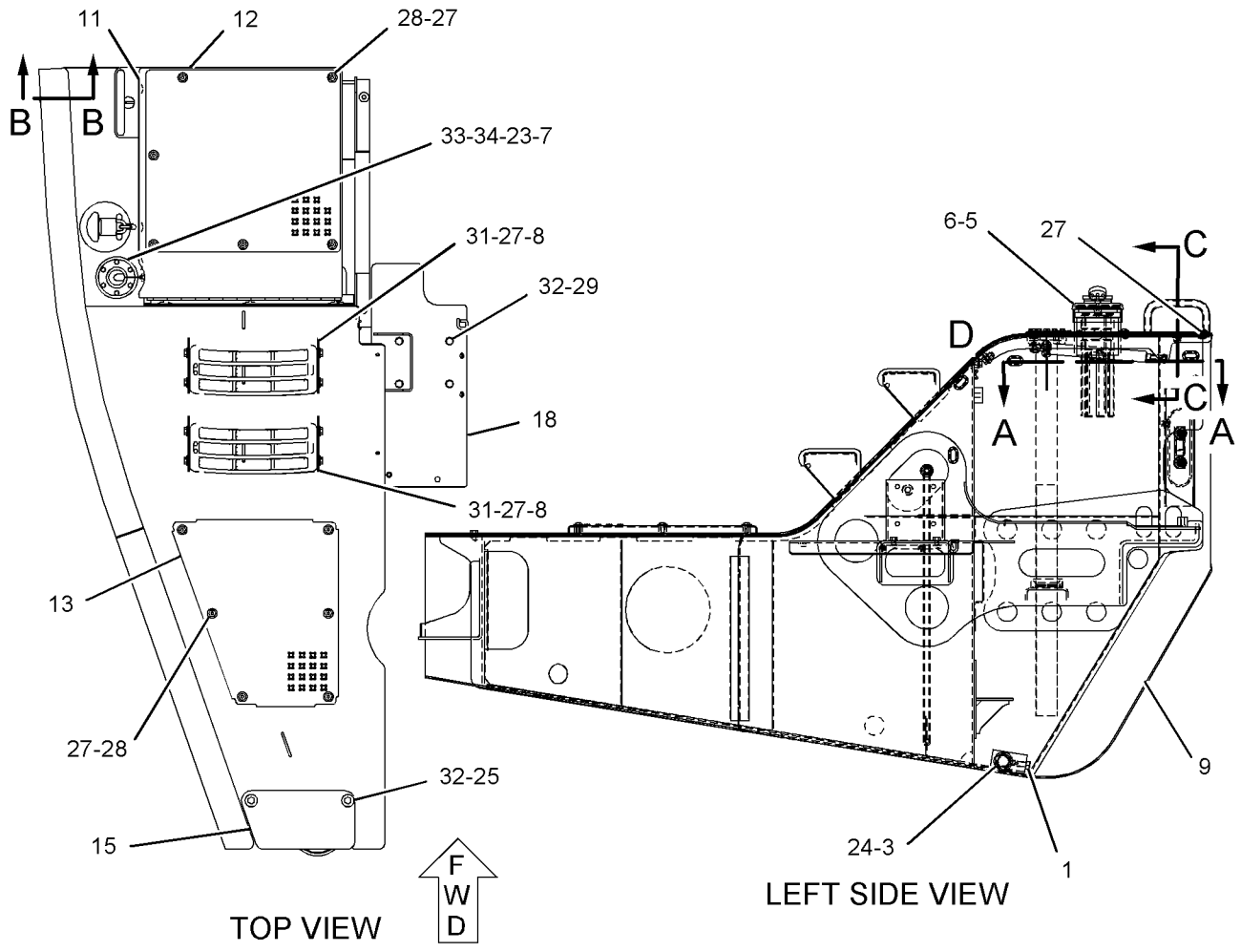

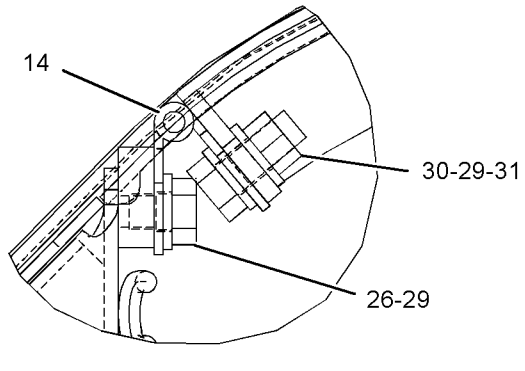

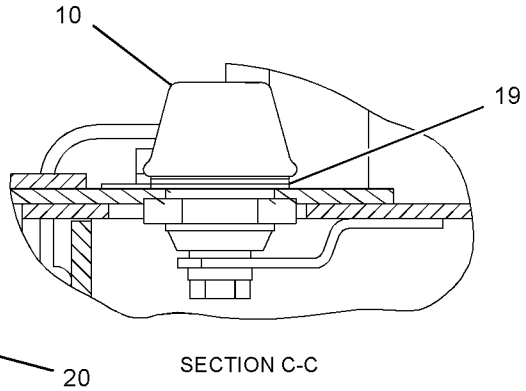

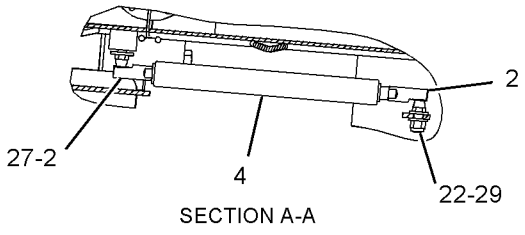

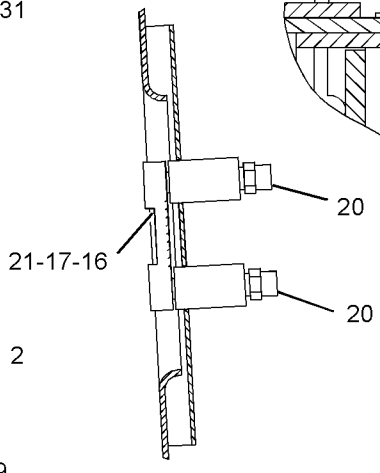

GRAPHIC #1 **<END>** g01133487

156-5783 VALVE GP-CHECK–FUEL FILTER

S/N: BET200-6091

PART OF 205-0349 BASE GP-FUEL FILTER

SMCS-1261 **i01950601**

NOTE	REF NO	GRAPHIC REF	PART NUMBER	QTY	PART NAME 1 2 3 4 5 6 (PRODUCT LEVEL)	SEE PAGE
	1	1	**6V-6923**	1	RING-BACKUP (13.16MM ID)	
	2	1	**033-6033**	1	SEAL-O-RING	

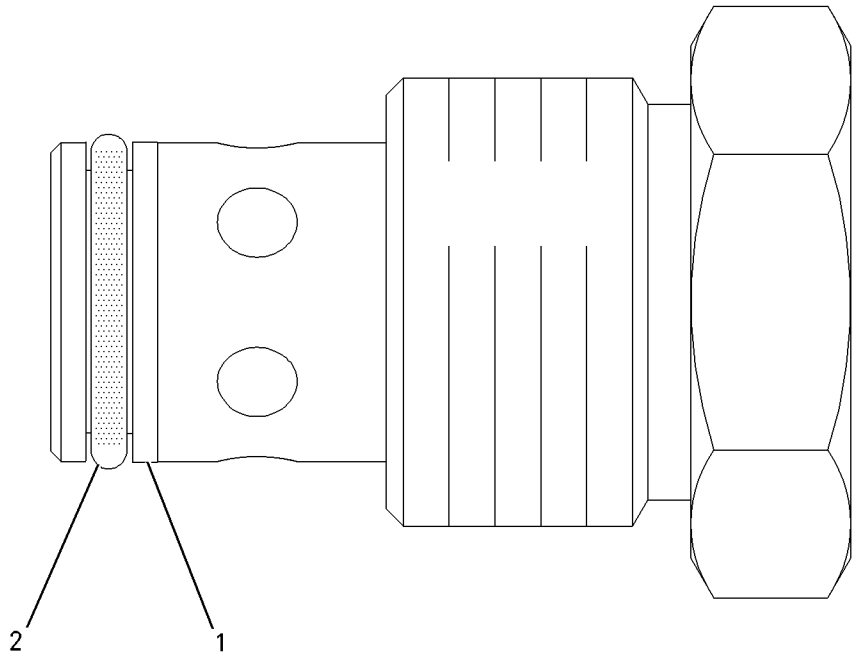

GRAPHIC #1 **<END>** g00864141

233-6742 VALVE GP-CHECK–FUEL FILTER

S/N: BET6092-UP

PART OF 205-0349 BASE GP-FUEL FILTER

SMCS-1261 **i02140022**

NOTE	REF NO	GRAPHIC REF	PART NUMBER	QTY	PART NAME 1 2 3 4 5 6 (PRODUCT LEVEL)	SEE PAGE
Y	1	1	**238-0296**	1	VALVE GP-CHECK (FUEL) (FILTER)	193
	2	1	**6V-4589**	1	SEAL-O-RING	

Y-SEPARATE ILLUSTRATION

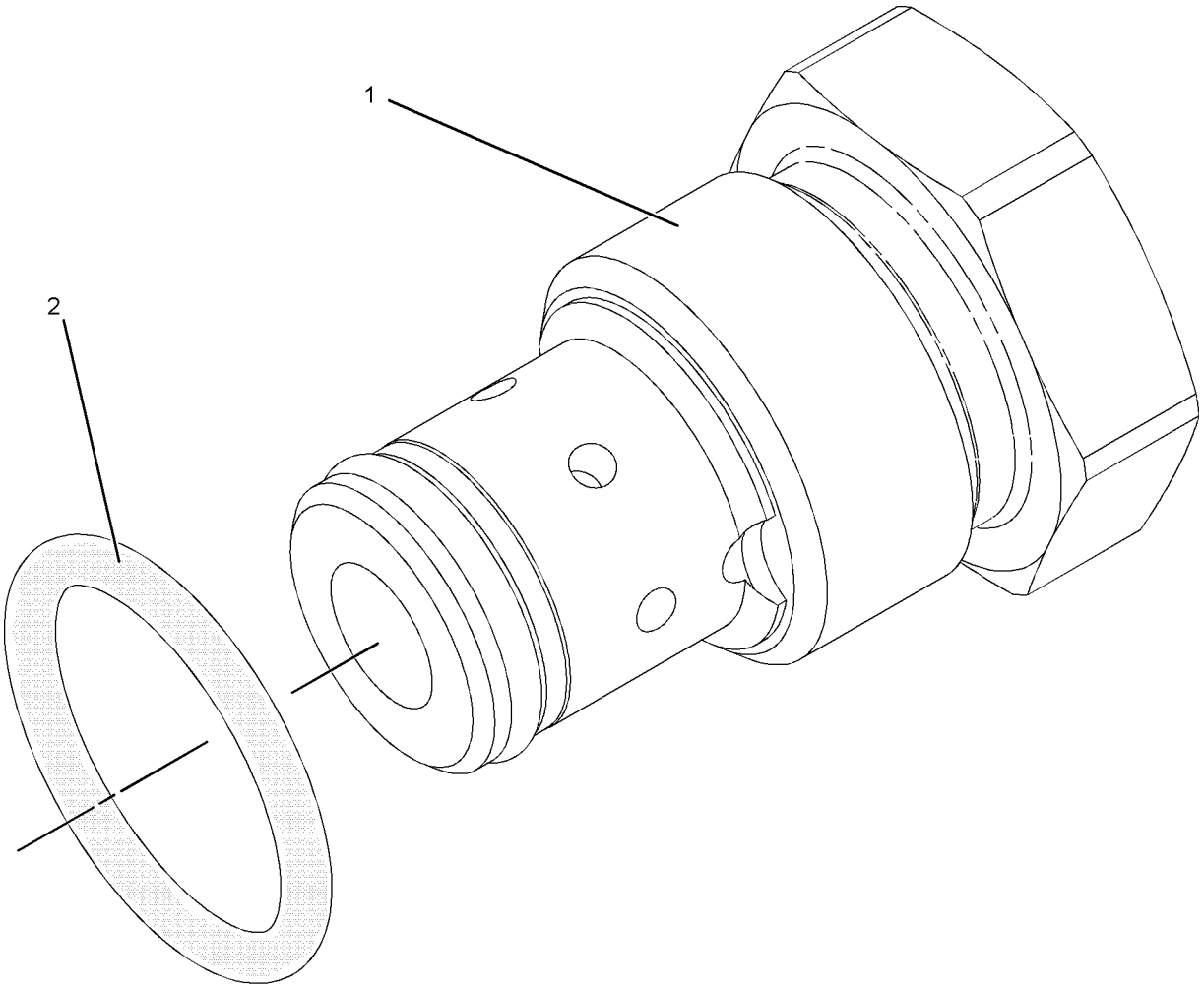

GRAPHIC #1 **<END>** g01031823

238-0296 VALVE GP-CHECK—FUEL FILTER

S/N: BET6092-UP

PART OF 233-6742 VALVE GP-CHECK

SMCS-1261 **i02140024**

NOTE	REF NO	GRAPHIC REF	PART NUMBER	QTY	PART NAME 1 2 3 4 5 6 (PRODUCT LEVEL)	SEE PAGE
	1	1	**6V-6923**	1	RING-BACKUP	
	2	1	**033-6033**	1	SEAL-O-RING	

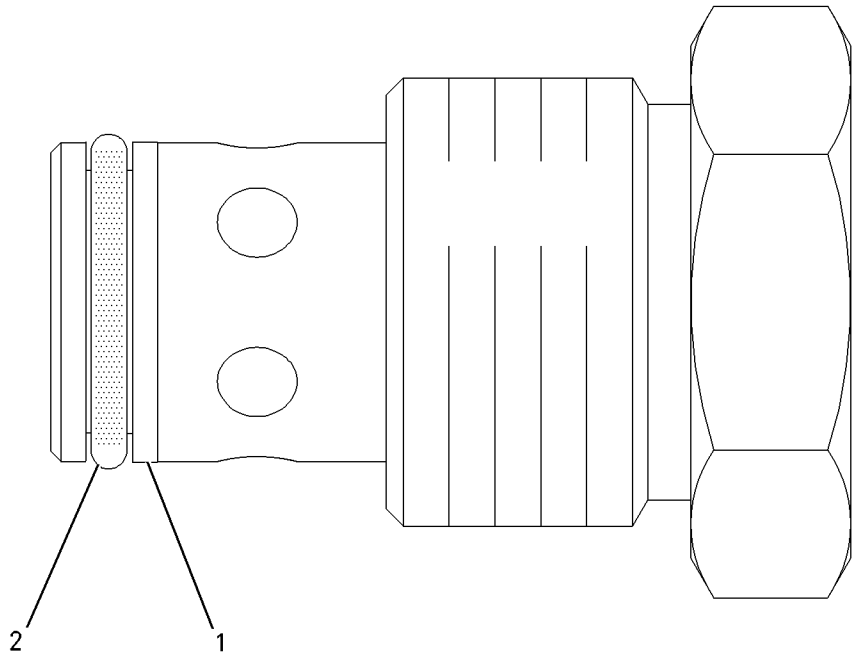

GRAPHIC #1 **<END>** g00864141

139-6873 VALVE GP-FUEL BYPASS

S/N: BET200-UP

PART OF 205-0349 BASE GP-FUEL FILTER

SMCS-1261 **i01986135**

NOTE	REF NO	GRAPHIC REF	PART NUMBER	QTY	PART NAME 1 2 3 4 5 6 (PRODUCT LEVEL)	SEE PAGE
	1	1	**9X-7737**	1	SEAL-O-RING	

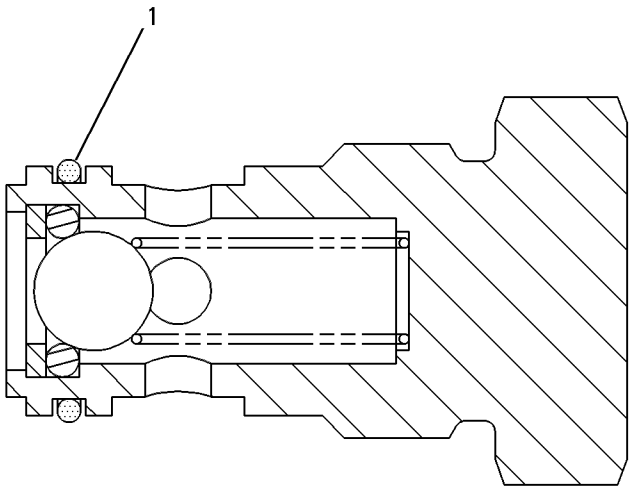

GRAPHIC #1 **<END>** g00266124

3E-6328 ALARM GP

S/N: AXM1377-UP
24-VOLT
PART OF 235-2676 CIRCUIT BREAKER GP

SMCS-7407 **i02160203**

NOTE	REF NO	GRAPHIC REF	PART NUMBER	QTY	PART NAME 1 2 3 4 5 6 (PRODUCT LEVEL)	SEE PAGE
	1	1	**102-8802**	1	KIT-RECEPTACLE (2-PIN)	
					(INCLUDES RECEPTACLE AS & WEDGE)	
	2	1	**186-3735**	2	PIN-CONNECTOR	
	3	1	**3E-3365**	1	WEDGE-RECEPTACLE LOCK (2-PIN)	

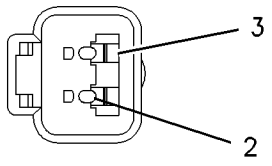

VIEW A–A

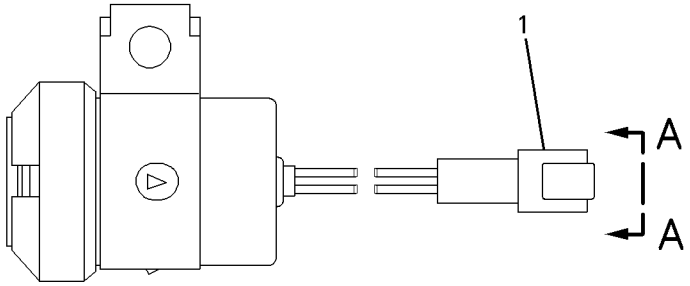

GRAPHIC #1 **<END>** g00826023

ELECTRICAL AND STARTING SYSTEM

114-2401 ALTERNATOR GP-CHARGING*R

S/N: BET200-683
24-VOLT,75-AMPERE
PART OF 187-9076 ALTERNATOR GP-CHARGING

SMCS-1405 **i02135290**

NOTE	REF NO	GRAPHIC REF	PART NUMBER	QTY	PART NAME 1 2 3 4 5 6 (PRODUCT LEVEL)	SEE PAGE
	1	1	**8T-4205**	2	WASHER-HARD (7.2X14.5X2-MM THK)	
		1	**1H-3244**	2	LOCKWASHER	
	2	1	**9X-2500**	4	SCREW-HEX FLANGE (10-24X38.1-MM)	
	3	1	**6V-8187**	1	NUT (1/4-28-THD)	
	4	1	**5S-7349**	1	BOLT (1/4-20X0.5-IN)	
	5	1	**9L-6770**	1	CAP	
	6	1	**9N-0943**	1	PLUG-BEARING WELL	
	7	1	**5P-3418**	1	BEARING-ROLLER	
	8	1	**5P-3419**	1	RACE-BEARING INNER	
	9	1	**9L-6776**	1	RECTIFIER AS	
	10	1	**6N-1944**	1	DIODE AS	
	11	1	**3T-6354**	1	REGULATOR AS-VOLTAGE (24-VOLT)	
	12	1	**105-3763**	1	CAPACITOR AS-ALTERNATOR	
	13	1	**5P-7807**	1	BALL BEARING	
	14	1	**100-6531**	1	FAN-ALTERNATOR (14-BLADE)	
	15	1	**2K-4821**	1	LOCKNUT (5/8-18-THD)	
		1	**7F-7621**	1	WASHER (0.635X1.25X0.09-IN THK)	
	16	1	**9S-2009**	4	SCREW-HEAD (10-24X3.625-IN)	
	17	1	**6N-1872**	2	SCREW AS (8-32X1.25-IN)	
	18	1	**7N-9023**	1	SCREW AS (8-32X26.9-MM)	
	19	1	**106-7689**	1	CONNECTOR-ALTERNATOR	
	20	1	**106-7690**	1	CONNECTOR-ALTERNATOR	
	21	1	**9B-7233**	6	LOCKWASHER	
	22	1	**100-6532**	1	COLLAR-ALTERNATOR	
	23	1	**2L-8075**	3	TERMINAL	
	24	1	**7N-9021**	2	SCREW AS (8-32X1.34-IN)	
	25	1	**9S-2302**	1	ROTOR AS	
	26	1	**9N-0942**	1	PLATE-COVER	
	27	1	**7X-3353**	5	SCREW-HEX HEAD (10X24X19.05-MM)	
	28	1	**106-7687**	1	HOUSING AS-ALTERNATOR	
	29	1	**2P-5616**	1	FRAME-DRIVE END	
	30	1	**117-9690**	1	STATOR AS-ALTERNATOR	
	31	1	**6N-1945**	1	COIL AS-FIELD	
	32	1	**9S-2390**	1	RETAINER	
	33	1	**4B-2043**	4	NUT (8-32X3.18-MM)	
	34	1	**9S-2544**	2	SCREW-HEX HEAD (8-32X11.13-MM)	
	35	1	**8T-0328**	11	WASHER-HARD (5.5X10X1-MM THK)	
	36	1	**030-9612**	4	SCREW-FORMING (10-24X0.5-IN)	
					AVAILABLE REPAIR KIT(S):	
			9S-2013	1	KIT-RELAY TERMINAL (ALTERNATOR)	
					(INCL BUSHING, WASHERS, NUT AS, & STUD)	
			105-3764	1	KIT-ALTERNATOR TERMINAL	
					(INCL TERMINAL AS, INSULATOR, BUSHING, WASHER, NUTS & LOCKWASHERS)	

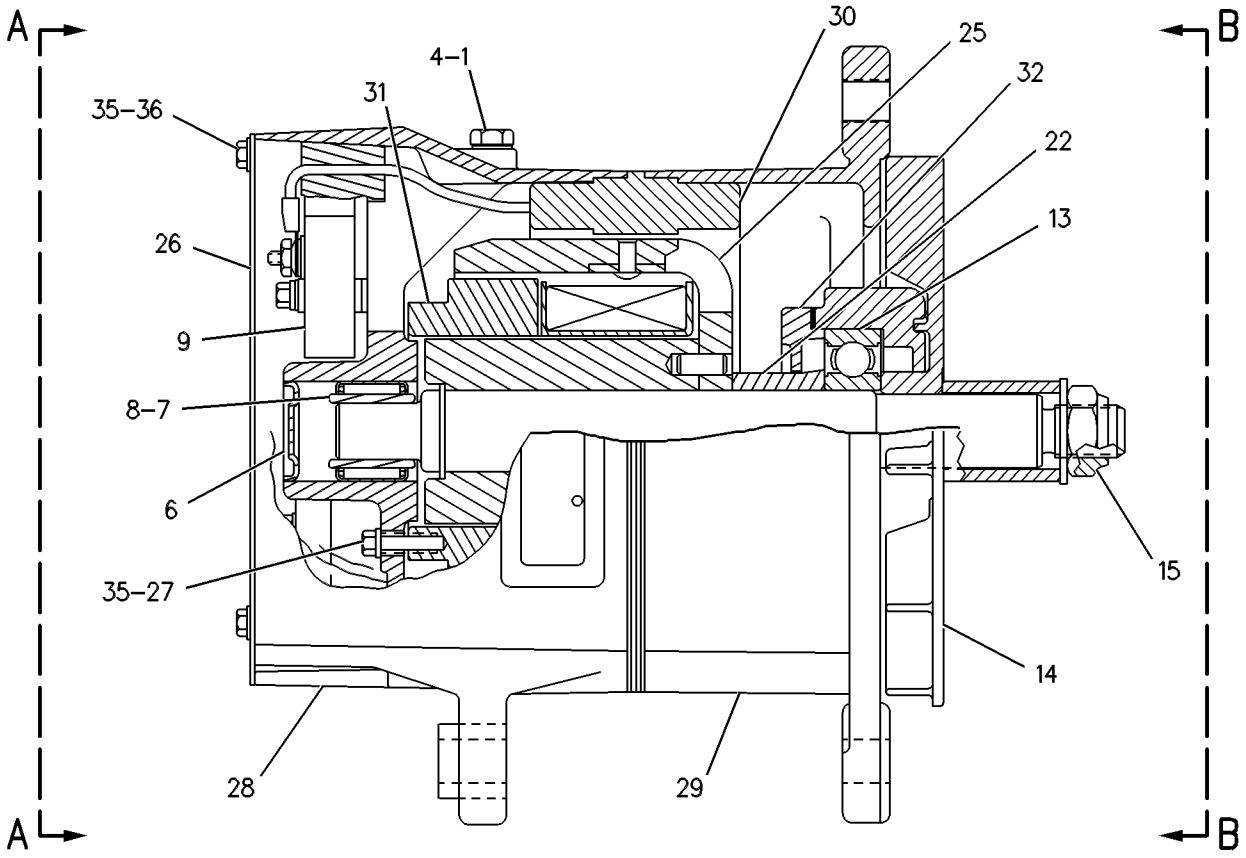

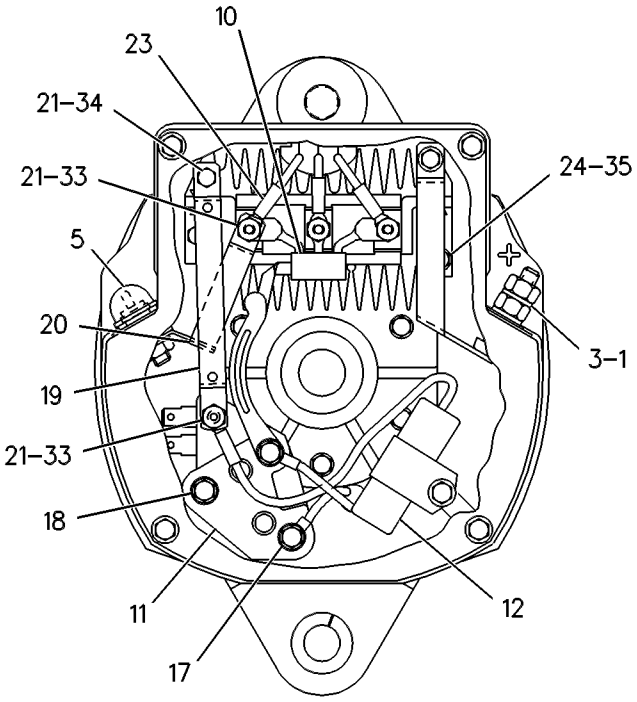

VIEW A-A

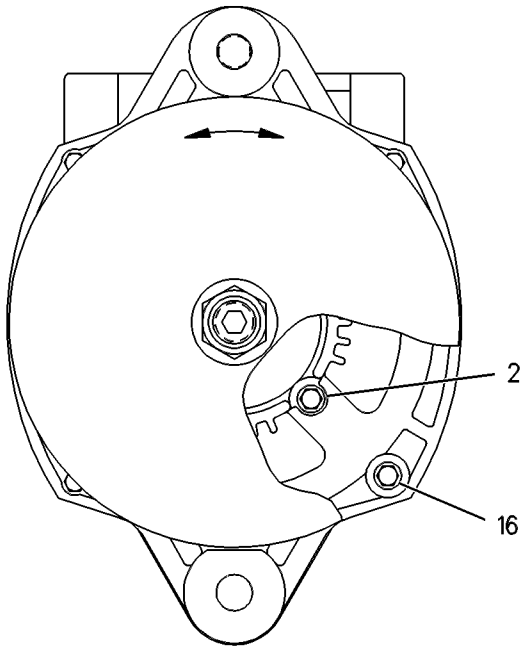

VIEW B-B

GRAPHIC #1 **<END>** g00120853

185-5294 ALTERNATOR GP-CHARGING*R

S/N: BET684-UP
24 VOLT, 65 AMPERE
PART OF 187-9076 ALTERNATOR GP-CHARGING

SMCS-1405 **i02147128**

NOTE	REF NO	GRAPHIC REF	PART NUMBER	QTY	PART NAME 1 2 3 4 5 6 (PRODUCT LEVEL)	SEE PAGE
	1	1	**185-2653**	1	FRAME	
	2	1	**5S-7349**	1	BOLT (1/4-20X0.5-IN)	
	3	1	**185-2639**	1	FAN AS	
	4	1	**1H-3244**	1	LOCKWASHER	
	5	1	**185-2645**	1	FRAME	
	6	1	**2K-4821**	1	LOCKNUT (5/8-18-THD)	
	7	1	**5P-8247**	1	WASHER-HARD (17X32X3.5-MM THK)	
	8	1	**185-2651**	1	COVER	
	9	1	**8T-4205**	1	WASHER-HARD (7.2X14.5X2-MM THK)	
	10	1	**185-2647**	1	GROMMET	
	11	1	**9L-6770**	1	CAP (ALTERNATOR RELAY TERMINAL)	
	12	1	**185-2642**	1	STATOR AS	
	13	1	**185-2638**	2	COLLAR	
	14	1	**185-2654**	1	PLATE	
	15	1	**185-2650**	1	ROTOR AS	
	16	1	**185-2644**	1	COIL AS	
	17	1	**185-2648**	1	REGULATOR AS-VOLTAGE (24-VOLT) (ALTERNATOR)	
	18	1	**6V-8189**	1	NUT (5/16-18-THD)	
	19	1	**8T-4224**	1	WASHER-HARD (8.8X16X2-MM THK)	
	20	1	**3F-9556**	1	LOCKWASHER	
					AVAILABLE REPAIR KIT(S):	
			185-2655	1	KIT-BEARING (ALTERNATOR)	
					(INCLUDES 2 BEARINGS)	
			199-8436	1	KIT-TERMINAL (ALTERNATOR)	
					(INCLUDES HOLDER AS, PLATE, INSULATOR, PIN, BOLT, GROMMET, AND NUT)	
			199-7891	1	KIT-TERMINAL (ALTERNATOR)	
					(INCLUDES INSULATORS, WASHERS AND NUT)	
			185-2658	1	KIT-HARDWARE (ALTERNATOR)	
					(INCLUDES BOLTS)	

185-5294 ALTERNATOR GP-CHARGING *(contd.)* **i02147128**

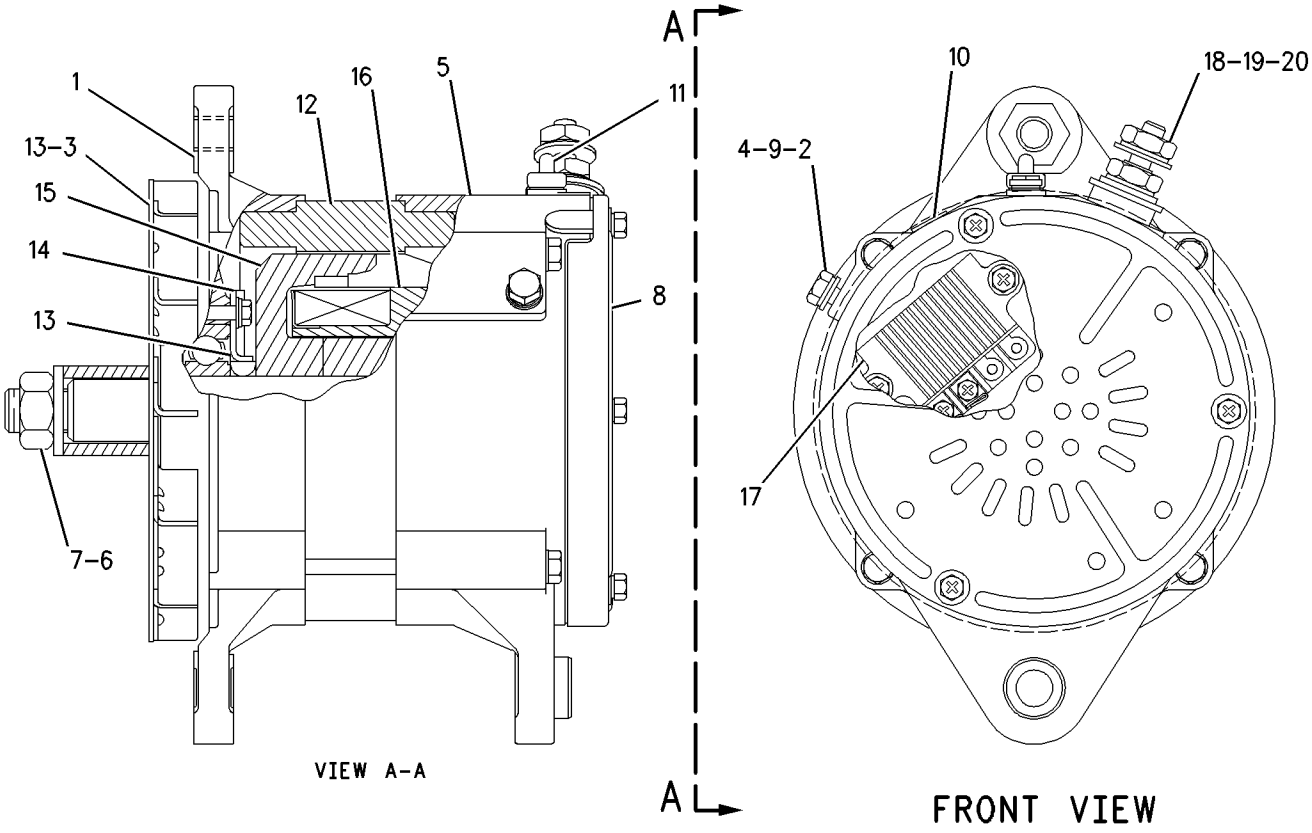

GRAPHIC #1 **<END>** g00806894

187-9076 ALTERNATOR GP-CHARGING

S/N: BET200-683
24 VOLT- 75 AMPERE
PART OF 153-7076 ENGINE AR-COMPLETE

SMCS-1405 **i01971294**

NOTE	REF NO	GRAPHIC REF	PART NUMBER	QTY	PART NAME 1 2 3 4 5 6 (PRODUCT LEVEL)	SEE PAGE
	1	1	**5G-2308**	1	SPACER (10-MM THK)	
	2	1	**123-0791**	1	PULLEY (8-GROOVE)	
	3	1	**179-8318**	1	WIRE AS	
YR	4	1	**114-2401**	1	ALTERNATOR GP-CHARGING (75-AMPERE)	196
	5	1	**234-3412**	1	BRACKET AS	
M		1	**159-9540**	2	NUT-WELD (M8X1.25-THD)	
	6	1	**234-4772**	1	PLATE	
	7	1	**4M-5281**	1	BOLT (1/4-20X0.75-IN)	
M	8	1	**6V-5217**	2	BOLT (M8X1.25X20-MM)	
	9	1	**6V-8188**	1	NUT (1/2-13-THD)	
	10	1	**8T-4223**	4	WASHER-HARD (13.5X25.5X3-MM THK)	
M	11	1	**8T-4244**	1	NUT (M12X1.75-THD)	
M	12	1	**8T-7930**	1	BOLT (M12X1.75X160-MM)	
	13	1	**8T-9389**	1	BOLT (1/2-13X2.75-IN)	
	14	1	**9M-1974**	2	WASHER-HARD (8.8X16X2-MM THK)	

M-METRIC PART
R-REMFG PART MAY BE AVAILABLE
Y-SEPARATE ILLUSTRATION

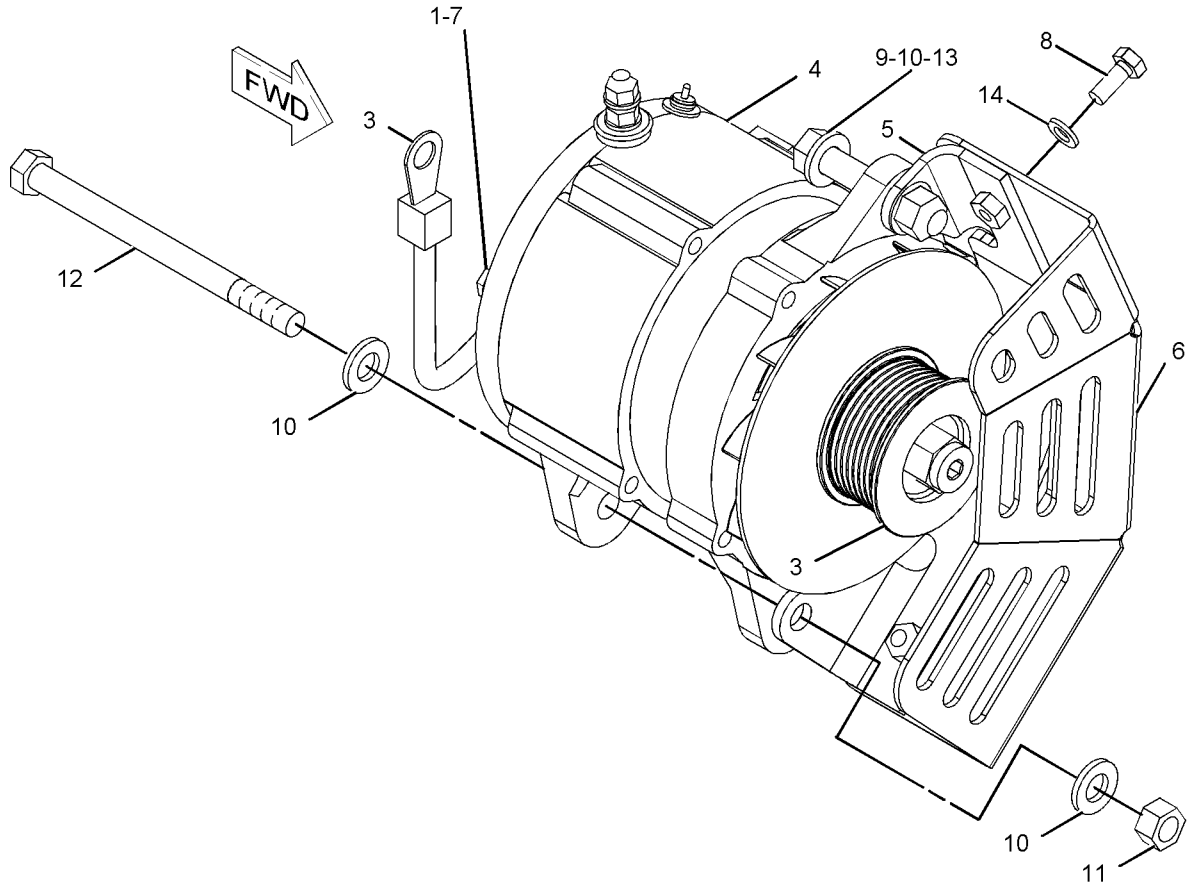

GRAPHIC #1 **<END>** g01028438

187-9076 ALTERNATOR GP-CHARGING

S/N: BET684-UP
24 VOLT- 75 AMPERE
PART OF 153-7076, 235-4689 ENGINE AR-COMPLETE

SMCS-1405 **i02044728**

NOTE	REF NO	GRAPHIC REF	PART NUMBER	QTY	PART NAME 1 2 3 4 5 6 (PRODUCT LEVEL)	SEE PAGE
	1	1	**5G-2308**	1	SPACER (10-MM THK)	
	2	1	**123-0791**	1	PULLEY (8-GROOVE)	
	3	1	**179-8318**	1	WIRE AS	
CYR	4	1	**185-5294**	1	ALTERNATOR GP-CHARGING (24-VOLT)	198
	5	1	**234-3412**	1	BRACKET AS	
M		1	**159-9540**	2	NUT-WELD (M8X1.25-THD)	
	6	1	**234-4772**	1	PLATE	
	7	1	**4M-5281**	1	BOLT (1/4-20X0.75-IN)	
M	8	1	**6V-5217**	2	BOLT (M8X1.25X20-MM)	
	9	1	**6V-8188**	1	NUT (1/2-13-THD)	
	10	1	**8T-4223**	4	WASHER-HARD (13.5X25.5X3-MM THK)	
M	11	1	**8T-4244**	1	NUT (M12X1.75-THD)	
M	12	1	**8T-7930**	1	BOLT (M12X1.75X160-MM)	
	13	1	**8T-9389**	1	BOLT (1/2-13X2.75-IN)	
	14	1	**9M-1974**	2	WASHER-HARD (8.8X16X2-MM THK)	

C-CHANGE FROM PREVIOUS TYPE
M-METRIC PART
R-REMFG PART MAY BE AVAILABLE
Y-SEPARATE ILLUSTRATION

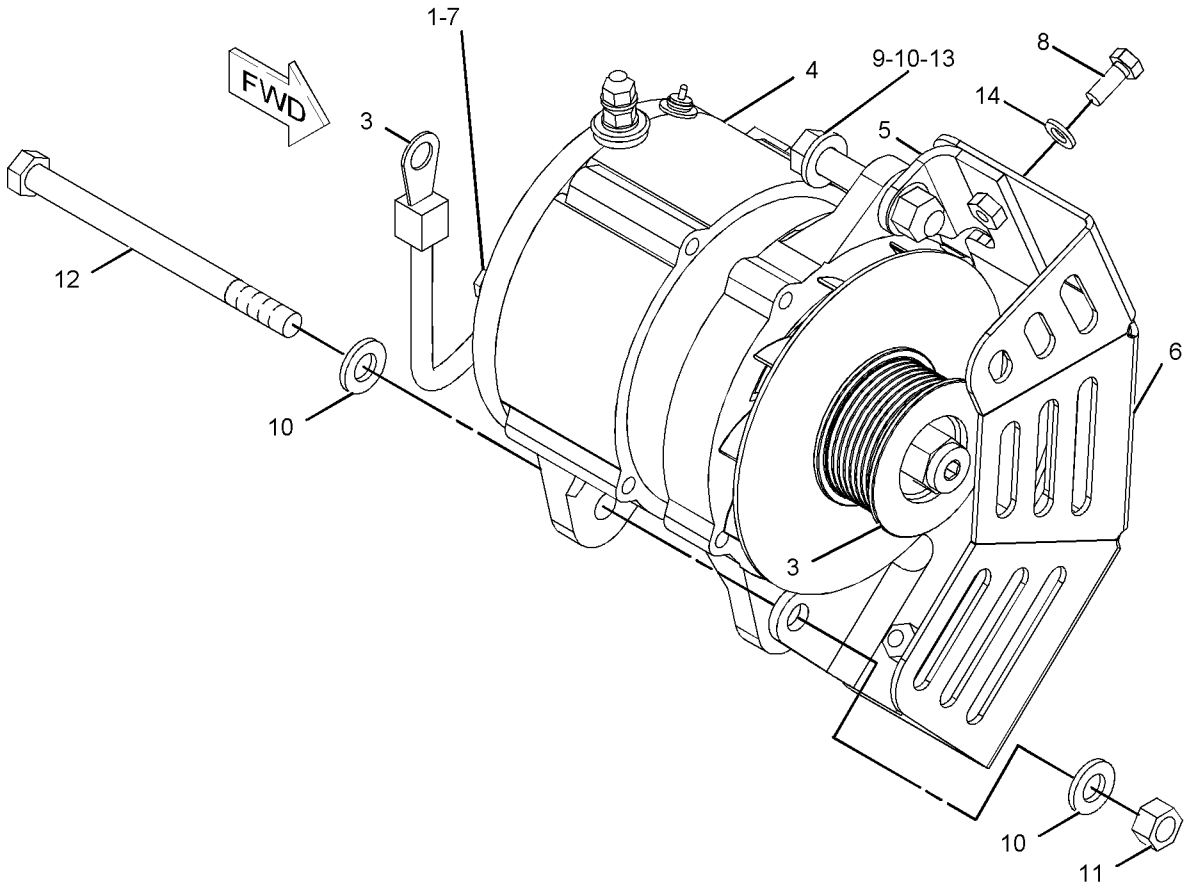

GRAPHIC #1 **<END>** g01028438

ELECTRICAL AND STARTING SYSTEM

141-6885 BATTERY & WIRING GP

S/N: AXM1-1376

PART OF 152-6922 HYDRAULIC AR-MACHINE

SMCS-1401, 1402, 1408 **i01834376**

NOTE	PART NUMBER	QTY	PART NAME 1 2 3 4 5 6 (PRODUCT LEVEL)	SEE PAGE
	9X-9720	2	BATTERY (12-VOLT)	
			(EACH INCLUDES)	
	7N-0060	6	VENT AS	
Y	**124-5814**	1	BLOCK GP-JUNCTION	208
M	**5C-9553**	1	BOLT (M6X1X16-MM)	
M	**8T-4136**	31	BOLT (M10X1.5X25-MM)	
M	**8T-4137**	1	BOLT (M10X1.5X20-MM)	
M	**8T-4138**	4	BOLT (M6X1X20-MM)	
M	**8T-4139**	2	BOLT (M12X1.75X30-MM)	
M	**8T-4171**	3	BOLT (M6X1X12-MM)	
M	**8T-4185**	1	BOLT (M10X1.5X50-MM)	
M	**8T-4186**	1	BOLT (M10X1.5X40-MM)	
M	**8T-4195**	1	BOLT (M10X1.5X30-MM)	
	200-1052	1	BRACKET AS	
	7T-1099	1	LINK	
M	**8T-3490**	1	NUT-WELD (M10X1.5-THD)	
	190-7429	1	CABLE AS	
	1S-7251	1	TERMINAL-RING (FOR 1/2-IN BOLT)	
	1S-7252	1	TERMINAL-RING (FOR 3/8-IN BOLT)	
E	**5P-0747**		CABLE (00-GA, BLACK) (54CM)	
	192-5877	1	CABLE AS	
	1S-7251	1	TERMINAL-RING (FOR 1/2-IN BOLT)	
E	**5P-0761**		CABLE (00-GA, RED) (128CM)	
	8N-0869	1	COVER-TERMINAL (RED)	
	8N-1725	1	COVER-TERMINAL (RED)	
	3S-6049	1	TERMINAL AS-BATTERY (POSITIVE)	
	1M-6119	1	BOLT (5/16-18X1.375-IN)	
	1M-6120	1	NUT (5/16-18-THD)	
	193-7316	1	CABLE AS	
	1S-7252	2	TERMINAL-RING (FOR 3/8-IN BOLT)	
E	**5P-0747**		CABLE (00-GA, BLACK) (128CM)	
	193-7892	1	CABLE AS	
	1S-7252	2	TERMINAL-RING (FOR 3/8-IN BOLT)	
E	**5P-0747**		CABLE (00-GA, BLACK) (108CM)	
	037-5197	2	BOOT	
	193-7894	1	CABLE AS	
	1S-7252	2	TERMINAL-RING (FOR 3/8-IN BOLT)	
E	**5P-0747**		CABLE (00-GA, BLACK) (47CM)	
	193-7895	1	CABLE AS	
	1S-7251	2	TERMINAL-RING (FOR 1/2-IN BOLT)	
E	**5P-0761**		CABLE (00-GA, RED) (60CM)	
	8N-0869	2	COVER-TERMINAL (RED)	
	193-7896	1	CABLE AS	
	1S-7251	1	TERMINAL-RING (FOR 1/2-IN BOLT)	
	1S-7252	1	TERMINAL-RING (FOR 3/8-IN BOLT)	
E	**5P-0761**		CABLE (00-GA, RED) (300CM)	
	8N-0869	2	COVER-TERMINAL (RED)	
	206-0154	1	CABLE AS	
E	**5P-0761**		CABLE (00-GA, RED) (43CM)	
	7N-5274	1	COVER-TERMINAL (BLACK)	
	8N-1725	1	COVER-TERMINAL (RED)	
	3S-6050	1	TERMINAL AS-BATTERY (NEGATIVE)	
	3S-6049	1	TERMINAL AS-BATTERY (POSITIVE)	
	6G-2256	5	CLAMP	
	3S-8665	1	CLIP	
	6D-3479	28	CLIP	

141-6885 **BATTERY & WIRING GP** *(contd.)* **i01834376**

NOTE	PART NUMBER	QTY	PART NAME 1 2 3 4 5 6 (PRODUCT LEVEL)	SEE PAGE
	190-6300	1	CABLE AS	
M	**8T-4133**	8	NUT (M10X1.5-THD)	
Y	*186-5855*	1	PANEL GP-CIRCUIT BREAKER	240
	200-0933	1	PLATE	
	188-6087	1	PLATE AS	
	6M-4016	2	LUG	
	194-3173	1	PLATE AS	
M	**8T-3490**	3	NUT-WELD (M10X1.5-THD)	
M	**8T-3597**	2	NUT-WELD (M12X1.75-THD)	
	7U-9542	1	PLATE-CLAMPING	
	176-3393	2	STUD	
	106-8704	1	SUPPRESSOR AS-ARC	
Y	**3E-0154**	1	SWITCH GP-MAGNETIC	278
	2G-8767	5	WASHER (10.5X60X3-MM THK)	
	9X-8256	7	WASHER (6.6X12X2-MM THK)	
	5P-4115	1	WASHER-HARD (7.2X19X2-MM THK)	
	8T-4121	36	WASHER-HARD (11X21X2.5-MM THK)	
	8T-4223	2	WASHER-HARD (13.5X25.5X3-MM THK)	
	200-6844	1	WIRE AS	

E-ORDER BY THE CENTIMETER
M-METRIC PART
Y-SEPARATE ILLUSTRATION

<END>

ELECTRICAL AND STARTING SYSTEM

238-8543 BATTERY & WIRING GP

S/N: AXM1377-UP

PART OF 152-6922 HYDRAULIC AR-MACHINE

SMCS-1401, 1402, 1408 **i02241413**

NOTE	REF NO	GRAPHIC REF	PART NUMBER	QTY	PART NAME 1 2 3 4 5 6 (PRODUCT LEVEL)	SEE PAGE
	1	2	**2G-8767**	5	WASHER (10.5X60X3-MM THK)	
Y	2	2	**179-0006**	1	SWITCH GP-MAGNETIC	280
	3	2	**6G-2256**	5	CLAMP	
	4	2	**7U-9542**	1	PLATE-CLAMPING	
	5	2	*9X-9720*	2	BATTERY (12-VOLT)	
Y	6	1	*124-5814*	1	BLOCK GP-JUNCTION	208
	7	2	**176-3393**	2	STUD	
	8	2	**188-6087**	1	PLATE AS	
	9	1	**190-6300**	1	CABLE AS (NEGATIVE)	
		1	**037-5197**	1	BOOT	
		1	**235-2678**	1	TERMINAL-RING	
E		1	**5P-0747**		CABLE (00-GA, BLACK) (128-CM)	
		1	**7N-5274**	1	COVER-TERMINAL (BLACK)	
	10	1	**190-7429**	1	CABLE AS (STARTER, GROUND)	
E		1	**5P-0747**		CABLE (00-GA, BLACK) (54-CM)	
		1	**235-2677**	1	TERMINAL-RING	
		1	**235-2678**	1	TERMINAL-RING	
	11	1	**192-5877**	1	CABLE AS (POSITIVE)	
E		1	**5P-0761**		CABLE (00-GA, RED) (128-CM)	
		1	**8N-0869**	1	COVER-TERMINAL (RED)	
		1	**8N-1725**	1	COVER-TERMINAL (RED)	
		1	**8L-8413**	1	STRAP-CABLE	
		1	**235-2677**	1	TERMINAL-RING	
	12	1	**193-7316**	1	CABLE AS (DISCONNECT TO GROUND)	
E		1	**5P-0747**		CABLE (00-GA, BLACK) (128-CM)	
		1	**235-2678**	2	TERMINAL-RING	
	13	1	**193-7892**	1	CABLE AS (STEERING SUPPLY)	
E		1	**5P-0747**		CABLE (00-GA, BLACK) (108-CM)	
		1	**037-5197**	2	BOOT	
		1	**235-2678**	2	TERMINAL-RING	
	14	1	**193-7894**	1	CABLE AS (STEERING, GROUND)	
E		1	**5P-0747**		CABLE (00-GA, BLACK) (47-CM)	
		1	**235-2678**	2	TERMINAL-RING	
	15	1	**193-7895**	1	CABLE AS (STARTER, POSITIVE)	
E		1	**5P-0761**		CABLE (00-GA, RED) (60-CM)	
		1	**8N-0869**	2	COVER-TERMINAL (RED)	
		1	**235-2677**	2	TERMINAL-RING	
	16	1	**193-7896**	1	CABLE AS (STEERING RELAY)	
E		1	**5P-0761**		CABLE (00-GA, RED) (300-CM)	
		1	**8N-0869**	2	COVER-TERMINAL (RED)	
		1	**235-2677**	1	TERMINAL-RING	
		1	**235-2678**	1	TERMINAL-RING	
	17	1	**194-3173**	1	PLATE AS	
M		1	**8T-3490**	3	NUT-WELD (M10X1.5-THD)	
M		1	**8T-3597**	2	NUT-WELD (M12X1.75-THD)	
	18	2	**200-0933**	1	PLATE	
	19	2	**200-1052**	1	BRACKET AS	
		2	**7T-1099**	1	LINK	
M		2	**8T-3490**	1	NUT-WELD (M10X1.5-THD)	
	20	1	**206-0154**	1	CABLE AS (LINK)	
		1	**5P-0761**		CABLE (00-GA, RED) (43-CM)	
		1	**7N-5274**	1	COVER-TERMINAL (BLACK)	
		1	**8L-8413**	1	STRAP-CABLE	
		1	**8N-1725**	1	COVER-TERMINAL (RED)	
		1	**8L-8413**	1	STRAP-CABLE	
Y	21	1	*238-3240*	1	PANEL GP-CIRCUIT BREAKER	242

238-8543 **BATTERY & WIRING GP** *(contd.)* **i02241413**

NOTE	REF NO	GRAPHIC REF	PART NUMBER	QTY	PART NAME 1 2 3 4 5 6 (PRODUCT LEVEL)	SEE PAGE
M	22	2	**5C-9553**	1	BOLT (M6X1X16-MM)	
	23	2	**5P-4115**	1	WASHER-HARD (7.2X19X2-MM THK)	
	24	1,2	**263-6342**	28	CLIP	
	25	1,2	**8T-4121**	36	WASHER-HARD (11X21X2.5-MM THK)	
M	26	1,2	**8T-4133**	8	NUT (M10X1.5-THD)	
M	27	1,2	**8T-4136**	31	BOLT (M10X1.5X25-MM)	
M	28	1	**8T-4137**	1	BOLT (M10X1.5X20-MM)	
M	29	2	**8T-4138**	4	BOLT (M6X1X20-MM)	
M	30	1	**8T-4139**	2	BOLT (M12X1.75X30-MM)	
M	31	2	**8T-4171**	3	BOLT (M6X1X12-MM)	
M	32	2	**8T-4185**	1	BOLT (M10X1.5X50-MM)	
M	33	2	**8T-4186**	1	BOLT (M10X1.5X40-MM)	
M	34	2	**8T-4195**	1	BOLT (M10X1.5X30-MM)	
	35	1	**8T-4223**	2	WASHER-HARD (13.5X25.5X3-MM THK)	
	36	2	**9X-8256**	7	WASHER (6.6X12X2-MM THK)	

E-ORDER BY THE CENTIMETER
M-METRIC PART
Y-SEPARATE ILLUSTRATION

REFER TO ALL ILLUSTRATIONS OF
THIS GROUP FOR AUXILIARY VIEWS

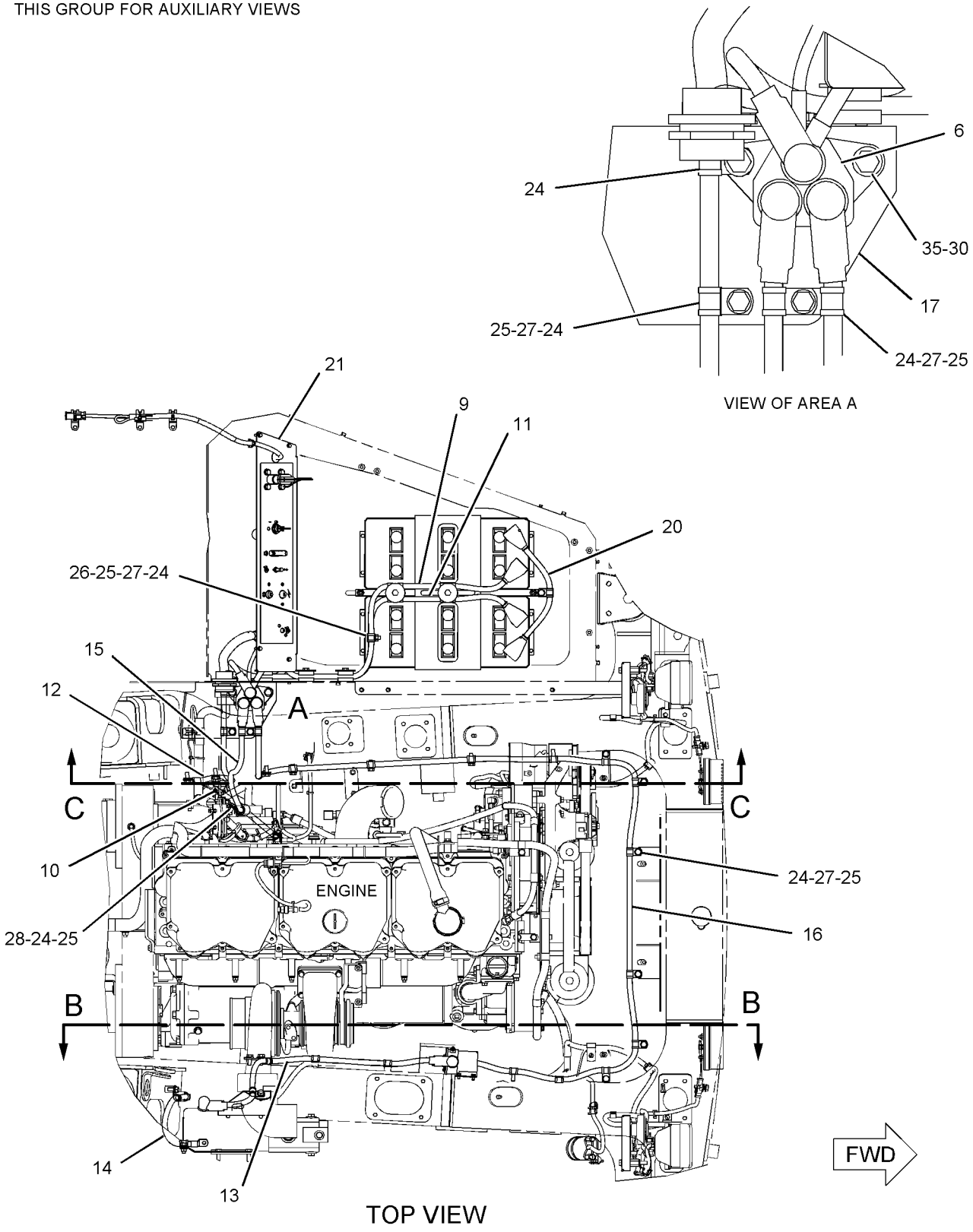

GRAPHIC #1 g01136317

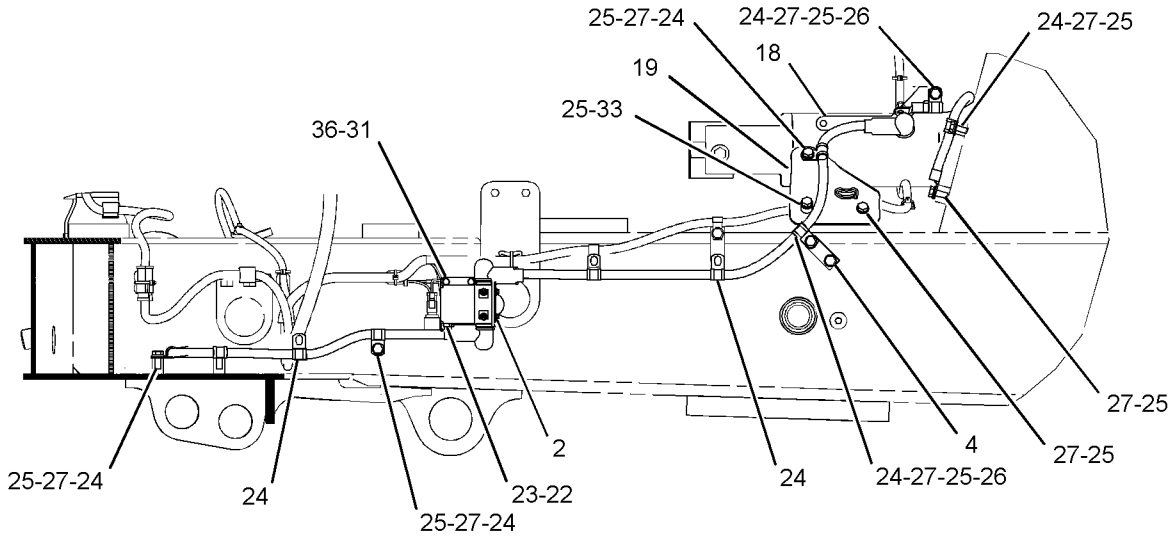

SECTION B-B

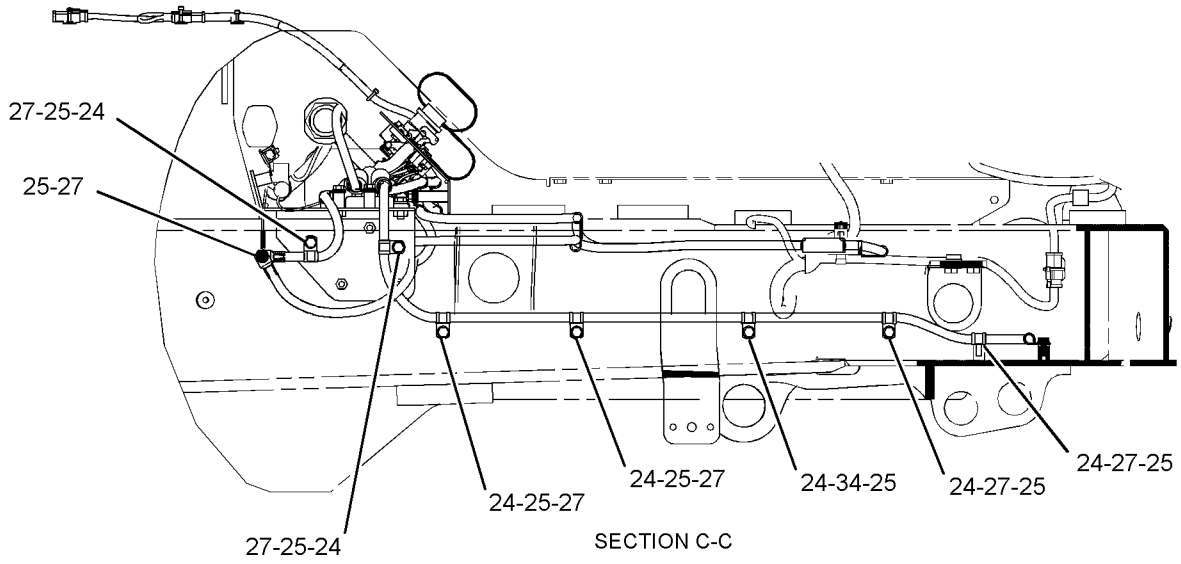

SECTION C-C

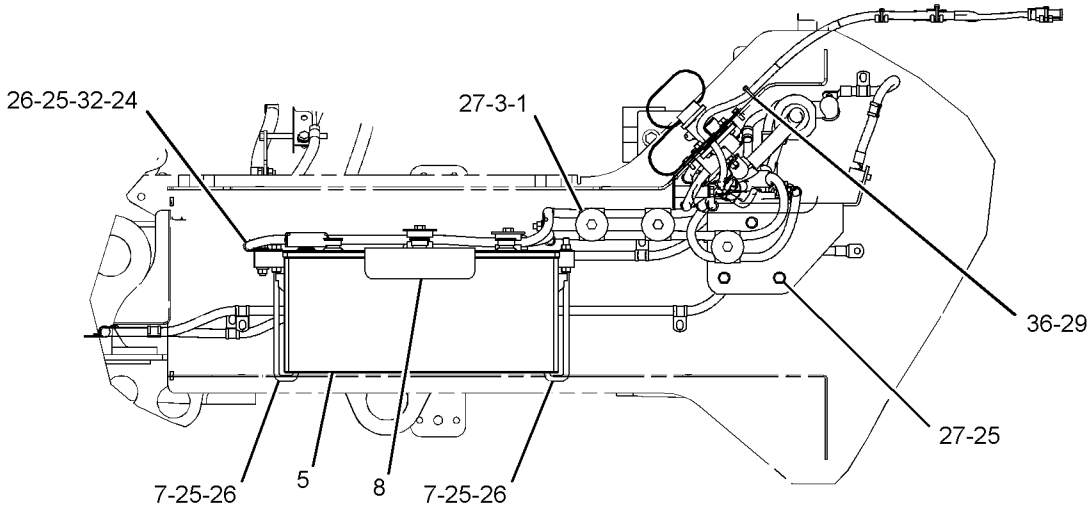

LEFT SIDE VIEW

GRAPHIC #2 **<END>** g01136318

124-5814 BLOCK GP-JUNCTION

S/N: AXM1-UP

PART OF 141-6885, 238-8543 BATTERY & WIRING GP

SMCS-1408 **i01546578**

NOTE	REF NO	GRAPHIC REF	PART NUMBER	QTY	PART NAME 1 2 3 4 5 6 (PRODUCT LEVEL)	SEE PAGE
	1	1	**8C-6358**	1	BLOCK GP-JUNCTION	
		1	**1D-5117**	3	NUT-JAM (1/2-13-THD)	
	2	1	**7F-0560**	6	WASHER (0.516X0.938X0.101-IN THK)	
D	3	1	**6V-2722**		TUBE-HEAT SHRINK (0.1M)	
	4	1	**8T-3518**	6	NUT-FULL (1/2-13-THD)	

D-ORDER BY THE METER

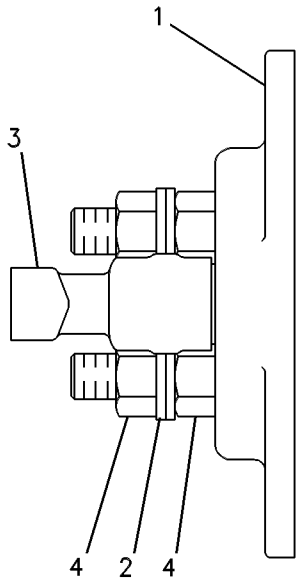

GRAPHIC #1 **<END>** g00108983

ELECTRICAL AND STARTING SYSTEM

149-0077 CIRCUIT BREAKER GP

S/N: AXM1-1376

PART OF 153-5485 CAB AR

SMCS-1420 **i01933072**

NOTE	REF NO	GRAPHIC REF	PART NUMBER	QTY	PART NAME 1 2 3 4 5 6 (PRODUCT LEVEL)	SEE PAGE
	1	1	**3E-6328**	1	ALARM GP (24-VOLT)	
		1	**102-8802**	1	KIT-RECEPTACLE (2-PIN)	
	2	1	**6T-6329**	2	BEZEL	
	3	1	**6V-8927**	4	BOLT-SOCKET HEAD (6-32X0.5-IN)	
	4	1	**9R-7941**	1	SOCKET AS	
		1	**9R-7980**	1	COVER	
	5	1	**9W-1442**	19	FUSE (10-AMPERE)	
	6	1	**9W-1446**	2	FUSE (20-AMPERE)	
	7	1	**114-6658**	8	WASHER (6.5X17X1-MM THK)	
	8	1	**116-0118**	2	CLIP	
	9	1	**117-2311**	1	RECEPTACLE AS-POWER (12-VOLT)	
	10	1	**9X-8256**	1	WASHER (6.6X12X2-MM THK)	
	11	1	**163-9427**	1	PLATE AS	
	12	1	**163-9433**	1	FILM-IDENTIFICATION (12V/24V)	
	13	1	**163-9434**	1	FILM-IDENTIFICATION (FUSE, CIRCUIT BREAKER)	
	14	1	**166-7278**	1	PLATE	
Y	15	1	**167-0138**	1	SWITCH GP-MAGNETIC (24-VOLT) (MAIN RELAY)	279
	16	1	**173-0289**	2	PLATE AS	
	17	1	**175-3593**	1	FILM-IDENTIFICATION (FUSE)	
	18	1	**178-0263**	1	DOOR AS	
		1	**3H-0240**	11	WASHER (5X9.7X0.8-MM THK)	
		1	**9M-5733**	11	RIVET-POP	
		1	**165-0396**	1	COVER AS	
		1	**188-8846**	1	LATCH AS	
	19	1	**202-4327**	1	PULLER-FUSE	
M	20	1	**9X-2044**	8	SCREW-TRUSS HEAD (M6X1X16-MM)	
	21	1	**101-3625**	1	CLIP	
	22	1	**132-5789**	1	CLIP	
	23	1	**9G-4360**	1	CAP-CONNECTOR	
M	24	1	**150-4086**	4	SCREW (M4X0.7X16-MM)	
	25	1	**3S-2093**	3	STRAP-CABLE	
	26	1	**3T-2662**	1	CIRCUIT BREAKER AS (15-AMPERE) (HEADLAMP)	
		1	**6V-8376**	2	SCREW-MACHINE (8-32X0.25-IN)	
		1	**9B-7233**	2	LOCKWASHER	
	27	1	**6T-3642**	1	CIRCUIT BREAKER AS (10-AMPERE) (KEY)	
		1	**6V-8376**	2	SCREW-MACHINE (8-32X0.25-IN)	
		1	**9B-7233**	2	LOCKWASHER	
	28	1	**6T-3643**	2	CIRCUIT BREAKER AS (15-AMPERE) (ADEM III)	
					(EACH INCLUDES)	
		1	**6V-8376**	2	SCREW-MACHINE (8-32X0.25-IN)	
		1	**9B-7233**	2	LOCKWASHER	
	29	1	**6T-6066**	2	SWITCH GP-ROCKER (SERVICE)	
					(EACH INCLUDES)	
		1	**3L-8187**	2	LOCKWASHER	
		1	**6V-8374**	2	SCREW-MACHINE (6-32X0.25-IN)	
	30	1	**6V-8185**	2	NUT (1/4-20-THD)	
M	31	1	**6V-8225**	1	NUT (M6X1-THD)	
	32	1	**8T-4205**	2	WASHER-HARD (7.2X14.5X2-MM THK)	
	33	1	**7U-4892**	8	SCREW (8-32X0.75-IN)	
M	34	1	**7Y-7389**	2	SCREW (M5X0.8X16-MM)	
	35	1	**8T-4121**	3	WASHER-HARD (11X21X2.5-MM THK)	
M	36	1	**8T-4137**	2	BOLT (M10X1.5X20-MM)	
M	37	1	**8T-4195**	1	BOLT (M10X1.5X30-MM)	
F			**128-6157**	1	PLATE	
EF			**103-2543**		SEAL (3CM)	

149-0077 **CIRCUIT BREAKER GP** *(contd.)* **i01933072**

NOTE	REF NO	GRAPHIC REF	PART NUMBER	QTY	PART NAME 1 2 3 4 5 6 (PRODUCT LEVEL)	SEE PAGE
F			**204-9926**	1	HARNESS AS-JUNCTION BOX	
			9W-2035	4	BLOCK-FUSE	
			102-8802	1	KIT-RECEPTACLE (2-PIN)	
			102-8801	1	KIT-RECEPTACLE (12-PIN)	
			155-2274	1	KIT-CONNECTING PLUG (6-PIN)	
			155-2270	1	KIT-CONNECTING PLUG (2-PIN)	
			155-2265	1	KIT-CONNECTING PLUG (8-PIN)	
F			**141-4976**	4	SCREW-WASHER HEAD (NO 4X12.7-MM)	
F			**7D-7233**	1	CLIP	

E-ORDER BY THE CENTIMETER
F-NOT SHOWN
M-METRIC PART
Y-SEPARATE ILLUSTRATION

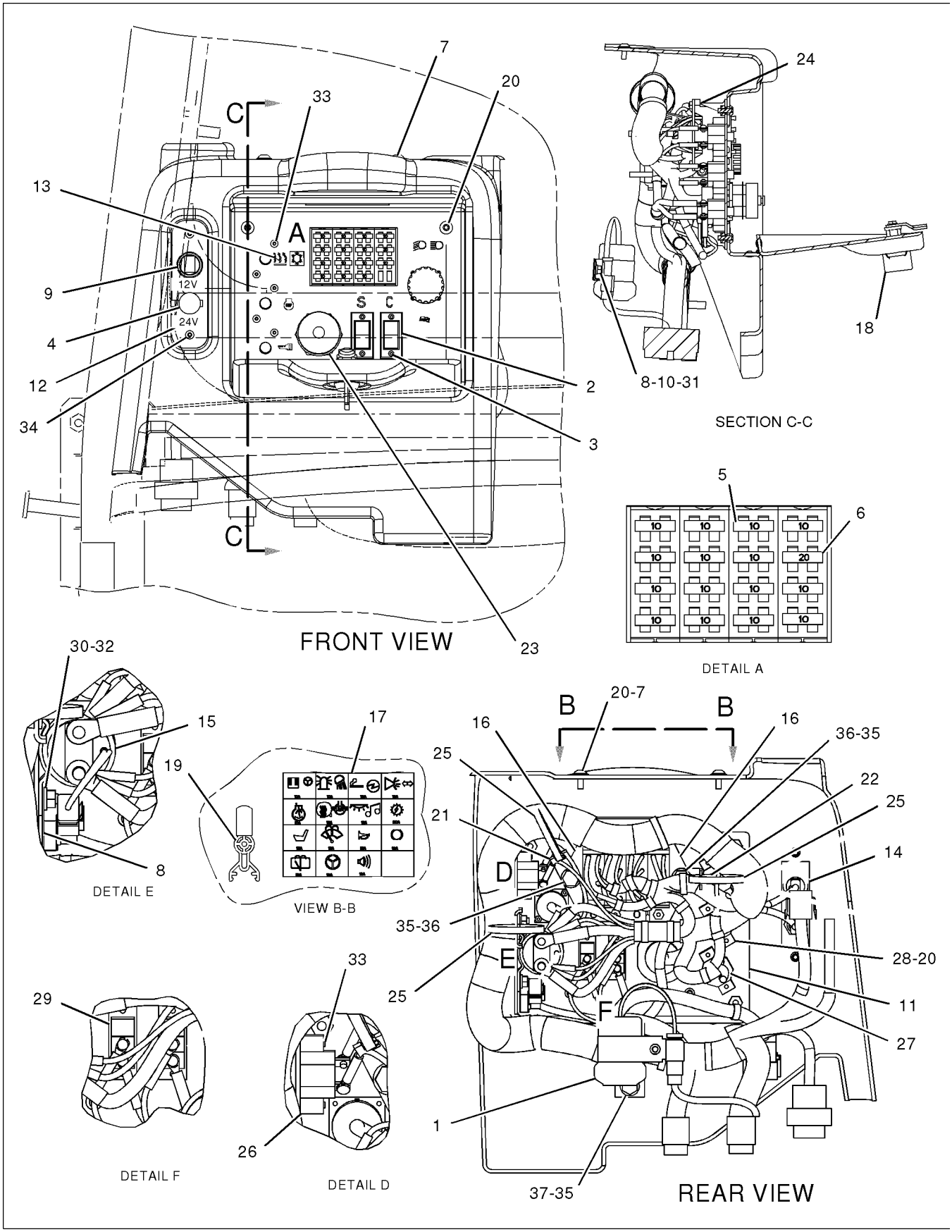

GRAPHIC #1 **<END>** g01007723

ELECTRICAL AND STARTING SYSTEM

235-2676 CIRCUIT BREAKER GP

S/N: AXM1377-UP

PART OF 229-8087 CAB AR

SMCS-1420 **i02262553**

NOTE	PART NUMBER	QTY	PART NAME 1 2 3 4 5 6 (PRODUCT LEVEL)	SEE PAGE
Y	**3E-6328**	1	ALARM GP (24-VOLT) (EMS ACTION)	195
Y	**167-0138**	1	SWITCH GP-MAGNETIC (24-VOLT) (MAIN RELAY)	279
M	**8T-4137**	2	BOLT (M10X1.5X20-MM)	
M	**8T-4189**	1	BOLT (M8X1.25X20-MM)	
	2S-9255	4	BOLT-SOCKET HEAD (4-40X0.375-IN)	
	3T-2662	1	CIRCUIT BREAKER AS (15-AMPERE)	
	6V-8376	2	SCREW-MACHINE (8-32X0.25-IN)	
	9B-7233	2	LOCKWASHER	
	6T-3642	1	CIRCUIT BREAKER AS (10-AMPERE)	
	6V-8376	2	SCREW-MACHINE (8-32X0.25-IN)	
	9B-7233	2	LOCKWASHER	
	6T-3643	2	CIRCUIT BREAKER AS (15-AMPERE)	
			(EACH INCLUDES)	
	6V-8376	2	SCREW-MACHINE (8-32X0.25-IN)	
	9B-7233	2	LOCKWASHER	
	116-0118	1	CLIP	
	9M-8406	1	CLIP	
	4P-8134	2	CLIP	
	6D-4246	1	CLIP	
	178-0263	1	DOOR AS	
	3H-0240	11	WASHER (5X9.7X0.8-MM THK)	
	9M-5733	11	RIVET-POP	
	178-0266	1	HINGE AS	
	188-8846	1	LATCH AS	
	235-2683	1	FILM (FUSE, CIRCUIT BREAKER)	
	163-9433	1	FILM-IDENTIFICATION (12V/24V)	
	9W-1442	15	FUSE (10-AMPERE)	
	9W-1446	1	FUSE (20-AMPERE)	
	235-2670	1	HARNESS AS-JUNCTION BOX	
	9W-2035	4	BLOCK-FUSE	
	127-5483	1	PLUG AS-CONNECTOR (1-PIN)	
	245-0159	2	PLUG AS	
	245-0164	1	PLUG AS (12-PIN)	
	245-8023	1	PLUG AS	
	245-0165	1	RECEPTACLE AS	
	245-0169	1	RECEPTACLE AS (12-PIN)	
	245-0172	1	RECEPTACLE AS	
	245-8027	1	RECEPTACLE AS	
M	**6V-8225**	2	NUT (M6X1-THD)	
M	**5C-7261**	1	NUT (M8X1.25-THD)	
	6V-8185	2	NUT (1/4-20-THD)	
	128-6157	1	PLATE	
	166-7278	1	PLATE	
	235-2685	1	PLATE AS	
	237-4506	1	PLATE AS	
	202-4327	1	PULLER-FUSE	
	117-2311	1	RECEPTACLE AS-POWER (12-VOLT)	
	7U-4892	8	SCREW (8-32X0.75-IN)	
M	**7Y-7389**	2	SCREW (M5X0.8X16-MM)	
M	**6V-5698**	4	SCREW-BUTTON HEAD (M4X0.7X10-MM)	
M	**6V-9672**	4	SCREW-MACHINE (M4X0.7X16-MM)	
M	**9X-2044**	8	SCREW-TRUSS HEAD (M6X1X16-MM)	
	141-4976	4	SCREW-WASHER HEAD (NO 4X12.7-MM)	
	9R-7941	1	SOCKET AS	
	9R-7980	1	COVER	
	3S-2093	3	STRAP-CABLE	

235-2676 **CIRCUIT BREAKER GP** ***(contd.)*** **i02262553**

NOTE	PART NUMBER	QTY	PART NAME 1 2 3 4 5 6 (PRODUCT LEVEL)	SEE PAGE
	114-6658	8	WASHER (6.5X17X1-MM THK)	
	8T-4224	3	WASHER-HARD (8.8X16X2-MM THK)	
	8T-4205	2	WASHER-HARD (7.2X14.5X2-MM THK)	
	8T-4121	2	WASHER-HARD (11X21X2.5-MM THK)	

M-METRIC PART
Y-SEPARATE ILLUSTRATION

<END>

159-9107 CONNECTION GP-ELECTRICAL

S/N: BET200-UP

PROVIDES ALTERNATE GROUNDING LOCATION IN CYLINDER HEAD

PART OF 153-7076, 235-4689 ENGINE AR-COMPLETE

SMCS-1408, 7553 **i01936347**

NOTE	REF NO	GRAPHIC REF	PART NUMBER	QTY	PART NAME 1 2 3 4 5 6 (PRODUCT LEVEL)	SEE PAGE
	1	1	**174-9599**	1	STUD (3/8-16 THD)	
	2	1	**8T-4896**	3	WASHER-HARD (10.2X18.5X2.5MM THK)	
	3	1	**6V-8801**	1	NUT (3/8-16 THD)	

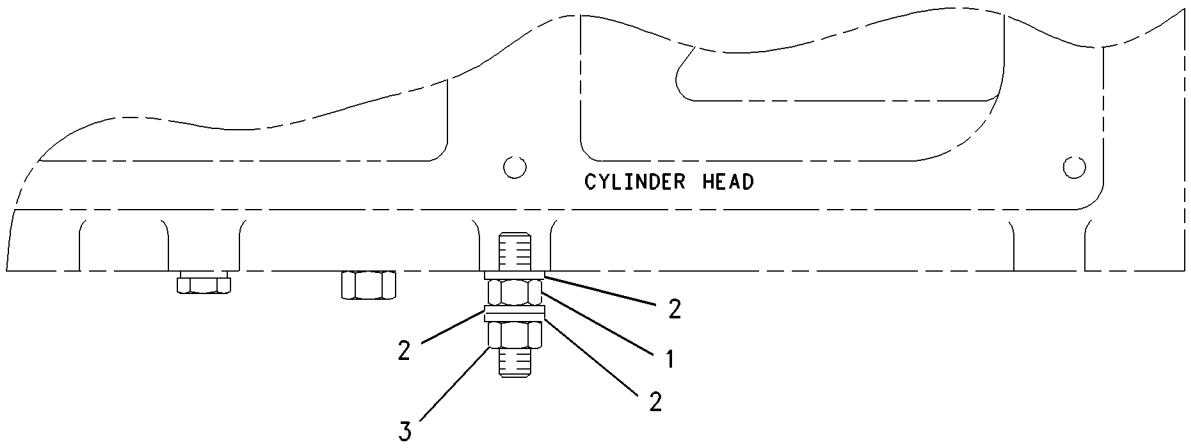

TOP VIEW

GRAPHIC #1 **<END>** g00833120

173-7072 CONTROL & MTG GP-ENGINE ELEK

S/N: BET200-10459

PART OF 153-7076, 235-4689 ENGINE AR-COMPLETE

SMCS-1901 **i01774920**

NOTE	REF NO	GRAPHIC REF	PART NUMBER	QTY	PART NAME 1 2 3 4 5 6 (PRODUCT LEVEL)	SEE PAGE
	1	1	**6I-1418**	2	SPACER (8.2X12.7X28.7-MM THK)	
	2	1	**8T-9655**	8	MOUNT-ISOLATION	
	3	1	**9N-0869**	7	WASHER-HARD (8.8X25.5X2-MM THK)	
	4	1	**127-1991**	4	SPACER (15-MM THK)	
	5	1	**168-4594**	2	SPACER	
	6	1	**172-0234**	1	PLATE AS	
Y	7	1	*210-0849*	1	CONTROL GP-ENGINE ELECTRONIC	224
	8	1	**1D-4539**	2	BOLT (5/16-18X2.5-IN)	
	9	1	**1F-4111**	2	BOLT (5/16-18X3.5-IN)	
	10	1	**3E-4352**	3	WASHER-HARD (8.8X20.5X2.5-MM THK)	
	11	1	**4B-3388**	3	BOLT (5/16-18X1.125-IN)	
	12	1	**9M-1974**	4	WASHER-HARD (8.8X16X2-MM THK)	
	13	1	**126-1773**	1	CAP-CONNECTOR	

Y-SEPARATE ILLUSTRATION

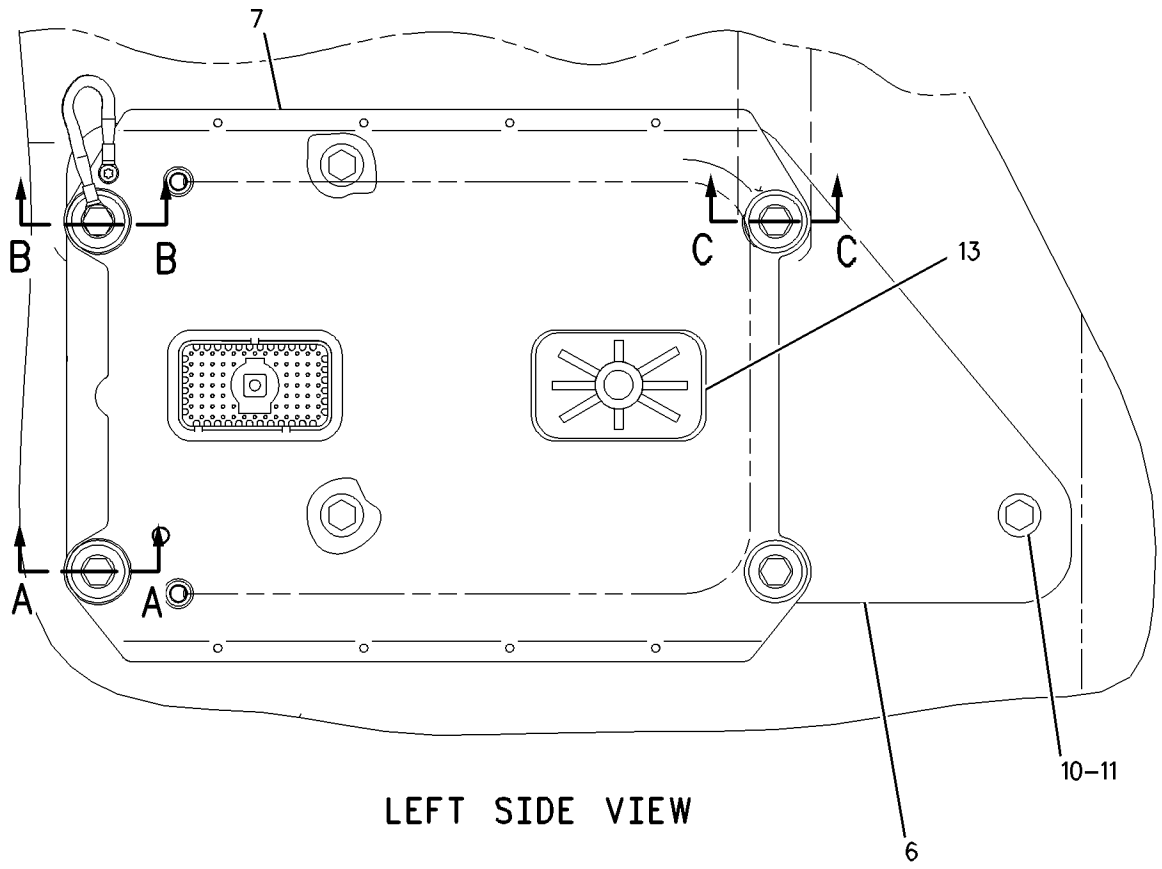

LEFT SIDE VIEW

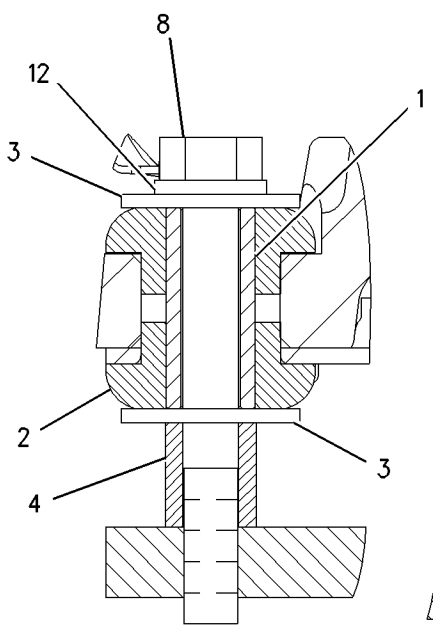

SECTION A-A

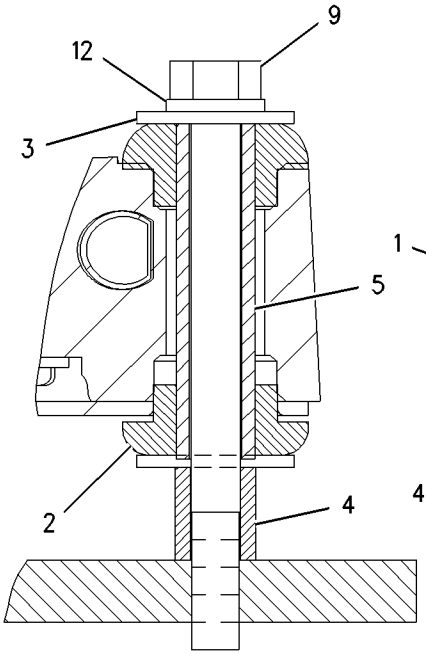

SECTION C-C

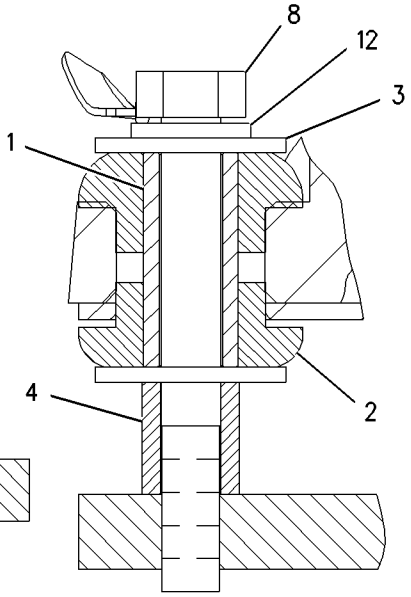

SECTION B-B

GRAPHIC #1 **<END>** g00917084

240-8855 CONTROL & MTG GP-ENGINE ELEK

S/N: BET10460-UP

PART OF 235-4689 ENGINE AR-COMPLETE

SMCS-1901 **i02186418**

NOTE	REF NO	GRAPHIC REF	PART NUMBER	QTY	PART NAME 1 2 3 4 5 6 (PRODUCT LEVEL)	SEE PAGE
	1	1	**6I-1418**	4	SPACER (8.2X12.7X28.7-MM THK)	
	2	1	**8T-9655**	8	MOUNT-ISOLATION	
	3	1	**126-1773**	1	CAP-CONNECTOR	
	4	1	**127-1991**	4	SPACER (15-MM THK)	
	5	1	**172-0234**	1	PLATE AS	
Y	6	1	*209-9588*	1	CONTROL GP-ENGINE ELECTRONIC	222
	7	1	**1D-4539**	4	BOLT (5/16-18X2.5-IN)	
	8	1	**3E-4352**	3	WASHER-HARD (8.8X20.5X2.5-MM THK)	
	9	1	**4B-3388**	3	BOLT (5/16-18X1.125-IN)	
	10	1	**9M-1974**	4	WASHER-HARD (8.8X16X2-MM THK)	
	11	1	**9N-0869**	8	WASHER-HARD (8.8X25.5X2-MM THK)	

Y-SEPARATE ILLUSTRATION

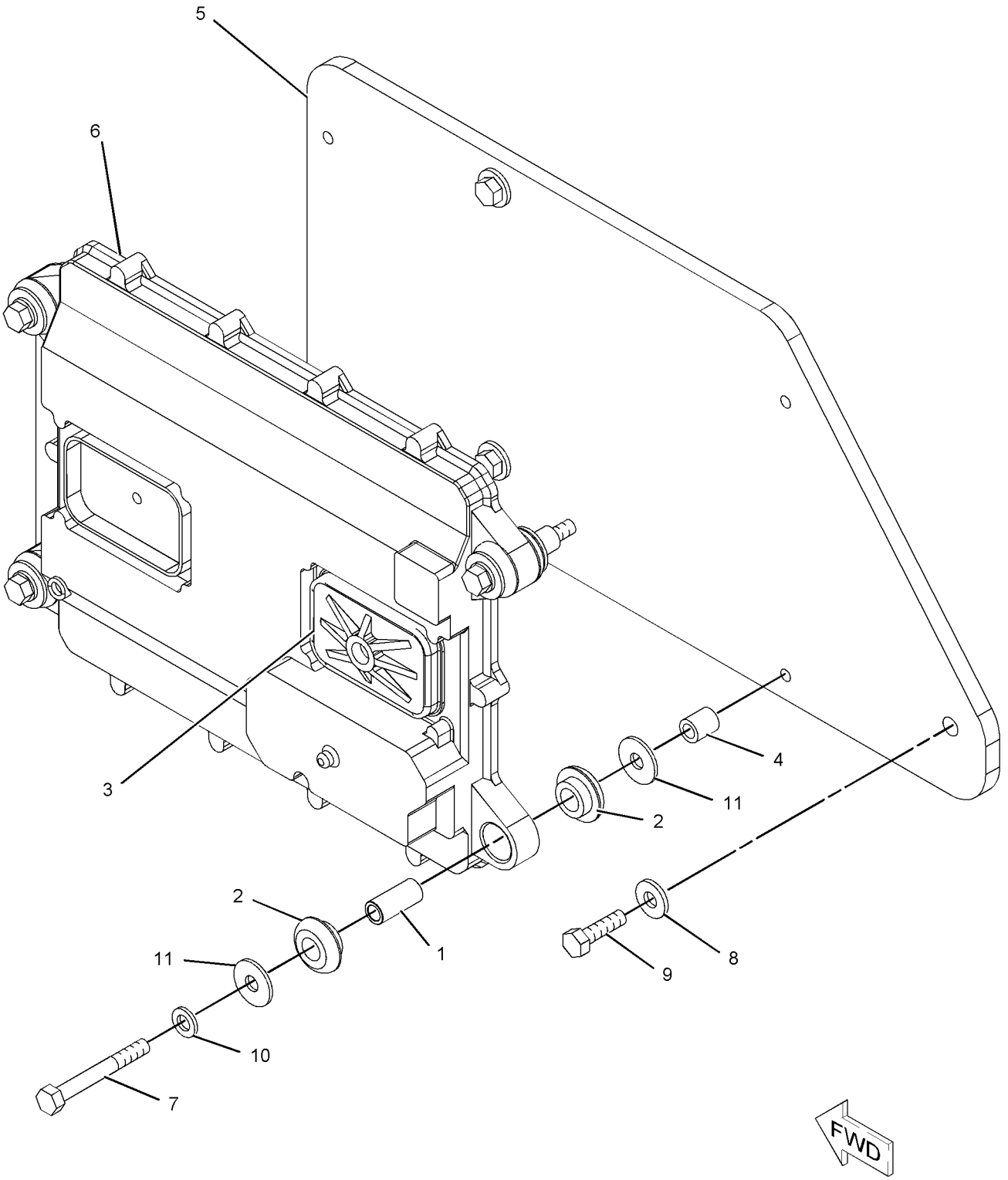

GRAPHIC #1 **<END>** g01106042

ELECTRICAL AND STARTING SYSTEM

149-0062 CONTROL & MTG GP-POWER TRAIN

S/N: AXM1-1376

PART OF 153-5485 CAB AR

SMCS-3168 **i01589531**

NOTE	REF NO	GRAPHIC REF	PART NUMBER	QTY	PART NAME 1 2 3 4 5 6 (PRODUCT LEVEL)	SEE PAGE
	1	1	**8T-9655**	8	MOUNT-ISOLATION	
	2	1	**6I-1418**	4	SPACER (8.2X12.7X28.7-MM THK)	
	3	1	**161-2355**	1	CONTROL GP-UNPROGRAMMED	
		1	**7X-6315**	1	STRAP AS-GROUND	
		1	**134-4126**	1	WASHER (4.52X8.28X0.76-MM THK)	
		1	**184-2472**	1	SCREW-PAN HEAD (NO 8-32X9.52-MM)	
M	4	1	**7X-0818**	4	BOLT (M8X1.25X45-MM)	
	5	1	**9N-0869**	4	WASHER-HARD (8.8X25.5X2-MM THK)	

M-METRIC PART

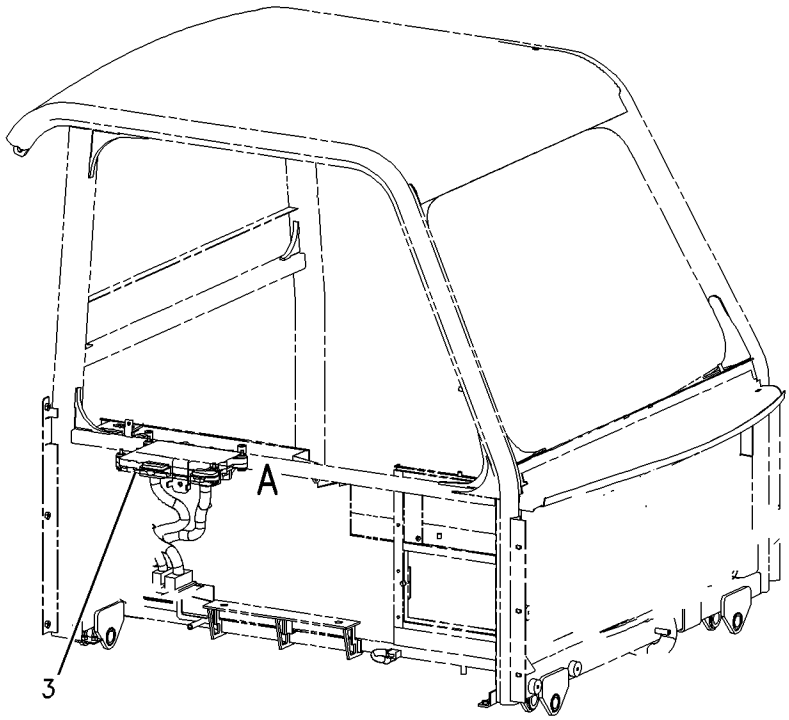

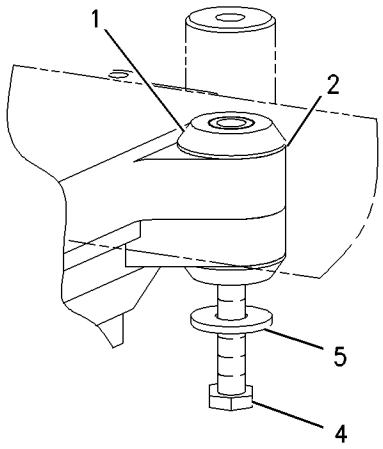

VIEW OF AREA A

GRAPHIC #1 **<END>** g00803688

ELECTRICAL AND STARTING SYSTEM

233-0336 CONTROL & MTG GP-POWER TRAIN

S/N: AXM1377-UP

PART OF 229-8087 CAB AR

SMCS-3168 **i02224107**

NOTE	PART NUMBER	QTY	PART NAME 1 2 3 4 5 6 (PRODUCT LEVEL)	SEE PAGE
Y	**230-7490**	1	CONTROL GP-UNPROGRAMMED (POWER TRAIN)	226
M	**7X-0818**	4	BOLT (M8X1.25X45-MM)	
	8T-9655	8	MOUNT-ISOLATION	
	6I-1418	4	SPACER (8.2X12.7X28.7-MM THK)	
	9N-0869	4	WASHER-HARD (8.8X25.5X2-MM THK)	

M-METRIC PART
Y-SEPARATE ILLUSTRATION

<END>

209-9587 CONTROL GP-ENGINE ELECTRONIC

S/N: BET10460-UP
FULL FEATURE PROGRAM
PART OF 209-9588 CONTROL GP-ENGINE ELECTRONIC
FIELD REPLACEMENT FOR 209-9588—PAGE 222

SMCS-1901 **i01780194**

NOTE	REF NO	GRAPHIC REF	PART NUMBER	QTY	PART NAME 1 2 3 4 5 6 (PRODUCT LEVEL)	SEE PAGE
	1	1	**184-2472**	1	SCREW-PAN HEAD (NO 8-32X9.52-MM)	
	2	1	**7X-6315**	1	STRAP AS-GROUND	

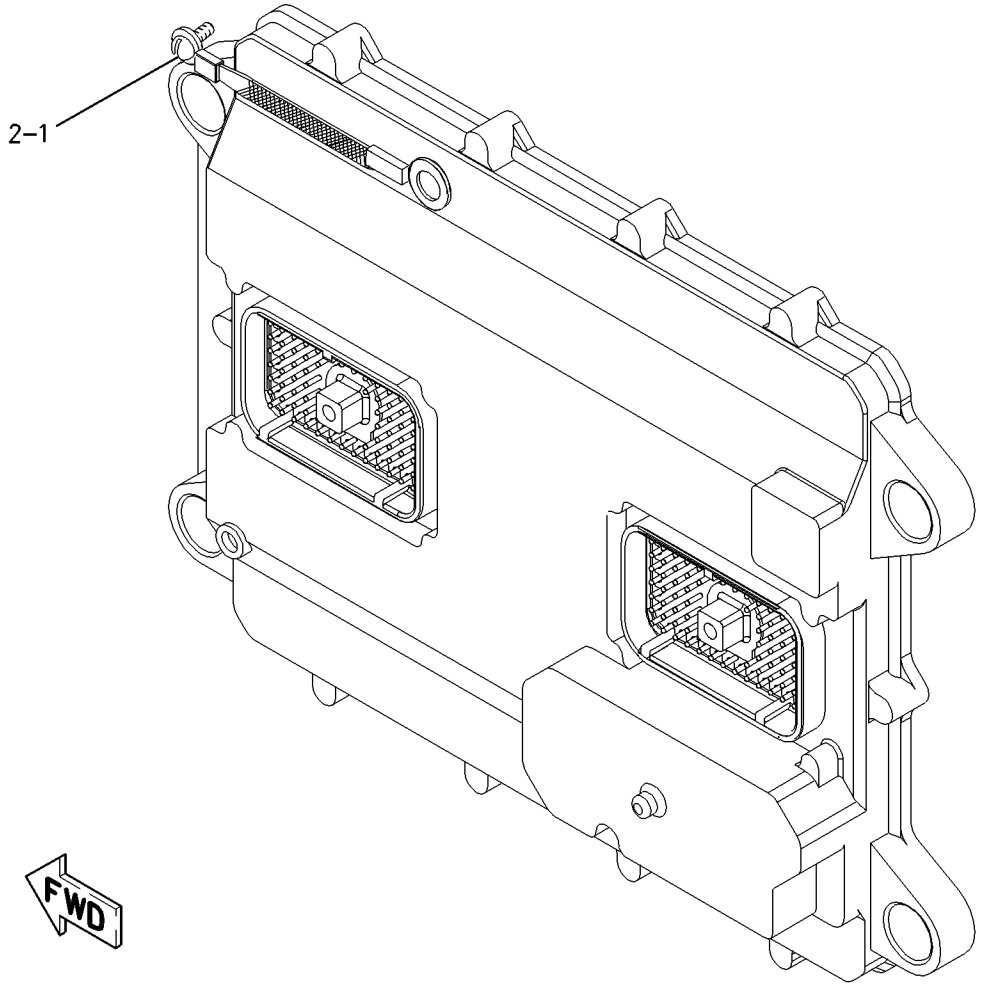

GRAPHIC #1 **<END>** g00916697

209-9588 CONTROL GP-ENGINE ELECTRONIC

S/N: BET10460-UP

PART OF 240-8855 CONTROL & MTG GP-ENGINE ELEK

FIELD REPLACEMENT ORDER 209-9587—PAGE 221, 240-5307—PAGE 227

SMCS-1901 **i02221753**

NOTE	REF NO	GRAPHIC REF	PART NUMBER	QTY	PART NAME 1 2 3 4 5 6 (PRODUCT LEVEL)	SEE PAGE
Y	1	1	**209-9587**	1	CONTROL GP-ENGINE ELECTRONIC	221
					(FOR 12 VOLT APPLICATION ONLY)	
					—OR—	
CY		1	**240-5307**	1	CONTROL GP-UNPROGRAMMED	227
					(FOR 12 AND 24 VOLT APPLICATION ONLY)	

C-CHANGE FROM PREVIOUS TYPE
Y-SEPARATE ILLUSTRATION

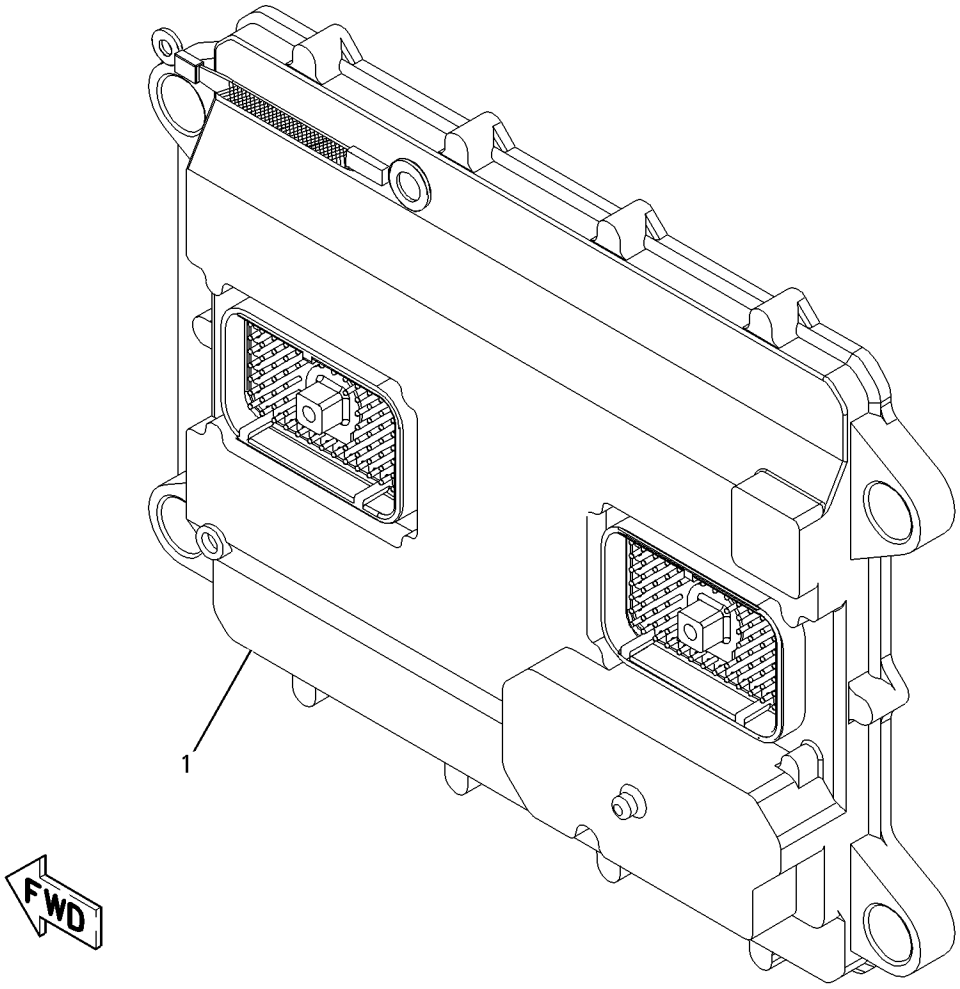

GRAPHIC #1 **<END>** g00913420

210-0848 CONTROL GP-ENGINE ELECTRONIC

S/N: BET200-UP

FIELD REPLACEMENT FOR 210-0849—PAGE 224

SMCS-1901 **i01776083**

NOTE	REF NO	GRAPHIC REF	PART NUMBER	QTY	PART NAME 1 2 3 4 5 6 (PRODUCT LEVEL)	SEE PAGE
	1	1	**7X-6315**	1	STRAP AS-GROUND	
	2	1	**184-2472**	1	SCREW-PAN HEAD (NO 8-32X9.52-MM)	

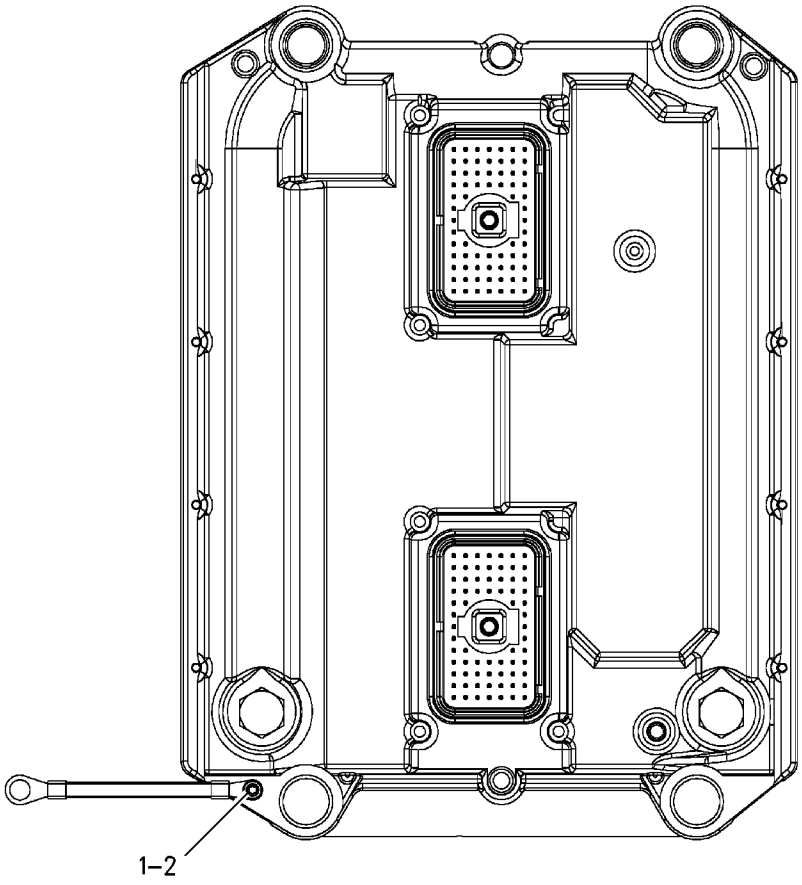

GRAPHIC #1 **<END>** g00907978

210-0849 CONTROL GP-ENGINE ELECTRONIC

S/N: BET200-10459

PART OF 173-7072 CONTROL & MTG GP-ENGINE ELEK

FIELD REPLACEMENT ORDER 210-0848—PAGE 223

SMCS-1901 **i02054605**

NOTE	REF NO	GRAPHIC REF	PART NUMBER	QTY	PART NAME 1 2 3 4 5 6 (PRODUCT LEVEL)	SEE PAGE
Y	1	1	**240-5304**	1	CONTROL GP-ENGINE ELECTRONIC	225

Y-SEPARATE ILLUSTRATION

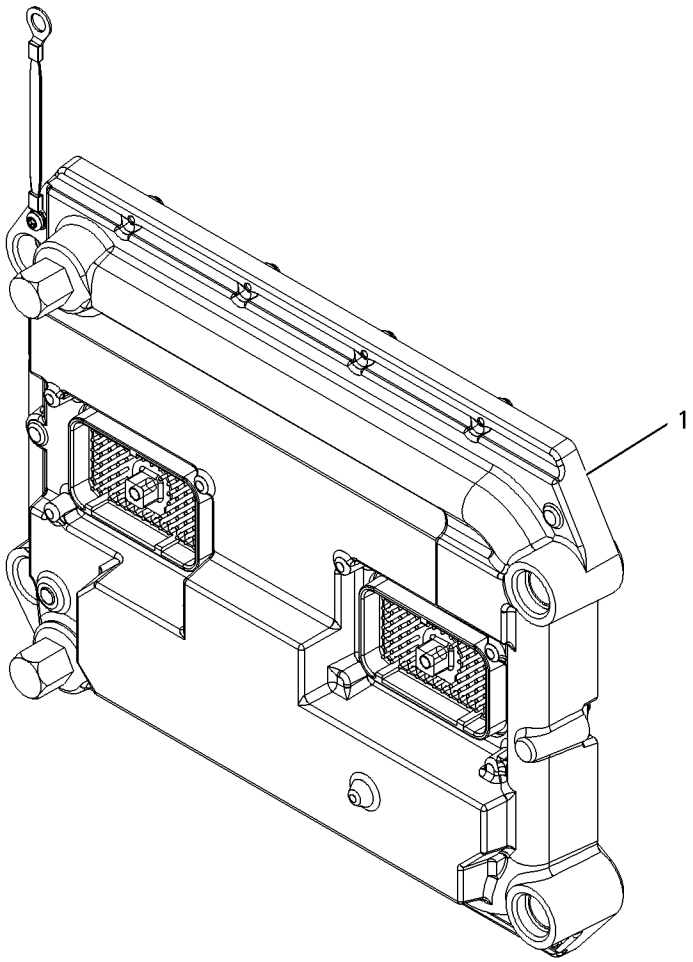

GRAPHIC #1 **<END>** g01007040

240-5304 CONTROL GP-ENGINE ELECTRONIC

S/N: BET200-10459

PART OF 210-0849 CONTROL GP-ENGINE ELECTRONIC

SMCS-1901 **i02051599**

NOTE	REF NO	GRAPHIC REF	PART NUMBER	QTY	PART NAME 1 2 3 4 5 6 (PRODUCT LEVEL)	SEE PAGE
	1	1	**7X-6315**	1	STRAP AS-GROUND	
	2	1	**184-2472**	1	SCREW-PAN HEAD (NO 8-32X9.52-MM)	

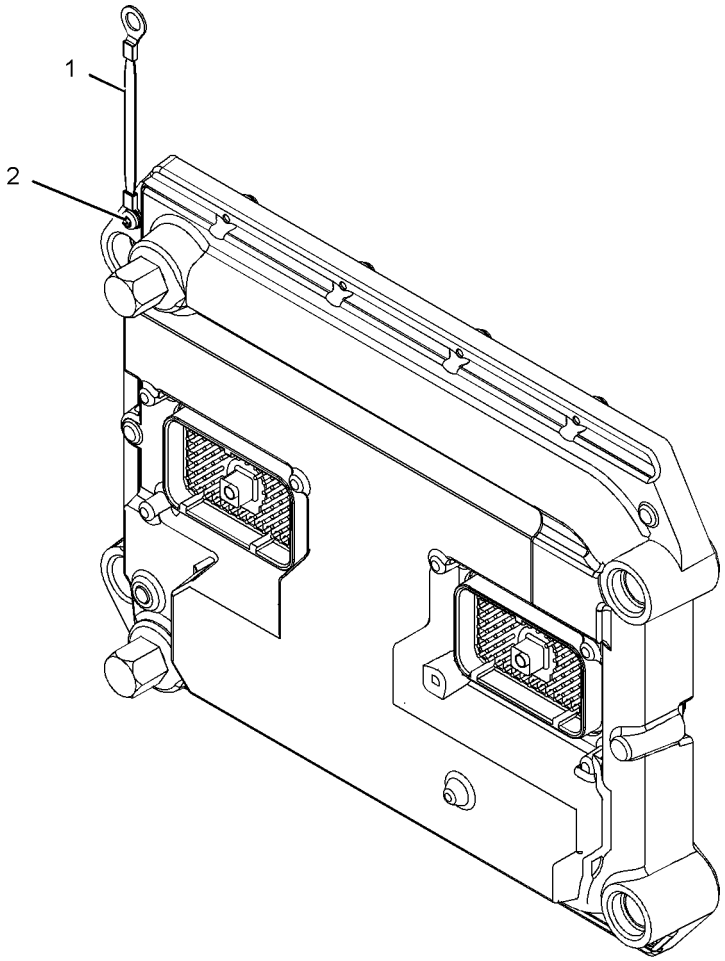

GRAPHIC #1 **<END>** g01055257

230-7490 CONTROL GP-UNPROGRAMMED—POWER TRAIN

S/N: AXM1377-UP

PART OF 233-0336 CONTROL & MTG GP-POWER TRAIN

SMCS-7610 **i02163081**

NOTE	PART NUMBER	QTY	PART NAME 1 2 3 4 5 6 (PRODUCT LEVEL)	SEE PAGE
			(NO SERVICED PARTS)	

<END>

240-5307 CONTROL GP-UNPROGRAMMED

S/N: BET10460-UP

PART OF 209-9588 CONTROL GP-ENGINE ELECTRONIC

FIELD REPLACEMENT FOR 209-9588—PAGE 222

SMCS-7610 **i02217626**

NOTE	REF NO	GRAPHIC REF	PART NUMBER	QTY	PART NAME 1 2 3 4 5 6 (PRODUCT LEVEL)	SEE PAGE
	1	1	**7X-6315**	1	STRAP AS-GROUND	
	2	1	**184-2472**	1	SCREW-PAN HEAD (NO 8-32X9.52-MM)	

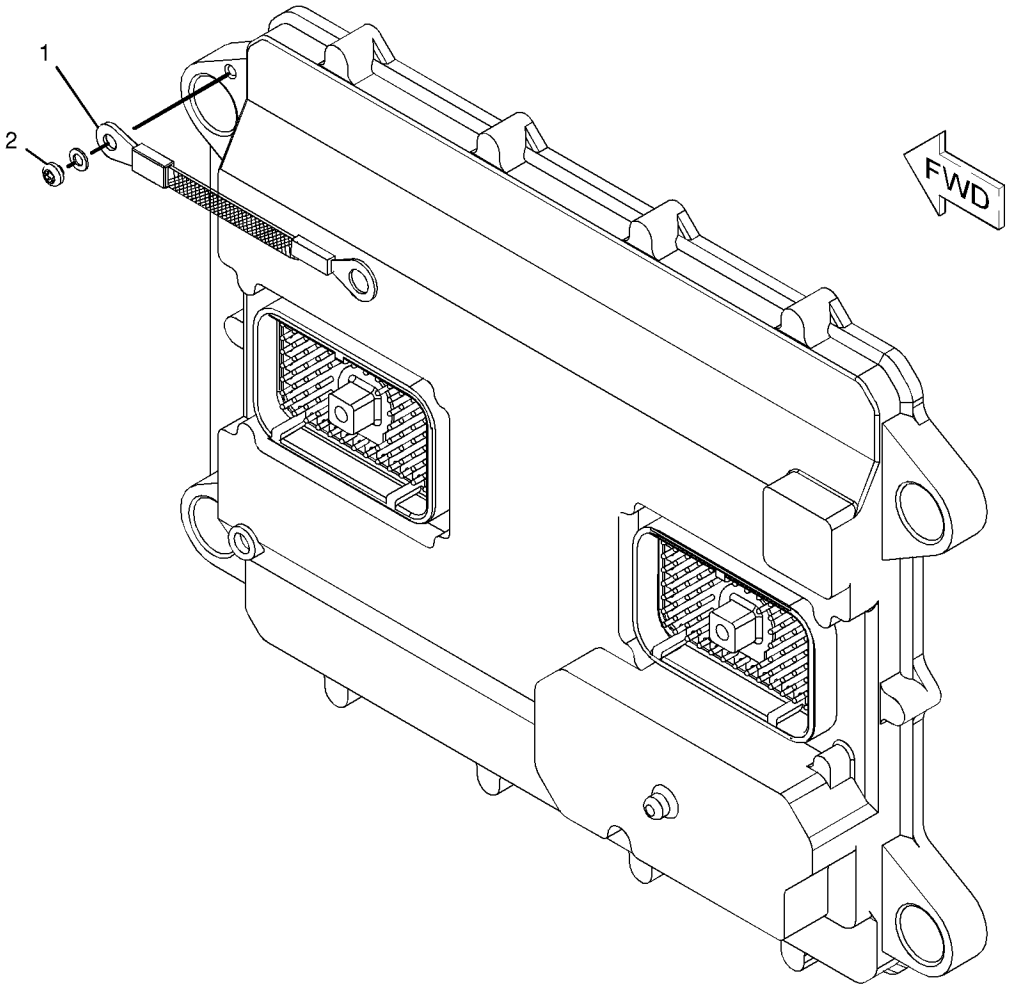

GRAPHIC #1 **<END>** g01027711

212-9872 ELECTRONICS GP-MONITOR

S/N: AXM1-1376

PART OF 152-6924 INSTALLATION AR-MACHINE

SMCS-7490, 7610, 7620 **i01914169**

NOTE	PART NUMBER	QTY	PART NAME 1 2 3 4 5 6 (PRODUCT LEVEL)	SEE PAGE
	236-2137	1	SOFTWARE GP-MONITOR (CATERPILLAR MONITORING SYSTEM)	
			-OR-	
			(OPTIONAL SERVICE REPLACEMENT)	
	236-2138	1	SERVICE GP-MONITOR (CATERPILLAR MONITORING SYSTEM)	
	236-2601	1	SOFTWARE GP-POWER TRAIN	
	160-6567	1	CONTROL GP-UNPROGRAMMED (ELECTRONIC MONITORING SYSTEM)	

<END>

153-9628 ELECTRONICS GP-POWER TRAIN

S/N: AXM1-1376

PART OF 152-6924 INSTALLATION AR-MACHINE

SMCS-4800, 4808, 7610, 7620 **i01915084**

NOTE	PART NUMBER	QTY	PART NAME 1 2 3 4 5 6 (PRODUCT LEVEL)	SEE PAGE
	236-2601	1	SOFTWARE GP-POWER TRAIN	
			-OR-	
			(OPTIONAL SERVICE REPLACEMENT)	
	236-2602	1	SERVICE GP-POWER TRAIN	
	216-8680	1	SOFTWARE GP-POWER TRAIN	
	161-2355	1	CONTROL GP-UNPROGRAMMED	
	7X-6315	1	STRAP AS-GROUND	
	134-4126	1	WASHER (4.52X8.28X0.76-MM THK)	
	184-2472	1	SCREW-PAN HEAD (NO 8-32X9.52-MM)	

<END>

237-5514 ELECTRONICS GP-POWER TRAIN

S/N: AXM1377-UP

PART OF 152-6924 INSTALLATION AR-MACHINE

SMCS-4800, 4808, 7610, 7620 **i02253781**

NOTE	PART NUMBER	QTY	PART NAME 1 2 3 4 5 6 (PRODUCT LEVEL)	SEE PAGE
	252-9989	1	SOFTWARE GP-POWER TRAIN	
			-OR-	
			(OPTIONAL SERVICE REPLACEMENT)	
	252-9990	1	SERVICE GP-POWER TRAIN	
	252-9989	1	SOFTWARE GP-POWER TRAIN	
	262-1408	1	CONTROL GP-UNPROGRAMMED (MACHINE)	

<END>

3E-6389 LAMP GP-DOME

S/N: AXM1-UP
24-VOLT. WITH SWITCH
PART OF 153-5487, 233-0338 WIRING GP-CAB

SMCS-1433 **i02254152**

NOTE	REF NO	GRAPHIC REF	PART NUMBER	QTY	PART NAME 1 2 3 4 5 6 (PRODUCT LEVEL)	SEE PAGE
	1	1	**7N-9943**	1	LAMP (24-VOLT)	
	2	1	**102-8803**	1	KIT-RECEPTACLE (3-PIN)	
					(INCLUDES RECEPTACLE AS & WEDGE)	
	3	1	**3E-3371**	1	WEDGE-RECEPTACLE LOCK (3-PIN)	
	4	1	**8T-8729**	3	PIN-CONNECTOR	
	5	1	**7T-0020**	1	LENS (DOME LIGHT)	

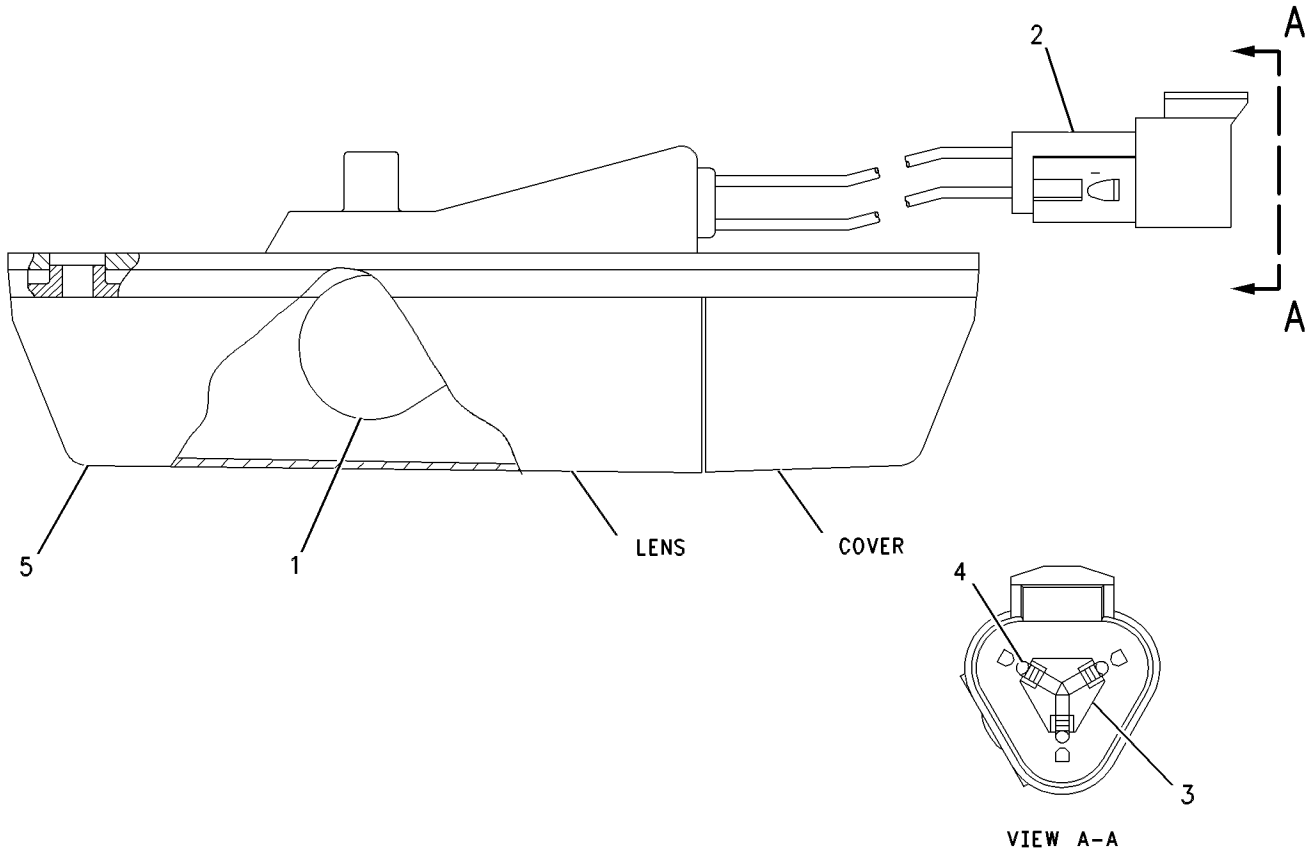

GRAPHIC #1 **<END>** g00647928

133-6335 LAMP GP-FLOOD–CAB

S/N: AXM1-UP
24 VOLT. SUSPENDED
PART OF 153-5487 WIRING GP-CAB

SMCS-1434 **i01961519**

NOTE	REF NO	GRAPHIC REF	PART NUMBER	QTY	PART NAME 1 2 3 4 5 6 (PRODUCT LEVEL)	SEE PAGE
	1	1	**107-5851**	4	SCREW	
	2	1	**107-5853**	1	LENS AS (FLOODLIGHT)	
	3	1	**107-5852**	1	SEAL	
	4	1	**139-8660**	1	BODY AS-LAMP	
	5	1	**9X-3463**	1	LAMP-HALOGEN (24 VOLT)(65 WATT) (FLOODLIGHT)	
	6	1	**8T-8729**	2	PIN-CONNECTOR	
	7	1	**3E-3365**	1	WEDGE-RECEPTACLE LOCK (2 PIN)	
	8	1	**102-8802**	1	KIT-RECEPTACLE (2 PIN)	
					(INCLUDES RECEPTACLE AS AND WEDGE)	

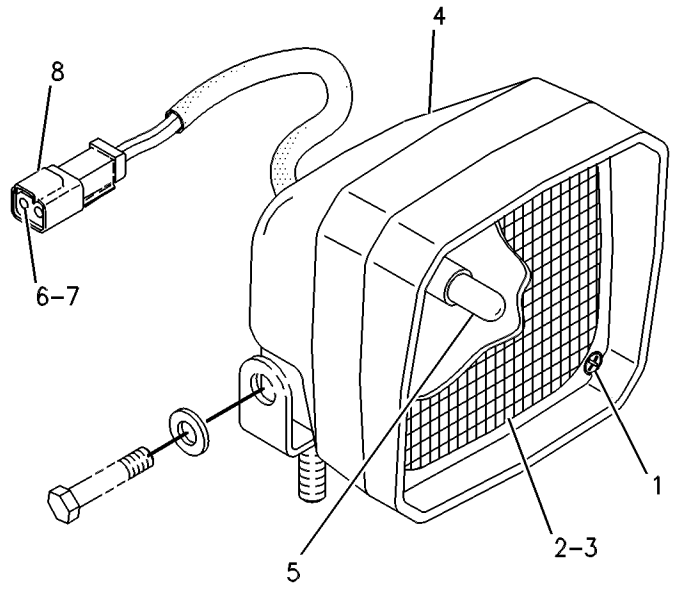

GRAPHIC #1 **<END>** g00272797

172-9973 LAMP GP-FLOOD–CAB

S/N: AXM1-UP
24 VOLT, VERTICAL
PART OF 152-7031, 237-5513, 252-9405 WARNING GP-BACKUP, 233-0338 WIRING GP-CAB

SMCS-1434 **i02194615**

NOTE	REF NO	GRAPHIC REF	PART NUMBER	QTY	PART NAME 1 2 3 4 5 6 (PRODUCT LEVEL)	SEE PAGE
	1	1	**9X-4244**	4	SCREW	
	2	1	**9X-4174**	1	LENS AS (FLOODLIGHT)	
	3	1	**9X-4243**	1	SEAL	
	4	1	**176-7261**	1	BODY AS	
	5	1	**9X-3463**	1	LAMP-HALOGEN (24-VOLT, 65-WATT)	
	6	1	**102-8802**	1	KIT-RECEPTACLE (2-PIN)	
					(INCLUDES RECEPTACLE AS AND WEDGE)	
	7	1	**3E-3365**	1	WEDGE-RECEPTACLE LOCK (2-PIN)	
	8	1	**8T-8729**	2	PIN-CONNECTOR	

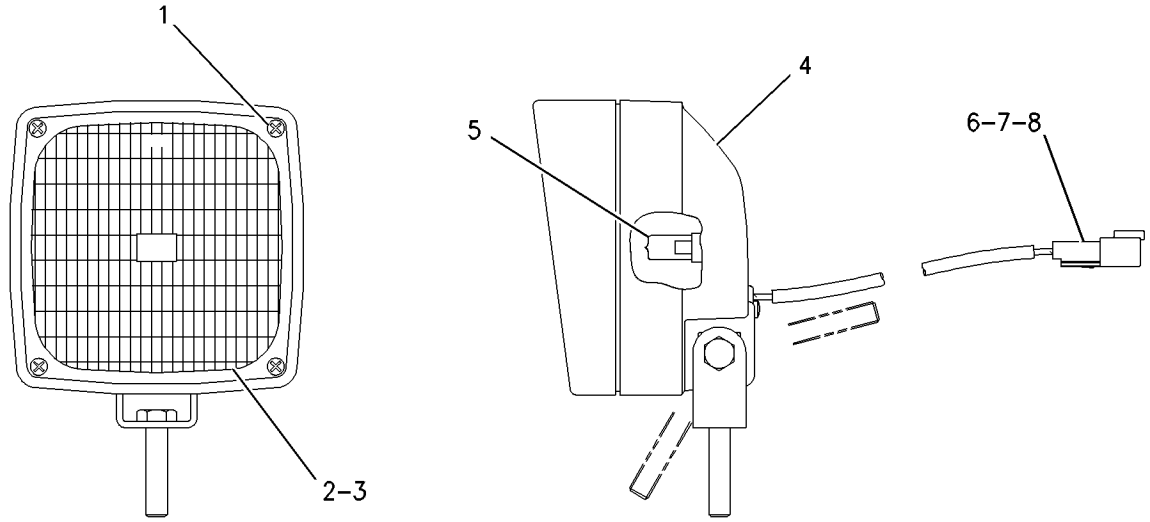

GRAPHIC #1 **<END>** g00673521

171-7213 LAMP GP-HEAD–LOW BEAM

S/N: AXM1-UP

PART OF 152-6930 WIRING GP-CAB, 237-5510 WIRING GP-LIGHTING

SMCS-1429 **i01961524**

NOTE	REF NO	GRAPHIC REF	PART NUMBER	QTY	PART NAME 1 2 3 4 5 6 (PRODUCT LEVEL)	SEE PAGE
	1	1	**9X-4244**	4	SCREW	
	2	1	**9X-7798**	1	LENS AS (LOW BEAM)	
	3	1	**9X-4243**	1	SEAL	
	4	1	**176-7261**	1	BODY AS	
		1	**8T-4121**	1	WASHER-HARD (11X21X2.5-MM THK)	
M		1	**8T-4133**	1	NUT (M10X1.5-THD)	
	5	1	**9X-3463**	1	LAMP-HALOGEN (24-VOLT, 65-WATT)	
	6	1	**102-8802**	1	KIT-RECEPTACLE (2-PIN)	
					(INCLUDES RECEPTACLE AS AND WEDGE)	
	7	1	**3E-3365**	1	WEDGE-RECEPTACLE LOCK (2-PIN)	
	8	1	**8T-8729**	2	PIN-CONNECTOR	

M-METRIC PART

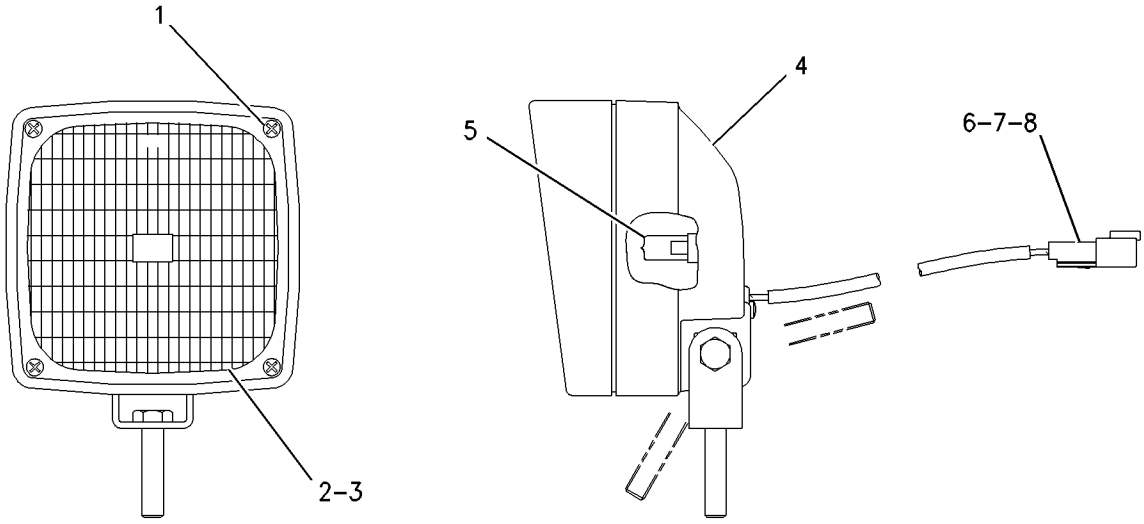

GRAPHIC #1 **<END>** g00673521

171-7214 LAMP GP-HEAD–HIGH BEAM

S/N: AXM1-UP

PART OF 152-6930 WIRING GP-CAB, 237-5510 WIRING GP-LIGHTING

SMCS-1429 **i01627603**

NOTE	REF NO	GRAPHIC REF	PART NUMBER	QTY	PART NAME 1 2 3 4 5 6 (PRODUCT LEVEL)	SEE PAGE
	1	1	**9X-4244**	4	SCREW	
	2	1	**9X-7797**	1	LENS AS (HIGH BEAM)	
	3	1	**9X-4243**	1	SEAL	
	4	1	**176-7261**	1	BODY AS	
		1	**8T-4121**	1	WASHER-HARD (11X21X2.5-MM THK)	
M		1	**8T-4133**	1	NUT (M10X1.5-THD)	
	5	1	**9X-3463**	1	LAMP-HALOGEN (24-VOLT, 65-WATT)	
	6	1	**102-8802**	1	KIT-RECEPTACLE (2-PIN)	
	7	1	**3E-3365**	1	WEDGE-RECEPTACLE LOCK (2-PIN)	
	8	1	**8T-8729**	2	PIN-CONNECTOR	

M-METRIC PART

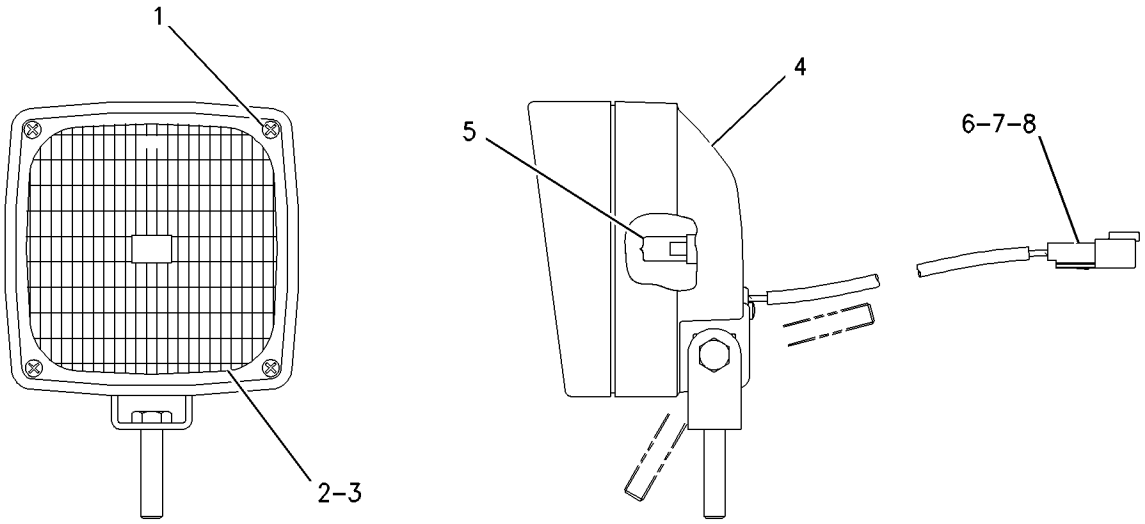

GRAPHIC #1 **<END>** g00673521

3E-6466 LAMP GP-SIGNAL–FRONT TURN

S/N: AXM1-UP
24 VOLT
PART OF 152-6930 WIRING GP-CAB, 237-5510 WIRING GP-LIGHTING

SMCS-1430 **i02219628**

NOTE	REF NO	GRAPHIC REF	PART NUMBER	QTY	PART NAME 1 2 3 4 5 6 (PRODUCT LEVEL)	SEE PAGE
	1	1	**9X-3066**	1	LENS-AMBER	
	2	1	**9X-4493**	1	LAMP (24-VOLT, 21-WATT)	
	3	1	**102-8802**	1	KIT-RECEPTACLE (2-PIN)	
					(INCLUDES RECEPTACLE AS & WEDGE)	
	4	1	**8T-8729**	2	PIN-CONNECTOR	

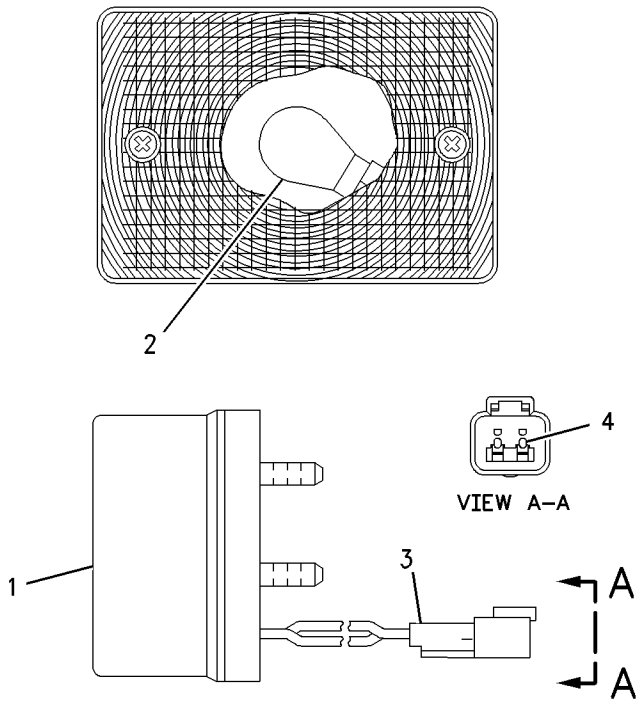

GRAPHIC #1 **<END>** g00728141

149-5534 LAMP GP-SIGNAL–RH–REAR

S/N: AXM1-1606

PART OF 152-7031, 237-5513 WARNING GP-BACKUP

SMCS-1430 **i02173217**

NOTE	REF NO	GRAPHIC REF	PART NUMBER	QTY	PART NAME 1 2 3 4 5 6 (PRODUCT LEVEL)	SEE PAGE
	1	1	**8T-8729**	4	PIN-CONNECTOR	
	2	1	**134-6748**	2	SCREW-LENS	
	3	1	**102-8804**	1	KIT-RECEPTACLE (4-PIN)	
					(INCLUDES RECEPTACLE AS & WEDGE)	
M	4	1	**8T-0288**	2	BOLT (M5X0.8X12-MM)	
	5	1	**8F-1434**	2	LOCKWASHER	
	6	1	**9X-4493**	2	LAMP (24-VOLT, 21-WATT)	
	7	1	**130-3565**	1	LAMP (24-VOLT)	
	8	1	**134-6750**	1	LENS (STOP, TAIL, TURN)	

M-METRIC PART

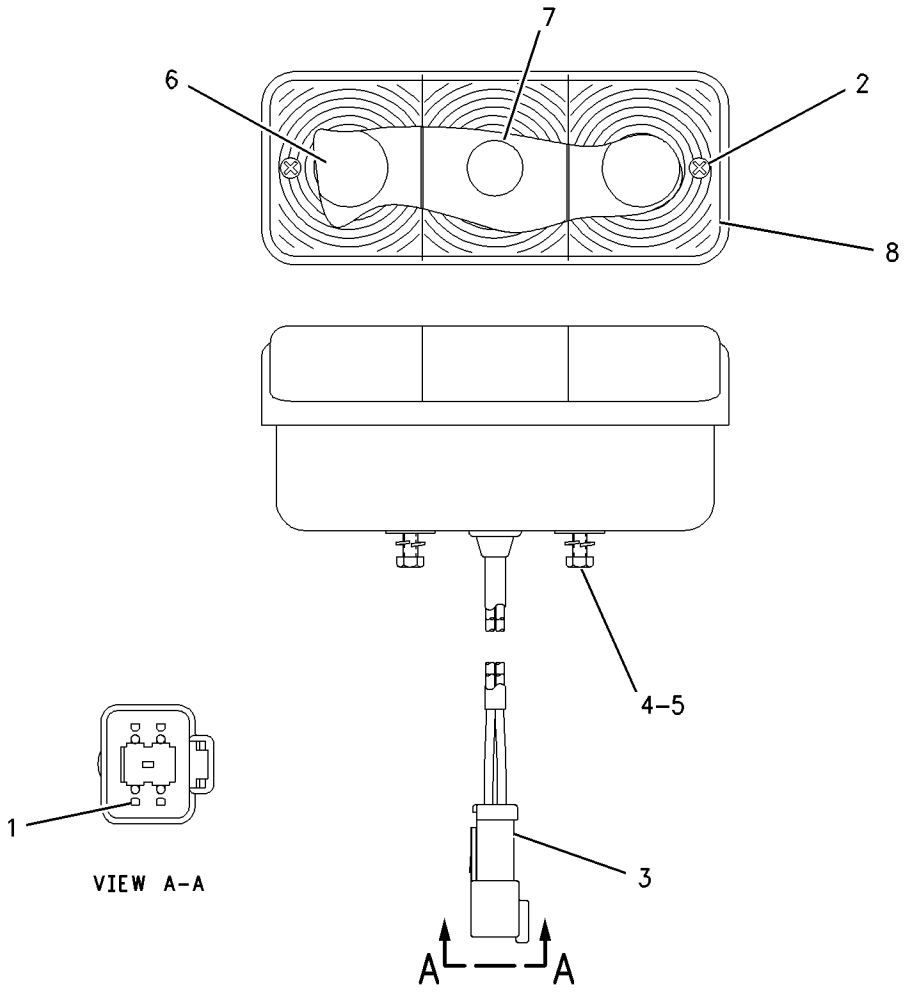

GRAPHIC #1 **<END>** g00810730

149-5535 LAMP GP-SIGNAL–LH–REAR

S/N: AXM1-1606

PART OF 152-7031, 237-5513 WARNING GP-BACKUP

SMCS-1430 **i02173232**

NOTE	REF NO	GRAPHIC REF	PART NUMBER	QTY	PART NAME 1 2 3 4 5 6 (PRODUCT LEVEL)	SEE PAGE
	1	1	**8T-8729**	4	PIN-CONNECTOR	
	2	1	**134-6748**	2	SCREW-LENS	
	3	1	**102-8804**	1	KIT-RECEPTACLE (4-PIN)	
					(INCLUDES RECEPTACLE AS & WEDGE)	
M	4	1	**8T-0288**	2	BOLT (M5X0.8X12-MM)	
	5	1	**8F-1434**	2	LOCKWASHER	
	6	1	**9X-4493**	2	LAMP (24-VOLT, 21-WATT)	
	7	1	**130-3565**	1	LAMP (24-VOLT)	
	8	1	**134-6750**	1	LENS (STOP, TAIL, TURN)	

M-METRIC PART

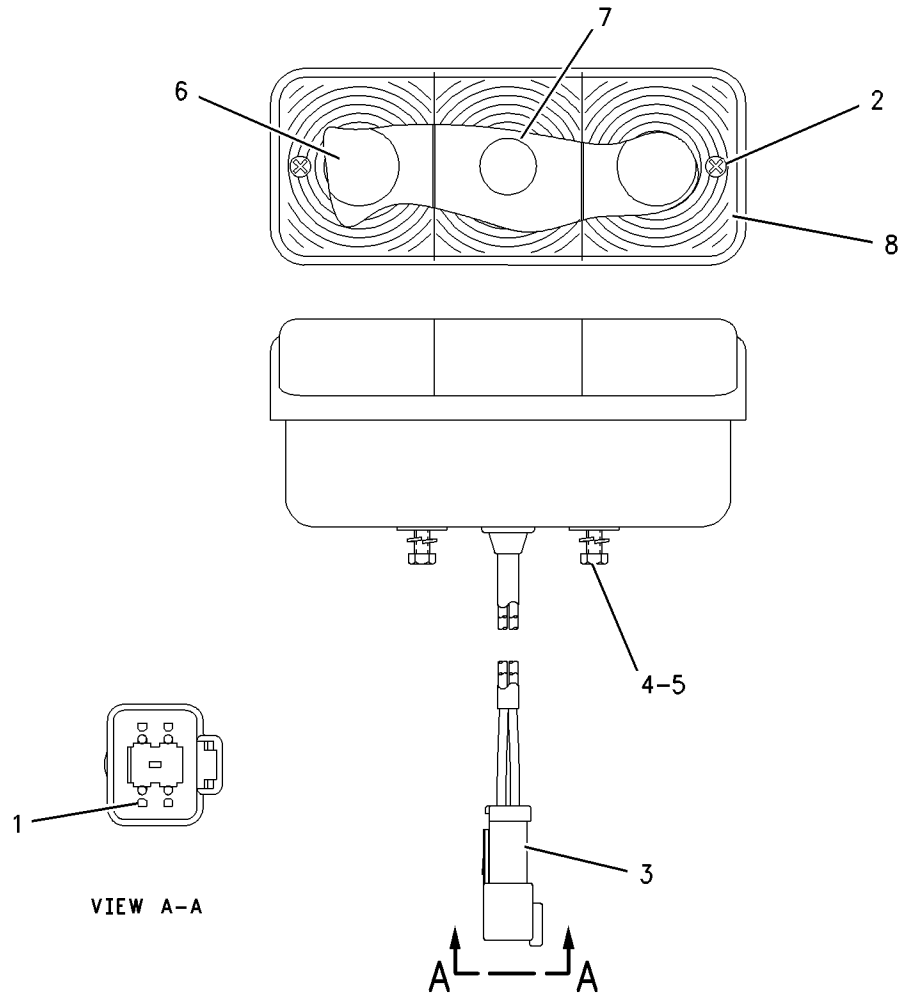

GRAPHIC #1 **<END>** g00810734

162-5402 LAMP GP-SIGNAL–FRONT

S/N: AXM1-UP

PART OF 152-6930 WIRING GP-CAB, 237-5510 WIRING GP-LIGHTING

SMCS-1430 **i01903783**

NOTE	REF NO	GRAPHIC REF	PART NUMBER	QTY	PART NAME 1 2 3 4 5 6 (PRODUCT LEVEL)	SEE PAGE
	1	1	**9X-3068**	1	LENS-CLEAR	
	2	1	**9X-4494**	1	LAMP (24 VOLT)	
	3	1	**8T-8729**	2	PIN-CONNECTOR	
J	4	1	**102-8802**	1	KIT-RECEPTACLE (2 PIN)	
J	5	1	**3E-3365**	1	WEDGE-RECEPTACLE LOCK (2 PIN)	
FM		1	**5C-2890**	3	NUT (M6X1 THD)	
F		1	**8T-4205**	3	WASHER-HARD (7.2X14.5X2MM THK)	

F-NOT SHOWN
J-KIT MARKED J INCLUDES PARTS MARKED J
M-METRIC PART

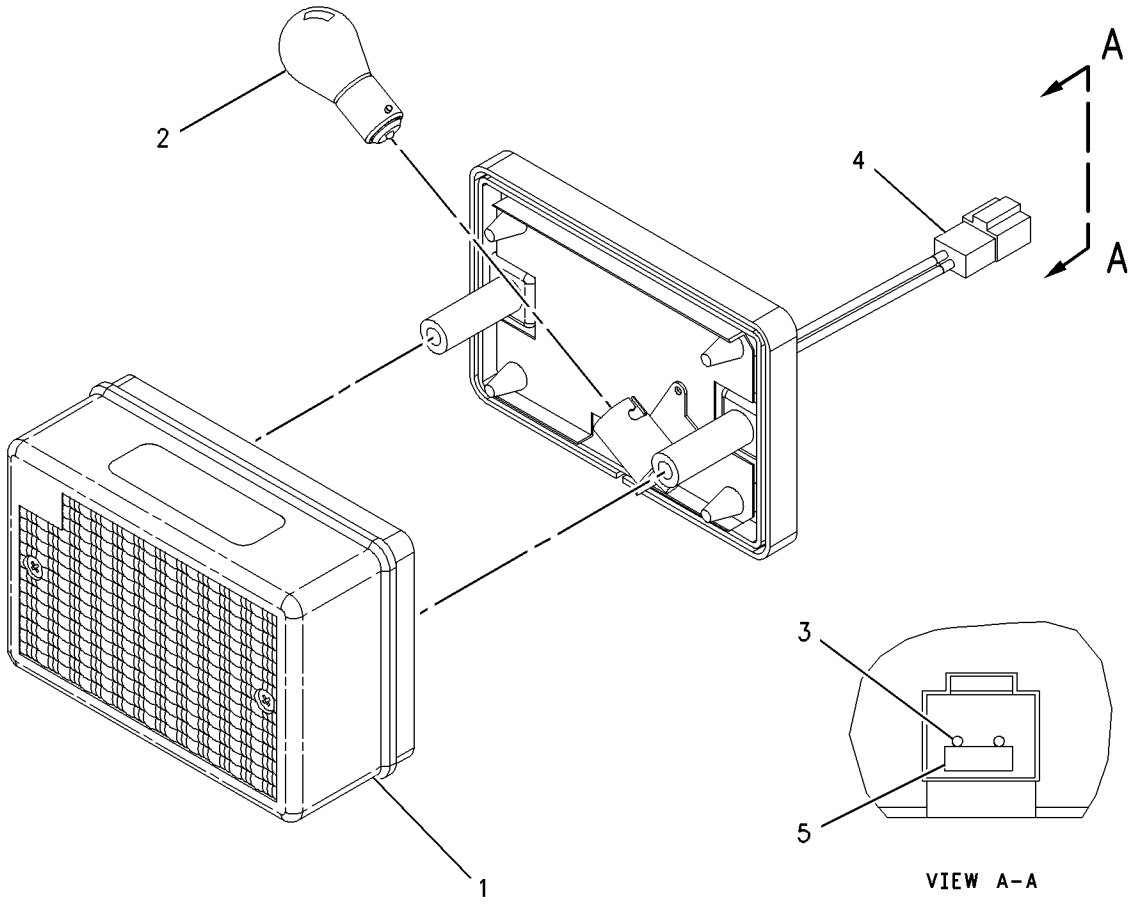

GRAPHIC #1 **<END>** g00724778

225-8758 LAMP GP-SIGNAL–STOP, TAIL, TURN

S/N: AXM1607-UP

PART OF 252-9405 WARNING GP-BACKUP

SMCS-1430 **i02141109**

NOTE	REF NO	GRAPHIC REF	PART NUMBER	QTY	PART NAME 1 2 3 4 5 6 (PRODUCT LEVEL)	SEE PAGE
	1	1	**186-3735**	4	PIN-CONNECTOR	
	2	1	**9X-4492**	1	LAMP (24-VOLT, 5-WATT)	
	3	1	**9X-4493**	1	LAMP (24-VOLT, 21-WATT)	
	4	1	**102-8804**	1	KIT-RECEPTACLE (4-PIN)	
					(INCLUDES RECEPTACLE AS & WEDGE)	
	5	1	**146-2438**	1	LENS (STOP, TAIL, TURN)	
M	6	1	**5C-2890**	2	NUT (M6X1-THD)	
	7	1	**2U-2453**	2	WASHER (5.6X12.6X1.22-MM THK)	

M-METRIC PART

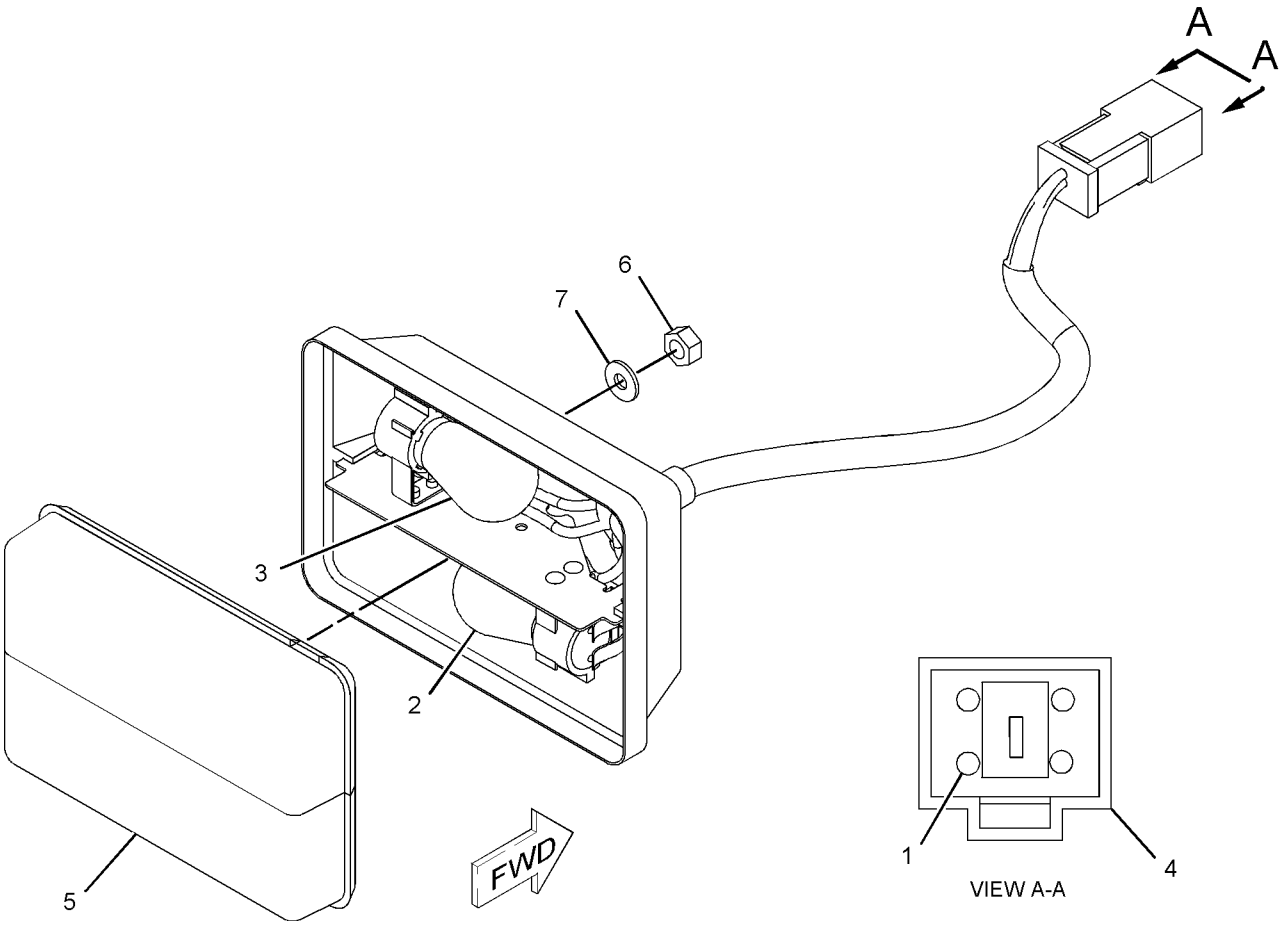

GRAPHIC #1 **<END>** g01089481

117-3915 MOTOR GP-ELECTRIC—SECONDARY STEERING

S/N: AXM1-UP

24-VOLT

PART OF 141-6389 PUMP & MOTOR GP-SEC STEERING

SMCS-5927 **i01441397**

NOTE	REF NO	GRAPHIC REF	PART NUMBER	QTY	PART NAME 1 2 3 4 5 6 (PRODUCT LEVEL)	SEE PAGE
	1	1	**6V-8801**	2	NUT (3/8-16-THD)	
	2	1	**7X-0608**	2	WASHER-HARD (10.2X16X2-MM THK)	

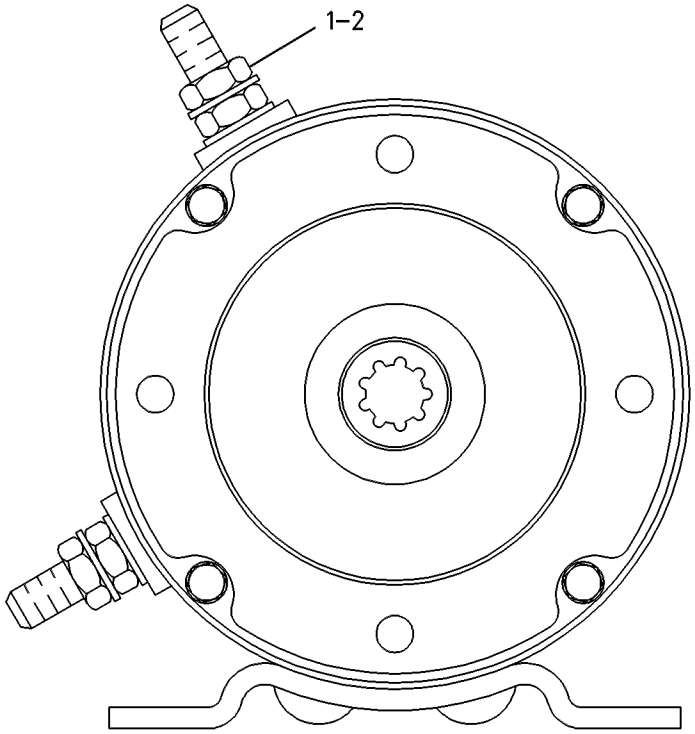

GRAPHIC #1 **<END>** g00085784

ELECTRICAL AND STARTING SYSTEM

186-5855 PANEL GP-CIRCUIT BREAKER

S/N: AXM1-1376

PART OF 141-6885 BATTERY & WIRING GP

SMCS-1420 **i01933092**

NOTE	REF NO	GRAPHIC REF	PART NUMBER	QTY	PART NAME 1 2 3 4 5 6 (PRODUCT LEVEL)	SEE PAGE
	1	1	**3S-2093**	4	STRAP-CABLE	
	2	1	**3E-5169**	1	GUARD-SWITCH	
	3	1	**4D-1836**	1	SWITCH AS-TOGGLE (ENGINE SHUTDOWN)	
	4	1	**4P-8134**	2	CLIP	
	5	1	**6D-3479**	8	CLIP	
	6	1	**6T-3644**	1	CIRCUIT BREAKER GP (20-AMPERE) (HOOD)	
		1	**6V-8376**	2	SCREW-MACHINE (8-32X0.25-IN)	
		1	**9B-7233**	2	LOCKWASHER	
Y	7	1	**7N-0718**	1	SWITCH GP-DISCONNECT (BATTERY)	277
	8	1	**7U-4891**	4	SCREW (10-32X1-IN)	
	9	1	**7V-9275**	1	STRAP	
	10	1	**8S-2634**	1	COVER AS	
		1	**2P-2975**	2	SEAL-O-RING	
	11	1	**8S-4211**	2	PLATE	
	12	1	**9S-4693**	2	CIRCUIT BREAKER GP (80-AMPERE) (MAIN/ALT) (EACH INCLUDES)	
		1	**1H-3244**	2	LOCKWASHER	
		1	**7X-3182**	2	BOLT (1/4-28X0.5-IN)	
		1	**8T-4205**	2	WASHER-HARD (7.2X14.5X2-MM THK)	
	13	1	**146-0240**	1	SWITCH GP-TOGGLE (HOOD LOCKING)	
J		1	**3E-3371**	1	WEDGE-RECEPTACLE LOCK (3-PIN)	
		1	**6T-3631**	2	NUT-HEX (15/32-32-THD)	
		1	**6T-3632**	1	LOCKWASHER	
		1	**6T-3633**	1	RING-LOCKING	
		1	**186-3735**	3	PIN-CONNECTOR	
J		1	**102-8803**	1	KIT-RECEPTACLE (3-PIN)	
	14	1	**186-5857**	1	PLATE AS-DISC	
	15	1	**186-5858**	1	PLATE (CONTROL)	
	16	1	**190-6302**	1	HARNESS AS-FRONT CHASSIS	
		1	**155-2260**	1	KIT-CONNECTING PLUG (3-PIN)	
	17	1	**193-7317**	1	RECEPTACLE AS-AUXILIARY START	
	18	1	**4L-6454**	4	BOLT (3/8-16X1-IN)	
	19	1	**7U-4892**	2	SCREW (8-32X0.75-IN)	
	20	1	**8T-4121**	3	WASHER-HARD (11X21X2.5-MM THK)	
M	21	1	**8T-4136**	3	BOLT (M10X1.5X25-MM)	
	22	1	**8T-4896**	4	WASHER-HARD (10.2X18.5X2.5-MM THK)	

J-KIT MARKED J INCLUDES PART(S) MARKED J
M-METRIC PART
Y-SEPARATE ILLUSTRATION

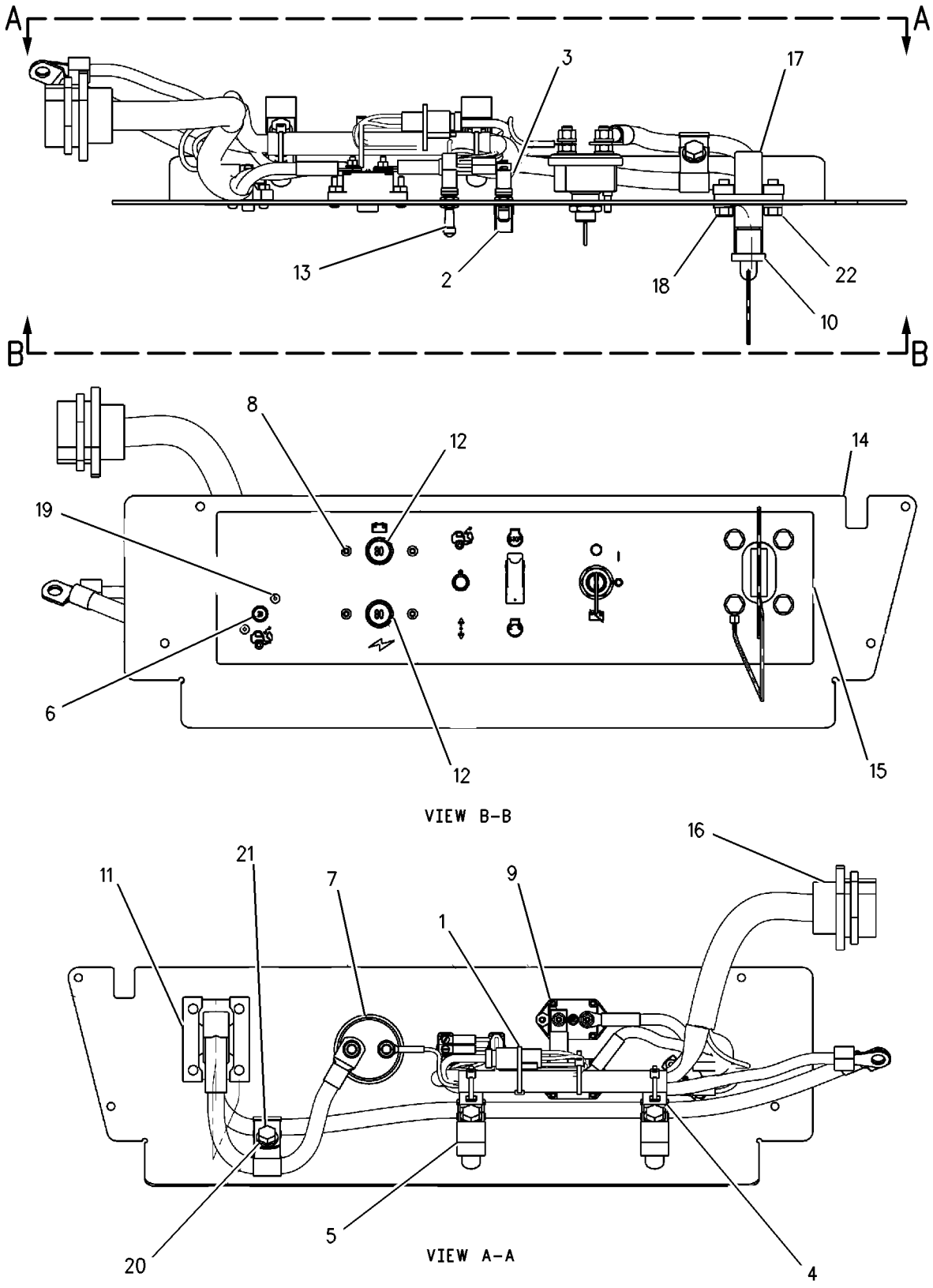

GRAPHIC #1 **<END>** g00848147

ELECTRICAL AND STARTING SYSTEM

238-3240 PANEL GP-CIRCUIT BREAKER

S/N: AXM1377-UP

PART OF 238-8543 BATTERY & WIRING GP

SMCS-1420 **i02241289**

NOTE	REF NO	GRAPHIC REF	PART NUMBER	QTY	PART NAME 1 2 3 4 5 6 (PRODUCT LEVEL)	SEE PAGE
Y	1	1	**7N-0718**	1	SWITCH GP-DISCONNECT (BATTERY)	277
	2	1	**3E-5169**	1	GUARD-SWITCH	
	3	1	**3S-2093**	9	STRAP-CABLE	
	4	1	**4D-1836**	1	SWITCH AS-TOGGLE (GROUND LEVEL SHUTDOWN)	
	5	1	**6T-3644**	1	CIRCUIT BREAKER GP (20-AMPERE)	
		1	**6V-8376**	2	SCREW-MACHINE (8-32X0.25-IN)	
		1	**9B-7233**	2	LOCKWASHER	
	6	1	**7U-4891**	4	SCREW (10-32X1-IN)	
	7	1	**7V-9275**	1	STRAP	
	8	1	**8S-2634**	1	COVER AS	
		1	**2P-2975**	2	SEAL-O-RING	
	9	1	**8S-4211**	2	PLATE	
	10	1	**9S-4693**	2	CIRCUIT BREAKER GP (80-AMPERE)	
					(EACH INCLUDES)	
		1	**253-2111**	2	LOCKWASHER	
		1	**7X-3182**	2	BOLT (1/4-28X0.5-IN)	
		1	**8T-4205**	2	WASHER-HARD (7.2X14.5X2-MM THK)	
	11	1	**122-7052**	1	SPACER (10.5X20X28-MM THK)	
	12	1	**146-0240**	1	SWITCH GP-TOGGLE (HOOD LOCKING)	
		1	**6T-3631**	2	NUT-HEX (15/32-32-THD)	
		1	**6T-3632**	1	LOCKWASHER	
		1	**6T-3633**	1	RING-LOCKING	
		1	**186-3735**	3	PIN-CONNECTOR	
		1	**102-8803**	1	KIT-RECEPTACLE (3-PIN)	
					(INCLUDES RECEPTACLE AS & WEDGE)	
	13	1	**186-5858**	1	PLATE	
	14	1	**193-7317**	1	RECEPTACLE AS-AUXILIARY START	
		1	**4N-6579**	1	RECEPTACLE AS	
		1	**1S-7251**	2	TERMINAL-RING (FOR 1/2-IN BOLT)	
E		1	**5P-0747**		CABLE (00-GA, BLACK) (272CM)	
E		1	**5P-0761**		CABLE (00-GA, RED) (269CM)	
		1	**235-2677**	1	TERMINAL-RING	
		1	**235-2678**	1	TERMINAL-RING	
	15	1	**238-3239**	1	PLATE AS	
	16	1	**238-4595**	1	HARNESS AS-PANEL (CIRCUIT BREAKER)	
		1	**102-8804**	1	KIT-RECEPTACLE (4-PIN)	
					(INCLUDES RECEPTACLE AS & WEDGE)	
		1	**155-2260**	1	KIT-CONNECTING PLUG (3-PIN)	
		1	**155-2270**	1	KIT-CONNECTING PLUG (2-PIN)	
		1	**155-2271**	1	KIT-CONNECTING PLUG (4-PIN)	
					(EACH PLUG KIT INCLUDES PLUG AS, WEDGE & INTERFACE SEAL)	
	17	1	**4L-6454**	4	BOLT (3/8-16X1-IN)	
	18	1	**4P-7581**	3	CLIP	
	19	1	**4P-8134**	3	CLIP	
	20	1	**263-6342**	8	CLIP	
	21	1	**7U-4892**	2	SCREW (8-32X0.75-IN)	
	22	1	**8T-4121**	3	WASHER-HARD (11X21X2.5-MM THK)	
M	23	1	**8T-4136**	2	BOLT (M10X1.5X25-MM)	
M	24	1	**8T-4185**	1	BOLT (M10X1.5X50-MM)	
	25	1	**8T-4896**	4	WASHER-HARD (10.2X18.5X2.5-MM THK)	

E-ORDER BY THE CENTIMETER
M-METRIC PART
Y-SEPARATE ILLUSTRATION

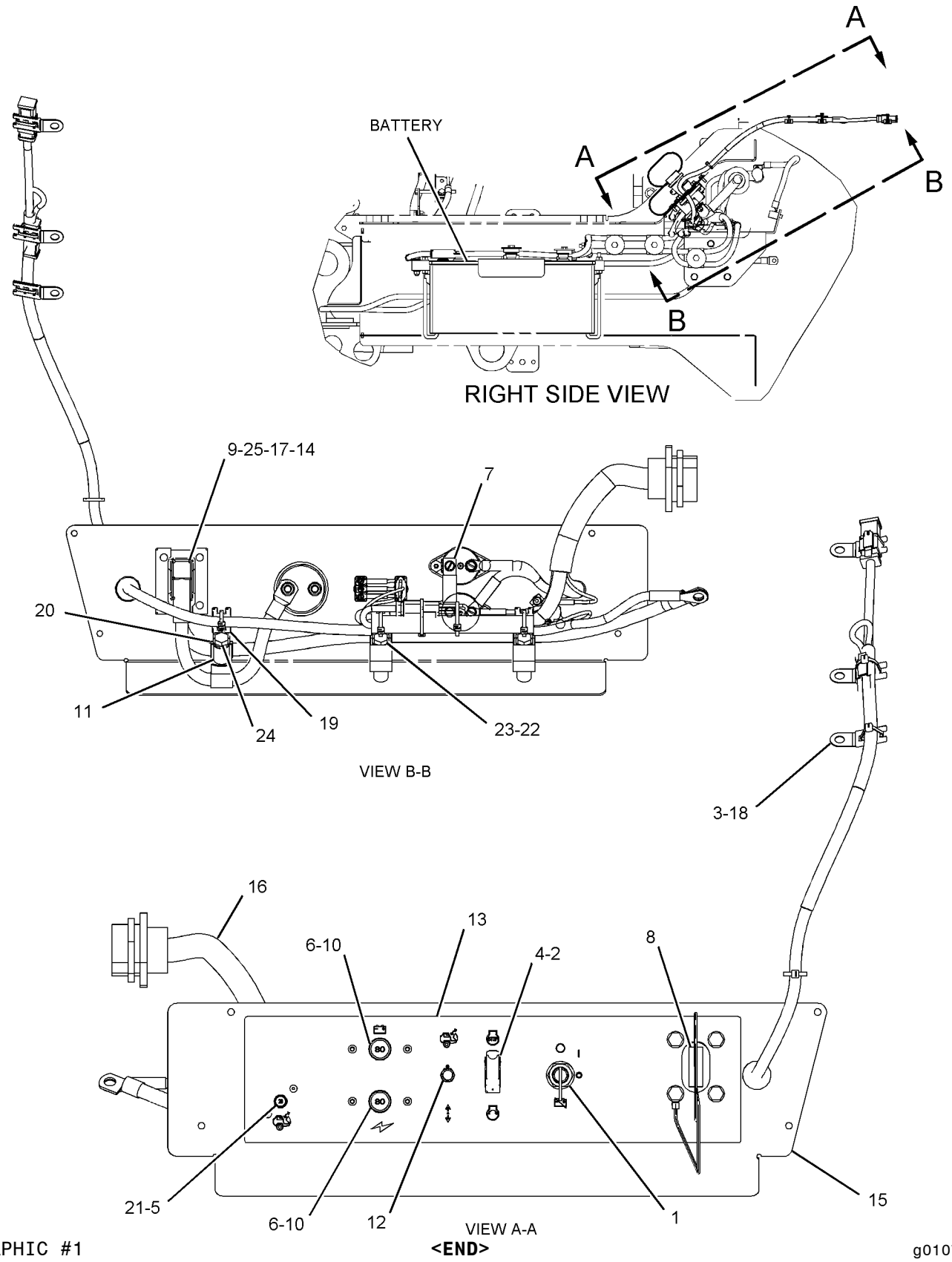

GRAPHIC #1

<END>

g01072569

102-7664 SENSOR & MTG GP-PRESSURE

S/N: BET200-UP

ATMOSPHERIC PRESSURE. MOUNTS TO LH SIDE OF CYLINDER BLOCK

PART OF 153-7076, 235-4689 ENGINE AR-COMPLETE

SMCS-1408, 1923, 1924 **i01545718**

NOTE	REF NO	GRAPHIC REF	PART NUMBER	QTY	PART NAME 1 2 3 4 5 6 (PRODUCT LEVEL)	SEE PAGE
	1	1	**166-6693**	1	ADAPTER	
	2	1	**6V-5048**	2	SEAL-O-RING	
CY	3	1	**194-6722**	1	SENSOR GP-PRESSURE (ATMOSPHERIC)	247
	4	1	**9S-4182**	2	PLUG	
	5	1	**0S-1588**	2	BOLT (3/8-16X1.25-IN)	
	6	1	**5M-2894**	2	WASHER-HARD (10.2X18.5X2.5-MM THK)	
	7	1	**6V-3683**	1	SEAL-O-RING	
	8	1	**8J-4351**	1	SEAL-O-RING	
	9	1	**6V-5049**	1	SEAL-O-RING	

C-CHANGE FROM PREVIOUS TYPE
Y-SEPARATE ILLUSTRATION

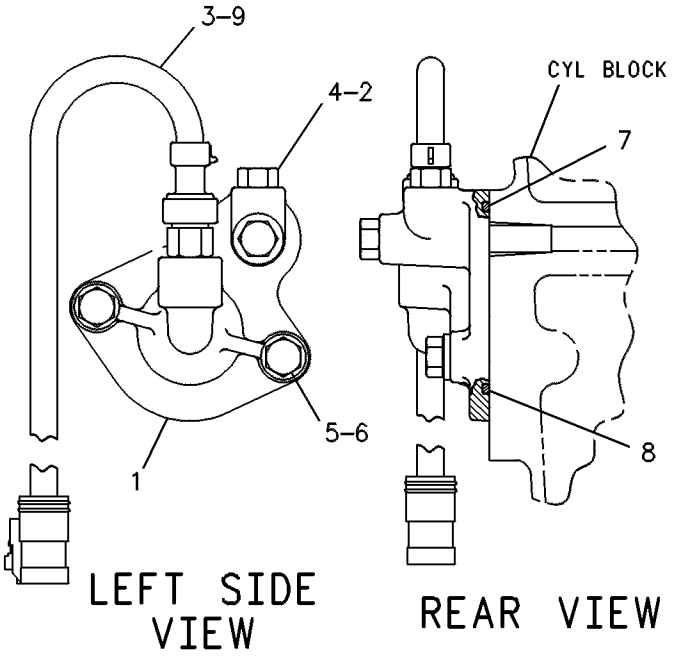

GRAPHIC #1 **<END>** g00237894

198-8761 SENSOR GP-POSITION–TRANSMISSION SPEED

S/N: 4WY500-UP

PART OF 147-2352 CONTROL GP-TRANSMISSION HYD

SMCS-1905, 1907 **i01546612**

NOTE	REF NO	GRAPHIC REF	PART NUMBER	QTY	PART NAME 1 2 3 4 5 6 (PRODUCT LEVEL)	SEE PAGE
	3	1	**9X-2026**	4	WASHER (6.5X17X1MM THK)	
	4	1	**7B-2742**	2	BOLT (1/4-20X1.25 IN)	
	5	1	**8C-9649**	2	SPACER (9.52MM THK)	
	6	1	**8C-9648**	4	MOUNT-ISOLATION	
	7	1	**7X-2031**	2	RETAINER	
	8	1	**7T-7376**	1	SPACER (7.4MM THK)	

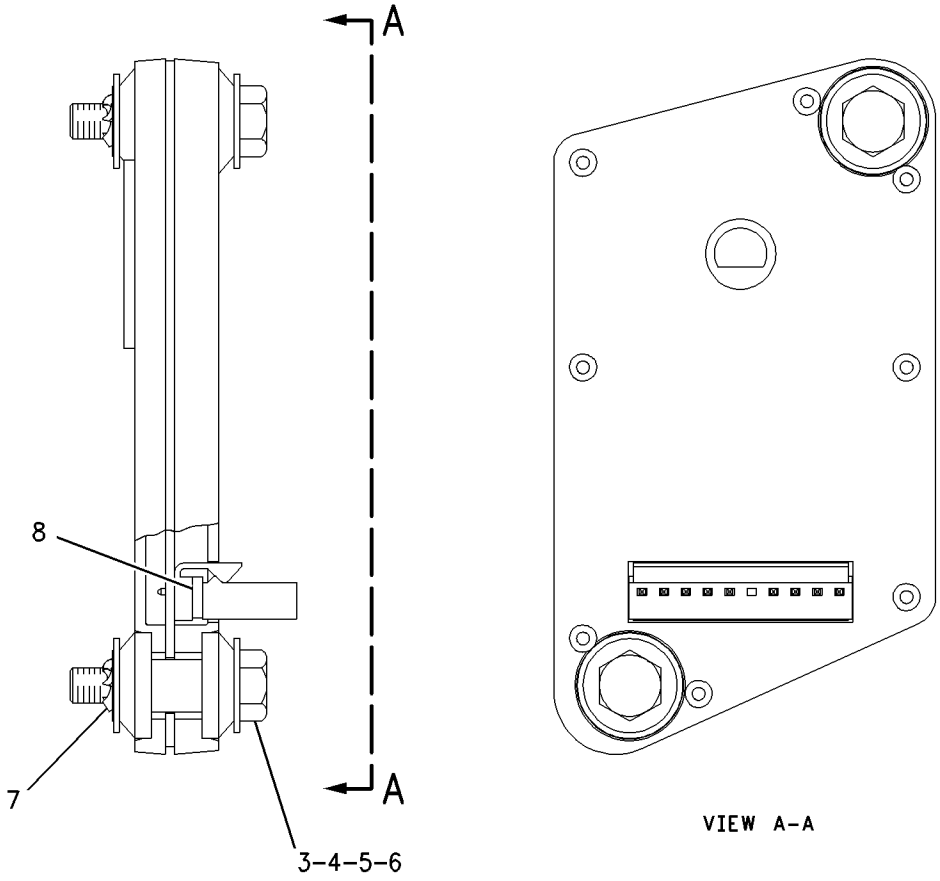

GRAPHIC #1 **<END>** g00803700

161-9931 SENSOR GP-PRESSURE

S/N: BET200-523

PART OF 146-2741 CYLINDER BLOCK GP

SMCS-1408, 1917, 1924 **i02103482**

NOTE	REF NO	GRAPHIC REF	PART NUMBER	QTY	PART NAME 1 2 3 4 5 6 (PRODUCT LEVEL)	SEE PAGE
E	1	1	**9X-1813**		SLEEVE (34-CM)	
	2	1	**155-2260**	1	KIT-CONNECTING PLUG (3-PIN)	
					(INCLUDES PLUG AS & WEDGE)	
	4	1	**186-3736**	3	SOCKET-CONNECTOR	
	5	1	**3E-3368**	1	WEDGE-PLUG LOCK (3-PIN)	
E-ORDER BY THE CENTIMETER						

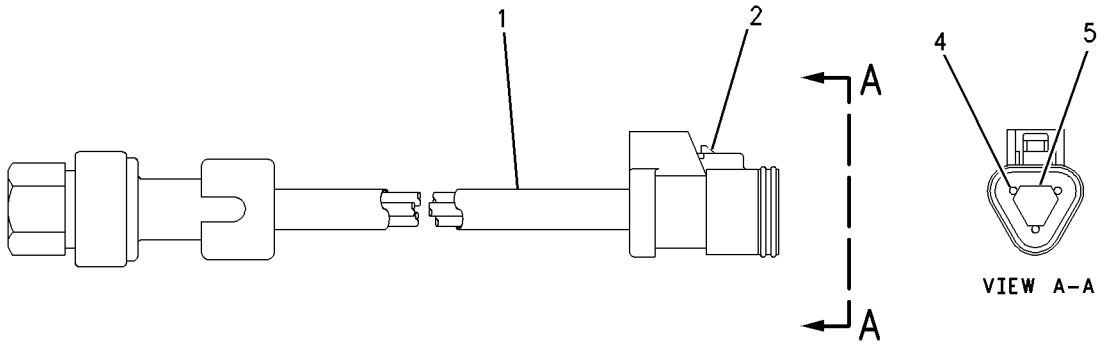

GRAPHIC #1 **<END>** g00807023

194-6722 SENSOR GP-PRESSURE

S/N: AXM1377-UP; BET200-UP

PART OF 102-7664 SENSOR & MTG GP-PRESSURE, 241-6067 WIRING GP-FRONT

SMCS-1408, 1917, 1924 **i02230727**

NOTE	REF NO	GRAPHIC REF	PART NUMBER	QTY	PART NAME 1 2 3 4 5 6 (PRODUCT LEVEL)	SEE PAGE
BE	1	1	**9X-1813**		SLEEVE	
	2	1	**155-2260**	1	KIT-CONNECTING PLUG (3-PIN)	
					(INCLUDES PLUG AS & WEDGE)	
	3	1	**180-9340**	3	SOCKET-CONNECTOR	
	4	1	**3E-3368**	1	WEDGE-PLUG LOCK (3-PIN)	

B-USE AS REQUIRED
E-ORDER BY THE CENTIMETER

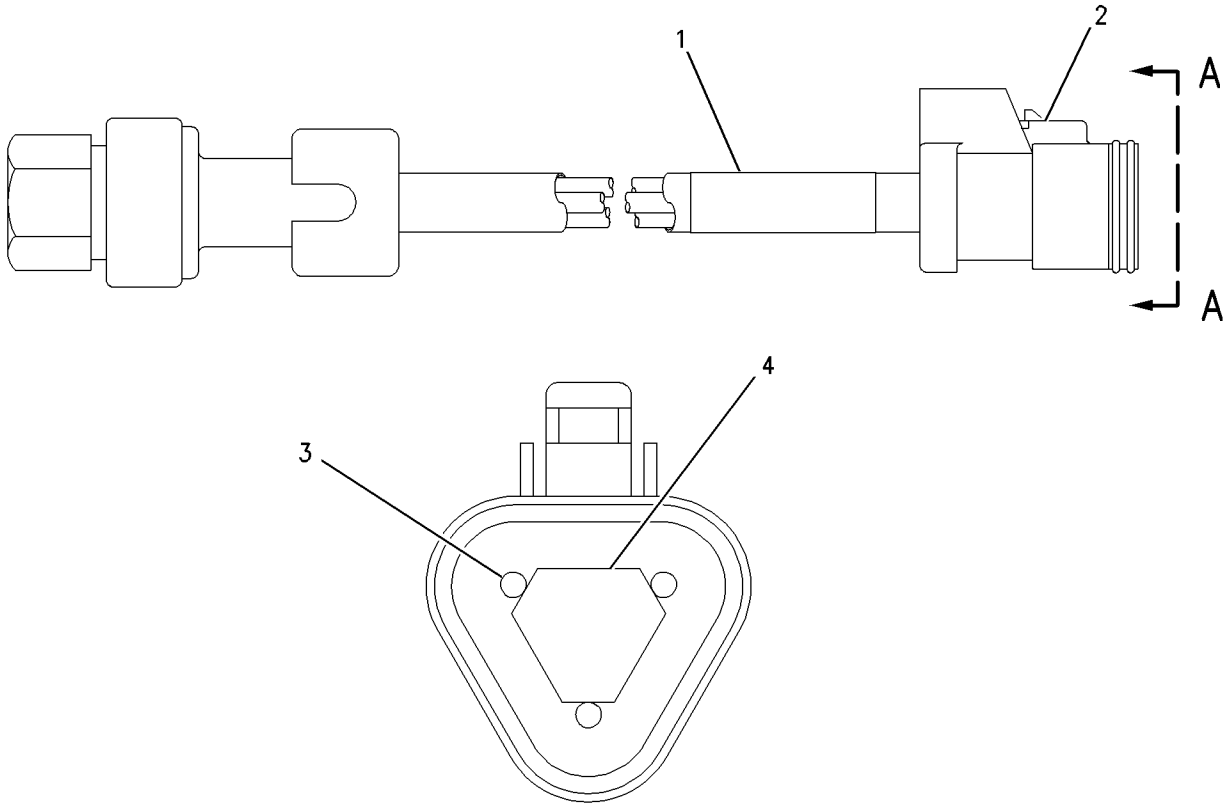

VIEW A-A

GRAPHIC #1 **<END>** g00934579

194-6724 SENSOR GP-PRESSURE

S/N: BET200-UP

PART OF 173-8807, 235-3177 CYLINDER HEAD GP

SMCS-1408, 1917, 1924 **i02201378**

NOTE	REF NO	GRAPHIC REF	PART NUMBER	QTY	PART NAME 1 2 3 4 5 6 (PRODUCT LEVEL)	SEE PAGE
E	1	1	**9X-1813**		SLEEVE (34-CM)	
	2	1	**155-2260**	1	KIT-CONNECTING PLUG (3-PIN)	
					(INCLUDES PLUG AS AND WEDGE)	
	3	1	**194-5226**	3	WIRE AS-HARNESS (16-GA TO 18-GA)	
	4	1	**3E-3368**	1	WEDGE-PLUG LOCK (3-PIN)	

E-ORDER BY THE CENTIMETER

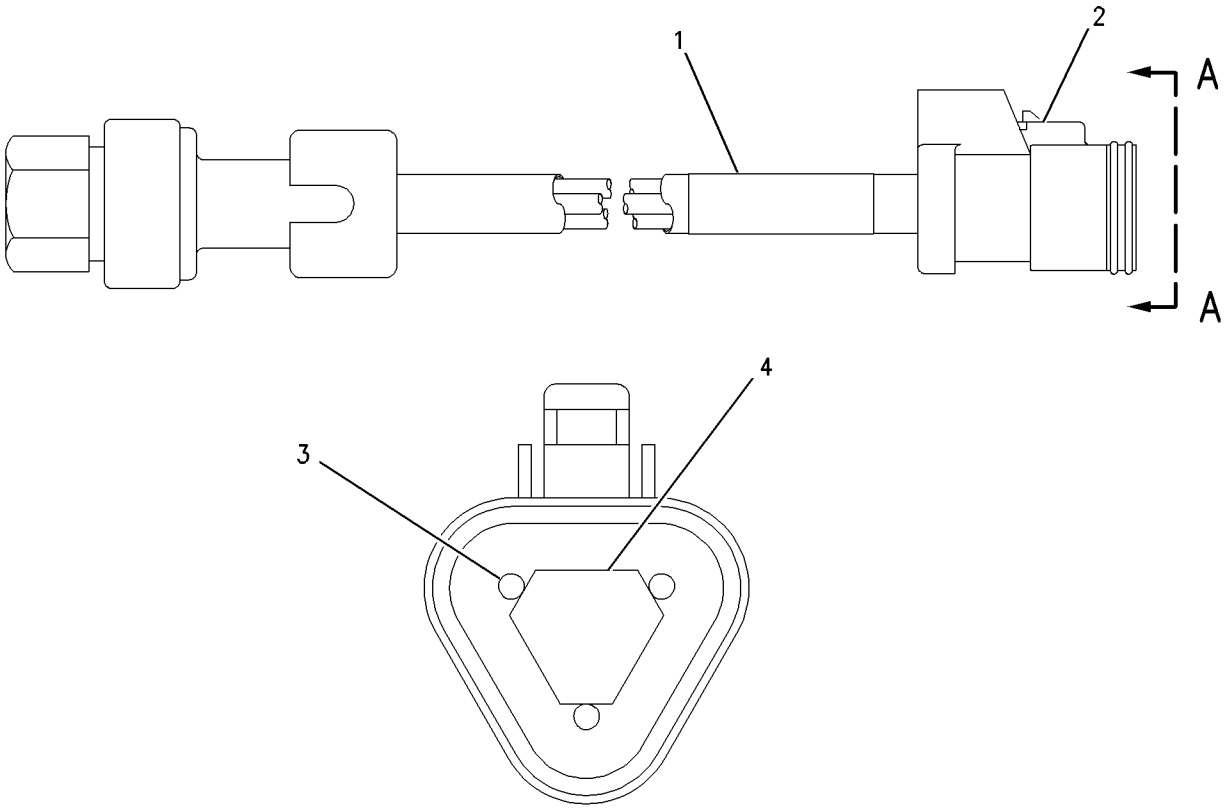

VIEW A-A

GRAPHIC #1 **<END>** g00851220

194-6725 SENSOR GP-PRESSURE

S/N: BET200-UP

PART OF 205-0349 BASE GP-FUEL FILTER, 146-2741 CYLINDER BLOCK GP

SMCS-1408, 1917, 1924 **i02267093**

NOTE	REF NO	GRAPHIC REF	PART NUMBER	QTY	PART NAME 1 2 3 4 5 6 (PRODUCT LEVEL)	SEE PAGE
E	1	1	**9X-1813**		SLEEVE (34-CM)	
	2	1	**155-2260**	1	KIT-CONNECTING PLUG (3-PIN)	
					(INCLUDES PLUG AS AND WEDGE)	
	3	1	**194-5226**	3	WIRE AS-HARNESS (16-GA TO 18-GA)	
	4	1	**3E-3368**	1	WEDGE-PLUG LOCK (3-PIN)	

E-ORDER BY THE CENTIMETER

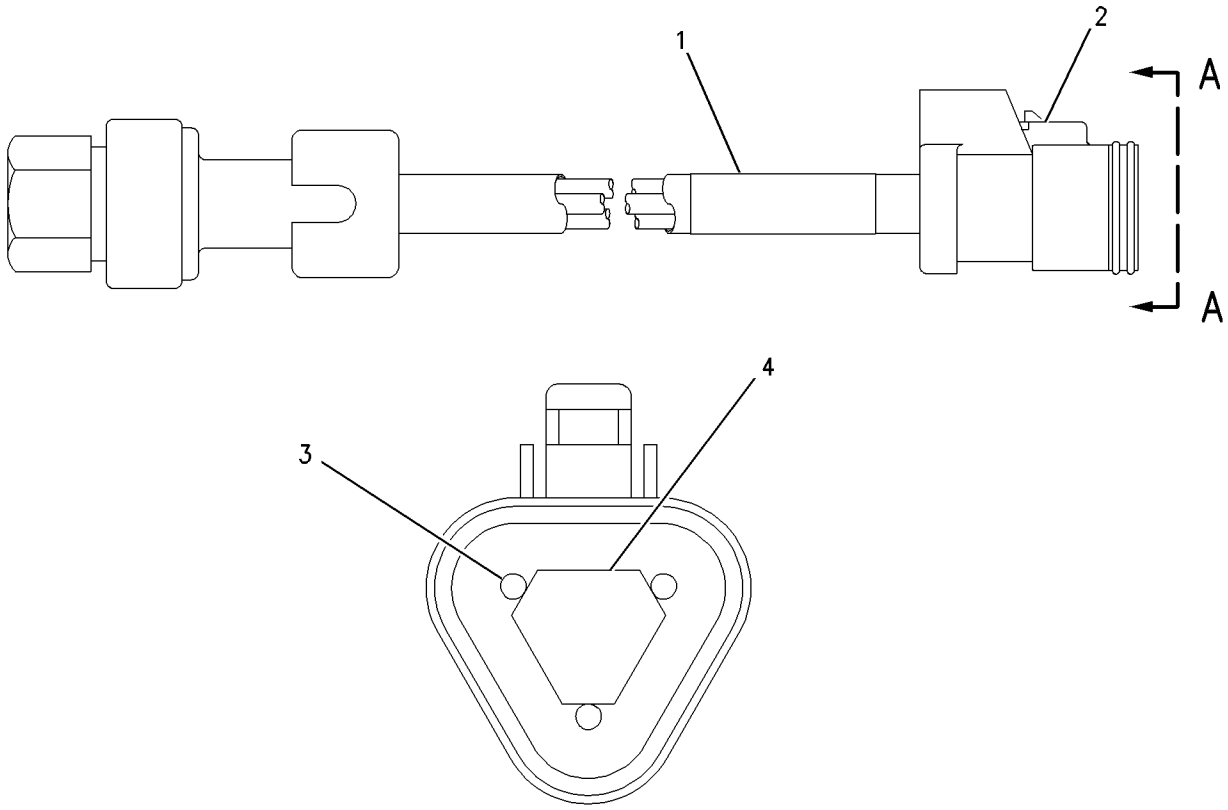

VIEW A-A

GRAPHIC #1 **<END>** g00851220

189-5746 SENSOR GP-SPEED–ENGINE–TRANSMISSION INPUT

S/N: AXM1377-UP

PART OF 241-6067 WIRING GP-FRONT

SMCS-7493 **i02251252**

NOTE	REF NO	GRAPHIC REF	PART NUMBER	QTY	PART NAME 1 2 3 4 5 6 (PRODUCT LEVEL)	SEE PAGE
	1	1	**171-5349**	1	MARKER	
	2	1	**102-8802**	1	KIT-RECEPTACLE (2-PIN)	
					(INCLUDES RECEPTACLE ASSEMBLY AND WEDGE)	
	3	1	**186-3735**	2	PIN-CONNECTOR	
	4	1	**3E-3365**	1	WEDGE-RECEPTACLE LOCK (2-PIN)	
BE	5	1	**9X-1386**		SLEEVE (14-CM)	

B-USE AS REQUIRED
E-ORDER BY THE CENTIMETER

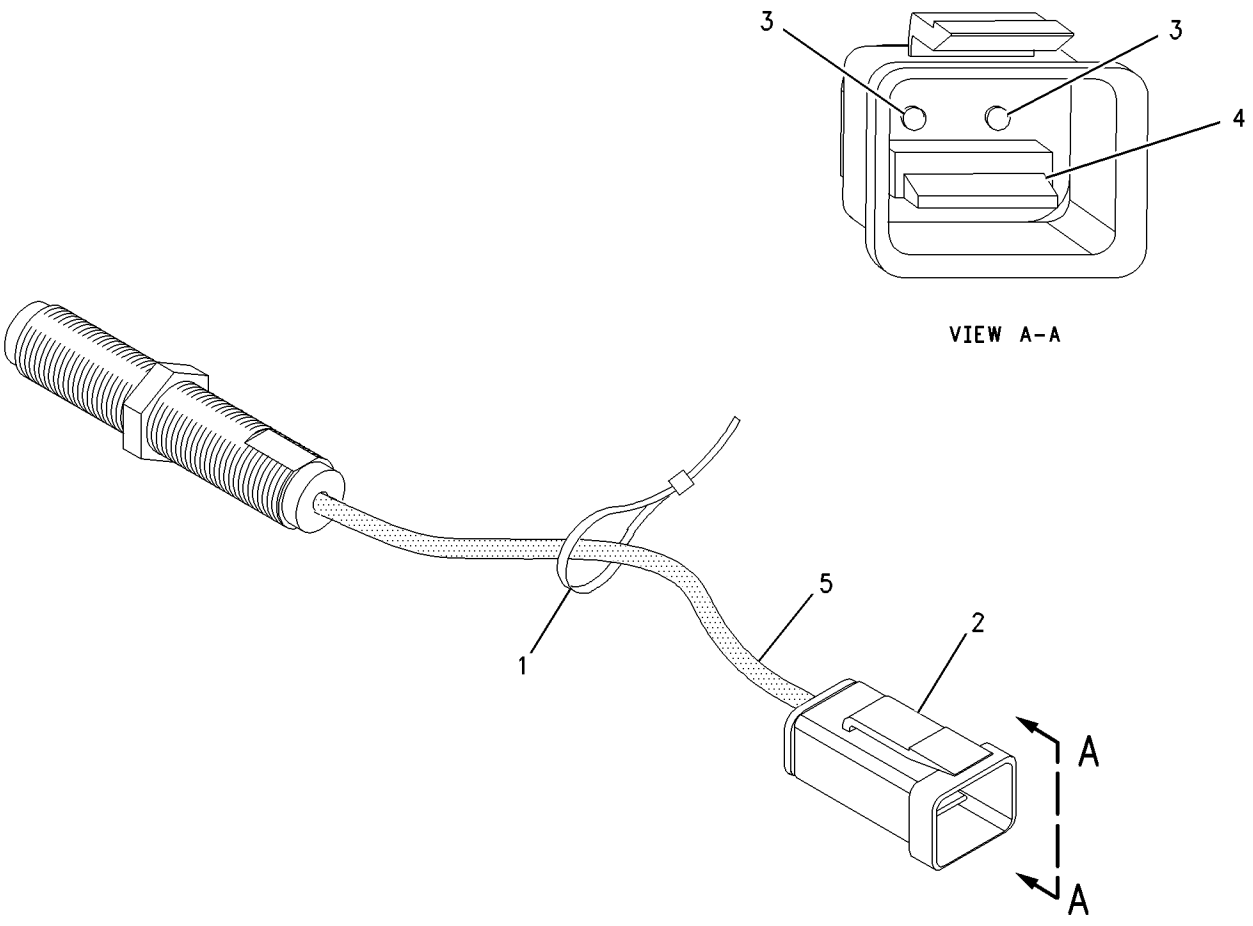

GRAPHIC #1 **<END>** g00837278

118-7226 SENSOR GP-TEMPERATURE–TORQUE CONVERTER OIL

S/N: AXM1-1376
8-VOLT. PULSE WIDTH MODULATION
PART OF 152-6930 WIRING GP-CAB

SMCS-1919, 1921 **i02128103**

NOTE	REF NO	GRAPHIC REF	PART NUMBER	QTY	PART NAME 1 2 3 4 5 6 (PRODUCT LEVEL)	SEE PAGE
E	1	1	**9X-1813**		SLEEVE (33-CM)	
	2	1	**102-8803**	1	KIT-RECEPTACLE (3-PIN)	
					(INCLUDES RECEPTACLE AS & WEDGE)	
	3	1	**186-3735**	3	PIN-CONNECTOR	
	4	1	**3E-3371**	1	WEDGE-RECEPTACLE LOCK (3-PIN)	

E-ORDER BY THE CENTIMETER

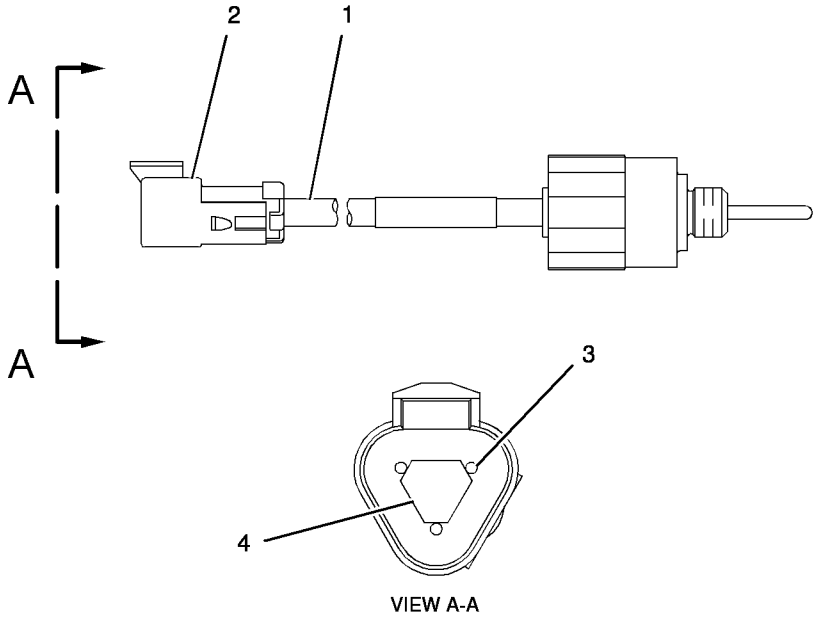

VIEW A-A

GRAPHIC #1 **<END>** g01023677

134-2252 SENSOR GP-TEMPERATURE–TORQUE CONVERTER OIL

S/N: AXM1377-UP
8 VOLT
PART OF 241-6067 WIRING GP-FRONT

SMCS-1919, 1921 **i01988640**

NOTE	REF NO	GRAPHIC REF	PART NUMBER	QTY	PART NAME 1 2 3 4 5 6 (PRODUCT LEVEL)	SEE PAGE
	1	1	**3E-3371**	1	WEDGE-RECEPTACLE LOCK (3-PIN)	
BE	2	1	**9X-1386**		SLEEVE	
	3	1	**102-8803**	1	KIT-RECEPTACLE (3-PIN)	
					(INCLUDES RECEPTACLE AS & WEDGE)	
	4	1	**8T-8729**	3	PIN-CONNECTOR	

B-USE AS REQUIRED
E-ORDER BY THE CENTIMETER

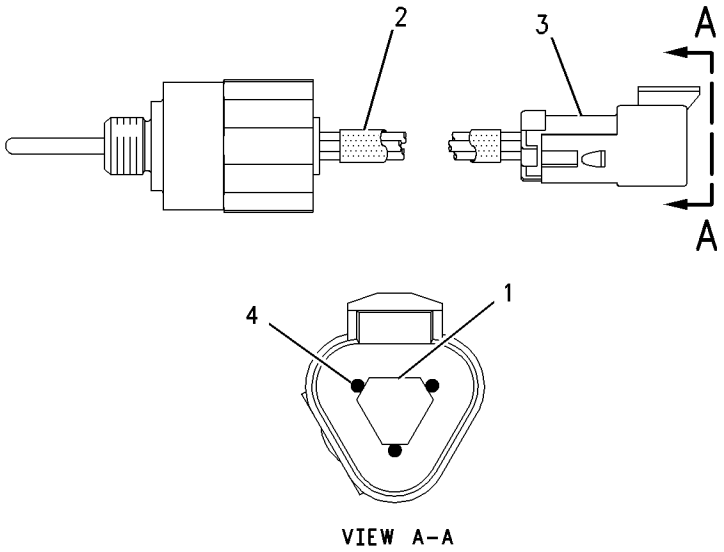

VIEW A-A

GRAPHIC #1 **<END>** g00658816

188-9395 SENSOR GP-TEMPERATURE

S/N: BET200-8002
COOLANT
PART OF 153-7076 ENGINE AR-COMPLETE

SMCS-1919, 1921 **i01464136**

NOTE	REF NO	GRAPHIC REF	PART NUMBER	QTY	PART NAME 1 2 3 4 5 6 (PRODUCT LEVEL)	SEE PAGE
	1	1	**130-9811**	1	SENSOR GP-TEMPERATURE (COOLANT)	
		1	**102-8802**	1	KIT-RECEPTACLE (2-PIN)	
					(INCLUDES RECEPTACLE AS. AND WEDGE)	
		1	**3E-3362**	1	WEDGE-PLUG LOCK (2-PIN)	
	2	1	**112-3231**	1	ADAPTER	
	3	1	**112-5282**	1	SEAL-O-RING	

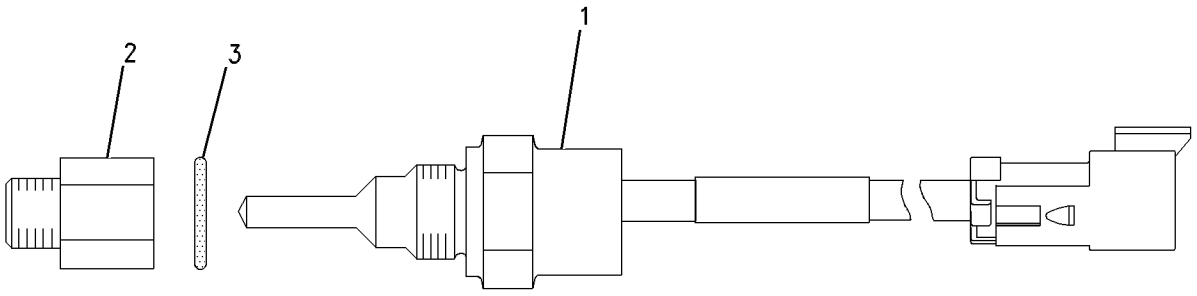

GRAPHIC #1 **<END>** g00311757

236-2247 SENSOR GP-TEMPERATURE

S/N: BET8003-UP

INSTALL ON TOP OF CYLINDER HEAD AT RIGHT FRONT CORNER OF ENGINE

PART OF 235-4689 ENGINE AR-COMPLETE

SMCS-1919, 1921 **i02054004**

NOTE	REF NO	GRAPHIC REF	PART NUMBER	QTY	PART NAME 1 2 3 4 5 6 (PRODUCT LEVEL)	SEE PAGE
	1	1	**130-9811**	1	SENSOR GP-TEMPERATURE (COOLANT)	
			155-2270	1	KIT-CONNECTING PLUG (2-PIN)	
					(INCLUDES PLUG AS & WEDGE)	
	2	1	**112-5282**	1	SEAL-O-RING	

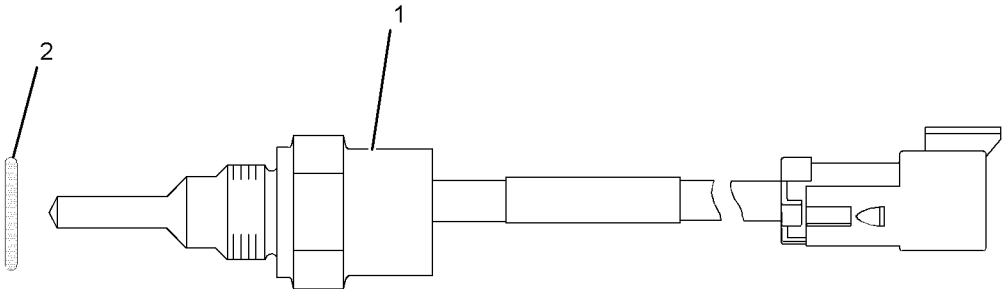

GRAPHIC #1 **<END>** g01073778

ELECTRICAL AND STARTING SYSTEM

152-6957 STARTING AID GP-ETHER

S/N: AXM1-UP

PART OF 152-6943 POWER TRAIN AR

SMCS-1456 **i01933098**

NOTE	REF NO	GRAPHIC REF	PART NUMBER	QTY	PART NAME 1 2 3 4 5 6 (PRODUCT LEVEL)	SEE PAGE
	1	1	**2U-4223**	1	TUBE	
	3	1	**3E-6333**	1	VALVE AS-SOLENOID (ETHER START, 24-VOLT)	
J		1	**3E-3365**	1	WEDGE-RECEPTACLE LOCK (2-PIN)	
		1	**7N-9801**	1	GASKET	
		1	**186-3735**	2	PIN-CONNECTOR	
J		1	**102-8802**	1	KIT-RECEPTACLE (2-PIN)	
	4	1	**5P-2948**	1	CONNECTOR AS	
	5	1	**6N-7672**	1	ATOMIZER AS-ETHER	
	6	1	**7N-2059**	1	CLAMP AS	
M	7	1	**5C-7261**	4	NUT (M8X1.25-THD)	
	8	1	**8T-4224**	8	WASHER-HARD (8.8X16X2-MM THK)	
M	9	1	**8T-4908**	4	BOLT (M8X1.25X25-MM)	
AF			**7N-0296**		CYLINDER AS-ETHER	
					(MAY BE PROCURED LOCALLY FROM CAT DEALER)	

A-NOT PART OF THIS GROUP
F-NOT SHOWN
J-KIT MARKED J INCLUDES PART(S) MARKED J
M-METRIC PART

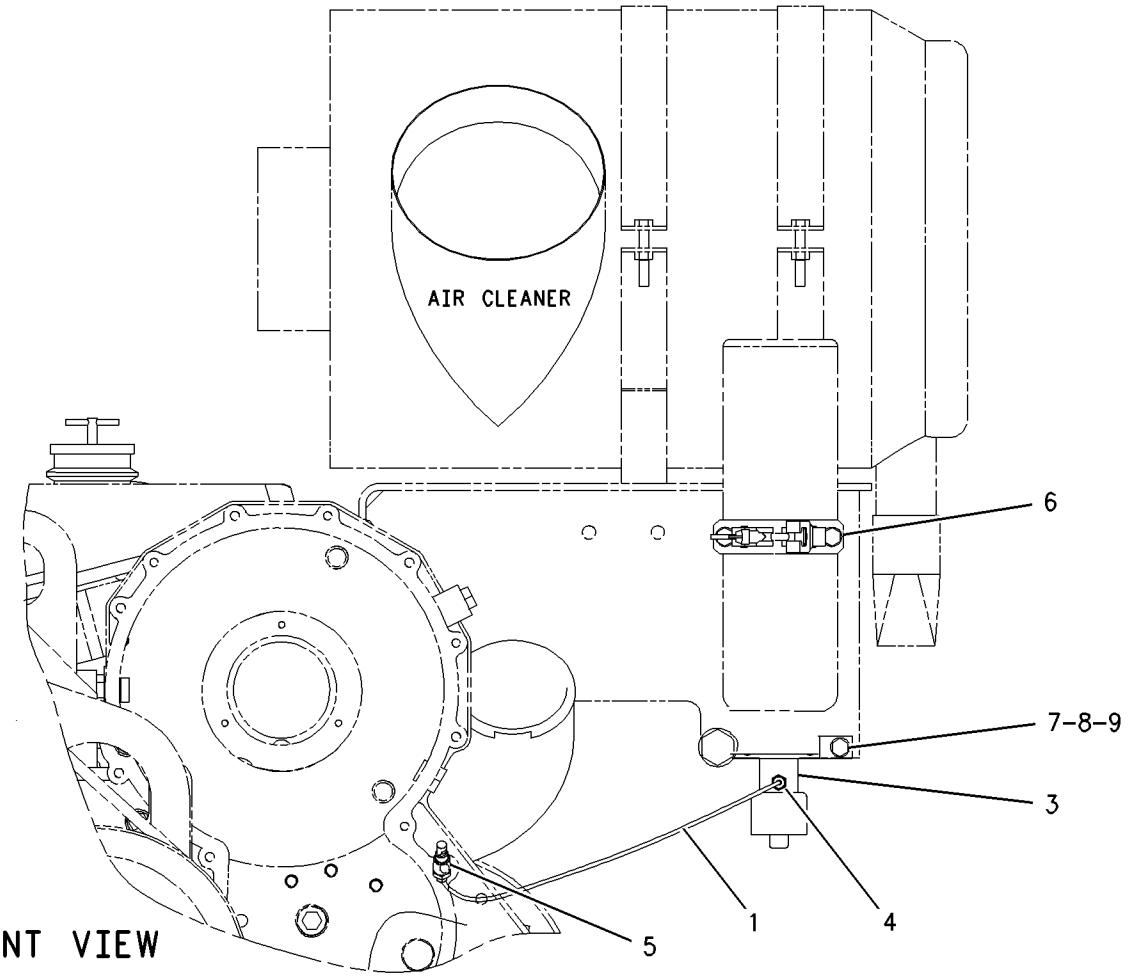

GRAPHIC #1 **<END>** g00803851

ELECTRICAL AND STARTING SYSTEM

233-7462 STARTING AR-COLD WEATHER

S/N: AXM1-UP

AN ATTACHMENT

SMCS-1450 **i02108567**

NOTE	PART NUMBER	QTY	PART NAME 1 2 3 4 5 6 (PRODUCT LEVEL)	SEE PAGE
Y	*251-1445*	1	CONTROL GP-SERVICE BRAKE	602
Y	*105-4729*	1	STARTING MOTOR GP-ELECTRIC	264
	233-7458	1	BATTERY GP	
	153-5710	2	BATTERY (12-VOLT)	

Y-SEPARATE ILLUSTRATION

<END>

ELECTRICAL AND STARTING SYSTEM

6V-0890 STARTING MOTOR GP-ELECTRIC*R

S/N: AXM1-UP
24-VOLT
PART OF 105-4729 STARTING MOTOR GP-ELECTRIC
FIELD REPLACEMENT ORDER 237-1962—PAGE 273. FIELD REPLACEMENT FOR
6V-5539—PAGE 260
AN ATTACHMENT

SMCS-1453 **i02116565**

NOTE	REF NO	GRAPHIC REF	PART NUMBER	QTY	PART NAME 1 2 3 4 5 6 (PRODUCT LEVEL)	SEE PAGE
	1	1	**7M-0326**	1	CONNECTOR	
	2	1	**9H-3757**	2	WASHER (0.516X1X0.094-IN THK)	
	3	1	**1S-7446**	3	SCREW-MACHINE (8-32X0.437-IN)	
	4	1	**8C-9660**	3	WASHER (4.6X7.9X0.8-MM THK)	
	5	1	**9S-2544**	9	SCREW-HEX HEAD (8-32X11.13-MM)	
	6	1	**7M-0327**	1	WASHER-THRUST (17.4X25.4X1.6-MM THK)	
	7	1	**3T-3418**	1	FRAME AS-END	
		1	**3T-3423**	1	CUP	
		1	**9G-4101**	1	BUSHING-END	
		1	**3T-3424**	1	PLUG-FELT	
	8	1	**3T-9525**	1	PLATE AS-BRUSH	
	8A	1	**6T-0371**	1	INSULATOR	
	8B	1	**5P-6298**	12	SCREW-MACHINE (10-32X0.5-IN)	
		1	**9F-5599**	12	LOCKWASHER	
	8C	1	**7F-3525**	6	WASHER-BUSHING (0.209X0.39X0.09-MM THK)	
	8D	1	**6T-0372**	1	PLATE	
	8E	1	**3T-4709**	3	PLATE	
	8F	1	**2L-6679**	3	PLATE-INSULATOR	
	8G	1	**3T-4710**	3	PLATE	
	8H	1	**6T-0363**	6	HOLDER AS-BRUSH	
					(EACH INCLUDES)	
	8J	1	**3T-9494**	1	SPRING	
	9	1	**7F-3491**	2	WASHER (0.516X1X0.094-IN THK)	
	10	1	**3T-3422**	1	WIRE AS	
	11	1	**2J-8163**	2	SEAL-O-RING	
	12	1	**7X-3373**	1	BOLT (5/16-18X0.88-IN)	
B	13	1	**3T-3434**	6	PLUG	
	14	1	**5J-5314**	5	BOLT (5/16-18X1.5-IN)	
	15	1	**3L-3380**	1	BUSHING-TERMINAL	
	16	1	**036-9821**	1	WASHER	
	17	1	**4M-1828**	1	RETAINER-SPRING	
	18	1	**4M-1829**	1	BOOT-RUBBER	
	19	1	**9M-7606**	1	PLUNGER AS	
	20	1	**9M-7609**	1	SPRING (SHIFT LEVER)	
	21	1	**4M-1827**	1	RETAINER-SPRING	
	22	1	**8C-3089**	1	SEAL-O-RING	
	23	1	**4M-1853**	1	LEVER AS-SHIFT	
	24	1	**5M-3034**	1	LOCKNUT (5/16-24-IN THD)	
	25	1	**7L-2894**	4	GASKET	
	26	1	**4M-1831**	4	PLUG-LEVER HOUSING	
	27	1	**4M-1854**	1	SHAFT-LEVER	
	28	1	**1H-1023**	1	SEAL-O-RING	
	29	1	**2D-6392**	1	SEAL-O-RING	
	30	1	**7T-3974**	1	HOUSING AS-DRIVE	
	31	1	**6N-3826**	1	DRIVE AS-MOTOR	
	32	1	**2H-3429**	2	RING-RETAINING (EXTERNAL)	
	33	1	**6V-1322**	4	BOLT (1/4-20X0.375-IN)	
	34	1	**8T-4205**	4	WASHER-HARD (7.2X14.5X2-MM THK)	
	35	1	**6N-3279**	1	INSULATOR	
	36	1	**036-9823**	13	BOLT (1/4-28X1-IN)	
	37	1	**1M-9971**	1	SPACER (0.84X1.72X1.88-IN THK)	
	38	1	**1H-2629**	3	STRIP-INSULATION	

6V-0890 **STARTING MOTOR GP-ELECTRIC** *(contd.)* **i02116565**

NOTE	REF NO	GRAPHIC REF	PART NUMBER	QTY	PART NAME 1 2 3 4 5 6 (PRODUCT LEVEL)	SEE PAGE
	39	1	**7M-0324**	1	COIL AS-FIELD	
	40	1	**3F-0379**	12	SCREW-POLE SHOE (3/8-24-THD)	
	41	1	**7F-3488**	6	SHOE-POLE	
	42	1	**7M-8651**	1	ARMATURE AS	
	43	1	**7M-0325**	1	INSULATOR	
	44	1	**3T-9524**	6	BRUSH AS	
	45	1	**3N-3763**	1	KIT-TERMINAL (STARTING MOTOR)	
					(INCLUDES INSULATOR, BUSHINGS AND WASHER)	
	46	1	**125-6537**	1	INSULATOR	
	47	1	**3R-8801**	1	CLAMP	
	48	1	**8F-1434**	2	LOCKWASHER	
	49	1	**6V-8188**	6	NUT (1/2-13-THD)	
	50	1	**7X-0562**	6	WASHER-HARD (13.5X19X0.8-MM THK)	
	51	1	**4B-2049**	6	NUT (10-32-THD)	
	52	1	**8T-0328**	10	WASHER-HARD (5.5X10X1-MM THK)	
	53	1	**3T-9494**	6	SPRING	
	54	1	**3E-7771**	1	HOUSING AS	
	55	1	**9G-4101**	1	BUSHING-END	
	56	1	**3T-3424**	3	PLUG-FELT	
	57	1	**3T-3423**	3	CUP	
	58	1	**1M-9968**	1	BUSHING	
	59	1	**2F-6678**	1	SEAL-LIP TYPE	
	60	1	**4L-2729**	1	WASHER (0.844X1.9X0.188-IN THK)	
	61	1	**4M-1896**	1	BUSHING-TERMINAL	
	62	1	**045-4065**	4	SCREW-MACHINE (10-32X0.75-IN)	
	63	1	**6V-8373**	3	SCREW-MACHINE (6-32X0.187-IN)	
	64	1	**9G-6770**	1	CONTACT AS	
	65	1	**6T-1120**	1	BUSHING-TERMINAL	
	66	1	**4M-1815**	1	SPRING-CONTACT	
	67	1	**125-6535**	1	COVER-STARTING MOTOR	
	68	1	**7T-9123**	1	GASKET-PLATE	
	69	1	**125-6536**	1	TERMINAL AS	
	70	1	**125-6533**	1	SOLENOID AS (24-VOLT, STARTING MOTOR)	
		1	**3R-8801**	1	CLAMP	

B-USE AS REQUIRED

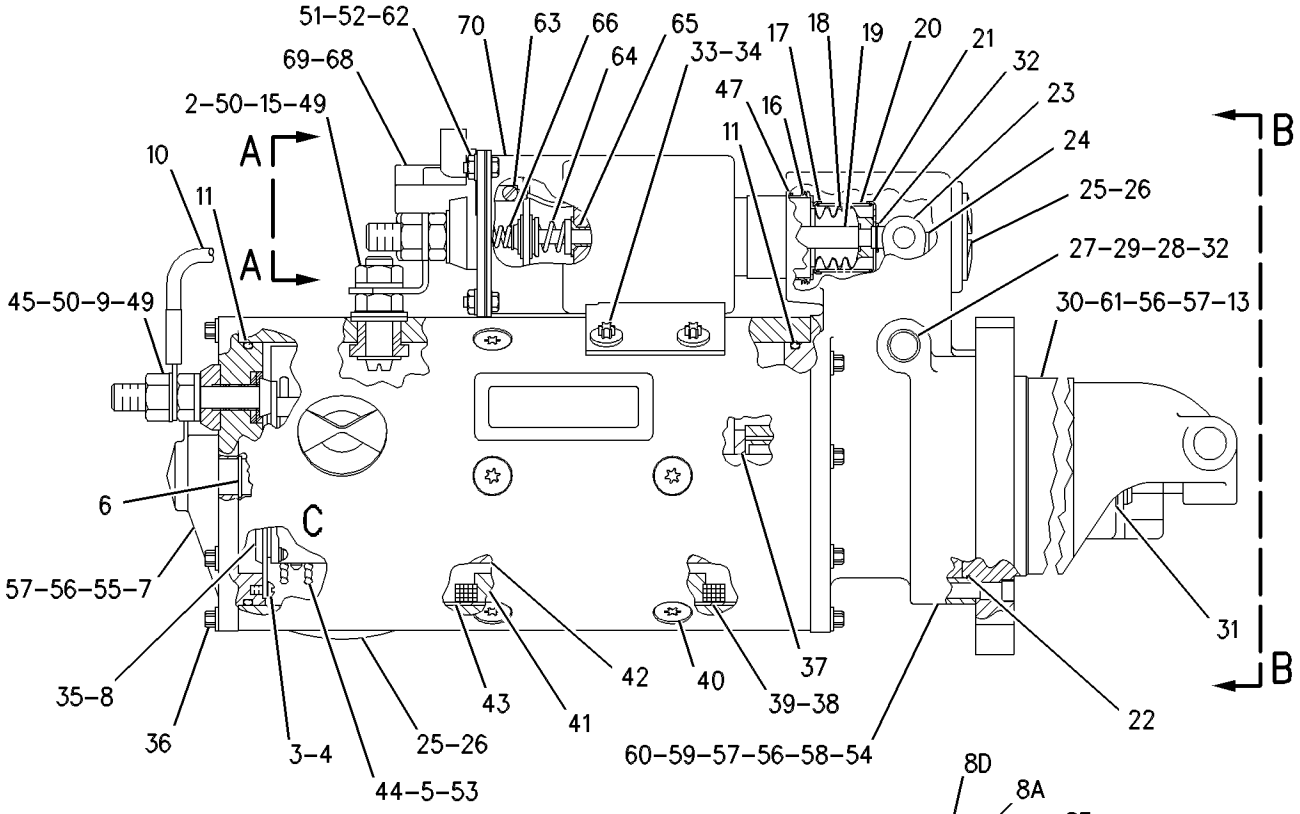

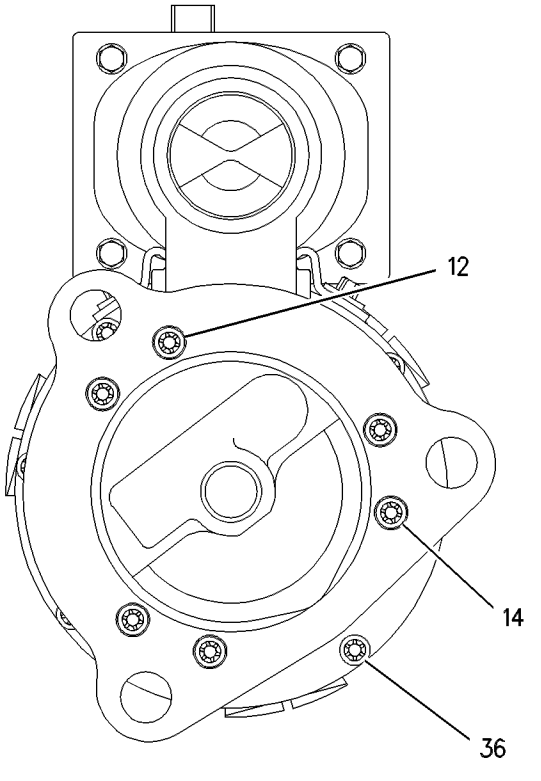

VIEW B-B

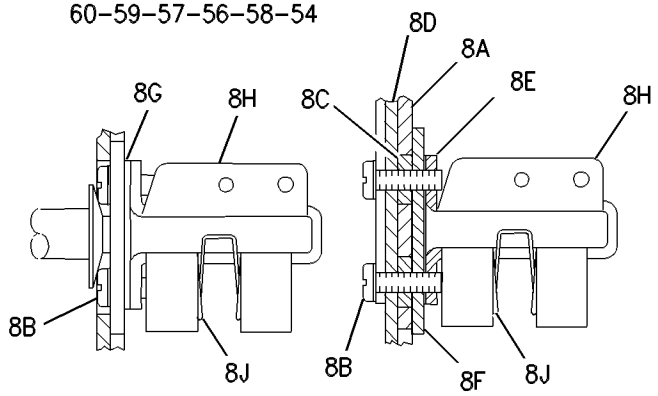

VIEW OF AREA C

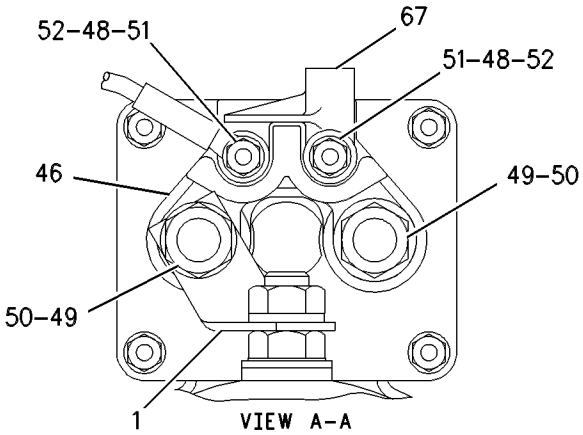

VIEW A-A

GRAPHIC #1 **<END>** g00597432

6V-5539 STARTING MOTOR GP-ELECTRIC*R

S/N: BET200-1244
24-VOLT
PART OF 137-9427 STARTING MOTOR GP-ELECTRIC
FIELD REPLACEMENT ORDER 207-1556—PAGE 270. OPTIONAL FIELD REPLACEMENT ORDER 6V-0890—PAGE 257

SMCS-1453 **i01199648**

NOTE	PART NUMBER	QTY	PART NAME 1 2 3 4 5 6 (PRODUCT LEVEL)	SEE PAGE
Y	*6V-5540*	1	STARTING MOTOR GP-ELECTRIC	261
			—OR—	
Y	*6V-5582*	1	STARTING MOTOR GP-ELECTRIC	262
			—OR—	
Y	*106-8554*	1	STARTING MOTOR GP-ELECTRIC	266

Y-SEPARATE ILLUSTRATION

<END>

6V-5540 STARTING MOTOR GP-ELECTRIC

S/N: BET200-1244

24-VOLT

PART OF 6V-5539 STARTING MOTOR GP-ELECTRIC

SMCS-1453 **i00112093**

NOTE	REF NO	GRAPHIC REF	PART NUMBER	QTY	PART NAME 1 2 3 4 5 6 (PRODUCT LEVEL)	SEE PAGE
	1	1	**7X-0562**	5	WASHER-HARD (0.8MM THK)	
M	2	1	**8T-4244**	5	NUT (M12X1.75 THD)	
M	3	1	**5C-2874**	2	NUT (M5X.8 THD)	
	4	1	**8F-1434**	2	LOCKWASHER (5MM ID)	
	5	1	**8T-0328**	2	WASHER-HARD (1MM THK)	

M-METRIC PART

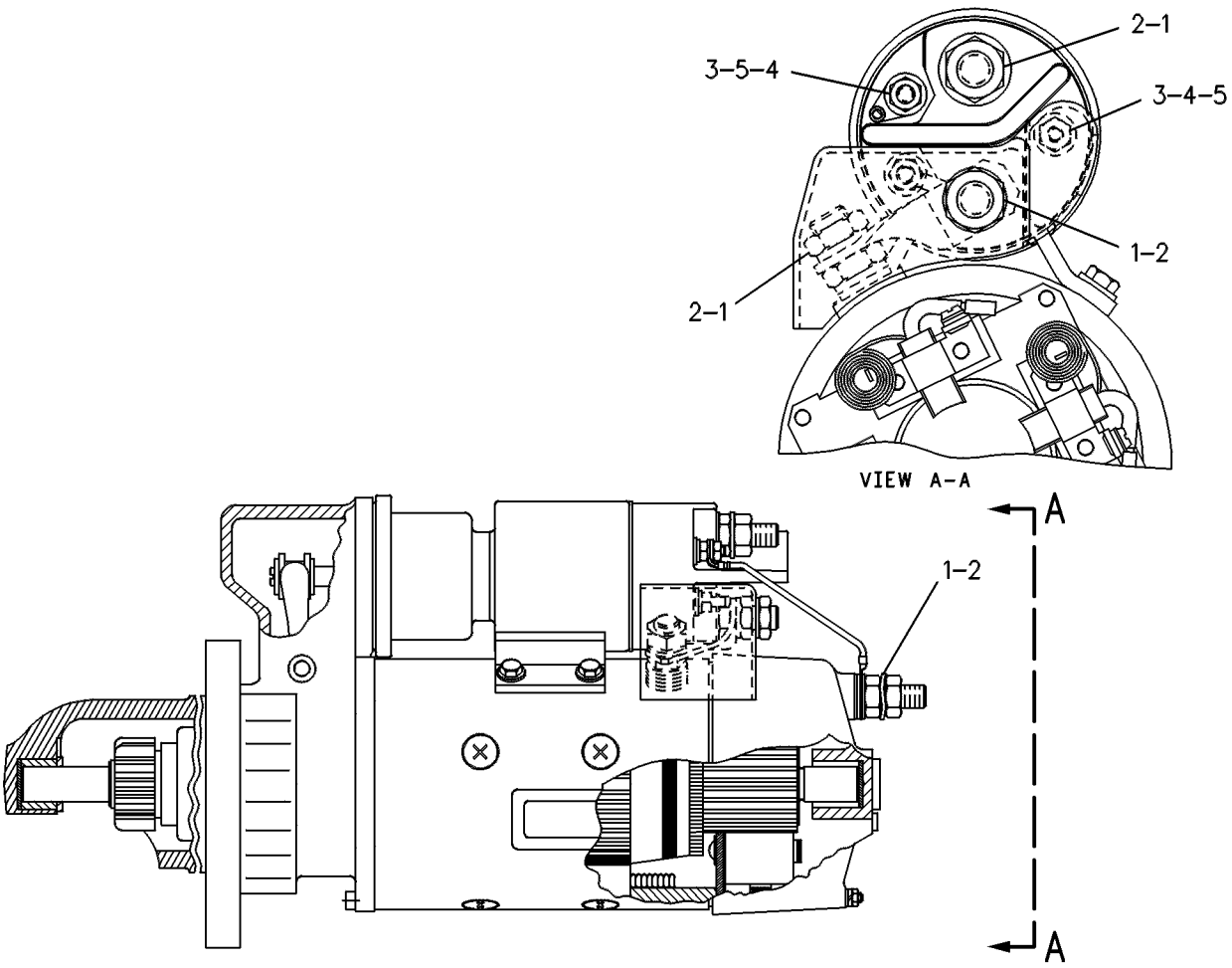

GRAPHIC #1 **<END>** g00084514

ELECTRICAL AND STARTING SYSTEM

6V-5582 STARTING MOTOR GP-ELECTRIC

S/N: BET200-UP

24-VOLT

PART OF 207-1556, 6V-5539 STARTING MOTOR GP-ELECTRIC

SMCS-1453 **i02253251**

NOTE	REF NO	GRAPHIC REF	PART NUMBER	QTY	PART NAME 1 2 3 4 5 6 (PRODUCT LEVEL)	SEE PAGE
	1	1	**6V-8188**	3	NUT (1/2-13-THD)	
	2	1	**7X-0562**	3	WASHER-HARD (13.5X19X0.8-MM THK)	
	3	1	**4B-2049**	1	NUT (10-32-THD)	
	4	1	**8F-1434**	1	LOCKWASHER	
	5	1	**8T-0328**	1	WASHER-HARD (5.5X10X1-MM THK)	
M	6	1	**8T-4133**	1	NUT (M10X1.5-THD)	
	7	1	**8T-4121**	1	WASHER-HARD (11X21X2.5-MM THK)	
	8	1	**3E-0142**	1	HOUSING AS	
	9	1	**3E-0141**	1	STOP-STARTING MOTOR	
	10	1	**4N-7521**	1	RING-LOCK	
	11	1	**3E-0146**	1	DRIVE AS-STARTING MOTOR	
	12	1	**3E-0144**	1	HOUSING AS	
	13	1	**3E-0140**	1	LEVER AS-STARTER	
	14	1	**3E-0138**	1	ARMATURE AS (24-VOLT)	
	15	1	**3E-0137**	1	HOLDER AS-BRUSH (STARTING MOTOR)	
	16	1	**3E-0135**	1	SOLENOID AS (24-VOLT) (STARTING MOTOR)	
	17	1	**3E-0125**	1	COVER AS-STARTING MOTOR	
	18	1	**3E-0139**	1	HOUSING AS	
	19	1	**3E-0136**	1	HOUSING AS	
	20	1	**3E-0132**	1	CONNECTOR	
	21	1	**3E-0133**	1	WIRE AS-STARTING MOTOR	
	22	1	**3E-0134**	1	COVER-PLUNGER	
					AVAILABLE REPAIR KIT(S):	
			3E-0127		KIT-BEARING (STARTING MOTOR)	
					(INCLUDES BEARINGS, SEAL AND BUSHING)	
			3E-0128		KIT-BRUSH (STARTING MOTOR)	
					(INCLUDES O-RINGS, SCREW, SPRING, AND BRUSH)	
			3E-0129		KIT-HARDWARE (STARTING MOTOR)	
					(INCLUDES WASHERS, BOLTS, LOCKWASHERS, NUTS, BUSHINGS, AND PLATE)	
			3E-0145		KIT-STARTING MOTOR PIN	
					(INCLUDES O-RINGS, SHAFT, AND RING)	
			3E-0130		KIT-STARTING MOTOR SEAL	
					(INCLUDES SEAL AND O-RINGS)	
			3E-0131		KIT-WASHER (STARTING MOTOR)	
					(INCLUDES WASHERS)	

M-METRIC PART

6V-5582 **STARTING MOTOR GP-ELECTRIC** *(contd.)* **i02253251**

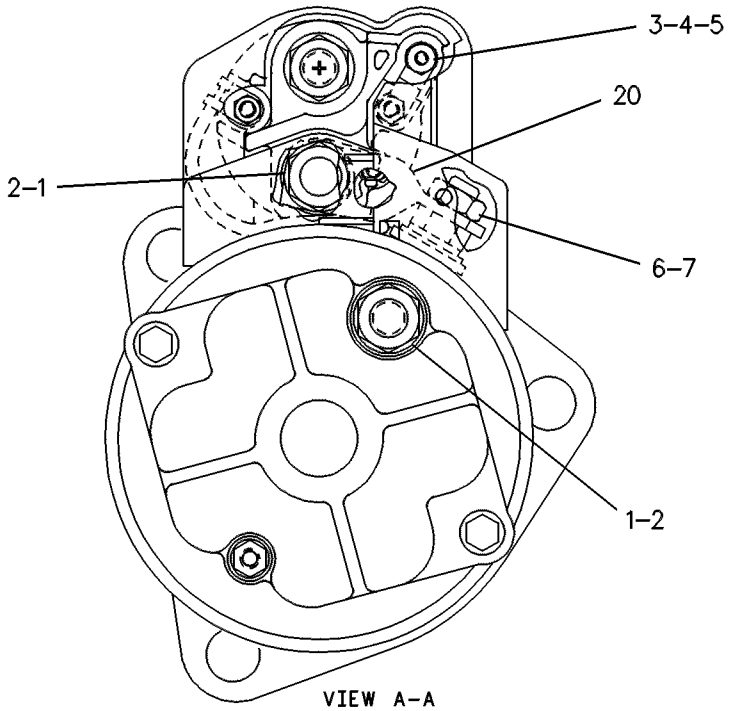

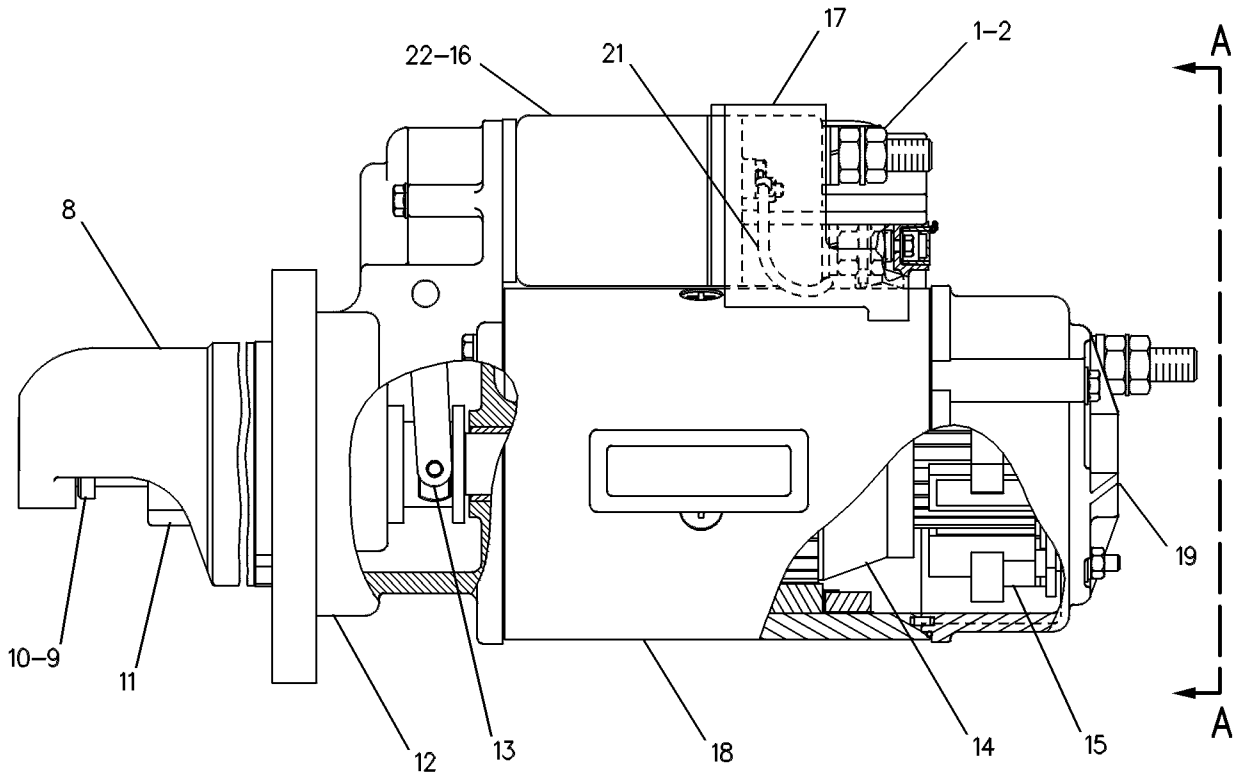

GRAPHIC #1 **<END>** g00084516

105-4729 STARTING MOTOR GP-ELECTRIC

S/N: AXM1-UP
24-VOLT
PART OF 233-7462 STARTING AR-COLD WEATHER
AN ATTACHMENT
TYPE 1

SMCS-1453 **i01883977**

NOTE	REF NO	GRAPHIC REF	PART NUMBER	QTY	PART NAME 1 2 3 4 5 6 (PRODUCT LEVEL)	SEE PAGE
	1	1	**8S-2332**	3	BOLT-12 POINT HEAD (5/8-11X1.75 IN)	
	2	1	**4N-1059**	1	GASKET	
YR	3	1	**6V-0890**	1	STARTING MOTOR GP-ELECTRIC	257
	4	1	**105-4728**	1	WIRE AS	

R-REMFG PART MAY BE AVAILABLE
Y-SEPARATE ILLUSTRATION

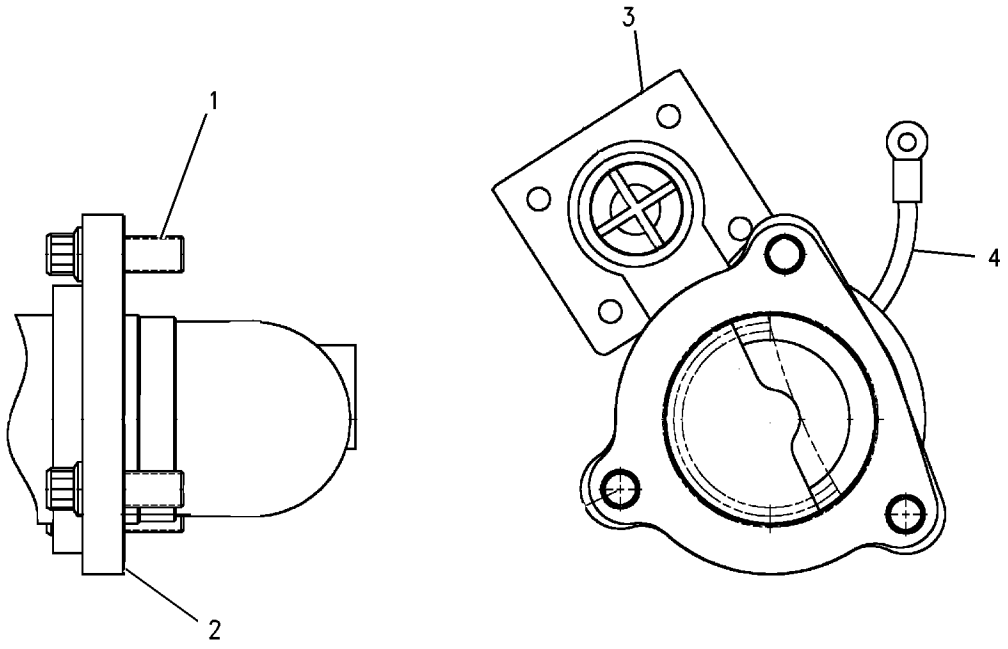

GRAPHIC #1 **<END>** g00658745

105-4729 STARTING MOTOR GP-ELECTRIC

S/N: AXM1-UP
24-VOLT
PART OF 233-7462 STARTING AR-COLD WEATHER
AN ATTACHMENT
TYPE 2

SMCS-1453 **i01972241**

NOTE	REF NO	GRAPHIC REF	PART NUMBER	QTY	PART NAME 1 2 3 4 5 6 (PRODUCT LEVEL)	SEE PAGE
	1	1	**8S-2332**	3	BOLT-12 POINT HEAD (5/8-11X1.75 IN)	
	2	1	**4N-1059**	1	GASKET	
YR	3	1	**237-1962**	1	STARTING MOTOR GP-ELECTRIC	273
	4	1	**105-4728**	1	WIRE AS	

R-REMFG PART MAY BE AVAILABLE
Y-SEPARATE ILLUSTRATION

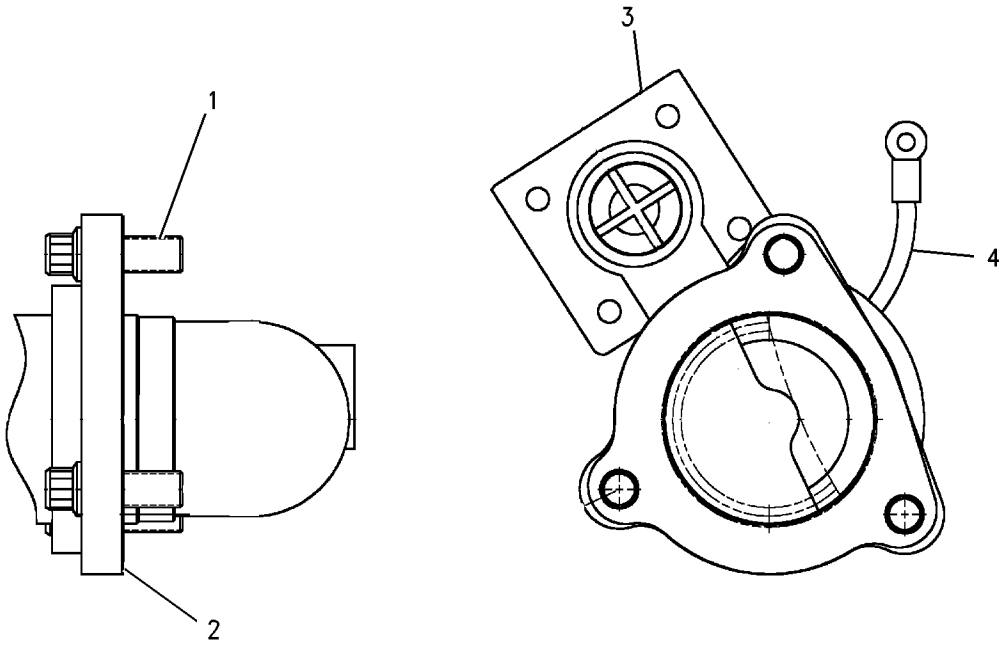

GRAPHIC #1 **<END>** g00658745

ELECTRICAL AND STARTING SYSTEM

106-8554 STARTING MOTOR GP-ELECTRIC*R

S/N: BET200-UP

24-VOLT

PART OF 6V-5539 STARTING MOTOR GP-ELECTRIC

SMCS-1453 **i02063088**

NOTE	REF NO	GRAPHIC REF	PART NUMBER	QTY	PART NAME 1 2 3 4 5 6 (PRODUCT LEVEL)	SEE PAGE
	1	1	**8F-1434**	2	LOCKWASHER	
	2	1	**6V-8188**	4	NUT (1/2-13-THD)	
	3	1	**8T-8566**	1	TERMINAL AS	
	4	1	**7X-0562**	4	WASHER-HARD (13.5X19X0.8-MM THK)	
	5	1	**3T-3422**	1	WIRE AS	
	6	1	**7T-3278**	1	HOLDER AS-BRUSH	
	7	1	**5S-7349**	4	BOLT (1/4-20X0.5-IN)	
	8	1	**8T-4205**	4	WASHER-HARD (7.2X14.5X2-MM THK)	
	9	1	**7T-3276**	1	ARMATURE AS (24-VOLT)	
	10	1	**4M-1831**	1	PLUG-LEVER HOUSING	
	11	1	**7L-2894**	1	GASKET	
	12	1	**9X-9511**	1	SOLENOID AS (24-VOLT) (STARTING MOTOR)	
	13	1	**036-9821**	1	WASHER	
	14	1	**7T-3269**	1	BOOT	
	15	1	**4M-1828**	1	RETAINER-SPRING	
	16	1	**9M-7609**	1	SPRING (SHIFT LEVER)	
	17	1	**4M-1827**	1	RETAINER-SPRING	
	18	1	**2H-3429**	1	RING-RETAINING	
	19	1	**4B-2049**	3	NUT (10-32-THD)	
	20	1	**6N-3826**	1	DRIVE AS-MOTOR	
	21	1	**9X-4824**	1	COVER-STARTING MOTOR	
	22	1	**8T-0328**	3	WASHER-HARD (5.5X10X1-MM THK)	
	23	1	**7T-3277**	1	COIL AS-FIELD	
	24	1	**7T-3454**	1	INSULATOR	
	25	1	**8H-1141**	4	SHOE-POLE	
	26	1	**3F-0379**	8	SCREW-POLE SHOE (3/8-24-THD)	
	27	1	**7T-3271**	1	CONNECTOR	
	28	1	**8T-8569**	1	INSULATOR-TERMINAL	
	29	1	**7T-3451**	1	INSULATOR-TERMINAL	
	30	1	**3E-7775**	1	HOUSING AS	
	31	1	**036-9823**	5	BOLT (1/4-28X1-IN)	
	32	1	**7T-3974**	1	HOUSING AS-DRIVE	
	33	1	**3T-3434**	6	PLUG	
	34	1	**7X-3373**	6	BOLT (5/16-18X0.88-IN)	
	35	1	**7T-3270**	1	PLUNGER AS	
	36	1	**7T-3279**	1	HOUSING AS	
					AVAILABLE REPAIR KIT(S):	
			8C-3655	1	KIT-BRUSH (STARTING MOTOR)	
					(INCLUDES SPRINGS, BRUSH ASSEMBLIES, & SCREWS)	
			7T-3267	1	KIT-BUSHING (STARTING MOTOR)	
					(INCLUDES NUT, SPACER, GASKET, BUSHINGS, WICKS, CUPS, SEALS, & SCREW ASSEMBLIES)	
			7T-3268	1	KIT-LEVER (STARTING MOTOR)	
					(INCLUDES RETAINER, LEVER ASSEMBLIES, NUT, & SEALS)	
			8T-9884	1	KIT-INSULATOR (STARTING MOTOR)	
					(INCLUDES BUSHING & INSULATORS)	

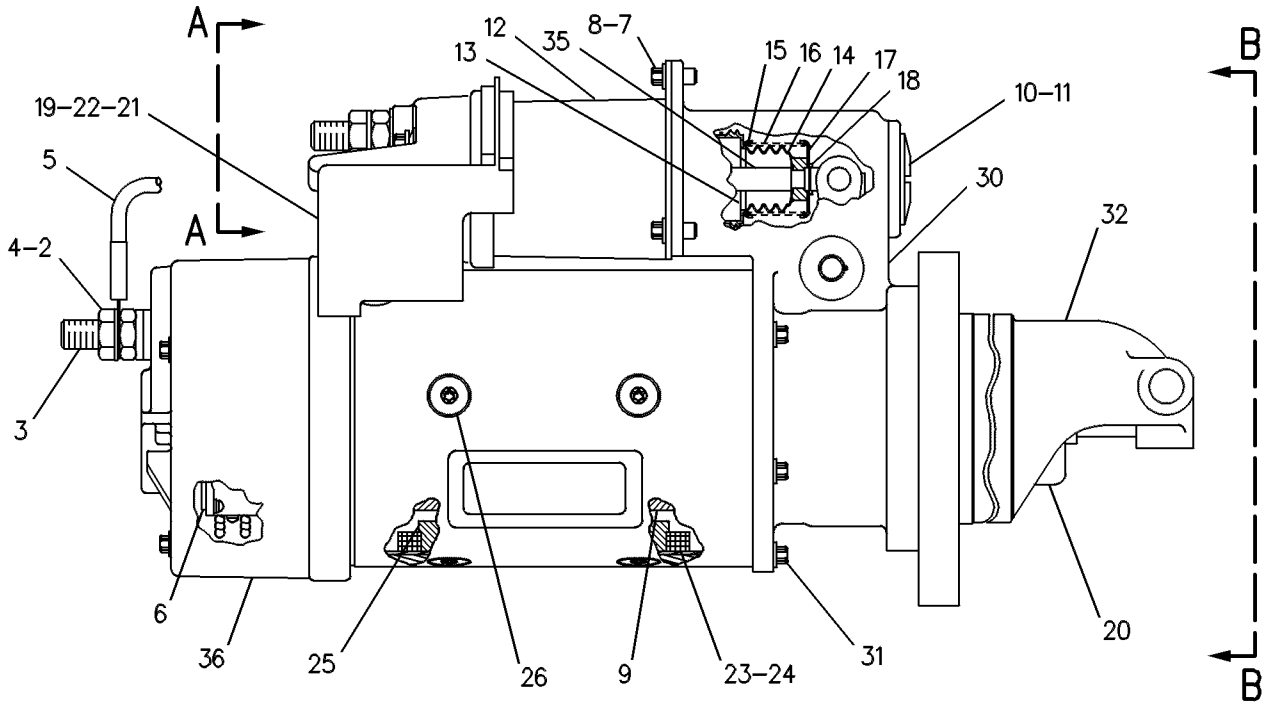

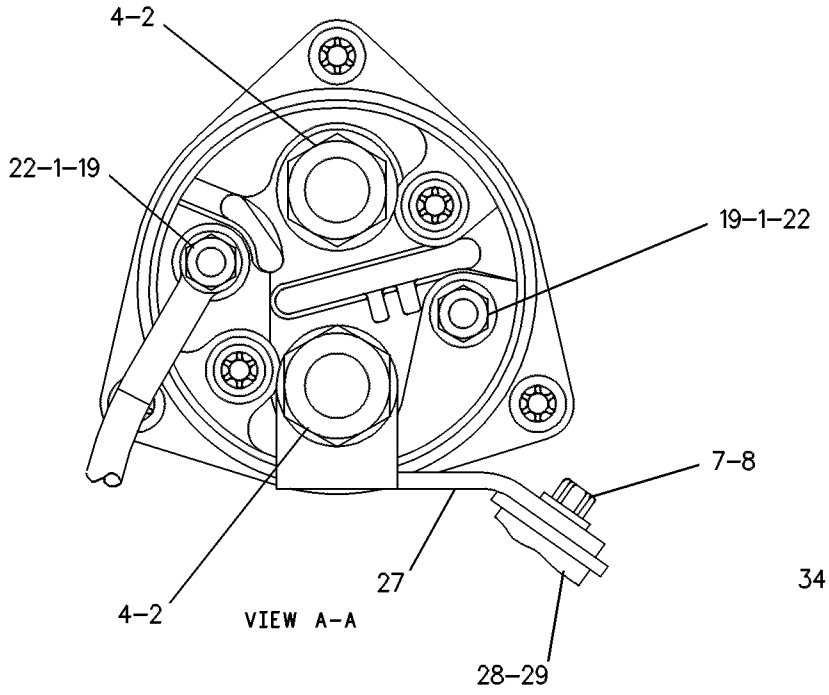

VIEW A-A

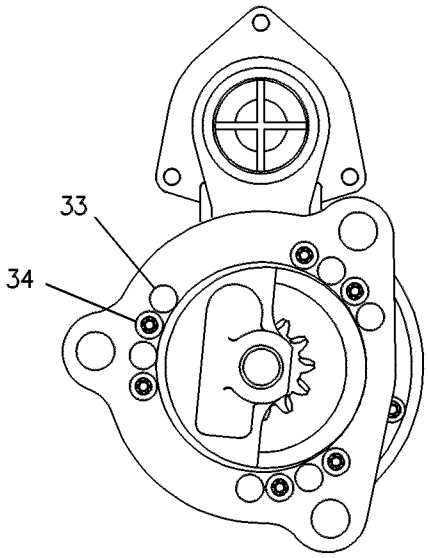

VIEW B-B

GRAPHIC #1 **<END>** g00084518

137-9427 STARTING MOTOR GP-ELECTRIC

S/N: BET200-1244
24 VOLT
PART OF 153-7076 ENGINE AR-COMPLETE

SMCS-1453 **i01469546**

NOTE	REF NO	GRAPHIC REF	PART NUMBER	QTY	PART NAME 1 2 3 4 5 6 (PRODUCT LEVEL)	SEE PAGE
	1	1	**8S-2332**	3	BOLT-12 POINT HEAD (5/8-11X1.75-IN)	
Y	2	1	**6V-5539**	1	STARTING MOTOR GP-ELECTRIC	260
	3	1	**4H-7869**	1	GASKET	
	4	1	**131-1449**	1	CABLE AS	
		1	**1S-7251**	1	TERMINAL-RING	
		1	**1S-7252**	1	TERMINAL-RING	
BE		1	**5P-0747**		CABLE (OO-GA, BLACK)	

B-USE AS REQUIRED
E-ORDER BY THE CENTIMETER
Y-SEPARATE ILLUSTRATION

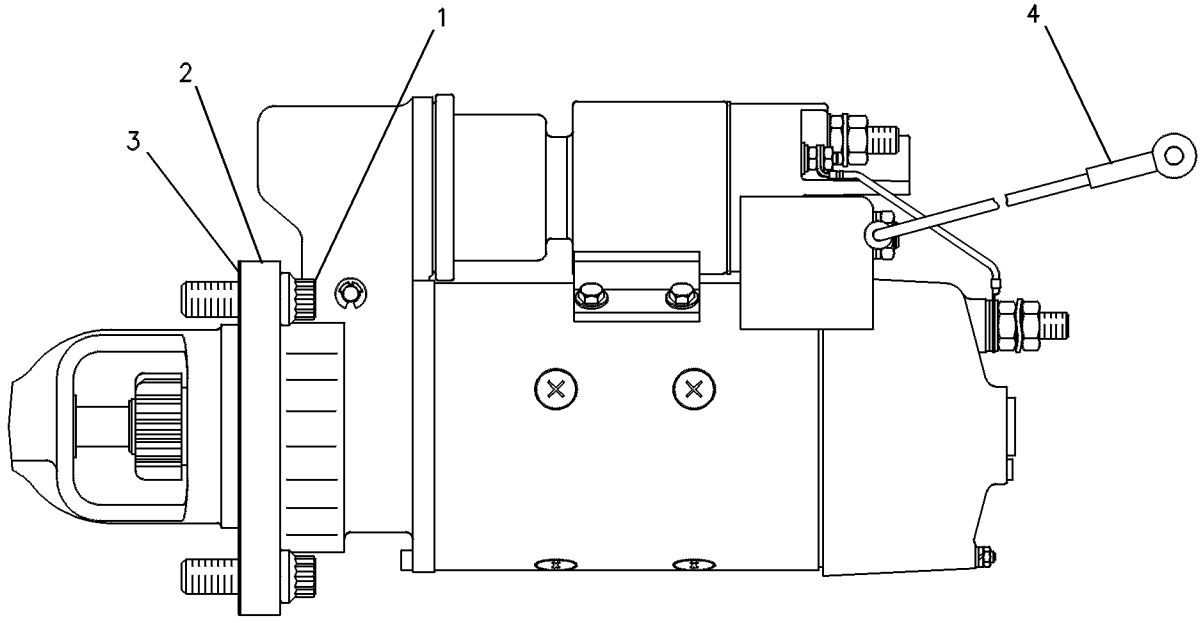

GRAPHIC #1 **<END>** g00108614

137-9427 STARTING MOTOR GP-ELECTRIC

S/N: BET1245-UP
24 VOLT
PART OF 153-7076, 235-4689 ENGINE AR-COMPLETE

SMCS-1453 **i01670152**

NOTE	REF NO	GRAPHIC REF	PART NUMBER	QTY	PART NAME 1 2 3 4 5 6 (PRODUCT LEVEL)	SEE PAGE
	1	1	**8S-2332**	3	BOLT-12 POINT HEAD (5/8-11X1.75-IN)	
CYR	2	1	**207-1556**	1	STARTING MOTOR GP-ELECTRIC	270
	3	1	**4H-7869**	1	GASKET	
	4	1	**131-1449**	1	CABLE AS	
		1	**1S-7251**	1	TERMINAL-RING	
		1	**1S-7252**	1	TERMINAL-RING	
BE		1	**5P-0747**		CABLE (OO-GA, BLACK)	

B-USE AS REQUIRED
C-CHANGE FROM PREVIOUS TYPE
E-ORDER BY THE CENTIMETER
R-REMFG PART MAY BE AVAILABLE
Y-SEPARATE ILLUSTRATION

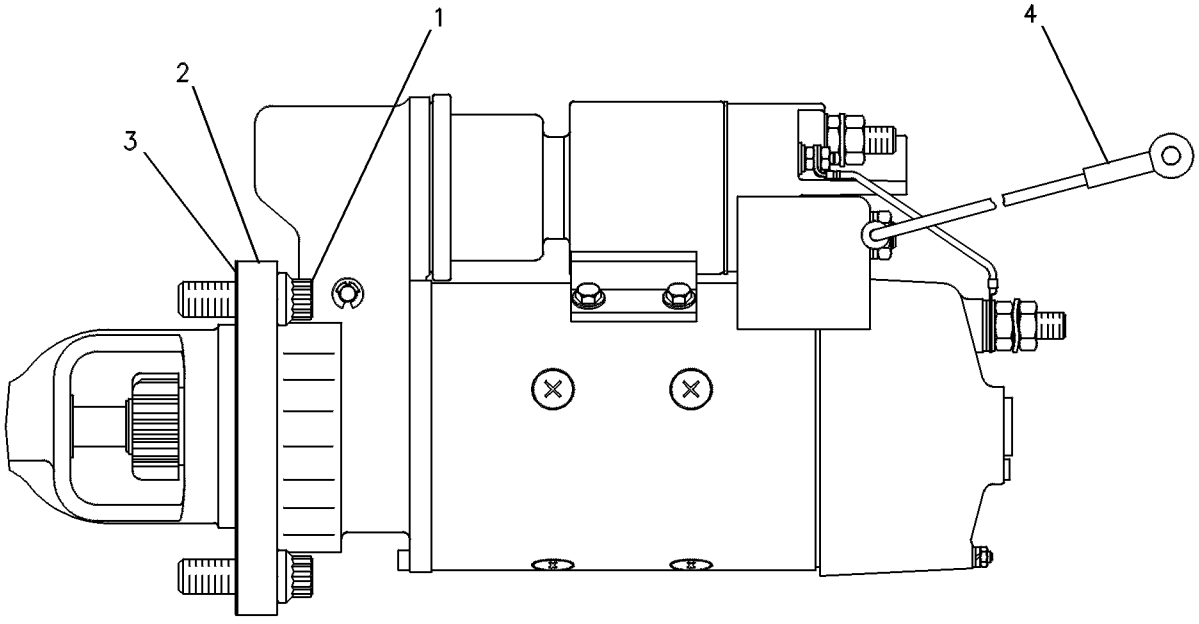

GRAPHIC #1 **<END>** g00108614

207-1556 STARTING MOTOR GP-ELECTRIC*R

S/N: BET1245-UP
24-VOLT
PART OF 137-9427 STARTING MOTOR GP-ELECTRIC
FIELD REPLACEMENT FOR 207-1557—PAGE 271: FOR 6V-5539—PAGE 260

SMCS-1453 **i02105118**

NOTE	PART NUMBER	QTY	PART NAME 1 2 3 4 5 6 (PRODUCT LEVEL)	SEE PAGE
Y	*6V-5582*	1	STARTING MOTOR GP-ELECTRIC	262
			—OR—	
Y	*207-1557*	1	STARTING MOTOR GP-ELECTRIC	271
Y-SEPARATE ILLUSTRATION				

<END>

207-1557 STARTING MOTOR GP-ELECTRIC

S/N: BET1245-UP
24-VOLT
PART OF 207-1556 STARTING MOTOR GP-ELECTRIC
FIELD REPLACEMENT ORDER 207-1556—PAGE 270

SMCS-1453 **i02253252**

NOTE	REF NO	GRAPHIC REF	PART NUMBER	QTY	PART NAME 1 2 3 4 5 6 (PRODUCT LEVEL)	SEE PAGE
	1	1	**3T-3434**	6	PLUG	
	2	1	**7T-3279**	1	HOUSING AS	
	3	1	**8T-8566**	1	TERMINAL AS	
	4	1	**6V-8188**	4	NUT (1/2-13-THD)	
	5	1	**7X-0562**	4	WASHER-HARD (13.5X19X0.8-MM THK)	
	6	1	**3T-3422**	1	WIRE AS	
	7	1	**7T-3278**	1	HOLDER AS-BRUSH	
	8	1	**7T-3277**	1	COIL AS-FIELD	
	9	1	**7T-3454**	1	INSULATOR	
	10	1	**7T-3271**	1	CONNECTOR	
	11	1	**7T-3451**	1	INSULATOR-TERMINAL	
	12	1	**8T-8569**	1	INSULATOR-TERMINAL	
	13	1	**5S-7349**	4	BOLT (1/4-20X0.5-IN)	
	14	1	**8T-4205**	4	WASHER-HARD (7.2X14.5X2-MM THK)	
	15	1	**8H-1141**	4	SHOE-POLE	
	16	1	**3F-0379**	8	SCREW-POLE SHOE (3/8-24-THD)	
	17	1	**7T-3276**	1	ARMATURE AS (24-VOLT)	
	18	1	**3E-7775**	1	HOUSING AS	
	19	1	**4M-1831**	1	PLUG-LEVER HOUSING	
	20	1	**7L-2894**	1	GASKET	
	21	1	**036-9823**	5	BOLT (1/4-28X1-IN)	
	22	1	**6N-3826**	1	DRIVE AS-MOTOR	
	23	1	**7T-3974**	1	HOUSING AS-DRIVE	
	24	1	**7X-3373**	6	BOLT (5/16-18X0.88-IN)	
	25	1	**193-8570**	1	SOLENOID AS (24-VOLT) (STARTING MOTOR)	
	26	1	**6V-8378**	3	NUT (10-32-THD)	
	27	1	**8F-1434**	2	LOCKWASHER	
	28	1	**8T-0328**	3	WASHER-HARD (5.5X10X1-MM THK)	
	29	1	**9X-4824**	1	COVER-STARTING MOTOR	
					AVAILABLE REPAIR KIT(S):	
			7T-3268	1	KIT-LEVER (STARTING MOTOR)	
					(INCLUDES LEVER ASSEMBLIES, SEALS, NUT, GASKET AND RETAINER)	
			7T-3267	1	KIT-BUSHING (STARTING MOTOR)	
					(INCLUDES BUSHINGS, WICKS, CUPS, SEALS, GASKET, SCREW AS, WASHERS, SPACER AND NUT)	
			8C-3655	1	KIT-BRUSH (STARTING MOTOR)	
					(INCLUDES BRUSHES, SPRINGS, SCREWS, SCREW AS AND SEAL)	
			8T-9884	1	KIT-INSULATOR (STARTING MOTOR)	
					(INCLUDES INSULATORS AND BUSHING)	

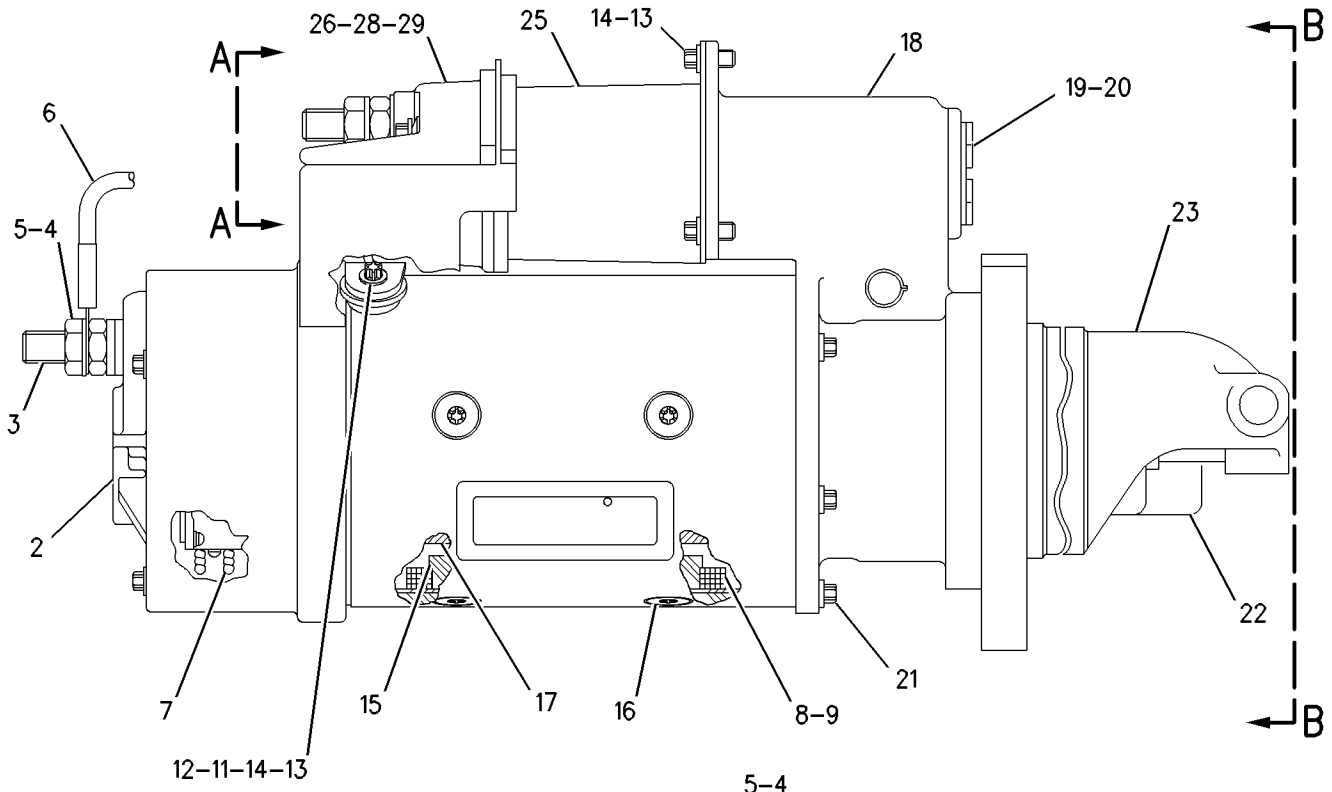

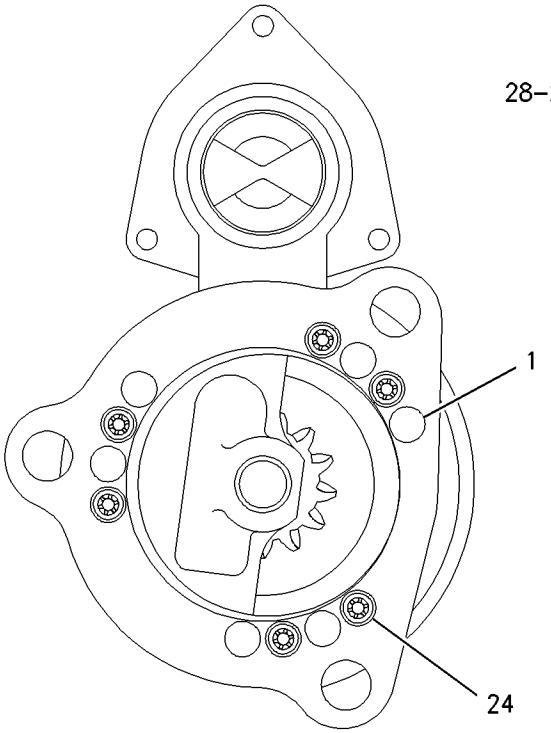

VIEW B–B

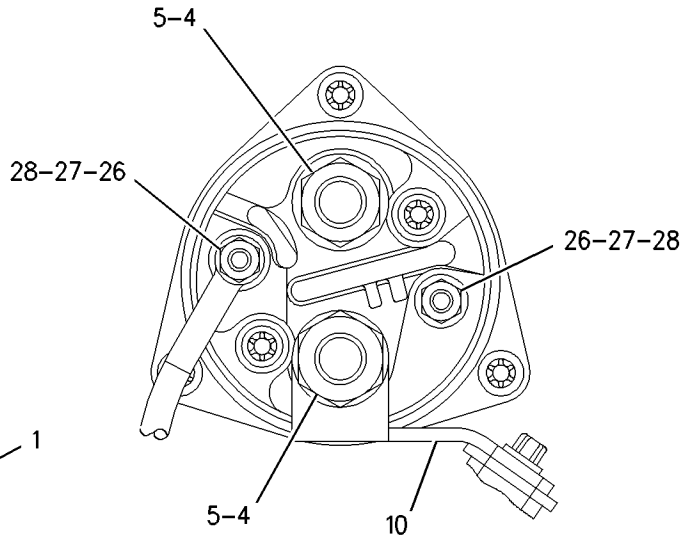

VIEW A–A

GRAPHIC #1 **<END>** g00826583

ELECTRICAL AND STARTING SYSTEM

237-1962 STARTING MOTOR GP-ELECTRIC*R

S/N: AXM1-UP
24-VOLT
PART OF 105-4729 STARTING MOTOR GP-ELECTRIC
FIELD REPLACEMENT FOR 6V-0890—PAGE 257
AN ATTACHMENT

SMCS-1453 **i02249643**

NOTE	REF NO	GRAPHIC REF	PART NUMBER	QTY	PART NAME 1 2 3 4 5 6 (PRODUCT LEVEL)	SEE PAGE
	1	1	**7M-0326**	1	CONNECTOR	
	2	1	**9H-3757**	2	WASHER (0.516X1X0.094-IN THK)	
	3	1	**1S-7446**	3	SCREW-MACHINE (8-32X0.437-IN)	
	4	1	**8C-9660**	3	WASHER (4.6X7.9X0.8-MM THK)	
	5	1	**9S-2544**	9	SCREW-HEX HEAD (8-32X11.13-MM)	
	6	1	**7M-0327**	1	WASHER-THRUST (17.4X25.4X1.6-MM THK)	
	7	1	**3T-3418**	1	FRAME AS-END	
		1	**3T-3423**	1	CUP	
		1	**3T-3424**	1	PLUG-FELT	
		1	**9G-4101**	1	BUSHING-END	
	8	1	**3T-9525**	1	PLATE AS-BRUSH	
	8A	2	**6T-0371**	1	INSULATOR	
	8B	2	**5P-6298**	12	SCREW-MACHINE (10-32X0.5-IN)	
		1	**9F-5599**	12	LOCKWASHER	
	8C	2	**7F-3525**	6	WASHER-BUSHING (0.209X0.39X0.09-MM THK)	
	8D	2	**6T-0372**	1	PLATE	
	8E	2	**3T-4709**	3	PLATE	
	8F	2	**2L-6679**	3	PLATE-INSULATOR	
	8G	2	**3T-4710**	3	PLATE	
	8H	2	**6T-0363**	6	HOLDER AS-BRUSH	
					(EACH INCLUDES)	
	8J	2	**3T-9494**	1	SPRING	
	9	1	**7F-3491**	2	WASHER (0.516X1X0.094-IN THK)	
	10	1	**3T-3422**	1	WIRE AS (STARTER)	
	11	1	**2J-8163**	2	SEAL-O-RING	
	12	1	**7X-3373**	1	BOLT (5/16-18X0.88-IN)	
	13	1	**3T-3434**	6	PLUG	
	14	1	**5J-5314**	5	BOLT (5/16-18X1.5-IN)	
	15	1	**3L-3380**	1	BUSHING-TERMINAL	
	16	2	**036-9821**	1	WASHER	
	17	2	**4M-1828**	1	RETAINER-SPRING	
	18	2	**4M-1829**	1	BOOT-RUBBER	
	19	2	**9M-7609**	1	SPRING (SHIFT LEVER)	
	20	2	**4M-1827**	1	RETAINER-SPRING	
	21	1	**8C-3089**	1	SEAL-O-RING	
	22	2	**4M-1853**	1	LEVER AS-SHIFT	
	23	2	**5M-3034**	1	LOCKNUT (5/16-24-IN THD)	
	24	1	**7L-2894**	4	GASKET	
	25	1	**4M-1831**	4	PLUG-LEVER HOUSING	
	26	1	**4M-1854**	1	SHAFT-LEVER	
	27	1	**1H-1023**	1	SEAL-O-RING	
	28	1	**2D-6392**	1	SEAL-O-RING	
	29	1	**7T-3974**	1	HOUSING AS-DRIVE	
	30	1	**6N-3826**	1	DRIVE AS-MOTOR	
	31	1,2	**2H-3429**	2	RING-RETAINING	
	32	1	**6V-1322**	4	BOLT (1/4-20X0.375-IN)	
	33	1	**8T-4205**	4	WASHER-HARD (7.2X14.5X2-MM THK)	
	34	1	**6N-3279**	1	INSULATOR	
	35	1	**036-9823**	13	BOLT (1/4-28X1-IN)	
	36	1	**1M-9971**	1	SPACER (0.84X1.72X1.88-IN THK)	
	37	1	**1H-2629**	3	STRIP-INSULATION	
	38	1	**7M-0324**	1	COIL AS-FIELD	
	39	1	**3F-0379**	12	SCREW-POLE SHOE (3/8-24-THD)	

237-1962 **STARTING MOTOR GP-ELECTRIC** *(contd.)* **i02249643**

NOTE	REF NO	GRAPHIC REF	PART NUMBER	QTY	PART NAME 1 2 3 4 5 6 (PRODUCT LEVEL)	SEE PAGE
	40	1	**7F-3488**	6	SHOE-POLE	
	41	1	**7M-8651**	1	ARMATURE AS	
	42	1	**7M-0325**	1	INSULATOR (COIL)	
	43	1	**3T-9524**	6	BRUSH AS	
	44	1	**3N-3763**	1	KIT-TERMINAL (STARTING MOTOR)	
					(INCLUDES BUSHINGS AND WASHERS)	
	45	1	**125-6537**	1	INSULATOR (STARTER)	
	46	2	**3R-8801**	1	CLAMP	
	47	1	**8F-1434**	2	LOCKWASHER	
	48	1	**6V-8188**	6	NUT (1/2-13-THD)	
	49	1	**7X-0562**	6	WASHER-HARD (13.5X19X0.8-MM THK)	
	50	1	**4B-2049**	6	NUT (10-32-THD)	
	51	1	**8T-0328**	10	WASHER-HARD (5.5X10X1-MM THK)	
	52	1	**3T-9494**	6	SPRING	
	53	1	**3E-7771**	1	HOUSING AS	
	54	1	**9G-4101**	1	BUSHING-END	
	55	1	**3T-3424**	3	PLUG-FELT	
	56	1	**3T-3423**	3	CUP	
	57	1	**1M-9968**	1	BUSHING	
	58	1	**2F-6678**	1	SEAL-LIP TYPE	
	59	1	**4L-2729**	1	WASHER (0.844X1.9X0.188-IN THK)	
	60	1	**4M-1896**	1	BUSHING-TERMINAL	
	61	1	**045-4065**	4	SCREW-MACHINE (10-32X0.75-IN)	
	62	1	**125-6535**	1	COVER-STARTING MOTOR	
	63	1	**7T-9123**	1	GASKET-PLATE	
	64	1	**238-1851**	1	SOLENOID AS (24-VOLT, STARTING MOTOR)	
	65	1	**125-6536**	1	TERMINAL AS	

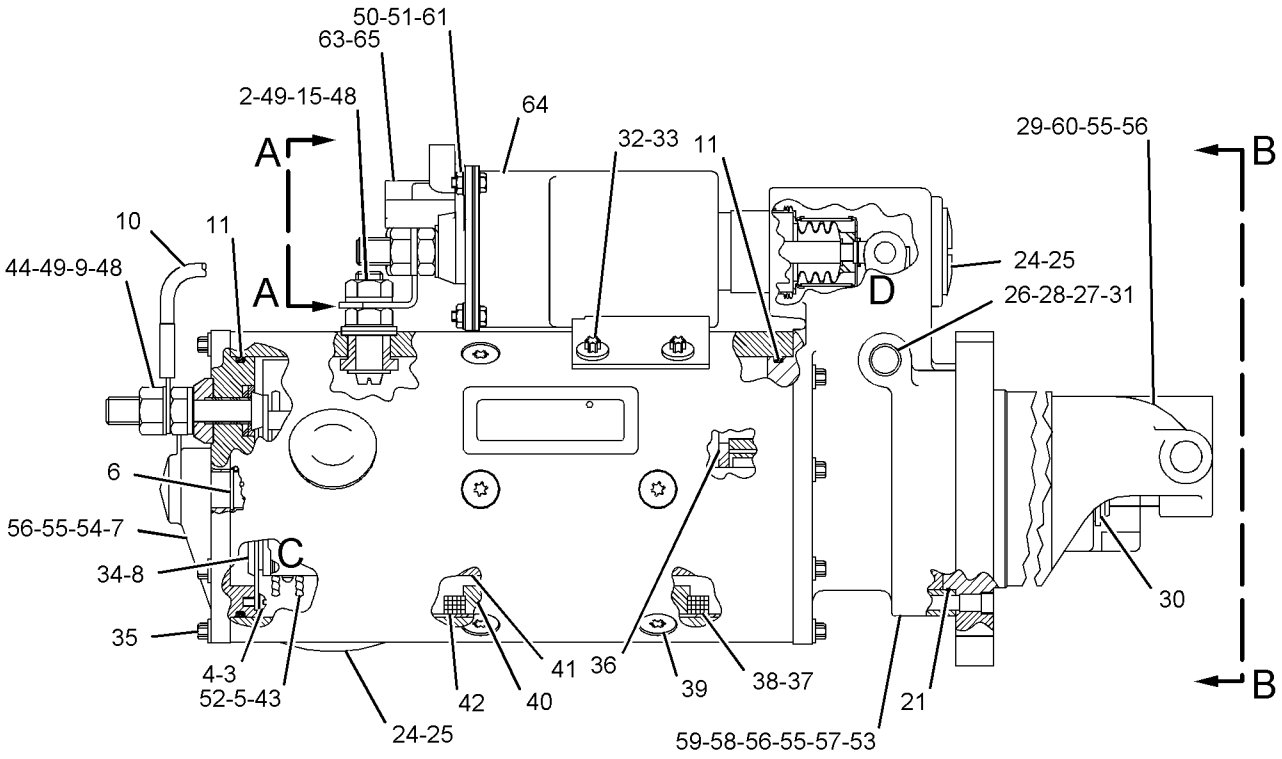

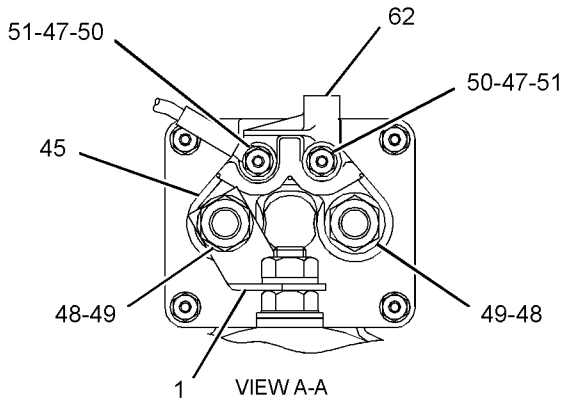

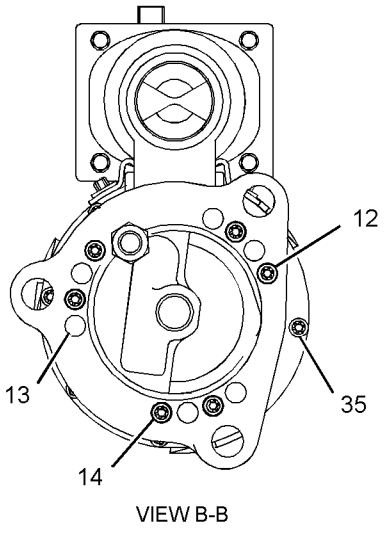

REFER TO ALL ILLUSTRATIONS OF THIS GROUP FOR AUXILIARY VIEWS

GRAPHIC #1

g01087643

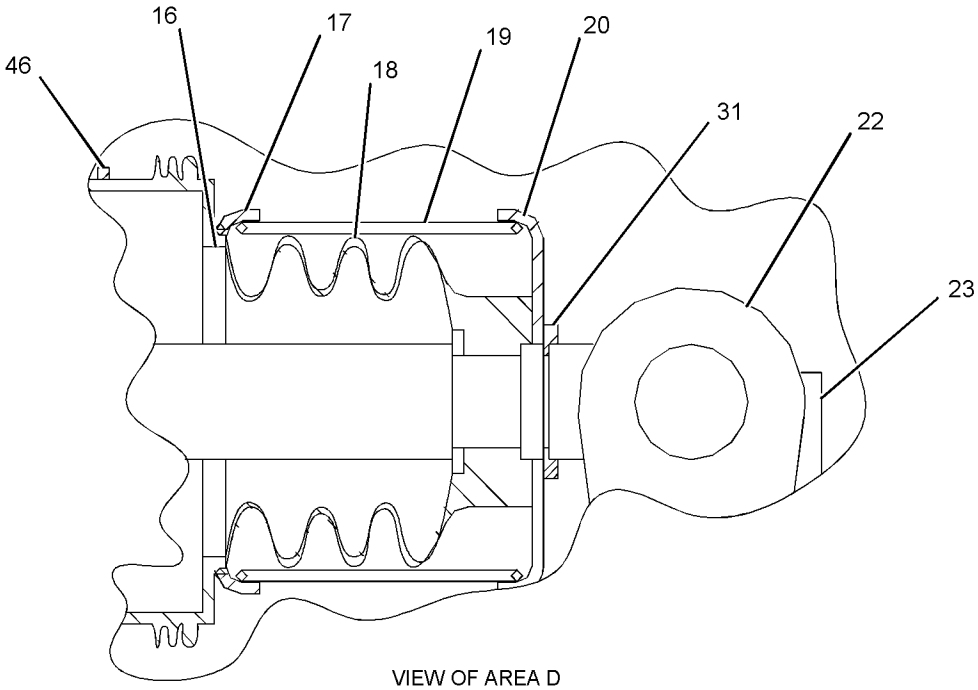

VIEW OF AREA D

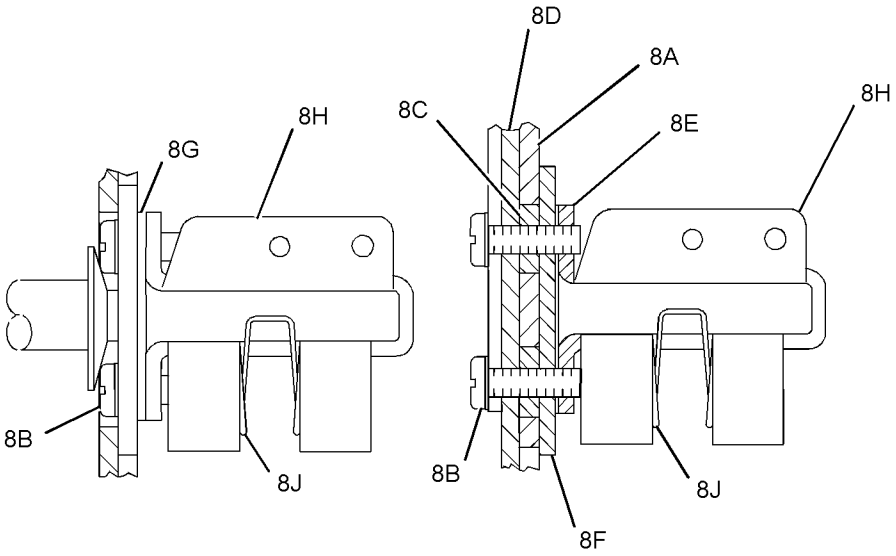

VIEW OF AREA C

GRAPHIC #2

<END>

g01087783

7N-0718 SWITCH GP-DISCONNECT–BATTERY

S/N: AXM1-UP

PART OF 186-5855, 238-3240 PANEL GP-CIRCUIT BREAKER

SMCS-1411 **i02163014**

NOTE	REF NO	GRAPHIC REF	PART NUMBER	QTY	PART NAME 1 2 3 4 5 6 (PRODUCT LEVEL)	SEE PAGE
	1	1	**8H-5306**	1	KEY (BATTERY DISCONNECT)	
	2	1	**8H-5303**	1	NUT (3/4-16-THD)	
	3	1	**2H-3922**	2	LOCKWASHER	
	4	1	**9F-5644**	2	LOCKWASHER	
	5	1	**6F-7045**	2	NUT-FULL (3/8X24-THD)	

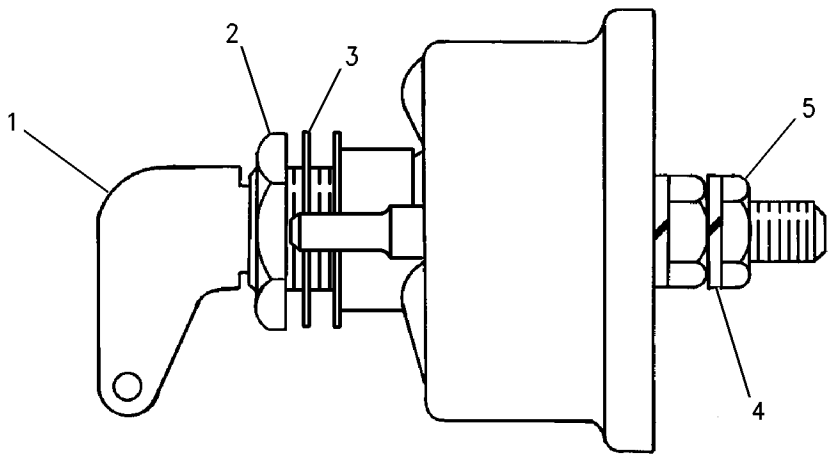

GRAPHIC #1 **<END>** g00715584

3E-0154 SWITCH GP-MAGNETIC

S/N: AXM1-1376
24-32-VOLT
PART OF 141-6885 BATTERY & WIRING GP

SMCS-7499 **i01819975**

NOTE	REF NO	GRAPHIC REF	PART NUMBER	QTY	PART NAME 1 2 3 4 5 6 (PRODUCT LEVEL)	SEE PAGE
	1	1	**7X-0620**	2	WASHER-HARD (5.5X13X1.6-MM THK)	
	2	1	**8F-1434**	2	LOCKWASHER	
	3	1	**6V-8378**	2	NUT (10-32-THD)	
C	4	1	**6V-8801**	2	NUT (3/8-16-THD)	
C	5	1	**7X-0608**	2	WASHER-HARD (10.2X16X2-MM THK)	
	6	1	**4D-1326**	2	LOCKWASHER	

C-CHANGE FROM PREVIOUS TYPE

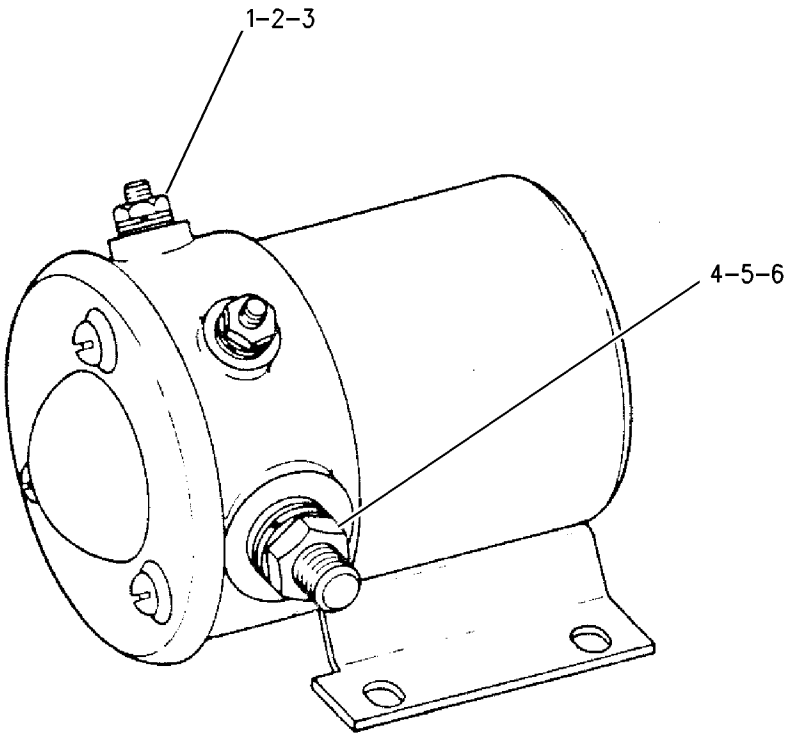

GRAPHIC #1 **<END>** g00726410

167-0138 SWITCH GP-MAGNETIC

S/N: AXM1-UP
24 VOLT
PART OF 149-0077, 235-2676 CIRCUIT BREAKER GP

SMCS-7499 **i02163020**

NOTE	REF NO	GRAPHIC REF	PART NUMBER	QTY	PART NAME 1 2 3 4 5 6 (PRODUCT LEVEL)	SEE PAGE
	1	1	**155-2270**	1	KIT-CONNECTING PLUG (2-PIN)	
					(INCLUDES PLUG AS AND WEDGE)	
	2	1	**4F-2294**	2	NUT-JAM (5/16-24-THD)	
	3	1	**186-3736**	2	SOCKET-CONNECTOR	

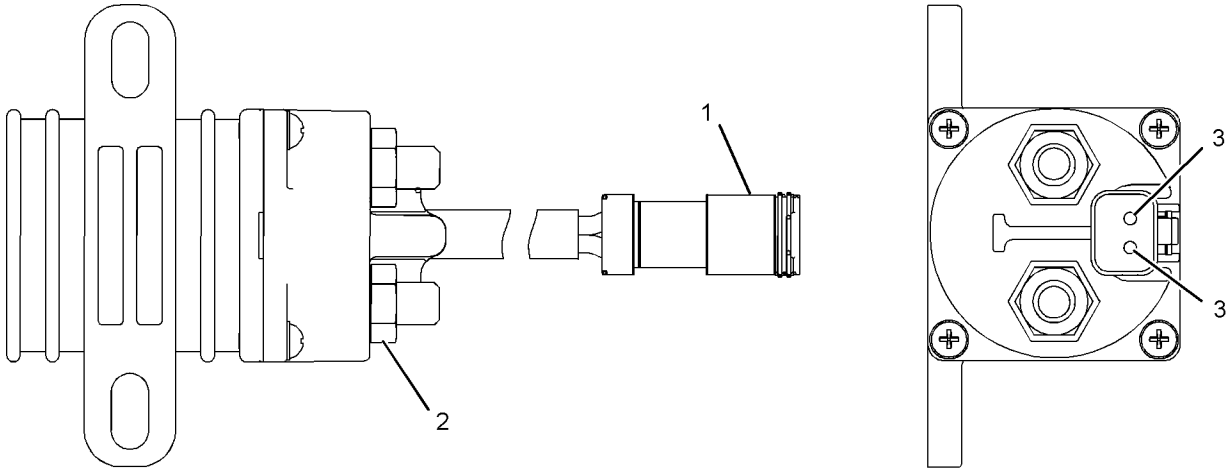

GRAPHIC #1 **<END>** g01079731

179-0006 SWITCH GP-MAGNETIC

S/N: AXM1377-UP

PART OF 238-8543 BATTERY & WIRING GP

SMCS-7499 **i02241405**

NOTE	REF NO	GRAPHIC REF	PART NUMBER	QTY	PART NAME 1 2 3 4 5 6 (PRODUCT LEVEL)	SEE PAGE
	1	1	**7X-0620**	2	WASHER-HARD (5.5X13X1.6-MM THK)	
	2	1	**8F-1434**	2	LOCKWASHER	
	3	1	**6V-8378**	2	NUT (10-32-THD)	
	4	1	**4L-6499**	2	WASHER (0.38X0.88X0.02-IN THK)	
	5	1	**4D-1326**	2	LOCKWASHER	
	6	1	**1B-2578**	2	NUT (3/8-16-THD)	

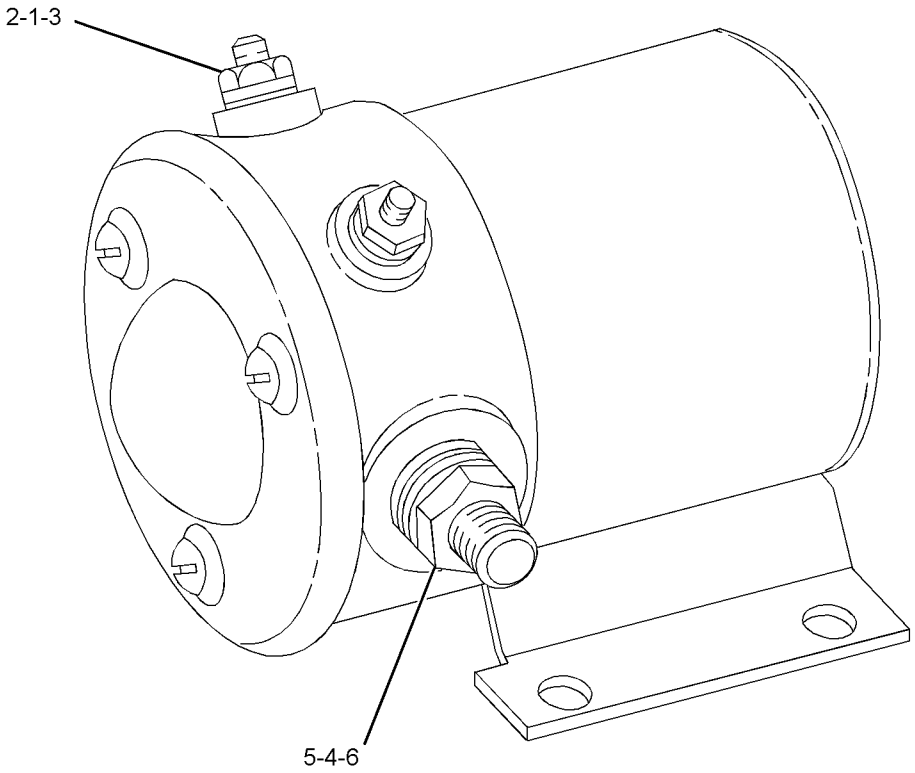

GRAPHIC #1 **<END>** g01132022

152-7031 WARNING GP-BACKUP

S/N: AXM1-1310

PART OF 152-7032 WIRING GP-REAR

SMCS-7406 **i02247386**

NOTE	REF NO	GRAPHIC REF	PART NUMBER	QTY	PART NAME 1 2 3 4 5 6 (PRODUCT LEVEL)	SEE PAGE
	1	1	**8C-5608**	8	SPACER (6.5X9.5X25.4-MM THK)	
	2	1	**8T-2228**	12	WASHER-HARD (6.5X17X2-MM THK)	
	3	1	**9X-9896**	16	MOUNT (ISOLATION)	
	4	1	**123-6449**	1	ALARM GP	
		1	**102-8802**	1	KIT-RECEPTACLE (2-PIN)	
					(INCLUDES RECEPTACLE AS AND WEDGE)	
E		1	**9X-1813**		SLEEVE (28CM)	
	5	1	**124-4111**	2	BRACKET	
Y	6	1	**149-5534**	1	LAMP GP-SIGNAL (STOP, TURN, TAIL, RH)	235
Y	7	1	**149-5535**	1	LAMP GP-SIGNAL (STOP, TAIL, TURN, LH)	236
	8	1	**150-3896**	4	STRIP-RUBBER	
	9	1	**151-7851**	1	LATCH-DRAWBAR	
	10	1	**154-8482**	2	BRACKET AS-LAMP	
Y	11	1	**172-9973**	2	LAMP GP-FLOOD (24-VOLT, VERTICAL MOUNT)	231
	12	1	**183-9035**	1	PLATE AS-MOUNTING	
		1	**7T-1099**	3	LINK	
	13	1	**190-6299**	1	HARNESS AS-REAR LIGHTING	
B	14	1	**6L-7008**	5	STRAP-CABLE	
	15	1	**4P-7581**	2	CLIP	
M	16	1	**6V-7744**	1	LOCKNUT (M10X1.5-THD)	
M	17	1	**8C-8451**	8	BOLT (M6X1X40-MM)	
	18	1	**8T-4121**	8	WASHER-HARD (11X21X2.5-MM THK)	
M	19	1	**8T-4133**	4	NUT (M10X1.5-THD)	
M	20	1	**8T-4186**	1	BOLT (M10X1.5X40-MM)	
M	21	1	**8T-4195**	2	BOLT (M10X1.5X30-MM)	
M	22	1	**8T-4198**	2	BOLT (M10X1.5X100-MM)	

B-USE AS REQUIRED
E-ORDER BY THE CENTIMETER
M-METRIC PART
Y-SEPARATE ILLUSTRATION

152-7031 **WARNING GP-BACKUP** ***(contd.)*** **i02247386**

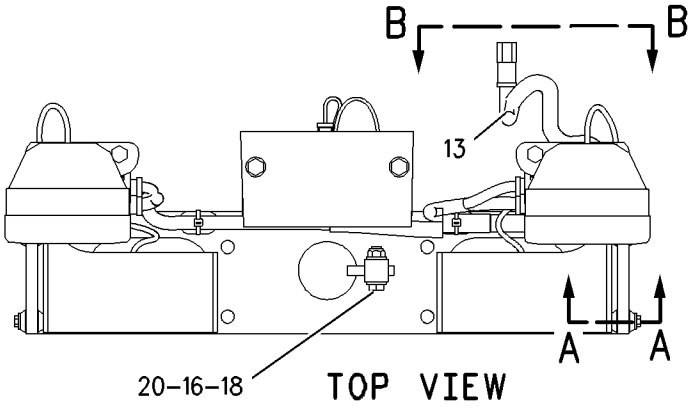

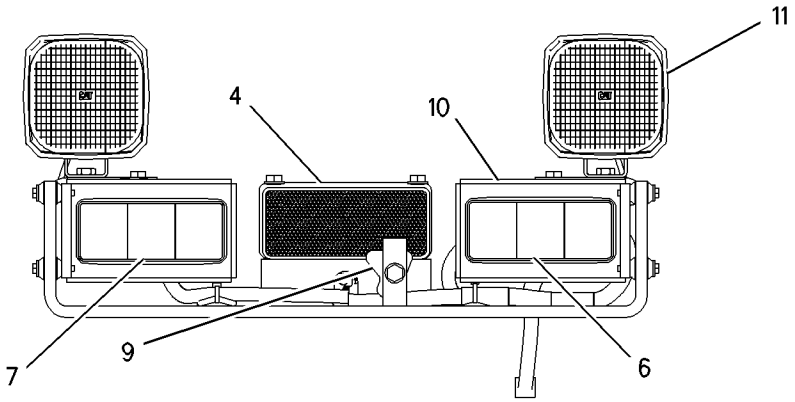

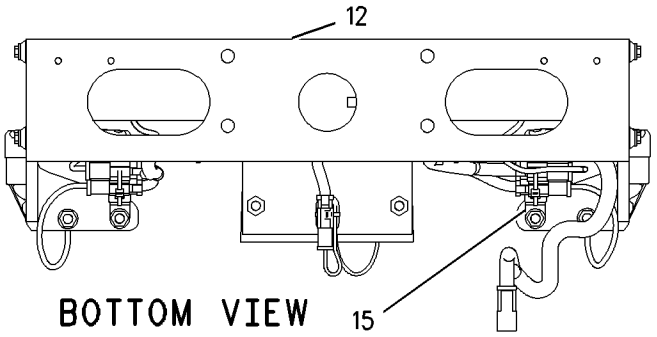

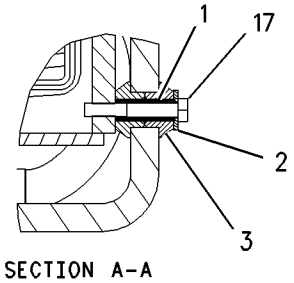

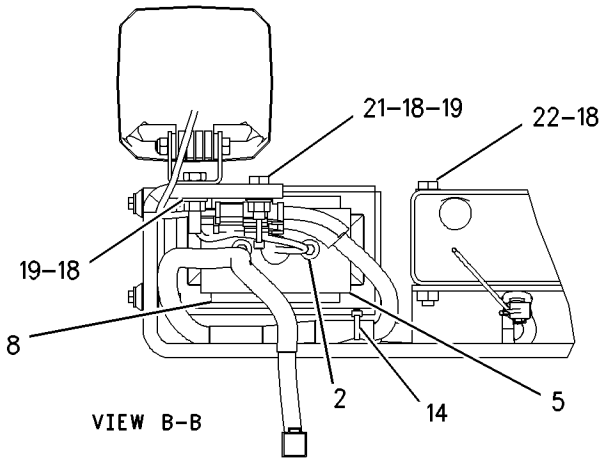

GRAPHIC #1 **<END>** g00828120

237-5513 WARNING GP-BACKUP

S/N: AXM1311-1606

PART OF 152-7032, 241-6069 WIRING GP-REAR

SMCS-7406 **i02155639**

NOTE	REF NO	GRAPHIC REF	PART NUMBER	QTY	PART NAME 1 2 3 4 5 6 (PRODUCT LEVEL)	SEE PAGE
	1	1	**3S-2093**	5	STRAP-CABLE	
	2	1	**8C-5608**	8	SPACER (6.5X9.5X25.4-MM THK)	
	3	1	**8T-2228**	12	WASHER-HARD (6.5X17X2-MM THK)	
	4	1	**9X-9896**	16	MOUNT (ISOLATION)	
	5	1	**124-4111**	2	BRACKET	
Y	6	1	**149-5534**	1	LAMP GP-SIGNAL (STOP, TURN, TAIL, RH)	235
Y	7	1	**149-5535**	1	LAMP GP-SIGNAL (STOP, TAIL, TURN, LH)	236
	8	1	**150-3896**	4	STRIP-RUBBER	
	9	1	**151-7851**	1	LATCH-DRAWBAR	
	10	1	**154-8482**	2	BRACKET AS-LAMP	
Y	11	1	**172-9973**	2	LAMP GP-FLOOD (24-VOLT, VERTICAL MOUNT)	231
	12	1	**183-9035**	1	PLATE AS-MOUNTING	
		1	**7T-1099**	3	LINK	
	13	1	**213-9100**	1	ALARM AS	
		1	**102-8802**	1	KIT-RECEPTACLE (2-PIN)	
		1	**3E-3365**	1	WEDGE-RECEPTACLE LOCK (2-PIN)	
		1	**9X-1813**	31	SLEEVE	
	14	1	**239-5042**	1	HARNESS AS-REAR LIGHTING	
		1	**102-8805**	1	KIT-RECEPTACLE (6-PIN)	
					(KIT INCLUDES RECEPTACLE AS & WEDGE)	
		1	**155-2270**	1	KIT-CONNECTING PLUG (2-PIN)	
		1	**155-2271**	1	KIT-CONNECTING PLUG (4-PIN)	
					(EACH PLUG KIT INCLUDES PLUG AS, WEDGE & INTERFACE SEAL)	
	15	1	**4P-7581**	2	CLIP	
	16	1	**5P-9085**	1	CLIP	
M	17	1	**6V-7744**	1	LOCKNUT (M10X1.5-THD)	
M	18	1	**8C-8451**	8	BOLT (M6X1X40-MM)	
	19	1	**8T-4121**	8	WASHER-HARD (11X21X2.5-MM THK)	
M	20	1	**8T-4133**	4	NUT (M10X1.5-THD)	
M	21	1	**8T-4136**	2	BOLT (M10X1.5X25-MM)	
M	22	1	**8T-4186**	1	BOLT (M10X1.5X40-MM)	
M	23	1	**8T-4195**	2	BOLT (M10X1.5X30-MM)	

M-METRIC PART
Y-SEPARATE ILLUSTRATION

237-5513 **WARNING GP-BACKUP** *(contd.)* **i02155639**

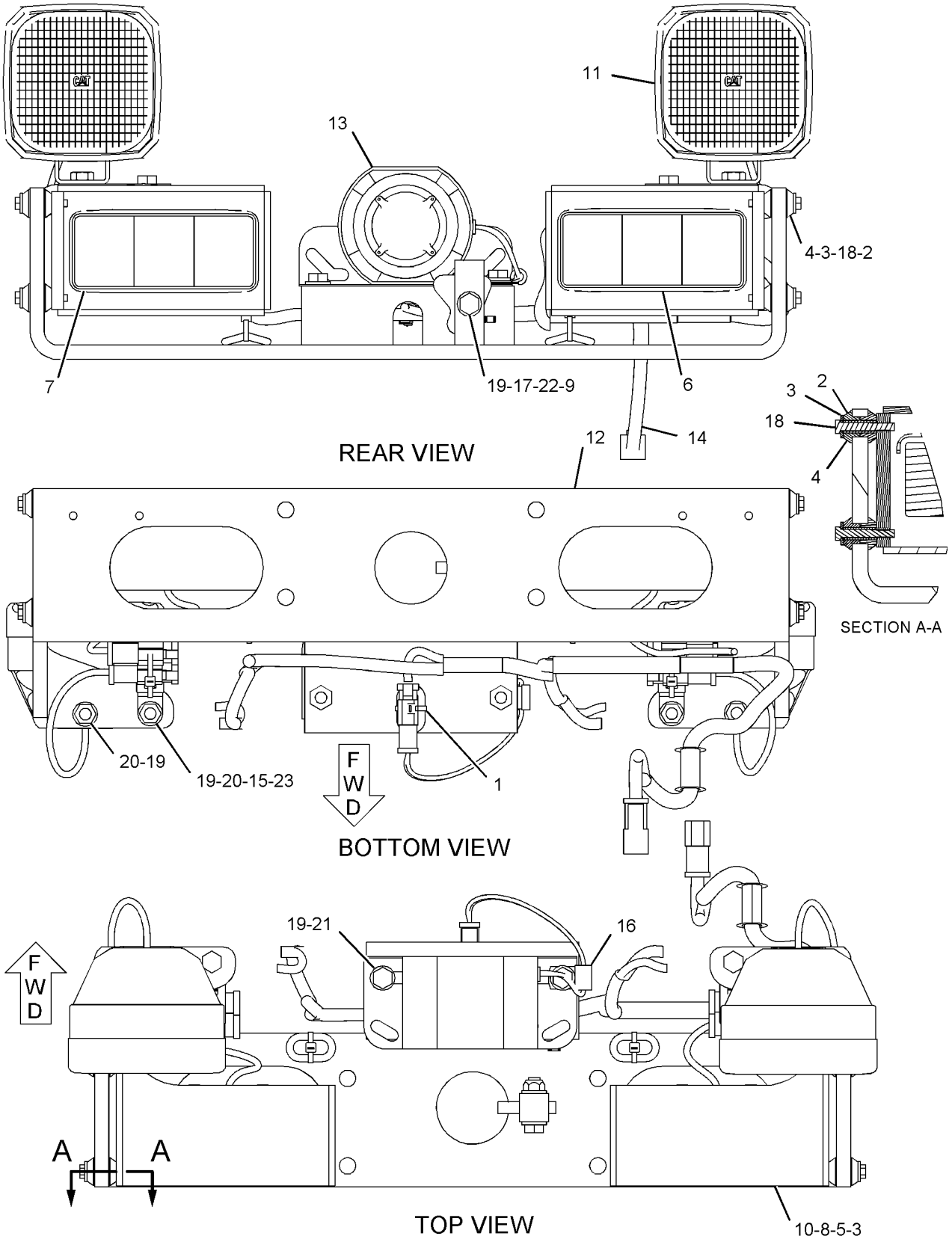

GRAPHIC #1

<END>

g01094039

252-9405 WARNING GP-BACKUP

S/N: AXM1607-UP

PART OF 241-6069 WIRING GP-REAR

SMCS-7406 **i02141120**

NOTE	REF NO	GRAPHIC REF	PART NUMBER	QTY	PART NAME 1 2 3 4 5 6 (PRODUCT LEVEL)	SEE PAGE
	1	1	**3S-2093**	9	STRAP-CABLE	
	2	1	**151-7851**	1	LATCH-DRAWBAR	
Y	3	1	**172-9973**	2	LAMP GP-FLOOD (24-VOLT, VERTICAL MOUNT)	231
	4	1	**213-9100**	1	ALARM AS	
Y	5	1	**225-8758**	2	LAMP GP-SIGNAL (STOP, TAIL, TURN)	238
	6	1	**228-4032**	1	PLATE AS	
		1	**7T-1099**	5	LINK	
M		1	**8T-3490**	2	NUT-WELD (M10X1.5-THD)	
	7	1	**239-5042**	1	HARNESS AS-REAR LIGHTING	
		1	**102-8805**	1	KIT-RECEPTACLE (6-PIN)	
					(INCLUDES RECEPTACLE AS & WEDGE)	
		1	**155-2270**	1	KIT-CONNECTING PLUG (2-PIN)	
		1	**155-2271**	1	KIT-CONNECTING PLUG (4-PIN)	
					(EACH PLUG KIT INCLUDES PLUG AS, WEDGE & INTERFACE SEAL)	
	8	1	**4P-7581**	2	CLIP	
	9	1	**5P-9085**	1	CLIP	
M	10	1	**6V-7744**	1	LOCKNUT (M10X1.5-THD)	
	11	1	**8T-4121**	8	WASHER-HARD (11X21X2.5-MM THK)	
M	12	1	**8T-4133**	4	NUT (M10X1.5-THD)	
M	13	1	**8T-4186**	1	BOLT (M10X1.5X40-MM)	
M	14	1	**8T-4195**	4	BOLT (M10X1.5X30-MM)	

M-METRIC PART
Y-SEPARATE ILLUSTRATION

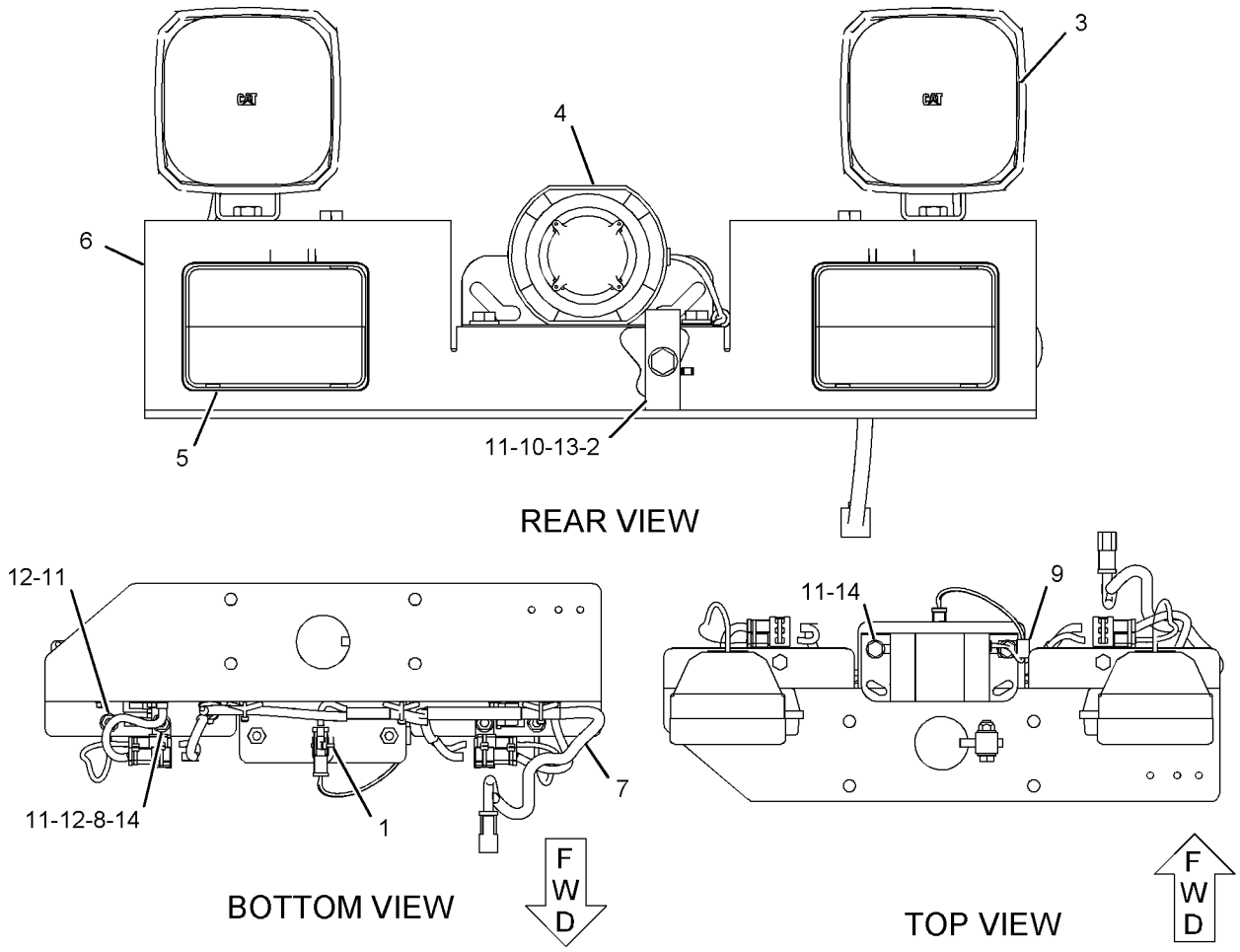

GRAPHIC #1 **<END>** g01089550

261-0326 WARNING GP-OPERATOR

S/N: AXM1377-1796
FIELD INSTALLATION

SMCS-7400, 7407 **i02245956**

NOTE	PART NUMBER	QTY	PART NAME 1 2 3 4 5 6 (PRODUCT LEVEL)	SEE PAGE
	2U-8863	1	ALARM AS (OIL TEMPERATURE)	
	2U-4500	1	GROMMET	
	7N-7779	1	SOCKET-CONNECTOR	
	7N-7780	1	PIN-CONNECTOR	
	7N-9737	1	HOUSING-PLUG	
	3T-0304	1	BASE-INDICATOR LIGHT	
	6V-8374	2	SCREW-MACHINE (6-32X0.25-IN)	
M	**8T-4137**	2	BOLT (M10X1.5X20-MM)	
	4P-7581	2	CLIP	
	261-0301	1	FILM-TRANSMISSION OIL	
	261-2191	1	FLANGE	
	261-0847	1	HARNESS AS-CAB	
	102-8802	1	KIT-RECEPTACLE (2-PIN)	
			(INCLUDES RECEPTACLE AS & WEDGE)	
	261-0846	1	HARNESS AS-DASH (PANEL)	
	7N-9738	1	HOUSING-RECEPTACLE	
	261-0848	1	HARNESS AS-TRANSMISSION	
	155-2270	1	KIT-CONNECTING PLUG (2-PIN)	
			(INCLUDES PLUG AS, WEDGE & INTERFACE SEAL)	
	7N-1996	1	LAMP (24-VOLT)	
	7N-1995	1	LENS (RED)	
M	**5C-2874**	2	NUT (M5X0.8-THD)	
M	**7Y-7389**	2	SCREW (M5X0.8X16-MM)	
	3K-0360	1	SEAL-O-RING	
	4J-0524	1	SEAL-O-RING	
	1P-3707	1	SEAL-RECTANGULAR	
	3S-2093	30	STRAP-CABLE	
	3E-7504	1	SWITCH GP-TEMPERATURE	
	186-3735	2	PIN-CONNECTOR	
	102-8802	1	KIT-RECEPTACLE (2-PIN)	
			(INCLUDES RECEPTACLE AS & WEDGE)	
	8T-0328	2	WASHER-HARD (5.5X10X1-MM THK)	
	8T-4121	2	WASHER-HARD (11X21X2.5-MM THK)	

M-METRIC PART

<END>

ELECTRICAL AND STARTING SYSTEM

261-3567 WARNING GP-OPERATOR

S/N: AXM1797-UP

FIELD INSTALLATION

SMCS-7400, 7407 **i02245971**

NOTE	PART NUMBER	QTY	PART NAME 1 2 3 4 5 6 (PRODUCT LEVEL)	SEE PAGE
	2U-8863	1	ALARM AS (OIL TEMPERATURE)	
	2U-4500	1	GROMMET	
	7N-7779	1	SOCKET-CONNECTOR	
	7N-7780	1	PIN-CONNECTOR	
	7N-9737	1	HOUSING-PLUG	
	3T-0304	1	BASE-INDICATOR LIGHT	
	6V-8374	2	SCREW-MACHINE (6-32X0.25-IN)	
M	**8T-4137**	2	BOLT (M10X1.5X20-MM)	
M	**8T-6868**	4	BOLT (M12X1.75X80-MM)	
	4P-7581	2	CLIP	
	261-0301	1	FILM-TRANSMISSION OIL	
	261-1956	1	FLANGE	
	261-0847	1	HARNESS AS-CAB	
	102-8802	1	KIT-RECEPTACLE (2-PIN)	
			(INCLUDES RECEPTACLE AS & WEDGE)	
	261-0846	1	HARNESS AS-DASH (PANEL)	
	7N-9738	1	HOUSING-RECEPTACLE	
	261-0848	1	HARNESS AS-TRANSMISSION	
	155-2270	1	KIT-CONNECTING PLUG (2-PIN)	
			(INCLUDES PLUG AS, WEDGE & INTERFACE SEAL)	
	7N-1996	1	LAMP (24-VOLT)	
	7N-1995	1	LENS (RED)	
M	**5C-2874**	2	NUT (M5X0.8-THD)	
M	**7Y-7389**	2	SCREW (M5X0.8X16-MM)	
	3K-0360	1	SEAL-O-RING	
	4J-0524	2	SEAL-O-RING	
	3S-2093	30	STRAP-CABLE	
	3E-7504	1	SWITCH GP-TEMPERATURE	
	186-3735	2	PIN-CONNECTOR	
	102-8802	1	KIT-RECEPTACLE (2-PIN)	
			(INCLUDES RECEPTACLE AS & WEDGE)	
	8T-0328	2	WASHER-HARD (5.5X10X1-MM THK)	
	8T-4121	2	WASHER-HARD (11X21X2.5-MM THK)	

M-METRIC PART

<END>

152-6930 WIRING GP-CAB

S/N: AXM1-1376

PART OF 152-6919 AXLE & FRAME AR

SMCS-1408, 7301 **i02270512**

NOTE	PART NUMBER	QTY	PART NAME 1 2 3 4 5 6 (PRODUCT LEVEL)	SEE PAGE
Y	**171-7213**	2	LAMP GP-HEAD (LOW BEAM)	232
Y	**171-7214**	2	LAMP GP-HEAD (HIGH BEAM)	233
Y	**3E-6466**	2	LAMP GP-SIGNAL (24-VOLT)	234
Y	**162-5402**	2	LAMP GP-SIGNAL (24-VOLT)	237
Y	**118-7226**	1	SENSOR GP-TEMPERATURE (TORQUE CONVERTER OIL)	251
	4L-6454	11	BOLT (3/8-16X1-IN)	
	5M-3062	1	BOLT (3/8-16X0.75-IN)	
	5P-2566	2	BOLT (1/2-13X1.5-IN)	
	7X-0292	1	BOLT (3/8-16X4.5-IN)	
	8T-2501	2	BOLT (3/8-16X2-IN)	
M	**8T-4136**	28	BOLT (M10X1.5X25-MM)	
M	**8T-4138**	6	BOLT (M6X1X20-MM)	

152-6930 **WIRING GP-CAB** ***(contd.)*** **i02270512**

NOTE	PART NUMBER	QTY	PART NAME 1 2 3 4 5 6 (PRODUCT LEVEL)	SEE PAGE
M	**8T-4185**	1	BOLT (M10X1.5X50-MM)	
M	**8T-4186**	1	BOLT (M10X1.5X40-MM)	
M	**8T-4196**	2	BOLT (M10X1.5X35-MM)	
	8T-9393	2	BOLT (5/8-11X1.5-IN)	
	211-7321	2	BOX	
	211-8021	3	BRACKET	
	6U-2703	3	BRACKET-ANGLE	
	206-6810	1	BRACKET-MOUNTING	
	3S-8665	2	CLIP	
	4P-7429	1	CLIP	
	4P-7581	20	CLIP	
	4P-8134	8	CLIP	
	5K-3294	4	CLIP	
	5P-9085	3	CLIP	
	5P-9297	3	CLIP	
	6D-3479	7	CLIP	
	6D-4246	9	CLIP	
	6V-2383	1	CLIP	
	7C-4354	6	CLIP	
	8M-2770	9	CLIP	
	8M-2771	4	CLIP	
	8M-2773	3	CLIP	
	9M-4972	9	CLIP	
	165-6365	1	FITTING AS	
	3J-1907	1	SEAL-O-RING	
	7W-7381	1	FITTING-OUTLET	
	7F-0880	1	GASKET-COPPER	
	206-7667	1	HARNESS AS-CAB	
	102-8802	3	KIT-RECEPTACLE (2-PIN)	
	102-8803	2	KIT-RECEPTACLE (3-PIN)	
	102-8805	1	KIT-RECEPTACLE (6-PIN)	
			(EACH RECEPTACLE KIT INCLUDES RECEPTACLE AS & WEDGE)	
	155-2260	1	KIT-CONNECTING PLUG (3-PIN)	
	155-2270	2	KIT-CONNECTING PLUG (2-PIN)	
	155-2274	1	KIT-CONNECTING PLUG (6-PIN)	
			(EACH PLUG KIT INCLUDES PLUG AS, WEDGE & INTERFACE SEAL)	
	214-4559	1	HARNESS AS-FRONT CHASSIS	
	102-8802	10	KIT-RECEPTACLE (2-PIN)	
	102-8803	2	KIT-RECEPTACLE (3-PIN)	
	102-8805	4	KIT-RECEPTACLE (6-PIN)	
			(EACH RECEPTACLE KIT INCLUDES RECEPTACLE AS & WEDGE)	
	155-2260	2	KIT-CONNECTING PLUG (3-PIN)	
	155-2270	10	KIT-CONNECTING PLUG (2-PIN)	
	155-2274	4	KIT-CONNECTING PLUG (6-PIN)	
			(EACH PLUG KIT INCLUDES PLUG AS, WEDGE & INTERFACE SEAL)	
	206-6210	1	HARNESS AS-HITCH	
	102-8802	2	KIT-RECEPTACLE (2-PIN)	
	102-8803	2	KIT-RECEPTACLE (3-PIN)	
	102-8805	2	KIT-RECEPTACLE (6-PIN)	
			(EACH RECEPTACLE KIT INCLUDES RECEPTACLE AS & WEDGE)	
	155-2270	2	KIT-CONNECTING PLUG (2-PIN)	
	155-2271	2	KIT-CONNECTING PLUG (4-PIN)	
	155-2274	2	KIT-CONNECTING PLUG (6-PIN)	
			(EACH PLUG KIT INCLUDES PLUG AS, WEDGE & INTERFACE SEAL)	

152-6930 **WIRING GP-CAB** ***(contd.)*** **i02270512**

NOTE	PART NUMBER	QTY	PART NAME 1 2 3 4 5 6 (PRODUCT LEVEL)	SEE PAGE
	244-8635	2	HARNESS AS-LIGHTING	
			(EACH INCLUDES)	
	102-8802	5	KIT-RECEPTACLE (2-PIN)	
	102-8805	1	KIT-RECEPTACLE (6-PIN)	
			(EACH RECEPTACLE KIT INCLUDES RECEPTACLE AS & WEDGE)	
	155-2270	5	KIT-CONNECTING PLUG (2-PIN)	
	155-2274	1	KIT-CONNECTING PLUG (6-PIN)	
			(EACH PLUG KIT INCLUDES PLUG AS, WEDGE & INTERFACE SEAL)	
	206-6211	2	HARNESS AS-LIGHTING	
	214-4560	1	HARNESS AS-TRANSMISSION	
	102-8802	17	KIT-RECEPTACLE (2-PIN)	
	102-8803	1	KIT-RECEPTACLE (3-PIN)	
	102-8804	1	KIT-RECEPTACLE (4-PIN)	
	102-8805	1	KIT-RECEPTACLE (6-PIN)	
	155-2260	1	KIT-CONNECTING PLUG (3-PIN)	
	155-2270	17	KIT-CONNECTING PLUG (2-PIN)	
	155-2271	1	KIT-CONNECTING PLUG (4-PIN)	
	155-2274	1	KIT-CONNECTING PLUG (6-PIN)	
	7T-0969	1	HORN AS (24-VOLT, LOW TONE)	
	7T-0970	1	HORN AS (24-VOLT, HIGH TONE)	
	163-1201	1	HORN AS (24-VOLT, LOW TONE)	
	174-7875	1	HORN AS (24-VOLT, HIGH TONE)	
	2V-2043	1	LOCKNUT-FLARED (1-5/8-12-THD)	
M	**5C-2890**	18	NUT (M6X1-THD)	
M	**8T-4133**	20	NUT (M10X1.5-THD)	
	199-2634	1	PLATE	
	205-5595	1	PLATE	
	199-2633	1	PLATE AS (STARTER)	
	205-5594	1	PLATE AS	
	7U-9542	2	PLATE-CLAMPING	
	215-2987	2	PLATE-MOUNTING	
	149-2612	1	RELAY AS (24-VOLT)	
	3E-7842	1	RESISTOR AS	
	3J-1907	3	SEAL-O-RING	
	3K-0360	3	SEAL-O-RING	
	9X-7378	1	SEAL-O-RING	
	194-6722	1	SENSOR GP-PRESSURE (TURBOCHARGER INLET)	
	155-2260	1	KIT-CONNECTING PLUG (3-PIN)	
	3E-3368	1	WEDGE-PLUG LOCK (3-PIN)	
	9X-1813		SLEEVE (34CM)	
	189-5746	1	SENSOR GP-SPEED (ENGINE)	
	102-8802	1	KIT-RECEPTACLE (2-PIN)	
	9X-1386		SLEEVE (14CM)	
	171-5349	1	MARKER	
	122-7052	1	SPACER (10.5X20X28-MM THK)	
	211-7322	4	SPACER-SPECIAL	
	2U-4497	85	STRAP	
	6U-0456	2	STRAP	
	106-8704	1	SUPPRESSOR AS-ARC	
	3E-6450	1	SWITCH AS-PRESSURE (STEERING OIL)	
	114-5333	1	SWITCH AS-PRESSURE (REFRIGERANT) (AIR CONDITIONER)	
	3E-6449	1	SWITCH AS-TEMPERATURE (OUTPUT TRANSFER GEAR)	
	118-3534	1	SWITCH GP-MAGNETIC (24-VOLT)	
	213-6947	1	SWITCH GP-PRESSURE	
	3E-6451	1	SWITCH GP-TEMPERATURE	
	9X-8256	10	WASHER (6.6X12X2-MM THK)	
	5P-1075	1	WASHER-HARD (10.2X22.5X3-MM THK)	

152-6930 **WIRING GP-CAB** ***(contd.)*** **i02270512**

NOTE	PART NUMBER	QTY	PART NAME 1 2 3 4 5 6 (PRODUCT LEVEL)	SEE PAGE
	5P-4115	8	WASHER-HARD (7.2X19X2-MM THK)	
	8T-4121	52	WASHER-HARD (11X21X2.5-MM THK)	
	8T-4122	2	WASHER-HARD (17X32X3.5-MM THK)	
	8T-4205	6	WASHER-HARD (7.2X14.5X2-MM THK)	
	8T-4223	2	WASHER-HARD (13.5X25.5X3-MM THK)	
	8T-4896	13	WASHER-HARD (10.2X18.5X2.5-MM THK)	
D	**5P-6028**		WIRE (08-GA) (1M)	
	214-6817	1	WIRE AS	
	214-6818	1	WIRE AS	

D-ORDER BY THE METER
M-METRIC PART
Y-SEPARATE ILLUSTRATION

<END>

153-5487 WIRING GP-CAB

S/N: AXM1-1376

PART OF 153-5485 CAB AR

SMCS-1408, 7301 **i02202854**

NOTE	REF NO	GRAPHIC REF	PART NUMBER	QTY	PART NAME 1 2 3 4 5 6 (PRODUCT LEVEL)	SEE PAGE
	1	1	**1S-9593**	1	STRAP-CABLE	
	2	1,2	**6L-7008**	50	STRAP-CABLE	
	3	1	**3E-5239**	1	RELAY AS (24-VOLT) (INTERMITTENT WIPER)	
	3A	1	**3E-5239**	1	RELAY AS (24-VOLT) (SECONDARY STEERING)	
	3B	1	**3E-5239**	1	RELAY AS (24-VOLT) (BACKUP ALARM)	
	3C	1	**3E-5239**	1	RELAY AS (24-VOLT) (START AID)	
	3D	1	**3E-5239**	1	RELAY AS (24-VOLT) (HORN)	
	3E	1	**3E-5239**	1	RELAY AS (24-VOLT) (HEADLAMP)	
Y	4	1	**3E-6389**	1	LAMP GP-DOME (24-VOLT, WITH SWITCH)	229
	5	2	**6T-3631**	1	NUT-HEX (15/32-32-THD)	
	6	1	**7G-1060**	1	STRAP AS-GROUND	
	7	2	**7K-1181**	4	STRAP-CABLE	
	8	2	**9D-4068**	1	SWITCH AS (DOOR DOME LAMP)	
Y	9	1	**103-5526**	1	CONTROL GP-MONITOR	838
	10	1	**116-5710**	1	GROMMET	
Y	11	1	**133-6335**	1	LAMP GP-FLOOD (24-VOLT)	230
	12	1	**134-1346**	1	CONVERTER GP-ELECTRICAL	
	13	1	**140-1088**	1	BRACKET AS	
M		1	**8T-3490**	1	NUT-WELD (M10X1.5-THD)	
	14	2	**141-0275**	1	LEVER GP-STEERING COLUMN	
	15	1	**147-1380**	1	SWITCH AS-FOOT (DIFFERENTIAL LOCK)	
		1	**3E-3365**	1	WEDGE-RECEPTACLE LOCK (2-PIN)	
		1	**8T-8729**	2	PIN-CONNECTOR	
		1	**102-8802**	1	KIT-RECEPTACLE (2-PIN)	
					(INCLUDES RECEPTACLE AS & WEDGE)	
	16	1	**162-0104**	1	PLATE AS	
M		1	**6V-9632**	9	NUT-WELD (M6X1-THD)	
		1	**7T-1099**	2	LINK	
M		1	**7X-0752**	1	BOSS-WELD (M10X1.5X65-MM OAL)	
	17	1	**162-0106**	1	HARNESS AS-FRONT CHASSIS (INSTRUMENT PANEL)	
		1	**102-8801**	1	KIT-RECEPTACLE (12-PIN)	
		1	**102-8804**	1	KIT-RECEPTACLE (4-PIN)	
					(EACH RECEPTACLE KIT INCLUDES RECEPTACLE AS & WEDGE)	
		1	**155-2255**	1	KIT-CONNECTING PLUG (12-PIN)	
		1	**155-2274**	1	KIT-CONNECTING PLUG (6-PIN)	
					(EACH PLUG KIT INCLUDES PLUG AS, WEDGE & INTERFACE SEAL)	
	18	1	**162-7264**	1	CABLE AS	
	19	1	**162-9347**	1	HARNESS AS-CAB (REAR LIGHTING)	
		1	**102-8802**	1	KIT-RECEPTACLE (2-PIN)	
		1	**102-8805**	1	KIT-RECEPTACLE (6-PIN)	
		1	**102-8806**	1	KIT-RECEPTACLE (8-PIN)	
					(EACH RECEPTACLE KIT INCLUDES RECEPTACLE AS & WEDGE)	
		1	**155-2270**	1	KIT-CONNECTING PLUG (2-PIN)	
		1	**155-2274**	1	KIT-CONNECTING PLUG (6-PIN)	
					(EACH PLUG KIT INCLUDES PLUG AS, WEDGE & INTERFACE SEAL)	
	20	1	**162-9348**	1	HARNESS AS-CONSOLE	
		1	**155-2255**	1	KIT-CONNECTING PLUG (12-PIN)	
		1	**155-2271**	1	KIT-CONNECTING PLUG (4-PIN)	
		1	**155-2274**	1	KIT-CONNECTING PLUG (6-PIN)	
					(EACH PLUG KIT INCLUDES PLUG AS, WEDGE & INTERFACE SEAL)	
		1	**180-0050**	1	KIT-CONNECTING PLUG (4-PIN)	
					(INCLUDES PLUG AS & WEDGES)	

153-5487 **WIRING GP-CAB** ***(contd.)*** **i02202854**

NOTE	REF NO	GRAPHIC REF	PART NUMBER	QTY	PART NAME 1 2 3 4 5 6 (PRODUCT LEVEL)	SEE PAGE
	21	1	**162-9349**	1	HARNESS AS-LIGHTING	
		1	**155-2260**	1	KIT-CONNECTING PLUG (3-PIN)	
					(INCLUDES PLUG AS, WEDGES & INTERFACE SEAL)	
		1	**155-2265**	1	KIT-CONNECTING PLUG (8-PIN)	
					(INCLUDES PLUG AS, WEDGE & INTERFACE SEAL)	
	22	2	**162-9350**	1	HARNESS AS-PANEL	
		2	**102-8806**	1	KIT-RECEPTACLE (8-PIN)	
					(INCLUDES RECEPTACLE AS & WEDGE)	
		2	**155-2260**	1	KIT-CONNECTING PLUG (3-PIN)	
					(INCLUDES PLUG AS, WEDGES & INTERFACE SEAL)	
		2	**155-2255**	1	KIT-CONNECTING PLUG (12-PIN)	
		2	**155-2265**	1	KIT-CONNECTING PLUG (8-PIN)	
		2	**155-2270**	1	KIT-CONNECTING PLUG (2-PIN)	
		2	**155-2274**	1	KIT-CONNECTING PLUG (6-PIN)	
					(EACH PLUG KIT INCLUDES PLUG AS, WEDGE & INTERFACE SEAL)	
	23	2	**163-6088**	1	MODULE AS (INTERMITTENT WIPER)	
	24	2	**172-7071**	1	SWITCH GP-PRESSURE (STOP LAMP)	
		2	**3E-3365**	1	WEDGE-RECEPTACLE LOCK (2-PIN)	
		2	**8T-8729**	2	PIN-CONNECTOR	
		2	**102-8804**	1	KIT-RECEPTACLE (4-PIN)	
					(INCLUDES RECEPTACLE AS & WEDGE)	
	24A	2	**172-7071**	1	SWITCH GP-PRESSURE (SERVICE BRAKE)	
		2	**3E-3365**	1	WEDGE-RECEPTACLE LOCK (2-PIN)	
		2	**8T-8729**	2	PIN-CONNECTOR	
		2	**102-8804**	1	KIT-RECEPTACLE (4-PIN)	
					(INCLUDES RECEPTACLE AS & WEDGE)	
	25	2	**190-3138**	1	HARNESS AS (CAB)	
		2	**102-8801**	1	KIT-RECEPTACLE (12-PIN)	
		2	**102-8802**	1	KIT-RECEPTACLE (2-PIN)	
		2	**102-8805**	1	KIT-RECEPTACLE (6-PIN)	
					(EACH RECEPTACLE KIT INCLUDES RECEPTACLE AS & WEDGE)	
		2	**155-2255**	1	KIT-CONNECTING PLUG (12-PIN)	
		2	**155-2260**	1	KIT-CONNECTING PLUG (3-PIN)	
		2	**155-2270**	1	KIT-CONNECTING PLUG (2-PIN)	
		2	**155-2271**	1	KIT-CONNECTING PLUG (4-PIN)	
		2	**155-2274**	1	KIT-CONNECTING PLUG (6-PIN)	
					(EACH PLUG KIT INCLUDES PLUG AS, WEDGE & INTERFACE SEAL)	
	26	2	**213-8477**	1	SWITCH GP-MULTIFUNCTION (WIPE/WASH/TURN/FLASH)	
J	27	1	**244-6861**	1	SWITCH GP-PARKING BRAKE	
		1	**203-7154**	1	SWITCH AS	
		1	**3E-3377**	1	WEDGE-RECEPTACLE LOCK (4-PIN)	
		1	**186-3735**	3	PIN-CONNECTOR	
		1	**9G-3695**	1	PLUG (GROMMET SEALING)	
	28	2	**033-8248**	1	CLIP	
M	29	2	**095-0642**	2	BOLT-SOCKET HEAD (M5X0.8-THDX50-MM)	
M	30	1	**096-4833**	3	BOLT-SOCKET HEAD (M5X0.8X20-MM)	
M	31	1,2	**120-9027**	16	SCREW-PAN HEAD (M3X0.5X16-MM)	
	32	1	**130-5300**	2	CLIP	
M	33	2	**150-4086**	4	SCREW (M4X0.7X16-MM)	
	34	2	**1S-0994**	1	CLIP	
	35	2	**3J-1907**	2	SEAL-O-RING	
	36	2	**3S-8664**	2	CLIP	
	37	2	**4B-4274**	4	WASHER (5.5X13X1.2-MM THK)	
	38	2	**4D-7794**	2	CLIP	
	39	1	**4V-6981**	2	SCREW-BUTTON HEAD (1/4-20X0.75-IN)	
M	40	1	**5C-8312**	8	NUT (M4X0.7-THD)	

153-5487 **WIRING GP-CAB** ***(contd.)*** **i02202854**

NOTE	REF NO	GRAPHIC REF	PART NUMBER	QTY	PART NAME 1 2 3 4 5 6 (PRODUCT LEVEL)	SEE PAGE
M	41	1	**5C-9553**	2	BOLT (M6X1X16-MM)	
	42	2	**5P-6419**	1	GROMMET	
	43	2	**5P-7854**	1	CLIP	
M	44	1	**6V-9189**	1	LOCKNUT (M8X1.25-THD)	
	45	1	**7C-4354**	3	CLIP	
	46	1,2	**7D-7233**	13	CLIP	
M	47	1	**7X-2534**	2	BOLT (M6X1X50-MM)	
	48	1,2	**8C-9660**	24	WASHER (4.6X7.9X0.8-MM THK)	
	49	2	**8D-6946**	1	FLASHER AS	
	50	1,2	**8T-4121**	22	WASHER-HARD (11X21X2.5-MM THK)	
M	51	1,2	**8T-4137**	22	BOLT (M10X1.5X20-MM)	
M	52	1	**8T-4171**	6	BOLT (M6X1X12-MM)	
M	53	1	**8T-4189**	1	BOLT (M8X1.25X20-MM)	
	54	1	**8T-4224**	3	WASHER-HARD (8.8X16X2-MM THK)	
M	55	1	**8T-6869**	1	BOLT (M8X1.25X60-MM)	
M	56	1	**8T-9405**	8	BOLT-SOCKET HEAD (M4X0.7X16-MM)	
	57	1	**9X-8256**	10	WASHER (6.6X12X2-MM THK)	
BE	58	1	**3U-4762**		TRIM-DASH	
					AVAILABLE REPAIR KIT(S):	
J			**188-3369**	1	KIT-KNOB	
					(INCLUDES KNOB, SCREW & SETSCREW)	

B-USE AS REQUIRED
E-ORDER BY THE CENTIMETER
J-KIT MARKED J AVAILABLE FOR PART MARKED J
M-METRIC PART
Y-SEPARATE ILLUSTRATION

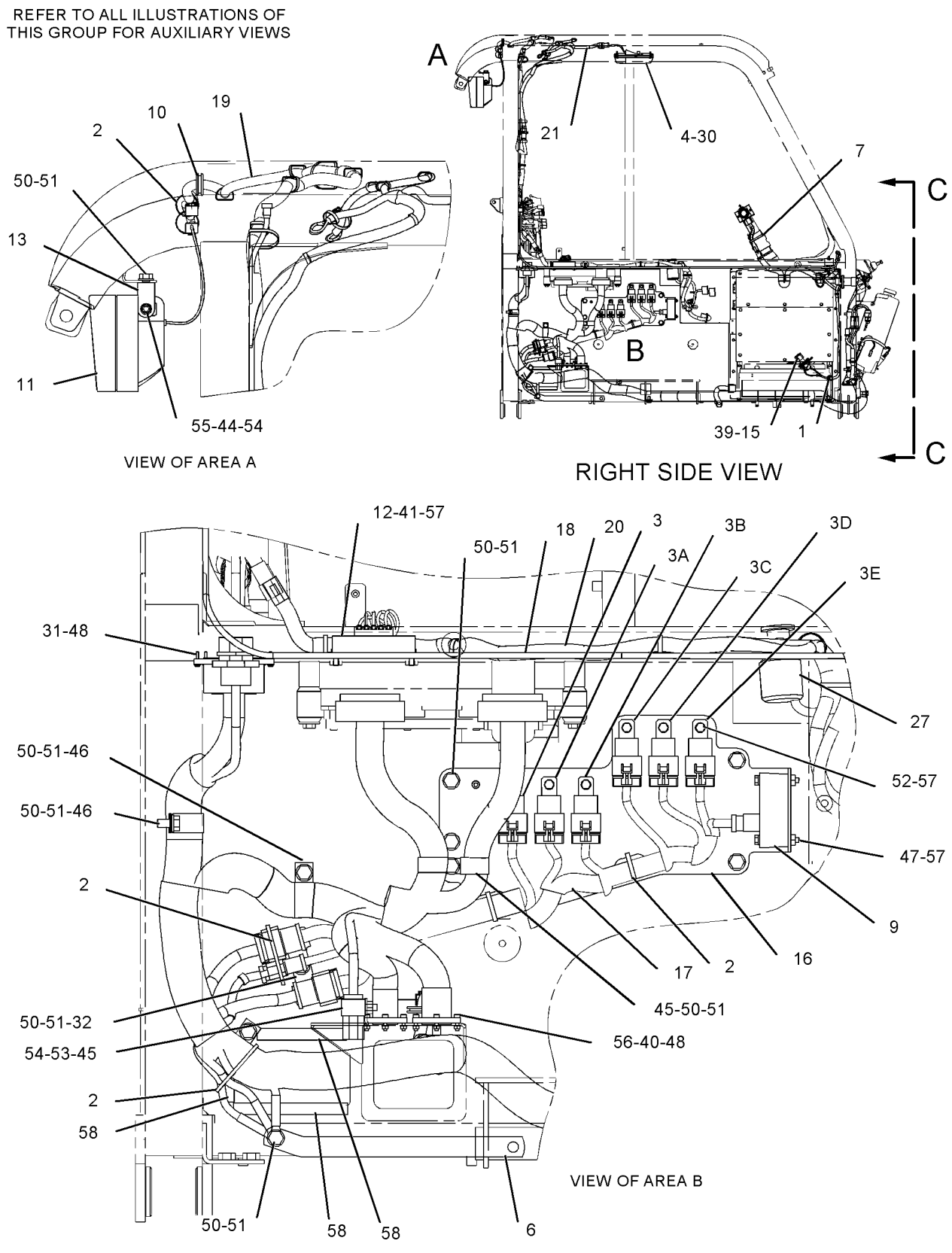

GRAPHIC #1 g01117663

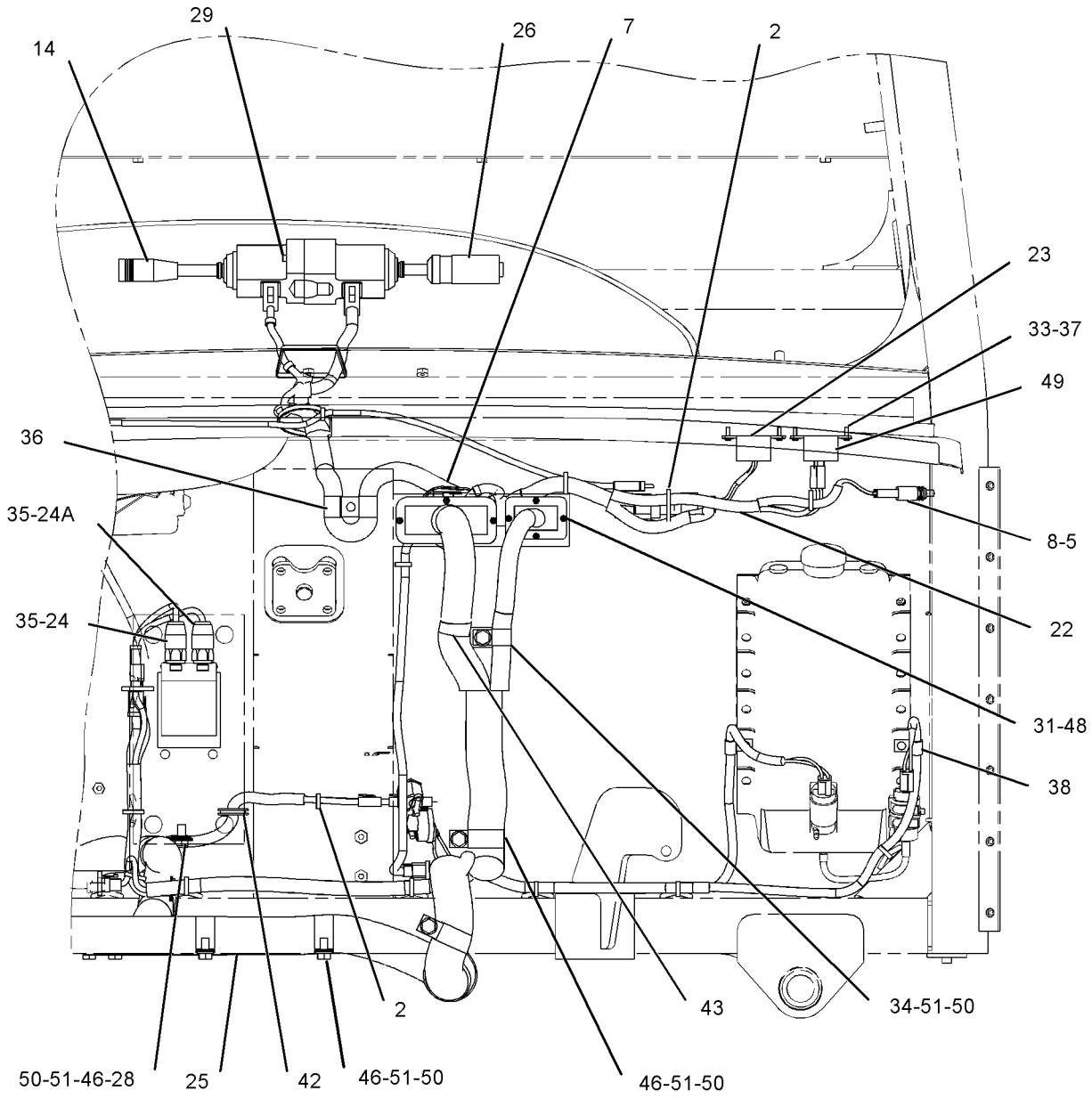

VIEW C-C

GRAPHIC #2 **<END>** g01117725

233-0338 WIRING GP-CAB

S/N: AXM1489-UP

PART OF 229-8087 CAB AR

SMCS-1408, 7301 **i02055833**

NOTE	PART NUMBER	QTY	PART NAME 1 2 3 4 5 6 (PRODUCT LEVEL)	SEE PAGE
Y	**3E-6389**	1	LAMP GP-DOME (24-VOLT, WITH SWITCH)	229
Y	**172-9973**	1	LAMP GP-FLOOD (24-VOLT, VERTICAL MOUNT)	231
M	**8T-4137**	12	BOLT (M10X1.5X20-MM)	
M	**095-0642**	2	BOLT-SOCKET HEAD (M5X0.8-THDX50-MM)	
M	**096-4833**	2	BOLT-SOCKET HEAD (M5X0.8X20-MM)	
	162-7264	1	CABLE AS	
	4P-7581	1	CLIP	
	5P-9085	3	CLIP	
	6D-3479	2	CLIP	
	6D-4246	1	CLIP	
	8M-2770	1	CLIP	
	8M-2773	3	CLIP	
	124-0174	1	CLIP	
	205-4285	1	CONVERTER GP-ELECTRICAL (24-VOLT TO 12-VOLT)	
	8D-6946	1	FLASHER AS	
	5P-6419	1	GROMMET	
	116-5710	1	GROMMET	
	236-0910	1	HARNESS AS-CAB (HEADLINER)	
	155-2260	1	KIT-CONNECTING PLUG (3-PIN)	
	102-8803	1	KIT-RECEPTACLE (3-PIN)	
	155-2274	1	KIT-CONNECTING PLUG (6-PIN)	
	102-8805	1	KIT-RECEPTACLE (6-PIN)	
	155-2270	1	KIT-CONNECTING PLUG (2-PIN)	
	102-8802	1	KIT-RECEPTACLE (2-PIN)	
	155-2255	1	KIT-CONNECTING PLUG (12-PIN)	
	102-8801	1	KIT-RECEPTACLE (12-PIN)	
	235-2672	1	HARNESS AS-CAB	
	155-2270	1	KIT-CONNECTING PLUG (2-PIN)	
	102-8802	1	KIT-RECEPTACLE (2-PIN)	
	155-2274	1	KIT-CONNECTING PLUG (6-PIN)	
	102-8805	1	KIT-RECEPTACLE (6-PIN)	
	155-2255	1	KIT-CONNECTING PLUG (12-PIN)	
	102-8801	1	KIT-RECEPTACLE (12-PIN)	
	235-2673	1	HARNESS AS-CAB	
	155-2270	1	KIT-CONNECTING PLUG (2-PIN)	
	102-8802	1	KIT-RECEPTACLE (2-PIN)	
	155-2274	1	KIT-CONNECTING PLUG (6-PIN)	
	102-8805	1	KIT-RECEPTACLE (6-PIN)	
	155-2255	1	KIT-CONNECTING PLUG (12-PIN)	
	102-8801	1	KIT-RECEPTACLE (12-PIN)	
	155-2265	1	KIT-CONNECTING PLUG (8-PIN)	
	102-8806	1	KIT-RECEPTACLE (8-PIN)	
	235-2674	1	HARNESS AS-CAB (OPERATOR CONTROLS)	
	180-0050	1	KIT-CONNECTING PLUG (4-PIN)	
	155-2260	1	KIT-CONNECTING PLUG (3-PIN)	
	102-8803	1	KIT-RECEPTACLE (3-PIN)	
	155-2271	1	KIT-CONNECTING PLUG (4-PIN)	
	102-8804	1	KIT-RECEPTACLE (4-PIN)	
	155-2274	1	KIT-CONNECTING PLUG (6-PIN)	
	102-8805	1	KIT-RECEPTACLE (6-PIN)	
	155-2255	1	KIT-CONNECTING PLUG (12-PIN)	
	102-8801	1	KIT-RECEPTACLE (12-PIN)	
	235-3903	1	HARNESS AS-RADIO	
	155-2270	1	KIT-CONNECTING PLUG (2-PIN)	
	102-8802	1	KIT-RECEPTACLE (2-PIN)	
	155-2260	1	KIT-CONNECTING PLUG (3-PIN)	

233-0338 **WIRING GP-CAB** ***(contd.)*** **i02055833**

NOTE	PART NUMBER	QTY	PART NAME 1 2 3 4 5 6 (PRODUCT LEVEL)	SEE PAGE
	102-8803	1	KIT-RECEPTACLE (3-PIN)	
	155-2274	1	KIT-CONNECTING PLUG (6-PIN)	
	102-8805	1	KIT-RECEPTACLE (6-PIN)	
	155-2265	1	KIT-CONNECTING PLUG (8-PIN)	
	102-8806	1	KIT-RECEPTACLE (8-PIN)	
	155-2255	1	KIT-CONNECTING PLUG (12-PIN)	
	102-8801	1	KIT-RECEPTACLE (12-PIN)	
	141-0275	1	LEVER GP-STEERING COLUMN	
	155-2274	1	KIT-CONNECTING PLUG (6-PIN)	
	102-8805	1	KIT-RECEPTACLE (6-PIN)	
	163-6088	1	MODULE AS (INTERMITTENT WIPER)	
	155-2267	1	PLUG AS-CONNECTOR (3-PIN)	
	102-8803	1	KIT-RECEPTACLE (3-PIN)	
	6T-3631	1	NUT-HEX (15/32-32-THD)	
	238-7385	1	PLATE AS	
	245-8682	1	PLATE AS	
	3E-5239	6	RELAY AS (24-VOLT)	
	4V-6981	2	SCREW-BUTTON HEAD (1/4-20X0.75-IN)	
M	**6V-9491**	4	SCREW-MACHINE (M4X0.7X20-MM)	
M	**8T-0337**	4	SCREW-MACHINE (M4X0.7X12-MM)	
M	**8T-6411**	6	SCREW-MACHINE (M6X1X12-MM)	
M	**157-4291**	30	SCREW-PAN HEAD	
	3J-1907	2	SEAL-O-RING	
	7G-1060	1	STRAP AS-GROUND	
	3S-2093	50	STRAP-CABLE	
	7K-1181	2	STRAP-CABLE	
	9D-4068	1	SWITCH AS	
	147-1380	1	SWITCH AS-FOOT (DIFFERENTIAL LOCK)	
	155-2270	1	KIT-CONNECTING PLUG (2-PIN)	
	102-8802	1	KIT-RECEPTACLE (2-PIN)	
	213-8477	1	SWITCH GP-MULTIFUNCTION (TURN SIGNAL, WIPER, WASHER)	
	155-2255	1	KIT-CONNECTING PLUG (12-PIN)	
	102-8801	1	KIT-RECEPTACLE (12-PIN)	
	218-3262	1	SWITCH GP-PARKING BRAKE	
	155-2271	1	KIT-CONNECTING PLUG (4-PIN)	
	102-8804	1	KIT-RECEPTACLE (4-PIN)	
	188-3369	1	KIT-KNOB	
	172-7071	2	SWITCH GP-PRESSURE	
	155-2270	1	KIT-CONNECTING PLUG (2-PIN)	
	102-8802	1	KIT-RECEPTACLE (2-PIN)	
	4B-4863	4	WASHER (4.7X11X1.2-MM THK)	
	8C-9660	30	WASHER (4.6X7.9X0.8-MM THK)	
	9X-8256	6	WASHER (6.6X12X2-MM THK)	
	8T-4121	12	WASHER-HARD (11X21X2.5-MM THK)	

M-METRIC PART
Y-SEPARATE ILLUSTRATION

<END>

194-4025 WIRING GP-ELECTRONIC CONTROL

S/N: BET200-UP

PART OF 153-7076, 235-4689 ENGINE AR-COMPLETE

SMCS-1408, 1900 **i01527300**

NOTE	REF NO	GRAPHIC REF	PART NUMBER	QTY	PART NAME 1 2 3 4 5 6 (PRODUCT LEVEL)	SEE PAGE
	1	1	**3S-2093**	17	STRAP-CABLE	
	2	1	**176-0274**	1	HARNESS AS-ENGINE	
		1	**102-8802**	2	KIT-RECEPTACLE (2-PIN)	
					(INCLUDES RECEPTACLE AS AND WEDGE)	
		1	**102-8803**	4	KIT-RECEPTACLE (3-PIN)	
					(INCLUDES RECEPTACLE AS AND WEDGE)	
		1	**155-2255**	1	KIT-CONNECTING PLUG (12-PIN)	
					(INCLUDES PLUG AS AND WEDGE)	
		1	**155-2270**	7	KIT-CONNECTING PLUG (2-PIN)	
					(INCLUDES PLUG AS AND WEDGE)	
		1	**160-7690**	1	PLUG AS-CONNECTOR (70-PIN)	
	3	1	**0S-0509**	2	BOLT (3/8-16X0.75-IN)	
	4	1	**104-6202**	2	CLIP	
	5	1	**130-5300**	1	CLIP	
	6	1	**4P-7581**	1	CLIP	
	7	1	**4P-8134**	7	CLIP	
	8	1	**5M-2894**	2	WASHER-HARD (10.2X18.5X2.5-MM THK)	
	9	1	**5P-8247**	2	WASHER-HARD (17X32X3.5-MM THK)	
	10	1	**6F-7316**	2	BOLT (5/8-18X1-IN)	

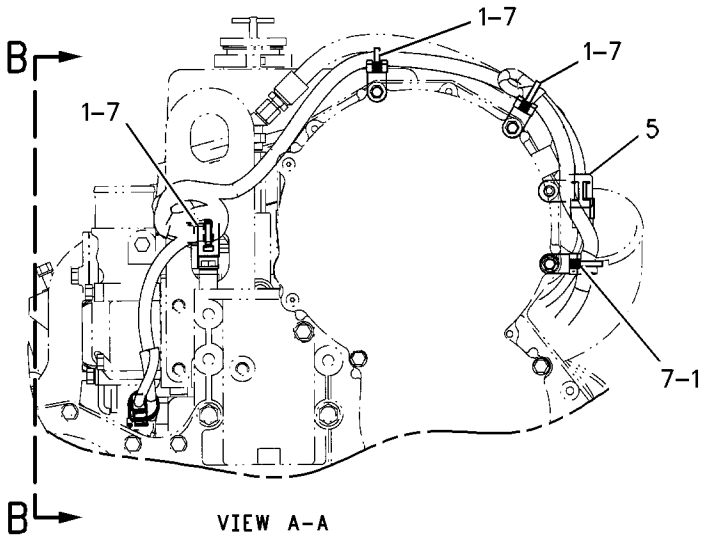

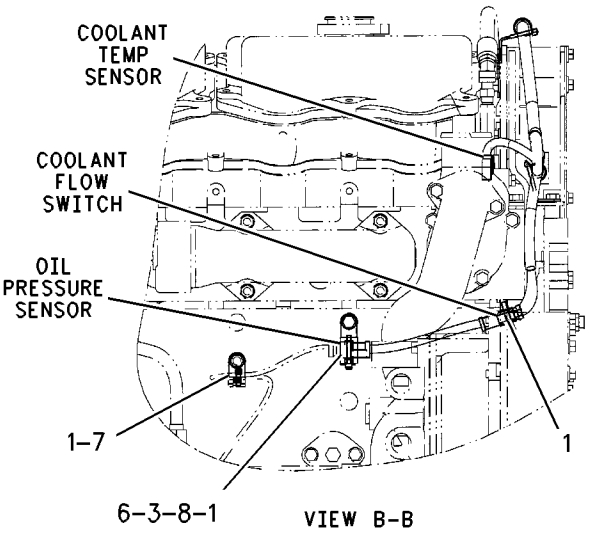

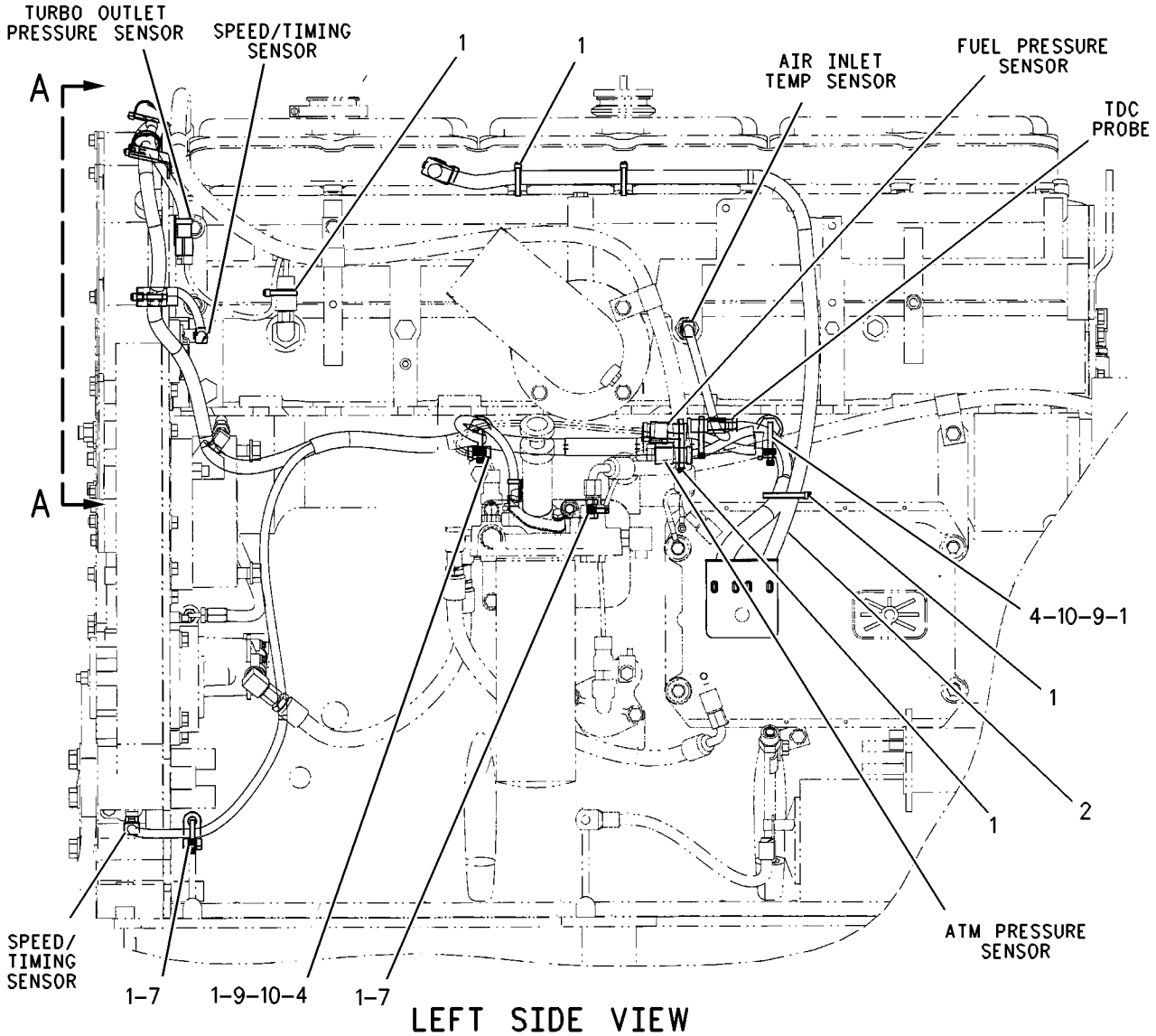

GRAPHIC #1 **<END>** g00805835

ELECTRICAL AND STARTING SYSTEM

241-6067 WIRING GP-FRONT

S/N: AXM1377-UP

PART OF 152-6919 AXLE & FRAME AR

SMCS-1408 **i02077012**

NOTE	REF NO	GRAPHIC REF	PART NUMBER	QTY	PART NAME 1 2 3 4 5 6 (PRODUCT LEVEL)	SEE PAGE
	1	2	**2V-2043**	1	LOCKNUT-FLARED (1-5/8-12-THD)	
	2	2	**3E-6449**	1	SWITCH AS-TEMPERATURE (OIL, OUTPUT TRANSFER GEAR)	
		2	**186-3735**	2	PIN-CONNECTOR	
		2	**102-8802**	1	KIT-RECEPTACLE (2-PIN)	
					(INCLUDES RECEPTACLE AS & WEDGE)	
	3	4	**230-5771**	1	SWITCH AS-PRESSURE (PRIMARY STEERING OIL)	
BE		4	**9X-1813**		SLEEVE	
		4	**186-3735**	3	PIN-CONNECTOR	
		4	**102-8803**	1	KIT-RECEPTACLE (3-PIN)	
					(INCLUDES RECEPTACLE AS & WEDGE)	
	4	2	**3E-6451**	1	SWITCH GP-TEMPERATURE (OIL, FRONT BRAKE)	
		2	**186-3735**	2	PIN-CONNECTOR	
		2	**102-8802**	1	KIT-RECEPTACLE (2-PIN)	
					(INCLUDES RECEPTACLE AS & WEDGE)	
	5	1,2,3, 4	**3S-2093**	76	STRAP-CABLE	
BD	6	4	**5P-6028**		WIRE (08-GA)	
	7	4	**6U-0456**	2	STRAP	
	8	2,3,4	**6U-2703**	3	BRACKET-ANGLE	
	9	3	**7F-0880**	1	GASKET-COPPER	
	10	3,4	**7U-9542**	2	PLATE-CLAMPING	
	11	4	**106-8704**	1	SUPPRESSOR AS-ARC (SECONDARY STEERING)	
		4	**186-3735**	2	PIN-CONNECTOR	
		4	**102-8802**	1	KIT-RECEPTACLE (2-PIN)	
					(INCLUDES RECEPTACLE AS & WEDGE)	
	11A	2	**106-8704**	1	SUPPRESSOR AS-ARC (AIR CONDITIONER)	
		2	**186-3735**	2	PIN-CONNECTOR	
		2	**102-8802**	1	KIT-RECEPTACLE (2-PIN)	
					(INCLUDES RECEPTACLE AS & WEDGE)	
	12	2	**114-5333**	1	SWITCH AS-PRESSURE (REFRIGERANT) (A/C COMPRESSOR)	
BE		2	**9X-1386**		SLEEVE	
		2	**186-3735**	2	PIN-CONNECTOR	
		2	**102-8802**	1	KIT-RECEPTACLE (2-PIN)	
					(INCLUDES RECEPTACLE AS & WEDGE)	
	13	2	**118-3534**	1	SWITCH GP-MAGNETIC (24-VOLT) (STARTER RELAY)	
	14	1	**122-7052**	1	SPACER (10.5X20X28-MM THK)	
Y	15	4	**134-2252**	1	SENSOR GP-TEMPERATURE (TORQUE CONVERTER OIL)	252
	16	2	**149-2612**	1	RELAY AS (24-VOLT) (START)	
		2	**9W-0852**	4	PIN-CONNECTOR	
		2	**102-8805**	1	KIT-RECEPTACLE (6-PIN)	
					(INCLUDES RECEPTACLE AS & WEDGE)	
	17	4	*165-6365*	1	FITTING AS	
		4	**3J-1907**	1	SEAL-O-RING	
		4	**7W-7381**	1	FITTING-OUTLET	
Y	18	3	**189-5746**	1	SENSOR GP-SPEED (ENGINE)	250
Y	19	2	**194-6722**	1	SENSOR GP-PRESSURE (TURBOCHARGER INLET)	247
	20	3	**199-2633**	1	PLATE AS	
M		3	**8T-3490**	2	NUT-WELD (M10X1.5-THD)	
	21	3	**199-2634**	1	PLATE	
	22	3	**205-5594**	1	PLATE AS	
M		3	**8T-3490**	2	NUT-WELD (M10X1.5-THD)	
	23	3	**205-5595**	1	PLATE	
	24	2	**206-6810**	1	BRACKET-MOUNTING	
	25	2,4	**211-8021**	2	BRACKET	

241-6067 **WIRING GP-FRONT** *(contd.)* **i02077012**

NOTE	REF NO	GRAPHIC REF	PART NUMBER	QTY	PART NAME 1 2 3 4 5 6 (PRODUCT LEVEL)	SEE PAGE
	26	4	**213-6947**	1	SWITCH GP-PRESSURE (OIL PRESSURE)	
BD		4	**8T-5677**		SLEEVE	
		4	**186-3735**	3	PIN-CONNECTOR	
		4	**102-8803**	1	KIT-RECEPTACLE (3-PIN)	
					(INCLUDES RECEPTACLE AS & WEDGE)	
	27	1	**224-5040**	1	PLUG AS-CODE	
BD		1	**5P-5677**		WIRE (18-GA, BLACK)	
		1	**186-3736**	4	SOCKET-CONNECTOR	
BE		1	**119-3662**		TUBE-HEAT SHRINK	
		1	**155-2265**	1	KIT-CONNECTING PLUG (8-PIN)	
					(INCLUDES PLUG AS, WEDGE & INTERFACE SEAL)	
	28	1	**241-6061**	1	HARNESS AS-CHASSIS	
		1	**102-8802**	1	KIT-RECEPTACLE (2-PIN)	
		1	**102-8803**	1	KIT-RECEPTACLE (3-PIN)	
					(EACH RECEPTACLE KIT INCLUDES RECEPTACLE AS & WEDGE)	
		1	**155-2265**	1	KIT-CONNECTING PLUG (8-PIN)	
		1	**155-2270**	1	KIT-CONNECTING PLUG (2-PIN)	
		1	**155-2274**	1	KIT-CONNECTING PLUG (6-PIN)	
					(EACH PLUG KIT INCLUDES PLUG AS, WEDGE & INTERFACE SEAL)	
		1	**155-2260**	1	KIT-CONNECTING PLUG (3-PIN)	
					(INCLUDES PLUG AS, WEDGES & INTERFACE SEAL)	
	29	1	**241-6062**	1	HARNESS AS-TRANSMISSION	
		1	**102-8802**	1	KIT-RECEPTACLE (2-PIN)	
		1	**102-8805**	1	KIT-RECEPTACLE (6-PIN)	
		1	**102-8806**	1	KIT-RECEPTACLE (8-PIN)	
					(EACH RECEPTACLE KIT INCLUDES RECEPTACLE AS & WEDGE)	
		1	**155-2260**	1	KIT-CONNECTING PLUG (3-PIN)	
		1	**155-2270**	1	KIT-CONNECTING PLUG (2-PIN)	
					(EACH PLUG KIT INCLUDES PLUG AS, WEDGE & INTERFACE SEAL)	
	30	1	**241-6064**	1	HARNESS AS-HITCH	
		1	**155-2265**	1	KIT-CONNECTING PLUG (8-PIN)	
		1	**155-2274**	1	KIT-CONNECTING PLUG (6-PIN)	
					(EACH PLUG KIT INCLUDES PLUG AS, WEDGE & INTERFACE SEAL)	
	31	1	**241-6065**	1	HARNESS AS-FUEL TANK	
		1	**102-8802**	1	KIT-RECEPTACLE (2-PIN)	
		1	**102-8804**	1	KIT-RECEPTACLE (4-PIN)	
		1	**102-8806**	1	KIT-RECEPTACLE (8-PIN)	
					(EACH RECEPTACLE KIT INCLUDES RECEPTACLE AS & WEDGE)	
		1	**155-2260**	1	KIT-CONNECTING PLUG (3-PIN)	
					(INCLUDES PLUG AS, WEDGES & INTERFACE SEAL)	
		1	**155-2270**	1	KIT-CONNECTING PLUG (2-PIN)	
		1	**155-2271**	1	KIT-CONNECTING PLUG (4-PIN)	
					(EACH PLUG KIT INCLUDES PLUG AS, WEDGE & INTERFACE SEAL)	
	32	2,4	**3J-1907**	3	SEAL-O-RING	
	33	2,4	**3K-0360**	3	SEAL-O-RING	
	34	4	**3S-8665**	1	CLIP	
	35	3,4	**4L-6454**	11	BOLT (3/8-16X1-IN)	
	36	2	**4P-7429**	1	CLIP	
	37	2,3,4	**4P-7581**	19	CLIP	
	38	2,3,4	**4P-8134**	5	CLIP	
M	39	2	**5C-2890**	6	NUT (M6X1-THD)	
	40	3,4	**5K-3294**	2	CLIP	
	41	2	**5M-3062**	1	BOLT (3/8-16X0.75-IN)	
	42	4	**5P-1075**	1	WASHER-HARD (10.2X22.5X3-MM THK)	

241-6067 **WIRING GP-FRONT** ***(contd.)*** **i02077012**

NOTE	REF NO	GRAPHIC REF	PART NUMBER	QTY	PART NAME 1 2 3 4 5 6 (PRODUCT LEVEL)	SEE PAGE
	43	3	**5P-2566**	2	BOLT (1/2-13X1.5-IN)	
	44	2	**5P-4115**	1	WASHER-HARD (7.2X19X2-MM THK)	
	45	2,4	**5P-9085**	3	CLIP	
	46	1,3	**5P-9297**	2	CLIP	
	47	1,2	**6D-3479**	6	CLIP	
	48	2,3	**6D-4244**	2	CLIP	
	49	2,3	**6D-4246**	3	CLIP	
	50	1,3,4	**7C-4354**	4	CLIP	
	51	3	**7X-0292**	1	BOLT (3/8-16X4.5-IN)	
	52	2,4	**8M-2770**	7	CLIP	
	53	2,3,4	**8M-2773**	7	CLIP	
	54	3	**8T-2501**	2	BOLT (3/8-16X2-IN)	
	55	1,2,3,4	**8T-4121**	37	WASHER-HARD (11X21X2.5-MM THK)	
	56	3	**8T-4122**	2	WASHER-HARD (17X32X3.5-MM THK)	
M	57	1,2,3,4	**8T-4133**	13	NUT (M10X1.5-THD)	
M	58	1,2,3,4	**8T-4136**	20	BOLT (M10X1.5X25-MM)	
M	59	2	**8T-4138**	6	BOLT (M6X1X20-MM)	
M	60	1	**8T-4185**	1	BOLT (M10X1.5X50-MM)	
M	61	4	**8T-4186**	2	BOLT (M10X1.5X40-MM)	
M	62	2	**8T-4196**	2	BOLT (M10X1.5X35-MM)	
	63	3	**8T-4223**	2	WASHER-HARD (13.5X25.5X3-MM THK)	
	64	2,3,4	**8T-4896**	13	WASHER-HARD (10.2X18.5X2.5-MM THK)	
	65	3	**8T-9393**	2	BOLT (5/8-11X1.5-IN)	
	66	1,3,4	**9M-4972**	9	CLIP	
	67	2	**9X-7378**	1	SEAL-O-RING	
	68	2	**9X-8256**	11	WASHER (6.6X12X2-MM THK)	

B-USE AS REQUIRED
D-ORDER BY THE METER
E-ORDER BY THE CENTIMETER
M-METRIC PART
Y-SEPARATE ILLUSTRATION

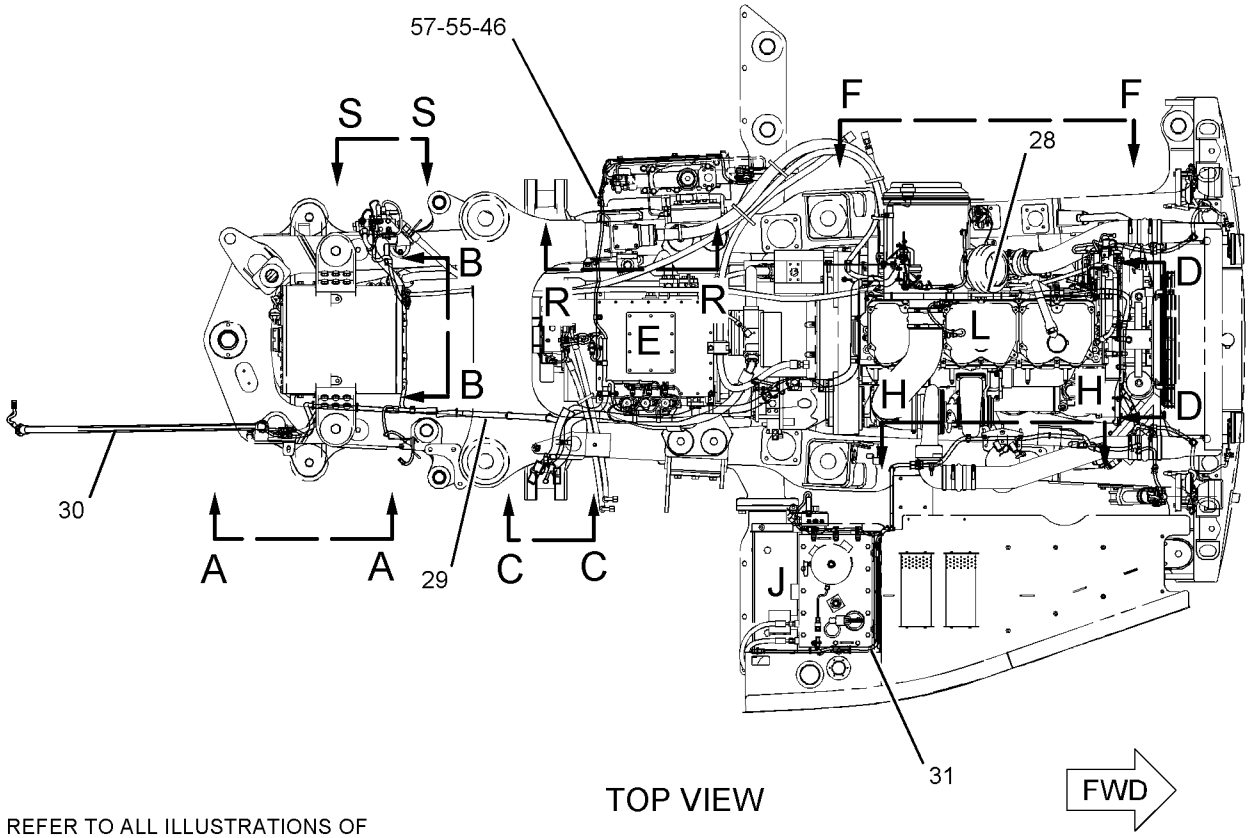

REFER TO ALL ILLUSTRATIONS OF
THIS GROUP FOR AUXILIARY VIEWS

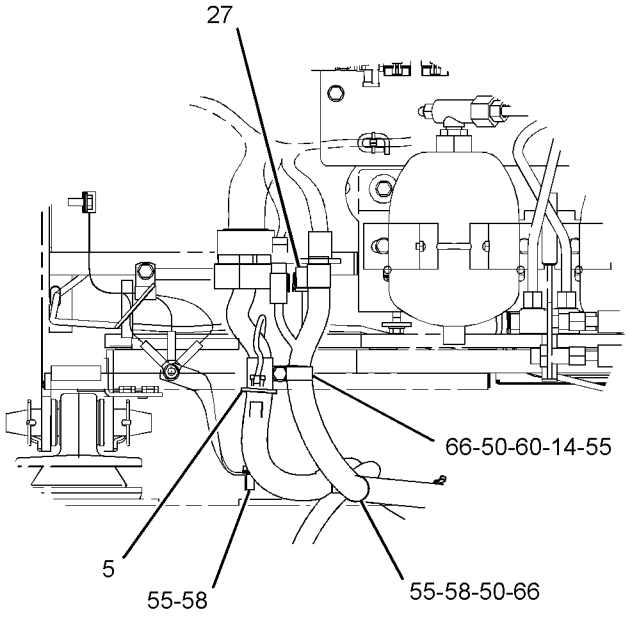

SECTION C-C

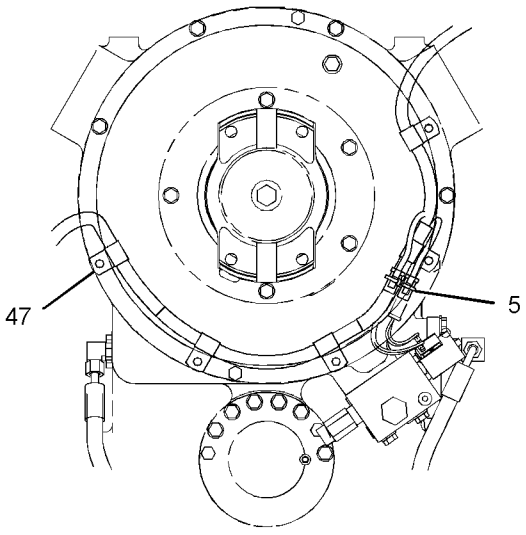

SECTION B-B

GRAPHIC #1

g01130831

241-6067 **WIRING GP-FRONT** *(contd.)* **i02077012**

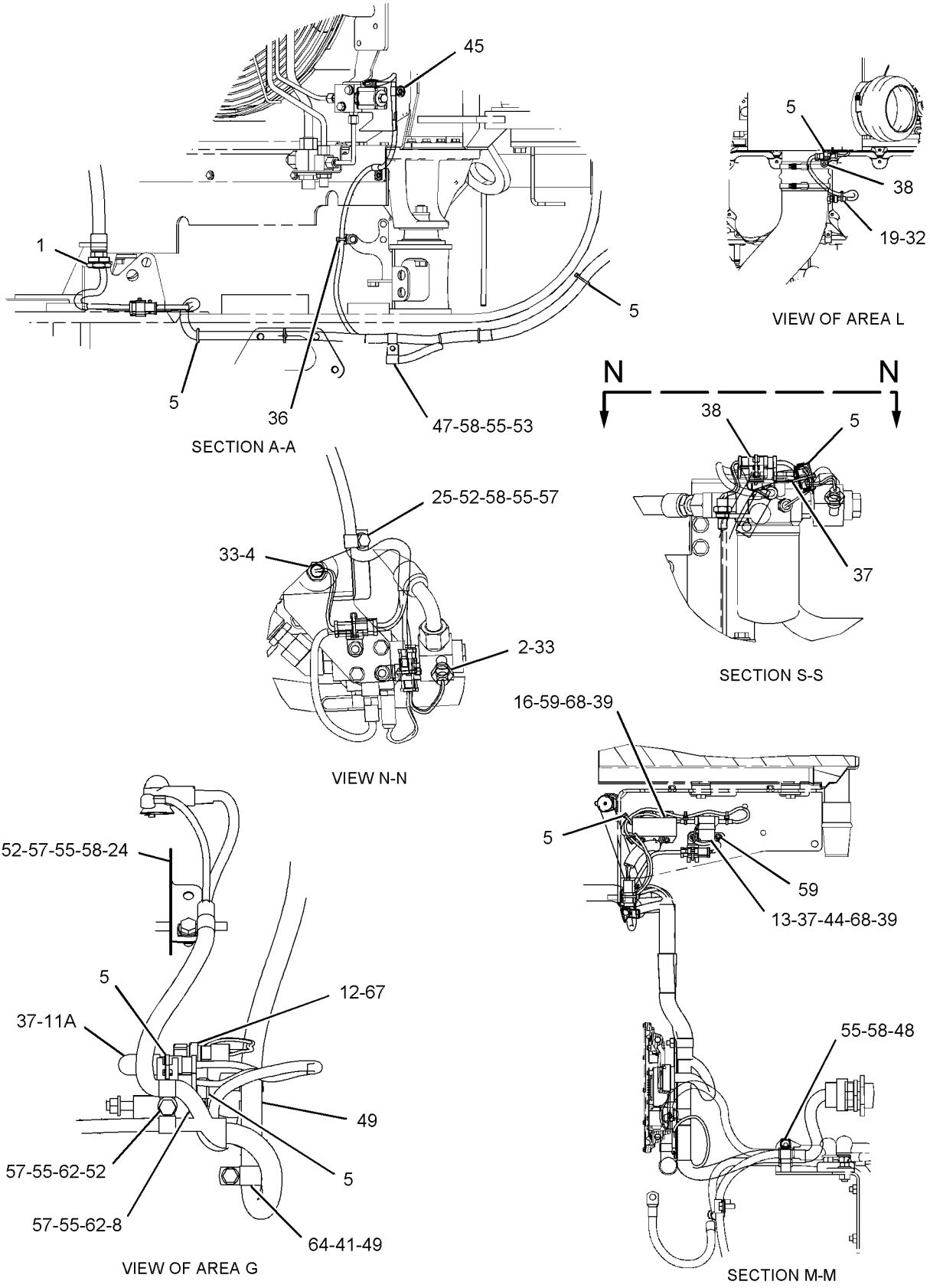

GRAPHIC #2

g01130832

REFER TO ALL ILLUSTRATIONS OF
THIS GROUP FOR AUXILIARY VIEWS

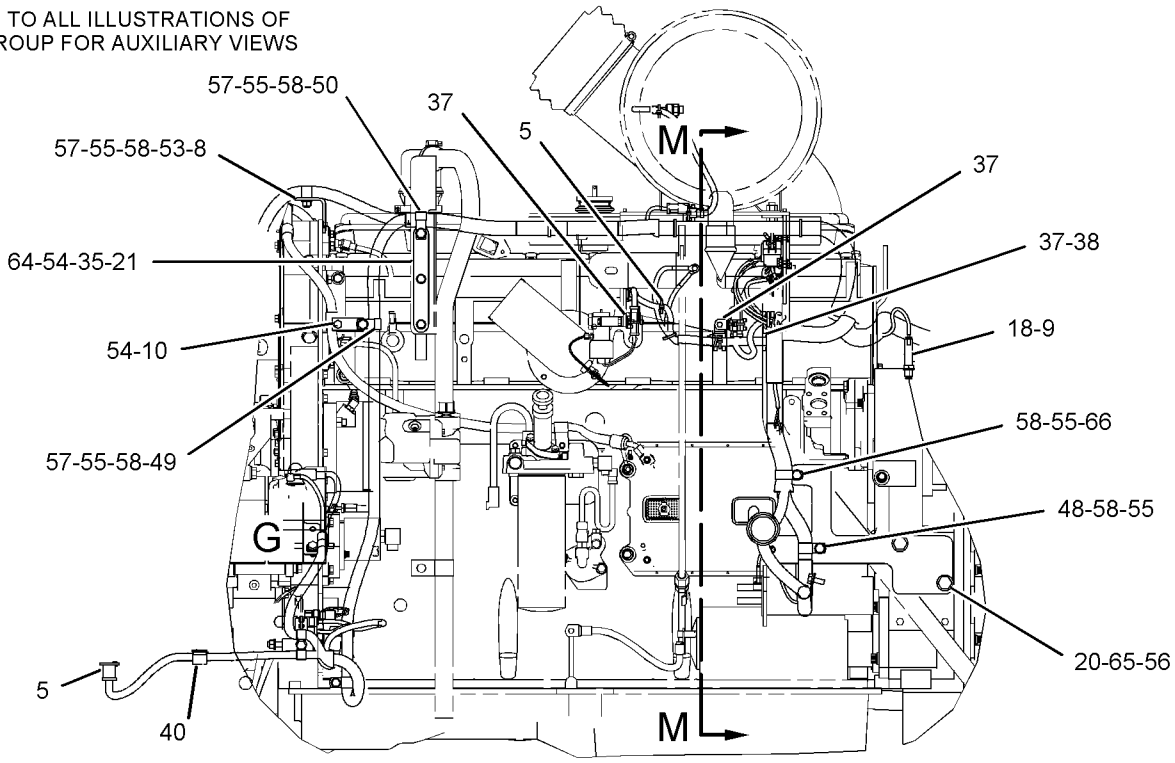

SECTION F-F

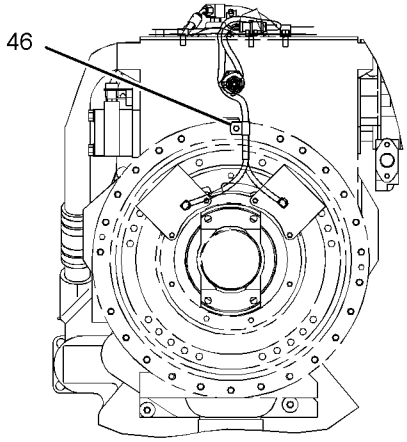

SECTION T-T

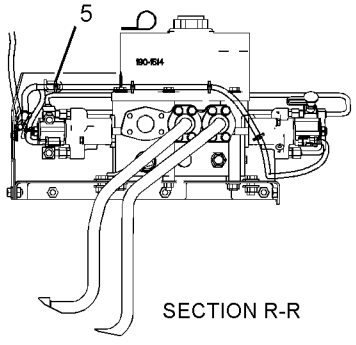

SECTION R-R

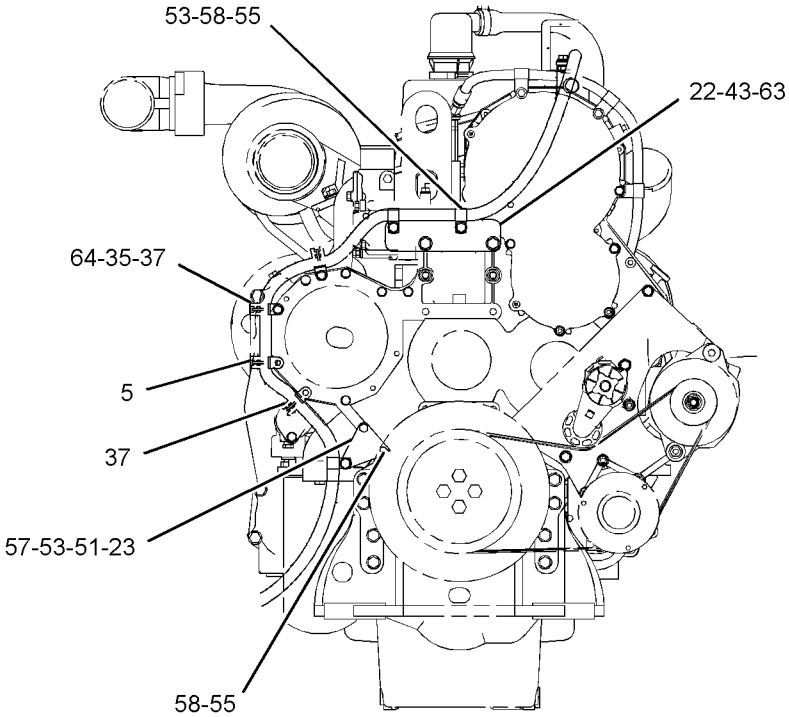

SECTION D-D

GRAPHIC #3 g01130834

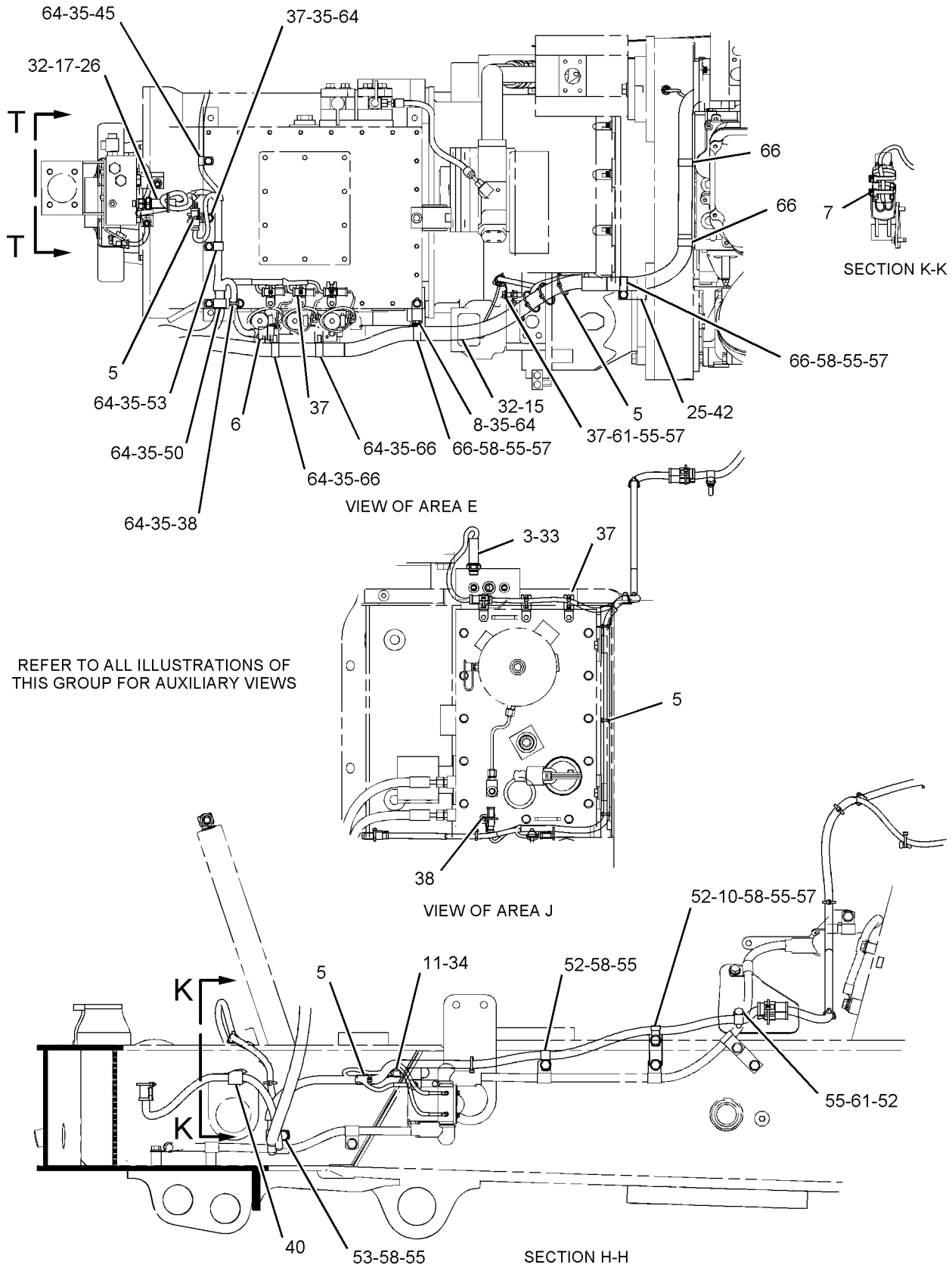

GRAPHIC #4 **<END>** g01130836

237-5510 WIRING GP-LIGHTING

S/N: AXM1377-UP

PART OF 152-7025 HOOD GP-ENGINE

SMCS-1408, 1429 **i02092995**

NOTE	REF NO	GRAPHIC REF	PART NUMBER	QTY	PART NAME 1 2 3 4 5 6 (PRODUCT LEVEL)	SEE PAGE
Y	1	1	**3E-6466**	2	LAMP GP-SIGNAL (24-VOLT)	234
	2	1	**3S-2093**	12	STRAP-CABLE	
Y	3	1	**162-5402**	2	LAMP GP-SIGNAL (24-VOLT)	237
Y	4	1	**171-7213**	2	LAMP GP-HEAD	232
Y	5	1	**171-7214**	2	LAMP GP-HEAD	233
	6	1	**211-7321**	2	BOX	
	7	1	**211-7322**	4	SPACER-SPECIAL	
	8	1	**215-2987**	2	PLATE-MOUNTING	
	9	1	**244-8635**	2	HARNESS AS-LIGHTING	
					(EACH INCLUDES)	
		1	**102-8805**	2	KIT-RECEPTACLE (6-PIN)	
					(EACH INCLUDES RECEPTACLE AS & WEDGE)	
		1	**155-2270**	10	KIT-CONNECTING PLUG (2-PIN)	
					(EACH INCLUDES PLUG AS, WEDGE & INTERFACE SEAL)	
	10	1	**163-1201**	1	HORN AS (24-VOLT, LOW TONE)	
	11	1	**174-7875**	1	HORN AS (24-VOLT, HIGH TONE)	
	12	1	**4P-7581**	4	CLIP	
	13	1	**4P-8134**	4	CLIP	
M	14	1	**5C-2890**	12	NUT (M6X1-THD)	
	15	1	**5K-3294**	2	CLIP	
	16	1	**5P-4115**	6	WASHER-HARD (7.2X19X2-MM THK)	
	17	1	**5P-9297**	2	CLIP	
	18	1	**8M-2770**	2	CLIP	
	19	1	**8M-2771**	4	CLIP	
	20	1	**8T-4121**	18	WASHER-HARD (11X21X2.5-MM THK)	
M	21	1	**8T-4133**	6	NUT (M10X1.5-THD)	
M	22	1	**8T-4136**	8	BOLT (M10X1.5X25-MM)	
	23	1	**8T-4205**	6	WASHER-HARD (7.2X14.5X2-MM THK)	

M-METRIC PART
Y-SEPARATE ILLUSTRATION

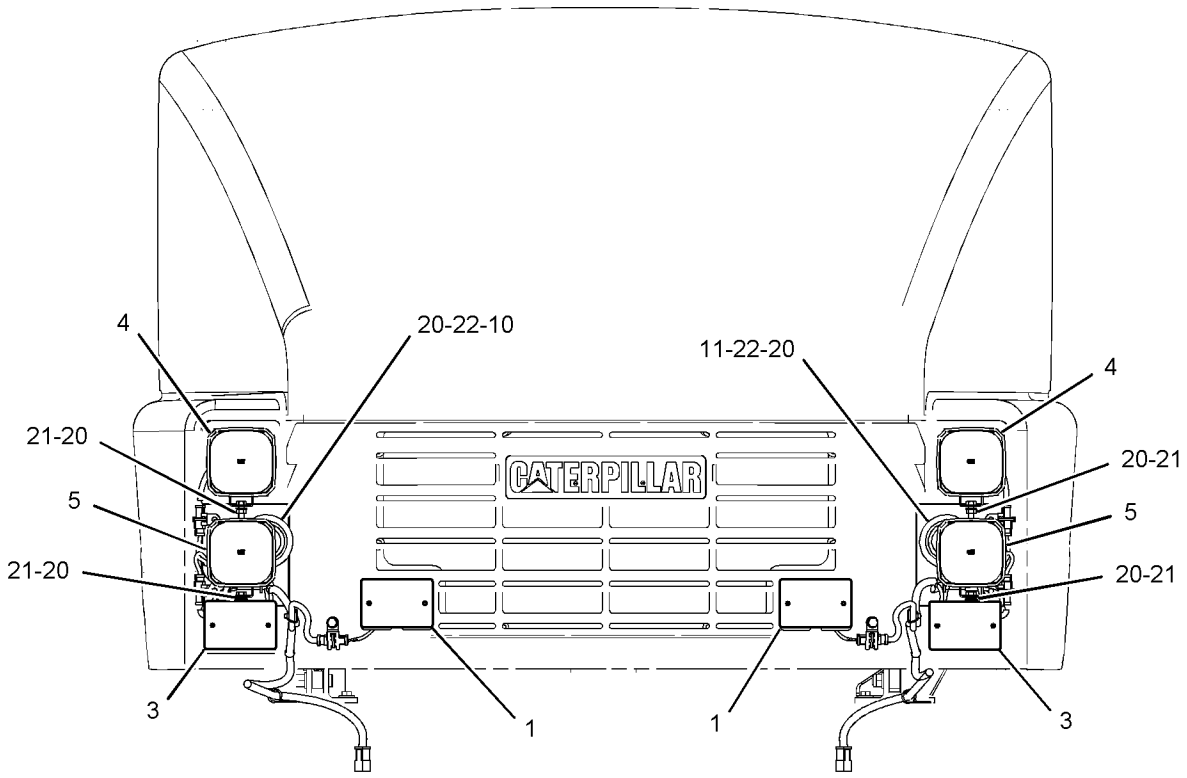

FRONT VIEW

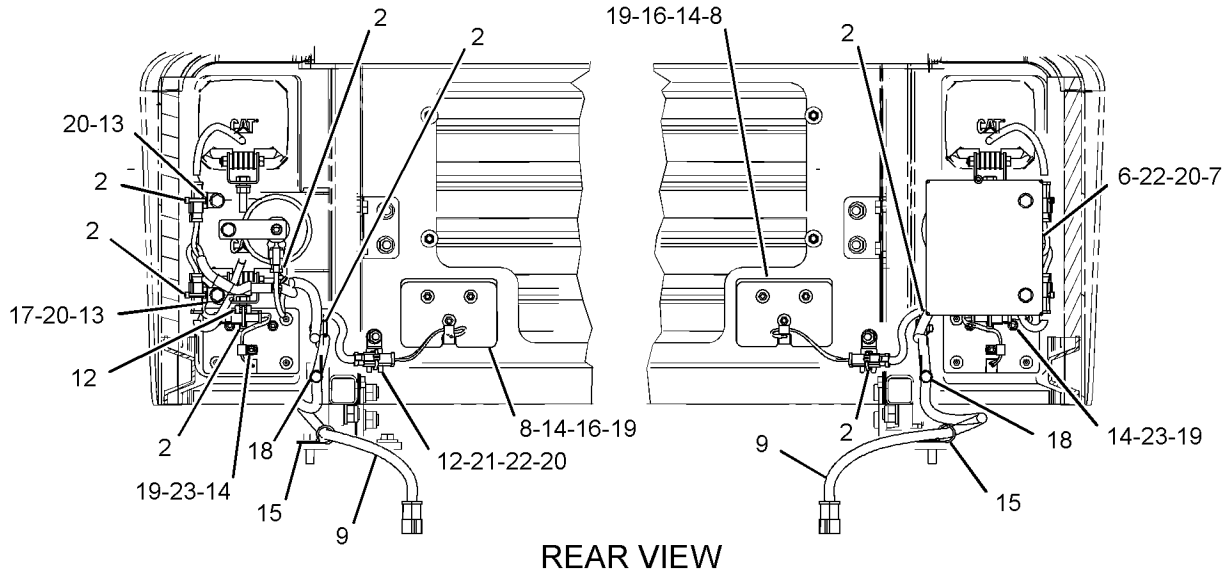

REAR VIEW

(LEFT HAND BOX REMOVED FOR CLARITY)

GRAPHIC #1

<END>

g01088910

152-7032 WIRING GP-REAR

S/N: AXM1-1376

PART OF 152-6921 AXLE & FRAME AR

SMCS-1408 **i02046340**

NOTE	PART NUMBER	QTY	PART NAME 1 2 3 4 5 6 (PRODUCT LEVEL)	SEE PAGE
	6L-7008	20	STRAP-CABLE	
	2V-2043	1	LOCKNUT-FLARED (1-5/8-12-THD)	
	3E-6451	1	SWITCH GP-TEMPERATURE	
	102-8802	1	KIT-RECEPTACLE (2-PIN)	
	186-3735	2	PIN-CONNECTOR	
	3J-1907	1	SEAL-O-RING	
	3K-0360	1	SEAL-O-RING	
M	**8T-4183**	4	BOLT (M12X1.75X40-MM)	
	8T-4223	4	WASHER-HARD (13.5X25.5X3-MM THK)	
	8W-8528	2	SLEEVE	
Y	*152-7031*	1	WARNING GP-BACKUP	281
			S/N: AXM1-1310	
Y	*237-5513*	1	WARNING GP-BACKUP	283
			S/N: AXM1311-1376	
	213-6947	1	SWITCH GP-PRESSURE	
	102-8803	1	KIT-RECEPTACLE (3-PIN)	
BD	**5P-6008**		TUBE (.2M)	
BD	**8T-5677**		SLEEVE (.6M)	
	186-3735	3	PIN-CONNECTOR	
	190-6298	1	HARNESS AS-REAR CHASSIS	
	102-8802	1	KIT-RECEPTACLE (2-PIN)	
	102-8804	1	KIT-RECEPTACLE (4-PIN)	
	102-8805	1	KIT-RECEPTACLE (6-PIN)	
	155-2270	2	KIT-CONNECTING PLUG (2-PIN)	
	155-2260	1	KIT-CONNECTING PLUG (3-PIN)	
	155-2274	1	KIT-CONNECTING PLUG (6-PIN)	

B-USE AS REQUIRED
D-ORDER BY THE METER
M-METRIC PART
Y-SEPARATE ILLUSTRATION

<END>

241-6069 WIRING & LIGHTING GP

S/N: AXM1377-1606

PART OF 152-6921 AXLE & FRAME AR

SMCS-1408 **i02144268**

NOTE	REF NO	GRAPHIC REF	PART NUMBER	QTY	PART NAME 1 2 3 4 5 6 (PRODUCT LEVEL)	SEE PAGE
	1	1	**2V-2043**	1	LOCKNUT-FLARED (1-5/8-12-THD)	
	2	1	**3E-6451**	1	SWITCH GP-TEMPERATURE (PARKING BRAKE OIL)	
		1	**102-8802**	1	KIT-RECEPTACLE (2-PIN)	
					(INCLUDES RECEPTACLE AS & WEDGE)	
		1	**3E-3365**	1	WEDGE-RECEPTACLE LOCK (2-PIN)	
		1	**186-3735**	2	PIN-CONNECTOR	
	3	1	**3S-2093**	18	STRAP-CABLE	
	4	1	**8W-8528**	2	SLEEVE	
	5	1	**213-6947**	1	SWITCH GP-PRESSURE (PARKING BRAKE)	
		1	**102-8803**	1	KIT-RECEPTACLE (3-PIN)	
					(INCLUDES RECEPTACLE AS & WEDGE)	
		1	**3E-3371**	1	WEDGE-RECEPTACLE LOCK (3-PIN)	
D		1	**5P-6008**		TUBE (0.2-M)	
		1	**8T-5677**	1	SLEEVE	
		1	**186-3735**	3	PIN-CONNECTOR	
Y	6	1	*237-5513*	1	WARNING GP-BACKUP	283
	7	1	**241-6066**	1	HARNESS AS-CHASSIS (REAR)	
		1	**102-8802**	1	KIT-RECEPTACLE (2-PIN)	
		1	**102-8805**	1	KIT-RECEPTACLE (6-PIN)	
		1	**102-8806**	1	KIT-RECEPTACLE (8-PIN)	
					(EACH RECEPTACLE KIT INCLUDES RECEPTACLE AS & WEDGE)	
		1	**155-2260**	1	KIT-CONNECTING PLUG (3-PIN)	
		1	**155-2270**	1	KIT-CONNECTING PLUG (2-PIN)	
		1	**155-2274**	1	KIT-CONNECTING PLUG (6-PIN)	
					(EACH PLUG KIT INCLUDES PLUG AS, WEDGE & INTERFACE SEAL)	
	8	1	**3J-1907**	1	SEAL-O-RING	
	9	1	**3K-0360**	1	SEAL-O-RING	
M	10	1	**8T-4183**	4	BOLT (M12X1.75X40-MM)	
	11	1	**8T-4223**	4	WASHER-HARD (13.5X25.5X3-MM THK)	

D-ORDER BY THE METER
M-METRIC PART
Y-SEPARATE ILLUSTRATION

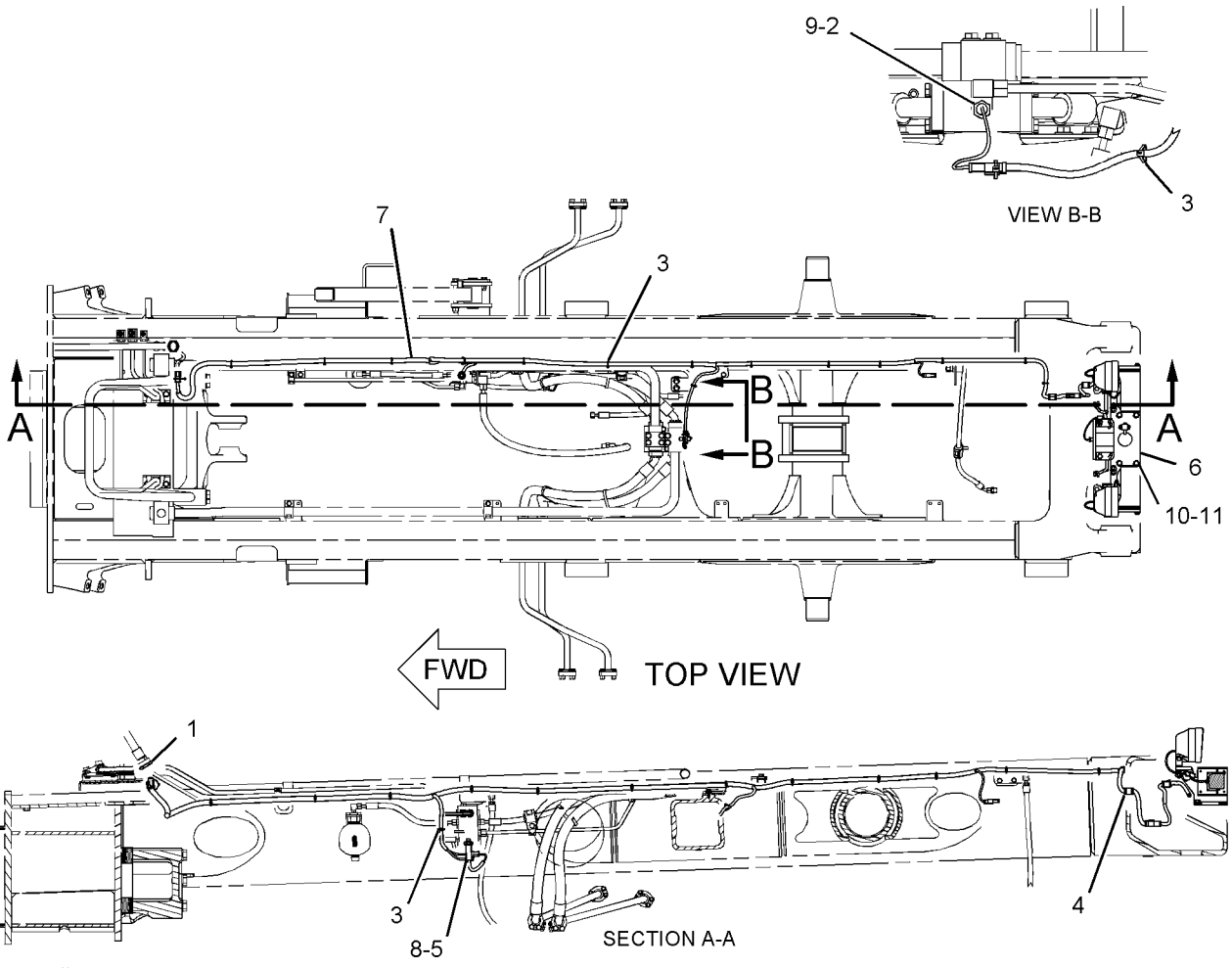

GRAPHIC #1 **<END>** g01089433

241-6069 WIRING & LIGHTING GP

S/N: AXM1607-UP

PART OF 152-6921 AXLE & FRAME AR

SMCS-1408 **i02217547**

NOTE	REF NO	GRAPHIC REF	PART NUMBER	QTY	PART NAME 1 2 3 4 5 6 (PRODUCT LEVEL)	SEE PAGE
	1	1	**2V-2043**	1	LOCKNUT-FLARED (1-5/8-12-THD)	
	2	1	**3E-6451**	1	SWITCH GP-TEMPERATURE (PARKING BRAKE OIL)	
		1	**102-8802**	1	KIT-RECEPTACLE (2-PIN)	
					(INCLUDES RECEPTACLE AS & WEDGE)	
		1	**3E-3365**	1	WEDGE-RECEPTACLE LOCK (2-PIN)	
		1	**186-3735**	2	PIN-CONNECTOR	
	3	1	**3S-2093**	18	STRAP-CABLE	
	4	1	**8W-8528**	2	SLEEVE	
	5	1	**213-6947**	1	SWITCH GP-PRESSURE (PARKING BRAKE)	
		1	**102-8803**	1	KIT-RECEPTACLE (3-PIN)	
					(INCLUDES RECEPTACLE AS & WEDGE)	
		1	**3E-3371**	1	WEDGE-RECEPTACLE LOCK (3-PIN)	
BD		1	**5P-6008**		TUBE	
		1	**8T-5677**	1	SLEEVE	
		1	**186-3735**	3	PIN-CONNECTOR	
	6	1	**241-6066**	1	HARNESS AS-CHASSIS (REAR)	
		1	**102-8802**	1	KIT-RECEPTACLE (2-PIN)	
		1	**102-8805**	1	KIT-RECEPTACLE (6-PIN)	
		1	**102-8806**	1	KIT-RECEPTACLE (8-PIN)	
					(EACH RECEPTACLE KIT INCLUDES RECEPTACLE AS & WEDGE)	
		1	**155-2260**	1	KIT-CONNECTING PLUG (3-PIN)	
		1	**155-2270**	1	KIT-CONNECTING PLUG (2-PIN)	
		1	**155-2274**	1	KIT-CONNECTING PLUG (6-PIN)	
					(EACH PLUG KIT INCLUDES PLUG AS, WEDGE & INTERFACE SEAL)	
CY	7	1	*252-9405*	1	WARNING GP-BACKUP	285
	8	1	**3J-1907**	1	SEAL-O-RING	
	9	1	**3K-0360**	1	SEAL-O-RING	
M	10	1	**8T-4956**	4	BOLT (M12X1.75X35-MM)	
	11	1	**8T-4223**	4	WASHER-HARD (13.5X25.5X3-MM THK)	

B-USE AS REQUIRED
C-CHANGE FROM PREVIOUS TYPE
D-ORDER BY THE METER
M-METRIC PART
Y-SEPARATE ILLUSTRATION

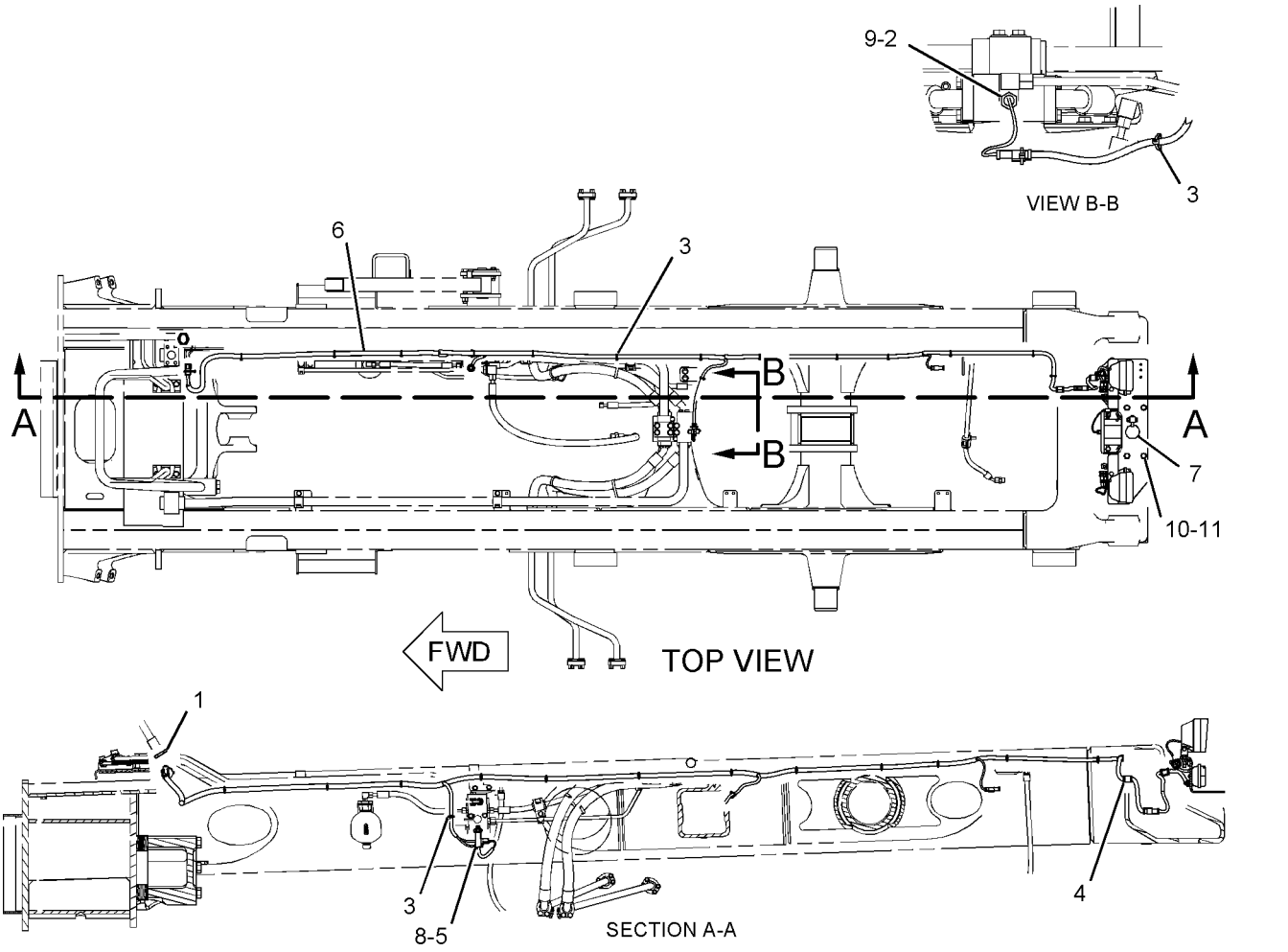

GRAPHIC #1 **<END>** g01089473

9W-4119 ACTUATOR GP-ROTARY—TRANSMISSION CONTROL

S/N: 4WY500-UP

PART OF 150-4728 VALVE GP-CONTROL

SMCS-3073, 3166 **i02231655**

NOTE	REF NO	GRAPHIC REF	PART NUMBER	QTY	PART NAME 1 2 3 4 5 6 (PRODUCT LEVEL)	SEE PAGE
C	1	1	**8E-8440**	1	BODY AS-ACTUATOR	
C	1A	1	**8E-8439**	2	DOWEL	
	1B	1	**5P-9400**	1	BEARING-ROLLER	
	2	1	**9W-4118**	1	ROTOR AS-ACTUATOR	
	3	1	**9G-9440**	1	VANE-ACTUATOR	
	4	1	**5D-4697**	2	BOLT-12 POINT HEAD (1/4-20X1-IN)	
	5	1	**9W-4116**	1	COVER AS	
	5A	1	**5P-9400**	1	BEARING-ROLLER	
	6	1	**1B-9575**	2	BOLT (5/16-18X1.75-IN)	
	7	1	**9W-6964**	1	VALVE AS-EXHAUST (UPSHIFT PRESSURE SIGNAL)	
		1	**8N-4173**	1	DOWEL	
		1	**3F-3152**	1	BALL	
	8	1	**9W-6964**	1	VALVE AS-EXHAUST (DOWNSHIFT PRESSURE SIGNAL)	
		1	**8N-4173**	1	DOWEL	
		1	**3F-3152**	1	BALL	
	9	1	**1J-9671**	2	SEAL-O-RING	
C	10	1	**9S-6155**	2	PLUG AS	
					(EACH INCLUDES)	
		1	**6J-4694**	1	PLUG	
	10A	1	**4H-8380**	1	PIN-SPRING	
	11	1	**9M-1974**	2	WASHER-HARD (8.8X16X2-MM THK)	

C-CHANGE FROM PREVIOUS TYPE

9W-4119 ACTUATOR GP-ROTARY *(contd.)* i02231655

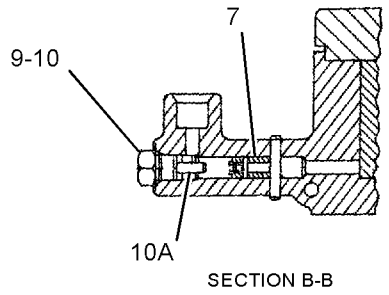

SECTION B-B

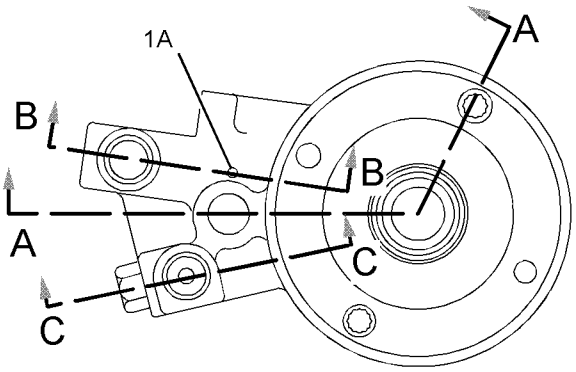

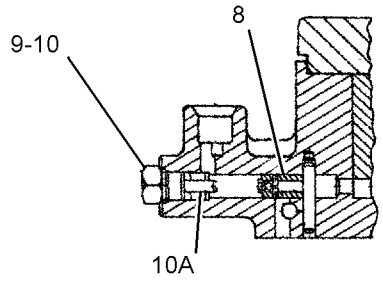

SECTION C-C

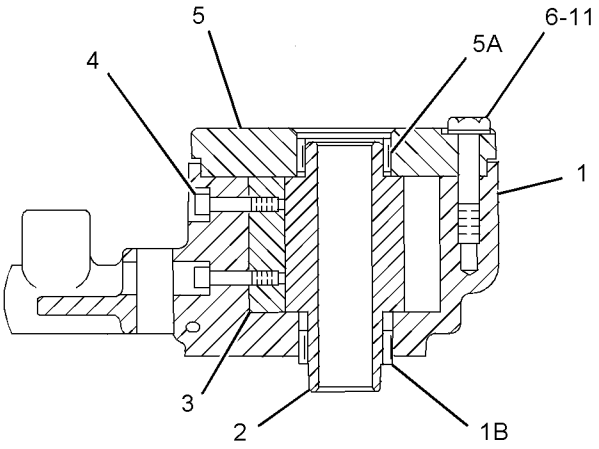

SECTION A-A

GRAPHIC #1 **<END>** g01125887

POWER TRAIN

152-6919 AXLE & FRAME AR

S/N: AXM1-UP

PART OF 141-6849 GENERAL AR

SMCS-3278, 7051 **i02096919**

NOTE	PART NUMBER	QTY	PART NAME 1 2 3 4 5 6 (PRODUCT LEVEL)	SEE PAGE
Y	*152-6935*	1	AXLE AR-FRONT	318
Y	*152-6929*	1	CYLINDER & MTG GP-STEERING	620
Y	*152-6931*	1	CYLINDER & MTG GP-SUSPENSION	795
			S/N: AXM1-1182	
Y	*235-6657*	1	CYLINDER & MTG GP-SUSPENSION	796
			S/N: AXM1183-UP	
Y	*141-6856*	1	FRAME GP-FRONT	500
Y	**141-6890**	1	GEAR GP-OUTPUT TRANSFER	380
			S/N: AXM1-1468	
Y	**243-4030**	1	GEAR GP-OUTPUT TRANSFER	404
			S/N: AXM1469-UP	
Y	*141-6886*	1	LINES GP-COOLANT	102
Y	*152-6933*	1	LINES GP-GREASE	536
Y	*152-6932*	1	MOUNTING GP-TRANSFER GEAR	424
Y	*152-6934*	1	SHAFT GP-FRONT DRIVE	443
Y	*152-6930*	1	WIRING GP-CAB	288
			S/N: AXM1-1376	
Y	*241-6067*	1	WIRING GP-FRONT	301
			S/N: AXM1377-UP	

Y-SEPARATE ILLUSTRATION

<END>

152-6921 AXLE & FRAME AR–REAR

S/N: AXM1-UP

PART OF 141-6849 GENERAL AR

SMCS-3278, 7051 **i02054218**

NOTE	PART NUMBER	QTY	PART NAME 1 2 3 4 5 6 (PRODUCT LEVEL)	SEE PAGE
Y	*152-7036*	1	AXLE AR-CENTER	318
Y	*152-7037*	1	AXLE AR-REAR	318
Y	*152-7034*	1	CONTROL GP-DIFFERENTIAL LOCK	346
Y	*152-7029*	1	CONTROL GP-PARKING BRAKE	585
Y	*152-7033*	1	CONTROL GP-SERVICE BRAKE	590
Y	*152-7035*	1	FRAME AR	499
Y	*141-6857*	1	HITCH GP-OSCILLATING	523
Y	*166-3946*	1	LINES GP-AXLE OIL COOLER	410
Y	*152-7030*	1	LINES GP-GREASE	538
Y	*152-7027*	1	SHAFT GP-HITCH DRIVE	444
Y	*152-7028*	1	SHAFT GP-REAR DRIVE	448
Y	*152-7032*	1	WIRING GP-REAR	310
			S/N: AXM1-1376	
Y	*241-6069*	1	WIRING GP-REAR	311
			S/N: AXM1377-UP	

Y-SEPARATE ILLUSTRATION

<END>

POWER TRAIN

152-7036 AXLE AR-CENTER

S/N: AXM1-UP

PART OF 152-6921 AXLE & FRAME AR

SMCS-3278 **i01454086**

NOTE	PART NUMBER	QTY	PART NAME 1 2 3 4 5 6 (PRODUCT LEVEL)	SEE PAGE
Y	*141-6892*	1	AXLE GP-CENTER	319
Y	*160-7200*	1	BRAKE GP-PARKING	575
Y	*152-7038*	1	BREATHER GP-POWER TRAIN	336
Y	*141-6859*	1	FRAME GP-CENTER SUSPENSION	801
Y	*192-1751*	1	GUARD GP-BRAKE LINES	504

Y-SEPARATE ILLUSTRATION

<END>

152-6935 AXLE AR-FRONT

S/N: AXM1-UP

PART OF 152-6919 AXLE & FRAME AR

SMCS-3278 **i02051440**

NOTE	PART NUMBER	QTY	PART NAME 1 2 3 4 5 6 (PRODUCT LEVEL)	SEE PAGE
Y	*141-6895*	1	AXLE GP-FRONT	325
			S/N: AXM1-1182	
Y	*237-4738*	1	AXLE GP-FRONT	329
			S/N: AXM1183-UP	
Y	*152-6936*	1	BREATHER GP-POWER TRAIN	335
Y	*141-6858*	1	FRAME GP-FRONT SUSPENSION	803
Y	*192-1682*	1	GUARD GP-BRAKE	503

Y-SEPARATE ILLUSTRATION

<END>

152-7037 AXLE AR-REAR

S/N: AXM1-UP

PART OF 152-6921 AXLE & FRAME AR

SMCS-3278 **i01447756**

NOTE	PART NUMBER	QTY	PART NAME 1 2 3 4 5 6 (PRODUCT LEVEL)	SEE PAGE
Y	*152-4410*	1	AXLE GP-REAR	333
Y	*153-0485*	1	BREATHER GP-POWER TRAIN	337
Y	*178-3852*	1	FRAME GP-REAR SUSPENSION	805

Y-SEPARATE ILLUSTRATION

<END>

141-6892 AXLE GP-CENTER

S/N: AXM1-857

PART OF 152-7036 AXLE AR-CENTER

SMCS-3278 **i01540652**

NOTE	REF NO	GRAPHIC REF	PART NUMBER	QTY	PART NAME 1 2 3 4 5 6 (PRODUCT LEVEL)	SEE PAGE
	1	1	**8G-5258**	25	SPACER (17X35X20-MM THK)	
	2	1	**8K-6464**	2	RING-RETAINING	
	4	1	**102-2453**	2	GEAR-SUN (16-TEETH)	
	6	1	**138-4117**	1	RETAINER-BEARING	
	7	1	**138-4121**	1	CAGE-BEARING	
Y	8	1	*138-4810*	2	WHEEL GP-FINAL DRIVE & BRAKE	480
	9	1	**139-2133**	1	YOKE AS	
		1	**132-0920**	1	GUARD	
	10	1	**139-2157**	1	SHAFT	
	11	1	**139-2159**	1	SHAFT	
	12	1	**139-2161**	1	SHAFT	
	13	1	**141-8891**	2	CONE-BEARING	
	14	1	**141-8892**	2	CUP-BEARING	
	15	1	**151-6899**	2	BRACKET AS	
					(EACH INCLUDES)	
M		1	**8T-3597**	2	NUT-WELD (M12X1.75-THD)	
	16	1	**151-6901**	2	BRACKET AS	
					(EACH INCLUDES)	
M		1	**8T-3597**	1	NUT-WELD (M12X1.75-THD)	
Y	17	1	**154-0300**	1	DIFFERENTIAL & BEVEL GEAR GP	368
	18	1	**159-4637**	1	YOKE AS	
	20	1	**162-7183**	1	SEAL-LIP TYPE	
	21	1	**5P-4484**	1	PLUG-MAGNETIC	
		1	**7M-8485**	1	SEAL-O-RING	
	22	1	**188-3777**	1	DISC	
Y	23	1	*190-6280*	1	LINES GP-SERVICE BRAKE	606
	24	1	**194-7819**	1	SPACER (76.5X87X4-MM THK)	
	25	1	**196-7243**	1	LOCKNUT (2.75X18-THD)	
	26	1	**205-0202**	1	HOUSING AS-AXLE	
		1	**160-6213**	2	BEARING-SLEEVE	
	27	1	**5P-4483**	1	PLUG	
		1	**7M-8485**	1	SEAL-O-RING	
	28	1	**2K-2939**	2	SEAL-O-RING	
	29	1	**4F-7391**	1	SEAL-O-RING	
	30	1	**5H-3252**	2	SEAL-O-RING	
	31	1	**6V-2360**	52	WASHER-HARD (20X32X3-MM THK)	
	32	1	**6V-2881**	52	BOLT (3/4-10X3.5-IN)	
M	33	1	**7X-2454**	1	BOLT (M24X3X110-MM)	
M	34	1	**7X-2554**	25	BOLT (M16X2X70-MM)	
	35	1	**8T-4121**	4	WASHER-HARD (11X21X2.5-MM THK)	
M	36	1	**8T-4138**	2	BOLT (M6X1X20-MM)	
	37	1	**8T-4167**	1	WASHER-HARD (26X44X4-MM THK)	
M	38	1	**8T-4186**	4	BOLT (M10X1.5X40-MM)	
M	39	1	**8T-4193**	2	BOLT (M16X2X50-MM)	
M	40	1	**8T-4944**	20	BOLT-SOCKET HEAD (M16X2X40-MM)	
	41	1	**9X-8256**	2	WASHER (6.6X12X2-MM THK)	
	42	1	**9X-8257**	47	WASHER (17.5X30X3.5-MM THK)	

M-METRIC PART
Y-SEPARATE ILLUSTRATION

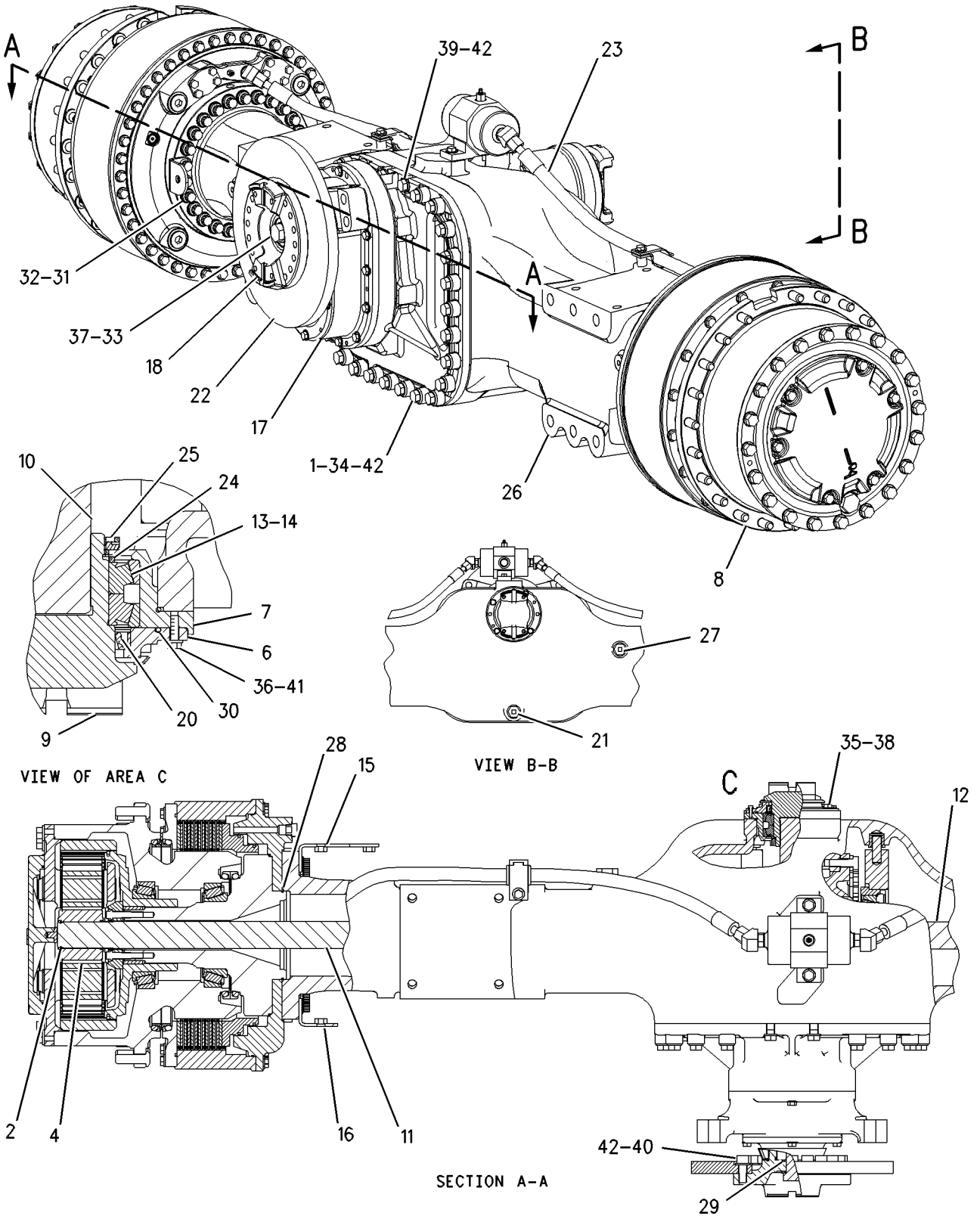

GRAPHIC #1 **<END>** g00800334

141-6892 AXLE GP-CENTER

S/N: AXM858-1323

PART OF 152-7036 AXLE AR-CENTER

SMCS-3278 **i01828645**

NOTE	REF NO	GRAPHIC REF	PART NUMBER	QTY	PART NAME 1 2 3 4 5 6 (PRODUCT LEVEL)	SEE PAGE
	1	1	**8G-5258**	25	SPACER (17X35X20-MM THK)	
	2	1	**8K-6464**	2	RING-RETAINING	
	3	1	**102-2453**	2	GEAR-SUN (16-TEETH)	
	5	1	**138-4117**	1	RETAINER-BEARING	
	6	1	**138-4121**	1	CAGE-BEARING	
Y	7	1	*138-4810*	2	WHEEL GP-FINAL DRIVE & BRAKE	480
	8	1	**139-2133**	1	YOKE AS	
		1	**132-0920**	1	GUARD	
	9	1	**139-2157**	1	SHAFT	
	10	1	**139-2159**	1	SHAFT	
	11	1	**139-2161**	1	SHAFT	
	12	1	**141-8891**	2	CONE-BEARING	
	13	1	**141-8892**	2	CUP-BEARING	
	14	1	**151-6899**	2	BRACKET AS	
					(EACH INCLUDES)	
M		1	**8T-3597**	2	NUT-WELD (M12X1.75-THD)	
	15	1	**151-6901**	2	BRACKET AS	
					(EACH INCLUDES)	
M		1	**8T-3597**	1	NUT-WELD (M12X1.75-THD)	
Y	16	1	**154-0300**	1	DIFFERENTIAL & BEVEL GEAR GP	368
	17	1	**159-4637**	1	YOKE AS	
	18	1	**162-7183**	1	SEAL-LIP TYPE	
	19	1	**188-3777**	1	DISC	
	20	1	**194-7819**	1	SPACER (76.5X87X4-MM THK)	
	21	1	**196-7243**	1	LOCKNUT (2.75X18-THD)	
	22	1	**205-0202**	1	HOUSING AS-AXLE	
		1	**160-6213**	2	BEARING-SLEEVE	
		1	*165-4929*	1	PLUG AS	
		1	**5P-4484**	1	PLUG-MAGNETIC	
		1	**7M-8485**	1	SEAL-O-RING	
		1	*197-4977*	1	PLUG AS	
		1	**5P-4483**	1	PLUG	
		1	**7M-8485**	1	SEAL-O-RING	
CY	23	1	*226-7366*	1	LINES GP-SERVICE BRAKE	612
	24	1	**2K-2939**	2	SEAL-O-RING	
	25	1	**4F-7391**	1	SEAL-O-RING	
	26	1	**5H-3252**	2	SEAL-O-RING	
	27	1	**6V-2360**	52	WASHER-HARD (20X32X3-MM THK)	
	28	1	**6V-2881**	52	BOLT (3/4-10X3.5-IN)	
M	29	1	**7X-2454**	1	BOLT (M24X3X110-MM)	
M	30	1	**7X-2554**	25	BOLT (M16X2X70-MM)	
	31	1	**8T-4121**	4	WASHER-HARD (11X21X2.5-MM THK)	
M	32	1	**8T-4138**	2	BOLT (M6X1X20-MM)	
	33	1	**8T-4167**	1	WASHER-HARD (26X44X4-MM THK)	
M	34	1	**8T-4186**	4	BOLT (M10X1.5X40-MM)	
M	35	1	**8T-4193**	2	BOLT (M16X2X50-MM)	
M	36	1	**8T-4944**	20	BOLT-SOCKET HEAD (M16X2X40-MM)	
	37	1	**9X-8256**	2	WASHER (6.6X12X2-MM THK)	
	38	1	**9X-8257**	47	WASHER (17.5X30X3.5-MM THK)	

C-CHANGE FROM PREVIOUS TYPE
M-METRIC PART
Y-SEPARATE ILLUSTRATION

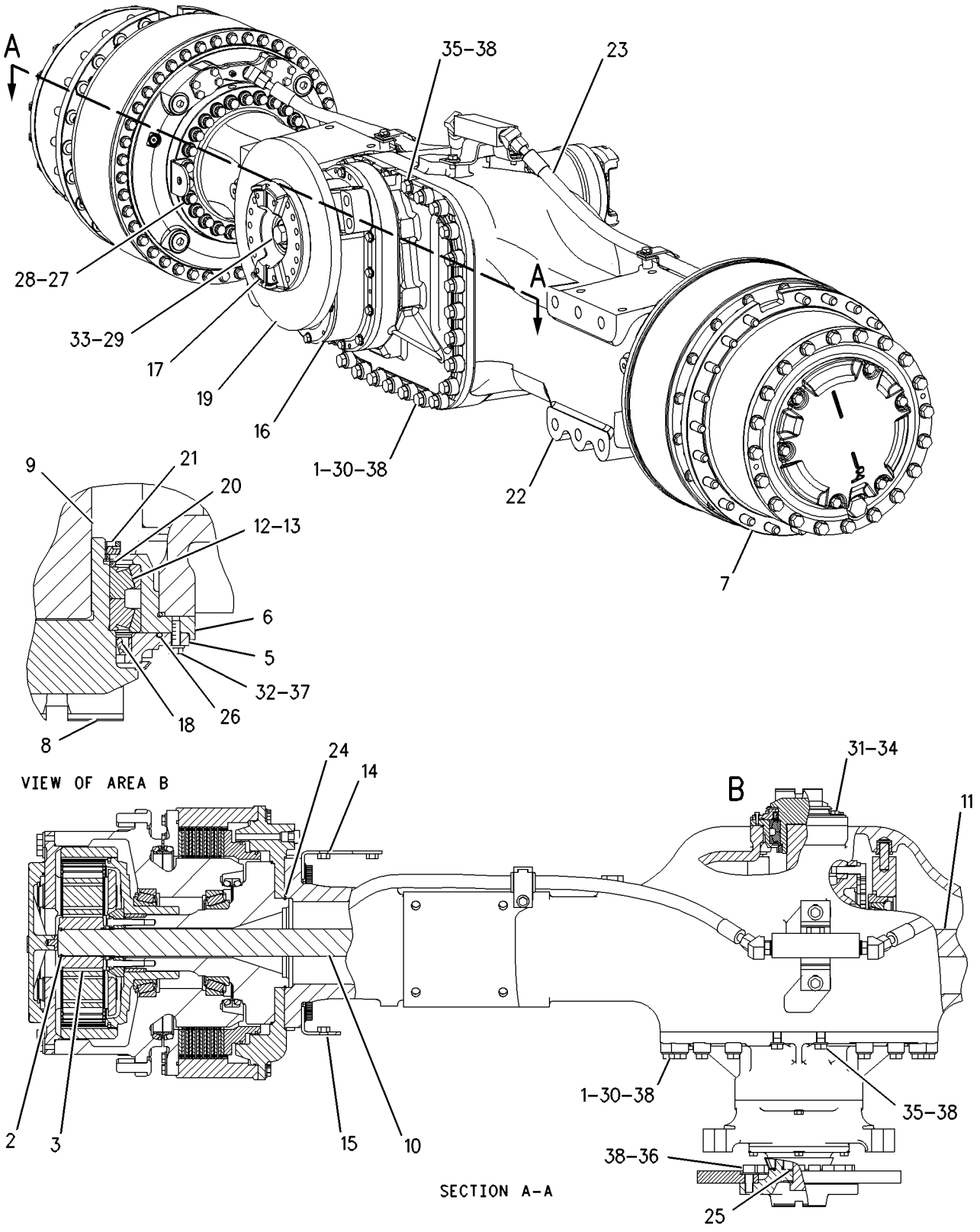

GRAPHIC #1 **<END>** g00932903

141-6892 AXLE GP-CENTER

S/N: AXM1324-UP

PART OF 152-7036 AXLE AR-CENTER

SMCS-3278 **i02042801**

NOTE	REF NO	GRAPHIC REF	PART NUMBER	QTY	PART NAME 1 2 3 4 5 6 (PRODUCT LEVEL)	SEE PAGE
	1	1	**8G-5258**	25	SPACER (17X35X20-MM THK)	
	2	1	**8K-6464**	2	RING-RETAINING	
	3	1	**102-2453**	2	GEAR-SUN (16-TEETH)	
	4	1	**9X-8257**	47	WASHER (17.5X30X3.5-MM THK)	
	5	1	**138-4117**	1	RETAINER-BEARING	
	6	1	**138-4121**	1	CAGE-BEARING	
	7	1	**139-2133**	1	YOKE AS	
		1	**132-0920**	1	GUARD	
	8	1	**139-2157**	1	SHAFT	
	9	1	**139-2159**	1	SHAFT	
	10	1	**139-2161**	1	SHAFT	
	11	1	**141-8891**	2	CONE-BEARING	
	12	1	**141-8892**	2	CUP-BEARING	
	13	1	**151-6899**	2	BRACKET AS	
					(EACH INCLUDES)	
M		1	**8T-3597**	2	NUT-WELD (M12X1.75-THD)	
	14	1	**151-6901**	2	BRACKET AS	
					(EACH INCLUDES)	
M		1	**8T-3597**	1	NUT-WELD (M12X1.75-THD)	
Y	15	1	**154-0300**	1	DIFFERENTIAL & BEVEL GEAR GP	368
	16	1	**159-4637**	1	YOKE AS	
	17	1	**162-7183**	1	SEAL-LIP TYPE	
	18	1	**188-3777**	1	DISC	
	19	1	**194-7819**	1	SPACER (76.5X87X4-MM THK)	
	20	1	**196-7243**	1	LOCKNUT (2.75X18 THD)	
	21	1	**205-0202**	1	HOUSING AS-AXLE	
		1	**160-6213**	2	BEARING-SLEEVE	
		1	*165-4929*	1	PLUG AS	
		1	**5P-4484**	1	PLUG-MAGNETIC	
		1	**7M-8485**	1	SEAL-O-RING	
		1	*197-4977*	1	PLUG AS	
		1	**5P-4483**	1	PLUG	
		1	**7M-8485**	1	SEAL-O-RING	
CY	22	1	*217-6290*	2	WHEEL GP-FINAL DRIVE & BRAKE	484
CY	23	1	*226-7366*	1	LINES GP-SERVICE BRAKE	612
	24	1	**2K-2939**	2	SEAL-O-RING	
	25	1	**4F-7391**	1	SEAL-O-RING	
	26	1	**5H-3252**	2	SEAL-O-RING	
	27	1	**6V-2360**	52	WASHER-HARD (20X32X3-MM THK)	
	28	1	**6V-2881**	52	BOLT (3/4-10X3.5-IN)	
M	29	1	**7X-2454**	1	BOLT (M24X3X110-MM)	
M	30	1	**7X-2554**	25	BOLT (M16X2X70-MM)	
	31	1	**8T-4121**	4	WASHER-HARD (11X21X2.5-MM THK)	
M	32	1	**8T-4138**	2	BOLT (M6X1X20-MM)	
	33	1	**8T-4167**	1	WASHER-HARD (26X44X4-MM THK)	
M	34	1	**8T-4186**	4	BOLT (M10X1.5X40-MM)	
M	35	1	**8T-4193**	2	BOLT (M16X2X50-MM)	
M	36	1	**8T-4944**	20	BOLT-SOCKET HEAD (M16X2X40-MM)	
	37	1	**9X-8256**	2	WASHER (6.6X12X2-MM THK)	

C-CHANGE FROM PREVIOUS TYPE
M-METRIC PART
Y-SEPARATE ILLUSTRATION

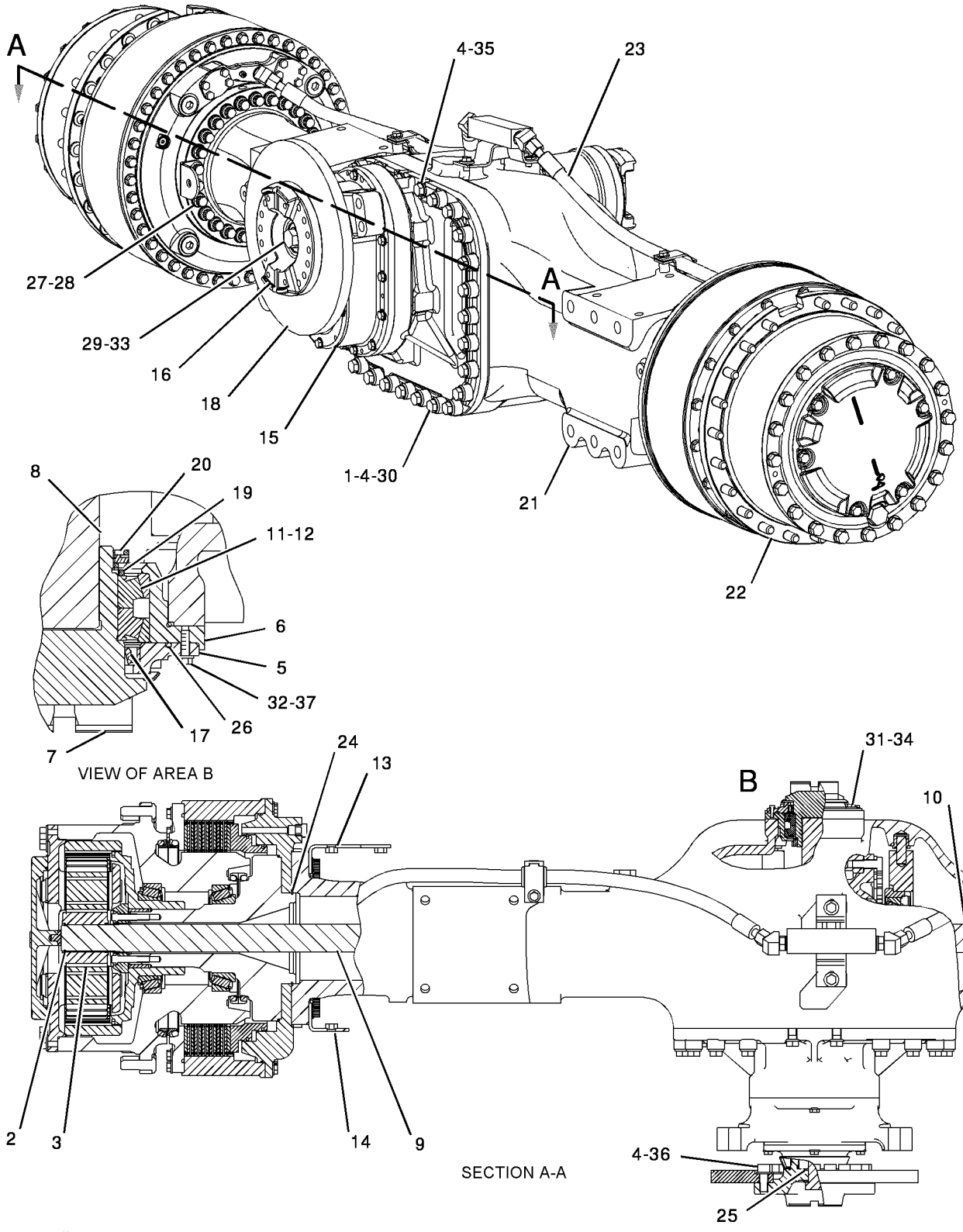

GRAPHIC #1 **<END>** g01053690

141-6895 AXLE GP-FRONT

S/N: AXM1-857

PART OF 152-6935 AXLE AR-FRONT

SMCS-3278 **i01846691**

NOTE	REF NO	GRAPHIC REF	PART NUMBER	QTY	PART NAME 1 2 3 4 5 6 (PRODUCT LEVEL)	SEE PAGE
	1	1	**8G-5258**	28	SPACER (17X35X20-MM THK)	
	2	1	**8K-6464**	2	RING-RETAINING	
	3	1	**102-2453**	2	GEAR-SUN (16-TEETH)	
Y	5	1	*138-4810*	2	WHEEL GP-FINAL DRIVE & BRAKE	480
	6	1	**139-2159**	1	SHAFT	
	7	1	**139-2161**	1	SHAFT	
	8	1	**139-2245**	1	YOKE AS	
Y	9	1	**148-7200**	1	DIFFERENTIAL & BEVEL GEAR GP	366
	10	1	**151-6899**	2	BRACKET AS	
M		1	**8T-3597**	2	NUT-WELD (M12X1.75-THD)	
	11	1	**151-6901**	2	BRACKET AS	
M		1	**8T-3597**	1	NUT-WELD (M12X1.75-THD)	
Y	12	1	*191-3491*	1	LINES GP-SERVICE BRAKE	608
	13	1	**205-0199**	1	HOUSING AS	
	13A	1	**160-6213**	2	BEARING-SLEEVE	
	13B	1	**5P-4484**	1	PLUG-MAGNETIC	
		1	**7M-8485**	1	SEAL-O-RING	
	13C	1	**5P-4483**	1	PLUG	
		1	**7M-8485**	1	SEAL-O-RING	
	14	1	**2K-2939**	2	SEAL-O-RING	
	15	1	**4F-7391**	1	SEAL-O-RING	
	16	1	**6V-2360**	52	WASHER-HARD (20X32X3-MM THK)	
	17	1	**6V-2881**	52	BOLT (3/4-10X3.5-IN)	
M	18	1	**7X-2554**	28	BOLT (M16X2X70-MM)	
	19	1	**8T-4121**	2	WASHER-HARD (11X21X2.5-MM THK)	
M	20	1	**8T-4196**	2	BOLT (M10X1.5X35-MM)	
	21	1	**8T-4223**	1	WASHER-HARD (13.5X25.5X3-MM THK)	
M	22	1	**8T-6868**	1	BOLT (M12X1.75X80-MM)	
	23	1	**9X-8257**	28	WASHER (17.5X30X3.5-MM THK)	

M-METRIC PART
Y-SEPARATE ILLUSTRATION

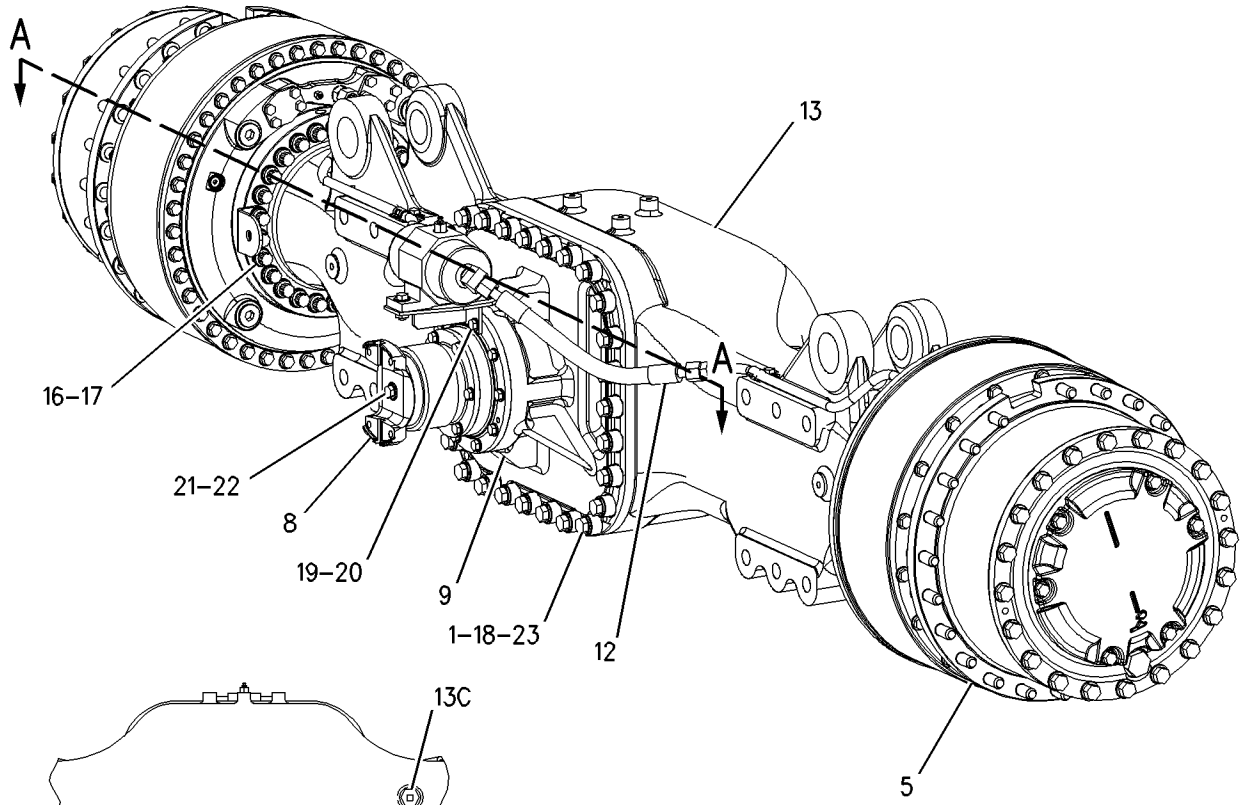

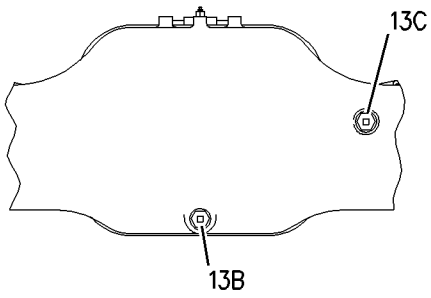

VIEW B-B

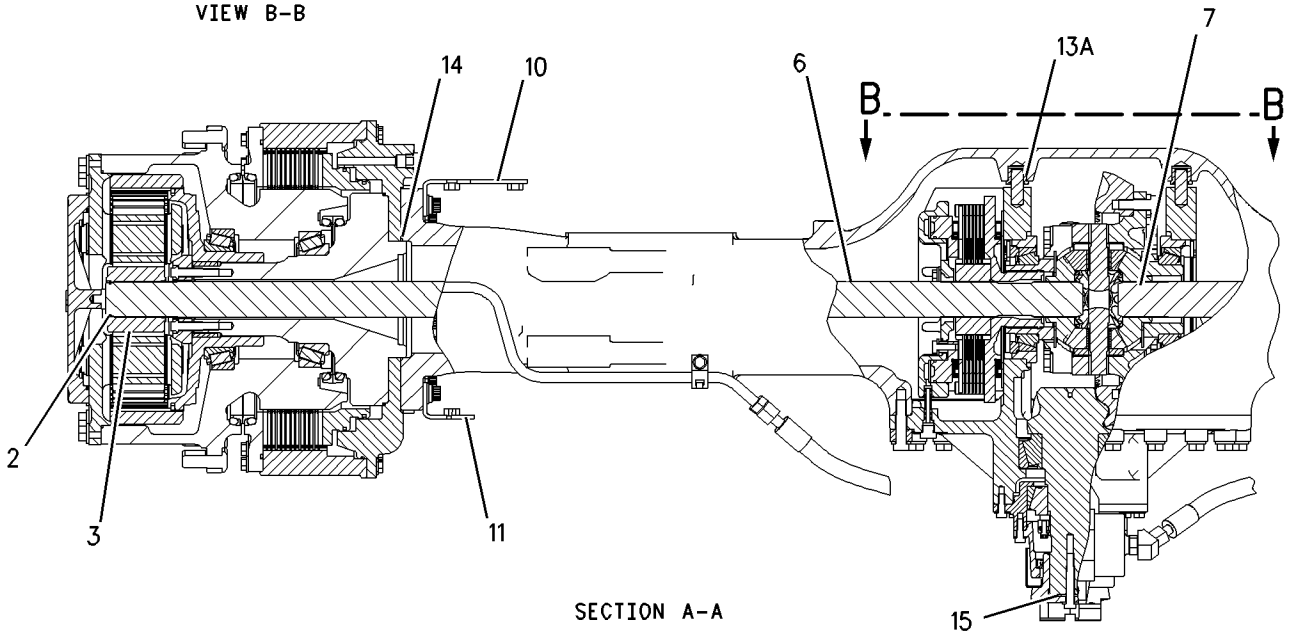

SECTION A-A

GRAPHIC #1 **<END>** g00834065

141-6895 AXLE GP-FRONT

S/N: AXM858-1182

PART OF 152-6935 AXLE AR-FRONT

SMCS-3278 **i01811899**

NOTE	REF NO	GRAPHIC REF	PART NUMBER	QTY	PART NAME 1 2 3 4 5 6 (PRODUCT LEVEL)	SEE PAGE
	1	1	**8G-5258**	28	SPACER (17X35X20-MM THK)	
	2	1	**8K-6464**	2	RING-RETAINING	
	3	1	**102-2453**	2	GEAR-SUN (16-TEETH)	
	4	1	**109-8895**	1	PLATE-IDENTIFICATION	
Y	5	1	*138-4810*	2	WHEEL GP-FINAL DRIVE & BRAKE	480
	6	1	**139-2159**	1	SHAFT	
	7	1	**139-2161**	1	SHAFT	
	8	1	**139-2245**	1	YOKE AS	
Y	9	1	*148-7200*	1	DIFFERENTIAL & BEVEL GEAR GP	366
	10	1	**151-6899**	2	BRACKET AS	
M		1	**8T-3597**	2	NUT-WELD (M12X1.75-THD)	
	11	1	**151-6901**	2	BRACKET AS	
M		1	**8T-3597**	1	NUT-WELD (M12X1.75-THD)	
	12	1	**205-0199**	1	HOUSING AS	
	12A	1	**160-6213**	2	BEARING-SLEEVE	
	12B	1	**5P-4484**	1	PLUG-MAGNETIC	
		1	**7M-8485**	1	SEAL-O-RING	
	12C	1	**5P-4483**	1	PLUG	
		1	**7M-8485**	1	SEAL-O-RING	
CY	13	1	*226-7365*	1	LINES GP-SERVICE BRAKE	610
	14	1	**2K-2939**	2	SEAL-O-RING	
	15	1	**4F-7391**	1	SEAL-O-RING	
	16	1	**6V-2360**	52	WASHER-HARD (20X32X3-MM THK)	
	17	1	**6V-2881**	52	BOLT (3/4-10X3.5-IN)	
M	18	1	**7X-2554**	28	BOLT (M16X2X70-MM)	
	19	1	**8T-4121**	2	WASHER-HARD (11X21X2.5-MM THK)	
M	20	1	**8T-4196**	2	BOLT (M10X1.5X35-MM)	
	21	1	**8T-4223**	1	WASHER-HARD (13.5X25.5X3-MM THK)	
M	22	1	**8T-6868**	1	BOLT (M12X1.75X80-MM)	
	23	1	**9X-8257**	28	WASHER (17.5X30X3.5-MM THK)	

C-CHANGE FROM PREVIOUS TYPE
M-METRIC PART
Y-SEPARATE ILLUSTRATION

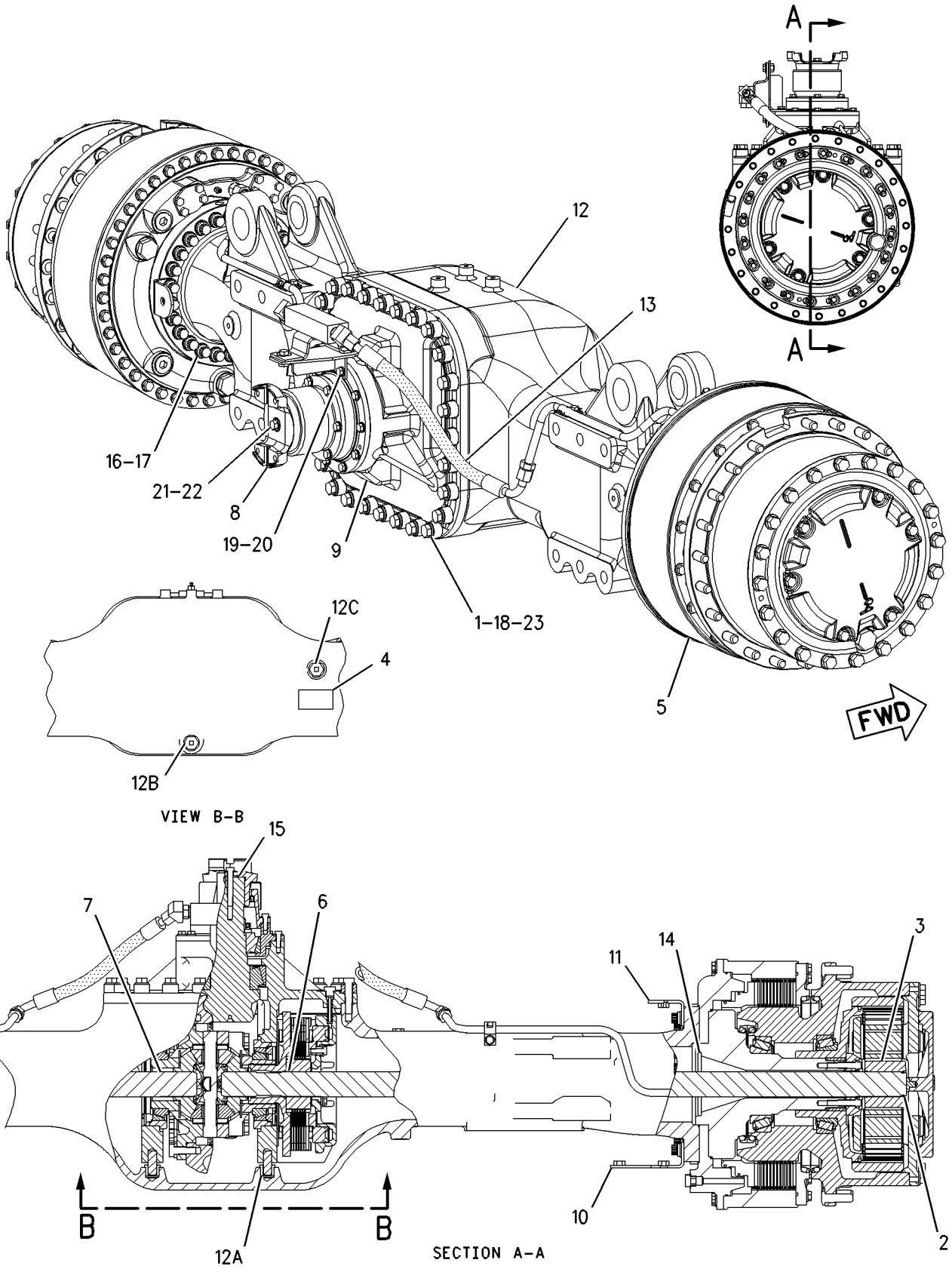

GRAPHIC #1 **<END>** g00925962

237-4738 AXLE GP-FRONT

S/N: AXM1183-1323

PART OF 152-6935 AXLE AR-FRONT

SMCS-3278 **i02188503**

NOTE	REF NO	GRAPHIC REF	PART NUMBER	QTY	PART NAME 1 2 3 4 5 6 (PRODUCT LEVEL)	SEE PAGE
	1	1	**8G-5258**	28	SPACER (17X35X20-MM THK)	
	2	1	**8K-6464**	2	RING-RETAINING	
	3	1	**102-2453**	2	GEAR-SUN (16-TEETH)	
	4	1	**9X-8257**	28	WASHER (17.5X30X3.5-MM THK)	
Y	5	1	*138-4810*	2	WHEEL GP-FINAL DRIVE & BRAKE	480
	6	1	**139-2159**	1	SHAFT	
	7	1	**139-2161**	1	SHAFT	
	8	1	**139-2245**	1	YOKE AS	
Y	9	1	**148-7200**	1	DIFFERENTIAL & BEVEL GEAR GP	366
	10	1	**151-6899**	2	BRACKET AS	
					(EACH INCLUDES)	
M		1	**8T-3597**	2	NUT-WELD (M12X1.75-THD)	
	11	1	**151-6901**	2	BRACKET AS	
					(EACH INCLUDES)	
M		1	**8T-3597**	2	NUT-WELD (M12X1.75-THD)	
	12	1	**219-8561**	1	HOUSING AS-AXLE	
		1	**160-6213**	2	BEARING-SLEEVE	
		1	**5P-4484**	1	PLUG-MAGNETIC (AXLE HOUSING)	
		1	**5P-4483**	1	PLUG	
		1	**7M-8485**	2	SEAL-O-RING	
Y	13	1	*226-7365*	1	LINES GP-SERVICE BRAKE	610
	14	1	**2K-2939**	2	SEAL-O-RING	
	15	1	**4F-7391**	1	SEAL-O-RING	
	16	1	**6V-2360**	52	WASHER-HARD (20X32X3-MM THK)	
	17	1	**6V-2881**	52	BOLT (3/4-10X3.5-IN)	
M	18	1	**7X-2554**	28	BOLT (M16X2X70-MM)	
	19	1	**8T-4121**	2	WASHER-HARD (11X21X2.5-MM THK)	
M	20	1	**8T-4196**	2	BOLT (M10X1.5X35-MM)	
	21	1	**8T-4223**	1	WASHER-HARD (13.5X25.5X3-MM THK)	
M	22	1	**8T-6868**	1	BOLT (M12X1.75X80-MM)	

M-METRIC PART
Y-SEPARATE ILLUSTRATION

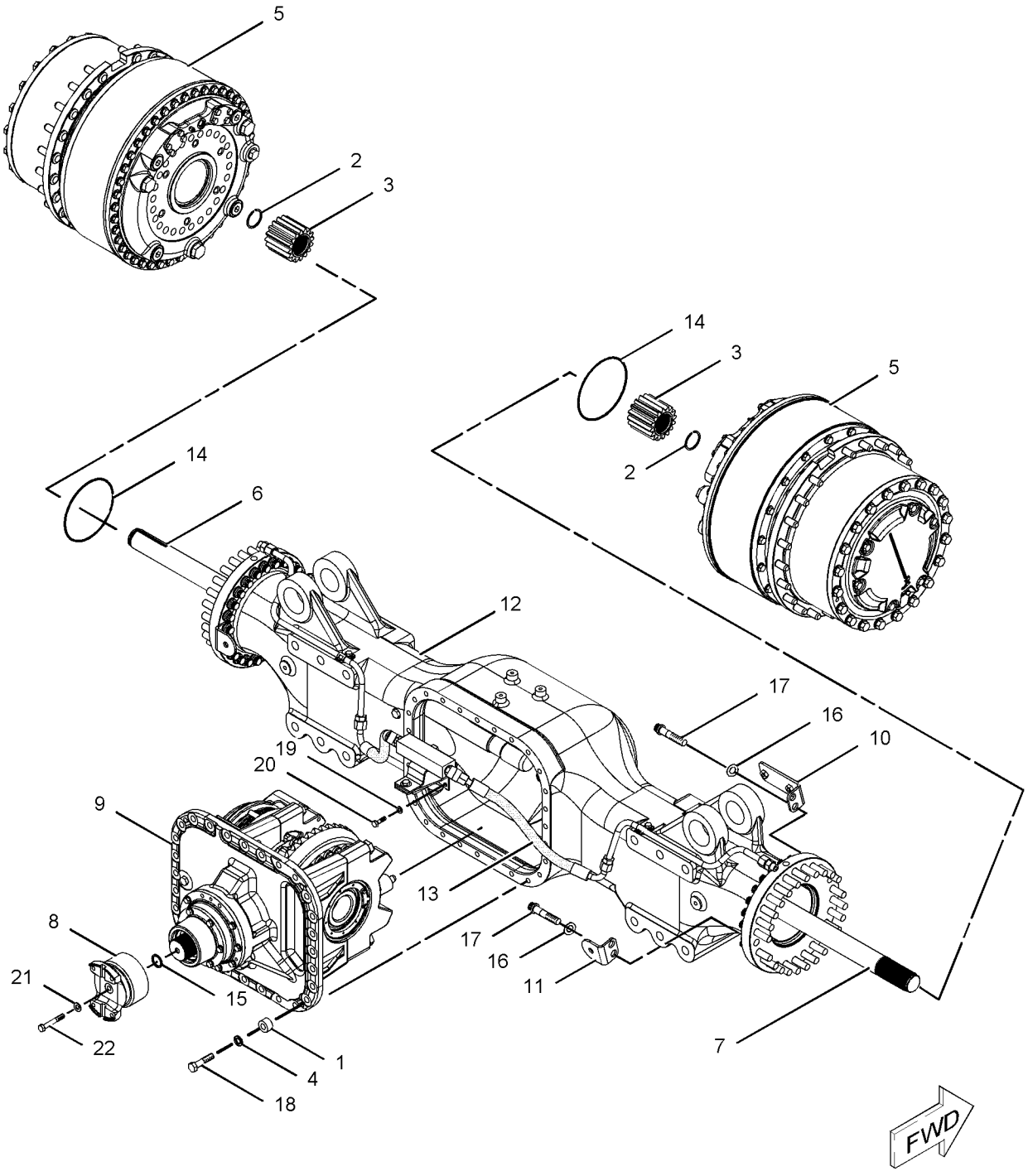

GRAPHIC #1 **<END>** g01107525

237-4738 AXLE GP-FRONT

S/N: AXM1324-UP

PART OF 152-6935 AXLE AR-FRONT

SMCS-3278 **i02188504**

NOTE	REF NO	GRAPHIC REF	PART NUMBER	QTY	PART NAME 1 2 3 4 5 6 (PRODUCT LEVEL)	SEE PAGE
	1	1	**8G-5258**	28	SPACER (17X35X20-MM THK)	
	2	1	**8K-6464**	2	RING-RETAINING	
	3	1	**102-2453**	2	GEAR-SUN (16-TEETH)	
	4	1	**9X-8257**	28	WASHER (17.5X30X3.5-MM THK)	
Y	5	1	*217-6290*	2	WHEEL GP-FINAL DRIVE & BRAKE	484
	6	1	**139-2159**	1	SHAFT	
	7	1	**139-2161**	1	SHAFT	
	8	1	**139-2245**	1	YOKE AS	
Y	9	1	**148-7200**	1	DIFFERENTIAL & BEVEL GEAR GP	366
	10	1	**151-6899**	2	BRACKET AS	
					(EACH INCLUDES)	
M		1	**8T-3597**	2	NUT-WELD (M12X1.75-THD)	
	11	1	**151-6901**	2	BRACKET AS	
					(EACH INCLUDES)	
M		1	**8T-3597**	2	NUT-WELD (M12X1.75-THD)	
	12	1	**219-8561**	1	HOUSING AS-AXLE	
		1	**160-6213**	2	BEARING-SLEEVE	
		1	**5P-4484**	1	PLUG-MAGNETIC (AXLE HOUSING)	
		1	**5P-4483**	1	PLUG	
		1	**7M-8485**	2	SEAL-O-RING	
Y	13	1	*226-7365*	1	LINES GP-SERVICE BRAKE	610
	14	1	**2K-2939**	2	SEAL-O-RING	
	15	1	**4F-7391**	1	SEAL-O-RING	
	16	1	**6V-2360**	52	WASHER-HARD (20X32X3-MM THK)	
	17	1	**6V-2881**	52	BOLT (3/4-10X3.5-IN)	
M	18	1	**7X-2554**	28	BOLT (M16X2X70-MM)	
	19	1	**8T-4121**	2	WASHER-HARD (11X21X2.5-MM THK)	
M	20	1	**8T-4196**	2	BOLT (M10X1.5X35-MM)	
	21	1	**8T-4223**	1	WASHER-HARD (13.5X25.5X3-MM THK)	
M	22	1	**8T-6868**	1	BOLT (M12X1.75X80-MM)	

M-METRIC PART
Y-SEPARATE ILLUSTRATION

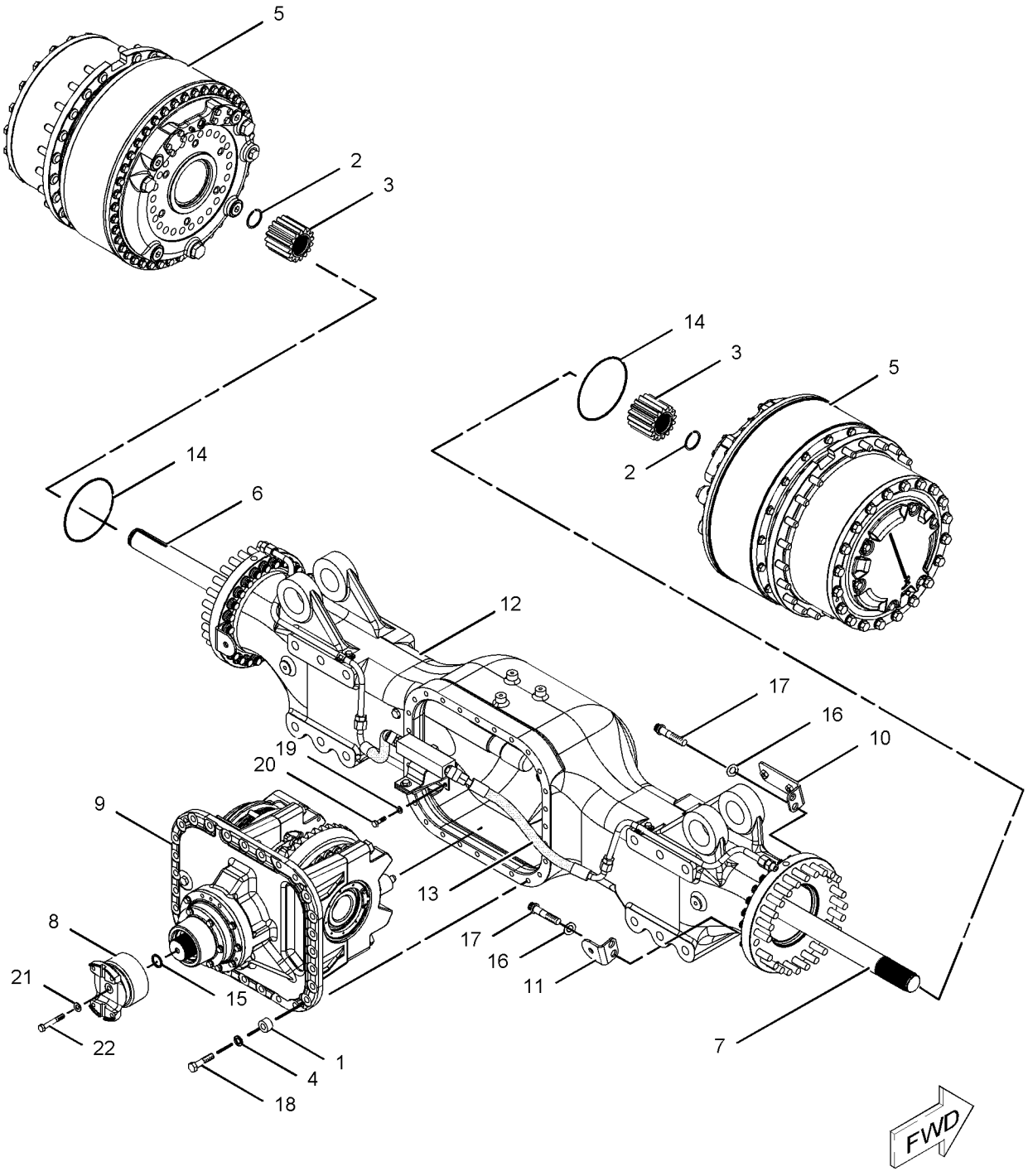

GRAPHIC #1 **<END>** g01107525

152-4410 AXLE GP-REAR

S/N: AXM1-UP

PART OF 152-7037 AXLE AR-REAR

SMCS-3278 **i01541145**

NOTE	REF NO	GRAPHIC REF	PART NUMBER	QTY	PART NAME 1 2 3 4 5 6 (PRODUCT LEVEL)	SEE PAGE
	1	1	**8G-5258**	28	SPACER (17X35X20-MM THK)	
	2	1	**8K-6464**	2	RING-RETAINING	
	3	1	**8X-0489**	2	PLATE	
	4	1	**102-2453**	2	GEAR-SUN (16-TEETH)	
	6	1	**139-2159**	1	SHAFT	
	7	1	**139-2161**	1	SHAFT	
	8	1	**139-2245**	1	YOKE AS	
Y	9	1	*141-6054*	2	WHEEL & FINAL DRIVE GP	477
Y	10	1	**148-7200**	1	DIFFERENTIAL & BEVEL GEAR GP	366
	11	1	**205-0203**	1	HOUSING AS-AXLE	
		1	**160-6213**	2	BEARING-SLEEVE	
	12	1	**2K-2939**	2	SEAL-O-RING	
	13	1	**4F-7391**	1	SEAL-O-RING	
	14	1	**6V-2360**	52	WASHER-HARD (20X32X3-MM THK)	
	15	1	**6V-2881**	52	BOLT (3/4-10X3.5-IN)	
M	16	1	**7X-2554**	28	BOLT (M16X2X70-MM)	
	17	1	**8T-4223**	1	WASHER-HARD (13.5X25.5X3-MM THK)	
M	18	1	**8T-6868**	1	BOLT (M12X1.75X80-MM)	
	19	1	**9X-8257**	28	WASHER (17.5X30X3.5-MM THK)	

M-METRIC PART
Y-SEPARATE ILLUSTRATION

152-4410 **AXLE GP-REAR** *(contd.)* **i01541145**

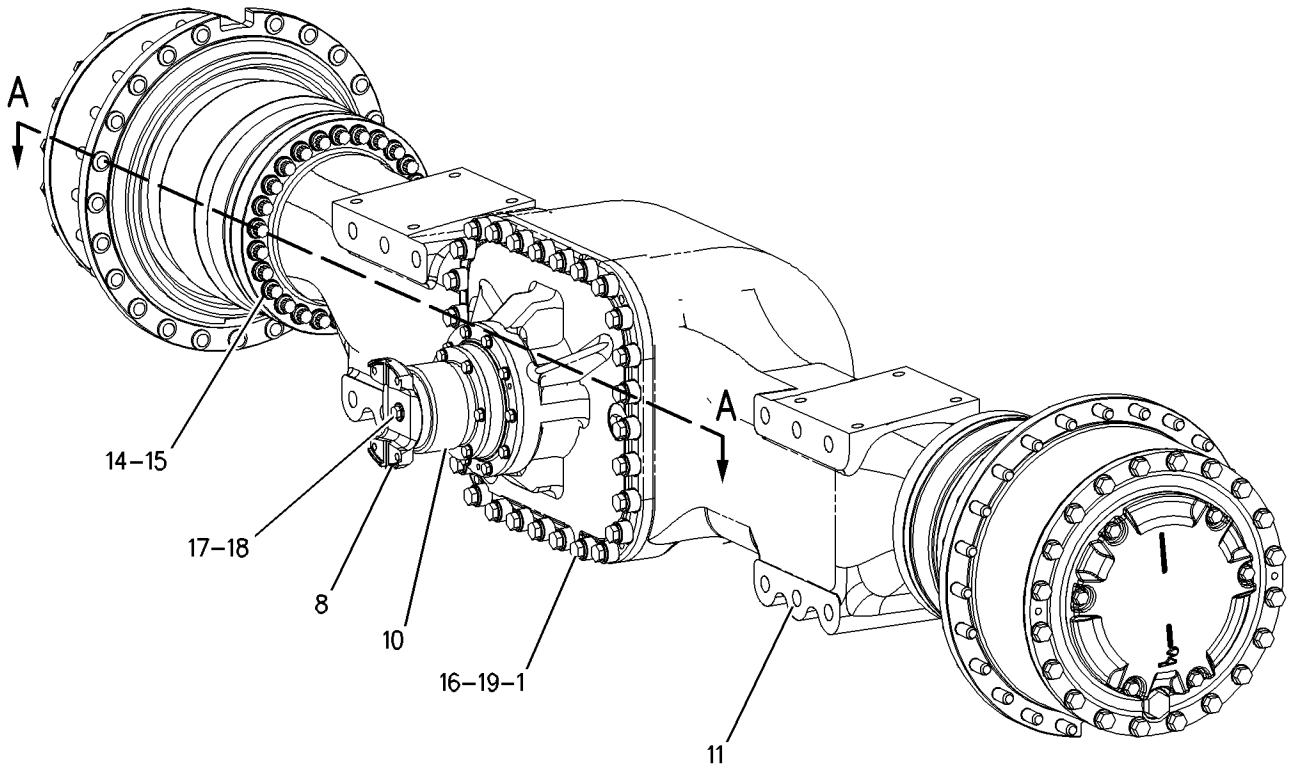

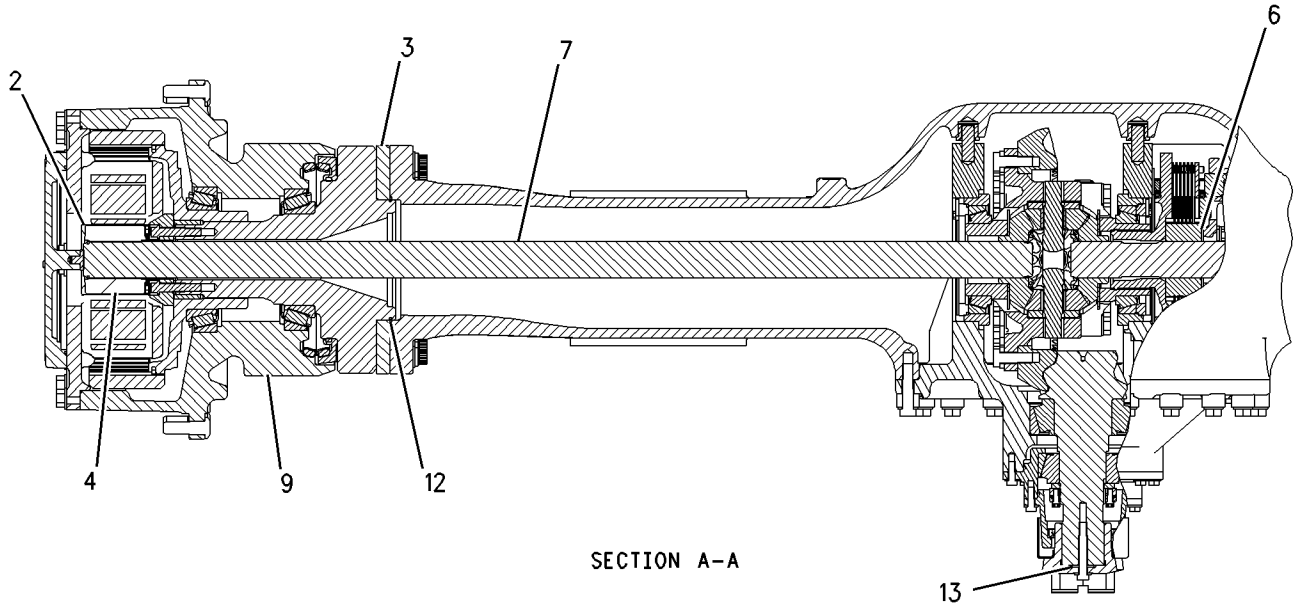

SECTION A-A

GRAPHIC #1 **<END>** g00800963

152-6936 BREATHER GP-POWER TRAIN–FRONT

S/N: AXM1-UP

PART OF 152-6935 AXLE AR-FRONT

SMCS-3024 **i01812025**

NOTE	REF NO	GRAPHIC REF	PART NUMBER	QTY	PART NAME 1 2 3 4 5 6 (PRODUCT LEVEL)	SEE PAGE
	1	1	**6U-0455**	1	STRAP	
	2	1	**6U-1989**	1	VALVE AS-RELIEF	
	3	1	*169-7395*	1	ADAPTER AS	
		1	**156-6129**	1	ADAPTER	
		1	**6V-8398**	1	SEAL-O-RING	
I	4	1	**206-7179**	1	HOSE AS	
	5	1	*148-8364*	1	ELBOW AS	
		1	**6V-8625**	1	ELBOW	
		1	**3K-0360**	1	SEAL-O-RING	
		1	**6V-8398**	1	SEAL-O-RING	
	6	1	**6V-9169**	1	NUT-BULKHEAD (13/16-16-THD)	

I-REFER TO HYDRAULIC INFORMATION SYSTEM

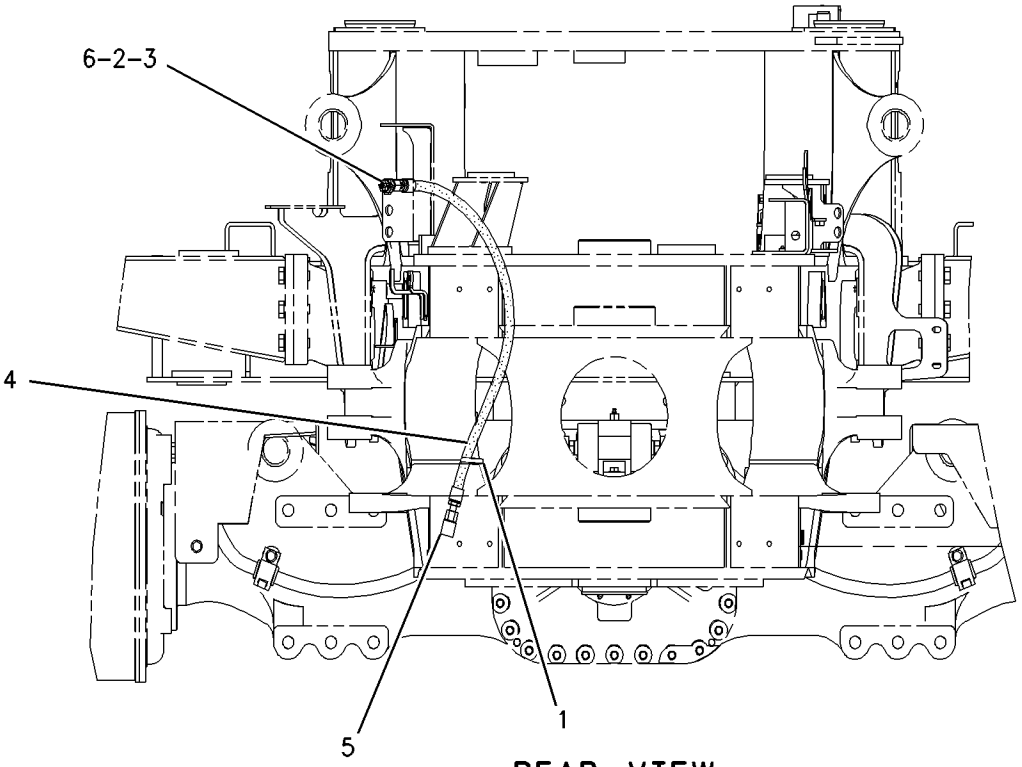

REAR VIEW

GRAPHIC #1 **<END>** g00926042

152-7038 BREATHER GP-POWER TRAIN–CENTER

S/N: AXM1-UP

PART OF 152-7036 AXLE AR-CENTER

SMCS-3024 **i01846695**

NOTE	REF NO	GRAPHIC REF	PART NUMBER	QTY	PART NAME 1 2 3 4 5 6 (PRODUCT LEVEL)	SEE PAGE
	1	1	**6U-1989**	1	VALVE AS-RELIEF	
I	2	1	**156-3527**	1	HOSE AS	
	3	1	*169-7402*	1	ADAPTER AS	
		1	**156-6131**	1	ADAPTER	
		1	**3J-7354**	1	SEAL-O-RING	
		1	**6V-8398**	1	SEAL-O-RING	
	4	1	*148-8364*	1	ELBOW AS	
		1	**6V-8625**	1	ELBOW	
		1	**3K-0360**	1	SEAL-O-RING	
		1	**6V-8398**	1	SEAL-O-RING	
	5	1	*148-8370*	1	ELBOW AS	
		1	**6V-9851**	1	ELBOW	
		1	**6V-8398**	1	SEAL-O-RING	

I-REFER TO HYDRAULIC INFORMATION SYSTEM

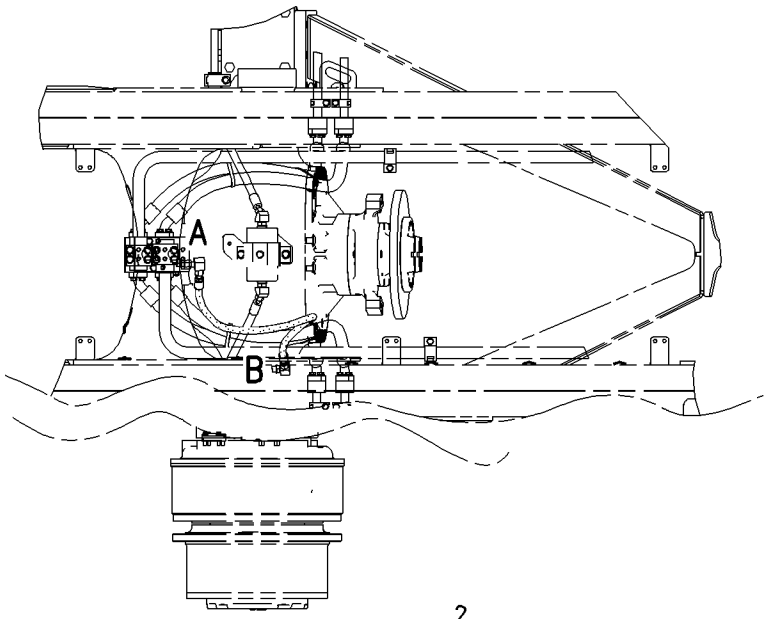

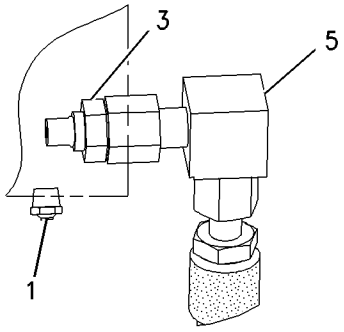

VIEW OF AREA A

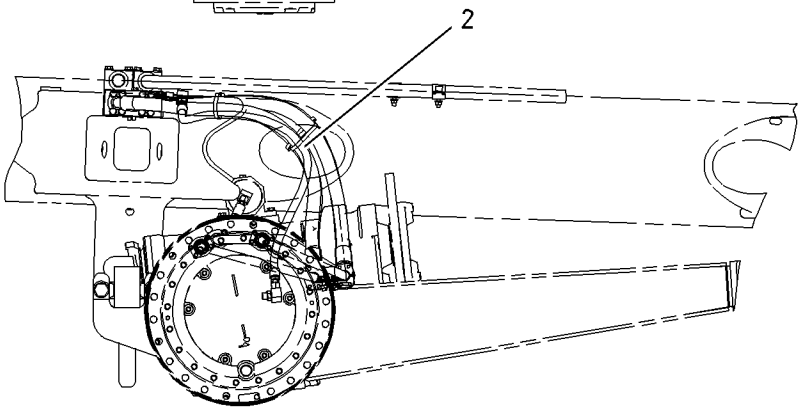

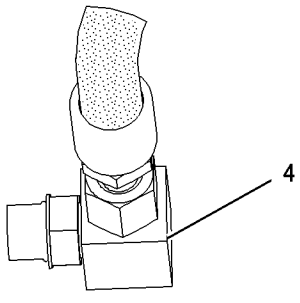

VIEW OF AREA B

GRAPHIC #1 **<END>** g00795964

153-0485 BREATHER GP-POWER TRAIN–REAR

S/N: AXM1-UP

PART OF 152-7037 AXLE AR-REAR

SMCS-3024 **i01846692**

NOTE	REF NO	GRAPHIC REF	PART NUMBER	QTY	PART NAME 1 2 3 4 5 6 (PRODUCT LEVEL)	SEE PAGE
	1	1	**6U-1989**	1	VALVE AS-RELIEF	
I	2	1	**8X-6973**	1	HOSE AS	
	3	1	*169-7395*	1	ADAPTER AS	
		1	**156-6129**	1	ADAPTER	
		1	**6V-8398**	1	SEAL-O-RING	
	4	1	*148-8364*	1	ELBOW AS	
		1	**6V-8625**	1	ELBOW (90 DEGREE)	
		1	**3K-0360**	1	SEAL-O-RING	
		1	**6V-8398**	1	SEAL-O-RING	
	5	1	**6V-9169**	1	NUT-BULKHEAD (13/16-16-THD)	

I-REFER TO HYDRAULIC INFORMATION SYSTEM

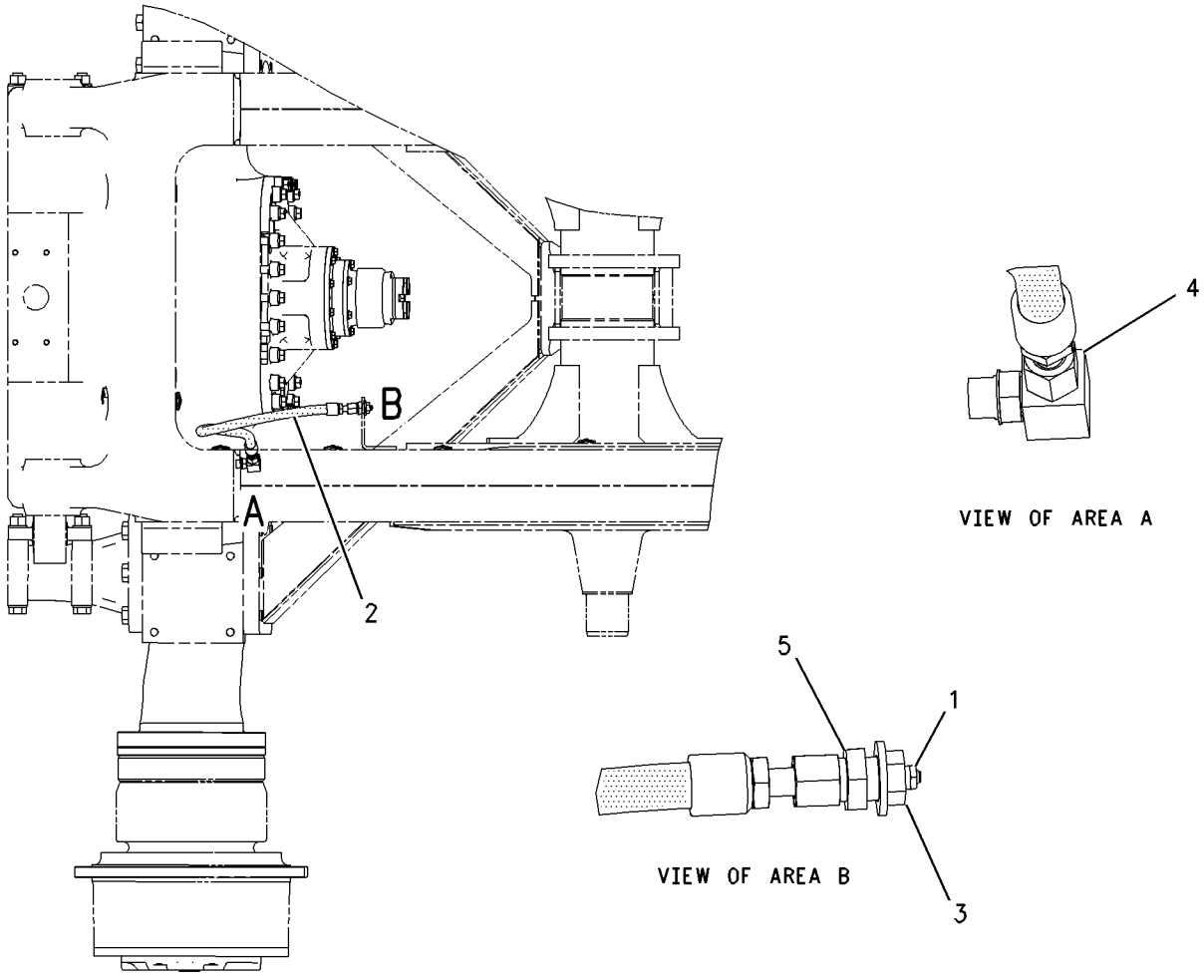

GRAPHIC #1 **<END>** g00764363

197-7200 BREATHER GP-POWER TRAIN

S/N: AXM1-UP

PART OF 152-6922 HYDRAULIC AR-MACHINE

SMCS-3024 **i01644651**

NOTE	REF NO	GRAPHIC REF	PART NUMBER	QTY	PART NAME 1 2 3 4 5 6 (PRODUCT LEVEL)	SEE PAGE
	1	1	**7U-6574**	1	SEAL	
	2	1	**8X-4575**	2	BREATHER AS	
	3	1	**9M-2904**	2	CLAMP-HOSE	
	4	1	**105-0381**	2	BLOCK	
	5	1	**178-8977**	1	PLATE AS	
	6	1	*208-1628*	1	ELBOW AS	
		1	**2T-1922**	1	ELBOW	
		1	**6V-8398**	1	SEAL-O-RING	
	7	1	**212-5826**	1	BRACKET AS	
M		1	**8T-3612**	6	NUT-WELD (M8X1.25-THD)	
	8	1	**212-5828**	1	PLATE AS	
M		1	**8T-3612**	2	NUT-WELD (M8X1.25-THD)	
	9	1	**212-5830**	1	TUBE AS	
I	10	1	**212-5831**	1	HOSE AS	
I	11	1	**212-5832**	1	HOSE AS	
	12	1	*148-8306*	2	ADAPTER AS	
					(EACH INCLUDES)	
		1	**5P-5777**	1	ADAPTER-O-RING	
		1	**7M-8485**	1	SEAL-O-RING	
	13	1	*148-8354*	2	ELBOW AS	
					(EACH INCLUDES)	
		1	**6V-8398**	1	SEAL-O-RING	
		1	**6V-9002**	1	ELBOW	
		1	**3K-0360**	1	SEAL-O-RING	
	14	1	*148-8365*	1	ELBOW AS	
		1	**3J-1907**	1	SEAL-O-RING	
		1	**6V-8398**	1	SEAL-O-RING	
		1	**8T-6876**	1	ELBOW	
	15	1	*148-8375*	1	ELBOW GP	
		1	**6V-8398**	2	SEAL-O-RING	
		1	**6V-8981**	1	ELBOW	
	16	1	**6U-0455**	2	STRAP	
	17	1	**5P-1075**	2	WASHER-HARD (10.2X22.5X3-MM THK)	
	18	1	**5P-7468**	3	CLIP (SLOT)	
	19	1	**5P-7469**	3	CLIP (TAB)	
	20	1	**8T-2525**	3	GROMMET	
	21	1	**6V-9169**	1	NUT-BULKHEAD (13/16-16-THD)	
	22	1	**8T-2502**	2	BOLT (3/8-16X1.125-IN)	
	23	1	**8T-4123**	2	WASHER-PLATED (22X35X3.5-MM THK)	
	24	1	**8T-4223**	2	WASHER-HARD (13.5X25.5X3-MM THK)	
	25	1	**5P-4116**	10	WASHER-HARD (8.8X20.5X2-MM THK)	
M	26	1	**8T-4244**	1	NUT (M12X1.75-THD)	
M	27	1	**8T-4956**	1	BOLT (M12X1.75X35-MM)	
M	28	1	**8T-6870**	4	BOLT (M8X1.25X70-MM)	
M	29	1	**8T-7547**	6	BOLT (M8X1.25X30-MM)	

I-REFER TO HYDRAULIC INFORMATION SYSTEM
M-METRIC PART

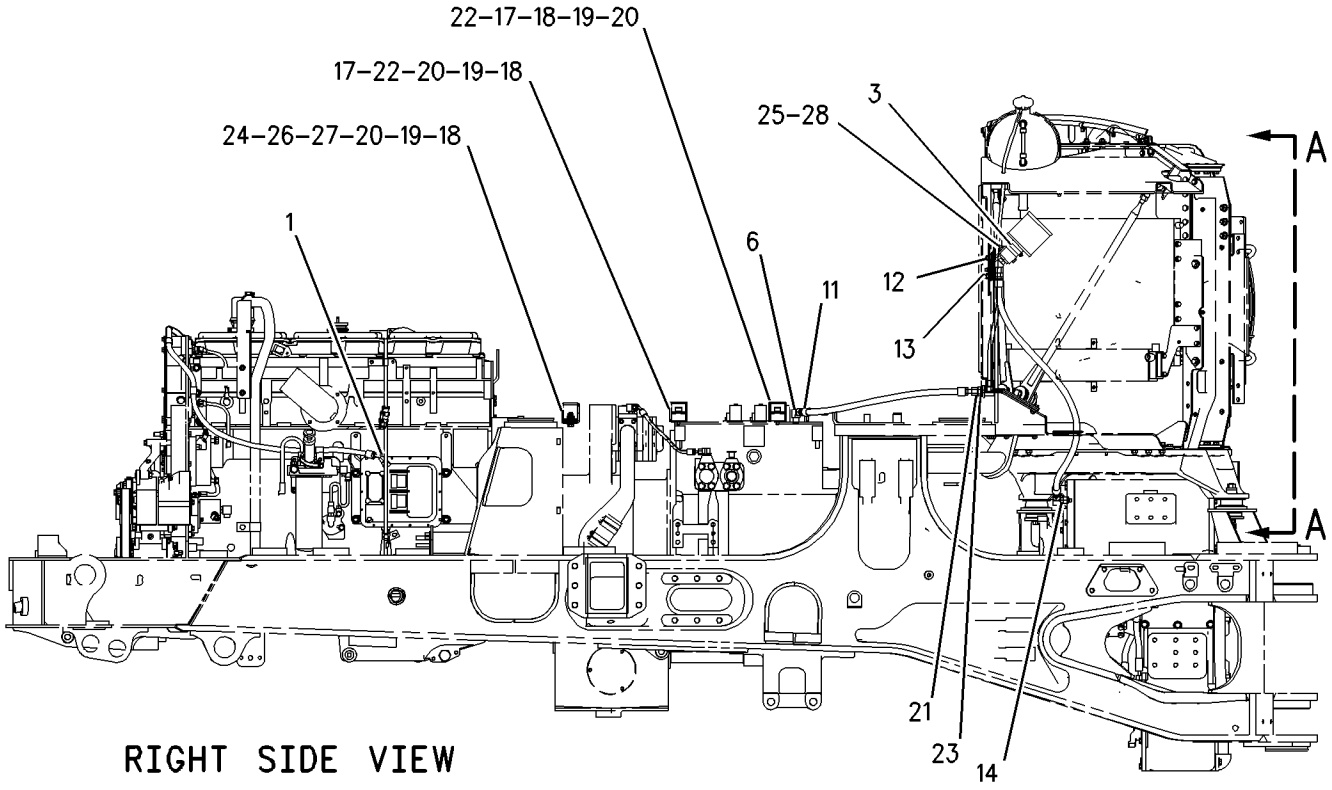

RIGHT SIDE VIEW

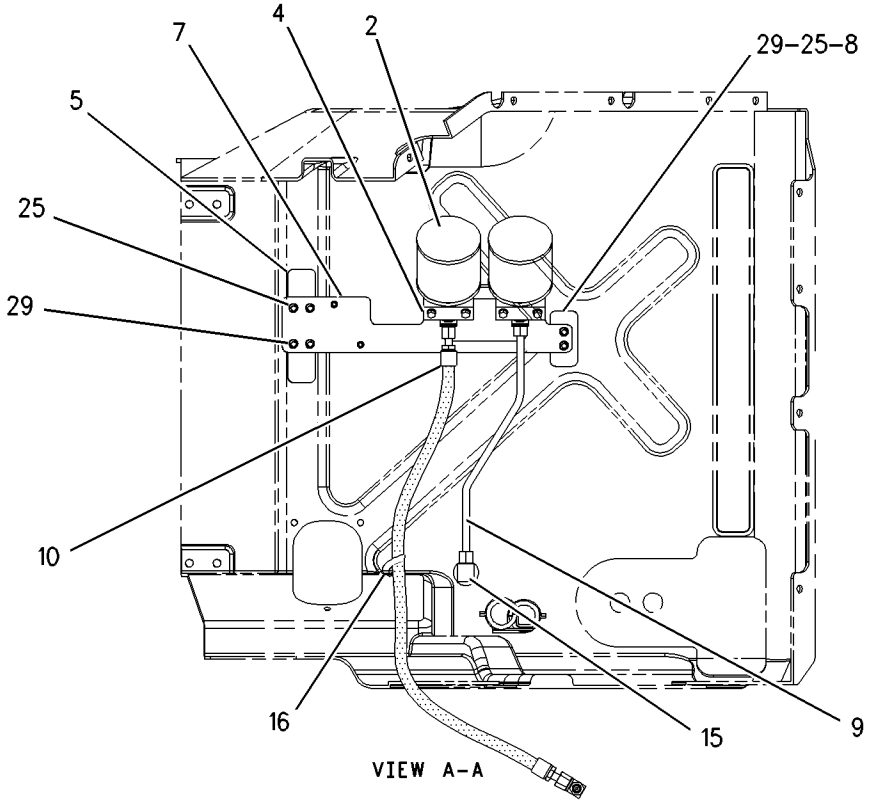

VIEW A–A

GRAPHIC #1 **<END>** g00850093

139-2140 CARRIER GP-DIFFERENTIAL–FRONT

S/N: AXM1-UP

PART OF 148-7200 DIFFERENTIAL & BEVEL GEAR GP

SMCS-3284 **i02061693**

NOTE	REF NO	GRAPHIC REF	PART NUMBER	QTY	PART NAME 1 2 3 4 5 6 (PRODUCT LEVEL)	SEE PAGE
	1	1	**3D-8242**	2	SLEEVE	
	2	1	**138-1477**	2	BUSHING	
M	3	1	**6V-9167**	2	BOLT (M20X2.5X140-MM)	
M	4	1	**8T-0670**	2	BOLT (M24X3X140-MM)	
	5	1	**8T-3282**	2	WASHER-HARD (22X35X3.5-MM THK)	
	6	1	**157-7240**	2	DOWEL	
	7	1	**6V-8237**	2	WASHER (26X44X4-MM THK)	

M-METRIC PART

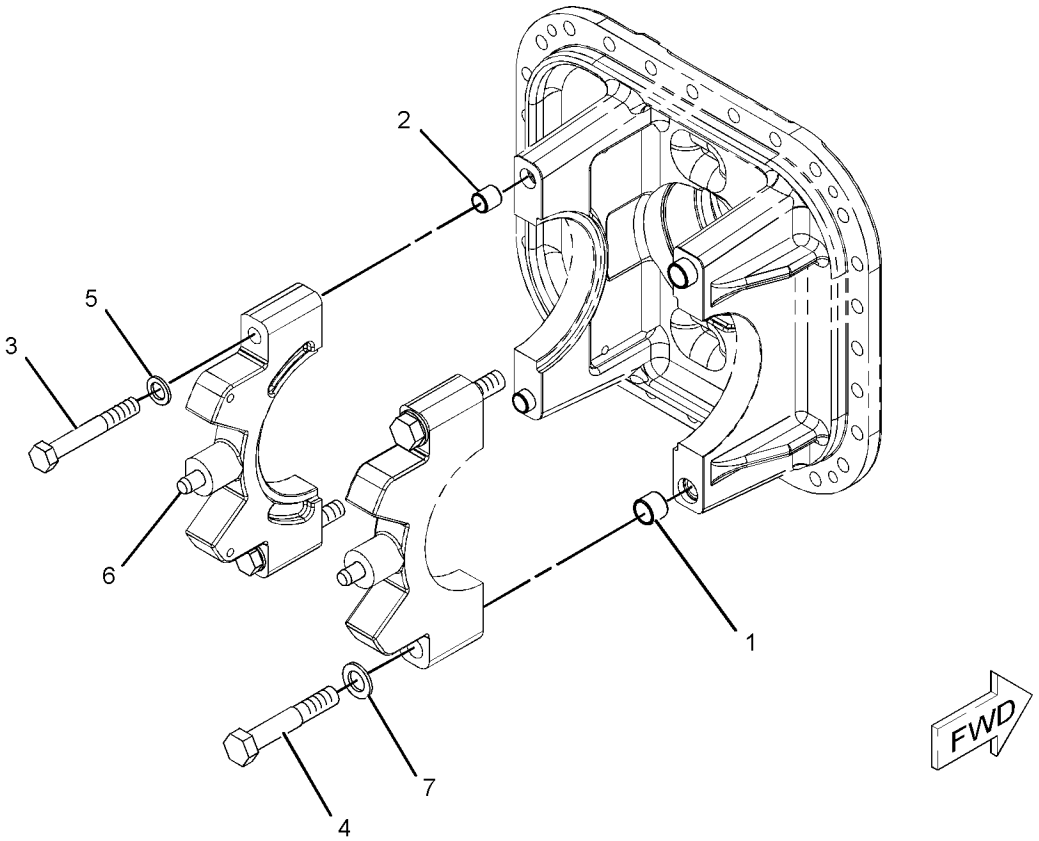

GRAPHIC #1 **<END>** g01056596

160-8518 CARRIER GP-DIFFERENTIAL

S/N: AXM1-UP

PART OF 154-0300 DIFFERENTIAL & BEVEL GEAR GP

SMCS-3284 **i02054450**

NOTE	REF NO	GRAPHIC REF	PART NUMBER	QTY	PART NAME 1 2 3 4 5 6 (PRODUCT LEVEL)	SEE PAGE
	1	1	**3D-8242**	2	SLEEVE	
	2	1	**138-1477**	2	BUSHING	
	3	1	**8T-4121**	10	WASHER-HARD (11X21X2.5-MM THK)	
M	4	1	**8T-4186**	10	BOLT (M10X1.5X40-MM)	
	5	1	**157-7240**	2	DOWEL	
	6	1	**160-8519**	1	CARRIER-DIFFERENTIAL	
	7	1	**160-8520**	1	CAGE	
	8	1	**6V-8237**	2	WASHER (26X44X4-MM THK)	
M	9	1	**6V-9167**	2	BOLT (M20X2.5X140-MM)	
M	10	1	**8T-0670**	2	BOLT (M24X3X140-MM)	
	11	1	**8T-3282**	2	WASHER-HARD (22X35X3.5-MM THK)	

M-METRIC PART

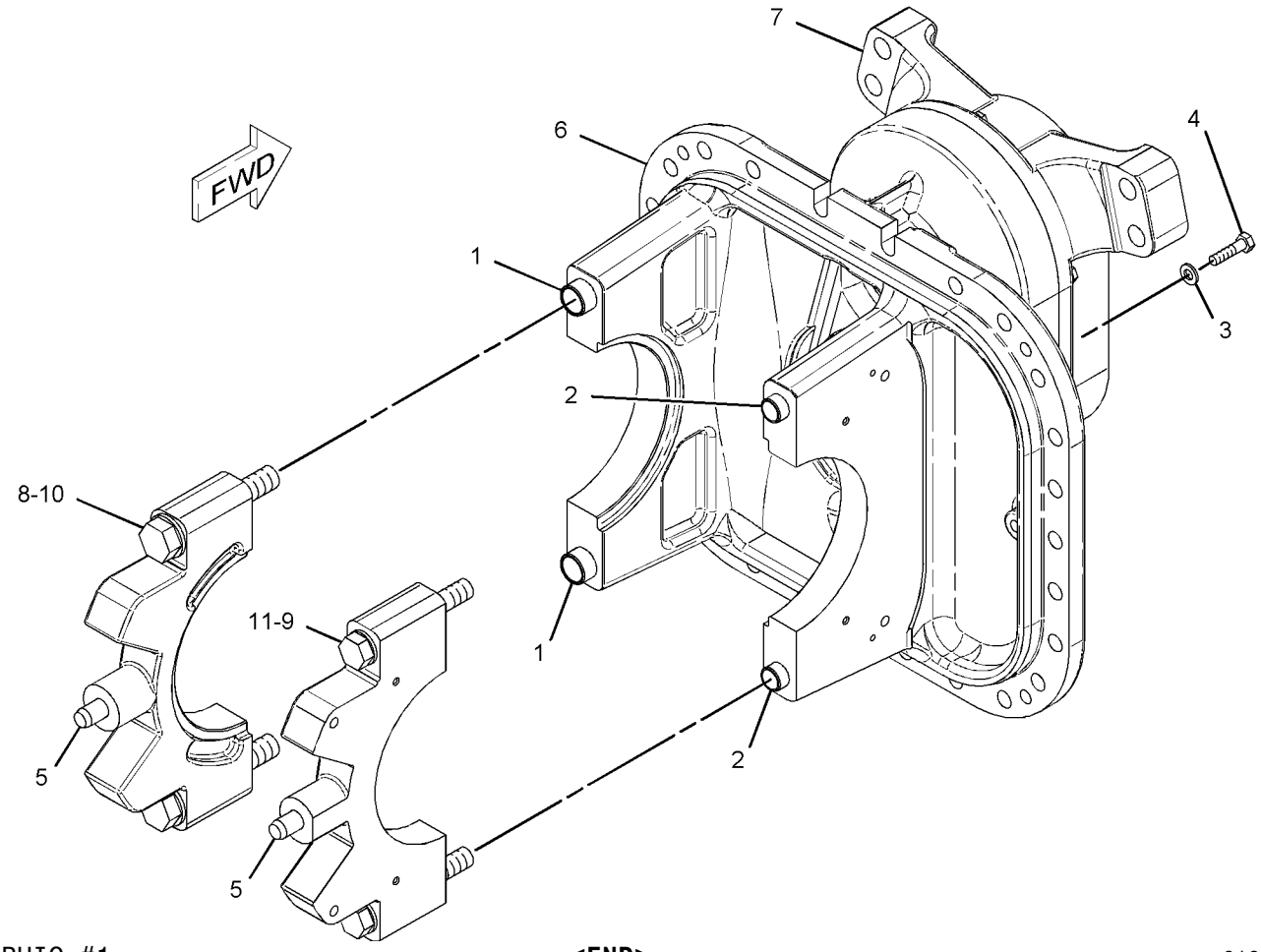

GRAPHIC #1 **<END>** g01054881

146-6222 CASE GP-TRANSMISSION

S/N: 4WY500-2048

PART OF 146-6225 TRANSMISSION AR

SMCS-3064 **i01933202**

NOTE	REF NO	GRAPHIC REF	PART NUMBER	QTY	PART NAME 1 2 3 4 5 6 (PRODUCT LEVEL)	SEE PAGE
	1	1	**141-6678**	1	CASE-TRANSMISSION	
	2	1	**0S-0509**	22	BOLT (3/8-16X0.75-IN)	
	3	1	**7G-6373**	1	GASKET	
	4	1	**173-5476**	1	COVER AS	
		1	**7M-5007**	1	FITTING	
		1	**7M-7794**	10	STUD-WELD (3/8X16X1.16-IN OAL)	
	5	1	**3D-2824**	1	SEAL-O-RING	
	6	1	**9S-4183**	1	PLUG	
	7	1	**8M-5661**	2	SEAL-O-RING	
	8	1	**8W-5179**	1	ADAPTER	
	9	1	**6V-0852**	1	CAP-DUST	
	10	1	**6V-8627**	2	ELBOW	
	11	1	**3J-1907**	3	SEAL-O-RING	
	12	1	**4J-5477**	2	SEAL-O-RING	
I	13	1	**165-7940**	1	HOSE AS	
	14	1	**188-3024**	1	ADAPTER	
	15	1	**6V-3965**	1	FITTING AS	
	16	1	**1P-4579**	4	FLANGE-HALF	
	17	1	**1B-2886**	8	BOLT (1/2-13X3.75-IN)	
M	18	1	**5P-8245**	19	WASHER-HARD (13.5X25.5X3-MM THK)	
	19	1	**2H-3927**	2	SEAL-O-RING	
	20	1	**9G-9928**	2	FLANGE-ONE PIECE	
	21	1	**2T-3019**	1	CLIP	
	22	1	**0S-1621**	1	BOLT (1/2-13X1-IN)	
	23	1	**2H-3932**	1	SEAL-O-RING	
	24	1	**7G-1593**	1	COVER	
	25	1	**7G-1594**	1	GASKET	
	26	1	**9S-8752**	10	NUT-FULL (3/8-16-THD)	
	27	1	**5P-4483**	1	PLUG	
	28	1	**7M-8485**	1	SEAL-O-RING	
	29	1	**0S-1585**	2	BOLT (1/2-13X1.5-IN)	
	30	1	**9M-7002**	1	SEAL-O-RING	
	31	1	**5F-3092**	2	SEAL-O-RING	
	32	1	**1D-4569**	2	BOLT (1/2-13X4.25-IN)	
	33	1	**141-4008**	1	TUBE AS	
	34	1	**9X-8876**	2	BOLT (1/2-13X4.75-IN)	
	35	1	**1A-5822**	2	BOLT (1/2-13X2.75-IN)	
	36	1	**2H-3931**	1	SEAL-O-RING	
	37	1	**194-5061**	1	ELBOW	
	38	1	**8N-7907**	1	BRACKET	
	39	1	**0S-1595**	1	BOLT (1/2-13X1.25-IN)	
	40	1	**1F-7958**	1	NUT-FULL (1/2-13-THD)	

I-REFER TO HYDRAULIC INFORMATION SYSTEM
M-METRIC PART

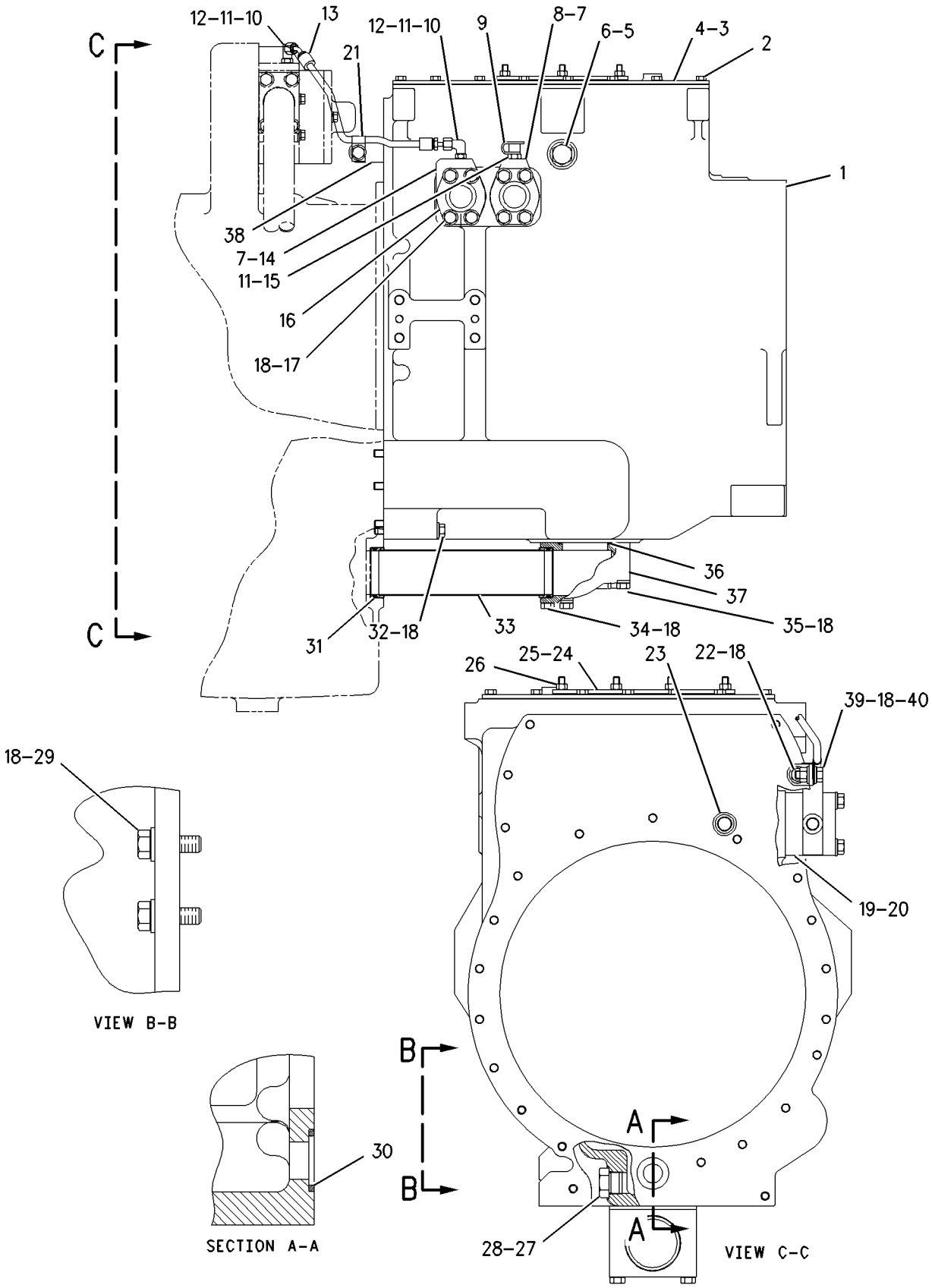

GRAPHIC #1 **<END>** g01005708

245-2768 CASE GP-TRANSMISSION

S/N: 4WY2049-UP

PART OF 146-6225 TRANSMISSION AR

SMCS-3064 **i02181394**

NOTE	REF NO	GRAPHIC REF	PART NUMBER	QTY	PART NAME 1 2 3 4 5 6 (PRODUCT LEVEL)	SEE PAGE
	1	1	**245-8080**	1	HOUSING	
	2	1	**0S-0509**	22	BOLT (3/8-16X0.75-IN)	
	3	1	**7G-6373**	1	GASKET	
	4	1	**173-5476**	1	COVER AS	
		1	**7M-5007**	1	FITTING	
		1	**7M-7794**	10	STUD-WELD (3/8X16X1.16-IN OAL)	
	5	1	**3D-2824**	1	SEAL-O-RING	
	6	1	**9S-4183**	1	PLUG	
	7	1	**8M-5661**	2	SEAL-O-RING	
	8	1	**8W-5179**	1	ADAPTER	
	9	1	**6V-0852**	1	CAP-DUST	
	10	1	**6V-8627**	2	ELBOW	
	11	1	**3J-1907**	3	SEAL-O-RING	
	12	1	**4J-5477**	2	SEAL-O-RING	
I	13	1	**165-7940**	1	HOSE AS	
	14	1	**188-3024**	1	ADAPTER	
	15	1	**6V-3965**	1	FITTING AS	
	16	1	**1P-4579**	4	FLANGE-HALF	
	17	1	**1B-2886**	8	BOLT (1/2-13X3.75-IN)	
M	18	1	**5P-8245**	15	WASHER-HARD (13.5X25.5X3-MM THK)	
	19	1	**2H-3927**	2	SEAL-O-RING	
	20	1	**9G-9928**	2	FLANGE-ONE PIECE	
	21	1	**2T-3019**	1	CLIP	
	22	1	**0S-1621**	1	BOLT (1/2-13X1-IN)	
	23	1	**2H-3932**	1	SEAL-O-RING	
	24	1	**7G-1593**	1	COVER	
	25	1	**7G-1594**	1	GASKET	
	26	1	**9S-8752**	10	NUT-FULL (3/8-16-THD)	
	27	1	**5P-4483**	1	PLUG	
	28	1	**7M-8485**	1	SEAL-O-RING	
	29	1	**0S-1585**	2	BOLT (1/2-13X1.5-IN)	
	30	1	**4H-9105**	1	SEAL-O-RING	
	31	1	**1D-4569**	2	BOLT (1/2-13X4.25-IN)	
	32	1	**8N-7907**	1	BRACKET	
	33	1	**0S-1595**	1	BOLT (1/2-13X1.25-IN)	
	34	1	**1F-7958**	1	NUT-FULL (1/2-13-THD)	

I-REFER TO HYDRAULIC INFORMATION SYSTEM
M-METRIC PART

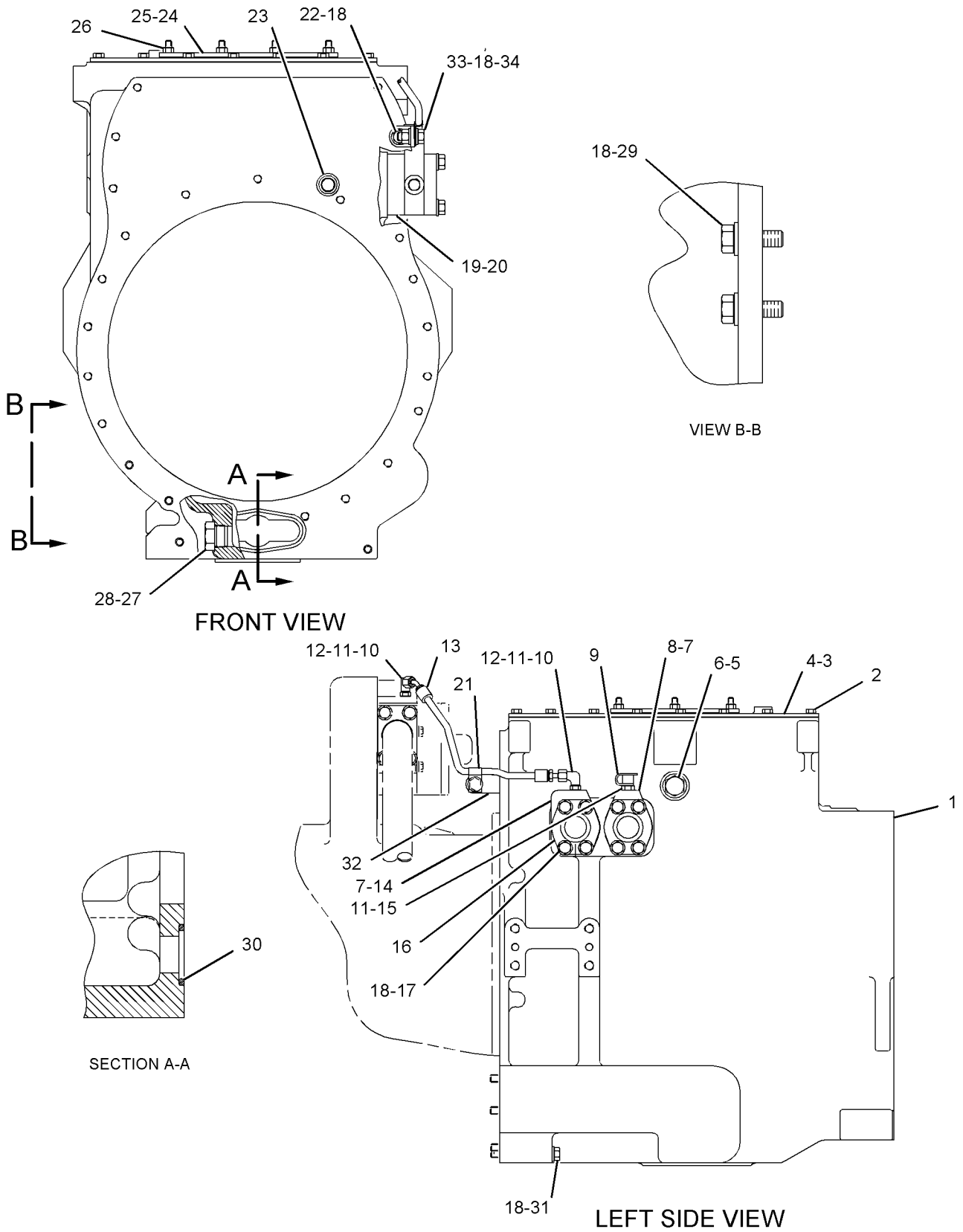

GRAPHIC #1 **<END>** g01103869

152-7034 CONTROL GP-DIFFERENTIAL LOCK

S/N: AXM1-UP

PART OF 152-6921 AXLE & FRAME AR

SMCS-3264 **i01858735**

NOTE	REF NO	GRAPHIC REF	PART NUMBER	QTY	PART NAME 1 2 3 4 5 6 (PRODUCT LEVEL)	SEE PAGE
I	1	1	**115-7817**	1	HOSE AS	
	2	1	**154-0008**	1	TUBE AS	
I	3	1	**163-8452**	1	HOSE AS	
	4	1	**171-1979**	1	TUBE AS	
	5	1	**190-6291**	1	BRACKET	
	6	1	**206-9434**	1	BRACKET	
	7	1	*148-8318*	2	CONNECTOR AS	
					(EACH INCLUDES)	
		1	**6V-8634**	1	CONNECTOR	
		1	**3K-0360**	1	SEAL-O-RING	
		1	**6V-8397**	1	SEAL-O-RING	
	8	1	*148-8377*	2	ELBOW AS	
					(EACH INCLUDES)	
		1	**6V-8980**	1	ELBOW	
		1	**6V-8397**	2	SEAL-O-RING	
	9	1	*153-6246*	1	TEE GP	
		1	**7X-0820**	1	TEE-UNION	
		1	**6V-8397**	3	SEAL-O-RING	
	10	1	**5P-4116**	4	WASHER-HARD (8.8X20.5X2-MM THK)	
	11	1	**5P-7462**	1	CLIP (SLOT)	
	12	1	**5P-7463**	1	CLIP (TAB)	
	13	1	**6V-0683**	1	GROMMET	
	14	1	**6V-9168**	3	NUT (11/16-16-THD)	
	15	1	**7X-0507**	1	WASHER-HARD (12X22.5X5-MM THK)	
	16	1	**8T-1887**	2	CLIP (SLOT)	
	17	1	**8T-1888**	2	CLIP (TAB)	
	18	1	**8T-4121**	5	WASHER-HARD (11X21X2.5-MM THK)	
M	19	1	**8T-4133**	2	NUT (M10X1.5-THD)	
M	20	1	**8T-4186**	1	BOLT (M10X1.5X40-MM)	
M	21	1	**8T-4189**	4	BOLT (M8X1.25X20-MM)	
M	22	1	**8T-4195**	2	BOLT (M10X1.5X30-MM)	
	23	1	**8W-8909**	2	SLEEVE	

I-REFER TO HYDRAULIC INFORMATION SYSTEM
M-METRIC PART

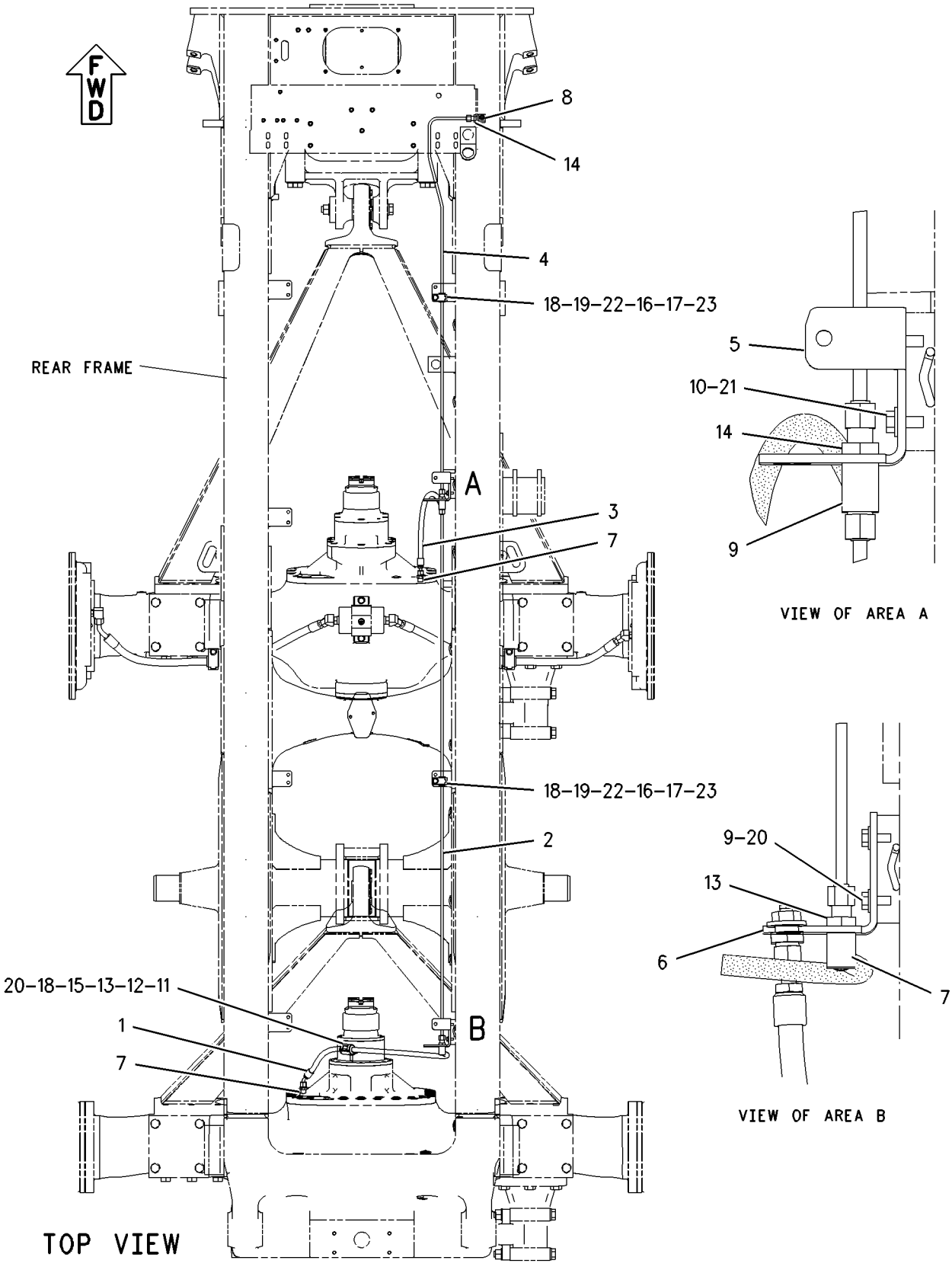

GRAPHIC #1 **<END>** g00947564

POWER TRAIN

199-6425 CONTROL GP-DIFFERENTIAL LOCK

S/N: AXM1-1796

PART OF 152-6922 HYDRAULIC AR-MACHINE

SMCS-3264 **i02261981**

NOTE	REF NO	GRAPHIC REF	PART NUMBER	QTY	PART NAME 1 2 3 4 5 6 (PRODUCT LEVEL)	SEE PAGE
Y	1	1	**9M-8669**	1	SCREEN GP-MAGNETIC (DIFFERENTIAL LOCK)	441
	2	2	**113-9145**	1	CLAMP	
	3	1	**164-6049**	1	TUBE AS	
	4	2	**196-1203**	1	TEE	
Y	5	2	**196-5540**	1	FILTER GP-OIL (HYDRAULIC)	378
	6	2	**202-1109**	1	BRACKET AS	
	7	2	**202-1112**	1	BRACKET	
	8	2	**202-1113**	1	FLANGE-ONE PIECE	
I	9	1	**202-1225**	1	HOSE AS	
I	10	1	**202-2043**	1	HOSE AS	
I	11	1	**202-2044**	1	HOSE AS	
I	12	1	**202-2045**	1	HOSE AS	
I	13	1	**202-2046**	1	HOSE AS	
I	14	1	**149-6336**	1	HOSE AS	
	15	1	**202-3104**	1	TUBE AS	
I	16	1	**3W-8795**	1	HOSE AS	
	17	2	*148-8327*	1	CONNECTOR AS	
		2	**3D-2824**	1	SEAL-O-RING	
		2	**6V-8637**	1	CONNECTOR	
		2	**6V-9746**	1	SEAL-O-RING	
	18	2	*148-8336*	2	CONNECTOR AS	
					(EACH INCLUDES)	
		2	**3J-1907**	1	SEAL-O-RING	
		2	**6V-8397**	1	SEAL-O-RING	
		2	**6V-8636**	1	CONNECTOR	
	19	1	*148-8374*	1	ELBOW AS	
		1	**3K-0360**	1	SEAL-O-RING	
		1	**6V-8397**	1	SEAL-O-RING	
		1	**6V-8723**	1	ELBOW	
	20	1	*148-8377*	1	ELBOW AS	
		1	**6V-8397**	2	SEAL-O-RING	
		1	**6V-8980**	1	ELBOW	
	21	2	*148-8408*	1	PLUG AS	
		2	**3D-2824**	1	SEAL-O-RING	
		2	**9S-4183**	1	PLUG	
	22	1,2	*153-6237*	2	ELBOW AS	
					(EACH INCLUDES)	
		1,2	**3D-2824**	1	SEAL-O-RING	
		1,2	**6V-9004**	1	ELBOW	
		1,2	**6V-9746**	1	SEAL-O-RING	
	23	1	**6U-0456**	3	STRAP	
	24	2	**1P-3707**	1	SEAL-RECTANGULAR	
	25	1	**1P-4578**	2	FLANGE-HALF	
	26	1,2	**1P-4579**	6	FLANGE-HALF	
	27	2	**3D-2824**	1	SEAL-O-RING	
	28	1	**4J-0522**	1	SEAL-O-RING	
	29	1,2	**4J-0524**	4	SEAL-O-RING	
	30	2	**5P-0076**	2	BOLT-12 POINT HEAD (3/8-16X1.5-IN)	
	31	1	**5P-7462**	1	CLIP (SLOT)	
	32	1	**5P-7463**	1	CLIP (TAB)	
	33	1	**8T-2920**	1	GROMMET	
	34	1	**6V-8801**	4	NUT (3/8-16-THD)	
	35	1	**6V-9168**	1	NUT (11/16-16-THD)	
	36	2	**6V-9746**	1	SEAL-O-RING	
	37	1	**7S-8920**	2	CLIP (SLOT)	
	38	1	**7S-8921**	2	CLIP (TAB)	

199-6425 **CONTROL GP-DIFFERENTIAL LOCK** *(contd.)* **i02261981**

NOTE	REF NO	GRAPHIC REF	PART NUMBER	QTY	PART NAME 1 2 3 4 5 6 (PRODUCT LEVEL)	SEE PAGE
M	39	1	**7X-2549**	4	BOLT (M12X1.75X100-MM)	
	40	1,2	**8T-4121**	12	WASHER-HARD (11X21X2.5-MM THK)	
M	41	1	**8T-4133**	1	NUT (M10X1.5-THD)	
M	42	2	**8T-4136**	2	BOLT (M10X1.5X25-MM)	
M	43	2	**8T-4137**	2	BOLT (M10X1.5X20-MM)	
M	44	1,2	**8T-4139**	6	BOLT (M12X1.75X30-MM)	
M	45	2	**8T-4184**	8	BOLT (M12X1.75X45-MM)	
M	46	1,2	**8T-4196**	5	BOLT (M10X1.5X35-MM)	
	47	1,2	**8T-4223**	22	WASHER-HARD (13.5X25.5X3-MM THK)	
M	48	1,2	**8T-4244**	6	NUT (M12X1.75-THD)	
	49	1	**8T-4896**	4	WASHER-HARD (10.2X18.5X2.5-MM THK)	

I-REFER TO HYDRAULIC INFORMATION SYSTEM
M-METRIC PART
Y-SEPARATE ILLUSTRATION

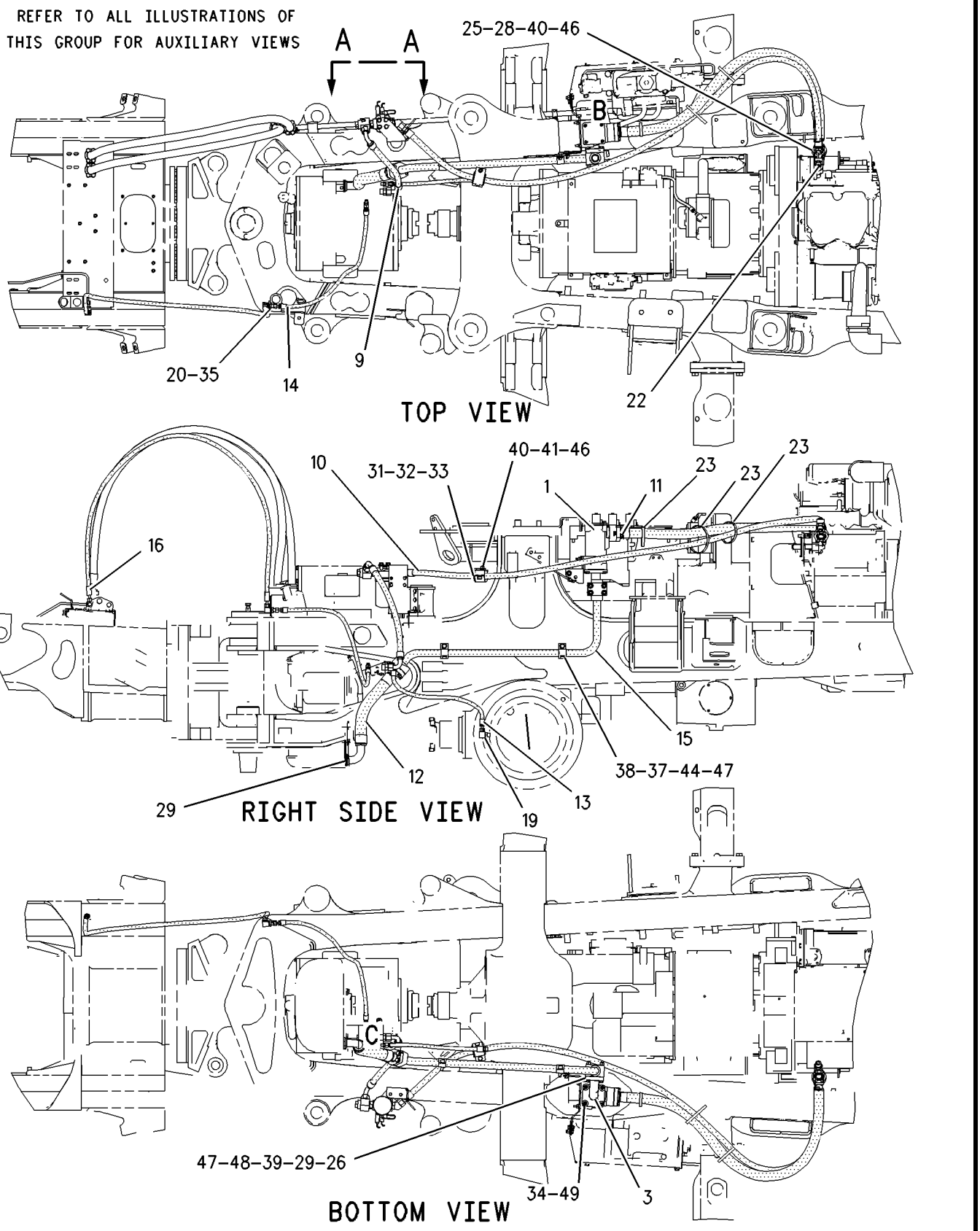

GRAPHIC #1 g00871154

199-6425 **CONTROL GP-DIFFERENTIAL LOCK** *(contd.)* **i02261981**

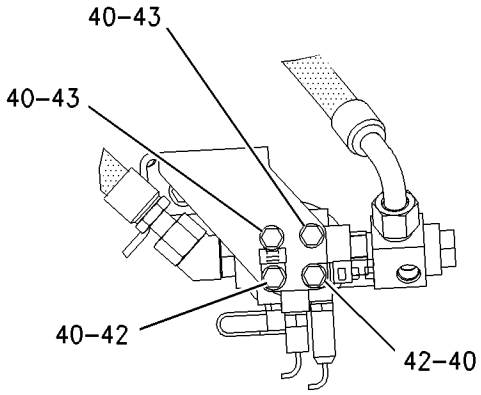

VIEW D-D

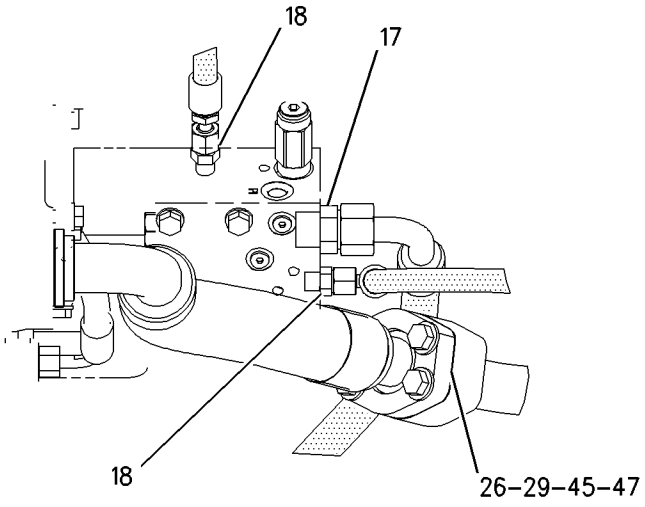

VIEW OF AREA C

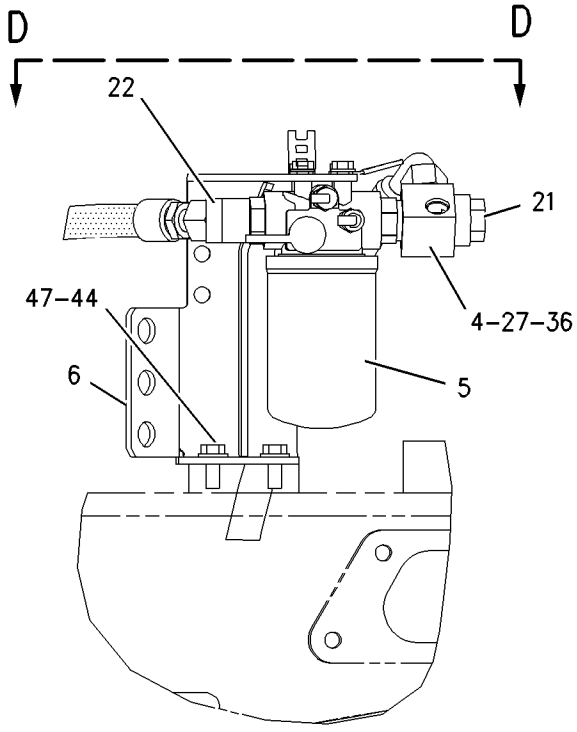

VIEW A-A

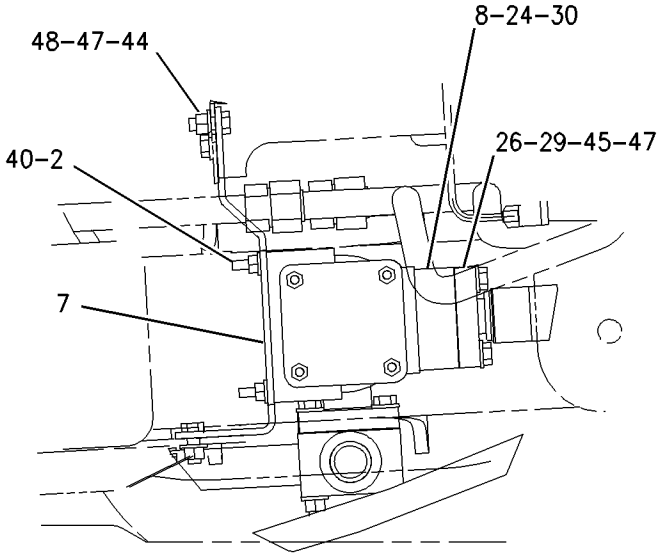

VIEW OF AREA B

GRAPHIC #2 **<END>** g00871152

POWER TRAIN

199-6425 CONTROL GP-DIFFERENTIAL LOCK

S/N: AXM1797-UP

PART OF 152-6922 HYDRAULIC AR-MACHINE

SMCS-3264 **i02202766**

NOTE	REF NO	GRAPHIC REF	PART NUMBER	QTY	PART NAME 1 2 3 4 5 6 (PRODUCT LEVEL)	SEE PAGE
I	1	1	**3W-8795**	1	HOSE AS	
	2	1	**6U-0456**	3	STRAP	
I	3	1	**149-6336**	1	HOSE AS	
	4	2	**196-1203**	1	TEE	
Y	5	2	**196-5540**	1	FILTER GP-OIL (HYDRAULIC)	378
	6	2	**202-1109**	1	BRACKET AS	
I	7	1	**202-1225**	1	HOSE AS	
I	8	1	**202-2043**	1	HOSE AS	
I	9	1	**202-2044**	1	HOSE AS	
I	10	1	**202-2045**	1	HOSE AS	
I	11	1	**202-2046**	1	HOSE AS	
C	12	1	**254-5859**	1	TUBE AS	
C	13	2	**254-5860**	1	BRACKET	
	14	2	*148-8327*	1	CONNECTOR AS	
		2	**3D-2824**	1	SEAL-O-RING	
		2	**6V-8637**	1	CONNECTOR	
		2	**6V-9746**	1	SEAL-O-RING	
	15	2	*148-8336*	2	CONNECTOR AS	
					(EACH INCLUDES)	
		2	**3J-1907**	1	SEAL-O-RING	
		2	**6V-8397**	1	SEAL-O-RING	
		2	**6V-8636**	1	CONNECTOR	
	16	1	*148-8374*	1	ELBOW AS	
		1	**3K-0360**	1	SEAL-O-RING	
		1	**6V-8397**	1	SEAL-O-RING	
		1	**6V-8723**	1	ELBOW	
	17	1	*148-8377*	1	ELBOW AS	
		1	**6V-8397**	2	SEAL-O-RING	
		1	**6V-8980**	1	ELBOW	
	18	2	*148-8408*	1	PLUG AS	
		2	**3D-2824**	1	SEAL-O-RING	
		2	**9S-4183**	1	PLUG	
	19	1,2	*153-6237*	2	ELBOW AS	
					(EACH INCLUDES)	
		1,2	**3D-2824**	1	SEAL-O-RING	
		1,2	**6V-9004**	1	ELBOW	
		1,2	**6V-9746**	1	SEAL-O-RING	
	20	1	**1P-4578**	2	FLANGE-HALF	
C	21	1,2	**1P-4579**	4	FLANGE-HALF	
	22	2	**3D-2824**	1	SEAL-O-RING	
	23	1	**4J-0522**	1	SEAL-O-RING	
C	24	1,2	**4J-0524**	3	SEAL-O-RING	
	25	1	**5P-7464**	1	CLIP (SLOT)	
	26	1	**5P-7465**	1	CLIP (TAB)	
	27	1	**6V-9168**	1	NUT (11/16-16-THD)	
	28	2	**6V-9746**	1	SEAL-O-RING	
C	29	1,2	**7S-8920**	3	CLIP (SLOT)	
C	30	1,2	**7S-8921**	3	CLIP (TAB)	
	31	1	**8T-2920**	1	GROMMET	
C	32	1,2	**8T-4121**	10	WASHER-HARD (11X21X2.5-MM THK)	
M	33	1	**8T-4133**	1	NUT (M10X1.5-THD)	
M	34	2	**8T-4136**	2	BOLT (M10X1.5X25-MM)	
M	35	2	**8T-4137**	2	BOLT (M10X1.5X20-MM)	
CM	36	1,2	**8T-4139**	7	BOLT (M12X1.75X30-MM)	
M	37	1,2	**8T-4184**	8	BOLT (M12X1.75X45-MM)	
M	38	1	**8T-4196**	5	BOLT (M10X1.5X35-MM)	

199-6425 CONTROL GP-DIFFERENTIAL LOCK *(contd.)* i02202766

NOTE	REF NO	GRAPHIC REF	PART NUMBER	QTY	PART NAME 1 2 3 4 5 6 (PRODUCT LEVEL)	SEE PAGE
C	39	1,2	**8T-4223**	15	WASHER-HARD (13.5X25.5X3-MM THK)	
CM	40	2	**8T-4244**	3	NUT (M12X1.75-THD)	

C-CHANGE FROM PREVIOUS TYPE
I-REFER TO HYDRAULIC INFORMATION SYSTEM
M-METRIC PART
Y-SEPARATE ILLUSTRATION

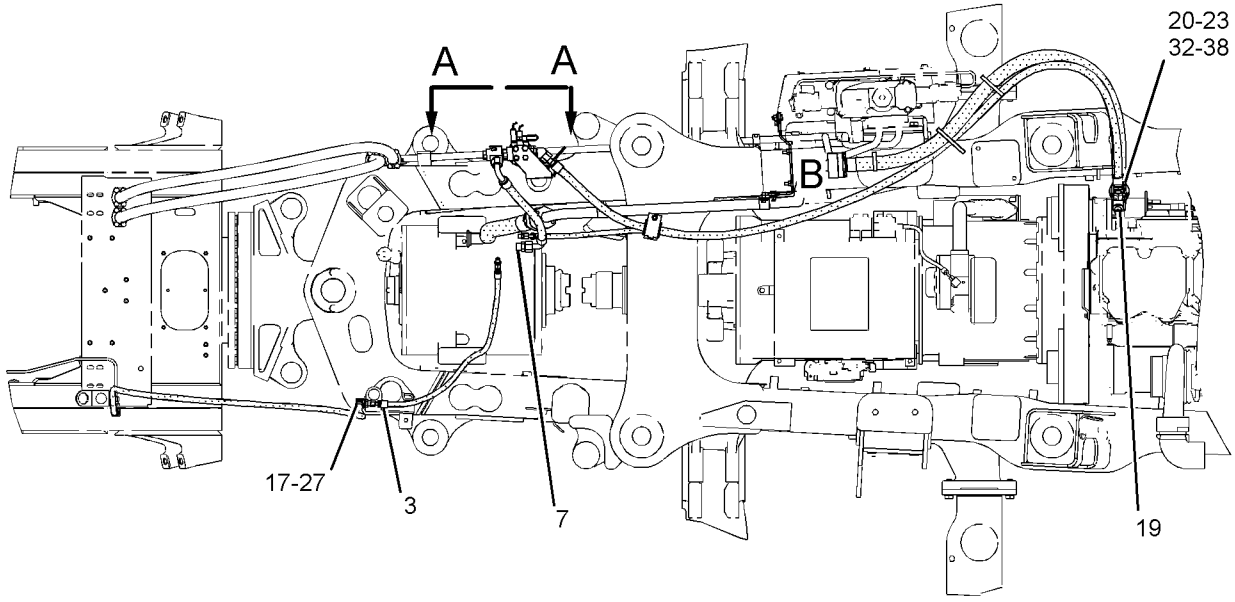

TOP VIEW FWD

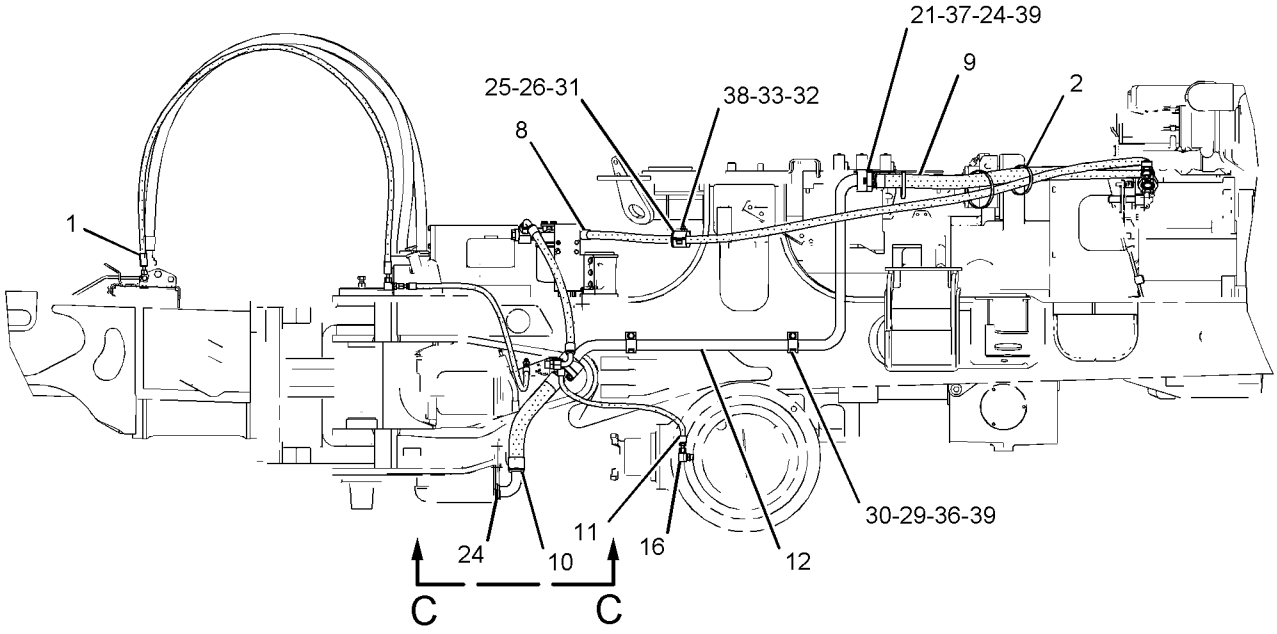

RIGHT SIDE VIEW

REFER TO ALL ILLUSTRATIONS OF
THIS GROUP FOR AUXILIARY VIEWS

GRAPHIC #1 g01118436

199-6425 **CONTROL GP-DIFFERENTIAL LOCK** *(contd.)* **i02202766**

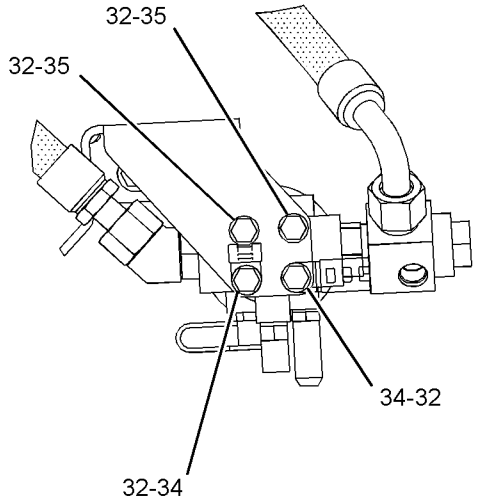

VIEW D-D

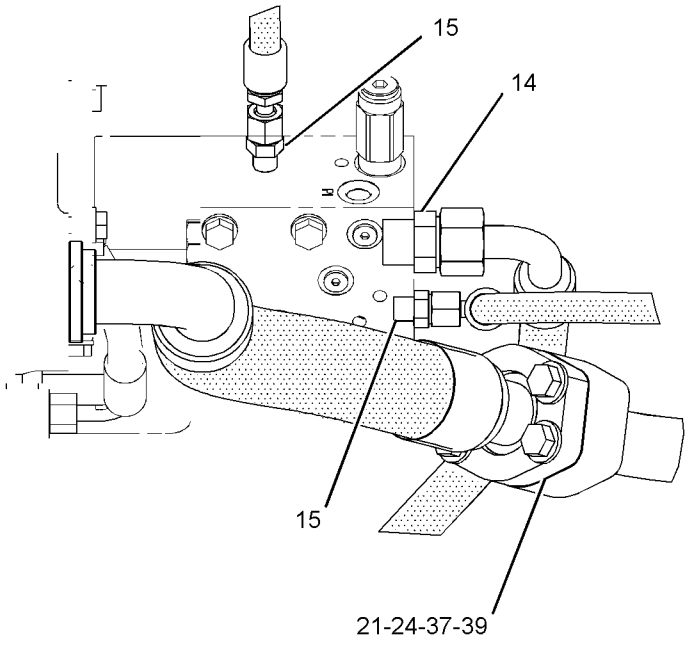

VIEW C-C

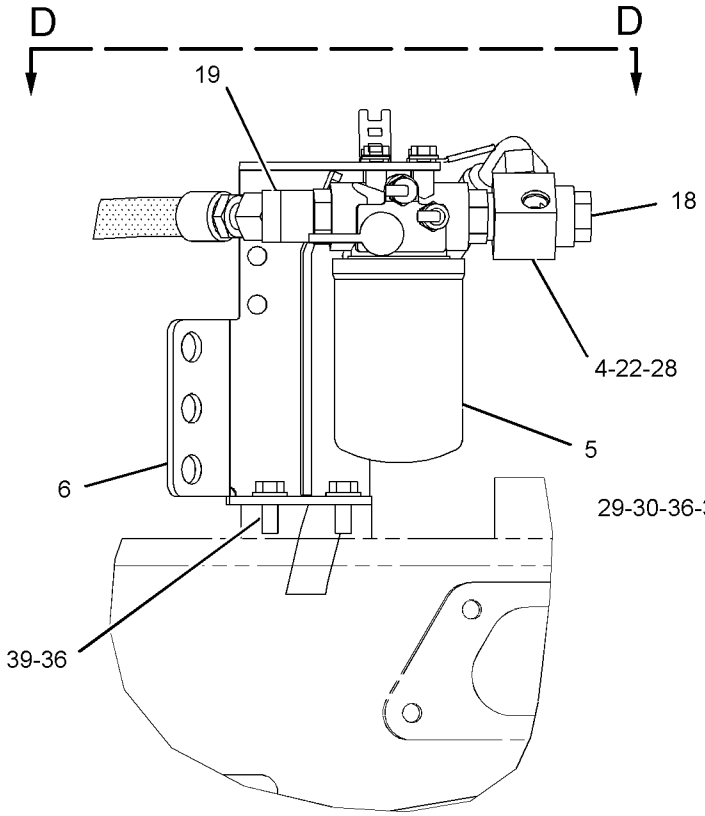

VIEW A-A

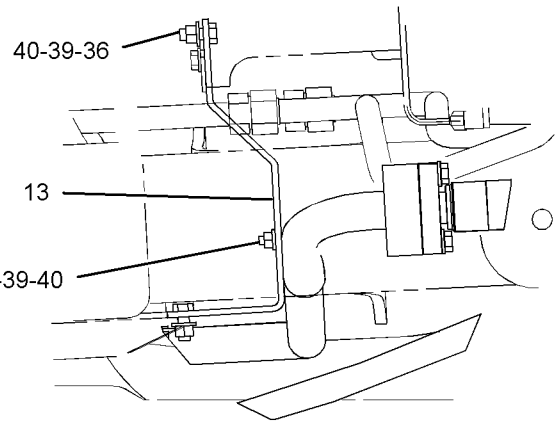

VIEW OF AREA B

GRAPHIC #2 **<END>** g01118440

147-2352 CONTROL GP-TRANSMISSION HYD

S/N: 4WY500-1765, 1771-1772

PART OF 146-6225 TRANSMISSION AR

SMCS-3073, 3167 **i01933238**

NOTE	REF NO	GRAPHIC REF	PART NUMBER	QTY	PART NAME 1 2 3 4 5 6 (PRODUCT LEVEL)	SEE PAGE
Y	1	1	**150-4728**	1	VALVE GP-CONTROL	466
	2	1	**8M-8157**	6	SEAL-O-RING	
	3	1	**3T-0918**	3	SLEEVE	
	4	1	**130-5300**	3	CLIP	
	5	1	**3T-0919**	1	SLEEVE	
	6	1	**6V-4365**	2	SEAL-O-RING	
	7	1,2	**9S-8001**	10	PLUG	
	8	1,2	**4J-7533**	10	SEAL-O-RING	
	9	1	**9G-9412**	1	ADAPTER	
	10	1	**8M-4992**	1	SEAL-O-RING	
	11	1	**7G-9473**	1	SLEEVE	
	12	1	**8M-4432**	2	SEAL-O-RING	
	13	1	**7G-1595**	2	SLEEVE	
	14	1	**8M-5254**	4	SEAL-O-RING	
	15	1	**9F-2773**	4	BOLT (3/8-16X8.5-IN)	
	16	1,2	**5M-2894**	6	WASHER-HARD (10.2X18.5X2.5-MM THK)	
	17	2	**0S-0509**	2	BOLT (3/8-16X0.75-IN)	
	18	2	**120-9288**	1	HARNESS AS-TRANSMISSION	
	19	2	**8M-4988**	1	SEAL-O-RING	
Y	20	2	**198-8761**	1	SENSOR GP-POSITION	245
	21	2	**3D-4197**	1	COVER	
Y	22	2	**160-0270**	3	VALVE GP-SOLENOID	474
	23	1	**9S-8005**	5	PLUG	
	24	1	**3K-0360**	5	SEAL-O-RING	
	25	2	**5F-7054**	5	SEAL-O-RING	
	26	2	**9S-8004**	1	PLUG	
	27	2	**3J-1907**	3	SEAL-O-RING	
	28	2	**0S-1594**	7	BOLT (3/8-16X1-IN)	
	29	2	**8T-4896**	3	WASHER-HARD (10.2X18.5X2.5-MM THK)	
	30	2	**6V-0484**	1	ADAPTER-O-RING	
	31	2	**6V-3965**	1	FITTING AS	
	32	2	**6V-0852**	1	CAP-DUST	
	33	2	**0S-1619**	2	BOLT (3/8-16X3-IN)	
	34	2	**0S-1617**	6	BOLT (5/16-18X0.75-IN)	
	35	2	**0L-2070**	2	BOLT (3/8-16X2.25-IN)	
	36	2	**6T-5132**	1	COVER	
	37	2	**6T-5133**	1	GASKET	
	38	2	**100-3998**	1	MANIFOLD AS	
		2	**5P-7661**	1	BEARING AS-NEEDLE	
	39	2	**8M-4446**	1	SEAL-O-RING	
	40	2	**7S-5757**	1	RING-RETAINING	
	41	2	**6Y-9850**	1	COUPLING AS	
	42	1	**8S-5575**	1	SEAL-LIP TYPE	

Y-SEPARATE ILLUSTRATION

147-2352 **CONTROL GP-TRANSMISSION HYD** *(contd.)* **i01933238**

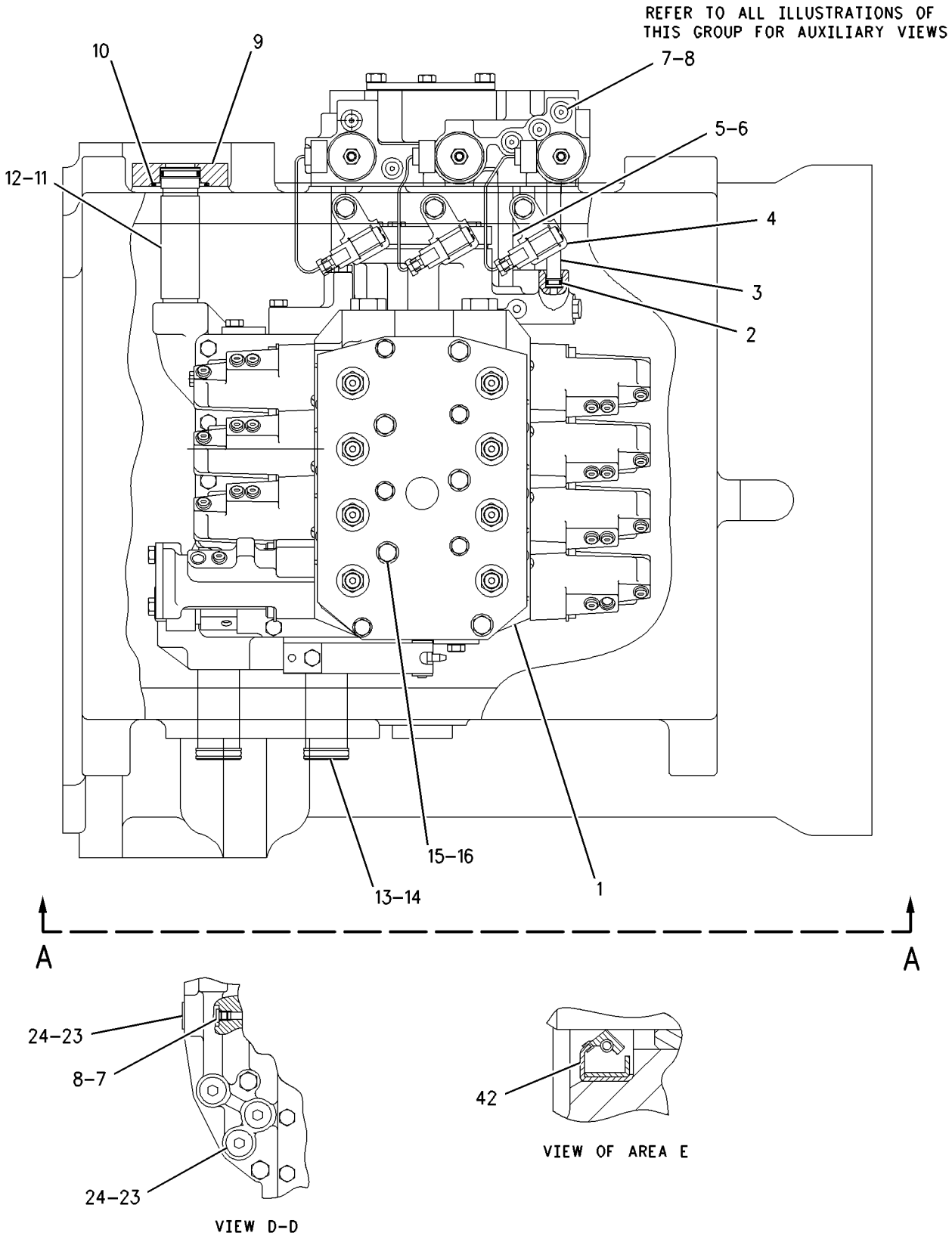

GRAPHIC #1 g00948898

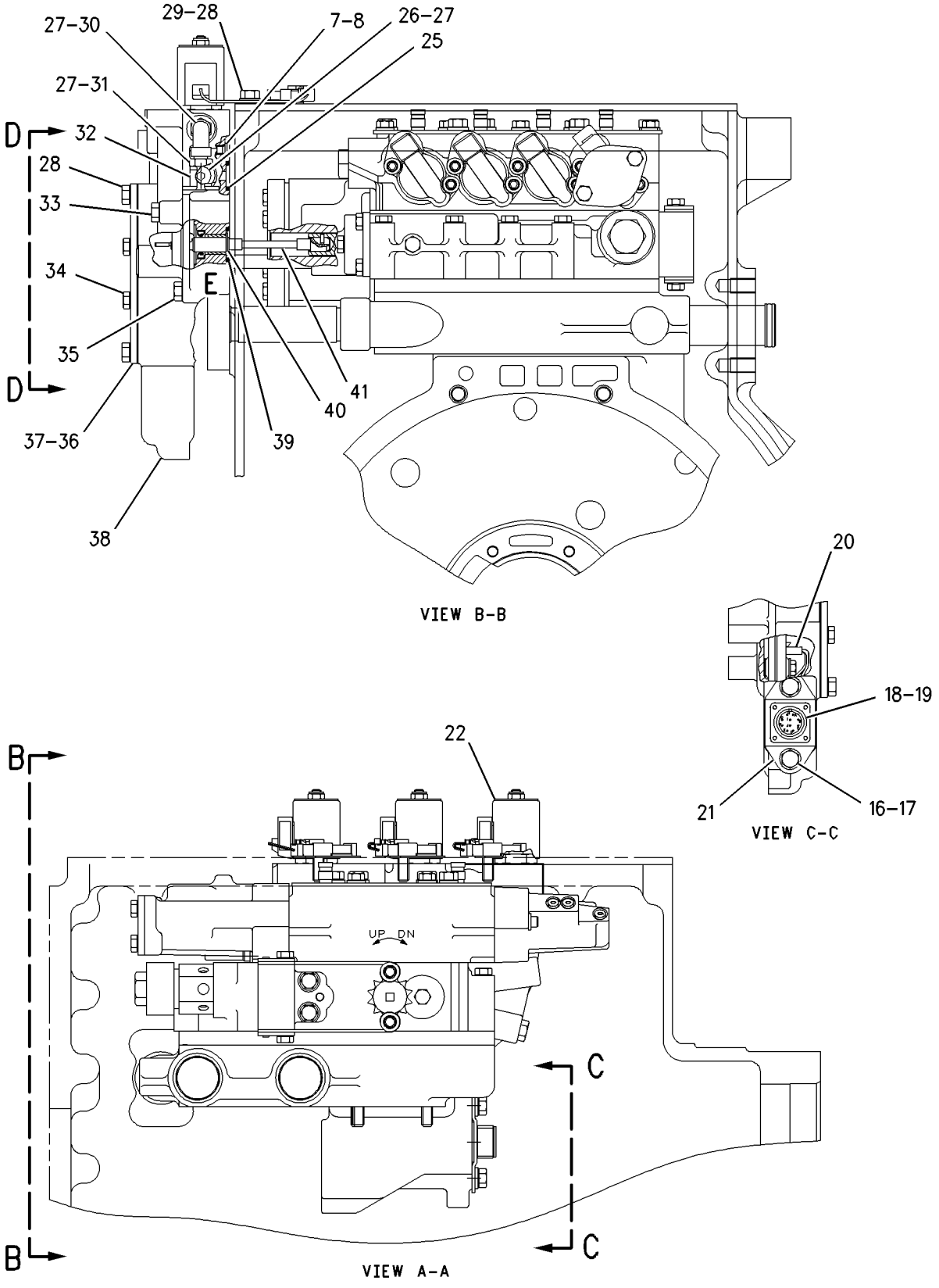

GRAPHIC #2 **<END>** g00765677

147-2352 CONTROL GP-TRANSMISSION HYD

S/N: 4WY1766-1770, 1773-UP

PART OF 146-6225 TRANSMISSION AR

SMCS-3073, 3167 **i02116701**

NOTE	REF NO	GRAPHIC REF	PART NUMBER	QTY	PART NAME 1 2 3 4 5 6 (PRODUCT LEVEL)	SEE PAGE
Y	1	1	*150-4728*	1	VALVE GP-CONTROL	466
	2	1	**8M-8157**	6	SEAL-O-RING	
	3	1	**3T-0918**	3	SLEEVE	
	4	1	**130-5300**	3	CLIP	
	5	1	**3T-0919**	1	SLEEVE	
	6	1	**6V-4365**	2	SEAL-O-RING	
	7	1,2,3	**9S-8001**	10	PLUG	
	8	1,2,3	**4J-7533**	10	SEAL-O-RING	
	9	1	**9G-9412**	1	ADAPTER	
	10	1	**8M-4992**	1	SEAL-O-RING	
	11	1	**7G-9473**	1	SLEEVE	
	12	1	**8M-4432**	2	SEAL-O-RING	
	13	1	**7G-1595**	2	SLEEVE	
	14	1	**8M-5254**	4	SEAL-O-RING	
	15	1	**9F-2773**	4	BOLT (3/8-16X8.5-IN)	
	16	1,2	**5M-2894**	6	WASHER-HARD (10.2X18.5X2.5-MM THK)	
	17	2	**0S-0509**	2	BOLT (3/8-16X0.75-IN)	
	18	2	**120-9288**	1	HARNESS AS-TRANSMISSION	
	19	2	**8M-4988**	1	SEAL-O-RING	
Y	20	2	**198-8761**	1	SENSOR GP-POSITION	245
	21	2	**3D-4197**	1	COVER	
Y	22	2	**193-8559**	3	VALVE GP-SOLENOID	475
	23	2	**9S-8005**	5	PLUG	
	24	2	**3K-0360**	5	SEAL-O-RING	
	25	3	**5F-7054**	5	SEAL-O-RING	
	26	3	**9S-8004**	1	PLUG	
	27	3	**3J-1907**	3	SEAL-O-RING	
	28	3	**0S-1594**	7	BOLT (3/8-16X1-IN)	
	29	3	**8T-4896**	3	WASHER-HARD (10.2X18.5X2.5-MM THK)	
	30	3	**6V-0484**	1	ADAPTER-O-RING	
	31	3	**6V-3965**	1	FITTING AS	
	32	3	**6V-0852**	1	CAP-DUST	
	33	3	**0S-1619**	2	BOLT (3/8-16X3-IN)	
	34	3	**0S-1617**	6	BOLT (5/16-18X0.75-IN)	
	35	3	**0L-2070**	2	BOLT (3/8-16X2.25-IN)	
	36	3	**6T-5132**	1	COVER	
	37	3	**6T-5133**	1	GASKET	
	38	3	**100-3998**	1	MANIFOLD AS	
		3	**5P-7661**	1	BEARING AS-NEEDLE	
	39	3	**8M-4446**	1	SEAL-O-RING	
	40	3	**7S-5757**	1	RING-RETAINING	
	41	3	**6Y-9850**	1	COUPLING AS	
	42	3	**8S-5575**	1	SEAL-LIP TYPE	

Y-SEPARATE ILLUSTRATION

REFER TO ALL ILLUSTRATIONS OF THIS GROUP FOR AUXILIARY VIEWS

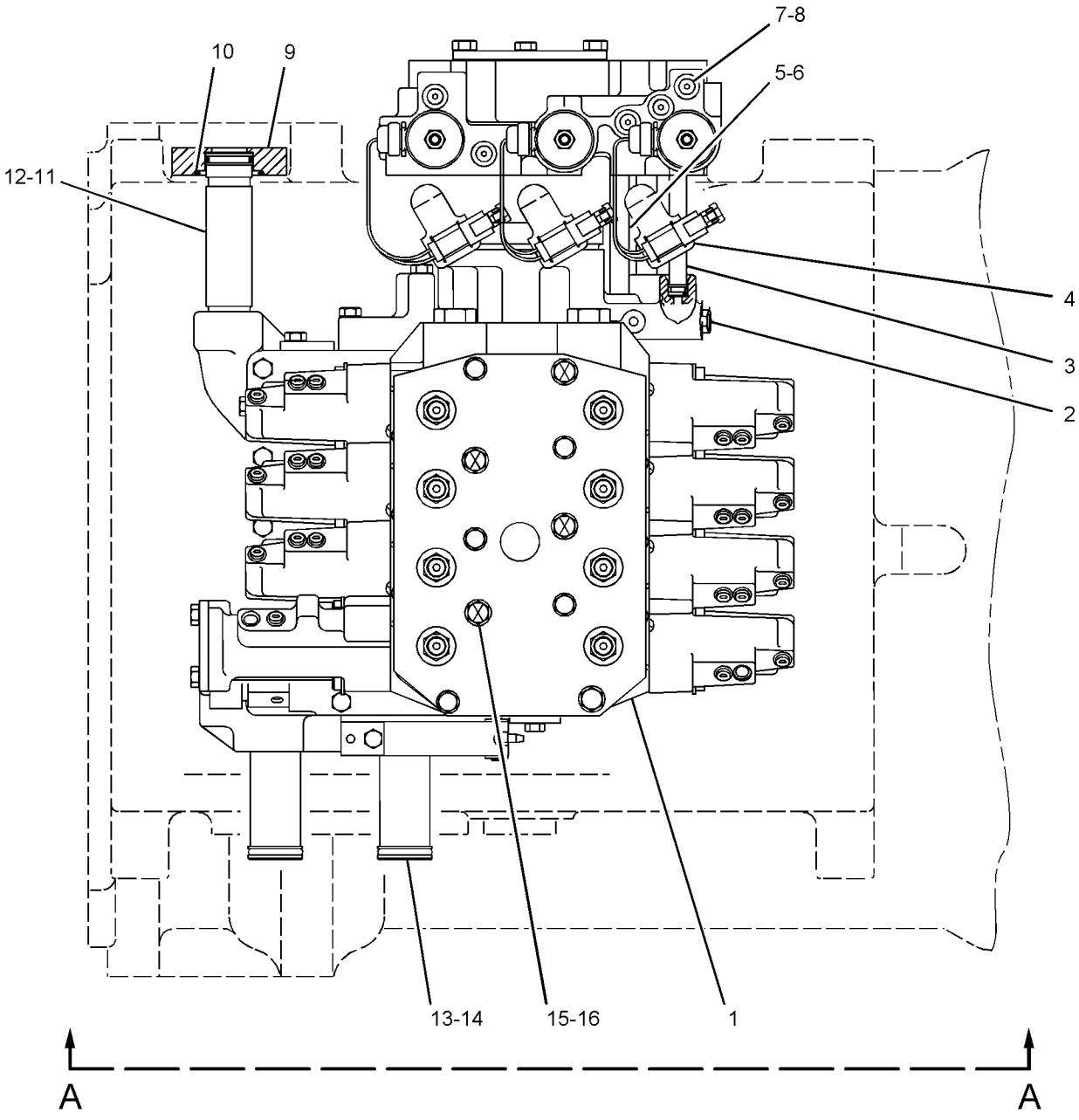

GRAPHIC #1

g01081671

147-2352 **CONTROL GP-TRANSMISSION HYD** *(contd.)* **i02116701**

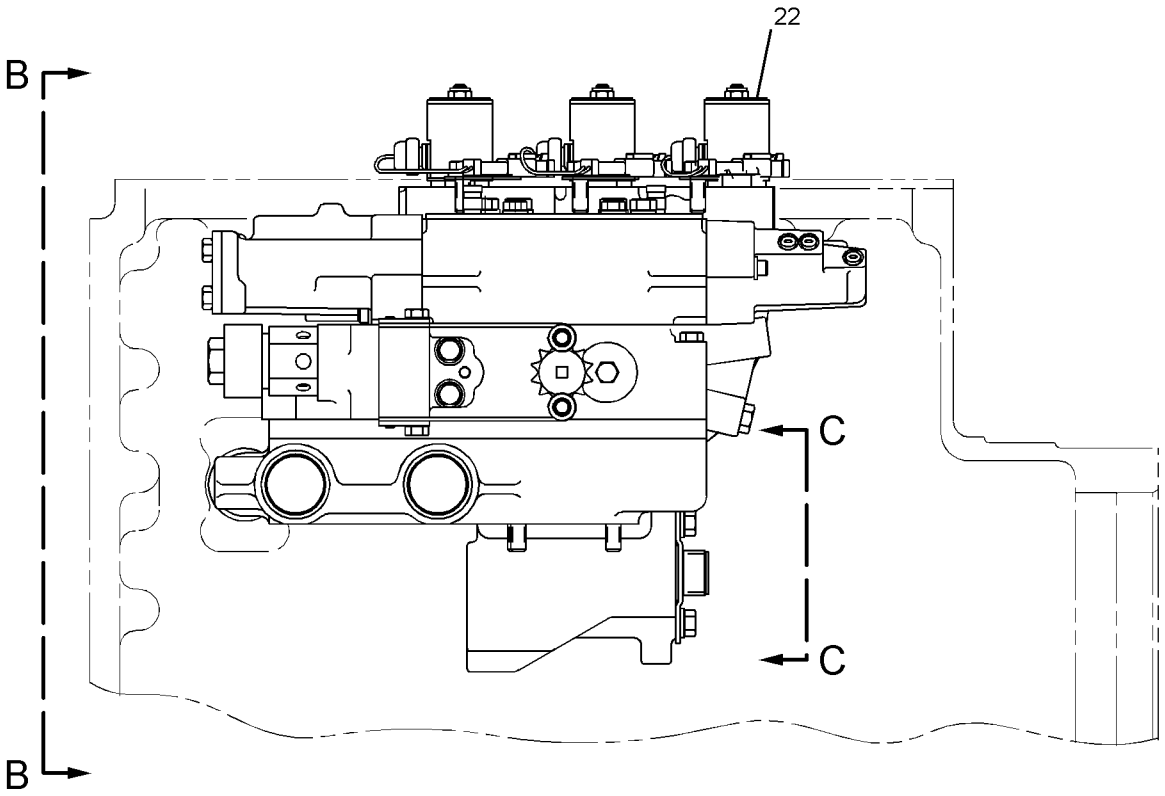

VIEW A-A

REFER TO ALL ILLUSTRATIONS OF THIS GROUP FOR AUXILIARY VIEWS

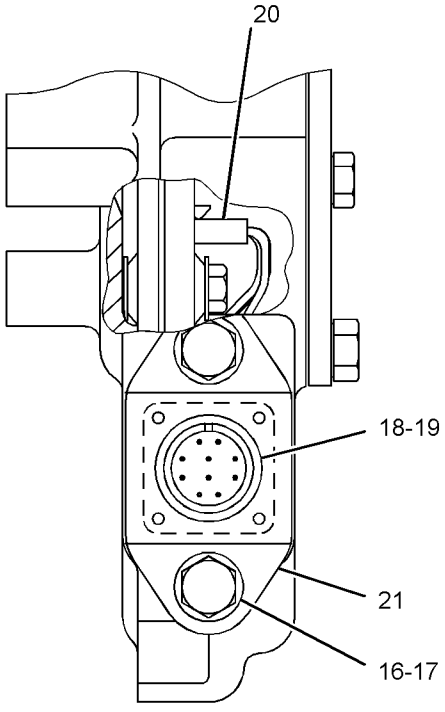

VIEW C-C

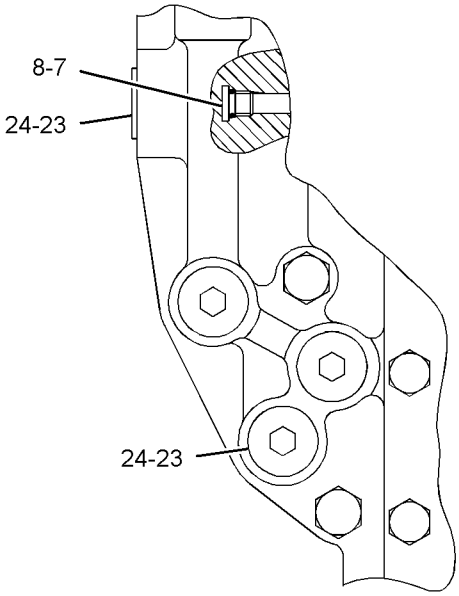

VIEW D-D

GRAPHIC #2

g01081672

REFER TO ALL ILLUSTRATIONS OF
THIS GROUP FOR AUXILIARY VIEWS

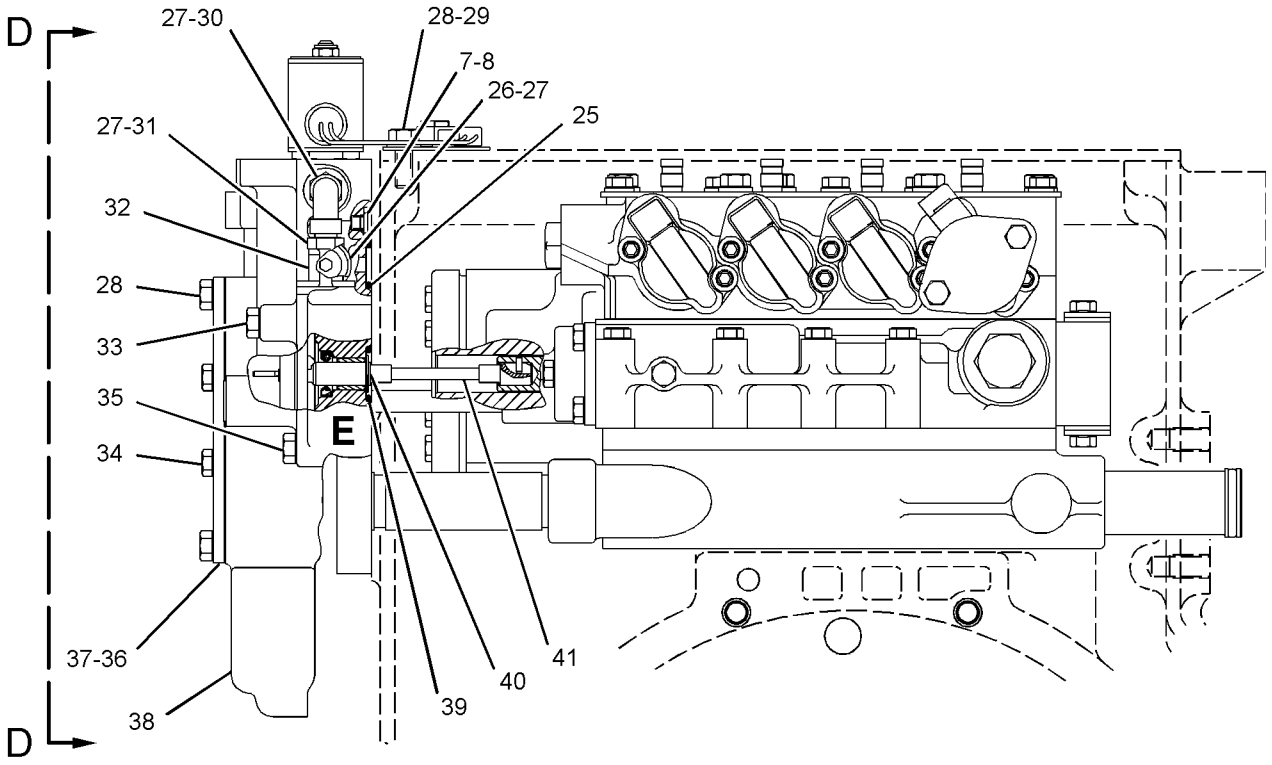

VIEW B-B

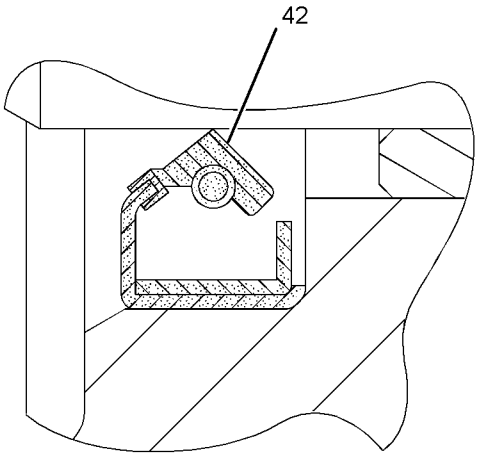

VIEW OF AREA E

GRAPHIC #3

<END>

g01081670

168-8312 COOLER GP-BRAKE & TORQUE CONV

S/N: BET200-UP

PART OF 153-7076, 235-4689 ENGINE AR-COMPLETE

SMCS-1366, 1375 **i01464288**

NOTE	REF NO	GRAPHIC REF	PART NUMBER	QTY	PART NAME 1 2 3 4 5 6 (PRODUCT LEVEL)	SEE PAGE
	1	1	**2S-0795**	4	GASKET	
YR	2	1	**4P-7731**	1	CORE GP-OIL COOLER	605
	3	1	**8M-9307**	2	PLUG-DRAIN	
	4	1	**8S-4304**	2	BONNET-TMSN OIL COOLER	
	5	1	**137-8480**	1	CORE AS	
	6	1	**168-8313**	1	SUPPORT AS	
	7	1	**168-8314**	1	SUPPORT	
	8	1	**0S-1587**	5	BOLT (1/2-13X1.75 IN)	
	9	1	**0S-1595**	5	BOLT (1/2-13X1.25 IN)	
	10	1	**1A-2029**	4	BOLT (3/8-16X1.125 IN)	
	11	1	**5P-8245**	4	WASHER-HARD (13.5X25.5X3MM THK)	
	12	1	**5P-8247**	4	WASHER-HARD (17X32X3.5MM THK)	
	13	1	**6F-7062**	2	WASHER (12.7X19.05X1.83MM THK)	
	14	1	**7B-3235**	1	BOLT (1/2-13X1.375 IN)	
	15	1	**9X-6458**	4	WASHER-HARD (10.2X22.5X3MM THK)	
	16	1	**9X-8873**	2	BOLT (1/2-13X2.25 IN)	
	17	1	**9X-8875**	11	BOLT (1/2-13X3.5IN)	
	18	1	**9X-8880**	4	BOLT (5/8-11X2 IN)	

R-REMFG PART MAY BE AVAILABLE
Y-SEPARATE ILLUSTRATION

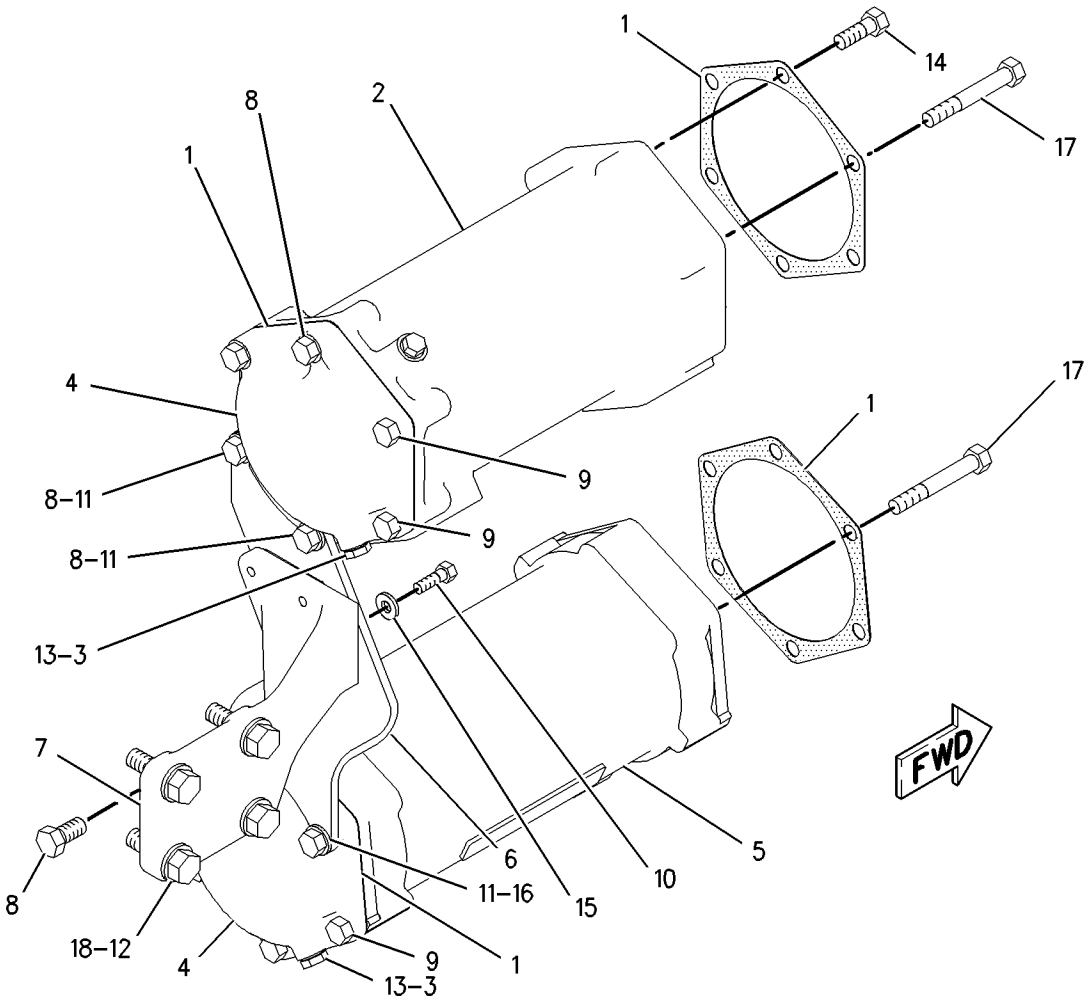

GRAPHIC #1 **<END>** g00766121

245-9570 COVER GP-TORQUE CONVERTER

S/N: 4WY2049-UP

PART OF 255-6875 DRIVE GP-PUMP

SMCS-3105 **i02054234**

NOTE	REF NO	GRAPHIC REF	PART NUMBER	QTY	PART NAME 1 2 3 4 5 6 (PRODUCT LEVEL)	SEE PAGE
	1	1	**245-8081**	1	HOUSING-TORQUE CONVERTER	
	2	1	**1A-2358**	1	PLUG-CUP	
	3	1	**183-6386**	1	TUBE AS	
	4	1	**0L-1026**	1	PLUG-CUP	
	5	1	**0S-0509**	1	BOLT (3/8-16X0.75-IN)	
	6	1	**6N-8863**	1	WASHER (10.2X32X2.5-MM THK)	

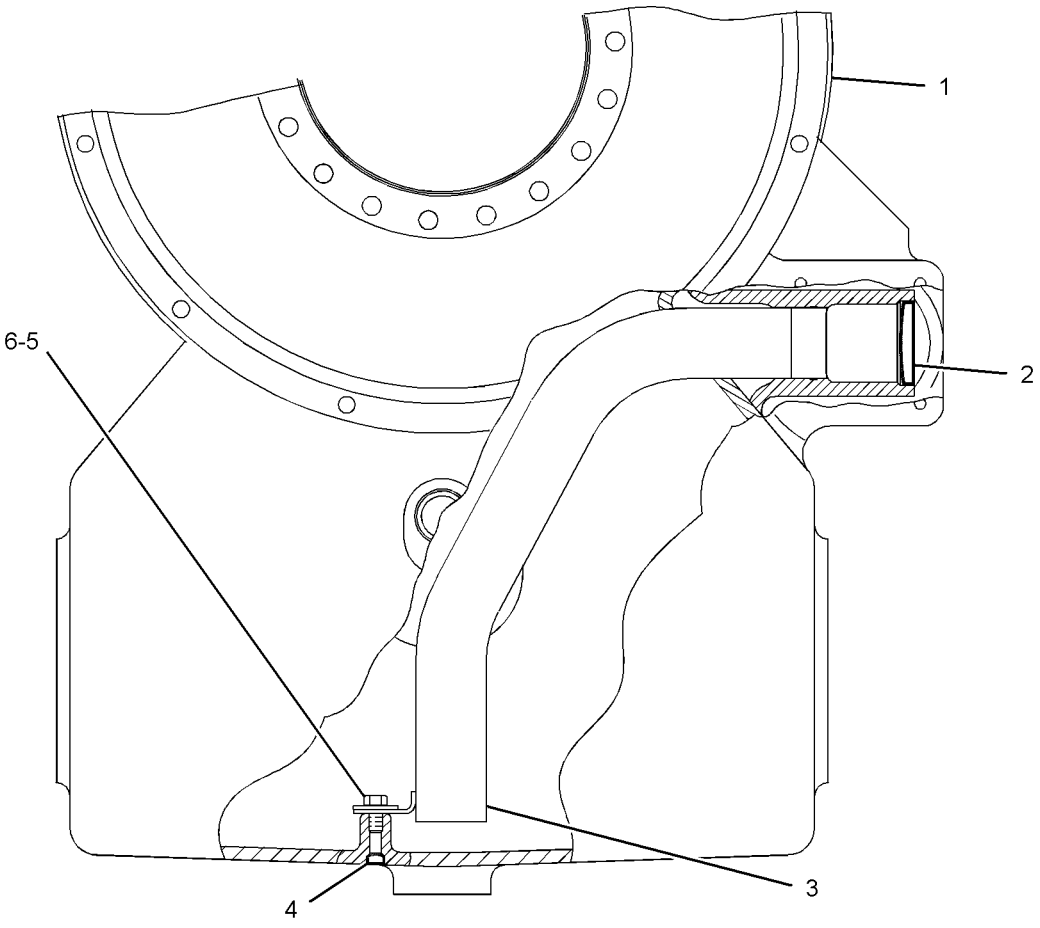

FRONT VIEW
(SECTIONED)

GRAPHIC #1 **<END>** g01053612

148-7200 DIFFERENTIAL & BEVEL GEAR GP–FRONT

S/N: AXM1-UP

PART OF 141-6895, 237-4738 AXLE GP-FRONT, 152-4410 AXLE GP-REAR

SMCS-3256, 3258 **i02075273**

NOTE	REF NO	GRAPHIC REF	PART NUMBER	QTY	PART NAME 1 2 3 4 5 6 (PRODUCT LEVEL)	SEE PAGE
	1	1	**2D-9454**	1	CUP-BEARING	
	2	1	**2D-9455**	1	CONE-BEARING	
	3	1	**3F-5792**	1	SEAL-O-RING	
	4	1	**3S-1374**	3	SPRING	
	5	1	**5P-9505**	1	CONE-BEARING	
	6	1	**8S-9075**	2	CONE-BEARING	
	7	1	**8S-9076**	2	CUP-BEARING	
M	8	1	**127-1960**	4	SCREW-FLAT HEAD (M6X1X16-MM)	
	9	1	**136-6325**	6	DISC-FRICTION	
	10	1	**138-1490**	3	SPACER (15-MM THK)	
	11	1	**138-3623**	2	CAGE	
	12	1	**138-3624**	2	RING	
	13	1	**138-3626**	2	LOCK	
	14	1	**138-3638**	1	HUB	
B	15	1	**138-4096**	5	SHIM (0.05-MM THK)	
B	16	1	**138-4097**	5	SHIM (0.08-MM THK)	
B	17	1	**138-4098**	3	SHIM (0.12-MM THK)	
B	18	1	**138-4099**	1	SHIM (0.5-MM THK)	
	19	1	**138-7099**	1	CUP-BEARING	
Y	20	1	**139-2140**	1	CARRIER GP-DIFFERENTIAL	340
	21	1	**143-7605**	1	RETAINER	
	22	1	**147-7245**	1	GEAR SET-BEVEL	
	23	1	**147-7381**	1	CAGE	
	24	1	**151-8279**	1	HUB AS	
		1	**2M-0401**	7	DOWEL	
		1	**151-8108**	3	DOWEL	
	25	1	**151-8281**	1	PLATE	
	26	1	**151-8282**	6	PLATE	
	27	1	**151-8397**	1	PLATE	
	28	1	**224-2323**	2	BEARING AS-NEEDLE	
	29	1	**152-4093**	1	HOUSING	
	30	1	**160-8058**	1	PISTON	
	31	1	**162-7183**	1	SEAL-LIP TYPE	
	32	1	**163-1921**	1	TUBE	
	33	1	**171-3010**	28	WASHER-HARD (M17.5X32X7-MM THK)	
	34	1	**176-5816**	1	WASHER (70.4X96X8-MM THK)	
M	35	1	**178-3707**	28	BOLT (M16X2X50-MM)	
	36	1	**250-7859**	1	LOCKNUT (2.75X18-THD)	
Y	37	1	**219-1879**	1	DIFFERENTIAL GP	371
	38	1	**1H-8278**	1	SEAL-O-RING	
	39	1	**4J-2506**	2	SEAL-O-RING	
M	40	1	**5C-9553**	4	BOLT (M6X1X16-MM)	
	41	1	**5H-4909**	1	SEAL-O-RING	
	42	1	**7X-7729**	3	WASHER (11X25X3-MM THK)	
	43	1	**8C-3347**	2	PIN-ROLL	
	44	1	**8T-4121**	16	WASHER-HARD (11X21X2.5-MM THK)	
M	45	1	**8T-4195**	19	BOLT (M10X1.5X30-MM)	
	46	1	**8T-4223**	4	WASHER-HARD (13.5X25.5X3-MM THK)	
M	47	1	**8T-5412**	4	BOLT (M12X1.75X140-MM)	
	48	1	**9F-1399**	1	SEAL-O-RING	
	49	1	**1U-8846**	1	SEALANT-GASKET	

B-USE AS REQUIRED
M-METRIC PART
Y-SEPARATE ILLUSTRATION

148-7200 DIFFERENTIAL & BEVEL GEAR GP *(contd.)* i02075273

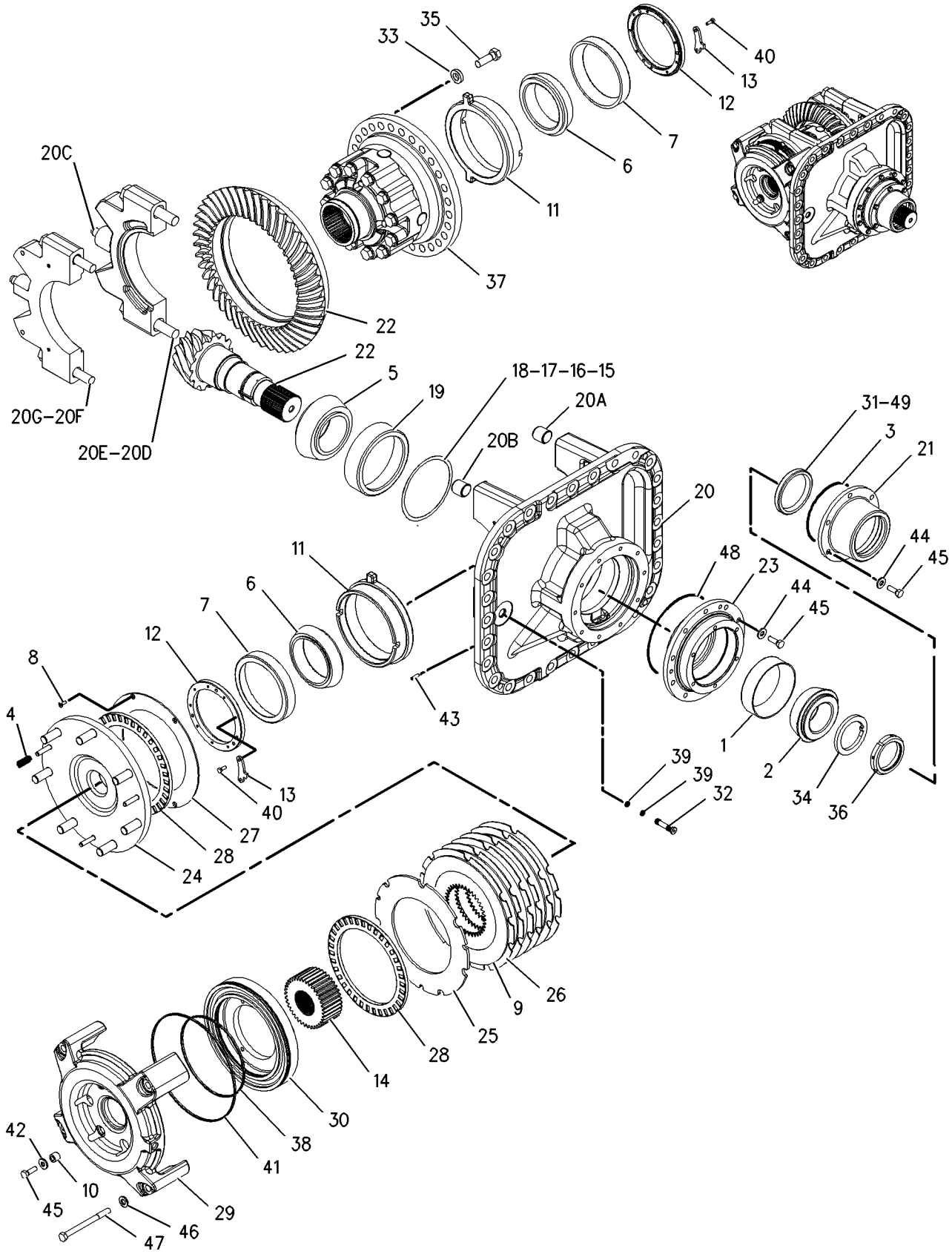

GRAPHIC #1 **<END>** g00869778

POWER TRAIN

154-0300 DIFFERENTIAL & BEVEL GEAR GP–CENTER AXLE

S/N: AXM1-UP

PART OF 141-6892 AXLE GP-CENTER

SMCS-3256, 3258 **i02167277**

NOTE	REF NO	GRAPHIC REF	PART NUMBER	QTY	PART NAME 1 2 3 4 5 6 (PRODUCT LEVEL)	SEE PAGE
	1	1	**2D-9454**	1	CUP-BEARING	
	2	1	**2D-9455**	1	CONE-BEARING	
	3	1	**3S-1374**	3	SPRING	
	4	1	**5P-9505**	1	CONE-BEARING	
	5	1	**5S-3676**	1	SEAL-O-RING	
	6	1	**6V-5057**	1	SEAL-O-RING	
	7	1	**8H-7801**	2	CONE-BEARING	
	8	1	**8H-7803**	2	CUP-BEARING	
	9	1	**8S-9075**	2	CONE-BEARING	
	10	1	**8S-9076**	2	CUP-BEARING	
	11	1	**9D-1853**	2	RETAINER	
	12	1	**9D-1854**	1	SPACER-SPECIAL	
M	13	1	**127-1960**	4	SCREW-FLAT HEAD (M6X1X16-MM)	
	14	1	**136-6325**	6	DISC-FRICTION	
	15	1	**138-1490**	3	SPACER (15-MM THK)	
	16	1	**138-1505**	1	SPACER (23.54-MM THK)	
	17	1	**138-3623**	2	CAGE	
	18	1	**138-3624**	2	RING	
	19	1	**138-3626**	2	LOCK	
	20	1	**138-3638**	1	HUB	
B	21	1	**138-4096**	5	SHIM (0.05-MM THK)	
B	22	1	**138-4097**	5	SHIM (0.08-MM THK)	
B	23	1	**138-4098**	3	SHIM (0.12-MM THK)	
B	24	1	**138-4099**	1	SHIM (0.5-MM THK)	
	25	1	**138-7099**	1	CUP-BEARING	
	26	1	**139-2154**	1	CAGE	
B	27	1	**139-2155**	4	SHIM (0.08-MM THK)	
B	28	1	**139-2156**	5	SHIM (0.12-MM THK)	
	29	1	**147-6794**	1	GEAR SET-BEVEL	
	30	1	**147-7379**	1	GEAR (33-TEETH)	
	31	1	**147-7383**	1	RETAINER-SEAL	
	32	1	**151-8279**	1	HUB AS	
		1	**2M-0401**	7	DOWEL	
		1	**151-8108**	3	DOWEL	
	33	1	**151-8281**	1	PLATE	
	34	1	**151-8282**	6	PLATE	
	35	1	**151-8397**	1	PLATE	
	36	1	**224-2323**	2	BEARING AS-NEEDLE	
	37	1	**152-4093**	1	HOUSING	
Y	38	1	**219-1879**	1	DIFFERENTIAL GP	371
	39	1	**160-8058**	1	PISTON	
Y	40	1	**160-8518**	1	CARRIER GP-DIFFERENTIAL	341
	41	1	**162-7183**	1	SEAL-LIP TYPE	
	42	1	**163-1921**	1	TUBE	
	43	1	**168-9029**	1	GEAR AS	
		1	**4K-0149**	1	PLUG-CUP	
	44	1	**176-5816**	1	WASHER (70.4X96X8-MM THK)	
M	45	1	**178-3707**	28	BOLT (M16X2X50-MM)	
	46	1	**184-4339**	1	SHIM (0.92-MM THK)	
	47	1	**250-7859**	1	LOCKNUT (2.75X18-THD)	
M	48	1	**136-4183**	4	BOLT-12 POINT HEAD (M10X1.5X30-MM)	
	49	1	**171-3010**	28	WASHER-HARD (M17.5X32X7-MM THK)	
	50	1	**1H-8278**	1	SEAL-O-RING	
	51	1	**1S-2199**	2	DOWEL	
	52	1	**4J-2506**	2	SEAL-O-RING	
M	53	1	**5C-9553**	4	BOLT (M6X1X16-MM)	

154-0300 DIFFERENTIAL & BEVEL GEAR GP *(contd.)* i02167277

NOTE	REF NO	GRAPHIC REF	PART NUMBER	QTY	PART NAME 1 2 3 4 5 6 (PRODUCT LEVEL)	SEE PAGE
	54	1	**5H-4909**	1	SEAL-O-RING	
	55	1	**7X-7729**	3	WASHER (11X25X3-MM THK)	
	56	1	**8C-3347**	2	PIN-ROLL	
	57	1	**8T-4121**	10	WASHER-HARD (11X21X2.5-MM THK)	
M	58	1	**8T-4195**	9	BOLT (M10X1.5X30-MM)	
	59	1	**8T-4223**	4	WASHER-HARD (13.5X25.5X3-MM THK)	
M	60	1	**8T-5412**	4	BOLT (M12X1.75X140-MM)	
B	61	1	**1U-8846**	1	SEALANT-GASKET	

B-USE AS REQUIRED
M-METRIC PART
Y-SEPARATE ILLUSTRATION

154-0300 DIFFERENTIAL & BEVEL GEAR GP *(contd.)* i02167277

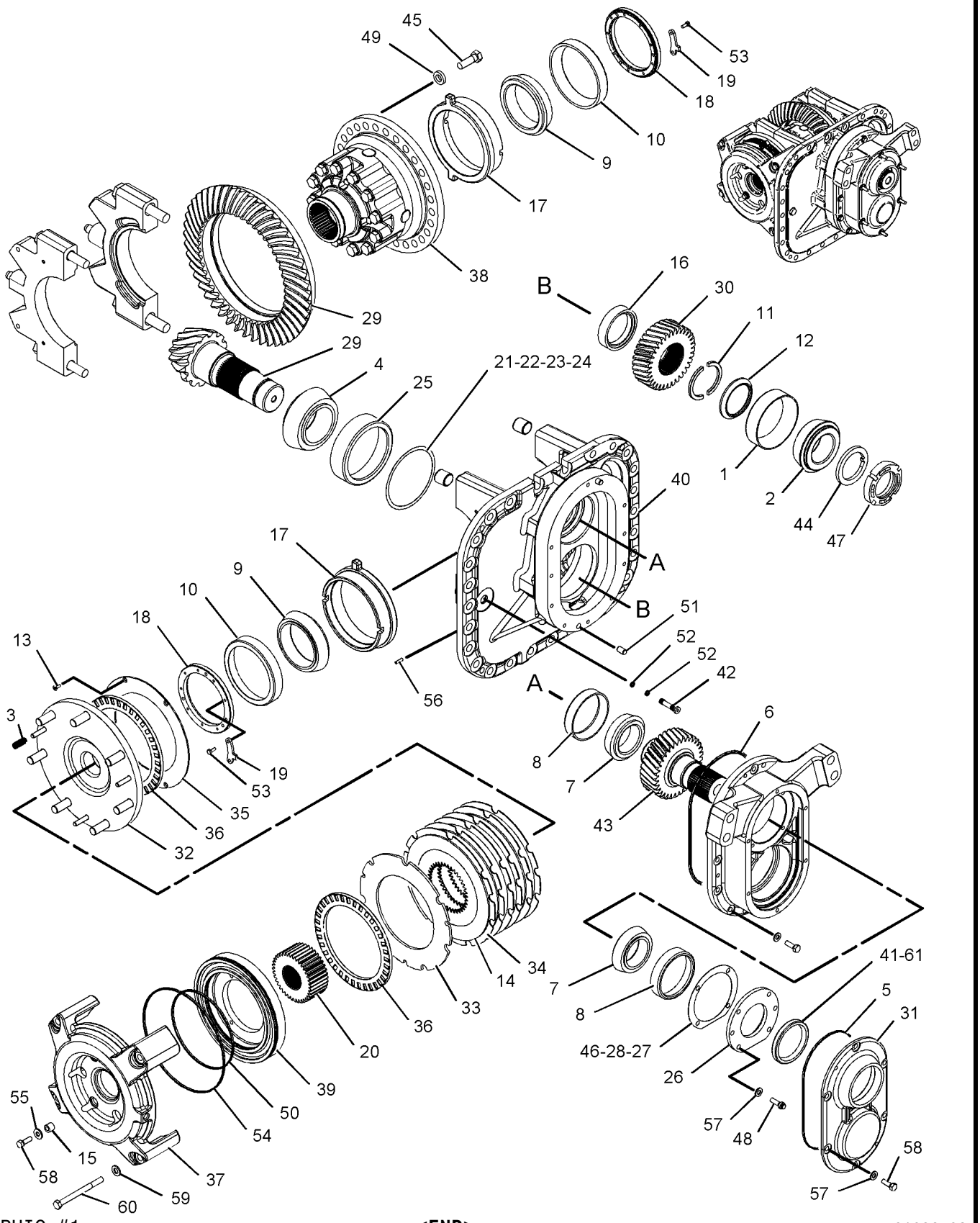

GRAPHIC #1 **<END>** g01098503

219-1879 DIFFERENTIAL GP

S/N: AXM1-UP

PART OF 148-7200, 154-0300 DIFFERENTIAL & BEVEL GEAR GP

SMCS-3258 **i02110499**

NOTE	REF NO	GRAPHIC REF	PART NUMBER	QTY	PART NAME 1 2 3 4 5 6 (PRODUCT LEVEL)	SEE PAGE
	1	1	**4V-5392**	1	SPIDER	
	2	1	**136-6551**	2	GEAR (16-TEETH)	
	3	1	**139-2169**	4	PINION	
	4	1	**139-2176**	4	WASHER-SPECIAL	
	5	1	**139-2239**	2	WASHER-THRUST	
	6	1	**171-4736**	1	CASE AS-DIFFERENTIAL	
M		1	**8T-0207**	12	BOLT (M16X2X100-MM)	
		1	**9X-8268**	12	WASHER (17.5X30X3.5-MM THK)	
	7	1	**243-6480**	4	BEARING-SLEEVE	

M-METRIC PART

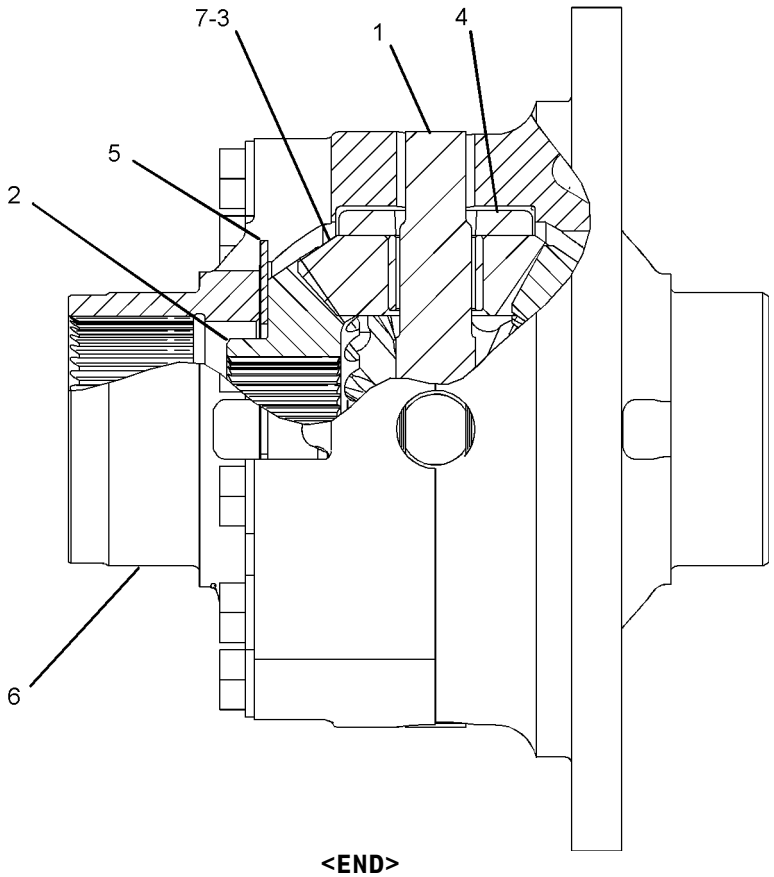

GRAPHIC #1 **<END>** g01074514

POWER TRAIN

146-3679 DRIVE GP-PUMP

S/N: 4WY500-2048

PART OF 146-6225 TRANSMISSION AR

SMCS-3108 **i01628993**

NOTE	REF NO	GRAPHIC REF	PART NUMBER	QTY	PART NAME 1 2 3 4 5 6 (PRODUCT LEVEL)	SEE PAGE
	1	1	**145-2354**	1	HOUSING AS-TORQUE CONVERTER	
		1	**183-6386**	1	TUBE AS	
		1	**0L-1026**	1	PLUG-CUP	
		1	**0S-0509**	1	BOLT (3/8-16X0.75-IN)	
		1	**1A-2358**	1	PLUG-CUP	
		1	**6N-8863**	1	WASHER (10.2X32X2.5-MM THK)	
	2	1	**3S-3875**	1	SCREEN-SUCTION	
	3	1	**5P-0597**	4	CLAMP-HOSE	
	4	1	**5P-1293**	1	HOSE	
	5	1	**149-5462**	2	SEAL-O-RING	
	6	1	**9X-8874**	15	BOLT (1/2-13X3-IN)	
M	7	1	**5P-8245**	33	WASHER-HARD (13.5X25.5X3-MM THK)	
	8	1	**0L-1352**	2	BOLT (3/8-16X3.25-IN)	
	9	1	**5M-2894**	18	WASHER-HARD (10.2X18.5X2.5-MM THK)	
	10	1	**1H-8720**	1	SEAL-O-RING	
	11	1	**1A-2029**	6	BOLT (3/8-16X1.125-IN)	
	12	1	**136-9150**	1	CAGE-BEARING	
	13	1	**5M-7142**	1	SEAL-O-RING	
	14	1	**164-8453**	1	GEAR AS	
		1	**5H-4279**	1	PLUG-CUP	
	15	1	**8J-7636**	2	RING-RETAINING	
	16	1	**4B-3665**	2	BALL BEARING	
	17	1	**1T-0034**	1	RING-LOCK	
	18	1	**139-2403**	1	SHAFT-IDLER	
	19	1	**5J-5793**	1	BOLT-12 POINT HEAD (1/2-13X1.75-IN)	
	20	1	**139-4635**	1	GEAR (58-TEETH) (58 TEETH)	
	21	1	**174-4112**	1	TUBE AS	
	22	1	**9H-0846**	1	SEAL-O-RING	
	23	1	**8H-7521**	1	SEAL-O-RING	
	24	1	**9W-5531**	1	TUBE AS (MAGNETIC)	
	25	1	**138-1509**	1	DRAIN AS	
		1	**7M-8485**	1	SEAL-O-RING	
		1	**8F-0212**	1	SEAL-O-RING	
		1	**138-1510**	1	PLUG	
	26	1	**3F-5792**	2	SEAL-O-RING	
	27	1	**8S-0617**	2	COVER	
	28	1	**0S-1594**	10	BOLT (3/8-16X1-IN)	
	29	1	**8P-3251**	1	COVER AS	
		1	**8P-1722**	1	COVER	
		1	**7B-3028**	2	SCREW-DRIVE (NO 4X3/16-IN)	
		1	**7S-2962**	1	WASHER-SPRING (52.3X82.5X9.1-MM THK)	
	30	1	**2H-6184**	1	SEAL-O-RING	
	31	1	**3H-5368**	2	BOLT (7/16-14X1.375-IN)	
	32	1	**5P-8244**	2	WASHER (12X22.5X2.5-MM THK)	
	33	1	**174-4111**	1	TUBE AS	
	34	1	**8F-6711**	1	SEAL-O-RING	
	35	1	**0S-1585**	18	BOLT (1/2-13X1.5-IN)	
	36	1	**8M-5007**	1	SEAL-O-RING	
	37	1	**6M-5218**	1	SEAL-O-RING	

M-METRIC PART

146-3679 **DRIVE GP-PUMP** *(contd.)* **i01628993**

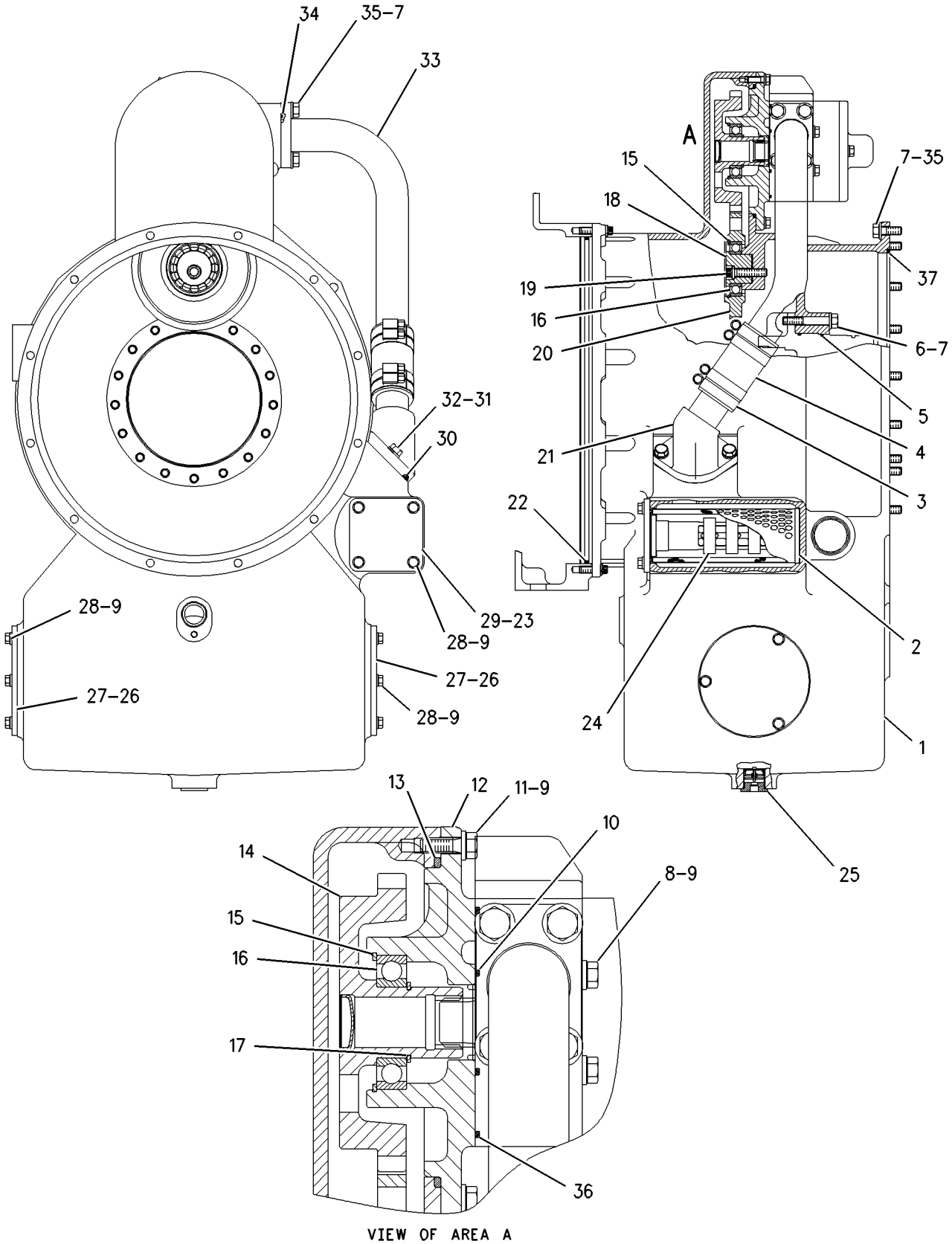

VIEW OF AREA A

GRAPHIC #1 **<END>** g00844283

255-6875 DRIVE GP-PUMP

S/N: 4WY2049-UP

PART OF 146-6225 TRANSMISSION AR

SMCS-3108 **i02135825**

NOTE	REF NO	GRAPHIC REF	PART NUMBER	QTY	PART NAME 1 2 3 4 5 6 (PRODUCT LEVEL)	SEE PAGE
Y	1	1	**245-9570**	1	COVER GP-TORQUE CONVERTER	365
	2	1	**3S-3875**	1	SCREEN-SUCTION	
	3	1	**5P-0597**	4	CLAMP-HOSE	
E	4	1	**5P-1293**		HOSE (13-CM)	
	5	1	**149-5462**	2	SEAL-O-RING	
	6	1	**9X-8874**	15	BOLT (1/2-13X3-IN)	
M	7	1	**5P-8245**	33	WASHER-HARD (13.5X25.5X3-MM THK)	
	8	1	**8M-5007**	1	SEAL-O-RING	
	9	1	**6M-5218**	1	SEAL-O-RING	
	10	1	**0S-1585**	18	BOLT (1/2-13X1.5-IN)	
	11	1	**0L-1352**	2	BOLT (3/8-16X3.25-IN)	
	12	1	**5M-2894**	18	WASHER-HARD (10.2X18.5X2.5-MM THK)	
	13	1	**1H-8720**	1	SEAL-O-RING	
	14	1	**1A-2029**	6	BOLT (3/8-16X1.125-IN)	
	15	1	**136-9150**	1	CAGE-BEARING	
	16	1	**5M-7142**	1	SEAL-O-RING	
	17	1	**164-8453**	1	GEAR AS	
		1	**5H-4279**	1	PLUG-CUP	
	18	1	**8J-7636**	2	RING-RETAINING	
	19	1	**4B-3665**	2	BALL BEARING	
	20	1	**1T-0034**	1	RING-LOCK	
	21	1	**139-2403**	1	SHAFT-IDLER	
	22	1	**5J-5793**	1	BOLT-12 POINT HEAD (1/2-13X1.75-IN)	
	23	1	**139-4635**	1	GEAR (58-TEETH)	
	24	1	**174-4112**	1	TUBE AS	
	25	1	**9H-0846**	1	SEAL-O-RING	
	26	1	**8H-7521**	1	SEAL-O-RING	
	27	1	**9W-5531**	1	TUBE AS (MAGNETIC)	
	28	1	**138-1509**	1	DRAIN AS	
		1	**7M-8485**	1	SEAL-O-RING	
		1	**8F-0212**	1	SEAL-O-RING	
		1	**138-1510**	1	PLUG	
	29	1	**3F-5792**	2	SEAL-O-RING	
	30	1	**8S-0617**	2	COVER	
	31	1	**0S-1594**	10	BOLT (3/8-16X1-IN)	
	32	1	**8P-3251**	1	COVER AS	
		1	**7B-3028**	2	SCREW-DRIVE (NO 4X3/16-IN)	
		1	**7S-2962**	1	WASHER-SPRING (52.3X82.5X9.1-MM THK)	
		1	**8P-1722**	1	COVER	
	33	1	**2H-6184**	1	SEAL-O-RING	
	34	1	**3H-5368**	2	BOLT (7/16-14X1.375-IN)	
	35	1	**5P-8244**	2	WASHER (12X22.5X2.5-MM THK)	
	36	1	**174-4111**	1	TUBE AS	
	37	1	**8F-6711**	1	SEAL-O-RING	

E-ORDER BY THE CENTIMETER
M-METRIC PART
Y-SEPARATE ILLUSTRATION

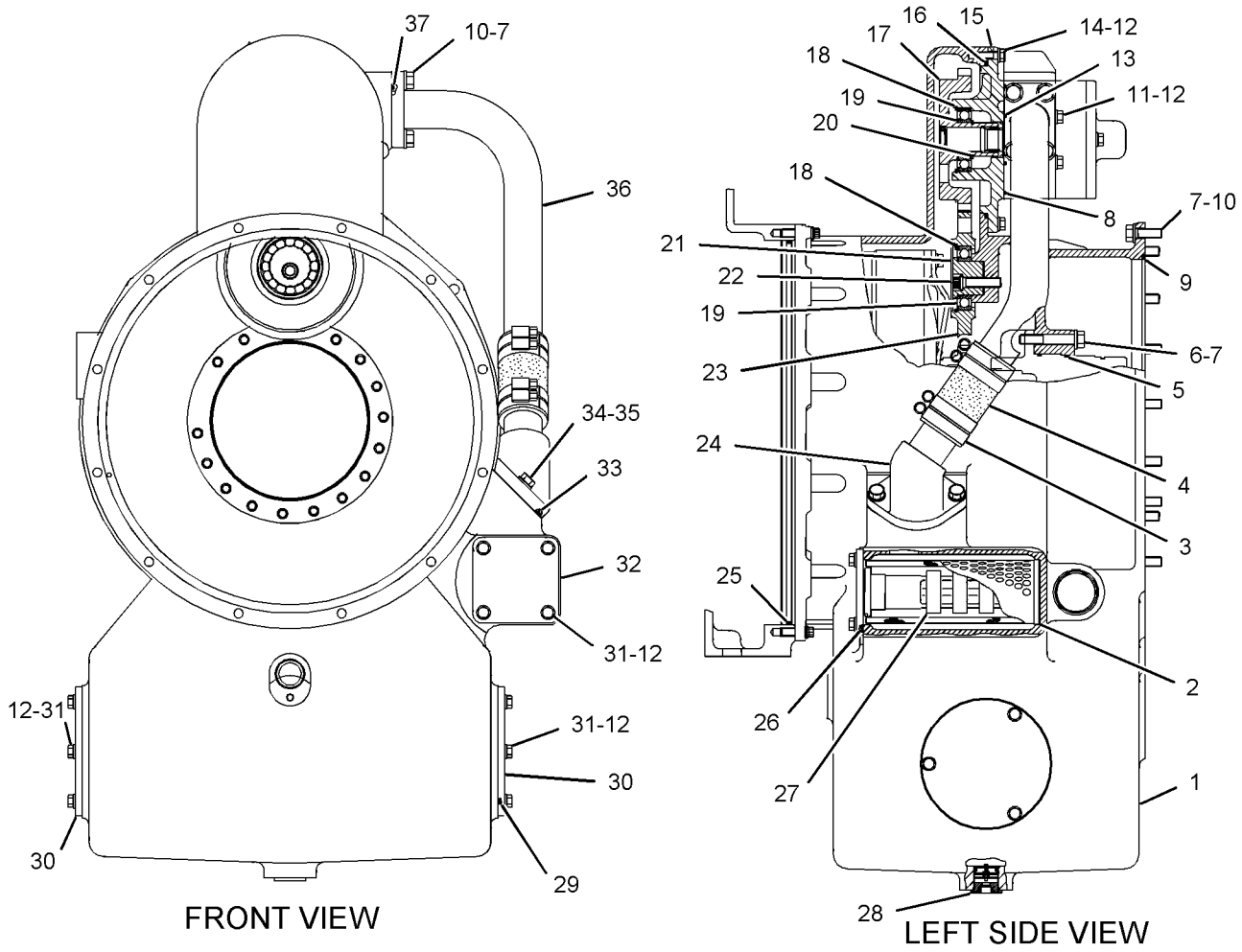

GRAPHIC #1 **<END>** g01106229

206-4943 FILLER GP-POWER TRAIN OIL

S/N: AXM1-UP

PART OF 152-6943 POWER TRAIN AR

SMCS-3005, 3081 **i01660219**

NOTE	REF NO	GRAPHIC REF	PART NUMBER	QTY	PART NAME 1 2 3 4 5 6 (PRODUCT LEVEL)	SEE PAGE
	1	1	**206-4941**	1	TUBE AS	
	2	1	**206-7169**	1	COVER AS	
	3	1	**215-2866**	1	GAUGE-TRANSMISSION OIL	
	4	1	**1P-4579**	2	FLANGE-HALF	
	5	1	**4J-0524**	1	SEAL-O-RING	
	6	1	**4L-6454**	3	BOLT (3/8-16X1-IN)	
	7	1	**7S-8920**	1	CLIP (SLOT)	
	8	1	**7S-8921**	1	CLIP (TAB)	
M	9	1	**8T-4184**	4	BOLT (M12X1.75X45-MM)	
	10	1	**8T-4223**	6	WASHER-HARD (13.5X25.5X3-MM THK)	
M	11	1	**8T-4244**	1	NUT (M12X1.75-THD)	
	12	1	**8T-4896**	3	WASHER-HARD (10.2X18.5X2.5-MM THK)	
M	13	1	**8T-4956**	1	BOLT (M12X1.75X35-MM)	

M-METRIC PART

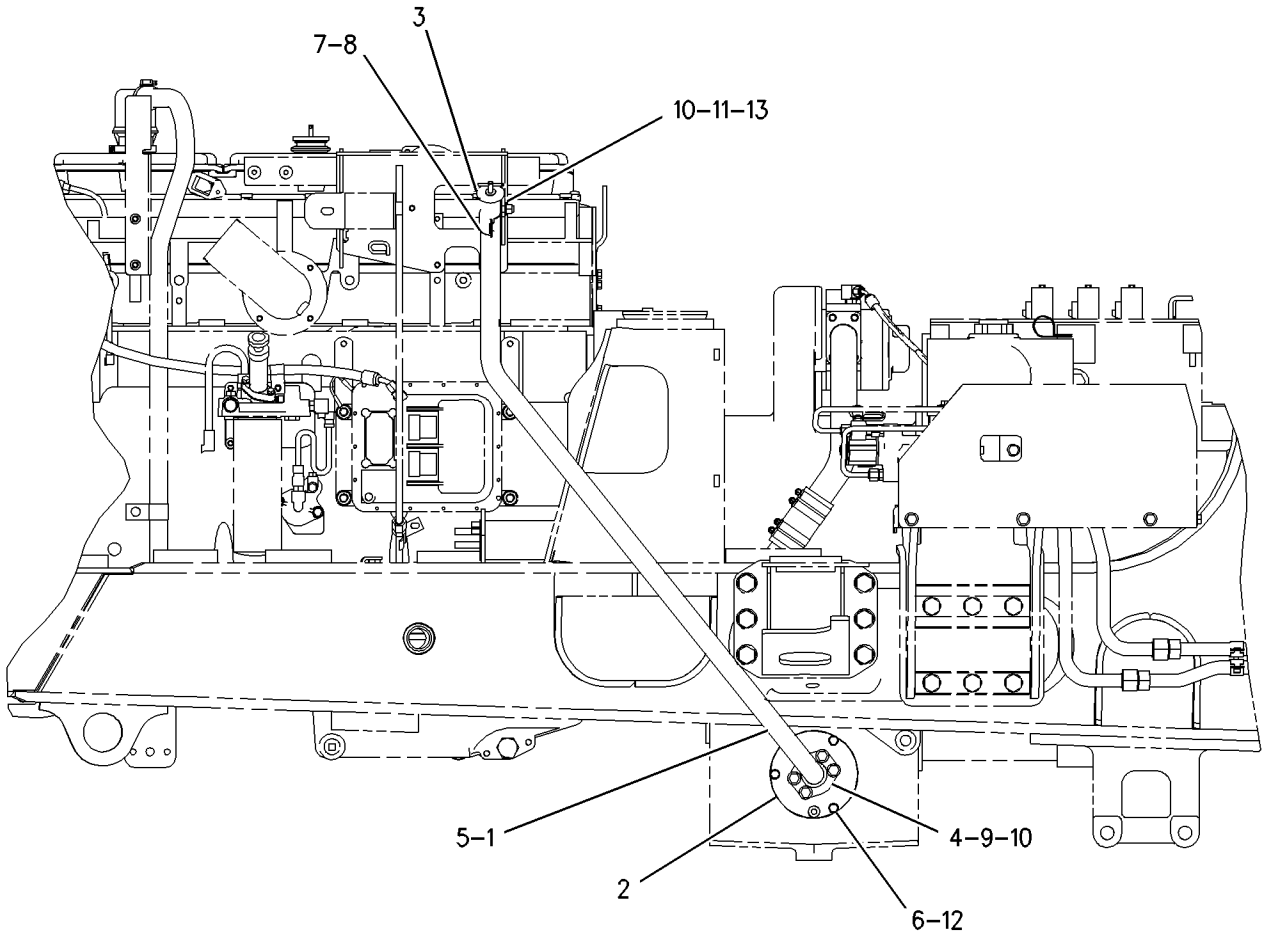

GRAPHIC #1 **<END>** g00856863

6P-4603 FILTER GP-OIL

S/N: AXM1-UP
WITH HOUSING
PART OF 164-6810 LINES GP-TRANSMISSION OIL

SMCS-3004, 3067 **i02160708**

NOTE	REF NO	GRAPHIC REF	PART NUMBER	QTY	PART NAME 1 2 3 4 5 6 (PRODUCT LEVEL)	SEE PAGE
	1	1	**3D-2824**	1	SEAL-O-RING	
	2	1	**3T-0688**	1	SPOOL	
	3	1	**9M-1986**	1	SPRING	
	4	1	**9S-4191**	3	PLUG	
		1	**3J-1907**	3	SEAL-O-RING	
	5	1	**6P-4227**	1	BASE-OIL FILTER	
	6	1	**1R-0719**	1	FILTER ELEMENT AS-OIL (HYDRAULIC) (STANDARD EFFICIENCY)	
					—OR—	
		1	**132-8875**	1	FILTER ELEMENT AS-OIL (HYDRAULIC)	
					AFTER INITIAL 8 HOURS OF CONTINUOUS OPERATION CHANGE ELEMENT TO STANDARD EFFICIENCY ELEMENT	
	7	1	**2J-6356**	1	RING-RETAINING	
	8	1	**7S-6745**	1	RETAINER	
	9	1	**3S-8652**	1	SPRING	
	10	1	**3P-0887**	1	HOUSING AS	
	11	1	**2S-8439**	1	SEAL-O-RING	

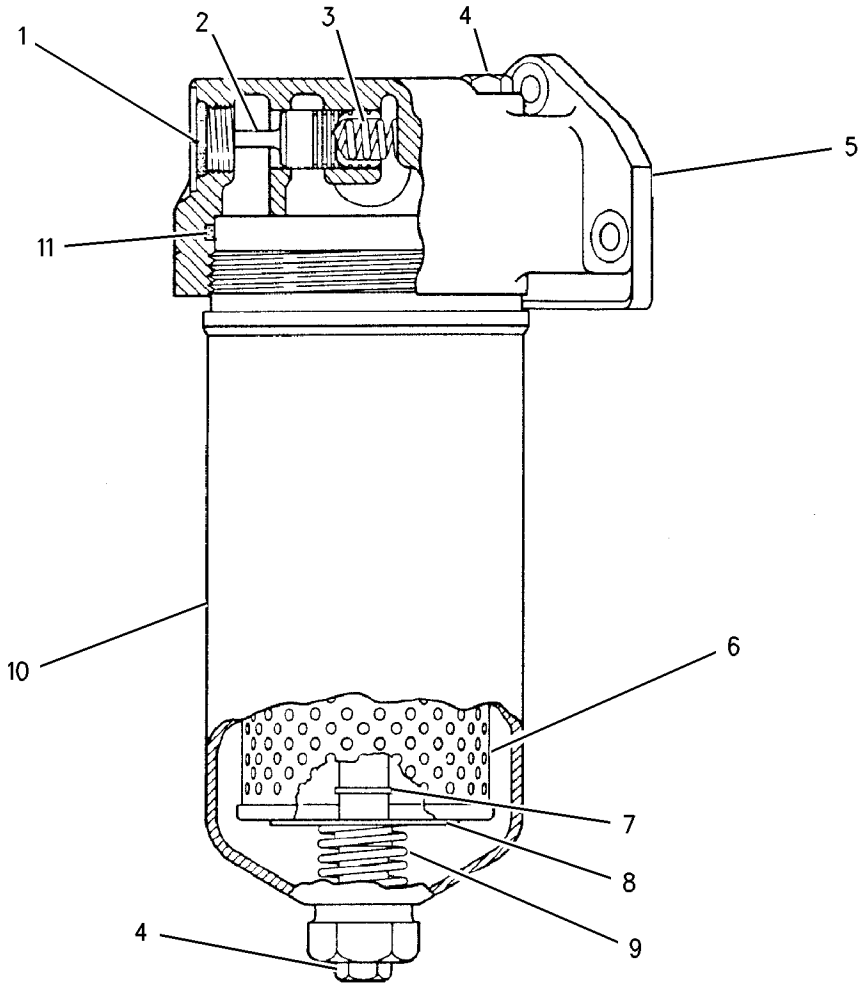

GRAPHIC #1 **<END>** g00830779

196-5540 FILTER GP-OIL

S/N: AXM1-UP

PART OF 199-6425 CONTROL GP-DIFFERENTIAL LOCK

SMCS-3004, 3067 **i02025777**

NOTE	REF NO	GRAPHIC REF	PART NUMBER	QTY	PART NAME 1 2 3 4 5 6 (PRODUCT LEVEL)	SEE PAGE
	1	1	**144-6691**	1	FILTER ELEMENT AS-OIL (HYDRAULIC)	
	2	1	**3E-7692**	2	SWITCH AS-PRESSURE (LOW OIL)	
					(EACH INCLUDES)	
		1	**186-3735**	2	PIN-CONNECTOR	
		1	**102-8802**	1	KIT-RECEPTACLE (2-PIN)	
	3	1	**183-7264**	1	VALVE AS-FLUID SAMPLING (OIL)	
	4	1	**227-6744**	1	SWITCH GP-PRESSURE	
		1	**102-8802**	1	KIT-RECEPTACLE (2-PIN)	
					(INCLUDES RECEPTACLE AS AND WEDGE)	
		1	**8T-8729**	2	PIN-CONNECTOR	
E		1	**9X-1813**		SLEEVE (14CM)	
	5	1	**5F-9144**	1	SEAL-O-RING	
	6	1	**6V-0852**	1	CAP-DUST	
	7	1	**3J-1907**	3	SEAL-O-RING	

E-ORDER BY THE CENTIMETER

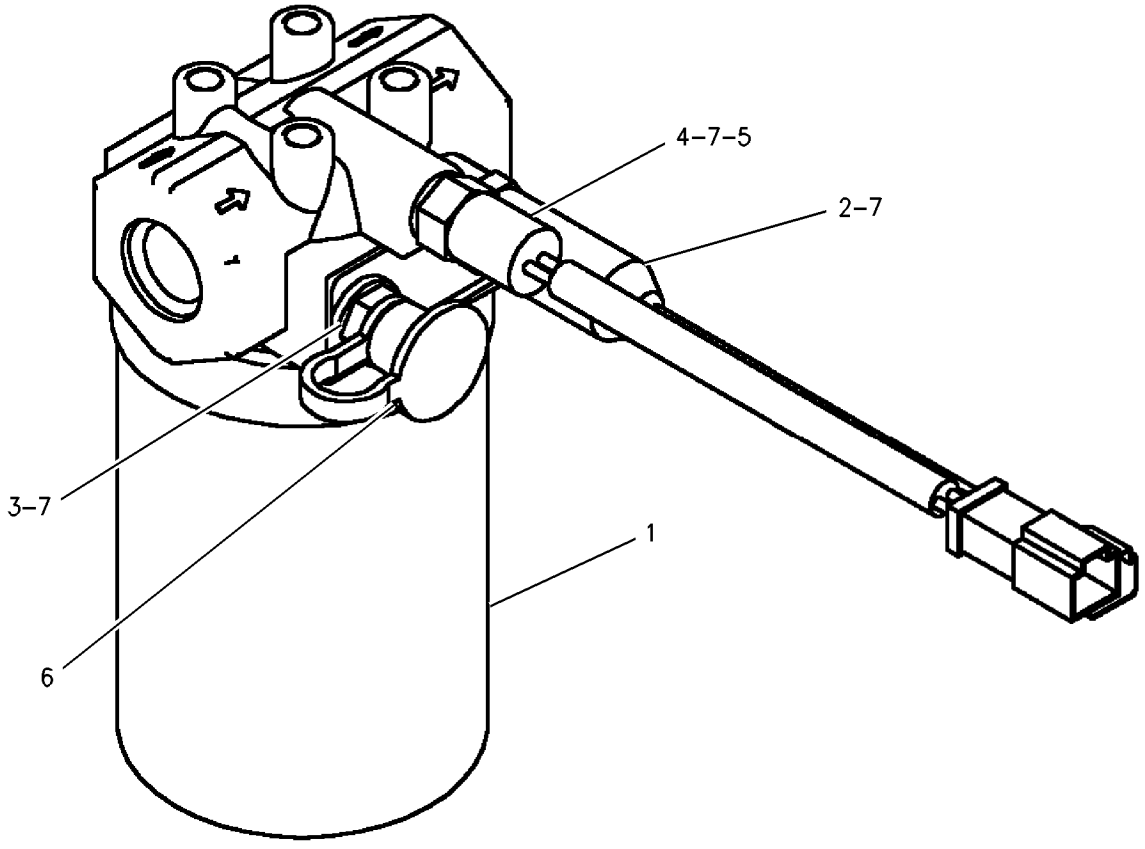

GRAPHIC #1 **<END>** g00806414

194-0782 GAUGE GP-OIL LEVEL (DIPSTICK)

S/N: AXM1-UP

PART OF 152-6943 POWER TRAIN AR

SMCS-3081 **i01538115**

NOTE	REF NO	GRAPHIC REF	PART NUMBER	QTY	PART NAME 1 2 3 4 5 6 (PRODUCT LEVEL)	SEE PAGE
	1	1	**7C-6641**	1	GAUGE-OIL LEVEL (DIPSTICK)	
	2	1	**194-0783**	1	TUBE AS	
	3	1	**4B-0418**	1	CLIP	
	4	1	**8T-4121**	2	WASHER-HARD (11X21X2.5-MM THK)	
M	5	1	**8T-4133**	1	NUT (M10X1.5-THD)	
M	6	1	**8T-4137**	1	BOLT (M10X1.5X20-MM)	

M-METRIC PART

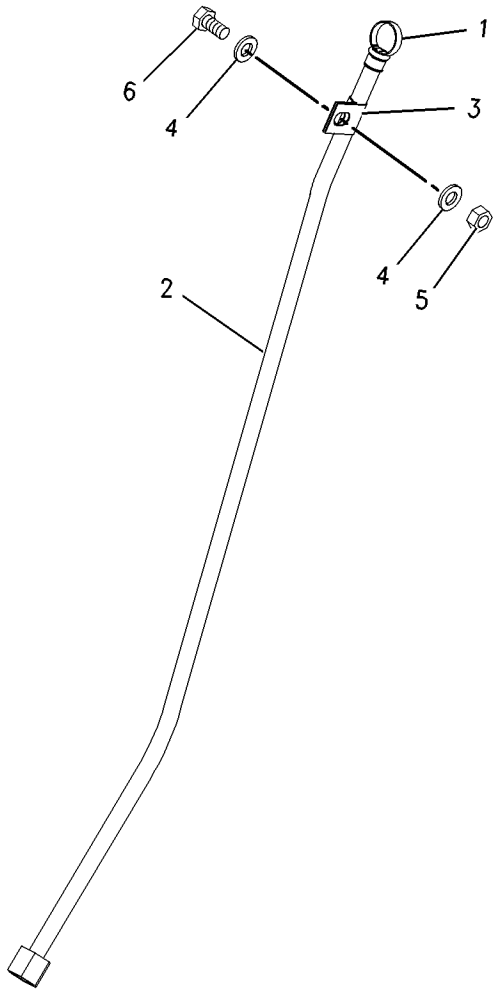

GRAPHIC #1 **<END>** g00798716

POWER TRAIN

141-6890 GEAR GP-OUTPUT TRANSFER

S/N: BBJ1-762

PART OF 152-6919 AXLE & FRAME AR

SMCS-3159 **i01933252**

NOTE	REF NO	GRAPHIC REF	PART NUMBER	QTY	PART NAME 1 2 3 4 5 6 (PRODUCT LEVEL)	SEE PAGE
	1	3	**6V-0327**	1	CUP-BEARING (TAPERED ROLLER)	
	2	3	**128-3935**	1	BEARING AS-ROLLER	
	3	3	**1M-5514**	1	RACE-ROLLER BEARING	
	4	3	**1T-1006**	1	RETAINER	
	5	3	**2D-6533**	1	SEAL-O-RING	
	6	3	**2K-9295**	1	BEARING AS-TAPERED ROLLER	
	7	3	**2M-3827**	2	RING-RETAINING	
	8	3	**3B-4124**	1	CUP-BEARING (TAPERED ROLLER)	
	9	3	**3J-0634**	2	SEAL-O-RING	
	10	1	**3K-7161**	3	NUT-FLARED (3/8-24-THD)	
	11	1	**5F-7054**	1	SEAL-O-RING	
	12	3	**5H-8624**	1	SEAL-O-RING	
	13	1	**5K-4069**	1	RING-RETAINING	
	14	2	**5K-9243**	1	ELBOW-FLARED	
	15	2	**5M-7142**	1	SEAL-O-RING	
	16	3	**155-6647**	1	CUP-BEARING	
	17	3	**155-6648**	1	CONE-BEARING	
	18	1	**5P-4484**	1	PLUG-MAGNETIC (DIFFERENTIAL)	
	19	3	**5P-9806**	2	SEAL-O-RING	
	20	2,3	**6F-5559**	5	SEAL-O-RING	
	21	1	**6F-6672**	2	SEAL-O-RING	
	22	2	**6G-9333**	1	CAP-FILLER	
	23	2	**6L-3616**	1	CONNECTOR	
	24	3	**6P-7985**	2	RING-SEAL	
	25	2	**6T-8527**	2	SLEEVE	
	26	3	**6V-0328**	1	CONE-BEARING (TAPERED ROLLER)	
	27	3	**7F-2122**	1	SEAL-O-RING	
	28	3	**7M-1419**	3	RACE-BEARING OUTER	
	29	1	**7N-4333**	1	PLUG-ORIFICE	
	30	3	**8B-7216**	2	SEAL-O-RING	
	31	3	**8F-5900**	1	SEAL-O-RING	
	32	3	**8M-5255**	2	SEAL-O-RING	
	34	3	**9H-5322**	2	RACE-ROLLER BEARING	
	35	1	**9S-7581**	3	CONNECTOR	
	36	3	**9W-7925**	3	BEARING AS-TAPERED ROLLER	
	37	3	**9W-7926**	3	CUP-BEARING	
	38	2	**9X-4605**	1	SEAL-LIP TYPE	
	39	1	**066-5816**	1	RING-RETAINING	
	40	2	**222-5824**	1	SEAL-LIP TYPE	
	41	1	**148-9313**	3	TUBE	
	42	3	**148-9325**	1	SHAFT	
	43	2	**148-9358**	1	COVER	
I	44	1	**148-9393**	2	HOSE AS	
	45	2	**148-9395**	1	TUBE AS	
	46	2	**148-9396**	4	TUBE	
	47	3	**148-9398**	1	YOKE AS	
	48	3	**148-9399**	1	PLATE	
	49	3	**148-9404**	1	CAGE AS	
		3	**2D-6642**	3	BALL	
	50	3	**148-9407**	1	SHIM PACK (INCLUDES 17-SHIMS)	
	51	3	**148-9408**	1	SHIM PACK (INCLUDES 17-SHIMS)	
	52	3	**148-9409**	1	SHIM PACK (INCLUDES 17-SHIMS)	
	53	3	**148-9412**	1	RETAINER AS	
		3	**6Y-0869**	1	PLUG	
		3	**148-9359**	1	PLUG	
	54	3	**148-9414**	1	CAGE AS	

141-6890 GEAR GP-OUTPUT TRANSFER *(contd.)* i01933252

NOTE	REF NO	GRAPHIC REF	PART NUMBER	QTY	PART NAME 1 2 3 4 5 6 (PRODUCT LEVEL)	SEE PAGE
		3	**148-9359**	2	PLUG	
	55	3	**148-9417**	1	YOKE	
	56	3	**148-9420**	1	RETAINER	
	57	3	**148-9423**	1	CAGE	
	58	1,3	**148-9428**	1	SHAFT	
	59	1,3	**148-9429**	1	SHAFT	
	60	3	**148-9430**	1	SPACER (M121X135X5.25-MM THK)	
	61	3	**148-9433**	1	GEAR-SPUR (52-TEETH)	
	62	3	**148-9434**	1	GEAR-SPUR (78-TEETH)	
	63	3	**148-9436**	1	GEAR-SPUR (72-TEETH)	
	64	3	**148-9437**	1	GEAR-SPUR (55-TEETH)	
Y	65	3	**148-9450**	1	PLANETARY GP-TRANSFER GEAR (OUTPUT)	426
	66	3	**168-2075**	3	BEARING	
	67	3	**168-2076**	2	BEARING	
	68	1	**170-0504**	3	ELBOW	
	69	2	**171-2183**	1	SEAL-V-RING	
	70	2	**173-6998**	2	SETSCREW	
	71	3	**173-7715**	1	SEAL-LIP TYPE	
Y	72	1	**201-5676**	1	VALVE GP-SOLENOID & RELIEF	476
	73	3	**201-6665**	1	CAGE AS	
		3	**9G-9506**	1	PLUG	
	74	3	**201-6666**	1	CASE	
	75	2	**203-0063**	1	TUBE AS-FILLER	
	76	2	**203-0225**	1	TUBE AS	
	77	3	**204-0741**	1	SHIM PACK (INCLUDES 17-SHIMS)	
	78	1	**204-0743**	1	SHAFT AS	
		1	**9G-9506**	1	PLUG	
	79	3	**205-0941**	1	GEAR-SPUR (56-TEETH)	
	80	3	**205-0942**	1	RETAINER AS	
		3	**8F-6864**	2	PIN	
	81	2	**208-1729**	1	BEARING AS	
	82	3	**208-9265**	1	CAGE AS	
		3	**4B-9880**	2	BALL	
	83	2	**208-9267**	1	SPACER (80.2X87X11.5-MM THK)	
	84	3	**210-8467**	1	YOKE AS	
	85	2	**5S-7878**	1	RING-RETAINING (116.89-MM ID)	
	86	2	**212-2017**	1	GAUGE-OIL LEVEL	
	87	1	**212-3298**	1	TUBE AS	
	88	3	**125-5894**	1	SPACER (M20X50X12.7-MM THK)	
	89	3	**171-3010**	1	WASHER-HARD (M17.5X32X7-MM THK)	
	90	2	**1H-9696**	1	SEAL-O-RING	
	91	2	**1J-9671**	1	SEAL-O-RING	
	92	1	**1P-4579**	2	FLANGE-HALF	
	93	1	**3J-1907**	1	SEAL-O-RING	
	94	1,2	**3K-0360**	6	SEAL-O-RING	
	95	2	**3K-8460**	1	PLUG	
	96	1	**4B-5432**	1	SEAL-LIP TYPE	
	97	1	**4J-0524**	2	SEAL-O-RING	
	98	2	**6V-1322**	1	BOLT (1/4-20X0.375-IN)	
	99	1	**6V-8397**	4	SEAL-O-RING	
	100	2	**6V-8398**	1	SEAL-O-RING	
	101	2	**6V-8625**	1	ELBOW	
	102	1	**6V-8724**	1	ELBOW	
	103	1	**7M-8485**	1	SEAL-O-RING	
M	104	1	**7X-2555**	1	BOLT (M16X2X80-MM)	
M	105	3	**7X-2558**	1	BOLT (M16X2X150-MM)	
M	106	1,2	**7X-2621**	11	BOLT (M10X1.5X12-MM)	
	107	3	**8J-1580**	1	RING-RETAINING	
	108	1,2,3	**8T-4121**	117	WASHER-HARD (11X21X2.5-MM THK)	

141-6890 GEAR GP-OUTPUT TRANSFER *(contd.)* i01933252

NOTE	REF NO	GRAPHIC REF	PART NUMBER	QTY	PART NAME 1 2 3 4 5 6 (PRODUCT LEVEL)	SEE PAGE
M	109	2	**8T-4137**	1	BOLT (M10X1.5X20-MM)	
M	110	2	**8T-4139**	2	BOLT (M12X1.75X30-MM)	
M	111	1,3	**8T-4174**	1	BOLT (M16X2X120-MM)	
M	112	1	**8T-4178**	3	BOLT (M10X1.5X90-MM)	
M	113	1	**8T-4182**	9	BOLT (M10X1.5X45-MM)	
M	114	1	**096-9986**	4	BOLT (M12X1.75X55-MM)	
M	115	1,2,3	**8T-4195**	91	BOLT (M10X1.5X30-MM)	
M	116	2	**8T-4196**	13	BOLT (M10X1.5X35-MM)	
	117	2	**8T-4205**	1	WASHER-HARD (7.2X14.5X2-MM THK)	
	118	1,2	**8T-4223**	6	WASHER-HARD (13.5X25.5X3-MM THK)	
M	119	2	**8T-9515**	2	BOLT-SOCKET HEAD (M10X1.5X40-MM)	
	120	1	**9S-4185**	2	PLUG	

I-REFER TO HYDRAULIC INFORMATION SYSTEM
M-METRIC PART
Y-SEPARATE ILLUSTRATION

141-6890 GEAR GP-OUTPUT TRANSFER *(contd.)* i01933252

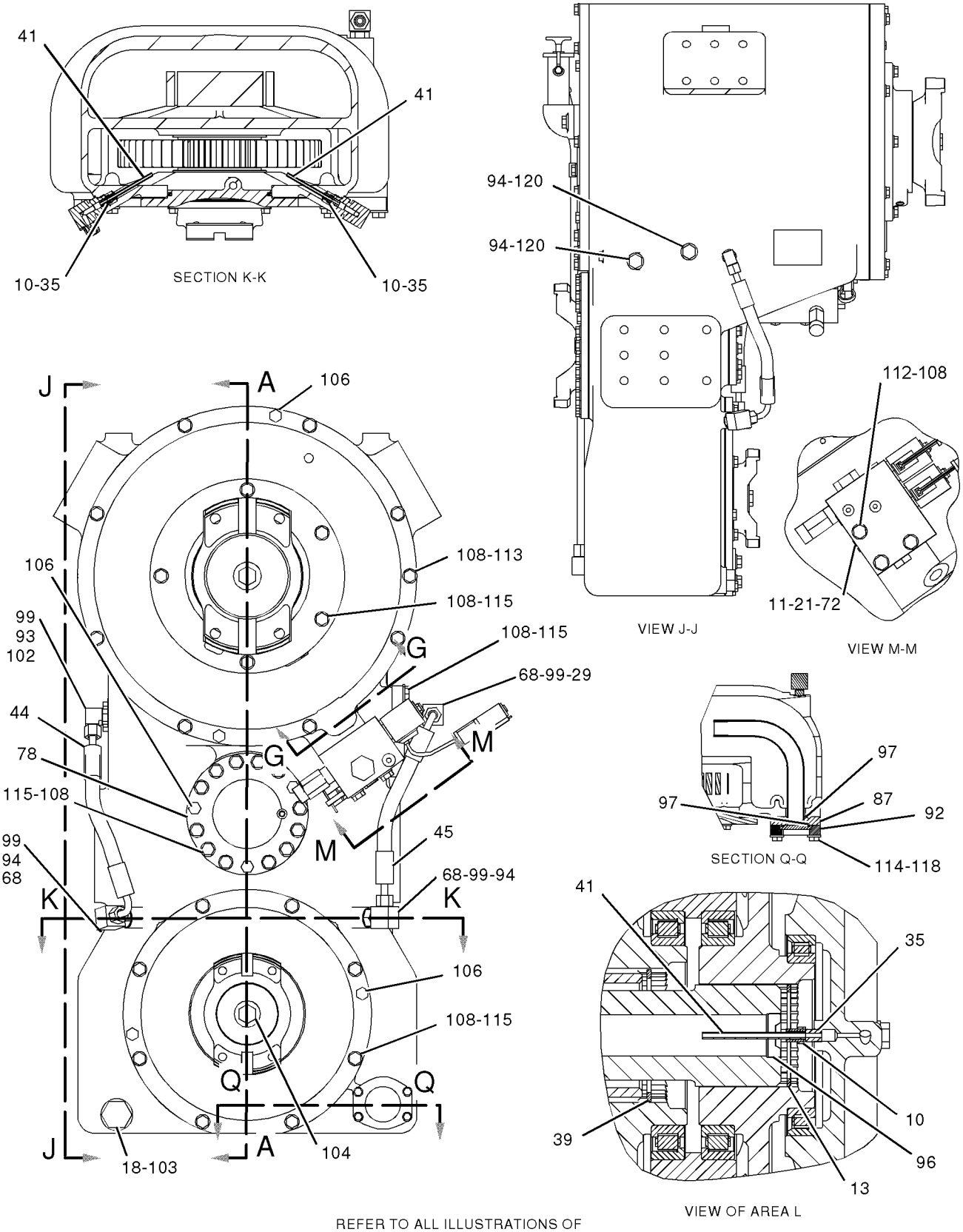

REFER TO ALL ILLUSTRATIONS OF
THIS GROUP FOR AUXILIARY VIEWS

GRAPHIC #1 g01021359

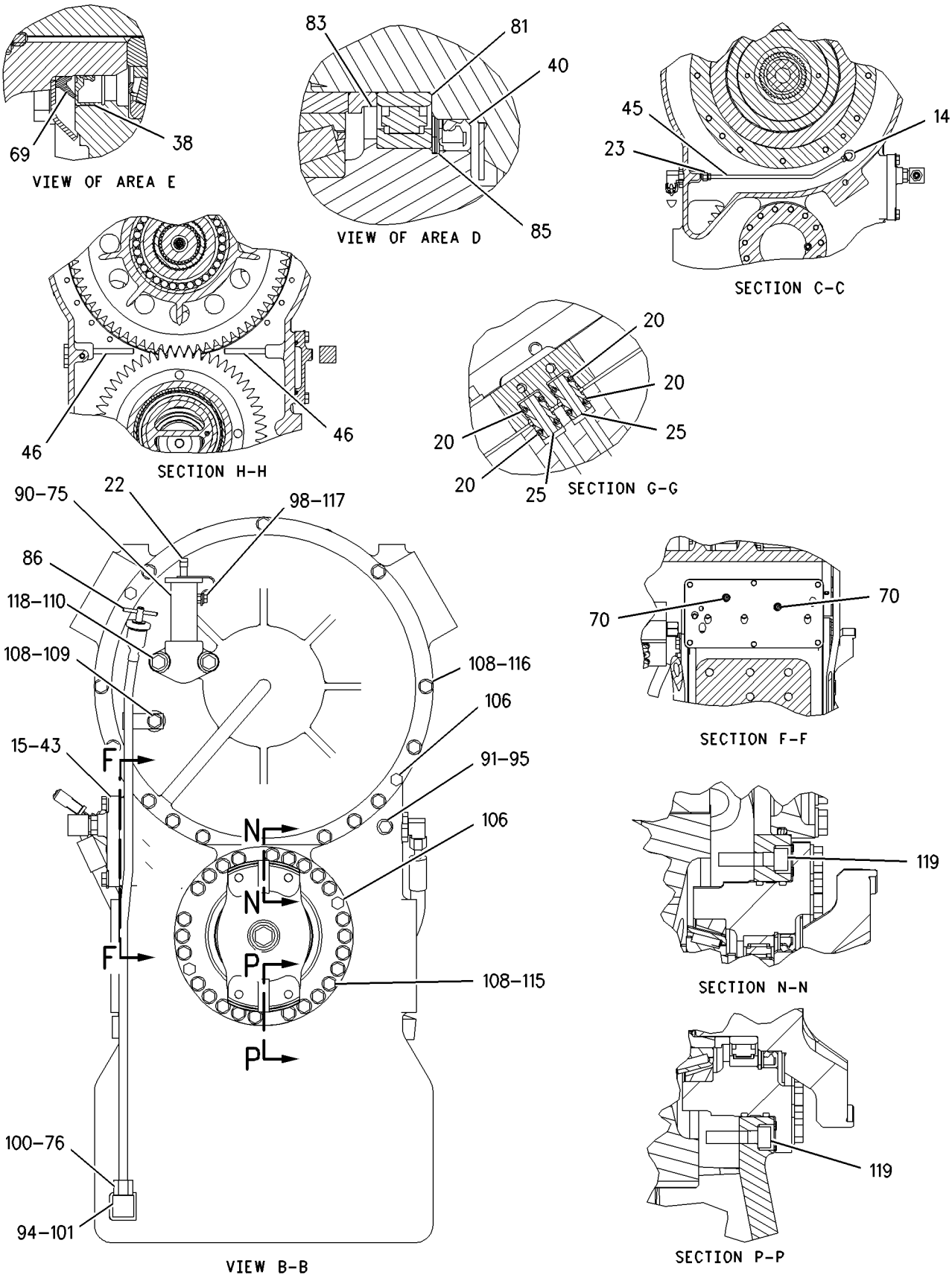

GRAPHIC #2 g00932522

141-6890 GEAR GP-OUTPUT TRANSFER *(contd.)* i01933252

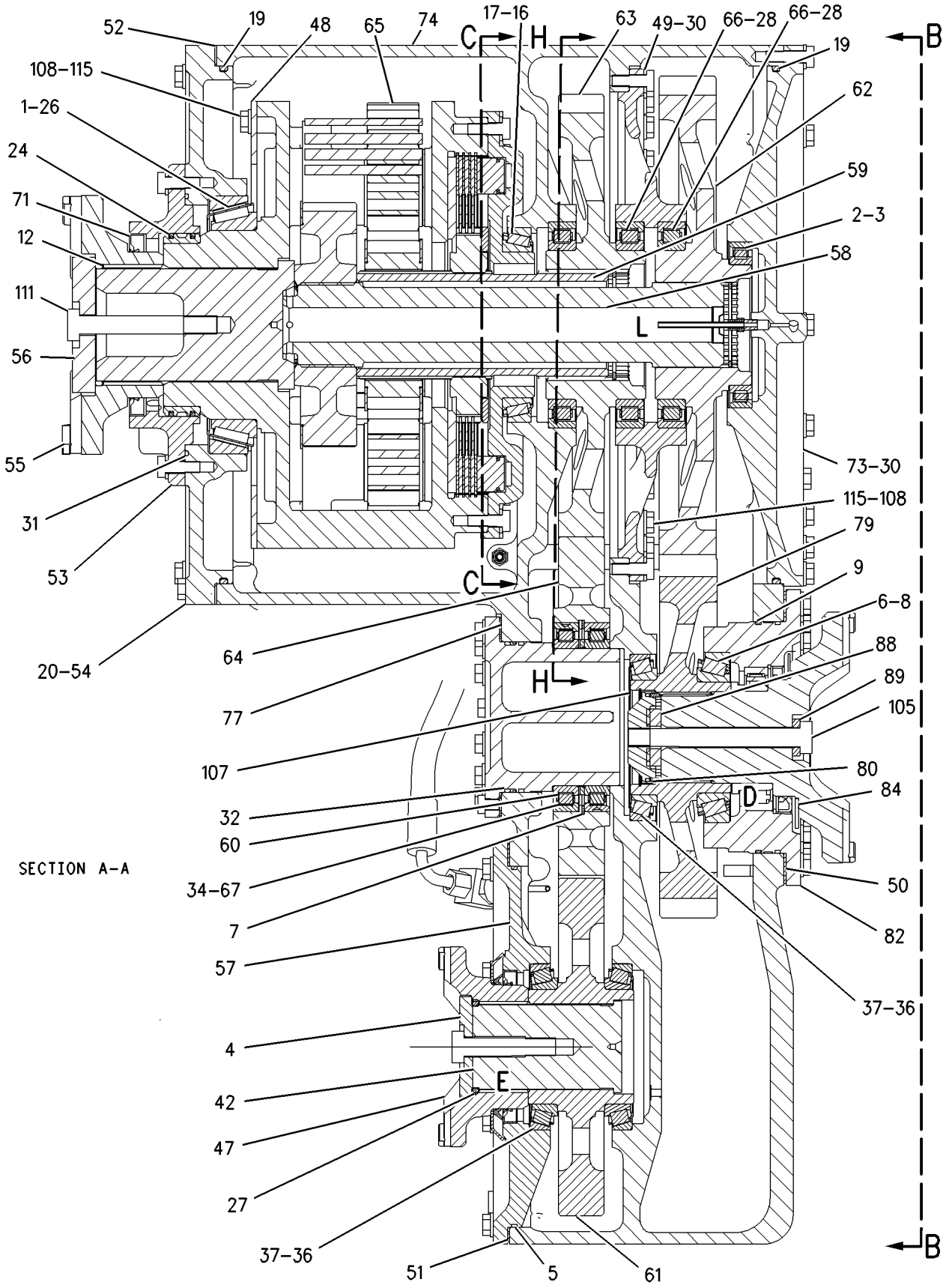

GRAPHIC #3 **<END>** g00873104

POWER TRAIN

141-6890 GEAR GP-OUTPUT TRANSFER

S/N: BBJ763-953

PART OF 152-6919 AXLE & FRAME AR

SMCS-3159 **i01962612**

NOTE	REF NO	GRAPHIC REF	PART NUMBER	QTY	PART NAME 1 2 3 4 5 6 (PRODUCT LEVEL)	SEE PAGE
	1	3	**6V-0327**	1	CUP-BEARING (TAPERED ROLLER)	
	2	3	**128-3935**	1	BEARING AS-ROLLER	
	3	3	**1M-5514**	1	RACE-ROLLER BEARING	
	4	3	**1T-1006**	1	RETAINER	
	5	3	**2D-6533**	1	SEAL-O-RING	
	6	3	**2K-9295**	1	BEARING AS-TAPERED ROLLER	
	7	3	**2M-3827**	2	RING-RETAINING	
	8	3	**3B-4124**	1	CUP-BEARING (TAPERED ROLLER)	
	9	3	**3J-0634**	2	SEAL-O-RING	
	10	1	**3K-7161**	3	NUT-FLARED (3/8-24-THD)	
	11	1	**5F-7054**	1	SEAL-O-RING	
	12	3	**5H-8624**	1	SEAL-O-RING	
	13	1	**5K-4069**	1	RING-RETAINING	
	14	2	**5K-9243**	1	ELBOW-FLARED	
	15	2	**5M-7142**	1	SEAL-O-RING	
	16	3	**155-6647**	1	CUP-BEARING	
	17	3	**155-6648**	1	CONE-BEARING	
	18	1	**5P-4484**	1	PLUG-MAGNETIC (DIFFERENTIAL)	
	19	3	**5P-9806**	2	SEAL-O-RING	
	20	2,3	**6F-5559**	5	SEAL-O-RING	
	21	1	**6F-6672**	2	SEAL-O-RING	
	22	2	**6G-9333**	1	CAP-FILLER	
	23	2	**6L-3616**	1	CONNECTOR	
	24	3	**6P-7985**	2	RING-SEAL	
	25	2	**6T-8527**	2	SLEEVE	
	26	3	**6V-0328**	1	CONE-BEARING (TAPERED ROLLER)	
	27	3	**7F-2122**	1	SEAL-O-RING	
	28	3	**7M-1419**	3	RACE-BEARING OUTER	
	29	1	**7N-4333**	1	PLUG-ORIFICE	
	30	3	**8B-7216**	2	SEAL-O-RING	
	31	3	**8F-5900**	1	SEAL-O-RING	
	32	3	**8M-5255**	2	SEAL-O-RING	
	34	3	**9H-5322**	2	RACE-ROLLER BEARING	
	35	1	**9S-7581**	3	CONNECTOR	
	36	3	**9W-7925**	3	BEARING AS-TAPERED ROLLER	
	37	3	**9W-7926**	3	CUP-BEARING	
	38	2	**9X-4605**	1	SEAL-LIP TYPE	
	39	1	**066-5816**	1	RING-RETAINING	
	40	1	**148-9313**	3	TUBE	
	41	3	**148-9325**	1	SHAFT	
	42	2	**148-9358**	1	COVER	
I	43	1	**148-9393**	2	HOSE AS	
	44	2	**148-9395**	1	TUBE AS	
	45	2	**148-9396**	4	TUBE	
	46	3	**148-9398**	1	YOKE AS	
	47	3	**148-9399**	1	PLATE	
	48	3	**148-9404**	1	CAGE AS	
		3	**2D-6642**	3	BALL	
B	49	3	**148-9407**	1	SHIM PACK (INCLUDES 17-SHIMS)	
B	50	3	**148-9408**	1	SHIM PACK (INCLUDES 17-SHIMS)	
B	51	3	**148-9409**	1	SHIM PACK (INCLUDES 17-SHIMS)	
	52	3	**148-9412**	1	RETAINER AS	
		3	**6Y-0869**	1	PLUG	
		3	**148-9359**	1	PLUG	
	53	3	**148-9414**	1	CAGE AS	
		3	**148-9359**	2	PLUG	

141-6890 GEAR GP-OUTPUT TRANSFER *(contd.)* i01962612

NOTE	REF NO	GRAPHIC REF	PART NUMBER	QTY	PART NAME 1 2 3 4 5 6 (PRODUCT LEVEL)	SEE PAGE
	54	3	**148-9417**	1	YOKE	
	55	3	**148-9420**	1	RETAINER	
	56	3	**235-0553**	1	CAGE	
	57	1	**148-9428**	1	SHAFT	
	58	1	**148-9429**	1	SHAFT	
	59	3	**148-9430**	1	SPACER (M121X135X5.25-MM THK)	
	60	3	**148-9433**	1	GEAR-SPUR (52-TEETH)	
	61	3	**148-9434**	1	GEAR-SPUR (78-TEETH)	
	62	3	**148-9436**	1	GEAR-SPUR (72-TEETH)	
	63	3	**148-9437**	1	GEAR-SPUR (55-TEETH)	
Y	64	3	**148-9450**	1	PLANETARY GP-TRANSFER GEAR (OUTPUT)	426
	65	3	**168-2075**	3	BEARING	
	66	3	**168-2076**	2	BEARING	
	67	1	**170-0504**	3	ELBOW	
	68	2	**171-2183**	1	SEAL-V-RING	
	69	2	**173-6998**	2	SETSCREW	
	70	3	**173-7715**	1	SEAL-LIP TYPE	
Y	71	1	**201-5676**	1	VALVE GP-SOLENOID & RELIEF	476
	72	3	**201-6665**	1	CAGE AS	
		3	**9G-9506**	1	PLUG	
	73	3	**201-6666**	1	CASE	
	74	2	**203-0063**	1	TUBE AS-FILLER	
	75	2	**203-0225**	1	TUBE AS	
B	76	3	**204-0741**	1	SHIM PACK (INCLUDES 17-SHIMS)	
	77	1	**204-0743**	1	SHAFT AS	
		1	**9G-9506**	1	PLUG	
	78	2	**208-1729**	1	BEARING AS	
	79	3	**208-9265**	1	CAGE AS	
		3	**4B-9880**	2	BALL	
	80	2	**208-9267**	1	SPACER (80.2X87X11.5-MM THK)	
	81	2	**212-2017**	1	GAUGE-OIL LEVEL	
	82	1	**212-3298**	1	TUBE AS	
	83	2	**222-5824**	1	SEAL-LIP TYPE	
	84	3	**227-9318**	1	RETAINER	
	85	3	**227-9319**	1	RETAINER	
	86	3	**227-9321**	1	YOKE AS	
	87	3	**232-2324**	1	GEAR-SPUR (56-TEETH)	
M	88	1	**096-9986**	4	BOLT (M12X1.75X55-MM)	
	89	3	**171-3010**	1	WASHER-HARD (M17.5X32X7-MM THK)	
	90	2	**1H-9696**	1	SEAL-O-RING	
	91	2	**1J-9671**	1	SEAL-O-RING	
	92	1	**1P-4579**	2	FLANGE-HALF	
	93	1	**3J-1907**	1	SEAL-O-RING	
	94	1,2	**3K-0360**	6	SEAL-O-RING	
	95	2	**3K-8460**	1	PLUG	
	96	1	**4B-5432**	1	SEAL-LIP TYPE	
	97	1	**4J-0524**	2	SEAL-O-RING	
	98	2	**5S-7878**	1	RING-RETAINING (116.89-MM ID)	
	99	2	**6V-1322**	1	BOLT (1/4-20X0.375-IN)	
	100	1	**6V-8397**	4	SEAL-O-RING	
	101	2	**6V-8398**	1	SEAL-O-RING	
	102	2	**6V-8625**	1	ELBOW	
	103	1	**6V-8724**	1	ELBOW	
	104	1	**7M-8485**	1	SEAL-O-RING	
M	105	1	**7X-2555**	1	BOLT (M16X2X80-MM)	
M	106	3	**7X-2557**	1	BOLT (M16X2X140-MM)	
M	107	1,2	**7X-2621**	11	BOLT (M10X1.5X12-MM)	
	108	3	**8T-0315**	1	SEAL-O-RING	
	109	1,2,3	**8T-4121**	117	WASHER-HARD (11X21X2.5-MM THK)	

141-6890 GEAR GP-OUTPUT TRANSFER *(contd.)* i01962612

NOTE	REF NO	GRAPHIC REF	PART NUMBER	QTY	PART NAME 1 2 3 4 5 6 (PRODUCT LEVEL)	SEE PAGE
M	110	2	**8T-4137**	1	BOLT (M10X1.5X20-MM)	
M	111	2	**8T-4139**	2	BOLT (M12X1.75X30-MM)	
M	112	3	**8T-4174**	1	BOLT (M16X2X120-MM)	
M	113	1	**8T-4178**	3	BOLT (M10X1.5X90-MM)	
M	114	1	**8T-4182**	9	BOLT (M10X1.5X45-MM)	
M	115	1,2,3	**8T-4195**	91	BOLT (M10X1.5X30-MM)	
M	116	2	**8T-4196**	13	BOLT (M10X1.5X35-MM)	
	117	2	**8T-4205**	1	WASHER-HARD (7.2X14.5X2-MM THK)	
	118	1,2	**8T-4223**	6	WASHER-HARD (13.5X25.5X3-MM THK)	
M	119	2	**8T-9515**	2	BOLT-SOCKET HEAD (M10X1.5X40-MM)	
	120	1	**9S-4185**	2	PLUG	

B-USE AS REQUIRED
I-REFER TO HYDRAULIC INFORMATION SYSTEM
M-METRIC PART
Y-SEPARATE ILLUSTRATION

141-6890 GEAR GP-OUTPUT TRANSFER *(contd.)* i01962612

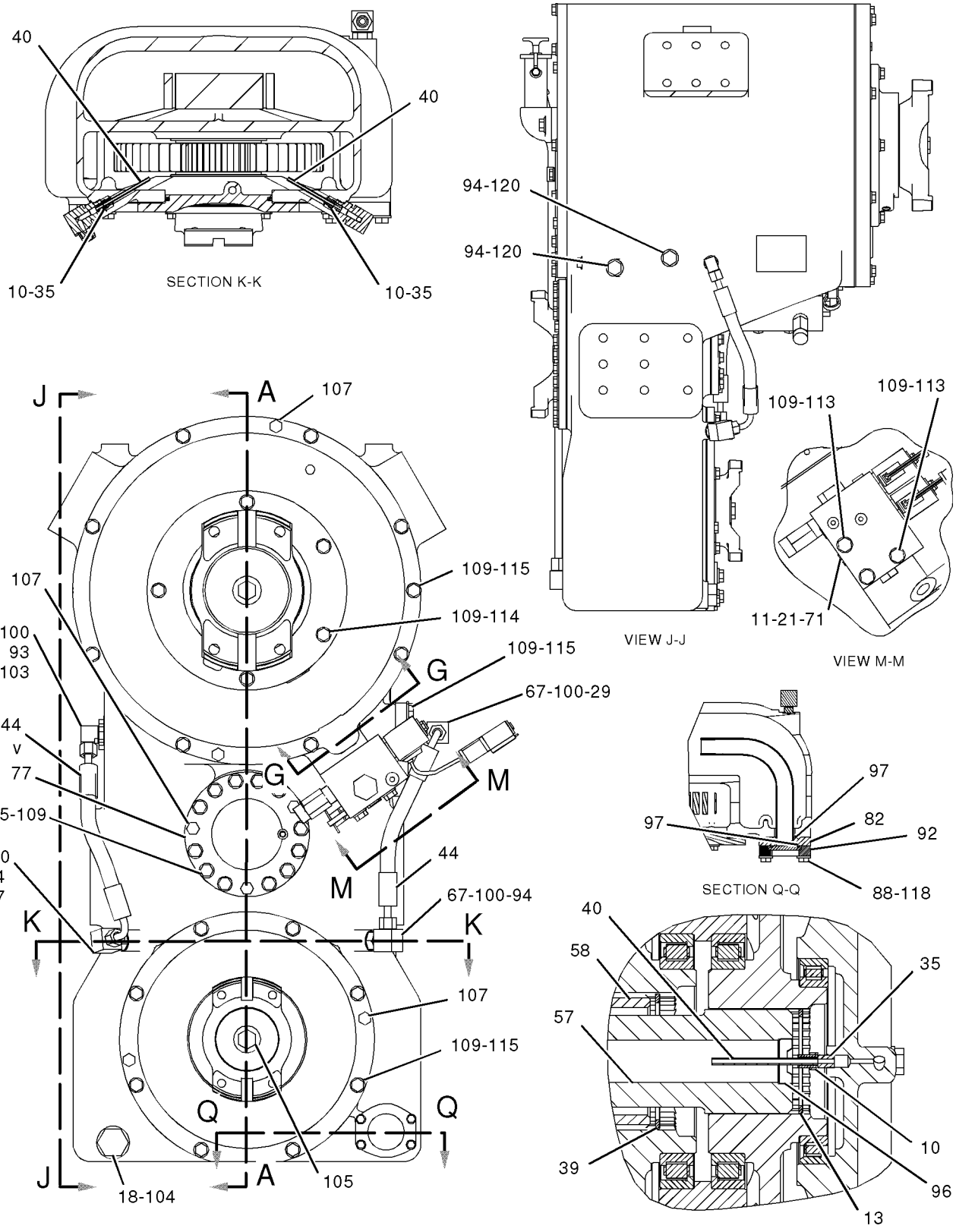

GRAPHIC #1 g01020872

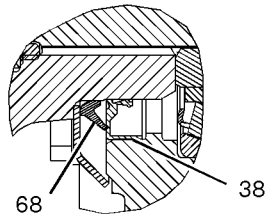

VIEW OF AREA E

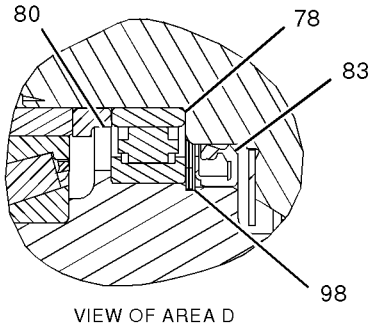

VIEW OF AREA D

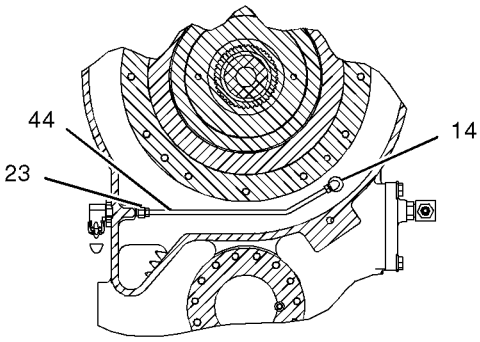

SECTION C-C

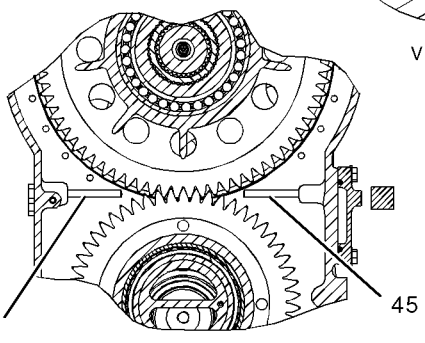

SECTION H-H

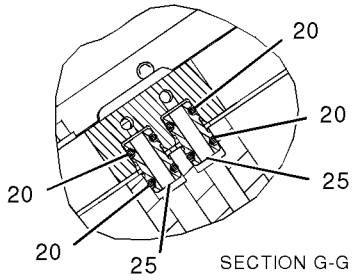

SECTION G-G

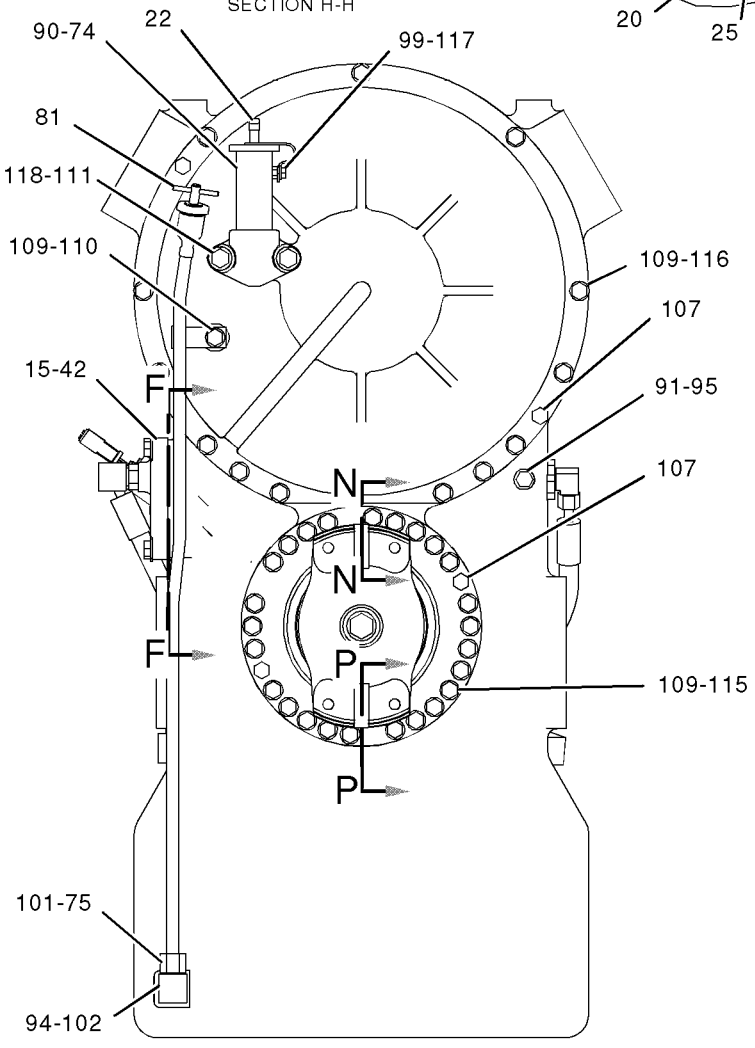

VIEW B-B

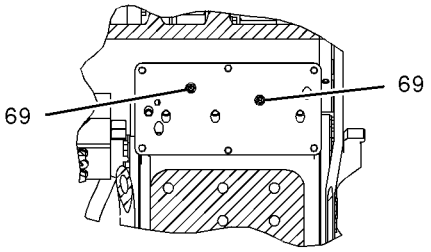

SECTION F-F

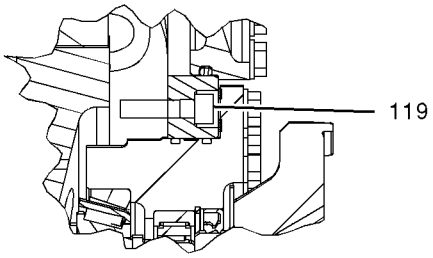

SECTION N-N

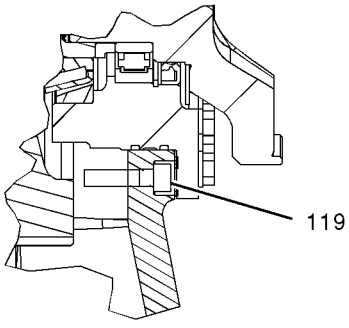

SECTION P-P

GRAPHIC #2

g01020866

141-6890 GEAR GP-OUTPUT TRANSFER *(contd.)* i01962612

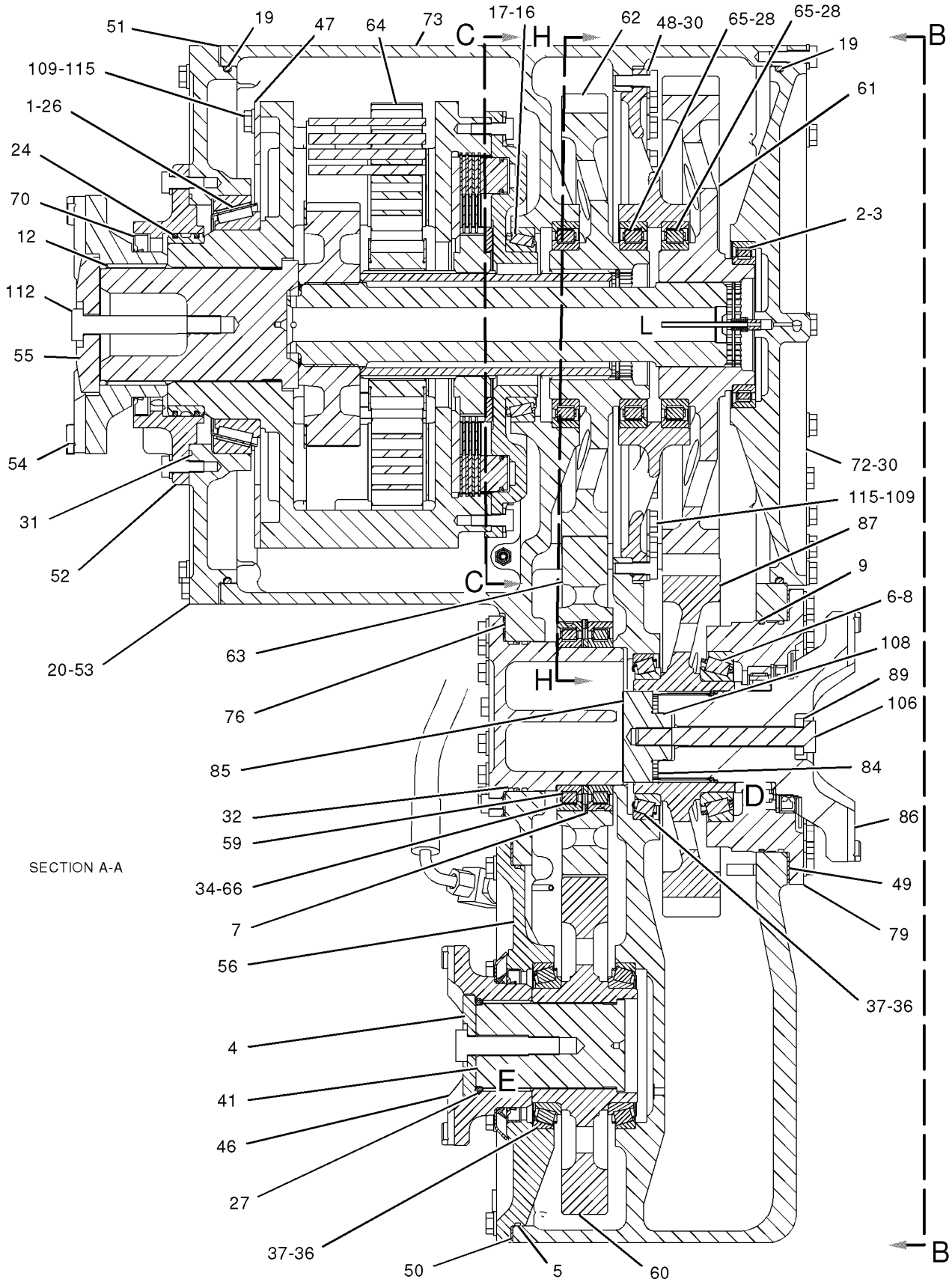

GRAPHIC #3

<END>

g01020750

POWER TRAIN

141-6890 GEAR GP-OUTPUT TRANSFER

S/N: BBJ954-1130

PART OF 152-6919 AXLE & FRAME AR

SMCS-3159 **i01962614**

NOTE	REF NO	GRAPHIC REF	PART NUMBER	QTY	PART NAME 1 2 3 4 5 6 (PRODUCT LEVEL)	SEE PAGE
	1	1	**6V-0327**	1	CUP-BEARING (TAPERED ROLLER)	
	2	1	**128-3935**	1	BEARING AS-ROLLER	
	3	1	**1M-5514**	1	RACE-ROLLER BEARING	
	4	1	**1T-1006**	1	RETAINER	
	5	1	**2D-6533**	1	SEAL-O-RING	
	6	1	**2K-9295**	1	BEARING AS-TAPERED ROLLER	
	7	1	**2M-3827**	2	RING-RETAINING	
	8	1	**3B-4124**	1	CUP-BEARING (TAPERED ROLLER)	
	9	1	**3J-0634**	2	SEAL-O-RING	
	10	3	**3K-7161**	3	NUT-FLARED (3/8-24-THD)	
	11	3	**5F-7054**	1	SEAL-O-RING	
	12	1	**5H-8624**	1	SEAL-O-RING	
	13	3	**5K-4069**	1	RING-RETAINING	
	14	2	**5K-9243**	1	ELBOW-FLARED	
	15	2	**5M-7142**	1	SEAL-O-RING	
	16	1	**155-6647**	1	CUP-BEARING	
	17	1	**155-6648**	1	CONE-BEARING	
	18	3	**5P-4484**	1	PLUG-MAGNETIC (DIFFERENTIAL)	
	19	1	**5P-9806**	2	SEAL-O-RING	
	20	1,2	**6F-5559**	5	SEAL-O-RING	
	21	3	**6F-6672**	2	SEAL-O-RING	
	22	2	**6L-3616**	1	CONNECTOR	
	23	1	**6P-7985**	2	RING-SEAL	
	24	2	**6T-8527**	2	SLEEVE	
	25	1	**6V-0328**	1	CONE-BEARING (TAPERED ROLLER)	
	26	1	**7F-2122**	1	SEAL-O-RING	
	27	1	**7M-1419**	3	RACE-BEARING OUTER	
	28	3	**7N-4333**	1	PLUG-ORIFICE	
	29	1	**8B-7216**	2	SEAL-O-RING	
	30	1	**8F-5900**	1	SEAL-O-RING	
	31	1	**8M-5255**	2	SEAL-O-RING	
	32	3	**9S-4185**	2	PLUG	
	33	1	**9H-5322**	2	RACE-ROLLER BEARING	
	34	3	**9S-7581**	3	CONNECTOR	
	35	1	**9W-7925**	3	BEARING AS-TAPERED ROLLER	
	36	1	**9W-7926**	3	CUP-BEARING	
	37	2	**9X-4605**	1	SEAL-LIP TYPE	
	38	3	**066-5816**	1	RING-RETAINING	
	39	3	**148-9313**	3	TUBE	
	40	1	**148-9325**	1	SHAFT	
	41	2	**148-9358**	1	COVER	
I	42	3	**148-9393**	2	HOSE AS	
	43	2	**148-9395**	1	TUBE AS	
	44	2	**148-9396**	4	TUBE	
	45	1	**148-9398**	1	YOKE AS	
	46	1	**148-9399**	1	PLATE	
	47	1	**148-9404**	1	CAGE AS	
		1	**2D-6642**	3	BALL	
B	48	1	**148-9407**	1	SHIM PACK (INCLUDES 17-SHIMS)	
B	49	1	**148-9408**	1	SHIM PACK (INCLUDES 17-SHIMS)	
B	50	1	**148-9409**	1	SHIM PACK (INCLUDES 17-SHIMS)	
	51	1	**148-9412**	1	RETAINER AS	
		1	**6Y-0869**	1	PLUG	
		1	**148-9359**	1	PLUG	
	52	1	**148-9414**	1	CAGE AS	
		1	**148-9359**	2	PLUG	

141-6890 GEAR GP-OUTPUT TRANSFER *(contd.)* i01962614

NOTE	REF NO	GRAPHIC REF	PART NUMBER	QTY	PART NAME 1 2 3 4 5 6 (PRODUCT LEVEL)	SEE PAGE
	53	1	**148-9417**	1	YOKE	
	54	1	**148-9420**	1	RETAINER	
	55	3	**148-9428**	1	SHAFT	
	56	3	**148-9429**	1	SHAFT	
	57	1	**148-9430**	1	SPACER (M121X135X5.25-MM THK)	
	58	1	**148-9433**	1	GEAR-SPUR (52-TEETH)	
	59	1	**148-9434**	1	GEAR-SPUR (78-TEETH)	
	60	1	**148-9436**	1	GEAR-SPUR (72-TEETH)	
	61	1	**148-9437**	1	GEAR-SPUR (55-TEETH)	
Y	62	1	**148-9450**	1	PLANETARY GP-TRANSFER GEAR (OUTPUT)	426
	63	1	**168-2075**	3	BEARING	
	64	1	**168-2076**	2	BEARING	
	65	3	**170-0504**	3	ELBOW	
	66	2	**171-2183**	1	SEAL-V-RING	
	67	2	**173-6998**	2	SETSCREW	
	68	1	**173-7715**	1	SEAL-LIP TYPE	
Y	69	3	**201-5676**	1	VALVE GP-SOLENOID & RELIEF	476
	70	1	**201-6665**	1	CAGE AS	
		1	**9G-9506**	1	PLUG	
	71	1	**201-6666**	1	CASE	
B	72	1	**204-0741**	1	SHIM PACK (INCLUDES 17-SHIMS)	
	73	3	**204-0743**	1	SHAFT AS	
		3	**9G-9506**	1	PLUG	
	74	2	**208-1729**	1	BEARING AS	
	75	1	**208-9265**	1	CAGE AS	
		1	**4B-9880**	2	BALL	
	76	2	**208-9267**	1	SPACER (80.2X87X11.5-MM THK)	
	77	3	**212-3298**	1	TUBE AS	
	78	2	**222-5824**	1	SEAL-LIP TYPE	
	79	1	**227-9318**	1	RETAINER	
	80	1	**227-9319**	1	RETAINER	
	81	1	**227-9321**	1	YOKE AS	
	82	1	**232-2324**	1	GEAR-SPUR (56-TEETH)	
C	83	1	**235-0553**	1	CAGE	
M	84	3	**096-9986**	4	BOLT (M12X1.75X55-MM)	
	85	1	**171-3010**	1	WASHER-HARD (M17.5X32X7-MM THK)	
	86	2	**1H-9696**	1	SEAL-O-RING	
	87	2	**1J-9671**	1	SEAL-O-RING	
	88	3	**1P-4579**	2	FLANGE-HALF	
C	89	2	**2J-7590**	1	COVER	
	90	3	**3J-1907**	1	SEAL-O-RING	
	91	2,3	**3K-0360**	6	SEAL-O-RING	
	92	2	**3K-8460**	1	PLUG	
	93	3	**4B-5432**	1	SEAL-LIP TYPE	
	94	3	**4J-0524**	2	SEAL-O-RING	
	95	2	**5S-7878**	1	RING-RETAINING (116.89-MM ID)	
C	96	2	**6E-5047**	1	PLUG	
C	97	3	**6V-7970**	1	SEAL-O-RING	
	98	3	**6V-8397**	4	SEAL-O-RING	
	99	3	**6V-8724**	1	ELBOW	
	100	3	**7M-8485**	1	SEAL-O-RING	
M	101	3	**7X-2555**	1	BOLT (M16X2X80-MM)	
M	102	1	**7X-2557**	1	BOLT (M16X2X140-MM)	
M	103	2,3	**7X-2621**	11	BOLT (M10X1.5X12-MM)	
C	104	3	**8C-4424**	1	PLUG	
	105	1	**8T-0315**	1	SEAL-O-RING	
C	106	1,2,3	**8T-4121**	116	WASHER-HARD (11X21X2.5-MM THK)	
M	107	2	**8T-4139**	2	BOLT (M12X1.75X30-MM)	
M	108	1	**8T-4174**	1	BOLT (M16X2X120-MM)	

141-6890 GEAR GP-OUTPUT TRANSFER *(contd.)* i01962614

NOTE	REF NO	GRAPHIC REF	PART NUMBER	QTY	PART NAME 1 2 3 4 5 6 (PRODUCT LEVEL)	SEE PAGE
M	109	3	**8T-4178**	3	BOLT (M10X1.5X90-MM)	
M	110	3	**8T-4182**	9	BOLT (M10X1.5X45-MM)	
M	111	1,2,3	**8T-4195**	91	BOLT (M10X1.5X30-MM)	
M	112	2	**8T-4196**	13	BOLT (M10X1.5X35-MM)	
	113	2,3	**8T-4223**	6	WASHER-HARD (13.5X25.5X3-MM THK)	
M	114	2	**8T-9515**	2	BOLT-SOCKET HEAD (M10X1.5X40-MM)	

B-USE AS REQUIRED
C-CHANGE FROM PREVIOUS TYPE
I-REFER TO HYDRAULIC INFORMATION SYSTEM
M-METRIC PART
Y-SEPARATE ILLUSTRATION

141-6890 GEAR GP-OUTPUT TRANSFER *(contd.)* i01962614

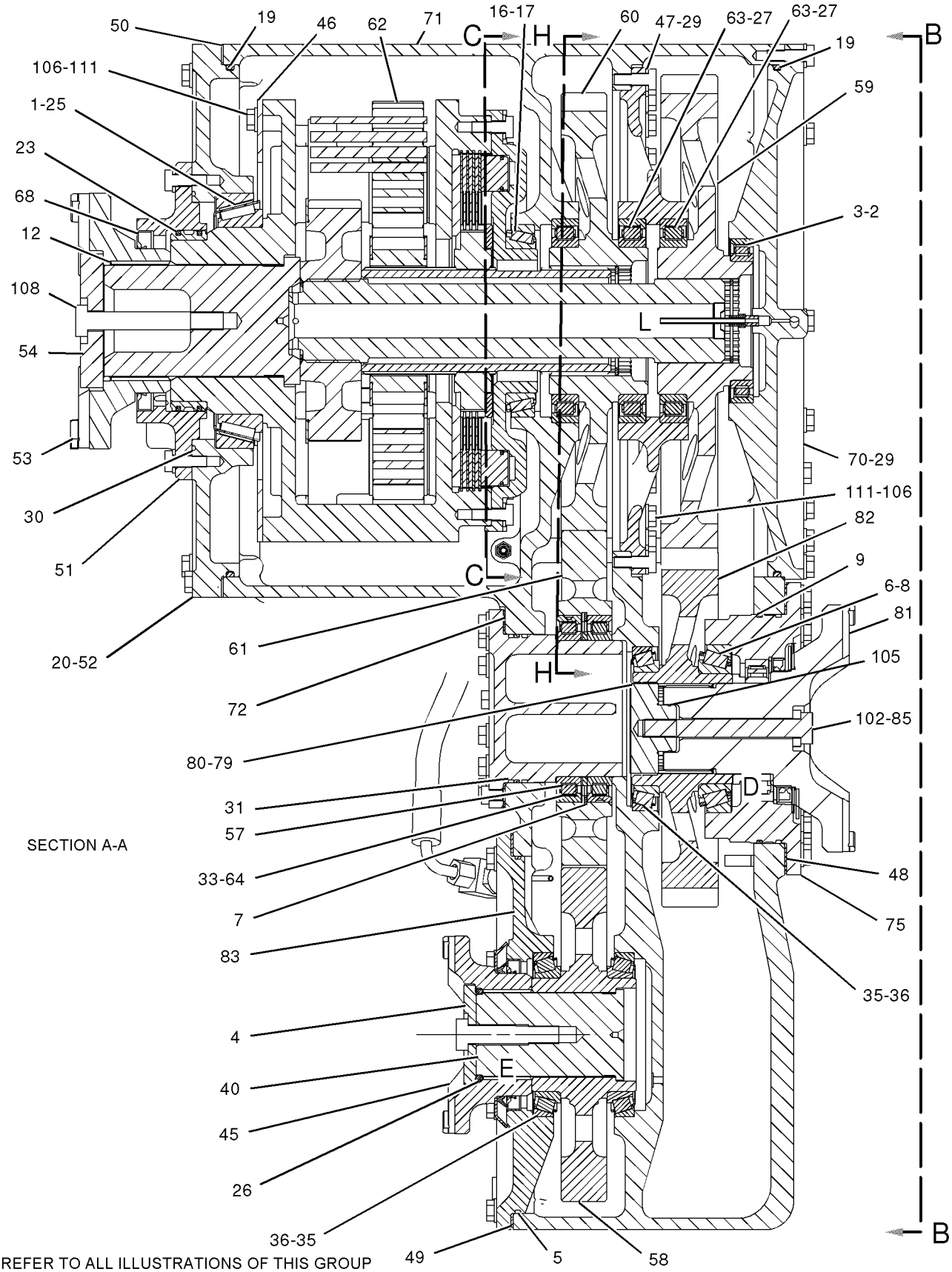

SECTION A-A

REFER TO ALL ILLUSTRATIONS OF THIS GROUP FOR AUXILIARY VIEWS

GRAPHIC #1

g01005773

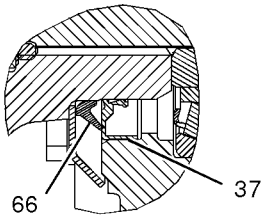

VIEW OF AREA E

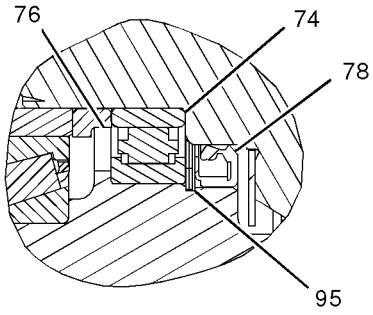

VIEW OF AREA D

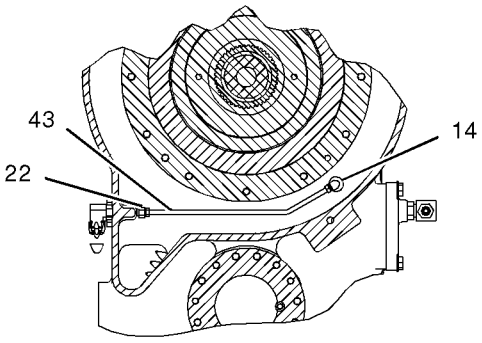

SECTION C-C

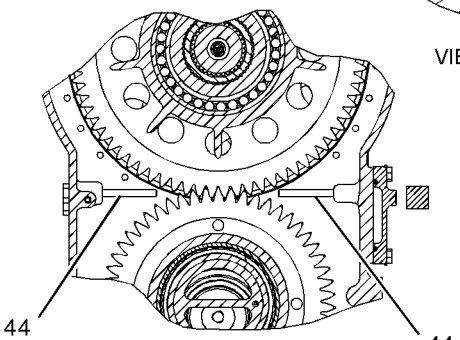

SECTION H-H

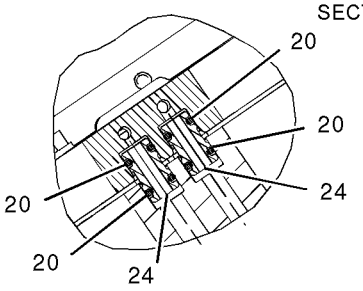

SECTION G-G

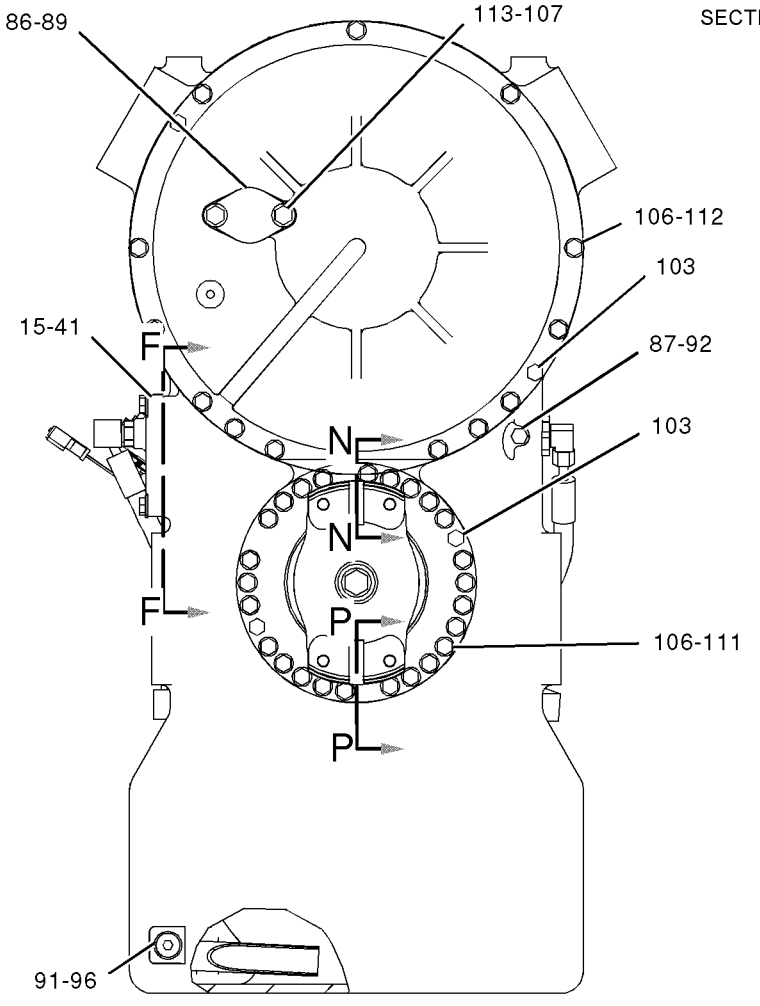

VIEW B-B

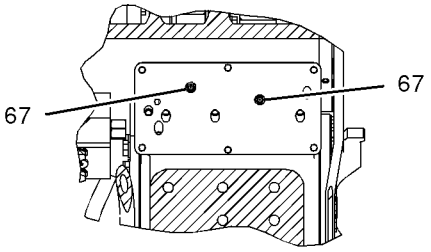

SECTION F-F

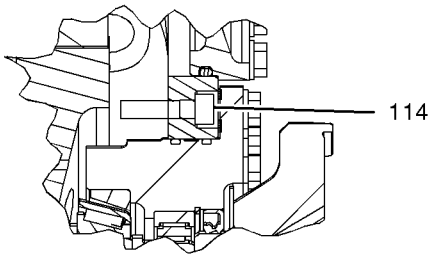

SECTION N-N

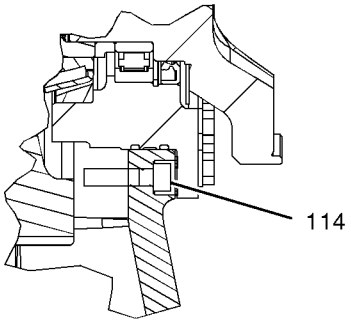

SECTION P-P

GRAPHIC #2 g01005774

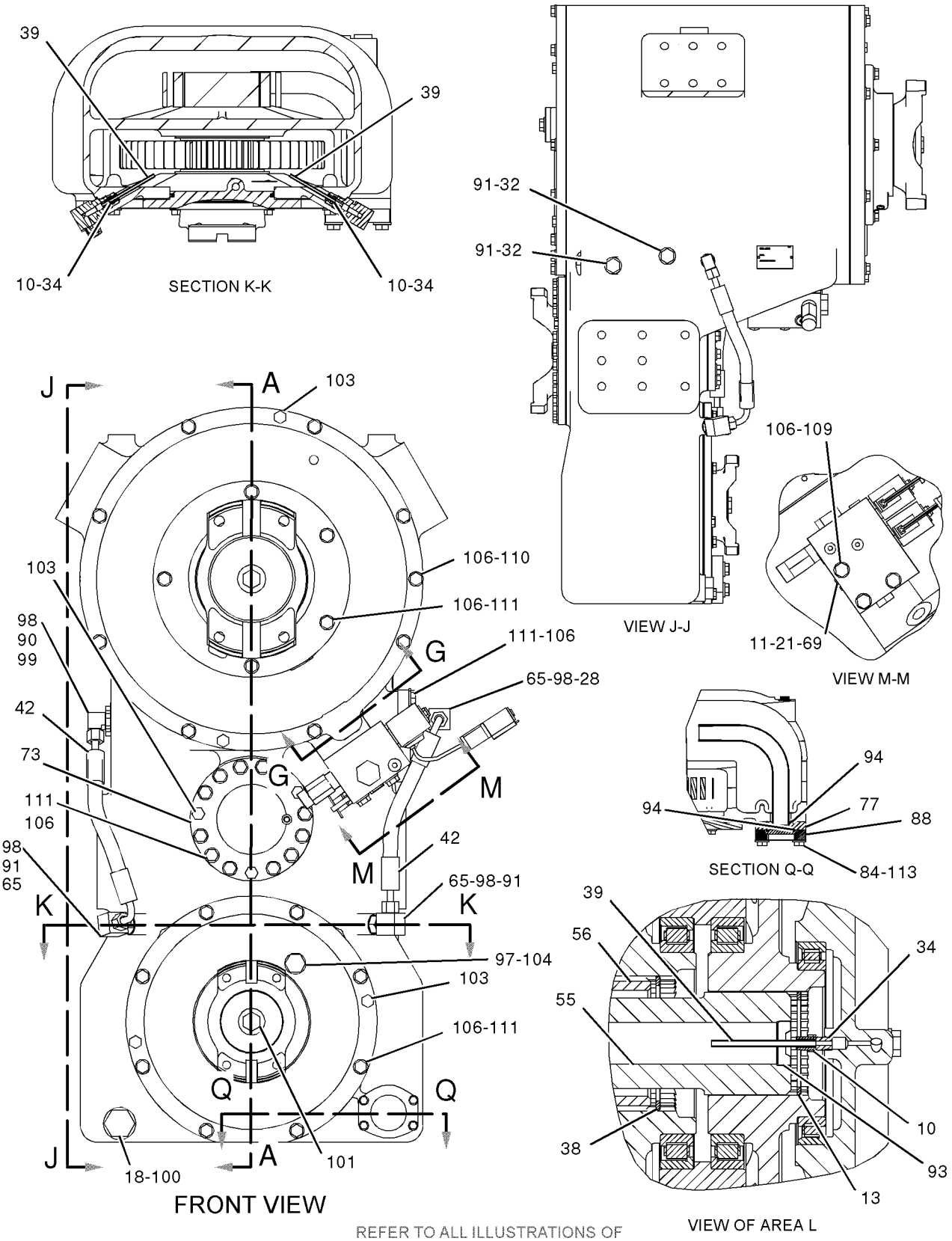

REFER TO ALL ILLUSTRATIONS OF THIS GROUP FOR AUXILIARY VIEWS

GRAPHIC #3 **<END>** g01005771

POWER TRAIN

141-6890 GEAR GP-OUTPUT TRANSFER

S/N: BBJ1131-99999

PART OF 152-6919 AXLE & FRAME AR

SMCS-3159 **i02215392**

NOTE	REF NO	GRAPHIC REF	PART NUMBER	QTY	PART NAME 1 2 3 4 5 6 (PRODUCT LEVEL)	SEE PAGE
	1	1	**6V-0327**	1	CUP-BEARING (TAPERED ROLLER)	
	2	1	**128-3935**	1	BEARING AS-ROLLER	
	3	1	**1M-5514**	1	RACE-ROLLER BEARING	
	4	1	**252-1604**	1	RETAINER	
	5	1	**2D-6533**	1	SEAL-O-RING	
	6	1	**2K-9295**	1	BEARING AS-TAPERED ROLLER	
	7	1	**2M-3827**	2	RING-RETAINING	
	8	1	**3B-4124**	1	CUP-BEARING (TAPERED ROLLER)	
	9	1	**3J-0634**	2	SEAL-O-RING	
	10	3	**3K-7161**	3	NUT-FLARED (3/8-24-THD)	
	11	3	**5F-7054**	1	SEAL-O-RING	
	12	1	**5H-8624**	1	SEAL-O-RING	
	13	3	**5K-4069**	1	RING-RETAINING	
	14	2	**5K-9243**	1	ELBOW-FLARED	
	15	2	**5M-7142**	1	SEAL-O-RING	
	16	1	**155-6647**	1	CUP-BEARING	
	17	1	**155-6648**	1	CONE-BEARING	
	18	3	**5P-4484**	1	PLUG-MAGNETIC (DRAIN)	
	19	1	**5P-9806**	2	SEAL-O-RING	
	20	1,2	**6F-5559**	5	SEAL-O-RING	
	21	3	**6F-6672**	2	SEAL-O-RING	
C	22	2	**6G-9333**	1	CAP-FILLER	
	23	2	**6L-3616**	1	CONNECTOR	
	24	1	**6P-7985**	2	RING-SEAL	
	25	2	**6T-8527**	2	SLEEVE	
	26	1	**6V-0328**	1	CONE-BEARING (TAPERED ROLLER)	
	27	1	**7F-2122**	1	SEAL-O-RING	
	28	1	**7M-1419**	3	RACE-BEARING OUTER	
	29	3	**7N-4333**	1	PLUG-ORIFICE	
	30	1	**8B-7216**	2	SEAL-O-RING	
	31	1	**8F-5900**	1	SEAL-O-RING	
	32	1	**8M-5255**	2	SEAL-O-RING	
	33	3	**9S-4185**	2	PLUG	
	34	1	**9H-5322**	2	RACE-ROLLER BEARING	
	35	3	**9S-7581**	3	CONNECTOR	
	36	1	**9W-7925**	3	BEARING AS-TAPERED ROLLER	
	37	1	**9W-7926**	3	CUP-BEARING	
	38	2	**9X-4605**	1	SEAL-LIP TYPE	
	39	3	**066-5816**	1	RING-RETAINING	
	40	3	**148-9313**	3	TUBE	
	41	1	**148-9325**	1	SHAFT	
	42	2	**148-9358**	1	COVER	
I	43	3	**148-9393**	2	HOSE AS	
	44	2	**148-9395**	1	TUBE AS	
	45	2	**148-9396**	4	TUBE	
	46	1	**252-2101**	1	YOKE AS	
	47		**148-9399**	1	PLATE	
	48	1	**148-9404**	1	CAGE AS	
		1	**2D-6642**	3	BALL	
B	49	1	**148-9407**	1	SHIM PACK (INCLUDES 17-SHIMS)	
B	50	1	**148-9408**	1	SHIM PACK (INCLUDES 17-SHIMS)	
B	51	1	**148-9409**	1	SHIM PACK (INCLUDES 17-SHIMS)	
	52	1	**148-9412**	1	RETAINER AS	
		1	**6Y-0869**	1	PLUG	
		1	**148-9359**	1	PLUG	
	53	1	**148-9414**	1	CAGE AS	

141-6890 GEAR GP-OUTPUT TRANSFER *(contd.)* i02215392

NOTE	REF NO	GRAPHIC REF	PART NUMBER	QTY	PART NAME 1 2 3 4 5 6 (PRODUCT LEVEL)	SEE PAGE
		1	**148-9359**	2	PLUG	
	54	1	**148-9417**	1	YOKE	
	55	1	**148-9420**	1	RETAINER	
	56	3	**148-9428**	1	SHAFT	
	57	3	**148-9429**	1	SHAFT	
	58	1	**148-9430**	1	SPACER (M121X135X5.25-MM THK)	
	59	1	**148-9433**	1	GEAR-SPUR (52-TEETH)	
	60	1	**148-9434**	1	GEAR-SPUR (78-TEETH)	
	61	1	**148-9436**	1	GEAR-SPUR (72-TEETH)	
	62	1	**148-9437**	1	GEAR-SPUR (55-TEETH)	
Y	63	1	**148-9450**	1	PLANETARY GP-TRANSFER GEAR (OUTPUT)	426
	64	1	**168-2075**	3	BEARING	
	65	1	**168-2076**	2	BEARING	
	66	3	**170-0504**	3	ELBOW	
	67	2	**171-2183**	1	SEAL-V-RING	
	68	2	**173-6998**	2	SETSCREW	
	69	1	**173-7715**	1	SEAL-LIP TYPE	
Y	70	3	**201-5676**	1	VALVE GP-SOLENOID & RELIEF	476
	71	1	**201-6665**	1	CAGE AS	
		1	**9G-9506**	1	PLUG	
	72	1	**201-6666**	1	CASE	
C	73	2	**203-0063**	1	TUBE AS-FILLER	
C	74	2	**203-0225**	1	TUBE AS	
B	75	1	**204-0741**	1	SHIM PACK (INCLUDES 17-SHIMS)	
	76	3	**204-0743**	1	SHAFT AS	
		3	**9G-9506**	1	PLUG	
	77	2	**208-1729**	1	BEARING AS	
	78	1	**208-9265**	1	CAGE AS	
		1	**4B-9880**	2	BALL	
	79	2	**208-9267**	1	SPACER (80.2X87X11.5-MM THK)	
C	80	2	**212-2017**	1	GAUGE-OIL LEVEL	
	81	3	**212-3298**	1	TUBE AS	
	82	2	**222-5824**	1	SEAL-LIP TYPE	
	83	1	**227-9318**	1	RETAINER	
	84	1	**227-9319**	1	RETAINER	
	85	1	**227-9321**	1	YOKE AS	
	86	1	**232-2324**	1	GEAR-SPUR (56-TEETH)	
	87	1	**235-0553**	1	CAGE	
M	88	3	**096-9986**	4	BOLT (M12X1.75X55-MM)	
	89	1	**171-3010**	1	WASHER-HARD (M17.5X32X7-MM THK)	
	90	2	**1H-9696**	1	SEAL-O-RING	
	91	2	**1J-9671**	1	SEAL-O-RING	
	92	3	**1P-4579**	2	FLANGE-HALF	
	93	3	**3J-1907**	1	SEAL-O-RING	
	94	2,3	**3K-0360**	6	SEAL-O-RING	
	95	2	**3K-8460**	1	PLUG	
	96	3	**4B-5432**	1	SEAL-LIP TYPE	
	97	3	**4J-0524**	2	SEAL-O-RING	
	98	2	**5S-7878**	1	RING-RETAINING (116.89-MM ID)	
C	99	2	**6V-1322**	1	BOLT (1/4-20X0.375-IN)	
	100	3	**6V-7970**	1	SEAL-O-RING	
	101	3	**6V-8397**	4	SEAL-O-RING	
C	102	2	**6V-8398**	1	SEAL-O-RING	
C	103	2	**6V-8625**	1	ELBOW	
	104	3	**6V-8724**	1	ELBOW	
	105	3	**7M-8485**	1	SEAL-O-RING	
M	106	3	**7X-2555**	1	BOLT (M16X2X80-MM)	
M	107	1	**7X-2557**	1	BOLT (M16X2X140-MM)	
M	108	2,3	**7X-2621**	11	BOLT (M10X1.5X12-MM)	

141-6890 GEAR GP-OUTPUT TRANSFER *(contd.)* i02215392

NOTE	REF NO	GRAPHIC REF	PART NUMBER	QTY	PART NAME 1 2 3 4 5 6 (PRODUCT LEVEL)	SEE PAGE
	109	3	**8C-4424**	1	PLUG	
	110	1	**8T-0315**	1	SEAL-O-RING	
	111	1,2,3	**8T-4121**	117	WASHER-HARD (11X21X2.5-MM THK)	
CM	112	2	**8T-4137**	1	BOLT (M10X1.5X20-MM)	
M	113	2	**8T-4139**	2	BOLT (M12X1.75X30-MM)	
M	114	1	**8T-4174**	1	BOLT (M16X2X120-MM)	
M	115	3	**8T-4178**	3	BOLT (M10X1.5X90-MM)	
M	116	3	**8T-4182**	9	BOLT (M10X1.5X45-MM)	
M	117	1,2,3	**8T-4195**	91	BOLT (M10X1.5X30-MM)	
M	118	2	**8T-4196**	13	BOLT (M10X1.5X35-MM)	
C	119	2	**8T-4205**	1	WASHER-HARD (7.2X14.5X2-MM THK)	
	120	2,3	**8T-4223**	6	WASHER-HARD (13.5X25.5X3-MM THK)	
M	121	2	**8T-9515**	2	BOLT-SOCKET HEAD (M10X1.5X40-MM)	

B-USE AS REQUIRED
C-CHANGE FROM PREVIOUS TYPE
I-REFER TO HYDRAULIC INFORMATION SYSTEM
M-METRIC PART
Y-SEPARATE ILLUSTRATION

141-6890 GEAR GP-OUTPUT TRANSFER *(contd.)* i02215392

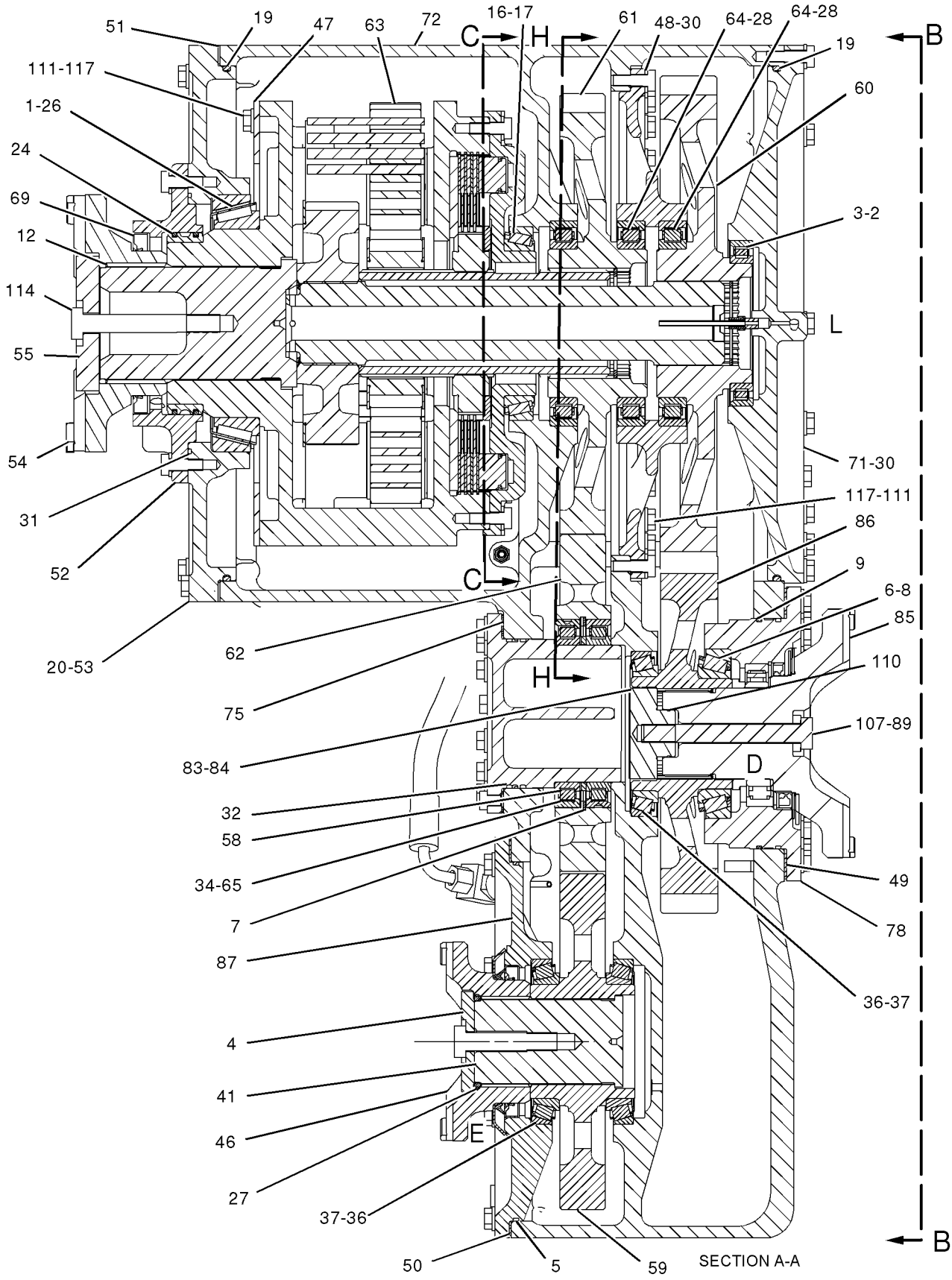

GRAPHIC #1 g01051975

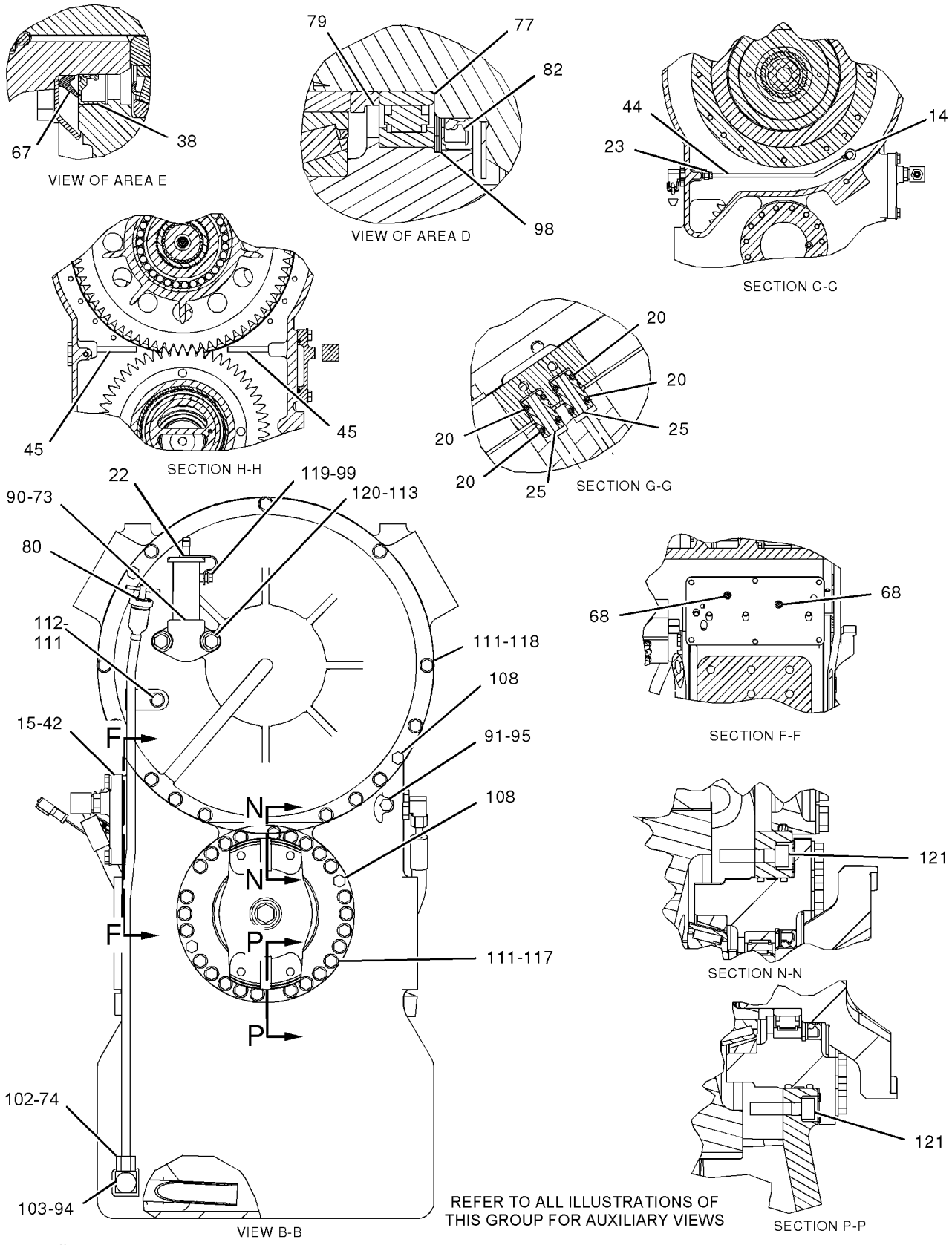

GRAPHIC #2

g01051972

141-6890 GEAR GP-OUTPUT TRANSFER *(contd.)* i02215392

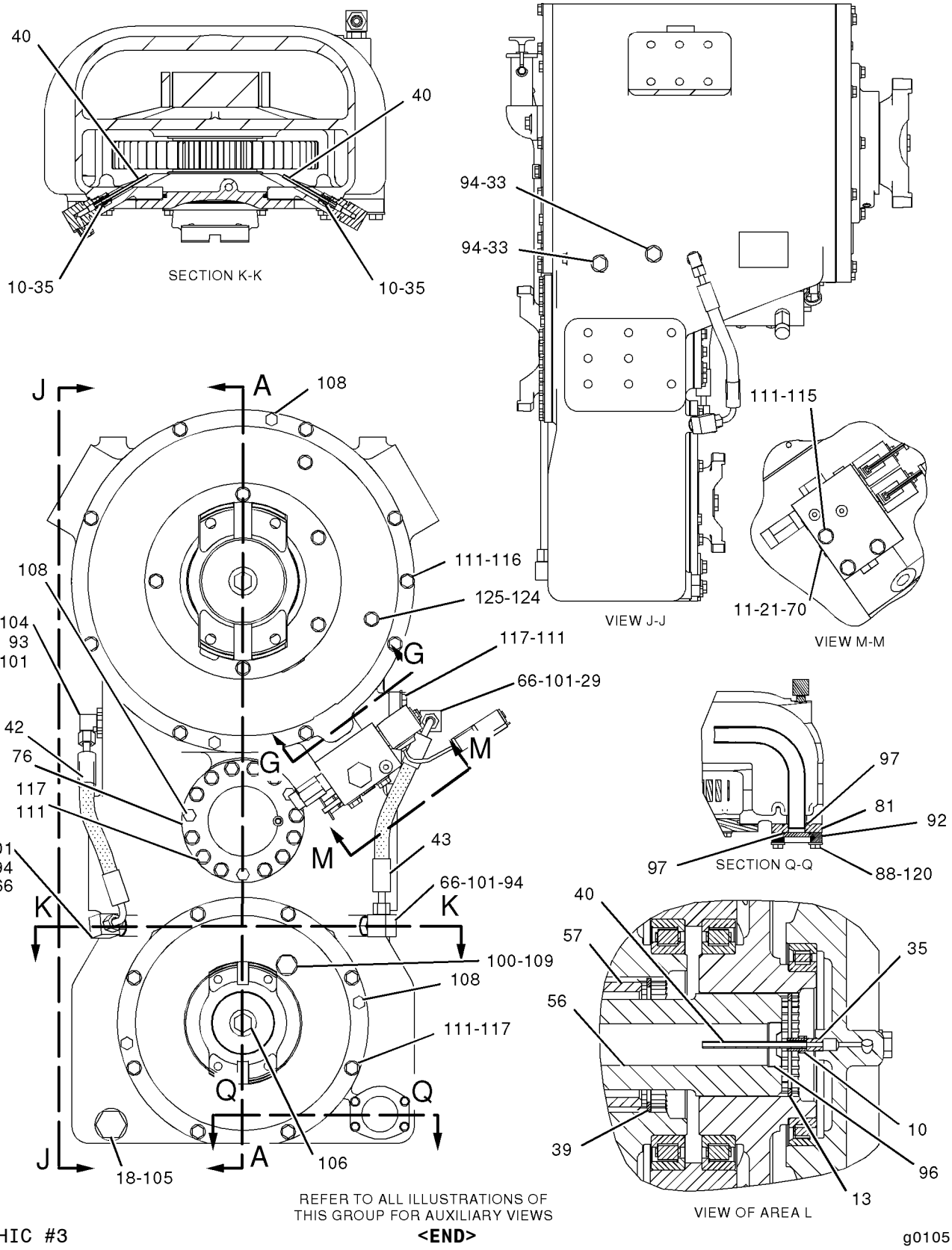

GRAPHIC #3

<END>

g01051973

POWER TRAIN

243-4030 GEAR GP-OUTPUT TRANSFER

S/N: A5L1-UP

PART OF 152-6919 AXLE & FRAME AR

SMCS-3159 **i02251932**

NOTE	REF NO	GRAPHIC REF	PART NUMBER	QTY	PART NAME 1 2 3 4 5 6 (PRODUCT LEVEL)	SEE PAGE
	1	1	**6V-0327**	1	CUP-BEARING (TAPERED ROLLER)	
	2	1	**128-3935**	1	BEARING AS-ROLLER	
	3	1	**1M-5514**	1	RACE-ROLLER BEARING	
	4	1	**2D-6533**	1	SEAL-O-RING	
	5	1	**2K-9295**	1	BEARING AS-TAPERED ROLLER	
	6	1	**2M-3827**	2	RING-RETAINING	
	7	1	**3B-4124**	1	CUP-BEARING (TAPERED ROLLER)	
	8	1	**3J-0634**	2	SEAL-O-RING	
	9	3	**5F-7054**	1	SEAL-O-RING	
	10	1	**5H-8624**	1	SEAL-O-RING	
	11	3	**5K-4069**	1	RING-RETAINING	
	12	2	**5M-7142**	1	SEAL-O-RING	
	13	1	**155-6647**	1	CUP-BEARING	
	14	1	**155-6648**	1	CONE-BEARING	
	15	1	**5P-4484**	1	PLUG-MAGNETIC	
	16	1	**5P-9806**	2	SEAL-O-RING	
	17	1,2	**6F-5559**	5	SEAL-O-RING	
	18	3	**6F-6672**	2	SEAL-O-RING	
	19	2	**6G-9333**	1	CAP-FILLER	
	20	1	**6L-3616**	1	CONNECTOR	
	21	1	**6P-7985**	2	RING-SEAL	
	22	2	**6T-8527**	2	SLEEVE	
	23	1	**6V-0328**	1	CONE-BEARING (TAPERED ROLLER)	
	24	1	**7F-2122**	1	SEAL-O-RING	
	25	1	**7M-1419**	3	RACE-BEARING OUTER	
	26	1	**8B-7216**	2	SEAL-O-RING	
	27	1	**8F-5900**	1	SEAL-O-RING	
	28	1	**8M-5255**	2	SEAL-O-RING	
	29	3	**9S-4185**	2	PLUG	
	30	1	**9H-5322**	2	RACE-ROLLER BEARING	
	31	1	**9W-7925**	3	BEARING AS-TAPERED ROLLER	
	32	1	**9W-7926**	3	CUP-BEARING	
	33	2	**223-9743**	1	SEAL-LIP TYPE	
	34	3	**066-5816**	1	RING-RETAINING	
	35	1	**148-9325**	1	SHAFT	
	36	2	**148-9358**	1	COVER	
I	37	1	**148-9393**	2	HOSE AS	
	38	2	**148-9396**	4	TUBE	
	39	1	**148-9399**	1	PLATE	
	40	1	**148-9404**	1	CAGE AS	
		1	**2D-6642**	3	BALL	
B	41	1	**148-9407**	1	SHIM PACK (INCLUDES 17-SHIMS)	
B	42	1	**148-9408**	1	SHIM PACK (INCLUDES 17-SHIMS)	
B	43	1	**148-9409**	1	SHIM PACK (INCLUDES 17-SHIMS)	
	44	1	**148-9412**	1	RETAINER AS	
		1	**6Y-0869**	1	PLUG	
		1	**148-9359**	1	PLUG	
	45	1	**148-9414**	1	CAGE AS	
		1	**148-9359**	2	PLUG	
	46	1	**148-9417**	1	YOKE	
	47	1	**148-9420**	1	RETAINER	
	48	3	**148-9428**	1	SHAFT	
	49	3	**148-9429**	1	SHAFT	
	50	1	**148-9430**	1	SPACER (M121X135X5.25-MM THK)	
	51	1	**148-9433**	1	GEAR-SPUR (52-TEETH)	
	52	1	**148-9434**	1	GEAR-SPUR (78-TEETH)	

243-4030 GEAR GP-OUTPUT TRANSFER *(contd.)* i02251932

NOTE	REF NO	GRAPHIC REF	PART NUMBER	QTY	PART NAME 1 2 3 4 5 6 (PRODUCT LEVEL)	SEE PAGE
	53	1	**148-9436**	1	GEAR-SPUR (72-TEETH)	
	54	1	**148-9437**	1	GEAR-SPUR (55-TEETH)	
Y	55	1	**148-9450**	1	PLANETARY GP-TRANSFER GEAR (OUTPUT)	426
	56	1	**168-2075**	3	BEARING	
	57	1	**168-2076**	2	BEARING	
	58	2	**171-2183**	1	SEAL-V-RING	
	59	2	**173-6998**	2	SETSCREW	
	60	1	**173-7715**	1	SEAL-LIP TYPE	
Y	61	3	**201-5676**	1	VALVE GP-SOLENOID & RELIEF	476
	62	1	**201-6665**	1	CAGE AS	
		1	**9G-9506**	1	PLUG	
	63	1	**201-6666**	1	CASE	
	64	2	**203-0063**	1	TUBE AS-FILLER	
	65	2	**203-0225**	1	TUBE AS	
B	66	1	**204-0741**	1	SHIM PACK (INCLUDES 17-SHIMS)	
	67	1	**204-0743**	1	SHAFT AS	
		1	**9G-9506**	1	PLUG	
	68	2	**208-1729**	1	BEARING AS	
	69	1	**208-9265**	1	CAGE AS	
		1	**4B-9880**	2	BALL	
	70	2	**208-9267**	1	SPACER (80.2X87X11.5-MM THK)	
	71	2	**212-2017**	1	GAUGE-OIL LEVEL	
	72	3	**212-3298**	1	TUBE AS	
	73	2	**222-5824**	1	SEAL-LIP TYPE	
	74	3	**227-9318**	1	RETAINER	
	75	3	**227-9319**	1	RETAINER	
	76	1	**227-9321**	1	YOKE AS	
	77	1	**232-2324**	1	GEAR-SPUR (56-TEETH)	
	78	1	**266-4311**	1	CAGE	
M	79	3	**8T-9515**	2	BOLT-SOCKET HEAD (M10X1.5X40-MM)	
	80	2,3	**8T-4223**	6	WASHER-HARD (13.5X25.5X3-MM THK)	
	81	1	**170-0504**	1	ELBOW	
	82	1	*249-0065*	2	ELBOW AS	
					(EACH INCLUDES)	
		1	**3K-0360**	1	SEAL-O-RING	
		1	**3K-7161**	1	NUT-FLARED (3/8-24-THD)	
		1	**6V-8397**	1	SEAL-O-RING	
		1	**9S-7581**	1	CONNECTOR	
		1	**148-9313**	1	TUBE	
		1	**170-0504**	1	ELBOW	
	83	1	**252-1604**	1	RETAINER	
	84	1	**252-2101**	1	YOKE AS	
M	85	3	**096-9986**	4	BOLT (M12X1.75X55-MM)	
	86	1	**171-3010**	1	WASHER-HARD (M17.5X32X7-MM THK)	
	87	2	**1H-9696**	1	SEAL-O-RING	
	88	2	**1J-9671**	1	SEAL-O-RING	
	89	3	**1P-4579**	2	FLANGE-HALF	
	90	1	**3J-1907**	1	SEAL-O-RING	
	91	2,3	**3K-0360**	3	SEAL-O-RING	
	92	2	**3K-8460**	1	PLUG	
	93	3	**4B-5432**	1	SEAL-LIP TYPE	
	94	3	**4J-0524**	2	SEAL-O-RING	
	95	2	**5S-7878**	1	RING-RETAINING (116.89-MM ID)	
	96	2	**6V-1322**	1	BOLT (1/4-20X0.375-IN)	
	97	1	**6V-7970**	1	SEAL-O-RING	
	98	1	**6V-8397**	1	SEAL-O-RING	
	99	2	**6V-8398**	1	SEAL-O-RING	
	100	2	**6V-8625**	1	ELBOW	
	101	1	**6V-8724**	1	ELBOW	

243-4030 GEAR GP-OUTPUT TRANSFER *(contd.)* i02251932

NOTE	REF NO	GRAPHIC REF	PART NUMBER	QTY	PART NAME 1 2 3 4 5 6 (PRODUCT LEVEL)	SEE PAGE
	102	1	**7M-8485**	1	SEAL-O-RING	
M	103	1	**7X-2555**	1	BOLT (M16X2X80-MM)	
M	104	1	**7X-2557**	1	BOLT (M16X2X140-MM)	
M	105	1,2	**7X-2621**	11	BOLT (M10X1.5X12-MM)	
	106	1	**8C-4424**	1	PLUG	
	107	3	**8T-0315**	1	SEAL-O-RING	
	108	1,2,3	**8T-4121**	117	WASHER-HARD (11X21X2.5-MM THK)	
M	109	2	**8T-4137**	1	BOLT (M10X1.5X20-MM)	
M	110	2	**8T-4139**	2	BOLT (M12X1.75X30-MM)	
M	111	1	**8T-4174**	1	BOLT (M16X2X120-MM)	
M	112	3	**8T-4178**	3	BOLT (M10X1.5X90-MM)	
M	113	1	**8T-4182**	9	BOLT (M10X1.5X45-MM)	
M	114	1,2	**8T-4195**	91	BOLT (M10X1.5X30-MM)	
M	115	2	**8T-4196**	13	BOLT (M10X1.5X35-MM)	
	116	2	**8T-4205**	1	WASHER-HARD (7.2X14.5X2-MM THK)	

B-USE AS REQUIRED
I-REFER TO HYDRAULIC INFORMATION SYSTEM
M-METRIC PART
Y-SEPARATE ILLUSTRATION

243-4030 GEAR GP-OUTPUT TRANSFER *(contd.)* i02251932

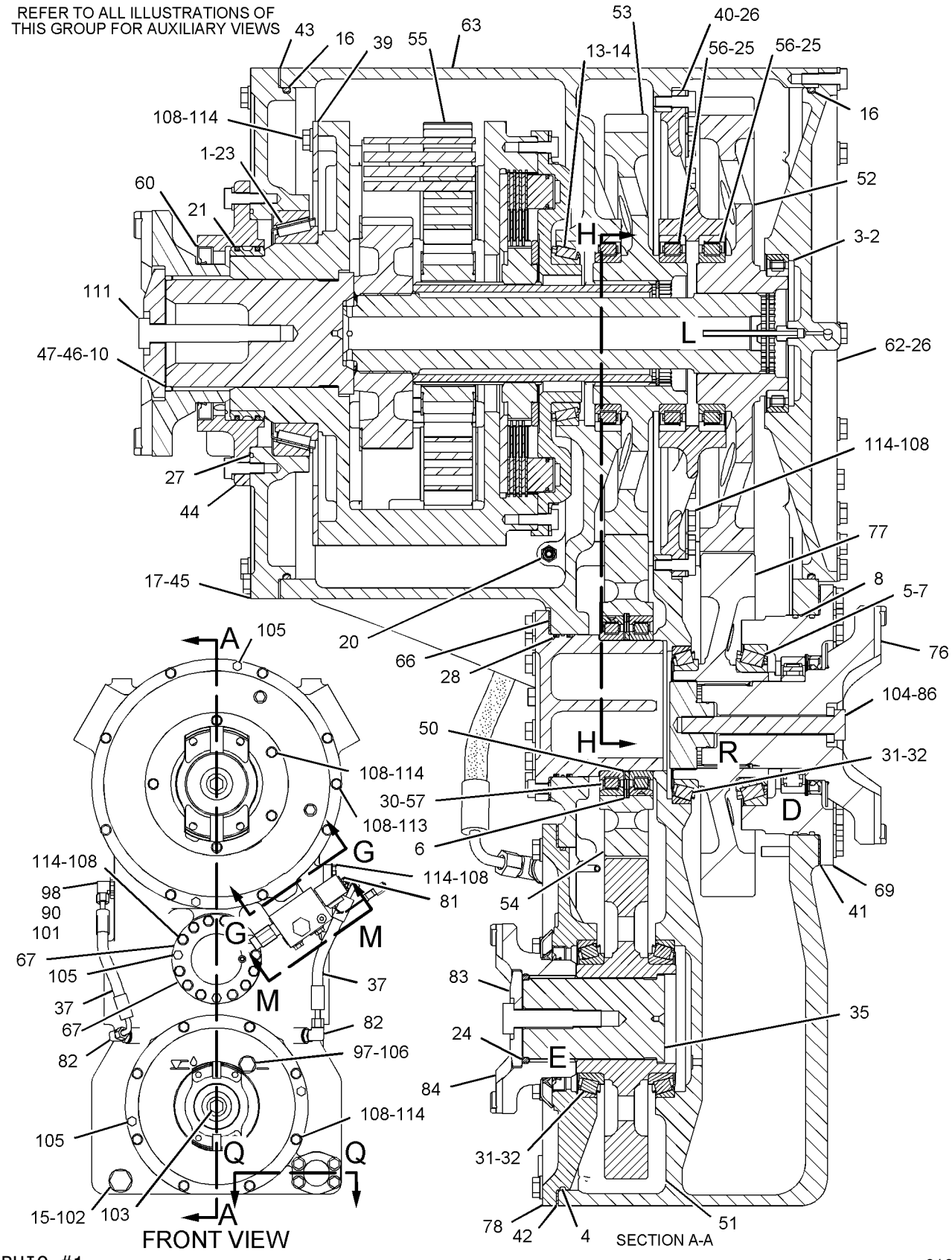

GRAPHIC #1 g01088225

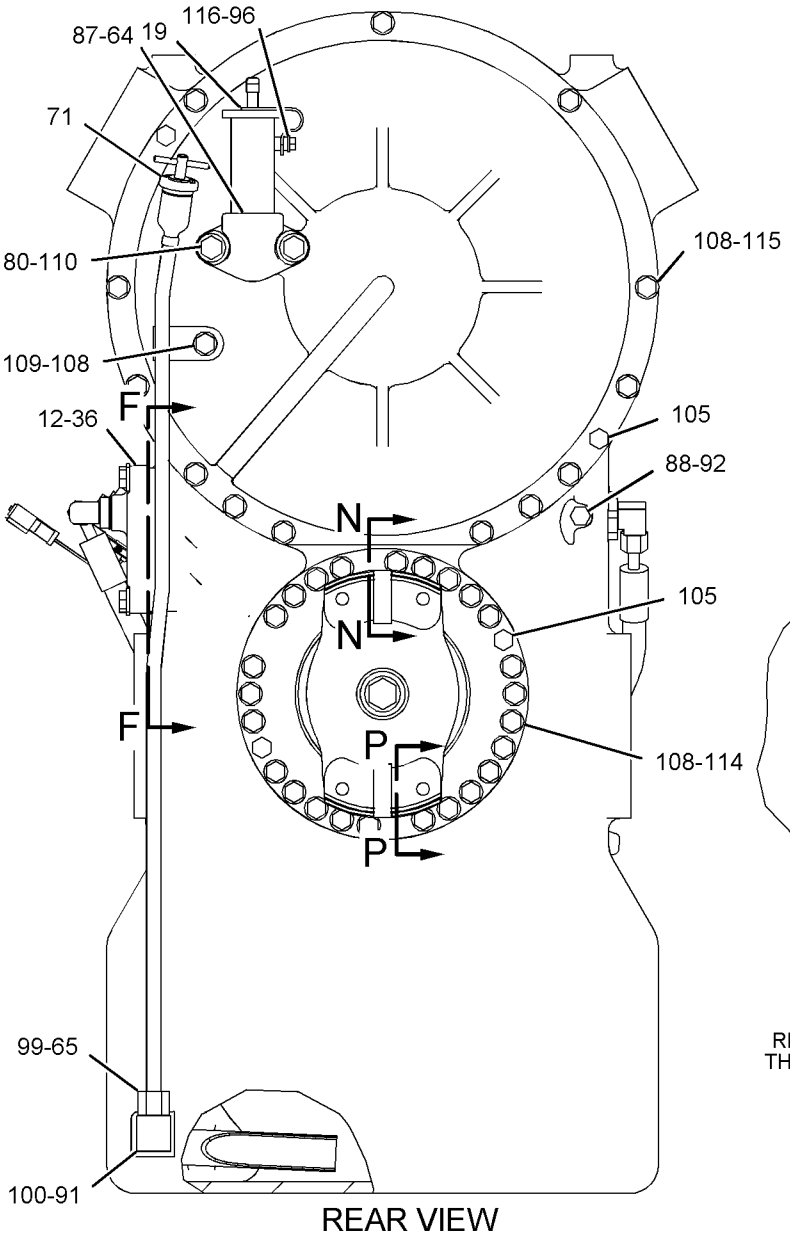

REAR VIEW

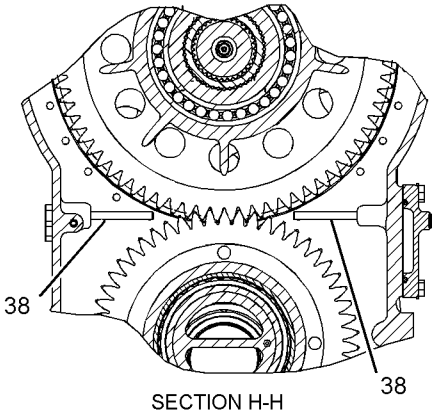

SECTION H-H

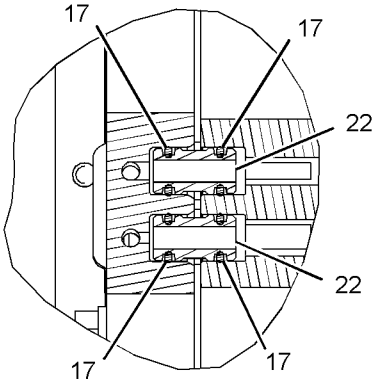

SECTION G-G

REFER TO ALL ILLUSTRATIONS OF
THIS GROUP FOR AUXILIARY VIEWS

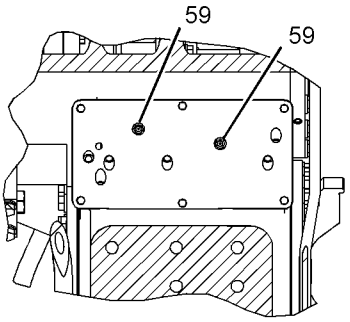

SECTION F-F

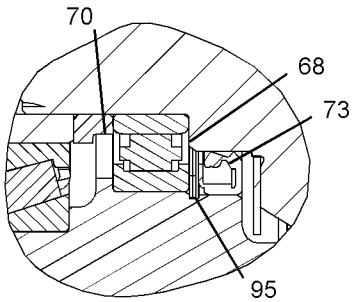

VIEW OF AREA D

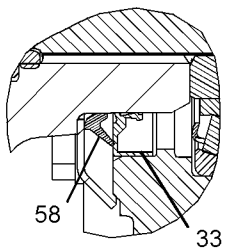

VIEW OF AREA E

GRAPHIC #2

g01088227

243-4030 GEAR GP-OUTPUT TRANSFER *(contd.)* **i02251932**

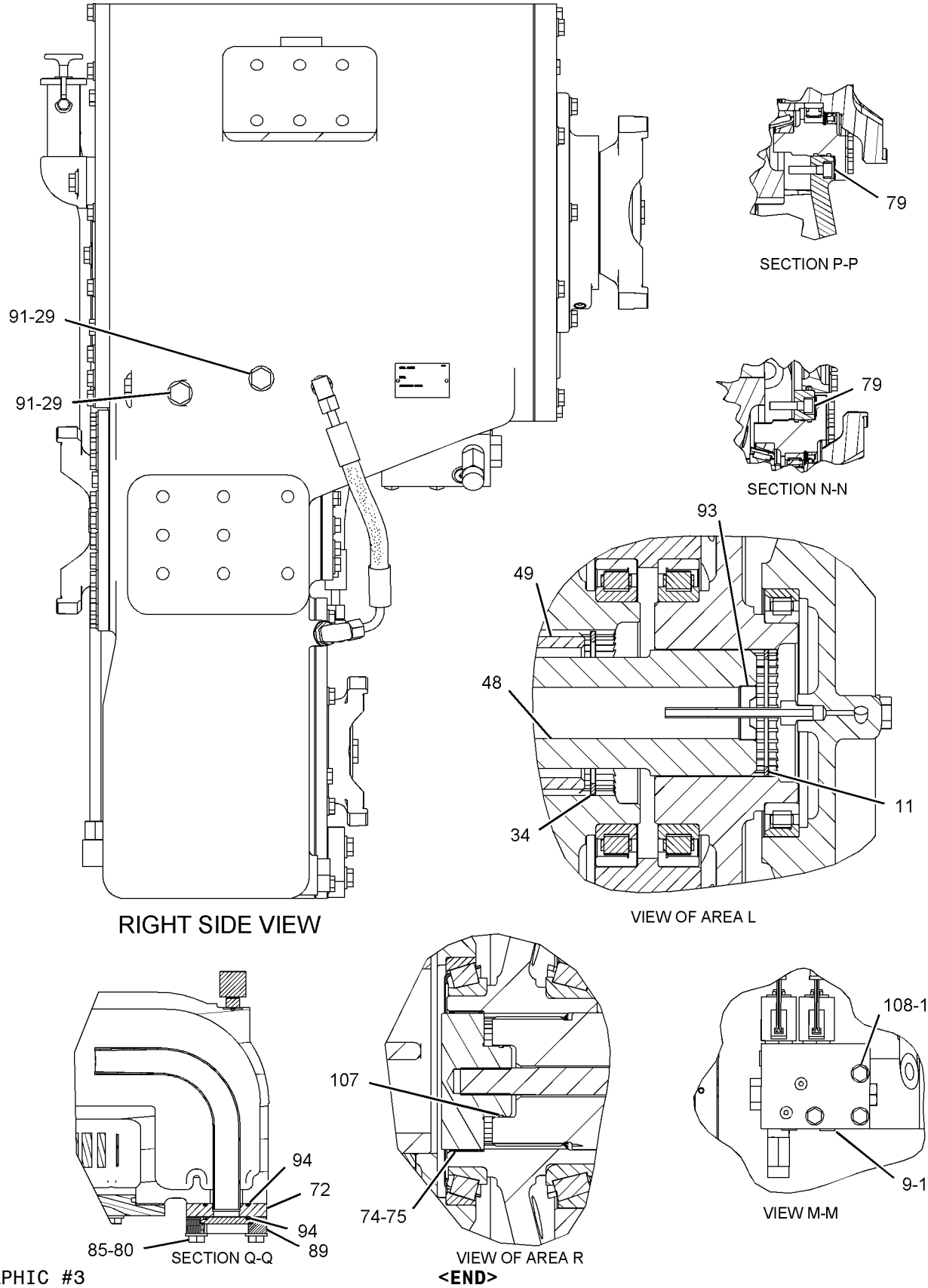

GRAPHIC #3

<END>

g01088229

166-3946 LINES GP-AXLE OIL COOLER

S/N: AXM1-UP

PART OF 152-6921 AXLE & FRAME AR

SMCS-3016 **i01532900**

NOTE	REF NO	GRAPHIC REF	PART NUMBER	QTY	PART NAME 1 2 3 4 5 6 (PRODUCT LEVEL)	SEE PAGE
	1	1	**6U-0456**	4	STRAP	
	2	1	**118-9573**	16	BOLT-12 POINT HEAD (M10X1.5-THD)	
	3	1	**153-2942**	1	TUBE AS	
	4	1	**153-2943**	1	TUBE AS	
	5	1	**153-2944**	1	TUBE AS	
	6	1	**153-2945**	1	TUBE AS	
	7	1	**159-2880**	1	MANIFOLD	
	8	1	**162-5532**	1	TUBE AS	
	9	1	**162-5533**	1	TUBE AS	
I	10	1	**195-3763**	2	HOSE AS	
I	11	1	**197-4926**	2	HOSE AS	
	12	1	**1P-3705**	2	SEAL-RECTANGULAR	
	13	1	**4J-0520**	12	SEAL-O-RING	
	14	1	**7S-8920**	4	CLIP (SLOT)	
	15	1	**7S-8921**	4	CLIP (TAB)	
	16	1	**8C-3206**	24	FLANGE-HALF	
	17	1	**8T-1889**	4	CLIP (SLOT)	
	18	1	**8T-1890**	4	CLIP (TAB)	
	19	1	**8T-4121**	50	WASHER-HARD (11X21X2.5-MM THK)	
M	20	1	**8T-4133**	8	NUT (M10X1.5-THD)	
M	21	1	**8T-4178**	2	BOLT (M10X1.5X90-MM)	
M	22	1	**8T-4196**	40	BOLT (M10X1.5X35-MM)	
	23	1	**8T-4223**	8	WASHER-HARD (13.5X25.5X3-MM THK)	
	24	1	**8T-4896**	16	WASHER-HARD (10.2X18.5X2.5-MM THK)	
M	25	1	**8T-6868**	8	BOLT (M12X1.75X80-MM)	

I-REFER TO HYDRAULIC INFORMATION SYSTEM
M-METRIC PART

166-3946 **LINES GP-AXLE OIL COOLER** *(contd.)* **i01532900**

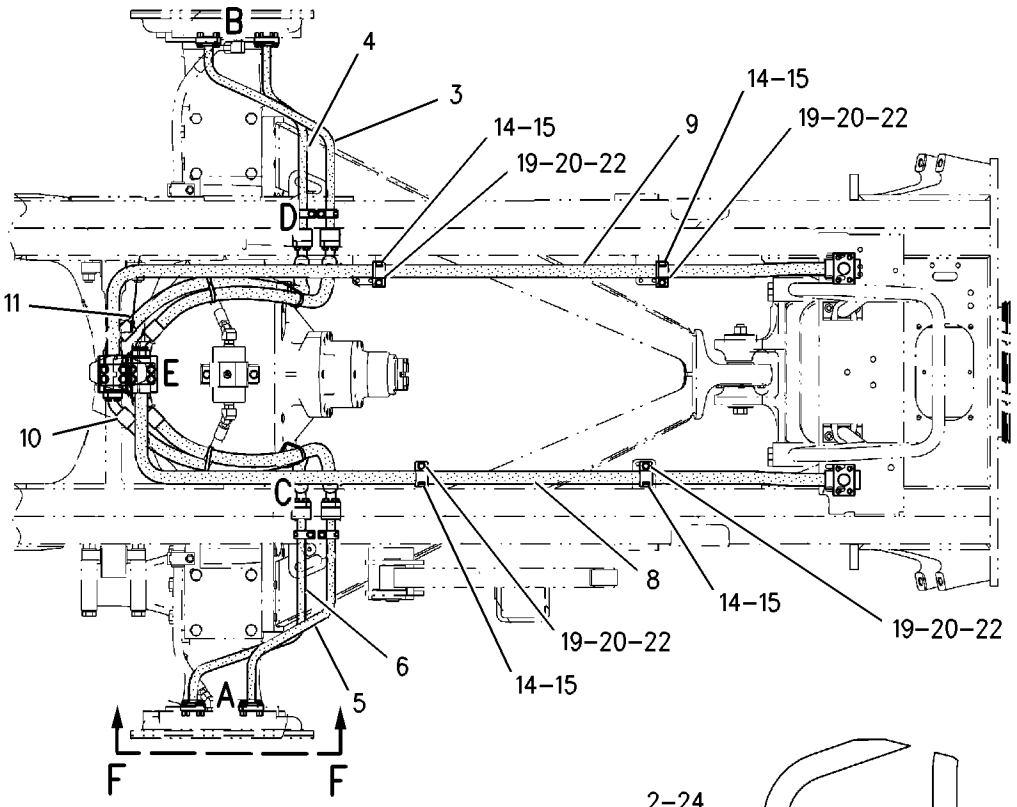

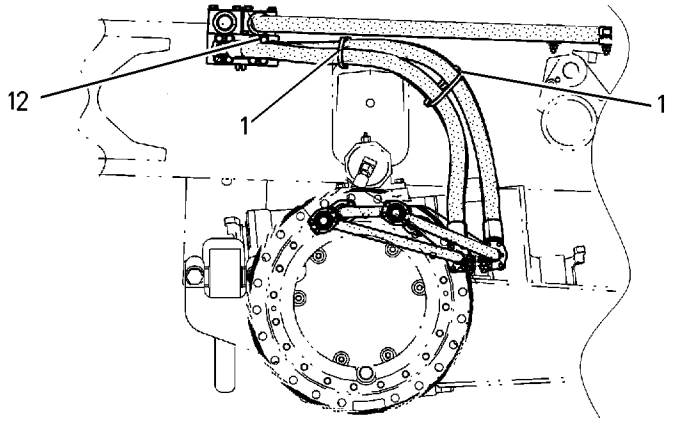

VIEW F-F

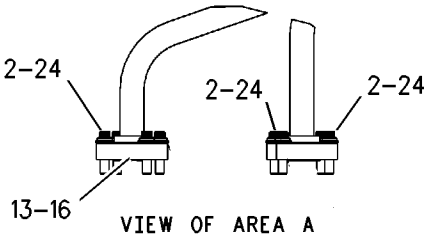

VIEW OF AREA A

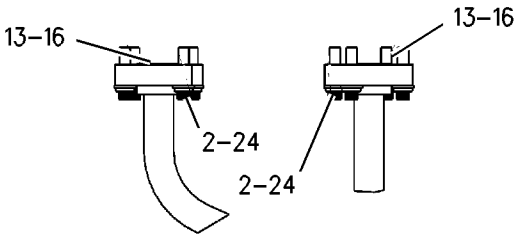

VIEW OF AREA B

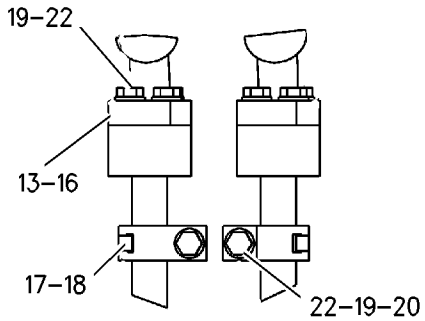

VIEW OF AREA C

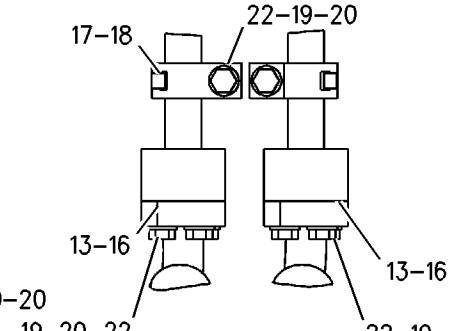

VIEW OF AREA D

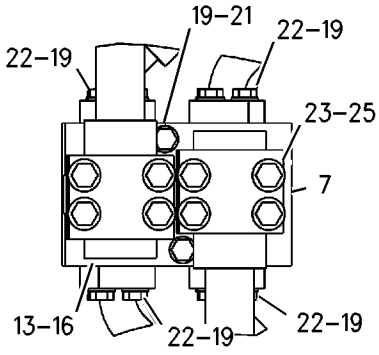

VIEW OF AREA E

GRAPHIC #1 **<END>** g00797464

POWER TRAIN

166-3950 LINES GP-AXLE OIL COOLER

S/N: AXM1-1457

PART OF 152-6922 HYDRAULIC AR-MACHINE

SMCS-3016 **i01839668**

NOTE	REF NO	GRAPHIC REF	PART NUMBER	QTY	PART NAME 1 2 3 4 5 6 (PRODUCT LEVEL)	SEE PAGE
	1	1	**118-9573**	32	BOLT-12 POINT HEAD (M10X1.5-THD)	
	2	2	**147-7330**	4	FLANGE-HALF	
	3	2	**190-0879**	1	TUBE AS	
I	4	1	**190-0881**	2	HOSE AS	
	5	2	**192-8687**	1	TUBE AS	
	6	2	**192-8688**	1	TUBE AS	
	7	1	**192-8689**	1	TUBE AS	
	8	2	**194-0708**	1	TUBE AS	
	9	1	**194-4016**	1	MANIFOLD	
	10	2	**194-4018**	1	ANGLE	
	11	2	**194-5013**	1	PLATE AS	
M		2	**8T-3490**	2	NUT-WELD (M10X1.5-THD)	
I	12	1	**194-6932**	1	HOSE AS	
I	13	1	**194-6933**	1	HOSE AS	
I	14	2	**194-6963**	1	HOSE AS	
	15	2	**194-8472**	1	PLATE AS	
M		2	**8T-3490**	2	NUT-WELD (M10X1.5-THD)	
	16	1	**195-3243**	1	PLATE	
	17	1	**199-3624**	1	TUBE AS	
	18	1	**199-3625**	1	TUBE AS	
	19	1	**199-3626**	1	TUBE AS	
	20	1	**199-3627**	1	TUBE AS	
I	21	1	**199-4150**	2	HOSE AS	
	22	2	**203-6942**	1	TUBE AS	
I	23	2	**216-7657**	1	HOSE AS	
	24	2	*148-8411*	1	PLUG AS	
		2	**3K-0360**	1	SEAL-O-RING	
		2	**9S-4185**	1	PLUG	
	25	2	**1N-5998**	1	PLUG	
	26	1,2	**1P-4579**	34	FLANGE-HALF	
	27	1	**4J-0520**	8	SEAL-O-RING	
	28	1,2	**4J-0524**	19	SEAL-O-RING	
	29	2	**4L-9337**	8	BOLT (3/8-16X1.5-IN)	
	30	2	**5P-7470**	2	CLIP (SLOT)	
	31	2	**5P-7471**	2	CLIP (TAB)	
	32	2	**5P-7703**	2	GROMMET	
	33	2	**6K-6307**	1	SEAL-O-RING	
	34	1,2	**7S-8920**	8	CLIP (SLOT)	
	35	1,2	**7S-8921**	8	CLIP (TAB)	
M	36	1	**7X-2543**	2	BOLT (M10X1.5X120-MM)	
M	37	1,2	**7X-2544**	1	BOLT (M10X1.5X104-MM)	
M	38	2	**7X-2549**	4	BOLT (M12X1.75X100-MM)	
M	39	1	**7X-2550**	12	BOLT (M12X1.75X110-MM)	
	40	1	**8C-3206**	16	FLANGE-HALF	
	41	1	**8T-1889**	4	CLIP (SLOT)	
	42	1	**8T-1890**	4	CLIP (TAB)	
	43	1	**8T-4121**	7	WASHER-HARD (11X21X2.5-MM THK)	
M	44	1,2	**8T-4139**	13	BOLT (M12X1.75X30-MM)	
M	45	1	**8T-4183**	1	BOLT (M12X1.75X40-MM)	
M	46	1	**8T-4184**	44	BOLT (M12X1.75X45-MM)	
M	47	1	**8T-4195**	4	BOLT (M10X1.5X30-MM)	
	48	1,2	**8T-4223**	105	WASHER-HARD (13.5X25.5X3-MM THK)	
M	49	1,2	**8T-4244**	25	NUT (M12X1.75-THD)	
	50	1,2	**8T-4896**	41	WASHER-HARD (10.2X18.5X2.5-MM THK)	
M	51	1	**8T-4956**	2	BOLT (M12X1.75X35-MM)	
M	52	2	**8T-5001**	3	BOLT (M12X1.75X130-MM)	

166-3950 LINES GP-AXLE OIL COOLER *(contd.)* i01839668

NOTE	REF NO	GRAPHIC REF	PART NUMBER	QTY	PART NAME 1 2 3 4 5 6 (PRODUCT LEVEL)	SEE PAGE
M	53	2	**8T-5041**	1	BOLT (M12X1.75X120-MM)	
	54	2	**9B-7237**	1	BOLT (3/8-16X1.25-IN)	

I-REFER TO HYDRAULIC INFORMATION SYSTEM
M-METRIC PART

166-3950 **LINES GP-AXLE OIL COOLER** *(contd.)* **i01839668**

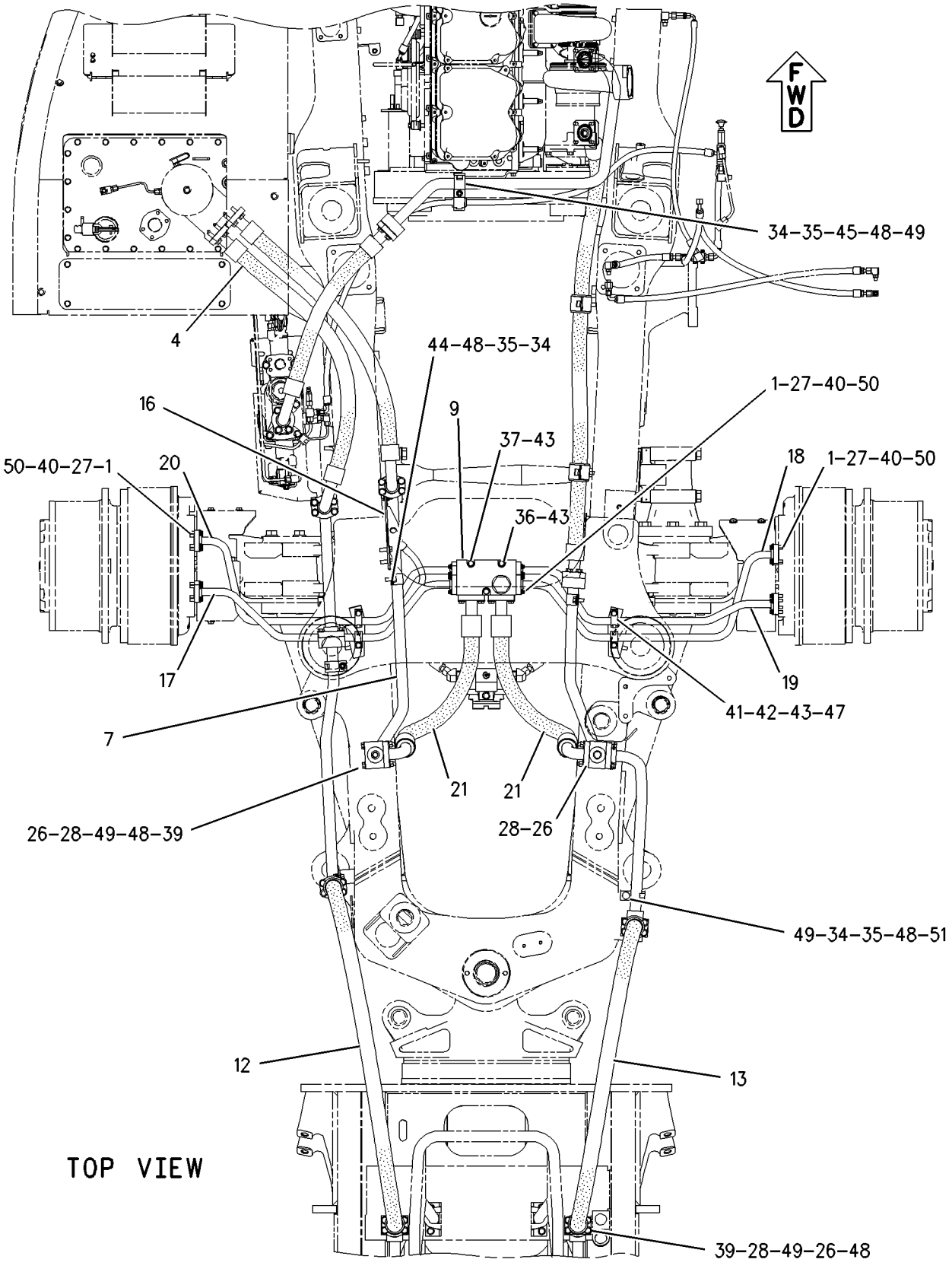

GRAPHIC #1 g00939177

166-3950 **LINES GP-AXLE OIL COOLER** ***(contd.)*** **i01839668**

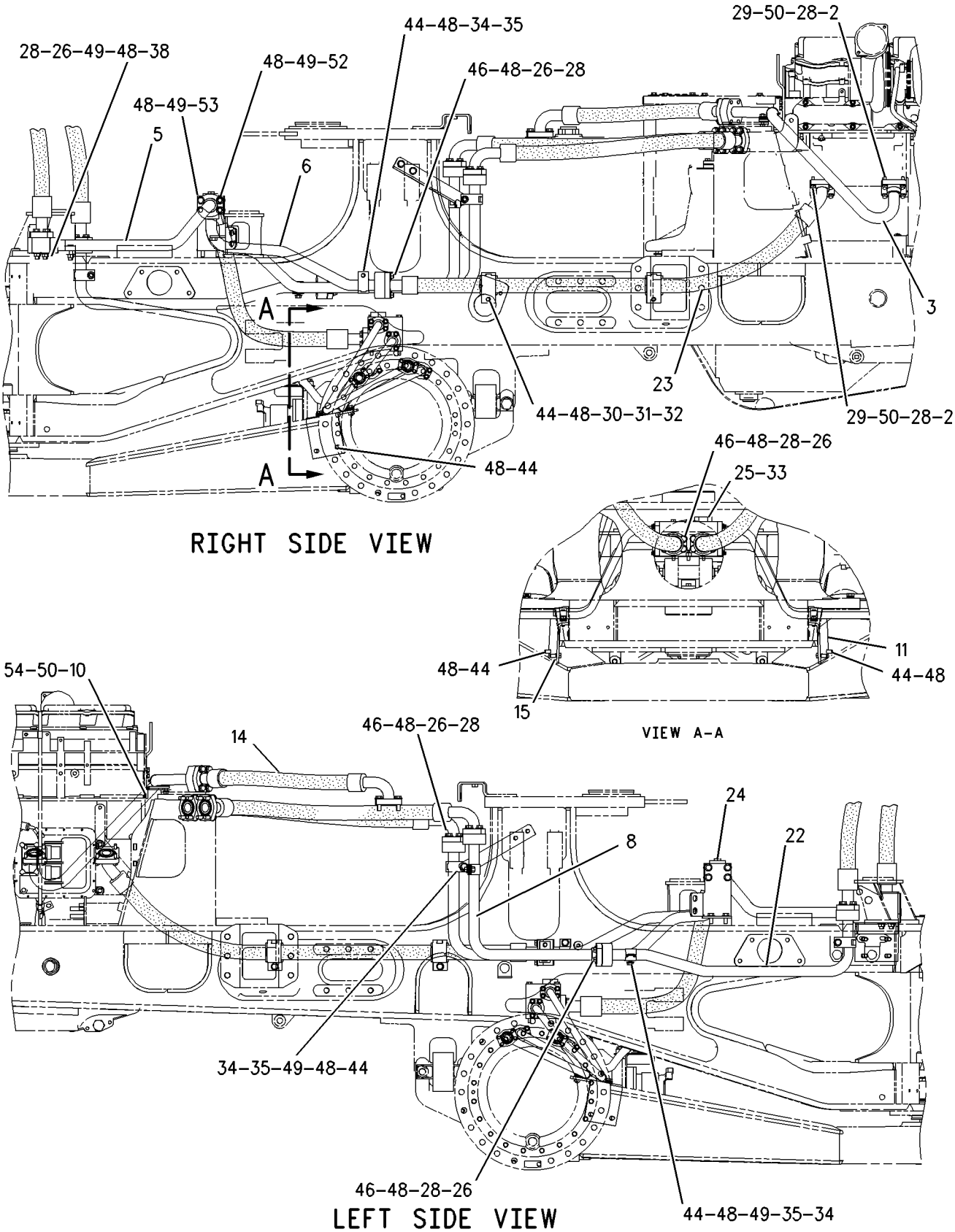

GRAPHIC #2

<END>

g00939178

POWER TRAIN

166-3950 LINES GP-AXLE OIL COOLER

S/N: AXM1458-UP

PART OF 152-6922 HYDRAULIC AR-MACHINE

SMCS-3016 **i02137993**

NOTE	REF NO	GRAPHIC REF	PART NUMBER	QTY	PART NAME 1 2 3 4 5 6 (PRODUCT LEVEL)	SEE PAGE
	1	1	**118-9573**	32	BOLT-12 POINT HEAD (M10X1.5-THD)	
	2	2	**147-7330**	4	FLANGE-HALF	
	3	2	**190-0879**	1	TUBE AS	
I	4	1	**190-0881**	2	HOSE AS	
	5	2	**192-8687**	1	TUBE AS	
	6	2	**192-8688**	1	TUBE AS	
	7	1	**192-8689**	1	TUBE AS	
	9	1	**194-4016**	1	MANIFOLD	
	10	2	**194-4018**	1	ANGLE	
	11	2	**194-5013**	1	PLATE AS	
M		2	**8T-3490**	2	NUT-WELD (M10X1.5-THD)	
I	12	1	**194-6932**	1	HOSE AS	
I	13	1	**194-6933**	1	HOSE AS	
I	14	2	**194-6963**	1	HOSE AS	
	15	2	**194-8472**	1	PLATE AS	
M		2	**8T-3490**	2	NUT-WELD (M10X1.5-THD)	
	16	1	**195-3243**	1	PLATE	
	17	1	**199-3624**	1	TUBE AS	
	18	1	**199-3625**	1	TUBE AS	
	19	1	**199-3626**	1	TUBE AS	
	20	1	**199-3627**	1	TUBE AS	
I	21	1	**199-4150**	2	HOSE AS	
C	22	2	**249-7499**	1	TUBE AS	
I	23	2	**216-7657**	1	HOSE AS	
	24	2	*148-8411*	1	PLUG AS	
		2	**3K-0360**	1	SEAL-O-RING	
		2	**9S-4185**	1	PLUG	
	25	2	**1N-5998**	1	PLUG	
C	26	1,2	**1P-4579**	32	FLANGE-HALF	
	27	1	**4J-0520**	8	SEAL-O-RING	
C	28	1,2	**4J-0524**	18	SEAL-O-RING	
	29	2	**4L-9337**	8	BOLT (3/8-16X1.5-IN)	
	30	2	**5P-7470**	2	CLIP (SLOT)	
	31	2	**5P-7471**	2	CLIP (TAB)	
	32	2	**5P-7703**	2	GROMMET	
	33	2	**6K-6307**	1	SEAL-O-RING	
	34	1,2	**7S-8920**	8	CLIP (SLOT)	
	35	1,2	**7S-8921**	8	CLIP (TAB)	
M	36	1	**7X-2543**	2	BOLT (M10X1.5X120-MM)	
M	37	1,2	**7X-2544**	1	BOLT (M10X1.5X104-MM)	
M	38	2	**7X-2549**	4	BOLT (M12X1.75X100-MM)	
M	39	1	**7X-2550**	12	BOLT (M12X1.75X110-MM)	
	40	1	**8C-3206**	16	FLANGE-HALF	
	41	1	**8T-1889**	4	CLIP (SLOT)	
	42	1	**8T-1890**	4	CLIP (TAB)	
	43	1	**8T-4121**	7	WASHER-HARD (11X21X2.5-MM THK)	
M	44	1,2	**8T-4139**	13	BOLT (M12X1.75X30-MM)	
M	45	1	**8T-4183**	1	BOLT (M12X1.75X40-MM)	
CM	46	1	**8T-4184**	40	BOLT (M12X1.75X45-MM)	
M	47	1	**8T-4195**	4	BOLT (M10X1.5X30-MM)	
C	48	1,2	**8T-4223**	101	WASHER-HARD (13.5X25.5X3-MM THK)	
M	49	1,2	**8T-4244**	25	NUT (M12X1.75-THD)	
	50	1,2	**8T-4896**	41	WASHER-HARD (10.2X18.5X2.5-MM THK)	
M	51	1	**8T-4956**	2	BOLT (M12X1.75X35-MM)	
M	52	2	**8T-5001**	3	BOLT (M12X1.75X130-MM)	
M	53	2	**8T-5041**	1	BOLT (M12X1.75X120-MM)	

166-3950 **LINES GP-AXLE OIL COOLER** *(contd.)* **i02137993**

NOTE	REF NO	GRAPHIC REF	PART NUMBER	QTY	PART NAME 1 2 3 4 5 6 (PRODUCT LEVEL)	SEE PAGE
	54	2	**9B-7237**	1	BOLT (3/8-16X1.25-IN)	

C-CHANGE FROM PREVIOUS TYPE
I-REFER TO HYDRAULIC INFORMATION SYSTEM
M-METRIC PART

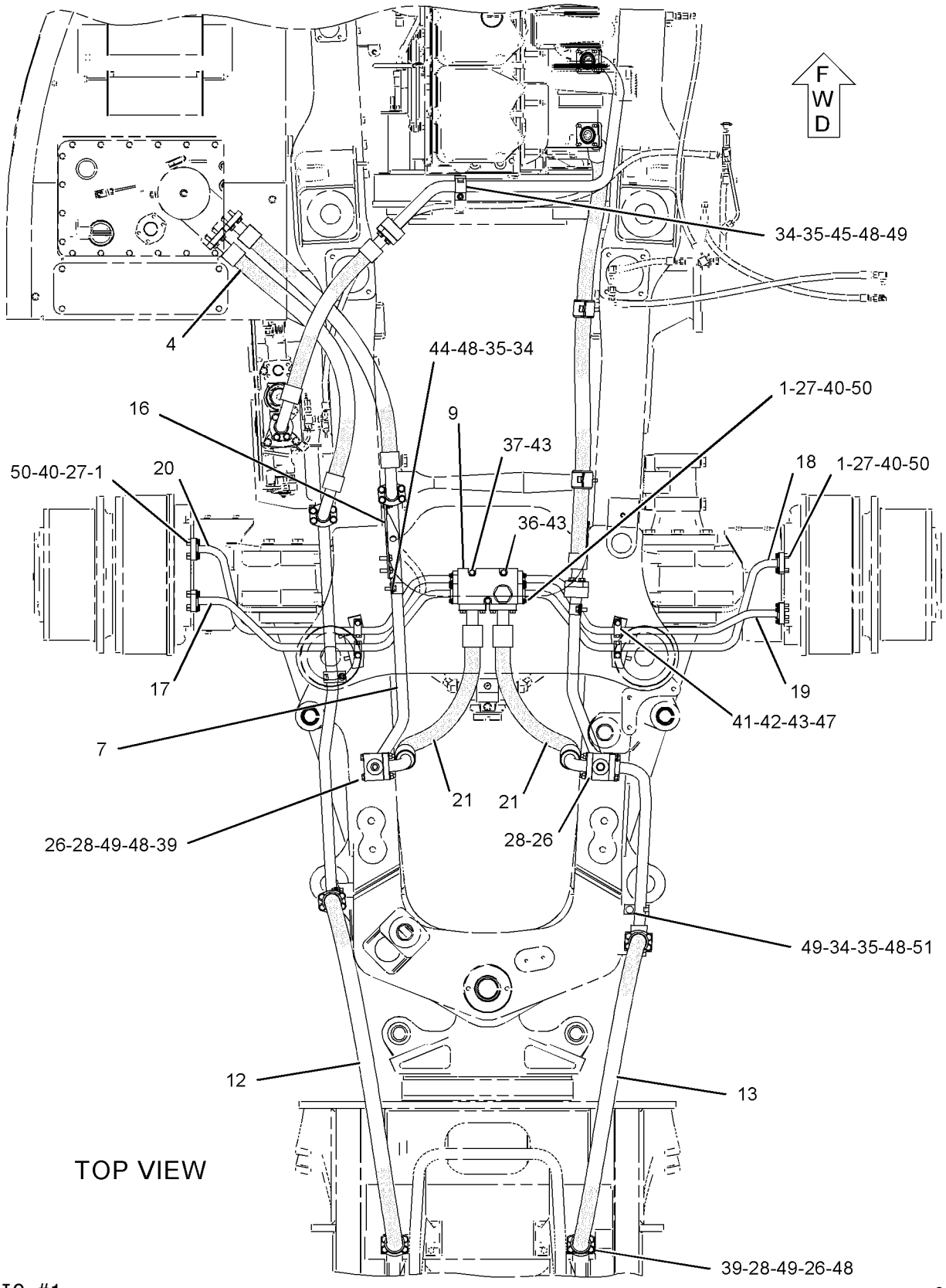

GRAPHIC #1

g01086487

166-3950 **LINES GP-AXLE OIL COOLER** *(contd.)* **i02137993**

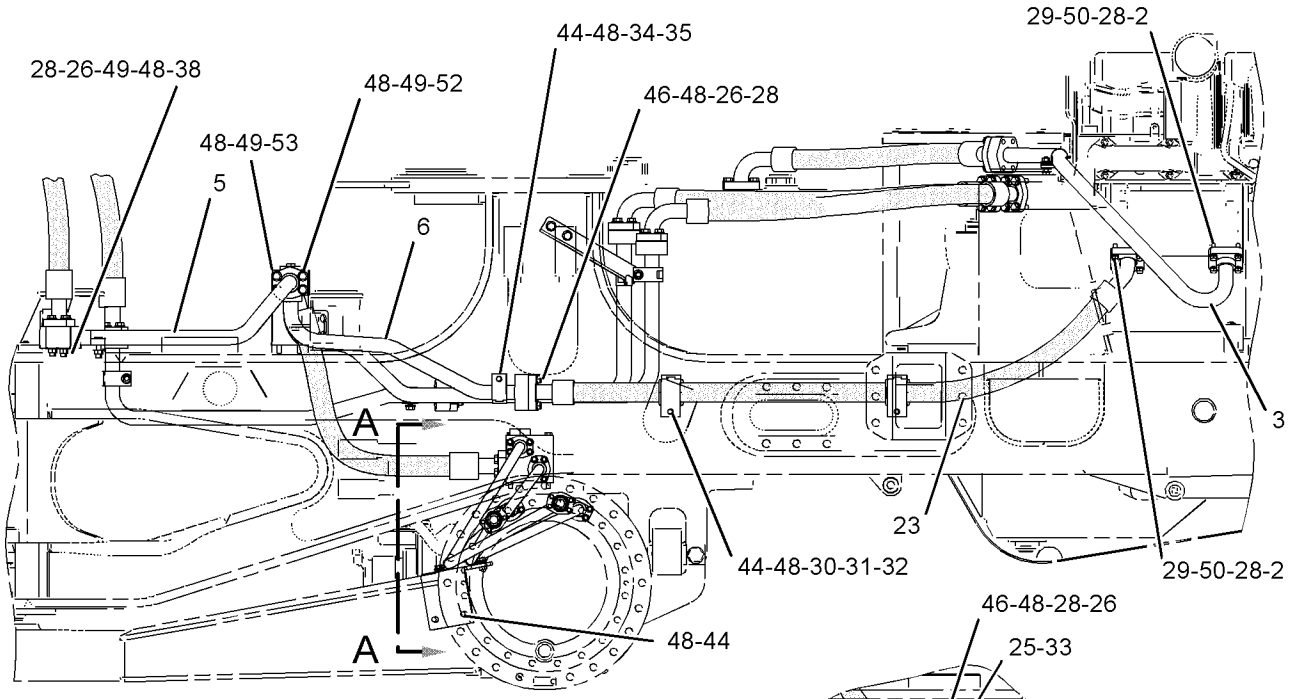

RIGHT SIDE VIEW

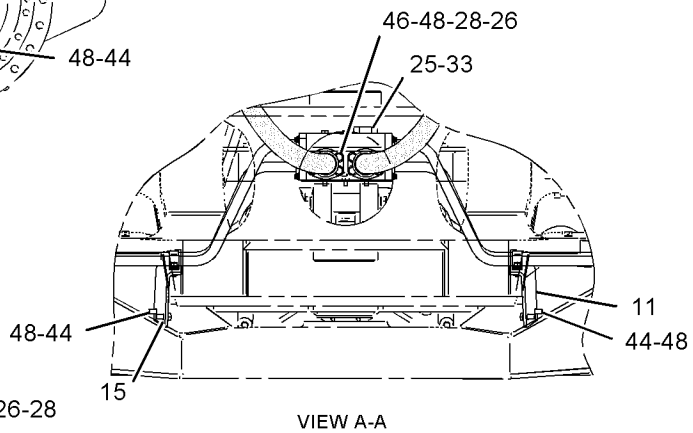

VIEW A-A

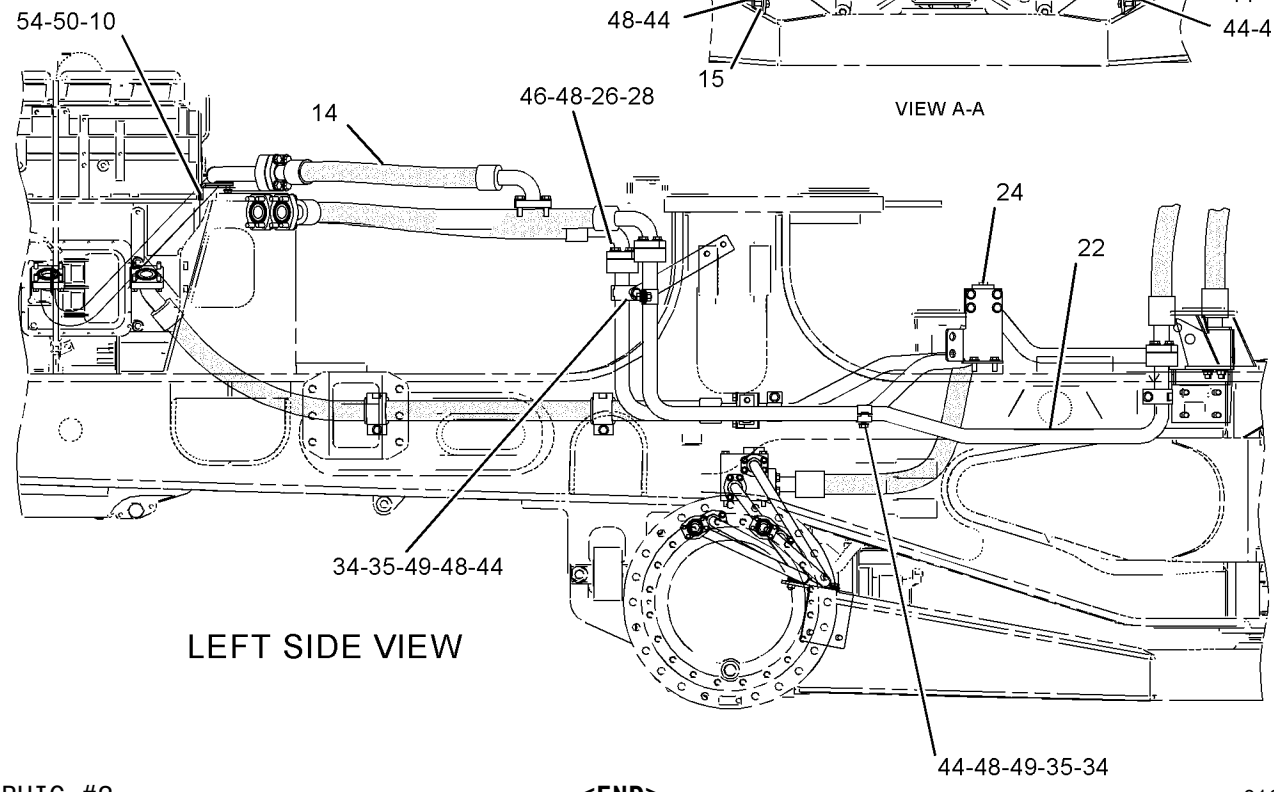

LEFT SIDE VIEW

GRAPHIC #2 **<END>** g01086488

152-6966 LINES GP-POWER TRAIN COOLER

S/N: AXM1-UP

PART OF 152-6943 POWER TRAIN AR

SMCS-1375, 3016 **i01530767**

NOTE	REF NO	GRAPHIC REF	PART NUMBER	QTY	PART NAME 1 2 3 4 5 6 (PRODUCT LEVEL)	SEE PAGE
	1	1	**8J-5914**	1	PLUG	
	2	1	**194-4649**	1	TUBE AS	
	3	1	**197-4836**	1	TUBE AS	
	4	1	**1P-3705**	2	SEAL-RECTANGULAR	
	5	1	**1P-4579**	2	FLANGE-HALF	
	6	1	**2S-4078**	1	SEAL-O-RING	
	7	1	**4J-0524**	1	SEAL-O-RING	
	8	1	**7X-0326**	4	BOLT (1/2-13X3-IN)	
	9	1	**8T-4223**	12	WASHER-HARD (13.5X25.5X3-MM THK)	
M	10	1	**8T-6868**	4	BOLT (M12X1.75X80-MM)	
	11	1	**8T-8919**	4	BOLT (1/2-13X1.75-IN)	

M-METRIC PART

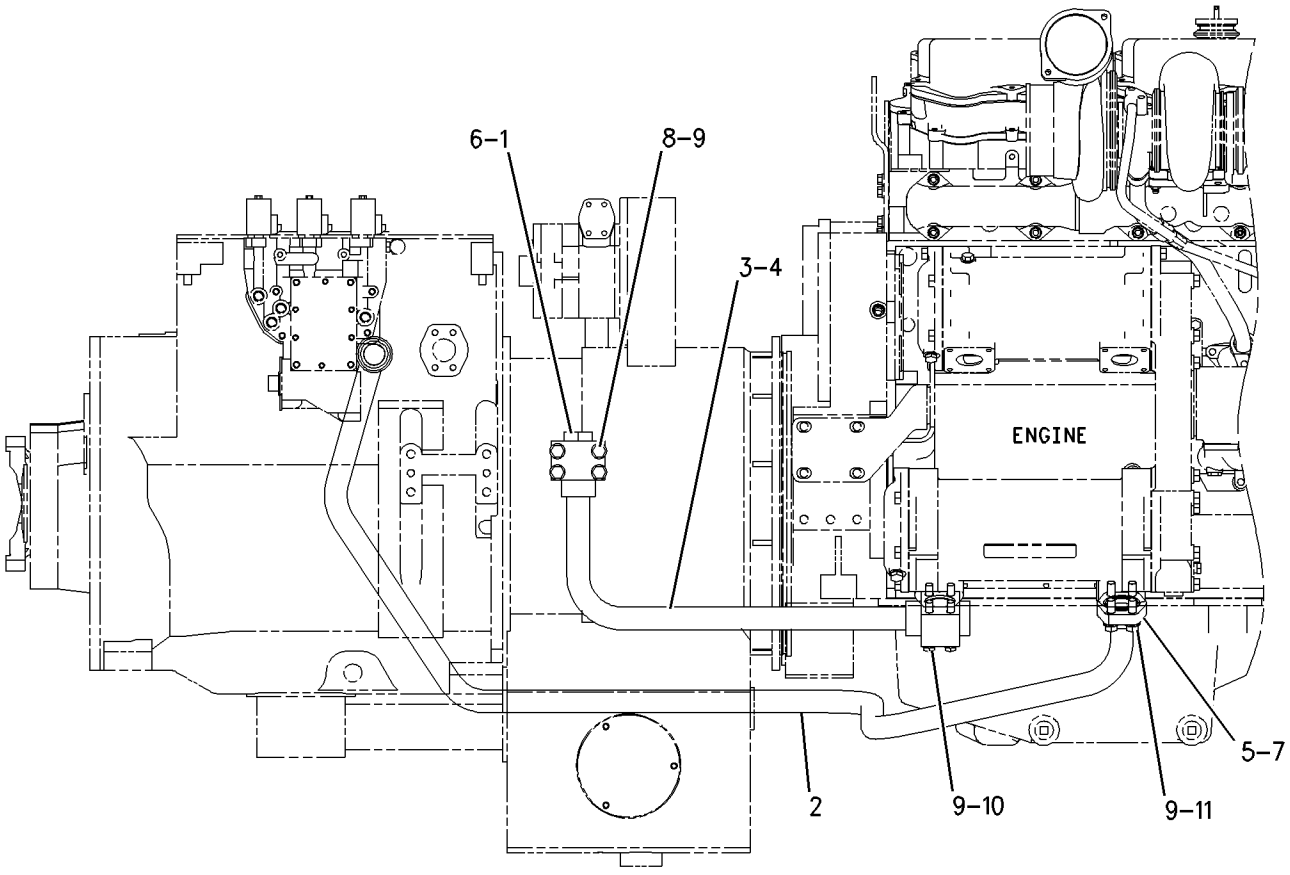

RIGHT SIDE VIEW

GRAPHIC #1 **<END>** g00794790

164-6810 LINES GP-TRANSMISSION OIL

S/N: AXM1-UP

PART OF 152-6943 POWER TRAIN AR

SMCS-3154 **i01834632**

NOTE	REF NO	GRAPHIC REF	PART NUMBER	QTY	PART NAME 1 2 3 4 5 6 (PRODUCT LEVEL)	SEE PAGE
Y	1	1	*6P-4603*	1	FILTER GP-OIL	377
	2	1	**6U-0456**	2	STRAP	
	3	1	**6V-0852**	1	CAP-DUST	
	4	1	**8C-3447**	1	CAP-DUST	
	5	1	**8S-9009**	1	ELBOW	
I	6	1	**8W-6650**	1	HOSE AS	
	7	1	**141-4007**	1	SLEEVE	
	8	1	*164-5567*	1	FITTING GP-COUPLING	
		1	**6V-3965**	1	FITTING AS	
		1	**3J-1907**	1	SEAL-O-RING	
	9	1	*164-5590*	1	VALVE GP-FLUID SAMPLING	
		1	**8C-3446**	1	VALVE AS-FLUID SAMPLING	
		1	**3J-7354**	1	SEAL-O-RING	
	10	1	*169-8429*	2	ELBOW AS	
					(EACH INCLUDES)	
		1	**2U-6317**	1	ELBOW	
		1	**3J-1907**	1	SEAL-O-RING	
	11	1	**197-4487**	1	TUBE AS	
	12	1	**197-4488**	1	TUBE AS	
I	13	1	**205-3557**	1	HOSE AS	
I	14	1	**205-3558**	1	HOSE AS	
	15	1	*148-8305*	1	ADAPTER AS	
		1	**5P-9617**	1	ADAPTER	
		1	**3J-1907**	1	SEAL-O-RING	
	16	1	*148-8354*	1	ELBOW AS	
		1	**6V-9002**	1	ELBOW	
		1	**6V-8398**	1	SEAL-O-RING	
		1	**3K-0360**	1	SEAL-O-RING	
	17	1	*148-8364*	1	ELBOW AS	
		1	**6V-8625**	1	ELBOW	
		1	**6V-8398**	1	SEAL-O-RING	
		1	**3K-0360**	1	SEAL-O-RING	
	18	1	**1P-4577**	2	FLANGE-HALF	
	19	1	**1P-4578**	10	FLANGE-HALF	
	20	1	**4J-0520**	1	SEAL-O-RING	
	21	1	**4J-0522**	5	SEAL-O-RING	
	22	1	**4L-9337**	1	BOLT (3/8-16X1.5-IN)	
	23	1	**5M-2894**	2	WASHER-HARD (10.2X18.5X2.5-MM THK)	
	24	1	**5P-1075**	1	WASHER-HARD (10.2X22.5X3-MM THK)	
	25	1	**5P-2566**	1	BOLT (1/2-13X1.5-IN)	
	26	1	**5S-7382**	4	BOLT (3/8-16X1.375-IN)	
	27	1	**6K-3771**	8	BOLT-12 POINT HEAD (7/16-14X1.5-IN)	
	28	1	**6V-8188**	1	NUT (1/2-13-THD)	
	29	1	**7X-0311**	4	BOLT (7/16-14X2.25-IN)	
	30	1	**7X-0623**	3	WASHER (10.5X21X2-MM THK)	
	31	1	**8M-4433**	2	SEAL-O-RING	
	32	1	**8S-0023**	4	CLIP (SLOT)	
	33	1	**8S-0024**	4	CLIP (TAB)	
	34	1	**8T-2502**	2	BOLT (3/8-16X1.125-IN)	
	35	1	**8T-4121**	8	WASHER-HARD (11X21X2.5-MM THK)	
M	36	1	**8T-4186**	8	BOLT (M10X1.5X40-MM)	
M	37	1	**8T-4196**	3	BOLT (M10X1.5X35-MM)	
	38	1	**8T-4223**	2	WASHER-HARD (13.5X25.5X3-MM THK)	
	39	1	**8T-4896**	4	WASHER-HARD (10.2X18.5X2.5-MM THK)	
	40	1	**8T-5360**	12	WASHER (12X22.5X2.5-MM THK)	
	41	1	**9L-2662**	1	GASKET	

164-6810 **LINES GP-TRANSMISSION OIL** *(contd.)* **i01834632**

I-REFER TO HYDRAULIC INFORMATION SYSTEM
M-METRIC PART
Y-SEPARATE ILLUSTRATION

164-6810 **LINES GP-TRANSMISSION OIL** *(contd.)* **i01834632**

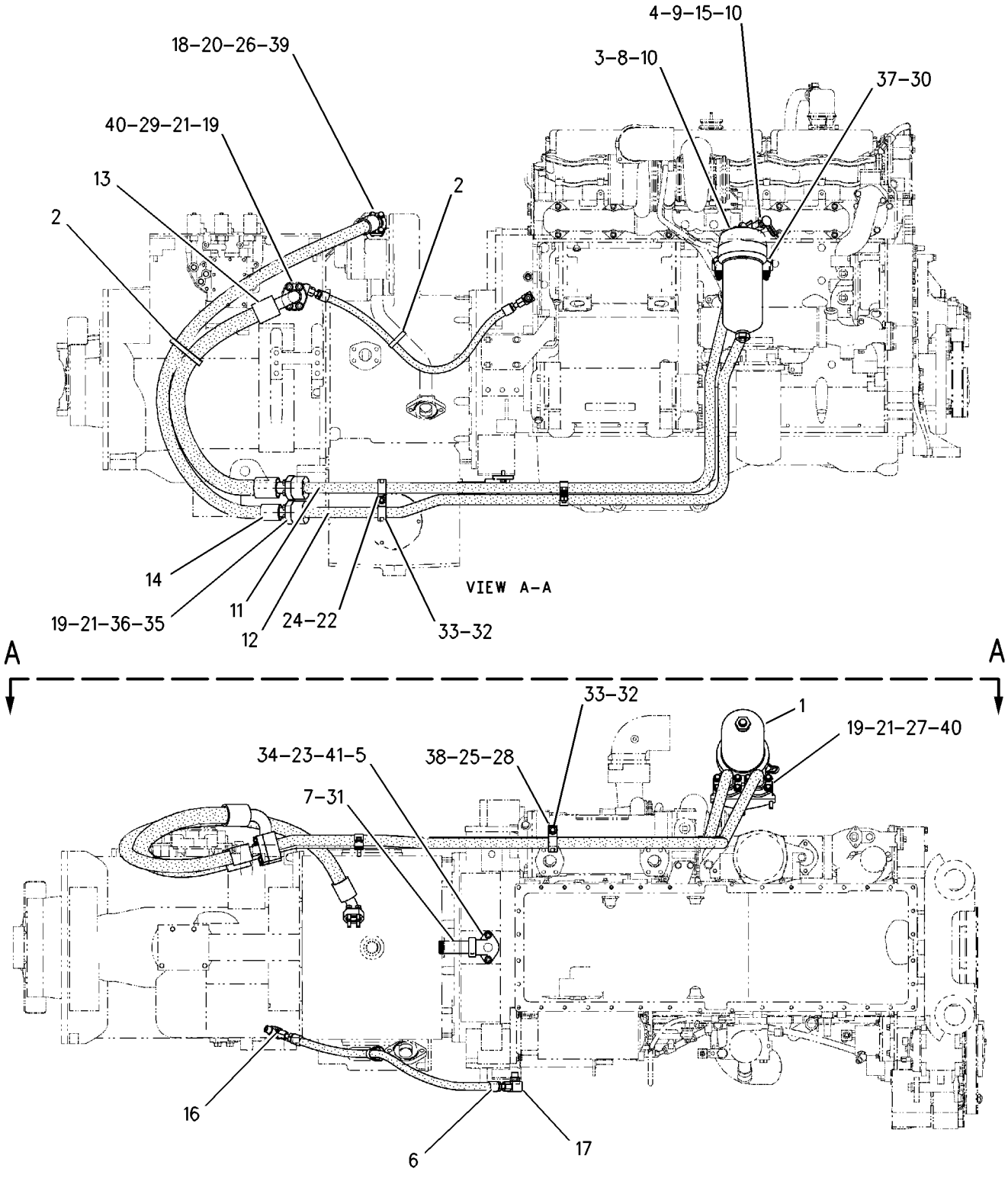

GRAPHIC #1 **<END>** g00937222

152-6932 MOUNTING GP-TRANSFER GEAR

S/N: AXM1-UP

PART OF 152-6919 AXLE & FRAME AR

SMCS-3159 **i01605520**

NOTE	REF NO	GRAPHIC REF	PART NUMBER	QTY	PART NAME 1 2 3 4 5 6 (PRODUCT LEVEL)	SEE PAGE
	1	1	**6Y-9960**	2	MOUNT AS	
					(EACH INCLUDES)	
		1	**9W-8095**		PAD-REBOUND	
	2	1	**9W-6582**	2	SLEEVE	
	3	1	**9W-6584**	2	WASHER (20.5X114X10-MM THK)	
	4	1	**9W-7385**	2	SLEEVE	
	5	1	**9W-7388**	4	WASHER (26X144X12-MM THK)	
	6	1	**9W-9930**	2	MOUNT AS	
	7	1	**178-6171**	1	BRACKET (RH)	
	8	1	**178-6924**	2	BRACKET	
	9	1	**179-2136**	1	BRACKET	
M	10	1	**8C-3290**	2	BOLT (M24X3X150-MM)	
M	11	1	**8C-8478**	2	BOLT (M20X2.5X140-MM)	
	12	1	**8T-4123**	4	WASHER-PLATED (22X35X3.5-MM THK)	
M	13	1	**8T-4131**	2	NUT (M20X2.5-THD)	
M	14	1	**8T-4140**	28	BOLT (M16X2X60-MM)	
	15	1	**8T-4167**	4	WASHER-HARD (26X44X4-MM THK)	
	16	1	**9X-8257**	28	WASHER (17.5X30X3.5-MM THK)	

M-METRIC PART

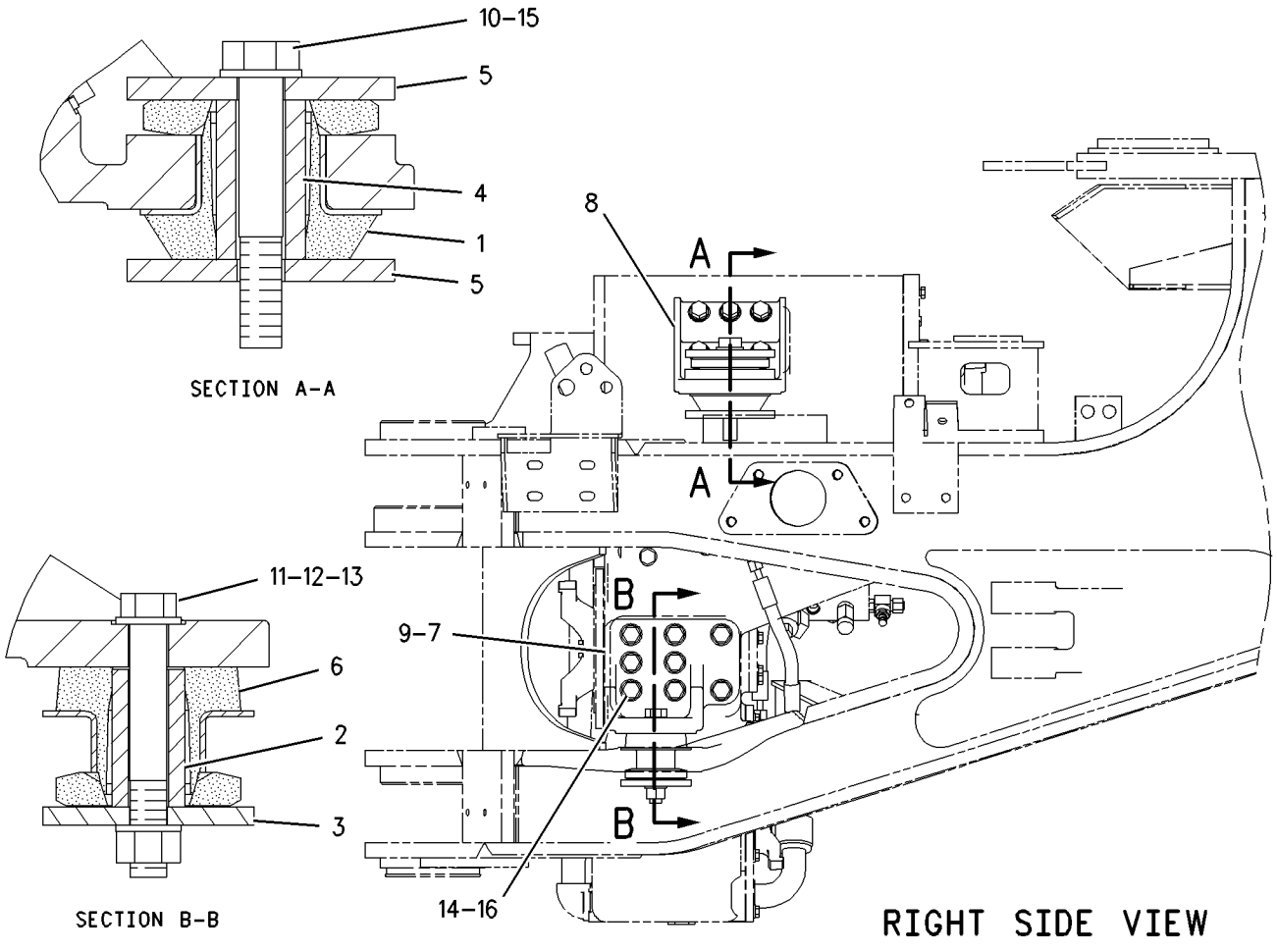

GRAPHIC #1 **<END>** g00763314

POWER TRAIN

195-1123 MOUNTING GP-TRANSMISSION

S/N: AXM1-UP

PART OF 152-6943 POWER TRAIN AR

SMCS-3082 **i02050205**

NOTE	REF NO	GRAPHIC REF	PART NUMBER	QTY	PART NAME 1 2 3 4 5 6 (PRODUCT LEVEL)	SEE PAGE
	1	1	**3K-6113**	12	WASHER-HARD (12X18.5X3-MM THK)	
	2	1	**6K-3771**	12	BOLT-12 POINT HEAD (7/16-14X1.5-IN)	

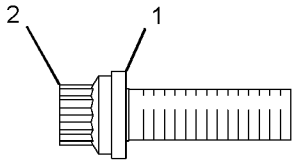

VIEW OF AREA A

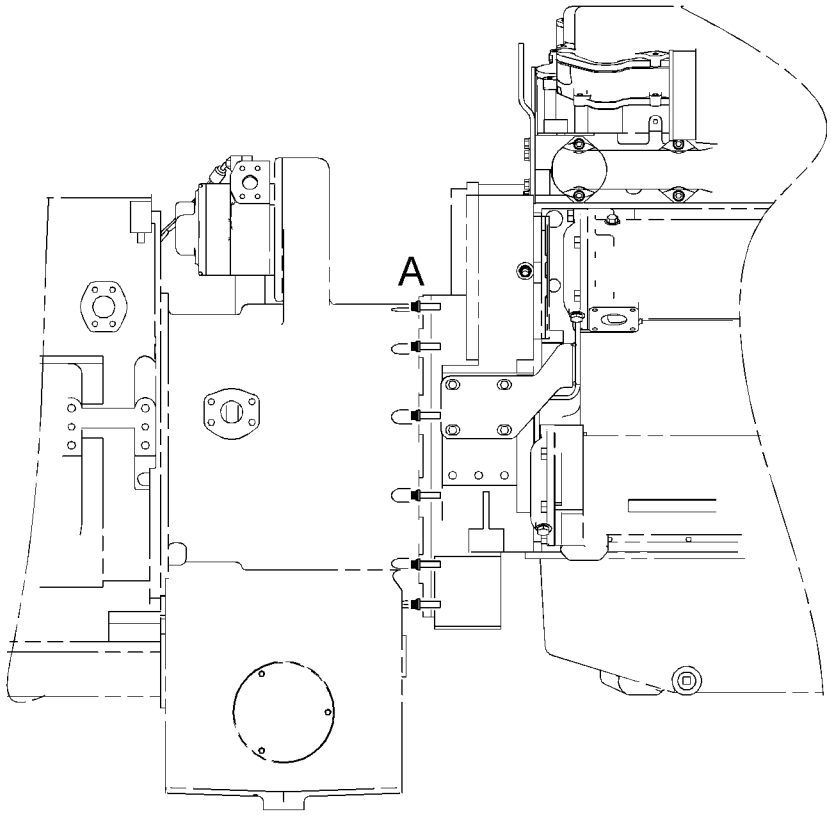

RIGHT SIDE VIEW

GRAPHIC #1

<END>

g01052192

148-9450 PLANETARY GP-TRANSFER GEAR

S/N: BBJ1-99999; A5L1-UP

PART OF 141-6890, 243-4030 GEAR GP-OUTPUT TRANSFER

SMCS-3159 **i01546766**

NOTE	REF NO	GRAPHIC REF	PART NUMBER	QTY	PART NAME 1 2 3 4 5 6 (PRODUCT LEVEL)	SEE PAGE
	1	1	**148-9442**	1	GEAR AS (30-TEETH)	
		1	**148-9443**	2	PLATE-THRUST	
	2	1	**2K-0715**	1	WASHER-THRUST (6.35-MM THK)	
	3	1	**3S-2708**	6	PIN-SPRING	
	4	1	**5M-0578**	12	BEARING AS-ROLLER	
	5	1	**6Y-7958**	3	DISC-FRICTION	
	6	1	**8D-3879**	4	DISC	
	7	1	**8D-3937**	1	PISTON	
	8	1	**8D-3971**	1	SEAL-RING	
	9	1	**8D-3972**	1	SEAL-RING	
	10	1	**8E-8308**	9	DISC-THRUST	
	11	1	**148-9403**	1	SPACER	
	12	1	**148-9411**	3	SPACER	
	13	1	**148-9425**	1	SHAFT	
	14	1	**148-9426**	1	HOUSING AS	
		1	**2D-6642**	2	BALL	
	15	1	**148-9431**	3	SPACER	
	16	1	**148-9439**	1	GEAR AS (45-TEETH)	
		1	**148-9438**	1	PLATE-THRUST	
	17	1	**148-9441**	1	CARRIER AS	
	17A	1	**6P-7564**	1	CARRIER-RING	
	17B	1	**2H-2255**	1	DOWEL	
	17C	1	**4B-9782**	1	BALL	
	17D	1	**4B-9784**	1	BALL	
	18	1	**148-9444**	1	HUB	
	19	1	**148-9445**	6	SHAFT	
	20	1	**148-9446**	3	GEAR-PLANETARY (25-TEETH)	
	21	1	**148-9447**	3	GEAR-PLANETARY (30-TEETH)	
	22	1	**8L-2746**	1	SEAL-O-RING	
	23	1	**8T-4121**	13	WASHER-HARD (11X21X2.5-MM THK)	
M	24	1	**8T-4195**	13	BOLT (M10X1.5X30-MM)	

M-METRIC PART

148-9450 PLANETARY GP-TRANSFER GEAR *(contd.)* i01546766

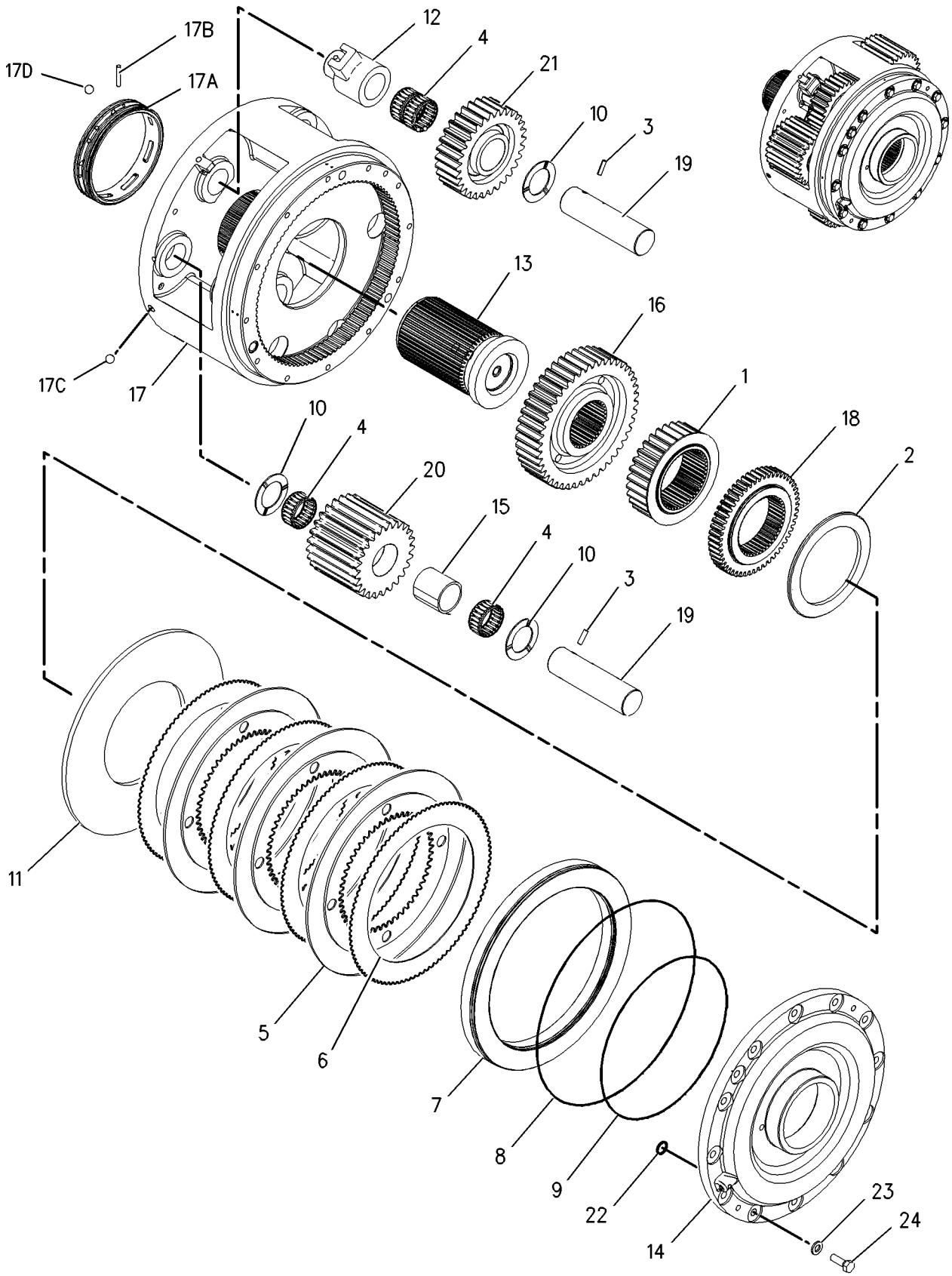

GRAPHIC #1 **<END>** g00763960

POWER TRAIN

146-0192 PLANETARY GP-TRANSMISSION

S/N: 4WY500-UP

PART OF 146-6225 TRANSMISSION AR

SMCS-3160 **i02181466**

NOTE	REF NO	GRAPHIC REF	PART NUMBER	QTY	PART NAME 1 2 3 4 5 6 (PRODUCT LEVEL)	SEE PAGE
	1	2	**185-8766**	1	YOKE AS	
		2	**2V-4458**	1	CUP	
	2	2,3	**6L-4783**	16	BOLT-12 POINT HEAD (5/16-18X1.25-IN)	
	3	3	**8E-3610**	1	RETAINER	
	4	3	**7G-1141**	1	SHAFT-CENTER	
	5	3	**176-4114**	1	CARRIER AS	
		3	**6F-6547**	1	BEARING-SLEEVE	
	6	3	**8D-8621**	1	RING-RETAINING	
B	7	3	**7G-1158**	1	SHIM PACK (INCLUDES 17-SHIMS)	
	8	3	**8E-8307**	10	DISC-THRUST	
	9	3	**7G-0747**	5	SHAFT AS	
					(EACH INCLUDES)	
		3	**2A-3746**	1	PLUG-CUP	
	10	3	**3S-2708**	19	PIN-SPRING	
	11	3	**5M-0578**	10	BEARING AS-ROLLER	
	12	3	**224-4826**	5	GEAR-PLANETARY (21-TEETH)	
	13	3	**133-2968**	1	GEAR-RING (85-TEETH)	
	14	3	**141-9746**	1	PLATE-END	
	15	3	**8D-4771**	1	SEAL-O-RING	
	16	3	**133-2972**	1	HOUSING AS	
		3	**1A-2223**	2	DOWEL	
	17	3	**102-8671**	16	DISC-FRICTION	
	18	3	**6T-1996**	9	PLATE-CLUTCH	
	19	3	**132-9643**	2	PISTON-CLUTCH	
	20	2,3	**3P-2795**	4	SEAL-RING	
	21	3	**7G-1186**	2	RING-SEAL EXTENSION	
	22	3	**7G-1596**	1	RING-RETAINING	
	23	3	**7G-0746**	4	SHAFT AS	
					(EACH INCLUDES)	
		3	**5M-7921**	1	PLUG-CORE	
	24	3	**9M-4355**	10	DAMPER-BOLT	
	25	3	**5P-9345**	8	BEARING	
	26	3	**224-4825**	4	GEAR-PLANETARY (20-TEETH)	
	27	3	**8E-8306**	8	DISC-THRUST	
	28	3	**133-3024**	1	HOUSING-CLUTCH	
	29	2,3	**8P-8744**	2	RING-SEAL EXTENSION	
	30	3	**5P-9362**	1	RING-RETAINING	
	31	3	**7G-0825**	3	PLATE-CLUTCH	
	32	3	**5M-6126**	13	BEARING AS-ROLLER	
	33	3	**7G-2516**	4	GEAR-PLANETARY (24-TEETH)	
	34	3	**8E-8304**	26	DISC-THRUST	
	35	3	**7G-0721**	4	SHAFT-PLANETARY	
	36	3	**6Y-9807**	5	DISC-FRICTION	
	37	3	**7G-0824**	4	PLATE-CLUTCH	
	38	3	**1T-0141**	1	RING-METAL SEAL	
	39	3	**2L-0043**	1	RING-RETAINING	
	40	3	**106-7799**	2	BALL BEARING	
	41	2,3	**1A-2170**	28	SPRING-RETAINER	
	42	3	**3T-2299**	2	RING-SEAL EXTENSION	
	43	3	**6Y-2281**	2	RING-SEAL	
	44	3	**1S-0579**	1	BALL BEARING	
	45	3	**6Y-5888**	2	RING-SEAL	
	46	3	**3T-3725**	2	RING-SEAL EXTENSION	
	47	3	**8S-3370**	1	RING-SEAL	
	48	2,3	**3P-0896**	2	RING-RETAINING	
	49	2,3	**5L-4753**	2	RING-RETAINING	

146-0192 **PLANETARY GP-TRANSMISSION** *(contd.)* **i02181466**

NOTE	REF NO	GRAPHIC REF	PART NUMBER	QTY	PART NAME 1 2 3 4 5 6 (PRODUCT LEVEL)	SEE PAGE
	50	3	**6V-4323**	1	BALL BEARING	
	51	3	**5M-6212**	3	TUBE	
	52	3	**7G-0719**	3	SHAFT-PLANETARY	
R	53	3	**8P-2051**	1	PLATE-CLUTCH	
	54	3	**9P-7390**	2	DISC AS-FRICTION	
	55	3	**8E-9599**	1	PISTON-CLUTCH	
	56	3	**145-2318**	1	HOUSING AS	
		3	**1A-2223**	2	DOWEL	
	57	1	**6V-1720**	1	PLATE-SERIAL NUMBER (TRANSMISSION)	
	58	3	**8P-2022**	1	RING-SEAL	
	59	3	**8P-9569**	1	RING-SEAL	
	60	3	**145-2339**	1	HUB AS	
		3	**9M-2001**	1	DOWEL	
	61	3	**145-2324**	1	CAGE-BEARING	
	62	3	**7G-2476**	6	GEAR-PLANETARY (20-TEETH)	
	63	3	**067-3161**	1	RING-RETAINING	
	64	3	**5P-6727**	1	BALL BEARING	
	65	3	**5P-5296**	1	RING-RETAINING	
	66	3	**3T-7000**	1	RING-RETAINING	
	67	3	**3N-8506**	1	RING-PISTON	
	68	3	**3T-6999**	1	GEAR-SUN (30, 26-TEETH)	
	69	2	**7G-0720**	3	SHAFT-PLANETARY	
	70	2	**149-5461**	1	SEAL-O-RING	
	71	2	**2B-0947**	8	BOLT (1/2-13X2.25-IN)	
M	72	2	**5P-8245**	63	WASHER-HARD (13.5X25.5X3-MM THK)	
	73	2	**7G-0725**	1	GEAR-RING (72-TEETH)	
	74	2	**3D-9348**	2	BOLT (1/2-13X7.75-IN)	
	75	2	**1A-7669**	8	BOLT (1/2-13X7-IN)	
	76	2	**4M-8871**	10	DOWEL	
	77	2	**4M-9592**	20	SPRING	
	78	2	**8E-9598**	1	HOUSING-CLUTCH	
	79	2	**9H-5545**	5	DOWEL-REACTION	
	80	2	**7G-0731**	2	PISTON-CLUTCH	
	81	2	**7M-5813**	10	SPRING	
	82	2	**8E-3602**	1	CARRIER AS	
		2	**3T-7003**	1	BEARING-SLEEVE	
	83	2	**7G-1143**	1	GEAR AS (73-TEETH)	
		2	**9M-2001**	1	DOWEL	
	84	2	**3T-0707**	2	PLATE AS	
					(EACH INCLUDES)	
		2	**5H-6202**	2	PIN	
	85	2	**0S-1588**	36	BOLT (3/8-16X1.25-IN)	
	86	2	**5M-2894**	55	WASHER-HARD (10.2X18.5X2.5-MM THK)	
	87	2	**7G-2475**	3	GEAR-PLANETARY (24-TEETH)	
	88	2	**8P-2053**	1	SEAL-RING	
	89	2	**9F-3823**	2	RING-SEAL	
	90	2	**9W-9158**	1	PISTON-BALANCE	
	91	2	**9W-9159**	1	PISTON-CLUTCH	
	92	2	**9W-9161**	1	HOUSING AS	
		2	**6B-6863**	1	PIN-SPRING	
		2	**6P-7706**	1	CARRIER-RING	
		2	**8M-6521**	2	DOWEL	
		2	**8S-3426**	1	DOWEL	
	93	2	**3T-0697**	1	MANIFOLD-CENTER	
	94	2	**0S-1571**	9	BOLT (3/8-16X1.75-IN)	
	95	2	**8E-9292**	1	MANIFOLD AS	
		2	**8S-3426**	1	DOWEL	
	96	2	**7G-0739**	1	HOUSING AS	
		2	**8M-6521**	2	DOWEL	

146-0192 **PLANETARY GP-TRANSMISSION** *(contd.)* **i02181466**

NOTE	REF NO	GRAPHIC REF	PART NUMBER	QTY	PART NAME 1 2 3 4 5 6 (PRODUCT LEVEL)	SEE PAGE
	97	2	**061-6712**	1	RING-RETAINING	
	98	2	**4S-5816**	1	RING-SEAL	
	99	2	**3T-3751**	1	PISTON-CLUTCH	
	100	2	**5P-0076**	6	BOLT-12 POINT HEAD (3/8-16X1.5-IN)	
	101	2	**3T-3723**	1	PISTON-BALANCE	
	102	2	**0L-1351**	2	BOLT (3/8-16X0.875-IN)	
	103	2	**3T-3997**	1	BAFFLE AS	
		2	**5C-1014**	2	BRACKET-LATCH	
	104	2	**7G-1146**	1	GEAR AS-SUN (55-TEETH)	
		2	**9M-2001**	1	DOWEL	
	105	2	**7G-0713**	1	CARRIER AS	
		2	**9L-9068**	2	DOWEL	
	106	2	**7G-0727**	1	GEAR-RING (101-TEETH)	
	107	2	**9F-3788**	1	RING-METAL SEAL	
	108	2	**164-9661**	1	HOUSING AS	
		2	**1A-2223**	4	DOWEL	
	109	2	**0S-1617**	4	BOLT (5/16-18X0.75-IN)	
	110	2	**1B-7182**	2	BOLT (5/16-18X1.25-IN)	
	111	2	**9M-1974**	6	WASHER-HARD (8.8X16X2-MM THK)	
	112	2	**7G-0743**	1	PLATE	
	113	2	**9M-1503**	1	RING-METAL SEAL	
	114	2	**1M-9691**	10	SPRING	
	115	2	**164-9662**	5	DOWEL-REACTION	
	116	2	**133-2969**	1	GEAR-RING (85-TEETH)	
	117	2	**4M-1678**	10	SPRING	
	118	2	**135-8685**	10	PIN	
	119	2	**0S-1587**	25	BOLT (1/2-13X1.75-IN)	
	120	2	**1D-4574**	10	BOLT (1/2-13X6-IN)	
	121	2	**4M-9641**	10	BOLT (1/2-13X12.75-IN)	
	122	2	**7G-0744**	1	PLATE-RETAINER	
	123	2	**1T-0720**	4	BOLT-12 POINT HEAD (3/8-16X1.25-IN)	
	124	2	**7G-1148**	1	GEAR-SUN (30-TEETH)	
	125	2	**7G-1159**	1	PLATE-RETAINER	
	126	2	**5F-7054**	1	SEAL-O-RING	
	127	2	**185-8733**	1	RETAINER AS	
	128	2	**9M-5894**	1	SEAL-O-RING	
	129	2	**188-0751**	1	RING-RETAINING	
	130	2	**0T-0573**	8	BOLT (3/8-16X2.75-IN)	
	131	2	**5P-9344**	1	BEARING AS-ROLLER	
	132	2	**6V-6804**	1	SEAL-LIP TYPE	
	133	2	**185-8731**	1	ROTOR-SENSOR	
	134	2	**7G-1136**	1	GEAR AS-SUN	
		2	**7G-1137**	1	GEAR-SUN (29-TEETH)	
		2	**7G-1138**	1	HUB-COUPLING	
		2	**9S-2843**	1	RING-LOCK	
	135	2	**171-7209**	1	RING-SEAL	
	136	2	**222-1550**	1	CARRIER-PLANETARY	
	137	1	**191-8304**	1	SENSOR GP-SPEED (TRANSMISSION OUTPUT)	
	138	1	**117-1385**	2	SEAL-O-RING	
	139	1	**2H-3755**	2	BOLT (5/16-18X0.62-IN)	
	140	1	**186-2447**	2	GUARD	
	141	1	**191-8305**	1	SENSOR GP-SPEED (TRANSMISSION OUTPUT)	
	142	1	**3E-4352**	2	WASHER-HARD (8.8X20.5X2.5-MM THK)	

B-USE AS REQUIRED
M-METRIC PART
R-REMFG PART MAY BE AVAILABLE

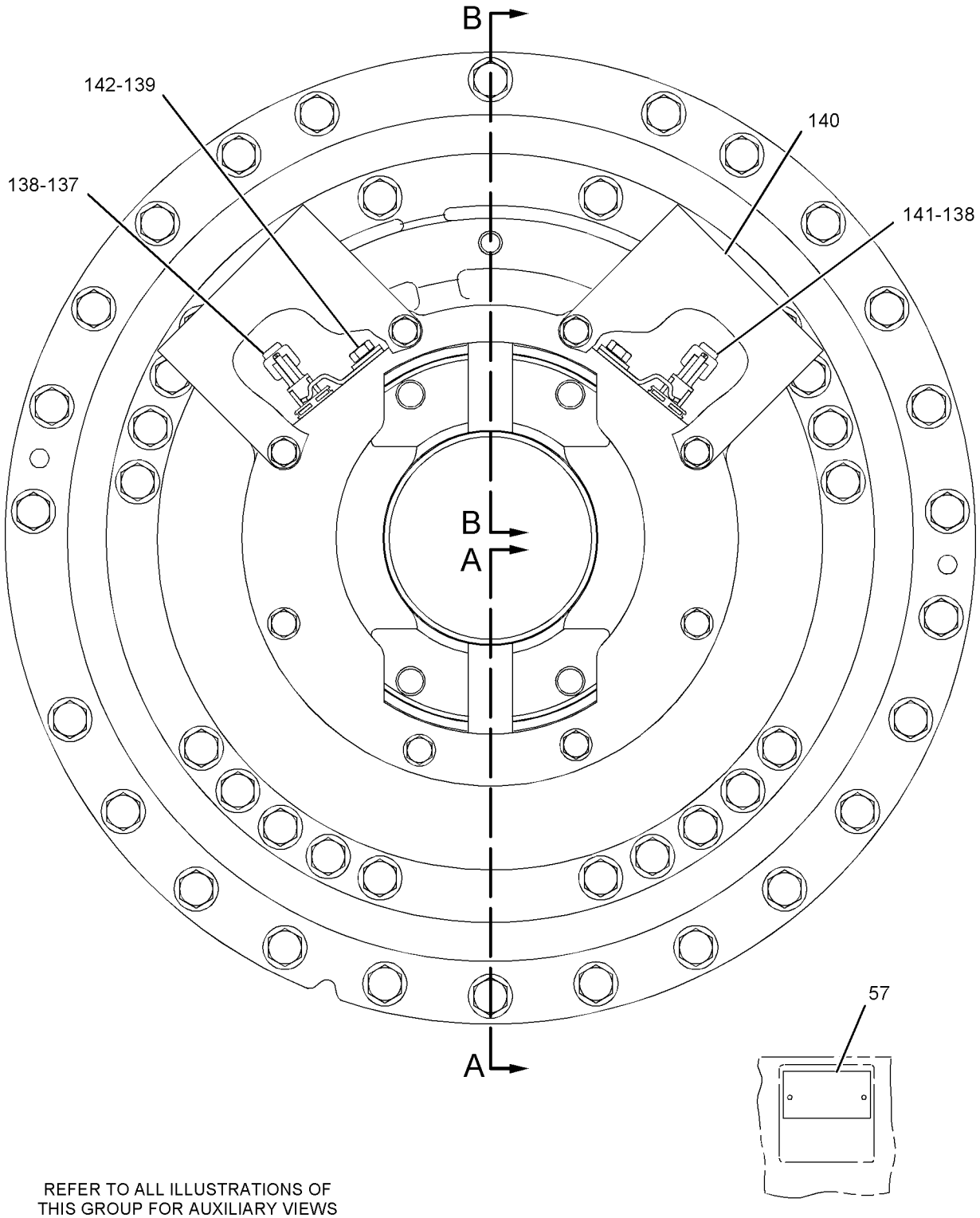

REFER TO ALL ILLUSTRATIONS OF
THIS GROUP FOR AUXILIARY VIEWS

GRAPHIC #1

g01103885

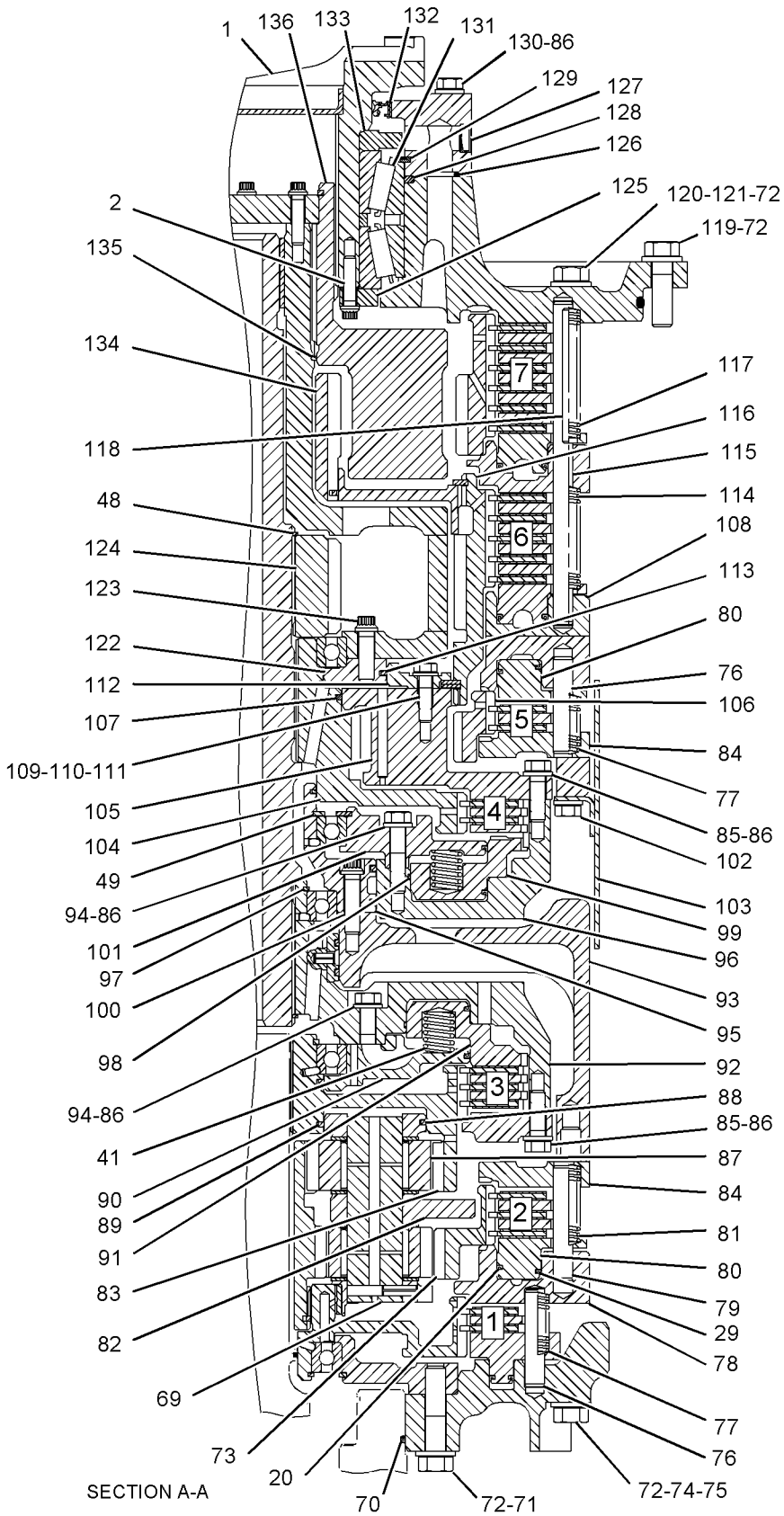

SPEED SELECTION CHART	
SPEED	CLUTCHES ENGAGED
REV	3 & 7
NEUTRAL	1
1 FWD	2 & 6
2 FWD	1 & 6
3 FWD	3 & 6
4 FWD	1 & 5
5 FWD	3 & 5
6 FWD	1 & 4
7 FWD	3 & 4

GRAPHIC #2 g01103886

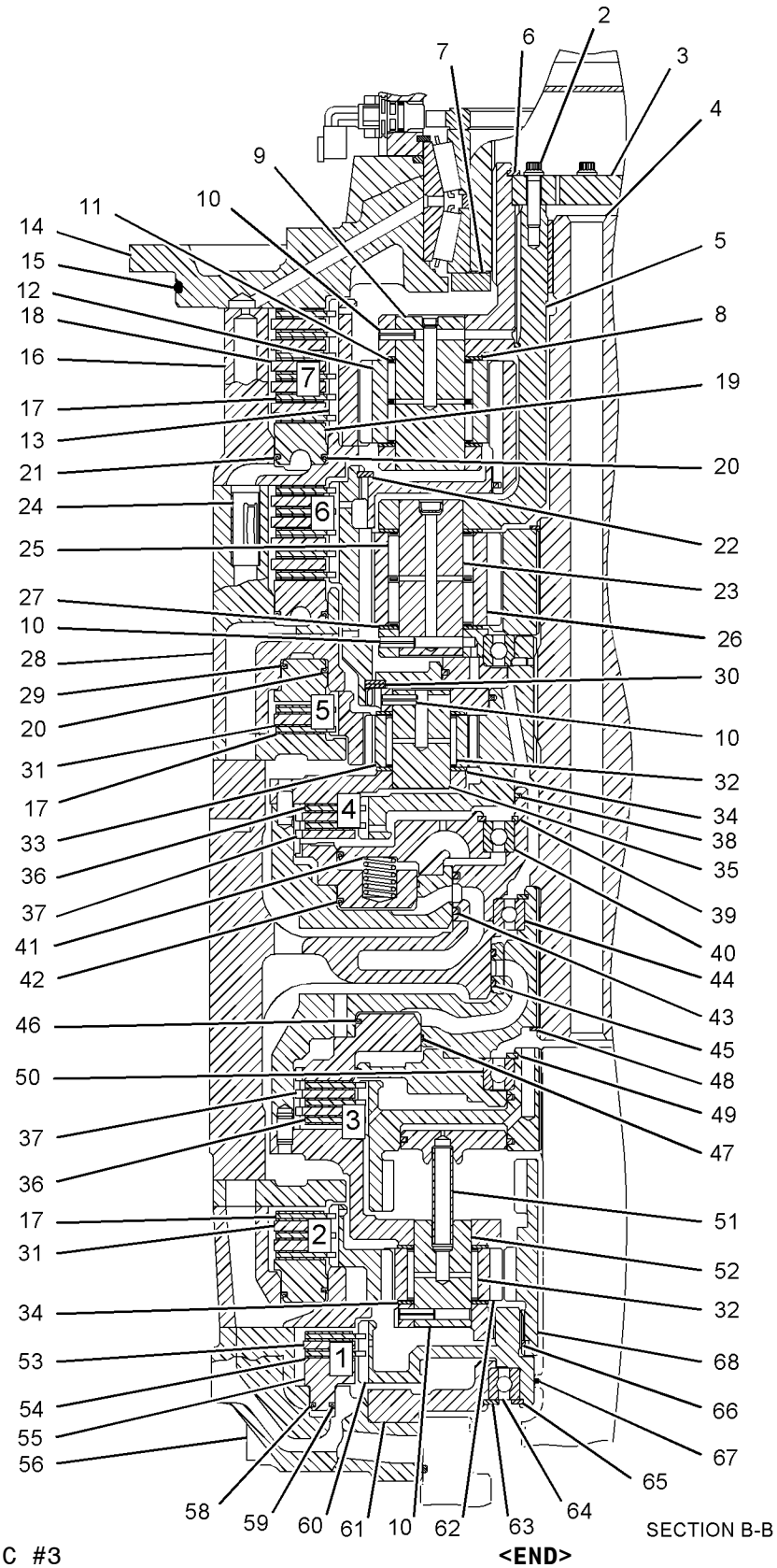

SECTION B-B

SPEED SELECTION CHART	
SPEED	CLUTCHES ENGAGED
REV	3 & 7
NEUTRAL	1
1 FWD	2 & 6
2 FWD	1 & 6
3 FWD	3 & 6
4 FWD	1 & 5
5 FWD	3 & 5
6 FWD	1 & 4
7 FWD	3 & 4

GRAPHIC #3

<END>

g01103905

POWER TRAIN

152-6943 POWER TRAIN AR

S/N: AXM1-UP

PART OF 152-6920 INSTALLATION AR-MACHINE

SMCS-3000, 4000 **i01933308**

NOTE	PART NUMBER	QTY	PART NAME 1 2 3 4 5 6 (PRODUCT LEVEL)	SEE PAGE
Y	*165-0234*	1	AFTERCOOLER GP-AIR	125
Y	*141-6876*	1	AIR CLEANER GP	131
Y	**153-7076**	1	ENGINE AR-COMPLETE	3
			S/N: AXM1-1237	
Y	**235-4689**	1	ENGINE AR-COMPLETE	5
			S/N: AXM1238-UP	
Y	*206-4943*	1	FILLER GP-POWER TRAIN OIL	376
Y	*194-0782*	1	GAUGE GP-OIL LEVEL (DIPSTICK) (TRANSMISSION)	379
Y	*141-6875*	1	LINES GP-AIR	135
Y	*162-5127*	1	LINES GP-AIR	136
Y	*214-7413*	1	LINES GP-ENGINE OIL FILTER	95
Y	*152-6966*	1	LINES GP-POWER TRAIN COOLER	420
Y	*164-6810*	1	LINES GP-TRANSMISSION OIL	421
Y	*152-6958*	1	MOUNTING GP-ENGINE	75
Y	*195-1123*	1	MOUNTING GP-TRANSMISSION	425
Y	*152-6961*	1	PUMP & MTG GP-BRAKE	614
Y	*152-6960*	1	PUMP & MTG GP-HOIST	727
Y	*191-6005*	1	PUMP & MTG GP-HYDRAULIC	728
Y	*152-6963*	1	PUMP & MTG GP-HYDRAULIC FAN	729
Y	*152-6959*	1	PUMP & MTG GP-STEERING	651
Y	*152-6964*	1	PUMP & MTG GP-TRANSFER GEAR	435
Y	*152-6957*	1	STARTING AID GP-ETHER	255
YR	**146-6225**	1	TRANSMISSION AR	460

R-REMFG PART MAY BE AVAILABLE
Y-SEPARATE ILLUSTRATION

<END>

152-6964 PUMP & MTG GP-TRANSFER GEAR

S/N: AXM1-UP

PART OF 152-6943 POWER TRAIN AR

SMCS-5073 **i01576855**

NOTE	REF NO	GRAPHIC REF	PART NUMBER	QTY	PART NAME 1 2 3 4 5 6 (PRODUCT LEVEL)	SEE PAGE
Y	1	1	**191-6119**	1	PUMP GP-GEAR	436
	2	1	**1H-6227**	1	SEAL-O-RING	
	3	1	**9M-6590**	2	BOLT-12 POINT HEAD (1/2-13X1.0 IN)	

Y-SEPARATE ILLUSTRATION

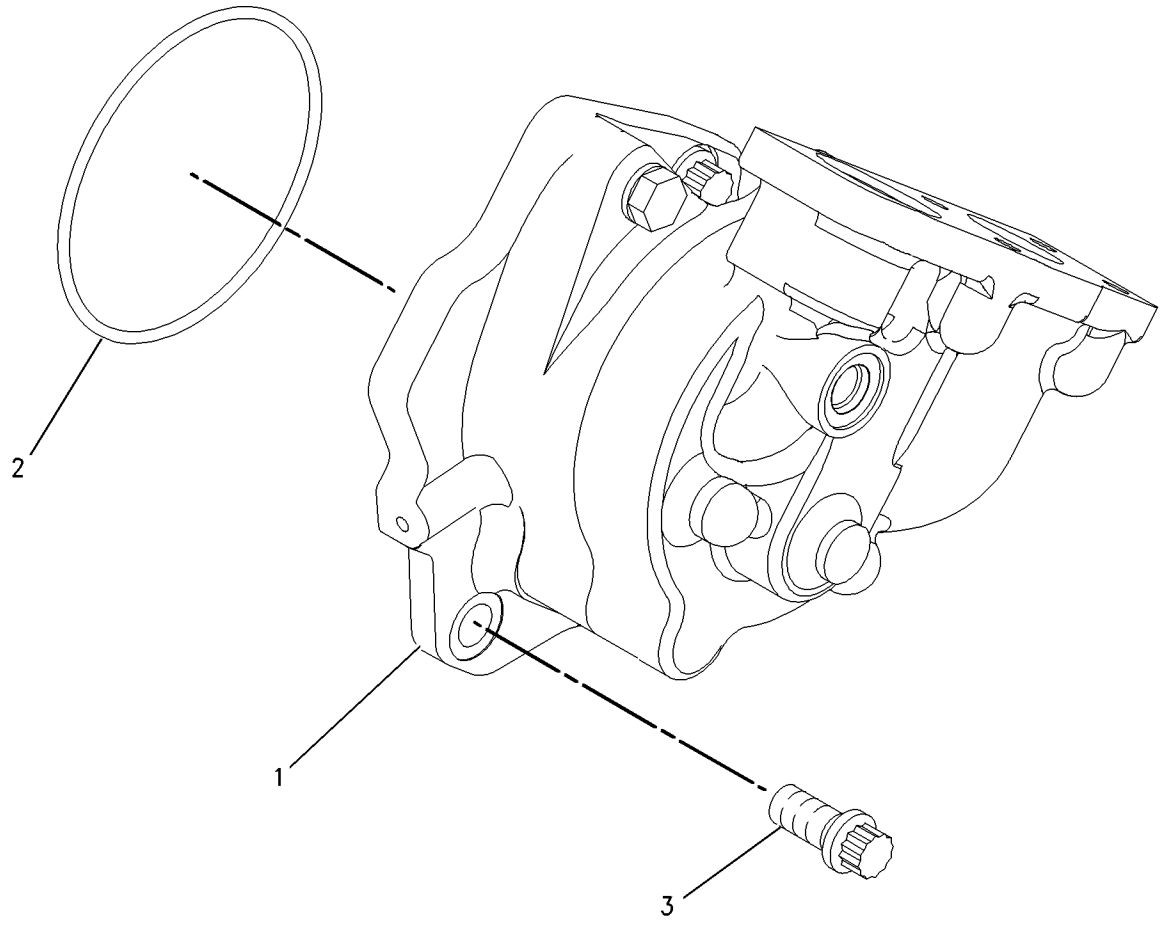

GRAPHIC #1 **<END>** g00763136

191-6119 PUMP GP-GEAR

S/N: AXM1-UP

PART OF 152-6964 PUMP & MTG GP-TRANSFER GEAR

SMCS-3066, 3115, 5073 **i01915942**

NOTE	REF NO	GRAPHIC REF	PART NUMBER	QTY	PART NAME 1 2 3 4 5 6 (PRODUCT LEVEL)	SEE PAGE
	1	1	**3S-0004**	6	WASHER (0.406X0.728X0.09-IN THK)	
	2	1	**3S-4384**	1	GEAR AS-PUMP (10-TEETH)	
		1	**1B-8704**	1	KEY-WOODRUFF	
	3	1	**6Y-5010**	8	WASHER (10.16X19X0.84-MM THK)	
	4	1	**7B-3028**	1	SCREW-DRIVE (NO 4X3/16-IN)	
	5	1	**167-9218**	1	COVER AS	
		1	**2S-7931**	1	BEARING	
		1	**121-6608**	1	BEARING-SLEEVE	
	6	1	**176-9329**	1	ADAPTER	
	7	1	**177-7884**	1	BODY AS-OIL PUMP	
		1	**1M-3736**	2	DOWEL	
	8	1	**197-8446**	1	ADAPTER AS	
	9	1	**184-7407**	1	GEAR AS-OIL PUMP	
		1	**1B-8704**	1	KEY-WOODRUFF	
	10	1	**191-6110**	1	MANIFOLD AS	
		1	**2S-7931**	1	BEARING	
	11	1	**193-3070**	1	PLATE	
	12	1	**1B-8705**	1	KEY-WOODRUFF	
	13	1	**1L-3768**	1	RING-RETAINING	
	14	1	**4J-0520**	1	SEAL-O-RING	
	15	1	**4J-8997**	1	SEAL-O-RING	
	16	1	**4M-0189**	2	SEAL-O-RING	
	17	1	**7S-3029**	2	SEAL-LIP TYPE	
	18	1	**8T-0706**	1	RING-RETAINING	
M	19	1	**8T-1160**	4	BOLT-SOCKET HEAD (M10X1.5X50-MM)	
M	20	1	**8T-4195**	2	BOLT (M10X1.5X30-MM)	
	21	1	**3J-1907**	1	SEAL-O-RING	
	22	1	**9S-4191**	1	PLUG	

M-METRIC PART

191-6119 PUMP GP-GEAR *(contd.)* **i01915942**

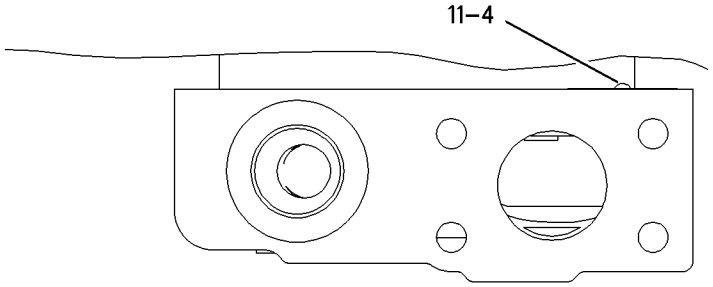

VIEW D–D

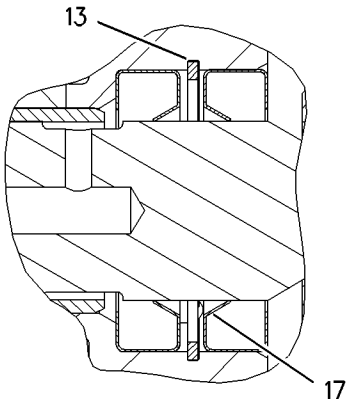

VIEW OF AREA C

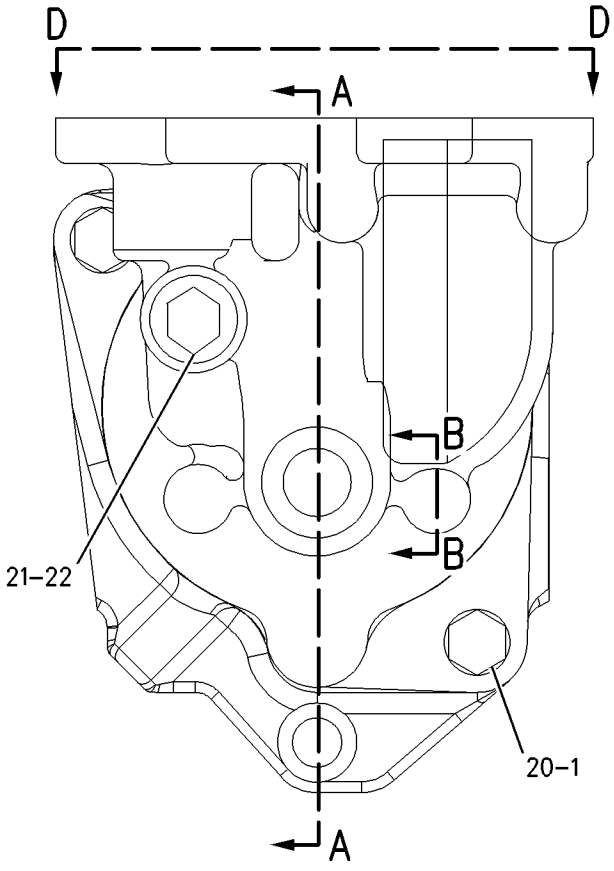

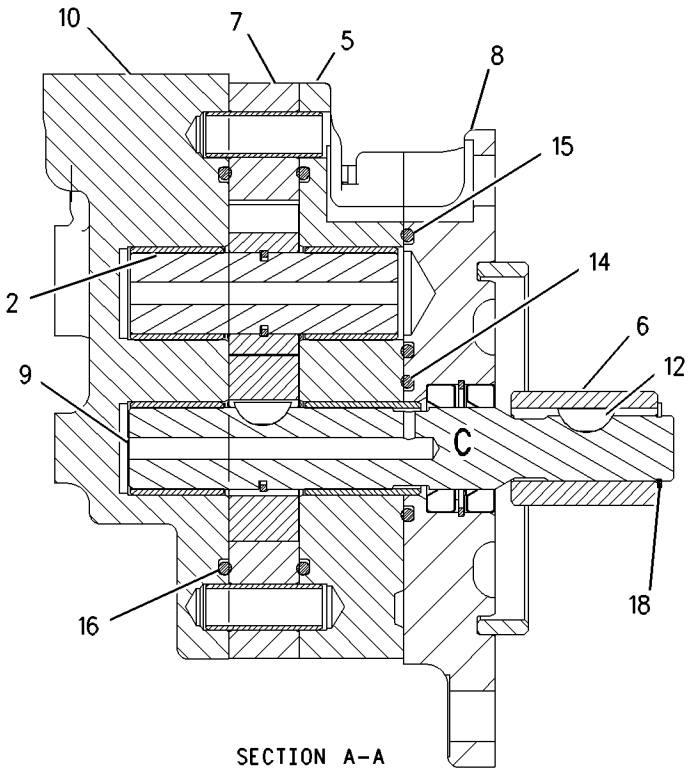

SECTION A–A

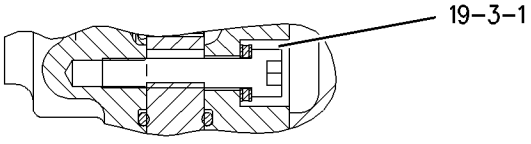

SECTION B–B

GRAPHIC #1 **<END>** g00998080

157-2446 PUMP GP-TRANSMISSION

S/N: 4WY500-UP

PART OF 146-6225 TRANSMISSION AR

SMCS-3066, 5073 **i01546202**

NOTE	REF NO	GRAPHIC REF	PART NUMBER	QTY	PART NAME 1 2 3 4 5 6 (PRODUCT LEVEL)	SEE PAGE
	1	1	**157-0683**	1	GEAR AS-OIL PUMP	
		1	**2B-9373**	1	KEY-WOODRUFF	
	2	1	**157-0682**	1	GEAR AS-OIL PUMP	
		1	**2B-9373**	1	KEY-WOODRUFF	
	3	1	**157-0681**	1	MANIFOLD AS	
	4	1	**1P-1479**	1	BODY AS-OIL PUMP	
		1	**8M-8489**	4	DOWEL	
	5	1	**156-4319**	1	COVER AS	
	6	1	**2D-8009**	2	SEAL-O-RING	
	7	1	**0S-1619**	6	BOLT (3/8-16X3 IN)	
	8	1	**3S-0004**	6	WASHER (0.406X0.728X0.09 IN THK)	

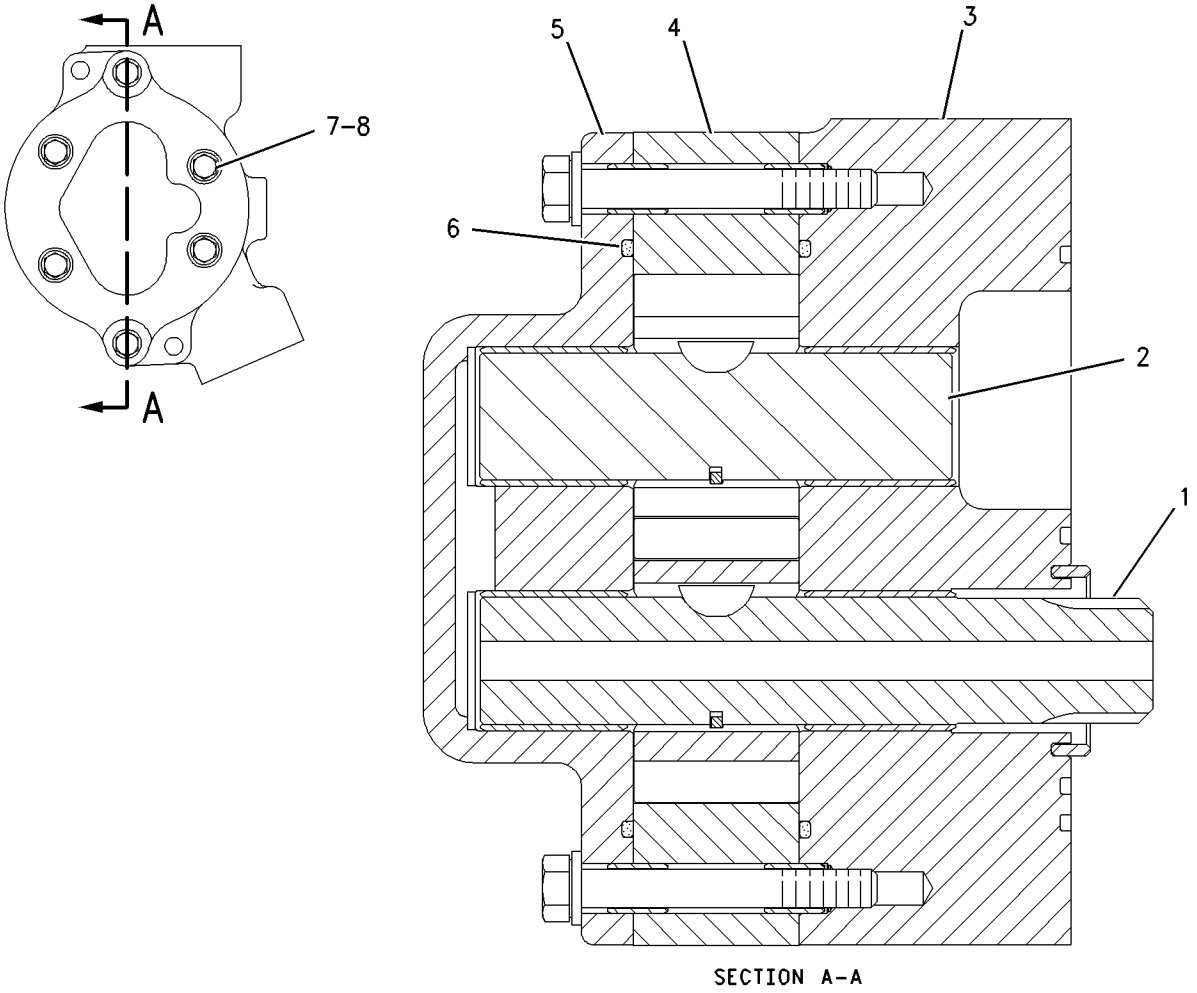

SECTION A-A

GRAPHIC #1 **<END>** g00803477

139-8621 RIM GP-DEMOUNTABLE

S/N: AXM1-UP
(25X25)
PART OF 150-3322, 150-3327, 150-4251, 166-6396, 184-4891, 187-7228, 199-3044, 206-3953, 246-4875, 261-1323, 263-1485, 265-7495 TIRE & RIM GP
ALSO AN ATTACHMENT

SMCS-4209 **i01820093**

NOTE	REF NO	GRAPHIC REF	PART NUMBER	QTY	PART NAME 1 2 3 4 5 6 (PRODUCT LEVEL)	SEE PAGE
	1	1	**5K-4865**	2	FLANGE	
	2	1	**5T-5682**	1	DRIVER	
	3	1	**7D-7469**	1	RING-LOCK	
	4	1	**8X-1983**	1	BAND AS	
		1	**8X-0948**	1	BAND-BEAD SEAT	
	5	1	**139-6938**	1	RIM AS	

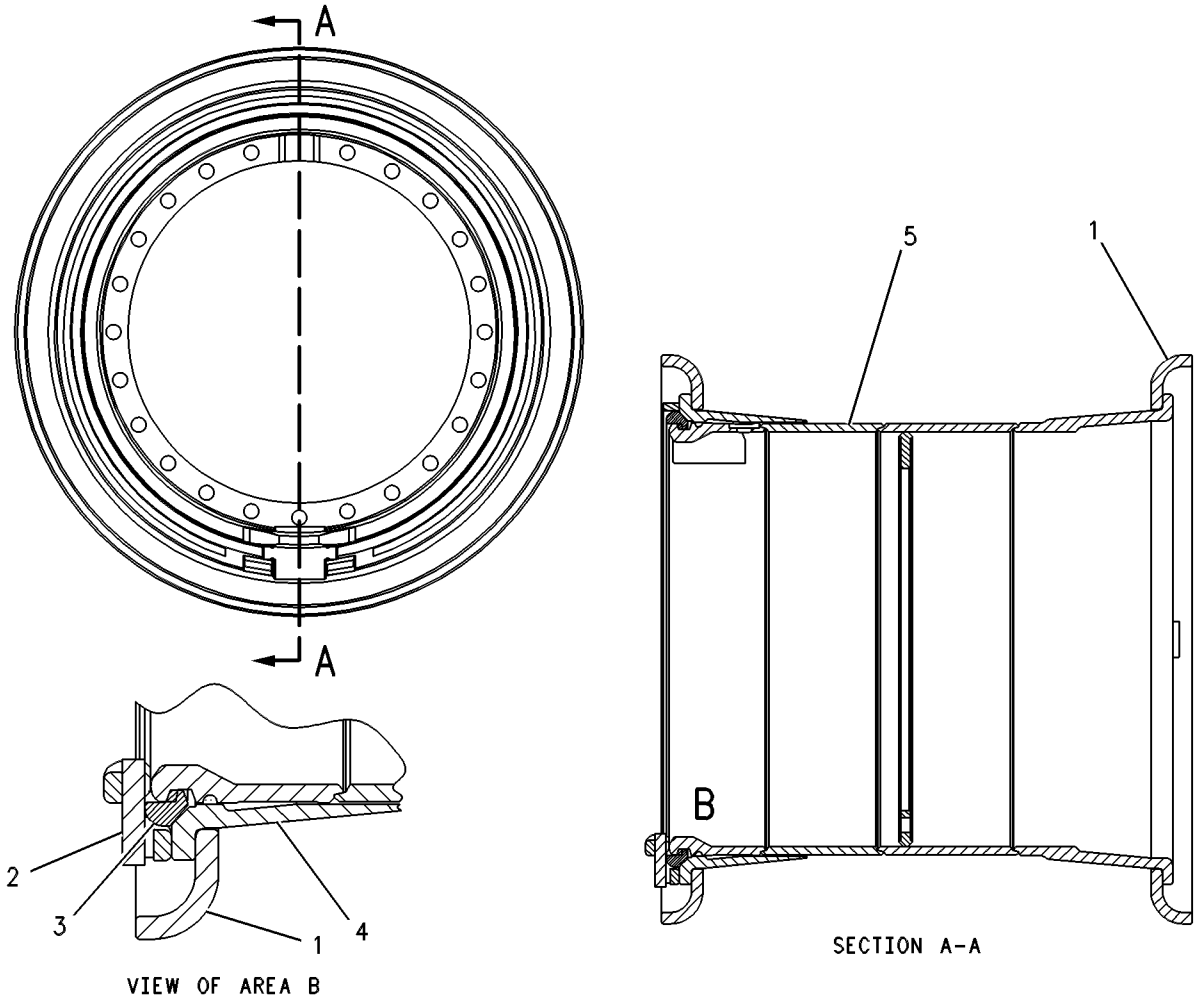

VIEW OF AREA B

SECTION A-A

GRAPHIC #1 **<END>** g00271525

140-6742 RIM GP-DEMOUNTABLE

S/N: AXM1-UP
(22 X 25)
PART OF 241-0614 TIRE & RIM GP
AN ATTACHMENT

SMCS-4209 **i02062146**

NOTE	REF NO	GRAPHIC REF	PART NUMBER	QTY	PART NAME 1 2 3 4 5 6 (PRODUCT LEVEL)	SEE PAGE
	1	1	**4F-8925**	2	FLANGE	
	2	1	**5T-5682**	1	DRIVER	
	3	1	**7D-7469**	1	RING-LOCK	
	4	1	**8X-1983**	1	BAND AS	
	5	1	**140-6745**	1	RIM AS	

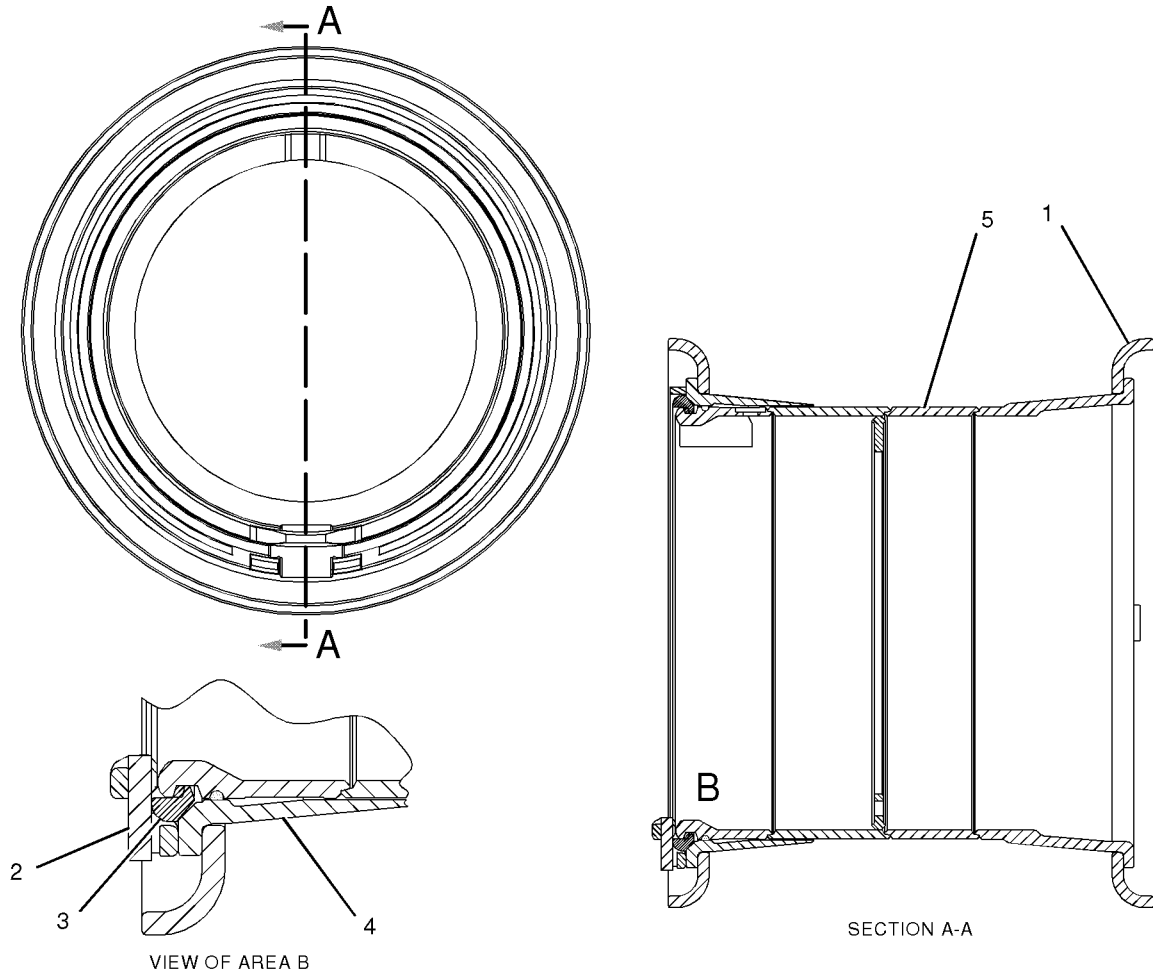

GRAPHIC #1 **<END>** g01057155

9M-8669 SCREEN GP-MAGNETIC—DIFFERENTIAL LOCK

S/N: AXM1-1796

PART OF 199-6425 CONTROL GP-DIFFERENTIAL LOCK

SMCS-3067 **i02235906**

NOTE	REF NO	GRAPHIC REF	PART NUMBER	QTY	PART NAME 1 2 3 4 5 6 (PRODUCT LEVEL)	SEE PAGE
	1	1	**3S-3440**	1	WASHER-WAVE	
	2	1	**6V-8801**	8	NUT (3/8-16-THD)	
	3	1	**3S-3439**	1	COVER-TOP	
	4	1	**8T-7196**	2	SEAL-FACE	
	5	1	*9M-2942*	1	HOUSING AS	
	5A	1	**8M-7166**	1	HOUSING-SCREEN	
	5B	1	**2M-1538**	4	STUD-TAPERLOCK	
	5C	1	**1J-8668**	4	STUD-TAPERLOCK	
					—OR—	
		1	**8M-1047**	4	STUD-TAPERLOCK	
					—OR—	
		1	**2M-4779**	4	STUD-TAPERLOCK	
	6	1	**3S-3875**	1	SCREEN-SUCTION (TRANSMISSION)	
	7	1	**9W-5531**	1	TUBE AS (MAGNETIC)	
	7A	1	**8M-7160**	4	MAGNET	
	8	1	**8T-4896**	4	WASHER-HARD (10.2X18.5X2.5-MM THK)	

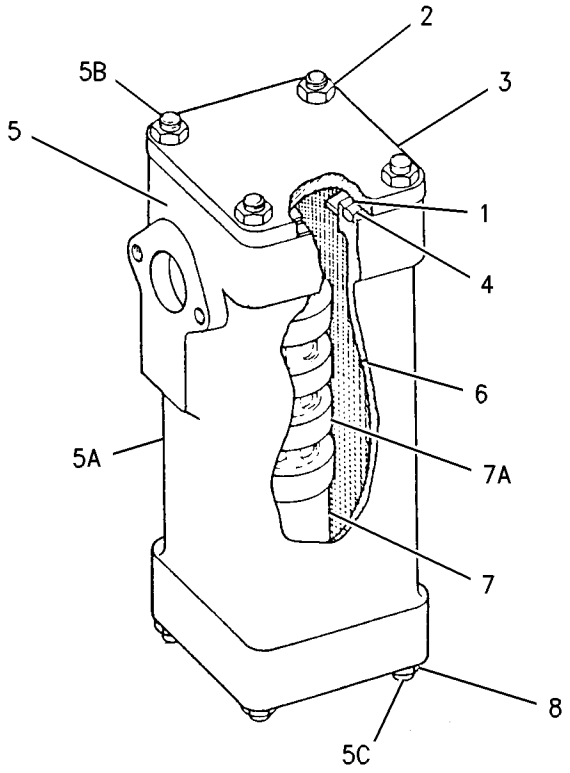

GRAPHIC #1 **<END>** g00916926

152-6938 SHAFT GP-DRIVE

S/N: AXM1-UP

PART OF 152-6920 INSTALLATION AR-MACHINE

SMCS-3253 **i01834678**

NOTE	REF NO	GRAPHIC REF	PART NUMBER	QTY	PART NAME 1 2 3 4 5 6 (PRODUCT LEVEL)	SEE PAGE
Y	1	1	**186-6357**	1	UNIVERSAL JOINT GP	464
	2	1	**8B-5144**	8	BOLT (5/8-18X3IN)	

Y-SEPARATE ILLUSTRATION

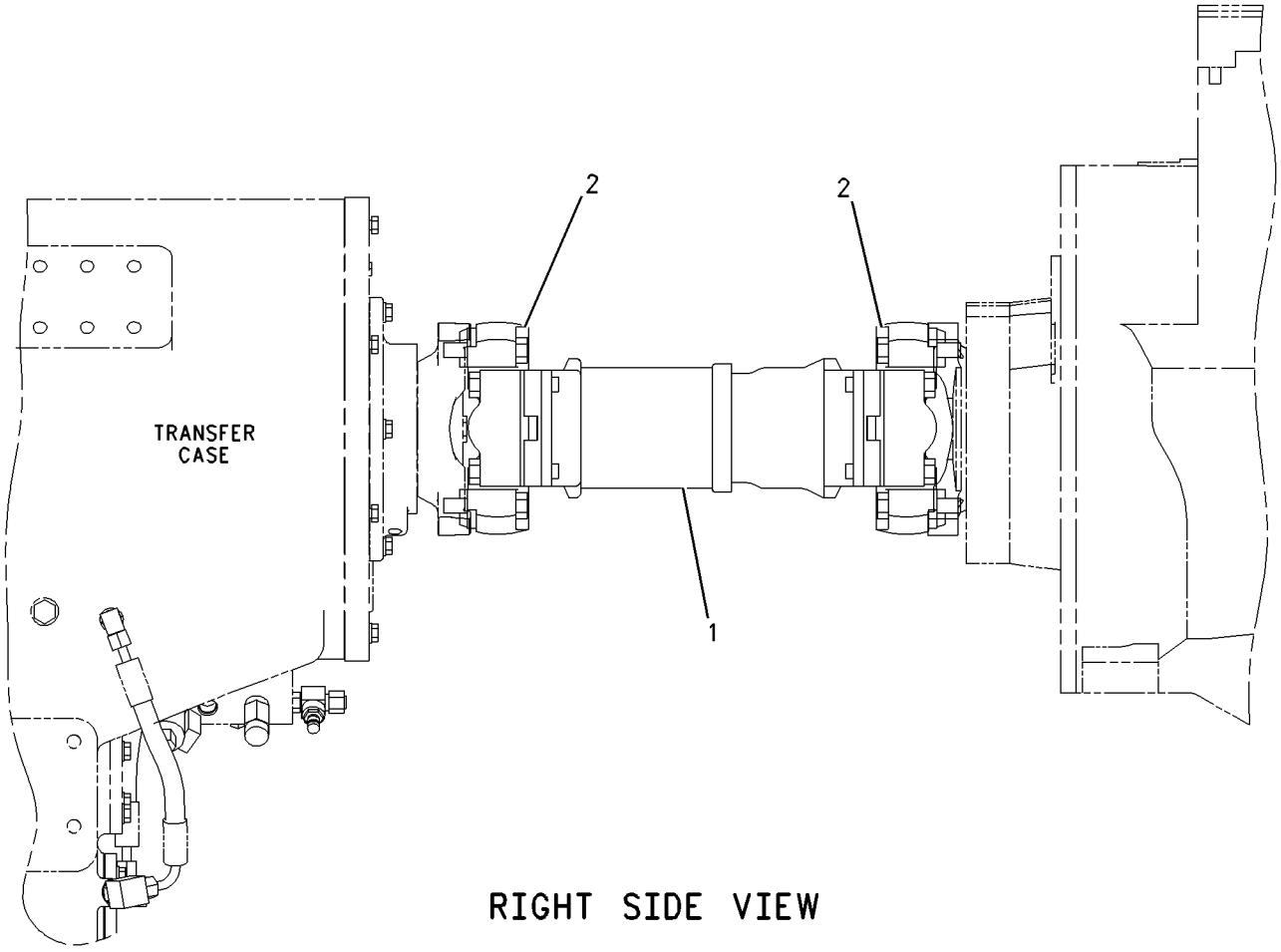

RIGHT SIDE VIEW

GRAPHIC #1 **<END>** g00763742

152-6934 SHAFT GP-FRONT DRIVE

S/N: AXM1-UP

PART OF 152-6919 AXLE & FRAME AR

SMCS-3253 **i01846703**

NOTE	REF NO	GRAPHIC REF	PART NUMBER	QTY	PART NAME 1 2 3 4 5 6 (PRODUCT LEVEL)	SEE PAGE
Y	1	1	**186-6356**	1	UNIVERSAL JOINT GP	463
	2	1	**0S-0484**	8	BOLT (1/2-20X2.25 IN)	

Y-SEPARATE ILLUSTRATION

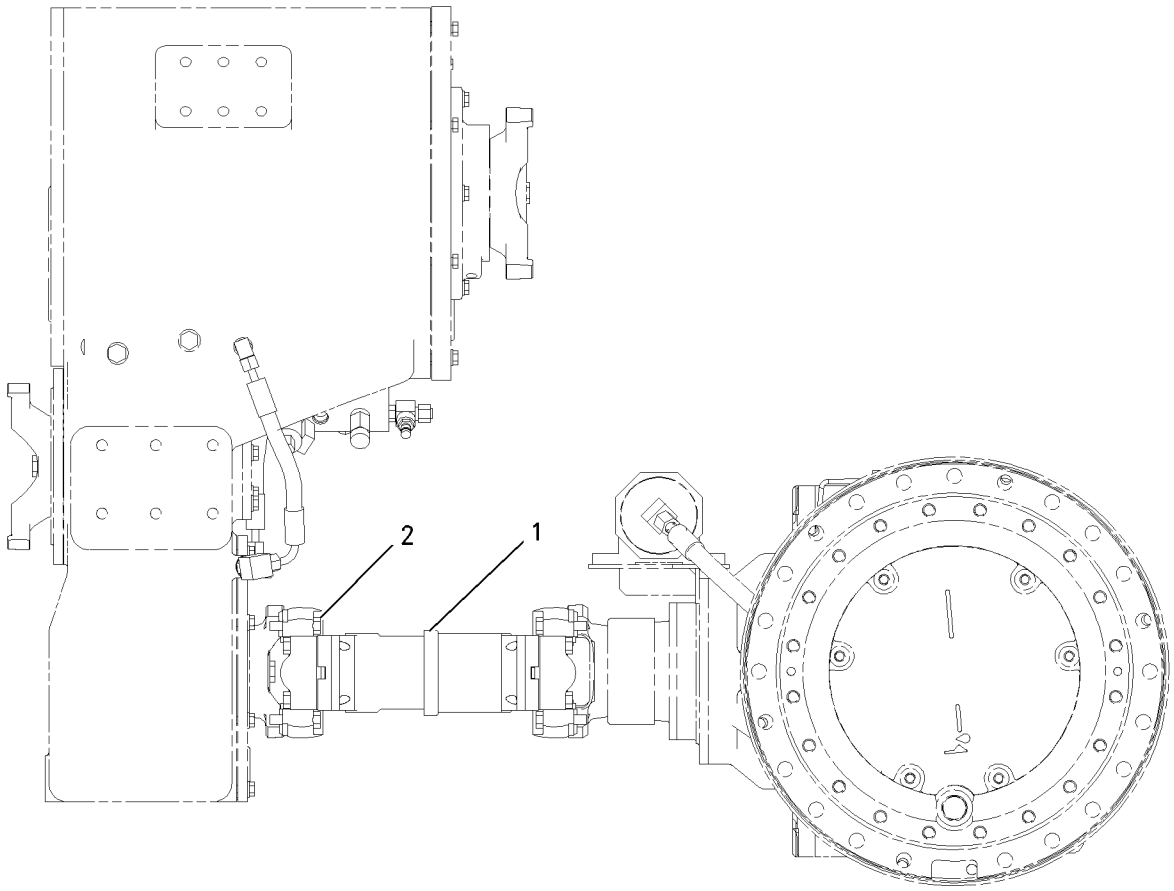

GRAPHIC #1 **<END>** g00754819

152-7027 SHAFT GP-HITCH DRIVE

S/N: AXM1-617

PART OF 152-6921 AXLE & FRAME AR

SMCS-3253 **i01540115**

NOTE	REF NO	GRAPHIC REF	PART NUMBER	QTY	PART NAME 1 2 3 4 5 6 (PRODUCT LEVEL)	SEE PAGE
	1	1	**2U-1573**	1	SEAL-O-RING	
	2	1	**146-2985**	1	PLATE AS-LOCK	
	3	1	**159-1073**	1	CARRIER	
	4	1	**159-1074**	1	CARRIER	
	5	1	**159-1075**	1	SHAFT	
	6	1	**177-0841**	2	YOKE AS	
					(EACH INCLUDES)	
		1	**105-5088**	1	GUARD	
	7	1	**184-4221**	1	FLANGE	
	8	1	**184-4223**	2	RETAINER	
Y	9	1	**188-0867**	1	UNIVERSAL JOINT GP	465
	10	1	**0S-1604**	8	BOLT (1/2-20X2.5-IN)	
	11	1	**109-0119**	1	RING-RETAINING	
	12	1	**5P-5293**	2	BALL BEARING	
	13	1	**6V-5028**	2	SEAL-LIP TYPE	
	14	1	**6V-7681**	1	SEAL-O-RING	
	15	1	**7D-1195**	2	SEAL-O-RING	
M	16	1	**7X-2556**	2	BOLT (M16X2X100-MM)	
M	17	1	**8T-0207**	9	BOLT (M16X2X100-MM)	
M	18	1	**8T-0649**	3	BOLT (M16X2X110-MM)	
	19	1	**8T-4121**	6	WASHER-HARD (11X21X2.5-MM THK)	
	20	1	**8T-4122**	12	WASHER-HARD (17X32X3.5-MM THK)	
M	21	1	**8T-4185**	6	BOLT (M10X1.5X50-MM)	

M-METRIC PART
Y-SEPARATE ILLUSTRATION

152-7027 **SHAFT GP-HITCH DRIVE** *(contd.)* **i01540115**

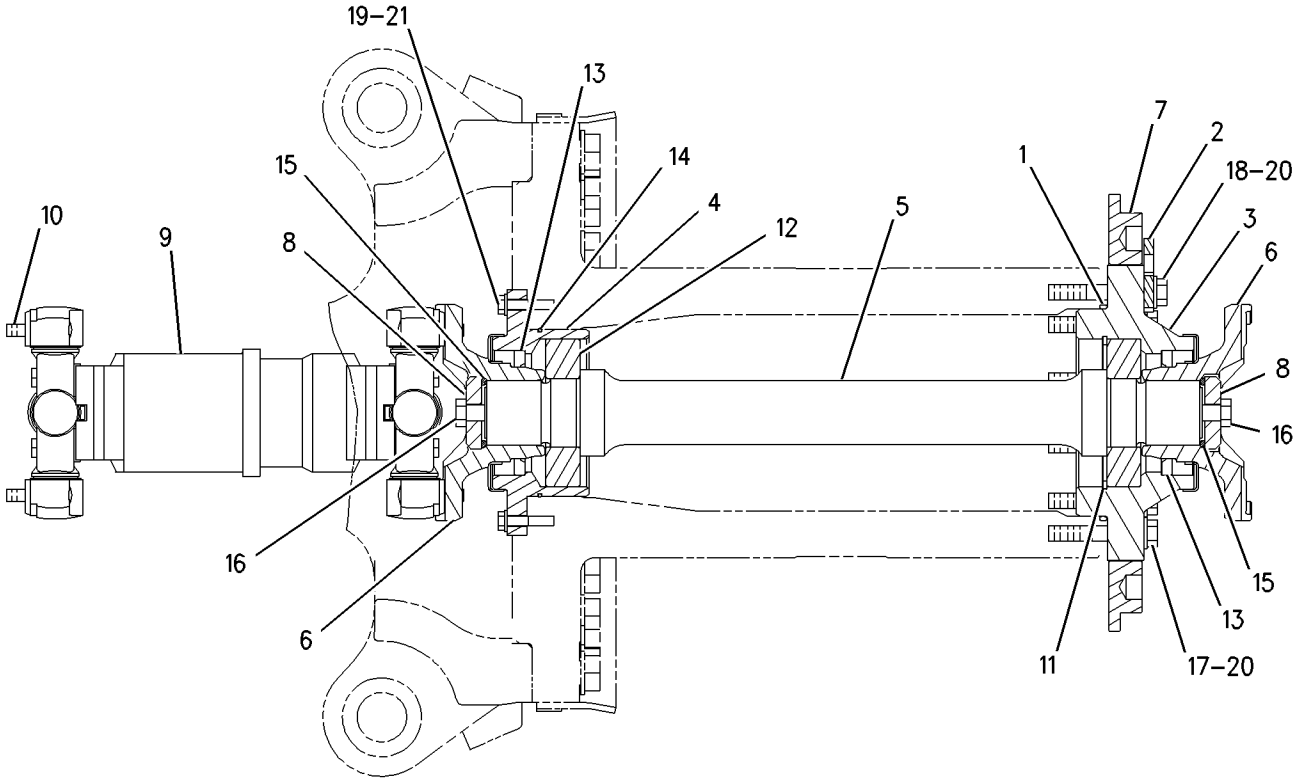

GRAPHIC #1 **<END>** g00799955

152-7027 SHAFT GP-HITCH DRIVE

S/N: AXM618-UP

PART OF 152-6921 AXLE & FRAME AR

SMCS-3253 **i01834679**

NOTE	REF NO	GRAPHIC REF	PART NUMBER	QTY	PART NAME 1 2 3 4 5 6 (PRODUCT LEVEL)	SEE PAGE
	1	1	**2U-1573**	1	SEAL-O-RING	
	2	1	**146-2985**	1	PLATE AS-LOCK	
	3	1	**159-1074**	1	CARRIER	
	4	1	**159-1075**	1	SHAFT	
	5	1	**177-0841**	2	YOKE AS	
					(EACH INCLUDES)	
		1	**105-5088**	1	GUARD	
	6	1	**184-4223**	2	RETAINER	
Y	7	1	**188-0867**	1	UNIVERSAL JOINT GP	465
C	8	1	**213-3409**	1	FLANGE	
C	9	1	**213-3410**	1	CARRIER	
	10	1	**0S-1604**	8	BOLT (1/2-20X2.5-IN)	
	11	1	**109-0119**	1	RING-RETAINING	
	12	1	**5P-5293**	2	BALL BEARING	
	13	1	**6V-5028**	2	SEAL-LIP TYPE	
	14	1	**6V-7681**	1	SEAL-O-RING	
	15	1	**7D-1195**	2	SEAL-O-RING	
M	16	1	**7X-2556**	2	BOLT (M16X2X100-MM)	
CM	17	1	**8T-0282**	3	BOLT (M16X2X120-MM)	
CM	18	1	**8T-0649**	9	BOLT (M16X2X110-MM)	
	19	1	**8T-4121**	6	WASHER-HARD (11X21X2.5-MM THK)	
	20	1	**8T-4122**	12	WASHER-HARD (17X32X3.5-MM THK)	
M	21	1	**8T-4185**	6	BOLT (M10X1.5X50-MM)	

C-CHANGE FROM PREVIOUS TYPE
M-METRIC PART
Y-SEPARATE ILLUSTRATION

152-7027 **SHAFT GP-HITCH DRIVE** *(contd.)* **i01834679**

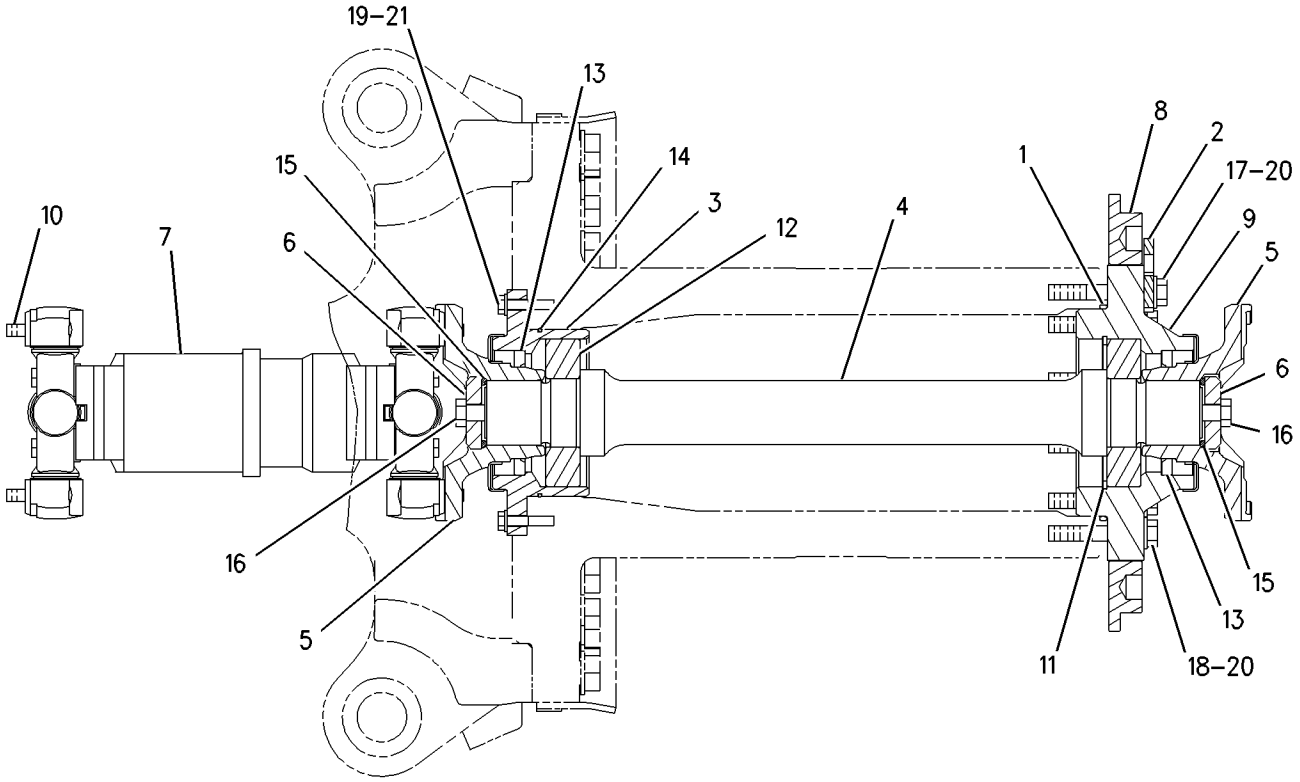

GRAPHIC #1 **<END>** g00906777

152-7028 SHAFT GP-REAR DRIVE

S/N: AXM1-UP

PART OF 152-6921 AXLE & FRAME AR

SMCS-3253 **i02261925**

NOTE	REF NO	GRAPHIC REF	PART NUMBER	QTY	PART NAME 1 2 3 4 5 6 (PRODUCT LEVEL)	SEE PAGE
Y	1	1	**184-6767**	1	UNIVERSAL JOINT GP (REAR)	462
Y	2	1	**184-6766**	1	UNIVERSAL JOINT GP (CENTER, FRONT)	461
	3	1	**0S-0484**	12	BOLT (1/2-20X2.25-IN)	
	4	1	**0S-1604**	4	BOLT (1/2-20X2.5-IN)	

Y-SEPARATE ILLUSTRATION

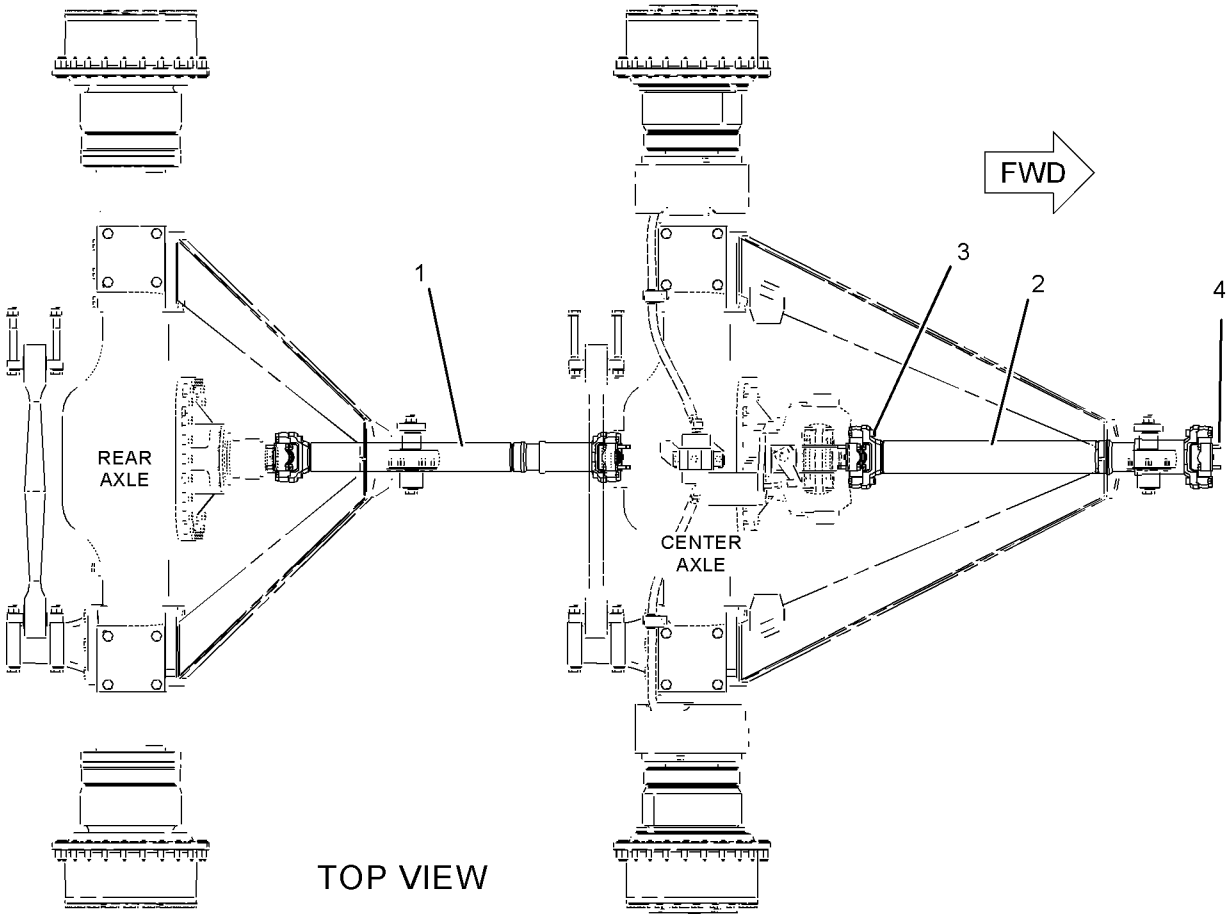

GRAPHIC #1 **<END>** g01136243

153-8030 TIRE & RIM AR

S/N: AXM1-UP

PART OF 152-6924 INSTALLATION AR-MACHINE

SMCS-4202 **i01058401**

NOTE	PART NUMBER	QTY	PART NAME 1 2 3 4 5 6 (PRODUCT LEVEL)	SEE PAGE
Y	*150-3322*	6	TIRE & RIM GP	452
Y-SEPARATE ILLUSTRATION				

<END>

153-8032 TIRE & RIM AR

S/N: AXM1-UP

AN ATTACHMENT

SMCS-4202 **i01080702**

NOTE	PART NUMBER	QTY	PART NAME 1 2 3 4 5 6 (PRODUCT LEVEL)	SEE PAGE
Y	*150-3327*	6	TIRE & RIM GP	452
Y-SEPARATE ILLUSTRATION				

<END>

153-8033 TIRE & RIM AR

S/N: AXM1-UP

AN ATTACHMENT

SMCS-4202 **i01080703**

NOTE	PART NUMBER	QTY	PART NAME 1 2 3 4 5 6 (PRODUCT LEVEL)	SEE PAGE
Y	*150-4251*	6	TIRE & RIM GP	452
Y-SEPARATE ILLUSTRATION				

<END>

166-6392 TIRE & RIM AR

S/N: AXM1-UP

AN ATTACHMENT

SMCS-4202 **i01772852**

NOTE	PART NUMBER	QTY	PART NAME 1 2 3 4 5 6 (PRODUCT LEVEL)	SEE PAGE
Y	*166-6396*	6	TIRE & RIM GP	453
Y	*206-8971*	1	EXTENSION GP-FENDER	495
Y-SEPARATE ILLUSTRATION				

<END>

184-4890 TIRE & RIM AR

S/N: AXM1-UP
AN ATTACHMENT

SMCS-4202 **i01246864**

NOTE	PART NUMBER	QTY	PART NAME 1 2 3 4 5 6 (PRODUCT LEVEL)	SEE PAGE
Y	*184-4891*	6	TIRE & RIM GP	453

Y-SEPARATE ILLUSTRATION

<END>

187-7227 TIRE & RIM AR

S/N: AXM1-UP
AN ATTACHMENT

SMCS-4202 **i01285262**

NOTE	PART NUMBER	QTY	PART NAME 1 2 3 4 5 6 (PRODUCT LEVEL)	SEE PAGE
Y	*187-7228*	6	TIRE & RIM GP	453

Y-SEPARATE ILLUSTRATION

<END>

199-3041 TIRE & RIM AR

S/N: AXM1-UP
AN ATTACHMENT

SMCS-4202 **i01447449**

NOTE	PART NUMBER	QTY	PART NAME 1 2 3 4 5 6 (PRODUCT LEVEL)	SEE PAGE
Y	*199-3044*	6	TIRE & RIM GP	454

Y-SEPARATE ILLUSTRATION

<END>

206-3950 TIRE & RIM AR

S/N: AXM1-UP
AN ATTACHMENT

SMCS-4202 **i01547457**

NOTE	PART NUMBER	QTY	PART NAME 1 2 3 4 5 6 (PRODUCT LEVEL)	SEE PAGE
Y	*206-3953*	6	TIRE & RIM GP	454

Y-SEPARATE ILLUSTRATION

<END>

246-4874 TIRE & RIM AR

S/N: AXM1-UP
AN ATTACHMENT

SMCS-4202 **i02135327**

NOTE	PART NUMBER	QTY	PART NAME 1 2 3 4 5 6 (PRODUCT LEVEL)	SEE PAGE
Y	*246-4875*	6	TIRE & RIM GP	455

Y-SEPARATE ILLUSTRATION

<END>

261-3641 TIRE & RIM AR

S/N: AXM1-UP
AN ATTACHMENT

SMCS-4202 **i02236581**

NOTE	PART NUMBER	QTY	PART NAME 1 2 3 4 5 6 (PRODUCT LEVEL)	SEE PAGE
Y	*261-1323*	6	TIRE & RIM GP	455

Y-SEPARATE ILLUSTRATION

<END>

263-1494 TIRE & RIM AR

S/N: AXM1-UP
AN ATTACHMENT

SMCS-4202 **i02239621**

NOTE	PART NUMBER	QTY	PART NAME 1 2 3 4 5 6 (PRODUCT LEVEL)	SEE PAGE
Y	*263-1485*	6	TIRE & RIM GP	455

Y-SEPARATE ILLUSTRATION

<END>

265-7496 TIRE & RIM AR

S/N: AXM1-UP
AN ATTACHMENT

SMCS-4202 **i02236592**

NOTE	PART NUMBER	QTY	PART NAME 1 2 3 4 5 6 (PRODUCT LEVEL)	SEE PAGE
Y	*265-7495*	6	TIRE & RIM GP	456

Y-SEPARATE ILLUSTRATION

<END>

150-3322 TIRE & RIM GP

S/N: AXM1-UP

PART OF 153-8030 TIRE & RIM AR

SMCS-4202 **i01546763**

NOTE	PART NUMBER	QTY	PART NAME 1 2 3 4 5 6 (PRODUCT LEVEL)	SEE PAGE
	140-9548	1	TIRE (29.5R25**E-2)	
Y	*139-8621*	1	RIM GP-DEMOUNTABLE	439
	6B-6682	23	NUT-FULL (3/4-16 THD)	
	2D-2443	1	SEAL-O-RING	
	2U-2879	1	VALVE AS	
	5P-8248	23	WASHER-HARD (20X36.5X3.5MM THK)	

Y-SEPARATE ILLUSTRATION

<END>

150-3327 TIRE & RIM GP

S/N: AXM1-UP

PART OF 153-8032 TIRE & RIM AR

AN ATTACHMENT

SMCS-4202 **i01613366**

NOTE	PART NUMBER	QTY	PART NAME 1 2 3 4 5 6 (PRODUCT LEVEL)	SEE PAGE
	119-3315	1	TIRE	
Y	*139-8621*	1	RIM GP-DEMOUNTABLE	439
	2D-2443	1	SEAL-O-RING	
	2U-2879	1	VALVE AS	
	5P-8248	23	WASHER-HARD (20X36.5X3.5-MM THK)	
	6B-6682	23	NUT-FULL (3/4-16-THD)	

Y-SEPARATE ILLUSTRATION

<END>

150-4251 TIRE & RIM GP

S/N: AXM1-UP

PART OF 153-8033 TIRE & RIM AR

AN ATTACHMENT

SMCS-4202 **i01591257**

NOTE	PART NUMBER	QTY	PART NAME 1 2 3 4 5 6 (PRODUCT LEVEL)	SEE PAGE
	119-3316	1	TIRE	
Y	*139-8621*	1	RIM GP-DEMOUNTABLE	439
	2D-2443	1	SEAL-O-RING	
	2U-2879	1	VALVE AS	
	5P-8248	23	WASHER-HARD (20X36.5X3.5-MM THK)	
	6B-6682	23	NUT-FULL (3/4-16-THD)	

Y-SEPARATE ILLUSTRATION

<END>

166-6396 TIRE & RIM GP

S/N: AXM1-UP
PART OF 166-6392 TIRE & RIM AR
AN ATTACHMENT

SMCS-4202 **i01546741**

NOTE	PART NUMBER	QTY	PART NAME 1 2 3 4 5 6 (PRODUCT LEVEL)	SEE PAGE
	164-8121	1	TIRE (810/65R25 E3 196B XAD)	
Y	*139-8621*	1	RIM GP-DEMOUNTABLE	439
	2D-2443	1	SEAL-O-RING	
	2U-2879	1	VALVE AS	
	5P-8248	23	WASHER-HARD (20X36.5X3.5MM THK)	
	6B-6682	23	NUT-FULL (3/4-16 THD)	

Y-SEPARATE ILLUSTRATION

<END>

184-4891 TIRE & RIM GP

S/N: AXM1-UP
PART OF 184-4890 TIRE & RIM AR
AN ATTACHMENT

SMCS-4202 **i01546735**

NOTE	PART NUMBER	QTY	PART NAME 1 2 3 4 5 6 (PRODUCT LEVEL)	SEE PAGE
	103-3986	1	TIRE	
Y	*139-8621*	1	RIM GP-DEMOUNTABLE	439
	2D-2443	1	SEAL-O-RING	
	2U-2879	1	VALVE AS	
	5P-8248	23	WASHER-HARD (20X36.5X3.5-MM THK)	
	6B-6682	23	NUT-FULL (3/4-16-THD)	

Y-SEPARATE ILLUSTRATION

<END>

187-7228 TIRE & RIM GP

S/N: AXM1-UP
PART OF 187-7227 TIRE & RIM AR
AN ATTACHMENT

SMCS-4202 **i01546697**

NOTE	PART NUMBER	QTY	PART NAME 1 2 3 4 5 6 (PRODUCT LEVEL)	SEE PAGE
	153-0068	1	TIRE (29.5R25**E-3 VLT)	
Y	*139-8621*	1	RIM GP-DEMOUNTABLE	439
	2D-2443	1	SEAL-O-RING	
	2U-2879	1	VALVE AS	
	5P-8248	23	WASHER-HARD (20X36.5X3.5MM THK)	
	6B-6682	23	NUT-FULL (3/4-16 THD)	

Y-SEPARATE ILLUSTRATION

<END>

199-3044 TIRE & RIM GP

S/N: AXM1-UP
PART OF 199-3041 TIRE & RIM AR
AN ATTACHMENT

SMCS-4202 **i01536685**

NOTE	PART NUMBER	QTY	PART NAME 1 2 3 4 5 6 (PRODUCT LEVEL)	SEE PAGE
	194-1928	1	TIRE (29.5R25 ** E4 VTLS)	
Y	*139-8621*	1	RIM GP-DEMOUNTABLE	439
	2U-2879	1	VALVE AS	
	6B-6682	23	NUT-FULL (3/4-16 THD)	
	5P-8248	23	WASHER-HARD (20X36.5X3.5MM THK)	
	2D-2443	1	SEAL-O-RING	

Y-SEPARATE ILLUSTRATION

<END>

206-3953 TIRE & RIM GP

S/N: AXM1-UP
PART OF 206-3950 TIRE & RIM AR
AN ATTACHMENT

SMCS-4202 **i01846704**

NOTE	PART NUMBER	QTY	PART NAME 1 2 3 4 5 6 (PRODUCT LEVEL)	SEE PAGE
	157-1744	1	TIRE (29.5R25*L-4)	
Y	*139-8621*	1	RIM GP-DEMOUNTABLE	439
	2D-2443	1	SEAL-O-RING	
	2U-2879	1	VALVE AS	
	5P-8248	23	WASHER-HARD (20X36.5X3.5MM THK)	
	6B-6682	23	NUT-FULL (3/4-16 THD)	

Y-SEPARATE ILLUSTRATION

<END>

241-0614 TIRE & RIM GP

S/N: AXM1-UP
PART OF 241-0615 WHEEL & TIRE AR
AN ATTACHMENT

SMCS-4202 **i02249729**

NOTE	PART NUMBER	QTY	PART NAME 1 2 3 4 5 6 (PRODUCT LEVEL)	SEE PAGE
Y	*140-6742*	1	RIM GP-DEMOUNTABLE	440
	2U-2879	1	VALVE AS	
	6B-6682	24	NUT-FULL (3/4-16-THD)	
	2D-2443	1	SEAL-O-RING	
	119-3314	1	TIRE (26.5-R25)	
	5P-8248	24	WASHER-HARD (20X36.5X3.5-MM THK)	

Y-SEPARATE ILLUSTRATION

<END>

246-4875 TIRE & RIM GP

S/N: AXM1-UP
PART OF 246-4874 TIRE & RIM AR
AN ATTACHMENT

SMCS-4202 **i02135328**

NOTE	PART NUMBER	QTY	PART NAME 1 2 3 4 5 6 (PRODUCT LEVEL)	SEE PAGE
Y	*139-8621*	1	RIM GP-DEMOUNTABLE	439
	6B-6682	23	NUT-FULL (3/4-16-THD)	
	2D-2443	1	SEAL-O-RING	
	246-4713	1	TIRE (29.5-R25)	
	2U-2879	1	VALVE AS	
	5P-8248	23	WASHER-HARD (20X36.5X3.5-MM THK)	

Y-SEPARATE ILLUSTRATION

<END>

261-1323 TIRE & RIM GP

S/N: AXM1-UP
PART OF 261-3641 TIRE & RIM AR
AN ATTACHMENT

SMCS-4202 **i02236593**

NOTE	PART NUMBER	QTY	PART NAME 1 2 3 4 5 6 (PRODUCT LEVEL)	SEE PAGE
Y	*139-8621*	1	RIM GP-DEMOUNTABLE	439
	6B-6682	16	NUT-FULL (3/4-16-THD)	
	2D-2443	1	SEAL-O-RING	
	261-1486	1	TIRE (29.5-R25)	
	2U-2879	1	VALVE AS	
	5P-8248	16	WASHER-HARD (20X36.5X3.5-MM THK)	

Y-SEPARATE ILLUSTRATION

<END>

263-1485 TIRE & RIM GP

S/N: AXM1-UP
PART OF 263-1494 TIRE & RIM AR
AN ATTACHMENT

SMCS-4202 **i02239622**

NOTE	PART NUMBER	QTY	PART NAME 1 2 3 4 5 6 (PRODUCT LEVEL)	SEE PAGE
Y	*139-8621*	1	RIM GP-DEMOUNTABLE	439
	6B-6682	16	NUT-FULL (3/4-16-THD)	
	2D-2443	1	SEAL-O-RING	
	263-1484	1	TIRE (29.5-R25)	
	2U-2879	1	VALVE AS	
	5P-8248	16	WASHER-HARD (20X36.5X3.5-MM THK)	

Y-SEPARATE ILLUSTRATION

<END>

265-7495 TIRE & RIM GP

S/N: AXM1-UP
PART OF 265-7496 TIRE & RIM AR
AN ATTACHMENT

SMCS-4202 **i02236585**

NOTE	PART NUMBER	QTY	PART NAME 1 2 3 4 5 6 (PRODUCT LEVEL)	SEE PAGE
Y	*139-8621*	1	RIM GP-DEMOUNTABLE	439
	6B-6682	16	NUT-FULL (3/4-16-THD)	
	2D-2443	1	SEAL-O-RING	
	188-2156	1	TIRE (29.5-R25)	
	2U-2879	1	VALVE AS	
	5P-8248	16	WASHER-HARD (20X36.5X3.5-MM THK)	

Y-SEPARATE ILLUSTRATION

<END>

POWER TRAIN

149-0423 TORQUE CONVERTER GP

S/N: CJT1-UP

PART OF 146-6225 TRANSMISSION AR

SMCS-3101 **i02054350**

NOTE	REF NO	GRAPHIC REF	PART NUMBER	QTY	PART NAME 1 2 3 4 5 6 (PRODUCT LEVEL)	SEE PAGE
	1	1	**1T-1452**	1	HOUSING AS	
		1	**1T-0936**	1	PLUG-PIPE	
		1	**5J-7386**	2	PLUG-ORIFICE (1/8-27-THD)	
	2	1	**1T-0791**	1	IMPELLER-CONVERTER	
	3	1	**1T-0867**	1	PLATE-REINFORCEMENT	
	4	1	**139-4636**	1	GEAR-PUMP DRIVE (69 TEETH)	
	5	1	**139-4632**	1	HUB-IMPELLER	
	6	1	**145-2343**	1	CARRIER-BEARING	
	7	1	**1T-1220**	1	CARRIER-RING	
	8	1	**9X-6574**	1	RING-RETAINING	
	9	1	**1L-7205**	1	BALL BEARING	
	10	1	**1N-8620**	1	RING-RETAINING	
	11	1	**139-4633**	1	SHAFT-INPUT	
	12	1	**6Y-5888**	2	RING-SEAL	
	13	1	**1T-0897**	2	RING-RETAINING	
	14	1	**3P-2573**	1	RACE-BEARING INNER	
	15	1	**3P-2574**	1	RACE & ROLLER AS	
	16	1	**1T-1221**	1	CARRIER-RING	
	17	1	**9W-6990**	1	RING-SEAL	
	18	1	**1T-1659**	1	SLEEVE AS	
		1	**5S-4441**	1	DOWEL	
	19	1	**9W-3136**	1	RING-RETAINING	
	20	1	**192-0875**	1	CARRIER AS	
		1	**192-0877**	1	BEARING-SLEEVE	
	21	1	**5P-5855**	8	BOLT-12 POINT HEAD (1/2-13X1.75-IN)	
	22	1	**5F-3999**	1	SEAL-O-RING	
	23	1	**1T-0794**	1	RING-SEAL METAL	
	24	1	**1T-0807**	2	RACE-THRUST BEARING	
	25	1	**1T-0806**	2	RETAINER-BEARING	
	26	1	**0S-1588**	36	BOLT (3/8-16X1.25-IN)	
	27	1	**5M-2894**	36	WASHER-HARD (10.2X18.5X2.5-MM THK)	
	28	1	**1T-0795**	3	RING-RETAINING	
	29	1	**148-0885**	1	STATOR-CONVERTER	
	30	1	**1T-1423**	1	CAM-FREEWHEEL	
	31	1	**1T-1910**	2	PLATE	
	32	1	**1T-0792**	1	TURBINE-CONVERTER	
	33	1	**1T-0896**	1	RING-RETAINING	
	34	1	**6P-9553**	1	PLATE-CLUTCH BACKING	
	35	1	**1T-1315**	2	PLATE-CLUTCH	
	36	1	**1T-0887**	2	DISC AS-CLUTCH	
	37	1	**7G-0141**	1	RING-SEAL	
	38	1	**1T-1426**	1	PISTON-LOCKUP CLUTCH	
	39	1	**1T-0804**	1	RING-CLAMP	
	40	1	**8S-3371**	1	RING-SEAL	
	41	1	**192-0876**	1	HUB-TURBINE	
	42	1	**1T-0786**	2	BEARING-THRUST	
	43	1	**0L-1351**	6	BOLT (3/8-16X0.875-IN)	
	44	1	**1T-1356**	1	RING-SEAL	
	45	1	**1T-1616**	1	WASHER-SPRING (54.9X86.4X6.1-IN)	
	46	1	**1T-1617**	1	PLATE-RETAINER	
	47	1	**1T-1236**	1	PILOT-FLYWHEEL	
	48	1	**8S-4724**	2	BOLT (7/16-20X2.25-IN)	
	49	1	**1T-0895**	1	RING-RETAINING	
	50	1	**6V-9191**	1	BALL BEARING	
	51	1	**1T-0847**	1	LOCK PIN	
	52	1	**8M-2530**	18	BOLT-12 POINT HEAD (1/2-13X1.25-IN)	

149-0423 **TORQUE CONVERTER GP** *(contd.)* **i02054350**

NOTE	REF NO	GRAPHIC REF	PART NUMBER	QTY	PART NAME 1 2 3 4 5 6 (PRODUCT LEVEL)	SEE PAGE
	53	1	**1T-1410**	13	ROLLER-FREEWHEEL	
	54	1	**1T-0680**	13	SPRING-FREEWHEEL	

149-0423 **TORQUE CONVERTER GP** *(contd.)* **i02054350**

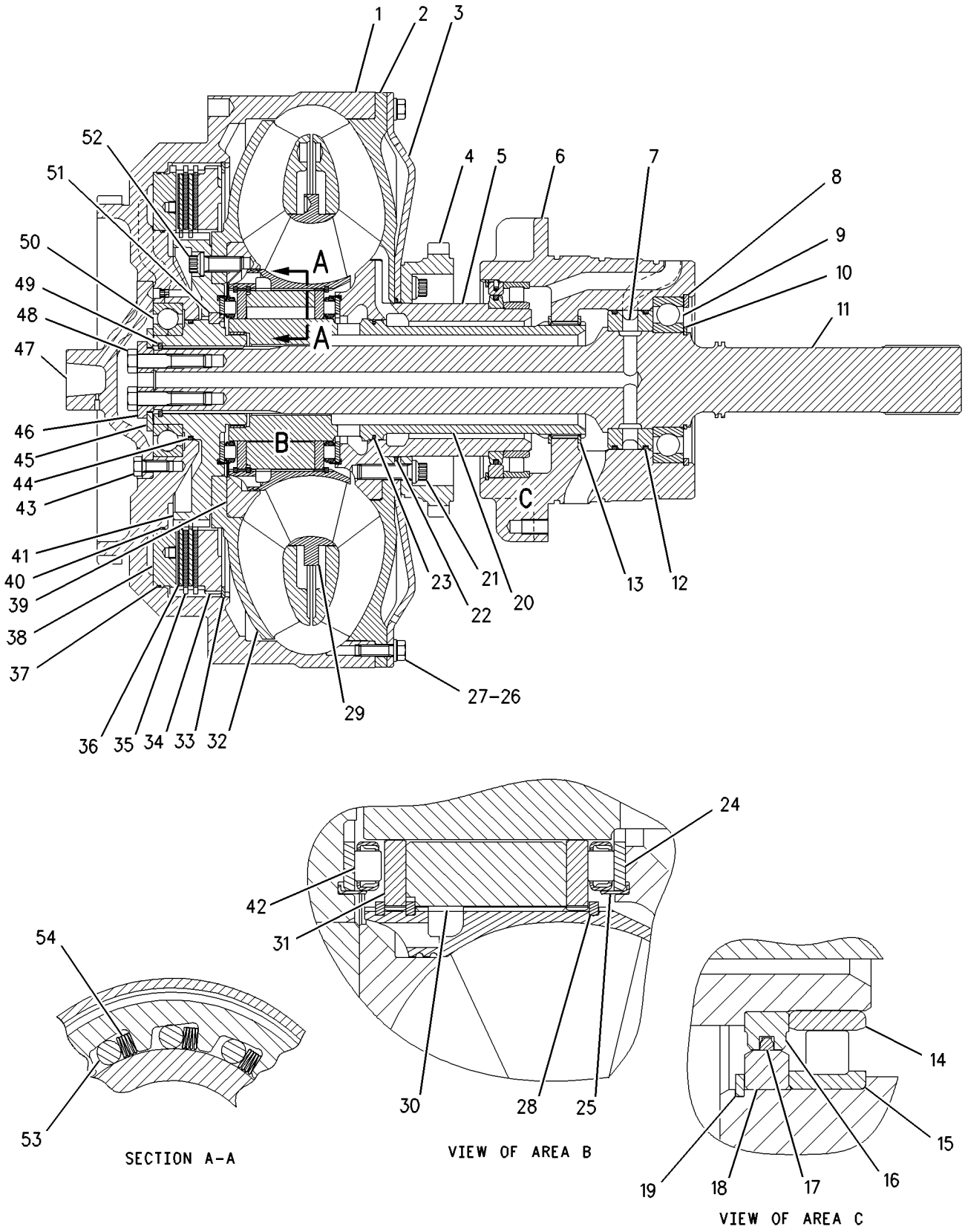

GRAPHIC #1 **<END>** g00762618

146-6225 TRANSMISSION AR*R

S/N: 4WY500-UP

PART OF 152-6943 POWER TRAIN AR

SMCS-3030 **i02111637**

NOTE	PART NUMBER	QTY	PART NAME 1 2 3 4 5 6 (PRODUCT LEVEL)	SEE PAGE
Y	*146-6222*	1	CASE GP-TRANSMISSION	342
			S/N: 4WY500-2048	
Y	*245-2768*	1	CASE GP-TRANSMISSION	344
			S/N: 4WY2049-UP	
Y	*147-2352*	1	CONTROL GP-TRANSMISSION HYD	356
Y	*146-6224*	1	COVER GP-SHIPPING	928
Y	*146-3679*	1	DRIVE GP-PUMP	372
			S/N: 4WY500-2048	
Y	*255-6875*	1	DRIVE GP-PUMP	374
			S/N: 4WY2049-UP	
Y	*146-0192*	1	PLANETARY GP-TRANSMISSION	428
Y	**157-2446**	1	PUMP GP-TRANSMISSION	438
Y	**149-0423**	1	TORQUE CONVERTER GP	457

Y-SEPARATE ILLUSTRATION

<END>

184-6766 UNIVERSAL JOINT GP–CENTER

S/N: AXM1-UP

PART OF 152-7028 SHAFT GP-REAR DRIVE

SMCS-3251, 3253 **i02261942**

NOTE	REF NO	GRAPHIC REF	PART NUMBER	QTY	PART NAME 1 2 3 4 5 6 (PRODUCT LEVEL)	SEE PAGE
	1	1	**172-7638**	1	SEAL	
	2	1	**173-0889**	2	SPIDER & BEARING AS	
	3	1	**0S-1599**	8	BOLT (1/2-20X2.75-IN)	

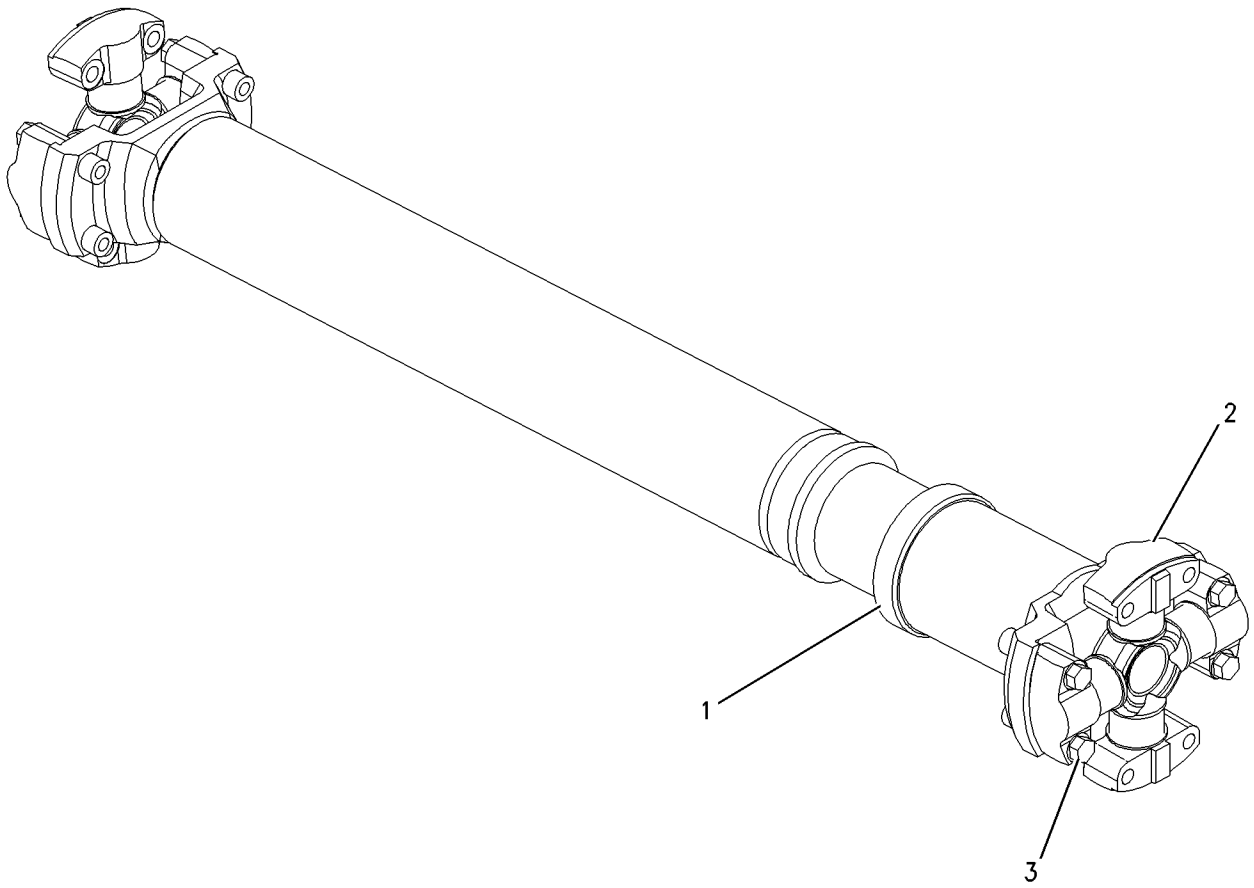

GRAPHIC #1 **<END>** g00765533

184-6767 UNIVERSAL JOINT GP–REAR

S/N: AXM1-UP

PART OF 152-7028 SHAFT GP-REAR DRIVE

SMCS-3251, 3253 **i02261943**

NOTE	REF NO	GRAPHIC REF	PART NUMBER	QTY	PART NAME 1 2 3 4 5 6 (PRODUCT LEVEL)	SEE PAGE
	1	1	**2U-6747**	1	SEAL	
	2	1	**172-0871**	2	SPIDER & BEARING AS	
	3	1	**0S-1599**	8	BOLT (1/2-20X2.75-IN)	

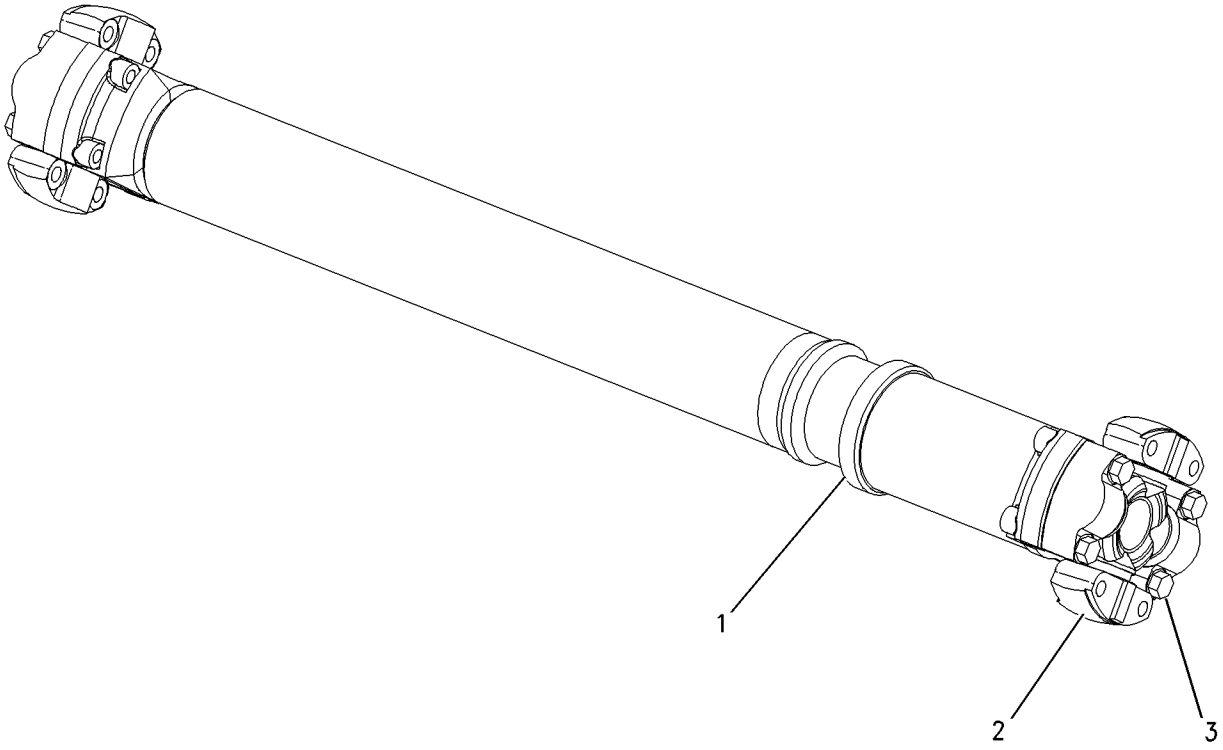

GRAPHIC #1 **<END>** g01005811

186-6356 UNIVERSAL JOINT GP–FRONT

S/N: AXM1-UP

PART OF 152-6934 SHAFT GP-FRONT DRIVE

SMCS-3251, 3253 **i02261945**

NOTE	REF NO	GRAPHIC REF	PART NUMBER	QTY	PART NAME 1 2 3 4 5 6 (PRODUCT LEVEL)	SEE PAGE
	1	1	**2U-6747**	1	SEAL	
	2	1	**172-0871**	2	SPIDER & BEARING AS	
	3	1	**0S-1604**	8	BOLT (1/2-20X2.5-IN)	

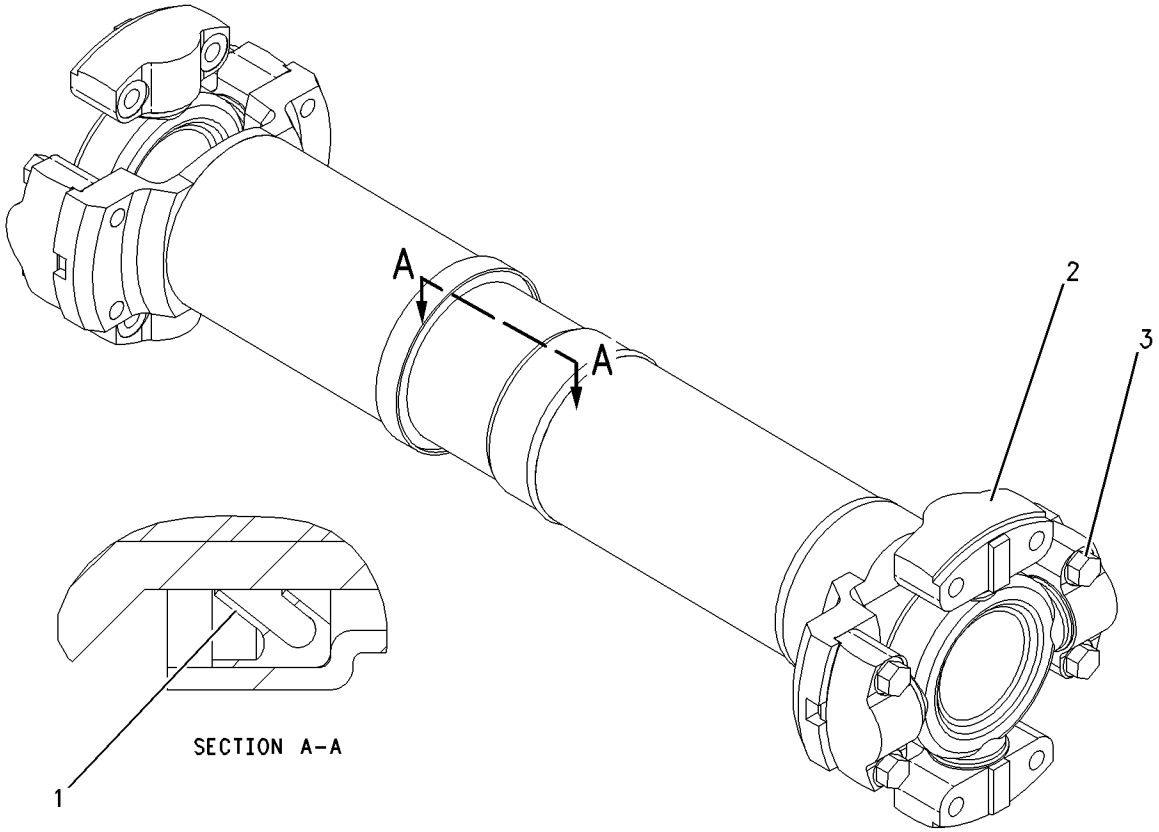

GRAPHIC #1 **<END>** g01005810

186-6357 UNIVERSAL JOINT GP

S/N: AXM1-UP

PART OF 152-6938 SHAFT GP-DRIVE

SMCS-3251, 3253 **i02261947**

NOTE	REF NO	GRAPHIC REF	PART NUMBER	QTY	PART NAME 1 2 3 4 5 6 (PRODUCT LEVEL)	SEE PAGE
	1	1	**172-5235**	2	SPIDER & BEARING AS	
	2	1	**172-7638**	1	SEAL	
	3	1	**0S-2318**	8	BOLT (5/8-18X3.25-IN)	

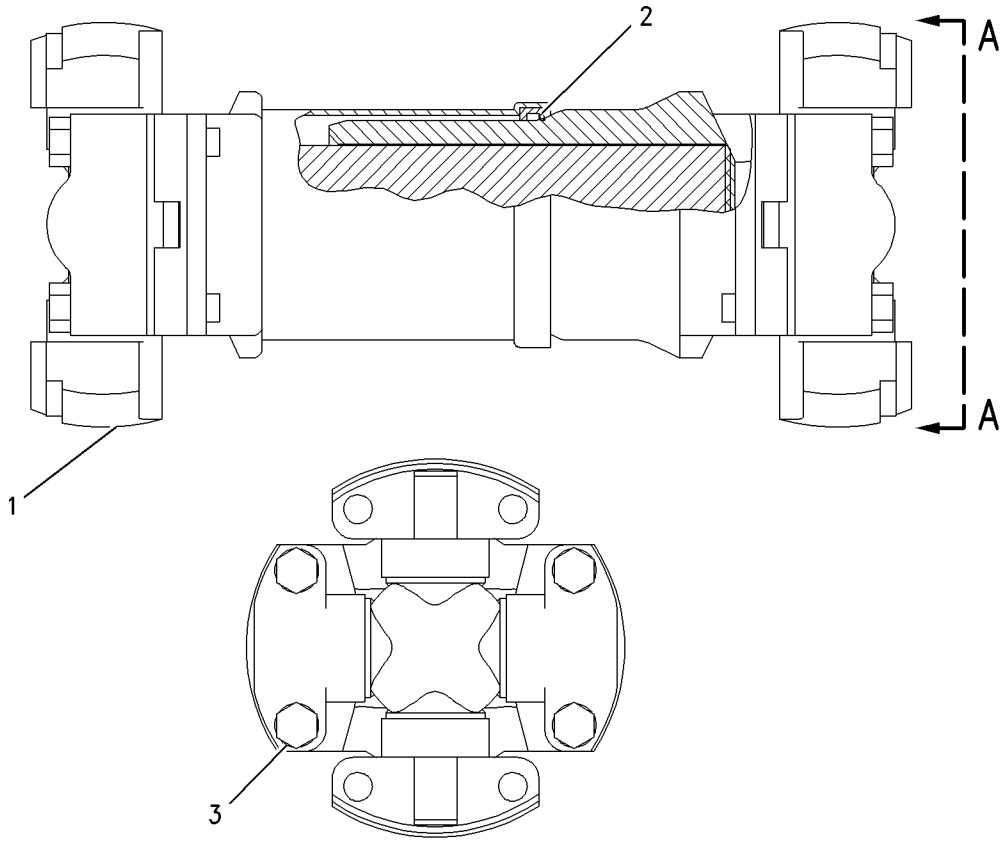

VIEW A-A

GRAPHIC #1 **<END>** g00781216

188-0867 UNIVERSAL JOINT GP–HITCH DRIVE

S/N: AXM1-UP

PART OF 152-7027 SHAFT GP-HITCH DRIVE

SMCS-3251, 3253 **i02261950**

NOTE	REF NO	GRAPHIC REF	PART NUMBER	QTY	PART NAME 1 2 3 4 5 6 (PRODUCT LEVEL)	SEE PAGE
	1	1	**173-0889**	2	SPIDER & BEARING AS	
	2	1	**172-7638**	1	SEAL	
	3	1	**0S-1604**	8	BOLT (1/2-20X2.5-IN)	

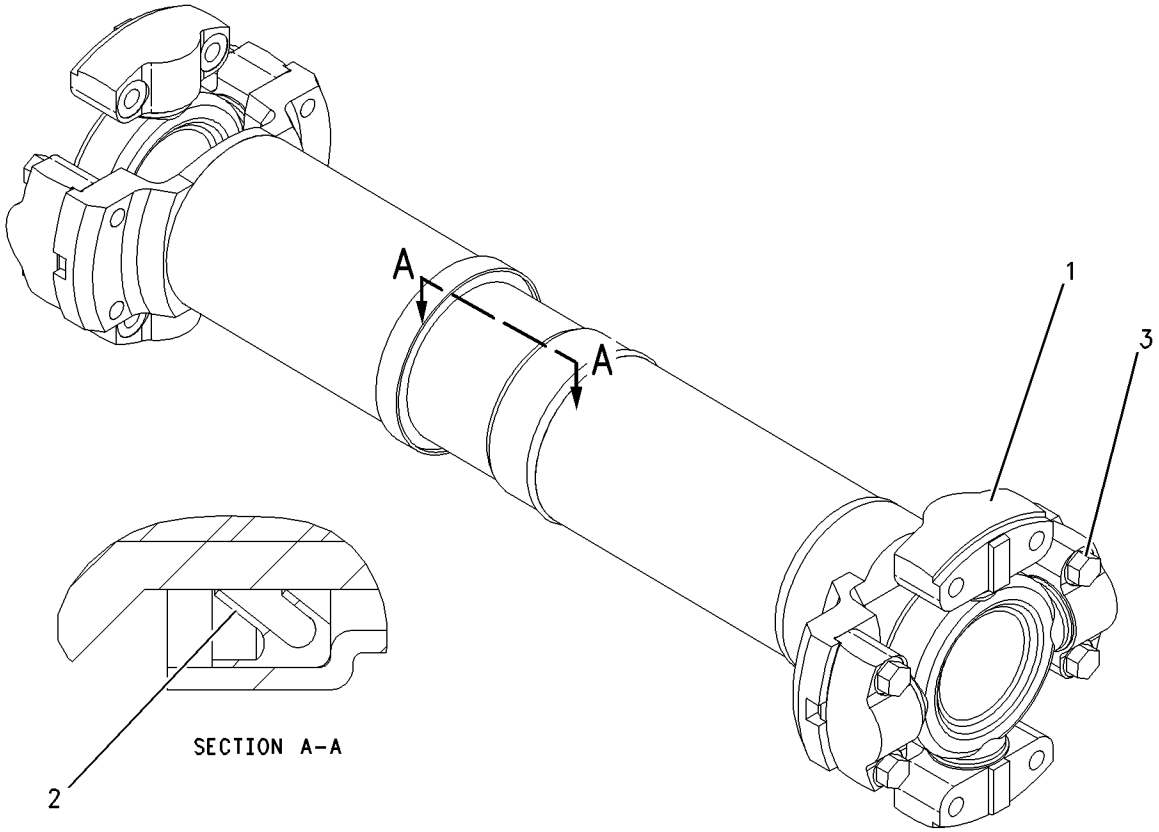

GRAPHIC #1 **<END>** g00867704

150-4728 VALVE GP-CONTROL

S/N: 4WY500-UP

PART OF 147-2352 CONTROL GP-TRANSMISSION HYD

SMCS-3073 **i01747482**

NOTE	REF NO	GRAPHIC REF	PART NUMBER	QTY	PART NAME 1 2 3 4 5 6 (PRODUCT LEVEL)	SEE PAGE
	1	1	**149-9894**	1	MANIFOLD	
	2	1	**150-2321**	1	PLATE	
	3	1	**0S-1618**	1	BOLT (5/16-18X1-IN)	
Y	4	1	**150-4730**	1	VALVE GP-SELECTOR & PRESS CONT	470
	5	1	**1D-4541**	12	BOLT (5/16-18X3-IN)	
	6	1	**1F-4111**	1	BOLT (5/16-18X3.5-IN)	
Y	7	1	**150-4729**	1	VALVE GP-PRESSURE CONTROL	467
	8	1	**6V-3965**	8	FITTING AS	
	9	1	**3J-1907**	8	SEAL-O-RING	
	10	1	**4F-3508**	5	BOLT (5/16-18X6.5-IN)	
	11	1	**9M-1974**	7	WASHER-HARD (8.8X16X2-MM THK)	
	12	1	**8F-8544**	1	BOLT (3/8-16X6.25-IN)	
	13	1	**5M-2894**	1	WASHER-HARD (10.2X18.5X2.5-MM THK)	
	14	1	**7T-9791**	1	COVER	
Y	15	1	**9W-4119**	1	ACTUATOR GP-ROTARY	315
	16	1	**4B-3903**	2	BOLT (5/16-18X4-IN)	

Y-SEPARATE ILLUSTRATION

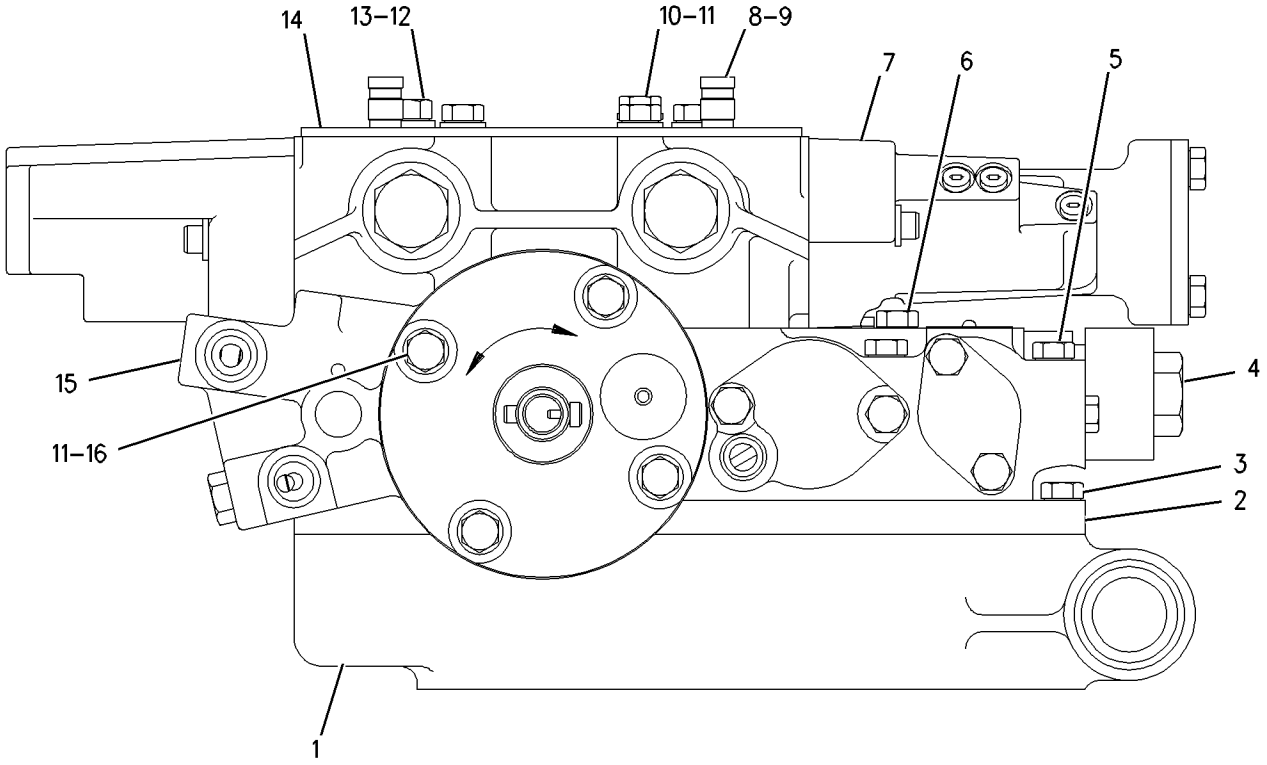

GRAPHIC #1 **<END>** g00894668

POWER TRAIN

150-4729 VALVE GP-PRESSURE CONTROL

S/N: 4WY500-UP

PART OF 150-4728 VALVE GP-CONTROL

SMCS-3073, 3074, 5051, 5058 **i02158425**

NOTE	REF NO	GRAPHIC REF	PART NUMBER	QTY	PART NAME 1 2 3 4 5 6 (PRODUCT LEVEL)	SEE PAGE
	1	1	**8P-7385**	1	BODY-VALVE	
	2	1	**5S-7906**	4	STOP	
	3	1	**6T-3773**	4	DOWEL	
	4	1	**5M-2504**	8	SLUG	
	5	1	**9P-0683**	8	SPRING	
	6	1	**9P-0656**	7	SPOOL AS	
					(EACH INCLUDES)	
		1	**1S-1636**	1	RETAINER	
		1	**1S-1638**	1	RING-RETAINING	
		1	**4B-9880**	1	BALL	
		1	**4M-2381**	1	SPRING	
	7	1	**8E-4592**	7	STOP	
	8	1	**9W-7410**	5	SPRING	
	9	1	**7G-5453**	1	SPRING	
	10	1	**160-7578**	7	BODY-LOAD PISTON	
B	11	1	**4M-1751**	14	SPACER (15.09X0.4-MM THK)	
B	12	1	**5J-2721**	14	SHIM (0.13-MM THK)	
B	13	1	**6J-3993**	14	SHIM (0.25-MM THK)	
B	14	1	**5J-1036**	35	SHIM (0.8-MM THK)	
	15	1	**7G-7431**	7	PISTON-SELECTOR	
	16	1	**9P-0687**	4	PISTON-LOAD	
	17	1	**4J-7533**	21	SEAL-O-RING	
	18	1	**9S-8001**	15	PLUG	
	19	1	**9G-7131**	3	PLUG-ORIFICE	
	20	1	**8P-9738**	6	ORIFICE-CASCADE	
	21	1	**3T-1437**	3	PISTON-LOAD	
	22	1	**9W-7411**	1	SPRING	
	23	1	**8P-9737**	2	ORIFICE-CASCADE	
	24	1	**7T-0570**	1	SPRING	
	25	1	**7G-2674**	2	PIN	
	26	1	**7T-0569**	4	SPRING	
	27	1	**9G-7132**	3	PLUG-ORIFICE	
	28	1	**9D-7884**	8	SPRING	
	29	1	**150-4731**	1	BODY	
	30	1	**9W-7412**	1	SPRING	
	31	1	**7T-0571**	1	SPRING	
	32	1	**8M-5127**	8	SEAL-O-RING	
	33	1	**2M-9780**	2	SEAL-O-RING	
	34	1	**9S-4190**	2	PLUG	
	35	1	**6Y-8048**	1	SPOOL AS	
		1	**1S-1636**	1	RETAINER	
		1	**1S-1638**	1	RING-RETAINING	
		1	**4B-9880**	1	BALL	
		1	**4M-2381**	1	SPRING	
	36	1	**8M-4986**	1	SEAL-O-RING	
	39	1	**5P-0537**	16	WASHER-HARD (7.2X14.5X2-MM THK)	
	40	1	**5L-9018**	16	BOLT-SOCKET HEAD (1/4X20X1.75-IN)	
	41	1	**6Y-4538**	1	COVER	
	42	1	**2B-2695**	2	BOLT (5/16-18X0.875-IN)	
	43	1	**6Y-4541**	1	PISTON-SELECTOR	
	44	1	**6Y-4542**	1	PISTON-LOAD	
B	45	1	**9J-1330**	2	SHIM (0.787-MM THK)	
B	46	1	**2S-0675**	2	SPACER (0.4-MM THK)	
B	47	1	**8J-4452**	2	SHIM (0.12-MM THK)	
	48	1	**8E-8908**	1	SPRING	
	49	1	**128-2880**	1	STOP	

150-4729 VALVE GP-PRESSURE CONTROL *(contd.)* **i02158425**

B-USE AS REQUIRED

150-4729 VALVE GP-PRESSURE CONTROL *(contd.)* **i02158425**

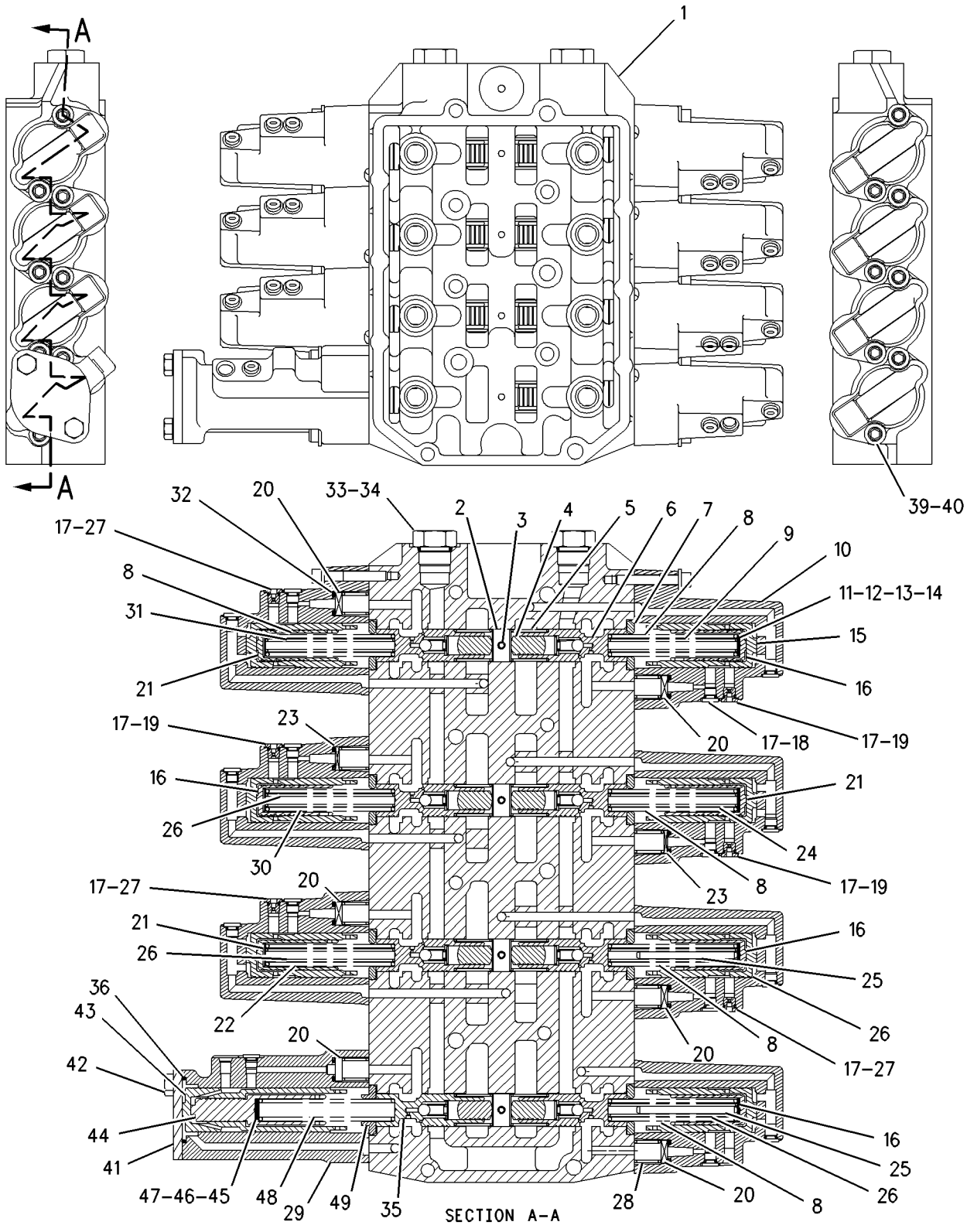

GRAPHIC #1 **<END>** g00894539

POWER TRAIN

150-4730 VALVE GP-SELECTOR & PRESS CONT

S/N: 4WY500-UP

PART OF 150-4728 VALVE GP-CONTROL

SMCS-3083 **i02181829**

NOTE	REF NO	GRAPHIC REF	PART NUMBER	QTY	PART NAME 1 2 3 4 5 6 (PRODUCT LEVEL)	SEE PAGE
	1	1	**7G-3472**	1	BODY-SELECTOR	
	2	1	**1P-9620**	2	RING-RETAINING	
	3	1	**162-5802**	1	CAM-DETENT	
	4	1	**4D-0514**	2	PLUG-PIPE	
	5	1	**8E-4094**	1	SUPPORT AS-SPRING	
		1	**8H-9208**	2	DOWEL	
	6	1	**145-0109**	1	SPOOL AS	
		1	**2L-6726**	1	RING-RETAINING	
		1	**4B-9880**	1	BALL	
		1	**4M-2381**	1	SPRING	
		1	**6T-5411**	1	SLUG	
		1	**147-0045**	1	PIN-SPRING	
	7	1	**7M-8485**	1	SEAL-O-RING	
	8	1	**9P-0673**	1	VALVE	
	9	1	**145-0107**	2	SPACER (3.18X20.62X1.6-MM THK)	
	10	1	**9P-0674**	1	BODY	
	11	1	**3T-9920**	1	SPRING	
	12	1	**150-4732**	1	CAP	
	13	1	**145-0106**	2	SPACER (3.18X20.62.9-MM THK)	
	14	1	**145-0105**	4	SPACER (3.18X20.62X0.25-MM THK)	
	15	1	**6T-5409**	1	SPRING	
	16	1	**8M-6402**	1	SPRING	
	17	1	**2S-0696**	1	DOWEL	
	18	1	**5M-3492**	3	SPACER (3.18X19.05X0.25-MM THK)	
	19	1	**7M-1397**	2	SPACER (3.18X19.05X0.9-MM THK)	
	20	1	**6T-3177**	1	SPRING	
	21	1	**6T-3696**	1	SPOOL AS-REDUCING	
	22	1	**5M-6214**	1	PLUG-PIPE	
	23	1	**8P-9852**	1	COVER	
	24	1	**8M-8515**	1	SEAL-O-RING	
	25	1	**8E-7190**	1	COVER AS	
		1	**3H-1156**	1	PIN	
	26	1	**6T-3115**	1	SPOOL AS	
		1	**1H-4142**	1	RING-RETAINING	
		1	**4B-9880**	1	BALL	
		1	**4M-2381**	1	SPRING	
		1	**5H-6005**	1	SEAL-O-RING	
		1	**7T-6175**	1	SEAT	
	27	1	**177-1880**	1	SPOOL AS-ROTARY	
		1	**3J-1907**	1	SEAL-O-RING	
		1	**3T-5219**	1	PIN	
		1	**6T-7640**	1	SCREEN-FILTER (TRANSMISSION)	
		1	**9P-9650**	1	DOWEL	
	28	1	**145-0108**	1	STOP	
	29	1	**138-1645**	1	PIN-SPRING	
	30	1	**8T-2925**	1	PIN-SPRING	
	31	1	**9S-8413**	1	WASHER-RETAINING (0.344X1.5X0.23-MM THK)	
	32	1	**031-4630**	1	BOLT-LOCKING (5/16-18X0.75-IN)	
	33	1	**129-3033**	2	SPRING AS	
					(EACH INCLUDES)	
		1	**3G-3916**	1	RING-RETAINING	
		1	**6V-5701**	2	BEARING AS-NEEDLE	
		1	**9W-7009**	2	RETAINER-BEARING	
		1	**9W-7011**	1	PIN	
	34	1	**9M-1974**	2	WASHER-HARD (8.8X16X2-MM THK)	
	35	1	**4B-3388**	4	BOLT (5/16-18X1.125-IN)	

150-4730 VALVE GP-SELECTOR & PRESS CONT *(contd.)* i02181829

NOTE	REF NO	GRAPHIC REF	PART NUMBER	QTY	PART NAME 1 2 3 4 5 6 (PRODUCT LEVEL)	SEE PAGE
	36	1	**7L-6210**	2	BOLT-LOCATING (5/16-18X1-IN)	
	37	1	**9P-0652**	2	RETAINER	
	38	1	**151-8083**	1	PLATE	
	39	1	**7B-3028**	1	SCREW-DRIVE (NO 4X3/16-IN)	
	40	1	**1B-2790**	1	BOLT (5/16-18X1.375-IN)	
	41	1	**1D-4539**	1	BOLT (5/16-18X2.5-IN)	
	42	1	**9W-6964**	1	VALVE AS-EXHAUST	
		1	**3F-3152**	1	BALL	
		1	**8N-4173**	1	DOWEL	
	43	1	**5H-6005**	1	SEAL-O-RING	

150-4730 VALVE GP-SELECTOR & PRESS CONT *(contd.)* i02181829

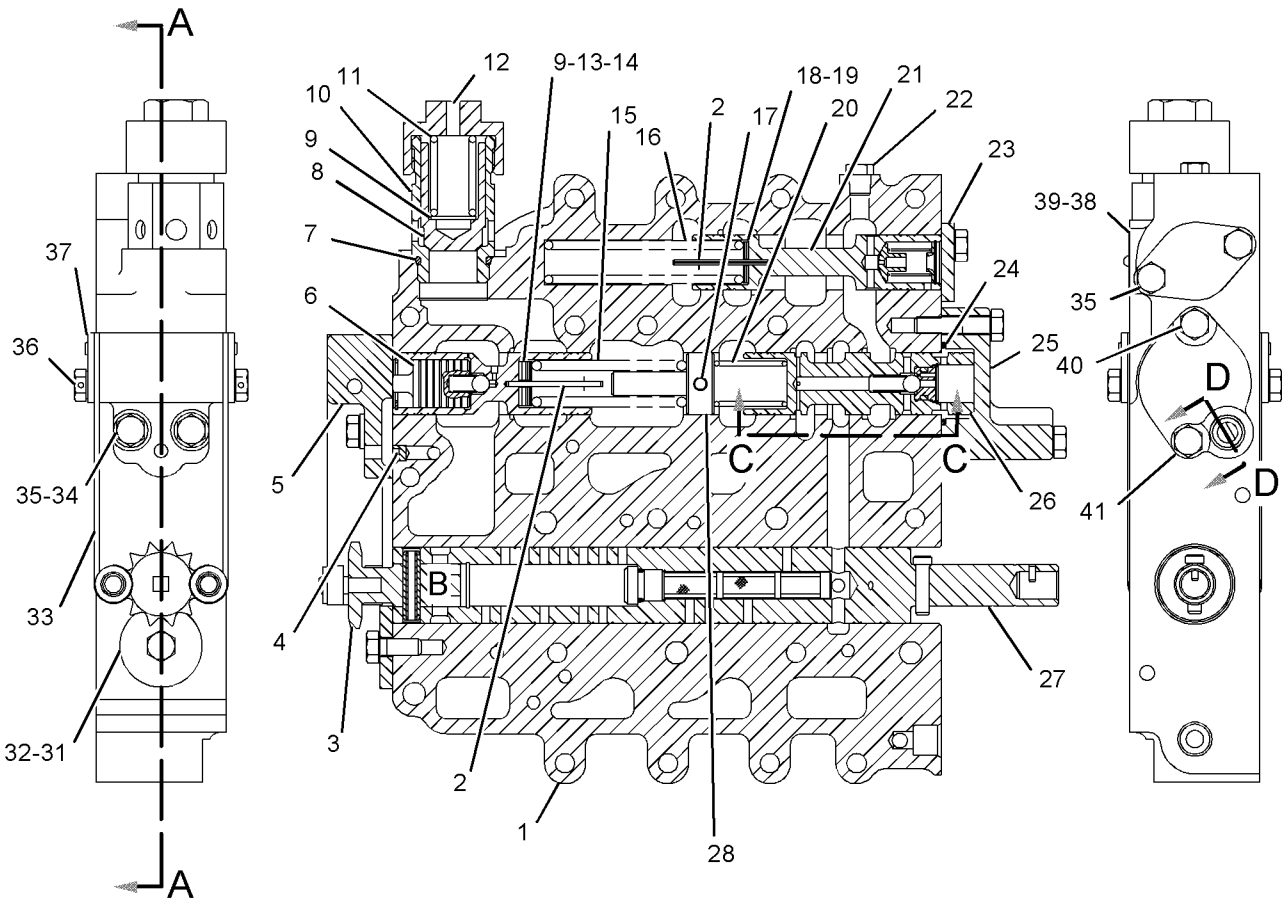

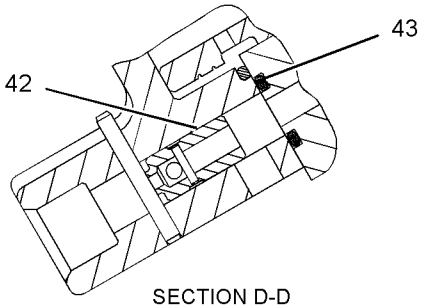

SECTION D-D

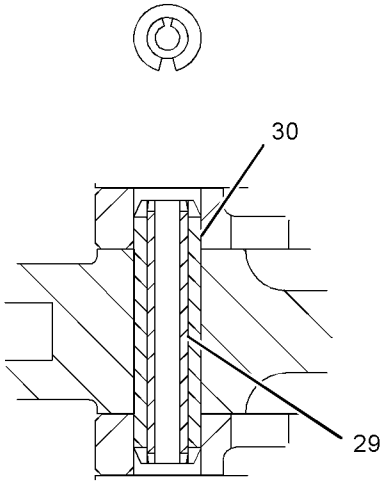

VIEW OF AREA B

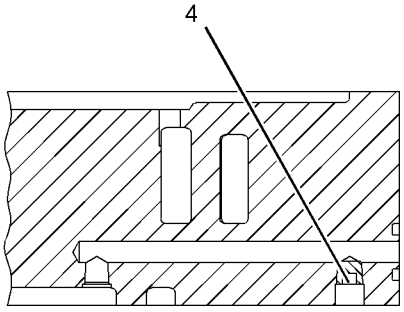

SECTION C-C

GRAPHIC #1 **<END>** g01103900

152-8385 VALVE GP-SOLENOID

S/N: BBJ1-UP; A5L1-UP
24-VOLT DC
PART OF 201-5676 VALVE GP-SOLENOID & RELIEF

SMCS-5479 **i01882797**

NOTE	REF NO	GRAPHIC REF	PART NUMBER	QTY	PART NAME 1 2 3 4 5 6 (PRODUCT LEVEL)	SEE PAGE
	1	1	**152-8383**	1	CARTRIDGE AS	
	1A	1	**8C-9987**	1	WASHER (8.3X28X2.5-MM THK)	
	1B	1	**111-0343**	1	LOCKNUT (5/16-18-THD)	
	2	1	**189-0189**	1	COIL AS (24 VDC)	
B	2A	1	**1S-9593**	2	STRAP-CABLE	
	2B	1	**102-8802**	1	KIT-RECEPTACLE (2-PIN)	
					(INCLUDES RECEPTACLE AS & WEDGE)	
		1	**3E-3365**	1	WEDGE-RECEPTACLE LOCK (2-PIN)	
		1	**186-3735**	2	PIN-CONNECTOR	
					AVAILABLE REPAIR KIT(S):	
			8J-9348		KIT-SEAL (SOLENOID VALVE)	
					(INCLUDES SEALS AND O-RINGS)	

B-USE AS REQUIRED

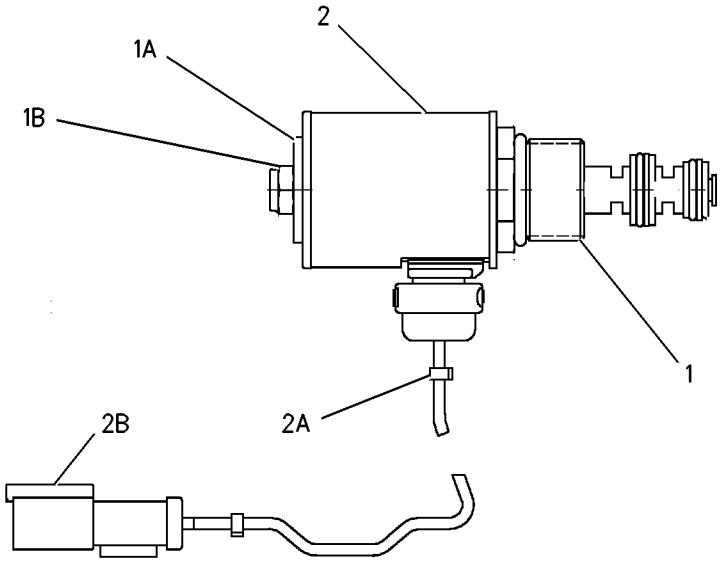

GRAPHIC #1 **<END>** g00837831

160-0270 VALVE GP-SOLENOID

S/N: 4WY500-1765, 1771-1772

PART OF 147-2352 CONTROL GP-TRANSMISSION HYD

SMCS-5479 **i01917630**

NOTE	REF NO	GRAPHIC REF	PART NUMBER	QTY	PART NAME 1 2 3 4 5 6 (PRODUCT LEVEL)	SEE PAGE
	1	1	**107-8611**	1	CARTRIDGE AS	
	1A	1	**149-5628**	1	WASHER (8.3X38.1X1.2-MM THK)	
	1B	1	**111-0343**	1	LOCKNUT (5/16-18-THD)	
	2	1	**189-0188**	1	COIL AS	
B		1	**1S-9593**	2	STRAP-CABLE	
J		1	**155-2270**	1	KIT-CONNECTING PLUG (2-PIN)	
J		1	**155-2261**	1	WEDGE-PLUG LOCK (2-PIN)	
		1	**186-3736**	2	SOCKET-CONNECTOR	
					AVAILABLE REPAIR KIT(S):	
			100-4083	1	KIT-SEAL	
					(INCLUDES RINGS AND SEALS)	

B-USE AS REQUIRED
J-KIT MARKED J INCLUDES PART(S) MARKED J

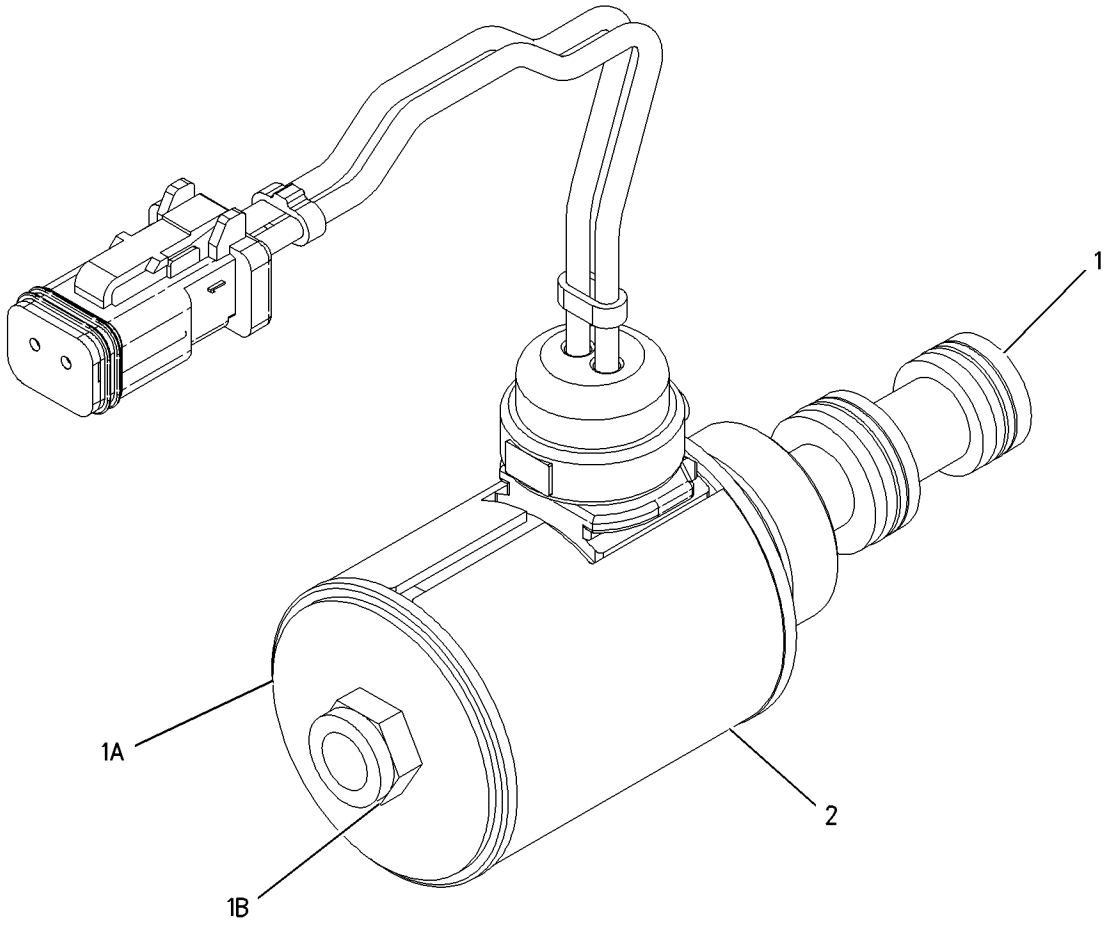

GRAPHIC #1 **<END>** g00998635

193-8559 VALVE GP-SOLENOID

S/N: 4WY1766-1770, 1773-UP
24 VOLT
PART OF 147-2352 CONTROL GP-TRANSMISSION HYD

SMCS-5479 **i02113006**

NOTE	REF NO	GRAPHIC REF	PART NUMBER	QTY	PART NAME 1 2 3 4 5 6 (PRODUCT LEVEL)	SEE PAGE
	1	1	**107-8611**	1	CARTRIDGE AS	
		1	**111-0343**	1	LOCKNUT (5/16-18-THD)	
		1	**149-5628**	1	WASHER (8.3X38.1X1.2-MM THK)	
	2	1	**111-0343**	1	LOCKNUT (5/16-18-THD)	
	3	1	**149-5628**	1	WASHER (8.3X38.1X1.2-MM THK)	
	4	1	**220-3629**	1	COIL AS	
		1	**3E-3365**	1	WEDGE-RECEPTACLE LOCK (2-PIN)	
		1	**1S-9593**	2	STRAP-CABLE	
		1	**102-8802**	1	KIT-RECEPTACLE (2-PIN)	
					(INCLUDES RECEPTACLE AS & WEDGE)	
		1	**186-3735**	2	PIN-CONNECTOR	
					AVAILABLE REPAIR KIT(S):	
			100-4083	1	KIT-SEAL (SOLENOID VALVE)	
					(INCLUDES SEALS AND RINGS)	

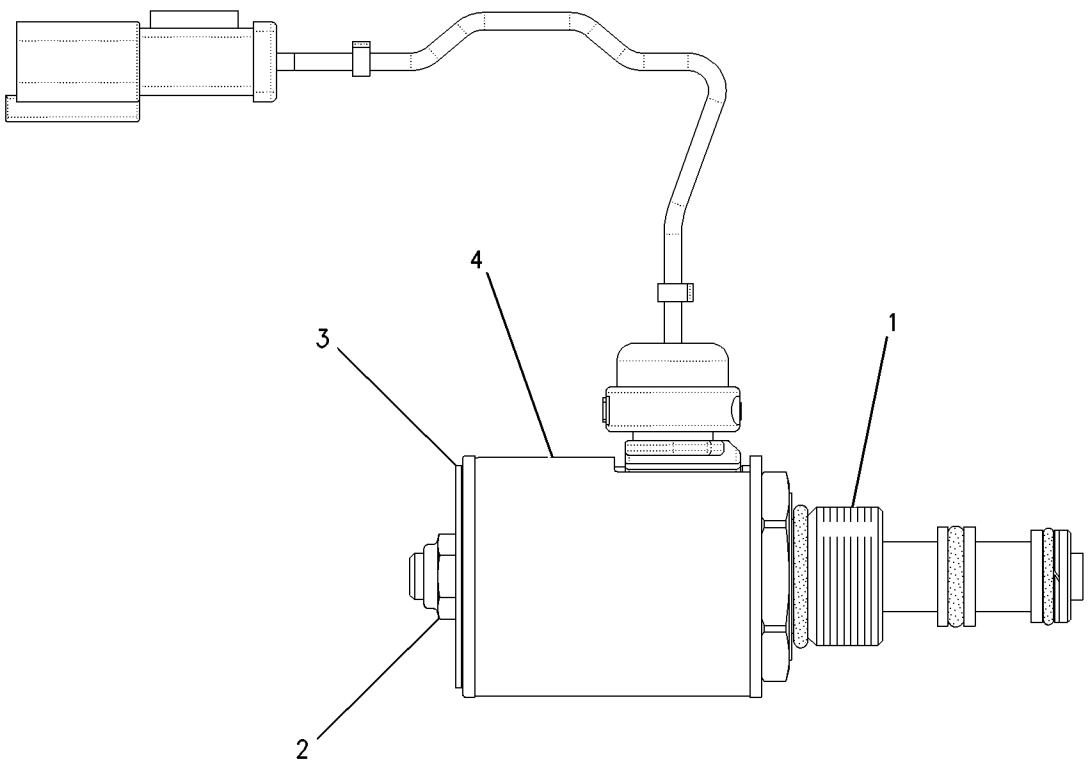

GRAPHIC #1 **<END>** g00895642

201-5676 VALVE GP-SOLENOID & RELIEF-
OUTPUT TRANSFER GEAR
S/N: BBJ1-99999; A5L1-UP

PART OF 141-6890, 243-4030 GEAR GP-OUTPUT TRANSFER

SMCS-5571 **i02206618**

NOTE	REF NO	GRAPHIC REF	PART NUMBER	QTY	PART NAME 1 2 3 4 5 6 (PRODUCT LEVEL)	SEE PAGE
	1	1	**148-9361**	1	VALVE GP-DIVERTER	
J	2	1	**148-9362**	1	VALVE GP-RELIEF (OUTPUT TRANSFER GEAR)	
		1	**2M-9780**	1	SEAL-O-RING	
		1	**6V-8398**	1	SEAL-O-RING	
	3	1	**148-9365**	1	ORIFICE	
Y	4	1	**152-8385**	2	VALVE GP-SOLENOID (24-VOLT)	473
	5	1	**3J-7354**	2	SEAL-O-RING	
	6	1	**9S-8002**	2	PLUG	
					AVAILABLE REPAIR KIT(S):	
J			**141-0888**	1	KIT-SEAL	
					(INCLUDES SEALS & BACK-UP RINGS)	

J-KIT MARKED J AVAILABLE FOR PART MARKED J
Y-SEPARATE ILLUSTRATION

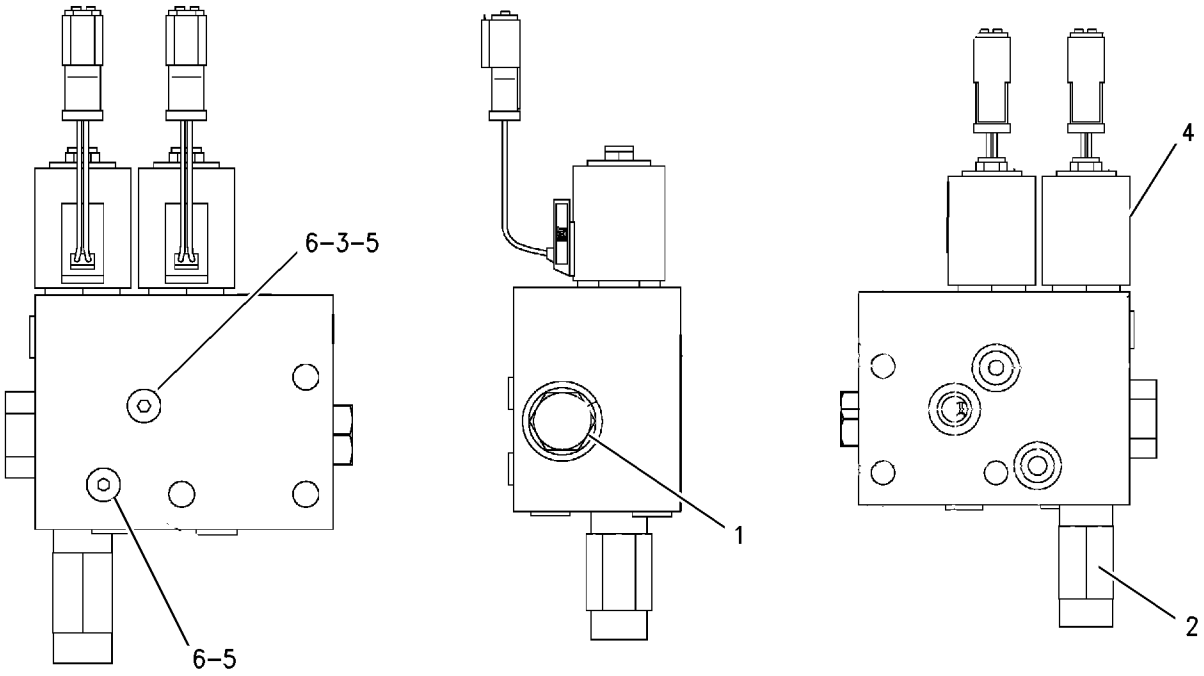

GRAPHIC #1 **<END>** g00806515

141-6054 WHEEL & FINAL DRIVE GP

S/N: AXM1-UP

PART OF 152-4410 AXLE GP-REAR

SMCS-4051 **i01620089**

NOTE	REF NO	GRAPHIC REF	PART NUMBER	QTY	PART NAME 1 2 3 4 5 6 (PRODUCT LEVEL)	SEE PAGE
	1	1	**4V-5237**	1	CARRIER-PLANETARY	
	2	1	**8X-0491**	1	SPINDLE	
	3	1	**174-7484**	1	HUB AS	
		1	**2V-5715**	1	BUSHING-TERMINAL	
	4	1	**8X-7026**	1	RETAINER AS-SEAL	
		1	**0S-0130**	1	PIN	
	5	1	**1M-6573**	1	CUP-BEARING	
	6	1	**9M-2744**	1	CONE-BEARING	
	7	1	**2N-2188**	1	CUP-BEARING	
	8	1	**2N-2189**	1	CONE-BEARING	
	9	1	**161-9772**	1	WHEEL	
	10	1	**8D-2714**	1	SEAL-O-RING	
	11	1	**2V-7092**	1	PLATE-RETAINER	
	12	1	**7K-6058**	8	BOLT-12 POINT HEAD (1/2-13X2.5IN)	
	13	1	**4V-4504**	1	GEAR-RING (65 TEETH)	
	14	1	**4V-5233**	6	WASHER-THRUST (1.6MM THK)	
	15	1	**4V-5234**	6	WASHER-THRUST (1.52MM THK)	
	16	1	**147-1206**	3	GEAR (23 TEETH)	
	17	1	**190-3593**	3	SHAFT-PLANETARY	
	18	1	**1P-3958**	6	ROLLER AS-SPECIAL	
	19	1	**2V-5656**	1	RING-SNAP	
	20	1	**2R-0239**	1	SEAL-O-RING	
	21	1	**5P-4484**	1	PLUG-MAGNETIC	
	22	1	**7M-8485**	1	SEAL-O-RING	
	23	1	**1V-3323**	23	STUD	
B	24	1	**2V-7390**	1	SHIM PACK (INCLUDES 15 SHIMS)	
	25	1	**2V-7398**	3	RING-RETAINING	
	26	1	**138-4809**	1	COVER	
	27	1	**1M-9015**	1	SEAL-O-RING	
	28	1	**9G-5319**	1	SEAL GP-DUO-CONE	
		1	**4M-0660**	2	RING-SEALING	
	29	1	**1A-1135**	20	BOLT (5/8-11X2 IN)	
	30	1	**5P-8247**	20	WASHER-HARD (17X32X3.5MM THK)	
	31	1	**0S-1587**	6	BOLT (1/2-13X1.75 IN)	
	32	1	**5P-8245**	6	WASHER-HARD (13.5X25.5X3MM THK)	
B	33	1	**4V-4500**	3	SPACER (5MM THK)	
	34	1	**2D-0604**	1	BUTTON	

B-USE AS REQUIRED

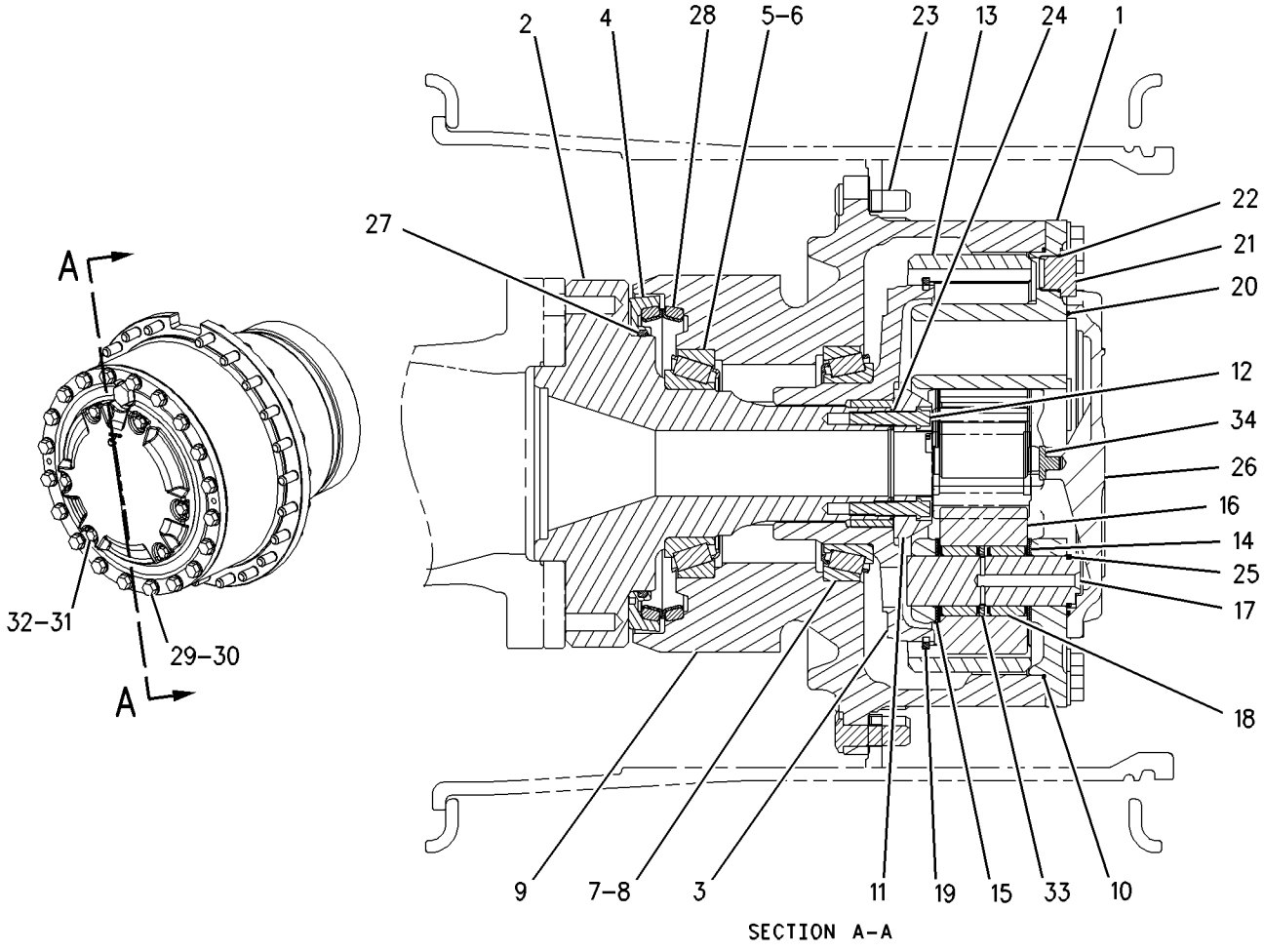

GRAPHIC #1 **<END>** g00838466

POWER TRAIN

241-0615 WHEEL & TIRE AR

S/N: AXM1-UP

AN ATTACHMENT

SMCS-4200 **i02249726**

NOTE	PART NUMBER	QTY	PART NAME 1 2 3 4 5 6 (PRODUCT LEVEL)	SEE PAGE
Y	*241-0614*	6	TIRE & RIM GP	454

Y-SEPARATE ILLUSTRATION

<END>

138-4810 WHEEL GP-FINAL DRIVE & BRAKE

S/N: AXM1-857

PART OF 141-6892 AXLE GP-CENTER, 141-6895 AXLE GP-FRONT

SMCS-4008 **i02261916**

NOTE	REF NO	GRAPHIC REF	PART NUMBER	QTY	PART NAME 1 2 3 4 5 6 (PRODUCT LEVEL)	SEE PAGE
	1	1	**1A-1135**	20	BOLT (5/8-11X2-IN)	
	2	1	**1M-6573**	1	CUP-BEARING	
	3	1	**1P-3958**	6	ROLLER AS-SPECIAL	
	4	1	**1V-3323**	23	STUD	
	5	1	**2N-2188**	1	CUP-BEARING	
	6	1	**2N-2189**	1	CONE-BEARING	
	7	1	**2R-0239**	1	SEAL-O-RING	
	8	1	**2V-5656**	1	RING-SNAP	
	9	1	**2V-7092**	1	PLATE-RETAINER	
B	10	1	**2V-7390**	1	SHIM PACK (INCLUDES 15-SHIMS)	
	11	1	**2V-7398**	3	RING-RETAINING	
B	12	1	**4V-4500**	3	SPACER (5-MM THK)	
	13	1	**190-3593**	3	SHAFT-PLANETARY	
	14	1	**4V-4504**	1	GEAR-RING (65-TEETH)	
	15	1	**4V-5233**	6	WASHER-THRUST (1.6-MM THK)	
	16	1	**4V-5234**	6	WASHER-THRUST (1.52-MM THK)	
	17	1	**4V-5237**	1	CARRIER-PLANETARY	
	18	1	**5P-2861**	1	SEAL-O-RING	
	19	1	**5P-4484**	1	PLUG-MAGNETIC (FINAL DRIVE)	
	20	1	**2D-0604**	1	BUTTON	
	21	1	**138-4809**	1	COVER AS	
	22	1	**6Y-6339**	1	SEAL GP-DUO-CONE	
		1	**5P-1606**	2	RING-SEALING	
	23	1	**174-7484**	1	HUB AS	
		1	**2V-5715**	1	BUSHING-TERMINAL	
	24	1	**9M-2744**	1	CONE-BEARING	
	25	1	**149-8434**	1	SEAL GP-DUO-CONE	
		1	**9W-5976**	2	RING-SEALING	
	26	1	**161-9773**	1	WHEEL	
Y	27	1	*136-7796*	1	BRAKE GP-SERVICE	577
	28	1	**139-1472**	1	SPINDLE	
	29	1	**147-1206**	3	GEAR (23-TEETH)	
	30	1	**0S-1587**	6	BOLT (1/2-13X1.75-IN)	
	31	1	**0S-1594**	6	BOLT (3/8-16X1-IN)	
M	32	1	**5P-8245**	6	WASHER-HARD (13.5X25.5X3-MM THK)	
	33	1	**5P-8247**	20	WASHER-HARD (17X32X3.5-MM THK)	
	34	1	**7K-6058**	8	BOLT-12 POINT HEAD (1/2-13X2.5-IN)	
	35	1	**7M-8485**	1	SEAL-O-RING	
	36	1	**8D-2714**	1	SEAL-O-RING	

B-USE AS REQUIRED
M-METRIC PART
Y-SEPARATE ILLUSTRATION

138-4810 **WHEEL GP-FINAL DRIVE & BRAKE** *(contd.)* **i02261916**

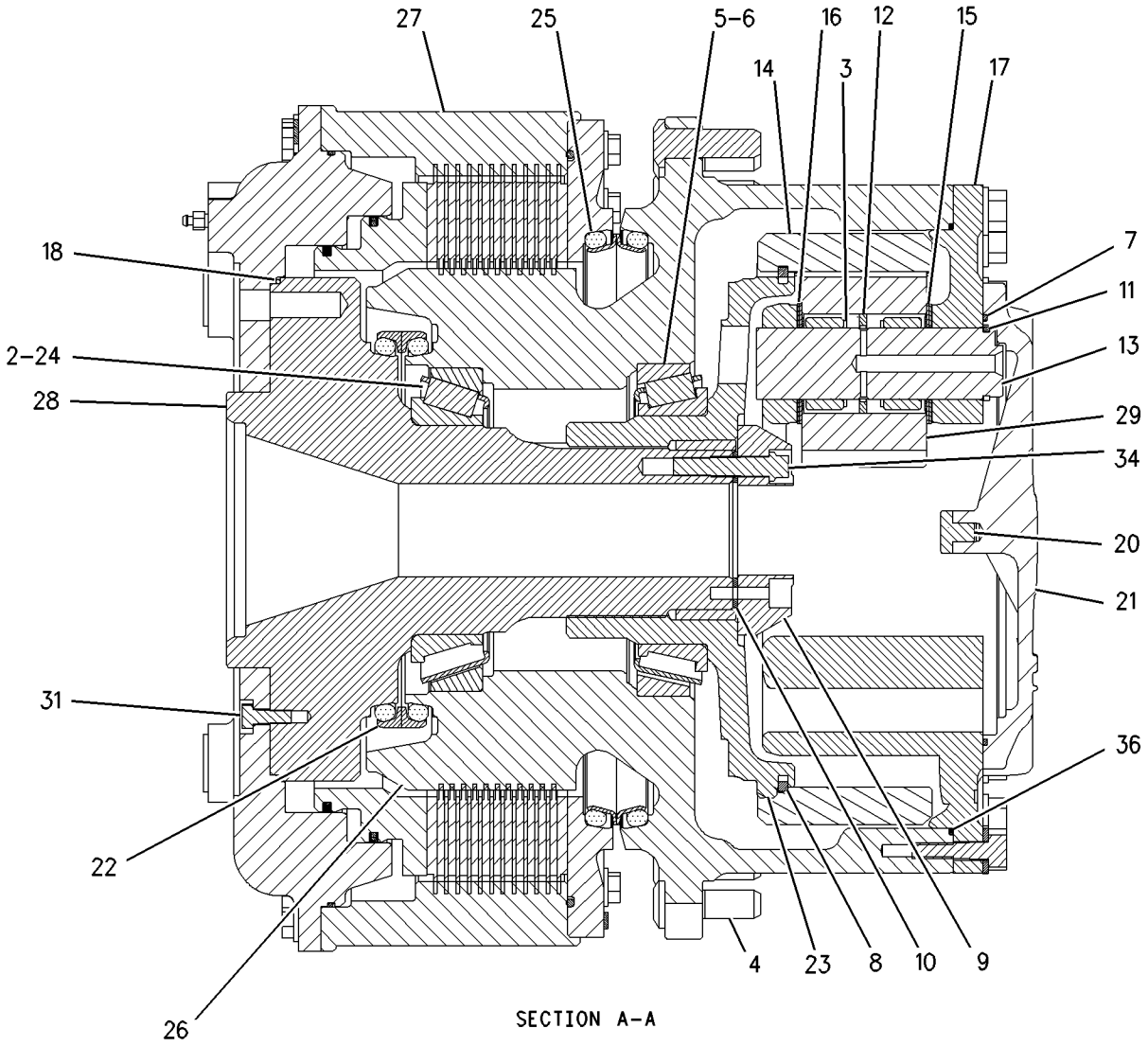

SECTION A-A

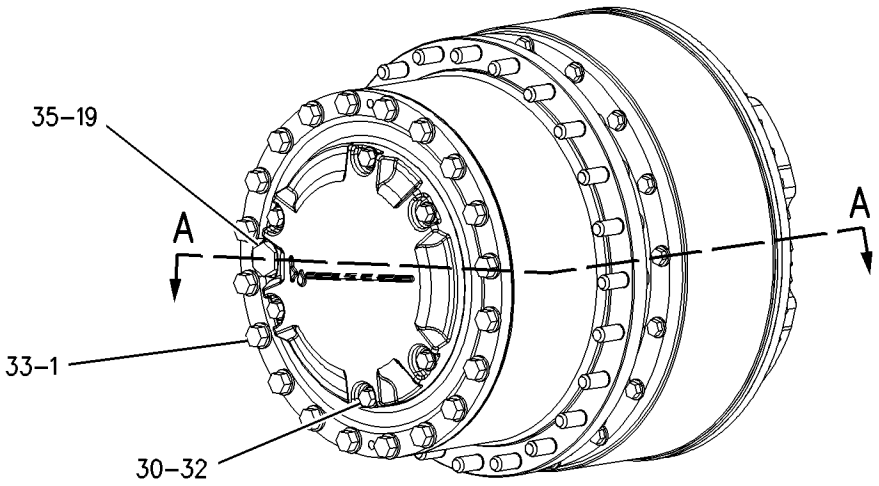

GRAPHIC #1 **<END>** g00869393

138-4810 WHEEL GP-FINAL DRIVE & BRAKE

S/N: AXM858-1323

PART OF 141-6892 AXLE GP-CENTER, 141-6895, 237-4738 AXLE GP-FRONT

SMCS-4008 **i02261915**

NOTE	REF NO	GRAPHIC REF	PART NUMBER	QTY	PART NAME 1 2 3 4 5 6 (PRODUCT LEVEL)	SEE PAGE
	1	1	**1A-1135**	20	BOLT (5/8-11X2-IN)	
	2	1	**1M-6573**	1	CUP-BEARING	
	3	1	**1P-3958**	6	ROLLER AS-SPECIAL	
	4	1	**1V-3323**	23	STUD	
	5	1	**2D-0604**	1	BUTTON	
	6	1	**2N-2188**	1	CUP-BEARING	
	7	1	**2N-2189**	1	CONE-BEARING	
	8	1	**2R-0239**	1	SEAL-O-RING	
	9	1	**2V-5656**	1	RING-SNAP	
	10	1	**2V-7092**	1	PLATE-RETAINER	
B	11	1	**2V-7390**	1	SHIM PACK (INCLUDES 15-SHIMS)	
	12	1	**2V-7398**	3	RING-RETAINING	
B	13	1	**4V-4500**	3	SPACER (5-MM THK)	
	14	1	**4V-4504**	1	GEAR-RING (65-TEETH)	
	15	1	**4V-5233**	6	WASHER-THRUST (1.6-MM THK)	
	16	1	**4V-5234**	6	WASHER-THRUST (1.52-MM THK)	
	17	1	**4V-5237**	1	CARRIER-PLANETARY	
	18	1	**5P-2861**	1	SEAL-O-RING	
	19	1	**5P-4484**	1	PLUG-MAGNETIC (FINAL DRIVE)	
	20	1	**6Y-6339**	1	SEAL GP-DUO-CONE	
		1	**5P-1606**	2	RING-SEALING	
	21	1	**9M-2744**	1	CONE-BEARING	
	22	1	**138-4809**	1	COVER AS	
	23	1	**139-1472**	1	SPINDLE	
	24	1	**147-1206**	3	GEAR (23-TEETH)	
	25	1	**149-8434**	1	SEAL GP-DUO-CONE	
		1	**9W-5976**	2	RING-SEALING	
	26	1	**161-9773**	1	WHEEL	
	27	1	**174-7484**	1	HUB AS	
		1	**2V-5715**	1	BUSHING-TERMINAL	
	28	1	**190-3593**	3	SHAFT-PLANETARY	
CY	29	1	*219-6710*	1	BRAKE GP-SERVICE	581
	30	1	**0S-1587**	6	BOLT (1/2-13X1.75-IN)	
	31	1	**0S-1594**	6	BOLT (3/8-16X1-IN)	
M	32	1	**5P-8245**	6	WASHER-HARD (13.5X25.5X3-MM THK)	
	33	1	**5P-8247**	20	WASHER-HARD (17X32X3.5-MM THK)	
	34	1	**7K-6058**	8	BOLT-12 POINT HEAD (1/2-13X2.5-IN)	
	35	1	**7M-8485**	1	SEAL-O-RING	
	36	1	**8D-2714**	1	SEAL-O-RING	

B-USE AS REQUIRED
C-CHANGE FROM PREVIOUS TYPE
M-METRIC PART
Y-SEPARATE ILLUSTRATION

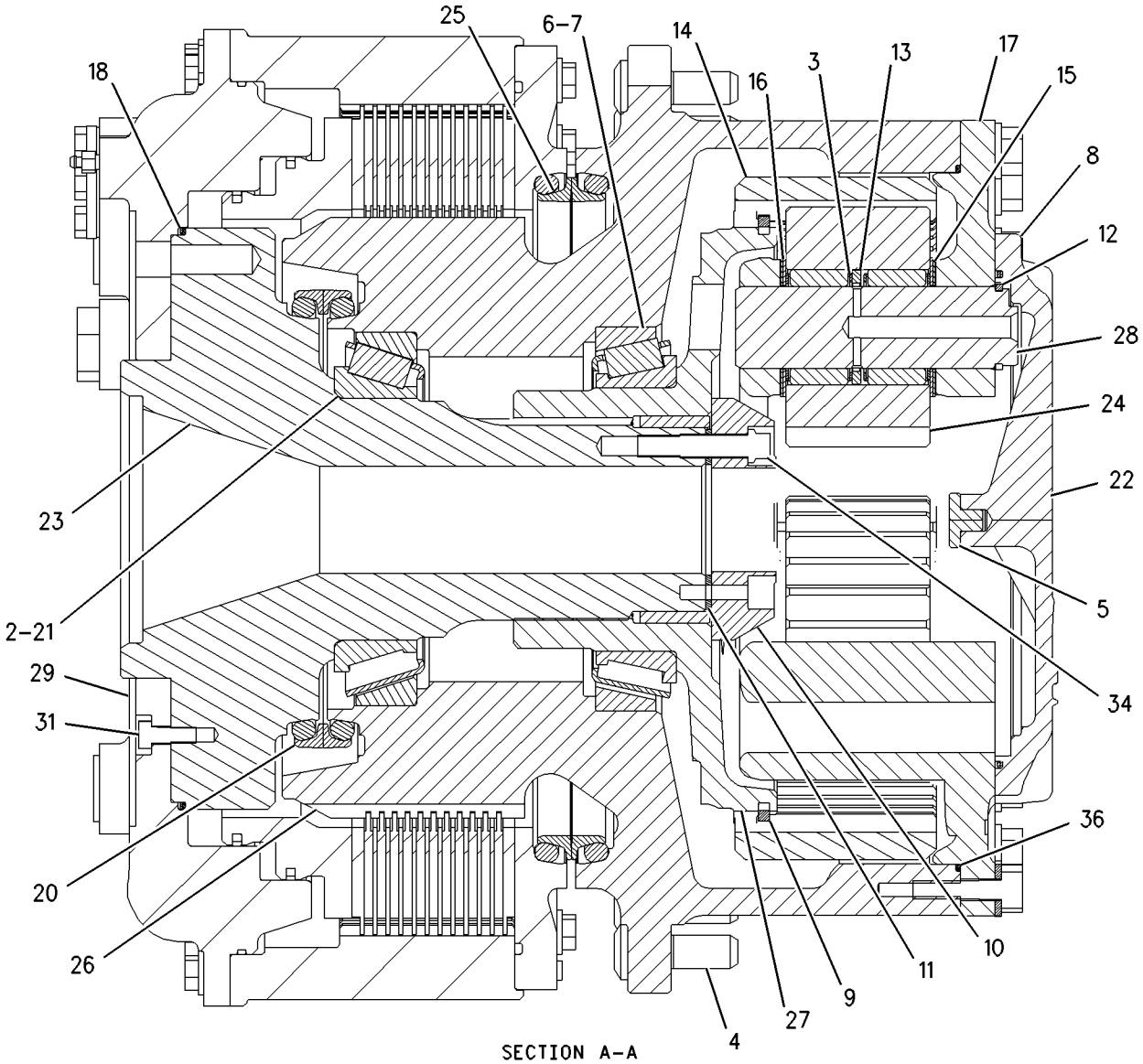

SECTION A-A

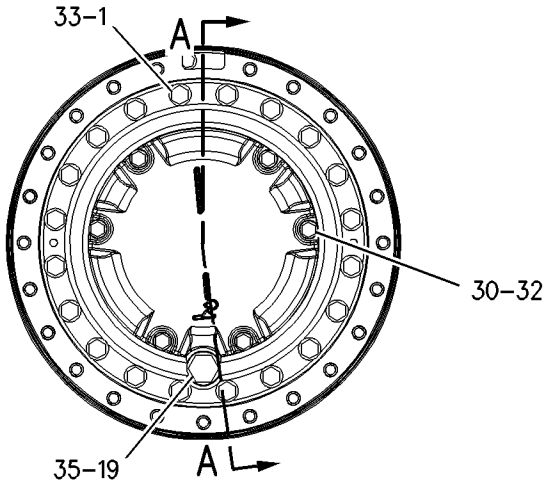

GRAPHIC #1 **<END>** g00932118

217-6290 WHEEL GP-FINAL DRIVE & BRAKE

S/N: AXM1324-UP

PART OF 141-6892 AXLE GP-CENTER, 237-4738 AXLE GP-FRONT

SMCS-4008 **i02050512**

NOTE	REF NO	GRAPHIC REF	PART NUMBER	QTY	PART NAME 1 2 3 4 5 6 (PRODUCT LEVEL)	SEE PAGE
	1	1	**1A-1135**	20	BOLT (5/8-11X2-IN)	
	2	1	**1M-6573**	1	CUP-BEARING	
	3	1	**1P-3958**	6	ROLLER AS-SPECIAL	
	4	1	**1V-3323**	23	STUD	
	5	1	**2D-0604**	1	BUTTON	
	6	1	**2N-2188**	1	CUP-BEARING	
	7	1	**2N-2189**	1	CONE-BEARING	
	8	1	**2R-0239**	1	SEAL-O-RING	
	9	1	**2V-5656**	1	RING-SNAP	
	10	1	**2V-7092**	1	PLATE-RETAINER	
	11	1	**2V-7390**	1	SHIM PACK (INCLUDES 15-SHIMS)	
	12	1	**2V-7398**	3	RING-RETAINING	
	13	1	**4V-4500**	3	SPACER (5-MM THK)	
	14	1	**4V-4504**	1	GEAR-RING (65-TEETH)	
	15	1	**4V-5233**	6	WASHER-THRUST (1.6-MM THK)	
	16	1	**4V-5234**	6	WASHER-THRUST (1.52-MM THK)	
	17	1	**4V-5237**	1	CARRIER-PLANETARY	
	18	1	**5P-2861**	1	SEAL-O-RING	
	19	1	**5P-4484**	1	PLUG-MAGNETIC	
	20	1	**6Y-6339**	1	SEAL GP-DUO-CONE	
	21	1	**9M-2744**	1	CONE-BEARING	
	22	1	**138-4809**	1	COVER AS	
	23	1	**147-1206**	3	GEAR (23-TEETH)	
	24	1	**174-7484**	1	HUB AS	
		1	**2V-5715**	1	BUSHING-TERMINAL	
	25	1	**190-3593**	3	SHAFT-PLANETARY	
	26	1	**217-6291**	1	WHEEL	
Y	27	1	*217-6309*	1	BRAKE GP-SERVICE	579
	28	1	**218-8117**	1	SPINDLE	
	29	1	**219-0615**	1	SEAL GP-DUO-CONE	
	30	1	**0S-1587**	6	BOLT (1/2-13X1.75-IN)	
	31	1	**0S-1594**	6	BOLT (3/8-16X1-IN)	
M	32	1	**5P-8245**	6	WASHER-HARD (13.5X25.5X3-MM THK)	
	33	1	**5P-8247**	20	WASHER-HARD (17X32X3.5-MM THK)	
	34	1	**7K-6058**	8	BOLT-12 POINT HEAD (1/2-13X2.5-IN)	
	35	1	**7M-8485**	1	SEAL-O-RING	
	36	1	**8D-2714**	1	SEAL-O-RING	

M-METRIC PART
Y-SEPARATE ILLUSTRATION

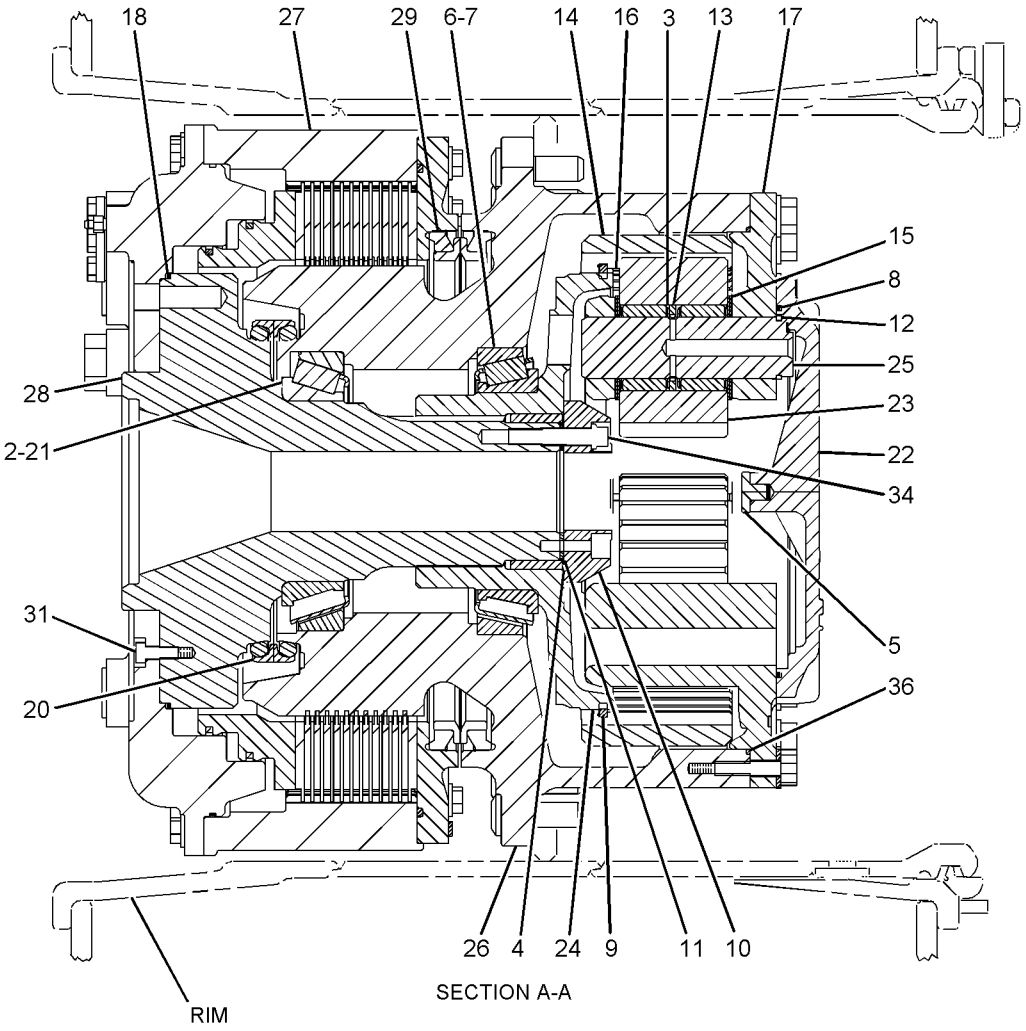

SECTION A-A

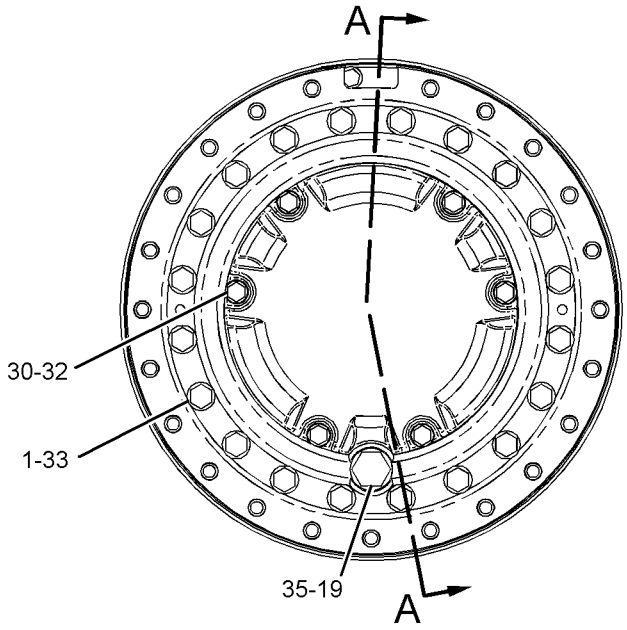

GRAPHIC #1

<END>

g01054930

196-8527 BAFFLE GP-RADIATOR

S/N: AXM1-UP

PART OF 152-6944 COOLING AR

SMCS-1353, 1806 **i01671604**

NOTE	REF NO	GRAPHIC REF	PART NUMBER	QTY	PART NAME 1 2 3 4 5 6 (PRODUCT LEVEL)	SEE PAGE
	1	1	**2U-2452**	12	LOCKNUT	
	2	1	**2U-2453**	12	WASHER (5.6X12.6X1.22MM THK)	
	3	1	**2U-2589**	12	BOLT	
	4	1	**2U-3416**	12	CLAMP-TUBE	
	5	1	**166-8324**	1	PLATE	
	6	1	**186-5117**	1	PLATE	
	7	1	**186-5118**	1	PLATE	
	8	1	**193-0547**	1	PLATE	
	9	1	**211-7524**	4	WASHER (50X11X10MM THK)	
	10	1	**5P-4116**	4	WASHER-HARD (8.8X20.5X2MM THK)	
	11	1	**7X-7729**	4	WASHER (11X25X3MM THK)	
M	12	1	**8T-4189**	4	BOLT (M8X1.25X20MM)	
M	13	1	**8T-4195**	4	BOLT (M10X1.5X30MM)	
D	14	1	**5P-5905**		SEAL (.8M)	
D	14A	1	**5P-5905**		SEAL (.7M)	
D	14B	1	**5P-5905**		SEAL (.9M)	
D	14C	1	**5P-5905**		SEAL (.5M)	
D	14D	1	**5P-5905**		SEAL (1M)	

D-ORDER BY THE METER
M-METRIC PART

196-8527 **BAFFLE GP-RADIATOR** *(contd.)* **i01671604**

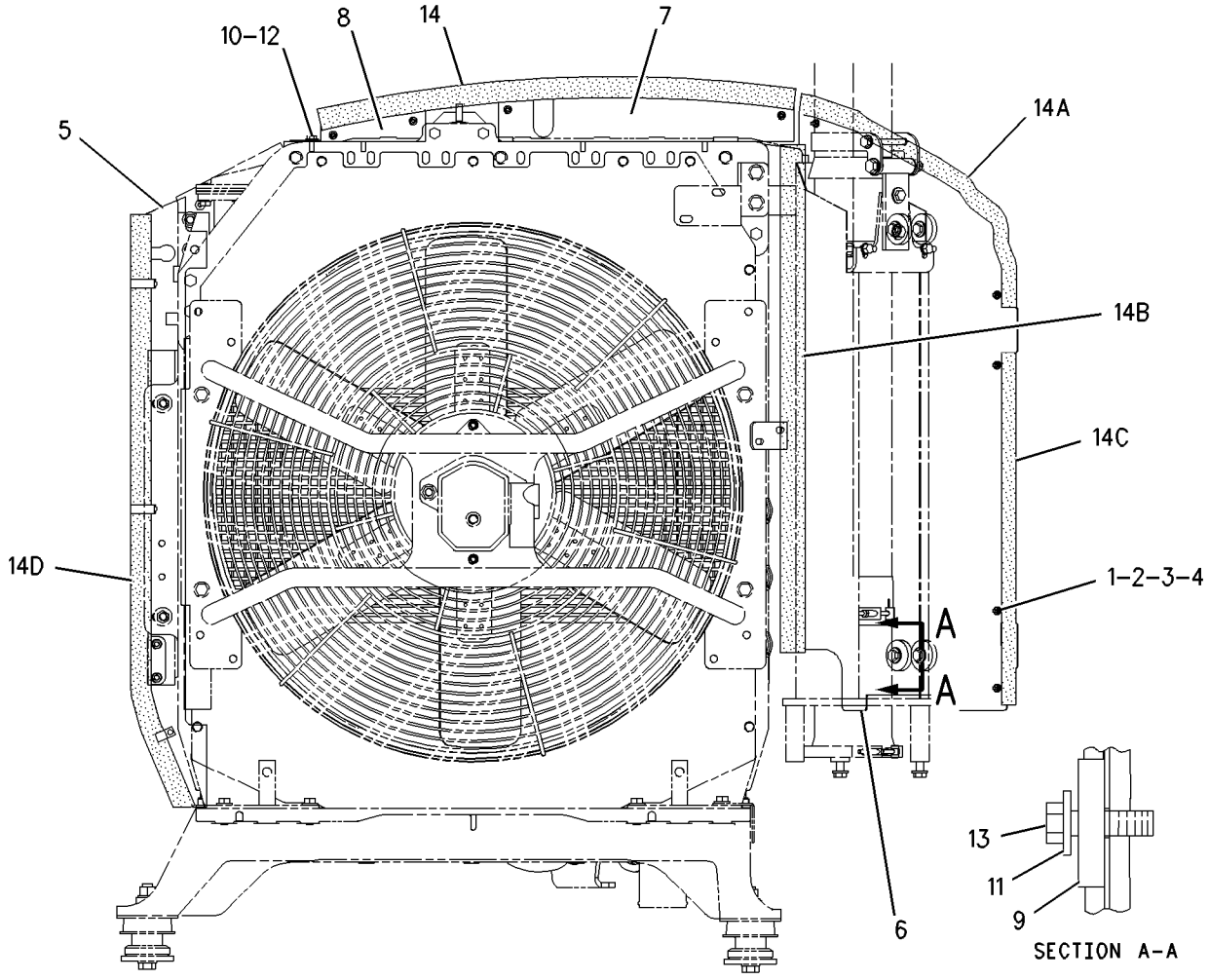

GRAPHIC #1 **<END>** g00863868

FRAME AND BODY

141-6863 BODY GP-TRUCK

S/N: AXM1-967

PART OF 152-6926 INSTALLATION AR-MACHINE

SMCS-7250, 7258 **i01444269**

NOTE	REF NO	GRAPHIC REF	PART NUMBER	QTY	PART NAME 1 2 3 4 5 6 (PRODUCT LEVEL)	SEE PAGE
	1	1	**5B-5150**	2	FITTING-GREASE	
B	2	1	**5U-0297**	6	SHIM (1.6-MM THK)	
	3	1	**5U-7151**	2	CAP	
	4	1	**140-8227**	8	BUFFER-RUBBER	
	5	1	**141-6866**	1	BODY AS-DUMP	
B	6	1	**142-0534**	24	SHIM (3-MM THK)	
B	7	1	**142-0535**	8	SHIM (8-MM THK)	
B	8	1	**142-0536**	4	SHIM (3-MM THK)	
B	9	1	**142-0537**	2	SHIM (8-MM THK)	
	10	1	**142-1227**	2	PIN AS-DUMP BODY	
	11	1	**144-6952**	2	BUSHING	
	12	1	**155-7877**	2	PLATE AS-GUIDE	
	13	1	**6K-6967**	2	ADAPTER-PIPE	
M	14	1	**7X-2552**	8	BOLT (M16X2X30-MM)	
M	15	1	**7X-2563**	6	BOLT (M20X2.5X60-MM)	
	16	1	**8T-4121**	32	WASHER-HARD (11X21X2.5-MM THK)	
	17	1	**8T-4123**	2	WASHER-PLATED (22X35X3.5-MM THK)	
M	18	1	**8T-4131**	2	NUT (M20X2.5-THD)	
M	19	1	**8T-4186**	32	BOLT (M10X1.5X40-MM)	
M	20	1	**8T-4187**	2	BOLT (M20X2.5X80-MM)	
	21	1	**8T-5439**	8	WASHER (21.5X45X6-MM THK)	
	22	1	**9X-8257**	8	WASHER (17.5X30X3.5-MM THK)	

B-USE AS REQUIRED
M-METRIC PART

141-6863 **BODY GP-TRUCK** *(contd.)* **i01444269**

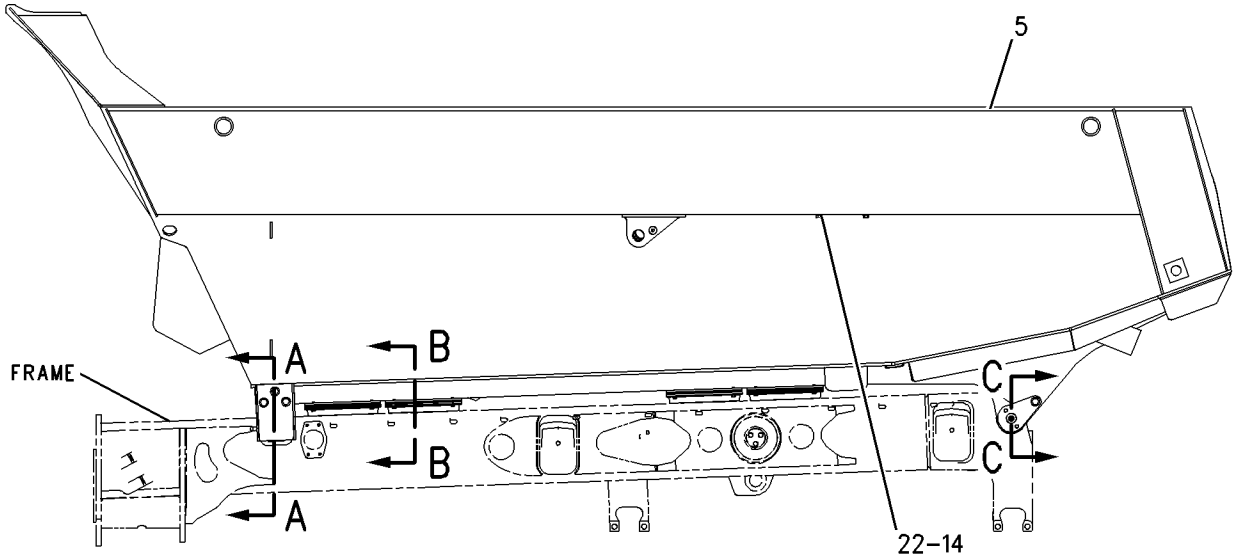

LEFT SIDE VIEW

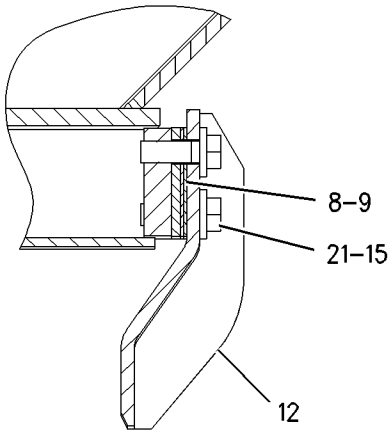

SECTION A-A

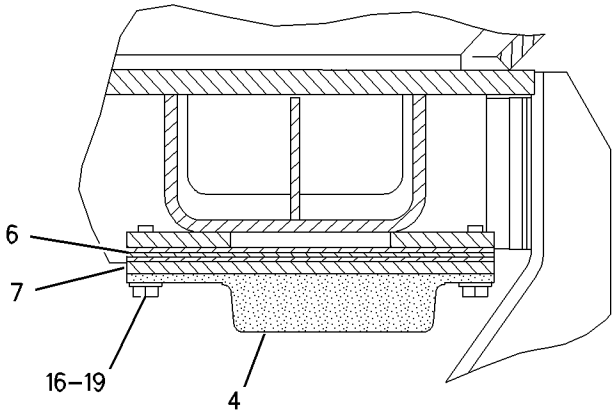

SECTION B-B

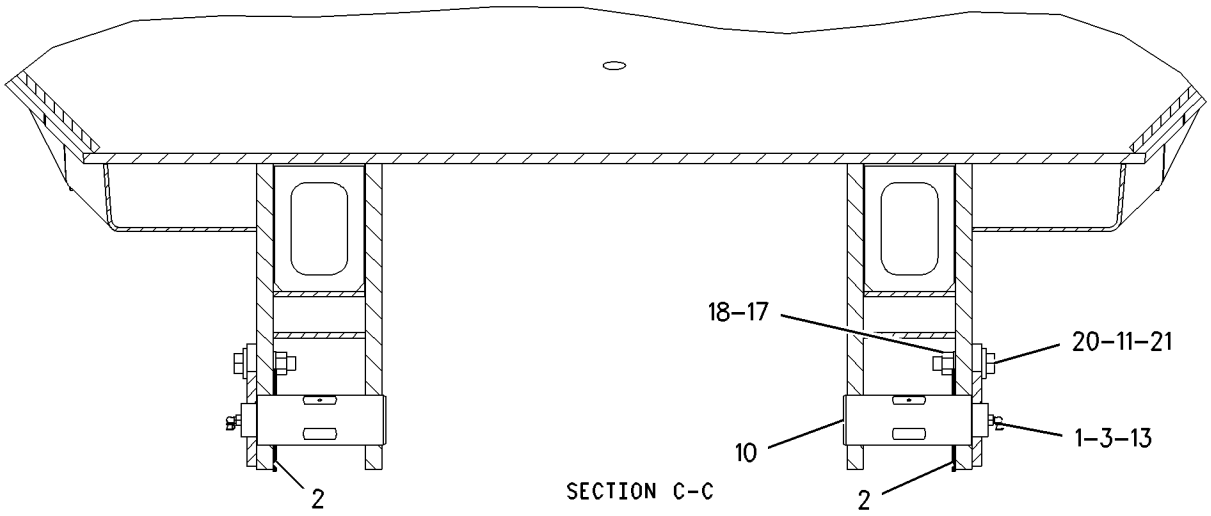

SECTION C-C

GRAPHIC #1 **<END>** g00757862

FRAME AND BODY

141-6863 BODY GP-TRUCK

S/N: AXM968-1255

PART OF 152-6926 INSTALLATION AR-MACHINE

SMCS-7250, 7258 **i02024643**

NOTE	REF NO	GRAPHIC REF	PART NUMBER	QTY	PART NAME 1 2 3 4 5 6 (PRODUCT LEVEL)	SEE PAGE
	1	1	**5B-5150**	2	FITTING-GREASE	
B	2	1	**5U-0297**	6	SHIM (1.6-MM THK)	
	3	1	**5U-7151**	2	CAP	
	4	1	**140-8227**	8	BUFFER-RUBBER	
BC	5	1	**142-0534**	8	SHIM (3-MM THK)	
BC	6	1	**142-0535**	16	SHIM (8-MM THK)	
B	7	1	**142-0536**	4	SHIM (3-MM THK)	
B	8	1	**142-0537**	2	SHIM (8-MM THK)	
	9	1	**142-1227**	2	PIN AS-DUMP BODY	
	10	1	**144-6952**	2	BUSHING	
	11	1	**155-7877**	2	PLATE AS-GUIDE	
C	12	1	**236-1987**	1	BODY AS-DUMP	
	13	1	**6K-6967**	2	ADAPTER-PIPE	
BM	14	1	**7X-2552**	8	BOLT (M16X2X30-MM)	
M	15	1	**7X-2563**	6	BOLT (M20X2.5X60-MM)	
	16	1	**8T-4121**	32	WASHER-HARD (11X21X2.5-MM THK)	
	17	1	**8T-4123**	2	WASHER-PLATED (22X35X3.5-MM THK)	
M	18	1	**8T-4131**	2	NUT (M20X2.5-THD)	
M	19	1	**8T-4186**	32	BOLT (M10X1.5X40-MM)	
M	20	1	**8T-4187**	2	BOLT (M20X2.5X80-MM)	
	21	1	**8T-5439**	8	WASHER (21.5X45X6-MM THK)	
B	22	1	**9X-8257**	8	WASHER (17.5X30X3.5-MM THK)	

B-USE AS REQUIRED
C-CHANGE FROM PREVIOUS TYPE
M-METRIC PART

141-6863 **BODY GP-TRUCK** *(contd.)* **i02024643**

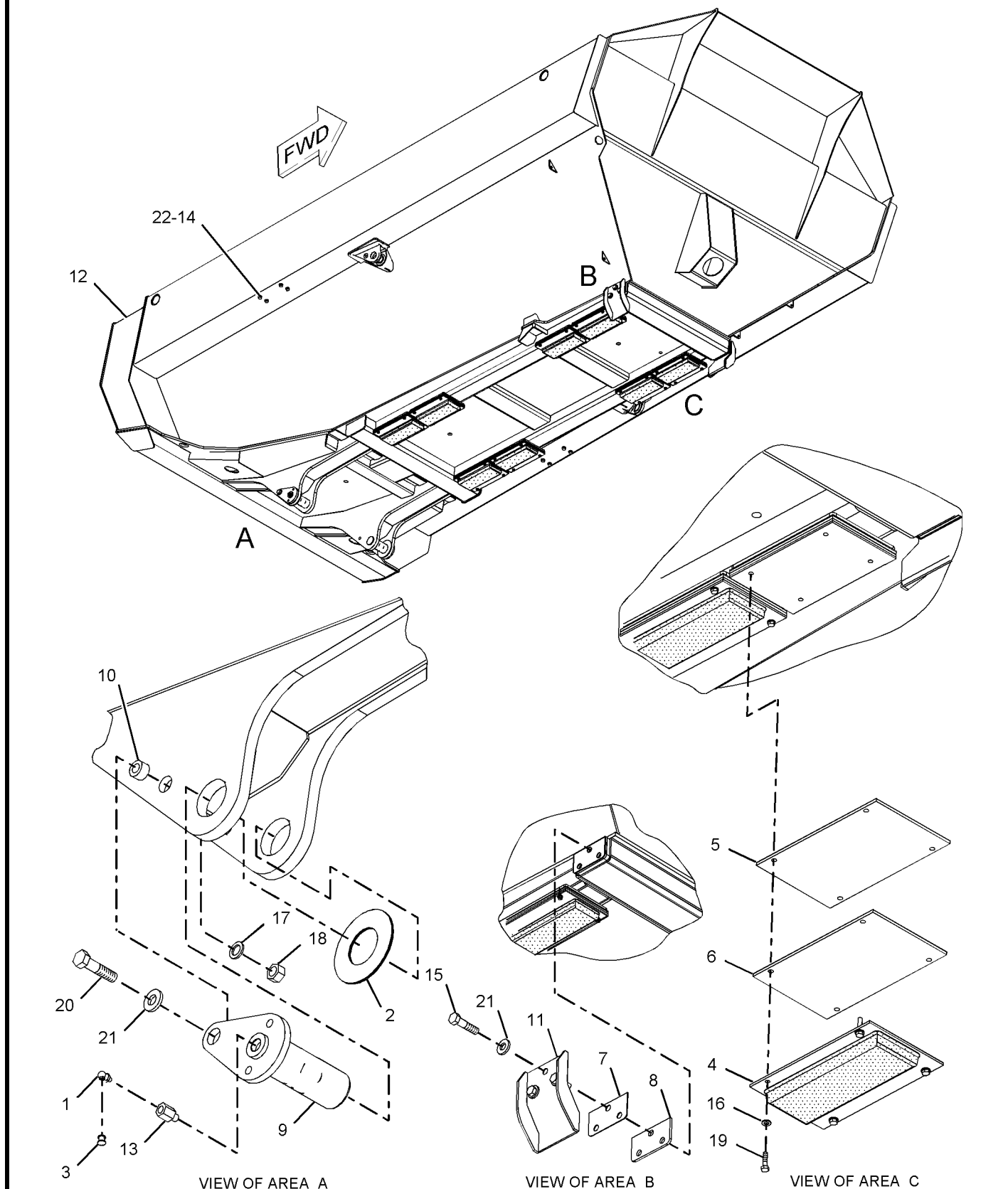

GRAPHIC #1

<END>

g01045537

FRAME AND BODY

141-6863 BODY GP-TRUCK

S/N: AXM1256-UP

PART OF 152-6926 INSTALLATION AR-MACHINE

SMCS-7250, 7258 **i02037050**

NOTE	REF NO	GRAPHIC REF	PART NUMBER	QTY	PART NAME 1 2 3 4 5 6 (PRODUCT LEVEL)	SEE PAGE
	1	1	**5B-5150**	2	FITTING-GREASE	
B	2	1	**5U-0297**	6	SHIM (1.6-MM THK)	
	3	1	**5U-7151**	2	CAP	
	4	1	**140-8227**	8	BUFFER-RUBBER	
B	5	1	**142-0534**	8	SHIM (3-MM THK)	
B	6	1	**9X-8257**	8	WASHER (17.5X30X3.5-MM THK)	
B	7	1	**142-0536**	4	SHIM (3-MM THK)	
B	8	1	**142-0537**	2	SHIM (8-MM THK)	
	9	1	**142-1227**	2	PIN AS-DUMP BODY	
	10	1	**144-6952**	2	BUSHING	
	11	1	**155-7877**	2	PLATE AS-GUIDE	
	12	1	**236-1987**	1	BODY AS-DUMP	
	13	1	**6K-6967**	2	ADAPTER-PIPE	
BM	14	1	**7X-2552**	8	BOLT (M16X2X30-MM)	
M	15	1	**7X-2563**	6	BOLT (M20X2.5X60-MM)	
	16	1	**8T-4121**	32	WASHER-HARD (11X21X2.5-MM THK)	
	17	1	**8T-4123**	2	WASHER-PLATED (22X35X3.5-MM THK)	
M	18	1	**8T-4131**	2	NUT (M20X2.5-THD)	
CM	19	1	**8T-4136**	32	BOLT (M10X1.5X25-MM)	
M	20	1	**8T-4187**	2	BOLT (M20X2.5X80-MM)	
	21	1	**8T-5439**	8	WASHER (21.5X45X6-MM THK)	

B-USE AS REQUIRED
C-CHANGE FROM PREVIOUS TYPE
M-METRIC PART

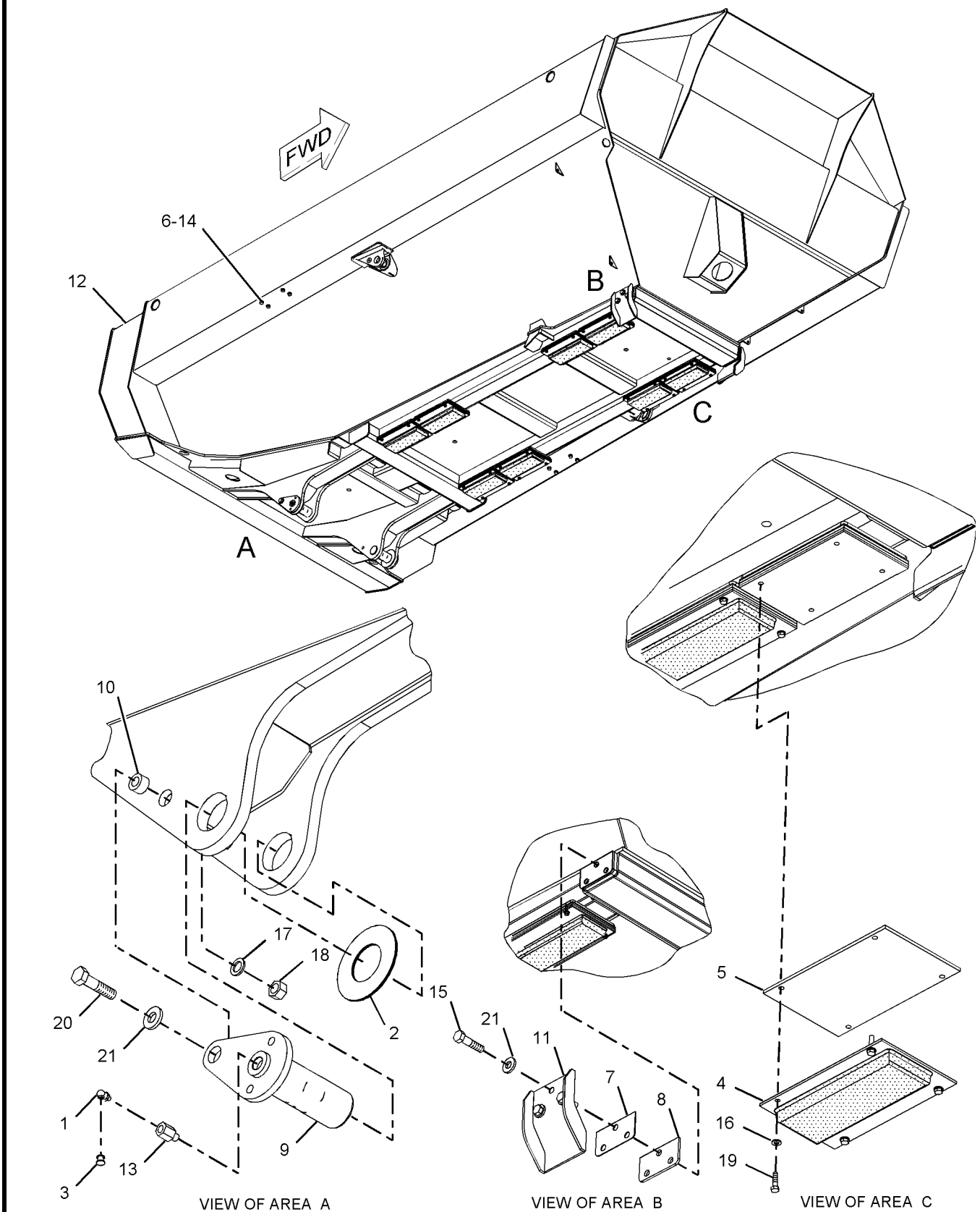

GRAPHIC #1

<END>

g01048298

184-7102 BUMPER GP-FRONT

S/N: AXM1-UP

PART OF 152-6927 INSTALLATION AR-MACHINE

SMCS-7156 **i01933440**

NOTE	REF NO	GRAPHIC REF	PART NUMBER	QTY	PART NAME 1 2 3 4 5 6 (PRODUCT LEVEL)	SEE PAGE
	1	1	**179-4612**	1	BUMPER	
	2	1	**233-3323**	4	BOLT-SOCKET HEAD (M16X2.0X45MM)	
	3	1	**4B-5275**	6	WASHER (17.5X 4.4X3.5MM THK)	
M	4	1	**8T-4132**	2	NUT (M16X2 THD)	

M-METRIC PART

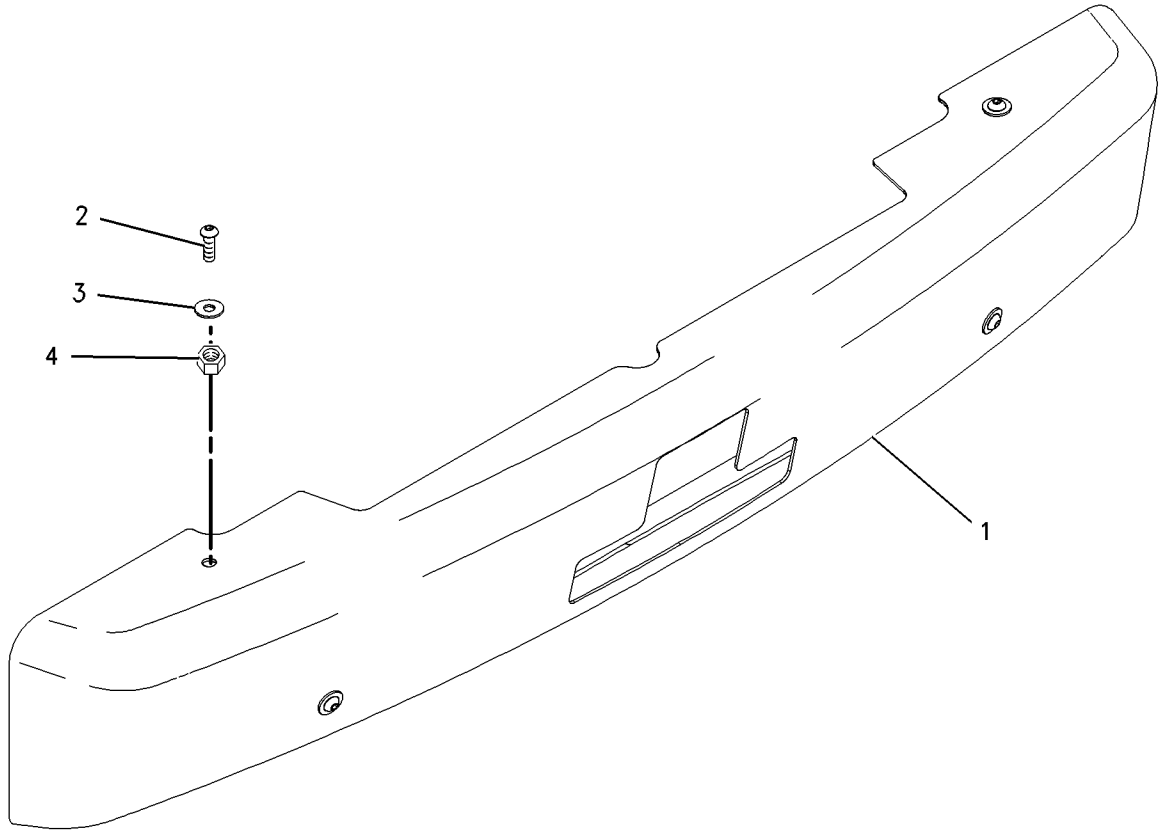

GRAPHIC #1 **<END>** g01005952

206-8971 EXTENSION GP-FENDER

S/N: AXM1-UP
PART OF 166-6392 TIRE & RIM AR
AN ATTACHMENT

SMCS-7252 **i01772601**

NOTE	PART NUMBER	QTY	PART NAME 1 2 3 4 5 6 (PRODUCT LEVEL)	SEE PAGE
	7X-0578	40	WASHER-HARD (10.2X32X2.5MM THK)	
M	**8T-4133**	20	NUT (M10X1.5 THD)	
M	**8T-4195**	20	BOLT (M10X1.5X30MM)	
	206-8967	1	EXTENSION AS (LH)	
	206-8968	1	EXTENSION AS (RH)	
	206-8969	1	COVER (LH)	
	206-8970	1	COVER (RH)	

M-METRIC PART

<END>

152-7099 FENDER & SUPPORT GP

S/N: AXM1-UP

PART OF 152-6922 HYDRAULIC AR-MACHINE

SMCS-7252 **i02203671**

NOTE	REF NO	GRAPHIC REF	PART NUMBER	QTY	PART NAME 1 2 3 4 5 6 (PRODUCT LEVEL)	SEE PAGE
	1	2	**7W-6333**	8	SPACER (10.5X20X10.7-MM THK)	
	2	2	**151-1676**	12	COLLAR	
	3	1	**164-6811**	1	COVER-FENDER	
	4	1	**164-9208**	1	COVER	
	5	1	**188-0961**	1	FENDER AS	
M		1	**8T-3490**	32	NUT-WELD (M10X1.5-THD)	
M		1	**8T-3597**	20	NUT-WELD (M12X1.75-THD)	
	6	1	**188-1366**	1	FENDER AS-LH	
M		1	**8T-3490**	32	NUT-WELD (M10X1.5-THD)	
M		1	**8T-3597**	20	NUT-WELD (M12X1.75-THD)	
	7	1	**188-1956**	1	SUPPORT	
	8	1	**188-1970**	1	SUPPORT	
	9	1	**189-2045**	1	DEFLECTOR (RH)	
	10	1	**189-2046**	1	DEFLECTOR (LH)	
	11	2	**189-2047**	1	PLATE-RH	
	12	2	**189-2048**	1	PLATE-LH	
	13	1	**189-2050**	2	SHIELD-INNER	
	14	1	**189-2290**	2	PLATE	
	15	2	**7X-7729**	8	WASHER (11X25X3-MM THK)	
	16	2	**190-0566**	2	PLATE-COVER	
	17	1	**200-2159**	2	STRIP	
	18	1	**206-5017**	20	SPACER (11X20X5-MM THK)	
	19	2	**206-6819**	4	PLATE-LOCK	
M	20	1	**7X-2553**	4	BOLT (M16X2X40-MM)	
	21	1,2	**8T-4121**	56	WASHER-HARD (11X21X2.5-MM THK)	
M	22	2	**8T-4137**	12	BOLT (M10X1.5X20-MM)	
M	23	2	**8T-4139**	4	BOLT (M12X1.75X30-MM)	
M	24	1	**8T-4140**	4	BOLT (M16X2X60-MM)	
M	25	2	**8T-4176**	6	BOLT (M12X1.75X90-MM)	
M	26	2	**8T-4186**	8	BOLT (M10X1.5X40-MM)	
M	27	1	**8T-4196**	3	BOLT (M10X1.5X35-MM)	
	28	2	**5P-1076**	10	WASHER-HARD (13.5X30X4-MM THK)	
	29	2	**8T-4224**	12	WASHER-HARD (8.8X16X2-MM THK)	
M	30	1	**8T-5005**	17	BOLT (M10X1.5X70-MM)	
M	31	1,2	**8T-6869**	12	BOLT (M8X1.25X60-MM)	
	32	1	**9X-8257**	8	WASHER (17.5X30X3.5-MM THK)	
M	33	1	**8T-4136**	24	BOLT (M10X1.5X25-MM)	
	34	1	**239-5015**	10	STEP	

M-METRIC PART

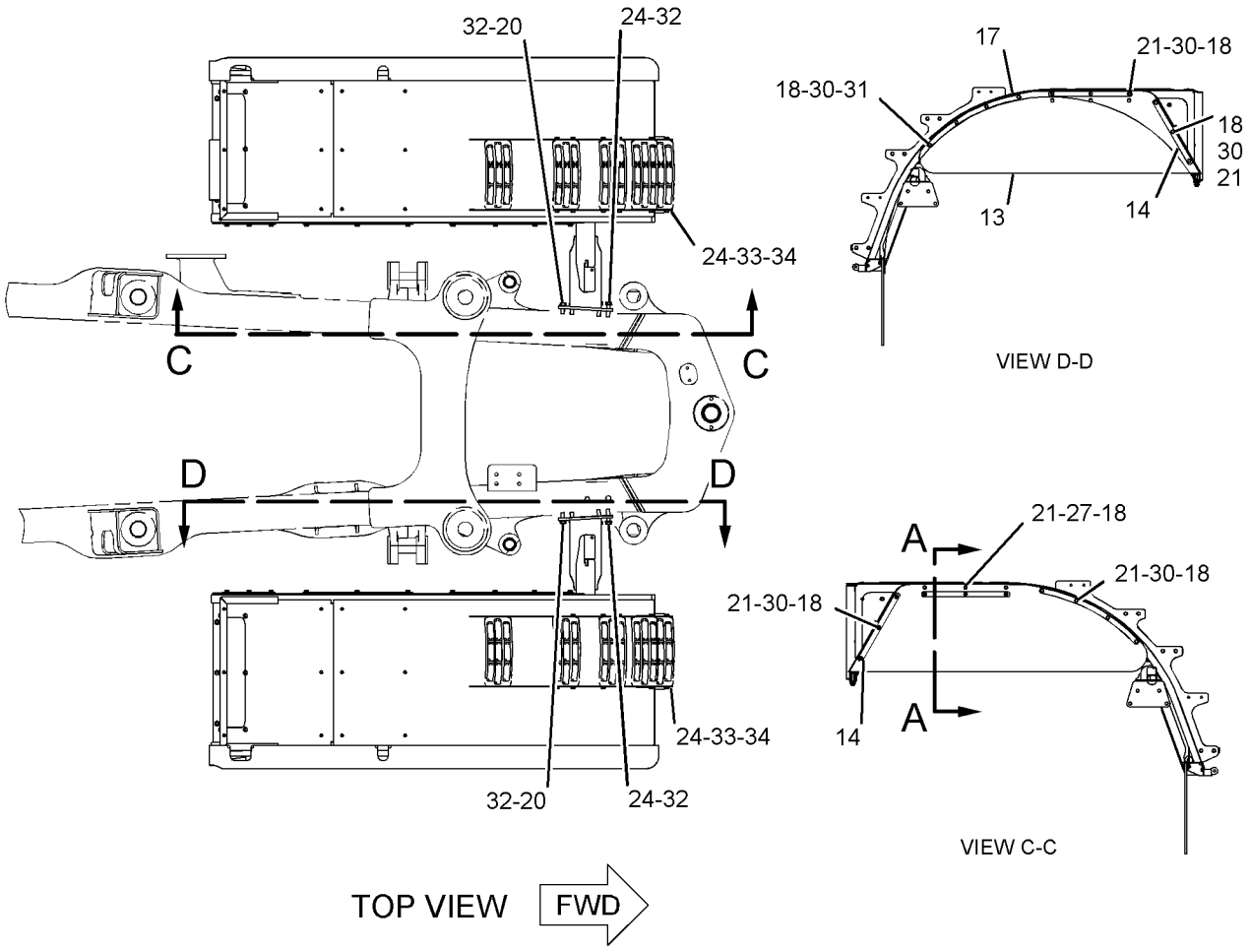

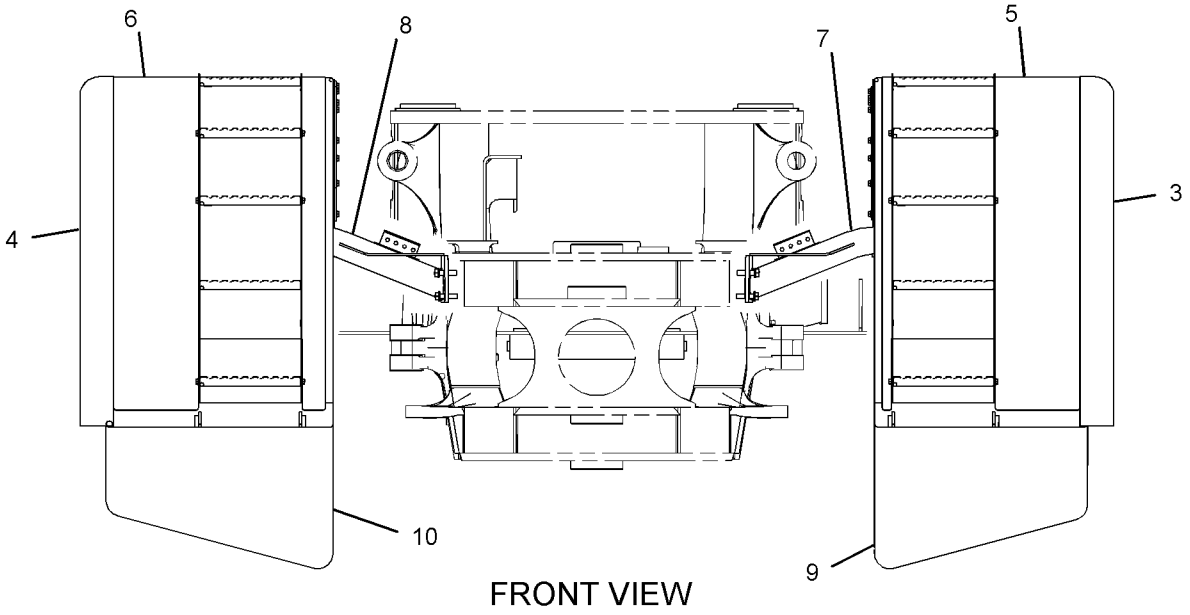

REFER TO ALL ILLUSTRATIONS OF THIS GROUP FOR AUXILIARY VIEWS

GRAPHIC #1

g01133563

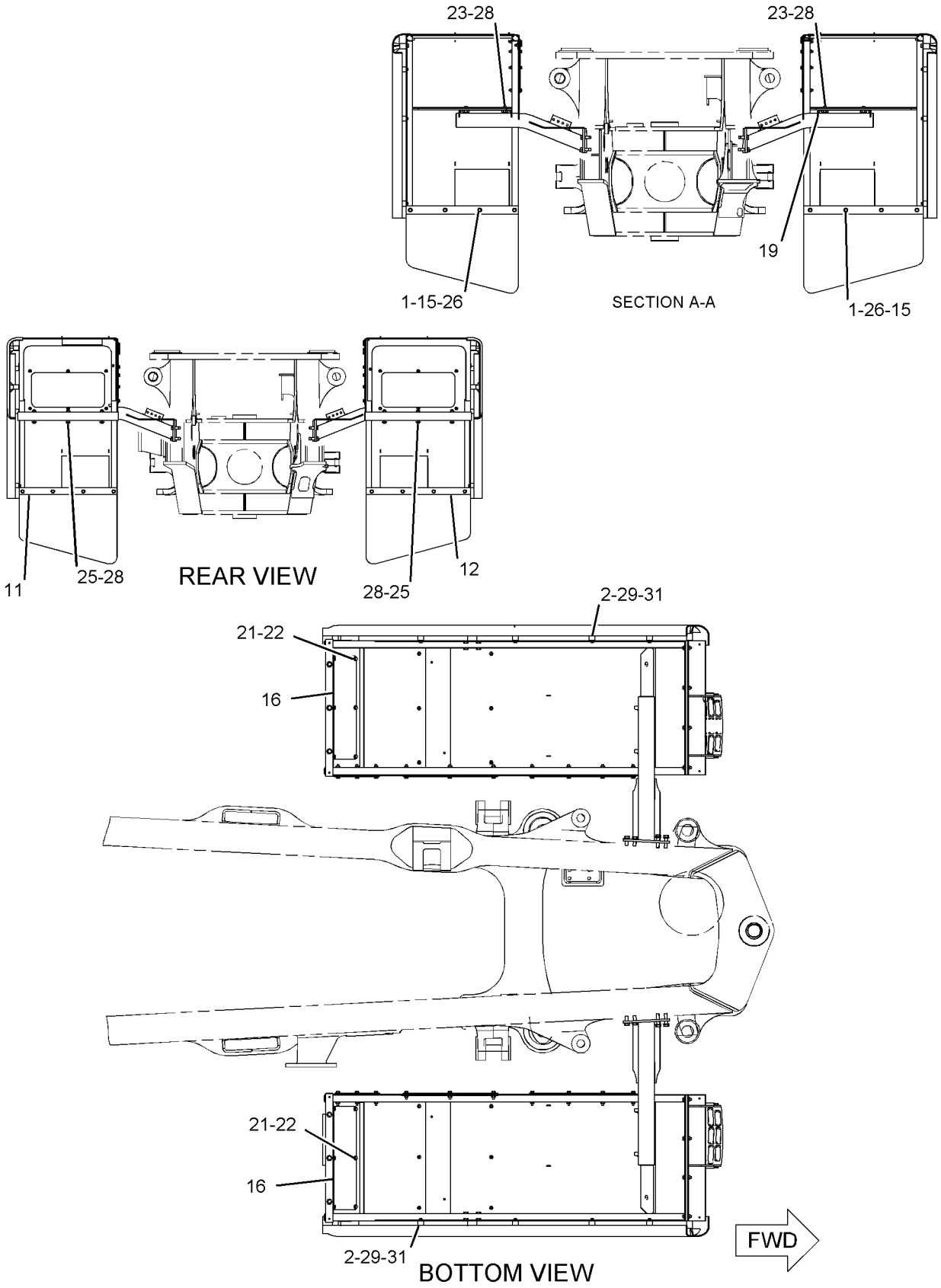

GRAPHIC #2

<END>

g01133564

FRAME AND BODY

152-7035 FRAME AR

S/N: AXM1-UP

PART OF 152-6921 AXLE & FRAME AR

SMCS-7051 **i01446876**

NOTE	PART NUMBER	QTY	PART NAME 1 2 3 4 5 6 (PRODUCT LEVEL)	SEE PAGE
Y	*141-6855*	1	FRAME GP-REAR	501
Y	*138-7962*	1	SUSPENSION GP-REAR EQUALIZER	811

Y-SEPARATE ILLUSTRATION

<END>

FRAME AND BODY

141-6856 FRAME GP-FRONT

S/N: AXM1-UP

PART OF 152-6919 AXLE & FRAME AR

SMCS-7050, 7051 **i02096263**

NOTE	REF NO	GRAPHIC REF	PART NUMBER	QTY	PART NAME 1 2 3 4 5 6 (PRODUCT LEVEL)	SEE PAGE
	1	1	**175-5899**	4	BUSHING	
	2	1	**187-3421**	1	PLATE AS (RH)	
	3	1	**188-1822**	1	SUPPORT AS (RH)	
	4	1	**188-1828**	1	SUPPORT AS (LH)	
	5	1	**217-6282**	1	PLATE AS	
	6	1	**238-7430**	1	FRAME AS-FRONT	
	7	1	**247-8397**	1	PLATE AS (LH)	
	8	1	**131-5879**	4	WASHER (11X32X3-MM THK)	
M	9	1	**7X-2563**	12	BOLT (M20X2.5X60-MM)	
	10	1	**8T-4121**	2	WASHER-HARD (11X21X2.5-MM THK)	
	11	1	**8T-4123**	24	WASHER-PLATED (22X35X3.5-MM THK)	
M	12	1	**8T-4136**	2	BOLT (M10X1.5X25-MM)	
M	13	1	**8T-4137**	2	BOLT (M10X1.5X20-MM)	
M	14	1	**8T-4141**	12	BOLT (M20X2.5X70-MM)	

M-METRIC PART

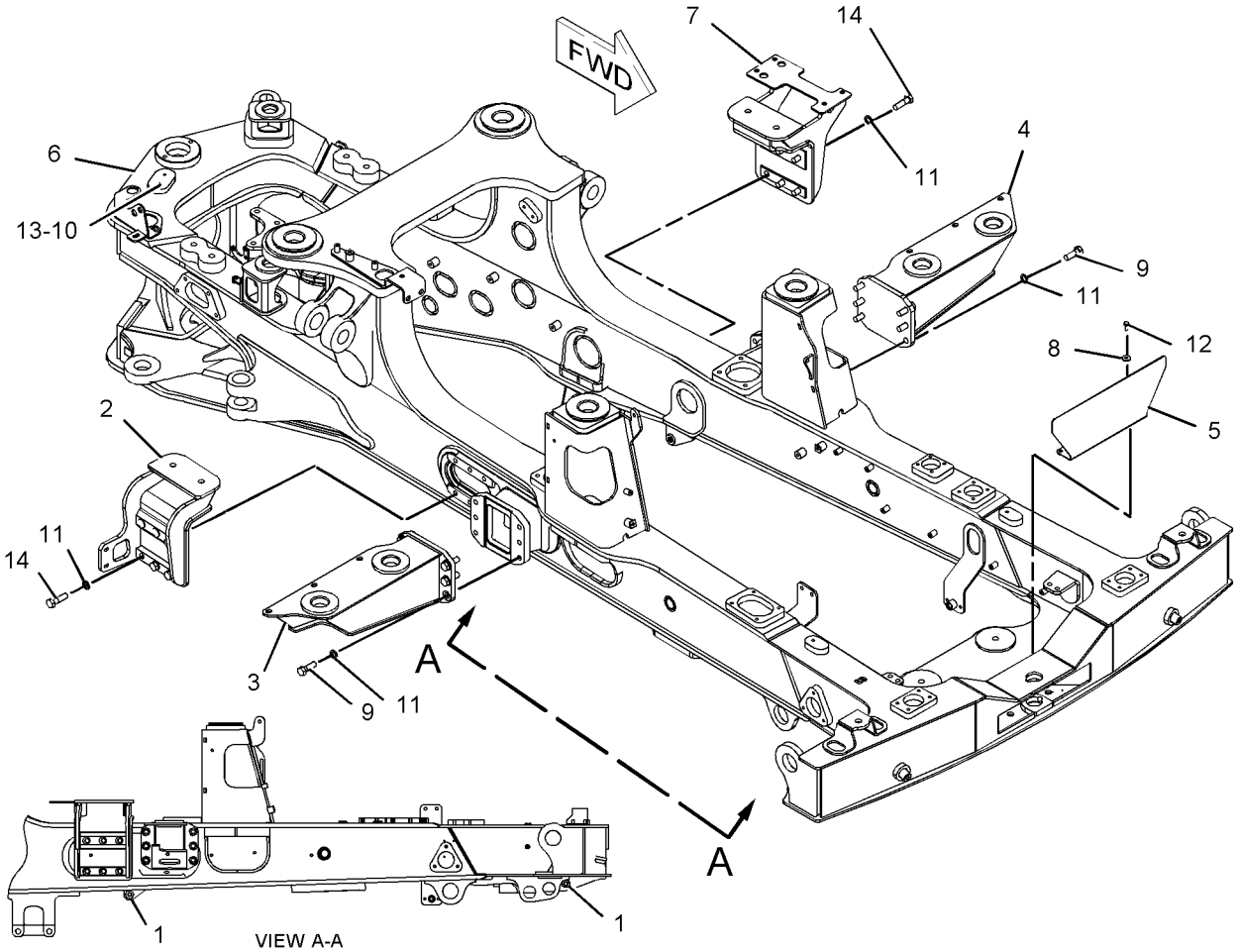

GRAPHIC #1 **<END>** g01068682

FRAME AND BODY

141-6855 FRAME GP-REAR

S/N: AXM1-UP

PART OF 152-7035 FRAME AR

SMCS-7051 **i02050187**

NOTE	REF NO	GRAPHIC REF	PART NUMBER	QTY	PART NAME 1 2 3 4 5 6 (PRODUCT LEVEL)	SEE PAGE
	1	1	**112-8517**	2	BUSHING	
	2	1	**141-6869**	1	FRAME AS-REAR	
		1	**7T-1099**	7	LINK	
		1	**9G-9155**	2	CLIP	
	3	1	**142-0050**	2	BUSHING	
	4	1	**142-0539**	1	STRUT AS	
		1	**3U-8952**	1	PIN AS	
	5	1	**144-4083**	1	BRACKET	
	6	1	**151-8455**	1	PIN AS	
	7	1	**162-5516**	2	BUSHING	
	8	1	**162-5517**	2	SEAL	
	9	1	**162-5518**	2	RING-RETAINER	
	10	1	**174-6769**	1	FRAME AS-GUARD	
	11	1	**189-2070**	1	PLATE AS	
		1	**7T-1099**	1	LINK	
M		1	**8T-3490**	6	NUT-WELD (M10X1.5-THD)	
M		1	**8T-3597**	7	NUT-WELD (M12X1.75-THD)	
		1	**153-8340**	1	BRACKET	
	12	1	**189-2908**	1	CLAMP GP	
	13	1	**194-5012**	1	DEFLECTOR	
M	14	1	**7X-2557**	1	BOLT (M16X2X140-MM)	
M	15	1	**8T-0365**	6	BOLT (M24X3X240-MM)	
M	16	1	**8T-4132**	1	NUT (M16X2-THD)	
M	17	1	**8T-4139**	4	BOLT (M12X1.75X30-MM)	
	18	1	**6V-8237**	6	WASHER (26X44X4-MM THK)	
M	19	1	**8T-4183**	8	BOLT (M12X1.75X40-MM)	
M	20	1	**8T-4194**	1	BOLT (M12X1.75X50-MM)	
	21	1	**8T-4223**	22	WASHER-HARD (13.5X25.5X3-MM THK)	
M	22	1	**8T-4244**	9	NUT (M12X1.75-THD)	
	23	1	**9X-8257**	2	WASHER (17.5X30X3.5-MM THK)	

M-METRIC PART

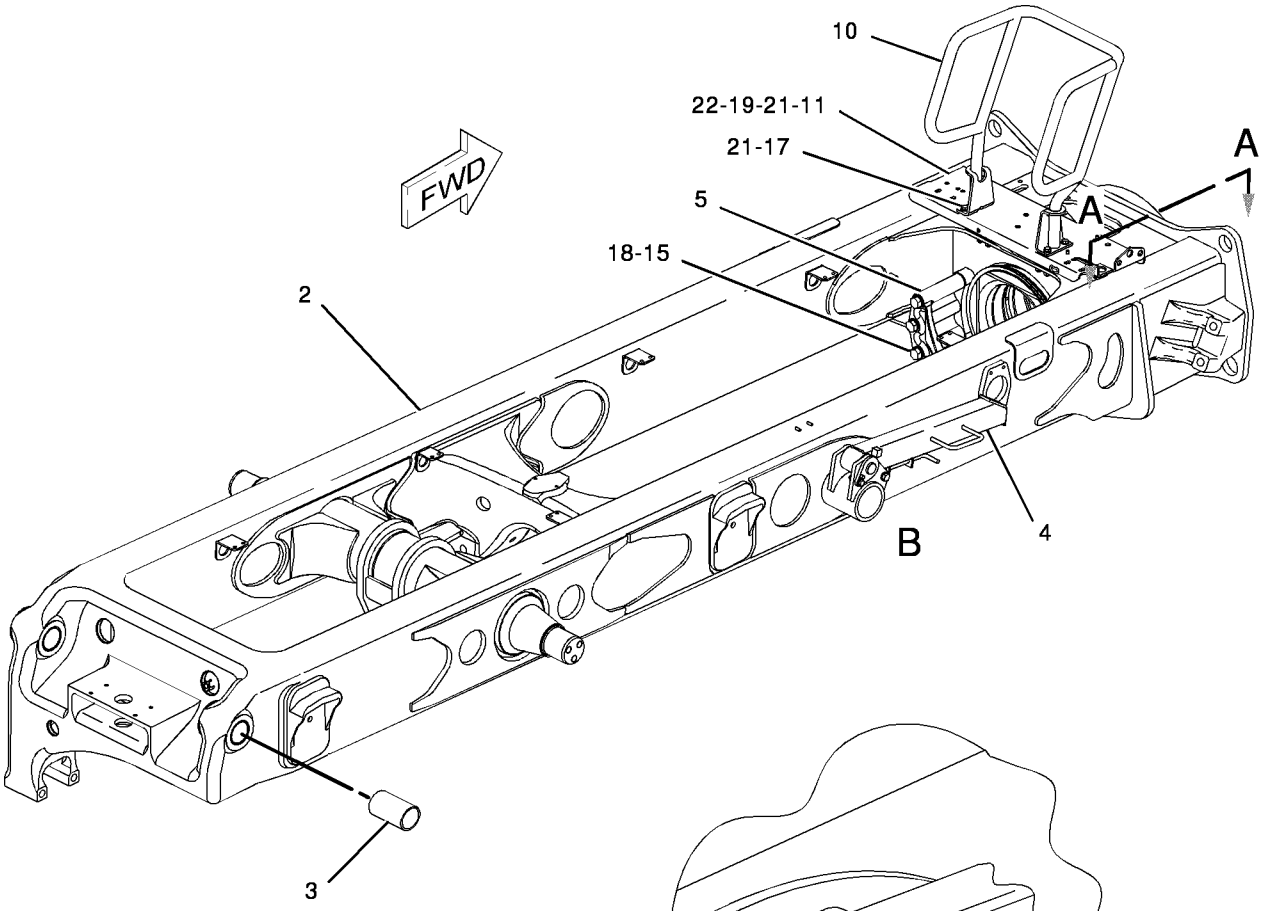

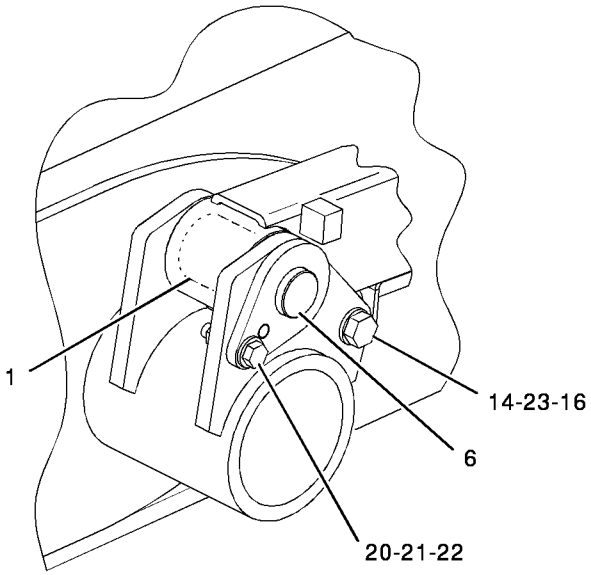

VIEW OF AREA B

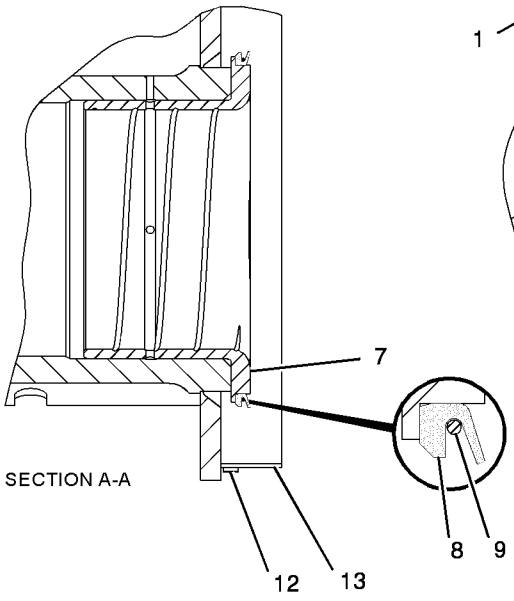

SECTION A-A

GRAPHIC #1 **<END>** g01051863

192-1682 GUARD GP-BRAKE–FRONT AXLE

S/N: AXM1-UP

PART OF 152-6935 AXLE AR-FRONT

SMCS-7166 **i01447492**

NOTE	REF NO	GRAPHIC REF	PART NUMBER	QTY	PART NAME 1 2 3 4 5 6 (PRODUCT LEVEL)	SEE PAGE
	1	1	**192-1683**	1	GUARD	
	2	1	**192-1684**	1	GUARD	
M	3	1	**8T-4139**	6	BOLT (M12X1.75X30-MM)	
	4	1	**8T-4223**	6	WASHER-HARD (13.5X25.5X3-MM THK)	

M-METRIC PART

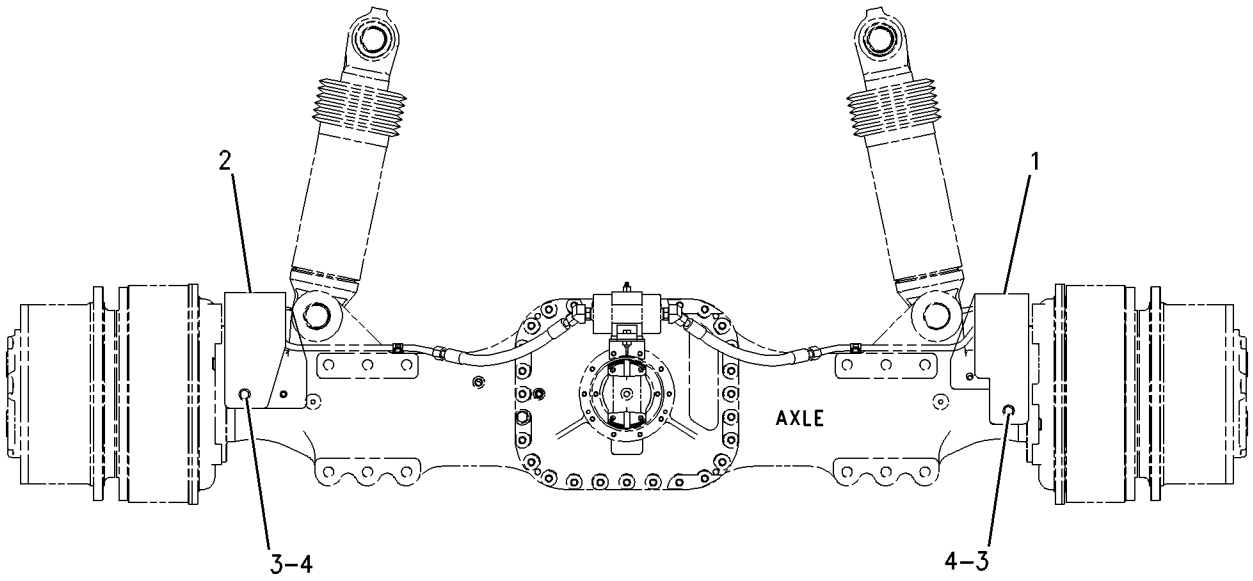

GRAPHIC #1 **<END>** g00765725

192-1751 GUARD GP-BRAKE LINES–CENTER AXLE

S/N: AXM1-UP

PART OF 152-7036 AXLE AR-CENTER

SMCS-7166 **i01858740**

NOTE	REF NO	GRAPHIC REF	PART NUMBER	QTY	PART NAME 1 2 3 4 5 6 (PRODUCT LEVEL)	SEE PAGE
	1	1	**173-3664**	1	GUARD (LH)	
	2	1	**173-3665**	1	GUARD (RH)	
	3	1	**192-1752**	1	GUARD (LH)	
	4	1	**192-1753**	1	GUARD (RH)	
M	5	1	**8T-4139**	10	BOLT (M12X1.75X30-MM)	
	6	1	**8T-4223**	10	WASHER-HARD (13.5X25.5X3-MM THK)	

M-METRIC PART

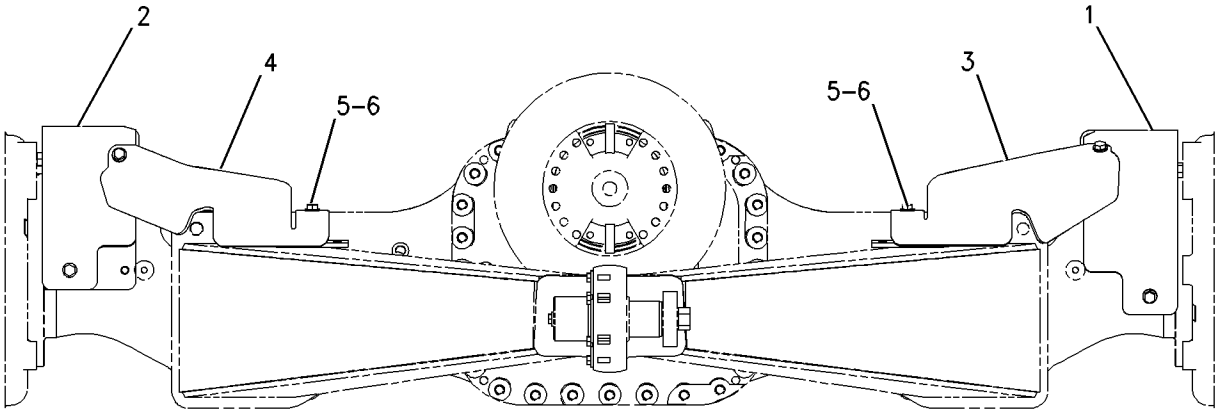

GRAPHIC #1 **<END>** g00948095

FRAME AND BODY

152-7048 GUARD GP-CRANKCASE

S/N: AXM1-UP

PART OF 152-6927 INSTALLATION AR-MACHINE

SMCS-7151 **i01950163**

NOTE	REF NO	GRAPHIC REF	PART NUMBER	QTY	PART NAME 1 2 3 4 5 6 (PRODUCT LEVEL)	SEE PAGE
	1	1	**6S-6646**	4	PIN-COTTER	
	2	1	**9K-3036**	4	PIN	
	3	1	**186-2727**	1	PLATE	
	4	1	**188-0435**	1	PLATE AS	
	5	1	**188-0436**	1	PLATE AS	
	6	1	**194-4030**	1	PLATE	
	7	1	**4B-5275**	4	WASHER (17.5X4.4X3.5-MM THK)	
	8	1	**5P-1076**	4	WASHER-HARD (13.5X30X4-MM THK)	
	9	1	**8T-4121**	3	WASHER-HARD (11X21X2.5-MM THK)	
M	10	1	**8T-4136**	3	BOLT (M10X1.5X25-MM)	
M	11	1	**8T-4139**	4	BOLT (M12X1.75X30-MM)	
	12	1	**8T-5439**	4	WASHER (21.5X45X6-MM THK)	
M	13	1	**8T-5460**	4	BOLT (M20X2.5X40-MM)	

M-METRIC PART

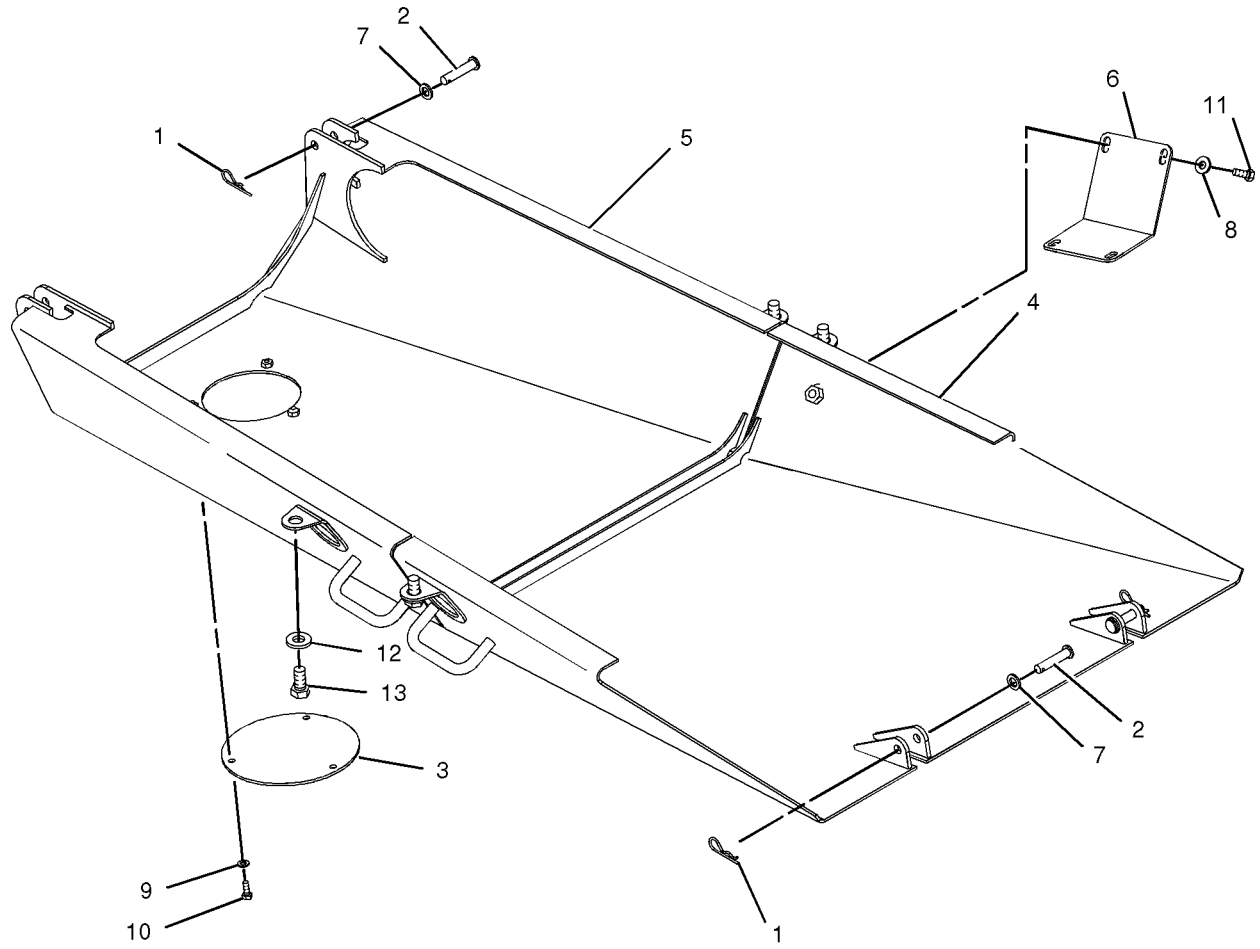

GRAPHIC #1 **<END>** g01014857

200-0148 GUARD GP-HYDRAULIC TANK

S/N: AXM222-1716

PART OF 162-5242 TANK GP-HYDRAULIC

SMCS-5056 **i01569698**

NOTE	REF NO	GRAPHIC REF	PART NUMBER	QTY	PART NAME 1 2 3 4 5 6 (PRODUCT LEVEL)	SEE PAGE
	1	1	**185-5698**	1	HINGE AS	
	2	1	**185-5700**	1	HINGE AS	
	3	1	**187-4278**	1	COVER AS	
	4	1	**187-6156**	4	LATCH AS	
	5	1	**192-1201**	2	PLATE-TREAD	
	6	1	**200-0142**	1	COVER AS	
M		1	**8T-3490**	7	NUT-WELD (M10X1.5-THD)	
	7	1	**200-0144**	1	COVER AS	
	8	1	**200-0147**	1	COVER AS	
	9	1	**200-1807**	1	PLATE-COVER	
	10	1	**200-2990**	1	COVER AS	
M		1	**8T-3490**	4	NUT-WELD (M10X1.5-THD)	
B	11	1	**201-1379**	4	SHIM (1-MM THK)	
	12	1	**201-4108**	1	BAR	
	13	1	**201-5492**	1	CLIP	
	14	1	**201-5493**	1	WASHER-RETAINING (PUSH ON)	
	15	1	**203-5393**	1	STRUT-GAS	
M	16	1	**5C-7261**	22	NUT (M8X1.25-THD)	
	17	1	**7X-0578**	3	WASHER-HARD (10.2X32X2.5-MM THK)	
	18	1	**7X-7729**	12	WASHER (11X25X3-MM THK)	
M	19	1	**8C-8585**	12	SCREW-BUTTON HEAD (M10X1.5X20-MM)	
M	20	1	**8T-4136**	3	BOLT (M10X1.5X25-MM)	
M	21	1	**8T-4189**	22	BOLT (M8X1.25X20-MM)	
	22	1	**8T-4224**	44	WASHER-HARD (8.8X16X2-MM THK)	

B-USE AS REQUIRED
M-METRIC PART

200-0148 **GUARD GP-HYDRAULIC TANK** *(contd.)* **i01569698**

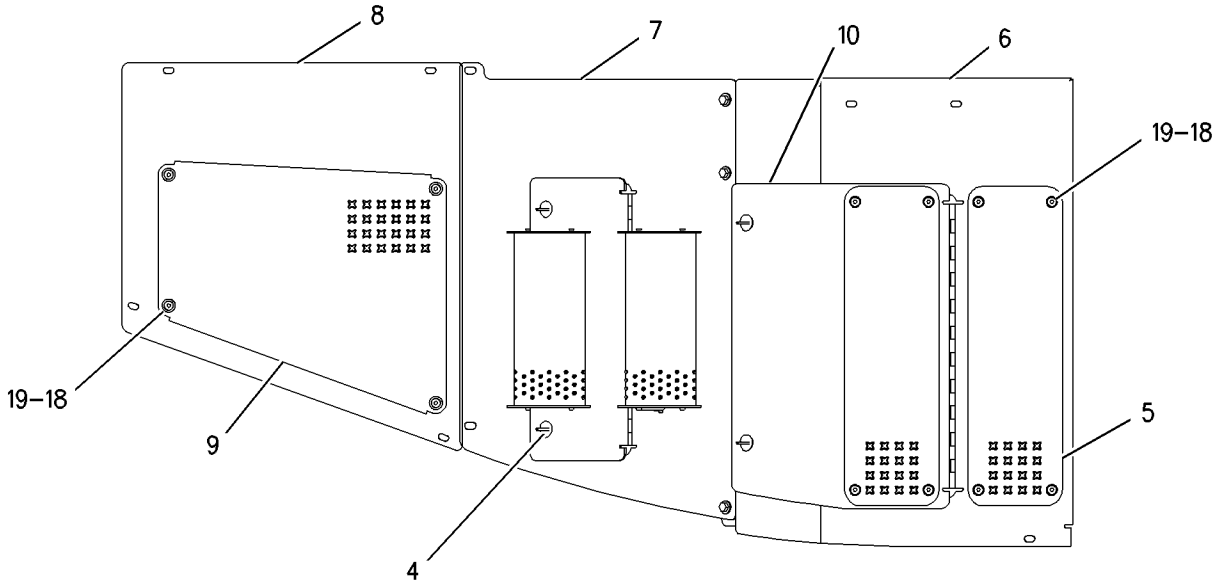

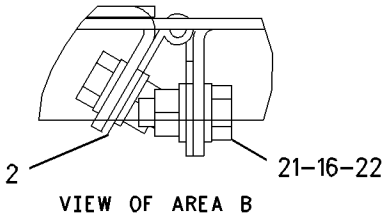

VIEW OF AREA B

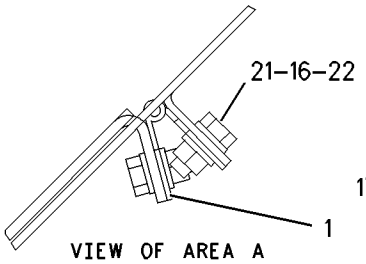

VIEW OF AREA A

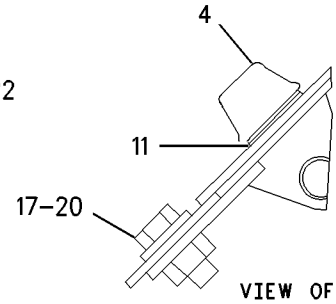

VIEW OF AREA C

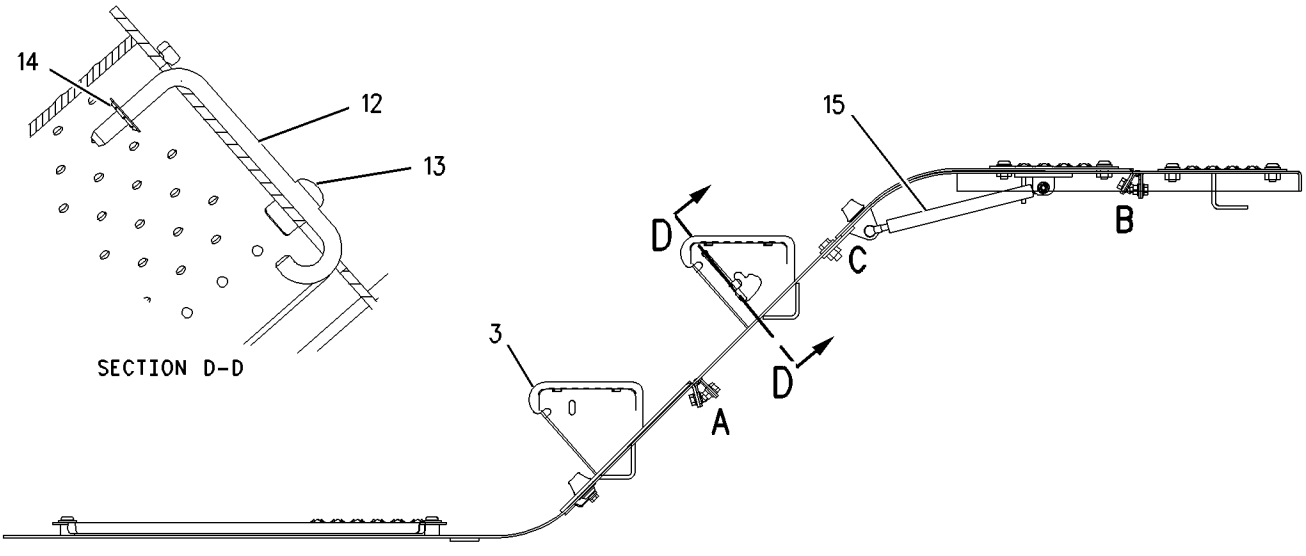

GRAPHIC #1 **<END>** g00815083

200-0148 GUARD GP-HYDRAULIC TANK

S/N: AXM1717-UP

PART OF 162-5242 TANK GP-HYDRAULIC

SMCS-5056 **i02203049**

NOTE	REF NO	GRAPHIC REF	PART NUMBER	QTY	PART NAME 1 2 3 4 5 6 (PRODUCT LEVEL)	SEE PAGE
	1	1	**185-5698**	1	HINGE AS	
	2	1	**185-5700**	1	HINGE AS	
	3	1	**187-4278**	1	COVER AS	
	4	1	**187-6156**	4	LATCH AS	
	5	1	**192-1201**	2	PLATE-TREAD	
C	6	1	**251-7333**	1	COVER AS	
M		1	**8T-3490**	7	NUT-WELD (M10X1.5-THD)	
C	7	1	**251-7336**	1	COVER AS	
	8	1	**200-0147**	1	COVER AS	
	9	1	**200-1807**	1	PLATE-COVER	
C	10	1	**251-7339**	1	COVER AS	
M		1	**8T-3490**	4	NUT-WELD (M10X1.5-THD)	
B	11	1	**201-1379**	4	SHIM (1-MM THK)	
	12	1	**201-4108**	1	BAR	
	13	1	**201-5492**	1	CLIP	
	14	1	**201-5493**	1	WASHER-RETAINING (PUSH ON)	
	15	1	**203-5393**	1	STRUT-GAS	
M	16	1	**5C-7261**	22	NUT (M8X1.25-THD)	
	17	1	**7X-0578**	3	WASHER-HARD (10.2X32X2.5-MM THK)	
	18	1	**7X-7729**	12	WASHER (11X25X3-MM THK)	
M	19	1	**8C-8585**	12	SCREW-BUTTON HEAD (M10X1.5X20-MM)	
M	20	1	**8T-4136**	3	BOLT (M10X1.5X25-MM)	
M	21	1	**8T-4189**	22	BOLT (M8X1.25X20-MM)	
	22	1	**8T-4224**	44	WASHER-HARD (8.8X16X2-MM THK)	

B-USE AS REQUIRED
C-CHANGE FROM PREVIOUS TYPE
M-METRIC PART

200-0148 **GUARD GP-HYDRAULIC TANK** *(contd.)* **i02203049**

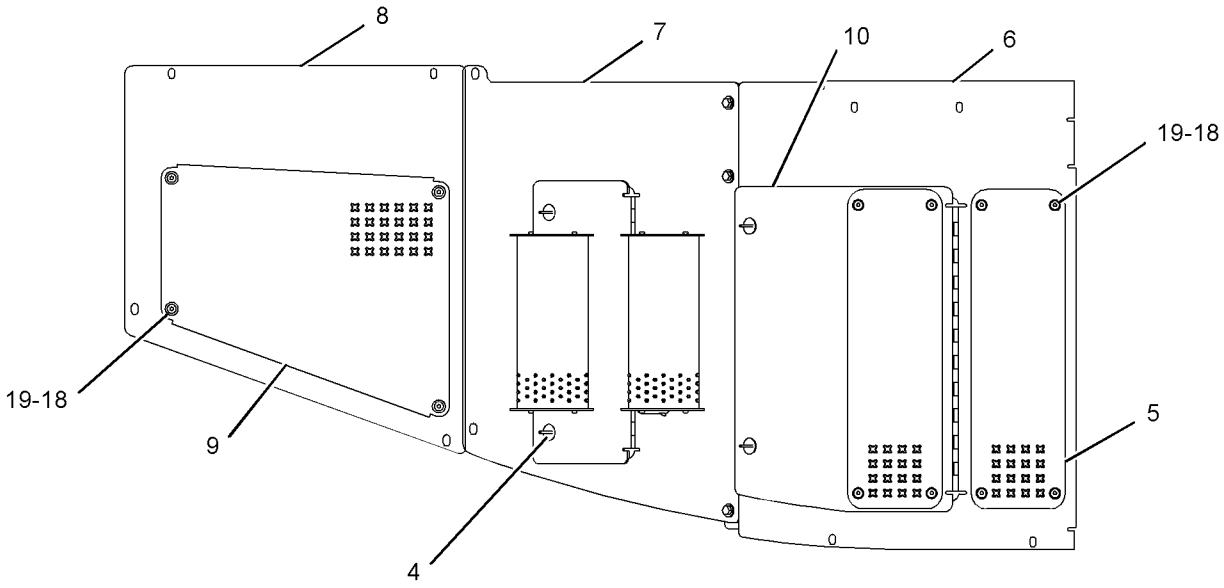

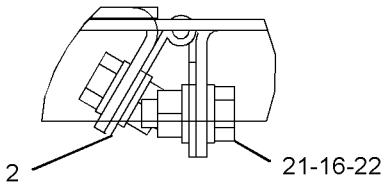

VIEW OF AREA B

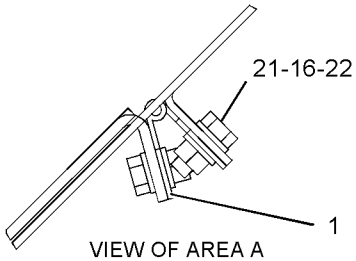

VIEW OF AREA A

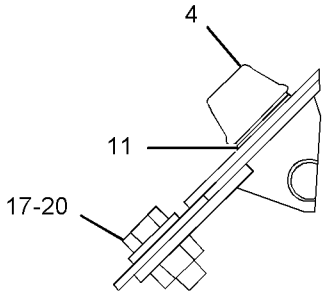

VIEW OF AREA C

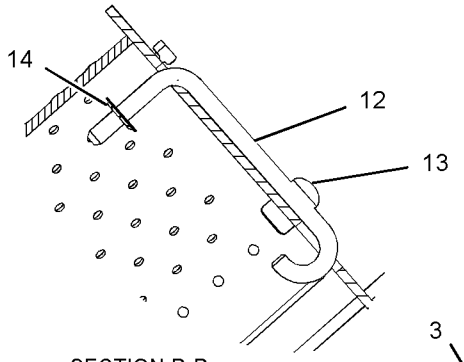

SECTION D-D

GRAPHIC #1 **<END>** g01114186

FRAME AND BODY

208-6624 GUARD GP-LINES

S/N: AXM1-UP

PART OF 203-4720 SUPPORT GP-HITCH LINES

SMCS-7167 **i01618712**

NOTE	REF NO	GRAPHIC REF	PART NUMBER	QTY	PART NAME 1 2 3 4 5 6 (PRODUCT LEVEL)	SEE PAGE
	1	1	**208-6626**	2	PLATE-RETAINER	
	2	1	**208-6629**	1	STRIP-RUBBER	
	3	1	**208-6631**	4	SPACER	
	4	1	**210-6062**	24	WASHER-SPRING	
	5	1	**213-7110**	2	PLATE-RETAINER	
M	6	1	**5C-2890**	4	NUT (M6X1 THD)	
M	7	1	**6V-8653**	4	BOLT-SOCKET HEAD (M6X1X40MM)	
	8	1	**8T-4205**	4	WASHER-HARD (7.2X14.5X2MM THK)	
	9	1	**9X-6165**	4	WASHER (6.5X22X2.5MM THK)	

M-METRIC PART

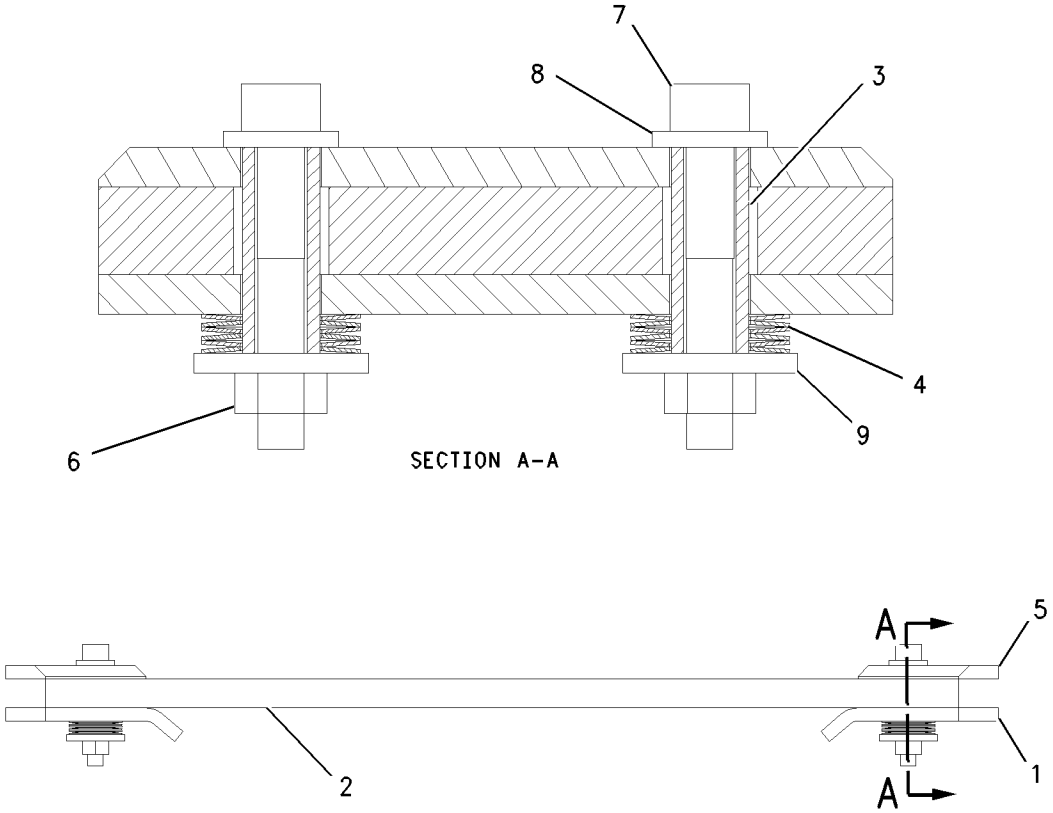

GRAPHIC #1 **<END>** g00837410

219-1615 GUARD GP-LINES

S/N: AXM1-UP

FIELD INSTALLATION

SMCS-7167 **i01735761**

NOTE	REF NO	GRAPHIC REF	PART NUMBER	QTY	PART NAME 1 2 3 4 5 6 (PRODUCT LEVEL)	SEE PAGE
	1	1	**219-1405**	4	SPACER	

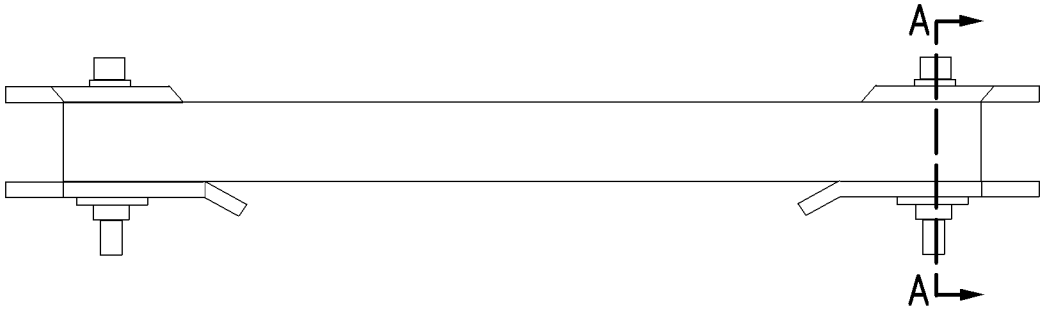

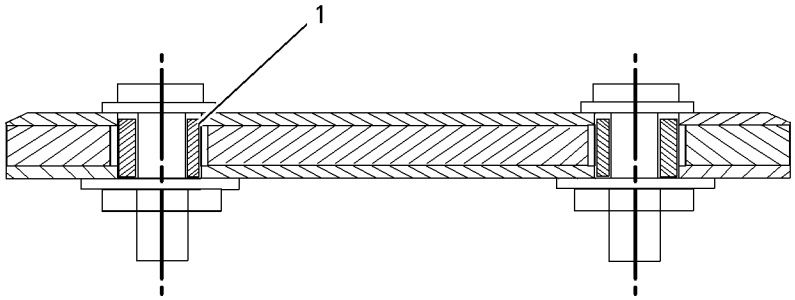

SECTION A-A

GRAPHIC #1 **<END>** g00889895

170-1673 GUARD GP-MUD

S/N: AXM1-UP

PART OF 152-6926 INSTALLATION AR-MACHINE

SMCS-4220, 7252 **i01546683**

NOTE	REF NO	GRAPHIC REF	PART NUMBER	QTY	PART NAME 1 2 3 4 5 6 (PRODUCT LEVEL)	SEE PAGE
	1	1	**164-7293**	2	PLATE-MOUNTING	
	2	1	**169-5026**	1	PLATE AS-MOUNTING	
		1	**4D-0670**	2	WASHER (0.562X1.19X0.188-IN THK)	
	3	1	**169-5027**	1	PLATE AS-MOUNTING	
		1	**4D-0670**	2	WASHER (0.562X1.19X0.188-IN THK)	
	4	1	**164-7294**	2	DEFLECTOR-MUD	
M	5	1	**8T-4184**	4	BOLT (M12X1.75X45-MM)	
M	6	1	**8T-4196**	18	BOLT (M10X1.5X35-MM)	
M	7	1	**8T-4244**	4	NUT (M12X1.75-THD)	
M	8	1	**8T-0389**	18	LOCKNUT (M10X1.5-THD)	
	9	1	**8T-4223**	8	WASHER-HARD (13.5X25.5X3-MM THK)	
	10	1	**8T-4121**	36	WASHER-HARD (11X21X2.5-MM THK)	

M-METRIC PART

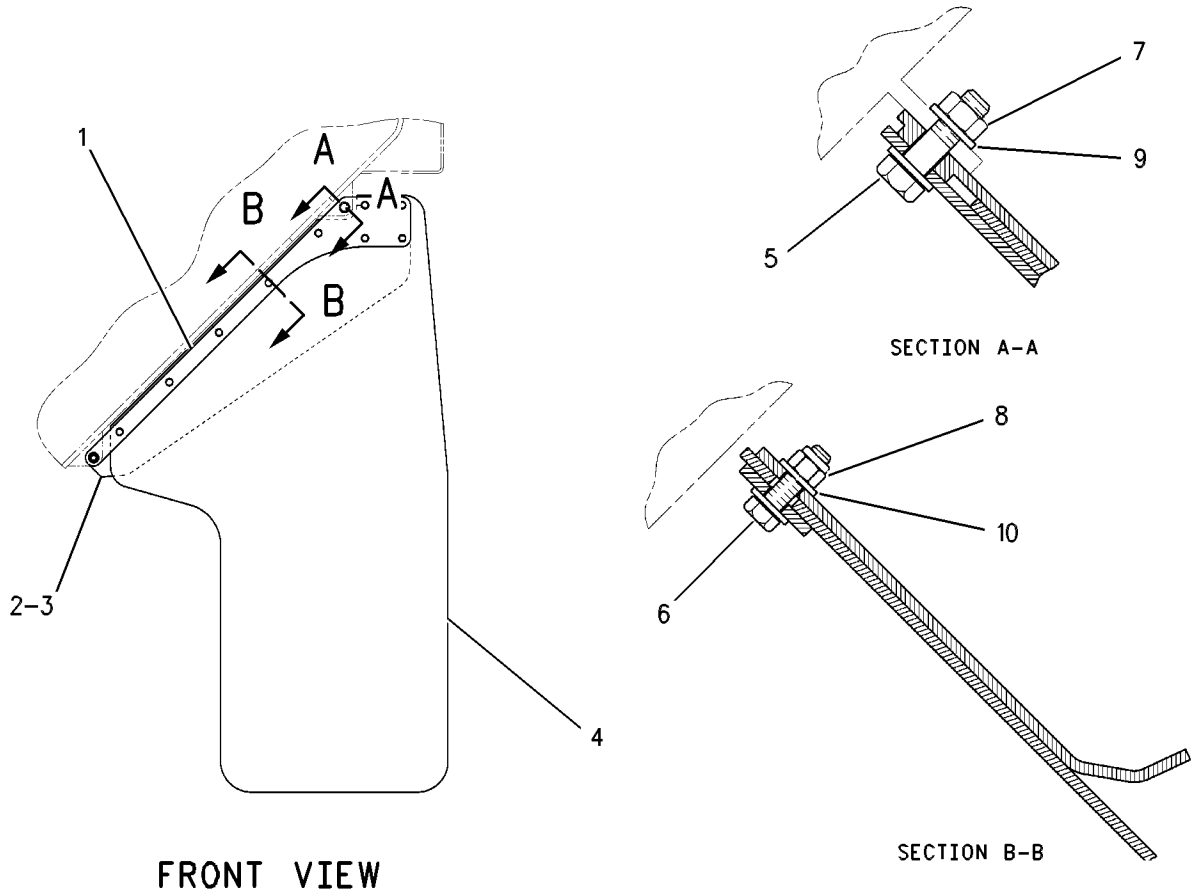

GRAPHIC #1 **<END>** g00599521

162-5126 GUARD GP-PLATFORM

S/N: AXM1-565

PART OF 152-6923 HOOD & GUARD AR

SMCS-7150, 7253, 7256 **i01665871**

NOTE	REF NO	GRAPHIC REF	PART NUMBER	QTY	PART NAME 1 2 3 4 5 6 (PRODUCT LEVEL)	SEE PAGE
	1	1	**3W-7412**	1	BUMPER-CONICAL	
	2	1	**188-4341**	1	HANDHOLD AS	
	3	1	**188-4342**	1	HANDHOLD AS	
	4	1	**194-1953**	1	HANDHOLD AS	
	5	1	**194-1954**	1	HANDHOLD AS	
	6	1	**5P-1076**	24	WASHER-HARD (13.5X30X4-MM THK)	
	7	1	**6V-8189**	1	NUT (5/16-18-THD)	
M	8	1	**8T-4139**	8	BOLT (M12X1.75X30-MM)	
M	9	1	**8T-4192**	20	BOLT (M12X1.75X25-MM)	
	10	1	**8T-4223**	8	WASHER-HARD (13.5X25.5X3-MM THK)	
	11	1	**8T-4224**	1	WASHER-HARD (8.8X16X2-MM THK)	
M	12	1	**8T-4910**	4	BOLT (M12X1.75X60-MM)	

M-METRIC PART

162-5126 **GUARD GP-PLATFORM** *(contd.)* **i01665871**

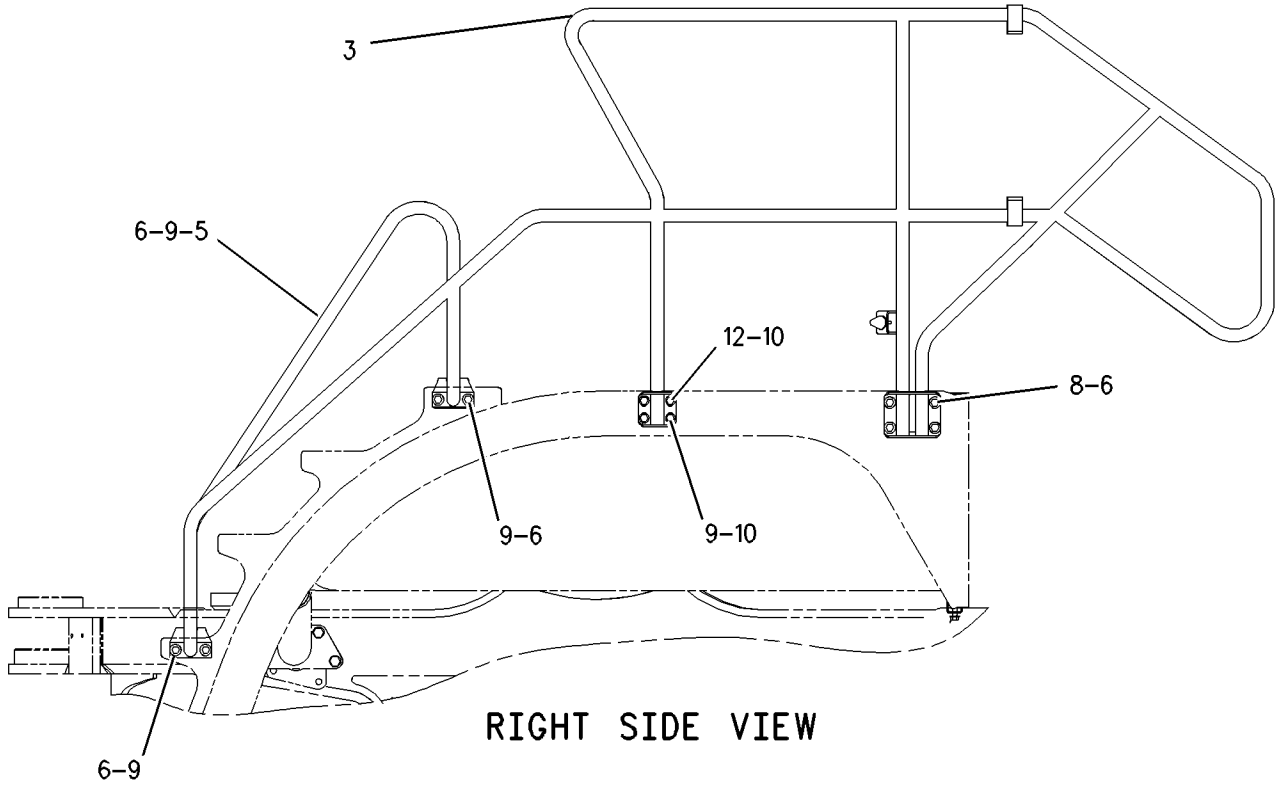

RIGHT SIDE VIEW

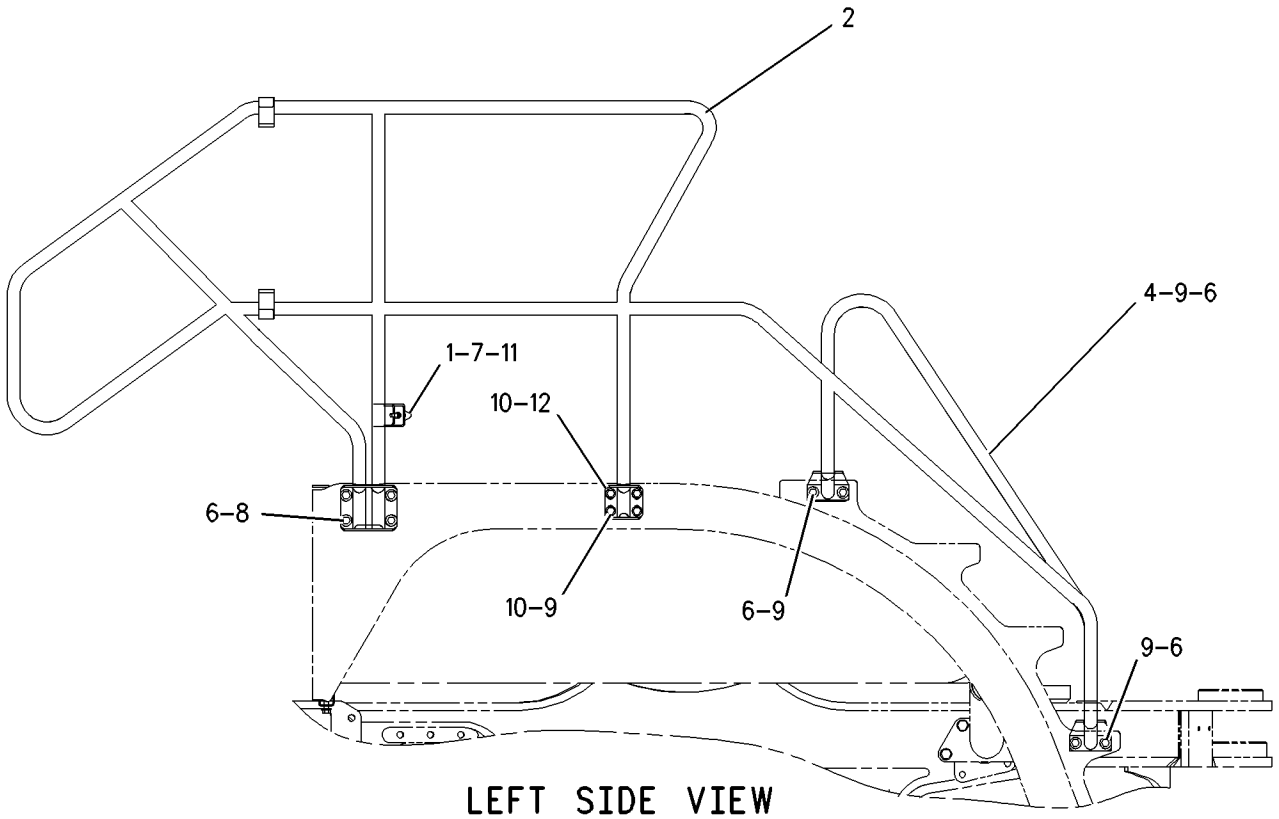

LEFT SIDE VIEW

GRAPHIC #1 **<END>** g00860292

162-5126 GUARD GP-PLATFORM

S/N: AXM566-UP

PART OF 152-6923 HOOD & GUARD AR

SMCS-7150, 7253, 7256 **i01666347**

NOTE	REF NO	GRAPHIC REF	PART NUMBER	QTY	PART NAME 1 2 3 4 5 6 (PRODUCT LEVEL)	SEE PAGE
C	1	1	**096-6573**	1	STOP	
	2	1	**188-4341**	1	HANDHOLD AS	
	3	1	**188-4342**	1	HANDHOLD AS	
	4	1	**194-1953**	1	HANDHOLD AS	
	5	1	**194-1954**	1	HANDHOLD AS	
CM	6	1	**4I-9631**	1	NUT	
	7	1	**5P-1076**	24	WASHER-HARD (13.5X30X4-MM THK)	
C	8	1	**7X-7729**	1	WASHER (11X25X3-MM THK)	
M	9	1	**8T-4139**	8	BOLT (M12X1.75X30-MM)	
M	10	1	**8T-4192**	20	BOLT (M12X1.75X25-MM)	
	11	1	**8T-4223**	8	WASHER-HARD (13.5X25.5X3-MM THK)	
M	12	1	**8T-4910**	4	BOLT (M12X1.75X60-MM)	

C-CHANGE FROM PREVIOUS TYPE
M-METRIC PART

162-5126 **GUARD GP-PLATFORM** *(contd.)* **i01666347**

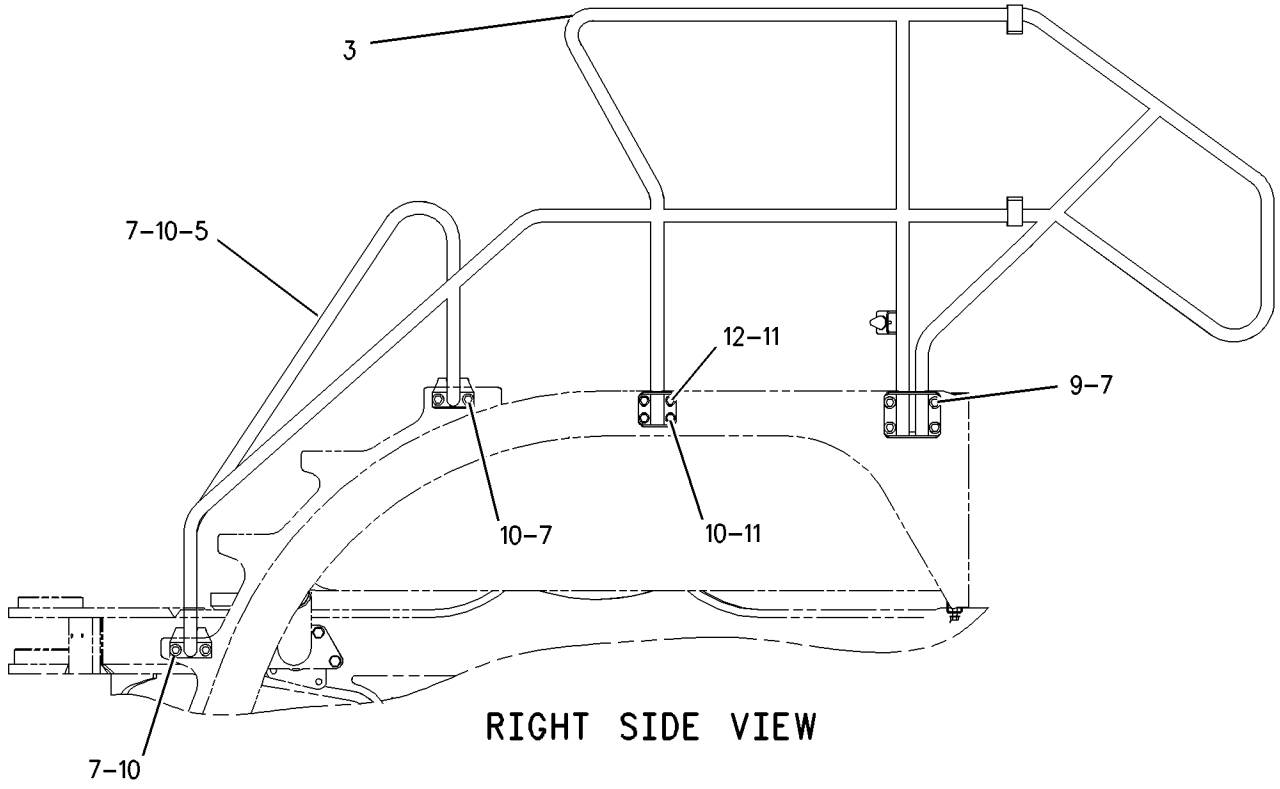

RIGHT SIDE VIEW

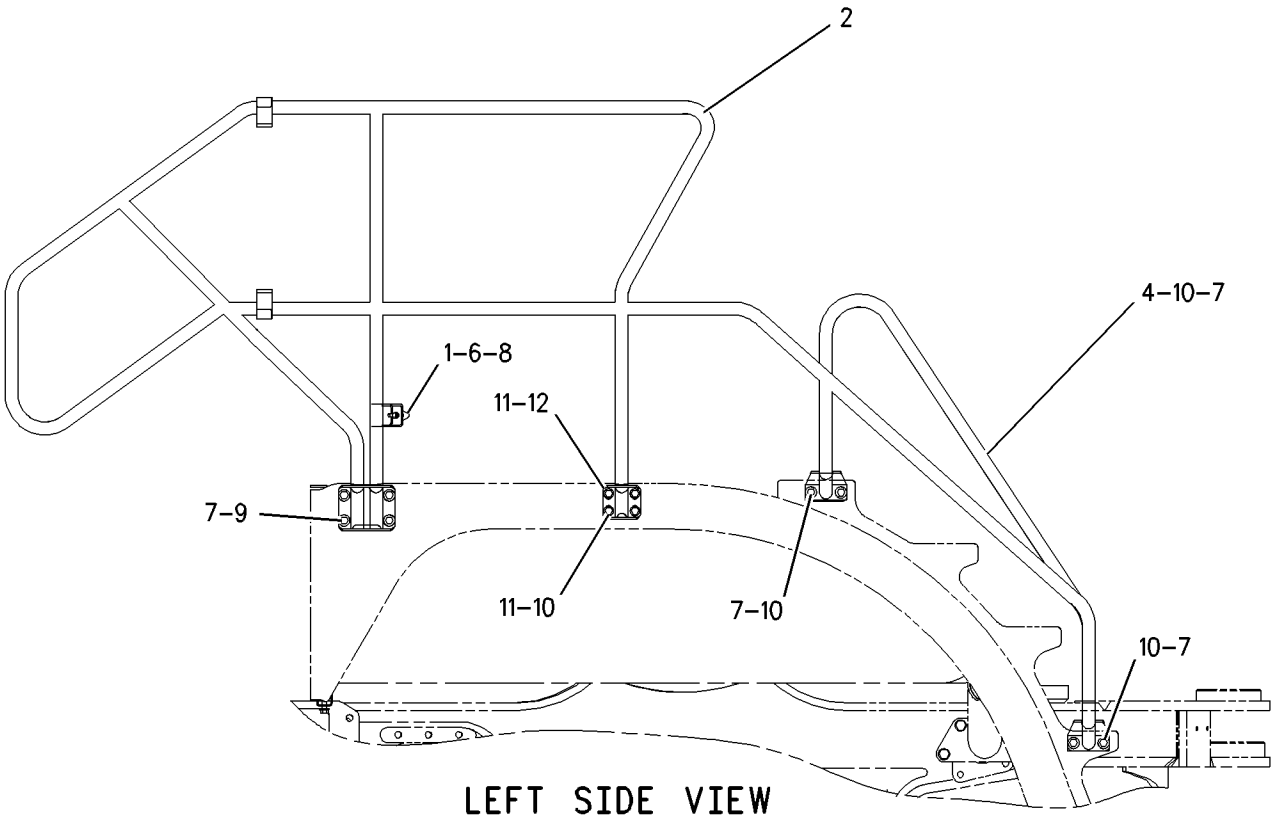

LEFT SIDE VIEW

GRAPHIC #1 **<END>** g00860529

150-8272 GUARD GP-RADIATOR

S/N: AXM1-UP
PART OF 152-6923 HOOD & GUARD AR
TYPE 1

SMCS-7155 **i01903900**

NOTE	REF NO	GRAPHIC REF	PART NUMBER	QTY	PART NAME 1 2 3 4 5 6 (PRODUCT LEVEL)	SEE PAGE
	1	1	**176-6519**	1	COVER AS-TOP	
	2	1	**187-6101**	2	BRACKET AS	
	3	1	**187-6102**	1	ANGLE	
	4	1	**211-6496**	1	PLATE AS (REAR)	
	5	1	**193-4333**	1	COVER AS (LH)	
	6	1	**193-4334**	1	SUPPORT AS	
	7	1	**193-4342**	1	BRACKET AS	
M		1	**8T-3612**	1	NUT-WELD (M8X1.25-THD)	
	8	1	**193-4344**	1	BRACKET AS	
M		1	**8T-3612**	1	NUT-WELD (M8X1.25-THD)	
Y	9	1	**196-3538**	1	GUARD GP-RADIATOR	521
	10	1	**206-5538**	4	PLATE AS	
					(EACH INCLUDES)	
M		1	**8T-3490**	2	NUT-WELD (M10X1.5-THD)	
	11	1	**5P-4116**	6	WASHER-HARD (8.8X20.5X2-MM THK)	
	12	1	**7X-0578**	2	WASHER-HARD (10.2X32X2.5-MM THK)	
	13	1	**7X-7729**	15	WASHER (11X25X3-MM THK)	
	14	1	**8T-4121**	20	WASHER-HARD (11X21X2.5-MM THK)	
M	15	1	**8T-4133**	8	NUT (M10X1.5-THD)	
M	16	1	**8T-4136**	11	BOLT (M10X1.5X25-MM)	
M	17	1	**8T-4186**	4	BOLT (M10X1.5X40-MM)	
M	18	1	**8T-4195**	14	BOLT (M10X1.5X30-MM)	
M	19	1	**8T-4908**	6	BOLT (M8X1.25X25-MM)	

M-METRIC PART
Y-SEPARATE ILLUSTRATION

150-8272 **GUARD GP-RADIATOR** *(contd.)* **i01903900**

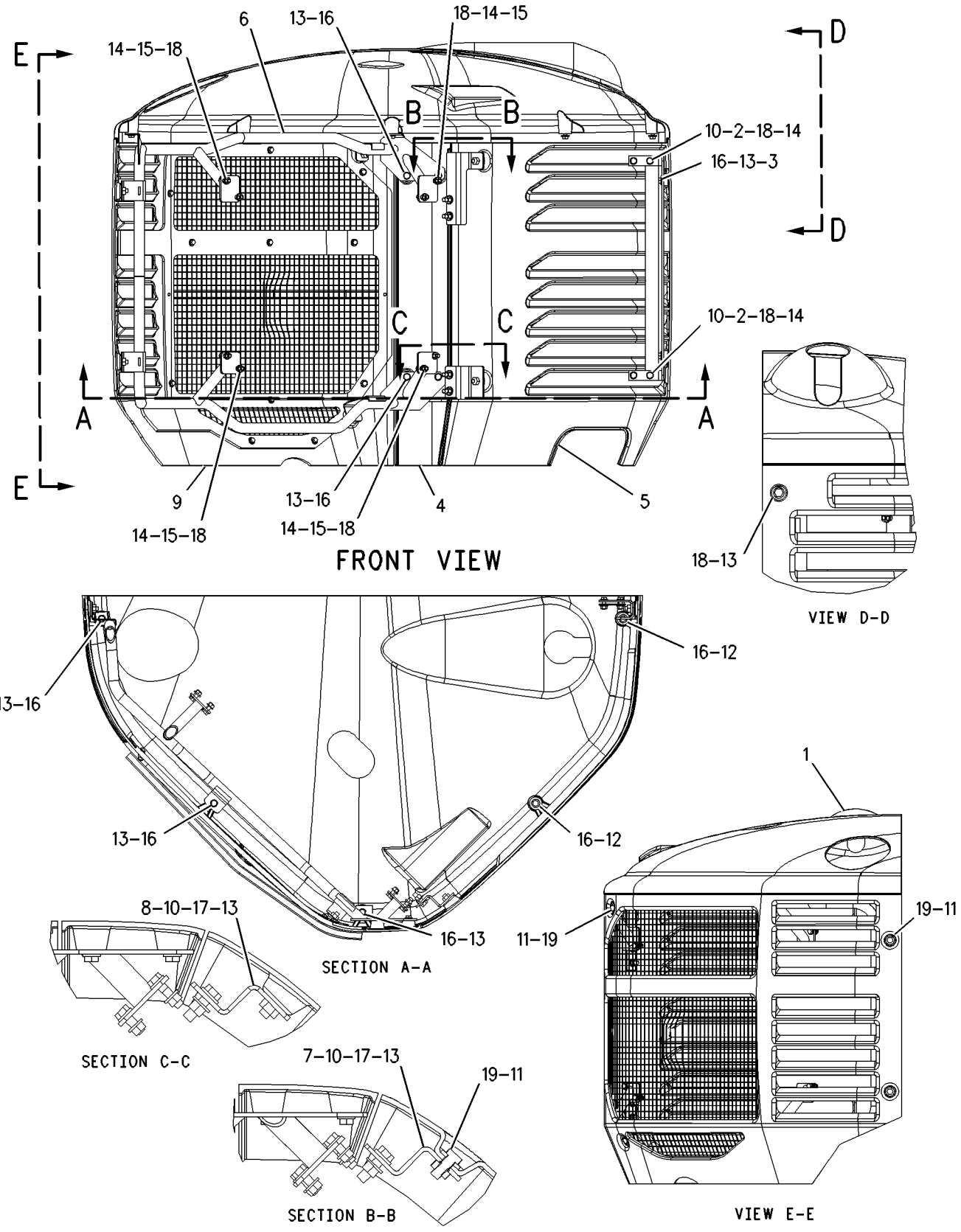

GRAPHIC #1 **<END>** g00936112

150-8272 GUARD GP-RADIATOR

S/N: AXM1-UP
PART OF 152-6923 HOOD & GUARD AR
TYPE 2

SMCS-7155 **i02232817**

NOTE	REF NO	GRAPHIC REF	PART NUMBER	QTY	PART NAME 1 2 3 4 5 6 (PRODUCT LEVEL)	SEE PAGE
	1	1	**176-6519**	1	COVER AS-TOP	
	2	1	**187-6101**	2	BRACKET AS	
	3	1	**187-6102**	1	ANGLE	
	4	1	**193-4334**	1	SUPPORT AS	
	5	1	**193-4342**	1	BRACKET AS	
M		1	**8T-3612**	1	NUT-WELD (M8X1.25-THD)	
	6	1	**193-4344**	1	BRACKET AS	
M		1	**8T-3612**	1	NUT-WELD (M8X1.25-THD)	
	7	1	**206-5538**	4	PLATE AS	
					(EACH INCLUDES)	
M		1	**8T-3490**	2	NUT-WELD (M10X1.5-THD)	
	8	1	**211-6496**	1	PLATE AS (REAR)	
	9	1	**248-5219**	1	COVER AS (LH) (LH)	
Y	10	1	**249-3664**	1	GUARD GP-RADIATOR	522
	11	1	**5P-4116**	6	WASHER-HARD (8.8X20.5X2-MM THK)	
	12	1	**7X-0578**	2	WASHER-HARD (10.2X32X2.5-MM THK)	
	13	1	**7X-7729**	15	WASHER (11X25X3-MM THK)	
	14	1	**8T-4121**	20	WASHER-HARD (11X21X2.5-MM THK)	
M	15	1	**8T-4133**	8	NUT (M10X1.5-THD)	
M	16	1	**8T-4136**	11	BOLT (M10X1.5X25-MM)	
M	17	1	**8T-4186**	4	BOLT (M10X1.5X40-MM)	
M	18	1	**8T-4195**	14	BOLT (M10X1.5X30-MM)	
M	19	1	**8T-4908**	6	BOLT (M8X1.25X25-MM)	

M-METRIC PART
Y-SEPARATE ILLUSTRATION

150-8272 **GUARD GP-RADIATOR** *(contd.)* **i02232817**

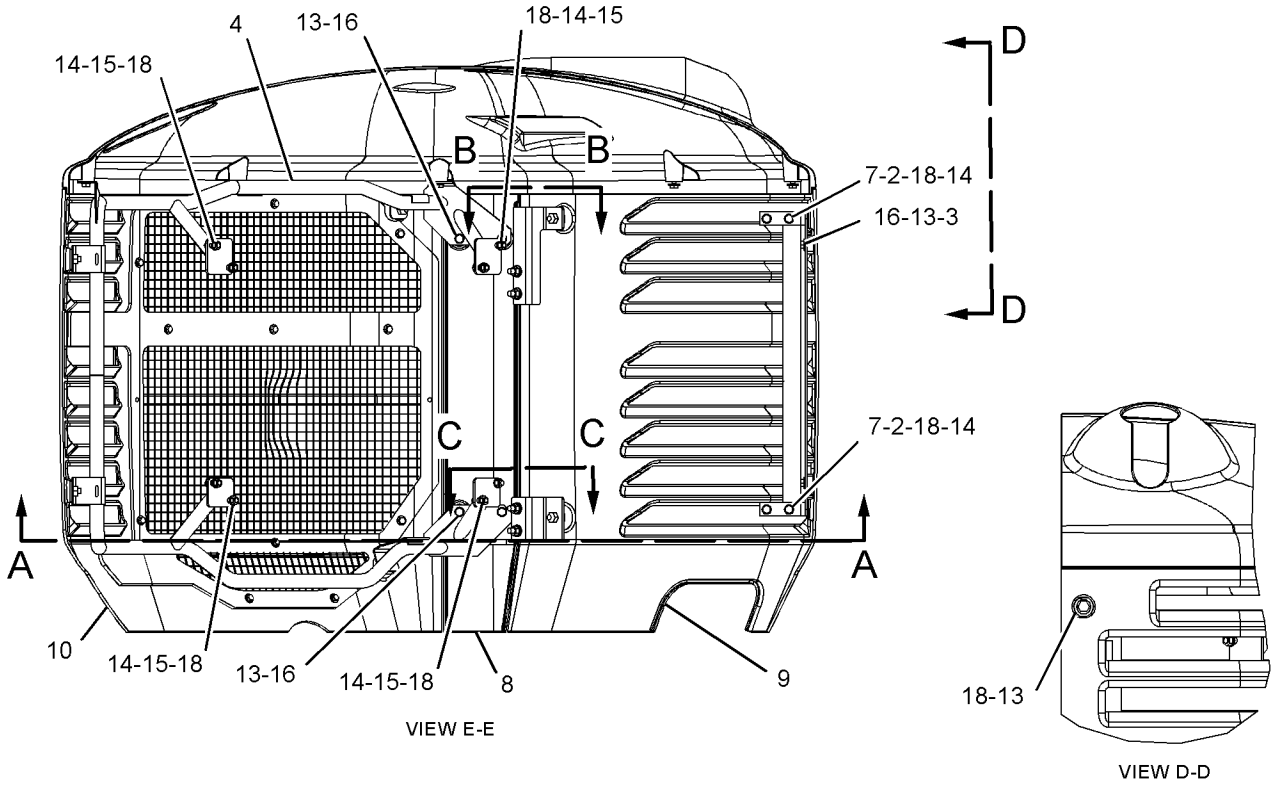

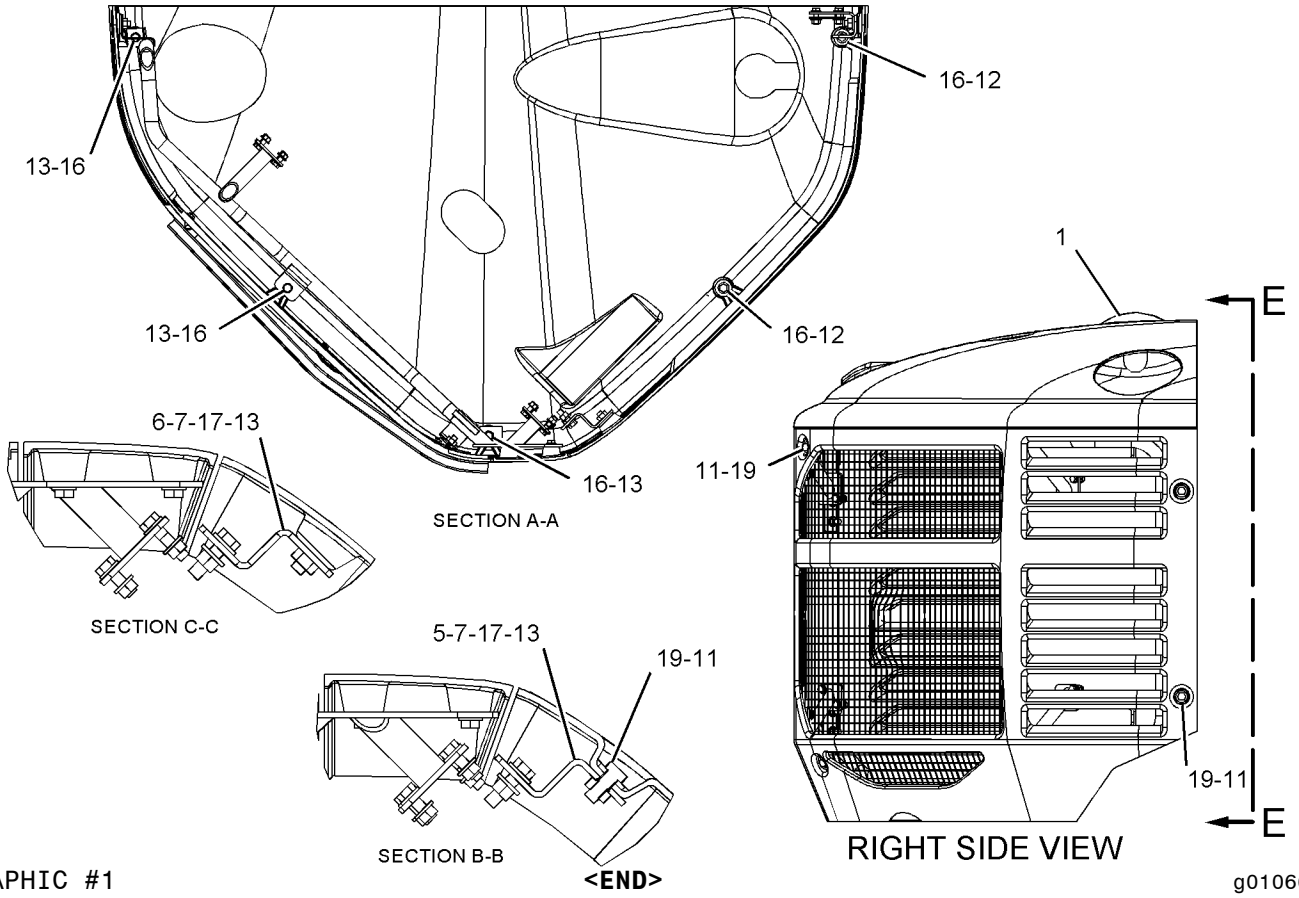

GRAPHIC #1

<END>

g01066787

196-3538 GUARD GP-RADIATOR

S/N: AXM1-UP

PART OF 150-8272 GUARD GP-RADIATOR

SMCS-7155 **i02246532**

NOTE	REF NO	GRAPHIC REF	PART NUMBER	QTY	PART NAME 1 2 3 4 5 6 (PRODUCT LEVEL)	SEE PAGE
	1	1	**196-3539**	1	PANEL (RH)	
	2	1	**196-3540**	1	GRILL (BOTTOM)	
	3	1	**207-6940**	1	GRILL (TOP)	
	4	1	**089-7960**	24	WASHER (5.3X25X1.6-MM THK)	
M	5	1	**5C-2874**	24	NUT (M5X0.8-THD)	

M-METRIC PART

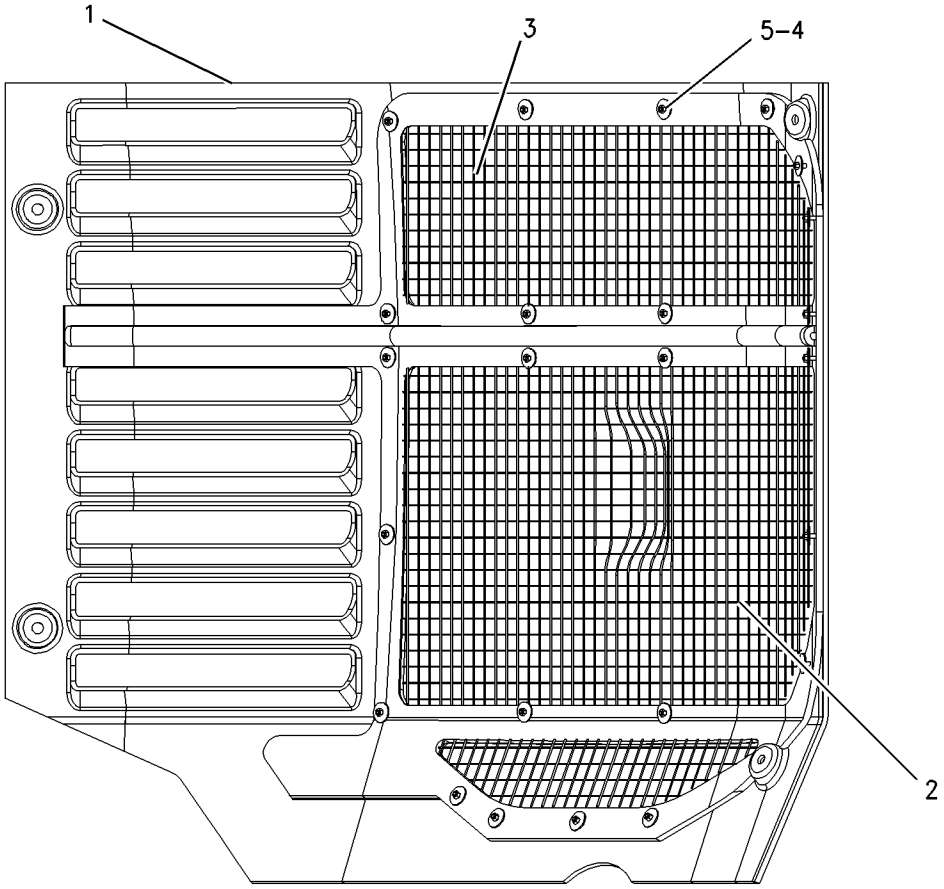

GRAPHIC #1 **<END>** g00806396

FRAME AND BODY

249-3664 GUARD GP-RADIATOR

S/N: AXM1-UP

PART OF 150-8272 GUARD GP-RADIATOR

SMCS-7155 **i02246498**

NOTE	REF NO	GRAPHIC REF	PART NUMBER	QTY	PART NAME 1 2 3 4 5 6 (PRODUCT LEVEL)	SEE PAGE
	1	1	**196-3540**	1	GRILL (BOTTOM)	
	2	1	**207-6940**	1	GRILL (TOP)	
	3	1	**248-5220**	1	PANEL (RH)	
	4	1	**089-7960**	24	WASHER (5.3X25X1.6-MM THK)	
M	5	1	**5C-2874**	24	NUT (M5X0.8-THD)	

M-METRIC PART

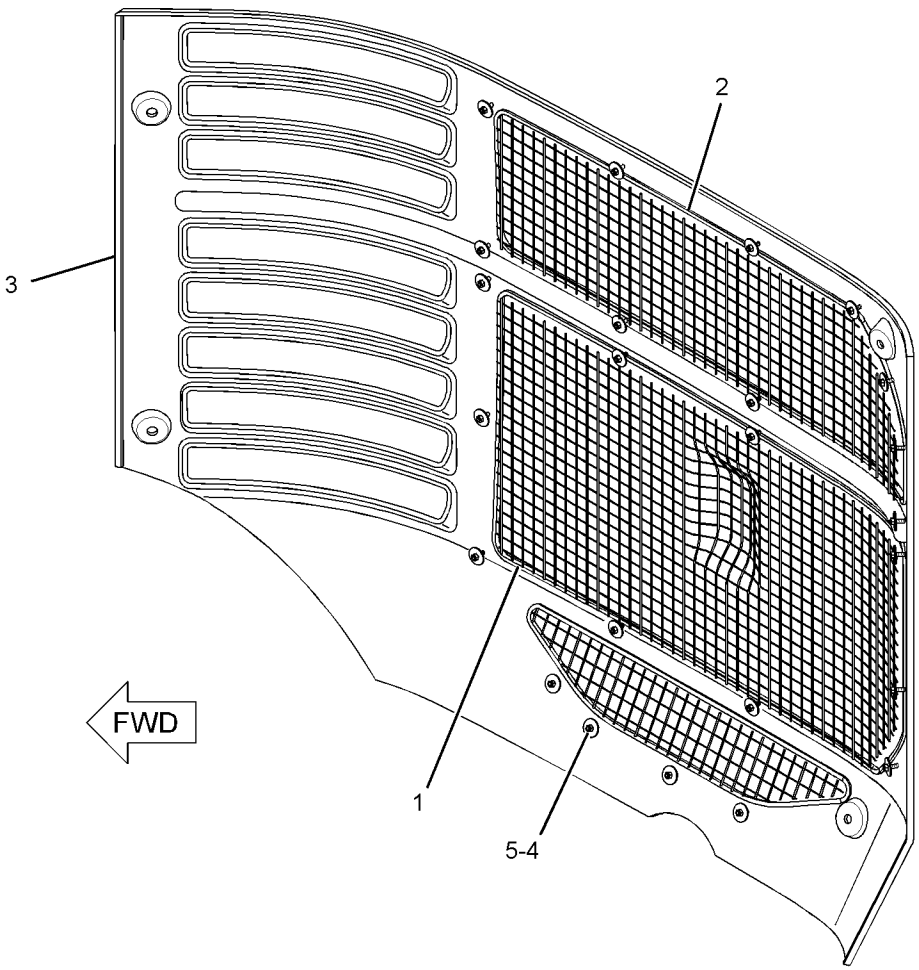

GRAPHIC #1 **<END>** g01064849

141-6857 HITCH GP-OSCILLATING

S/N: AXM1-UP

PART OF 152-6921 AXLE & FRAME AR

SMCS-7113 **i02178436**

NOTE	REF NO	GRAPHIC REF	PART NUMBER	QTY	PART NAME 1 2 3 4 5 6 (PRODUCT LEVEL)	SEE PAGE
	1	1	**2U-5388**	1	SEAL-V-RING	
	2	1	**3B-8485**	2	FITTING-GREASE	
	3	1	**5U-7151**	2	CAP	
	4	1	**107-8126**	2	BEARING	
	5	1	**156-4078**	1	PIN-HITCH	
	6	1	**156-4081**	1	WASHER (115X118X5-MM THK)	
	7	1	**156-4083**	1	SPACER (13-MM THK)	
	8	1	**156-4085**	1	WASHER-SPECIAL	
	9	1	**156-4087**	1	SPACER (8.6-MM THK)	
	10	1	**185-4306**	1	WASHER-SPECIAL	
	11	1	**185-4308**	1	PIN-HITCH	
	12	1	**187-3579**	1	SPACER-BEARING	
	13	1	**190-2768**	1	HITCH AS	
M		1	**7X-2489**	2	BOLT (M24X3X100-MM)	
		1	**8T-4167**	28	WASHER-HARD (26X44X4-MM THK)	
M		1	**8T-6380**	26	BOLT (M24X3X130-MM)	
		1	**153-8351**	1	PIVOT AS	
		1	**153-8352**	1	TUBE	
	14	1	**195-3659**	1	SPACER (80X118X14-MM THK)	
M	15	1	**170-8555**	2	BOLT (M16X2X90-MM)	
	16	1	**1H-6227**	1	SEAL-O-RING	
	17	1	**1K-6992**	1	RING-LOCK	
	18	1	**2H-3931**	1	SEAL-O-RING	
M	19	1	**7X-2568**	1	BOLT (M20X2.5X180-MM)	
M	20	1	**7X-2569**	1	BOLT (M20X2.5X200-MM)	
	21	1	**8T-4123**	2	WASHER-PLATED (22X35X3.5-MM THK)	
M	22	1	**8T-4132**	2	NUT (M16X2-THD)	
	23	1	**9X-8257**	2	WASHER (17.5X30X3.5-MM THK)	

M-METRIC PART

141-6857 **HITCH GP-OSCILLATING** *(contd.)* **i02178436**

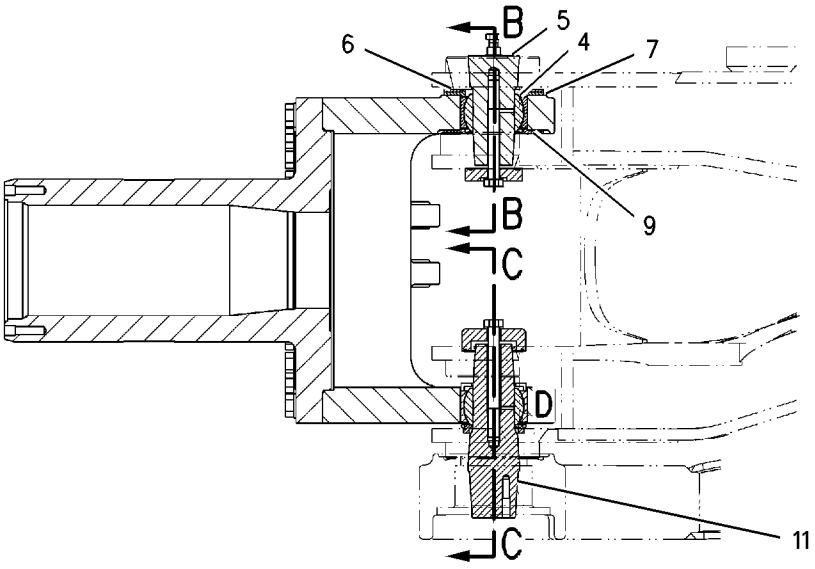

SECTION A-A

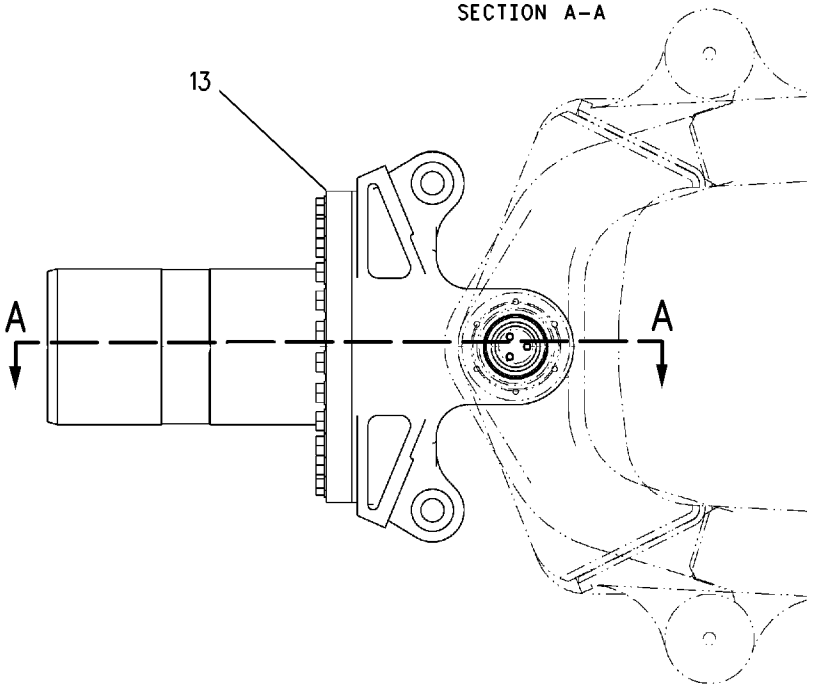

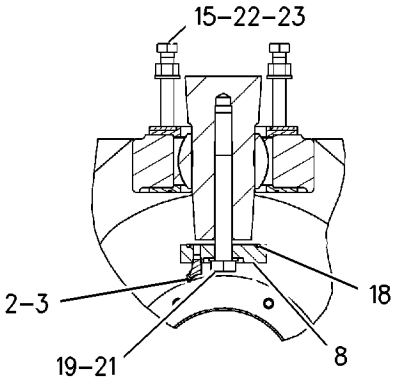

SECTION B-B

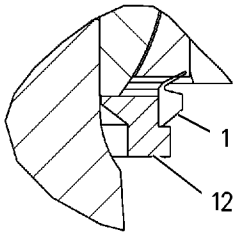

VIEW OF AREA D

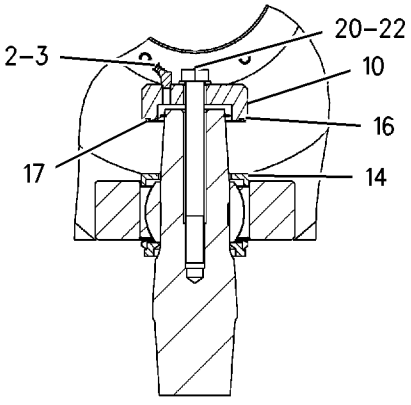

SECTION C-C

GRAPHIC #1 **<END>** g00867707

FRAME AND BODY

152-6923 HOOD & GUARD AR

S/N: AXM1-UP

PART OF 141-6849 GENERAL AR

SMCS-7150, 7251 **i01429601**

NOTE	PART NUMBER	QTY	PART NAME 1 2 3 4 5 6 (PRODUCT LEVEL)	SEE PAGE
Y	*162-5126*	1	GUARD GP-PLATFORM	513
Y	*150-8272*	1	GUARD GP-RADIATOR	517
Y	*149-0104*	1	GUARD GP-WINDOW	844
Y	*152-7025*	1	HOOD GP-ENGINE	526
Y	*152-7024*	1	TILT GP-HOOD	562

Y-SEPARATE ILLUSTRATION

<END>

FRAME AND BODY

152-7025 HOOD GP-ENGINE

S/N: AXM1-370, 373-374, 383-399, 401
PART OF 152-6923 HOOD & GUARD AR

SMCS-7251 **i01829903**

NOTE	REF NO	GRAPHIC REF	PART NUMBER	QTY	PART NAME 1 2 3 4 5 6 (PRODUCT LEVEL)	SEE PAGE
	1	2	**9G-2773**	2	SOCKET	
	2	1	**187-4425**	1	GRILL AS	
	2A	1	**196-1044**	1	PLATE (CATERPILLAR)	
	3	2	**188-6049**	1	FRAME AS	
	4	1	**190-0282**	1	DUCT	
	5	2	**190-2171**	1	BRACKET AS	
	6	2	**190-2172**	1	BRACKET AS	
Y	7	2	*191-5963*	1	TILT GP-HOOD (RH)	563
	8	1	**191-5964**	1	HOOD AS	
	9	2	**192-5453**	1	SUPPORT AS-HOOD	
	10	2	**193-3809**	2	PIN-GUIDE	
Y	11	2	*202-6378*	1	TILT GP-HOOD (LH)	564
	12	2	**206-8077**	2	PLATE-ANGLE	
	13	2	**209-2287**	1	BAFFLE	
	14	2	**209-2288**	1	PLATE	
	15	1	**210-1917**	1	GRILL	
M	16	1	**131-3540**	5	LOCKNUT (M8X1.25-THD)	
M	17	2	**5A-3604**	2	BOLT-SOCKET HEAD (M8X1.25X25-MM)	
M	18	2	**5C-7261**	2	NUT (M8X1.25-THD)	
	19	2	**5P-1076**	4	WASHER-HARD (13.5X30X4-MM THK)	
	20	2	**5P-4116**	2	WASHER-HARD (8.8X20.5X2-MM THK)	
M	21	2	**6V-7744**	4	LOCKNUT (M10X1.5-THD)	
M	22	2	**6V-9189**	2	LOCKNUT (M8X1.25-THD)	
	23	2	**7X-0579**	4	WASHER-HARD (8.8X25.5X2-MM THK)	
	24	1	**7X-7729**	15	WASHER (11X25X3-MM THK)	
	25	1,2	**8T-4121**	30	WASHER-HARD (11X21X2.5-MM THK)	
M	26	2	**8T-4133**	4	NUT (M10X1.5-THD)	
M	27	1,2	**8T-4137**	14	BOLT (M10X1.5X20-MM)	
M	28	2	**8T-4139**	12	BOLT (M12X1.75X30-MM)	
M	29	1	**8T-4186**	5	BOLT (M10X1.5X40-MM)	
M	30	2	**8T-4192**	4	BOLT (M12X1.75X25-MM)	
	31	2	**8T-4223**	16	WASHER-HARD (13.5X25.5X3-MM THK)	
	32	2	**8T-4224**	2	WASHER-HARD (8.8X16X2-MM THK)	
M	33	2	**8T-4244**	4	NUT (M12X1.75-THD)	
M	34	1	**8T-4908**	5	BOLT (M8X1.25X25-MM)	
M	35	2	**8T-5005**	8	BOLT (M10X1.5X70-MM)	

M-METRIC PART
Y-SEPARATE ILLUSTRATION

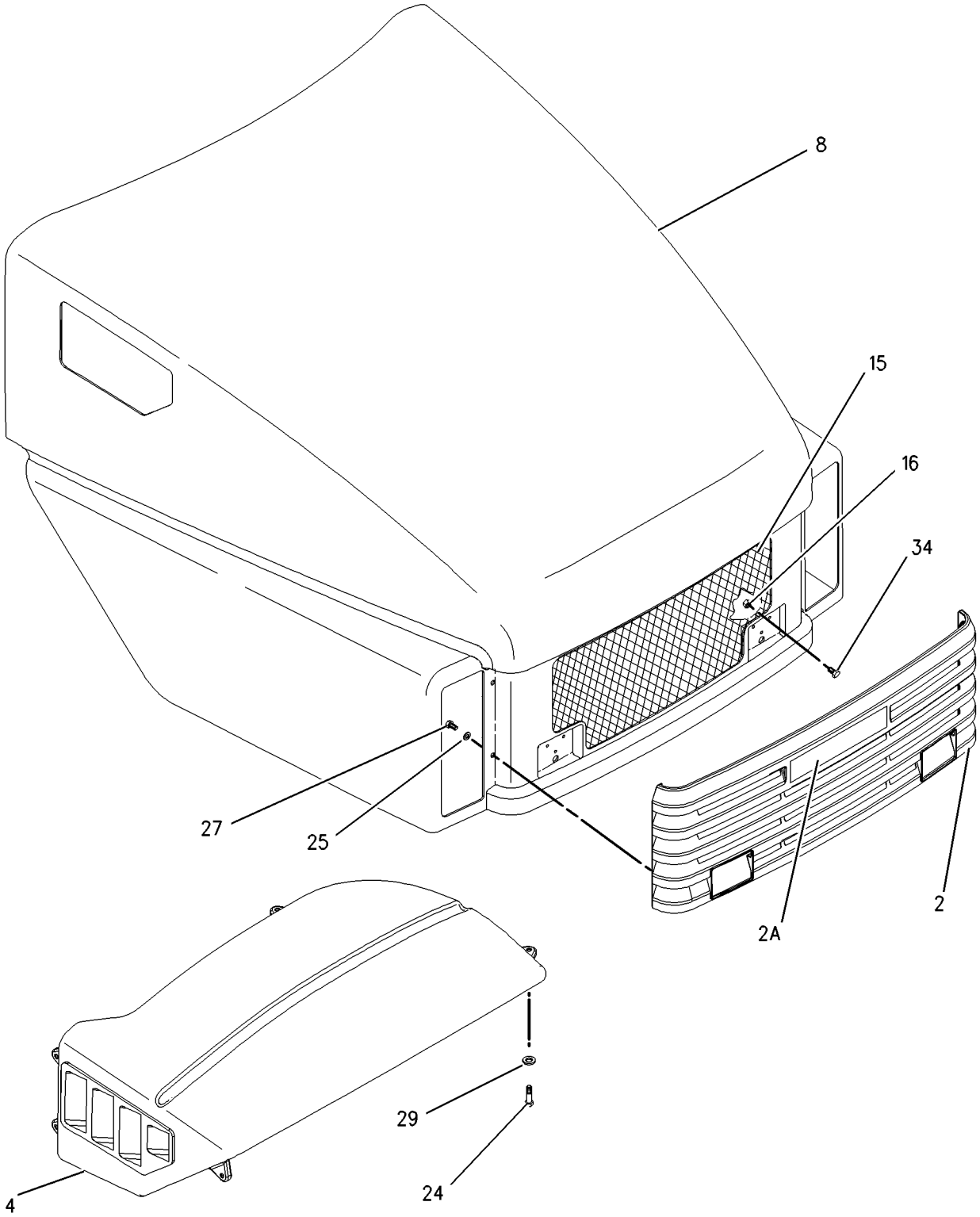

GRAPHIC #1 g00934040

152-7025 **HOOD GP-ENGINE** *(contd.)* **i01829903**

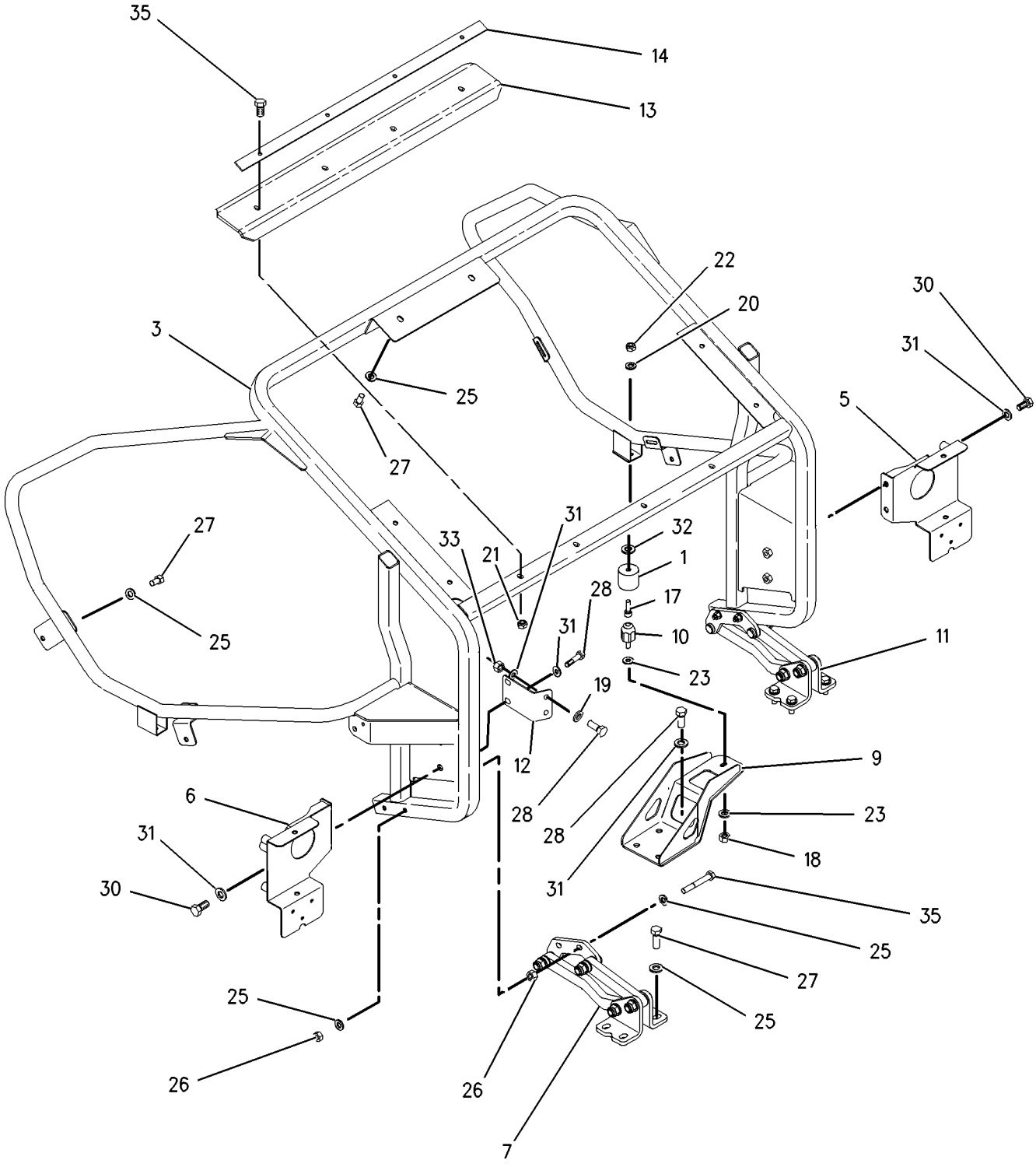

GRAPHIC #2 **<END>** g00819859

FRAME AND BODY

152-7025 HOOD GP-ENGINE

S/N: AXM371-372, 375-382, 400, 402-1376

PART OF 152-6923 HOOD & GUARD AR

SMCS-7251 **i01875048**

NOTE	REF NO	GRAPHIC REF	PART NUMBER	QTY	PART NAME 1 2 3 4 5 6 (PRODUCT LEVEL)	SEE PAGE
	1	2	**9G-2773**	2	SOCKET	
	2	2	**187-4425**	1	GRILL AS	
		2	**4I-7924**	2	WASHER (4.5X40X1.2-MM THK)	
M		2	**123-0707**	2	SCREW-HEX SOCKET (M4X0.7X20-MM)	
M		2	**178-9983**	2	LOCKNUT (M4X0.7-THD)	
		2	**196-1044**	1	PLATE (CATERPILLAR)	
	3	1	**188-6049**	1	FRAME AS	
	4	1	**190-0282**	1	DUCT	
	5	2	**190-2171**	1	BRACKET AS	
	6	1	**190-2172**	1	BRACKET AS	
Y	7	1	*191-5963*	1	TILT GP-HOOD (RH)	563
	8	1	**191-5964**	1	HOOD AS	
	9	1	**192-5453**	1	SUPPORT AS-HOOD	
	10	2	**193-3809**	2	PIN-GUIDE	
Y	11	2	*202-6378*	1	TILT GP-HOOD (LH)	564
C	12	1	**202-7838**	22	RETAINER	
C	13	1	**202-7839**	22	FASTENER	
	14	2	**206-8077**	2	PLATE-ANGLE	
	15	1	**206-8137**	1	LINER	
	16	1	**209-2287**	1	BAFFLE	
	17	1	**209-2288**	1	PLATE	
	18	1	**210-1917**	1	GRILL	
C	19	2	**216-2218**	2	PLATE-SPACER	
C	20	1	**217-0561**	1	LINER (TOP RH)	
C	21	1	**217-0562**	1	LINER (TOP LH)	
C	22	1	**217-0563**	1	LINER (TOP LH)	
C	23	1	**217-0564**	1	LINER (LOWER RH)	
C	24	1	**217-0565**	1	LINER (LOWER LH)	
C	25	1	**217-0566**	1	LINER (UPPER RH)	
C	26	1	**217-0567**	1	LINER (UPPER LH)	
C	27	1	**218-2529**	8	PLUG	
CM	28	1	**131-3540**	8	LOCKNUT (M8X1.25-THD)	
CM	29	1,2	**5C-7261**	6	NUT (M8X1.25-THD)	
	30	2	**5P-1076**	4	WASHER-HARD (13.5X30X4-MM THK)	
	31	2	**5P-4116**	2	WASHER-HARD (8.8X20.5X2-MM THK)	
M	32	1	**6V-7744**	4	LOCKNUT (M10X1.5-THD)	
M	33	2	**6V-9189**	2	LOCKNUT (M8X1.25-THD)	
	34	2	**7X-0579**	4	WASHER-HARD (8.8X25.5X2-MM THK)	
C	35	1	**7X-7729**	21	WASHER (11X25X3-MM THK)	
CM	36	2	**8T-0338**	2	BOLT-SOCKET HEAD (M8X1.25X45-MM)	
C	37	1,2	**8T-4121**	26	WASHER-HARD (11X21X2.5-MM THK)	
M	38	1,2	**8T-4133**	4	NUT (M10X1.5-THD)	
CM	39	1,2	**8T-4137**	10	BOLT (M10X1.5X20-MM)	
CM	40	1	**8T-4139**	8	BOLT (M12X1.75X30-MM)	
M	41	1	**8T-4186**	5	BOLT (M10X1.5X40-MM)	
M	42	1	**8T-4192**	4	BOLT (M12X1.75X25-MM)	
	43	1,2	**8T-4223**	16	WASHER-HARD (13.5X25.5X3-MM THK)	
C	44	1,2	**8T-4224**	6	WASHER-HARD (8.8X16X2-MM THK)	
M	45	2	**8T-4244**	4	NUT (M12X1.75-THD)	
CM	46	1	**8T-4908**	8	BOLT (M8X1.25X25-MM)	
CM	47	2	**8T-4956**	4	BOLT (M12X1.75X35-MM)	
M	48	1,2	**8T-5005**	8	BOLT (M10X1.5X70-MM)	

C-CHANGE FROM PREVIOUS TYPE
M-METRIC PART
Y-SEPARATE ILLUSTRATION

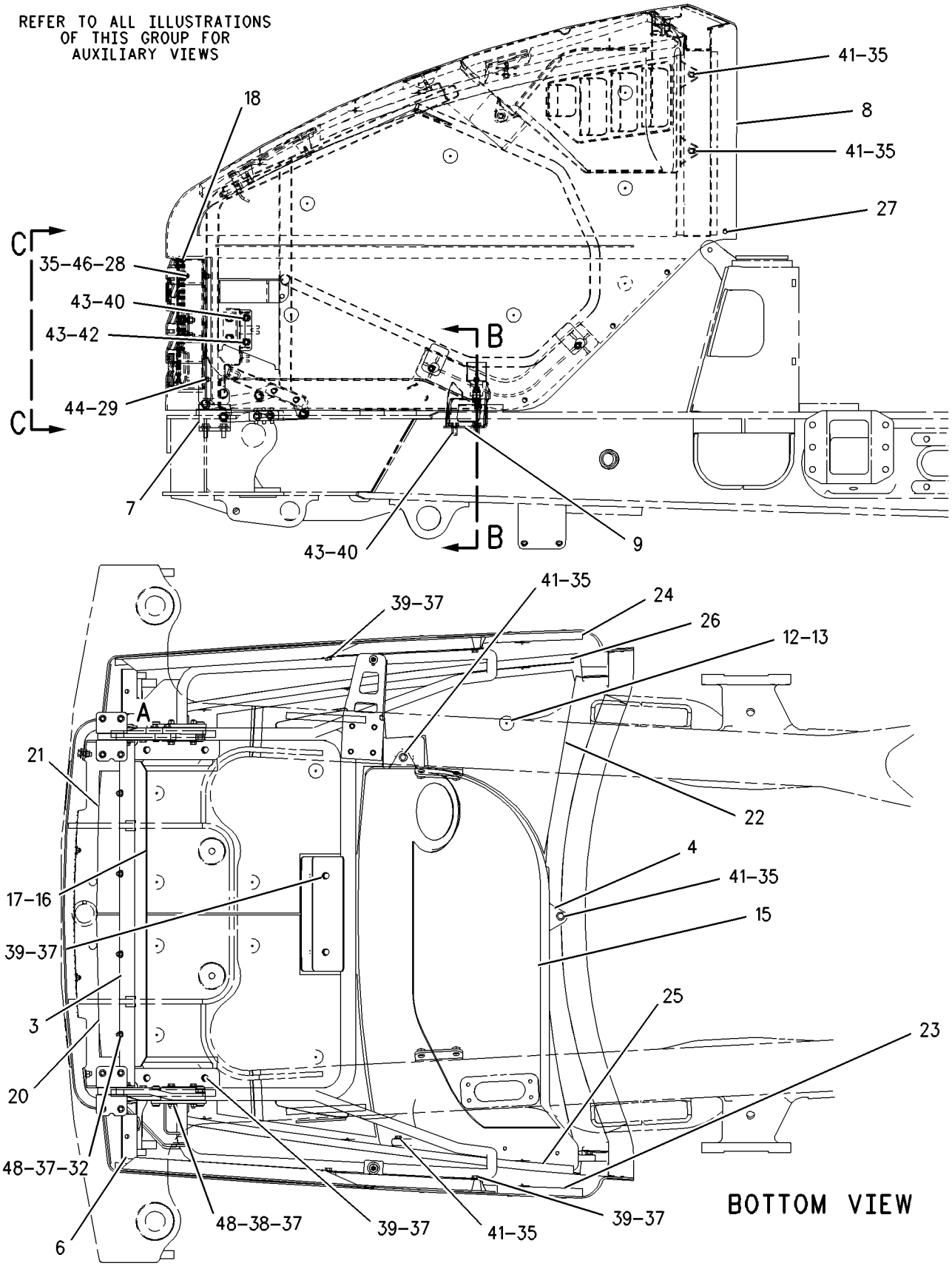

GRAPHIC #1

g00954381

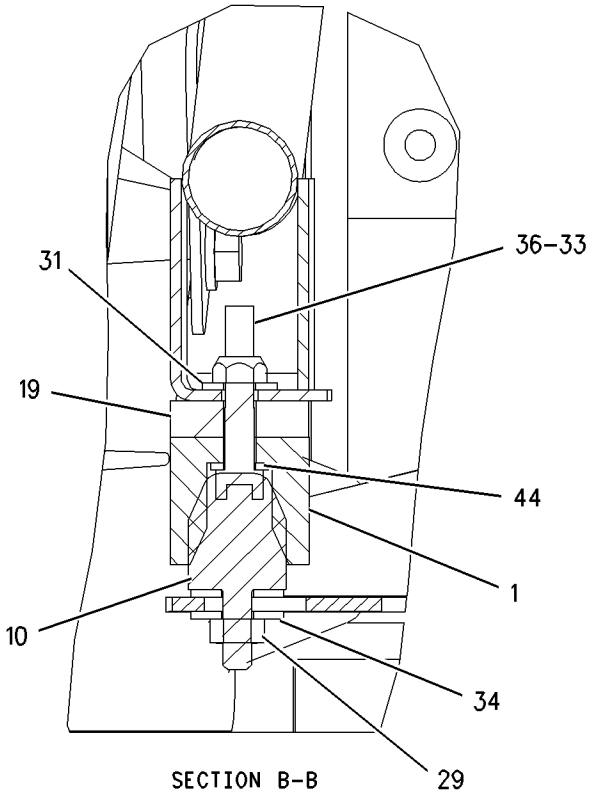

SECTION B-B

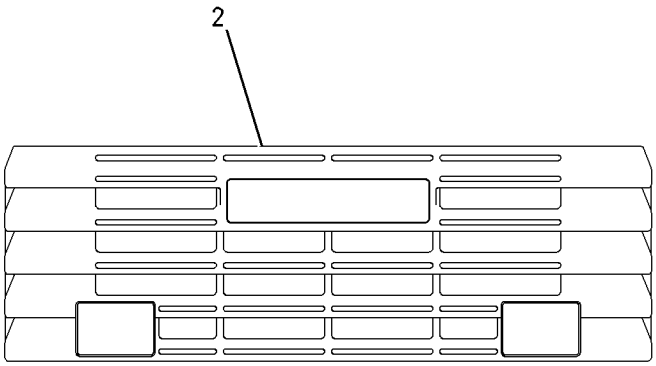

VIEW C-C

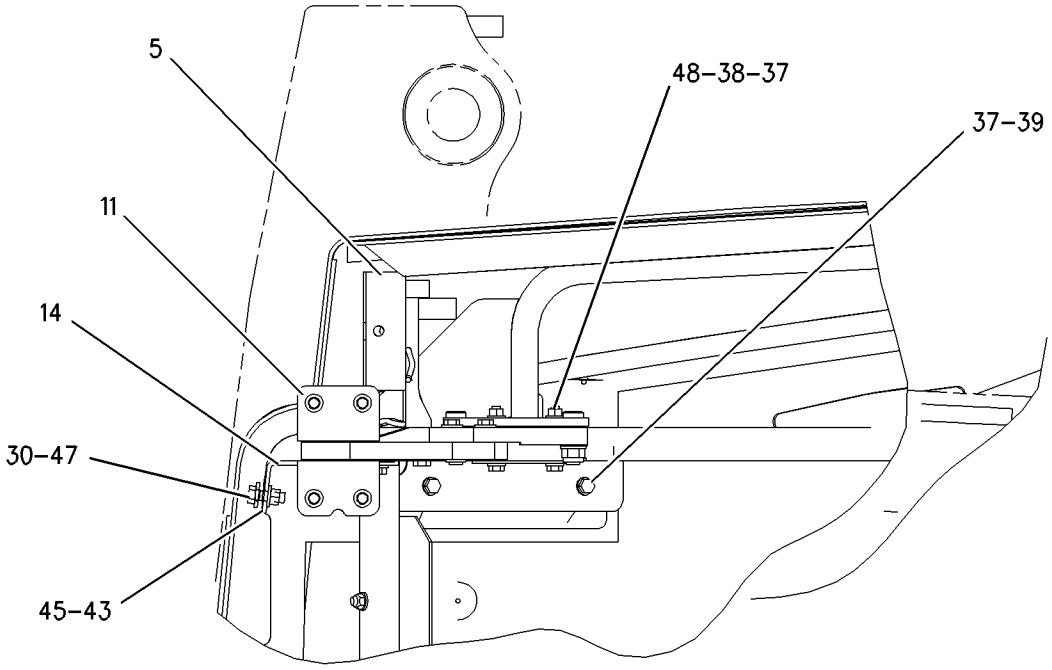

VIEW OF AREA A

GRAPHIC #2 **<END>** g00954382

FRAME AND BODY

152-7025 HOOD GP-ENGINE

S/N: AXM1377-UP

PART OF 152-6923 HOOD & GUARD AR

SMCS-7251 **i02185716**

NOTE	REF NO	GRAPHIC REF	PART NUMBER	QTY	PART NAME 1 2 3 4 5 6 (PRODUCT LEVEL)	SEE PAGE
	1	2	**9G-2773**	2	SOCKET	
	2	2	**187-4425**	1	GRILL AS	
		2	**4I-7924**	2	WASHER (4.5X40X1.2-MM THK)	
M		2	**123-0707**	2	SCREW-HEX SOCKET (M4X0.7X20-MM)	
M		2	**178-9983**	2	LOCKNUT (M4X0.7-THD)	
		2	**196-1044**	1	PLATE (CATERPILLAR)	
	3	1	**188-6049**	1	FRAME AS	
	4	1	**190-0282**	1	DUCT	
	5	2	**190-2171**	1	BRACKET AS	
	6	1	**190-2172**	1	BRACKET AS	
Y	7	1	*191-5963*	1	TILT GP-HOOD (RH)	563
	8	1	**191-5964**	1	HOOD AS	
	9	1	**192-5453**	1	SUPPORT AS-HOOD	
	10	2	**193-3809**	2	PIN-GUIDE	
Y	11	2	*202-6378*	1	TILT GP-HOOD (LH)	564
	12	1	**202-7838**	22	RETAINER	
	13	1	**202-7839**	22	FASTENER	
	14	2	**206-8077**	2	PLATE-ANGLE	
	15	1	**209-2287**	1	BAFFLE	
	16	1	**209-2288**	1	PLATE	
	17	1	**210-1917**	1	GRILL	
	18	2	**216-2218**	2	PLATE-SPACER	
	19	1	**217-0561**	1	LINER (TOP RH)	
	20	1	**217-0562**	1	LINER (TOP LH)	
	21	1	**217-0563**	1	LINER (TOP LH)	
	22	1	**217-0564**	1	LINER (LOWER RH)	
	23	1	**217-0565**	1	LINER (LOWER LH)	
	24	1	**217-0566**	1	LINER (UPPER RH)	
	25	1	**217-0567**	1	LINER (UPPER LH)	
	26	1	**218-2529**	8	PLUG	
CY	27	1	**237-5510**	1	WIRING GP-LIGHTING	308
M	28	1	**131-3540**	8	LOCKNUT (M8X1.25-THD)	
M	29	1,2	**5C-7261**	6	NUT (M8X1.25-THD)	
	30	2	**5P-1076**	4	WASHER-HARD (13.5X30X4-MM THK)	
	31	2	**5P-4116**	2	WASHER-HARD (8.8X20.5X2-MM THK)	
M	32	1	**6V-7744**	4	LOCKNUT (M10X1.5-THD)	
M	33	2	**6V-9189**	2	LOCKNUT (M8X1.25-THD)	
	34	2	**7X-0579**	4	WASHER-HARD (8.8X25.5X2-MM THK)	
C	35	1	**7X-7729**	25	WASHER (11X25X3-MM THK)	
M	36	2	**8T-0338**	2	BOLT-SOCKET HEAD (M8X1.25X45-MM)	
	37	1,2	**8T-4121**	26	WASHER-HARD (11X21X2.5-MM THK)	
M	38	1,2	**8T-4133**	4	NUT (M10X1.5-THD)	
CM	39	2	**8T-4136**	2	BOLT (M10X1.5X25-MM)	
CM	40	1,2	**8T-4137**	8	BOLT (M10X1.5X20-MM)	
M	41	1	**8T-4139**	8	BOLT (M12X1.75X30-MM)	
M	42	1	**8T-4186**	5	BOLT (M10X1.5X40-MM)	
M	43	1	**8T-4192**	4	BOLT (M12X1.75X25-MM)	
	44	1,2	**8T-4223**	16	WASHER-HARD (13.5X25.5X3-MM THK)	
	45	1,2	**8T-4224**	6	WASHER-HARD (8.8X16X2-MM THK)	
M	46	2	**8T-4244**	4	NUT (M12X1.75-THD)	
M	47	1	**8T-4908**	8	BOLT (M8X1.25X25-MM)	
M	48	2	**8T-4956**	4	BOLT (M12X1.75X35-MM)	
M	49	1,2	**8T-5005**	8	BOLT (M10X1.5X70-MM)	

C-CHANGE FROM PREVIOUS TYPE
M-METRIC PART
Y-SEPARATE ILLUSTRATION

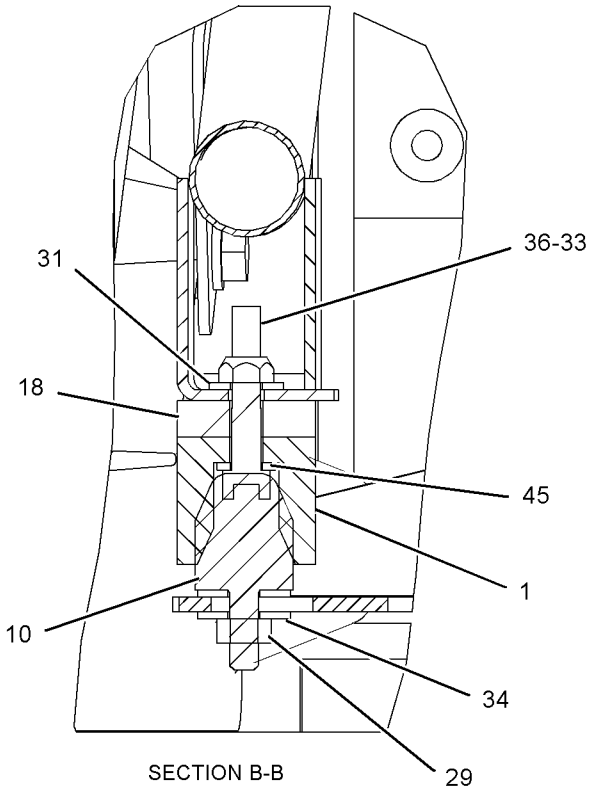

SECTION B-B

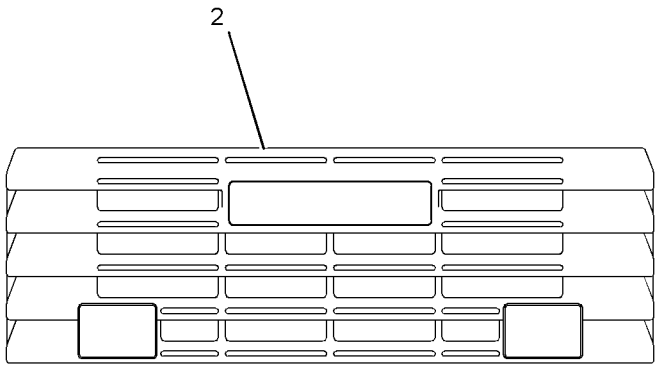

VIEW C-C

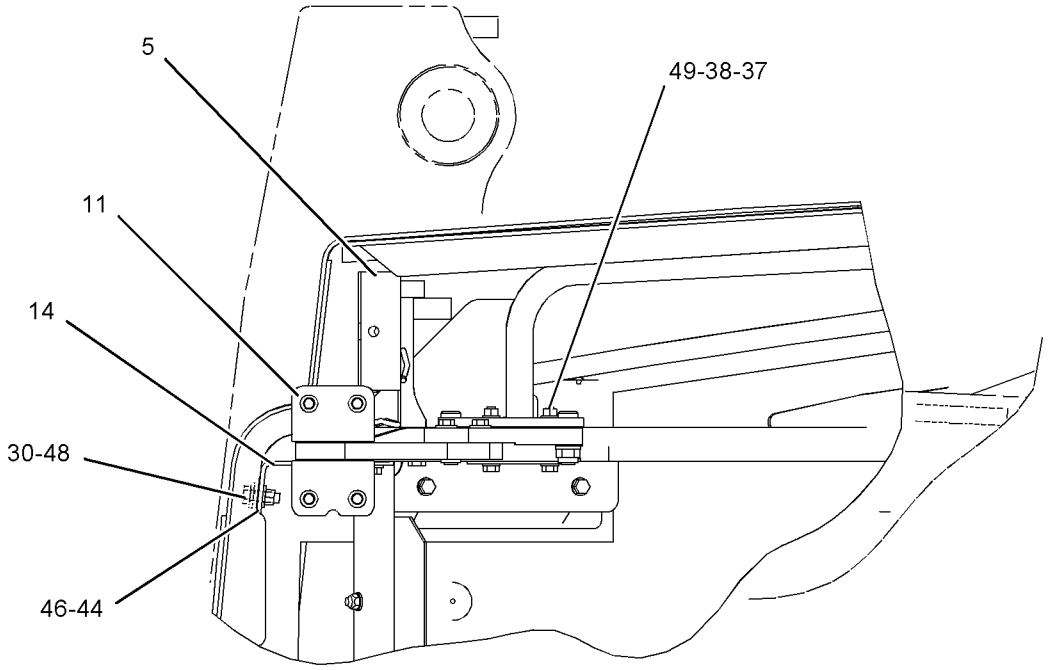

VIEW OF AREA A

GRAPHIC #1

g01105771

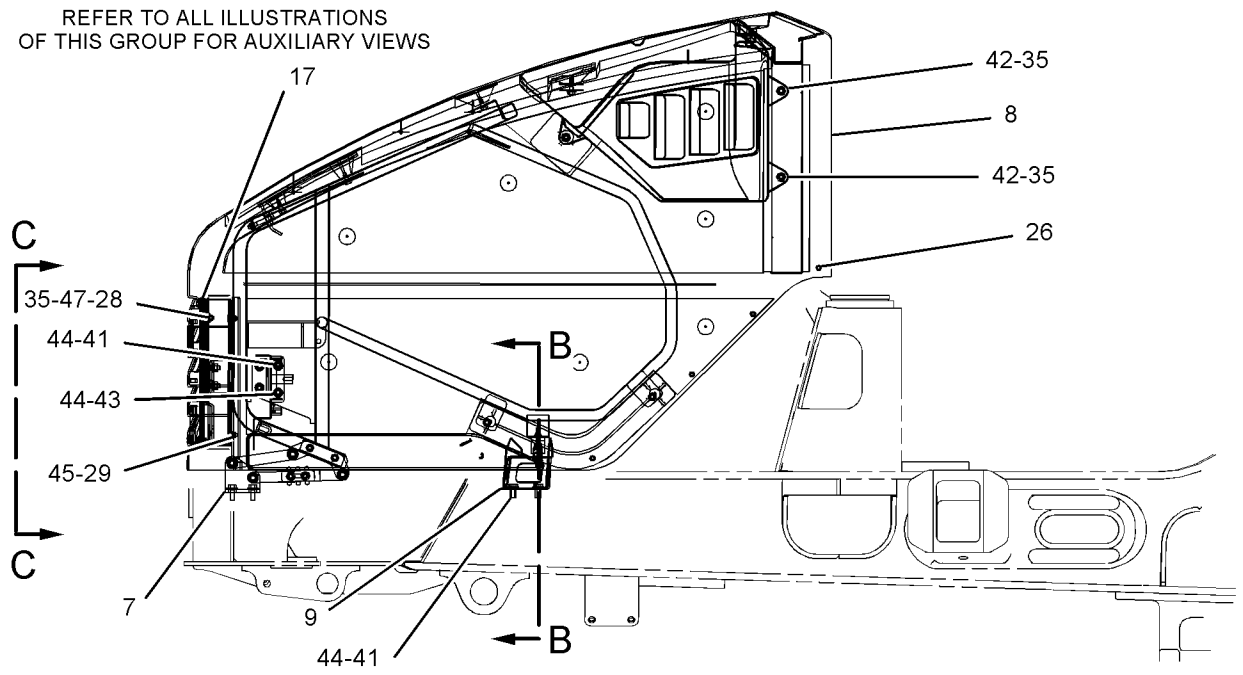

LEFT SIDE VIEW

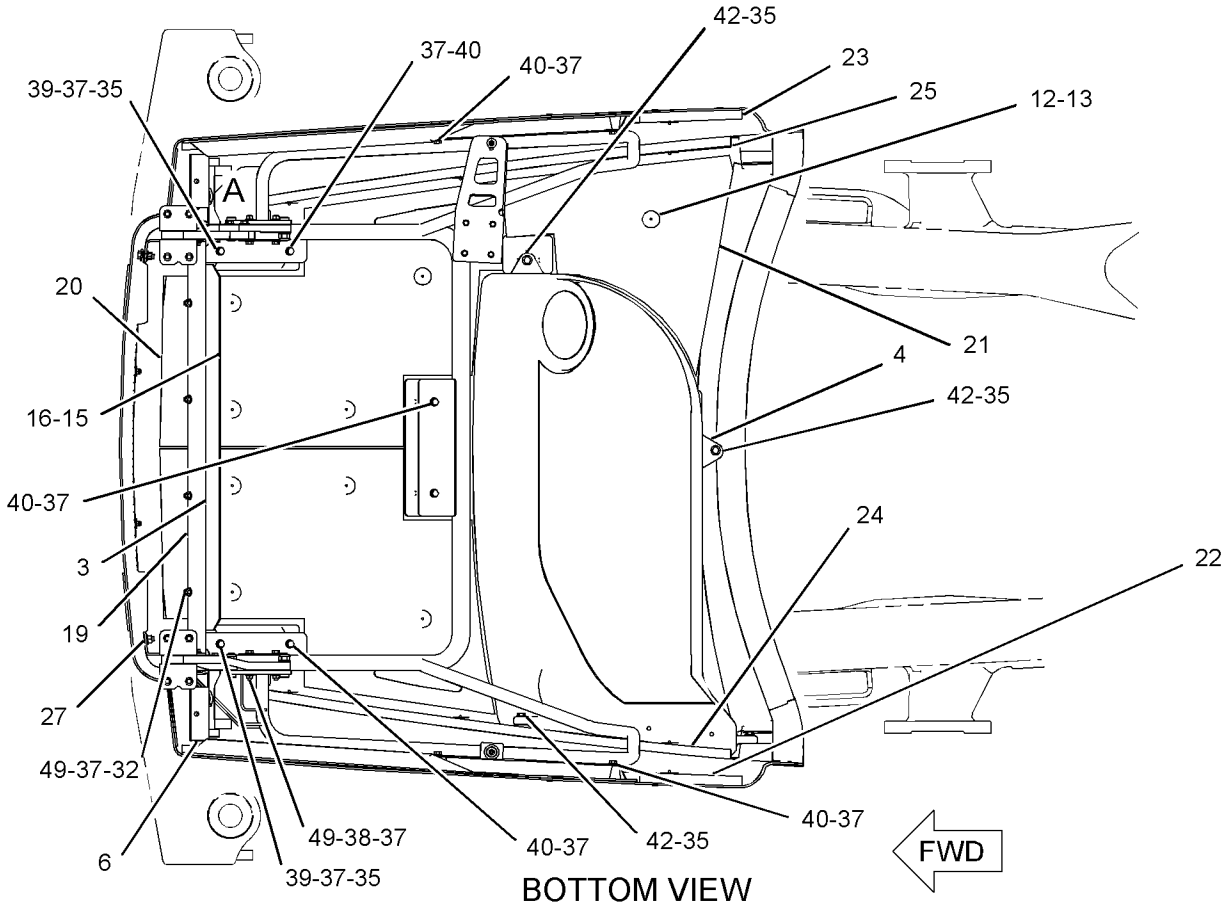

BOTTOM VIEW

GRAPHIC #2

<END>

g01105772

139-0959 LINER GP-BODY

S/N: AXM1-UP

AN ATTACHMENT

SMCS-7269 **i01906376**

NOTE	REF NO	GRAPHIC REF	PART NUMBER	QTY	PART NAME 1 2 3 4 5 6 (PRODUCT LEVEL)	SEE PAGE
	1	1	**143-4001**	1	PLATE	
	2	1	**143-4002**	1	PLATE	
	3	1	**143-4005**	2	PLATE	
	4	1	**143-4006**	1	PLATE	
	5	1	**143-4007**	2	PLATE	
	6	1	**143-4008**	2	PLATE	
	7	1	**143-4009**	2	PLATE	
	8	1	**233-6950**	1	PLATE	
	9	1	**233-6951**	1	PLATE	

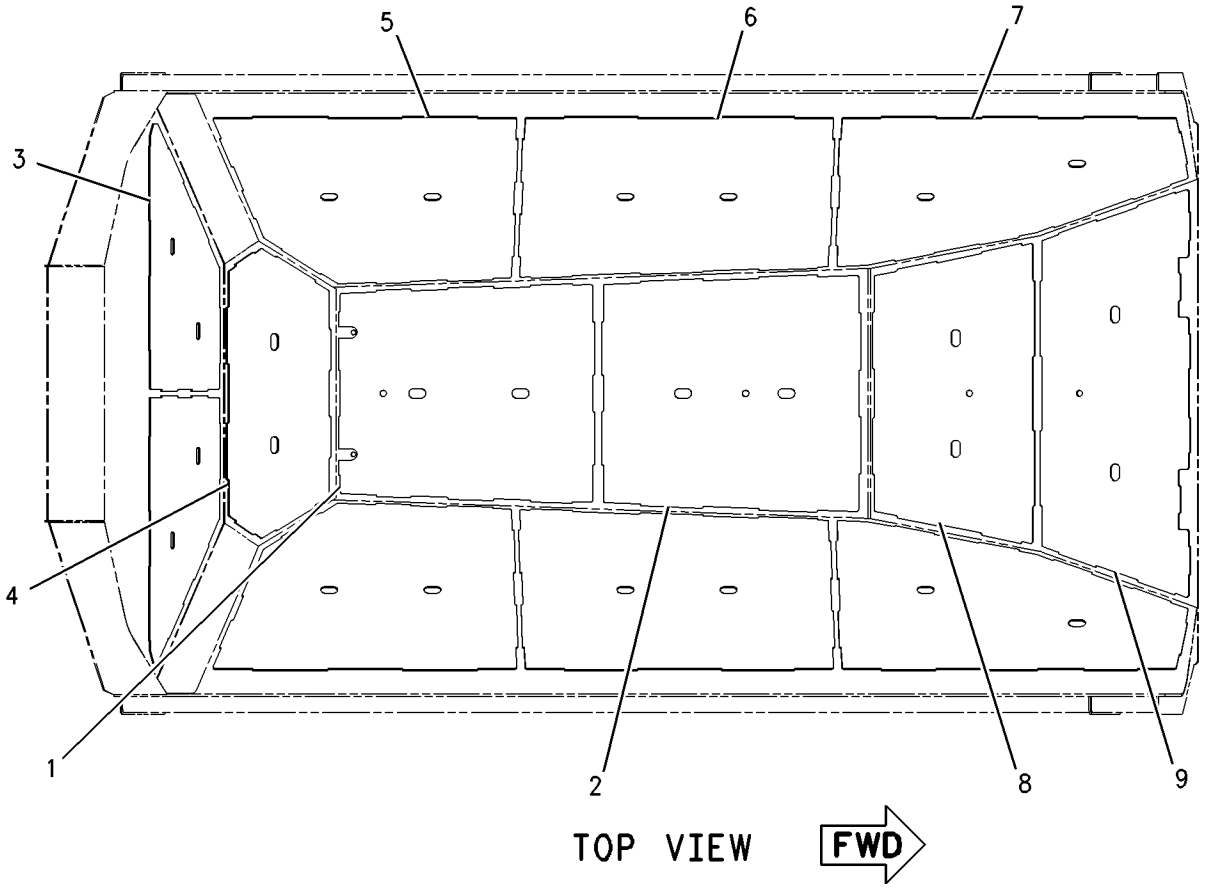

GRAPHIC #1 **<END>** g00992886

FRAME AND BODY

152-6933 LINES GP-GREASE

S/N: AXM1-758, 1183-UP

PART OF 152-6919 AXLE & FRAME AR

SMCS-7510 **i01966969**

NOTE	REF NO	GRAPHIC REF	PART NUMBER	QTY	PART NAME 1 2 3 4 5 6 (PRODUCT LEVEL)	SEE PAGE
	1	1	**2U-4132**	4	ELBOW	
	2	1	**3B-8489**	7	FITTING-GREASE	
	3	1	**4U-1697**	7	ADAPTER-BULKHEAD	
	4	1	**5B-3254**	7	NUT-JAM (7/16-20-THD)	
	5	1	**5U-7151**	7	CAP	
I	6	1	**195-3641**	1	HOSE AS	
I	7	1	**195-3642**	2	HOSE AS	
I	8	1	**195-3643**	2	HOSE AS	
I	9	1	**225-8819**	2	HOSE AS	
	10	1	**2N-1287**	3	ELBOW-FLARED	
	11	1	**6D-3479**	7	CLIP	
	12	1	**6U-0455**	4	STRAP	
	13	1	**8T-4121**	3	WASHER-HARD (11X21X2.5-MM THK)	
M	14	1	**8T-4136**	3	BOLT (M10X1.5X25-MM)	
	15	1	**8T-5360**	7	WASHER (12X22.5X2.5-MM THK)	

I-REFER TO HYDRAULIC INFORMATION SYSTEM
M-METRIC PART

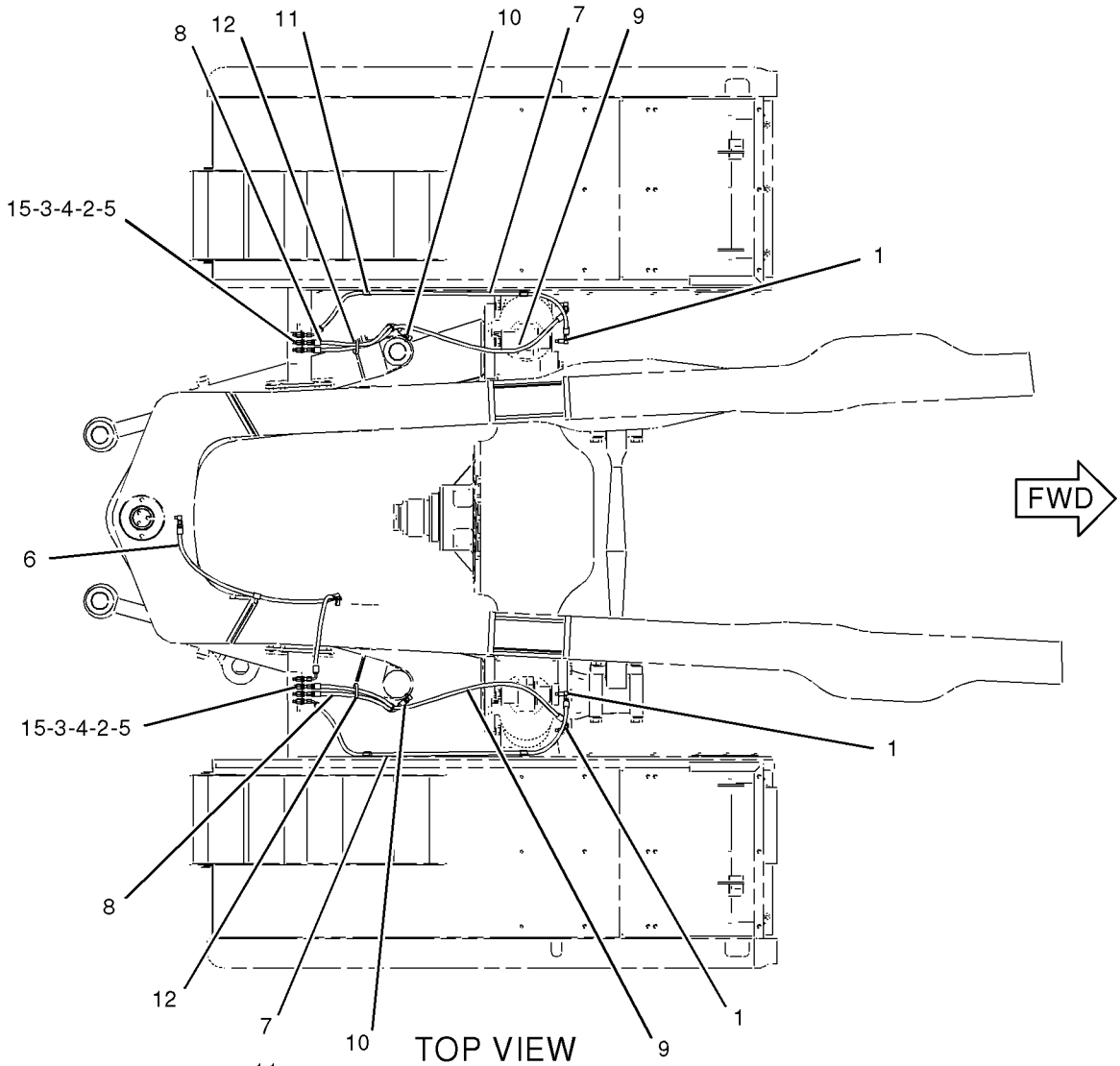

TOP VIEW

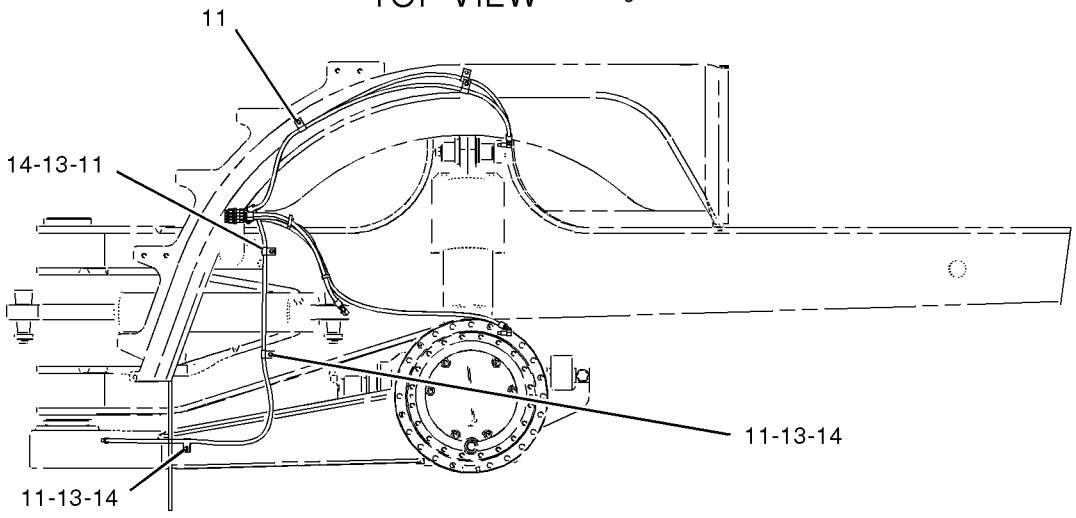

RIGHT SIDE VIEW

GRAPHIC #1

<END>

g01021257

FRAME AND BODY

152-7030 LINES GP-GREASE

S/N: AXM1-1296

PART OF 152-6921 AXLE & FRAME AR

SMCS-7510 **i01655400**

NOTE	REF NO	GRAPHIC REF	PART NUMBER	QTY	PART NAME 1 2 3 4 5 6 (PRODUCT LEVEL)	SEE PAGE
	1	1	**3B-8485**	5	FITTING-GREASE	
	2	1	**4U-1697**	5	ADAPTER-BULKHEAD	
	3	1	**5B-3254**	5	NUT-JAM (7/16-20-THD)	
	4	1	**5U-7151**	5	CAP	
I	5	1	**145-1058**	1	HOSE AS	
I	6	1	**148-0168**	1	HOSE AS	
	7	1	**153-8341**	1	PLATE-COVER	
I	8	1	**159-3122**	1	HOSE AS	
	9	1	**159-7192**	1	BRACKET	
	10	1	**191-7565**	1	TUBE AS	
I	11	1	**193-7864**	3	HOSE AS	
	12	1	**124-0174**	1	CLIP	
	13	1	**2N-1287**	3	ELBOW-FLARED	
	14	1	**5P-5008**	2	REDUCER	
	15	1	**7K-9197**	1	ELBOW	
	16	1	**8L-6557**	2	CONNECTOR	
	17	1	**8T-1887**	3	CLIP (SLOT)	
	18	1	**8T-1888**	3	CLIP (TAB)	
	19	1	**8T-4121**	13	WASHER-HARD (11X21X2.5-MM THK)	
M	20	1	**8T-4133**	3	NUT (M10X1.5-THD)	
M	21	1	**8T-4137**	1	BOLT (M10X1.5X20-MM)	
M	22	1	**8T-4195**	9	BOLT (M10X1.5X30-MM)	
	23	1	**8W-8909**	3	SLEEVE	

I-REFER TO HYDRAULIC INFORMATION SYSTEM
M-METRIC PART

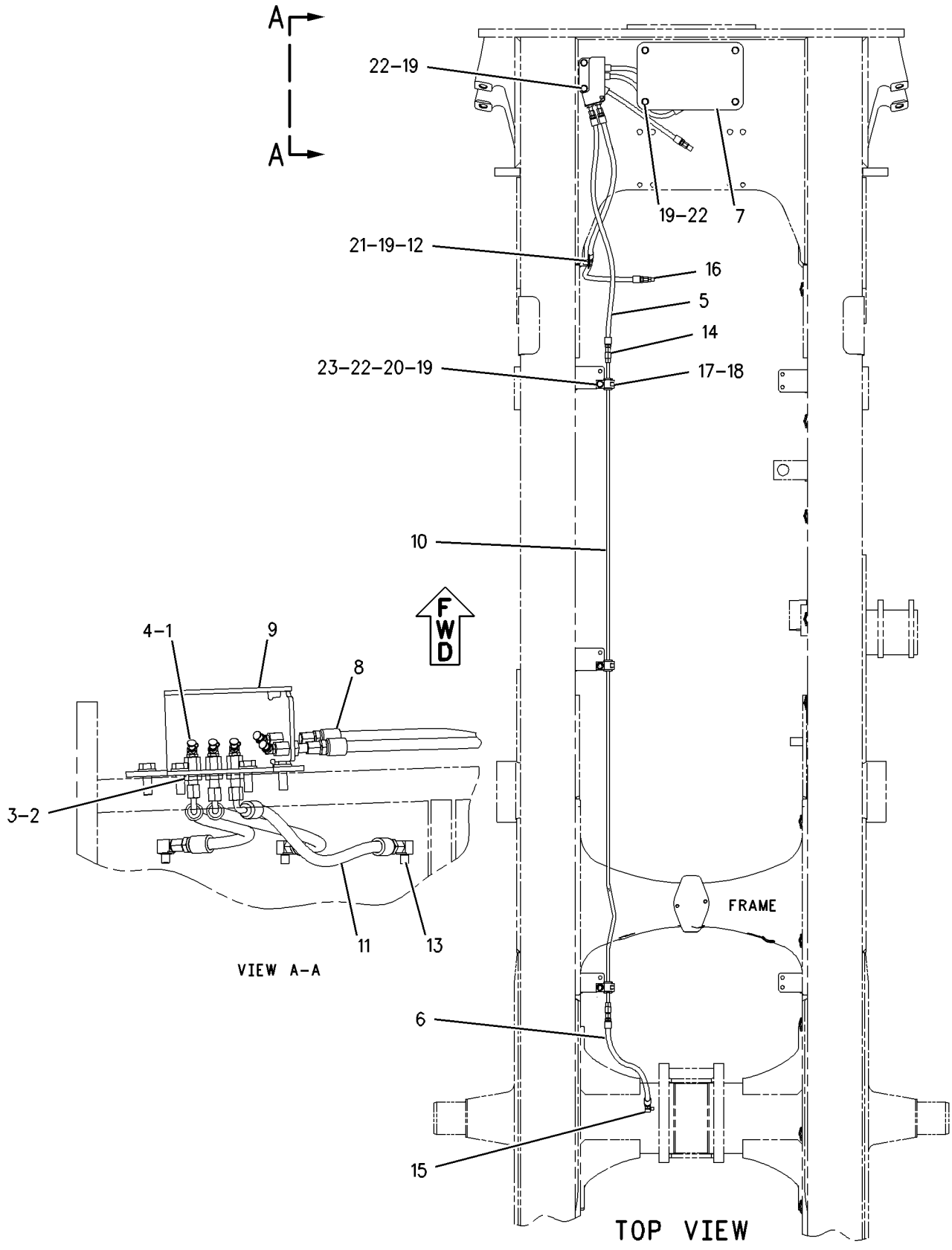

GRAPHIC #1 **<END>** g00854924

FRAME AND BODY

152-7030 LINES GP-GREASE

S/N: AXM1297-UP

PART OF 152-6921 AXLE & FRAME AR

SMCS-7510 **i02085078**

NOTE	REF NO	GRAPHIC REF	PART NUMBER	QTY	PART NAME 1 2 3 4 5 6 (PRODUCT LEVEL)	SEE PAGE
	1	1	**3B-8485**	5	FITTING-GREASE	
	2	1	**4U-1697**	5	ADAPTER-BULKHEAD	
	3	1	**5B-3254**	5	NUT-JAM (7/16-20-THD)	
	4	1	**5U-7151**	5	CAP	
	5	1	**153-8341**	1	PLATE-COVER	
I	6	1	**159-3122**	1	HOSE AS	
	7	1	**159-7192**	1	BRACKET	
I	8	1	**193-7864**	3	HOSE AS	
CI	9	1	**241-8802**	1	HOSE AS	
C	10	1	**124-0174**	4	CLIP	
	11	1	**2N-1287**	3	ELBOW-FLARED	
	12	1	**7K-9197**	1	ELBOW	
	13	1	**8L-6557**	2	CONNECTOR	
	14	1	**8T-4121**	13	WASHER-HARD (11X21X2.5-MM THK)	
M	15	1	**8T-4133**	3	NUT (M10X1.5-THD)	
M	16	1	**8T-4137**	1	BOLT (M10X1.5X20-MM)	
M	17	1	**8T-4195**	9	BOLT (M10X1.5X30-MM)	

C-CHANGE FROM PREVIOUS TYPE
I-REFER TO HYDRAULIC INFORMATION SYSTEM
M-METRIC PART

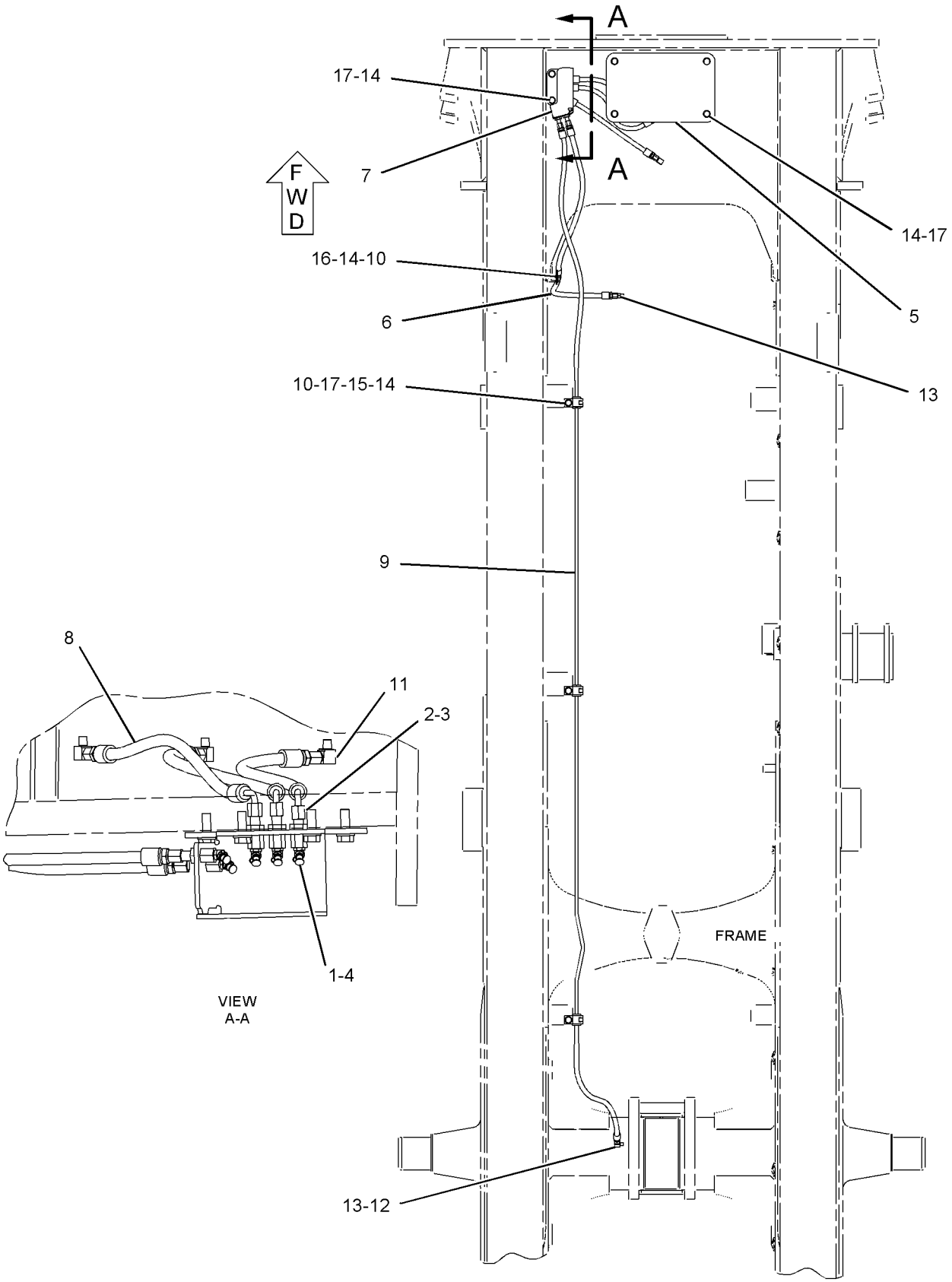

GRAPHIC #1 **<END>** g01068989

139-1031 LINK GP-STEERING FRAME LOCK

S/N: AXM1-822

PART OF 152-6927 INSTALLATION AR-MACHINE

SMCS-7506 **i01048728**

NOTE	REF NO	GRAPHIC REF	PART NUMBER	QTY	PART NAME 1 2 3 4 5 6 (PRODUCT LEVEL)	SEE PAGE
	1	1	**149-0817**	4	PLATE AS-LOCK	
M		1	**6V-8149**	1	NUT (M12X1.75-THD)	
M	2	1	**8T-4184**	4	BOLT (M12X1.75X45-MM)	
	3	1	**8T-4223**	4	WASHER-HARD (13.5X25.5X3-MM THK)	

M-METRIC PART

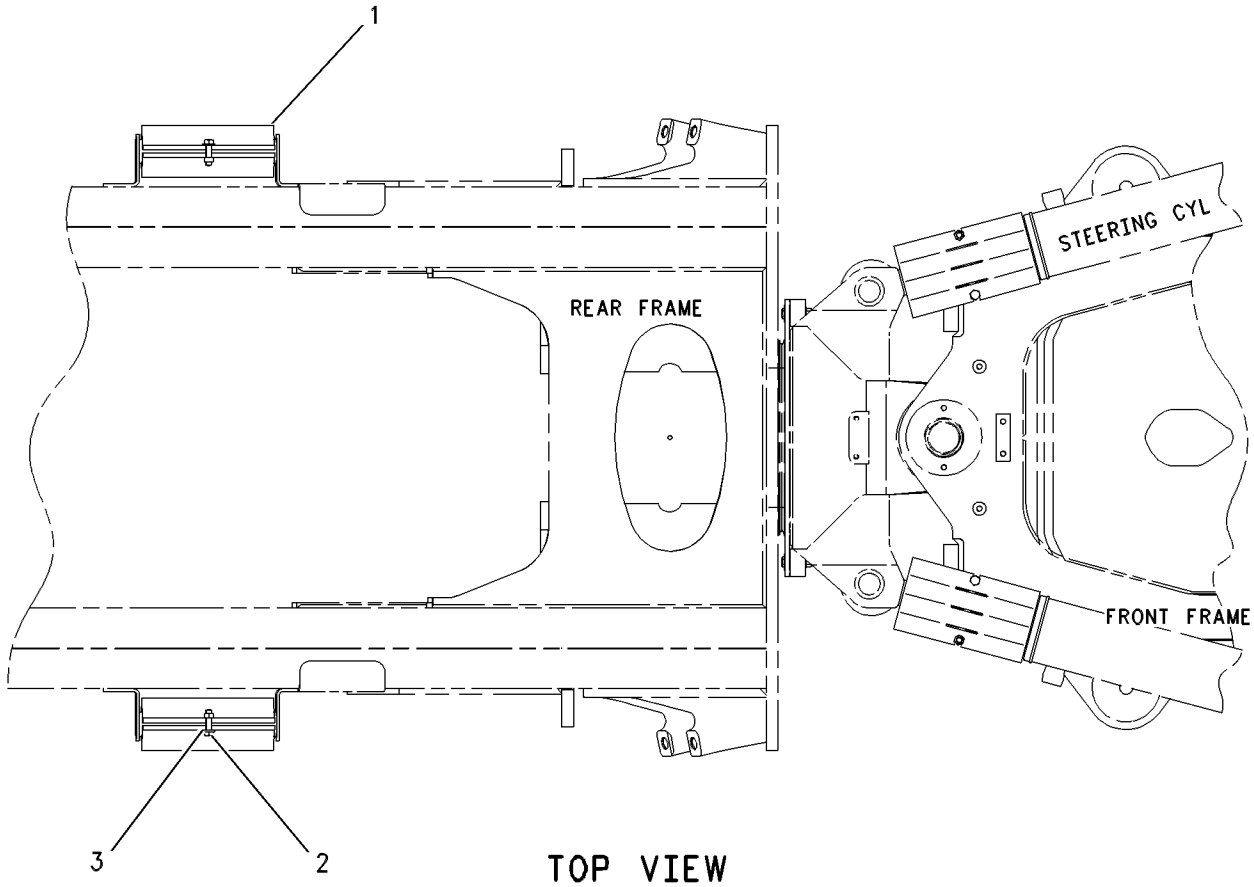

TOP VIEW

GRAPHIC #1 **<END>** g00582244

FRAME AND BODY

236-4389 LINK GP-STEERING FRAME LOCK

S/N: AXM823-UP

PART OF 152-6927 INSTALLATION AR-MACHINE

SMCS-7506 **i01933009**

NOTE	REF NO	GRAPHIC REF	PART NUMBER	QTY	PART NAME 1 2 3 4 5 6 (PRODUCT LEVEL)	SEE PAGE
	1	1	**236-5879**	4	PLATE AS	
					(EACH INCLUDES)	
M		1	**6V-8149**	1	NUT (M12X1.75-THD)	
M	2	1	**8T-4184**	4	BOLT (M12X1.75X45-MM)	
	3	1	**8T-4223**	4	WASHER-HARD (13.5X25.5X3-MM THK)	

M-METRIC PART

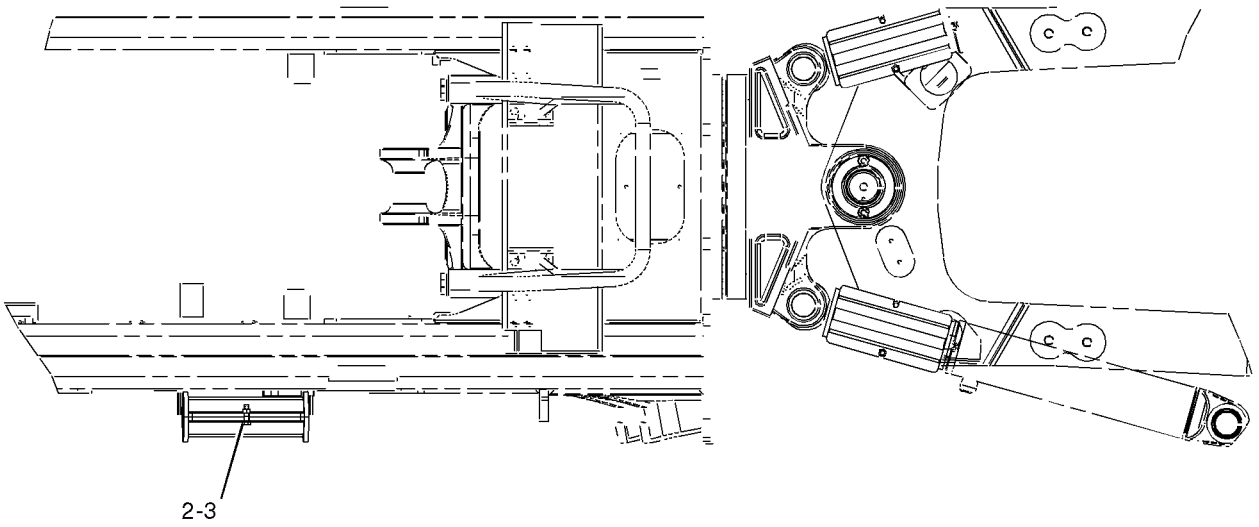

TOP VIEW

GRAPHIC #1 **<END>** g01006688

FRAME AND BODY

251-7322 LUBRICATION AR-AUTOMATIC

S/N: AXM1377-UP

AN ATTACHMENT

SMCS-7540 **i02054587**

NOTE	PART NUMBER	QTY	PART NAME 1 2 3 4 5 6 (PRODUCT LEVEL)	SEE PAGE
			(NO SERVICED PARTS)	

<END>

152-7049 PIN GP-HITCH

S/N: AXM1-UP

PART OF 152-6927 INSTALLATION AR-MACHINE

SMCS-7057 **i01468423**

NOTE	REF NO	GRAPHIC REF	PART NUMBER	QTY	PART NAME 1 2 3 4 5 6 (PRODUCT LEVEL)	SEE PAGE
	1	1	**151-7854**	2	PIN AS	
	2	1	**2U-2606**	1	PIN	

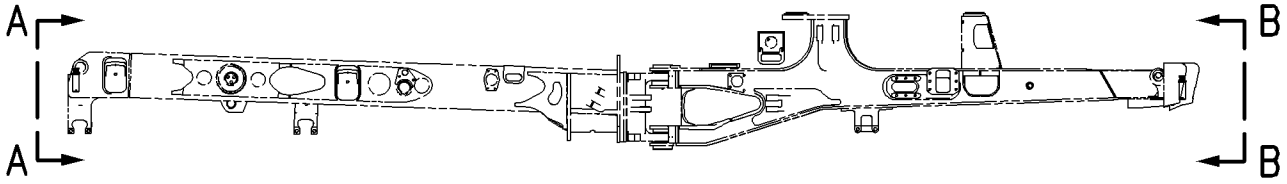

RIGHT SIDE VIEW

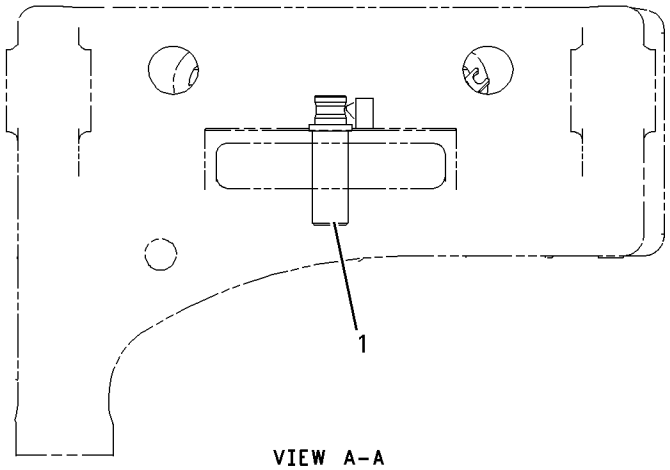

VIEW A-A

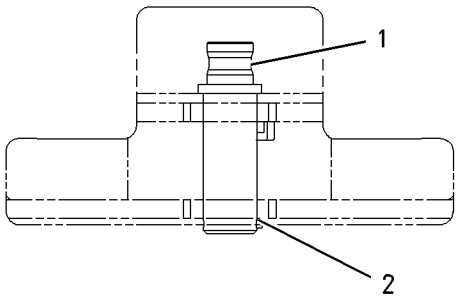

VIEW B-B

GRAPHIC #1 **<END>** g00766420

152-7115 STEP GP

S/N: AXM1-UP

PART OF 152-6922 HYDRAULIC AR-MACHINE

SMCS-7254 **i02114269**

NOTE	REF NO	GRAPHIC REF	PART NUMBER	QTY	PART NAME 1 2 3 4 5 6 (PRODUCT LEVEL)	SEE PAGE
	1	1	**141-3114**	4	RETAINER	
	2	1	**242-7345**	2	STEP	
M	3	1	**6V-7687**	4	LOCKNUT (M12X1.75-THD)	
M	4	1	**8T-4183**	4	BOLT (M12X1.75X40-MM)	
	5	1	**8T-4223**	12	WASHER-HARD (13.5X25.5X3-MM THK)	
	6	1	**9X-0941**	4	LOCKNUT (1/2-13-THD)	

M-METRIC PART

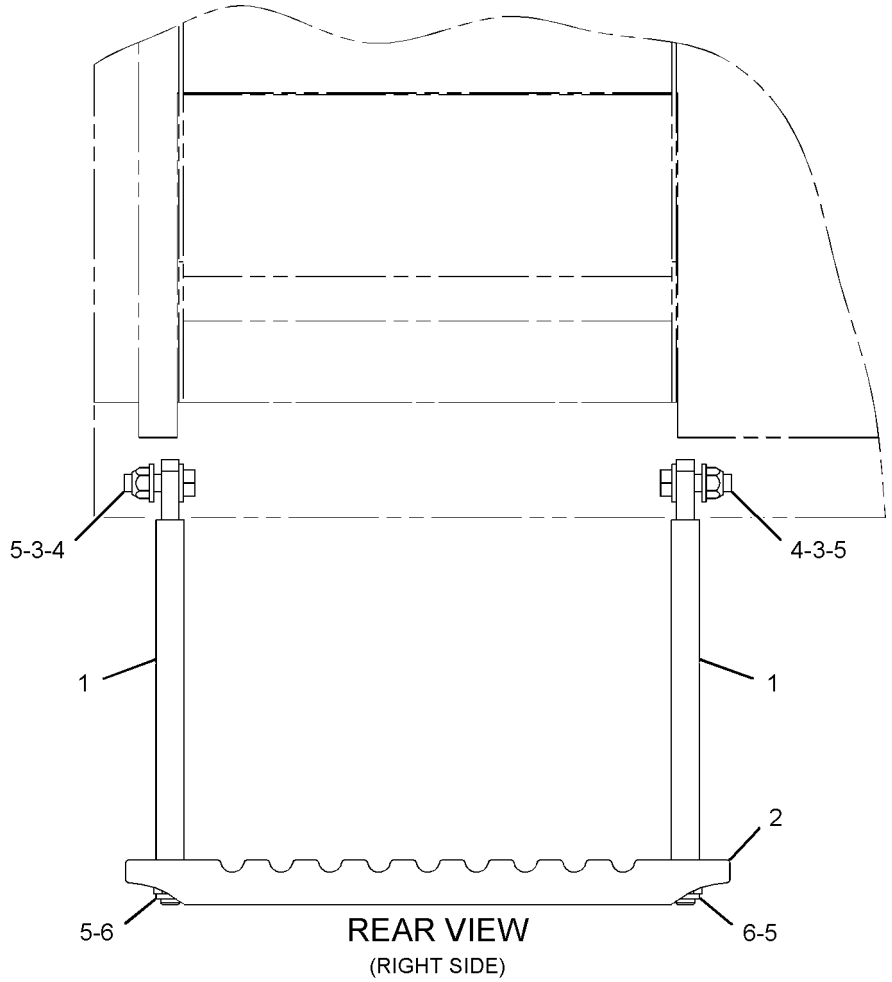

GRAPHIC #1

<END>

g01076992

180-9407 STOP GP-STEERING

S/N: AXM1-UP

PART OF 152-6927 INSTALLATION AR-MACHINE

SMCS-7188 **i01644409**

NOTE	REF NO	GRAPHIC REF	PART NUMBER	QTY	PART NAME 1 2 3 4 5 6 (PRODUCT LEVEL)	SEE PAGE
	1	1	**180-9408**	4	PLATE AS	
	2	1	**180-9411**	4	PAD	
B	3	1	**180-9412**	4	SHIM (3MM THK)	
B	4	1	**180-9413**	8	SHIM (1MM THK)	
B	5	1	**180-9414**	8	SHIM (.5MM THK)	
	6	1	**5C-8815**	8	WASHER (13X20X2.5MM THK)	
M	7	1	**8T-7811**	8	BOLT-SOCKET HEAD (M12X1.75X50MM)	
B	8	1	**213-9782**	4	SHIM (15MM THK)	
B	9	1	**214-1541**	4	SHIM (10MM THK)	

B-USE AS REQUIRED
M-METRIC PART

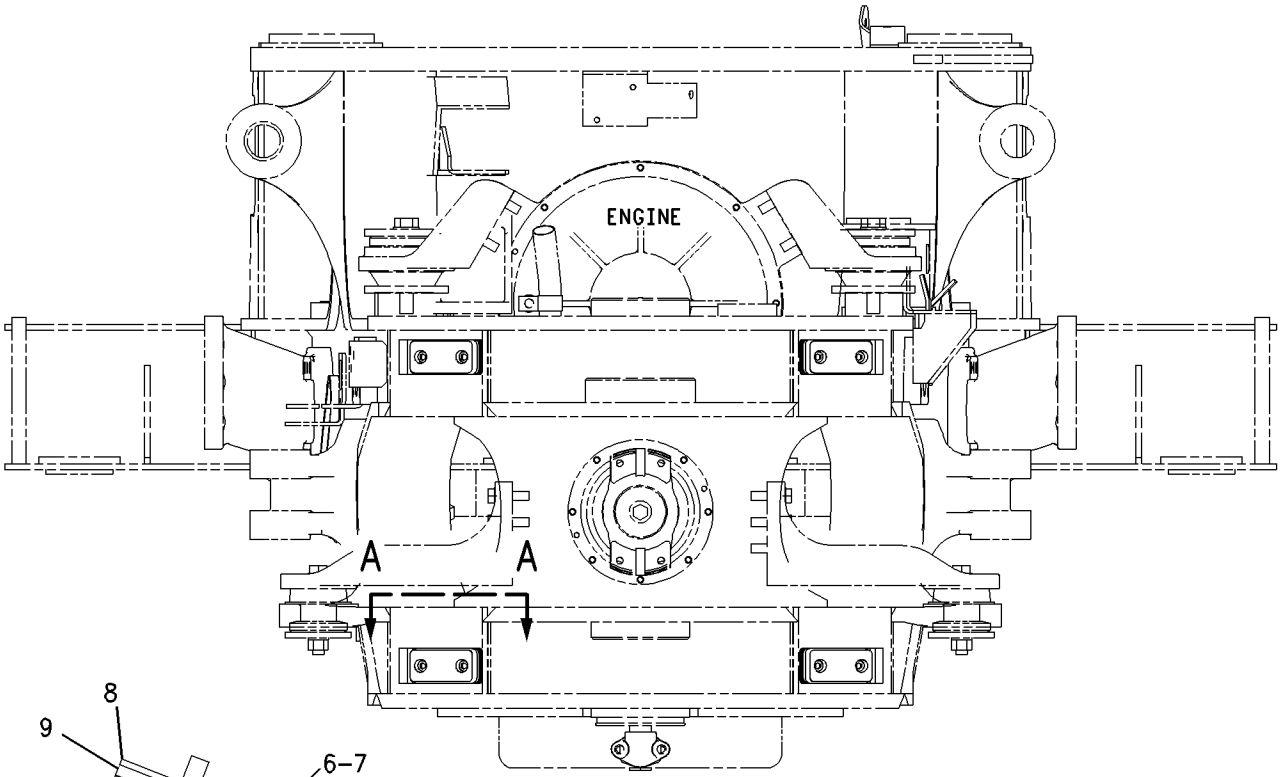

REAR VIEW

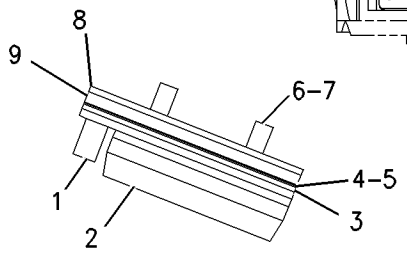

VIEW A-A

GRAPHIC #1 **<END>** g00850112

FRAME AND BODY

203-4720 SUPPORT GP-HITCH LINES

S/N: AXM1-523

PART OF 152-6922 HYDRAULIC AR-MACHINE

SMCS-5057 **i01618713**

NOTE	REF NO	GRAPHIC REF	PART NUMBER	QTY	PART NAME 1 2 3 4 5 6 (PRODUCT LEVEL)	SEE PAGE
	1	1	**203-4722**	1	FRAME AS-SUPPORT	
	2	1	**204-6362**	2	COVER	
Y	3	1	*208-6624*	2	GUARD GP-LINES	510
	4	1	**209-6566**	1	FRAME AS-SUPPORT	
	5	1	**211-2325**	4	SPACER	
	6	1	**8T-4121**	4	WASHER-HARD (11X21X2.5-MM THK)	
M	7	1	**8T-4186**	4	BOLT (M10X1.5X40-MM)	

M-METRIC PART
Y-SEPARATE ILLUSTRATION

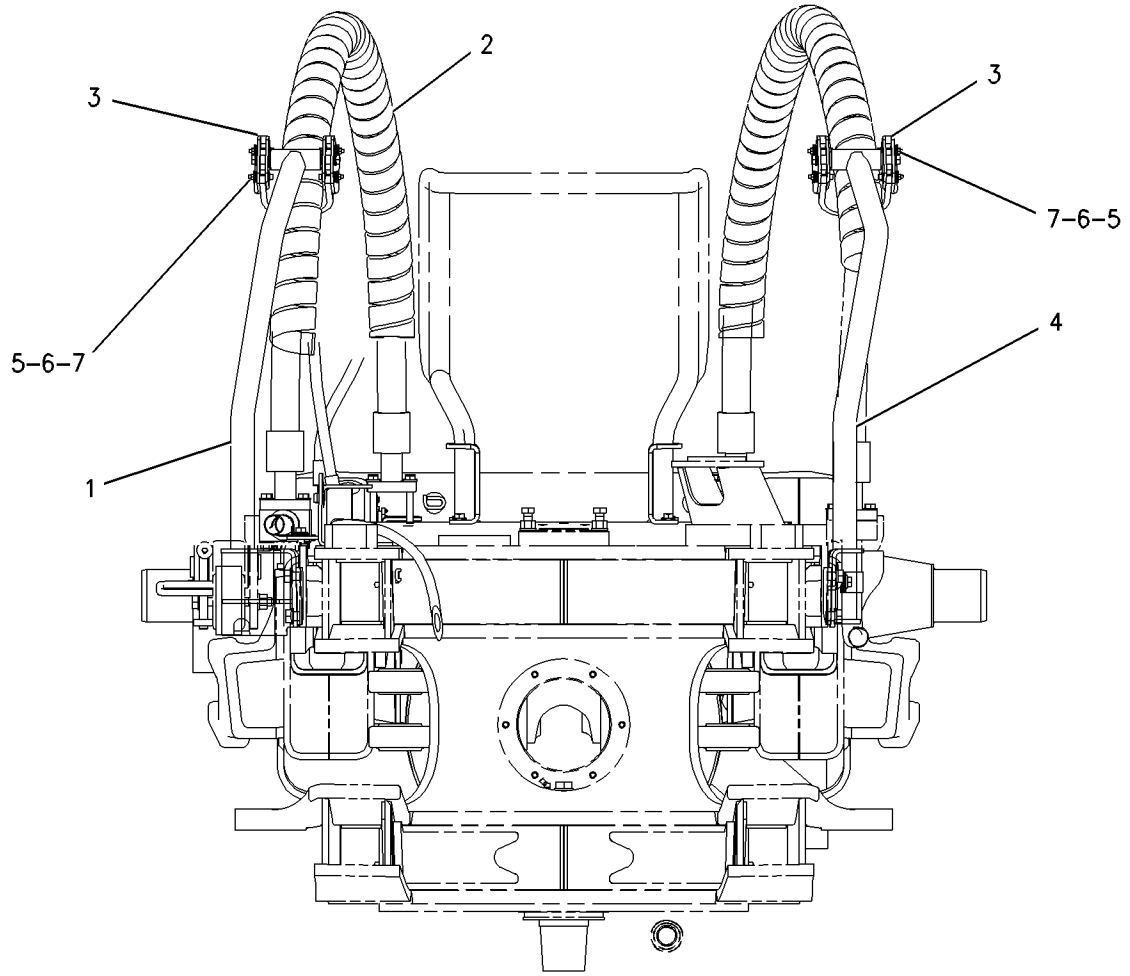

GRAPHIC #1 **<END>** g00836894

203-4720 SUPPORT GP-HITCH LINES

S/N: AXM524-UP

PART OF 152-6922 HYDRAULIC AR-MACHINE

SMCS-5057 **i01843935**

NOTE	REF NO	GRAPHIC REF	PART NUMBER	QTY	PART NAME 1 2 3 4 5 6 (PRODUCT LEVEL)	SEE PAGE
	1	1	**4I-5480**	4	WASHER (11X72X3-MM THK)	
	2	1	**191-5216**	4	PLATE-RETAINER	
	3	1	**204-6362**	2	COVER	
	4	1	**217-7699**	2	STRIP-RUBBER	
	5	1	**218-0054**	2	SPACER (11X25X100-MM THK)	
	6	1	**218-0055**	4	SPACER (10.5X25.4X9.5-MM THK)	
	7	1	**218-7122**	1	FRAME AS-SUPPORT	
	8	1	**218-7124**	1	FRAME AS-SUPPORT	
	9	1	**8T-4121**	4	WASHER-HARD (11X21X2.5-MM THK)	
M	10	1	**8T-4133**	2	NUT (M10X1.5-THD)	
M	11	1	**8T-6408**	2	BOLT (M10X1.50X160-MM)	

M-METRIC PART

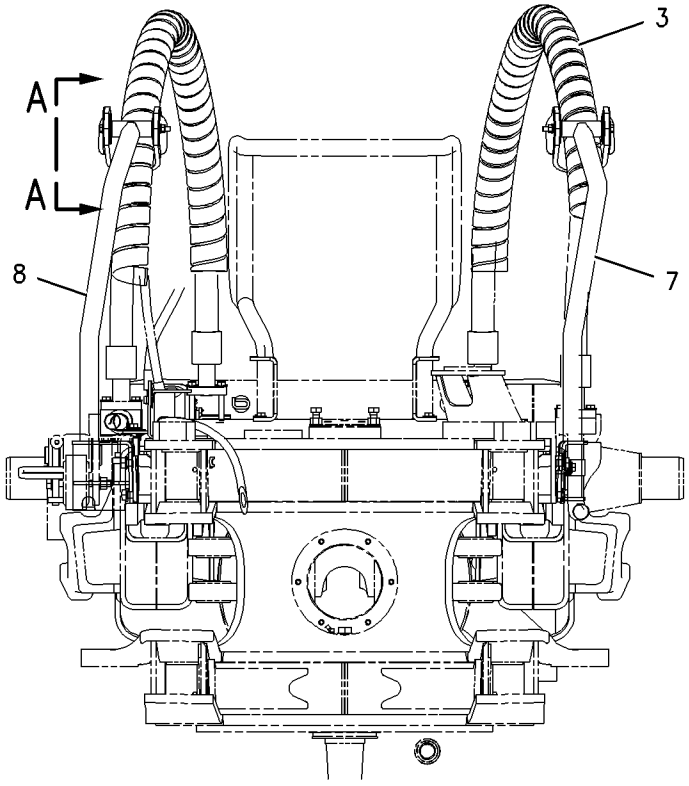

REAR VIEW

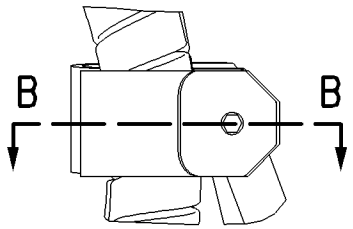

VIEW A-A

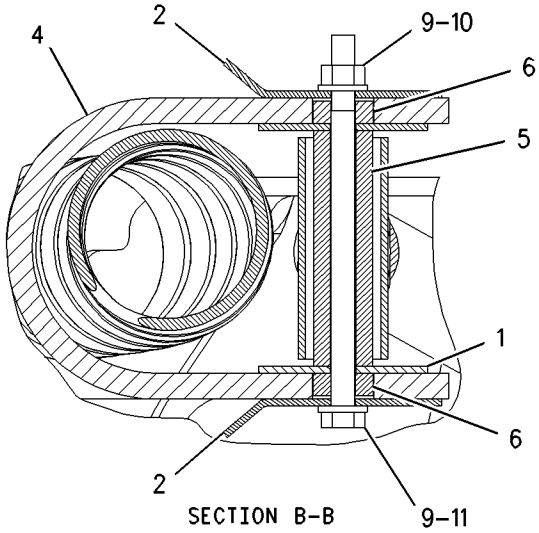

SECTION B-B

GRAPHIC #1 **<END>** g00945349

FRAME AND BODY

216-2484 SUPPRESSION AR-SOUND

S/N: AXM400-UP

AN ATTACHMENT

SMCS-1801, 7076, 7261 **i01728838**

NOTE	REF NO	GRAPHIC REF	PART NUMBER	QTY	PART NAME 1 2 3 4 5 6 (PRODUCT LEVEL)	SEE PAGE
	1	1,2	**2U-2452**	9	LOCKNUT	
	2	1,2	**2U-2453**	9	WASHER (5.6X12.6X1.22-MM THK)	
	3	1,2	**2U-2589**	9	BOLT	
	4	1,2	**2U-3416**	9	CLAMP-TUBE	
	5	4	**7K-1181**	6	STRAP-CABLE	
	6	1	**215-4406**	1	PANEL	
	7	1	**215-4407**	1	PANEL	
	8	2	**215-6562**	1	PANEL	
	9	2	**215-6563**	1	PANEL	
	10	2	**215-6564**	1	PANEL	
	11	2	**215-7475**	1	PANEL	
	12	2	**215-7476**	1	PANEL	
	13	1	**215-7477**	1	PANEL	
	14	1	**215-8103**	1	BRACKET AS	
M		1	**8T-3612**	3	NUT-WELD (M8X1.25-THD)	
	15	2	**216-5114**	2	PLATE-SUPPORT	
	16	2	**216-5115**	1	PLATE-SUPPORT	
	17	3	**216-7280**	2	PANEL	
	18	3	**217-8014**	2	STRAP	
	19	4	**217-9644**	1	INSULATION	
	20	4	**217-9645**	1	INSULATION	
	21	4	**217-9646**	6	INSERT	
	22	3	**218-1507**	2	PLATE-SUPPORT	
	23	4	**0T-0055**	1	BOLT (3/8-16X4.25-IN)	
M	24	3	**131-3540**	8	LOCKNUT (M8X1.25-THD)	
	25	4	**165-3936**	2	BOLT (3/8-16X4.5-IN)	
	26	4	**1B-2790**	2	BOLT (5/16-18X1.375-IN)	
M	27	2	**5C-7261**	6	NUT (M8X1.25-THD)	
	28	3,4	**5P-4116**	10	WASHER-HARD (8.8X20.5X2-MM THK)	
	29	3	**7X-0578**	8	WASHER-HARD (10.2X32X2.5-MM THK)	
	30	1	**7X-0613**	3	WASHER-HARD (8.8X25.5X5-MM THK)	
M	31	3	**7X-2537**	8	BOLT (M8X1.25X35-MM)	
	32	2,4	**7X-7729**	20	WASHER (11X25X3-MM THK)	
	33	4	**8S-9191**	1	BOLT (3/8-16X4-IN)	
M	34	2	**8T-0389**	12	LOCKNUT (M10X1.5-THD)	
	35	2	**8T-4121**	20	WASHER-HARD (11X21X2.5-MM THK)	
M	36	2,4	**8T-4133**	6	NUT (M10X1.5-THD)	
M	37	2	**8T-4136**	12	BOLT (M10X1.5X25-MM)	
M	38	2	**8T-4137**	2	BOLT (M10X1.5X20-MM)	
M	39	3	**8T-4172**	17	BOLT (M10X1.50X80-MM)	
M	40	3	**8T-4182**	3	BOLT (M10X1.5X45-MM)	
M	41	1	**8T-4189**	3	BOLT (M8X1.25X20-MM)	
M	42	2	**8T-4195**	4	BOLT (M10X1.5X30-MM)	
	43	2	**8T-4224**	12	WASHER-HARD (8.8X16X2-MM THK)	
M	44	2	**8T-7547**	6	BOLT (M8X1.25X30-MM)	
BD	45	3	**216-3262**		SEAL (2M)	
BD	46	3	**217-9487**		SEAL (3M)	
BD	47	1,2	**5P-5905**		SEAL (2M)	
BE	48	3	**9X-8699**		SEAL (160CM)	
	49	3	**217-7754**	2	STRIP-RUBBER	

B-USE AS REQUIRED
D-ORDER BY THE METER
E-ORDER BY THE CENTIMETER
M-METRIC PART

REFER TO ALL ILLUSTRATIONS OF
THIS GROUP FOR AUXILIARY VIEWS

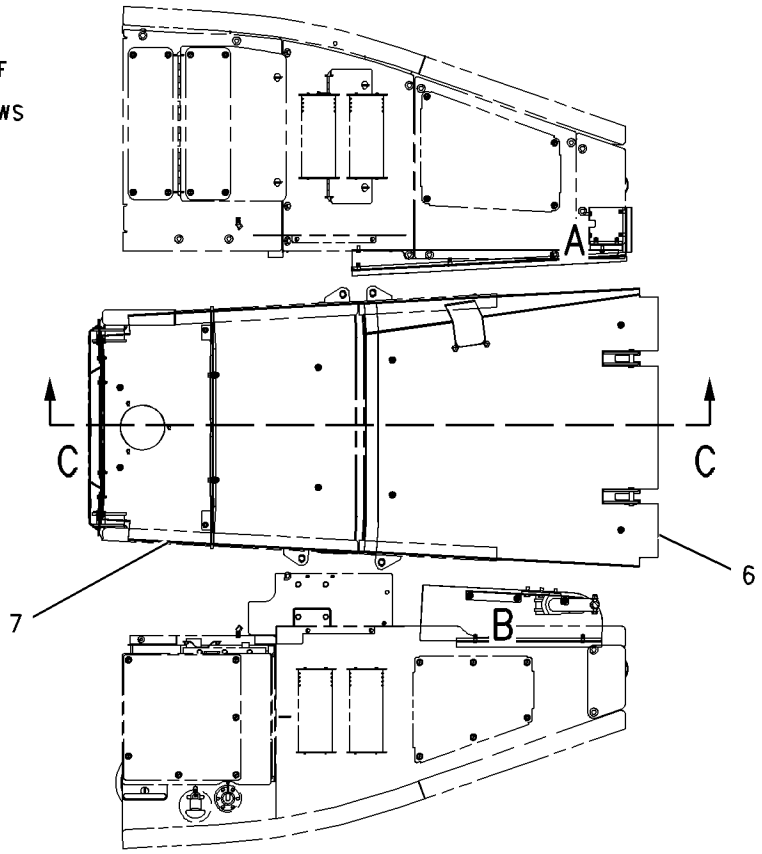

TOP VIEW

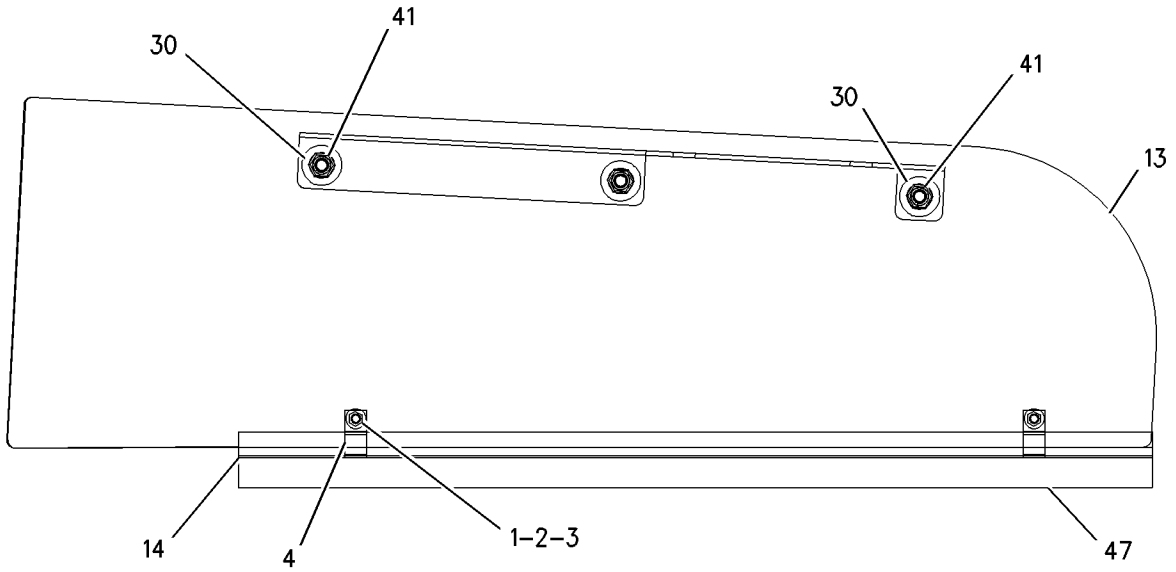

VIEW OF AREA B

GRAPHIC #1 g00882822

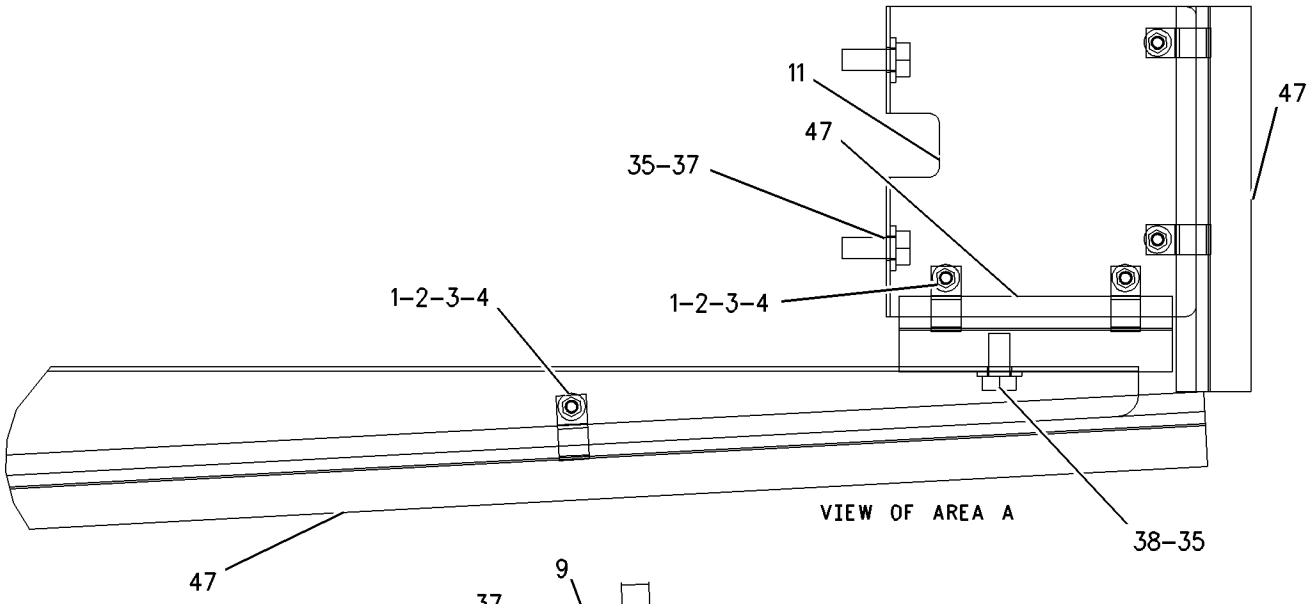

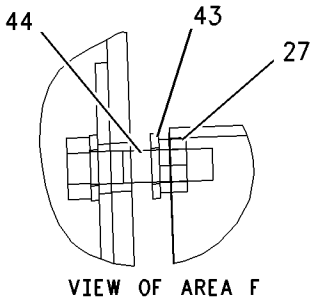

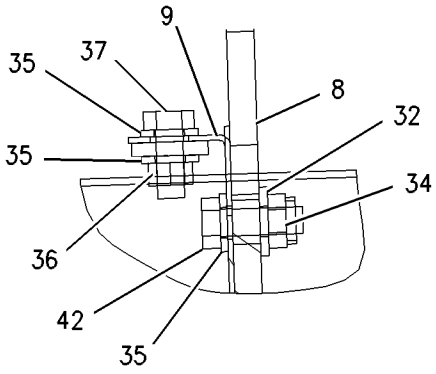

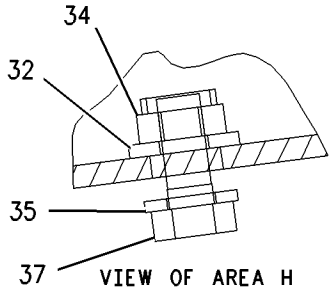

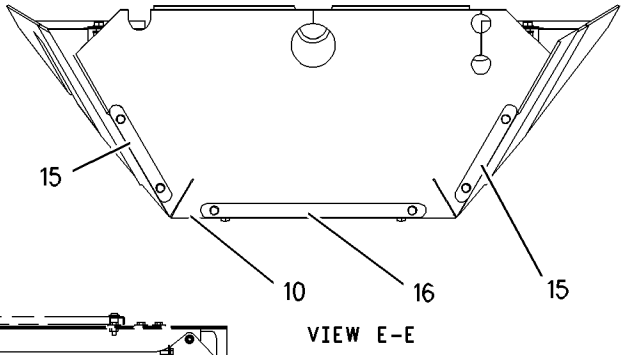

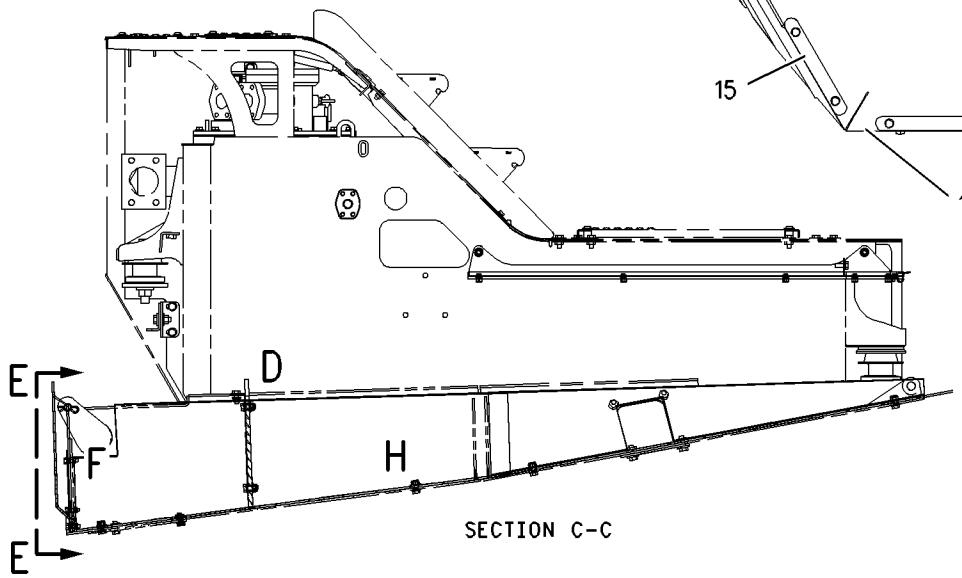

GRAPHIC #2 g00882867

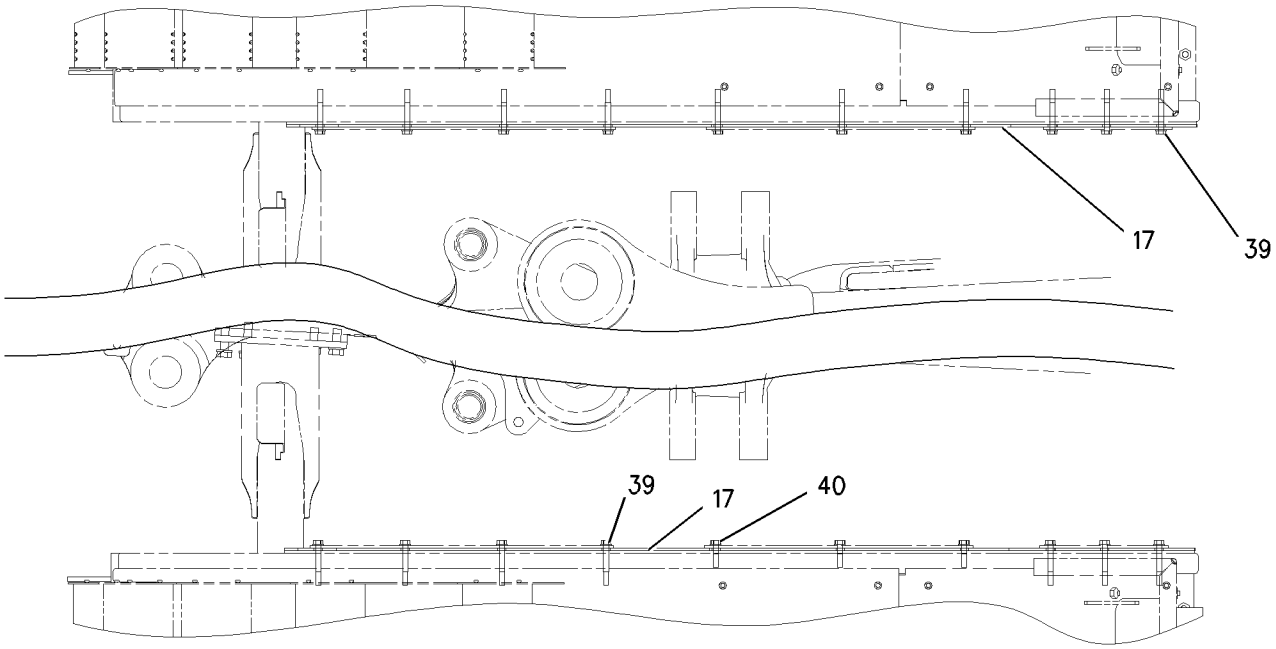

TOP VIEW

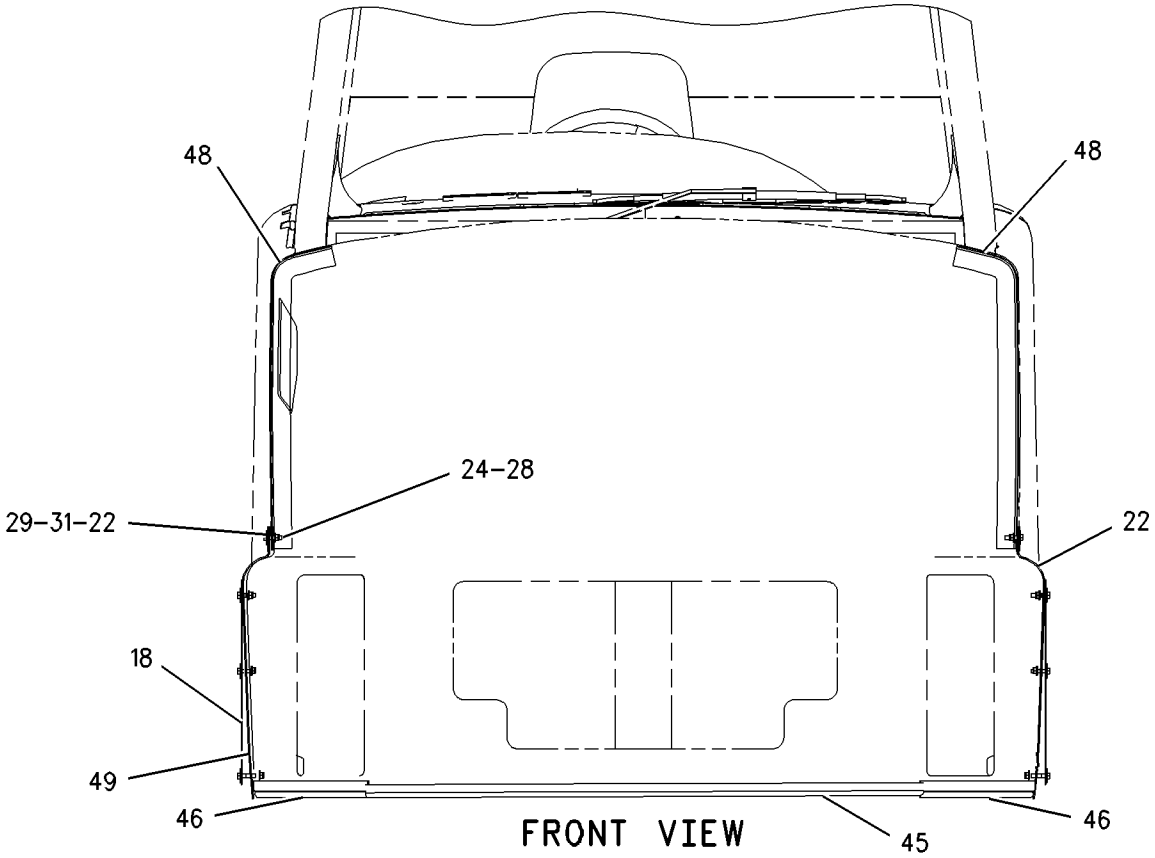

FRONT VIEW

GRAPHIC #3

g00882868

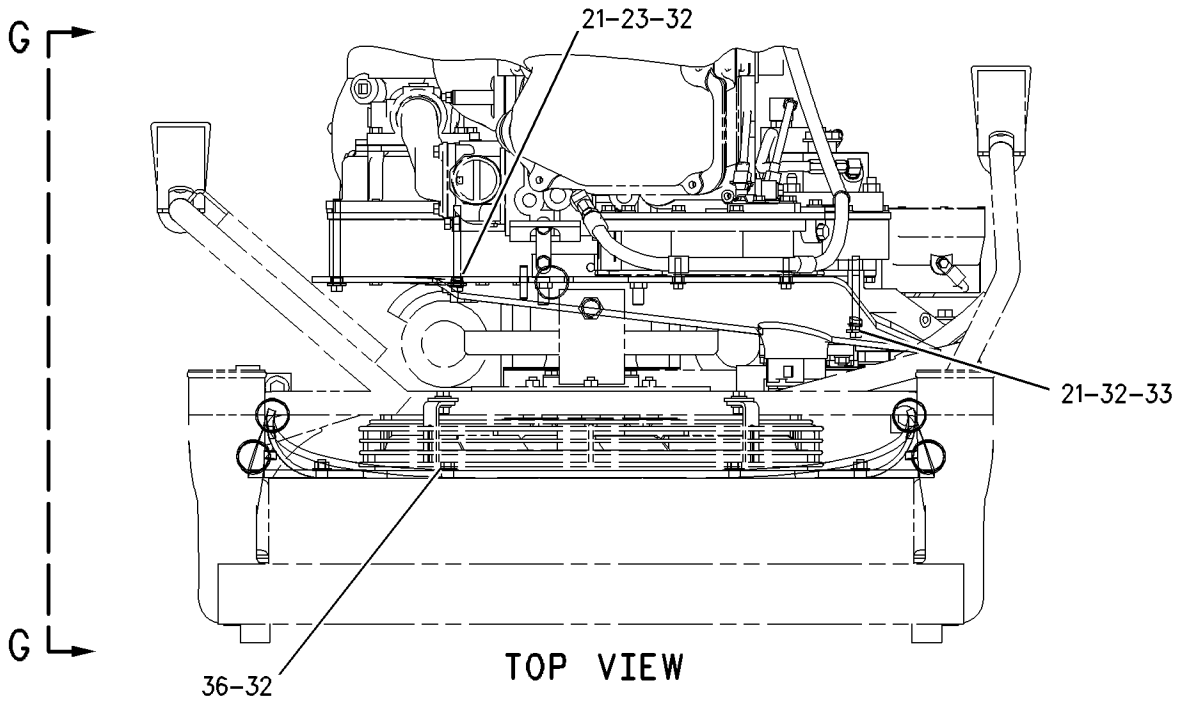

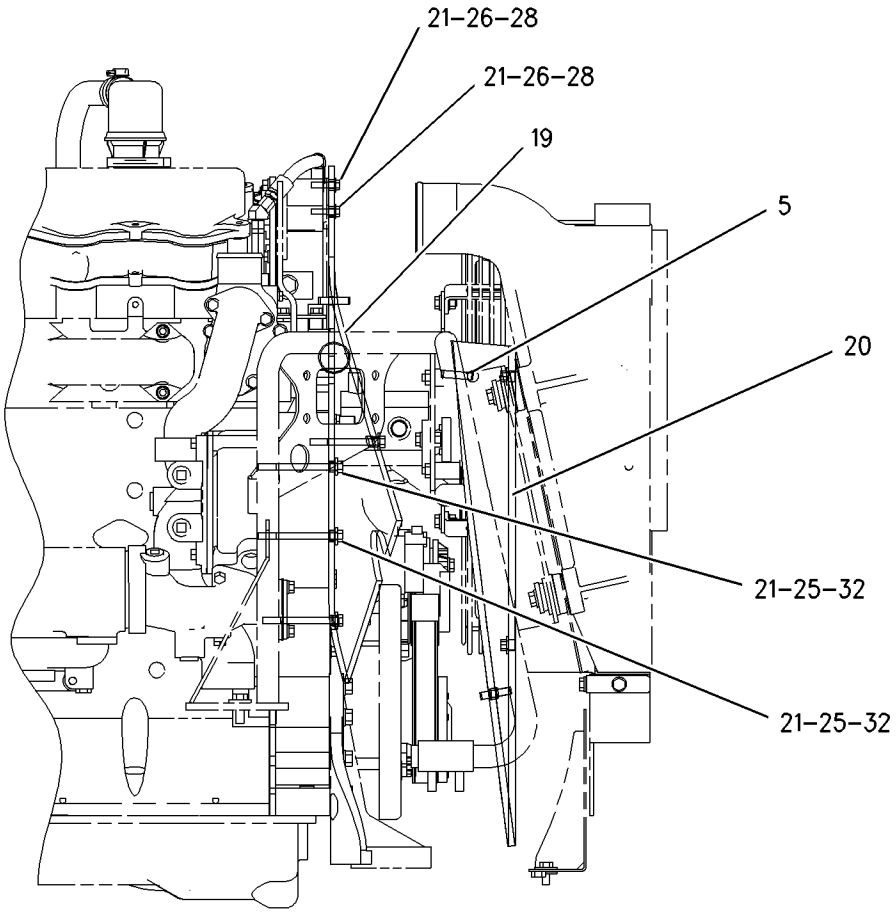

GRAPHIC #4

<END>

g00882870

FRAME AND BODY

152-7111 TAILGATE AR

S/N: AXM1-967
AN ATTACHMENT

SMCS-7271 **i01445675**

NOTE	PART NUMBER	QTY	PART NAME 1 2 3 4 5 6 (PRODUCT LEVEL)	SEE PAGE
Y	*157-1601*	1	CYLINDER & MTG GP-TAILGATE	671
Y	*152-7114*	1	LINES GP-TAILGATE	717
Y	*142-0547*	1	TAILGATE GP	556

Y-SEPARATE ILLUSTRATION

<END>

142-0547 TAILGATE GP

S/N: AXM1-967

PART OF 152-7111 TAILGATE AR

AN ATTACHMENT

SMCS-7271 **i01704785**

NOTE	REF NO	GRAPHIC REF	PART NUMBER	QTY	PART NAME 1 2 3 4 5 6 (PRODUCT LEVEL)	SEE PAGE
	6	1	**6U-2193**	2	PIN-CENTER	
	7	1	**6U-2176**	1	BRACKET AS	
	9	1	**179-3103**	1	PLATE AS-SIDE (LH)	
		1	**7U-7345**	1	BUSHING-FLANGED	
	10	1	**179-3104**	1	PLATE AS-SIDE (RH)	
		1	**7U-7345**	1	BUSHING-FLANGED	
	11	1	**6U-2194**	1	PIN-TOP	
	12	1	**144-6850**	1	LINK AS	
	14	1	**144-6857**	1	TAILGATE AS	
	15	1	**6U-2195**	2	PIN-SPACER	
M	16	1	**7X-2578**	1	BOLT (M24X3X200-MM)	
	17	1	**5U-5605**	2	WASHER (10-MM THK)	
	18	1	**8T-4167**	2	WASHER-HARD (26X44X4-MM THK)	
M	19	1	**6V-7676**	1	NUT (M24X3-THD)	
M	20	1	**7X-2549**	1	BOLT (M12X1.75X100-MM)	
	21	1	**8T-4223**	3	WASHER-HARD (13.5X25.5X3-MM THK)	
M	22	1	**8T-4244**	3	NUT (M12X1.75-THD)	
	23	1	**127-4835**	2	BOLT (1.125-7X190.5-MM)	
	24	1	**7X-0531**	2	WASHER-HARD (31X52.5X6-MM THK)	
	25	1	**7X-0450**	2	NUT-FULL (1-1/8-7-THD)	
	27	1	**146-9574**	2	SHAFT	
	28	1	**6V-5002**	2	BEARING-ALIGNING	
	29	1	**3B-8489**	2	FITTING-GREASE	
	30	1	**5U-7151**	2	CAP	
M	31	1	**8T-5041**	2	BOLT (M12X1.75X120-MM)	
	34	1	**166-0103**	8	SPACER (2.5-MM THK)	

M-METRIC PART

142-0547 **TAILGATE GP** *(contd.)* **i01704785**

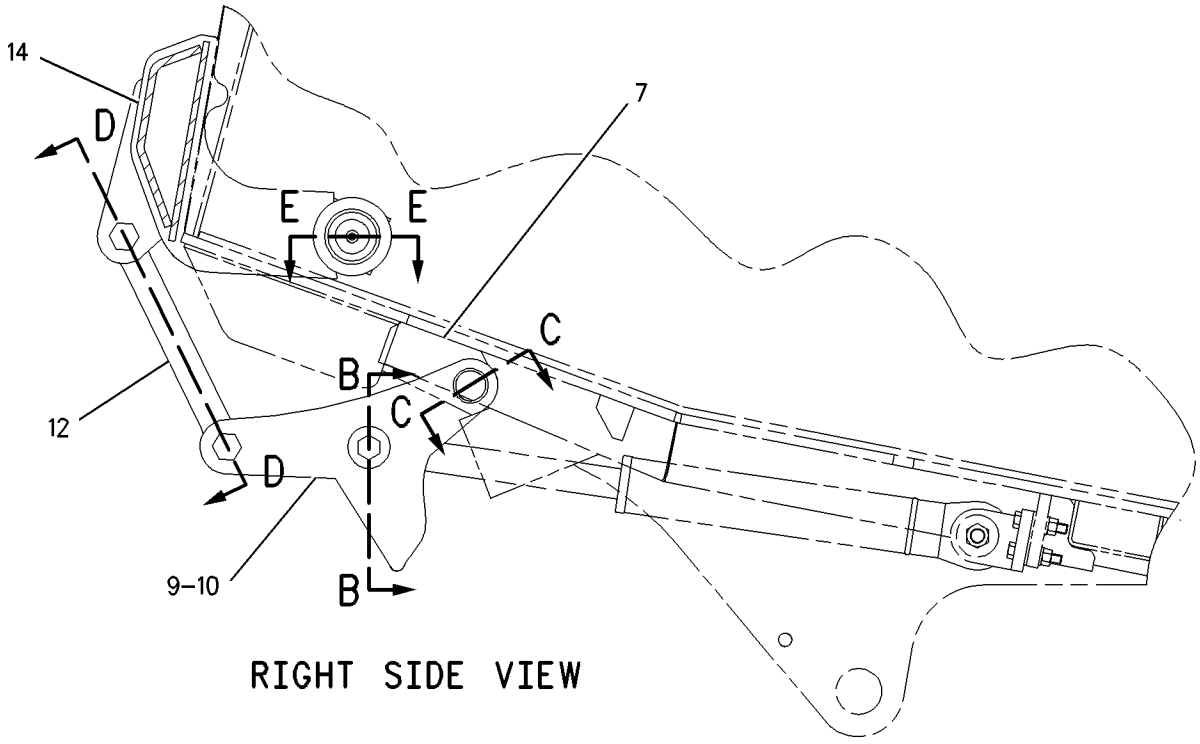

RIGHT SIDE VIEW

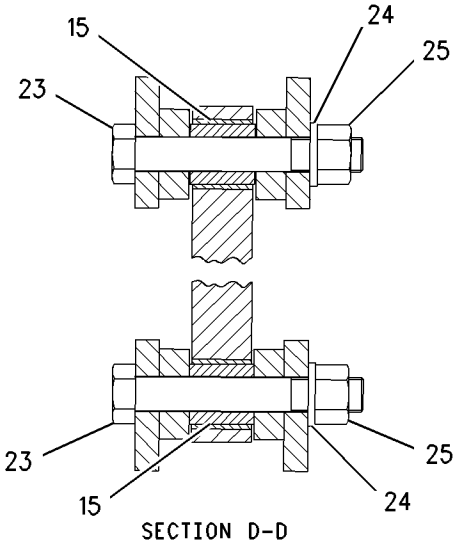

SECTION D-D

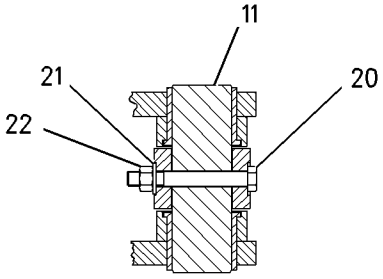

SECTION C-C

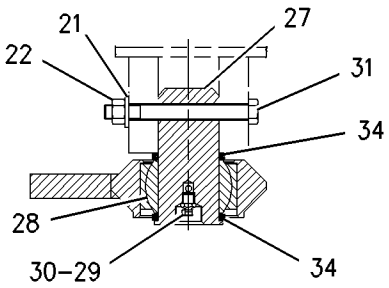

SECTION E-E

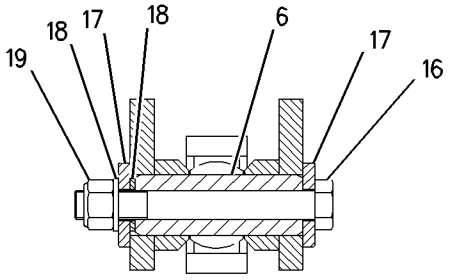

SECTION B-B

GRAPHIC #1 **<END>** g00640019

FRAME AND BODY

173-9001 TAILGATE GP–SCISSOR

S/N: AXM1-UP

AN ATTACHMENT

SMCS-7271 **i01858880**

NOTE	REF NO	GRAPHIC REF	PART NUMBER	QTY	PART NAME 1 2 3 4 5 6 (PRODUCT LEVEL)	SEE PAGE
	1	1	**173-9000**	1	PLATE AS-TAILGATE	
M		1	**8T-3597**	2	NUT-WELD (M12X1.75-THD)	
	2	1	**173-5232**	1	ARM AS (LH)	
	3	1	**173-5231**	1	ARM AS (RH)	
	4	1	**154-4812**	2	ABSORBER AS-SHOCK	
	5	1	**192-9067**	4	BUSHING	
	6	1	**153-9307**	2	PLATE AS-MOUNTING	
	7	1	**192-9068**	2	PIN	
	8	1	**3U-2837**	2	PAD-THRUST	
	9	1	**4U-3165**	2	DISC	
	10	1	**3U-2838**	2	CHAIN	
	11	1	**154-6370**	2	ANCHOR AS	
B	12	1	**154-6369**	4	SHIM (3-MM THK)	
M	13	1	**7X-2554**	18	BOLT (M16X2X70-MM)	
	14	1	**8T-4122**	16	WASHER-HARD (17X32X3.5-MM THK)	
M	15	1	**8T-4139**	4	BOLT (M12X1.75X30-MM)	
	16	1	**8T-4223**	4	WASHER-HARD (13.5X25.5X3-MM THK)	
M	17	1	**8T-4193**	8	BOLT (M16X2X50-MM)	
M	18	1	**7X-2556**	4	BOLT (M16X2X100-MM)	
	19	1	**167-9033**	4	SHIM (6-MM)	
	20	1	**8T-4167**	4	WASHER-HARD (26X44X4-MM THK)	
M	21	1	**9X-8913**	2	BOLT (M24X3X300-MM)	
M	22	1	**6V-7676**	2	NUT (M24X3-THD)	
M	23	1	**8T-4132**	4	NUT (M16X2-THD)	
	24	1	**3E-9411**	18	WASHER-HARD (17.5X38X6-MM THK)	

B-USE AS REQUIRED
M-METRIC PART

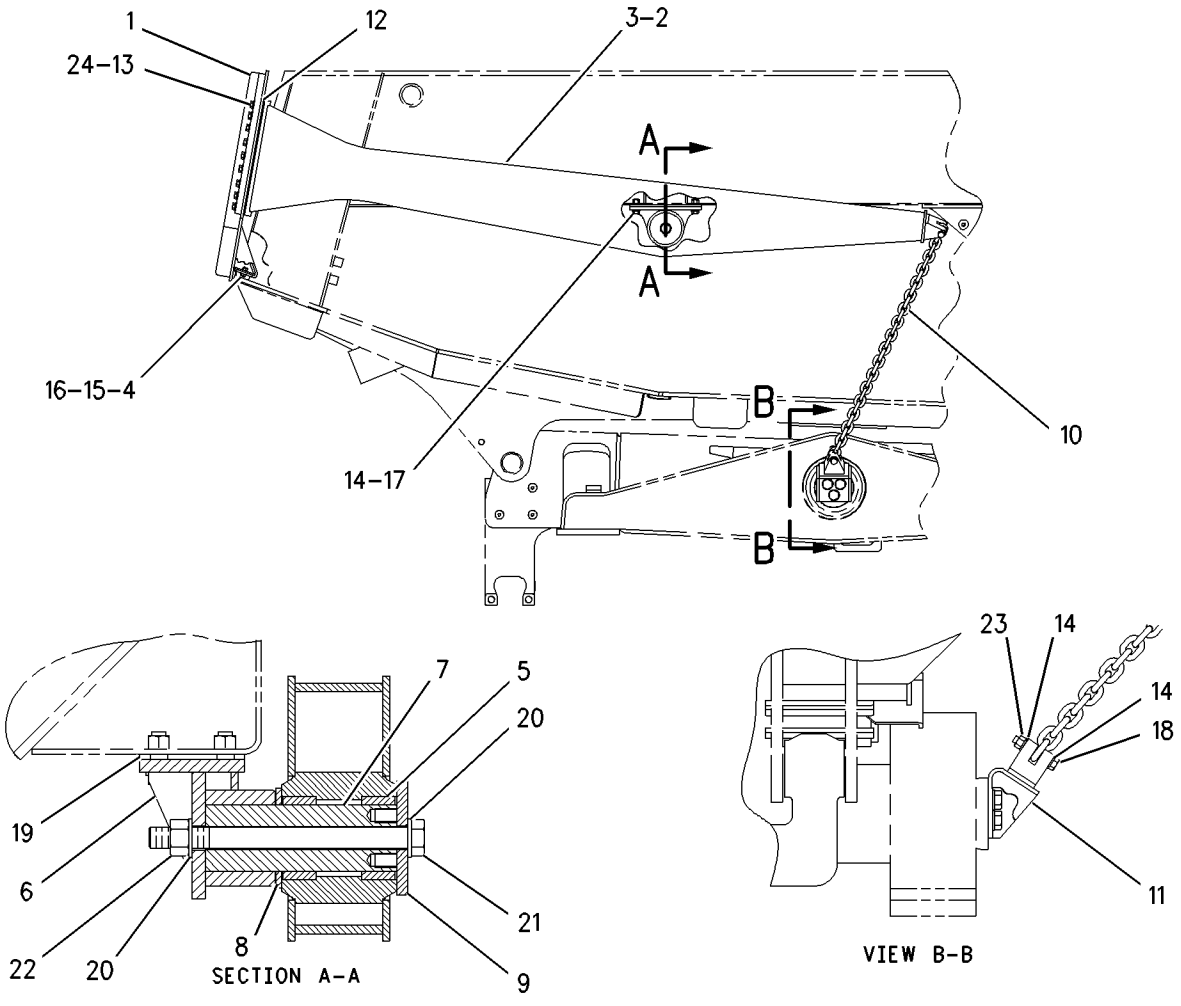

GRAPHIC #1 **<END>** g00640998

FRAME AND BODY

227-4057 TAILGATE GP–SCISSORS

S/N: AXM1-UP

AN ATTACHMENT

SMCS-7271 **i02194351**

NOTE	REF NO	GRAPHIC REF	PART NUMBER	QTY	PART NAME 1 2 3 4 5 6 (PRODUCT LEVEL)	SEE PAGE
	1	1	**3U-2837**	2	PAD-THRUST	
	2	1	**4U-3165**	2	DISC	
	4	1	**233-1363**	2	PIVOT	
	5	1	**154-4812**	2	ABSORBER AS-SHOCK	
B	6	1	**154-6369**	4	SHIM (3-MM THK)	
B	7	1	**167-9033**	4	SHIM (6-MM)	
	8	1	**173-9000**	1	PLATE AS-TAILGATE	
	9	1	**192-9067**	4	BUSHING	
	10	1	**192-9068**	2	PIN	
	11	1	**219-6336**	2	PLATE	
	12	1	**225-8754**	2	LINK AS (LONG)	
	13	1	**227-4058**	1	ARM AS (SCISSORS)	
	14	1	**227-4059**	1	ARM AS (SCISSORS)	
	15	1	**227-4062**	2	LINK AS (SHORT)	
	16	1	**232-3032**	2	CHAIN	
	18	1	**3E-9411**	18	WASHER-HARD (17.5X38X6-MM THK)	
M	19	1	**7X-2489**	4	BOLT (M24X3X100-MM)	
M	20	1	**6V-7676**	6	NUT (M24X3-THD)	
	21	1	**6V-8237**	6	WASHER (26X44X4-MM THK)	
M	22	1	**7X-2554**	22	BOLT (M16X2X70-MM)	
M	23	1	**7X-2557**	8	BOLT (M16X2X140-MM)	
M	24	1	**8T-0668**	6	BOLT (M24X3X110-MM)	
	25	1	**9X-8257**	16	WASHER (17.5X30X3.5-MM THK)	
M	26	1	**8T-4139**	4	BOLT (M12X1.75X30-MM)	
	27	1	**8T-4167**	4	WASHER-HARD (26X44X4-MM THK)	
	28	1	**8T-4223**	4	WASHER-HARD (13.5X25.5X3-MM THK)	
M	29	1	**8T-4778**	4	LOCKNUT (M16X2-THD)	
M	30	1	**9X-8913**	2	BOLT (M24X3X300-MM)	

B-USE AS REQUIRED
M-METRIC PART

227-4057 **TAILGATE GP** *(contd.)* **i02194351**

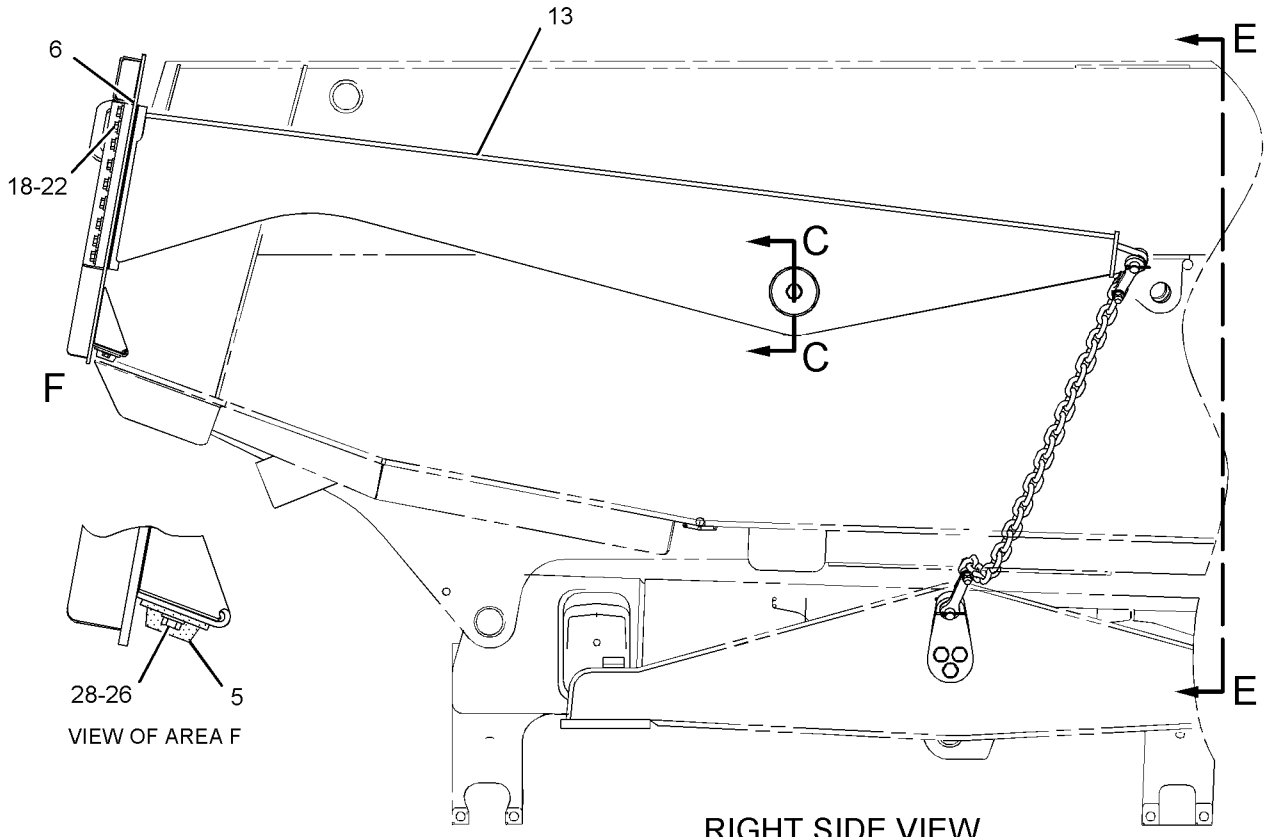

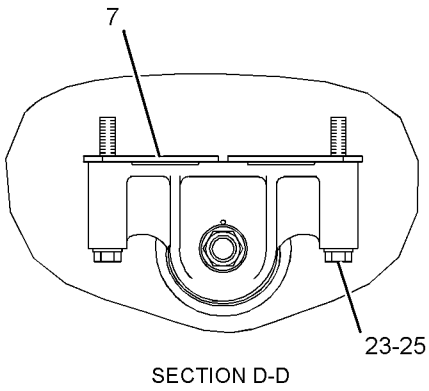

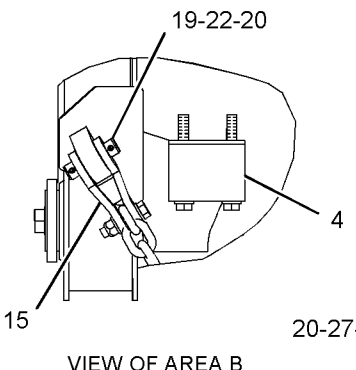

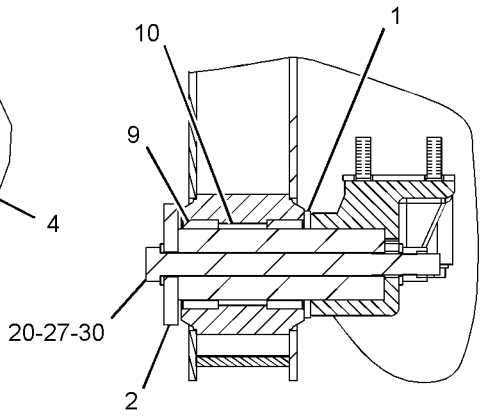

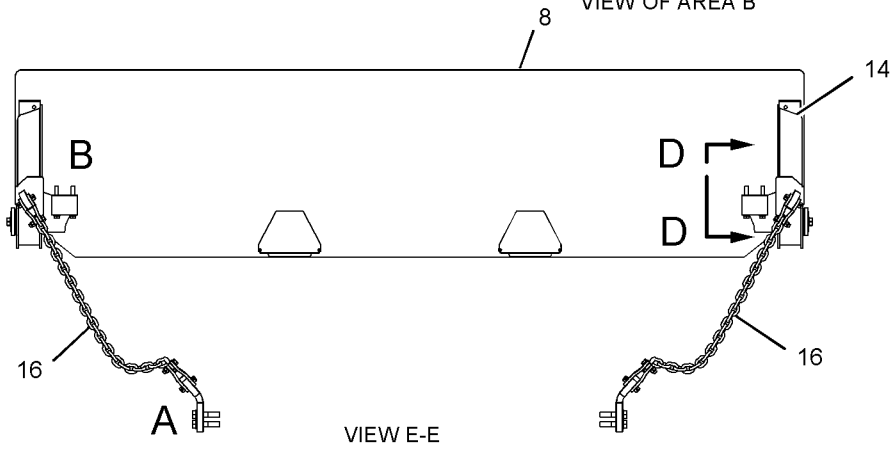

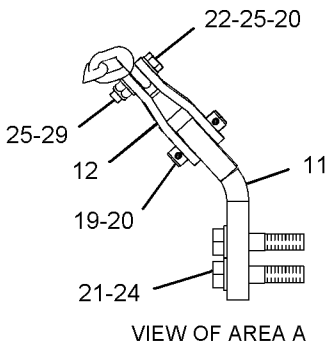

GRAPHIC #1 **<END>** g01108842

FRAME AND BODY

152-7024 TILT GP-HOOD

S/N: AXM1-UP

PART OF 152-6923 HOOD & GUARD AR

SMCS-1427, 7251 **i01626361**

NOTE	REF NO	GRAPHIC REF	PART NUMBER	QTY	PART NAME 1 2 3 4 5 6 (PRODUCT LEVEL)	SEE PAGE
	1	1	**204-7016**	1	ACTUATOR GP-HOOD TILT	
		1	**8N-1540**	1	PIN-CONNECTOR	
		1	**8N-1541**	1	SOCKET-CONNECTION	
		1	**129-7163**	1	PLUG AS-CONNECTOR (1-PIN)	
		1	**129-7164**	1	RECEPTACLE AS (1-PIN)	
	2	1	**206-7688**	1	BRACKET AS	
M	3	1	**6V-7687**	2	LOCKNUT (M12X1.75-THD)	
M	4	1	**8T-4139**	3	BOLT (M12X1.75X30-MM)	
	5	1	**8T-4223**	6	WASHER-HARD (13.5X25.5X3-MM THK)	
M	6	1	**8T-4648**	2	BOLT (M12X1.75X70-MM)	

M-METRIC PART

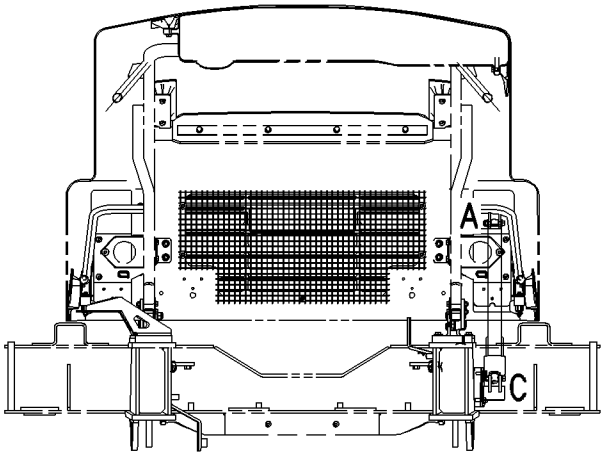

FRONT VIEW

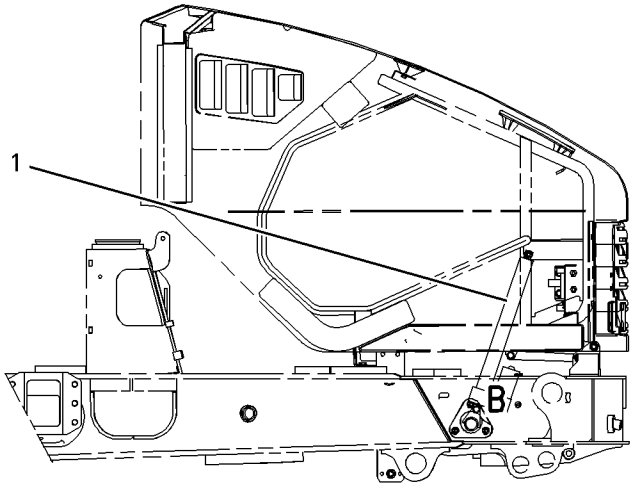

RIGHT SIDE VIEW

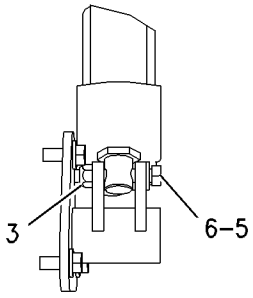

VIEW OF AREA C

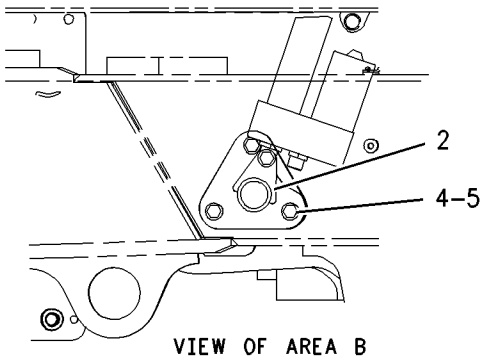

VIEW OF AREA B

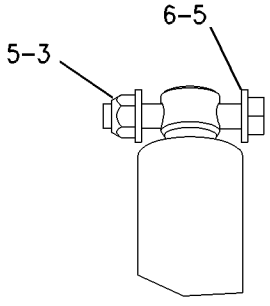

VIEW OF AREA A

GRAPHIC #1 **<END>** g00833790

FRAME AND BODY

191-5963 TILT GP-HOOD–RH

S/N: AXM1-UP

PART OF 152-7025 HOOD GP-ENGINE

SMCS-1427, 7251 **i01702276**

NOTE	REF NO	GRAPHIC REF	PART NUMBER	QTY	PART NAME 1 2 3 4 5 6 (PRODUCT LEVEL)	SEE PAGE
	1	1	**188-0432**	4	BEARING	
	2	1	**188-0433**	1	PLATE-SIDE	
	3	1	**192-1180**	1	PLATE AS	
	4	1	**192-1181**	8	WASHER-PLASTIC	
	5	1	**207-4296**	1	LINK-FRONT	
	6	1	**207-4297**	1	LINK-REAR	
	7	1	**207-4715**	1	CONNECTOR AS	
	8	1	**9X-8257**	4	WASHER (17.5X30X3.5MM THK)	
M	9	1	**176-5311**	4	LOCKNUT (M16X2 THD)	
	10	1	**5P-1076**	4	WASHER-HARD (13.5X30X4MM THK)	
M	11	1	**8T-4956**	4	BOLT (M12X1.75X35MM)	

M-METRIC PART

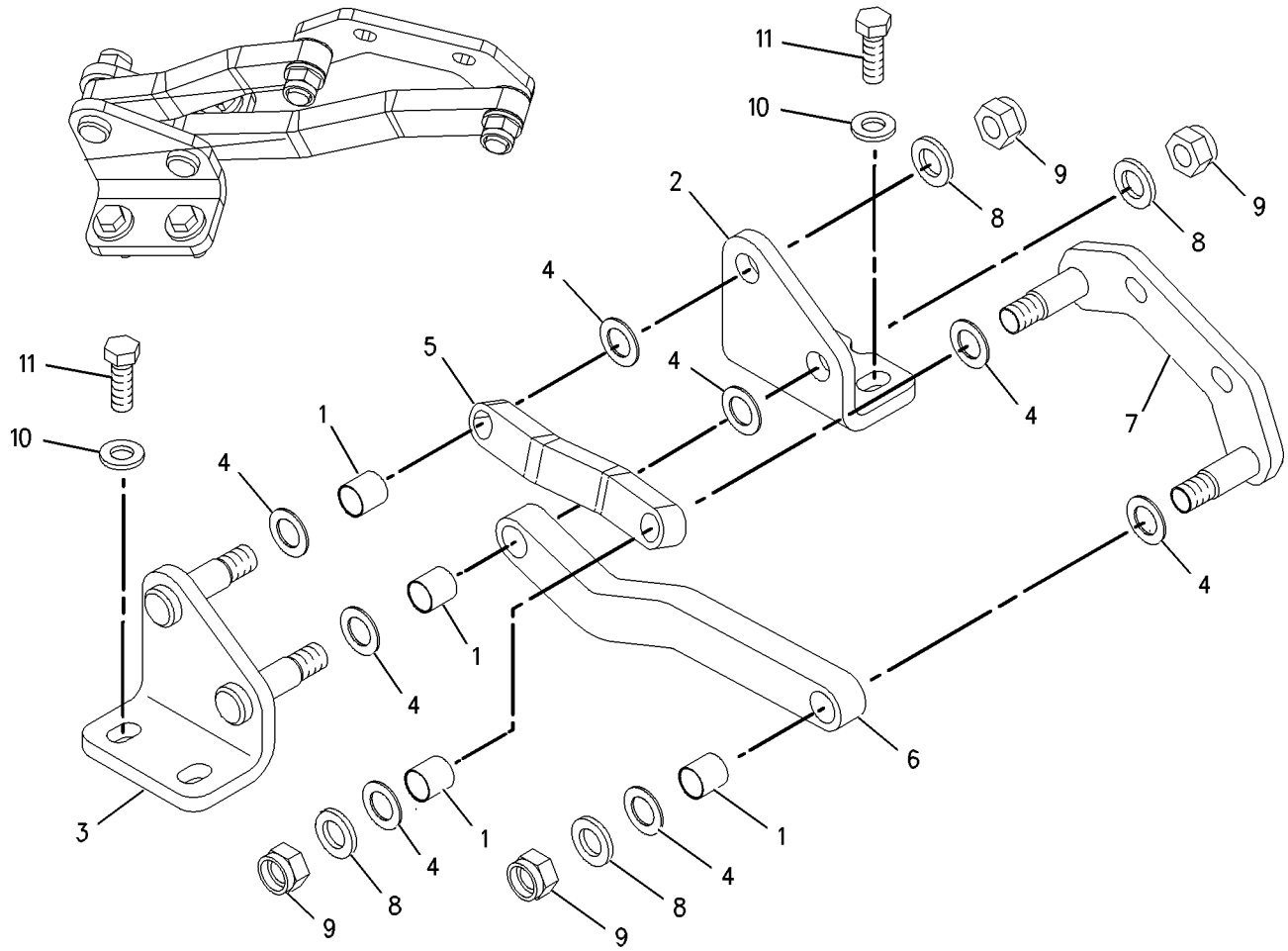

GRAPHIC #1 **<END>** g00876745

202-6378 TILT GP-HOOD–LH

S/N: AXM1-UP

PART OF 152-7025 HOOD GP-ENGINE

SMCS-1427, 7251 **i01697991**

NOTE	REF NO	GRAPHIC REF	PART NUMBER	QTY	PART NAME 1 2 3 4 5 6 (PRODUCT LEVEL)	SEE PAGE
	1	1	**188-0432**	4	BEARING	
	2	1	**188-0433**	1	PLATE-SIDE	
	3	1	**192-1180**	1	PLATE AS	
	4	1	**192-1181**	8	WASHER-PLASTIC	
	5	1	**207-4296**	1	LINK-FRONT	
	6	1	**207-4715**	1	CONNECTOR AS	
	7	1	**217-6348**	1	LINK AS	
		1	**7X-7729**	2	WASHER (11X25X3MM THK)	
M		1	**8T-4186**	2	BOLT (M10X1.5X40MM)	
		1	**217-6350**	1	LINK	
		1	**217-6351**	1	LINK	
M	8	1	**176-5311**	4	LOCKNUT (M16X2 THD)	
	9	1	**5P-1076**	4	WASHER-HARD (13.5X30X4MM THK)	
M	10	1	**8T-4956**	4	BOLT (M12X1.75X35MM)	
	11	1	**9X-8257**	4	WASHER (17.5X30X3.5MM THK)	

M-METRIC PART

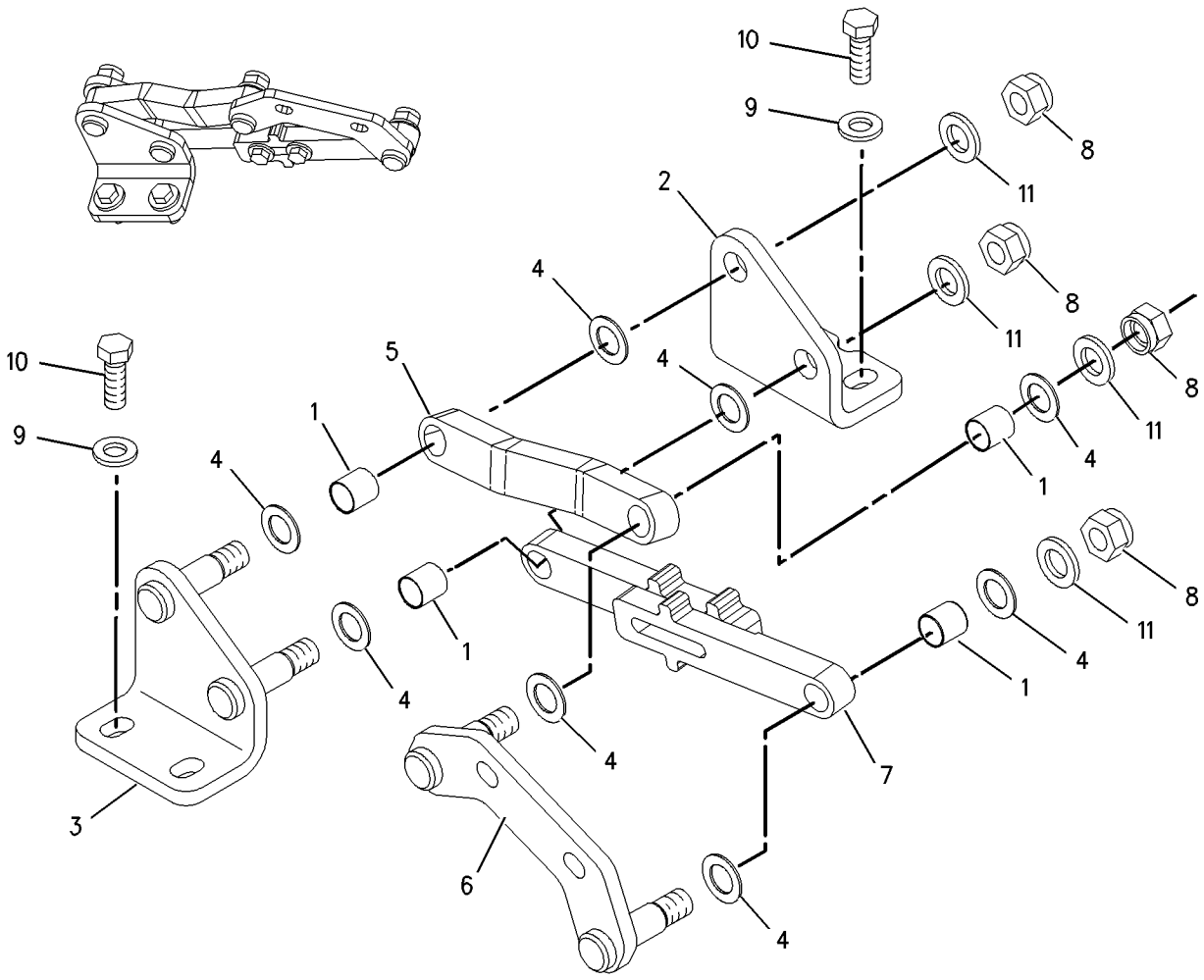

GRAPHIC #1 **<END>** g00874173

FRAME AND BODY

152-7116 WALKWAY GP

S/N: AXM1-UP

PART OF 152-6922 HYDRAULIC AR-MACHINE

SMCS-7255 **i01858882**

NOTE	REF NO	GRAPHIC REF	PART NUMBER	QTY	PART NAME 1 2 3 4 5 6 (PRODUCT LEVEL)	SEE PAGE
M	1	1	**6R-9245**	6	SCREW-BUTTON HEAD	
	2	1	**188-4343**	1	PLATE-TREAD (LH)	
	3	1	**188-4344**	1	PLATE-TREAD (LH)	
	4	1	**188-4345**	1	PLATE-TREAD (RH)	
	5	1	**188-4346**	1	PLATE-TREAD (RH)	
	6	1	**200-2160**	2	PLATE-SPACER	
M	7	1	**8C-8585**	18	SCREW-BUTTON HEAD (M10X1.5X20-MM)	
	8	1	**7X-7729**	24	WASHER (11X25X3-MM THK)	

M-METRIC PART

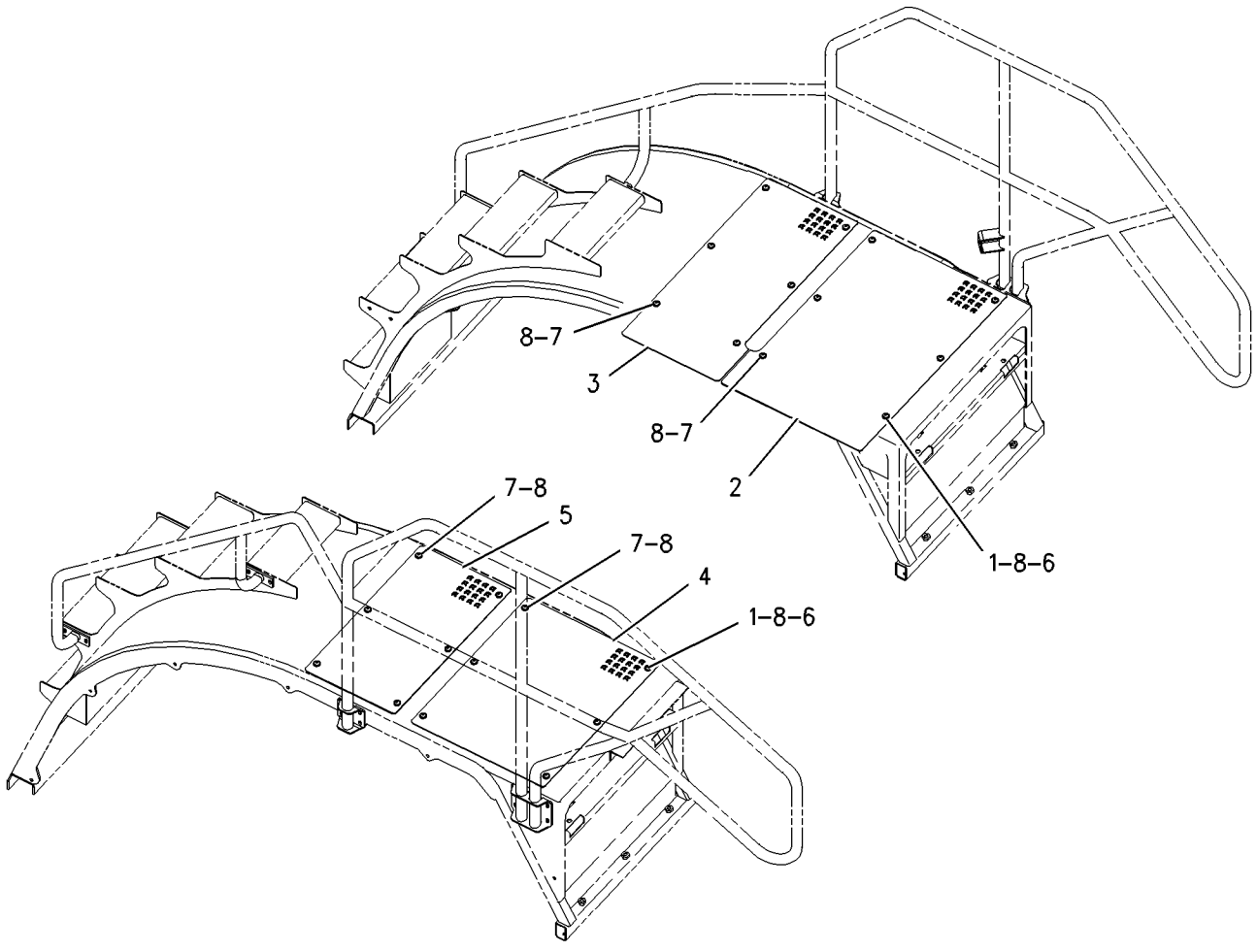

GRAPHIC #1 **<END>** g00763506

163-5632 ACCUMULATOR GP-BRAKE–CHARGED

S/N: AXM1-UP

PART OF 152-7029 CONTROL GP-PARKING BRAKE

FIELD REPLACEMENT ORDER 172-2412–PAGE 567

SMCS-4263 **i01673153**

NOTE	REF NO	GRAPHIC REF	PART NUMBER	QTY	PART NAME 1 2 3 4 5 6 (PRODUCT LEVEL)	SEE PAGE
	1	1	**117-8687**	1	SCREW	
	2	1	**117-8688**	1	SEAL	
	3	1	**117-8689**	1	CAP	
	4	1	**117-8690**	1	FITTING	
	5	1	**117-8692**	1	CAP	

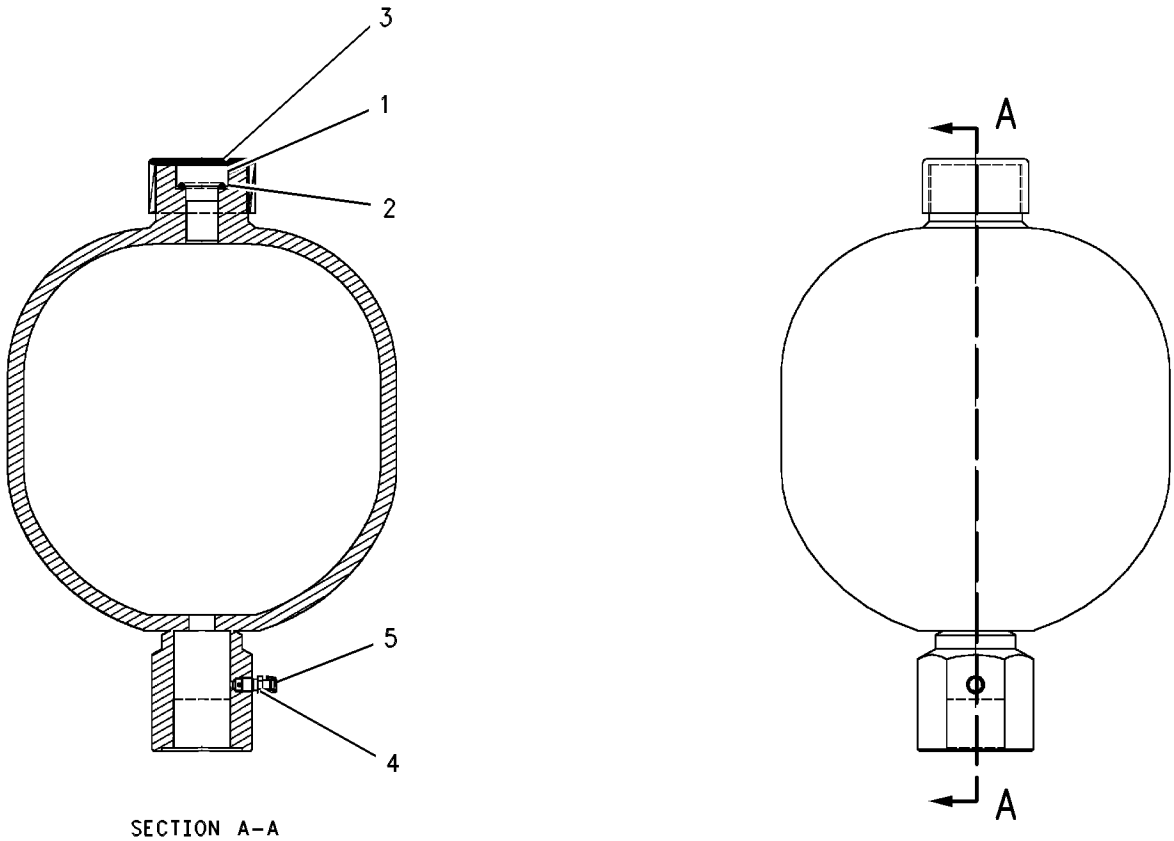

GRAPHIC #1 **<END>** g00586568

172-2412 ACCUMULATOR GP-HYDRAULIC—UNCHARGED

S/N: AXM1-UP

FIELD REPLACEMENT FOR 163-5632—PAGE 566

SMCS-4263 **i02053028**

NOTE	REF NO	GRAPHIC REF	PART NUMBER	QTY	PART NAME 1 2 3 4 5 6 (PRODUCT LEVEL)	SEE PAGE
					(NO SERVICED PARTS)	

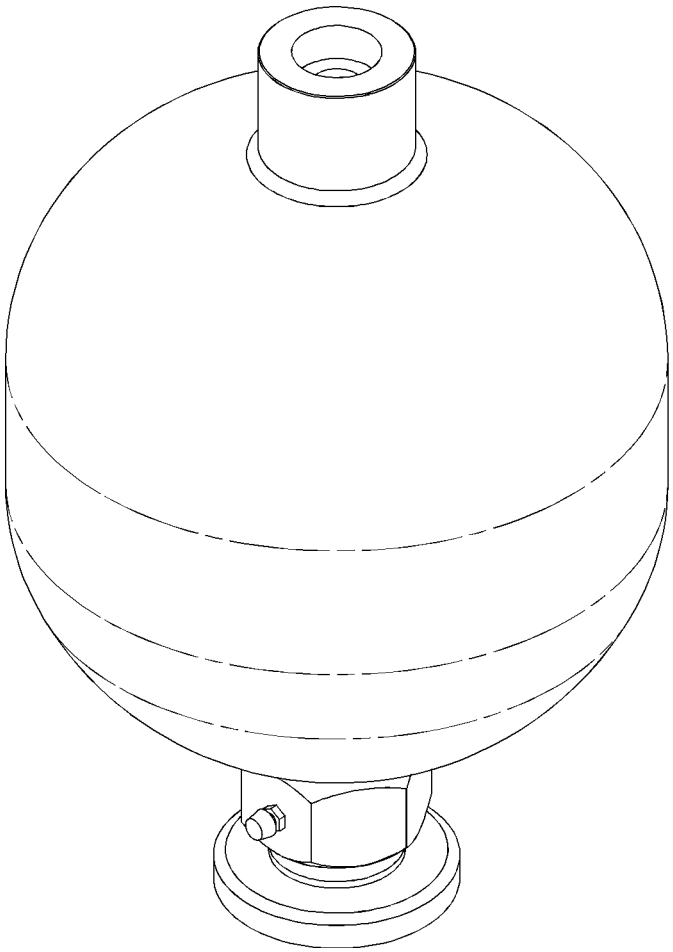

GRAPHIC #1

<END>

g01053551

174-3199 ACCUMULATOR GP-BRAKE–UNCHARGED

S/N: AXM1-855

SMCS-4263 **i02061669**

NOTE	REF NO	GRAPHIC REF	PART NUMBER	QTY	PART NAME 1 2 3 4 5 6 (PRODUCT LEVEL)	SEE PAGE
	1	1	**117-8687**	1	SCREW	
	2	1	**117-8688**	1	SEAL	
	3	1	**117-8689**	1	CAP	

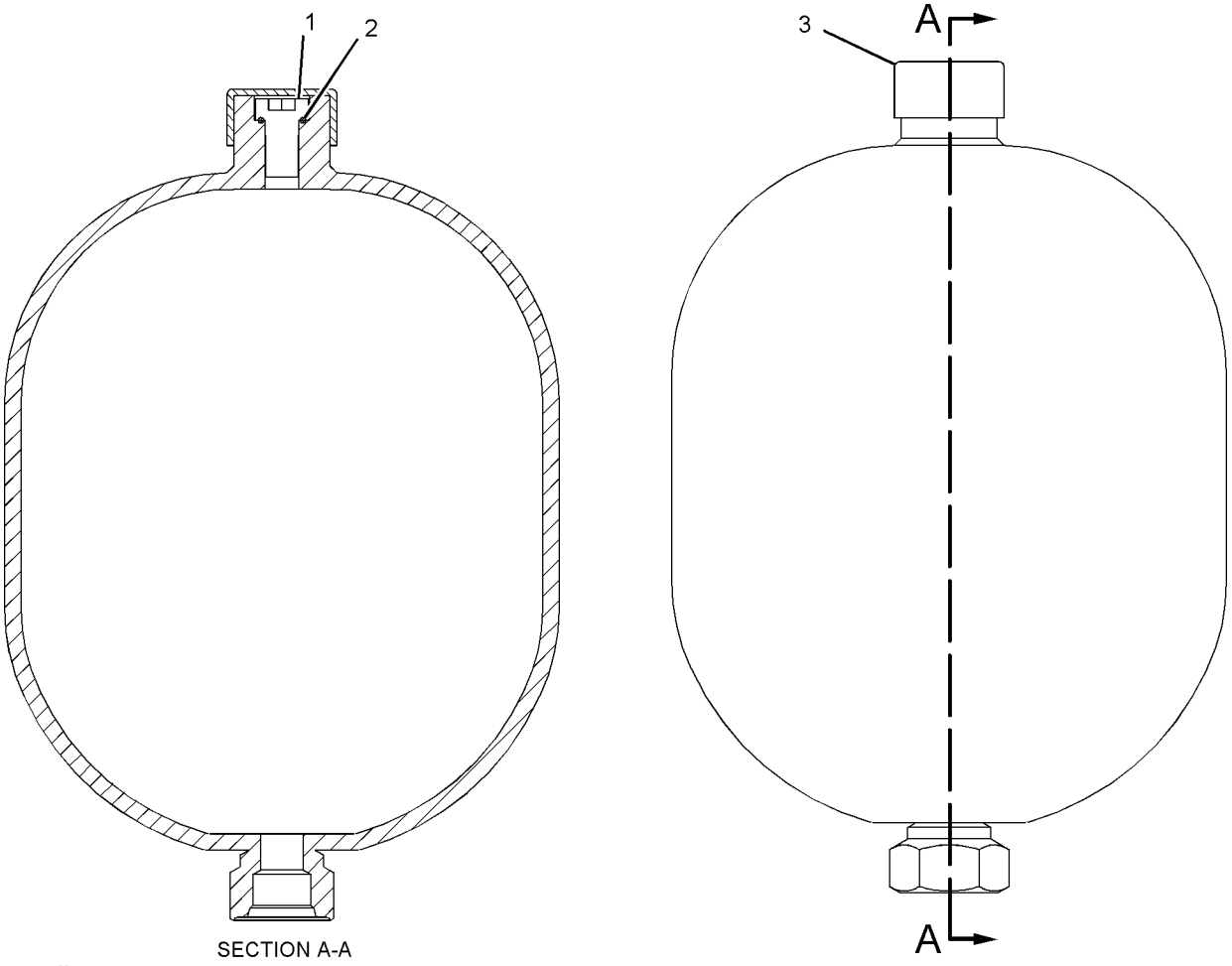

SECTION A-A

GRAPHIC #1 **<END>** g01056734

192-1462 ACCUMULATOR GP-BRAKE—CHARGED

S/N: AXM1-855

PART OF 194-4072 ACCUMULATOR GP-BRAKE

FIELD REPLACEMENT ORDER 174-3199—PAGE 568

SMCS-4263 **i02061664**

NOTE	REF NO	GRAPHIC REF	PART NUMBER	QTY	PART NAME 1 2 3 4 5 6 (PRODUCT LEVEL)	SEE PAGE
	1	1	**117-8687**	1	SCREW	
	2	1	**117-8688**	1	SEAL	
	3	1	**117-8689**	1	CAP	

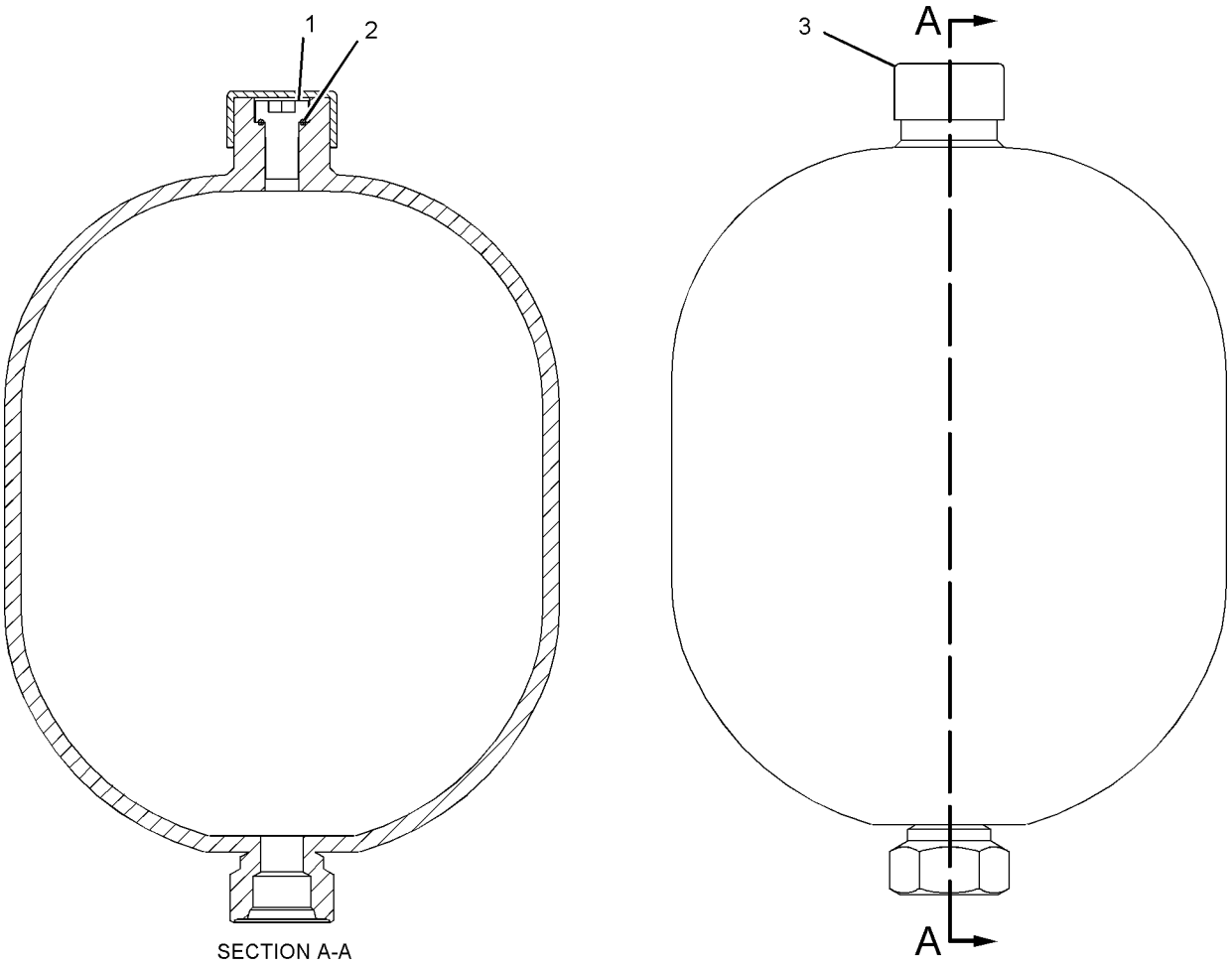

SECTION A-A

GRAPHIC #1 **<END>** g01056719

194-4072 ACCUMULATOR GP-BRAKE

S/N: AXM1-855

PART OF 200-8472 CONTROL GP-SERVICE BRAKE

SMCS-4263 **i02061672**

NOTE	REF NO	GRAPHIC REF	PART NUMBER	QTY	PART NAME 1 2 3 4 5 6 (PRODUCT LEVEL)	SEE PAGE
	1	1	**163-9417**	2	CLAMP AS	
	2	1	**163-9423**	1	PLATE AS	
M		1	**8T-3490**	6	NUT-WELD (M10X1.5-THD)	
Y	3	1	*192-1462*	2	ACCUMULATOR GP-BRAKE	569
	4	1	**8T-4121**	4	WASHER-HARD (11X21X2.5-MM THK)	
M	5	1	**8T-4137**	4	BOLT (M10X1.5X20-MM)	

M-METRIC PART
Y-SEPARATE ILLUSTRATION

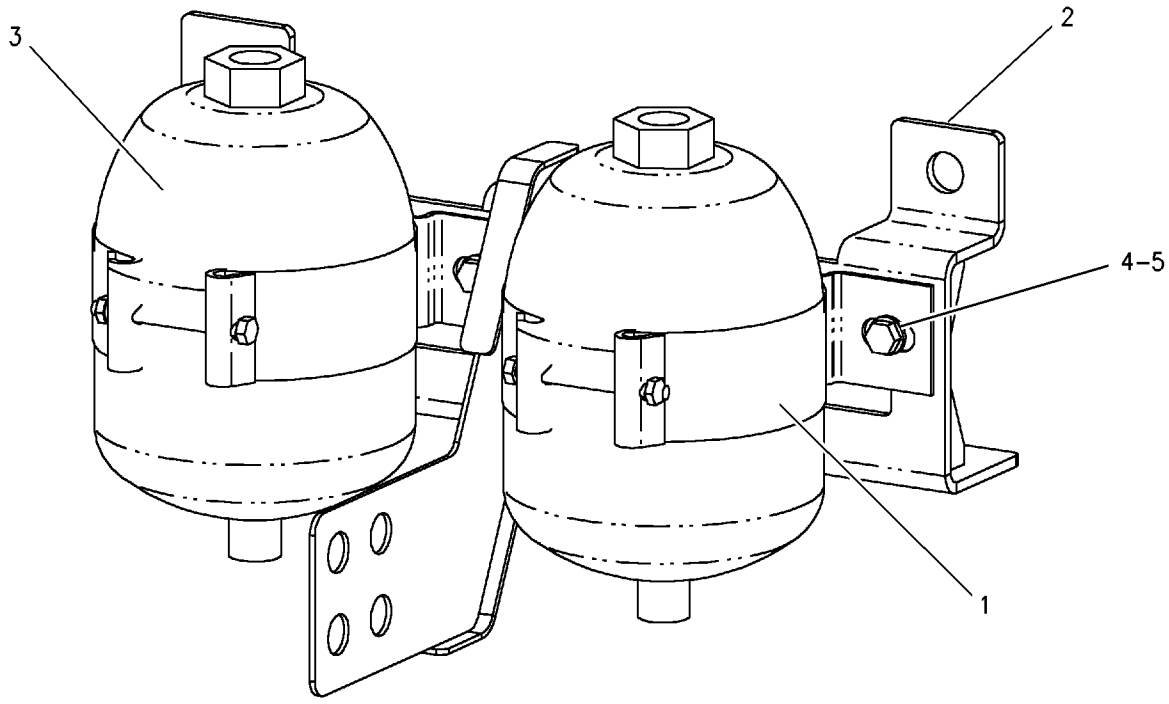

GRAPHIC #1 **<END>** g00798795

251-1446 ACCUMULATOR GP-BRAKE

S/N: AXM1-UP
PART OF 251-1445 CONTROL GP-SERVICE BRAKE
AN ATTACHMENT

SMCS-4263 **i02096942**

NOTE	REF NO	GRAPHIC REF	PART NUMBER	QTY	PART NAME 1 2 3 4 5 6 (PRODUCT LEVEL)	SEE PAGE
	1	1	**142-3061**	2	CLAMP AS	
Y	2	1	*223-2444*	2	ACCUMULATOR GP-SUSPENSION	791
	3	1	**251-1447**	1	CHANNEL AS	
M		1	**8T-3490**	11	NUT-WELD (M10X1.5-THD)	
	4	1	**251-1450**	1	PLATE AS	
	5	1	**8T-4121**	14	WASHER-HARD (11X21X2.5-MM THK)	
M	6	1	**8T-4136**	4	BOLT (M10X1.5X25-MM)	
M	7	1	**8T-4191**	6	BOLT (M10X1.5X16-MM)	
M	8	1	**8T-4195**	4	BOLT (M10X1.5X30-MM)	

M-METRIC PART
Y-SEPARATE ILLUSTRATION

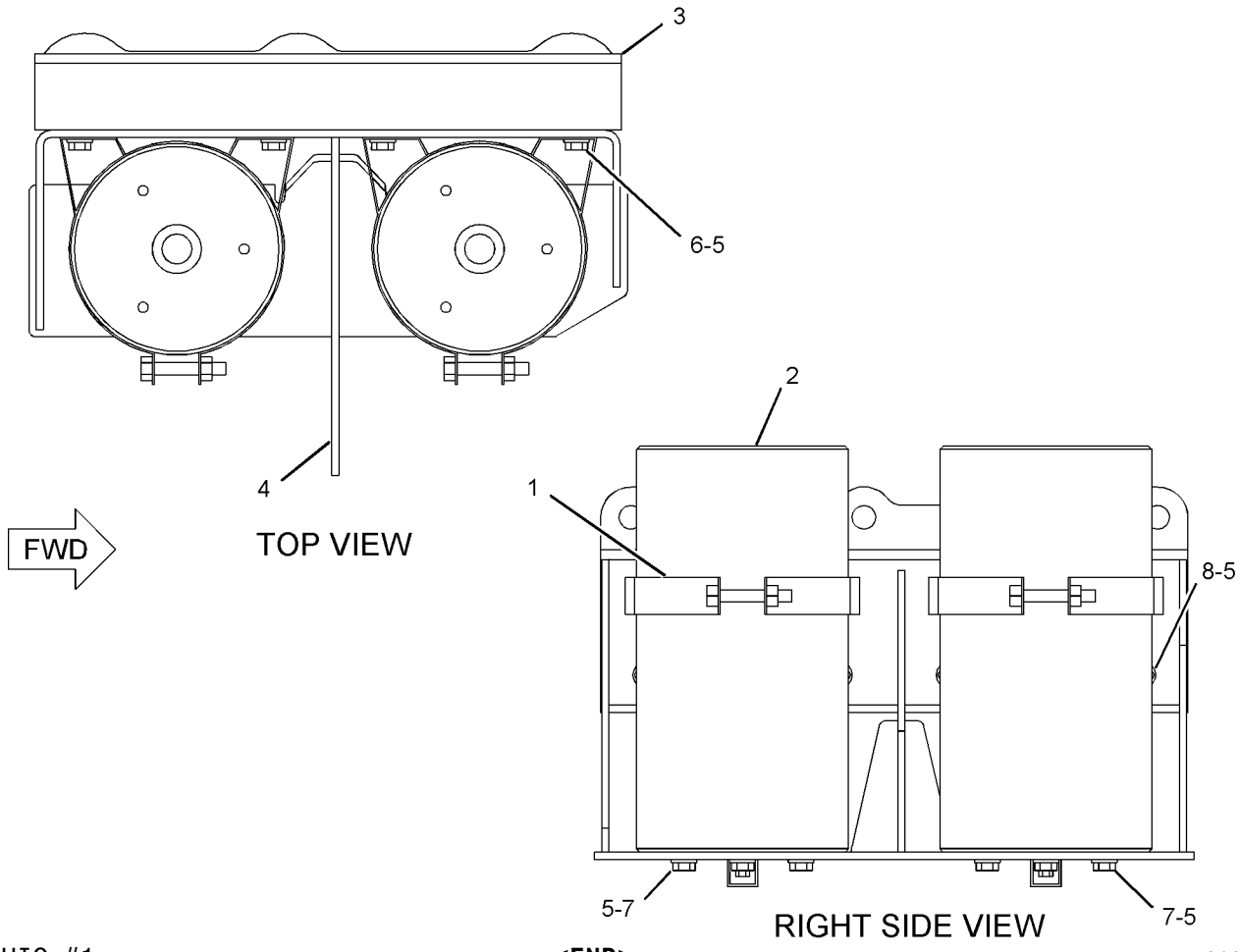

GRAPHIC #1

<END>

g01088764

251-8265 ACCUMULATOR GP-BRAKE–CHARGED

S/N: AXM856-UP

PART OF 251-8789 ACCUMULATOR GP-BRAKE

FIELD REPLACEMENT ORDER 251-8266–PAGE 573

SMCS-4263 **i02168994**

NOTE	REF NO	GRAPHIC REF	PART NUMBER	QTY	PART NAME 1 2 3 4 5 6 (PRODUCT LEVEL)	SEE PAGE
	1	1	**117-8687**	1	SCREW	
	2	1	**117-8688**	1	SEAL	
	3	1	**117-8689**	1	CAP	

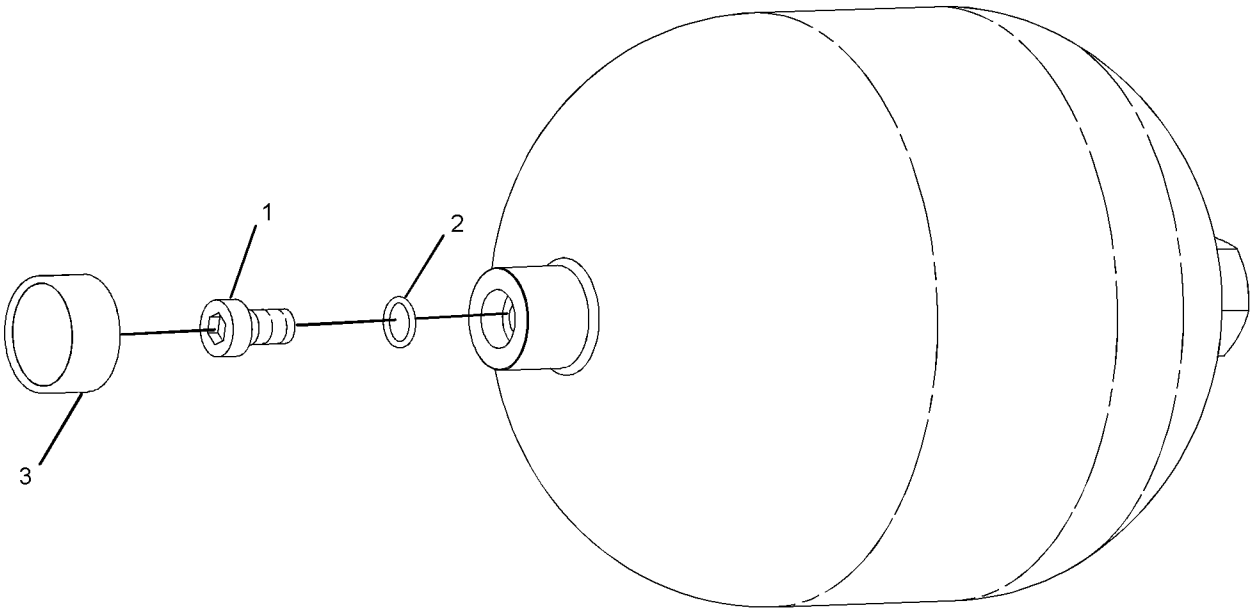

GRAPHIC #1 **<END>** g01112587

251-8266 ACCUMULATOR GP-BRAKE—UNCHARGED

S/N: AXM856-UP

FIELD REPLACEMENT FOR 251-8265—PAGE 572

SMCS-4263 **i02168996**

NOTE	REF NO	GRAPHIC REF	PART NUMBER	QTY	PART NAME 1 2 3 4 5 6 (PRODUCT LEVEL)	SEE PAGE
	1	1	**117-8687**	1	SCREW	
	2	1	**117-8688**	1	SEAL	
	3	1	**117-8689**	1	CAP	

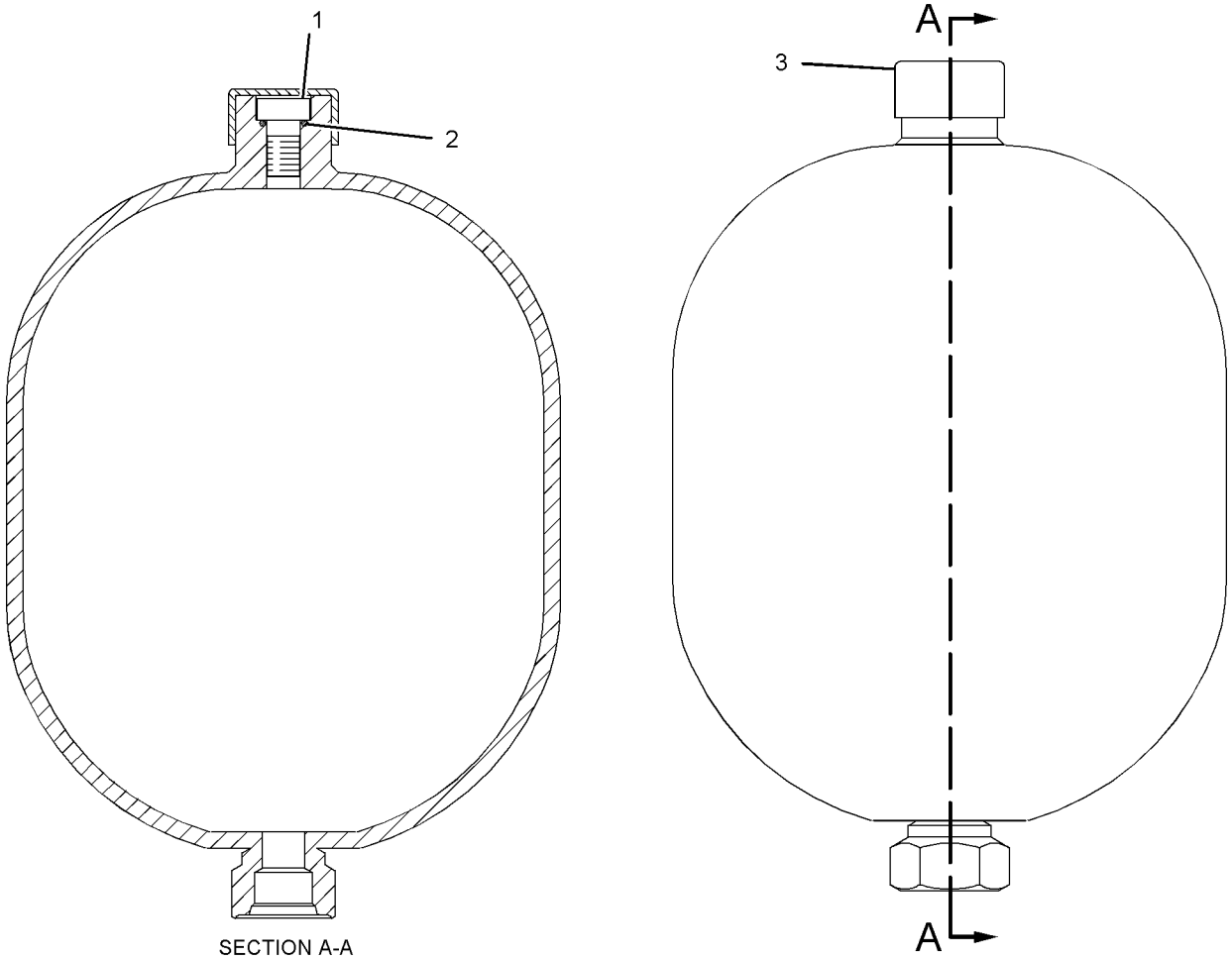

SECTION A-A

GRAPHIC #1 **<END>** g01116865

251-8789 ACCUMULATOR GP-BRAKE

S/N: AXM856-UP

PART OF 200-8472 CONTROL GP-SERVICE BRAKE

SMCS-4263 **i02168992**

NOTE	REF NO	GRAPHIC REF	PART NUMBER	QTY	PART NAME 1 2 3 4 5 6 (PRODUCT LEVEL)	SEE PAGE
Y	1	1	*251-8265*	2	ACCUMULATOR GP-BRAKE (CHARGED)	572
	2	1	**255-1144**	1	PLATE AS	
M		1	**8T-3490**	2	NUT-WELD (M10X1.5-THD)	
M		1	**8T-3612**	4	NUT-WELD (M8X1.25-THD)	
	3	1	**255-6195**	2	CLAMP AS	
	4	1	**5P-4116**	4	WASHER-HARD (8.8X20.5X2-MM THK)	
M	5	1	**8T-4189**	4	BOLT (M8X1.25X20-MM)	

M-METRIC PART
Y-SEPARATE ILLUSTRATION

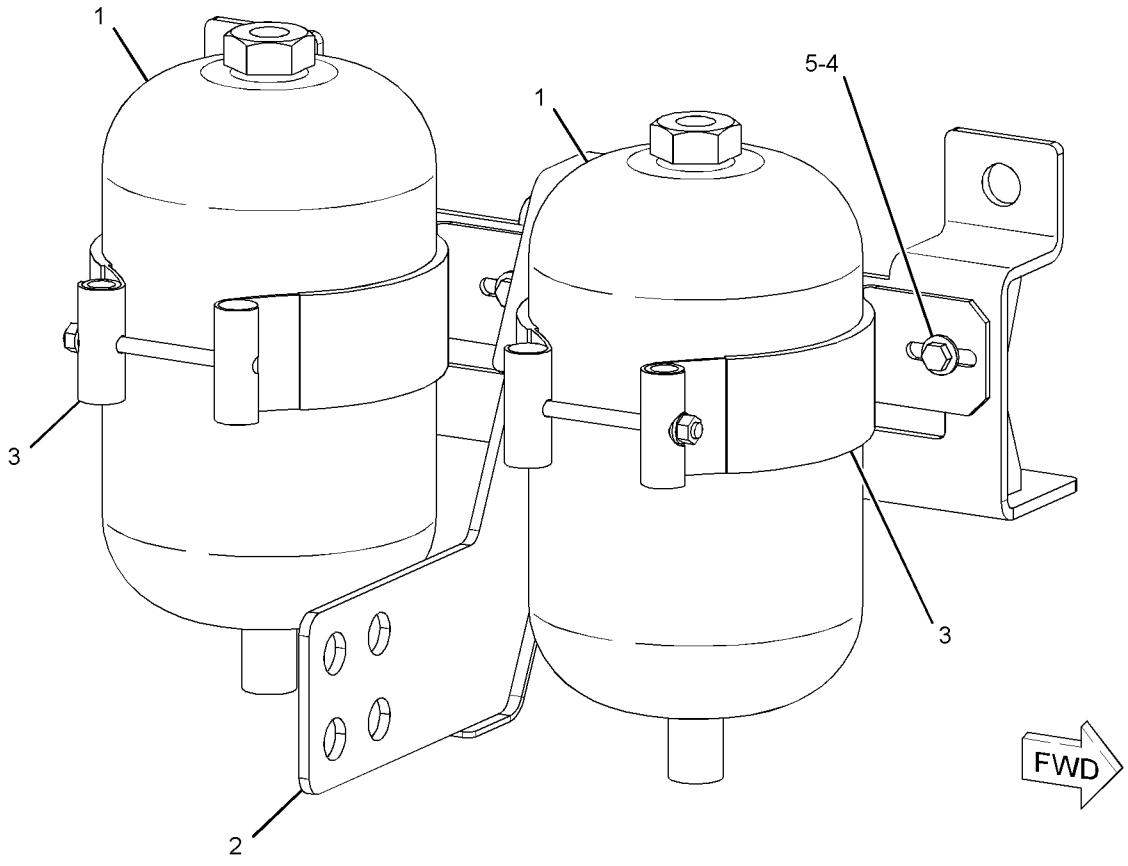

GRAPHIC #1 **<END>** g01117163

BRAKING SYSTEM

160-7200 BRAKE GP-PARKING

S/N: AXM1-UP

PART OF 152-7036 AXLE AR-CENTER

SMCS-4267 **i01547161**

NOTE	REF NO	GRAPHIC REF	PART NUMBER	QTY	PART NAME 1 2 3 4 5 6 (PRODUCT LEVEL)	SEE PAGE
Y	1	1	*160-8009*	1	BRAKE GP-PARKING	576
M	2	1	**177-9011**	4	BOLT	
	3	1	**8T-4123**	4	WASHER-PLATED (22X35X3.5-MM THK)	

M-METRIC PART
Y-SEPARATE ILLUSTRATION

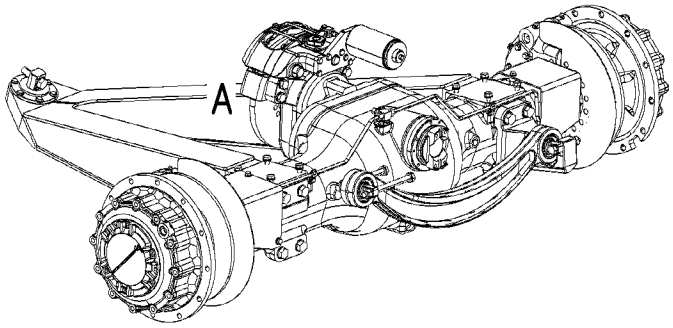

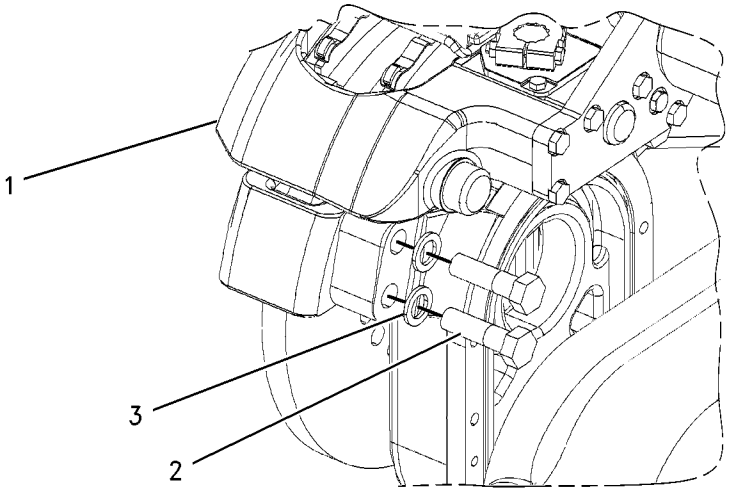

VIEW OF AREA A

GRAPHIC #1 **<END>** g00804116

BRAKING SYSTEM

160-8009 BRAKE GP-PARKING

S/N: AXM1-UP

PART OF 160-7200 BRAKE GP-PARKING

SMCS-4267 **i01769102**

NOTE	REF NO	GRAPHIC REF	PART NUMBER	QTY	PART NAME 1 2 3 4 5 6 (PRODUCT LEVEL)	SEE PAGE
	1	1	**154-8042**	1	ACTUATOR AS-PARKING BRAKE	
	2	1	**172-3931**	1	PIN	
	3	1	**172-3932**	2	SPACER (10-MM THK)	
	4	1	**172-3933**	2	SHOE AS-BRAKE	
	5	1	**172-3934**	2	SPRING	
	6	1	**6C-8608**	1	PIN	
	7	1	**3B-4610**	1	PIN-COTTER	
	8	1	**3B-4607**	1	PIN-COTTER	
	9	1	**8T-4223**	2	WASHER-HARD (13.5X25.5X3-MM THK)	
M	10	1	**8T-4244**	2	NUT (M12X1.75-THD)	
M	11	1	**5C-7261**	1	NUT (M8X1.25-THD)	
M	12	1	**8T-6869**	1	BOLT (M8X1.25X60-MM)	
M	13	1	**8T-4139**	5	BOLT (M12X1.75X30-MM)	
	14	1	**172-3935**	1	PLUG	
	15	1	**4W-9026**	1	GASKET	
	16	1	**211-8472**	1	LEVER	
	17	1	**220-0432**	1	YOKE	
M	18	1	**160-8503**	1	NUT (M10X1.5-THD)	

M-METRIC PART

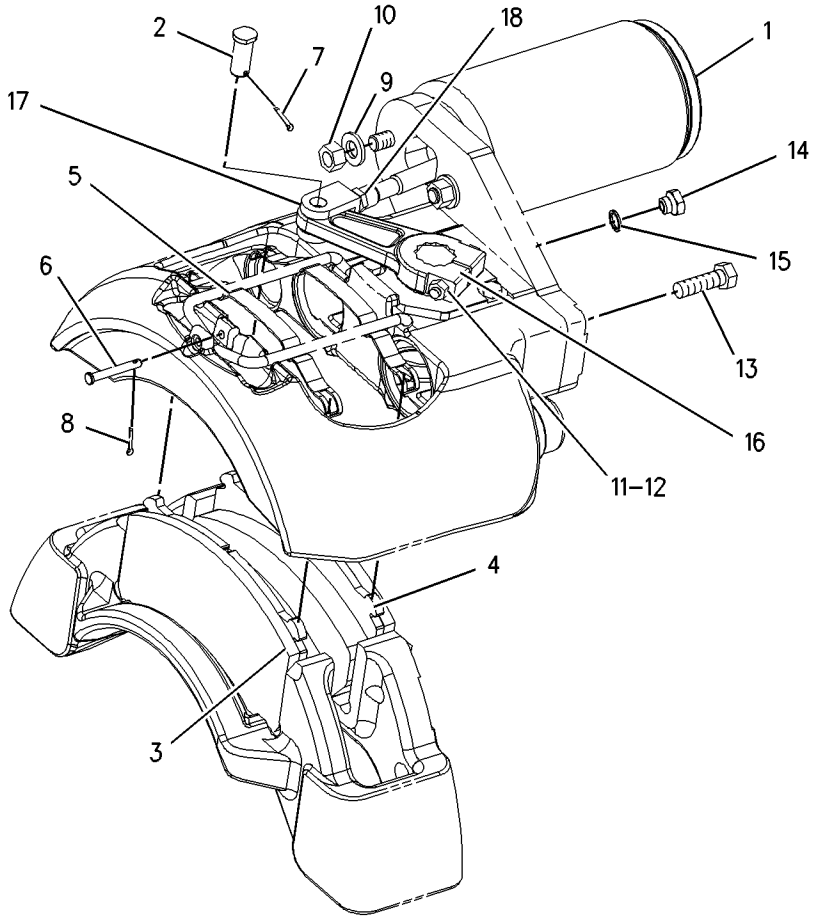

GRAPHIC #1 **<END>** g00904799

136-7796 BRAKE GP-SERVICE

S/N: AXM1-857

PART OF 138-4810 WHEEL GP-FINAL DRIVE & BRAKE

SMCS-4251 **i01451125**

NOTE	REF NO	GRAPHIC REF	PART NUMBER	QTY	PART NAME 1 2 3 4 5 6 (PRODUCT LEVEL)	SEE PAGE
	1	1	**5H-3701**	1	SCREW-PURGE	
	2	1	**9J-5491**	4	SPRING	
	3	1	**133-9883**	1	PISTON	
	4	1	**134-2562**	4	GUIDE	
	5	1	**137-8116**	1	RING-SEAL	
	6	1	**137-8117**	1	SEAL-RING	
	7	1	**137-8118**	1	RING-SEAL	
	8	1	**137-8119**	1	SEAL-RING	
	9	1	**158-1990**	1	HOUSING	
	10	1	**161-9755**	1	ANCHOR	
	11	1	**2M-9780**	1	SEAL-O-RING	
	12	1	**3J-1907**	2	SEAL-O-RING	
M	13	1	**5P-8245**	59	WASHER-HARD (13.5X25.5X3-MM THK)	
	14	1	**6M-9155**	4	PIN	
M	15	1	**6V-8336**	59	BOLT (M12X1.75X70-MM)	
	16	1	**6W-4310**	1	SEAL-O-RING	
	17	1	**7M-8485**	4	SEAL-O-RING	
	18	1	**8V-9372**	1	PLATE	
	19	1	**8W-9707**	2	DAMPER AS	
	20	1	**9H-0846**	1	SEAL-O-RING	
	21	1	**9S-4190**	1	PLUG	
	22	1	**9S-8004**	2	PLUG	
	23	1	**9S-9334**	4	PLUG	
	24	1	**9V-6164**	10	PLATE-OUTER	
	25	1	**9W-7020**	11	DISC-FRICTION	

M-METRIC PART

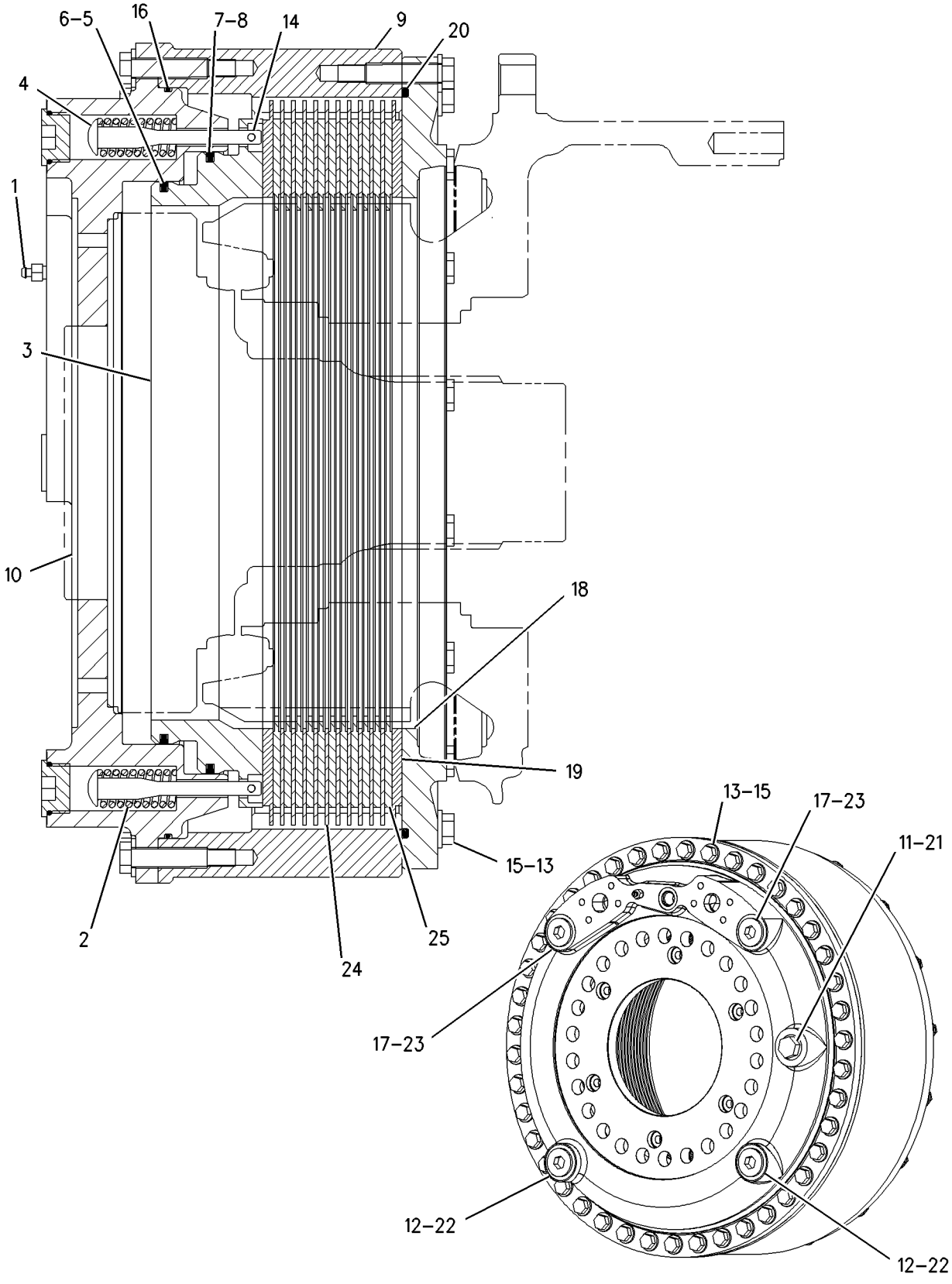

GRAPHIC #1 **<END>** g00702402

217-6309 BRAKE GP-SERVICE

S/N: AXM1234-UP

PART OF 217-6290 WHEEL GP-FINAL DRIVE & BRAKE

SMCS-4251 **i02016061**

NOTE	REF NO	GRAPHIC REF	PART NUMBER	QTY	PART NAME 1 2 3 4 5 6 (PRODUCT LEVEL)	SEE PAGE
	1	1	**5H-3701**	1	SCREW-PURGE	
	2	1	**9J-5491**	4	SPRING	
	3	1	**133-9883**	1	PISTON	
	4	1	**134-2562**	4	GUIDE	
	5	1	**137-8116**	1	RING-SEAL	
	6	1	**137-8117**	1	SEAL-RING	
	7	1	**137-8118**	1	RING-SEAL	
	8	1	**137-8119**	1	SEAL-RING	
	9	1	*148-8406*	4	PLUG AS	
					(EACH INCLUDES)	
		1	**9S-9334**	1	PLUG	
		1	**7M-8485**	1	SEAL-O-RING	
	10	1	*148-8410*	1	PLUG AS	
		1	**2M-9780**	1	SEAL-O-RING	
		1	**9S-4190**	1	PLUG	
	11	1	*164-4180*	3	PLUG AS	
					(EACH INCLUDES)	
		1	**9S-4181**	1	PLUG	
		1	**7M-8485**	1	SEAL-O-RING	
	12	1	**195-3834**	3	SCREW	
	13	1	**217-6289**	1	PLATE	
	14	1	**218-8119**	1	ANCHOR	
	15	1	**218-8120**	1	HOUSING	
M	16	1	**5P-8245**	59	WASHER-HARD (13.5X25.5X3-MM THK)	
	17	1	**6M-9155**	4	PIN	
M	18	1	**6V-8336**	59	BOLT (M12X1.75X70-MM)	
	19	1	**6W-4310**	1	SEAL-O-RING	
	20	1	**8T-4223**	3	WASHER-HARD (13.5X25.5X3-MM THK)	
M	21	1	**8T-4244**	3	NUT (M12X1.75-THD)	
	22	1	**8W-9707**	2	DAMPER AS	
	23	1	**9H-0846**	1	SEAL-O-RING	
	24	1	**9V-6164**	10	PLATE-OUTER	
	25	1	**9W-7020**	11	DISC-FRICTION	

M-METRIC PART

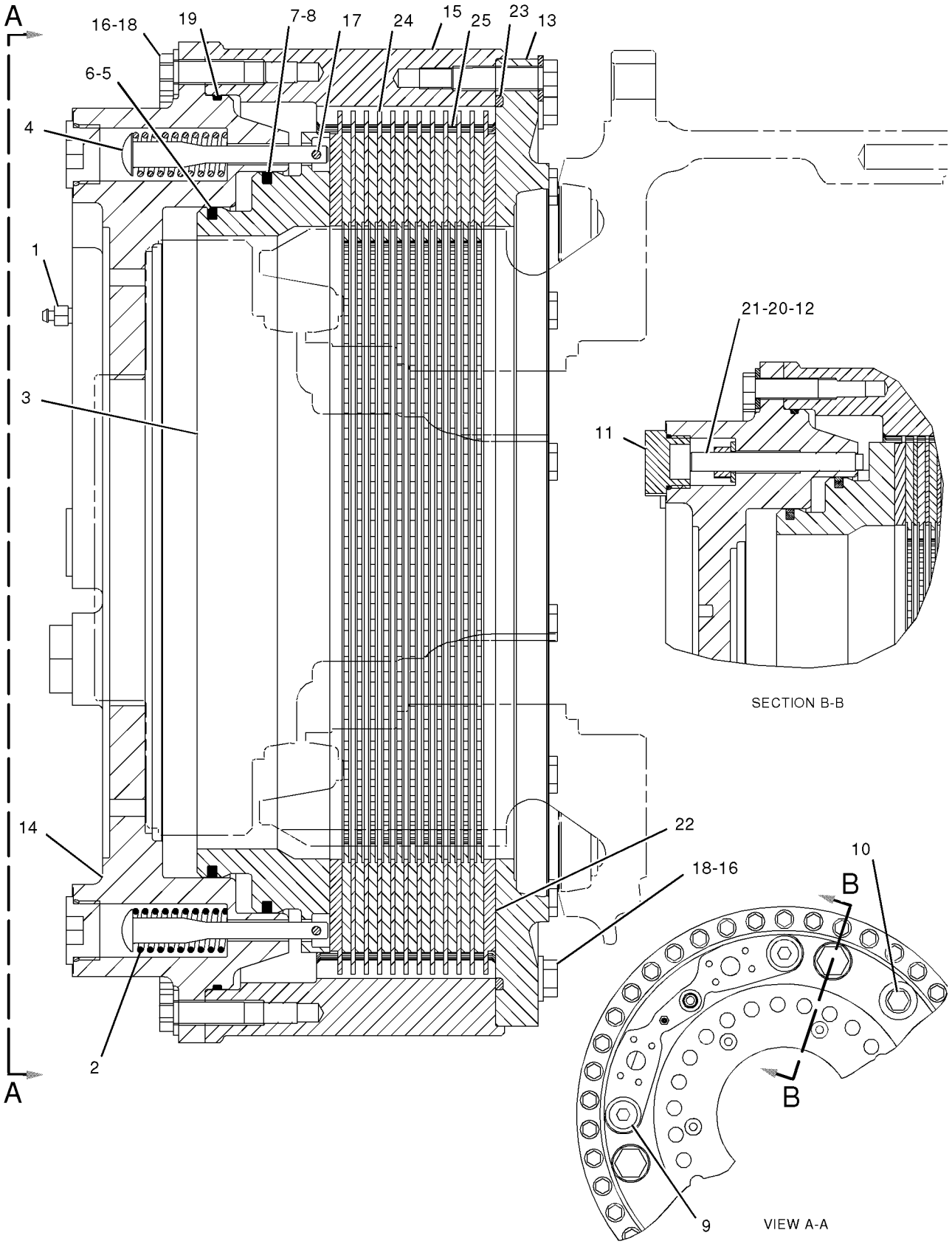

GRAPHIC #1 **<END>** g01042569

219-6710 BRAKE GP-SERVICE

S/N: AXM858-1323

PART OF 138-4810 WHEEL GP-FINAL DRIVE & BRAKE

SMCS-4251 **i01822786**

NOTE	REF NO	GRAPHIC REF	PART NUMBER	QTY	PART NAME 1 2 3 4 5 6 (PRODUCT LEVEL)	SEE PAGE
	1	1	**5H-3701**	1	SCREW-PURGE	
	2	1	**9J-5491**	4	SPRING	
	3	1	**133-9883**	1	PISTON	
	4	1	**134-2562**	4	GUIDE	
	5	1	**137-8116**	1	RING-SEAL	
	6	1	**137-8117**	1	SEAL-RING	
	7	1	**137-8118**	1	RING-SEAL	
	8	1	**137-8119**	1	SEAL-RING	
	9	1	*148-8406*	4	PLUG AS	
					(EACH INCLUDES)	
		1	**7M-8485**	1	SEAL-O-RING	
		1	**9S-9334**	1	PLUG	
	10	1	*148-8410*	1	PLUG AS	
		1	**2M-9780**	1	SEAL-O-RING	
		1	**9S-4190**	1	PLUG	
	11	1	**158-1990**	1	HOUSING	
	12	1	*164-4180*	3	PLUG AS	
					(EACH INCLUDES)	
		1	**7M-8485**	1	SEAL-O-RING	
		1	**9S-4181**	1	PLUG	
	13	1	**195-3834**	3	SCREW	
	14	1	**218-8109**	1	HOUSING	
M	15	1	**5P-8245**	59	WASHER-HARD (13.5X25.5X3-MM THK)	
	16	1	**6M-9155**	4	PIN	
M	17	1	**6V-8336**	59	BOLT (M12X1.75X70-MM)	
	18	1	**6W-4310**	1	SEAL-O-RING	
	19	1	**8T-4223**	3	WASHER-HARD (13.5X25.5X3-MM THK)	
M	20	1	**8T-4244**	3	NUT (M12X1.75-THD)	
	21	1	**8V-9372**	1	PLATE	
	22	1	**8W-9707**	2	DAMPER AS	
	23	1	**9H-0846**	1	SEAL-O-RING	
	24	1	**9V-6164**	10	PLATE-OUTER	
	25	1	**9W-7020**	11	DISC-FRICTION	

M-METRIC PART

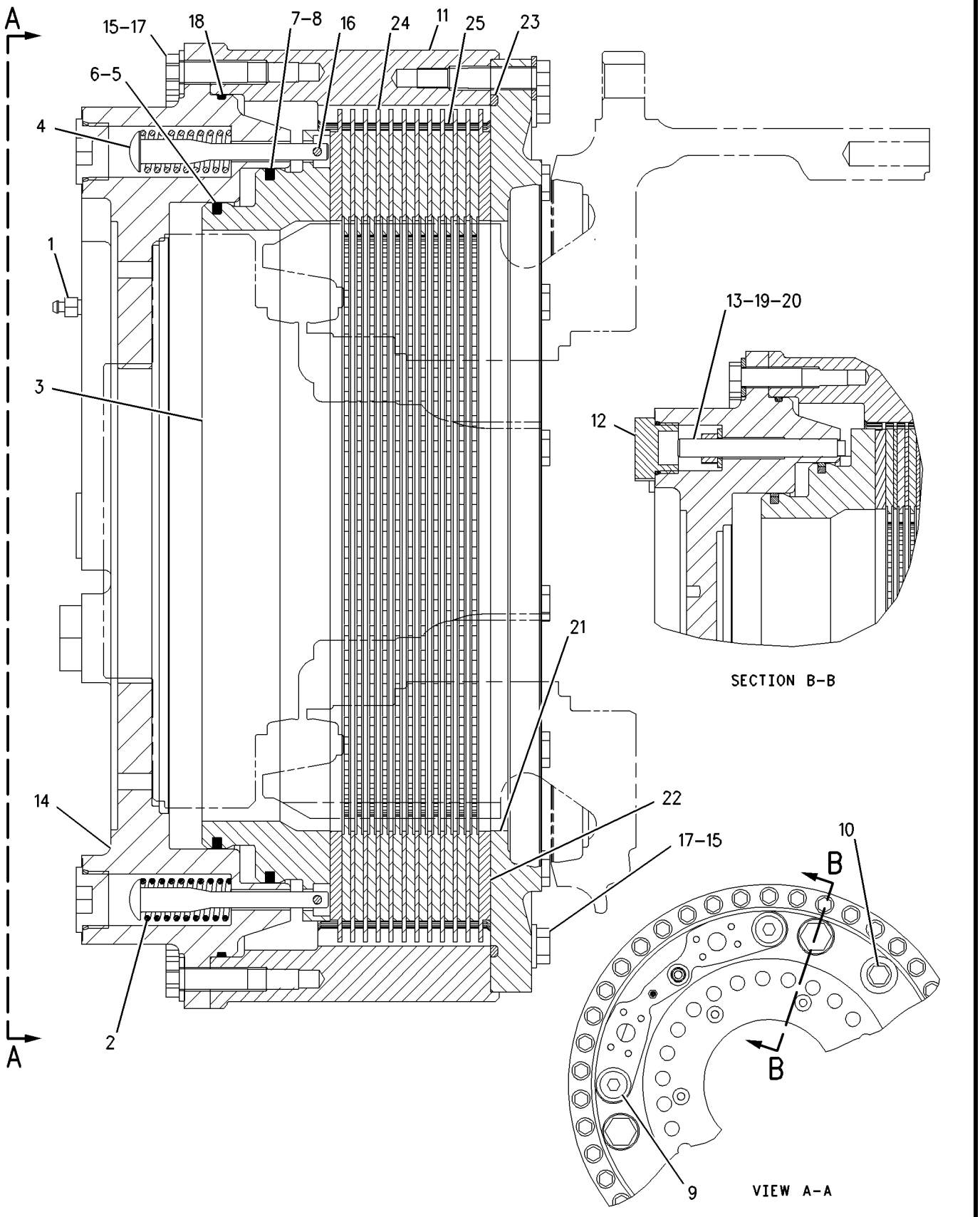

GRAPHIC #1 **<END>** g00933196

152-6939 CONTROL GP-PARKING BRAKE

S/N: AXM1-UP

PART OF 152-6920 INSTALLATION AR-MACHINE

SMCS-4284 **i01858884**

NOTE	REF NO	GRAPHIC REF	PART NUMBER	QTY	PART NAME 1 2 3 4 5 6 (PRODUCT LEVEL)	SEE PAGE
I	1	1	**160-6013**	1	HOSE AS	
I	2	1	**193-9083**	1	HOSE AS	
	3	1	*148-8375*	1	ELBOW GP	
		1	**6V-8981**	1	ELBOW	
		1	**6V-8398**	2	SEAL-O-RING	
	4	1	*148-8415*	1	REDUCER AS	
		1	**6V-8936**	1	REDUCER	
		1	**6V-8397**	1	SEAL-O-RING	
	5	1	*148-8444*	1	TEE AS-SWIVEL	
		1	**6V-9837**	1	TEE-SWIVEL	
		1	**6V-8398**	2	SEAL-O-RING	
	6	1	**5P-7464**	1	CLIP (SLOT)	
	7	1	**5P-7465**	1	CLIP (TAB)	
	8	1	**6V-7359**	1	GROMMET	
	9	1	**6V-9169**	1	NUT-BULKHEAD (13/16-16-THD)	
M	10	1	**8T-4183**	1	BOLT (M12X1.75X40-MM)	
	11	1	**8T-4223**	1	WASHER-HARD (13.5X25.5X3-MM THK)	

I-REFER TO HYDRAULIC INFORMATION SYSTEM
M-METRIC PART

152-6939 **CONTROL GP-PARKING BRAKE** *(contd.)* **i01858884**

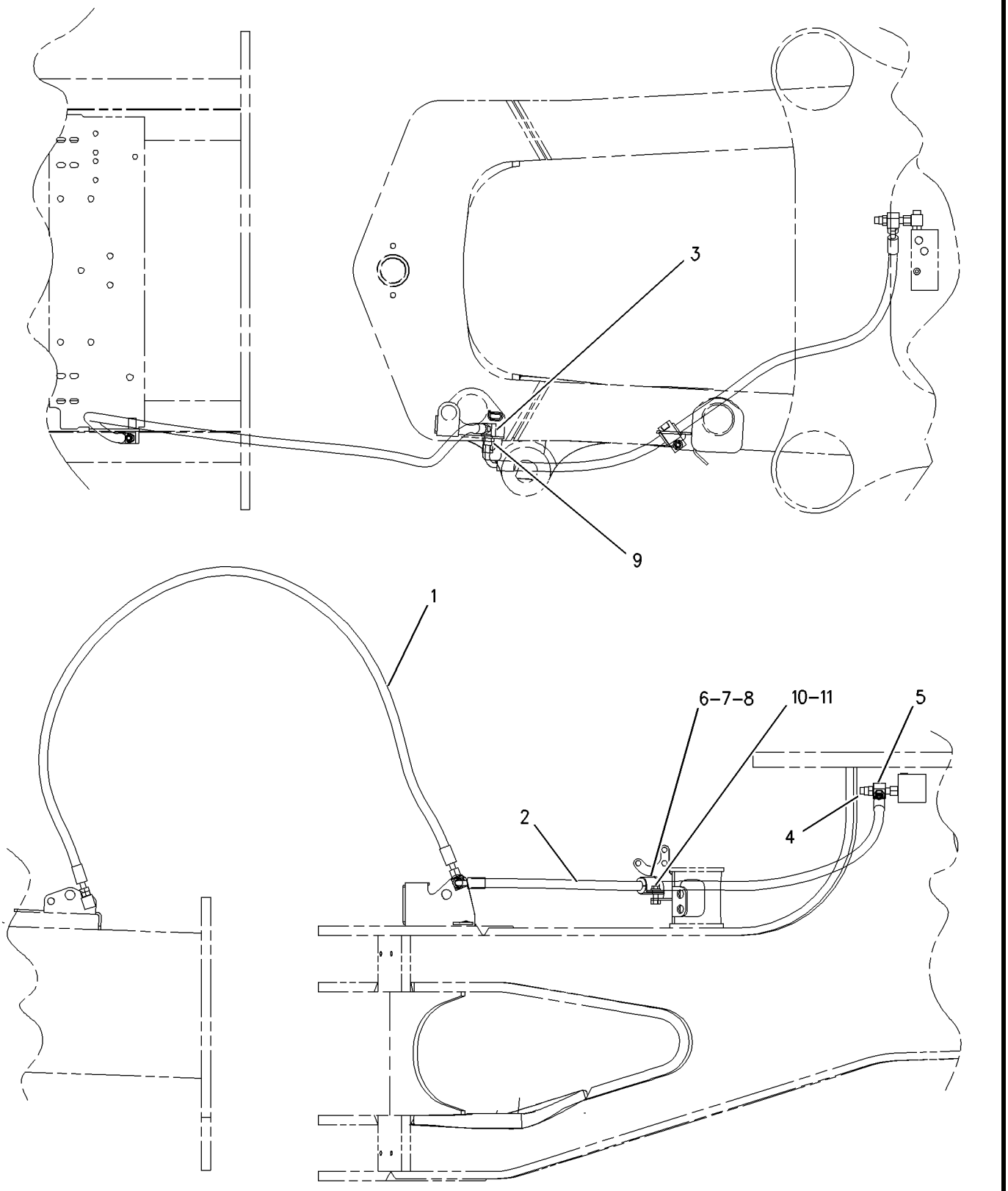

GRAPHIC #1 **<END>** g00795806

152-7029 CONTROL GP-PARKING BRAKE

S/N: AXM1-UP

PART OF 152-6921 AXLE & FRAME AR

SMCS-4284 **i01906245**

NOTE	REF NO	GRAPHIC REF	PART NUMBER	QTY	PART NAME 1 2 3 4 5 6 (PRODUCT LEVEL)	SEE PAGE
I	1	1	**128-4197**	1	HOSE AS	
Y	2	1	*163-5632*	1	ACCUMULATOR GP-BRAKE (CHARGED)	566
	3	1	*164-5567*	1	FITTING GP-COUPLING	
		1	**6V-3965**	1	FITTING AS	
		1	**3J-1907**	1	SEAL-O-RING	
	4	1	**171-1978**	1	TUBE AS	
I	5	1	**190-6278**	1	HOSE AS	
	6	1	**190-6282**	1	TUBE AS	
Y	7	1	**190-6290**	1	VALVE GP-BRAKE CONTROL	616
	8	1	**202-3063**	1	BRACKET	
I	9	1	**221-5281**	1	HOSE AS	
	10	1	*222-5608*	1	ELBOW AS	
		1	**3K-0360**	1	SEAL-O-RING	
		1	**6V-8398**	1	SEAL-O-RING	
		1	**222-5609**	1	ELBOW	
	11	1	*222-6869*	1	CONNECTOR AS	
		1	**3J-1907**	1	SEAL-O-RING	
		1	**6V-8397**	1	SEAL-O-RING	
		1	**9X-2614**	1	CONNECTOR	
	12	1	*148-8336*	1	CONNECTOR AS	
		1	**6V-8636**	1	CONNECTOR	
		1	**3J-1907**	1	SEAL-O-RING	
		1	**6V-8397**	1	SEAL-O-RING	
	13	1	*148-8340*	1	CONNECTOR AS	
		1	**6V-8639**	1	CONNECTOR	
		1	**3K-0360**	1	SEAL-O-RING	
		1	**6V-8398**	1	SEAL-O-RING	
	14	1	*148-8361*	1	ELBOW AS	
		1	**6V-9200**	1	ELBOW	
		1	**3J-7354**	1	SEAL-O-RING	
		1	**6V-8397**	1	SEAL-O-RING	
	15	1	*148-8365*	1	ELBOW AS	
		1	**8T-6876**	1	ELBOW	
		1	**3J-1907**	1	SEAL-O-RING	
		1	**6V-8398**	1	SEAL-O-RING	
	16	1	*148-8375*	1	ELBOW GP	
		1	**6V-8981**	1	ELBOW	
		1	**6V-8398**	2	SEAL-O-RING	
	17	1	*148-8377*	1	ELBOW AS	
		1	**6V-8980**	1	ELBOW	
		1	**6V-8397**	2	SEAL-O-RING	
	18	1	**5P-4116**	2	WASHER-HARD (8.8X20.5X2-MM THK)	
	19	1	**5P-7462**	2	CLIP (SLOT)	
	20	1	**5P-7463**	2	CLIP (TAB)	
	21	1	**6V-0683**	2	GROMMET	
	22	1	**6V-0852**	1	CAP-DUST	
	23	1	**6V-9168**	1	NUT (11/16-16-THD)	
	24	1	**6V-9169**	1	NUT-BULKHEAD (13/16-16-THD)	
	25	1	**7X-7729**	2	WASHER (11X25X3-MM THK)	
	26	1	**8T-1885**	3	CLIP (SLOT)	
	27	1	**8T-1886**	3	CLIP (TAB)	
	28	1	**8T-4121**	4	WASHER-HARD (11X21X2.5-MM THK)	
M	29	1	**8T-4133**	2	NUT (M10X1.5-THD)	
M	30	1	**8T-4137**	2	BOLT (M10X1.5X20-MM)	
M	31	1	**8T-4196**	2	BOLT (M10X1.5X35-MM)	
M	32	1	**8T-6870**	2	BOLT (M8X1.25X70-MM)	

152-7029 **CONTROL GP-PARKING BRAKE** *(contd.)* **i01906245**

I-REFER TO HYDRAULIC INFORMATION SYSTEM
M-METRIC PART
Y-SEPARATE ILLUSTRATION

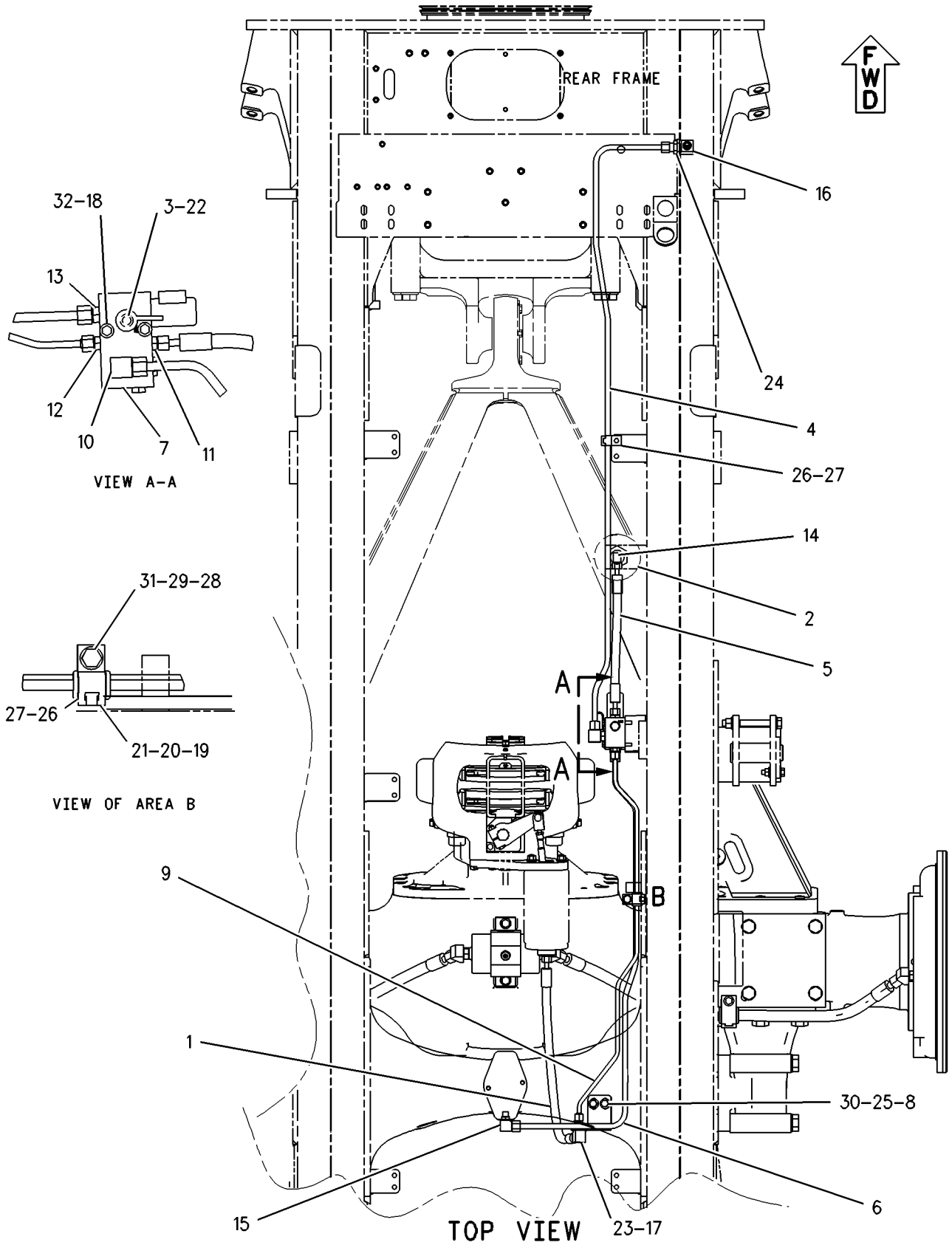

GRAPHIC #1

<END>

g00992785

BRAKING SYSTEM

152-6941 CONTROL GP-SERVICE BRAKE

S/N: AXM1-UP

PART OF 152-6920 INSTALLATION AR-MACHINE

SMCS-4269 **i01853983**

NOTE	REF NO	GRAPHIC REF	PART NUMBER	QTY	PART NAME 1 2 3 4 5 6 (PRODUCT LEVEL)	SEE PAGE
I	1	1	**193-0849**	1	HOSE AS	
I	2	1	**204-5696**	1	HOSE AS	
I	3	1	**207-9519**	1	HOSE AS	
	4	1	**219-1393**	1	BRACKET	
	5	1	*148-8382*	1	ELBOW AS	
		1	**8T-0404**	1	ELBOW	
		1	**3D-2824**	1	SEAL-O-RING	
		1	**7J-9108**	1	SEAL-O-RING	
	6	1	*169-7404*	1	ELBOW AS	
		1	**6V-8982**	1	ELBOW	
		1	**7J-9108**	2	SEAL-O-RING	
	7	1	**5P-7464**	2	CLIP (SLOT)	
	8	1	**5P-7465**	2	CLIP (TAB)	
	9	1	**5P-7470**	1	CLIP (SLOT)	
	10	1	**5P-7471**	1	CLIP (TAB)	
	11	1	**5P-7703**	1	GROMMET	
	12	1	**6V-1867**	1	CLIP (SLOT)	
	13	1	**6V-1868**	1	CLIP (TAB)	
	14	1	**6V-1869**	1	GROMMET	
	15	1	**6V-9170**	1	NUT-BULKHEAD (1-14-THD)	
	16	1	**8T-2920**	2	GROMMET	
M	17	1	**8T-4139**	1	BOLT (M12X1.75X30-MM)	
M	18	1	**8T-4183**	1	BOLT (M12X1.75X40-MM)	
	19	1	**8T-4223**	4	WASHER-HARD (13.5X25.5X3-MM THK)	
M	20	1	**8T-4244**	1	NUT (M12X1.75-THD)	
M	21	1	**8T-4956**	1	BOLT (M12X1.75X35-MM)	

I-REFER TO HYDRAULIC INFORMATION SYSTEM
M-METRIC PART

152-6941 **CONTROL GP-SERVICE BRAKE** *(contd.)* **i01853983**

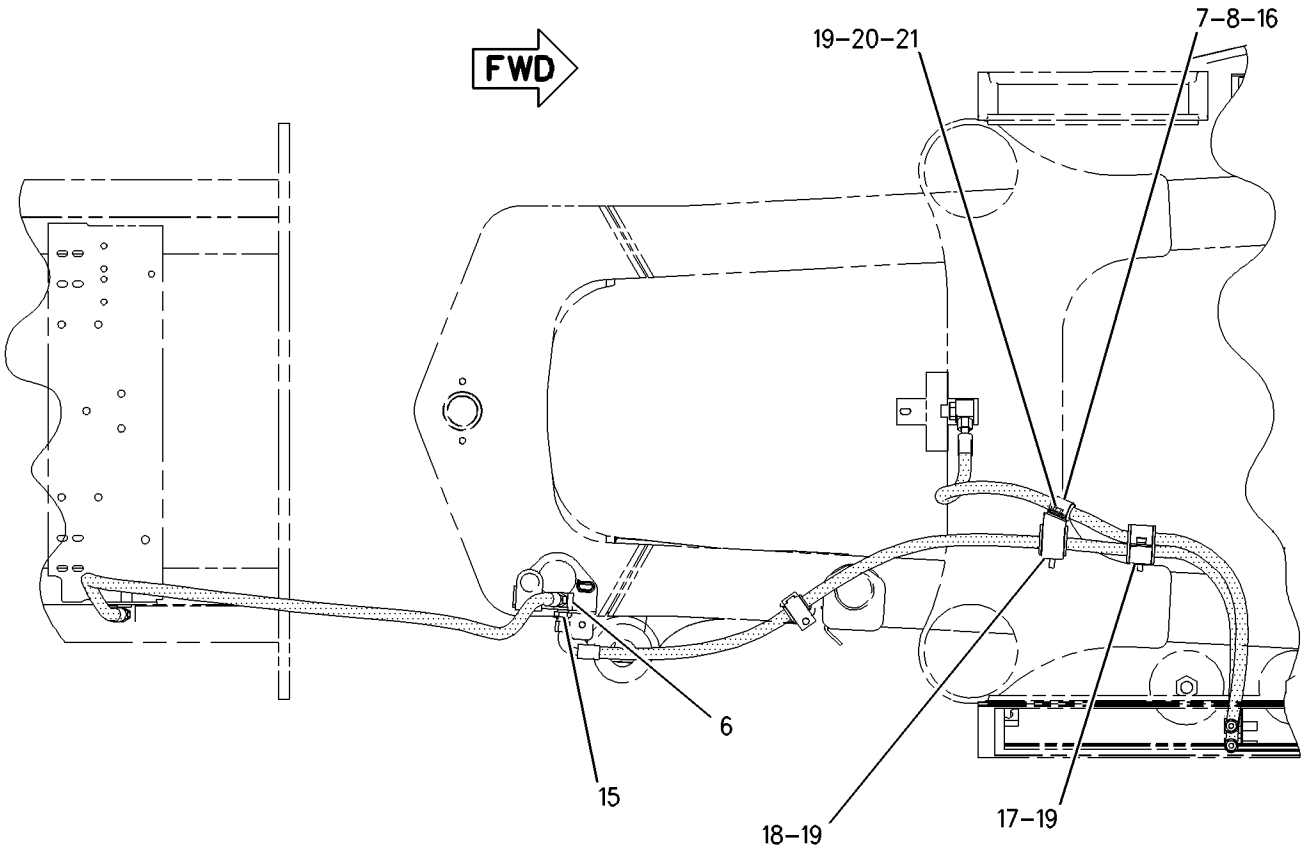

TOP VIEW

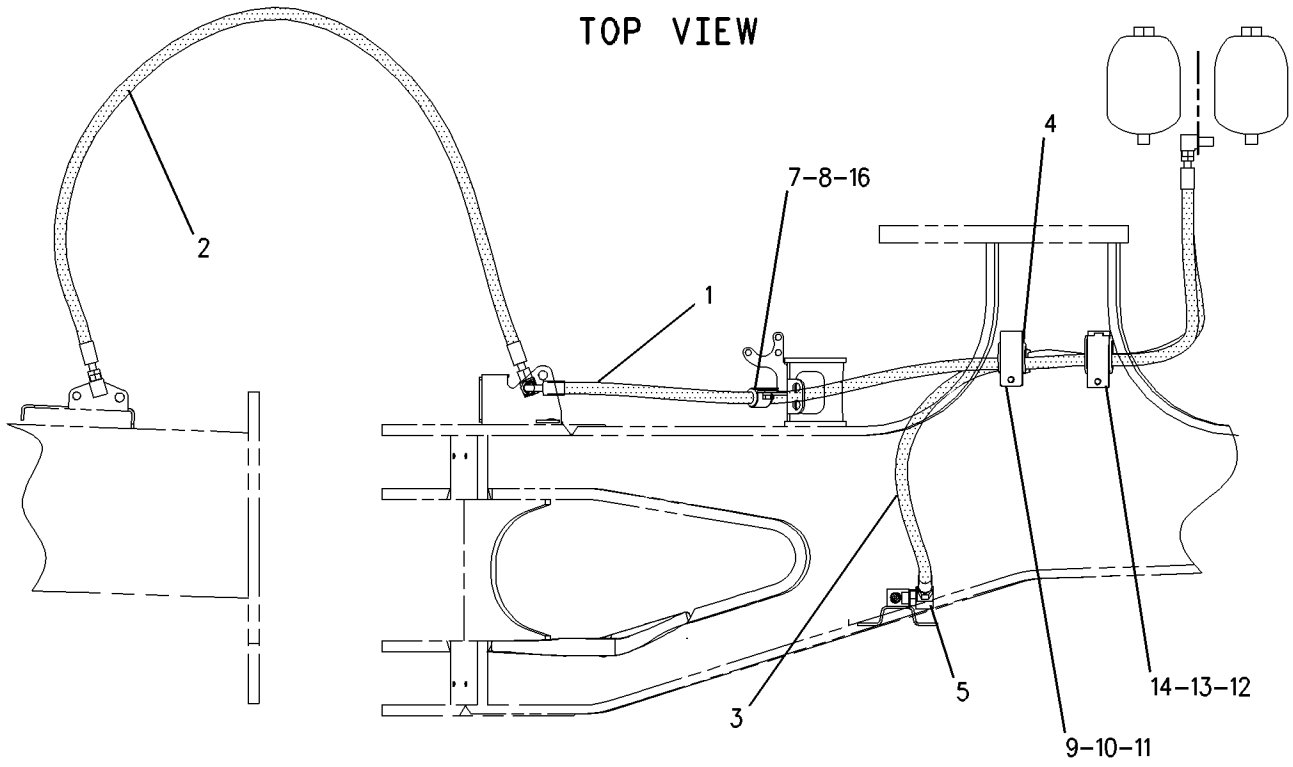

RIGHT SIDE VIEW

GRAPHIC #1 **<END>** g00945780

152-7033 CONTROL GP-SERVICE BRAKE

S/N: AXM1-UP

PART OF 152-6921 AXLE & FRAME AR

SMCS-4269 **i01446862**

NOTE	REF NO	GRAPHIC REF	PART NUMBER	QTY	PART NAME 1 2 3 4 5 6 (PRODUCT LEVEL)	SEE PAGE
	1	1	**171-1977**	1	TUBE AS	
I	2	1	**177-0105**	1	HOSE AS	
	3	1	**6V-8989**	1	ELBOW	
		1	**7J-9108**	2	SEAL-O-RING	
	4	1	**6V-8713**	1	CONNECTOR	
		1	**3D-2824**	1	SEAL-O-RING	
		1	**7J-9108**	1	SEAL-O-RING	
	5	1	**6V-8982**	1	ELBOW	
		1	**7J-9108**	2	SEAL-O-RING	
	6	1	**5P-7464**	1	CLIP (SLOT)	
	7	1	**5P-7465**	1	CLIP (TAB)	
	8	1	**6V-7359**	1	GROMMET	
	9	1	**6V-9170**	2	NUT-BULKHEAD (1-14-THD)	
	10	1	**8T-4121**	2	WASHER-HARD (11X21X2.5-MM THK)	
M	11	1	**8T-4133**	1	NUT (M10X1.5-THD)	
M	12	1	**8T-4186**	1	BOLT (M10X1.5X40-MM)	
	13	1	**9R-1004**	1	CLIP (TAB)	
	14	1	**9R-1005**	1	CLIP (SLOT)	

I-REFER TO HYDRAULIC INFORMATION SYSTEM
M-METRIC PART

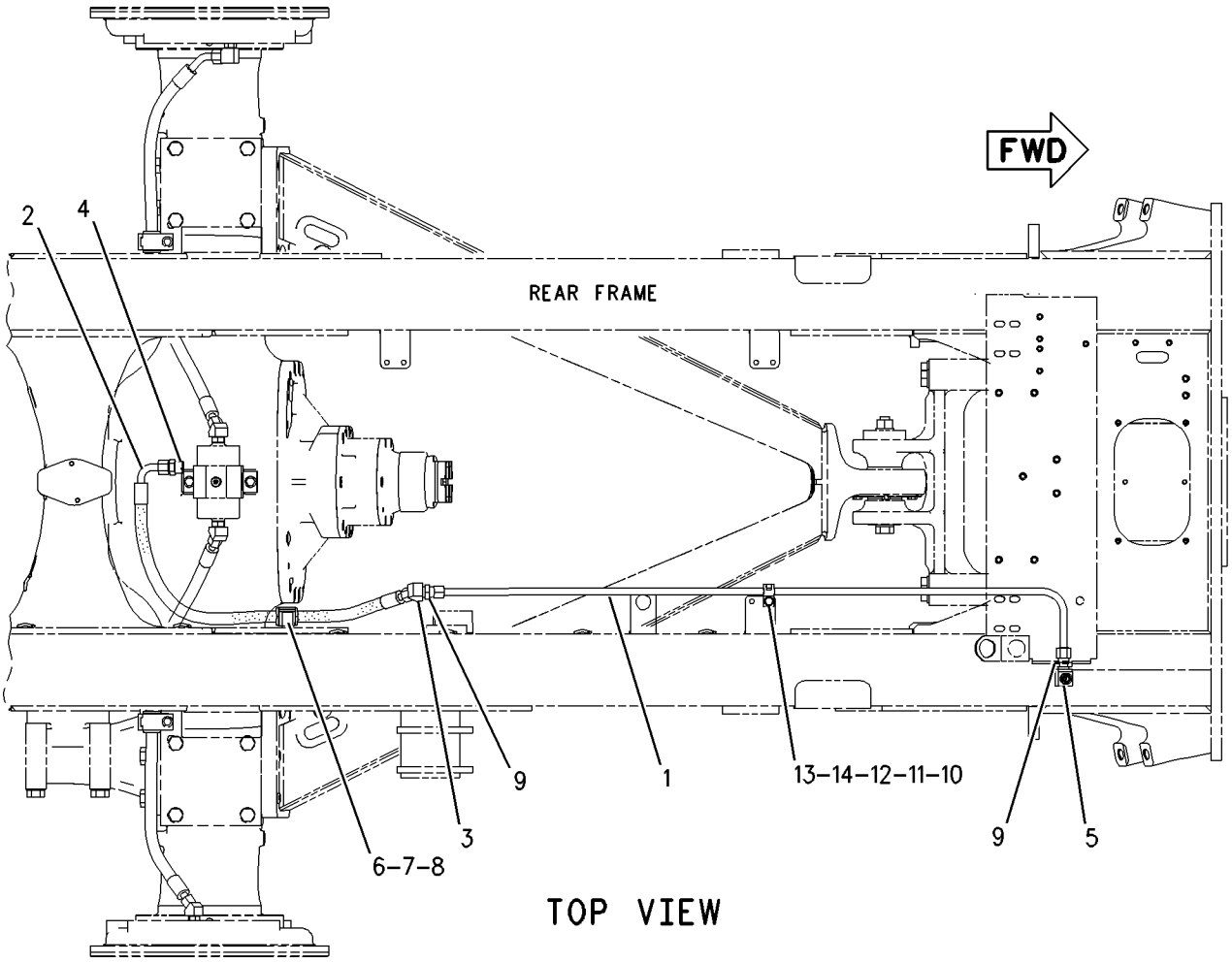

GRAPHIC #1 **<END>** g00762305

BRAKING SYSTEM

200-8472 CONTROL GP-SERVICE BRAKE

S/N: AXM1-855

PART OF 153-5485 CAB AR

SMCS-4269 **i01687584**

NOTE	REF NO	GRAPHIC REF	PART NUMBER	QTY	PART NAME 1 2 3 4 5 6 (PRODUCT LEVEL)	SEE PAGE
	1	2	**3E-2345**	2	TEE-O-RING	
	2	2,3	**6N-6984**	11	MOUNT-RUBBER	
	3	2	**9F-2167**	2	SCREW-PURGE	
	4	2	**108-8393**	2	CAP	
	5	2	*169-7403*	2	ADAPTER AS	
					(EACH INCLUDES)	
		2	**3J-1907**	1	SEAL-O-RING	
		2	**6G-3432**	1	ADAPTER (HEX)	
	6	2	*172-5761*	2	TEE AS	
					(EACH INCLUDES)	
		2	**3K-0360**	1	SEAL-O-RING	
		2	**6V-8398**	1	SEAL-O-RING	
		2	**126-8306**	1	TEE-O-RING	
	7	2	**172-6525**	1	PLATE	
	8	2	**179-4327**	1	TUBE AS	
	9	2	**179-4328**	1	TUBE AS	
	10	2	**180-8145**	1	SEAL	
	11	3	**191-0888**	1	PLATE	
Y	12	2	*194-4072*	1	ACCUMULATOR GP-BRAKE	570
	13	2	**217-9037**	1	VALVE GP-BRAKE	
L		1	**204-0281**	1	PEDAL AS	
P		1	**217-9036**	1	VALVE AS	
	14	2	**200-8473**	1	PLATE AS	
	15	2	**200-8475**	1	TUBE AS	
	16	2	**200-8476**	1	TUBE AS	
	17	2	**200-8481**	1	GASKET	
I	18	3	**208-7969**	1	HOSE AS	
I	19	3	**208-7970**	1	HOSE AS	
I	20	3	**208-7971**	1	HOSE AS	
I	21	3	**208-7972**	1	HOSE AS	
I	22	3	**208-7973**	1	HOSE AS	
I	23	3	**208-7974**	1	HOSE AS	
I	24	3	**208-7975**	1	HOSE AS	
I	25	3	**209-9136**	1	HOSE AS	
	26	2	*148-8364*	2	ELBOW AS	
					(EACH INCLUDES)	
		2	**3K-0360**	1	SEAL-O-RING	
		2	**6V-8398**	1	SEAL-O-RING	
		2	**6V-8625**	1	ELBOW	
	27	2	*148-8418*	2	REDUCER GP	
					(EACH INCLUDES)	
		2	**6V-8942**	1	REDUCER-O-RING (FACE)	
		2	**6V-8398**	1	SEAL-O-RING	
	28	2	*148-8427*	2	TEE AS	
					(EACH INCLUDES)	
		2	**8T-6895**	1	TEE-UNION	
		2	**6V-8398**	3	SEAL-O-RING	
	29	1	*148-8444*	2	TEE AS-SWIVEL	
					(EACH INCLUDES)	
		1	**6V-8398**	2	SEAL-O-RING	
		1	**6V-9837**	1	TEE-SWIVEL	
	30	1	*148-8457*	4	UNION AS	
					(EACH INCLUDES)	
		1	**6V-8398**	2	SEAL-O-RING	
		1	**6V-8995**	1	UNION	
	31	2	*153-6241*	1	ELBOW GP	

200-8472 **CONTROL GP-SERVICE BRAKE** *(contd.)* **i01687584**

NOTE	REF NO	GRAPHIC REF	PART NUMBER	QTY	PART NAME 1 2 3 4 5 6 (PRODUCT LEVEL)	SEE PAGE
		2	**6V-8398**	1	SEAL-O-RING	
		2	**8C-8989**	1	ELBOW	
	32	3	*164-5580*	1	TEE AS	
		3	**6V-8398**	2	SEAL-O-RING	
		3	**6V-9489**	1	TEE-BULKHEAD	
		3	**6V-9746**	1	SEAL-O-RING	
	33	2	*164-6864*	2	ELBOW AS	
					(EACH INCLUDES)	
		2	**6V-8398**	1	SEAL-O-RING	
		2	**7J-9108**	1	SEAL-O-RING	
		2	**8T-1810**	1	ELBOW	
	34	2	*164-8909*	2	ADAPTER-FAN	
					(EACH INCLUDES)	
		2	**3K-0360**	1	SEAL-O-RING	
		2	**6V-8398**	1	SEAL-O-RING	
		2	**8T-0077**	1	CONNECTOR	
	35	2	**3D-2824**	2	SEAL-O-RING	
	36	3	**6V-1228**	1	CLIP	
	37	2	**6V-8556**	2	NUT (1-3/16-12-THD)	
	38	1,3	**6V-9169**	9	NUT-BULKHEAD (13/16-16-THD)	
	39	2	**6V-9746**	2	SEAL-O-RING	
	40	2,3	**8M-4069**	11	WASHER (10.3X38.1X5-MM THK)	
	41	2,3	**8T-4121**	14	WASHER-HARD (11X21X2.5-MM THK)	
M	42	3	**8T-4137**	2	BOLT (M10X1.5X20-MM)	
M	43	2	**8T-4186**	6	BOLT (M10X1.5X40-MM)	
M	44	2,3	**8T-4195**	6	BOLT (M10X1.5X30-MM)	
M	45	2	**8T-4971**	3	BOLT (M6X1X30-MM)	
	46	3	**9X-8250**	4	CLIP	
	47	2	**9X-8256**	3	WASHER (6.6X12X2-MM THK)	
					AVAILABLE REPAIR KIT(S):	
L			**204-0275**	1	KIT-REPAIR	
					(INCLUDES CLIP, BUSHING, BEARING)	
P			**204-0273**	1	KIT-REPAIR	
					(INCLUDES SEALS AND BOOT)	

I-REFER TO HYDRAULIC INFORMATION SYSTEM
L-KIT MARKED L SERVICES PART MARKED L
M-METRIC PART
P-KIT MARKED P SERVICES PART MARKED P
Y-SEPARATE ILLUSTRATION

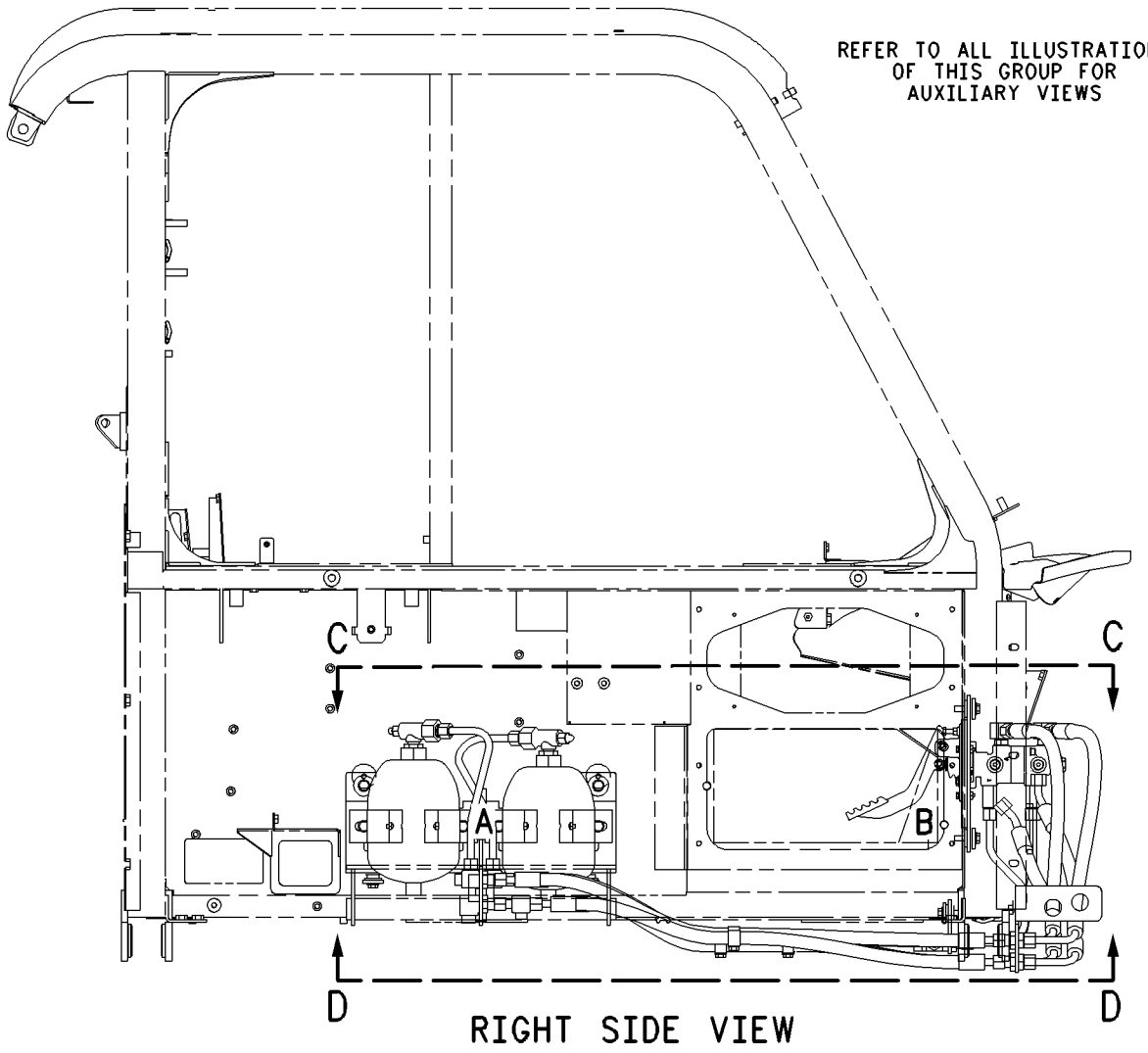

RIGHT SIDE VIEW

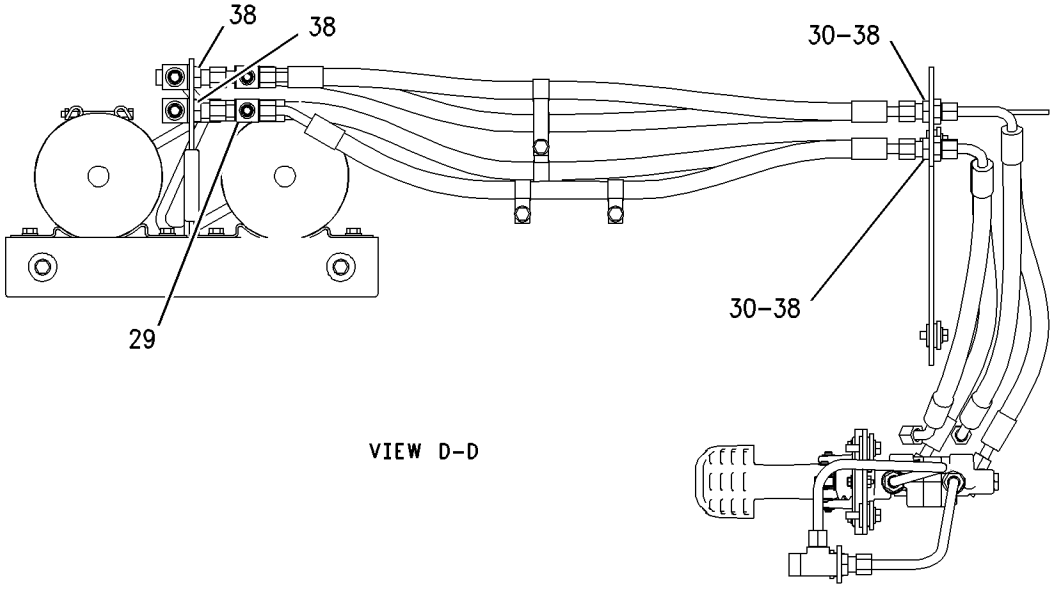

VIEW D-D

GRAPHIC #1 g00841107

200-8472 **CONTROL GP-SERVICE BRAKE** *(contd.)* **i01687584**

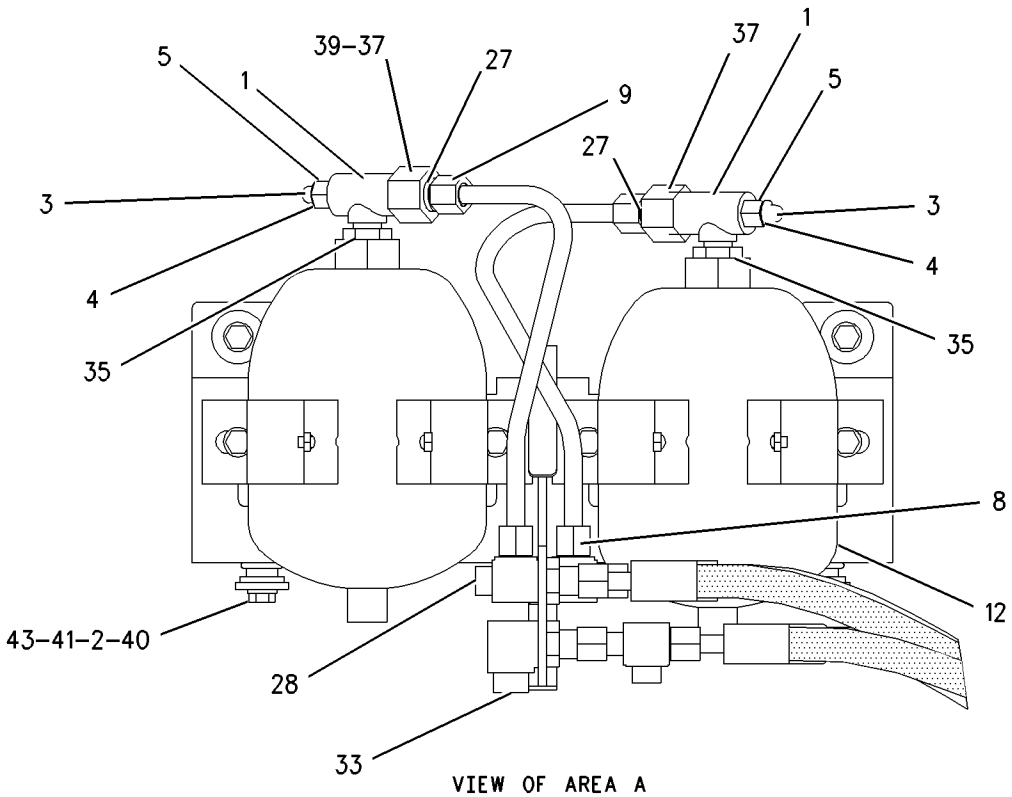

VIEW OF AREA A

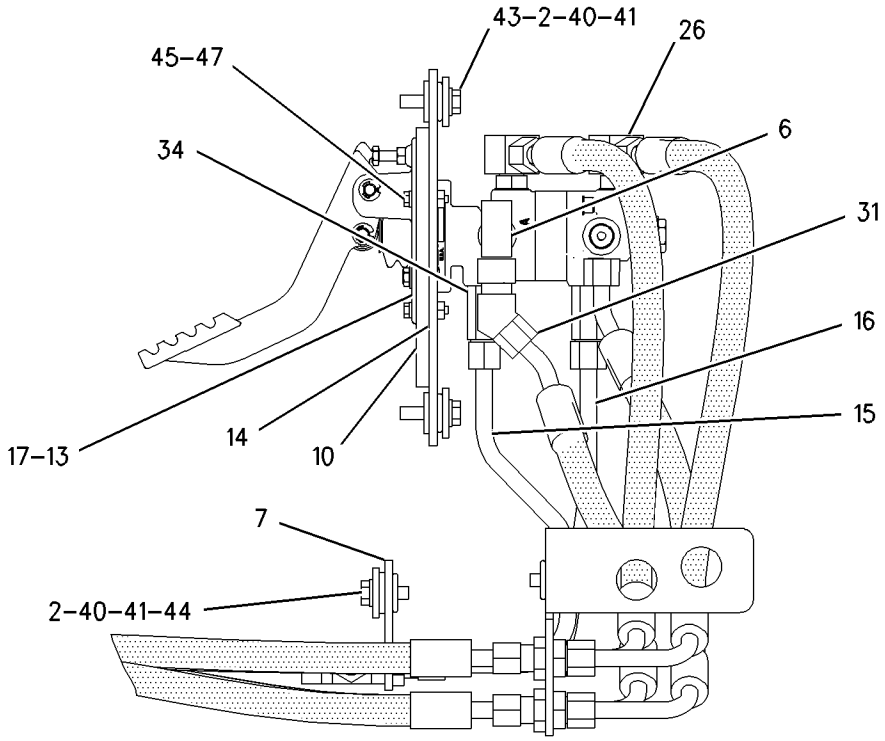

VIEW OF AREA B

GRAPHIC #2 g00797094

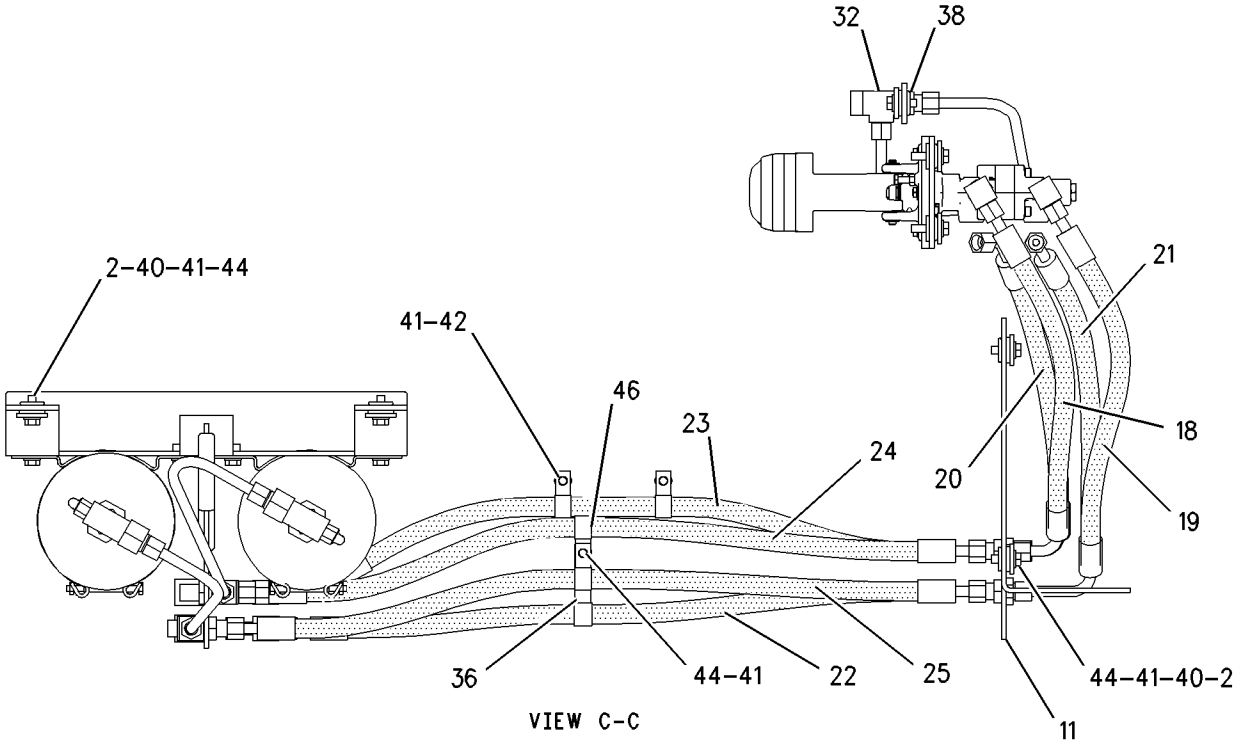

VIEW C-C

GRAPHIC #3 **<END>** g00797074

200-8472 CONTROL GP-SERVICE BRAKE

S/N: AXM856-UP

PART OF 153-5485, 229-8087 CAB AR

SMCS-4269 **i02217545**

NOTE	REF NO	GRAPHIC REF	PART NUMBER	QTY	PART NAME 1 2 3 4 5 6 (PRODUCT LEVEL)	SEE PAGE
	1	2	**3E-2345**	2	TEE-O-RING	
	2	2,3	**6N-6984**	11	MOUNT-RUBBER	
	3	2	**9F-2167**	2	SCREW-PURGE	
	4	2	**108-8393**	2	CAP	
	5	2	*169-7403*	2	ADAPTER AS	
					(EACH INCLUDES)	
		2	**3J-1907**	1	SEAL-O-RING	
		2	**6G-3432**	1	ADAPTER (HEX)	
	6	2	*172-5761*	2	TEE AS	
					(EACH INCLUDES)	
		2	**3K-0360**	1	SEAL-O-RING	
		2	**6V-8398**	1	SEAL-O-RING	
		2	**126-8306**	1	TEE-O-RING	
	7	2	**172-6525**	1	PLATE	
C	8	2	**251-8794**	1	TUBE AS	
C	9	2	**251-8796**	1	TUBE AS	
	10	2	**180-8145**	1	SEAL	
	11	3	**191-0888**	1	PLATE	
CY	12	2	*251-8789*	1	ACCUMULATOR GP-BRAKE	574
	13	2	**217-9037**	1	VALVE GP-BRAKE	
L		1	**204-0281**	1	PEDAL AS	
P		1	**217-9036**	1	VALVE AS	
	14	2	**200-8473**	1	PLATE AS	
	15	2	**200-8475**	1	TUBE AS	
	16	2	**200-8476**	1	TUBE AS	
	17	2	**200-8481**	1	GASKET	
I	18	3	**208-7969**	1	HOSE AS	
I	19	3	**208-7970**	1	HOSE AS	
I	20	3	**208-7971**	1	HOSE AS	
I	21	3	**208-7972**	1	HOSE AS	
I	22	3	**208-7973**	1	HOSE AS	
I	23	3	**208-7974**	1	HOSE AS	
I	24	3	**208-7975**	1	HOSE AS	
I	25	3	**209-9136**	1	HOSE AS	
	26	2	*148-8364*	2	ELBOW AS	
					(EACH INCLUDES)	
		2	**3K-0360**	1	SEAL-O-RING	
		2	**6V-8398**	1	SEAL-O-RING	
		2	**6V-8625**	1	ELBOW	
	27	2	*148-8418*	2	REDUCER GP	
					(EACH INCLUDES)	
		2	**6V-8942**	1	REDUCER-O-RING (FACE)	
		2	**6V-8398**	1	SEAL-O-RING	
	28	2	*148-8427*	2	TEE AS	
					(EACH INCLUDES)	
		2	**8T-6895**	1	TEE-UNION	
		2	**6V-8398**	3	SEAL-O-RING	
	29	1	*148-8444*	2	TEE AS-SWIVEL	
					(EACH INCLUDES)	
		1	**6V-8398**	2	SEAL-O-RING	
		1	**6V-9837**	1	TEE-SWIVEL	
	30	1	*148-8457*	4	UNION AS	
					(EACH INCLUDES)	
		1	**6V-8398**	2	SEAL-O-RING	
		1	**6V-8995**	1	UNION	
	31	2	*153-6241*	1	ELBOW GP	

200-8472 **CONTROL GP-SERVICE BRAKE** *(contd.)* **i02217545**

NOTE	REF NO	GRAPHIC REF	PART NUMBER	QTY	PART NAME 1 2 3 4 5 6 (PRODUCT LEVEL)	SEE PAGE
		2	**6V-8398**	1	SEAL-O-RING	
		2	**8C-8989**	1	ELBOW	
	32	3	*164-5580*	1	TEE AS	
		3	**6V-8398**	2	SEAL-O-RING	
		3	**6V-9489**	1	TEE-BULKHEAD	
		3	**6V-9746**	1	SEAL-O-RING	
	33	2	*164-6864*	2	ELBOW AS	
					(EACH INCLUDES)	
		2	**6V-8398**	1	SEAL-O-RING	
		2	**7J-9108**	1	SEAL-O-RING	
		2	**8T-1810**	1	ELBOW	
	34	2	*164-8909*	2	ADAPTER-FAN	
					(EACH INCLUDES)	
		2	**3K-0360**	1	SEAL-O-RING	
		2	**6V-8398**	1	SEAL-O-RING	
		2	**8T-0077**	1	CONNECTOR	
	35	2	**3D-2824**	2	SEAL-O-RING	
	36	3	**6V-1228**	1	CLIP	
	37	2	**6V-8556**	2	NUT (1-3/16-12-THD)	
	38	1,3	**6V-9169**	9	NUT-BULKHEAD (13/16-16-THD)	
	39	2	**6V-9746**	2	SEAL-O-RING	
	40	2,3	**8M-4069**	11	WASHER (10.3X38.1X5-MM THK)	
	41	2,3	**8T-4121**	13	WASHER-HARD (11X21X2.5-MM THK)	
M	42	3	**8T-4137**	1	BOLT (M10X1.5X20-MM)	
M	43	2	**8T-4186**	6	BOLT (M10X1.5X40-MM)	
M	44	2,3	**8T-4195**	6	BOLT (M10X1.5X30-MM)	
M	45	2	**8T-4971**	3	BOLT (M6X1X30-MM)	
	46	3	**9X-8250**	3	CLIP	
	47	2	**9X-8256**	3	WASHER (6.6X12X2-MM THK)	
					AVAILABLE REPAIR KIT(S):	
L			**204-0275**	1	KIT-REPAIR	
					(INCLUDES CLIP, BUSHING, BEARING)	
P			**204-0273**	1	KIT-REPAIR	
					(INCLUDES SEALS AND BOOT)	

C-CHANGE FROM PREVIOUS TYPE
I-REFER TO HYDRAULIC INFORMATION SYSTEM
L-KIT MARKED L SERVICES PART MARKED L
M-METRIC PART
P-KIT MARKED P SERVICES PART MARKED P
Y-SEPARATE ILLUSTRATION

200-8472 **CONTROL GP-SERVICE BRAKE** *(contd.)* **i02217545**

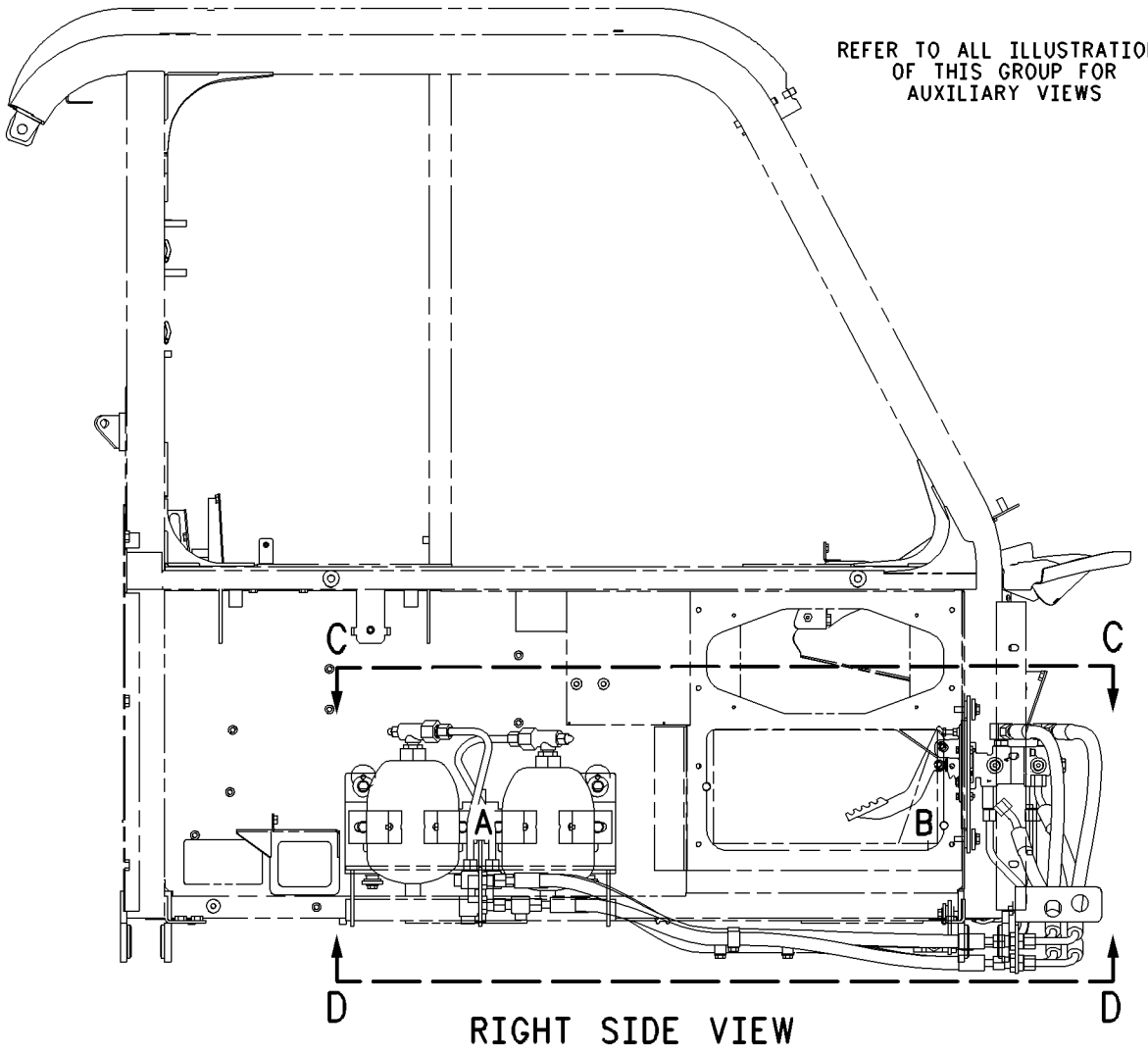

RIGHT SIDE VIEW

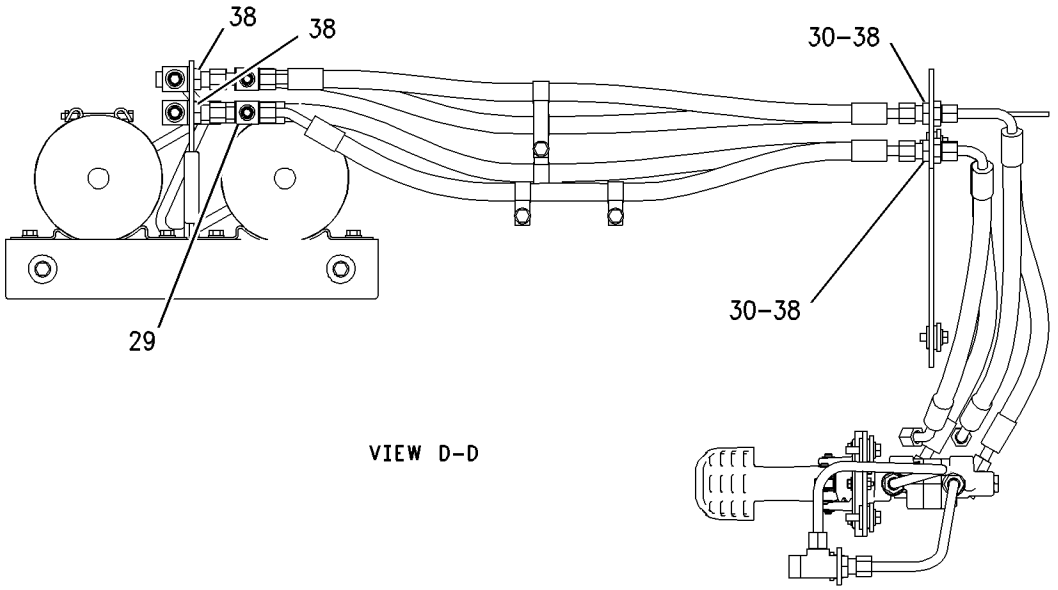

VIEW D-D

GRAPHIC #1 g00841107

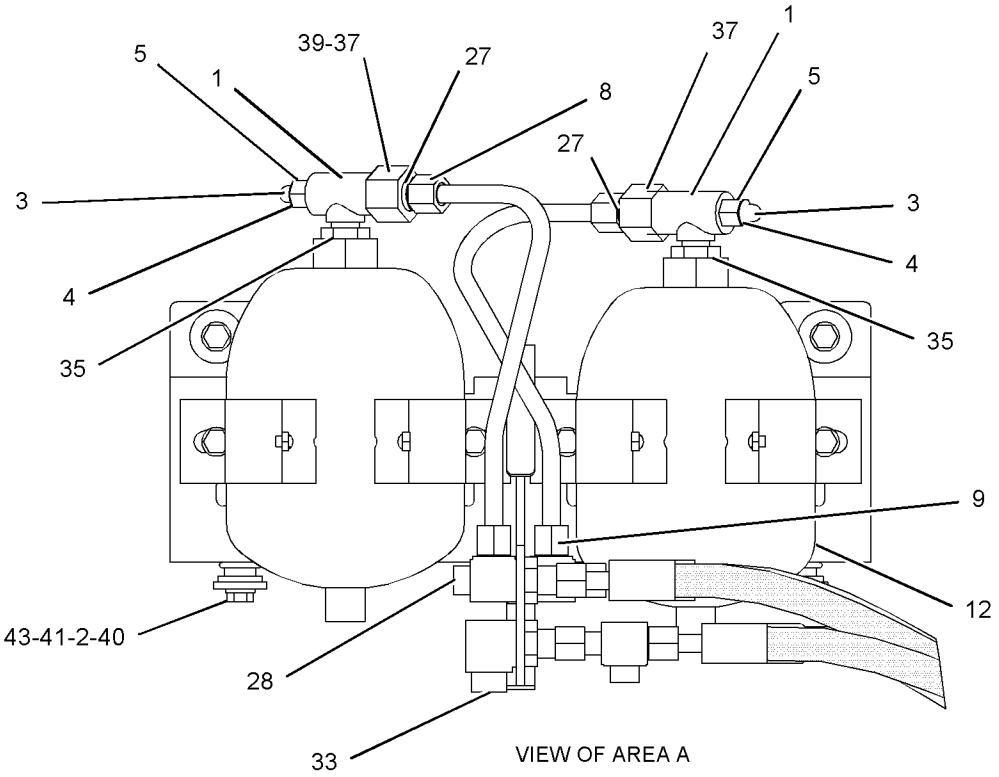

VIEW OF AREA A

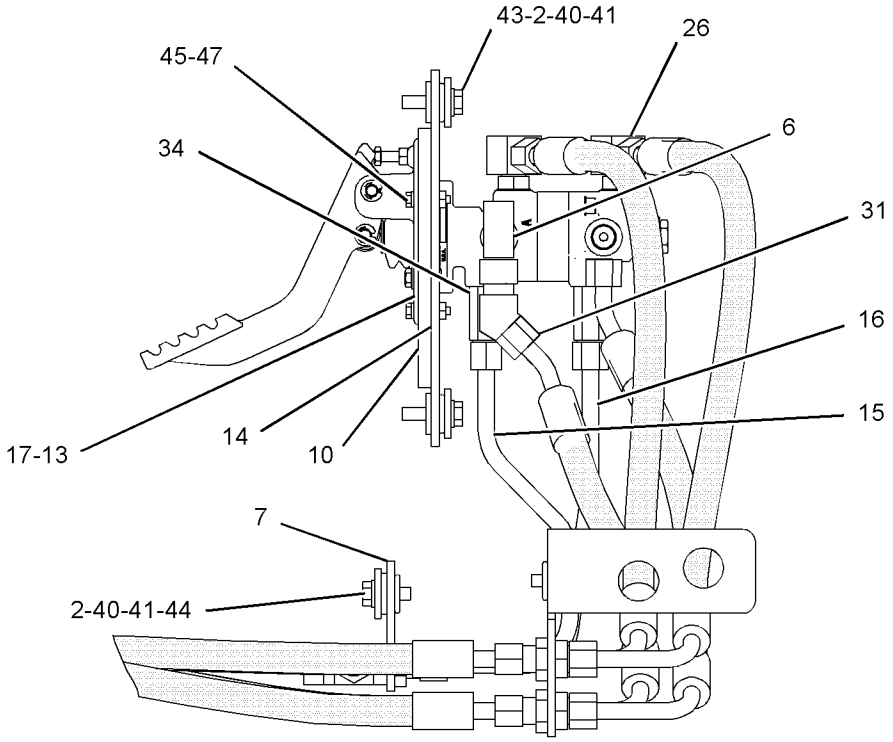

VIEW OF AREA B

GRAPHIC #2 g01099774

200-8472 **CONTROL GP-SERVICE BRAKE** *(contd.)* **i02217545**

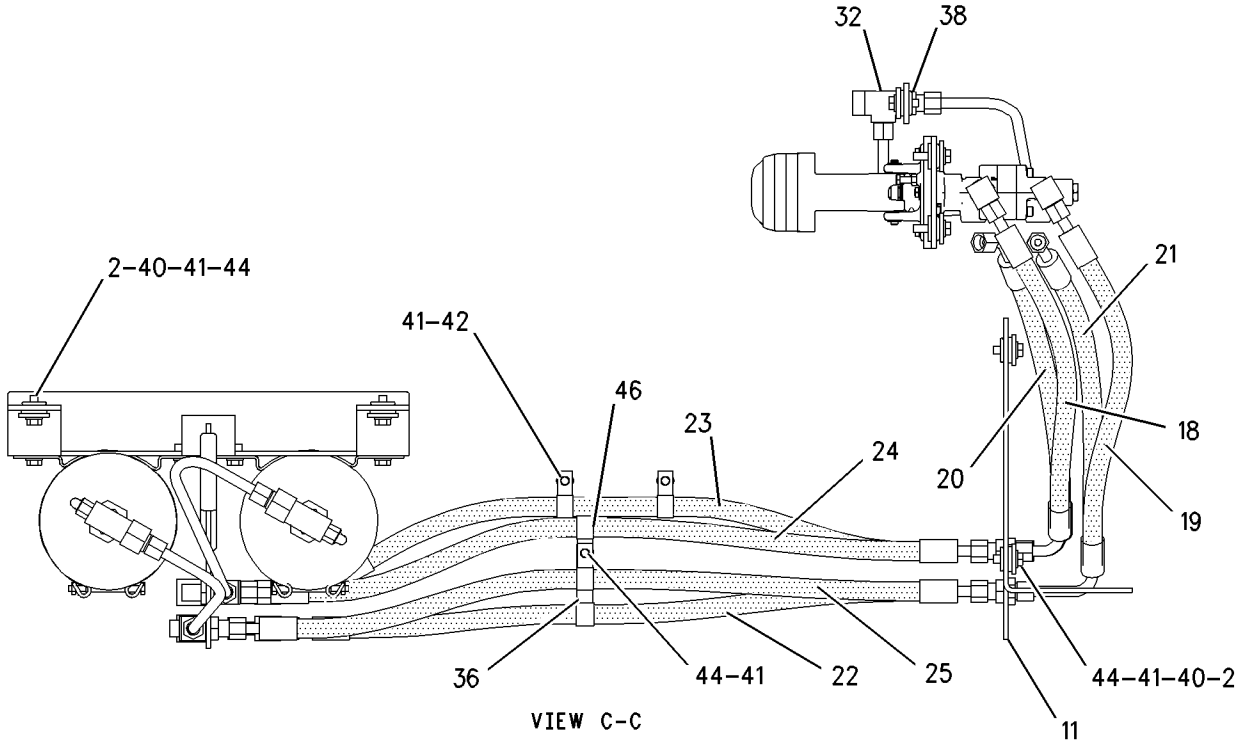

VIEW C-C

GRAPHIC #3 **<END>** g00797074

BRAKING SYSTEM

251-1445 CONTROL GP-SERVICE BRAKE

S/N: AXM1-UP
PART OF 233-7462 STARTING AR-COLD WEATHER
AN ATTACHMENT

SMCS-4269 **i02096941**

NOTE	REF NO	GRAPHIC REF	PART NUMBER	QTY	PART NAME 1 2 3 4 5 6 (PRODUCT LEVEL)	SEE PAGE
	1	1	**2W-9710**	3	MOUNT AS	
	2	1	**3E-2345**	2	TEE-O-RING	
	3	1	**6N-6984**	10	MOUNT-RUBBER	
	4	1	**9F-2167**	2	SCREW-PURGE	
	5	1	**108-8393**	2	CAP	
	6	1	*169-7403*	2	ADAPTER AS	
					(EACH INCLUDES)	
		1	**3J-1907**	1	SEAL-O-RING	
		1	**6G-3432**	1	ADAPTER (HEX)	
	7	1	*172-5761*	2	TEE AS	
					(EACH INCLUDES)	
		1	**3K-0360**	1	SEAL-O-RING	
		1	**6V-8398**	1	SEAL-O-RING	
		1	**126-8306**	1	TEE-O-RING	
	8	1	**172-6525**	1	PLATE	
	9	1	**180-8145**	1	SEAL	
	10	1	**191-0888**	1	PLATE	
	11	1	**200-8473**	1	PLATE AS	
M		1	**6V-9632**	3	NUT-WELD (M6X1-THD)	
	12	1	**200-8475**	1	TUBE AS	
	13	1	**200-8476**	1	TUBE AS	
	14	1	**200-8481**	1	GASKET	
I	15	1	**208-7969**	1	HOSE AS	
I	16	1	**208-7970**	1	HOSE AS	
I	17	1	**208-7971**	1	HOSE AS	
I	18	1	**208-7972**	1	HOSE AS	
I	19	1	**208-7973**	1	HOSE AS	
I	20	1	**208-7975**	1	HOSE AS	
I	21	1	**209-9136**	1	HOSE AS	
	22	1	**217-9037**	1	VALVE GP-BRAKE	
J		1	**204-0281**	1	PEDAL AS	
L		1	**217-9036**	1	VALVE AS	
Y	23	1	*251-1446*	1	ACCUMULATOR GP-BRAKE	571
	24	1	**251-1934**	1	TUBE AS	
	25	1	*148-8364*	2	ELBOW AS	
					(EACH INCLUDES)	
		1	**3K-0360**	1	SEAL-O-RING	
		1	**6V-8398**	1	SEAL-O-RING	
		1	**6V-8625**	1	ELBOW	
	26	1	**251-1935**	1	TUBE AS	
	27	1	*148-8418*	2	REDUCER GP	
					(EACH INCLUDES)	
		1	**6V-8398**	1	SEAL-O-RING	
		1	**6V-8942**	1	REDUCER-O-RING (FACE)	
	28	1	*148-8427*	2	TEE AS	
					(EACH INCLUDES)	
		1	**6V-8398**	3	SEAL-O-RING	
		1	**8T-6895**	1	TEE-UNION	
	29	1	*148-8444*	2	TEE AS-SWIVEL	
					(EACH INCLUDES)	
		1	**6V-8398**	2	SEAL-O-RING	
		1	**6V-9837**	1	TEE-SWIVEL	
	30	1	*148-8457*	4	UNION AS	
					(EACH INCLUDES)	
		1	**6V-8398**	2	SEAL-O-RING	

251-1445 **CONTROL GP-SERVICE BRAKE** *(contd.)* **i02096941**

NOTE	REF NO	GRAPHIC REF	PART NUMBER	QTY	PART NAME 1 2 3 4 5 6 (PRODUCT LEVEL)	SEE PAGE
		1	**6V-8995**	1	UNION	
	31	1	*153-6241*	1	ELBOW GP	
		1	**6V-8398**	1	SEAL-O-RING	
		1	**8C-8989**	1	ELBOW	
	32	1	*164-5580*	1	TEE AS	
		1	**6V-8398**	2	SEAL-O-RING	
		1	**6V-9489**	1	TEE-BULKHEAD	
		1	**6V-9746**	1	SEAL-O-RING	
	33	1	*164-6864*	2	ELBOW AS	
					(EACH INCLUDES)	
		1	**6V-8398**	1	SEAL-O-RING	
		1	**7J-9108**	1	SEAL-O-RING	
		1	**8T-1810**	1	ELBOW	
	34	1	*164-8908*	2	CONNECTOR GP	
					(EACH INCLUDES)	
		1	**3K-0360**	1	SEAL-O-RING	
		1	**6V-8398**	1	SEAL-O-RING	
		1	**8T-0077**	1	CONNECTOR	
I	35	1	**208-7974**	1	HOSE AS	
	36	1	**3D-2824**	2	SEAL-O-RING	
	37	1	**6V-1228**	1	CLIP	
	38	1	**6V-8556**	2	NUT (1-3/16-12-THD)	
	39	1	**6V-9169**	9	NUT-BULKHEAD (13/16-16-THD)	
	40	1	**6V-9746**	2	SEAL-O-RING	
	41	1	**8M-4069**	13	WASHER (10.3X38.1X5-MM THK)	
	42	1	**8T-4121**	16	WASHER-HARD (11X21X2.5-MM THK)	
M	43	1	**8T-4137**	2	BOLT (M10X1.5X20-MM)	
M	44	1	**8T-4186**	7	BOLT (M10X1.5X40-MM)	
M	45	1	**8T-4195**	4	BOLT (M10X1.5X30-MM)	
M	46	1	**8T-4196**	3	BOLT (M10X1.5X35-MM)	
M	47	1	**8T-4971**	3	BOLT (M6X1X30-MM)	
	48	1	**9X-8250**	4	CLIP	
	49	1	**9X-8256**	3	WASHER (6.6X12X2-MM THK)	
					AVAILABLE REPAIR KIT(S):	
J			**204-0275**	1	KIT-REPAIR	
L			**204-0273**	1	KIT-REPAIR	

I-REFER TO HYDRAULIC INFORMATION SYSTEM
J-KIT MARKED J AVAILABLE FOR PART MARKED J
L-KIT MARKED L AVAILABLE FOR PART MARKED L
M-METRIC PART
Y-SEPARATE ILLUSTRATION

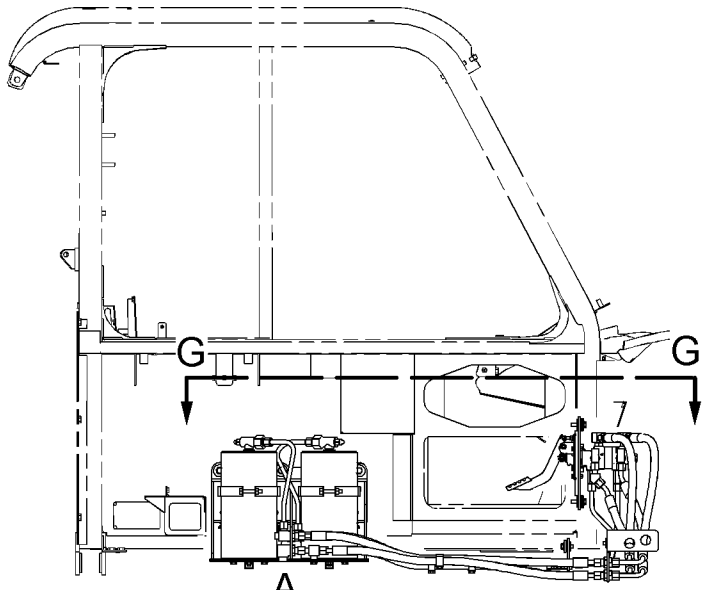

RIGHT SIDE VIEW

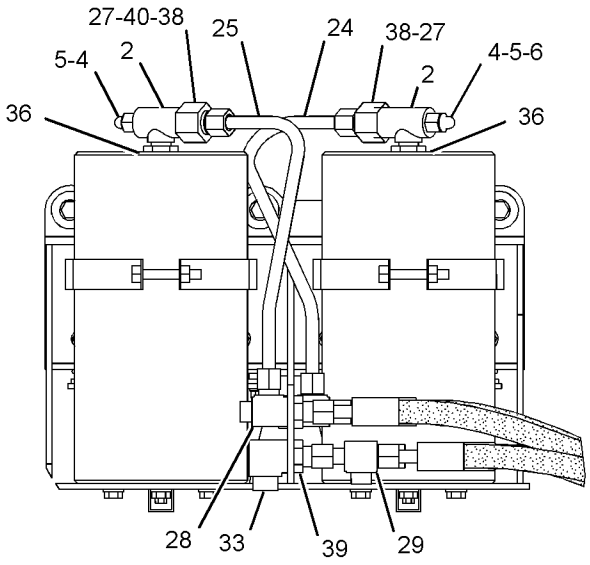

VIEW OF AREA A

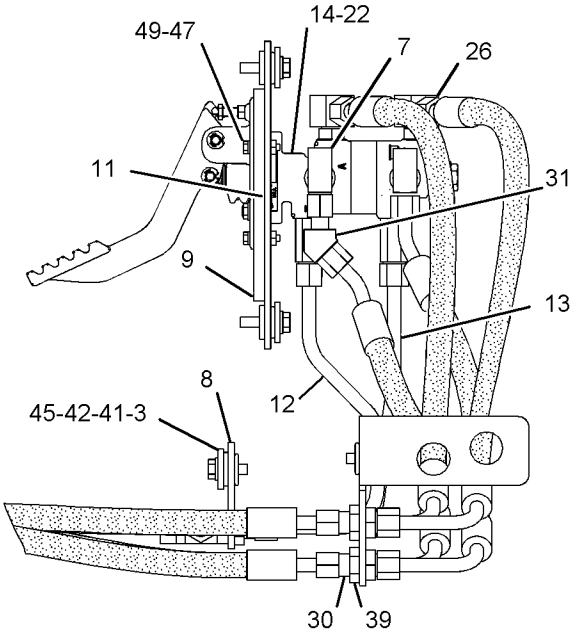

VIEW OF AREA B

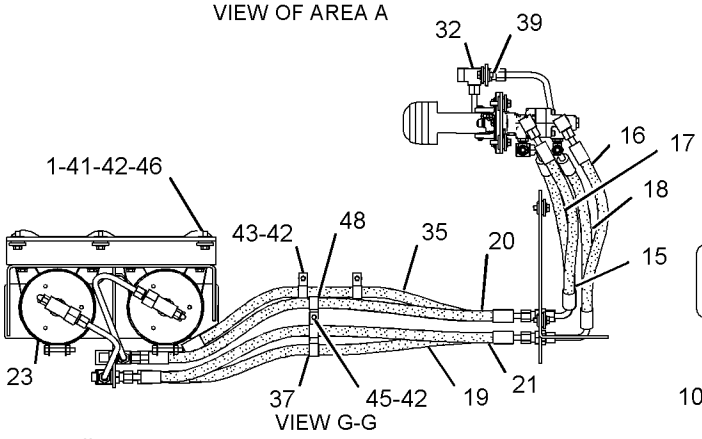

VIEW G-G

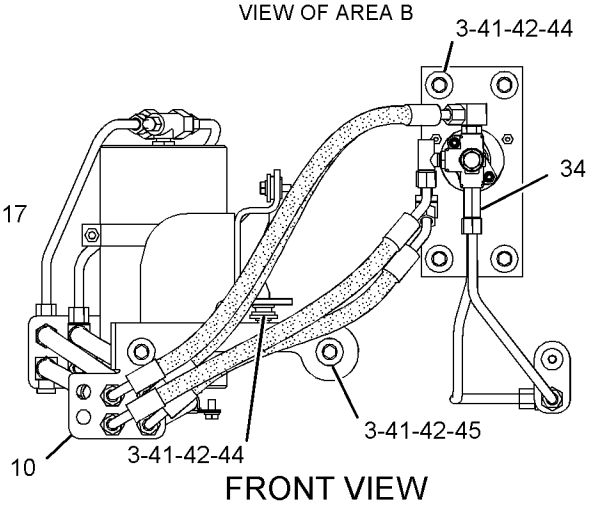

FRONT VIEW

GRAPHIC #1 **<END>** g01088613

4P-7731 CORE GP-OIL COOLER–TRANSMISSION*R

S/N: BET200-UP

PART OF 168-8312 COOLER GP-BRAKE & TORQUE CONV

SMCS-1365 **i01998483**

NOTE	REF NO	GRAPHIC REF	PART NUMBER	QTY	PART NAME 1 2 3 4 5 6 (PRODUCT LEVEL)	SEE PAGE
R	1	1	**7E-2660**	1	CORE GP-OIL COOLER (TRANSMISSION)	
	2	1	**3K-8460**	1	PLUG	
	3	1	**5P-7814**	1	SEAL-O-RING	

R-REMFG PART MAY BE AVAILABLE

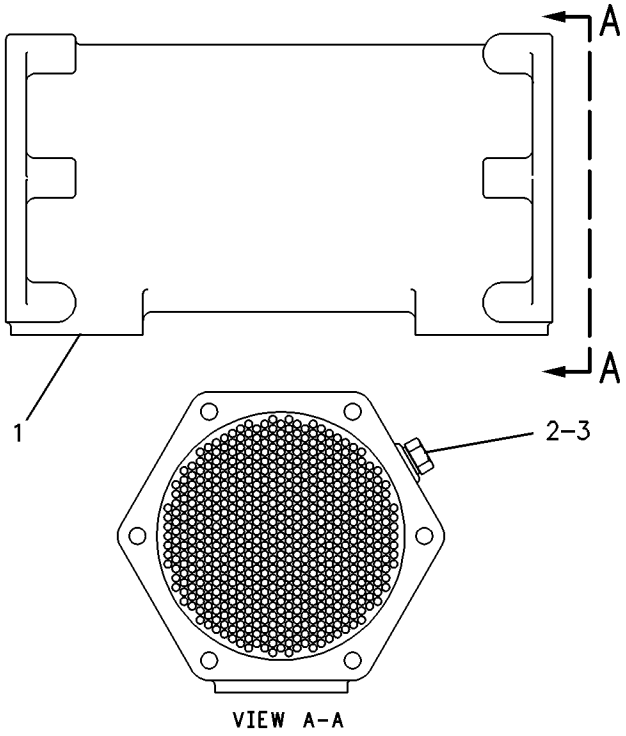

VIEW A-A

GRAPHIC #1 **<END>** g00233484

BRAKING SYSTEM

190-6280 LINES GP-SERVICE BRAKE—CENTER AXLE

S/N: AXM1-857

PART OF 141-6892 AXLE GP-CENTER

SMCS-4257 **i01858879**

NOTE	REF NO	GRAPHIC REF	PART NUMBER	QTY	PART NAME 1 2 3 4 5 6 (PRODUCT LEVEL)	SEE PAGE
	1	1	**9F-2167**	1	SCREW-PURGE	
I	2	1	**163-8374**	1	HOSE AS	
Y	3	1	**169-3655**	1	SLACK ADJUSTER GP	615
	4	1	*169-7403*	1	ADAPTER AS	
		1	**6G-3432**	1	ADAPTER (HEX)	
		1	**3J-1907**	1	SEAL-O-RING	
I	5	1	**190-6281**	1	HOSE AS	
	6	1	*150-3037*	1	ELBOW GP	
		1	**8T-2530**	1	ELBOW	
		1	**3K-0360**	1	SEAL-O-RING	
		1	**7J-9108**	1	SEAL-O-RING	
	7	1	*150-4048*	1	ELBOW AS	
		1	**6V-8722**	1	ELBOW	
		1	**3K-0360**	1	SEAL-O-RING	
		1	**7J-9108**	1	SEAL-O-RING	
	8	1	*155-3504*	2	ELBOW GP	
					(EACH INCLUDES)	
		1	**6V-9003**	1	ELBOW	
		1	**2M-9780**	1	SEAL-O-RING	
		1	**7J-9108**	1	SEAL-O-RING	
	9	1	**5P-7464**	2	CLIP (SLOT)	
	10	1	**5P-7465**	2	CLIP (TAB)	
	11	1	**6V-7359**	2	GROMMET	
	12	1	**3J-5696**	2	PIPE	
	13	1	**7X-7729**	2	WASHER (11X25X3-MM THK)	
M	14	1	**8T-4139**	2	BOLT (M12X1.75X30-MM)	
M	15	1	**8T-4185**	2	BOLT (M10X1.5X50-MM)	
	16	1	**8T-4223**	2	WASHER-HARD (13.5X25.5X3-MM THK)	

I-REFER TO HYDRAULIC INFORMATION SYSTEM
M-METRIC PART
Y-SEPARATE ILLUSTRATION

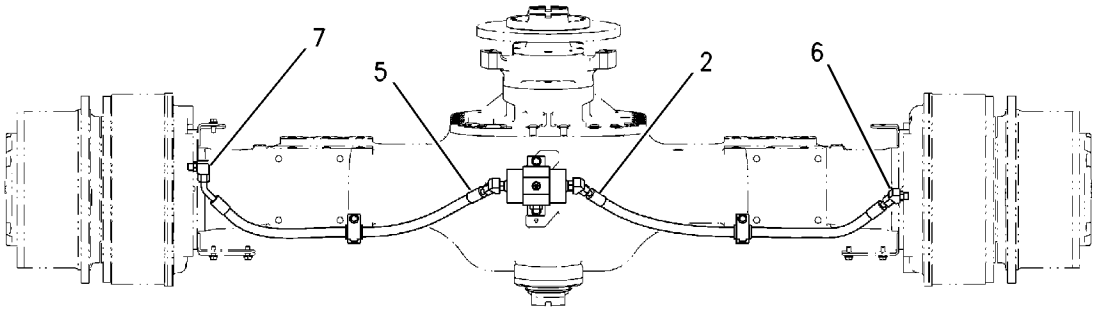

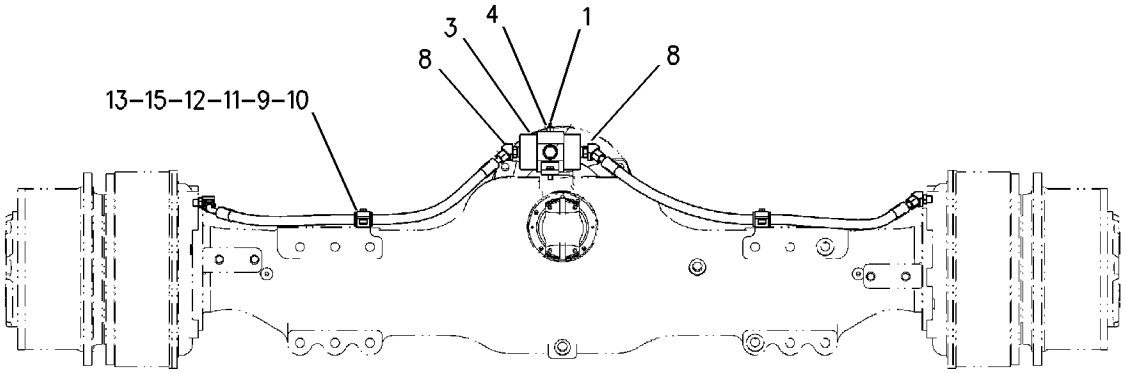

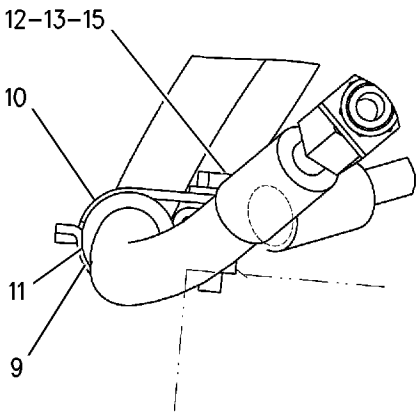

VIEW OF AREA B

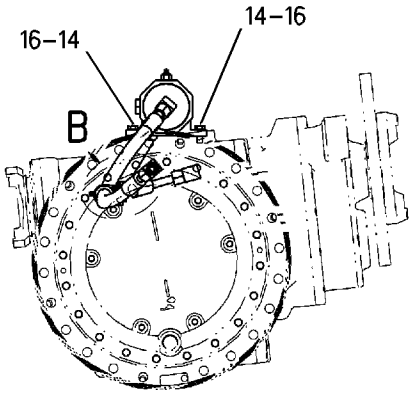

GRAPHIC #1 **<END>** g00849736

BRAKING SYSTEM

191-3491 LINES GP-SERVICE BRAKE—FRONT AXLE

S/N: AXM1-857

PART OF 141-6895 AXLE GP-FRONT

SMCS-4257 **i01846739**

NOTE	REF NO	GRAPHIC REF	PART NUMBER	QTY	PART NAME 1 2 3 4 5 6 (PRODUCT LEVEL)	SEE PAGE
	1	1	**9F-2167**	1	SCREW-PURGE	
	2	1	**151-9817**	1	BRACKET AS	
M		1	**8T-3597**	2	NUT-WELD (M12X1.75-THD)	
Y	3	1	**169-3655**	1	SLACK ADJUSTER GP	615
	4	1	**6G-3432**	1	ADAPTER (HEX)	
		1	**3J-1907**	1	SEAL-O-RING	
	5	1	**198-6823**	1	TUBE AS	
	6	1	**198-6824**	1	TUBE AS	
I	7	1	**9R-3695**	2	HOSE AS	
	8	1	*148-8342*	2	CONNECTOR GP	
					(EACH INCLUDES)	
		1	**6V-8632**	1	CONNECTOR	
		1	**3K-0360**	1	SEAL-O-RING	
		1	**7J-9108**	1	SEAL-O-RING	
	9	1	*155-3504*	2	ELBOW GP	
					(EACH INCLUDES)	
		1	**6V-9003**	1	ELBOW	
		1	**2M-9780**	1	SEAL-O-RING	
		1	**7J-9108**	1	SEAL-O-RING	
	10	1	**7J-9108**	2	SEAL-O-RING	
	11	1	**8T-4121**	2	WASHER-HARD (11X21X2.5-MM THK)	
M	12	1	**8T-4136**	2	BOLT (M10X1.5X25-MM)	
	13	1	**8T-4223**	2	WASHER-HARD (13.5X25.5X3-MM THK)	
M	14	1	**8T-4956**	2	BOLT (M12X1.75X35-MM)	
	15	1	**9R-1004**	2	CLIP (TAB)	
	16	1	**9R-1005**	2	CLIP (SLOT)	
	17	1	**7X-0732**	2	WASHER-HARD (10X22.5X8-MM THK)	

I-REFER TO HYDRAULIC INFORMATION SYSTEM
M-METRIC PART
Y-SEPARATE ILLUSTRATION

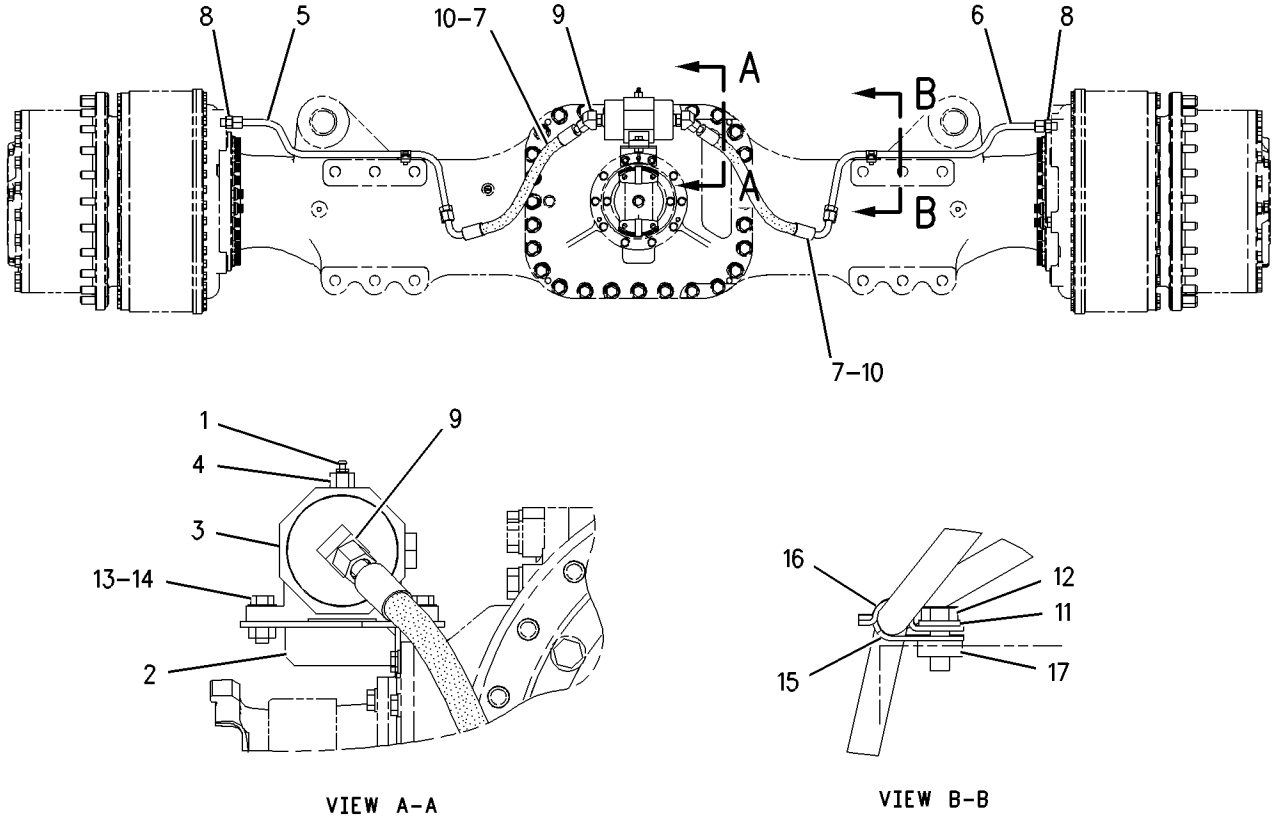

GRAPHIC #1 **<END>** g00763561

226-7365 LINES GP-SERVICE BRAKE—FRONT AXLE

S/N: AXM858-UP

PART OF 141-6895, 237-4738 AXLE GP-FRONT

SMCS-4257 **i01812022**

NOTE	REF NO	GRAPHIC REF	PART NUMBER	QTY	PART NAME 1 2 3 4 5 6 (PRODUCT LEVEL)	SEE PAGE
I	1	1	**9R-3695**	2	HOSE AS	
	2	1	**151-9817**	1	BRACKET AS	
M		1	**8T-3597**	2	NUT-WELD (M12X1.75-THD)	
	3	1	**198-6823**	1	TUBE AS	
	4	1	**198-6824**	1	TUBE AS	
	5	1	**224-2454**	1	MANIFOLD AS	
	6	1	*148-8342*	2	CONNECTOR GP	
					(EACH INCLUDES)	
		1	**3K-0360**	1	SEAL-O-RING	
		1	**6V-8632**	1	CONNECTOR	
		1	**7J-9108**	1	SEAL-O-RING	
	7	1	*155-3504*	2	ELBOW GP	
					(EACH INCLUDES)	
		1	**2M-9780**	1	SEAL-O-RING	
		1	**6V-9003**	1	ELBOW	
		1	**7J-9108**	1	SEAL-O-RING	
	8	1	**5P-1076**	2	WASHER-HARD (13.5X30X4-MM THK)	
	9	1	**7J-9108**	2	SEAL-O-RING	
	10	1	**7X-0732**	2	WASHER-HARD (10X22.5X8-MM THK)	
	11	1	**8T-4121**	2	WASHER-HARD (11X21X2.5-MM THK)	
M	12	1	**8T-4136**	2	BOLT (M10X1.5X25-MM)	
M	13	1	**8T-4192**	2	BOLT (M12X1.75X25-MM)	
	14	1	**9R-1004**	2	CLIP (TAB)	
	15	1	**9R-1005**	2	CLIP (SLOT)	

I-REFER TO HYDRAULIC INFORMATION SYSTEM
M-METRIC PART

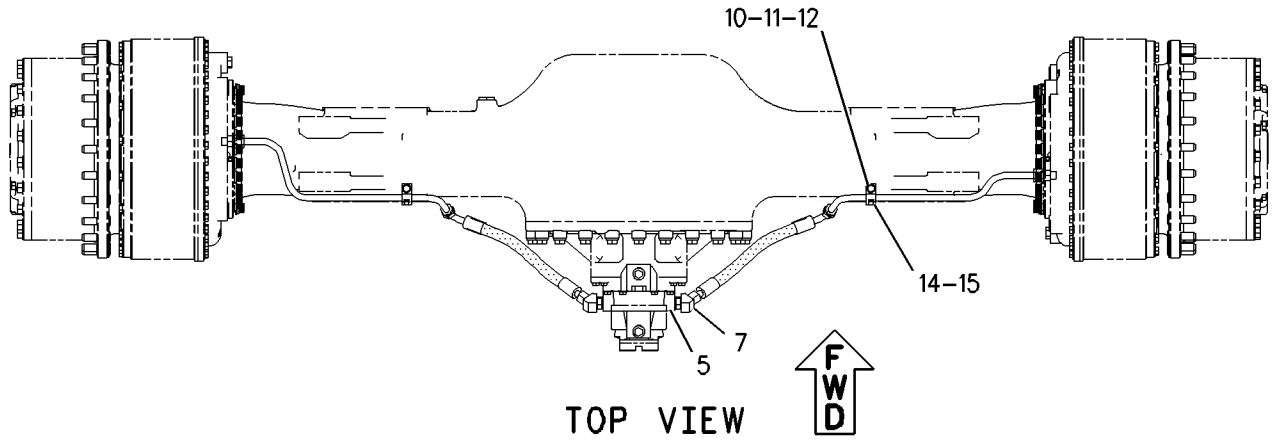

TOP VIEW

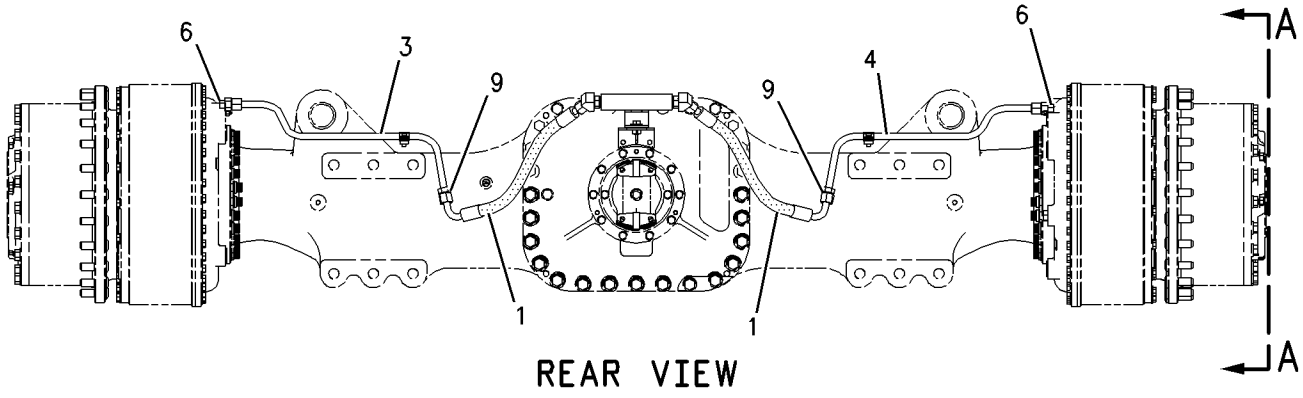

REAR VIEW

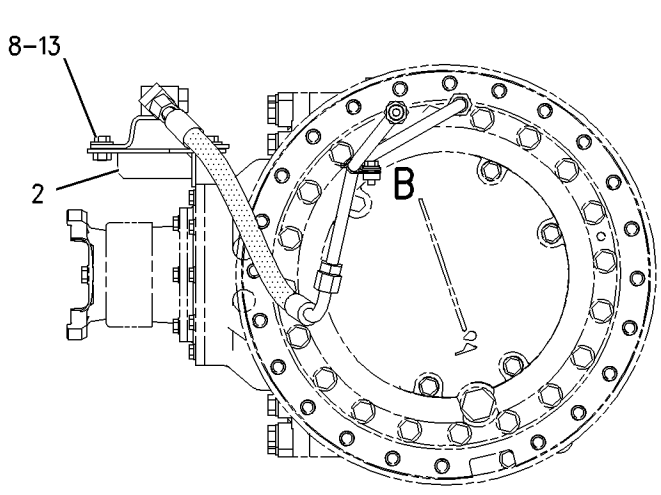

VIEW A–A

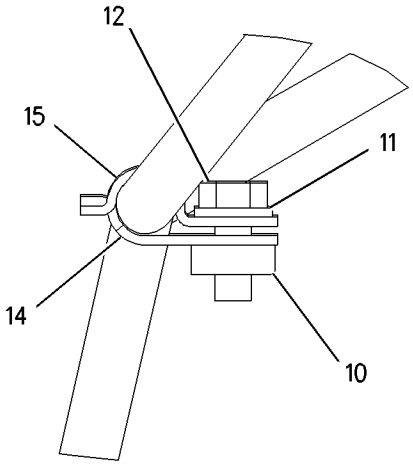

VIEW OF AREA B

GRAPHIC #1 **<END>** g00926512

BRAKING SYSTEM

226-7366 LINES GP-SERVICE BRAKE—CENTER AXLE

S/N: AXM858-UP

PART OF 141-6892 AXLE GP-CENTER

SMCS-4257 **i01822799**

NOTE	REF NO	GRAPHIC REF	PART NUMBER	QTY	PART NAME 1 2 3 4 5 6 (PRODUCT LEVEL)	SEE PAGE
I	1	1	**163-8374**	1	HOSE AS	
I	2	1	**190-6281**	1	HOSE AS	
	3	1	**224-2454**	1	MANIFOLD AS	
	4	1	*150-3037*	1	ELBOW GP	
		1	**3K-0360**	1	SEAL-O-RING	
		1	**7J-9108**	1	SEAL-O-RING	
		1	**8T-2530**	1	ELBOW	
	5	1	*150-4048*	1	ELBOW AS	
		1	**3K-0360**	1	SEAL-O-RING	
		1	**6V-8722**	1	ELBOW	
		1	**7J-9108**	1	SEAL-O-RING	
	6	1	*155-3504*	2	ELBOW GP	
					(EACH INCLUDES)	
		1	**2M-9780**	1	SEAL-O-RING	
		1	**6V-9003**	1	ELBOW	
		1	**7J-9108**	1	SEAL-O-RING	
	7	1	**3J-5696**	2	PIPE	
	8	1	**5P-1076**	2	WASHER-HARD (13.5X30X4-MM THK)	
	9	1	**5P-7464**	2	CLIP (SLOT)	
	10	1	**5P-7465**	2	CLIP (TAB)	
	11	1	**6V-7359**	2	GROMMET	
	12	1	**7X-7729**	2	WASHER (11X25X3-MM THK)	
M	13	1	**8T-4179**	2	BOLT (M12X1.75X20-MM)	
M	14	1	**8T-4185**	2	BOLT (M10X1.5X50-MM)	

I-REFER TO HYDRAULIC INFORMATION SYSTEM
M-METRIC PART

226-7366 **LINES GP-SERVICE BRAKE** *(contd.)* **i01822799**

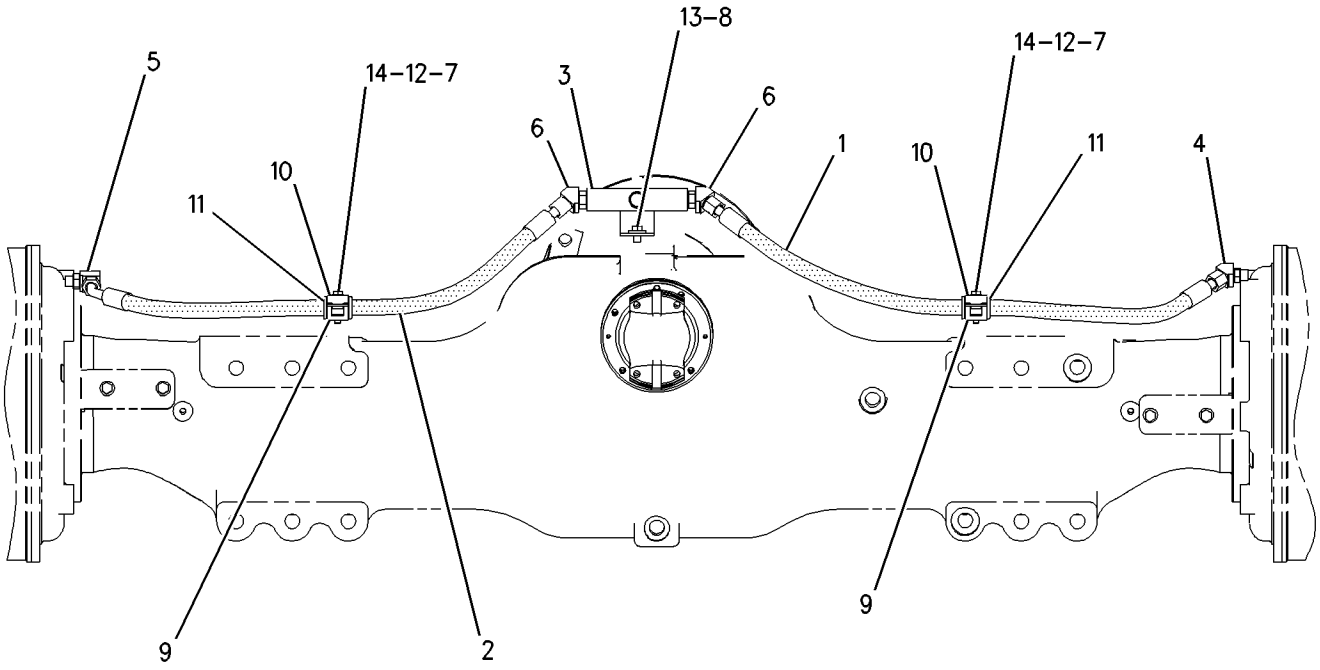

GRAPHIC #1 **<END>** g00932328

BRAKING SYSTEM

152-6961 PUMP & MTG GP-BRAKE

S/N: AXM1-UP

PART OF 152-6943 POWER TRAIN AR

SMCS-4268, 5070 **i02261923**

NOTE	REF NO	GRAPHIC REF	PART NUMBER	QTY	PART NAME 1 2 3 4 5 6 (PRODUCT LEVEL)	SEE PAGE
	1	1	**7X-3389**	2	BOLT-12 POINT HEAD (1/2-13X1.75-IN)	
Y	2	1	*187-9090*	1	PUMP GP-PISTON (BRAKE)	735
	3	1	**8T-4223**	2	WASHER-HARD (13.5X25.5X3-MM THK)	
	4	1	**9H-8872**	1	GASKET	

Y-SEPARATE ILLUSTRATION

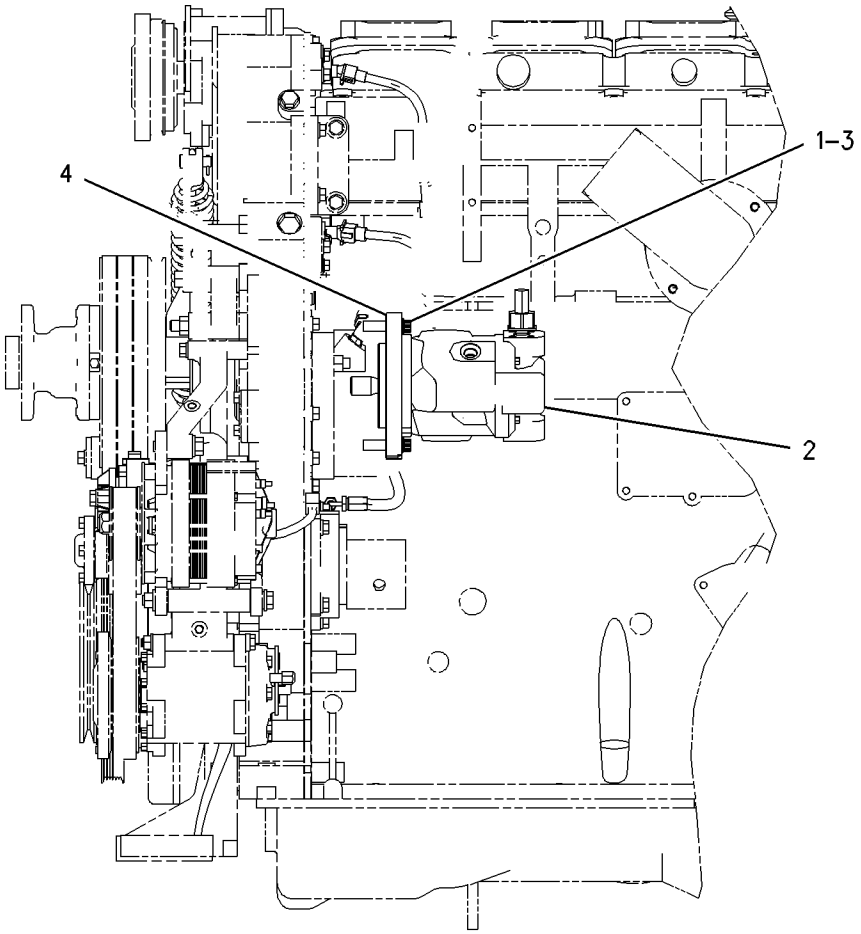

GRAPHIC #1 **<END>** g00764342

169-3655 SLACK ADJUSTER GP

S/N: AXM1-857

PART OF 190-6280, 191-3491 LINES GP-SERVICE BRAKE

SMCS-4261 **i01729009**

NOTE	REF NO	GRAPHIC REF	PART NUMBER	QTY	PART NAME 1 2 3 4 5 6 (PRODUCT LEVEL)	SEE PAGE
	1	1	**2G-8932**	2	HOUSING	
	2	1	**211-8611**	1	BASE	
	3	1	**2G-1202**	2	SPRING	
	4	1	**7F-2122**	2	SEAL-O-RING	
L	5	1	**9V-3222**	2	PISTON AS	
	6	1	**2H-4145**	2	SEAL-O-RING	
					AVAILABLE REPAIR KIT(S):	
L			**9V-3225**	1	KIT-PISTON	
					(INCLUDES PISTON AS, RINGS, SEALS, SPRINGS)	

L-KIT MARKED L SERVICES PART(S) MARKED L

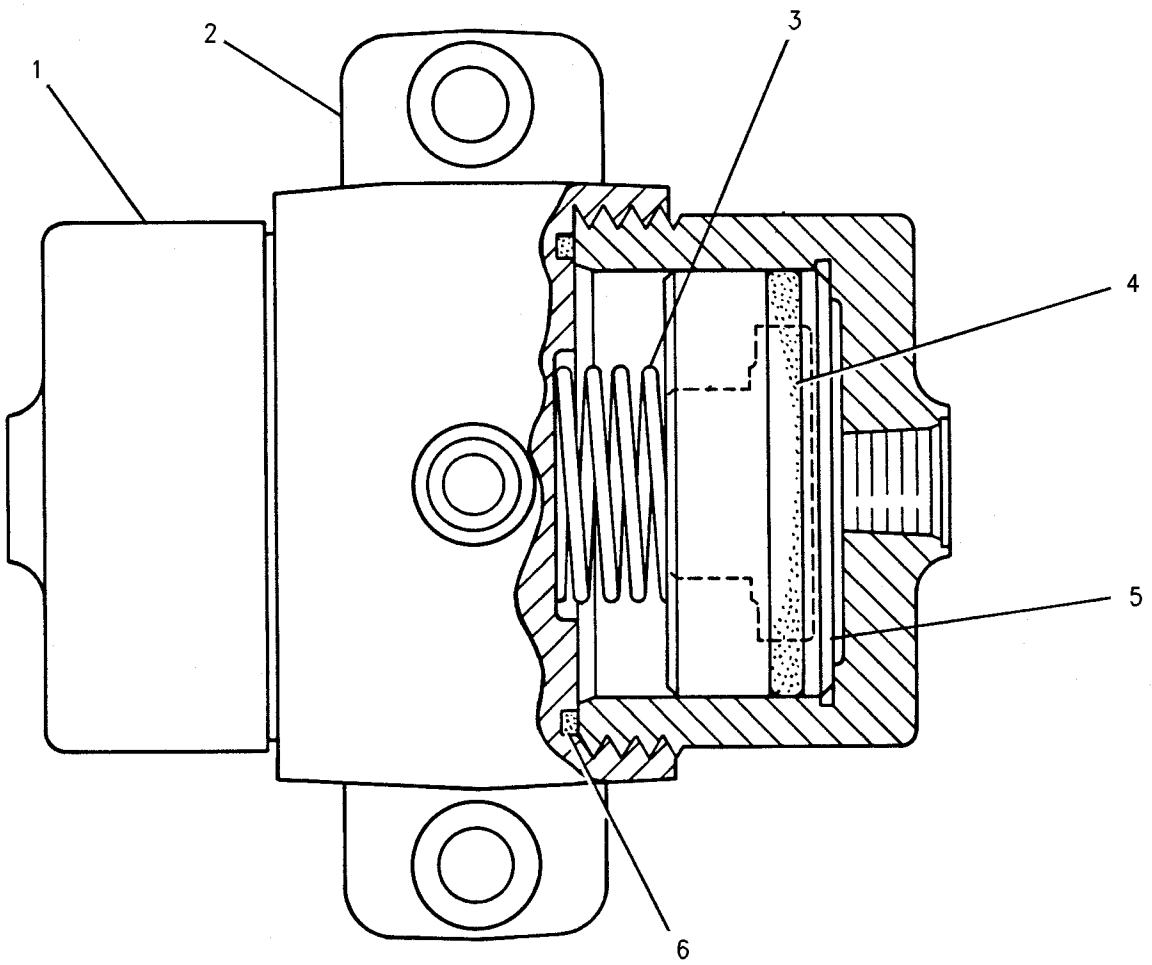

GRAPHIC #1 **<END>** g00877912

190-6290 VALVE GP-BRAKE CONTROL

S/N: AXM1-UP

PART OF 152-7029 CONTROL GP-PARKING BRAKE

SMCS-4265, 4282 **i01858878**

NOTE	REF NO	GRAPHIC REF	PART NUMBER	QTY	PART NAME 1 2 3 4 5 6 (PRODUCT LEVEL)	SEE PAGE
Y	1	1	**152-8340**	1	VALVE GP-SOLENOID (24-VOLT)	618
	2	1	**158-9956**	1	VALVE GP-CHECK	
		1	**3K-0360**	1	SEAL-O-RING	
		1	**6E-0381**	1	RING-BACKUP	
		1	**161-6154**	1	SEAL-O-RING	
	3	1	**9S-8004**	1	PLUG	
	4	1	**3J-1907**	1	SEAL-O-RING	

Y-SEPARATE ILLUSTRATION

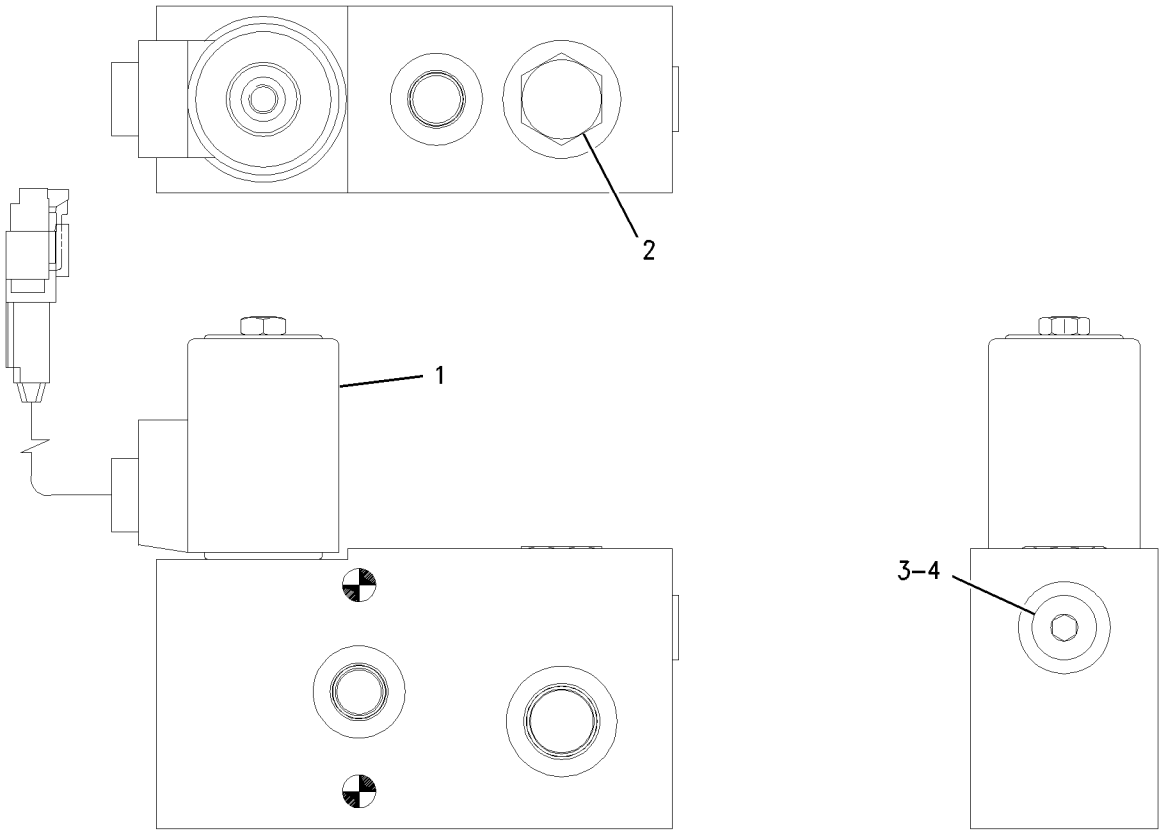

GRAPHIC #1 **<END>** g00764739

213-4555 VALVE GP-SHUTTLE

S/N: AXM1-UP
PART OF 236-9982 VALVE GP-COMBINATION
AN ATTACHMENT

SMCS-4289, 5079 **i02160712**

NOTE	REF NO	GRAPHIC REF	PART NUMBER	QTY	PART NAME 1 2 3 4 5 6 (PRODUCT LEVEL)	SEE PAGE
	1	1	**3K-0360**	1	SEAL-O-RING	
	2	1	**161-6149**	1	SEAL-O-RING	
	3	1	**095-1750**	1	SEAL-O-RING	
	4	1	**161-6161**	1	RING-BACKUP	
	5	1	**187-0541**	1	RING-BACKUP	

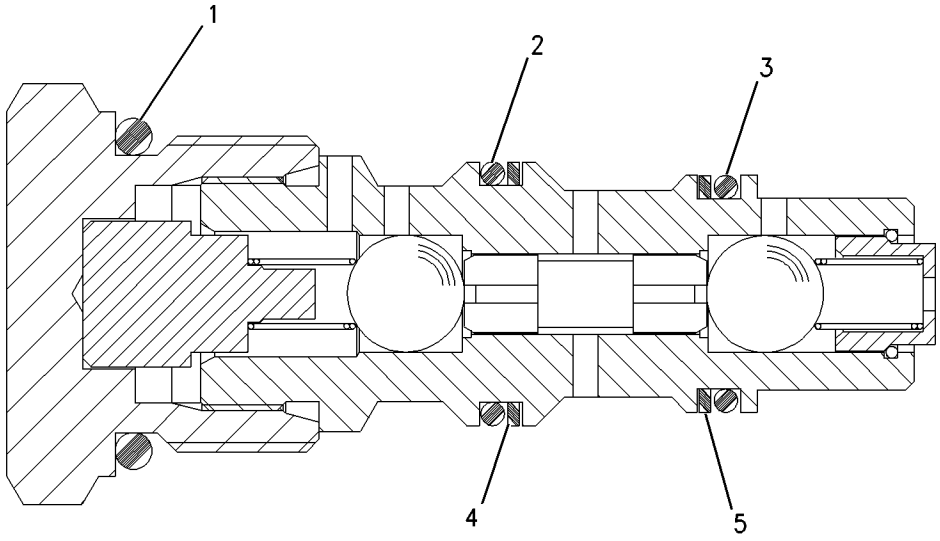

GRAPHIC #1 **<END>** g00994258

BRAKING SYSTEM

152-8340 VALVE GP-SOLENOID

S/N: AXM1-UP
24-VOLT
PART OF 190-6290 VALVE GP-BRAKE CONTROL

SMCS-4267, 5479 **i02235947**

NOTE	REF NO	GRAPHIC REF	PART NUMBER	QTY	PART NAME 1 2 3 4 5 6 (PRODUCT LEVEL)	SEE PAGE
	1	1	**8C-9987**	1	WASHER (8.3X28X2.5-MM THK)	
	2	1	**111-0343**	1	LOCKNUT (5/16-18-THD)	
	3	1	**152-8338**	1	CARTRIDGE AS	
		1	**8C-9987**	1	WASHER (8.3X28X2.5-MM THK)	
		1	**111-0343**	1	LOCKNUT (5/16-18-THD)	
	4	1	**189-0189**	1	COIL AS	
					—OR—	
	5	1	**227-4398**	1	COIL AS	
					(EACH COIL ASSEMBLY INCLUDES)	
	5A	1	**186-3735**	2	PIN-CONNECTOR	
	5B	1	**3E-3365**	1	WEDGE-RECEPTACLE LOCK (2-PIN)	
	5C	1	**102-8802**	1	KIT-RECEPTACLE (2-PIN)	
					(INCLUDES RECEPTACLE AS & WEDGE)	
	5D	1	**1S-9593**	2	STRAP-CABLE	
					AVAILABLE REPAIR KIT(S):	
			197-7701	1	KIT-SEAL (SOLENOID VALVE)	
					(INCLUDES SEALS AND RINGS)	

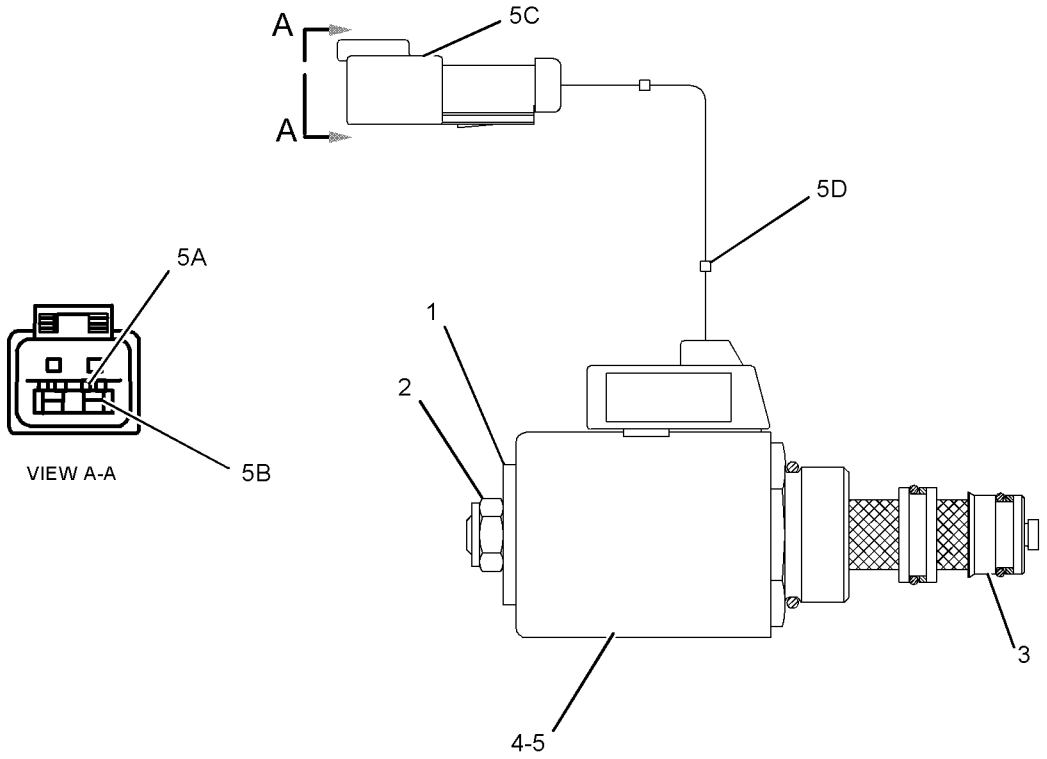

GRAPHIC #1 **<END>** g01127692

STEERING SYSTEM

153-5490 CONTROL GP-STEERING

S/N: AXM1-UP

PART OF 153-5485, 229-8087 CAB AR

SMCS-4343 **i02241294**

NOTE	REF NO	GRAPHIC REF	PART NUMBER	QTY	PART NAME 1 2 3 4 5 6 (PRODUCT LEVEL)	SEE PAGE
	1	1	**2T-3360**	1	BUTTON AS-HORN	
	2	1	**2U-9074**	1	STEERING WHEEL	
	3	1	**6N-6984**	4	MOUNT-RUBBER	
Y	4	1	**160-9727**	1	PUMP GP-METERING	655
	5	1	**191-1786**	1	PLATE AS	
M		1	**8T-3490**	4	NUT-WELD (M10X1.5-THD)	
Y	6	1	**252-8050**	1	STEERING COLUMN GP-ADJUSTABLE	656
M	7	1	**6V-4248**	4	BOLT (M10X1.5X25-MM)	
	8	1	**6V-5839**	4	WASHER (11X21X2.5-MM THK)	
	9	1	**7X-7729**	4	WASHER (11X25X3-MM THK)	
	10	1	**8M-4069**	8	WASHER (10.3X38.1X5-MM THK)	
	11	1	**8T-4121**	4	WASHER-HARD (11X21X2.5-MM THK)	
M	12	1	**8T-4182**	4	BOLT (M10X1.5X45-MM)	
M	13	1	**8T-4195**	4	BOLT (M10X1.5X30-MM)	

M-METRIC PART
Y-SEPARATE ILLUSTRATION

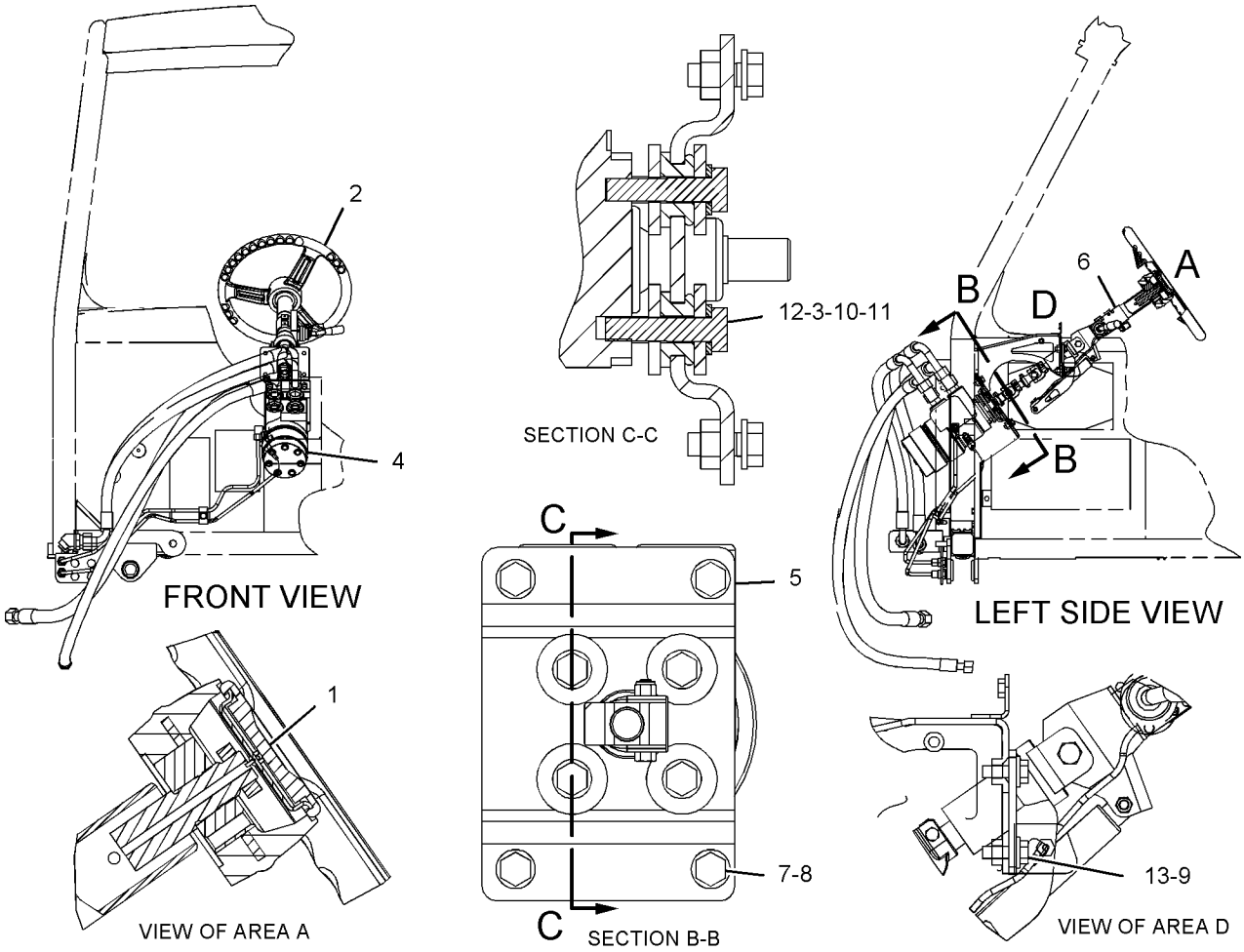

GRAPHIC #1

<END>

g01131104

STEERING SYSTEM

152-6929 CYLINDER & MTG GP-STEERING

S/N: AXM369-822

PART OF 152-6919 AXLE & FRAME AR

SMCS-4303 **i01902122**

NOTE	REF NO	GRAPHIC REF	PART NUMBER	QTY	PART NAME 1 2 3 4 5 6 (PRODUCT LEVEL)	SEE PAGE
	1	1	**3U-9657**	8	SEAL FACE	
	2	1	**7F-2122**	8	SEAL-O-RING	
	3	1	**7U-0887**	4	WASHER	
	4	1	**174-5578**	4	PIN-TAPERED	
CY	5	1	**215-3025**	1	CYLINDER GP-STEERING (RH)	623
CY	6	1	**215-3026**	1	CYLINDER GP-STEERING (LH)	625
CM	7	1	**8T-4140**	4	BOLT (M16X2X60MM)	
	8	1	**9X-8257**	4	WASHER (17.5X30X3.5MM THK)	

C-CHANGE FROM PREVIOUS TYPE
M-METRIC PART
Y-SEPARATE ILLUSTRATION

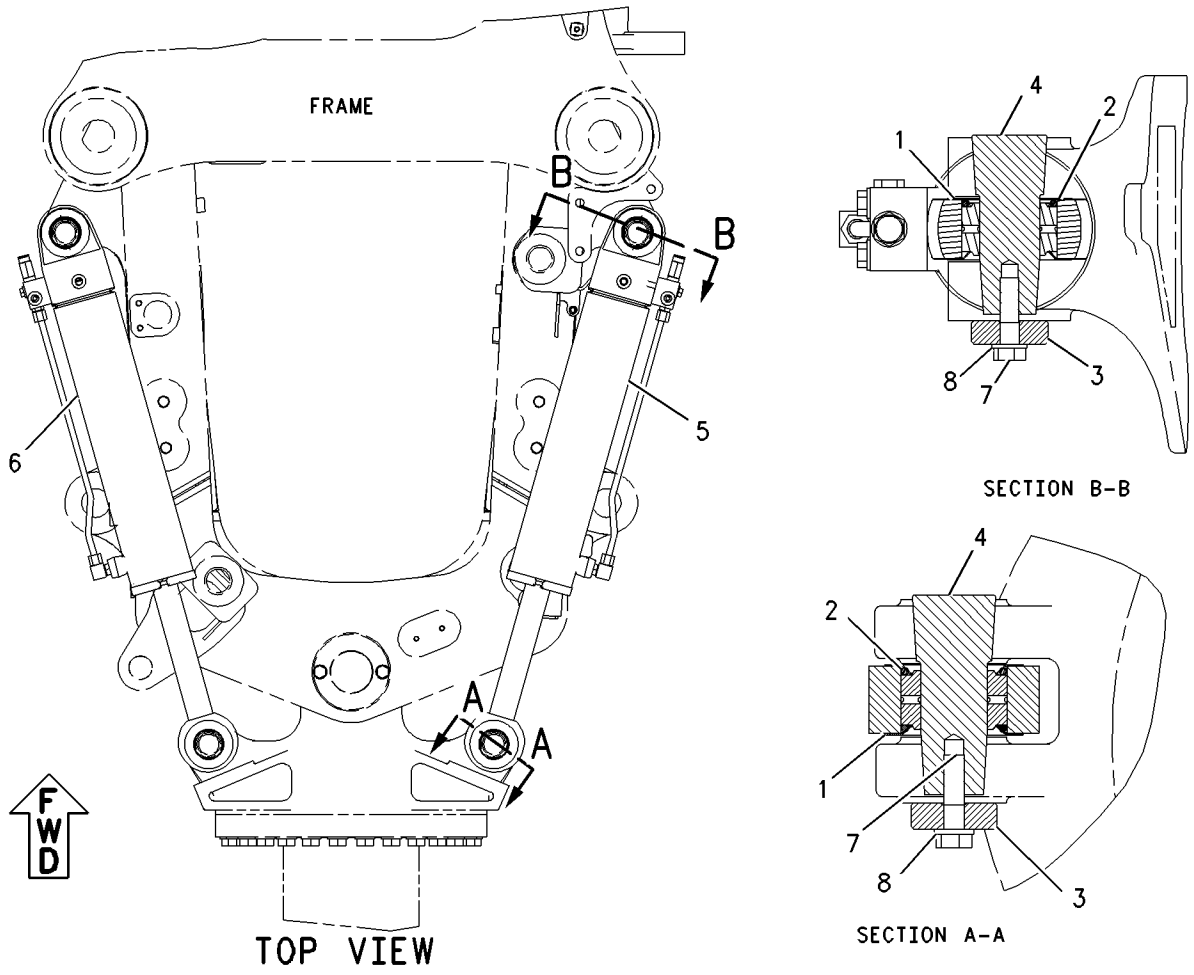

GRAPHIC #1 **<END>** g00905129

152-6929 CYLINDER & MTG GP-STEERING

S/N: AXM823, 930-UP

PART OF 152-6919 AXLE & FRAME AR

SMCS-4303 **i01811777**

NOTE	REF NO	GRAPHIC REF	PART NUMBER	QTY	PART NAME 1 2 3 4 5 6 (PRODUCT LEVEL)	SEE PAGE
	1	1	**3U-9657**	8	SEAL FACE	
	2	1	**7F-2122**	8	SEAL-O-RING	
	3	1	**7U-0887**	4	WASHER	
	4	1	**174-5578**	4	PIN-TAPERED	
CY	5	1	**223-1335**	2	CYLINDER GP-STEERING	627
M	6	1	**8T-4140**	4	BOLT (M16X2X60MM)	
	7	1	**9X-8257**	4	WASHER (17.5X30X3.5MM THK)	

C-CHANGE FROM PREVIOUS TYPE
M-METRIC PART
Y-SEPARATE ILLUSTRATION

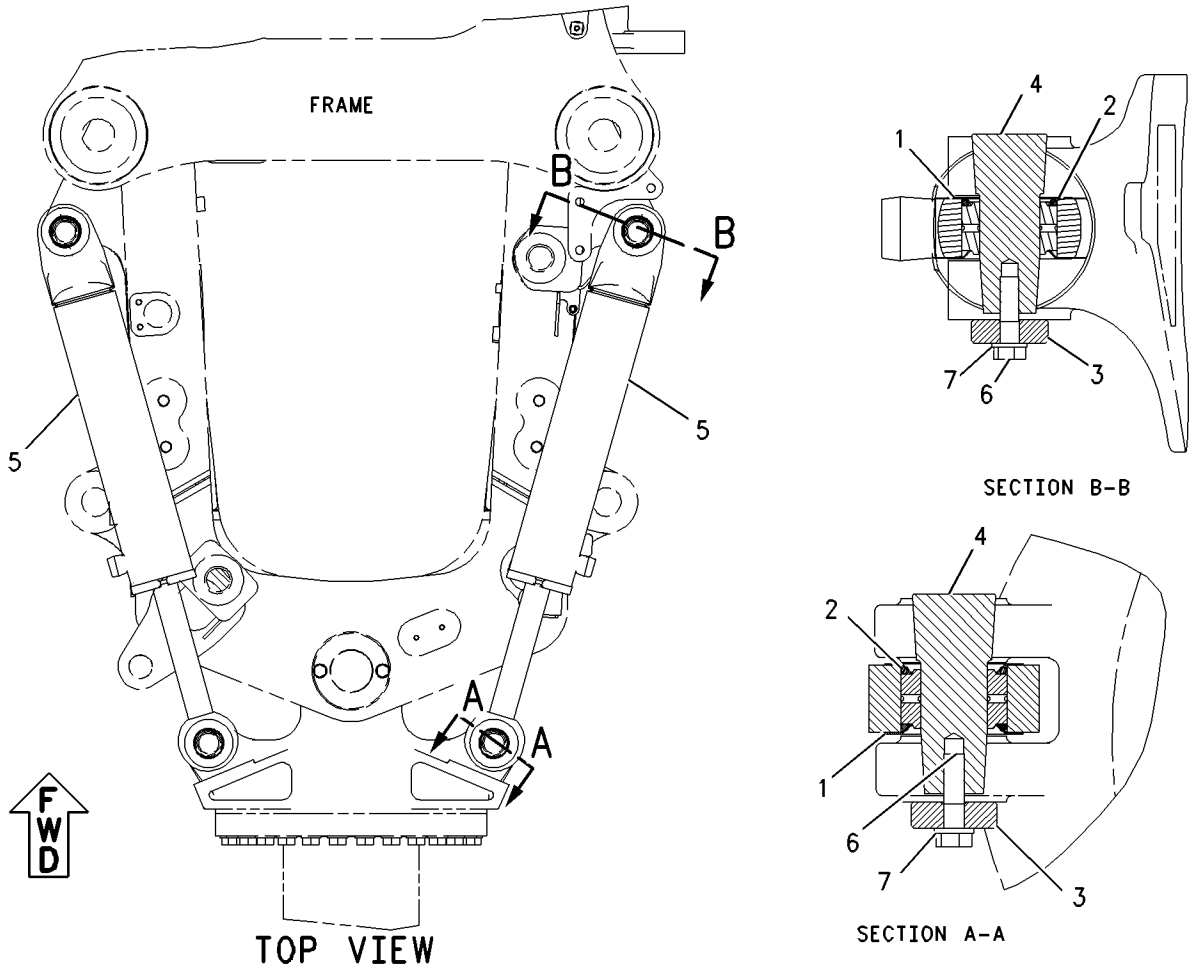

GRAPHIC #1 **<END>** g00925921

152-6929 CYLINDER & MTG GP-STEERING

S/N: AXM824-929

PART OF 152-6919 AXLE & FRAME AR

SMCS-4303 **i01933575**

NOTE	REF NO	GRAPHIC REF	PART NUMBER	QTY	PART NAME 1 2 3 4 5 6 (PRODUCT LEVEL)	SEE PAGE
	1	1	**3U-9657**	8	SEAL FACE	
	2	1	**7F-2122**	8	SEAL-O-RING	
	3	1	**7U-0887**	4	WASHER	
	4	1	**174-5578**	4	PIN-TAPERED	
CY	5	1	**223-1335**	2	CYLINDER GP-STEERING	627
	6	1	**9X-8257**	4	WASHER (17.5X30X3.5MM THK)	
J	7	1	**7S-4001**	4	SEAL-O-RING	
M	8	1	**8T-4140**	4	BOLT (M16X2X60MM)	
M	9	1	**8T-7811**	4	BOLT-SOCKET HEAD (M12X1.75X50MM)	

C-CHANGE FROM PREVIOUS TYPE
J-CUT O-RING TO INSTALL OVER CYLINDER ROD
M-METRIC PART
Y-SEPARATE ILLUSTRATION

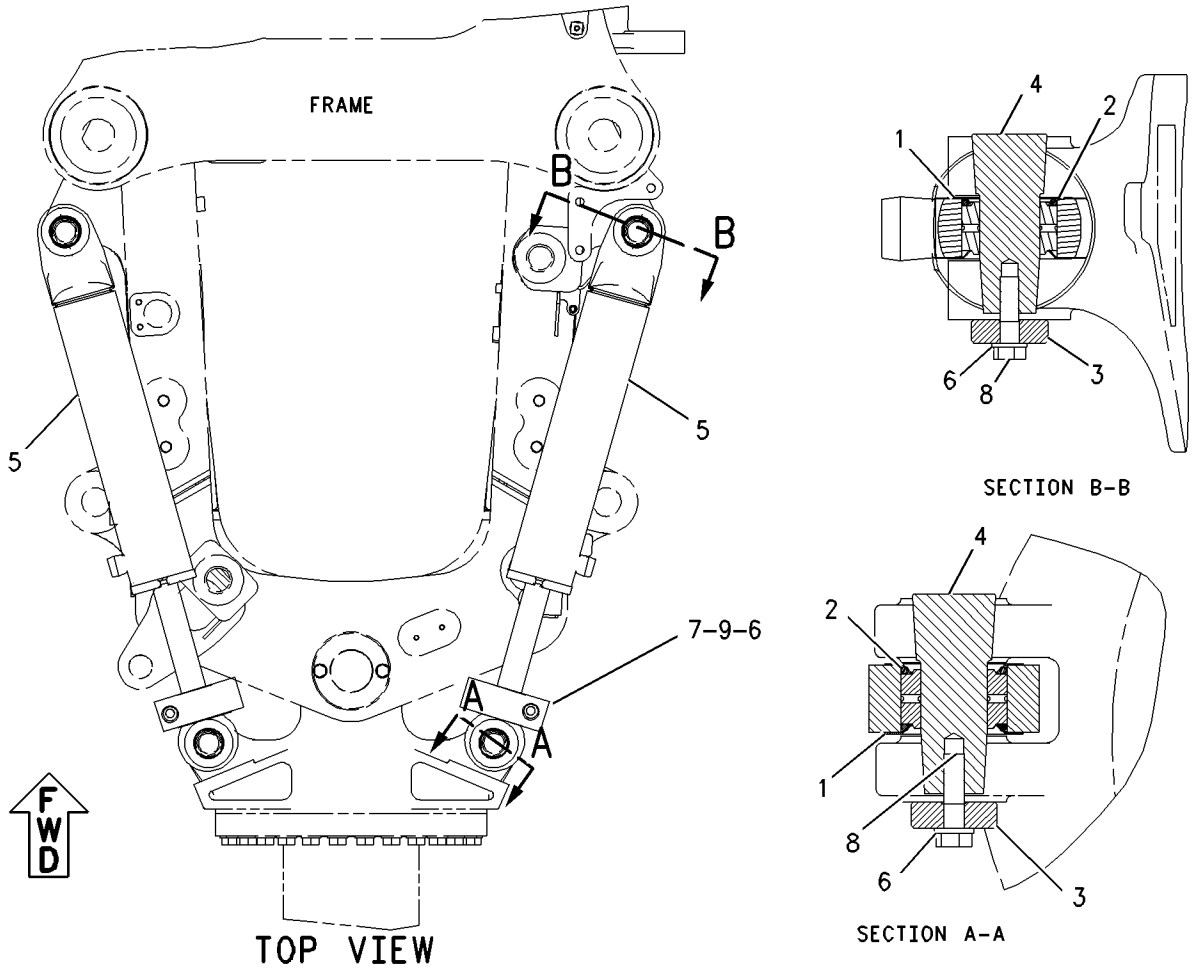

GRAPHIC #1 **<END>** g01006037

215-3025 CYLINDER GP-STEERING—RH

S/N: AXM369-822
114.3MM (4.5 IN) BORE X 495MM (19.49 IN) STROKE
PART OF 152-6929 CYLINDER & MTG GP-STEERING

SMCS-4303 **i02216820**

NOTE	REF NO	GRAPHIC REF	PART NUMBER	QTY	PART NAME 1 2 3 4 5 6 (PRODUCT LEVEL)	SEE PAGE
	1	1	**3B-8488**	1	FITTING-GREASE	
	2	1	**4M-5912**	1	SPRING	
	3	1	**6E-3772**	1	SPRING	
	4	1	**141-5849**	1	PISTON	
	5	1	**141-5851**	1	HEAD	
	6	1	**141-5864**	1	BOLT (M30X3.5X90-MM)	
M	7	1	**179-4324**	1	LOCKNUT (M5X0.8-THD)	
	8	1	**198-4856**	1	CYLINDER AS	
		1	**6V-5002**	1	BEARING-ALIGNING	
I	9	1	**214-2282**	1	HOSE AS	
	10	1	**204-0858**	1	VALVE	
	11	1	**207-7467**	1	ROD AS	
		1	**6V-5002**	1	BEARING-ALIGNING	
J	12	1	**165-9280**	1	SEAL-LIP TYPE	
J	13	1	**140-0249**	1	RING-WEAR	
	14	1	*148-8340*	1	CONNECTOR AS	
		1	**3K-0360**	1	SEAL-O-RING	
		1	**6V-8398**	1	SEAL-O-RING	
		1	**6V-8639**	1	CONNECTOR	
	15	1	*148-8364*	1	ELBOW AS	
		1	**3K-0360**	1	SEAL-O-RING	
		1	**6V-8398**	1	SEAL-O-RING	
		1	**6V-8625**	1	ELBOW	
J	16	1	**167-2199**	1	SEAL AS-BUFFER	
J	17	1	**167-2306**	1	SEAL-U-CUP	
	18	1	**197-2091**	1	MANIFOLD	
J	19	1	**1K-7095**	1	RING-BACKUP	
	20	1	**214-9055**	1	VALVE GP-RELIEF	
		1	**2M-9780**	1	SEAL-O-RING	
		1	**212-6027**	2	RING	
		1	**212-6028**	1	SEAL-O-RING	
J	21	1	**3E-6703**	1	SEAL-O-RING	
J	22	1	**4J-3745**	1	RING-WEAR	
	23	1	**5P-0840**	1	SEAL-O-RING	
	24	1	**8T-4223**	2	WASHER-HARD (13.5X25.5X3-MM THK)	
M	25	1	**8T-4648**	2	BOLT (M12X1.75X70-MM)	
J	26	1	**9X-7269**	1	SEAL AS	
	27	1	**9X-8399**	1	WASHER (33X56X6-MM THK)	
					AVAILABLE REPAIR KIT(S):	
J			**217-9894**	1	KIT-SEAL	

I-REFER TO HYDRAULIC INFORMATION SYSTEM
J-KIT MARKED J SERVICES PART(S) MARKED J
M-METRIC PART

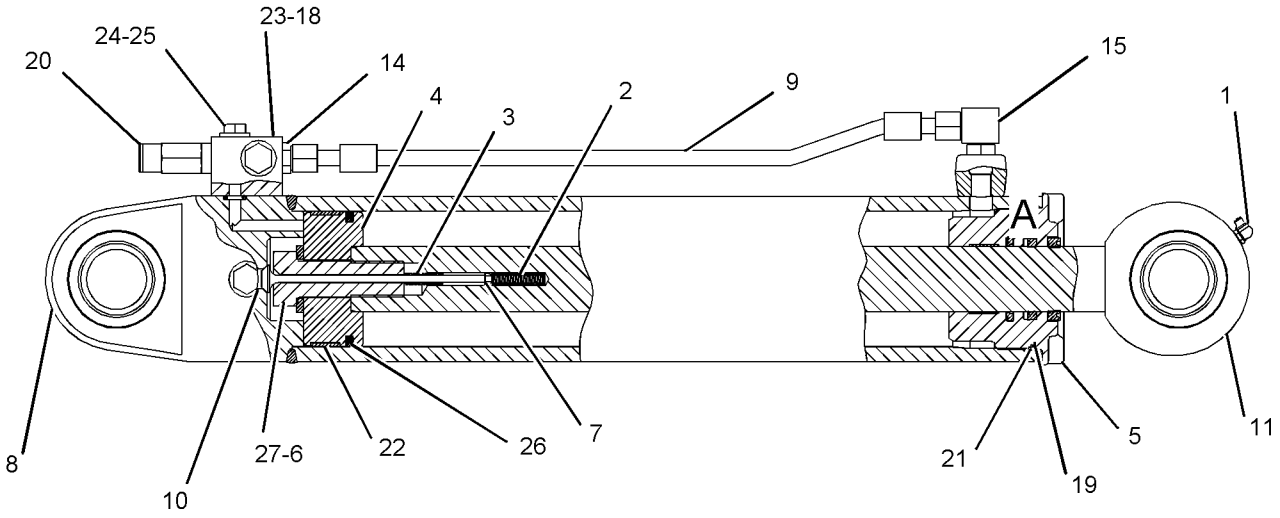

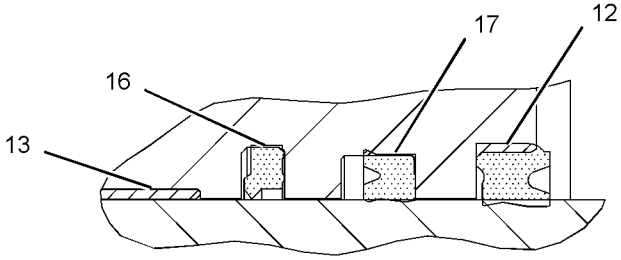

VIEW OF AREA A

GRAPHIC #1 **<END>** g01118724

STEERING SYSTEM

215-3026 CYLINDER GP-STEERING—LH

S/N: AXM1-822
114.3MM (4.5 IN) BORE X 495MM (19.49 IN) STROKE
PART OF 152-6929 CYLINDER & MTG GP-STEERING

SMCS-4303 **i02215389**

NOTE	REF NO	GRAPHIC REF	PART NUMBER	QTY	PART NAME 1 2 3 4 5 6 (PRODUCT LEVEL)	SEE PAGE
	1	1	**3B-8488**	1	FITTING-GREASE	
	2	1	**4M-5912**	1	SPRING	
	3	1	**6E-3772**	1	SPRING	
	4	1	**141-5849**	1	PISTON	
	5	1	**141-5851**	1	HEAD	
	6	1	**141-5864**	1	BOLT (M30X3.5X90-MM)	
M	7	1	**179-4324**	1	LOCKNUT (M5X0.8-THD)	
I	8	1	**214-2282**	1	HOSE AS	
	9	1	**204-0858**	1	VALVE	
	10	1	**207-7467**	1	ROD AS	
		1	**6V-5002**	1	BEARING-ALIGNING	
J	11	1	**165-9280**	1	SEAL-LIP TYPE	
J	12	1	**140-0249**	1	RING-WEAR	
	13	1	*148-8340*	1	CONNECTOR AS	
		1	**3K-0360**	1	SEAL-O-RING	
		1	**6V-8398**	1	SEAL-O-RING	
		1	**6V-8639**	1	CONNECTOR	
	14	1	*148-8364*	1	ELBOW AS	
		1	**3K-0360**	1	SEAL-O-RING	
		1	**6V-8398**	1	SEAL-O-RING	
		1	**6V-8625**	1	ELBOW	
J	15	1	**167-2199**	1	SEAL AS-BUFFER	
J	16	1	**167-2306**	1	SEAL-U-CUP	
	17	1	**197-2092**	1	MANIFOLD	
J	18	1	**1K-7095**	1	RING-BACKUP	
	19	1	**200-2426**	1	CYLINDER AS	
		1	**6V-5002**	1	BEARING-ALIGNING	
	20	1	**214-9055**	1	VALVE GP-RELIEF	
		1	**2M-9780**	1	SEAL-O-RING	
		1	**212-6027**	2	RING	
		1	**212-6028**	1	SEAL-O-RING	
J	21	1	**3E-6703**	1	SEAL-O-RING	
J	22	1	**4J-3745**	1	RING-WEAR	
	23	1	**5P-0840**	1	SEAL-O-RING	
	24	1	**8T-4223**	2	WASHER-HARD (13.5X25.5X3-MM THK)	
M	25	1	**8T-4648**	2	BOLT (M12X1.75X70-MM)	
J	26	1	**9X-7269**	1	SEAL AS	
	27	1	**9X-8399**	1	WASHER (33X56X6-MM THK)	
					AVAILABLE REPAIR KIT(S):	
J			**217-9894**	1	KIT-SEAL	

I-REFER TO HYDRAULIC INFORMATION SYSTEM
J-KIT MARKED J SERVICES PART(S) MARKED J
M-METRIC PART

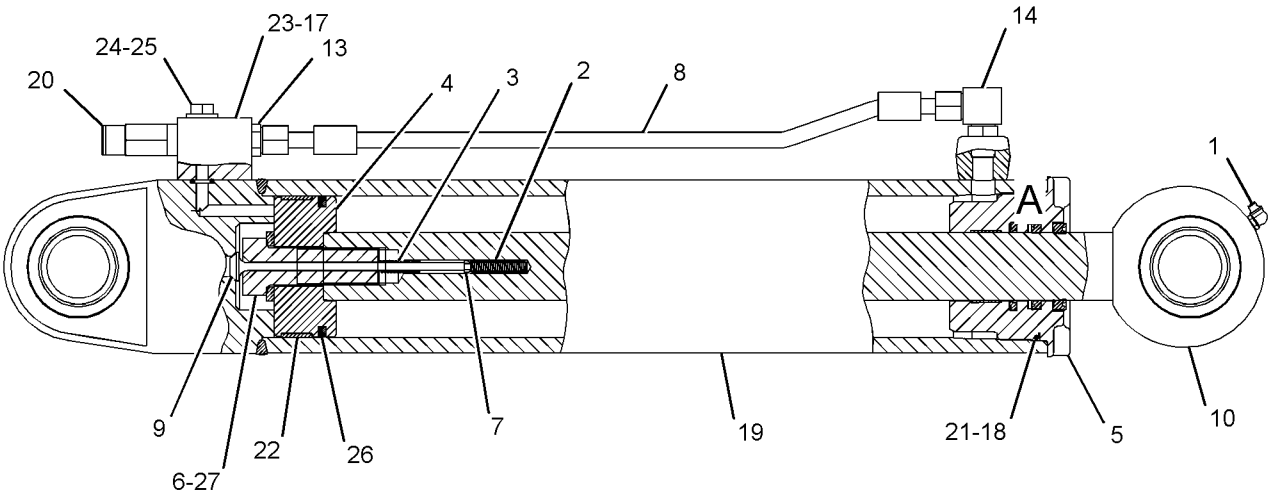

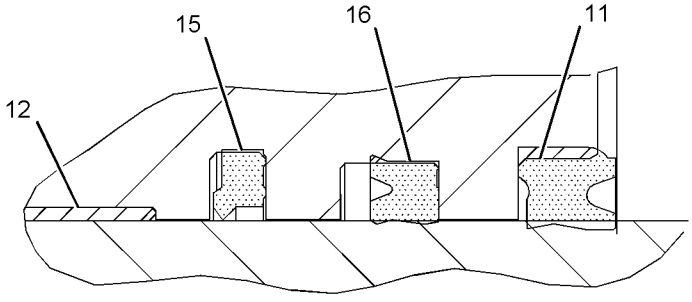

VIEW OF AREA A

GRAPHIC #1 **<END>** g01118638

223-1335 CYLINDER GP-STEERING

S/N: AXM823-UP
114.3MM(4.50IN)BORE X 495MM(19.49IN)STROKE
PART OF 152-6929 CYLINDER & MTG GP-STEERING

SMCS-4303 **i01811806**

NOTE	REF NO	GRAPHIC REF	PART NUMBER	QTY	PART NAME 1 2 3 4 5 6 (PRODUCT LEVEL)	SEE PAGE
	1	1	**3B-8488**	1	FITTING-GREASE	
	2	1	**4M-5912**	1	SPRING	
	3	1	**6E-3772**	1	SPRING	
	4	1	**141-5849**	1	PISTON	
	5	1	**141-5851**	1	HEAD	
	6	1	**141-5864**	1	BOLT (M30X3.5X90MM)	
M	7	1	**179-4324**	1	LOCKNUT	
	8	1	**223-1336**	1	ROD AS	
		1	**6V-5002**	1	BEARING-ALIGNING	
	9	1	**223-1338**	1	VALVE	
J	10	1	**165-9280**	1	SEAL-LIP TYPE	
J	11	1	**140-0249**	1	RING-WEAR	
	12	1	**141-1190**	1	CYLINDER AS	
		1	**6V-5002**	1	BEARING-ALIGNING	
J	13	1	**167-2199**	1	SEAL AS-BUFFER	
J	14	1	**167-2306**	1	SEAL-U-CUP	
J	15	1	**1K-7095**	1	RING-BACKUP	
J	16	1	**3E-6703**	1	SEAL-O-RING	
J	17	1	**4J-3745**	1	RING-WEAR	
J	18	1	**9X-7269**	1	SEAL AS	
	19	1	**9X-8399**	1	WASHER (33X56X6MM THK)	
					AVAILABLE REPAIR KIT(S):	
J			**217-9894**	1	KIT-SEAL	

J-KIT MARKED J INCLUDES PARTS MARKED J
M-METRIC PART

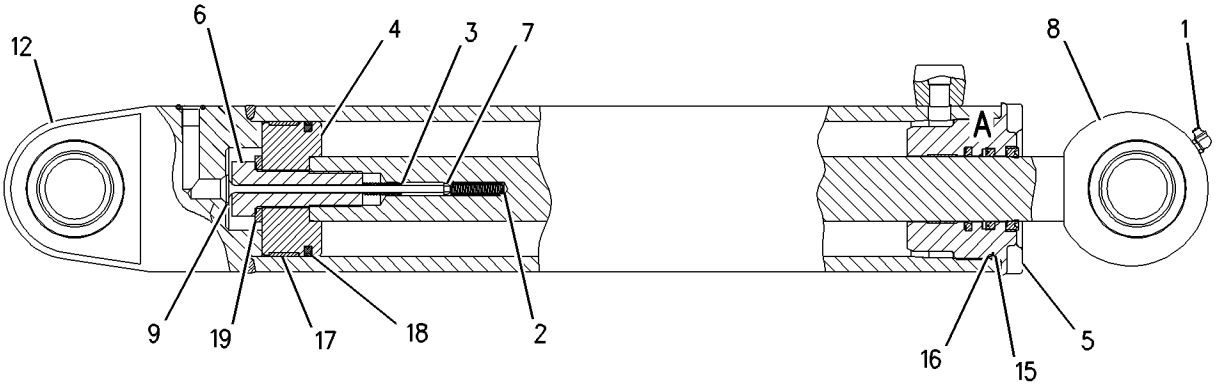

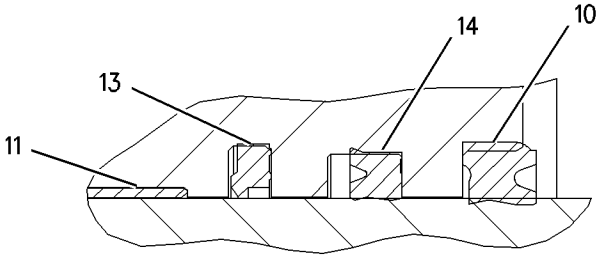

VIEW OF AREA A

GRAPHIC #1 **<END>** g00925941

STEERING SYSTEM

152-7100 LINES GP-PUMP–BRAKE CONTROL

S/N: AXM1-536, 539, 541, 586-587, 590, 592, 594, 596-598, 600, 602

PART OF 152-6922 HYDRAULIC AR-MACHINE

SMCS-4304 **i01835281**

NOTE	REF NO	GRAPHIC REF	PART NUMBER	QTY	PART NAME 1 2 3 4 5 6 (PRODUCT LEVEL)	SEE PAGE
	1	1	**6U-0455**	2	STRAP	
	2	1	*164-5567*	1	FITTING GP-COUPLING	
		1	**6V-3965**	1	FITTING AS	
		1	**3J-1907**	1	SEAL-O-RING	
	3	1	*164-5586*	1	TEE AS	
		1	**7X-0871**	1	TEE	
		1	**6V-8398**	1	SEAL-O-RING	
Y	4	1	**173-6219**	1	VALVE GP-CHK & PRESS REDUCING	658
	5	1	**193-2947**	1	BRACKET AS	
M		1	**8T-3597**	2	NUT-WELD (M12X1.75-THD)	
M		1	**8T-3612**	2	NUT-WELD (M8X1.25-THD)	
I	6	1	**194-9428**	1	HOSE AS	
I	7	1	**194-9429**	1	HOSE AS	
I	8	1	**194-9431**	1	HOSE AS	
I	9	1	**197-8225**	1	HOSE AS	
I	10	1	**210-3090**	1	HOSE AS	
I	11	1	**210-3216**	1	HOSE AS	
	12	1	*148-8346*	1	ELBOW AS	
		1	**8T-1686**	1	ELBOW	
		1	**3K-0360**	1	SEAL-O-RING	
		1	**6V-8398**	1	SEAL-O-RING	
	13	1	*148-8347*	1	ELBOW AS	
		1	**3D-2824**	1	SEAL-O-RING	
		1	**6V-9007**	1	ELBOW	
		1	**6V-9746**	1	SEAL-O-RING	
	14	1	*148-8364*	2	ELBOW AS	
					(EACH INCLUDES)	
		1	**3K-0360**	1	SEAL-O-RING	
		1	**6V-8398**	1	SEAL-O-RING	
		1	**6V-8625**	1	ELBOW	
	15	1	*148-8365*	2	ELBOW AS	
					(EACH INCLUDES)	
		1	**8T-6876**	1	ELBOW	
		1	**3J-1907**	1	SEAL-O-RING	
		1	**6V-8398**	1	SEAL-O-RING	
	16	1	*148-8407*	1	PLUG AS	
		1	**9S-4191**	1	PLUG	
		1	**3J-1907**	1	SEAL-O-RING	
	17	1	*148-8411*	1	PLUG AS	
		1	**9S-4185**	1	PLUG	
		1	**3K-0360**	1	SEAL-O-RING	
	18	1	*148-8428*	1	TEE AS	
		1	**6V-8782**	1	TEE	
		1	**3K-0360**	1	SEAL-O-RING	
		1	**6V-8398**	2	SEAL-O-RING	
	19	1	**4J-0520**	2	SEAL-O-RING	
	20	1	**4J-5267**	1	SEAL-O-RING	
W	21	1	**5P-7468**	1	CLIP (SLOT)	
W	22	1	**5P-7469**	1	CLIP (TAB)	
W	23	1	**5S-7382**	1	BOLT (3/8-16X1.375-IN)	
	24	1	**6V-0852**	1	CAP-DUST	
W	25	1	**6V-1874**	1	GROMMET	
W	26	1	**7X-7729**	1	WASHER (11X25X3-MM THK)	
	27	1	**8C-3205**	2	FLANGE-HALF	
	28	1	**8C-3206**	4	FLANGE-HALF	
	29	1	**8T-4121**	12	WASHER-HARD (11X21X2.5-MM THK)	

152-7100 **LINES GP-PUMP** *(contd.)* **i01835281**

NOTE	REF NO	GRAPHIC REF	PART NUMBER	QTY	PART NAME 1 2 3 4 5 6 (PRODUCT LEVEL)	SEE PAGE
M	30	1	**8T-4139**	1	BOLT (M12X1.75X30-MM)	
M	31	1	**8T-4177**	2	BOLT (M8X1.25X90-MM)	
M	32	1	**8T-4192**	3	BOLT (M12X1.75X25-MM)	
M	33	1	**8T-4196**	12	BOLT (M10X1.5X35-MM)	
	34	1	**8T-4223**	4	WASHER-HARD (13.5X25.5X3-MM THK)	
	35	1	**8T-4224**	2	WASHER-HARD (8.8X16X2-MM THK)	
	36	1	**6U-0456**	4	STRAP	

I-REFER TO HYDRAULIC INFORMATION SYSTEM
M-METRIC PART
W-FOR USE WITH THE 740 AND 740 EJECTOR MACHINE
Y-SEPARATE ILLUSTRATION

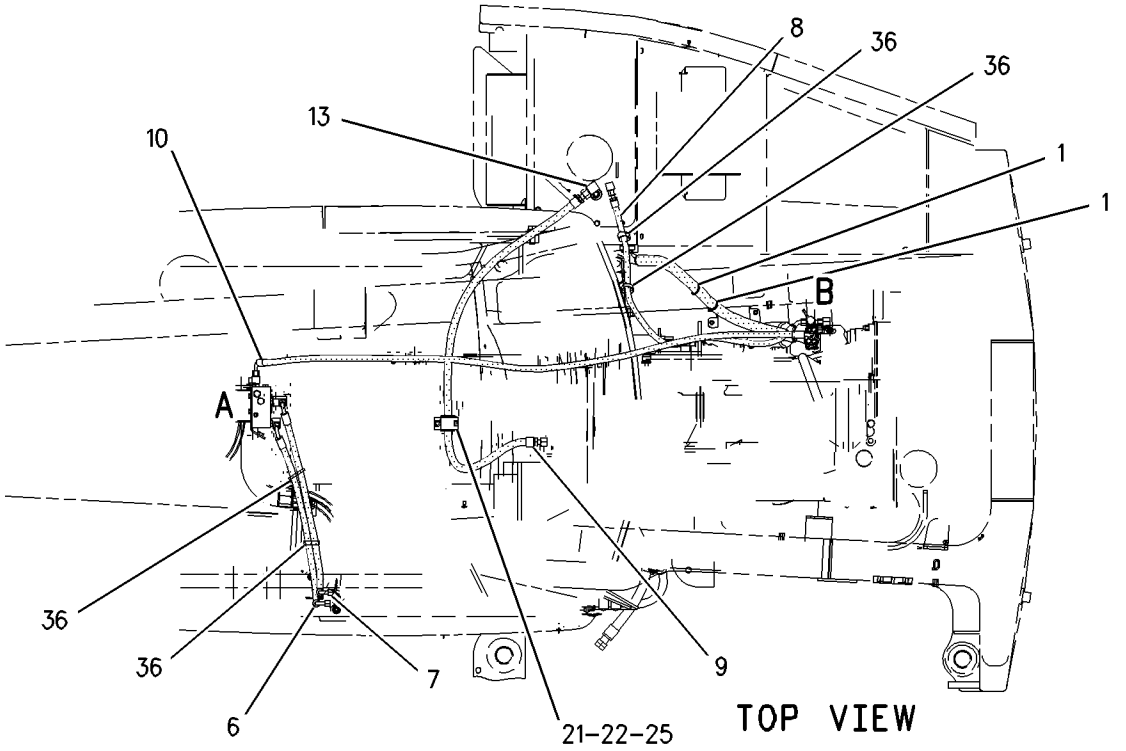

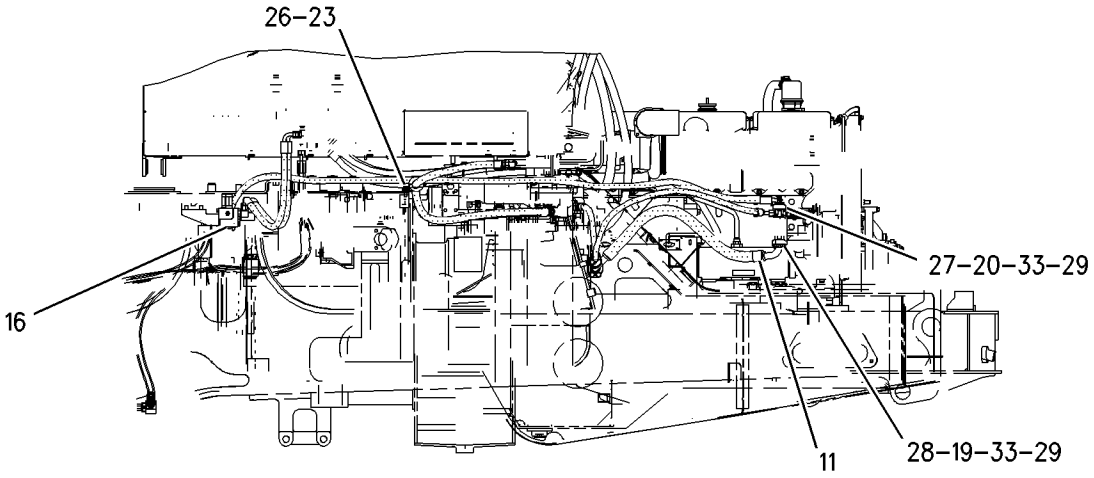

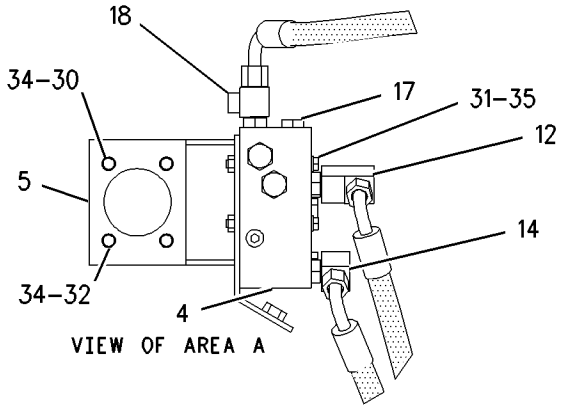

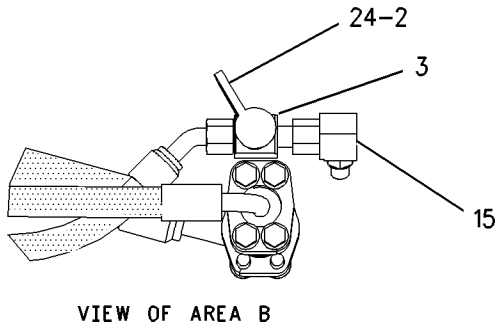

GRAPHIC #1 **<END>** g00937579

STEERING SYSTEM

152-7100 LINES GP-PUMP—BRAKE CONTROL

S/N: AXM537-538, 540, 542-585, 588-589, 591, 593, 595, 599, 601, 603-UP
PART OF 152-6922 HYDRAULIC AR-MACHINE

SMCS-4304 **i02114348**

NOTE	REF NO	GRAPHIC REF	PART NUMBER	QTY	PART NAME 1 2 3 4 5 6 (PRODUCT LEVEL)	SEE PAGE
	1	1	**6U-0455**	5	STRAP	
	2	1	**6U-0456**	4	STRAP	
	3	1	**6V-0852**	1	CAP-DUST	
	4	1	*164-5567*	1	FITTING GP-COUPLING	
		1	**6V-3965**	1	FITTING AS	
		1	**3J-1907**	1	SEAL-O-RING	
	5	1	*164-5586*	1	TEE AS	
		1	**7X-0871**	1	TEE	
		1	**6V-8398**	1	SEAL-O-RING	
I	6	1	**191-6585**	1	HOSE AS	
	7	1	**193-2947**	1	BRACKET AS	
I	8	1	**194-9428**	1	HOSE AS	
I	9	1	**194-9429**	1	HOSE AS	
I	10	1	**197-8225**	1	HOSE AS	
I	11	1	**210-3090**	1	HOSE AS	
I	12	1	**210-3216**	1	HOSE AS	
CY	13	1	**224-1209**	1	VALVE GP-CHK & PRESS REDUCING	659
	14	1	*148-8346*	1	ELBOW AS	
		1	**8T-1686**	1	ELBOW	
		1	**3K-0360**	1	SEAL-O-RING	
		1	**6V-8398**	1	SEAL-O-RING	
	15	1	*148-8347*	1	ELBOW AS	
		1	**3D-2824**	1	SEAL-O-RING	
		1	**6V-9007**	1	ELBOW	
		1	**6V-9746**	1	SEAL-O-RING	
	16	1	*148-8364*	2	ELBOW AS	
					(EACH INCLUDES)	
		1	**3K-0360**	1	SEAL-O-RING	
		1	**6V-8398**	1	SEAL-O-RING	
		1	**6V-8625**	1	ELBOW	
	17	1	*148-8365*	2	ELBOW AS	
					(EACH INCLUDES)	
		1	**8T-6876**	1	ELBOW	
		1	**3J-1907**	1	SEAL-O-RING	
		1	**6V-8398**	1	SEAL-O-RING	
	18	1	*148-8407*	1	PLUG AS	
		1	**9S-4191**	1	PLUG	
		1	**3J-1907**	1	SEAL-O-RING	
	19	1	*148-8411*	1	PLUG AS	
		1	**9S-4185**	1	PLUG	
		1	**3K-0360**	1	SEAL-O-RING	
	20	1	*148-8428*	1	TEE AS	
		1	**6V-8782**	1	TEE	
		1	**3K-0360**	1	SEAL-O-RING	
		1	**6V-8398**	2	SEAL-O-RING	
	21	1	**4J-0520**	2	SEAL-O-RING	
	22	1	**4J-5267**	1	SEAL-O-RING	
W	23	1	**5P-7468**	1	CLIP (SLOT)	
W	24	1	**5P-7469**	1	CLIP (TAB)	
W	25	1	**5S-7382**	1	BOLT (3/8-16X1.375-IN)	
W	26	1	**6V-1874**	1	GROMMET	
W	27	1	**7X-7729**	1	WASHER (11X25X3-MM THK)	
	28	1	**8C-3205**	2	FLANGE-HALF	
	29	1	**8C-3206**	4	FLANGE-HALF	
	30	1	**8T-4121**	12	WASHER-HARD (11X21X2.5-MM THK)	
M	31	1	**8T-4139**	1	BOLT (M12X1.75X30-MM)	

152-7100 **LINES GP-PUMP** *(contd.)* **i02114348**

NOTE	REF NO	GRAPHIC REF	PART NUMBER	QTY	PART NAME 1 2 3 4 5 6 (PRODUCT LEVEL)	SEE PAGE
M	32	1	**8T-4177**	2	BOLT (M8X1.25X90-MM)	
M	33	1	**8T-4192**	3	BOLT (M12X1.75X25-MM)	
M	34	1	**8T-4196**	12	BOLT (M10X1.5X35-MM)	
	35	1	**8T-4223**	4	WASHER-HARD (13.5X25.5X3-MM THK)	
	36	1	**8T-4224**	2	WASHER-HARD (8.8X16X2-MM THK)	

C-CHANGE FROM PREVIOUS TYPE
I-REFER TO HYDRAULIC INFORMATION SYSTEM
M-METRIC PART
W-FOR USE WITH THE 740 AND 740 EJECTOR MACHINES
Y-SEPARATE ILLUSTRATION

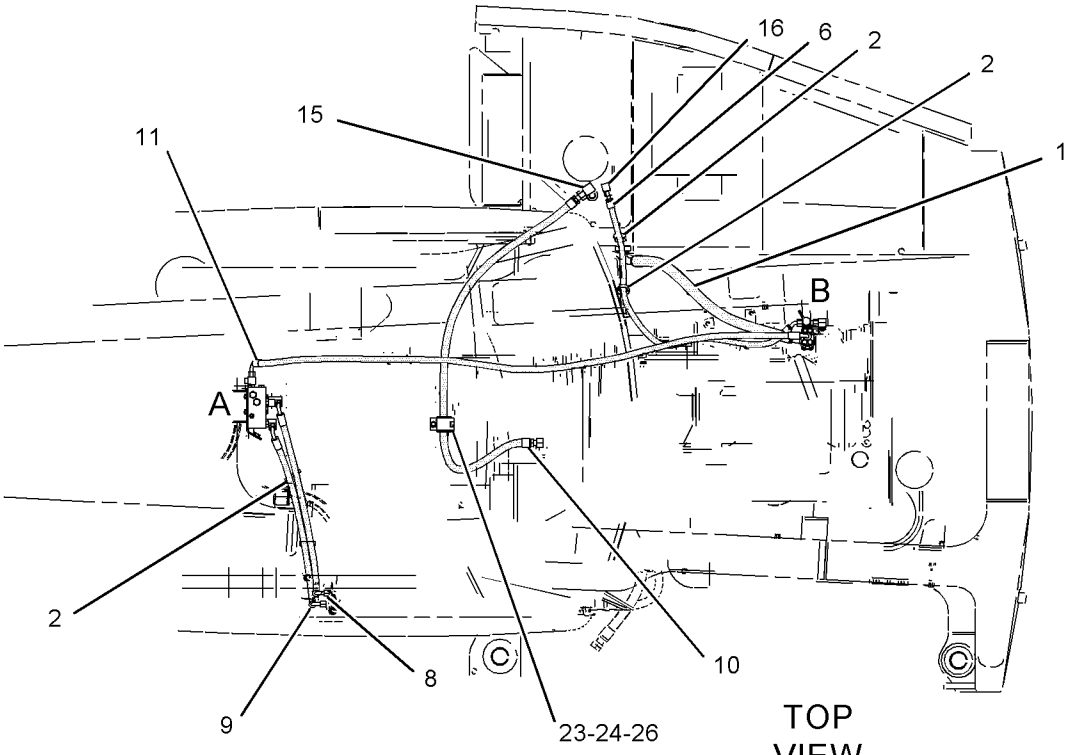

TOP VIEW

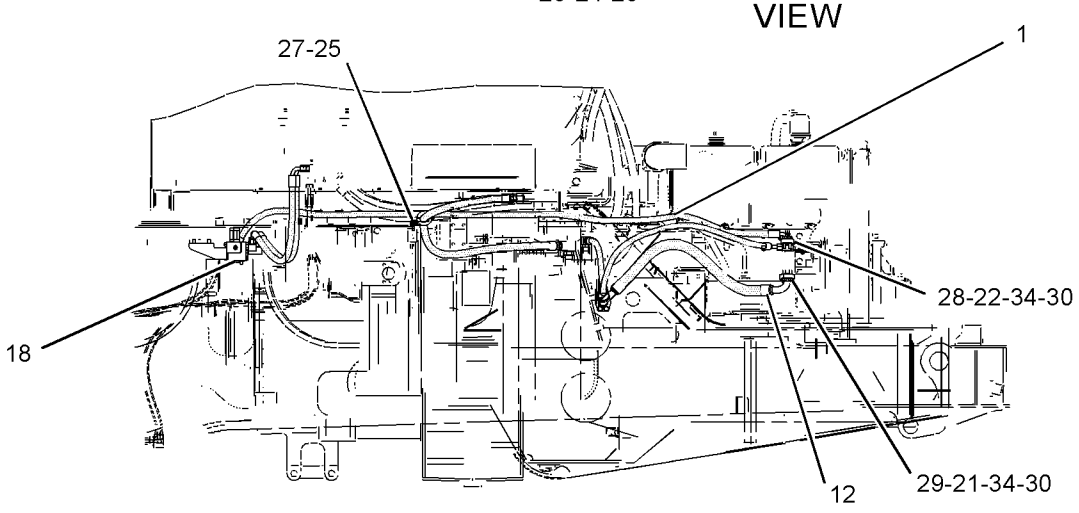

RIGHT SIDE VIEW

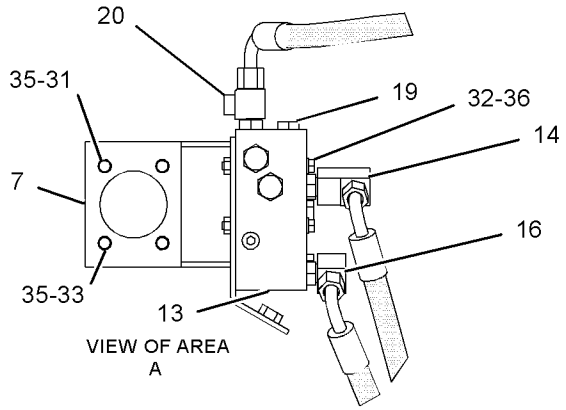

VIEW OF AREA A

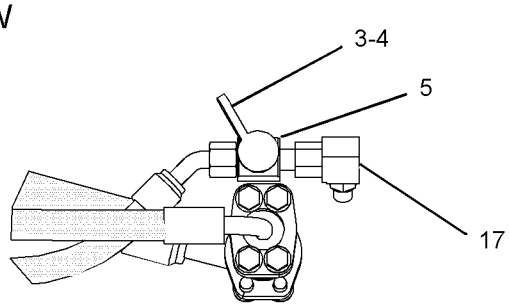

VIEW OF AREA B

GRAPHIC #1 **<END>** g01077004

STEERING SYSTEM

152-7103 LINES GP-STEERING

S/N: AXM1-822

PART OF 152-6922 HYDRAULIC AR-MACHINE

SMCS-4304 **i01858936**

NOTE	REF NO	GRAPHIC REF	PART NUMBER	QTY	PART NAME 1 2 3 4 5 6 (PRODUCT LEVEL)	SEE PAGE
I	1	1	**2T-2099**	1	HOSE AS	
	2	1	**6U-2703**	1	BRACKET-ANGLE	
I	3	1	**9R-3656**	1	HOSE AS	
I	4	1	**9U-0361**	1	HOSE AS	
I	5	1	**124-8847**	1	HOSE AS	
I	6	1	**142-2316**	1	HOSE AS	
I	7	1	**191-7566**	1	HOSE AS	
I	8	1	**203-6728**	2	HOSE AS	
I	9	1	**203-6729**	2	HOSE AS	
	10	1	*148-8354*	2	ELBOW AS	
					(EACH INCLUDES)	
		1	**6V-9002**	1	ELBOW	
		1	**3K-0360**	1	SEAL-O-RING	
		1	**6V-8398**	1	SEAL-O-RING	
	11	1	*148-8364*	2	ELBOW AS	
					(EACH INCLUDES)	
		1	**6V-8625**	1	ELBOW	
		1	**3K-0360**	1	SEAL-O-RING	
		1	**6V-8398**	1	SEAL-O-RING	
	12	1	*148-8380*	4	ELBOW AS	
					(EACH INCLUDES)	
		1	**6V-8988**	1	ELBOW	
		1	**6V-8398**	2	SEAL-O-RING	
	13	1	*164-5580*	2	TEE AS	
					(EACH INCLUDES)	
		1	**6V-9489**	1	TEE-BULKHEAD	
		1	**6V-8398**	2	SEAL-O-RING	
		1	**6V-9746**	1	SEAL-O-RING	
	14	1	**2U-2749**	2	CLIP	
	15	1	**3G-8047**	2	GROMMET	
	16	1	**3G-8054**	2	CLIP (TAB)	
	17	1	**3G-8057**	2	CLIP (SLOT)	
	18	1	**5P-7470**	2	CLIP (SLOT)	
	19	1	**5P-7471**	2	CLIP (TAB)	
	20	1	**5P-7703**	2	GROMMET	
	21	1	**6V-9169**	6	NUT-BULKHEAD (13/16-16-THD)	
	22	1	**8T-4121**	3	WASHER-HARD (11X21X2.5-MM THK)	
	23	1	**8T-4123**	10	WASHER-PLATED (22X35X3.5-MM THK)	
M	24	1	**8T-4133**	1	NUT (M10X1.5-THD)	
M	25	1	**8T-4195**	2	BOLT (M10X1.5X30-MM)	
	26	1	**8T-4223**	5	WASHER-HARD (13.5X25.5X3-MM THK)	
M	27	1	**8T-4956**	5	BOLT (M12X1.75X35-MM)	

I-REFER TO HYDRAULIC INFORMATION SYSTEM
M-METRIC PART

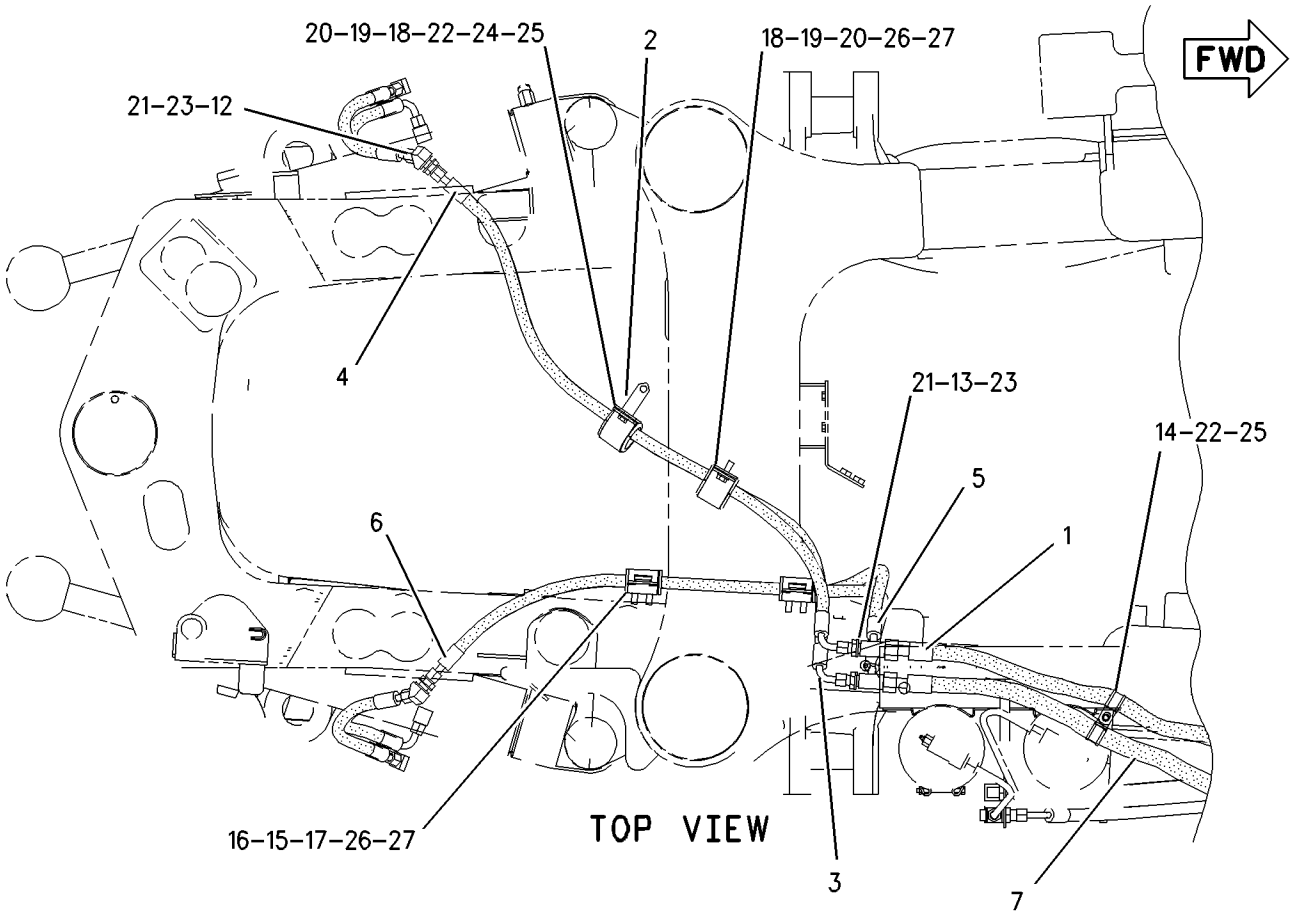

TOP VIEW

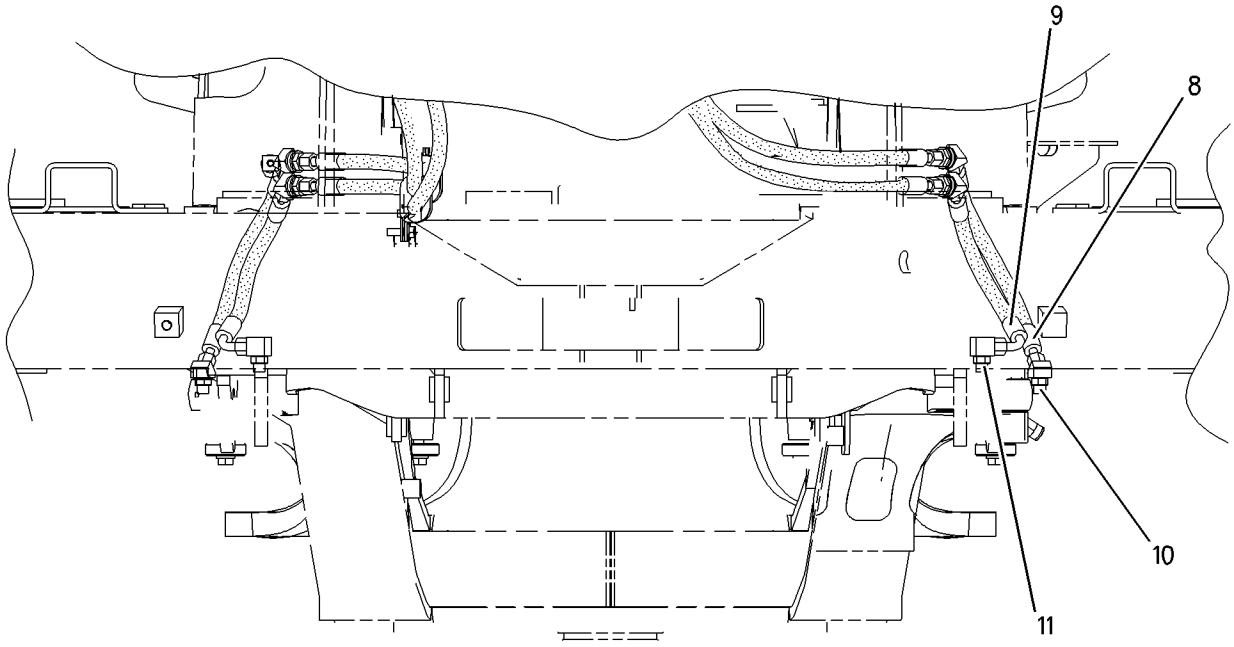

FRONT VIEW

GRAPHIC #1 **<END>** g00789439

STEERING SYSTEM

152-7103 LINES GP-STEERING

S/N: AXM823-UP

PART OF 152-6922 HYDRAULIC AR-MACHINE

SMCS-4304 **i01822571**

NOTE	REF NO	GRAPHIC REF	PART NUMBER	QTY	PART NAME 1 2 3 4 5 6 (PRODUCT LEVEL)	SEE PAGE
I	1	1	**2T-2099**	1	HOSE AS	
	2	1	**6U-2703**	1	BRACKET-ANGLE	
I	3	1	**9R-3656**	1	HOSE AS	
I	4	1	**9U-0361**	1	HOSE AS	
I	5	1	**124-8847**	1	HOSE AS	
I	6	1	**142-2316**	1	HOSE AS	
CI	7	1	**148-7779**	2	HOSE AS	
I	8	1	**191-7566**	1	HOSE AS	
CI	9	1	**204-7388**	2	HOSE AS	
C	10	1	*148-8364*	4	ELBOW AS	
					(EACH INCLUDES)	
		1	**6V-8625**	1	ELBOW	
		1	**3K-0360**	1	SEAL-O-RING	
		1	**6V-8398**	1	SEAL-O-RING	
C	11	1	**148-8457**	4	UNION AS	
					(EACH INCLUDES)	
		1	**6V-8398**	2	SEAL-O-RING	
		1	**6V-8995**	1	UNION	
	12	1	*164-5580*	2	TEE AS	
					(EACH INCLUDES)	
		1	**6V-9489**	1	TEE-BULKHEAD	
		1	**6V-8398**	2	SEAL-O-RING	
		1	**6V-9746**	1	SEAL-O-RING	
	13	1	**2U-2749**	2	CLIP	
	14	1	**3G-8047**	2	GROMMET	
	15	1	**3G-8054**	2	CLIP (TAB)	
	16	1	**3G-8057**	2	CLIP (SLOT)	
	17	1	**5P-7470**	2	CLIP (SLOT)	
	18	1	**5P-7471**	2	CLIP (TAB)	
	19	1	**5P-7703**	2	GROMMET	
	20	1	**6V-9169**	6	NUT-BULKHEAD (13/16-16-THD)	
	21	1	**8T-4121**	3	WASHER-HARD (11X21X2.5-MM THK)	
	22	1	**8T-4123**	10	WASHER-PLATED (22X35X3.5-MM THK)	
M	23	1	**8T-4133**	1	NUT (M10X1.5-THD)	
M	24	1	**8T-4195**	2	BOLT (M10X1.5X30-MM)	
	25	1	**8T-4223**	5	WASHER-HARD (13.5X25.5X3-MM THK)	
M	26	1	**8T-4956**	5	BOLT (M12X1.75X35-MM)	

C-CHANGE FROM PREVIOUS TYPE
I-REFER TO HYDRAULIC INFORMATION SYSTEM
M-METRIC PART

152-7103 **LINES GP-STEERING** *(contd.)* **i01822571**

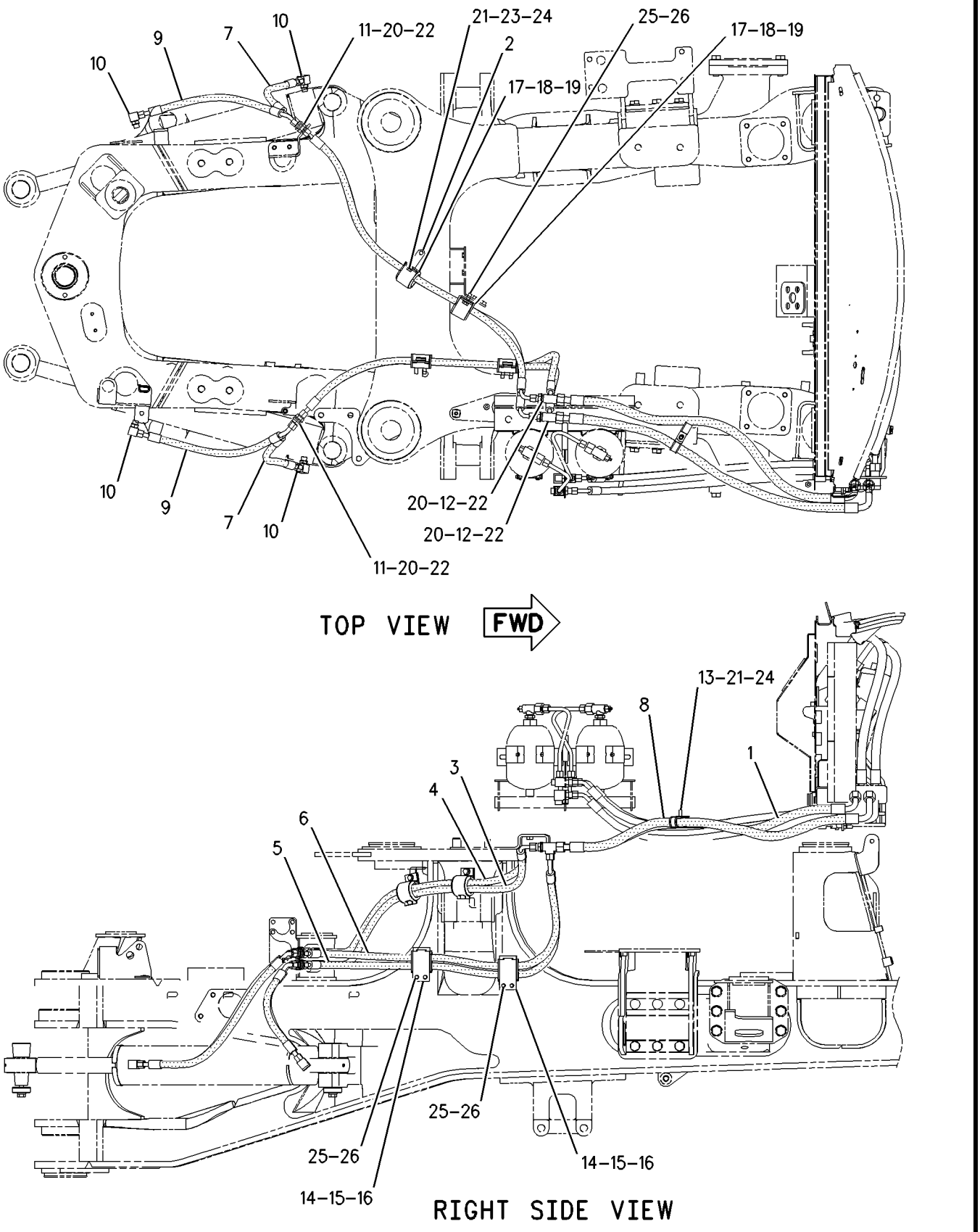

GRAPHIC #1 **<END>** g00932571

STEERING SYSTEM

153-5493 LINES GP-STEERING

S/N: AXM1-UP

PART OF 153-5485, 229-8087 CAB AR

SMCS-4304 **i02049323**

NOTE	REF NO	GRAPHIC REF	PART NUMBER	QTY	PART NAME 1 2 3 4 5 6 (PRODUCT LEVEL)	SEE PAGE
I	1	1	**191-0892**	1	HOSE AS	
I	2	1	**191-0893**	1	HOSE AS	
I	3	1	**191-0894**	1	HOSE AS	
	4	1	**248-0963**	1	TUBE AS	
	5	1	*148-8317*	1	CONNECTOR GP	
		1	**6V-8714**	1	CONNECTOR	
		1	**3D-2824**	1	SEAL-O-RING	
		1	**5K-9090**	1	SEAL-O-RING	
	6	1	*148-8344*	2	CONNECTOR GP	
					(EACH INCLUDES)	
		1	**6V-9162**	1	CONNECTOR	
		1	**3D-2824**	1	SEAL-O-RING	
		1	**6V-9746**	1	SEAL-O-RING	
	7	1	*148-8347*	1	ELBOW AS	
		1	**3D-2824**	1	SEAL-O-RING	
		1	**6V-9007**	1	ELBOW	
		1	**6V-9746**	1	SEAL-O-RING	
	8	1	*148-8361*	1	ELBOW AS	
		1	**6V-9200**	1	ELBOW	
		1	**3J-7354**	1	SEAL-O-RING	
		1	**6V-8397**	1	SEAL-O-RING	
	9	1	*149-5452*	1	UNION AS	
		1	**6V-8994**	1	UNION	
		1	**6V-8397**	2	SEAL-O-RING	
	10	1	*165-4933*	2	ELBOW AS	
					(EACH INCLUDES)	
		1	**6V-8990**	1	ELBOW	
		1	**6V-9746**	2	SEAL-O-RING	
	11	1	*183-7263*	1	PLUG AS	
		1	**3J-7354**	1	SEAL-O-RING	
		1	**9S-8002**	1	PLUG	
	12	1	**2P-1293**	2	LOCKNUT (1-3/16-12-THD)	
	13	1	**6V-9168**	1	NUT (11/16-16-THD)	

I-REFER TO HYDRAULIC INFORMATION SYSTEM

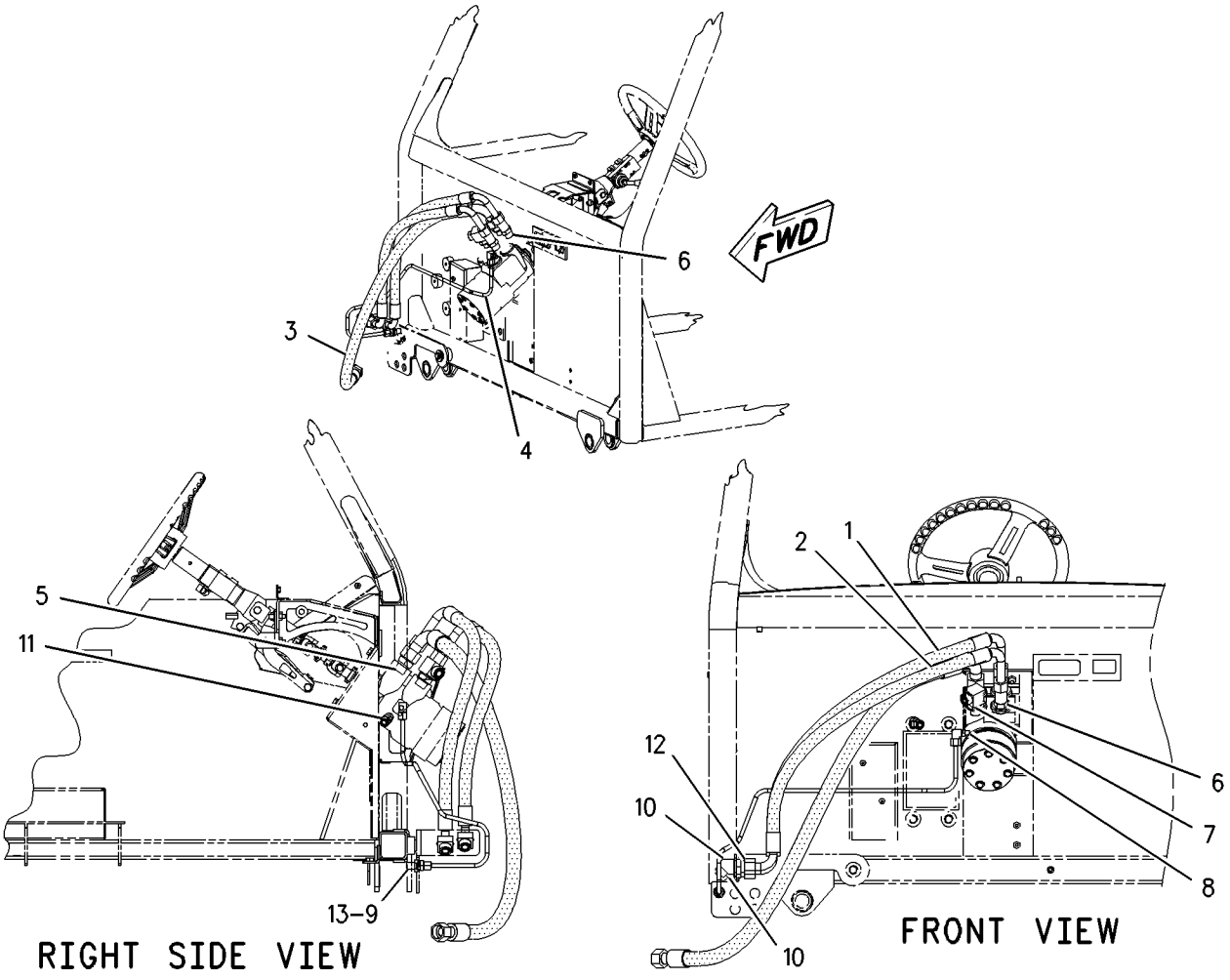

GRAPHIC #1 **<END>** g00942033

STEERING SYSTEM

166-3953 LINES GP-STEERING

S/N: AXM1-879

PART OF 152-6922 HYDRAULIC AR-MACHINE

SMCS-4304 **i02261940**

NOTE	REF NO	GRAPHIC REF	PART NUMBER	QTY	PART NAME 1 2 3 4 5 6 (PRODUCT LEVEL)	SEE PAGE
	1	1	*150-3065*	1	ADAPTER AS	
		1	**3J-1907**	1	SEAL-O-RING	
		1	**6V-0484**	1	ADAPTER-O-RING	
	2	1	*164-5567*	1	FITTING GP-COUPLING	
		1	**6V-3965**	1	FITTING AS	
		1	**3J-1907**	1	SEAL-O-RING	
	3	1	**170-1603**	1	VALVE GP-SIG & PRESS REDUCING	
		1	**2S-4078**	1	SEAL-O-RING	
		1	**3K-0360**	1	SEAL-O-RING	
		1	**7M-8485**	1	SEAL-O-RING	
		1	**8T-6850**	1	SEAL-O-RING	
Y	4	1	**176-5691**	1	VALVE GP-STEER CHK & COMBINER	661
	5	1	**180-4850**	1	VALVE GP-CHECK	
		1	**5K-9090**	1	SEAL-O-RING	
		1	**7M-8485**	1	SEAL-O-RING	
	6	1	**227-6030**	1	HOSE AS	
I	7	1	**194-1430**	1	HOSE AS	
I	8	1	**194-1431**	1	HOSE AS	
I	9	1	**194-1432**	1	HOSE AS	
	10	1	**194-6927**	1	BRACKET	
	11	1	**206-9436**	1	BRACKET AS	
M		1	**8T-3597**	1	NUT-WELD (M12X1.75-THD)	
	12	1	**130-8433**	1	GROMMET	
	13	1	*148-8309*	1	ADAPTER AS	
		1	**2P-8421**	1	ADAPTER-O-RING	
		1	**3D-2824**	1	SEAL-O-RING	
	14	1	*148-8336*	2	CONNECTOR AS	
					(EACH INCLUDES)	
		1	**6V-8636**	1	CONNECTOR	
		1	**3J-1907**	1	SEAL-O-RING	
		1	**6V-8397**	1	SEAL-O-RING	
	15	1	*148-8347*	1	ELBOW AS	
		1	**6V-9007**	1	ELBOW (90 DEGREE)	
		1	**3D-2824**	1	SEAL-O-RING	
		1	**6V-9746**	1	SEAL-O-RING	
	16	1	*148-8357*	1	ELBOW AS	
		1	**6V-9008**	1	ELBOW (90 DEGREE)	
		1	**5K-9090**	1	SEAL-O-RING	
		1	**7M-8485**	1	SEAL-O-RING	
	17	1	*148-8362*	3	ELBOW GP	
					(EACH INCLUDES)	
		1	**8T-6684**	1	ELBOW (90-DEG)	
		1	**3D-2824**	1	SEAL-O-RING	
		1	**5K-9090**	1	SEAL-O-RING	
	18	1	*148-8391*	1	ELBOW GP	
		1	**8T-8987**	1	ELBOW	
		1	**2S-4078**	1	SEAL-O-RING	
		1	**5K-9090**	1	SEAL-O-RING	
	19	1	*148-8411*	1	PLUG AS	
		1	**9S-4185**	1	PLUG	
		1	**3K-0360**	1	SEAL-O-RING	
	20	1	**1P-4578**	2	FLANGE-HALF	
	21	1	**1P-4584**	4	FLANGE-HALF	
	22	1	**4J-0522**	1	SEAL-O-RING	
	23	1	**5P-7470**	1	CLIP (SLOT)	
	24	1	**5P-7471**	1	CLIP (TAB)	

166-3953 **LINES GP-STEERING** *(contd.)* **i02261940**

NOTE	REF NO	GRAPHIC REF	PART NUMBER	QTY	PART NAME 1 2 3 4 5 6 (PRODUCT LEVEL)	SEE PAGE
	25	1	**5P-7703**	1	GROMMET	
	26	1	**6J-2680**	2	SEAL-O-RING	
	27	1	**6V-0852**	1	CAP-DUST	
	28	1	**6V-4356**	1	CLIP (SLOT)	
	29	1	**6V-4357**	1	CLIP (TAB)	
M	30	1	**7X-2549**	2	BOLT (M12X1.75X100-MM)	
	31	1	**8T-4121**	4	WASHER-HARD (11X21X2.5-MM THK)	
M	32	1	**8T-4177**	4	BOLT (M8X1.25X90-MM)	
M	33	1	**8T-4183**	2	BOLT (M12X1.75X40-MM)	
M	34	1	**8T-4184**	4	BOLT (M12X1.75X45-MM)	
M	35	1	**8T-4196**	4	BOLT (M10X1.5X35-MM)	
	36	1	**8T-4223**	17	WASHER-HARD (13.5X25.5X3-MM THK)	
	37	1	**8T-4224**	4	WASHER-HARD (8.8X16X2-MM THK)	
M	38	1	**8T-4244**	5	NUT (M12X1.75-THD)	
M	39	1	**8T-5092**	4	BOLT (M12X1.75X150-MM)	

I-REFER TO HYDRAULIC INFORMATION SYSTEM
M-METRIC PART
Y-SEPARATE ILLUSTRATION

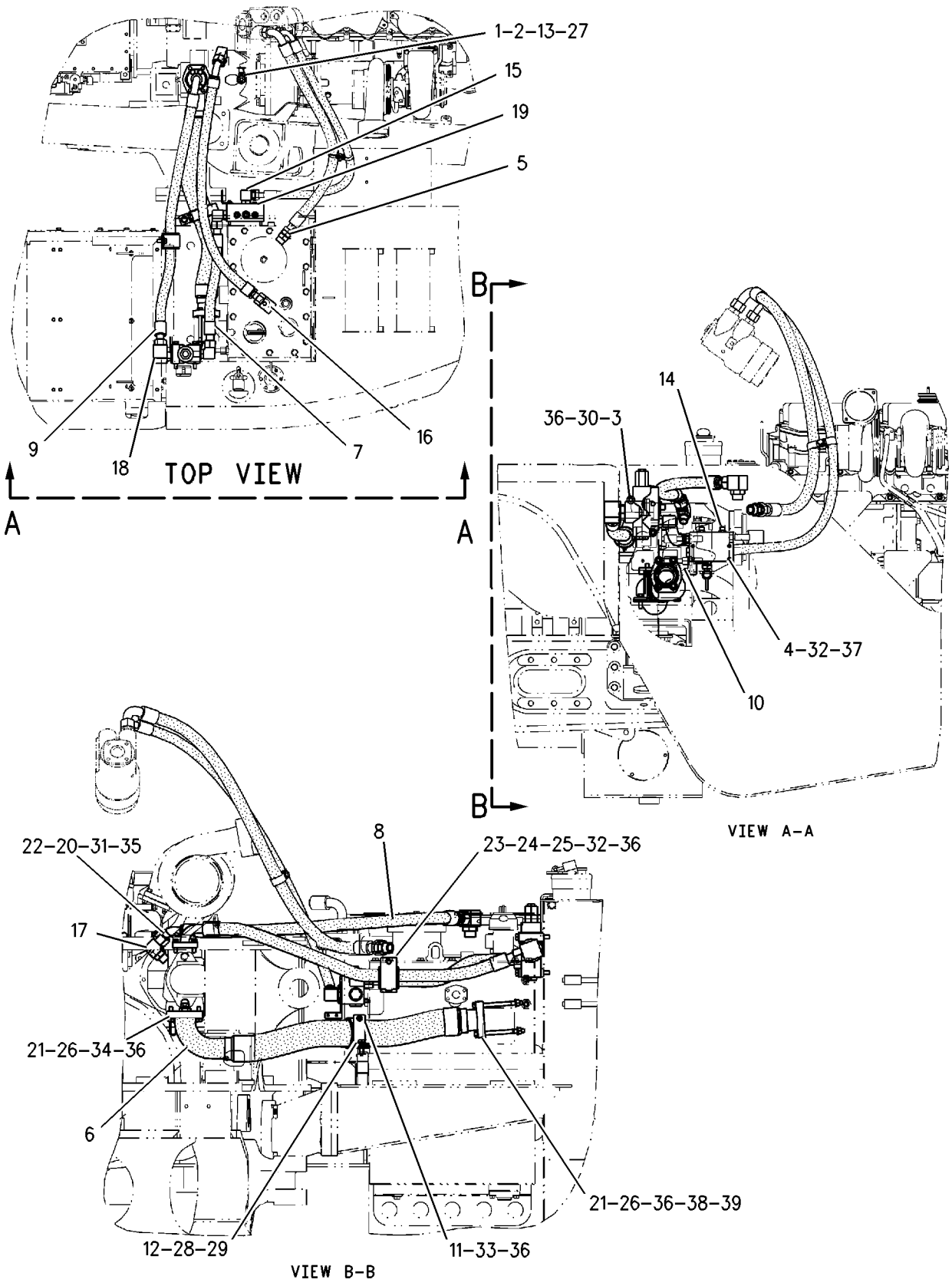

GRAPHIC #1 **<END>** g00930567

STEERING SYSTEM

227-5284 LINES GP-STEERING

S/N: AXM880-1579

PART OF 152-6922 HYDRAULIC AR-MACHINE

SMCS-4304 **i02095354**

NOTE	REF NO	GRAPHIC REF	PART NUMBER	QTY	PART NAME 1 2 3 4 5 6 (PRODUCT LEVEL)	SEE PAGE
	1	1	*150-3065*	1	ADAPTER AS	
		1	**3J-1907**	1	SEAL-O-RING	
		1	**6V-0484**	1	ADAPTER-O-RING	
	2	1	*164-5567*	1	FITTING GP-COUPLING	
		1	**3J-1907**	1	SEAL-O-RING	
		1	**6V-3965**	1	FITTING AS	
Y	3	1	**176-5691**	1	VALVE GP-STEER CHK & COMBINER	661
	4	1	**180-4850**	1	VALVE GP-CHECK	
		1	**5K-9090**	1	SEAL-O-RING	
		1	**7M-8485**	1	SEAL-O-RING	
	5	1	*188-2008*	1	ELBOW AS	
		1	**3D-2824**	1	SEAL-O-RING	
		1	**5K-9090**	1	SEAL-O-RING	
		1	**8T-7970**	1	ELBOW	
I	6	1	**191-0895**	1	HOSE AS	
I	7	1	**194-1431**	1	HOSE AS	
I	8	1	**227-5286**	1	HOSE AS	
	9	1	**227-5288**	1	BRACKET	
	10	1	**227-6030**	1	HOSE AS	
	11	1	*148-8309*	1	ADAPTER AS	
		1	**2P-8421**	1	ADAPTER-O-RING	
		1	**3D-2824**	1	SEAL-O-RING	
	12	1	*148-8327*	1	CONNECTOR AS	
		1	**3D-2824**	1	SEAL-O-RING	
		1	**6V-8637**	1	CONNECTOR	
		1	**6V-9746**	1	SEAL-O-RING	
	13	1	*148-8336*	2	CONNECTOR AS	
					(EACH INCLUDES)	
		1	**3J-1907**	1	SEAL-O-RING	
		1	**6V-8397**	1	SEAL-O-RING	
		1	**6V-8636**	1	CONNECTOR	
	14	1	*148-8357*	1	ELBOW AS	
		1	**5K-9090**	1	SEAL-O-RING	
		1	**6V-9008**	1	ELBOW	
		1	**7M-8485**	1	SEAL-O-RING	
	15	1	*148-8362*	1	ELBOW GP	
		1	**3D-2824**	1	SEAL-O-RING	
		1	**5K-9090**	1	SEAL-O-RING	
		1	**8T-6684**	1	ELBOW (90-DEG)	
	16	1	*148-8411*	1	PLUG AS	
		1	**3K-0360**	1	SEAL-O-RING	
		1	**9S-4185**	1	PLUG	
	17	1	**1P-4578**	2	FLANGE-HALF	
	18	1	**1P-4584**	4	FLANGE-HALF	
	19	1	**4J-0522**	1	SEAL-O-RING	
	20	1	**6J-2680**	2	SEAL-O-RING	
	21	1	**6V-0852**	1	CAP-DUST	
	22	1	**8T-4121**	4	WASHER-HARD (11X21X2.5-MM THK)	
M	23	1	**8T-4177**	4	BOLT (M8X1.25X90-MM)	
M	24	1	**8T-4184**	4	BOLT (M12X1.75X45-MM)	
M	25	1	**8T-4196**	4	BOLT (M10X1.5X35-MM)	
	26	1	**8T-4223**	12	WASHER-HARD (13.5X25.5X3-MM THK)	
	27	1	**8T-4224**	4	WASHER-HARD (8.8X16X2-MM THK)	
M	28	1	**8T-4244**	4	NUT (M12X1.75-THD)	
M	29	1	**8T-5092**	4	BOLT (M12X1.75X150-MM)	

227-5284 **LINES GP-STEERING** *(contd.)* **i02095354**

I-REFER TO HYDRAULIC INFORMATION SYSTEM
M-METRIC PART
Y-SEPARATE ILLUSTRATION

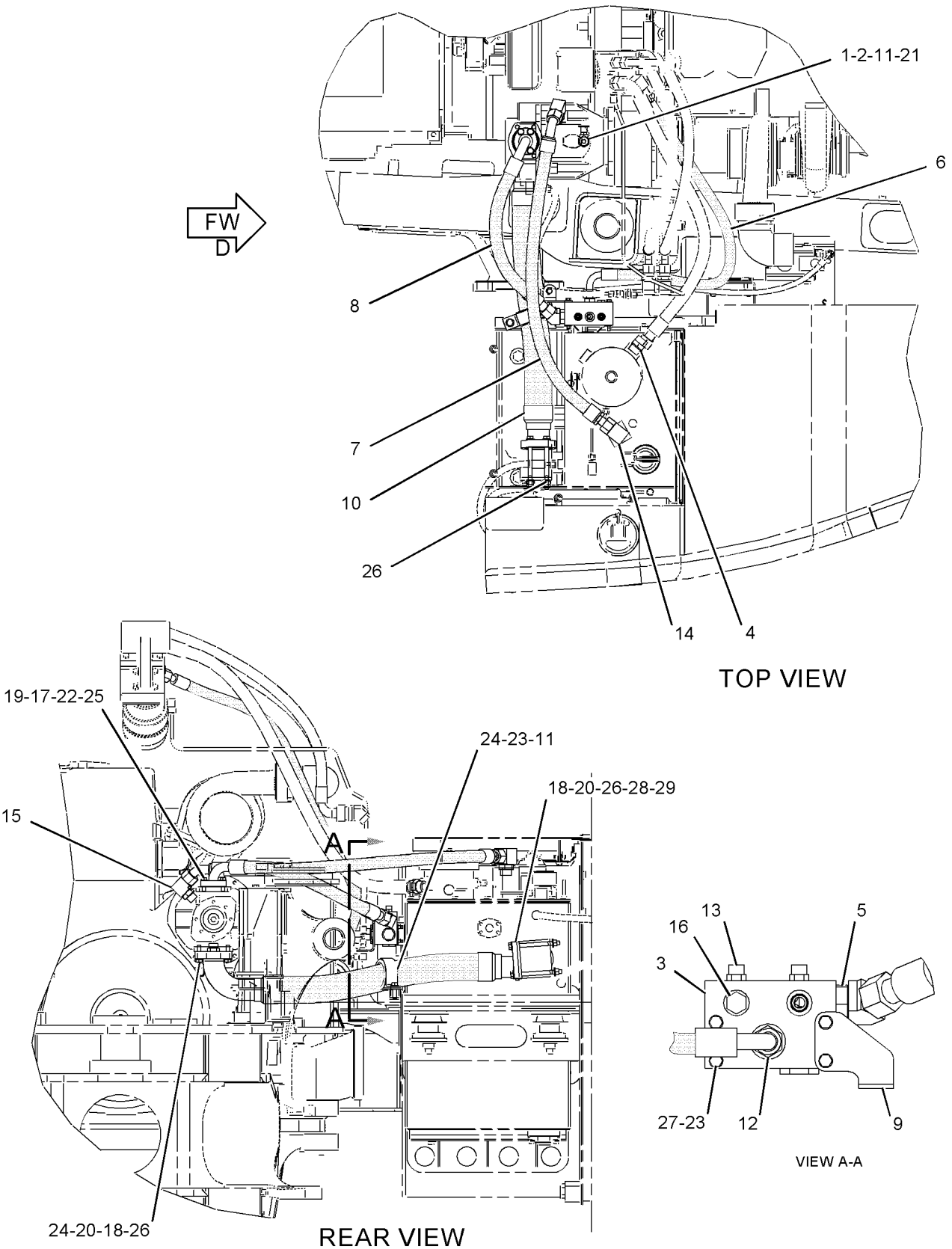

GRAPHIC #1 **<END>** g01068322

STEERING SYSTEM

227-5284 LINES GP-STEERING

S/N: AXM1580-UP

PART OF 152-6922 HYDRAULIC AR-MACHINE

SMCS-4304 **i02120370**

NOTE	REF NO	GRAPHIC REF	PART NUMBER	QTY	PART NAME 1 2 3 4 5 6 (PRODUCT LEVEL)	SEE PAGE
I	1	1	**131-2949**	1	HOSE AS	
	2	1	*150-3065*	1	ADAPTER AS	
		1	**3J-1907**	1	SEAL-O-RING	
		1	**6V-0484**	1	ADAPTER-O-RING	
	3	1	*164-5567*	1	FITTING GP-COUPLING	
		1	**3J-1907**	1	SEAL-O-RING	
		1	**6V-3965**	1	FITTING AS	
Y	4	1	**176-5691**	1	VALVE GP-STEER CHK & COMBINER	661
	5	1	**180-4850**	1	VALVE GP-CHECK	
		1	**5K-9090**	1	SEAL-O-RING	
		1	**7M-8485**	1	SEAL-O-RING	
	6	1	*188-2008*	1	ELBOW AS	
		1	**3D-2824**	1	SEAL-O-RING	
		1	**5K-9090**	1	SEAL-O-RING	
		1	**8T-7970**	1	ELBOW	
I	7	1	**191-0895**	1	HOSE AS	
I	8	1	**227-5286**	1	HOSE AS	
	9	1	**227-5288**	1	BRACKET	
	10	1	**227-6030**	1	HOSE AS	
	11	1	*148-8309*	1	ADAPTER AS	
		1	**2P-8421**	1	ADAPTER-O-RING	
		1	**3D-2824**	1	SEAL-O-RING	
	12	1	*148-8327*	1	CONNECTOR AS	
		1	**3D-2824**	1	SEAL-O-RING	
		1	**6V-8637**	1	CONNECTOR	
		1	**6V-9746**	1	SEAL-O-RING	
	13	1	*148-8336*	2	CONNECTOR AS	
					(EACH INCLUDES)	
		1	**3J-1907**	1	SEAL-O-RING	
		1	**6V-8397**	1	SEAL-O-RING	
		1	**6V-8636**	1	CONNECTOR	
	14	1	*148-8357*	1	ELBOW AS	
		1	**5K-9090**	1	SEAL-O-RING	
		1	**6V-9008**	1	ELBOW	
		1	**7M-8485**	1	SEAL-O-RING	
	15	1	*148-8362*	1	ELBOW GP	
		1	**3D-2824**	1	SEAL-O-RING	
		1	**5K-9090**	1	SEAL-O-RING	
		1	**8T-6684**	1	ELBOW (90-DEG)	
	16	1	*148-8411*	1	PLUG AS	
		1	**3K-0360**	1	SEAL-O-RING	
		1	**9S-4185**	1	PLUG	
	17	1	**1P-4578**	2	FLANGE-HALF	
	18	1	**1P-4584**	4	FLANGE-HALF	
	19	1	**4J-0522**	1	SEAL-O-RING	
	20	1	**6J-2680**	2	SEAL-O-RING	
	21	1	**6V-0852**	1	CAP-DUST	
	22	1	**8T-4121**	4	WASHER-HARD (11X21X2.5-MM THK)	
M	23	1	**8T-4177**	4	BOLT (M8X1.25X90-MM)	
M	24	1	**8T-4184**	4	BOLT (M12X1.75X45-MM)	
M	25	1	**8T-4196**	4	BOLT (M10X1.5X35-MM)	
	26	1	**8T-4223**	12	WASHER-HARD (13.5X25.5X3-MM THK)	
	27	1	**8T-4224**	4	WASHER-HARD (8.8X16X2-MM THK)	
M	28	1	**8T-4244**	4	NUT (M12X1.75-THD)	
CM	29	1	**8T-5041**	4	BOLT (M12X1.75X120-MM)	

227-5284 **LINES GP-STEERING** ***(contd.)*** **i02120370**

C-CHANGE FROM PREVIOUS TYPE
I-REFER TO HYDRAULIC INFORMATION SYSTEM
M-METRIC PART
Y-SEPARATE ILLUSTRATION

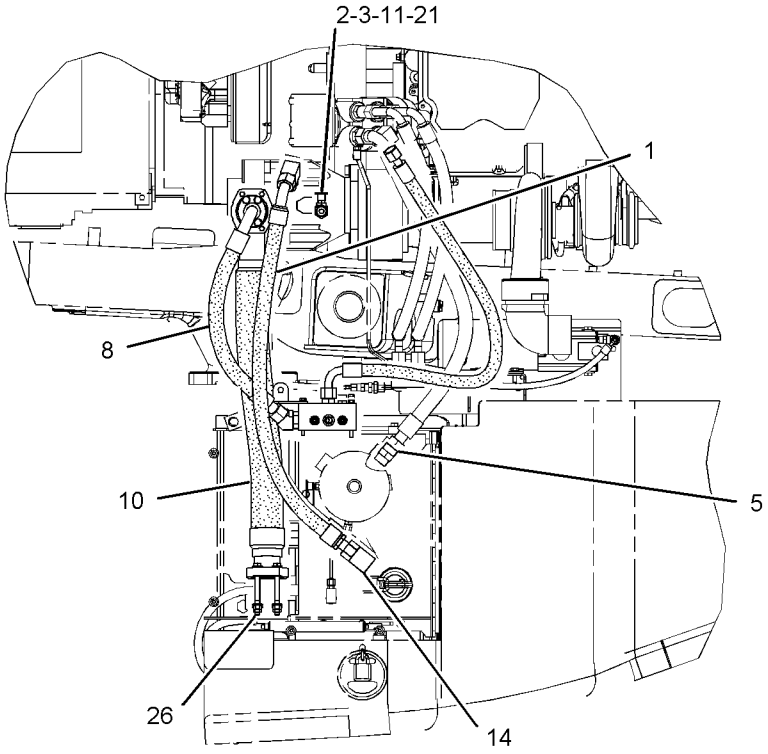

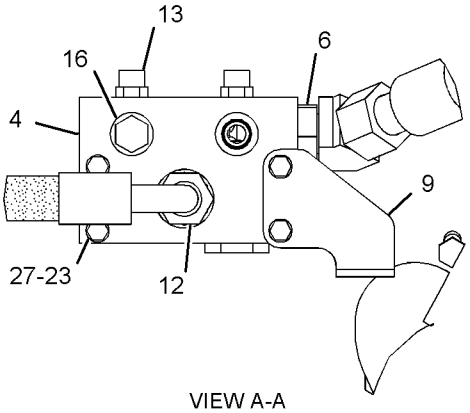

VIEW A-A

TOP VIEW FWD

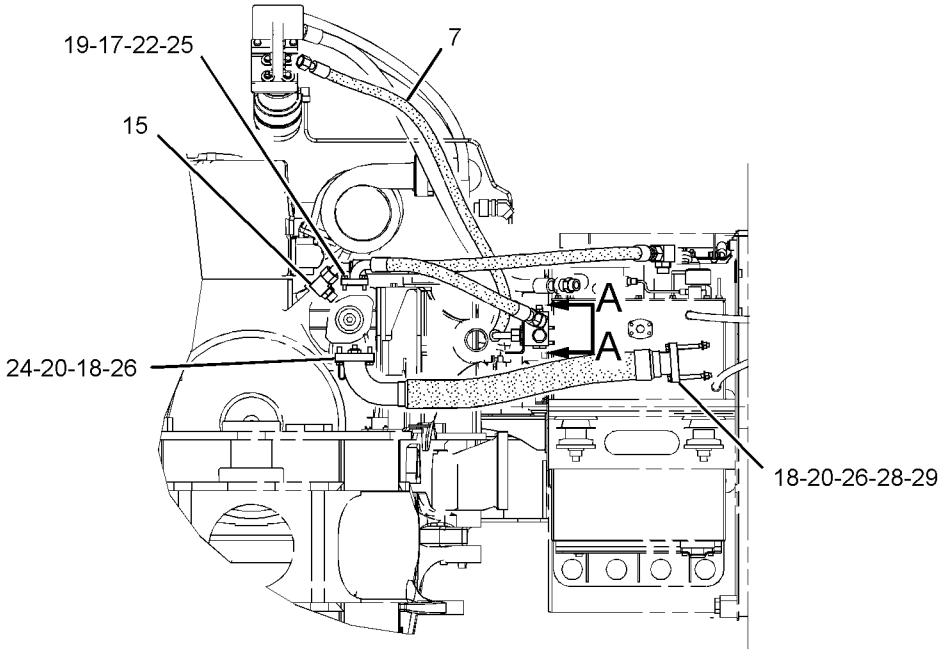

FRONT VIEW

GRAPHIC #1 **<END>** g01134220

141-6389 PUMP & MOTOR GP-SEC STEERING

S/N: AXM1-UP

PART OF 152-6962 PUMP & MTG GP-SECONDARY STEER

SMCS-4324 **i01429892**

NOTE	REF NO	GRAPHIC REF	PART NUMBER	QTY	PART NAME 1 2 3 4 5 6 (PRODUCT LEVEL)	SEE PAGE
Y	1	1	**117-3915**	1	MOTOR GP-ELECTRIC	239
Y	2	1	**176-9781**	1	PUMP GP-GEAR	653
	3	1	**1A-2209**	2	BOLT (3/8-24X1.25-IN)	
	4	1	**8T-4896**	2	WASHER-HARD (10.2X18.5X2.5-MM THK)	
	5	1	**117-5268**	1	GASKET	

Y-SEPARATE ILLUSTRATION

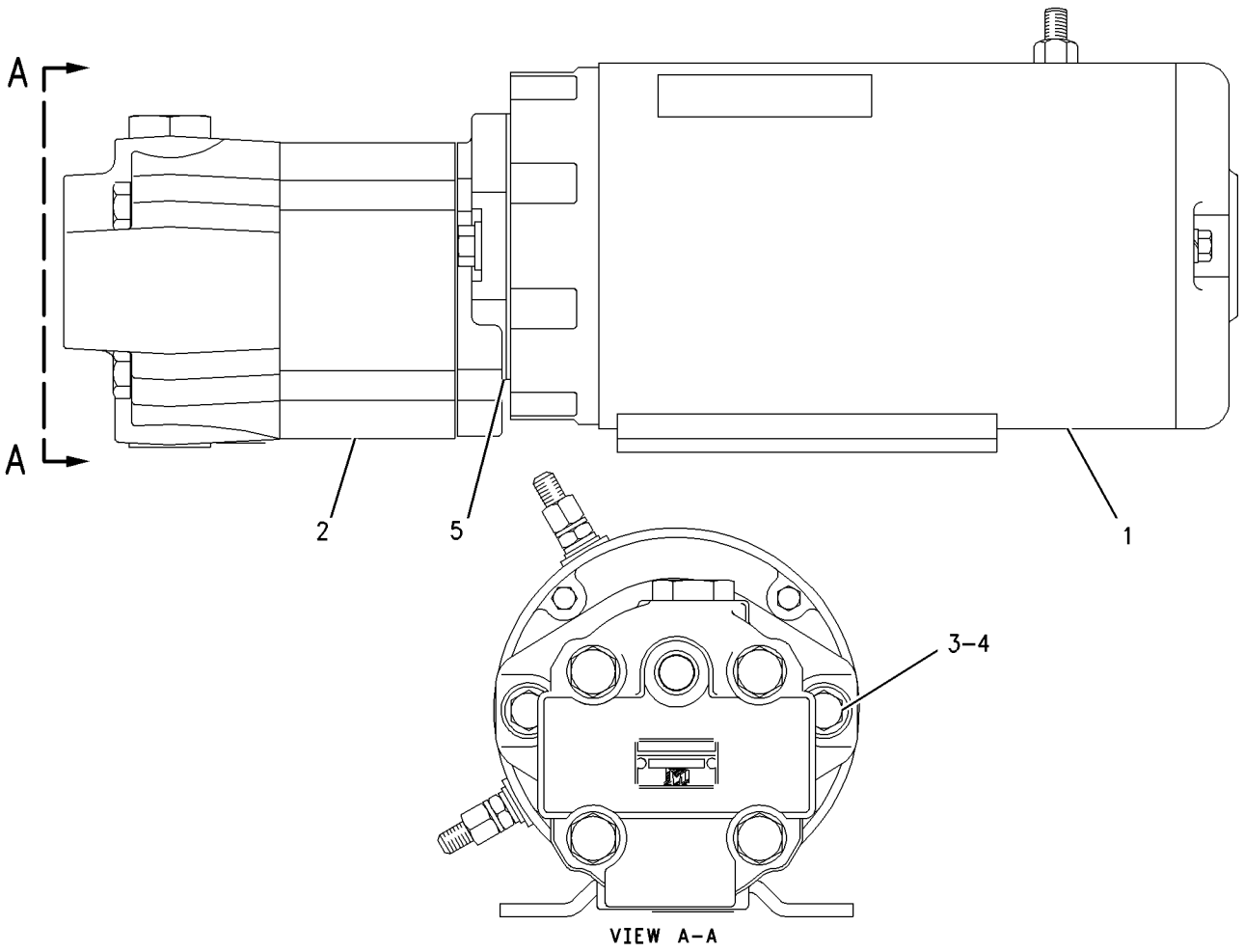

GRAPHIC #1 **<END>** g00642565

STEERING SYSTEM

152-6962 PUMP & MTG GP-SECONDARY STEER

S/N: AXM1-UP

PART OF 152-6922 HYDRAULIC AR-MACHINE

SMCS-4324 **i01596868**

NOTE	REF NO	GRAPHIC REF	PART NUMBER	QTY	PART NAME 1 2 3 4 5 6 (PRODUCT LEVEL)	SEE PAGE
Y	1	1	**141-6389**	1	PUMP & MOTOR GP-SEC STEERING	649
	2	1	**8T-4121**	4	WASHER-HARD (11X21X2.5-MM THK)	
M	3	1	**8T-4195**	4	BOLT (M10X1.5X30-MM)	

M-METRIC PART
Y-SEPARATE ILLUSTRATION

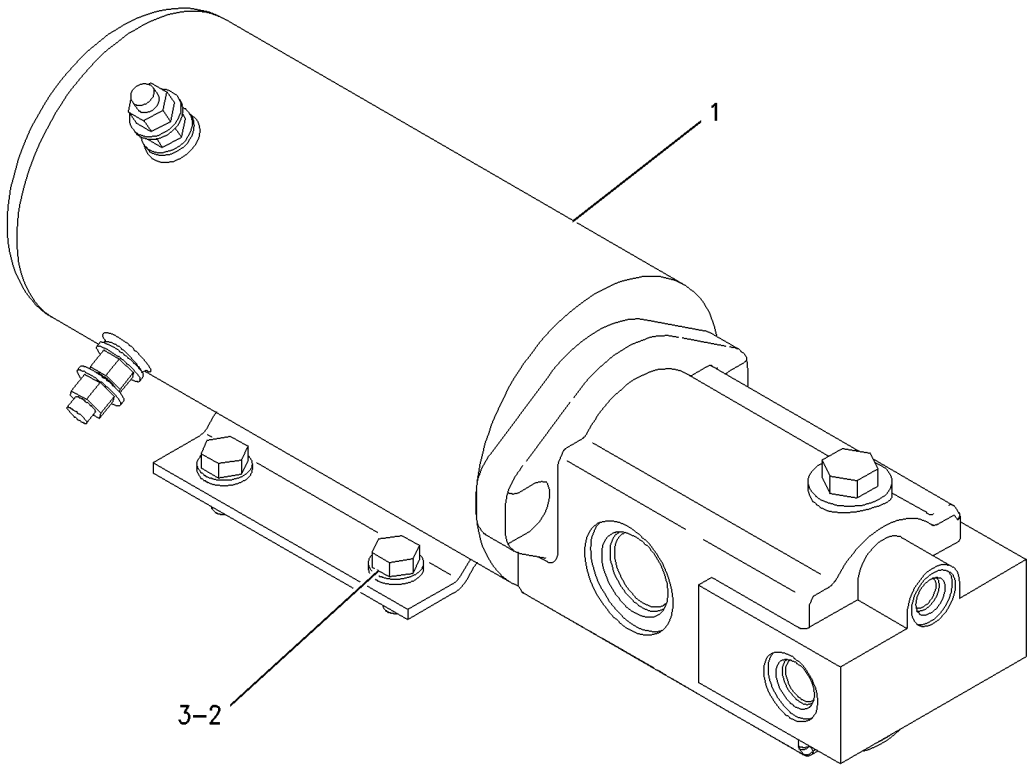

GRAPHIC #1 **<END>** g00764384

STEERING SYSTEM

152-6959 PUMP & MTG GP-STEERING

S/N: AXM1-879

PART OF 152-6943 POWER TRAIN AR

SMCS-4306, 5070 **i02262572**

NOTE	REF NO	GRAPHIC REF	PART NUMBER	QTY	PART NAME 1 2 3 4 5 6 (PRODUCT LEVEL)	SEE PAGE
Y	1	1	**153-7021**	1	PUMP GP-PISTON (STEERING)	733
	2	1	**5F-3106**	1	SEAL-O-RING	
M	3	1	**8T-7338**	2	BOLT (M16X2X45-MM)	
	4	1	**9X-8257**	2	WASHER (17.5X30X3.5-MM THK)	

M-METRIC PART
Y-SEPARATE ILLUSTRATION

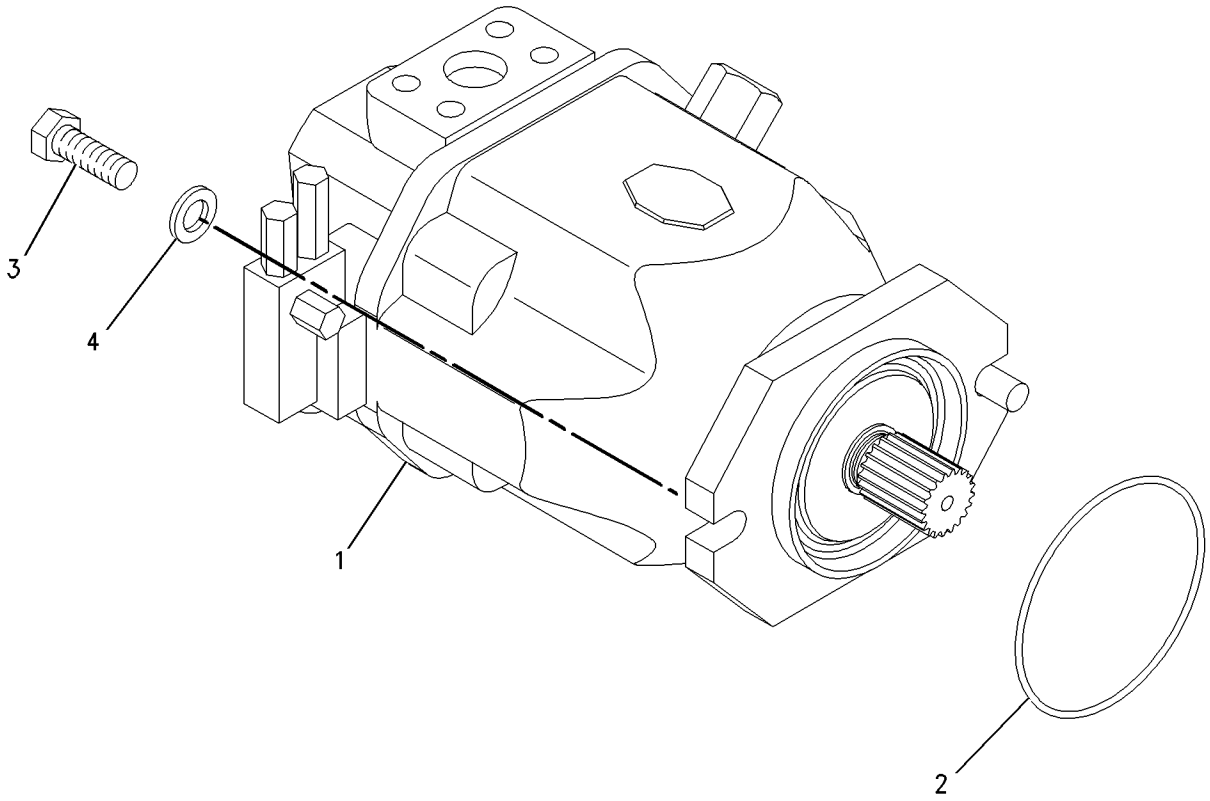

GRAPHIC #1 **<END>** g00763734

STEERING SYSTEM

152-6959 PUMP & MTG GP-STEERING

S/N: AXM880-UP

PART OF 152-6943 POWER TRAIN AR

SMCS-4306, 5070 **i02261921**

NOTE	REF NO	GRAPHIC REF	PART NUMBER	QTY	PART NAME 1 2 3 4 5 6 (PRODUCT LEVEL)	SEE PAGE
Y	1	1	**224-4432**	1	PUMP GP-PISTON (STEERING)	737
	2	1	**5F-3106**	1	SEAL-O-RING	
M	3	1	**8T-7338**	2	BOLT (M16X2X45-MM)	
	4	1	**9X-8257**	2	WASHER (17.5X30X3.5-MM THK)	

M-METRIC PART
Y-SEPARATE ILLUSTRATION

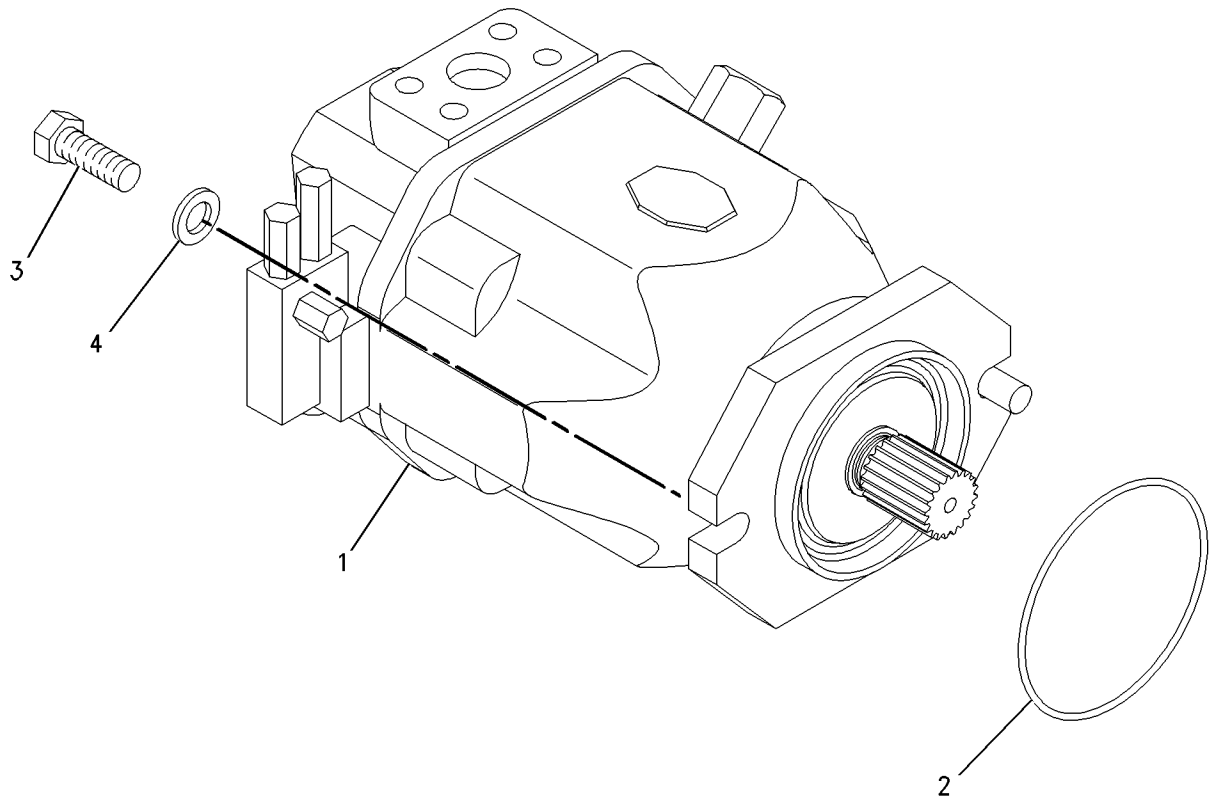

GRAPHIC #1 **<END>** g00763734

176-9781 PUMP GP-GEAR–SEC STEERING

S/N: AXM1-UP

PART OF 141-6389 PUMP & MOTOR GP-SEC STEERING

SMCS-4324 **i01835243**

NOTE	REF NO	GRAPHIC REF	PART NUMBER	QTY	PART NAME 1 2 3 4 5 6 (PRODUCT LEVEL)	SEE PAGE
	1	1	**8J-6273**	1	RING-RETAINING	
	2	1	**145-6899**	1	FLANGE	
	3	1	**099-3095**	4	DOWEL	
M	6	1	**145-7231**	4	BOLT (M10X1.5X135-MM)	
L	7	1	**135-5935**	1	SEAL-SHAFT	
	8	1	**177-0078**	1	PLUG	
J	9	1	**2M-9780**	2	SEAL-O-RING	
	10	1	**177-0082**	1	SPRING	
	11	1	**9S-4190**	1	PLUG	
	12	1	**9S-4182**	2	PLUG	
J	13	1	**3J-7354**	2	SEAL-O-RING	
	14	1	**9S-4191**	1	PLUG	
J	15	1	**3J-1907**	1	SEAL-O-RING	
					AVAILABLE REPAIR KIT(S):	
J			**145-6902**	1	VALVE GP-PUMP CONTROL (PRESSURE COMPENSATION)	
L			**145-6905**	1	KIT-SEAL	
					(ALSO INCLUDES RINGS)	

J-KIT MARKED J INCLUDES PART(S) MARKED J
L-KIT MARKED L INCLUDES PART(S) MARKED L
M-METRIC PART

176-9781 PUMP GP-GEAR *(contd.)* i01835243

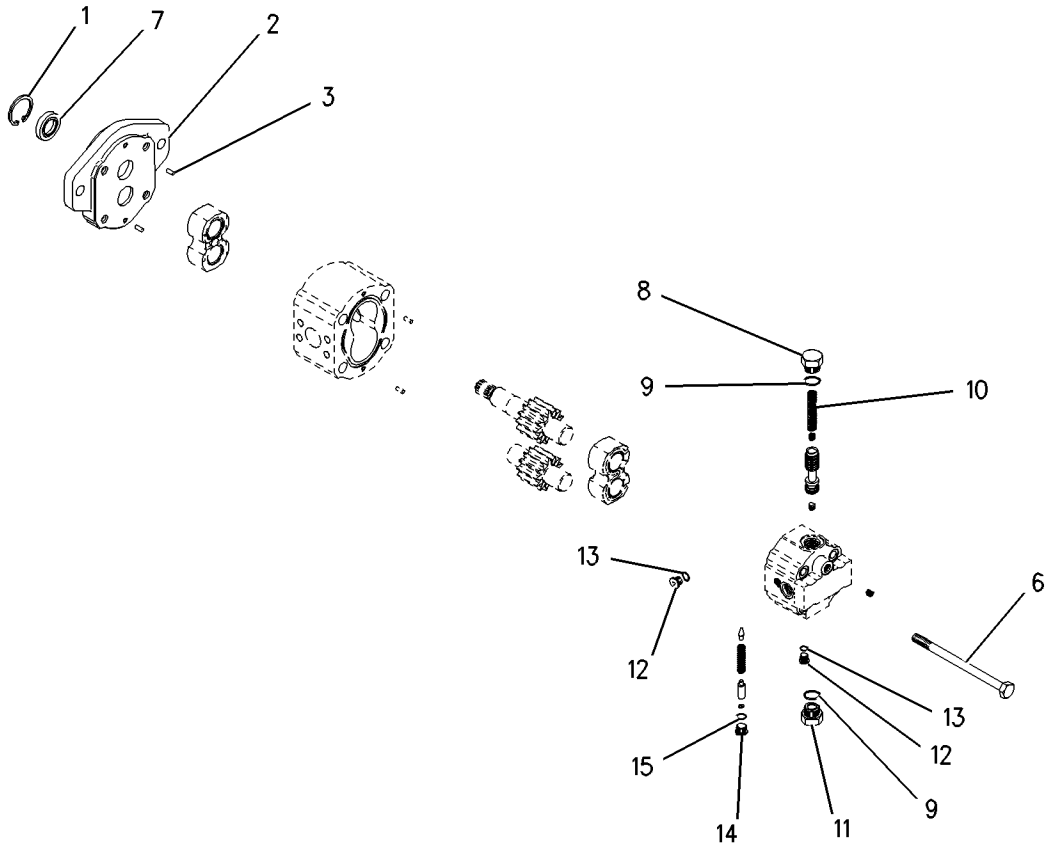

GRAPHIC #1 **<END>** g00937553

STEERING SYSTEM

160-9727 PUMP GP-METERING

S/N: AXM1-UP

PART OF 153-5490 CONTROL GP-STEERING

SMCS-4312 **i02203676**

NOTE	REF NO	GRAPHIC REF	PART NUMBER	QTY	PART NAME 1 2 3 4 5 6 (PRODUCT LEVEL)	SEE PAGE
	1	1	**5L-1100**	1	BEARING-THRUST	
	2	1	**3G-6891**	1	RACE	
	3	1	**187-5007**	1	RACE	
					AVAILABLE REPAIR KIT(S):	
			258-8411	1	KIT-SEAL	
					(INCLUDES SEALS)	

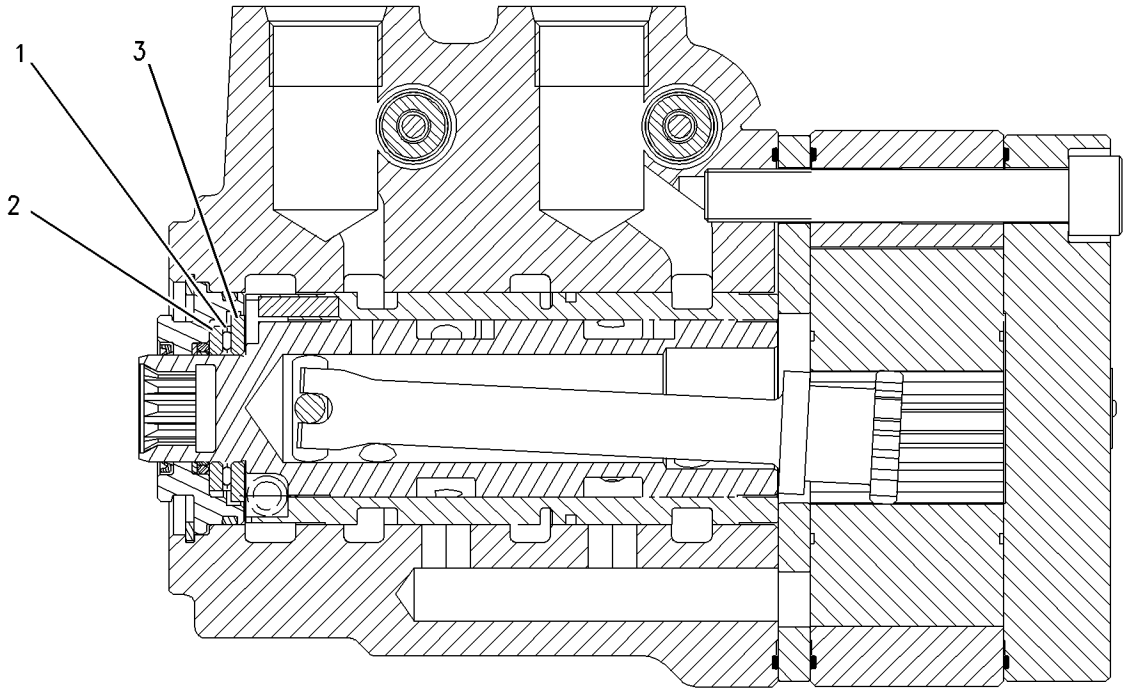

GRAPHIC #1 **<END>** g00804110

STEERING SYSTEM

252-8050 STEERING COLUMN GP-ADJUSTABLE

S/N: AXM1-UP

PART OF 153-5490 CONTROL GP-STEERING

SMCS-4338 **i02215921**

NOTE	REF NO	GRAPHIC REF	PART NUMBER	QTY	PART NAME 1 2 3 4 5 6 (PRODUCT LEVEL)	SEE PAGE
	1	1	**252-8051**	1	ADAPTER AS	
	2	1	**162-8550**	1	KIT-GAS STRUT (STEERING COLUMN TILT)	
					(INCLUDES STRUT, BOLTS, NUTS & SPACER)	
	3	1	**189-9368**	1	KIT-COLUMN (STEERING COLUMN)	
	4	1	**191-3700**	1	KIT-TILT LEVER (STEERING COLUMN)	
					(INCLUDES CONTROL AS, SCREW & CLAMP AS)	
	5	1	**252-8054**	1	KIT-CONTACT (STEERING COLUMN)	
					(INCLUDES HORN CONTACT AS & SCREW)	
M	6	1	**6V-8227**	1	NUT (M18X1.5-6-THD)	
	7	1	**189-9370**	1	SHAFT	
	8	1	**162-8551**	2	JOINT AS-UNIVERSAL	
					(EACH INCLUDES)	
M		1	**099-3649**	2	BOLT (M8X1.25X40-MM)	
M		1	**131-3540**	2	LOCKNUT (M8X1.25-THD)	
	9	1	**185-3886**	1	CLAMP AS-CABLE	
	10	1	**224-9929**	1	KIT-PIVOT	
					(INCLUDES BUSHING AND PIN PIVOTS)	
	11	1	**201-5121**	1	KIT-SHAFT (STEERING COLUMN)	
					(INCLUDES UPPER SHAFT, WASHERS, SPRING, PIN & HORN CONTACT)	
	12	1	**102-8802**	1	KIT-RECEPTACLE (2-PIN)	
					(INCLUDES RECEPTACLE AS & WEDGE)	
	13	1	**186-3735**	1	PIN-CONNECTOR	
	14	1	**9G-3695**	1	PLUG (GROMMET SEALING)	

M-METRIC PART

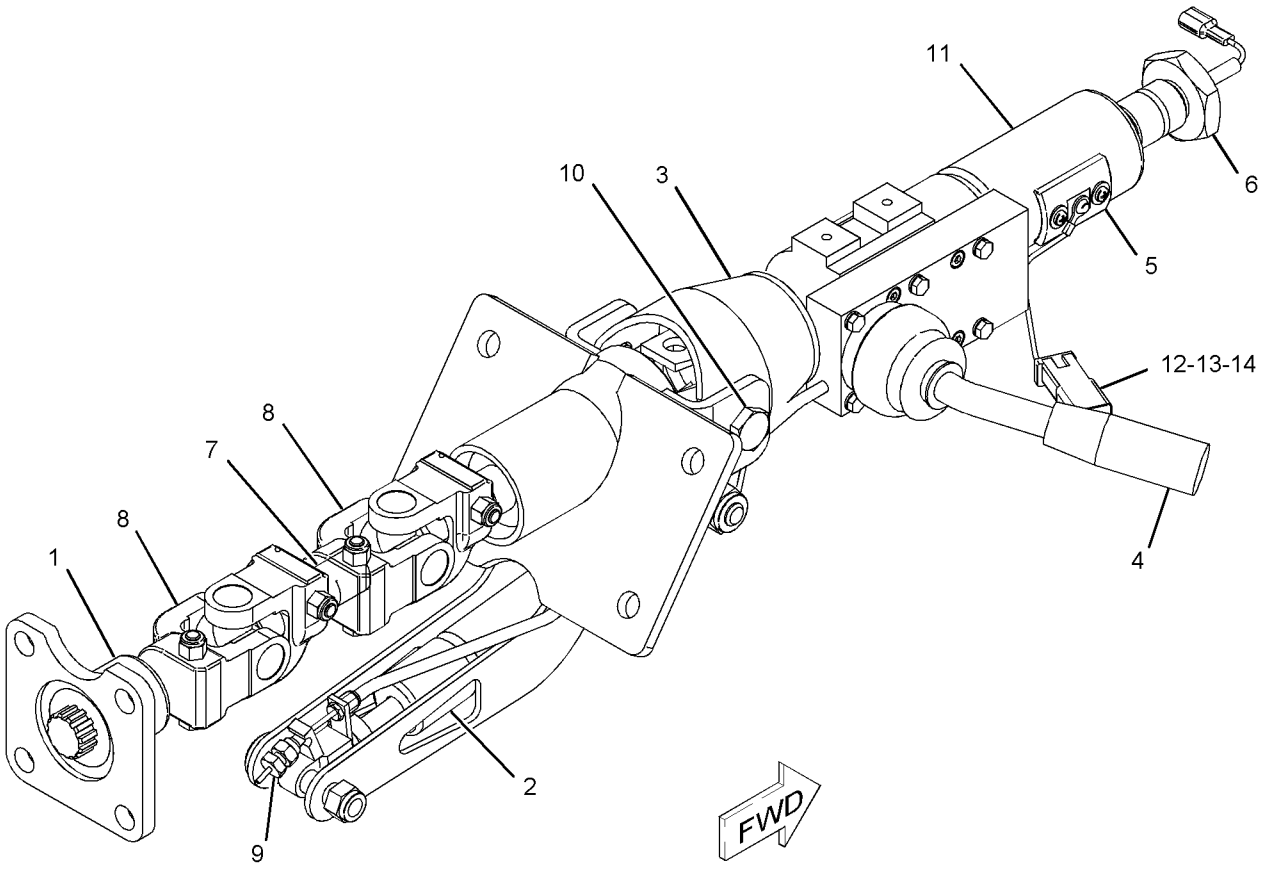

GRAPHIC #1 **<END>** g01121013

173-6219 VALVE GP-CHK & PRESS REDUCING

S/N: AXM1-536, 539, 541, 586-587, 590, 592, 594, 596-598, 600, 602

PART OF 152-7100 LINES GP-PUMP

SMCS-4337, 5067 **i01547251**

NOTE	REF NO	GRAPHIC REF	PART NUMBER	QTY	PART NAME 1 2 3 4 5 6 (PRODUCT LEVEL)	SEE PAGE
	1	1	**134-9911**	2	VALVE-CHECK	
	2	1	**140-0973**	1	VALVE GP-PRESSURE REDUCING	
		1	**141-0889**	1	KIT-SEAL	
	3	1	**180-3790**	1	VALVE GP-RELIEF	
		1	**109-6926**	1	RING	
		1	**2M-9780**	1	SEAL-O-RING	
		1	**6V-8398**	1	SEAL-O-RING	
	4	1	**141-0888**	2	KIT-SEAL	
	5	1	**141-0889**	1	KIT-SEAL	
	6	1	**2M-9780**	1	SEAL-O-RING	
	7	1	**6V-8398**	1	SEAL-O-RING	
	8	1	**109-6926**	1	RING	

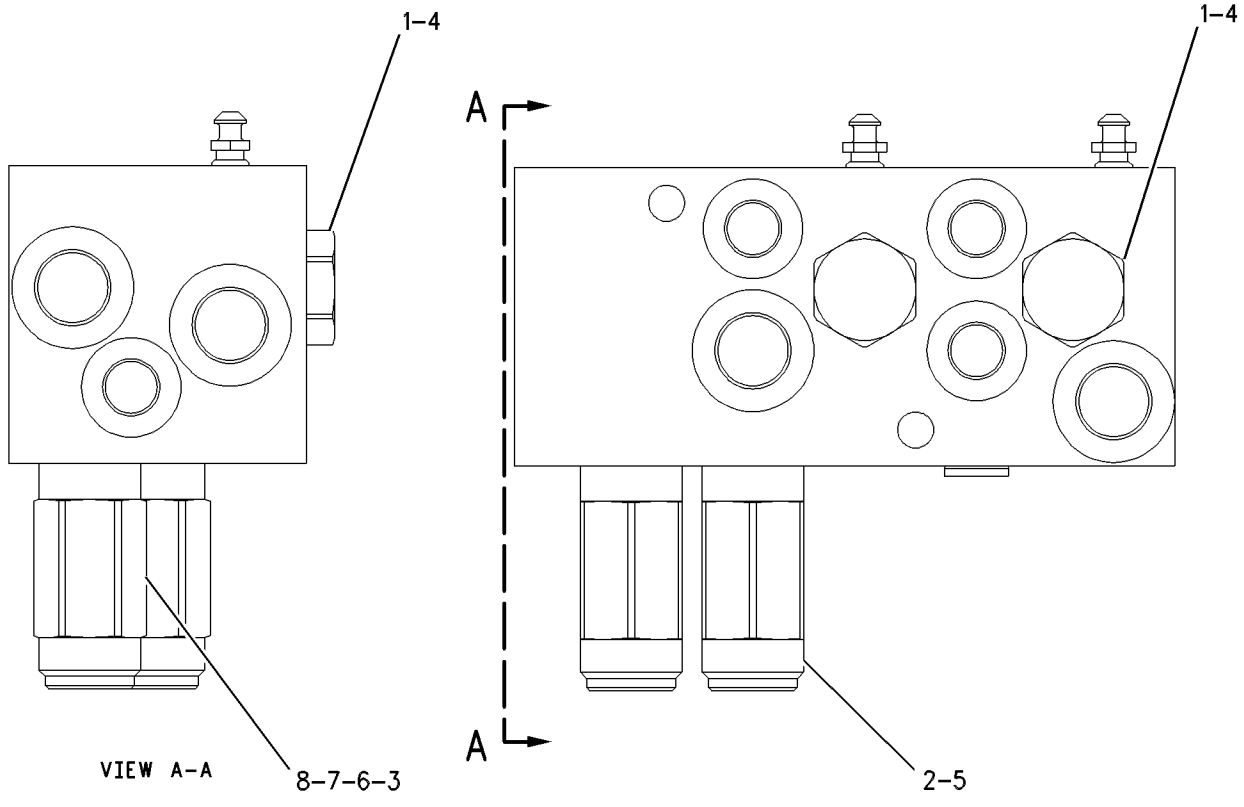

GRAPHIC #1 **<END>** g00638894

STEERING SYSTEM

224-1209 VALVE GP-CHK & PRESS REDUCING

S/N: AXM537-538, 540, 542-585, 588-589, 591, 593, 595, 599, 601, 603-UP
PART OF 152-7100 LINES GP-PUMP

SMCS-4337, 5067 **i02246407**

NOTE	REF NO	GRAPHIC REF	PART NUMBER	QTY	PART NAME 1 2 3 4 5 6 (PRODUCT LEVEL)	SEE PAGE
	1	1	**134-9911**	2	VALVE-CHECK	
Y	2	1	**140-0973**	1	VALVE GP-PRESSURE REDUCING (SERVICE BRAKE)	660
	3	1	**224-4530**	1	VALVE GP-RELIEF	
		1	**2M-9780**	1	SEAL-O-RING	
		1	**6V-8398**	1	SEAL-O-RING	
		1	**109-6926**	1	RING	
	4	1	**141-0888**	2	KIT-SEAL	
	5	1	**141-0889**	1	KIT-SEAL	
	6	1	**2M-9780**	1	SEAL-O-RING	
	7	1	**6V-8398**	1	SEAL-O-RING	
	8	1	**109-6926**	1	RING	
	9	1	**9F-2167**	2	SCREW-PURGE	

Y-SEPARATE ILLUSTRATION

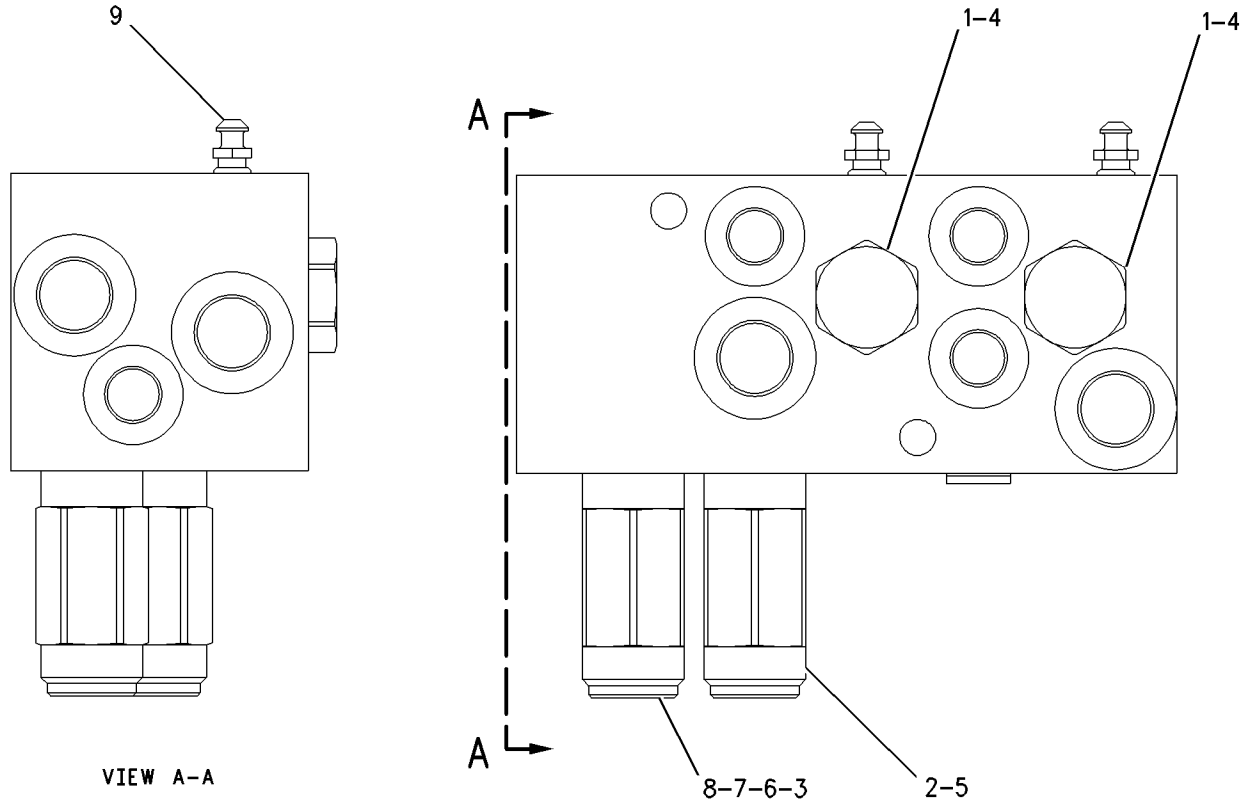

GRAPHIC #1 **<END>** g00928598

STEERING SYSTEM

140-0973 VALVE GP-PRESSURE REDUCING

S/N: AXM537-538, 540, 542-585, 588-589, 591, 593, 595, 599, 601, 603-UP
PART OF 224-1209 VALVE GP-CHK & PRESS REDUCING

SMCS-4337 **i01047183**

NOTE	REF NO	GRAPHIC REF	PART NUMBER	QTY	PART NAME 1 2 3 4 5 6 (PRODUCT LEVEL)	SEE PAGE
	1	1	**141-0889**		KIT-SEAL	

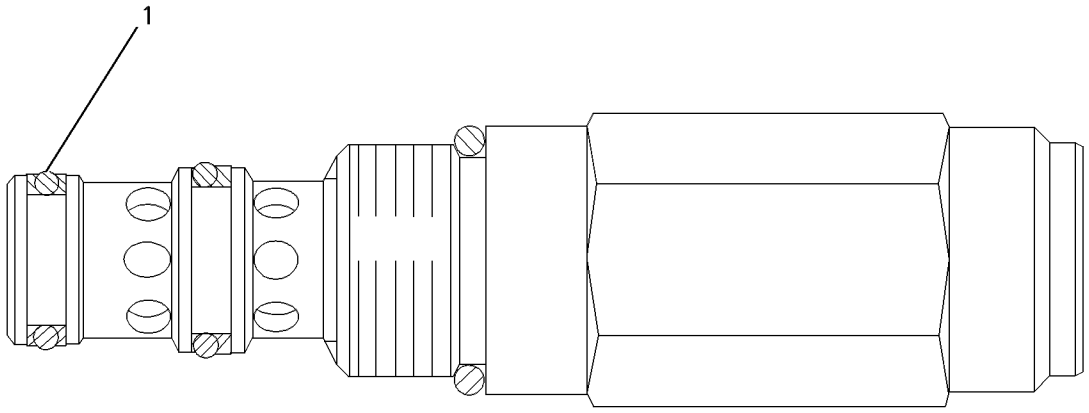

GRAPHIC #1 **<END>** g00280277

STEERING SYSTEM

176-5691 VALVE GP-STEER CHK & COMBINER

S/N: AXM1-UP

PART OF 166-3953, 227-5284 LINES GP-STEERING

SMCS-5067, 5471 **i01720262**

NOTE	REF NO	GRAPHIC REF	PART NUMBER	QTY	PART NAME 1 2 3 4 5 6 (PRODUCT LEVEL)	SEE PAGE
	1	1	**141-1233**	1	VALVE GP-CHECK	
	2	1	**134-9911**	1	VALVE-CHECK	
	3	1	**3K-0360**	1	SEAL-O-RING	
	4	1	**9S-4185**	1	PLUG	

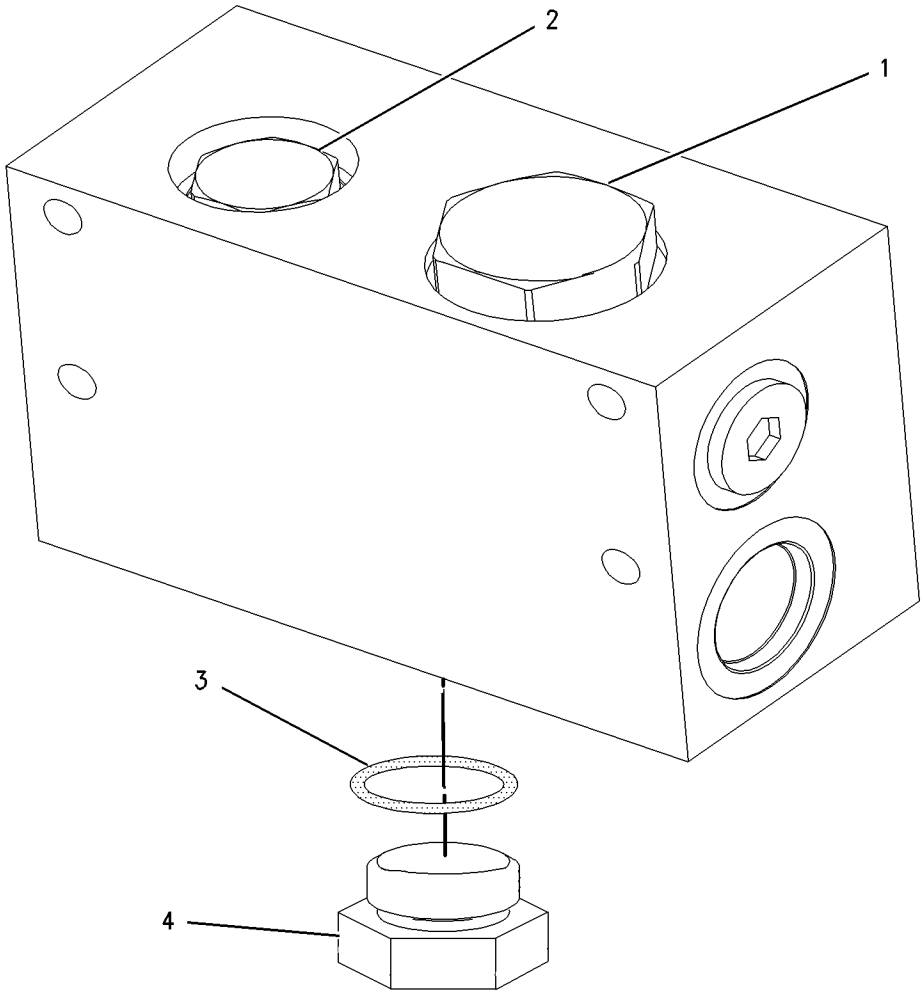

GRAPHIC #1 **<END>** g00884610

HYDRAULIC SYSTEM

192-6443 ACTUATOR GP-PILOT CONTROL

S/N: AXM1-UP

PART OF 189-5772 VALVE GP-HOIST CONTROL

SMCS-5078 **i02230483**

NOTE	REF NO	GRAPHIC REF	PART NUMBER	QTY	PART NAME 1 2 3 4 5 6 (PRODUCT LEVEL)	SEE PAGE
J	1	1	**5S-6980**	1	RING-RETAINING	
	2	1	**141-5497**	1	SPRING (OUTER)	
	3	1	**141-5498**	1	SPRING (INNER)	
	4	1	**146-3728**	1	WASHER-SPRING	
	5	1	**148-2350**	1	COIL AS	
Z	6	1		1	HOUSING	
	7	1	**154-4133**	1	CARTRIDGE AS	
		1	**6V-5049**	2	SEAL-O-RING	
	8	1	**173-4012**	1	SPRING	
Z	9	1		1	SPOOL-CONTROL	
	10	1	**188-3365**	1	SPRING (INNER)	
	11	1	**173-3993**	1	PLUG AS	
	11A	1	**4J-7533**	1	SEAL-O-RING	
		1	**9S-8001**	1	PLUG	
	12	1	**142-2864**	1	RETAINER	
	13	1	**162-0177**	3	PLUG AS	
					(EACH INCLUDES)	
	13A	1	**3J-1907**	1	SEAL-O-RING	
		1	**9S-8004**	1	PLUG	
					AVAILABLE REPAIR KIT(S):	
J			**204-1320**	1	KIT-RETAINING RING	

J-KIT MARKED J INCLUDES PART MARKED J
Z-NOT SERVICED SEPARATELY

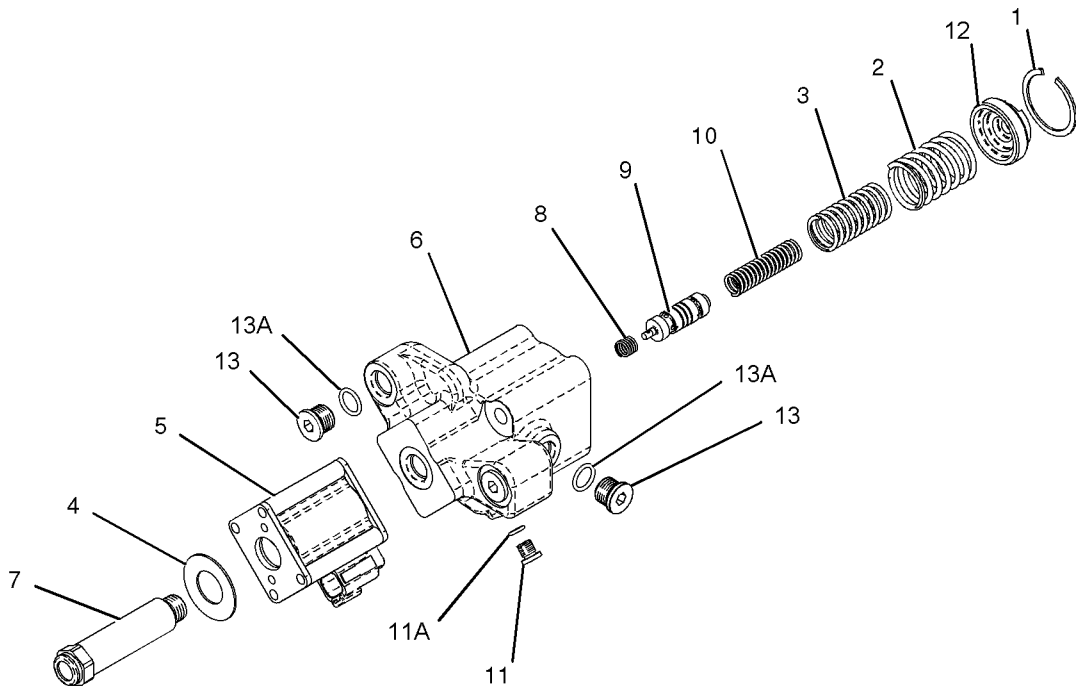

GRAPHIC #1 **<END>** g01006056

196-2403 ACTUATOR GP-PILOT CONTROL

S/N: AXM1-UP

PART OF 189-5772 VALVE GP-HOIST CONTROL

SMCS-5078 **i02112271**

NOTE	REF NO	GRAPHIC REF	PART NUMBER	QTY	PART NAME 1 2 3 4 5 6 (PRODUCT LEVEL)	SEE PAGE
	1	1	**5S-6980**	1	RING-RETAINING	
	2	1	**126-7654**	1	SPACER (29X36X7-MM THK)	
	3	1	**141-5497**	1	SPRING	
	4	1	**141-5498**	1	SPRING	
	5	1	**146-3728**	1	WASHER-SPRING	
	6	1	**148-2350**	1	COIL AS	
	7	1	**173-3993**	1	PLUG AS	
		1	**9S-8001**	1	PLUG	
		1	**4J-7533**	1	SEAL-O-RING	
	8	1	**154-4133**	1	CARTRIDGE AS	
	9	1	**173-4012**	1	SPRING	
	10	1	**162-0177**	3	PLUG AS	
					(EACH INCLUDES)	
		1	**3J-1907**	1	SEAL-O-RING	
	11	1	**189-9807**	1	SPRING	
	12	1	**142-2864**	1	RETAINER	
					AVAILABLE REPAIR KIT(S):	
			204-1320	1	KIT-RETAINING RING	
					(INCLUDES RETAINING RINGS)	

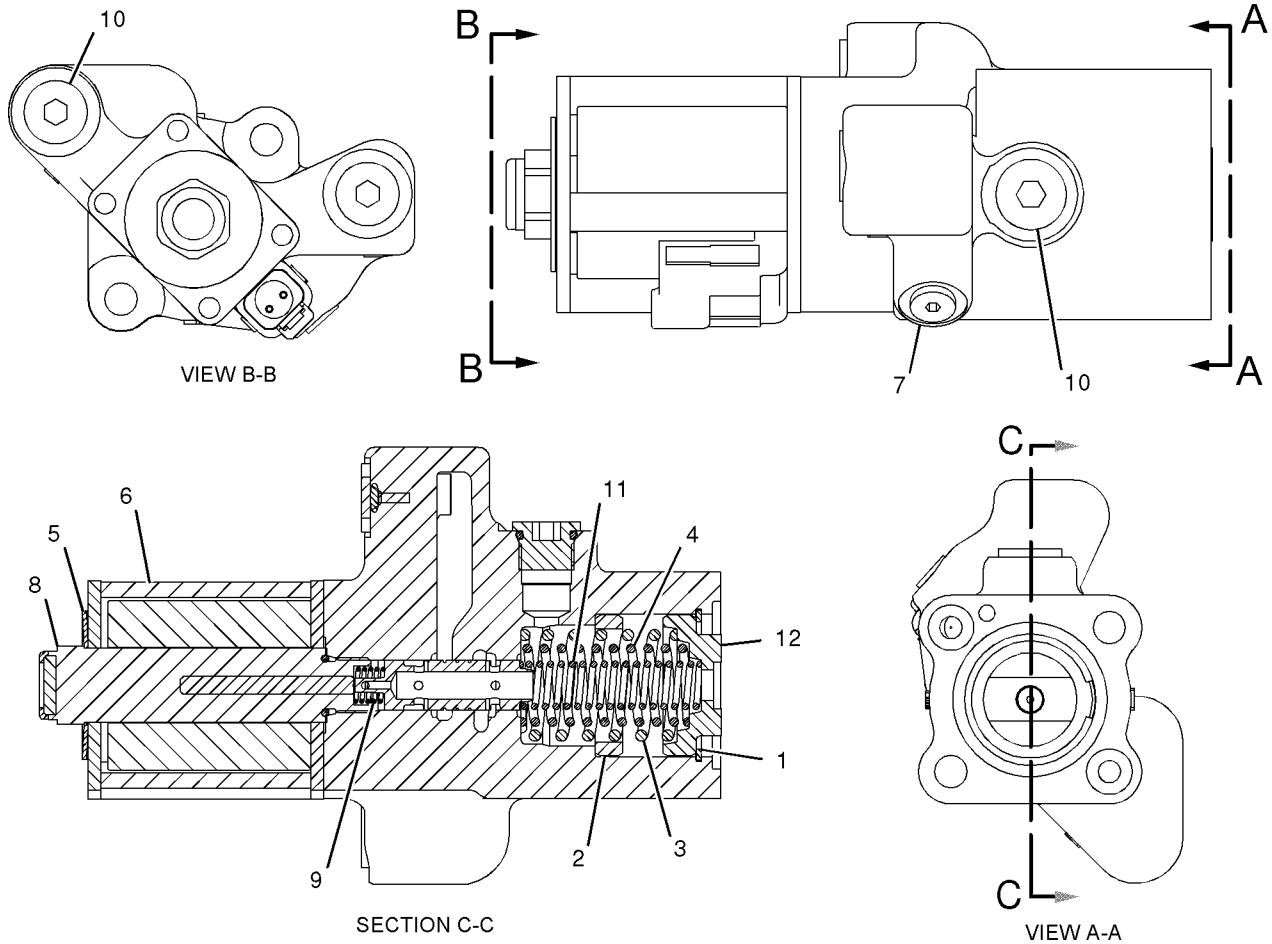

GRAPHIC #1 **<END>** g01006084

HYDRAULIC SYSTEM

152-7040 CONTROL GP-HOIST

S/N: AXM1-UP

PART OF 152-6924 INSTALLATION AR-MACHINE

SMCS-5136 **i01829629**

NOTE	REF NO	GRAPHIC REF	PART NUMBER	QTY	PART NAME 1 2 3 4 5 6 (PRODUCT LEVEL)	SEE PAGE
	1	1	**7G-5984**	1	CLIP (TAB)	
	2	1	**7G-5985**	1	CLIP (SLOT)	
	3	1	**153-3528**	1	MANIFOLD-HOIST	
	4	1	**166-0436**	1	TUBE AS	
I	5	1	**189-9940**	1	HOSE AS	
I	6	1	**189-9941**	1	HOSE AS	
	7	1	**190-6286**	1	TUBE AS	
	8	1	**207-5745**	1	PLATE-ANGLE	
	9	1	**215-1198**	4	CLAMP	
	10	1	**215-1199**	4	CLAMP	
I	11	1	**221-7227**	1	HOSE AS	
I	12	1	**221-7250**	1	HOSE AS	
	13	1	*148-8313*	1	ADAPTER AS	
		1	**3K-0360**	1	SEAL-O-RING	
		1	**5P-6944**	1	ADAPTER	
	14	1	*148-8357*	4	ELBOW AS	
					(EACH INCLUDES)	
		1	**6V-9008**	1	ELBOW	
		1	**5K-9090**	1	SEAL-O-RING	
		1	**7M-8485**	1	SEAL-O-RING	
	15	1	*148-8411*	1	PLUG AS	
		1	**9S-4185**	1	PLUG	
		1	**3K-0360**	1	SEAL-O-RING	
	16	1	*164-5567*	1	FITTING GP-COUPLING	
		1	**3J-1907**	1	SEAL-O-RING	
		1	**6V-3965**	1	FITTING AS	
	17	1	**4J-0520**	4	SEAL-O-RING	
	18	1	**5K-9090**	2	SEAL-O-RING	
	19	1	**6V-0852**	1	CAP-DUST	
	20	1	**7G-5986**	1	GROMMET	
	21	1	**8C-3206**	8	FLANGE-HALF	
M	22	1	**8T-0389**	4	LOCKNUT (M10X1.5-THD)	
	23	1	**8T-1889**	4	CLIP (SLOT)	
	24	1	**8T-1890**	4	CLIP (TAB)	
	25	1	**8T-4121**	25	WASHER-HARD (11X21X2.5-MM THK)	
M	26	1	**8T-4186**	4	BOLT (M10X1.5X40-MM)	
M	27	1	**8T-4196**	16	BOLT (M10X1.5X35-MM)	
M	28	1	**8T-4198**	1	BOLT (M10X1.5X100-MM)	
	29	1	**8T-4223**	6	WASHER-HARD (13.5X25.5X3-MM THK)	
M	30	1	**8T-4244**	2	NUT (M12X1.75-THD)	
M	31	1	**8T-4956**	4	BOLT (M12X1.75X35-MM)	

I-REFER TO HYDRAULIC INFORMATION SYSTEM
M-METRIC PART

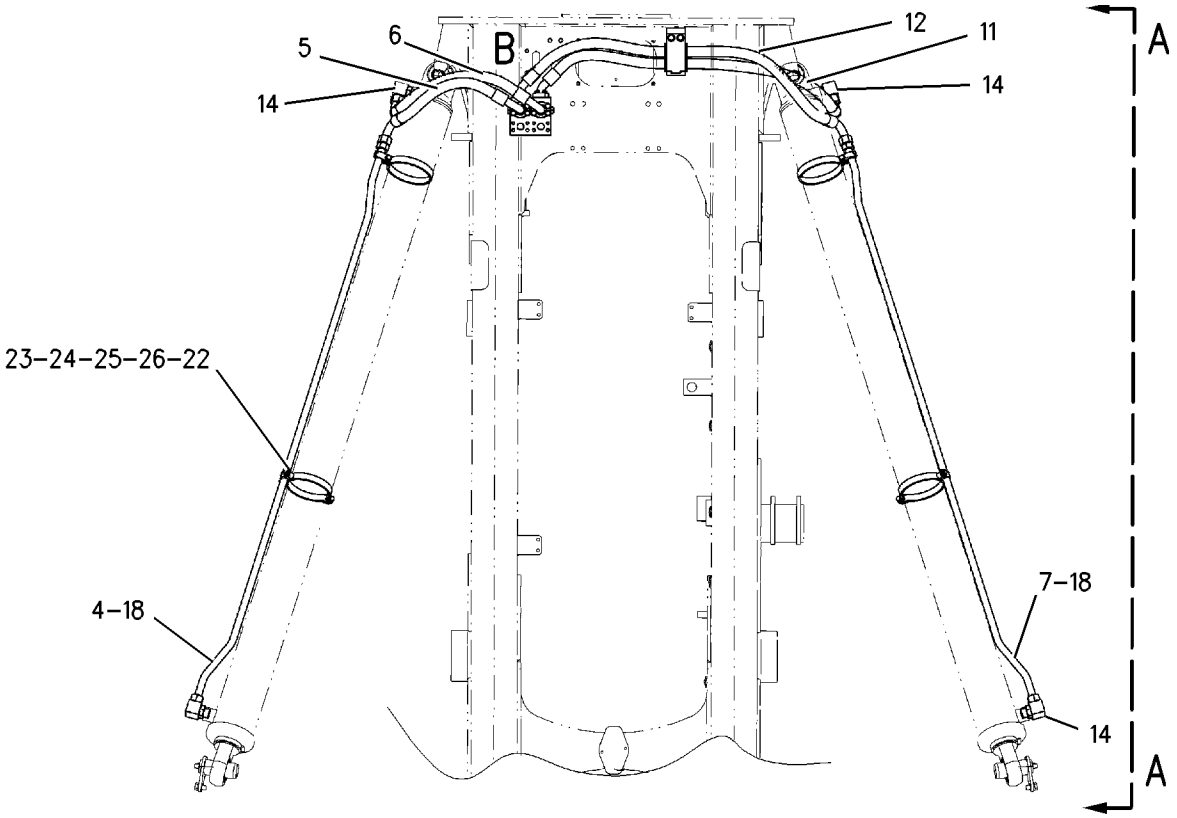

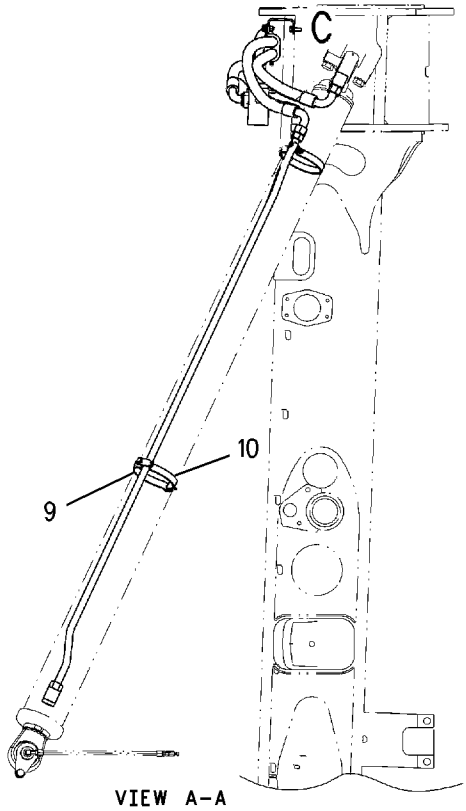

VIEW A-A

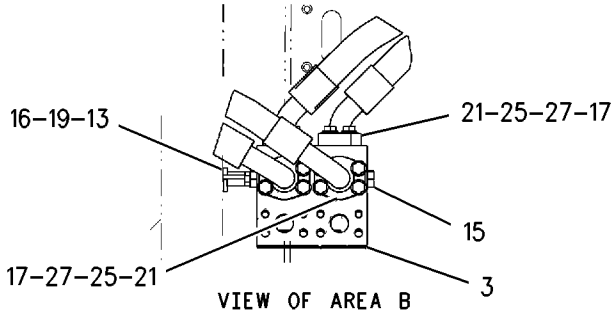

VIEW OF AREA B

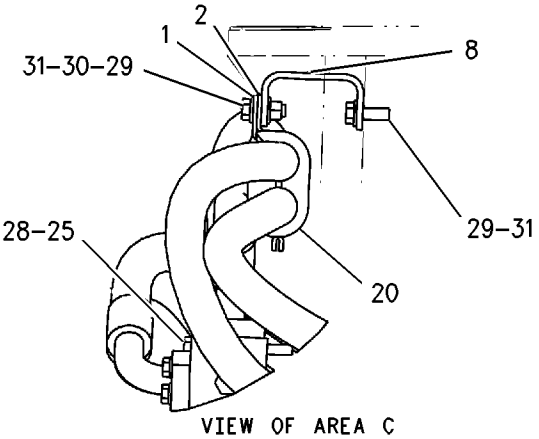

VIEW OF AREA C

GRAPHIC #1 **<END>** g00933730

HYDRAULIC SYSTEM

171-1961 COOLER & MTG GP-HYDRAULIC OIL

S/N: AXM1-UP

PART OF 152-6944 COOLING AR

SMCS-1374 **i01746947**

NOTE	REF NO	GRAPHIC REF	PART NUMBER	QTY	PART NAME 1 2 3 4 5 6 (PRODUCT LEVEL)	SEE PAGE
	1	1	**122-6485**	1	CORE AS-OIL COOLER	
	2	1	**196-4777**	1	BRACKET	
	3	1	**207-3296**	1	BRACKET AS	
M	4	1	**5C-7261**	4	NUT (M8X1.25 THD)	
M	5	1	**7X-2536**	4	BOLT (M8X1.25X14MM)	
	6	1	**8T-4224**	12	WASHER-HARD (8.8X16X2MM THK)	
M	7	1	**8T-4908**	4	BOLT (M8X1.25X25MM)	

M-METRIC PART

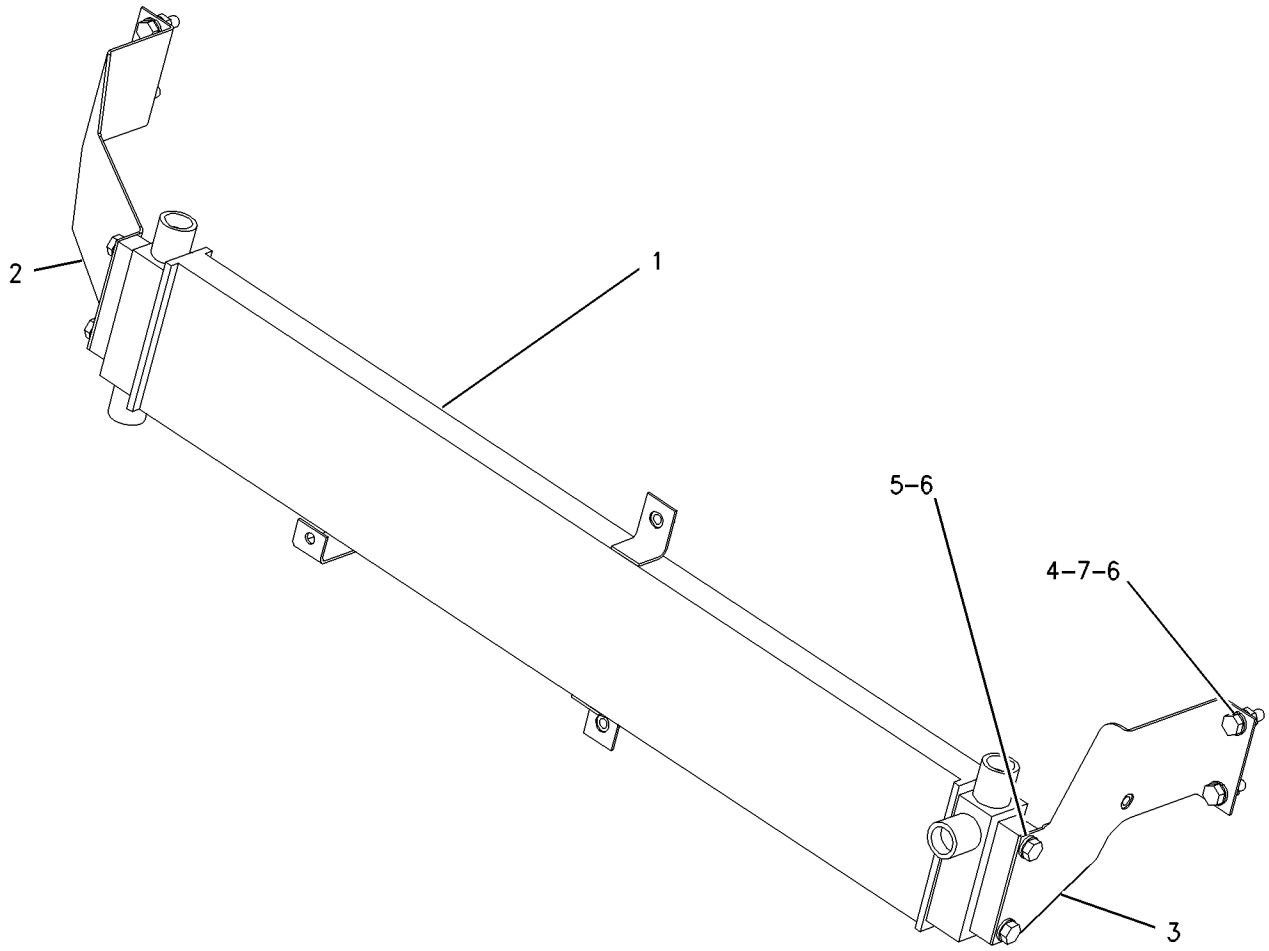

GRAPHIC #1 **<END>** g00894377

HYDRAULIC SYSTEM

185-1740 COVER GP-TANK

S/N: AXM1-UP

PART OF 186-9959 TANK GP-HYDRAULIC

SMCS-5056 **i01687015**

NOTE	REF NO	GRAPHIC REF	PART NUMBER	QTY	PART NAME 1 2 3 4 5 6 (PRODUCT LEVEL)	SEE PAGE
	1	1	**1U-1643**	1	VALVE	
	2	1	**2D-4202**	1	PLATE	
	3	1	**2J-0917**	1	RETAINER	
	4	1	**4J-1704**	1	SEAT-VALVE	
	5	1	**4T-8698**	1	WASHER (12.2X62X3.5-MM THK)	
	6	1	**5D-1911**	1	COVER-HYDRAULIC CAP	
	7	1	**5D-7927**	1	STRAINER AS	
		1	**5F-3488**	1	END-STRAINER	
	8	1	**5J-2926**	1	SPRING	
	10	1	**5P-8502**	1	PADLOCK GP	
		1	**5P-8500**	1	KEY	
		1	**8Y-6364**	1	SLEEVE	
	11	1	**6J-3795**	1	SCREEN AS	
	12	1	**6P-3860**	1	SPRING	
	13	1	**7H-1447**	1	CAP-FILLER	
	14	1	**7J-0815**	1	BOLT-FILTER	
	15	1	**8C-3451**	1	CAP-DUST	
	16	1	**9M-7394**	1	LEVER (COVER)	
	17	1	**9R-3176**	1	SEAL	
	18	1	**119-4885**	1	SCREEN	
	19	1	**120-5447**	1	DIFFUSER AS	
	20	1	**129-4131**	1	COVER-FILTER	
	21	1	**132-8876**	2	FILTER ELEMENT AS-OIL (HYDRAULIC)	
	22	1	**157-7911**	1	BREATHER (7-PSI)	
	23	1	*164-5590*	1	VALVE GP-FLUID SAMPLING	
		1	**3J-7354**	1	SEAL-O-RING	
		1	**8C-3446**	1	VALVE AS-FLUID SAMPLING	
	24	1	**185-1465**	1	TUBE AS-FILTER	
	25	1	**189-9047**	1	TUBE AS	
	26	1	*148-8325*	1	CONNECTOR AS	
		1	**3J-1907**	1	SEAL-O-RING	
		1	**4J-5477**	1	SEAL-O-RING	
		1	**6V-8641**	1	CONNECTOR	
	27	1	**1H-1200**	1	PIN-SPRING	
	28	1	**1L-5072**	1	DOWEL	
	29	1	**2J-7761**	1	RING-RETAINING	
	30	1	**5P-8167**	6	BOLT (3/8-16X0.625-IN)	
	31	1	**5P-8248**	1	WASHER-HARD (20X36.5X3.5-MM THK)	
	32	1	**6F-4855**	1	SEAL-O-RING	
	33	1	**6H-9361**	1	RING-RETAINING	
M	34	1	**6V-7744**	1	LOCKNUT (M10X1.5-THD)	
	35	1	**7J-5925**	1	PIN-COTTER	
	36	1	**8J-1665**	1	SEAL-O-RING	
	37	1	**8T-2275**	1	BALL	
	38	1	**8T-4121**	1	WASHER-HARD (11X21X2.5-MM THK)	
	39	1	**8T-4122**	1	WASHER-HARD (17X32X3.5-MM THK)	
	40	1	**8T-4896**	6	WASHER-HARD (10.2X18.5X2.5-MM THK)	
	41	1	**9H-6454**	1	GASKET	
	42	1	*148-8316*	1	CONNECTOR AS	
		1	**3J-7354**	1	SEAL-O-RING	
		1	**4J-5477**	1	SEAL-O-RING	
		1	**6V-8647**	1	CONNECTOR	

M-METRIC PART

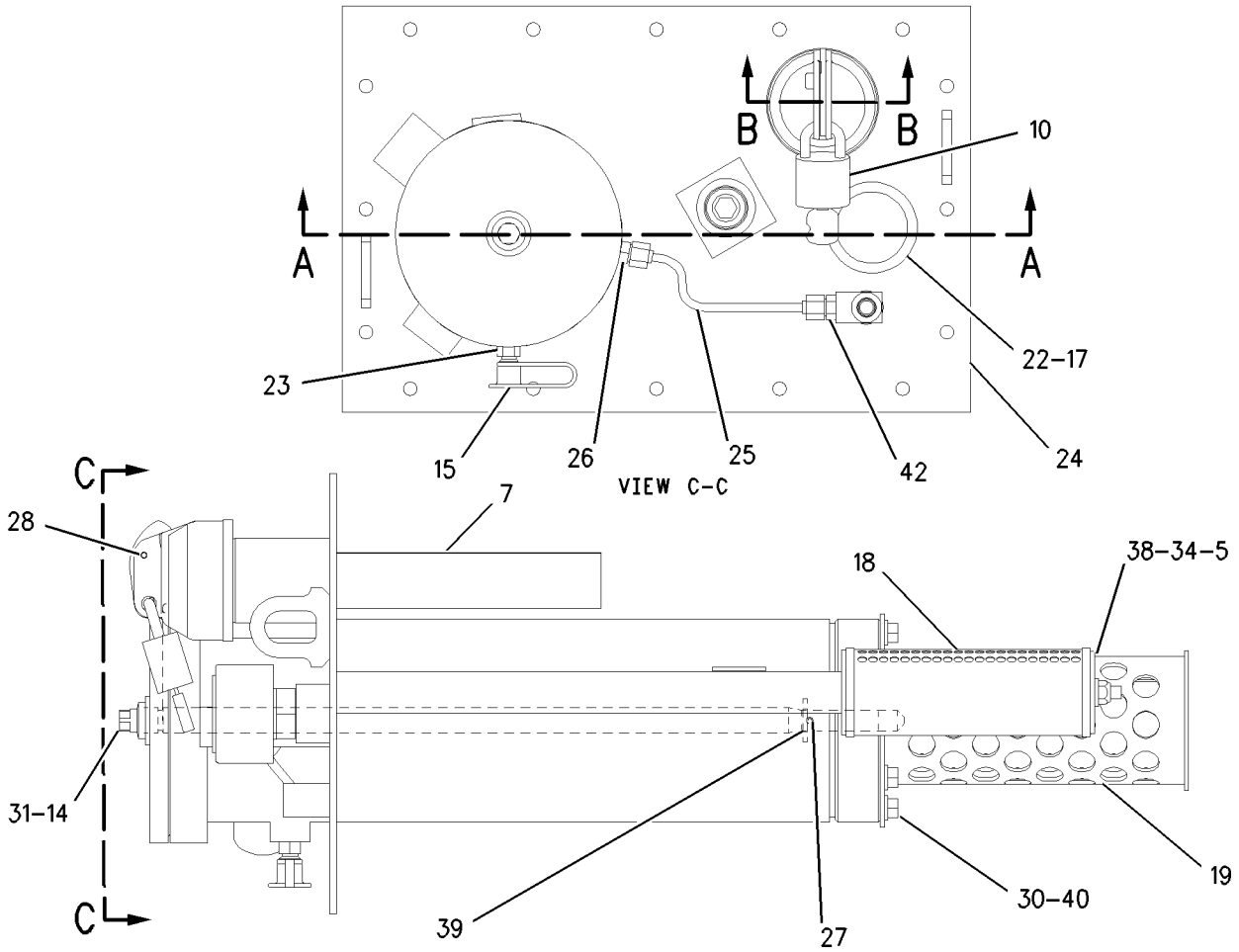

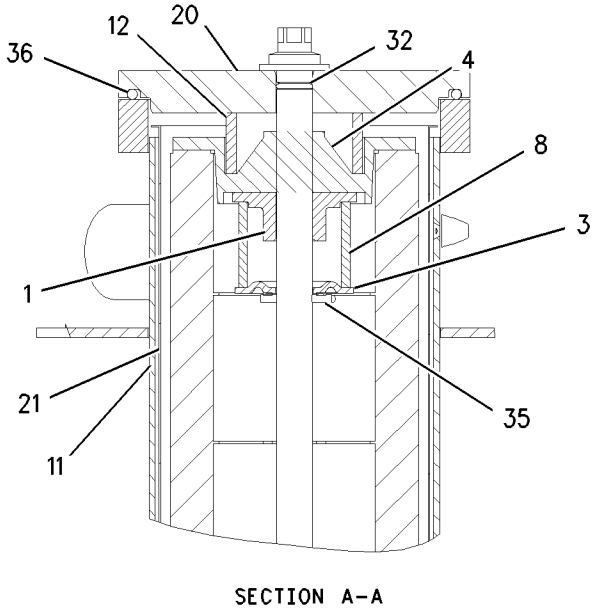

SECTION A-A

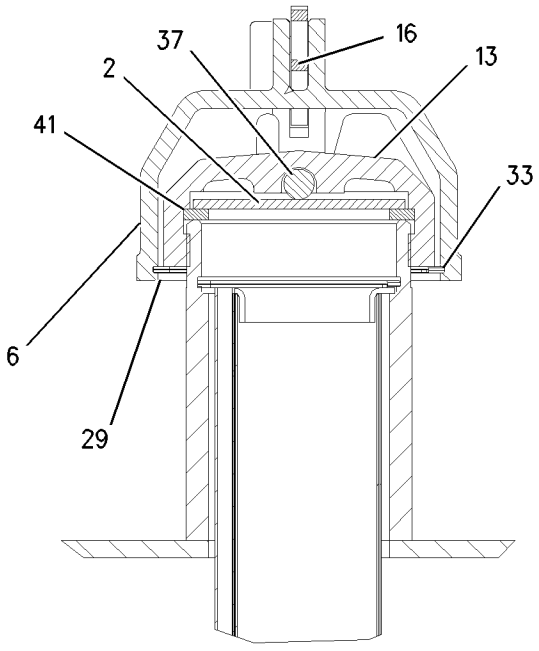

SECTION B-B

GRAPHIC #1 **<END>** g00869529

HYDRAULIC SYSTEM

164-9855 CYLINDER & MTG GP-HOIST

S/N: AXM1-UP

PART OF 152-6924 INSTALLATION AR-MACHINE

SMCS-5102 **i01547007**

NOTE	REF NO	GRAPHIC REF	PART NUMBER	QTY	PART NAME 1 2 3 4 5 6 (PRODUCT LEVEL)	SEE PAGE
	1	1	**2U-9202**	2	PIN AS-TIP CYLINDER	
	2	1	**2U-9204**	2	SPACER (17X25.4X11.5-MM THK)	
	3	1	**5U-7151**	2	CAP	
	4	1	**6V-3582**	2	CLAMP-HOSE	
	5	1	**138-0637**	2	SPACER (57.5X72X7-MM THK)	
Y	6	1	**141-6667**	2	CYLINDER GP-HOIST	672
	7	1	**150-6553**	2	PIN	
	8	1	**157-1728**	2	SEAL	
B	9	1	**164-8408**	4	PLATE-SPACER	
	10	1	**166-7871**	2	WASHER-RUBBER (52X100X8-MM THK)	
I	11	1	**191-5966**	2	HOSE AS	
	12	1	**2N-1287**	2	ELBOW-FLARED	
	13	1	**3B-8489**	2	FITTING-GREASE	
	14	1	**5D-9231**	2	CONNECTOR	
	15	1	**6K-6967**	2	ADAPTER-PIPE	
M	16	1	**7X-2552**	2	BOLT (M16X2X30-MM)	
	17	1	**8J-8322**	2	RING-RETAINING	
	18	1	**8T-4167**	4	WASHER-HARD (26X44X4-MM THK)	
M	19	1	**8T-5878**	4	BOLT (M24X3X80-MM)	
	20	1	**9X-8257**	2	WASHER (17.5X30X3.5-MM THK)	

B-USE AS REQUIRED
I-REFER TO HYDRAULIC INFORMATION SYSTEM
M-METRIC PART
Y-SEPARATE ILLUSTRATION

164-9855 **CYLINDER & MTG GP-HOIST** *(contd.)* **i01547007**

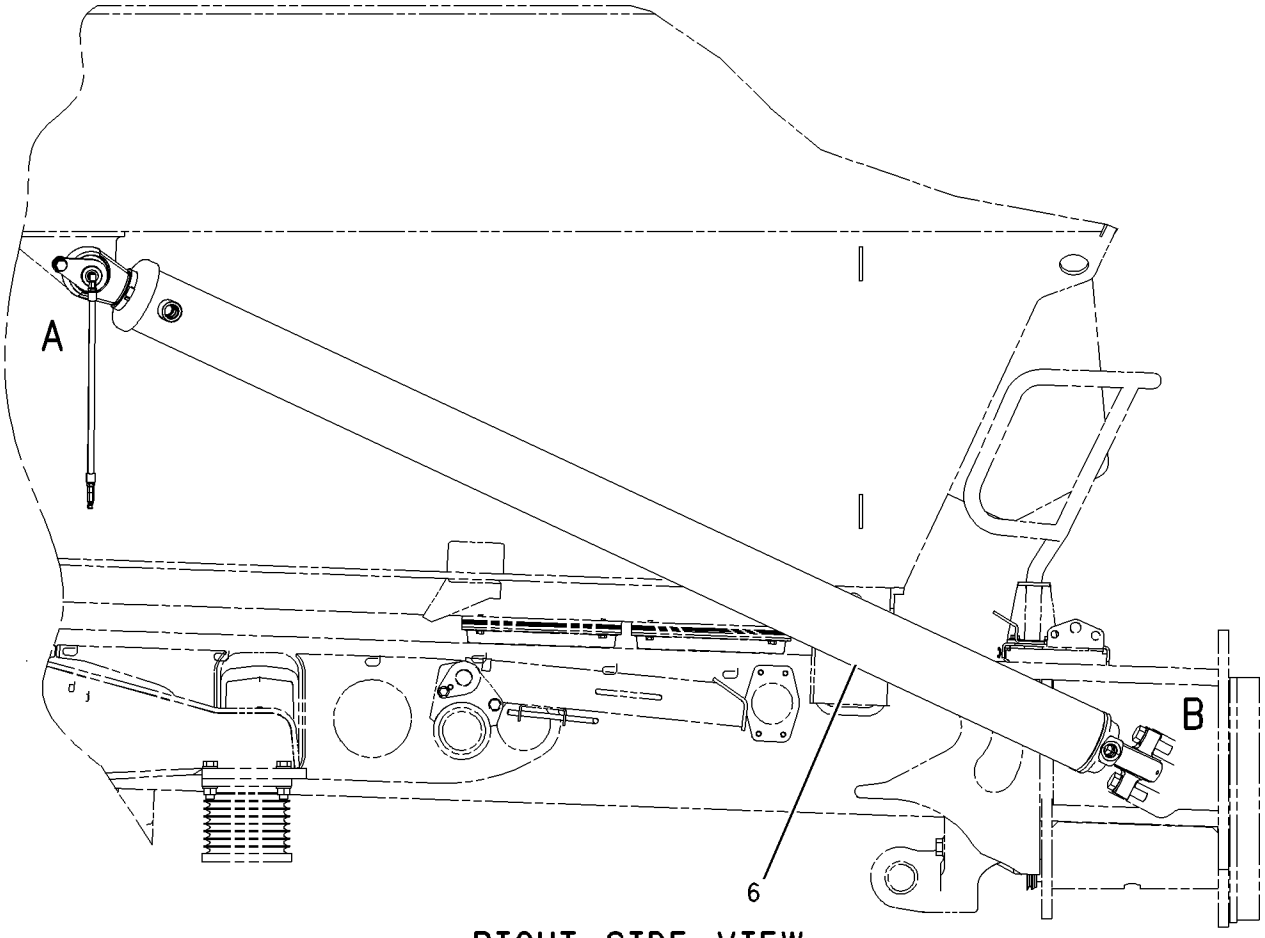

RIGHT SIDE VIEW

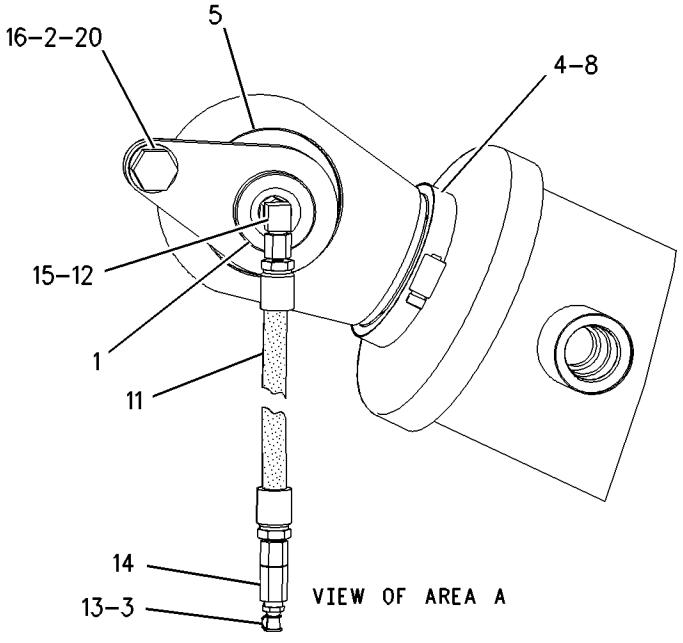

VIEW OF AREA A

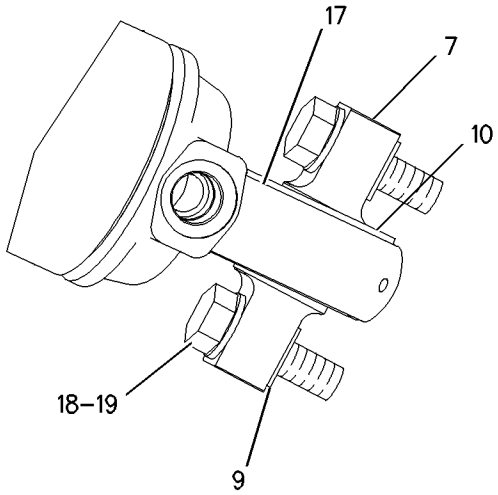

VIEW OF AREA B

GRAPHIC #1 **<END>** g00763714

HYDRAULIC SYSTEM

157-1601 CYLINDER & MTG GP-TAILGATE

S/N: AXM1-967
PART OF 152-7111 TAILGATE AR
AN ATTACHMENT

SMCS-5107 **i01547008**

NOTE	REF NO	GRAPHIC REF	PART NUMBER	QTY	PART NAME 1 2 3 4 5 6 (PRODUCT LEVEL)	SEE PAGE
Y	1	1	**151-2611**	1	CYLINDER GP-TAILGATE	673
	2	1	**144-6845**	1	BRACKET AS-RAM MTG ANCHOR	
B	3	1	**6U-2270**	1	SHIM (1.6MM THK)	
B	4	1	**6U-2271**	1	SHIM (3.0MM THK)	
B	5	1	**6U-2272**	1	SHIM (5.0MM THK)	
	6	1	**7U-6339**	1	MOUNTING AS-CYLINDER	
	7	1	**6U-2193**	1	PIN-CENTER	
M	8	1	**7X-2578**	1	BOLT (M24X3X200MM)	
	9	1	**5U-5605**	2	WASHER (10MM THK)	
	10	1	**8T-4167**	2	WASHER-HARD (26X44X4MM THK)	
M	11	1	**6V-7676**	1	NUT (M24X3.0THD)	
M	12	1	**7X-2555**	4	BOLT (M16X2X80MM)	
	13	1	**9X-8257**	4	WASHER (17.5X30X3.5MM THK)	
M	14	1	**8T-4132**	4	NUT (M16X2 THD)	
	15	1	**158-6094**	1	BRACKET	

B-USE AS REQUIRED
M-METRIC PART
Y-SEPARATE ILLUSTRATION

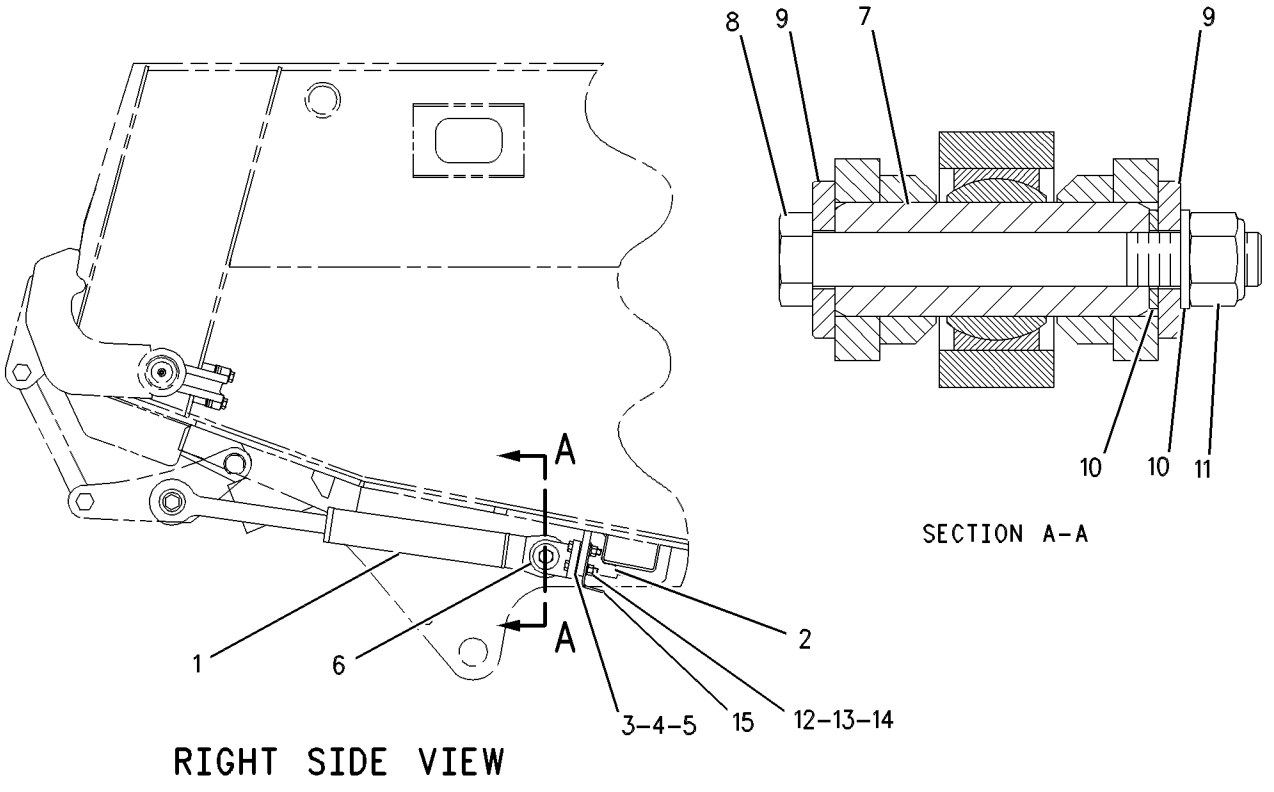

GRAPHIC #1 **<END>** g00586088

HYDRAULIC SYSTEM

141-6667 CYLINDER GP-HOIST

S/N: AXM1-UP
139.7MM (5.5 IN) BORE X 2420MM (95.28 IN) STROKE
PART OF 164-9855 CYLINDER & MTG GP-HOIST

SMCS-5102 **i02050192**

NOTE	REF NO	GRAPHIC REF	PART NUMBER	QTY	PART NAME 1 2 3 4 5 6 (PRODUCT LEVEL)	SEE PAGE
	1	1	**3B-8489**	1	FITTING-GREASE	
	2	1	**141-6668**	1	CYLINDER AS	
		1	**1J-6472**	2	RING-RETAINING	
		1	**066-5815**	1	BEARING-SELF-ALIGNING	
	3	1	**141-6670**	1	ROD AS	
		1	**1J-6472**	2	RING-RETAINING	
		1	**066-5815**	1	BEARING-SELF-ALIGNING	
	4	1	**141-6672**	1	HEAD	
	5	1	**141-6673**	1	PISTON	
	6	1	**132-4907**	1	RING-WEAR (ROD)	
	7	1	**140-0233**	1	RING-BACKUP	
	8	1	**167-2211**	1	SEAL AS-BUFFER	
	9	1	**167-2324**	1	SEAL-U-CUP	
	10	1	**225-3286**	1	SEAL-WIPER	
	11	1	**2U-2576**	1	NUT (1/2-IN THD)	
	12	1	**3S-6162**	1	WASHER-HARD (40.5X67X6-MM THK)	
	13	1	**4J-4606**	2	RING-WEAR	
	14	1	**5P-1979**	1	SEAL-O-RING	
	15	1	**6E-0465**	1	SEAL AS	

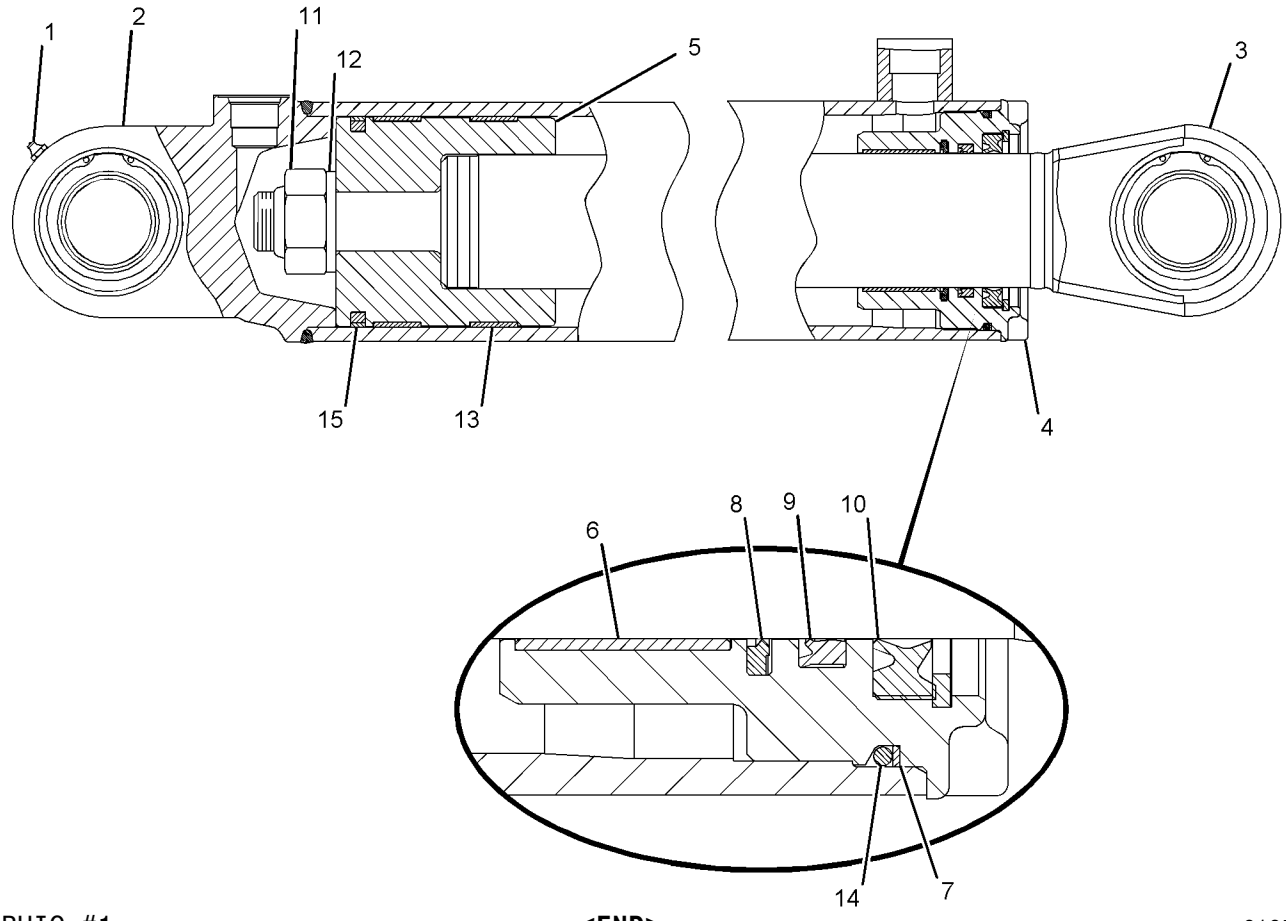

GRAPHIC #1 **<END>** g01051893

HYDRAULIC SYSTEM

151-2611 CYLINDER GP-TAILGATE

S/N: AXM1-967
76.2MM (3 IN) BORE X 350MM (13.8 IN) STROKE
PART OF 157-1601 CYLINDER & MTG GP-TAILGATE
AN ATTACHMENT

SMCS-5107 **i01795180**

NOTE	REF NO	GRAPHIC REF	PART NUMBER	QTY	PART NAME 1 2 3 4 5 6 (PRODUCT LEVEL)	SEE PAGE
	1	1	**3B-8488**	1	FITTING-GREASE	
	2	1	**3B-8489**	1	FITTING-GREASE	
	3	1	**5U-6605**	1	PLUG (GRUB)	
	4	1	**151-7033**	1	CYLINDER AS	
		1	**4D-1736**	1	RING-RETAINING	
		1	**6U-7417**	1	RING-CUSHION	
	5	1	**151-7037**	1	PISTON	
	6	1	**151-7038**	1	HEAD	
	7	1	**193-0676**	1	ROD AS	
J	8	1	**167-2195**	1	SEAL AS-BUFFER	
J	9	1	**167-2304**	1	SEAL-U-CUP	
J	10	1	**167-2457**	1	SEAL-WIPER	
J	11	1	**1H-7339**	1	SEAL-O-RING	
	12	1	**2W-1145**	4	RING-RETAINING	
J	13	1	**4T-5613**	1	RING-WEAR	
J	14	1	**6J-1972**	1	SEAL AS	
J	15	1	**6J-5731**	1	RING-BACKUP	
J	16	1	**6J-5733**	1	RING-WEAR	
	17	1	**6V-5002**	2	BEARING-ALIGNING	
	18	1	**9F-2247**	1	PLUG-PIPE (1/8-27-THD)	
					AVAILABLE REPAIR KIT(S):	
J			**185-7667**	1	KIT-SEAL	
					(INCLUDES ADDITIONAL SEAL)	

J-KIT MARKED J INCLUDES PART(S) MARKED J

151-2611 CYLINDER GP-TAILGATE *(contd.)* i01795180

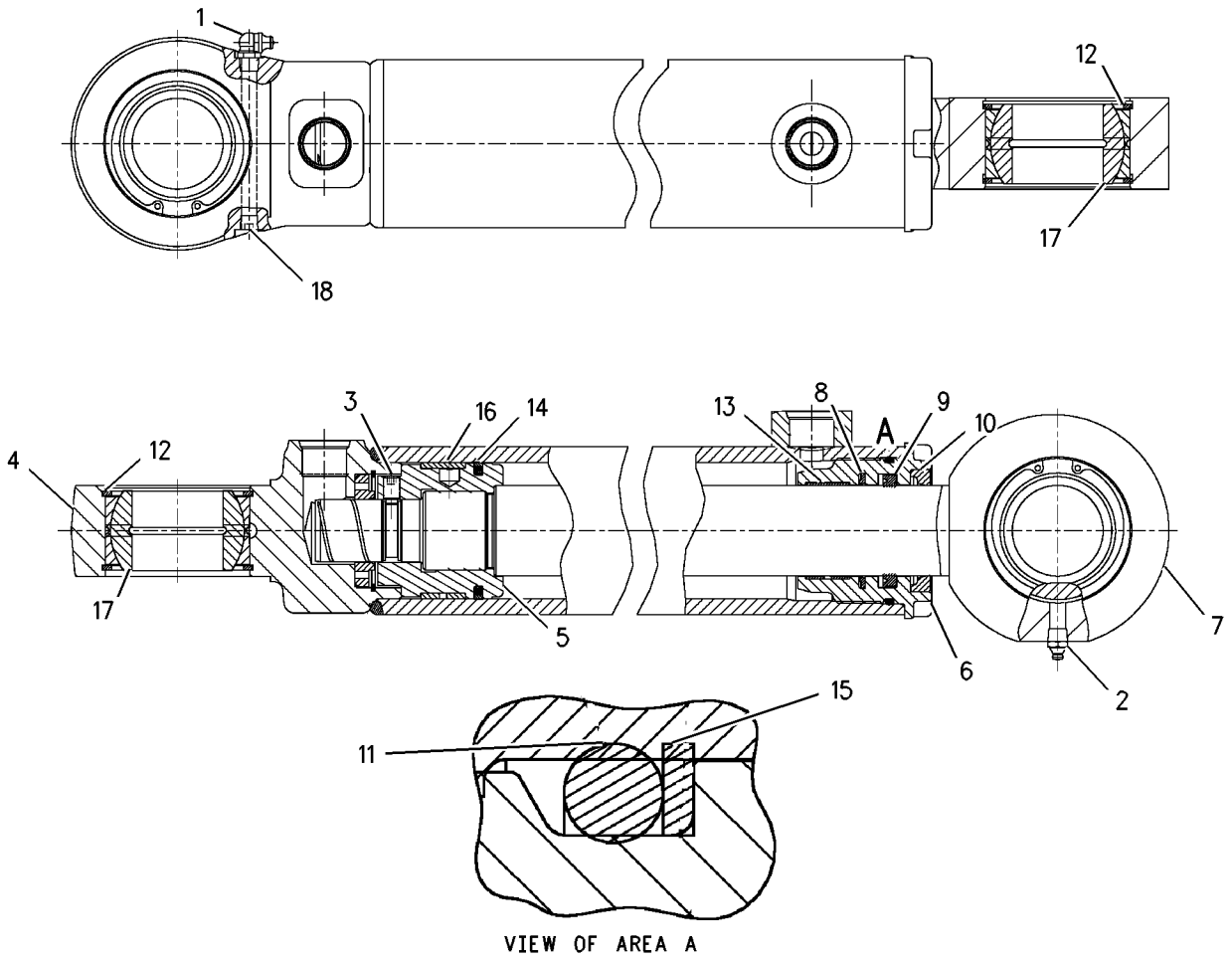

GRAPHIC #1 **<END>** g00779791

HYDRAULIC SYSTEM

152-6922 HYDRAULIC AR-MACHINE

S/N: AXM1-UP

PART OF 141-6849 GENERAL AR

SMCS-7000 **i02269891**

NOTE	PART NUMBER	QTY	PART NAME 1 2 3 4 5 6 (PRODUCT LEVEL)	SEE PAGE
Y	*166-3936*	1	ACCUMULATOR & MTG GP-SUSP	787
			S/N: AXM1-1182	
Y	*141-6885*	1	BATTERY & WIRING GP	202
			S/N: AXM1-1376	
Y	*238-8543*	1	BATTERY & WIRING GP	204
			S/N: AXM1377-UP	
Y	*197-7200*	1	BREATHER GP-POWER TRAIN	338
Y	*153-5485*	1	CAB AR	832
			S/N: AXM1-1376	
Y	*229-8087*	1	CAB AR	833
			S/N: AXM1377-UP	
Y	*199-6425*	1	CONTROL GP-DIFFERENTIAL LOCK	348
Y	*152-7099*	1	FENDER & SUPPORT GP	496
Y	*152-6946*	1	LINES GP-AIR CONDITIONER	854
Y	*166-3950*	1	LINES GP-AXLE OIL COOLER	412
Y	*152-7112*	1	LINES GP-DRAIN	676
Y	*152-7113*	1	LINES GP-FUEL	160
Y	*153-1135*	1	LINES GP-HEATER	858
Y	*166-3941*	1	LINES GP-HOIST	679
Y	*152-7101*	1	LINES GP-HOIST	677
Y	*152-7106*	1	LINES GP-HYDRAULIC FAN	680
			S/N: AXM1-370	
Y	*213-6518*	1	LINES GP-HYDRAULIC FAN	683
			S/N: AXM371-UP	
Y	*166-3954*	1	LINES GP-PILOT	692
			S/N: AXM371-879	
Y	*227-5285*	1	LINES GP-PILOT	698
			S/N: AXM880-UP	
Y	*179-1712*	1	LINES GP-PRESSURE TEST	700
Y	*179-2810*	1	LINES GP-PUMP (RADIATOR FAN)	707
Y	*153-1137*	1	LINES GP-PUMP (HYDRAULIC FAN)	702
Y	*152-7100*	1	LINES GP-PUMP	629
Y	*166-3944*	1	LINES GP-PUMP (SECONDARY STEERING)	705
Y	*166-3938*	1	LINES GP-RETURN	711
Y	*152-7103*	1	LINES GP-STEERING	635
Y	*166-3953*	1	LINES GP-STEERING	641
			S/N: AXM371-879	
Y	*227-5284*	1	LINES GP-STEERING	644
			S/N: AXM880-UP	
Y	*166-3945*	1	LINES GP-SUSPENSION	807
			S/N: AXM1-1182	
Y	*139-4593*	1	MOUNTING GP-ROPS	869
Y	*152-7109*	1	MUFFLER GP	139
Y	*152-6962*	1	PUMP & MTG GP-SECONDARY STEER	650
Y	*208-0701*	1	SHIELD GP-EXHAUST	150
Y	*152-7115*	1	STEP GP	546
Y	*203-4720*	1	SUPPORT GP-HITCH LINES	548
Y	*141-6878*	1	TANK & MTG GP-FUEL	174
Y	*141-6884*	1	TANK & MTG GP-HYDRAULIC (HOIST)	741
Y	*189-0601*	1	TANK & MTG GP-HYDRAULIC (STEERING)	743
Y	*152-7117*	1	TILT GP-PLATFORM	915
Y	*152-7116*	1	WALKWAY GP	565

Y-SEPARATE ILLUSTRATION

<END>

HYDRAULIC SYSTEM

152-7112 LINES GP-DRAIN

S/N: AXM1-UP

PART OF 152-6922 HYDRAULIC AR-MACHINE

SMCS-5057 **i01646470**

NOTE	REF NO	GRAPHIC REF	PART NUMBER	QTY	PART NAME 1 2 3 4 5 6 (PRODUCT LEVEL)	SEE PAGE
	1	1	**4B-7739**	1	PLUG-DRAIN	
	2	1	**8H-9819**	1	ADAPTER-PLUG	
	3	1	**8J-0135**	1	PLUG	
I	4	1	**150-7954**	1	HOSE AS	
	5	1	*153-6247*	1	CONNECTOR AS	
		1	**8C-6875**	1	CONNECTOR	
		1	**5K-9090**	1	SEAL-O-RING	
	6	1	*169-7394*	1	CONNECTOR AS	
		1	**8C-3370**	1	CONNECTOR	
		1	**5K-9090**	1	SEAL-O-RING	
		1	**3K-0360**	1	SEAL-O-RING	
	7	1	**8H-9818**	1	GASKET	
	8	1	**8T-4121**	4	WASHER-HARD (11X21X2.5-MM THK)	
M	9	1	**8T-4133**	2	NUT (M10X1.5-THD)	
M	10	1	**8T-4186**	2	BOLT (M10X1.5X40-MM)	

I-REFER TO HYDRAULIC INFORMATION SYSTEM
M-METRIC PART

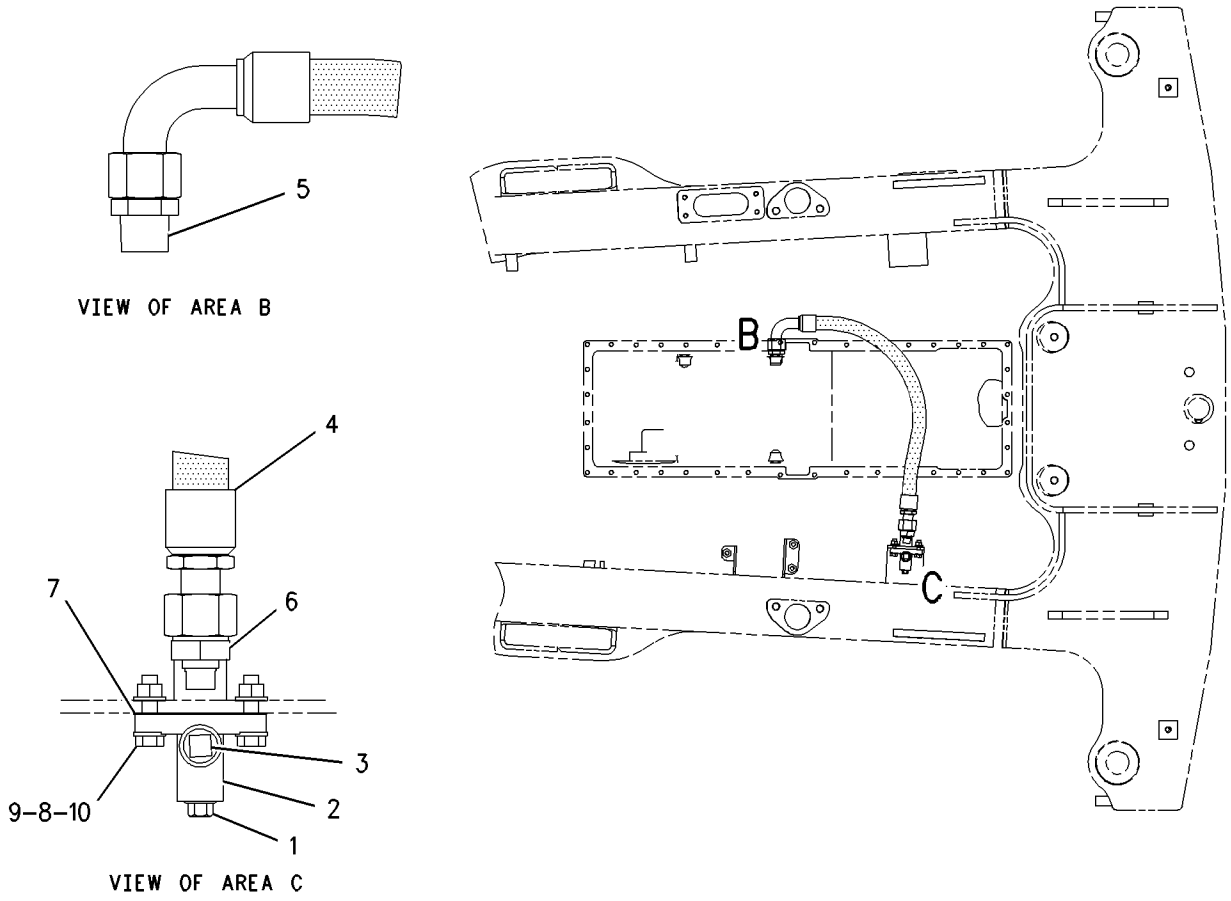

GRAPHIC #1 **<END>** g00850982

HYDRAULIC SYSTEM

152-7101 LINES GP-HOIST

S/N: AXM1-UP

PART OF 152-6922 HYDRAULIC AR-MACHINE

SMCS-5057 **i02054524**

NOTE	REF NO	GRAPHIC REF	PART NUMBER	QTY	PART NAME 1 2 3 4 5 6 (PRODUCT LEVEL)	SEE PAGE
Y	1	1	*152-7120*	1	VALVE & MTG GP-HOIST CONTROL	754
	2	1	**194-1556**	1	TUBE AS	
	3	1	**194-1559**	1	TUBE AS	
	4	1	**194-1560**	1	TUBE AS	
I	5	1	**194-7711**	2	HOSE AS	
	6	1	**197-6651**	1	SHIELD AS	
		1	**7T-1099**	6	LINK	
	7	1	**207-8892**	1	TUBE AS	
	8	1	**1P-3704**	2	SEAL-RECTANGULAR	
	9	1	**1P-5761**	4	FLANGE-HALF	
	10	1	**4J-0520**	4	SEAL-O-RING	
	11	1	**5K-9090**	2	SEAL-O-RING	
	12	1	**5P-1076**	8	WASHER-HARD (13.5X30X4-MM THK)	
	13	1	**8C-3206**	8	FLANGE-HALF	
	14	1	**8T-1889**	6	CLIP (SLOT)	
	15	1	**8T-1890**	6	CLIP (TAB)	
	16	1	**8T-4121**	32	WASHER-HARD (11X21X2.5-MM THK)	
M	17	1	**8T-4133**	4	NUT (M10X1.5-THD)	
M	18	1	**8T-4182**	8	BOLT (M10X1.5X45-MM)	
M	19	1	**8T-4192**	4	BOLT (M12X1.75X25-MM)	
M	20	1	**8T-4195**	2	BOLT (M10X1.5X30-MM)	
M	21	1	**8T-4196**	14	BOLT (M10X1.5X35-MM)	
	22	1	**8T-4223**	4	WASHER-HARD (13.5X25.5X3-MM THK)	
M	23	1	**8T-4244**	4	NUT (M12X1.75-THD)	
M	24	1	**8T-4956**	4	BOLT (M12X1.75X35-MM)	
M	25	1	**8T-6685**	4	BOLT (M10X1.5X110-MM)	

I-REFER TO HYDRAULIC INFORMATION SYSTEM
M-METRIC PART
Y-SEPARATE ILLUSTRATION

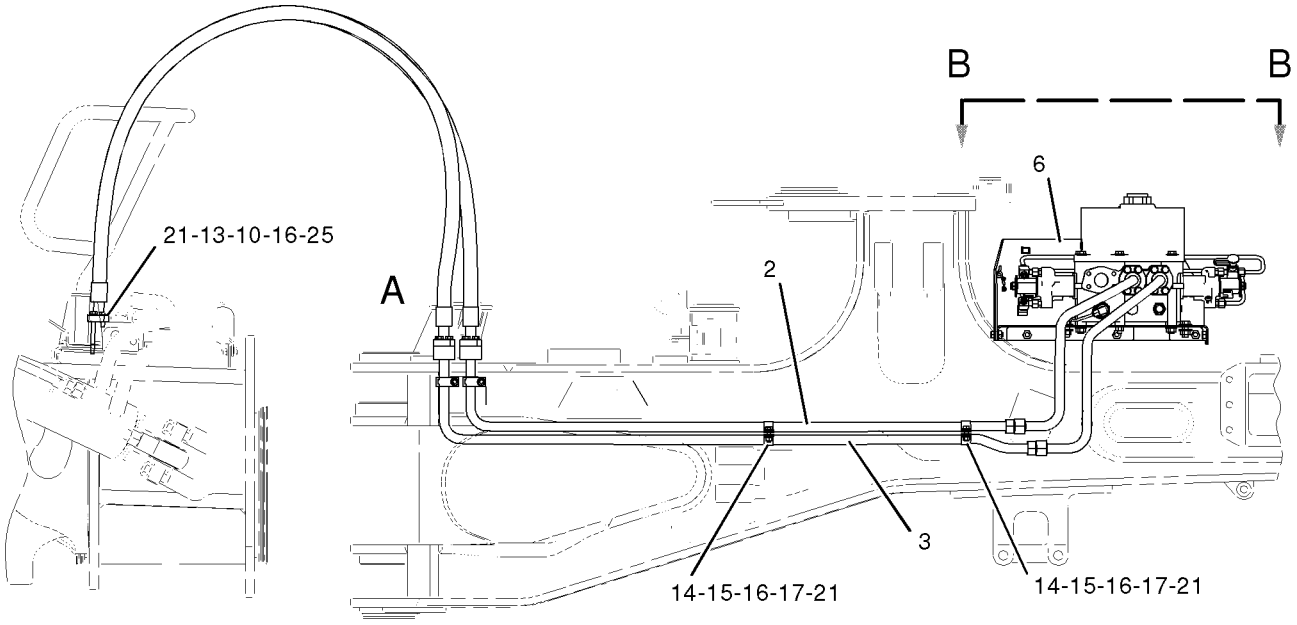

RIGHT SIDE VIEW

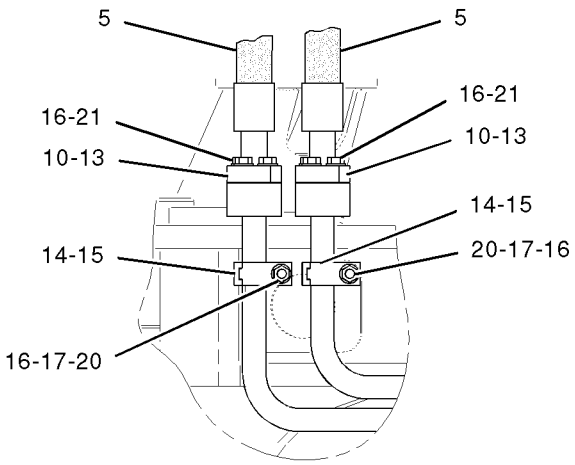

VIEW OF AREA A

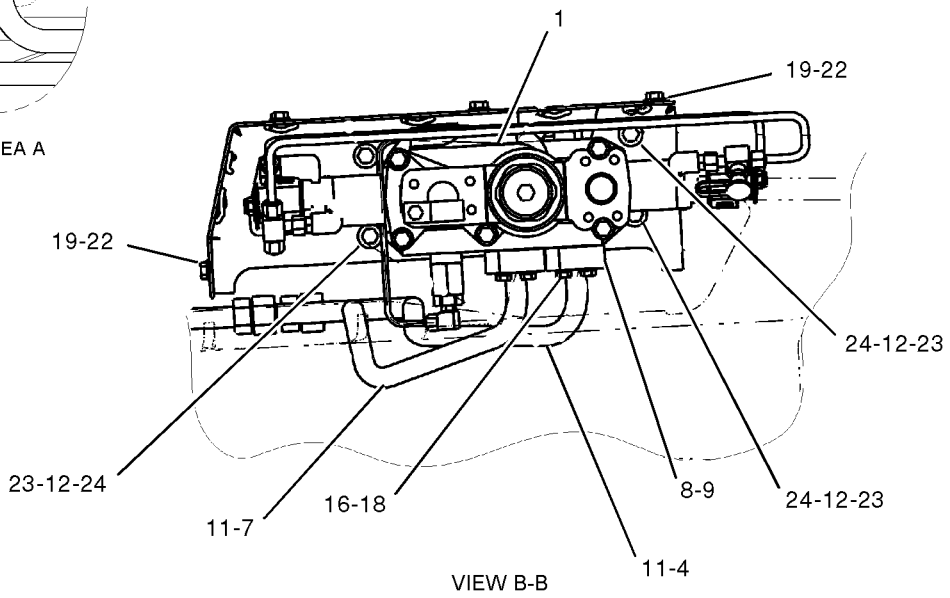

VIEW B-B

GRAPHIC #1 **<END>** g01053508

HYDRAULIC SYSTEM

166-3941 LINES GP-HOIST

S/N: AXM1-UP

PART OF 152-6922 HYDRAULIC AR-MACHINE

SMCS-5057 **i01822605**

NOTE	REF NO	GRAPHIC REF	PART NUMBER	QTY	PART NAME 1 2 3 4 5 6 (PRODUCT LEVEL)	SEE PAGE
	1	1	**7U-9542**	1	PLATE-CLAMPING	
	2	1	**227-6029**	1	HOSE AS	
I	3	1	**193-7279**	1	HOSE AS	
	4	1	**117-1266**	2	SEAL-O-RING	
	5	1	**157-6199**	1	GROMMET	
	6	1	**1P-4579**	4	FLANGE-HALF	
	7	1	**1P-4585**	4	FLANGE-HALF	
	8	1	**4J-0524**	2	SEAL-O-RING	
	9	1	**5P-1076**	1	WASHER-HARD (13.5X30X4-MM THK)	
	10	1	**6V-6782**	1	CLIP (SLOT)	
	11	1	**6V-6783**	1	CLIP (TAB)	
M	12	1	**8T-4184**	8	BOLT (M12X1.75X45-MM)	
M	13	1	**8T-4193**	8	BOLT (M16X2X50-MM)	
M	14	1	**8T-4194**	1	BOLT (M12X1.75X50-MM)	
	15	1	**8T-4223**	9	WASHER-HARD (13.5X25.5X3-MM THK)	
M	16	1	**8T-4244**	1	NUT (M12X1.75-THD)	
	17	1	**9X-8257**	8	WASHER (17.5X30X3.5-MM THK)	

I-REFER TO HYDRAULIC INFORMATION SYSTEM
M-METRIC PART

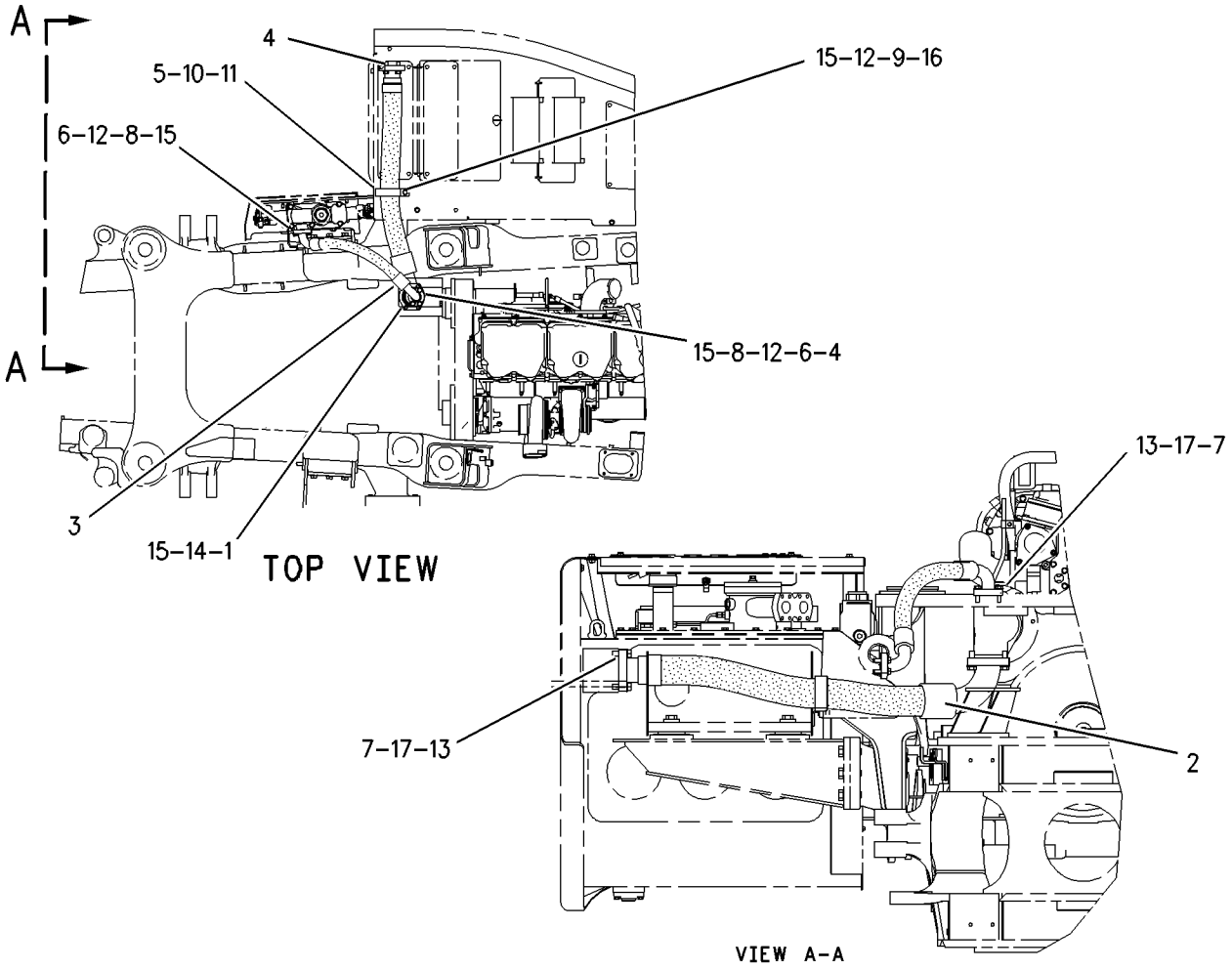

GRAPHIC #1 **<END>** g00867613

HYDRAULIC SYSTEM

152-7106 LINES GP-HYDRAULIC FAN

S/N: AXM1-370

PART OF 152-6922 HYDRAULIC AR-MACHINE

SMCS-5057 **i01614143**

NOTE	REF NO	GRAPHIC REF	PART NUMBER	QTY	PART NAME 1 2 3 4 5 6 (PRODUCT LEVEL)	SEE PAGE
I	1	1	**121-3286**	1	HOSE AS	
I	2	1	**135-7902**	1	HOSE AS	
	3	1	*148-8322*	1	CONNECTOR GP	
		1	**6V-8640**	1	CONNECTOR	
		1	**2M-9780**	1	SEAL-O-RING	
		1	**6V-9746**	1	SEAL-O-RING	
	4	1	*148-8327*	1	CONNECTOR AS	
		1	**6V-8637**	1	CONNECTOR	
		1	**3D-2824**	1	SEAL-O-RING	
		1	**6V-9746**	1	SEAL-O-RING	
	5	1	*148-8347*	2	ELBOW AS	
					(EACH INCLUDES)	
		1	**6V-9007**	1	ELBOW	
		1	**3D-2824**	1	SEAL-O-RING	
		1	**6V-9746**	1	SEAL-O-RING	
	6	1	*148-8365*	1	ELBOW AS	
		1	**8T-6876**	1	ELBOW	
		1	**3J-1907**	1	SEAL-O-RING	
		1	**6V-8398**	1	SEAL-O-RING	
	7	1	*148-8411*	2	PLUG AS	
					(EACH INCLUDES)	
		1	**9S-4185**	1	PLUG	
		1	**3K-0360**	1	SEAL-O-RING	
	8	1	**151-9929**	1	VALVE GP-THERMAL COMPENSATOR	
	9	1	**171-4364**	1	SPACER (11X19X11.5-MM THK)	
I	10	1	**173-7546**	1	HOSE AS	
	11	1	**174-6781**	1	TUBE AS	
	12	1	**174-6886**	1	BLOCK-MANIFOLD	
	13	1	**178-8903**	1	TUBE AS	
	14	1	**188-8726**	1	VALVE-BYPASS	
	15	1	**193-9230**	1	VALVE GP-CHECK	
		1	**3D-2824**	1	SEAL-O-RING	
		1	**6V-9746**	1	SEAL-O-RING	
	16	1	**194-0772**	1	TUBE AS	
	17	1	**194-0773**	1	TUBE AS	
	18	1	**194-0774**	1	TUBE AS	
	19	1	*194-1497*	1	TEE AS	
		1	**8T-8900**	1	TEE-O-RING PORT	
		1	**3D-2824**	1	SEAL-O-RING	
		1	**6V-9746**	1	SEAL-O-RING	
	20	1	**197-0372**	1	TUBE AS	
	21	1	**199-6168**	1	TUBE AS	
	22	1	**200-2164**	1	TUBE AS	
	23	1	**200-2165**	1	TUBE AS	
	24	1	**211-6062**	1	VALVE GP-CHECK	
		1	**3J-1907**	1	SEAL-O-RING	
		1	**6V-8397**	1	SEAL-O-RING	
	25	1	*148-8324*	2	CONNECTOR GP	
					(EACH INCLUDES)	
		1	**6V-9874**	1	CONNECTOR	
		1	**3K-0360**	1	SEAL-O-RING	
		1	**6V-9746**	1	SEAL-O-RING	
	26	1	*148-8326*	1	CONNECTOR AS	
		1	**6V-9872**	1	CONNECTOR	
		1	**3J-7354**	1	SEAL-O-RING	
		1	**6V-8397**	1	SEAL-O-RING	

152-7106 LINES GP-HYDRAULIC FAN *(contd.)* i01614143

NOTE	REF NO	GRAPHIC REF	PART NUMBER	QTY	PART NAME 1 2 3 4 5 6 (PRODUCT LEVEL)	SEE PAGE
	27	1	*148-8332*	1	CONNECTOR AS	
		1	**8T-5043**	1	CONNECTOR	
		1	**1J-9671**	1	SEAL-O-RING	
		1	**6V-8397**	1	SEAL-O-RING	
	28	1	*148-8339*	3	CONNECTOR GP	
					(EACH INCLUDES)	
		1	**6V-8716**	1	CONNECTOR	
		1	**6V-9746**	1	SEAL-O-RING	
		1	**7M-8485**	1	SEAL-O-RING	
	29	1	*148-8407*	1	PLUG AS	
		1	**9S-4191**	1	PLUG	
		1	**3J-1907**	1	SEAL-O-RING	
	30	1	*148-8417*	1	REDUCER AS	
		1	**6V-8941**	1	REDUCER	
		1	**6V-8397**	1	SEAL-O-RING	
	31	1	*148-8427*	1	TEE AS	
		1	**8T-6895**	1	TEE-UNION	
		1	**6V-8398**	3	SEAL-O-RING	
	32	1	*148-8451*	1	TEE AS	
		1	**6V-8791**	1	TEE-FACE SEAL	
		1	**6V-9746**	3	SEAL-O-RING	
	33	1	*150-4033*	1	TEE AS	
		1	**6V-9846**	1	TEE-SWIVEL	
		1	**6V-9746**	2	SEAL-O-RING	
	34	1	*150-4049*	1	ELBOW AS	
		1	**8T-4149**	1	ELBOW	
		1	**6V-9746**	1	SEAL-O-RING	
		1	**7M-8485**	1	SEAL-O-RING	
	35	1	*164-6862*	1	TEE GP	
		1	**6V-9160**	1	TEE-FACE SEAL	
		1	**6V-9746**	3	SEAL-O-RING	
	36	1	*168-1969*	1	ADAPTER AS	
		1	**5P-1318**	1	ADAPTER	
		1	**1J-9671**	1	SEAL-O-RING	
	37	1	**2P-1293**	1	LOCKNUT (1-3/16-12-THD)	
	38	1	**3D-2824**	1	SEAL-O-RING	
	39	1	**5P-7462**	1	CLIP (SLOT)	
	40	1	**5P-7463**	1	CLIP (TAB)	
	41	1	**5P-9297**	5	CLIP	
	42	1	**6V-0683**	1	GROMMET	
	43	1	**6V-9169**	1	NUT-BULKHEAD (13/16-16-THD)	
	44	1	**6V-9746**	1	SEAL-O-RING	
	45	1	**7X-0531**	1	WASHER-HARD (31X52.5X6-MM THK)	
	46	1	**8T-1885**	1	CLIP (SLOT)	
	47	1	**8T-1886**	1	CLIP (TAB)	
	48	1	**8T-1887**	1	CLIP (SLOT)	
	49	1	**8T-1888**	1	CLIP (TAB)	
	50	1	**8T-4121**	10	WASHER-HARD (11X21X2.5-MM THK)	
	51	1	**8T-4123**	1	WASHER-PLATED (22X35X3.5-MM THK)	
M	52	1	**8T-4133**	5	NUT (M10X1.5-THD)	
M	53	1	**8T-4139**	1	BOLT (M12X1.75X30-MM)	
M	54	1	**8T-4177**	2	BOLT (M8X1.25X90-MM)	
M	55	1	**8T-4185**	1	BOLT (M10X1.5X50-MM)	
M	56	1	**8T-4195**	2	BOLT (M10X1.5X30-MM)	
	57	1	**8T-4223**	1	WASHER-HARD (13.5X25.5X3-MM THK)	
	58	1	**8T-4224**	2	WASHER-HARD (8.8X16X2-MM THK)	
M	59	1	**8T-5005**	2	BOLT (M10X1.5X70-MM)	
	60	1	**9X-6580**	1	NUT (1-3/16-12-THD)	

I-REFER TO HYDRAULIC INFORMATION SYSTEM
M-METRIC PART

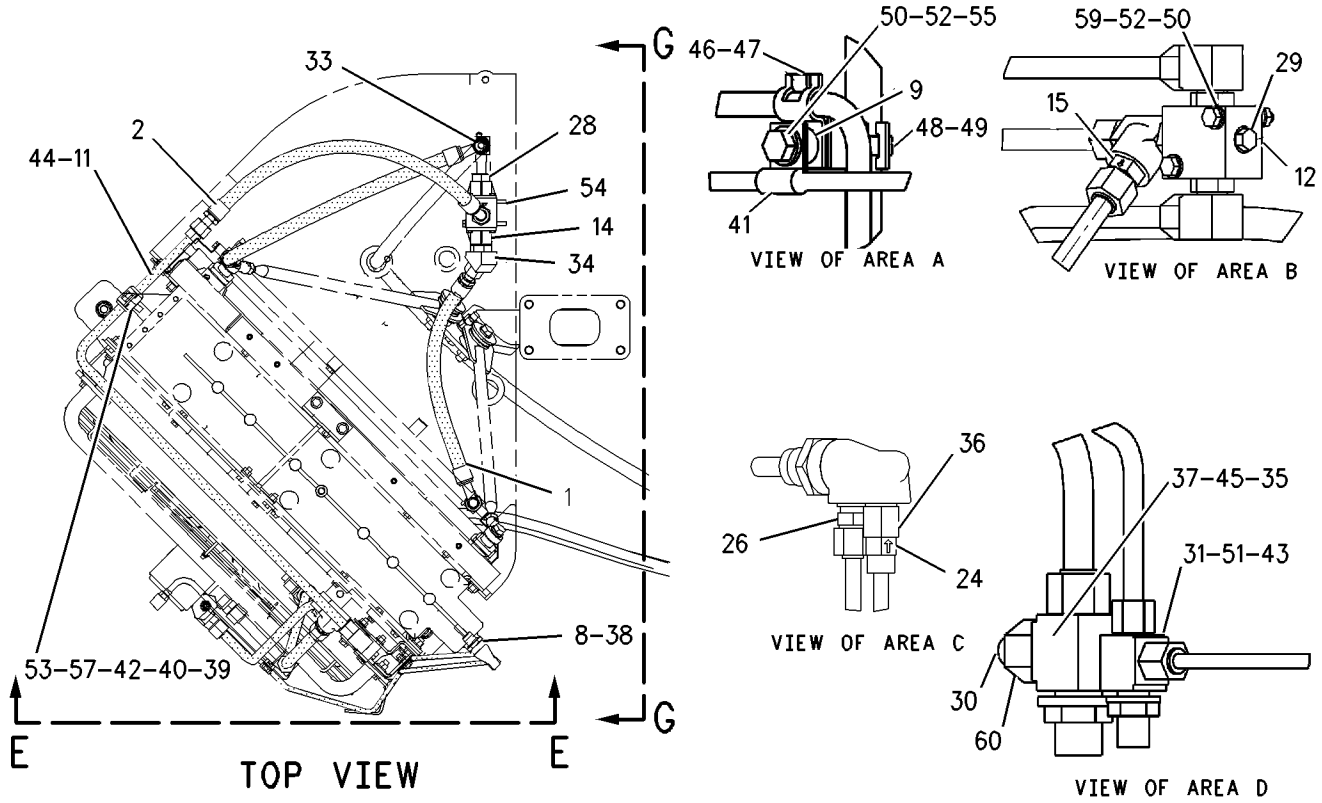

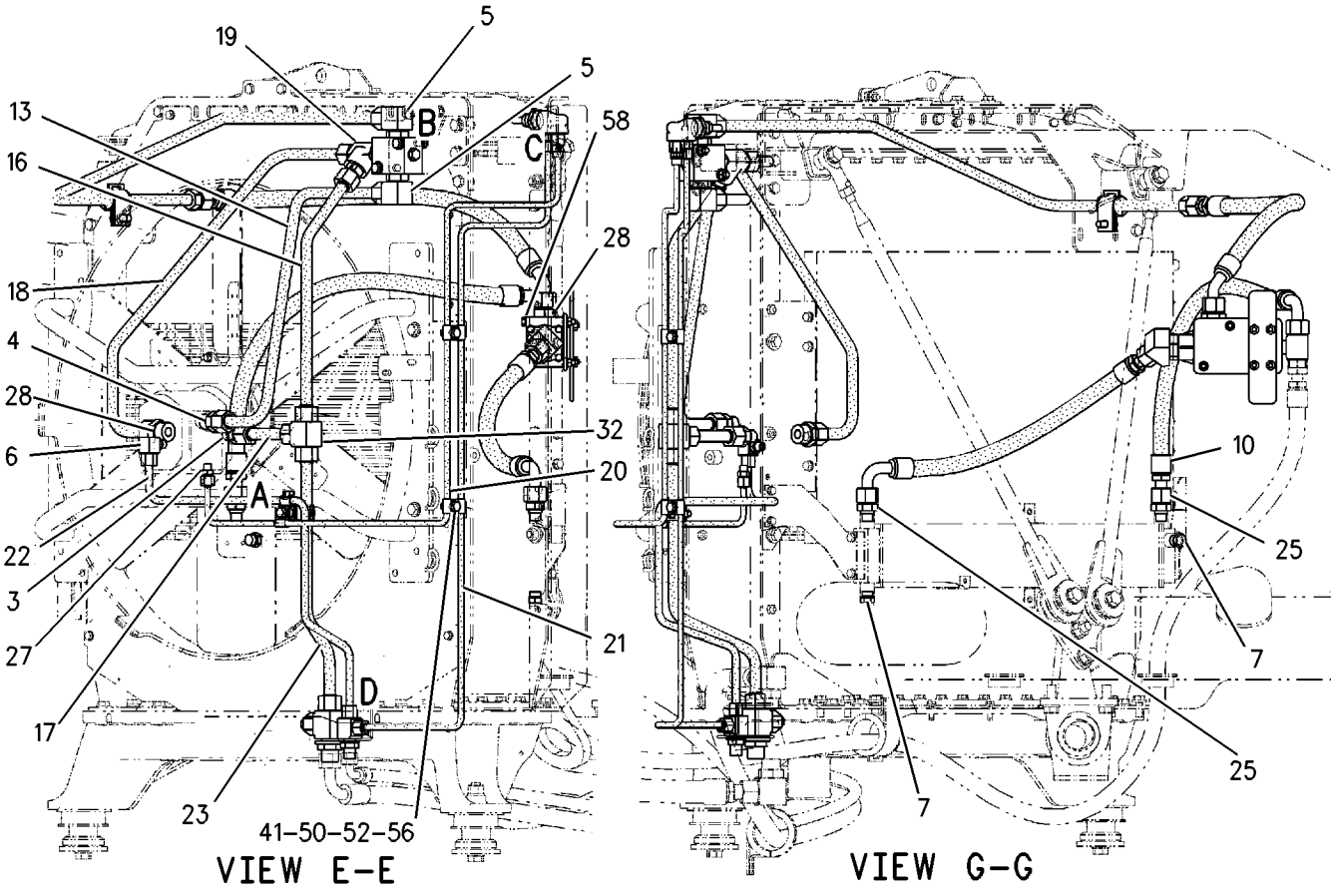

GRAPHIC #1 **<END>** g00835614

HYDRAULIC SYSTEM

213-6518 LINES GP-HYDRAULIC FAN

S/N: AXM371-471

PART OF 152-6922 HYDRAULIC AR-MACHINE

SMCS-5057 **i01933924**

NOTE	REF NO	GRAPHIC REF	PART NUMBER	QTY	PART NAME 1 2 3 4 5 6 (PRODUCT LEVEL)	SEE PAGE
I	1	1	**121-3286**	1	HOSE AS	
I	2	1	**135-7902**	1	HOSE AS	
	3	2	**171-4364**	1	SPACER (11X19X11.5-MM THK)	
I	4	1	**173-7546**	1	HOSE AS	
	5	1	**174-6781**	1	TUBE AS	
	6	2	**174-6886**	1	BLOCK-MANIFOLD	
	7	1	**178-8903**	1	TUBE AS	
	8	1	**188-8726**	1	VALVE-BYPASS	
	9	2	**193-9230**	1	VALVE GP-CHECK (HYDRAULIC FAN)	
		2	**3D-2824**	1	SEAL-O-RING	
		2	**6V-9746**	1	SEAL-O-RING	
	10	1	**194-0772**	1	TUBE AS	
	11	1	**194-0773**	1	TUBE AS	
	12	1	**194-0774**	1	TUBE AS	
	13	1	*194-1497*	1	TEE AS	
		1	**8T-8900**	1	TEE-O-RING PORT	
		1	**3D-2824**	1	SEAL-O-RING	
		1	**6V-9746**	1	SEAL-O-RING	
Y	14	2	*194-2530*	1	VALVE & MTG GP-HYDRAULIC FAN	760
	15	1	**200-2165**	1	TUBE AS	
	16	1	**211-3375**	1	TUBE AS	
	17	2	**211-3377**	1	PLATE	
	18	2	**211-6062**	1	VALVE GP-CHECK (HYDRAULIC FAN)	
		2	**3J-1907**	1	SEAL-O-RING	
		2	**6V-8397**	1	SEAL-O-RING	
	19	1	**213-6519**	1	TUBE AS	
	20	2	**213-6520**	1	TUBE AS	
	21	1	*148-8322*	1	CONNECTOR GP	
		1	**6V-8640**	1	CONNECTOR	
		1	**2M-9780**	1	SEAL-O-RING	
		1	**6V-9746**	1	SEAL-O-RING	
	22	1	*148-8324*	2	CONNECTOR GP	
					(EACH INCLUDES)	
		1	**6V-9874**	1	CONNECTOR	
		1	**3K-0360**	1	SEAL-O-RING	
		1	**6V-9746**	1	SEAL-O-RING	
	23	1	*148-8327*	1	CONNECTOR AS	
		1	**6V-8637**	1	CONNECTOR	
		1	**3D-2824**	1	SEAL-O-RING	
		1	**6V-9746**	1	SEAL-O-RING	
	24	2	*148-8336*	1	CONNECTOR AS	
		2	**3J-1907**	1	SEAL-O-RING	
		2	**6V-8397**	1	SEAL-O-RING	
		2	**6V-8636**	1	CONNECTOR	
	25	1	*148-8339*	3	CONNECTOR GP	
					(EACH INCLUDES)	
		1	**6V-8716**	1	CONNECTOR	
		1	**6V-9746**	1	SEAL-O-RING	
		1	**7M-8485**	1	SEAL-O-RING	
	26	1	*148-8347*	2	ELBOW AS	
					(EACH INCLUDES)	
		1	**6V-9007**	1	ELBOW	
		1	**3D-2824**	1	SEAL-O-RING	
		1	**6V-9746**	1	SEAL-O-RING	
	27	1	*148-8365*	1	ELBOW AS	
		1	**8T-6876**	1	ELBOW	

213-6518 **LINES GP-HYDRAULIC FAN** *(contd.)* **i01933924**

NOTE	REF NO	GRAPHIC REF	PART NUMBER	QTY	PART NAME 1 2 3 4 5 6 (PRODUCT LEVEL)	SEE PAGE
		1	**3J-1907**	1	SEAL-O-RING	
		1	**6V-8398**	1	SEAL-O-RING	
	28	1	*148-8379*	1	ELBOW AS	
		1	**7X-0901**	1	ELBOW	
		1	**1J-9671**	1	SEAL-O-RING	
		1	**6V-8397**	1	SEAL-O-RING	
	29	2	*148-8407*	1	PLUG AS	
		2	**9S-4191**	1	PLUG	
		2	**3J-1907**	1	SEAL-O-RING	
	30	1	*148-8408*	1	PLUG AS	
		1	**9S-4183**	1	PLUG	
		1	**3D-2824**	1	SEAL-O-RING	
	31	1	*148-8411*	2	PLUG AS	
					(EACH INCLUDES)	
		1	**9S-4185**	1	PLUG	
		1	**3K-0360**	1	SEAL-O-RING	
	32	2	*148-8417*	1	REDUCER AS	
		2	**6V-8941**	1	REDUCER	
		2	**6V-8397**	1	SEAL-O-RING	
	33	2	*148-8427*	1	TEE AS	
		2	**8T-6895**	1	TEE-UNION	
		2	**6V-8398**	3	SEAL-O-RING	
	34	1	*148-8451*	1	TEE AS	
		1	**6V-8791**	1	TEE-FACE SEAL	
		1	**6V-9746**	3	SEAL-O-RING	
	35	1	*150-4033*	1	TEE AS	
		1	**6V-9846**	1	TEE-SWIVEL	
		1	**6V-9746**	2	SEAL-O-RING	
	36	1	*150-4049*	1	ELBOW AS	
		1	**8T-4149**	1	ELBOW	
		1	**6V-9746**	1	SEAL-O-RING	
		1	**7M-8485**	1	SEAL-O-RING	
	37	2	*164-6862*	1	TEE GP	
		2	**6V-9160**	1	TEE-FACE SEAL	
		2	**6V-9746**	3	SEAL-O-RING	
	38	2	**2P-1293**	1	LOCKNUT (1-3/16-12-THD)	
	39	1	**5P-7462**	1	CLIP (SLOT)	
	40	1	**5P-7463**	1	CLIP (TAB)	
	41	2	**5P-9297**	1	CLIP	
	42	1	**6V-0683**	1	GROMMET	
	43	2	**6V-9169**	1	NUT-BULKHEAD (13/16-16-THD)	
	44	1	**6V-9746**	1	SEAL-O-RING	
	45	2	**7X-0531**	1	WASHER-HARD (31X52.5X6-MM THK)	
	46	2	**8T-1885**	1	CLIP (SLOT)	
	47	2	**8T-1886**	1	CLIP (TAB)	
	48	2	**8T-1887**	1	CLIP (SLOT)	
	49	2	**8T-1888**	1	CLIP (TAB)	
	50	2	**8T-4121**	10	WASHER-HARD (11X21X2.5-MM THK)	
	51	2	**8T-4123**	1	WASHER-PLATED (22X35X3.5-MM THK)	
M	52	2	**8T-4133**	5	NUT (M10X1.5-THD)	
M	53	1	**8T-4139**	1	BOLT (M12X1.75X30-MM)	
M	54	1	**8T-4177**	2	BOLT (M8X1.25X90-MM)	
M	55	2	**8T-4185**	3	BOLT (M10X1.5X50-MM)	
	56	1	**8T-4223**	1	WASHER-HARD (13.5X25.5X3-MM THK)	
	57	1	**8T-4224**	2	WASHER-HARD (8.8X16X2-MM THK)	
M	58	2	**8T-5005**	2	BOLT (M10X1.5X70-MM)	
	59	2	**9X-6580**	1	NUT (1-3/16-12-THD)	

I-REFER TO HYDRAULIC INFORMATION SYSTEM
M-METRIC PART
Y-SEPARATE ILLUSTRATION

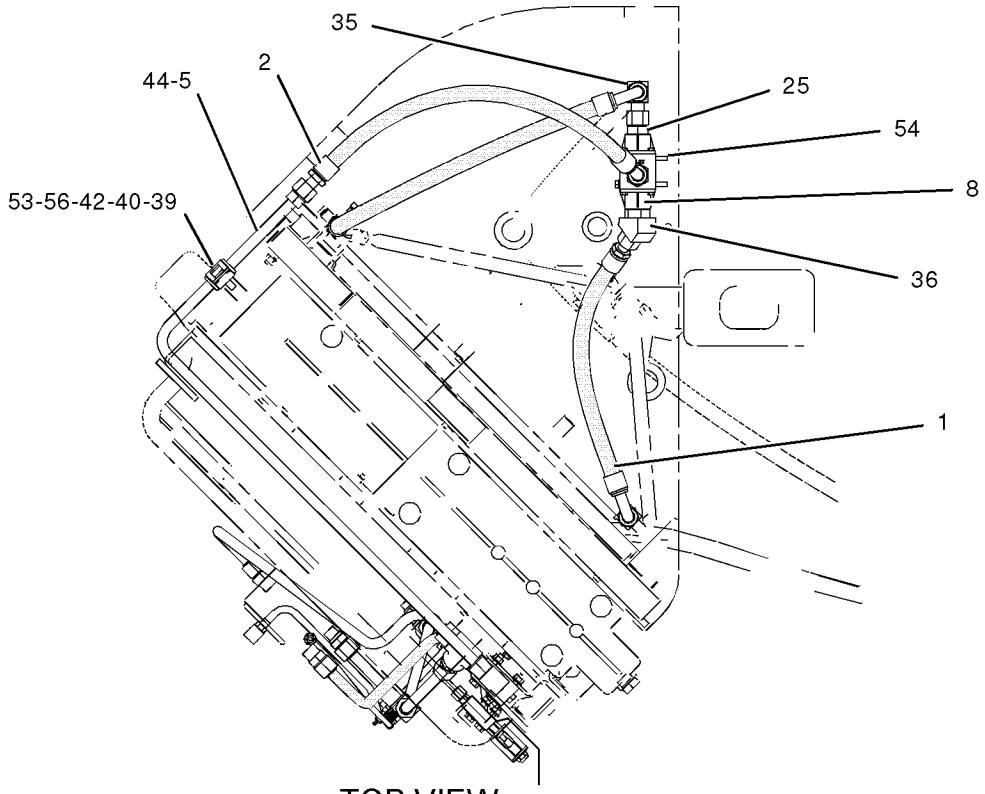

TOP VIEW

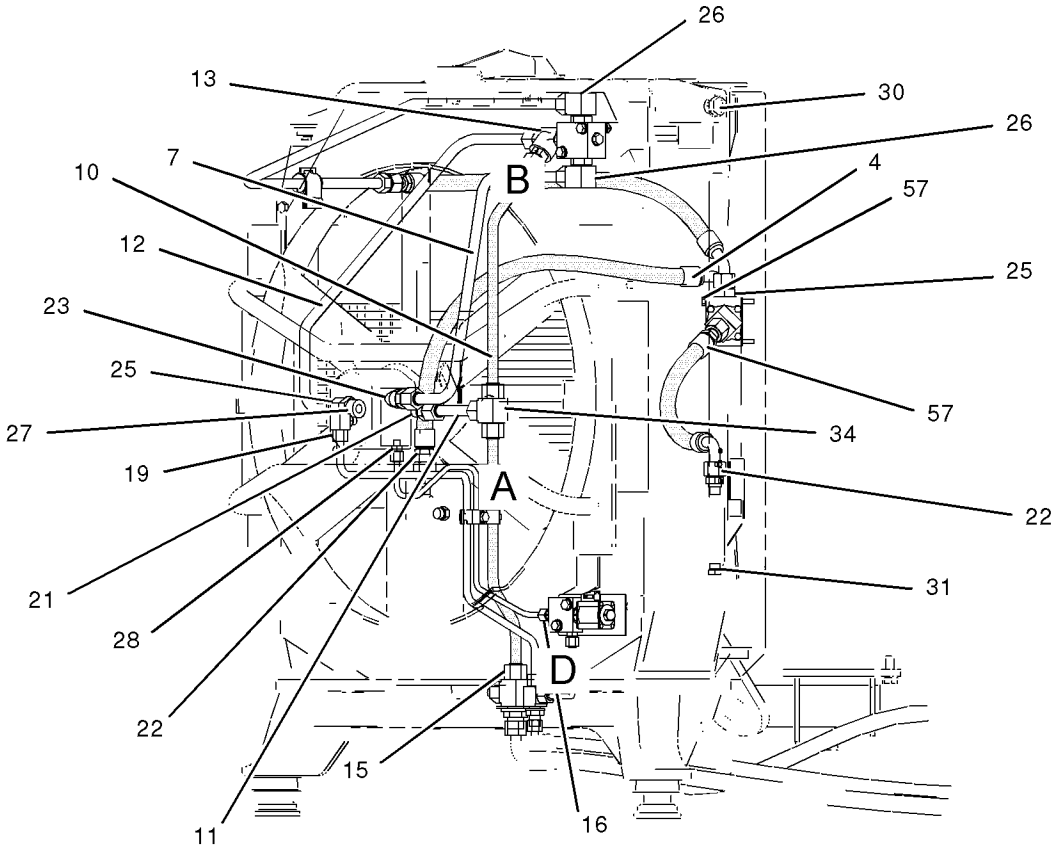

RIGHT SIDE VIEW

REFER TO ALL ILLUSTRATIONS OF THIS GROUP FOR AUXILIARY VIEWS

GRAPHIC #1

g01006385

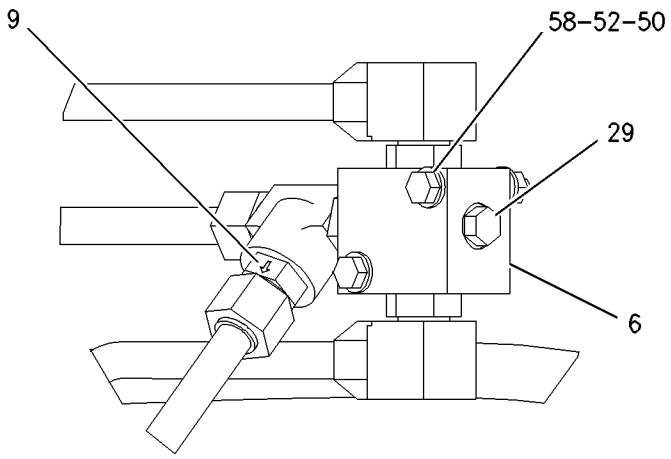

VIEW OF AREA B

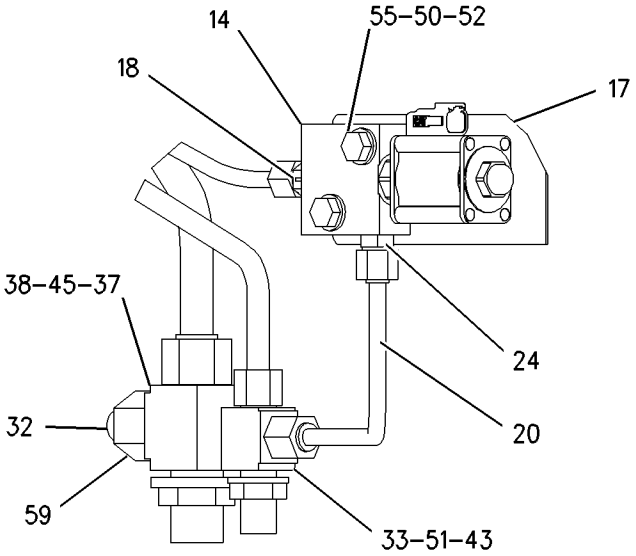

VIEW OF AREA D

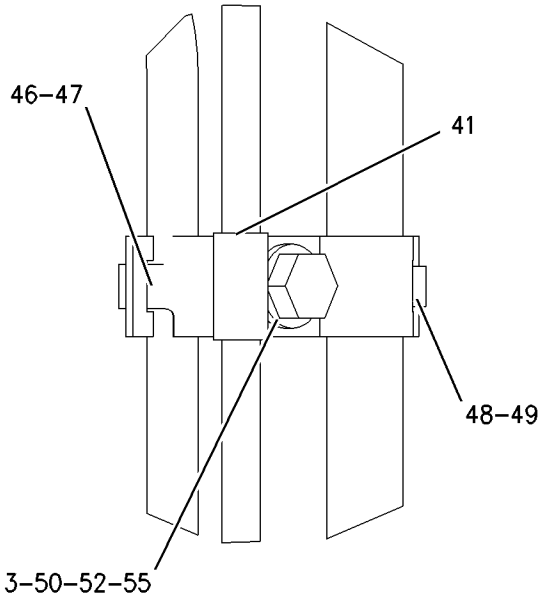

VIEW OF AREA A

GRAPHIC #2 **<END>** g00844936

HYDRAULIC SYSTEM

213-6518 LINES GP-HYDRAULIC FAN

S/N: AXM472-UP

PART OF 152-6922 HYDRAULIC AR-MACHINE

SMCS-5057 **i01933938**

NOTE	REF NO	GRAPHIC REF	PART NUMBER	QTY	PART NAME 1 2 3 4 5 6 (PRODUCT LEVEL)	SEE PAGE
I	1	1	**121-3286**	1	HOSE AS	
I	2	1	**135-7902**	1	HOSE AS	
CM	3	2	**8T-4186**	1	BOLT (M10X1.5X40-MM)	
I	4	1	**173-7546**	1	HOSE AS	
	5	1	**174-6781**	1	TUBE AS	
	6	2	**174-6886**	1	BLOCK-MANIFOLD	
	7	1	**178-8903**	1	TUBE AS	
	8	1	**188-8726**	1	VALVE-BYPASS	
	9	2	**193-9230**	1	VALVE GP-CHECK (HYDRAULIC FAN)	
		2	**3D-2824**	1	SEAL-O-RING	
		2	**6V-9746**	1	SEAL-O-RING	
	10	1	**194-0772**	1	TUBE AS	
	11	1	**194-0773**	1	TUBE AS	
	12	1	**194-0774**	1	TUBE AS	
	13	1	*194-1497*	1	TEE AS	
		1	**8T-8900**	1	TEE-O-RING PORT	
		1	**3D-2824**	1	SEAL-O-RING	
		1	**6V-9746**	1	SEAL-O-RING	
Y	14	2	*194-2530*	1	VALVE & MTG GP-HYDRAULIC FAN	760
	15	1	**200-2165**	1	TUBE AS	
C	16	1	**216-3220**	1	TUBE AS	
	17	2	**211-3377**	1	PLATE	
	18	2	**211-6062**	1	VALVE GP-CHECK (HYDRAULIC FAN)	
		2	**3J-1907**	1	SEAL-O-RING	
		2	**6V-8397**	1	SEAL-O-RING	
	19	1	**213-6519**	1	TUBE AS	
	20	2	**213-6520**	1	TUBE AS	
	21	1	*148-8322*	1	CONNECTOR GP	
		1	**6V-8640**	1	CONNECTOR	
		1	**2M-9780**	1	SEAL-O-RING	
		1	**6V-9746**	1	SEAL-O-RING	
	22	1	*148-8324*	2	CONNECTOR GP	
					(EACH INCLUDES)	
		1	**6V-9874**	1	CONNECTOR	
		1	**3K-0360**	1	SEAL-O-RING	
		1	**6V-9746**	1	SEAL-O-RING	
	23	1	*148-8327*	1	CONNECTOR AS	
		1	**6V-8637**	1	CONNECTOR	
		1	**3D-2824**	1	SEAL-O-RING	
		1	**6V-9746**	1	SEAL-O-RING	
	24	2	*148-8336*	1	CONNECTOR AS	
		2	**6V-8636**	1	CONNECTOR	
		2	**3J-1907**	1	SEAL-O-RING	
		2	**6V-8397**	1	SEAL-O-RING	
	25	1	*148-8339*	3	CONNECTOR GP	
					(EACH INCLUDES)	
		1	**6V-8716**	1	CONNECTOR	
		1	**6V-9746**	1	SEAL-O-RING	
		1	**7M-8485**	1	SEAL-O-RING	
	26	1	*148-8347*	2	ELBOW AS	
					(EACH INCLUDES)	
		1	**6V-9007**	1	ELBOW	
		1	**3D-2824**	1	SEAL-O-RING	
		1	**6V-9746**	1	SEAL-O-RING	
	27	1	*148-8365*	1	ELBOW AS	
		1	**8T-6876**	1	ELBOW	

213-6518 **LINES GP-HYDRAULIC FAN** *(contd.)* **i01933938**

NOTE	REF NO	GRAPHIC REF	PART NUMBER	QTY	PART NAME 1 2 3 4 5 6 (PRODUCT LEVEL)	SEE PAGE
		1	**3J-1907**	1	SEAL-O-RING	
		1	**6V-8398**	1	SEAL-O-RING	
C	28	1	*148-8332*	1	CONNECTOR AS	
		1	**8T-5043**	1	CONNECTOR	
		1	**1J-9671**	1	SEAL-O-RING	
		1	**6V-8397**	1	SEAL-O-RING	
	29	2	*148-8407*	1	PLUG AS	
		2	**9S-4191**	1	PLUG	
		2	**3J-1907**	1	SEAL-O-RING	
	30	1	*148-8408*	1	PLUG AS	
		1	**9S-4183**	1	PLUG	
		1	**3D-2824**	1	SEAL-O-RING	
	31	1	*148-8411*	2	PLUG AS	
					(EACH INCLUDES)	
		1	**9S-4185**	1	PLUG	
		1	**3K-0360**	1	SEAL-O-RING	
	32	2	*148-8417*	1	REDUCER AS	
		2	**6V-8941**	1	REDUCER	
		2	**6V-8397**	1	SEAL-O-RING	
	33	2	*148-8427*	1	TEE AS	
		2	**8T-6895**	1	TEE-UNION	
		2	**6V-8398**	3	SEAL-O-RING	
	34	1	*148-8451*	1	TEE AS	
		1	**6V-8791**	1	TEE-FACE SEAL	
		1	**6V-9746**	3	SEAL-O-RING	
	35	1	*150-4033*	1	TEE AS	
		1	**6V-9846**	1	TEE-SWIVEL	
		1	**6V-9746**	2	SEAL-O-RING	
	36	1	*150-4049*	1	ELBOW AS	
		1	**8T-4149**	1	ELBOW	
		1	**6V-9746**	1	SEAL-O-RING	
		1	**7M-8485**	1	SEAL-O-RING	
	37	2	*164-6862*	1	TEE GP	
		2	**6V-9160**	1	TEE-FACE SEAL	
		2	**6V-9746**	3	SEAL-O-RING	
	38	2	**2P-1293**	1	LOCKNUT (1-3/16-12-THD)	
	39	1	**5P-7462**	1	CLIP (SLOT)	
	40	1	**5P-7463**	1	CLIP (TAB)	
	41	2	**5P-9297**	1	CLIP	
	42	1	**6V-0683**	1	GROMMET	
	43	2	**6V-9169**	1	NUT-BULKHEAD (13/16-16-THD)	
	44	1	**6V-9746**	1	SEAL-O-RING	
	45	2	**7X-0531**	1	WASHER-HARD (31X52.5X6-MM THK)	
	46	2	**8T-1885**	1	CLIP (SLOT)	
	47	2	**8T-1886**	1	CLIP (TAB)	
	48	2	**8T-1887**	1	CLIP (SLOT)	
	49	2	**8T-1888**	1	CLIP (TAB)	
	50	2	**8T-4121**	10	WASHER-HARD (11X21X2.5-MM THK)	
	51	2	**8T-4123**	1	WASHER-PLATED (22X35X3.5-MM THK)	
M	52	2	**8T-4133**	5	NUT (M10X1.5-THD)	
M	53	1	**8T-4139**	1	BOLT (M12X1.75X30-MM)	
M	54	1	**8T-4177**	2	BOLT (M8X1.25X90-MM)	
CM	55	2	**8T-4185**	2	BOLT (M10X1.5X50-MM)	
	56	1	**8T-4223**	1	WASHER-HARD (13.5X25.5X3-MM THK)	
	57	1	**8T-4224**	2	WASHER-HARD (8.8X16X2-MM THK)	
M	58	2	**8T-5005**	2	BOLT (M10X1.5X70-MM)	
	59	2	**9X-6580**	1	NUT (1-3/16-12-THD)	

C-CHANGE FROM PREVIOUS TYPE
I-REFER TO HYDRAULIC INFORMATION SYSTEM
M-METRIC PART
Y-SEPARATE ILLUSTRATION

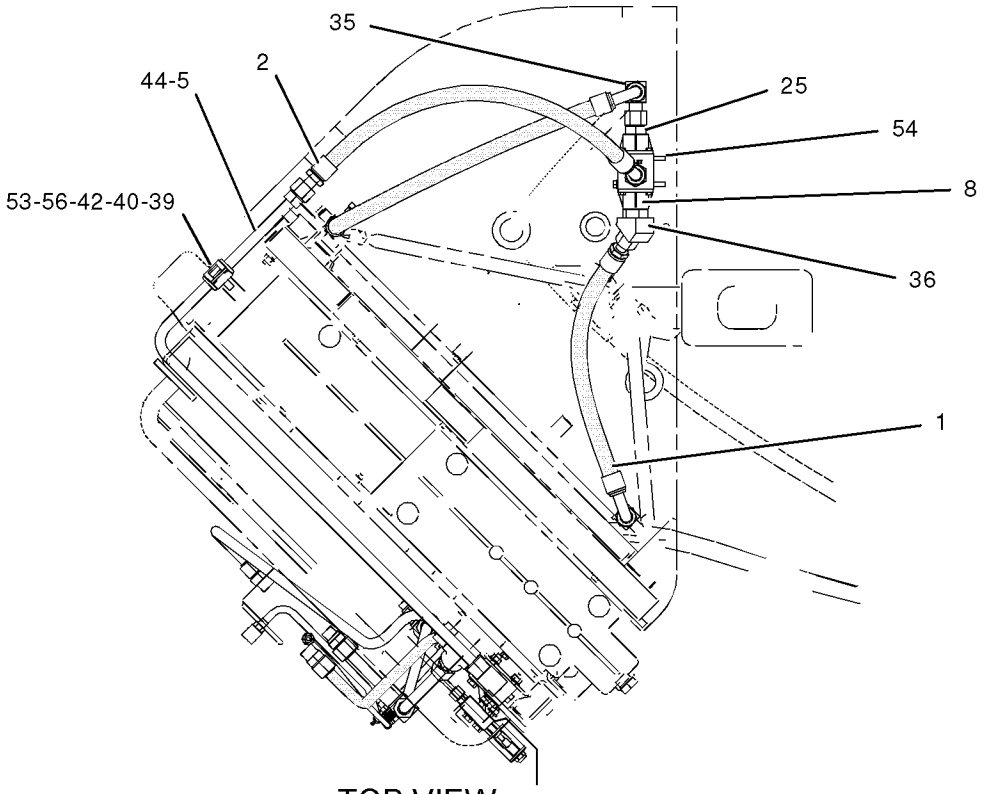

TOP VIEW

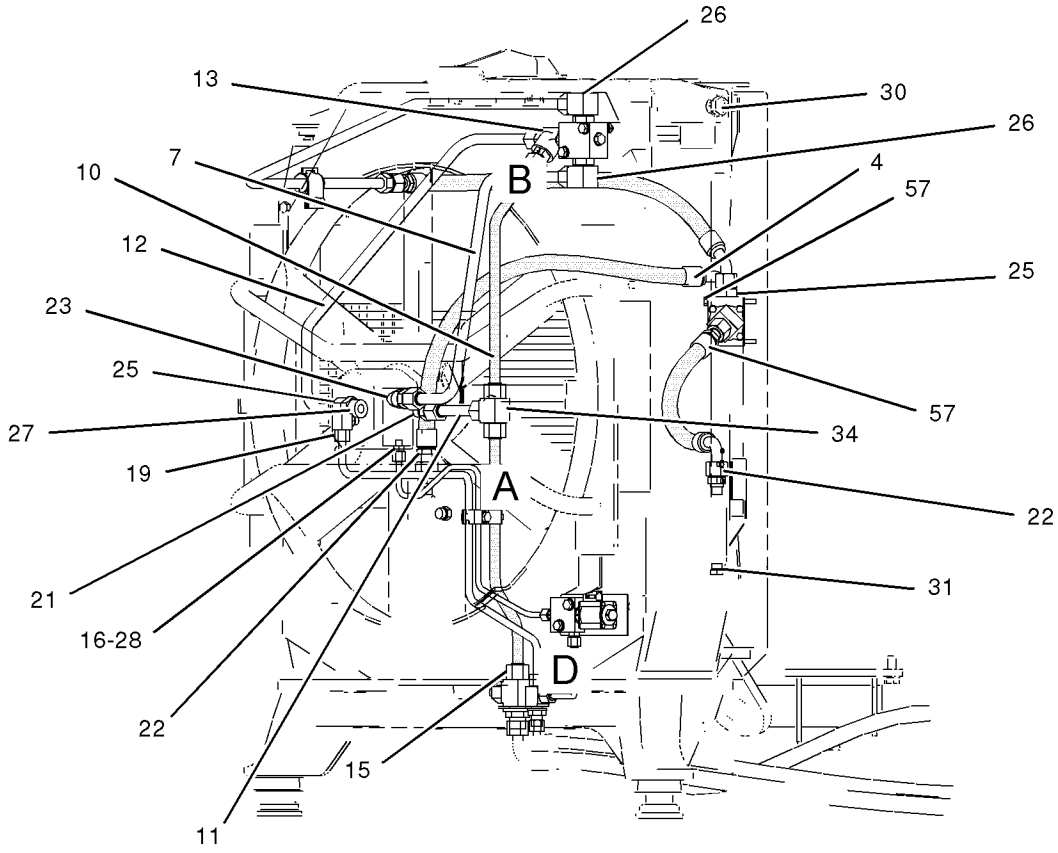

RIGHT SIDE VIEW

REFER TO ALL ILLUSTRATIONS OF THIS GROUP FOR AUXILIARY VIEWS

GRAPHIC #1

g01021618

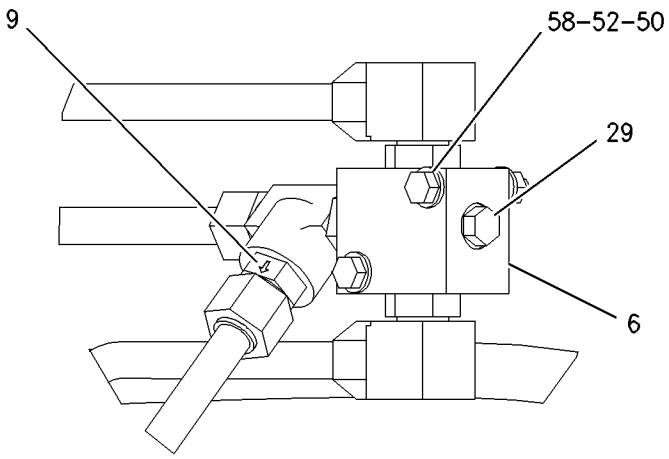

VIEW OF AREA B

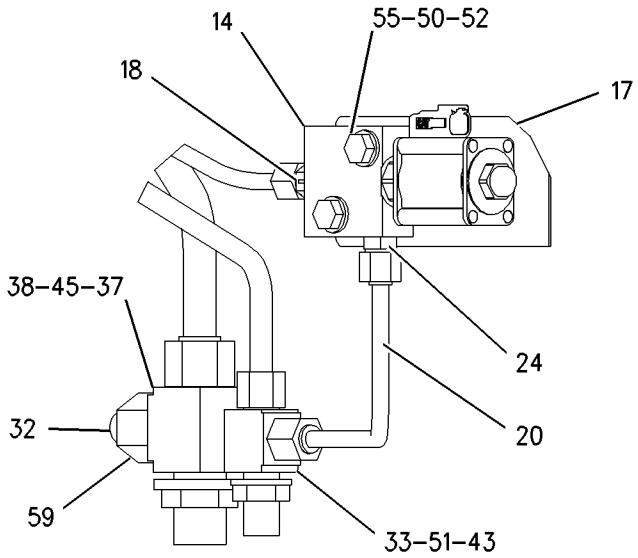

VIEW OF AREA D

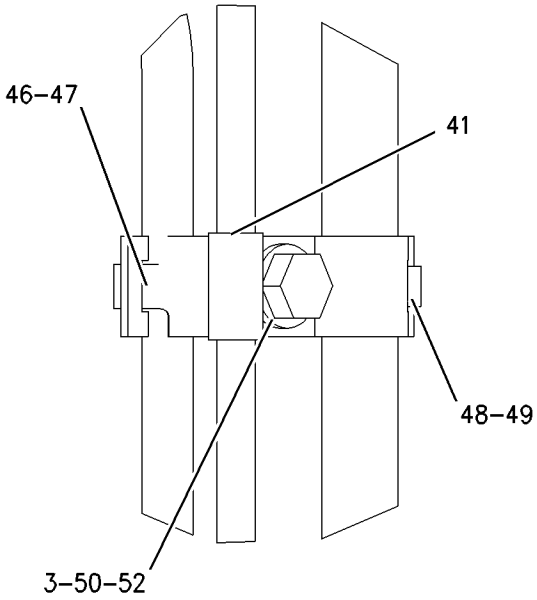

VIEW OF AREA A

GRAPHIC #2 **<END>** g00871053

HYDRAULIC SYSTEM

166-3954 LINES GP-PILOT

S/N: AXM1-491

PART OF 152-6922 HYDRAULIC AR-MACHINE

SMCS-5057 **i01904148**

NOTE	REF NO	GRAPHIC REF	PART NUMBER	QTY	PART NAME 1 2 3 4 5 6 (PRODUCT LEVEL)	SEE PAGE
	1	1	**6U-0455**	3	STRAP	
	2	2	**7U-7310**	1	VALVE GP-SHUTTLE	
		2	**3K-0360**	2	SEAL-O-RING	
I	3	1	**122-8291**	1	HOSE AS	
	4	2	**145-8587**	1	VALVE GP-LOWERING CONTROL	
	5	2	*150-3065*	2	ADAPTER AS	
					(EACH INCLUDES)	
		2	**6V-0484**	1	ADAPTER-O-RING	
		2	**3J-1907**	1	SEAL-O-RING	
	6	2	*150-4027*	1	TEE AS	
		2	**3E-2310**	1	TEE	
		2	**3J-1907**	1	SEAL-O-RING	
		2	**6V-8397**	1	SEAL-O-RING	
Y	7	2	**165-7948**	1	VALVE GP-CHECK (HOIST)	764
	8	2	*166-2033*	1	TEE GP	
		2	**7X-2444**	1	TEE-SWIVEL	
		2	**4J-5477**	1	SEAL-O-RING	
Y	9	1	**179-9223**	1	VALVE GP-CHECK (STEERING PUMP)	765
I	10	1	**194-6919**	1	HOSE AS	
I	11	2	**194-6920**	1	HOSE AS	
I	12	1	**194-6921**	1	HOSE AS	
I	13	1	**194-6922**	1	HOSE AS	
I	14	2	**194-6923**	1	HOSE AS	
	15	2	**194-6925**	1	TUBE AS	
I	16	1	**201-0959**	1	HOSE AS	
	17	1,2	*148-8336*	3	CONNECTOR AS	
					(EACH INCLUDES)	
		1,2	**6V-8636**	1	CONNECTOR	
		1,2	**3J-1907**	1	SEAL-O-RING	
		1,2	**6V-8397**	1	SEAL-O-RING	
	18	1	*148-8361*	2	ELBOW AS	
					(EACH INCLUDES)	
		1	**6V-9200**	1	ELBOW	
		1	**3J-7354**	1	SEAL-O-RING	
		1	**6V-8397**	1	SEAL-O-RING	
	19	2	*148-8368*	1	ELBOW AS	
		2	**6V-8627**	1	ELBOW	
		2	**3J-1907**	1	SEAL-O-RING	
		2	**4J-5477**	1	SEAL-O-RING	
	20	2	*148-8374*	1	ELBOW AS	
		2	**6V-8723**	1	ELBOW	
		2	**3K-0360**	1	SEAL-O-RING	
		2	**6V-8397**	1	SEAL-O-RING	
	21	2	*148-8378*	2	ELBOW AS	
					(EACH INCLUDES)	
		2	**3J-1907**	1	SEAL-O-RING	
		2	**6V-8397**	1	SEAL-O-RING	
		2	**6V-8724**	1	ELBOW	
	22	2	*148-8435*	1	TEE AS	
		2	**6V-8781**	1	TEE-FACE SEAL	
		2	**3J-1907**	1	SEAL-O-RING	
		2	**6V-8397**	2	SEAL-O-RING	
	23	1	*150-4047*	1	ADAPTER GP	
		1	**8T-2353**	1	ADAPTER	
		1	**3J-7354**	1	SEAL-O-RING	
	24	2	*150-4050*	1	ELBOW AS	

166-3954 **LINES GP-PILOT** *(contd.)* **i01904148**

NOTE	REF NO	GRAPHIC REF	PART NUMBER	QTY	PART NAME 1 2 3 4 5 6 (PRODUCT LEVEL)	SEE PAGE
		2	**8T-0788**	1	ELBOW	
		2	**3J-1907**	1	SEAL-O-RING	
	25	2	*153-6248*	2	ADAPTER AS	
					(EACH INCLUDES)	
		2	**8T-6663**	1	ADAPTER-PORT	
		2	**6V-8397**	1	SEAL-O-RING	
	26	2	**3J-1907**	2	SEAL-O-RING	
	27	1	**3U-2753**	1	CLIP	
M	28	2	**5C-2890**	2	NUT (M6X1-THD)	
	29	1	**5P-7462**	2	CLIP (SLOT)	
	30	1	**5P-7463**	2	CLIP (TAB)	
	31	1	**5P-9297**	1	CLIP	
	32	1	**6V-0683**	2	GROMMET	
	33	1	**7S-8920**	1	CLIP (SLOT)	
	34	1	**7S-8921**	1	CLIP (TAB)	
M	35	2	**7X-2534**	2	BOLT (M6X1X50-MM)	
	36	1	**8T-4121**	2	WASHER-HARD (11X21X2.5-MM THK)	
M	37	1	**8T-4133**	1	NUT (M10X1.5-THD)	
M	38	1	**8T-4137**	1	BOLT (M10X1.5X20-MM)	
	39	1	**8T-4223**	2	WASHER-HARD (13.5X25.5X3-MM THK)	
M	40	1	**8T-4244**	1	NUT (M12X1.75-THD)	
M	41	1	**8T-4956**	1	BOLT (M12X1.75X35-MM)	
	42	2	**9X-8256**	4	WASHER (6.6X12X2-MM THK)	
Y	43	2	**165-7948**	1	VALVE GP-CHECK (SECONDARY STEER PUMP)	764
Y	44	2	**165-7948**	1	VALVE GP-CHECK (PRIORITY)	764

I-REFER TO HYDRAULIC INFORMATION SYSTEM
M-METRIC PART
Y-SEPARATE ILLUSTRATION

166-3954 **LINES GP-PILOT** *(contd.)* **i01904148**

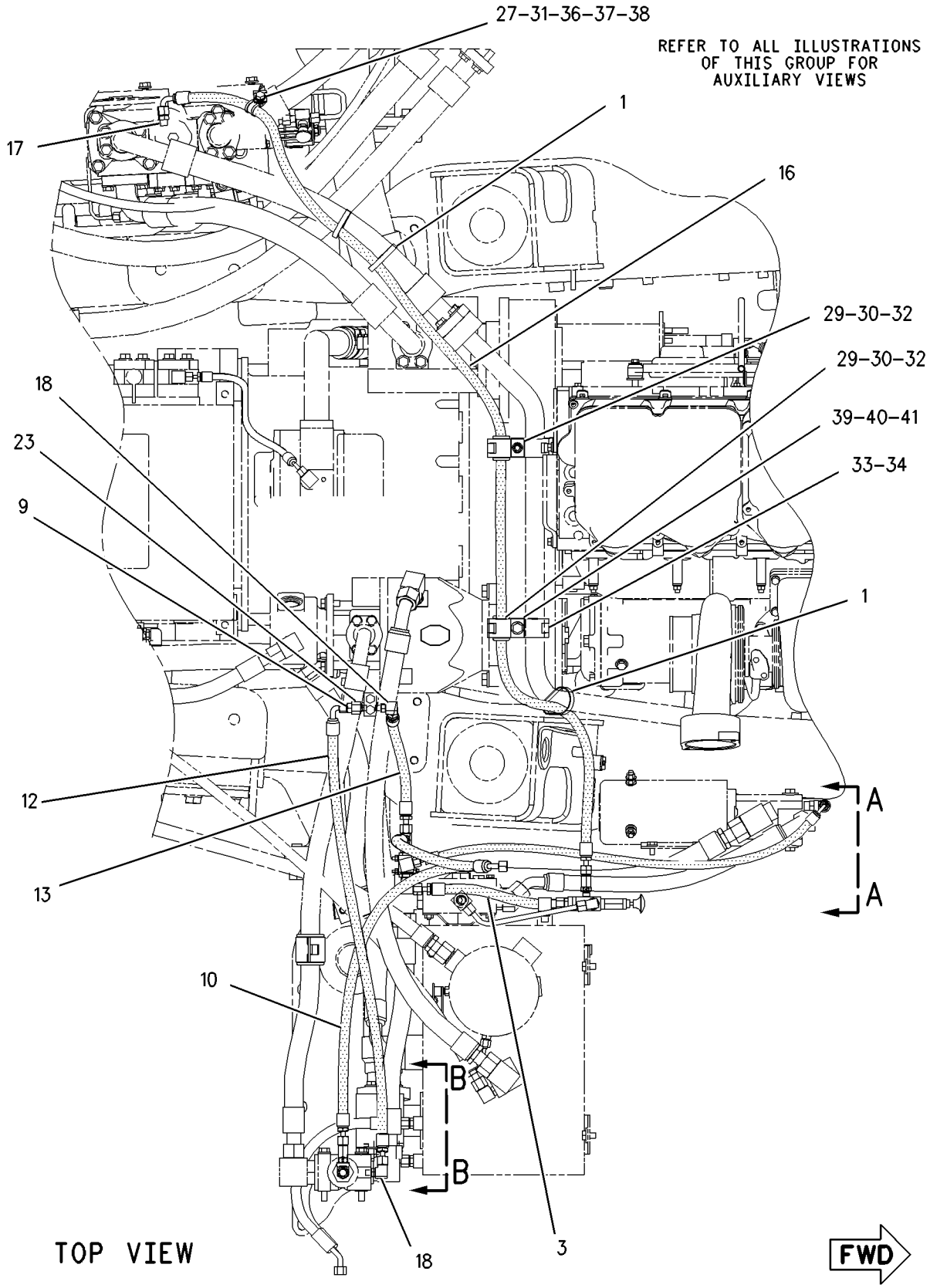

GRAPHIC #1 g00997994

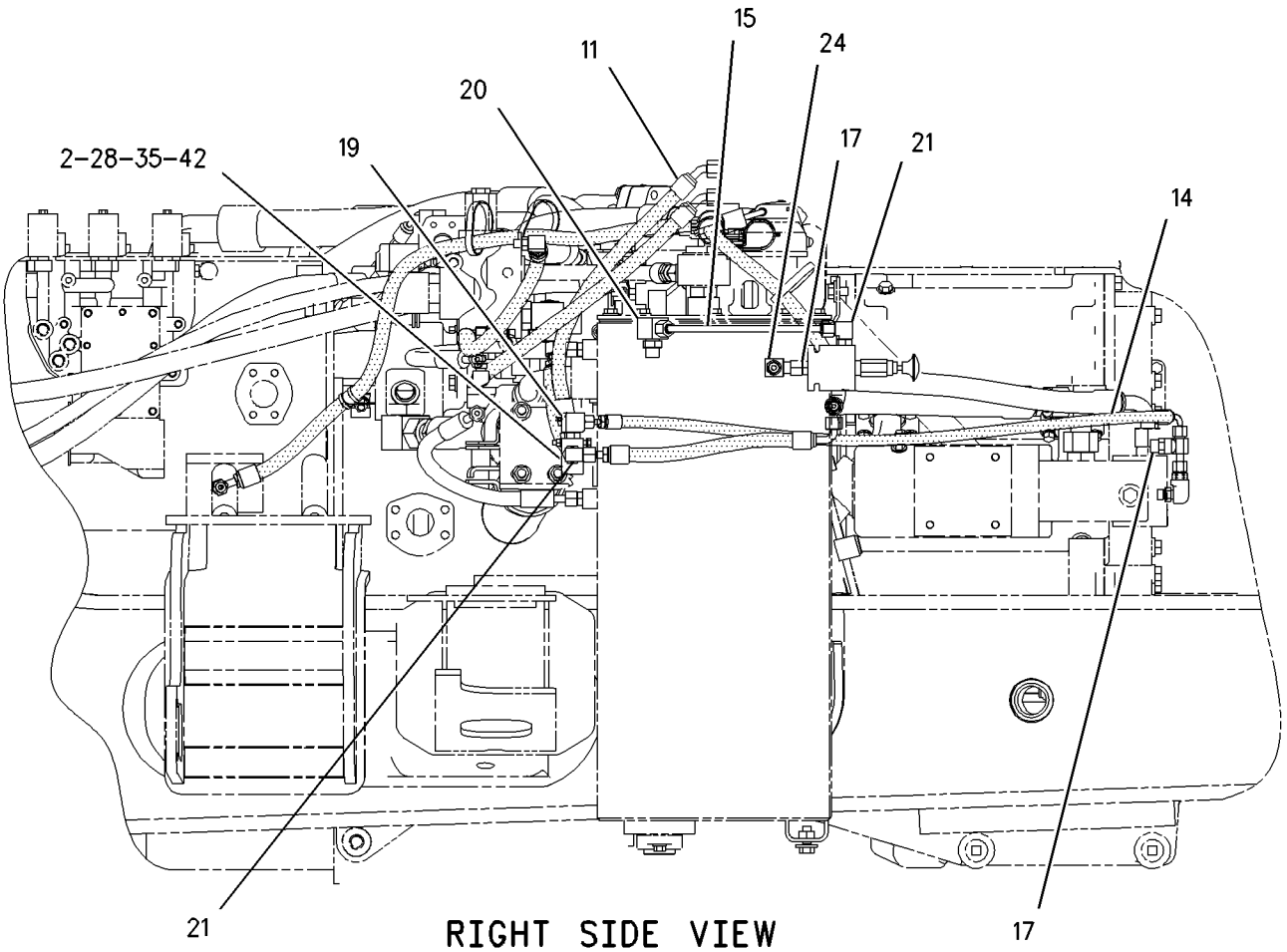

RIGHT SIDE VIEW

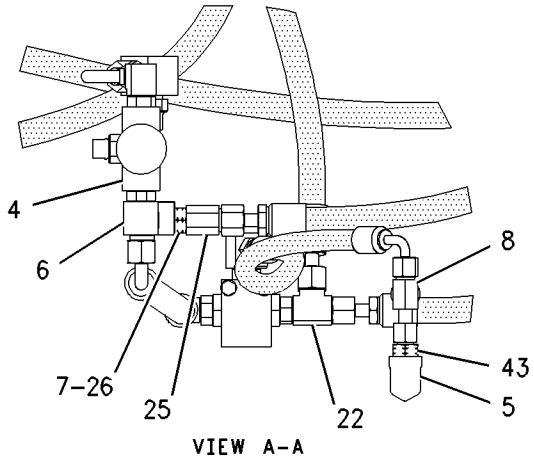

VIEW A-A

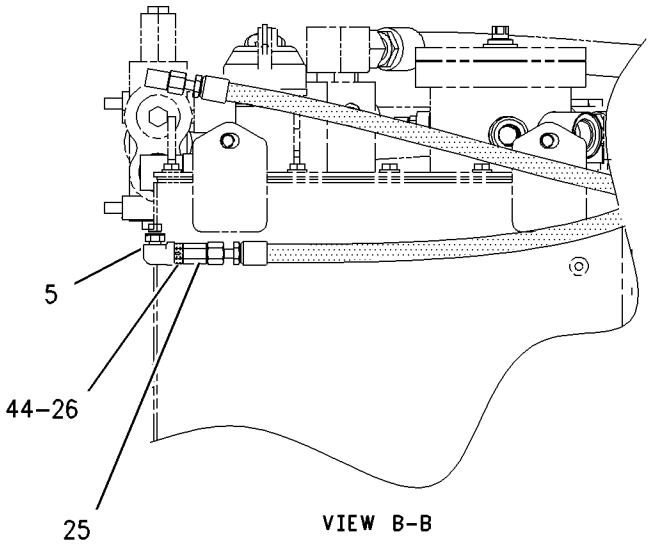

VIEW B-B

GRAPHIC #2 **<END>** g00998042

HYDRAULIC SYSTEM

166-3954 LINES GP-PILOT

S/N: AXM492-879

PART OF 152-6922 HYDRAULIC AR-MACHINE

SMCS-5057 **i02261941**

NOTE	REF NO	GRAPHIC REF	PART NUMBER	QTY	PART NAME 1 2 3 4 5 6 (PRODUCT LEVEL)	SEE PAGE
	1	1	*150-3065*	2	ADAPTER AS	
					(EACH INCLUDES)	
		1	**6V-0484**	1	ADAPTER-O-RING	
		1	**3J-1907**	1	SEAL-O-RING	
Y	2	1	**165-7948**	2	VALVE GP-CHECK (HOIST)	764
	3	1	*166-2033*	1	TEE GP	
		1	**7X-2444**	1	TEE-SWIVEL	
		1	**4J-5477**	1	SEAL-O-RING	
Y	4	1	**179-9223**	1	VALVE GP-CHECK (STEERING PUMP)	765
I	5	1	**194-6919**	1	HOSE AS	
I	6	1	**194-6920**	1	HOSE AS	
I	7	1	**194-6921**	1	HOSE AS	
I	8	1	**194-6922**	1	HOSE AS	
I	9	1	**194-6923**	1	HOSE AS	
	10	1	**221-2821**	1	MANIFOLD	
	11	1	*148-8336*	1	CONNECTOR AS	
		1	**3J-1907**	1	SEAL-O-RING	
		1	**6V-8397**	1	SEAL-O-RING	
		1	**6V-8636**	1	CONNECTOR	
	12	1	*148-8361*	2	ELBOW AS	
					(EACH INCLUDES)	
		1	**6V-9200**	1	ELBOW	
		1	**3J-7354**	1	SEAL-O-RING	
		1	**6V-8397**	1	SEAL-O-RING	
	13	1	*148-8368*	1	ELBOW AS	
		1	**6V-8627**	1	ELBOW	
		1	**3J-1907**	1	SEAL-O-RING	
		1	**4J-5477**	1	SEAL-O-RING	
	14	1	*148-8435*	1	TEE AS	
		1	**6V-8781**	1	TEE-FACE SEAL	
		1	**3J-1907**	1	SEAL-O-RING	
		1	**6V-8397**	2	SEAL-O-RING	
	15	1	*150-4047*	1	ADAPTER GP	
		1	**3J-7354**	1	SEAL-O-RING	
		1	**8T-2353**	1	ADAPTER	
	16	1	*153-6248*	1	ADAPTER AS	
		1	**6V-8397**	1	SEAL-O-RING	
		1	**8T-6663**	1	ADAPTER-PORT	
	17	1	**3J-1907**	1	SEAL-O-RING	
M	18	1	**5C-2890**	2	NUT (M6X1-THD)	
M	19	1	**7X-2534**	2	BOLT (M6X1X50-MM)	
	20	1	**9X-8256**	4	WASHER (6.6X12X2-MM THK)	

I-REFER TO HYDRAULIC INFORMATION SYSTEM
M-METRIC PART
Y-SEPARATE ILLUSTRATION

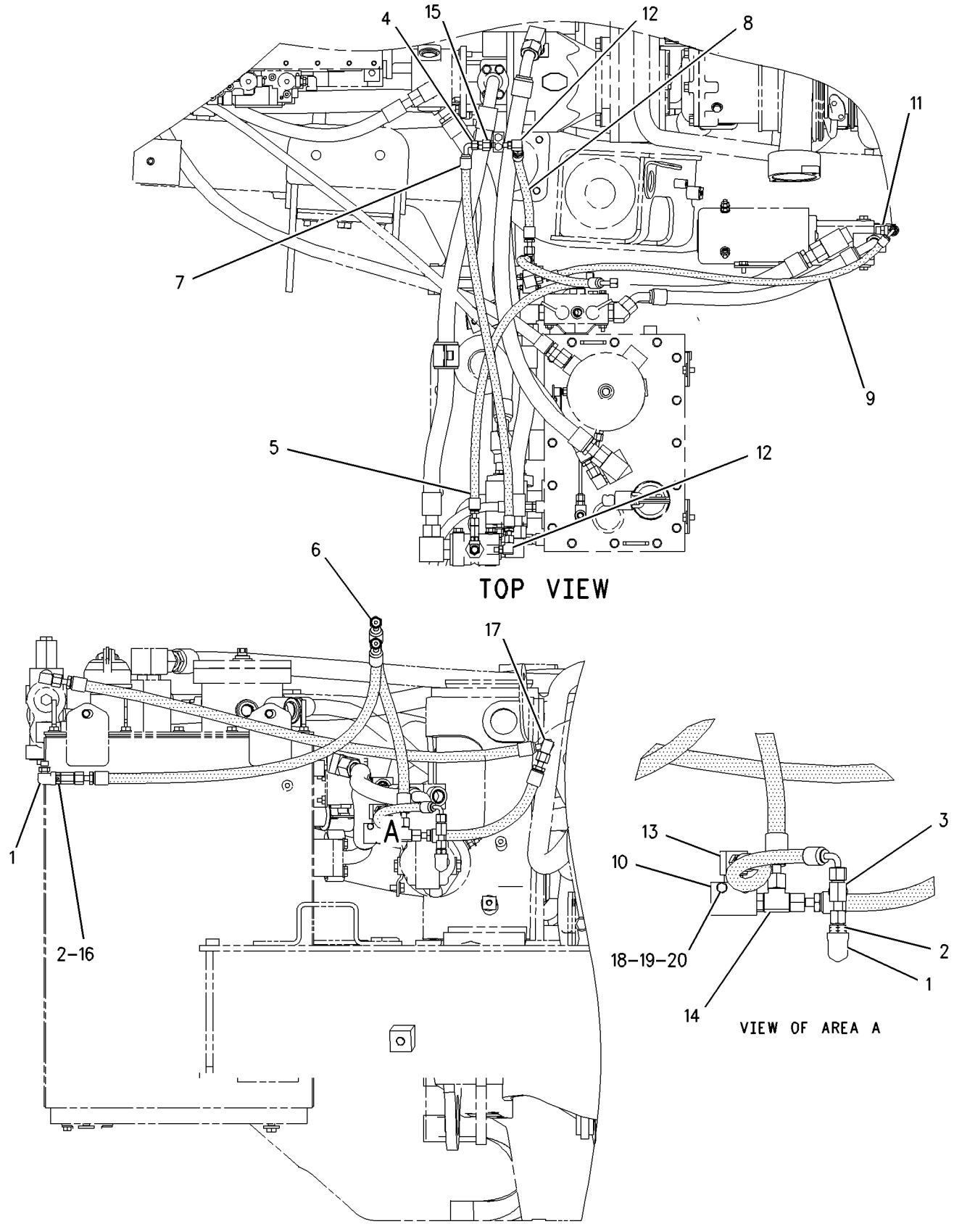

GRAPHIC #1 **<END>** g00933153

HYDRAULIC SYSTEM

227-5285 LINES GP-PILOT

S/N: AXM880-UP

PART OF 152-6922 HYDRAULIC AR-MACHINE

SMCS-5057 **i02261970**

NOTE	REF NO	GRAPHIC REF	PART NUMBER	QTY	PART NAME 1 2 3 4 5 6 (PRODUCT LEVEL)	SEE PAGE
I	1	1	**109-6640**	1	HOSE AS	
	2	1	*150-3065*	1	ADAPTER AS	
		1	**3J-1907**	1	SEAL-O-RING	
		1	**6V-0484**	1	ADAPTER-O-RING	
	3	1	*162-6616*	1	TEE AS	
		1	**4J-5477**	3	SEAL-O-RING	
Y	4	1	**165-7948**	2	VALVE GP-CHECK (HOIST)	764
	5	1	*166-2033*	1	TEE GP	
		1	**4J-5477**	1	SEAL-O-RING	
		1	**7X-2444**	1	TEE-SWIVEL	
I	6	1	**194-6923**	1	HOSE AS	
I	7	1	**211-1071**	1	HOSE AS	
	8	1	*148-8336*	1	CONNECTOR AS	
		1	**3J-1907**	1	SEAL-O-RING	
		1	**6V-8397**	1	SEAL-O-RING	
		1	**6V-8636**	1	CONNECTOR	
	9	1	*148-8351*	1	ELBOW GP	
		1	**4J-5477**	1	SEAL-O-RING	
		1	**6V-9849**	1	ELBOW (SWIVEL)	
	10	1	*148-8413*	1	REDUCER AS	
		1	**4J-5477**	1	SEAL-O-RING	
		1	**6V-8934**	1	REDUCER	
	11	1	*150-4047*	1	ADAPTER GP	
		1	**3J-7354**	1	SEAL-O-RING	
		1	**8T-2353**	1	ADAPTER	
	12	1	**2P-1279**	1	LOCKNUT (9/16-18-THD)	

I-REFER TO HYDRAULIC INFORMATION SYSTEM
Y-SEPARATE ILLUSTRATION

227-5285 **LINES GP-PILOT** *(contd.)* **i02261970**

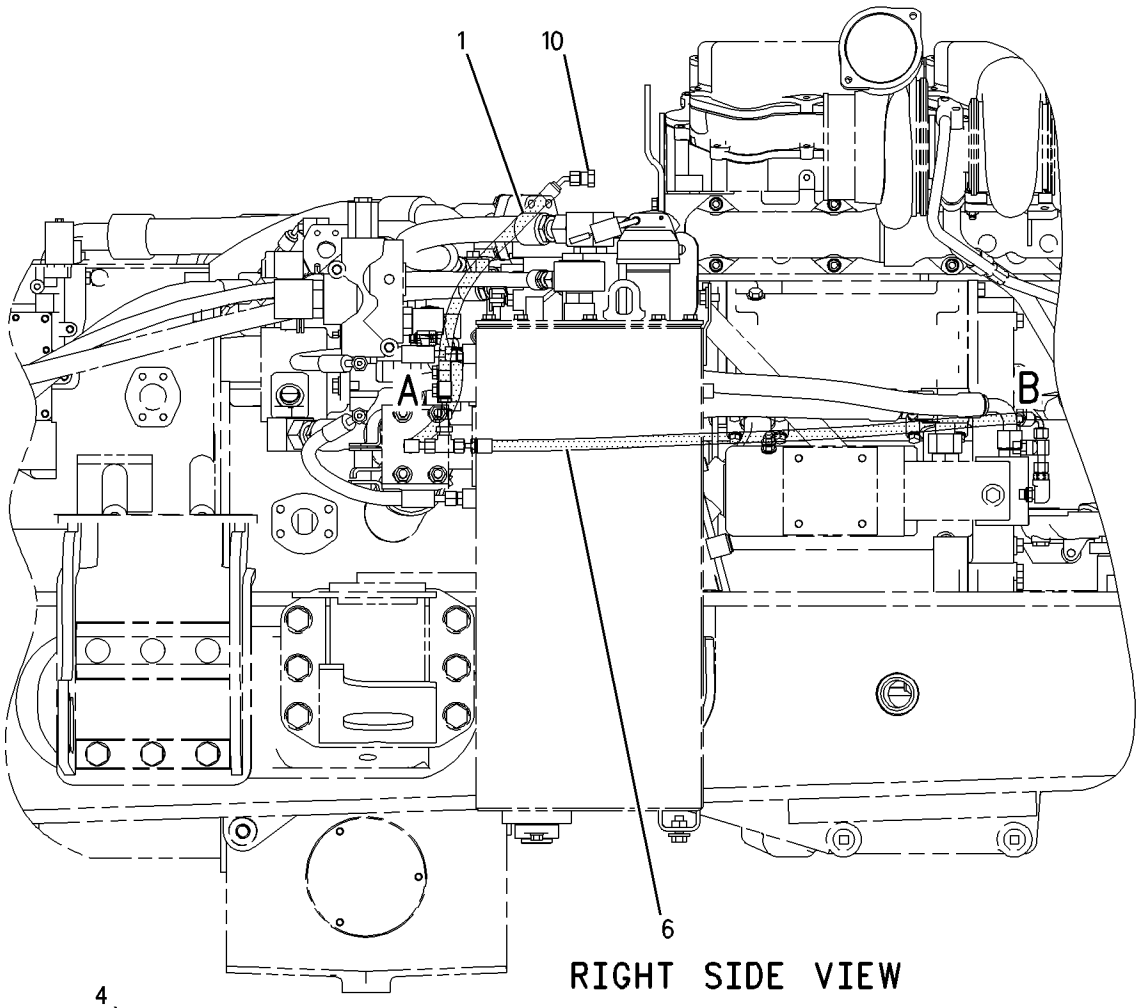

RIGHT SIDE VIEW

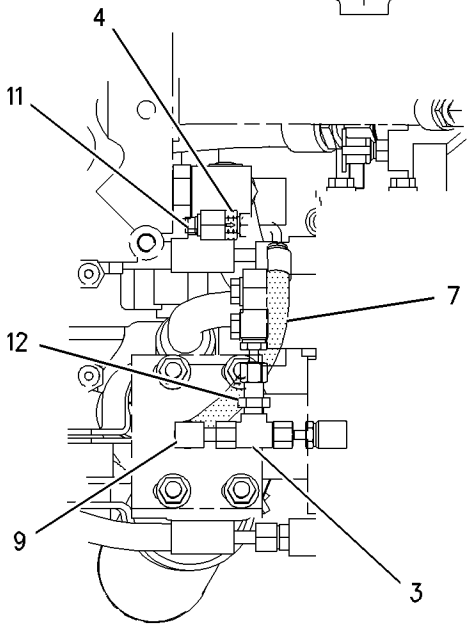

VIEW OF AREA A

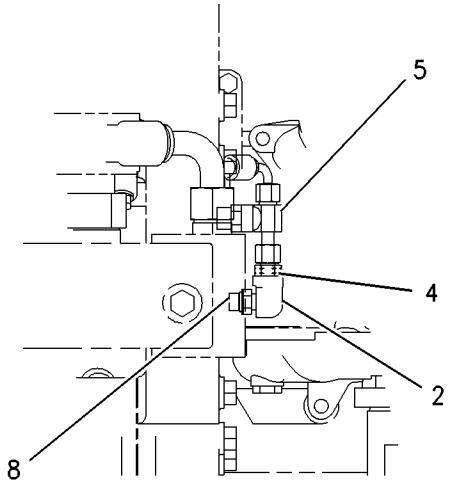

VIEW OF AREA B

GRAPHIC #1 **<END>** g00947022

HYDRAULIC SYSTEM

179-1712 LINES GP-PRESSURE TEST

S/N: AXM1-UP

PART OF 152-6922 HYDRAULIC AR-MACHINE

SMCS-5057 **i02215395**

NOTE	REF NO	GRAPHIC REF	PART NUMBER	QTY	PART NAME 1 2 3 4 5 6 (PRODUCT LEVEL)	SEE PAGE
	1	1	**6U-0455**	11	STRAP	
	3	1	**121-0530**	10	FITTING GP (QUICK DISCONNECT)	
					(EACH INCLUDES)	
		1	**6V-8397**	1	SEAL-O-RING	
	4	1	**185-2620**	1	PLATE	
	5	1	**257-8083**	3	HOSE AS	
	6	1	**257-8092**	2	HOSE AS	
	7	1	**257-8093**	2	HOSE AS	
	8	1	**257-8094**	1	HOSE AS	
	9	1	**257-8095**	1	HOSE AS	
	10	1	**257-8096**	1	HOSE AS	
	11	1	**204-6012**	1	BRACKET AS	
M		1	**8T-3490**	3	NUT-WELD (M10X1.5-THD)	
	12	1	*148-8378*	3	ELBOW AS	
					(EACH INCLUDES)	
		1	**6V-8724**	1	ELBOW	
		1	**3J-1907**	1	SEAL-O-RING	
		1	**6V-8397**	1	SEAL-O-RING	
	13	1	*148-8415*	2	REDUCER AS	
					(EACH INCLUDES)	
		1	**6V-8936**	1	REDUCER	
		1	**6V-8397**	1	SEAL-O-RING	
	14	1	**6V-0852**	10	CAP-DUST	
	15	1	**6V-9168**	10	NUT (11/16-16-THD)	
	16	1	**8T-4121**	3	WASHER-HARD (11X21X2.5-MM THK)	
M	17	1	**8T-4195**	3	BOLT (M10X1.5X30-MM)	

M-METRIC PART

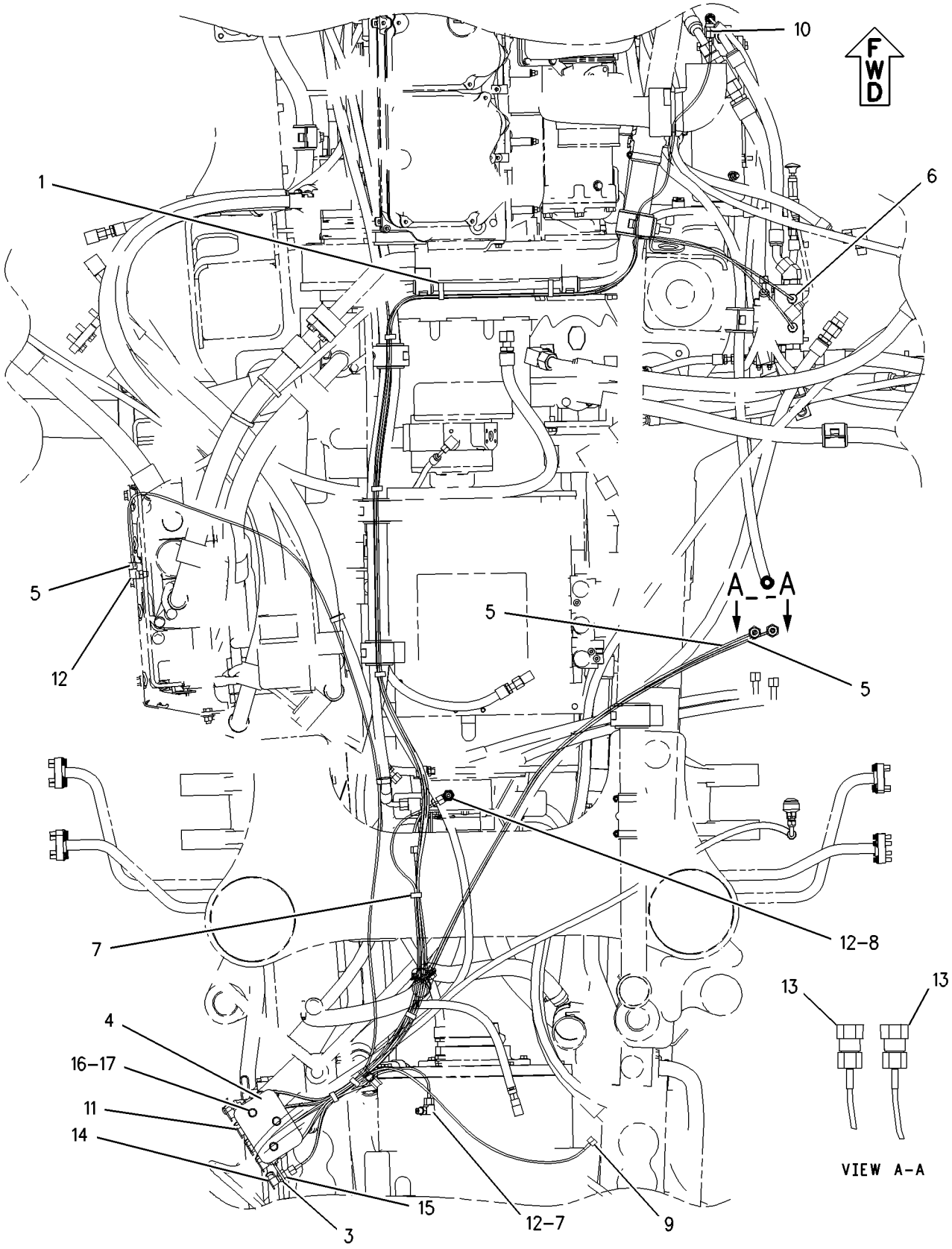

GRAPHIC #1 **<END>** g00857764

HYDRAULIC SYSTEM

153-1137 LINES GP-PUMP–HYDRAULIC FAN

S/N: AXM1-UP

PART OF 152-6922 HYDRAULIC AR-MACHINE

SMCS-5057 **i01633800**

NOTE	REF NO	GRAPHIC REF	PART NUMBER	QTY	PART NAME 1 2 3 4 5 6 (PRODUCT LEVEL)	SEE PAGE
	1	1	**6U-0456**	4	STRAP	
	2	1	**6U-2703**	1	BRACKET-ANGLE	
	3	1	**7U-9542**	1	PLATE-CLAMPING	
	4	1	*164-5586*	1	TEE AS	
		1	**6V-8398**	1	SEAL-O-RING	
		1	**7X-0871**	1	TEE	
I	5	1	**194-4334**	1	HOSE AS	
I	6	1	**207-5454**	1	HOSE AS	
I	7	1	**207-5958**	1	HOSE AS	
I	8	1	**213-1746**	1	HOSE AS	
	9	1	*148-8341*	1	CONNECTOR GP	
		1	**6V-8713**	1	CONNECTOR	
		1	**3D-2824**	1	SEAL-O-RING	
		1	**7J-9108**	1	SEAL-O-RING	
	10	1	*148-8345*	1	CONNECTOR AS	
		1	**6V-8638**	1	CONNECTOR	
		1	**2M-9780**	1	SEAL-O-RING	
		1	**6V-8398**	1	SEAL-O-RING	
	11	1	*148-8353*	1	ELBOW AS	
		1	**6V-9001**	1	ELBOW	
		1	**3J-1907**	1	SEAL-O-RING	
		1	**6V-8397**	1	SEAL-O-RING	
	12	1	*148-8361*	1	ELBOW AS	
		1	**6V-9200**	1	ELBOW	
		1	**3J-7354**	1	SEAL-O-RING	
		1	**6V-8397**	1	SEAL-O-RING	
	13	1	*148-8362*	1	ELBOW GP	
		1	**5K-9090**	1	SEAL-O-RING	
		1	**3D-2824**	1	SEAL-O-RING	
		1	**8T-6684**	1	ELBOW (90-DEG)	
	14	1	*148-8372*	1	ELBOW AS	
		1	**6V-8721**	1	ELBOW	
		1	**2M-9780**	1	SEAL-O-RING	
		1	**6V-8398**	1	SEAL-O-RING	
	15	1	*148-8390*	1	ELBOW AS	
		1	**6V-8626**	1	ELBOW	
		1	**2M-9780**	1	SEAL-O-RING	
		1	**7J-9108**	1	SEAL-O-RING	
	16	1	*164-5567*	1	FITTING GP-COUPLING	
		1	**3J-1907**	1	SEAL-O-RING	
		1	**6V-3965**	1	FITTING AS	
	17	1	**5P-7464**	3	CLIP (SLOT)	
	18	1	**5P-7465**	3	CLIP (TAB)	
	19	1	**5P-7468**	3	CLIP (SLOT)	
	20	1	**5P-7469**	3	CLIP (TAB)	
	21	1	**5P-7470**	1	CLIP (SLOT)	
	22	1	**5P-7471**	1	CLIP (TAB)	
	23	1	**5P-7703**	1	GROMMET	
	24	1	**5P-8444**	3	GROMMET	
	25	1	**6V-0852**	1	CAP-DUST	
	26	1	**6V-1867**	1	CLIP (SLOT)	
	27	1	**6V-1868**	1	CLIP (TAB)	
	28	1	**6V-1869**	1	GROMMET	
	29	1	**6V-7359**	3	GROMMET	
	30	1	**7S-8920**	1	CLIP (SLOT)	
	31	1	**7S-8921**	1	CLIP (TAB)	

153-1137 **LINES GP-PUMP** *(contd.)* **i01633800**

NOTE	REF NO	GRAPHIC REF	PART NUMBER	QTY	PART NAME 1 2 3 4 5 6 (PRODUCT LEVEL)	SEE PAGE
	32	1	**7X-7729**	2	WASHER (11X25X3-MM THK)	
	33	1	**8T-4121**	1	WASHER-HARD (11X21X2.5-MM THK)	
M	34	1	**8T-4133**	1	NUT (M10X1.5-THD)	
M	35	1	**8T-4183**	1	BOLT (M12X1.75X40-MM)	
M	36	1	**8T-4184**	1	BOLT (M12X1.75X45-MM)	
M	37	1	**8T-4196**	2	BOLT (M10X1.5X35-MM)	
	38	1	**8T-4223**	6	WASHER-HARD (13.5X25.5X3-MM THK)	
M	39	1	**8T-4244**	3	NUT (M12X1.75-THD)	
M	40	1	**8T-4956**	1	BOLT (M12X1.75X35-MM)	
	41	1	**8T-2502**	1	BOLT (3/8-16X1.125-IN)	
	42	1	**8T-4896**	2	WASHER-HARD (10.2X18.5X2.5-MM THK)	
	43	1	**5M-3062**	1	BOLT (3/8-16X0.75-IN)	

I-REFER TO HYDRAULIC INFORMATION SYSTEM
M-METRIC PART

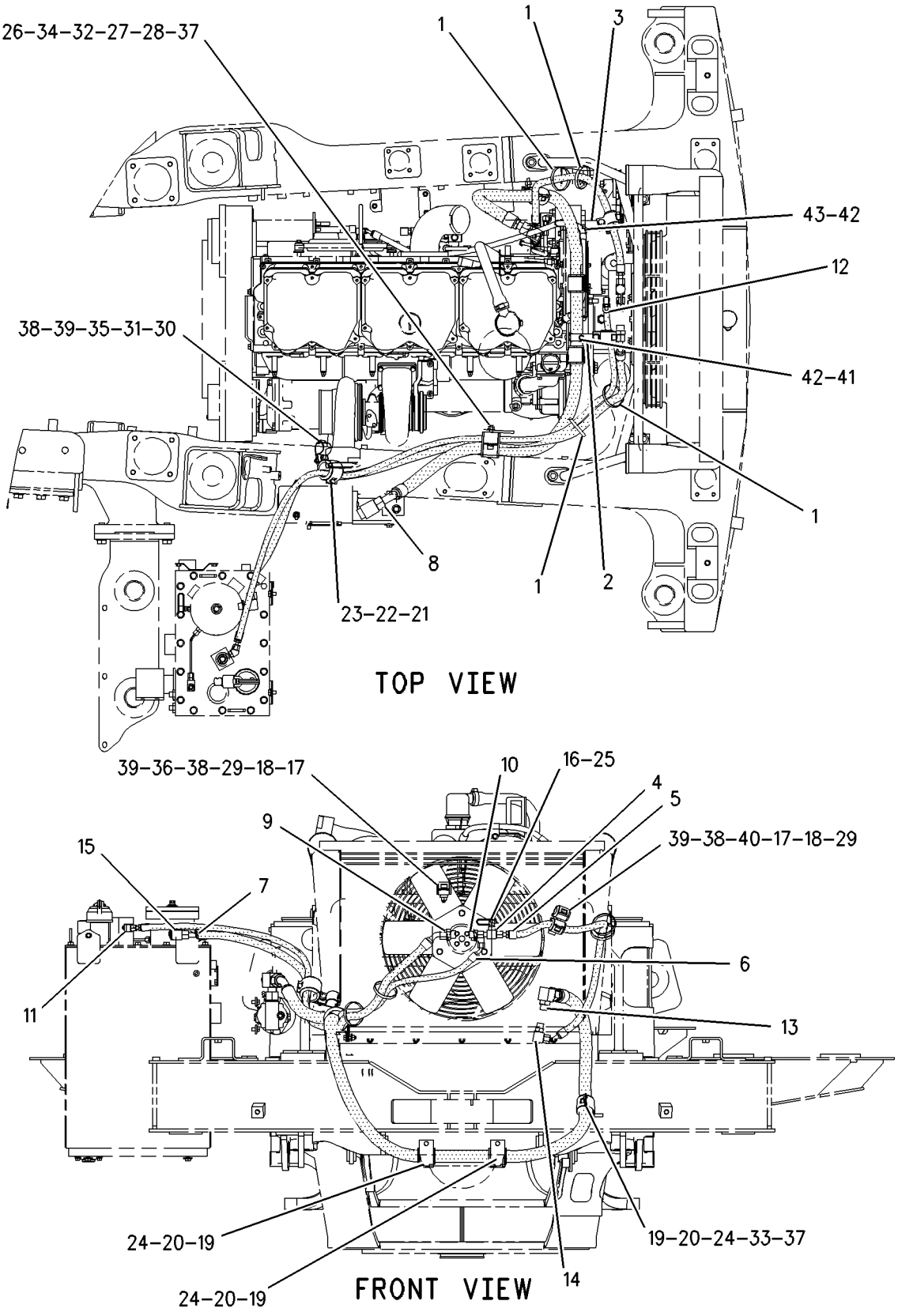

GRAPHIC #1 **<END>** g00846203

HYDRAULIC SYSTEM

166-3944 LINES GP-PUMP

S/N: AXM1-UP

PART OF 152-6922 HYDRAULIC AR-MACHINE

SMCS-5057 **i01858970**

NOTE	REF NO	GRAPHIC REF	PART NUMBER	QTY	PART NAME 1 2 3 4 5 6 (PRODUCT LEVEL)	SEE PAGE
I	1	1	**194-3662**	1	HOSE AS	
I	2	1	**194-3663**	1	HOSE AS	
	3	1	*148-8324*	1	CONNECTOR GP	
		1	**6V-9874**	1	CONNECTOR	
		1	**3K-0360**	1	SEAL-O-RING	
		1	**6V-9746**	1	SEAL-O-RING	
	4	1	*148-8335*	1	CONNECTOR AS	
		1	**6V-8635**	1	CONNECTOR	
		1	**5K-9090**	1	SEAL-O-RING	
		1	**7M-8485**	1	SEAL-O-RING	
	5	1	*148-8445*	1	FITTING GP	
		1	**6V-9847**	1	TEE-SWIVEL	
		1	**5K-9090**	2	SEAL-O-RING	
	6	1	*153-6237*	1	ELBOW AS	
		1	**6V-9004**	1	ELBOW	
		1	**3D-2824**	1	SEAL-O-RING	
		1	**6V-9746**	1	SEAL-O-RING	
	7	1	**4J-0520**	1	SEAL-O-RING	
	8	1	**8C-3206**	2	FLANGE-HALF	
	9	1	**8T-4121**	4	WASHER-HARD (11X21X2.5-MM THK)	
M	10	1	**8T-4196**	4	BOLT (M10X1.5X35-MM)	

I-REFER TO HYDRAULIC INFORMATION SYSTEM
M-METRIC PART

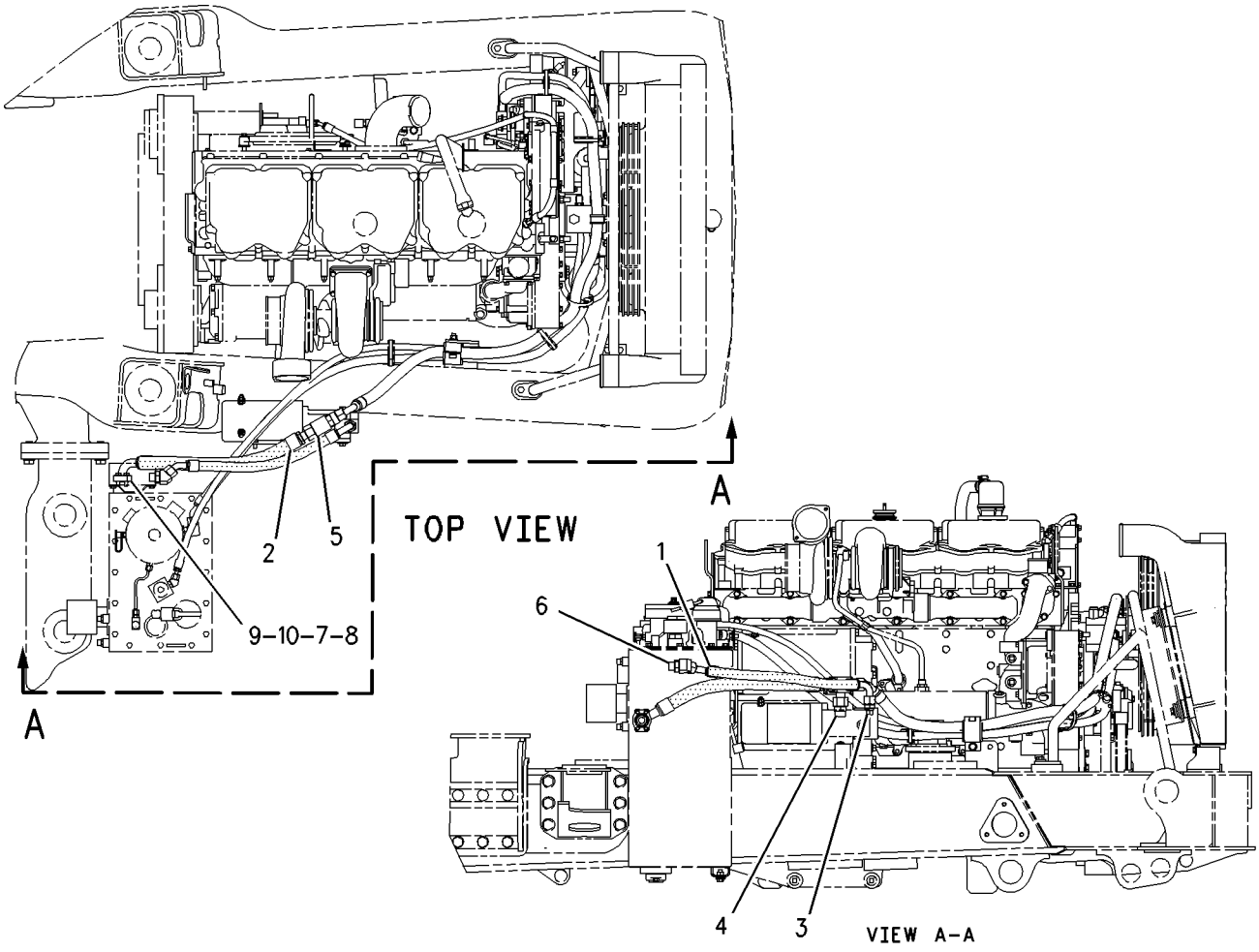

GRAPHIC #1 **<END>** g00759111

HYDRAULIC SYSTEM

179-2810 LINES GP-PUMP—RADIATOR FAN

S/N: AXM1-879

PART OF 152-6922 HYDRAULIC AR-MACHINE

SMCS-5057 **i01835293**

NOTE	REF NO	GRAPHIC REF	PART NUMBER	QTY	PART NAME 1 2 3 4 5 6 (PRODUCT LEVEL)	SEE PAGE
I	1	1	**8W-0161**	1	HOSE AS	
I	2	1	**160-4094**	1	HOSE AS	
	3	1	**8T-4223**	1	WASHER-HARD (13.5X25.5X3-MM THK)	
I	4	1	**197-0376**	1	HOSE AS	
I	5	1	**201-2489**	1	HOSE AS	
	6	1	*148-8327*	1	CONNECTOR AS	
		1	**6V-8637**	1	CONNECTOR	
		1	**3D-2824**	1	SEAL-O-RING	
		1	**6V-9746**	1	SEAL-O-RING	
	7	1	*148-8347*	1	ELBOW AS	
		1	**6V-9007**	1	ELBOW	
		1	**3D-2824**	1	SEAL-O-RING	
		1	**6V-9746**	1	SEAL-O-RING	
	8	1	*148-8357*	1	ELBOW AS	
		1	**6V-9008**	1	ELBOW	
		1	**5K-9090**	1	SEAL-O-RING	
		1	**7M-8485**	1	SEAL-O-RING	
	9	1	*148-8365*	1	ELBOW AS	
		1	**8T-6876**	1	ELBOW	
		1	**3J-1907**	1	SEAL-O-RING	
		1	**6V-8398**	1	SEAL-O-RING	
	10	1	**4J-0520**	1	SEAL-O-RING	
	11	1	**5P-7468**	1	CLIP (SLOT)	
	12	1	**5P-7469**	2	CLIP (TAB)	
	13	1	**5P-8444**	1	GROMMET	
	14	1	**8C-3206**	2	FLANGE-HALF	
	15	1	**8T-4121**	4	WASHER-HARD (11X21X2.5-MM THK)	
M	16	1	**8T-4139**	1	BOLT (M12X1.75X30-MM)	
M	17	1	**8T-4196**	4	BOLT (M10X1.5X35-MM)	
	18	1	**6U-0456**	2	STRAP	

I-REFER TO HYDRAULIC INFORMATION SYSTEM
M-METRIC PART

179-2810 **LINES GP-PUMP** *(contd.)* **i01835293**

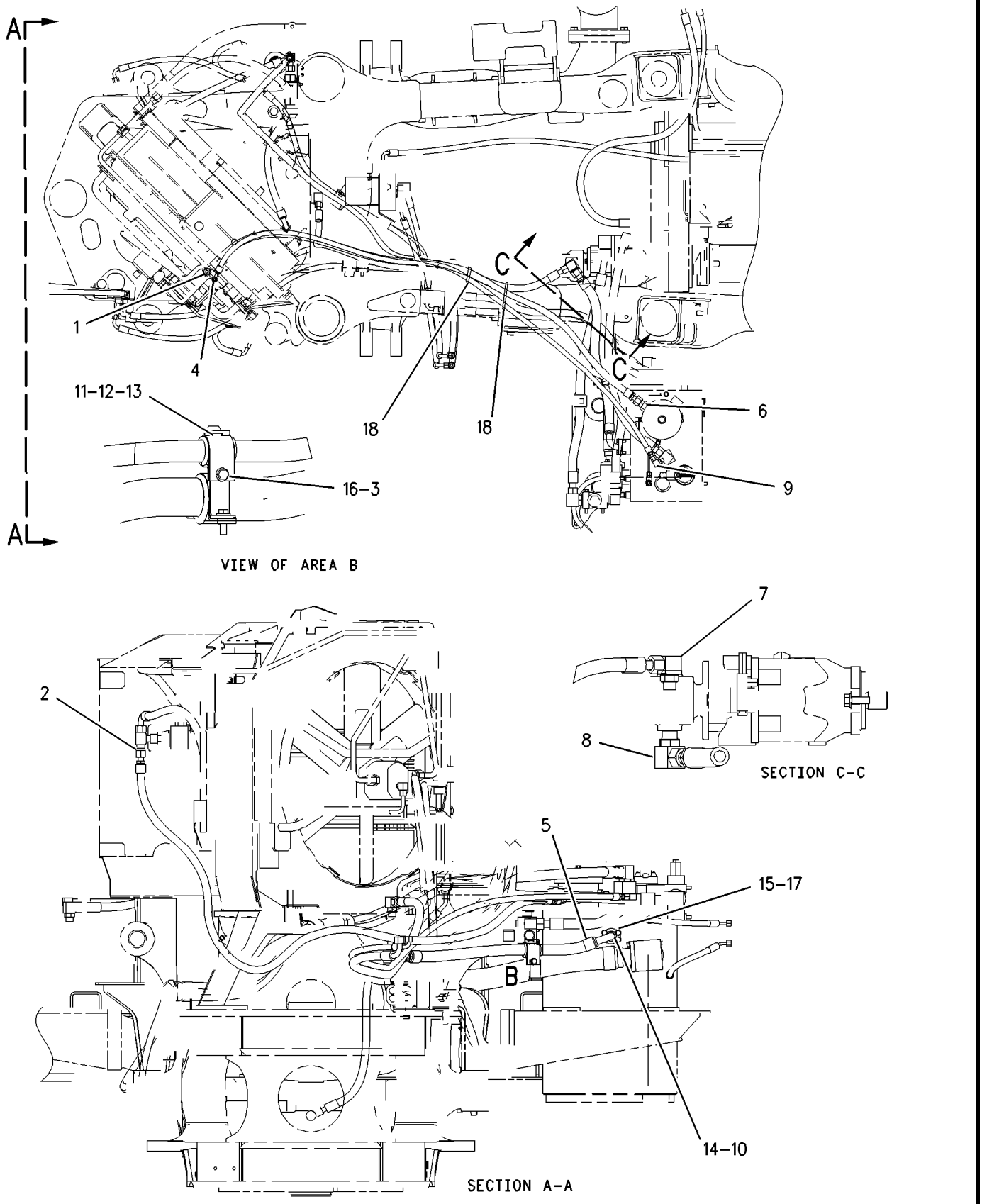

GRAPHIC #1 **<END>** g00937599

HYDRAULIC SYSTEM

179-2810 LINES GP-PUMP–RADIATOR FAN

S/N: AXM880-UP

PART OF 152-6922 HYDRAULIC AR-MACHINE

SMCS-5057 **i02096530**

NOTE	REF NO	GRAPHIC REF	PART NUMBER	QTY	PART NAME 1 2 3 4 5 6 (PRODUCT LEVEL)	SEE PAGE
I	1	1	**8W-0161**	1	HOSE AS	
I	2	1	**160-4094**	1	HOSE AS	
I	4	1	**197-0376**	1	HOSE AS	
I	5	1	**201-2489**	1	HOSE AS	
	6	1	*148-8327*	1	CONNECTOR AS	
		1	**6V-8637**	1	CONNECTOR	
		1	**3D-2824**	1	SEAL-O-RING	
		1	**6V-9746**	1	SEAL-O-RING	
	7	1	*148-8347*	1	ELBOW AS	
		1	**6V-9007**	1	ELBOW	
		1	**3D-2824**	1	SEAL-O-RING	
		1	**6V-9746**	1	SEAL-O-RING	
	8	1	*148-8357*	1	ELBOW AS	
		1	**6V-9008**	1	ELBOW	
		1	**5K-9090**	1	SEAL-O-RING	
		1	**7M-8485**	1	SEAL-O-RING	
	9	1	*148-8365*	1	ELBOW AS	
		1	**8T-6876**	1	ELBOW	
		1	**3J-1907**	1	SEAL-O-RING	
		1	**6V-8398**	1	SEAL-O-RING	
	10	1	**4J-0520**	1	SEAL-O-RING	
	14	1	**8C-3206**	2	FLANGE-HALF	
	15	1	**8T-4121**	4	WASHER-HARD (11X21X2.5-MM THK)	
M	17	1	**8T-4196**	4	BOLT (M10X1.5X35-MM)	
	18	1	**6U-0456**	3	STRAP	

I-REFER TO HYDRAULIC INFORMATION SYSTEM
M-METRIC PART

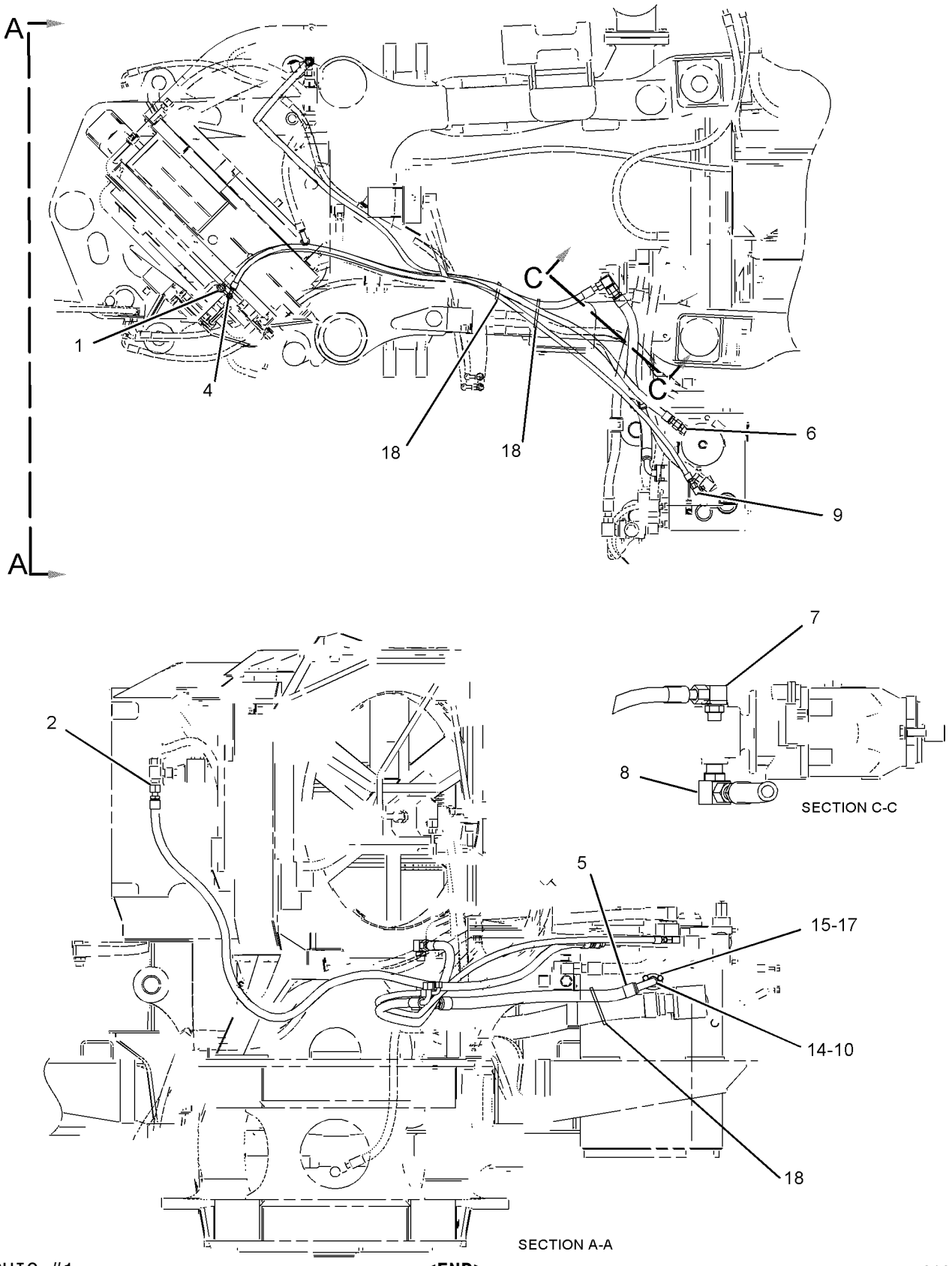

GRAPHIC #1 **<END>** g01070458

HYDRAULIC SYSTEM

166-3938 LINES GP-RETURN—HOIST PILOT

S/N: AXM1-1182

PART OF 152-6922 HYDRAULIC AR-MACHINE

TYPE 1

SMCS-5057 **i01933999**

NOTE	REF NO	GRAPHIC REF	PART NUMBER	QTY	PART NAME 1 2 3 4 5 6 (PRODUCT LEVEL)	SEE PAGE
	1	1	**6U-0455**	2	STRAP	
	2	1	**6U-0456**	3	STRAP	
I	3	1	**166-6000**	1	HOSE AS	
I	4	1	**193-1516**	1	HOSE AS	
I	5	1	**193-3792**	1	HOSE AS	
I	6	1	**207-5879**	1	HOSE AS	
	7	1	*148-8378*	1	ELBOW AS	
		1	**6V-8724**	1	ELBOW	
		1	**3J-1907**	1	SEAL-O-RING	
		1	**6V-8397**	1	SEAL-O-RING	
	8	1	*148-8433*	1	TEE AS	
		1	**6V-9836**	1	TEE-SWIVEL	
		1	**6V-8397**	2	SEAL-O-RING	
	9	1	**1P-4579**	2	FLANGE-HALF	
	10	1	**1P-4582**	2	FLANGE-HALF	
	11	1	**4J-0524**	1	SEAL-O-RING	
	12	1	**4J-0527**	1	SEAL-O-RING	
M	13	1	**8T-4184**	8	BOLT (M12X1.75X45-MM)	
	14	1	**8T-4223**	8	WASHER-HARD (13.5X25.5X3-MM THK)	

I-REFER TO HYDRAULIC INFORMATION SYSTEM
M-METRIC PART

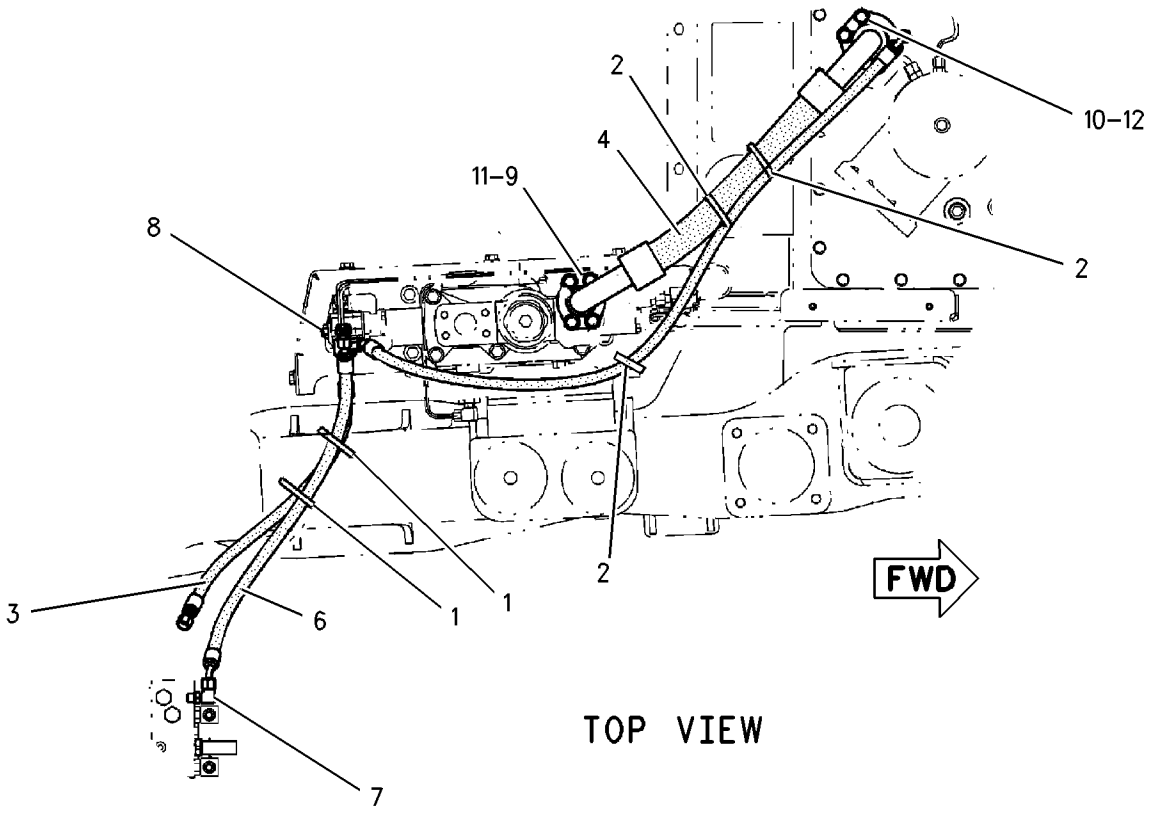

TOP VIEW

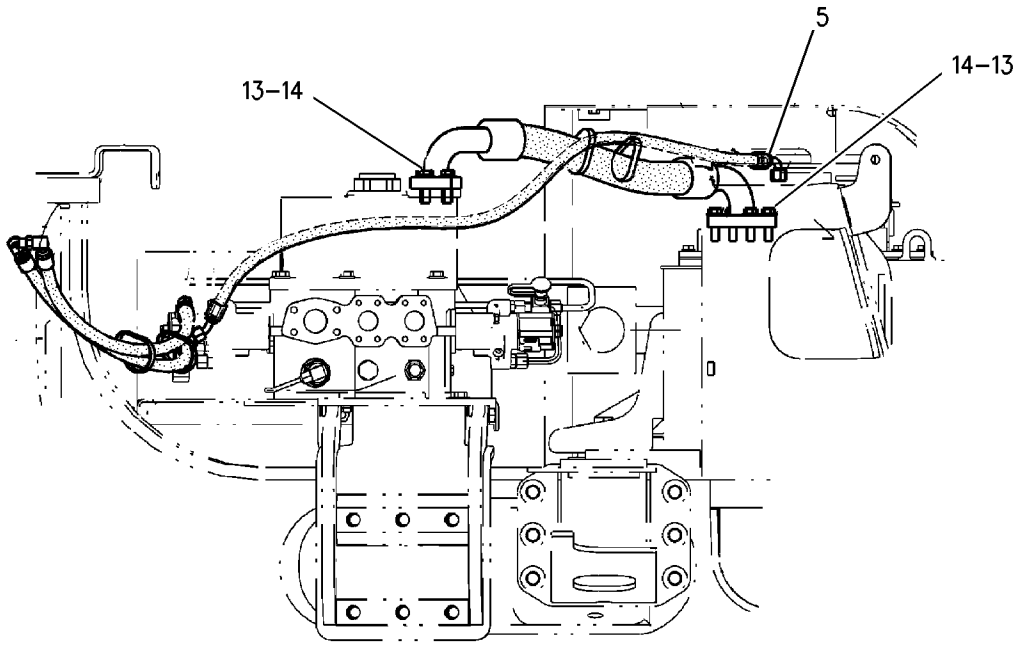

RIGHT SIDE VIEW

GRAPHIC #1 **<END>** g00869474

HYDRAULIC SYSTEM

166-3938 LINES GP-RETURN—HOIST PILOT

S/N: AXM1-1182

PART OF 152-6922 HYDRAULIC AR-MACHINE

TYPE 2

SMCS-5057 **i01964921**

NOTE	REF NO	GRAPHIC REF	PART NUMBER	QTY	PART NAME 1 2 3 4 5 6 (PRODUCT LEVEL)	SEE PAGE
	1	1	**6U-0455**	2	STRAP	
	2	1	**6U-0456**	3	STRAP	
CI	3	1	**176-1579**	1	HOSE AS	
I	4	1	**193-1516**	1	HOSE AS	
I	5	1	**207-5879**	1	HOSE AS	
CI	6	1	**217-2574**	1	HOSE AS	
	7	1	*148-8378*	1	ELBOW AS	
		1	**6V-8724**	1	ELBOW	
		1	**3J-1907**	1	SEAL-O-RING	
		1	**6V-8397**	1	SEAL-O-RING	
	8	1	*148-8433*	1	TEE AS	
		1	**6V-9836**	1	TEE-SWIVEL	
		1	**6V-8397**	2	SEAL-O-RING	
	9	1	**1P-4579**	2	FLANGE-HALF	
	10	1	**1P-4582**	2	FLANGE-HALF	
	11	1	**4J-0524**	1	SEAL-O-RING	
	12	1	**4J-0527**	1	SEAL-O-RING	
M	13	1	**8T-4184**	8	BOLT (M12X1.75X45-MM)	
	14	1	**8T-4223**	8	WASHER-HARD (13.5X25.5X3-MM THK)	

C-CHANGE FROM PREVIOUS TYPE
I-REFER TO HYDRAULIC INFORMATION SYSTEM
M-METRIC PART

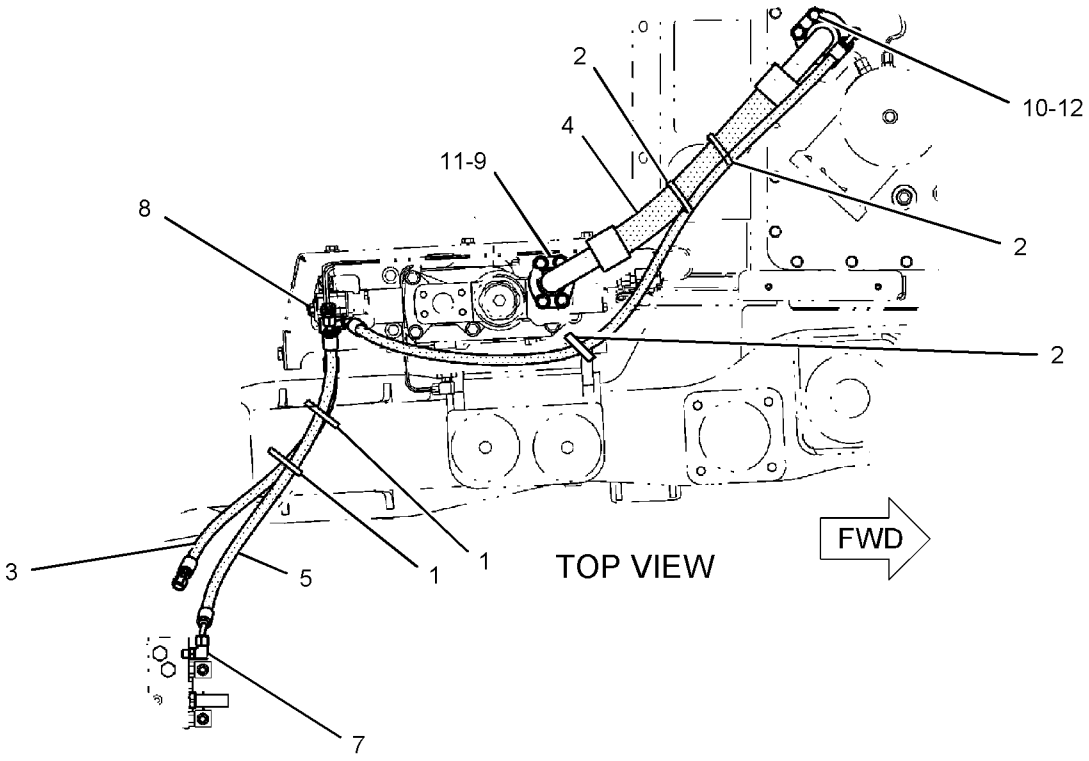

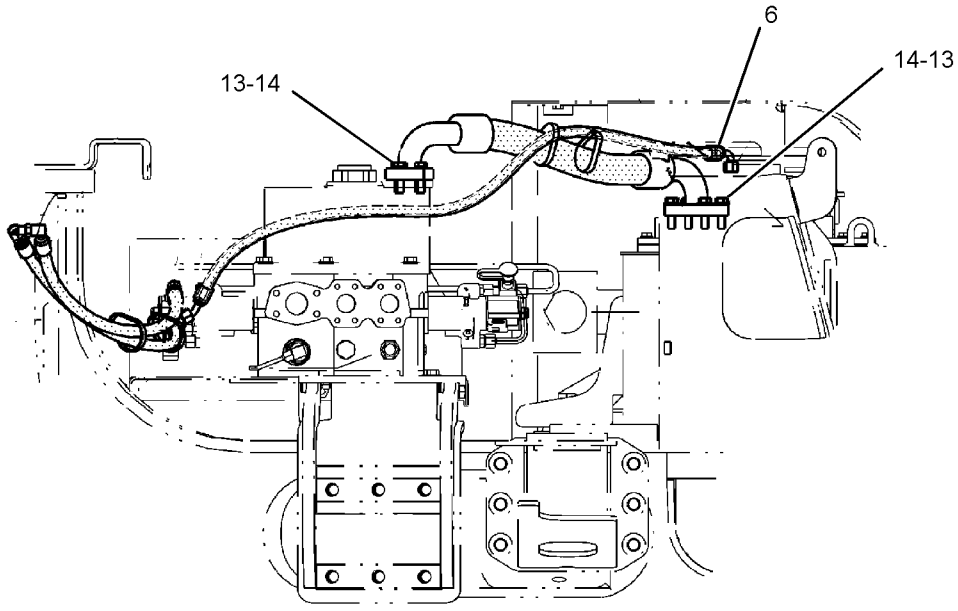

GRAPHIC #1 **<END>** g01020773

HYDRAULIC SYSTEM

166-3938 LINES GP-RETURN—HOIST PILOT

S/N: AXM1183-UP

PART OF 152-6922 HYDRAULIC AR-MACHINE

SMCS-5057 **i01964874**

NOTE	REF NO	GRAPHIC REF	PART NUMBER	QTY	PART NAME 1 2 3 4 5 6 (PRODUCT LEVEL)	SEE PAGE
	1	1	**6U-0455**	2	STRAP	
	2	1	**6U-0456**	3	STRAP	
I	3	1	**193-1516**	1	HOSE AS	
I	4	1	**207-5879**	2	HOSE AS	
CI	5	1	**217-2574**	1	HOSE AS	
	6	1	*148-8336*	1	CONNECTOR AS	
		1	**6V-8636**	1	CONNECTOR	
		1	**3J-1907**	1	SEAL-O-RING	
		1	**6V-8397**	1	SEAL-O-RING	
	7	1	*148-8378*	1	ELBOW AS	
		1	**6V-8724**	1	ELBOW	
		1	**3J-1907**	1	SEAL-O-RING	
		1	**6V-8397**	1	SEAL-O-RING	
	8	1	*148-8383*	1	ELBOW AS	
		1	**8T-1683**	1	ELBOW	
		1	**3K-0360**	1	SEAL-O-RING	
		1	**6V-8397**	1	SEAL-O-RING	
	9	1	*148-8433*	1	TEE AS	
		1	**6V-9836**	1	TEE-SWIVEL	
		1	**6V-8397**	2	SEAL-O-RING	
	10	1	**1P-4579**	2	FLANGE-HALF	
	11	1	**1P-4582**	2	FLANGE-HALF	
	12	1	**4J-0524**	1	SEAL-O-RING	
	13	1	**4J-0527**	1	SEAL-O-RING	
M	14	1	**8T-4184**	8	BOLT (M12X1.75X45-MM)	
	15	1	**8T-4223**	8	WASHER-HARD (13.5X25.5X3-MM THK)	

C-CHANGE FROM PREVIOUS TYPE
I-REFER TO HYDRAULIC INFORMATION SYSTEM
M-METRIC PART

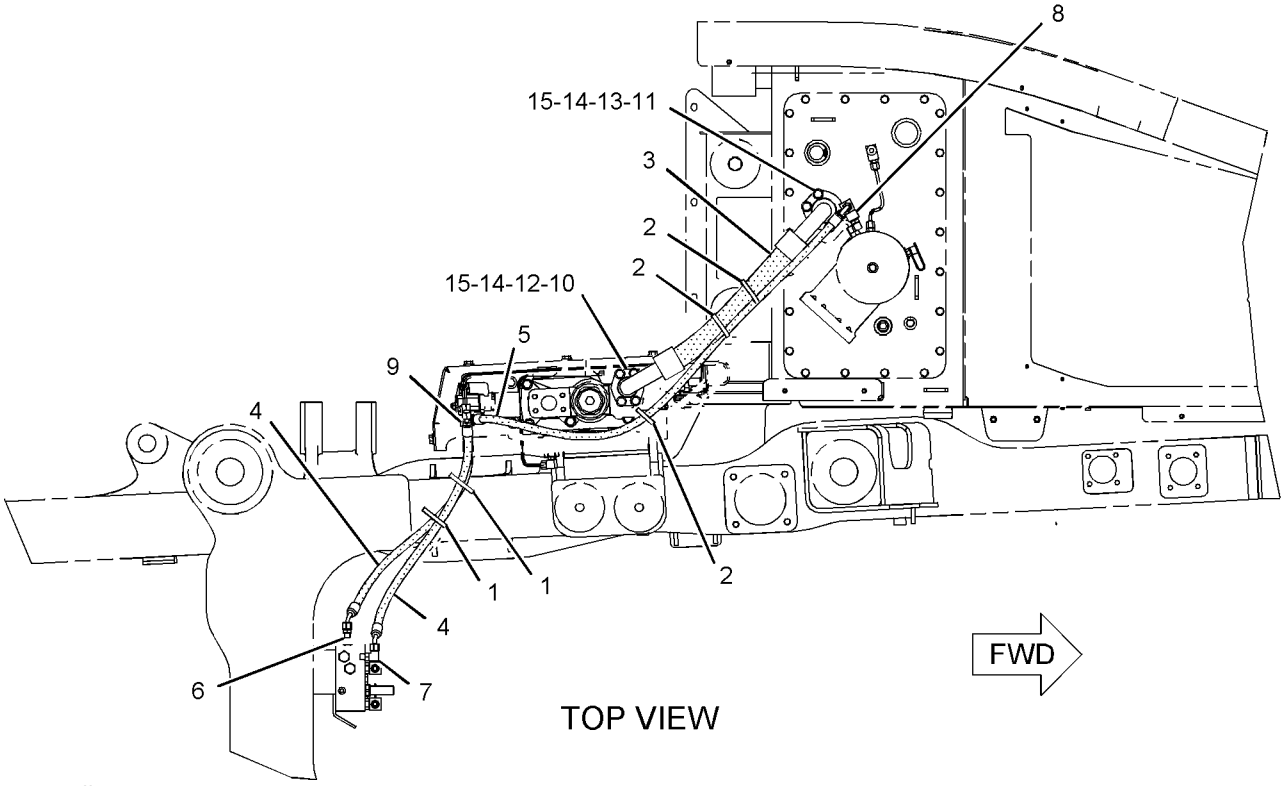

GRAPHIC #1 **<END>** g01020929

HYDRAULIC SYSTEM

152-7114 LINES GP-TAILGATE

S/N: AXM1-967
PART OF 152-7111 TAILGATE AR
AN ATTACHMENT

SMCS-5057 **i02097734**

NOTE	REF NO	GRAPHIC REF	PART NUMBER	QTY	PART NAME 1 2 3 4 5 6 (PRODUCT LEVEL)	SEE PAGE
	1	1	**9X-6582**	1	NUT (13/16-16-THD)	
	2	1	**154-5585**	1	TUBE AS	
I	3	1	**9U-0361**	1	HOSE AS	
I	4	1	**158-6092**	1	HOSE AS	
	5	1	**158-7413**	1	TUBE AS	
	6	1	*164-5586*	1	TEE AS	
		1	**6V-8398**	1	SEAL-O-RING	
		1	**7X-0871**	1	TEE	
I	7	1	**164-5847**	1	HOSE AS	
	8	1	**190-6283**	1	TUBE AS	
	9	1	**224-4286**	1	TUBE AS	
Y	10	1	**133-8810**	1	VALVE GP-COUNTERBALANCE (TAILGATE)	768
	11	1	*148-8364*	2	ELBOW AS	
					(EACH INCLUDES)	
		1	**6V-8625**	1	ELBOW	
		1	**3K-0360**	1	SEAL-O-RING	
		1	**6V-8398**	1	SEAL-O-RING	
	12	1	*148-8368*	1	ELBOW AS	
		1	**6V-8627**	1	ELBOW	
		1	**3J-1907**	1	SEAL-O-RING	
		1	**4J-5477**	1	SEAL-O-RING	
	13	1	*148-8381*	2	ELBOW AS	
					(EACH INCLUDES)	
		1	**8T-5429**	1	ELBOW	
		1	**3D-2824**	1	SEAL-O-RING	
		1	**6V-8398**	1	SEAL-O-RING	
	14	1	*148-8419*	1	REDUCER GP	
		1	**6V-8935**	1	REDUCER-O-RING	
		1	**4J-5477**	1	SEAL-O-RING	
	15	1	*148-8444*	1	TEE AS-SWIVEL	
		1	**6V-9837**	1	TEE-SWIVEL	
		1	**6V-8398**	2	SEAL-O-RING	
	16	1	*164-5567*	1	FITTING GP-COUPLING	
		1	**3J-1907**	1	SEAL-O-RING	
		1	**6V-3965**	1	FITTING AS	
	17	1	**5P-7464**	2	CLIP (SLOT)	
	18	1	**5P-7465**	2	CLIP (TAB)	
	19	1	**6U-0455**	2	STRAP	
	20	1	**6V-0852**	1	CAP-DUST	
	21	1	**6V-1249**	2	GROMMET	
	22	1	**6V-8398**	4	SEAL-O-RING	
	23	1	**8T-1885**	8	CLIP (SLOT)	
	24	1	**8T-1886**	8	CLIP (TAB)	
	25	1	**8T-4121**	18	WASHER-HARD (11X21X2.5-MM THK)	
M	26	1	**8T-4133**	9	NUT (M10X1.5-THD)	
M	27	1	**8T-4185**	1	BOLT (M10X1.5X50-MM)	
M	28	1	**8T-4195**	8	BOLT (M10X1.5X30-MM)	

I-REFER TO HYDRAULIC INFORMATION SYSTEM
M-METRIC PART
Y-SEPARATE ILLUSTRATION

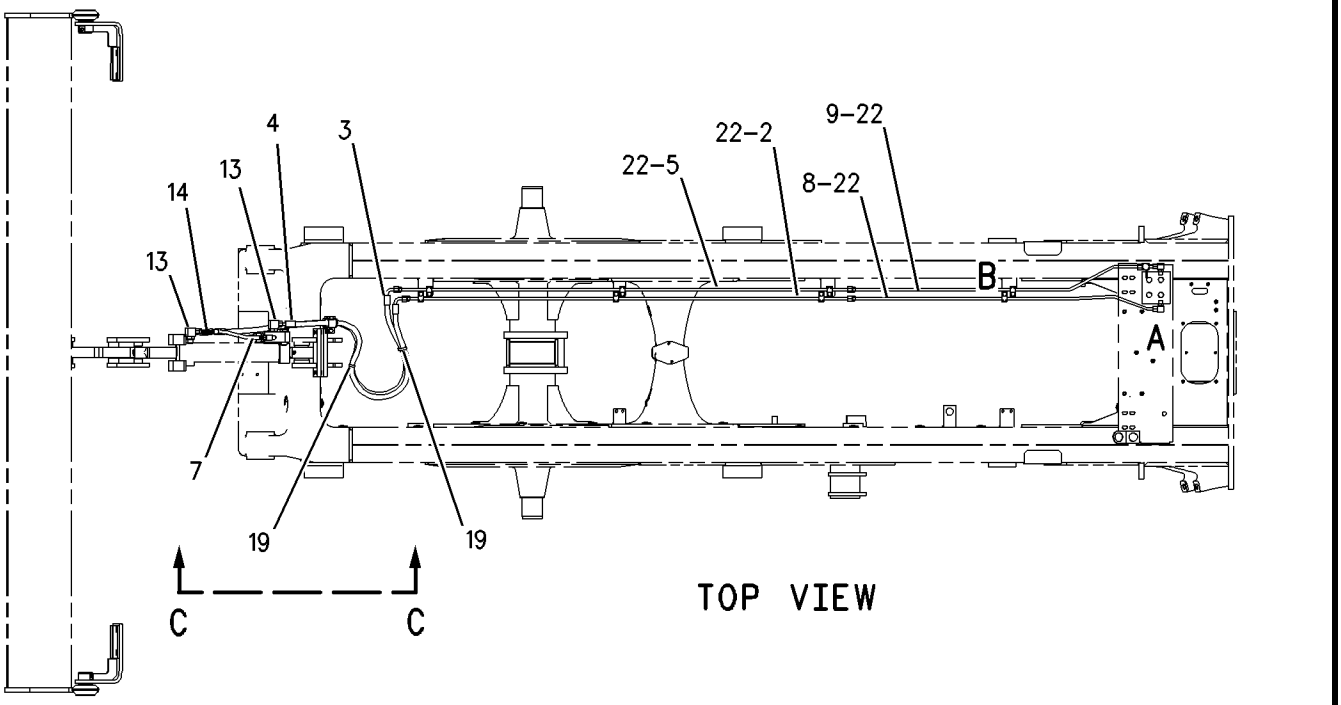

TOP VIEW

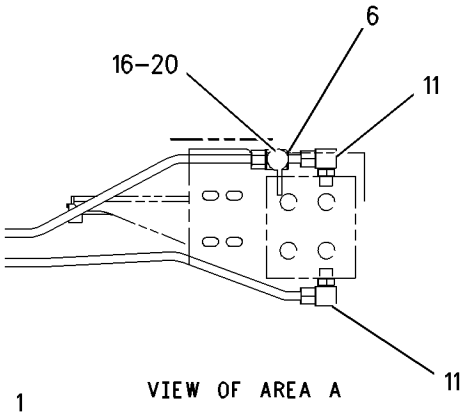

VIEW OF AREA A

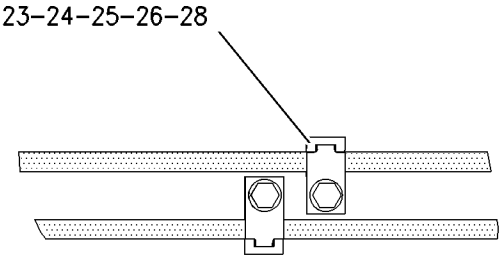

VIEW OF AREA B

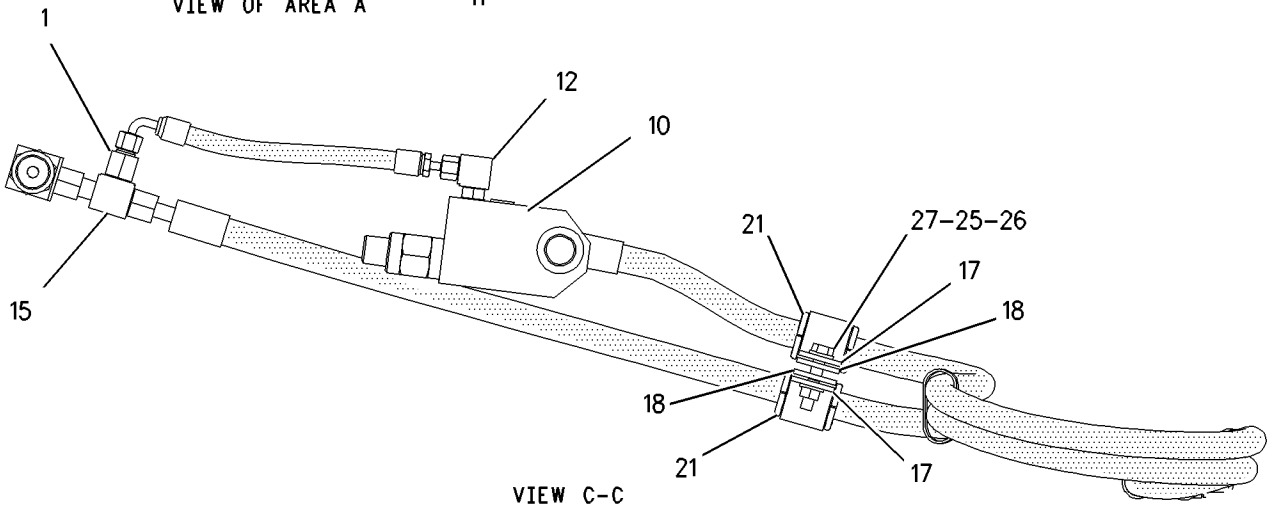

VIEW C-C

GRAPHIC #1 **<END>** g00941588

170-4734 MOTOR GP-GEAR–HYDRAULIC FAN

S/N: AXM1-UP

PART OF 152-6945 MOTOR & MTG GP-HYDRAULIC FAN

SMCS-5061 **i02247368**

NOTE	REF NO	GRAPHIC REF	PART NUMBER	QTY	PART NAME 1 2 3 4 5 6 (PRODUCT LEVEL)	SEE PAGE
	1	1	**1B-8714**	1	KEY-WOODRUFF	
M	2	1	**8T-0341**	2	BOLT-SOCKET HEAD (M10X1.5X60-MM)	
J	3	1	**201-2693**	1	VALVE GP-THERMOSTATIC	
JY	4	1	**201-2692**	1	MOTOR GP-GEAR (HYDRAULIC FAN)	720
					AVAILABLE REPAIR KIT(S):	
J			**201-2695**	1	KIT-SEAL	

J-KIT MARKED J IS FOR USE WITH PART(S) MARKED J
M-METRIC PART
Y-SEPARATE ILLUSTRATION

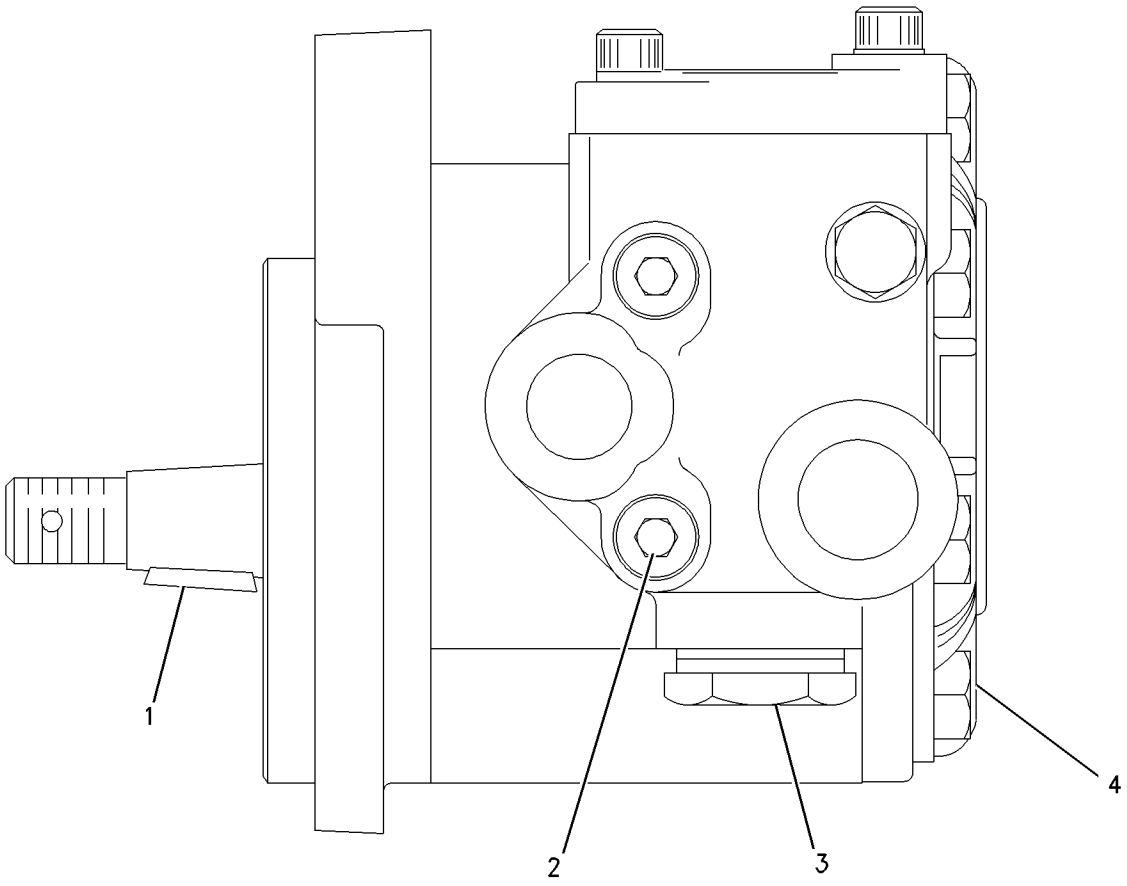

GRAPHIC #1 **<END>** g00764386

HYDRAULIC SYSTEM

201-2692 MOTOR GP-GEAR–HYDRAULIC FAN

S/N: AXM1-UP

PART OF 170-4734 MOTOR GP-GEAR

SMCS-5061 **i02206953**

NOTE	REF NO	GRAPHIC REF	PART NUMBER	QTY	PART NAME 1 2 3 4 5 6 (PRODUCT LEVEL)	SEE PAGE
M	1	1	**6V-1820**	8	BOLT (M10X1.5X30-MM)	
J	2	1	**4K-4986**	4	SEAL-O-RING	
J	3	1	**5P-3881**	2	SEAL-O-RING	
	4	1	**145-6115**	4	DOWEL	
J	5	1	**6V-3865**	2	SEAL-O-RING	
	6	1	**1B-8714**	1	KEY-WOODRUFF	
	7	1	**2R-1230**	1	RING-RETAINING	
M	8	1	**101-7404**	8	BOLT-SOCKET HEAD (M10X1.5X30-MM)	
					AVAILABLE REPAIR KIT(S):	
J			**213-8025**	1	KIT-SEAL	
					(INCLUDES WASHERS, SEALS, SHAFT & RINGS)	

J-KIT MARKED J SERVICES PART(S) MARKED J
M-METRIC PART

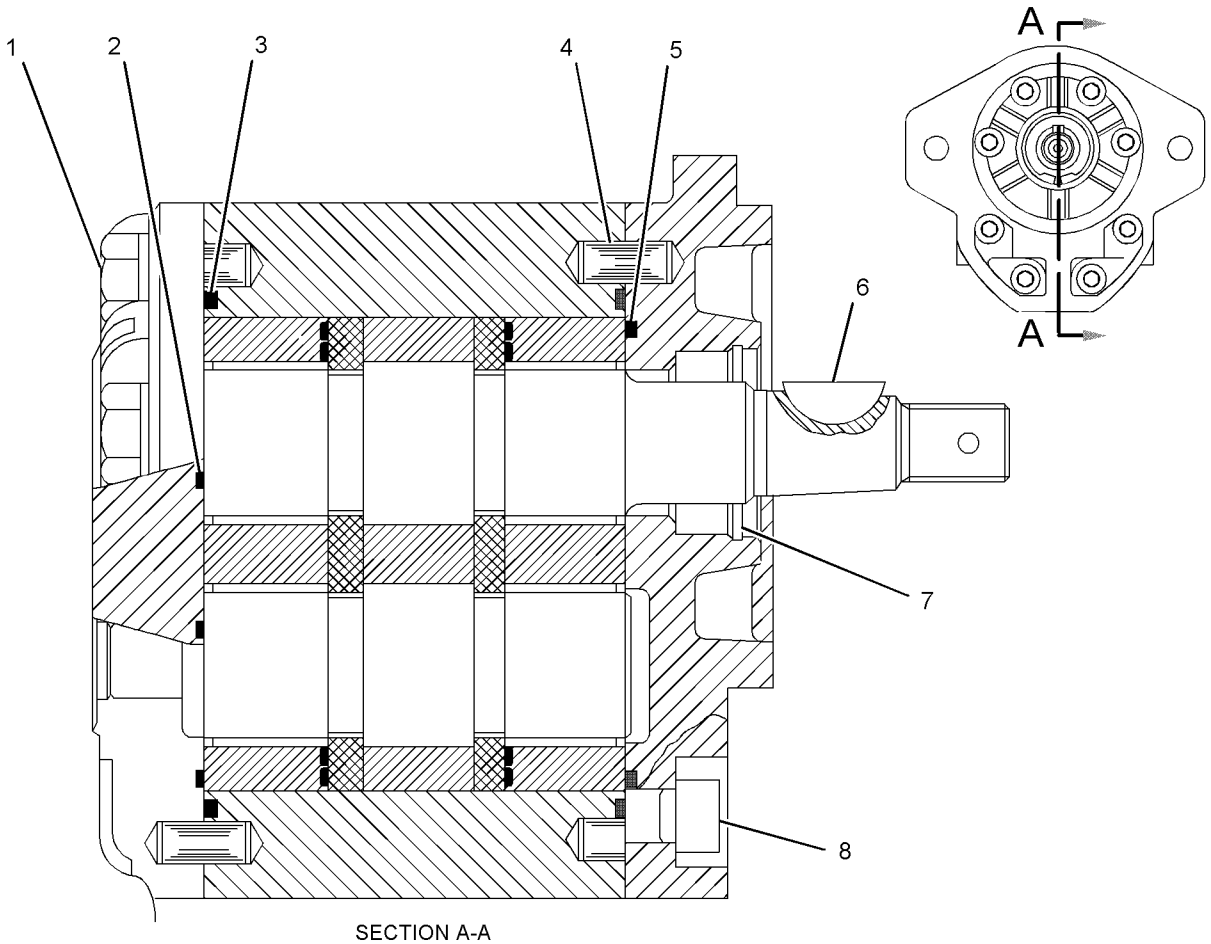

SECTION A-A

GRAPHIC #1 **<END>** g01115950

206-2543 MOTOR GP-GEAR—AIR-TO-AIR AFTERCOOLER

S/N: AXM1-399

PART OF 165-0234 AFTERCOOLER GP-AIR

SMCS-5061 **i01757408**

NOTE	REF NO	GRAPHIC REF	PART NUMBER	QTY	PART NAME 1 2 3 4 5 6 (PRODUCT LEVEL)	SEE PAGE
	1	1	**2M-2570**	1	LOCKNUT	
M	2	1	**5P-8245**	1	WASHER-HARD (13.5X25.5X3-MM THK)	
	3	1	**113-3632**	1	ADAPTER-FAN	
	4	1	**176-0209**	1	SEAL-LIP TYPE	
	5	1	**8J-6273**	1	RING-RETAINING	
	6	1	**177-4255**	1	SEAL-SHAFT	
	7	1	**176-0210**	1	FLANGE	
	8	1	**4W-7356**	2	SEAL	
	9	1	**099-3095**	4	DOWEL	
	10	1	**9S-4182**	2	PLUG	
	11	1	**3J-7354**	2	SEAL-O-RING	
	12	1	**183-7815**	1	BODY-VALVE	
JL	13	1	**6V-8397**	2	SEAL-O-RING	
JL	14	1	**3K-0360**	2	SEAL-O-RING	
	15	1	**201-5923**	1	VALVE-CHECK	
M	16	1	**160-8492**	4	BOLT (M10X1.5X85-MM)	
	17	1	**201-5925**	1	VALVE GP-RELIEF	
					AVAILABLE REPAIR KIT(S):	
J			**120-9051**	2	KIT-SEAL	
L			**201-5924**	1	KIT-SEAL	

J-KIT MARKED J INCLUDES PARTS MARKED J
L-KIT MARKED L INCLUDES PARTS MARKED L
M-METRIC PART

206-2543 MOTOR GP-GEAR *(contd.)* **i01757408**

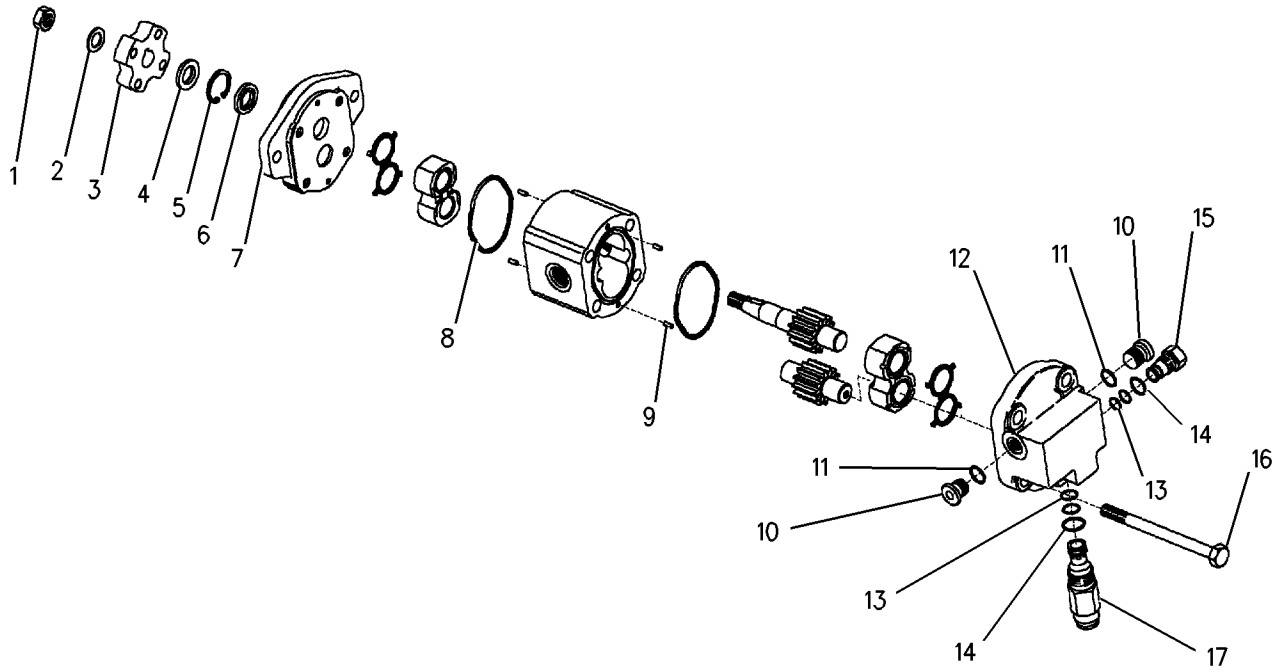

GRAPHIC #1 **<END>** g00898938

220-2290 MOTOR GP-GEAR–AIR-TO-AIR AFTERCOOLER

S/N: AXM400-1248

PART OF 165-0234 AFTERCOOLER GP-AIR

SMCS-5061 **i01757305**

NOTE	REF NO	GRAPHIC REF	PART NUMBER	QTY	PART NAME 1 2 3 4 5 6 (PRODUCT LEVEL)	SEE PAGE
	1	1	**2M-2570**	1	LOCKNUT	
M	2	1	**5P-8245**	1	WASHER-HARD (13.5X25.5X3-MM THK)	
	3	1	**113-3632**	1	ADAPTER-FAN	
	4	1	**176-0209**	1	SEAL-LIP TYPE	
	5	1	**8J-6273**	1	RING-RETAINING	
	6	1	**177-4255**	1	SEAL-SHAFT	
	7	1	**176-0210**	1	FLANGE	
	8	1	**4W-7356**	2	SEAL	
	9	1	**099-3095**	4	DOWEL	
	10	1	**9S-4182**	2	PLUG	
	11	1	**3J-7354**	2	SEAL-O-RING	
	12	1	**183-7815**	1	BODY-VALVE	
JL	13	1	**6V-8397**	3	SEAL-O-RING	
JL	14	1	**3K-0360**	3	SEAL-O-RING	
	15	1	**201-5923**	1	VALVE-CHECK	
M	16	1	**160-8492**	4	BOLT (M10X1.5X85-MM)	
	17	1	**222-6472**	1	VALVE-RELIEF	
					AVAILABLE REPAIR KIT(S):	
J			**120-9051**	2	KIT-SEAL	
L			**201-5924**	1	KIT-SEAL	

J-KIT MARKED J INCLUDES PARTS MARKED J
L-KIT MARKED L INCLUDES PARTS MARKED L
M-METRIC PART

220-2290 MOTOR GP-GEAR *(contd.)* i01757305

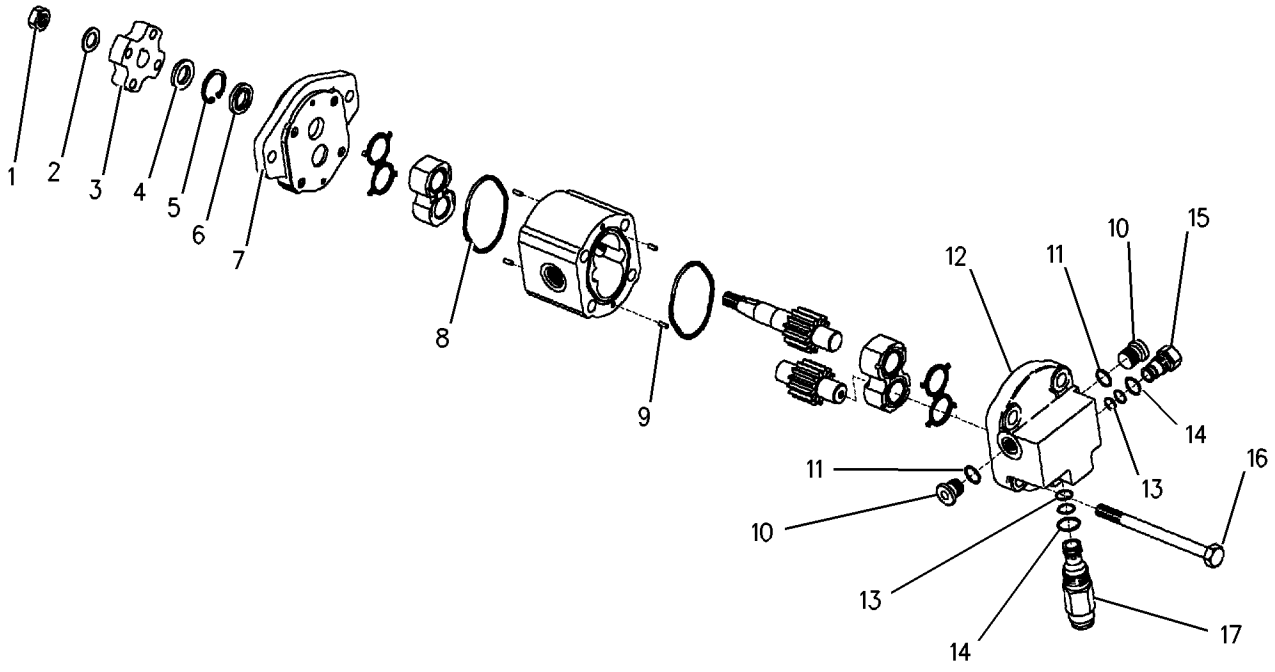

GRAPHIC #1 **<END>** g00898860

HYDRAULIC SYSTEM

242-0431 MOTOR GP-GEAR–AIR-TO-AIR AFTERCOOLER

S/N: AXM1249-UP

PART OF 165-0234 AFTERCOOLER GP-AIR

SMCS-5061 **i02024506**

NOTE	REF NO	GRAPHIC REF	PART NUMBER	QTY	PART NAME 1 2 3 4 5 6 (PRODUCT LEVEL)	SEE PAGE
	1	1	**2M-2570**	1	LOCKNUT	
M	2	1	**5P-8245**	1	WASHER-HARD (13.5X25.5X3-MM THK)	
	3	1	**113-3632**	1	ADAPTER-FAN	
	4	1	**176-0209**	1	SEAL-LIP TYPE	
	5	1	**8J-6273**	1	RING-RETAINING	
	6	1	**177-4255**	1	SEAL-SHAFT	
	7	1	**176-0210**	1	FLANGE	
	8	1	**4W-7356**	2	SEAL	
	9	1	**099-3095**	4	DOWEL	
	10	1	**9S-4182**	2	PLUG	
	11	1	**3J-7354**	2	SEAL-O-RING	
	12	1	**183-7815**	1	BODY-VALVE	
JL	13	1	**6V-8397**	4	SEAL-O-RING	
JL	14	1	**3K-0360**	2	SEAL-O-RING	
	15	1	**201-5923**	1	VALVE-CHECK	
M	16	1	**160-8492**	4	BOLT (M10X1.5X85-MM)	
	17	1	**222-6472**	1	VALVE-RELIEF	
					AVAILABLE REPAIR KIT(S):	
J			**120-9051**	2	KIT-SEAL (GEAR MOTOR)	
L			**201-5924**	1	KIT-SEAL (GEAR MOTOR)	

J-KIT MARKED J INCLUDES PARTS MARKED J
L-KIT MARKED L INCLUDES PARTS MARKED L
M-METRIC PART

242-0431 MOTOR GP-GEAR *(contd.)* **i02024506**

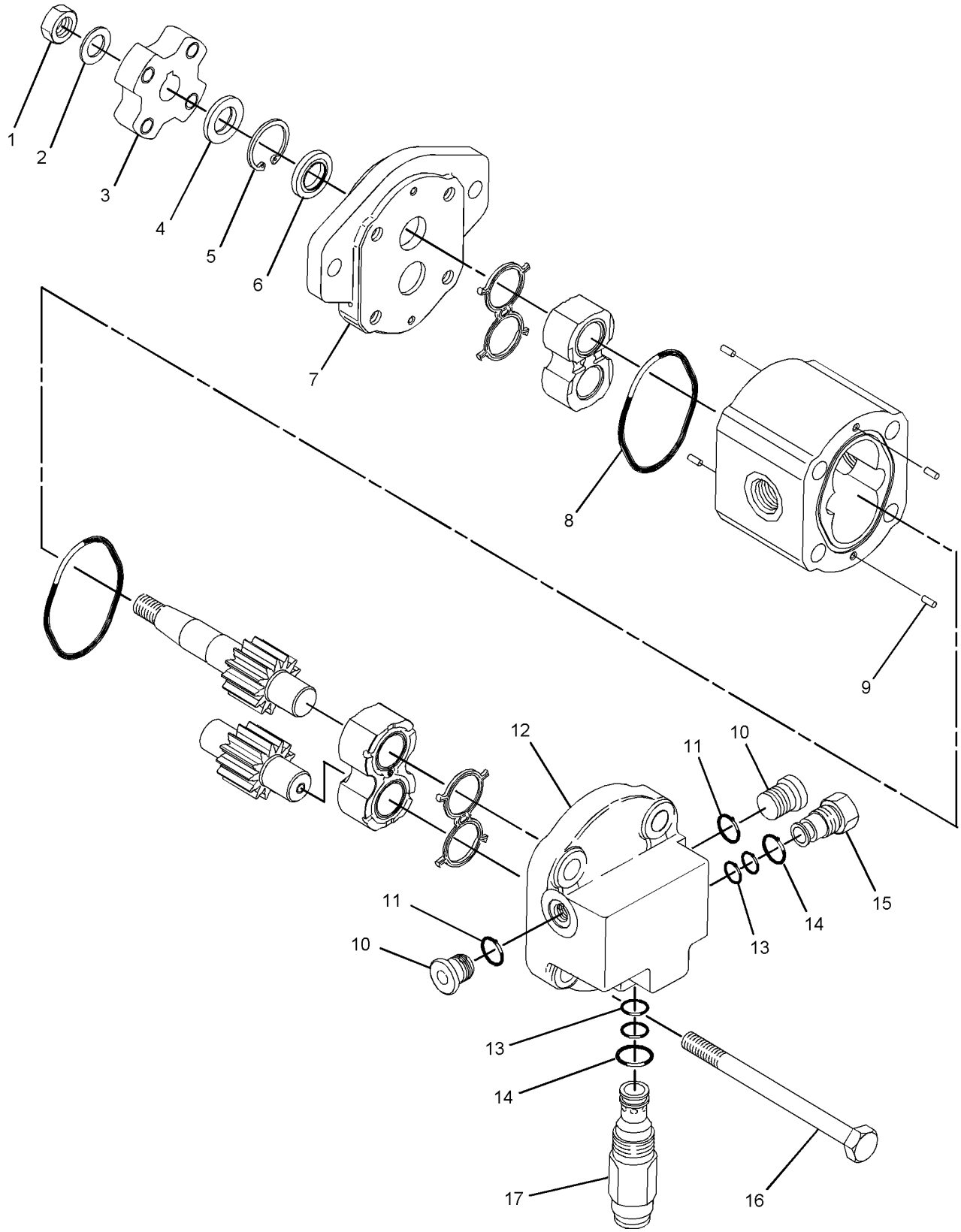

GRAPHIC #1 **<END>** g01055264

HYDRAULIC SYSTEM

152-6960 PUMP & MTG GP-HOIST

S/N: AXM1-UP

PART OF 152-6943 POWER TRAIN AR

SMCS-5073, 5083 **i02261922**

NOTE	REF NO	GRAPHIC REF	PART NUMBER	QTY	PART NAME 1 2 3 4 5 6 (PRODUCT LEVEL)	SEE PAGE
Y	1	1	**188-4455**	1	PUMP GP-GEAR (HOIST)	730
	2	1	**5F-3106**	1	SEAL-O-RING	
M	3	1	**7X-2553**	2	BOLT (M16X2X40-MM)	
	4	1	**9X-8257**	2	WASHER (17.5X30X3.5-MM THK)	

M-METRIC PART
Y-SEPARATE ILLUSTRATION

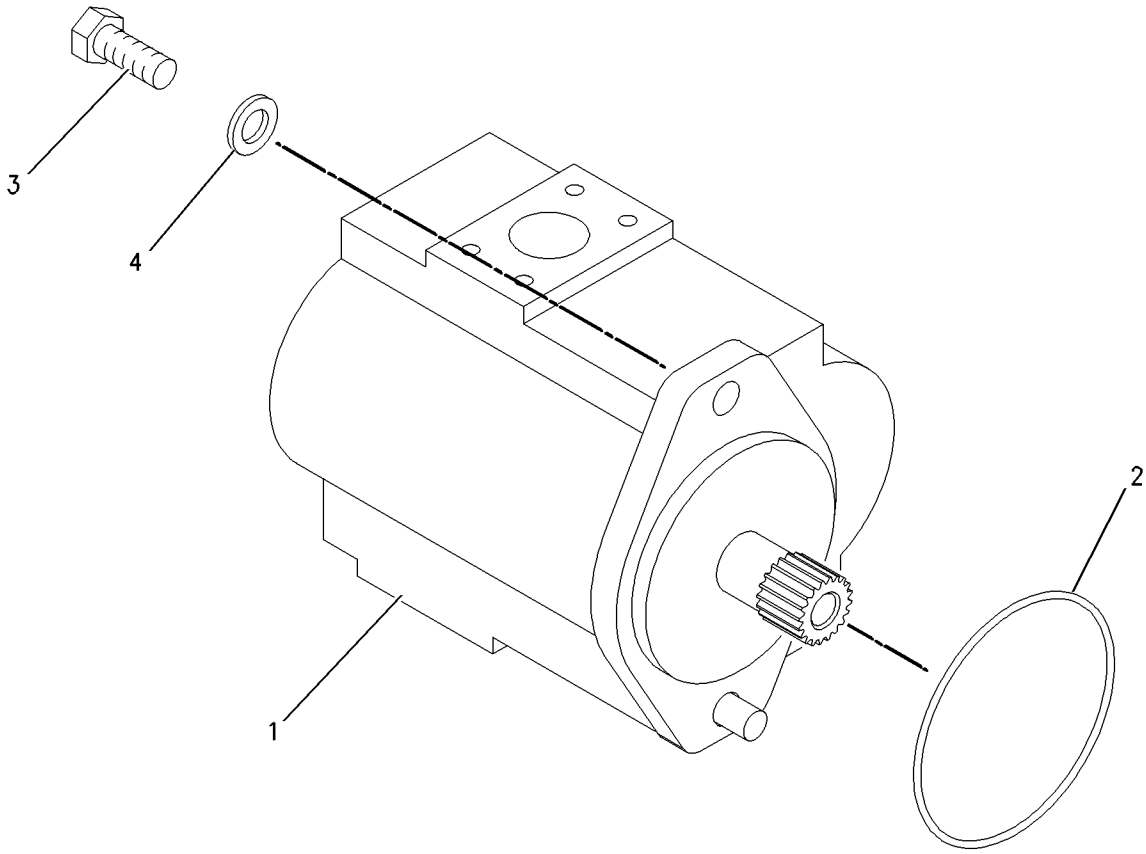

GRAPHIC #1 **<END>** g00763157

HYDRAULIC SYSTEM

191-6005 PUMP & MTG GP-HYDRAULIC

S/N: AXM1-UP

PART OF 152-6943 POWER TRAIN AR

SMCS-5055, 5070 **i01644424**

NOTE	REF NO	GRAPHIC REF	PART NUMBER	QTY	PART NAME 1 2 3 4 5 6 (PRODUCT LEVEL)	SEE PAGE
Y	1	1	**201-5733**	1	PUMP GP-GEAR	731
	2	1	**129-3173**	2	BOLT-12 POINT HEAD (3/8-16X31.75MM)	
	3	1	**5P-1075**	2	WASHER-HARD (10.2X22.5X3MM THK)	

Y-SEPARATE ILLUSTRATION

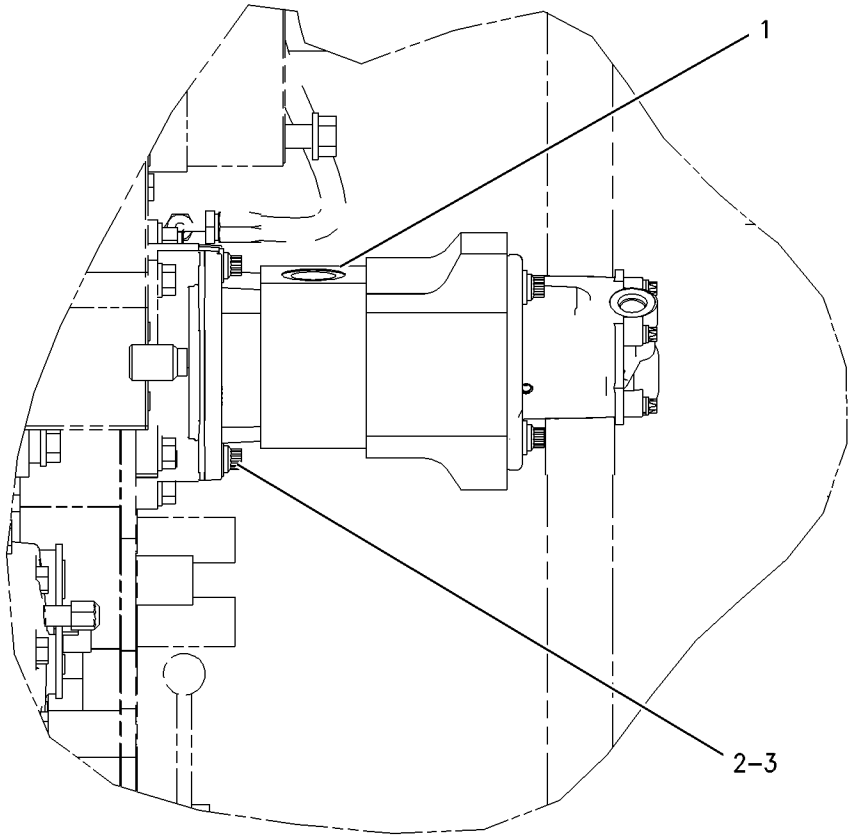

GRAPHIC #1 **<END>** g00814502

HYDRAULIC SYSTEM

152-6963 PUMP & MTG GP-HYDRAULIC FAN

S/N: AXM1-UP

PART OF 152-6943 POWER TRAIN AR

SMCS-1387 **i02261924**

NOTE	REF NO	GRAPHIC REF	PART NUMBER	QTY	PART NAME 1 2 3 4 5 6 (PRODUCT LEVEL)	SEE PAGE
Y	1	1	**210-0053**	1	PUMP GP-GEAR (HYDRAULIC FAN)	732
	2	1	**1H-6227**	1	SEAL-O-RING	
M	3	1	**8T-4139**	2	BOLT (M12X1.75X30-MM)	
	4	1	**8T-4223**	2	WASHER-HARD (13.5X25.5X3-MM THK)	

M-METRIC PART
Y-SEPARATE ILLUSTRATION

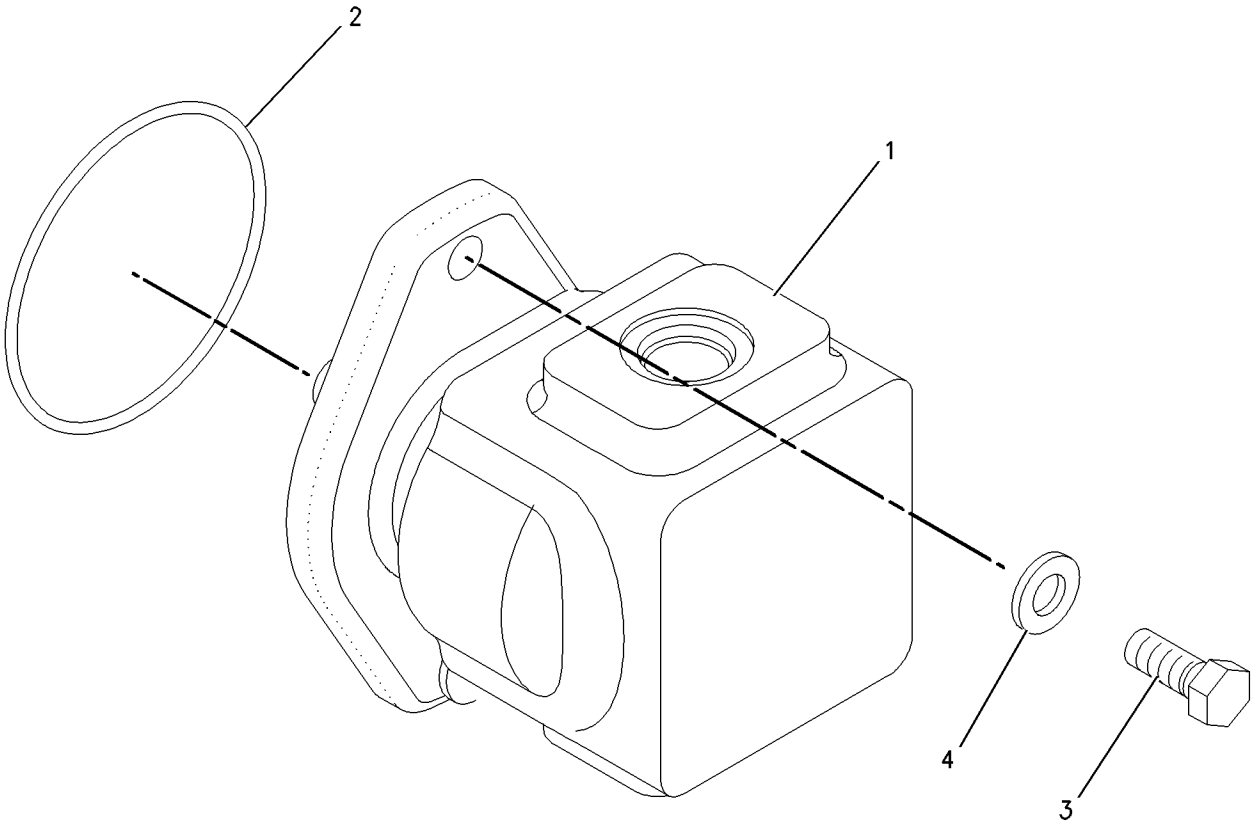

GRAPHIC #1 **<END>** g00763152

HYDRAULIC SYSTEM

188-4455 PUMP GP-GEAR–HOIST

S/N: AXM1-UP

PART OF 152-6960 PUMP & MTG GP-HOIST

SMCS-5073 **i01547038**

NOTE	REF NO	GRAPHIC REF	PART NUMBER	QTY	PART NAME 1 2 3 4 5 6 (PRODUCT LEVEL)	SEE PAGE
M	1	1	**170-8553**	4	BOLT-SOCKET HEAD (M12X1.75X40MM)	
	2	1	**184-4419**	1	FLANGE	
M	3	1	**118-0589**	4	BOLT-SOCKET HEAD (M20X2.5X60MM)	
	4	1	**184-4421**	1	COVER-FRONT	
	5	1	**184-4427**	1	PLATE-WEAR	
	6	1	**184-4424**	1	GEAR-DRIVE (17 TEETH)	
	7	1	**184-4425**	1	GEAR-IDLER	
	8	1	**184-4426**	1	PLATE-WEAR	
	9	1	**6V-5553**	1	SEAL-O-RING	
					AVAILABLE REPAIR KIT(S):	
			184-4429	1	KIT-SEAL	
					(INCLUDES SEALS AND CLIP)	

M-METRIC PART

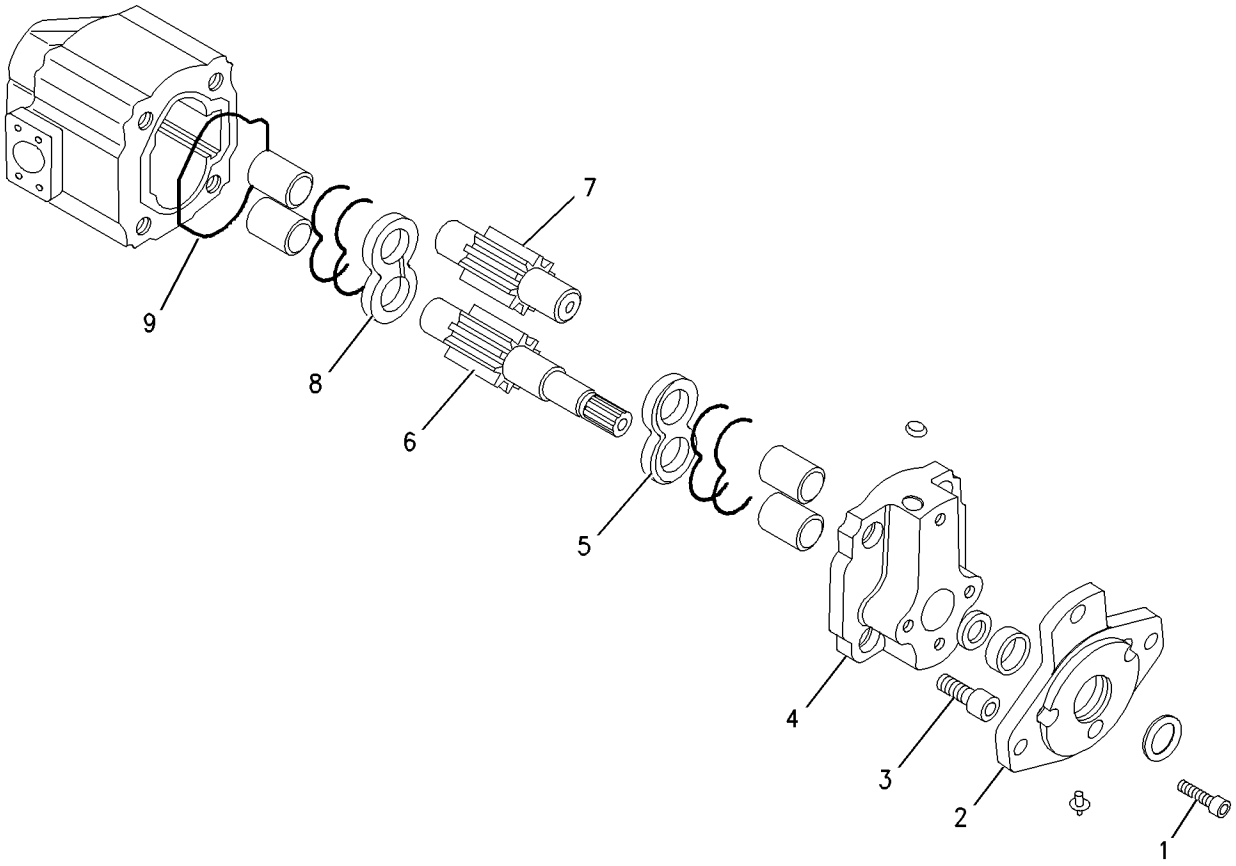

GRAPHIC #1 **<END>** g00765499

HYDRAULIC SYSTEM

201-5733 PUMP GP-GEAR

S/N: AXM1-UP

PART OF 191-6005 PUMP & MTG GP-HYDRAULIC

SMCS-5073 **i01575130**

NOTE	REF NO	GRAPHIC REF	PART NUMBER	QTY	PART NAME 1 2 3 4 5 6 (PRODUCT LEVEL)	SEE PAGE
J	1	1	**131-0715**	1	SEAL-SHAFT	
J	2	1	**204-4148**	1	SEAL-SHAFT	
	3	1	**6E-2943**	1	PLUG	
	4	1	**099-3095**	4	DOWEL	
	5	1	**196-5731**	1	PLATE	
	6	1	**8J-6273**	1	RING-RETAINING	
	7	1	**204-4147**	1	FLANGE	
	8	1	**192-7640**	4	SEAL	
M	9	1	**086-2369**	4	BOLT-SOCKET HEAD (M10X1.5X130MM)	
	10	1	**117-5268**	1	GASKET	
J	11	1	**004-1964**	2	SEAL-O-RING	
	12	1	**204-5174**	1	COUPLING	
					AVAILABLE REPAIR KIT(S):	
J			**201-5242**	1	KIT-SEAL	
					(INCLUDES ADDITIONAL PARTS)	

J-KIT MARKED J INCLUDES PART(S) MARKED J
M-METRIC PART

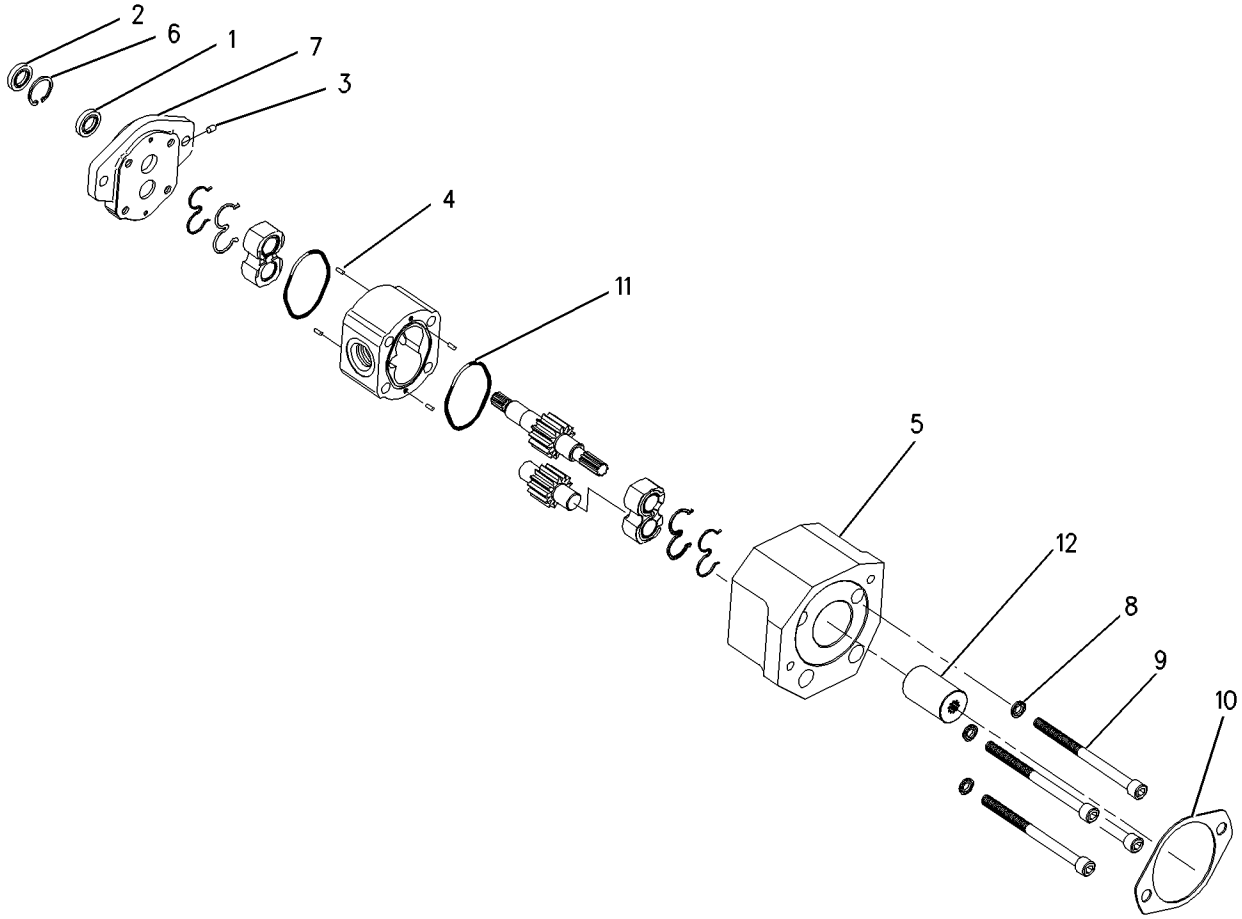

GRAPHIC #1 **<END>** g00796946

HYDRAULIC SYSTEM

210-0053 PUMP GP-GEAR–HYDRAULIC FAN

S/N: AXM1-UP

PART OF 152-6963 PUMP & MTG GP-HYDRAULIC FAN

SMCS-5073 **i01575284**

NOTE	REF NO	GRAPHIC REF	PART NUMBER	QTY	PART NAME 1 2 3 4 5 6 (PRODUCT LEVEL)	SEE PAGE
M	1	1	**7X-3342**	4	STUD-LOCKING	
	2	1	**136-9030**	4	WASHER (12.5X18X1.5MM THK)	
M	3	1	**095-1207**	4	NUT (M12X1.75 THD)	
					AVAILABLE REPAIR KIT(S):	
			192-5124	1	KIT-SEAL	
					(INCLUDES SEALS, RING, AND O-RING)	

M-METRIC PART

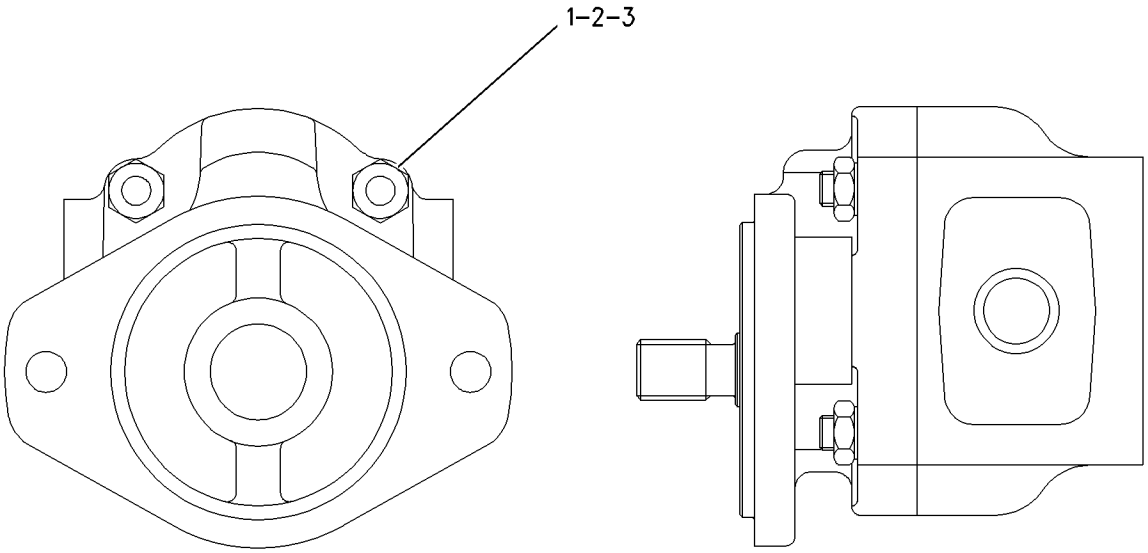

GRAPHIC #1 **<END>** g00820910

153-7021 PUMP GP-PISTON—STEERING

S/N: AXM1-879

PART OF 152-6959 PUMP & MTG GP-STEERING

SMCS-5070 **i02261939**

NOTE	REF NO	GRAPHIC REF	PART NUMBER	QTY	PART NAME 1 2 3 4 5 6 (PRODUCT LEVEL)	SEE PAGE
	1	1	**8T-9598**	1	RING-RETAINING	
	2	1	**105-1642**	2	BEARING	
	3	1	**105-1633**	1	HOUSING-PUMP	
Y	4	1	**105-1644**	1	ROTATING GP-PUMP (STEERING)	739
	5	1	**8U-5951**	4	SEAL-O-RING	
M	6	1	**6V-8201**	4	BOLT-SOCKET HEAD (M16X2X45-MM)	
	7	1	**105-3033**	1	CUP-BEARING	
	8	1	**105-3032**	1	CONE-BEARING	
	9	1	**194-6848**	1	COUPLER	
	10	1	**105-1638**	1	SPACER	
	11	1	**162-9997**	1	SEAL-O-RING	
	12	1	**105-1636**	1	CYLINDER-CONTROL	
	13	1	**105-1635**	1	SPRING	
	14	1	**105-1634**	1	PLUNGER	
	15	1	**9S-4183**	1	PLUG	
	16	1	**3D-2824**	1	SEAL-O-RING	
	17	1	**194-6847**	1	SHAFT	
	18	1	**3B-2263**	1	CUP-BEARING	
	19	1	**105-3031**	1	CONE-BEARING	
	20	1	**105-1632**	1	SEAL	
	21	1	**105-1641**	1	SWASHPLATE AS-LH	
	22	1	**105-1640**	1	PISTON-CONTROL	
	23	1	**105-1639**	1	GUIDE-CONTROL	
	24	1	**3J-7354**	1	SEAL-O-RING	
	25	1	**136-8423**	1	PLUG-BREAK OFF	
	26	1	**9X-8979**	1	DOWEL	
	27	1	**143-7052**	1	SLEEVE-STOP	
	28	1	**118-3122**	1	SEAL-O-RING	
M	29	1	**8T-3957**	2	BOLT-SOCKET HEAD (M12X1.75X30-MM)	
	30	1	**8T-4223**	2	WASHER-HARD (13.5X25.5X3-MM THK)	
Y	31	1	**184-5173**	1	VALVE GP-PUMP CONTROL (PRESSURE, FLOW COMPENSATOR)	777
	32	1	**9X-7680**	3	SEAL-O-RING	
M	33	1	**8T-8442**	4	BOLT-SOCKET HEAD (M6X1X30-MM)	
	34	1	**9S-8002**	1	PLUG	

M-METRIC PART
Y-SEPARATE ILLUSTRATION

153-7021 PUMP GP-PISTON *(contd.)* **i02261939**

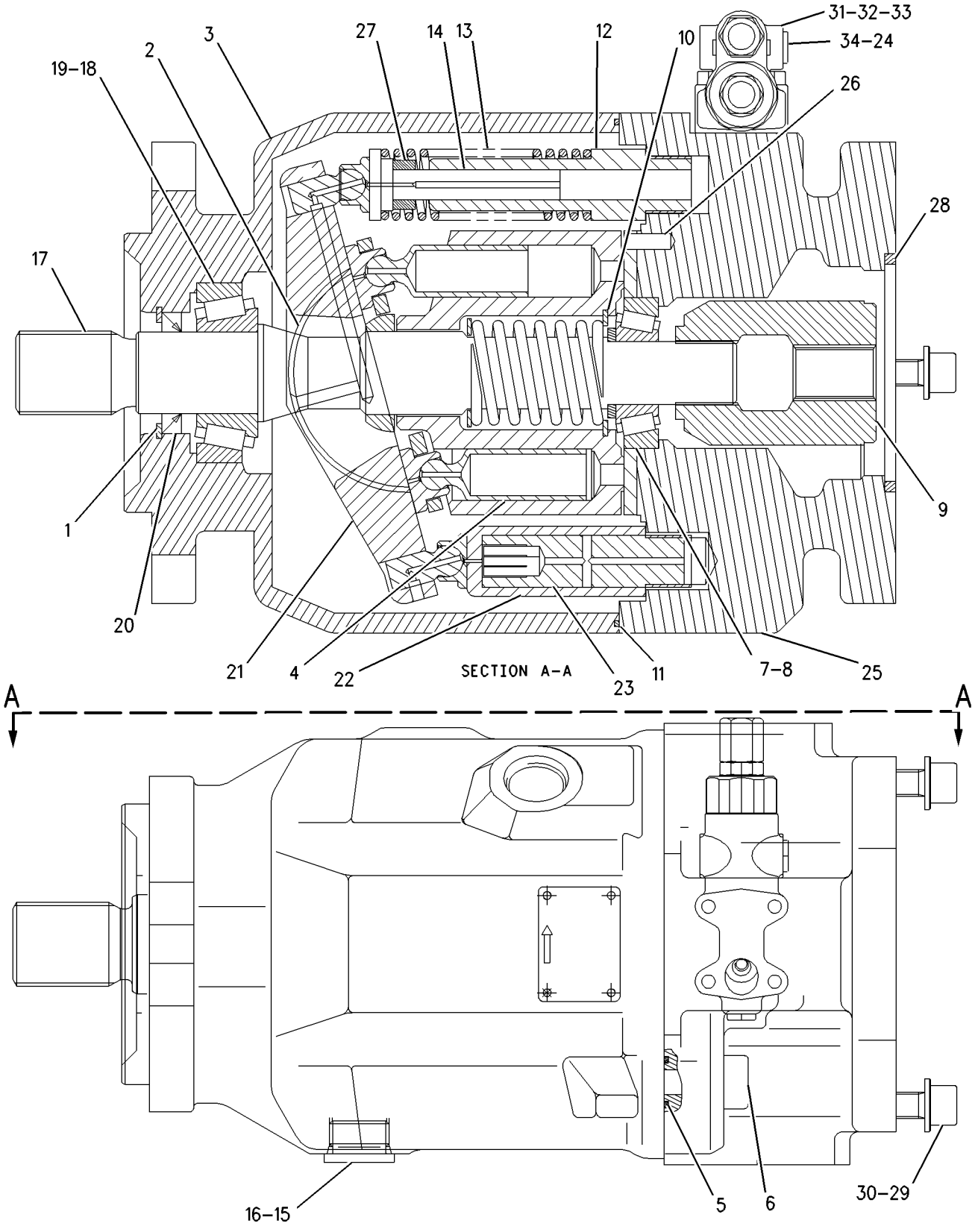

GRAPHIC #1 **<END>** g00825342

187-9090 PUMP GP-PISTON–BRAKE

S/N: AXM1-UP

PART OF 152-6961 PUMP & MTG GP-BRAKE

SMCS-5070 **i02247369**

NOTE	REF NO	GRAPHIC REF	PART NUMBER	QTY	PART NAME 1 2 3 4 5 6 (PRODUCT LEVEL)	SEE PAGE
	1	1	**197-1358**	1	FLANGE	
	2	1	**8T-9597**	1	RING-RETAINING	
	3	1	**095-1711**	1	SEAL-O-RING	
	4	1	**189-4719**	2	BEARING	
Y	5	1	**189-4710**	1	ROTATING GP-PUMP (BRAKE)	740
	6	1	**197-1356**	1	SHAFT	
	7	1	**169-7442**	1	SEAL-O-RING	
	8	1	**117-8216**	4	SEAL-O-RING	
M	9	1	**6V-5192**	4	BOLT-SOCKET HEAD (M8X1.25X30-MM)	
	10	1	**3J-1907**	1	SEAL-O-RING	
	11	1	**9S-8004**	1	PLUG	
	12	1	**173-0641**	1	PLUG-FILTER	
	13	1	**189-4720**	2	SEAL-SHAFT	
	14	1	**189-4717**	1	BEARING	
	15	1	**189-4714**	1	SWASHPLATE AS	
	16	1	**189-4733**	1	PISTON	
	17	1	**189-4734**	1	GUIDE	
	18	1	**186-4259**	1	PIN	
B	19	1	**189-4716**	1	SHIM (2.5-MM THK) (2.5MM THK)	
	20	1	**189-4718**	1	BEARING	
	21	1	**137-3780**	2	PLUG	
	22	1	**189-4735**	1	GUIDE	
	23	1	**189-4736**	1	SPRING	
	24	1	**191-5185**	1	PLUNGER	
M	25	1	**8T-1159**	2	BOLT-SOCKET HEAD (M10X1.5X25-MM)	
	26	1	**8T-4121**	2	WASHER-HARD (11X21X2.5-MM THK)	
	27	1	**136-8423**	1	PLUG-BREAK OFF	
Y	28	1	**193-3182**	1	VALVE GP-PUMP CONTROL (PRESSURE, FLOW COMPENSATOR)	780
M	29	1	**8T-8442**	4	BOLT-SOCKET HEAD (M6X1X30-MM)	
	30	1	**9X-7680**	3	SEAL-O-RING	

B-USE AS REQUIRED
M-METRIC PART
Y-SEPARATE ILLUSTRATION

187-9090 PUMP GP-PISTON *(contd.)* i02247369

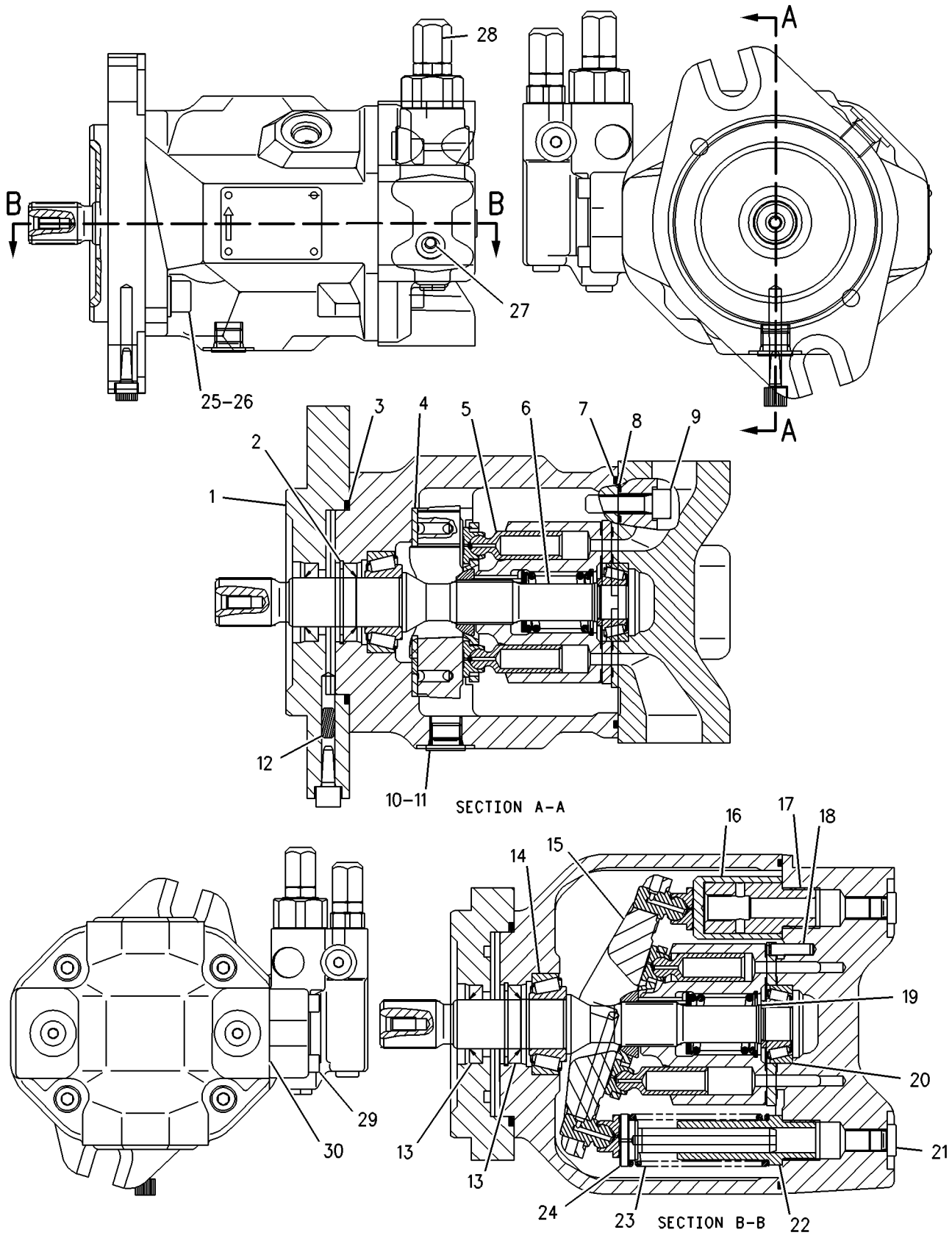

GRAPHIC #1 **<END>** g00764737

224-4432 PUMP GP-PISTON—STEERING

S/N: AXM880-UP

PART OF 152-6959 PUMP & MTG GP-STEERING

SMCS-5070 **i02261969**

NOTE	REF NO	GRAPHIC REF	PART NUMBER	QTY	PART NAME 1 2 3 4 5 6 (PRODUCT LEVEL)	SEE PAGE
	1	1	**8T-9598**	1	RING-RETAINING	
	2	1	**105-1642**	2	BEARING	
	3	1	**105-1633**	1	HOUSING-PUMP	
Y	4	1	**105-1644**	1	ROTATING GP-PUMP (STEERING)	739
	5	1	**8U-5951**	4	SEAL-O-RING	
M	6	1	**6V-8201**	4	BOLT-SOCKET HEAD (M16X2X45-MM)	
	7	1	**105-3033**	1	CUP-BEARING	
	8	1	**105-3032**	1	CONE-BEARING	
	9	1	**194-6848**	1	COUPLER	
	10	1	**105-1638**	1	SPACER	
	11	1	**162-9997**	1	SEAL-O-RING	
	12	1	**105-1636**	1	CYLINDER-CONTROL	
	13	1	**105-1635**	1	SPRING	
	14	1	**105-1634**	1	PLUNGER	
	15	1	**9S-4183**	1	PLUG	
	16	1	**3D-2824**	1	SEAL-O-RING	
	17	1	**194-6847**	1	SHAFT	
	18	1	**3B-2263**	1	CUP-BEARING	
	19	1	**105-3031**	1	CONE-BEARING	
	20	1	**105-1632**	1	SEAL	
	21	1	**105-1641**	1	SWASHPLATE AS-LH	
	22	1	**105-1640**	1	PISTON-CONTROL	
	23	1	**105-1639**	1	GUIDE-CONTROL	
	24	1	**3J-7354**	1	SEAL-O-RING	
	25	1	**136-8423**	1	PLUG-BREAK OFF	
	26	1	**9X-8979**	1	DOWEL	
	27	1	**143-7052**	1	SLEEVE-STOP	
	28	1	**118-3122**	1	SEAL-O-RING	
M	29	1	**8T-3957**	2	BOLT-SOCKET HEAD (M12X1.75X30-MM)	
	30	1	**8T-4223**	2	WASHER-HARD (13.5X25.5X3-MM THK)	
Y	31	1	**184-5174**	1	VALVE GP-PUMP CONTROL (PRESSURE, FLOW COMPENSATOR)	778
	32	1	**9X-7680**	3	SEAL-O-RING	
M	33	1	**8T-8442**	4	BOLT-SOCKET HEAD (M6X1X30-MM)	
	34	1	**9S-8002**	1	PLUG	

M-METRIC PART
Y-SEPARATE ILLUSTRATION

224-4432 PUMP GP-PISTON *(contd.)* **i02261969**

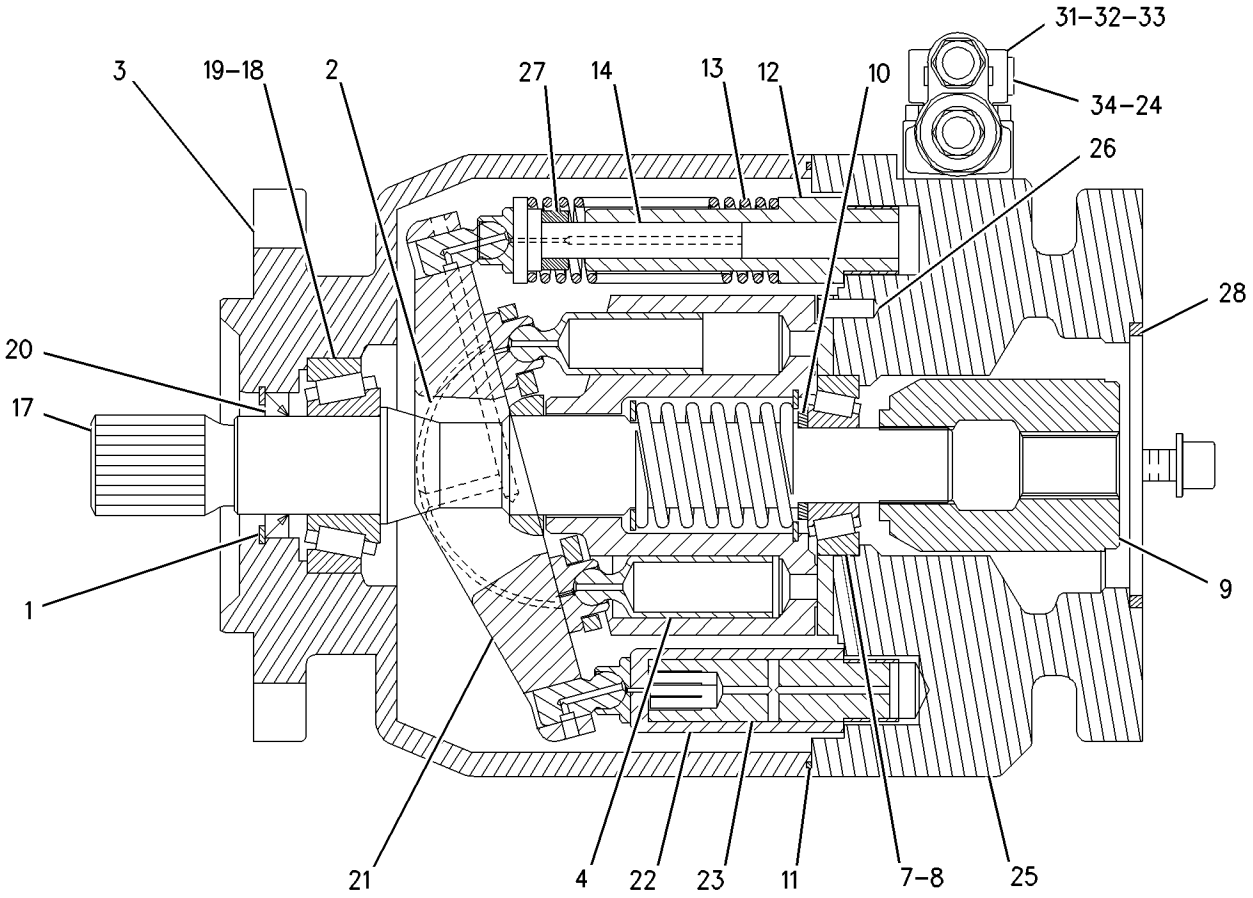

SECTION A-A

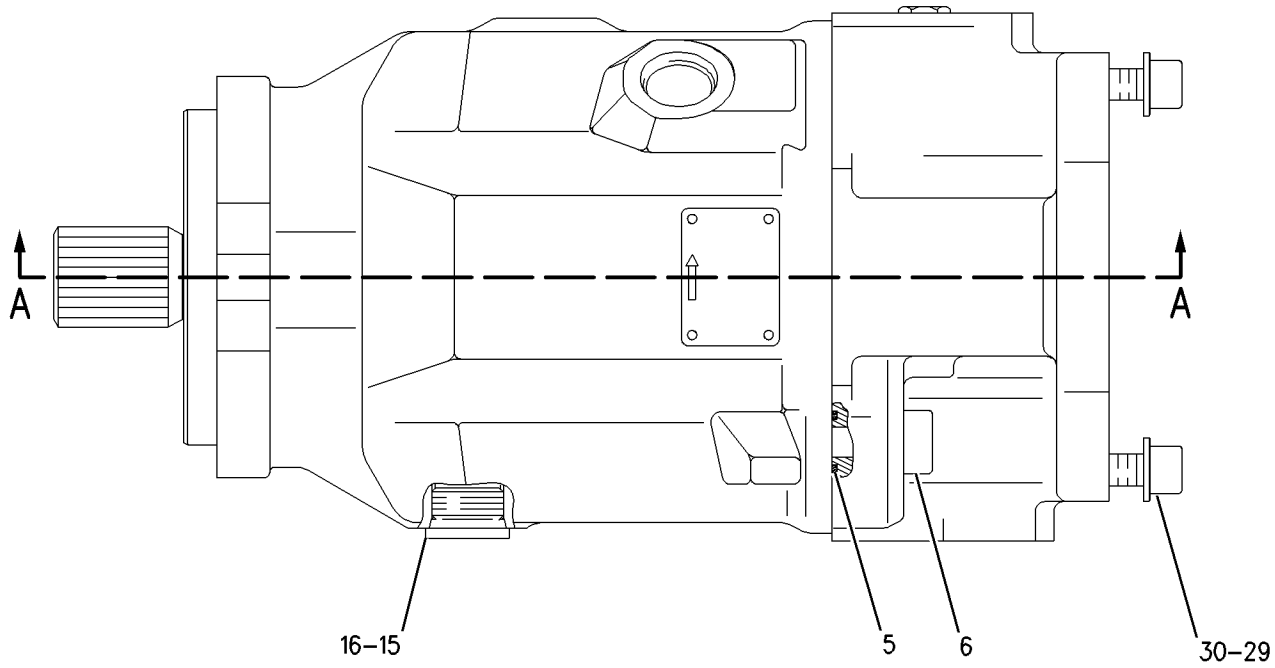

GRAPHIC #1 **<END>** g00947262

105-1644 ROTATING GP-PUMP–STEERING

S/N: AXM1-UP

PART OF 153-7021, 224-4432 PUMP GP-PISTON

SMCS-5070 **i01613271**

NOTE	REF NO	GRAPHIC REF	PART NUMBER	QTY	PART NAME 1 2 3 4 5 6 (PRODUCT LEVEL)	SEE PAGE
	1	1	**105-1646**	9	PISTON AS-PUMP	
	2	1	**188-9637**	1	PLATE-RETRACTION	
	3	1	**105-1648**	1	BEARING	
	4	1	**198-7405**	1	BARREL	
	5	1	**105-1650**	1	SPACER-BARREL	
	6	1	**105-1651**	1	SPRING	
	7	1	**180-6213**	1	RING-RETAINING	
	8	1	**105-1652**	1	PLATE-PORT	
	9	1	**105-1653**	3	PIN-RETRACTION	

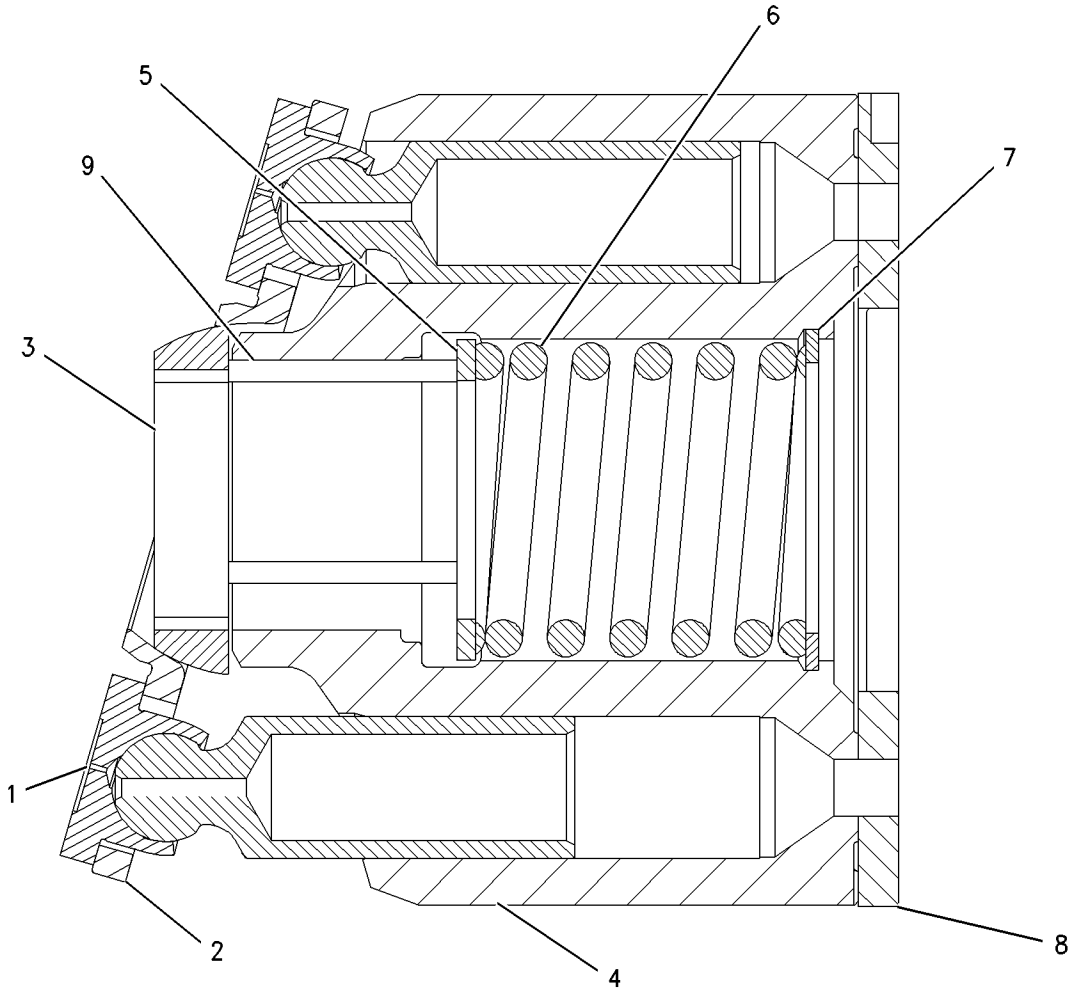

GRAPHIC #1 **<END>** g00835030

189-4710 ROTATING GP-PUMP–BRAKE

S/N: AXM1-UP

PART OF 187-9090 PUMP GP-PISTON

SMCS-5070 **i01746994**

NOTE	REF NO	GRAPHIC REF	PART NUMBER	QTY	PART NAME 1 2 3 4 5 6 (PRODUCT LEVEL)	SEE PAGE
	1	1	**189-4724**	9	PISTON AS	
	2	1	**189-4725**	1	BARREL	
	3	1	**189-4726**	1	PLATE (VALVE)	
	4	1	**189-4727**	1	PLATE (RETRACTION)	
	5	1	**189-4728**	1	BEARING	
	6	1	**189-4729**	1	SPRING	
	7	1	**189-4730**	3	PIN	
	8	1	**6V-5205**	1	RING	
	9	1	**189-4732**	1	SPACER	

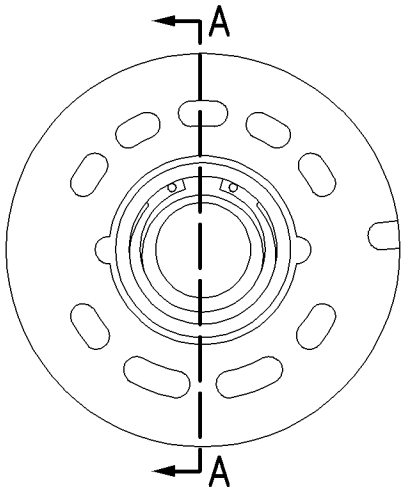

LEFT SIDE VIEW

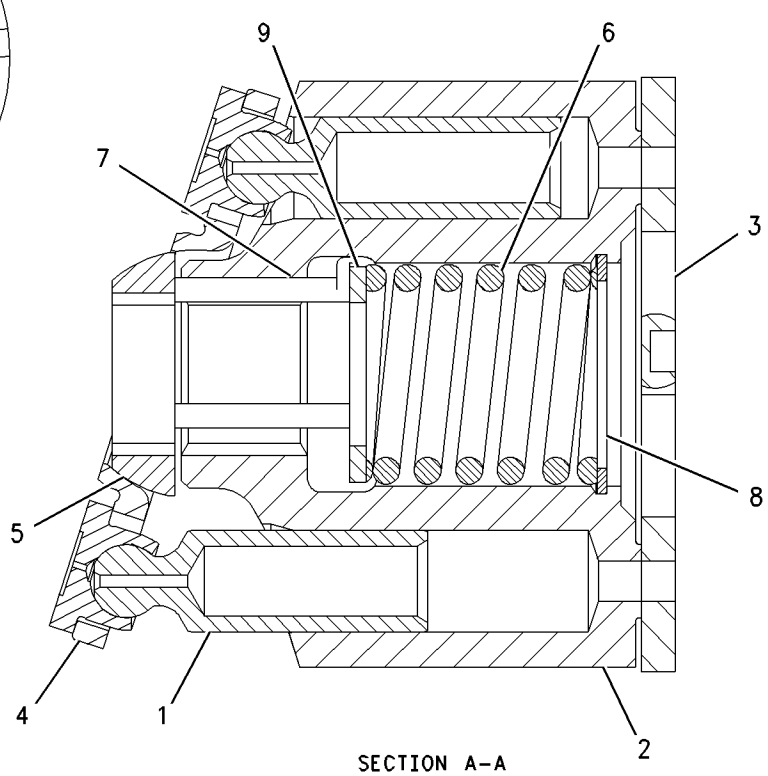

SECTION A–A

GRAPHIC #1 **<END>** g00822431

HYDRAULIC SYSTEM

141-6884 TANK & MTG GP-HYDRAULIC–HOIST

S/N: AXM1-394

PART OF 152-6922 HYDRAULIC AR-MACHINE

SMCS-5056 **i01551063**

NOTE	REF NO	GRAPHIC REF	PART NUMBER	QTY	PART NAME 1 2 3 4 5 6 (PRODUCT LEVEL)	SEE PAGE
	1	1	**9W-6582**	3	SLEEVE	
	2	1	**9W-6584**	3	WASHER (20.5X114X10-MM THK)	
	3	1	**9W-9920**	3	MOUNT AS	
Y	4	1	*162-5242*	1	TANK GP-HYDRAULIC	744
	5	1	**205-3984**	3	WASHER-SPECIAL (22X125X10-MM THK)	
	6	1	**197-3820**	3	WASHER	
M	7	1	**8C-8478**	3	BOLT (M20X2.5X140-MM)	
M	8	1	**8T-4131**	3	NUT (M20X2.5-THD)	
	9	1	**8T-5439**	3	WASHER (21.5X45X6-MM THK)	

M-METRIC PART
Y-SEPARATE ILLUSTRATION

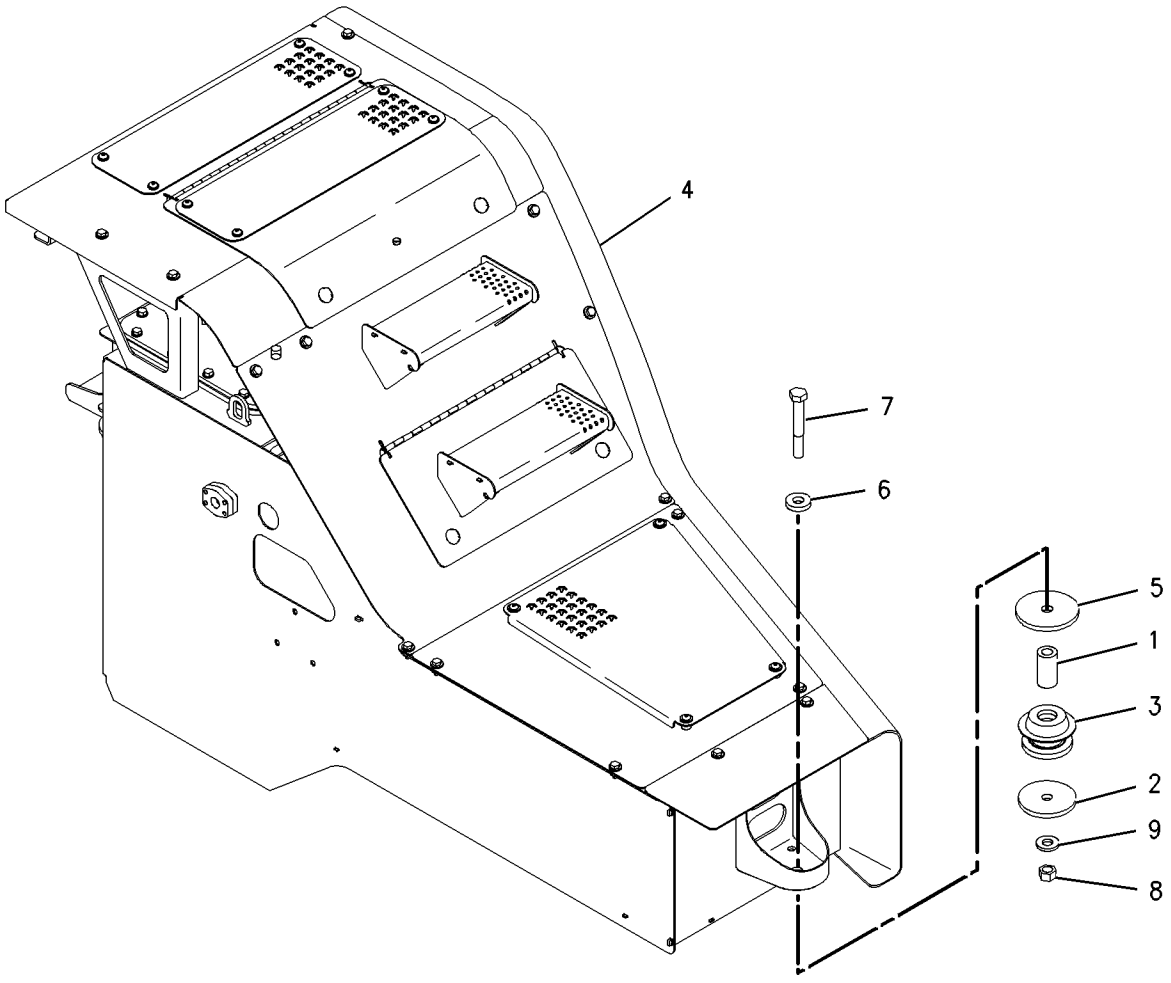

GRAPHIC #1 **<END>** g00764286

HYDRAULIC SYSTEM

141-6884 TANK & MTG GP-HYDRAULIC—HOIST

S/N: AXM395-UP

PART OF 152-6922 HYDRAULIC AR-MACHINE

SMCS-5056 **i01858973**

NOTE	REF NO	GRAPHIC REF	PART NUMBER	QTY	PART NAME 1 2 3 4 5 6 (PRODUCT LEVEL)	SEE PAGE
BC	1	1	**7U-4105**	3	SHIM (2-MM THK)	
	2	1	**9W-6582**	3	SLEEVE	
	3	1	**9W-6584**	3	WASHER (20.5X114X10-MM THK)	
	4	1	**9W-9920**	3	MOUNT AS	
Y	5	1	*162-5242*	1	TANK GP-HYDRAULIC	744
	6	1	**197-3820**	3	WASHER	
	7	1	**205-3984**	3	WASHER-SPECIAL (22X125X10-MM THK)	
M	8	1	**8T-4131**	3	NUT (M20X2.5-THD)	
CM	9	1	**8T-4170**	3	BOLT (M20X2.5X150-MM)	
	10	1	**8T-5439**	3	WASHER (21.5X45X6-MM THK)	

B-USE AS REQUIRED
C-CHANGE FROM PREVIOUS TYPE
M-METRIC PART
Y-SEPARATE ILLUSTRATION

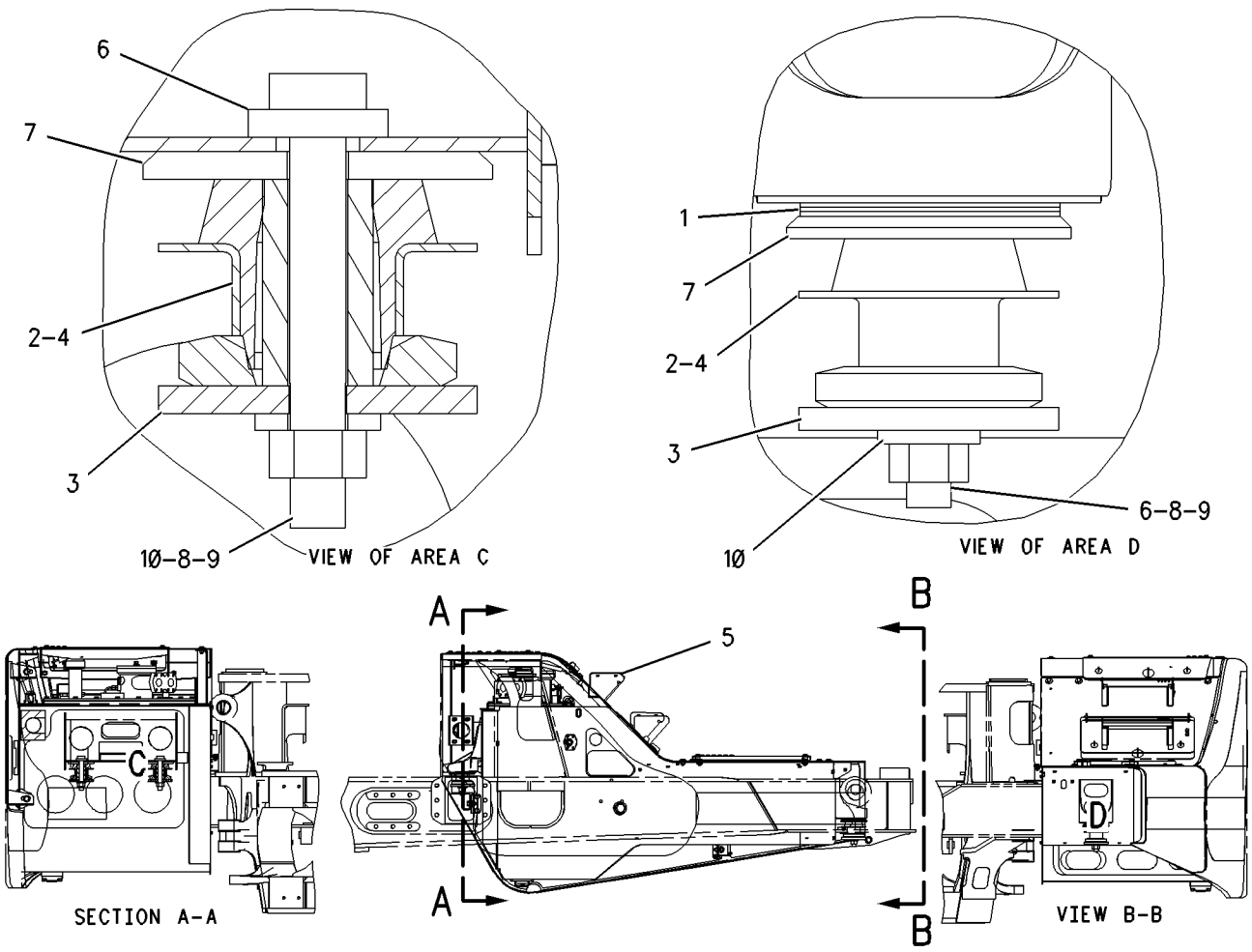

GRAPHIC #1 **<END>** g00858352

189-0601 TANK & MTG GP-HYDRAULIC—STEERING

S/N: AXM1-UP

PART OF 152-6922 HYDRAULIC AR-MACHINE

SMCS-5056 **i01454384**

NOTE	REF NO	GRAPHIC REF	PART NUMBER	QTY	PART NAME 1 2 3 4 5 6 (PRODUCT LEVEL)	SEE PAGE
Y	1	1	*186-9959*	1	TANK GP-HYDRAULIC	752
	2	1	**5P-1076**	4	WASHER-HARD (13.5X30X4MM THK)	
M	3	1	**8T-4139**	2	BOLT (M12X1.75X30MM)	
M	4	1	**8T-4179**	2	BOLT (M12X1.75X20MM)	

M-METRIC PART
Y-SEPARATE ILLUSTRATION

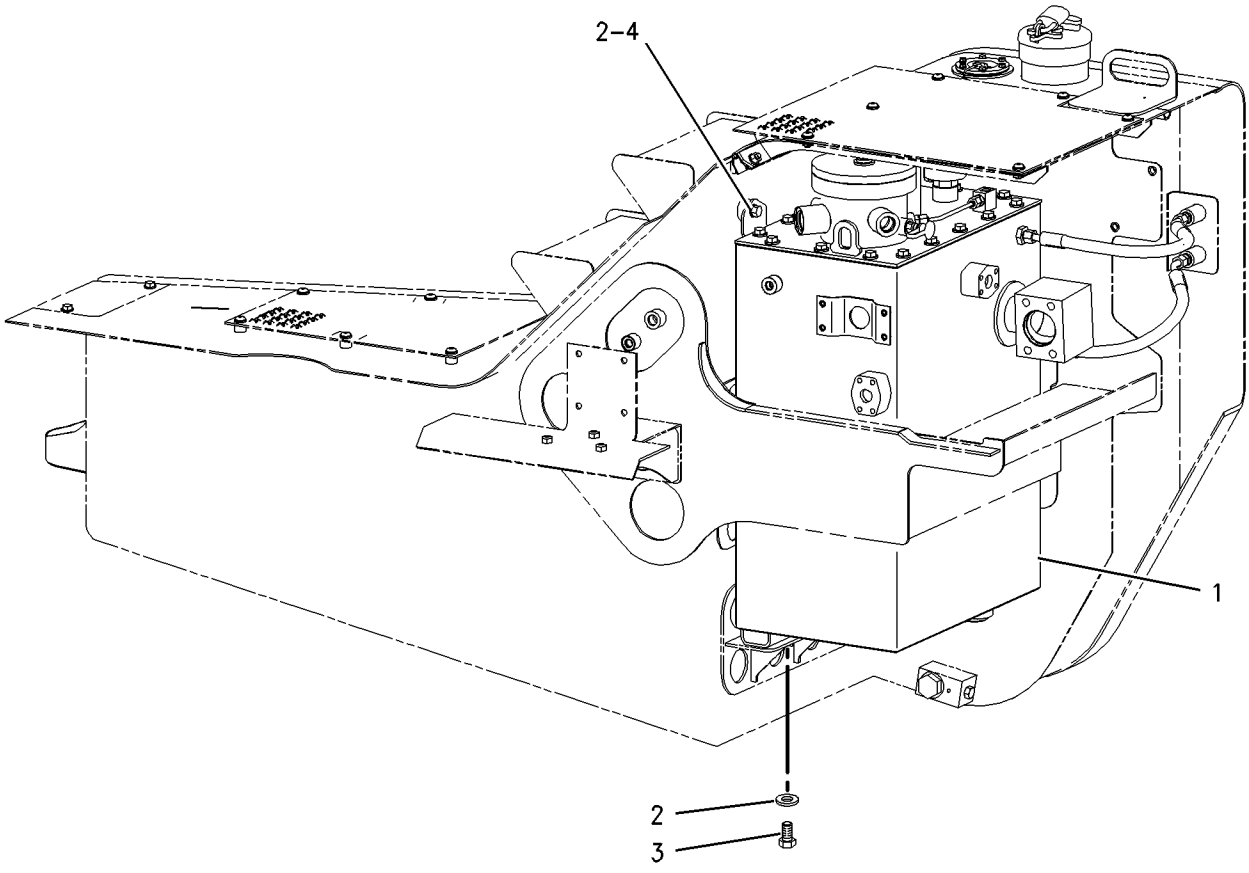

GRAPHIC #1 **<END>** g00761761

HYDRAULIC SYSTEM

162-5242 TANK GP-HYDRAULIC

S/N: AXM1-226

PART OF 141-6884 TANK & MTG GP-HYDRAULIC

SMCS-4332, 5056, 5068 **i02043657**

NOTE	REF NO	GRAPHIC REF	PART NUMBER	QTY	PART NAME 1 2 3 4 5 6 (PRODUCT LEVEL)	SEE PAGE
	1	1	**1L-5072**	1	DOWEL	
	2	2	**1U-1643**	1	VALVE	
	3	2	**1U-2827**	1	GUIDE-VALVE	
	4	1	**2D-4202**	1	PLATE	
	5	2	**2J-0917**	1	RETAINER	
	6	2	**4J-1704**	1	SEAT-VALVE	
	7	2	**4T-8698**	1	WASHER (12.2X62X3.5-MM THK)	
	8	1	**5D-1911**	1	COVER-HYDRAULIC CAP	
	9	1	**5D-7927**	1	STRAINER AS	
		1	**5F-3488**	1	END-STRAINER	
	10	2	**5J-2926**	1	SPRING	
	11	1	**5P-8502**	1	PADLOCK GP	
		1	**5P-8500**	1	KEY	
		1	**8Y-6364**	1	SLEEVE	
	12	1	**9H-6454**	1	GASKET	
	13	2	**6P-3860**	1	SPRING	
	14	2	**7B-3039**	1	SPRING	
	15	1	**7H-1447**	1	CAP-FILLER (HYDRAULIC OIL)	
	16	1	**8C-3451**	1	CAP-DUST	
	17	2	**8J-8782**	1	BODY-DRAIN VALVE	
	18	2	**8J-8783**	1	VALVE	
	19	2	**8T-3298**	1	SEAL-RECTANGULAR	
	20	2	**9J-7031**	1	PLUG-DRAIN	
	21	1	**9M-7394**	1	LEVER (COVER)	
	22	2	**9R-3176**	1	SEAL	
	23	2	**119-4885**	1	SCREEN	
	24	2	**128-6234**	1	PAD	
	25	2	**129-4131**	1	COVER-FILTER	
	26	2	**132-8876**	3	FILTER ELEMENT AS-OIL (HYDRAULIC)	
	27	2	*148-8316*	1	CONNECTOR AS	
		2	**6V-8647**	1	CONNECTOR	
		2	**3J-7354**	1	SEAL-O-RING	
		2	**4J-5477**	1	SEAL-O-RING	
	28	2	*148-8325*	1	CONNECTOR AS	
		2	**6V-8641**	1	CONNECTOR	
		2	**3J-1907**	1	SEAL-O-RING	
		2	**4J-5477**	1	SEAL-O-RING	
	29	2	**149-2744**	1	BOLT-FILTER (5/8-11X31.3-IN)	
	30	1	**150-5939**	2	ADAPTER	
	31	2	**150-8457**	1	SCREEN AS	
	32	2	**157-7911**	1	BREATHER (7-PSI) (HYDRAULIC)	
	33	1	**162-5129**	1	TANK AS-HYDRAULIC	
	34	1	*164-5590*	1	VALVE GP-FLUID SAMPLING	
		1	**8C-3446**	1	VALVE AS-FLUID SAMPLING	
		1	**3J-7354**	1	SEAL-O-RING	
	35	1	**184-9785**	1	PLATE AS (OUTER)	
	36	1	**187-5168**	1	COVER	
	37	2	**188-7298**	1	GASKET	
	38	2	**188-7300**	1	COVER AS	
	39	2	**189-9047**	1	TUBE AS	
	40	2	**191-7740**	2	TUBE AS	
	41	1	**192-7620**	1	GAUGE-OIL LEVEL	
	42	1	**193-0249**	1	PLATE (OIL LEVEL)	
Y	43	1	*200-0148*	1	GUARD GP-HYDRAULIC TANK	506
	44	1,2	**1H-1200**	1	PIN-SPRING	
	45	1	**2J-7761**	1	RING-RETAINING	

162-5242 **TANK GP-HYDRAULIC** *(contd.)* **i02043657**

NOTE	REF NO	GRAPHIC REF	PART NUMBER	QTY	PART NAME 1 2 3 4 5 6 (PRODUCT LEVEL)	SEE PAGE
	46	2	**4L-6454**	2	BOLT (3/8-16X1-IN)	
	47	2	**5M-2057**	1	SEAL-O-RING	
	48	2	**5P-8167**	6	BOLT (3/8-16X0.625-IN)	
	49	1,2	**6F-4855**	1	SEAL-O-RING	
	50	1	**6H-9361**	1	RING-RETAINING	
M	51	2	**6V-7744**	1	LOCKNUT (M10X1.5-THD)	
	52	2	**7J-5925**	1	PIN-COTTER	
M	53	1	**7X-2621**	3	BOLT (M10X1.5X12-MM)	
	54	1	**7X-7729**	20	WASHER (11X25X3-MM THK)	
	55	2	**8J-1665**	1	SEAL-O-RING	
	56	1	**8T-2275**	1	BALL	
	57	1,2	**8T-4121**	35	WASHER-HARD (11X21X2.5-MM THK)	
	58	1,2	**8T-4122**	1	WASHER-HARD (17X32X3.5-MM THK)	
M	59	1	**8T-4133**	6	NUT (M10X1.5-THD)	
M	60	1	**8T-4136**	45	BOLT (M10X1.5X25-MM)	
M	61	1	**8T-4191**	1	BOLT (M10X1.5X16-MM)	
	62	1,2	**8T-4896**	2	WASHER-HARD (10.2X18.5X2.5-MM THK)	

M-METRIC PART
Y-SEPARATE ILLUSTRATION

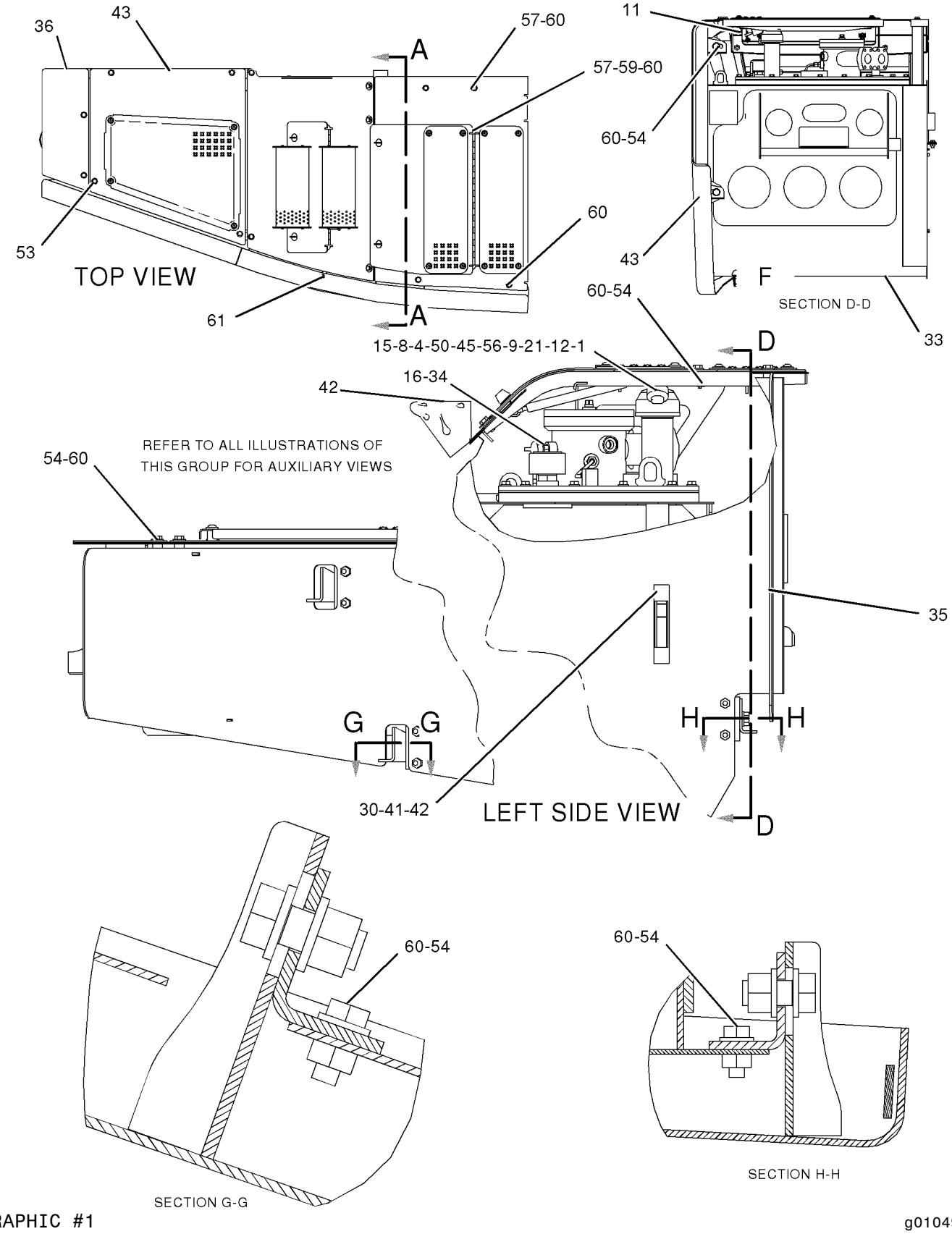

GRAPHIC #1

g01049661

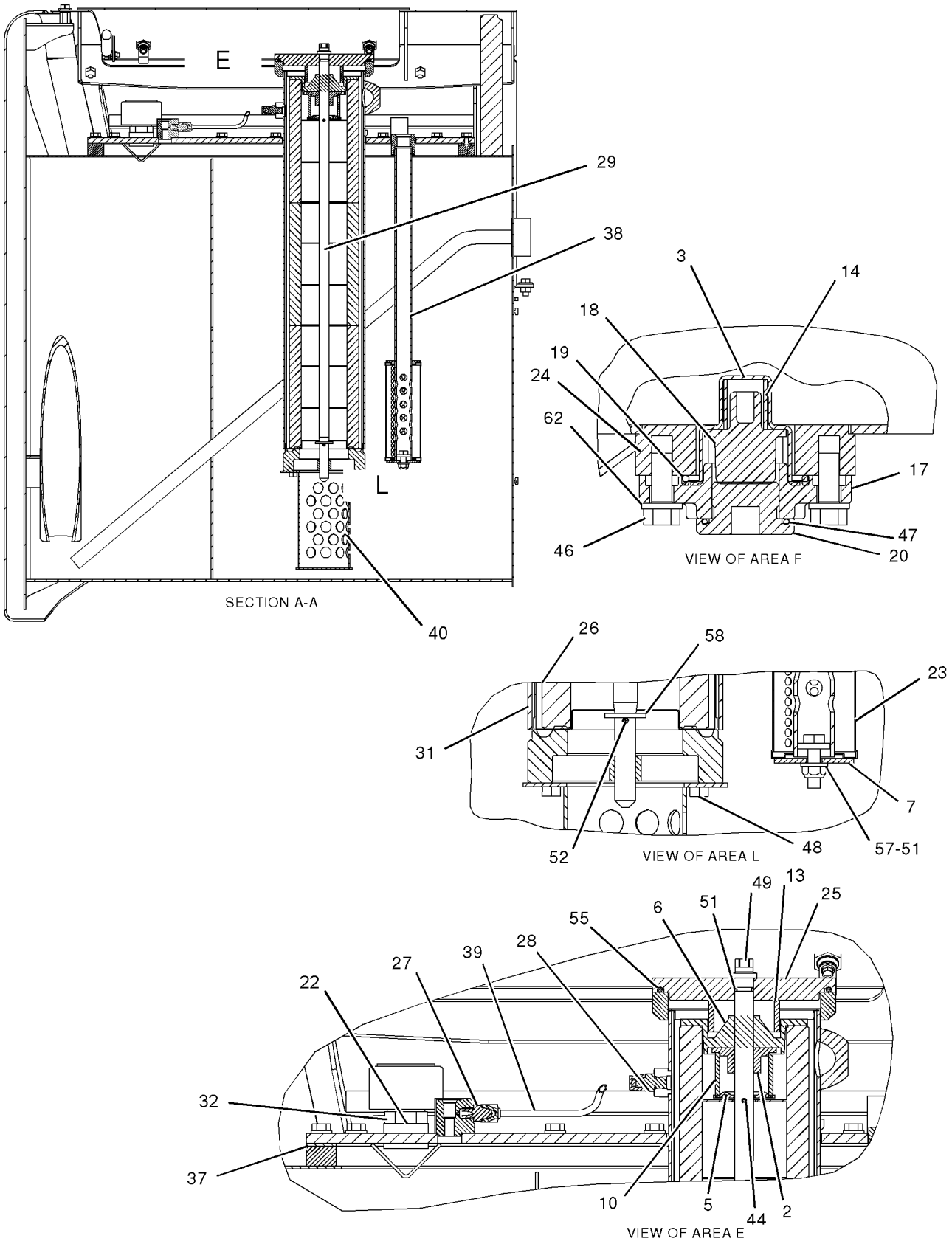

GRAPHIC #2 **<END>** g01049662

HYDRAULIC SYSTEM

162-5242 TANK GP-HYDRAULIC

S/N: AXM227-UP

PART OF 141-6884 TANK & MTG GP-HYDRAULIC

SMCS-4332, 5056, 5068 **i02247367**

NOTE	REF NO	GRAPHIC REF	PART NUMBER	QTY	PART NAME 1 2 3 4 5 6 (PRODUCT LEVEL)	SEE PAGE
	1	2	**1L-5072**	1	DOWEL	
	2	1	**1U-1643**	1	VALVE	
	3	1	**1U-2827**	1	GUIDE-VALVE	
	4	2	**2D-4202**	1	PLATE	
	5	1	**2J-0917**	1	RETAINER	
	6	1	**4J-1704**	1	SEAT-VALVE	
	7	1	**4T-8698**	1	WASHER (12.2X62X3.5-MM THK)	
	8	2	**5D-1911**	1	COVER-HYDRAULIC CAP	
	9	2	**5D-7927**	1	STRAINER AS	
		2	**5F-3488**	1	END-STRAINER	
	10	1	**5J-2926**	1	SPRING	
	11	2	**5P-8502**	1	PADLOCK GP	
		2	**5P-8500**	1	KEY	
		2	**8Y-6364**	1	SLEEVE	
	12	2	**9H-6454**	1	GASKET	
	13	1	**6P-3860**	1	SPRING	
	14	1	**7B-3039**	1	SPRING	
	15	2	**7H-1447**	1	CAP-FILLER (HYDRAULIC OIL)	
	16	2	**8C-3451**	1	CAP-DUST	
	17	1	**8J-8782**	1	BODY-DRAIN VALVE	
	18	1	**8J-8783**	1	VALVE	
	19	1	**8T-3298**	1	SEAL-RECTANGULAR	
	20	1	**9J-7031**	1	PLUG-DRAIN	
	21	2	**9M-7394**	1	LEVER (COVER)	
	22	1	**9R-3176**	1	SEAL	
	23	1	**119-4885**	1	SCREEN	
	24	1	**129-4131**	1	COVER-FILTER	
	25	1	**132-8876**	3	FILTER ELEMENT AS-OIL (HYDRAULIC)	
	26	1	*148-8316*	1	CONNECTOR AS	
		1	**6V-8647**	1	CONNECTOR	
		1	**3J-7354**	1	SEAL-O-RING	
		1	**4J-5477**	1	SEAL-O-RING	
	27	1	*148-8325*	1	CONNECTOR AS	
		1	**6V-8641**	1	CONNECTOR	
		1	**3J-1907**	1	SEAL-O-RING	
		1	**4J-5477**	1	SEAL-O-RING	
	28	1	**149-2744**	1	BOLT-FILTER (5/8-11X31.3-IN)	
	29	2	**150-5939**	2	ADAPTER	
	30	1	**150-8457**	1	SCREEN AS	
	31	1	**157-7911**	1	BREATHER (7-PSI) (HYDRAULIC)	
	32	2	**162-5129**	1	TANK AS-HYDRAULIC	
	33	2	*164-5590*	1	VALVE GP-FLUID SAMPLING	
		2	**8C-3446**	1	VALVE AS-FLUID SAMPLING	
		2	**3J-7354**	1	SEAL-O-RING	
	34	2	**187-5168**	1	COVER	
	35	1	**188-7298**	1	GASKET	
	36	1	**188-7300**	1	COVER AS	
	37	1	**189-9047**	1	TUBE AS	
	38	1	**191-7740**	2	TUBE AS	
	39	2	**192-7620**	1	GAUGE-OIL LEVEL	
	40	2	**193-0247**	1	PLATE (OIL LEVEL)	
	41	2	**199-7649**	1	INSERT	
Y	42	2	*200-0148*	1	GUARD GP-HYDRAULIC TANK	506
C	43	2	**203-5815**	1	PLATE AS-LH	
	44	2	**207-0845**	4	BRACKET	
	45	1	**1H-1200**	1	PIN-SPRING	

162-5242 **TANK GP-HYDRAULIC** *(contd.)* **i02247367**

NOTE	REF NO	GRAPHIC REF	PART NUMBER	QTY	PART NAME 1 2 3 4 5 6 (PRODUCT LEVEL)	SEE PAGE
	46	2	**2J-7761**	1	RING-RETAINING	
	47	1	**4L-6454**	2	BOLT (3/8-16X1-IN)	
	48	1	**5M-2057**	1	SEAL-O-RING	
	49	2	**5P-1076**	8	WASHER-HARD (13.5X30X4-MM THK)	
	50	1	**5P-8167**	6	BOLT (3/8-16X0.625-IN)	
	51	1	**6F-4855**	1	SEAL-O-RING	
	52	2	**6H-9361**	1	RING-RETAINING	
M	53	1	**6V-7744**	1	LOCKNUT (M10X1.5-THD)	
	54	1	**7J-5925**	1	PIN-COTTER	
	55	2	**7X-0578**	12	WASHER-HARD (10.2X32X2.5-MM THK)	
	56	1	**8J-1665**	1	SEAL-O-RING	
	57	2	**8T-2275**	1	BALL	
	58	1,2	**8T-4121**	43	WASHER-HARD (11X21X2.5-MM THK)	
	59	1	**8T-4122**	1	WASHER-HARD (17X32X3.5-MM THK)	
M	60	1	**8T-4133**	6	NUT (M10X1.5-THD)	
M	61	1,2	**8T-4136**	48	BOLT (M10X1.5X25-MM)	
M	62	2	**8T-4244**	4	NUT (M12X1.75-THD)	
	63	1	**8T-4896**	2	WASHER-HARD (10.2X18.5X2.5-MM THK)	
M	64	2	**8T-4956**	4	BOLT (M12X1.75X35-MM)	

C-CHANGE FROM PREVIOUS TYPE
M-METRIC PART
Y-SEPARATE ILLUSTRATION

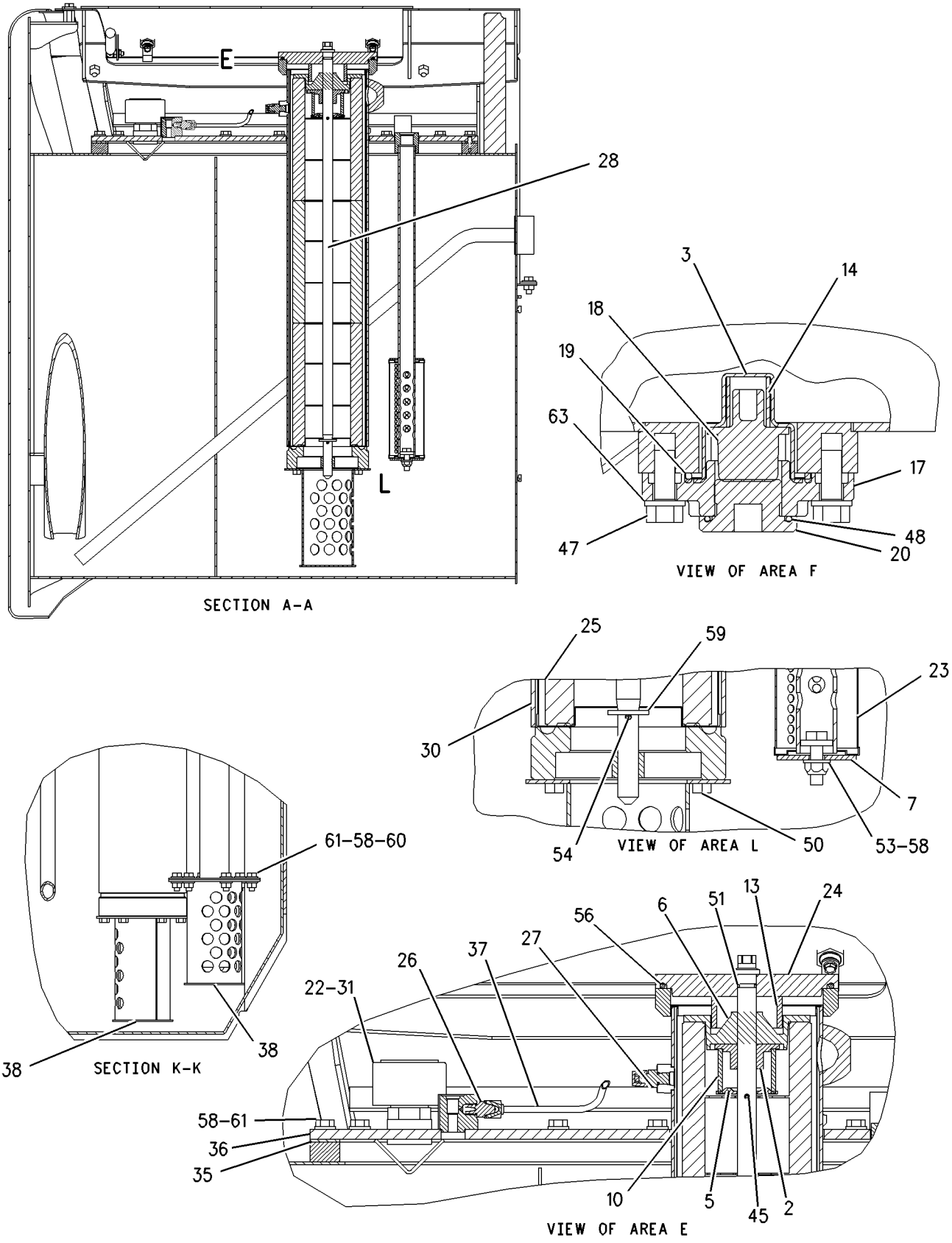

GRAPHIC #1

g00990601

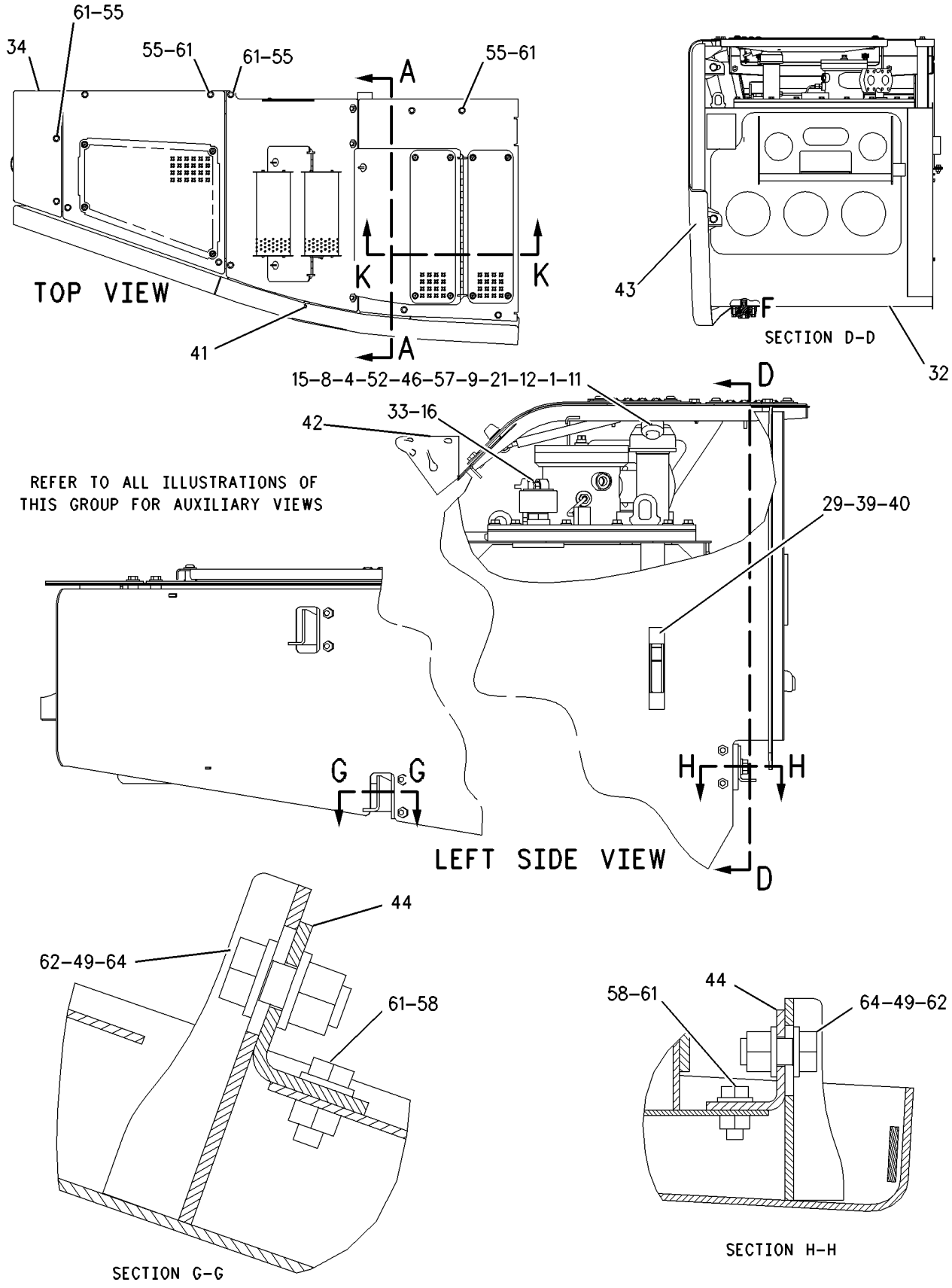

GRAPHIC #2 **<END>** g00990602

HYDRAULIC SYSTEM

186-9959 TANK GP-HYDRAULIC

S/N: AXM1-UP

PART OF 189-0601 TANK & MTG GP-HYDRAULIC

SMCS-4332, 5056, 5068 **i01934040**

NOTE	REF NO	GRAPHIC REF	PART NUMBER	QTY	PART NAME 1 2 3 4 5 6 (PRODUCT LEVEL)	SEE PAGE
	1	1	**1U-2827**	1	GUIDE-VALVE	
	2	1	**7B-3039**	1	SPRING	
	3	1	**8J-8782**	1	BODY-DRAIN VALVE	
	4	1	**8J-8783**	1	VALVE	
	5	1	**8T-3298**	1	SEAL-RECTANGULAR	
	6	1	**9J-7031**	1	PLUG-DRAIN (HYDRAULIC TANK)	
	7	1	*148-8336*	2	CONNECTOR AS	
					(EACH INCLUDES)	
		1	**6V-8636**	1	CONNECTOR	
		1	**3J-1907**	1	SEAL-O-RING	
		1	**6V-8397**	1	SEAL-O-RING	
Y	8	1	*185-1740*	1	COVER GP-TANK	667
	9	1	**192-4900**	1	GASKET	
I	10	1	**194-5444**	1	HOSE AS	
I	11	1	**194-5445**	1	HOSE AS	
	12	1	**231-0660**	1	TANK AS-HYDRAULIC	
	13	1	**4L-6454**	2	BOLT (3/8-16X1-IN)	
	14	1	**5M-2057**	1	SEAL-O-RING	
	15	1	**8T-4121**	16	WASHER-HARD (11X21X2.5-MM THK)	
M	16	1	**8T-4136**	16	BOLT (M10X1.5X25-MM)	
	17	1	**8T-4896**	2	WASHER-HARD (10.2X18.5X2.5-MM THK)	

I-REFER TO HYDRAULIC INFORMATION SYSTEM
M-METRIC PART
Y-SEPARATE ILLUSTRATION

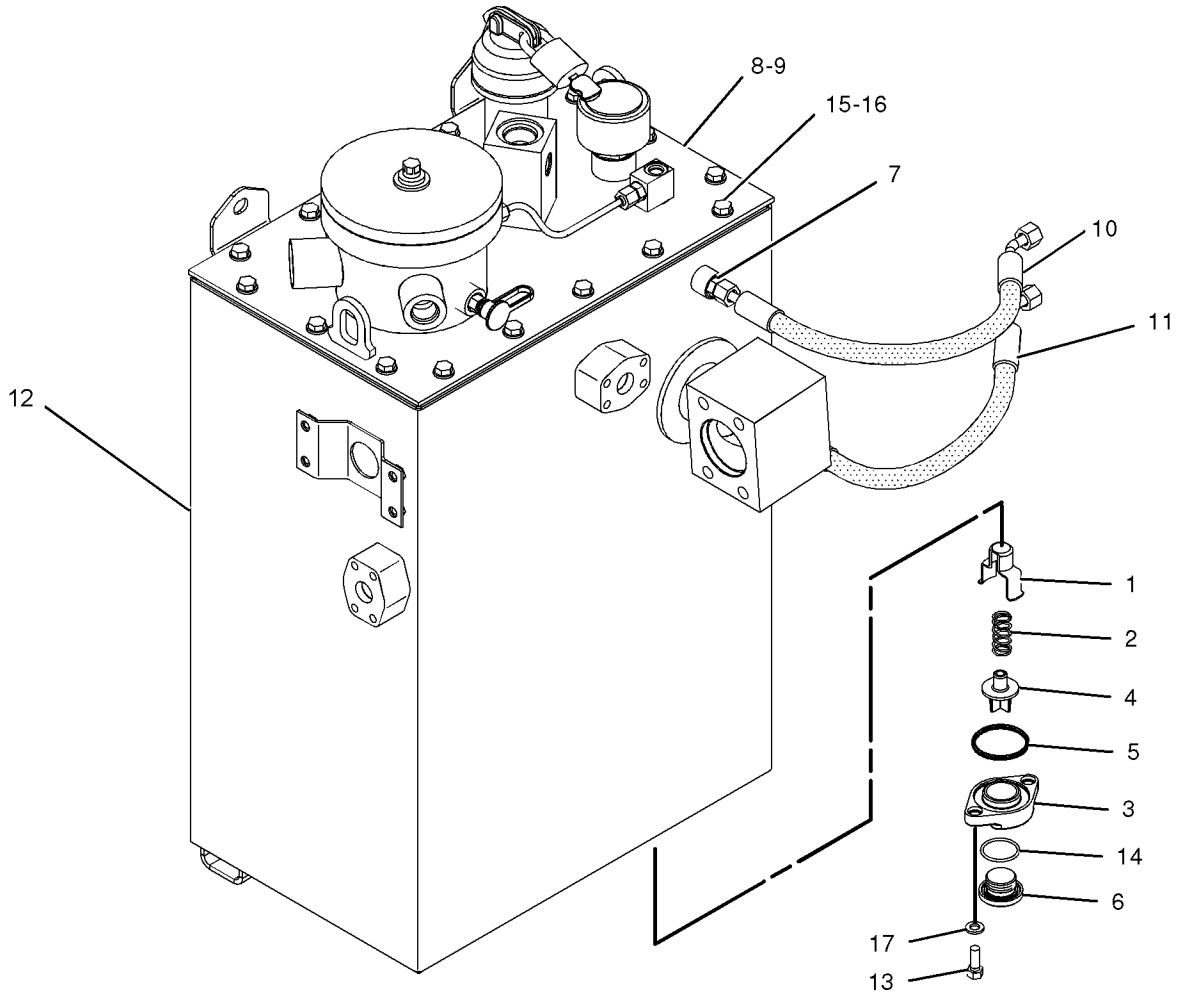

GRAPHIC #1 **<END>** g01006449

HYDRAULIC SYSTEM

152-7120 VALVE & MTG GP-HOIST CONTROL

S/N: AXM1-524

PART OF 152-7101 LINES GP-HOIST

SMCS-5136 **i01533444**

NOTE	REF NO	GRAPHIC REF	PART NUMBER	QTY	PART NAME 1 2 3 4 5 6 (PRODUCT LEVEL)	SEE PAGE
	1	1	**8T-8902**	1	TEE	
		1	**6V-8397**	1	SEAL-O-RING	
	2	1	**6V-3965**	1	FITTING AS	
		1	**3J-1907**	1	SEAL-O-RING	
Y	3	1	**189-5772**	1	VALVE GP-HOIST CONTROL	771
	4	1	**189-9263**	1	TUBE AS	
	5	1	**189-9264**	1	TUBE AS	
	6	1	**206-8994**	1	TUBE AS	
	7	1	**192-7706**	1	PLATE AS	
	8	1	**6V-8636**	4	CONNECTOR	
		1	**3J-1907**	4	SEAL-O-RING	
		1	**6V-8397**	4	SEAL-O-RING	
	9	1	**6V-9850**	1	ELBOW	
		1	**6V-8397**	1	SEAL-O-RING	
	10	1	**6V-8627**	1	ELBOW	
		1	**3J-1907**	1	SEAL-O-RING	
		1	**4J-5477**	1	SEAL-O-RING	
	11	1	**6V-8628**	1	ELBOW	
		1	**3J-7354**	1	SEAL-O-RING	
		1	**4J-5477**	1	SEAL-O-RING	
	12	1	**6V-9843**	2	TEE-SWIVEL	
		1	**6V-8397**	4	SEAL-O-RING	
	13	1	**6V-0852**	1	CAP-DUST	
M	14	1	**7X-7960**	4	BOLT (M12X1.75X220-MM)	
	15	1	**8T-4223**	8	WASHER-HARD (13.5X25.5X3-MM THK)	
M	16	1	**8T-4244**	4	NUT (M12X1.75-THD)	

M-METRIC PART
Y-SEPARATE ILLUSTRATION

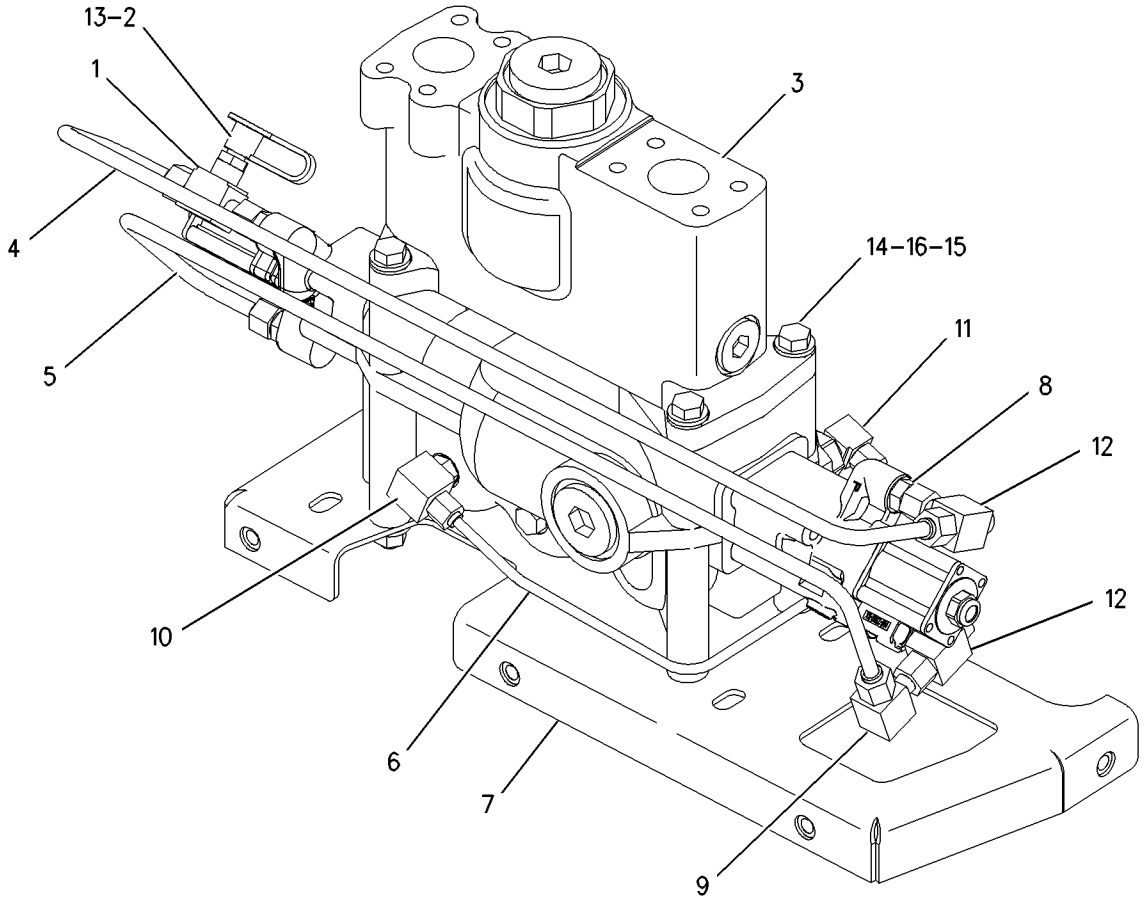

GRAPHIC #1 **<END>** g00764753

HYDRAULIC SYSTEM

152-7120 VALVE & MTG GP-HOIST CONTROL

S/N: AXM525-1492

PART OF 152-7101 LINES GP-HOIST

SMCS-5136 **i01659616**

NOTE	REF NO	GRAPHIC REF	PART NUMBER	QTY	PART NAME 1 2 3 4 5 6 (PRODUCT LEVEL)	SEE PAGE
	1	1	*148-8424*	1	TEE AS	
		1	**6V-8397**	1	SEAL-O-RING	
		1	**8T-8902**	1	TEE	
	2	1	*164-5567*	1	FITTING GP-COUPLING	
		1	**3J-1907**	1	SEAL-O-RING	
		1	**6V-3965**	1	FITTING AS	
Y	3	1	**189-5772**	1	VALVE GP-HOIST CONTROL	771
	4	1	**189-9263**	1	TUBE AS	
	5	1	**192-7706**	1	PLATE AS	
	6	1	**206-8994**	1	TUBE AS	
	7	1	**217-2573**	1	TUBE AS	
	8	1	*148-8336*	4	CONNECTOR AS	
					(EACH INCLUDES)	
		1	**3J-1907**	1	SEAL-O-RING	
		1	**6V-8397**	1	SEAL-O-RING	
		1	**6V-8636**	1	CONNECTOR	
	9	1	*148-8368*	1	ELBOW AS	
		1	**3J-1907**	1	SEAL-O-RING	
		1	**4J-5477**	1	SEAL-O-RING	
		1	**6V-8627**	1	ELBOW	
	10	1	*148-8369*	1	ELBOW AS	
		1	**3J-7354**	1	SEAL-O-RING	
		1	**4J-5477**	1	SEAL-O-RING	
		1	**6V-8628**	1	ELBOW	
	11	1	*148-8434*	2	TEE AS	
					(EACH INCLUDES)	
		1	**6V-8397**	2	SEAL-O-RING	
		1	**6V-9843**	1	TEE-SWIVEL	
	12	1	**6V-0852**	1	CAP-DUST	
M	13	1	**7X-7960**	4	BOLT (M12X1.75X220-MM)	
	14	1	**8T-4223**	8	WASHER-HARD (13.5X25.5X3-MM THK)	
M	15	1	**8T-4244**	4	NUT (M12X1.75-THD)	

M-METRIC PART
Y-SEPARATE ILLUSTRATION

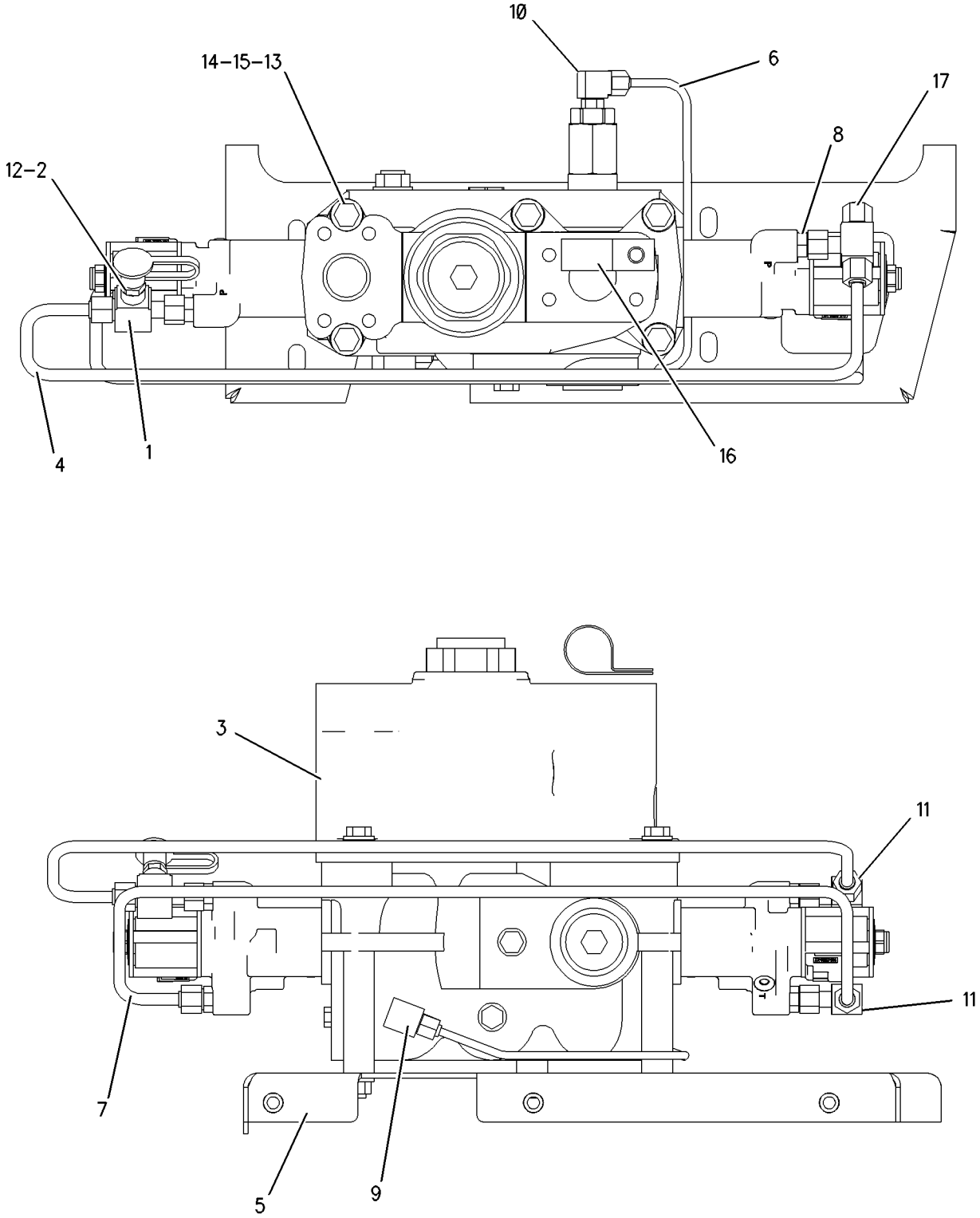

GRAPHIC #1 **<END>** g00856471

HYDRAULIC SYSTEM

152-7120 VALVE & MTG GP-HOIST CONTROL

S/N: AXM1493-UP

PART OF 152-7101 LINES GP-HOIST

SMCS-5136 **i02137999**

NOTE	REF NO	GRAPHIC REF	PART NUMBER	QTY	PART NAME 1 2 3 4 5 6 (PRODUCT LEVEL)	SEE PAGE
	1	1	*148-8424*	1	TEE AS	
		1	**6V-8397**	1	SEAL-O-RING	
		1	**8T-8902**	1	TEE	
	2	1	*164-5567*	1	FITTING GP-COUPLING	
		1	**3J-1907**	1	SEAL-O-RING	
		1	**6V-3965**	1	FITTING AS	
Y	3	1	**189-5772**	1	VALVE GP-HOIST CONTROL	771
	4	1	**189-9263**	1	TUBE AS	
	5	1	**217-2573**	1	TUBE AS	
C	6	1	**247-8399**	1	PLATE AS	
M		1	**8T-3597**	5	NUT-WELD (M12X1.75-THD)	
C	7	1	**247-8401**	1	TUBE AS	
	8	1	*148-8336*	4	CONNECTOR AS	
					(EACH INCLUDES)	
		1	**3J-1907**	1	SEAL-O-RING	
		1	**6V-8397**	1	SEAL-O-RING	
		1	**6V-8636**	1	CONNECTOR	
	9	1	*148-8368*	1	ELBOW AS	
		1	**3J-1907**	1	SEAL-O-RING	
		1	**4J-5477**	1	SEAL-O-RING	
		1	**6V-8627**	1	ELBOW	
	10	1	*148-8369*	1	ELBOW AS	
		1	**3J-7354**	1	SEAL-O-RING	
		1	**4J-5477**	1	SEAL-O-RING	
		1	**6V-8628**	1	ELBOW	
	11	1	*148-8434*	2	TEE AS	
					(EACH INCLUDES)	
		1	**6V-8397**	2	SEAL-O-RING	
		1	**6V-9843**	1	TEE-SWIVEL	
	12	1	**6V-0852**	1	CAP-DUST	
C	13	1	**7X-7729**	3	WASHER (11X25X3-MM THK)	
M	14	1	**7X-7960**	4	BOLT (M12X1.75X220-MM)	
C	15	1	**8K-5440**	1	CLIP	
CM	16	1	**8T-4133**	1	NUT (M10X1.5-THD)	
CM	17	1	**8T-4195**	1	BOLT (M10X1.5X30-MM)	
	18	1	**8T-4223**	8	WASHER-HARD (13.5X25.5X3-MM THK)	
M	19	1	**8T-4244**	4	NUT (M12X1.75-THD)	

C-CHANGE FROM PREVIOUS TYPE
M-METRIC PART
Y-SEPARATE ILLUSTRATION

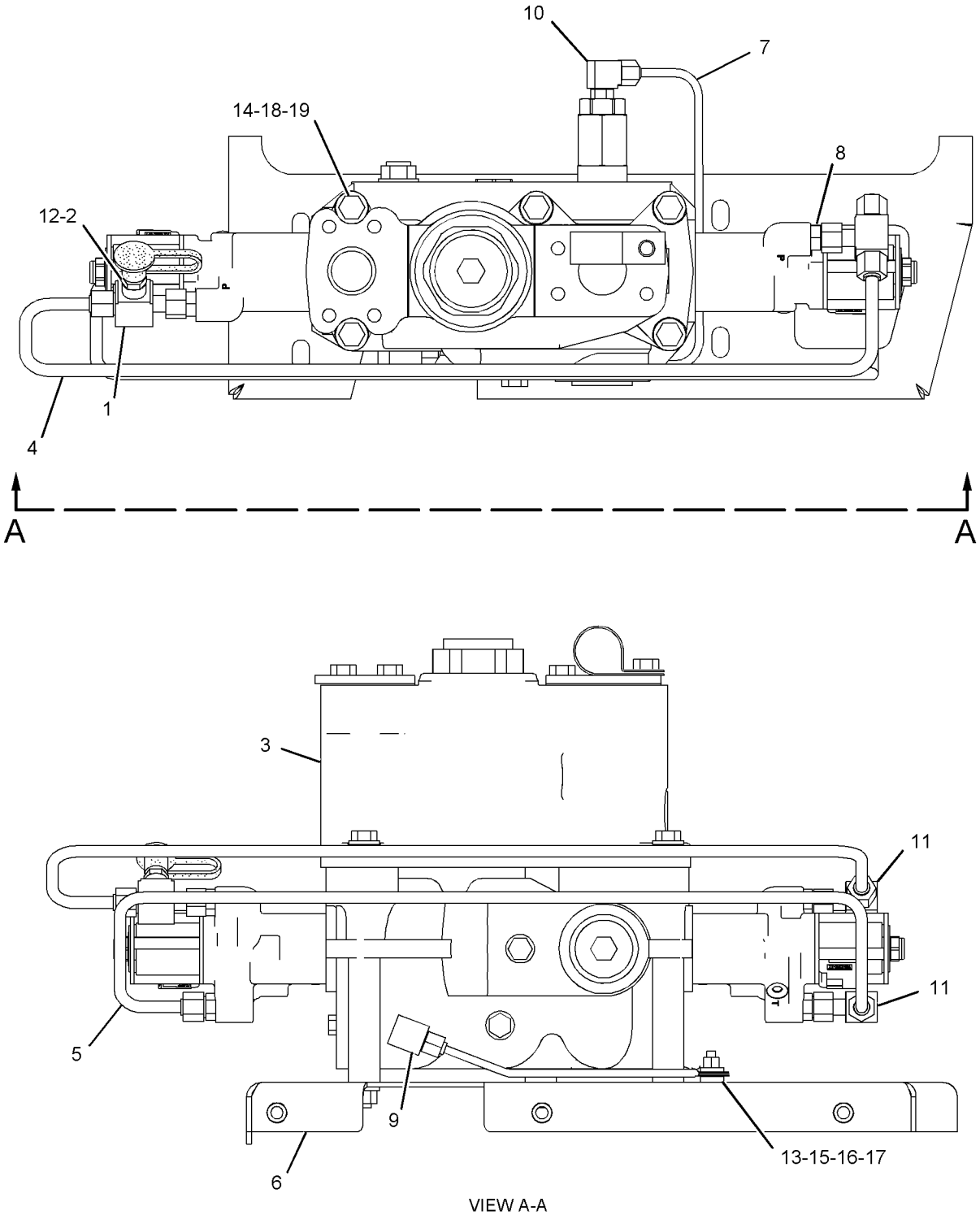

VIEW A-A

GRAPHIC #1 **<END>** g01086425

HYDRAULIC SYSTEM

194-2530 VALVE & MTG GP-HYDRAULIC FAN

S/N: AXM1-UP

PART OF 213-6518 LINES GP-HYDRAULIC FAN

SMCS-5051 **i01846764**

NOTE	REF NO	GRAPHIC REF	PART NUMBER	QTY	PART NAME 1 2 3 4 5 6 (PRODUCT LEVEL)	SEE PAGE
	1	1	**191-7785**	1	VALVE GP-SOLENOID	
	1A	1	**146-3728**	1	WASHER-SPRING	
	1B	1	**148-2350**	1	COIL AS	
		1	**146-3728**	1	WASHER-SPRING	
	1C	1	**154-4133**	1	CARTRIDGE AS	
		1	**6V-5049**	2	SEAL-O-RING	
	2	1	**206-4794**	1	MANIFOLD	

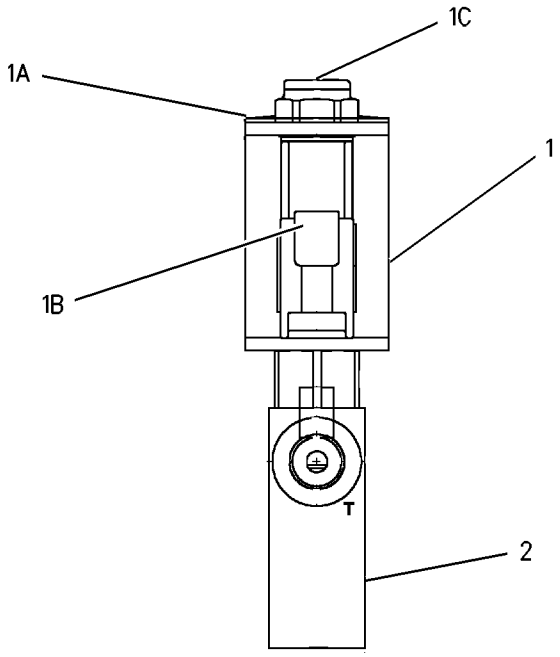

GRAPHIC #1 **<END>** g00847514

HYDRAULIC SYSTEM

127-8175 VALVE GP-CHECK

S/N: AXM1-UP
PART OF 236-9982 VALVE GP-COMBINATION
AN ATTACHMENT

SMCS-5067 **i02091228**

NOTE	REF NO	GRAPHIC REF	PART NUMBER	QTY	PART NAME 1 2 3 4 5 6 (PRODUCT LEVEL)	SEE PAGE
	1	1	**3K-0360**	1	SEAL-O-RING	
	2	1	**161-6154**	1	SEAL-O-RING	
	3	1	**6E-0381**	1	RING-BACKUP	

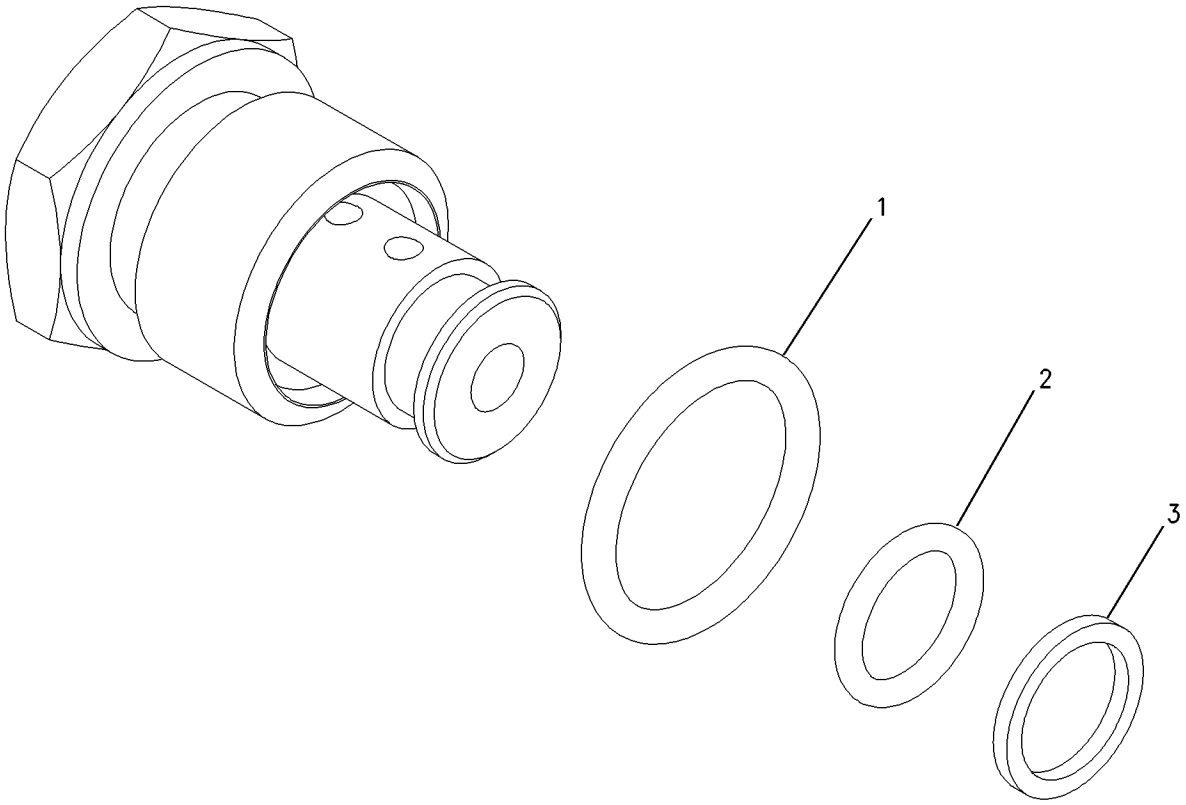

GRAPHIC #1 **<END>** g00722550

128-2780 VALVE GP-CHECK–MAIN CONTROL VALVE

S/N: AXM1-UP
PART OF 236-9982 VALVE GP-COMBINATION
AN ATTACHMENT

SMCS-5067 **i02212166**

NOTE	PART NUMBER	QTY	PART NAME 1 2 3 4 5 6 (PRODUCT LEVEL)	SEE PAGE
	128-2779	2	KIT-SEAL (CHECK VALVE) (HYDRAULIC FAN, REVERSING)	

<END>

158-9956 VALVE GP-CHECK–HYDRAULIC FAN–
MAIN CONTROL VALVE
S/N: AXM1-UP
PART OF 236-9982 VALVE GP-COMBINATION
AN ATTACHMENT

SMCS-5067 **i01950824**

NOTE	REF NO	GRAPHIC REF	PART NUMBER	QTY	PART NAME 1 2 3 4 5 6 (PRODUCT LEVEL)	SEE PAGE
	1	1	**3K-0360**	1	SEAL-O-RING	
	2	1	**161-6154**	1	SEAL-O-RING	
	3	1	**6E-0381**	1	RING-BACKUP	

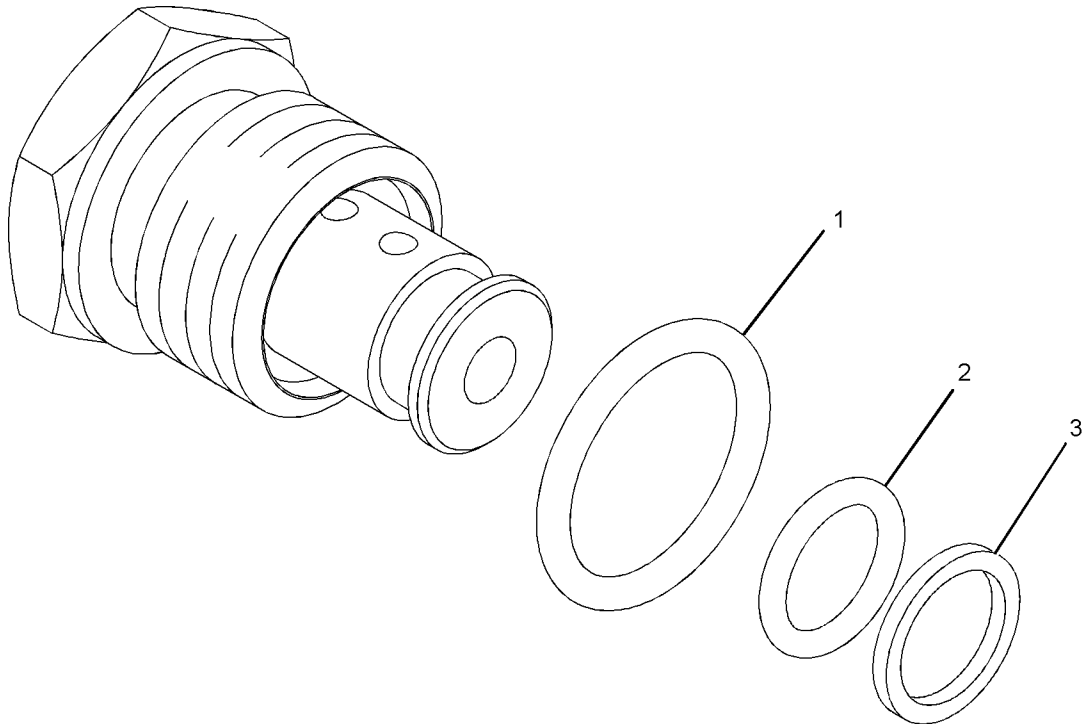

GRAPHIC #1 **<END>** g01016882

HYDRAULIC SYSTEM

165-7948 VALVE GP-CHECK–HOIST

S/N: AXM1-UP

PART OF 166-3954, 227-5285 LINES GP-PILOT

SMCS-5067 **i01125883**

NOTE	REF NO	GRAPHIC REF	PART NUMBER	QTY	PART NAME 1 2 3 4 5 6 (PRODUCT LEVEL)	SEE PAGE
	1	1	**3J-1907**	1	SEAL-O-RING	
	2	1	**4J-5477**	1	SEAL-O-RING	

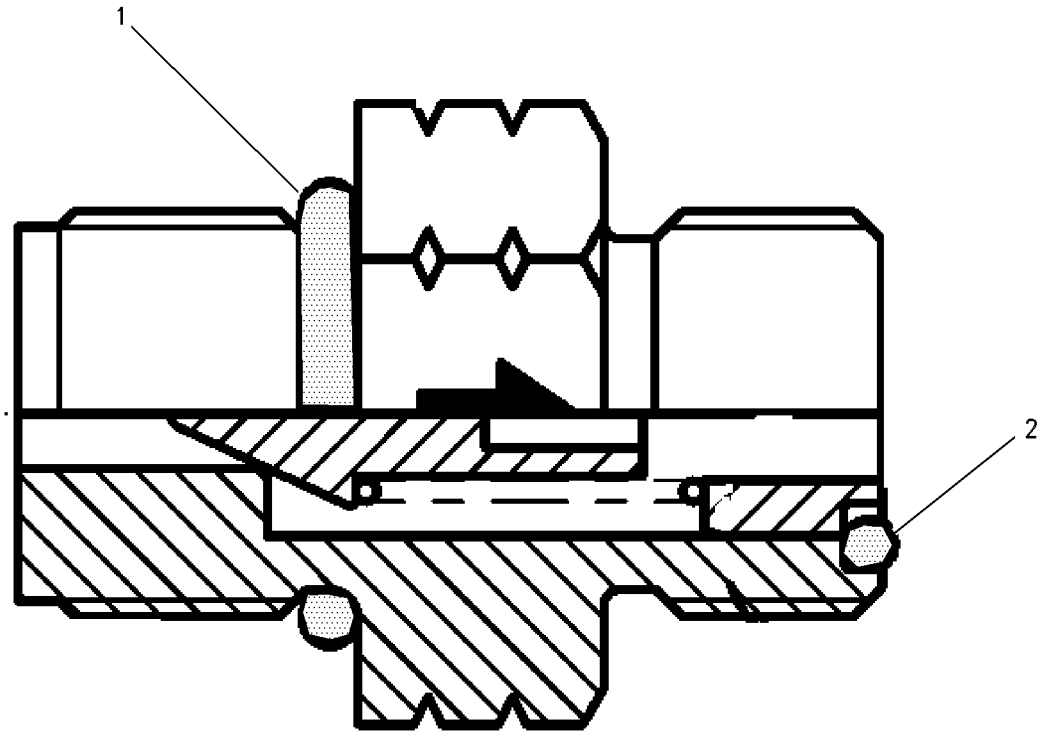

GRAPHIC #1 **<END>** g00603896

179-9223 VALVE GP-CHECK–STEERING PUMP

S/N: AXM1-UP

PART OF 166-3954 LINES GP-PILOT

SMCS-5067 **i01540749**

NOTE	REF NO	GRAPHIC REF	PART NUMBER	QTY	PART NAME 1 2 3 4 5 6 (PRODUCT LEVEL)	SEE PAGE
	1	1	**3J-1907**	1	SEAL-O-RING	
	2	1	**4J-5477**	1	SEAL-O-RING	

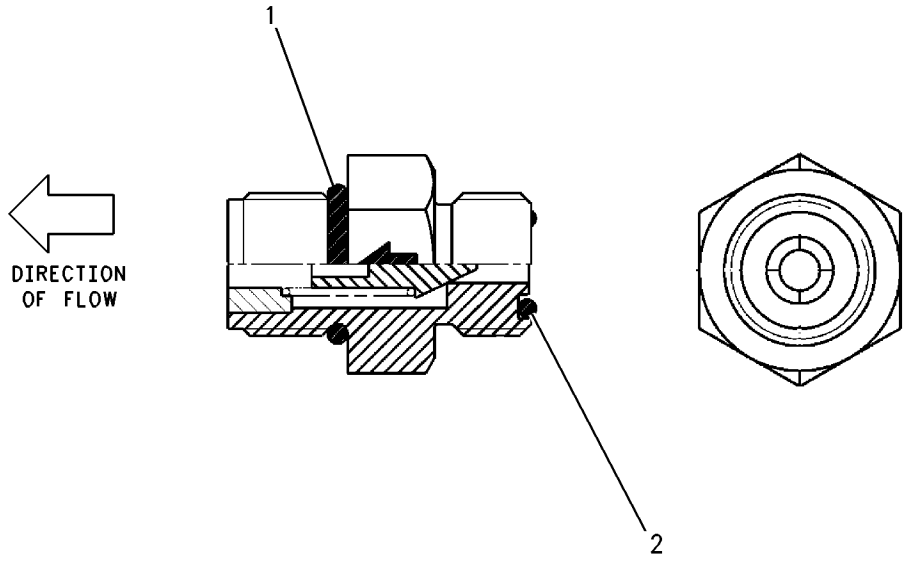

GRAPHIC #1 **<END>** g00800488

194-1723 VALVE GP-CHECK–MAIN CONTROL VALVE

S/N: AXM1-UP
PART OF 236-9982 VALVE GP-COMBINATION
AN ATTACHMENT

SMCS-5067 **i02091208**

NOTE	REF NO	GRAPHIC REF	PART NUMBER	QTY	PART NAME 1 2 3 4 5 6 (PRODUCT LEVEL)	SEE PAGE
	1	1	**2M-9780**	1	SEAL-O-RING	
	2	1	**161-6149**	1	SEAL-O-RING	
	3	1	**7X-4776**	1	RING-BACKUP	

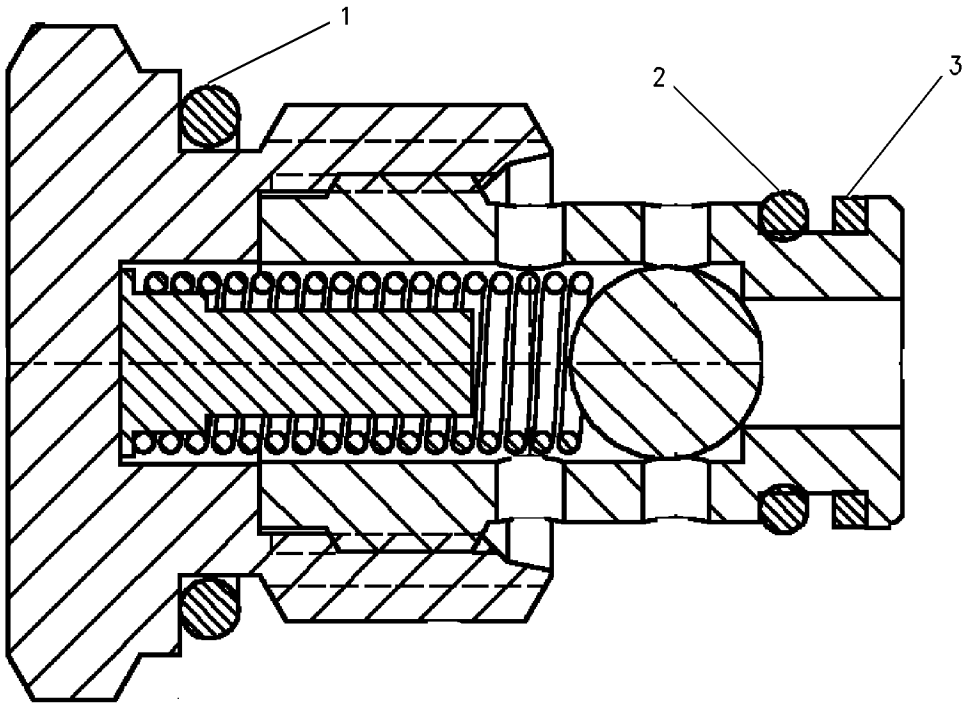

GRAPHIC #1 **<END>** g00748809

HYDRAULIC SYSTEM

236-9982 VALVE GP-COMBINATION

S/N: AXM1-UP

AN ATTACHMENT

SMCS-5064 **i02060011**

NOTE	PART NUMBER	QTY	PART NAME 1 2 3 4 5 6 (PRODUCT LEVEL)	SEE PAGE
Y	**158-9956**	2	VALVE GP-CHECK	763
Y	**194-1723**	1	VALVE GP-CHECK	766
Y	**128-2780**	1	VALVE GP-CHECK	762
Y	**127-8175**	1	VALVE GP-CHECK	761
Y	**239-0603**	2	VALVE GP-DIVERTER	769
Y	**239-0605**	1	VALVE GP-DIVERTER	770
Y	**239-0615**	1	VALVE GP-PRESSURE REDUCING	776
Y	**213-4555**	1	VALVE GP-SHUTTLE	617
Y	**201-0950**	1	VALVE GP-SOLENOID	786
Y	**191-7785**	1	VALVE GP-SOLENOID	785
	6E-5066	2	SCREEN	
	239-0617	2	VALVE GP-CHECK	
			(EACH INCLUDES)	
	3H-0442	1	SEAL-O-RING	
	095-1513	1	SEAL-O-RING	
	239-5157	1	KIT-SEAL (CHECK VALVE)	
			(INCLUDES SEALS & RINGS)	
	239-0621	1	VALVE GP-DIVERTER	
	200-6282	1	KIT-SEAL (DIVERTER VALVE)	
			(INCLUDES SEALS & RINGS)	
	239-0612	1	VALVE GP-RELIEF	
	1H-1023	1	SEAL-O-RING	
	5F-9144	1	SEAL-O-RING	
	225-9611	1	KIT-SEAL (RELIEF VALVE)	
			(INCLUDES SEALS & RINGS)	
	239-0614	1	VALVE GP-RELIEF	
	133-5545	1	KIT-SEAL (RELIEF VALVE)	
			(INCLUDES SEALS & RINGS)	
	239-0618	2	VALVE GP-SHUTTLE	
			(EACH INCLUDES)	
	3H-0442	1	SEAL-O-RING	
	239-5195	1	KIT-SEAL (SHUTTLE VALVE)	
			(INCLUDES SEALS & RINGS)	

Y-SEPARATE ILLUSTRATION

<END>

HYDRAULIC SYSTEM

133-8810 VALVE GP-COUNTERBALANCE

S/N: AXM1-967
PART OF 152-7114 LINES GP-TAILGATE
AN ATTACHMENT

SMCS-5811 **i01547396**

NOTE	REF NO	GRAPHIC REF	PART NUMBER	QTY	PART NAME 1 2 3 4 5 6 (PRODUCT LEVEL)	SEE PAGE
	1	1	**6V-0408**	1	SEAL-BONDED	
	2	1	**6V-0409**	1	SEAL-BONDED (33.89-MM ID)	
	3	1	**3J-1907**	1	SEAL-O-RING	
	4	1	**2U-1457**	1	BOLT (1 1/16-12 THD)	
	5	1	**9S-8004**	1	PLUG	
					AVAILABLE REPAIR KIT(S):	
			7U-2303	1	KIT-SEAL	

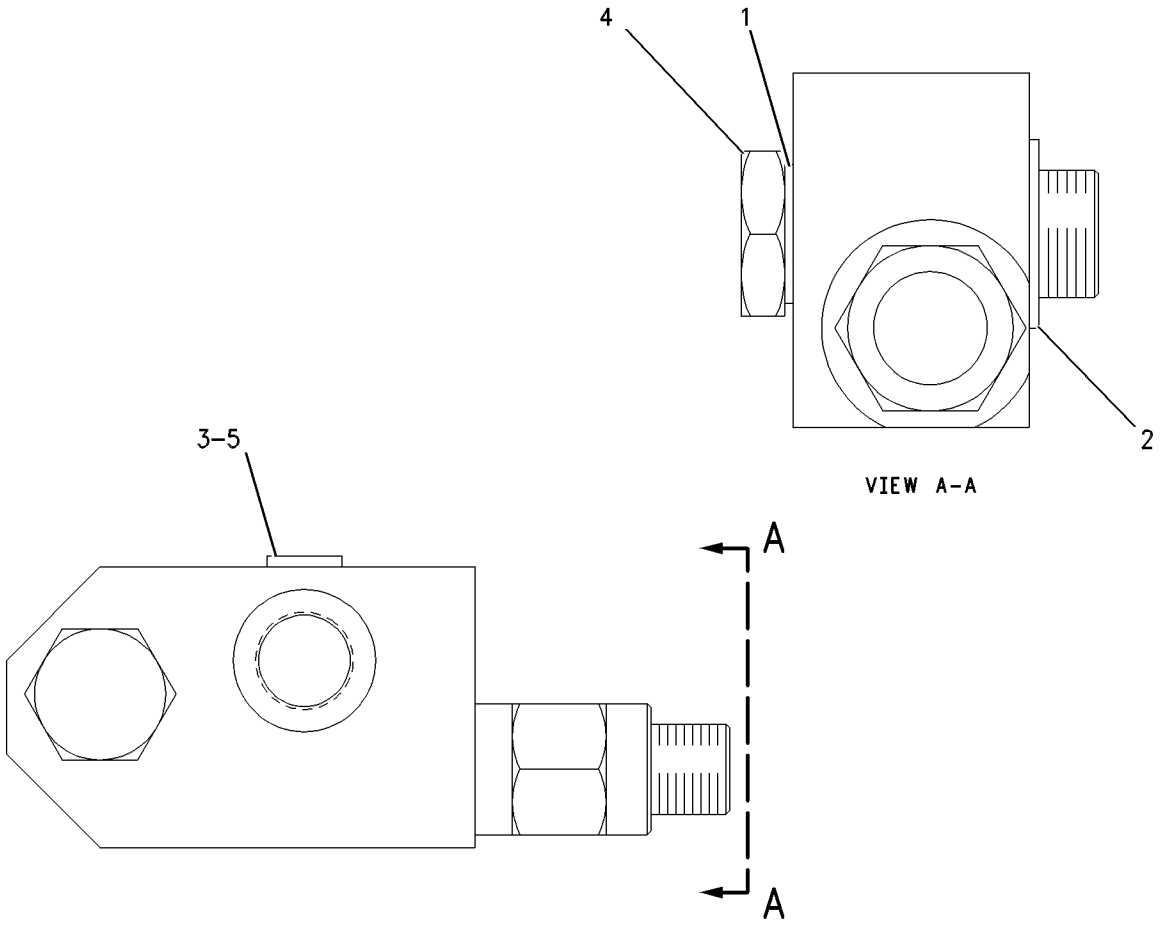

GRAPHIC #1 **<END>** g00564662

HYDRAULIC SYSTEM

239-0603 VALVE GP-DIVERTER

S/N: AXM1-UP
PART OF 236-9982 VALVE GP-COMBINATION
AN ATTACHMENT

SMCS-5066 **i02075368**

NOTE	REF NO	GRAPHIC REF	PART NUMBER	QTY	PART NAME 1 2 3 4 5 6 (PRODUCT LEVEL)	SEE PAGE
J	1	1	**9X-7744**	1	SEAL-O-RING	
J	2	1	**030-4605**	1	SEAL-O-RING	
J	3	1	**5L-4759**	1	SEAL-O-RING	
					AVAILABLE REPAIR KIT(S):	
J			**239-6336**	1	KIT-SEAL (DIVERTER VALVE)	
					(INCLUDES BACK-UP RINGS)	

J-KIT MARKED J SERVICES PARTS MARKED J

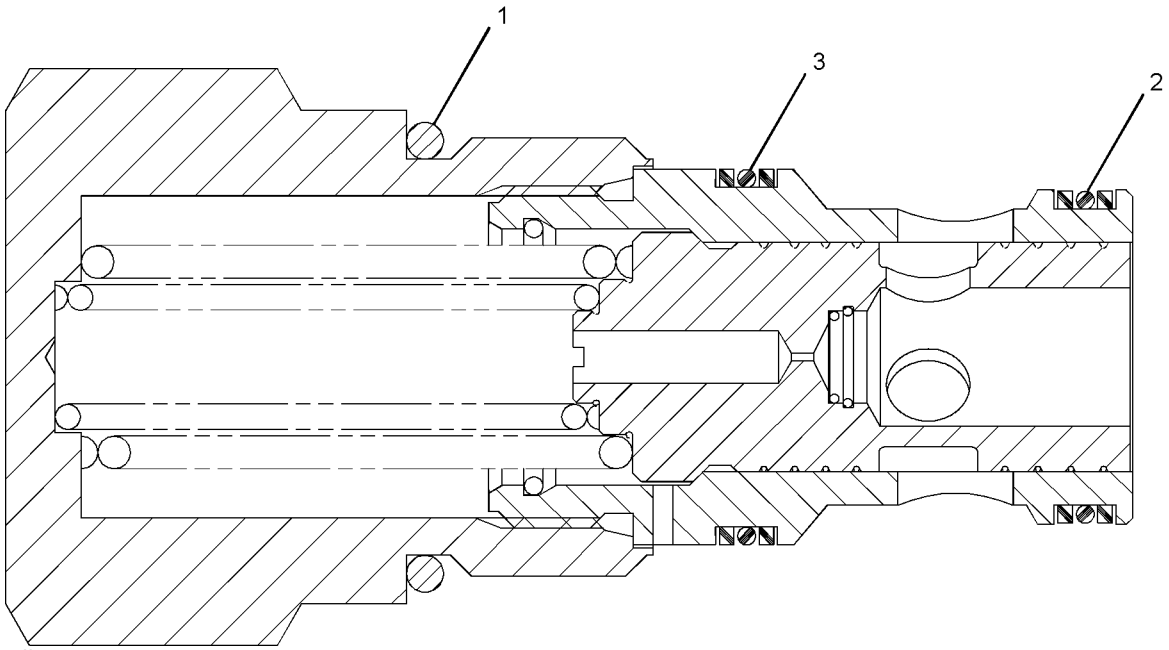

GRAPHIC #1 **<END>** g01063414

HYDRAULIC SYSTEM

239-0605 VALVE GP-DIVERTER

S/N: AXM1-UP
PART OF 236-9982 VALVE GP-COMBINATION
AN ATTACHMENT

SMCS-5066 **i02060014**

NOTE	REF NO	GRAPHIC REF	PART NUMBER	QTY	PART NAME 1 2 3 4 5 6 (PRODUCT LEVEL)	SEE PAGE
	1	1	**2M-9780**	1	SEAL-O-RING	
	2	1	**6V-5142**	1	SEAL-O-RING	
	3	1	**169-1617**	2	RING-BACKUP	
	4	1	**095-1751**	1	SEAL-O-RING	
	5	1	**169-1616**	2	RING-BACKUP	
					AVAILABLE REPAIR KIT(S):	
			200-6282	1	KIT-SEAL (DIVERTER VALVE)	
					(INCLUDES RING-BACKUP & SEAL-O-RINGS)	

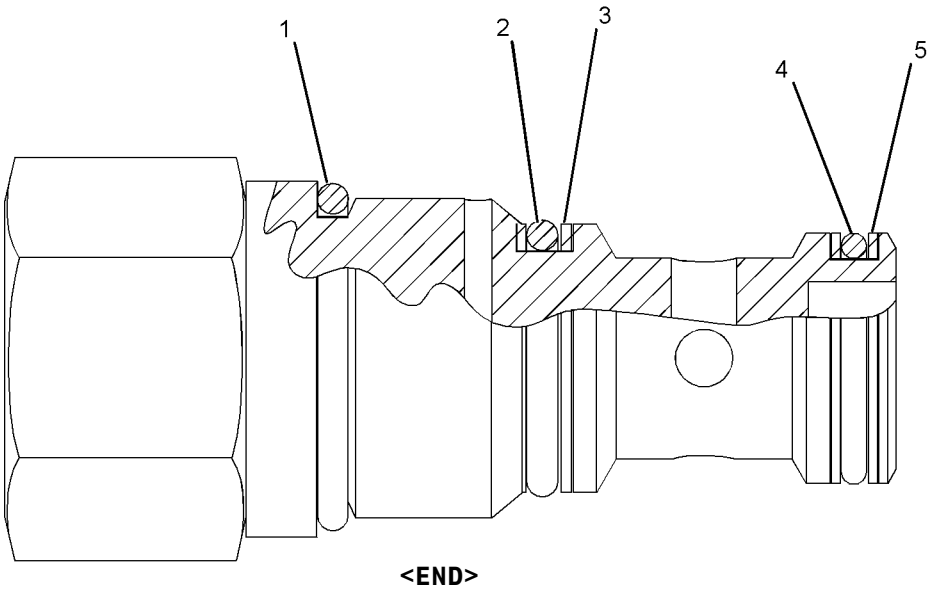

GRAPHIC #1 **<END>** g01056821

HYDRAULIC SYSTEM

189-5772 VALVE GP-HOIST CONTROL

S/N: AXM1-1056

PART OF 152-7120 VALVE & MTG GP-HOIST CONTROL

SMCS-5136 **i02261956**

NOTE	REF NO	GRAPHIC REF	PART NUMBER	QTY	PART NAME 1 2 3 4 5 6 (PRODUCT LEVEL)	SEE PAGE
	1	1	**1U-0323**		PLUG AS	
		1	**1U-0322**	1	BEARING-SLEEVE	
	2	1	**4B-4158**	1	SCREW-DRIVE (3/16X0.25-IN)	
	3	1	**6E-6129**	1	PLUG-MAIN RELIEF	
	4	1	**7J-7423**	1	VALVE	
	5	1	**7S-8491**	1	SPRING	
Y	6	1	**126-6099**	1	VALVE GP-RELIEF (HOIST CONTROL)	782
Y	9	1	**204-2124**	1	VALVE GP-LOWERING CONTROL	775
Y	10	1	**171-5911**	1	VALVE GP-RELIEF (HOIST CONTROL)	783
	11	1	**190-1514**	1	BODY-VALVE	
Y	12	1	**192-6443**	1	ACTUATOR GP-PILOT CONTROL	662
Y	14	1	**196-2403**	1	ACTUATOR GP-PILOT CONTROL	663
	15	1	**1H-1023**	4	SEAL-O-RING	
	16	1	**2S-4078**	1	SEAL-O-RING	
	17	1	**3J-1907**	1	SEAL-O-RING	
	18	1	**3K-0360**	1	SEAL-O-RING	
	19	1	**4D-3107**	2	SEAL-O-RING	
	20	1	**4J-0522**	1	SEAL-O-RING	
	21	1	**4J-0523**	1	SEAL-O-RING	
	22	1	**7J-9933**	1	SEAL-O-RING	
M	23	1	**7X-7960**	5	BOLT (M12X1.75X220-MM)	
	24	1	**8T-4223**	10	WASHER-HARD (13.5X25.5X3-MM THK)	
M	25	1	**8T-6870**	4	BOLT (M8X1.25X70-MM)	
	26	1	**9S-4191**	1	PLUG	

M-METRIC PART
Y-SEPARATE ILLUSTRATION

189-5772 VALVE GP-HOIST CONTROL *(contd.)* i02261956

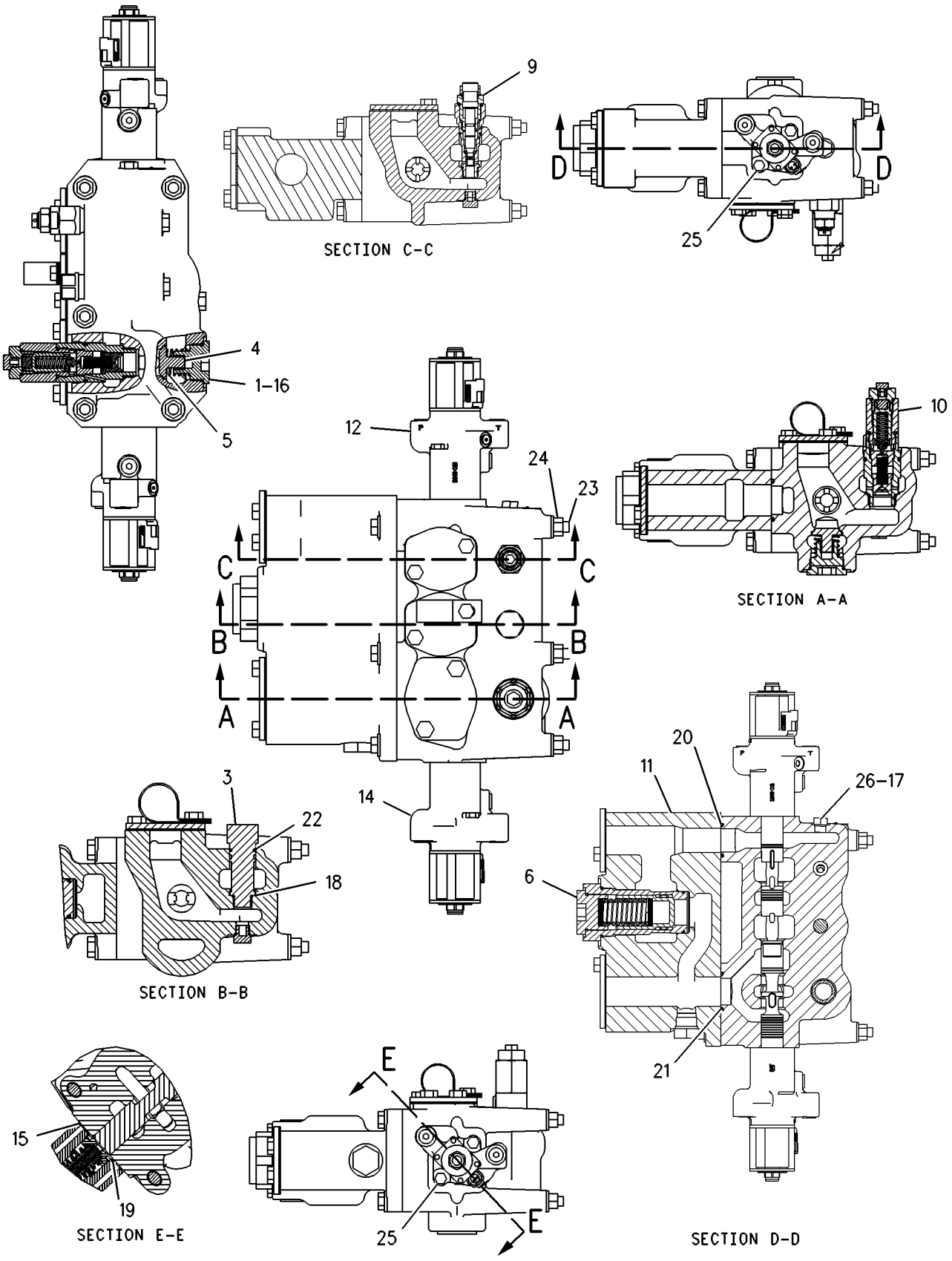

GRAPHIC #1 **<END>** g00944177

189-5772 VALVE GP-HOIST CONTROL

S/N: AXM1057-UP

PART OF 152-7120 VALVE & MTG GP-HOIST CONTROL

SMCS-5136 **i02261953**

NOTE	REF NO	GRAPHIC REF	PART NUMBER	QTY	PART NAME 1 2 3 4 5 6 (PRODUCT LEVEL)	SEE PAGE
	1	1	**1U-0323**	1	PLUG AS	
		1	**3G-2683**	1	PLUG	
		1	**1U-0322**	1	BEARING-SLEEVE	
	2	1	**4B-4158**	1	SCREW-DRIVE (3/16X0.25-IN)	
	3	1	**6E-6129**	1	PLUG-MAIN RELIEF	
	4	1	**7J-7423**	1	VALVE	
	5	1	**7S-8491**	1	SPRING	
Y	6	1	**126-6099**	1	VALVE GP-RELIEF (HOIST CONTROL)	782
	7	1	**9S-4191**	1	PLUG	
M	8	1	**8T-6870**	4	BOLT (M8X1.25X70-MM)	
	9	1	**190-1514**	1	BODY-VALVE	
Y	10	1	**192-6443**	1	ACTUATOR GP-PILOT CONTROL	662
	11	1	**8T-4223**	10	WASHER-HARD (13.5X25.5X3-MM THK)	
Y	12	1	**196-2403**	1	ACTUATOR GP-PILOT CONTROL	663
Y	13	1	**204-2124**	1	VALVE GP-LOWERING CONTROL	775
C	14	1	**224-1167**	1	VALVE GP-RELIEF (HOIST CONTROL)	
		1	**4J-0522**	2	SEAL-O-RING	
		1	**7M-8485**	1	SEAL-O-RING	
	15	1	**1H-1023**	4	SEAL-O-RING	
	16	1	**2S-4078**	1	SEAL-O-RING	
	17	1	**3J-1907**	1	SEAL-O-RING	
	18	1	**3K-0360**	1	SEAL-O-RING	
	19	1	**4D-3107**	2	SEAL-O-RING	
	20	1	**4J-0522**	1	SEAL-O-RING	
	21	1	**4J-0523**	1	SEAL-O-RING	
	22	1	**7J-9933**	1	SEAL-O-RING	
M	23	1	**7X-7960**	5	BOLT (M12X1.75X220-MM)	

C-CHANGE FROM PREVIOUS TYPE
M-METRIC PART
Y-SEPARATE ILLUSTRATION

189-5772 VALVE GP-HOIST CONTROL *(contd.)* i02261953

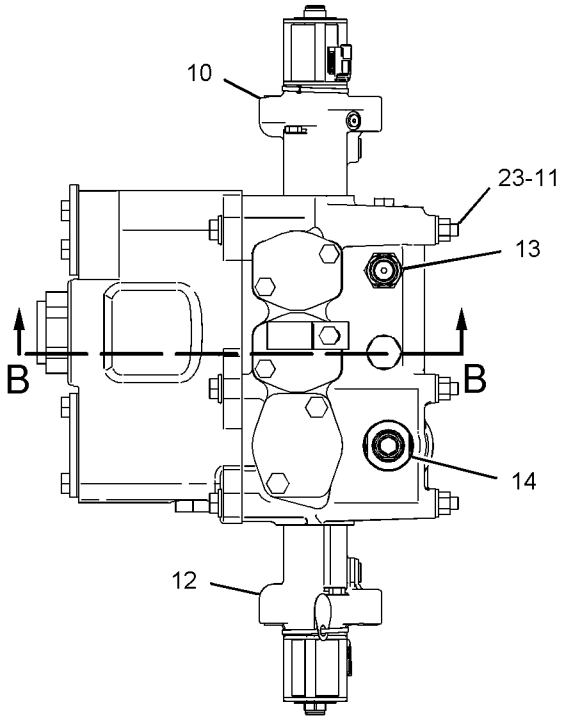

RIGHT SIDE VIEW

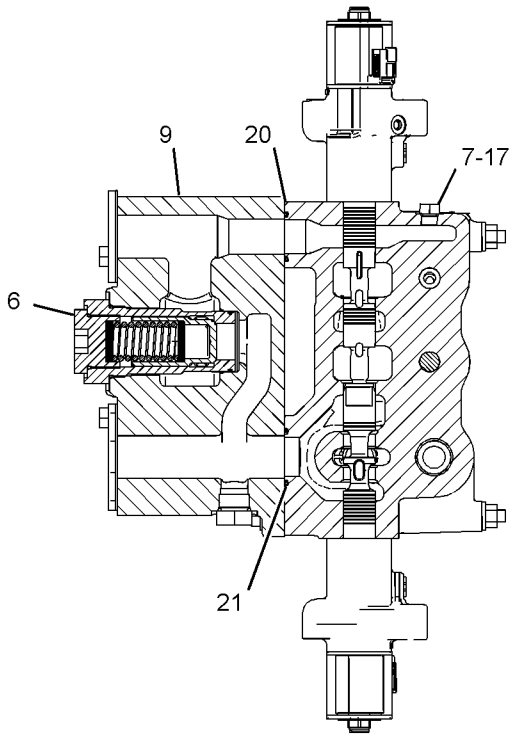

SECTION D-D

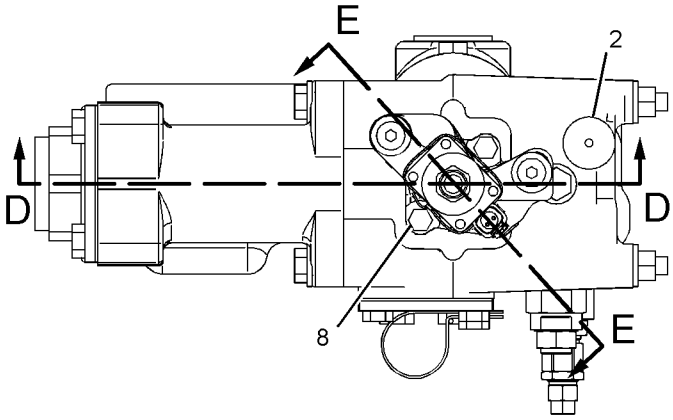

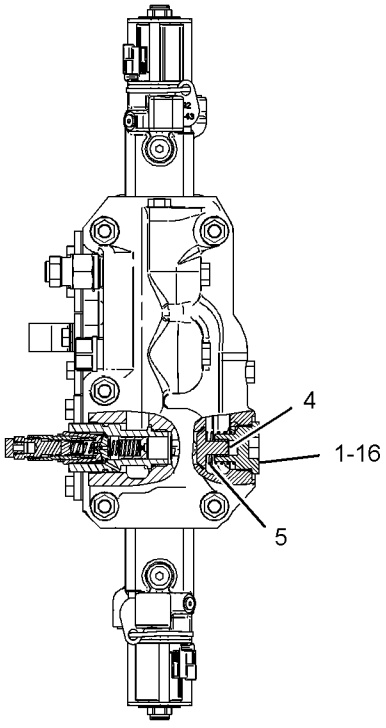

FRONT VIEW

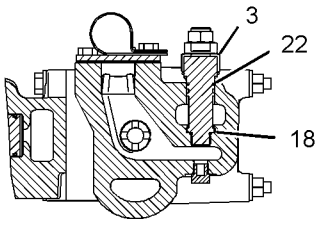

SECTION B-B

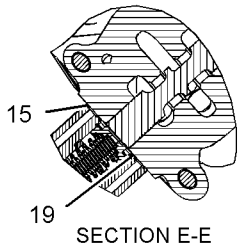

SECTION E-E

GRAPHIC #1 **<END>** g01123528

204-2124 VALVE GP-LOWERING CONTROL–HOIST

S/N: AXM1-UP

PART OF 189-5772 VALVE GP-HOIST CONTROL

SMCS-5147 **i01781460**

NOTE	REF NO	GRAPHIC REF	PART NUMBER	QTY	PART NAME 1 2 3 4 5 6 (PRODUCT LEVEL)	SEE PAGE
	1	1	**9X-6395**	1	NUT (3/4-16-THD)	
	2	1	**8C-5061**	1	RING-RETAINING	
	3	1	**7J-9933**	1	SEAL-O-RING	
	4	1	**3K-0360**	2	SEAL-O-RING	
	5	1	**3D-2824**	1	SEAL-O-RING	
	6	1	**3J-7354**	1	SEAL-O-RING	

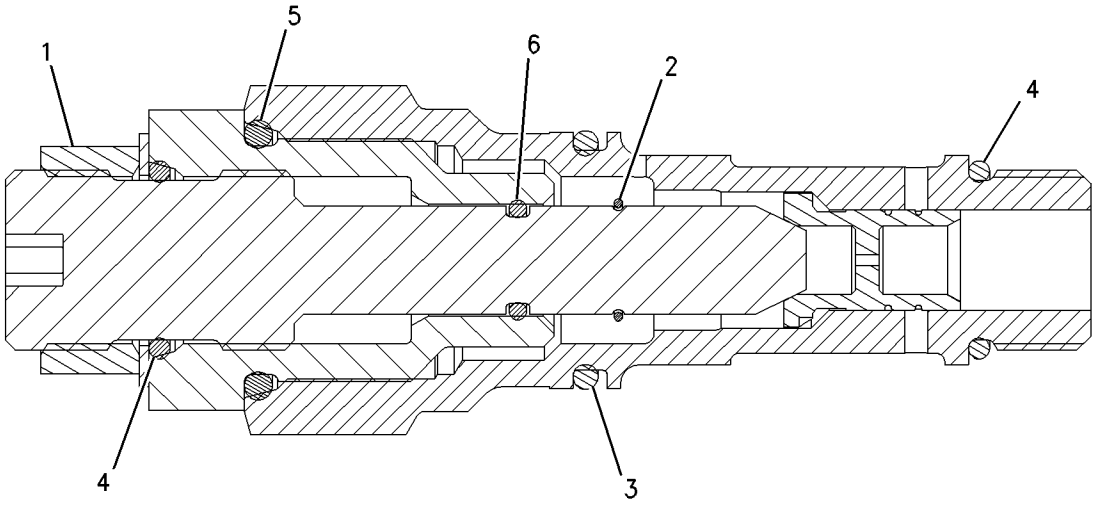

GRAPHIC #1 **<END>** g00916886

239-0615 VALVE GP-PRESSURE REDUCING–MAIN CONTROL

S/N: AXM1-UP
PART OF 236-9982 VALVE GP-COMBINATION
AN ATTACHMENT

SMCS-5467 **i02060016**

NOTE	REF NO	GRAPHIC REF	PART NUMBER	QTY	PART NAME 1 2 3 4 5 6 (PRODUCT LEVEL)	SEE PAGE
	1	1	**3K-0360**	1	SEAL-O-RING	
	2	1	**161-6149**	1	SEAL-O-RING	
	3	1	**095-1750**	1	SEAL-O-RING	
	4	1	**161-6161**	2	RING-BACKUP	
	5	1	**187-0541**	2	RING-BACKUP	

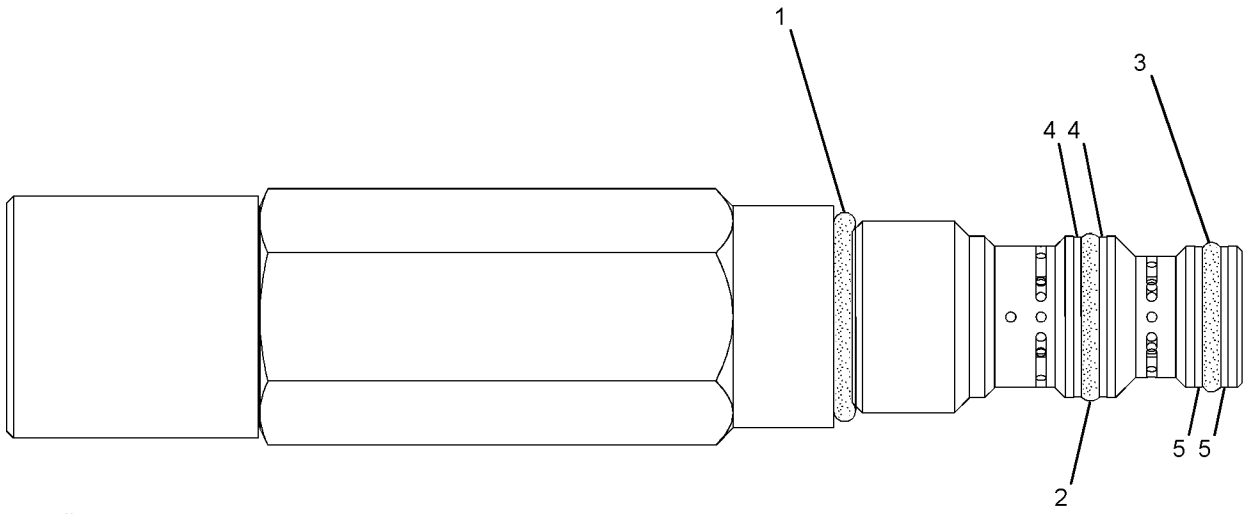

GRAPHIC #1 **<END>** g01064669

HYDRAULIC SYSTEM

184-5173 VALVE GP-PUMP CONTROL–
PRESSURE, FLOW COMPENSATOR
S/N: AXM1-879
PART OF 153-7021 PUMP GP-PISTON

SMCS-5455 **i01547477**

NOTE	REF NO	GRAPHIC REF	PART NUMBER	QTY	PART NAME 1 2 3 4 5 6 (PRODUCT LEVEL)	SEE PAGE
	1	1	**6E-6528**	6	SEAL (9.3MM ID)	
	2	1	**6E-6527**	2	PLUG	
	3	1	**193-3086**	1	RETAINER	
	4	1	**193-3087**	1	SPRING	
	5	1	**033-6043**	1	SEAL-O-RING	
	6	1	**6E-3272**	1	SEAT	
	7	1	**6E-6540**	1	PLUG	
	8	1	**6E-6538**	2	NUT-ADJUSTMENT (M8X1 THD)	
	9	1	**6E-6537**	2	SCREW-ADJUSTMENT (M8X1X28MM)	
	10	1	**6E-6539**	2	NUT-CAP (M8X1 THD)	
	11	1	**6E-3273**	1	SEAT	
	12	1	**6E-6536**	1	PLUG	
	13	1	**6V-8352**	1	SEAL-O-RING	
	14	1	**193-1036**	1	SPRING	
	15	1	**6E-3276**	1	SPRING	
	16	1	**6E-3269**	1	RETAINER-SPRING	
	17	1	**105-2145**	1	VALVE-ORIFICE	
	18	1	**5P-9262**	1	SEAL-O-RING	

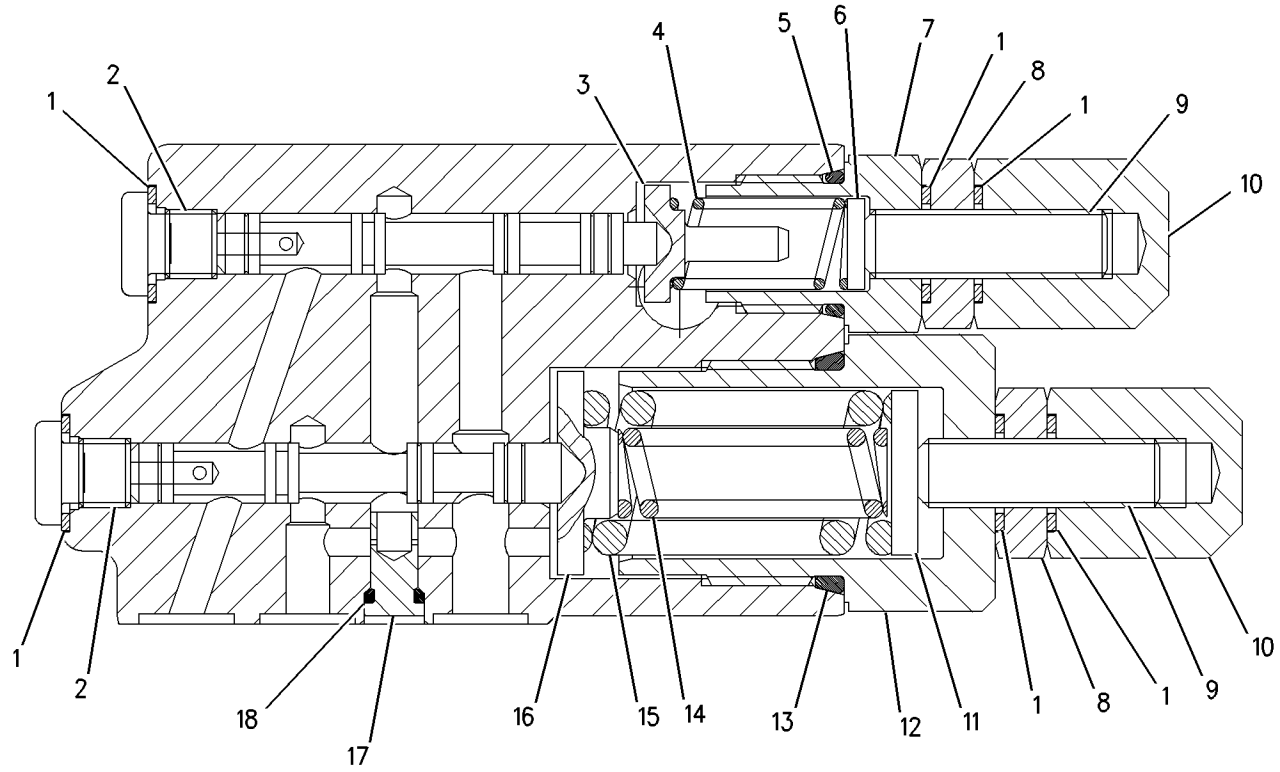

GRAPHIC #1 **<END>** g00764476

184-5174 VALVE GP-PUMP CONTROL–PRESSURE, FLOW COMPENSATOR–STEERING

S/N: AXM880-UP

PART OF 224-4432 PUMP GP-PISTON

SMCS-5455 **i01669786**

NOTE	REF NO	GRAPHIC REF	PART NUMBER	QTY	PART NAME 1 2 3 4 5 6 (PRODUCT LEVEL)	SEE PAGE
	1	1	**6E-6528**	6	SEAL	
	2	1	**6E-6527**	2	PLUG	
	3	1	**6E-3268**	1	RETAINER-SPRING	
	4	1	**6E-3275**	1	SPRING	
	5	1	**6E-3274**	1	SPRING	
	6	1	**033-6043**	1	SEAL-O-RING	
	7	1	**6E-3272**	1	SEAT	
	8	1	**6E-6540**	1	PLUG	
M	9	1	**6E-6538**	2	NUT-ADJUSTMENT (M8X1 THD)	
M	10	1	**6E-6537**	2	SCREW-ADJUSTMENT (M8X1X28MM)	
M	11	1	**6E-6539**	2	NUT-CAP (M8X1 THD)	
	12	1	**6E-3273**	1	SEAT	
	13	1	**6E-6536**	1	PLUG	
	14	1	**6V-8352**	1	SEAL-O-RING	
	15	1	**105-2145**	1	VALVE-ORIFICE	
	16	1	**5P-9262**	1	SEAL-O-RING	
	17	1	**193-1036**	1	SPRING	
	18	1	**6E-3276**	1	SPRING	
	19	1	**6E-3269**	1	RETAINER-SPRING	

M-METRIC PART

184-5174 VALVE GP-PUMP CONTROL *(contd.)* **i01669786**

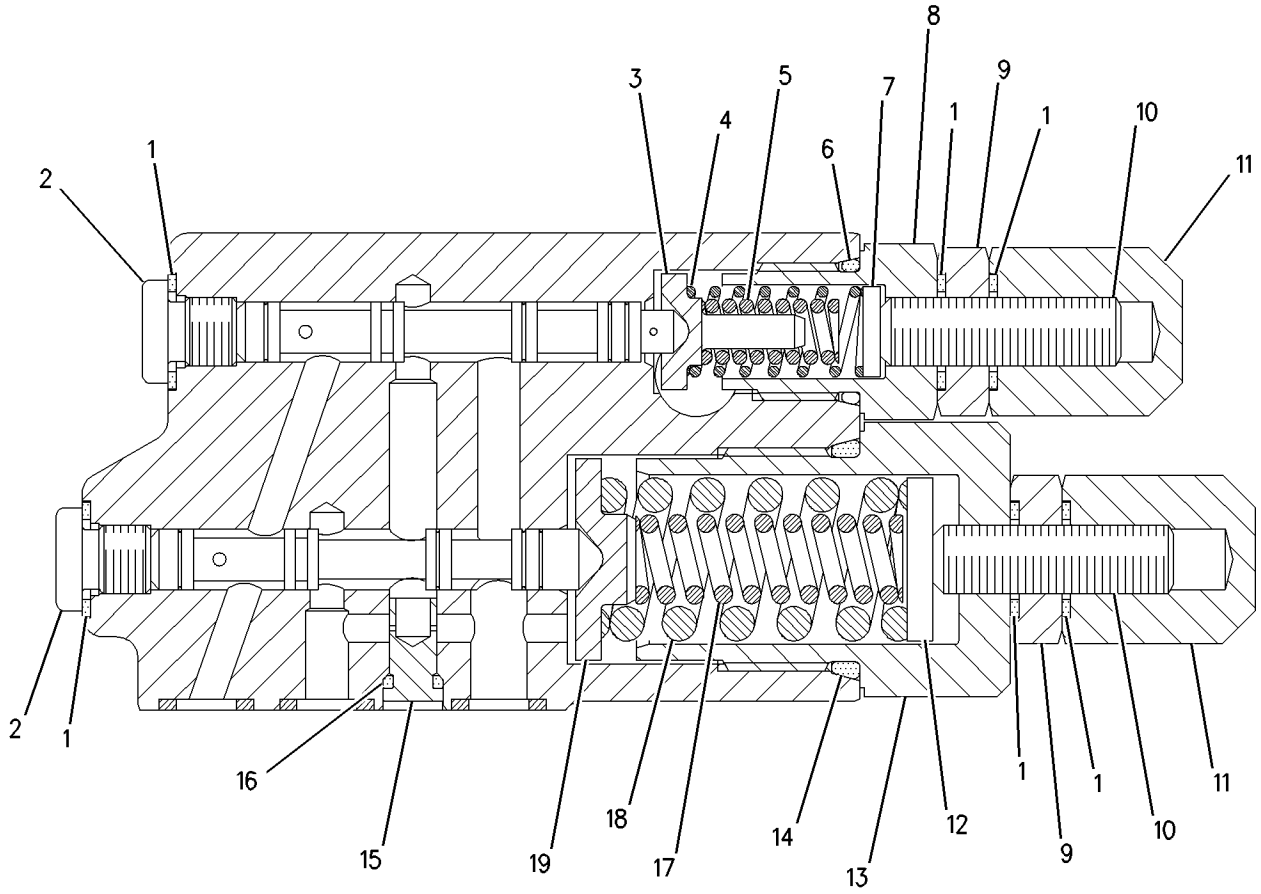

GRAPHIC #1 **<END>** g00757559

HYDRAULIC SYSTEM

193-3182 VALVE GP-PUMP CONTROL–PRESSURE, FLOW COMPENSATOR–BRAKE

S/N: AXM1-UP

PART OF 187-9090 PUMP GP-PISTON

SMCS-5455 **i02235880**

NOTE	REF NO	GRAPHIC REF	PART NUMBER	QTY	PART NAME 1 2 3 4 5 6 (PRODUCT LEVEL)	SEE PAGE
	1	1	**6E-6528**	6	SEAL	
	2	1	**6E-6527**	2	PLUG	
	3	1	**6E-3268**	1	RETAINER-SPRING	
	4	1	**6E-3275**	1	SPRING (OUTER)	
	5	1	**6E-3274**	1	SPRING (INNER)	
	6	1	**033-6043**	1	SEAL-O-RING	
	7	1	**6E-3272**	1	SEAT	
	8	1	**6E-6540**	1	PLUG	
M	9	1	**6E-6538**	2	NUT-ADJUSTMENT (M8X1-THD)	
M	10	1	**6E-6537**	2	SCREW-ADJUSTMENT (M8X1X28-MM)	
M	11	1	**6E-6539**	2	NUT-CAP (M8X1-THD)	
	12	1	**6E-3273**	1	SEAT	
	13	1	**6E-6536**	1	PLUG	
	14	1	**6V-8352**	1	SEAL-O-RING	
	15	1	**9S-8002**	2	PLUG	
	16	1	**3J-7354**	2	SEAL-O-RING	
	17	1	**193-1036**	1	SPRING (INNER)	
	18	1	**6E-3276**	1	SPRING (OUTER)	
	19	1	**6E-3269**	1	RETAINER-SPRING	
	20	1	**6E-6545**	1	PLUG	
	21	1	**105-2145**	1	VALVE-ORIFICE	
	22	1	**5P-9262**	1	SEAL-O-RING	

M-METRIC PART

193-3182 VALVE GP-PUMP CONTROL *(contd.)* **i02235880**

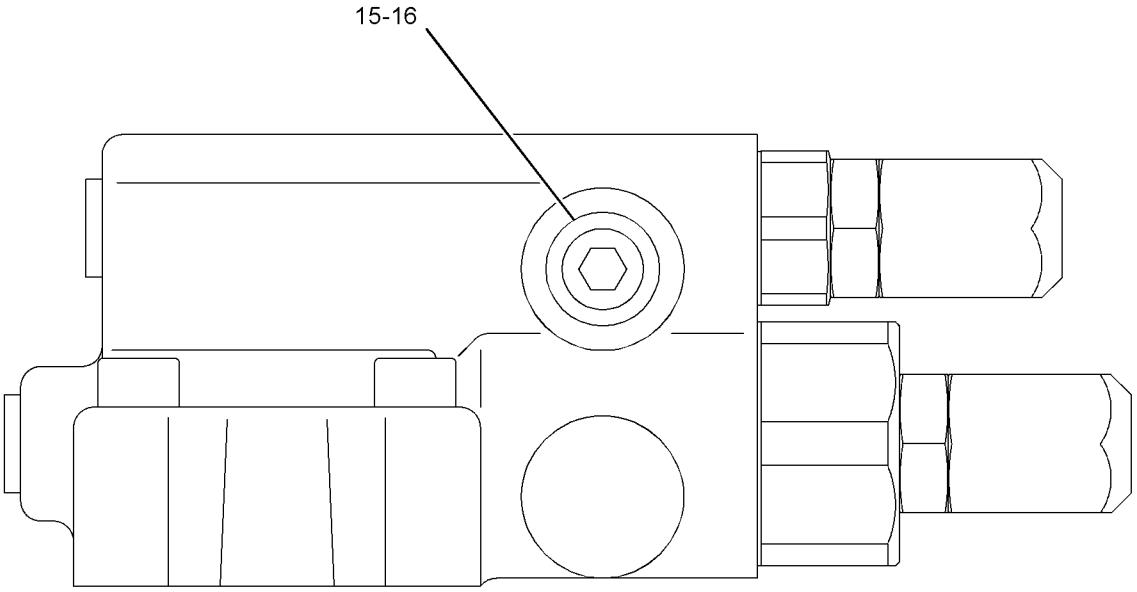

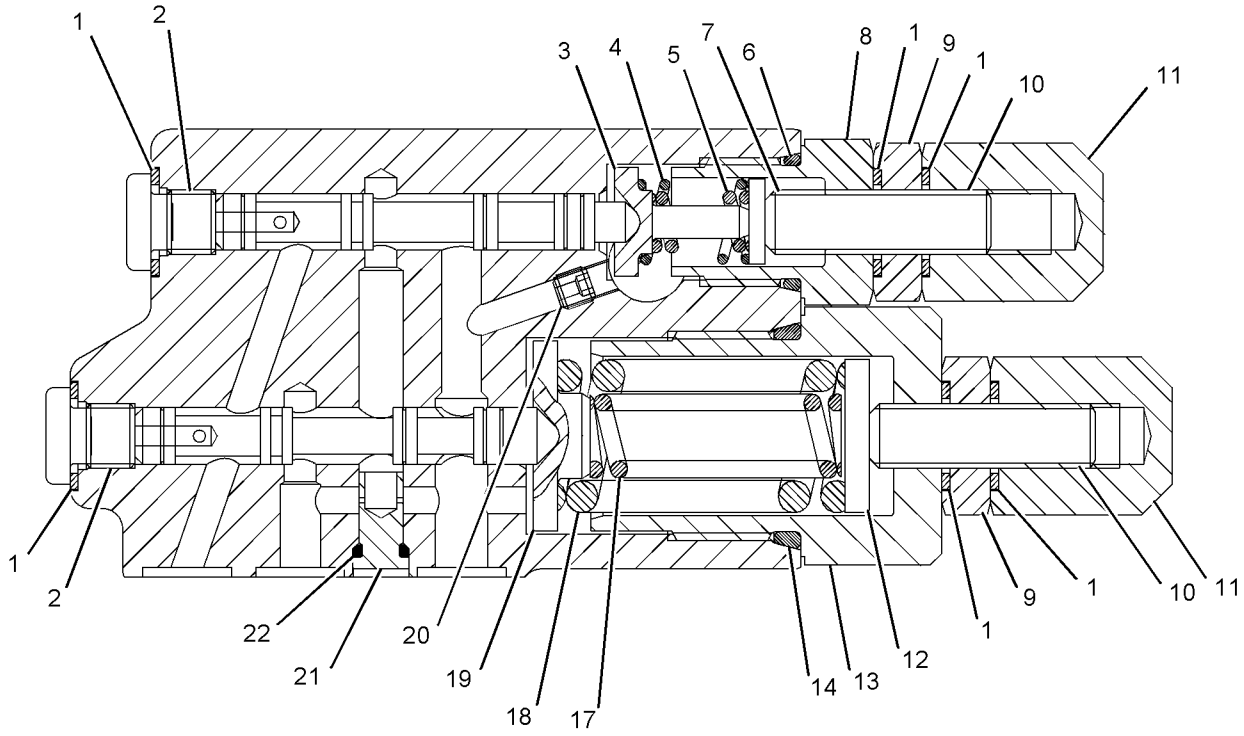

SECTIONAL VIEW

GRAPHIC #1 **<END>** g01127665

126-6099 VALVE GP-RELIEF–HOIST CONTROL

S/N: AXM1-UP

PART OF 189-5772 VALVE GP-HOIST CONTROL

SMCS-5069, 5117 **i01460808**

NOTE	REF NO	GRAPHIC REF	PART NUMBER	QTY	PART NAME 1 2 3 4 5 6 (PRODUCT LEVEL)	SEE PAGE
	1	1	**6V-8676**	1	SEAL-O-RING	
	2	1	**8J-2379**	1	VALVE-RELIEF	
	3	1	**6J-3380**	1	SPRING	
	4	1	**030-4606**	1	SEAL-O-RING	
	5	1	**6K-6307**	1	SEAL-O-RING	
	6	1	**126-6612**	1	BODY	
	7	1	**126-6104**	1	PLUG	
	8	1	**8B-4624**	7	SHIM (0.032-MM THK)	
B	9	1	**8B-4624**	8	SHIM (0.032-MM THK)	

B-USE AS REQUIRED

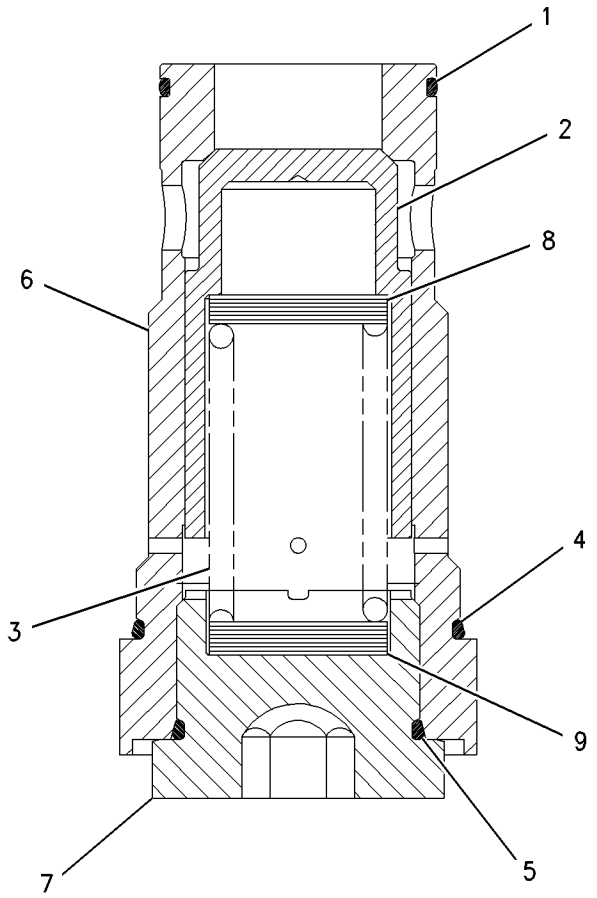

GRAPHIC #1 **<END>** g00764142

171-5911 VALVE GP-RELIEF—HOIST CONTROL

S/N: AXM1-1056

PART OF 189-5772 VALVE GP-HOIST CONTROL

SMCS-5069, 5117 **i01791064**

NOTE	REF NO	GRAPHIC REF	PART NUMBER	QTY	PART NAME 1 2 3 4 5 6 (PRODUCT LEVEL)	SEE PAGE
	1	1	**7M-8485**	2	SEAL-O-RING	
	2	1	**4J-0522**	1	SEAL-O-RING	
	3	1	**4T-5988**	1	VALVE GP	
		1	**4T-4603**	1	PISTON	
	4	1	**171-5910**	1	SPRING	
	5	1	**8J-0331**	1	VALVE	
B	6	1	**3J-7473**	1	SHIM (0.12-MM THK)	
B	7	1	**3H-2549**	5	SHIM (0.254-MM THK)	
B	8	1	**4T-4660**	1	SHIM (0.08-MM THK)	
B	9	1	**3J-7470**	1	SHIM (1.22-MM THK)	
	10	1	**3D-2824**	1	SEAL-O-RING	
	11	1	**6P-4975**	1	ADAPTER	
	12	1	**4T-4605**	1	RETAINER	
B	13	1	**4M-6978**	2	SHIM (0.05-MM THK)	
B	14	1	**4M-6979**	1	SHIM (0.13-MM THK)	
B	15	1	**4M-6980**	1	SHIM (0.25-MM THK)	
B	16	1	**4T-4659**	6	SHIM (0.8-MM THK)	
	17	1	**103-8652**	1	VALVE GP	
		1	**8H-3532**	1	SPRING-VALVE	

B-USE AS REQUIRED

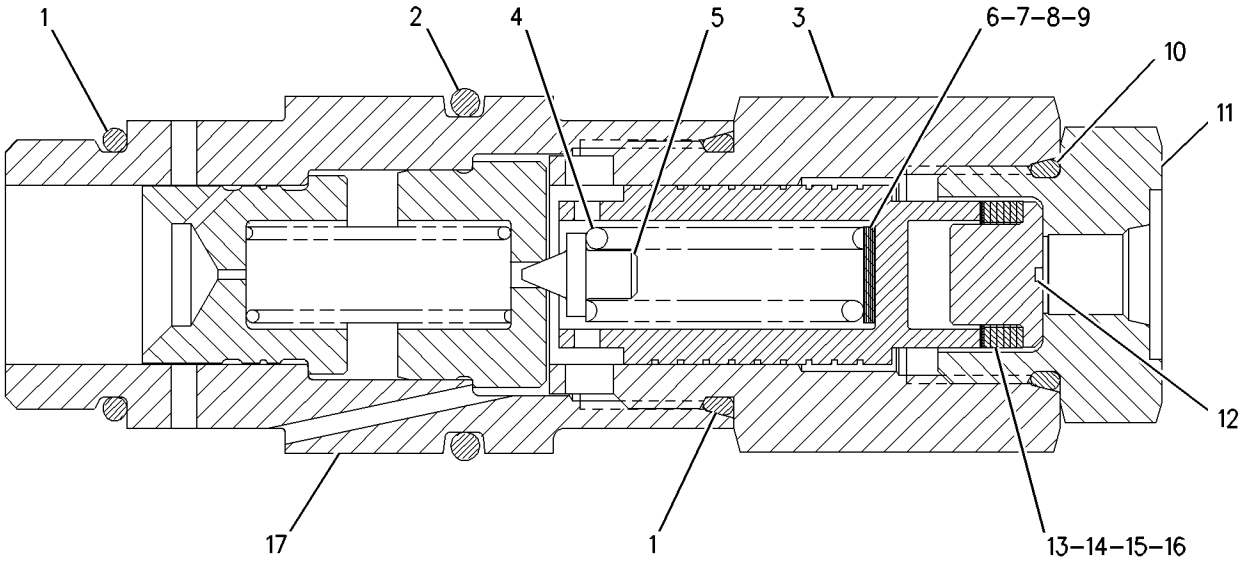

GRAPHIC #1 **<END>** g00677900

191-7785 VALVE GP-SOLENOID–FAN DRIVE

S/N: AXM1-UP
PART OF 236-9982 VALVE GP-COMBINATION
AN ATTACHMENT

SMCS-5479 **i02249746**

NOTE	REF NO	GRAPHIC REF	PART NUMBER	QTY	PART NAME 1 2 3 4 5 6 (PRODUCT LEVEL)	SEE PAGE
	1	1	**146-3728**	1	WASHER-SPRING	
	2	1	**187-8191**	1	COIL AS	
	3	1	**154-4133**	1	CARTRIDGE AS	
	4	1	**191-7784**	1	ADAPTER AS	

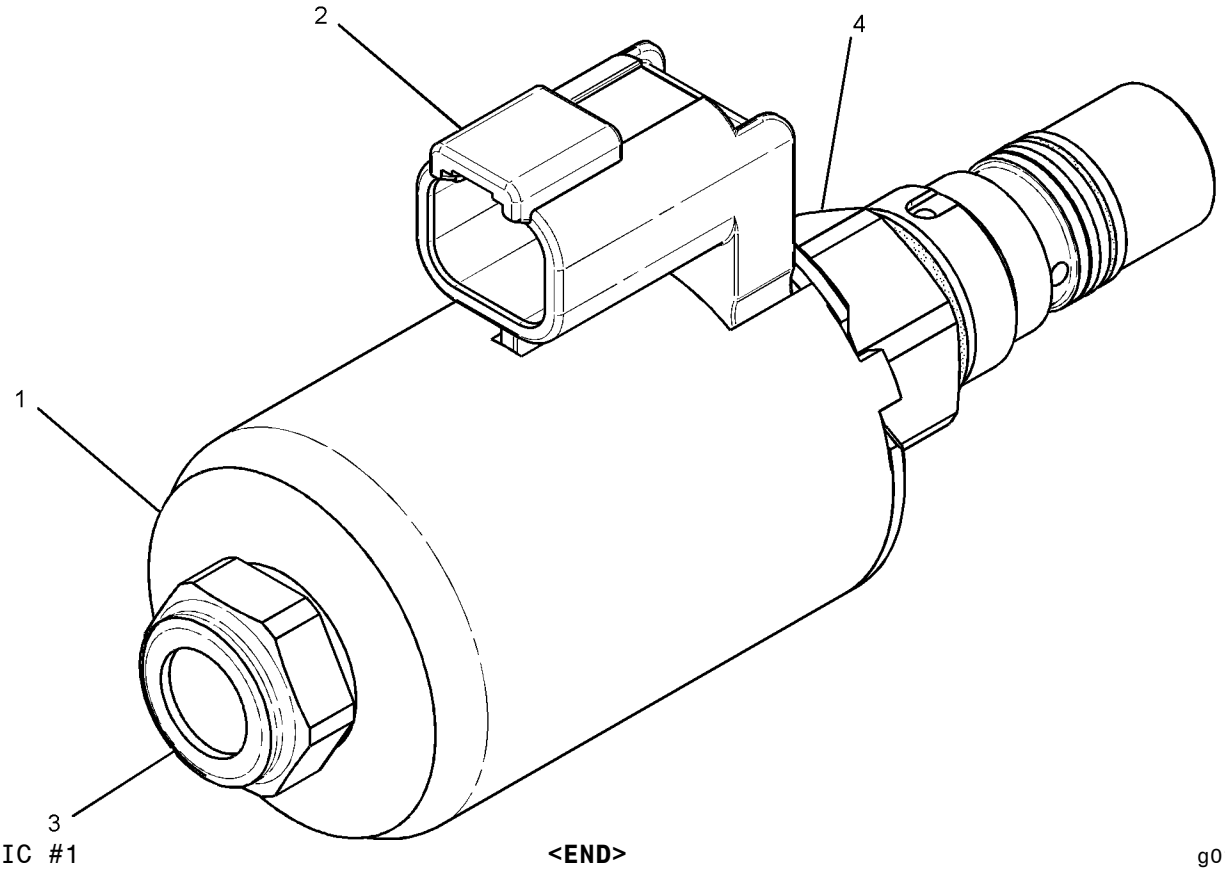

GRAPHIC #1 **<END>** g01134134

HYDRAULIC SYSTEM

201-0950 VALVE GP-SOLENOID–IMPLEMENT, STEERING

S/N: AXM1-UP
PART OF 236-9982 VALVE GP-COMBINATION
AN ATTACHMENT

SMCS-5479 **i02214064**

NOTE	REF NO	GRAPHIC REF	PART NUMBER	QTY	PART NAME 1 2 3 4 5 6 (PRODUCT LEVEL)	SEE PAGE
	1	1	**122-1133**	1	COIL AS (24-VOLT)	
		1	**1S-9593**	2	STRAP-CABLE	
		1	**186-3735**	2	PIN-CONNECTOR	
		1	**102-8802**	1	KIT-RECEPTACLE (2-PIN)	
					(KIT INCLUDES RECEPTACLE AS & WEDGE)	
	2	1	**156-5970**	1	NUT (1/2-20-2B THD)	
	3	1	**171-8772**	1	VALVE AS-SOLENOID	
		1	**156-5970**	1	NUT (1/2-20-2B THD)	
					AVAILABLE REPAIR KIT(S):	
			195-7430	1	KIT-SEAL (SOLENOID VALVE)	

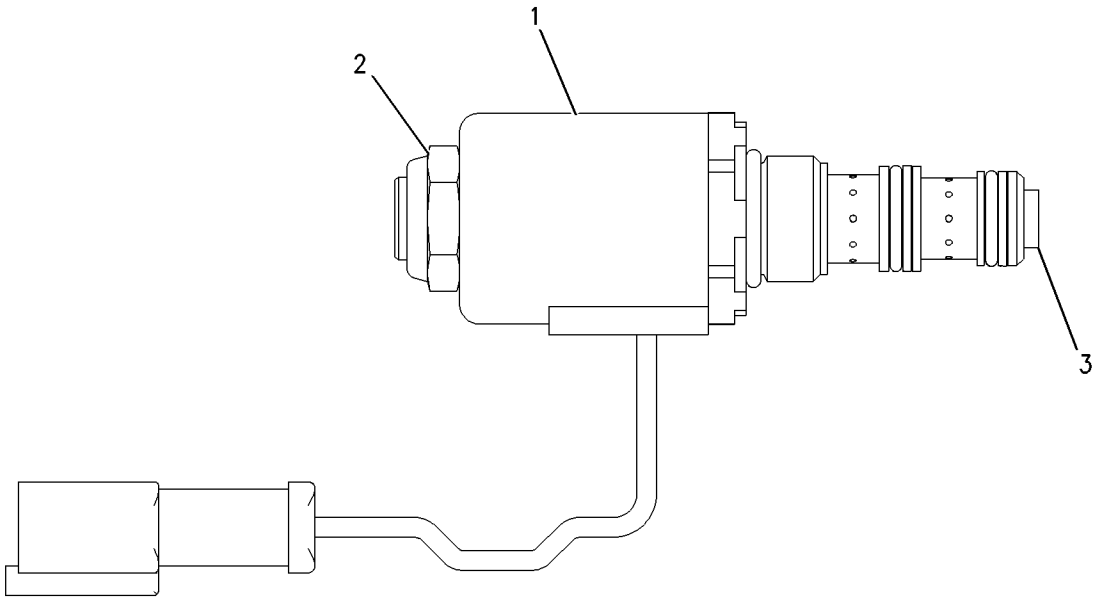

GRAPHIC #1 **<END>** g00888488

166-3936 ACCUMULATOR & MTG GP-SUSP

S/N: AXM1-536, 539, 541, 586-587, 590, 592, 594, 596-598, 600, 602

PART OF 152-6922 HYDRAULIC AR-MACHINE

SMCS-5077 **i02207440**

NOTE	REF NO	GRAPHIC REF	PART NUMBER	QTY	PART NAME 1 2 3 4 5 6 (PRODUCT LEVEL)	SEE PAGE
Y	1	1	*190-5981*	2	ACCUMULATOR GP-SUSPENSION (CHARGED)	789
	2	1	**192-0671**	4	U-BOLT	
	3	1	**7X-7729**	8	WASHER (11X25X3-MM THK)	
	4	1	**2U-2437**	8	NUT (M10-THD)	

Y-SEPARATE ILLUSTRATION

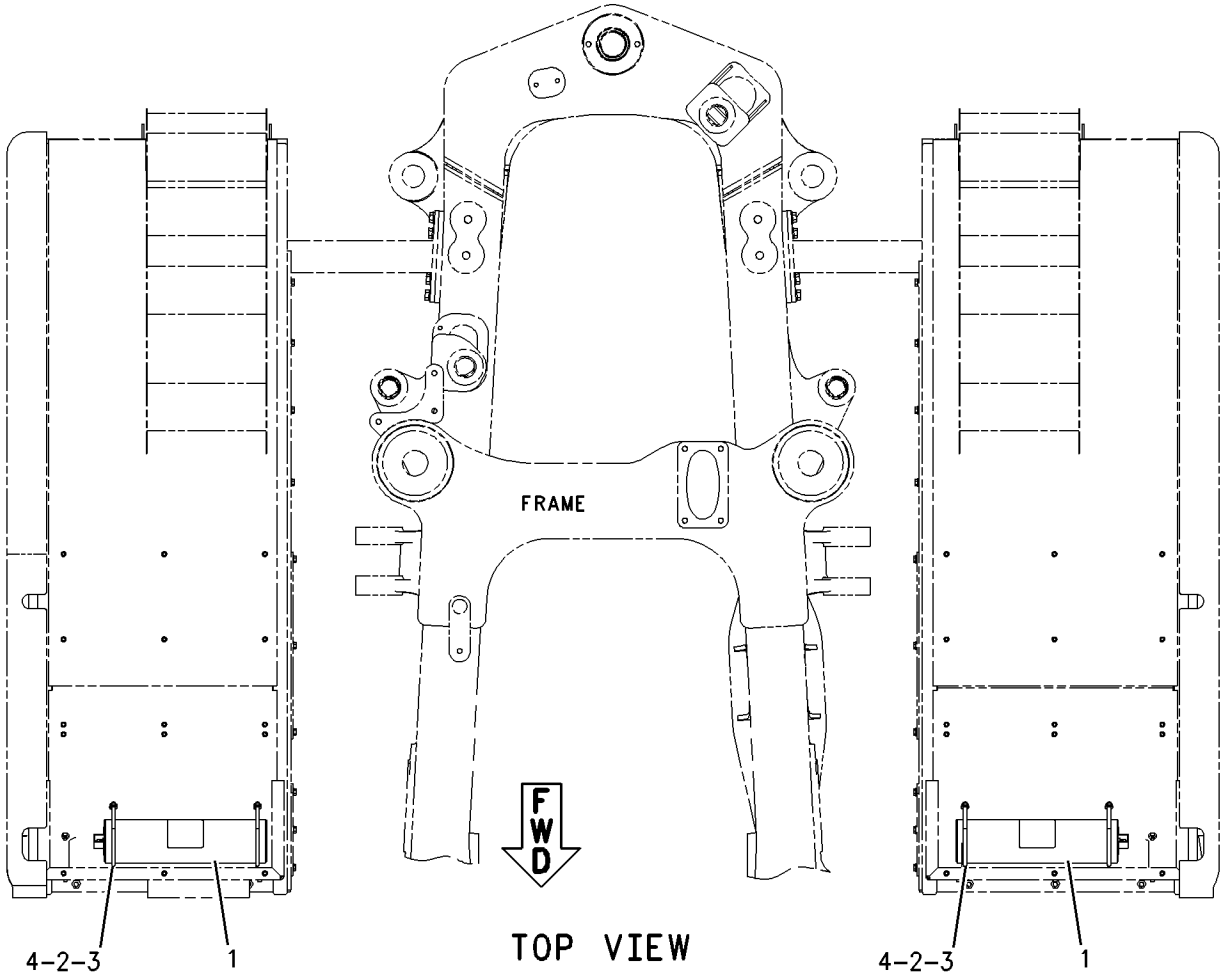

TOP VIEW

GRAPHIC #1 **<END>** g00928132

SUSPENSION SYSTEM

166-3936 ACCUMULATOR & MTG GP-SUSP

S/N: AXM537-538, 540, 542-585, 588-589, 591, 593, 595, 599, 601, 603-1182
PART OF 152-6922 HYDRAULIC AR-MACHINE

SMCS-5077 **i02207441**

NOTE	REF NO	GRAPHIC REF	PART NUMBER	QTY	PART NAME 1 2 3 4 5 6 (PRODUCT LEVEL)	SEE PAGE
	1	1	**2U-2437**	8	NUT (M10-THD)	
	2	1	**192-0671**	4	U-BOLT	
Y	3	1	*223-2446*	2	ACCUMULATOR GP-SUSPENSION (CHARGED)	793
	4	1	**7X-7729**	8	WASHER (11X25X3-MM THK)	

Y-SEPARATE ILLUSTRATION

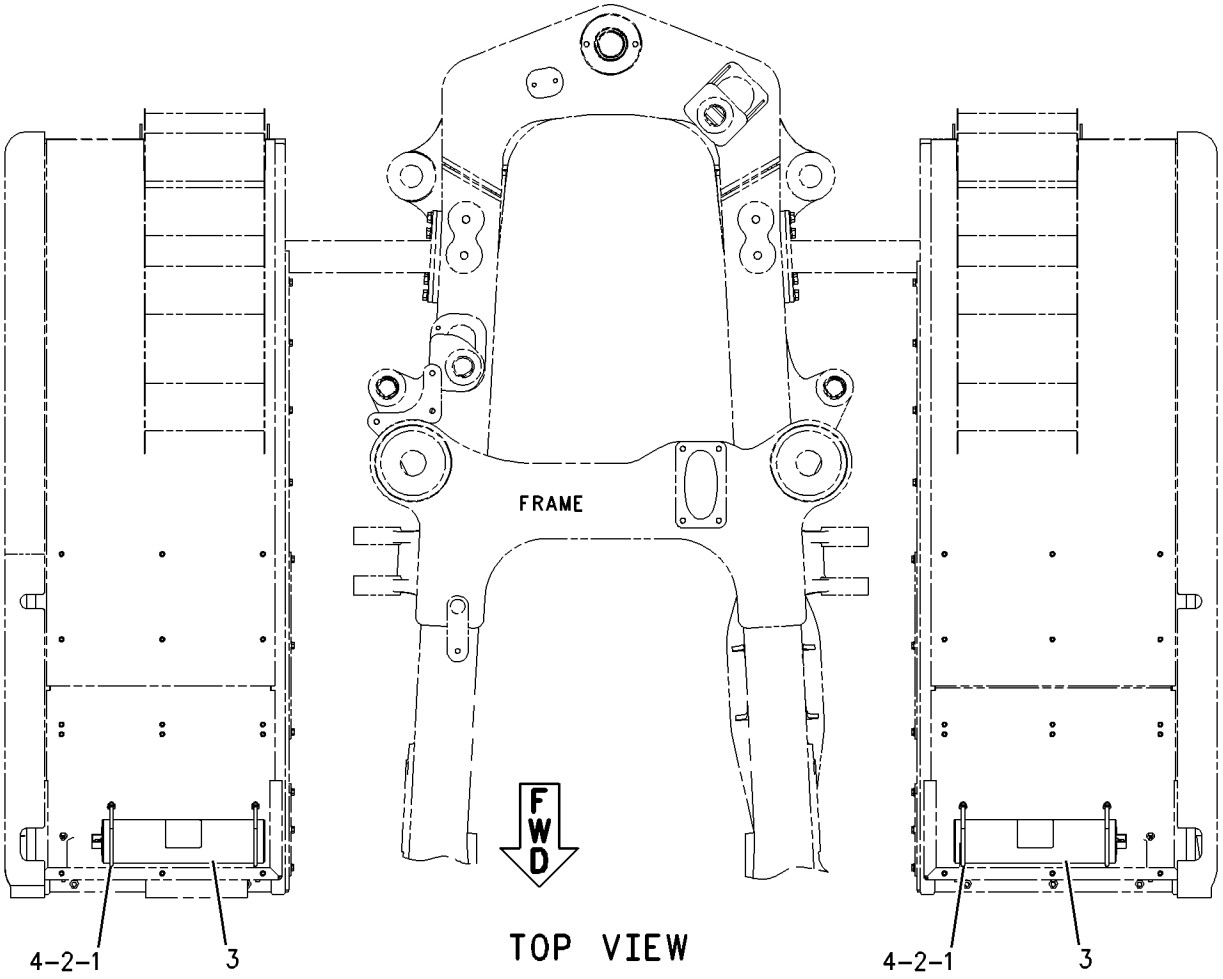

TOP VIEW

GRAPHIC #1 **<END>** g00931723

190-5981 ACCUMULATOR GP-SUSPENSION–CHARGED

S/N: AXM1-536, 539, 541, 586-587, 590, 592, 594, 596-598, 600, 602

PART OF 166-3936 ACCUMULATOR & MTG GP-SUSP

FIELD REPLACEMENT ORDER 190-7470–PAGE 790

SMCS-5077 **i02207379**

NOTE	REF NO	GRAPHIC REF	PART NUMBER	QTY	PART NAME 1 2 3 4 5 6 (PRODUCT LEVEL)	SEE PAGE
	1	1	**158-2336**	1	VALVE-GAS	
	2	1	**170-0493**	1	KIT-SEAL	
					(INCLUDES SEALS, WASHERS & RINGS)	
	3	1	**204-7946**	1	STRAP	
	4	1	**0S-0509**	2	BOLT (3/8-16X0.75-IN)	
	5	1	**157-5537**	1	PISTON	
	6	1	**170-0503**	1	FILM (PLATE-NAME)	
F			**241-0037**	1	FILM (HYDRAULIC ACCUMULATOR)	

F-NOT SHOWN

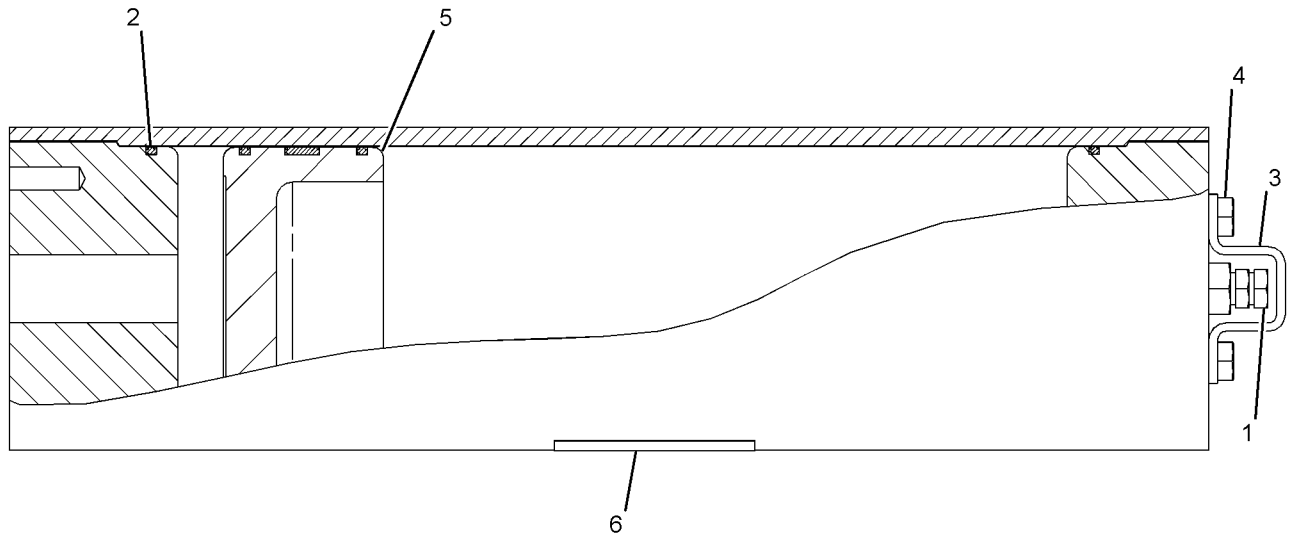

FRONT VIEW

GRAPHIC #1 **<END>** g01123591

190-7470 ACCUMULATOR GP-SUSPENSION—UNCHARGED

S/N: AXM1-536, 539, 541, 586-587, 590, 592, 594, 596-598, 600, 602

FIELD REPLACEMENT FOR 190-5981—PAGE 789

SMCS-5077 **i02207386**

NOTE	PART NUMBER	QTY	PART NAME 1 2 3 4 5 6 (PRODUCT LEVEL)	SEE PAGE
	241-0037	1	FILM (HYDRAULIC ACCUMULATOR)	

<END>

223-2444 ACCUMULATOR GP-SUSPENSION–CHARGED

S/N: AXM1-UP
PART OF 251-1446 ACCUMULATOR GP-BRAKE
FIELD REPLACEMENT ORDER 223-2445–PAGE 792
AN ATTACHMENT

SMCS-5077 **i02232501**

NOTE	REF NO	GRAPHIC REF	PART NUMBER	QTY	PART NAME 1 2 3 4 5 6 (PRODUCT LEVEL)	SEE PAGE
	1	1	**158-2306**	1	VALVE-GAS	
	2	1	**241-0037**	1	FILM (HYDRAULIC ACCUMULATOR)	
					AVAILABLE REPAIR KIT(S):	
			170-0494	1	KIT-SEAL	

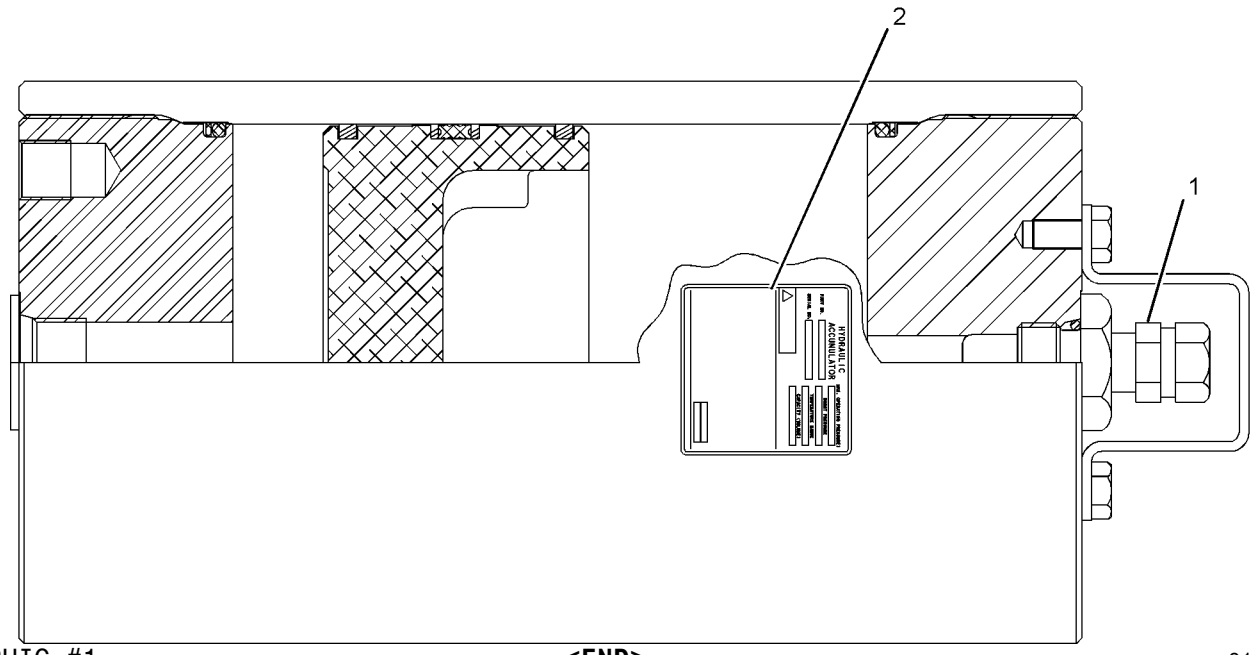

GRAPHIC #1 **<END>** g01126400

223-2445 ACCUMULATOR GP-SUSPENSION—UNCHARGED

S/N: AXM1-UP

FIELD REPLACEMENT FOR 223-2444—PAGE 791

SMCS-5077 **i02232502**

NOTE	REF NO	GRAPHIC REF	PART NUMBER	QTY	PART NAME 1 2 3 4 5 6 (PRODUCT LEVEL)	SEE PAGE
	1	1	**222-2367**	1	VALVE-GAS	
		1	**190-3850**	1	CORE	
	2	1	**241-0037**	1	FILM (HYDRAULIC ACCUMULATOR)	
					AVAILABLE REPAIR KIT(S):	
			170-0494	1	KIT-SEAL	

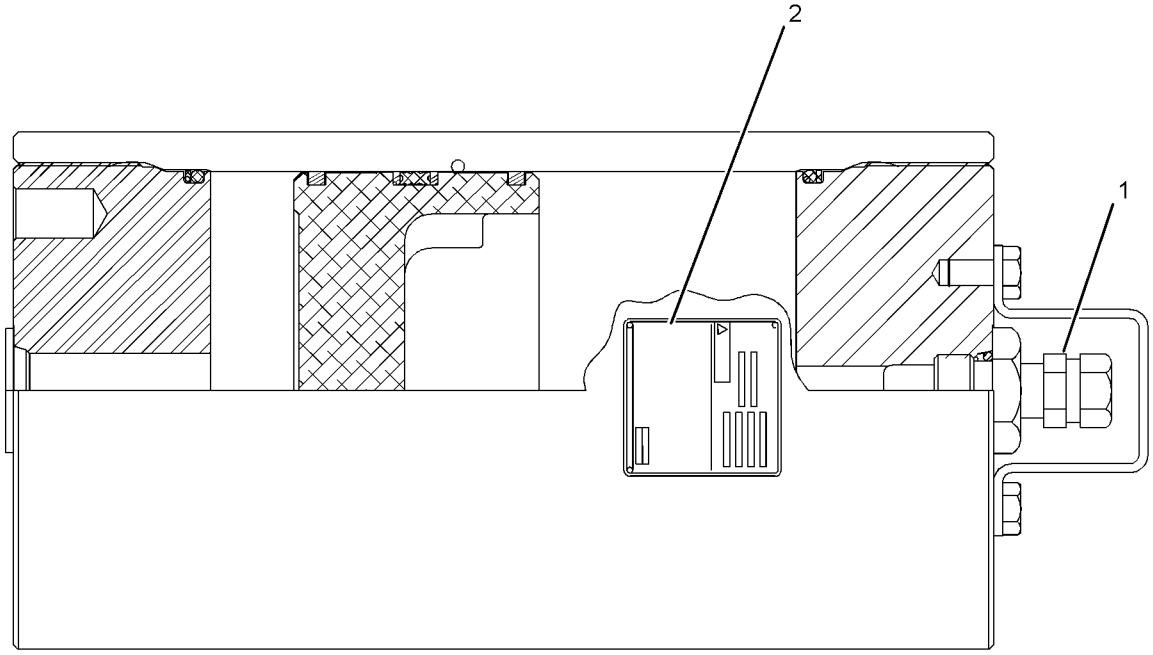

GRAPHIC #1 **<END>** g01126391

223-2446 ACCUMULATOR GP-SUSPENSION—CHARGED

S/N: AXM537-538, 540, 542-585, 588-589, 591, 593, 595, 599, 601, 603-1182
PART OF 166-3936 ACCUMULATOR & MTG GP-SUSP
FIELD REPLACEMENT ORDER 223-2447—PAGE 794

SMCS-5077 **i02207338**

NOTE	REF NO	GRAPHIC REF	PART NUMBER	QTY	PART NAME 1 2 3 4 5 6 (PRODUCT LEVEL)	SEE PAGE
	1	1	**158-2306**	1	VALVE-GAS	
	2	1	**204-7946**	1	STRAP	
	3	1	**5M-3062**	2	BOLT (3/8-16X0.75-IN)	
					AVAILABLE REPAIR KIT(S):	
			170-0493	1	KIT-SEAL	
					(INCLUDES SEALS, WASHERS & RING)	

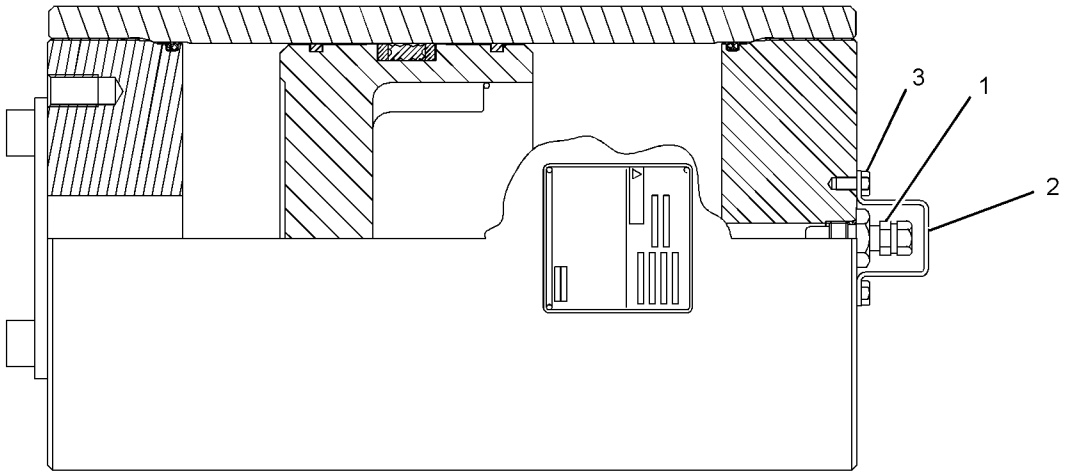

GRAPHIC #1 **<END>** g01132011

223-2447 ACCUMULATOR GP-SUSPENSION—UNCHARGED

S/N: AXM537-538, 540, 542-585, 588-589, 591, 593, 595, 599, 601, 603-1182

FIELD REPLACEMENT FOR 223-2446—PAGE 793

SMCS-5077 **i02207349**

NOTE	PART NUMBER	QTY	PART NAME 1 2 3 4 5 6 (PRODUCT LEVEL)	SEE PAGE
	241-0037	1	FILM (HYDRAULIC ACCUMULATOR)	

<END>

SUSPENSION SYSTEM

152-6931 CYLINDER & MTG GP-SUSPENSION

S/N: AXM1-1182

PART OF 152-6919 AXLE & FRAME AR

SMCS-7201 **i01620492**

NOTE	REF NO	GRAPHIC REF	PART NUMBER	QTY	PART NAME 1 2 3 4 5 6 (PRODUCT LEVEL)	SEE PAGE
Y	1	1	**146-8928**	2	CYLINDER GP-SUSPENSION	797
	2	1	**174-5639**	4	WASHER-SPECIAL (22X80X25-MM THK)	
	3	1	**174-5643**	2	SPACER (15-MM THK)	
	4	1	**176-9922**	2	SEAL	
	5	1	**187-9001**	2	PIN	
	6	1	**204-0499**	2	PIN	
	7	1	**204-0500**	4	SPACER (16.5-MM THK)	
M	8	1	**089-7990**	4	BOLT (M20X2.5X250-MM)	
	9	1	**7F-2122**	4	SEAL-O-RING	
	10	1	**8T-4123**	8	WASHER-PLATED (22X35X3.5-MM THK)	
M	11	1	**8T-4131**	4	NUT (M20X2.5-THD)	

M-METRIC PART
Y-SEPARATE ILLUSTRATION

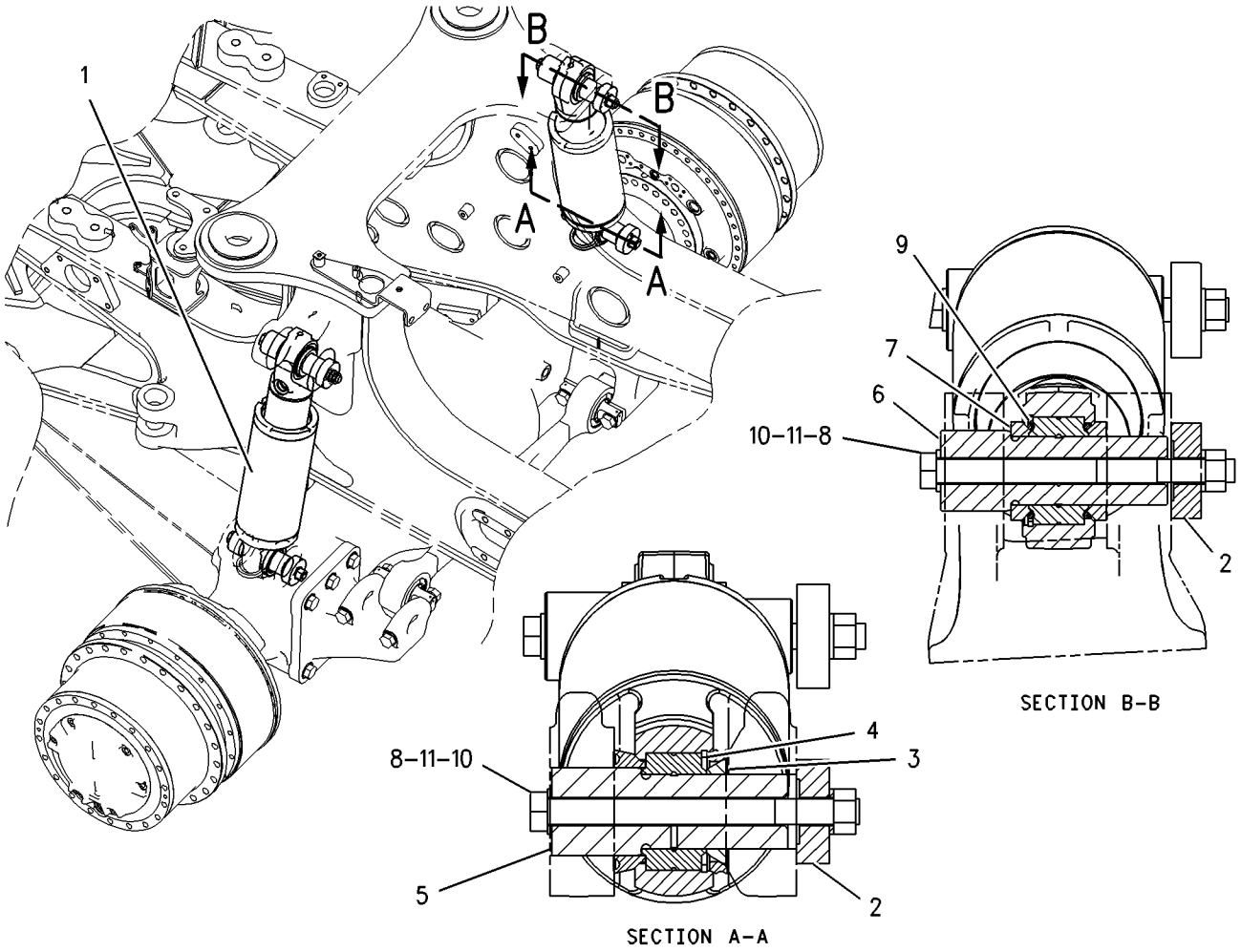

GRAPHIC #1 **<END>** g00838748

SUSPENSION SYSTEM

235-6657 CYLINDER & MTG GP-SUSPENSION

S/N: AXM1183-UP

PART OF 152-6919 AXLE & FRAME AR

SMCS-7201 **i02050212**

NOTE	REF NO	GRAPHIC REF	PART NUMBER	QTY	PART NAME 1 2 3 4 5 6 (PRODUCT LEVEL)	SEE PAGE
	1	1	**211-7328**	8	SEAL	
	2	1	**212-0136**	4	PIN	
	3	1	**212-0137**	4	SPACER	
	4	1	**212-0138**	4	WASHER-SPECIAL (22X94X1.25-MM THK)	
Y	5	1	**228-2758**	2	CYLINDER GP-SUSPENSION	799
M	6	1	**125-3297**	4	BOLT (M20X2.5X260-MM)	
	7	1	**8T-4123**	8	WASHER-PLATED (22X35X3.5-MM THK)	
M	8	1	**8T-4131**	4	NUT (M20X2.5-THD)	

M-METRIC PART
Y-SEPARATE ILLUSTRATION

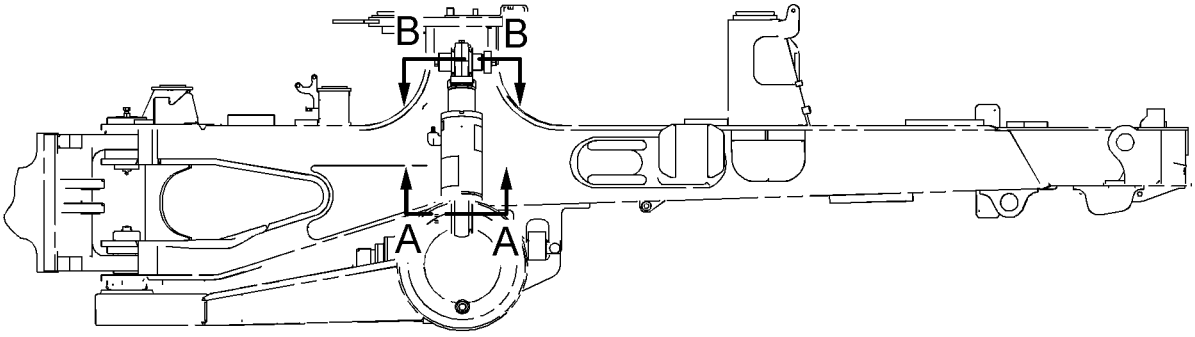

RIGHT SIDE VIEW

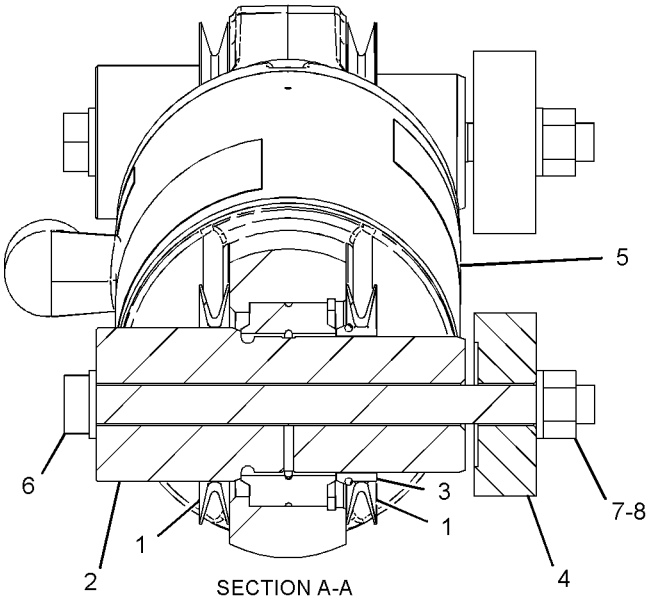

SECTION A-A

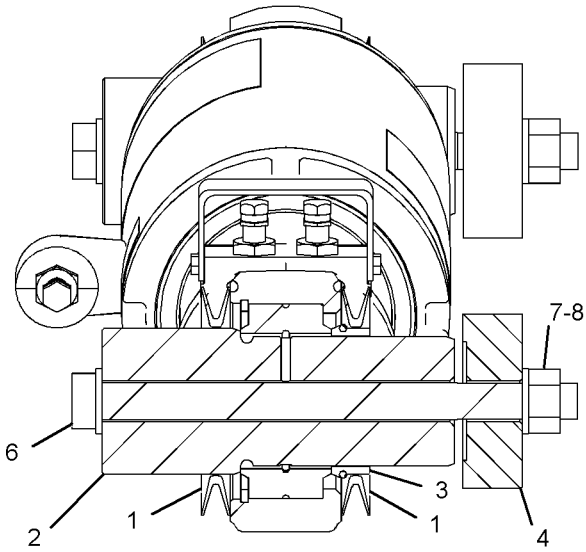

SECTION B-B

GRAPHIC #1 **<END>** g01054061

SUSPENSION SYSTEM

146-8928 CYLINDER GP-SUSPENSION

S/N: AXM1-1182
150.1-MM (5.9-IN) BORE X 152-MM (6-IN) STROKE
PART OF 152-6931 CYLINDER & MTG GP-SUSPENSION

SMCS-7201 **i02207427**

NOTE	REF NO	GRAPHIC REF	PART NUMBER	QTY	PART NAME 1 2 3 4 5 6 (PRODUCT LEVEL)	SEE PAGE
	1	1	**4B-9786**	2	BALL	
	2	1	**141-1819**	1	PISTON	
	3	1	**142-6219**	1	RETAINER	
	4	1	**146-8929**	1	CYLINDER AS	
		1	**6V-5839**	1	WASHER (11X21X2.5-MM THK)	
M		1	**136-4183**	1	BOLT-12 POINT HEAD (M10X1.5X30-MM)	
		1	**6V-5003**	1	BEARING	
		1	**8C-3229**	1	RING-RETAINING	
	5	1	**146-8931**	1	HEAD	
	6	1	**146-8932**	1	ROD AS	
		1	**6V-5003**	1	BEARING	
		1	**8C-3229**	1	RING-RETAINING	
	7	1	**095-1633**	1	SEAL-O-RING	
	8	1	**116-3589**	1	RING	
	9	1	**167-2220**	1	SEAL AS-BUFFER	
	10	1	**167-2236**	1	SEAL AS-BUFFER	
	11	1	**198-2643**	1	RING-BACKUP	
	12	1	**225-3289**	1	SEAL-WIPER	
	13	1	**8F-8733**	1	SEAL-O-RING	
M	14	1	**8T-4190**	1	BOLT (M16X2X25-MM)	
	15	1	**9X-3579**	1	RING-WEAR	
	16	1	**9X-3601**	1	SEAL AS	
	17	1	**9X-8257**	1	WASHER (17.5X30X3.5-MM THK)	

M-METRIC PART

146-8928 CYLINDER GP-SUSPENSION *(contd.)* **i02207427**

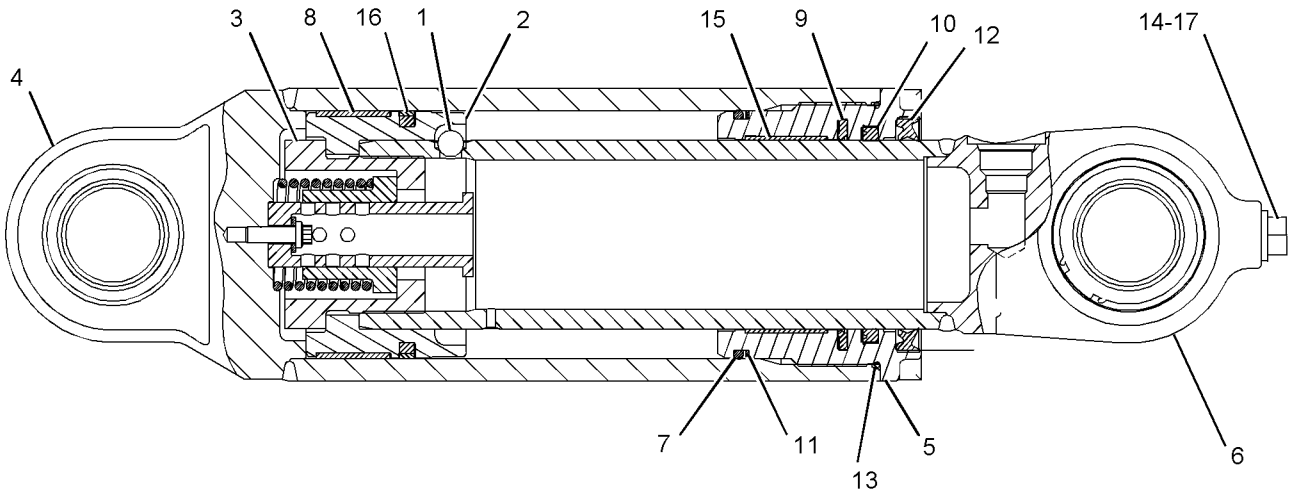

GRAPHIC #1 **<END>** g01116814

SUSPENSION SYSTEM

228-2758 CYLINDER GP-SUSPENSION

S/N: AXM1183-UP
150MM (5.91 IN) BORE X 152MM (5.98 IN) STROKE
PART OF 235-6657 CYLINDER & MTG GP-SUSPENSION

SMCS-7201 **i02106183**

NOTE	REF NO	GRAPHIC REF	PART NUMBER	QTY	PART NAME 1 2 3 4 5 6 (PRODUCT LEVEL)	SEE PAGE
	1	1	**175-3184**	3	VALVE GP (HYDRAULIC CYLINDER)	
					(EACH INCLUDES)	
		1	**6J-0368**	1	CAP	
		1	**175-3185**	1	CORE	
	2	1	**200-4290**	1	PISTON	
	3	1	**200-4291**	1	HEAD	
	4	1	**201-1311**	1	RETAINER	
	5	1	**226-9765**	1	PLATE-COVER	
	6	1	**235-3487**	1	CYLINDER AS	
		1	**164-9309**	1	BEARING	
	7	1	**235-3491**	1	ROD AS	
		1	**8T-7567**	1	RING	
		1	**164-9309**	1	BEARING	
	8	1	**095-1633**	1	SEAL-O-RING	
	9	1	**114-3361**	3	SEAL-O-RING	
	10	1	**116-3589**	1	RING	
	11	1	**167-2220**	1	SEAL AS-BUFFER	
	12	1	**167-2336**	1	SEAL-U-CUP	
	13	1	**198-2643**	1	RING-BACKUP	
	14	1	**225-3289**	1	SEAL-WIPER	
	15	1	**231-6533**	1	FILM-WARNING (HIGH PRESSURE CYLINDER)	
	16	1	**4B-9786**	2	BALL	
	17	1	**8F-8733**	1	SEAL-O-RING	
M	18	1	**8T-4171**	2	BOLT (M6X1X12-MM)	
M	19	1	**8T-4190**	1	BOLT (M16X2X25-MM)	
	20	1	**9X-3579**	1	RING-WEAR	
	21	1	**9X-3601**	1	SEAL AS	
	22	1	**9X-8257**	1	WASHER (17.5X30X3.5-MM THK)	

M-METRIC PART

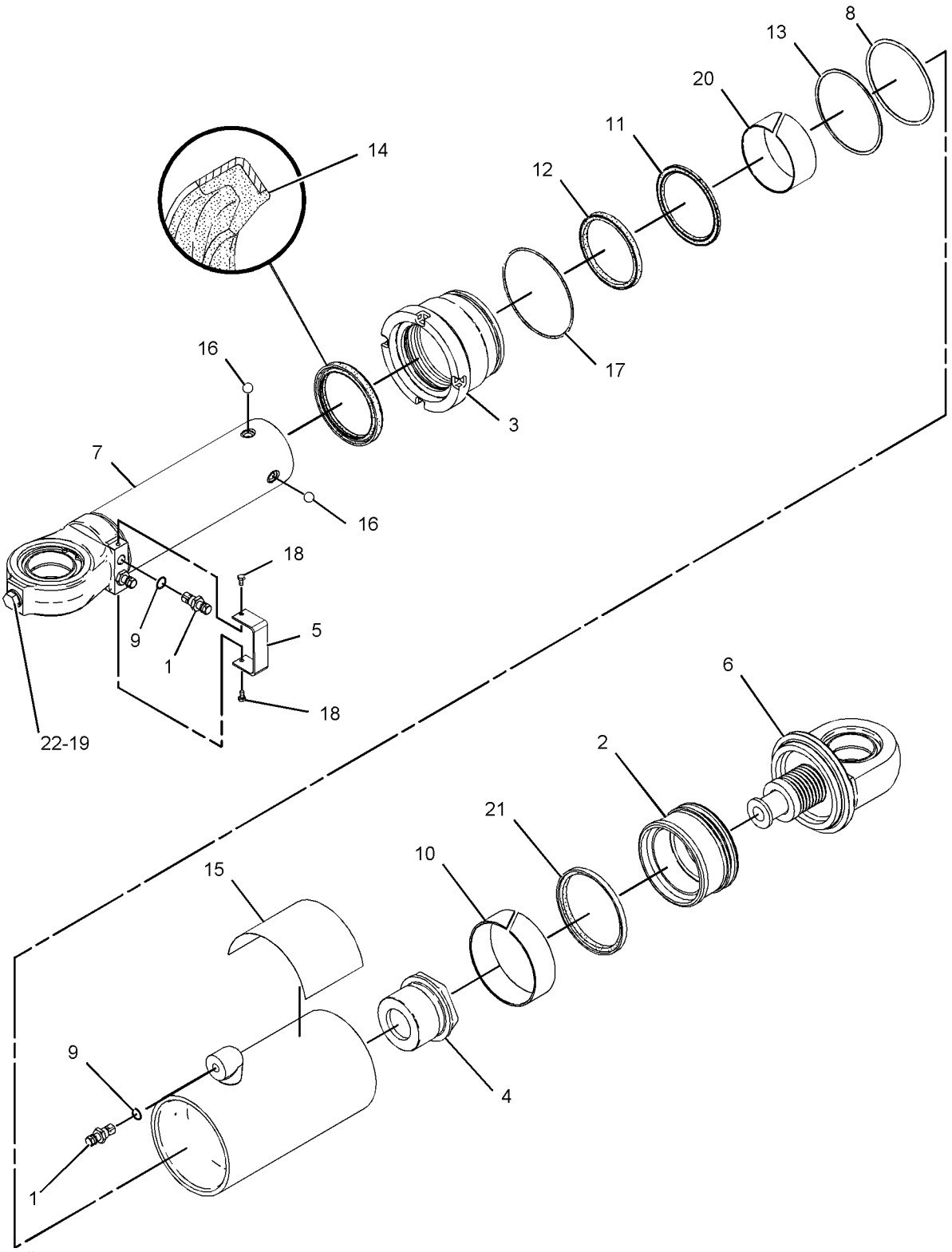

GRAPHIC #1 **<END>** g01072543

141-6859 FRAME GP-CENTER SUSPENSION

S/N: AXM1-UP

PART OF 152-7036 AXLE AR-CENTER

SMCS-7050, 7203 **i02232856**

NOTE	REF NO	GRAPHIC REF	PART NUMBER	QTY	PART NAME 1 2 3 4 5 6 (PRODUCT LEVEL)	SEE PAGE
	1	1	**231-7071**	6	BOLT (M24X3X315-MM)	
	2	1	**124-5529**	2	DOWEL	
	3	1	**141-6897**	1	FRAME AS	
		1	**173-4315**	2	BOSS	
	4	1	**155-0195**	1	PIN	
	5	1	**155-0198**	1	WASHER (26X100X25-MM THK)	
	6	1	**155-0385**	1	RING-CLAMP	
	7	1	**155-3537**	1	BEARING	
	8	1	**178-3317**	1	STABILIZER AS	
		1	**164-7826**	2	BUSHING	
		1	**196-8503**	1	ROD	
	9	1	**180-8517**	1	BRACKET-STABILIZER	
M	10	1	**8T-0367**	1	BOLT (M24X3X260-MM)	
M	11	1	**8T-0364**	4	BOLT (M24X3X220-MM)	
M	12	1	**7X-2563**	8	BOLT (M20X2.5X60-MM)	
M	13	1	**7X-0851**	5	NUT (M24X3-THD)	
	14	1	**8T-4121**	6	WASHER-HARD (11X21X2.5-MM THK)	
	15	1	**8T-4123**	8	WASHER-PLATED (22X35X3.5-MM THK)	
	16	1	**6V-8237**	22	WASHER (26X44X4-MM THK)	
M	17	1	**8T-4195**	6	BOLT (M10X1.5X30-MM)	
M	18	1	**8T-5397**	6	BOLT (M24X3X280-MM)	

M-METRIC PART

141-6859 **FRAME GP-CENTER SUSPENSION** *(contd.)* **i02232856**

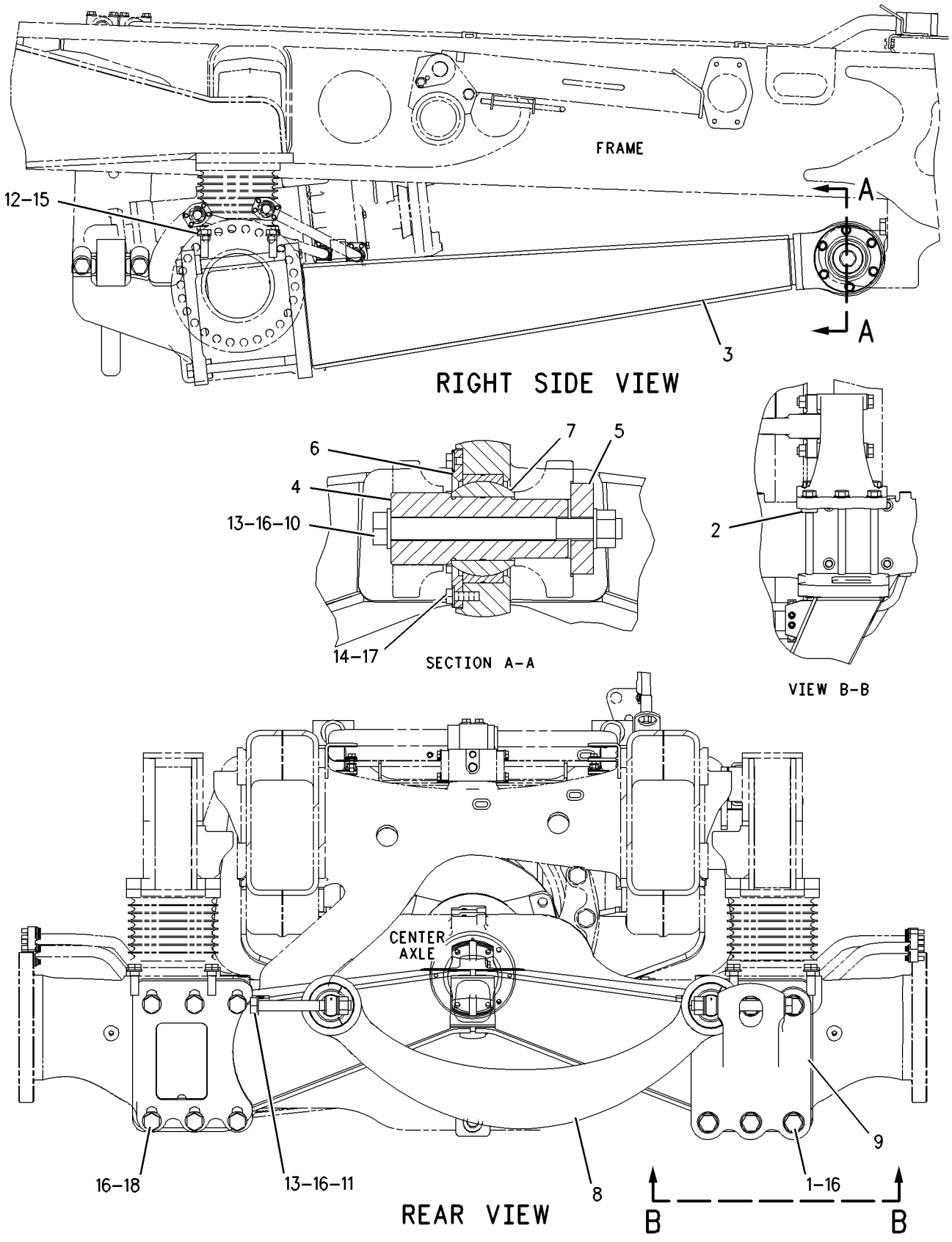

GRAPHIC #1 **<END>** g00764587

SUPPLY SYSTEM

141-6858 FRAME GP-FRONT SUSPENSION

S/N: AXM1-UP

PART OF 152-6935 AXLE AR-FRONT

SMCS-7050, 7203 **i02229020**

NOTE	REF NO	GRAPHIC REF	PART NUMBER	QTY	PART NAME 1 2 3 4 5 6 (PRODUCT LEVEL)	SEE PAGE
	1	1	**231-7071**	6	BOLT (M24X3X315-MM)	
	2	1	**124-5529**	2	DOWEL	
	3	1	**141-6898**	1	FRAME AS-SUSPENSION	
	4	1	**159-1076**	1	BRACKET	
	5	1	**178-3314**	1	STABILIZER AS	
		1	**164-7826**	2	BUSHING	
		1	**178-3313**	1	ROD	
	6	1	**185-4310**	1	SEAL	
	7	1	**233-9954**	1	BEARING-SPHERICAL	
	8	1	**233-9955**	1	WASHER-SPECIAL	
	9	1	**254-0811**	1	COLLAR	
M	10	1	**5P-8245**	3	WASHER-HARD (13.5X25.5X3-MM THK)	
M	11	1	**8T-0364**	4	BOLT (M24X3X220-MM)	
M	12	1	**8T-0372**	3	BOLT (M12X1.75X90-MM)	
M	13	1	**7X-0851**	4	NUT (M24X3-THD)	
	14	1	**6V-8237**	20	WASHER (26X44X4-MM THK)	
M	15	1	**8T-4194**	6	BOLT (M12X1.75X50-MM)	
	16	1	**8T-4223**	6	WASHER-HARD (13.5X25.5X3-MM THK)	
M	17	1	**8T-5397**	6	BOLT (M24X3X280-MM)	

M-METRIC PART

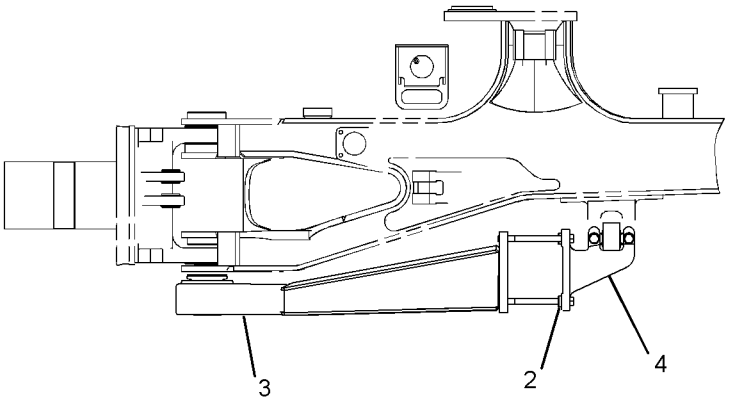

LEFT SIDE VIEW

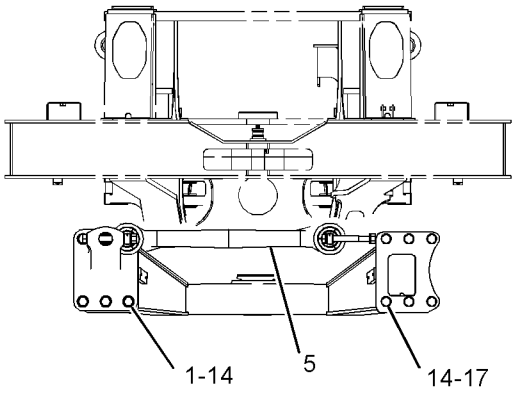

REAR VIEW

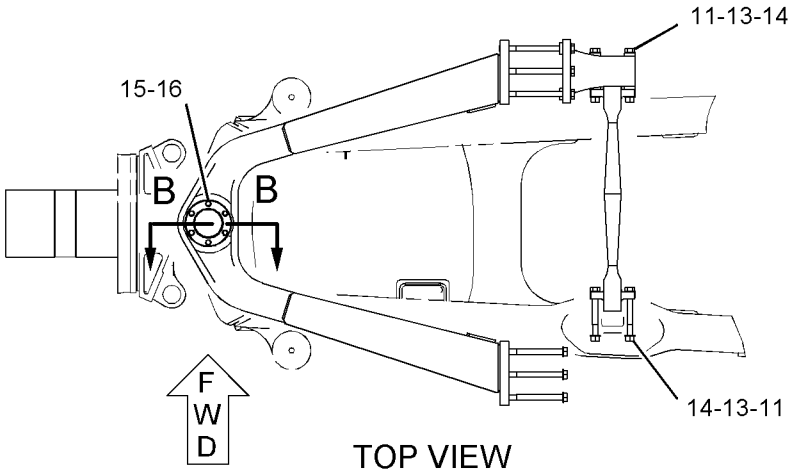

TOP VIEW

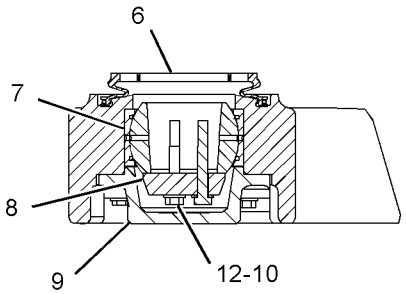

SECTION B-B

GRAPHIC #1 **<END>** g01124888

178-3852 FRAME GP-REAR SUSPENSION

S/N: AXM1-UP

PART OF 152-7037 AXLE AR-REAR

SMCS-7050, 7203 **i01934226**

NOTE	REF NO	GRAPHIC REF	PART NUMBER	QTY	PART NAME 1 2 3 4 5 6 (PRODUCT LEVEL)	SEE PAGE
	1	1	**231-7071**	6	BOLT (M24X3X315-MM)	
	2	1	**124-5529**	2	DOWEL	
	3	1	**155-0195**	1	PIN	
	4	1	**155-0198**	1	WASHER (26X100X25-MM THK)	
	5	1	**155-0385**	1	RING-CLAMP	
	6	1	**155-3537**	1	BEARING	
	7	1	**178-3314**	1	STABILIZER AS	
		1	**164-7826**	2	BUSHING	
		1	**178-3313**	1	ROD	
	8	1	**178-9223**	1	FRAME AS	
	9	1	**180-8517**	1	BRACKET-STABILIZER	
M	10	1	**8T-0367**	1	BOLT (M24X3X260-MM)	
M	11	1	**8T-0364**	4	BOLT (M24X3X220-MM)	
M	12	1	**7X-2563**	8	BOLT (M20X2.5X60-MM)	
M	13	1	**7X-0851**	5	NUT (M24X3-THD)	
	14	1	**8T-4121**	6	WASHER-HARD (11X21X2.5-MM THK)	
	15	1	**8T-4123**	8	WASHER-PLATED (22X35X3.5-MM THK)	
	16	1	**6V-8237**	22	WASHER (26X44X4-MM THK)	
M	17	1	**8T-4195**	6	BOLT (M10X1.5X30-MM)	
M	18	1	**8T-5397**	6	BOLT (M24X3X280-MM)	

M-METRIC PART

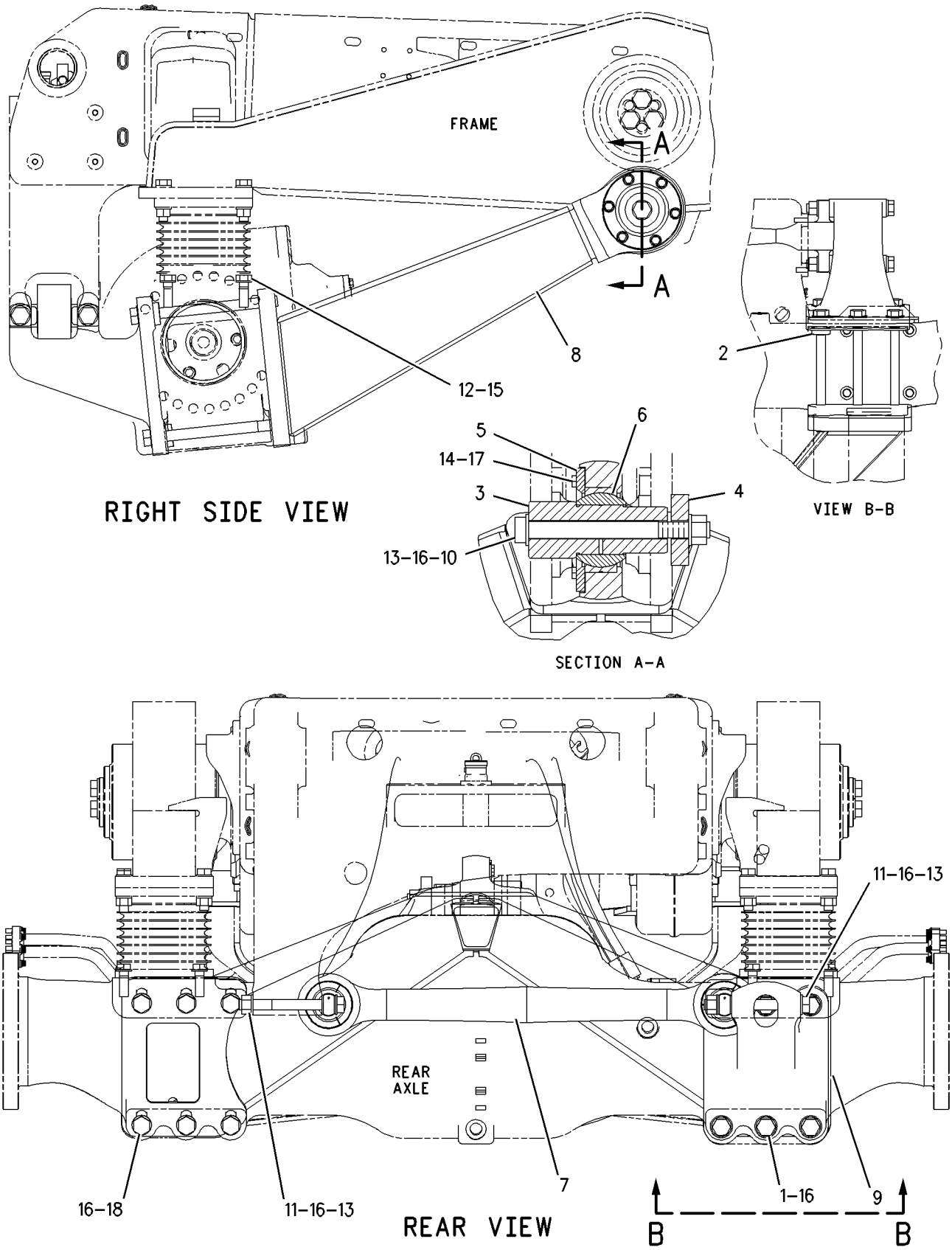

GRAPHIC #1 **<END>** g00764557

SUSPENSION SYSTEM

166-3945 LINES GP-SUSPENSION

S/N: AXM1-1182

PART OF 152-6922 HYDRAULIC AR-MACHINE

SMCS-7218 **i01849396**

NOTE	REF NO	GRAPHIC REF	PART NUMBER	QTY	PART NAME 1 2 3 4 5 6 (PRODUCT LEVEL)	SEE PAGE
	1	2	*148-8424*	1	TEE AS	
		2	**8T-8902**	1	TEE	
		2	**6V-8397**	1	SEAL-O-RING	
	2	2	*164-5567*	1	FITTING GP-COUPLING	
		2	**6V-3965**	1	FITTING AS	
		2	**3J-1907**	1	SEAL-O-RING	
	3	1	**187-5092**	2	VALVE GP-MANUAL	
					(EACH INCLUDES)	
		1	**208-9093**	2	VALVE GP-CONTROL	
					(EACH INCLUDES)	
		1	**6V-6560**	1	SEAL-O-RING	
I	4	2	**195-0794**	2	HOSE AS	
I	5	1	**195-0798**	2	HOSE AS	
I	6	1	**195-0799**	1	HOSE AS	
I	7	1	**195-0800**	1	HOSE AS	
I	8	1	**195-0803**	2	HOSE AS	
	9	2	**207-0401**	2	FLANGE	
	10	1	*148-8318*	1	CONNECTOR AS	
		1	**6V-8634**	1	CONNECTOR	
		1	**3K-0360**	1	SEAL-O-RING	
		1	**6V-8397**	1	SEAL-O-RING	
	11	2	*148-8336*	2	CONNECTOR AS	
					(EACH INCLUDES)	
		2	**6V-8636**	1	CONNECTOR	
		2	**3J-1907**	1	SEAL-O-RING	
		2	**6V-8397**	1	SEAL-O-RING	
	12	1	*148-8338*	1	CONNECTOR AS	
		1	**3J-1907**	1	SEAL-O-RING	
		1	**6V-8397**	1	SEAL-O-RING	
		1	**8T-0075**	1	CONNECTOR	
	13	1	*148-8353*	1	ELBOW AS	
		1	**6V-9001**	1	ELBOW	
		1	**3J-1907**	1	SEAL-O-RING	
		1	**6V-8397**	1	SEAL-O-RING	
	14	1	*148-8357*	2	ELBOW AS	
					(EACH INCLUDES)	
		1	**6V-9008**	1	ELBOW	
		1	**5K-9090**	1	SEAL-O-RING	
		1	**7M-8485**	1	SEAL-O-RING	
	15	1,2	*148-8378*	4	ELBOW AS	
					(EACH INCLUDES)	
		1,2	**6V-8724**	1	ELBOW	
		1,2	**3J-1907**	1	SEAL-O-RING	
		1,2	**6V-8397**	1	SEAL-O-RING	
	16	1	*148-8433*	2	TEE AS	
					(EACH INCLUDES)	
		1	**6V-9836**	1	TEE-SWIVEL	
		1	**6V-8397**	2	SEAL-O-RING	
	17	1	*148-8434*	1	TEE AS	
		1	**6V-9843**	1	TEE-SWIVEL	
		1	**6V-8397**	2	SEAL-O-RING	
	18	2	*150-3036*	2	ELBOW AS	
					(EACH INCLUDES)	
		2	**3J-1907**	1	SEAL-O-RING	
		2	**6V-8397**	1	SEAL-O-RING	
		2	**8T-1905**	1	ELBOW	

166-3945 **LINES GP-SUSPENSION** *(contd.)* **i01849396**

NOTE	REF NO	GRAPHIC REF	PART NUMBER	QTY	PART NAME 1 2 3 4 5 6 (PRODUCT LEVEL)	SEE PAGE
	19	2	**4J-0520**	4	SEAL-O-RING	
M	20	1	**5C-7261**	4	NUT (M8X1.25-THD)	
	21	1	**5P-7462**	2	CLIP (SLOT)	
	22	1	**5P-7463**	2	CLIP (TAB)	
	23	1	**5P-7468**	1	CLIP (SLOT)	
	24	1	**5P-7469**	1	CLIP (TAB)	
	25	1	**5P-8444**	1	GROMMET	
	26	1	**6V-0683**	2	GROMMET	
	27	2	**6V-0852**	1	CAP-DUST	
	28	2	**8C-3206**	4	FLANGE-HALF	
	29	2	**8T-4121**	8	WASHER-HARD (11X21X2.5-MM THK)	
M	30	1	**8T-4197**	4	BOLT (M8X1.25X40-MM)	
	31	1	**8T-4223**	4	WASHER-HARD (13.5X25.5X3-MM THK)	
	32	1	**8T-4224**	8	WASHER-HARD (8.8X16X2-MM THK)	
M	33	1	**8T-4244**	2	NUT (M12X1.75-THD)	
M	34	1	**8T-4956**	2	BOLT (M12X1.75X35-MM)	
M	35	2	**8T-6466**	8	BOLT (M10X1.5X60-MM)	

I-REFER TO HYDRAULIC INFORMATION SYSTEM
M-METRIC PART

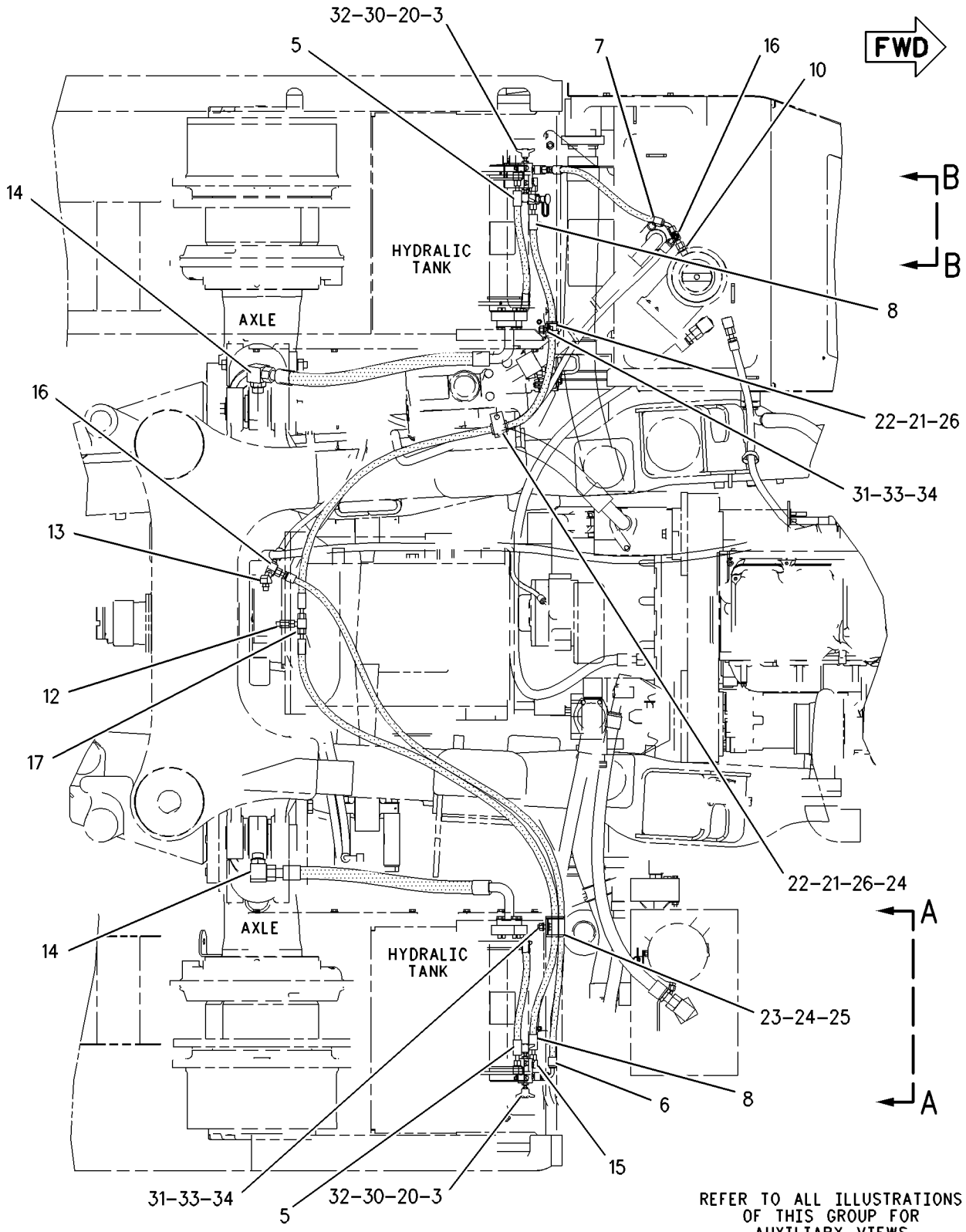

TOP VIEW

GRAPHIC #1 g00944176

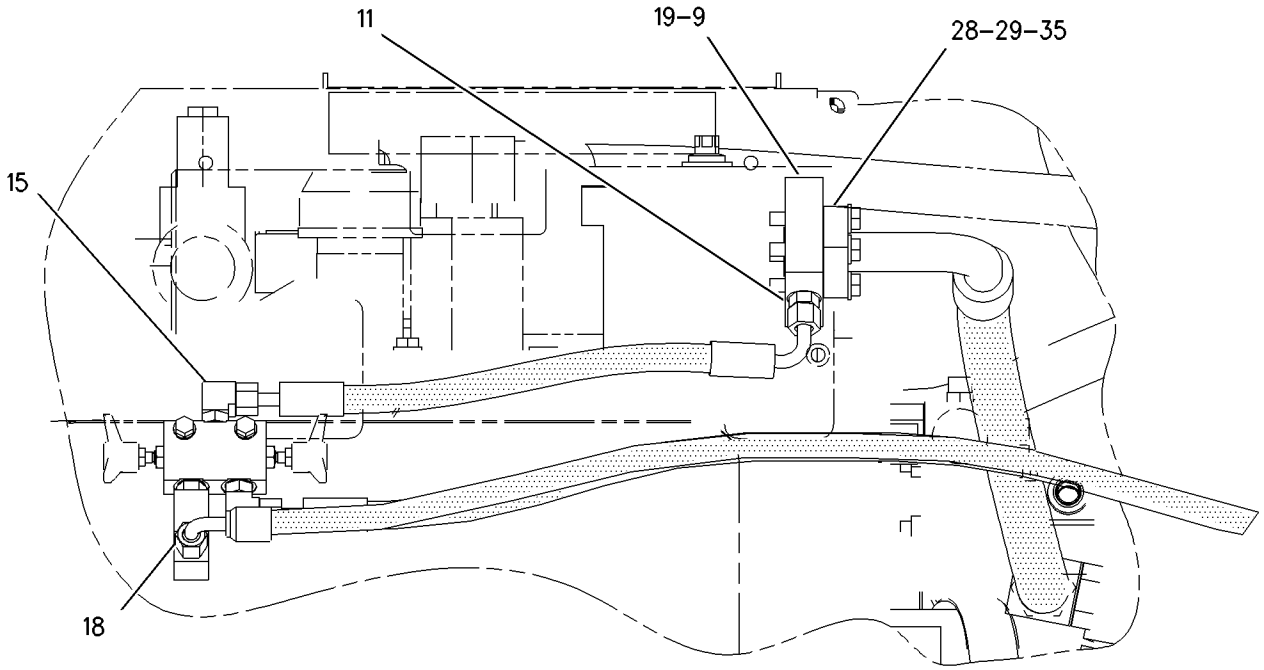

VIEW A–A

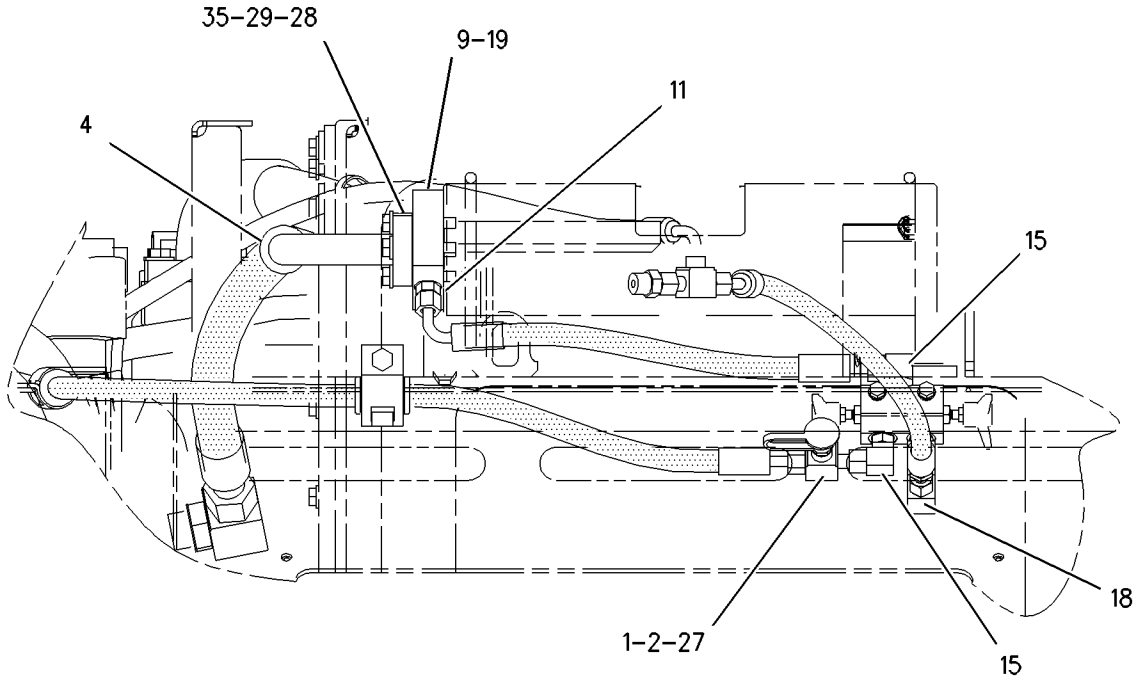

VIEW B–B

GRAPHIC #2 **<END>** g00944174

SUSPENSION SYSTEM

138-7962 SUSPENSION GP-REAR EQUALIZER

S/N: AXM1-UP

PART OF 152-7035 FRAME AR

SMCS-7203, 7207 **i02124564**

NOTE	REF NO	GRAPHIC REF	PART NUMBER	QTY	PART NAME 1 2 3 4 5 6 (PRODUCT LEVEL)	SEE PAGE
	1	1	**138-9223**	1	ARM AS (LH)	
	2	1	**211-4987**	4	MOUNT AS	
	3	1	**138-9226**	2	CAP-END	
	4	1	**138-9231**	4	BUSHING	
	5	1	**143-3911**	2	WASHER (10-MM THK)	
	6	1	**148-3665**	1	ARM AS (RH)	
M	7	1	**8T-0666**	6	BOLT (M24X3X90-MM)	
	8	1	**8T-4123**	32	WASHER-PLATED (22X35X3.5-MM THK)	
M	9	1	**8T-4131**	16	NUT (M20X2.5-THD)	
	10	1	**6V-8237**	6	WASHER (26X44X4-MM THK)	
M	11	1	**8T-4187**	16	BOLT (M20X2.5X80-MM)	

M-METRIC PART

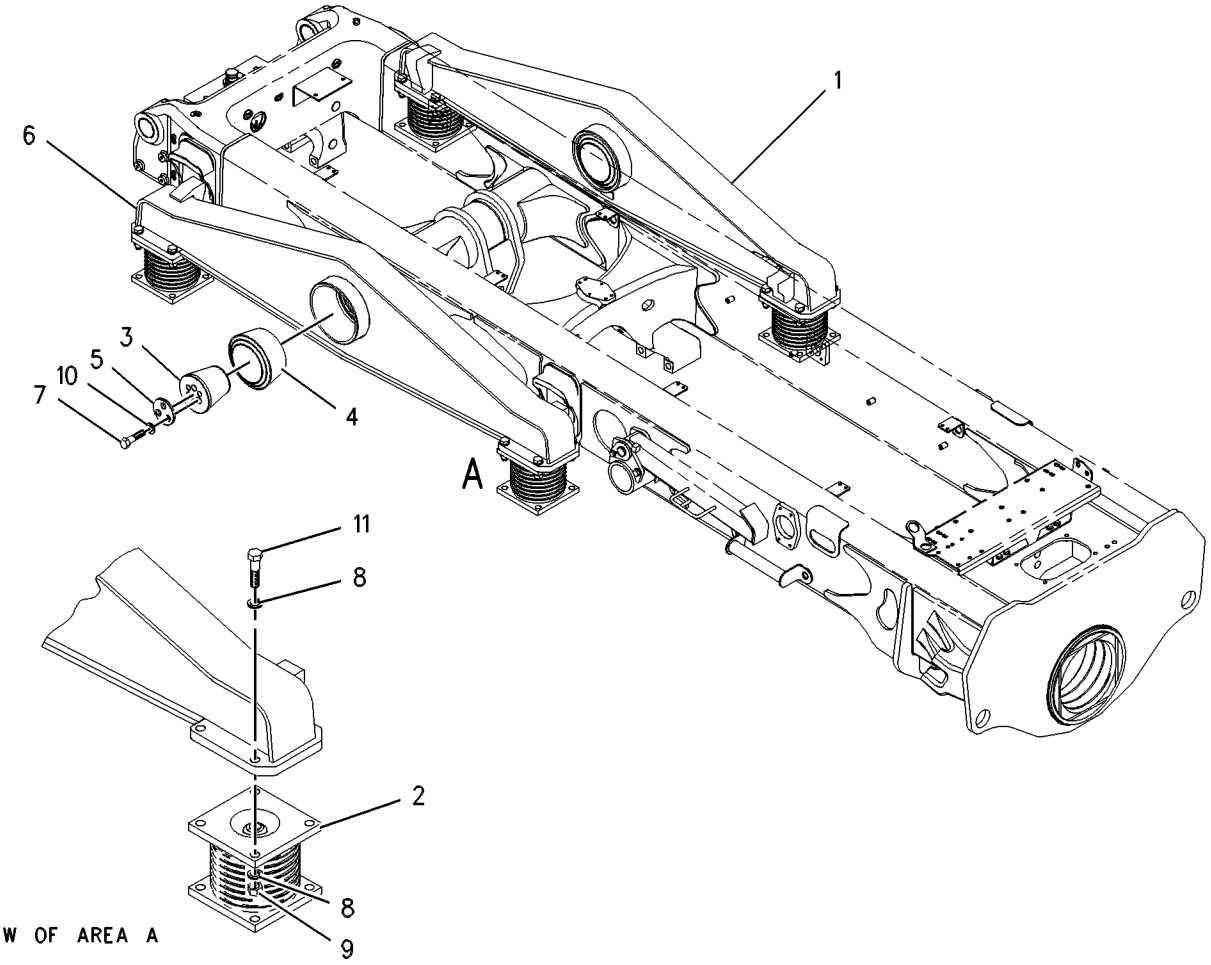

GRAPHIC #1 **<END>** g00580380

OPERATOR STATION

173-1029 ADJUSTER GP-SEAT

S/N: AXM1-UP
PART OF 187-4296, 218-8514 SEAT GP
ALSO AN ATTACHMENT

SMCS-7321 **i01793039**

NOTE	REF NO	GRAPHIC REF	PART NUMBER	QTY	PART NAME 1 2 3 4 5 6 (PRODUCT LEVEL)	SEE PAGE
	1	1	**4V-8256**	4	SPRING	
	2	1	**117-4492**	1	ROD	
	3	1	**136-1544**	1	LATCH AS-LH	
		1	**156-5546**	1	PIN	
	4	1	**156-5545**	1	LATCH AS-RH	
		1	**156-5546**	1	PIN	
	5	1	**164-4531**	1	ROD	
	6	1	**170-1114**	1	HANDLE	
	7	1	**170-1115**	1	HANDLE	
	8	1	**204-5284**	1	PLATE AS	
	9	1	**132-0338**	2	WASHER-PLASTIC (13X31.7X.8MM THK)	
	10	1	**2K-4973**	2	LOCKNUT (3/8-16 THD)	
	11	1	**7X-0608**	2	WASHER-HARD (10.2X16X2.0MM THK)	

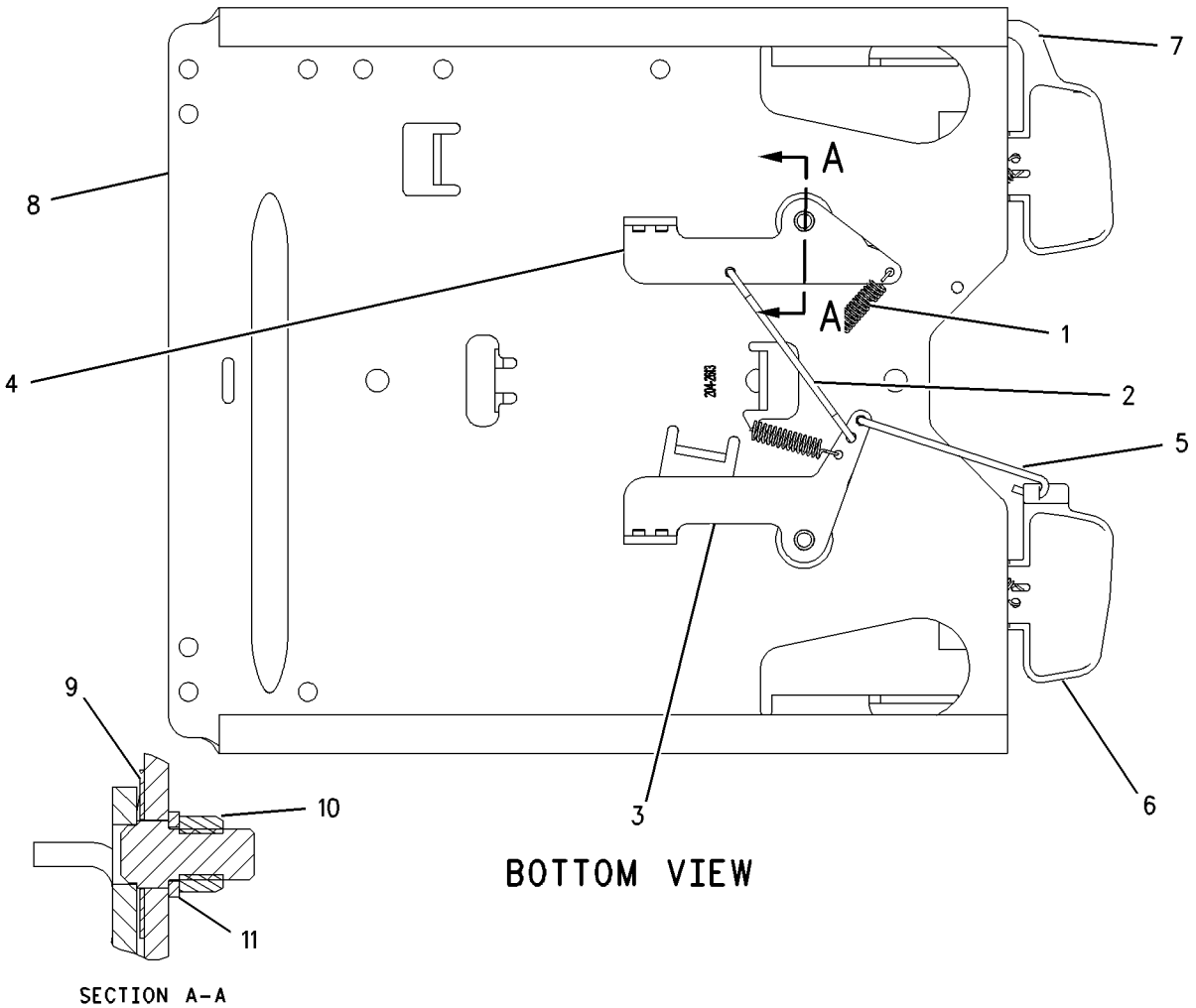

GRAPHIC #1 **<END>** g00917091

OPERATOR STATION

214-0783 AIR COMPRESSOR GP-SEAT

S/N: AXM625-820

PROVIDES OPTIONAL FIELD REPLACEMENT AIR COMPRESSOR

FIELD REPLACEMENT FOR 237-3970—PAGE 814

SMCS-731S, 7324 **i02012101**

NOTE	REF NO	GRAPHIC REF	PART NUMBER	QTY	PART NAME 1 2 3 4 5 6 (PRODUCT LEVEL)	SEE PAGE
	1	1	**5P-4423**	1	ELBOW	
	2	1	**5P-4432**	1	ELBOW-AIR BRAKE	
	3	1	**175-5058**	1	MOUNT	
	4	1	**186-5107**	3	SCREW (NO 8X1.25-IN)	
	5	1	**214-0784**	1	COMPRESSOR AS	
AEF			**211-5358**		CONDUIT (100CM)	
ADF			**5P-6010**		TUBE (1M)	

A-NOT PART OF THIS GROUP
D-ORDER BY THE METER
E-ORDER BY THE CENTIMETER
F-NOT SHOWN

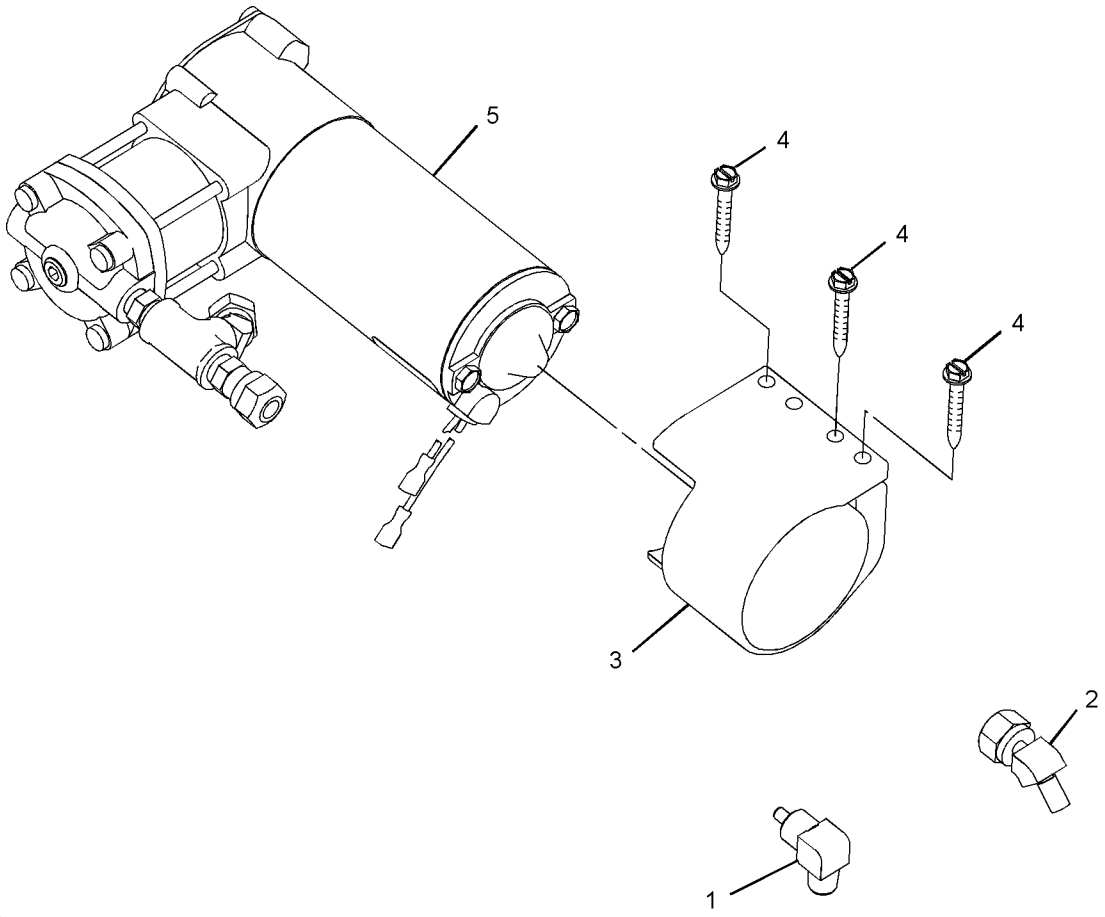

GRAPHIC #1 **<END>** g01040572

OPERATOR STATION

237-3970 AIR COMPRESSOR GP-SEAT

S/N: AXM625-820
PART OF 199-5725 SUSPENSION GP-SEAT
FIELD REPLACEMENT ORDER 214-0783—PAGE 813
ALSO AN ATTACHMENT

SMCS-731S, 7324 **i02012095**

NOTE	REF NO	GRAPHIC REF	PART NUMBER	QTY	PART NAME 1 2 3 4 5 6 (PRODUCT LEVEL)	SEE PAGE
					(NO SERVICED PARTS)	

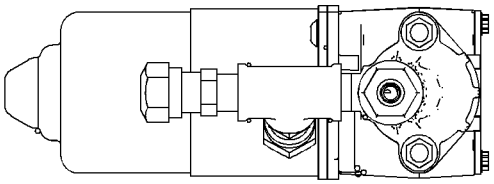

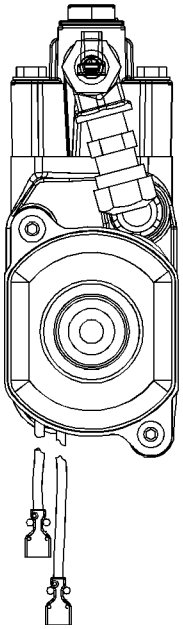

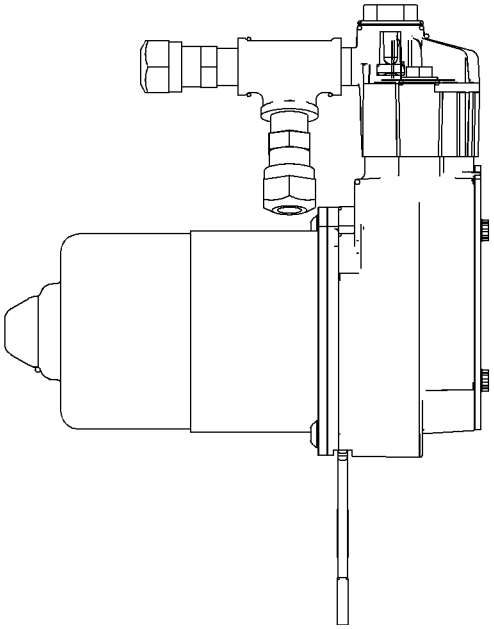

GRAPHIC #1 **<END>** g01040576

OPERATOR STATION

149-0091 AIR CONDITIONER & MOUNTING GP

S/N: AXM1-1488

PART OF 153-5485, 229-8087 CAB AR

SMCS-7320 **i02147179**

NOTE	REF NO	GRAPHIC REF	PART NUMBER	QTY	PART NAME 1 2 3 4 5 6 (PRODUCT LEVEL)	SEE PAGE
	1	2	**8Y-6388**	1	LOUVER AS	
	2	2	**104-5604**	4	WASHER (2-MM THK)	
	3	1	**119-3355**	1	FILTER-AIR (AIR CONDITIONER)	
	4	1	**120-3950**	1	GASKET	
	5	2	**151-5715**	1	LOUVER AS	
Y	6	1	**157-2878**	1	AIR CONDITIONER GP	819
	7	2	**160-8720**	1	PLENUM	
	8	2	**170-4855**	1	PLENUM	
	9	1	**170-5337**	1	GASKET	
	10	2	**170-5338**	2	GASKET	
	11	1	**170-5339**	1	GASKET	
	12	1	**170-5340**	2	GASKET	
	13	1	**170-5341**	1	GASKET	
	14	1	**170-5342**	1	COVER	
M	15	1	**175-7141**	8	NUT-HEX FLANGE	
	16	1	**185-9464**	3	LATCH AS	
	17	2	**104-2091**	2	SCREW-FLAT HEAD (6-20X0.5-IN)	
	18	2	**118-5619**	2	SCREW-FLAT HEAD (NO 0.6-20X1-IN)	
M	19	2	**6V-7357**	2	BOLT (M6X1X25-MM)	
M	20	2	**7X-2533**	2	BOLT (M6X1X35-MM)	
M	21	1	**8T-7004**	8	STUD-TAPERLOCK	
M	22	1	**9X-2044**	4	SCREW-TRUSS HEAD	

M-METRIC PART
Y-SEPARATE ILLUSTRATION

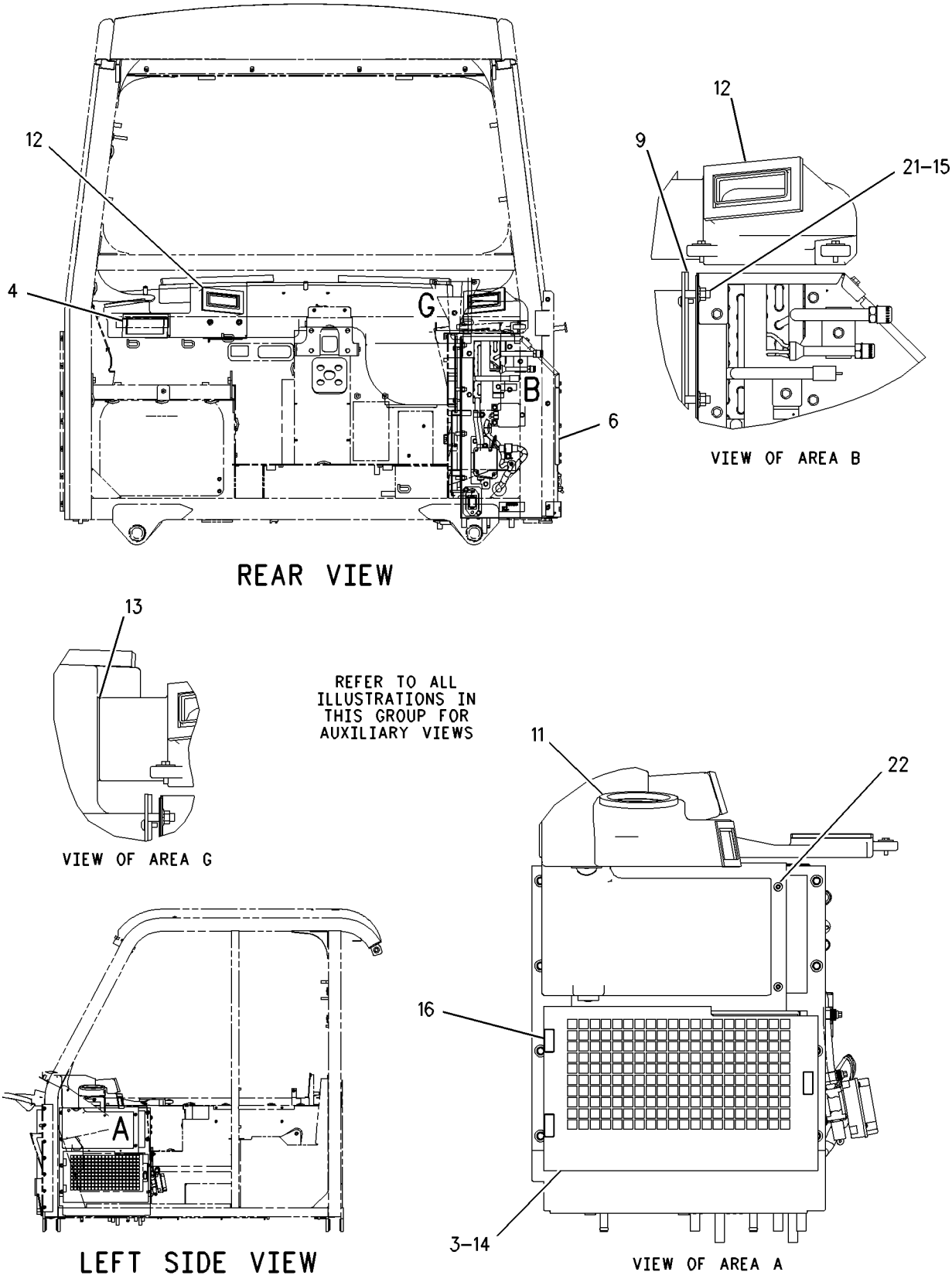

GRAPHIC #1 g00751854

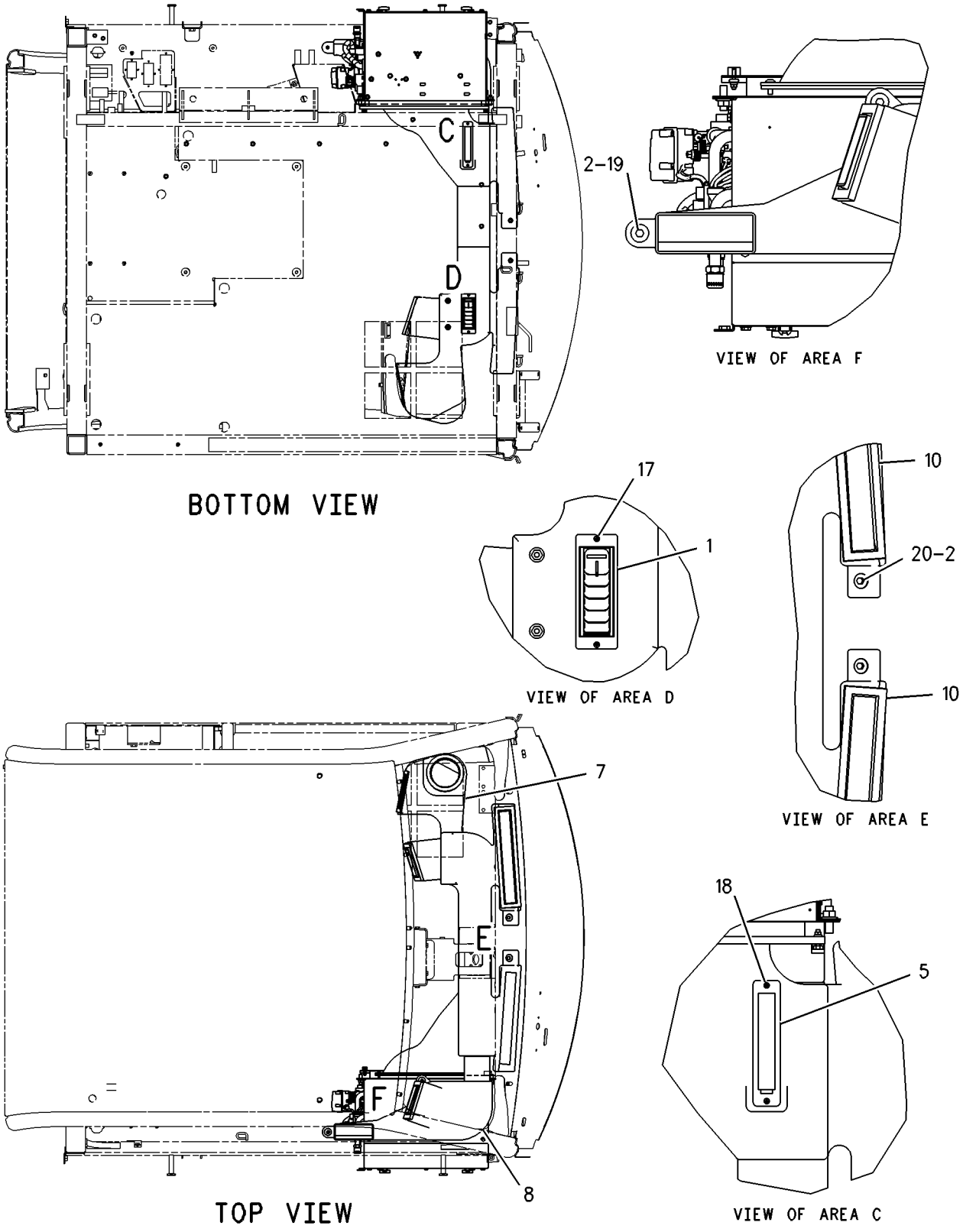

GRAPHIC #2 **<END>** g00751856

OPERATOR STATION

246-0845 AIR CONDITIONER & MOUNTING GP

S/N: AXM1489-UP

PART OF 229-8087 CAB AR

SMCS-7320 **i02053060**

NOTE	PART NUMBER	QTY	PART NAME 1 2 3 4 5 6 (PRODUCT LEVEL)	SEE PAGE
Y	*246-0846*	1	AIR CONDITIONER GP	825
M	**6V-7357**	2	BOLT (M6X1X25-MM)	
M	**7X-2533**	2	BOLT (M6X1X35-MM)	
	170-5342	1	COVER	
	119-3355	1	FILTER-AIR	
	120-3950	1	GASKET	
	170-5337	1	GASKET	
	170-5338	2	GASKET	
	170-5339	1	GASKET	
	170-5340	2	GASKET	
	170-5341	1	GASKET	
	185-9464	3	LATCH AS	
	8Y-6388	1	LOUVER AS	
	151-5715	1	LOUVER AS	
M	**175-7141**	8	NUT-HEX FLANGE	
	170-4855	1	PLENUM	
	104-2091	2	SCREW-FLAT HEAD (6-20X0.5-IN)	
	118-5619	2	SCREW-FLAT HEAD (NO 0.6-20X1-IN)	
M	**9X-2044**	4	SCREW-TRUSS HEAD	
M	**8T-7004**	8	STUD-TAPERLOCK	
	104-5604	4	WASHER (2-MM THK)	

M-METRIC PART
Y-SEPARATE ILLUSTRATION

<END>

OPERATOR STATION

157-2878 AIR CONDITIONER GP

S/N: AXM1-1488

PART OF 149-0091 AIR CONDITIONER & MOUNTING GP

TYPE 1

SMCS-7320 **i02247372**

NOTE	REF NO	GRAPHIC REF	PART NUMBER	QTY	PART NAME 1 2 3 4 5 6 (PRODUCT LEVEL)	SEE PAGE
	1	1	**3E-0400**	2	BLOWER AS	
					(EACH INCLUDES)	
		1	**037-4838**	1	CLAMP	
	2	1	**3E-5464**	1	SWITCH AS-TEMPERATURE (THERMOSTAT) (AIR CONDITIONER)	
	3	1	**3S-2093**	3	STRAP-CABLE	
	4	1	**3T-2511**	2	TUBE	
	5	1	**6T-6708**	2	WASHER (7X28.6X4.1-MM THK)	
	7	1	**8C-4586**	2	CLAMP	
	8	1	**8P-5141**	2	PLATE-ORIFICE	
	9	1	**9G-9154**	1	CLIP	
	10	1	**9X-2185**	4	SCREW (8-15X11.11-MM)	
	11	1	**9X-2488**	2	CLAMP-HOSE	
	12	1	**037-4838**	2	CLAMP	
	13	1	**102-0340**	1	COVER	
	14	1	**125-9740**	1	RESISTOR	
	15	1	**131-2639**	4	WASHER (3.2X9X0.5-MM THK)	
M	16	1	**141-9784**	1	BOLT (M6X1X190-MM)	
	17	1	**149-8195**	1	VALVE AS-WATER	
		1	**7N-7779**	3	SOCKET-CONNECTOR	
		1	**7N-7780**	2	PIN-CONNECTOR	
		1	**9G-3670**	1	HOUSING-PLUG	
		1	**9G-3695**	2	PLUG (GROMMET SEALING)	
	18	1	**149-8217**	1	CONTROL AS-BOARD	
		1	**7N-7779**	5	SOCKET-CONNECTOR	
		1	**7N-7780**	5	PIN-CONNECTOR	
		1	**9G-3670**	1	HOUSING-PLUG	
		1	**9G-3676**	1	HOUSING-RECEPTACLE	
		1	**9G-3695**	4	PLUG (GROMMET SEALING)	
	19	1	**157-2482**	1	CASE AS	
	20	1	**157-2483**	1	COVER AS	
	21	1	**157-2484**	1	COVER AS	
	22	1	**157-2485**	1	HOUSING AS	
	23	1	**157-2487**	1	COVER	
	24	1	**157-2488**	1	GASKET	
	25	1	**157-2493**	1	PLATE	
	26	1	**157-2494**	1	GASKET	
	27	1	**157-2495**	1	GASKET	
	28	1	**157-2496**	1	GASKET	
	29	1	**157-2497**	2	GASKET	
	30	1	**157-2500**	1	HARNESS AS-HEATER & AIR COND	
		1	**103-8134**	1	KIT-RECEPTACLE (12-PIN)	
					(INCLUDES RECEPTACLE AS & WEDGE)	
		1	**155-2270**	1	KIT-CONNECTING PLUG (2-PIN)	
					(INCLUDES PLUG AS, WEDGE & INTERFACE SEAL)	
	31	1	**157-2501**	1	PAN-DRAIN	
	32	1	**157-2509**	1	BRACKET	
	33	1	**157-2510**	1	PLATE AS	
	34	1	**157-2514**	1	GASKET	
	35	1	**157-2515**	1	GASKET	
	36	1	**157-2522**	1	COIL AS-HEATER	
	37	1	**157-2523**	1	COIL AS-EVAPORATOR	
	38	1	**174-1494**	1	MOTOR AS-BLOWER (24-VOLT, A/C, HEATER)	
		1	**3E-3365**	1	WEDGE-RECEPTACLE LOCK (2-PIN)	
		1	**9W-0852**	2	PIN-CONNECTOR	

157-2878 **AIR CONDITIONER GP** *(contd.)* **i02247372**

NOTE	REF NO	GRAPHIC REF	PART NUMBER	QTY	PART NAME 1 2 3 4 5 6 (PRODUCT LEVEL)	SEE PAGE
		1	**102-8802**	1	KIT-RECEPTACLE (2-PIN)	
	39	1	**174-8145**	1	FILTER-AIR	
	40	1	**180-9562**	2	LATCH AS	
	41	1	**033-7291**	12	RIVET	
M	42	1	**129-3178**	16	LOCKNUT (M6X1-THD)	
M	43	1	**5C-9553**	32	BOLT (M6X1X16-MM)	
	44	1	**6V-1668**	2	WASHER (6.5X29.1X3-MM THK)	
M	45	1	**6V-7728**	1	BOLT (M6X1X45-MM)	
M	46	1	**6V-9671**	4	SCREW-MACHINE (M3X0.5X12-MM)	
	47	1	**8T-4205**	50	WASHER-HARD (7.2X14.5X2-MM THK)	
E	48	1	**136-1953**		HOSE (14CM)	
D	49	1	**6V-2496**		SEAL (1M)	
D	50	1	**5P-5908**		SEAL (0.2M)	
D	51	1	**5P-5672**		SEAL (0.4M)	

D-ORDER BY THE METER
E-ORDER BY THE CENTIMETER
M-METRIC PART

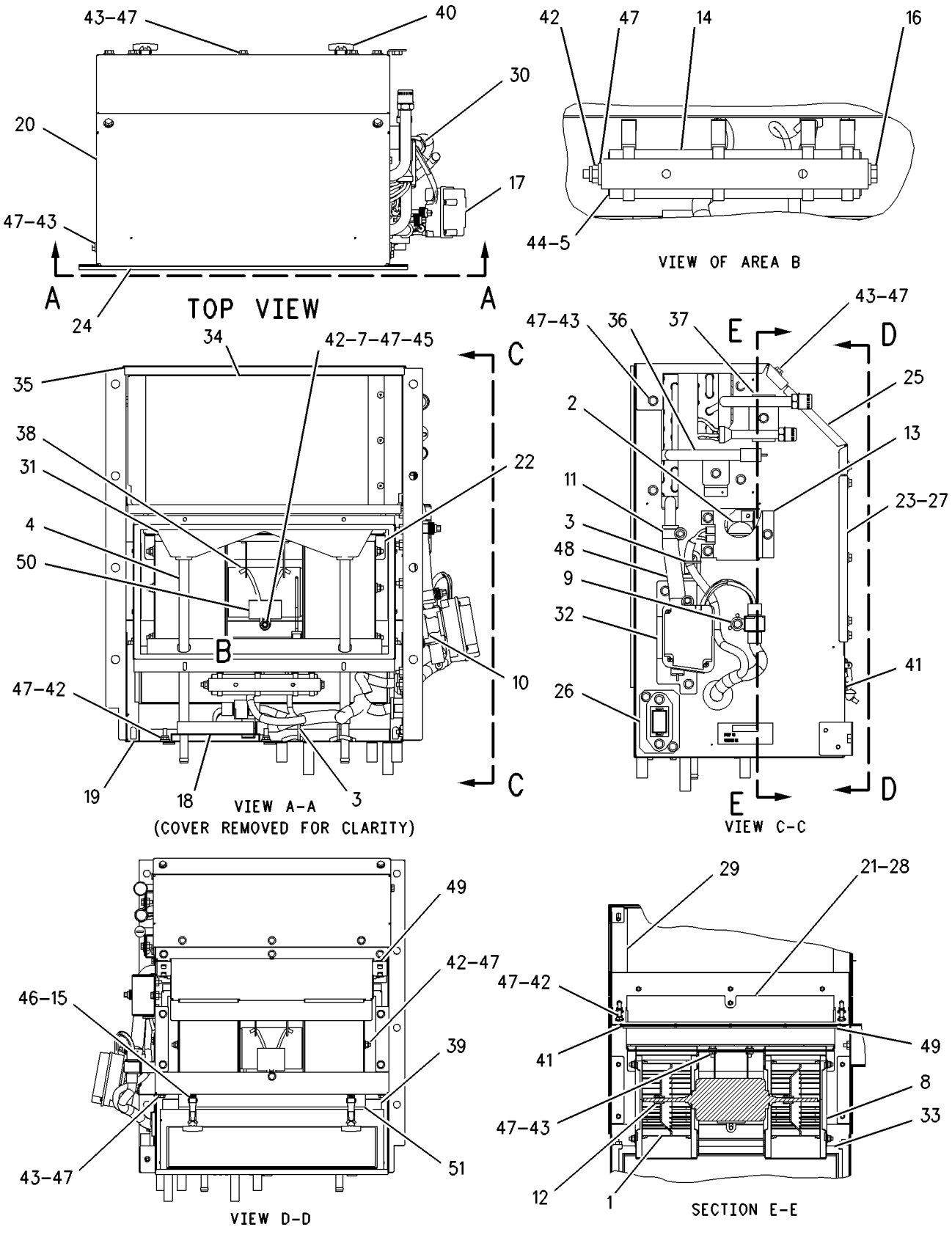

GRAPHIC #1 **<END>** g00804060

OPERATOR STATION

157-2878 AIR CONDITIONER GP

S/N: AXM1-1488

PART OF 149-0091 AIR CONDITIONER & MOUNTING GP

TYPE 2

SMCS-7320 **i02147182**

NOTE	REF NO	GRAPHIC REF	PART NUMBER	QTY	PART NAME 1 2 3 4 5 6 (PRODUCT LEVEL)	SEE PAGE
	1	1	**3E-0400**	2	BLOWER AS	
					(EACH INCLUDES)	
		1	**037-4838**	1	CLAMP	
	2	1	**3E-5464**	1	SWITCH AS-TEMPERATURE (THERMOSTAT) (AIR CONDITIONER)	
	3	1	**3S-2093**	3	STRAP-CABLE	
	4	1	**3T-2511**	2	TUBE	
	5	1	**6T-6708**	2	WASHER (7X28.6X4.1-MM THK)	
	6	1	**8C-3756**	1	FILM-IDENTIFICATION (GROUP NUMBER) (AIR CONDITIONER)	
	7	1	**8C-4586**	2	CLAMP	
	8	1	**8P-5141**	2	PLATE-ORIFICE	
	9	1	**9G-9154**	1	CLIP	
	10	1	**9X-2185**	4	SCREW (8-15X11.11-MM)	
	11	1	**9X-2488**	2	CLAMP-HOSE	
	12	1	**037-4838**	2	CLAMP	
	13	1	**102-0340**	1	COVER	
	14	1	**125-9740**	1	RESISTOR	
	15	1	**131-2639**	4	WASHER (3.2X9X0.5-MM THK)	
M	16	1	**141-9784**	1	BOLT (M6X1X190-MM)	
	17	1	**157-2482**	1	CASE AS	
	18	1	**157-2483**	1	COVER AS	
	19	1	**157-2484**	1	COVER AS	
	20	1	**157-2485**	1	HOUSING AS	
	21	1	**157-2487**	1	COVER	
	22	1	**157-2488**	1	GASKET	
	23	1	**157-2493**	1	PLATE	
	24	1	**157-2494**	1	GASKET	
	25	1	**157-2495**	1	GASKET	
	26	1	**157-2496**	1	GASKET	
	27	1	**157-2497**	2	GASKET	
	28	1	**157-2500**	1	HARNESS AS-HEATER & AIR COND	
		1	**103-8134**	1	KIT-RECEPTACLE (12-PIN)	
					(INCLUDES RECEPTACLE AS & WEDGE)	
		1	**155-2270**	1	KIT-CONNECTING PLUG (2-PIN)	
					(KIT INCLUDES PLUG AS & WEDGE)	
	29	1	**157-2501**	1	PAN-DRAIN	
	30	1	**157-2509**	1	BRACKET	
	31	1	**157-2510**	1	PLATE AS	
	32	1	**157-2514**	1	GASKET	
	33	1	**157-2515**	1	GASKET	
	34	1	**157-2522**	1	COIL AS-HEATER	
	35	1	**157-2523**	1	COIL AS-EVAPORATOR	
	36	1	**174-1494**	1	MOTOR AS-BLOWER (24-VOLT, A/C, HEATER)	
		1	**3E-3365**	1	WEDGE-RECEPTACLE LOCK (2-PIN)	
		1	**9W-0852**	2	PIN-CONNECTOR	
		1	**102-8802**	1	KIT-RECEPTACLE (2-PIN)	
					(KIT INCLUDES RECEPTACLE AS & WEDGE)	
	37	1	**174-8145**	1	FILTER-AIR (AIR CONDITIONER)	
	38	1	**180-9562**	2	LATCH AS	
C	39	1	**205-4285**	1	CONVERTER GP-ELECTRICAL (24-VOLT TO 12-VOLT) (AIR CONDITIONER)	
C	40	1	**239-5611**	1	BRACKET AS	
C	41	1	**239-9368**	1	RESISTOR AS	
C	42	1	**241-5670**	1	VALVE GP-FLOW CONTROL (WATER) (AIR CONDITIONER)	

157-2878 **AIR CONDITIONER GP** *(contd.)* **i02147182**

NOTE	REF NO	GRAPHIC REF	PART NUMBER	QTY	PART NAME 1 2 3 4 5 6 (PRODUCT LEVEL)	SEE PAGE
C	43	1	**241-7692**	1	HARNESS AS-HEATER & AIR COND	
		1	**155-2269**	1	PLUG AS-CONNECTOR (2-PIN)	
		1	**155-2274**	1	KIT-CONNECTING PLUG (6-PIN)	
					(KIT INCLUDES PLUG AS & WEDGE)	
C	44	1	**241-7693**	1	HARNESS AS-POWER	
	45	1	**247-8272**	2	GASKET	
	46	1	**247-8274**	1	GASKET	
	47	1	**247-8275**	1	GASKET	
	48	1	**247-8276**	1	PLATE AS	
	49	1	**247-8302**	10	RIVET	
	50	1	**033-7291**	2	RIVET	
C	51	1	**096-6166**	2	WASHER-HARD (4.5X9X1-MM THK)	
M	52	1	**129-3178**	16	LOCKNUT (M6X1-THD)	
	53	1	**247-8273**	1	GASKET	
M	54	1	**5C-9553**	33	BOLT (M6X1X16-MM)	
	55	1	**6V-1668**	2	WASHER (6.5X29.1X3-MM THK)	
M	56	1	**6V-7728**	1	BOLT (M6X1X45-MM)	
M	57	1	**6V-9671**	4	SCREW-MACHINE (M3X0.5X12-MM)	
CM	58	1	**8T-0285**	2	SCREW-MACHINE (M4X0.7X12-MM)	
M	59	1	**8T-4138**	2	BOLT (M6X1X20-MM)	
	60	1	**8T-4205**	53	WASHER-HARD (7.2X14.5X2-MM THK)	
E	61	1	**136-1953**		HOSE (14CM)	
BD	62	1	**6V-2496**		SEAL	
BD	63	1	**5P-5908**		SEAL	
BD	64	1	**5P-5672**		SEAL	

B-USE AS REQUIRED
C-CHANGE FROM PREVIOUS TYPE
D-ORDER BY THE METER
E-ORDER BY THE CENTIMETER
M-METRIC PART

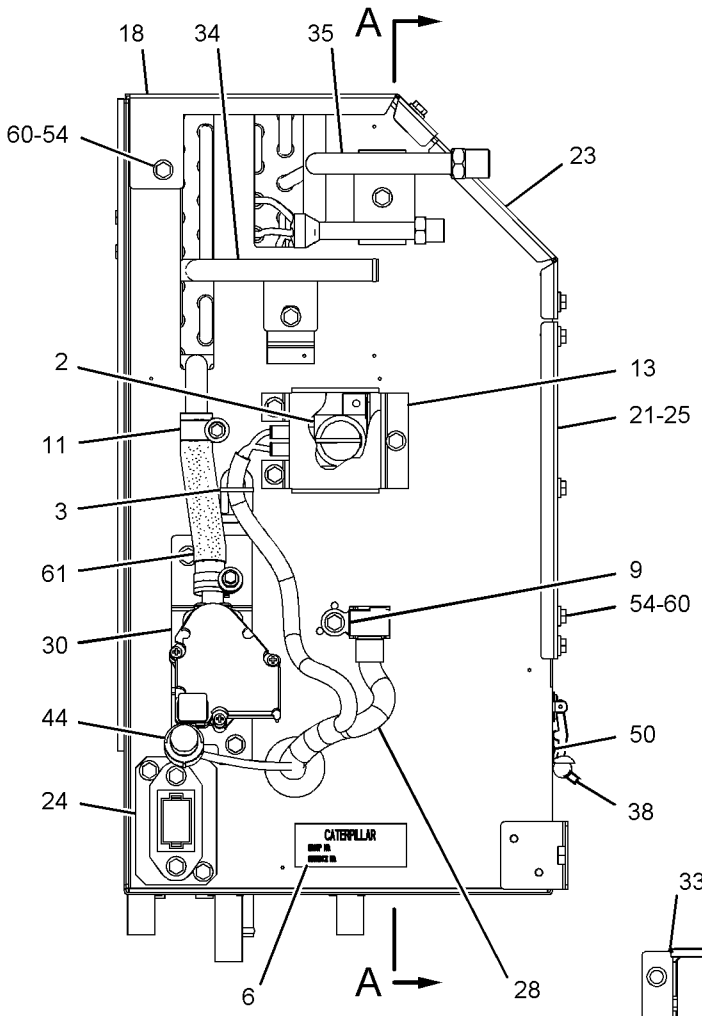

LEFT SIDE VIEW

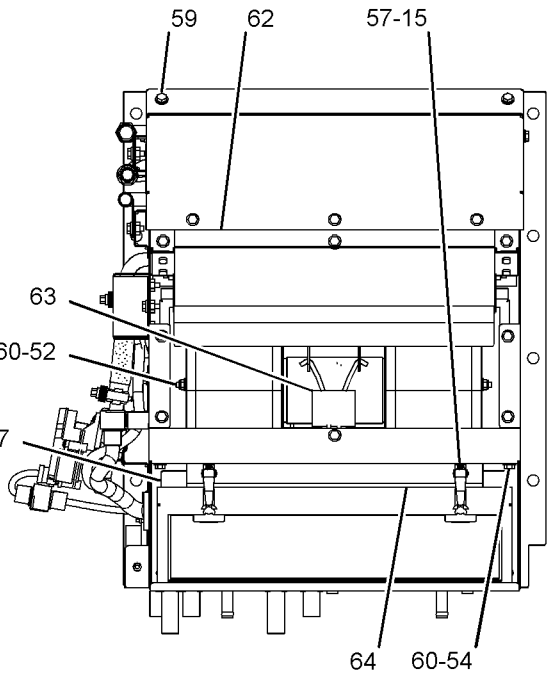

FRONT VIEW

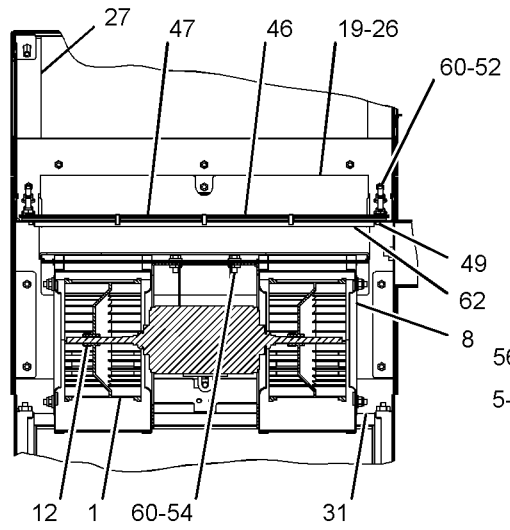

SECTION A-A

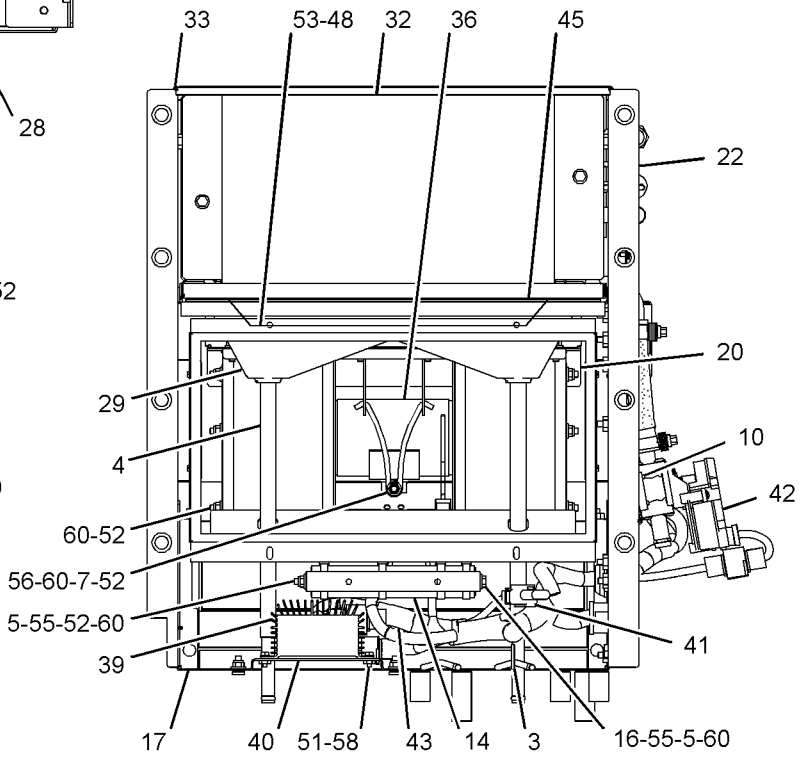

REAR VIEW

GRAPHIC #1 **<END>** g01082763

OPERATOR STATION

246-0846 AIR CONDITIONER GP

S/N: AXM1489-UP

PART OF 246-0845 AIR CONDITIONER & MOUNTING GP

SMCS-7320 **i02230513**

NOTE	REF NO	GRAPHIC REF	PART NUMBER	QTY	PART NAME 1 2 3 4 5 6 (PRODUCT LEVEL)	SEE PAGE
	1	2	**3E-0400**	2	BLOWER AS	
					(EACH INCLUDES)	
		2	**037-4838**	1	CLAMP	
	2	1	**3E-5464**	1	SWITCH AS-TEMPERATURE (THERMOSTAT) (AIR CONDITIONER)	
	3	1	**3S-2093**	3	STRAP-CABLE	
	4	1	**3T-2511**	2	TUBE	
	5	1	**6T-6708**	2	WASHER (7X28.6X4.1-MM THK)	
	6	1	**8C-3756**	1	FILM-IDENTIFICATION (GROUP NUMBER)	
	7	1	**8C-4586**	2	CLAMP	
	8	2	**8P-5141**	2	PLATE-ORIFICE	
	9	1	**9G-9154**	1	CLIP	
	10	1	**9X-2185**	4	SCREW (8-15X11.11-MM)	
	11	1	**9X-2488**	2	CLAMP-HOSE	
	12	2	**037-4838**	2	CLAMP	
	13	1	**102-0340**	1	COVER	
	14	1	**125-9740**	1	RESISTOR	
	15	2	**131-2639**	4	WASHER (3.2X9X0.5-MM THK)	
M	16	1	**141-9784**	1	BOLT (M6X1X190-MM)	
	17	1	**157-2482**	1	CASE AS	
	18	1	**157-2483**	1	COVER AS	
	19	2	**157-2484**	1	COVER AS	
	20	1	**157-2485**	1	HOUSING AS	
	21	1	**157-2487**	1	COVER	
	22	1	**157-2488**	1	GASKET	
	23	1	**157-2493**	1	PLATE	
	24	1	**157-2494**	1	GASKET	
	25	1	**157-2495**	1	GASKET	
	26	2	**157-2496**	1	GASKET	
	27	2	**157-2497**	2	GASKET	
	28	1	**157-2501**	1	PAN-DRAIN	
	29	1	**157-2509**	1	BRACKET	
	30	2	**157-2510**	1	PLATE AS	
	31	1	**157-2514**	1	GASKET	
	32	1	**157-2515**	1	GASKET	
	33	1	**157-2522**	1	COIL AS-HEATER	
	34	1	**157-2523**	1	COIL AS-EVAPORATOR	
	35	1	**174-1494**	1	MOTOR AS-BLOWER (24-VOLT, A/C, HEATER)	
		1	**3E-3365**	1	WEDGE-RECEPTACLE LOCK (2-PIN)	
		1	**9W-0852**	2	PIN-CONNECTOR	
		1	**100-3426**	2	WHEEL-BLOWER	
		1	**102-8802**	1	KIT-RECEPTACLE (2-PIN)	
					(INCLUDES RECEPTACLE AS & WEDGE)	
	36	2	**174-8145**	1	FILTER-AIR	
	37	1	**180-9562**	2	LATCH AS	
	38	1	**239-9368**	1	RESISTOR AS	
	39	1	**241-5670**	1	VALVE GP-FLOW CONTROL (WATER)	
	40	1	**241-7691**	1	HARNESS AS-HEATER & AIR COND (POWER)	
		1	**102-8803**	1	KIT-RECEPTACLE (3-PIN)	
					(INCLUDES RECEPTACLE AS & WEDGE)	
	41	2	**246-7280**	1	HARNESS AS-CHASSIS	
		2	**103-8134**	1	KIT-RECEPTACLE (12-PIN)	
					(INCLUDES RECEPTACLE AS & WEDGE)	
		2	**155-2260**	1	KIT-CONNECTING PLUG (3-PIN)	
		2	**155-2270**	1	KIT-CONNECTING PLUG (2-PIN)	

246-0846 AIR CONDITIONER GP *(contd.)* i02230513

NOTE	REF NO	GRAPHIC REF	PART NUMBER	QTY	PART NAME 1 2 3 4 5 6 (PRODUCT LEVEL)	SEE PAGE
		2	**155-2270**	1	KIT-CONNECTING PLUG (2-PIN)	
					(EACH INCLUDES PLUG AS & WEDGE)	
	42	1	**247-8272**	2	GASKET	
	43	2	**247-8274**	1	GASKET	
	44	2	**247-8275**	1	GASKET	
	45	1	**247-8276**	1	PLATE AS	
	46	2	**247-8302**	10	RIVET	
	47	1	**033-7291**	2	RIVET	
M	48	1,2	**129-3178**	12	LOCKNUT (M6X1-THD)	
	49	1	**247-8273**	1	GASKET	
M	50	1,2	**5C-9553**	36	BOLT (M6X1X16-MM)	
	51	1	**6V-1668**	2	WASHER (6.5X29.1X3-MM THK)	
M	52	1	**6V-7728**	1	BOLT (M6X1X45-MM)	
M	53	2	**6V-9671**	4	SCREW-MACHINE (M3X0.5X12-MM)	
M	54	2	**8T-4138**	2	BOLT (M6X1X20-MM)	
	55	1,2	**8T-4205**	49	WASHER-HARD (7.2X14.5X2-MM THK)	
E	56	1	**136-1953**		HOSE (14-CM)	
BD	57	2	**6V-2496**		SEAL	
BD	58	2	**5P-5908**		SEAL	
BD	59	2	**5P-5672**		SEAL	

B-USE AS REQUIRED
D-ORDER BY THE METER
E-ORDER BY THE CENTIMETER
M-METRIC PART

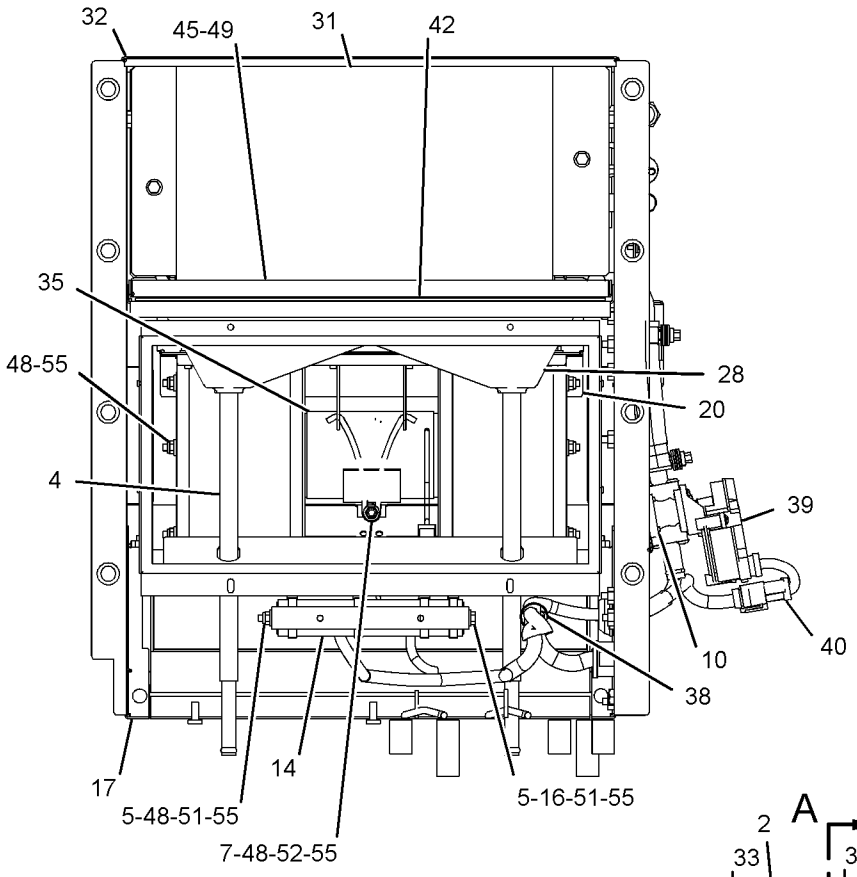

LEFT SIDE VIEW

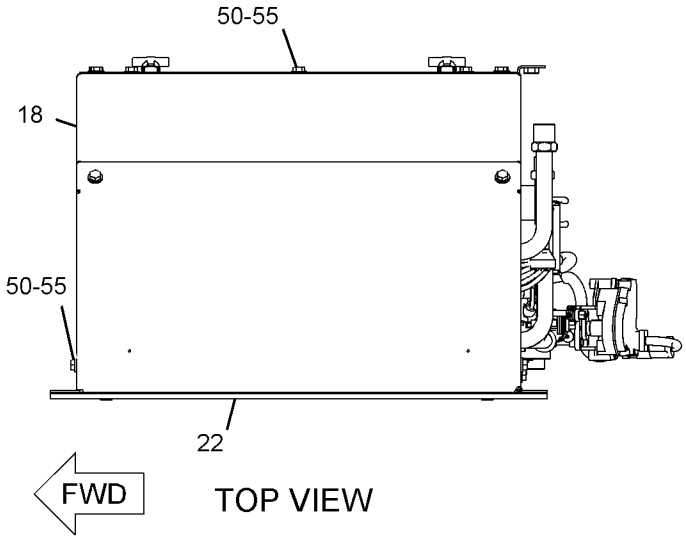

TOP VIEW

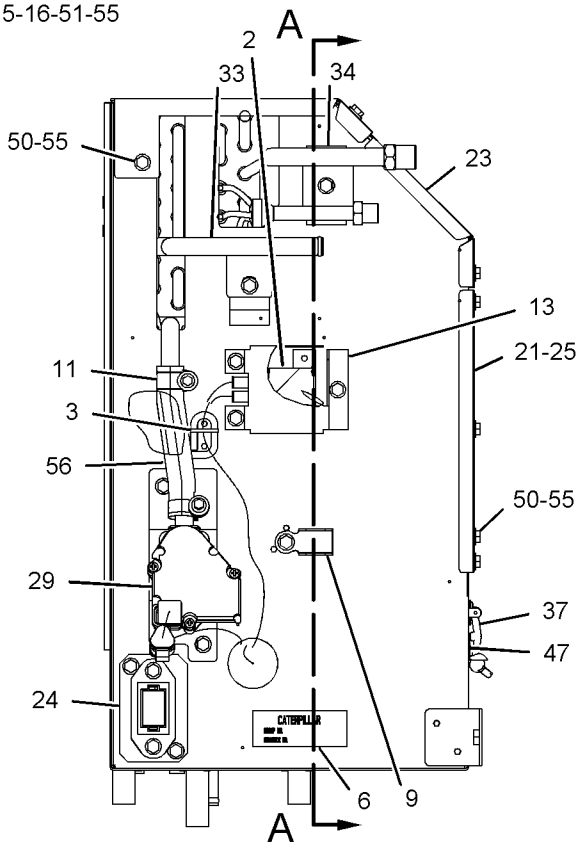

REAR VIEW

GRAPHIC #1

g01055301

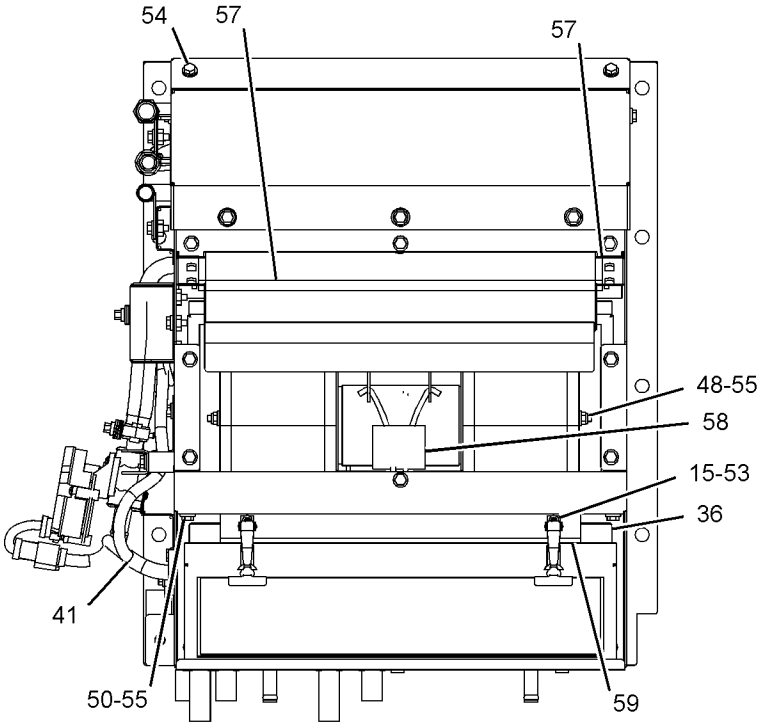

RIGHT SIDE VIEW

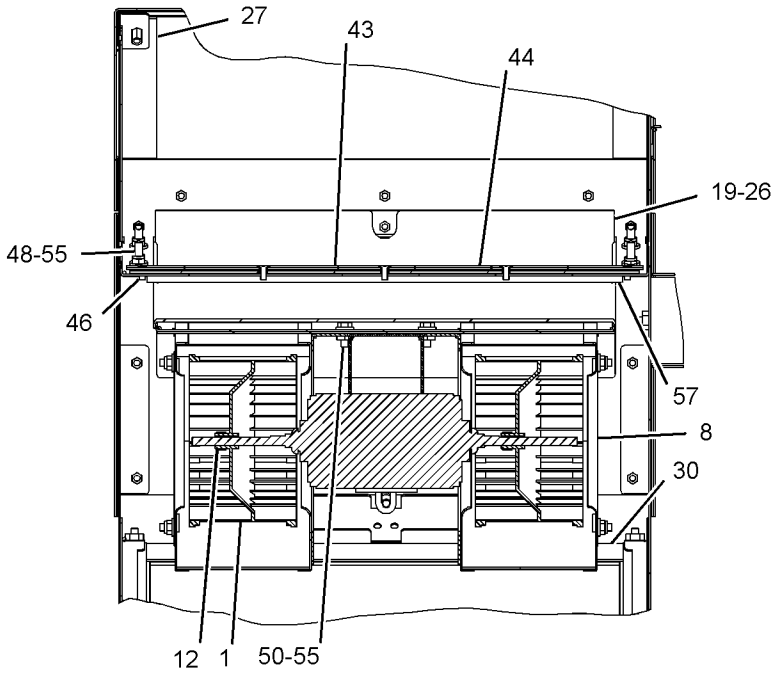

SECTION A-A

GRAPHIC #2

<END>

g01055794

8Y-5904 ARMREST GP

S/N: AXM1-UP
PART OF 162-8447, 162-8448 ARMREST GP
ALSO AN ATTACHMENT

SMCS-7307 **i02238661**

NOTE	REF NO	GRAPHIC REF	PART NUMBER	QTY	PART NAME 1 2 3 4 5 6 (PRODUCT LEVEL)	SEE PAGE
	1	1	**8Y-5906**	1	BASE-ARMREST	
L	2	1	**8S-7803**	1	RING-RETAINING	
J	3	1	**6V-2687**	4	SCREW-PAN HEAD (10-24X1-IN)	
L	4	1	**8T-8641**	1	WASHER (M9.8X16X0.8-MM THK)	
L	5	1	**3E-4312**	1	NUT-SQUARE (3/8-16-THD)	
					AVAILABLE REPAIR KIT(S):	
J			**8Y-5988**	1	KIT-CUSHION (ARMREST)	
					(INCLUDES CUSHION AS & SCREWS)	
L			**8Y-6028**	1	KIT-ADJUSTER (ARMREST)	
					(INCLUDES KNOB AS, NUT, WASHER, RING & SPRING)	

J-KIT MARKED J INCLUDES PART MARKED J
L-KIT MARKED L INCLUDES PART(S) MARKED L

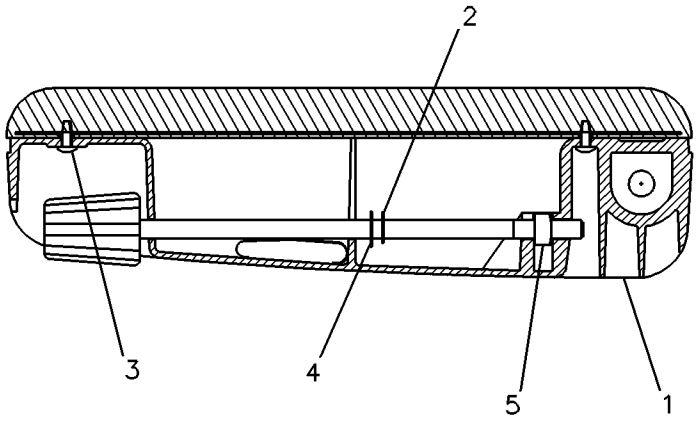

GRAPHIC #1 **<END>** g00083048

OPERATOR STATION

162-8447 ARMREST GP–LH

S/N: AXM1-UP
PART OF 187-4295 SEAT GP
ALSO AN ATTACHMENT

SMCS-7307 **i02246438**

NOTE	REF NO	GRAPHIC REF	PART NUMBER	QTY	PART NAME 1 2 3 4 5 6 (PRODUCT LEVEL)	SEE PAGE
Y	1	1	**8Y-5904**	1	ARMREST GP	829
	2	1	**143-1288**	1	LOCKNUT-FLANGE (3/8-16-THD)	
	3	1	**163-1149**	1	BRACKET AS	
	4	1	**1K-6872**	1	LOCKNUT (1/2-13-THD)	
	5	1	**4L-6454**	1	BOLT (3/8-16X1-IN)	
M	6	1	**5P-8245**	1	WASHER-HARD (13.5X25.5X3-MM THK)	
	7	1	**9X-8873**	1	BOLT (1/2-13X2.25-IN)	

M-METRIC PART
Y-SEPARATE ILLUSTRATION

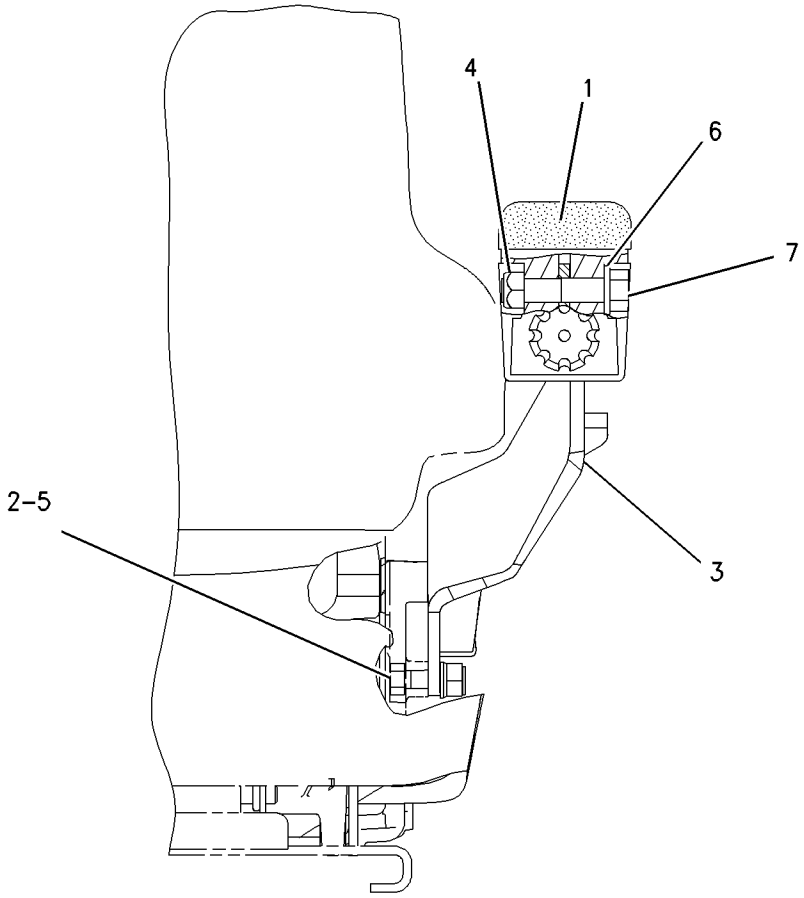

FRONT VIEW

GRAPHIC #1 **<END>** g00800891

OPERATOR STATION

162-8448 ARMREST GP–RH

S/N: AXM1-UP
PART OF 187-4295 SEAT GP
ALSO AN ATTACHMENT

SMCS-7307 **i01682241**

NOTE	REF NO	GRAPHIC REF	PART NUMBER	QTY	PART NAME 1 2 3 4 5 6 (PRODUCT LEVEL)	SEE PAGE
Y	1	1	**8Y-5904**	1	ARMREST GP	829
	2	1	**143-1288**	1	LOCKNUT-FLANGE (3/8-16 THD)	
	3	1	**163-1148**	1	BRACKET AS-RH	
	4	1	**1K-6872**	1	LOCKNUT (1/2-13 THD)	
	5	1	**4L-6454**	1	BOLT (3/8-16X1 IN)	
	6	1	**5P-8245**	1	WASHER-HARD (13.5X25.5X3MM THK)	
	7	1	**9X-8873**	1	BOLT (1/2-13X2.25 IN)	

Y-SEPARATE ILLUSTRATION

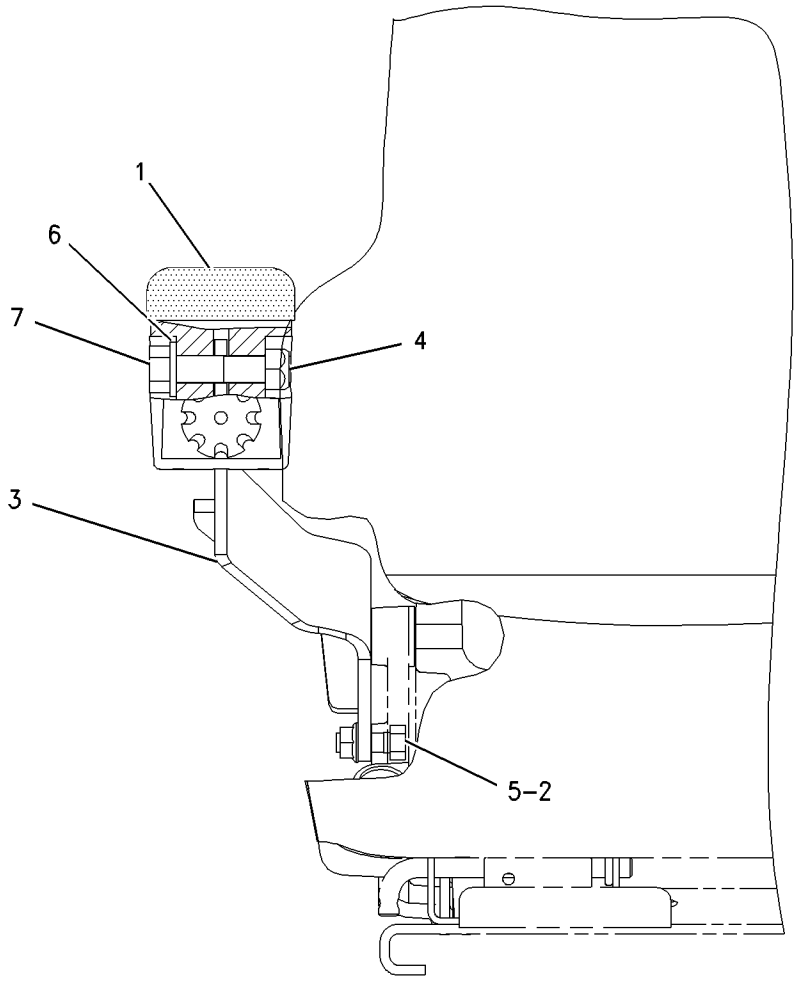

GRAPHIC #1 **<END>** g00801340

OPERATOR STATION

153-5485 CAB AR

S/N: AXM1-1376

PART OF 152-6922 HYDRAULIC AR-MACHINE

SMCS-7301 **i01907958**

NOTE	PART NUMBER	QTY	PART NAME 1 2 3 4 5 6 (PRODUCT LEVEL)	SEE PAGE
Y	*149-0091*	1	AIR CONDITIONER & MOUNTING GP	815
Y	*149-0077*	1	CIRCUIT BREAKER GP	209
Y	*149-0062*	1	CONTROL & MTG GP-POWER TRAIN	219
Y	*149-0086*	1	CONTROL GP-GOVERNOR	157
Y	*200-8472*	1	CONTROL GP-SERVICE BRAKE	592
Y	*153-5490*	1	CONTROL GP-STEERING	619
Y	*149-5822*	1	CONTROL GP-TMSN & HOIST	839
Y	*149-0082*	1	DOOR GP-CAB	842
Y	*155-7474*	1	LINER GP-CAB (SOUND SUPPRESSION)	850
Y	*149-0085*	1	LINER GP-CAB	847
Y	*184-6138*	1	LINES GP-AIR CONDITIONER	856
Y	*153-5493*	1	LINES GP-STEERING	639
Y	*153-5489*	1	PANEL GP-INSTRUMENT	878
Y	*191-8724*	1	ROPS GP	886
Y	*149-0092*	1	SEAT & MOUNTING GP	889
			S/N: AXM1-820	
Y	*231-9810*	1	SEAT & MOUNTING GP	891
			S/N: AXM821-1376	
Y	*149-0088*	1	SEAT GP-COMPANION	904
			S/N: AXM1-820	
Y	*231-9809*	1	SEAT GP-COMPANION	905
			S/N: AXM821-1376	
Y	*149-0087*	1	VISOR GP-CAB	917
Y	*149-0090*	1	WINDOW GP	919
Y	*149-0096*	1	WIPER & WASHER GP-WINDOW	923
Y	*153-5487*	1	WIRING GP-CAB	292

Y-SEPARATE ILLUSTRATION

<END>

OPERATOR STATION

229-8087 CAB AR

S/N: AXM1377-UP

PART OF 152-6922 HYDRAULIC AR-MACHINE

SMCS-7301 **i02097770**

NOTE	PART NUMBER	QTY	PART NAME 1 2 3 4 5 6 (PRODUCT LEVEL)	SEE PAGE
Y	*149-0091*	1	AIR CONDITIONER & MOUNTING GP	815
			S/N: AXM1377-1488	
Y	*246-0845*	1	AIR CONDITIONER & MOUNTING GP	818
			S/N: AXM1489-UP	
Y	*235-2676*	1	CIRCUIT BREAKER GP	212
Y	*149-5822*	1	CONTROL GP-TMSN & HOIST	839
Y	*233-0336*	1	CONTROL & MTG GP-POWER TRAIN	220
Y	*149-0086*	1	CONTROL GP-GOVERNOR	157
Y	*200-8472*	1	CONTROL GP-SERVICE BRAKE	592
Y	*153-5490*	1	CONTROL GP-STEERING	619
Y	*149-0082*	1	DOOR GP-CAB	842
Y	*155-7474*	1	LINER GP-CAB (SOUND SUPPRESSION)	850
Y	*241-8105*	1	LINER GP-CAB (OPERATOR)	852
Y	*184-6138*	1	LINES GP-AIR CONDITIONER	856
Y	*153-5493*	1	LINES GP-STEERING	639
Y	*233-0334*	1	PANEL GP-INSTRUMENT	881
Y	*191-8724*	1	ROPS GP	886
Y	*231-9810*	1	SEAT & MOUNTING GP	891
Y	*231-9809*	1	SEAT GP-COMPANION	905
Y	*149-0087*	1	VISOR GP-CAB	917
Y	*149-0090*	1	WINDOW GP	919
Y	*237-7311*	1	WIPER & WASHER GP-WINDOW	927
Y	*233-0338*	1	WIRING GP-CAB	297

Y-SEPARATE ILLUSTRATION

<END>

OPERATOR STATION

172-1248 COMPRESSOR GP-REFRIGERANT

S/N: BET200-UP

PART OF 153-7076, 235-4689 ENGINE AR-COMPLETE

SMCS-1802 **i01691126**

NOTE	REF NO	GRAPHIC REF	PART NUMBER	QTY	PART NAME 1 2 3 4 5 6 (PRODUCT LEVEL)	SEE PAGE
Y	1	1	**218-0324**	1	COMPRESSOR GP-REFRIGERANT	835
	2	1	**8T-4121**	2	WASHER-HARD (11X21X2.5-MM THK)	
M	3	1	**8T-4133**	2	NUT (M10X1.5-THD)	
M	4	1	**8T-5436**	2	BOLT (M10X1.50X130-MM)	
	5	1	**8T-7934**	2	WASHER-HARD (11X21X5-MM THK)	

M-METRIC PART
Y-SEPARATE ILLUSTRATION

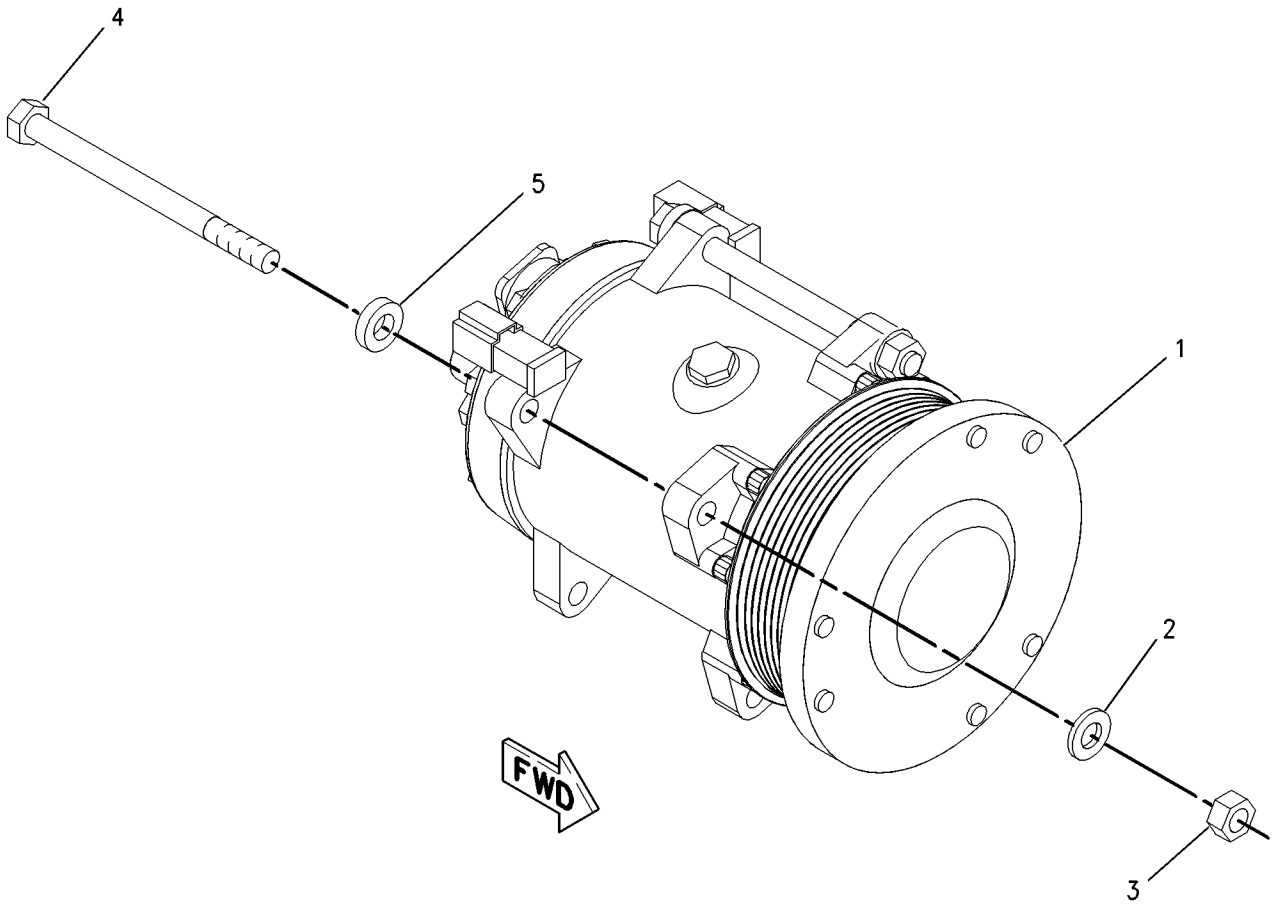

GRAPHIC #1 **<END>** g00688540

OPERATOR STATION

218-0324 COMPRESSOR GP-REFRIGERANT

S/N: BET200-UP

PART OF 172-1248 COMPRESSOR GP-REFRIGERANT

SMCS-1802 **i02108106**

NOTE	REF NO	GRAPHIC REF	PART NUMBER	QTY	PART NAME 1 2 3 4 5 6 (PRODUCT LEVEL)	SEE PAGE
	1	1	**102-8802**	1	KIT-RECEPTACLE (2-PIN)	
					(INCLUDES RECEPTACLE AS AND WEDGE)	
	2	1	**114-3469**	1	VALVE GP-RELIEF (REFRIGERANT)	
		1	**9X-7378**	1	SEAL-O-RING	
	3	1	**7T-4532**	1	PLUG AS	
	4	1	**9X-7385**	2	SEAL-O-RING	

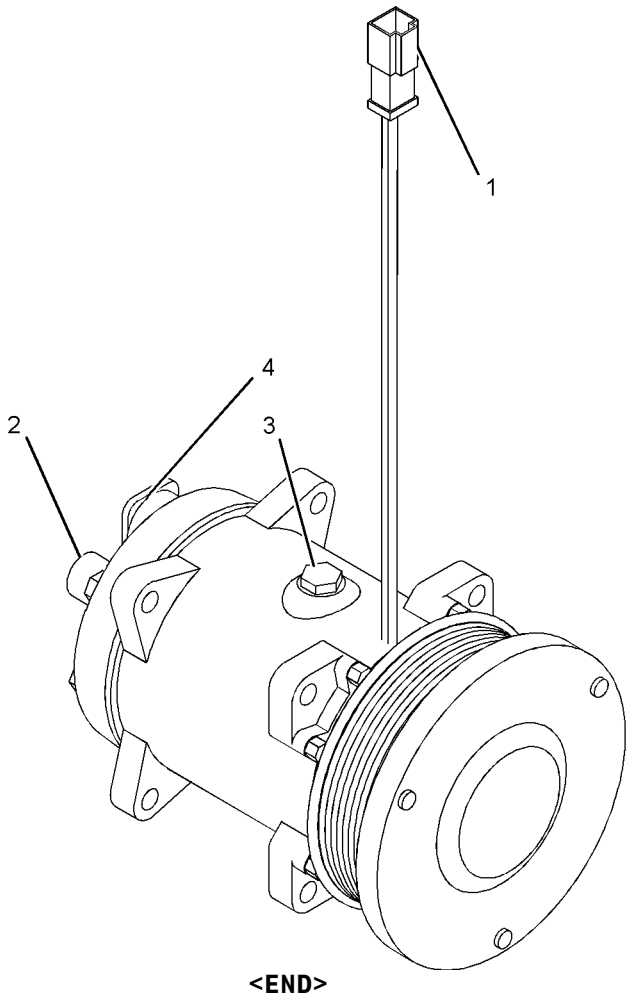

GRAPHIC #1 **<END>** g01073367

OPERATOR STATION

149-0152 CONDENSER & MTG GP-REFRIGERANT

S/N: AXM1-UP

PART OF 152-6947 CONDENSER GP-REFRIGERANT

SMCS-1805 **i01459509**

NOTE	REF NO	GRAPHIC REF	PART NUMBER	QTY	PART NAME 1 2 3 4 5 6 (PRODUCT LEVEL)	SEE PAGE
	1	1	**7W-8126**	1	CONDENSER AS	
	2	1	**196-4774**	1	BRACKET	
	3	1	**196-4775**	1	BRACKET	
	4	1	**5P-8167**	8	BOLT (3/8-16X0.625 IN)	
	5	1	**8T-4896**	8	WASHER-HARD (10.2X18.5X2.5MM THK)	

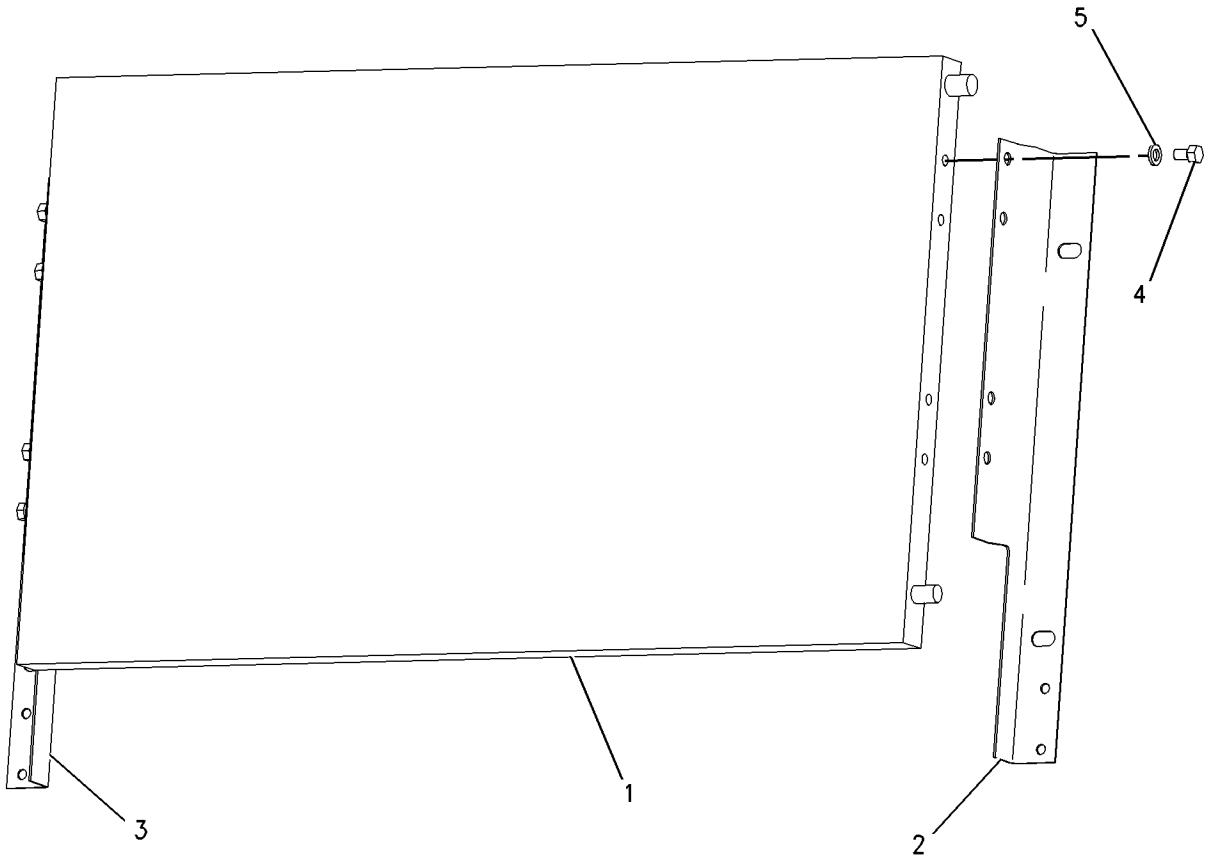

GRAPHIC #1 **<END>** g00674636

OPERATOR STATION

152-6947 CONDENSER GP-REFRIGERANT

S/N: AXM1-UP

PART OF 152-6944 COOLING AR

SMCS-1805 **i01860940**

NOTE	REF NO	GRAPHIC REF	PART NUMBER	QTY	PART NAME 1 2 3 4 5 6 (PRODUCT LEVEL)	SEE PAGE
Y	1	1	*149-0152*	1	CONDENSER & MTG GP-REFRIGERANT	836
	2	1	**5P-1076**	8	WASHER-HARD (13.5X30X4MM THK)	
M	3	1	**8T-4139**	4	BOLT (M12X1.75X30MM)	
M	4	1	**8T-4244**	4	NUT (M12X1.75 THD)	

M-METRIC PART
Y-SEPARATE ILLUSTRATION

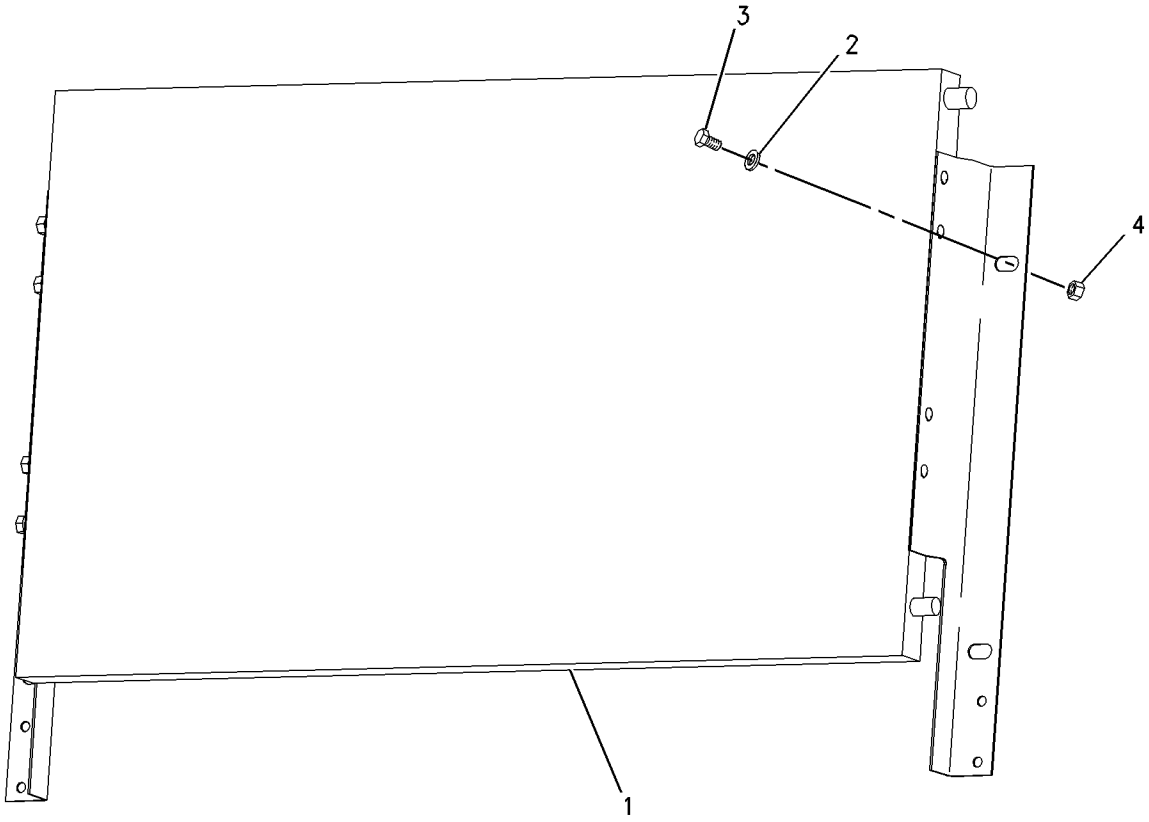

GRAPHIC #1 **<END>** g00948915

OPERATOR STATION

103-5526 CONTROL GP-MONITOR—DIMMER

S/N: AXM1-UP

PART OF 153-5487 WIRING GP-CAB

SMCS-7490 **i02234563**

NOTE	REF NO	GRAPHIC REF	PART NUMBER	QTY	PART NAME 1 2 3 4 5 6 (PRODUCT LEVEL)	SEE PAGE
	1	1	**5P-9132**	2	SCREW-HEX FLANGE (6-32X0.187-IN) (6-32X.19 IN)	
	2	1	**186-3735**	6	PIN-CONNECTOR	
					AVAILABLE REPAIR KIT(S):	
			102-8805	1	KIT-RECEPTACLE (6-PIN)	
					(INCLUDES RECEPTACLE AS & WEDGE)	

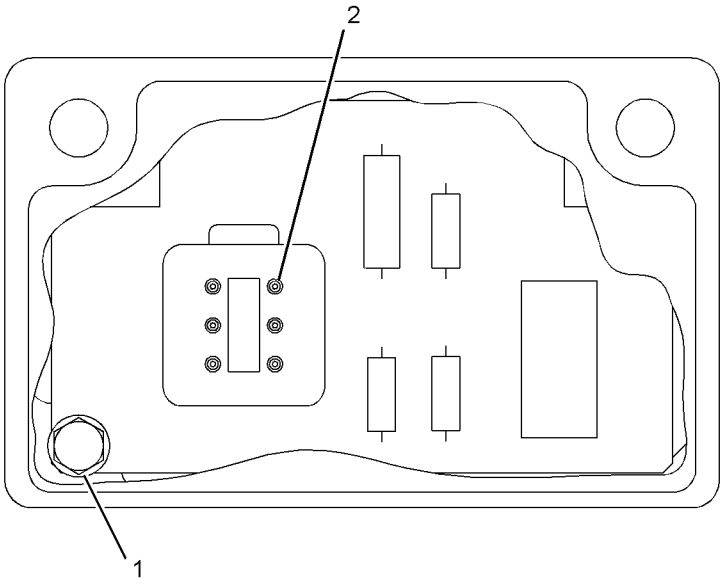

GRAPHIC #1 **<END>** g01126720

OPERATOR STATION

149-5822 CONTROL GP-TMSN & HOIST

S/N: AXM1-UP

PART OF 153-5485, 229-8087 CAB AR

SMCS-3065, 5063 **i02040031**

NOTE	REF NO	GRAPHIC REF	PART NUMBER	QTY	PART NAME 1 2 3 4 5 6 (PRODUCT LEVEL)	SEE PAGE
Y	1	1	**232-3774**	1	CONTROL GP-TMSN & HOIST	840
M	2	1	**8C-8585**	4	SCREW-BUTTON HEAD (M10X1.5X20-MM)	

M-METRIC PART
Y-SEPARATE ILLUSTRATION

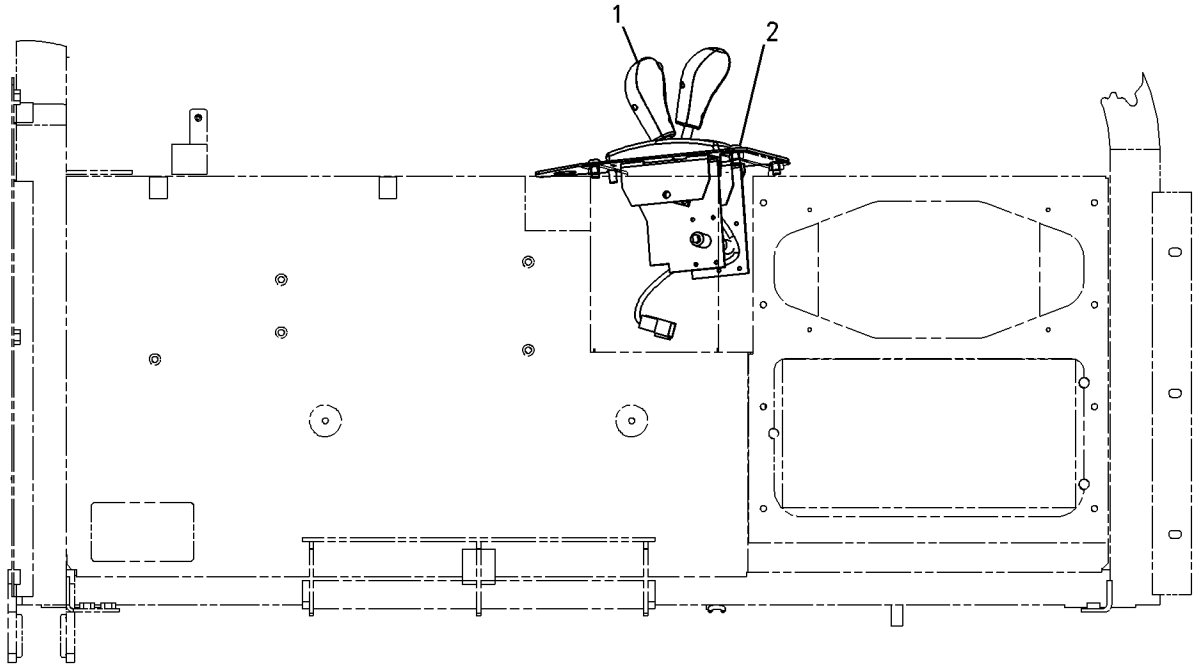

GRAPHIC #1 **<END>** g00765081

OPERATOR STATION

232-3774 CONTROL GP-TMSN & HOIST—ELECTRONIC

S/N: AXM1-UP

PART OF 149-5822 CONTROL GP-TMSN & HOIST

SMCS-3065, 5063 **i02216171**

NOTE	REF NO	GRAPHIC REF	PART NUMBER	QTY	PART NAME 1 2 3 4 5 6 (PRODUCT LEVEL)	SEE PAGE
	1	1	**257-8858**	1	SENSOR GP-POSITION	
	2	1	**257-2531**	1	SENSOR AS-POSITION	
	3	1	**145-0875**	1	HANDLE GP-MODULAR (TRANSMISSION)	
	4	1	**145-0874**	1	HANDLE GP-MODULAR (HOIST)	
	5	1	**102-8805**	1	KIT-RECEPTACLE (6-PIN)	
					(INCLUDES RECEPTACLE AS & WEDGE)	
	6	1	**186-3735**	6	PIN-CONNECTOR	
	7	1	**7N-5876**	2	LAMP (24-VOLT)	
M	8	1	**150-1293**	4	SCREW-BUTTON HEAD (M4X0.7X12-MM)	
	9	1	**153-9019**	2	KIT-SPRING	
					(EACH INCLUDES SPRING, SPRING AS, BOLT & NUT)	
	10	1	**200-5965**	2	LEVER AS	
	11	1	**190-8436**	1	INDICATOR (TRANSMISSION SPEED)	
	12	1	**190-8438**	1	INDICATOR (BODY POSITION)	
	13	1	**190-8439**	1	PLATE-MOUNTING	
	14	1	**190-8440**	1	CONTROL GP-ELECTROHYDRAULIC (TRANSMISSION)	
	15	1	**190-8441**	1	CONTROL GP-ELECTROHYDRAULIC (HOIST)	

M-METRIC PART

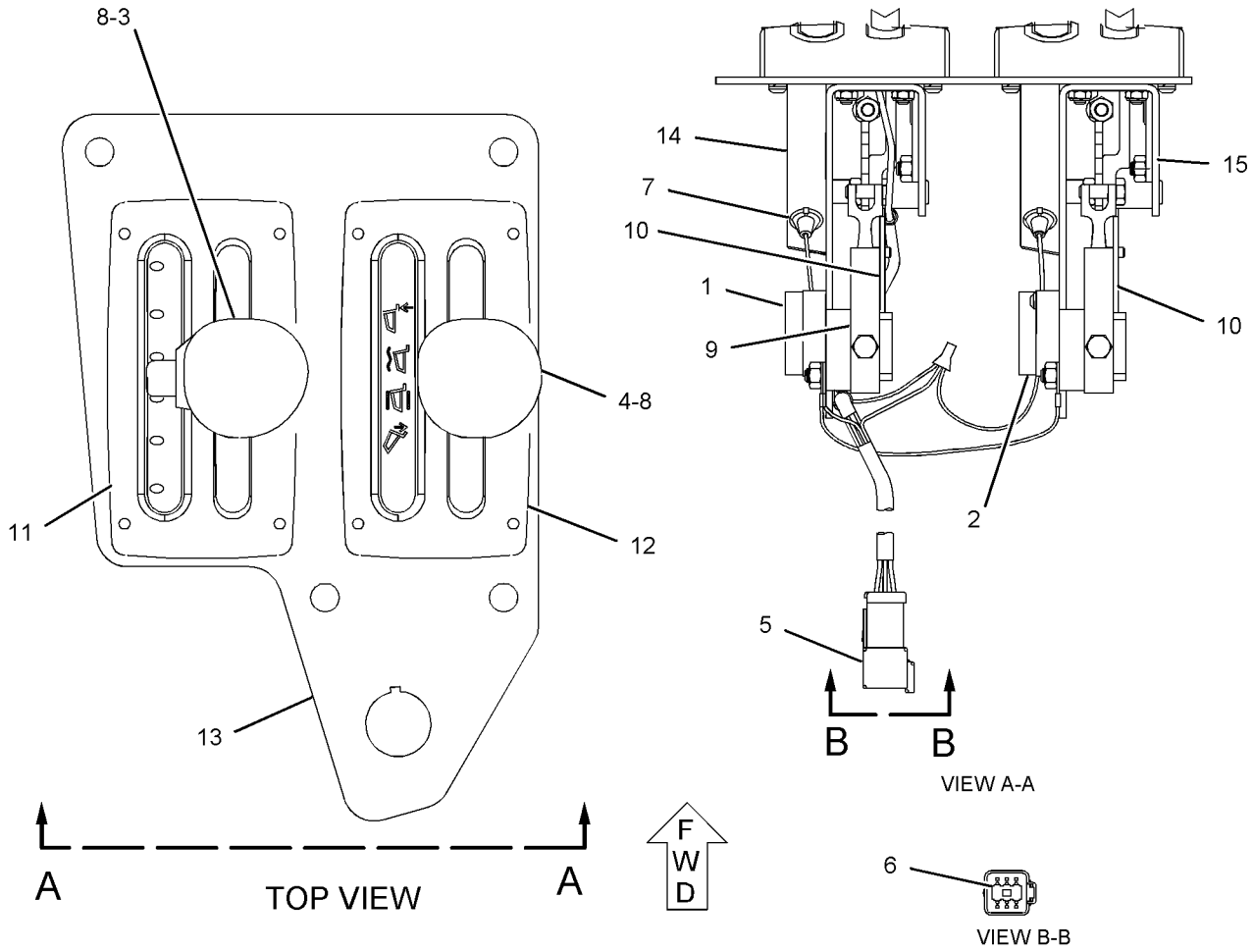

GRAPHIC #1 **<END>** g01119057

OPERATOR STATION

183-3513 CYLINDER GP-CAB TILT

S/N: AXM1-UP

PART OF 152-7117 TILT GP-PLATFORM

SMCS-5104 **i01563554**

NOTE	REF NO	GRAPHIC REF	PART NUMBER	QTY	PART NAME 1 2 3 4 5 6 (PRODUCT LEVEL)	SEE PAGE
	1	1	**6U-9992**	1	SEAL	
	2	1	**3G-9108**	4	WASHER (1.57MM THK)	
M	3	1	**6V-5212**	1	SETSCREW-SOCKET	
	4	1	**6U-9993**	1	RING	
	5	1	**6U-9994**	1	SEAL - WIPER	
	6	1	**3B-4615**	4	PIN-COTTER	
	7	1	**109-5255**	1	ADAPTER	
	8	1	**038-4974**	1	PIN	
	9	1	**6W-5677**	1	ROD	
	10	1	**7U-2948**	2	PIN	
	11	1	**196-3918**	1	LOCKPIN	

M-METRIC PART

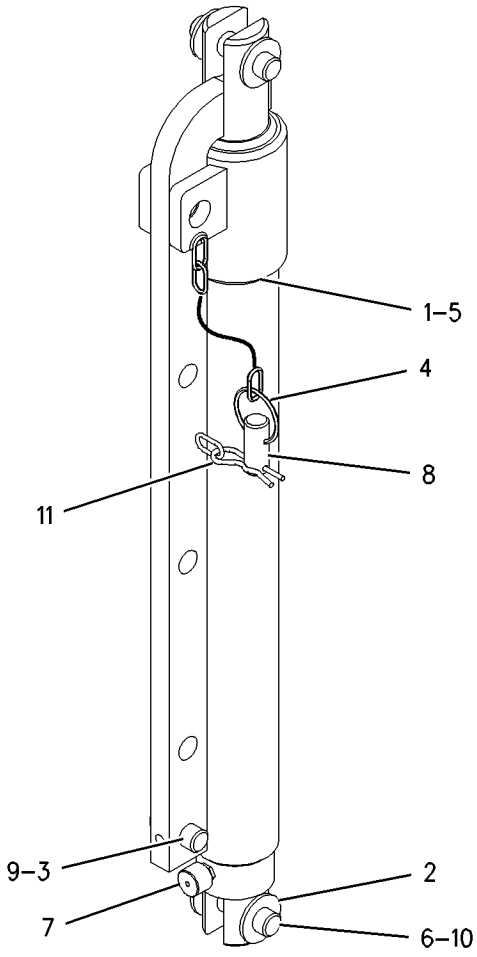

GRAPHIC #1 **<END>** g00764540

OPERATOR STATION

149-0082 DOOR GP-CAB

S/N: AXM1-UP

PART OF 153-5485, 229-8087 CAB AR

SMCS-7308 **i01634101**

NOTE	REF NO	GRAPHIC REF	PART NUMBER	QTY	PART NAME 1 2 3 4 5 6 (PRODUCT LEVEL)	SEE PAGE
	1	1	**7X-2497**	1	HANDLE-DOOR	
M	2	1	**8T-0267**	1	BOLT-SOCKET HEAD (M6X1X12-MM)	
	3	1	**8Y-6386**	1	SEAL-HANDLE	
	4	1	**126-2373**	1	HANDLE AS-PULL	
	5	1	**147-3019**	2	BRACKET	
	6	1	**155-1576**	1	HINGE-DOOR	
	7	1	**155-1578**	1	DOOR AS	
	8	1	**164-0043**	1	LATCH AS-DOOR	
	9	1	**164-0044**	1	HANDLE AS	
B	10	1	**169-4782**	1	SHIM (2-MM THK)	
	11	1	**178-7881**	1	COVER-LATCH	
E	12	1	**133-3234**		SEAL (470CM)	
M	13	1	**163-3274**	4	SCREW-MACHINE	
M	14	1	**8T-0269**	2	BOLT-SOCKET HEAD (M6X1X20-MM)	
	15	1	**8T-4224**	14	WASHER-HARD (8.8X16X2-MM THK)	
M	16	1	**8T-4908**	14	BOLT (M8X1.25X25-MM)	
M	17	1	**9X-2042**	2	SCREW-TRUSS HEAD	
M	18	1	**9X-6155**	4	BOLT-SOCKET HEAD (M6X1X16.7-MM)	
	19	1	**114-6658**	2	WASHER (6.5X17X1-MM THK)	

B-USE AS REQUIRED
E-ORDER BY THE CENTIMETER
M-METRIC PART

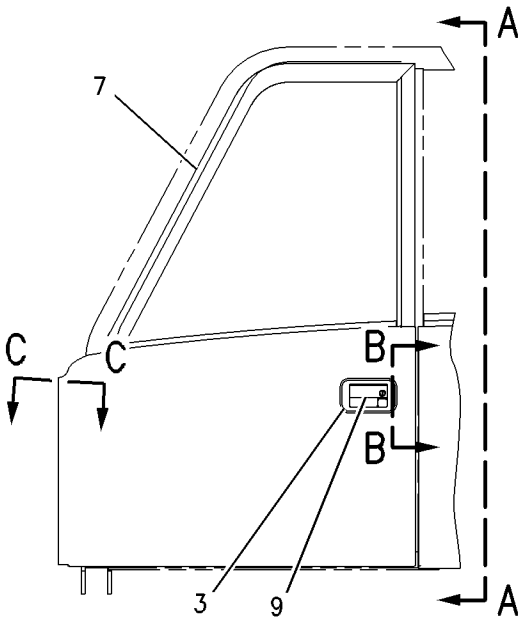

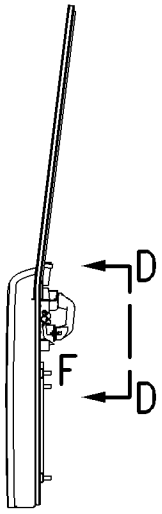

VIEW A-A

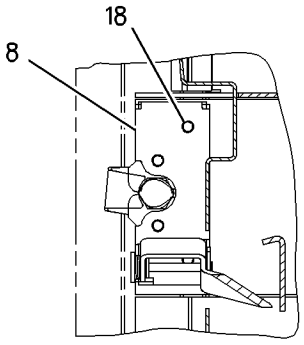

SECTION B-B

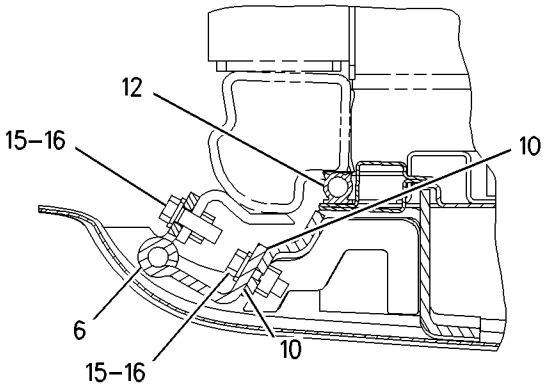

SECTION C-C

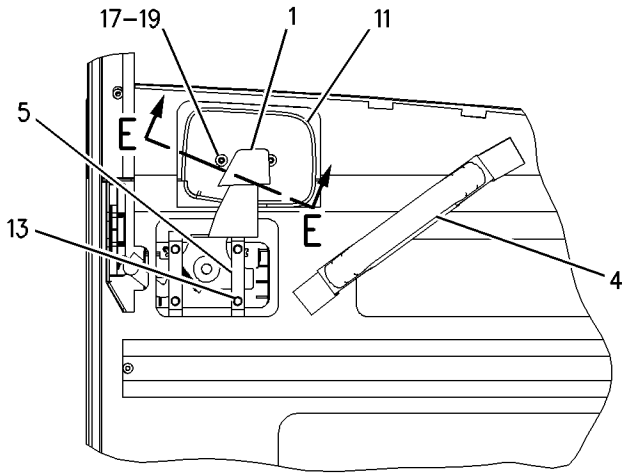

SECTION D-D

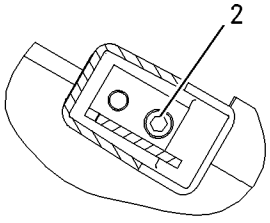

SECTION E-E

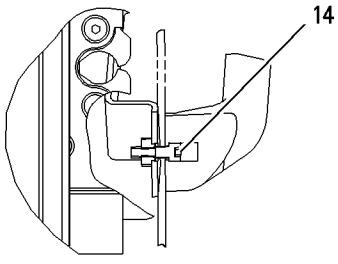

VIEW OF AREA F

GRAPHIC #1 **<END>** g00846400

OPERATOR STATION

149-0104 GUARD GP-WINDOW

S/N: AXM1-229

PART OF 152-6923 HOOD & GUARD AR

SMCS-7315 **i01654371**

NOTE	REF NO	GRAPHIC REF	PART NUMBER	QTY	PART NAME 1 2 3 4 5 6 (PRODUCT LEVEL)	SEE PAGE
	1	1	**173-5255**	1	GUARD AS-WINDOW	
	2	1	**188-2993**	1	SUPPORT AS (LH)	
	3	1	**188-2995**	1	SUPPORT AS (RH)	
	4	1	**188-3001**	1	BOSS	
	5	1	**3E-9411**	1	WASHER-HARD (17.5X38X6-MM THK)	
M	6	1	**8T-4140**	2	BOLT (M16X2X60-MM)	
M	7	1	**8T-4194**	4	BOLT (M12X1.75X50-MM)	
	8	1	**8T-4223**	8	WASHER-HARD (13.5X25.5X3-MM THK)	
M	9	1	**8T-4244**	4	NUT (M12X1.75-THD)	
	10	1	**9X-8257**	1	WASHER (17.5X30X3.5-MM THK)	

M-METRIC PART

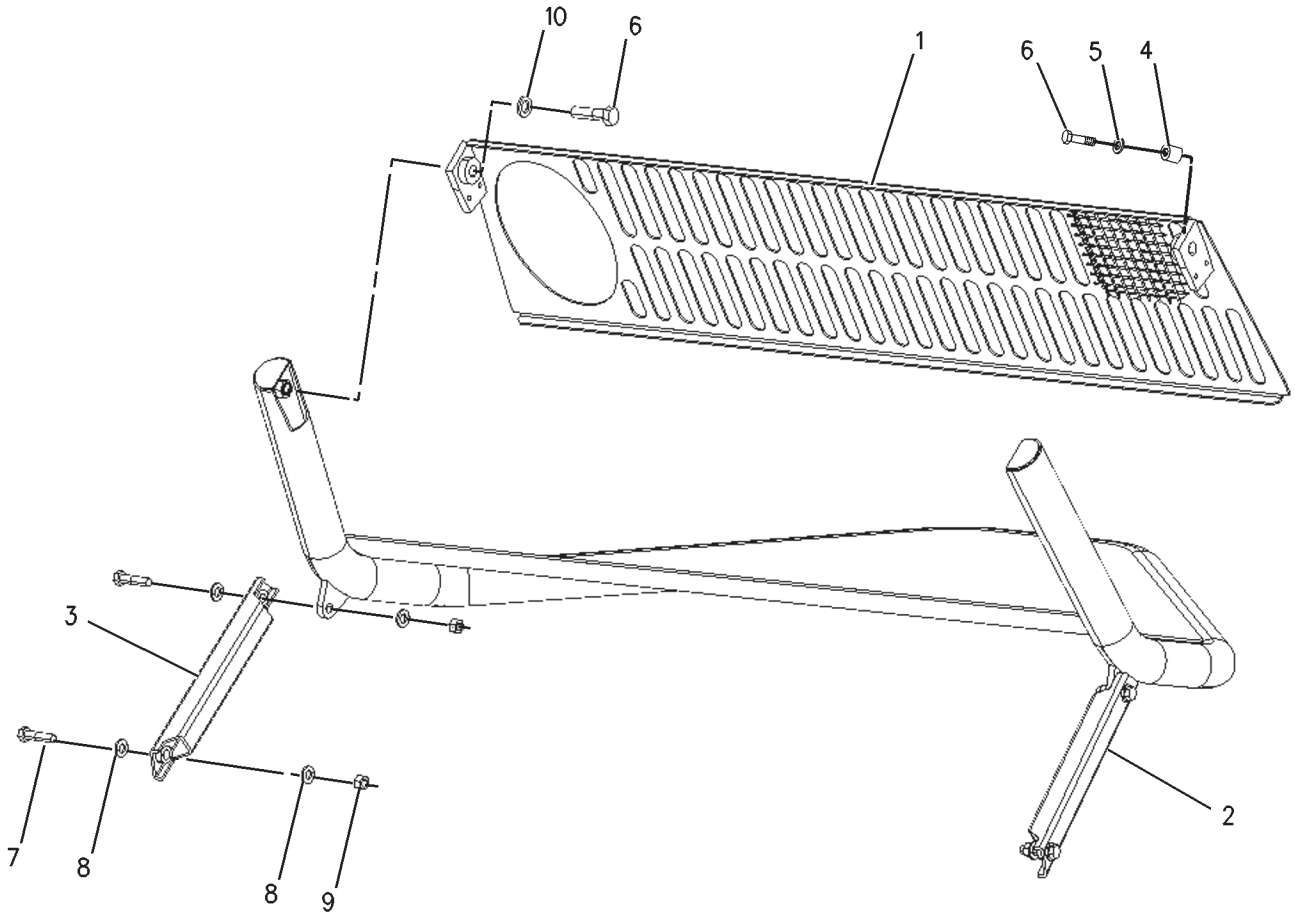

GRAPHIC #1 **<END>** g00855755

OPERATOR STATION

149-0104 GUARD GP-WINDOW

S/N: AXM230-UP

PART OF 152-6923 HOOD & GUARD AR

SMCS-7315 **i01895021**

NOTE	REF NO	GRAPHIC REF	PART NUMBER	QTY	PART NAME 1 2 3 4 5 6 (PRODUCT LEVEL)	SEE PAGE
	1	1	**173-5255**	1	GUARD AS-WINDOW	
	2	1	**188-2993**	1	SUPPORT AS (LH)	
	3	1	**188-2995**	1	SUPPORT AS (RH)	
	4	1	**188-3001**	1	BOSS	
C	5	1	**197-2420**	1	GUARD AS-EXHAUST	
C	6	1	**227-4768**	1	U-BOLT	
C	7	1	**198-4767**	1	WASHER-HARD (13.5X30X12-MM THK)	
	8	1	**3E-9411**	1	WASHER-HARD (17.5X38X6-MM THK)	
C	9	1	**5P-4116**	2	WASHER-HARD (8.8X20.5X2-MM THK)	
CM	10	1	**6V-9189**	2	LOCKNUT (M8X1.25-THD)	
CM	11	1	**7X-2554**	2	BOLT (M16X2X70-MM)	
CM	12	1	**8T-4184**	3	BOLT (M12X1.75X45-MM)	
M	13	1	**8T-4192**	3	BOLT (M12X1.75X25-MM)	
	14	1	**8T-4223**	11	WASHER-HARD (13.5X25.5X3-MM THK)	
M	15	1	**8T-4244**	4	NUT (M12X1.75-THD)	
CM	16	1	**8T-4910**	1	BOLT (M12X1.75X60-MM)	
	17	1	**9X-8257**	1	WASHER (17.5X30X3.5-MM THK)	

C-CHANGE FROM PREVIOUS TYPE
M-METRIC PART

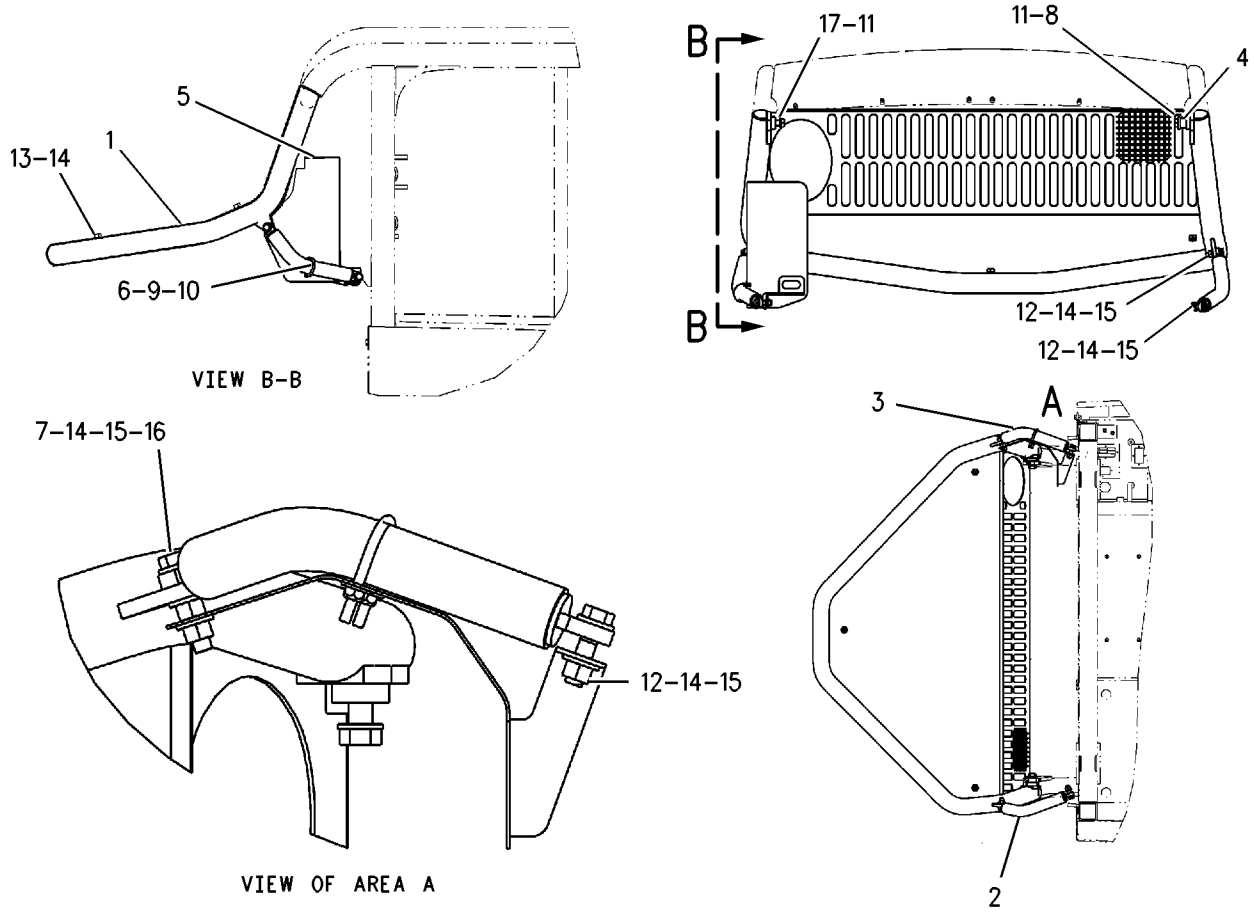

GRAPHIC #1 **<END>** g00985958

OPERATOR STATION

149-5824 INSTALLATION GP-RADIO

S/N: AXM1-UP

AN ATTACHMENT

SMCS-7338 **i01373582**

NOTE	REF NO	GRAPHIC REF	PART NUMBER	QTY	PART NAME 1 2 3 4 5 6 (PRODUCT LEVEL)	SEE PAGE
	1	1	**4E-1411**	1	BUSHING-TERMINAL	
	2	1	**8E-1118**	1	ANTENNA AS	
	3	1	**124-6046**	2	SPEAKER AS-RADIO	
	4	1	**175-3565**	1	PLATE AS	
M		1	**6V-9632**	2	NUT-WELD (M6X1 THD)	
	5	1	**175-3567**	1	PLATE AS	
	6	1	**175-3570**	1	PLATE	
	7	1	**189-3744**	1	SEAL	
	8	1	**5P-4115**	6	WASHER-HARD (7.2X19X2-MM THK)	
M	9	1	**8T-4171**	6	BOLT (M6X1X12-MM)	

M-METRIC PART

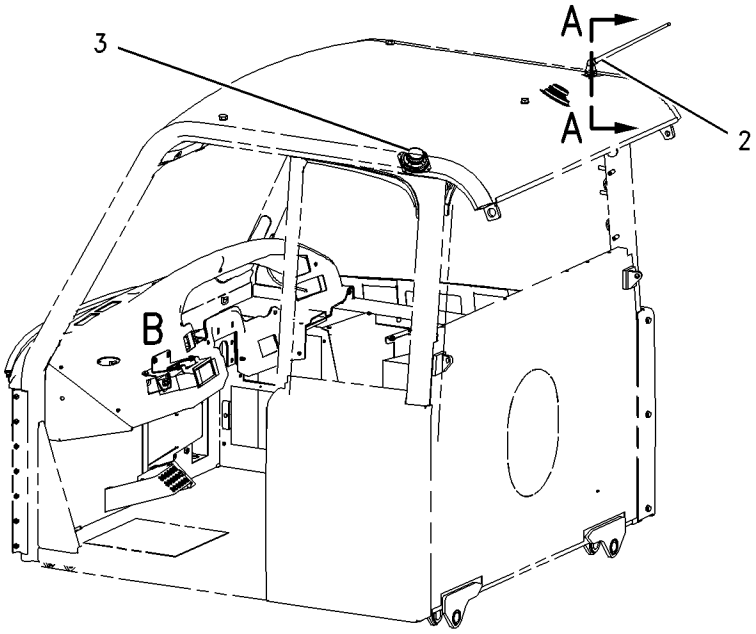

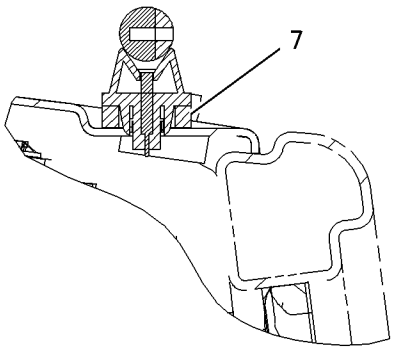

SECTION A-A

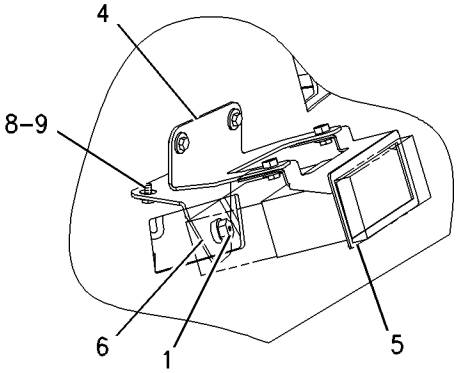

VIEW OF AREA B

GRAPHIC #1 **<END>** g00725452

OPERATOR STATION

149-0085 LINER GP-CAB

S/N: AXM1-1376

PART OF 153-5485 CAB AR

SMCS-7329 **i02232791**

NOTE	REF NO	GRAPHIC REF	PART NUMBER	QTY	PART NAME 1 2 3 4 5 6 (PRODUCT LEVEL)	SEE PAGE
	1	2	**6V-8928**	1	HOOK-COAT	
	2	2	**8C-0618**	1	ASHTRAY AS	
	3	2	**8Y-6388**	1	LOUVER AS	
	4	2	**9U-8263**	1	COVER	
	5	1,2	**114-6658**	66	WASHER (6.5X17X1-MM THK)	
	6	2	**151-5715**	5	LOUVER AS	
	7	2	**154-7468**	1	COVER AS	
	8	2	**154-7470**	1	COVER	
	9	2	**155-9708**	1	COVER AS	
	10	2	**155-9709**	1	COVER (BOTTOM) (BOTTOM)	
	11	1	**160-8641**	1	LINER AS-CAB	
M		1	**9X-2045**	4	SCREW-TRUSS HEAD (M6X1X20-MM)	
M		1	**9X-1046**	8	SCREW (M4X0.7X18-MM)	
		1	**160-8684**	1	COVER (REAR-WIPER)	
		1	**173-9164**	2	GRILL-SPEAKER	
	12	1	**160-8686**	1	CHANNEL-REAR	
	13	2	**160-8687**	1	COVER (REAR, LH)	
	14	2	**160-8688**	1	COVER (REAR, RH)	
	15	1	**160-8718**	1	PANEL AS-DOOR	
	16	2	**160-8722**	1	DASH AS	
	17	2	**160-8723**	1	TRIM AS-PANEL	
		2	**114-9125**	1	HOLDER-CUP	
	18	1	**160-8724**	1	TRIM AS	
	19	1	**160-8725**	1	CONSOLE AS	
		1	**114-9125**	1	HOLDER-CUP	
	20	1	**160-8728**	1	TRIM	
	21	2	**161-1168**	1	FILM-INSTRUCTION	
	22	2	**164-8473**	2	LOUVER AS	
	23	1	**170-6019**	1	STORAGE AS	
	24	2	**170-7656**	2	GASKET	
	25	1	**172-6030**	1	GASKET	
	26	2	**185-9793**	1	FILM-RETARDER	
	27	1	**189-6003**	1	PLATE	
	28	2	**228-7260**	1	DOOR AS	
		2	**3H-0240**	11	WASHER (5X9.7X0.8-MM THK)	
		2	**9M-5733**	11	RIVET-POP	
		2	**228-7261**	1	TRIM-SEAT	
		2	**165-0399**	1	HINGE AS	
		2	**188-8846**	1	LATCH AS	
	29	1	**101-2867**	2	WASHER-HARD (7.2X25X2-MM THK)	
	30	2	**104-2091**	8	SCREW-FLAT HEAD (6-20X0.5-IN)	
	31	2	**118-5619**	14	SCREW-FLAT HEAD (NO 0.6-20X1-IN)	
M	32	2	**3E-4313**	10	SCREW-BUTTON HEAD	
	33	1	**6V-0292**	1	PLUG	
M	34	1,2	**9X-2042**	29	SCREW-TRUSS HEAD (M6X1X12-MM)	
M	35	1,2	**9X-2044**	30	SCREW-TRUSS HEAD (M6X1X16-MM)	
M	36	1,2	**9X-2045**	10	SCREW-TRUSS HEAD (M6X1X20-MM)	
BE	37	2	**148-7361**		TAPE	
BE	38	2	**148-7362**		TAPE	

B-USE AS REQUIRED
E-ORDER BY THE CENTIMETER
M-METRIC PART

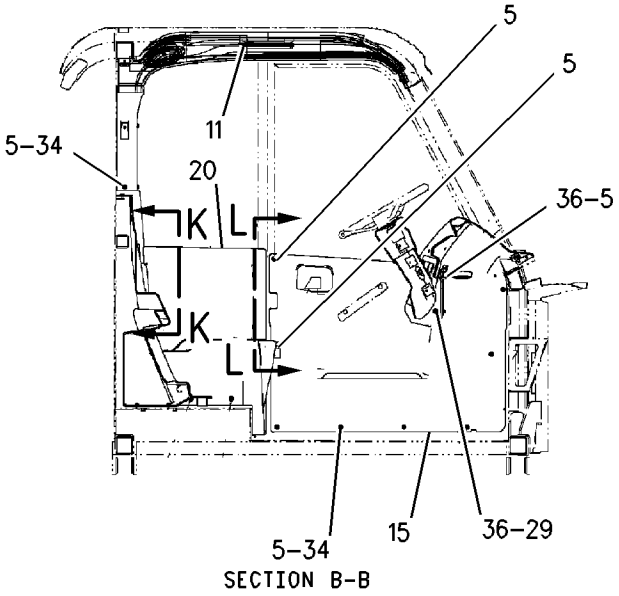

SECTION B-B

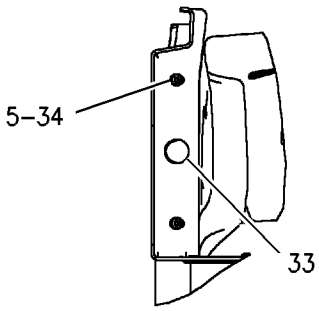

VIEW L-L

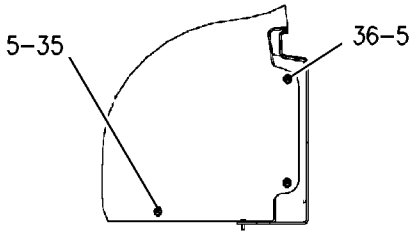

VIEW K-K

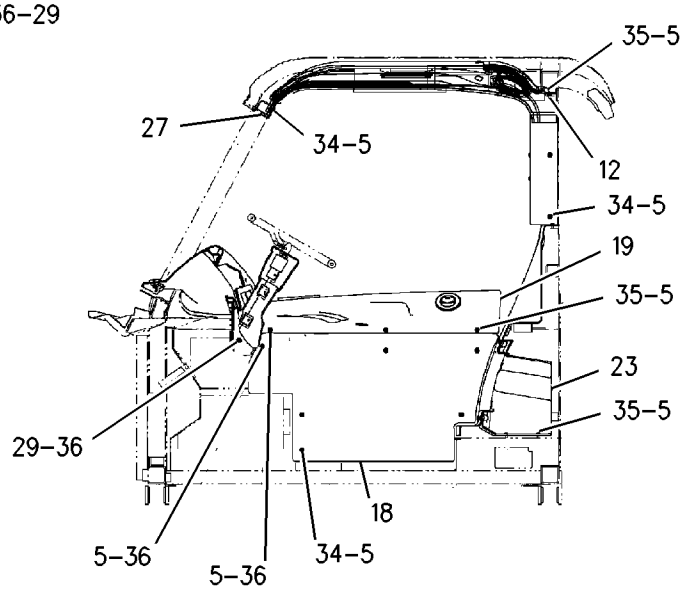

SECTION A-A

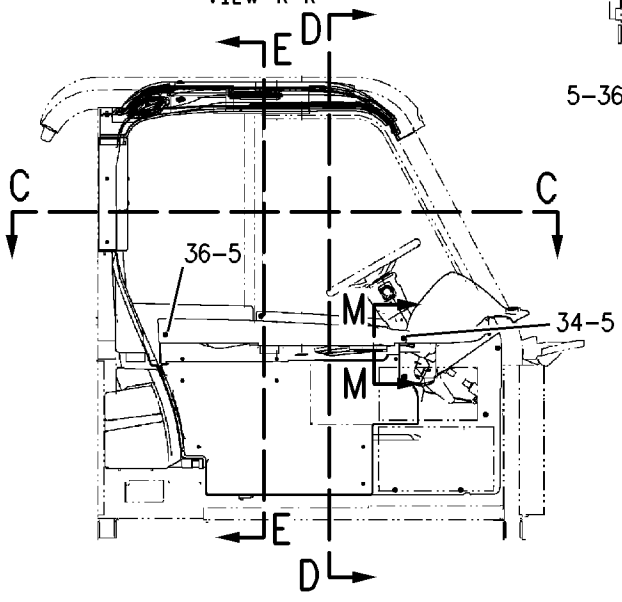

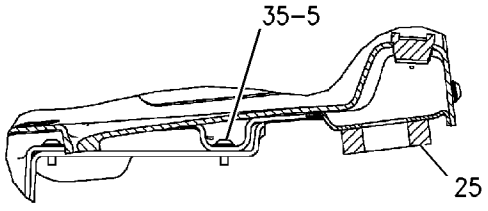

VIEW M-M

GRAPHIC #1 g01006686

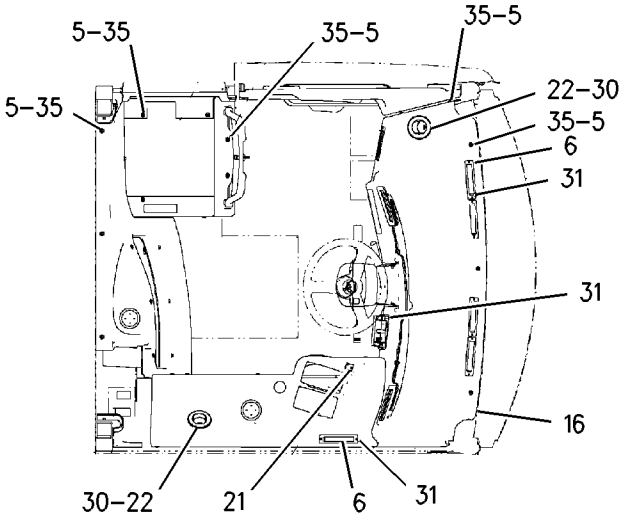

SECTION C-C

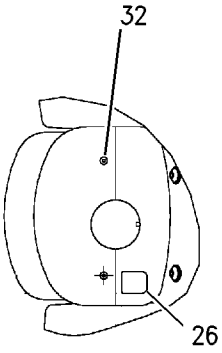

VIEW J-J

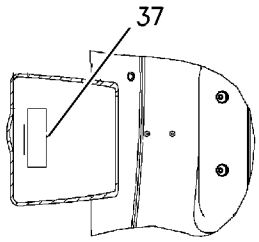

SECTION H-H

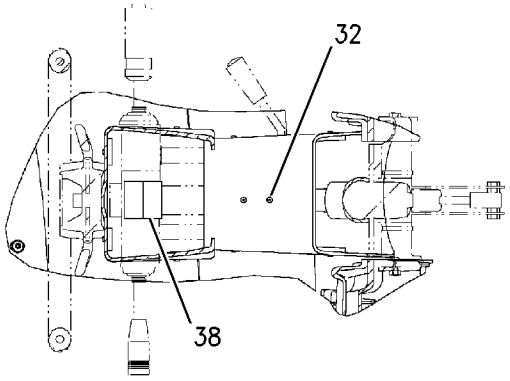

SECTION G-G

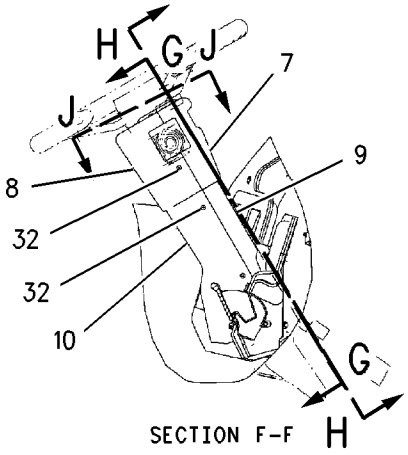

SECTION F-F

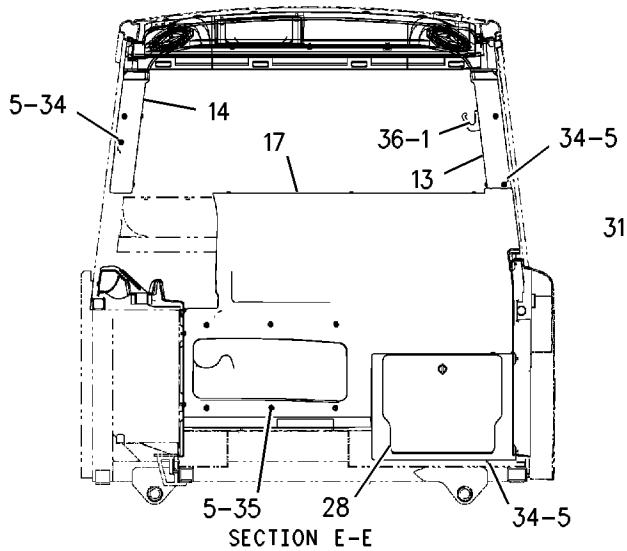

SECTION E-E

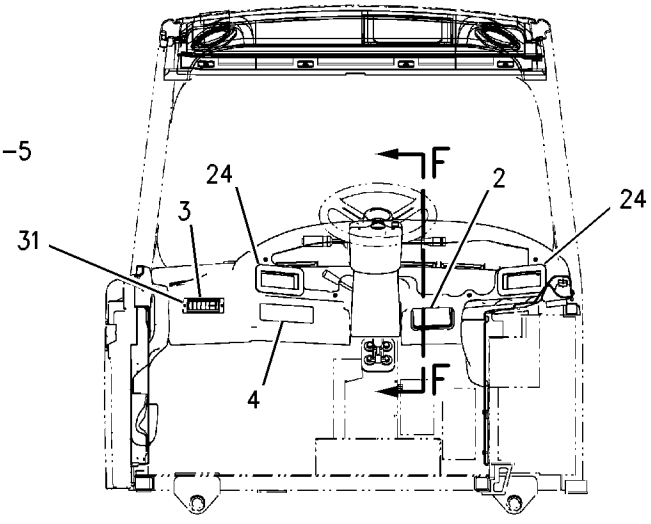

SECTION D-D

GRAPHIC #2 **<END>** g01006687

OPERATOR STATION

155-7474 LINER GP-CAB—SOUND SUPPRESSION

S/N: AXM1-UP

PART OF 153-5485, 229-8087 CAB AR

SMCS-7329 **i02060288**

NOTE	REF NO	GRAPHIC REF	PART NUMBER	QTY	PART NAME 1 2 3 4 5 6 (PRODUCT LEVEL)	SEE PAGE
	1	1	**6P-2216**	49	CAP	
	2	1	**160-8721**	1	TRIM	
	3	1	**164-5792**	1	INSULATION	
	4	1	**164-5794**	1	INSULATION	
	5	1	**168-0374**	1	INSULATION	
	6	1	**168-0375**	1	INSULATION	
	7	1	**168-0376**	1	INSULATION	
	8	1	**168-0377**	1	INSULATION	
	9	1	**168-0378**	1	INSULATION	
	10	1	**170-4880**	1	TRIM-FRONT PANEL	
	11	1	**189-6524**	2	PLUG	
	12	1	**198-6074**	1	LINER	
	13	1	**198-6081**	2	INSULATION	
	14	1	**198-7409**	4	PLUG	
	15	1	**237-6175**	1	FLOOR MAT	
	16	1	**237-6176**	1	FLOOR MAT	

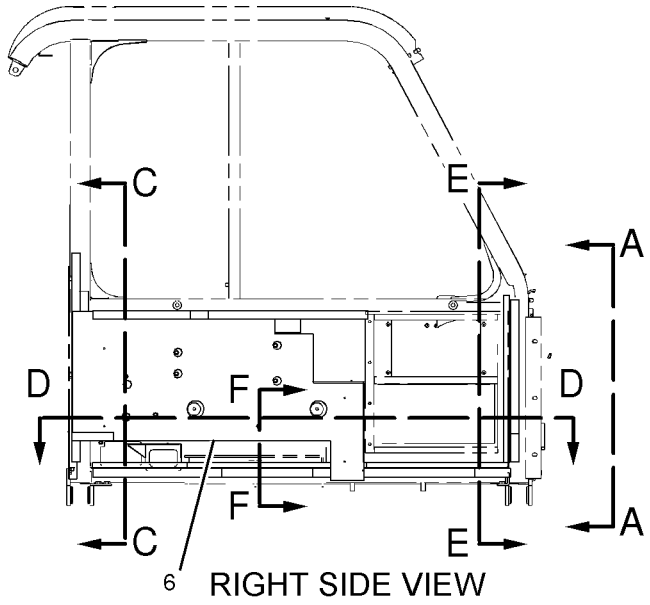

RIGHT SIDE VIEW

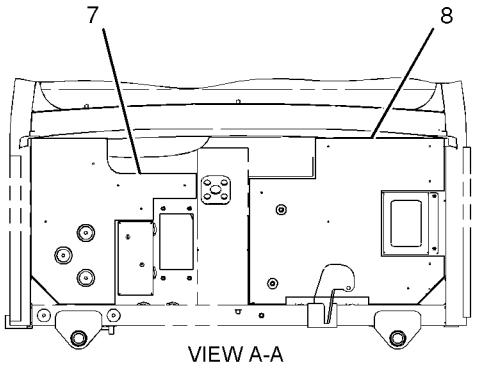

VIEW A-A

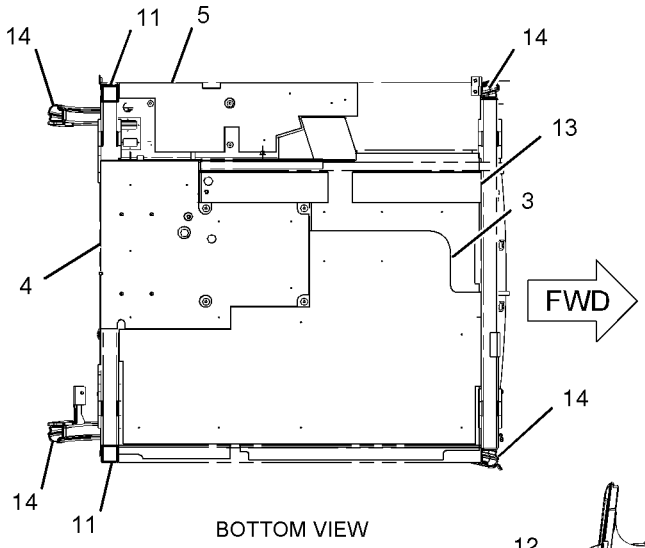

BOTTOM VIEW

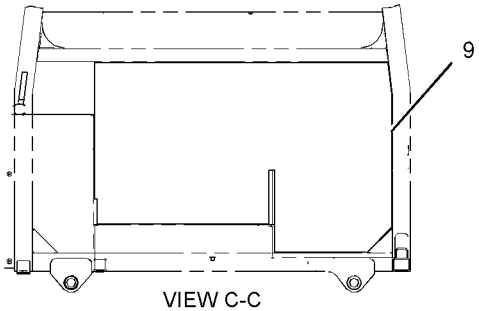

VIEW C-C

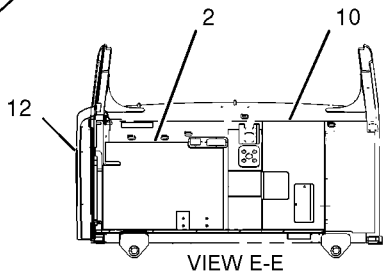

VIEW E-E

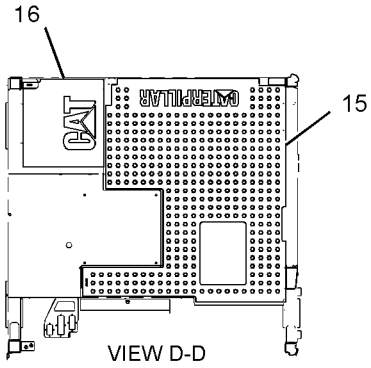

VIEW D-D

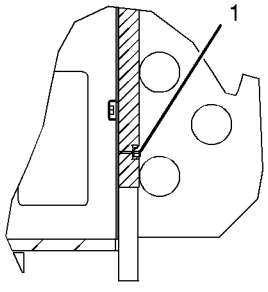

SECTION F-F

GRAPHIC #1 **<END>** g01055944

OPERATOR STATION

241-8105 LINER GP-CAB

S/N: AXM1377-UP

PART OF 229-8087 CAB AR

SMCS-7329 **i02206782**

NOTE	REF NO	GRAPHIC REF	PART NUMBER	QTY	PART NAME 1 2 3 4 5 6 (PRODUCT LEVEL)	SEE PAGE
	1	1	**6V-8928**	1	HOOK-COAT	
	2	1	**8C-0618**	1	ASHTRAY AS	
	3	1	**8Y-6388**	1	LOUVER AS	
	4	1	**9U-8263**	1	COVER	
	5	1	**114-6658**	66	WASHER (6.5X17X1-MM THK)	
	6	1	**151-5715**	5	LOUVER AS	
	7	1	**154-7468**	1	COVER AS	
	8	1	**154-7470**	1	COVER	
	9	1	**155-9708**	1	COVER AS	
	10	1	**155-9709**	1	COVER (BOTTOM)	
	11	1	**160-8641**	1	LINER AS-CAB	
M		1	**9X-2045**	4	SCREW-TRUSS HEAD (M6X1X20-MM)	
M		1	**9X-1046**	8	SCREW (M4X0.7X18-MM)	
		1	**160-8684**	1	COVER	
		1	**173-9164**	2	GRILL-SPEAKER	
	12	1	**160-8686**	1	CHANNEL-REAR	
	13	1	**160-8687**	1	COVER (REAR, LH)	
	14	1	**160-8688**	1	COVER (REAR, RH)	
	15	1	**160-8718**	1	PANEL AS-DOOR	
	16	1	**160-8723**	1	TRIM AS-PANEL	
		1	**114-9125**	1	HOLDER-CUP	
	17	1	**160-8724**	1	TRIM AS	
	18	1	**160-8725**	1	CONSOLE AS	
		1	**114-9125**	1	HOLDER-CUP	
	19	1	**160-8728**	1	TRIM	
	20	1	**161-1168**	1	FILM-INSTRUCTION	
	21	1	**164-8473**	2	LOUVER AS	
	22	1	**170-6019**	1	STORAGE AS	
	23	1	**170-7656**	2	GASKET	
	24	1	**172-6030**	1	GASKET	
	25	1	**185-9793**	1	FILM-RETARDER	
	26	1	**228-7260**	1	DOOR AS	
		1	**3H-0240**	11	WASHER (5X9.7X0.8-MM THK)	
		1	**9M-5733**	11	RIVET-POP	
		1	**165-0399**	1	HINGE AS	
		1	**188-8846**	1	LATCH AS	
		1	**228-7261**	1	TRIM-SEAT	
	27	1	**240-8432**	1	DASH AS	
	28	1	**247-5834**	1	PLATE	
	29	1	**101-2867**	2	WASHER-HARD (7.2X25X2-MM THK)	
	30	1	**104-2091**	8	SCREW-FLAT HEAD (6-20X0.5-IN)	
	31	1	**118-5619**	14	SCREW-FLAT HEAD (NO 0.6-20X1-IN)	
M	32	1	**3E-4313**	10	SCREW-BUTTON HEAD	
	33	1	**6V-0292**	1	PLUG	
M	34	1	**9X-2042**	29	SCREW-TRUSS HEAD (M6X1X12-MM)	
M	35	1	**9X-2044**	30	SCREW-TRUSS HEAD (M6X1X16-MM)	
M	36	1	**9X-2045**	10	SCREW-TRUSS HEAD (M6X1X20-MM)	
BE	37	1	**148-7361**		TAPE	
BE	38	1	**148-7362**		TAPE	

B-USE AS REQUIRED
E-ORDER BY THE CENTIMETER
M-METRIC PART

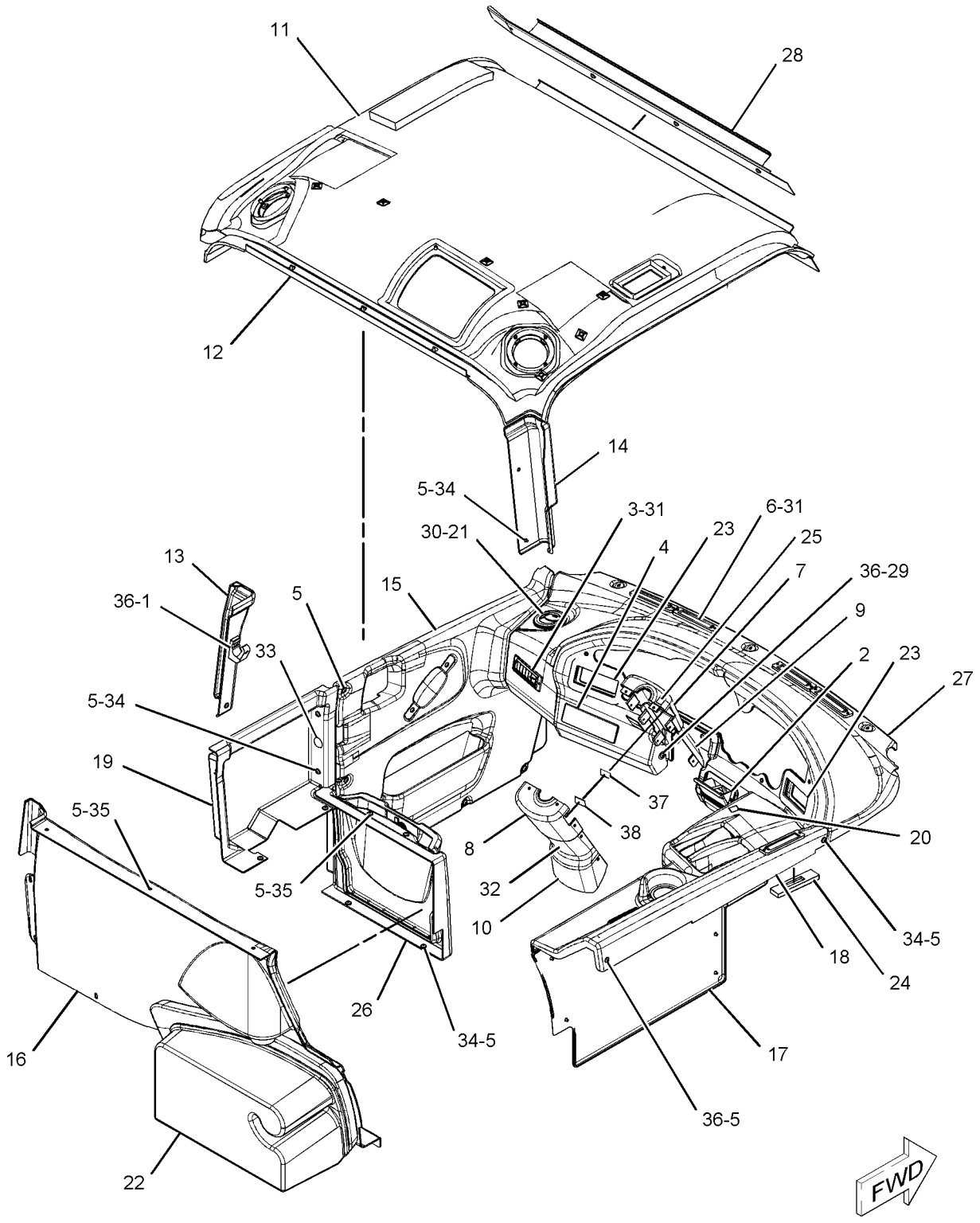

GRAPHIC #1 **<END>** g01053703

OPERATOR STATION

152-6946 LINES GP-AIR CONDITIONER

S/N: AXM1-UP

PART OF 152-6922 HYDRAULIC AR-MACHINE

SMCS-1808 **i01747478**

NOTE	REF NO	GRAPHIC REF	PART NUMBER	QTY	PART NAME 1 2 3 4 5 6 (PRODUCT LEVEL)	SEE PAGE
	1	1	**1P-6356**	1	PLATE	
	2	1	**103-6100**	1	COUPLER AS-QUICK	
		1	**9X-7382**	2	SEAL-O-RING	
I	3	1	**188-0995**	1	HOSE AS	
I	4	1	**194-7899**	1	HOSE AS	
I	5	1	**198-1803**	1	HOSE AS	
	6	1	**116-6202**	1	BOOT	
	7	1	**125-2796**	1	FITTING AS	
		1	**3E-4051**	1	CAP-SEAL	
		1	**3E-4057**	1	VALVE AS	
	8	1	**3E-4066**	1	FITTING AS	
		1	**3E-4052**	1	CAP-SEAL	
		1	**3E-4058**	1	VALVE AS	
	9	1	**3U-2753**	3	CLIP	
	10	1	**3U-2754**	2	CLIP	
	11	1	**5P-7464**	1	CLIP (SLOT)	
	12	1	**5P-7465**	1	CLIP (TAB)	
	13	1	**5P-7470**	1	CLIP (SLOT)	
	14	1	**5P-7471**	1	CLIP (TAB)	
	15	1	**5P-7703**	1	GROMMET	
	16	1	**6V-7359**	1	GROMMET	
	17	1	**7X-7729**	2	WASHER (11X25X3-MM THK)	
	18	1	**8T-4121**	6	WASHER-HARD (11X21X2.5-MM THK)	
M	19	1	**8T-4133**	3	NUT (M10X1.5-THD)	
M	20	1	**8T-4136**	2	BOLT (M10X1.5X25-MM)	
M	21	1	**8T-4137**	1	BOLT (M10X1.5X20-MM)	
M	22	1	**8T-4186**	1	BOLT (M10X1.5X40-MM)	
M	23	1	**8T-6466**	1	BOLT (M10X1.5X60-MM)	
	24	1	**9X-7380**	2	SEAL-O-RING	
	25	1	**9X-7381**	2	SEAL-O-RING	
	26	1	**9X-7382**	1	SEAL-O-RING	
	27	1	**9X-7383**	1	SEAL-O-RING	
	28	1	**9X-7385**	2	SEAL-O-RING	

I-REFER TO HYDRAULIC INFORMATION SYSTEM
M-METRIC PART

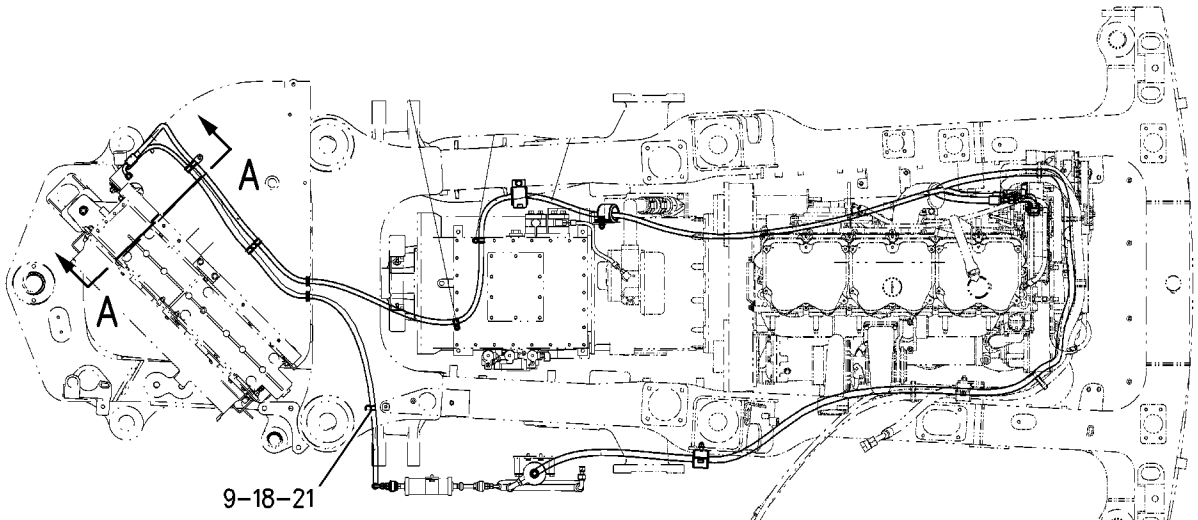

TOP VIEW

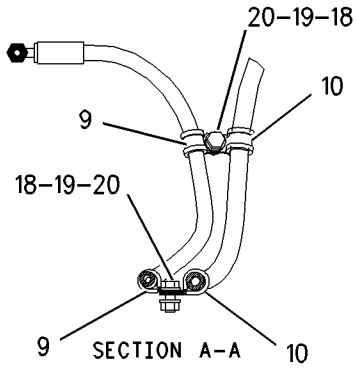

SECTION A-A

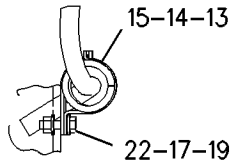

VIEW OF AREA D

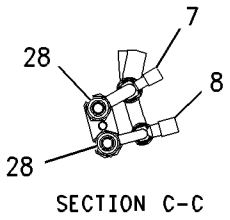

SECTION C-C

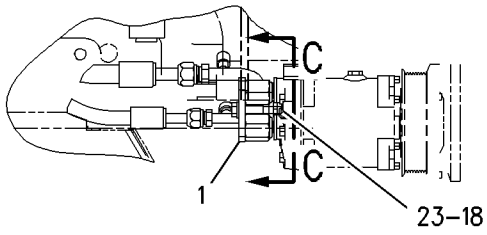

VIEW OF AREA B

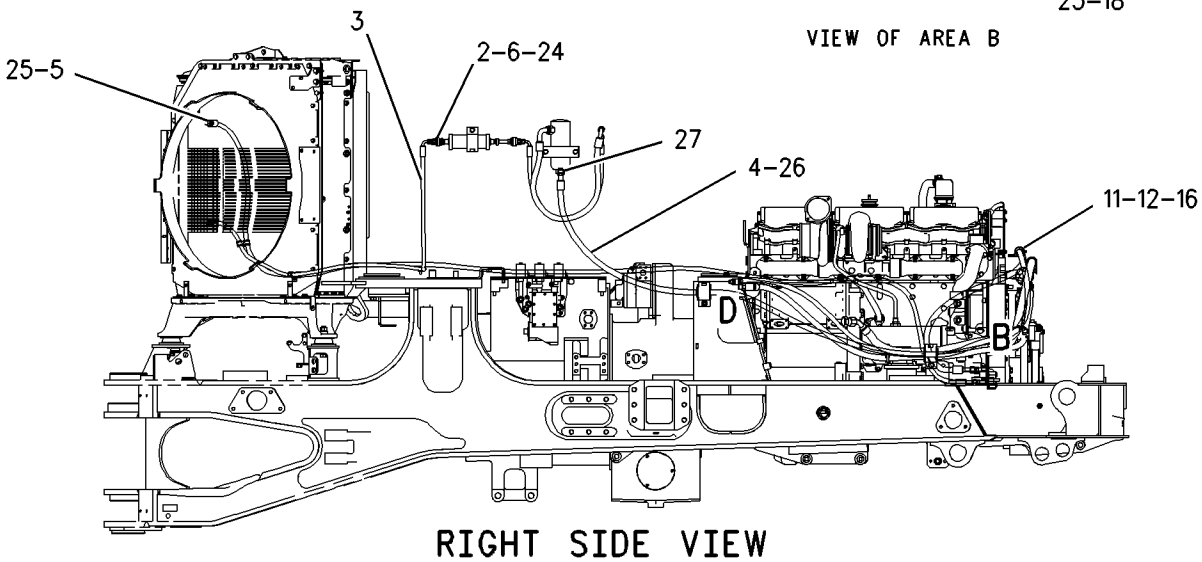

RIGHT SIDE VIEW

GRAPHIC #1 **<END>** g00894667

OPERATOR STATION

184-6138 LINES GP-AIR CONDITIONER

S/N: AXM1-UP

PART OF 153-5485, 229-8087 CAB AR

SMCS-1808 **i02144278**

NOTE	REF NO	GRAPHIC REF	PART NUMBER	QTY	PART NAME 1 2 3 4 5 6 (PRODUCT LEVEL)	SEE PAGE
	1	1	**103-6100**	1	COUPLER AS-QUICK	
I	2	1	**184-6139**	1	HOSE AS	
	3	1	**185-6981**	1	BRACKET AS	
	4	1	**186-6189**	1	ACCUMULATOR GP-REFRIGERANT	
	5	1	**101-8296**	2	CLIP	
	6	1	**109-1633**	1	CLIP (SLOT)	
	7	1	**109-1634**	1	CLIP (TAB)	
	8	1	**116-6202**	1	BOOT	
I	9	1	**184-6140**	1	HOSE AS	
	10	1	**175-7162**	1	RECEIVER-DRYER GP (AIR CONDITIONER)	
	11	1	**8T-4121**	5	WASHER-HARD (11X21X2.5-MM THK)	
M	12	1	**8T-4136**	1	BOLT (M10X1.5X25-MM)	
M	13	1	**8T-4137**	4	BOLT (M10X1.5X20-MM)	
	14	1	**9X-7380**	1	SEAL-O-RING	
	15	1	**9X-7381**	1	SEAL-O-RING	
	16	1	**9X-7382**	1	SEAL-O-RING	
	17	1	**9X-7383**	1	SEAL-O-RING	
BD	18	1	**6V-2495**		SEAL	

B-USE AS REQUIRED
D-ORDER BY THE METER
I-REFER TO HYDRAULIC INFORMATION SYSTEM
M-METRIC PART

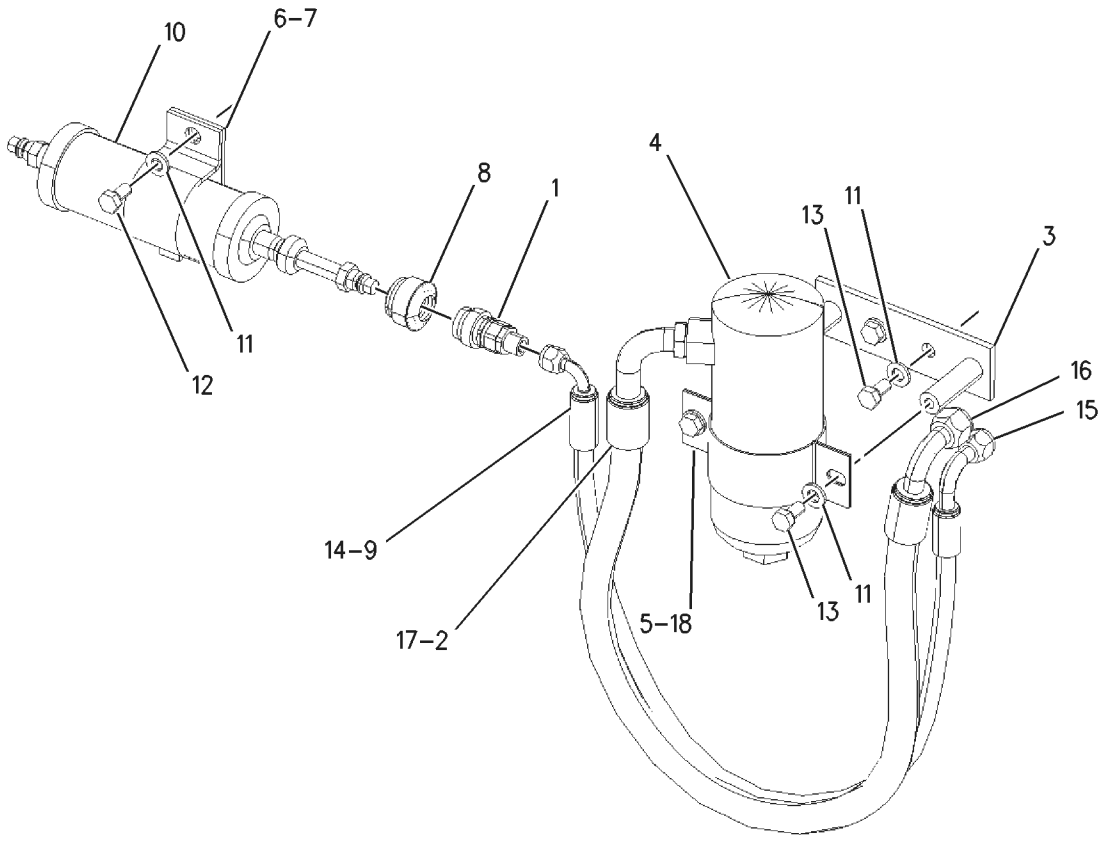

GRAPHIC #1 **<END>** g00745467

OPERATOR STATION

153-1135 LINES GP-HEATER

S/N: AXM1-UP

PART OF 152-6922 HYDRAULIC AR-MACHINE

SMCS-7304 **i01533773**

NOTE	REF NO	GRAPHIC REF	PART NUMBER	QTY	PART NAME 1 2 3 4 5 6 (PRODUCT LEVEL)	SEE PAGE
	1	1	**5D-1026**	4	CLAMP-HOSE	
	2	1	**6U-0455**	3	STRAP	
	3	1	**6U-0456**	1	STRAP	
	4	1	**7D-7026**	1	CONNECTOR-HOSE	
	5	1	**7U-6574**	1	SEAL	
	6	1	**005-7889**	1	VALVE AS	
	7	1	**208-0252**	2	HOSE-HEATER	
	8	1	**003-2143**	1	ELBOW	
	9	1	**6B-4661**	2	BUSHING-REDUCER	

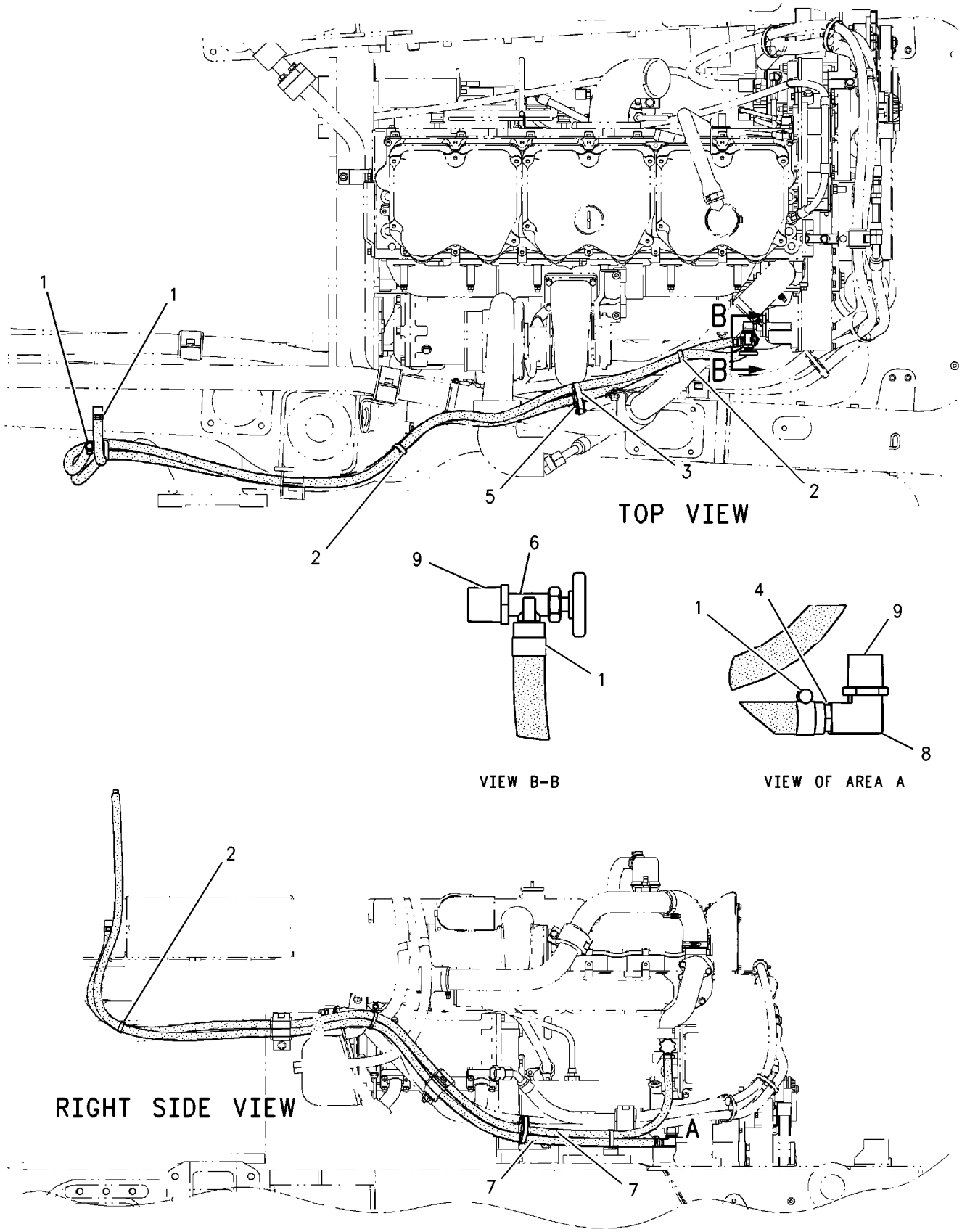

GRAPHIC #1 **<END>** g00799339

OPERATOR STATION

211-2038 MIRROR GP-REAR VIEW—HEATED

S/N: AXM1-1376

AN ATTACHMENT

SMCS-7319 **i01746970**

NOTE	REF NO	GRAPHIC REF	PART NUMBER	QTY	PART NAME 1 2 3 4 5 6 (PRODUCT LEVEL)	SEE PAGE
	1	1	**110-0017**	2	MIRROR	
	2	1	**208-4539**	2	MIRROR	
BF		1	**6L-7008**	53	STRAP-CABLE	
F		1	**102-8802**	3	KIT-RECEPTACLE (2-PIN)	
					(INCLUDES WEDGE)	
F		1	**3E-3365**	4	WEDGE-RECEPTACLE LOCK (2-PIN)	
F		1	**4P-7581**	5	CLIP	
F		1	**186-3735**	8	PIN-CONNECTOR	
F		1	*165-5979*	1	SWITCH AS-ROCKER (HEATED MIRROR)	
		1	**3E-8825**	2	LAMP (24-VOLT)	
		1	**3E-8857**	1	SWITCH AS (HEATED MIRROR)	
		1	**165-5980**	1	ACTUATOR-ROCKER	
F		1	**211-2039**	2	HARNESS AS (MIRROR)	
		1	**102-8802**	1	KIT-RECEPTACLE (2-PIN)	
					(INCLUDES WEDGE)	
		1	**155-2270**	1	KIT-CONNECTING PLUG (2-PIN)	
					(INCLUDES WEDGE)	

B-USE AS REQUIRED
F-NOT SHOWN

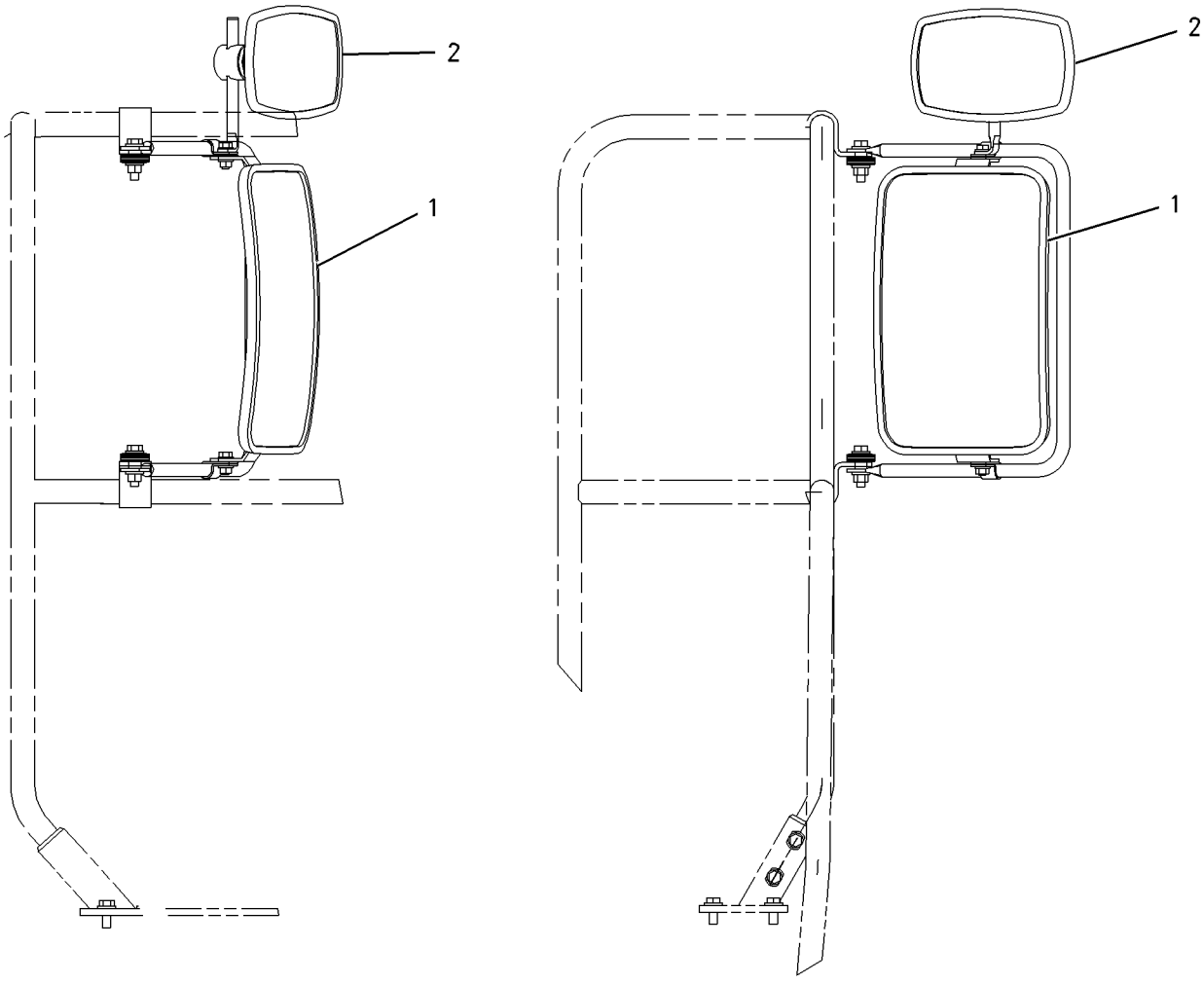

GRAPHIC #1 **<END>** g00888138

OPERATOR STATION

211-2038 MIRROR GP-REAR VIEW—HEATED

S/N: AXM1-UP

AN ATTACHMENT

SMCS-7319 **i02203678**

NOTE	PART NUMBER	QTY	PART NAME 1 2 3 4 5 6 (PRODUCT LEVEL)	SEE PAGE
	4P-7581	5	CLIP	
	102-8804	2	KIT-RECEPTACLE (4-PIN)	
			(EACH INCLUDES RECEPTACLE AS & WEDGE)	
	236-2147	1	MIRROR (RH)	
	236-0422	1	MIRROR (LH)	
	236-0423	2	MIRROR-CONVEX	
	186-3735	8	PIN-CONNECTOR	
	3S-2093	34	STRAP-CABLE	
	165-5979	1	SWITCH AS-ROCKER (HEATED MIRROR)	
	3E-8825	2	LAMP (24-VOLT)	
	3E-8857	1	SWITCH AS (HEATED MIRROR)	
	165-5980	1	ACTUATOR-ROCKER	
	3E-3377	2	WEDGE-RECEPTACLE LOCK (4-PIN)	
	236-5334	4	WIRE AS	

<END>

OPERATOR STATION

211-7978 MIRROR GP-REAR VIEW

S/N: AXM1-594

PART OF 152-6927 INSTALLATION AR-MACHINE

SMCS-7319 **i01605801**

NOTE	REF NO	GRAPHIC REF	PART NUMBER	QTY	PART NAME 1 2 3 4 5 6 (PRODUCT LEVEL)	SEE PAGE
	1	1	**4W-8926**	16	WASHER (18.3X40X3.15-MM THK)	
	2	1	**5P-6879**	2	MIRROR	
	3	1	**7U-1903**	2	SUPPORT	
	4	1	**108-7638**	4	SPACER (17.4-MM THK)	
	5	1	**203-0780**	2	MIRROR	
	6	1	**211-7972**	2	SUPPORT	
	7	1	**8T-1887**	8	CLIP (SLOT)	
	8	1	**8T-1888**	8	CLIP (TAB)	
	9	1	**8T-4121**	16	WASHER-HARD (11X21X2.5-MM THK)	
M	10	1	**8T-4133**	8	NUT (M10X1.5-THD)	
M	11	1	**8T-4136**	4	BOLT (M10X1.5X25-MM)	
M	12	1	**8T-4194**	4	BOLT (M12X1.75X50-MM)	
M	13	1	**8T-4195**	4	BOLT (M10X1.5X30-MM)	
	14	1	**8T-4223**	8	WASHER-HARD (13.5X25.5X3-MM THK)	
M	15	1	**8T-4244**	4	NUT (M12X1.75-THD)	

M-METRIC PART

211-7978 **MIRROR GP-REAR VIEW** *(contd.)* **i01605801**

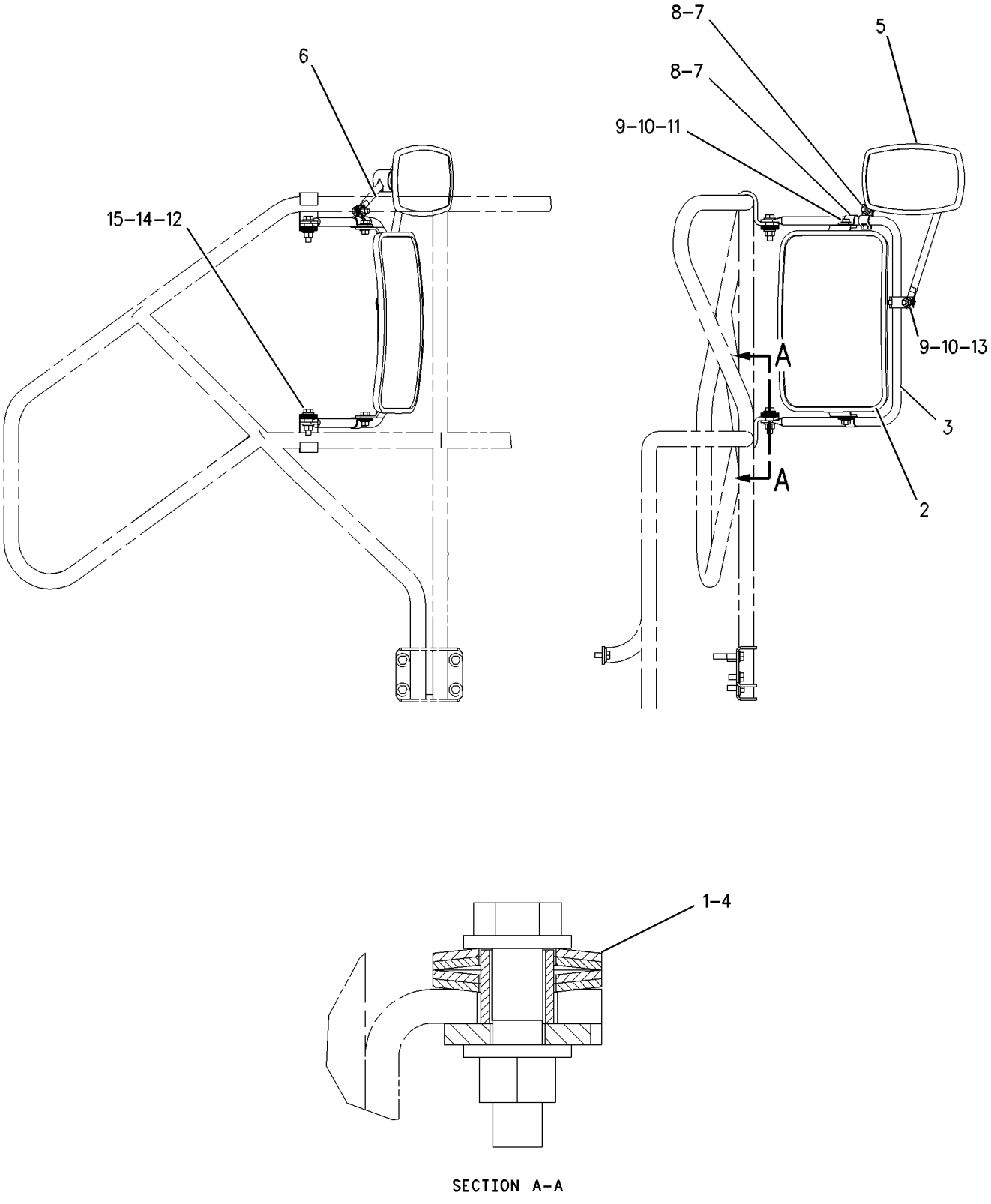

GRAPHIC #1 **<END>** g00840883

OPERATOR STATION

211-7978 MIRROR GP-REAR VIEW

S/N: AXM595-1071

PART OF 152-6927 INSTALLATION AR-MACHINE

SMCS-7319 **i02015259**

NOTE	REF NO	GRAPHIC REF	PART NUMBER	QTY	PART NAME 1 2 3 4 5 6 (PRODUCT LEVEL)	SEE PAGE
	1	1	**4W-8926**	16	WASHER (18.3X40X3.15-MM THK)	
	2	1	**108-7638**	4	SPACER (17.4-MM THK)	
	3	1	**222-7374**	2	MIRROR-CONVEX	
	4	1	**235-2698**	1	MIRROR (LH)	
	5	1	**236-2146**	1	MIRROR (RH)	
	6	1	**222-5110**	2	BRACKET AS-MIRROR	
M	7	1	**8T-4194**	4	BOLT (M12X1.75X50-MM)	
	8	1	**8T-4223**	8	WASHER-HARD (13.5X25.5X3-MM THK)	
M	9	1	**8T-4244**	4	NUT (M12X1.75-THD)	

M-METRIC PART

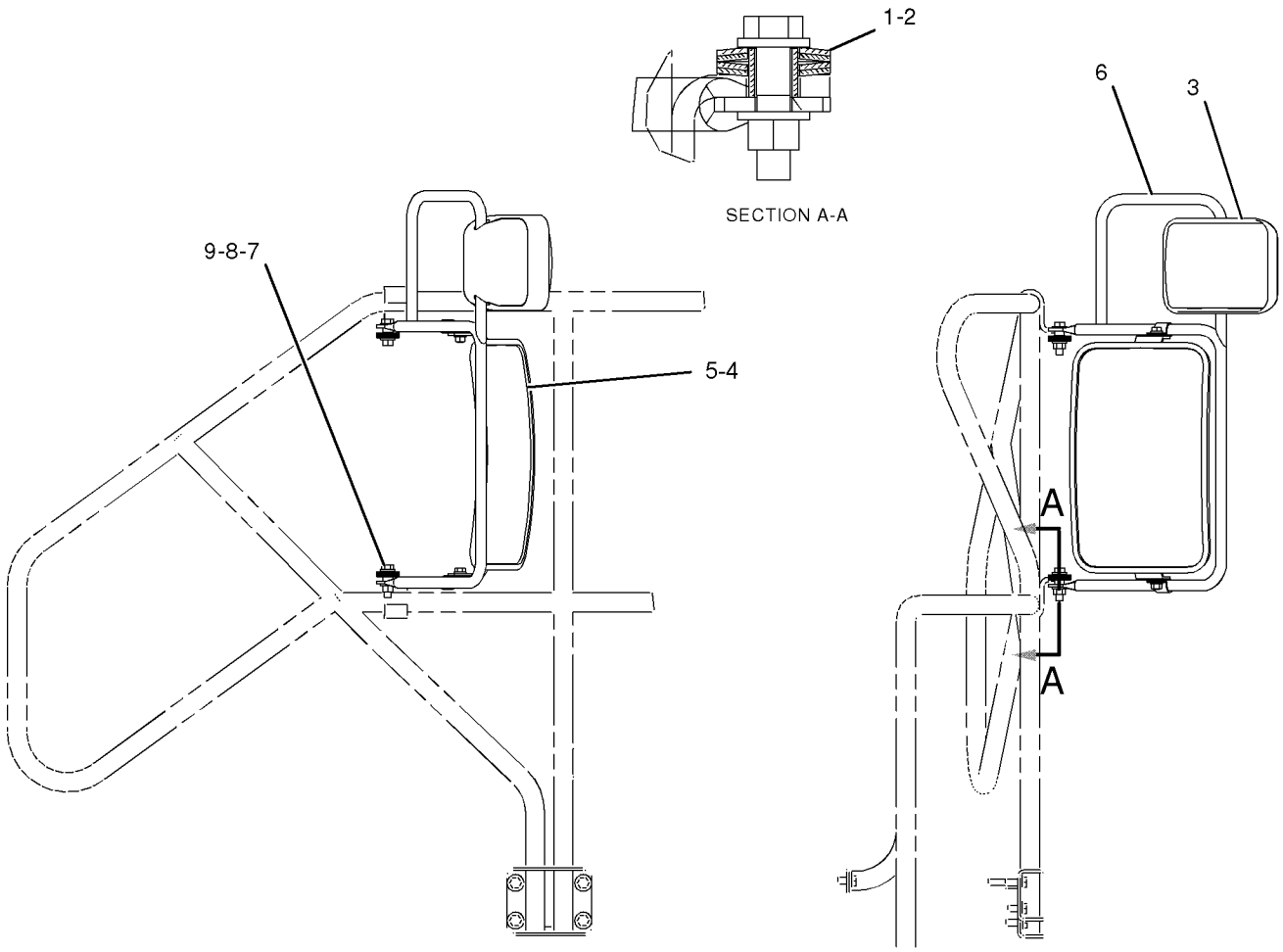

GRAPHIC #1 **<END>** g01041865

OPERATOR STATION

211-7978 MIRROR GP-REAR VIEW

S/N: AXM1072-UP

PART OF 152-6927 INSTALLATION AR-MACHINE

SMCS-7319 **i02016011**

NOTE	REF NO	GRAPHIC REF	PART NUMBER	QTY	PART NAME 1 2 3 4 5 6 (PRODUCT LEVEL)	SEE PAGE
	1	1	**4W-8926**	16	WASHER (18.3X40X3.15-MM THK)	
	2	1	**108-7638**	4	SPACER (17.4-MM THK)	
	3	1	**222-7374**	2	MIRROR-CONVEX	
	4	1	**235-2698**	1	MIRROR (LH)	
	5	1	**236-2146**	1	MIRROR (RH)	
C	6	1	**242-8783**	2	BRACKET AS-MIRROR	
M	7	1	**8T-4194**	4	BOLT (M12X1.75X50-MM)	
	8	1	**8T-4223**	8	WASHER-HARD (13.5X25.5X3-MM THK)	
M	9	1	**8T-4244**	4	NUT (M12X1.75-THD)	

C-CHANGE FROM PREVIOUS TYPE
M-METRIC PART

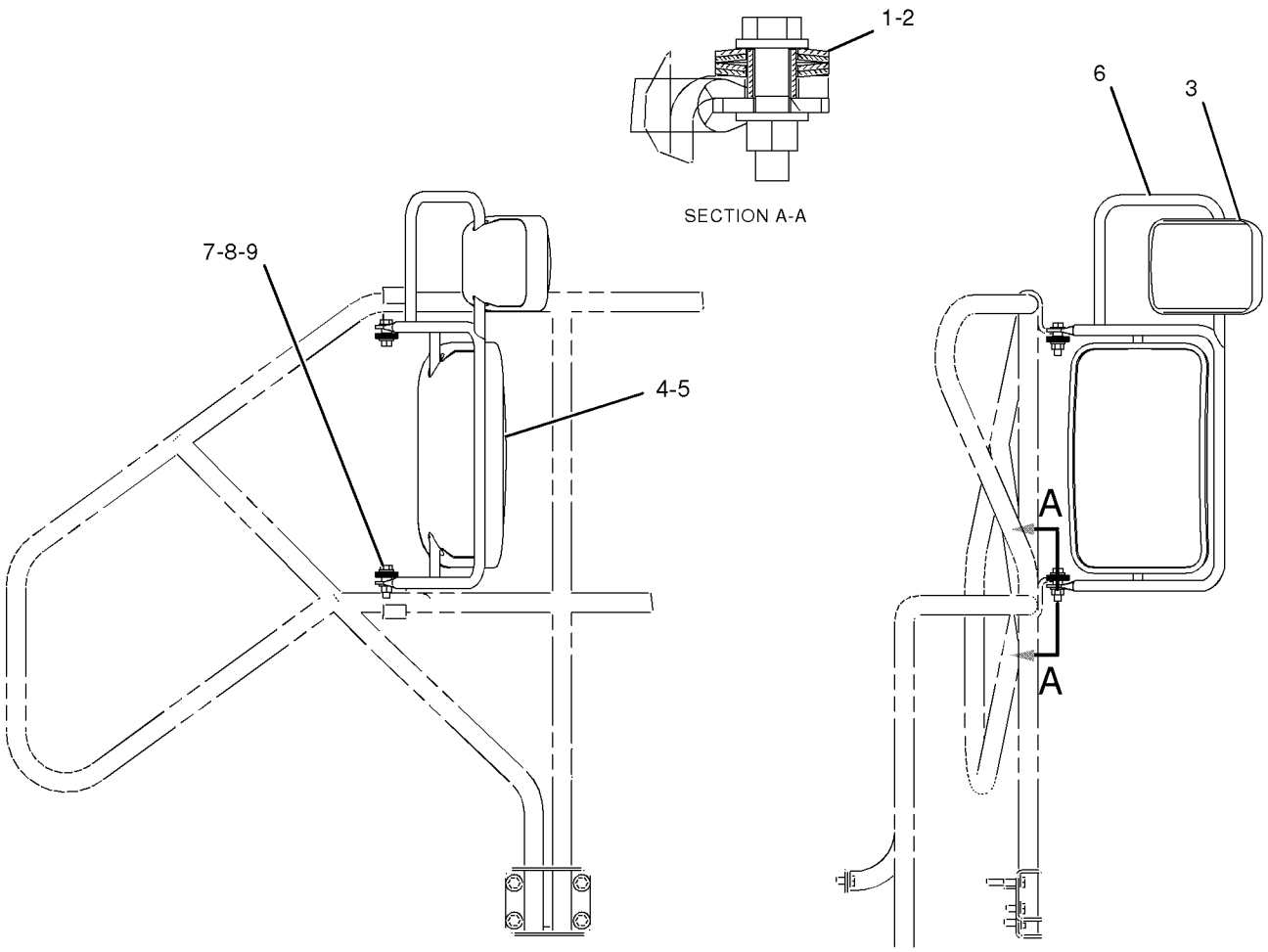

GRAPHIC #1 **<END>** g01043271

OPERATOR STATION

166-6938 MODULE GP-QUAD GAUGE

S/N: AXM1-UP

PART OF 153-5489 PANEL GP-INSTRUMENT

SMCS-7450, 7451, 7490 **i01903950**

NOTE	REF NO	GRAPHIC REF	PART NUMBER	QTY	PART NAME 1 2 3 4 5 6 (PRODUCT LEVEL)	SEE PAGE
J	1	1	**102-8805**	1	KIT-RECEPTACLE (6-PIN)	
	2	1	**8T-8729**	6	PIN-CONNECTOR	
J	3	1	**3E-3383**	1	WEDGE-RECEPTACLE LOCK (6-PIN)	

J-KIT MARKED J INCLUDES PART(S) MARKED J

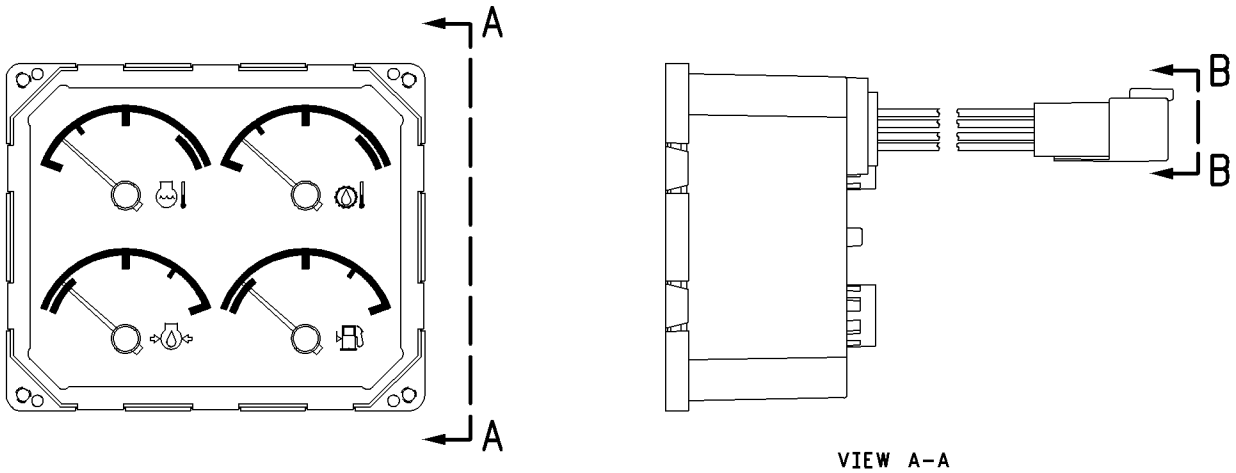

VIEW A-A

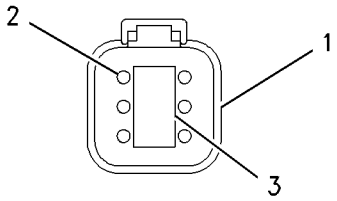

VIEW B-B

GRAPHIC #1 **<END>** g00804076

OPERATOR STATION

125-6806 MODULE GP-SPEEDOMETER & TACH

S/N: AXM1-UP

PART OF 153-5489 PANEL GP-INSTRUMENT

SMCS-7451, 7462, 7463, 7490 **i01903952**

NOTE	REF NO	GRAPHIC REF	PART NUMBER	QTY	PART NAME 1 2 3 4 5 6 (PRODUCT LEVEL)	SEE PAGE
J	1	1	**102-8805**	1	KIT-RECEPTACLE (6-PIN)	
J	2	1	**3E-3383**	1	WEDGE-RECEPTACLE LOCK (6-PIN)	
	3	1	**8T-8729**	6	PIN-CONNECTOR	

J-KIT MARKED J INCLUDES PART(S) MARKED J

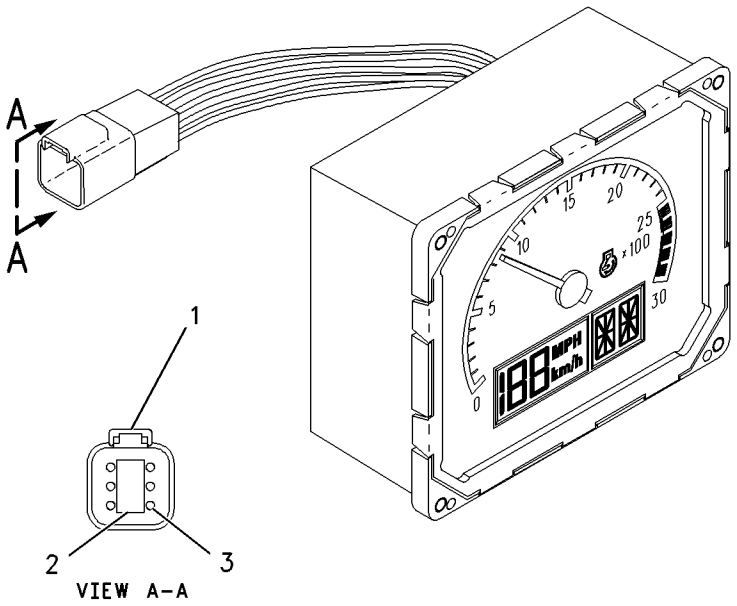

GRAPHIC #1 **<END>** g00678223

OPERATOR STATION

139-4593 MOUNTING GP-ROPS

S/N: AXM1-684

PART OF 152-6922 HYDRAULIC AR-MACHINE

SMCS-7266 **i01934323**

NOTE	REF NO	GRAPHIC REF	PART NUMBER	QTY	PART NAME 1 2 3 4 5 6 (PRODUCT LEVEL)	SEE PAGE
	1	1	**9W-9941**	4	MOUNT AS	
	2	1	**103-5796**	4	PIN-KEEPER	
	3	1	**149-4614**	4	MOUNT	
	4	1	**149-4615**	8	SPACER	
	5	1	**149-4616**	3	PIN	
	6	1	**171-7097**	4	WASHER (12.0MM THK)	
	7	1	**189-1942**	4	BOLT (M41.28X1.27X92.47MM)	
	8	1	**190-3509**	1	PIN	
	9	1	**5P-8250**	4	WASHER (28X49X5MM THK)	

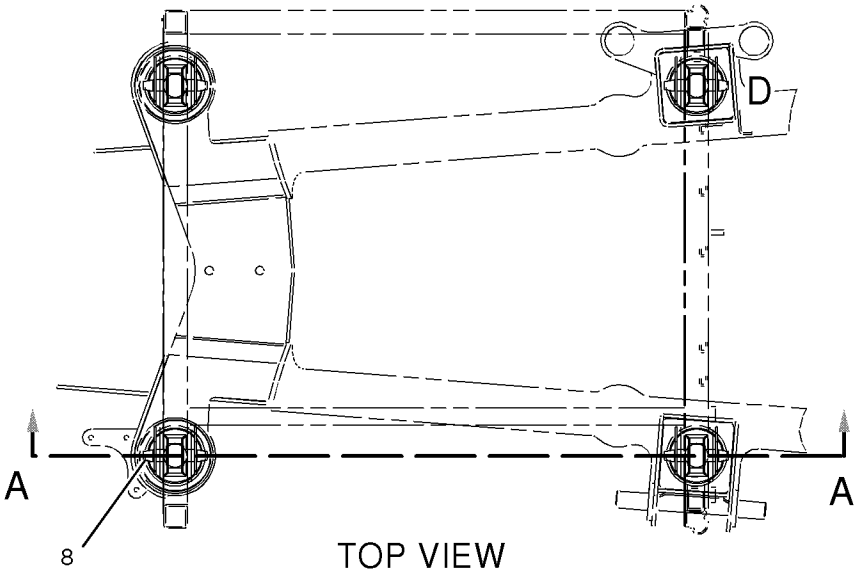

TOP VIEW

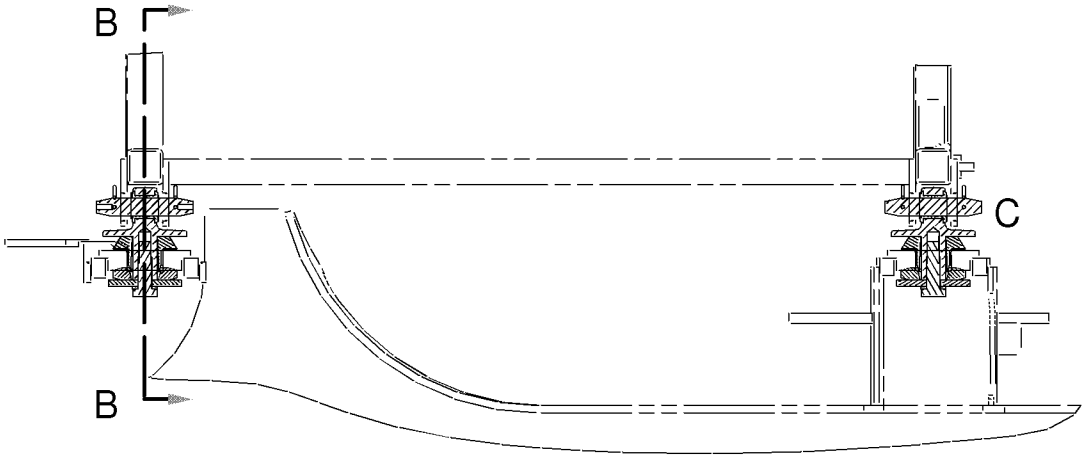

SECTION A-A

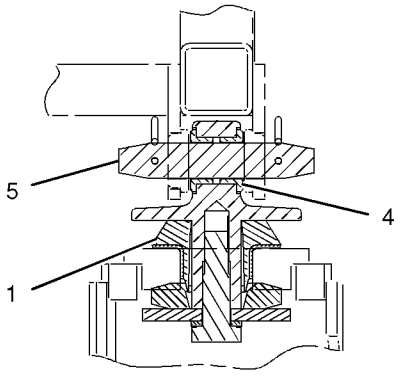

VIEW OF AREA C

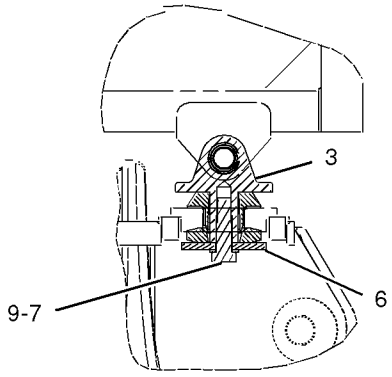

SECTION B-B

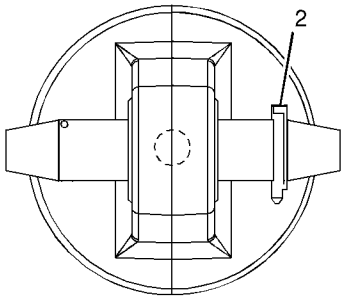

VIEW OF AREA D

GRAPHIC #1 **<END>** g01006694

OPERATOR STATION

139-4593 MOUNTING GP-ROPS

S/N: AXM685-UP

PART OF 152-6922 HYDRAULIC AR-MACHINE

SMCS-7266 **i02182054**

NOTE	REF NO	GRAPHIC REF	PART NUMBER	QTY	PART NAME 1 2 3 4 5 6 (PRODUCT LEVEL)	SEE PAGE
	1	1	**9W-9941**	4	MOUNT AS	
	2	1	**103-5796**	4	PIN-KEEPER	
	3	1	**149-4614**	4	MOUNT	
	4	1	**149-4615**	8	SPACER	
	5	1	**149-4616**	3	PIN	
	6	1	**171-7097**	4	WASHER (12-MM THK)	
	7	1	**189-1942**	4	BOLT (M41.28X1.27X92.47MM)	
	8	1	**190-3509**	1	PIN	
	9	1	**5P-8250**	4	WASHER (28X49X5-MM THK)	

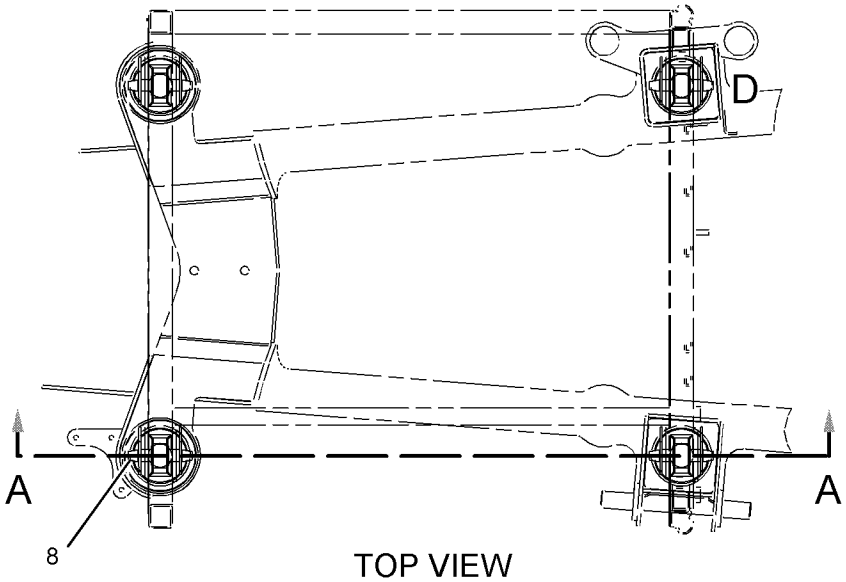

TOP VIEW

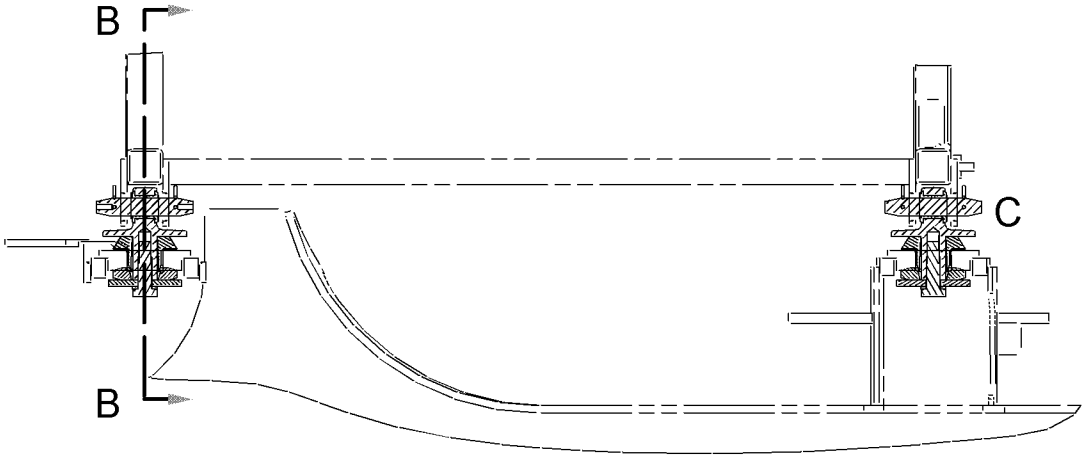

SECTION A-A

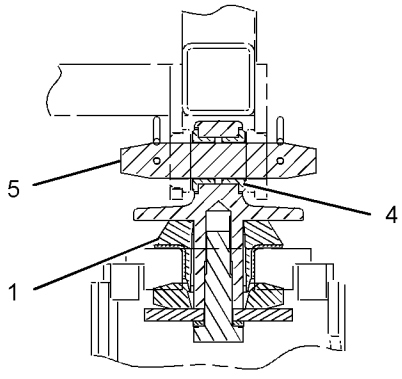

VIEW OF AREA C

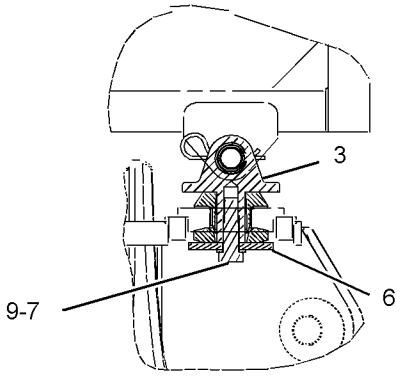

SECTION B-B

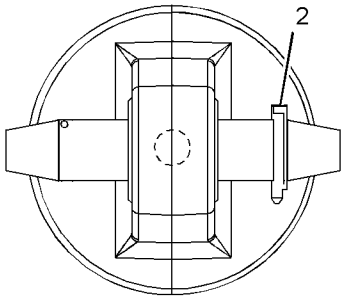

VIEW OF AREA D

GRAPHIC #1

<END>

g01104034

OPERATOR STATION

178-0605 PAN GP-BACKREST

S/N: AXM1-UP

PART OF 251-7684 PAN GP-BACKREST

AN ATTACHMENT

SMCS-7312 **i01508995**

NOTE	REF NO	GRAPHIC REF	PART NUMBER	QTY	PART NAME 1 2 3 4 5 6 (PRODUCT LEVEL)	SEE PAGE
	1	1	**4K-9429**	8	RIVET-POP	
	2	1	**5P-7957**	1	LANYARD	
	3	1	**136-1543**	1	PLATE AS-LUMBAR	
	4	1	**173-2052**	1	RETAINER	
	5	1	**178-7907**	1	HOLDER	
	6	1	**177-4930**	1	PAN AS-BACK	

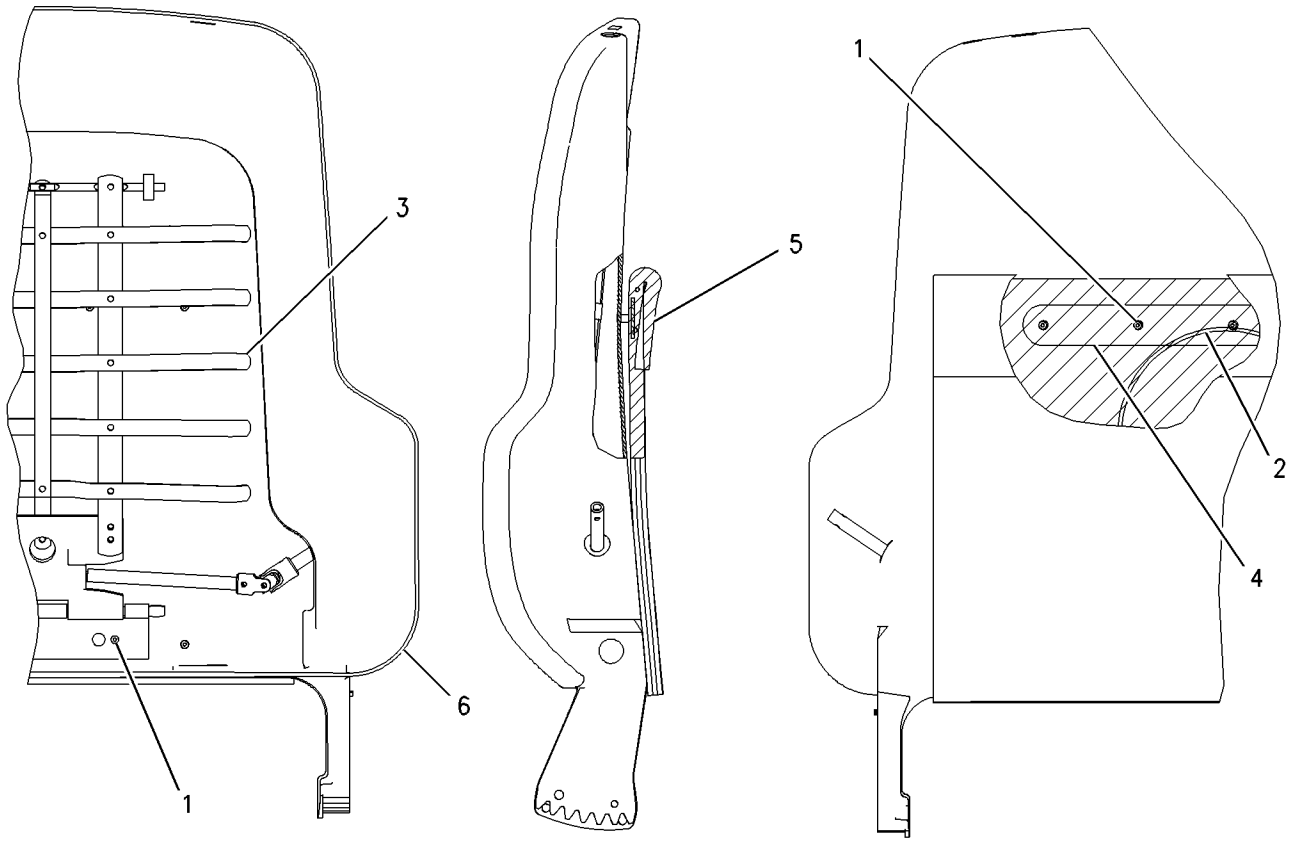

GRAPHIC #1 **<END>** g00716497

OPERATOR STATION

186-3059 PAN GP-BACKREST

S/N: AXM1-UP

PART OF 187-4296 SEAT GP

SMCS-7312 **i01830028**

NOTE	REF NO	GRAPHIC REF	PART NUMBER	QTY	PART NAME 1 2 3 4 5 6 (PRODUCT LEVEL)	SEE PAGE
	1	1	**117-4504**	1	CUSHION AS-BACK	
	1A	1	**184-2300**	1	FILM (SEAT CUSHION IDENTIFICATION)	
	2	1	**164-4883**	1	KNOB-LUMBAR	
	3	1	*186-3421*	1	PAN AS	
	3A	1	**4K-9429**	8	RIVET-POP	
	3B	1	**5P-7957**	1	LANYARD	
	3C	1	**136-1543**	1	PLATE AS-LUMBAR	
	3D	1	**173-2052**	1	RETAINER	
	3E	1	**177-4931**	1	PAN-BACK	
	3F	1	**178-7907**	1	HOLDER	
	4	1	**8T-7566**	1	PIN-SPRING	

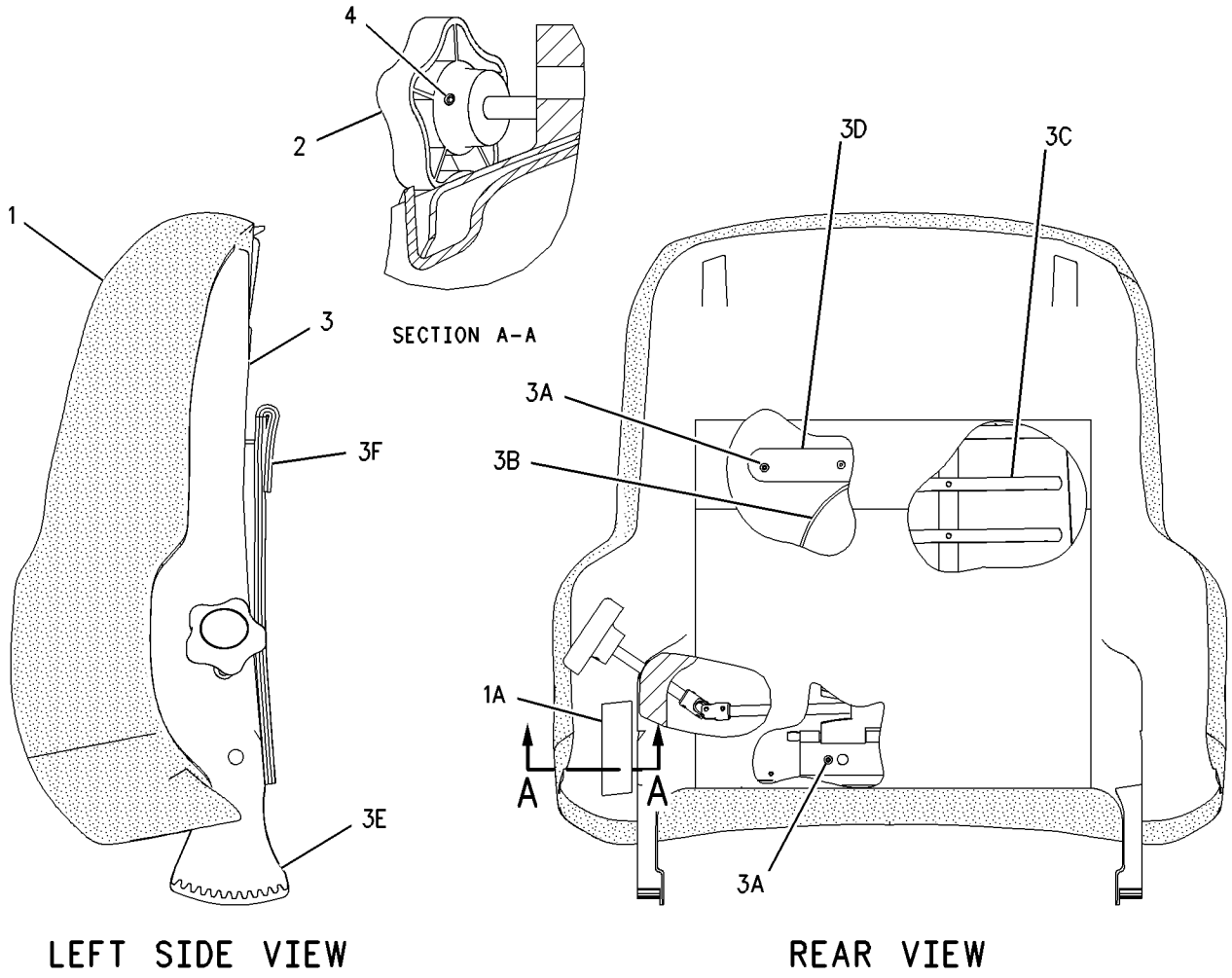

GRAPHIC #1 **<END>** g00934144

OPERATOR STATION

218-0864 PAN GP-BACKREST

S/N: AXM625-820
PART OF 218-8514 SEAT GP
ALSO AN ATTACHMENT

SMCS-7312 **i01817439**

NOTE	REF NO	GRAPHIC REF	PART NUMBER	QTY	PART NAME 1 2 3 4 5 6 (PRODUCT LEVEL)	SEE PAGE
	1	1	**164-4883**	1	KNOB-LUMBAR	
	2	1	*186-3421*	1	PAN AS	
	2A	1	**4K-9429**	8	RIVET-POP	
	2B	1	**5P-7957**	1	LANYARD	
	2C	1	**136-1543**	1	PLATE AS-LUMBAR	
	2D	1	**173-2052**	1	RETAINER	
	2E	1	**177-4931**	1	PAN-BACK	
	2F	1	**178-7907**	1	HOLDER	
	3	1	**217-9048**	1	CUSHION AS	
	3A	1	**184-2300**	1	FILM (SEAT CUSHION IDENTIFICATION)	
	4	1	**8T-7566**	1	PIN-SPRING	

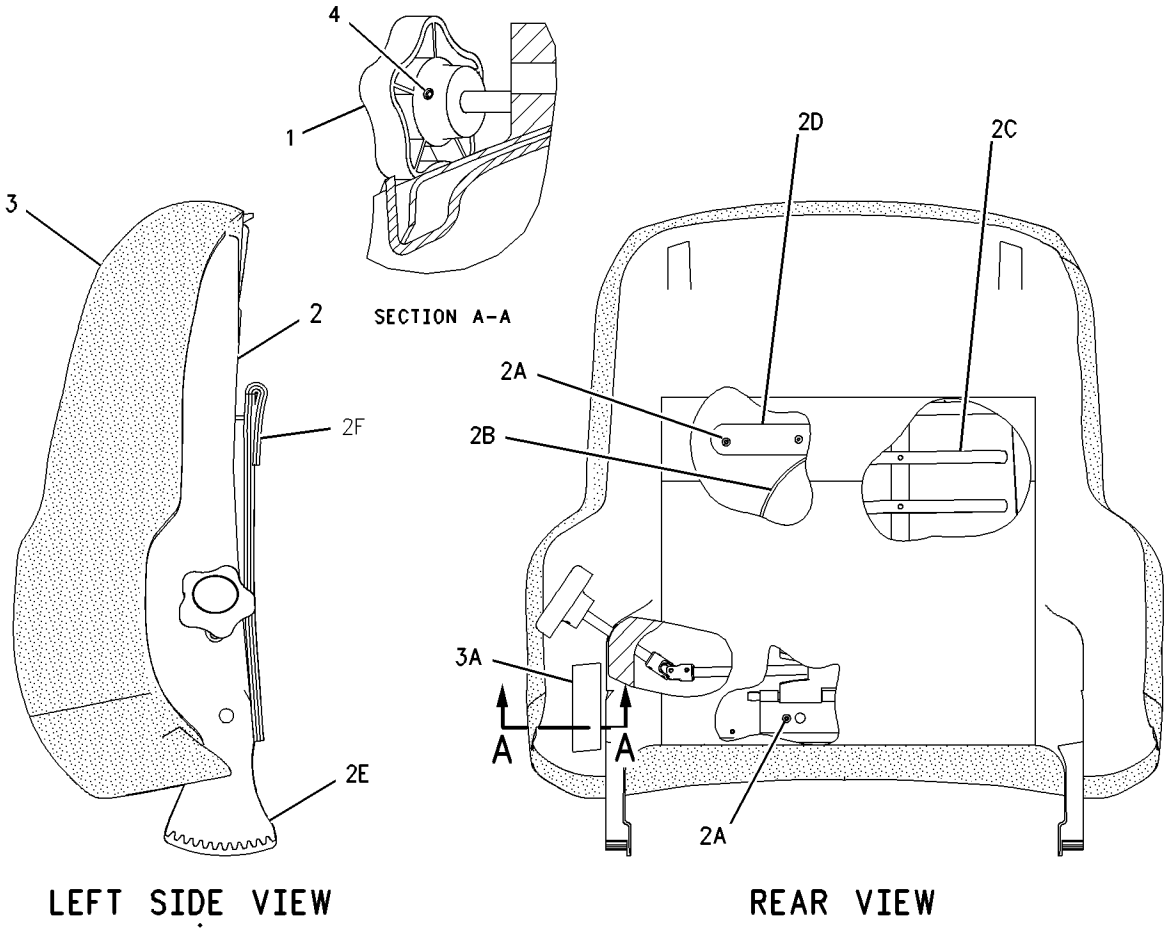

GRAPHIC #1 **<END>** g00932590

OPERATOR STATION

251-7684 PAN GP-BACKREST

S/N: AXM1-UP
PART OF 218-8514 SEAT GP
AN ATTACHMENT

SMCS-7312 **i02182829**

NOTE	REF NO	GRAPHIC REF	PART NUMBER	QTY	PART NAME 1 2 3 4 5 6 (PRODUCT LEVEL)	SEE PAGE
	1	1	**164-4883**	1	KNOB-LUMBAR	
Y	2	1	*178-0605*	1	PAN GP-BACKREST	873
	3	1	**217-9048**	1	CUSHION AS	
	4	1	**8T-7566**	1	PIN-SPRING	

Y-SEPARATE ILLUSTRATION

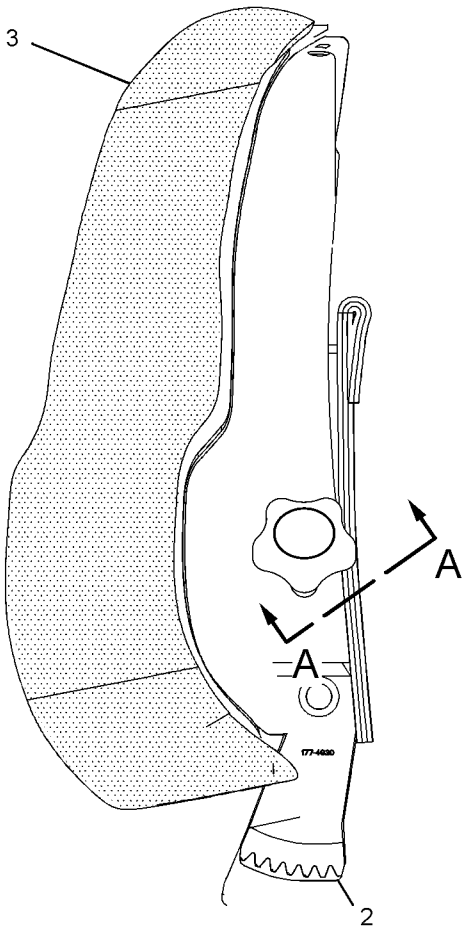

LEFT SIDE VIEW

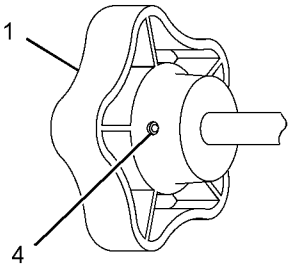

VIEW A-A

GRAPHIC #1 **<END>** g01106743

OPERATOR STATION

229-5263 PANEL GP-CAB

S/N: AXM1-UP

PART OF 152-6927 INSTALLATION AR-MACHINE

SMCS-7301 **i01853839**

NOTE	REF NO	GRAPHIC REF	PART NUMBER	QTY	PART NAME 1 2 3 4 5 6 (PRODUCT LEVEL)	SEE PAGE
	1	1	**2R-2376**	2	WASHER (7X16X.8MM THK)	
	2	1	**8C-6368**	2	SCREW AS-WING	
	3	1	**224-1128**	1	PANEL AS	
		1	**7K-4201**	2	NUT-SPEED	
	4	1	**224-3018**	1	COVER	
	5	1	**5P-4115**	1	WASHER-HARD (7.2X19X2MM THK)	
	6	1	**7X-7729**	6	WASHER (11X25X3MM THK)	
M	7	1	**8T-4137**	6	BOLT (M10X1.5X20MM)	
M	8	1	**8T-4138**	1	BOLT (M6X1X20MM)	

M-METRIC PART

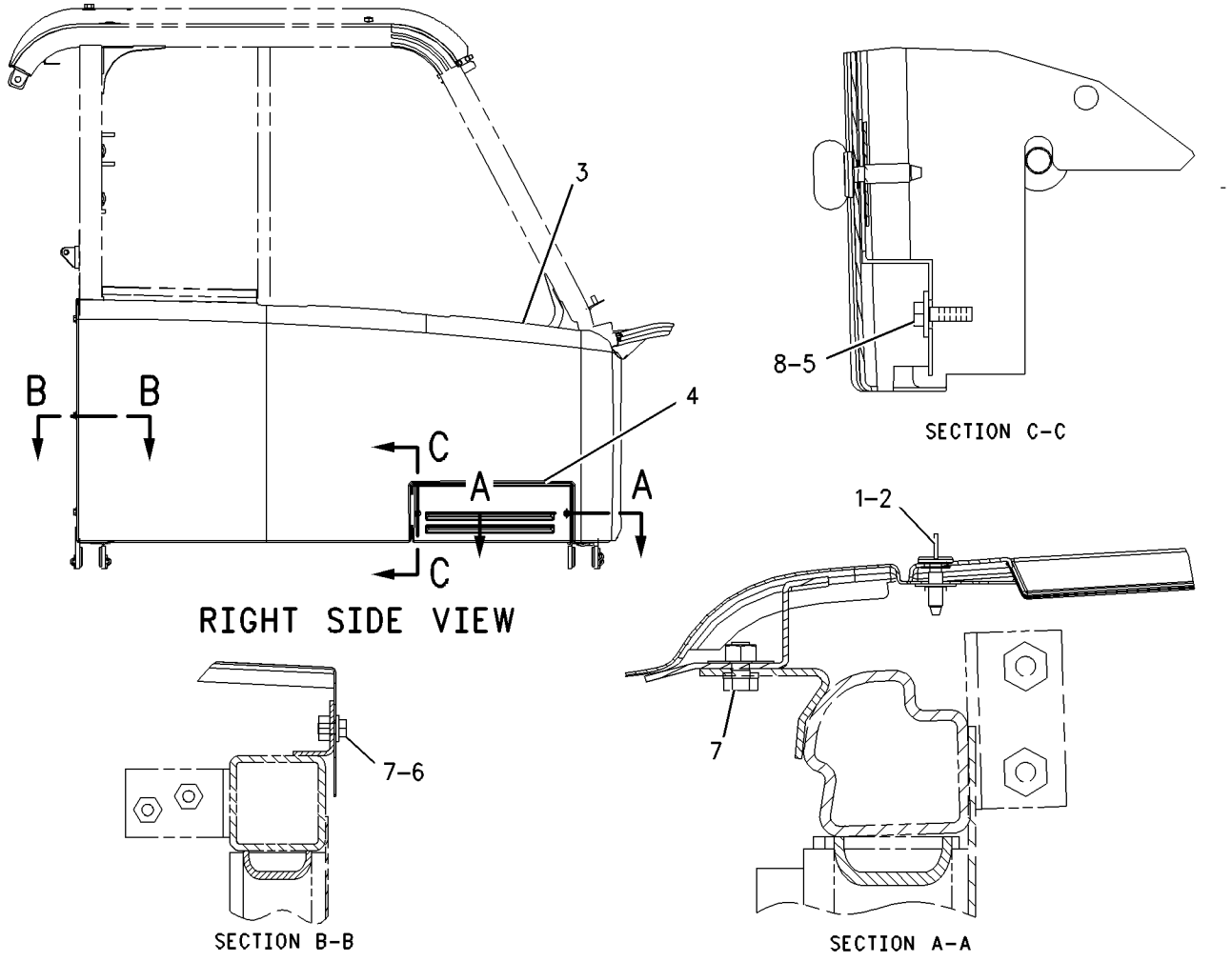

GRAPHIC #1 **<END>** g00947751

OPERATOR STATION

153-5489 PANEL GP-INSTRUMENT

S/N: AXM1-1376

PART OF 153-5485 CAB AR

SMCS-7451 **i01934334**

NOTE	REF NO	GRAPHIC REF	PART NUMBER	QTY	PART NAME 1 2 3 4 5 6 (PRODUCT LEVEL)	SEE PAGE
	1	1	**2P-4339**	1	NUT-JAM (7/16-28-THD)	
	2	1	**3E-0109**	2	PLUG (ROCKER SWITCH)	
B	3	1	**3S-2093**	9	STRAP-CABLE	
	4	1	**7T-1874**	6	TERMINAL-BLADE	
	5	1	**8Y-6388**	2	LOUVER AS	
	6	1	**9D-3737**	1	PLUG-BUTTON	
	7	1	**9W-0335**	1	LIGHTER AS (CIGAR, 24-VOLT)	
	8	1	**107-1983**	13	LAMP (24-VOLT) (INSTRUMENT PANEL)	
	9	1	**110-2079**	3	LAMP (24-VOLT)	
	10	1	**110-6109**	2	KNOB-CONTROL (TEMPERATURE/FAN SPEED)	
	11	1	**110-7887**	1	SWITCH GP-START (KEY)	
		1	**3E-3377**	1	WEDGE-RECEPTACLE LOCK (4-PIN)	
		1	**7T-6799**	1	NUT-MOUNTING (1-32-THD)	
		1	**186-3735**	4	PIN-CONNECTOR	
		1	**102-8804**	1	KIT-RECEPTACLE (4-PIN)	
					(INCLUDES RECEPTACLE AS & WEDGE)	
Y	12	1	**125-6806**	1	MODULE GP-SPEEDOMETER & TACH	868
	13	1	**127-4540**	1	POTENTIOMETER AS	
		1	**3S-2093**	1	STRAP-CABLE	
		1	**9W-0852**	3	PIN-CONNECTOR	
		1	**102-8803**	1	KIT-RECEPTACLE (3-PIN)	
					(INCLUDES RECEPTACLE AS & WEDGE)	
	14	1	**132-5789**	5	CLIP	
	15	1	**160-6567**	1	CONTROL GP-UNPROGRAMMED (ELECTRONIC MONITORING SYSTEM)	
	16	1	**155-8806**	1	PANEL AS	
	17	1	**157-0217**	1	SWITCH AS-ROTARY (FAN SPEED)	
		1	**6V-8362**	6	SCREW-MACHINE (8-32X7.94-MM)	
		1	**9B-7233**	6	LOCKWASHER	
	18	1	**162-7261**	1	FILM-PANEL	
	19	1	**162-7262**	1	FILM-PANEL	
	20	1	**232-1068**	1	PLUG AS-CODE	
					(USED ON RM576)	
					—OR—	
		1	**162-7268**	1	PLUG AS-CODE	
					(USED ON RM577)	
					—OR—	
		1	**224-5040**	1	PLUG AS-CODE	
					(USED ON RM690)	
M	21	1	**9X-2046**	5	SCREW-TRUSS HEAD (M6X1X35-MM)	
Y	22	1	**166-6938**	1	MODULE GP-QUAD GAUGE	867
	23	1	**3E-8856**	1	SWITCH AS-ROCKER (CROSS AXLE LOCK)	
		1	**3E-8825**	2	LAMP (24-VOLT) (CROSS AXLE LOCK)	
		1	**170-1332**	1	ACTUATOR-ROCKER	
	24	1	**189-0961**	1	FILM (MONITOR)	
	25	1	**190-6049**	1	HARNESS AS-INSTRUMENT PANEL	
		1	**155-2274**	2	KIT-CONNECTING PLUG (6-PIN)	
		1	**155-2271**	1	KIT-CONNECTING PLUG (4-PIN)	
		1	**155-2260**	1	KIT-CONNECTING PLUG (3-PIN)	
		1	**102-8806**	2	KIT-RECEPTACLE (8-PIN)	
	26	1	**104-2091**	4	SCREW-FLAT HEAD (6-20X0.5-IN)	
	27	1	**3E-8768**	1	SWITCH AS (24-VOLT) (MONITORING SYSTEM)	
		1	**3E-8825**	1	LAMP (24-VOLT) (MONITORING SYSTEM)	
		1	**112-6170**	1	ACTUATOR-ROCKER	
	28	1	**3E-8763**	1	SWITCH AS (REAR WORK LAMP)	
		1	**3E-8825**	1	LAMP (24-VOLT) (REAR WORK)	

153-5489 **PANEL GP-INSTRUMENT** *(contd.)* **i01934334**

NOTE	REF NO	GRAPHIC REF	PART NUMBER	QTY	PART NAME 1 2 3 4 5 6 (PRODUCT LEVEL)	SEE PAGE
		1	**3E-8782**	1	ACTUATOR-ROCKER	
	29	1	**3E-8857**	1	SWITCH AS (A/C)	
		1	**3E-8825**	2	LAMP (24-VOLT) (A/C)	
		1	**126-1699**	1	ACTUATOR-ROCKER	
	30	1	**108-8162**	1	SWITCH AS (SECONDARY STEERING)	
		1	**3E-8825**	2	LAMP (24-VOLT) (SECONDARY STEERING)	
		1	**3E-8816**	1	ACTUATOR-ROCKER	
	31	1	**3E-8859**	1	SWITCH AS (HAZARD FLASHER)	
		1	**3E-8825**	1	LAMP (24-VOLT) (HAZARD FLASHER)	
		1	**155-2704**	1	ACTUATOR-ROCKER	
	32	1	**3E-9045**	1	SWITCH AS (STARTING AID)	
		1	**3E-8825**	1	LAMP (24-VOLT) (STARTING AID)	
		1	**3E-8798**	1	ACTUATOR-ROCKER	
	33	1	**3E-8772**	1	SWITCH AS-ROCKER (HEAD/TAIL DASH LAMP)	
		1	**3E-8825**	2	LAMP (24-VOLT) (HEAD/TAIL DASH)	
		1	**3E-9326**	1	ACTUATOR-ROCKER	
	34	1	**4P-8134**	2	CLIP	
	35	1	**6V-1889**	1	CLIP	
	36	1	**7F-6998**	1	LOCKWASHER	
M	37	1	**7Y-7388**	12	SCREW-BUTTON HEAD (M5X0.8X12-MM)	
	38	1	**8T-4121**	1	WASHER-HARD (11X21X2.5-MM THK)	
M	39	1	**8T-4191**	1	BOLT (M10X1.5X16-MM)	
M	40	1	**9X-2042**	7	SCREW-TRUSS HEAD (M6X1X12-MM)	

B-USE AS REQUIRED
M-METRIC PART
Y-SEPARATE ILLUSTRATION

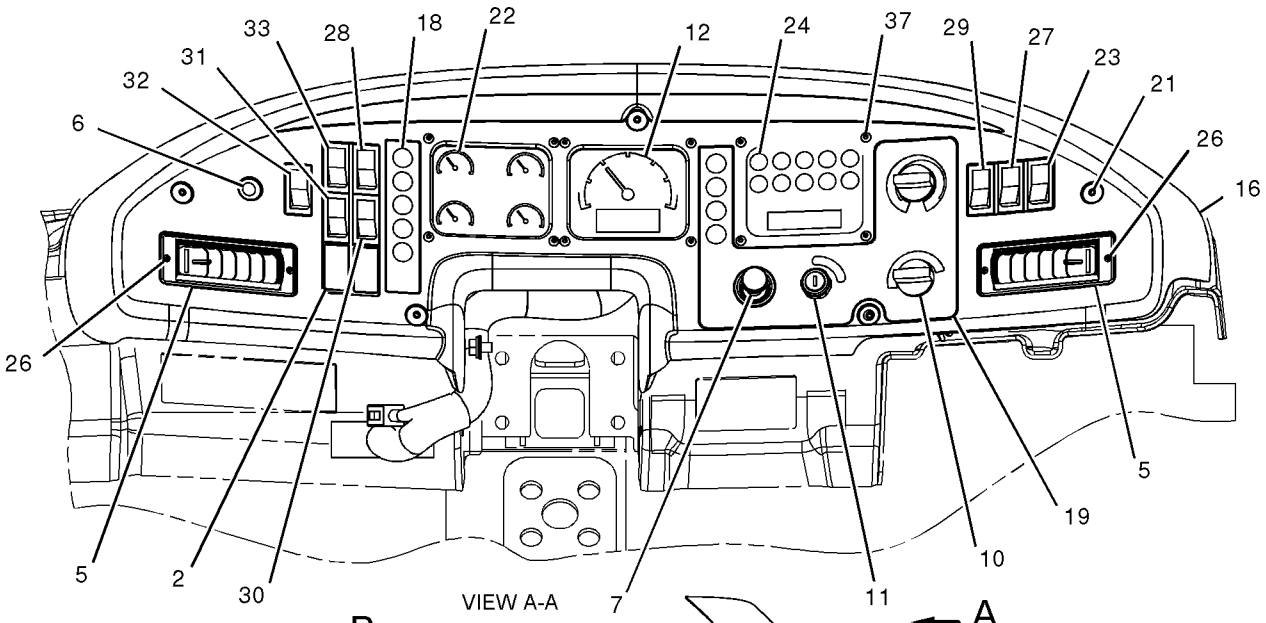

VIEW A-A

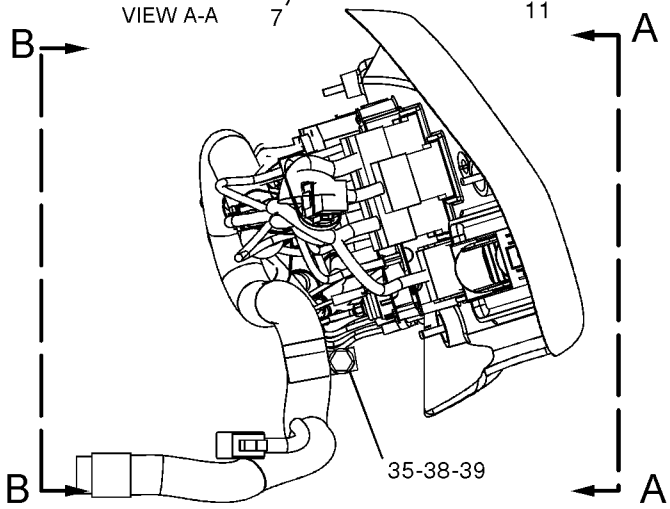

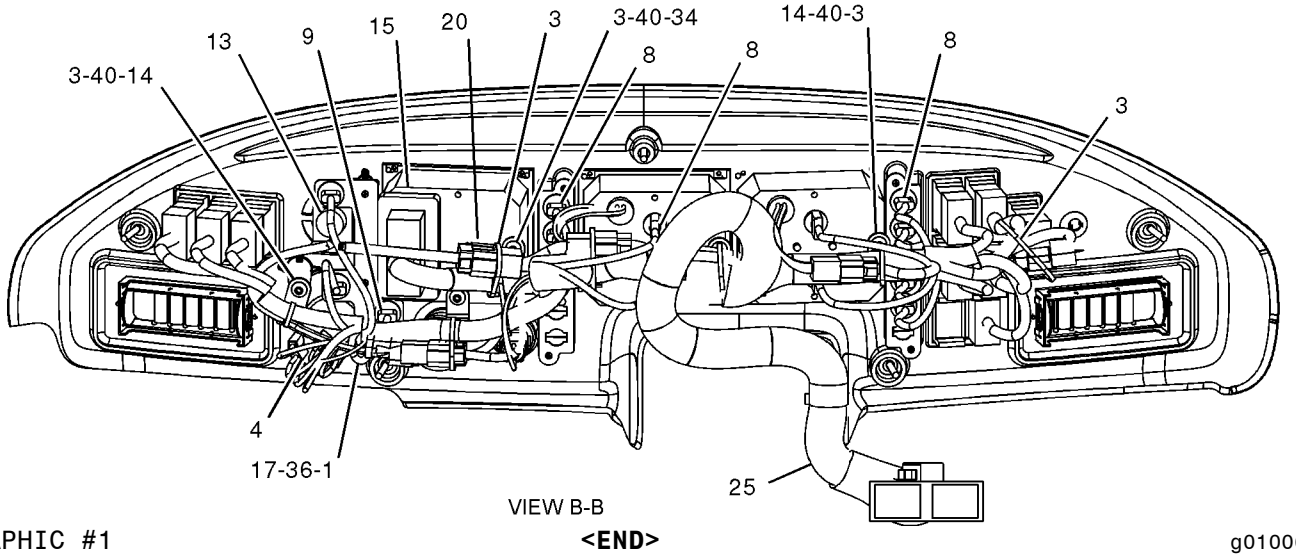

VIEW B-B

GRAPHIC #1 **<END>** g01006715

OPERATOR STATION

233-0334 PANEL GP-INSTRUMENT

S/N: AXM1377-UP

PART OF 229-8087 CAB AR

SMCS-7451 **i02224709**

NOTE	REF NO	GRAPHIC REF	PART NUMBER	QTY	PART NAME 1 2 3 4 5 6 (PRODUCT LEVEL)	SEE PAGE
	1	1	**3E-0109**	3	PLUG (ROCKER SWITCH)	
	2	1	**3S-2093**	2	STRAP-CABLE	
	3	1	**8Y-6388**	2	LOUVER AS	
	4	1	**9W-0335**	1	LIGHTER AS (CIGAR, 24-VOLT)	
	5	1	**110-2079**	2	LAMP (24-VOLT)	
	6	1	**110-6109**	1	KNOB-CONTROL (A/C)	
	6A	1	**110-6109**	1	KNOB-CONTROL (BLOWER FAN)	
	7	1	**110-7885**	1	KNOB (WIPER, WASHER REAR)	
		1	**014-0816**	1	SETSCREW (8-32X0.5-IN)	
	8	1	**110-7887**	1	SWITCH GP-START (KEY)	
		1	**7T-6799**	1	NUT-MOUNTING (1-32-THD)	
		1	**102-8804**	1	KIT-RECEPTACLE (4-PIN)	
		1	**186-3735**	4	PIN-CONNECTOR	
	9	1	**112-6174**	1	SWITCH AS-ROTARY (24-VOLT) (REAR WIPER)	
	10	1	**127-4540**	1	POTENTIOMETER AS	
	11	1	**157-0217**	1	SWITCH AS-ROTARY (FAN SPEED)	
		1	**6V-8362**	6	SCREW-MACHINE (8-32X7.94-MM)	
		1	**9B-7233**	6	LOCKWASHER	
	12	1	*170-1330*	1	SWITCH AS-ROCKER (DIFFERENTIAL LOCK) (CROSS AXLE LOCK)	
		1	**3E-8825**	2	LAMP (24-VOLT)	
		1	**3E-8856**	1	SWITCH AS-ROCKER (CROSS AXLE LOCK)	
		1	**170-1332**	1	ACTUATOR-ROCKER	
	13	1	**258-0590**	1	HARNESS AS-INSTRUMENT PANEL	
		1	**245-0168**	1	RECEPTACLE AS (8-PIN)	
		1	**245-0169**	1	RECEPTACLE AS (12-PIN)	
					(EACH INCLUDES RECEPTACLE AS & WEDGE)	
		1	**245-0160**	1	PLUG AS (3-PIN)	
		1	**245-0161**	1	PLUG AS (4-PIN)	
		1	**245-0163**	1	PLUG AS (8-PIN)	
		1	**245-0164**	1	PLUG AS (12-PIN)	
		1	**245-8021**	1	PLUG AS (24-PIN)	
		1	**245-8024**	1	PLUG AS (70-PIN)	
					(EACH INCLUDES PLUG AS, WEDGE & INTERFACE SEAL)	
	14	1	**235-3497**	1	MODULE GP-INSTRUMENT PANEL	
	15	1	**242-4921**	1	PLATE	
	16	1	**242-5044**	1	FILM (INSTRUMENT PANEL)	
	17	1	**256-4710**	1	COVER	
	18	1	**104-2091**	4	SCREW-FLAT HEAD (6-20X0.5-IN)	
	19	1	*123-5849*	1	SWITCH AS-ROCKER (REAR FLOOD)	
		1	**3E-8763**	1	SWITCH AS (REAR FLOOD)	
		1	**3E-8782**	1	ACTUATOR-ROCKER	
		1	**3E-8825**	1	LAMP (24-VOLT)	
	20	1	*125-9257*	1	SWITCH AS-ROCKER (AIR CONDITIONER SELECTION)	
		1	**3E-8825**	2	LAMP (24-VOLT)	
		1	**3E-8857**	1	SWITCH AS (AIR CONDITIONER SELECTION)	
		1	**126-1699**	1	ACTUATOR-ROCKER	
	21	1	*155-2702*	1	SWITCH AS-ROCKER (SECONDARY STEERING)	
		1	**3E-8816**	1	ACTUATOR-ROCKER	
		1	**3E-8825**	2	LAMP (24-VOLT)	
		1	**108-8162**	1	SWITCH AS (SECONDARY STEERING)	
	22	1	*155-2703*	1	SWITCH AS-ROCKER (HAZARDS)	
		1	**3E-8825**	1	LAMP (24-VOLT)	
		1	**3E-8859**	1	SWITCH AS (HAZARDS)	
		1	**155-2704**	1	ACTUATOR-ROCKER	

233-0334 **PANEL GP-INSTRUMENT** *(contd.)* **i02224709**

NOTE	REF NO	GRAPHIC REF	PART NUMBER	QTY	PART NAME 1 2 3 4 5 6 (PRODUCT LEVEL)	SEE PAGE
	23	1	**256-4709**	1	PANEL AS-INSTRUMENT	
	24	1	*3E-7160*	1	SWITCH AS-ROCKER (START AID)	
		1	**3E-8798**	1	ACTUATOR-ROCKER	
		1	**3E-8825**	1	LAMP (24-VOLT)	
		1	**3E-9045**	1	SWITCH AS (START AID)	
	25	1	*3E-9317*	1	SWITCH AS-ROCKER (LIGHTING)	
		1	**3E-8772**	1	SWITCH AS-ROCKER (LIGHTING)	
		1	**3E-8825**	2	LAMP (24-VOLT)	
		1	**3E-9326**	1	ACTUATOR-ROCKER	
M	26	1	**7Y-7389**	6	SCREW (M5X0.8X16-MM)	
M	27	1	**8T-4171**	2	BOLT (M6X1X12-MM)	
M	28	1	**8T-4189**	2	BOLT (M8X1.25X20-MM)	
	29	1	**8T-4224**	2	WASHER-HARD (8.8X16X2-MM THK)	
	30	1	**9M-8406**	2	CLIP	
M	31	1	**9X-2046**	5	SCREW-TRUSS HEAD (M6X1X35-MM)	
	32	1	**9X-8256**	2	WASHER (6.6X12X2-MM THK)	

M-METRIC PART

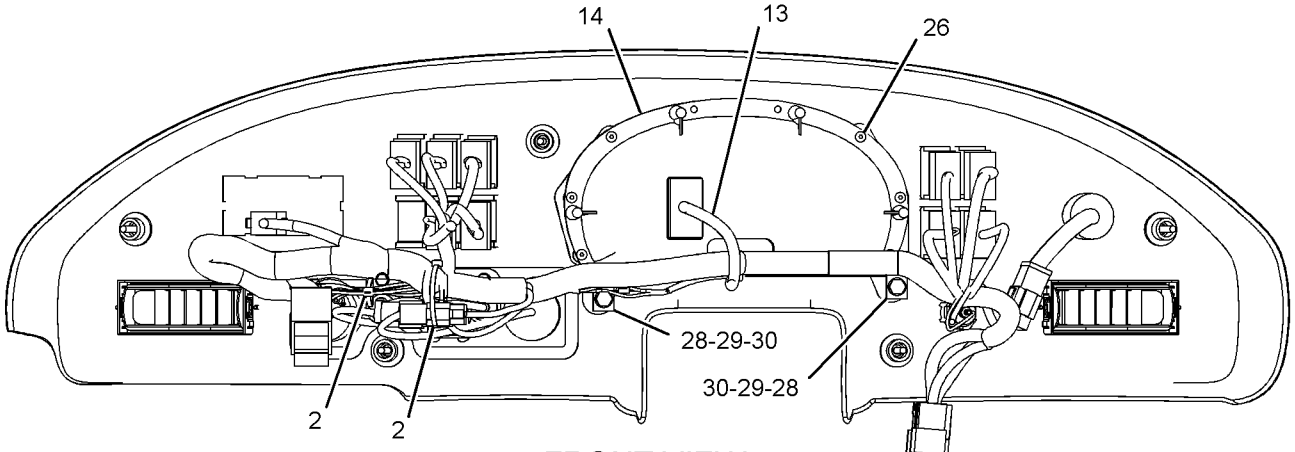

FRONT VIEW
(REAR VIEW OF INSTRUMENT PANEL)

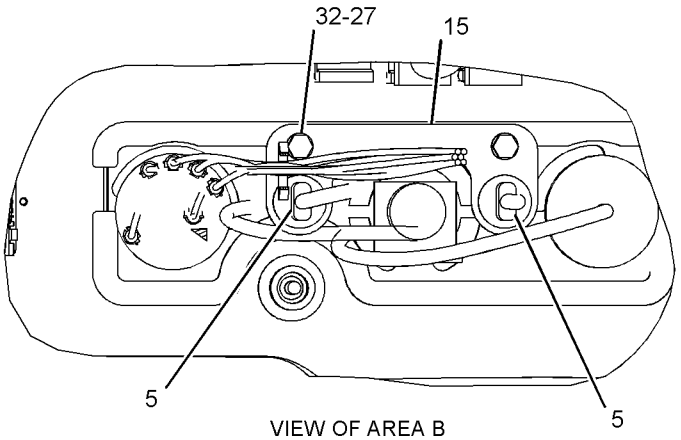

VIEW OF AREA B
(MAIN HARNESS REMOVED FOR CLARITY)

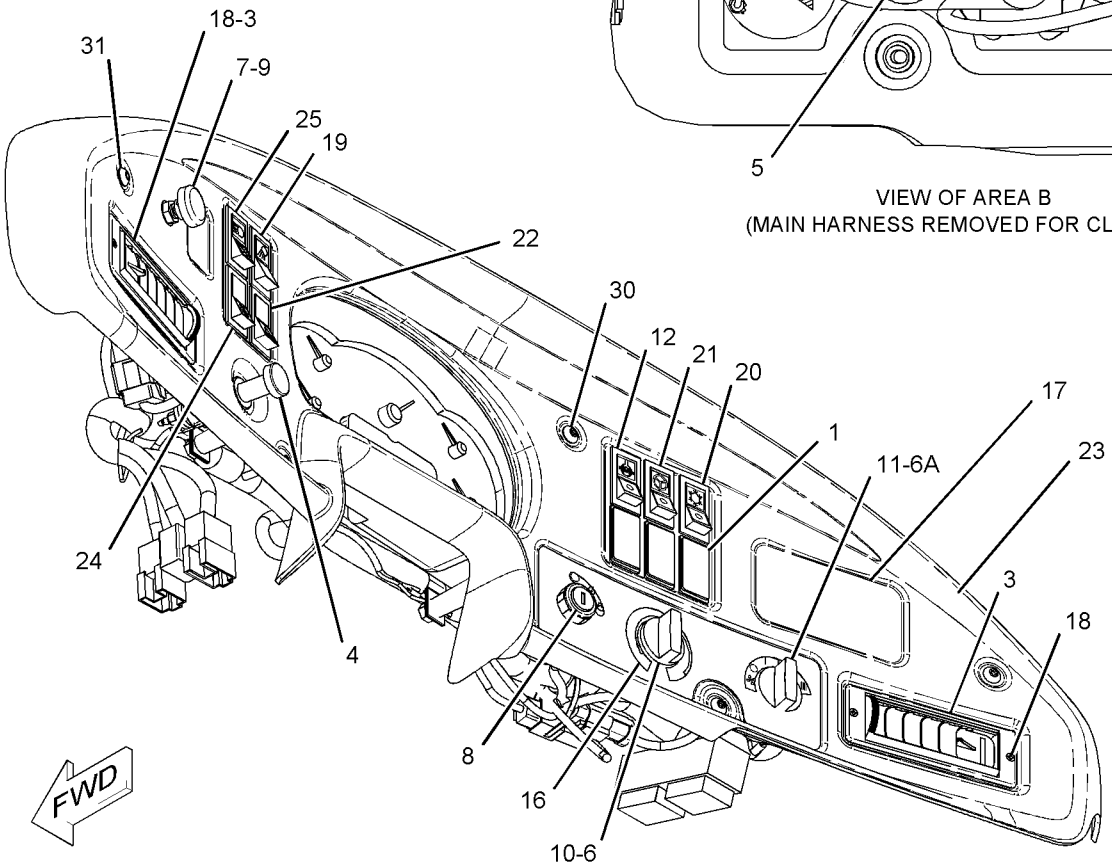

GRAPHIC #1

<END>

g01122301

OPERATOR STATION

177-4935 RECLINER GP-SEAT

S/N: AXM1-UP
PART OF 187-4296, 218-8514 SEAT GP
ALSO AN ATTACHMENT

SMCS-7312 **i01682915**

NOTE	REF NO	GRAPHIC REF	PART NUMBER	QTY	PART NAME 1 2 3 4 5 6 (PRODUCT LEVEL)	SEE PAGE
	1	1	**217-7933**	1	LATCH	
	2	1	**164-4146**	1	SPRING	
	3	1	**177-1860**	1	GEAR (14 TEETH) (LOCK)	
	4	1	**177-1862**	1	BRACKET	
	5	1	**178-0607**	1	SHAFT AS	
	5A	1	**2K-9111**	2	PIN-SPRING	
	5B	1	**9M-6803**	2	DOWEL	
	5C	1	**170-8590**	1	SPRING	
	6	1	**178-0608**	1	BRACKET AS	
	7	1	**178-0609**	1	BRACKET AS	
	8	1	**031-0214**	1	BOLT-LOCKING (1/4-20X0.5 IN)	
	9	1	**101-2867**	1	WASHER-HARD (7.2X25X2MM THK)	
	10	1	**4M-6425**	1	BOLT (5/16-18X1 IN)	
	11	1	**5S-7383**	1	BOLT (3/8-16X1.75 IN)	
	12	1	**8T-4224**	1	WASHER-HARD (8.8X16X2MM THK)	

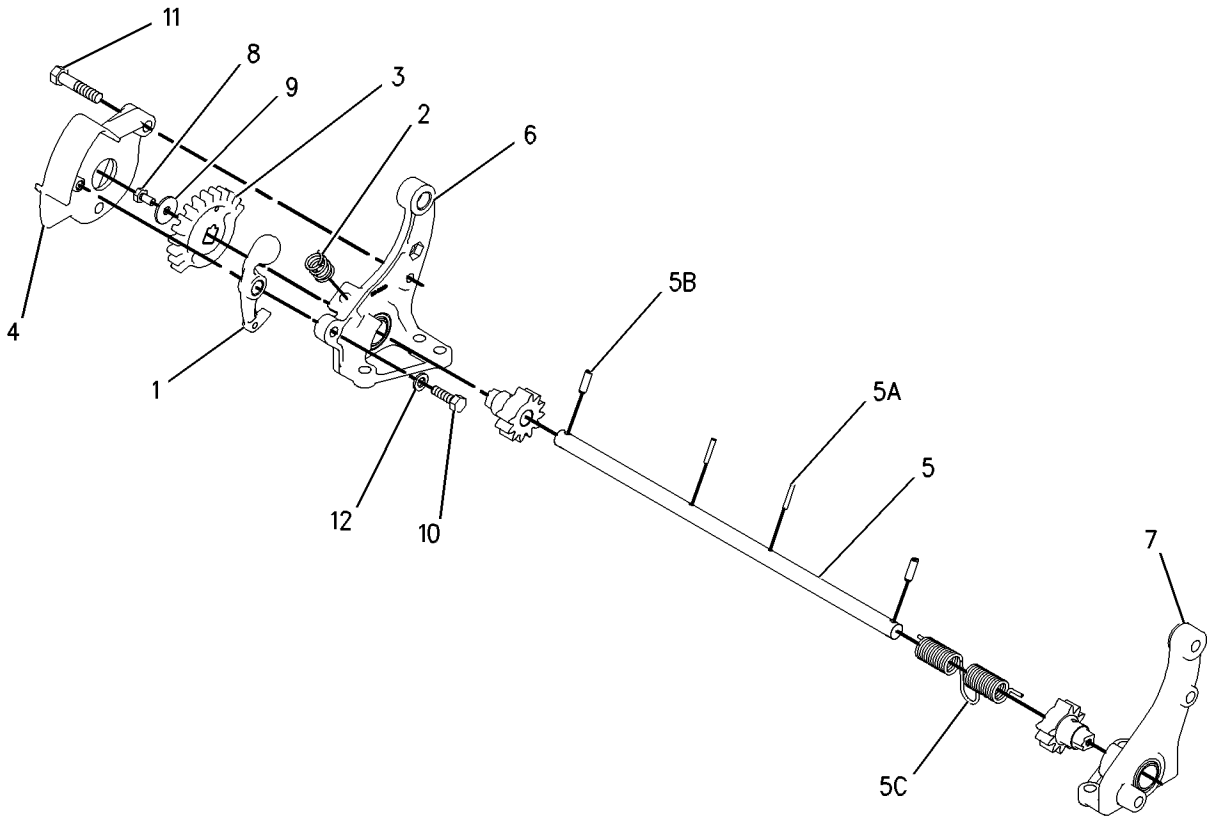

GRAPHIC #1 **<END>** g00673022

210-2270 RECLINER GP-SEAT

S/N: AXM1-UP
PART OF 218-8514 SEAT GP
AN ATTACHMENT

SMCS-7312 **i02179368**

NOTE	REF NO	GRAPHIC REF	PART NUMBER	QTY	PART NAME 1 2 3 4 5 6 (PRODUCT LEVEL)	SEE PAGE
	1	1	**177-1862**	1	BRACKET (SEAT BELT)	
	2	1	**210-2262**	1	BRACKET AS	
	3	1	**210-2263**	1	BRACKET AS	
	4	1	**210-2266**	1	GEAR (14 TEETH)	
	5	1	**210-2268**	1	SHAFT AS	
	6	1	**217-7933**	1	LATCH	
	7	1	**236-5197**	1	SPRING	
	8	1	**031-0214**	1	BOLT-LOCKING (1/4-20X0.5-IN)	
	9	1	**101-2867**	1	WASHER-HARD (7.2X25X2-MM THK)	
	10	1	**4M-6425**	1	BOLT (5/16-18X1-IN)	
	11	1	**5M-2894**	1	WASHER-HARD (10.2X18.5X2.5-MM THK)	
	12	1	**5S-7383**	1	BOLT (3/8-16X1.75-IN)	
	13	1	**8T-4224**	1	WASHER-HARD (8.8X16X2-MM THK)	

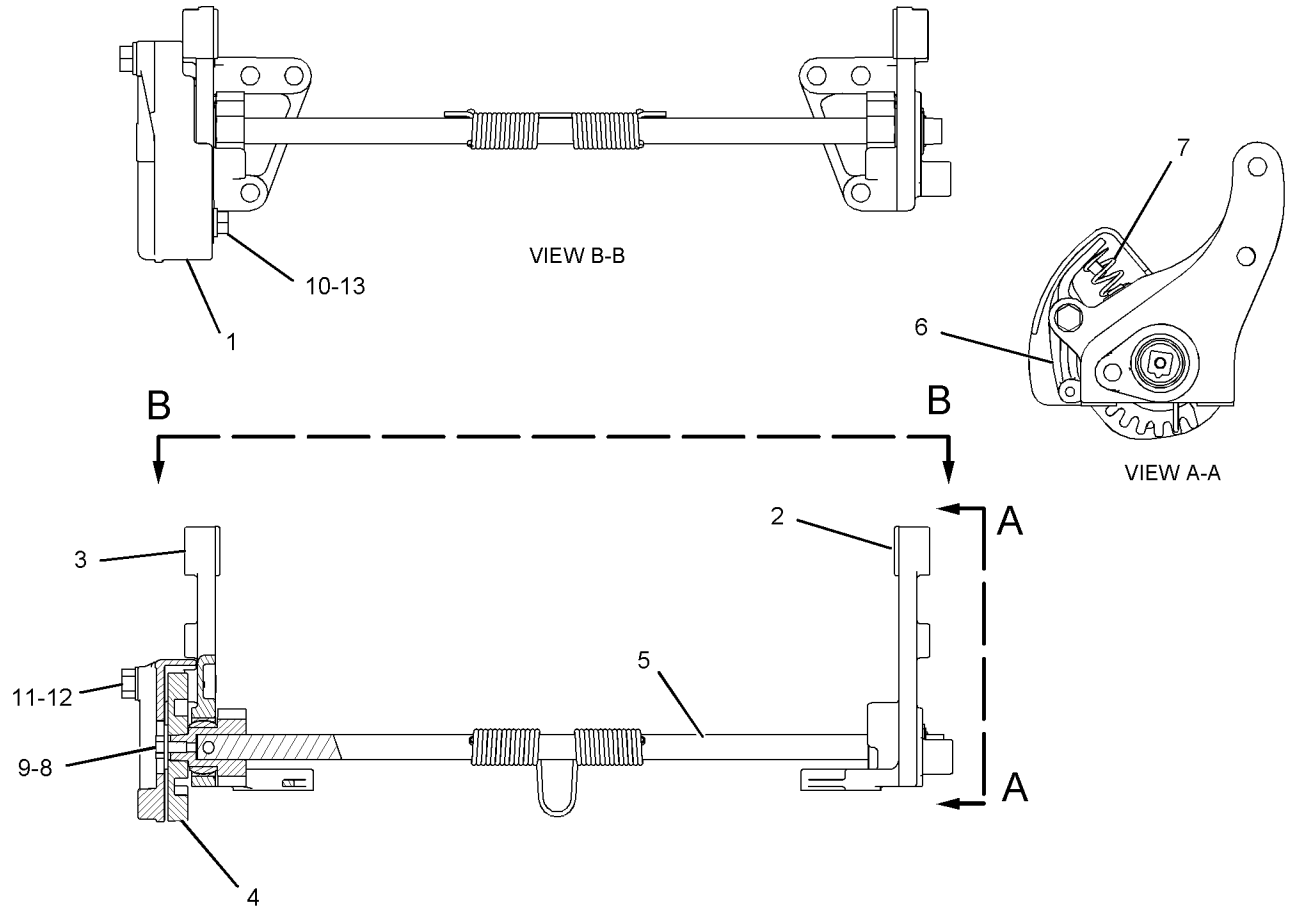

GRAPHIC #1 **<END>** g01040293

OPERATOR STATION

191-8724 ROPS GP

S/N: AXM1-UP

PART OF 153-5485, 229-8087 CAB AR

SMCS-7301 **i02209832**

NOTE	REF NO	GRAPHIC REF	PART NUMBER	QTY	PART NAME 1 2 3 4 5 6 (PRODUCT LEVEL)	SEE PAGE
	1	1	**8N-4409**	3	WASHER	
B	2	2	**8T-0318**	1	SHIM (0.8-MM THK)	
	3	1	**9R-5615**	1	PLUG	
	4	1	**140-9628**	5	PLUG	
	5	1	**168-0371**	1	PANEL	
	6	1	**180-1546**	1	PLATE-COVER	
	7	2	**219-0302**	1	FILM-WARNING (NO WELD)	
M	8	2	**184-0983**	1	NUT-HEX FLANGE	
	9	2	**186-0134**	1	PLATE AS	
M		2	**6V-9632**	2	NUT-WELD (M6X1 THD)	
	10	2	**186-0256**	1	PLATE AS-COVER	
M		2	**6V-9632**	1	NUT-WELD (M6X1 THD)	
	11	1	**191-6186**	1	CAB AS-ROPS	
	12	2	**192-6437**	1	STRIKER AS	
M	13	2	**6V-5217**	4	BOLT (M8X1.25X20-MM)	
M	14	1	**7X-2552**	3	BOLT (M16X2X30-MM)	
	15	2	**8Y-6385**	1	SHIELD-STRIKER	
	16	2	**9M-1974**	4	WASHER-HARD (8.8X16X2-MM THK)	
M	17	2	**9X-2044**	3	SCREW-TRUSS HEAD (M6X1X16-MM)	
BE	18	2	**3E-6600**		SEAL	
BE	19	2	**123-3827**		SEAL	

B-USE AS REQUIRED
E-ORDER BY THE CENTIMETER
M-METRIC PART

REFER TO ALL ILLUSTRATIONS IN
THIS GROUP FOR AUXILIARY VIEWS

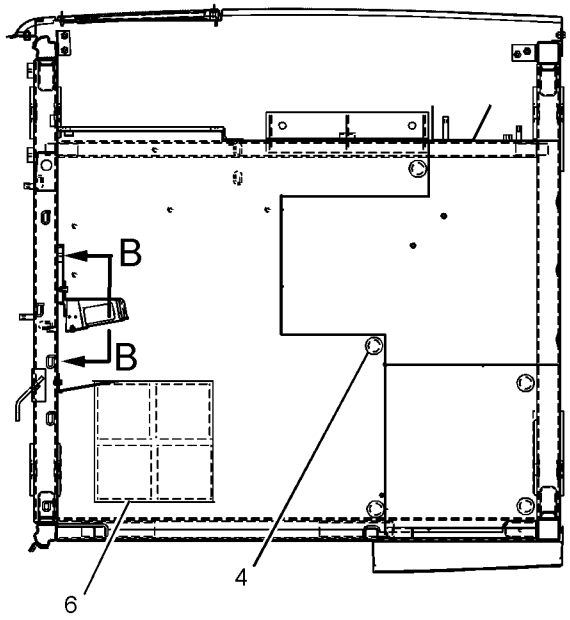

SECTION A-A

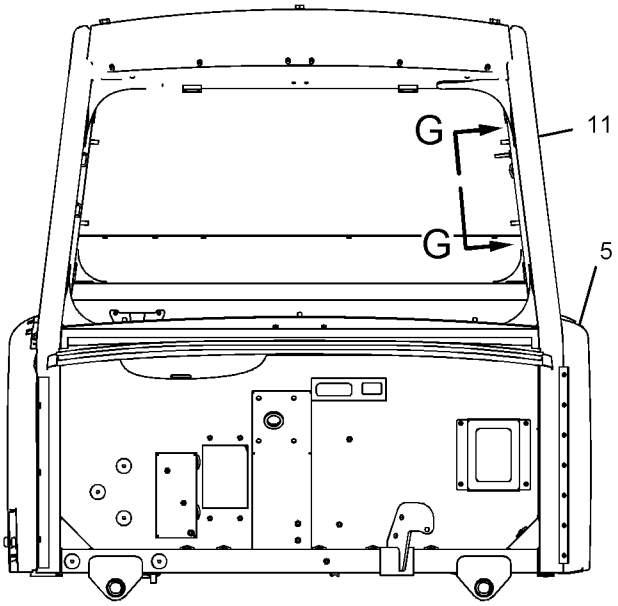

FRONT VIEW

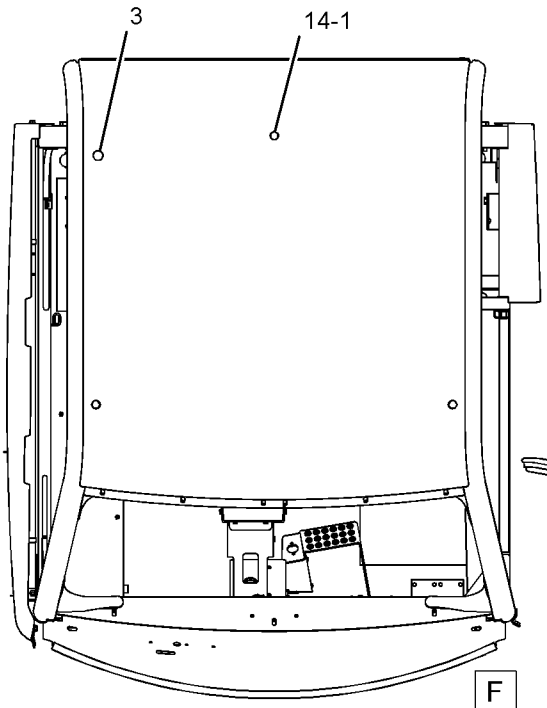

TOP VIEW

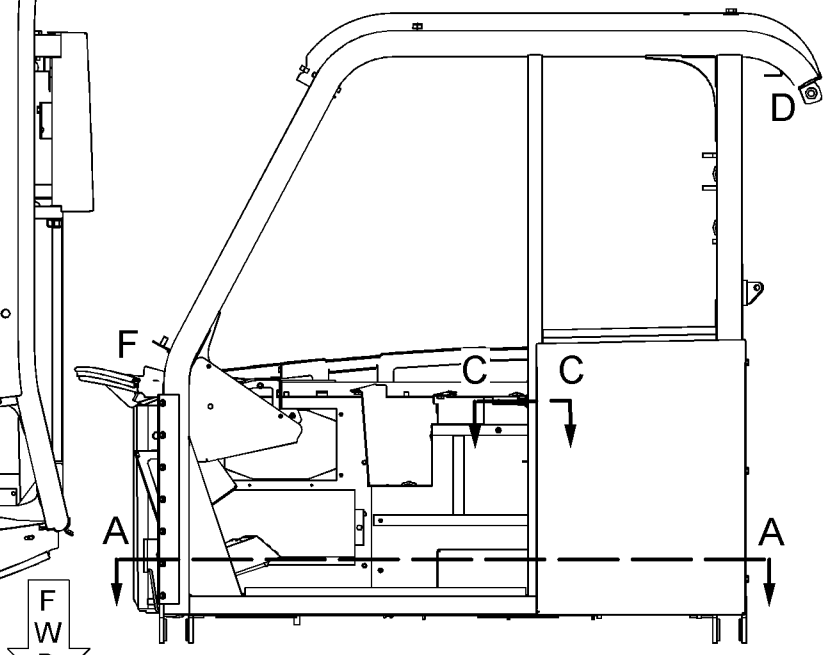

LEFT SIDE VIEW

GRAPHIC #1 g01118625

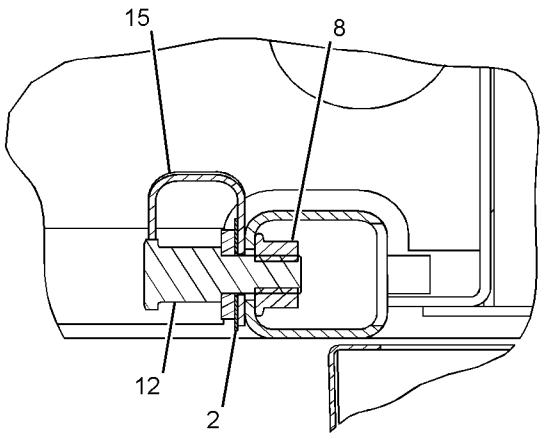

SECTION C-C

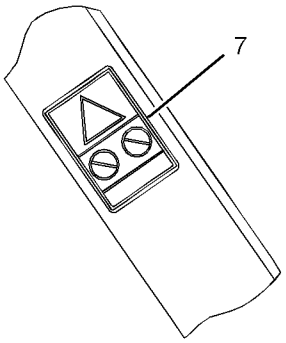

VIEW G-G

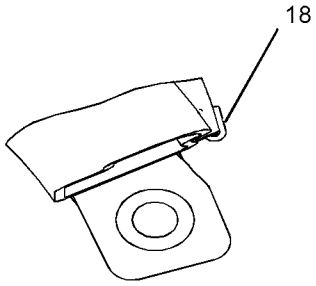

VIEW OF AREA D

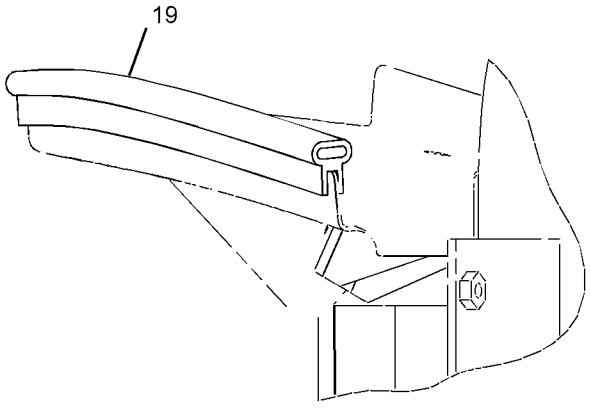

VIEW OF AREA F

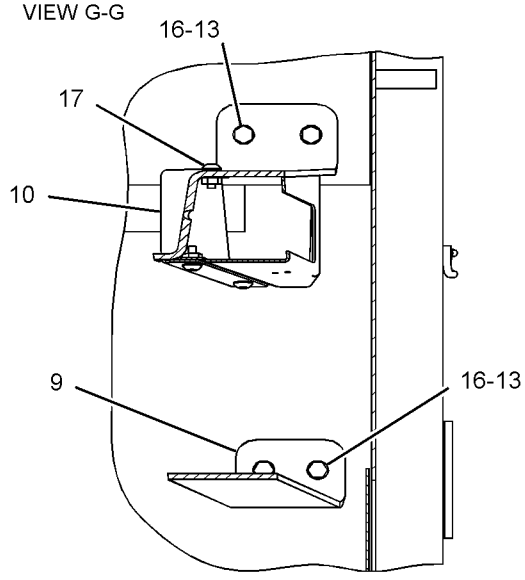

SECTION B-B

GRAPHIC #2 **<END>** g01118626

OPERATOR STATION

149-0092 SEAT & MOUNTING GP

S/N: AXM1-624

PART OF 153-5485 CAB AR

SMCS-7312 **i01373226**

NOTE	REF NO	GRAPHIC REF	PART NUMBER	QTY	PART NAME 1 2 3 4 5 6 (PRODUCT LEVEL)	SEE PAGE
Y	1	1	*169-3279*	1	SEAT GP-SUSPENSION	907
	2	1	**8T-4121**	4	WASHER-HARD (11X21X2.5-MM THK)	
M	3	1	**8T-4136**	4	BOLT (M10X1.5X25-MM)	

M-METRIC PART
Y-SEPARATE ILLUSTRATION

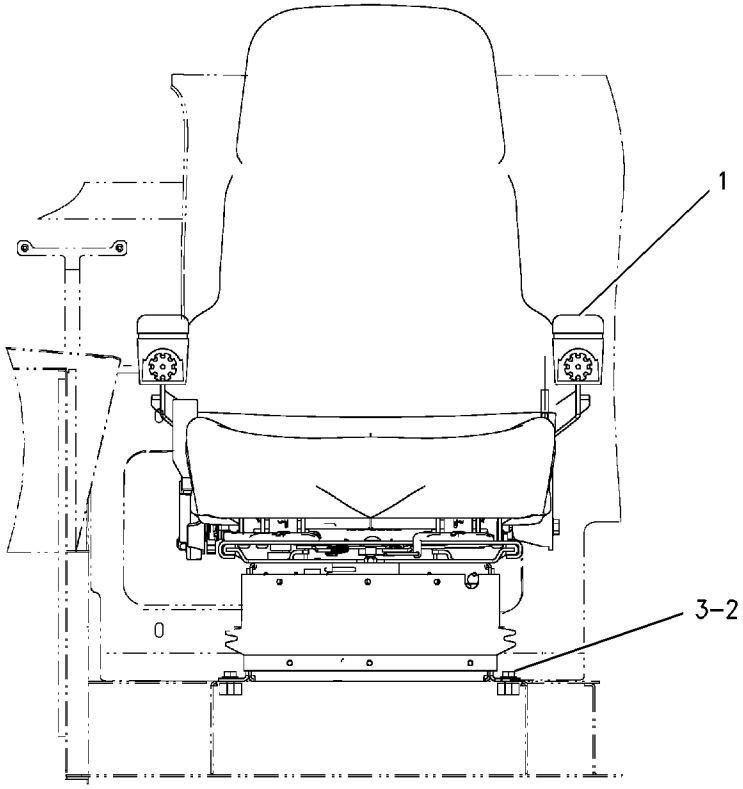

GRAPHIC #1 **<END>** g00731426

OPERATOR STATION

149-0092 SEAT & MOUNTING GP

S/N: AXM625-820

PART OF 153-5485 CAB AR

SMCS-7312 **i01846853**

NOTE	REF NO	GRAPHIC REF	PART NUMBER	QTY	PART NAME 1 2 3 4 5 6 (PRODUCT LEVEL)	SEE PAGE
CY	1	1	*200-3173*	1	SEAT GP-SUSPENSION	908
	2	1	**8T-4121**	4	WASHER-HARD (11X21X2.5-MM THK)	
M	3	1	**8T-4136**	4	BOLT (M10X1.5X25-MM)	

C-CHANGE FROM PREVIOUS TYPE
M-METRIC PART
Y-SEPARATE ILLUSTRATION

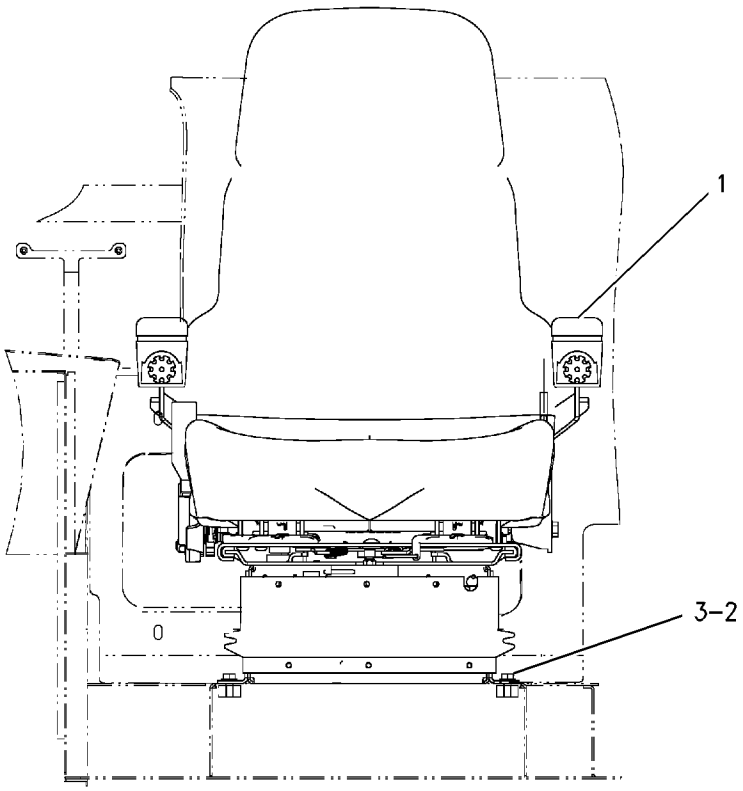

GRAPHIC #1 **<END>** g00731426

OPERATOR STATION

231-9810 SEAT & MOUNTING GP

S/N: AXM821-UP

PART OF 153-5485, 229-8087 CAB AR

SMCS-7312 **i01907474**

NOTE	REF NO	GRAPHIC REF	PART NUMBER	QTY	PART NAME 1 2 3 4 5 6 (PRODUCT LEVEL)	SEE PAGE
Y	1	1	*230-3393*	1	SEAT GP-SUSPENSION	909
	2	1	**198-4777**	4	WASHER-HARD (11X25X10-MM THK)	
M	3	1	**8T-4196**	4	BOLT (M10X1.5X35-MM)	

M-METRIC PART
Y-SEPARATE ILLUSTRATION

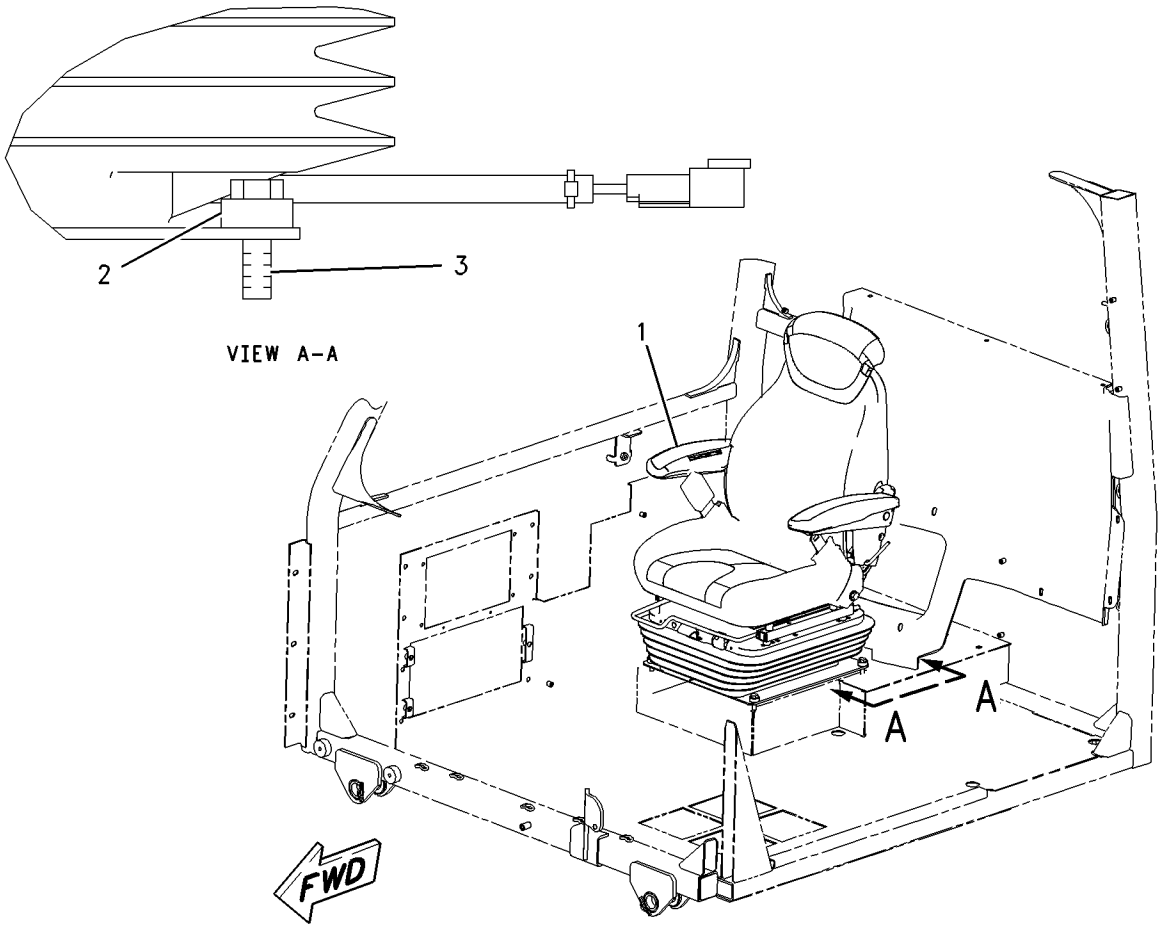

GRAPHIC #1 **<END>** g00998285

OPERATOR STATION

156-1145 SEAT BELT GP

S/N: AXM1-820

PART OF 149-0088 SEAT GP-COMPANION

SMCS-7327 **i01547124**

NOTE	REF NO	GRAPHIC REF	PART NUMBER	QTY	PART NAME 1 2 3 4 5 6 (PRODUCT LEVEL)	SEE PAGE
	1	1	**0T-0244**	1	BOLT (7/16-20)	
	2	1	**0T-0489**	1	BOLT (7/16-20 THD)	
	3	1	**8T-5360**	1	WASHER (12X22.5X2.5MM THK)	

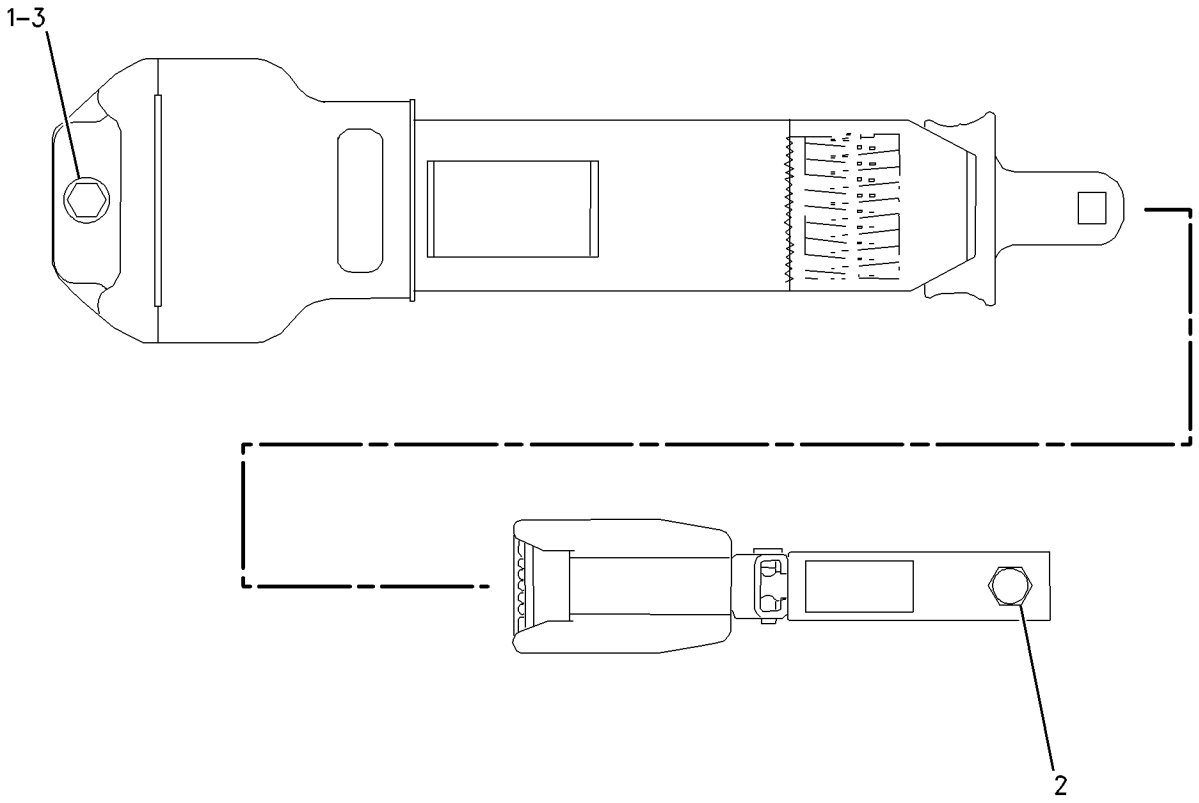

GRAPHIC #1 **<END>** g00643555

OPERATOR STATION

187-4295 SEAT GP

S/N: AXM1-820

PART OF 169-3279, 200-3173 SEAT GP-SUSPENSION

SMCS-7312 **i01832600**

NOTE	REF NO	GRAPHIC REF	PART NUMBER	QTY	PART NAME 1 2 3 4 5 6 (PRODUCT LEVEL)	SEE PAGE
	1	1	**117-4489**	1	EXTENSION GP-BACKREST	
Y	2	1	**162-8447**	1	ARMREST GP (LH)	830
Y	3	1	**162-8448**	1	ARMREST GP (RH)	831
	4	1	**177-4937**	1	SPACER (11.7X19.8X20.3MM THK)	
	5	1	**180-5559**	1	SCREW-PAN HEAD (7/16-20X1.75 IN)	
	6	1	**180-5560**	1	SCREW-PAN HEAD (7/16-20X1.25 IN)	
	7	1	**183-3648**	1	SEAT BELT GP	
Y	8	1	**187-4296**	1	SEAT GP	895

Y-SEPARATE ILLUSTRATION

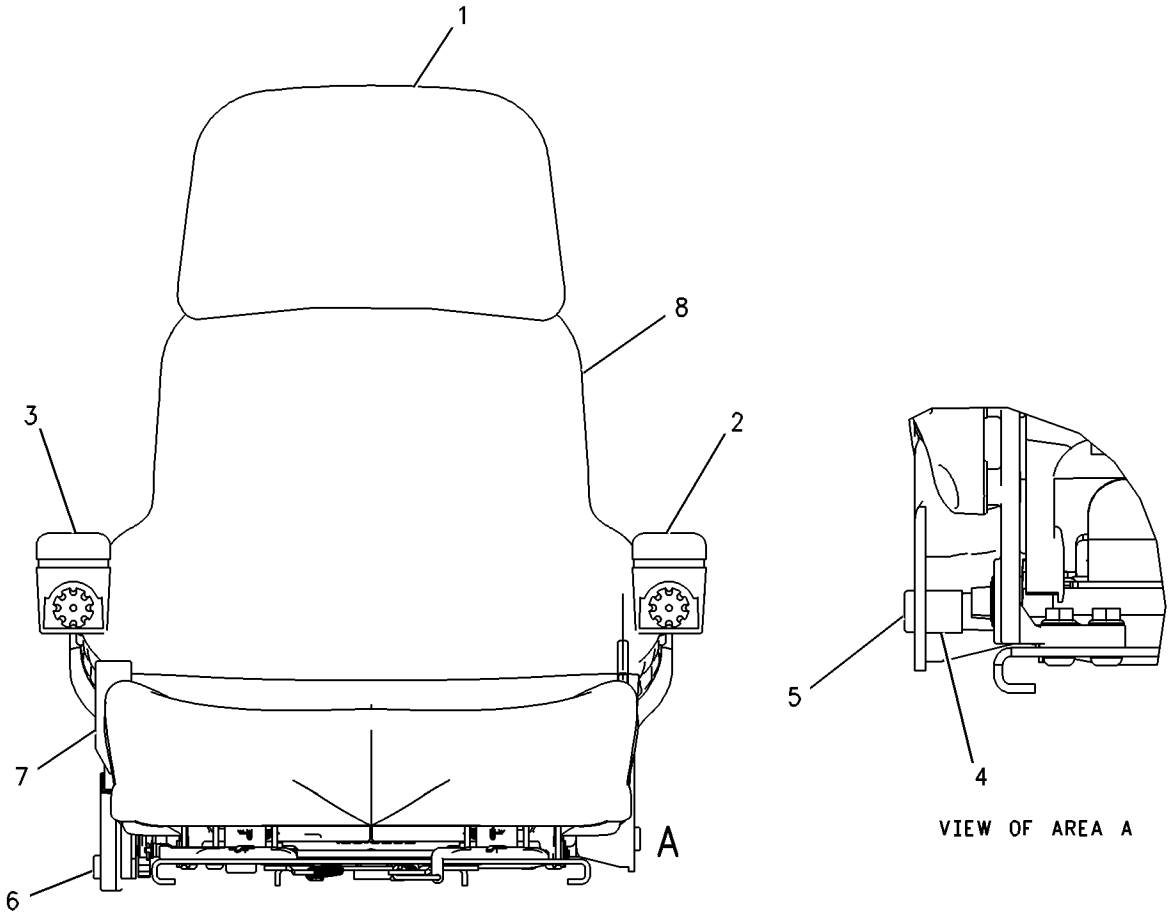

GRAPHIC #1 **<END>** g00936165

OPERATOR STATION

187-4295 SEAT GP

S/N: AXM625-820
PART OF 200-3173 SEAT GP-SUSPENSION
ALSO AN ATTACHMENT

SMCS-7312 **i02144294**

NOTE	REF NO	GRAPHIC REF	PART NUMBER	QTY	PART NAME 1 2 3 4 5 6 (PRODUCT LEVEL)	SEE PAGE
Y	1	1	**162-8447**	1	ARMREST GP (LH)	830
Y	2	1	**162-8448**	1	ARMREST GP (RH)	831
	3	1	**177-4937**	1	SPACER (11.7X19.8X20.3-MM THK)	
C	4	1	**217-9051**	1	EXTENSION GP-BACKREST	
CY	5	1	**218-8514**	1	SEAT GP	897
C	6	1	**222-0345**	1	SEAT BELT GP	
C	7	1	**0T-0244**	1	BOLT (7/16-20X1.25-IN)	
C	8	1	**205-6388**	1	BOLT (7/16-20X44.45-MM)	

C-CHANGE FROM PREVIOUS TYPE
Y-SEPARATE ILLUSTRATION

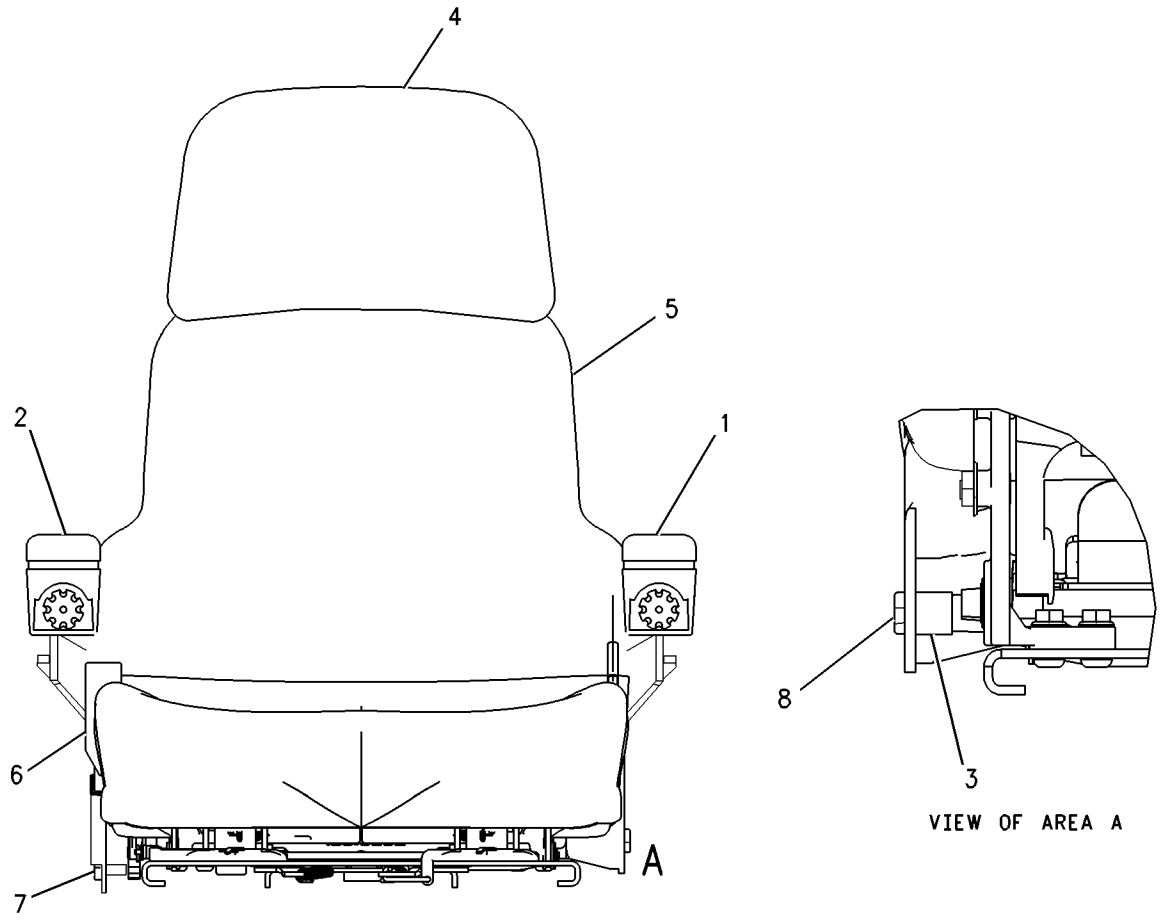

GRAPHIC #1 **<END>** g00931625

OPERATOR STATION

187-4296 SEAT GP

S/N: AXM1-820
CLOTH - GRAY
PART OF 187-4295 SEAT GP

SMCS-7312 **i01793090**

NOTE	REF NO	GRAPHIC REF	PART NUMBER	QTY	PART NAME 1 2 3 4 5 6 (PRODUCT LEVEL)	SEE PAGE
	1	1	**135-5499**	1	PAN AS	
		1	**8T-9082**	5	RIVET-POP	
		1	**117-4506**	1	CUSHION AS	
	2	1	**143-1288**	8	LOCKNUT-FLANGE (3/8-16 THD)	
	3	1	**171-1230**	6	SCREW-BUTTON HEAD (3/8-16X1 IN)	
	4	1	**171-6682**	1	BAR-RECLINER	
	5	1	**172-2416**	2	PIN	
Y	6	1	*173-1029*	1	ADJUSTER GP-SEAT	812
	7	1	**177-1863**	2	BOLT-PIVOT (3/8-16X2.89 IN)	
Y	8	1	*177-4935*	1	RECLINER GP-SEAT	884
	9	1	**184-2298**	1	ROD	
	10	1	**184-2299**	4	WASHER (7X25.4X2.54MM THK)	
Y	11	1	*186-3059*	1	PAN GP-BACKREST	874
	12	1	**095-0843**	2	PIN-COTTER	
	13	1	**5V-1496**	2	RETAINER	
	14	1	**6V-7646**	2	WASHER-HARD (7.2X25X2MM THK)	
	15	1	**8T-0328**	1	WASHER-HARD (5.5X10X1MM THK)	
	16	1	**8T-4205**	1	WASHER-HARD (7.2X14.5X2MM THK)	
	17	1	**8Y-6277**	2	SPACER (10.5X28.6X10MM THK)	

Y-SEPARATE ILLUSTRATION

187-4296 SEAT GP *(contd.)* **i01793090**

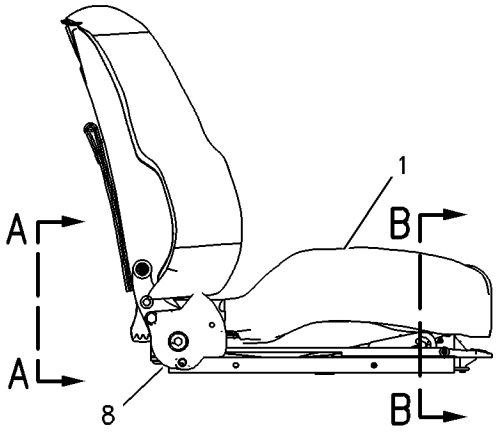

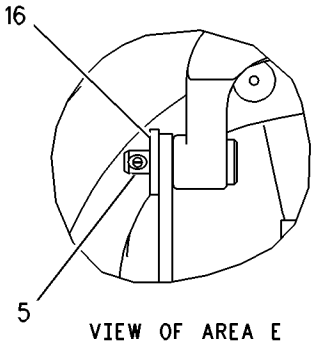

VIEW OF AREA E

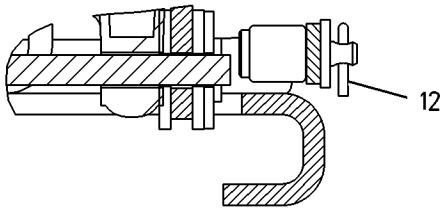

SECTION B-B

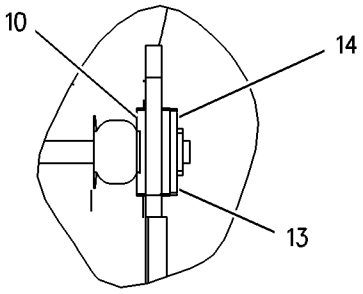

VIEW OF AREA D

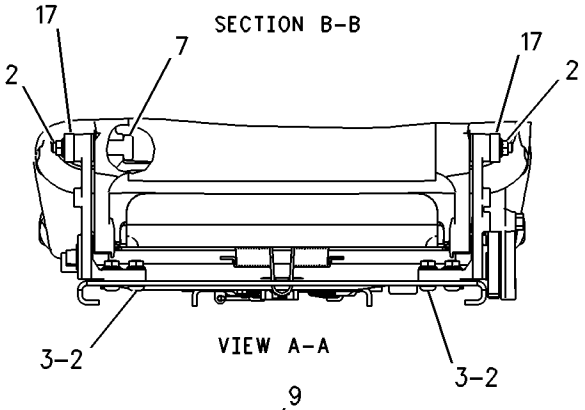

VIEW A-A

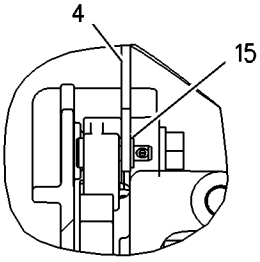

VIEW OF AREA F

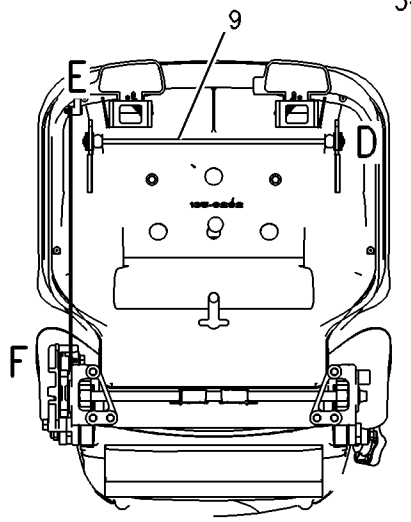

SECTION C-C

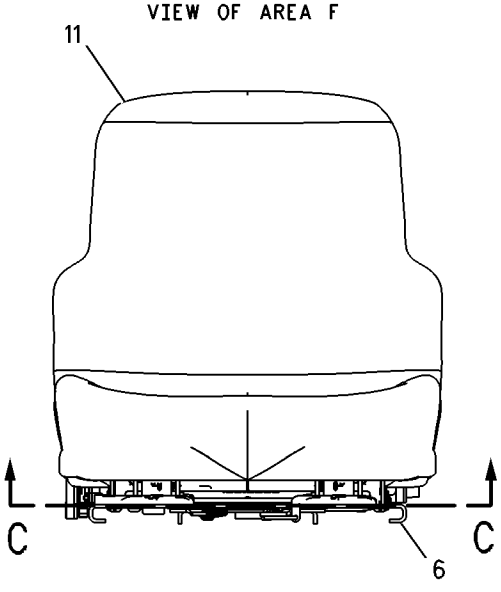

GRAPHIC #1 **<END>** g00737787

OPERATOR STATION

218-8514 SEAT GP

S/N: AXM625-820
CLOTH - GRAY
PART OF 187-4295 SEAT GP
ALSO AN ATTACHMENT

SMCS-7312 **i01817425**

NOTE	REF NO	GRAPHIC REF	PART NUMBER	QTY	PART NAME 1 2 3 4 5 6 (PRODUCT LEVEL)	SEE PAGE
	1	1	**143-1288**	8	LOCKNUT-FLANGE (3/8-16 THD)	
	2	1	**171-1230**	6	SCREW-BUTTON HEAD (3/8-16X1 IN)	
	3	1	**171-6682**	1	BAR-RECLINER	
	4	1	**172-2416**	2	PIN	
Y	5	1	*173-1029*	1	ADJUSTER GP-SEAT	812
	6	1	**177-1863**	2	BOLT-PIVOT (3/8-16X2.89 IN)	
Y	7	1	*177-4935*	1	RECLINER GP-SEAT	884
	8	1	**184-2298**	1	ROD	
	9	1	**184-2299**	4	WASHER (7X25.4X2.54MM THK)	
	10	1	**218-0861**	1	PAN AS	
		1	**8T-9082**	5	RIVET-POP	
		1	**217-9049**	1	CUSHION AS	
Y	11	1	*218-0864*	1	PAN GP-BACKREST	875
	12	1	**095-0843**	2	PIN-COTTER	
	13	1	**5V-1496**	2	RETAINER	
	14	1	**6V-7646**	2	WASHER-HARD (7.2X25X2MM THK)	
	15	1	**8T-0328**	1	WASHER-HARD (5.5X10X1MM THK)	
	16	1	**8T-4205**	1	WASHER-HARD (7.2X14.5X2MM THK)	
	17	1	**8Y-6277**	2	SPACER (10.5X28.6X10MM THK)	

Y-SEPARATE ILLUSTRATION

218-8514 SEAT GP *(contd.)* **i01817425**

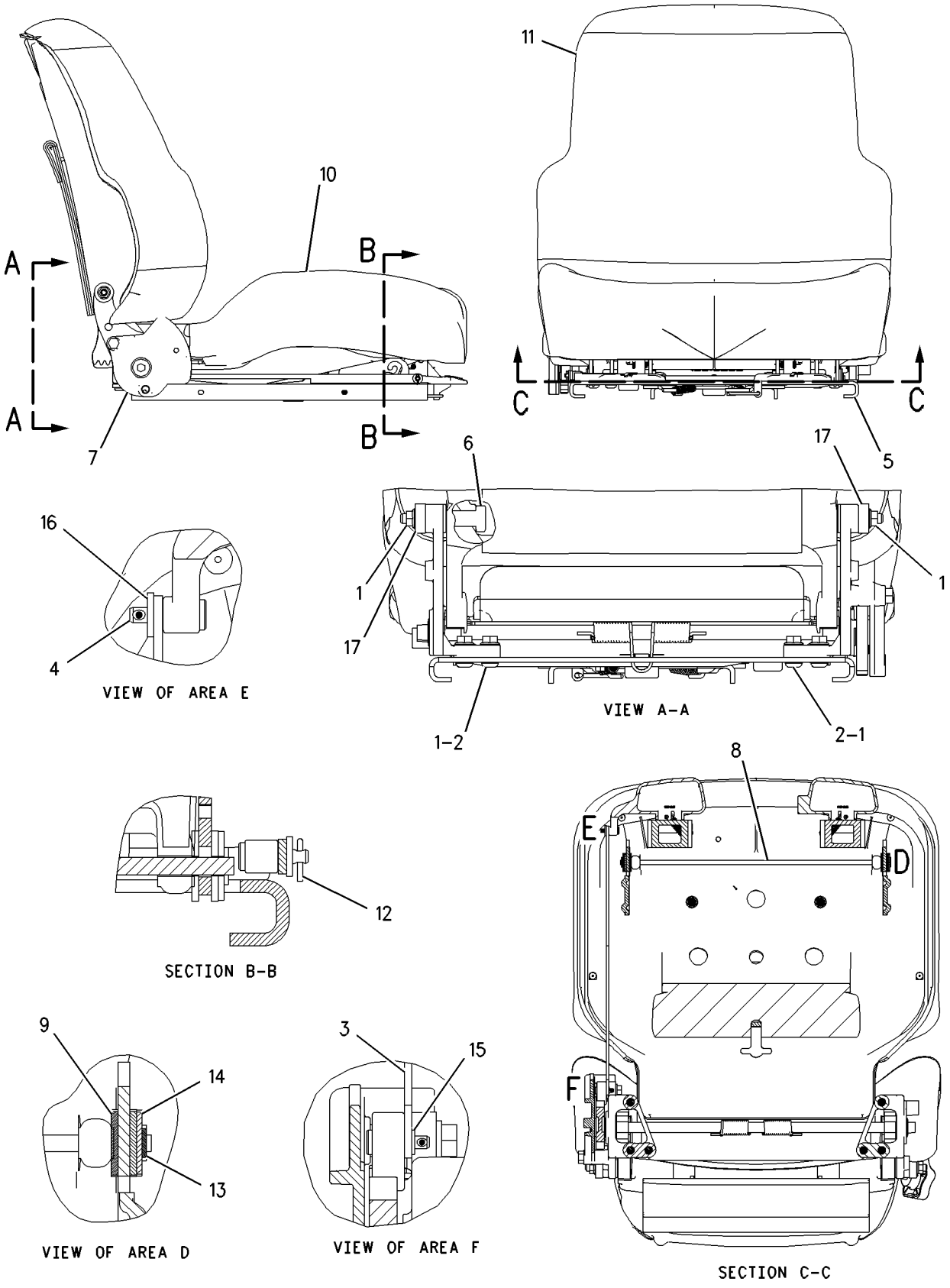

GRAPHIC #1 **<END>** g00935806

OPERATOR STATION

218-8514 SEAT GP

S/N: AXM1-UP
CLOTH - GRAY
PART OF 187-4295 SEAT GP
AN ATTACHMENT
TYPE 1

SMCS-7312 **i02116893**

NOTE	REF NO	GRAPHIC REF	PART NUMBER	QTY	PART NAME 1 2 3 4 5 6 (PRODUCT LEVEL)	SEE PAGE
	1	1	**143-1288**	8	LOCKNUT-FLANGE (3/8-16-THD)	
	2	1	**171-1230**	6	SCREW-BUTTON HEAD (3/8-16X1-IN)	
	3	1	**171-6682**	1	BAR	
	4	1	**172-2416**	2	PIN	
Y	5	1	*173-1029*	1	ADJUSTER GP-SEAT	812
	6	1	**177-1863**	2	BOLT-PIVOT (3/8-16X2.89-IN)	
CY	7	1	*210-2270*	1	RECLINER GP-SEAT	885
	8	1	**184-2298**	1	ROD	
	9	1	**184-2299**	4	WASHER (7X25.4X2.54-MM THK)	
	10	1	**218-0861**	1	PAN AS	
		1	**8T-9082**	5	RIVET-POP	
		1	**217-9049**	1	CUSHION AS	
Y	11	1	*218-0864*	1	PAN GP-BACKREST	875
	12	1	**095-0843**	2	PIN-COTTER	
	13	1	**5V-1496**	2	RETAINER	
	14	1	**6V-7646**	2	WASHER-HARD (7.2X25X2-MM THK)	
	15	1	**8T-0328**	1	WASHER-HARD (5.5X10X1-MM THK)	
	16	1	**8T-4205**	1	WASHER-HARD (7.2X14.5X2-MM THK)	
	17	1	**8Y-6277**	2	SPACER (10.5X28.6X10-MM THK)	

C-CHANGE FROM PREVIOUS TYPE
Y-SEPARATE ILLUSTRATION

218-8514 SEAT GP *(contd.)* **i02116893**

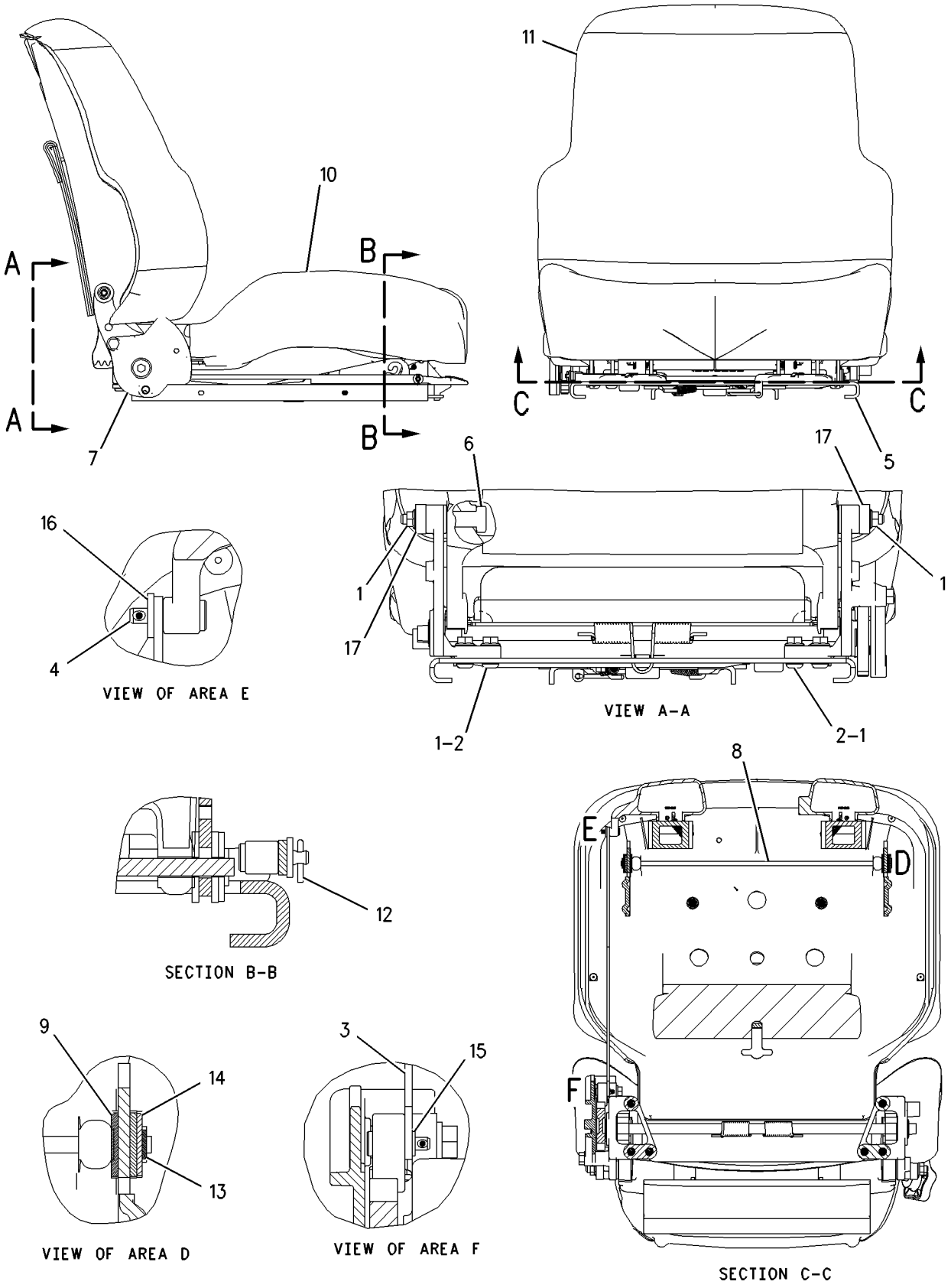

GRAPHIC #1 **<END>** g00935806

OPERATOR STATION

218-8514 SEAT GP

S/N: AXM1-UP
CLOTH - GRAY
PART OF 187-4295 SEAT GP
AN ATTACHMENT
TYPE 2

SMCS-7312 **i02182781**

NOTE	REF NO	GRAPHIC REF	PART NUMBER	QTY	PART NAME 1 2 3 4 5 6 (PRODUCT LEVEL)	SEE PAGE
	1	1	**143-1288**	8	LOCKNUT-FLANGE (3/8-16-THD)	
	2	1	**171-1230**	6	SCREW-BUTTON HEAD (3/8-16X1-IN)	
	3	1	**171-6682**	1	BAR	
	4	1	**172-2416**	2	PIN	
Y	5	1	*173-1029*	1	ADJUSTER GP-SEAT	812
	6	1	**177-1863**	2	BOLT-PIVOT (3/8-16X2.89-IN)	
Y	7	1	*210-2270*	1	RECLINER GP-SEAT	885
	8	1	**184-2298**	1	ROD	
	9	1	**184-2299**	4	WASHER (7X25.4X2.54-MM THK)	
	10	1	**218-0861**	1	PAN AS	
		1	**8T-9082**	5	RIVET-POP	
		1	**217-9049**	1	CUSHION AS	
CY	11	1	*251-7684*	1	PAN GP-BACKREST	876
	12	1	**095-0843**	2	PIN-COTTER	
	13	1	**5V-1496**	2	RETAINER	
	14	1	**6V-7646**	2	WASHER-HARD (7.2X25X2-MM THK)	
	15	1	**8T-0328**	1	WASHER-HARD (5.5X10X1-MM THK)	
	16	1	**8T-4205**	1	WASHER-HARD (7.2X14.5X2-MM THK)	
	17	1	**8Y-6277**	2	SPACER (10.5X28.6X10-MM THK)	

C-CHANGE FROM PREVIOUS TYPE
Y-SEPARATE ILLUSTRATION

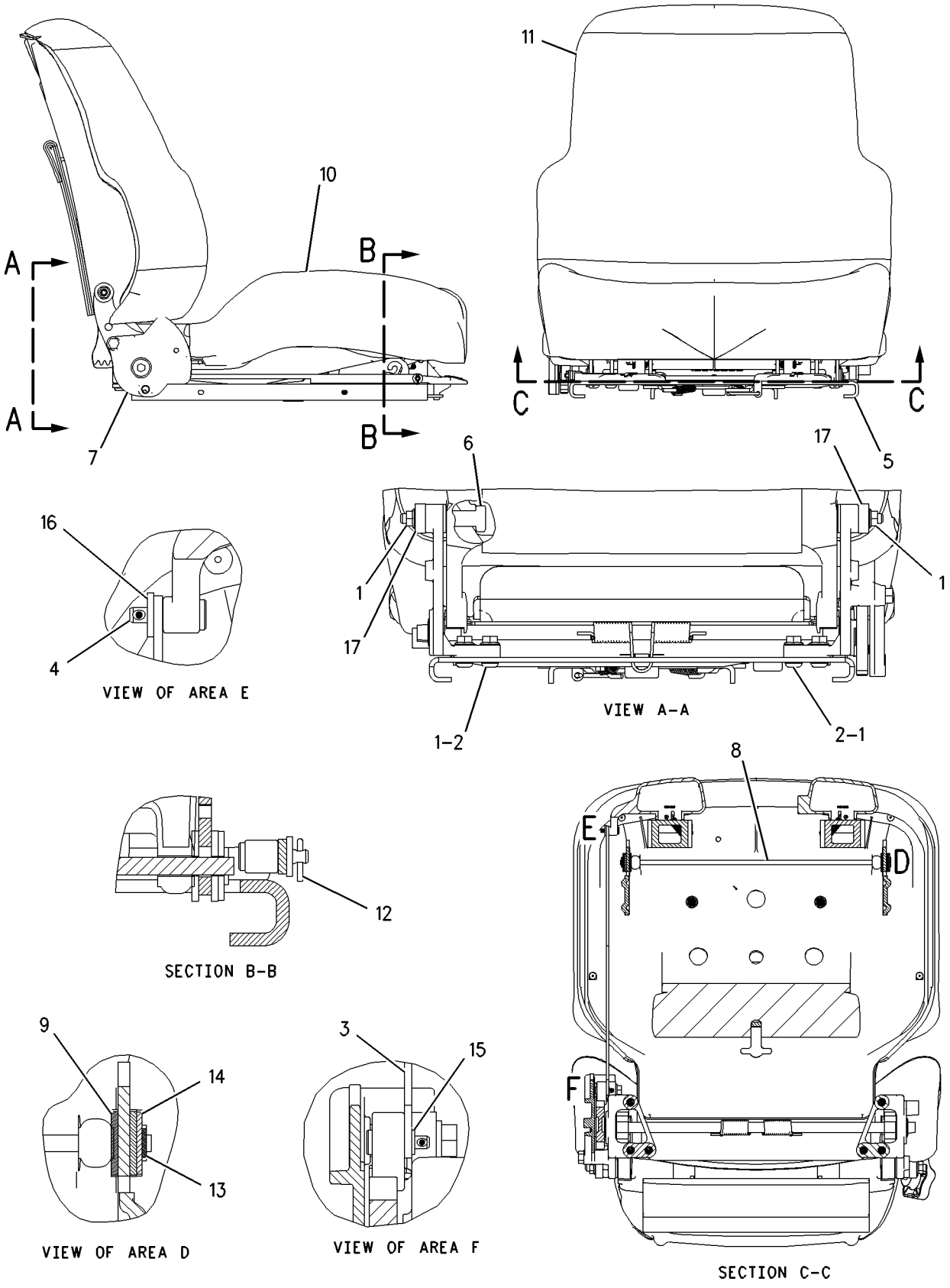

GRAPHIC #1 **<END>** g00935806

OPERATOR STATION

246-6445 SEAT GP

S/N: AXM1-UP
AN ATTACHMENT

SMCS-7312 **i02046444**

NOTE	REF NO	GRAPHIC REF	PART NUMBER	QTY	PART NAME 1 2 3 4 5 6 (PRODUCT LEVEL)	SEE PAGE
	1	1	**145-2894**	1	SEAT AS	
Y	2	1	*200-3173*	1	SEAT GP-SUSPENSION	908
	3	1	**222-0345**	1	SEAT BELT GP	
		1	**0T-0244**	1	BOLT (7/16-20X1.25-IN)	
		1	**205-6388**	1	BOLT (7/16-20X44.45-MM)	
	4	1	**246-6446**	1	PLATE AS	
	5	1	**0T-0244**	1	BOLT (7/16-20X1.25-IN)	
	6	1	**0T-0489**	1	BOLT (7/16-20X2-IN)	
	7	1	**5K-0906**	4	BOLT (5/16-18X0.63-IN)	
	8	1	**8T-4121**	4	WASHER-HARD (11X21X2.5-MM THK)	
M	9	1	**8T-4136**	4	BOLT (M10X1.5X25-MM)	
M	10	1	**8T-4189**	4	BOLT (M8X1.25X20-MM)	
	11	1	**8T-4224**	8	WASHER-HARD (8.8X16X2-MM THK)	
	12	1	**8T-5360**	1	WASHER (12X22.5X2.5-MM THK)	

M-METRIC PART
Y-SEPARATE ILLUSTRATION

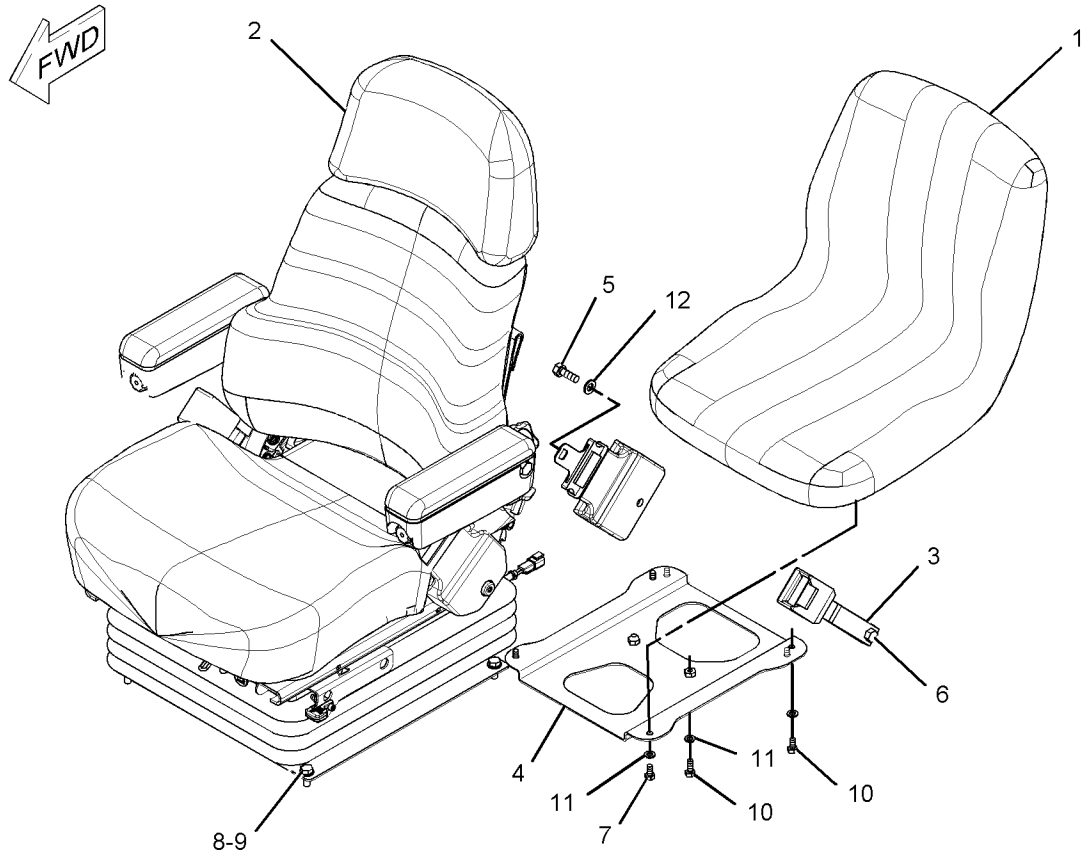

GRAPHIC #1 **<END>** g01052677

OPERATOR STATION

149-0088 SEAT GP-COMPANION

S/N: AXM1-820

PART OF 153-5485 CAB AR

SMCS-7312, 7327 **i02182062**

NOTE	REF NO	GRAPHIC REF	PART NUMBER	QTY	PART NAME 1 2 3 4 5 6 (PRODUCT LEVEL)	SEE PAGE
	1	1	**145-2894**	1	SEAT AS	
Y	2	1	**156-1145**	1	SEAT BELT GP	892
	3	1	**6V-8918**	4	BOLT (5/16-18X1.25-IN)	
	4	1	**8T-4224**	4	WASHER-HARD (8.8X16X2-MM THK)	

Y-SEPARATE ILLUSTRATION

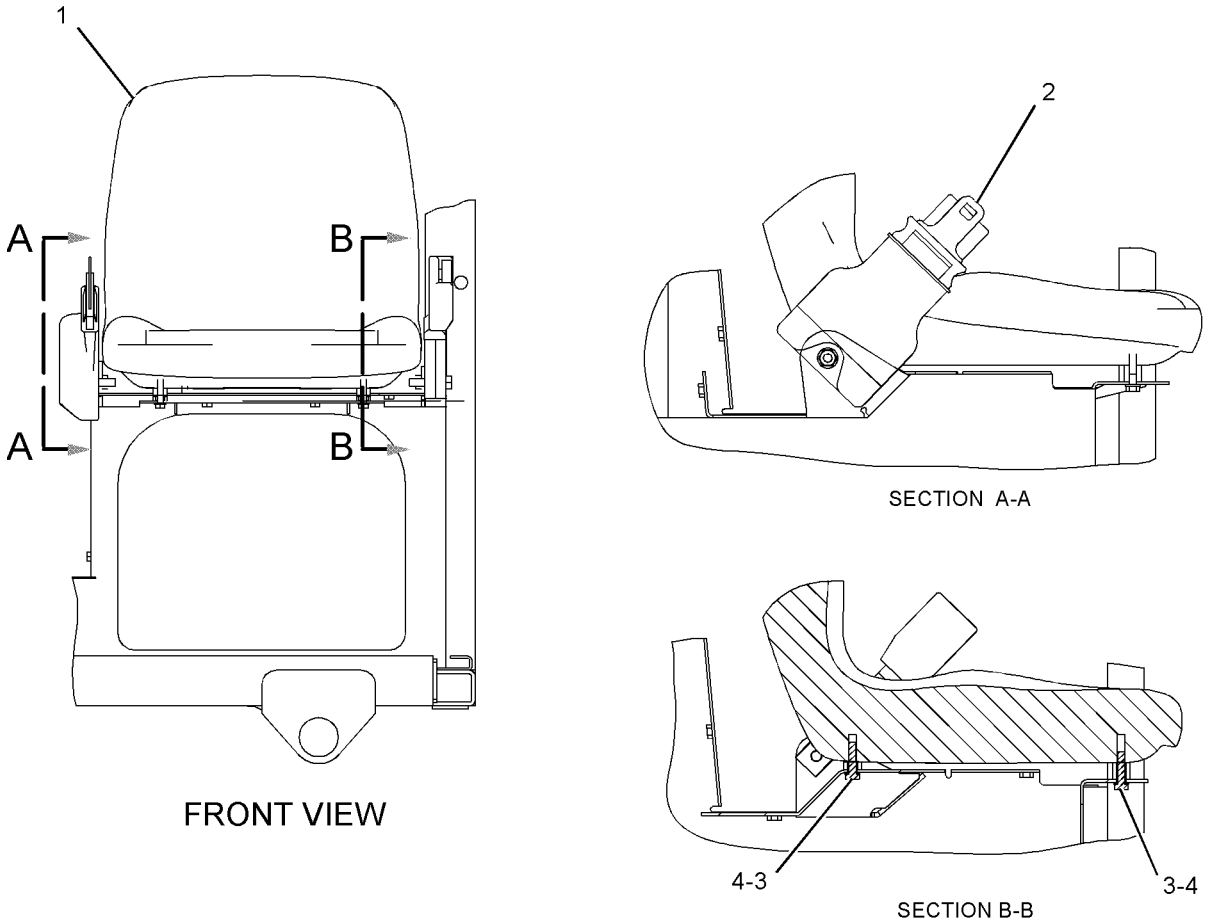

FRONT VIEW

SECTION A-A

SECTION B-B

GRAPHIC #1 **<END>** g01104038

OPERATOR STATION

231-9809 SEAT GP-COMPANION

S/N: AXM821-UP

PART OF 153-5485, 229-8087 CAB AR

SMCS-7312, 7327 **i01907471**

NOTE	REF NO	GRAPHIC REF	PART NUMBER	QTY	PART NAME 1 2 3 4 5 6 (PRODUCT LEVEL)	SEE PAGE
	1	1	**222-0345**	1	SEAT BELT GP	
		1	**0T-0244**	1	BOLT (7/16-20X1.25-IN)	
		1	**205-6388**	1	BOLT (7/16-20X44.45-MM)	
	2	1	**230-9876**	1	SEAT AS	
	3	1	**0T-0244**	1	BOLT (7/16-20X1.25-IN)	
	4	1	**0T-0489**	1	BOLT (7/16-20X2-IN)	
	5	1	**5P-4116**	4	WASHER-HARD (8.8X20.5X2-MM THK)	
M	6	1	**8T-4189**	4	BOLT (M8X1.25X20-MM)	
	7	1	**8T-5360**	1	WASHER (12X22.5X2.5-MM THK)	

M-METRIC PART

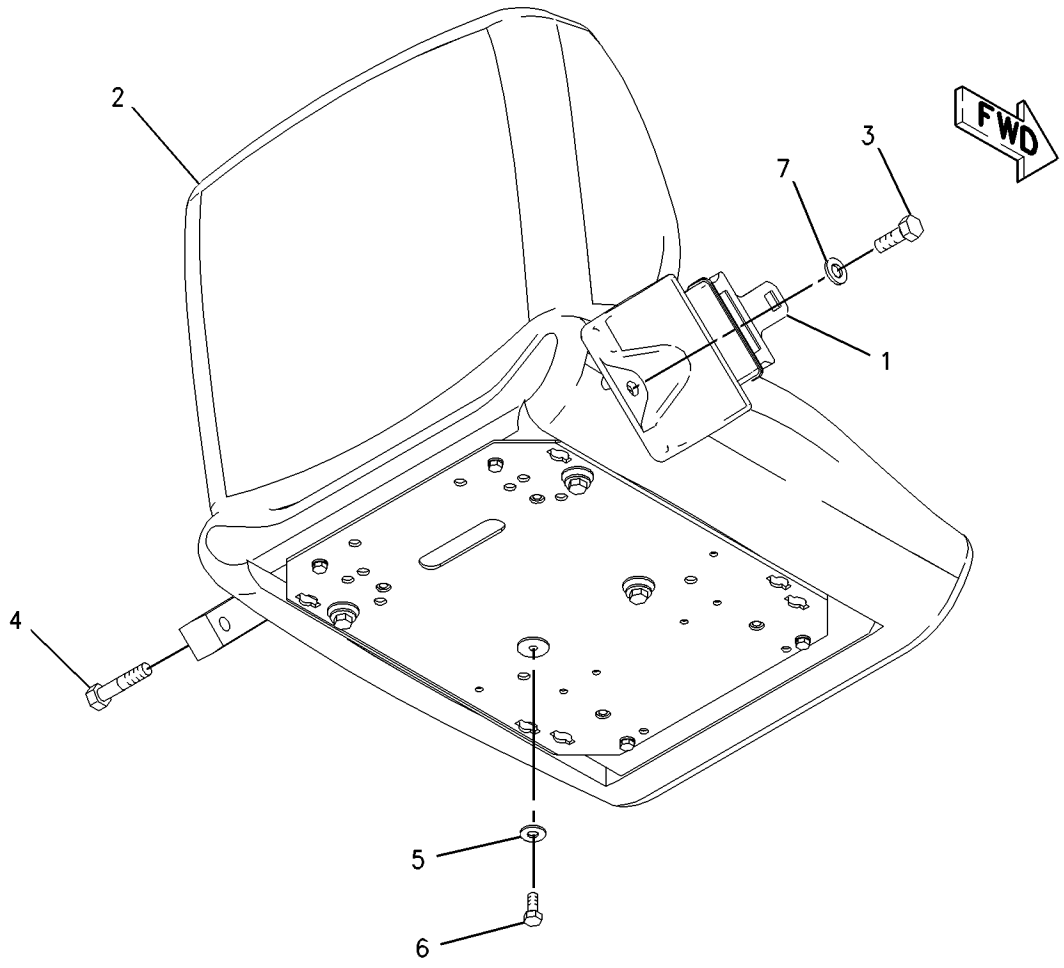

GRAPHIC #1 **<END>** g00998238

OPERATOR STATION

231-9809 SEAT GP-COMPANION

S/N: AXM1377-UP

PART OF 229-8087 CAB AR

SMCS-7312, 7327 **i02140597**

NOTE	REF NO	GRAPHIC REF	PART NUMBER	QTY	PART NAME 1 2 3 4 5 6 (PRODUCT LEVEL)	SEE PAGE
C	1	1	**5V-5262**	2	BOLT-SHOULDER (7/16-20X1.26-IN)	
	2	1	**8Y-4030**	1	SEAT BELT GP	
	3	1	**230-9876**	1	SEAT AS	
C	4	1	**5P-4116**	4	WASHER-HARD (8.8X20.5X2-MM THK)	
M	5	1	**8T-4189**	4	BOLT (M8X1.25X20-MM)	

C-CHANGE FROM PREVIOUS TYPE
M-METRIC PART

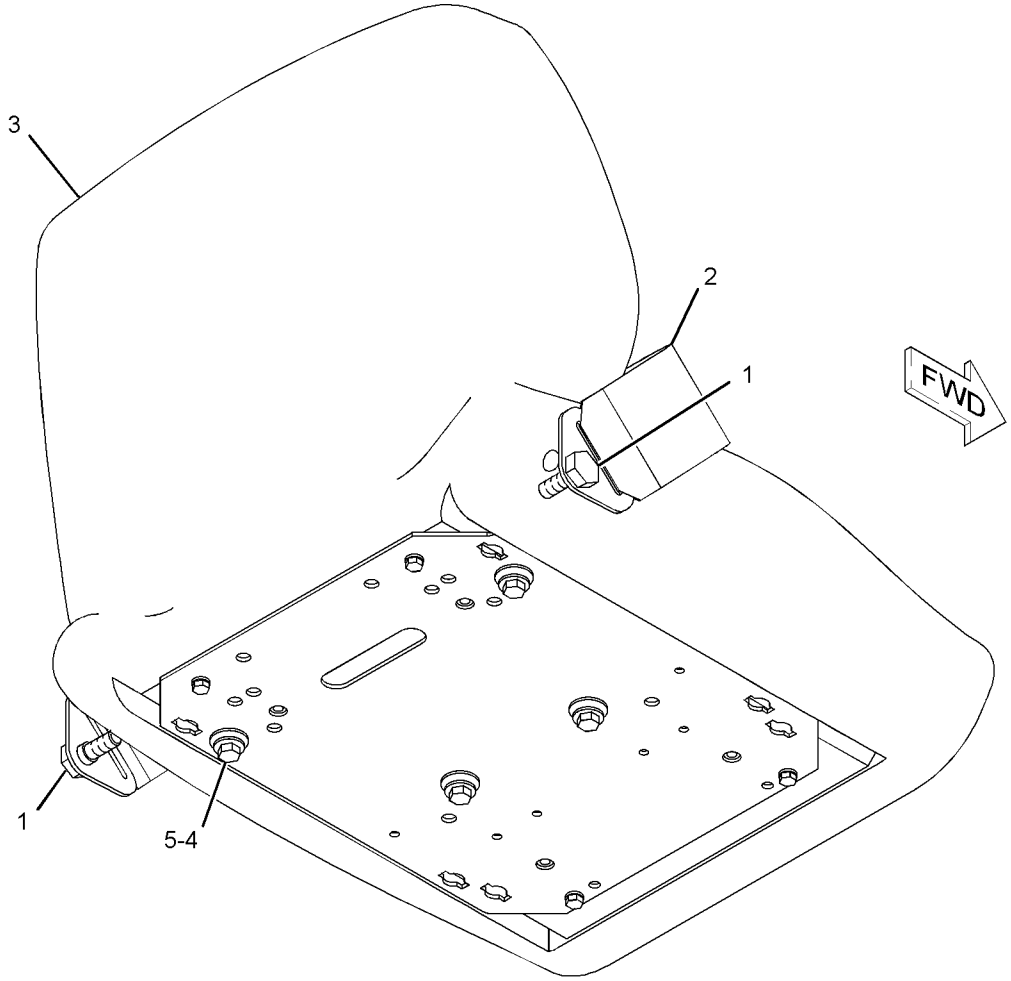

GRAPHIC #1 **<END>** g01087815

OPERATOR STATION

169-3279 SEAT GP-SUSPENSION

S/N: AXM1-624

PART OF 149-0092 SEAT & MOUNTING GP

SMCS-7324, 7336 **i01636661**

NOTE	REF NO	GRAPHIC REF	PART NUMBER	QTY	PART NAME 1 2 3 4 5 6 (PRODUCT LEVEL)	SEE PAGE
J	1	1	**161-9289**	4	BLOCK-SLIDER	
Y	2	1	**169-7034**	1	SUSPENSION GP-SEAT	910
J	3	1	**173-5787**	4	SETSCREW	
Y	4	1	**187-4295**	1	SEAT GP	893
J	5	1	**203-7703**	2	WASHER-HARD (10.2X22.22X2.38MM THK)	
J	6	1	**4F-4879**	1	BOLT (3/8-16X.5 IN)	
					AVAILABLE REPAIR KIT(S):	
J			**173-7035**	1	KIT-SLIDER BLOCK	

J-KIT MARKED J INCLUDES PART(S) MARKED J
Y-SEPARATE ILLUSTRATION

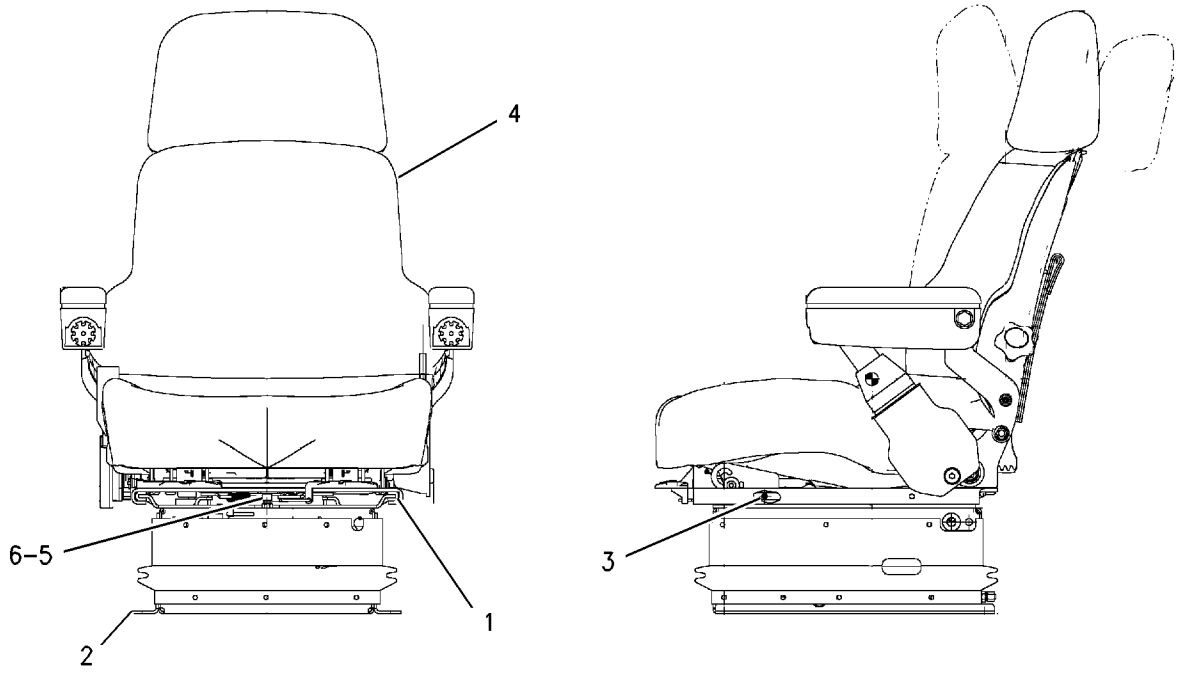

GRAPHIC #1 **<END>** g00847279

OPERATOR STATION

200-3173 SEAT GP-SUSPENSION

S/N: AXM625-820

PART OF 149-0092 SEAT & MOUNTING GP, 246-6445 SEAT GP

ALSO AN ATTACHMENT

SMCS-7324, 7336 **i02182068**

NOTE	REF NO	GRAPHIC REF	PART NUMBER	QTY	PART NAME 1 2 3 4 5 6 (PRODUCT LEVEL)	SEE PAGE
J	1	1	**173-5787**	4	SETSCREW (1/4-20-THD)	
Y	2	1	**187-4295**	1	SEAT GP	893
Y	3	1	**199-5725**	1	SUSPENSION GP-SEAT (AIR)	912
J	4	1	**203-7703**	2	WASHER-HARD (10.2X22.22X2.38-MM THK)	
J	5	1	**4F-4879**	1	BOLT (3/8-16X0.5-IN)	
					AVAILABLE REPAIR KIT(S):	
J			**173-7035**	1	KIT-SLIDER BLOCK (SEAT)	
					(INCLUDES SLIDER BLOCKS & PARTS MARKED J)	

J-KIT MARKED J SERVICES PARTS MARKED J
Y-SEPARATE ILLUSTRATION

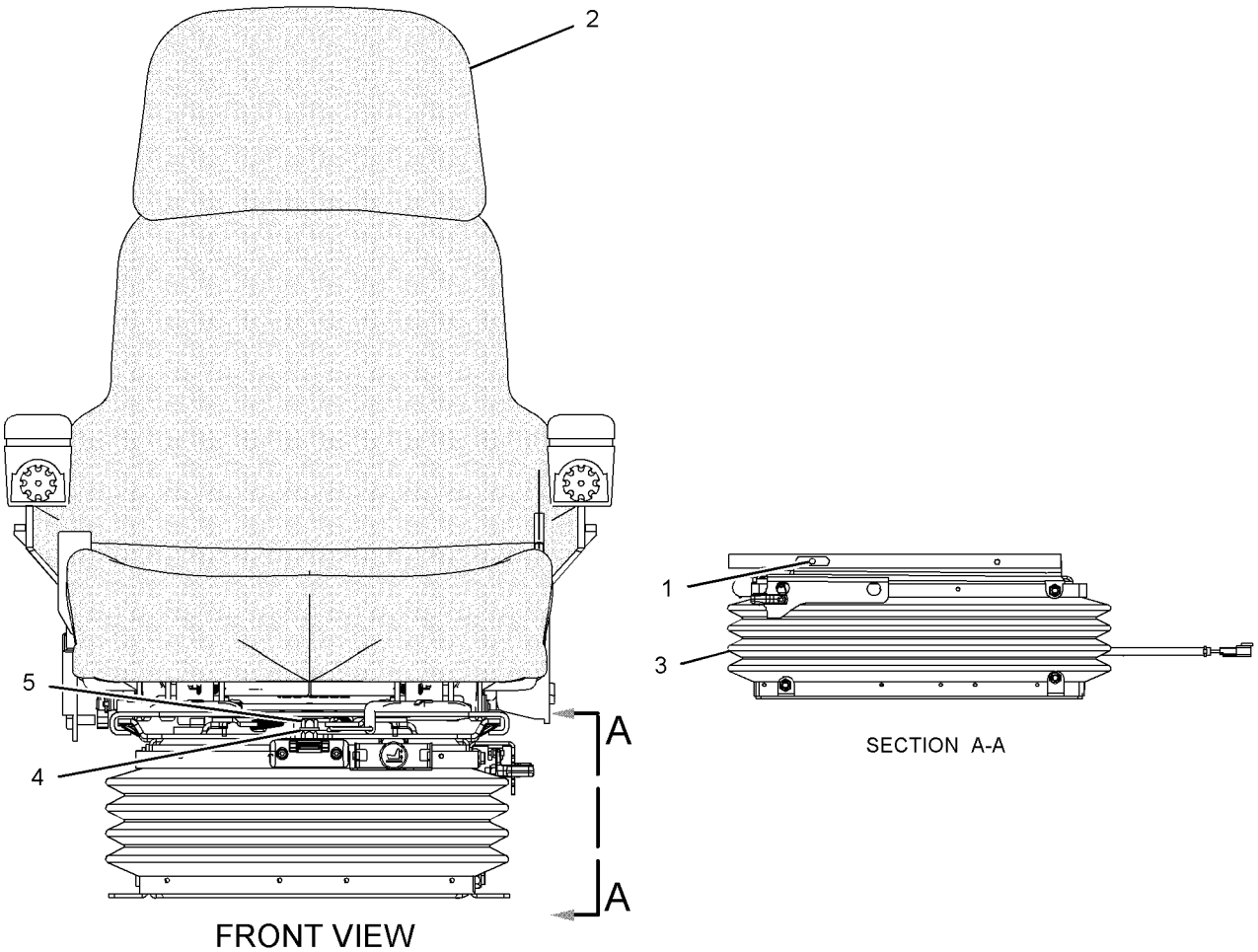

GRAPHIC #1 **<END>** g01104043

OPERATOR STATION

230-3393 SEAT GP-SUSPENSION

S/N: AXM821-UP

PART OF 231-9810 SEAT & MOUNTING GP

SMCS-7324, 7336 **i02206774**

NOTE	REF NO	GRAPHIC REF	PART NUMBER	QTY	PART NAME 1 2 3 4 5 6 (PRODUCT LEVEL)	SEE PAGE
	1	1	**222-0345**	1	SEAT BELT GP	
		1	**0T-0244**	1	BOLT (7/16-20X1.25-IN)	
		1	**205-6388**	1	BOLT (7/16-20X44.45-MM)	
Y	2	1	**231-9811**	1	SUSPENSION GP-SEAT	914
	3	1	**232-7313**	1	SEAT GP	
	3A	1	**242-8767**	1	COVER-SEAT	
	3B	1	**242-8769**	1	COVER-BACK	
	4	1	**242-8763**	1	RAIL AS	
	5	1	**242-8764**	1	SUPPORT (RH)	
	6	1	**242-8765**	1	SUPPORT (LH)	
	7	1	**242-8766**	1	EXTENSION-BACK	
	8	1	**243-4029**	1	MOUNT AS (SEAT BELT)	
	9	1	**246-4190**	1	KNOB AS	
	10	1	**261-5134**	1	MOUNT AS	

Y-SEPARATE ILLUSTRATION

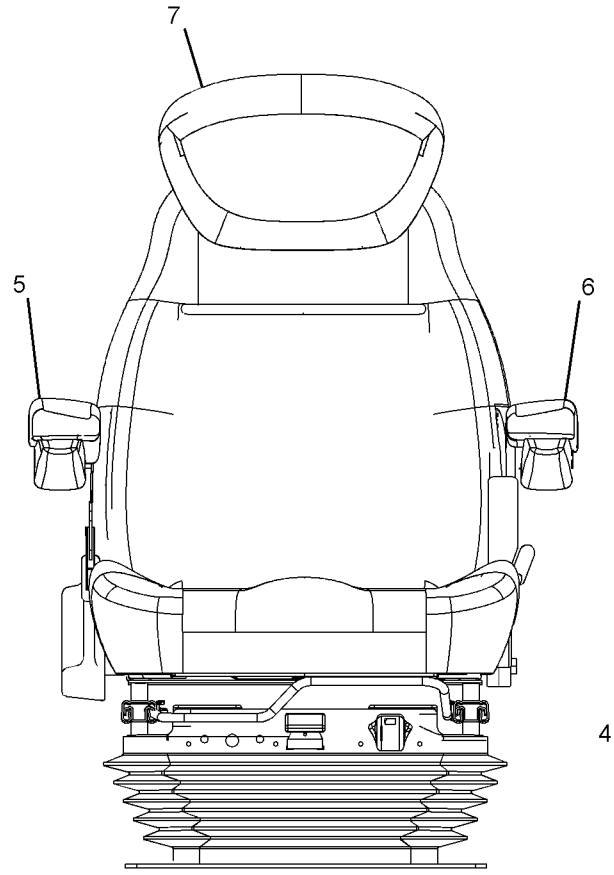

FRONT VIEW

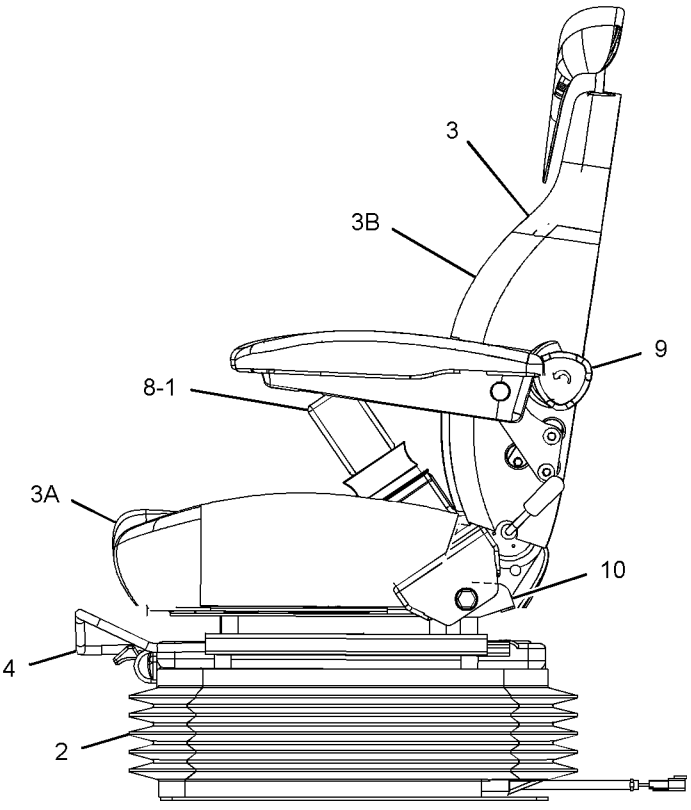

LEFT SIDE VIEW

GRAPHIC #1

<END>

g01116657

OPERATOR STATION

169-7034 SUSPENSION GP-SEAT

S/N: AXM1-624

PART OF 169-3279 SEAT GP-SUSPENSION

SMCS-7312, 7324 **i01805790**

NOTE	REF NO	GRAPHIC REF	PART NUMBER	QTY	PART NAME 1 2 3 4 5 6 (PRODUCT LEVEL)	SEE PAGE
	1	1	**102-6317**	4	BUMPER	
	2	1	**123-8157**	2	SHAFT	
	3	1	**124-7128**	1	BUSHING-RELIEF	
	4	1	**128-0686**	2	SPACER (9.78X15.88X27.8-MM THK)	
	5	1	**128-5082**	1	BOOT	
	6	1	**128-5084**	1	ABSORBER AS-SHOCK	
	7	1	**128-5085**	1	KNOB-DAMPER	
	8	1	**145-0326**	1	FILM-INSTRUCTION (SEAT ADJUSTMENT)	
	9	1	**147-4549**	1	FITTING-ELBOW	
	10	1	**147-6522**	1	SPRING	
	11	1	**148-3749**	1	SCISSORS AS	
	12	1	**149-2399**	1	FITTING	
	13	1	**149-2400**	1	FITTING	
	14	1	**149-2403**	1	VALVE AS	
	15	1	**160-7765**	1	WASHER (16.26X22.23X1.97-MM THK)	
B	16	1	**160-7766**	6	WASHER (16.26X22.23X0.51-MM THK)	
B	17	1	**160-7767**	6	WASHER (3.68X12.57X0.51-MM THK)	
	18	1	**169-7380**	1	BOLT-SOCKET HEAD (3/8-16X0.375-IN)	
	19	1	**173-7486**	1	HOUSING AS	
	20	1	**207-6027**	1	CLIP	
	21	1	**1B-4430**	4	NUT-JAM (1/2-20-THD)	
	22	1	**2K-4973**	3	LOCKNUT (3/8-16-THD)	
	23	1	**3J-4818**	4	LOCKWASHER	
	24	1	**4V-7884**	2	BEARING	
	25	1	**4V-8556**	1	BOLT (3/8-16X2.20-IN)	
	26	1	**5P-8167**	1	BOLT (3/8-16X0.625-IN)	
	27	1	**6K-0806**	1	STRAP-CABLE	
	28	1	**8L-8413**	5	STRAP-CABLE	
	29	1	**8M-3267**	1	SCREW-HEX SOCKET (3/8-16X0.75-IN)	
	30	1	**8T-2501**	2	BOLT (3/8-16X2-IN)	
	31	1	**8Y-6922**	1	HOUSING AS	
	32	1	**9M-0164**	1	CLAMP-HOSE	
E	33	1	**147-6541**		TUBE (38 CM)	
F			**203-7700**	1	BOLT (3/8-16-THD)	
					AVAILABLE REPAIR KIT(S):	
			149-2398	1	KIT-AIR COMPRESSOR	
					(INCLUDES COMPRESSOR AS AND SLEEVE)	
			8Y-6928	1	KIT-FASTENER	
					(INCLUDES RACHET CLIPS)	
			132-3439	1	KIT-INDICATOR (RIDE)	
					(INCLUDES CAM, INDICATOR, MAGNET CARRIER, NUT, SPRING, AND LABEL)	
			123-9128	1	KIT-ROLLER	
					(INCLUDES BEARINGS, ROLLERS, AND STRAP)	
			128-0613	1	KIT-TETHER	
					(INCLUDES TETHERS)	

B-USE AS REQUIRED
E-ORDER BY THE CENTIMETER
F-NOT SHOWN

169-7034 SUSPENSION GP-SEAT *(contd.)* i01805790

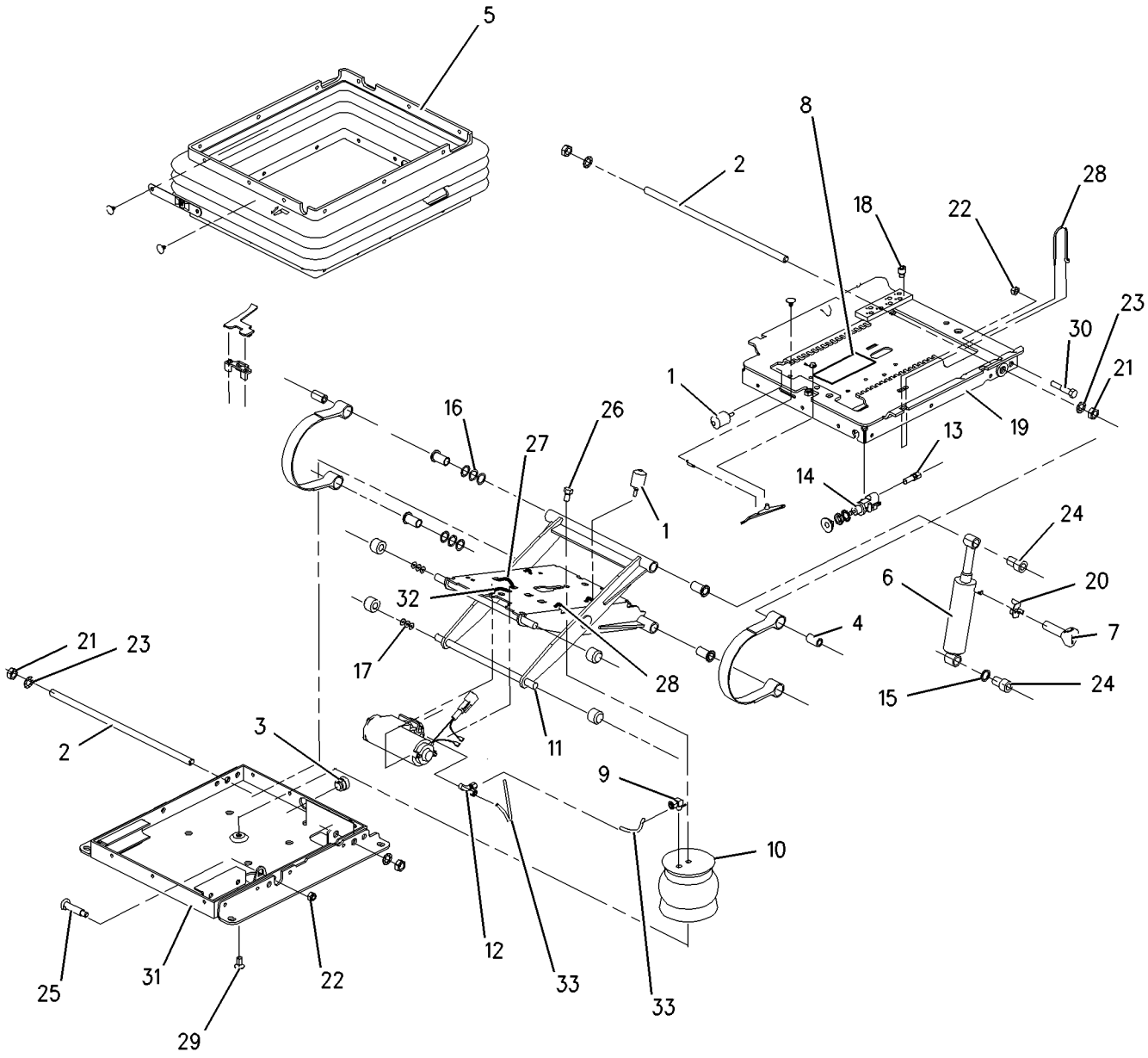

GRAPHIC #1 **<END>** g00870302

OPERATOR STATION

199-5725 SUSPENSION GP-SEAT—AIR

S/N: AXM625-820
PART OF 200-3173 SEAT GP-SUSPENSION
ALSO AN ATTACHMENT

SMCS-7312, 7324 **i02183751**

NOTE	REF NO	GRAPHIC REF	PART NUMBER	QTY	PART NAME 1 2 3 4 5 6 (PRODUCT LEVEL)	SEE PAGE
	1	1	**3P-9900**	5	WASHER (10.5X30X3-MM THK)	
	2	1	**4B-4278**	2	WASHER (10.2X20.5X1.6-MM THK)	
	3	1	**4V-8577**	12	BEARING	
	4	1	**8L-8413**	1	STRAP-CABLE	
	5	1	**145-0326**	1	FILM-INSTRUCTION (SEAT ADJUSTMENT)	
	6	1	**237-3943**	1	BRACKET	
	7	1	**164-1234**	1	PLATE	
	8	1	**101-0003**	26	FASTENER	
	9	1	**169-7380**	1	BOLT-SOCKET HEAD (3/8-16X0.375-IN)	
	10	1	**186-5107**	2	SCREW (NO 8X1.25-IN)	
	11	1	**192-7752**	4	SHAFT AS	
	12	1	**192-7755**	1	HOUSING AS	
	13	1	**192-7760**	1	SHAFT	
	14	1	**192-7767**	1	SCISSORS AS	
	15	1	**192-7783**	1	TOGGLE AS (WIDE)	
	16	1	**192-7787**	1	TOGGLE AS (NARROW)	
	17	1	**192-7790**	1	HOUSING AS	
	18	1	**192-7795**	1	BOOT	
	19	1	**192-7805**	1	HARNESS AS-VALVE (SEAT AIR COMPRESSOR)	
		1	**102-8802**	1	KIT-RECEPTACLE (2-PIN)	
					(INCLUDES RECEPTACLE AS & WEDGE)	
	20	1	**192-7810**	1	SPRING AS-AIR	
		1	**5P-4423**	1	ELBOW	
		1	**163-1135**	1	SPRING	
	21	1	**192-7812**	1	BOLT-SHOULDER	
	22	1	**192-7820**	3	BUMPER	
	23	1	**192-7822**	1	SHAFT	
Y	24	1	**237-3970**	1	AIR COMPRESSOR GP-SEAT	814
	25	1	**1H-8296**	1	SCREW-MACHINE	
	26	1	**2K-4973**	8	LOCKNUT (3/8-16-THD)	
	27	1	**3J-4818**	1	LOCKWASHER	
M	28	1	**5C-2890**	3	NUT (M6X1-THD)	
	29	1	**8T-9371**	1	BOLT (3/8-16X0.5-IN)	
BE	30	1	**211-5358**		CONDUIT (35.6-CM)	
BE	31	1	**211-5358**		CONDUIT (26.7-CM)	
BD	32	1	**5P-6010**		TUBE	
BD	33	1	**5P-6010**		TUBE	
					AVAILABLE REPAIR KIT(S):	
			192-7799	1	KIT-AIR VALVE	
					(INCLUDES KNOB ASSEMBLY)	
			212-7779	1	KIT-SHOCK ABSORBER	
					(INCLUDES LOCKNUTS, BALL, LOCKWASHER, STRAP, SPRING, CLAMP, ADJUSTERS, BOLTS, BEARINGS, WASHERS, SHOCK ABSORBER,	
					BRACKETS, KIT, CABLE ASSEMBLY, & KNOB)	
			213-5170	1	KIT-INDICATOR	
					(INCLUDES BOLTS, NUTS, ROD, ARM, & HOUSING)	
			211-9294	1	KIT-TETHER	
					(INCLUDES TETHER)	

B-USE AS REQUIRED
D-ORDER BY THE METER
E-ORDER BY THE CENTIMETER
M-METRIC PART
Y-SEPARATE ILLUSTRATION

199-5725 SUSPENSION GP-SEAT *(contd.)* i02183751

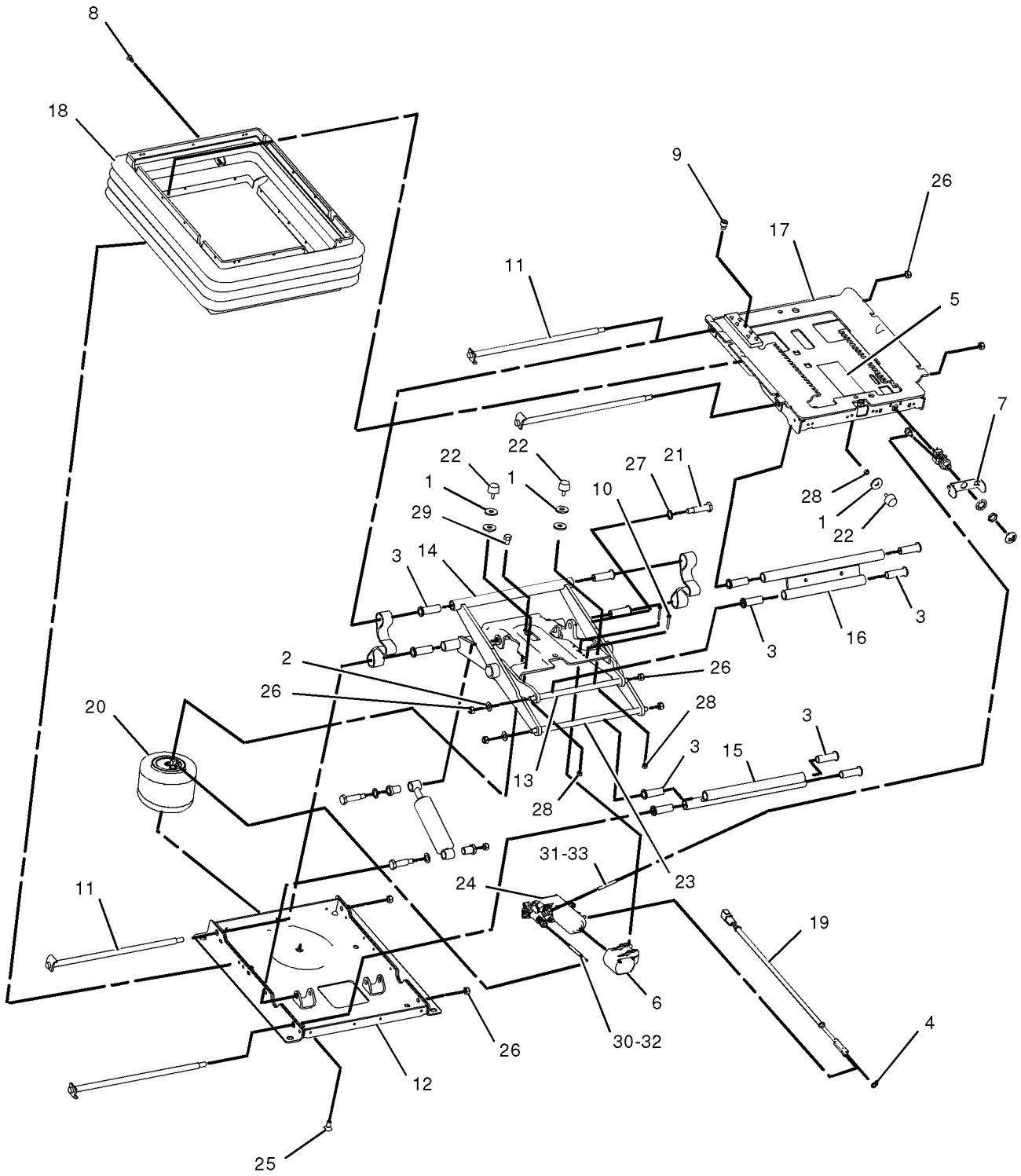

GRAPHIC #1 **<END>** g01054555

OPERATOR STATION

231-9811 SUSPENSION GP-SEAT

S/N: AXM821-UP

PART OF 230-3393 SEAT GP-SUSPENSION

SMCS-7312, 7324 **i02250066**

NOTE	REF NO	GRAPHIC REF	PART NUMBER	QTY	PART NAME 1 2 3 4 5 6 (PRODUCT LEVEL)	SEE PAGE
J	1	1	**242-8768**	1	BOOT AS	
	2	1	**242-8771**	1	VALVE AS	
	3	1	**242-8772**	1	COMPRESSOR AS-AIR	
	4	1	**242-8773**	1	SPRING AS	
	5	1	**242-8774**	1	DAMPER AS	
	6	1	**264-6362**	1	TUBE AS	
					AVAILABLE REPAIR KIT(S):	
J			**147-4921**	1	KIT-CLIP	
					(INCLUDES CLIPS)	

J-KIT MARKED J IS AVAILABLE FOR PART MARKED J

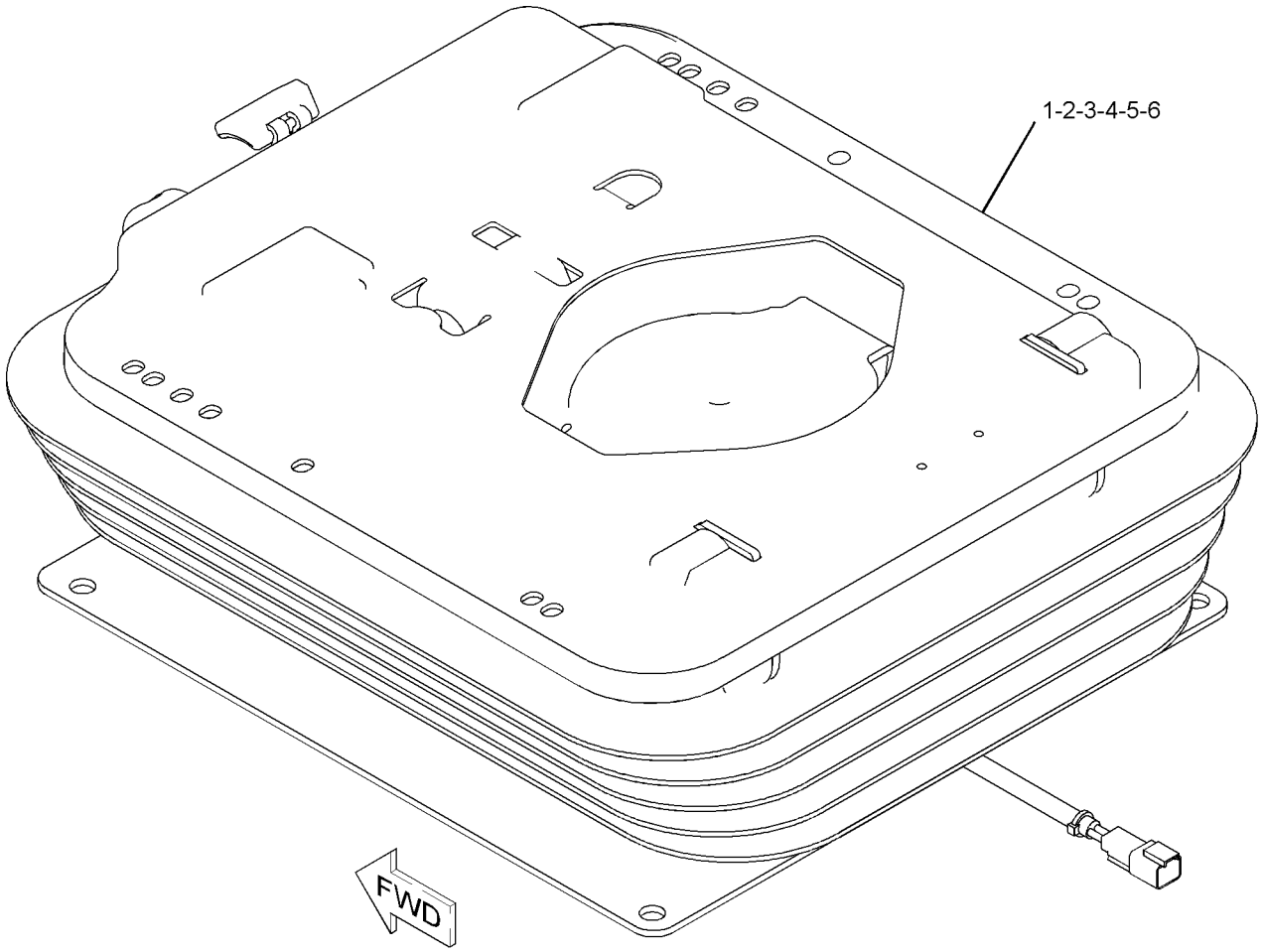

GRAPHIC #1 **<END>** g01134183

OPERATOR STATION

152-7117 TILT GP-PLATFORM

S/N: AXM1-UP

PART OF 152-6922 HYDRAULIC AR-MACHINE

SMCS-7301, 7341 **i02203672**

NOTE	REF NO	GRAPHIC REF	PART NUMBER	QTY	PART NAME 1 2 3 4 5 6 (PRODUCT LEVEL)	SEE PAGE
Y	1	1	**183-3513**	1	CYLINDER GP-CAB TILT	841
	2	1	**183-3514**	1	PUMP GP-CAB TILT	
	3	1	**184-5858**	1	HANDLE	
	4	1	**191-3490**	1	BRACKET AS	
I	6	1	**195-1206**	1	HOSE AS	
	7	1	**123-8829**	1	ELBOW AS	
		1	**4J-5477**	1	SEAL-O-RING	
		1	**8T-7876**	1	SEAL-O-RING	
	8	1	**2U-2748**	1	CLIP	
	9	1	**3U-2752**	1	CLIP	
	10	1	**4J-5477**	1	SEAL-O-RING	
	11	1	**8T-4121**	8	WASHER-HARD (11X21X2.5-MM THK)	
M	12	1	**8T-4133**	2	NUT (M10X1.5-THD)	
M	13	1	**8T-4136**	3	BOLT (M10X1.5X25-MM)	
M	14	1	**8T-4196**	3	BOLT (M10X1.5X35-MM)	

I-REFER TO HYDRAULIC INFORMATION SYSTEM
M-METRIC PART
Y-SEPARATE ILLUSTRATION

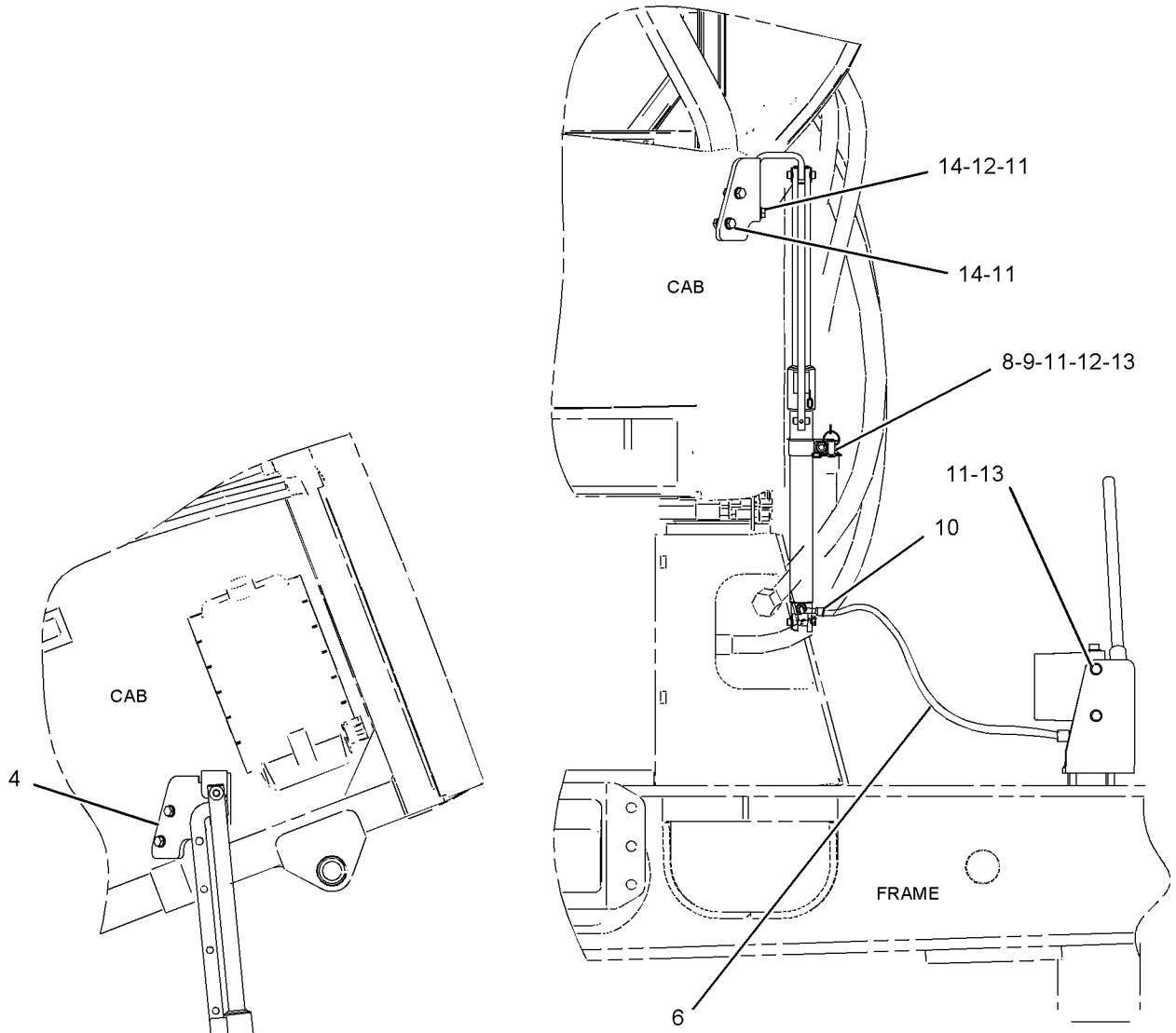

RIGHT SIDE VIEW

FRONT VIEW

GRAPHIC #1 **<END>** g01117813

OPERATOR STATION

149-0087 VISOR GP-CAB

S/N: AXM1-UP

PART OF 153-5485, 229-8087 CAB AR

SMCS-7301 **i01321281**

NOTE	REF NO	GRAPHIC REF	PART NUMBER	QTY	PART NAME 1 2 3 4 5 6 (PRODUCT LEVEL)	SEE PAGE
	1	1	**166-3772**	1	VISOR AS	
M	2	1	**9X-2044**	6	SCREW-TRUSS HEAD	

M-METRIC PART

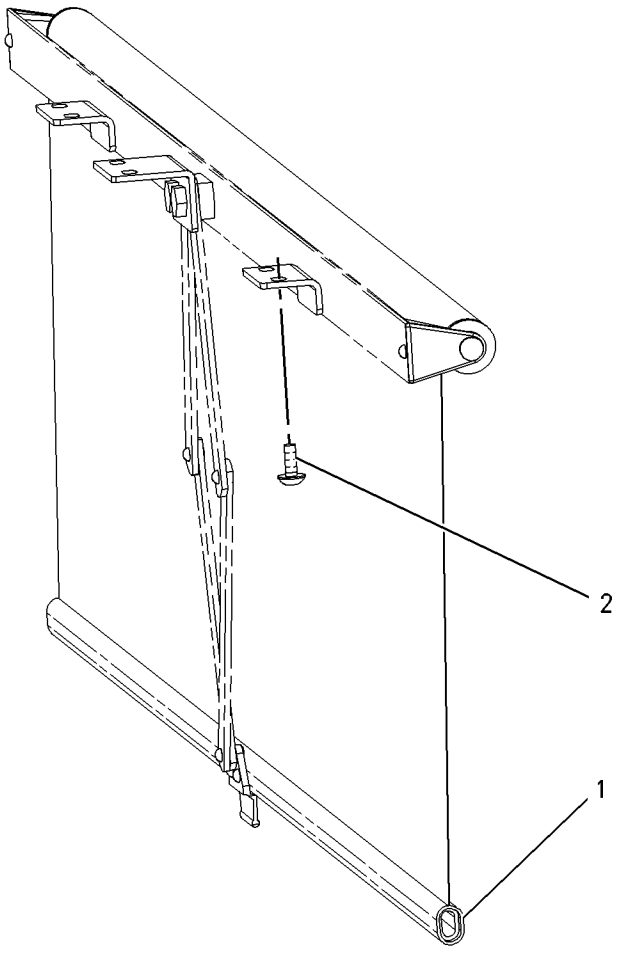

GRAPHIC #1 **<END>** g00709410

OPERATOR STATION

149-0087 VISOR GP-CAB

S/N: AXM1377-UP

PART OF 229-8087 CAB AR

SMCS-7301 **i02056101**

NOTE	REF NO	GRAPHIC REF	PART NUMBER	QTY	PART NAME 1 2 3 4 5 6 (PRODUCT LEVEL)	SEE PAGE
C	1	1	**243-3544**	1	VISOR GP-CAB	
CM	2	1	**9X-2044**	4	SCREW-TRUSS HEAD	

C-CHANGE FROM PREVIOUS TYPE
M-METRIC PART

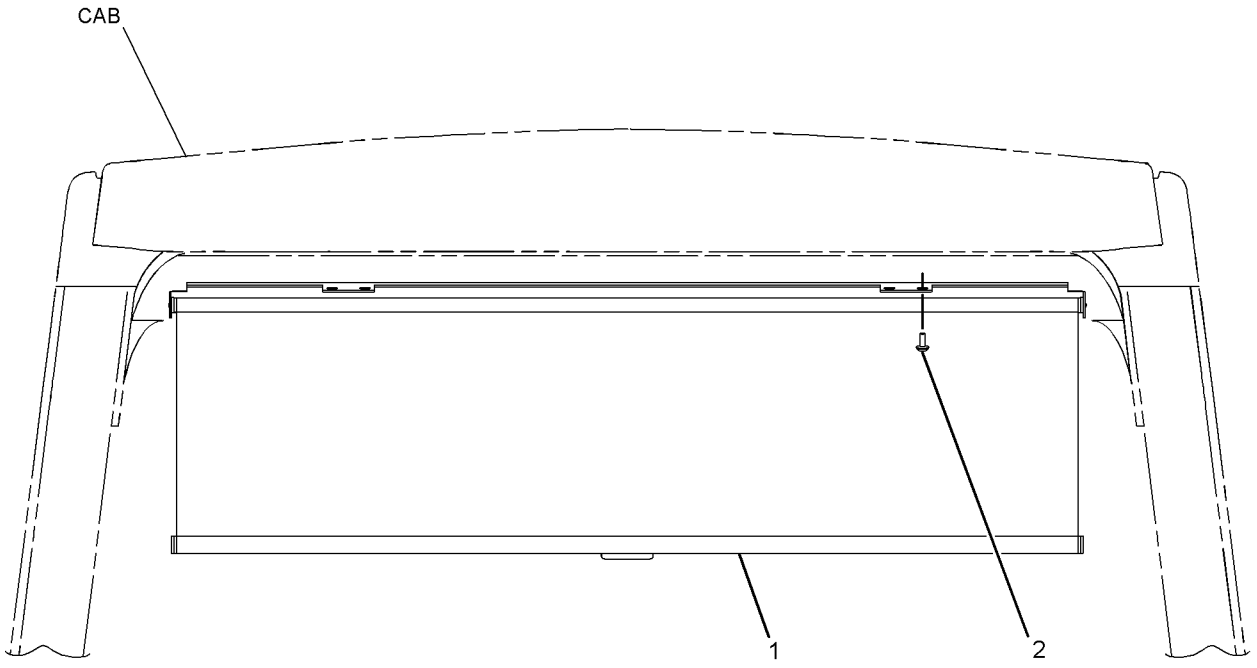

REAR VIEW

GRAPHIC #1 **<END>** g01055572

OPERATOR STATION

149-0090 WINDOW GP

S/N: AXM1-UP

PART OF 153-5485, 229-8087 CAB AR

SMCS-7310 **i02143118**

NOTE	REF NO	GRAPHIC REF	PART NUMBER	QTY	PART NAME 1 2 3 4 5 6 (PRODUCT LEVEL)	SEE PAGE
B	1	1	**110-7524**	5	BUTTON	
	2	1	**158-0988**	1	WINDOW	
	3	1	**162-4284**	1	CLAMP	
	4	1	**162-7588**	1	WINDOW-REAR	
	5	1	**162-7589**	2	PLATE-CLAMP	
	6	1	**162-7590**	1	TRIM-WINDOW(LH)	
	7	1	**162-7591**	1	TRIM-WINDOW(RH)	
	8	1	**163-3272**	1	WINDOW-DOOR	
	9	1	**168-0229**	1	CLAMP	
Y	10	1	*168-6449*	1	WINDOW GP (RH SLIDING)	921
Y	11	1	*168-6450*	1	WINDOW GP (VENTILATION)	922
M	12	1	**184-0982**	6	SCREW-PAN HEAD (M6X1X16-MM)	
M	13	1	**8T-4171**	2	BOLT (M6X1X12-MM)	
	14	1	**9X-8256**	2	WASHER (6.6X12X2-MM THK)	
E	15	1	**3E-6600**		SEAL (128CM)	

B-USE AS REQUIRED
E-ORDER BY THE CENTIMETER
M-METRIC PART
Y-SEPARATE ILLUSTRATION

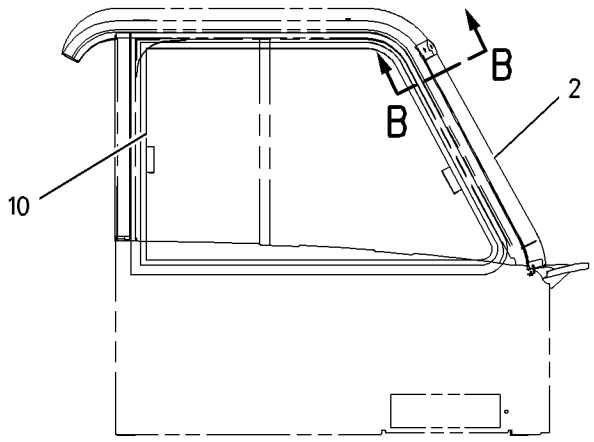

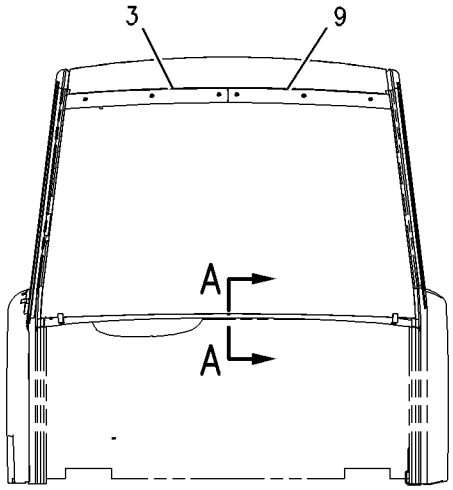

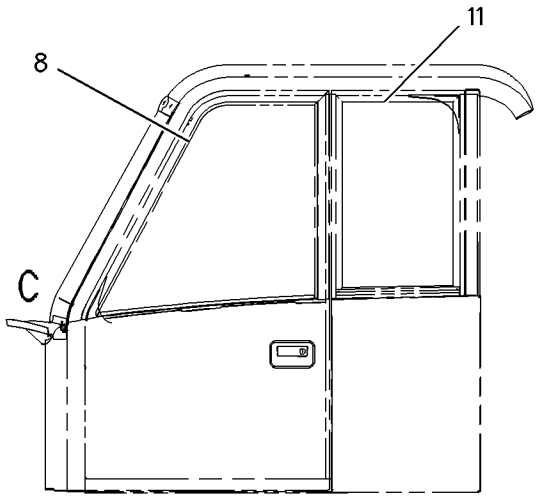

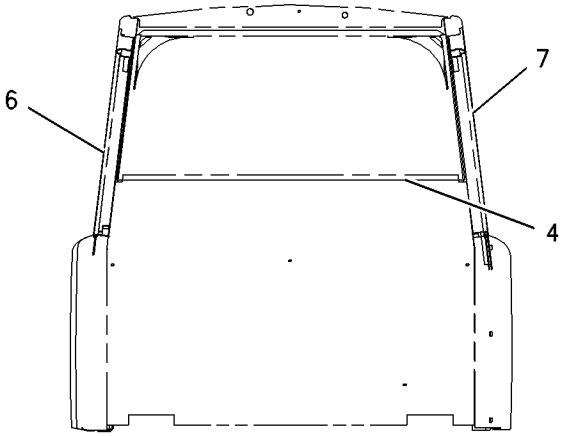

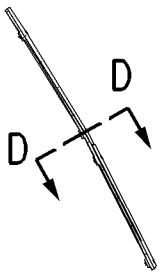

VIEW B-B

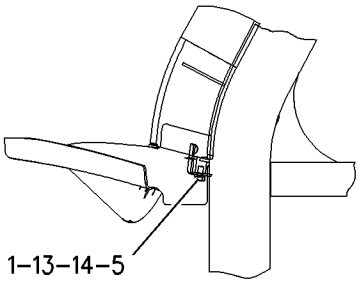

VIEW OF AREA C

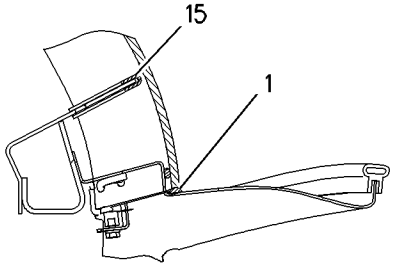

SECTION A-A

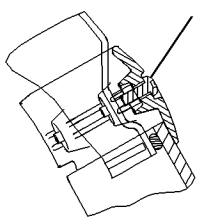

SECTION D-D

GRAPHIC #1 **<END>** g00863513

168-6449 WINDOW GP–RH SLIDING

S/N: AXM1-UP

PART OF 149-0090 WINDOW GP

SMCS-7310 **i01823552**

NOTE	REF NO	GRAPHIC REF	PART NUMBER	QTY	PART NAME 1 2 3 4 5 6 (PRODUCT LEVEL)	SEE PAGE
	1	1	**201-9818**	1	GLASS	
	2	1	**201-9819**	1	GLASS	
	3	1	**201-9820**	2	LATCH AS	
	4	1	**201-9821**	1	CATCH	
	5	1	**201-9824**	1	STOP AS	
	6	1	**201-9825**	1	CATCH	
	7	1	**201-9826**	1	STOP AS	
BE	8	1	**226-4872**		SEAL (18.1CM)	
BE	8A	1	**226-4872**		SEAL (19.9CM)	

B-USE AS REQUIRED
E-ORDER BY THE CENTIMETER

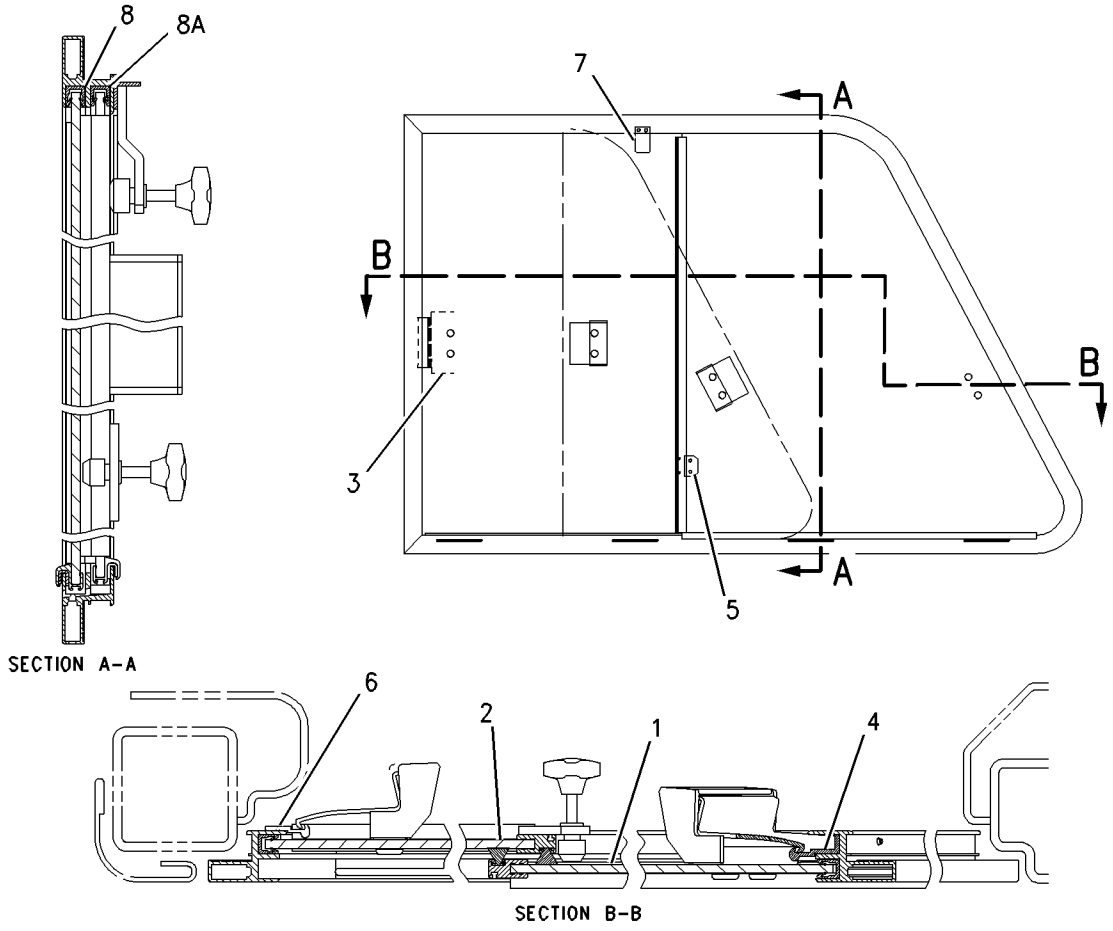

GRAPHIC #1 **<END>** g00931398

OPERATOR STATION

168-6450 WINDOW GP–VENTILATION

S/N: AXM1-UP

PART OF 149-0090 WINDOW GP

SMCS-7310 **i02056089**

NOTE	REF NO	GRAPHIC REF	PART NUMBER	QTY	PART NAME 1 2 3 4 5 6 (PRODUCT LEVEL)	SEE PAGE
	1	1	**8Y-8294**	1	LATCH AS-WINDOW	
	2	1	**201-9807**	1	GLASS	
	3	1	**201-9808**	1	SEAL	
	4	1	**201-9810**	1	HINGE	
	5	1	**201-9817**	1	BRACKET	
	6	1	**246-5905**	1	FASTENER	

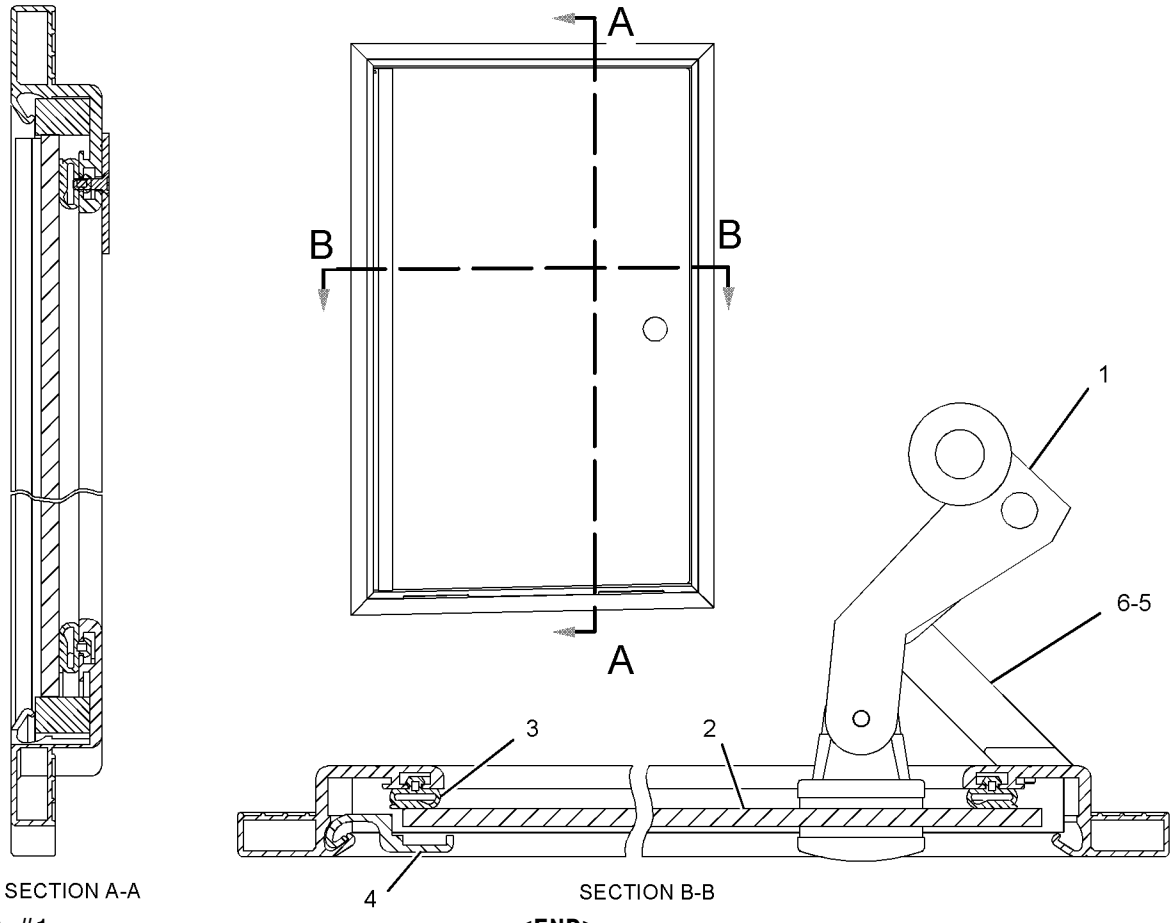

GRAPHIC #1

<END>

g01054957

OPERATOR STATION

149-0096 WIPER & WASHER GP-WINDOW—FRONT

S/N: AXM1-1376

PART OF 153-5485 CAB AR

SMCS-7305, 7306 **i01836768**

NOTE	REF NO	GRAPHIC REF	PART NUMBER	QTY	PART NAME 1 2 3 4 5 6 (PRODUCT LEVEL)	SEE PAGE
	1	1	**6V-7419**	1	BLADE AS-WIPER	
		1	**4F-2318**	1	LOCKWASHER	
		1	**4L-0569**	1	WASHER (4.8X9.1X0.6-MM THK)	
M		1	**5C-8312**	1	NUT (M4X0.7-THD)	
M		1	**6V-6942**	1	BOLT-SHOULDER (M4X0.7X27-MM)	
		1	**6V-6943**	1	BRACKET-SADDLE	
	2	1	**8T-5400**	2	CONNECTOR	
	3	1	**127-0821**	1	TANK AS-WINDOW WASHER	
	3A	1	**3S-2093**	1	STRAP-CABLE	
	3C	1	**7T-8891**	2	PUMP AS-WASHER	
	3D	1	**8E-8292**	1	CAP-VENTED	
	3E	1	**8E-8293**	1	GROMMET	
E	3F	1	**144-0195**		HOSE (18CM)	
	4	1	**147-7985**	1	MOTOR GP-WINDOW WIPER	
		1	**3F-9556**	1	LOCKWASHER	
M		1	**5C-7261**	1	NUT (M8X1.25-THD)	
		1	**9G-3695**	1	PLUG (GROMMET SEALING)	
		1	**102-8805**	1	KIT-RECEPTACLE (6-PIN)	
		1	**186-3735**	5	PIN-CONNECTOR	
	5	1	**168-8927**	1	ARM AS	
	6	1	**204-2581**	2	VALVE AS-CHECK	
	7	1	**8P-5411**	1	BUTTON-PLUG	
B	8	1	**3S-2093**	33	STRAP-CABLE	
M	9	1	**5C-9553**	2	BOLT (M6X1X16-MM)	
	10	1	**5P-8524**	2	GROMMET	
	11	1	**5P-9085**	2	CLIP	
	12	1	**8T-4224**	4	WASHER-HARD (8.8X16X2-MM THK)	
M	13	1	**8T-4908**	4	BOLT (M8X1.25X25-MM)	
	14	1	**9R-2620**	1	PLUG	
	15	1	**9X-8256**	2	WASHER (6.6X12X2-MM THK)	
E	16	1	**144-0195**		HOSE (152CM)	
E	16A	1	**144-0195**		HOSE (10CM EACH)	
E	16B	1	**144-0195**		HOSE (670CM)	

B-USE AS REQUIRED
E-ORDER BY THE CENTIMETER
M-METRIC PART

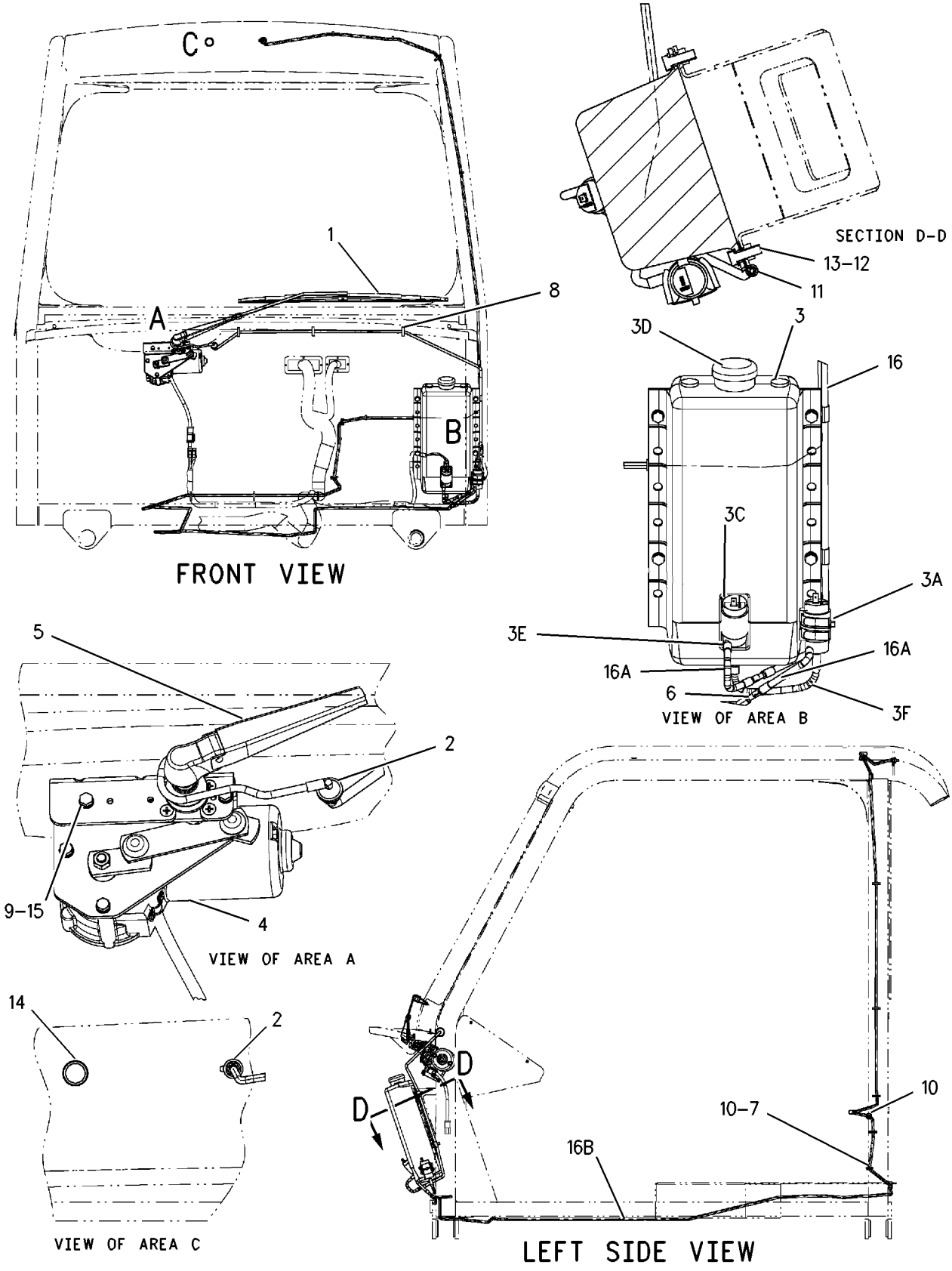

GRAPHIC #1 **<END>** g00937608

OPERATOR STATION

149-0097 WIPER & WASHER GP-WINDOW—REAR

S/N: AXM1-UP
AN ATTACHMENT

SMCS-7305, 7306 **i01746989**

NOTE	REF NO	GRAPHIC REF	PART NUMBER	QTY	PART NAME 1 2 3 4 5 6 (PRODUCT LEVEL)	SEE PAGE
	1	1	**9X-8256**	2	WASHER (6.6X12X2-MM THK)	
M	2	1	**8T-4137**	2	BOLT (M10X1.5X20-MM)	
	3	1	**8T-4121**	2	WASHER-HARD (11X21X2.5-MM THK)	
	4	1	**110-7885**	1	KNOB	
	5	1	**112-6174**	1	SWITCH AS-ROTARY (24-VOLT) (WIPER/WASHER)	
		1	**2H-3920**	1	LOCKWASHER	
		1	**3E-3389**	1	WEDGE-RECEPTACLE LOCK	
		1	**6V-8369**	1	NUT (7/16-28-THD)	
		1	**8T-8729**	6	PIN-CONNECTOR	
		1	**8T-8737**	2	PLUG-SEAL	
		1	**102-8806**	1	KIT-RECEPTACLE (8-PIN)	
	6	1	**130-7034**	1	BLADE AS-WIPER (REAR)	
	7	1	**168-3392**	1	PLATE	
	8	1	**168-8926**	1	MOTOR GP-WINDOW WIPER	
		1	**3F-9556**	1	LOCKWASHER	
M		1	**5C-7261**	1	NUT (M8X1.25-THD)	
		1	**8T-8737**	1	PLUG-SEAL	
		1	**102-8805**	1	KIT-RECEPTACLE (6-PIN)	
		1	**186-3735**	5	PIN-CONNECTOR	
	9	1	**168-8928**	1	ARM AS	
M	10	1	**5C-9553**	2	BOLT (M6X1X16-MM)	

M-METRIC PART

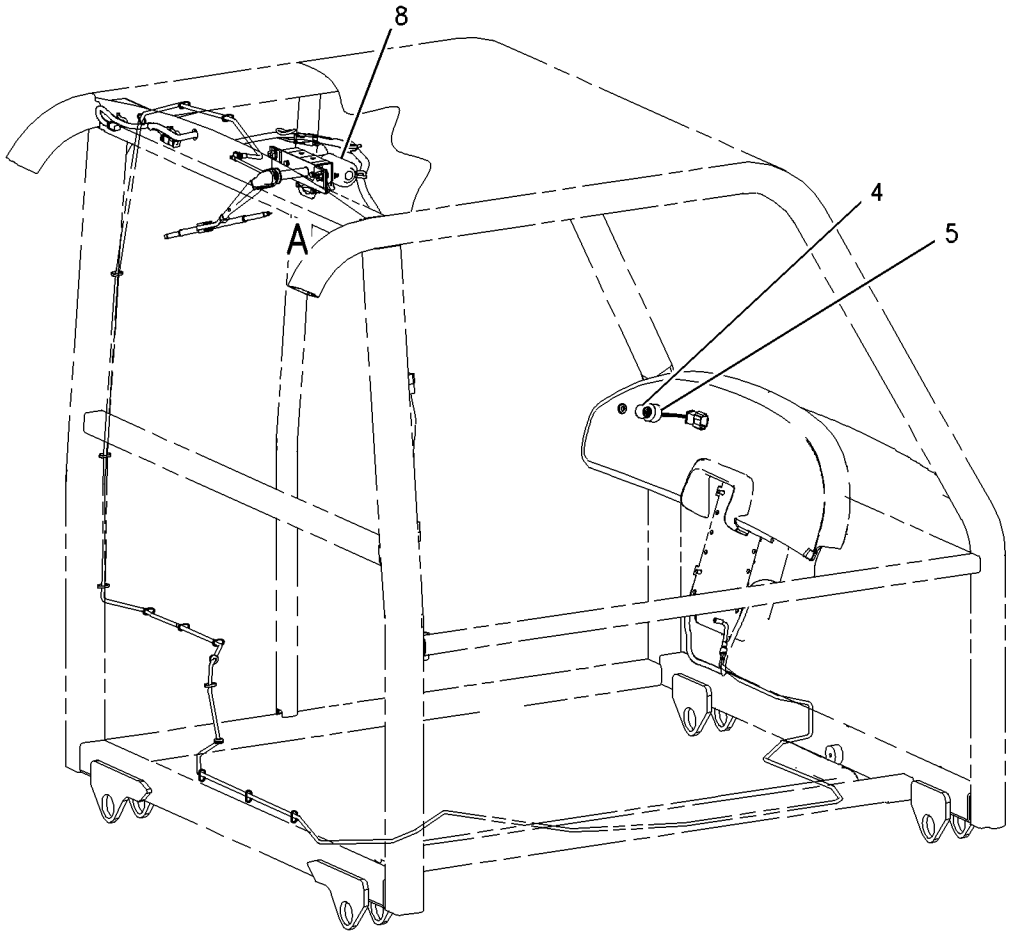

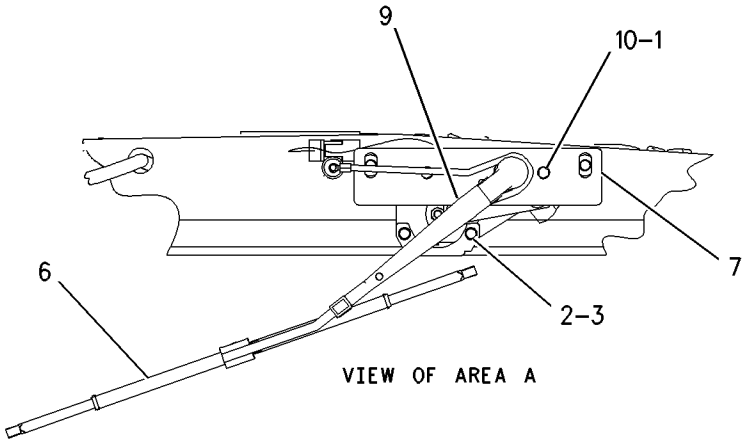

VIEW OF AREA A

GRAPHIC #1 **<END>** g00797590

OPERATOR STATION

237-7311 WIPER & WASHER GP-WINDOW

S/N: AXM1377-UP

PART OF 229-8087 CAB AR

SMCS-7305, 7306 **i02110045**

NOTE	PART NUMBER	QTY	PART NAME 1 2 3 4 5 6 (PRODUCT LEVEL)	SEE PAGE
	168-8927	1	ARM AS	
	168-8928	1	ARM AS	
	6V-7419	1	BLADE AS-WIPER	
	130-7034	1	BLADE AS-WIPER	
M	**5C-9553**	4	BOLT (M6X1X16-MM)	
M	**8T-4137**	2	BOLT (M10X1.5X20-MM)	
M	**8T-4908**	4	BOLT (M8X1.25X25-MM)	
	8T-5400	3	CONNECTOR	
E	**144-0195**		HOSE (850-CM)	
	147-7985	1	MOTOR GP-WINDOW WIPER	
	9G-3695	1	PLUG (GROMMET SEALING)	
	3F-9556	1	LOCKWASHER	
M	**5C-7261**	1	NUT (M8X1.25-THD)	
	102-8805	1	KIT-RECEPTACLE (6-PIN)	
			(INCLUDES RECEPTACLE AS & WEDGE)	
	186-3735	5	PIN-CONNECTOR	
	168-8926	1	MOTOR GP-WINDOW WIPER	
	3F-9556	1	LOCKWASHER	
M	**5C-7261**	1	NUT (M8X1.25-THD)	
	8T-8737	1	PLUG-SEAL	
	102-8805	1	KIT-RECEPTACLE (6-PIN)	
			(INCLUDES RECEPTACLE AS & WEDGE)	
	186-3735	5	PIN-CONNECTOR	
	168-3392	1	PLATE	
	1S-9593	30	STRAP-CABLE	
	235-2679	1	TANK GP-WINDOW WASHER	
	235-2680	1	TANK	
	235-2681	1	CAP	
	7T-8891	2	PUMP AS-WASHER	
	147-3701	2	GROMMET	
	204-2581	2	VALVE AS-CHECK	
	9X-8256	4	WASHER (6.6X12X2-MM THK)	
	8T-4121	2	WASHER-HARD (11X21X2.5-MM THK)	
	8T-4224	4	WASHER-HARD (8.8X16X2-MM THK)	

E-ORDER BY THE CENTIMETER
M-METRIC PART

<END>

SERVICE EQUIPMENT AND SUPPLIES

146-6224 COVER GP-SHIPPING

S/N: 4WY500-UP

PART OF 146-6225 TRANSMISSION AR

SMCS-7500 **i01444551**

NOTE	REF NO	GRAPHIC REF	PART NUMBER	QTY	PART NAME 1 2 3 4 5 6 (PRODUCT LEVEL)	SEE PAGE
	1	1	**2B-0858**	1	PLUG-PIPE	
	2	1	**2J-2668**	2	COVER	
	3	1	**4J-0524**	2	SEAL-O-RING	
	4	1	**149-0533**	1	COVER-SHIPPING	
	5	1	**0T-0573**	5	BOLT (3/8-16X2.75-IN)	
	6	1	**5M-2894**	9	WASHER-HARD (10.2X18.5X2.5-MM THK)	
	7	1	**9S-8752**	6	NUT-FULL (3/8-16-THD)	
	8	1	**0L-1143**	1	BOLT (3/8-16X2.5-IN)	
	9	1	**8E-7365**	1	GASKET	
	10	1	**1S-3730**	1	COVER	
	12	1	**1S-2176**	1	COVER	
	13	1	**0S-1621**	4	BOLT (1/2-13X1-IN)	
	14	1	**1S-3725**	1	COVER	
	15	1	**8E-7366**	1	GASKET	
	16	1	**0T-0768**	4	BOLT (7/16-14X1.75-IN)	
	17	1	**150-6251**	1	PLUG	
	18	1	**0S-0509**	5	BOLT (3/8-16X0.75-IN)	
	19	1	**6P-8339**	1	LOCK	
	20	1	**8M-4433**	1	SEAL-O-RING	
	21	1	**9S-4185**	1	PLUG	
	22	1	**3K-0360**	1	SEAL-O-RING	
	23	1	**180-6138**	1	GUARD	
	24	1	**8T-6762**	1	PLUG-PIPE	

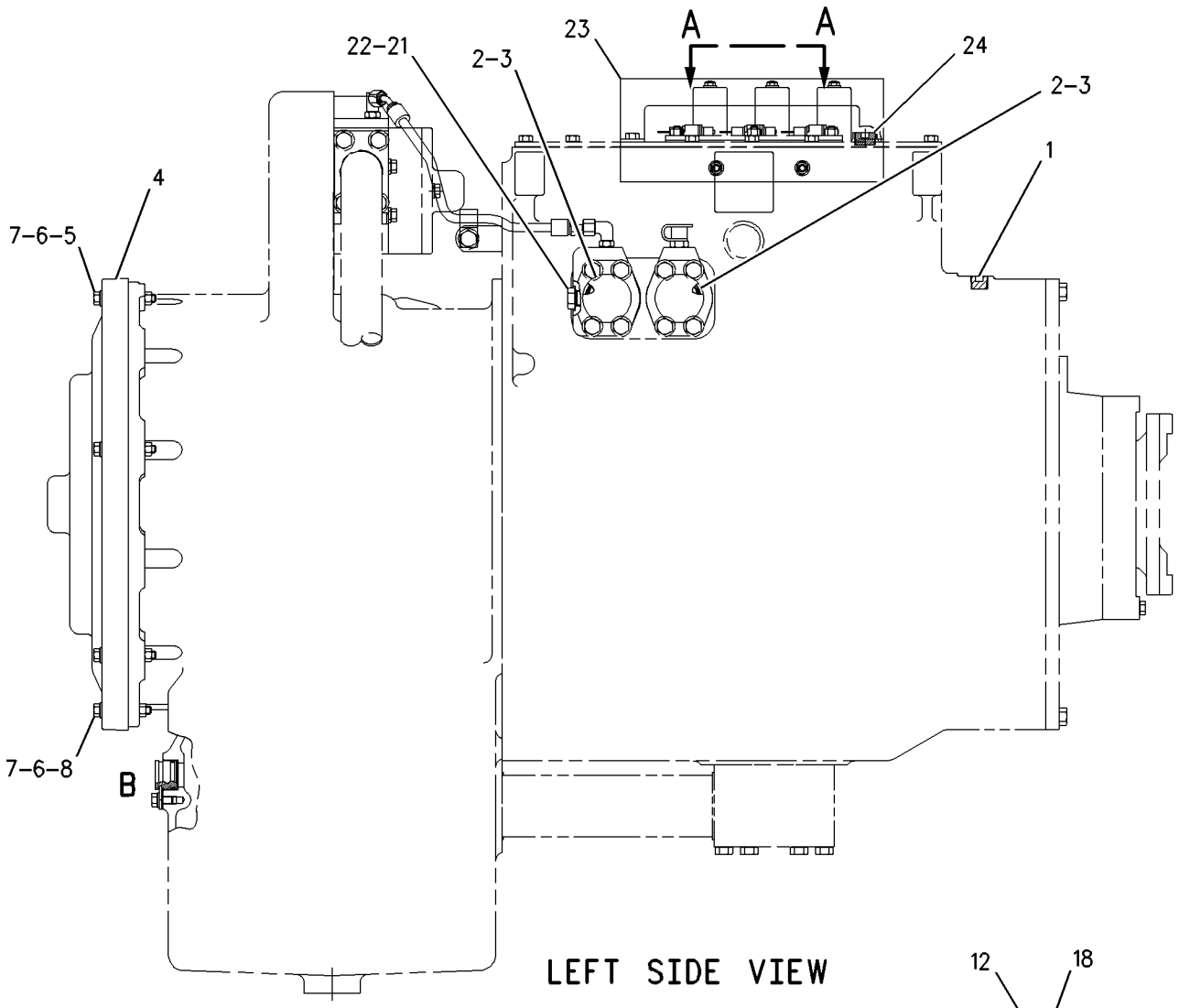

LEFT SIDE VIEW

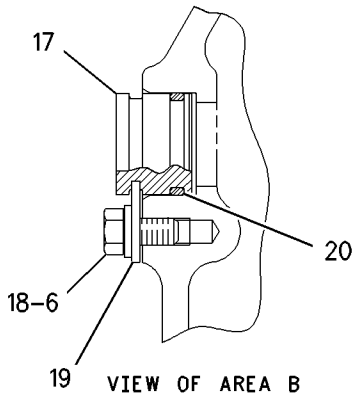

VIEW OF AREA B

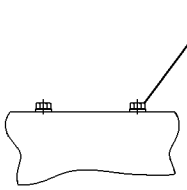

VIEW A-A

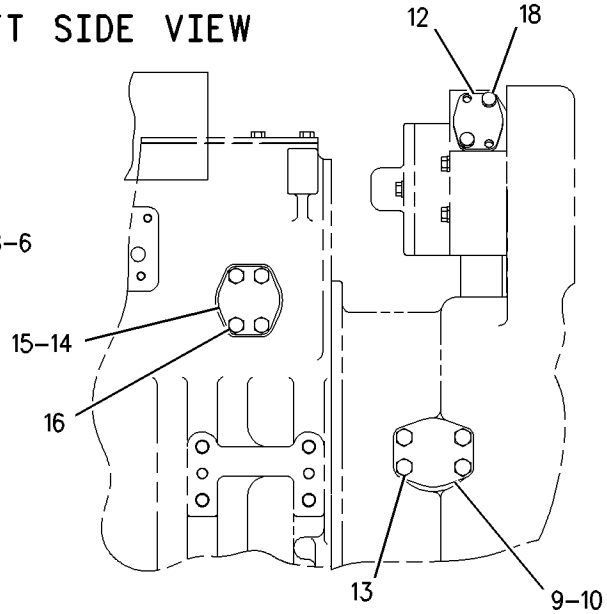

RIGHT SIDE VIEW

GRAPHIC #1 **<END>** g00763077

SERVICE EQUIPMENT AND SUPPLIES

152-7050 PLATE & FILM GP

S/N: AXM1-1254

PART OF 152-6927 INSTALLATION AR-MACHINE

SMCS-7405, 7557, 7563 **i02261927**

NOTE	REF NO	GRAPHIC REF	PART NUMBER	QTY	PART NAME 1 2 3 4 5 6 (PRODUCT LEVEL)	SEE PAGE
	1	2	**203-7634**	2	PLATE-WARNING (ACCUMULATOR)	
	2	1	**180-5937**	1	PLATE-WARNING (HIGH PRESSURE CYLINDER)	
	3	1,2	**2U-7544**	2	PLATE-WARNING (HIGH PRESSURE OIL)	
	4	1,2	**6U-7529**	2	PLATE-WARNING (DUMP BODY PROP)	
	5	2	**6U-7837**	1	PLATE-WARNING (CAB TILT CYLINDER PIN)	
	6	2	**5P-8197**	1	PLATE-WARNING (READ OPERATION MANUAL)	
	7	2	**137-0246**	2	PLATE-WARNING (NO CLEARANCE)	
	8	1	**4P-6464**	1	FILM-INFORMATION (AIR CLEANER)	
	9	2	**193-1507**	1	FILM-INSTRUCTION (RETARDING GUIDELINES)	
	10	1	**6V-4611**	1	FILM-WARNING (JUMPER CABLES)	
	11	1	**206-4926**	1	FILM-IDENTIFICATION (CAT)	
	12	1	**205-6250**	1	FILM (STRIPE, LH)	
	13	1,2	**201-5613**	2	FILM-IDENTIFICATION (740)	
	14	1,2	**205-6251**	1	FILM (STRIPE, RH)	
	15	1	**9X-6340**	1	FILM-INSTRUCTION (ENGINE OIL)	
	16	1	**9X-1878**	1	PLATE (PRODUCT IDENTIFICATION)	
BE	17	1,2	**120-0210**		FILM (RED STRIPE)	
	18	1	**7X-7644**	5	FILM-INSTRUCTION (TIE-DOWN)	
	19	1	**118-1225**	2	FILM (TRANSMISSION FILL CAP)	
	20	1	**205-6253**	1	FILM (STRIPE, LH)	
	21	2	**205-6252**	1	FILM-IDENTIFICATION (STRIPE, RH)	
	22	1	**8T-7532**	1	FILM-WARNING (RECOIL SPRING)	
	23	2	**143-7089**	2	FILM-WARNING (ACCUMULATOR)	
	24	1	**190-2938**	1	FILM-WARNING (PRESSURIZED COOLANT)	
BE	25	1	**178-4929**		FILM (RED REFLECTIVE)	
	26	1	**110-6393**	1	PLATE-INSTRUCTION (A/C)	
BE	27	1,2	**180-0561**		FILM (YELLOW REFLECTIVE)	
	28	1,2	**1P-2808**	2	FILM-IDENTIFICATION (LIFT POINT)	
	29	1,2	**1P-2807**	4	FILM-IDENTIFICATION (LIFT POINT)	
	30	2	**206-0162**	1	FILM (HYDRAULIC TEST POINT)	
BF			**2U-2720**	4	SCREW-DRIVE	
BF			**6L-7008**	2	STRAP-CABLE	
BF			**6U-9078**	12	FASTENER	
BF			**033-7291**	28	RIVET	

B-USE AS REQUIRED
E-ORDER BY THE CENTIMETER
F-NOT SHOWN

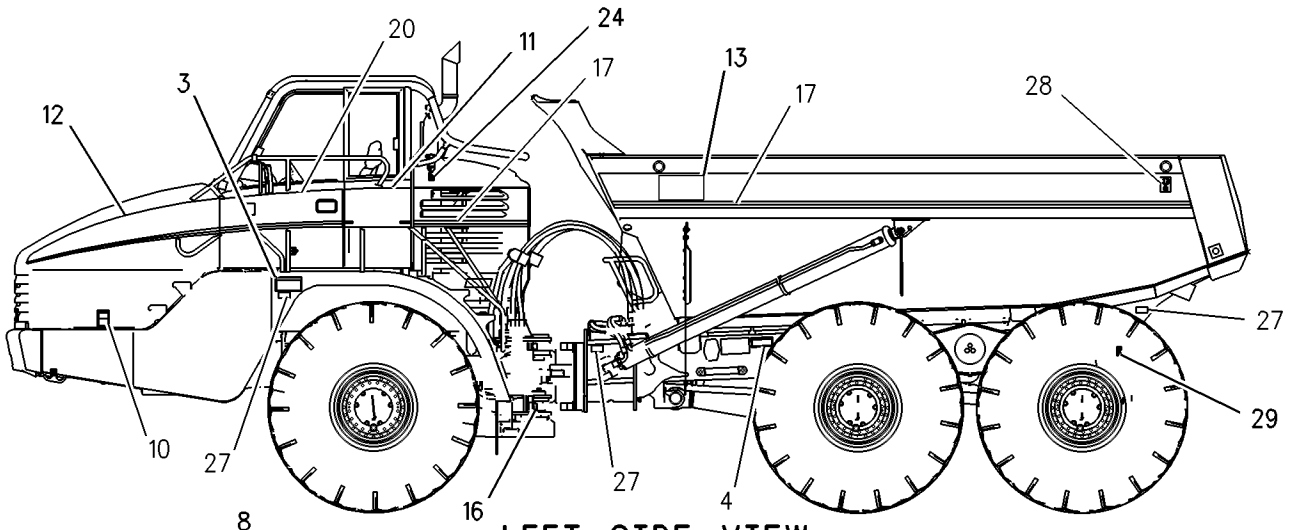

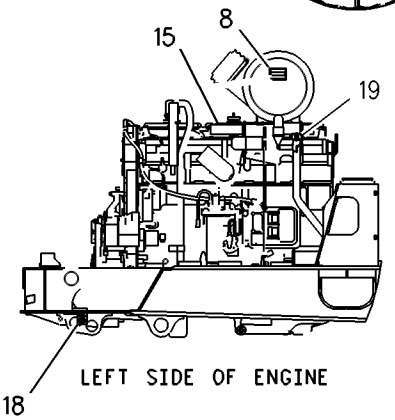

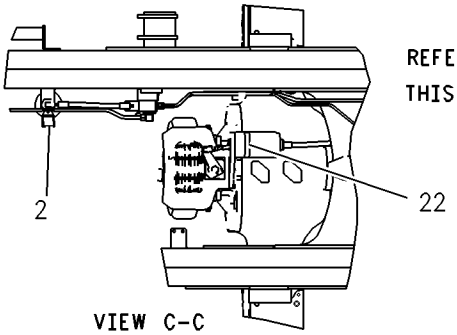

REFER TO ALL ILLUSTRATIONS OF THIS GROUP FOR AUXILIARY VIEWS

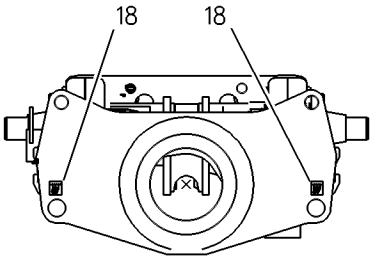

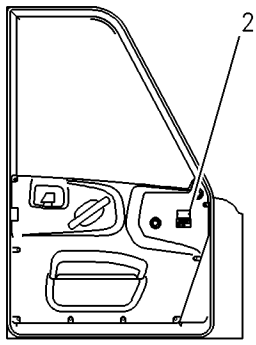

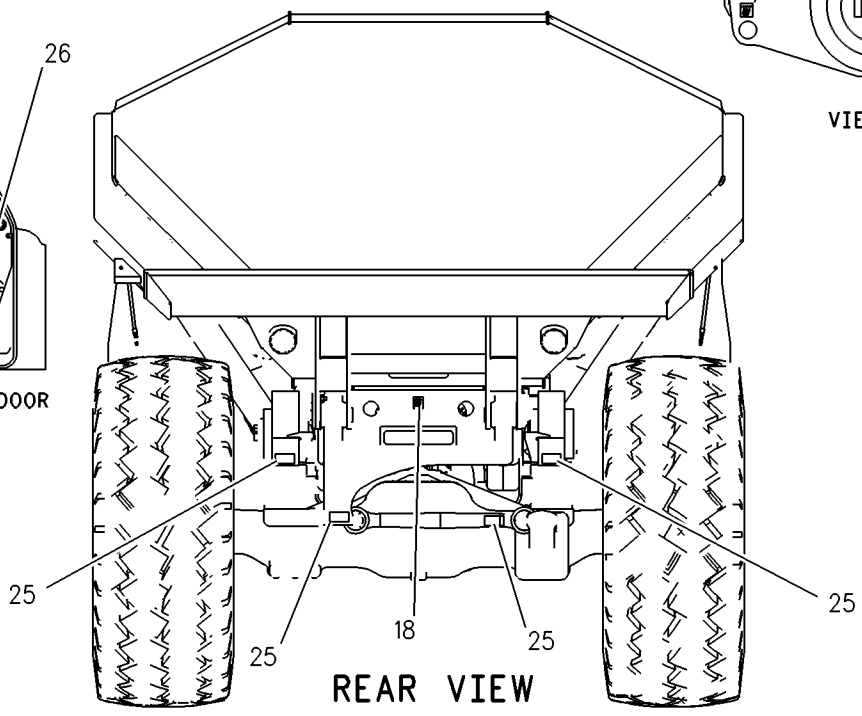

GRAPHIC #1 g00811890

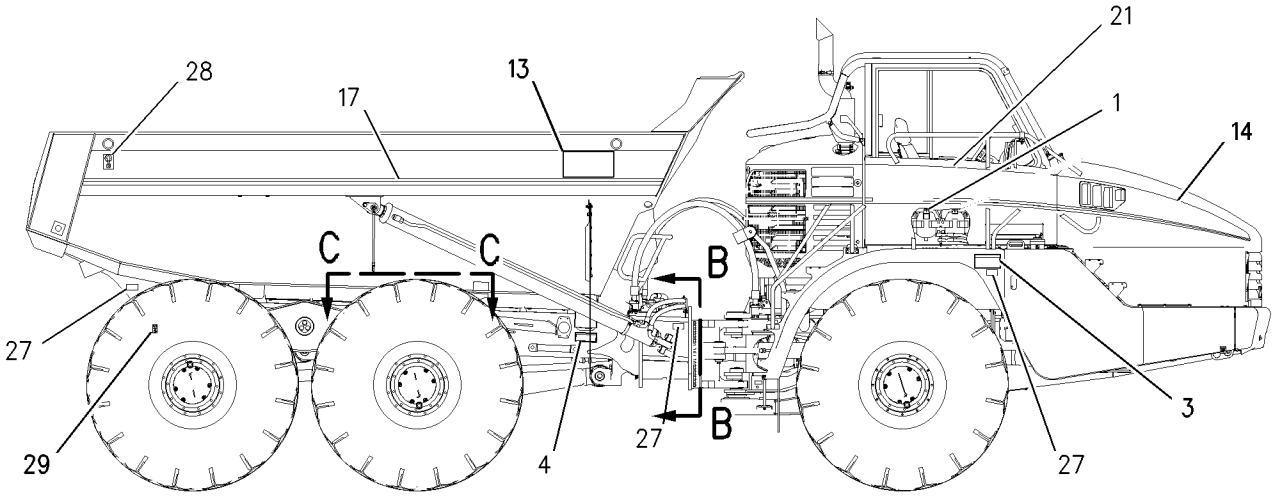

RIGHT SIDE VIEW

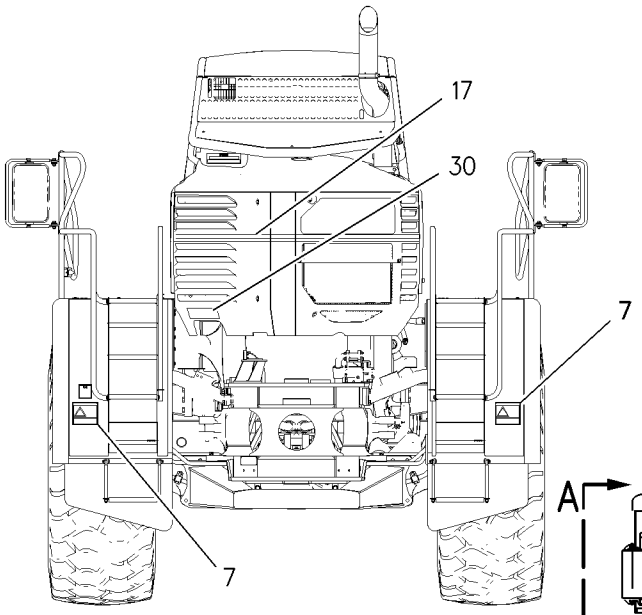

VIEW A-A

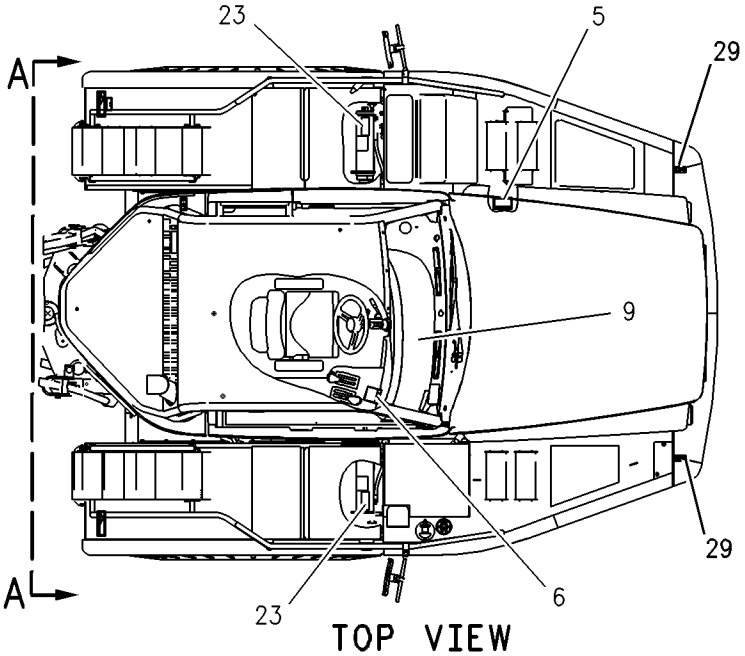

TOP VIEW

GRAPHIC #2 **<END>** g00811895

SERVICE EQUIPMENT AND SUPPLIES

152-7050 PLATE & FILM GP

S/N: AXM1255-1698

PART OF 152-6927 INSTALLATION AR-MACHINE

SMCS-7405, 7557, 7563 **i02261926**

NOTE	REF NO	GRAPHIC REF	PART NUMBER	QTY	PART NAME 1 2 3 4 5 6 (PRODUCT LEVEL)	SEE PAGE
C	1	1	**203-7634**	2	PLATE-WARNING (ACCUMULATOR)	
	2	2	**180-5937**	1	PLATE-WARNING (HIGH PRESSURE CYLINDER)	
	3	1,2	**2U-7544**	2	PLATE-WARNING (HIGH PRESSURE OIL)	
	4	1,2	**6U-7529**	2	PLATE-WARNING (DUMP BODY PROP)	
	5	1	**6U-7837**	1	PLATE-WARNING (CAB TILT CYLINDER PIN)	
	6	1	**5P-8197**	1	PLATE-WARNING (READ OPERATION MANUAL)	
	7	1	**137-0246**	2	PLATE-WARNING (NO CLEARANCE)	
	8	2	**4P-6464**	1	FILM-INFORMATION (AIR CLEANER)	
	9	1	**193-1507**	1	FILM-INSTRUCTION (RETARDING GUIDELINES)	
	10	2	**6V-4611**	1	FILM-WARNING (JUMPER CABLES)	
	11	2	**206-4926**	1	FILM-IDENTIFICATION (CAT)	
	12	2	**205-6250**	1	FILM (STRIPE, LH)	
	13	1,2	**201-5613**	2	FILM-IDENTIFICATION	
	14	1	**205-6251**	1	FILM (STRIPE, RH)	
	15	2	**9X-6340**	1	FILM-INSTRUCTION (ENGINE OIL)	
	16	2	**239-6986**	1	PLATE (PRODUCT IDENTIFICATION)	
BE	17	1,2	**120-0210**		FILM (RED STRIPE)	
	18	2	**7X-7644**	5	FILM-INSTRUCTION (TIE-DOWN)	
	19	2	**118-1225**	2	FILM (TRANSMISSION FILL CAP)	
	20	2	**205-6253**	1	FILM (STRIPE, LH)	
	21	1	**205-6252**	1	FILM-IDENTIFICATION (STRIPE, RH)	
	22	2	**8T-7532**	1	FILM-WARNING (RECOIL SPRING)	
	23	1	**7X-0741**	1	FILM (FUEL)	
	24	2	**190-2938**	1	FILM-WARNING (PRESSURIZED COOLANT)	
BE	25	2	**178-4929**		FILM (RED REFLECTIVE)	
	26	2	**110-6393**	1	PLATE-INSTRUCTION (A/C)	
BE	27	1,2	**180-0561**		FILM (YELLOW REFLECTIVE)	
	28	1,2	**1P-2808**	2	FILM-IDENTIFICATION (LIFT POINT)	
	29	1,2	**1P-2807**	4	FILM-IDENTIFICATION (LIFT POINT)	
	30	1	**206-0162**	1	FILM (HYDRAULIC TEST POINT)	
	31	2	**8C-9047**	1	PLATE-SOUND SUPPRESSION	
	32	1	**196-4140**	1	PLATE-WARNING (ROPS, FOPS)	
	33	2	**201-8002**	1	FILM-NOTICE (SHIP)	
BF			**6U-9078**	12	FASTENER	
BF			**033-7291**	28	RIVET	
BF			**3S-2093**	2	STRAP-CABLE	

B-USE AS REQUIRED
C-CHANGE FROM PREVIOUS TYPE
E-ORDER BY THE CENTIMETER
F-NOT SHOWN

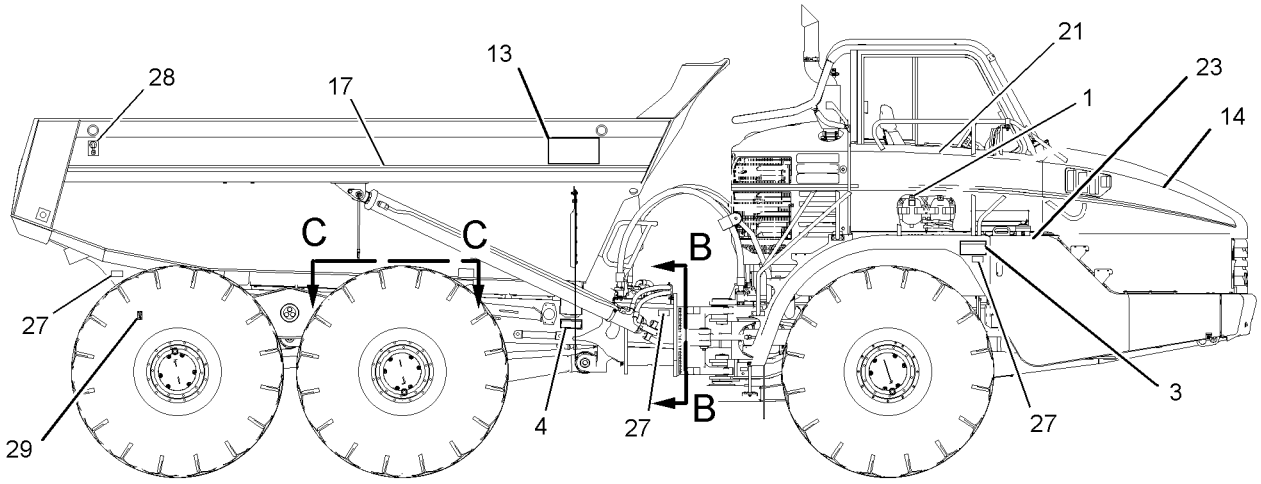

RIGHT SIDE VIEW

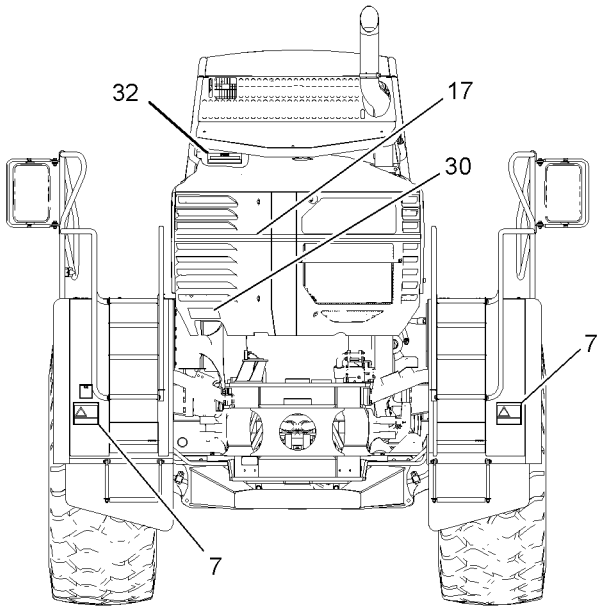

REAR VIEW

REFER TO ALL ILLUSTRATIONS OF THIS GROUP FOR AUXILIARY VIEWS

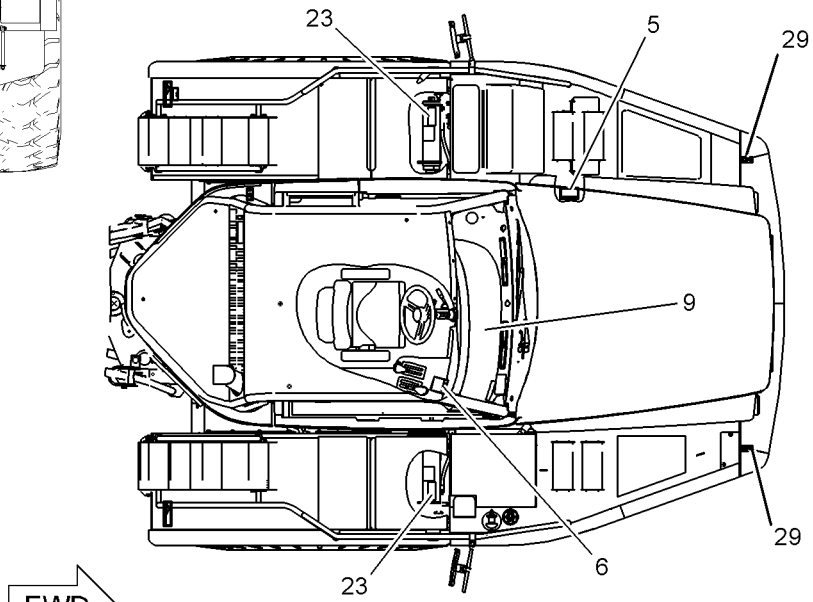

TOP VIEW

GRAPHIC #1

g01076859

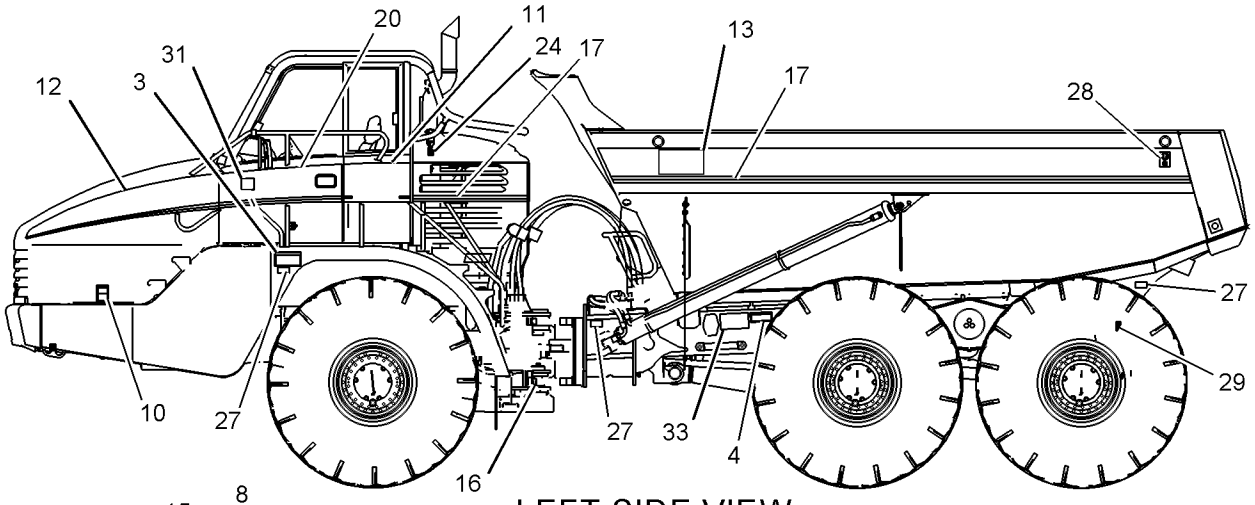

LEFT SIDE VIEW

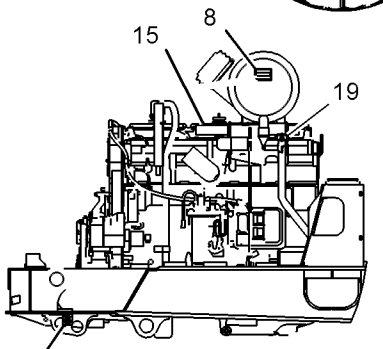

LEFT SIDE VIEW
(ENGINE)

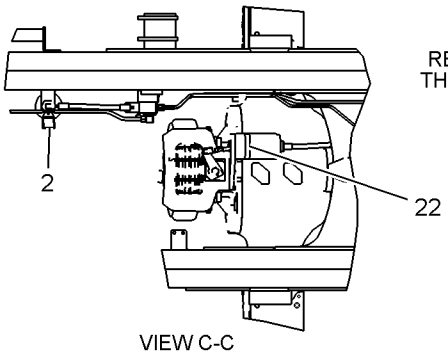

VIEW C-C

REFER TO ALL ILLUSTRATIONS OF THIS GROUP FOR AUXILIARY VIEWS

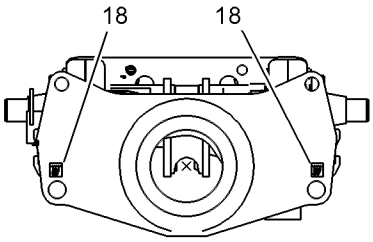

VIEW B-B

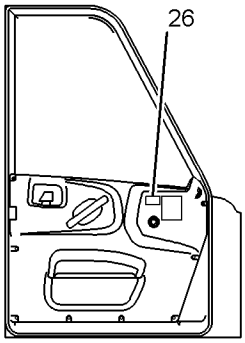

INSIDE OF CAB DOOR

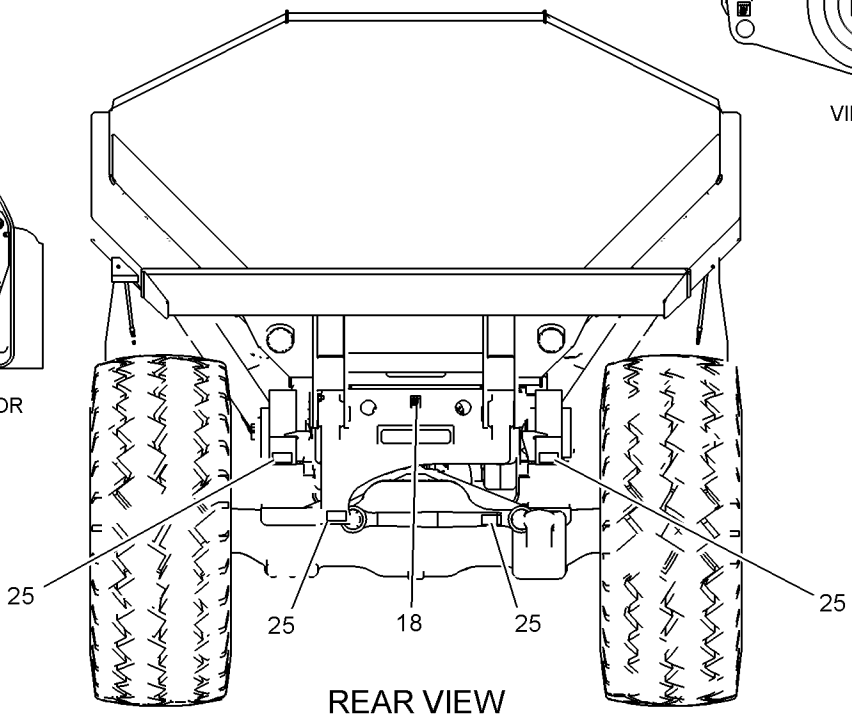

REAR VIEW

GRAPHIC #2

<END>

g01076860

SERVICE EQUIPMENT AND SUPPLIES

152-7050 PLATE & FILM GP

S/N: AXM1699-UP

PART OF 152-6927 INSTALLATION AR-MACHINE

SMCS-7405, 7557, 7563 **i02208393**

NOTE	REF NO	GRAPHIC REF	PART NUMBER	QTY	PART NAME 1 2 3 4 5 6 (PRODUCT LEVEL)	SEE PAGE
C	1	1	**256-3011**	2	PLATE-WARNING (ACCUMULATOR)	
	2	2	**180-5937**	1	PLATE-WARNING (HIGH PRESSURE CYLINDER)	
	3	1,2	**2U-7544**	2	PLATE-WARNING (HIGH PRESSURE OIL)	
	4	1,2	**6U-7529**	2	PLATE-WARNING (DUMP BODY PROP)	
	5	1	**6U-7837**	1	PLATE-WARNING (CAB TILT CYLINDER PIN)	
	6	1	**5P-8197**	1	PLATE-WARNING (READ OPERATION MANUAL)	
	7	1	**137-0246**	2	PLATE-WARNING (NO CLEARANCE)	
	8	2	**4P-6464**	1	FILM-INFORMATION (AIR CLEANER)	
	9	1	**193-1507**	1	FILM-INSTRUCTION (RETARDING GUIDELINES)	
	10	2	**6V-4611**	1	FILM-WARNING (JUMPER CABLES)	
	11	2	**206-4926**	1	FILM-IDENTIFICATION (CAT)	
	12	2	**205-6250**	1	FILM (STRIPE, LH)	
	13	1,2	**201-5613**	2	FILM-IDENTIFICATION	
	14	1	**205-6251**	1	FILM (STRIPE, RH)	
	15	1	**9X-6340**	1	FILM-INSTRUCTION (ENGINE OIL)	
	16	2	**239-6986**	1	PLATE (PRODUCT IDENTIFICATION)	
BE	17	1,2	**120-0210**		FILM (RED STRIPE)	
	18	1,2	**7X-7644**	5	FILM-INSTRUCTION (TIE-DOWN)	
	19	2	**118-1225**	2	FILM (TRANSMISSION FILL CAP)	
	20	2	**205-6253**	1	FILM (STRIPE, LH)	
	21	1	**205-6252**	1	FILM-IDENTIFICATION (STRIPE, RH)	
	22	2	**8T-7532**	1	FILM-WARNING (RECOIL SPRING)	
	23	1	**7X-0741**	1	FILM (FUEL)	
	24	2	**190-2938**	1	FILM-WARNING (PRESSURIZED COOLANT)	
BE	25	2	**178-4929**		FILM (RED REFLECTIVE)	
	26	1	**110-6393**	1	PLATE-INSTRUCTION (A/C)	
BE	27	1,2	**180-0561**		FILM (YELLOW REFLECTIVE)	
	28	1,2	**1P-2808**	2	FILM-IDENTIFICATION (LIFT POINT)	
	29	1,2	**1P-2807**	4	FILM-IDENTIFICATION (LIFT POINT)	
	30	1	**206-0162**	1	FILM (HYDRAULIC TEST POINT)	
	31	2	**8C-9047**	1	PLATE-SOUND SUPPRESSION	
	32	1	**196-4140**	1	PLATE-WARNING (ROPS, FOPS)	
	33	2	**201-8002**	1	FILM-NOTICE (SHIP)	
BF			**6U-9078**	12	FASTENER	
BF			**033-7291**	28	RIVET	
BF			**6L-7008**	2	STRAP-CABLE	

B-USE AS REQUIRED
C-CHANGE FROM PREVIOUS TYPE
E-ORDER BY THE CENTIMETER
F-NOT SHOWN

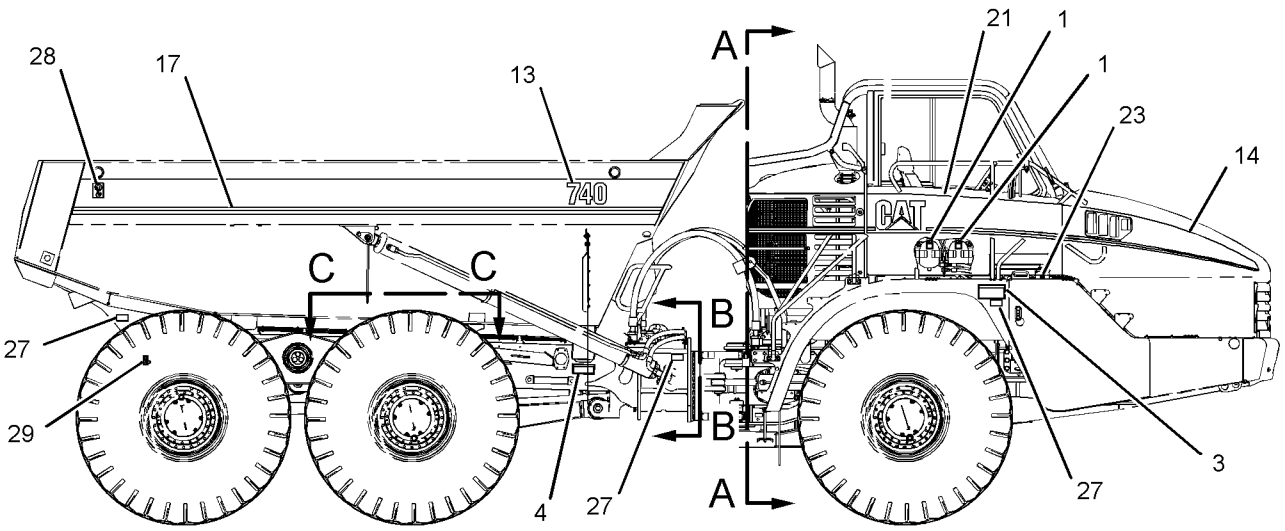

RIGHT SIDE VIEW

REFER TO ALL ILLUSTRATIONS OF THIS GROUP FOR AUXILIARY VIEWS

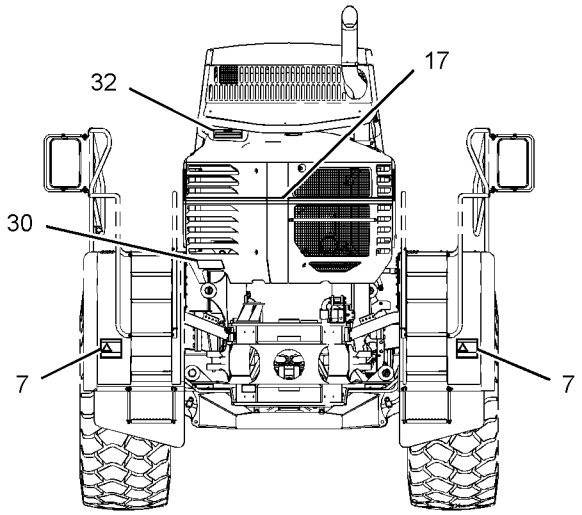

VIEW A-A

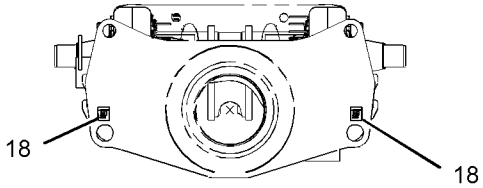

VIEW B-B

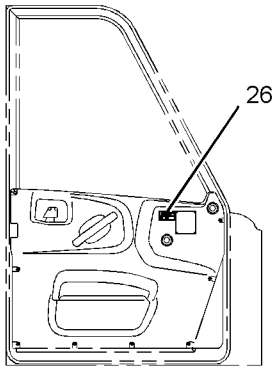

SECTION D-D

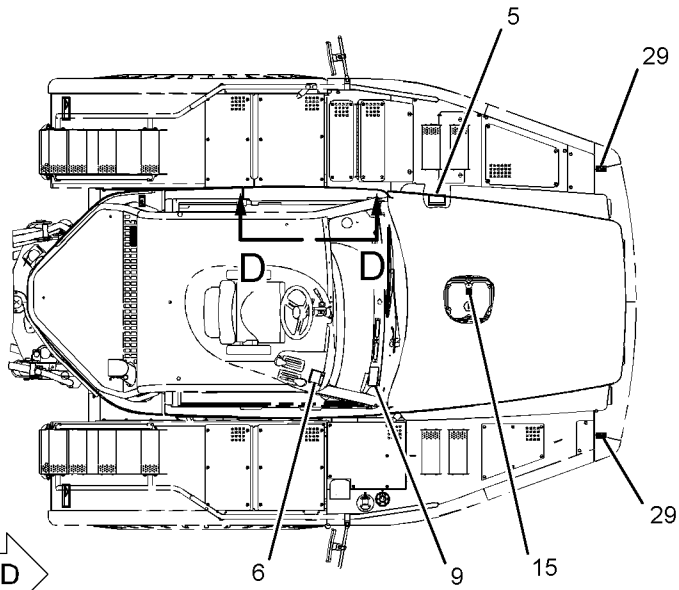

TOP VIEW

GRAPHIC #1 g01125518

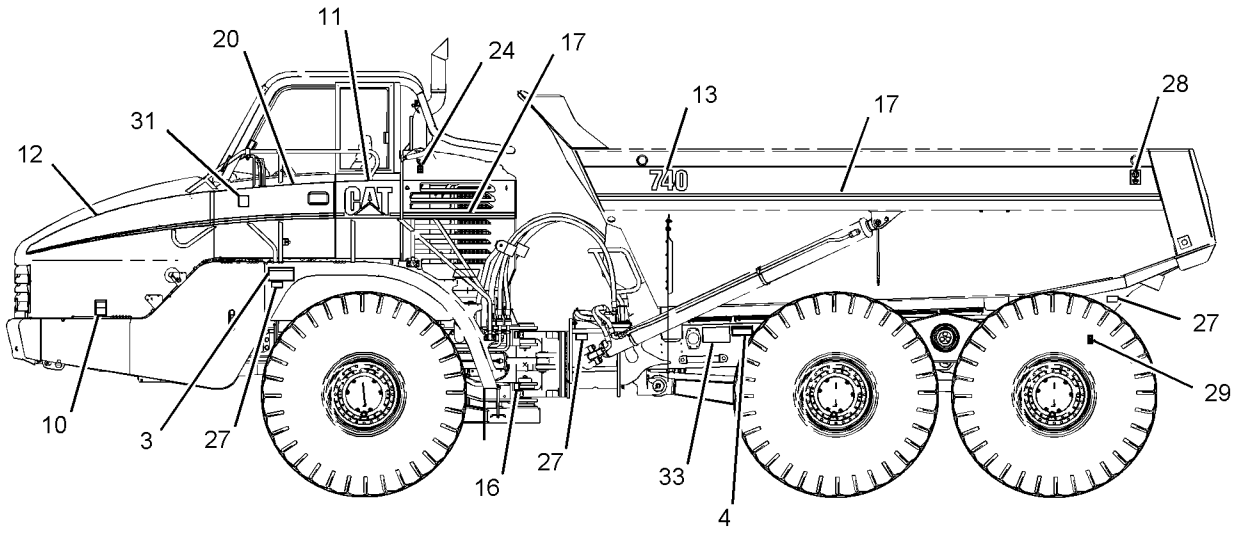

LEFT SIDE VIEW

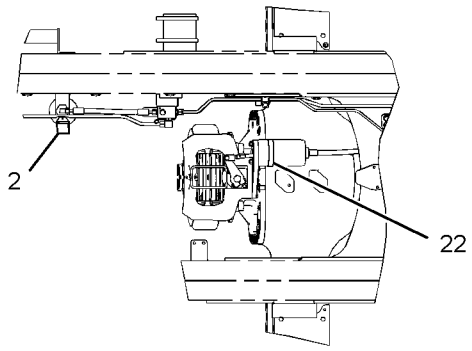

VIEW C-C

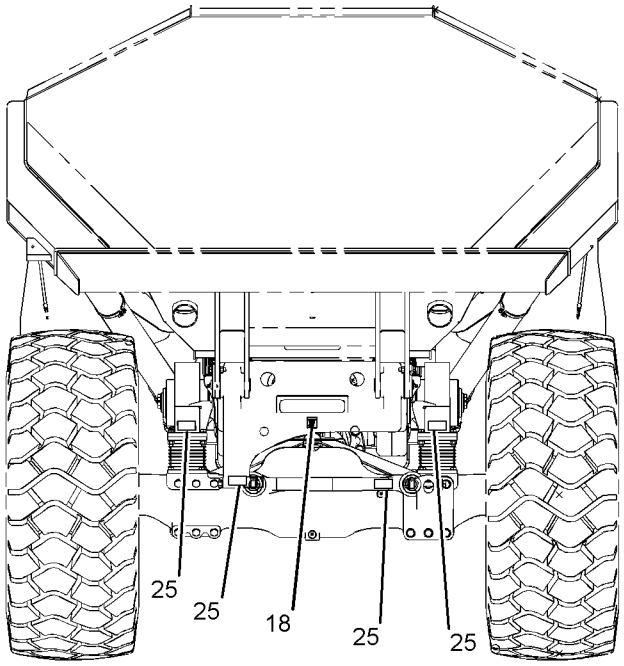

REAR VIEW

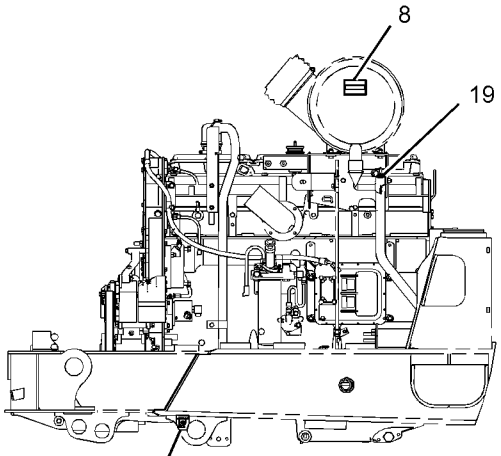

LEFT SIDE VIEW
(ENGINE)

GRAPHIC #2 **<END>** g01125519

SERVICE EQUIPMENT AND SUPPLIES

152-7081 PLATE & FILM GP–ARABIC

S/N: AXM1-1698
AN ATTACHMENT

SMCS-7405, 7557, 7563 **i02261928**

NOTE	REF NO	GRAPHIC REF	PART NUMBER	QTY	PART NAME 1 2 3 4 5 6 (PRODUCT LEVEL)	SEE PAGE
	1	2	**203-7829**	2	PLATE-WARNING (ACCUMULATOR)	
	2	1	**180-6650**	1	PLATE-WARNING (ACCUMULATOR)	
	3	1,2	**147-2619**	2	PLATE-WARNING (HIGH PRESSURE OIL)	
	4	1,2	**147-2646**	2	PLATE-WARNING (DUMP BODY PROP)	
	5	2	**150-9505**	1	PLATE-WARNING (CAB TILT CYLINDER PIN)	
	6	2	**5P-9761**	1	PLATE-WARNING (READ OPERATION MANUAL)	
	7	2	**150-9500**	2	PLATE-WARNING (NO CLEARANCE)	
	8	1	**4P-8686**	1	FILM-INFORMATION (AIR CLEANER)	
	9	2	**193-1508**	1	FILM-INSTRUCTION (RETARDING GUIDELINES)	
	10	1	**6V-8831**	1	FILM-WARNING (JUMPER CABLES)	
	11	2	**196-5778**	1	PLATE-WARNING (ROPS, FOPS)	

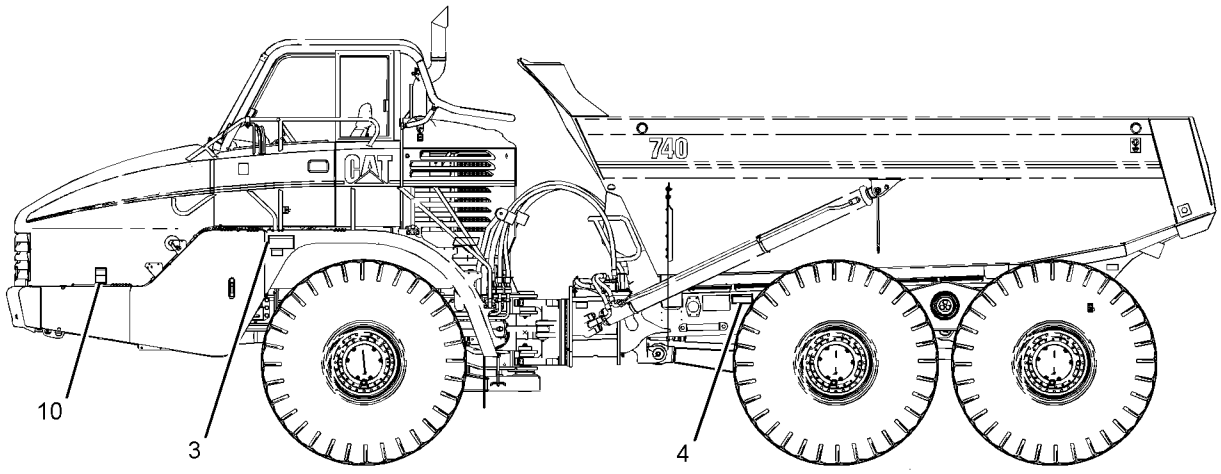

LEFT SIDE VIEW

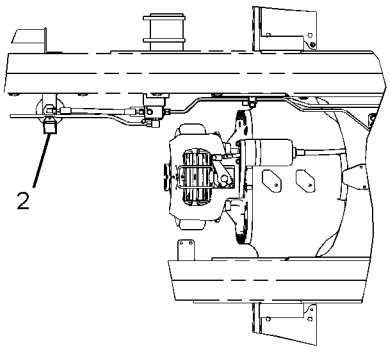

VIEW C-C

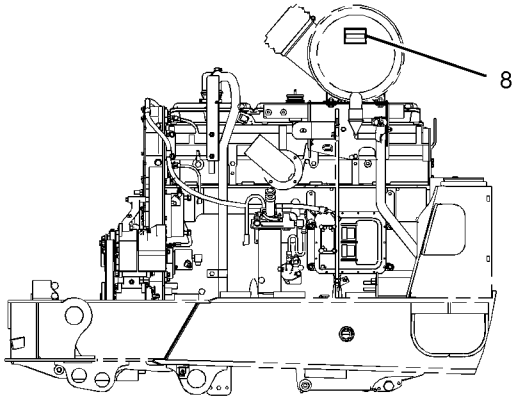

LEFT SIDE VIEW
(ENGINE)

GRAPHIC #1 g01105168

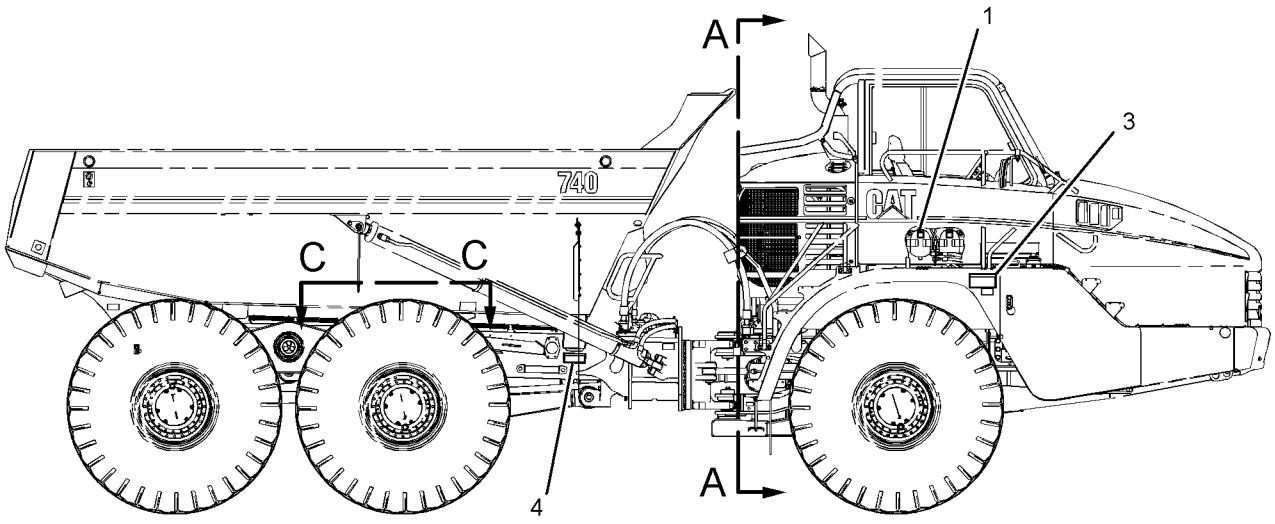

RIGHT SIDE VIEW

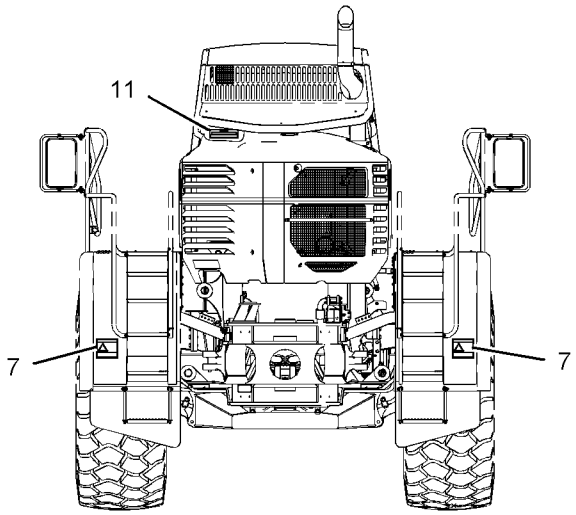

VIEW A-A

REFER TO ALL ILLUSTRATIONS OF
THIS GROUP FOR AUXILIARY VIEWS

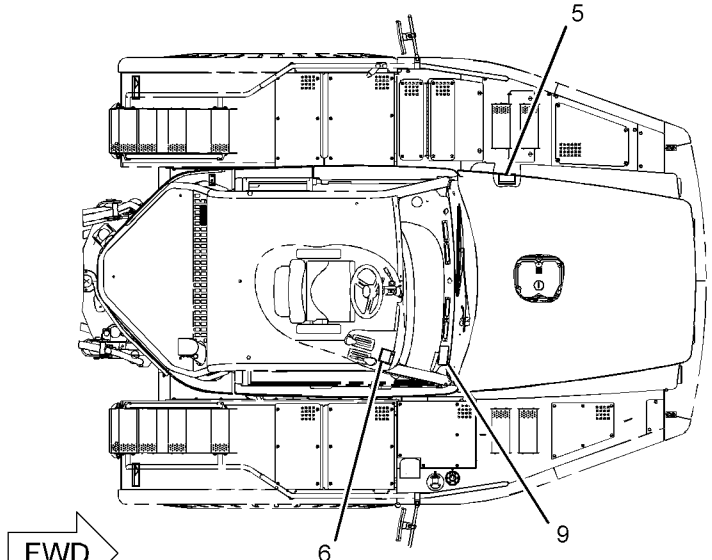

TOP VIEW

GRAPHIC #2 **<END>** g01105169

SERVICE EQUIPMENT AND SUPPLIES

152-7081 PLATE & FILM GP–ARABIC

S/N: AXM1699-UP
AN ATTACHMENT

SMCS-7405, 7557, 7563 **i02183162**

NOTE	REF NO	GRAPHIC REF	PART NUMBER	QTY	PART NAME 1 2 3 4 5 6 (PRODUCT LEVEL)	SEE PAGE
C	1	2	**256-9952**	2	PLATE-WARNING (ACCUMULATOR)	
	2	1	**180-6650**	1	PLATE-WARNING (ACCUMULATOR)	
	3	1,2	**147-2619**	2	PLATE-WARNING (HIGH PRESSURE OIL)	
	4	1,2	**147-2646**	2	PLATE-WARNING (DUMP BODY PROP)	
	5	2	**150-9505**	1	PLATE-WARNING (CAB TILT CYLINDER PIN)	
	6	2	**5P-9761**	1	PLATE-WARNING (READ OPERATION MANUAL)	
	7	2	**150-9500**	2	PLATE-WARNING (NO CLEARANCE)	
	8	1	**4P-8686**	1	FILM-INFORMATION (AIR CLEANER)	
	9	2	**193-1508**	1	FILM-INSTRUCTION (RETARDING GUIDELINES)	
	10	1	**6V-8831**	1	FILM-WARNING (JUMPER CABLES)	
	11	2	**196-5778**	1	PLATE-WARNING (ROPS, FOPS)	

C-CHANGE FROM PREVIOUS TYPE

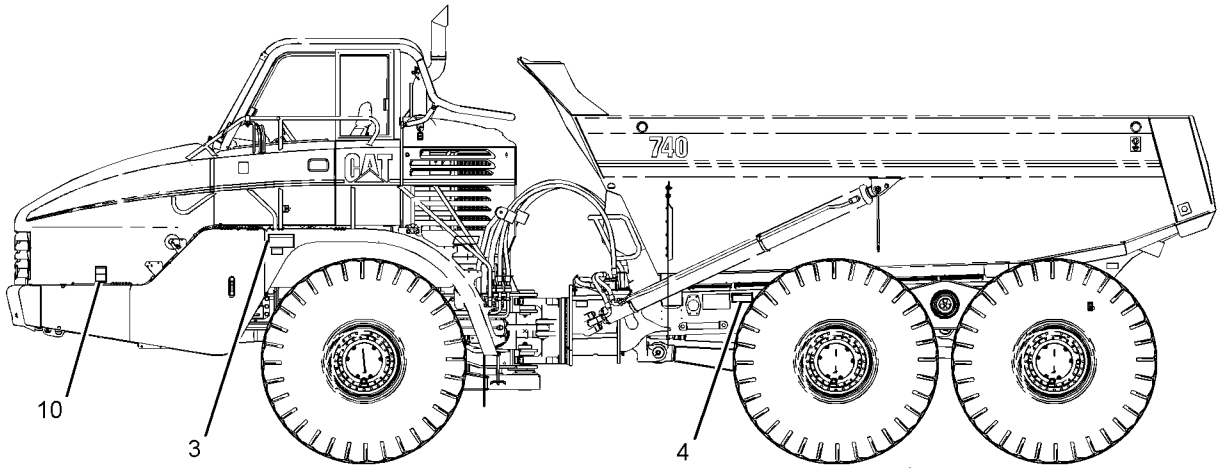

LEFT SIDE VIEW

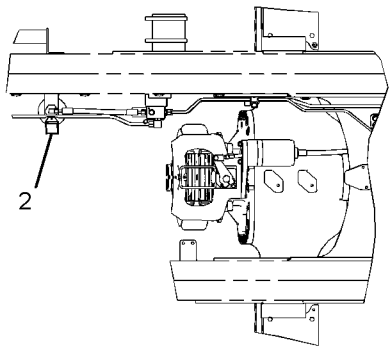

VIEW C-C

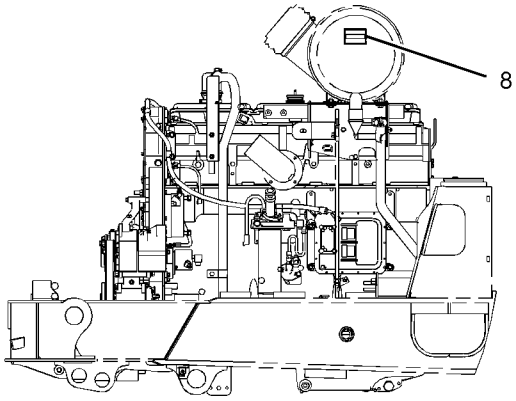

LEFT SIDE VIEW
(ENGINE)

GRAPHIC #1 g01105168

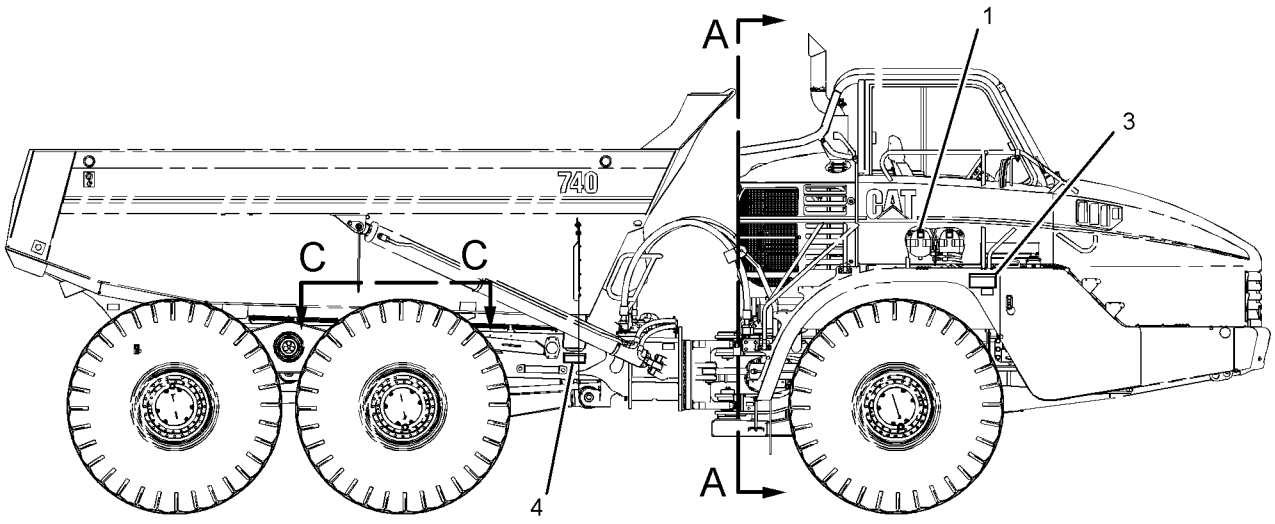

RIGHT SIDE VIEW

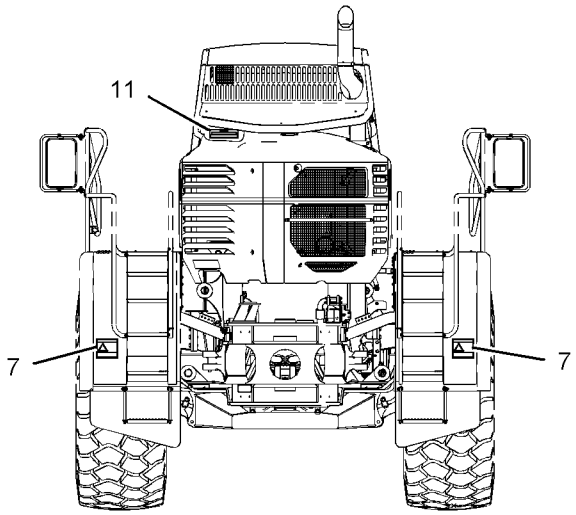

VIEW A-A

REFER TO ALL ILLUSTRATIONS OF
THIS GROUP FOR AUXILIARY VIEWS

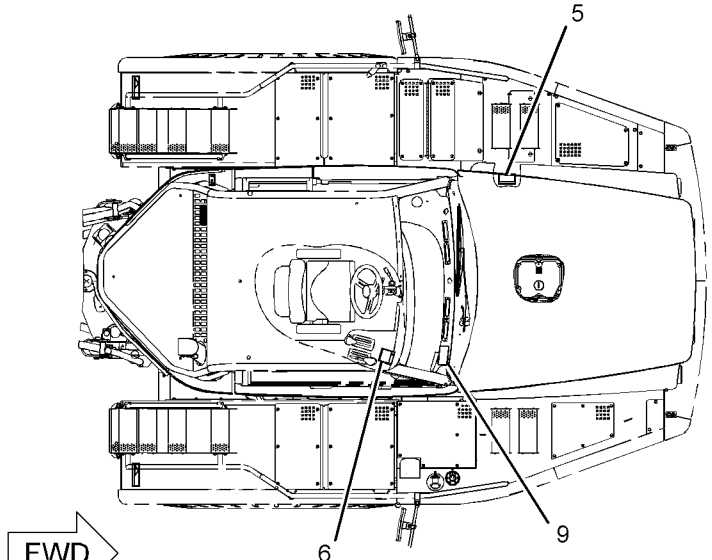

TOP VIEW

GRAPHIC #2 **<END>** g01105169

SERVICE EQUIPMENT AND SUPPLIES

152-7082 PLATE & FILM GP–ITALIAN

S/N: AXM1-1698
AN ATTACHMENT

SMCS-7405, 7557, 7563 **i02261929**

NOTE	REF NO	GRAPHIC REF	PART NUMBER	QTY	PART NAME 1 2 3 4 5 6 (PRODUCT LEVEL)	SEE PAGE
	1	2	**203-7834**	2	PLATE-WARNING (ACCUMULATOR)	
	2	1	**180-6656**	1	PLATE-WARNING (ACCUMULATOR)	
	3	1,2	**123-4148**	2	PLATE-WARNING (HIGH PRESSURE LINES)	
	4	1,2	**123-4168**	2	PLATE-WARNING (DUMP BODY PROP)	
	5	2	**123-6067**	1	PLATE-WARNING (CAB PIN)	
	6	2	**5P-8202**	1	PLATE-WARNING (DO NOT OPERATE)	
	7	2	**137-1584**	2	PLATE-WARNING (NO CLEARANCE)	
	8	1	**4P-8689**	1	FILM-INFORMATION (AIR CLEANER)	
	9	2	**193-1510**	1	FILM-INSTRUCTION (RETARDING GUIDELINES)	
	10	1	**5C-9625**	1	FILM-WARNING (CABLE CONNECTION)	
	11	2	**196-5784**	1	PLATE-WARNING (ROPS, FOPS)	

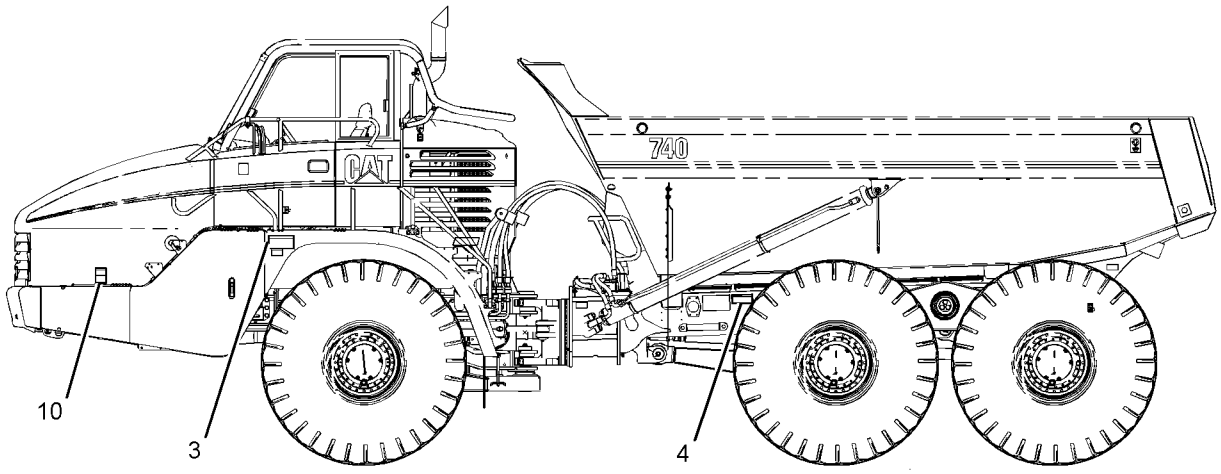

LEFT SIDE VIEW

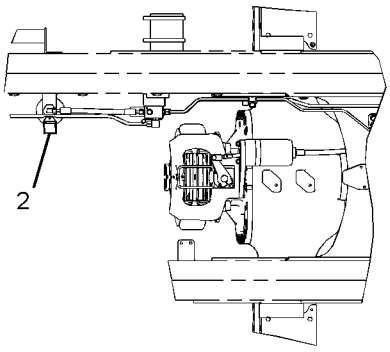

VIEW C-C

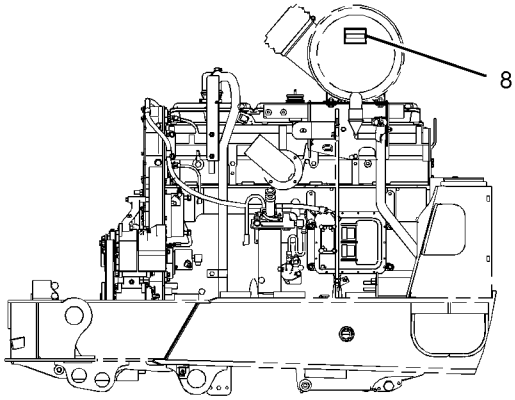

LEFT SIDE VIEW
(ENGINE)

GRAPHIC #1 g01105168

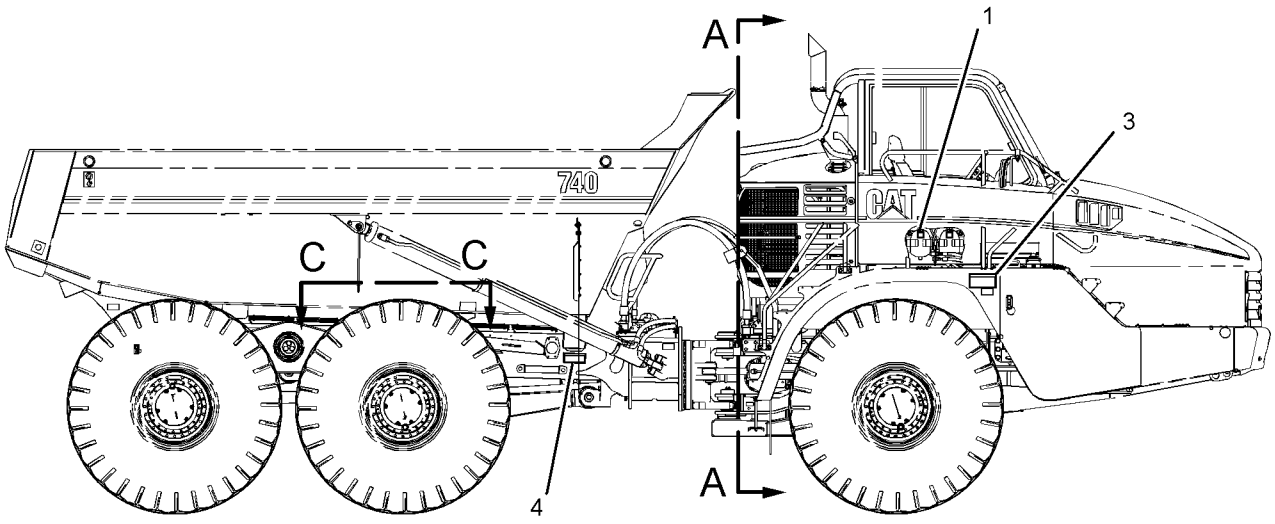

RIGHT SIDE VIEW

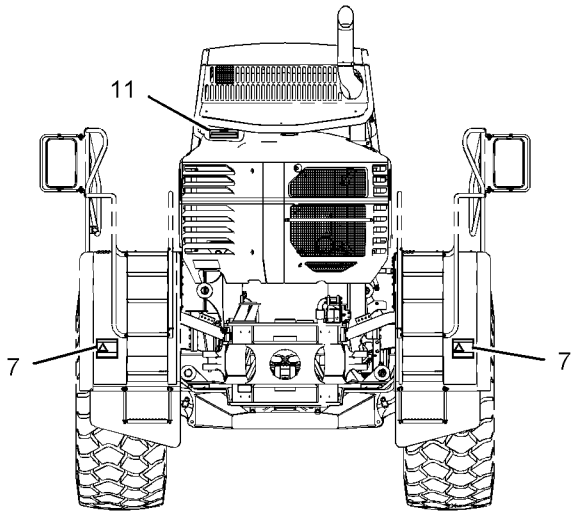

VIEW A-A

REFER TO ALL ILLUSTRATIONS OF
THIS GROUP FOR AUXILIARY VIEWS

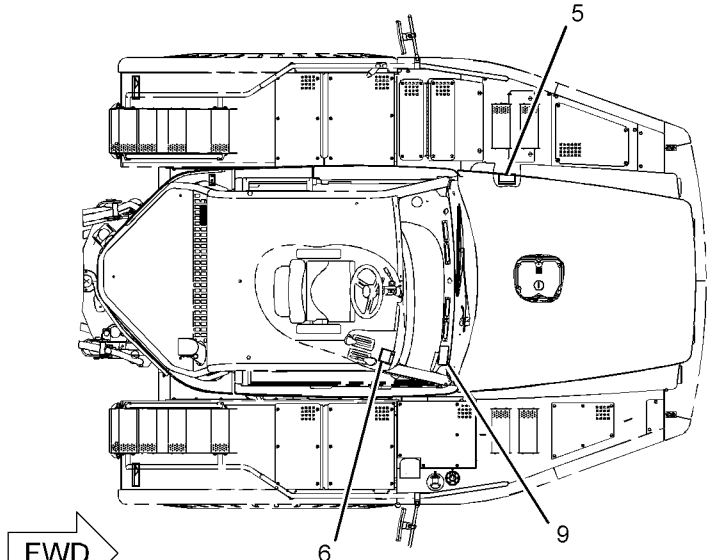

TOP VIEW

GRAPHIC #2 **<END>** g01105169

SERVICE EQUIPMENT AND SUPPLIES

152-7082 PLATE & FILM GP–ITALIAN

S/N: AXM1699-UP
AN ATTACHMENT

SMCS-7405, 7557, 7563 **i02183164**

NOTE	REF NO	GRAPHIC REF	PART NUMBER	QTY	PART NAME 1 2 3 4 5 6 (PRODUCT LEVEL)	SEE PAGE
C	1	2	**256-9959**	2	PLATE-WARNING (ACCUMULATOR)	
	2	1	**180-6656**	1	PLATE-WARNING (ACCUMULATOR)	
	3	1,2	**123-4148**	2	PLATE-WARNING (HIGH PRESSURE LINES)	
	4	1,2	**123-4168**	2	PLATE-WARNING (DUMP BODY PROP)	
	5	2	**123-6067**	1	PLATE-WARNING (CAB PIN)	
	6	2	**5P-8202**	1	PLATE-WARNING (DO NOT OPERATE)	
	7	2	**137-1584**	2	PLATE-WARNING (NO CLEARANCE)	
	8	1	**4P-8689**	1	FILM-INFORMATION (AIR CLEANER)	
	9	2	**193-1510**	1	FILM-INSTRUCTION (RETARDING GUIDELINES)	
	10	1	**5C-9625**	1	FILM-WARNING (CABLE CONNECTION)	
	11	2	**196-5784**	1	PLATE-WARNING (ROPS, FOPS)	

C-CHANGE FROM PREVIOUS TYPE

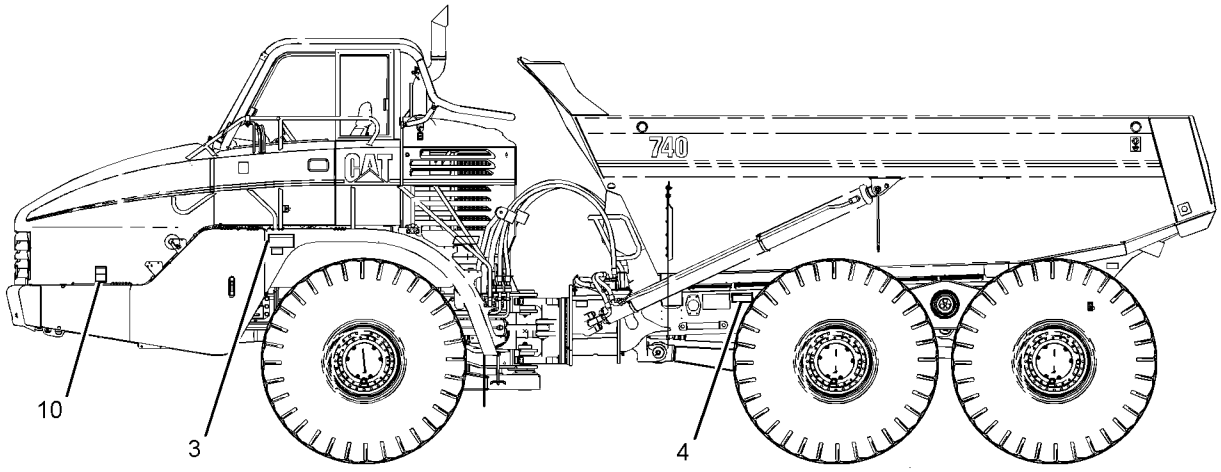

LEFT SIDE VIEW

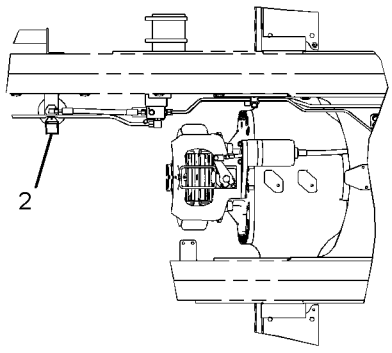

VIEW C-C

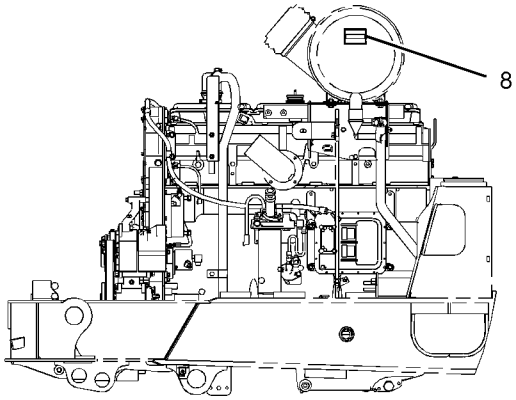

LEFT SIDE VIEW
(ENGINE)

GRAPHIC #1 g01105168

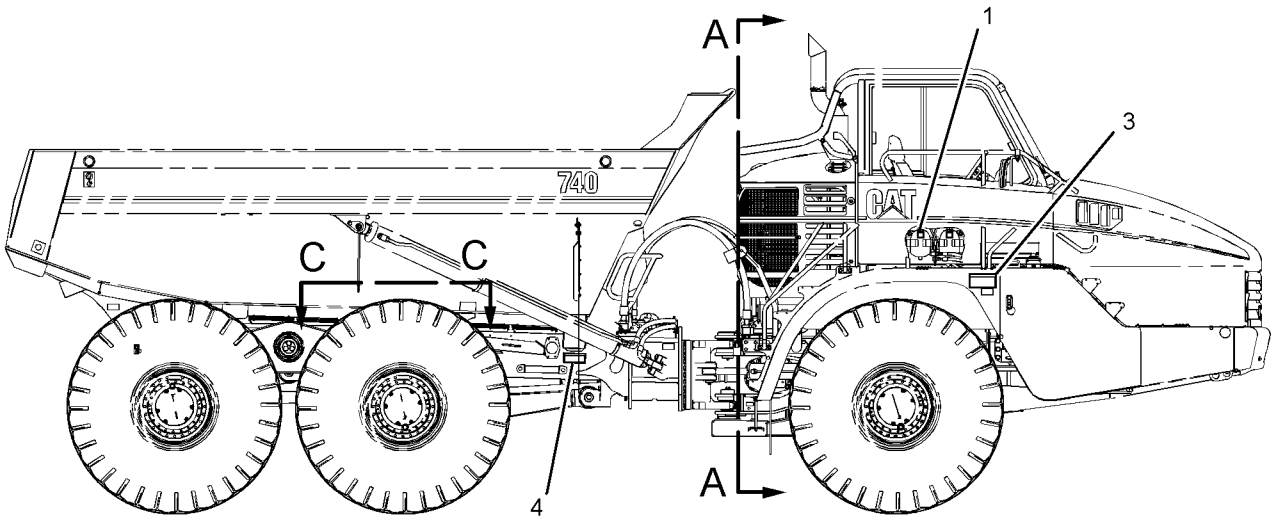

RIGHT SIDE VIEW

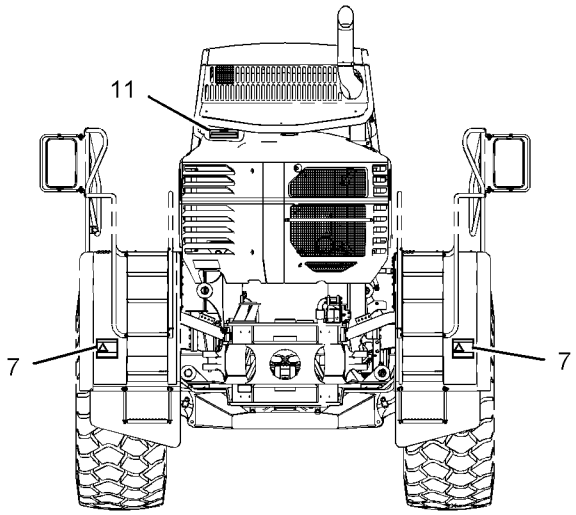

VIEW A-A

REFER TO ALL ILLUSTRATIONS OF
THIS GROUP FOR AUXILIARY VIEWS

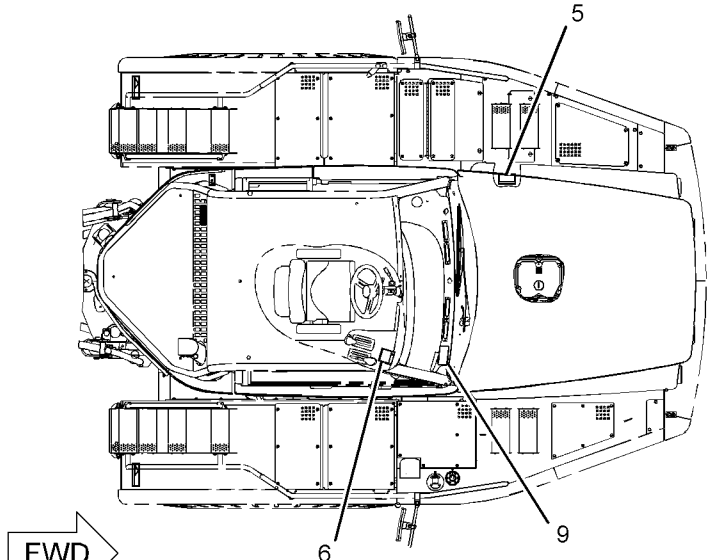

TOP VIEW

GRAPHIC #2 **<END>** g01105169

SERVICE EQUIPMENT AND SUPPLIES

152-7083 PLATE & FILM GP–GREEK

S/N: AXM1-1698
AN ATTACHMENT

SMCS-7405, 7557, 7563 **i02261930**

NOTE	REF NO	GRAPHIC REF	PART NUMBER	QTY	PART NAME 1 2 3 4 5 6 (PRODUCT LEVEL)	SEE PAGE
	1	2	**203-7833**	2	PLATE-WARNING (ACCUMULATOR)	
	2	1	**180-6655**	1	PLATE-WARNING (ACCUMULATOR)	
	3	1,2	**123-4146**	2	PLATE-WARNING (HIGH PRESSURE LINES)	
	4	1,2	**123-4166**	2	PLATE-WARNING (DUMP BODY PROP)	
	5	2	**123-6065**	1	PLATE-WARNING (CAB PIN)	
	6	2	**3E-0635**	1	PLATE-WARNING (DO NOT OPERATE)	
	7	2	**137-1586**	2	PLATE-WARNING (NO CLEARANCE)	
	8	1	**4P-8690**	1	FILM-INFORMATION (AIR CLEANER)	
	9	2	**193-1511**	1	FILM-INSTRUCTION (RETARDING GUIDELINES)	
	10	1	**3E-0846**	1	FILM-WARNING (CABLE CONNECTION)	
	11	2	**196-5783**	1	PLATE-WARNING (ROPS, FOPS)	

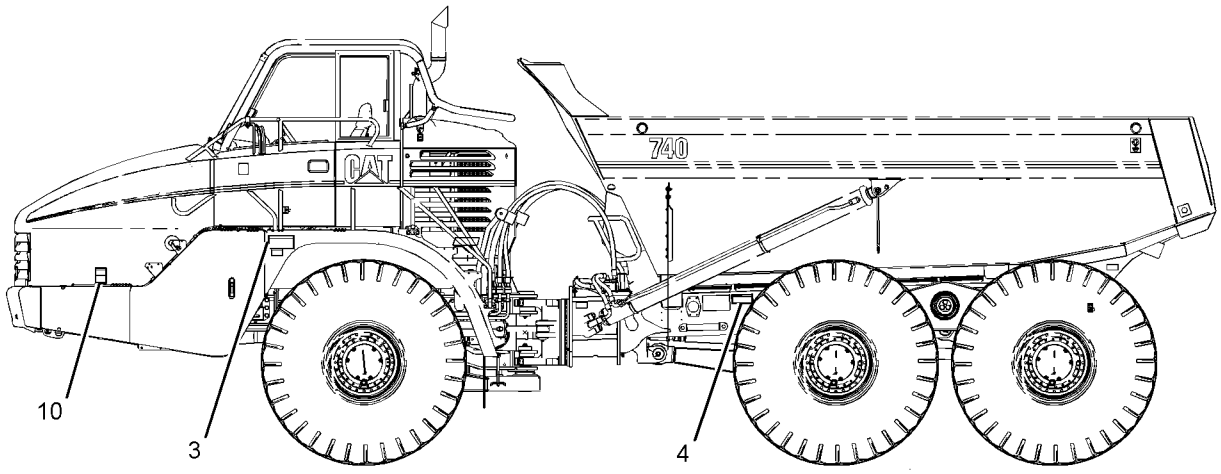

LEFT SIDE VIEW

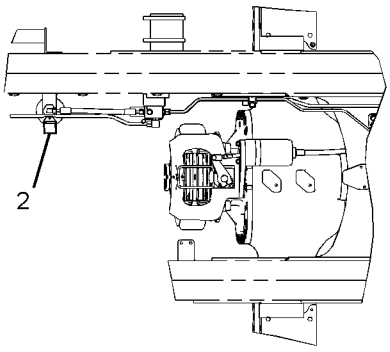

VIEW C-C

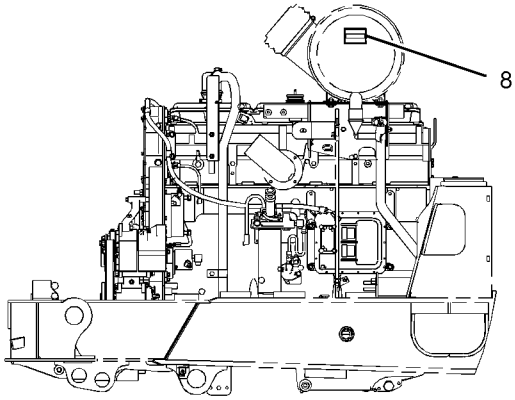

LEFT SIDE VIEW
(ENGINE)

GRAPHIC #1 g01105168

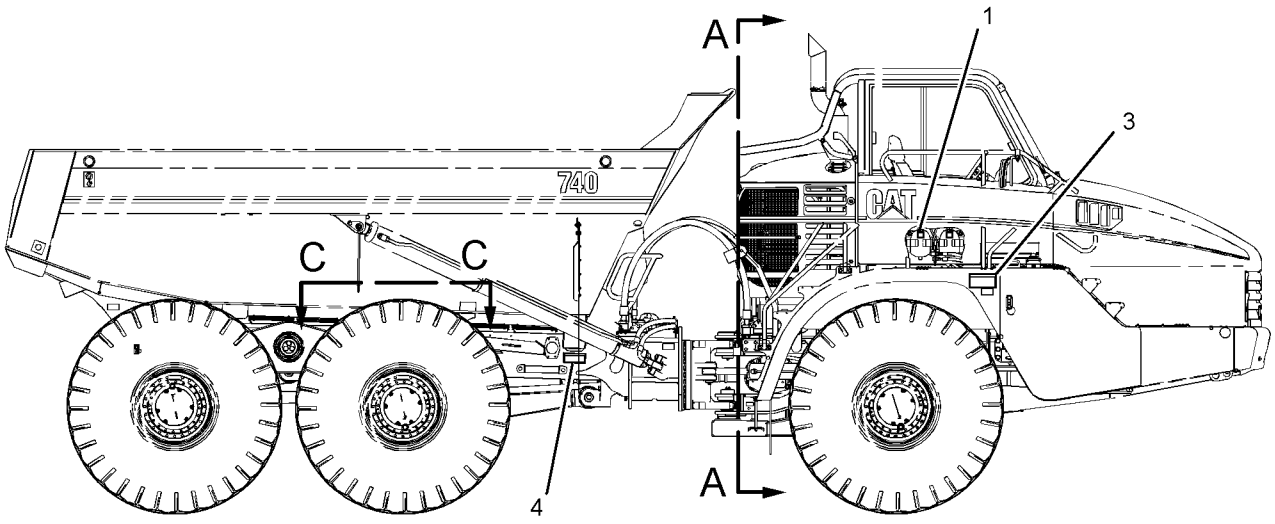

RIGHT SIDE VIEW

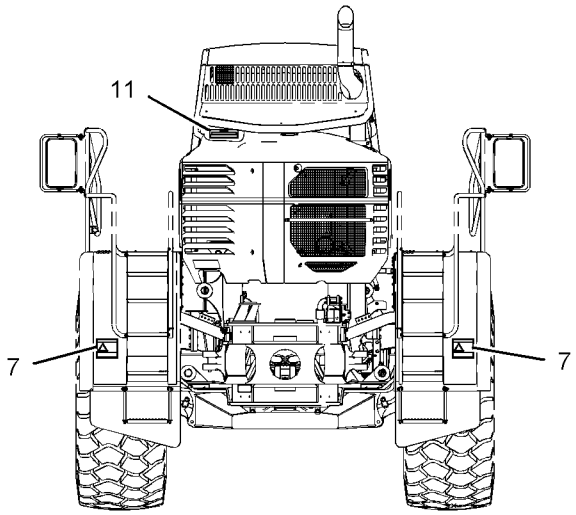

VIEW A-A

REFER TO ALL ILLUSTRATIONS OF
THIS GROUP FOR AUXILIARY VIEWS

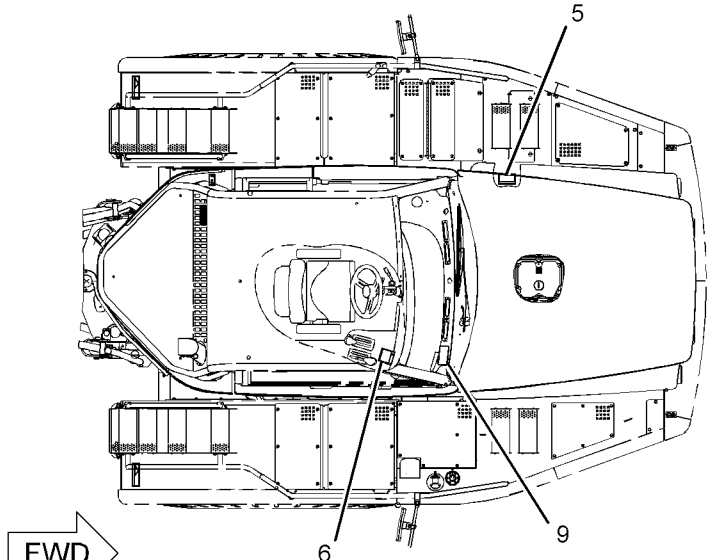

TOP VIEW

GRAPHIC #2 **<END>** g01105169

SERVICE EQUIPMENT AND SUPPLIES

152-7083 PLATE & FILM GP–GREEK

S/N: AXM1699-UP
AN ATTACHMENT

SMCS-7405, 7557, 7563 **i02183169**

NOTE	REF NO	GRAPHIC REF	PART NUMBER	QTY	PART NAME 1 2 3 4 5 6 (PRODUCT LEVEL)	SEE PAGE
C	1	2	**256-9958**	2	PLATE-WARNING (ACCUMULATOR)	
	2	1	**180-6655**	1	PLATE-WARNING (ACCUMULATOR)	
	3	1,2	**123-4146**	2	PLATE-WARNING (HIGH PRESSURE LINES)	
	4	1,2	**123-4166**	2	PLATE-WARNING (DUMP BODY PROP)	
	5	2	**123-6065**	1	PLATE-WARNING (CAB PIN)	
	6	2	**3E-0635**	1	PLATE-WARNING (DO NOT OPERATE)	
	7	2	**137-1586**	2	PLATE-WARNING (NO CLEARANCE)	
	8	1	**4P-8690**	1	FILM-INFORMATION (AIR CLEANER)	
	9	2	**193-1511**	1	FILM-INSTRUCTION (RETARDING GUIDELINES)	
	10	1	**3E-0846**	1	FILM-WARNING (CABLE CONNECTION)	
	11	2	**196-5783**	1	PLATE-WARNING (ROPS, FOPS)	

C-CHANGE FROM PREVIOUS TYPE

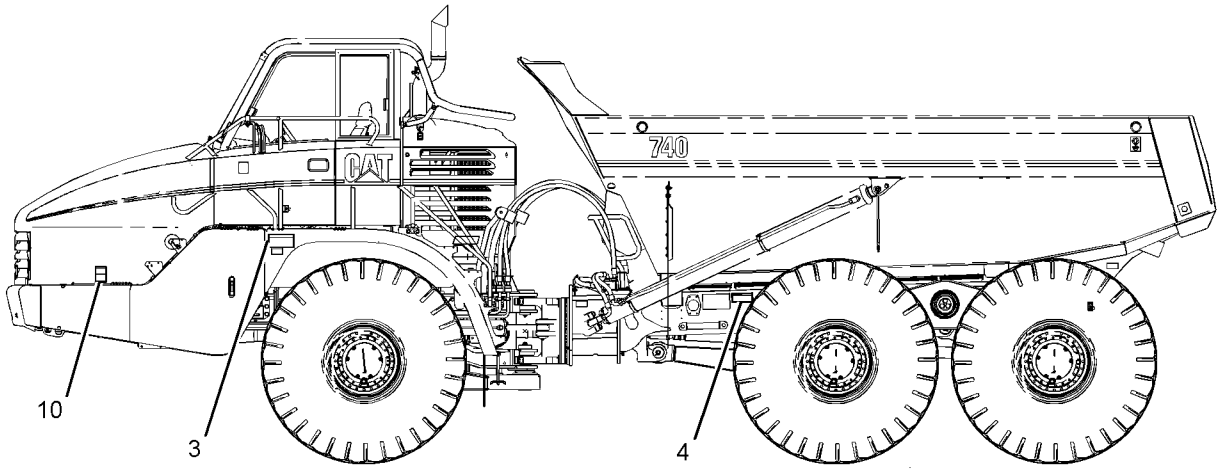

LEFT SIDE VIEW

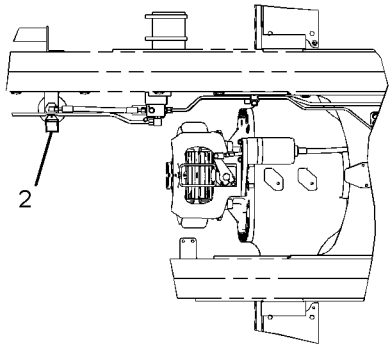

VIEW C-C

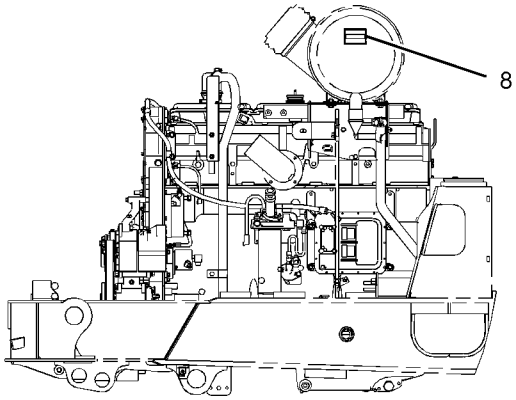

LEFT SIDE VIEW
(ENGINE)

GRAPHIC #1 g01105168

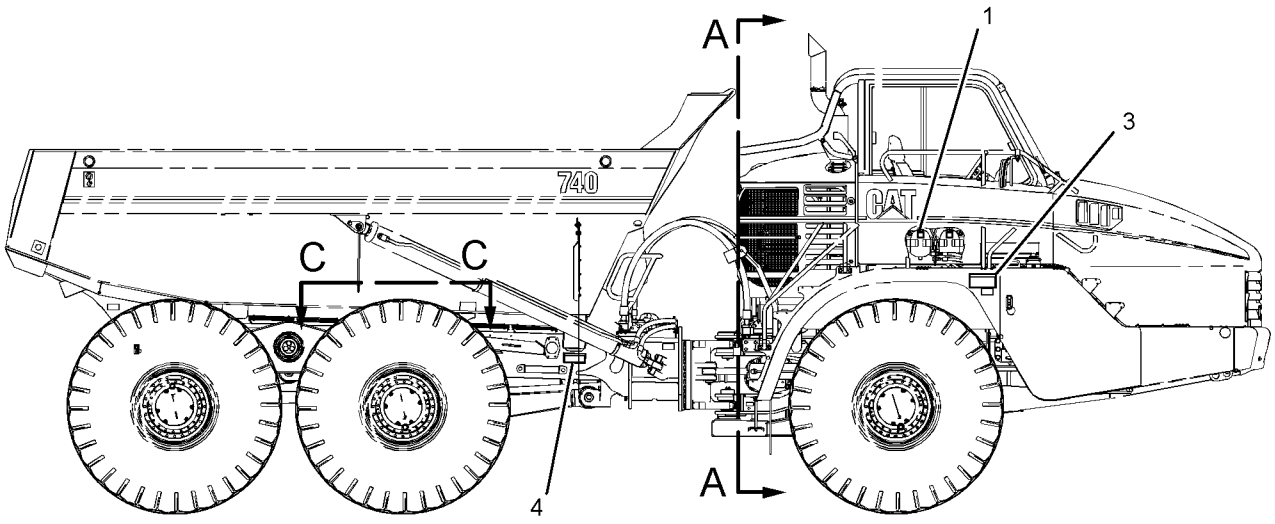

RIGHT SIDE VIEW

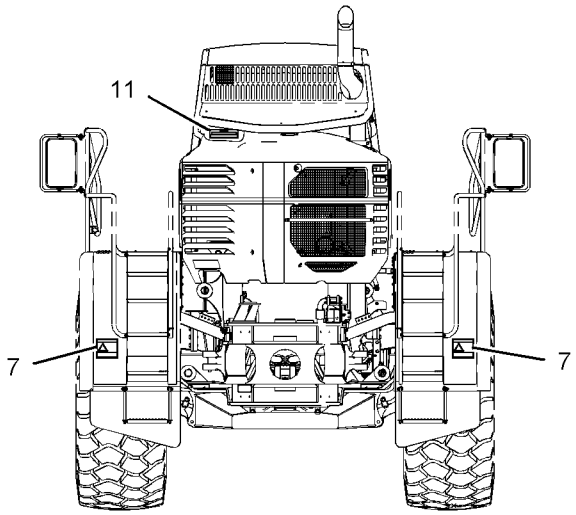

VIEW A-A

REFER TO ALL ILLUSTRATIONS OF
THIS GROUP FOR AUXILIARY VIEWS

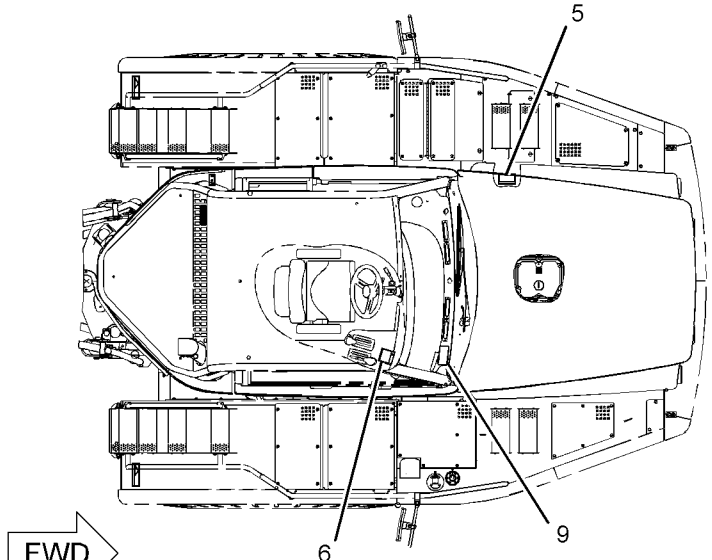

TOP VIEW

GRAPHIC #2 **<END>** g01105169

SERVICE EQUIPMENT AND SUPPLIES

152-7084 PLATE & FILM GP–DUTCH

S/N: AXM1-1698
AN ATTACHMENT

SMCS-7405, 7557, 7563 **i02261931**

NOTE	REF NO	GRAPHIC REF	PART NUMBER	QTY	PART NAME 1 2 3 4 5 6 (PRODUCT LEVEL)	SEE PAGE
	1	2	**203-7831**	2	PLATE-WARNING (ACCUMULATOR)	
	2	1	**180-6652**	1	PLATE-WARNING (ACCUMULATOR)	
	3	1,2	**123-4147**	2	PLATE-WARNING (HIGH PRESSURE LINES)	
	4	1,2	**123-4167**	2	PLATE-WARNING (DUMP BODY PROP)	
	5	2	**123-6066**	1	PLATE-WARNING (CAB PIN)	
	6	2	**3E-0636**	1	PLATE-WARNING (DO NOT OPERATE)	
	7	2	**137-1587**	2	PLATE-WARNING (NO CLEARANCE)	
	8	1	**114-6055**	1	FILM-INFORMATION (AIR CLEANER)	
	9	2	**193-1512**	1	FILM-INSTRUCTION (RETARDING GUIDELINES)	
	10	1	**3E-0847**	1	FILM-WARNING (CABLE CONNECTION)	
	11	2	**196-5780**	1	PLATE-WARNING (ROPS, FOPS)	

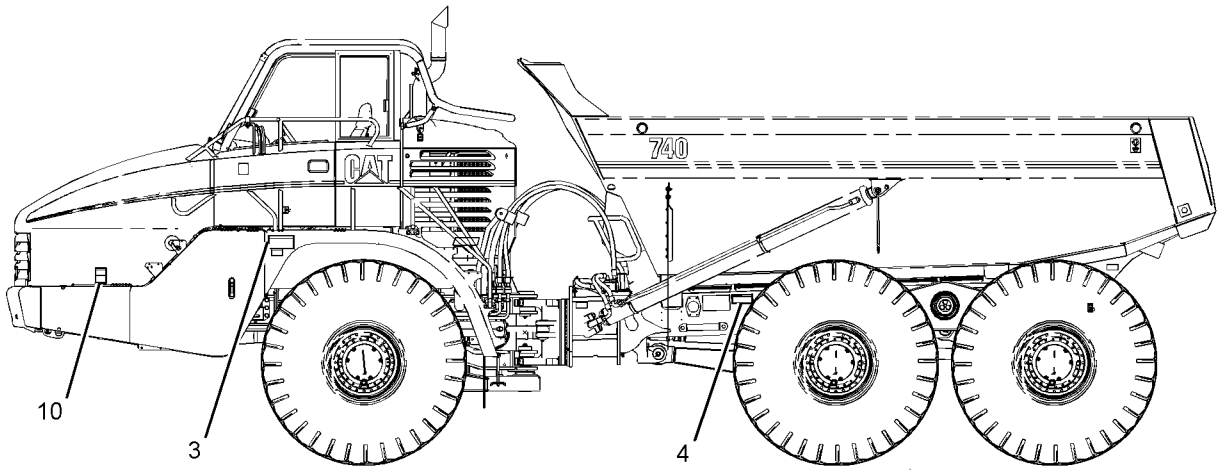

LEFT SIDE VIEW

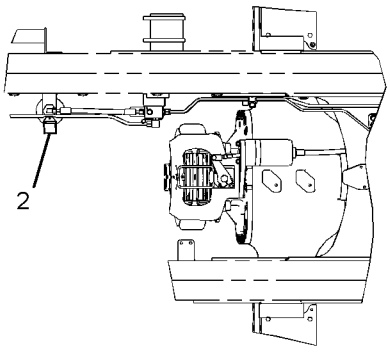

VIEW C-C

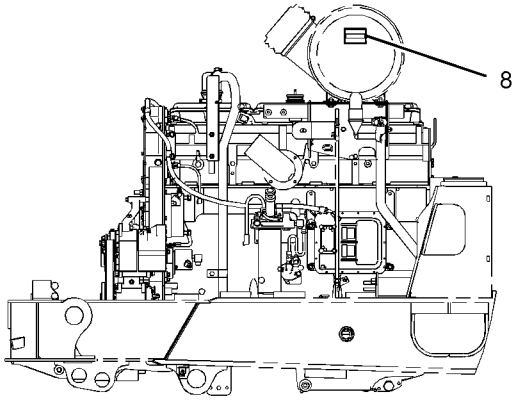

LEFT SIDE VIEW
(ENGINE)

GRAPHIC #1 g01105168

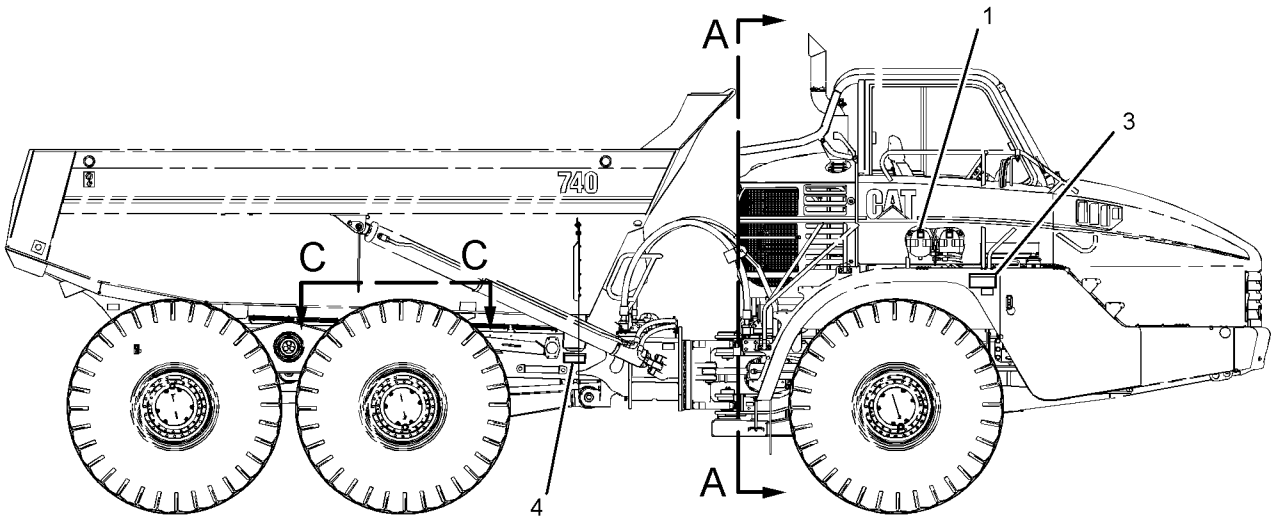

RIGHT SIDE VIEW

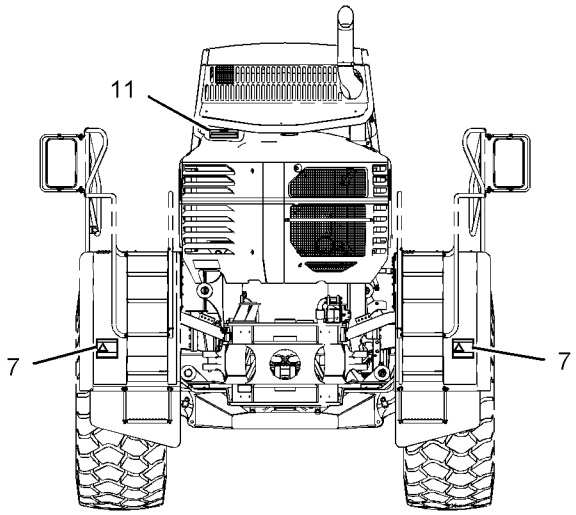

VIEW A-A

REFER TO ALL ILLUSTRATIONS OF
THIS GROUP FOR AUXILIARY VIEWS

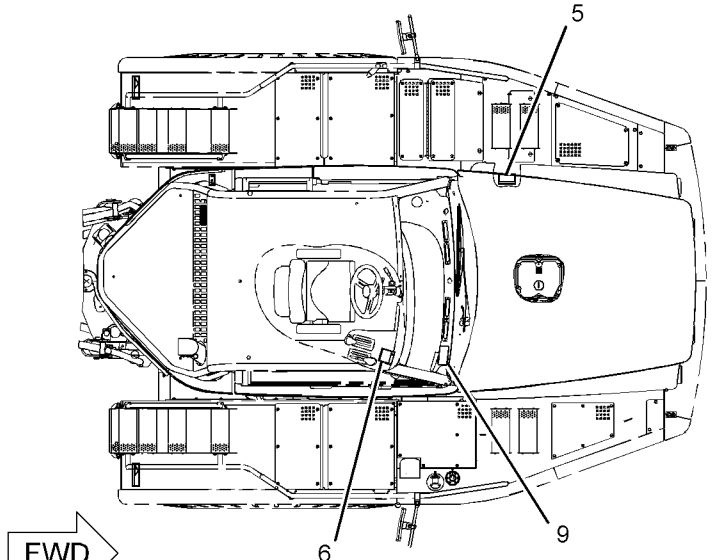

TOP VIEW

GRAPHIC #2 **<END>** g01105169

SERVICE EQUIPMENT AND SUPPLIES

152-7084 PLATE & FILM GP–DUTCH

S/N: AXM1699-UP
AN ATTACHMENT

SMCS-7405, 7557, 7563 **i02183158**

NOTE	REF NO	GRAPHIC REF	PART NUMBER	QTY	PART NAME 1 2 3 4 5 6 (PRODUCT LEVEL)	SEE PAGE
C	1	2	**256-9954**	2	PLATE-WARNING (ACCUMULATOR)	
	2	1	**180-6652**	1	PLATE-WARNING (ACCUMULATOR)	
	3	1,2	**123-4147**	2	PLATE-WARNING (HIGH PRESSURE LINES)	
	4	1,2	**123-4167**	2	PLATE-WARNING (DUMP BODY PROP)	
	5	2	**123-6066**	1	PLATE-WARNING (CAB PIN)	
	6	2	**3E-0636**	1	PLATE-WARNING (DO NOT OPERATE)	
	7	2	**137-1587**	2	PLATE-WARNING (NO CLEARANCE)	
	8	1	**114-6055**	1	FILM-INFORMATION (AIR CLEANER)	
	9	2	**193-1512**	1	FILM-INSTRUCTION (RETARDING GUIDELINES)	
	10	1	**3E-0847**	1	FILM-WARNING (CABLE CONNECTION)	
	11	2	**196-5780**	1	PLATE-WARNING (ROPS, FOPS)	

C-CHANGE FROM PREVIOUS TYPE

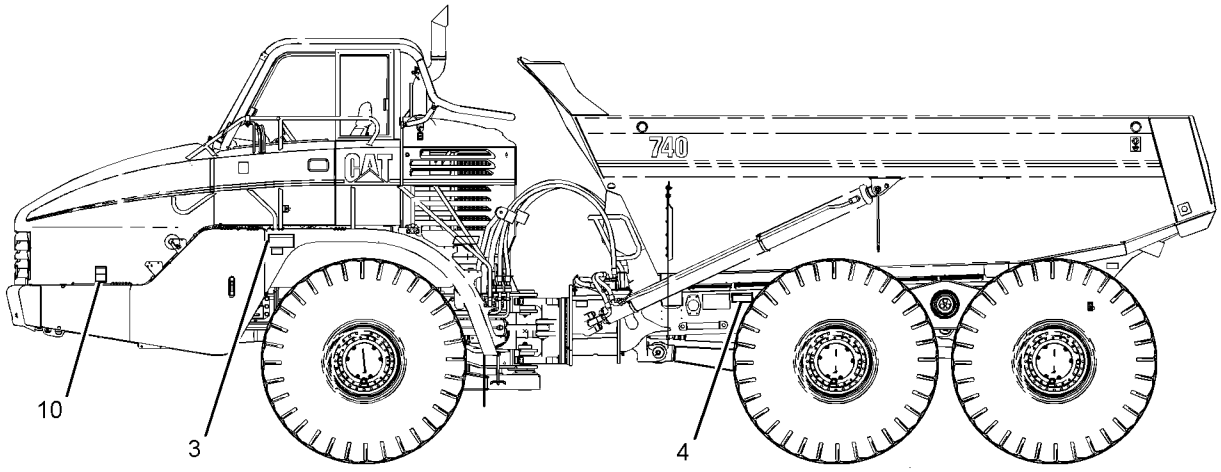

LEFT SIDE VIEW

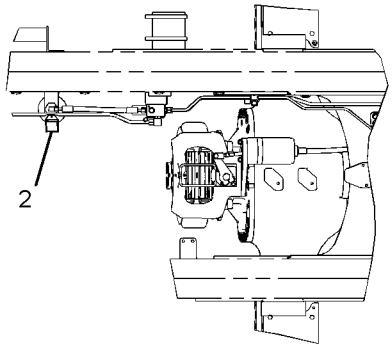

VIEW C-C

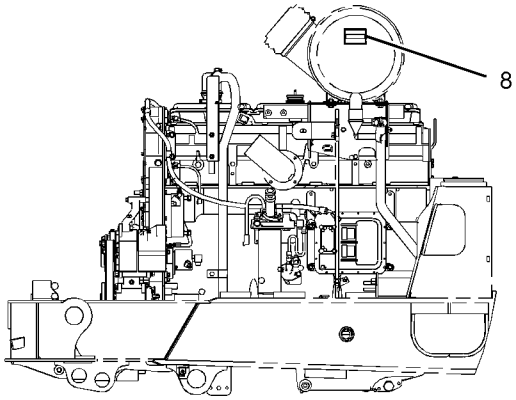

LEFT SIDE VIEW
(ENGINE)

GRAPHIC #1 g01105168

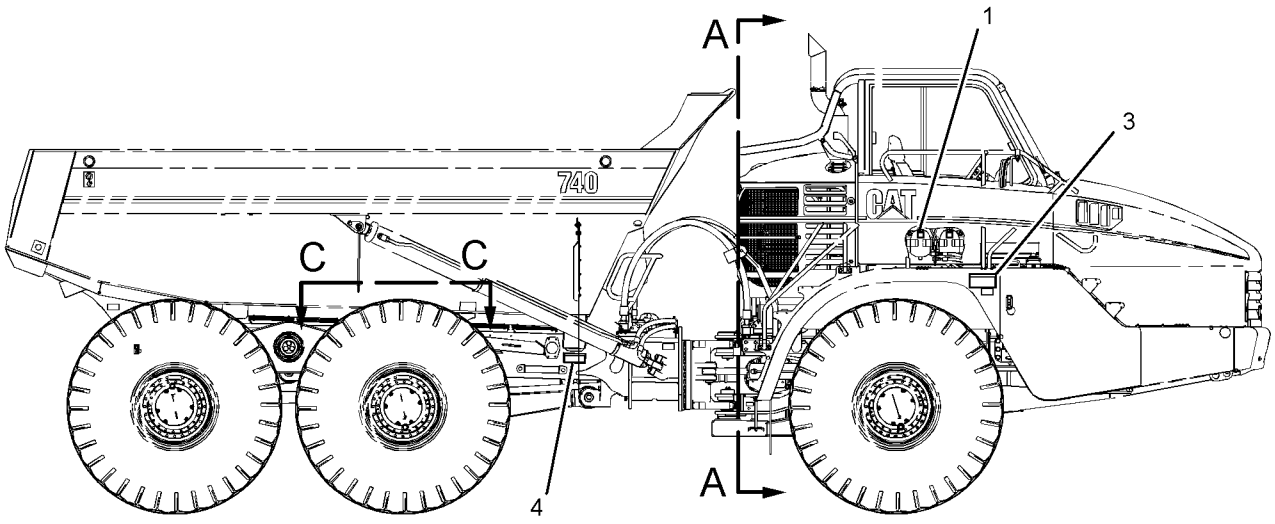

RIGHT SIDE VIEW

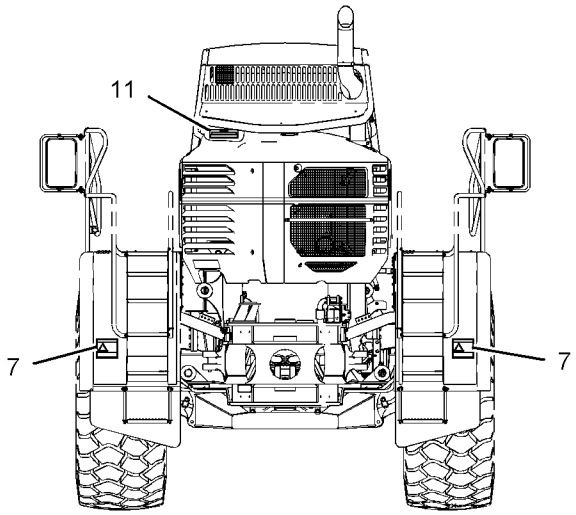

VIEW A-A

REFER TO ALL ILLUSTRATIONS OF
THIS GROUP FOR AUXILIARY VIEWS

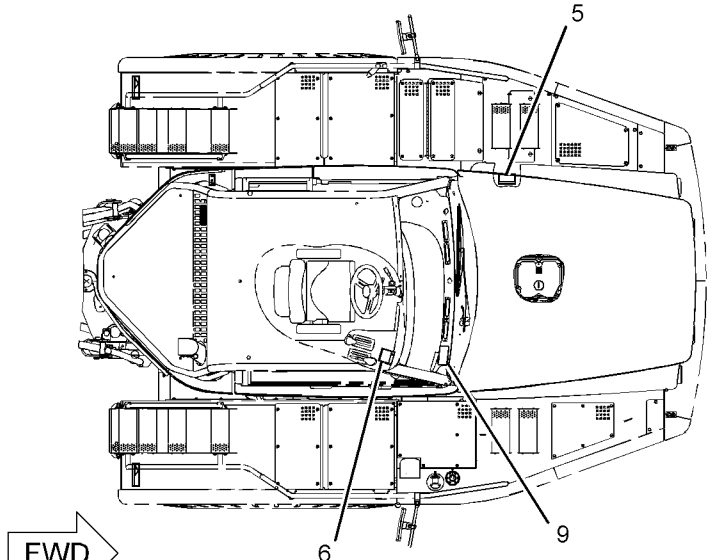

TOP VIEW

GRAPHIC #2 **<END>** g01105169

SERVICE EQUIPMENT AND SUPPLIES

152-7086 PLATE & FILM GP–GERMAN

S/N: AXM1-1698
AN ATTACHMENT

SMCS-7405, 7557, 7563 **i02261932**

NOTE	REF NO	GRAPHIC REF	PART NUMBER	QTY	PART NAME 1 2 3 4 5 6 (PRODUCT LEVEL)	SEE PAGE
	1	2	**203-7823**	2	PLATE-WARNING (ACCUMULATOR)	
	2	1	**180-6654**	1	PLATE-WARNING (ACCUMULATOR)	
	3	1,2	**2U-7546**	2	PLATE-WARNING (HIGH PRESSURE LINES)	
	4	1,2	**6U-7531**	2	PLATE-WARNING (DUMP BODY PROP)	
	5	2	**6U-7839**	1	PLATE-WARNING (CAB PIN)	
	6	2	**5P-8201**	1	PLATE-WARNING (DO NOT OPERATE)	
	7	2	**137-1583**	2	PLATE-WARNING (NO CLEARANCE)	
	8	1	**4P-8682**	1	FILM-INFORMATION (AIR CLEANER)	
	9	2	**193-1513**	1	FILM-INSTRUCTION (RETARDING GUIDELINES)	
	10	1	**6V-4615**	1	FILM-WARNING (JUMPER CABLES)	
	11	2	**196-5782**	1	PLATE-WARNING (ROPS, FOPS)	

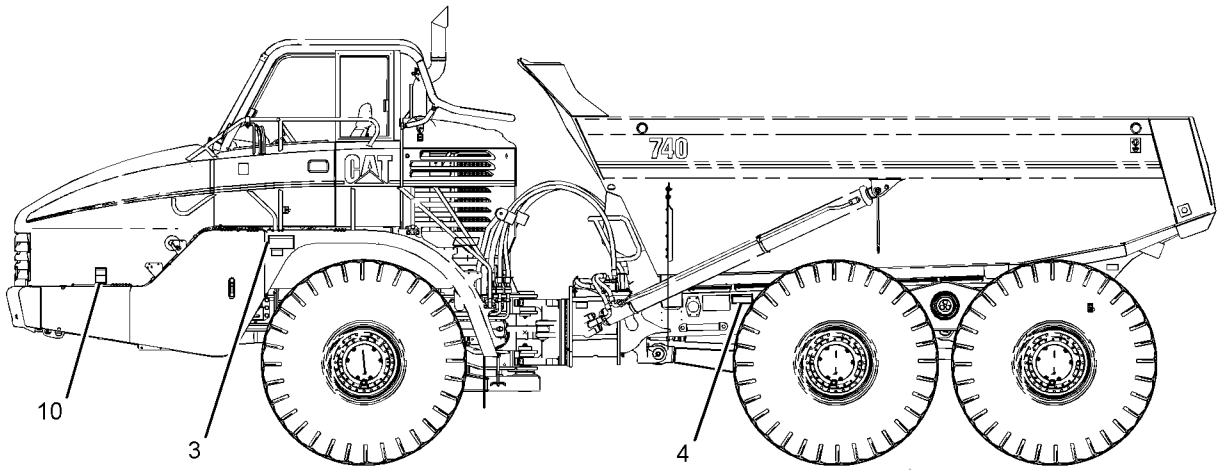

LEFT SIDE VIEW

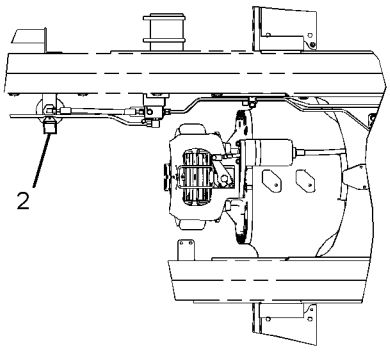

VIEW C-C

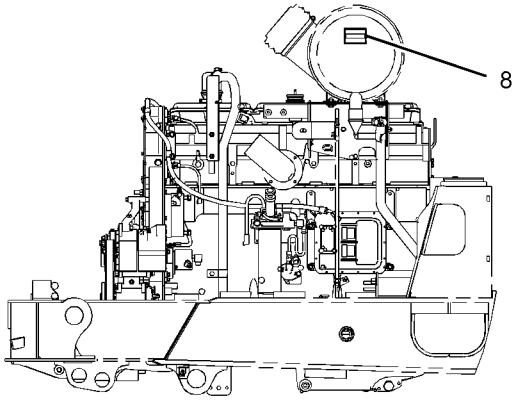

LEFT SIDE VIEW
(ENGINE)

GRAPHIC #1 g01105168

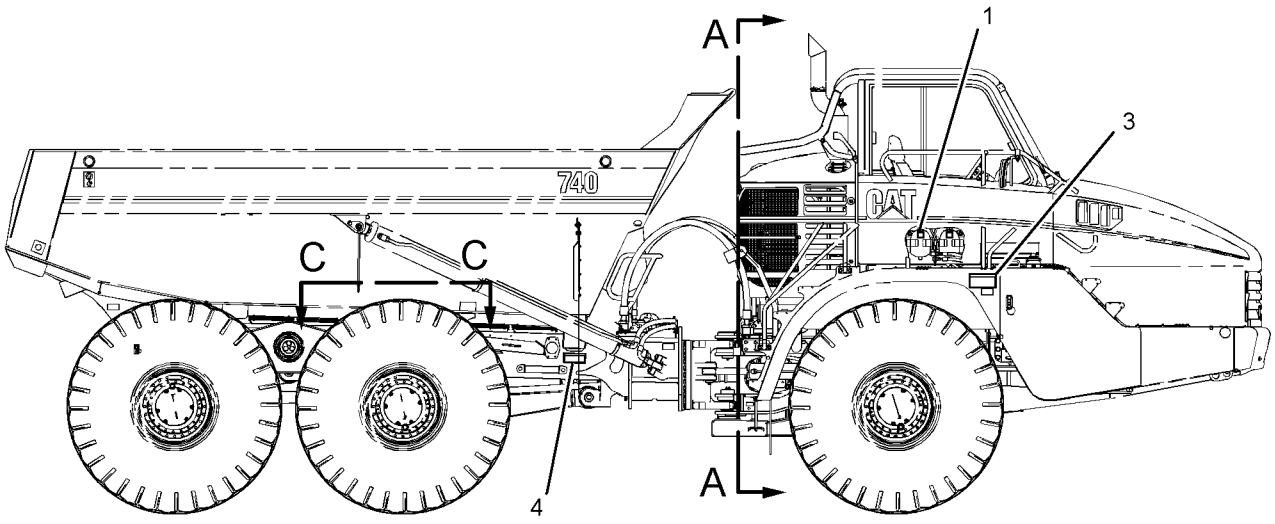

RIGHT SIDE VIEW

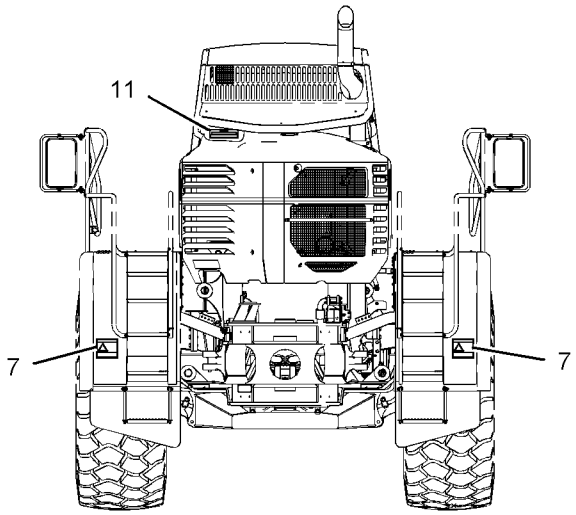

VIEW A-A

REFER TO ALL ILLUSTRATIONS OF
THIS GROUP FOR AUXILIARY VIEWS

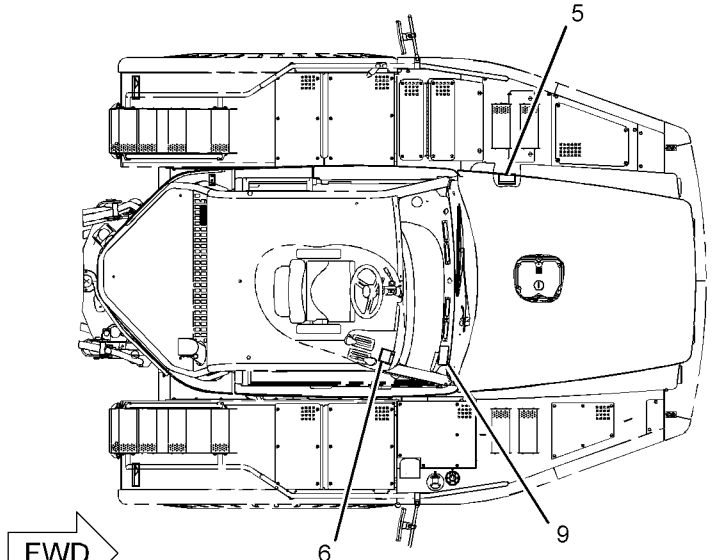

TOP VIEW

GRAPHIC #2 **<END>** g01105169

SERVICE EQUIPMENT AND SUPPLIES

152-7086 PLATE & FILM GP–GERMAN

S/N: AXM1699-UP
AN ATTACHMENT

SMCS-7405, 7557, 7563 **i02183172**

NOTE	REF NO	GRAPHIC REF	PART NUMBER	QTY	PART NAME 1 2 3 4 5 6 (PRODUCT LEVEL)	SEE PAGE
C	1	2	**256-9957**	2	PLATE-WARNING (ACCUMULATOR)	
	2	1	**180-6654**	1	PLATE-WARNING (ACCUMULATOR)	
	3	1,2	**2U-7546**	2	PLATE-WARNING (HIGH PRESSURE LINES)	
	4	1,2	**6U-7531**	2	PLATE-WARNING (DUMP BODY PROP)	
	5	2	**6U-7839**	1	PLATE-WARNING (CAB PIN)	
	6	2	**5P-8201**	1	PLATE-WARNING (DO NOT OPERATE)	
	7	2	**137-1583**	2	PLATE-WARNING (NO CLEARANCE)	
	8	1	**4P-8682**	1	FILM-INFORMATION (AIR CLEANER)	
	9	2	**193-1513**	1	FILM-INSTRUCTION (RETARDING GUIDELINES)	
	10	1	**6V-4615**	1	FILM-WARNING (JUMPER CABLES)	
	11	2	**196-5782**	1	PLATE-WARNING (ROPS, FOPS)	

C-CHANGE FROM PREVIOUS TYPE

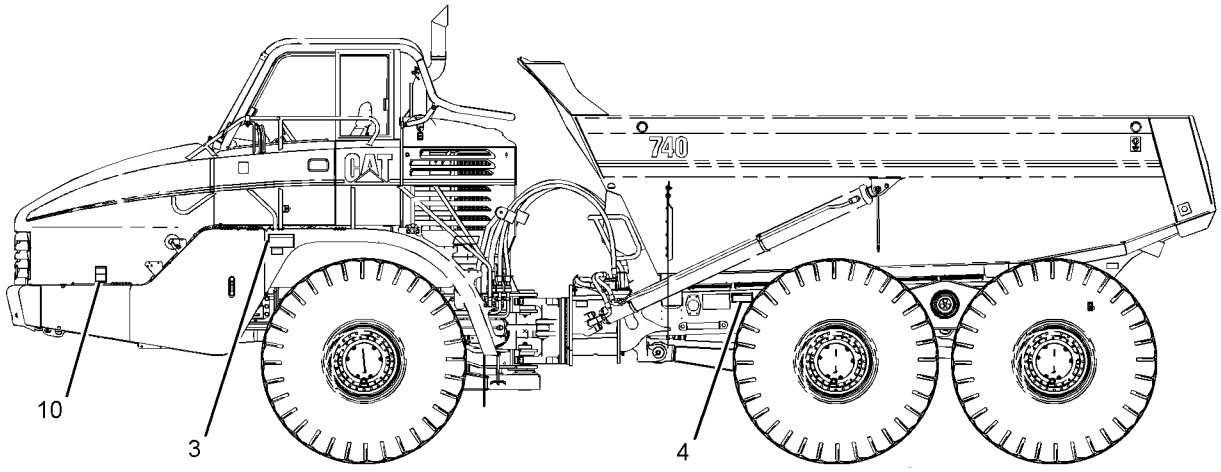

LEFT SIDE VIEW

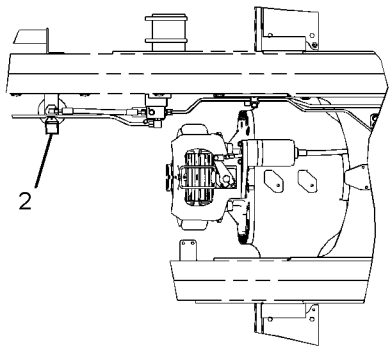

VIEW C-C

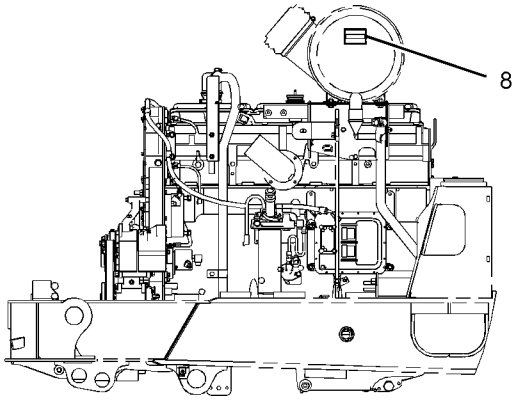

LEFT SIDE VIEW
(ENGINE)

GRAPHIC #1 g01105168

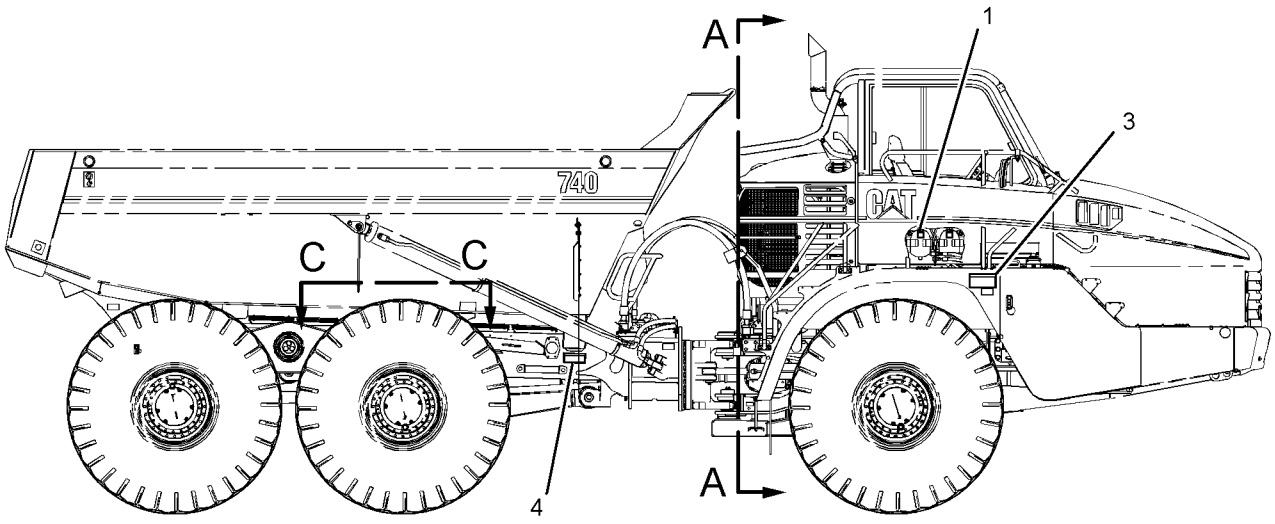

RIGHT SIDE VIEW

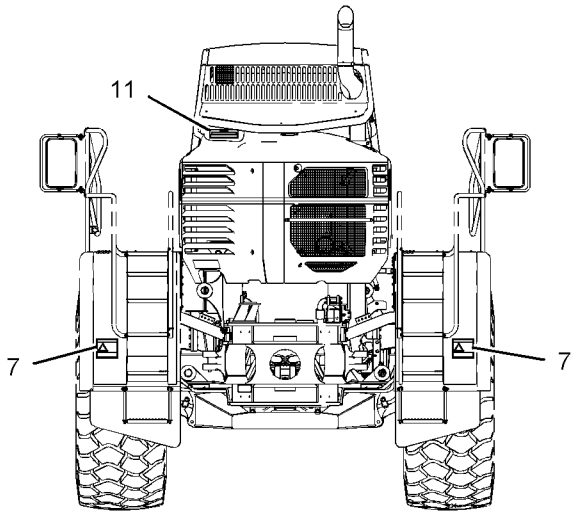

VIEW A-A

REFER TO ALL ILLUSTRATIONS OF
THIS GROUP FOR AUXILIARY VIEWS

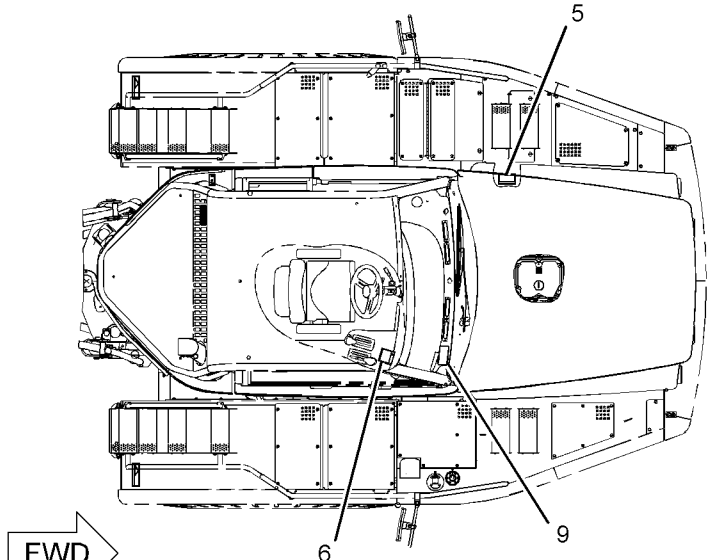

TOP VIEW

GRAPHIC #2 **<END>** g01105169

SERVICE EQUIPMENT AND SUPPLIES

152-7087 PLATE & FILM GP–PORTUGUESE

S/N: AXM1-1698
AN ATTACHMENT

SMCS-7405, 7557, 7563 **i02261933**

NOTE	REF NO	GRAPHIC REF	PART NUMBER	QTY	PART NAME 1 2 3 4 5 6 (PRODUCT LEVEL)	SEE PAGE
	1	2	**203-7825**	2	PLATE-WARNING (ACCUMULATOR)	
	2	1	**180-6657**	1	PLATE-WARNING (ACCUMULATOR)	
	3	1,2	**2U-7548**	2	PLATE-WARNING (HIGH PRESSURE LINES)	
	4	1,2	**6U-7533**	2	PLATE-WARNING (DUMP BODY PROP)	
	5	2	**6U-7841**	1	PLATE-WARNING (CAB PIN)	
	6	2	**5P-8200**	1	PLATE-WARNING (DO NOT OPERATE)	
	7	2	**137-1582**	2	PLATE-WARNING (NO CLEARANCE)	
	8	1	**4P-8685**	1	FILM-INFORMATION (AIR CLEANER)	
	9	2	**193-1514**	1	FILM-INSTRUCTION (RETARDING GUIDELINES)	
	10	1	**6V-4614**	1	FILM-WARNING (JUMPER CABLES)	
	11	2	**196-5787**	1	PLATE-WARNING (ROPS, FOPS)	

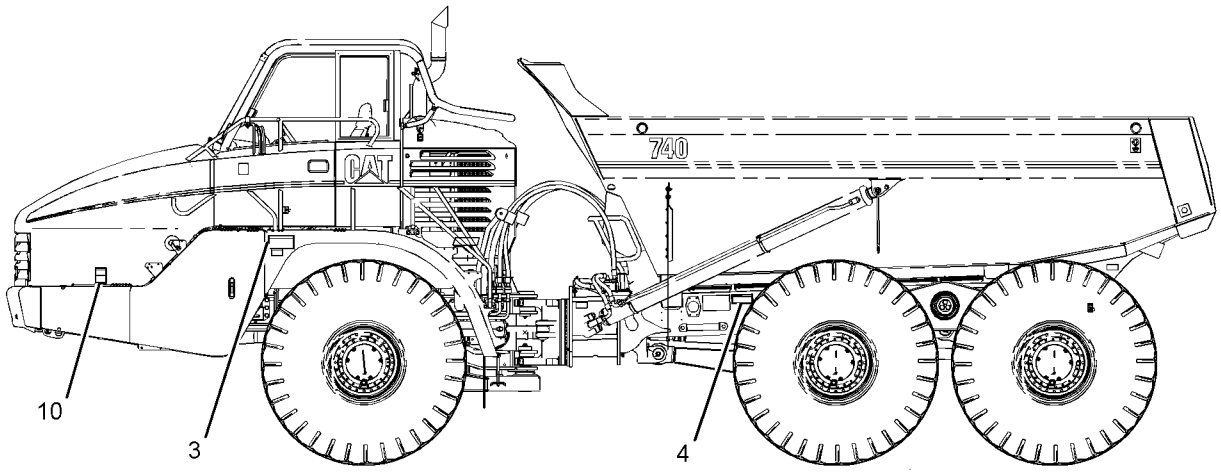

LEFT SIDE VIEW

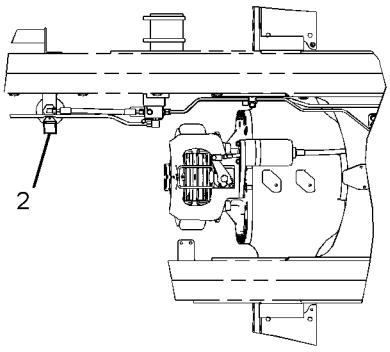

VIEW C-C

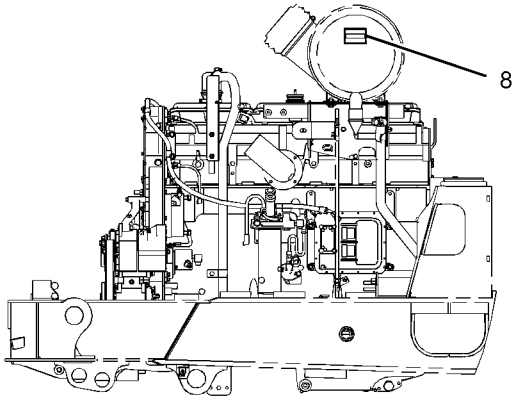

LEFT SIDE VIEW
(ENGINE)

GRAPHIC #1 g01105168

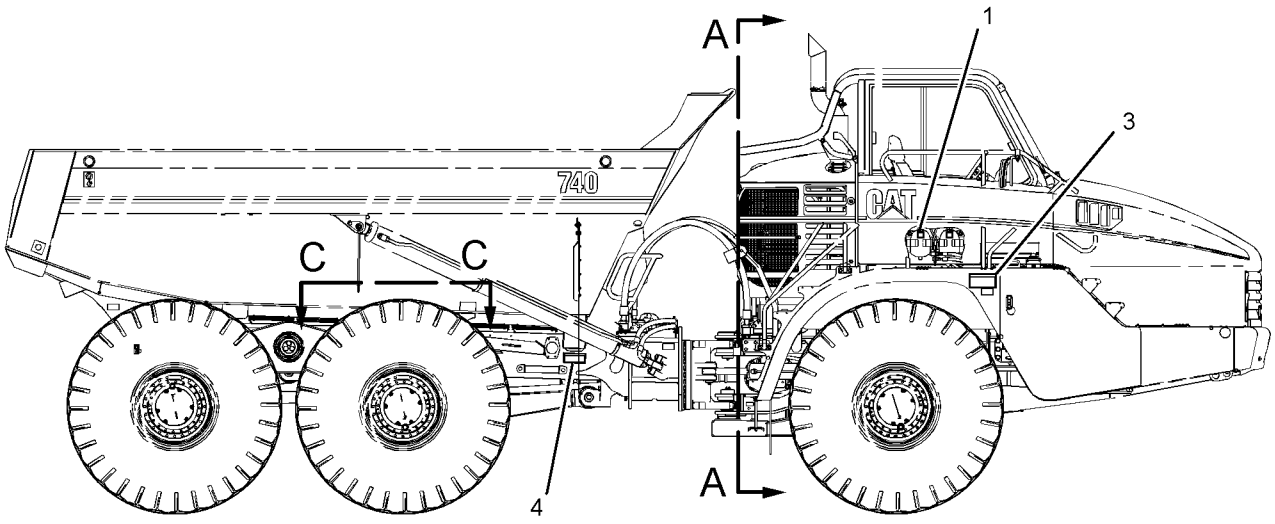

RIGHT SIDE VIEW

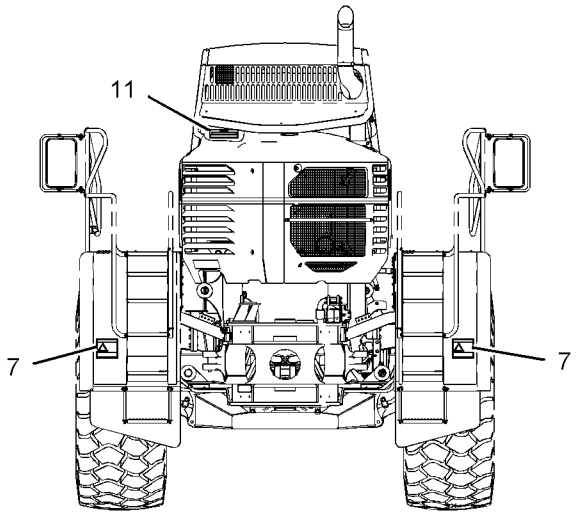

VIEW A-A

REFER TO ALL ILLUSTRATIONS OF
THIS GROUP FOR AUXILIARY VIEWS

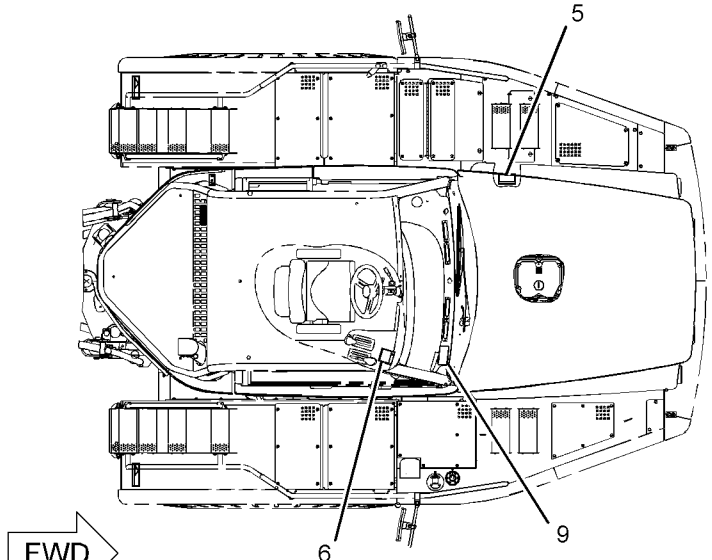

TOP VIEW

GRAPHIC #2 **<END>** g01105169

SERVICE EQUIPMENT AND SUPPLIES

152-7087 PLATE & FILM GP–PORTUGUESE

S/N: AXM1699-UP

AN ATTACHMENT

SMCS-7405, 7557, 7563 **i02249944**

NOTE	REF NO	GRAPHIC REF	PART NUMBER	QTY	PART NAME 1 2 3 4 5 6 (PRODUCT LEVEL)	SEE PAGE
C	1	2	**256-9962**	2	PLATE-WARNING (ACCUMULATOR)	
	2	1	**180-6657**	1	PLATE-WARNING (ACCUMULATOR)	
	3	1,2	**2U-7548**	2	PLATE-WARNING (HIGH PRESSURE LINES)	
	4	1,2	**6U-7533**	2	PLATE-WARNING (DUMP BODY PROP)	
	5	2	**6U-7841**	1	PLATE-WARNING (CAB PIN)	
	6	2	**5P-8200**	1	PLATE-WARNING (DO NOT OPERATE)	
	7	2	**137-1582**	2	PLATE-WARNING (NO CLEARANCE)	
	8	1	**4P-8685**	1	FILM-INFORMATION (AIR CLEANER)	
	9	2	**193-1514**	1	FILM-INSTRUCTION (RETARDING GUIDELINES)	
	10	1	**6V-4614**	1	FILM-WARNING (JUMPER CABLES)	
	11	2	**196-5787**	1	PLATE-WARNING (ROPS, FOPS)	

C-CHANGE FROM PREVIOUS TYPE

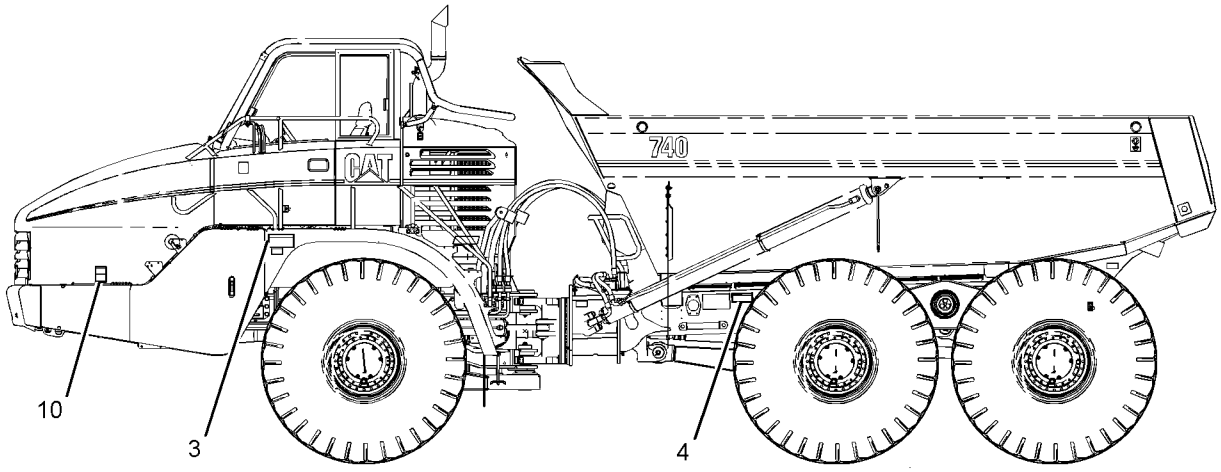

LEFT SIDE VIEW

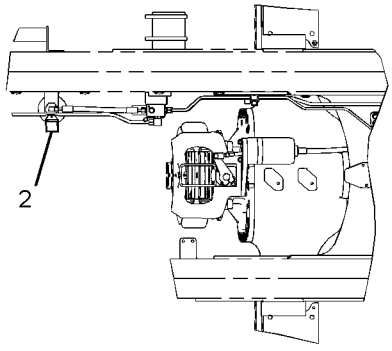

VIEW C-C

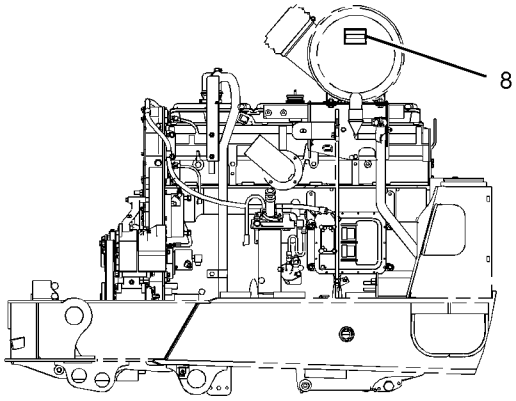

LEFT SIDE VIEW
(ENGINE)

GRAPHIC #1 g01105168

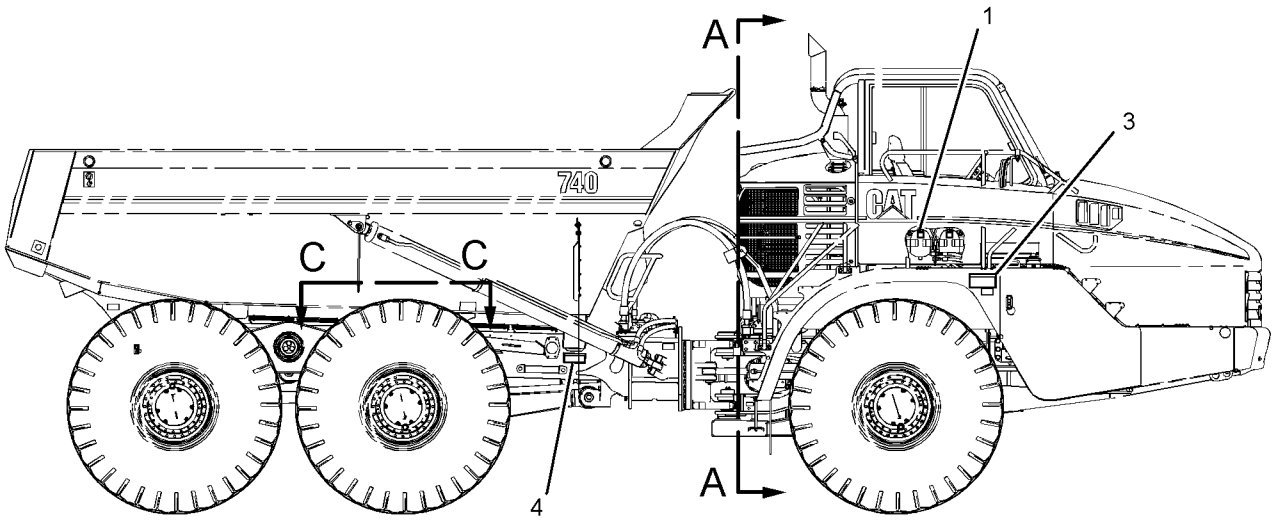

RIGHT SIDE VIEW

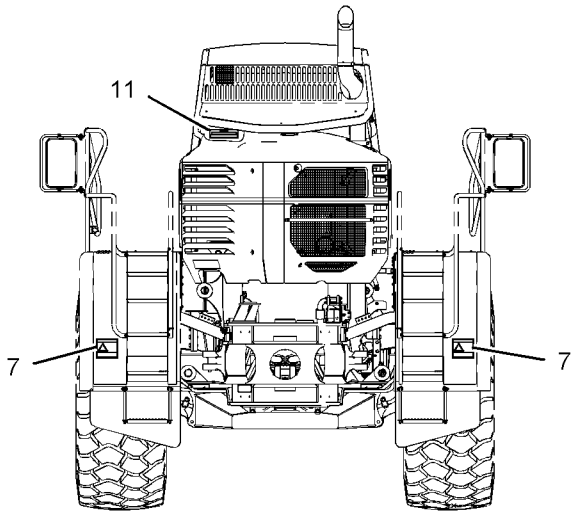

VIEW A-A

REFER TO ALL ILLUSTRATIONS OF
THIS GROUP FOR AUXILIARY VIEWS

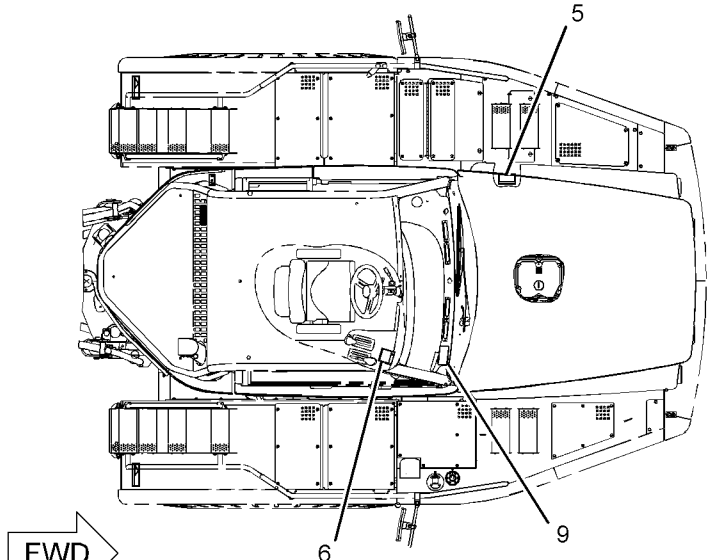

TOP VIEW

GRAPHIC #2 **<END>** g01105169

SERVICE EQUIPMENT AND SUPPLIES

152-7088 PLATE & FILM GP–SPANISH

S/N: AXM1-1698
AN ATTACHMENT

SMCS-7405, 7557, 7563 **i02261934**

NOTE	REF NO	GRAPHIC REF	PART NUMBER	QTY	PART NAME 1 2 3 4 5 6 (PRODUCT LEVEL)	SEE PAGE
	1	2	**203-7837**	2	PLATE-WARNING (ACCUMULATOR)	
	2	1	**180-6658**	1	PLATE-WARNING (ACCUMULATOR)	
	3	1,2	**2U-7547**	2	PLATE-WARNING (HIGH PRESSURE LINES)	
	4	1,2	**6U-7532**	2	PLATE-WARNING (DUMP BODY PROP)	
	5	2	**6U-7840**	1	PLATE-WARNING (CAB PIN)	
	6	2	**5P-8199**	1	PLATE-WARNING (DO NOT OPERATE)	
	7	2	**137-1581**	2	PLATE-WARNING (NO CLEARANCE)	
	8	1	**114-6461**	1	FILM-INFORMATION (AIR CLEANER)	
	9	2	**193-1515**	1	FILM-INSTRUCTION (RETARDING GUIDELINES)	
	10	1	**6V-4613**	1	FILM-WARNING (JUMPER CABLES)	
	11	2	**196-5788**	1	PLATE-WARNING (ROPS, FOPS)	

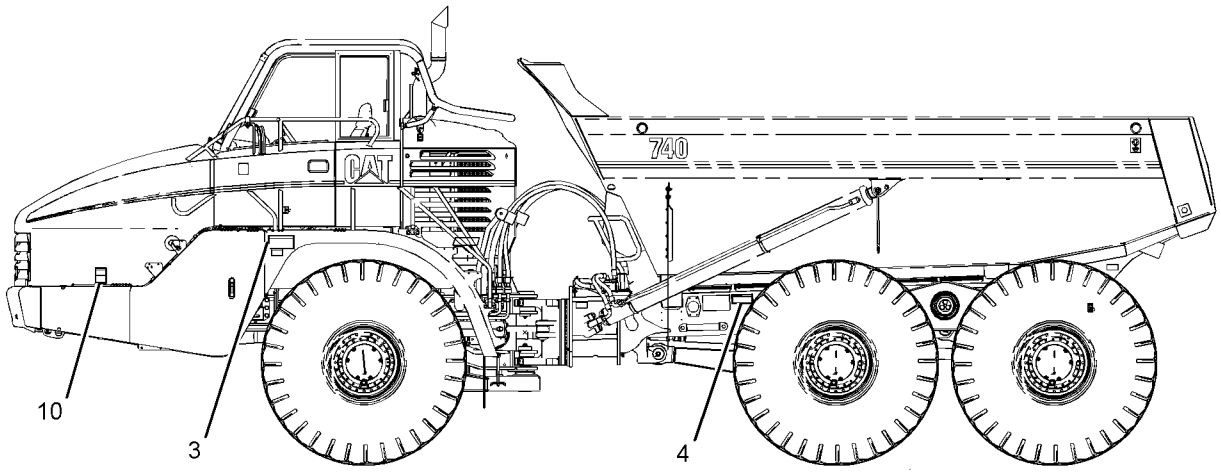

LEFT SIDE VIEW

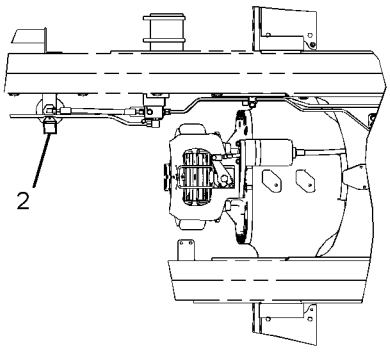

VIEW C-C

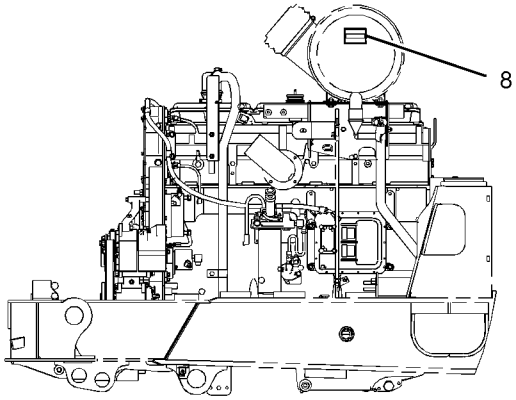

LEFT SIDE VIEW
(ENGINE)

GRAPHIC #1 g01105168

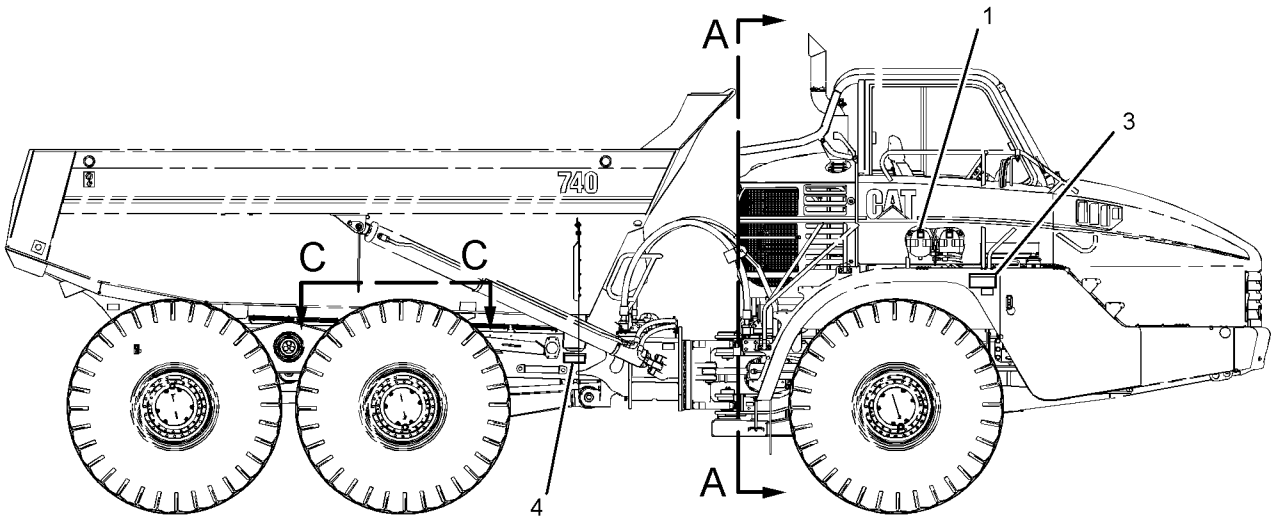

RIGHT SIDE VIEW

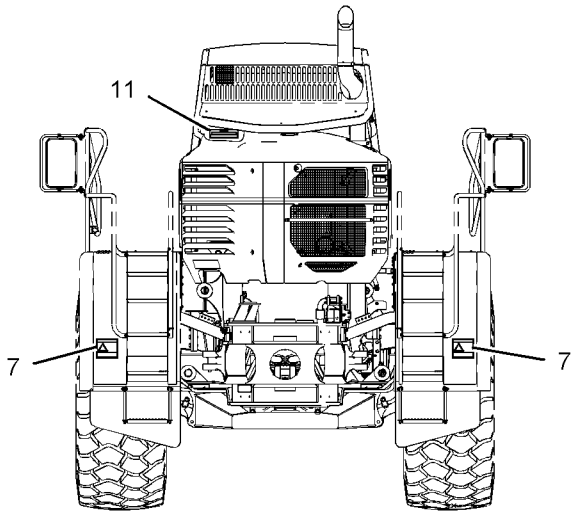

VIEW A-A

REFER TO ALL ILLUSTRATIONS OF
THIS GROUP FOR AUXILIARY VIEWS

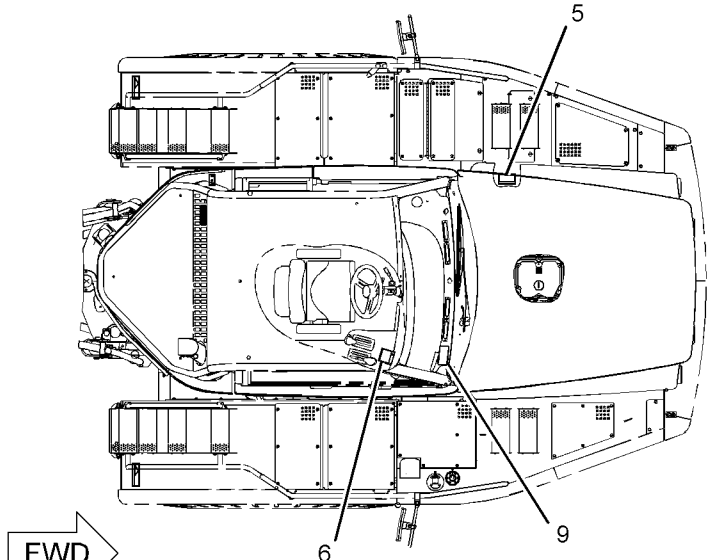

TOP VIEW

GRAPHIC #2 **<END>** g01105169

SERVICE EQUIPMENT AND SUPPLIES

152-7088 PLATE & FILM GP–SPANISH

S/N: AXM1699-UP
AN ATTACHMENT

SMCS-7405, 7557, 7563 **i02183176**

NOTE	REF NO	GRAPHIC REF	PART NUMBER	QTY	PART NAME 1 2 3 4 5 6 (PRODUCT LEVEL)	SEE PAGE
C	1	2	**256-9963**	2	PLATE-WARNING (ACCUMULATOR)	
	2	1	**180-6658**	1	PLATE-WARNING (ACCUMULATOR)	
	3	1,2	**2U-7547**	2	PLATE-WARNING (HIGH PRESSURE LINES)	
	4	1,2	**6U-7532**	2	PLATE-WARNING (DUMP BODY PROP)	
	5	2	**6U-7840**	1	PLATE-WARNING (CAB PIN)	
	6	2	**5P-8199**	1	PLATE-WARNING (DO NOT OPERATE)	
	7	2	**137-1581**	2	PLATE-WARNING (NO CLEARANCE)	
	8	1	**114-6461**	1	FILM-INFORMATION (AIR CLEANER)	
	9	2	**193-1515**	1	FILM-INSTRUCTION (RETARDING GUIDELINES)	
	10	1	**6V-4613**	1	FILM-WARNING (JUMPER CABLES)	
	11	2	**196-5788**	1	PLATE-WARNING (ROPS, FOPS)	

C-CHANGE FROM PREVIOUS TYPE

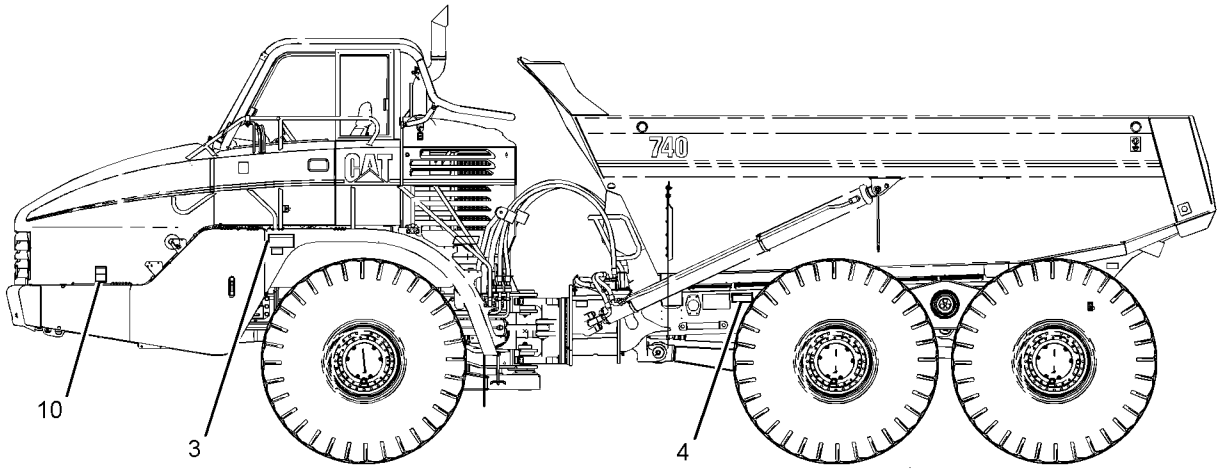

LEFT SIDE VIEW

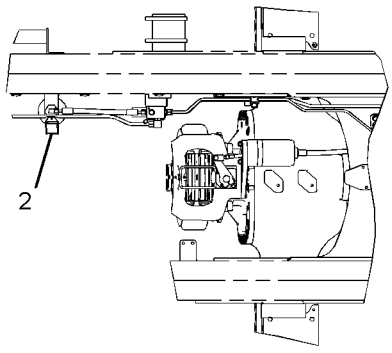

VIEW C-C

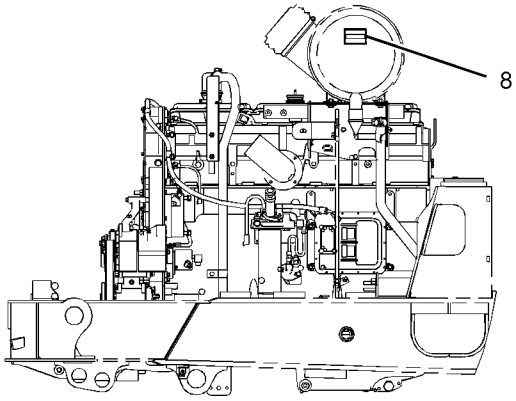

LEFT SIDE VIEW
(ENGINE)

GRAPHIC #1 g01105168

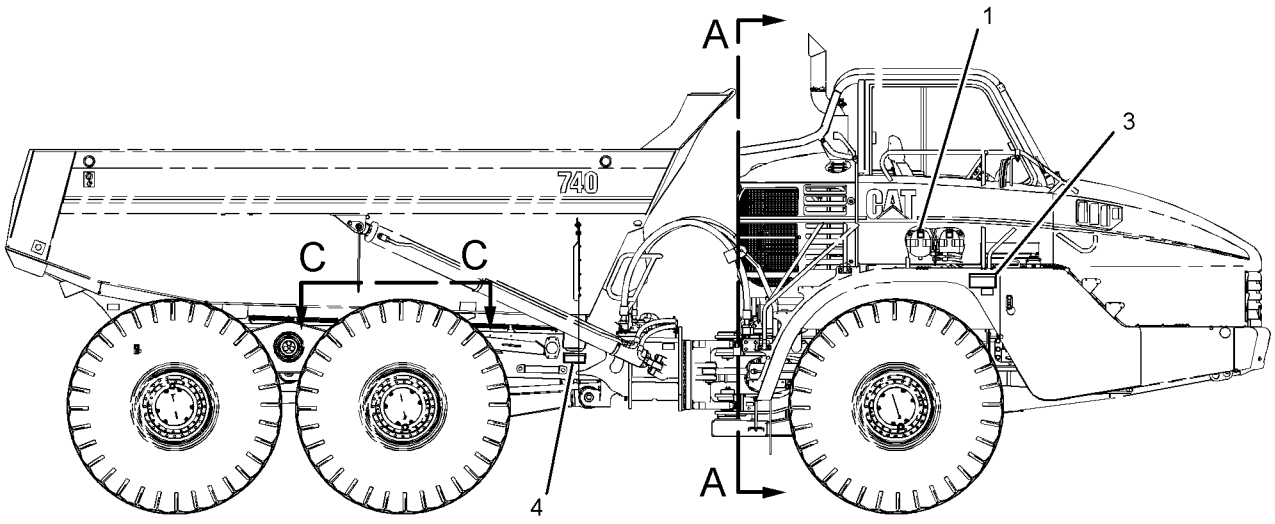

RIGHT SIDE VIEW

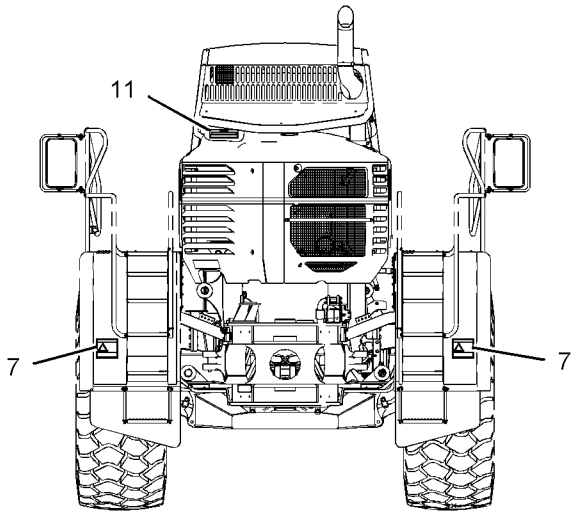

VIEW A-A

REFER TO ALL ILLUSTRATIONS OF
THIS GROUP FOR AUXILIARY VIEWS

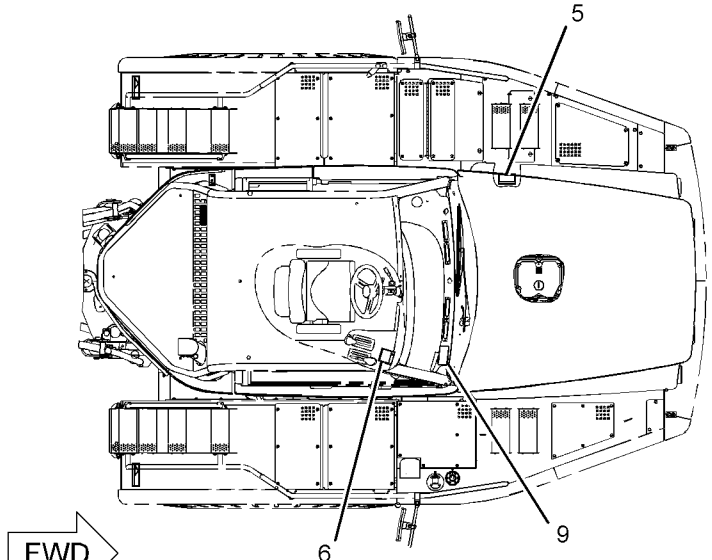

TOP VIEW

GRAPHIC #2 **<END>** g01105169

SERVICE EQUIPMENT AND SUPPLIES

152-7089 PLATE & FILM GP–SWEDISH

S/N: AXM1-1698
AN ATTACHMENT

SMCS-7405, 7557, 7563 **i02261935**

NOTE	REF NO	GRAPHIC REF	PART NUMBER	QTY	PART NAME 1 2 3 4 5 6 (PRODUCT LEVEL)	SEE PAGE
	1	2	**203-7838**	2	PLATE-WARNING (ACCUMULATOR)	
	2	1	**180-6659**	1	PLATE-WARNING (ACCUMULATOR)	
	3	1,2	**129-5438**	2	PLATE-WARNING (HIGH PRESSURE LINES)	
	4	1,2	**129-5435**	2	PLATE-WARNING (DUMP BODY PROP)	
	5	2	**129-5436**	1	PLATE-WARNING (CAB PIN)	
	6	2	**8C-4843**	1	PLATE-WARNING (DO NOT OPERATE)	
	7	2	**137-1588**	2	PLATE-WARNING (NO CLEARANCE)	
	8	1	**4P-8691**	1	FILM-INFORMATION (AIR CLEANER)	
	9	2	**193-1517**	1	FILM-INSTRUCTION (RETARDING GUIDELINES)	
	10	1	**8C-3560**	1	FILM-WARNING (JUMPER CABLES)	
	11	2	**196-5789**	1	PLATE-WARNING (ROPS, FOPS)	

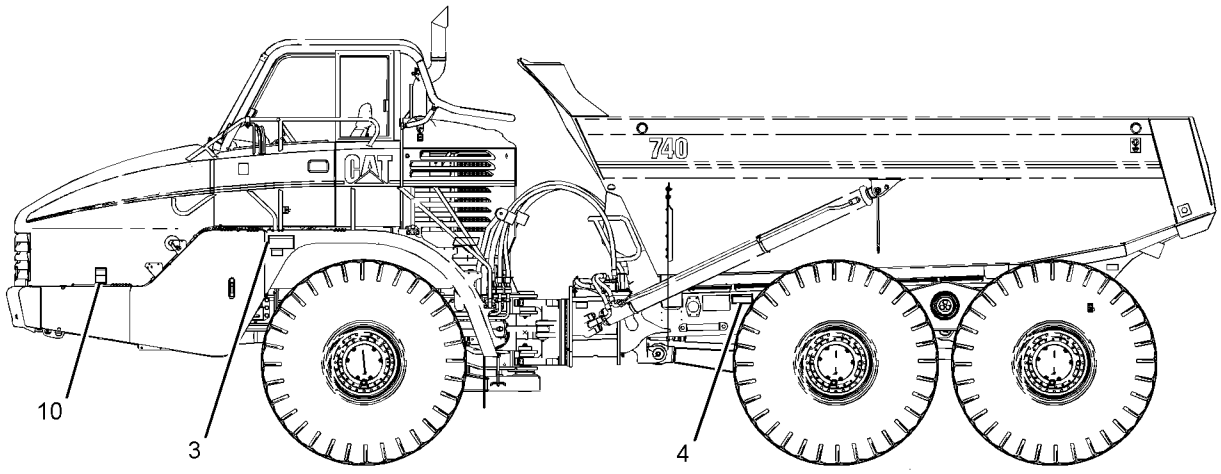

LEFT SIDE VIEW

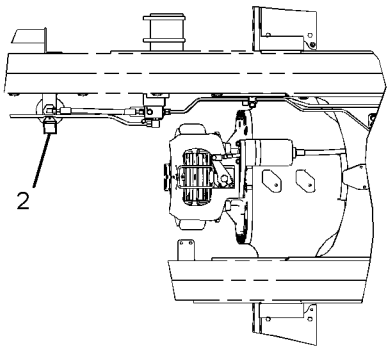

VIEW C-C

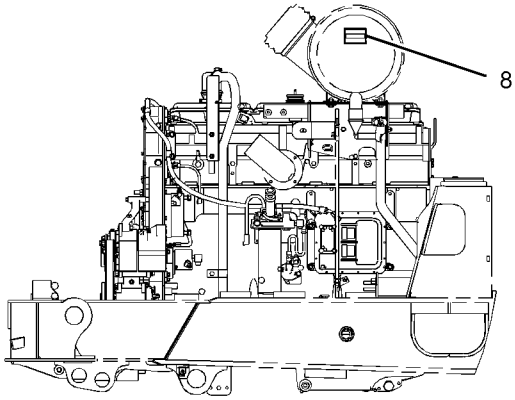

LEFT SIDE VIEW
(ENGINE)

GRAPHIC #1 g01105168

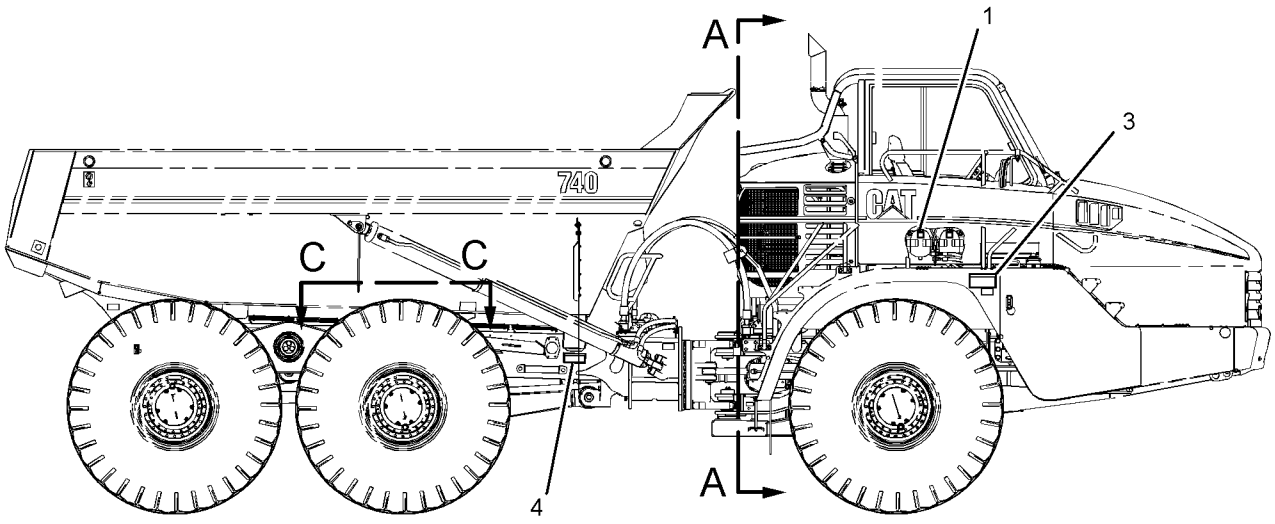

RIGHT SIDE VIEW

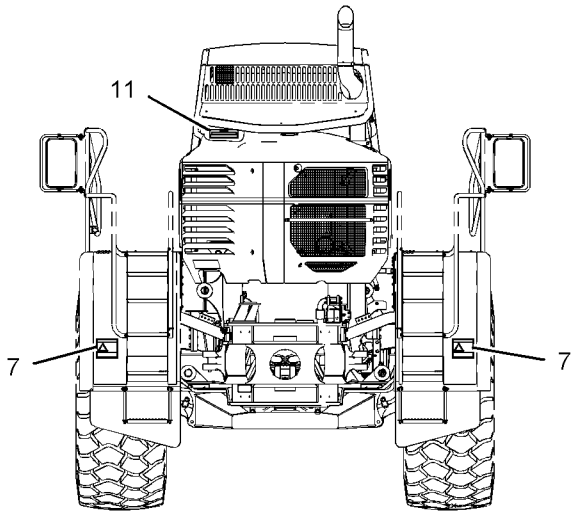

VIEW A-A

REFER TO ALL ILLUSTRATIONS OF
THIS GROUP FOR AUXILIARY VIEWS

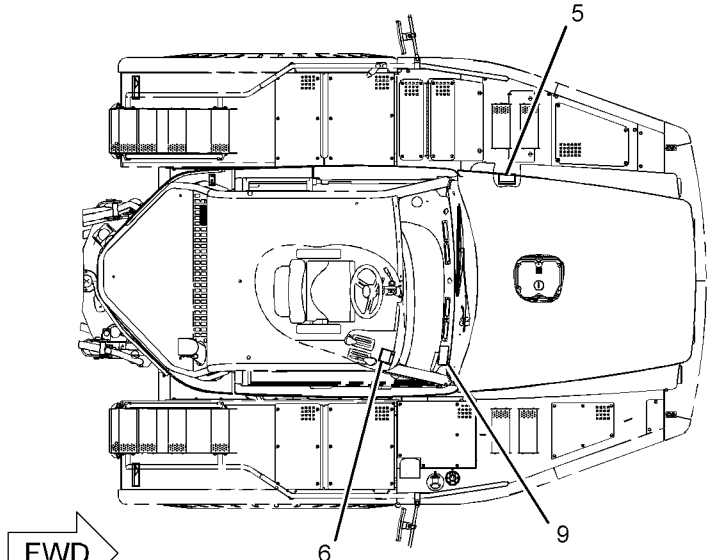

TOP VIEW

GRAPHIC #2 **<END>** g01105169

SERVICE EQUIPMENT AND SUPPLIES

152-7089 PLATE & FILM GP–SWEDISH

S/N: AXM1699-UP

AN ATTACHMENT

SMCS-7405, 7557, 7563 **i02183177**

NOTE	REF NO	GRAPHIC REF	PART NUMBER	QTY	PART NAME 1 2 3 4 5 6 (PRODUCT LEVEL)	SEE PAGE
C	1	2	**256-9964**	2	PLATE-WARNING (ACCUMULATOR)	
	2	1	**180-6659**	1	PLATE-WARNING (ACCUMULATOR)	
	3	1,2	**129-5438**	2	PLATE-WARNING (HIGH PRESSURE LINES)	
	4	1,2	**129-5435**	2	PLATE-WARNING (DUMP BODY PROP)	
	5	2	**129-5436**	1	PLATE-WARNING (CAB PIN)	
	6	2	**8C-4843**	1	PLATE-WARNING (DO NOT OPERATE)	
	7	2	**137-1588**	2	PLATE-WARNING (NO CLEARANCE)	
	8	1	**4P-8691**	1	FILM-INFORMATION (AIR CLEANER)	
	9	2	**193-1517**	1	FILM-INSTRUCTION (RETARDING GUIDELINES)	
	10	1	**8C-3560**	1	FILM-WARNING (JUMPER CABLES)	
	11	2	**196-5789**	1	PLATE-WARNING (ROPS, FOPS)	

C-CHANGE FROM PREVIOUS TYPE

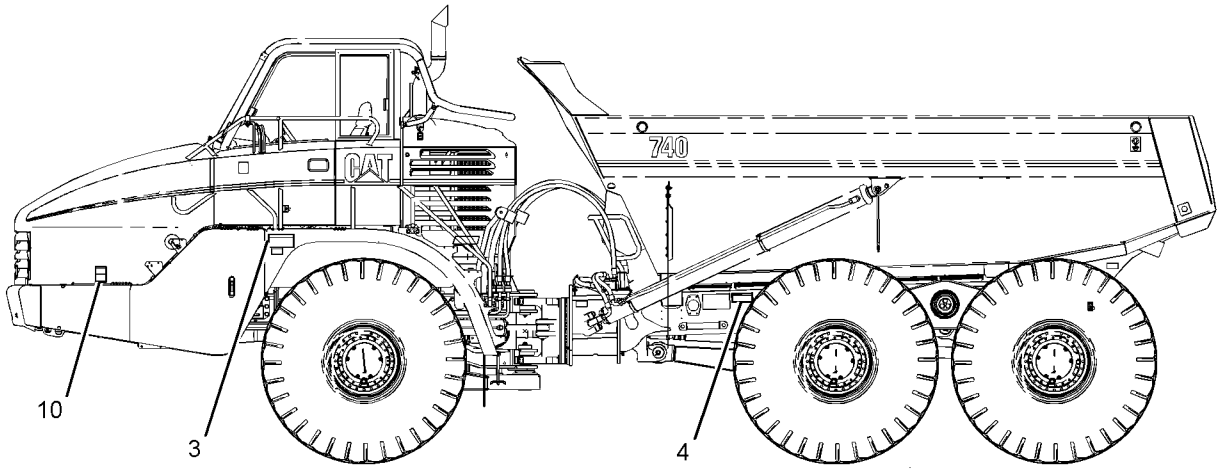

LEFT SIDE VIEW

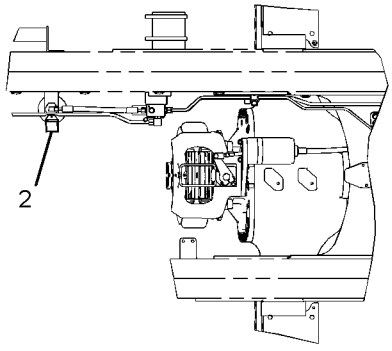

VIEW C-C

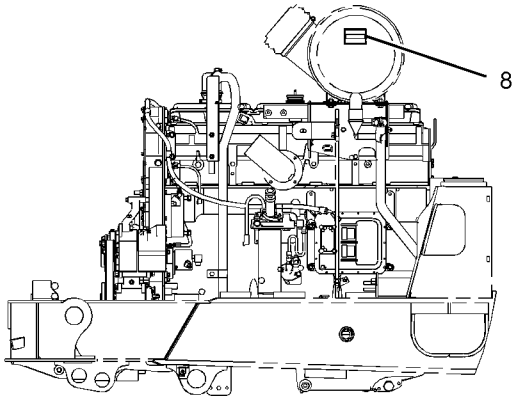

LEFT SIDE VIEW
(ENGINE)

GRAPHIC #1 g01105168

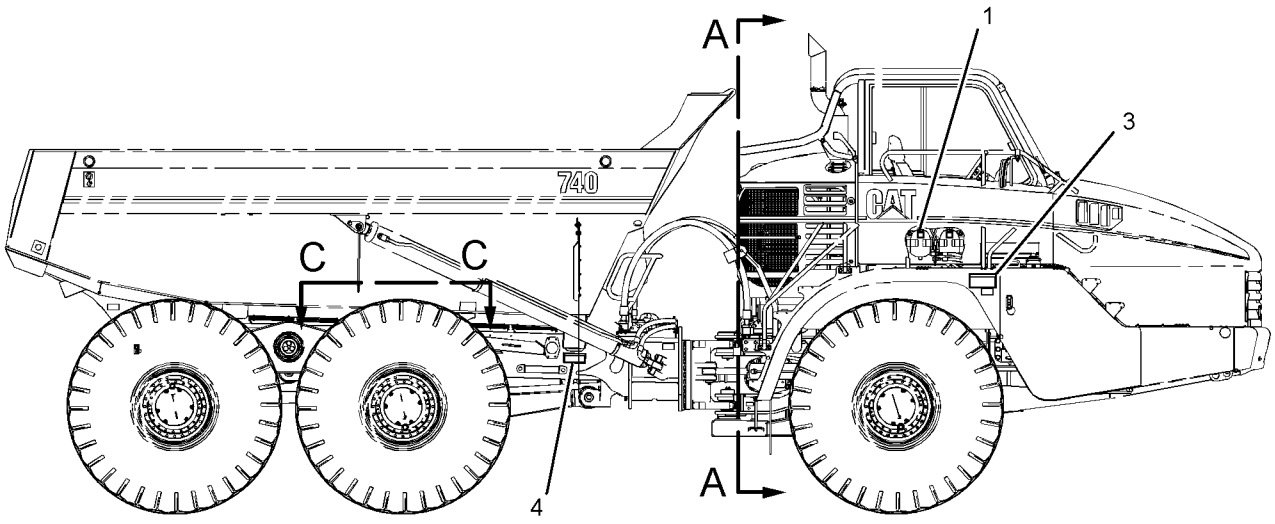

RIGHT SIDE VIEW

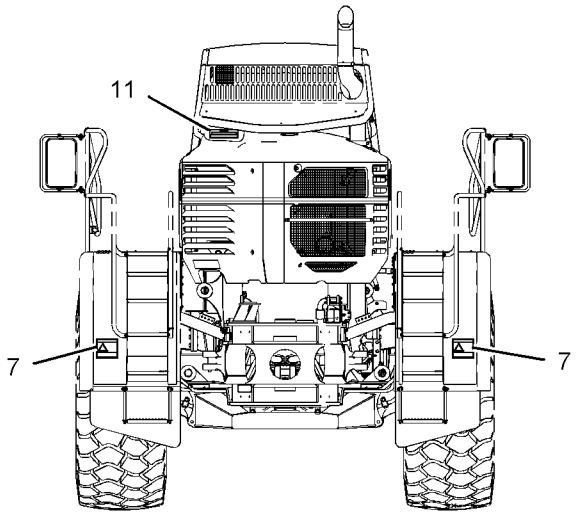

VIEW A-A

REFER TO ALL ILLUSTRATIONS OF
THIS GROUP FOR AUXILIARY VIEWS

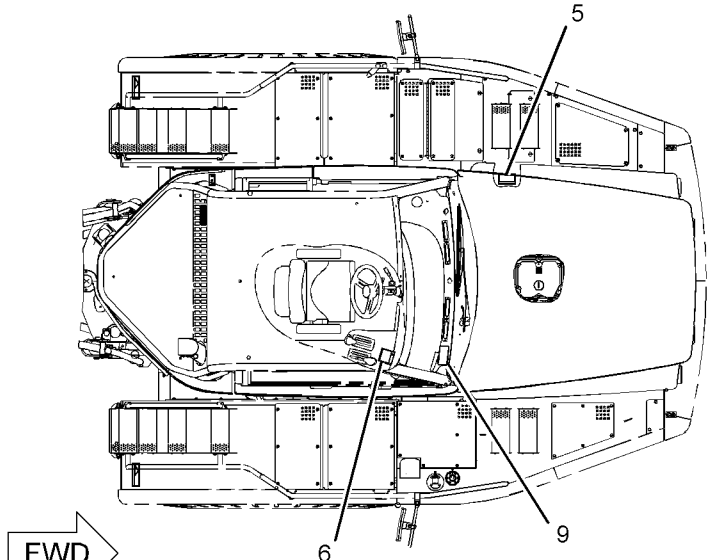

TOP VIEW

GRAPHIC #2 **<END>** g01105169

SERVICE EQUIPMENT AND SUPPLIES

152-7090 PLATE & FILM GP–FRENCH

S/N: AXM1-1698
AN ATTACHMENT

SMCS-7405, 7557, 7563 **i02261936**

NOTE	REF NO	GRAPHIC REF	PART NUMBER	QTY	PART NAME 1 2 3 4 5 6 (PRODUCT LEVEL)	SEE PAGE
	1	2	**203-7822**	2	PLATE-WARNING (ACCUMULATOR)	
	2	1	**180-6653**	1	PLATE-WARNING (ACCUMULATOR)	
	3	1,2	**2U-7545**	2	PLATE-WARNING (HIGH PRESSURE LINES)	
	4	1,2	**6U-7530**	2	PLATE-WARNING (DUMP BODY PROP)	
	5	2	**6U-7838**	1	PLATE-WARNING (CAB PIN)	
	6	2	**5P-8198**	1	PLATE-WARNING (DO NOT OPERATE)	
	7	2	**137-1580**	2	PLATE-WARNING (NO CLEARANCE)	
	8	1	**4P-8684**	1	FILM-INFORMATION (AIR CLEANER)	
	9	2	**193-1518**	1	FILM-INSTRUCTION (RETARDING GUIDELINES)	
	10	1	**6V-4612**	1	FILM-WARNING (JUMPER CABLES)	
	11	2	**196-5781**	1	PLATE-WARNING (ROPS, FOPS)	

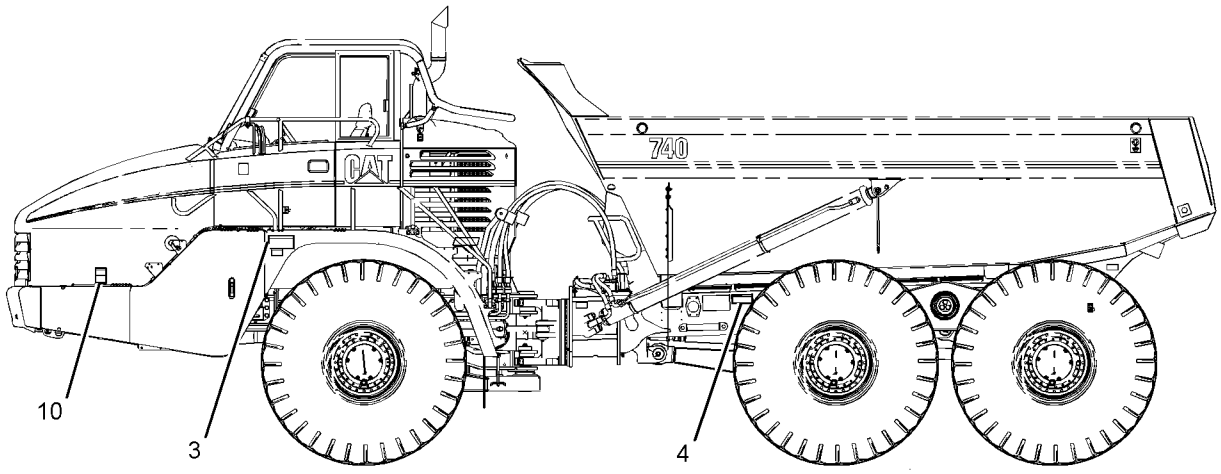

LEFT SIDE VIEW

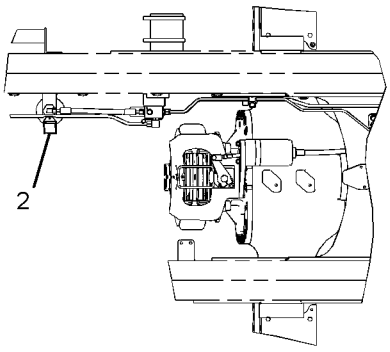

VIEW C-C

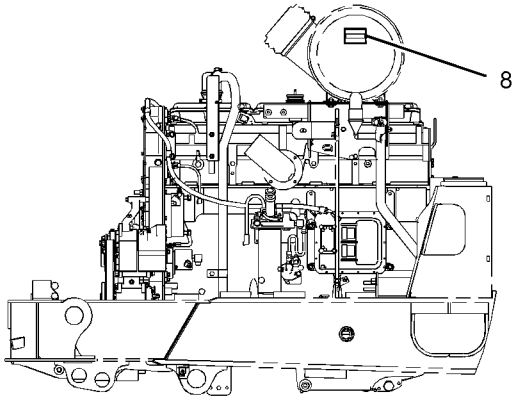

LEFT SIDE VIEW
(ENGINE)

GRAPHIC #1 g01105168

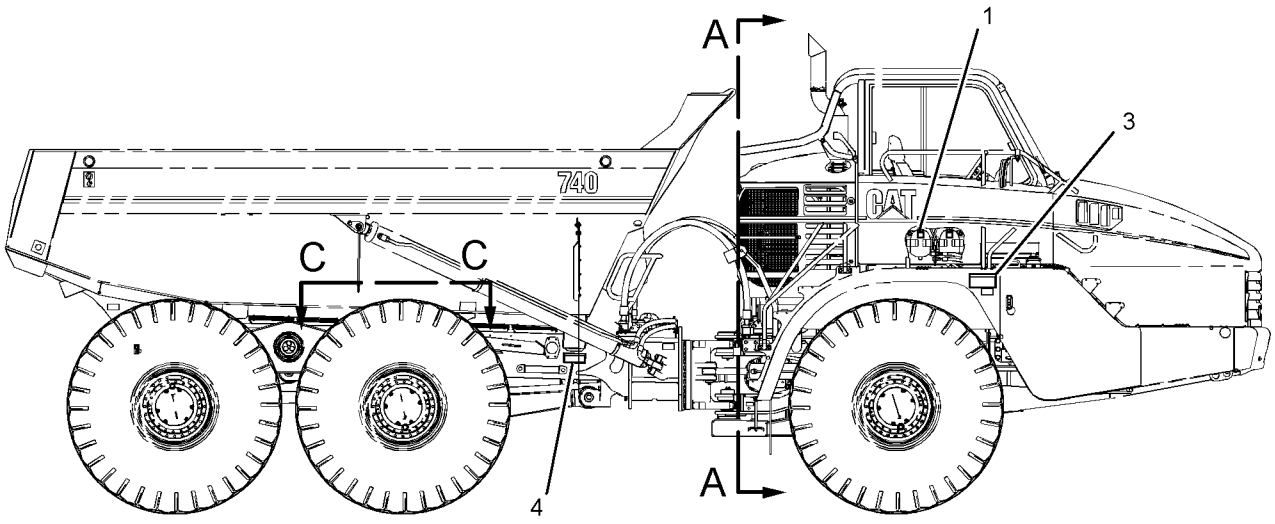

RIGHT SIDE VIEW

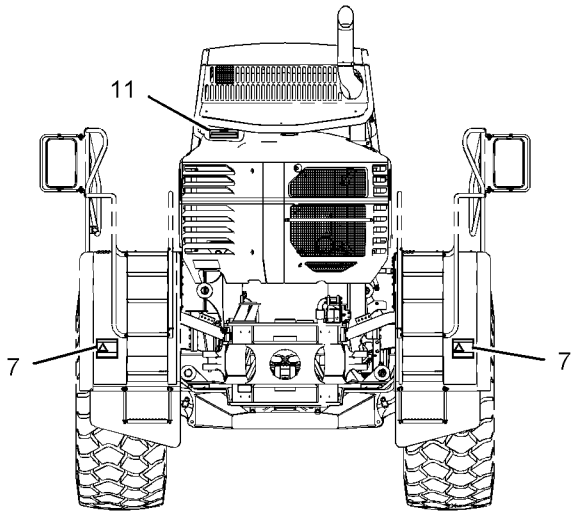

VIEW A-A

REFER TO ALL ILLUSTRATIONS OF
THIS GROUP FOR AUXILIARY VIEWS

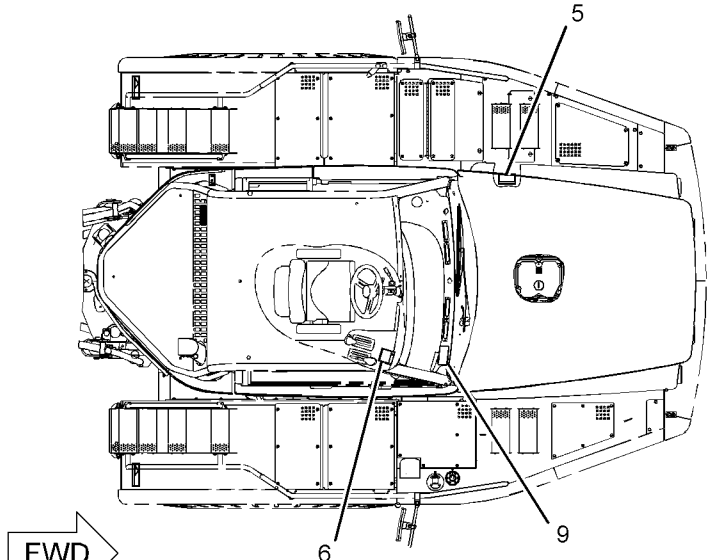

TOP VIEW

GRAPHIC #2 **<END>** g01105169

SERVICE EQUIPMENT AND SUPPLIES

152-7090 PLATE & FILM GP–FRENCH

S/N: AXM1699-UP
AN ATTACHMENT

SMCS-7405, 7557, 7563 **i02183178**

NOTE	REF NO	GRAPHIC REF	PART NUMBER	QTY	PART NAME 1 2 3 4 5 6 (PRODUCT LEVEL)	SEE PAGE
C	1	2	**256-9956**	2	PLATE-WARNING (ACCUMULATOR)	
	2	1	**180-6653**	1	PLATE-WARNING (ACCUMULATOR)	
	3	1,2	**2U-7545**	2	PLATE-WARNING (HIGH PRESSURE LINES)	
	4	1,2	**6U-7530**	2	PLATE-WARNING (DUMP BODY PROP)	
	5	2	**6U-7838**	1	PLATE-WARNING (CAB PIN)	
	6	2	**5P-8198**	1	PLATE-WARNING (DO NOT OPERATE)	
	7	2	**137-1580**	2	PLATE-WARNING (NO CLEARANCE)	
	8	1	**4P-8684**	1	FILM-INFORMATION (AIR CLEANER)	
	9	2	**193-1518**	1	FILM-INSTRUCTION (RETARDING GUIDELINES)	
	10	1	**6V-4612**	1	FILM-WARNING (JUMPER CABLES)	
	11	2	**196-5781**	1	PLATE-WARNING (ROPS, FOPS)	

C-CHANGE FROM PREVIOUS TYPE

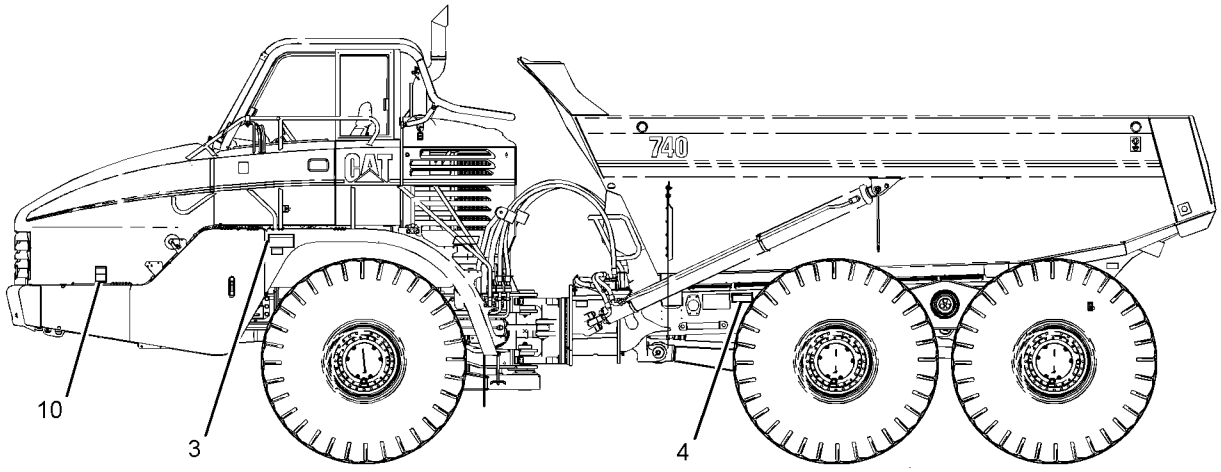

LEFT SIDE VIEW

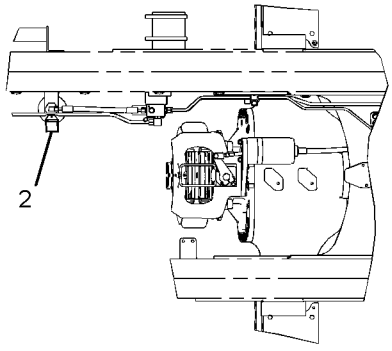

VIEW C-C

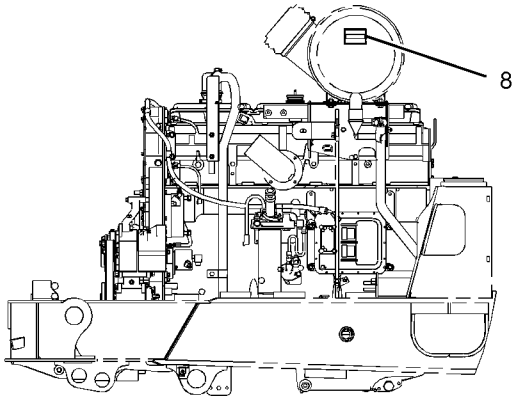

LEFT SIDE VIEW
(ENGINE)

GRAPHIC #1 g01105168

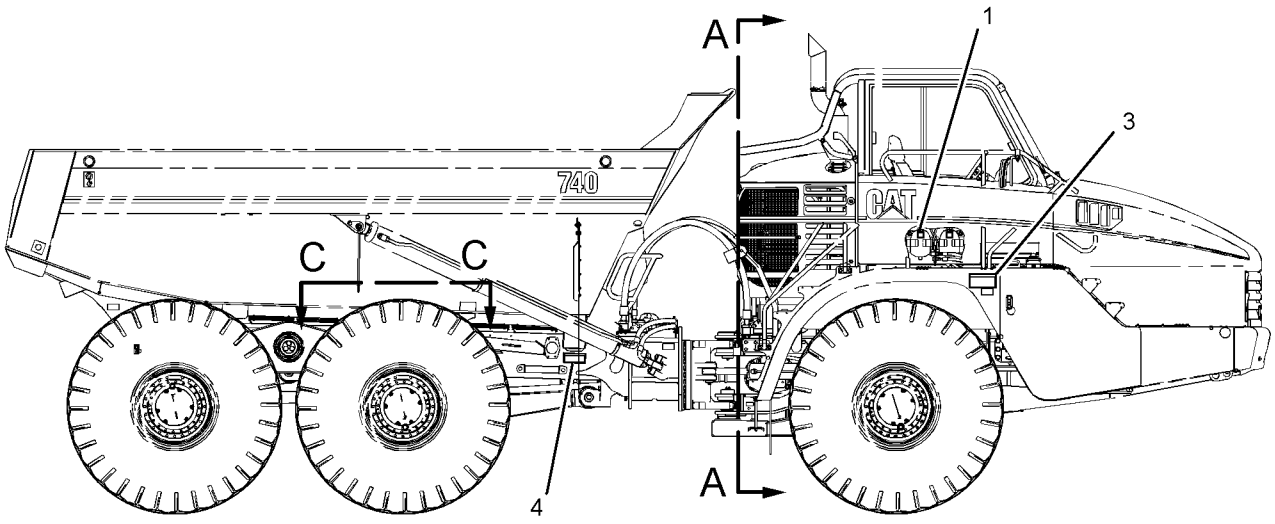

RIGHT SIDE VIEW

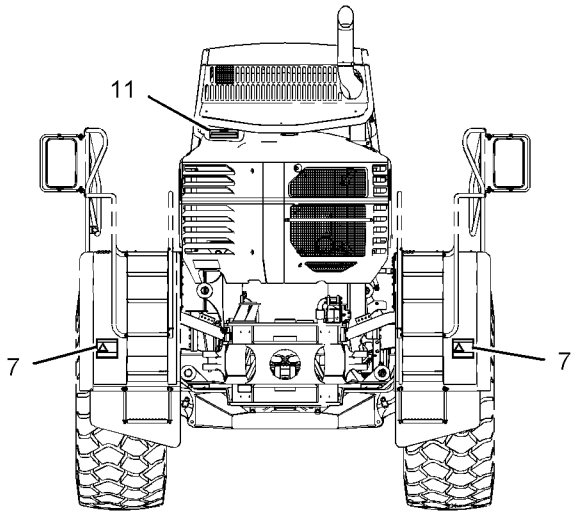

VIEW A-A

REFER TO ALL ILLUSTRATIONS OF
THIS GROUP FOR AUXILIARY VIEWS

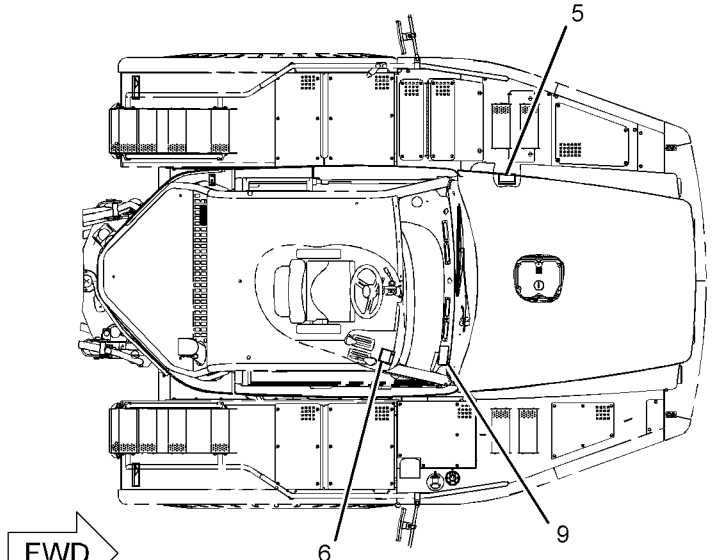

TOP VIEW

GRAPHIC #2 **<END>** g01105169

SERVICE EQUIPMENT AND SUPPLIES

152-7091 PLATE & FILM GP–DANISH

S/N: AXM1-1698
AN ATTACHMENT

SMCS-7405, 7557, 7563 **i02261937**

NOTE	REF NO	GRAPHIC REF	PART NUMBER	QTY	PART NAME 1 2 3 4 5 6 (PRODUCT LEVEL)	SEE PAGE
	1	2	**203-7830**	2	PLATE-WARNING (ACCUMULATOR)	
	2	1	**180-6651**	1	PLATE-WARNING (ACCUMULATOR)	
	3	1,2	**123-4145**	2	PLATE-WARNING (HIGH PRESSURE LINES)	
	4	1,2	**123-4165**	2	PLATE-WARNING (DUMP BODY PROP)	
	5	2	**123-6051**	1	PLATE-WARNING (CAB PIN)	
	6	2	**3E-0634**	1	PLATE-WARNING (DO NOT OPERATE)	
	7	2	**137-1585**	2	PLATE-WARNING (NO CLEARANCE)	
	8	1	**114-6058**	1	FILM-INFORMATION (AIR CLEANER)	
	9	2	**193-1519**	1	FILM-INSTRUCTION (RETARDING GUIDELINES)	
	10	1	**3E-0845**	1	FILM-WARNING (CABLE CONNECTION)	
	11	2	**196-5779**	1	PLATE-WARNING (ROPS, FOPS)	

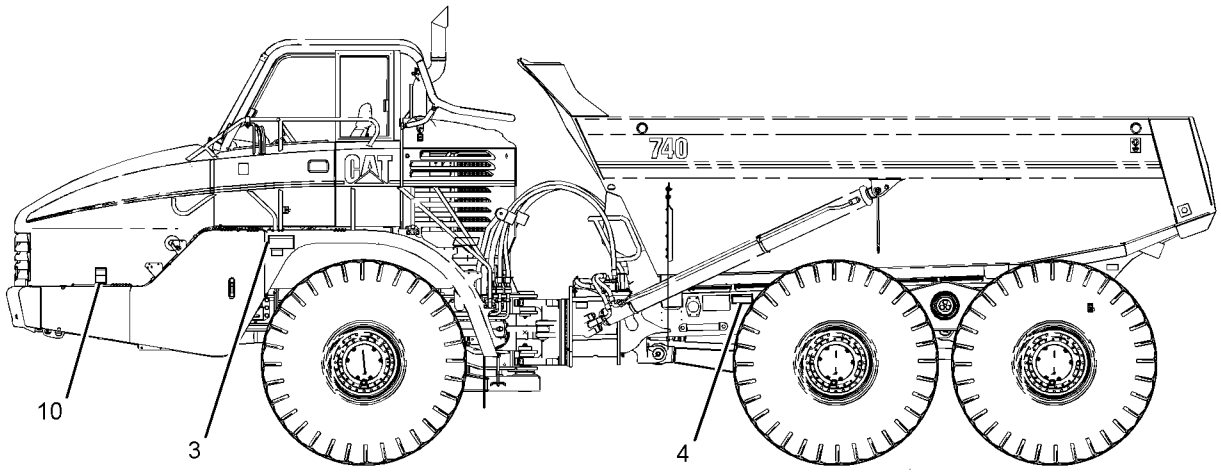

LEFT SIDE VIEW

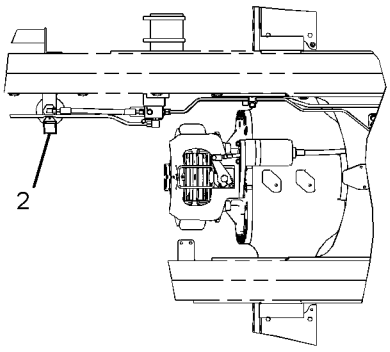

VIEW C-C

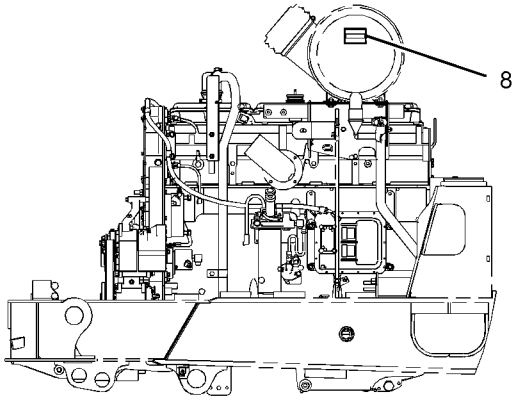

LEFT SIDE VIEW
(ENGINE)

GRAPHIC #1 g01105168

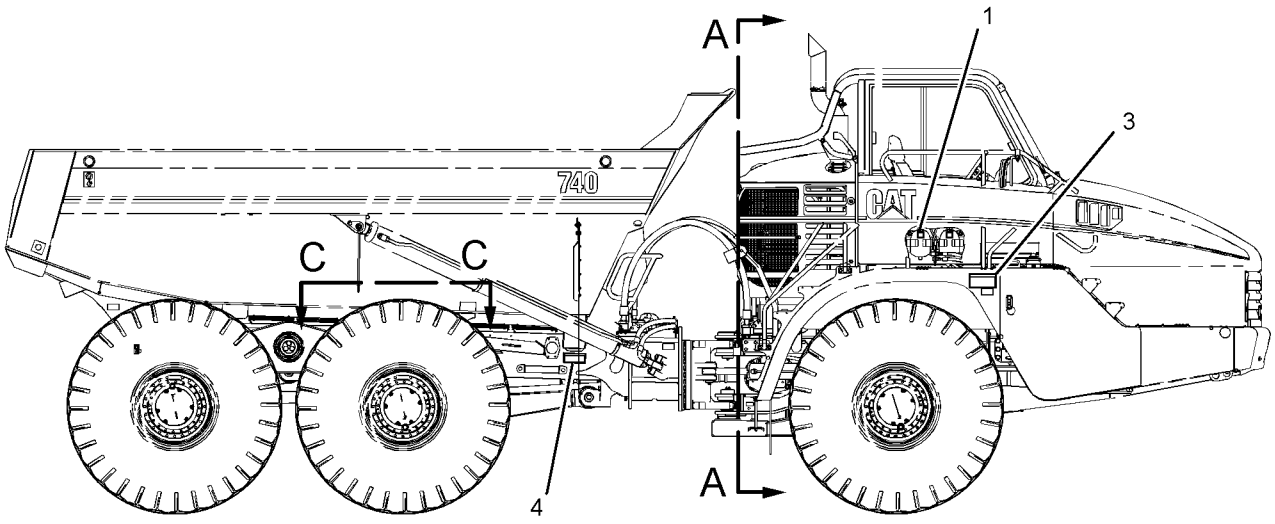

RIGHT SIDE VIEW

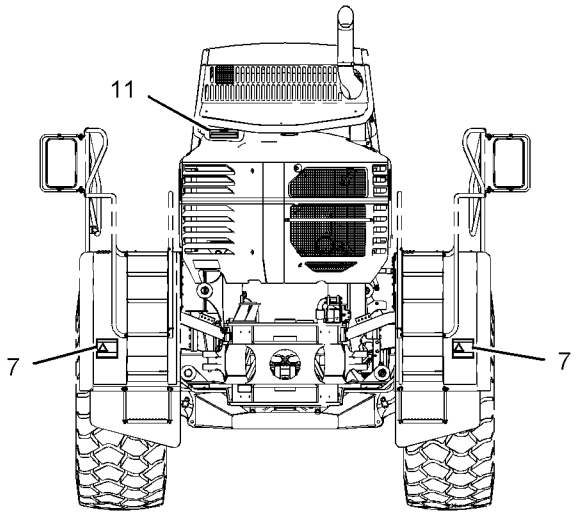

VIEW A-A

REFER TO ALL ILLUSTRATIONS OF
THIS GROUP FOR AUXILIARY VIEWS

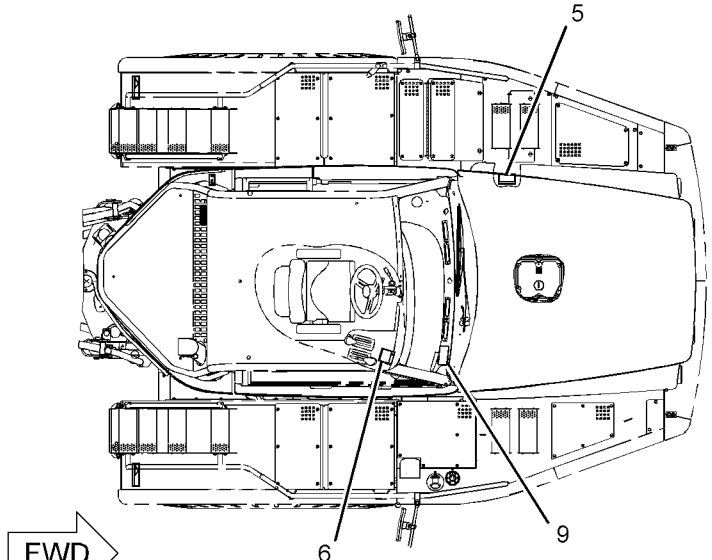

TOP VIEW

GRAPHIC #2 **<END>** g01105169

SERVICE EQUIPMENT AND SUPPLIES

152-7091 PLATE & FILM GP–DANISH

S/N: AXM1699-UP
AN ATTACHMENT

SMCS-7405, 7557, 7563 **i02183181**

NOTE	REF NO	GRAPHIC REF	PART NUMBER	QTY	PART NAME 1 2 3 4 5 6 (PRODUCT LEVEL)	SEE PAGE
C	1	2	**256-9953**	2	PLATE-WARNING (ACCUMULATOR)	
	2	1	**180-6651**	1	PLATE-WARNING (ACCUMULATOR)	
	3	1,2	**123-4145**	2	PLATE-WARNING (HIGH PRESSURE LINES)	
	4	1,2	**123-4165**	2	PLATE-WARNING (DUMP BODY PROP)	
	5	2	**123-6051**	1	PLATE-WARNING (CAB PIN)	
	6	2	**3E-0634**	1	PLATE-WARNING (DO NOT OPERATE)	
	7	2	**137-1585**	2	PLATE-WARNING (NO CLEARANCE)	
	8	1	**114-6058**	1	FILM-INFORMATION (AIR CLEANER)	
	9	2	**193-1519**	1	FILM-INSTRUCTION (RETARDING GUIDELINES)	
	10	1	**3E-0845**	1	FILM-WARNING (CABLE CONNECTION)	
	11	2	**196-5779**	1	PLATE-WARNING (ROPS, FOPS)	

C-CHANGE FROM PREVIOUS TYPE

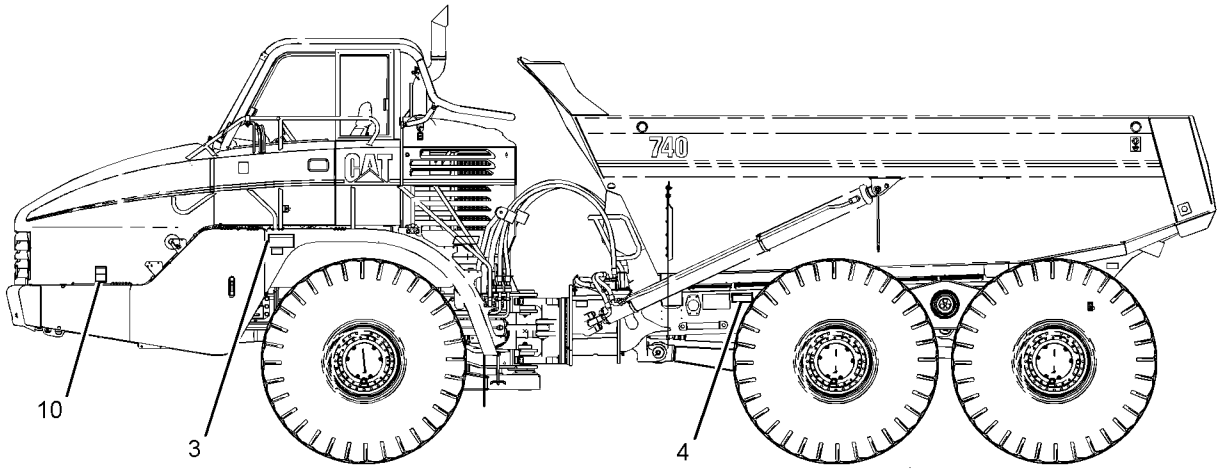

LEFT SIDE VIEW

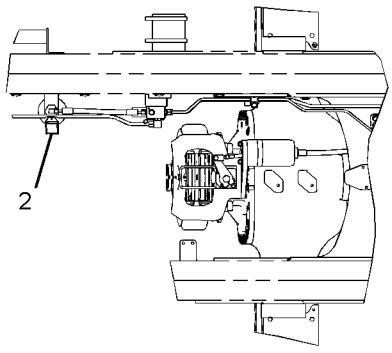

VIEW C-C

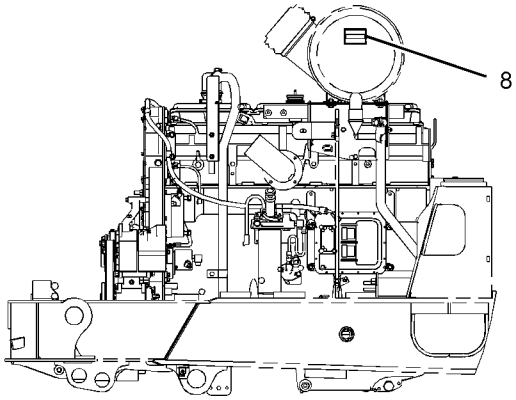

LEFT SIDE VIEW
(ENGINE)

GRAPHIC #1 g01105168

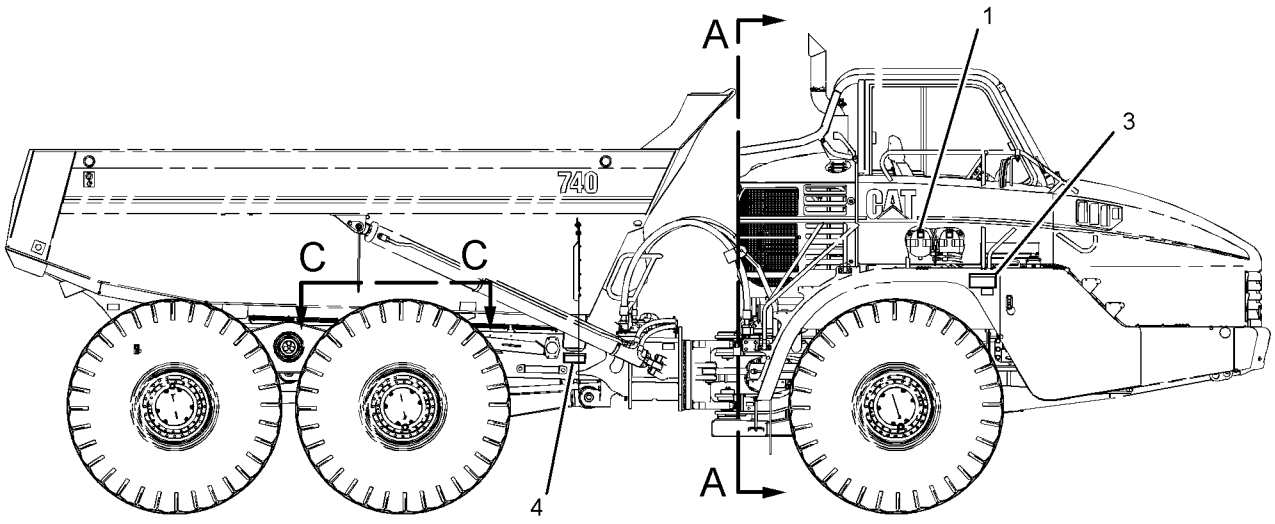

RIGHT SIDE VIEW

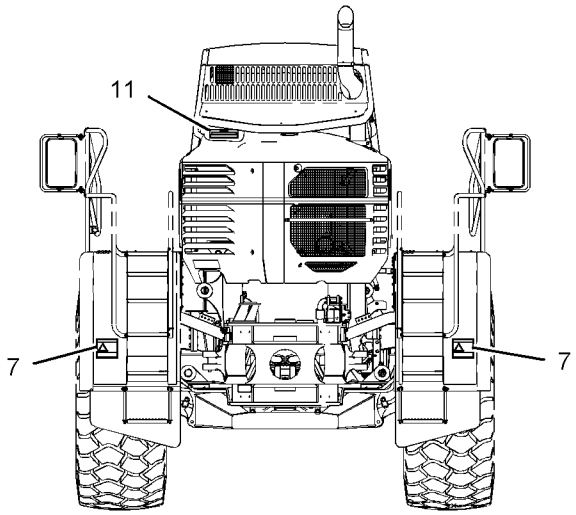

VIEW A-A

REFER TO ALL ILLUSTRATIONS OF
THIS GROUP FOR AUXILIARY VIEWS

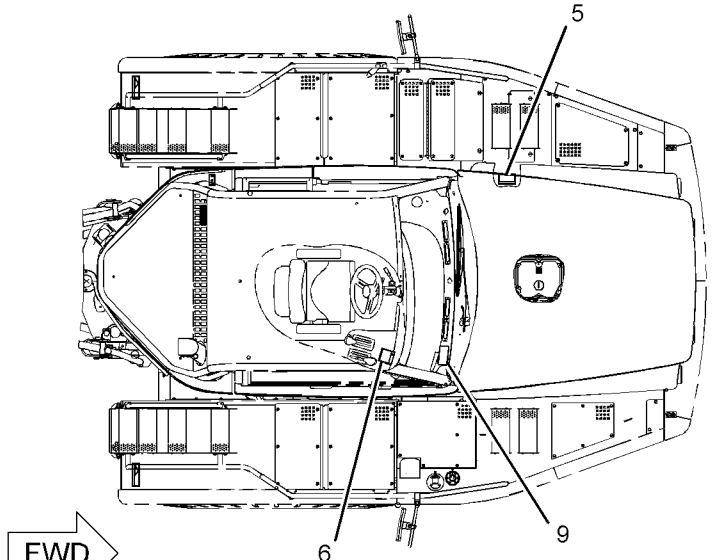

TOP VIEW

GRAPHIC #2 **<END>** g01105169

SERVICE EQUIPMENT AND SUPPLIES

152-7092 PLATE & FILM GP–NORWEGIAN

S/N: AXM1-1698

AN ATTACHMENT

SMCS-7405, 7557, 7563 **i02261938**

NOTE	REF NO	GRAPHIC REF	PART NUMBER	QTY	PART NAME 1 2 3 4 5 6 (PRODUCT LEVEL)	SEE PAGE
	1	2	**203-7836**	2	PLATE-WARNING (ACCUMULATOR)	
	2	1	**193-2426**	1	PLATE-WARNING (ACCUMULATOR)	
	3	1,2	**193-2424**	2	PLATE-WARNING (HIGH PRESSURE LINES)	
	4	1,2	**193-2422**	2	PLATE-WARNING (DUMP BODY PROP)	
	5	2	**193-2420**	1	PLATE-WARNING (CAB PIN)	
	6	2	**104-6429**	1	PLATE-WARNING (DO NOT OPERATE)	
	7	2	**193-2417**	2	PLATE-WARNING (NO CLEARANCE)	
	8	1	**133-4965**	1	FILM-INFORMATION (AIR CLEANER)	
	9	2	**193-1521**	1	FILM-INSTRUCTION (RETARDING GUIDELINES)	
	10	1	**104-6408**	1	FILM-WARNING (JUMPER CABLES)	
	11	2	**196-5786**	1	PLATE-WARNING (ROPS, FOPS)	

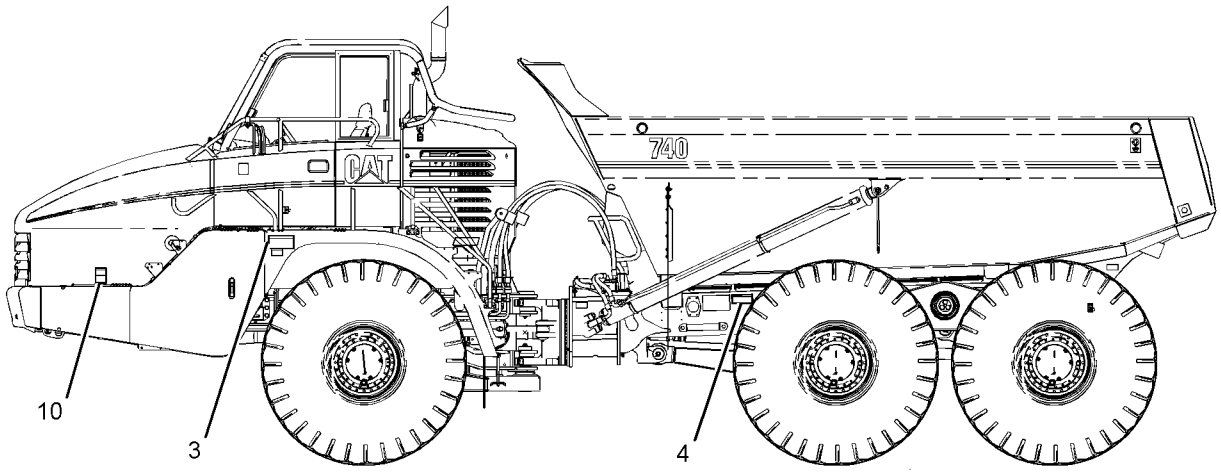

LEFT SIDE VIEW

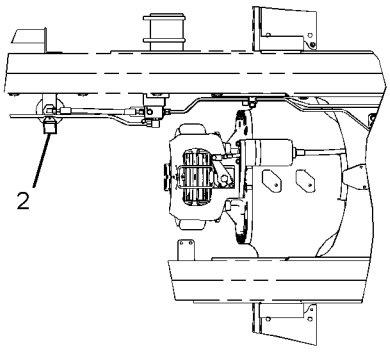

VIEW C-C

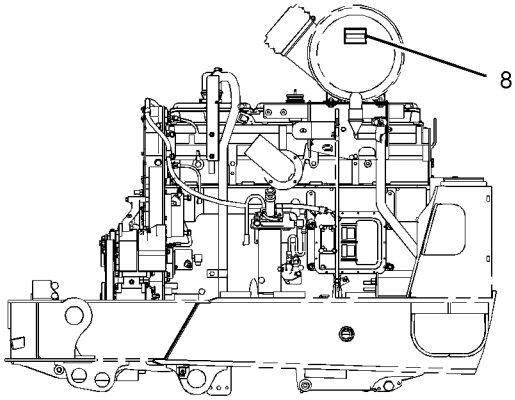

LEFT SIDE VIEW
(ENGINE)

GRAPHIC #1 g01105168

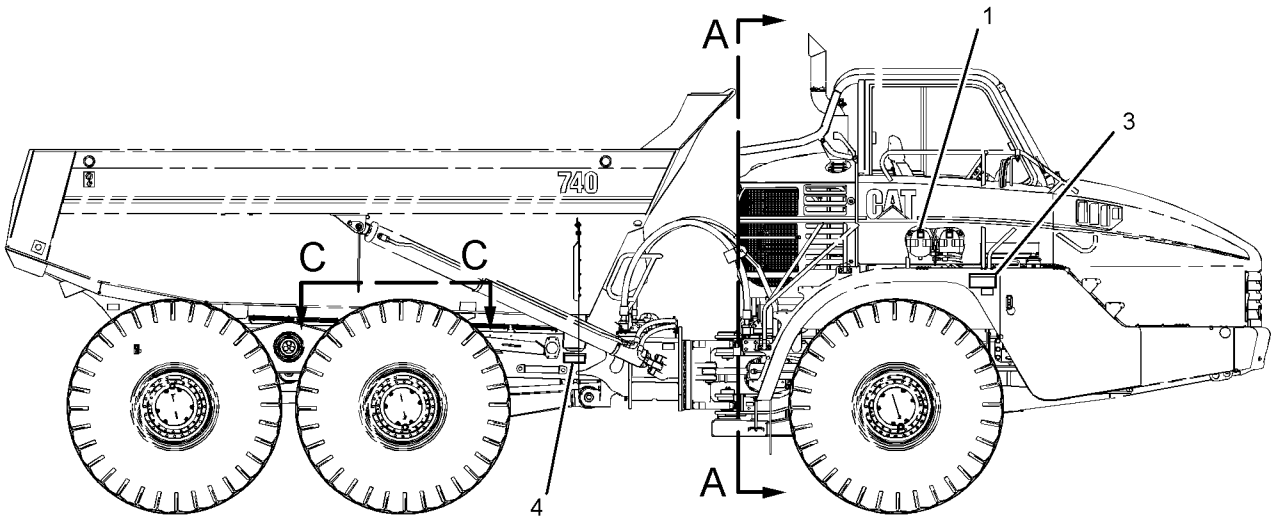

RIGHT SIDE VIEW

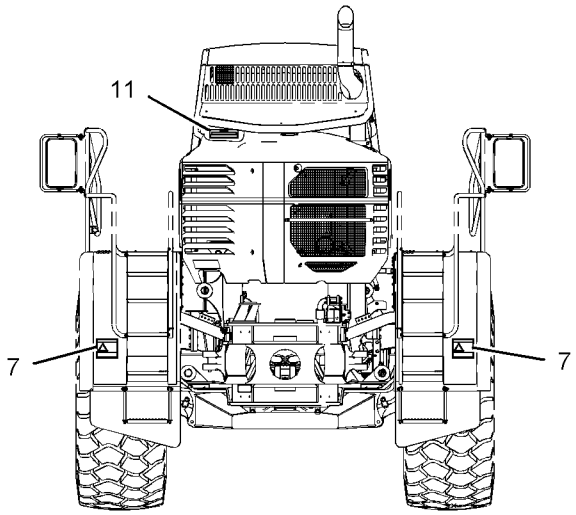

VIEW A-A

REFER TO ALL ILLUSTRATIONS OF
THIS GROUP FOR AUXILIARY VIEWS

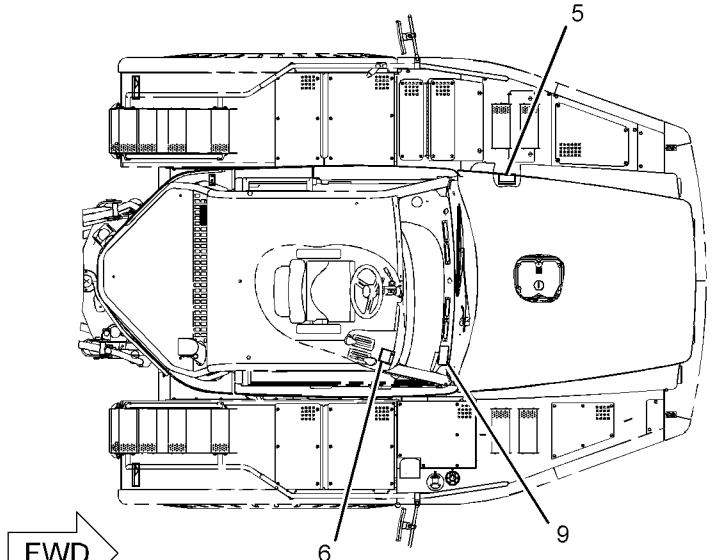

TOP VIEW

GRAPHIC #2 **<END>** g01105169

SERVICE EQUIPMENT AND SUPPLIES

152-7092 PLATE & FILM GP—NORWEGIAN

S/N: AXM1699-UP

AN ATTACHMENT

SMCS-7405, 7557, 7563 **i02183184**

NOTE	REF NO	GRAPHIC REF	PART NUMBER	QTY	PART NAME 1 2 3 4 5 6 (PRODUCT LEVEL)	SEE PAGE
C	1	2	**256-9961**	2	PLATE-WARNING (ACCUMULATOR)	
	2	1	**193-2426**	1	PLATE-WARNING (ACCUMULATOR)	
	3	1,2	**193-2424**	2	PLATE-WARNING (HIGH PRESSURE LINES)	
	4	1,2	**193-2422**	2	PLATE-WARNING (DUMP BODY PROP)	
	5	2	**193-2420**	1	PLATE-WARNING (CAB PIN)	
	6	2	**104-6429**	1	PLATE-WARNING (DO NOT OPERATE)	
	7	2	**193-2417**	2	PLATE-WARNING (NO CLEARANCE)	
	8	1	**133-4965**	1	FILM-INFORMATION (AIR CLEANER)	
	9	2	**193-1521**	1	FILM-INSTRUCTION (RETARDING GUIDELINES)	
	10	1	**104-6408**	1	FILM-WARNING (JUMPER CABLES)	
	11	2	**196-5786**	1	PLATE-WARNING (ROPS, FOPS)	

C-CHANGE FROM PREVIOUS TYPE

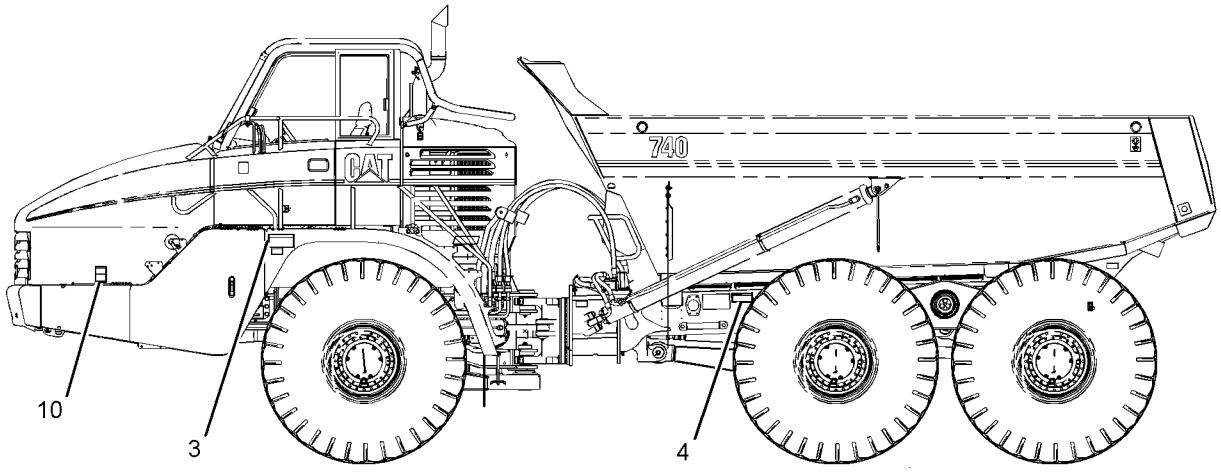

LEFT SIDE VIEW

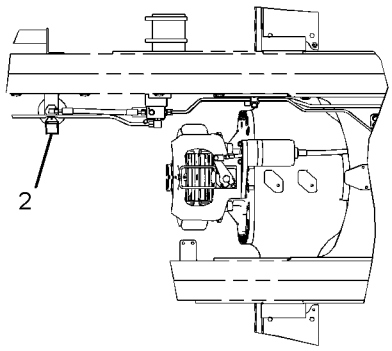

VIEW C-C

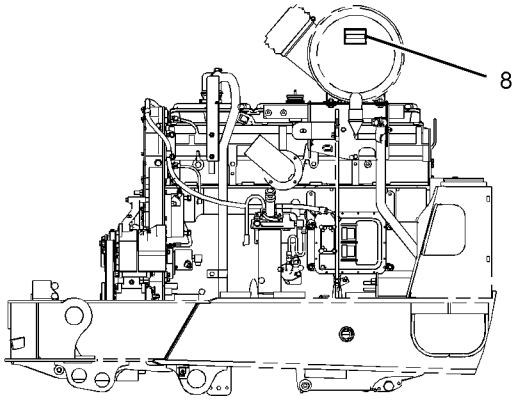

LEFT SIDE VIEW
(ENGINE)

GRAPHIC #1 g01105168

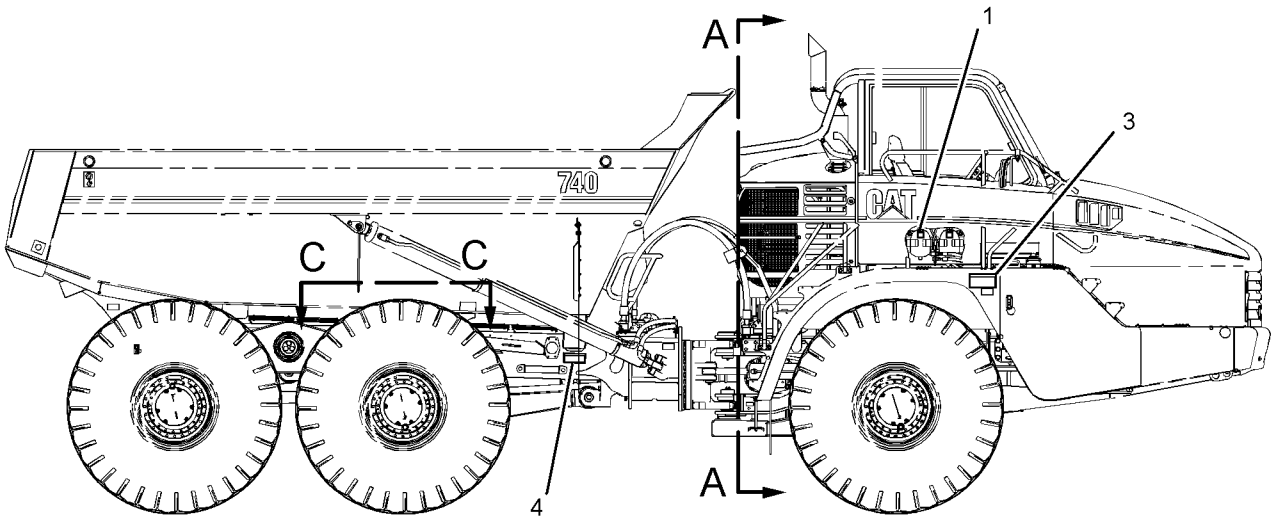

RIGHT SIDE VIEW

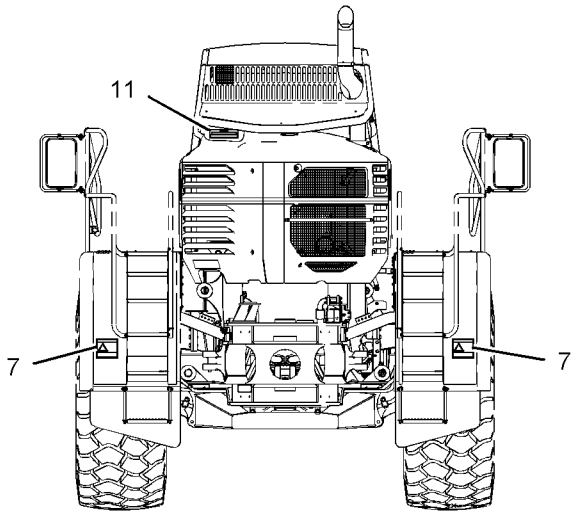

VIEW A-A

REFER TO ALL ILLUSTRATIONS OF
THIS GROUP FOR AUXILIARY VIEWS

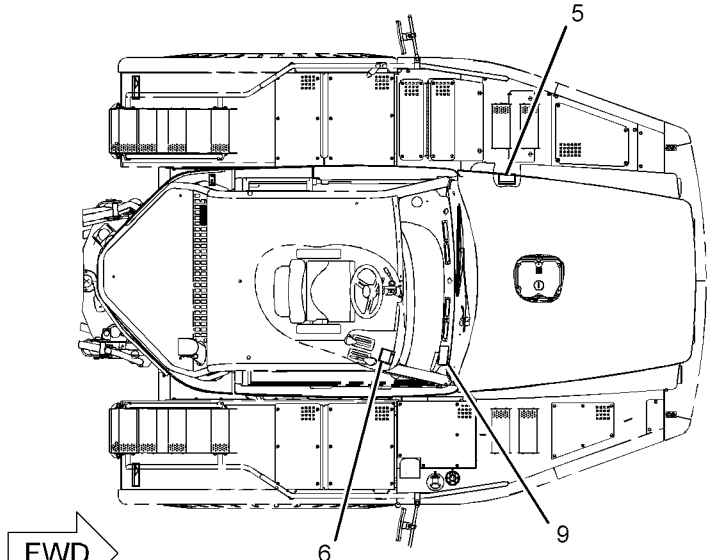

TOP VIEW

GRAPHIC #2 **<END>** g01105169

SERVICE EQUIPMENT AND SUPPLIES

192-9086 PLATE & FILM GP–JAPANESE

S/N: AXM1-1698

AN ATTACHMENT

SMCS-7405, 7557, 7563 **i02261959**

NOTE	REF NO	GRAPHIC REF	PART NUMBER	QTY	PART NAME 1 2 3 4 5 6 (PRODUCT LEVEL)	SEE PAGE
	1	2	**203-7835**	2	PLATE-WARNING (ACCUMULATOR)	
	2	1	**193-2425**	1	PLATE-WARNING (ACCUMULATOR)	
	3	1,2	**193-2423**	2	PLATE-WARNING (HIGH PRESSURE LINES)	
	4	1,2	**193-2421**	2	PLATE-WARNING (DUMP BODY PROP)	
	5	2	**193-2419**	1	PLATE-WARNING (CAB PIN)	
	6	2	**5P-8203**	1	PLATE-WARNING (DO NOT OPERATE)	
	7	2	**193-2416**	2	PLATE-WARNING (NO CLEARANCE)	
	8	1	**114-6056**	1	FILM-INFORMATION (AIR CLEANER)	
	9	2	**193-1520**	1	FILM-INSTRUCTION (RETARDING GUIDELINES)	
	10	1	**9X-6700**	1	FILM-WARNING (CABLE CONNECTION)	
	11	2	**196-5785**	1	PLATE-WARNING (ROPS, FOPS)	

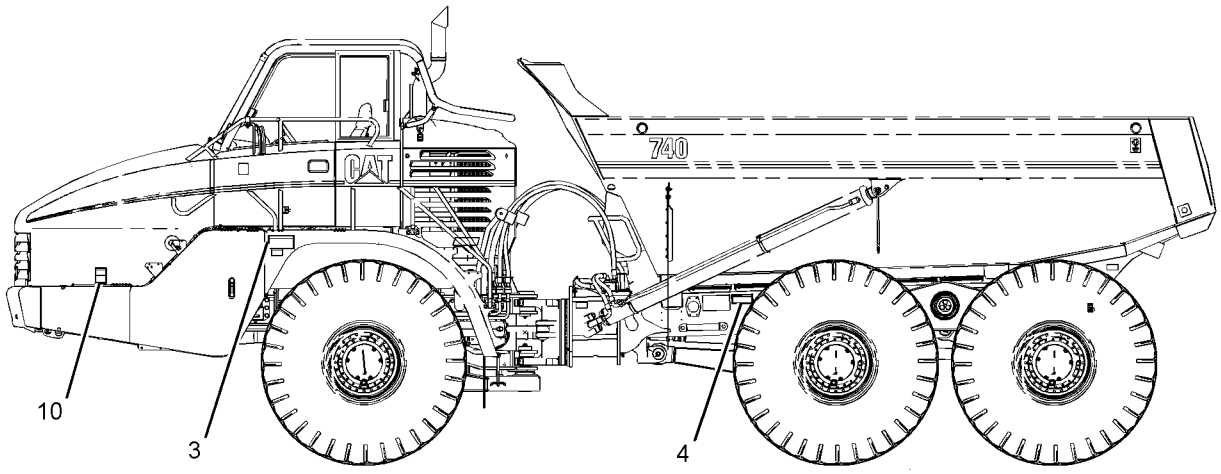

LEFT SIDE VIEW

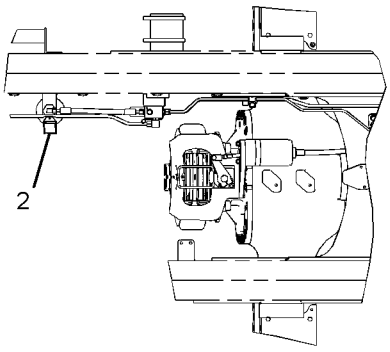

VIEW C-C

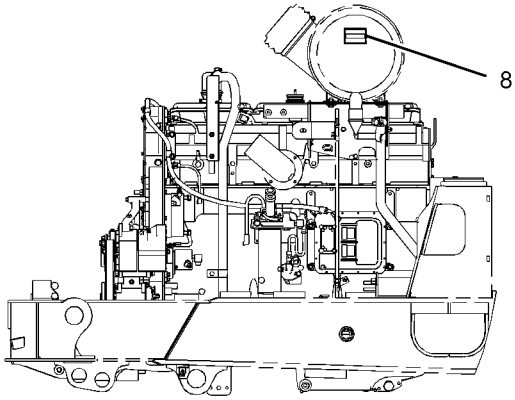

LEFT SIDE VIEW
(ENGINE)

GRAPHIC #1 g01105168

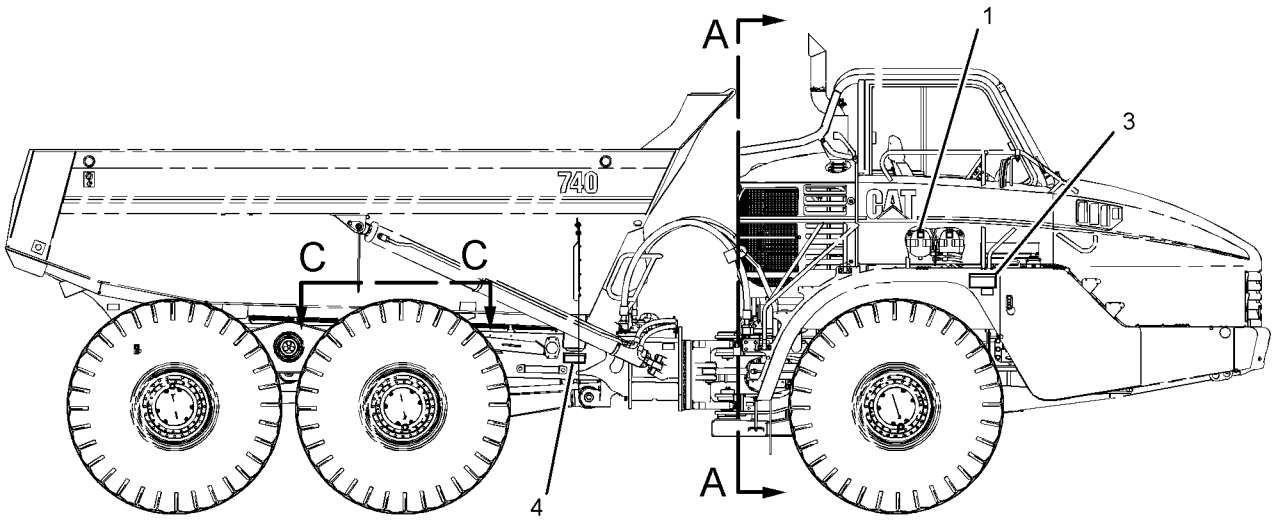

RIGHT SIDE VIEW

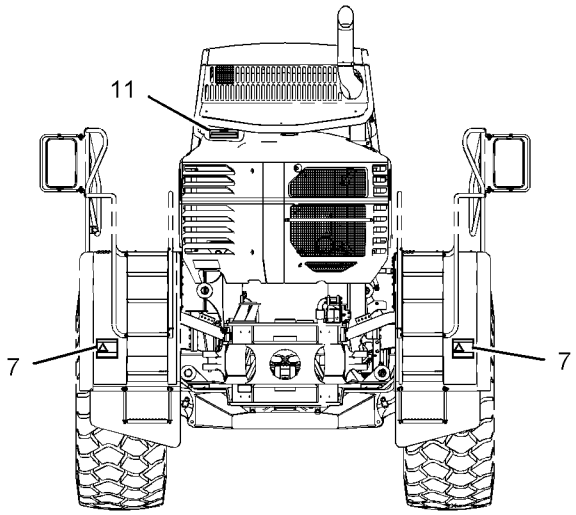

VIEW A-A

REFER TO ALL ILLUSTRATIONS OF
THIS GROUP FOR AUXILIARY VIEWS

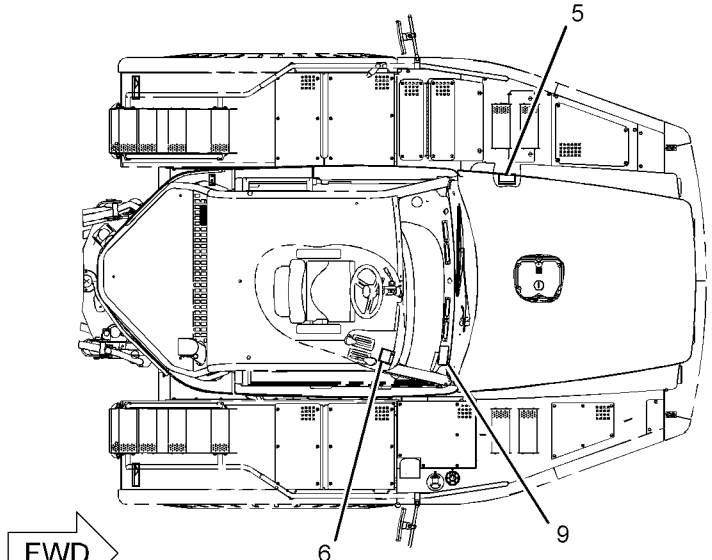

TOP VIEW

GRAPHIC #2 **<END>** g01105169

SERVICE EQUIPMENT AND SUPPLIES

192-9086 PLATE & FILM GP–JAPANESE

S/N: AXM1699-UP
AN ATTACHMENT

SMCS-7405, 7557, 7563 **i02183213**

NOTE	REF NO	GRAPHIC REF	PART NUMBER	QTY	PART NAME 1 2 3 4 5 6 (PRODUCT LEVEL)	SEE PAGE
C	1	2	**256-9960**	2	PLATE-WARNING (ACCUMULATOR)	
	2	1	**193-2425**	1	PLATE-WARNING (ACCUMULATOR)	
	3	1,2	**193-2423**	2	PLATE-WARNING (HIGH PRESSURE LINES)	
	4	1,2	**193-2421**	2	PLATE-WARNING (DUMP BODY PROP)	
	5	2	**193-2419**	1	PLATE-WARNING (CAB PIN)	
	6	2	**5P-8203**	1	PLATE-WARNING (DO NOT OPERATE)	
	7	2	**193-2416**	2	PLATE-WARNING (NO CLEARANCE)	
	8	1	**114-6056**	1	FILM-INFORMATION (AIR CLEANER)	
	9	2	**193-1520**	1	FILM-INSTRUCTION (RETARDING GUIDELINES)	
	10	1	**9X-6700**	1	FILM-WARNING (CABLE CONNECTION)	
	11	2	**196-5785**	1	PLATE-WARNING (ROPS, FOPS)	

C-CHANGE FROM PREVIOUS TYPE

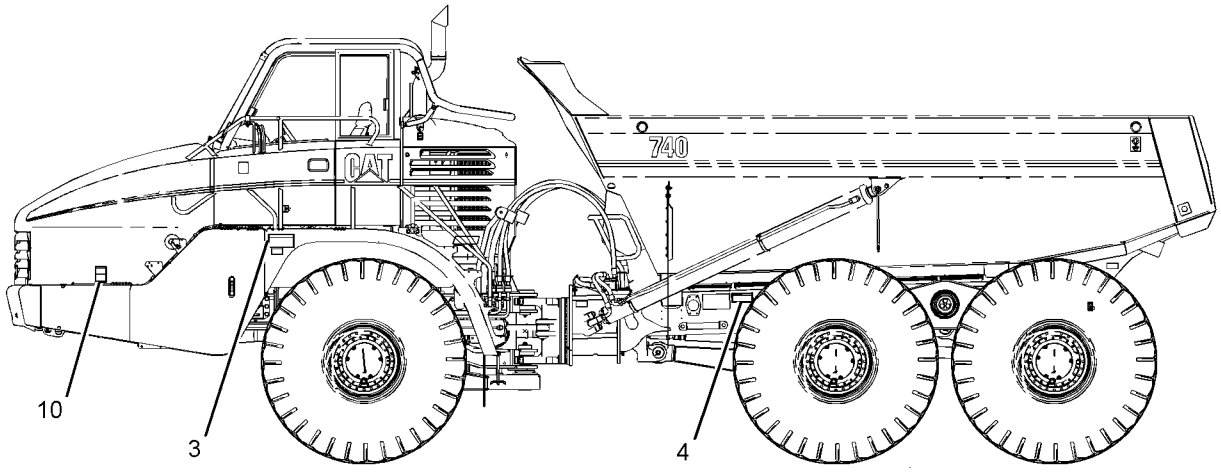

LEFT SIDE VIEW

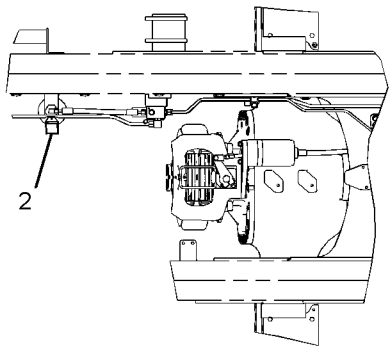

VIEW C-C

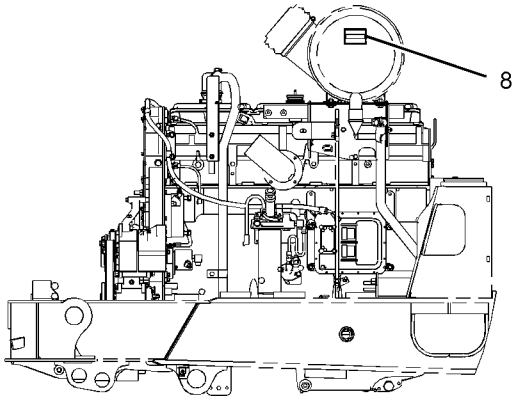

LEFT SIDE VIEW
(ENGINE)

GRAPHIC #1 g01105168

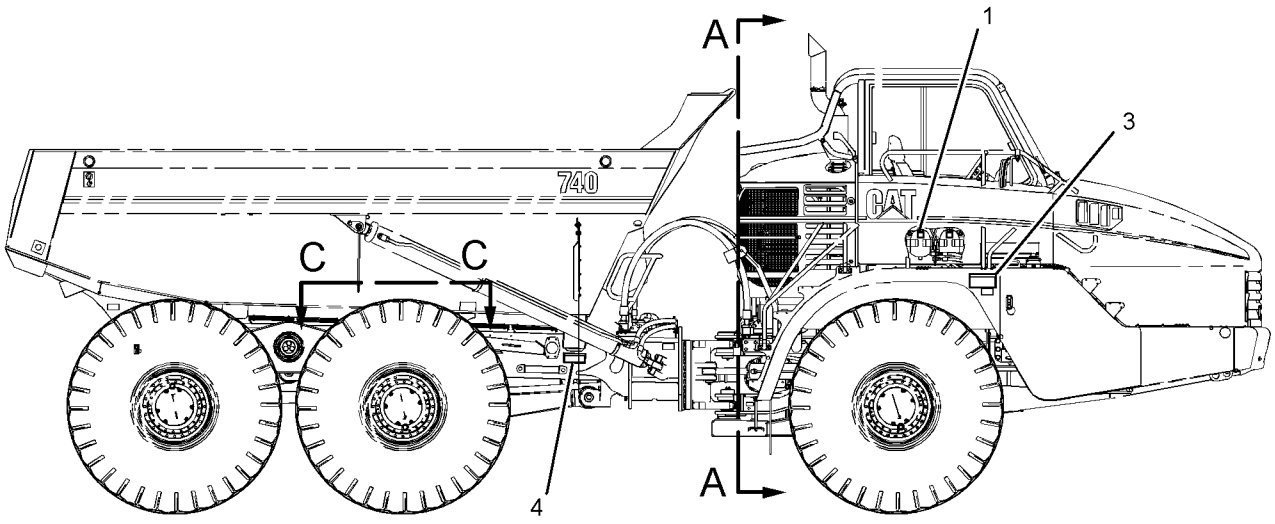

RIGHT SIDE VIEW

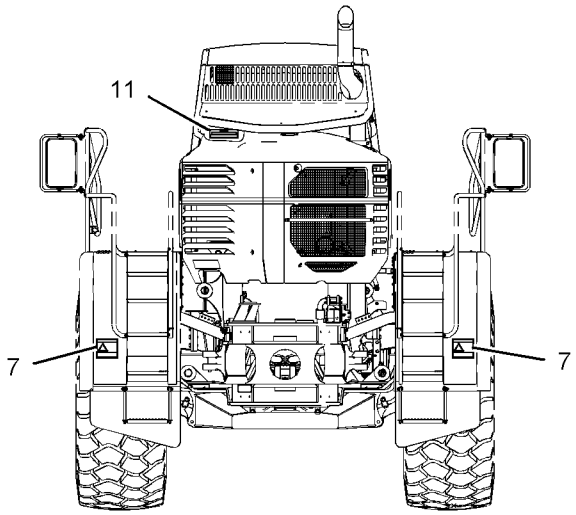

VIEW A-A

REFER TO ALL ILLUSTRATIONS OF
THIS GROUP FOR AUXILIARY VIEWS

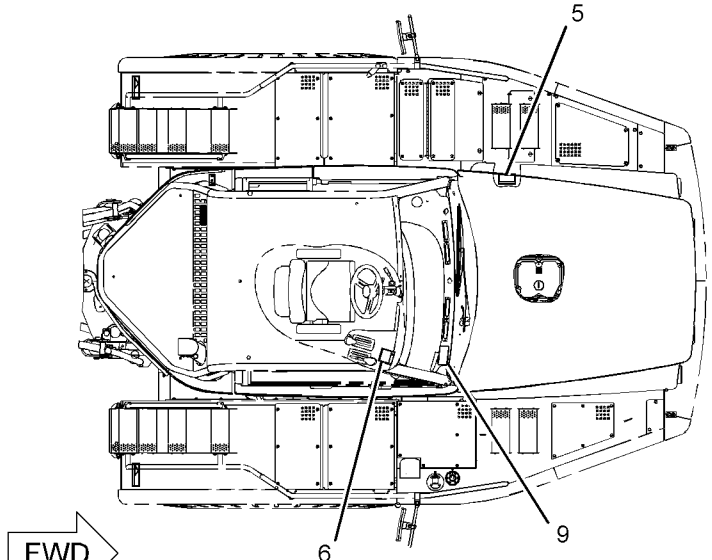

TOP VIEW

GRAPHIC #2 **<END>** g01105169

SERVICE EQUIPMENT AND SUPPLIES

193-1540 PLATE & FILM GP–FINNISH

S/N: AXM1-1698
AN ATTACHMENT

SMCS-7405, 7557, 7563 **i02261963**

NOTE	REF NO	GRAPHIC REF	PART NUMBER	QTY	PART NAME 1 2 3 4 5 6 (PRODUCT LEVEL)	SEE PAGE
	1	2	**203-7832**	2	PLATE-WARNING (ACCUMULATOR)	
	2	1	**195-0771**	1	PLATE-WARNING (ACCUMULATOR)	
	3	1,2	**151-5877**	2	PLATE-WARNING (HIGH PRESSURE LINES)	
	4	1,2	**151-5876**	2	PLATE-WARNING (DUMP BODY PROP)	
	5	2	**195-0770**	1	PLATE-WARNING (CAB PIN)	
	6	2	**104-6430**	1	PLATE-WARNING (DO NOT OPERATE)	
	7	2	**197-8290**	2	PLATE-WARNING (NO CLEARANCE)	
	8	1	**133-4967**	1	FILM-INFORMATION (AIR CLEANER)	
	9	2	**193-1522**	1	FILM-INSTRUCTION (RETARDING GUIDELINES)	
	10	1	**104-6409**	1	FILM-WARNING (JUMPER CABLES)	
	11	2	**200-1786**	1	PLATE-WARNING (ROPS, FOPS)	

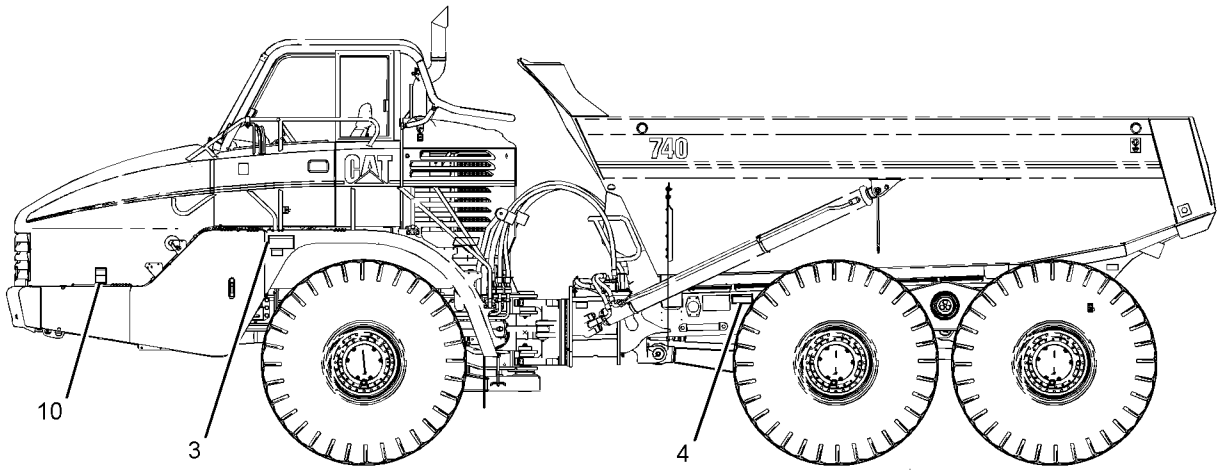

LEFT SIDE VIEW

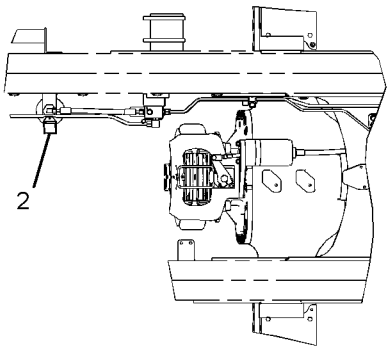

VIEW C-C

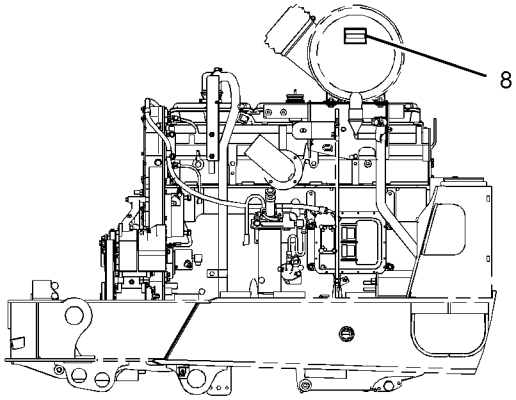

LEFT SIDE VIEW
(ENGINE)

GRAPHIC #1 g01105168

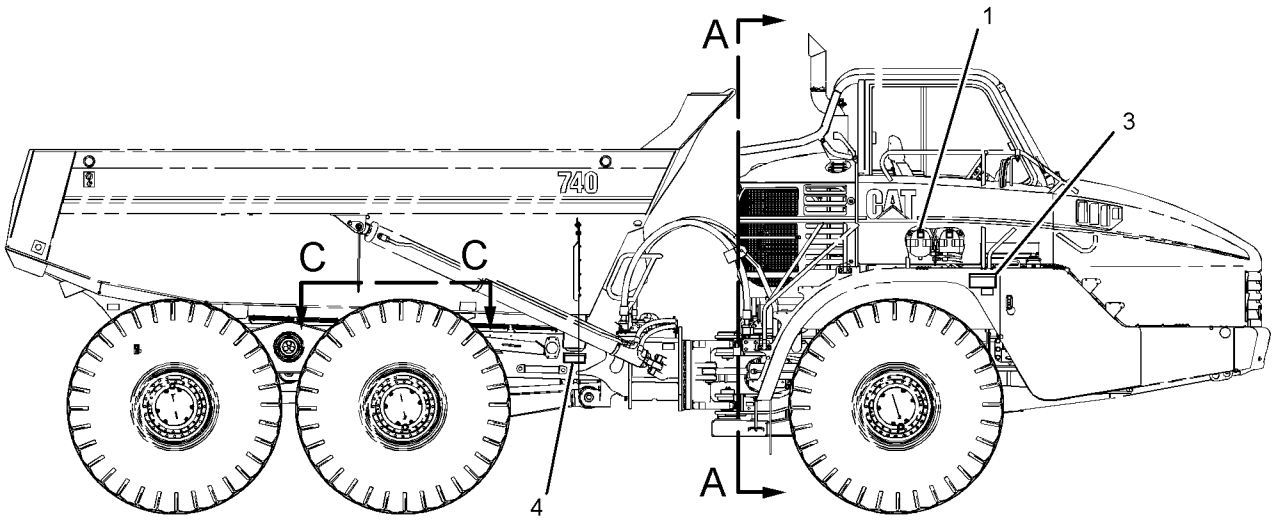

RIGHT SIDE VIEW

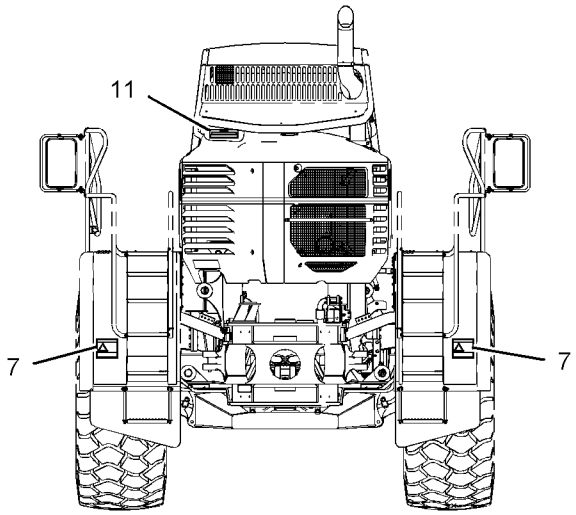

VIEW A-A

REFER TO ALL ILLUSTRATIONS OF
THIS GROUP FOR AUXILIARY VIEWS

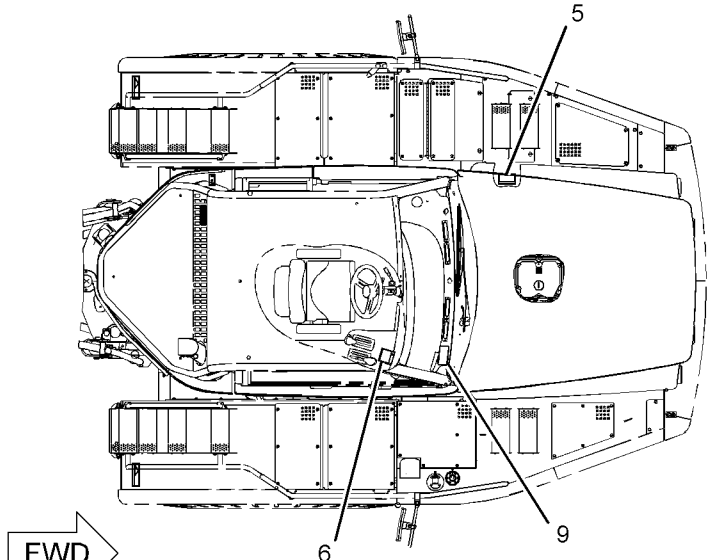

TOP VIEW

GRAPHIC #2 **<END>** g01105169

SERVICE EQUIPMENT AND SUPPLIES

193-1540 PLATE & FILM GP–FINNISH

S/N: AXM1699-UP

AN ATTACHMENT

SMCS-7405, 7557, 7563 **i02183120**

NOTE	REF NO	GRAPHIC REF	PART NUMBER	QTY	PART NAME 1 2 3 4 5 6 (PRODUCT LEVEL)	SEE PAGE
C	1	2	**256-9955**	2	PLATE-WARNING (ACCUMULATOR)	
	2	1	**195-0771**	1	PLATE-WARNING (ACCUMULATOR)	
	3	1,2	**151-5877**	2	PLATE-WARNING (HIGH PRESSURE LINES)	
	4	1,2	**151-5876**	2	PLATE-WARNING (DUMP BODY PROP)	
	5	2	**195-0770**	1	PLATE-WARNING (CAB PIN)	
	6	2	**104-6430**	1	PLATE-WARNING (DO NOT OPERATE)	
	7	2	**197-8290**	2	PLATE-WARNING (NO CLEARANCE)	
	8	1	**133-4967**	1	FILM-INFORMATION (AIR CLEANER)	
	9	2	**193-1522**	1	FILM-INSTRUCTION (RETARDING GUIDELINES)	
	10	1	**104-6409**	1	FILM-WARNING (JUMPER CABLES)	
	11	2	**200-1786**	1	PLATE-WARNING (ROPS, FOPS)	

C-CHANGE FROM PREVIOUS TYPE

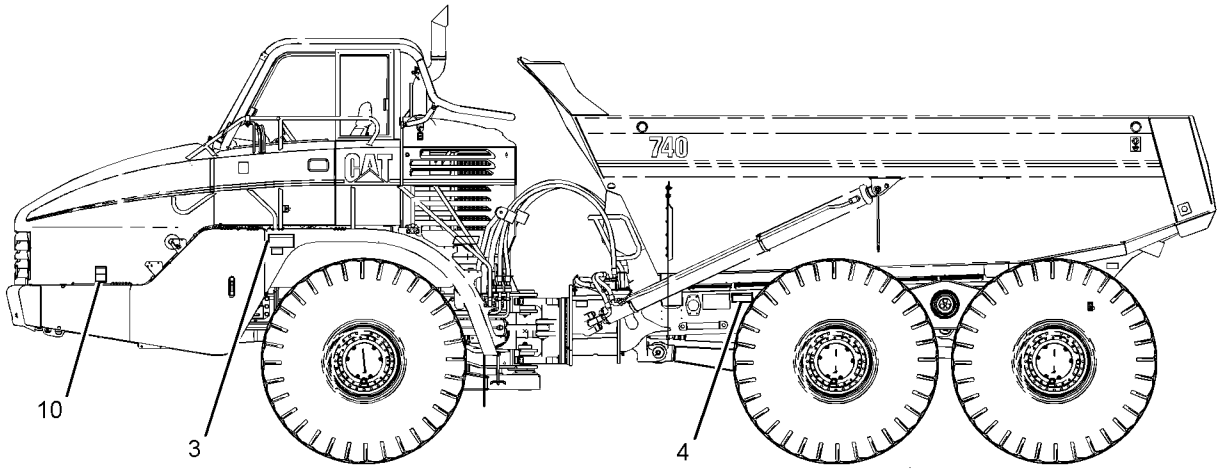

LEFT SIDE VIEW

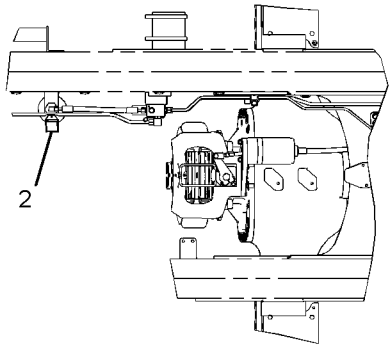

VIEW C-C

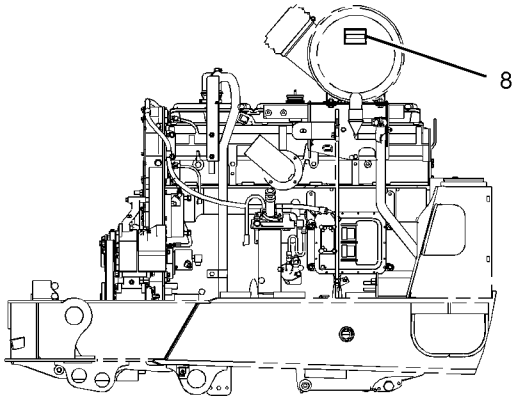

LEFT SIDE VIEW
(ENGINE)

GRAPHIC #1 g01105168

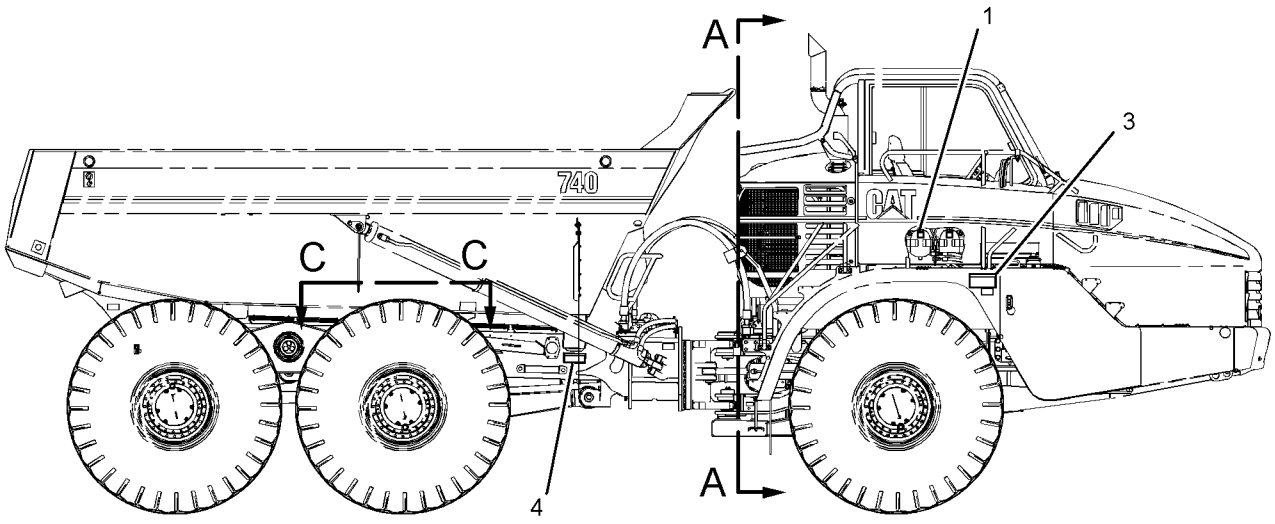

RIGHT SIDE VIEW

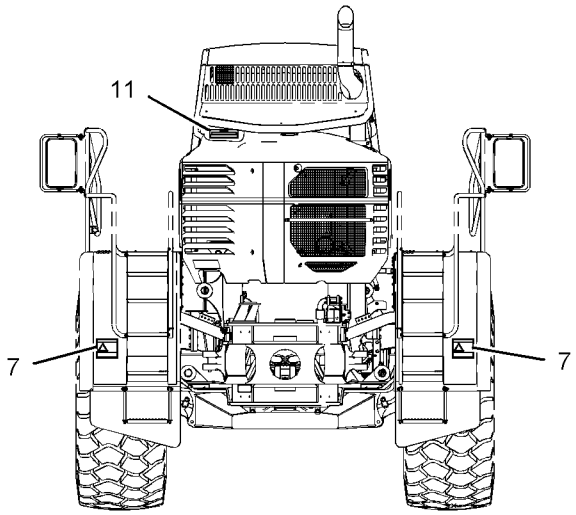

VIEW A-A

REFER TO ALL ILLUSTRATIONS OF
THIS GROUP FOR AUXILIARY VIEWS

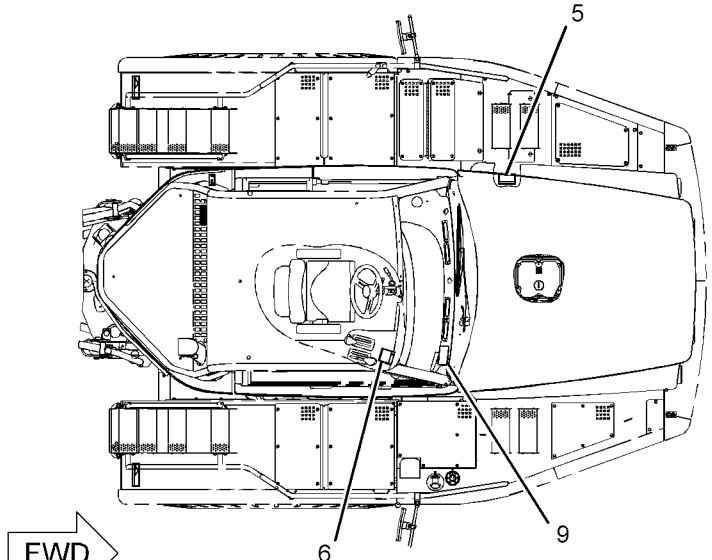

TOP VIEW

GRAPHIC #2 **<END>** g01105169

SERVICE EQUIPMENT AND SUPPLIES

247-6904 PLATE & FILM GP

S/N: AXM1-UP

AN ATTACHMENT

SMCS-7405, 7557, 7563 **i02189508**

NOTE	PART NUMBER	QTY	PART NAME 1 2 3 4 5 6 (PRODUCT LEVEL)	SEE PAGE
	114-6057	1	FILM-INFORMATION (AIR CLEANER)	
	247-7007	1	FILM-INSTRUCTION (RETARDING GUIDELINES)	
	8T-4904	1	FILM-WARNING (JUMPER CABLES)	
	247-7005	1	PLATE-WARNING (ROPS, FOPS)	
	5P-8204	1	PLATE-WARNING (READ OPERATION MANUAL)	
	247-7001	2	PLATE-WARNING (NO CLEARANCE)	
	247-7002	2	PLATE-WARNING (ACCUMULATOR)	
	247-7004	1	PLATE-WARNING (HIGH PRESSURE CYLINDER)	
	247-7006	2	PLATE-WARNING (HIGH PRESSURE OIL)	
	247-7011	2	PLATE-WARNING (DUMP BODY PROP)	
	247-7012	1	PLATE-WARNING (CAB TILT CYLINDER PIN)	

<END>

SERVICE EQUIPMENT AND SUPPLIES

3U-8686 TOOL GP-HAND

S/N: AXM1-UP

PART OF 7U-1981 TOOL GP-HAND

AN ATTACHMENT

SMCS-0600, 7259 **i01643594**

NOTE	PART NUMBER	QTY	PART NAME 1 2 3 4 5 6 (PRODUCT LEVEL)	SEE PAGE
	5F-4764	1	BAR-PRY	
	8H-8581	1	GAUGE GP-FEELER	
	8H-8577	1	HAMMER	
	213-1985	1	HANDLE	
	2U-5060	1	PLIERS	
	6V-7932	1	SCREWDRIVER (3/8-IN TIP)	
	6V-7935	1	SCREWDRIVER	
	6V-7934	1	SCREWDRIVER	
	6V-9112	1	SOCKET (17-MM)	
	6V-9114	1	SOCKET (19-MM)	
	6V-9116	1	SOCKET (22-MM)	
	6V-9117	1	SOCKET (24-MM)	
	6V-9118	1	SOCKET (30-MM)	
	8H-8549	1	SOCKET (1/2-IN) (9/16 IN)	
	8H-8554	1	SOCKET (7/8 IN)	
	8H-8555	1	SOCKET (1/2-IN) (15/16 IN)	
	8H-8556	1	SOCKET (1 IN)	
	9S-1730	1	SOCKET (1 1/8 IN)	
	2U-5046	1	SOCKET 1/2 DRIVE 10MM A/F	
	8S-1588	1	ADAPTER	
	6V-9106	1	SOCKET (10-MM)	
	2U-5047	1	SOCKET 1/2 DRIVE 13MM A/F	
	8S-1588	1	ADAPTER	
	6V-9109	1	SOCKET (13-MM)	
	6V-9090	1	WRENCH (10-MM)	
	6V-9093	1	WRENCH (13-MM)	
	6V-9097	1	WRENCH (17-MM)	
	6V-9099	1	WRENCH (19-MM)	
	6V-9102	1	WRENCH (22-MM)	
	1B-7536	1	WRENCH (8-IN)	
	4C-9605	1	WRENCH (5/16-IN)	
	4C-9606	1	WRENCH (3/8-IN)	
	4C-9607	1	WRENCH (7/16-IN)	
	4C-9594	1	WRENCH (1/2-IN)	
	4C-9595	1	WRENCH (9/16-IN)	
	4C-9609	1	WRENCH (5/8-IN)	
	4C-9611	1	WRENCH (11/16-IN)	
	4C-9598	1	WRENCH (3/4-IN)	
	4C-9601	1	WRENCH (7/8-IN)	
	4C-9603	1	WRENCH (1-IN)	
	185-3630	1	WRENCH AS-STRAP	
	1P-0551	1	PIN-SPRING	
	2P-8253	1	STRAP	
	6H-7378	2	RING-RETAINING	
	2U-5045	1	WRENCH O/E 3/4 X 7/8 BSW	

<END>

SERVICE EQUIPMENT AND SUPPLIES

7U-1981 TOOL GP-HAND

S/N: AXM1-UP

AN ATTACHMENT

SMCS-0600, 7259 **i01070339**

NOTE	PART NUMBER	QTY	PART NAME 1 2 3 4 5 6 (PRODUCT LEVEL)	SEE PAGE
	5P-8500	2	KEY	
	5P-8502	1	PADLOCK GP	
A	**5P-8500**	2	KEY	
A	**8Y-6364**	1	SLEEVE	
Y	*3U-8686*	1	TOOL GP-HAND	992

A-NOT PART OF THIS GROUP
Y-SEPARATE ILLUSTRATION

<END>

MEMORANDA

PART NUMBER INDEX

Part	Page
0	
0L-1026	365
	372
0L-1143	88
	928
0L-1351	94
	104
	164
	166
	168
	430
	457
0L-1352	104
	372
	374
0L-2070	70
	89
	90
	164
	166
	168
	356
	359
0S-0130	477
0S-0484	443
	448
0S-0509	92
	93
	299
	342
	344
	356
	359
	365
	372
	789
	928
0S-0699	171
	172
0S-1571	56
	58
	70
	96
	164
	166
	168
	429
0S-1585	68
	90
	342
	344
	372
	374
0S-1587	363
	430
	477
	480
	482
	484
0S-1588	70
	134
	244
	429
	457
0S-1590	48
	88
0S-1591	16
	70
	94
	104
	108
	152
	164
	166
	168
0S-1592	13
0S-1594	14
	15
	17
	51
	68
	72
	89
	90
	104
	137
	356
	359
	372
	374
	480
	482
	484
0S-1595	73
	342
	344
	363
0S-1599	461
	462
0S-1602	54
0S-1604	444
	446
	448
	463
	465
0S-1608	74
0S-1617	356
	359
	430
0S-1618	466
0S-1619	68
	96
	104
	356
	359
	438
0S-1621	342
	344
	928
0S-2318	464
0T-0055	70
	550
0T-0065	89
	90
	104
0T-0244	892
	894
	903
	905
	909
0T-0489	892
	903
	905
0T-0573	74
	104
	430
	928
0T-0768	928
1	
1A-1135	108
	477
	480
	482
	484
1A-1460	60
	62
1A-2029	94
	96
	363
	372
	374
1A-2170	428
1A-2209	649
1A-2223	75
	428
	429
	430
1A-2358	365
	372
1A-3203	45
1A-5822	342
1A-7669	429
1B-2578	280
1B-2790	471
	550
1B-2886	342
	344
1B-3867	9
1B-4430	910
1B-7182	108
	173
	430
1B-7536	992
1B-8704	436
1B-8705	56
	58
	436
1B-8714	719
	720
1B-9575	315
1D-4539	215
	217
	471
1D-4541	466
1D-4569	342
	344
1D-4574	430
1D-5117	208
1F-4111	215
	466
1F-7958	52
	342
	344
1H-1023	257
	273
	767
	771
	773
1H-1200	667
	744
	748
1H-2629	257
	273
1H-3244	196
	198
	240
1H-4142	470
1H-6227	435
	523
	729
1H-7339	673
1H-8128	178
	181
1H-8278	366
	368
1H-8296	912
1H-8306	176
	178
	181
	185
	187
	189
1H-8647	9
1H-8720	372
	374
1H-9696	381
	387
	393
	399
	405
1J-6472	672
1J-8668	441
1J-9671	178
	181
	315
	381
	387
	393
	399
	405
	681
	684
	688
1K-6872	830
	831
1K-6992	523
1K-7095	623
	625
	627
1L-3768	436
1L-5072	667
	744
	748
1L-7205	457
1M-0130	17
1M-0644	97

► **PRIMARY REFERENCE**

PART NUMBER INDEX

Part	Page
1M-3736	436
1M-5514	380
	386
	392
	398
	404
1M-6119	202
1M-6120	202
1M-6573	477
	480
	482
	484
1M-9015	477
1M-9691	430
1M-9968	258
	274
1M-9971	257
	273
1N-3974	46
	47
1N-5998	412
	416
1N-8620	457
1P-0436	173
1P-0551	992
1P-1367	89
	90
1P-1479	438
1P-2807	930
	933
	936
1P-2808	930
	933
	936
1P-3704	677
1P-3705	410
	420
1P-3707	287
	348
1P-3958	477
	480
	482
	484
1P-4577	421
1P-4578	348
	352
	421
	641
	644
	646
1P-4579	342
	344
	348
	352
	376
	381
	387
	393
	399
	405
	412
	416
	420
	679
	711
	713
	715
1P-4582	711
	713
	715
1P-4584	641
	644
	646
1P-4585	679
1P-5761	677
1P-6356	854
1P-7346	56
	58
1P-9620	470
1Q-9551	64
	66
1R-0716	89
	90
1R-0719	377
1R-0749	173
1S-0579	428
1S-0994	293
1S-1636	467
1S-1638	467
1S-2176	928
1S-2199	368
1S-3725	928
1S-3730	928
1S-4295	154
1S-4577	152
1S-7251	202
	242
	268
	269
1S-7252	202
	268
	269
1S-7446	257
	273
1S-9540	26
	28
1S-9593	292
	473
	474
	475
	618
	786
	927
1T-0034	372
	374
1T-0141	428
1T-0680	458
1T-0720	430
1T-0765	171
	172
1T-0786	457
1T-0791	457
1T-0792	457
1T-0794	457
1T-0795	457
1T-0804	457
1T-0806	457
1T-0807	457
1T-0847	457
1T-0867	457
1T-0887	457
1T-0895	457
1T-0896	457
1T-0897	457
1T-0936	457
1T-1006	380
	386
	392
1T-1220	457
1T-1221	457
1T-1236	457
1T-1315	457
1T-1356	457
1T-1410	458
1T-1423	457
1T-1426	457
1T-1452	457
1T-1616	457
1T-1617	457
1T-1659	457
1T-1910	457
1U-0322	771
	773
1U-0323	771
	773
1U-1643	667
	744
	748
1U-2827	744
	748
	752
1U-6605	101
	129
1U-8846	366
	369
1V-3323	477
	480
	482
	484
1W-2431	147
1W-2636	104
1W-3136	68
1W-6448	70
1W-7238	97
1W-7239	97
1W-8341	3
	5
	▶17

2

Part	Page
2A-1162	68
2A-2677	164
	166
	168
2A-3746	428
2A-4429	41
	42
2B-0858	37
	928
2B-0947	429
2B-2695	18
	70
	104
	467
2B-9373	438
2D-0604	477
	480
	482
	484
2D-2443	452
	453
	454
	455
	456
2D-4202	667
	744
	748
2D-6392	257
	273
2D-6533	380
	386
	392
	398
	404
2D-6642	380
	386
	392
	398
	404
	426
2D-8009	438
2D-9454	366
	368
2D-9455	366
	368
2F-6678	258
	274
2F-8616	176
	178
	181
	185
	187
	189
2G-1202	615
2G-8767	203
	204
2G-8932	615
2H-1193	104
2H-2255	426
2H-3429	257
	266
	273
2H-3755	70
	430
2H-3920	925
2H-3922	277
2H-3927	342
	344
2H-3931	342
	523
2H-3932	342
	344
2H-4145	615
2H-6184	372
	374
2J-0917	667
	744
	748

▶ PRIMARY REFERENCE

PART NUMBER INDEX

Part	Page	Part	Page	Part	Page	Part	Page
2J-2668	928		683		771	2U-7545	971
2J-3118	56		687		773		973
	58		702	2S-7905	97	2U-7546	955
2J-6356	377		766	2S-7931	436		957
2J-7590	393		770	2S-8439	377	2U-7547	963
2J-7761	667	2N-1287	536	2S-9255	212		965
	744		538	2T-1922	338	2U-7548	959
	749		540	2T-2099	635		961
2J-8163	257		669		637	2U-8863	287
	273	2N-2188	477	2T-2897	139		288
2K-0715	426		480	2T-3019	342	2U-9074	619
2K-2939	319		482		344	2U-9202	669
	321		484	2T-3360	619	2U-9204	669
	323	2N-2189	477	2U-1457	768	2V-2043	290
	325		480	2U-1492	64		301
	327		482		66		310
	329		484	2U-1493	64		311
	331	2N-2765	137	2U-1573	444		313
	333		154		446	2V-4458	428
2K-4821	100	2N-2766	137	2U-2146	135	2V-5656	477
	101		138	2U-2437	787		480
	196		154		788		482
	198	2N-8109	19	2U-2452	486		484
2K-4973	812	2P-1279	698		550	2V-5715	477
	910	2P-1293	639	2U-2453	238		480
	912		681		486		482
2K-9111	884		684		550		484
2K-9295	380		688	2U-2576	672	2V-7092	477
	386	2P-1974	74	2U-2589	486		480
	392	2P-2772	68		550		482
	398		104	2U-2606	545		484
	404	2P-2975	240	2U-2720	930	2V-7248	133
2L-0043	428		242	2U-2748	915	2V-7390	477
2L-6679	257	2P-3203	76	2U-2749	635		480
	273	2P-3205	97		637		482
2L-6726	470	2P-3760	89	2U-2879	452		484
2L-8075	196		90		453	2V-7398	477
2M-0401	366	2P-3761	89		454		480
	368		90		455		482
2M-1538	441	2P-4304	89		456		484
2M-2570	721		90	2U-3416	486	2W-1145	673
	723	2P-4339	878		550	2W-6000	21
	725	2P-5616	196	2U-4132	536	2W-9710	602
2M-3827	380	2P-8253	992	2U-4223	255		
	386	2P-8421	37	2U-4497	290		
	392		641	2U-4500	287		
	398		644		288		
	404		646	2U-5045	992	3B-0623	32
2M-4779	441	2R-0239	477	2U-5046	992		34
2M-9780	37		480	2U-5047	992		39
	467		482	2U-5060	992	3B-0645	32
	476		484	2U-5283	176		34
	577	2R-1230	720		178		39
	579	2R-2376	877		185	3B-1915	60
	581	2R-6806	164		187		62
	606		166	2U-5388	523		92
	608		168	2U-6317	421		104
	610	2S-0675	467	2U-6747	462	3B-2263	733
	612	2S-0696	470		463		737
	623	2S-0795	363	2U-7477	147	3B-4124	380
	625	2S-2053	92		148		386
	653	2S-2760	97		149		392
	658	2S-3770	138	2U-7544	930		398
	659	2S-4078	420		933		404
	680		641		936	3B-4607	576

3

► **PRIMARY REFERENCE**

PART NUMBER INDEX

Part	Page
3B-4610	576
3B-4615	841
3B-8485	523
	538
	540
3B-8488	623
	625
	627
	673
3B-8489	536
	556
	669
	672
	673
3D-2824	37
	342
	344
	348
	352
	377
	588
	590
	593
	598
	603
	629
	632
	639
	641
	644
	646
	680
	681
	683
	684
	687
	688
	702
	705
	707
	709
	717
	733
	737
	775
	783
3D-4197	356
	359
3D-8242	340
	341
3D-9348	429
3E-0109	878
	881
3E-0125	262
3E-0127	262
3E-0128	262
3E-0129	262
3E-0130	262
3E-0131	262
3E-0132	262
3E-0133	262
3E-0134	262
3E-0135	262
3E-0136	262
3E-0137	262
3E-0138	262
3E-0139	262
3E-0140	262
3E-0141	262
3E-0142	262
3E-0144	262
3E-0145	262
3E-0146	262
3E-0154	203
	▶278
3E-0400	819
	822
	825
3E-0634	975
	977
3E-0635	947
	949
3E-0636	951
	953
3E-0845	975
	977
3E-0846	947
	949
3E-0847	951
	953
3E-2310	692
3E-2332	37
3E-2345	592
	597
	602
3E-3362	253
3E-3365	195
	230
	231
	232
	233
	237
	250
	255
	283
	292
	293
	311
	313
	473
	475
	618
	819
	822
	825
	860
3E-3368	246
	247
	248
	249
	290
3E-3371	157
	229
	240
	251
	252
	311
	313
3E-3377	293
	862
	878
3E-3383	867
	868
3E-3389	925
3E-4051	854
3E-4052	854
3E-4057	854
3E-4058	854
3E-4066	854
3E-4312	829
3E-4313	847
	852
3E-4352	18
	215
	217
	430
3E-5169	240
	242
3E-5239	292
	298
3E-5464	819
	822
	825
3E-6328	▶195
	209
	212
3E-6333	255
3E-6389	▶229
	292
	297
3E-6449	290
	301
3E-6450	290
3E-6451	290
	301
	310
	311
	313
3E-6466	▶234
	288
	308
3E-6600	886
	919
3E-6703	623
	625
	627
3E-6747	23
	26
3E-6772	37
	43
3E-7160	882
3E-7424	135
3E-7448	26
	28
3E-7504	287
	288
3E-7692	378
3E-7771	258
	274
3E-7775	266
	271
3E-7842	290
3E-8044	70
3E-8763	878
	881
3E-8768	878
3E-8772	879
	882
3E-8782	879
	881
3E-8798	879
	882
3E-8816	879
	881
3E-8825	860
	862
	878
	879
	881
	882
3E-8856	878
	881
3E-8857	860
	862
	879
	881
3E-8859	879
	881
3E-9045	879
	882
3E-9317	882
3E-9326	879
	882
3E-9411	110
	112
	114
	558
	560
	844
	845
3F-0379	258
	266
	271
	273
3F-1547	60
	62
3F-3152	315
	471
3F-5792	366
	372
	374
3F-9556	198
	923
	925
	927
3G-2683	773
3G-3916	470
3G-6891	655
3G-8047	635
	637
3G-8054	635
	637
3G-8057	635
	637
3G-9108	841
3H-0240	209
	212
	847
	852
3H-0442	767

▶ PRIMARY REFERENCE

PART NUMBER INDEX

Part	Page	Part	Page	Part	Page	Part	Page
3H-1156	470		692		287		775
3H-2549	783		693		288		776
3H-5368	372		696		290		807
	374		698		302		928
3H-7654	49		700		310	3K-4290	181
	50		702		311		189
3J-0634	380		707		313	3K-6113	425
	386		709		335	3K-6175	18
	392		711		336	3K-7161	380
	398		713		337		386
	404		715		338		392
3J-1907	47		717		346		398
	160		735		348		405
	162		744		352	3K-8460	381
	289		748		356		387
	290		752		359		393
	293		754		381		399
	298		756		387		405
	301		758		393		605
	302		764		399	3L-3380	257
	310		765		405		273
	311		768		412	3L-8187	209
	313		771		416	3N-3763	258
	338		773		421		274
	342		807		585	3N-8506	429
	344	3J-4818	910		592	3P-0650	89
	348		912		593		90
	352	3J-5696	606		597	3P-0887	377
	356		612		598	3P-0896	428
	359	3J-7354	46		602	3P-1155	70
	377		47		603	3P-1323	21
	378		176		606		22
	381		178		608	3P-2573	457
	387		181		610	3P-2574	457
	393		185		612	3P-2795	428
	399		187		616	3P-9900	912
	405		189		617	3R-8801	258
	421		336		623		274
	436		421		625	3S-0004	436
	466		476		629		438
	470		585		632	3S-1374	366
	577		639		635		368
	585		653		637	3S-2093	209
	592		667		641		212
	597		680		644		240
	602		692		646		242
	606		696		661		283
	608		698		664		285
	616		702		676		287
	629		721		680		288
	632		723		683		298
	641		725		684		299
	644		733		687		301
	646		737		688		308
	653		744		692		311
	662		748		705		313
	663		754		715		819
	664		756		717		822
	667		758		721		825
	680		775		723		862
	681		780		725		878
	683	3J-7470	783		761		881
	684	3J-7473	783		763		923
	687	3K-0360	160		771		933
	688		162		773	3S-2708	426

► **PRIMARY REFERENCE**

PART NUMBER INDEX

Part	Page
	428
3S-3439	441
3S-3440	441
3S-3875	372
	374
	441
3S-4384	436
3S-6049	202
3S-6050	202
3S-6162	672
3S-8652	377
3S-8664	293
3S-8665	202
	289
	302
3S-9643	104
3T-0304	287
	288
3T-0688	377
3T-0697	429
3T-0707	429
3T-0918	356
	359
3T-0919	356
	359
3T-1437	467
3T-2299	428
3T-2511	819
	822
	825
3T-2662	209
	212
3T-3418	257
	273
3T-3422	257
	266
	271
	273
3T-3423	257
	258
	273
	274
3T-3424	257
	258
	273
	274
3T-3434	257
	266
	271
	273
3T-3723	430
3T-3725	428
3T-3751	430
3T-3997	430
3T-4709	257
	273
3T-4710	257
	273
3T-5219	470
3T-6354	196
3T-6999	429
3T-7000	429
3T-7003	429
3T-9494	257
	258
	273
3T-9524	258
	274
3T-9525	257
	273
3T-9920	470
3U-2752	915
3U-2753	160
	162
	693
	854
3U-2754	160
	162
	854
3U-2837	558
	560
3U-2838	558
3U-4762	294
3U-8686	▶992
	993
3U-8952	501
3U-9657	620
	621
	622
3W-7412	513
3W-8795	348
	352
4	
4B-0418	379
4B-2043	196
4B-2049	258
	262
	266
	274
4B-3388	18
	215
	217
	470
4B-3665	372
	374
4B-3903	466
4B-4158	771
	773
4B-4161	89
4B-4274	293
4B-4278	912
4B-4863	298
4B-5272	139
	143
4B-5275	494
	505
4B-5432	381
	387
	393
	399
	405
4B-7739	676
4B-9782	84
	426
4B-9784	426
4B-9786	797
	799
4B-9880	381
	387
	393
	399
	405
	467
	470
4C-9594	992
4C-9595	992
4C-9598	992
4C-9601	992
4C-9603	992
4C-9605	992
4C-9606	992
4C-9607	992
4C-9609	992
4C-9611	992
4D-0514	470
4D-0670	512
4D-1326	278
	280
4D-1736	673
4D-1836	240
	242
4D-3107	771
	773
4D-3704	54
4D-7735	164
4D-7794	293
4E-1411	846
4F-2294	279
4F-2318	923
4F-3508	466
4F-4879	907
	908
4F-7390	19
4F-7391	319
	321
	323
	325
	327
	329
	331
	333
4F-7957	9
	10
4F-8925	440
4H-7869	268
	269
4H-8380	315
4H-9105	344
4I-5480	549
4I-7924	529
	532
4I-9631	515
4J-0520	410
	412
	416
	421
	436
	629
	632
	664
	677
	705
	707
	709
	808
4J-0522	348
	352
	421
	641
	644
	646
	771
	773
	783
4J-0523	771
	773
4J-0524	287
	288
	348
	352
	376
	381
	387
	393
	399
	405
	412
	416
	420
	679
	711
	713
	715
	928
4J-0527	178
	181
	711
	713
	715
4J-1704	667
	744
	748
4J-2506	366
	368
4J-3745	623
	625
	627
4J-4606	672
4J-5267	629
	632
4J-5477	47
	342
	344
	667
	692
	696
	698
	717
	744
	748
	754
	756
	758
	764
	765
	915

▶ **PRIMARY REFERENCE**

PART NUMBER INDEX

Part	Page
4J-7533	356
	359
	467
	662
	663
4J-8997	436
4K-0149	368
4K-4986	720
4K-9429	873
	874
	875
4L-0569	923
4L-2729	258
	274
4L-6454	131
	240
	242
	288
	302
	376
	745
	749
	752
	830
	831
4L-6499	280
4L-9337	412
	416
	421
4M-0189	68
	436
4M-0660	477
4M-1678	430
4M-1751	467
4M-1815	258
4M-1827	257
	266
	273
4M-1828	257
	266
	273
4M-1829	257
	273
4M-1831	257
	266
	271
	273
4M-1853	257
	273
4M-1854	257
	273
4M-1896	258
	274
4M-2381	467
	470
4M-5281	200
	201
4M-5912	623
	625
	627
4M-6425	884
	885
4M-6480	17
4M-6978	783
4M-6979	783
4M-6980	783
4M-8871	429
4M-9592	429
4M-9641	430
4N-0362	104
4N-0641	104
4N-0683	26
	28
4N-0684	20
4N-0699	14
	15
	96
4N-0756	3
	5
	▶76
4N-0913	94
4N-0914	94
4N-0933	68
	104
4N-0995	94
4N-1059	264
	265
4N-1128	3
	5
	▶94
4N-1151	76
4N-1156	104
4N-1650	26
	28
4N-2040	96
4N-2109	45
4N-2481	7
	8
	▶88
4N-2514	54
4N-2572	100
	101
4N-3002	104
4N-5264	92
4N-5857	21
	22
4N-6162	92
4N-6257	104
4N-6276	89
4N-6579	242
4N-6749	102
4N-7521	262
4N-8150	89
	90
4P-0902	164
	166
	168
4P-2383	107
4P-4278	84
4P-4279	84
4P-5893	3
	5
	▶45
4P-6464	930
	933
	936
4P-6846	7
	8
	▶51
4P-7371	84
4P-7377	77
4P-7429	289
	302
4P-7581	242
	281
	283
	285
	287
	288
	289
	297
	299
	302
	308
	860
	862
4P-7731	363
	▶605
4P-8134	212
	240
	242
	289
	299
	302
	308
	879
4P-8682	955
	957
4P-8684	971
	973
4P-8685	959
	961
4P-8686	939
	941
4P-8689	943
	945
4P-8690	947
	949
4P-8691	967
	969
4S-5719	92
4S-5816	430
4S-6137	138
4T-4603	783
4T-4605	783
4T-4659	783
4T-4660	783
4T-5613	673
4T-5988	783
4T-8698	667
	744
	748
4U-1697	536
	538
	540
4U-3165	558
	560
4U-6354	160
	162
4U-7962	102
4V-4500	477
	480
	482
	484
4V-5233	477
	480
	482
	484
4V-5234	477
	480
	482
	484
4V-5237	477
	480
	482
	484
4V-5392	371
4V-6981	293
	298
4V-7884	910
4V-8256	812
4V-8556	910
4V-8577	912
4W-5698	20
4W-5699	20
4W-5700	20
4W-5701	20
4W-7356	721
	723
	725
4W-8926	863
	865
	866
4W-9026	576
4W-9890	14
	15
5A-3604	526
5B-3254	536
	538
	540
5B-5150	488
	490
	492
5C-1014	430
5C-2874	261
	287
	288
	521
	522
5C-2890	237
	238
	290
	302
	308
	510
	693
	696
	912
5C-7261	110
	112
	114
	118

5

▶ PRIMARY REFERENCE

PART NUMBER INDEX

Part	Page	Part	Page	Part	Page	Part	Page
	139	5G-2308	200	5L-4759	769		392
	143		201	5L-8854	137		398
	212	5H-1504	37	5L-9018	467		404
	255		43	5M-0578	426	5M-7921	428
	506	5H-3252	319		428	5P-0076	348
	508		321	5M-2057	745		430
	526		323		749	5P-0537	10
	529	5H-3701	577		752		173
	532		579	5M-2504	467		467
	550		581	5M-2894	14	5P-0597	372
	576	5H-4279	372		15		374
	666		374		16	5P-0747	202
	808	5H-4909	366		17		204
	923		369		48		242
	925	5H-6005	470		51		268
	927		471		68		269
5C-8312	293	5H-6202	429		70	5P-0761	202
	923	5H-6734	178		72		204
5C-8815	547		181		74		242
5C-9553	157	5H-7704	137		88	5P-0840	26
	202	5H-8624	380		89		28
	205		386		90		37
	294		392		92		43
	366		398		93		623
	368		404		96		625
	820	5J-1036	467		97	5P-1075	139
	823	5J-2721	467		104		290
	826	5J-2926	667		134		302
	923		744		137		338
	925		748		138		421
	927	5J-5314	257		164		728
5C-9625	943		273		166	5P-1076	102
	945	5J-5793	68		168		118
5D-1026	102		372		171		139
	858		374		172		143
5D-1911	667	5J-7386	457		244		496
	744	5K-0906	903		299		505
	748	5K-3294	289		356		513
5D-4697	315		302		359		515
5D-7927	667		308		372		526
	744	5K-4069	380		374		529
	748		386		421		532
5D-9231	669		392		429		563
5E-8771	56		398		457		564
	58		404		466		610
5F-0304	68	5K-4865	439		885		612
5F-3092	342	5K-9090	90		928		677
5F-3106	651		639	5M-3034	257		679
	652		641		273		743
	727		644	5M-3062	53		749
5F-3488	667		646		288		837
	744		664		302	5P-1253	102
	748		676		703	5P-1293	372
5F-3999	457		677		793		374
5F-4764	992		702	5M-3492	470	5P-1318	681
5F-7054	356		705	5M-6126	428	5P-1606	480
	359		707	5M-6212	429		482
	380		709	5M-6213	89	5P-1979	672
	386		807		90	5P-2566	288
	392	5K-9243	380		104		303
	398		386	5M-6214	470		421
	404		392	5M-7142	372	5P-2618	178
	430		398		374		181
5F-9144	378	5L-1100	655		380	5P-2861	480
	767	5L-4753	428		386		482

PART NUMBER INDEX

Part	Page	Part	Page	Part	Page	Part	Page
	484		477		606	5P-8200	959
5P-2948	255		480		612		961
5P-3418	196		482		702	5P-8201	955
5P-3419	196		484		717		957
5P-3881	720	5P-5008	538		854	5P-8202	943
5P-4115	203	5P-5293	444	5P-7468	95		945
	205		446		102	5P-8203	983
	291	5P-5296	429		338		985
	303	5P-5672	820		629	5P-8204	991
	308		823		632	5P-8210	76
	846		826		702	5P-8244	372
	877	5P-5677	302		707		374
5P-4116	110	5P-5678	10		808	5P-8245	52
	112		19	5P-7469	95		68
	114	5P-5727	116		102		73
	118	5P-5777	338		338		86
	178	5P-5855	457		629		90
	181	5P-5905	486		632		342
	338		550		702		344
	346	5P-5908	820		707		363
	486		823		808		372
	517		826	5P-7470	412		374
	519	5P-6008	310		416		429
	526		311		588		477
	529		313		635		480
	532	5P-6010	813		637		482
	550		912		641		484
	574	5P-6028	291		702		577
	585		301		854		579
	845	5P-6298	257	5P-7471	412		581
	905		273		416		721
	906	5P-6419	294		588		723
5P-4142	56		297		635		725
	58	5P-6727	429		637		803
5P-4255	70	5P-6879	863		641		830
5P-4423	813	5P-6944	664		702		831
	912	5P-7462	346		854	5P-8247	13
5P-4432	813		348	5P-7661	356		198
5P-4483	319		585		359		299
	321		681	5P-7703	412		363
	323		684		416		477
	325		688		588		480
	327		693		635		482
	329		808		637		484
	331	5P-7463	346		642	5P-8248	452
	342		348		702		453
	344		585		854		454
5P-4484	176		681	5P-7807	196		455
	178		684	5P-7814	605		456
	181		688	5P-7854	294		667
	185		693	5P-7957	873	5P-8250	869
	187		808		874		871
	189	5P-7464	352		875	5P-8444	95
	319		583	5P-8167	667		702
	321		588		745		707
	323		590		749		808
	325		606		836	5P-8500	667
	327		612		910		744
	329		702	5P-8197	930		748
	331		717		933		993
	380		854		936	5P-8502	667
	386	5P-7465	352	5P-8198	971		744
	392		583		973		748
	398		588	5P-8199	963		993
	404		590		965	5P-8524	923

► **PRIMARY REFERENCE**

PART NUMBER INDEX

Part	Page
5P-9085	283
	285
	289
	297
	303
	923
5P-9132	838
5P-9262	777
	778
	780
5P-9297	289
	303
	308
	681
	684
	688
	693
5P-9344	430
5P-9345	428
5P-9362	428
5P-9400	315
5P-9505	366
	368
5P-9617	47
	421
5P-9761	939
	941
5P-9806	380
	386
	392
	398
	404
5S-0003	18
5S-0581	108
5S-3676	368
5S-4441	457
5S-6980	662
	663
5S-7349	196
	198
	266
	271
5S-7382	421
	629
	632
5S-7383	884
	885
5S-7878	381
	387
	393
	399
	405
5S-7906	467
5T-5682	439
	440
5U-0297	488
	490
	492
5U-5605	556
	671
5U-5922	102
5U-6605	673
5U-6733	176
	178
	181
	185
	187
	189
5U-7151	488
	490
	492
	523
	536
	538
	540
	556
	669
5V-1496	895
	897
	899
	901
5V-5262	906

6

Part	Page
6B-2882	150
6B-4661	858
6B-6682	452
	453
	454
	455
	456
6B-6684	64
6B-6863	429
6C-3060	176
	178
	181
	185
	187
	189
6C-8608	576
6D-3479	202
	240
	289
	297
	303
	536
6D-4244	303
6D-4246	212
	289
	297
	303
	616
6E-0381	761
	763
6E-0465	672
6E-2943	731
6E-3268	778
	780
6E-3269	777
	778
	780
6E-3272	777
	778
	780
6E-3273	777
	778
	780
6E-3274	778
	780
6E-3275	778
	780
6E-3276	777
	778
	780
6E-3772	623
	625
	627
6E-5047	393
6E-5066	767
6E-6129	771
	773
6E-6527	777
	778
	780
6E-6528	777
	778
	780
6E-6536	777
	778
	780
6E-6537	777
	778
	780
6E-6538	777
	778
	780
6E-6539	777
	778
	780
6E-6540	777
	778
	780
6E-6545	780
6F-4855	667
	745
	749
6F-5559	380
	386
	392
	398
	404
6F-6547	428
6F-6672	380
	386
	392
	398
	404
6F-7045	277
6F-7062	363
6F-7316	299
6G-2256	202
	204
6G-3432	592
	597
	602
	606
	608
6G-9333	380
	386
	398
	404
6H-7062	95
6H-7378	992
6H-9361	667
	745
	749
6I-0213	159
6I-0901	84
6I-0928	41
	42
6I-1055	26
	28
6I-1418	215
	217
	219
	220
6I-1458	87
6I-1483	49
	50
6I-3623	56
	58
6I-3624	56
	58
6I-3625	56
	58
6I-3632	56
6I-3638	7
	8
	▶48
6I-3643	108
6I-3968	70
6I-4025	37
6I-4421	26
	28
6I-4575	9
6I-4683	3
	5
	▶19
6J-0368	799
6J-1972	673
6J-2680	642
	644
	646
6J-3380	782
6J-3795	667
6J-3993	467
6J-4694	315
6J-5731	673
6J-5733	673
6K-0806	910
6K-3771	421
	425
6K-6307	412
	416
	782
6K-6967	488
	490
	492
	669
6K-9194	164
	166
6L-3616	380
	386
	392
	398
	404
6L-4783	428
6L-7008	281

▶ PRIMARY REFERENCE

PART NUMBER INDEX

Part	Page	Part	Page	Part	Page	Part	Page
	292		298		114		644
	310	6T-3632	240	6U-2176	556		646
	860		242	6U-2193	556		692
	930	6T-3633	240		671		696
	936		242	6U-2194	556		698
6L-8617	123	6T-3642	209	6U-2195	556	6V-0545	102
	124		212	6U-2270	671	6V-0683	346
6M-4016	203	6T-3643	209	6U-2271	671		585
6M-5218	372		212	6U-2272	671		681
	374	6T-3644	240	6U-2703	289		684
6M-9155	577		242		301		688
	579	6T-3696	470		635		693
	581	6T-3773	467		637		808
6N-0367	104	6T-5132	356		702	6V-0852	342
6N-1872	196		359	6U-3890	160		344
6N-1931	97	6T-5133	356		162		356
6N-1944	196		359	6U-5219	139		359
6N-1945	196	6T-5409	470		143		378
6N-3279	257	6T-5411	470	6U-7417	673		421
	273	6T-6066	209	6U-7529	930		585
6N-3826	257	6T-6329	209		933		629
	266	6T-6708	819		936		632
	271		822	6U-7530	971		642
	273		825		973		644
6N-6984	592	6T-7640	470	6U-7531	955		646
	597	6T-8527	380		957		664
	602		386	6U-7532	963		700
	619		392		965		702
6N-7249	94		398	6U-7533	959		717
6N-7672	255		404		961		754
6N-8863	365	6U-0455	162	6U-7837	930		756
	372		335		933		758
6P-2216	850		338		936		808
6P-3860	667		536	6U-7838	971	6V-0890	▶257
	744		629		973		264
	748		632	6U-7839	955	6V-1197	12
6P-4227	377		692		957	6V-1228	593
6P-4603	▶377		700	6U-7840	963		598
	421		711		965		603
6P-4975	783		713	6U-7841	959	6V-1249	717
6P-6641	118		715		961	6V-1322	257
6P-7564	426		717	6U-9078	930		273
6P-7706	429		858		933		381
6P-7985	380	6U-0456	160		936		387
	386		162	6U-9992	841		399
	392		290	6U-9993	841		405
	398		301	6U-9994	841	6V-1668	820
	404		348	6V-0128	10		823
6P-8339	928		352	6V-0292	847		826
6P-9553	457		410		852	6V-1720	429
6R-9245	565		421	6V-0327	380	6V-1820	720
6S-6646	505		630		386	6V-1867	102
6T-0363	257		632		392		588
	273		702		398		702
6T-0371	257		707		404	6V-1868	102
	273		709	6V-0328	380		588
6T-0372	257		711		386		702
	273		713		392	6V-1869	588
6T-1120	258		715		398		702
6T-1996	428		858		404	6V-1874	629
6T-3115	470	6U-1989	335	6V-0408	768		632
6T-3177	470		336	6V-0409	768	6V-1889	879
6T-3631	240		337	6V-0484	356	6V-2360	319
	242	6U-2097	110		359		321
	292		112		641		323

▶ **PRIMARY REFERENCE**

PART NUMBER INDEX

Part	Page	Part	Page	Part	Page	Part	Page
	325		961		612		560
	327	6V-4615	955		702		801
	329		957		854		803
	331	6V-5002	556	6V-7419	923		805
	333		623		927		811
6V-2383	289		625	6V-7646	895	6V-8336	577
6V-2495	856		627		897		579
6V-2496	820		673		899		581
	823	6V-5003	797		901	6V-8352	777
	826	6V-5028	444	6V-7676	556		778
6V-2687	829		446		558		780
6V-2722	208	6V-5048	26		560	6V-8362	878
6V-2881	319		28		671		881
	321		37	6V-7681	444	6V-8369	925
	323		43		446	6V-8373	258
	325		68	6V-7687	139	6V-8374	209
	327		155		143		287
	329		156		546		288
	331		244		562	6V-8376	209
	333	6V-5049	37	6V-7728	820		212
6V-3251	80		43		823		240
	82		155		826		242
6V-3582	669		156	6V-7744	133	6V-8378	271
6V-3677	56		244		139		278
	58		662		143		280
6V-3683	244		760		281	6V-8397	160
6V-3865	720	6V-5057	368		283		162
6V-3908	90	6V-5100	19		285		176
6V-3965	342	6V-5141	60		526		178
	344		62		529		181
	356	6V-5142	770		532		185
	359	6V-5192	735		667		187
	421	6V-5205	740		745		189
	466	6V-5212	841		749		346
	585	6V-5217	200	6V-7932	992		348
	629		201	6V-7934	992		352
	632		886	6V-7935	992		381
	641	6V-5539	▶260	6V-7970	393		387
	644		268		399		393
	646	6V-5540	260		405		399
	664		▶261	6V-8149	542		405
	702	6V-5553	730		543		583
	717	6V-5582	260	6V-8185	209		585
	754		▶262		212		639
	756		270	6V-8187	196		641
	758	6V-5698	212	6V-8188	46		644
	807	6V-5701	470		47		646
6V-4248	619	6V-5839	90		200		680
6V-4323	429		619		201		681
6V-4356	642		797		258		683
6V-4357	642	6V-6560	807		262		684
6V-4365	356	6V-6609	80		266		687
	359		82		271		688
6V-4432	150	6V-6782	679		274		692
6V-4589	155	6V-6783	679		421		693
	156	6V-6804	430	6V-8189	198		696
	192	6V-6923	191		513		698
6V-4611	930		193	6V-8201	733		700
	933	6V-6942	923		737		702
	936	6V-6943	923	6V-8225	209		711
6V-4612	971	6V-7357	815		212		713
	973		818	6V-8227	656		715
6V-4613	963	6V-7359	583	6V-8237	340		721
	965		590		341		723
6V-4614	959		606		501		725

▶ **PRIMARY REFERENCE**

PART NUMBER INDEX

Part	Page	Part	Page	Part	Page	Part	Page
	752		637	6V-8653	510		590
	754		717	6V-8676	782	6V-8988	635
	756	6V-8626	702	6V-8713	590	6V-8989	590
	758	6V-8627	164		702	6V-8990	639
	807		166	6V-8714	639	6V-8994	639
6V-8398	160		168	6V-8716	681	6V-8995	592
	162		342		683		597
	335		344		687		603
	336		692	6V-8721	702		637
	337		696	6V-8722	606	6V-9001	702
	338		717		612		807
	381		754	6V-8723	348	6V-9002	338
	387		756		352		421
	399		758		692		635
	405	6V-8628	754	6V-8724	160	6V-9003	606
	421		756		162		608
	476		758		381		610
	583	6V-8632	608		387		612
	585		610		393	6V-9004	348
	592	6V-8634	346		399		352
	593		807		405		705
	597	6V-8635	705		692	6V-9007	629
	598	6V-8636	160		700		632
	602		162		711		639
	603		348		713		641
	623		352		715		680
	625		585		807		683
	629		641	6V-8781	692		687
	632		644		696		707
	635		646	6V-8782	629		709
	637		683		632	6V-9008	90
	658		687	6V-8791	681		641
	659		692		684		644
	680		696		688		646
	681		698	6V-8801	139		664
	684		715		143		707
	688		752		214		709
	702		754		239		807
	707		756		278	6V-9090	992
	709		758		348	6V-9093	992
	717		807		441	6V-9097	992
6V-8556	593	6V-8637	348	6V-8831	939	6V-9099	992
	598		352		941	6V-9102	992
	603		644	6V-8918	904	6V-9106	992
6V-8625	160		646	6V-8927	209	6V-9109	992
	162		680	6V-8928	847	6V-9112	992
	164		683		852	6V-9114	992
	166		687	6V-8934	698	6V-9116	992
	168		707	6V-8935	717	6V-9117	992
	335		709	6V-8936	583	6V-9118	992
	336	6V-8638	702		700	6V-9160	681
	337	6V-8639	160	6V-8941	681		684
	381		162		684		688
	387		585		688	6V-9162	639
	399		623	6V-8942	592	6V-9167	340
	405		625		597		341
	421	6V-8640	680		602	6V-9168	346
	592		683	6V-8980	346		348
	597		687		348		352
	602	6V-8641	667		352		585
	623		744		585		639
	625		748	6V-8981	338		700
	629	6V-8647	667		583	6V-9169	335
	632		744		585		337
	635		748	6V-8982	588		338

► **PRIMARY REFERENCE**

PART NUMBER INDEX

Part	Page
	583
	585
	593
	598
	603
	635
	637
	681
	684
	688
6V-9170	588
	590
6V-9189	100
	101
	294
	526
	529
	532
	845
6V-9191	457
6V-9200	585
	639
	692
	696
	702
6V-9489	593
	598
	603
	635
	637
6V-9491	298
6V-9632	292
	602
	846
	886
6V-9671	820
	823
	826
6V-9672	212
6V-9746	348
	352
	593
	598
	603
	629
	632
	635
	637
	639
	641
	644
	646
	680
	681
	683
	684
	687
	688
	705
	707
	709
6V-9836	711
	713
	715
	807
6V-9837	583
	592
	597
	602
	717
6V-9843	754
	756
	758
	807
6V-9846	681
	684
	688
6V-9847	705
6V-9849	698
6V-9850	754
6V-9851	336
6V-9872	176
	178
	181
	185
	187
	189
	680
6V-9874	680
	683
	687
	705
6W-4310	577
	579
	581
6W-5677	841
6Y-0869	380
	386
	392
	398
	404
6Y-2281	428
6Y-4538	467
6Y-4541	467
6Y-4542	467
6Y-5010	436
6Y-5888	428
	457
6Y-6339	480
	482
	484
6Y-7958	426
6Y-8048	467
6Y-9807	428
6Y-9850	356
	359
6Y-9960	424
7	
7B-2742	173
	245
7B-3028	372
	374
	436
	471
7B-3039	744
	748
	752
7B-3235	363
7C-0307	104
7C-1445	70
7C-3039	98
7C-4354	289
	294
	303
7C-5665	137
7C-6514	19
7C-6641	379
7D-1195	444
	446
7D-1649	125
	127
	129
7D-7026	858
7D-7233	210
	294
7D-7469	439
	440
7E-0558	77
7E-0559	77
7E-1177	77
7E-2660	605
7E-4195	77
7E-5661	56
	58
7E-6455	133
7E-6508	10
7E-8630	136
7E-9262	20
7F-0560	208
7F-0880	289
	301
7F-2122	380
	386
	392
	398
	404
	615
	620
	621
	622
	795
7F-3488	258
	274
7F-3491	257
	273
7F-3525	257
	273
7F-6998	879
7F-7621	196
7G-0141	457
7G-0713	430
7G-0719	429
7G-0720	429
7G-0721	428
7G-0725	429
7G-0727	430
7G-0731	429
7G-0739	429
7G-0743	430
7G-0744	430
7G-0746	428
7G-0747	428
7G-0824	428
7G-0825	428
7G-1060	292
	298
7G-1136	430
7G-1137	430
7G-1138	430
7G-1141	428
7G-1143	429
7G-1146	430
7G-1148	430
7G-1158	428
7G-1159	430
7G-1186	428
7G-1593	342
	344
7G-1594	342
	344
7G-1595	356
	359
7G-1596	428
7G-2475	429
7G-2476	429
7G-2516	428
7G-2674	467
7G-3472	470
7G-5453	467
7G-5984	664
7G-5985	664
7G-5986	664
7G-6373	342
	344
7G-7431	467
7G-9473	356
	359
7H-1447	667
	744
	748
7J-0815	667
7J-5925	667
	745
	749
7J-7423	771
	773
7J-9108	588
	590
	593
	598
	603
	606
	608
	610
	612
	702
7J-9933	771
	773
	775
7K-1181	292
	298
	550
7K-4201	877
7K-6058	477
	480
	482
	484

► **PRIMARY REFERENCE**

PART NUMBER INDEX

Part	Page	Part	Page	Part	Page	Part	Page
7K-9197	538		684		693		927
	540		687		702	7T-9123	258
7L-2894	257		688	7S-8921	348		274
	266		705		352	7T-9791	466
	271		707		376	7U-0887	620
	273		709		410		621
7L-6210	471		773		412		622
7L-6326	92		783		416	7U-1903	863
7M-0324	258		807		693	7U-1981	▶993
	273	7M-8651	258		702	7U-2303	768
7M-0325	258		274	7T-0020	229	7U-2948	841
	274	7N-0060	202	7T-0569	467	7U-4105	174
7M-0326	257	7N-0296	255	7T-0570	467		742
	273	7N-0452	51	7T-0571	467	7U-4891	240
7M-0327	257	7N-0718	240	7T-0969	290		242
	273		242	7T-0970	290	7U-4892	209
7M-1397	470		▶277	7T-1099	131		212
7M-1419	380	7N-1572	104		176		240
	386	7N-1995	287		178		242
	392		288		181	7U-6339	671
	398	7N-1996	287		185	7U-6574	338
	404		288		187		858
7M-5007	342	7N-2043	77		189	7U-6645	133
	344	7N-2059	255		202	7U-7310	692
7M-5813	429	7N-2156	97		204	7U-7345	556
7M-7794	342	7N-3451	89		281	7U-8704	110
	344		90		283		112
7M-8485	90	7N-4333	380		285		114
	176		386		292	7U-9542	203
	178		392		501		204
	181		398		677		290
	185	7N-5274	202	7T-1874	878		301
	187		204	7T-3267	266		679
	189	7N-5876	840		271		702
	319	7N-7779	287	7T-3268	266	7V-9275	240
	321		288		271		242
	323		819	7T-3269	266	7W-2206	3
	325	7N-7780	287	7T-3270	266		5
	327		288	7T-3271	266		▶98
	329		819		271	7W-3145	137
	331	7N-8374	13	7T-3276	266	7W-6333	496
	338	7N-9021	196		271	7W-6492	23
	342	7N-9023	196	7T-3277	266		24
	344	7N-9737	287		271		26
	372		288	7T-3278	266		28
	374	7N-9738	287		271		79
	381		288	7T-3279	266	7W-7381	289
	387	7N-9801	255		271		301
	393	7N-9943	229	7T-3451	266	7W-8126	836
	399	7S-2962	372		271	7X-0292	288
	406		374	7T-3454	266		303
	470	7S-3029	436		271	7X-0311	421
	477	7S-4001	622	7T-3974	257	7X-0326	420
	480	7S-5005	20		266	7X-0345	83
	482	7S-5757	356		271	7X-0349	75
	484		359		273	7X-0450	556
	577	7S-6745	377	7T-4532	835	7X-0507	346
	579	7S-8491	771	7T-6175	470	7X-0531	556
	581		773	7T-6799	878		681
	641	7S-8920	348		881		684
	644		352	7T-7376	245		688
	646		376	7T-8331	125	7X-0562	258
	664		410		127		261
	681		412		129		262
	683		416	7T-8891	923		266

▶ **PRIMARY REFERENCE**

PART NUMBER INDEX

Part	Page
	271
	274
7X-0578	121
	176
	178
	181
	185
	187
	189
	495
	506
	508
	517
	519
	550
	749
7X-0579	110
	112
	114
	118
	526
	529
	532
7X-0590	125
	127
	129
7X-0608	239
	278
	812
7X-0613	550
7X-0618	131
7X-0620	278
	280
7X-0623	421
7X-0732	608
	610
7X-0741	933
	936
7X-0752	292
7X-0818	219
	220
7X-0820	346
7X-0851	801
	803
	805
7X-0871	629
	632
	702
	717
7X-0901	684
7X-2031	245
7X-2444	692
	696
	698
7X-2454	319
	321
	323
7X-2475	110
	112
	114
7X-2489	523
	560
7X-2497	842
7X-2532	75
7X-2533	815
	818
7X-2534	294
	693
	696
7X-2536	666
7X-2537	139
	143
	550
7X-2539	125
	127
	129
7X-2543	412
	416
7X-2544	412
	416
7X-2549	349
	412
	416
	556
	642
7X-2550	139
	143
	412
	416
7X-2552	488
	490
	492
	669
	886
7X-2553	110
	112
	496
	727
7X-2554	110
	112
	114
	319
	321
	323
	325
	327
	329
	331
	333
	558
	560
	845
7X-2555	381
	387
	393
	399
	406
	671
7X-2556	444
	446
	558
7X-2557	387
	393
	399
	406
	501
	560
7X-2558	381
7X-2563	488
	490
	492
	500
	801
	805
7X-2568	523
7X-2569	523
7X-2578	556
	671
7X-2621	176
	178
	181
	185
	187
	189
	381
	387
	393
	399
	406
	745
7X-3182	240
	242
7X-3342	732
7X-3353	196
7X-3373	257
	266
	271
	273
7X-3389	614
7X-4776	766
7X-4805	70
7X-6315	219
	221
	223
	225
	227
	228
7X-7644	930
	933
	936
7X-7700	176
	178
	181
	185
	187
	189
	366
	369
	486
	496
	506
	508
	515
	517
	519
	526
	529
	532
	550
	564
	565
	585
	606
	612
	619
	629
	632
	703
	745
	758
	787
	788
	854
	877
7X-7731	104
7X-7732	23
	24
	26
	28
7X-7960	754
	756
	758
	771
	773
7Y-3196	118
7Y-7388	879
7Y-7389	209
	212
	287
	288
	882

8

Part	Page
8B-4624	782
8B-5144	442
8B-7216	380
	386
	392
	398
	404
8C-0618	847
	852
8C-3089	257
	273
8C-3205	629
	632
8C-3206	410
	412
	416
	629
	632
	664
	677
	705
	707
	709

► **PRIMARY REFERENCE**

PART NUMBER INDEX

Part	Page	Part	Page	Part	Page	Part	Page
	808	8C-9649	245		112	8L-2779	155
8C-3229	797	8C-9660	257		114		156
8C-3290	424		273	8G-5258	319	8L-2786	37
8C-3347	366		294		321		43
	369		298		323		68
8C-3370	676	8C-9987	473		325		81
8C-3445	47		618		327		155
	90	8D-2714	477		329		156
8C-3446	47		480		331		164
	421		482		333		166
	667		484	8H-1141	266		168
	744	8D-3879	426		271	8L-6557	46
	748	8D-3937	426	8H-3127	10		538
8C-3447	421	8D-3971	426	8H-3532	783		540
8C-3451	667	8D-3972	426	8H-5303	277	8L-8413	204
	744	8D-4771	428	8H-5306	277		910
	748	8D-6946	294	8H-7521	372		912
8C-3560	967		297		374	8M-1047	441
	969	8D-8259	102	8H-7801	368	8M-2530	457
8C-3655	266	8D-8621	428	8H-7803	368	8M-2770	289
	271	8E-1118	846	8H-8549	992		297
8C-3681	120	8E-3602	429	8H-8554	992		303
	160	8E-3610	428	8H-8555	992		308
	162	8E-4094	470	8H-8556	992	8M-2771	289
8C-3756	822	8E-4592	467	8H-8577	992		308
	825	8E-7190	470	8H-8581	992	8M-2773	289
8C-4424	393	8E-7365	928	8H-9208	470		297
	400	8E-7366	928	8H-9818	676		303
	406	8E-8292	923	8H-9819	676	8M-3267	910
8C-4586	819	8E-8293	923	8J-0135	676	8M-4069	593
	822	8E-8304	428	8J-0331	783		598
	825	8E-8306	428	8J-1580	381		603
8C-4843	967	8E-8307	428	8J-1665	667		619
	969	8E-8308	426		745	8M-4432	356
8C-5061	775	8E-8439	315		749		359
8C-5230	89	8E-8440	315	8J-2379	782	8M-4433	421
	90	8E-8908	467	8J-4351	244		928
8C-5608	281	8E-9292	429	8J-4452	467	8M-4446	356
	283	8E-9598	429	8J-5914	420		359
8C-6358	208	8E-9599	429	8J-6273	653	8M-4986	467
8C-6368	877	8F-0212	372		721	8M-4988	356
8C-6515	90		374		723		359
8C-6865	47	8F-1434	235		725	8M-4992	356
8C-6875	676		236		731		359
8C-8451	281		258	8J-7636	372	8M-5007	372
	283		261		374		374
8C-8478	75		262	8J-8322	669	8M-5127	467
	424		266	8J-8782	744	8M-5254	356
	741		271		748		359
8C-8585	176		274		752	8M-5255	380
	178		278	8J-8783	744		386
	181		280		748		392
	185	8F-5900	380		752		398
	187		386	8J-9348	473		404
	189		392	8K-5440	758	8M-5661	342
	506		398	8K-6464	319		344
	508		404		321	8M-6402	470
	565	8F-6711	372		323	8M-6521	429
	839		374		325	8M-7160	441
8C-8989	593	8F-6864	381		327	8M-7166	441
	598	8F-8544	466		329	8M-8157	356
	603	8F-8733	797		331		359
8C-9047	933		799		333	8M-8489	97
	936	8F-9206	122	8L-2746	426		438
8C-9648	245	8G-0841	110	8L-2777	84	8M-8515	470

► **PRIMARY REFERENCE**

PART NUMBER INDEX

Part	Page
8M-9307	363
8M-9315	60
	68
8N-0869	202
	204
8N-1540	562
8N-1541	562
8N-1725	202
	204
8N-2104	94
8N-4173	315
	471
8N-4266	3
	5
	►13
8N-4326	164
	166
	168
8N-4409	886
8N-7907	342
	344
8N-8846	124
8P-1722	372
	374
8P-2022	429
8P-2051	429
8P-2053	429
8P-3251	372
	374
8P-5141	819
	822
	825
8P-5411	923
8P-7385	467
8P-8744	428
8P-9569	429
8P-9737	467
8P-9738	467
8P-9852	470
8S-0023	421
8S-0024	421
8S-0617	372
	374
8S-1588	992
8S-2332	264
	265
	268
	269
8S-2634	240
	242
8S-3370	428
8S-3371	457
8S-3426	429
8S-4211	240
	242
8S-4304	363
8S-4724	457
8S-5575	356
	359
8S-6511	97
8S-7803	829
8S-9009	421
8S-9075	366
	368
8S-9076	366
	368
8S-9094	23
	24
	26
	28
8S-9191	70
	159
	550
8T-0075	807
8T-0077	593
	598
	603
8T-0122	139
8T-0207	371
	444
8T-0267	842
8T-0269	842
8T-0282	446
8T-0285	823
8T-0288	235
	236
8T-0315	387
	393
	400
	406
8T-0318	886
8T-0328	196
	258
	261
	262
	266
	271
	274
8T-0337	298
8T-0338	529
	532
8T-0341	719
8T-0364	801
	803
	805
8T-0365	501
8T-0367	801
	805
8T-0372	803
8T-0389	512
	550
	664
8T-0404	588
8T-0649	444
	446
8T-0666	811
8T-0668	560
8T-0670	340
	341
8T-0706	436
8T-0788	693
8T-1159	735
8T-1160	436
8T-1683	715
8T-1686	629
	632
8T-1810	593
	598
	603
8T-1885	585
	681
	684
	688
	717
8T-1886	585
	681
	684
	688
	717
8T-1887	346
	538
	681
	684
	688
	863
8T-1888	346
	538
	681
	684
	688
	863
8T-1889	102
	410
	412
	416
	664
	677
8T-1890	102
	410
	412
	416
	664
	677
8T-1905	807
8T-2228	281
	283
8T-2275	667
	745
	749
8T-2353	692
	696
	698
8T-2501	288
	303
	910
8T-2502	131
	338
	421
	703
8T-2525	338
8T-2530	606
	612
8T-2920	348
	352
	588
8T-2925	470
8T-3282	340
	341
8T-3298	744
	748
	752
8T-3313	47
8T-3490	139
	143
	150
	176
	178
	181
	185
	187
	189
	202
	203
	204
	285
	292
	301
	412
	416
	496
	501
	506
	508
	517
	519
	570
	571
	574
	619
	700
8T-3518	208
8T-3597	150
	203
	204
	319
	321
	323
	325
	327
	329
	331
	496
	501
	558
	608
	610
	629
	641
	758
8T-3612	338
	517
	519
	550
	574
	629
8T-3957	733
	737
8T-4121	11
	95
	102
	116
	120
	125
	127

► PRIMARY REFERENCE

PART NUMBER INDEX

Part	Page	Part	Page	Part	Page	Part	Page
	129		512		303		205
	139		517		444		232
	143		519		446		233
	147		526		558		262
	148		529		667		281
	149		532		745		283
	160		536		749		285
	162		538	8T-4123	75		290
	176		540		338		303
	179		548		424		308
	181		549		488		346
	185		550		490		349
	187		570		492		352
	189		571		500		379
	203		585		523		410
	205		590		575		495
	209		593		635		517
	213		598		637		519
	232		603		681		526
	233		608		684		529
	240		610		688		532
	242		619		795		538
	262		629		796		540
	281		632		801		549
	283		635		805		550
	285		637		811		585
	287		642	8T-4131	75		590
	288		644		174		635
	291		646		424		637
	294		650		488		676
	298		664		490		677
	303		667		492		681
	308		676		741		684
	319		677		742		688
	321		681		795		693
	323		684		796		703
	325		688		811		717
	327		693	8T-4132	110		745
	329		700		112		749
	331		703		114		758
	341		705		494		834
	346		707		501		854
	349		709		523		863
	352		717		558		915
	366		735		671	8T-4136	116
	369		745	8T-4133	90		125
	379		749		102		127
	381		752		116		129
	387		801		120		147
	393		805		121		149
	400		808		125		150
	406		834		127		176
	410		854		129		179
	412		856		139		181
	416		863		143		185
	421		879		147		187
	426		889		160		189
	444		890		162		202
	446		903		176		205
	488		915		179		240
	490		925		181		242
	492		927		185		283
	496	8T-4122	100		187		288
	500		101		189		303
	505		291		203		308

► **PRIMARY REFERENCE**

PART NUMBER INDEX

Part	Page	Part	Page	Part	Page	Part	Page
	349		927		622		112
	352	8T-4138	176		844		114
	492		179	8T-4141	500		125
	496		181	8T-4149	681		127
	500		185		684		129
	505		187		688		310
	506		189	8T-4167	319		311
	508		202		321		412
	517		205		323		416
	519		288		424		501
	532		303		523		546
	536		319		556		583
	550		321		558		588
	571		323		560		642
	608		823		669		703
	610		826		671	8T-4184	143
	745		877	8T-4170	174		349
	749	8T-4139	102		742		352
	752		116	8T-4171	202		376
	854		131		205		412
	856		139		294		416
	863		143		799		512
	889		202		846		542
	890		205		882		543
	903		349		919		642
	915		352	8T-4172	550		644
8T-4137	176		382	8T-4174	382		646
	179		388		388		679
	181		393		393		703
	185		400		400		711
	187		406		406		713
	189		412	8T-4175	110		715
	202		416		112		845
	205		496		114	8T-4185	202
	209		501	8T-4176	496		205
	212		503	8T-4177	630		242
	287		504		633		289
	288		505		642		303
	294		513		644		444
	297		515		646		446
	349		526		681		606
	352		529		684		612
	379		532		688		681
	382		558	8T-4178	11		684
	388		560		382		688
	400		562		388		717
	406		576		394	8T-4186	139
	496		588		400		143
	500		606		406		148
	526		630		410		162
	529		632	8T-4179	612		202
	532		681		743		205
	538		684	8T-4182	382		281
	540		688		388		283
	550		707		394		285
	570		729		400		289
	585		743		406		303
	593		837		550		319
	598	8T-4140	110		619		321
	603		112		677		323
	693		114	8T-4183	100		341
	854		424		101		346
	856		496		102		421
	877		620		106		488
	925		621		110		490

PART NUMBER INDEX

Part	Page	Part	Page	Part	Page	Part	Page
	496		125		406		118
	517		127		410		125
	519		129		421		127
	526		139		496		129
	529		143		512		139
	532		150		585		143
	548		160		603		148
	564		162		630		149
	590		202		633		150
	593		205		642		200
	598		209		644		201
	603		281		646		203
	664		283		664		205
	676		285		677		291
	687		346		703		303
	854		366		705		310
8T-4187	488		369		707		311
	490		382		709		313
	492		388		891		325
	811		394		915		327
8T-4189	139		400	8T-4197	110		329
	143		406		112		331
	212		412		114		333
	294		416		808		338
	346		426	8T-4198	281		349
	486		436		664		353
	506		486	8T-4199	139		366
	508		495		143		369
	550		517		176		376
	574		519	8T-4205	196		382
	882		538		198		388
	903		540		209		394
	905		550		213		400
	906		571		237		405
8T-4190	797		593		240		410
	799		598		242		412
8T-4191	571		603		257		416
	745		619		266		420
	879		635		271		421
8T-4192	513		637		273		501
	515		650		291		503
	526		677		308		504
	529		681		382		512
	532		700		388		513
	610		717		400		515
	630		758		406		526
	633		801		510		529
	677		805		820		532
	845		863		823		542
8T-4193	319	8T-4196	102		826		543
	321		116		895		546
	323		160		897		556
	558		162		899		558
	679		289		901		560
8T-4194	148		303	8T-4223	46		562
	149		325		47		576
	501		327		95		579
	679		329		100		581
	803		331		101		583
	844		349		102		588
	863		352		106		606
	865		382		110		608
	866		388		112		614
8T-4195	90		394		114		623
	116		400		116		625

► **PRIMARY REFERENCE**

PART NUMBER INDEX

Part	Page	Part	Page	Part	Page	Part	Page
	630		842		131		635
	633		882		214		637
	635		884		240		664
	637		885		242		677
	642		903		291		693
	644		904		303		703
	646		923		349		749
	664		927		356		808
	677	8T-4226	150		359	8T-4971	593
	679	8T-4244	95		376		598
	681		100		410		603
	684		101		412	8T-5001	412
	688		102		416		416
	693		106		421	8T-5005	496
	703		110		441		526
	707		112		649		529
	711		114		667		532
	713		116		703		681
	715		118		745		684
	729		200		749		688
	733		201		752	8T-5041	413
	737		261		836		416
	754		338	8T-4904	991		556
	756		349	8T-4908	100		646
	758		353		101	8T-5043	681
	771		376		110		688
	773		412		118	8T-5092	642
	803		416		179		644
	808		501		181	8T-5360	421
	844		512		255		536
	845		526		517		892
	863		529		519		903
	865		532		526		905
	866		556		529	8T-5397	801
8T-4224	100		576		532		803
	101		579		666		805
	118		581		842	8T-5400	923
	125		588		923		927
	127		642		927	8T-5412	366
	129		644	8T-4910	125		369
	139		646		127	8T-5429	717
	143		664		129	8T-5436	834
	176		677		513	8T-5439	174
	198		679		515		488
	213		693		845		490
	255		703	8T-4944	319		492
	294		749		321		505
	496		754		323		741
	506		756	8T-4956	102		742
	508		758		116	8T-5460	505
	513		808		118	8T-5677	302
	526		837		125		310
	529		844		127		311
	532		845		129		313
	550		863		313	8T-5878	669
	630		865		338	8T-6380	523
	633		866		376	8T-6408	549
	642	8T-4648	140		412	8T-6411	298
	644		562		416	8T-6431	139
	646		623		529		143
	666		625		532	8T-6466	125
	681	8T-4778	560		563		127
	684	8T-4896	53		564		129
	688		100		588		160
	808		101		608		162

► PRIMARY REFERENCE

PART NUMBER INDEX

Part	Page
	808
	854
8T-6663	693
	696
8T-6684	641
	644
	646
	702
8T-6685	140
	143
	677
8T-6757	23
	24
	32
	34
	39
	137
8T-6761	76
	104
8T-6762	928
8T-6763	37
8T-6765	37
	68
	134
8T-6767	79
	81
	104
8T-6850	122
	123
	124
	641
8T-6868	95
	288
	325
	327
	329
	331
	333
	410
	420
8T-6869	294
	496
	576
8T-6870	338
	585
	771
	773
8T-6876	338
	585
	629
	632
	680
	683
	687
	707
	709
8T-6895	592
	597
	602
	681
	684
	688
8T-7004	815
	818
8T-7062	49
	50
8T-7196	441
8T-7338	651
	652
8T-7532	930
	933
	936
8T-7547	110
	112
	114
	118
	338
	550
8T-7566	874
	875
	876
8T-7567	799
8T-7586	133
8T-7811	547
	622
8T-7876	915
8T-7930	200
	201
8T-7934	834
8T-7970	644
	646
8T-8442	733
	735
	737
8T-8566	266
	271
8T-8569	266
	271
8T-8641	829
8T-8729	229
	230
	231
	232
	233
	234
	235
	236
	237
	252
	292
	293
	378
	867
	868
	925
8T-8737	925
	927
8T-8900	680
	683
	687
8T-8902	754
	756
	758
	807
8T-8919	420
8T-8987	641
8T-9082	895
	897
	899
	901
8T-9371	912
8T-9389	200
	201
8T-9393	289
	303
8T-9405	294
8T-9515	382
	388
	394
	400
	405
8T-9527	48
8T-9597	735
8T-9598	733
	737
8T-9655	215
	217
	219
	220
8T-9884	266
	271
8U-5951	733
	737
8V-9372	577
	581
8W-0161	707
	709
8W-5179	342
	344
8W-6650	421
8W-8528	310
	311
	313
8W-8909	346
	538
	577
	579
	581
8X-0489	333
8X-0491	477
8X-0948	439
8X-1983	439
	440
8X-4575	338
8X-6973	337
8X-7026	477
8Y-4030	906
8Y-5904	▶829
	830
	831
8Y-5906	829
8Y-5988	829
8Y-6028	829
8Y-6277	895
	897
	899
	901
8Y-6364	667
	744
	748
	993
8Y-6385	886
8Y-6386	842
8Y-6388	815
	818
	847
	852
	878
	881
8Y-6922	910
8Y-6928	910
8Y-8294	922
	9
9B-7233	196
	209
	212
	240
	242
	878
	881
9B-7237	100
	101
	150
	413
	417
9D-0630	178
	181
9D-1853	368
9D-1854	368
9D-3737	878
9D-4068	292
	298
9D-7884	467
9F-1399	366
9F-2167	592
	597
	602
	606
	608
	659
9F-2247	673
9F-2773	356
	359
9F-3788	430
9F-3823	429
9F-5599	257
	273
9F-5644	277
9G-2773	526
	529
	532
9G-3670	819
9G-3676	819
9G-3695	293
	656
	819
	923
	927
9G-4101	257
	258
	273
	274
9G-4360	209
9G-5319	477
9G-6770	258
9G-7131	467
9G-7132	467

► **PRIMARY REFERENCE**

PART NUMBER INDEX

Part	Page
9G-9154	819
	822
	825
9G-9155	501
9G-9412	356
	359
9G-9440	315
9G-9506	381
	387
	393
	399
	405
9G-9928	342
	344
9H-0846	372
	374
	577
	579
	581
9H-1031	21
	22
	30
	31
9H-3757	257
	273
9H-5322	380
	386
	392
	398
	404
9H-5545	429
9H-6454	667
	744
	748
9H-8872	614
9J-1330	467
9J-5491	577
	579
	581
9J-7031	744
	748
	752
9K-3036	505
9K-7290	68
9L-2662	421
9L-5839	137
9L-5854	21
	31
9L-6671	3
	6
	▶152
9L-6770	196
	198
9L-6776	196
9L-7712	84
9L-8925	10
	19
9L-9068	430
9M-0164	910
9M-1503	430
9M-1974	18
	70
	104
	173
	200
	201
	215
	217
	315
	430
	466
	470
	886
9M-1986	377
9M-2001	429
	430
9M-2744	477
	480
	482
	484
9M-2904	92
	338
9M-2942	441
9M-3786	107
9M-4355	428
9M-4584	96
9M-4972	289
	303
9M-5733	209
	212
	847
	852
9M-5894	430
9M-6527	96
	108
9M-6590	435
9M-6803	884
9M-7002	342
9M-7394	667
	744
	748
9M-7540	96
9M-7606	257
9M-7609	257
	266
	273
9M-8406	212
	882
9M-8669	348
	▶441
9N-0869	215
	217
	219
	220
9N-0942	196
9N-0943	196
9N-1008	152
9N-1941	139
	143
9N-2038	153
9N-2699	137
9N-5124	94
9P-0652	471
9P-0656	467
9P-0673	470
9P-0674	470
9P-0683	467
9P-0687	467
9P-7121	176
	178
	181
	185
	187
	189
9P-7390	429
9P-9650	470
9R-1004	590
	608
	610
9R-1005	590
	608
	610
9R-2620	923
9R-3176	667
	744
	748
9R-3572	116
9R-3656	635
	637
9R-3695	608
	610
9R-4760	110
	112
	114
9R-5615	886
9R-7941	209
	212
9R-7980	209
	212
9S-1730	992
9S-2009	196
9S-2013	196
9S-2302	196
9S-2390	196
9S-2544	196
	257
	273
9S-2843	430
9S-4167	155
	156
9S-4181	579
	581
9S-4182	23
	24
	26
	28
	68
	244
	653
	721
	723
	725
9S-4183	342
	344
	348
	352
	684
	688
	733
	737
	738
9S-4185	68
	382
	388
	392
	398
	404
	412
	416
	629
	632
	641
	644
	646
	661
	664
	680
	684
	688
	928
9S-4190	23
	24
	26
	28
	37
	467
	577
	579
	581
	653
9S-4191	37
	164
	166
	168
	377
	436
	629
	632
	653
	681
	684
	688
	771
	773
9S-4693	240
	242
9S-6155	315
9S-7581	380
	386
	392
	398
	405
9S-8001	356
	359
	467
	662
	663
9S-8002	476
	639
	733
	737
	780
9S-8004	37
	43
	80
	82
	356
	359
	577
	616
	662

▶ PRIMARY REFERENCE

PART NUMBER INDEX

Part	Page	Part	Page	Part	Page	Part	Page
	735	9W-6582	75		249		236
	768		174		251		238
9S-8005	68		424		281	9X-4494	237
	80		741		283	9X-4605	380
	81		742		290		386
	82	9W-6584	75		301		392
	160		174		378		398
	162		424	9X-1878	930	9X-4824	266
	356		741	9X-2026	245		271
	359		742	9X-2038	9	9X-6155	842
9S-8006	80	9W-6964	315	9X-2042	842	9X-6165	510
	82		471		847	9X-6340	930
9S-8413	470	9W-6990	457		852		933
9S-8752	48	9W-7009	470		879		936
	56	9W-7011	470	9X-2044	209	9X-6395	775
	58	9W-7020	577		212	9X-6451	76
	70		579		815	9X-6458	56
	74		581		818		58
	92	9W-7385	424		847		70
	96	9W-7388	424		852		94
	152	9W-7410	467		886		104
	164	9W-7411	467		917		363
	166	9W-7412	467		918	9X-6574	457
	168	9W-7925	380	9X-2045	847	9X-6580	681
	171		386		852		684
	172		392	9X-2046	878		688
	342		398		882	9X-6582	717
	344		404	9X-2133	102	9X-6700	983
	928	9W-7926	380	9X-2185	819		985
9S-9334	577		386		822	9X-7269	623
	579		392		825		625
	581		398	9X-2201	136		627
9U-0361	635		404		147	9X-7317	159
	637	9W-8095	424	9X-2205	176	9X-7371	13
	717	9W-9158	429		178	9X-7378	23
9U-8263	847	9W-9159	429		182		24
	852	9W-9161	429		185		26
9V-3222	615	9W-9915	110		187		28
9V-3225	615		112		189		290
9V-6164	577		114	9X-2488	819		303
	579	9W-9920	174		822		835
	581		741		825	9X-7380	854
9W-0335	878		742	9X-2500	196		856
	881	9W-9930	75	9X-2614	585	9X-7381	854
9W-0852	301		424	9X-3066	234		856
	819	9W-9941	869	9X-3068	237	9X-7382	854
	822		871	9X-3401	178		856
	825	9W-9952	110	9X-3463	230	9X-7383	854
	878		112		231		856
9W-1442	209		114		232	9X-7385	835
	212	9W-9953	110		233		854
9W-1446	209		112	9X-3579	797	9X-7430	32
	212		114		799		34
9W-2035	210	9X-0261	155	9X-3601	797		39
	212		156		799	9X-7680	733
9W-3136	457	9X-0941	546	9X-4174	231		735
9W-4116	315	9X-1046	847	9X-4243	231		737
9W-4118	315		852		232	9X-7737	194
9W-4119	▶315	9X-1386	250		233	9X-7744	769
	466		252	9X-4244	231	9X-7797	233
9W-5531	372		290		232	9X-7798	232
	374		301		233	9X-8250	593
	441	9X-1813	246	9X-4492	238		598
9W-5976	480		247	9X-4493	234		603
	482		248		235	9X-8256	157

▶ **PRIMARY REFERENCE**

PART NUMBER INDEX

Part	Page
	176
	179
	181
	185
	187
	189
	203
	205
	209
	290
	294
	298
	303
	319
	321
	323
	593
	598
	603
	693
	696
	882
	919
	923
	925
	927
9X-8257	110
	112
	114
	319
	321
	323
	325
	327
	329
	331
	333
	424
	488
	490
	492
	496
	501
	523
	560
	563
	564
	620
	621
	622
	651
	652
	669
	671
	679
	727
	797
	799
	844
	845
9X-8268	371
9X-8399	623
	625
	627
9X-8600	176
	178
	181
	185
	187
9X-8699	550
9X-8872	55
	56
9X-8873	363
	830
	831
9X-8874	372
	374
9X-8875	363
9X-8876	342
9X-8878	86
9X-8880	363
9X-8913	558
	560
9X-8979	733
	737
9X-9511	266
9X-9720	202
	204
9X-9896	281
	283
9Y-1792	97
9Y-1981	60
	62
9Y-1985	60
	62
9Y-2092	60
	62
9Y-2094	60
	62
9Y-2988	19
9Y-5281	92
9Y-5618	60
9Y-6054	77
9Y-7735	77
0	
003-2143	102
	858
004-1964	731
005-7889	102
	858
014-0816	881
030-4605	769
030-4606	782
030-7937	164
	166
	168
030-7946	46
030-7947	164
	166
	168
030-7962	164
	166
	168
030-9612	196
031-0214	884
	885
031-3185	56
	58
031-4630	470
032-9313	84
033-6033	191
	193
033-6042	164
	166
	168
033-6043	777
	778
	780
033-7291	820
	823
	826
	930
	933
	936
033-8248	293
036-9821	257
	266
	273
036-9823	257
	266
	271
	273
037-4838	819
	822
	825
037-5197	202
	204
038-4974	841
045-4065	258
	274
061-6712	430
061-8639	84
061-9455	70
066-5815	672
066-5816	380
	386
	392
	398
	404
067-2551	166
	168
067-3161	429
086-2369	731
089-7960	521
	522
089-7990	795
091-0081	104
095-0642	293
	297
095-0670	178
	181
095-0843	895
	897
	899
	901
095-1207	732
095-1513	767
095-1633	797
	799
095-1711	735
095-1750	617
	776
095-1751	770
096-4833	293
	297
096-6166	823
096-6573	515
096-9986	382
	387
	393
	399
	405
099-3095	653
	721
	723
	725
	731
099-3649	656
1	
100-2878	68
100-3426	825
100-3998	356
	359
100-4083	474
	475
100-5072	159
100-5218	10
100-5219	10
100-6531	196
100-6532	196
100-7399	23
	24
	26
	28
100-9347	3
	5
	▶107
101-0003	912
101-2867	847
	852
	884
	885
101-3120	70
101-3125	134
101-3625	209
101-6596	46
101-7352	138
101-7404	720
101-8296	856
101-8468	56
	58
102-0340	819
	822
	825
102-2453	319
	321
	323
	325
	327
	329
	331
	333
102-5828	90

▶ **PRIMARY REFERENCE**

PART NUMBER INDEX

Part	Page
102-5829	90
102-5861	56
	58
102-6317	910
102-7664	3
	5
	▶244
102-8502	138
102-8633	19
102-8671	428
102-8780	64
	66
102-8801	210
	292
	293
	297
	298
102-8802	178
	195
	209
	210
	230
	231
	232
	233
	234
	237
	250
	253
	255
	281
	283
	287
	288
	289
	290
	292
	293
	297
	298
	299
	301
	302
	310
	311
	313
	378
	473
	475
	618
	656
	786
	820
	822
	825
	835
	860
	912
102-8803	157
	229
	240
	242
	251
	252
	289
	290
	297
	298
	299
	301
	302
	310
	311
	313
	825
	878
102-8804	235
	236
	238
	242
	290
	292
	293
	297
	298
	301
	302
	310
	862
	878
	881
102-8805	283
	285
	289
	290
	292
	293
	297
	298
	301
	302
	308
	310
	311
	313
	838
	840
	867
	868
	923
	925
	927
102-8806	292
	293
	297
	298
	302
	311
	313
	878
	925
102-9089	12
103-1271	19
103-2543	209
103-3986	453
103-5526	292
	▶838
103-5796	869
	871
103-6045	18
103-6100	854
103-8134	10
	819
	822
	825
103-8652	783
104-2091	815
	818
	847
	852
	878
	881
104-5604	815
	818
104-6202	299
104-6408	979
	981
104-6409	987
	989
104-6429	979
	981
104-6430	987
	989
104-7995	90
104-8586	73
104-9270	84
105-0381	338
105-1632	733
	737
105-1633	733
	737
105-1634	733
	737
105-1635	733
	737
105-1636	733
	737
105-1638	733
	737
105-1639	733
	737
105-1640	733
	737
105-1641	733
	737
105-1642	733
	737
105-1644	733
	737
	▶739
105-1646	739
105-1648	739
105-1650	739
105-1651	739
105-1652	739
105-1653	739
105-2145	777
	778
	780
105-3031	733
	737
105-3032	733
	737
105-3033	733
	737
105-3763	196
105-3764	196
105-4728	264
	265
105-4729	256
	▶264
	▶265
105-5088	444
	446
106-1767	133
106-1792	138
106-5673	37
106-7687	196
106-7689	196
106-7690	196
106-7799	428
106-8554	260
	▶266
106-8704	203
	290
	301
107-0583	56
	58
107-1983	878
107-5769	171
	172
107-5851	230
107-5852	230
107-5853	230
107-6736	3
	5
	▶14
107-6737	3
	5
	▶15
107-8126	523
107-8611	474
	475
108-3612	138
108-7638	863
	865
	866
108-7930	108
108-8162	879
	881
108-8393	592
	597
	602
109-0072	94
109-0076	104
109-0077	98
	104
	107
109-0078	94
109-0119	444
	446
109-1633	856
109-1634	856
109-5255	841
109-6640	698
109-6926	658
	659
109-7423	3
	5
	▶16

▶ **PRIMARY REFERENCE**

PART NUMBER INDEX

Part	Page
109-7424	16
109-7425	16
109-8895	327
109-9985	72
110-0017	860
110-2079	878
	881
110-2220	21
	31
110-6109	878
	881
110-6393	930
	933
	936
110-7524	919
110-7885	881
	925
110-7887	878
	881
111-0343	473
	474
	475
	618
111-2088	3
	5
	▶72
112-2418	3
	5
	▶73
112-2644	3
	5
	▶52
112-3231	253
112-5282	253
	254
112-6170	878
112-6174	881
	925
112-8517	501
112-8728	157
112-9217	56
	58
113-3632	721
	723
	725
113-4885	19
113-9002	164
	166
113-9145	348
114-2401	▶196
	200
114-2687	96
114-3361	799
114-3469	835
114-4427	23
	24
	26
	28
	96
114-5333	290
	301
114-5785	104
114-6055	951
	953
114-6056	983
	985
114-6057	991
114-6058	975
	977
114-6461	963
	965
114-6658	209
	213
	842
	847
	852
114-9125	847
	852
115-7817	346
116-0118	209
	212
116-3046	68
116-3589	797
	799
116-5710	292
	297
116-6202	854
	856
117-1266	679
117-1385	430
117-2311	209
	212
117-3915	▶239
	649
117-4489	893
117-4492	812
117-4504	874
117-4506	895
117-5268	649
	731
117-8216	735
117-8557	56
	58
117-8687	566
	568
	569
	572
	573
117-8688	566
	568
	569
	572
	573
117-8689	566
	568
	569
	572
	573
117-8690	566
117-8692	566
117-8801	56
	58
117-9690	196
118-0589	730
118-1225	930
	933
	936
118-3122	733
	737
118-3534	290
	301
118-5068	93
118-5619	815
	818
	847
	852
118-7226	▶251
	288
118-9573	410
	412
	416
119-0036	12
119-3314	454
119-3315	452
119-3316	452
119-3355	815
	818
119-3662	302
119-4885	667
	744
	748
119-7834	3
	▶89
120-0210	930
	933
	936
120-3950	815
	818
120-5447	667
120-9027	293
120-9051	721
	723
	725
120-9243	70
120-9288	356
	359
121-0145	76
121-0530	700
121-3286	680
	683
	687
121-6608	436
122-0447	34
	39
122-1133	786
122-1248	7
	8
	▶10
122-1472	10
122-1486	10
122-3772	107
122-6485	666
122-7052	242
	290
	301
122-7375	32
	34
	39
122-8291	692
122-8612	34
	39
123-0707	529
	532
123-0791	200
	201
123-3202	10
123-3827	886
123-4145	975
	977
123-4146	947
	949
123-4147	951
	953
123-4148	943
	945
123-4165	975
	977
123-4166	947
	949
123-4167	951
	953
123-4168	943
	945
123-5849	881
123-6051	975
	977
123-6065	947
	949
123-6066	951
	953
123-6067	943
	945
123-6449	281
123-8157	910
123-8829	915
123-9128	910
123-9711	92
123-9817	92
124-0174	297
	538
	540
124-1854	37
	43
124-1855	43
124-2732	131
124-4111	281
	283
124-5529	801
	803
	805
124-5814	202
	204
	▶208
124-6046	846
124-6818	7
	8
	▶56
	▶58
124-6822	3
	5
	▶70
124-7128	910
124-7340	70
124-8847	635
	637
125-2796	854
125-3297	796
125-5032	134
125-5894	381
125-6533	258

▶ **PRIMARY REFERENCE**

PART NUMBER INDEX

Part	Page
125-6535	258
	274
125-6536	258
	274
125-6537	258
	274
125-6806	▶868
	878
125-7484	125
	127
	129
125-9257	881
125-9740	819
	822
	825
126-1699	879
	881
126-1756	56
	58
126-1757	70
126-1773	215
	217
126-2373	842
126-2702	96
126-2704	96
126-6099	771
	773
	▶782
126-6104	782
126-6612	782
126-7654	663
126-8306	592
	597
	602
127-0821	923
127-1960	366
	368
127-1991	215
	217
127-4540	878
	881
127-4835	556
127-5483	212
127-6356	97
127-7122	75
127-8175	▶761
	767
127-9039	3
	5
	▶134
128-0317	108
128-0613	910
128-0686	910
128-2659	56
	58
128-2779	762
128-2780	▶762
	767
128-2880	467
128-2922	108
128-3935	380
	386
	392
	398
	404
128-4197	585
128-5082	910
128-5084	910
128-5085	910
128-6157	209
	212
128-6234	744
128-8510	7
	8
	▶159
128-8853	56
	58
129-0375	158
129-3033	470
129-3173	728
129-3178	820
	823
	826
129-4131	667
	744
	748
129-5427	70
129-5428	70
129-5435	967
	969
129-5436	967
	969
129-5438	967
	969
129-7163	562
129-7164	562
129-9452	138
129-9907	108
130-2336	148
	149
130-3565	235
	236
130-4698	56
	58
130-4701	56
	58
130-5300	293
	299
	356
	359
130-7034	925
	927
130-8433	641
130-9811	37
	43
	155
	156
	253
	254
131-0715	731
131-1449	268
	269
131-2639	819
	822
	825
131-2949	646
131-3540	526
	529
	532
	550
	656
131-5879	500
131-7123	56
	58
131-8674	60
131-8829	132
132-0338	812
132-0920	319
	321
	323
132-3439	910
132-4907	672
132-5789	209
	878
132-6663	77
132-8875	377
132-8876	667
	744
	748
132-9643	428
132-9770	70
132-9771	7
	8
	▶20
133-2223	47
133-2968	428
133-2969	430
133-2972	428
133-3024	428
133-3234	842
133-4965	979
	981
133-4967	987
	989
133-5545	767
133-5671	▶158
	160
	162
133-5673	158
133-6335	▶230
	292
133-8810	717
	▶768
133-9116	171
	172
133-9883	577
	579
	581
133-9906	9
133-9907	▶9
	48
134-1346	292
134-2252	▶252
	301
134-2562	577
	579
	581
134-3761	77
134-4126	219
	228
134-6748	235
	236
134-6750	235
	236
134-9911	658
	659
	661
135-4918	108
135-4925	107
	▶108
135-4928	108
135-5499	895
135-5935	653
135-7902	680
	683
	687
135-8685	430
136-1107	108
136-1543	873
	874
	875
136-1544	812
136-1953	820
	823
	826
136-3742	108
136-4183	368
	797
136-5017	155
	156
136-6325	366
	368
136-6551	371
136-7796	480
	▶577
136-8423	733
	735
	737
136-8605	20
136-8882	20
136-8884	56
136-9030	732
136-9141	164
136-9150	372
	374
136-9354	160
136-9497	164
	166
	168
137-0246	930
	933
	936
137-1580	971
	973
137-1581	963
	965
137-1582	959
	961
137-1583	955
	957
137-1584	943
	945
137-1585	975
	977
137-1586	947
	949
137-1587	951
	953
137-1588	967
	969

▶ **PRIMARY REFERENCE**

PART NUMBER INDEX

Part	Page
137-3780	735
137-4367	158
137-4550	153
137-5541	173
137-8116	577
	579
	581
137-8117	577
	579
	581
137-8118	577
	579
	581
137-8119	577
	579
	581
137-8467	▶21
	26
137-8468	▶22
	23
137-8469	▶23
	▶24
137-8480	363
137-9427	3
	6
	▶268
	▶269
138-0637	669
138-1477	340
	341
138-1490	366
	368
138-1505	368
138-1509	372
	374
138-1510	372
	374
138-1645	470
138-3623	366
	368
138-3624	366
	368
138-3626	366
	368
138-3638	366
	368
138-4096	366
	368
138-4097	366
	368
138-4098	366
	368
138-4099	366
	368
138-4117	319
	321
	323
138-4121	319
	321
	323
138-4809	477
	480
	482
	484
138-4810	319
	321
	325
	327
	329
	▶480
	▶482
138-6744	108
138-7099	366
	368
138-7962	499
	▶811
138-9223	811
138-9226	811
138-9231	811
139-0166	104
139-0170	104
139-0959	▶535
139-1031	2
	▶542
139-1472	480
	482
139-2133	319
	321
	323
139-2140	▶340
	366
139-2154	368
139-2155	368
139-2156	368
139-2157	319
	321
	323
139-2159	319
	321
	325
	327
	329
	331
	333
139-2161	319
	321
	323
	325
	327
	329
	331
	333
139-2169	371
139-2176	371
139-2239	371
139-2245	325
	327
	329
	331
	333
139-2403	372
	374
139-4593	675
	▶869
	▶871
139-4632	457
139-4633	457
139-4635	372
	374
139-4636	457
139-4727	104
139-5320	99
	▶120
	▶121
139-5324	99
	▶100
	▶101
139-6180	171
139-6873	155
	156
	▶194
139-6938	439
139-8621	▶439
	452
	453
	454
	455
	456
139-8660	230
139-8794	132
139-8883	132
140-0233	672
140-0249	623
	625
	627
140-0973	658
	659
	▶660
140-1088	292
140-6742	▶440
	454
140-6745	440
140-8227	488
	490
	492
140-8644	3
	5
	▶138
140-9548	452
140-9628	886
141-0275	292
	298
141-0284	158
141-0888	476
	658
	659
141-0889	658
	659
	660
141-1190	627
141-1233	661
141-1497	49
	50
141-1819	797
141-3114	546
141-4007	421
141-4008	342
141-4976	210
	212
141-5497	662
	663
141-5498	662
	663
141-5849	623
	625
	627
141-5851	623
	625
	627
141-5864	623
	625
	627
141-6054	333
	▶477
141-6389	▶649
	650
141-6667	669
	▶672
141-6668	672
141-6670	672
141-6672	672
141-6673	672
141-6678	342
141-6849	▶1
141-6855	499
	▶501
141-6856	317
	▶500
141-6857	317
	▶523
141-6858	318
	▶803
141-6859	318
	▶801
141-6863	2
	▶488
	▶490
	▶492
141-6866	488
141-6869	501
141-6875	▶135
	434
141-6876	▶131
	434
141-6878	▶174
	675
141-6884	675
	▶741
	▶742
141-6885	▶202
	675
141-6886	▶102
	317
141-6890	317
	▶380
	▶386
	▶392
	▶398
141-6892	318
	▶319
	▶321
	▶323
141-6895	318
	▶325
	▶327
141-6897	801
141-6898	803
141-8891	319
	321

▶ PRIMARY REFERENCE

PART NUMBER INDEX

Part	Page	Part	Page	Part	Page	Part	Page
	323	143-4008	535	145-2343	457	147-4921	914
141-8892	319	143-4009	535	145-2354	372	147-6322	148
	321	143-6561	64	145-2894	903		149
	323		66		904	147-6513	148
141-9746	428	143-6575	66	145-5012	3	147-6514	148
141-9784	819	143-6579	64		▶46	147-6522	910
	822		66	145-6115	720	147-6541	910
	825	143-6580	64	145-6851	3	147-6794	368
142-0050	501	143-6581	64		▶79	147-7245	366
142-0485	139		66	145-6899	653	147-7330	412
	143	143-6582	64	145-6902	653		416
142-0534	148		66	145-6905	653	147-7379	368
	149	143-6583	64	145-7231	653	147-7381	366
	488	143-6584	64	145-7755	148	147-7383	368
	490		66		149	147-7985	923
	492	143-6585	64	145-8587	692		927
142-0535	148		66	146-0192	▶428	148-0168	538
	488	143-6588	64		460	148-0885	457
	490		66	146-0240	240	148-2350	662
142-0536	488	143-6589	64		242		663
	490		66	146-2438	238		760
	492	143-6642	64	146-2601	18	148-3665	811
142-0537	488		66	146-2741	7	148-3749	910
	490	143-6679	64		8	148-7200	325
	492	143-6680	64		▶26		327
142-0539	501		66		▶28		329
142-0547	555	143-7052	733	146-2985	444		331
	▶556		737		446		333
142-1227	488	143-7089	930	146-3027	148		▶366
	490	143-7605	366	146-3679	▶372	148-7361	847
	492	143-8971	46		460		852
142-1340	132		47	146-3728	662	148-7362	847
142-1403	132	143-9161	3		663		852
142-2316	635		5		760	148-7482	7
	637		▶104		785		8
142-2329	26	143-9732	46	146-6222	▶342		▶87
	28		47		460	148-7486	3
142-2864	662	144-0195	923	146-6224	460		5
	663		927		▶928		▶49
142-3061	571	144-3527	3	146-6225	434		▶50
142-5867	20		5		▶460	148-7779	637
142-5868	68		▶68	146-8438	18	148-8305	421
142-6217	21	144-4083	501	146-8928	795	148-8306	338
	31	144-6142	46		▶797	148-8309	641
142-6219	797		47	146-8929	797		644
142-7072	21	144-6691	378	146-8931	797		646
	31	144-6845	671	146-8932	797	148-8313	664
143-1288	830	144-6850	556	146-9574	556	148-8316	667
	831	144-6857	556	147-0045	470		744
	895	144-6952	488	147-1206	477		748
	897		490		480	148-8317	639
	899		492		482	148-8318	346
	901	145-0105	470		484		807
143-2536	64	145-0106	470	147-1380	292	148-8320	47
	66	145-0107	470		298	148-8322	680
143-2596	64	145-0108	470	147-2352	▶356		683
	66	145-0109	470		▶359		687
143-2933	155	145-0326	910		460	148-8324	680
	156		912	147-2619	939		683
143-3911	811	145-0874	840		941		687
143-4001	535	145-0875	840	147-2646	939		705
143-4002	535	145-1058	538		941	148-8325	667
143-4005	535	145-2318	429	147-3019	842		744
143-4006	535	145-2324	429	147-3701	927		748
143-4007	535	145-2339	429	147-4549	910	148-8326	178

▶ **PRIMARY REFERENCE**

PART NUMBER INDEX

Part	Page
	181
	185
	187
	189
	680
148-8327	348
	352
	644
	646
	680
	683
	687
	707
	709
148-8332	681
	688
148-8335	90
	705
148-8336	160
	162
	348
	352
	585
	641
	644
	646
	683
	687
	692
	696
	698
	715
	752
	756
	758
	807
148-8338	807
148-8339	681
	683
	687
148-8340	160
	162
	585
	623
	625
148-8341	702
148-8342	608
	610
148-8344	639
148-8345	702
148-8346	629
	632
148-8347	629
	632
	639
	641
	680
	683
	687
	707
	709
148-8351	698
148-8353	702
	807
148-8354	338
	421
	635
148-8357	90
	641
	644
	646
	664
	707
	709
	807
148-8361	585
	639
	692
	696
	702
148-8362	641
	644
	646
	702
148-8364	160
	162
	335
	336
	337
	421
	592
	597
	602
	623
	625
	629
	632
	635
	637
	717
148-8365	338
	585
	629
	632
	680
	683
	687
148-8368	692
	696
	717
	756
	758
148-8369	756
	758
148-8370	336
148-8372	702
148-8374	348
	352
	692
148-8375	338
	583
	585
148-8377	346
	348
	352
	585
148-8378	160
	162
	692
	700
	711
	713
	715
	807
148-8379	684
148-8380	635
148-8381	717
148-8382	588
148-8383	715
148-8390	702
148-8391	641
148-8395	160
	162
148-8406	579
	581
148-8407	629
	632
	681
	684
	688
148-8408	348
	352
	684
	688
148-8410	579
	581
148-8411	412
	416
	629
	632
	641
	644
	646
	664
	680
	684
	688
148-8413	698
148-8415	583
	700
148-8417	681
	684
	688
148-8418	592
	597
	602
148-8419	717
148-8424	756
	758
	807
148-8427	592
	597
	602
	681
	684
	688
148-8428	629
	632
148-8433	711
	713
	715
	807
148-8434	756
	758
	807
148-8435	692
	696
148-8444	583
	592
	597
	602
	717
148-8445	705
148-8451	681
	684
	688
148-8457	592
	597
	602
	637
148-9104	153
148-9313	380
	386
	392
	398
	405
148-9325	380
	386
	392
	398
	404
148-9358	380
	386
	392
	398
	404
148-9359	380
	381
	386
	392
	398
	399
	404
148-9361	476
148-9362	476
148-9365	476
148-9393	380
	386
	392
	398
	404
148-9395	380
	386
	392
	398
148-9396	380
	386
	392
	398
	404
148-9398	380
	386
	392
148-9399	380
	386
	392
	398
	404

► **PRIMARY REFERENCE**

PART NUMBER INDEX

Part	Page	Part	Page	Part	Page	Part	Page
148-9403	426		404		837		684
148-9404	380	148-9434	381	149-0423	▶457		688
	386		387		460	150-4047	692
	392		393	149-0533	928		696
	398		399	149-0817	542		698
	404		404	149-2398	910	150-4048	606
148-9407	380	148-9436	381	149-2399	910		612
	386		387	149-2400	910	150-4049	681
	392		393	149-2403	910		684
	398		399	149-2612	290		688
	404		405		301	150-4050	692
148-9408	380	148-9437	381	149-2744	744	150-4086	209
	386		387		748		293
	392		393	149-4614	869	150-4251	449
	398		399		871		▶452
	404		405	149-4615	869	150-4278	3
148-9409	380	148-9438	426		871		5
	386	148-9439	426	149-4616	869		▶18
	392	148-9441	426		871	150-4279	3
	398	148-9442	426	149-5267	52		5
	404	148-9443	426	149-5452	639		▶171
148-9411	426	148-9444	426	149-5461	429		▶172
148-9412	380	148-9445	426	149-5462	372	150-4637	76
	386	148-9446	426		374	150-4728	356
	392	148-9447	426	149-5534	▶235		359
	398	148-9450	381		281		▶466
	404		387		283	150-4729	466
148-9414	380		393	149-5535	▶236		▶467
	386		399		281	150-4730	466
	392		405		283		▶470
	398		▶426	149-5628	474	150-4731	467
	404	149-0062	▶219		475	150-4732	470
148-9417	381		832	149-5822	832	150-5939	744
	387	149-0077	▶209		833		748
	393		832		▶839	150-6251	928
	399	149-0082	832	149-5824	▶846	150-6553	669
	404		833	149-6336	348	150-7954	676
148-9420	381		▶842		352	150-8272	▶517
	387	149-0085	832	149-8195	819		▶519
	393		▶847	149-8217	819		525
	399	149-0086	▶157	149-8434	480	150-8457	744
	404		832		482		748
148-9423	381		833	149-9894	466	150-9500	939
148-9425	426	149-0087	832	150-1293	840		941
148-9426	426		833	150-2321	466	150-9505	939
148-9428	381		▶917	150-3036	807		941
	387		▶918	150-3037	606	151-1676	496
	393	149-0088	832		612	151-2611	671
	399		▶904	150-3065	641		▶673
	404	149-0090	832		644	151-5555	133
148-9429	381		833		646	151-5715	815
	387		▶919		692		818
	393	149-0091	▶815		696		847
	399		832		698		852
	404		833	150-3322	449	151-5876	987
148-9430	381	149-0092	832		▶452		989
	387		▶889	150-3327	449	151-5877	987
	393		▶890		▶452		989
	399	149-0096	832	150-3345	3	151-5925	77
	404		▶923		5	151-5966	56
148-9431	426	149-0097	▶925		▶53		58
148-9433	381	149-0104	525	150-3896	281	151-6899	319
	387		▶844		283		321
	393		▶845	150-4027	692		323
	399	149-0152	▶836	150-4033	681		325

▶ **PRIMARY REFERENCE**

PART NUMBER INDEX

Part	Page
	327
	329
	331
151-6901	319
	321
	323
	325
	327
	329
	331
151-7033	673
151-7037	673
151-7038	673
151-7851	281
	283
	285
151-7854	545
151-8083	471
151-8108	366
	368
151-8279	366
	368
151-8281	366
	368
151-8282	366
	368
151-8397	366
	368
151-8455	501
151-9817	608
	610
151-9929	680
152-4093	366
	368
152-4410	318
	▶333
152-6919	1
	▶317
152-6920	1
152-6921	1
	▶317
152-6922	1
	▶675
152-6923	1
	▶525
152-6924	1
152-6926	1
	▶2
152-6927	1
	▶2
152-6929	317
	▶620
	▶621
	▶622
152-6930	▶288
	317
152-6931	317
	▶795
152-6932	317
	▶424
152-6933	317
	▶536
152-6934	317
	▶443
152-6935	317
	▶318
152-6936	318
	▶335
152-6938	1
	▶442
152-6939	1
	▶583
152-6941	1
	▶588
152-6943	1
	▶434
152-6944	1
	▶99
152-6945	99
	▶106
152-6946	675
	▶854
152-6947	99
	▶837
152-6957	▶255
	434
152-6958	▶75
	434
152-6959	434
	▶651
	▶652
152-6960	434
	▶727
152-6961	434
	▶614
152-6962	▶650
	675
152-6963	434
	▶729
152-6964	434
	▶435
152-6966	▶420
	434
152-7024	525
	▶562
152-7025	525
	▶526
	▶529
	▶532
152-7027	317
	▶444
	▶446
152-7028	317
	▶448
152-7029	317
	▶585
152-7030	317
	▶538
	▶540
152-7031	▶281
	310
152-7032	▶310
	317
152-7033	317
	▶590
152-7034	317
	▶346
152-7035	317
	▶499
152-7036	317
	▶318
152-7037	317
	▶318
152-7038	318
	▶336
152-7040	1
	▶664
152-7048	2
	▶505
152-7049	2
	▶545
152-7050	2
	▶930
	▶933
	▶936
152-7072	146
	▶147
152-7076	146
	▶148
	▶149
152-7081	▶939
	▶941
152-7082	▶943
	▶945
152-7083	▶947
	▶949
152-7084	▶951
	▶953
152-7086	▶955
	▶957
152-7087	▶959
	▶961
152-7088	▶963
	▶965
152-7089	▶967
	▶969
152-7090	▶971
	▶973
152-7091	▶975
	▶977
152-7092	▶979
	▶981
152-7099	▶496
	675
152-7100	▶629
	▶632
	675
152-7101	675
	▶677
152-7103	▶635
	▶637
	675
152-7106	675
	▶680
152-7109	▶139
	▶143
	675
152-7111	▶555
152-7112	675
	▶676
152-7113	▶160
	▶162
	675
152-7114	555
	▶717
152-7115	▶546
	675
152-7116	▶565
	675
152-7117	675
	▶915
152-7120	677
	▶754
	▶756
	▶758
152-7582	33
	39
152-8338	618
152-8340	616
	▶618
152-8383	473
152-8385	▶473
	476
153-0068	453
153-0485	318
	▶337
153-1025	70
153-1135	675
	▶858
153-1137	675
	▶702
153-1256	108
153-2942	410
153-2943	410
153-2944	410
153-2945	410
153-3528	664
153-4906	80
	82
153-5485	675
	▶832
153-5487	▶292
	832
153-5489	832
	▶878
153-5490	▶619
	832
	833
153-5493	▶639
	832
	833
153-5710	256
153-6237	348
	352
	705
153-6241	592
	597
	603
153-6246	346
153-6247	676
153-6248	693
	696
153-7021	651
	▶733
153-7023	41
	42
153-7024	41
	42
153-7076	▶3
	434

▶ PRIMARY REFERENCE

PART NUMBER INDEX

Part	Page
153-7078	3
	▶7
153-8030	1
	▶449
153-8032	▶449
153-8033	▶449
153-8340	501
153-8341	538
	540
153-8351	523
153-8352	523
153-9019	840
153-9307	558
153-9628	1
	▶228
154-0008	346
154-0300	319
	321
	323
	▶368
154-4133	662
	663
	760
	785
154-4812	558
	560
154-5585	717
154-6369	558
	560
154-6370	558
154-7468	847
	852
154-7470	847
	852
154-8042	576
154-8482	281
	283
154-9024	102
155-0195	801
	805
155-0198	801
	805
155-0385	801
	805
155-1576	842
155-1578	842
155-2255	292
	293
	297
	298
	299
155-2260	240
	242
	246
	247
	248
	249
	289
	290
	293
	297
	302
	310
	311
	313
	825
	878
155-2261	474
155-2265	210
	293
	297
	298
155-2267	298
155-2269	823
155-2270	210
	242
	254
	279
	283
	285
	287
	288
	289
	290
	292
	293
	297
	298
	299
	302
	308
	310
	311
	313
	474
	819
	822
	825
	826
	860
155-2271	242
	283
	285
	289
	290
	292
	293
155-2274	210
	289
	290
	292
	293
	297
	298
	302
	310
	311
	313
	823
	878
155-2629	158
155-2702	881
155-2703	881
155-2704	879
	881
155-3504	606
	608
	610
	612
155-3537	801
	805
155-3629	70
155-5619	68
155-6647	380
	386
	392
	398
	404
155-6648	380
	386
	392
	398
	404
155-7474	832
	833
	▶850
155-7877	488
	490
	492
155-8806	878
155-9708	847
	852
155-9709	847
	852
155-9819	70
156-1145	▶892
	904
156-3527	336
156-4078	523
156-4081	523
156-4083	523
156-4085	523
156-4087	523
156-4319	438
156-5545	812
156-5546	812
156-5783	155
	▶191
156-5970	786
156-6129	335
	337
156-6131	336
157-0217	878
	881
157-0670	102
157-0681	438
157-0682	438
157-0683	438
157-1206	158
157-1601	555
	▶671
157-1728	669
157-1744	454
157-2446	▶438
	460
157-2482	819
	822
	825
157-2483	819
	822
	825
157-2484	819
	822
	825
157-2485	819
	822
	825
157-2487	819
	822
	825
157-2488	819
	822
	825
157-2493	819
	822
	825
157-2494	819
	822
	825
157-2495	819
	822
	825
157-2496	819
	822
	825
157-2497	819
	822
	825
157-2500	819
	822
157-2501	819
	822
	825
157-2509	819
	822
	825
157-2510	819
	822
	825
157-2514	819
	822
	825
157-2515	819
	822
	825
157-2522	819
	822
	825
157-2523	819
	822
	825
157-2878	815
	▶819
	▶822
157-4291	298
157-5537	789
157-6199	679
157-7240	340
	341
157-7911	667
	744
	748
157-8859	176
	178
	185

▶ **PRIMARY REFERENCE**

PART NUMBER INDEX

Part	Page	Part	Page	Part	Page	Part	Page
	187	160-8503	576		434	163-8452	346
158-0988	919	160-8518	▶341	162-5129	744	163-9417	570
158-1990	577		368		748	163-9423	570
	581	160-8519	341	162-5242	741	163-9427	209
158-2306	791	160-8520	341		742	163-9433	209
	793	160-8641	847		▶744		212
158-2336	789		852		▶748	163-9434	209
158-3416	56	160-8684	847	162-5402	▶237	164-0043	842
	58		852		288	164-0044	842
158-6092	717	160-8686	847		308	164-1234	912
158-6094	671		852	162-5516	501	164-2025	64
158-7413	717	160-8687	847	162-5517	501	164-4146	884
158-9956	616		852	162-5518	501	164-4180	579
	▶763	160-8688	847	162-5532	410		581
	767		852	162-5533	410	164-4531	812
159-1073	444	160-8718	847	162-5802	470	164-4599	11
159-1074	444		852	162-6616	698	164-4883	874
	446	160-8720	815	162-7183	319		875
159-1075	444	160-8721	850		321		876
	446	160-8722	847		323	164-5567	421
159-1076	803	160-8723	847		366		585
159-2880	410		852		368		629
159-3122	538	160-8724	847	162-7261	878		632
	540		852	162-7262	878		641
159-4637	319	160-8725	847	162-7264	292		644
	321		852		297		646
	323	160-8728	847	162-7268	878		664
159-7192	538		852	162-7588	919		702
	540	160-9727	619	162-7589	919		717
159-9107	3		▶655	162-7590	919		756
	5	161-1168	847	162-7591	919		758
	▶214		852	162-8447	▶830		807
159-9540	200	161-2173	▶133		893	164-5580	593
	201		148		894		598
160-0270	356		149	162-8448	▶831		603
	▶474	161-2355	219		893		635
160-2443	157		228		894		637
160-4094	707	161-4113	7	162-8550	656	164-5586	629
	709		8	162-8551	656		632
160-6013	583		▶97	162-9112	157		702
160-6213	319	161-6149	617	162-9347	292		717
	321		766	162-9348	292	164-5590	421
	323		776	162-9349	293		667
	325	161-6154	616	162-9350	293		744
	327		761	162-9997	733		748
	329		763		737	164-5596	90
	331	161-6161	617	163-1135	912	164-5792	850
	333		776	163-1148	831	164-5794	850
160-6567	228	161-9289	907	163-1149	830	164-5847	717
	878	161-9755	577	163-1201	290	164-6049	348
160-7200	318	161-9772	477		308	164-6810	▶421
	▶575	161-9773	480	163-1553	64		434
160-7578	467		482		66	164-6811	496
160-7690	299	161-9931	26	163-1921	366	164-6862	681
160-7765	910		▶246		368		684
160-7766	910	162-0104	292	163-2478	41		688
160-7767	910	162-0106	292		42	164-6864	593
160-8009	575	162-0177	662	163-3272	919		598
	▶576		663	163-3274	842		603
160-8058	366	162-2177	135	163-5632	▶566	164-7293	512
	368	162-4284	919		585	164-7294	512
160-8184	62	162-5126	▶513	163-6088	293	164-7826	801
160-8492	721		▶515		298		803
	723		525	163-8374	606		805
	725	162-5127	▶136		612	164-8121	453

▶ **PRIMARY REFERENCE**

PART NUMBER INDEX

Part	Page
164-8408	669
164-8453	372
	374
164-8473	847
	852
164-8908	603
164-8909	593
	598
164-9208	496
164-9309	799
164-9661	430
164-9662	430
164-9855	1
	▶669
165-0234	▶125
	▶127
	▶129
	434
165-0396	209
165-0399	847
	852
165-3930	68
165-3932	68
165-3936	68
	550
165-4929	321
	323
165-4933	639
165-5979	860
	862
165-5980	860
	862
165-6170	93
165-6365	289
	301
165-7940	342
	344
165-7948	692
	693
	696
	698
	▶764
165-9280	623
	625
	627
166-0103	556
166-0436	664
166-2033	692
	696
	698
166-2903	32
	34
	39
166-2904	32
	34
	39
166-3297	100
	101
166-3772	917
166-3936	675
	▶787
	▶788
166-3938	675
	▶711
	▶713
	▶715
166-3941	675
	▶679
166-3944	675
	▶705
166-3945	675
	▶807
166-3946	317
	▶410
166-3950	▶412
	▶416
	675
166-3953	▶641
	675
166-3954	675
	▶692
	▶696
166-6000	711
166-6392	▶449
166-6396	449
	▶453
166-6693	244
166-6938	▶867
	878
166-6974	116
166-6975	116
166-7278	209
	212
166-7871	669
166-8324	486
166-9144	70
167-0138	209
	212
	▶279
167-0642	33
	39
167-0643	33
	39
167-0867	49
	50
167-1129	116
167-1130	116
167-2195	673
167-2199	623
	625
	627
167-2211	672
167-2220	797
	799
167-2236	797
167-2304	673
167-2306	623
	625
	627
167-2324	672
167-2336	799
167-2457	673
167-8081	30
	31
167-8083	30
	31
167-8126	45
167-9033	558
	560
167-9218	436
168-0229	919
168-0371	886
168-0374	850
168-0375	850
168-0376	850
168-0377	850
168-0378	850
168-1969	681
168-2075	381
	387
	393
	399
	405
168-2076	381
	387
	393
	399
	405
168-2100	45
168-3392	925
	927
168-4594	215
168-6449	919
	▶921
168-6450	919
	▶922
168-7246	77
168-8312	3
	5
	▶363
168-8313	363
168-8314	363
168-8926	925
	927
168-8927	923
	927
168-8928	925
	927
168-9029	368
168-9092	157
169-1616	770
169-1617	770
169-3279	889
	▶907
169-3506	176
	178
	182
	185
	187
169-3655	606
	608
	▶615
169-4782	842
169-5026	512
169-5027	512
169-5836	102
169-7034	907
	▶910
169-7380	910
	912
169-7394	676
169-7395	335
	337
169-7402	336
169-7403	592
169-7404	588
169-7442	735
169-8429	421
170-0493	789
	793
170-0494	791
	792
170-0503	789
170-0504	381
	387
	393
	399
	405
170-1114	812
170-1115	812
170-1330	881
170-1332	878
	881
170-1603	641
170-1673	2
	▶512
170-1757	3
	5
	▶83
170-4734	106
	▶719
170-4737	33
	39
170-4738	33
	39
170-4855	815
	818
170-4880	850
170-5337	815
	818
170-5338	815
170-5339	815
	818
170-5340	815
	818
170-5341	815
	818
170-5342	815
	818
170-6019	847
	852
170-7656	847
	852
170-8553	730
170-8555	523
170-8590	884
171-1230	895
	897
	899
	901
171-1590	176
	185
171-1961	99
	▶666
171-1977	590
171-1978	585

▶ **PRIMARY REFERENCE**

PART NUMBER INDEX

Part	Page
171-1979	346
171-2183	381
	387
	393
	399
	405
171-3010	366
	368
	381
	387
	393
	399
	405
171-4364	680
	683
171-4736	371
171-5349	250
	290
171-5910	783
171-5911	771
	▶783
171-6682	895
	897
	899
	901
171-7097	869
	871
171-7209	430
171-7213	▶232
	288
	308
171-7214	▶233
	288
	308
171-8772	786
172-0234	215
	217
172-0871	462
	463
172-1248	3
	5
	▶834
172-2412	▶567
172-2416	895
	897
	899
	901
172-3445	166
172-3446	168
172-3931	576
172-3932	576
172-3933	576
172-3934	576
172-3935	576
172-4848	83
172-5235	464
172-5761	592
	597
	602
172-6030	847
	852
172-6525	592
	597
	602
172-7071	293
	298
172-7638	461
	464
	465
172-9973	▶231
	281
	283
	285
	297
173-0289	209
173-0641	735
173-0889	461
	465
173-1029	▶812
	895
	897
	899
	901
173-1584	74
173-2052	873
	874
	875
173-2329	143
173-2330	143
173-3664	504
173-3665	504
173-3993	662
	663
173-4012	662
	663
173-4315	801
173-5231	558
173-5232	558
173-5255	844
	845
173-5476	342
	344
173-5549	176
	178
	181
	185
	187
	189
173-5787	907
	908
173-6219	629
	▶658
173-6998	381
	387
	393
	399
	405
173-7035	907
	908
173-7042	54
173-7043	3
	5
	▶54
173-7072	3
	5
	▶215
173-7486	910
173-7546	680
	683
	687
173-7715	381
	387
	393
	399
	405
173-8210	100
173-8807	7
	▶37
173-9000	558
	560
173-9001	▶558
173-9164	847
	852
174-1494	819
	822
	825
174-3199	▶568
174-4111	372
	374
174-4112	372
	374
174-5578	620
	621
	622
174-5592	120
	121
174-5602	122
	123
174-5639	795
174-5643	795
174-6769	501
174-6781	680
	683
	687
174-6793	110
	112
	114
174-6886	680
	683
	687
174-7484	477
	480
	482
	484
174-7875	290
	308
174-8145	820
	822
	825
174-9205	139
174-9246	139
	143
174-9599	214
175-3184	799
175-3185	799
175-3380	139
	143
175-3565	846
175-3567	846
175-3570	846
175-3593	209
175-3617	33
	39
175-4780	139
	143
175-4859	3
	5
	▶74
175-5058	813
175-5899	500
175-7141	815
	818
175-7162	856
175-9076	139
	143
175-9077	139
	143
175-9078	139
	143
175-9079	139
	143
176-0209	721
	723
	725
176-0210	721
	723
	725
176-0274	299
176-0569	102
176-1579	713
176-3393	203
	204
176-4114	428
176-5311	563
	564
176-5691	641
	644
	646
	▶661
176-5745	7
	8
	▶77
176-5749	77
176-5816	366
	368
176-6279	118
176-6404	118
176-6519	517
	519
176-7261	231
	232
	233
176-8102	139
	143
176-8234	139
	143
176-8237	139
	143
176-9329	436
176-9781	649
	▶653
176-9918	▶39
	41
176-9922	795
177-0078	653
177-0082	653
177-0105	590
177-0841	444
	446
177-1860	884

PART NUMBER INDEX

Part	Page	Part	Page	Part	Page	Part	Page
177-1862	884		625		5	184-6138	832
	885		627		▶96		833
177-1863	895	179-4327	592	183-2994	96		▶856
	897	179-4328	592	183-2995	96	184-6139	856
	899	179-4612	494	183-2996	3	184-6140	856
	901	179-8318	200		5	184-6766	448
177-1880	470		201		▶93		▶461
177-4152	10	179-9223	692	183-3408	80	184-6767	448
177-4255	721		696		82		▶462
	723		▶765	183-3513	▶841	184-7102	2
	725	180-0050	292		915		▶494
177-4930	873		297	183-3514	915	184-7407	436
177-4931	874	180-0561	930	183-3648	893	184-9785	744
	875		933	183-5296	37	185-1350	99
177-4935	▶884		936		▶41		▶110
	895	180-1546	886	183-6195	3		▶112
	897	180-3790	658		5		▶114
177-4937	893	180-4850	641		▶92	185-1351	110
	894		644	183-6386	365		112
177-7884	436		646		372		114
177-9011	575	180-5559	893	183-7263	639		▶116
178-0263	209	180-5560	893	183-7264	90	185-1352	185
	212	180-5734	26		378		187
178-0266	212	180-5937	930	183-7815	721		189
178-0605	▶873		933		723	185-1465	667
	876		936		725	185-1740	▶667
178-0607	884	180-6138	928	183-9035	281		752
178-0608	884	180-6213	739		283	185-1747	174
178-0609	884	180-6650	939	184-0982	919		▶185
178-3313	803		941	184-0983	886		▶187
	805	180-6651	975	184-2298	895		▶189
178-3314	803		977		897	185-2620	700
	805	180-6652	951		899	185-2638	198
178-3317	801		953		901	185-2639	198
178-3707	366	180-6653	971	184-2299	895	185-2642	198
	368		973		897	185-2644	198
178-3852	318	180-6654	955		899	185-2645	198
	▶805		957		901	185-2647	198
178-4929	930	180-6655	947	184-2300	874	185-2648	198
	933		949		875	185-2650	198
	936	180-6656	943	184-2472	219	185-2651	198
178-6171	424		945		221	185-2653	198
178-6924	424	180-6657	959		223	185-2654	198
178-7881	842		961		225	185-2655	198
178-7907	873	180-6658	963		227	185-2658	198
	874		965		228	185-3630	992
	875	180-6659	967	184-4221	444	185-3886	656
178-8903	680		969	184-4223	444	185-3941	99
	683	180-8145	592		446		▶118
	687		597	184-4339	368	185-4306	523
178-8977	338		602	184-4419	730	185-4308	523
178-9223	805	180-8517	801	184-4421	730	185-4310	803
178-9983	529		805	184-4424	730	185-5294	▶198
	532	180-9340	247	184-4425	730		201
179-0006	204	180-9407	2	184-4426	730	185-5673	118
	▶280		▶547	184-4427	730	185-5698	506
179-1712	675	180-9408	547	184-4429	730		508
	▶700	180-9411	547	184-4890	▶450	185-5700	506
179-2136	424	180-9412	547	184-4891	450		508
179-2810	675	180-9413	547		▶453	185-6278	3
	▶707	180-9414	547	184-5173	733		6
	▶709	180-9562	820		▶777		▶86
179-3103	556		822	184-5174	737	185-6349	12
179-3104	556		825		▶778	185-6924	102
179-4324	623	183-2770	3	184-5858	915	185-6925	102

▶ **PRIMARY REFERENCE**

PART NUMBER INDEX

Part	Page
185-6929	102
185-6932	102
185-6981	856
185-7667	673
185-8731	430
185-8733	430
185-8766	428
185-9464	815
	818
185-9699	7
	8
	▶12
185-9793	847
	852
186-0134	886
186-0256	886
186-2001	41
	42
186-2225	147
	148
	149
186-2447	430
186-2727	505
186-3059	▶874
	895
186-3421	874
	875
186-3735	157
	195
	238
	240
	242
	250
	251
	255
	287
	288
	293
	301
	302
	310
	311
	313
	378
	473
	475
	618
	656
	786
	838
	840
	860
	862
	878
	881
	923
	925
	927
186-3736	246
	279
	302
	474
186-4259	735
186-5065	147
186-5107	813
186-5117	486
186-5118	486
186-5855	203
	▶240
186-5857	240
186-5858	240
	242
186-6189	856
186-6356	443
	▶463
186-6357	442
	▶464
186-9959	743
	▶752
187-0541	617
	776
187-1919	133
187-3421	500
187-3440	135
187-3579	523
187-4278	506
	508
187-4295	▶893
	▶894
	907
	908
187-4296	893
	▶895
187-4425	526
	529
	532
187-5007	655
187-5092	807
187-5168	744
	748
187-6101	517
	519
187-6102	517
	519
187-6156	176
	178
	181
	185
	187
	189
	506
	508
187-6227	131
187-6467	131
	▶132
187-7227	▶450
187-7228	450
	▶453
187-8191	785
187-8196	62
187-8197	62
187-9001	795
187-9076	3
	5
	▶200
	▶201
187-9077	3
	5
	▶137
187-9090	614
	▶735
188-0432	563
	564
188-0433	563
	564
188-0435	505
188-0436	505
188-0751	430
188-0867	444
	446
	▶465
188-0961	496
188-0995	854
188-1366	496
188-1822	500
188-1828	500
188-1956	496
188-1970	496
188-2008	644
	646
188-2156	456
188-2993	844
	845
188-2995	844
	845
188-3001	844
	845
188-3024	342
	344
188-3365	662
188-3369	294
	298
188-3445	75
188-3446	75
188-3471	125
	127
	129
188-3777	319
	321
	323
188-4341	513
	515
188-4342	513
	515
188-4343	565
188-4344	565
188-4345	565
188-4346	565
188-4455	727
	▶730
188-4921	125
	127
	129
188-6049	526
	529
	532
188-6084	110
	112
	114
188-6087	203
	204
188-6399	110
	112
188-7298	744
	748
188-7300	744
	748
188-7513	70
188-8726	680
	683
	687
188-8846	209
	212
	847
	852
188-9132	93
188-9133	93
188-9134	3
	5
	▶60
	▶62
188-9138	3
	5
	▶164
	▶166
188-9395	3
	▶253
188-9528	60
188-9529	60
188-9637	739
189-0188	474
189-0189	473
	618
189-0601	675
	▶743
189-0961	878
189-1917	164
	166
	168
189-1942	869
	871
189-2045	496
189-2046	496
189-2047	496
189-2048	496
189-2050	496
189-2070	501
189-2290	496
189-2908	501
189-3545	110
	112
	114
189-3744	846
189-4710	735
	▶740
189-4714	735
189-4716	735
189-4717	735
189-4718	735
189-4719	735
189-4720	735
189-4724	740
189-4725	740
189-4726	740
189-4727	740
189-4728	740
189-4729	740
189-4730	740
189-4732	740

▶ PRIMARY REFERENCE

PART NUMBER INDEX

Part	Page	Part	Page	Part	Page	Part	Page
189-4733	735	190-3509	869		181	192-0877	457
189-4734	735		871		185	192-1180	563
189-4735	735	190-3593	477		187		564
189-4736	735		480		189	192-1181	563
189-5746	▶250		482	191-2779	139		564
	290		484		143	192-1201	506
	301	190-3850	792	191-3490	915		508
189-5772	754	190-4134	7	191-3491	325	192-1462	▶569
	756	190-5341	139		▶608		570
	758		143	191-3700	656	192-1682	318
	▶771	190-5938	147	191-5185	735		▶503
	▶773	190-5981	787	191-5216	549	192-1683	503
189-5950	49		▶789	191-5963	526	192-1684	503
	▶64	190-6049	878		529	192-1751	318
189-6003	847	190-6278	585		532		▶504
189-6524	850	190-6280	319		▶563	192-1752	504
189-8606	139		▶606	191-5964	526	192-1753	504
	143	190-6281	606		529	192-3192	116
189-8607	139		612		532	192-3640	110
	143	190-6282	585	191-5966	669		112
189-8608	139	190-6283	717	191-6005	434	192-4151	84
	143	190-6286	664		▶728	192-4900	752
189-8609	139	190-6290	585	191-6110	436	192-5124	732
	143		▶616	191-6119	435	192-5453	526
189-9047	667	190-6291	346		▶436		529
	744	190-6298	310	191-6186	886		532
	748	190-6299	281	191-6585	632	192-5501	64
189-9263	754	190-6300	203	191-7565	538		66
	756		204	191-7566	635	192-5502	64
	758	190-6302	240		637	192-5877	202
189-9264	754	190-6562	3	191-7740	744		204
189-9266	70		5		748	192-6437	886
189-9312	92		▶11	191-7784	785	192-6443	▶662
189-9368	656	190-7317	147	191-7785	760		771
189-9370	656	190-7429	202		767		773
189-9771	77		204		▶785	192-6998	176
189-9807	663	190-7470	▶790	191-8104	176		185
189-9940	664	190-7618	125		178	192-7619	176
189-9941	664		127		181		178
190-0282	526		129		185		181
	529	190-8436	840		187		185
	532	190-8438	840		189		187
190-0566	496	190-8439	840	191-8163	125		189
190-0879	412	190-8440	840		127	192-7620	744
	416	190-8441	840		129		748
190-0881	412	191-0888	592	191-8164	125	192-7640	731
	416		597		127	192-7706	754
190-1514	771		602		129		756
	773	191-0892	639	191-8166	125	192-7752	912
190-2171	526	191-0893	639		127	192-7755	912
	529	191-0894	639	191-8167	125	192-7760	912
	532	191-0895	644		127	192-7767	912
190-2172	526		646	191-8304	430	192-7783	912
	529	191-0993	150	191-8305	430	192-7787	912
	532	191-1786	619	191-8724	832	192-7790	912
190-2281	139	191-2206	176		833	192-7795	912
	143		185		▶886	192-7799	912
190-2768	523	191-2214	176	191-9264	116	192-7805	912
190-2938	930		178	191-9268	116	192-7810	912
	933		181	191-9270	116	192-7812	912
	936		185	191-9556	102	192-7820	912
190-3138	293		187	192-0671	787	192-7822	912
190-3381	139		189		788	192-8687	412
	143	191-2215	176	192-0875	457		416
190-3443	172		178	192-0876	457	192-8688	412

▶ **PRIMARY REFERENCE**

PART NUMBER INDEX

Part	Page	Part	Page	Part	Page	Part	Page
	416		981	194-0772	680		156
192-8689	412	193-2421	983		683		▶249
	416		985		687	194-6847	733
192-9067	558	193-2422	979	194-0773	680		737
	560		981		683	194-6848	733
192-9068	558	193-2423	983		687		737
	560		985	194-0774	680	194-6919	692
192-9086	▶983	193-2424	979		683		696
	▶985		981		687	194-6920	692
193-0247	748	193-2425	983	194-0782	▶379		696
193-0249	176		985		434	194-6921	692
	178	193-2426	979	194-0783	379		696
	181		981	194-1430	641	194-6922	692
	185	193-2947	629	194-1431	641		696
	187		632		644	194-6923	692
	189	193-3070	436	194-1432	641		696
	744	193-3086	777	194-1497	680		698
193-0547	486	193-3087	777		683	194-6925	692
193-0676	673	193-3182	735		687	194-6927	641
193-0849	588		▶780	194-1556	677	194-6932	412
193-1036	777	193-3792	711	194-1559	677		416
	778	193-3794	110	194-1560	677	194-6933	412
	780	193-3795	100	194-1723	▶766		416
193-1507	930		101		767	194-6963	412
	933	193-3809	526	194-1928	454		416
	936		529	194-1953	513	194-7711	677
193-1508	939		532		515	194-7819	319
	941	193-4333	517	194-1954	513		321
193-1510	943	193-4334	517		515		323
	945		519	194-2530	683	194-7899	854
193-1511	947	193-4342	517		687	194-8124	37
	949		519		▶760		43
193-1512	951	193-4344	517	194-3173	203	194-8472	412
	953		519		204		416
193-1513	955	193-5676	176	194-3662	705	194-9428	629
	957		178	194-3663	705		632
193-1514	959		181	194-4016	412	194-9429	629
	961		185		416		632
193-1515	963		187	194-4018	412	194-9431	629
	965		189		416	195-0770	987
193-1516	711	193-7279	679	194-4025	4		989
	713	193-7316	202		6	195-0771	987
	715		204		▶299		989
193-1517	967	193-7317	240	194-4030	505	195-0794	807
	969		242	194-4072	▶570	195-0798	807
193-1518	971	193-7864	538		592	195-0799	807
	973		540	194-4334	702	195-0800	807
193-1519	975	193-7892	202	194-4649	420	195-0803	807
	977		204	194-5012	501	195-1123	▶425
193-1520	983	193-7894	202	194-5013	412		434
	985		204		416	195-1206	915
193-1521	979	193-7895	202	194-5061	342	195-3243	412
	981		204	194-5226	248		416
193-1522	987	193-7896	202		249	195-3641	536
	989		204	194-5444	752	195-3642	536
193-1540	▶987	193-8559	359	194-5445	752	195-3643	536
	▶989		▶475	194-6722	244	195-3659	523
193-2120	102	193-8570	271		▶247	195-3763	410
193-2416	983	193-9083	583		290	195-3834	579
	985	193-9085	139		301		581
193-2417	979		143	194-6724	37	195-7430	786
	981	193-9230	680		43	196-1044	526
193-2419	983		683		▶248		529
	985		687	194-6725	28		532
193-2420	979	194-0708	412		155	196-1203	348

▶ PRIMARY REFERENCE

PART NUMBER INDEX

Part	Page
	352
196-2403	▶663
	771
	773
196-3538	517
	▶521
196-3539	521
196-3540	521
	522
196-3918	841
196-4140	933
	936
196-4774	836
196-4775	836
196-4777	666
196-5069	84
196-5070	84
196-5540	348
	352
	▶378
196-5731	731
196-5778	939
	941
196-5779	975
	977
196-5780	951
	953
196-5781	971
	973
196-5782	955
	957
196-5783	947
	949
196-5784	943
	945
196-5785	983
	985
196-5786	979
	981
196-5787	959
	961
196-5788	963
	965
196-5789	967
	969
196-7243	319
	321
	323
196-8503	801
196-8527	99
	▶486
197-0070	116
197-0372	680
197-0376	707
	709
197-1356	735
197-1358	735
197-1547	116
197-2091	623
197-2092	625
197-2420	845
197-3599	122
197-3601	122
	123
	124
197-3610	122
	123
	124
197-3820	174
	741
	742
197-4487	421
197-4488	421
197-4834	139
	143
197-4835	139
	143
197-4836	420
197-4926	410
197-4977	321
	323
197-6651	677
197-6793	116
197-7200	▶338
	675
197-7701	618
197-8225	629
	632
197-8290	987
	989
197-8446	436
197-9322	31
197-9336	77
198-1803	854
198-2643	797
	799
198-4767	845
198-4777	891
198-4856	623
198-6074	850
198-6081	850
198-6823	608
	610
198-6824	608
	610
198-7405	739
198-7409	850
198-8761	▶245
	356
	359
198-9898	▶84
	87
199-1261	139
	143
199-2633	290
	301
199-2634	290
	301
199-3041	▶450
199-3044	450
	▶454
199-3624	412
	416
199-3625	412
	416
199-3626	412
	416
199-3627	412
	416
199-4150	412
	416
199-5725	908
	▶912
199-6167	102
199-6168	680
199-6169	102
199-6425	▶348
	▶352
	675
199-7495	120
	▶122
	▶123
199-7649	748
199-7891	198
199-8436	198
	2
200-0142	506
200-0144	506
200-0147	506
	508
200-0148	▶506
	▶508
	744
	748
200-0933	203
	204
200-1052	202
	204
200-1786	987
	989
200-1807	506
	508
200-2159	496
200-2160	565
200-2163	116
200-2164	680
200-2165	680
	683
	687
200-2426	625
200-2990	506
200-3173	890
	903
	▶908
200-4290	799
200-4291	799
200-5965	840
200-6282	767
	770
200-6844	203
200-7743	160
	162
200-8472	▶592
	▶597
	832
	833
200-8473	592
	597
	602
200-8475	592
	597
	602
200-8476	592
	597
	602
200-8481	592
	597
	602
201-0950	767
	▶786
201-0959	692
201-1311	799
201-1379	176
	178
	181
	185
	187
	189
	506
	508
201-2489	707
	709
201-2692	719
	▶720
201-2693	719
201-2695	719
201-4108	506
	508
201-5121	656
201-5242	731
201-5492	506
	508
201-5493	506
	508
201-5613	930
	933
	936
201-5676	381
	387
	393
	399
	405
	▶476
201-5733	728
	▶731
201-5923	721
	723
	725
201-5924	721
	723
	725
201-5925	721
201-6665	381
	387
	393
	399
	405
201-6666	381
	387
	393
	399
	405
201-8002	933
	936
201-8901	116
201-9807	922
201-9808	922

▶ **PRIMARY REFERENCE**

PART NUMBER INDEX

Part	Page	Part	Page	Part	Page	Part	Page
201-9810	922	203-4720	▶548	204-5696	588	206-3953	450
201-9817	922		▶549	204-6012	700		▶454
201-9818	921		675	204-6362	548	206-4794	760
201-9819	921	203-4722	548		549	206-4926	930
201-9820	921	203-5393	506	204-7016	562		933
201-9821	921		508	204-7388	637		936
201-9824	921	203-5815	748	204-7946	789	206-4941	376
201-9825	921	203-6728	635		793	206-4943	▶376
201-9826	921	203-6729	635	204-9316	▶55		434
202-1109	348	203-6942	412		58	206-5017	496
	352	203-7154	293	204-9926	210	206-5538	517
202-1112	348	203-7634	930	205-0199	325		519
202-1113	348		933		327	206-6210	289
202-1225	348	203-7700	910	205-0202	319	206-6211	290
	352	203-7703	907		321	206-6810	289
202-1254	24		908		323		301
	▶30	203-7822	971	205-0203	333	206-6819	496
202-1261	28	203-7823	955	205-0347	3	206-7169	376
	▶31	203-7825	959		5	206-7179	335
202-1838	139	203-7829	939		▶173	206-7331	76
	143	203-7830	975	205-0349	▶155	206-7667	289
202-1839	139	203-7831	951		▶156	206-7688	562
	143	203-7832	987		173	206-8077	526
202-2035	147	203-7833	947	205-0941	381		529
202-2036	147	203-7834	943	205-0942	381		532
202-2038	148	203-7835	983	205-3557	421	206-8137	529
	149	203-7836	979	205-3558	421	206-8967	495
202-2042	147	203-7837	963	205-3625	139	206-8968	495
202-2043	348	203-7838	967		143	206-8969	495
	352	203-8822	84	205-3984	174	206-8970	495
202-2044	348	203-8824	84		741	206-8971	449
	352	204-0273	593		742		▶495
202-2045	348		598	205-4285	297	206-8994	754
	352		603		822		756
202-2046	348	204-0275	593	205-5594	290	206-9381	125
	352		598		301		127
202-2165	147		603	205-5595	290	206-9434	346
202-3063	585	204-0281	592		301	206-9436	641
202-3104	348		597	205-6250	930	207-0401	807
202-4122	147		602		933	207-0845	748
	148	204-0499	795		936	207-1556	269
	149	204-0500	795	205-6251	930		▶270
202-4327	209	204-0741	381		933	207-1557	270
	212		387		936		▶271
202-6378	526		393	205-6252	930	207-3296	666
	529		399		933	207-4296	563
	532		405		936		564
	▶564	204-0743	381	205-6253	930	207-4297	563
202-7224	150		387		933	207-4715	563
202-7838	529		393		936		564
	532		399	205-6388	894	207-5248	84
202-7839	529		405		903	207-5454	702
	532	204-0858	623		905	207-5745	664
203-0063	381		625		909	207-5879	711
	387	204-1320	662	206-0154	202		713
	399		663		204		715
	405	204-2124	771	206-0162	930	207-5958	702
203-0225	381		773		933	207-6027	910
	387		▶775		936	207-6940	521
	399	204-2581	923	206-0836	123		522
	405		927	206-0837	123	207-7467	623
203-0780	863	204-4147	731	206-2543	125		625
203-0865	150	204-4148	731		▶721	207-8197	153
203-0869	150	204-5174	731	206-3419	147	207-8201	153
203-3940	70	204-5284	812	206-3950	▶450	207-8799	3

▶ PRIMARY REFERENCE

PART NUMBER INDEX

Part	Page
	5
	▶47
207-8892	677
207-9506	160
	162
207-9519	588
208-0037	▶153
	154
208-0252	858
208-0701	▶150
	675
208-1628	338
208-1729	381
	387
	393
	399
	405
208-2378	7
	8
	▶154
208-4539	860
208-5116	▶146
208-6624	▶510
	548
208-6626	510
208-6629	510
208-6631	510
208-7969	592
	597
	602
208-7970	592
	597
	602
208-7971	592
	597
	602
208-7972	592
	597
	602
208-7973	592
	597
	602
208-7974	592
	597
	603
208-7975	592
	597
	602
208-9093	807
208-9265	381
	387
	393
	399
	405
208-9267	381
	387
	393
	399
	405
209-2287	526
	529
	532
209-2288	526
	529
	532
209-3526	125
	127
	129
209-4573	102
209-4578	102
209-6148	118
209-6149	118
209-6566	548
209-7533	118
209-7534	118
209-7535	118
209-9104	110
	112
	114
209-9105	110
	112
	114
209-9136	592
	597
	602
209-9587	▶221
	222
209-9588	217
	▶222
210-0053	729
	▶732
210-0848	▶223
210-0849	215
	▶224
210-1917	526
	529
	532
210-2262	885
210-2263	885
210-2266	885
210-2268	885
210-2270	▶885
	899
	901
210-3090	629
	632
210-3215	162
210-3216	629
	632
210-6062	510
210-8467	381
211-0592	20
211-1071	698
211-2038	▶860
	▶862
211-2039	860
211-2325	548
211-2326	143
211-3025	159
211-3122	41
	42
211-3123	41
	42
211-3375	683
211-3377	683
	687
211-4635	139
	143
211-4987	811
211-5358	813
	912
211-5735	121
211-6062	680
	683
	687
211-6496	517
	519
211-7321	289
	308
211-7322	290
	308
211-7328	796
211-7524	486
211-7972	863
211-7978	2
	▶863
	▶865
	▶866
211-7979	112
	114
211-8021	289
	301
211-8472	576
211-8611	615
211-9294	912
212-0136	796
212-0137	796
212-0138	796
212-1334	▶184
212-1335	▶176
	184
212-1337	176
212-2017	381
	387
	399
	405
212-3298	381
	387
	393
	399
	405
212-5826	338
212-5828	338
212-5830	338
212-5831	338
212-5832	338
212-6027	623
	625
212-6028	623
	625
212-7779	912
212-7961	118
212-9872	1
	▶228
213-1676	112
	114
213-1746	702
213-1985	992
213-3409	446
213-3410	446
213-4555	▶617
	767
213-5170	912
213-6518	675
	▶683
	▶687
213-6519	683
	687
213-6520	683
	687
213-6947	290
	302
	310
	311
	313
213-7110	510
213-8025	720
213-8477	293
	298
213-9100	283
	285
213-9782	547
214-0783	▶813
214-0784	813
214-1541	547
214-2282	623
	625
214-4559	289
214-4560	290
214-5859	101
214-5860	90
214-5861	90
214-6817	291
214-6818	291
214-7409	125
	127
	129
214-7413	▶95
	434
214-9055	623
	625
215-1198	664
215-1199	664
215-2866	376
215-2987	290
	308
215-3025	620
	▶623
215-3026	620
	▶625
215-4406	550
215-4407	550
215-6562	550
215-6563	550
215-6564	550
215-7475	550
215-7476	550
215-7477	550
215-8103	550
216-0612	143
216-2218	529
	532
216-2484	▶550
216-3220	687
216-3262	550
216-5114	550
216-5115	550
216-5582	32
	34
	39

▶ **PRIMARY REFERENCE**

PART NUMBER INDEX

Part	Page	Part	Page	Part	Page	Part	Page
216-6817	136	217-9487	550		903	224-5122	37
216-6818	136	217-9644	550		905		43
216-7280	550	217-9645	550		909	224-9929	656
216-7657	412	217-9646	550	222-1550	430	225-0556	178
	416	217-9894	623	222-1832	62		181
216-8680	228		625	222-1833	62	225-3286	672
216-9945	139		627	222-1982	32	225-3289	797
217-0561	529	218-0054	549	222-2367	792		799
	532	218-0055	549	222-5110	865	225-8754	560
217-0562	529	218-0324	834	222-5608	585	225-8758	▶238
	532		▶835	222-5609	585		285
217-0563	529	218-0861	897	222-5824	380	225-8819	536
	532		899		387	225-9611	767
217-0564	529		901		393	226-2659	143
	532	218-0864	▶875		399	226-4138	▶178
217-0565	529		897		405		▶181
	532		899	222-6472	723		184
217-0566	529	218-1507	550		725	226-4180	▶184
	532	218-2529	529	222-6869	585	226-4872	921
217-0567	529		532	222-7374	865	226-5561	32
	532	218-3262	298		866	226-7167	124
217-0751	32	218-7122	549	223-1335	621	226-7365	327
	34	218-7124	549		622		329
	39	218-8109	581		▶627		331
217-0752	32	218-8117	484	223-1336	627		▶610
	34	218-8119	579	223-1338	627	226-7366	321
	39	218-8120	579	223-1404	178		323
217-2573	756	218-8514	894		181		▶612
	758		▶897	223-2444	571	226-9765	799
217-2574	713		▶899		▶791	227-1204	28
	715		▶901	223-2445	▶792	227-3872	86
217-5703	178	219-0302	886	223-2446	788	227-4057	▶560
	181	219-0615	484		▶793	227-4058	560
217-5994	125	219-1393	588	223-2447	▶794	227-4059	560
	127	219-1405	511	223-7263	▶32	227-4062	560
	129	219-1615	▶511		34	227-4239	32
217-6282	500	219-1879	366	223-7420	178		34
217-6289	579		368		181		39
217-6290	323		▶371		187	227-4398	618
	331	219-6336	560		189	227-4768	845
	▶484	219-6710	482	223-7479	178	227-5284	▶644
217-6291	484		▶581		181		▶646
217-6309	484	219-8561	329	223-9250	▶42		675
	▶579		331		43	227-5285	675
217-6348	564	220-0432	576	223-9743	404		▶698
217-6350	564	220-2290	127	224-1128	877	227-5286	644
217-6351	564		▶723	224-1167	773		646
217-7699	549	220-3629	475	224-1209	632	227-5288	644
217-7754	550	220-8497	131		▶659		646
217-7933	884	221-1190	66	224-2323	366	227-5372	3
	885	221-1191	66		368		5
217-8014	550	221-1192	66	224-2454	610		▶90
217-8938	11	221-1193	66		612	227-6029	679
217-9036	592	221-1194	66	224-2988	178	227-6030	641
	597	221-1195	66		181		644
	602	221-1197	50	224-3018	877		646
217-9037	592		▶66	224-3983	32	227-6744	378
	597	221-2305	77	224-4286	717	227-9318	387
	602	221-2821	696	224-4432	652		393
217-9048	875	221-5281	585		▶737		399
	876	221-7227	664	224-4530	659		405
217-9049	897	221-7250	664	224-4825	428	227-9319	387
	899	221-7693	178	224-4826	428		393
	901		181	224-5040	302		399
217-9051	894	222-0345	894		878		405

PART NUMBER INDEX

Part	Page
227-9321	387
	393
	399
	405
228-2758	796
	▶799
228-4032	285
228-4975	121
	▶124
228-4976	124
228-4977	124
228-6978	102
228-7260	847
	852
228-7261	847
	852
229-2702	90
229-5263	2
	▶877
229-6711	5
	▶80
229-8087	675
	▶833
230-3393	891
	▶909
230-3728	159
230-3775	159
230-5771	301
230-7490	220
	▶226
230-9876	905
	906
231-0660	752
231-6533	799
231-7071	801
	803
	805
231-9809	832
	833
	▶905
	▶906
231-9810	832
	833
	▶891
231-9811	909
	▶914
232-0253	84
232-1068	878
232-1106	178
	181
	187
	189
232-2324	387
	393
	399
	405
232-3032	560
232-3774	839
	▶840
232-7313	909
233-0334	833
	▶881
233-0336	▶220
	833
233-0338	▶297
	833
233-1363	560
233-3323	494
233-6742	156
	▶192
233-6950	535
233-6951	535
233-7458	256
233-7462	▶256
233-9954	803
233-9955	803
234-3412	200
	201
234-4772	200
	201
234-5996	5
	▶81
235-0553	387
	393
	399
235-1587	97
235-2670	212
235-2672	297
235-2673	297
235-2674	297
235-2676	▶212
	833
235-2677	204
	242
235-2678	204
	242
235-2679	927
235-2680	927
235-2681	927
235-2683	212
235-2685	212
235-2698	865
	866
235-3174	5
	▶82
235-3177	8
	▶43
235-3472	5
	▶8
235-3487	799
235-3491	799
235-3497	881
235-3903	297
235-4689	▶5
	434
235-6657	317
	▶796
236-0422	862
236-0423	862
236-0910	297
236-1987	490
	492
236-2137	228
236-2138	228
236-2146	865
	866
236-2147	862
236-2247	6
	▶254
236-2601	228
236-2602	228
236-4389	2
	▶543
236-5197	885
236-5334	862
236-5879	543
236-9982	▶767
237-1962	265
	▶273
237-3943	912
237-3970	▶814
	912
237-4506	212
237-4738	318
	▶329
	▶331
237-5510	▶308
	532
237-5513	▶283
	310
	311
237-5514	1
	▶228
237-6175	850
237-6176	850
237-7311	833
	▶927
238-0296	192
	▶193
238-1851	274
238-3239	242
238-3240	204
	▶242
238-4595	242
238-7385	298
238-7430	500
238-8543	▶204
	675
239-0603	767
	▶769
239-0605	767
	▶770
239-0612	767
239-0614	767
239-0615	767
	▶776
239-0617	767
239-0618	767
239-0621	767
239-5015	182
	189
	496
239-5042	283
	285
239-5157	767
239-5195	767
239-5611	822
239-6336	769
239-6986	933
	936
239-9368	822
	825
240-5304	224
	▶225
240-5307	222
	▶227
240-8432	852
240-8854	5
	▶168
240-8855	5
	▶217
241-0037	789
	790
	791
	792
	794
241-0614	▶454
	479
241-0615	▶479
241-5670	822
	825
241-6061	302
241-6062	302
241-6064	302
241-6065	302
241-6066	311
	313
241-6067	▶301
	317
241-6069	▶311
	▶313
	317
241-6186	43
241-7691	825
241-7692	823
241-7693	823
241-8105	833
	▶852
241-8802	540
242-0431	129
	▶725
242-4921	881
242-5044	881
242-7345	546
242-8763	909
242-8764	909
242-8765	909
242-8766	909
242-8767	909
242-8768	914
242-8769	909
242-8771	914
242-8772	914
242-8773	914
242-8774	914
242-8783	866
243-0943	▶33
	34
243-3544	918
243-4029	909
243-4030	317
	▶404
243-6480	371
243-6741	▶34
	42
244-1943	181
	189
244-6861	293
244-8635	290
	308

▶ **PRIMARY REFERENCE**

PART NUMBER INDEX

Part	Page
245-0159	212
245-0160	881
245-0161	881
245-0163	881
245-0164	212
	881
245-0165	212
245-0168	881
245-0169	212
	881
245-0172	212
245-2768	▶344
	460
245-8021	881
245-8023	212
245-8024	881
245-8027	212
245-8080	344
245-8081	365
245-8682	298
245-9570	▶365
	374
246-0845	▶818
	833
246-0846	818
	▶825
246-1526	189
246-4190	909
246-4713	455
246-4874	▶451
246-4875	451
	▶455
246-5905	922
246-6445	▶903
246-6446	903
246-7280	825
246-7992	8
247-5834	852
247-6904	▶991
247-7001	991
247-7002	991
247-7004	991
247-7005	991
247-7006	991
247-7007	991
247-7011	991
247-7012	991
247-8272	823
	826
247-8273	823
	826
247-8274	823
	826
247-8275	823
	826
247-8276	823
	826
247-8302	823
	826
247-8397	500
247-8399	758
247-8401	758
248-0963	639
248-3008	58
248-5219	519
248-5220	522
248-5513	104
249-0065	405
249-2844	144
249-3664	519
	▶522
249-7499	416
250-0466	24
	28
250-7859	366
	368
251-1445	256
	▶602
251-1446	▶571
	602
251-1447	571
251-1450	571
251-1934	602
251-1935	602
251-7322	▶544
251-7333	508
251-7336	508
251-7339	508
251-7684	▶876
	901
251-8265	▶572
	574
251-8266	▶573
251-8789	▶574
	597
251-8794	597
251-8796	597
252-1604	398
	405
252-2101	398
	405
252-8050	619
	▶656
252-8051	656
252-8054	656
252-9405	▶285
	313
252-9989	228
252-9990	228
253-2111	242
253-4861	114
254-0811	803
254-5859	352
254-5860	352
255-1144	574
255-6169	129
255-6170	129
255-6171	129
255-6195	574
255-6875	▶374
	460
256-3011	936
256-4709	882
256-4710	881
256-9952	941
256-9953	977
256-9954	953
256-9955	989
256-9956	973
256-9957	957
256-9958	949
256-9959	945
256-9960	985
256-9961	981
256-9962	961
256-9963	965
256-9964	969
257-2122	50
257-2531	840
257-8083	700
257-8092	700
257-8093	700
257-8094	700
257-8095	700
257-8096	700
257-8858	840
258-0590	881
258-8411	655
261-0301	287
	288
261-0326	▶287
261-0846	287
	288
261-0847	287
	288
261-0848	287
	288
261-1323	451
	▶455
261-1486	455
261-1956	288
261-2191	287
261-3567	▶288
261-3641	▶451
261-5134	909
262-1408	228
263-1484	455
263-1485	451
	▶455
263-1494	▶451
263-6342	205
	242
264-6362	914
265-7495	451
	▶456
265-7496	▶451
266-4311	405

▶ PRIMARY REFERENCE



© 2004 Caterpillar
All Rights Reserved

Printed in U.S.A.