RUTHZIL TRATOR COMERCIAL DE PEÇAS LTDA 11 97083-6812 ROLANDO CITRANGULO

AGOSTO 2006

743

Parts Manual

S/N 5019 11001 & Above

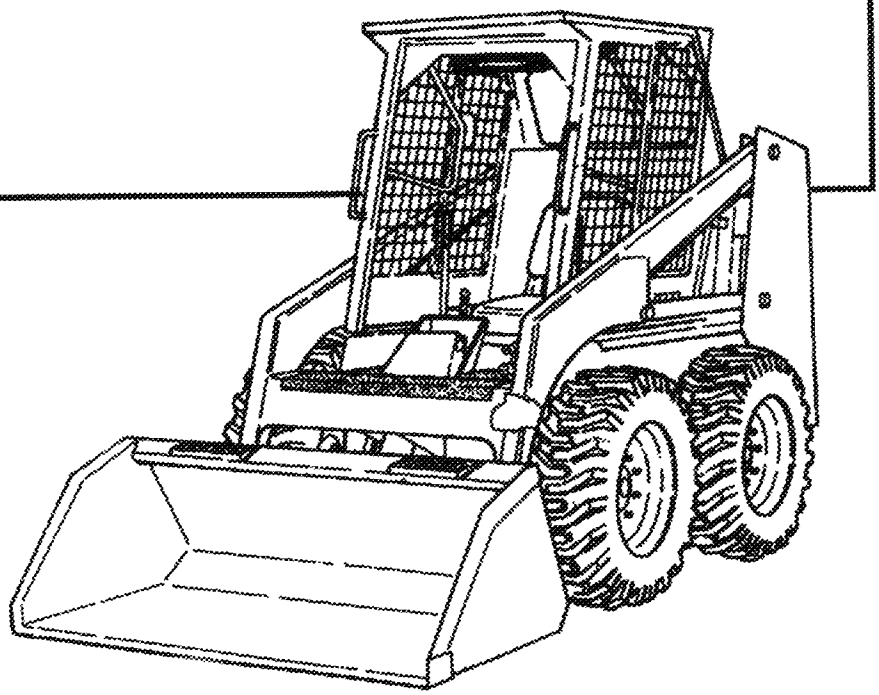

Ingersoll Rand
Compact Vehicle Technologies

6986179 (6-01) Revised (8-06)

Printed in U.S.A.

© Bobcat Company 2006

NOTE D'INFORMATION

Pour toute référence au numéro de série de l'engin, toujours donner le numéro complet.

Le chiffré apparaissant dans la colonne des quantités de ce manuel représentent le nombre de pièces nécessaires pour l'illustration reprise sur la page. Dans certains cas, on lira un "x" dans la colonne des quantités. Cet "x" indique que la quantité nécessaire est "selon besoin".

Pour toute référence vers la GAUCHE ou la DROITE dans ce manuel, considérer que la personne se trouve assise dans le siège de l'opérateur, en position de fonctionnement en marche avant.

Certaines illustrations et informations reprises dans ce manuel de pièces de rechange ont été fournies à Bobcat/Ingersoll-Rand par des fabricants de composants.

ABREVIATIONS & SYMBOLES

SALES	= Commander au Service Ventes à Bruxelles
NSS	= Pas vendu séparément
NAP	= Non disponible comme pièce de rechange
*	= Chapitre, page ou numéro de pièce modifié ou supplémentaire
BTI	= Bobcat Technical Information Bulletin : voir à la fin de la microfiché du modèle concerné ou la microfiche générale reprenant l' ensemble des "BTI".
was 6535403	= était avant 6535403
adj. (adjustment)	= réglage
Assembly	= ensemble
available W/Ref.	= disponible avec réf.
bulk/sold per foot	= en vrac/vendu par pied
does not include	= ne comprend pas
included with	= compris dans
I.D.	= D.I. (diamètre intérieur)
O.D.	= D.E. (diamètre extérieur)
not in kit	= pas en kit
W/ - WO/	= inclus/ - non inclus/
Qty	= quantité requise
see page/ref.	= voir page/réf.
used with ref/	= utilisé avec réf.
0,05 inch thickness	= 0,05 pouce d'épaisseur (un pouce = 25.4 mm)
weld on	= à souder

ALLGEMEINE INFORMATIONEN

Bei Angabe der Maschinen-Seriennummer stets die komplette Nummer angeben.

Bei der in der Mengenspalte (Anzahl) in diesem Handbuch angegebenen Zahl handelt es sich um die Anzahl von Teilen, die für die Abbildung auf der betreffenden Seite benötigt werden. Bei manchen Teilen in der Mengenspalte ist ein "x" angegeben. Dieses "x" weist darauf hin, dass sich die Anzahl der verwendeten Teile auf den "Bedarf" bezieht.

Bei Verwendung der Seitenangaben links und rechts in diesem Handbuch gelten diese für die Blickrichtung vom Fahrersitz aus, und zwar in Vorwärts-Betriebsrichtung.

Einige der in diesem Ersatzteilhandbuch aufgeführten Abbildungen und Informationen wurden der Bobcat/Ingersoll-Rand von den Herstellern von Maschinenbauteilen zur Verfügung gestellt.

ABKÜRZUNGEN UND SYMBOLE

SALES	= Bestellung bei der Verkaufsabteilung in Brüssel
NSS	= Nicht einzeln erhältlich
NAP	= Nicht als Ersatzteil erhältlich
*	= Geänderte oder hinzugefügte Abschnitte, Seiten oder Teilenummern
BTI	= Bobcat Technical Information Bulletin : Siehe am Ende der Mikrokarte des jeweiligen Modells oder der allgemeinen Mikrokarte der BTI.
was 6535403	= War 6535403
adj.	= Einstellung
Assembly	= Baugruppe
available W/Ref.	= erhältlich mit der Referenz
bulk/sold per foot	= Mengenabnahme / Verkauf pro Fuss
does not include	= beinhaltet nicht
included with	= enthalten in
I.D.	= Innendurchmesser
O.D.	= Aussendurchmesser
not in kit	= nicht in Bausatz
W/ - WO/	= mit/ - ohne/
Qty	= Anzahl
see page/ref.	= Siehe Seite / Referenz
used with ref.	= verwendet mit Referenz
0.05 inch thickness	= Dicke : 0.05 Zoll (ein Zoll = 25.4 mm)
weld on	= anschweissen

INFORMAZIONI GENERALI

Quando si usa il numero di serie della macchina usare il numero completo.

Il numero mostrato nella colonna della quantità di questo manuale corrisponde al numero di componenti necessari per l'illustrazione della pagina. Per alcuni componenti appare "X" nella colonna delle quantità. Questa "X" indica che la quantità da usare è "come necessario".

See in questo manuale si fa riferimento alla parte destra o sinistra, si intende dal sedile dell'operatore nella posizione in avanti di funzionamento.

Alcune delle illustrazioni e informazioni trovate in questo manuale di componenti sono state fornite alla Bobcat/Ingersoll-Rand da società di componenti di macchine.

SIMBOLI E ABBREVIAZIONI

SALES	= Ordinare al servizio vendite di Bruxelles
NSS	= Non vendute separatamente
NAP	= Non disponibile come componente
*	= Sezioni, pagine o numeri di componente cambiati o aggiunti
BTI	= (Bobcat Technical information) Ved. al termine del microfiche del modello relativo oppure microfiche generale
was 6535403	= era 6535403
adj. (adjustment)	= regol. (regolazione)
Assembly	= Compiessivo
available W/Ref.	= disponibile con rif.
bulk/sold per foot	= alla rinfusa/venduto al piede
does not include	= non comprende
Included with	= compreso con
I.D.	= d. i.
O.D.	= d. e.
not in kit	= non fa parte del kit
W/ ~ WO/	= con ~ senza
Qty	= Qtá
see page/ref	= ved. pagina/rif.
used with ref.	= usato con il rif.
0,05 inch thickness	= spessore 0,05 pollici (un pollice = 25,4 mm)
weld on	= a saldare

Page 5 - 06/25/2008 17:21:25 - Printed by Ken Cook Co. eSprint.exe [v2.24] 6/25/2008

INFORMACION GENERAL

Al utilizar el número de serie de la máquina, debe emplearse el número completo.

El numero que figura en la columna de "Unidades" en este manual es el número de piezas que se necesitan para la ilustración que consta en la página. En algunas piezas aparece una "x" en la columna de "Unidades". Esta "x" indica que las unidades a utilizar son "según sea necesario".

Cuando se empleen las referencias izq. y dcha., éstas se entienden mirando desde el asiento del conductor, en posición de marcha adelante.

Algunas de las ilustraciones y la información que figuran en este manual de piezas han sido facilitadas a Bobcat/Ingersoll-Rand por empresas de componentes de máquinas.

ABREVIATURAS Y SIMBOLOS

VENTAS	= Pedido al Departamento de Ventas de Bruselas
NSS	= No se vende por separado
NAP	= No disponible como pieza de repuesto
*	= Secciones, páginas o referencias modificadas o añadidas
BTI	= (Bobcat Tecnical Information) Ver al final de la microficha del modelo afectado o en la microficha general "Boletín de Información Técnica Bobcat".
was 6535403	= era anteriormente el 6535403
adj. (adjustment)	= ajuste
assembly	= conjunto
available W/Ref.	= disponible con la ref.
bulk/sold per foot	= a granel/vendido por pies
does not include	= no incluye
included with	= incluido en
I.D.	= diámetro interior
O.D.	= diámetro exterior
not in kit	= no en el kit
W/ - WO/	= con/ - sin
Qty	= Unidades
see page /ref.	= ver página/ref.
used with ref.	= empleado con la ref.
0,05 inch thickness	= 0,05 pulgadas de espesor (1 pulgada = 25,4 mm)
weld on	= debe ser soldado

ALGEMENE INFORMATIE

Als u het serienummer van de machine gebruikt, geef dan het gehele serienummer.

Het cijfer dat voorkomt in de kolom "Aantal", in deze handleiding, is het aantal onderdelen dat nodig is van de illustratie op de pagina. Voor sommige onderdelen staat er een "x" in de kolom "Aantal". Deze "x" betekent dat er een aantal "zoals nodig" vereisi is.

Wanneer er in deze handleiding naar "links" en naar "rechts" gerefereerd wordt, moet dit verstaan worden voor een bestuurder die in de bestuurdersstoel zit in de voorwaartse bedrijfsstand.

Sommige van de illustraties en informatie in deze onderdelen-handleiding werden door firma's van machine-componenten geleverd aan Bobcat/Ingersoll-Rand.

AFKORTINGEN EN SYMBOLEN

SALES	= Bestellen bij de Verkoopafdeling te Brussel
NSS	= Niet afzonderlijk te verkrijgen
NAP	= Niet beschikbaar als onderdeel
*	= Gewijzigde of toegevoegde paragrafen, pagina's of onderdeelnummers
BTI	= Bobcat Technical Information Bulletin : Zie einde van de microfiche van het desbetreffende model of einde van de algemene microfiche die het geheel van alle "BTI" herneemt.
was 6535403	= was vroeger 6535403
adj. (adjustment)	= afstelling
Assembly	= geheel
available W/Ref.	= beschikbaar met ref.
bulk/sold per foot	= bulk/aan de meter verkocht
does not include	= bevat niet
includes with	= is bevat in
I.D.	= ϕ inw. (inwendige diameter)
O.D.	= ϕ uitw. (uitwendige diameter)
not in kit	= niet in de kit
W/ - WO/	= met/ - zonder/
Qty	= vereiste aantal
see page/ref.	= zie pagina/ref.
used with ref/	= gebruikt met ref.
0,05 inch thickness	= 0.05 inch dik (een inch = 25.4 mm)
weld on	= te lassen

Page 7 of 11 08/20/2008 11:13:25 - Printed by Ken Cook Co - Account.asm (vg_24.1 8/25/2008)

Use only Bobcat belts and hoses to maintain maximum service life.

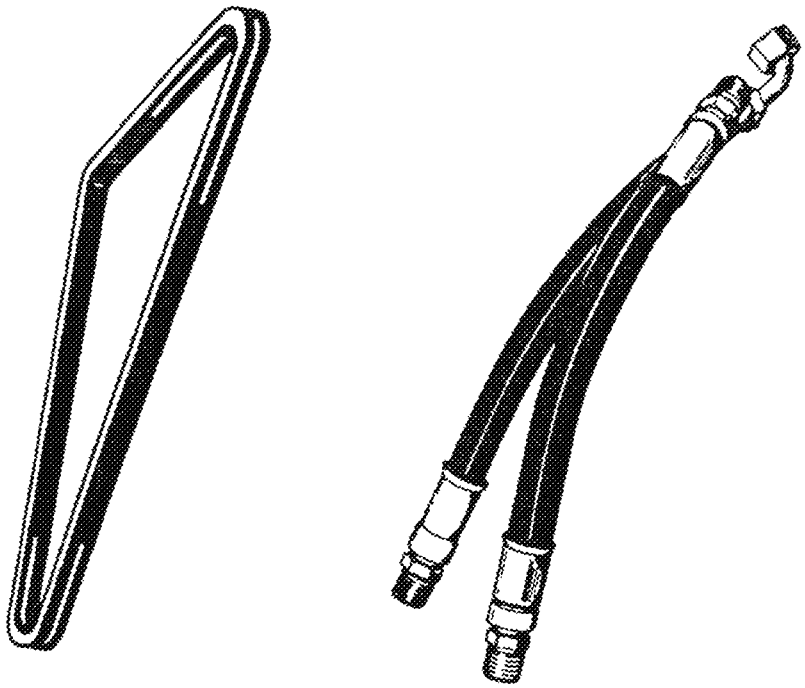

Available from Bobcat Parts.

Bobcat

CONTENTS

MAINTENANCE ITEMS **1-2**
MAINTENANCE ITEMS 1

MAIN FRAME **3-34**
SEAT & SEAT BAR 11
SEAT 13-16
REAR DOOR 17
LIFT ARMS & BOBTACH 19
BOB-TACH 21-24
PANELS 25-28
FUEL SYSTEM 29-34
MAIN FRAME 3
OPERATOR CAB 5-10

DRIVE TRAIN **35-42**
DRIVE TRAIN 35
GEARCASE 37
DISC BRAKE 39
AXLE 41

HYDRAULIC SYSTEM **43-88**
HYDRAULIC CIRCUITRY 43-46
AUXILIARY HYDRAULICS 47-50
LIFT CYLINDER 51-54
TILT CYLINDER 55-60
CONTROL PEDALS 61-64
HYDRAULIC CONTROL VALVE 65-66
INLET SECTION 67-78
LIFT CONTROL SECTION 69
AUXILIARY CONTROL SECTION 71
TILT CONTROL SECTION 73
AUXILIARY SECTION 79
LIFT SECTION 81
TILT SECTION 83

HYDROSTATIC SYSTEM **89-120**
HAND CONTROLS 103-106
HYDROSTATIC MOTOR 107
HYDROSTATIC PUMP 109-112
VANE PUMP 113
GEAR PUMP 115-118
HYDROSTATIC OIL FILTER 119
HYDROSTATIC CIRCUITRY 69-102

ELECTRICAL SYSTEM **121-156**
CAB ELECTRICAL CIRCUITRY 121-132
ENGINE ELECTRICAL CIRCUITRY 133-138
ALTERNATOR 139-146
STARTER 147-154
STARTER KIT 155

POWER UNIT **157-214**
ENGINE & ATTACHING PARTS 157-164
THROTTLE & FUEL SHUT-OFF 165
UNIVERSAL JOINT 167
ENGINE 169
GEARCASE 171
CRANKCASE 173

Page 9 - 11 - 07/27/2006 11:27:35 - Printed and by Ken Deck Co. eAgronic.exe 192.24.3 07/25/2006

POWER UNIT
ROCKER ARM COVER ... 175
VALVE ROCKER ARM ... 177
CYLINDER HEAD ... 179
OIL PAN ... 181
PISTON & CRANKSHAFT ... 183
FUEL CAMSHAFT ... 185
CAMSHAFT ... 187
WATER PUMP ... 189
WATER FLANGE & THERMOSTAT ... 191
MANIFOLDS ... 193
ENGINE STOP LEVER ... 195
GOVERNOR ... 197
SPEED CONTROL PLATE ... 199
INJECTION PUMP ... 201-204
INJECTOR NOZZLES ... 205
INJECTOR HOLDER ... 207
FUEL FILTER ... 209
AIR CLEANER ... 211-214

REPLACEMENT ENGINE ... 215-250
ENGINE & GASKET KITS ... 215
GEARCASE ... 217
CRANKCASE ... 219
ROCKER ARM COVER ... 221
VALVE ROCKER ARM ... 223
CYLINDER HEAD ... 225
OIL PAN ... 227
PISTON & CRANKSHAFT ... 229
FUEL CAMSHAFT ... 231
CAMSHAFT ... 233
WATER PUMP ... 235
WATER FLANGE & THERMOSTAT ... 237
MANIFOLDS ... 239
ENGINE STOP LEVER ... 241
GOVERNOR ... 243
SPEED CONTROL PLATE ... 245
FUEL & INJECTION PUMPS ... 247
INJECTOR NOZZLES ... 249

ACCESSORIES & OPTIONS ... 251-408
AIR CLEANER VALVE KIT ... 251
AIR DUCT KIT ... 253
AIR SEAL KIT ... 255
AIR SEAL/SCREEN KIT ... 257-260
BACK-UP ALARM KIT ... 261
BUCKET POSITION VALVE KIT ... 263
BUCKET POSITIONING VALVE ... 265
CAB ENCLOSURE ... 267-290
CAB DOOR ... 271-278
CAB WINDOWS ... 279
REAR WINDOWS ... 281
REAR WINDOW KIT ... 283
CLOSED ALTERNATOR ... 291

ACCESSORIES & OPTIONS

CLOSED ALTERNATOR KIT 293
COUNTERWEIGHT KIT 295
DEBRIS SCREEN KIT 297
DECALS 299-302
EUROPEAN ACCESSORIES 303-312
FIRE EXTINGUISHER 313
FLASHER LIGHTS 315
FUEL VALVE KIT 317-320
GEAR PUMP KIT 321
HEATER KIT 323-326
HEATER 327-330
HEATER PLUMBING KIT 331-334
HORN KIT 335
HOSE CLAMP KIT 337
INSECT SCREEN KIT 339
KEYLESS IGNITION 341
LIFT ARM SUPPORT DEVICE 343
MUFFLER/EXHAUST PURIFIER 345
MUFFLER/PURIFIER KIT 347
OPERATOR CAB 349-352
RADIATOR CONVERSION KIT 353
RENTAL KIT 355-360
SEAT BELT 361
SEAT BAR 363
SEAT BAR KIT 365-370
SHUTDOWN 371
SINGLE POINT LIFT 373-376
SOUND OPTION 377
SOUND REDUCTION HARDHAT 379
STROBE LIGHT KIT 381
SUSPENSION SEAT 383
SEAT 385
TANK HEATER KIT 387-390
TILT STOP KIT 391
TIRES & RIMS 393-398
UPHOLSTERY KIT 399
WATER LEVEL SENSOR KIT 401
WINDSHIELD WIPER 403
BULK ITEMS 405-408

NUMERICAL INDEX 410-461

001 - 09/28/2005 17:21:25 Formatted by Xeta Quick Co. - <Style Set: xeta Ver 14.3 07/25/2005>

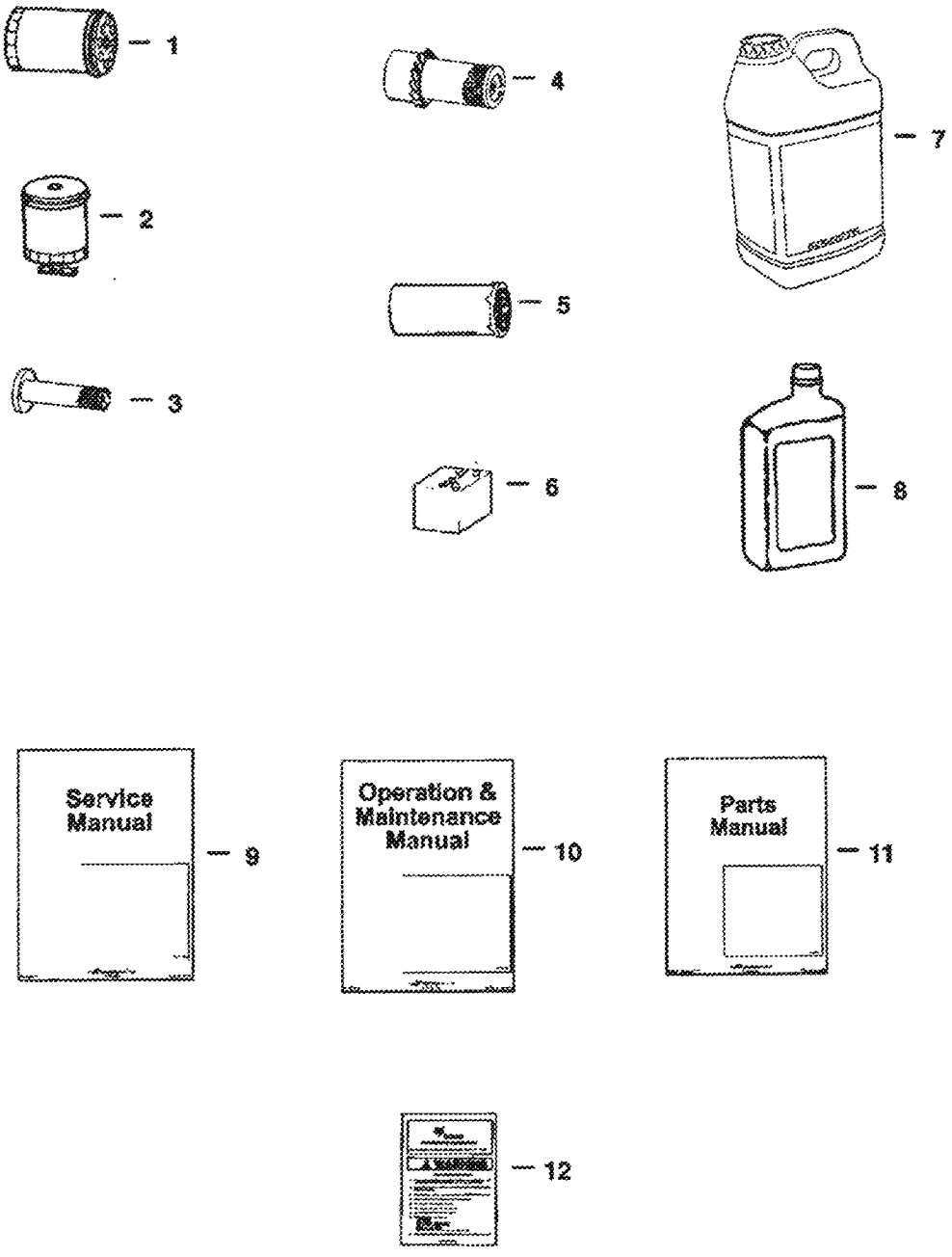
1
2
3
4
5
6
7
8
Service Manual
9
Operation & Maintenance Manual
10
Parts Manual
11
12
B-22668

Ref No	Part Number	Description	Remarks	Serial Number	Qty
1	6675517	FILTER	See Illustration GEARCASE/ B18573		x
2	3685315B	ELEMENT	See Illustration FUEL FILTER/ B5653 FUEL		x
3	6598362	ELEMENT	See Illustration AIR CLEANER/ B20264 See Illustration AIR CLEANER/ B13511 INNER AIR CLEANER		x
4	6598492	ELEMENT	See Illustration AIR CLEANER/ B20264 See Illustration AIR CLEANER/ B13511 OUTER AIR CLEANER		x
5	6661248	ELEMENT	See Illustration HYDROSTATIC OIL FILTER/ C2818 HYDROSTATIC # 3 MEDIA		x
5	6563995	FILTER KIT	See Illustration HYDROSTATIC CIRCUITRY/ E1327 Element Kit		x
6	6665032	BATTERY	See Illustration ENGINE ELECTRICAL CIRCUITRY/ E1309		x
7	6903117	HYD FLUID 2.5 GAL. 2	Was 6563328 [A]		x
7	6903118	HYD. FLUID 5GAL	Was 6722344 [A]		x
7	6903119	HYD. FLUID 55GAL	Was 6563330 [A]		x
8	6903107	OIL 10W30 QT. 12	Was 6657301 [A]		x
8	6903108	OIL 10W30 GAL. 6	Was 6724557 [A]		x
8	6903112	OIL 10W30 2.5 GAL 2	Was 6674205 [A]		x
8	6903105	OIL 15W40 QT. 12	Was 6657299 [A]		x
8	6903106	OIL 15W40 GAL. 6	Was 6724558 [A]		x
8	6903113	OIL 15W40 2.5 GAL. 2	Was 6674204 [A]		x
8	6903109	OIL 30W QT. 12	30W - 1 Qt. - Was 6657303 [A]		x
8	6903110	OIL 30W GAL. 6	Was 6724559 [A]		x
8	6903111	OIL 30W 2.5 GAL 2	Was 6674206 [A]		x
9	6566109	740-S S/M	743 Service Manual		1
10	6556862	743 O/M	743 Operation & Maintenance Manual	501914999 & Bel	1
10	6566605	743 OM	743 Operation & Maintenance Manual	501915001-501919999	1
10	6570166	740S O/M	743 Operation & Maintenance Manual	501920001 & Abv	1
11	6566179	743 P/M	743 Parts Manual		1
12	6567795	HANDBOOK	Operator Handbook		1

01 - 07/27/2020 10:27:25 Printed by Ken Cook Co. - eXpress.exe [V2.24.3 07/27/2020]

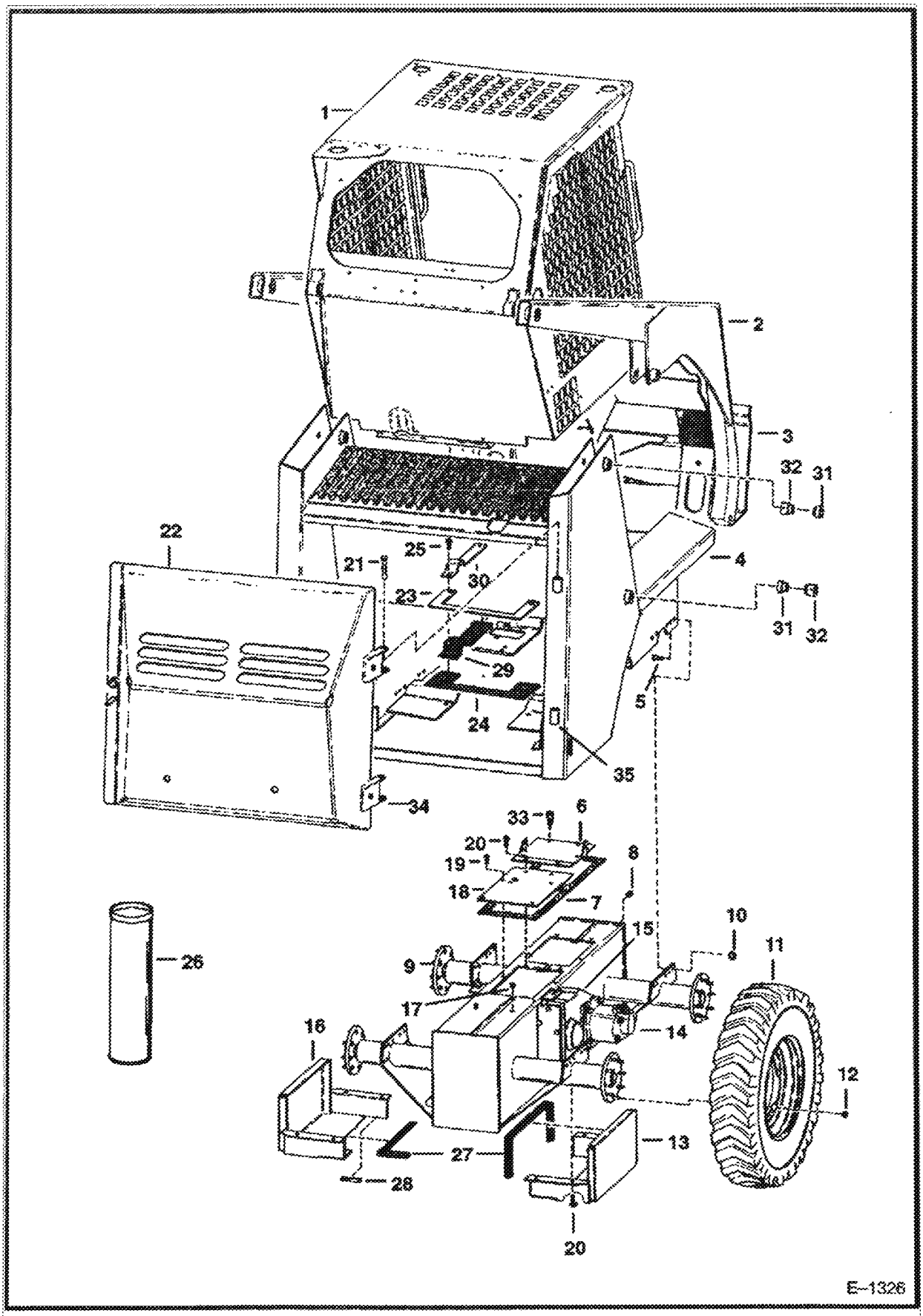
1
2
3
4
5
6
7
8
9
10
11
12
13
14
15
16
17
18
19
20
21
22
23
24
25
26
27
28
29
30
31
32
33
34
35
E–1326

Ref No	Part Number	Description	Remarks	Serial Number	Qty
1		OPERATOR CAB	See Illustration OPERATOR CAB/ B18916		1
2		LIFT ARM	See Illustration LIFT ARMS & BOBTACH/ B24203		1
3		BOB-TACH	See Illustration BOB-TACH/ D1547 SALES		1
4		MAIN FRAME	See BTI260 NAP - Order 6565480 & Ref. 13 & 16	13760 & Below	1
4	6565480	MAIN FRAME	See BTI260	13759 19999	1
4	6568205	MAIN FRAME		20001 & Above	1
5	31C820	BOLT			16
6		COVER	See Illustration DISC BRAKE/ B20254		1
7	6703117	GASKET	Was 6553833 [A]		1
8	40K000012B	PLUG			1
9	6565543	CHAINCASE			1
10	83D8	NUT 5			16
11		TIRE & RIMS	See Illustration TIRES & RIMS/ B20084		4
12	6564669	NUT	wheel - Was 6519169 [A]		3
13	6564919	COVER	R.H.		1
14		MOTOR	See Illustration HYDROSTATIC MOTOR/ D1443 HYDRO.		2
15	6558307	GEARCASE	See Illustration GEARCASE/ B18915		2
16	6564920	COVER	L.H.		1
17	6558506	PLUG	breather		1
18	6558467	COVER			1
19	84G3712	BOLT			12
20	84G3716	SCREW 5			10
21	6564340	PIN			2
22	6565073	DOOR	See Illustration REAR DOOR/ B18919		1
23	6565092	RETAINER			1
24	6563638	SEAL	rubber		1
25	84G3710	SCREW			2
26	6632501	SEALANT	chaincase cover		x
27	6513152	SEAL	bulk-Sold Per Foot		x
28		SEAL	NAP - bulk-Sold Per Foot - Was 6555026 [A]		x
29	6564936	SEAL			2
30	6704692	RETAINER	Was 6564937 [A]		2
31	6555989	BUSHING	Weld On		4
32	6555987	BUSHING	Weld On		4
33	6632601	BREATHER			1
34	6562225	HINGE	Weld On		2
35	6562224	BUSHING	Weld On		2

Page 13 - 401 - 08/28/2008 17:33:15 Printed by Ken Tech Inc. eXprint exe (v2.24.1 8/25/2008)

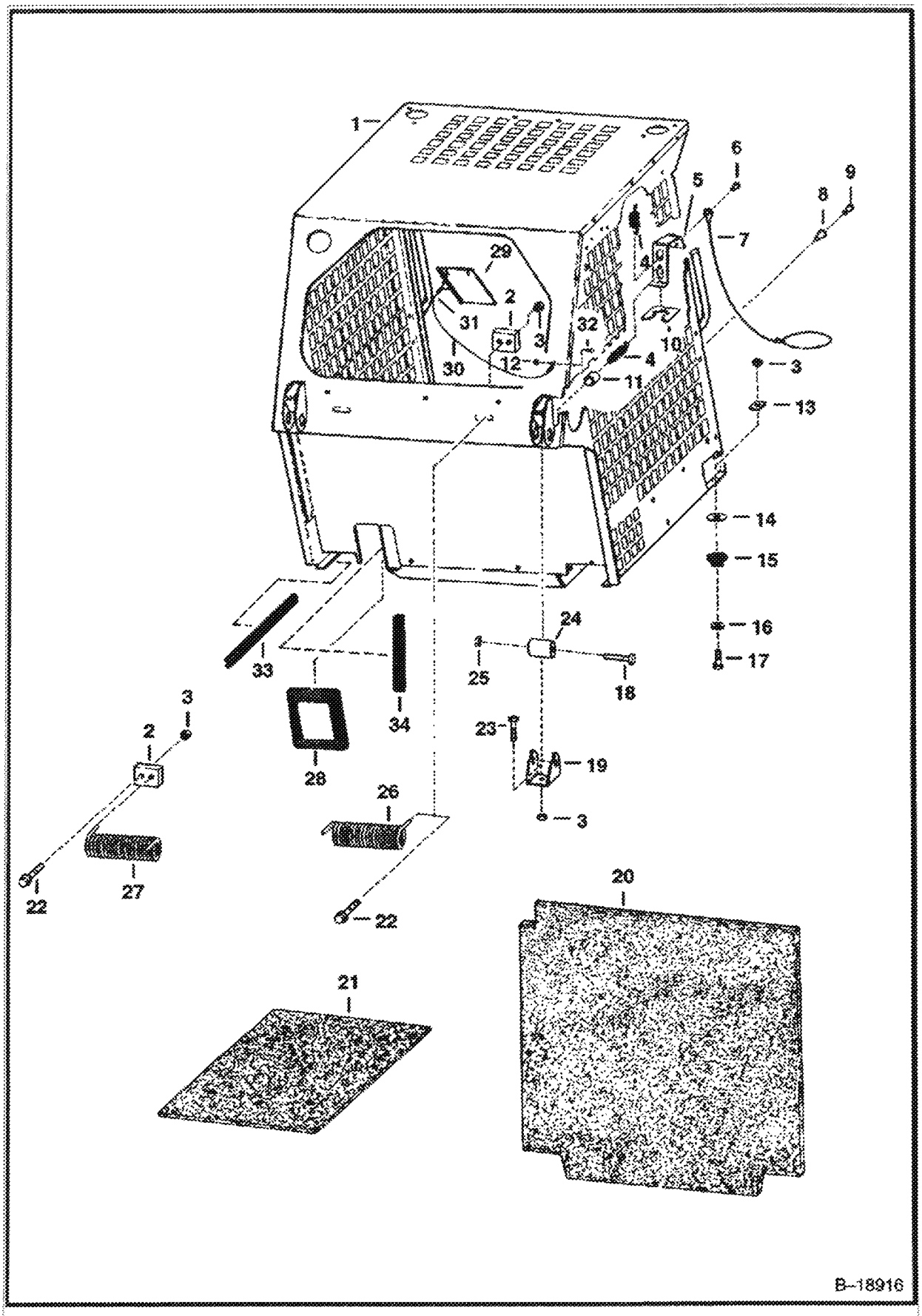
1
6
5
9
8
7
4
29
2
31
3
32
10
30
12
4
11
3
13
14
15
16
17
24
25
18
33
34
28
23
19
3
3
2
26
22
27
22
20
21
B-18916

OPERATOR CAB (Cont'd)
(S/N 19999 & Below)

Ref No	Part Number	Description	Remarks	Serial Number	Qty
1		CAB	See BTI245 NAP		1
2	6563722	BLOCK			2
3	59D8	NUT 5	Was 85D000008B [B]		6
4	6563128	SPRING			2
5	6563127	LEVER			1
6	6513733	RIVET			1
7	6563129	CABLE			1
8	6563156	SLEEVE		17431 & Below	2
9	6630207	RIVET	Was 6512797 [A]	17431 & Below	2
10	6564596	LATCH			1
11	6562683	TUBE			1
12	61D5	NUT			1
13	6553709	WASHER			2
14	6543321	WASHER			2
15	6560633	DAMPENER	shock		2
16	6515817	WASHER			2
17	17C000840B	BOLT			2
18	17C1056	BOLT			2
19	6562232	MOUNT			2
20	6563125	INSULATION	W/O Vinyl pouch seat back	12870 & Below	1
20	6568271	INSULATION	W/vinyl pouch seat back - Was 6563271 [D]	12871 & Above	1
21	6563124	INSULATION	seat pan	12870 & Below	1
21	6564688	INSULATION	seat pan	12871 & Above	1
22	31C824	BOLT 10			2
23	17C000824B	BOLT			2
24	6562602	BUSHING			2
25	85D000010B	NUT			2
26	6562688	SPRING			1
27	6562687	SPRING			1
28	6562804	SEAL			1
29	6567795	HANDBOOK	handbook - W/Ref. 30 & 31		1
29	6567692	KIT	handbook - 4 Language - W/Ref. 30 & 31		1
30	6558309	WIRE ROPE	33" (838,2 mm) long bulk-Sold Per Foot - Also Order (2) 6658310 Sleeve - Was 6558305 [A]		x
31	6558310	SLEEVE			2
32	10C000512B	BOLT	Was 6553808 [A]		1
33	6555351	SEAL	bulk-Sold Per Foot		x
34	6513152	SEAL	bulk-Sold Per Foot		x

Page 17 of 31 06/26/2008 12:21:25 Printed by Ken Couch Etc. eXpress exe ver 24.1 8/25/2008

NOTE: 6714062 Gas Spring Kit to be used when loader is equipped W/Cab Enclosure. Because Gas Spring is heavy duty w/larger diameter, (2) 91G-416 Screws, with low profile heads, must be used in place of 35C-410 Bolt located behind gas spring on left side of ROPS.

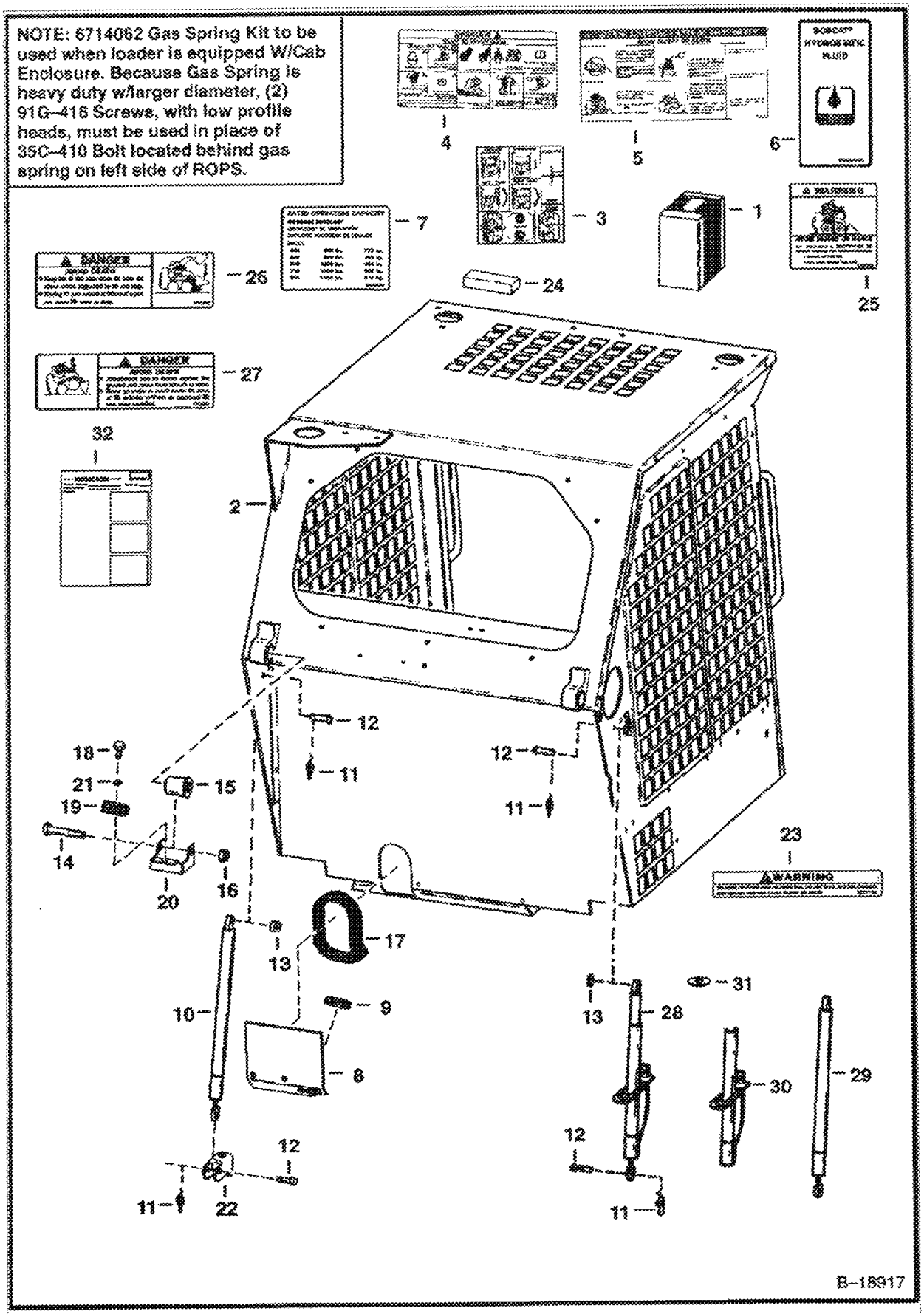

OPERATOR CAB (Cont'd)
(S/N 19999 & Below)

Ref No	Part Number	Description	Remarks	Serial Number	Qty
1	6569248	KIT	cab - Ref. 8-24, 28 & 32 - Also Order 6569249 Cab		1
2		CAB	See BTI245 NSS		1
3	6557312	DECAL			1
4	6579510	DECAL	Was 6575854 [A]		1
5		DECAL	NAP - Order Ref. 4 & 25-27 - Was 6575855 [A]		1
6	6565990	DECAL			1
7	6568439	DECAL			1
8	6568431	SHIELD			1
9	6553653	GROMMET			1
10	6700171	GAS SPRING	W/O lock - Was 6706590 [A]		1
10	6714062	KIT	W/O lock-heavy duty gas spring - See Note		1
10	6900531	INSTRUCTIONS	INSTRUCTIONS for kit 6714062		1
10	91G000416B	BOLT	See Note		2
11	6631418	PIN			4
12	6567743	PIN			4
13	6567604	SPACER			4
14	17C001060B	BOLT			2
15	6562602	BUSHING	rubber		2
16	83D000010B	NUT			2
17	6555351	SEAL	bulk - Sold Per Foot		x
18	84G002516B	BOLT	Was 61G000416B [B]		2
19	6568475	STOP			2
20	6568492	BRACKET			2
21	25E000013B	WASHER			2
22	6567603	BRACKET			2
23	6577754	DECAL	Gas Spring Warning - Was 6568741 [A]		2
24	6560690	STRIP			2
25	6702255	DECAL	warning		1
26	6702301	DECAL	danger		1
27	6702302	DECAL	danger		1
28		GAS SPRING	NAP - W/ lock - Order Ref. 29-31 - Was 6701176 [A]		1
29	6664205	GAS SPRING			1
30	6708189	TUBE	stop - Was 6701175 [A]		1
31	6701174	WASHER			1
32	6570065	INSTRUCTIONS			1

01 - 08/20/2008 21:33:26 - Printed by Can Cook Co - eSystem code (v2.24.3 8/25/2008)

OPERATOR CAB
(S/N 20001 & Above)

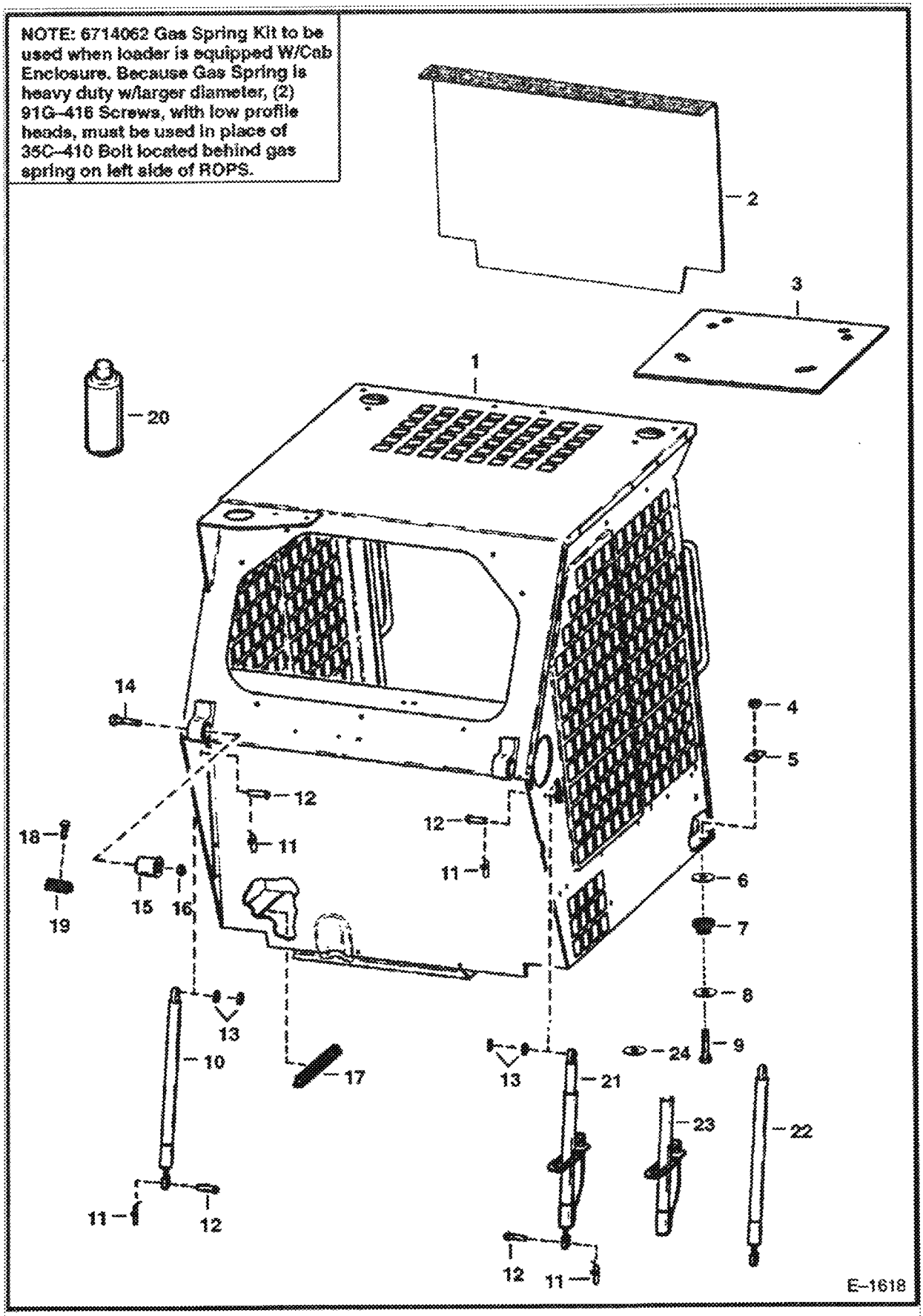

OPERATOR CAB (Cont'd)
(S/N 20001 & Above)

Ref No	Part Number	Description	Remarks	Serial Number	Qty
1	6569249	OPERATOR CAB	See BTI245 Includes Decals		1
2	6568271	INSULATION			1
3	6567890	INSULATION			1
4	59D8	NUT 5	Was 85D000008B [B]		2
5	6553709	WASHER			2
6	6543321	WASHER			2
7	6560633	DAMPENER			2
8	6515817	WASHER			2
9	17C000840B	BOLT			2
10	6700171	GAS SPRING	without/lock - Was 6700000 [A]		1
10	6714062	KIT	W/O Lock - heavy duty gas spring - see note		1
10	6900531	INSTRUCTIONS	INSTRUCTIONS For kit 6714062		1
10	91G000416B	BOLT	SEE NOTE		2
11	6631418	PIN	Was 14J001008B [B]		4
12	6567743	PIN			4
13	6567604	SPACER			4
14	17C1056	BOLT			2
15	6562602	BUSHING	rubber		2
16	83D000010B	NUT			2
17	6555351	SEAL	bulk-Sold Per Foot		x
18	84G002516B	BOLT	Was 61G000416B [B]		2
19	6568475	STOP			2
20	6632469	ADHESIVE	insulation - 24 oz. spray can		x
21		GAS SPRING	NAP - with lock - Order Ref. 22-24 - Was 6706410 [A]		1
22	6664205	GAS SPRING			1
23	6708189	TUBE	Stop		1
24	6701174	WASHER			1

Page 22 - 09/28/2005 17:23:27 - Printed by Ken Cook Co. - eXpress exe ver 30.3 6/15/2005

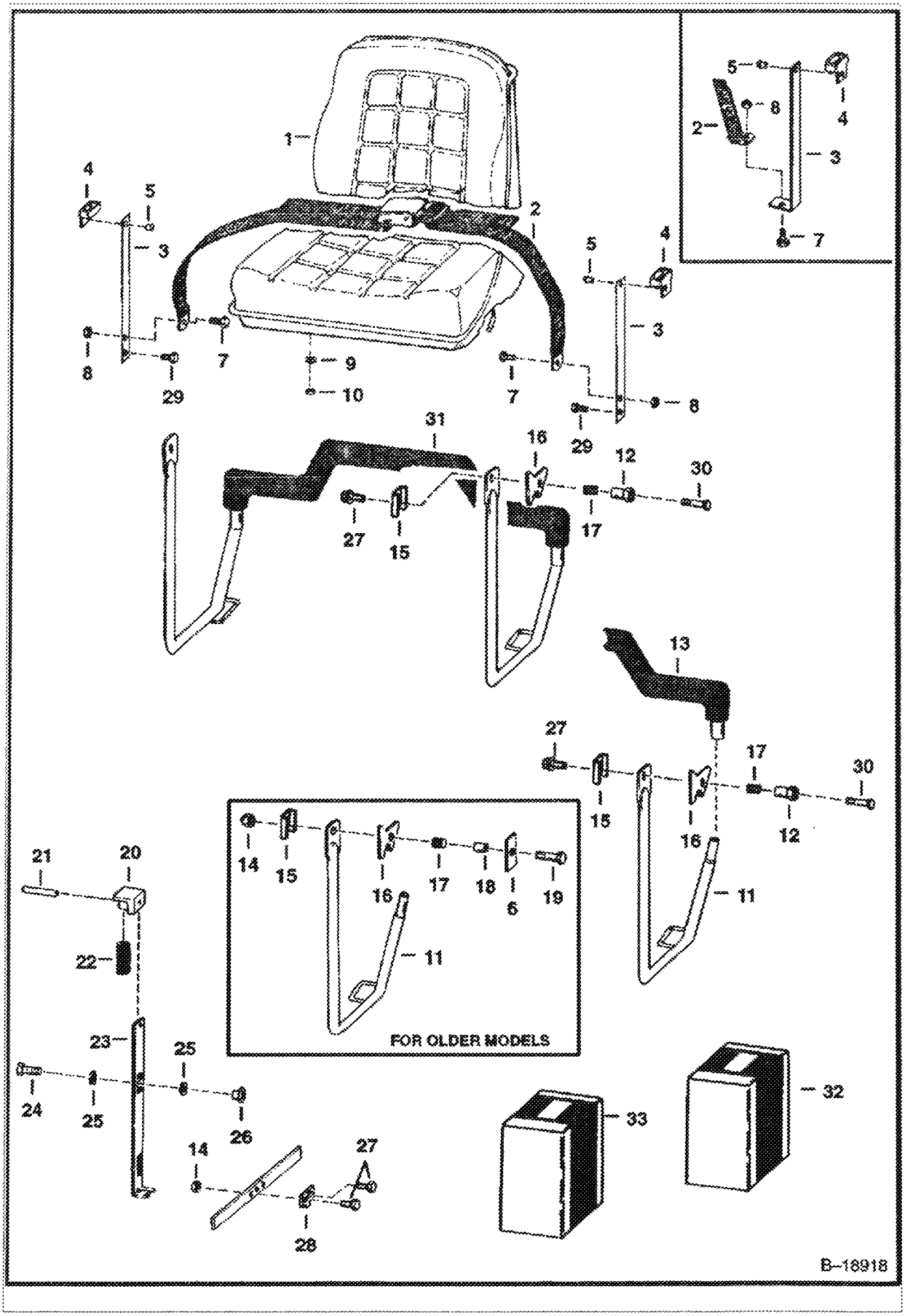
FOR OLDER MODELS
B–18918

SEAT & SEAT BAR (Cont'd)

Ref No	Part Number	Description	Remarks	Serial Number	Qty
1		SEAT	See Illustration SEAT/ B7185		1
2		SEAT BELT	NAP - Order 6675074 seat belt & (2) of 6725373 spring plate - Was 6563214 [A]	12870 & Below	1
2		SEAT BELT	NAP - Order 6713061 - Was 6564774 [A]	12871 & Above	1
2		SEAT BELT	NAP - Order 6675074 seat belt & (2) of Ref. 3 (6725373 spring plate) - Was 6667875 [A]		1
2		SEAT BELT	NAP - W/spring plates - Order 6675074 seat belt & (2) of Ref. 3 (6725373 Spring Plates)		1
2	6675074	SEAT BELT	W/O spring plates		1
3	6563206	GUIDE ASSY	L.H. - W/Ref. 4 & 5	12870 & Below	1
3	6563207	GUIDE ASSY	R.H. - W/Ref. 4 & 5	12870 & Below	1
3		GUIDE ASSY	NAP - W/Ref. 4 & 5, 13.75 used W/NAP 6564774 Seat Belt - Was 6565354 [A]	11903 & Above	2
3		GUIDE ASSY	NAP - W/Ref. 4 & 5, 12.25 USED W/NAP 6667875 ORDER 6711908 SPRING PLATE , & (2) OF REF. 5 - WAS 6711907 [A]		2
3	6711908	SPRING PLATE	Use W/Ref. 2 - (NAP/6667875 seat belt)		2
3	6725373	SPRING PLATE	Use W/Ref. 2 (6675074 seat belt)		2
4	6565355	GUIDE			2
5	6630207	RIVET			4
6	6564506	WASHER			2
7	17C716	BOLT			2
8	85D7	NUT			2
9	4E000005B	WASHER	Was 4E000006B [B]		4
10	61D5	NUT	Was 61D000006B [B]		4
11		ARM	NAP - Order Ref. 31 - Was 6563296 [A]		1
11		ARM	NAP - Order Ref. 31 - Was 6563295 [A]		1
12	6568742	BUSHING			2
13		SEAT BAR	NAP - Order Ref. 31 - Was 6563095 [A]		1
14	83D6	NUT 5			6
15	6563557	WASHER			2
16	6563313	RETAINER			2
17	6704453	SPRING	Was 6503387 [A]		2
18		BUSHING	NAP - Order 6564506 & 6564507		2
18	6564507	BUSHING			2
19	17C000636B	BOLT			2
20	6563148	BLOCK			2
21	14J002512B	ROLL PIN			2
22	6702430	SPRING	Was 6563149 [A]		2
23	6563150	LOCK			2
24	17C612	BOLT 5			4
25	6700170	WASHER	nylon - Was 6563152 [A]		8
26	6559479	NUT			4
27	17C000616B	BOLT			6
28	6563151	LINK			2
29	84G3712	BOLT			2
30	35C000608B	BOLT			2
31	6706324	SEAT BAR	1 Piece - Was 6703301 [A]		1
32	6706796	KIT	See Illustration SEAT BAR KIT/ C3341 GAS SPRING - SEAT BAR		1
33		KIT	NAP - W/Ref. 2 & 3 - Order Ref. 2 - Was 6713061 [A]		1

Page 33 - 01 08/29/2008 17:23:27 - Produced by Text Cook Co - <illegible> Opt:34,1 6/25/2008

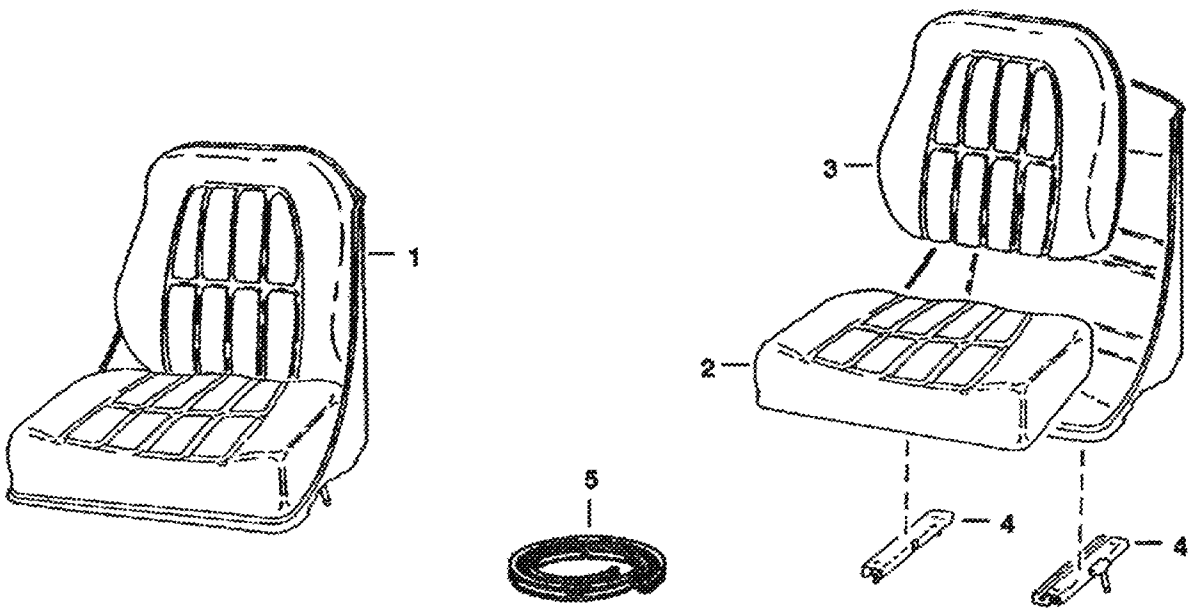

B–7185

Ref No	Part Number	Description	Remarks	Serial Number	Qty
1		SEAT	NAP - Order 6669135 - Was 6563140 [A]		1
2	6630468	CUSHION	seat		1
3	6630465	CUSHION	back		1
4	6630469	TRACK	W/Latch		1
4	6599780	TRACK	W/O Latch		1
5	6652935	EDGING	8 ft. (243 cm)		1
5	6665656	CLIP			1

Page 75 - 93 - 08/20/2008 17:33:27 - Printed by Ken Cook Co. - approved.drw (V5.30.3 6/25/2008)

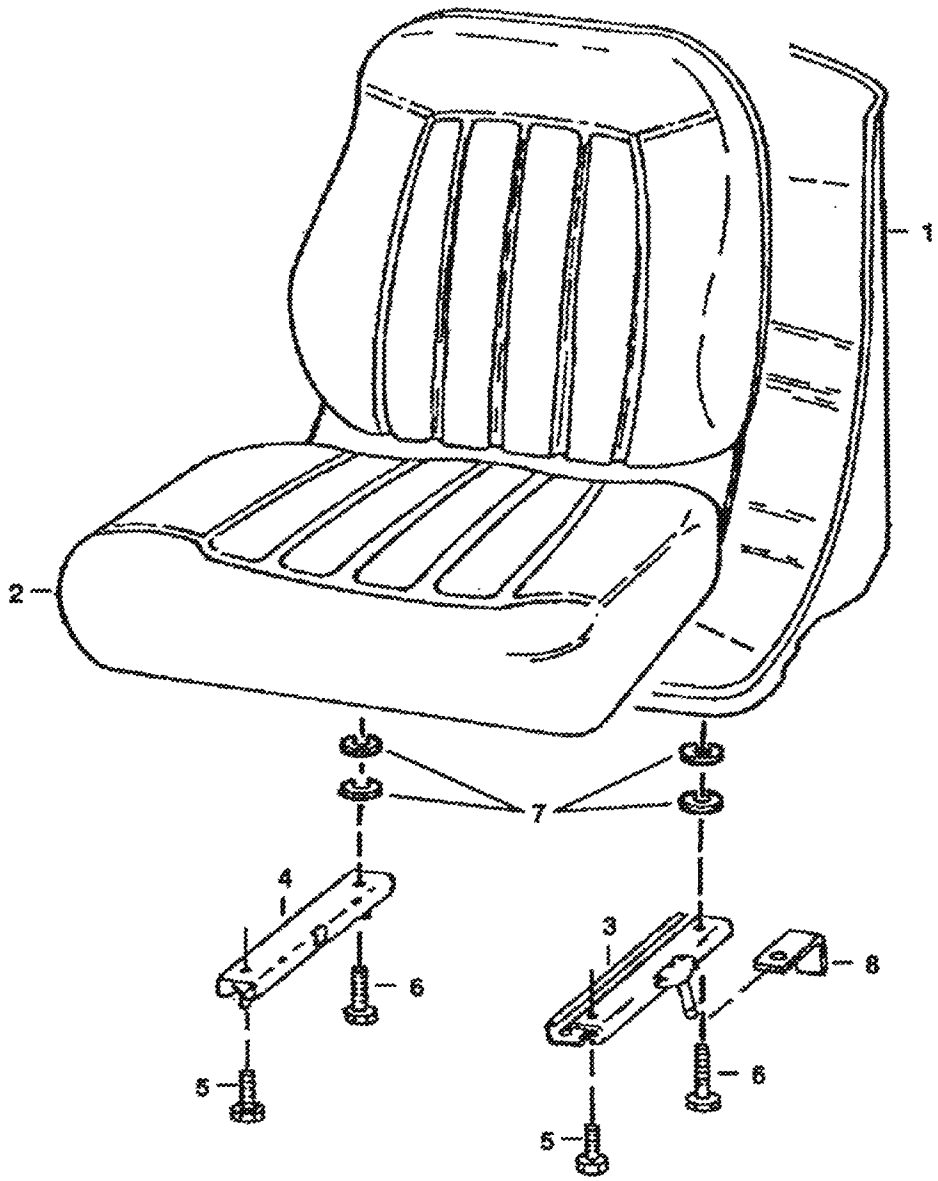
1
2
7
4
6
5
3
8
6
5
B-14720

Ref No	Part Number	Description	Remarks	Serial Number	Qty
1		SEAT	NAP - W/Ref. 2-5 & 8 - Order 6669135 Seat		1
1	6669135	SEAT	W/Ref. 2-7		1
2	6670160	CUSHION	W/edging, clip & (2) grommets		1
2		EDGING	NSS		1
2		CLIP	NSS		1
3		TRACK	NAP - L.H. - W/10" (254mm) Latch - Was 6669088 [A]		1
3	6674013	TRACK	L.H. - W/8" (203.2mm) Latch		1
4	6669089	TRACK	R.H. - W/O Latch		1
5	25G512	SCREW	6669135 Seat uses (2) bolts		4
6	25G520	SCREW			2
7	6672715	SPACER	Was 7000010 [A]		4
8	6668953	BRACKET	See S/L Dated 16 April 1996		2

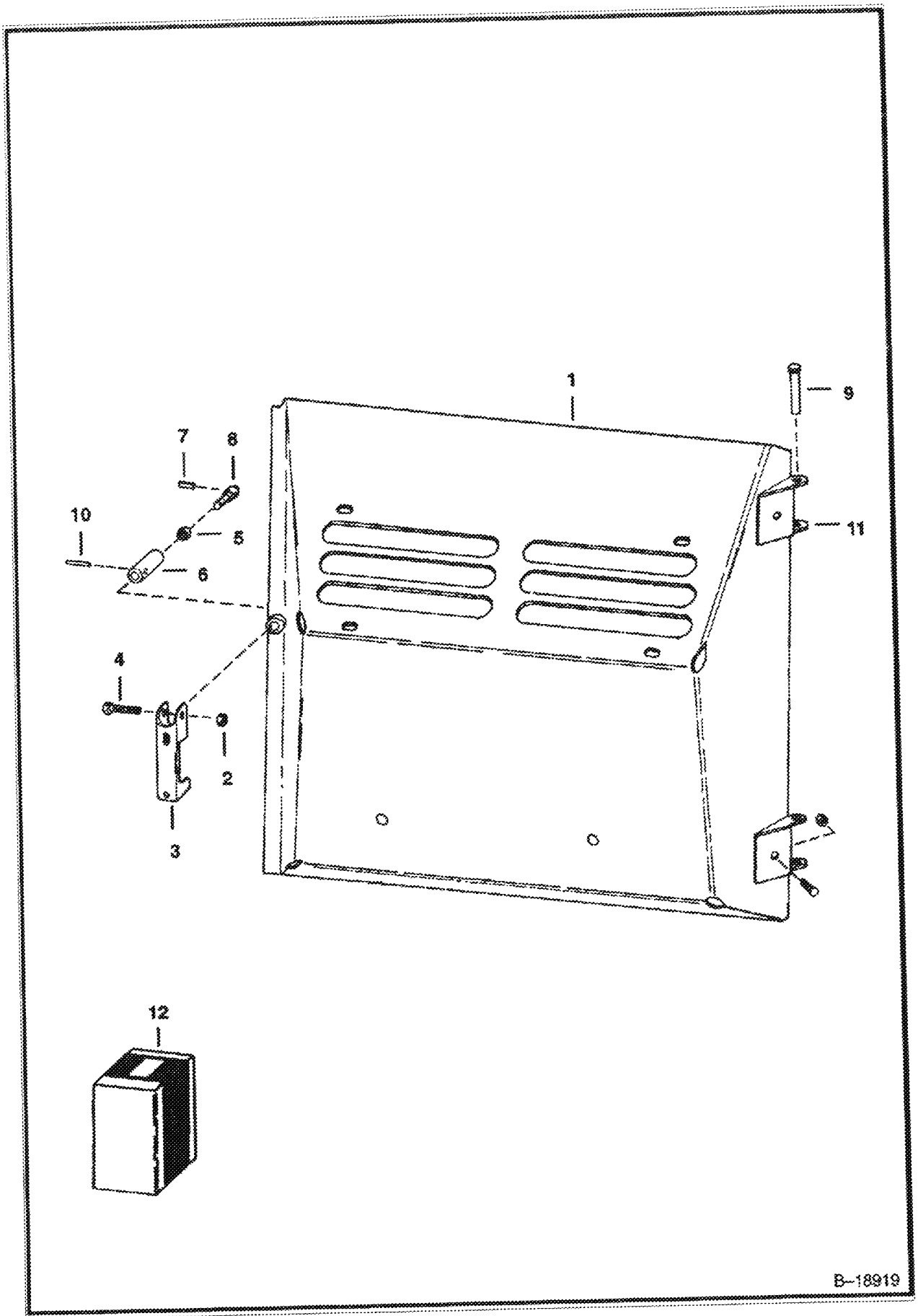
1
2
3
4
5
6
7
8
9
10
11
12
B-18919

REAR DOOR (Cont'd)

Ref No	Part Number	Description	Remarks	Serial Number	Qty
1	6704328	REAR DOOR	Was 6565073 [A]		1
2	85D5	NUT 5			1
3	6563681	HANDLE			1
4	38C000624B	BOLT	Was 6564599 [A]		1
5	61D000008B	NUT	1/2"		1
5	6563624	NUT	5/8" Coarse Thread		1
5	6565627	NUT	5/8" Fine Thread		1
6		NUT	NAP - 1/2" - Order 6565627 , 6565628 , 6565629 , 6599361 & 33G000404B		1
6		NUT	NAP - 5/8" Coarse Thread - Order 6565627 , 6565628 , 6565629		1
6	6565628	NUT	5/8" Fine Thread		1
7	6599361	PIN			1
8		SCREW	NAP - 1/2" - Order 33G-404, 6565627 , 6565628 , 6565629 , 6599361		1
8		SCREW	NAP - 5/8" - Coarse Thread - Order 6565627 , 6565628 , 6565629		1
8	6565629	SCREW	5/8" Fine Thread		1
9	6564340	PIN			2
10	33G000404B	SCREW			2
11	6562225	HINGE			2
12	6579448	LATCH KIT	Ref. 2-8 & 10		1

JS - 08/28/2008 17:23:27 Printed By Ken Cook Co - eSpiral.exe 10.2a 3 8/25/2008

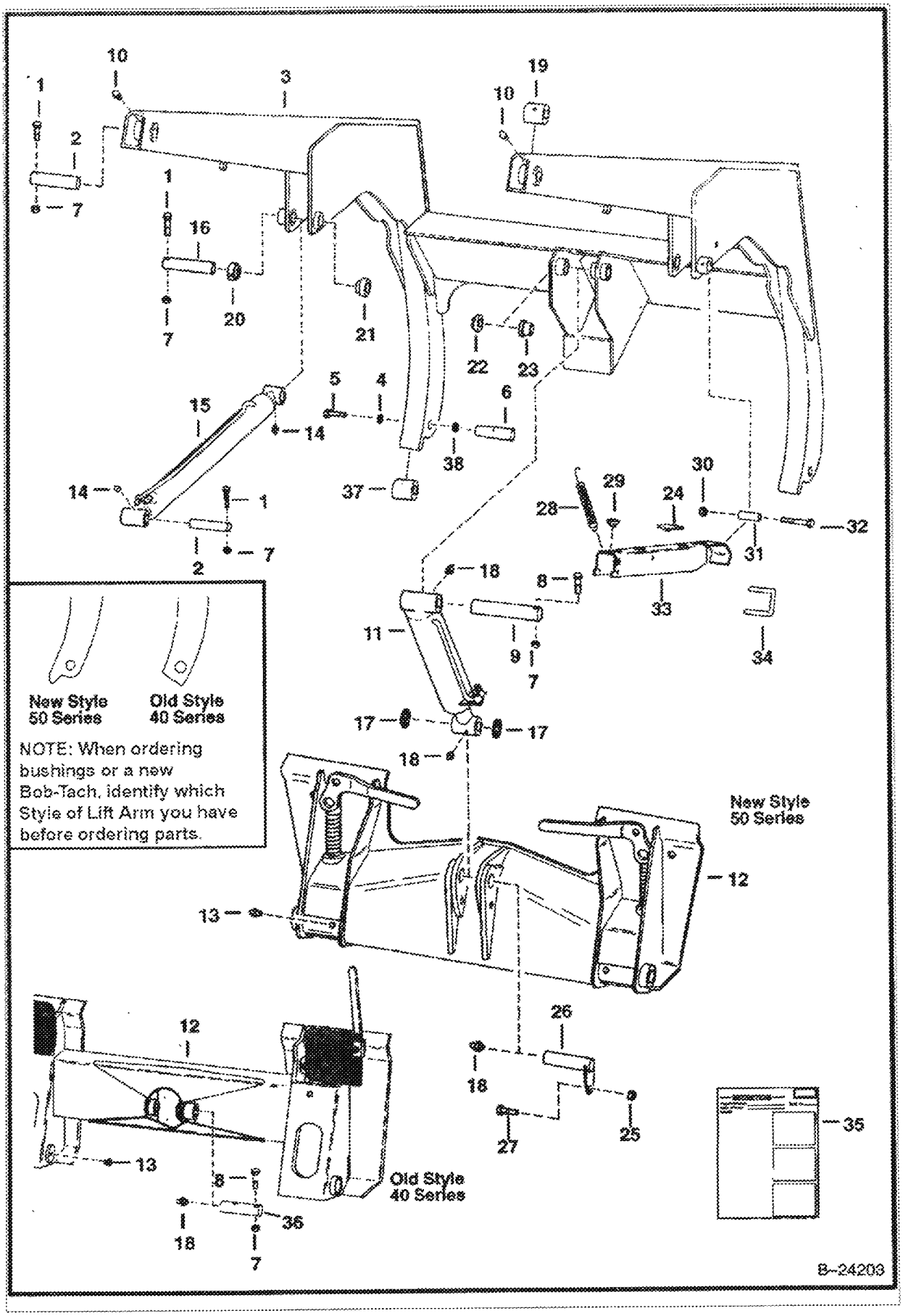
New Style
50 Series
Old Style
40 Series
NOTE: When ordering bushings or a new Bob-Tach, identify which Style of Lift Arm you have before ordering parts.
New Style
50 Series
Old Style
40 Series
B-24203

Ref No	Part Number	Description	Remarks	Serial Number	Qty
1	17C640	BOLT 5			6
2	6547595	PIN			4
3	6703953	LIFT ARM	Was 6702894 [A]		1
4	6555455	WASHER			2
5	17C001020B	BOLT	1-1/4" (31,8 mm)		2
5	31C001064B	BOLT	4" (101,6 mm) - Was 17C001064B [A]		2
6		PIN	NAP - Order 6707521 Pin Kit - Was 6700301 [A]		2
6	6707521	PIN KIT	W/ 6732012 Pin 31C001064B Bolt & Ref. 36		2
6	6732012	PIN	Was 6707042 [A]		2
7	85D6	LOCK NUT			8
8	17C000632B	BOLT			2
9	6704288	PIN	Was 6553061 [A]		1
10	10H000035B	GREASE ZERK	1/4/2028		2
10	10H25	GREASE ZERK	1/8/2027		2
11		CYLINDER	See Illustration TILT CYLINDER/ C2546 TILT		1
12		BOB-TACH	See Illustration BOB-TACH/ D1547 SALES		1
13	743332B	GREASE ZERK			2
14	11H15	GREASE FITTING			4
15		CYLINDER	See Illustration LIFT CYLINDER/ B6942 LIFT		2
16	6547593	PIN			2
17	255855B	SEAL	For new style Bobtach - Was 6654117 [A]		2
17	6513605	SEAL	For old style Bobtach		2
18	10H25	GREASE ZERK			2
19	6578356	BUSHING	Weld On		2
20	6555987	BUSHING	Weld On		2
21	6555989	BUSHING	Weld On		2
22	6703363	BUSHING	Weld On - New Style See Note		1
22	6558779	BUSHING	Weld On - Old Style See Note		1
23		BUSHING	NAP - Weld On - Order 6704287 & 6704288 - Was 6703364 [A]		1
23	6737623	BUSHING	Weld On - Was 6704287 [A]		1
23	6558803	BUSHING	Weld On - Old Style See Note		1
24	6704436	PAD	New Style See Note		1
25	85D6	LOCK NUT	New Style See Note		9
26	6705223	PIN	New Style See Note - Was 6700037 [A]		1
27	17C620	BOLT	New Style See Note		1
28	6579072	SPRING	New Style See Note - Was 6700743 [A]		1
29	6519178	BUMPER	New Style See Note		1
30	61D000006B	NUT	New Style See Note		1
31	6700469	SPACER	New Style See Note		1
32	17C000648B	BOLT	New Style See Note		1
33	6705089	LIFT ARM STOP	New Style See Note - Was 6700615 [A]		1
34	6714810	PIN	retainer - New Style See Note - Was 6578457 [A]		1
35	6722967	INSTRUCTIONS	INSTRUCTIONS for 6707521 Pin Kit		1
36	6703572	PIN	Old Style See Note - Was 6560704 [A]		1
37	6714874	BUSHING	W/Tapered Hole		2
38	27E000018B	WASHER	See BTI178		x

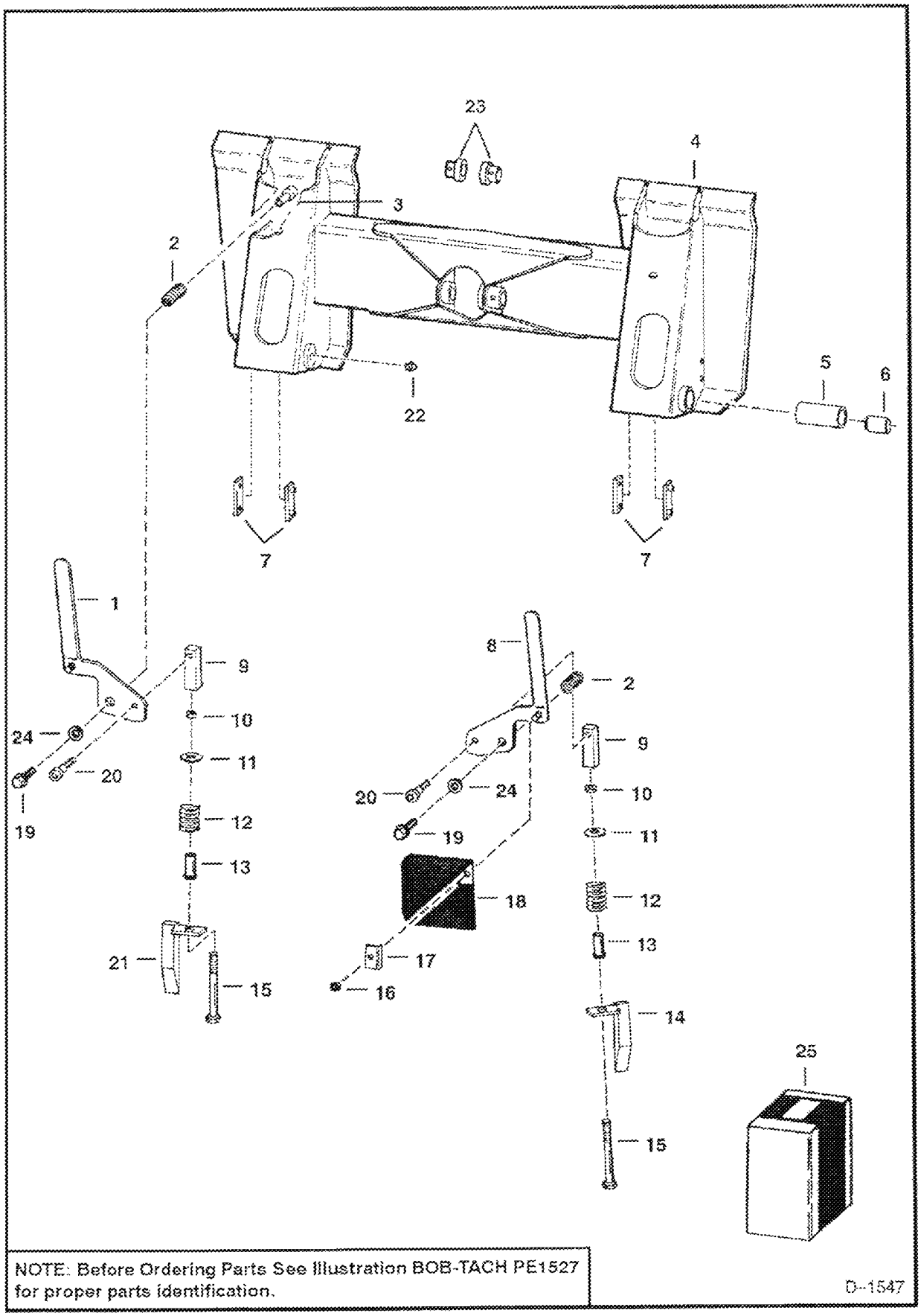

NOTE: Before Ordering Parts See Illustration BOB-TACH PE1527 for proper parts identification.

Ref No	Part Number	Description	Remarks	Serial Number	Qty
1	6563106	LEVER			1
2	6704453	SPRING	Was 6503387 [A]		2
3	6562013	STUD			2
4		FRAME	NAP - ORDER 6705172		1
5	6565326	BUSHING	Weld-In - W/Ref. 6		2
6	6562067	BUSHING	Press Fit		2
7	6562026	INSERT			4
8	6563107	LEVER			1
9		BLOCK	NAP - Order 6565186 Block & 17C000884B Bolt		2
9	6565186	BLOCK	Use only with 17C000884B Bolt		2
10	7D000008B	NUT			2
11	25E21	WASHER 5			2
12	6562018	SPRING			2
13	6562019	GUIDE			2
14	6565189	WEDGE			1
15	17C000880B	BOLT	1/2" x 5"		2
15	17C000884B	BOLT	1/2" x 5-1/4" - Use with 6565186 Block		2
16	85D6	LOCK NUT			2
17	6563108	ANGLE			2
18	6563103	COVER			2
19	35C000610B	BOLT			2
20	38C000810B	BOLT	Was 661846B [A]		2
21	6565190	WEDGE			1
22	743332B	GREASE ZERK			2
23	6562642	BUSHING	Weld On		2
24	619021B	WASHER			2
25	6579433	LEVER KIT	L.H. - Ref. 1, 2, 9-13, 15-21 & 24		1
25	6579434	LEVER KIT	R.H. - Ref. 2, 8, 9-20, & 24		1

Page 33 - 06/28/2006 17:01:28 Printed by Bob Cook Co - attach..rpt 10.24.3 8/25/2003

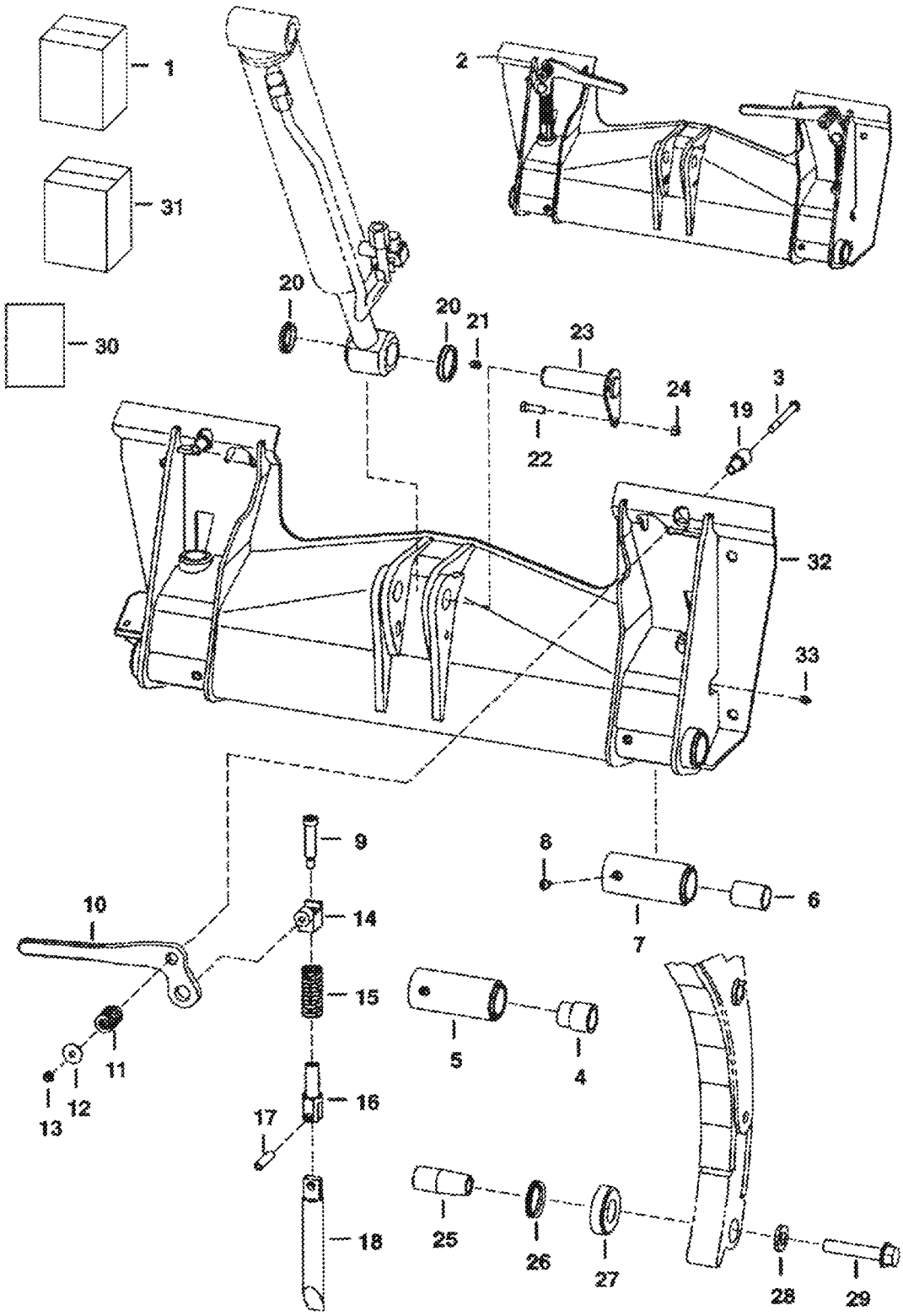

NOTE: Before Ordering repair parts make sure this is the correct style Bob-Tach.

PE-1527

Ref No	Part Number	Description	Remarks	Serial Number	Qty
1	6705172	KIT	Bob-Tach - Ref. 2, 4 & 20-28		1
2		BOB-TACH	See Illustration DECALS/ B20266 NAP - W/Ref. 7 (NAP/6577445 Bushing) - 2.25 in (57,15 mm) O.D. weld on bushings - Order 6571744 Bob-tach, (2) Ref. 4 & 6561383 decal - Was 6705173 [A]		1
2	6571744	BOB-TACH	See Illustration DECALS/ B20266 W/Ref. 5 - 2.50 in. (63,5 mm) O.D. weld on bushings - Also Order (2) Ref. 4 & 6561383 decal - Not in Kit		1
3	17C000644B	BOLT	See Ref. 11 & 12 - 2.75"(69,9mm) long		2
3	17C000660B	BOLT	See Ref. 11 & 12 - 3.75"(95,3mm) long		2
4	6732446	BUSHING	press fit - 1.25 in (31,8 mm) I.D. - stepped O.D.		2
5	6731979	BUSHING	weld on - 2.50 in. (63,5 mm) O.D. - Also Order Ref. 4		2
6	6589665	BUSHING	press fit - 1.25 in (31,8 mm) I.D. - straight O.D. - Was 6534387 [A]		2
7		BUSHING	NAP - weld on - 2.25 in. (57,15 mm) O.D. - W/Ref. 6 - Order 6577446 bushing & Ref. 6 - Was 6577445 [A]		2
7	6577446	BUSHING	weld on - 2.25 in (57,15 mm) O.D. - Also Order Ref. 6		2
8	743332B	GREASE ZERK			2
9	38C001036B	BOLT	shoulder - Was 38C001036B [A]		2
10	6702903	LEVER	L.H.		1
10	6702904	LEVER	R.H.		1
11	6704453	SPRING	Use W/Ref. 3 - 17C000644B bolt - Was 6578252 [A]		2
11	6713040	SPRING	Use W/Ref. 3 - 17C000660B bolt		2
12	6557831	WASHER	Use W/Ref. 3 - 17C000644B bolt		2
12	619021B	WASHER	Use W/Ref. 3 - 17C000660B bolt		2
13	85D6	LOCK NUT			6
14	6704240	PIVOT ASSY.	Was 6576456 [A]		2
15	6578253	SPRING			2
16	6704248	PIVOT	wedge		2
17	14J005032B	PIN			2
18	6737191	WEDGE	Was 6704242 [A]		2
19	6702958	BUSHING	weld on		2
20	6654117	SEAL			2
21	10H25	GREASE ZERK			1
22	17C620	BOLT			1
23	6705223	PIN	Was 6700037 [A]		1
24	85D6	LOCK NUT			1
25		PIN	NAP - Order 6707521 Pin Kit - Was 6700301 [A]		2
25	6707521	PIN KIT	W/6732012 Pin, 17C001064B Bolt & Ref. 36		2
25	6732012	PIN	Was 6707042 [A]		2
26	6651709	SEAL			2
27	6700039	CUP			2
28	6555455	WASHER			2
29	17C001020B	BOLT	1 1/4" (31,8mm)		2
29	17C001064B	BOLT	4"(101,6mm)		2
30	6722967	INSTRUCTIONS	for Ref. 25		1
31	6724775	LEVER KIT	lever - R.H. - Ref. 3 & 9-18		1
31	6724776	LEVER KIT	lever - R.H. - Ref. 3 & 9-18		1
32		FRAME	NAP		1
33	10H000035B	GREASE ZERK			2

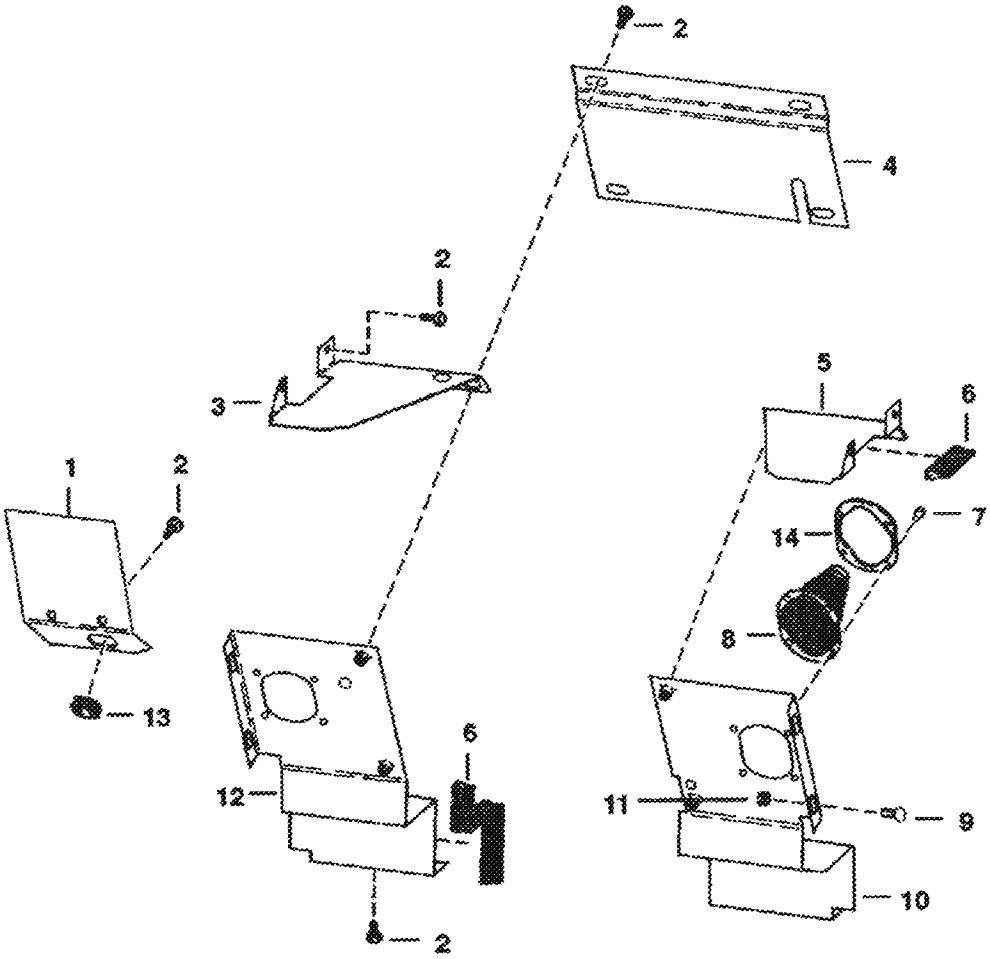
2
4
2
3
1
2
13
5
6
7
14
8
6
12
11
9
10
2
B-20251

PANELS (Cont'd)
(S/N 13759 & Below)

Ref No	Part Number	Description	Remarks	Serial Number	Qty
1	6562807	SHIELD	Wire Harness		1
2	84G3716	SCREW 5			12
3	6562450	BRACE	L.H.		1
4	6557172	PLATE			1
5	6562451	BRACE	R.H.		1
6	4126590	MOULDING	bulk-Sold Per Foot		x
7	6630207	RIVET	Was 6513493 [A]		8
8	6532127	BOOT	W/Ref. 14		2
9	37C616	BOLT	carriage - Was 6514537 [A]		4
10	6563537	PANEL	R.H.		1
11	57D6	NUT 5			4
12	6563539	PANEL	L.H.		1
13	6553653	GROMMET			1
14		PLATE	NSS - Order Ref. 8 - Was 6536392 [A]		2

Page xx - xx/xx/2008 10:23:48 - Printed by Kon Cook Co. - eSprint exe ver 24.1 8/25/2008

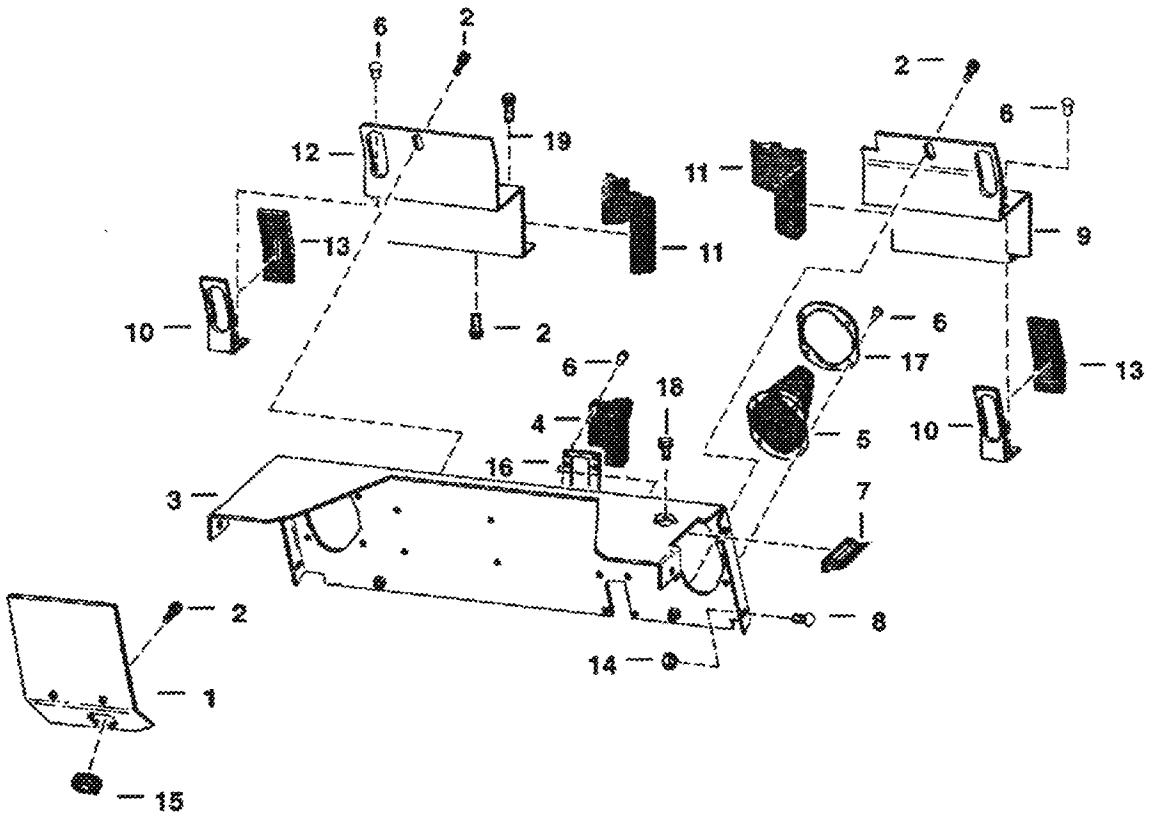
6
2
12
19
13
11
10
2
6
18
4
16
3
2
1
15
2
6
11
9
6
17
13
10
5
7
8
14
B-20252

PANELS (Cont'd)
(S/N 13760 & Above)

Ref No	Part Number	Description	Remarks	Serial Number	Qty
1	6562807	SHIELD	Wire Harness	13760 19999	1
2	84G3716	SCREW 5			4
3	6564674	SHIELD	Also Order Ref. 18		1
4		BOOT	NAP - Order 6571648 - Was 6565013 [A]		1
4	6571648	BOOT	W/Metal Insert		1
5	6532127	BOOT	W/Ref. 17		2
6	6630207	RIVET	Was 6513493 [A]		8
7	4126590	MOULDING	bulk-Sold Per Foot		x
8	37C616	BOLT	carriage - Was 6514537 [A]		4
9	6564670	SHIELD	If both shield and floor plate are slotted, use bolt, washer and nut		1
10	6564982	RETAINER			2
11	6513152	SEAL			2
12	6564671	SHIELD	If both shield and floor plate are slotted, use bolt, washer and nut		1
13	6564976	SEAL	foam block		2
14	57D6	NUT 5			6
15	6553653	GROMMET		13760 19999	1
16	6565014	RETAINER	Not used W/6571648		1
17		PLATE	NSS - Order Ref. 5 - Was 6536392 [A]		2
18	6598805	PLUG			1
19	84G3712	BOLT			2

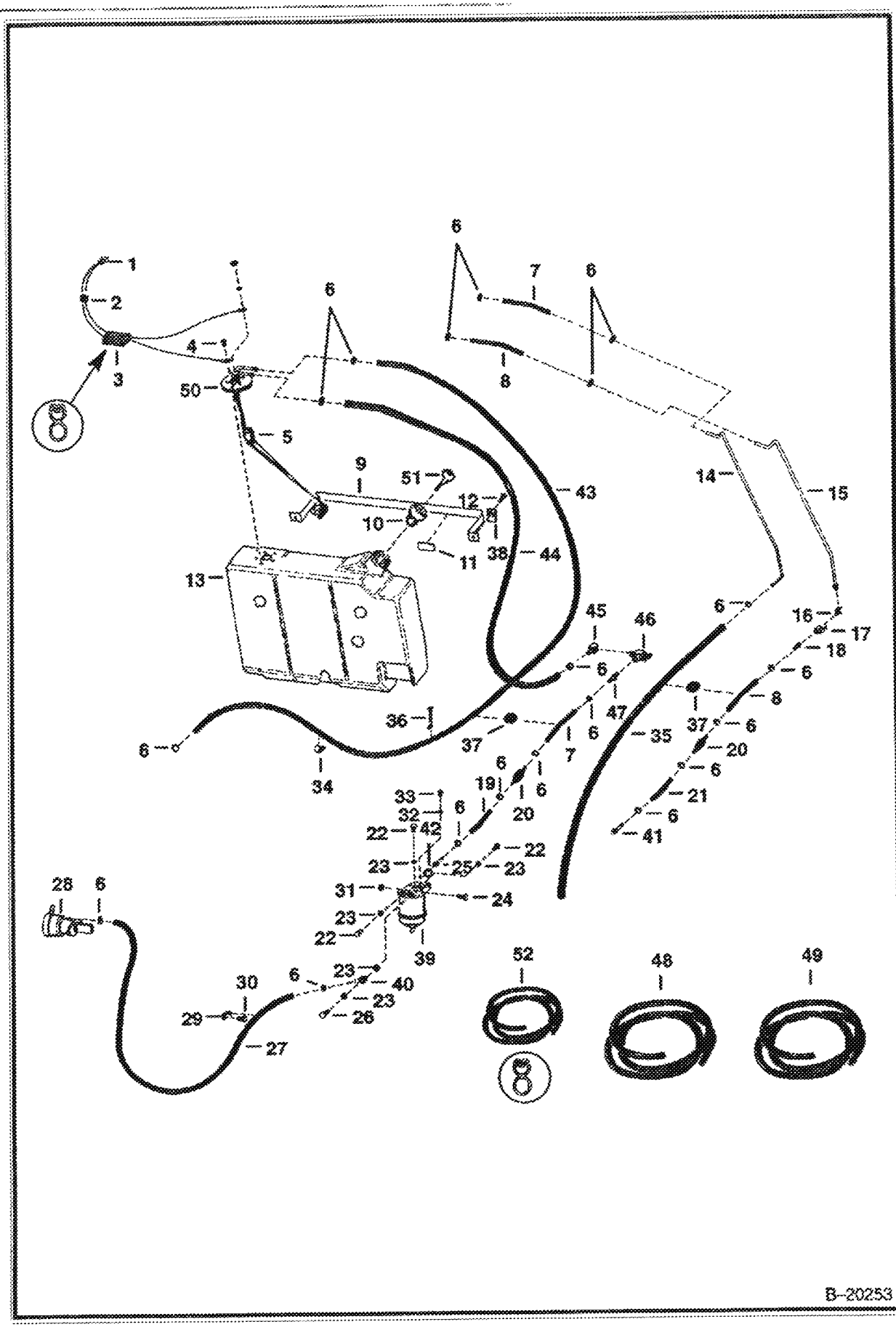
B-20253

FUEL SYSTEM (Cont'd)
(S/N 16124 & Below)

Ref No	Part Number	Description	Remarks	Serial Number	Qty
1	6560117	WIRE			1
2	742876B	GROMMET			1
3		SEAL	NAP - 3" (86mm) - Order Ref. 52		1
4	87G001010B	SCREW	Was 85G001010B [B]		5
5	6563210	SENDER			1
6	6515575	CLAMP			12
7		HOSE	NAP - 6" (152.4 mm) - Order Ref. 48		1
8		HOSE	NAP - 7" (177.8 mm) - Order Ref. 49	12381 & Below	2
9	6562559	BAND			1
10	6632468	CAP	Was 6555717 [A]		1
10		CAP	NAP - locking - W/Ref. 51 - Code GC020 - Was 6654373 [A]		1
10	6661696	CAP	locking - W/Ref. 51 - Code PK510		1
11	6591273	STRIP	rubber - bulk - Was 6563233 [A]	12381 & Below	1
12	84G3720	BOLT			2
13		TANK	See BTI216 NAP		1
14	6562548	TUBE		12381 & Below	1
15	6562547	TUBE		12381 & Below	1
16	62F000004B	ELBOW		12381 & Below	1
17	6562553	VALVE	shut off	12381 & Below	1
18	6513421	CONNECTOR		12381 & Below	1
19		HOSE	NAP - 2" (50,8 mm) - Order Ref. 48	12382 16124	1
20	6657734	PUMP	hand primer - Was 6563396 [A]		1
21		HOSE	NAP - 2-1/4" 57,15 mm) - Order Ref. 49	12381 & Below	1
22	6515682	PLUG			2
23	6515466	WASHER			4
24	17C000616B	BOLT			2
25	6560355	FITTING		12382 16124	1
26	3727284B	BOLT	hollow	14999 & Below	1
27		HOSE	NAP - 49" (1244,6 mm) - Order Ref. 49		1
28	6666850	FUEL PUMP	See Illustration INJECTION PUMP/ B3612 WAS 6598121 [A]		1
29	30H000036B	CLAMP			2
30	6CM1220	BOLT			1
31	57D6	NUT 5			2
32	6515468	WASHER			1
33	6515676	PLUG			1
34	30H000029B	CLAMP			1
35		HOSE	NAP - 30" (990,6 mm) - Order Ref. 48		1
36	6513471	CLAMP			1
37	6515603	GROMMET			1
38	6559447	WASHER	square		2
39	6560348	FILTER ASSY	See Illustration FUEL FILTER/ B5653		1
40	6511899	ADAPTER	banjo	14999 & Below	1
40	6599488	ELBOW		15001 16124	1
41	1324240	CONNECTOR		12381 & Below	1
42	79K000005B	O-RING			1
43		HOSE	NAP - 58" (1473,2 mm) - Order Ref. 48	12382 16124	1
44		HOSE	NAP - 35" (889 mm) - Order Ref. 49	12382 16124	1
45	6598753	ELBOW		12382 16124	1
46	6632593	VALVE	shut-off - Was 6512138 [B]	12382 16124	1
47	6505813	CONNECTOR	barbed - Used W/barbless valve	12382 16124	1
48	6577821	HOSE	bulk-Sold Per Foot - Was 672221B [A]		x
49	6577822	HOSE	bulk-Sold Per Foot - Was 6562515 [A]		x
50	6630972	GASKET			1
51	6654374	KEY	Set of 2 - Code GC020		1

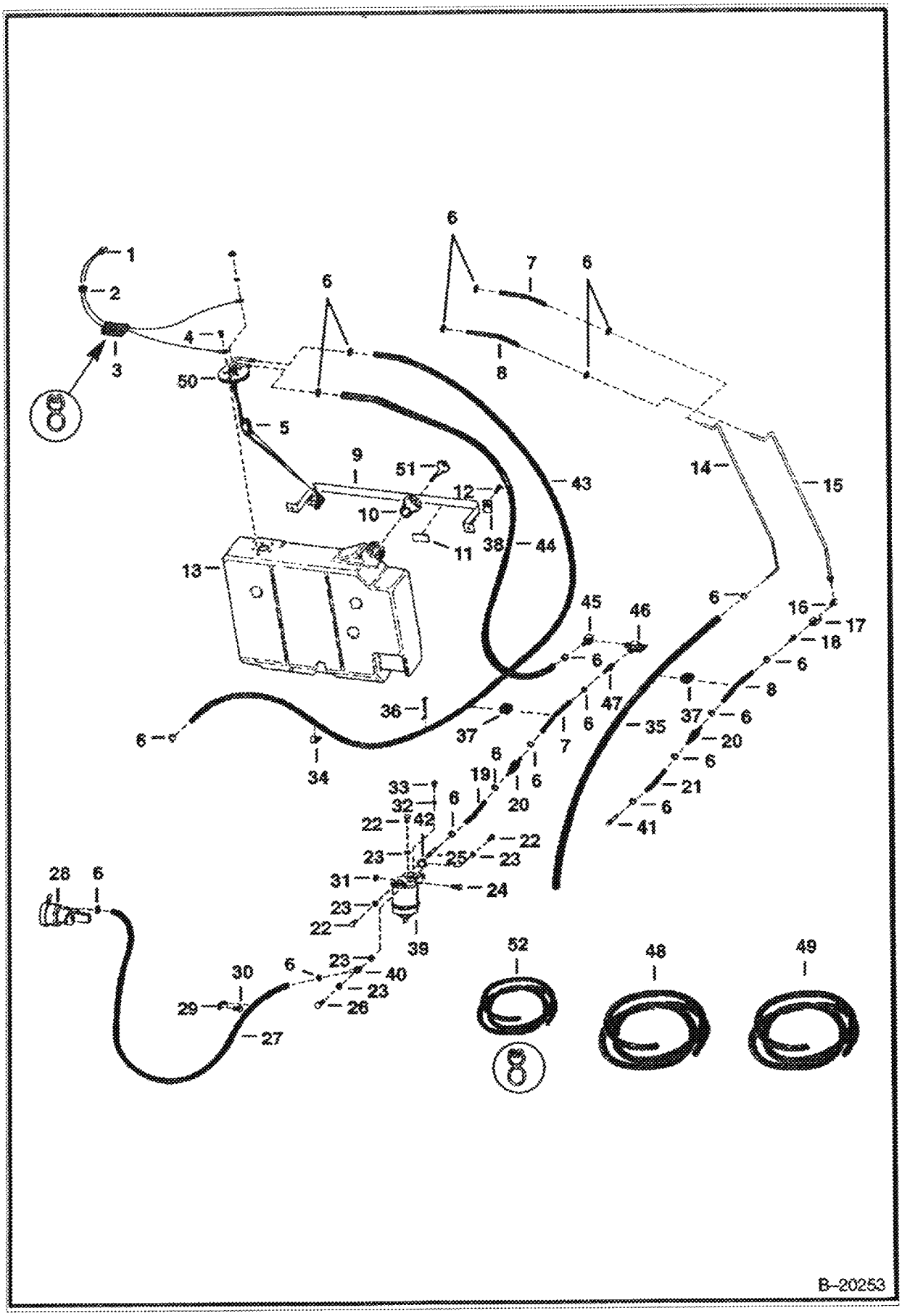
B-20253

Ref No	Part Number	Description	Remarks	Serial Number	Qty
51	6587458	KEY	Set of 2 - Code PK510		1
52	6513152	SEAL	bulk-Sold Per Foot		x

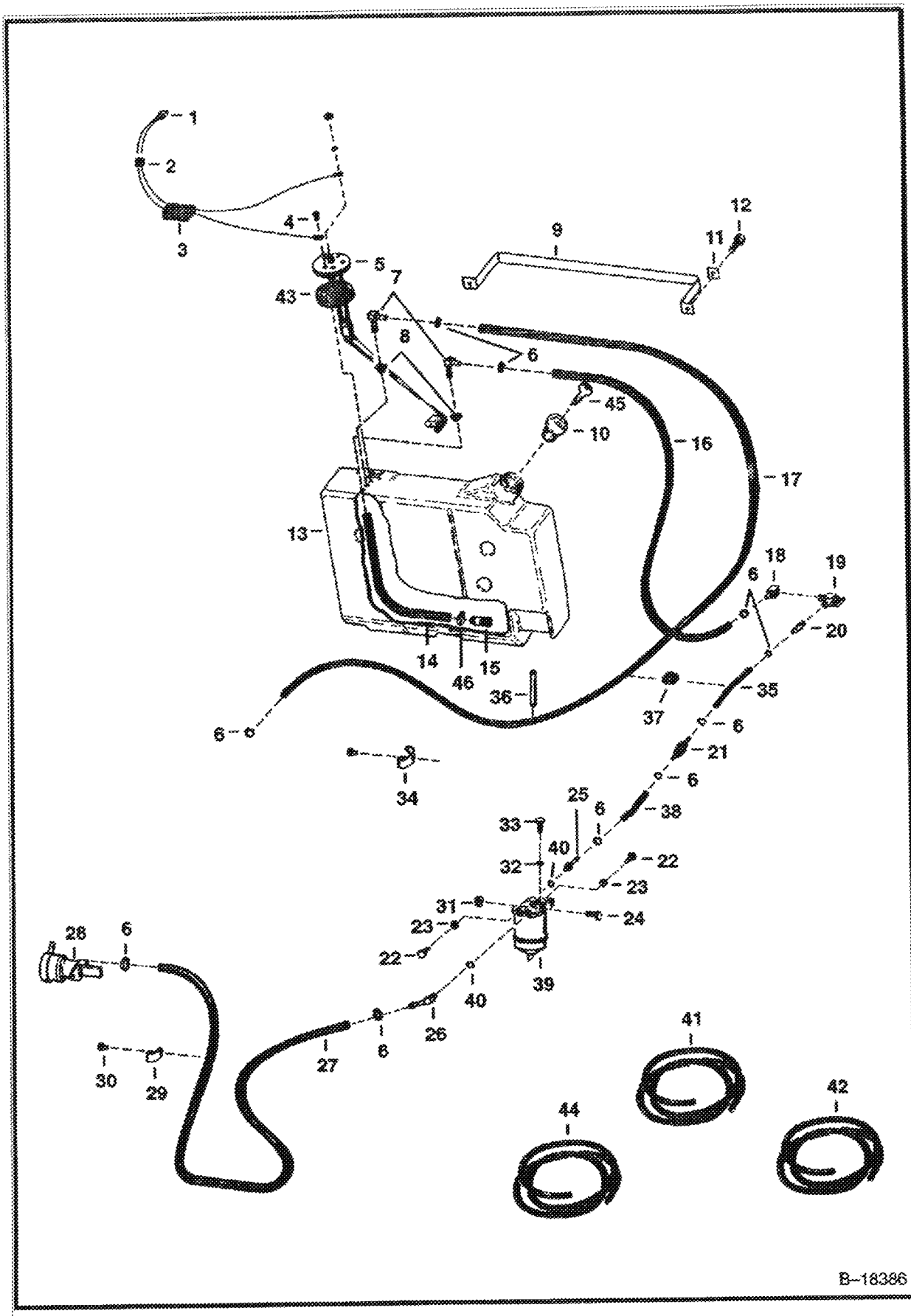
1
2
3
4
5
43
7
8
9
11
12
6
45
10
16
17
13
18
19
20
14
46
15
36
37
35
34
21
25
38
33
40
32
22
23
31
24
39
28
30
29
27
26
41
42
44
B-18386

FUEL SYSTEM (Cont'd)
(S/N 16125 & Above)

Ref No	Part Number	Description	Remarks	Serial Number	Qty
1	6560117	WIRE		16125 19999	1
2	742876B	GROMMET		16125 19999	1
3	6562606	SEAL		16125 19999	1
4	87G001010B	SCREW			5
5	6562552	SENDER		16125 19999	1
5	6568175	SENDER		20001 & Above	1
6	6515575	CLAMP			12
7	7101291	ELBOW	Was 6598908 [A]		2
8	6553411	BUSHING			2
9	6562559	BAND			1
10	6632468	CAP	Was 6555717 [A]		1
10		CAP	NAP - locking - W/Ref. 45 - Code GC020 - Was 6654373 [A]		1
10	6661696	CAP	locking - W/Ref. 45 - Code PK510		1
11	6559447	WASHER			2
12	84G3720	BOLT			2
13	6567909	TANK			1
14		HOSE	NAP - 21" (533,4 mm) - Order Ref. 44		1
15	6650239	SCREEN	Was 6598911 [A]		1
16		HOSE	NAP - 35" (889 mm) - Order Ref. 41		1
17		HOSE	NAP - 58" (1473,2 mm) - Order Ref. 42		1
18	6598753	ELBOW			1
19	6632593	VALVE	shut-off - Was 6512138 [B]		1
20	6505813	CONNECTOR	Used W/barbless fuel valve		1
21	6657734	PUMP	hand primer - Was 6563396 [A]		1
22	6515682	PLUG			2
23	6515466	WASHER	sealing		4
24	17C000616B	BOLT			2
25	6560355	FITTING			1
26		ELBOW	NAP - W/Ref. 40 - flat boss face - Was 6657083 [A]		1
26	6715183	ELBOW	W/Ref. 40 - check boss face to determine correct replacement o-ring		1
27		HOSE	NAP - 49" (1244,6 mm) - Order Ref. 41		1
28	6598121	FUEL PUMP	See Illustration INJECTION PUMP/ B3612		1
29	30H000036B	CLAMP			2
30	6CM1220	BOLT			1
31	57D6	NUT 5			2
32	6515468	WASHER	sealing		1
33	6515676	PLUG			1
34	30H000029B	CLAMP			1
35		HOSE	NAP - 6" (152,4 mm) - Order Ref. 42		1
36	6513471	CLAMP			1
37	6515603	GROMMET			1
38		HOSE	NAP - 2" (50,8 mm) - Order Ref. 42		1
39	6560348	FILTER ASSY	See Illustration FUEL FILTER/ B5653		1
40	79K000005B	O-RING	flat boss face		2
40	99K000005B	O-RING	tapered boss face		2
41	6577822	HOSE	bulk-Sold Per Foot		x
42	6577821	HOSE	bulk-Sold Per Foot		x
43	6630972	GASKET			1
44	6569752	HOSE BULK/FT	bulk-Sold Per Foot		x
45	6654374	KEY	Set of 2 - Code GC020		1
45	6587458	KEY	Set of 2 - Code PK510		1
46	6661213	RING			1

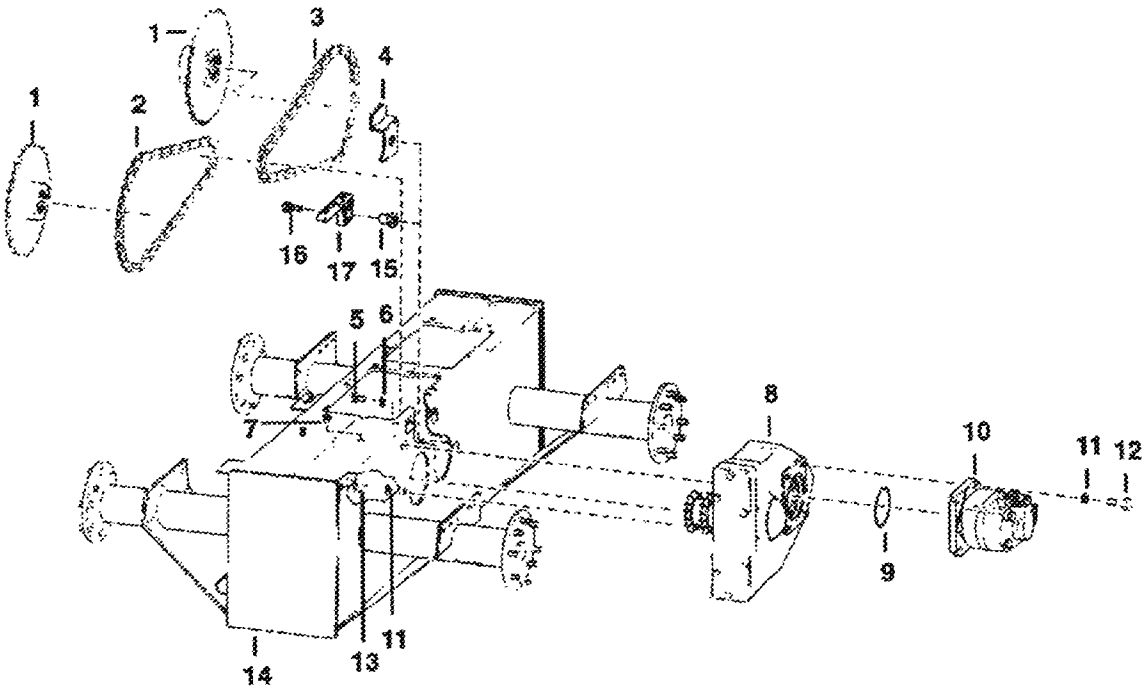

B-18922

Ref No	Part Number	Description	Remarks	Serial Number	Qty
1	6562999	SPROCKET			4
2	6559099	CHAIN			2
3	6559100	CHAIN			2
3	6510171	LINK	conn. - Used for Diamond & Daido chain		x
4		GUIDE	NAP - R.H. & L.H. - Order Ref. 15-17 - Was 6559726 [A]		2
5	17C001228B	BOLT			x
6	6576033	WASHER	Was 6558465 [A]		10
7	6558506	PLUG	breather		1
8	6558307	GEARCASE	See Illustration GEARCASE/ B18915		2
9	25K030508B	O-RING			2
10		MOTOR	See Illustration HYDROSTATIC MOTOR/ D1443		2
11	6701097	WASHER	Was 6803867 [A]		10
12	17C000828B	BOLT			8
13	17C820	BOLT			2
14	6565543	CHAINCASE			1
15	17C001252B	BOLT			2
16	6569807	BUSHING			2
17	6569808	CHAIN GUIDE	plastic		2

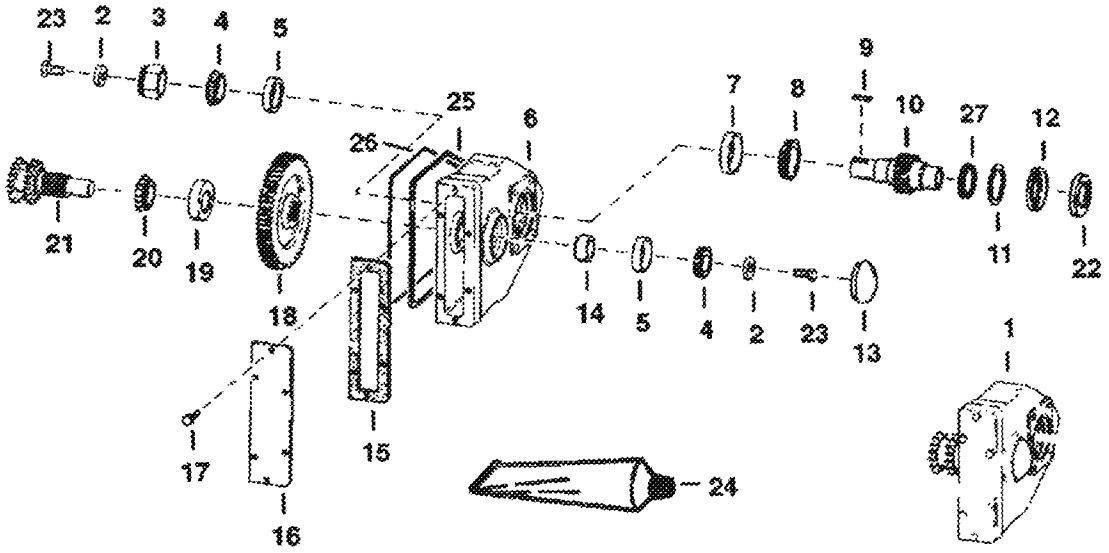
23
2
3
4
5
25
26
6
7
8
9
10
27
12
21
20
19
18
14
5
4
2
23
13
11
22
1
17
15
16
24

B–18915

Ref No	Part Number	Description	Remarks	Serial Number	Qty
1	6558307	GEARCASE	Ref. 2-23		1
2	6558234	WASHER			2
3	6558208	HUB			1
4	6648774	BEARING	Was 743778B [A]		2
5	6648776	RACE	Was 743777B [A]		2
6		HOUSING	NAP - Order Ref. 6 & 25		1
6	6563577	HOUSING	Without O-Ring Groove		1
7	1320905B	CUP			1
8	1320904B	BEARING			1
9	7J006012B	KEY			1
10	6558272	SHAFT			1
11	6559619	WASHER			1
12	6513588	SEAL			1
13	6565289	CAP			1
14	6558276	COLLAR			1
15	6558273	GASKET			1
16	6558274	COVER			1
17	17C000512B	BOLT			6
18	6558270	GEAR			1
19	660181B	RACE			1
20	731284B	BEARING			1
21	6558277	SHAFT			1
22	6513681	BEARING	bronze		1
23	17C001220B	BOLT			2
24	6561395	SEALANT	bortite		1
25	6563574	RETAINER	Used W/6563577 Housing		1
26	6558518	O-RING			1
27	6515195	SEAL	quad ring		1

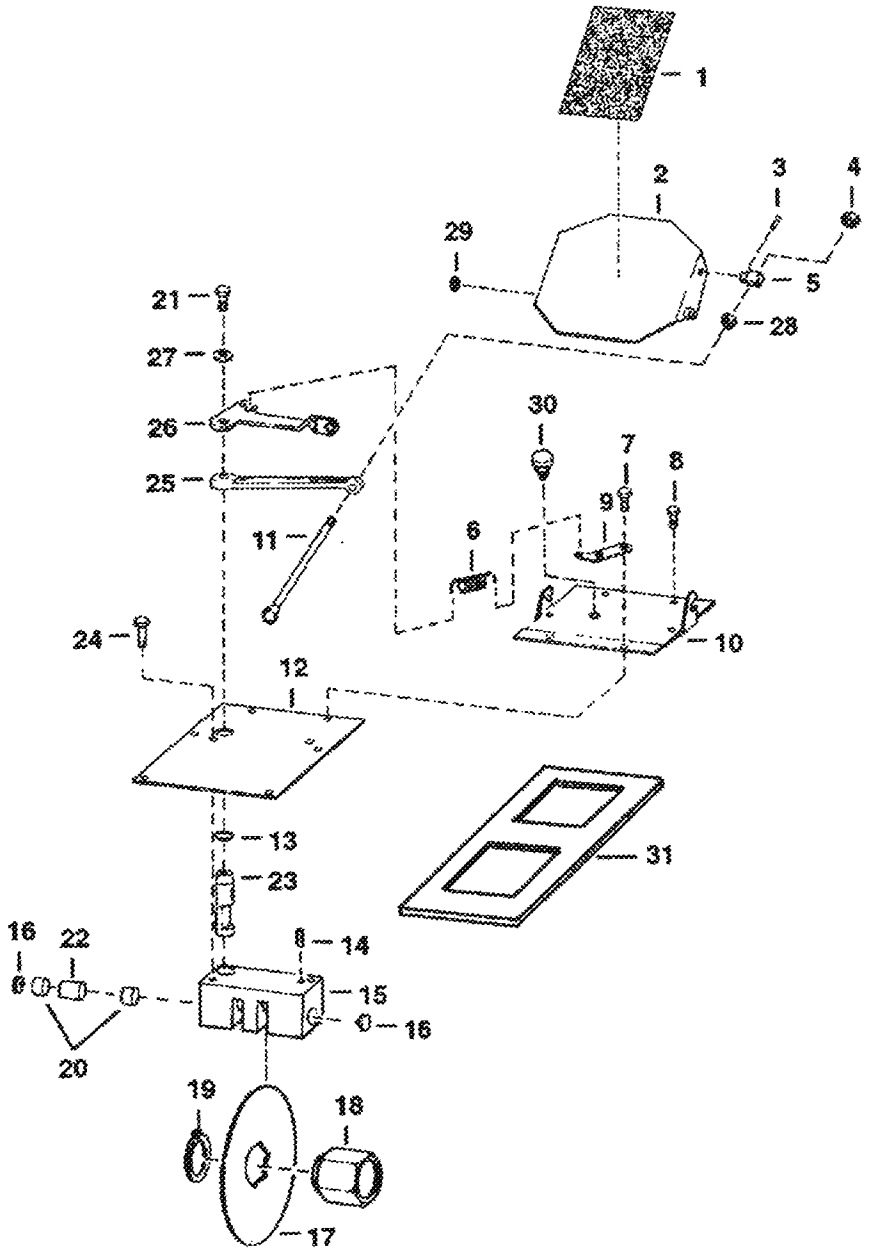
1
2
3
4
5
28
29
21
27
26
25
30
7
8
9
6
11
10
24
12
31
13
23
16
22
14
15
16
20
19
18
17
B-20254

Ref No	Part Number	Description	Remarks	Serial Number	Qty
1	6553976	SAFETY TREAD			1
2	6563187	PEDAL			1
3	14J0025168	PIN			1
4	85D8	NUT 5			1
5	6563178	PIVOT			1
6	6584584	SPRING	Was 6505076 [A]		1
7	84G3716	SCREW 5			2
8	84G3712	BOLT			8
9	6559218	ANGLE			1
10	6575654	COVER	Also Order Ref. 30 - Was 6554093 [A]		1
11	6569601	ROD			1
12	6558467	COVER			1
13	25K030100B	O-RING			1
14	784466B	PIN			1
15	6562757	BLOCK			1
16	6562756	WASHER	wear		2
17	6559237	DISC			2
18	6558208	HUB			1
19	742666	SNAP RING			2
20	6558659	PAD			2
21	17C820	BOLT			1
22	6558660	PAD			1
23	6562755	PIN			1
24	17C000812B	BOLT			2
25	6563823	LEVER			1
26	6577552	BRACKET	Was 6563173 [A]		1
27	6506477	WASHER			1
28	61D000008B	NUT			1
29	25E21	WASHER 5			x
30	6632601	BREATHER			1
31	6703117	GASKET			1

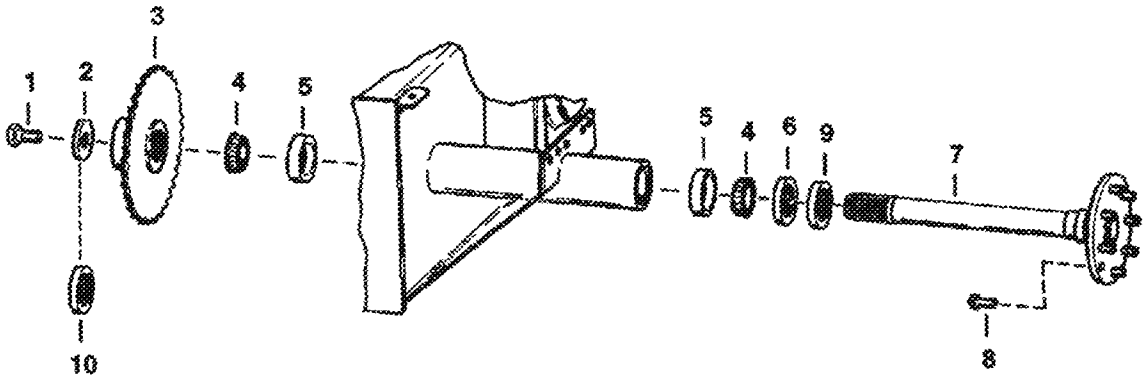

C–2611

Ref No	Part Number	Description	Remarks	Serial Number	Qty
1	18C001224B	BOLT			1
2	6552871	WASHER			1
3	6562999	SPROCKET			1
4	6519925	BEARING	Was 6669050 [A]		2
5	6519926	RACE			2
6	6513277	SEAL			1
7	6563251	AXLE			1
8	6709170	STUD	wheel - Was 6702302 [A]		8
9	6558477	RING	wear		1
10	6563606	WASHER	recessed - Used to take up .005 or .010 end play on axle		1
10	6568835	WASHER	recessed - Used to take up .020 end play on axle		1

Page 53 - 08/26/2008 11:23:39 - Scanned by Ken Cook Co. - exportinc.exe 10.2.20.3 8/26/2008

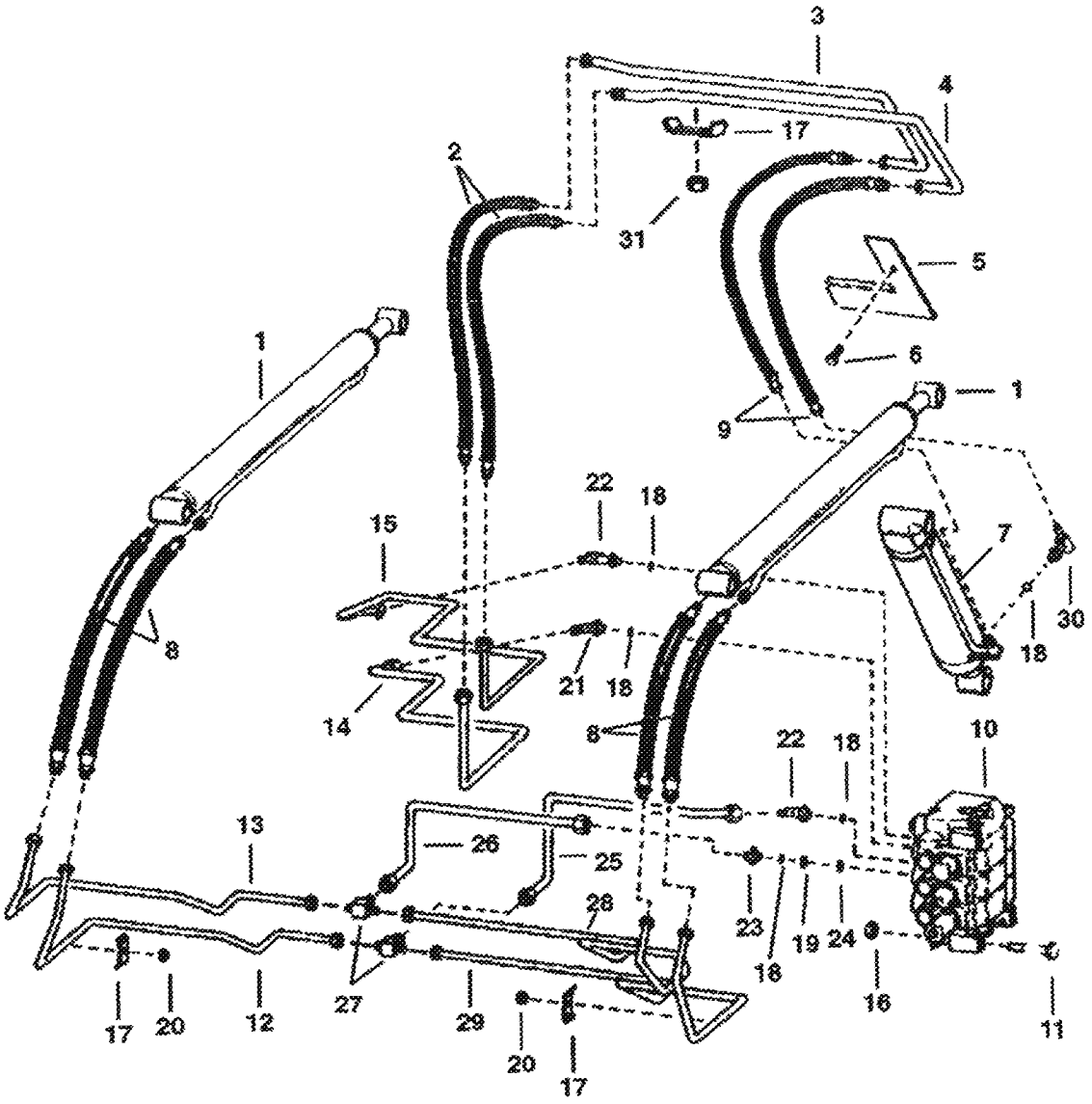
3
4
17
2
31
5
6
1
9
1
22
18
15
7
30
18
8
21
18
14
8
22
18
10
13
26
25
23
19
24
18
28
16
11
17
20
12
27
29
20
17
D-1555

HYDRAULIC CIRCUITRY (Cont'd)
(14999 & Below)

Ref No	Part Number	Description	Remarks	Serial Number	Qty
1		CYLINDER	See Illustration LIFT CYLINDER/ B2206 LIFT		2
2	6559199	HOSE			2
3	6557780	TUBE			1
4	6557781	TUBE			1
5	6553422	COVER			1
6	84G003724B	BOLT	Was 84G003720B [B]		1
7		CYLINDER	See Illustration TILT CYLINDER/ C2546 TILT		1
8	6563616	HOSE			4
9	6559200	HOSE			2
10	6558497	VALVE	See Illustration HYDRAULIC CONTROL VALVE/ B18926 See Illustration INLET SECTION/ B1541 See Illustration LIFT CONTROL SECTION/ C2471 See Illustration AUXILIARY CONTROL SECTION/ C2499 See Illustration TILT CONTROL SECTION/ B18932		1
11	17C000540B	BOLT			2
12	6562810	TUBE			1
13	6562809	TUBE			1
14	6558562	TUBE			1
15	6563167	TUBE			1
16	61D5	NUT			3
17	6502203	CLAMP			3
18	79K10	O RING 10			4
19	6598690	SPRING			x
20	85D6	LOCK NUT			3
21	17K000007B	ELBOW	W/Ref. 18		1
22	18K000007B	ELBOW	W/Ref. 18		1
23	15K000007B	CONNECTOR	W/Ref. 18	12211 & Below	1
23	18K000007B	ELBOW	W/Ref. 18	12212 14999	1
24	6598689	ORIFICE	.125 (3,17 mm)		1
25		TUBE	NAP - Order 6563703 , 6563704 & 18K000007B	12211 & Below	1
25	6563704	TUBE		12212 14999	1
26		TUBE	NAP - Order 6563703 & 18K000007B	12211 & Below	1
26	6563703	TUBE		12212 14999	1
27	6560136	TEE			2
28	6562811	TUBE			1
29	6562812	TUBE			1
30	6519195	ELBOW	W/Ref. 18		1
31	59D6	NUT			4

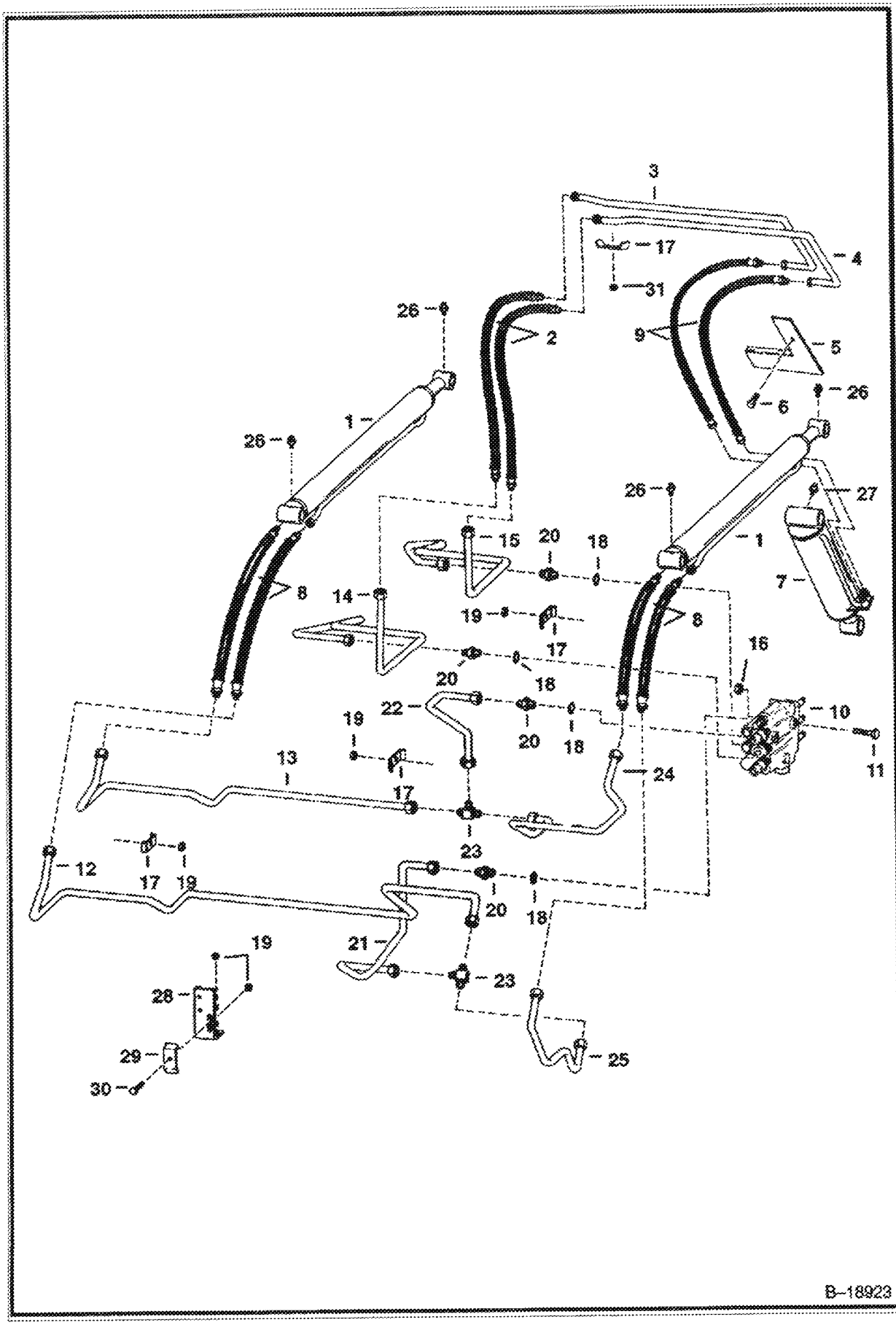
3
17
4
31
26
2
9
5
6
26
1
26
26
27
15
20
18
1
8
14
19
17
8
7
20
18
16
22
20
18
10
19
11
13
17
24
23
12
17
19
20
18
19
21
23
28
29
30
25
B-18923

HYDRAULIC CIRCUITRY (Cont'd)
(S/N 15001 & Above)

Ref No	Part Number	Description	Remarks	Serial Number	Qty
1		CYLINDER	See Illustration LIFT CYLINDER/ B2206 LIFT		2
2	6559199	HOSE			2
3	6557780	TUBE			1
4	6557781	TUBE			1
5	6553422	COVER			1
6	84G003724B	BOLT	Was 84G003720B [B]		1
7		CYLINDER	See Illustration TILT CYLINDER/ C2546 TILT		1
8	6563616	HOSE			4
9	6559200	HOSE			2
10		VALVE	See Illustration HYDRAULIC CONTROL VALVE/ B18925 BOBCAT		1
11	17C000560B	BOLT			2
12	6564470	TUBE			1
13	6564469	TUBE			1
14		TUBE	NAP - Order 6571690 & 6571691 - Was 6564477 [A]	29735 & Below	1
14	6571691	TUBE		29736 & Above	1
15		TUBE	NAP - Order 6571690 & 6571691 - Was 6564476 [A]	29735 & Below	1
15	6571690	TUBE		29736 & Above	1
16	85D5	NUT 5			2
17	6502203	CLAMP			7
18	79K10	O RING 10			4
19	85D6	LOCK NUT			5
20	15K000007B	CONNECTOR	W/Ref. 18		1
21	6704347	TUBE	Was 6564472 [A]		1
22	6564473	TUBE			1
23	6560136	TEE			2
24	6564468	TUBE			1
25	6564471	TUBE			1
26	11H15	GREASE FITTING			4
27	10H25	GREASE ZERK			1
28	6568667	BRACKET		25362 & Above	1
29	6569068	CLAMP		25362 & Above	1
30	17C000624B	BOLT		25362 & Above	1
31	59D6	NUT			4

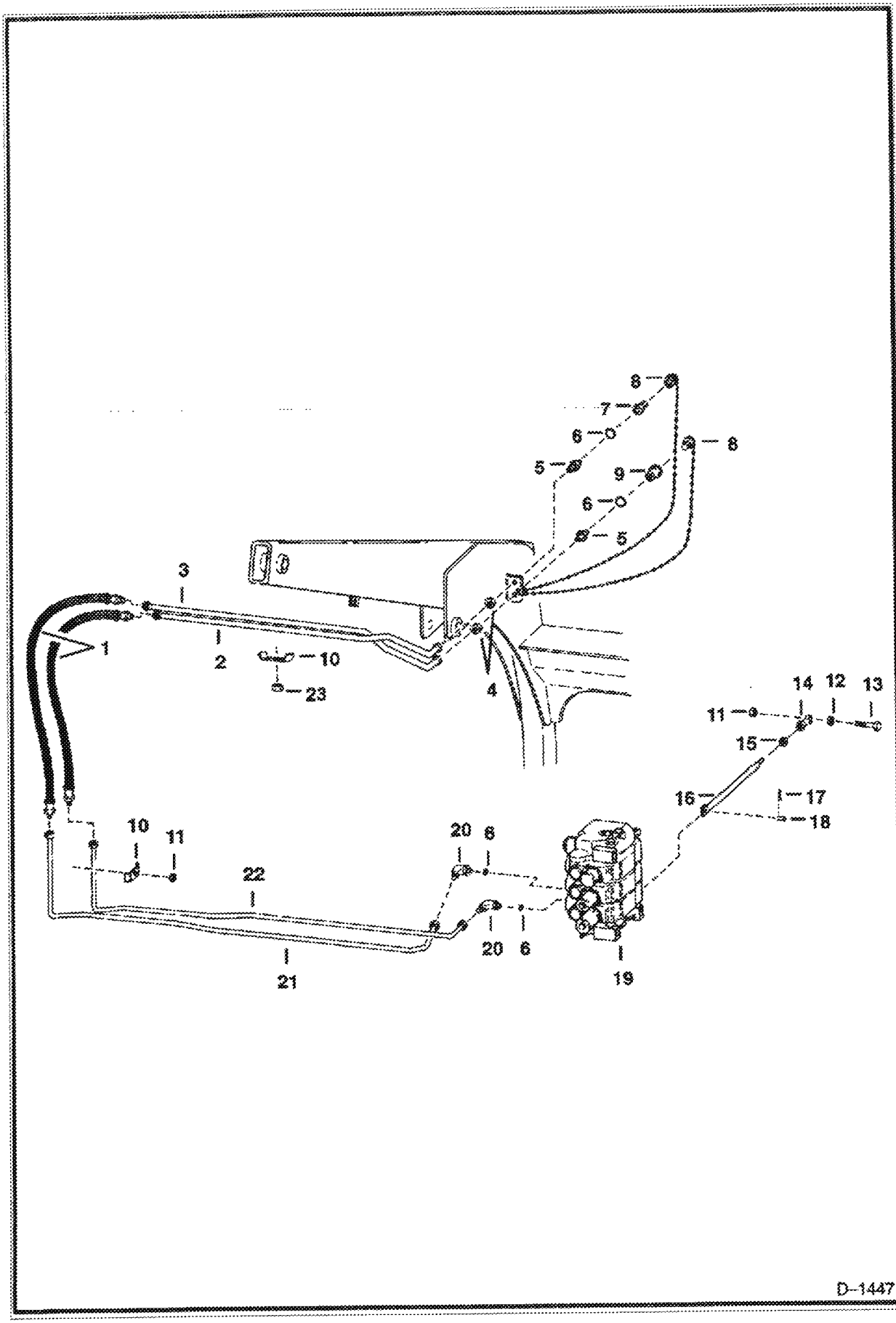
8
7
6
5
9
6
5
8
3
1
2
10
23
4
14
12
13
11
15
16
17
18
10
11
22
20
6
20
6
21
19
D-1447

AUXILIARY HYDRAULICS (Cont'd)
(S/N 14999 & Below)

Ref No	Part Number	Description	Remarks	Serial Number	Qty
1	6559199	HOSE			2
2	6558414	TUBE			1
3	6558415	TUBE	Was 6707041 [D]		1
4	86F000007B	NUT			2
5	45K000007B	FITTING	W/Ref. 6		2
6	79K10	O RING 10			4
7	6598757	QUICK COUPLER	Male		1
8	6598758	QUICK COUPLER	Female		1
8	48K000016B	O-RING			1
9	6513709	CAP PLUG	assy. - Rubber		1
9	6515167	PLUG	Steel		1
9	6515168	CAP	Steel		1
10	6502203	CLAMP			3
11	85D6	LOCK NUT			1
12	6557831	WASHER			1
13	17C620	BOLT			1
14	6512955	SWIVEL	L.H. threads		1
15	13D000006B	NUT			1
16	6558507	ROD			1
17	6513495	COTTER PIN			1
18	6559014	CLEVIS PIN			1
19	6558497	VALVE	See Illustration HYDRAULIC CONTROL VALVE/ B18926		1
20	17K000007B	ELBOW	W/Ref. 6		1
21	6558931	TUBE			1
22	6558932	TUBE			1
23	59D6	NUT			2

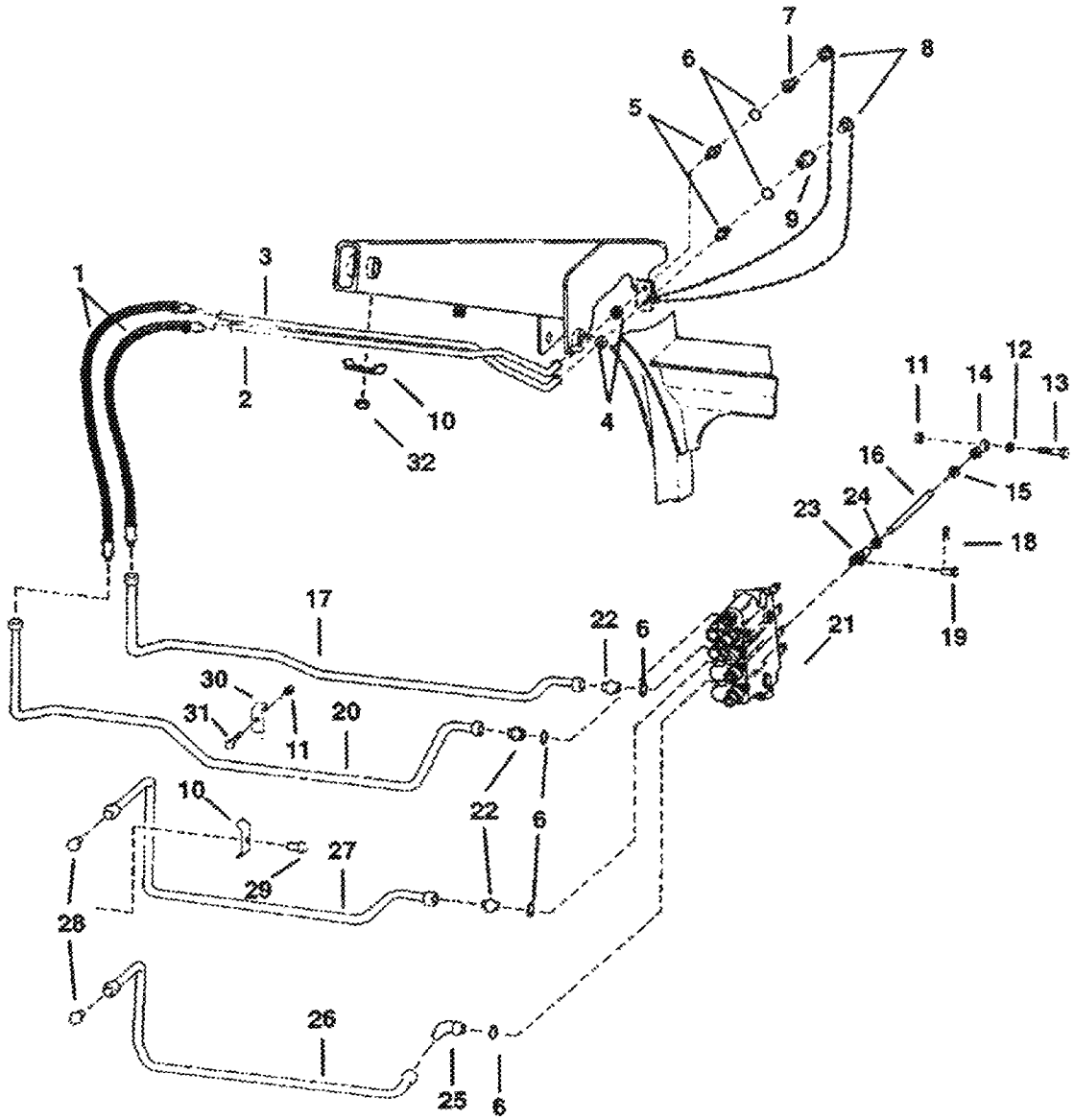
1
2
3
4
5
6
7
8
9
10
32
11
12
13
14
15
16
17
18
19
20
21
22
23
24
30
31
27
29
28
26
25

B-18924

AUXILIARY HYDRAULICS (Cont'd)
(S/N 15001 & Above)

Ref No	Part Number	Description	Remarks	Serial Number	Qty
1	6559199	HOSE			2
2	6558414	TUBE			1
3	6559415	TUBE	Was 6707041 [A]		1
4	86F000007B	NUT			2
5	45K000007B	FITTING	W/Ref. 6		2
6	79K10	O RING 10			4
7	6598757	QUICK COUPLER	Male		1
8	6513709	CAP PLUG	assy - Rubber		1
8	6515167	PLUG	Steel		1
8	6515168	CAP	Steel		1
9	6598758	QUICK COUPLER	Female		1
9	48K000016B	O-RING			1
9	6665430	BACKUP RING			1
10	6591804	CLAMP			3
11	85D6	LOCK NUT			2
12	6564535	SPACER			1
13	17C620	BOLT			1
14	6512955	SWIVEL	L.H. threads		1
15	13D000006B	NUT			1
16	6557090	ROD			1
17	6569591	TUBE			1
18	6513495	COTTER PIN			1
19		PIN	NAP - clevis - Was 6564654 [A]		1
20	6569590	TUBE			1
21		VALVE	See Illustration HYDRAULIC CONTROL VALVE/ B18925 BOBCAT		1
22	15K000007B	CONNECTOR	W/Ref. 6		3
23	6564655	CLEVIS			1
24	8D000006B	NUT			1
25	6519195	ELBOW	W/Ref. 6		1
26	6569488	TUBE			1
27	6569489	TUBE			1
28	6519493	PLUG			2
29	84G3720	BOLT			1
30	6569068	CLAMP		25362 & Above	1
31	17C000624B	BOLT		25362 & Above	1
32	59D6	NUT			2

LIFT CYLINDER
(W/Welded On Tube)

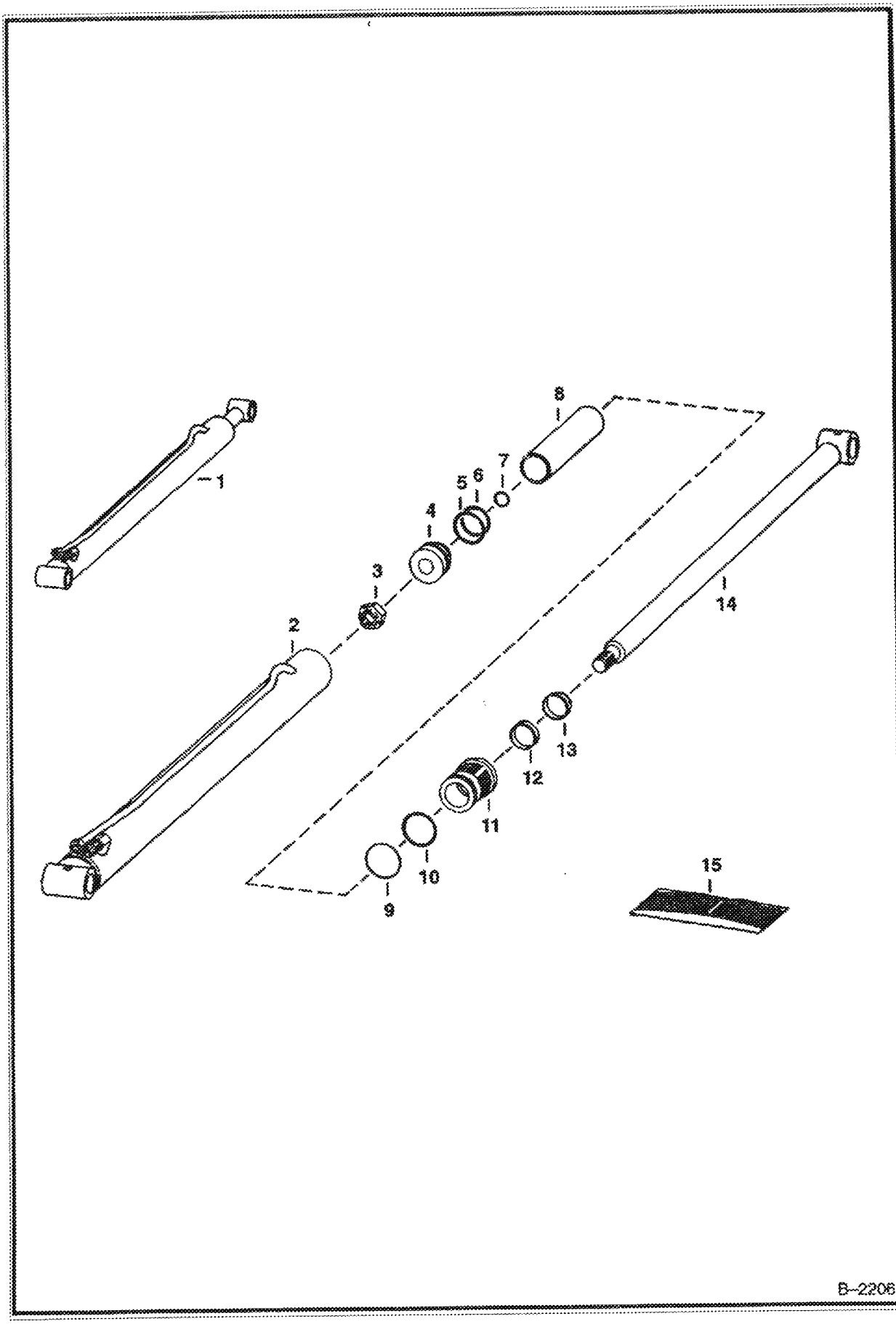

LIFT CYLINDER (Cont'd)
(W/Welded On Tube)

Ref No	Part Number	Description	Remarks	Serial Number	Qty
1		CYLINDER	NAP - Replaced by 6586671		2
2		CASE	NAP - Order 6586674 & 6529384		1
3	86D000012B	NUT			1
4	6558196	PISTON			1
5	54K30118	O-RING			1
6	6516231	RING			1
7		O-RING	NSS		1
8	6514501	SPACER			1
9	54K40124	O-RING			1
10	73K224	RING	back-up		1
11	6539323	HEAD	Was 6532702 [A]		1
12	6667324	SEAL	rod		1
13	6665208	SEAL	wiper		1
14	6592884	ROD			1
15	6803329	SEAL KIT	Ref. 5-7, 9, 10, 12 & 13 - Was 6589831 [A]		1

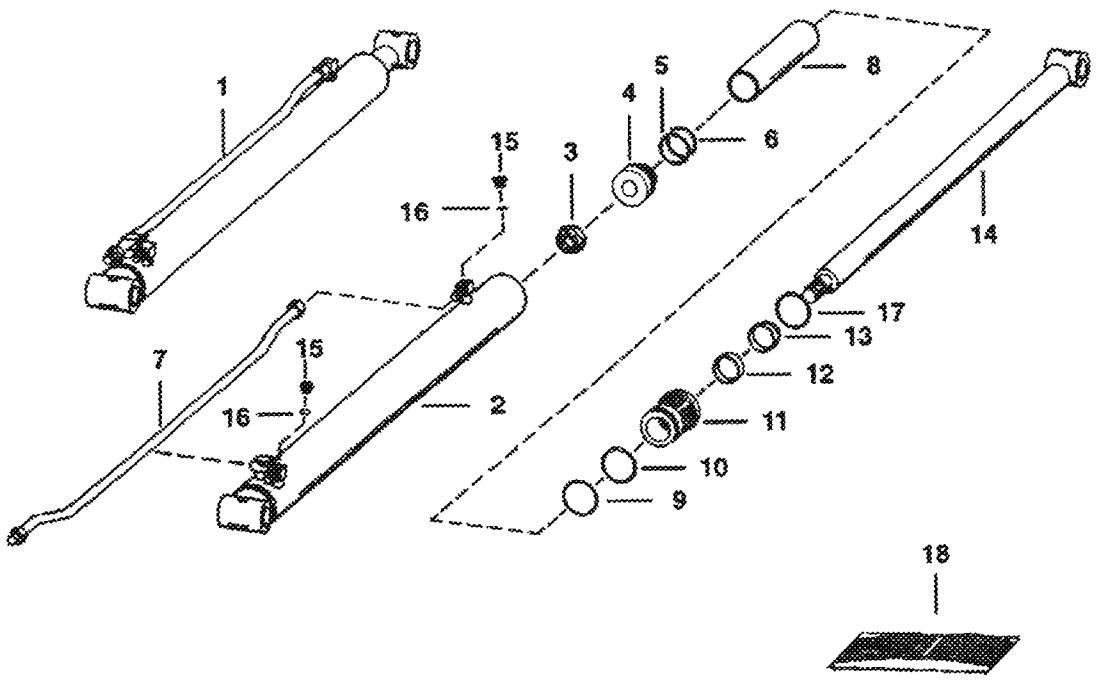
1
2
3
4
5
6
7
8
9
10
11
12
13
14
15
16
17
18
B-6942

LIFT CYLINDER (Cont'd)
(W/Replaceable Tube)

Ref No	Part Number	Description	Remarks	Serial Number	Qty
1	6586671	CYLINDER	Ref. 2-17 - Was 6592962 [A]		2
2	6586674	CASE	Was 6592621 [A]		1
3	92D000012B	NUT	Was 86D000012B [A]		1
4	6661694	PISTON	Ref. 5 & 6 - Was 6504931 [A]		1
5	6516231	RING			1
6	54K30118	O-RING	Was 25K030118B [A]		1
7	6529384	TUBE			1
8	6514501	SPACER			1
9	54K40124	O-RING	Was 25K040124B [A]		1
10	73K224	RING	Back-Up		1
11	6539323	HEAD	Was 6532702 [A]		1
12	6667324	SEAL	Rod - Was 6665184 [A]		1
13	6665208	SEAL	Wiper		1
14	6539304	ROD	Was 6592884 [A]		1
15		PLUG	NAP - W/Ref. 16 - flat boss face - Was 47K000005B [A]		2
15	90KV00005B	PLUG	tapered boss face		2
16	79K6	O RING 10	flat boss face		2
16	95K000006B	O-RING	tapered boss face		2
17	82K136	O-RING	Was 58K136 [B]		1
18	6803329	SEAL KIT	Ref. 3, 5, 6, 9, 10, 12, 13 and 17 - Was 6589831 [A]		1

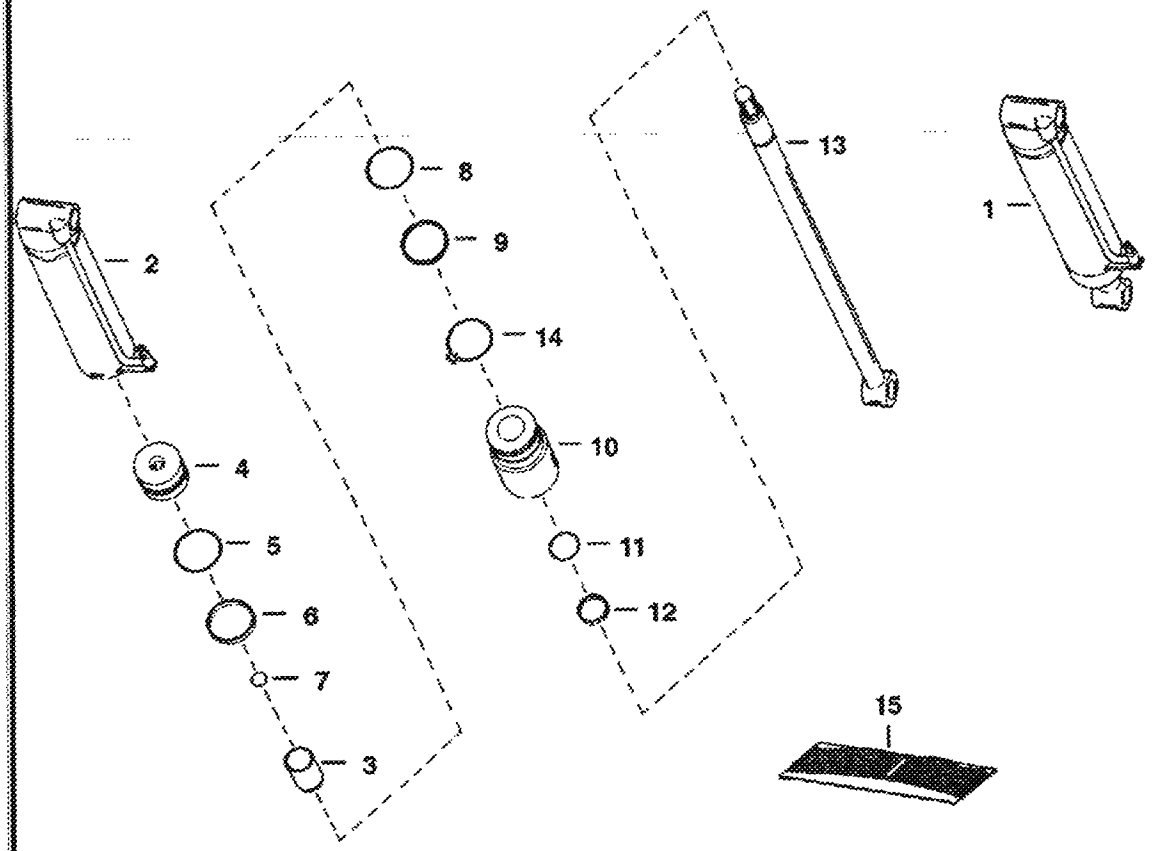

NOTE: Cessna cylinder has hydraulic tube welded on side of cylinder. Bobcat cylinder has replaceable tube.

C-2546

TILT CYLINDER (Cont'd)
(Cessna)

Ref No	Part Number	Description	Remarks	Serial Number	Qty
1		CYLINDER	NAP - Order 6539810 - See Note		1
2		CASE	NAP - Order 6539810 - Was 6598067 [A]		1
3	6514872	SLEEVE			1
4	6598305	PISTON	W/Non-replaceable wear sleeves		1
5		RING	NSS - slipper		1
6		O-RING	NSS		1
7		O-RING	NSS		1
8		O-RING	NSS		1
9		WASHER	NSS - back-up		1
10	6514869	HEAD			1
11		SEAL	NSS - rod		1
12		SEAL	NSS - wiper		1
13		ROD	NAP - Was 6598068 [A]		1
14		RING	NAP - lock - Was 6514873		1
15	6514736	SEAL KIT	Ref. 5-9, 11 & 12		1

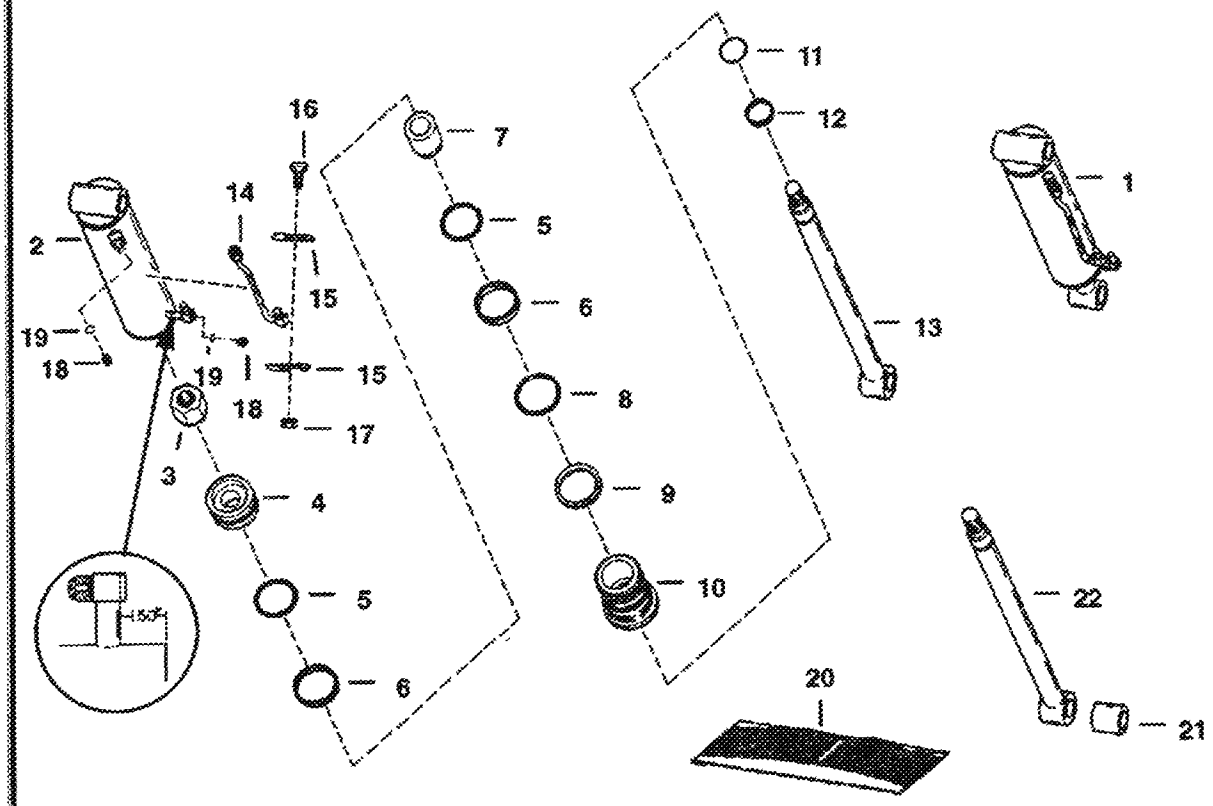

NOTE: Before ordering repair parts, make sure this is the correct style Cylinder.

C-2742

Ref No	Part Number	Description	Remarks	Serial Number	Qty
1		CYLINDER	See Illustration TILT CYLINDER/ B18047 NAP - Order 6539810 Cylinder		1
2		CASE	NAP - Order 6539810 - Was 6592041 [A]		1
3	86D000016B	NUT			1
4	6592448	PISTON			1
5	6513466	SEAL	Was NSS [D]		2
6	25K0302266	O-RING	Was NSS [D]		2
7	6591800	SLEEVE			1
8		O-RING	NSS		1
9		WASHER	NSS - back-up		1
10	6591799	HEAD			1
11		SEAL	NSS - rod		1
12		SEAL	NSS - wiper		1
13		ROD	NAP - cylinder - W/O Bushing - Order Ref. 22 - Was 6592800 [A]		1
14	6592019	TUBE			1
15	6591804	CLAMP			2
16	17C000616B	BOLT			1
17	85D6	LOCK NUT			1
18		PLUG	NAP - W/Ref. 19 - Was 47K000005B [A]		2
18	90KV00005B	PLUG	tapered boss face		2
19	79K6	O RING 10	flat boss face		2
19	95K000006B	O-RING	tapered boss face		2
20	6661297	SEAL KIT	Ref. 5, 6, 8, 9, 11 & 12 - Was 6591885 [A]		1
21	6589665	BUSHING	Used W/Ref. 22		2
22	6589785	ROD	W/Bushing		1

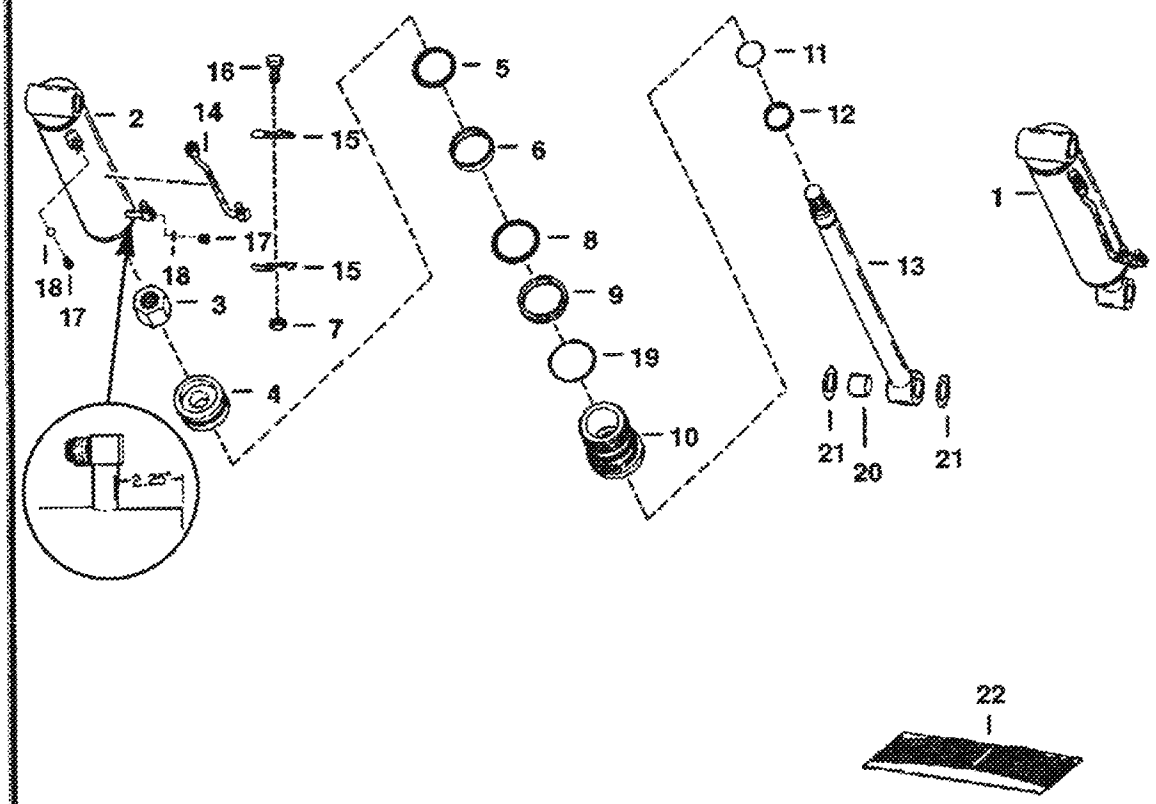

NOTE: Before ordering repair parts, make sure this is the correct style Cylinder.

B-18047

TILT CYLINDER (Cont'd)
(Bobcat)

Ref No	Part Number	Description	Remarks	Serial Number	Qty
1	6539810	CYLINDER	See Illustration TILT CYLINDER/ C2742 Ref. 2-18 & 19 & 20 - Was 6593398 [A]		1
2	6583686	CASE	Was 6593404 [A]		1
3	6804592	NUT	Was 6803253 [B]		1
4	6539290	PISTON	Was 6592589 [A]		1
5	6513466	SEAL			2
6	54K030226B	O-RING	Was 25K030226B [A]		2
7	85D6	LOCK NUT			1
8	54K040300B	O-RING	Was 58K000236B [B]		1
9	80K000234B	RING	back-up - Was 80K000236B [B,D]		1
10	6529680	HEAD	Was 6592590 [A]		1
11	6667326	SEAL	Was 6538141 [A]		1
12	6665086	SEAL	wiper		1
13	6539815	ROD	Also order 2 of Ref. 21 - Was 6593402 [A]		1
14	6593399	TUBE			1
15	6591804	CLAMP			2
16	17C000616B	BOLT			1
17		PLUG	NAP - Was 47K000005B - flat boss face [A]		2
17	90KV00005B	PLUG	W/Ref. 18 - tapered boss face		1
18	79K6	O RING 10	flat boss face		2
18	95K000006B	O-RING	tapered boss face		1
19	82K000236B	O-RING	Was 58K000236B [B]		1
20	6589665	BUSHING	Was 6534387 [B]		1
21	6654117	SEAL			2
22	6804605	SEAL KIT	Ref. 5, 6, 8, 9, 11, 12 & 19 Was 6661308 [A]		1

CONTROL PEDALS
(S/N 14999 & Below)

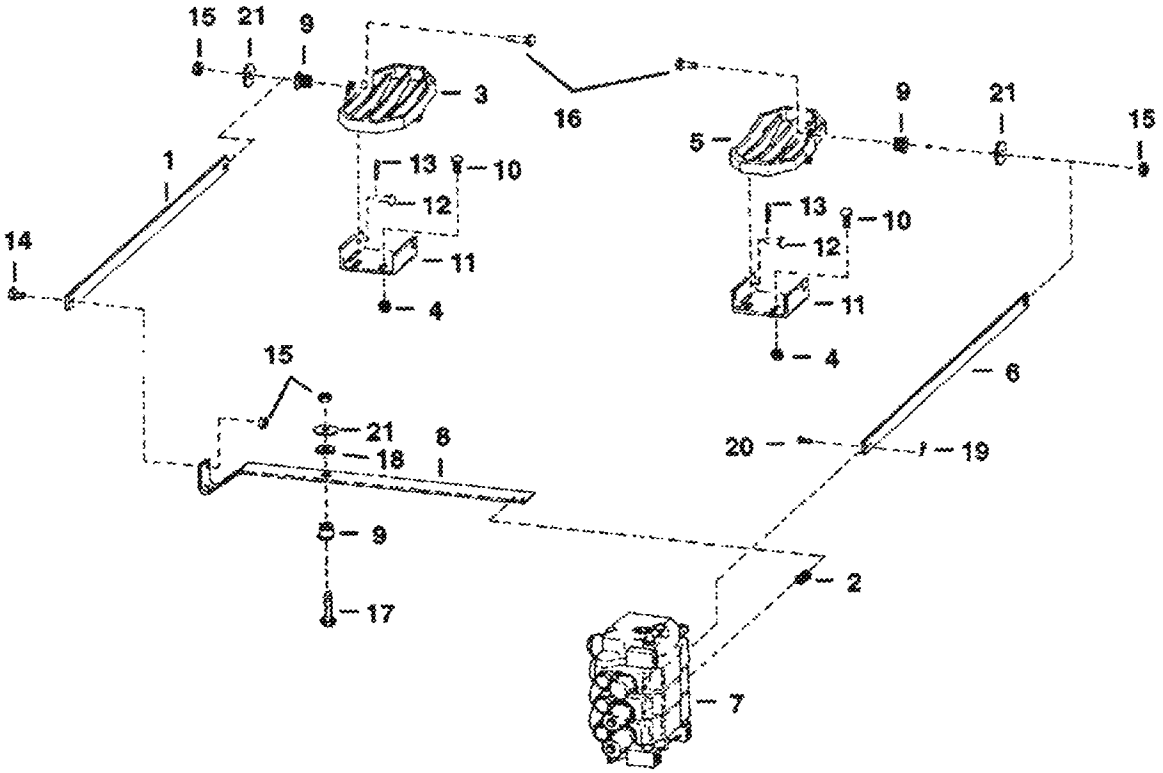

CONTROL PEDALS (Cont'd)
(S/N 14999 & Below)

Ref No	Part Number	Description	Remarks	Serial Number	Qty
1	6563146	BAR			1
2	6515186	CONNECTOR			1
3	6558451	PEDAL			1
4	57D6	NUT 5	flange		4
5	6558453	PEDAL			1
6	6563147	BAR			1
7		VALVE	See Illustration HYDRAULIC CONTROL VALVE/ B18926 See BTI242		1
8	6558456	LEVER			1
9	6665701	BUSHING	See BTI228 Was 6630081 [A]		3
10	6704349	BOLT	carriage - Was 37C000616B [B]		4
11	6558447	BRACKET			2
12	1737762B	PIN			4
13	1306637B	PIN	Hair		4
14	17C000616B	BOLT			1
15	85D6	LOCK NUT			1
16	17C000624B	BOLT			2
17	1304938B	BOLT			1
18	25E000017B	WASHER			2
19	6513495	COTTER PIN			2
20	6559014	CLEVIS PIN			2
21	6563914	WASHER			3

JD1 - 08/26/2008 17:33:33 - Printed by Seat Cover Co. - eSpirit.exe (v2.04.3 6/25/2008)
Page 71

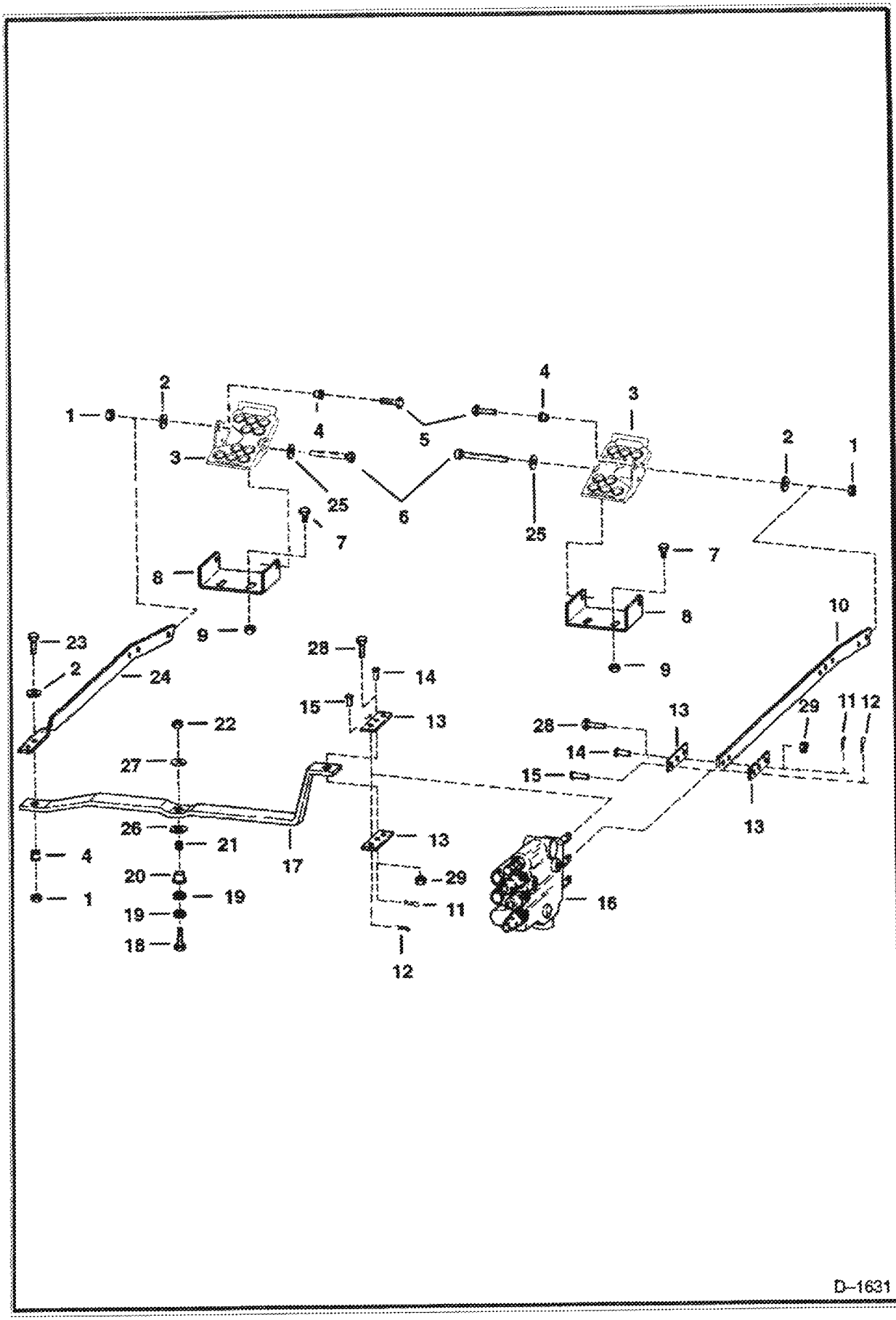
D-1631

CONTROL PEDALS (Cont'd)
(S/N 15001 & Above)

Ref No	Part Number	Description	Remarks	Serial Number	Qty
1	85D6	LOCK NUT			1
2	6563914	WASHER			4
3	7115219	PEDAL	Was 6726680 [A]		2
4	6665701	BUSHING	Was 6630081 [A]		3
5	17C000524B	BOLT			2
6	6564657	PIN			2
7	7C000620B	BOLT	Was 6704349 [B]		4
8	6726679	MOUNT	Was 6564658 [A]		2
9	57D6	NUT 5			4
10	6564652	BAR			1
11	1306637B	PIN			3
12	6513495	COTTER PIN			2
13	6706680	LINK	Also Order Ref. 28 & 29 - Was 6564544 [A]		4
14	4F6106	PIN			3
15		HOSE	NAP - Was 6564654 [A]		2
16		VALVE	See Illustration HYDRAULIC CONTROL VALVE/ B18925 BOBCAT		1
17	6564651	LEVER			1
18	6565067	BOLT			1
19	25E000017B	WASHER			2
20		BEARING	See BTI228 NAP	15001 25127	1
20	6569599	BEARING		25128 & Above	1
21		INSERT	See BTI228 NAP	15001 25127	1
21	6569598	INSERT		25128 & Above	1
22	61D000006B	NUT			1
23	17C000628B	BOLT			1
24	6564653	BAR			1
25	25E21	WASHER 5	Used if Serrations on Pins are too long		2
26	6569597	WASHER		25128 & Above	1
27	616789B	WASHER			1
28	17C620	BOLT			2
29	95D000006B	NUT	Was 91D000006B [A]		2

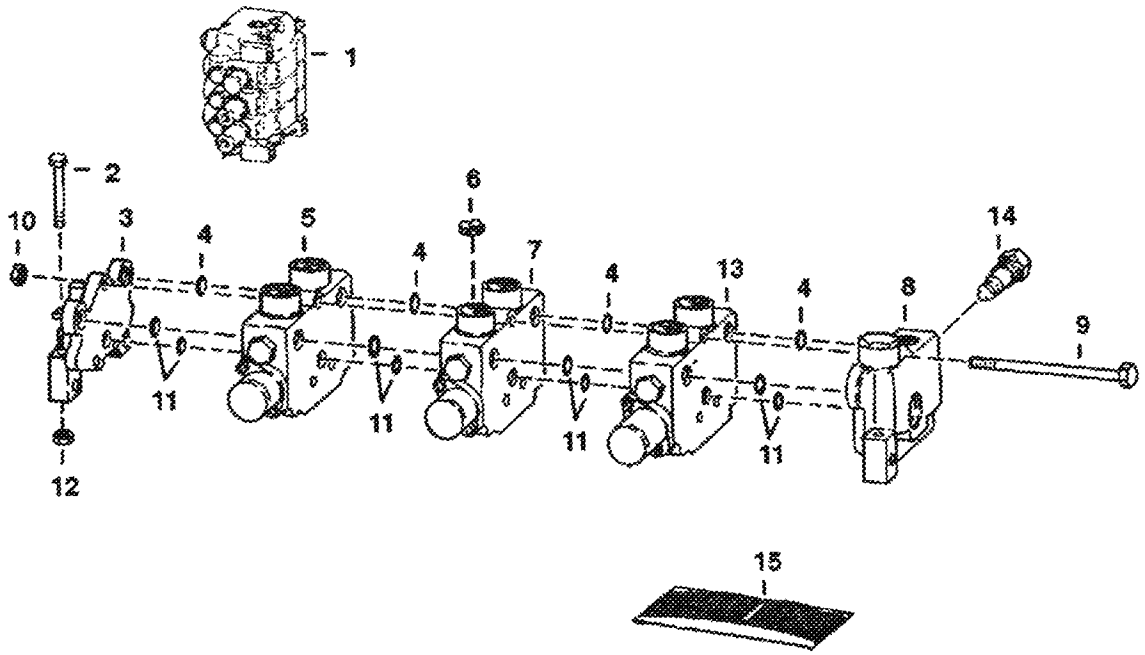
1
2
3
4
5
6
7
8
9
10
11
12
13
14
15
B-18926

HYDRAULIC CONTROL VALVE (Cont'd)
(Gresen CS)
(S/N 14999 & Below)

Ref No	Part Number	Description	Remarks	Serial Number	Qty
1		VALVE	See BTI242 NAP - 3 spool - W/Ref. 14 - Was 6558497 [A]		1
2	17C000540B	BOLT			3
3		COVER	See BTI242 NAP - Was 6519933 [A]		1
4		O-RING	NSS		4
5		SECTION	See Illustration AUXILIARY CONTROL SECTION/ C2499 NAP - AUXILIARY - WAS 6513590 [A]		1
6	6598689	ORIFICE	.125 (3.175 mm)		1
7		SECTION	See Illustration LIFT CONTROL SECTION/ C2471 See BTI242 NAP - LIFT - WAS 6513591 [A]		1
8		SECTION	See Illustration INLET SECTION/ B1541 See BTI242 NAP - INLET - WAS 6512244 [A]		1
9	6513592	STUD	3 Spool Valve		3
10	1579129B	NUT			3
11		O-RING	NSS		8
12	61D5	NUT			3
13		SECTION	See Illustration TILT CONTROL SECTION/ B18932 See BTI242 NAP - TILT - WAS 6519936 [A]		1
14	6519935	VALVE			1
15	6660750	SEAL KIT	3 section - Ref. 4 & 11 - Was 6511040 [A]		1

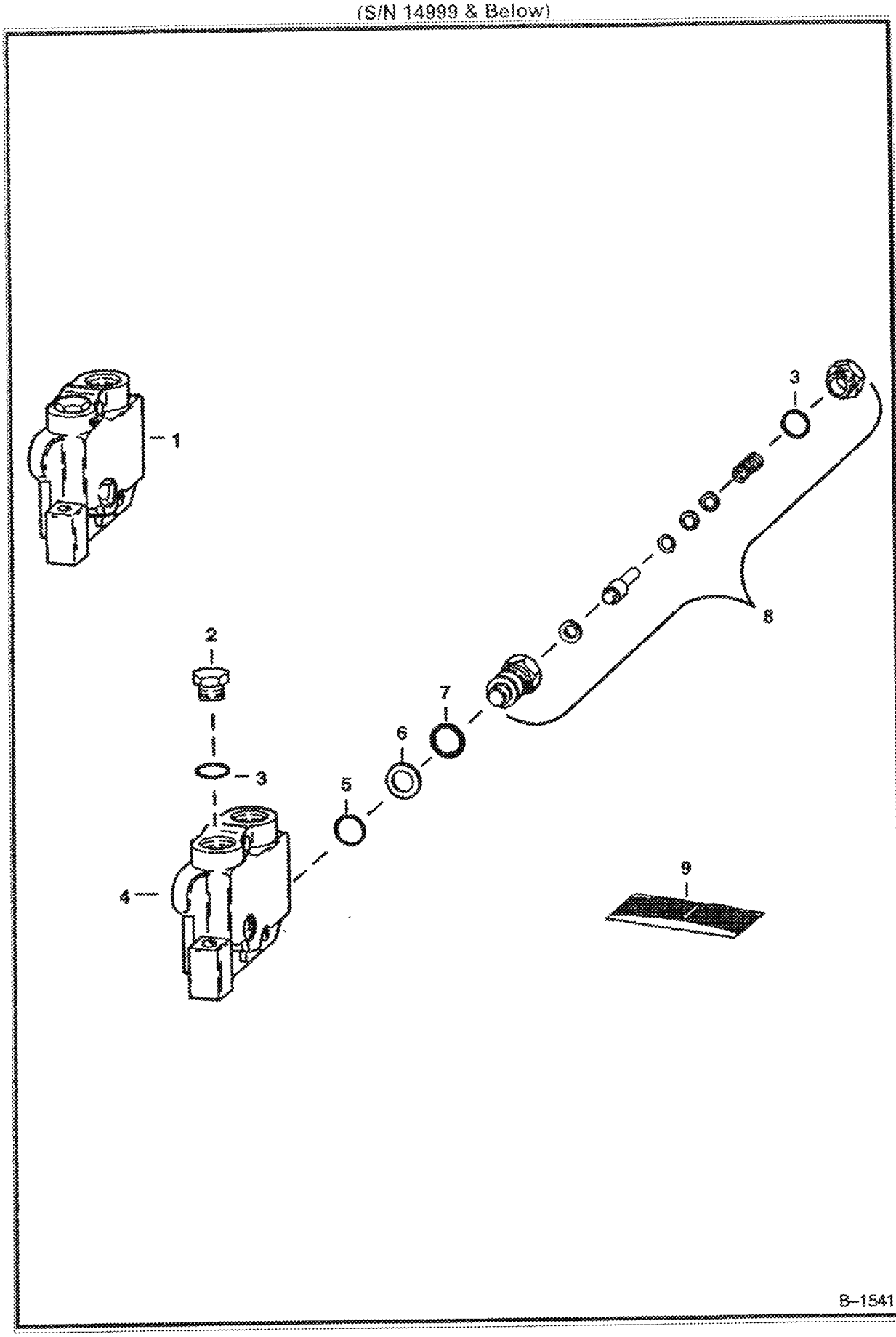
1
2
3
4
5
6
7
8
9
B-1541

INLET SECTION (Cont'd)
(Gresen CS)
(S/N 14999 & Below)

Ref No	Part Number	Description	Remarks	Serial Number	Qty
1		SECTION	NAP - inlet - Ref. 2-4 - Was 6512244 [A]		1
2	6519750	PLUG			1
3		O-RING	NSS		2
4		HOUSING	NAP		1
5		O-RING	NSS		1
6		SEAL	NSS - back-up		1
7		O-RING	NSS		1
8	6519935	VALVE			1
9	6661034	SEAL KIT	Ref. 3, 5, 6 & 7 - Was 6546438 [A]		1

LIFT CONTROL SECTION
(Gresen CS)
(S/N 14999 & Below)

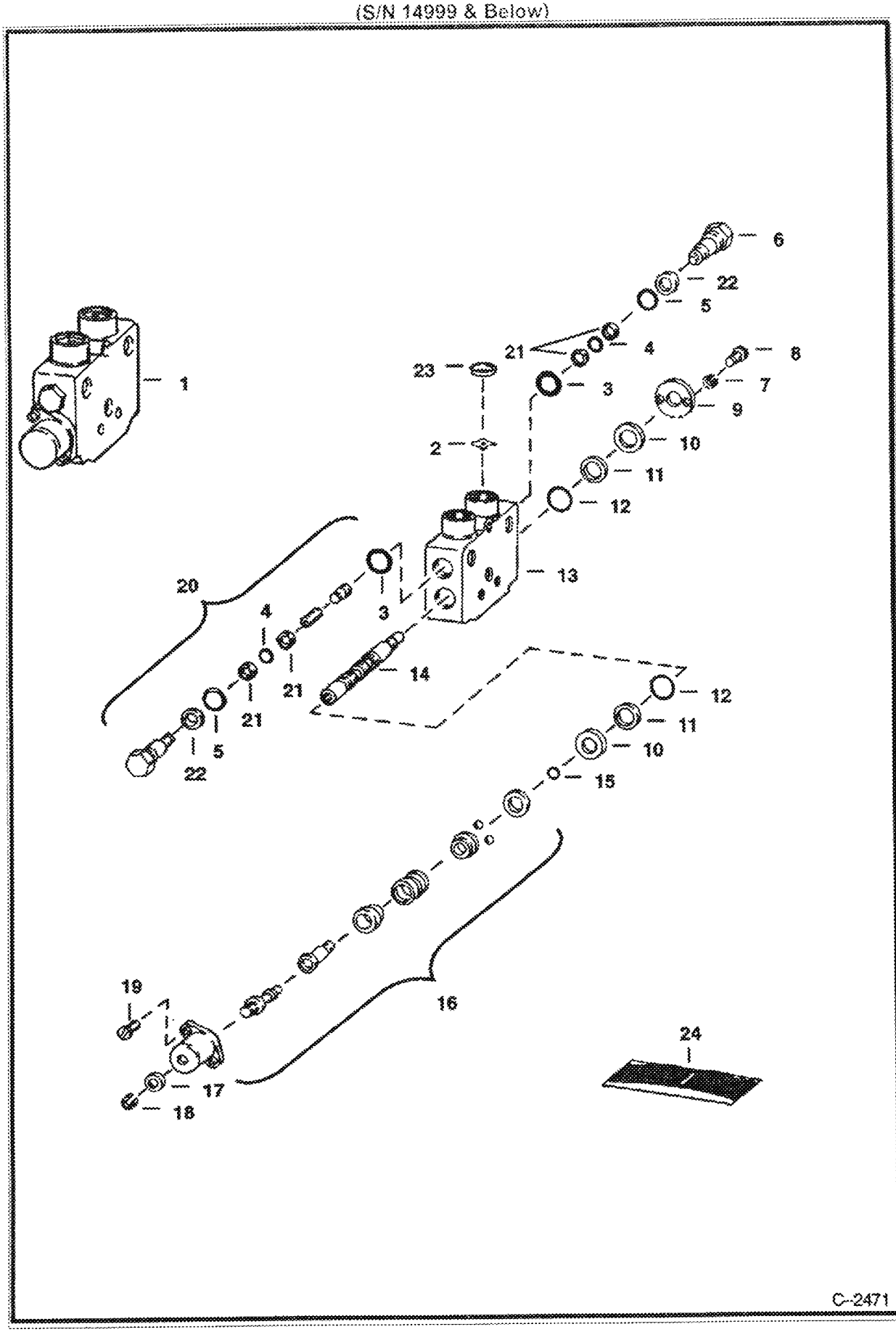

LIFT CONTROL SECTION (Cont'd)
(Gresen CS)
(S/N 14999 & Below)

Ref No	Part Number	Description	Remarks	Serial Number	Qty
1		SECTION	See BTI242 NAP - lift - Was 6513591 [A]		1
2	6598689	ORIFICE	.125 (3.175 mm)		1
3		O-RING	NSS		2
4		O-RING	NSS		2
5		O-RING	NSS		2
6		VALVE	NAP - anti-cavitation - Was 6552546 [A]		1
7	4E000004B	WASHER			2
8	89G000408B	BOLT			2
9	6519941	RETAINER			1
10	6519747	RETAINER			2
11	6519748	WASHER			2
12		O-RING	NSS		2
13		HOUSING	NAP		1
14		SPOOL	NAP		1
15		O-RING	NSS		1
16	6551781	POSITIONER	float - W/Ref. 15 & 17-19		1
17	25E14	WSHR			1
18	6512246	RING	retaining		1
19	5208677B	SCREW	cover		2
20		VALVE	NAP - port relief - Was 6513594 [A]		1
21		WASHER	NSS - back-up		4
22		WASHER	NSS - back-up		2
23		SLEEVE	NAP		2
24	6563973	SEAL KIT	Ref. 3, 4, 5, 12, 15, 21 & 22		1
24	6661333	SEAL KIT	Ref. 3, 4, 5, 21 & 22 - Was 6598838 [A]		1

AUXILIARY CONTROL SECTION
(Gresen CS)
(S/N 14999 & Below)

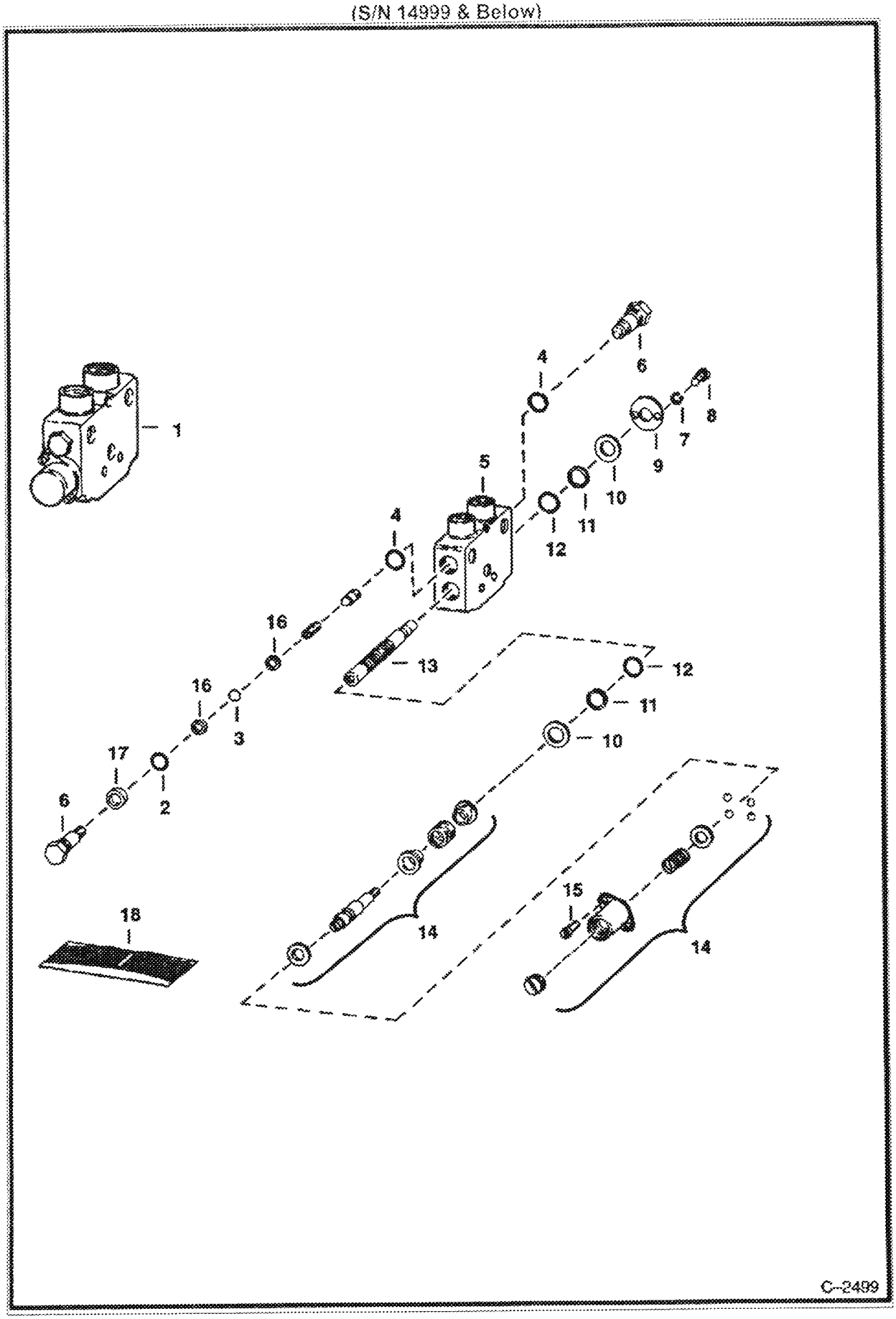

AUXILIARY CONTROL SECTION (Cont'd)
(Gresen CS)
(S/N 14999 & Below)

Ref No	Part Number	Description	Remarks	Serial Number	Qty
1		SECTION	NAP - auxiliary - Was 6513590 [A]		1
2		O-RING	NSS		2
3		O-RING	NSS		2
4		O-RING	NSS		2
5		HOUSING	NAP		1
6	6519937	CHECK	load		2
7	4E000004B	WASHER			2
8	89G000408B	BOLT			2
9	6519941	RETAINER			1
10	6519747	RETAINER			2
11	6519748	WASHER	back-up		2
12		O-RING	NSS		2
13		SPOOL	NAP		1
14	6598914	POSITIONER			1
15	5208677B	SCREW			2
16		WASHER	NSS - back-up		2
17		WASHER	NSS - back-up		1
18	6563973	SEAL KIT	Ref. 2-4, 12, 17 & 18		1

Page 83 - 08/28/2008 17:43:32 - Printed by Ken Cook Co. - Assist.mdb [v2.24.1 9/23/2003]

TILT CONTROL SECTION
(Gresen CS)
(S/N 14999 & Below)

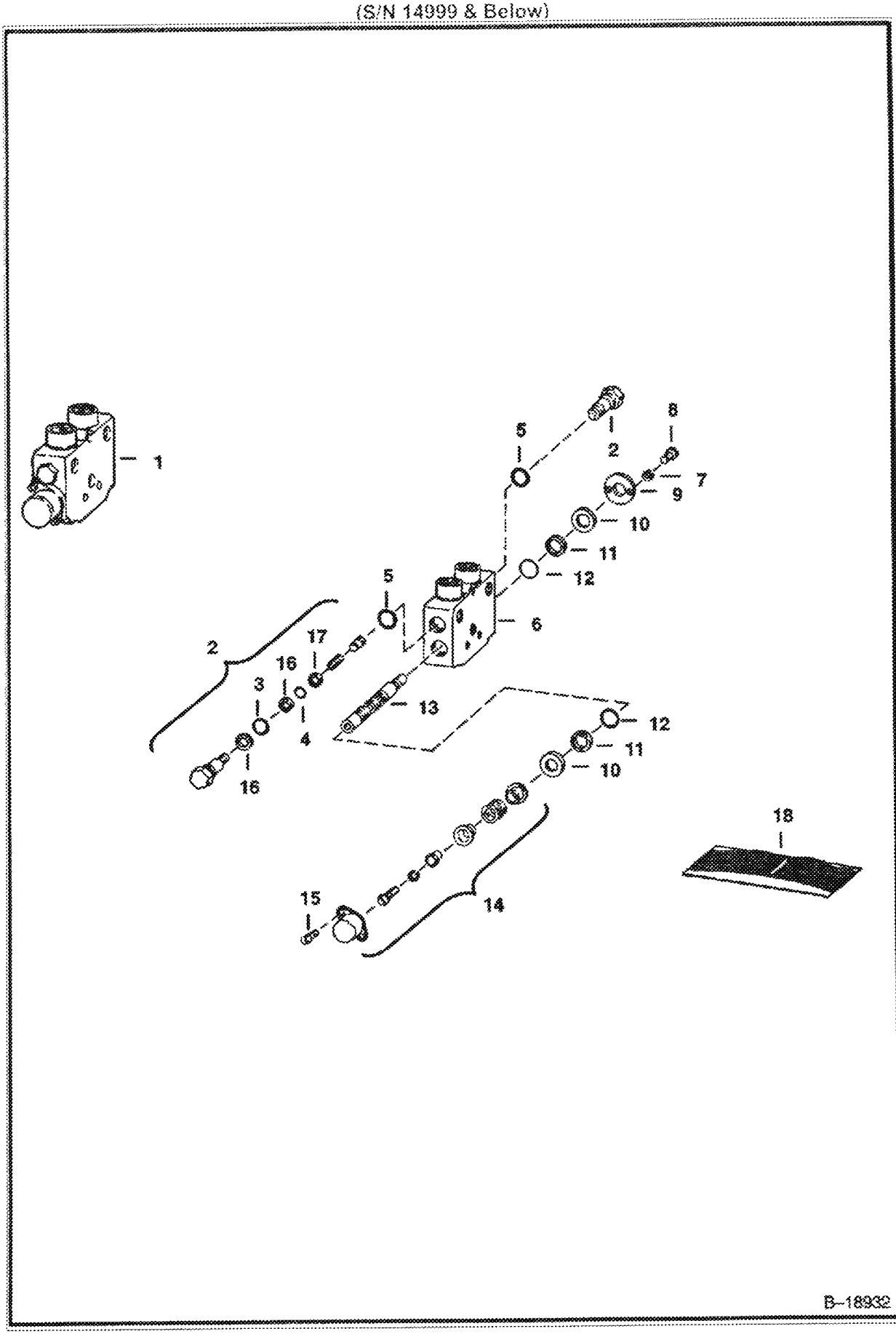

TILT CONTROL SECTION (Cont'd)
(Gresen CS)
(S/N 14999 & Below)

Ref No	Part Number	Description	Remarks	Serial Number	Qty
1		SECTION	See BTI242 NAP - tilt - Was 6519936 [A]		1
2	6519937	CHECK	load		2
3		O-RING	NSS		2
4		O-RING	NSS		2
5		O-RING	NSS		2
6		HOUSING	NAP		1
7	4E000004B	WASHER			2
8	89G000408B	BOLT			2
9	6519941	RETAINER			1
10	6519747	RETAINER			2
11	6519748	WASHER	back-up		2
12		O-RING	NSS		2
13		SPOOL	NAP		1
14	6519938	POSITIONER			1
15	5208677B	SCREW			2
16		WASHER	NSS - back-up		2
17		WASHER	NSS - back-up		1
18	6563973	SEAL KIT	Ref. 3-5, 12, 16 & 17		1

HYDRAULIC CONTROL VALVE
(Gresen V20)
(S/N 14999 & Below)

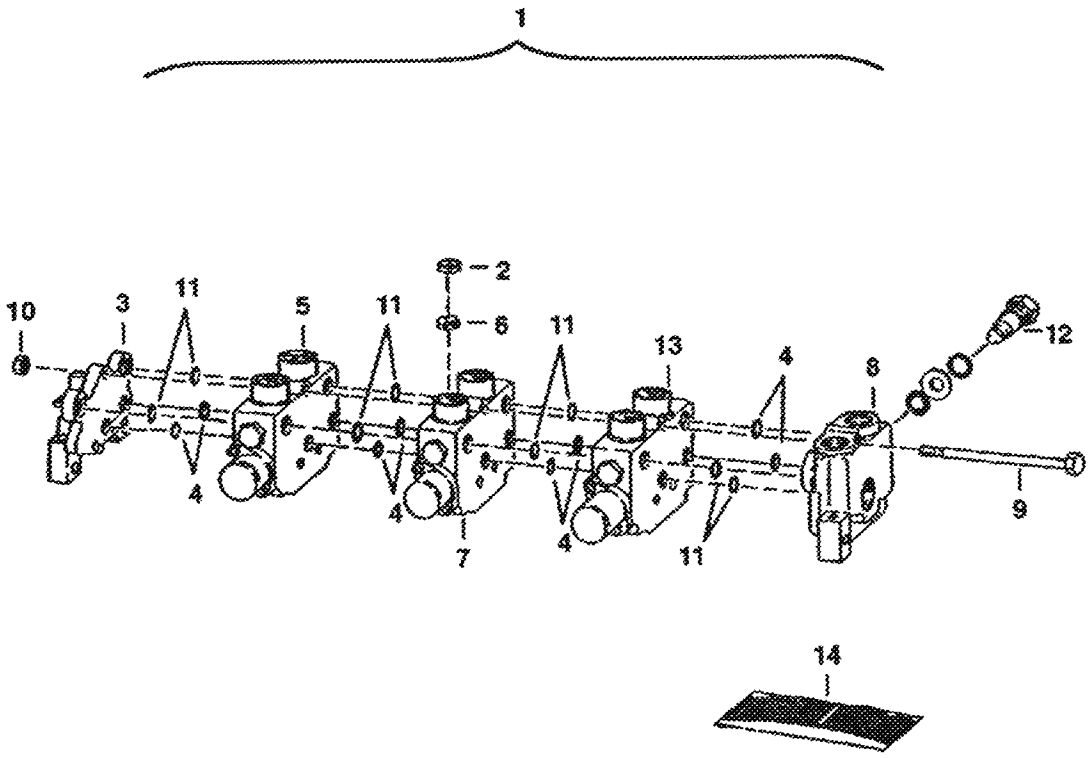

HYDRAULIC CONTROL VALVE (Cont'd)
(Gresen V20)
(S/N 14999 & Below)

Ref No	Part Number	Description	Remarks	Serial Number	Qty
1	6658666	VALVE	Was 6649495 [C]		1
2	6598690	SPRING			1
3	6650699	COVER			1
4		O-RING	NSS		8
5	6650700	SECTION	See Illustration AUXILIARY SECTION/ B12213 AUX.		1
6	6598689	ORIFICE	.125 (3.17 mm)		1
7	6659259	SECTION	See Illustration LIFT SECTION/ B18051 LIFT - WAS 6650701 [A]		1
8	6650702	COVER	See Illustration INLET SECTION/ B18934 INLET		1
9	6647706	STUD KIT	W/Ref. 10		1
10		NUT	NSS		3
11		O-RING	NSS		8
12	6650698	RELIEF VALVE			1
13	6650703	SECTION	See Illustration TILT SECTION/ B12205 TILT		1
14	6650704	SEAL KIT	Ref. 4 & 11		1

INLET SECTION
(Gresen V20)
(S/N 14999 & Below)

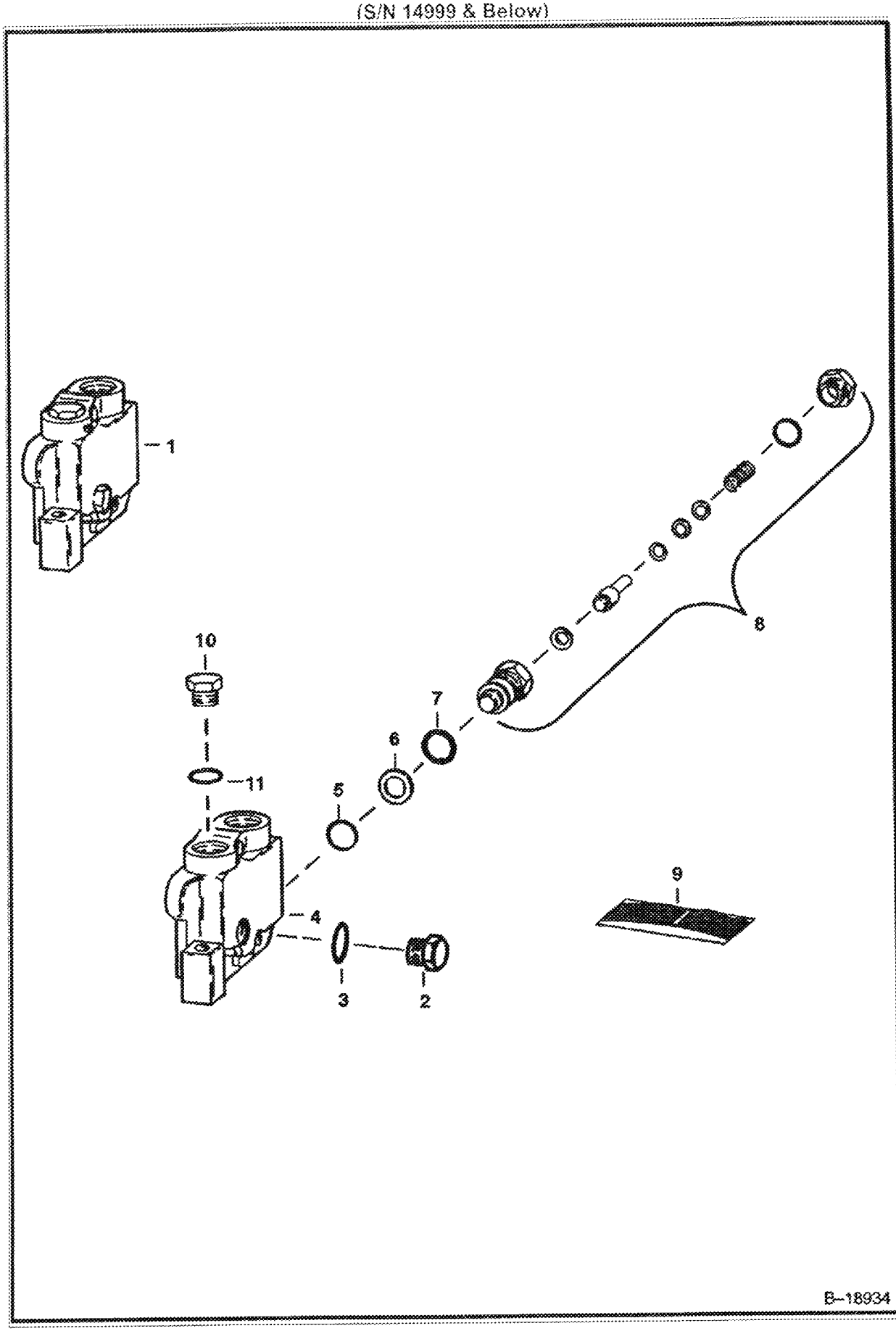

INLET SECTION (Cont'd)
(Gresen V20)
(S/N 14999 & Below)

Ref No	Part Number	Description	Remarks	Serial Number	Qty
1	6650702	COVER			1
2	6650697	PLUG			1
3	79K12	O RING 10			1
4		HOUSING	NSS		1
5		O-RING	NSS		1
6		RING	NSS - back-up		1
7		O-RING	NSS		1
8	6650698	RELIEF VALVE			1
9	6647710	SEAL KIT	Ref. 5-7		1
10	6651321	PLUG			1
11	79K10	O RING 10			1

Page 83 - 09/30/2008 07:23:33 - Printed by Ben Cook Co. - eSprint.exe [v2.24.3 07/27/2007]

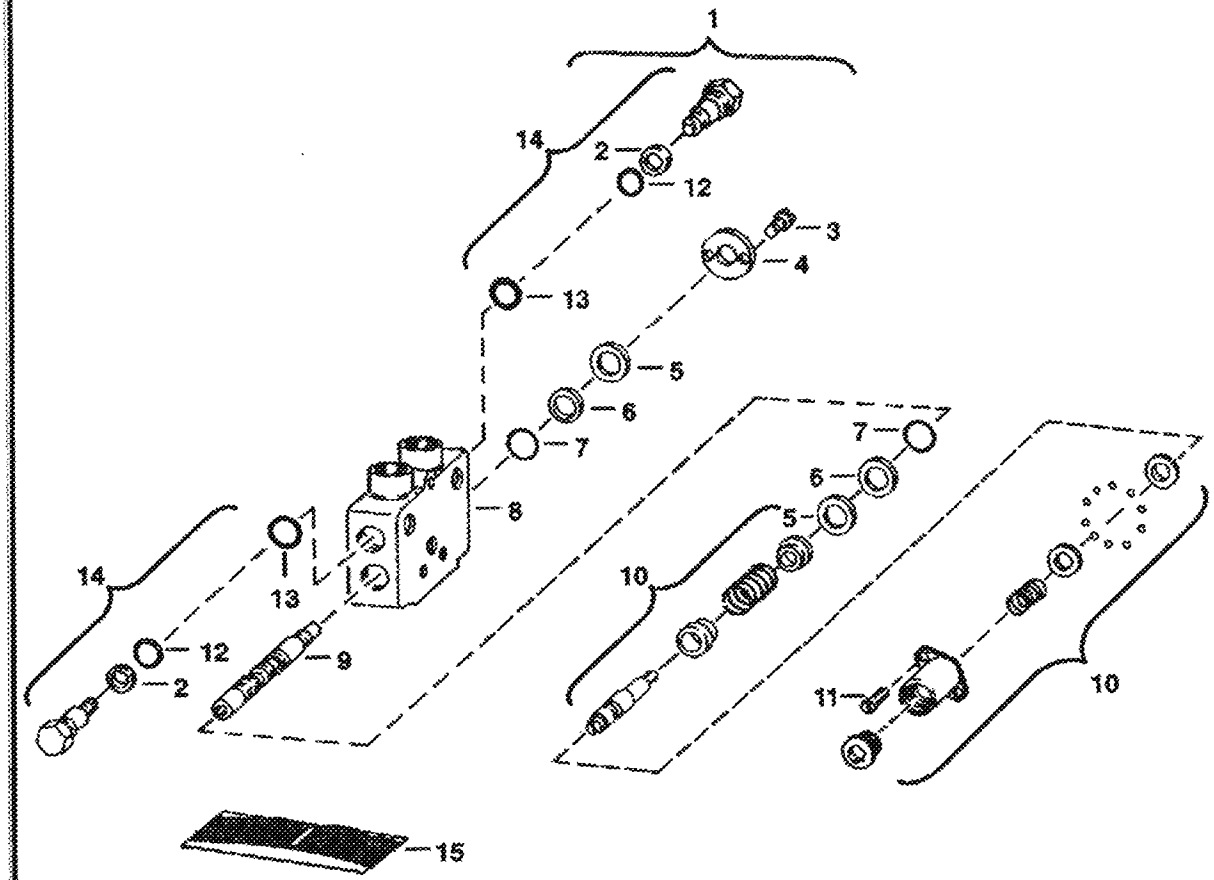
1
14
2
12
3
4
13
5
6
7
8
14
13
12
2
9
10
7
6
5
10
11
10
15
B-12213

AUXILIARY SECTION (Cont'd)
(Gresen V20)
(S/N 14999 & Below)

Ref No	Part Number	Description	Remarks	Serial Number	Qty
1	6650700	SECTION			1
2		RING	NSS - back-up		2
3	89G000408B	BOLT			2
4	6519941	RETAINER			1
5	6650693	RETAINER			2
6		RING	NSS - back-up		2
7		O-RING	NSS		2
8		HOUSING	NSS		1
9		SPOOL	NSS		1
10	6647716	POSITIONER			1
11	89G000414B	BOLT			2
12		O-RING	NSS		2
13		O-RING	NSS		2
14	6650695	LOAD CHECK			2
15	6647694	SEAL KIT	Ref. 6 & 7		1
15	6650696	SEAL KIT	Ref. 2, 12 & 13		2

Page 93 - 08/28/2008 17:51:33 - Printed by Ken Cook Co - Microfiche area (w) 24 x 87/20/0-0001

LIFT SECTION
(Gresen V20)
(S/N 14999 & Below)

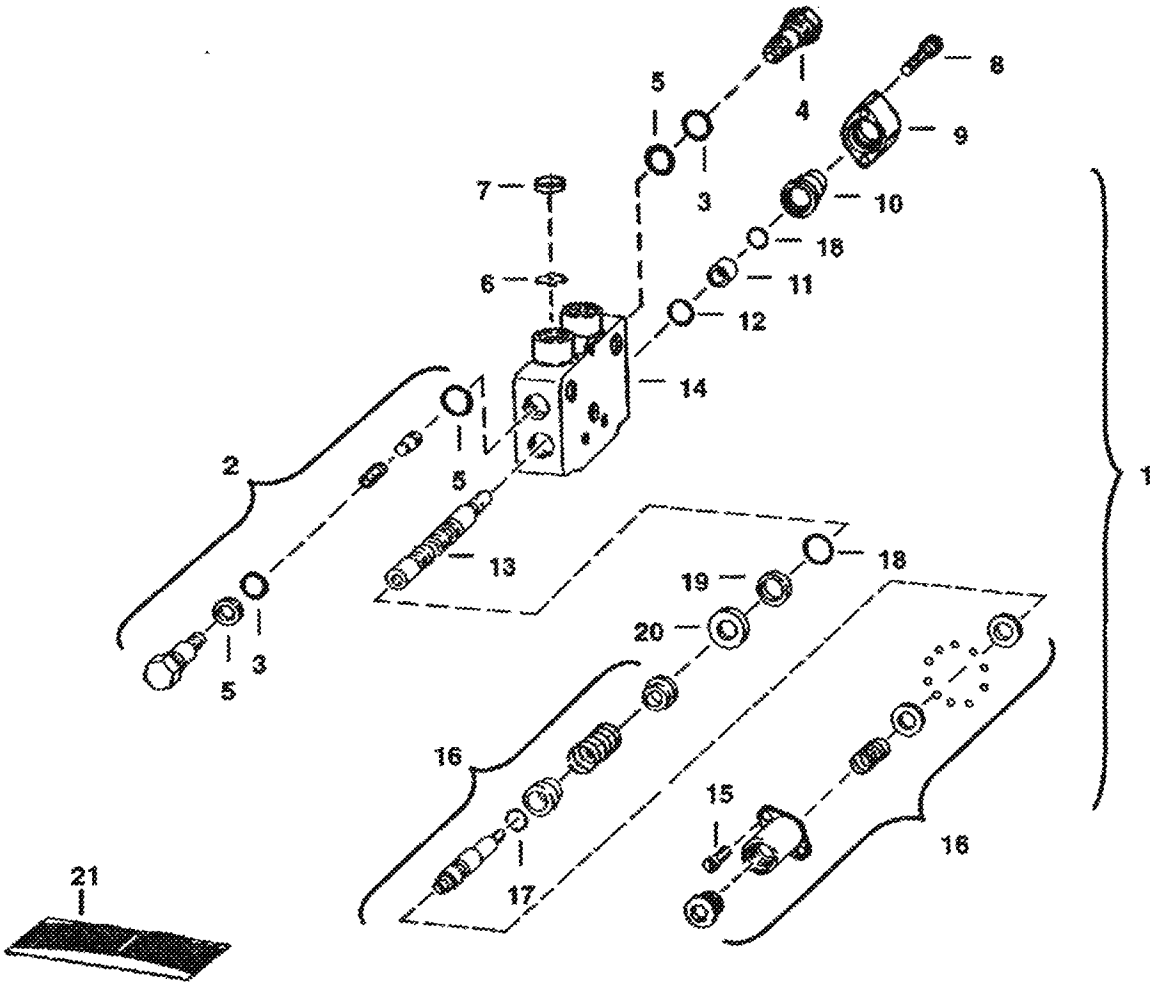

LIFT SECTION (Cont'd)
(Gresen V20)
(S/N 14999 & Below)

Ref No	Part Number	Description	Remarks	Serial Number	Qty
1	6659259	SECTION	Was 6650701 [C]		1
2	6650692	RELIEF VALVE			1
3		O-RING	NSS		2
4	6650694	ANTI-CAV. VALVE			1
5		O-RING	NSS		3
6	6598689	ORIFICE			1
7	6598690	SPRING			1
8	89G000408B	BOLT			2
9	6659527	PLATE			1
10	6659526	SPACER			1
11	6659528	SLEEVE			1
12	6659530	O-RING			1
13		SPOOL	NSS		1
14		HOUSING	NSS		1
15	89G000414B	BOLT			2
16	6659344	POSITIONER	Was 6651324 [A]		1
17		O-RING	NSS		1
18	6659529	O-RING			1
19	6651325	SEAL			1
20	6650693	RETAINER			1
21	6650691	SEAL KIT	Ref. 3 & 5		2
21	6659560	SEAL KIT	Ref. 12 & 18-21		1

TILT SECTION
(Gresen V20)
(S/N 14999 & Below)

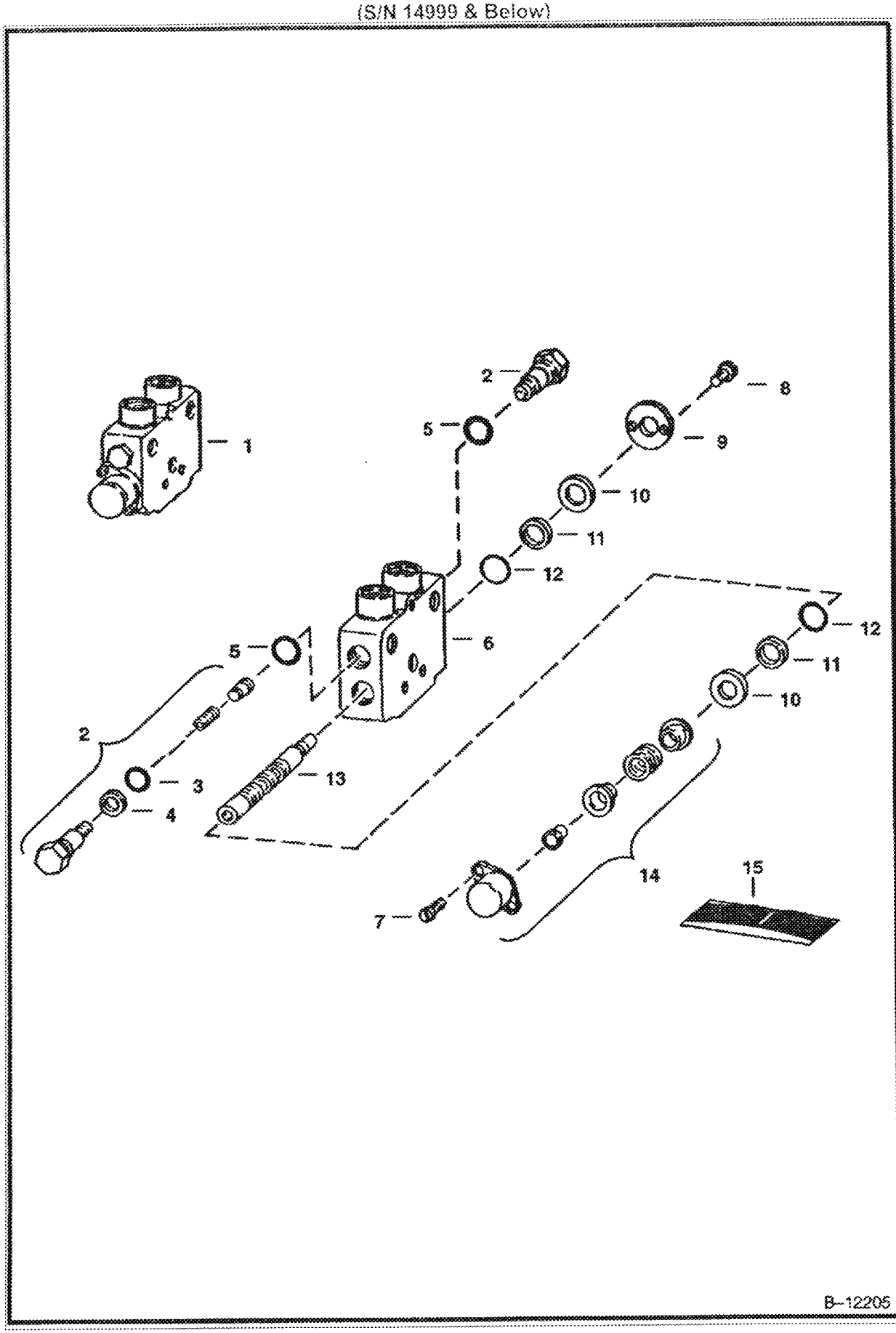

TILT SECTION (Cont'd)
(Gresen V20)
(S/N 14999 & Below)

Ref No	Part Number	Description	Remarks	Serial Number	Qty
1	6650703	SECTION			1
2	6650695	LOAD CHECK			2
3		O-RING	NSS		2
4		RING	NSS - back-up		2
5		O-RING	NSS		2
6		HOUSING	NSS		1
7	89G000414B	BOLT			2
8	89G000408B	BOLT			2
9	6519941	RETAINER			1
10	6650693	RETAINER			1
11		RING	NSS - back-up		2
12		O-RING	NSS		2
13		SPOOL	NSS		1
14	6647691	BONNET			1
15	6647694	SEAL KIT	Ref. 11 & 12		1
15	6650696	SEAL KIT	Ref. 3-5		2

HYDRAULIC CONTROL VALVE
(S/N 15001 & Above)

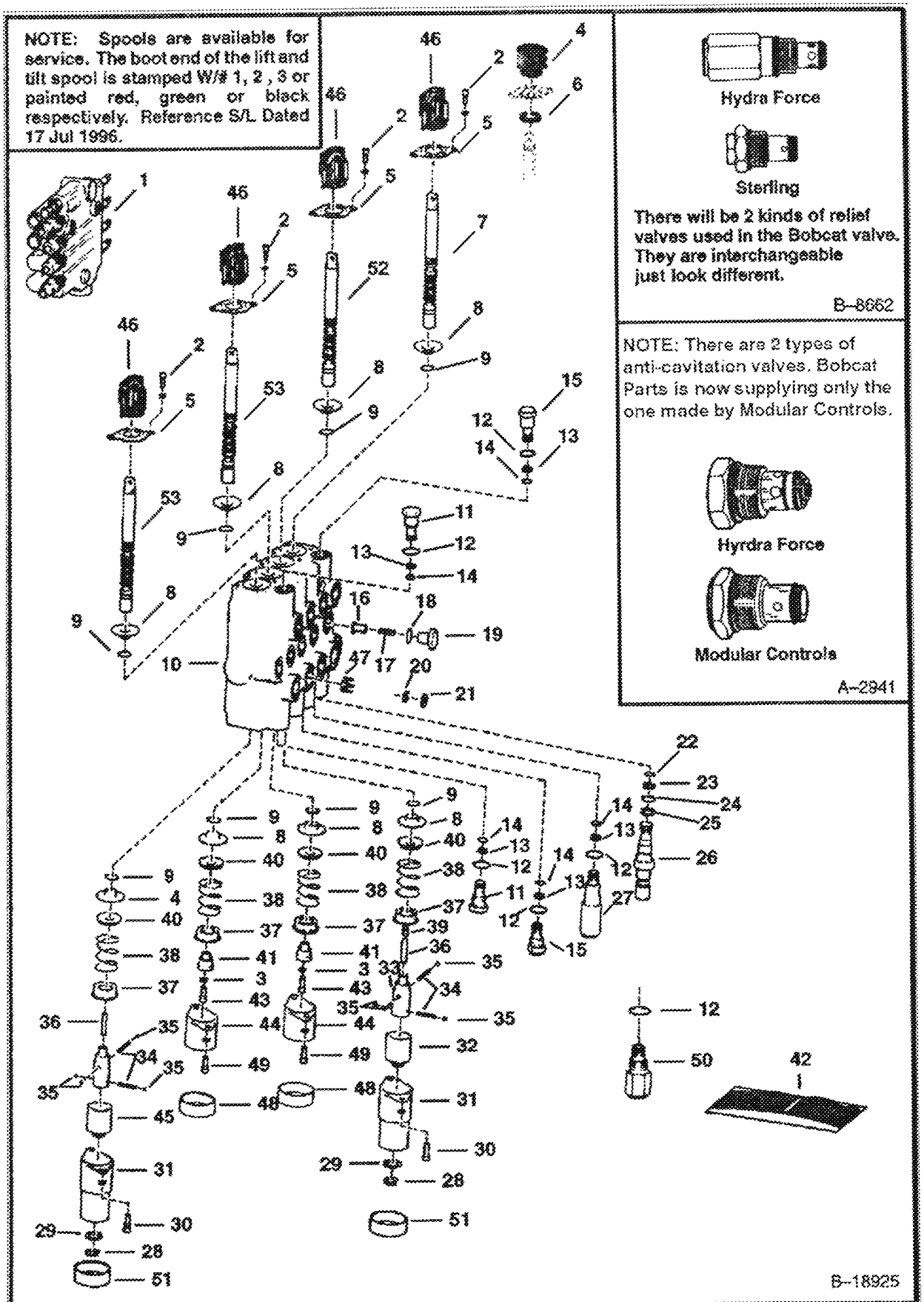

HYDRAULIC CONTROL VALVE (Cont'd)
(S/N 15001 & Above)

Ref No	Part Number	Description	Remarks	Serial Number	Qty
1	6539333	VALVE	Ref. 2-46 - Was 6592522 [A]		1
1		SHORT BLOCK	NAP - Ref. 2-10, & 38 - When ordering short block order 8 of Ref. 30 - See Service Letter dated 5 Jan. 87 - Was 6592740 [A]		1
2	6588165	SCREW	Was 73G-420 [B]		8
3	22E000004B	WASHER			2
4		BOOT	NAP - Order Ref. 44 - Was 6592122 [A]		4
5	6592123	RETAINER			4
6		FILTER	NAP - sintered - Ordered Ref. 44		4
7	6666582	SPOOL	lift - #1 or red - SEE NOTE		1
7	6666583	SPOOL	lift - #2 or green - SEE NOTE		1
7	6666584	SPOOL	lift - #3 or black - SEE NOTE		1
8	6592103	BUSHING	See Service Letter 5 Jan. 87		8
8	6538466	BUSHING	W/Part # Stamped on face		8
9	6665089	SEAL	See BTI374 lip seal - Was 6659554 [A]		8
9	6646372	SEAL	See BTI374 quad ring seal		8
10		BODY	NSS		1
11	6592720	PLUG	W/Ref. 12-14		2
12	79K10	O RING 10			5
13	73K000014B	WASHER	back-up - Was 80K000014B [B]		5
14	58K14	O RING 10	back-up washer required - Was 25K020016B [B]		5
14	6677106	O-RING	back-up ring not required		5
15	6667549	VALVE	anti-cavitation - W/Ref. 12-14 - See Note - Was 6661345 [A]		2
16	6592115	SEAT			4
17	6592117	SPRING			4
18	79K8	O RING 10			4
19	6592116	NUT	load check		4
20		ORIFICE	NAP - .123/.130 - .750 for old valve - Was 6592110 [A]		1
21	6593680	RETAINER	.750 for old valve		1
22		O-RING	NSS		1
23		WASHER	NSS - back-up		1
24		O-RING	NSS		1
25		WASHER	NSS - back-up		1
26		VALVE	NAP - main - W/Ref. 22-25 - pressure preset at factory - Was 6676199 [A]		1
26	6686360	VALVE	main - W/Ref. 22-25 - pressure to be set in field		1
27	6599161	RELIEF VALVE	W/Ref. 12-14 - See Note		1
28	799119B	SNAP RING			2
29	6592098	WASHER			2
30	6588163	SCREW	7/8" - Was 69G000412B [B]		8
30	29G000416B	SCREW	1"		4
31		BONNET	NAP - W/.25" Flange - Order 6589226 , 6660644 , 2 of 6588982		2
31	6589226	BONNET	W/.625" Flange		2
32	6592096	SLEEVE	lift		1
33	6587575	ADAPTER	Was 6592099 [A]		2
34	6592107	SPRING			4
35	6592105	BALL			8
36	6586918	SCREW	Was 6586819 [D]		2
37	6592100	COLLAR			4
38		PLUG	NAP - plastic - Order 6596807 Plug & 54K020002B Ring - Was 6592752 [A]		1
38	6596807	PLUG	plastic - .460" long		1
38	54K020002B	O-RING			1
39	6587580	SPRING	Was 6592106 [A]		4
40	6587523	WASHER	Was 6592101 [A]		4

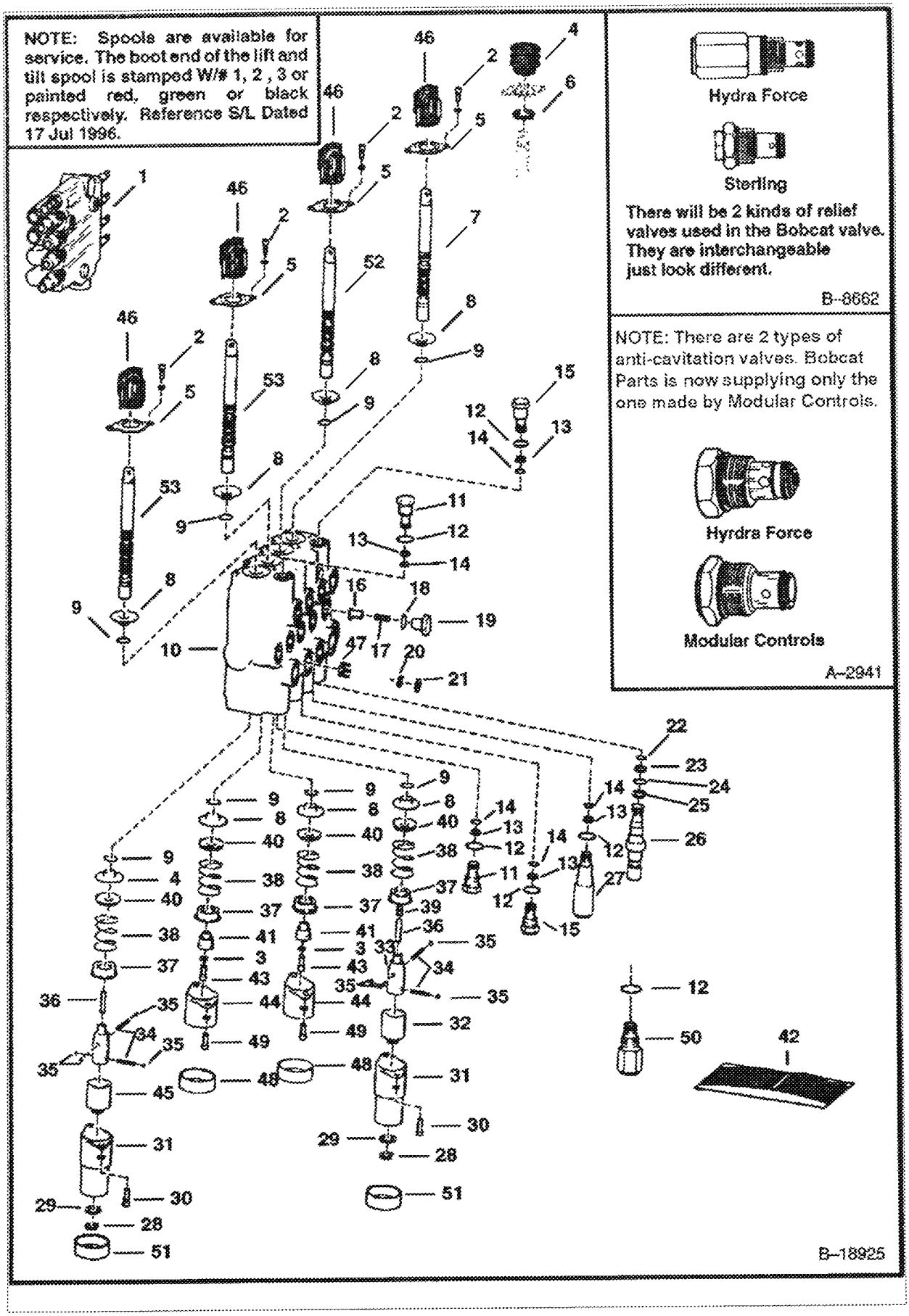
NOTE: Spools are available for service. The boot end of the lift and tilt spool is stamped W/# 1, 2, 3 or painted red, green or black respectively. Reference S/L Dated 17 Jul 1996.
Hydra Force
Sterling
There will be 2 kinds of relief valves used in the Bobcat valve. They are interchangeable just look different.
B-8662
NOTE: There are 2 types of anti-cavitation valves. Bobcat Parts is now supplying only the one made by Modular Controls.
Hyrdra Force
Modular Controls
A-2941
B-18925

HYDRAULIC CONTROL VALVE (Cont'd)
(S/N 15001 & Above)

Ref No	Part Number	Description	Remarks	Serial Number	Qty
41	6592109	ADAPTER			2
42	6816251	SEAL KIT	Ref. 9, 12-14, 18, 22-25, 30 & 46 - See Service letter 31 Aug 92 - Was 6803606 [A]		1
42	6816250	SEAL KIT	Ref. 9, 30 & 46 - For One Spool - See Service letter 31 Aug 92 - Was 6803605 [A]		4
42	6661328	SEAL KIT	main relief - Ref. 22-25 - Was 6592474 [A]		1
42	6809425	SEAL KIT	upper deck - Ref. 12-14 & 18 - Was 6586461 [A]		1
43	6588166	SCREW	Was 74G000416B [B]		2
44		BONNET	NAP - W.25" Flange - Order 6587633 , 6662848 , & 2 of 6588164 - Was 6592097 [A]		2
44	7101345	BONNET	W/.50" Flange - Was 6587633 [A]		2
45	6593349	SLEEVE	Aux.		1
46	6587763	BOOT	Ref. 6 must be removed when installing new boot Ref. 44 - Was 6583727 [A]		4
47	6587304	ORIFICE	.125" (3,17 mm)		1
48	6662848	CAP	used with 6587633 bonnet		2
49	69G000414B	SCREW	Was 6588164 [A]		2
50	6664373	VALVE	optional - port relief & anti-cav. - W/Ref. 12 - 2500PSI - used in tilt cyl. base end port		1
51	6660644	CAP			2
52	6666585	SPOOL	Tilt - #1 or Red - See Note		1
52	6666586	SPOOL	Tilt - #2 or Green - See Note		1
52	6666587	SPOOL	Tilt - #3 or Black - See Note		1
53	6592119	SPOOL	Aux. Rear - SEE NOTE		2

Page 93 - 98/287/0GB 17:21:33 - Printed by Man Cook Co - adaptation sous Ind.24 3 8/25/98

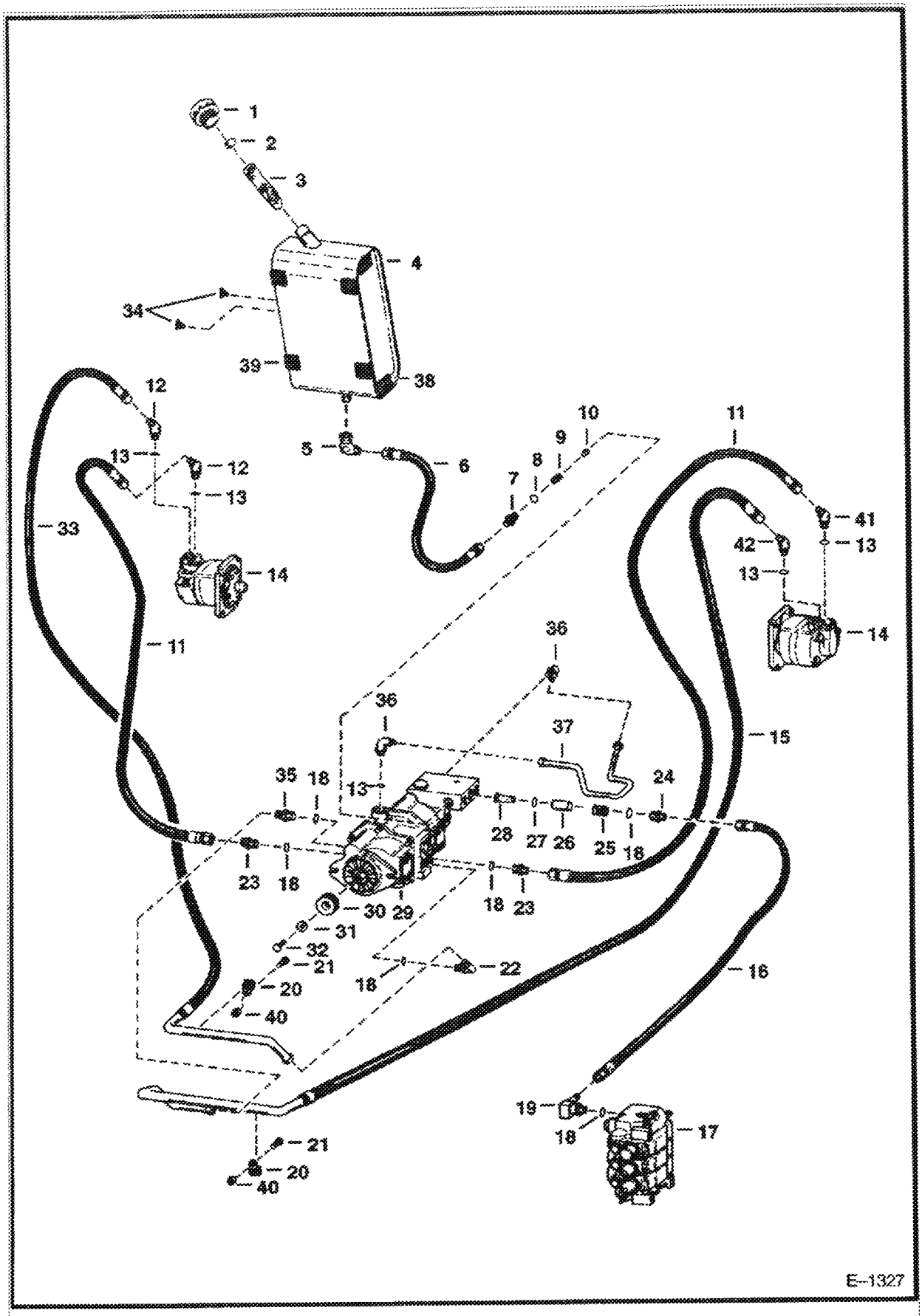
1
2
3
4
34
39
38
12
13
12
13
33
14
5
6
7
8
9
10
11
41
42
13
13
14
11
36
36
37
15
35
18
13
24
28
27
26
25
18
23
18
30
29
18
23
31
32
21
18
22
16
20
40
19
18
17
21
20
40
E-1327

HYDROSTATIC CIRCUITRY (Cont'd)
(S/N 14999 & Below)

Ref No	Part Number	Description	Remarks	Serial Number	Qty
1		BREATHER CAP	NAP - Pack of 12 - Was 1779011B [A]		1
1	6577785	CAP	Qty. of 1 - Was 6560209 [A]		1
2	713133B	SNAP RING			1
3	6558604	SCREEN			1
4		TANK	NAP - Order 1 of 713133B , 6558604 , 6563979 , 6563981 - Was 6562624 [A]		1
5	11K000008B	ELBOW	W/Ref. 8		1
6	6559007	HOSE			1
7	15K000008B	ADAPTER	W/Ref. 8		1
8	79K12	O RING 10			1
9	6560082	SPRING			1
10	6515078	POPPET			1
11	6558961	HOSE			2
12	18K000007B	ELBOW	W/Ref. 13		2
13	79K10	O RING 10			1
14		MOTOR	See Illustration HYDROSTATIC MOTOR/ D1443		2
15	6563241	HOSE & TUBE	assy.		1
16	515683B	HOSE			1
17		VALVE	See Illustration HYDRAULIC CONTROL VALVE/ B18926 See Illustration HYDRAULIC CONTROL VALVE/ B18933		1
18	79K000016B	O-RING			1
19	17KB01012B	ELBOW	W/Ref. 8 - Was 1302104B [A]		1
20	30H000049B	CLAMP			2
21	17C000416B	BOLT			2
22	17K000010B	ELBOW	W/Ref. 18		1
23	15KB01012B	ADAPTER	W/Ref. 18 - Was 712555B [A]		3
24	1303485B	CONNECTOR	W/Ref. 18		1
25	6562690	SPRING			1
26	6562650	TUBE	filter		1
27	25K040030B	O-RING			1
28	6563995	FILTER KIT	filter - W/Ref. 27		1
29		PUMP	See Illustration HYDROSTATIC PUMP/ D1392		1
30	7106572	ADAPTER	Was 6558924 [A]		1
31	616783B	WASHER			1
32	18C000616B	BOLT			1
33	6563242	HOSE & TUBE	assy.		1
34	72F000001B	DRAIN COCK			2
35	15K000010B	ADAPTER	W/Ref. 18		1
36	17K000007B	ELBOW	W/Ref. 13		2
37	6559015	TUBE			1
38	6559444	BLOCK	rubber		3
39	6559448	SEAL	rubber - Order 1'- Was 6562555 [A]		6
40	85D000004B	NUT			2
41	18K000007B	ELBOW	W/Ref. 13	13912 & Below	1
41	6519195	ELBOW	W/Ref. 13	13913 14999	1
42	18K000007B	ELBOW	W/Ref. 13	13912 & Below	1
42	17K000007B	ELBOW	W/Ref. 13	13913 14999	1

HYDROSTATIC CIRCUITRY
(S/N 14999 & Below)

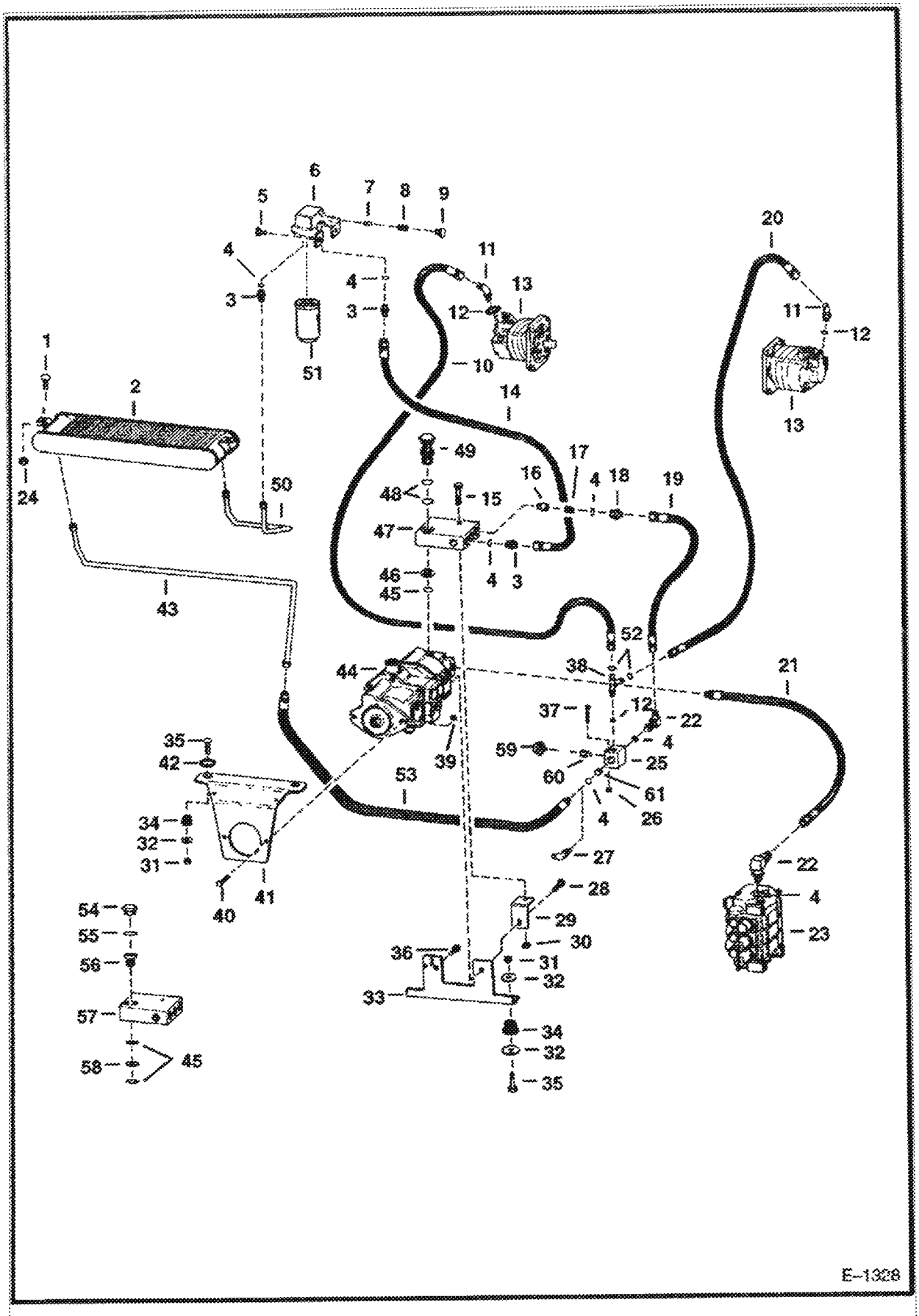

HYDROSTATIC CIRCUITRY (Cont'd)
(S/N 14999 & Below)

Ref No	Part Number	Description	Remarks	Serial Number	Qty
1	37C616	BOLT	carriage - Was 6514537 [A]		2
2	6560954	OIL COOLER			1
3	15K000007B	CONNECTOR	W/Ref. 4		3
4	79K10	O RING 10			3
5	84G3712	BOLT			2
6	6563339	FILTER HEAD	filter		1
7	6515078	POPPET			1
8	6553897	SPRING			1
9	6561811	PLUG			1
10	1326228	HOSE		13912 & Below	1
10	2337331B	HOSE		13913 14999	1
11	18K000005B	ELBOW	W/Ref. 12		2
12	79K6	O RING 10			2
13		MOTOR	See Illustration HYDROSTATIC MOTOR/ D1443		2
14	1524780	HOSE			1
15	17C640	BOLT 5			1
16	6565620	POPPET			1
17	6562691	SPRING			1
18	6562656	ADAPTER	W/Ref. 4		1
19	1317456B	HOSE			1
20	1530076	HOSE		13912 & Below	1
20	1518597B	HOSE		13913 14999	1
21	6559198	HOSE			1
22	17K000007B	ELBOW	W/Ref. 4		1
23		VALVE	See Illustration HYDRAULIC CONTROL VALVE/ B18926 See Illustration HYDRAULIC CONTROL VALVE/ B18933		1
24	83D6	NUT 5			2
25	6562692	BLOCK		14084 & Below	1
25	6564373	BLOCK		14085 14999	1
26	85D000004B	NUT			1
27	18K000007B	ELBOW	W/Ref. 4 - Not Used W/Ref. 53		1
28	17C820	BOLT			1
29	6557724	BRACKET			1
30	61D000006B	NUT			1
31	85D8	NUT 5			4
32	6564692	WASHER			6
33	6569553	BRACKET			1
34	6560633	DAMPENER	shock		4
35	35C000840B	BOLT			2
36	17C000816B	BOLT			1
37	17C000444B	BOLT			1
38	21K000005B	TEE	W/Ref. 12		1
39	83D8	NUT 5			2
40	17C000824B	BOLT			2
41	6562697	MOUNT			1
42	6560899	WASHER			x
43		TUBE	NAP - Order 6563676 & 6563684		1
43	6563676	TUBE	Use Ref. 53		1
44		PUMP	See Illustration HYDROSTATIC PUMP/ D1392		1
45	79K000016B	O-RING	Used W/Aluminum - Was 58K000127B [B]		1
46	6562655	WASHER	Used with Aluminum Block		1
47	6564032	BLOCK	Aluminum		1
48	58K000127B	O-RING	Used W/Aluminum Block		2
49	6585546	BOLT	hollow - Used W/Aluminum Block		1
50	6561333	TUBE			1

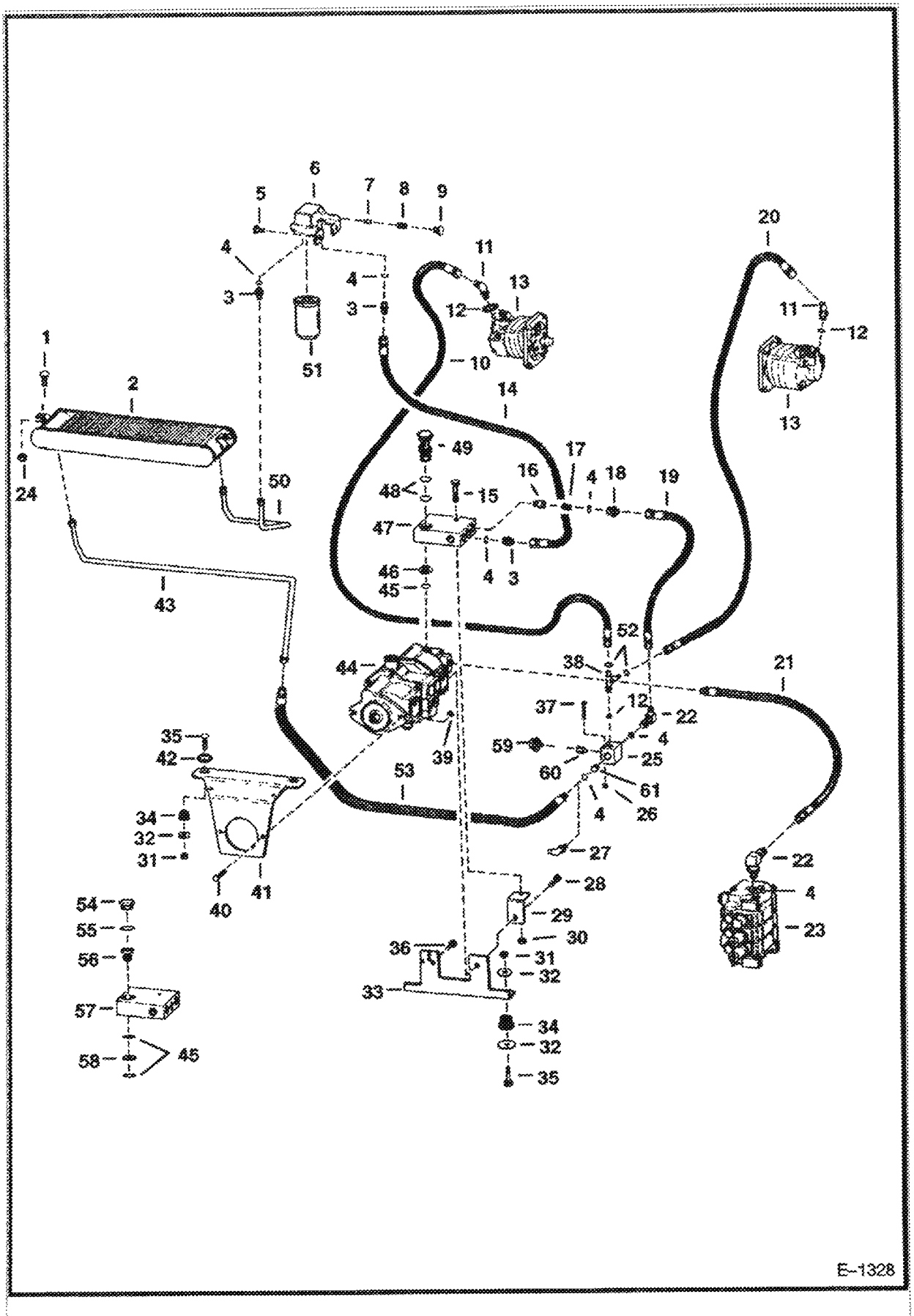
E-1328

HYDROSTATIC CIRCUITRY (Cont'd)
(S/N 14999 & Below)

Ref No	Part Number	Description	Remarks	Serial Number	Qty
51	6515541	ELEMENT	filter		1
52	6563588	RESTRICTOR	.154/.161 (3,91/4,08 mm)	14084 & Below	2
53	6563684	HOSE			1
54	6553899	PLUG	Used W/Steel Block		1
55	79K24	O RING 10	Used W/Steel Block		1
56	6560137	RETAINER	hollow - Used W/Steel Block		1
57		BLOCK	NAP - steel - Order Ref. 45-49		1
58	6557802	WASHER	Used W/Steel Block		1
59	6631695	SWITCH	hydrostatic oil pressure - Was 6519715 [A]	14084 & Below	1
59	6671062	SWITCH	hydro. pressure - Was 6664577 [A]	14085 14999	1
60	6564350	SNUBBER		14085 14999	1
60	6563922	SNUBBER	Optional As Required - W/Filter	14084 & Below	1
60	6563920	FILTER		14084 & Below	1
61	6599764	RESTRICTOR	.196/.205 (4,97/5,20 mm)	14085 14999	1

Page 199 - 10/31 - 09/29/2000 17:23:30 - Printed by Bob Cook Co. - epcmst.exe (v3.24.3 6/25/2000)

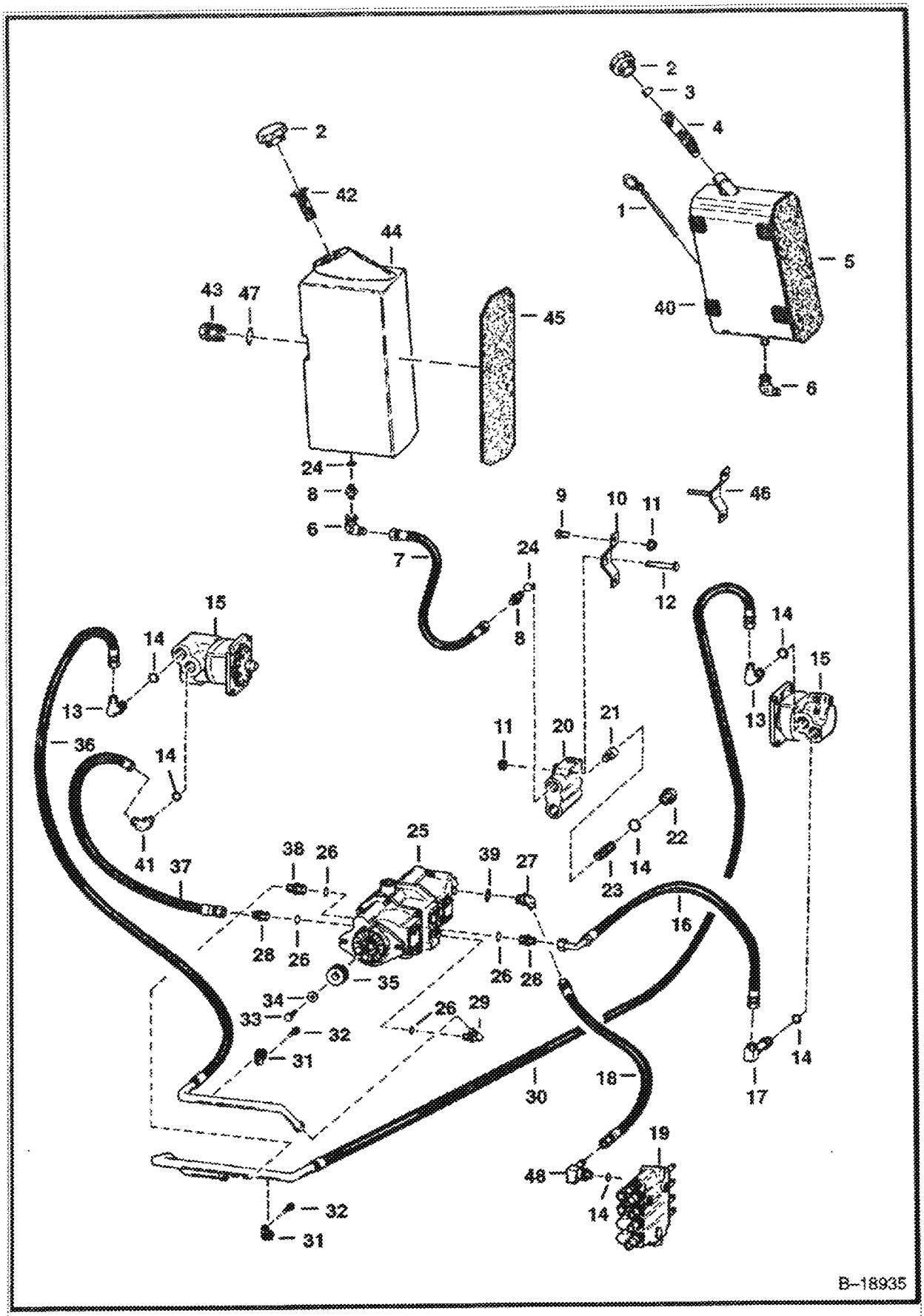
B–18935

HYDROSTATIC CIRCUITRY (Cont'd)
(S/N 15001 & Above)

Ref No	Part Number	Description	Remarks	Serial Number	Qty
1	6563979	DIPSTICK			1
2		BREATHER CAP	NAP - Pack of 12 - Was 1779011B [A]		x
2	6577785	CAP	Qty. of 1 - Was 6560209 [A]		1
3	713133B	SNAP RING		22946 & Below	1
4	6558604	SCREEN		22946 & Below	1
5	6563981	TANK	steel	15001 19999	1
5		TANK	NAP - steel - Order 6553981 , 713133B , 6558604 , 6563979 - Was 6568196 [A]	20001 22946	1
6	11K000008B	ELBOW	W/Ref. 8		1
7	6565572	HOSE			1
8	15K000008B	ADAPTER	W/Ref. 24		1
9	35C616	BOLT 5			2
10	6569580	BRACKET	Use W/7C-640		1
11	83D6	NUT 5			3
12	17C640	BOLT 5	hex		1
12	7C000640B	BOLT	carriage		1
13	17K000007B	ELBOW	W/Ref. 14		1
14	79K10	O RING 10			x
15		MOTOR	See Illustration HYDROSTATIC MOTOR/ D1443		2
16	6565490	HOSE			1
17	6519195	ELBOW	W/Ref. 14		2
18	6567542	HOSE	For use W/Vane pump		1
18	6704270	HOSE	For use W/6648323 Gear pump		1
18	6705891	HOSE	For use W/6662894 Gear pump		1
19		VALVE	See Illustration HYDRAULIC CONTROL VALVE/ B18925 MELROE		1
20	6565748	BLOCK	port		1
21	6565620	POPPET			1
22	6561811	PLUG	W/Ref. 14		1
23	6562691	SPRING			1
24	79K12	O RING 10			x
25		PUMP	See Illustration HYDROSTATIC PUMP/ D1392		1
26	79K000016B	O-RING			x
27	18K000006B	ELBOW	W/Ref. 39		1
28	15KB1216	ADAPTER	W/Ref. 26 - Was 712555B [A]		2
29	17K000010B	ELBOW	W/Ref. 26		1
30	6563241	HOSE & TUBE	assy.		1
31	30H000049B	CLAMP			2
32	17C000416B	BOLT			2
33	18C000616B	BOLT			1
34	616783B	WASHER			1
35	7106572	ADAPTER	Was 6558924 [A]		1
36	6563242	HOSE & TUBE	assy.		1
37	6558961	HOSE			1
38	15K000010B	ADAPTER	W/Ref. 26		1
39	79K8	O RING 10			x
40	6559448	SEAL	rubber - Order 1' - Was 6562555 [A]		6
41	18K000007B	ELBOW	W/Ref. 14		1
42	6569219	SCREEN		22947 & Above	1
43		GAUGE, sight	NAP - plastic - Order 6665915 Sight Glass & 79K000012B O-Ring		1
43	6665915	GAUGE	steel - Also Order 79K000012B - Was 6656338 [A]		1
44	6569220	TANK	nylon	22947 & Above	1
45	6565012	INSULATION		22947 & Above	1
46		BRACKET	NAP - Order Ref. 10 & (1) 7C000640B Bolt Ref. 12		1
47	25K040030B	O-RING	for plastic sight gauge	22947 & Above	1
47	79K12	O RING 10	for 6656338 steel sight gauge		1

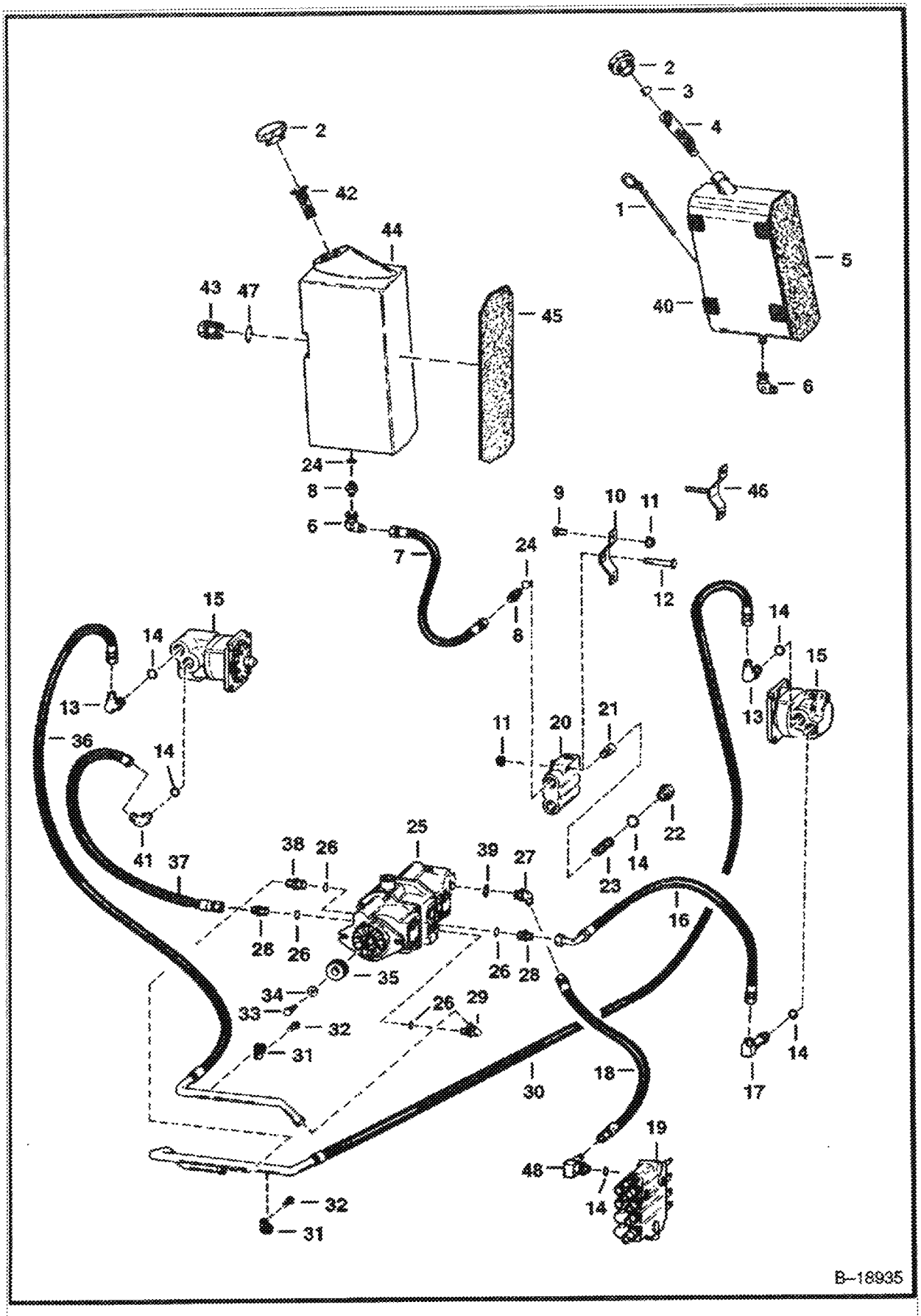
B-18935

Ref No	Part Number	Description	Remarks	Serial Number	Qty
48	6532179	ELBOW	W/Ref. 14		1

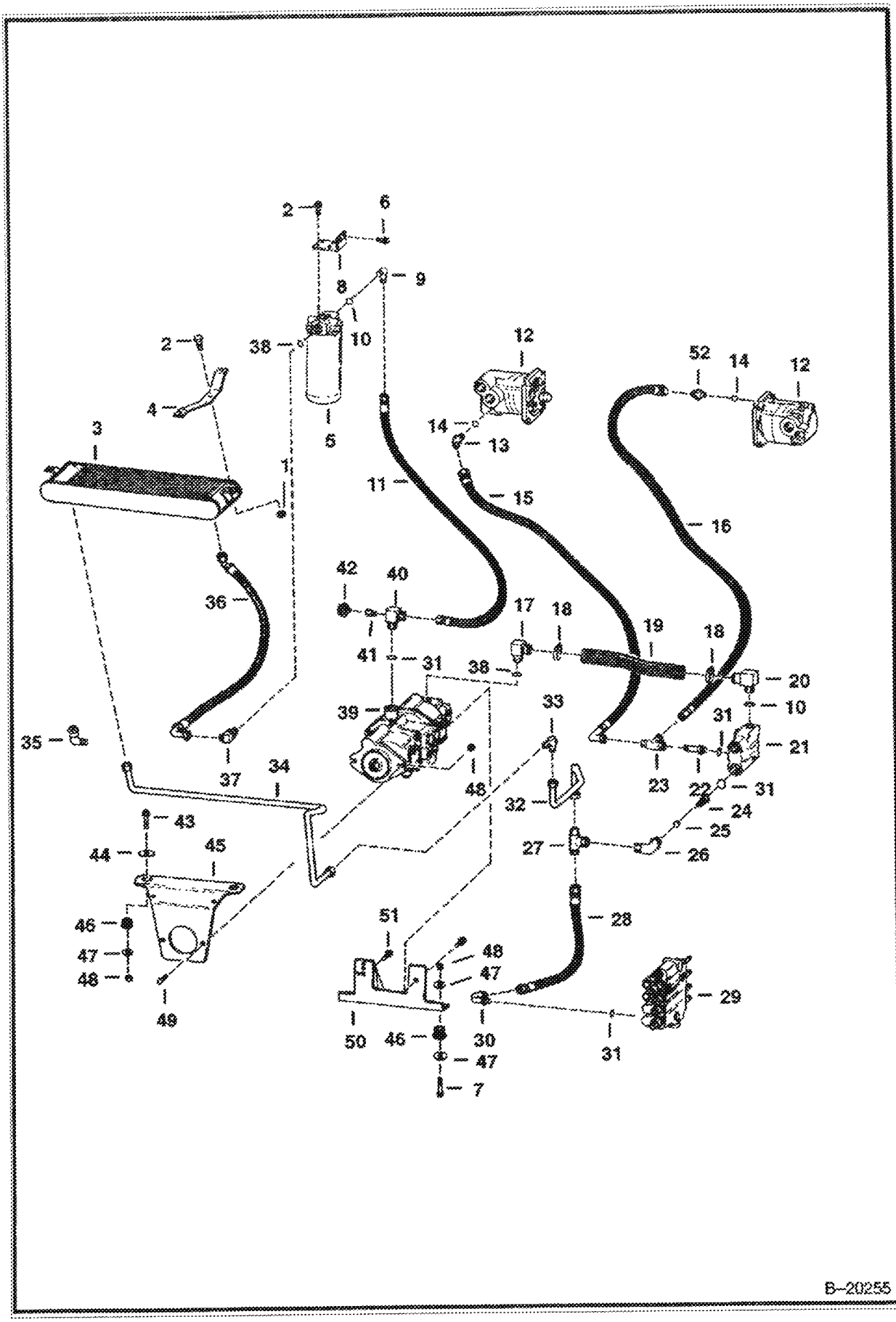
B-20255

HYDROSTATIC CIRCUITRY (Cont'd)
(S/N 15001 & Above)

Ref No	Part Number	Description	Remarks	Serial Number	Qty
1	85D6	LOCK NUT			2
2	35C000612B	BOLT			2
3	6560954	OIL COOLER			1
4	6565195	BRACKET			1
5		FILTER ASSY.	See Illustration HYDROSTATIC OIL FILTER/ C2818		1
6	84G3712	BOLT			2
7	17C000836B	BOLT			2
8	6565336	BRACKET		16552 & Below	1
9	17K000008B	ELBOW	W/Ref. 10		1
10	79K12	O RING 10			x
11	6702857	HOSE	Was 2525543B [A]		1
12		MOTOR	See Illustration HYDROSTATIC MOTOR/ D1443		2
13	18K000005B	ELBOW	W/Ref. 14		2
14	79K6	O RING 10			x
15	6564714	HOSE			1
16	1518597B	HOSE	14"		1
16	6542521	HOSE	16"		1
17	6567883	ELBOW	W/Ref. 38		1
18	44H20	CLAMP	Was 6666864 [A]		2
19		HOSE	NAP - 9 1/2 inch - Order 1 of 799136B - Was 6565344 [A]		1
20	1321499B	ELBOW	W/Ref. 10 - Was 6567884 [A]		1
21	6565748	BLOCK	port		1
22	731795B	ADAPTER			1
23	13K5	TEE			1
24	6565425	SPRING			1
25	6515078	POPPET			1
26	6565701	ELBOW			1
27	14K000007B	TEE			1
28		TUBE	NAP - Order 6567419 Hose		1
28	6567419	HOSE			1
29		VALVE	See Illustration HYDRAULIC CONTROL VALVE/ B18925 BOBCAT		1
30	6532179	ELBOW	W/Ref. 31 - Was 17K000007B [B]		1
31	79K10	O RING 10			x
32	6565338	TUBE		16552 & Below	1
32	6565717	TUBE		16553 & Above	1
33	87F000007B	ADAPTER		16552 & Below	1
33	77F000007B	ELBOW		16553 & Above	1
34	6565506	TUBE		16552 & Below	1
34	6567313	TUBE		16553 & Above	1
35	11K000007B	ELBOW	Use W/6565506 Tube	16552 & Below	2
36	6567026	HOSE			1
37	17KB01012B	ELBOW	W/Ref. 10 - Was 1302104B [A]		1
38	79K000016B	O-RING			x
39		PUMP	See Illustration HYDROSTATIC PUMP/ D1392		1
40	6565630	ELBOW	W/Ref. 31		1
41	6563922	SNUBBER	W/Filter		1
41	6563920	FILTER			1
42	6671062	SWITCH	hydro. pressure - Was 6664577 [A]		1
43	35C000840B	BOLT			2
44	6560899	WASHER			x
45	6562697	MOUNT			1
46	6560633	DAMPENER	rubber		4
47	6564692	WASHER			6
48	85D8	NUT 5			4

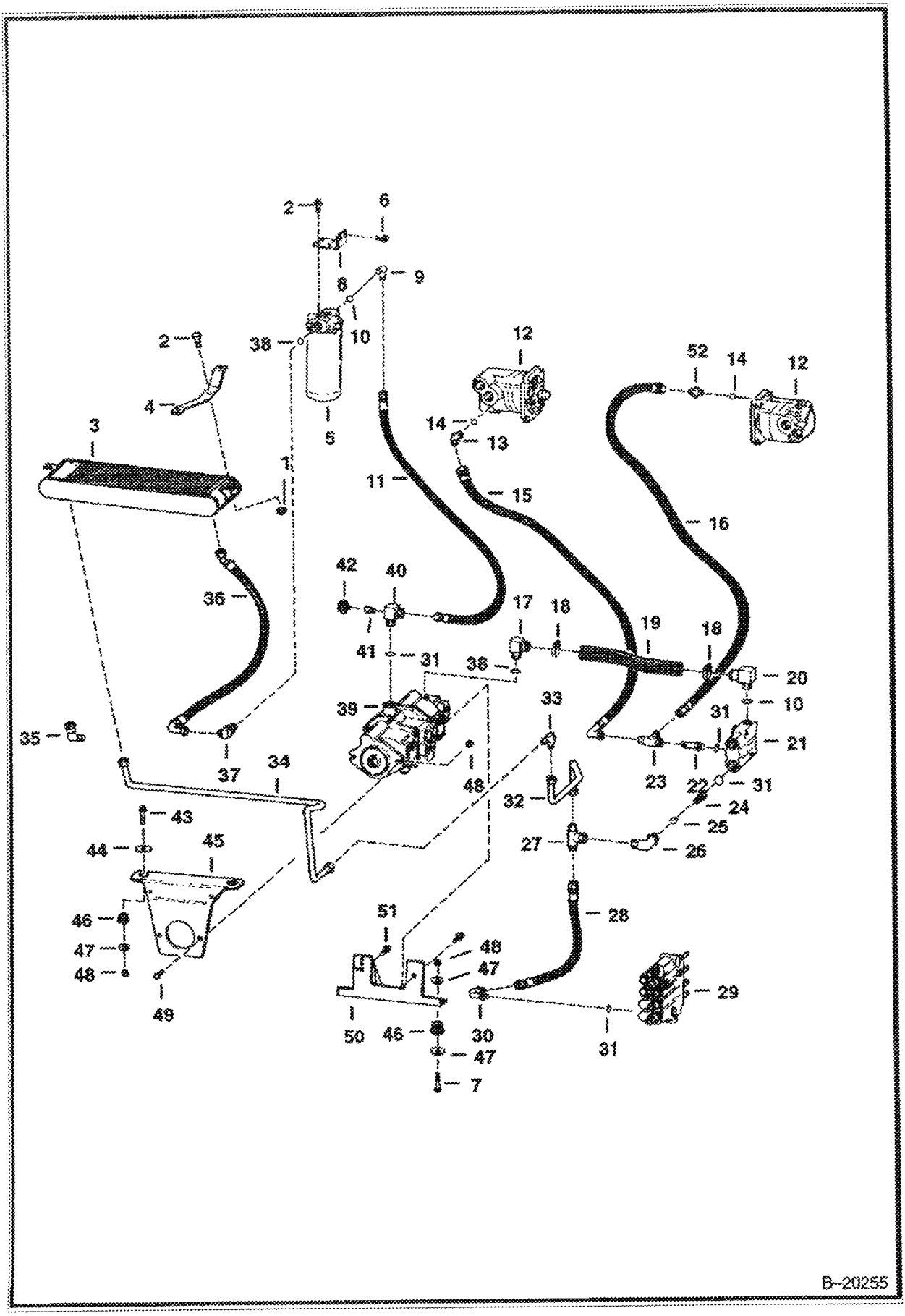
2
6
8
9
10
38
5
2
4
3
1
12
14
13
11
15
52
14
12
16
42
40
36
17
18
19
18
41
31
38
20
10
39
33
31
21
35
37
34
48
23
22
31
24
32
25
27
26
43
44
45
46
47
48
49
51
48
47
28
29
50
46
30
47
7
31

B-20255

Ref No	Part Number	Description	Remarks	Serial Number	Qty
49	17C000824B	BOLT			2
50	6569553	BRACKET			1
51	17C000816B	BOLT			1
52	15K000005B	ADAPTER	W/Ref. 14		1

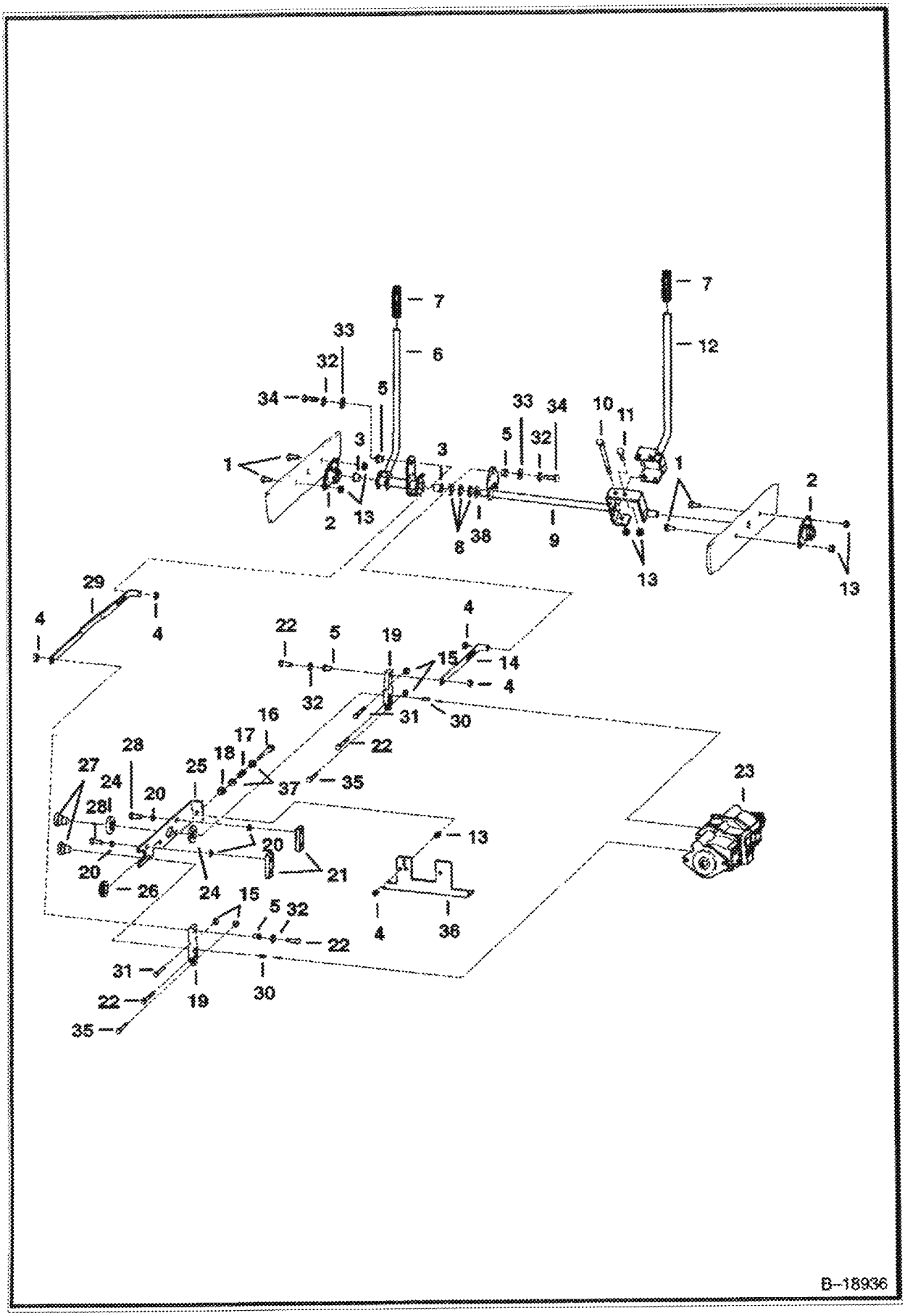
B--18936

HAND CONTROLS (Cont'd)
(S/N 14999 & Below)

Ref No	Part Number	Description	Remarks	Serial Number	Qty
1	17C612	BOLT 5			4
2	6558736	FLANGE			2
3	6512027	BUSHING			2
4	85D6	LOCK NUT			8
5	6665701	BUSHING	Was 6630081 [A]		4
6	6558460	HANDLE	L.H.		1
7	6513963	GRIP			2
8	25E000029B	WASHER			x
9	6564705	SHAFT	Was 6558461 [A]		1
10	6553081	BOLT			1
11	17C620	BOLT			1
12	6558615	HANDLE	R.H.		1
13	61D000006B	NUT			6
14	6558431	BAR			1
15	5562062	CAM			4
16	17C000692B	BOLT			1
17		SPRING	NAP - .44" (11.17 mm) I.D. - Order 6572026 & 2-6571991 - Was 6505082 [A]		1
17	6572026	SPRING	.75" (19.05 mm) I.D.		1
18	6579990	WASHER	Was 6558429 [A]		1
19	6565751	LEVER			2
20	6557831	WASHER			9
21	6562281	BAR			2
22	17C000628B	BOLT			4
23		PUMP	See Illustration HYDROSTATIC PUMP/ D1392		1
24	6558680	WASHER			2
25	6562767	BRACKET	See BTI241		1
26	6558436	GUIDE			1
27	6567973	HUB	Was 6562063 [B]		2
28	8C000616B	BOLT			4
29	6558430	BAR			1
30	5J000806B	KEY			2
31	17C000624B	BOLT			2
32	6563914	WASHER			4
33	6563965	WASHER			2
34	17C000626B	BOLT			2
35	17C000614B	BOLT			2
36	6569553	BRACKET			1
37	6571991	GUIDE	Use only with 6572026 spring		2
38	6705033	WASHER	.067 (1,70 mm)		x

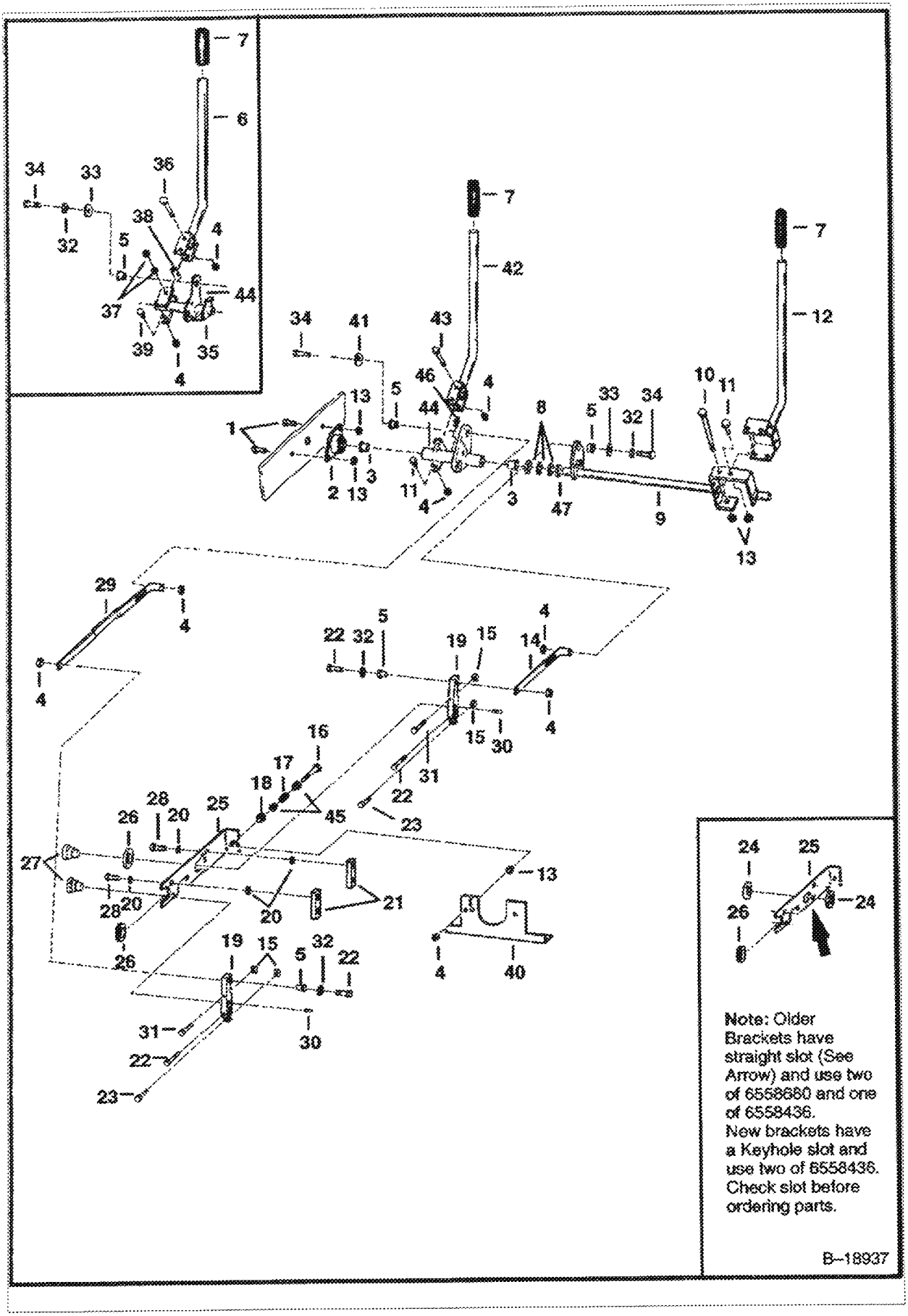
Note: Older Brackets have straight slot (See Arrow) and use two of 6558680 and one of 6558436.
New brackets have a Keyhole slot and use two of 6558436. Check slot before ordering parts.
B–18937

HAND CONTROLS (Cont'd)
(S/N 15001 & Above)

Ref No	Part Number	Description	Remarks	Serial Number	Qty
1	17C612	BOLT 5			4
2	6558736	FLANGE			2
3	6512027	BUSHING			2
4	85D6	LOCK NUT			8
5	6665701	BUSHING	Was 6630081 [A]		4
6	6564663	LEVER	L.H.	25368 & Below	1
7	6513963	GRIP			2
8	25E000029B	WASHER			x
9	6564705	SHAFT			1
10	6553081	BOLT			1
11	17C620	BOLT			1
12	6558615	HANDLE	R.H.		1
13	61D000006B	NUT			6
14	6558431	BAR			1
15	6562062	CAM			4
16	17C000696B	BOLT			1
17		SPRING	NAP - .44" (11,17 mm) I.D. - Order 6572026 & 2-6571991		1
17	6572026	SPRING	.75" (19,05 mm) I.D.		1
18	6579990	WASHER	Was 6558429 [A]	28626 & Below	1
18	6571988	BUSHING		28627 & Above	1
19	6565751	LEVER			2
20	6557831	WASHER			9
21	6562281	BAR			2
22	17C000628B	BOLT			4
23	17C000614B	BOLT			1
24	6558680	WASHER	See Note		x
25	6562767	BRACKET	See BTI241	28626 & Below	1
25	6571899	BRACKET	See Note	28627 & Above	1
26	6558436	GUIDE	See Note		x
27	6562063	HUB			2
28	8C000616B	BOLT			4
29	6558430	BAR			1
30	5J000806B	KEY			2
31	17C000624B	BOLT			2
32	6563914	WASHER		25368 & Below	4
33	6563965	WASHER		25368 & Below	2
34	17C000626B	BOLT			2
35	6564662	LEVER		25368 & Below	1
36	17C000648B	BOLT			1
37	6564648	WASHER		25368 & Below	x
38	6564667	BUSHING		25368 & Below	1
39	17C000616B	BOLT			1
40	6569553	BRACKET			1
41	6569505	WASHER		25369 & Above	1
42	6569496	LEVER		25369 & Above	1
43	6569141	BOLT		25369 & Above	1
44	6578492	LEVER	Was 6569143 [A]	25369 & Above	1
45	6571991	GUIDE	Use only with 6572026 spring		2
46	10H000035B	GREASE ZERK			1
47	6705033	WASHER	.067 (1,70 mm)		x

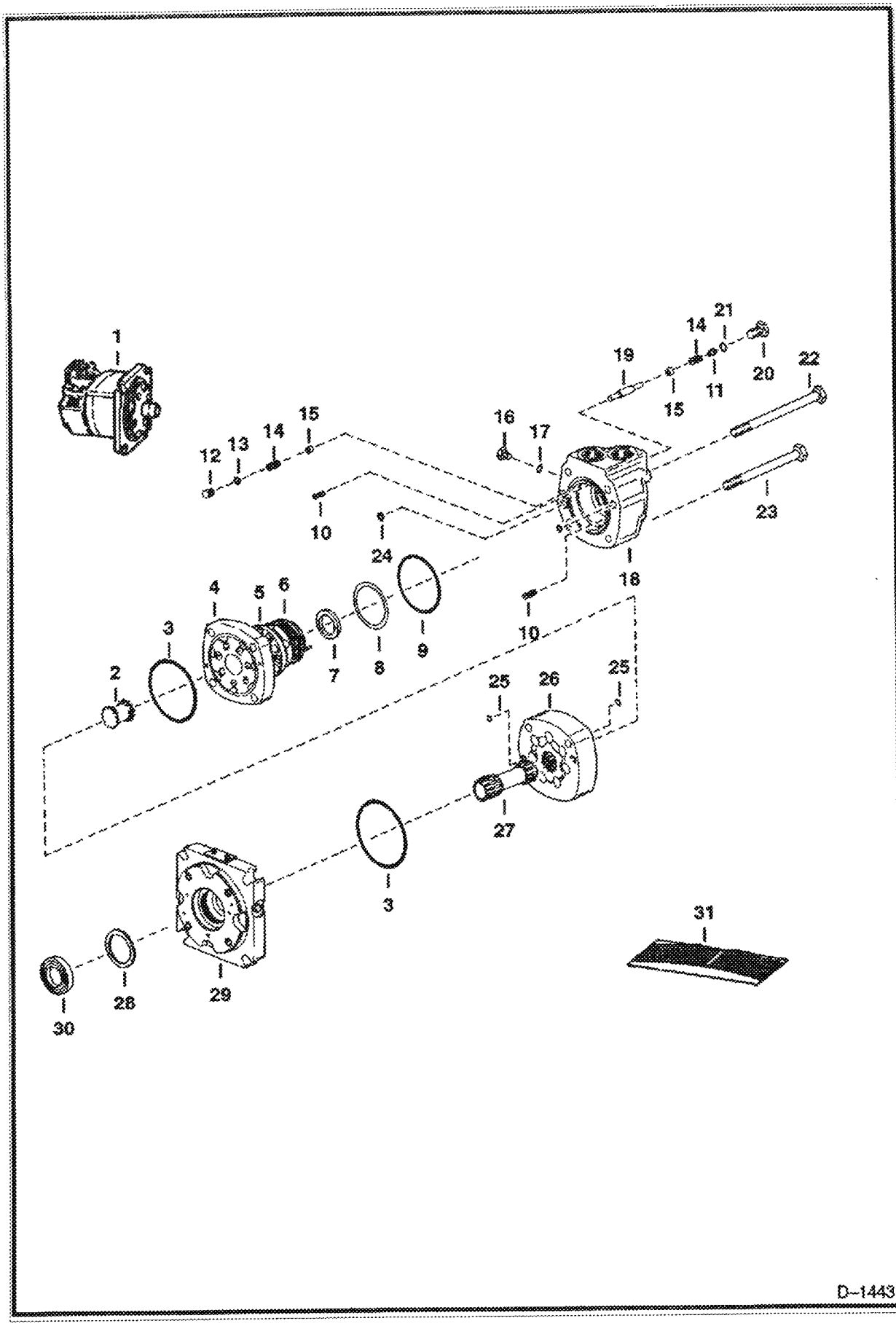
1
12
13
14
15
16
17
19
14
21
15
11
20
22
10
24
18
23
4
5
6
3
2
7
8
9
10
25
26
25
27
3
31
29
28
30
D-1443

Ref No	Part Number	Description	Remarks	Serial Number	Qty
1	6567421	MOTOR KIT	New motor, 25K030508B O-Ring & Ref. 30		1
1	6567752	MOTOR	Remanufactured		1
2	6513506	DRIVE			1
3		SEAL	NSS		2
4	6513505	PLATE	valve		1
5	6513507	VALVE			1
6	6630042	PLATE	balancing		1
7		SEAL	NSS - Inner		1
8		SEAL	NSS - Outer		1
9		SEAL	NSS		1
10	6190121	SPRING			2
11	6561218	SHUTTLE			2
12	6513534	PLUG			1
13		O-RING	NSS		1
14	6513533	SPRING			2
15	6513532	POPPET			2
16	47K000002B	PLUG	W/Ref. 17		1
17	79K000003B	O-RING			1
18	6599605	HOUSING	valve		1
19	6513510	PISTON			1
20	47K5	PLUG	W/Ref. 21		1
21	79K6	O RING 10			1
22	18C000788B	BOLT			1
23	18C000782B	BOLT			3
24		O-RING	NSS		1
25		O-RING	NSS		2
26	6513514	GEROLER	sub-assy.		1
27	6513513	DRIVE			1
28	58K000137B	SEAL	Was 58K000134B [B]	20217 & Below	1
29	6513512	FLANGE			1
30	6513681	BEARING	bronze		1
31	6514895	SEAL KIT	Ref. 3, 7-9, 13, 17, 24, 25 & 28		1

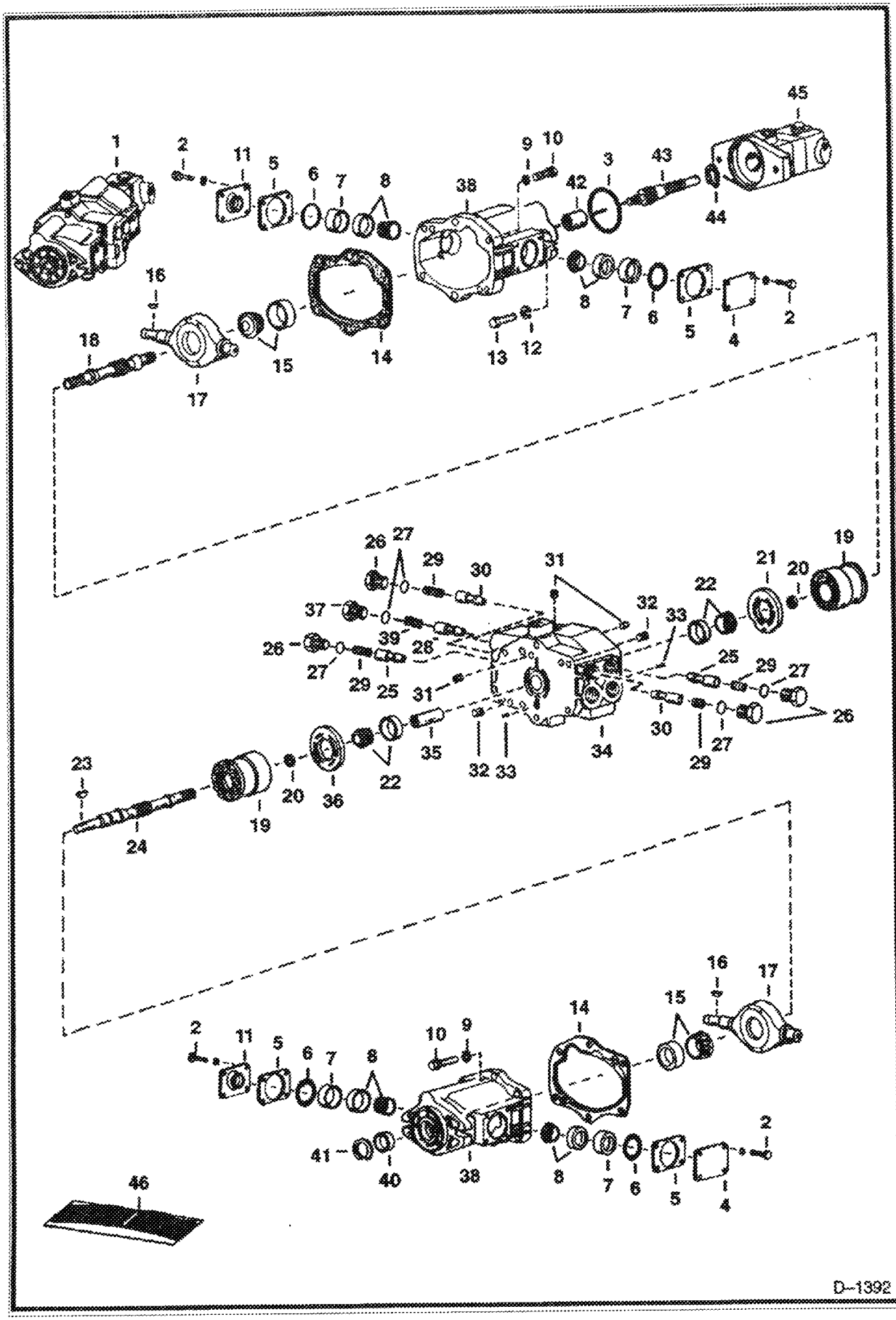
D-1392

Ref No	Part Number	Description	Remarks	Serial Number	Qty
1		PUMP	See BTI209 NAP	14999 & Below	1
1		PUMP	NAP - Vickers 451809 - Order 6648980	15001 37666	1
1	6648980	PUMP	New - Vickers 567686	37667 & Above	1
1	6630535REM	PUMP REM / CORE EXCHANGE REQUIRED	See BTI209 Remanufactured - Was 6630535 [A]		1
2	6513631	BOLT			16
3	6512949	O-RING			1
4	6512939	COVER			2
5	6512940	SHIM KIT			1
6		O-RING	NSS		4
7	6512938	SPACER			4
8	232539B	BEARING			4
9	4E000006B	WASHER			12
10	93G000624B	SCREW			12
11	6513094	COVER & SEAL			2
12	616791B	WASHER			2
13	17C820	BOLT			2
14	6512941	GASKET			2
15	6513091	BEARING			2
16	5J000806B	KEY			2
17	6512929	YOKE			2
18	6512932	SHAFT			1
19	6512930	ROTATING GROUP	rotating		2
20	6512948	KIT	spacer		2
20	6674240	SPACER	(.137")		1
20	6674241	SPACER	(.139")		1
20	6674242	SPACER	(.142")		1
20	6674243	SPACER	(.145")		1
20	6674244	SPACER	(.148")		1
20	6674245	SPACER	(.151")		1
20	6674246	SPACER	(.154")		1
20	6674247	SPACER	(.157")		1
20	6674248	SPACER	(.160")		1
20	6674249	SPACER	(.163")		1
20	6674250	SPACER	(.166")		1
20	6674251	SPACER	(.169")		1
21	6598478	WEAR PLATE			1
22	6513093	BEARING			2
23	6519654	KEY			1
24	6512942	SHAFT			1
25	6560968	KIT	relief valve - High PSI		2
26	6513434	PLUG			4
27	79K12	O RING 10			5
28	6630786	POPPET	Charge PSI - Was 6512945 [A]		1
29	6513433	SPRING			4
30	6513432	POPPET	replenishing		2
31	16F000004B	PLUG			3
32	6513089	PIN			4
33	6513092	PIN			2
34	6512931	BODY	valve		1
35	6512933	COUPLER			1
36	6598477	WEAR PLATE			1
37	6598902	PLUG		14999 & Below	1
37	6630784	PLUG		15001 & Above	1

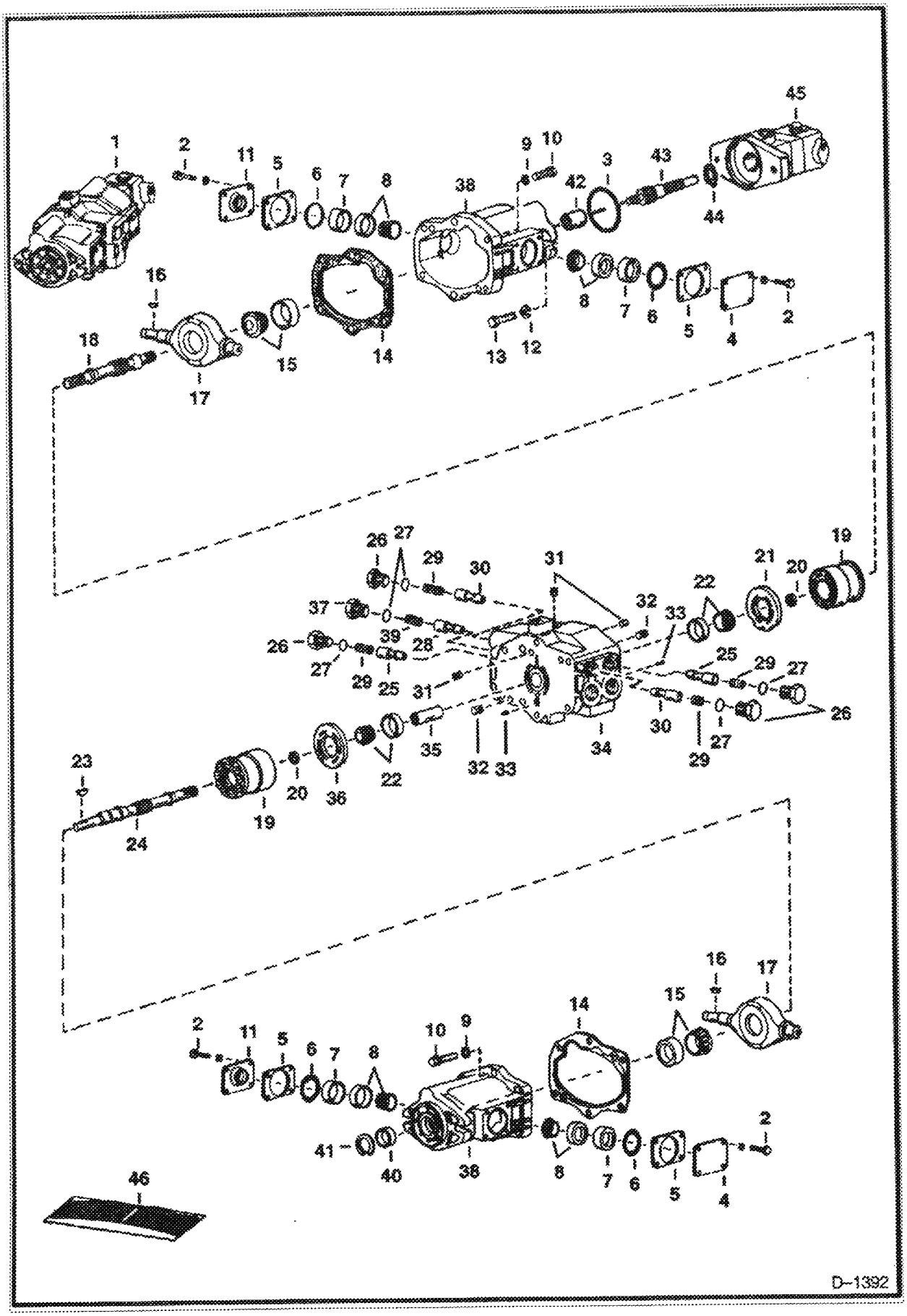
D-1392

Ref No	Part Number	Description	Remarks	Serial Number	Qty
38	6598433	HOUSING	Also Order Ref. 5 & 20 when replacing housing		2
39	6512946	SPRING		14999 & Below	1
39	6630785	SPRING	Was 6513429 [A]	15001 & Above	1
40	6513090	SEAL			1
41	507695B	SNAP RING			1
42	6512935	COUPLER			1
43	6512934	SHAFT			1
44	711054B	SNAP RING			1
45		PUMP	See Illustration VANE PUMP/ C2225 VANE		1
46	6512943	SEAL KIT	Ref. 3, 6, 14, 27 & 40		1

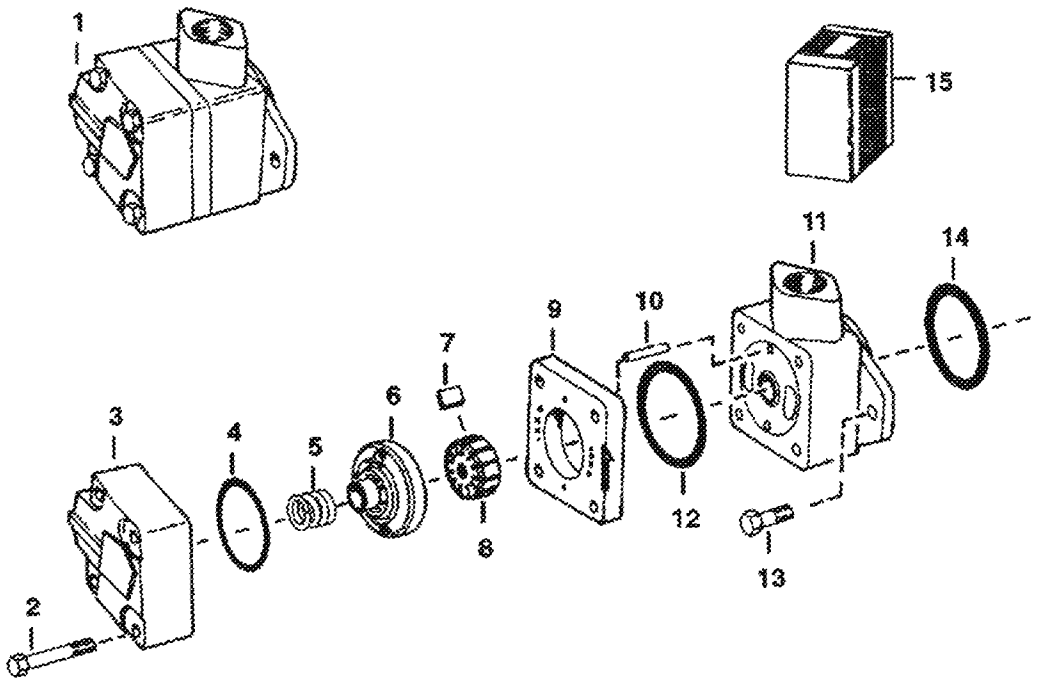

C-2225

Ref No	Part Number	Description	Remarks	Serial Number	Qty
1		PUMP	See Illustration GEAR PUMP KIT/ C3177 NAP - VANE - VICKERS 426757 -2 - ORDER 6648982 - FOR GEAR PUMP KIT WAS 6512950 [A]		1
1	6648982	PUMP	Vickers 503193 -2		1
2	17C000648B	BOLT			4
3		COVER	NAP		1
4	25K030214B	O-RING			1
5		SPRING	NAP		1
6		PLATE	NAP - pressure - Order 6649261 - Was 992509B [A]		1
6		PLATE	NAP - pressure - For 6648982 pump - Was 6649261 [A]		1
7		VANE	NSS		12
8		ROTOR	NSS - vane		1
9		RING	NSS		1
10		PIN	NSS		2
11		BODY	NAP		1
12	25K030216B	O-RING			1
13	17C000616B	BOLT			2
14	6512949	O-RING			1
15		KIT	NAP - cartridge - Ref. 7-9 - Order 6649262 - Was 4149184B [A]		1
15	6649262	KIT	cartridge - Ref. 7-9 - For 6648982 pump		1

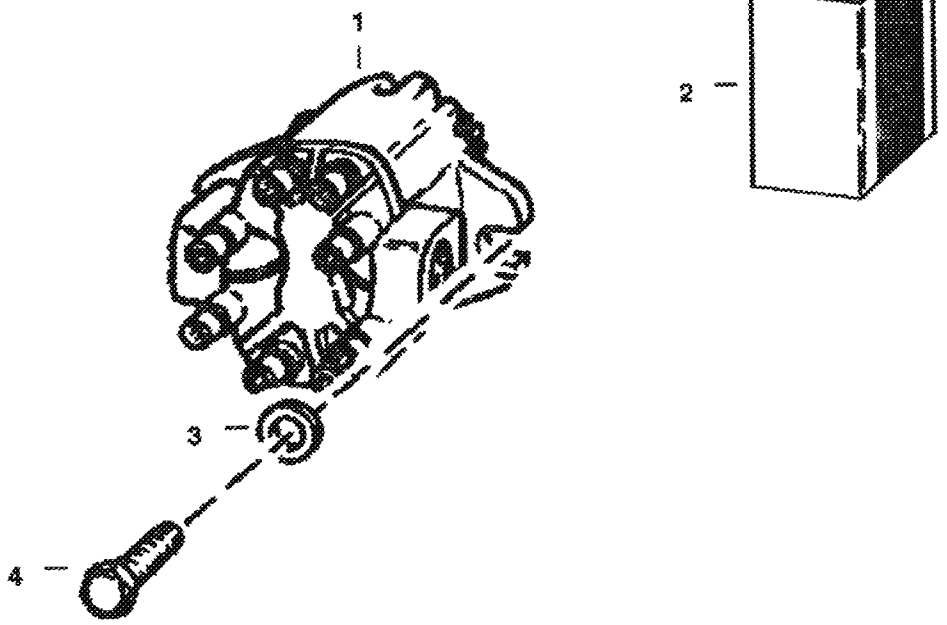

B–18344

GEAR PUMP (Cont'd)
(S/N 15001 & Above)

Ref No	Part Number	Description	Remarks	Serial Number	Qty
1		GEAR PUMP	See Illustration GEAR PUMP KIT/ C3177 NAP - Order 6662894 & 6705891 Hose - Use this replacement Gear Pump only if you have installed 6578864 Gear Pump Kit - Was 6648323 [A]		1
2	6652881	SEAL KIT	For 858021 Pump		1
3	6510584	WASHER			2
4	17C620	BOLT			2

GEAR PUMP
(W9A1S012)
(S/N 15001 & Above)

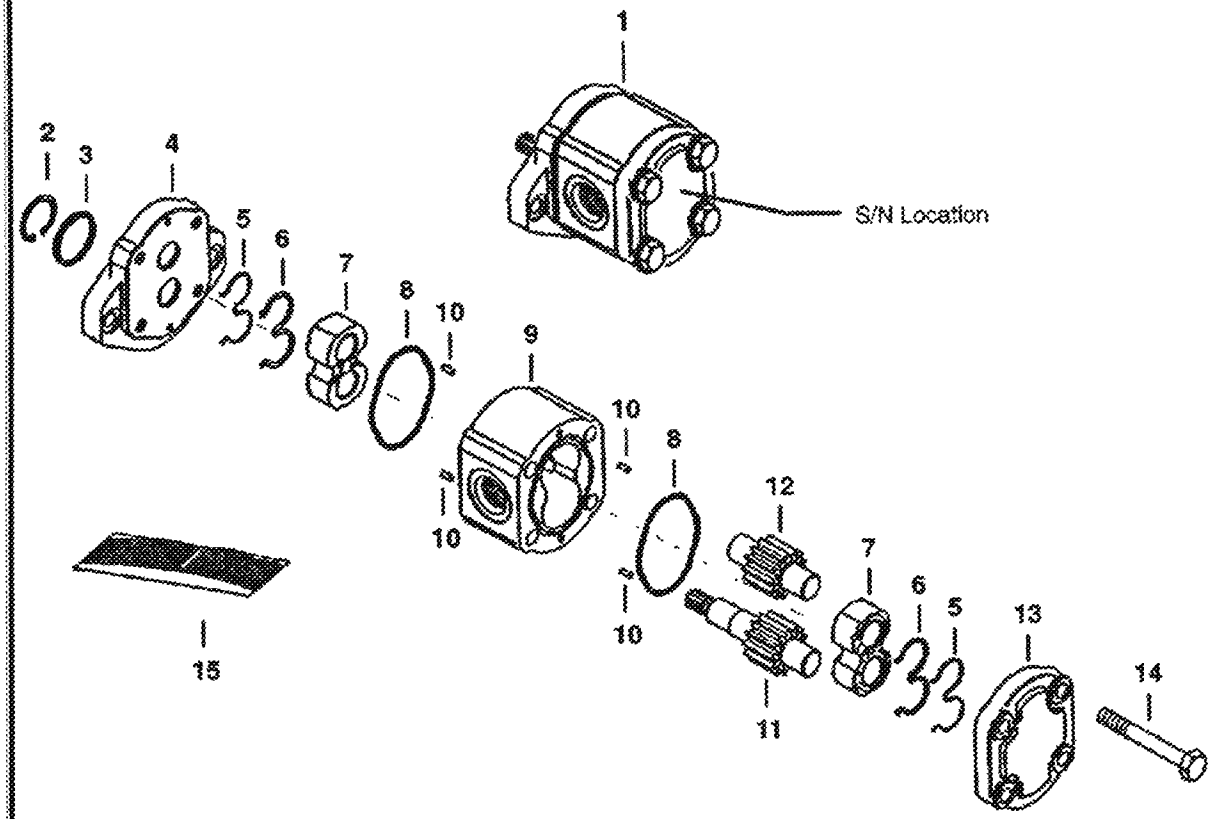

NOTE: Also order 6705891 Hose when switching to new – W9A1S012 pump.

B–18187

GEAR PUMP (Cont'd)
(W9A1S012)
(S/N 15001 & Above)

Ref No	Part Number	Description	Remarks	Serial Number	Qty
1	6662894	GEAR PUMP			1
2	6662925	SNAP RING			1
3	6662926	SEAL			1
4		FLANGE	NSS - Was 6662927 [A]		1
5		E-SEAL	NSS - Order Ref. 15		2
6		BACK-UP RING	NSS - Order Ref. 15		2
7		BEARING	NSS - Order Ref. 15		2
8		O-RING	NSS - Order Ref. 15		2
9		HOUSING	NSS - Was 6662928 [A]		1
10	6662929	DOWEL PIN			4
11	6662930	SHAFT			1
12	6662931	IDLER			1
13	6662932	COVER			1
14	6662933	BOLT			1
15	6662934	SEAL KIT	Ref. 3, 5 - 8		1
15	6664218	SEAL KIT	Ref. 3, 5, 6 & 8		1

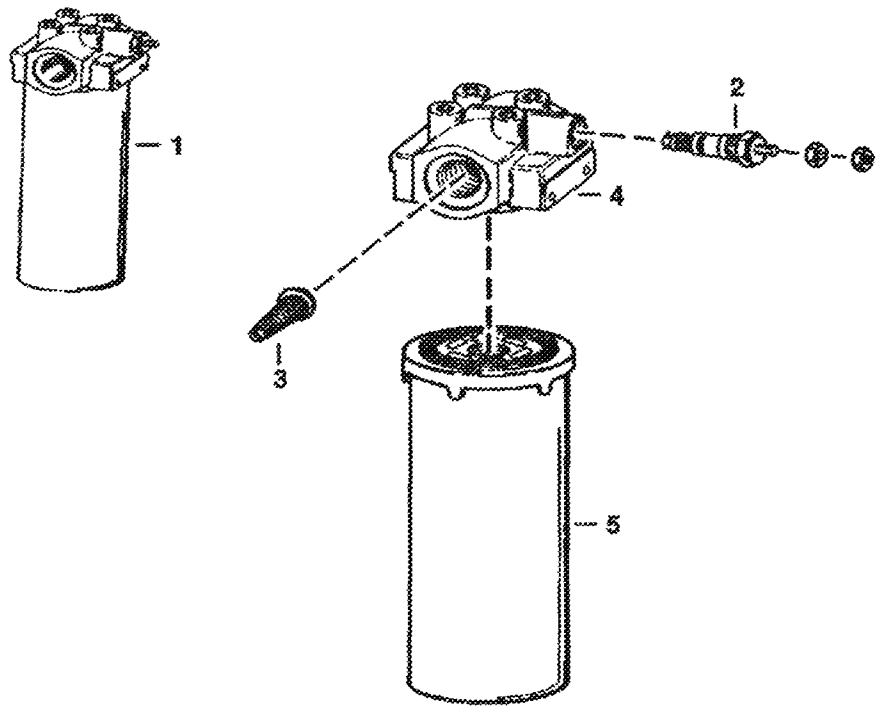

C-2818

HYDROSTATIC OIL FILTER (Cont'd)
(S/N 15001 & Above)

Ref No	Part Number	Description	Remarks	Serial Number	Qty
1		FILTER ASSY.	NAP - W/Ref. 2-5 - 25 PSI by-pass & switch - When replacing the 25 PSI by-pass filter assy. with the 50 PSI by-pass filter assy. Metal stamp the 50 PSI filter head to read 50 PSI so when ordering the by-pass or switch this will avoid confusion	15001 22872	1
1	6631706	FILTER ASSY.	W/Ref. 2-5 - 50 PSI by-pass & switch	22873 & Above	1
2	6599364	SWITCH	pressure - Use W/25 PSI by-pass	15001 22872	1
2	6632053	SWITCH	pressure - Use W/50 PSI by-pass	22873 & Above	1
2	6599365	KIT	Nut, washer & O-rings for 6599364 & 6632053 switches		1
3		VALVE	NAP - by-pass - 25 PSI - Order Ref. 1	15001 22872	1
3		VALVE	NAP - by-pass - 50 PSI - Order Ref. 1	22873 & Above	1
4		HEAD	NSS - Order Ref. 1		1
5	6598903	ELEMENT			1

CAB ELECTRICAL CIRCUITRY
(S/N 14084 & Below)

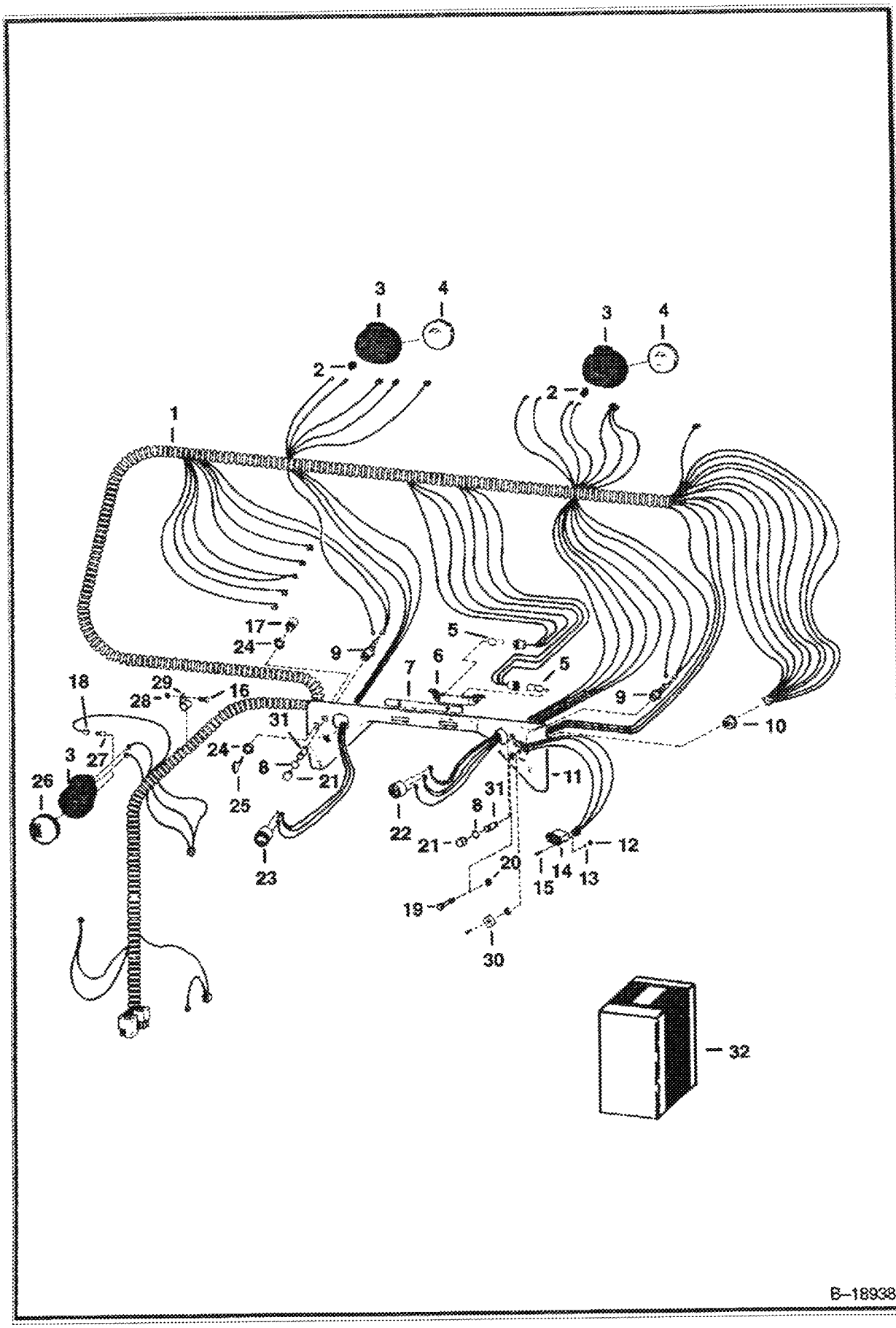

CAB ELECTRICAL CIRCUITRY (Cont'd)
(S/N 14084 & Below)

Ref No	Part Number	Description	Remarks	Serial Number	Qty
1	6561500	HARNESS			1
2	6557493	GROMMET			1
3	6558142	HOUSING			1
4	6557486	LAMP			2
5	6513468	BULB			2
6	6558242	BRACKET			1
7	6560699	LENS			1
8	6514643	GASKET			2
9	6513469	HOLDER	fuse		2
10	6512808	SWITCH			1
11	6560182	PANEL			1
12	12D000006B	NUT			2
13	12E000006B	WASHER			2
14	6664886	HOURMETER	Was 6631657 [A]		1
15	85G000608B	SCREW			2
16	10C000512B	BOLT	Was 6553808 [A]		3
17		SWITCH	See BTI289 NAP - W/Ref. 25 - Order Ref. 32 - WAS 6519592 [A]		1
17	6665606	SWITCH			1
18	6557504	SOCKET			1
19	17C000572B	BOLT			2
20	83D5	NUT 5			2
21	6514642	CAP			2
22	6634273	GAUGE	Was 6560353 [A]		1
23	6560354	VOLTMETER			1
24	6598721	NUT	For NAP/6519592 Switch - Was 6502904 [A]		1
24	6674202	NUT	For 6665606 Switch		1
25	6512809	KEY	For 6519592		x
25	6709527	KEY	For 6665606		1
26		LAMP	NAP - #4409 - Order 6563740 & 898731B		1
26	6563740	LAMP	#4409x		1
27	960855B	BULB	#1003 - Use only W/#4409 Lamp		1
27	898731B	BULB	#1156 - Use only W/#4409x lamp		1
28	61D5	NUT			3
29	30H000045B	CLAMP	Was 30H000041B [B]		3
30	6599781	KNOB	light switch		1
31	1319451B	FUSE			2
32	6724282	SWITCH KIT	Ref. 17, 25		1

CAB ELECTRICAL CIRCUITRY
(S/N 14085 thru 19999)

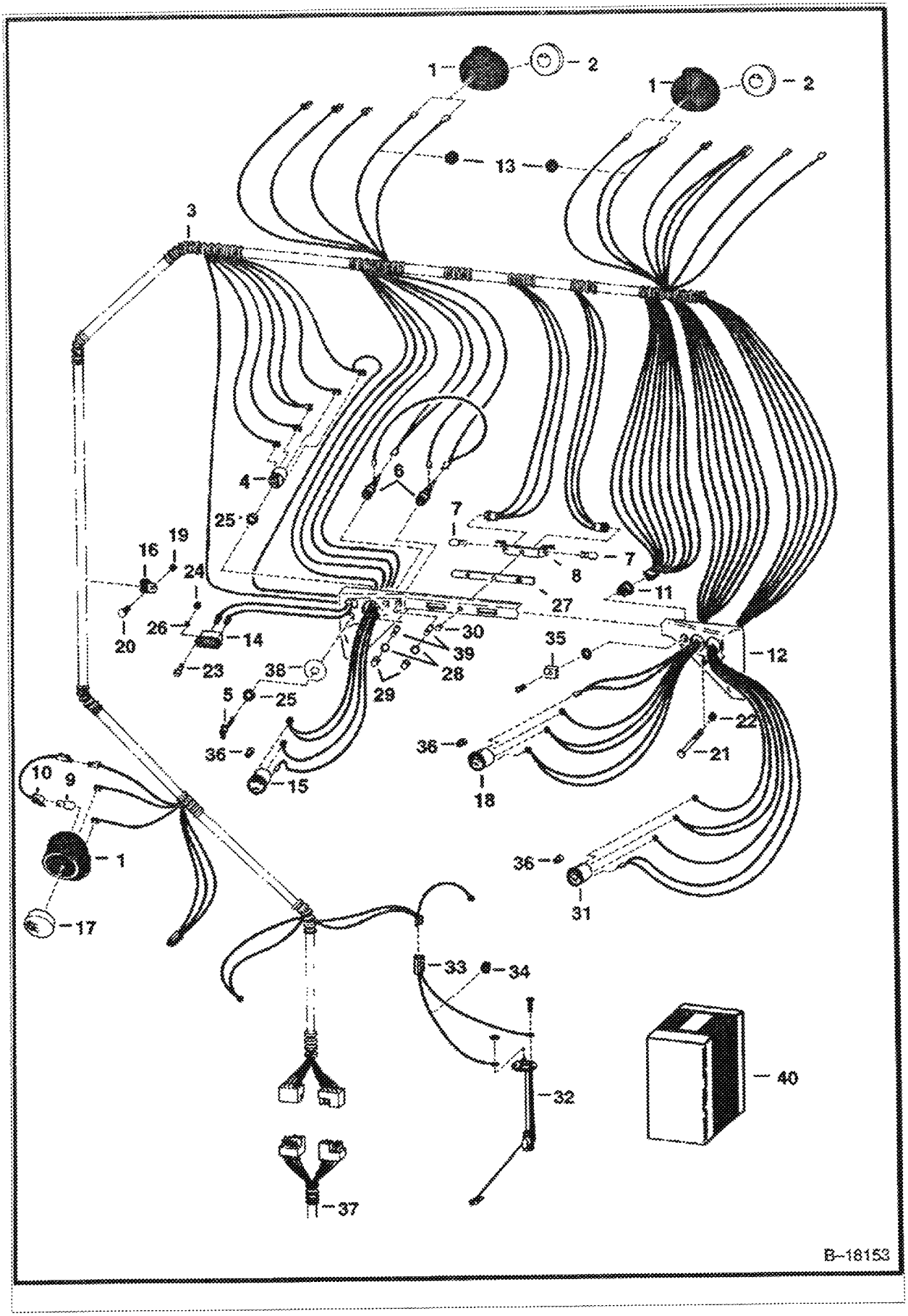

CAB ELECTRICAL CIRCUITRY (Cont'd)
(S/N 14085 thru 19999)

Ref No	Part Number	Description	Remarks	Serial Number	Qty
1	6558142	HOUSING			3
2	6557486	LAMP			2
3	6564837	HARNESS			1
4		SWITCH	See BTI289 NAP - W/Ref. 5 - Order Ref. 40 - WAS 6519595 [A]		1
4	6665606	SWITCH			1
5	6512809	KEY	For 6519592		x
5	6709527	KEY	For 6665606		x
6	6513469	HOLDER	fuse		2
7	6513468	BULB			2
8	6558242	BRACKET			1
9	898731B	BULB			1
10	6564907	SOCKET ASSY			1
11	6512808	SWITCH			1
12	6564787	PANEL			1
13	6557493	GROMMET			2
14	6664886	HOURMETER	Was 6631657 [A]		1
15	6669664	VOLTMETER	Was 6631651 [A]		1
16	30H000045B	CLAMP	Was 30H000041B [B]		3
17	6563740	LAMP			1
18	6669665	FUEL GUAGE	Was 6631650 [A]		1
19	61D5	NUT			3
20	10C000512B	BOLT	Was 6553808 [A]		3
21	17C000572B	BOLT			2
22	83D5	NUT 5			2
23	85G000608B	SCREW			2
24	12D000006B	NUT			2
25	6598721	NUT	For NAP/6519592 Switch		2
25	6674202	NUT	For 6665606 Switch		1
26	12E000006B	WASHER			2
27	6560699	LENS	Was 6564785 [A]		1
28	6514643	GASKET			2
29	6514642	CAP			2
30	6514742	RIVET			1
31	6631649	GAUGE	See BTI259 eng. temp.		1
31	6669663	GAUGE	See BTI259 eng. temp. - Was 6658817 [A]		1
32		SENDER	See Illustration FUEL SYSTEM/ B20253 FUEL		1
33	6560117	WIRE			1
34	742876B	GROMMET			1
35	6599781	KNOB	light switch		1
36	6599696	SOCKET & BULB	assy.		3
36	895771B	BULB			3
37		HARNESS	See Illustration ENGINE ELECTRICAL CIRCUITRY/ E1309 ENGINE		1
38	6703705	PLATE	brake start - For 6519592 - Was 6563431 [A]		1
38	6709028	PLATE	For 6665606		1
39	1319451B	FUSE			2
40	6724282	SWITCH KIT	Ref. 4, 5 & 38		1

CAB ELECTRICAL CIRCUITRY
(S/N 20001 thru 38567)

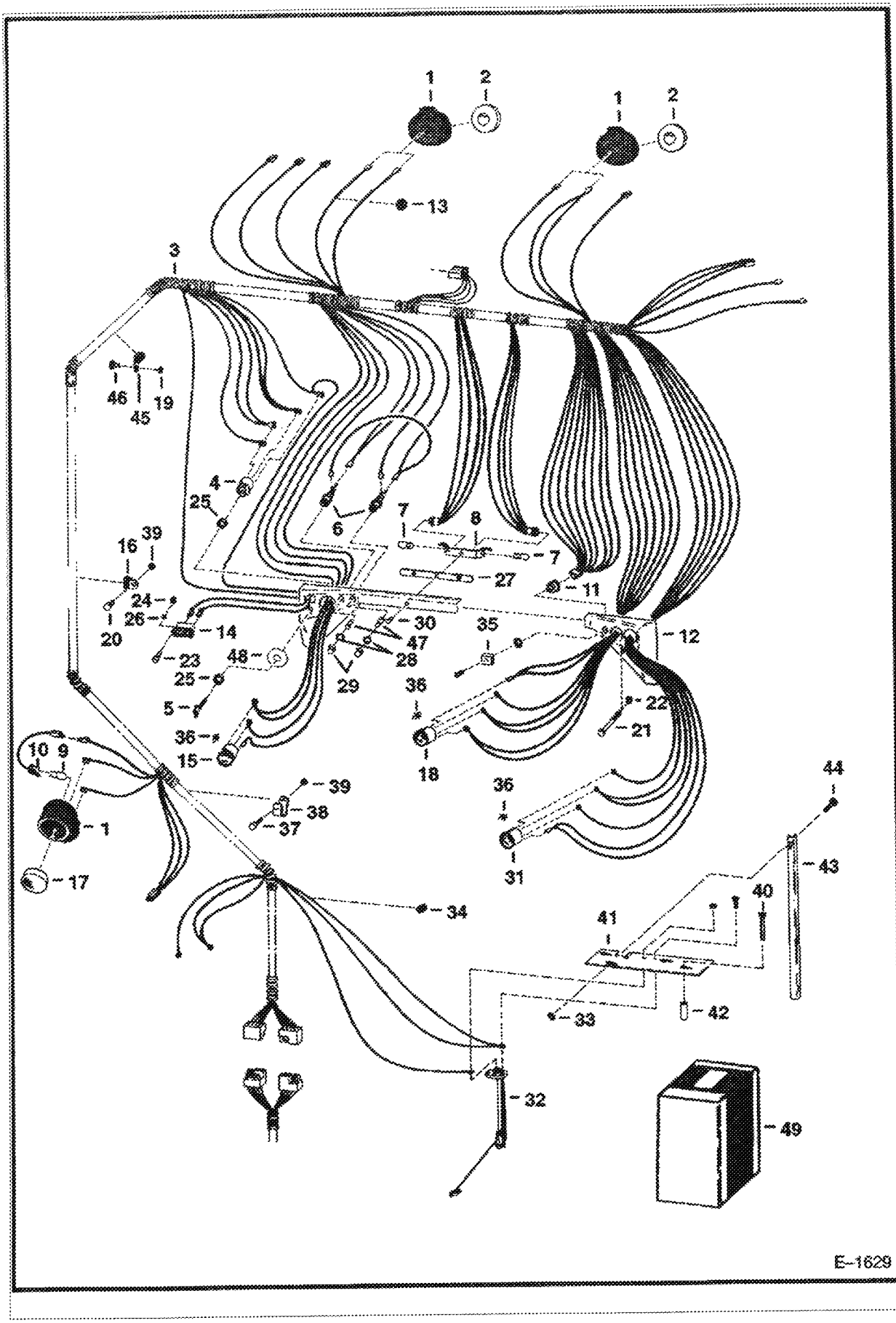

CAB ELECTRICAL CIRCUITRY (Cont'd)
(S/N 20001 thru 38567)

Ref No	Part Number	Description	Remarks	Serial Number	Qty
1	6558142	HOUSING			3
2	6557486	LAMP			2
3	6567802	HARNESS			1
4		SWITCH	See BTI289 NAP - Ref. 5 & 25 - Order Ref. 49 - WAS 6519592 [A]		1
4	6665606	SWITCH	For 6518592		1
5	6512809	KEY			x
5	6709527	KEY	For 6665606		1
6	6513469	HOLDER	fuse		2
7	6513468	BULB			2
8	6558242	BRACKET			1
9	898731B	BULB			1
10	6564907	SOCKET ASSY			1
11	6512808	SWITCH			1
12	6568211	PANEL			1
13	6557493	GROMMET			2
14	6664886	HOURMETER	Was 6631657 [A]		1
15	6669664	VOLTMETER	Was 6658819 [A]		1
16	30H000045B	CLAMP	Was 30H000041B [B]		2
17	6563740	LAMP			1
18	6669665	FUEL GUAGE	Was 6658820 [A]		1
19	83D4	NUT 10			2
20	25G000412B	BOLT			2
21	17C000572B	BOLT			2
22	83D5	NUT 5			2
23	85G000608B	SCREW			2
24	12D000006B	NUT			2
25	6598721	NUT	For NAP/6519592 Switch		2
25	6674202	NUT	For 6665606 Switch		1
26	12E000006B	WASHER			2
27	6560699	LENS	Was 6564785 [A]		1
28	6514643	GASKET			2
29	6514642	CAP			2
30	6514742	RIVET			1
31	6631649	GAUGE	See BTI259 engine temp.		1
31	6669663	GAUGE	See BTI259 eng. temp. - Was 6658817 [A]		1
32		SENDER	See Illustration FUEL SYSTEM/ B20253 FUEL		1
33	14D000010B	NUT			1
34	6632215	GROMMET			1
35	6599781	KNOB	light switch		1
36	6599696	SOCKET & BULB	assy.		3
36	895771B	BULB			3
37	17C000512B	BOLT			1
38	31H000038B	CLAMP			1
39	85D5	NUT 5			1
40	89G000544B	SCREW			3
41	6567896	SHIELD			1
42	6567898	SPACER			3
43	6567897	HOUSING			1
44	1G001008B	BOLT			1
45	30H000055B	CLAMP	Was 30H000054B [B]		2
46	10C000512B	BOLT	Was 6553808 [A]		3
47	6703705	PLATE	brake start - For 6519592 - Was 6563431 [A]		1
47	6709028	PLATE	For 6665606		1
48	1319451B	FUSE			2

Page 177 901 09/28/2008 17:23:38 Printed by Ken Cook Co. Export use for A.I. 9/29/2008

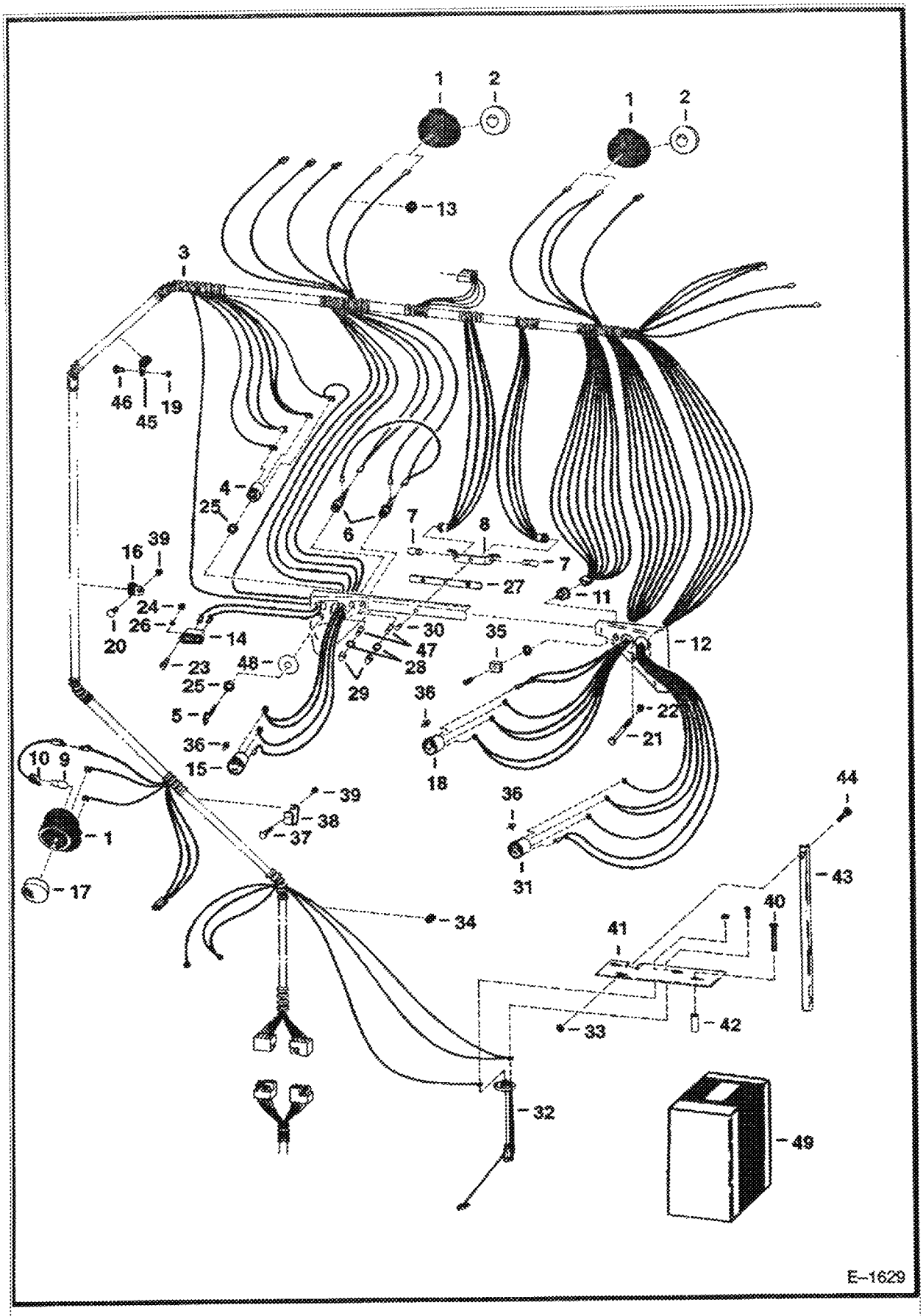
1
2
1
2
13
3
46
45
19
4
25
6
7
8
7
27
11
16
39
24
26
20
14
23
48
30
47
28
29
35
12
25
5
36
15
36
22
21
18
10
9
39
38
37
1
17
36
31
44
43
40
41
42
33
34
32
49
E-1629

Ref No	Part Number	Description	Remarks	Serial Number	Qty
49	6724282	SWITCH KIT	Ref. 4, 5 & 47		1

CAB ELECTRICAL CIRCUITRY
(S/N 38568 & Above)

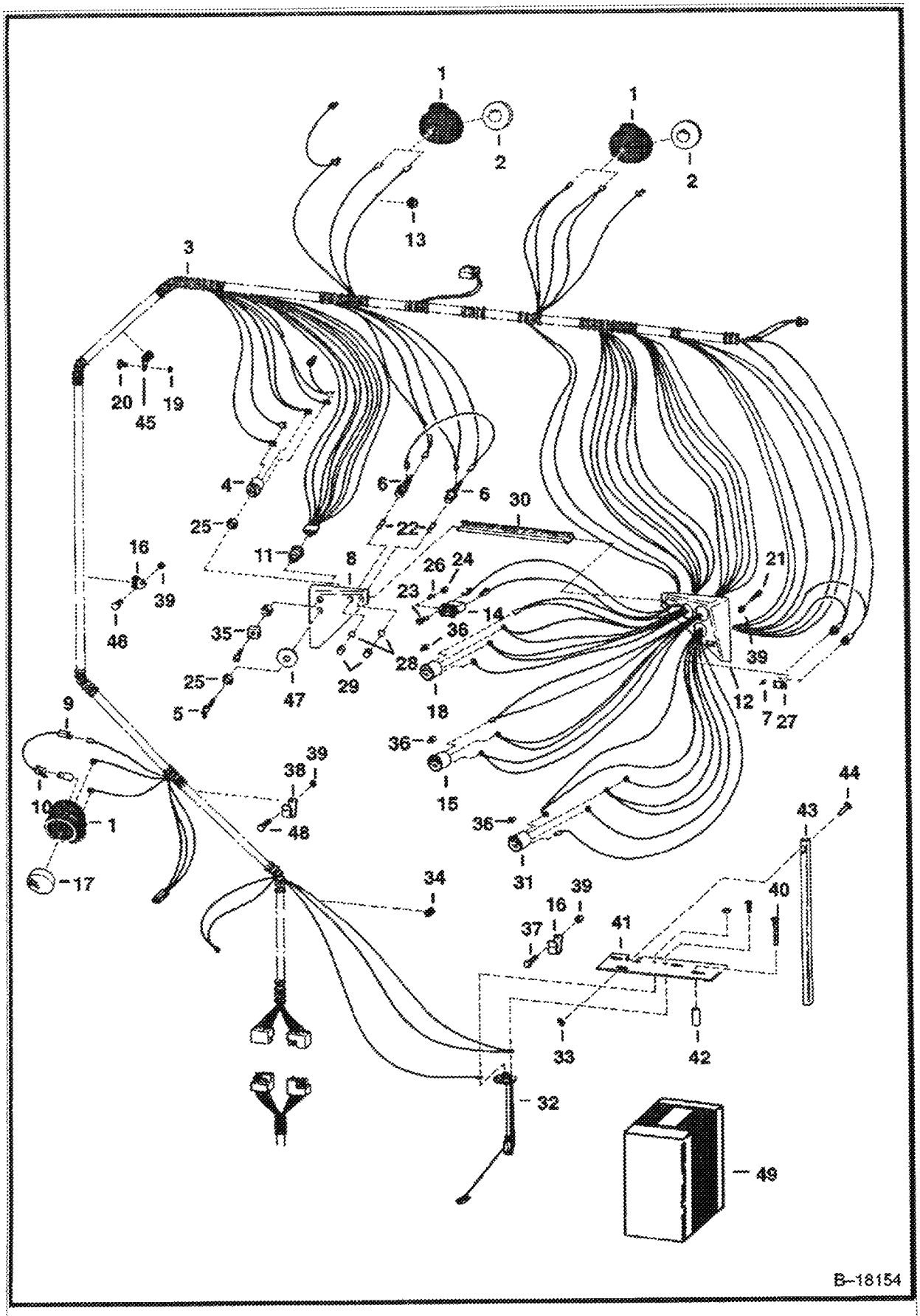

CAB ELECTRICAL CIRCUITRY (Cont'd)
(S/N 38568 & Above)

Ref No	Part Number	Description	Remarks	Serial Number	Qty
1	6558142	HOUSING			3
2	6557486	LAMP			2
3	6572060	HARNESS			1
3	6632594	TERMINAL			1
3	6632595	SOCKET	lamp		1
4		SWITCH	See BTI289 NAP - Ref. 5 & 25 - Order Ref. 52 - WAS 6519592 [A]		1
4	6665606	SWITCH	For 6519592		1
5	6512809	KEY	For 6519592		x
5	6709527	KEY	For 6665606		1
6	6513469	HOLDER	fuse		2
7	6572065	BULB			2
8	6572053	PANEL	R.H.		1
9	898731B	BULB			1
10	6564907	SOCKET ASSY			1
11	6512808	SWITCH			1
12	6572054	PANEL	L.H.		1
13	6557493	GROMMET			2
14	6664886	HOURMETER	Was 6631657 [A]		1
15	6669664	VOLTMETER	Was 6631651 [A]		1
16	30H000045B	CLAMP	Was 30H000041B [B]		2
17	6563740	LAMP			1
18	6669665	FUEL GUAGE	Was 6631650 [A]		1
19	83D4	NUT 10			2
20	25G000412B	BOLT			2
21	6702642	SCREW	Was 84G003112B [A]		6
22	1319451B	FUSE			2
23	65G000608B	BOLT			2
24	12D000006B	NUT			2
25	6598721	NUT	For NAP/6519592 Switch		2
25	6674202	NUT	For 6665606 Switch		1
26	12E000006B	WASHER			2
27	6572056	LENS	engine & hyd. warning light		1
28	6514643	GASKET			2
29	6514642	CAP			2
30	6578780	CROSSMEMBER	Was 6572066 [A]		1
31	6631649	GAUGE	See BTI259 engine temp.		1
31	6669663	GAUGE	See BTI259 eng. temp. - Was 6658817 [A]		1
32		SENDER	See Illustration FUEL SYSTEM/ B20253 FUEL		1
33	12D000010B	NUT			1
34	6632215	GROMMET			1
35	6599781	KNOB	light switch		1
36	6599696	SOCKET & BULB	assy.		3
36	895771B	BULB			3
37	17C000512B	BOLT			1
38	31H000038B	CLAMP			1
39	85D5	NUT 5			3
40	89G000544B	SCREW			3
41	6567896	SHIELD			1
42	6567898	SPACER			3
43	6567897	HOUSING			1
44	85G001008B	BOLT			1
45	30H000055B	CLAMP	Was 30H000054B [B]		2
46	10C000512B	BOLT	Was 6553808 [A]		1
47	6703705	PLATE	brake start - For 6519592 - Was 6563431 [A]		1

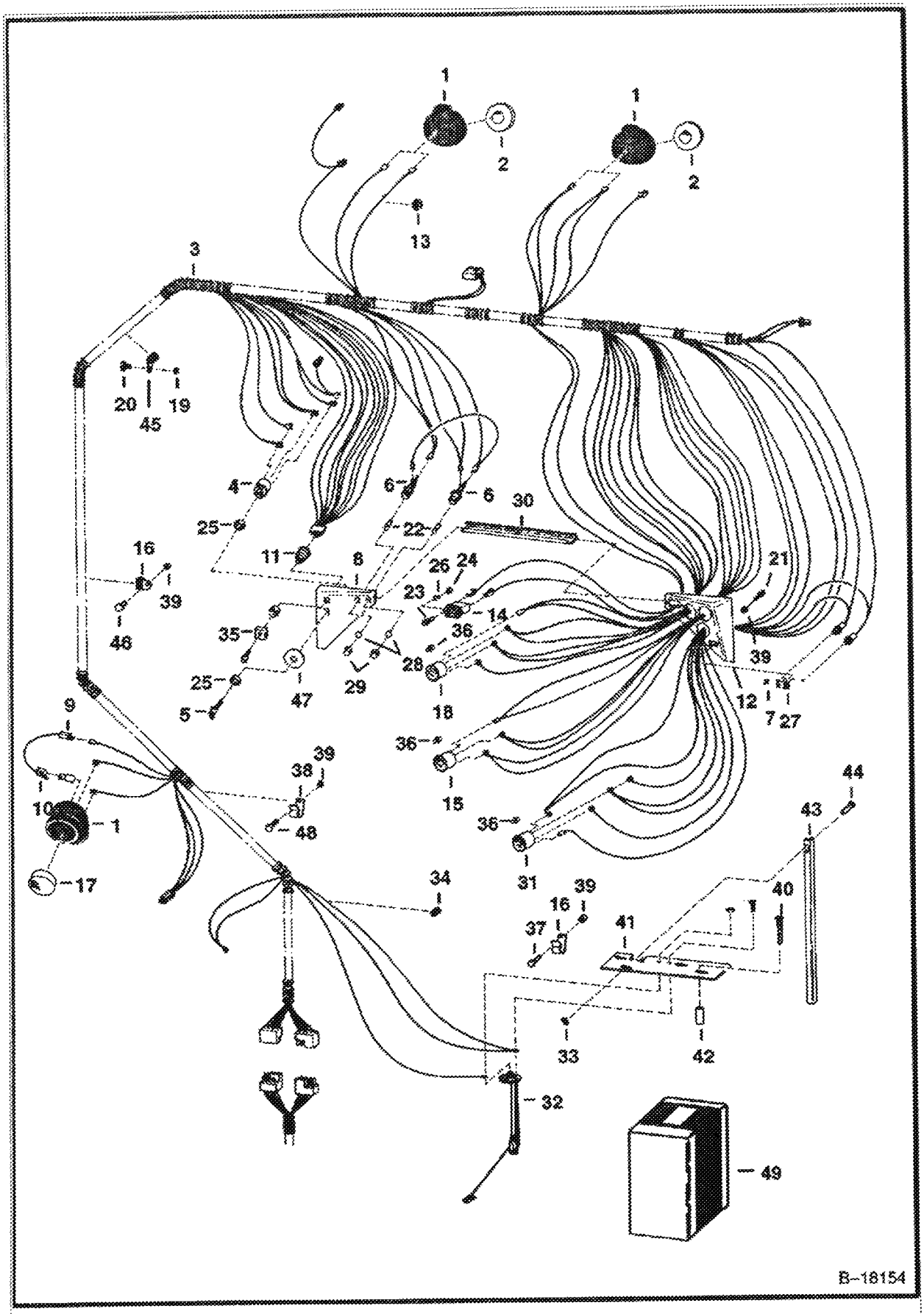
1
2
13
3
20
45
19
4
25
11
6
22
30
16
39
46
35
47
29
26
24
23
14
36
28
18
21
12
7
27
9
10
1
17
38
48
15
31
44
43
34
40
41
37
33
42
32
49
B-18154

Ref No	Part Number	Description	Remarks	Serial Number	Qty
47	6709028	PLATE	For 6665606		1
48	84G3712	BOLT			1
49	6724282	SWITCH KIT	Ref. 4, 5 & 47		1

ENGINE ELECTRICAL CIRCUITRY
(S/N 14084 & Below)

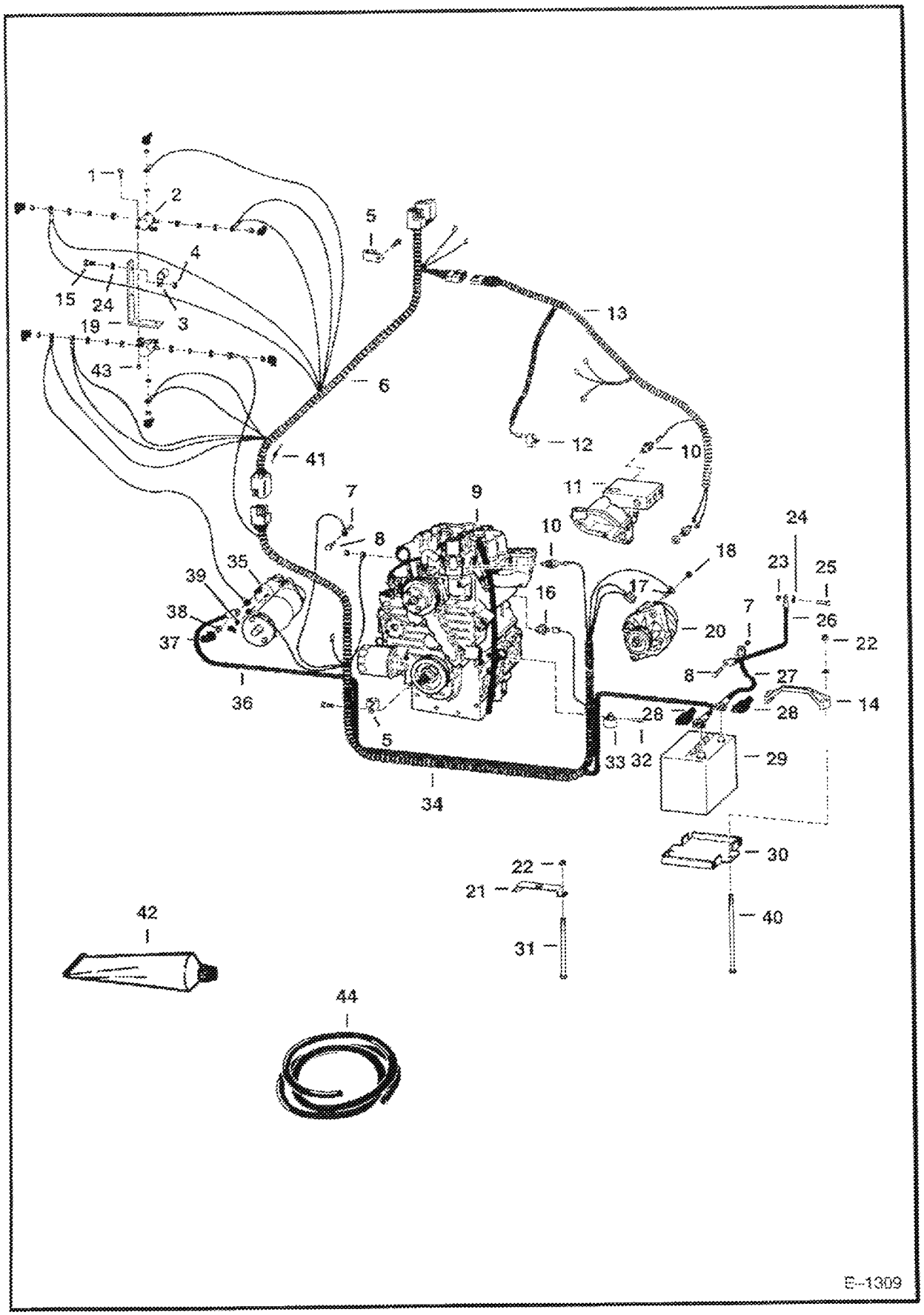

ENGINE ELECTRICAL CIRCUITRY (Cont'd)
(S/N 14084 & Below)

Ref No	Part Number	Description	Remarks	Serial Number	Qty
1	17C412	BOLT 5			2
2	6659319	SOLENOID	Was 6632186 [A]		2
3	30H000041B	CLAMP			1
4	61D5	NUT			2
5	30H000042B	CLAMP			2
6	6562260	HARNESS			1
7	6E6	WASHER			2
8	17C000610B	BOLT			2
9		ENGINE	See Illustration ENGINE/ E1332		1
10	6598384	SWITCH	eng. & hydro. temp.		2
11		PUMP	See Illustration HYDROSTATIC PUMP/ D1392 HYDRO.		1
12	6631695	SWITCH	hydrostatic oil pressure - Was 6519715 [A]		1
13	6563038	HARNESS			1
14	6569203	CLAMP	plastic		1
15	7C000520B	BOLT			2
16	6969775	SWITCH, OIL PRESSURE	eng. oil pressure - Was 6652576 [A]		1
17	6E4	WASHER 10			3
18	4DM00006B	NUT			1
19	6563483	BRACKET			1
20		ALTERNATOR	See Illustration ALTERNATOR/ B18939		1
21		CLAMP	NAP - Order Ref. 14 & 40		1
22	59D5	NUT 5			2
23	83D5	NUT 5			1
24	6E5	WASHER			3
25	31C000512B	BOLT			1
26	6563025	CABLE			1
27	6553094	CABLE	Was 6562905 [A]		1
28	2356058B	BOOT			2
29	6665032	BATTERY	Was 6665031 [A]		1
29	6630153	BATTERY CAP			6
30	6561733	MOUNT			1
31	6562473	BOLT			2
32	6CM1220	BOLT			1
33	30H000048B	CLAMP			2
34	6563170	HARNESS			1
35		STARTER	See Illustration STARTER/ B18466		1
36	6564991	CABLE	W/Ref. 44		1
37	6560172	COVER			1
38	61D000006B	NUT			1
39	12D000008B	NUT			1
40	6569623	BOLT			2
41	3675725B	DIODE			1
42	6599360	SEALANT	electrical - 3 oz. Tube		x
43	61D000004B	NUT			2
44	6563505	CONDUIT	bulk - Sold Per Foot		x

ENGINE ELECTRICAL CIRCUITRY
(S/N 14085 & Above)

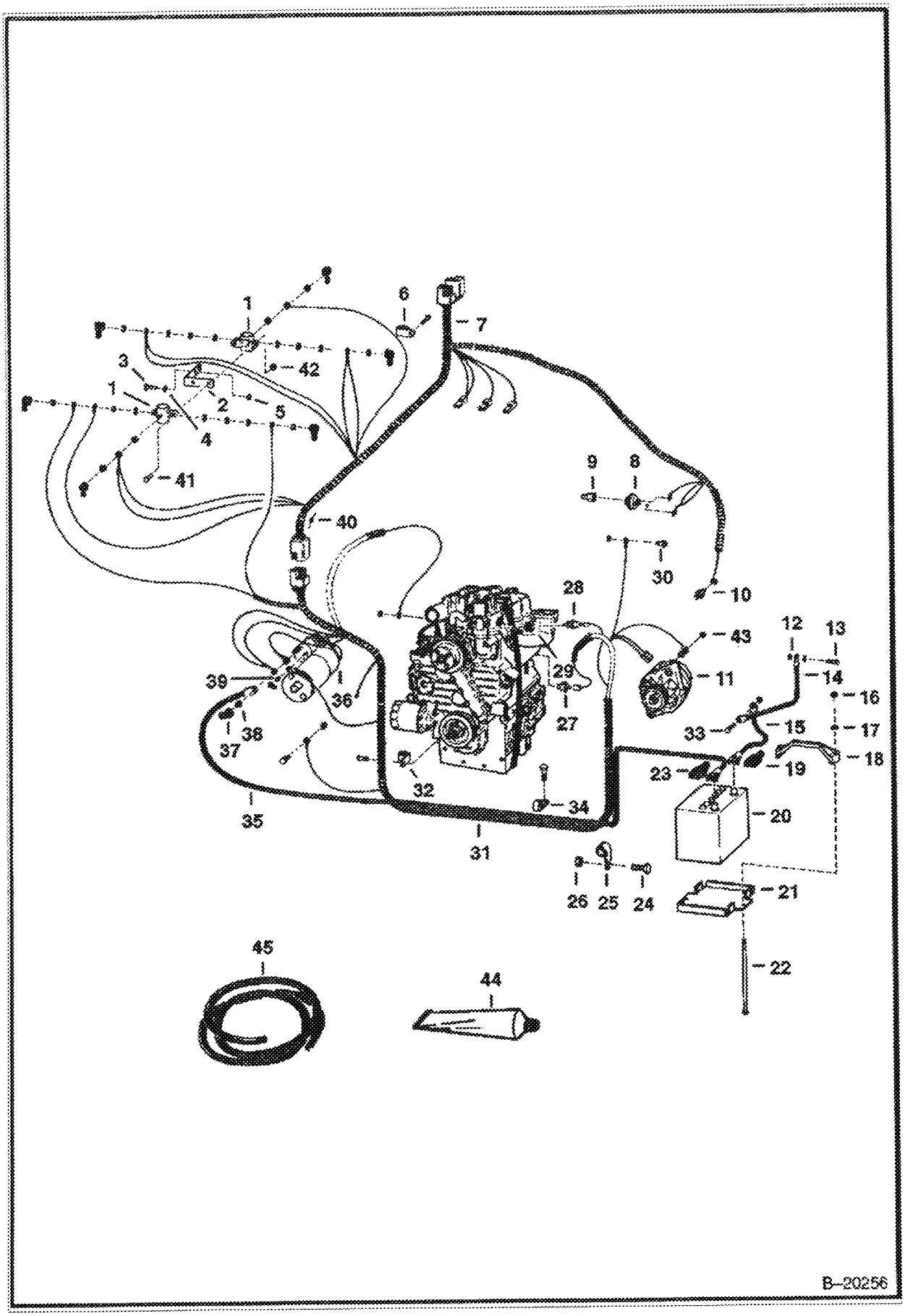

ENGINE ELECTRICAL CIRCUITRY (Cont'd)
(S/N 14085 & Above)

Ref No	Part Number	Description	Remarks	Serial Number	Qty
1	6659319	SOLENOID	Was 6632186 [A]		2
2	6563483	BRACKET			1
3	7C000520B	BOLT			2
4	6E5	WASHER			2
5	61D5	NUT			2
6	30H000042B	CLAMP			2
7	6564908	HARNESS	chassis	14085 14999	1
7	6565639	HARNESS	chassis	15001 & Above	1
8	6671062	SWITCH	hydro. press. - Was 6664577 [A]		1
9	6564350	SNUBBER		14085 14999	1
9	6563922	SNUBBER	W/Filter		1
9	6563920	FILTER		15001 & Above	1
10	6632633	SWITCH	hydro. temp. - Was 6564560 [A]		1
11		ALTERNATOR	See Illustration ALTERNATOR/ B18939		1
12	83D5	NUT 5			1
13	17C000512B	BOLT			1
14	6563025	CABLE	Ground		1
15	6553094	CABLE	Ground - Was 6562905 [A]		1
16	59D5	NUT 5			2
17	25E15	WASHER			2
18	6569203	CLAMP			1
19	6599652	BOOT			1
20	6665031	BATTERY	Was 6568707 [A]		1
20	6630153	BATTERY CAP			6
21	6561733	MOUNT			1
22	6569623	BOLT			2
23	2356058B	BOOT			1
24	31C820	BOLT			1
25	30H000048B	CLAMP			2
26	57D000008B	NUT			1
27	6969775	SWITCH, OIL PRESSURE	eng. oil press. - Was 6652576 [A]		1
28		SENDER	See BTI259 NAP - eng. temp. - 1/8" threads - See Ref. 29 - Was 6599492 [A]		1
28	6658818	SENDER	See BTI259 engine temp.		1
29	19F000004B	ADAPTER	Used W/Ref. 28 if engine has 1/2" hole for temp. switch		1
30		SWITCH	See Illustration HYDROSTATIC OIL FILTER/ C2818 FILTER		1
31	6564909	HARNESS	engine	14085 14999	1
31	6567088	HARNESS	engine	15001 27387	1
31	6571535	HARNESS	Use W/Bobcat alt.	27388 & Above	1
32	30H000029B	CLAMP			1
33	17C000610B	BOLT			2
34	30H30	CLAMP			1
35	6564991	CABLE	pos. - W/Ref. 45		1
36		STARTER	See Illustration STARTER/ B18466		1
37	6560172	COVER			1
38	61D000006B	NUT		15749 & Below	2
38	4DM10	NUT		15750 & Above	2
39	12D000008B	NUT		15749 & Below	1
39	4DM00005B	NUT		15750 & Above	1
40	3675725B	DIODE			1
41	17C412	BOLT 5			2
42	61D000004B	NUT			2
43	4DM00006B	NUT	Use W/Bobcat alt.	27387 & Below	1
44	6599360	SEALANT	electrical - 3 oz. Tube		x

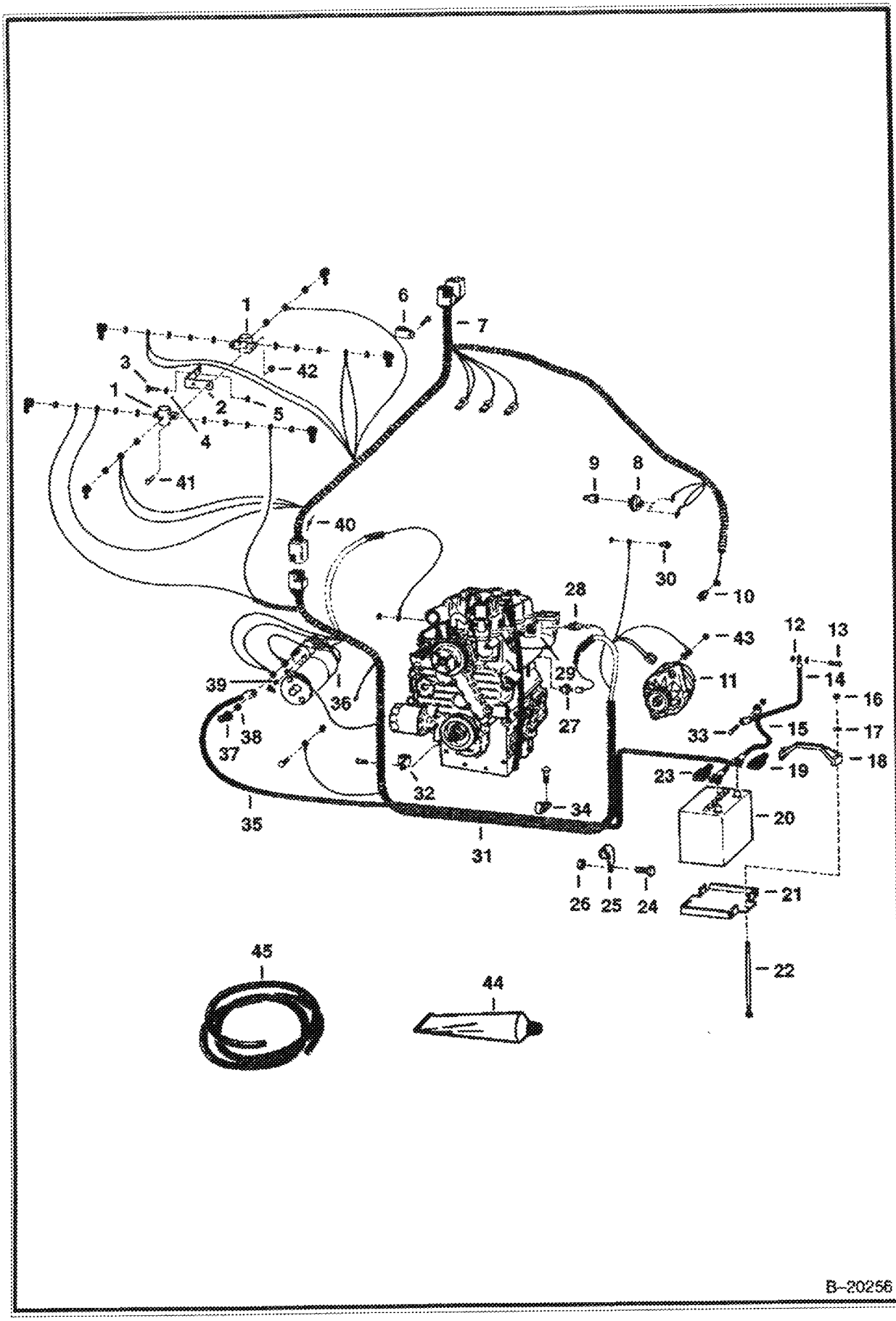
1
6
7
42
3
1
2
5
4
41
9
8
40
30
10
28
43
12
13
14
16
39
36
29
11
33
15
17
38
37
27
18
23
19
32
34
20
35
31
26
25
24
21
22
45
44
B-20256

Ref No	Part Number	Description	Remarks	Serial Number	Qty
45	6563505	CONDUIT	bulk - Sold Per Foot		x

ALTERNATOR
(Open)
(Delco 1103133)

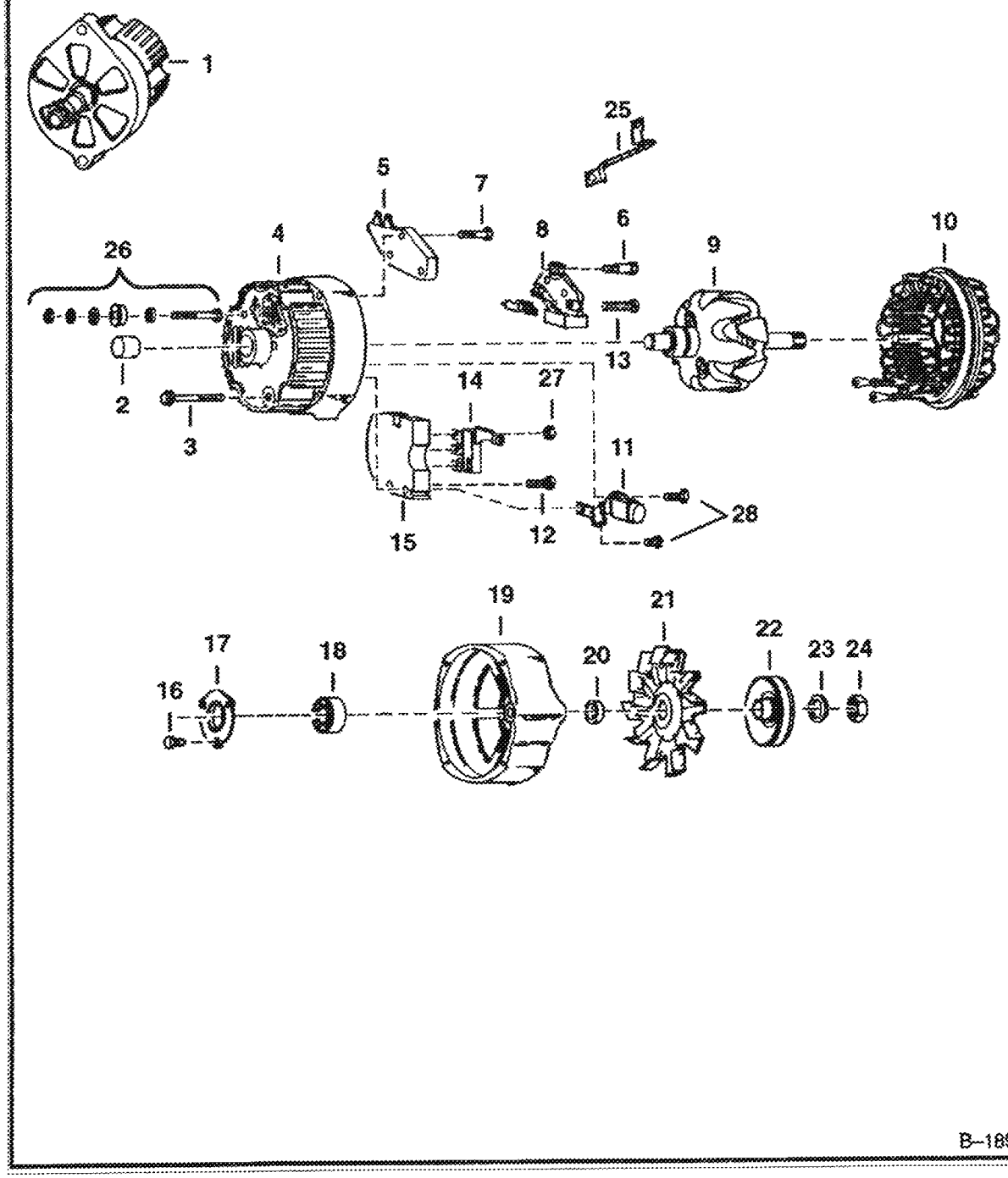

ALTERNATOR (Cont'd)
(Open)
(Delco 1103133)

Ref No	Part Number	Description	Remarks	Serial Number	Qty
1		ALTERNATOR	NAP - Order 908221B REM		1
2	905351B	BEARING			1
3	897467B	BOLT			4
4	905956B	FRAME	W/Ref. 2		1
5	994381B	REGULATOR	voltage		1
6	6511957	BOLT			2
7	999396B	BOLT			2
8	999394B	HOLDER	brush assembly		1
9	999305B	ROTOR			1
10	2343911B	STATOR	Was 999392B [A]		1
11	999308B	CAPACITOR			1
12	994373	BOLT			1
13	999397B	BOLT			1
14	994383B	DIODE			1
15	995185B	RECTIFIER			1
16	45G001006B	BOLT			3
17	897456B	RETAINER			1
18	905350B	BEARING			1
19		HOUSING	NAP		1
20	909831B	COLLAR	Was 905958B [A]		1
21	329884B	FAN			1
22	6541902	PULLEY			1
23	794584B	WASHER			1
24		NUT	NAP - Was 859369B [A]		1
25	999395B	TERMINAL	relay		1
26	905952B	TERMINAL PKG.			1
27	12D000008B	NUT			1
28	994378B	BOLT			2

ALTERNATOR
(Open)
(Delco 1105070 or 1105422)

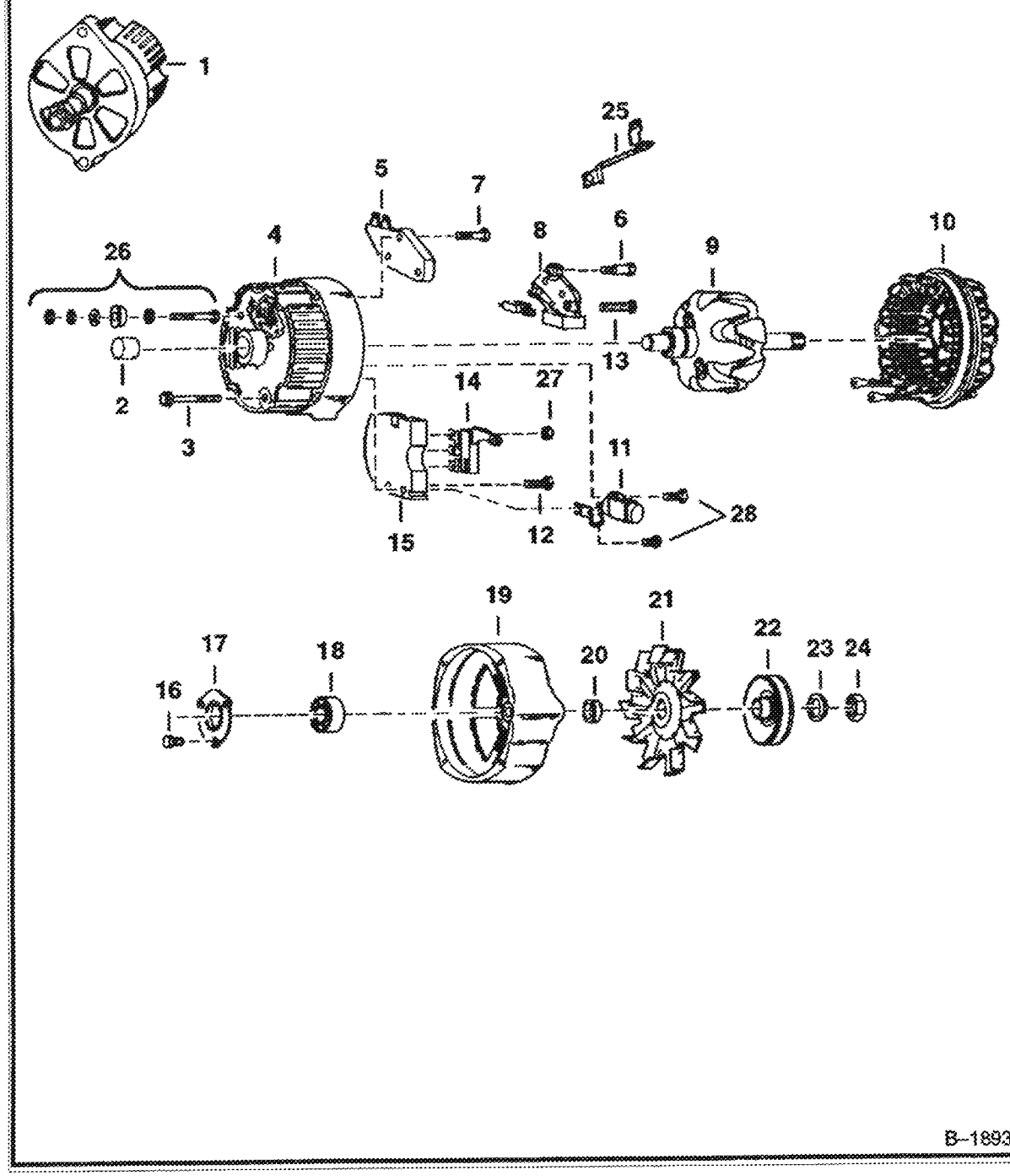

ALTERNATOR (Cont'd)
(Open)
(Delco 1105070 or 1105422)

Ref No	Part Number	Description	Remarks	Serial Number	Qty
1		ALTERNATOR	NAP - Less Pulley & Fan - Order 908221B REM - Was 908221B [A]		1
2	905351B	BEARING			1
3	897467B	BOLT			4
4	905956B	FRAME	W/Ref. 2		1
5	994381B	REGULATOR	voltage		1
6	6511957	BOLT			2
7	999396B	BOLT			2
8	999394B	HOLDER	brush assembly		1
9	6599771	ROTOR			1
10	907953B	STATOR			1
11	999308B	CAPACITOR			1
12	6599768	BOLT			1
13	999397B	BOLT			1
14	994383B	DIODE			1
15	6599767	RECTIFIER			1
16	45G001008B	BOLT			3
17	850315B	RETAINER			1
18	905350B	BEARING			1
19	905957B	HOUSING			1
20	909831B	COLLAR	Was 905958B [A]		1
21	329884B	FAN			1
22	6541902	PULLEY			1
23	794584B	WASHER			1
24		NUT	NAP - Was 859369B [A]		1
25		TERMINAL	NAP - Was 6599774 [A]		1
26	905952B	TERMINAL PKG.			1
27	12D000008B	NUT			1
28	994378B	BOLT			2

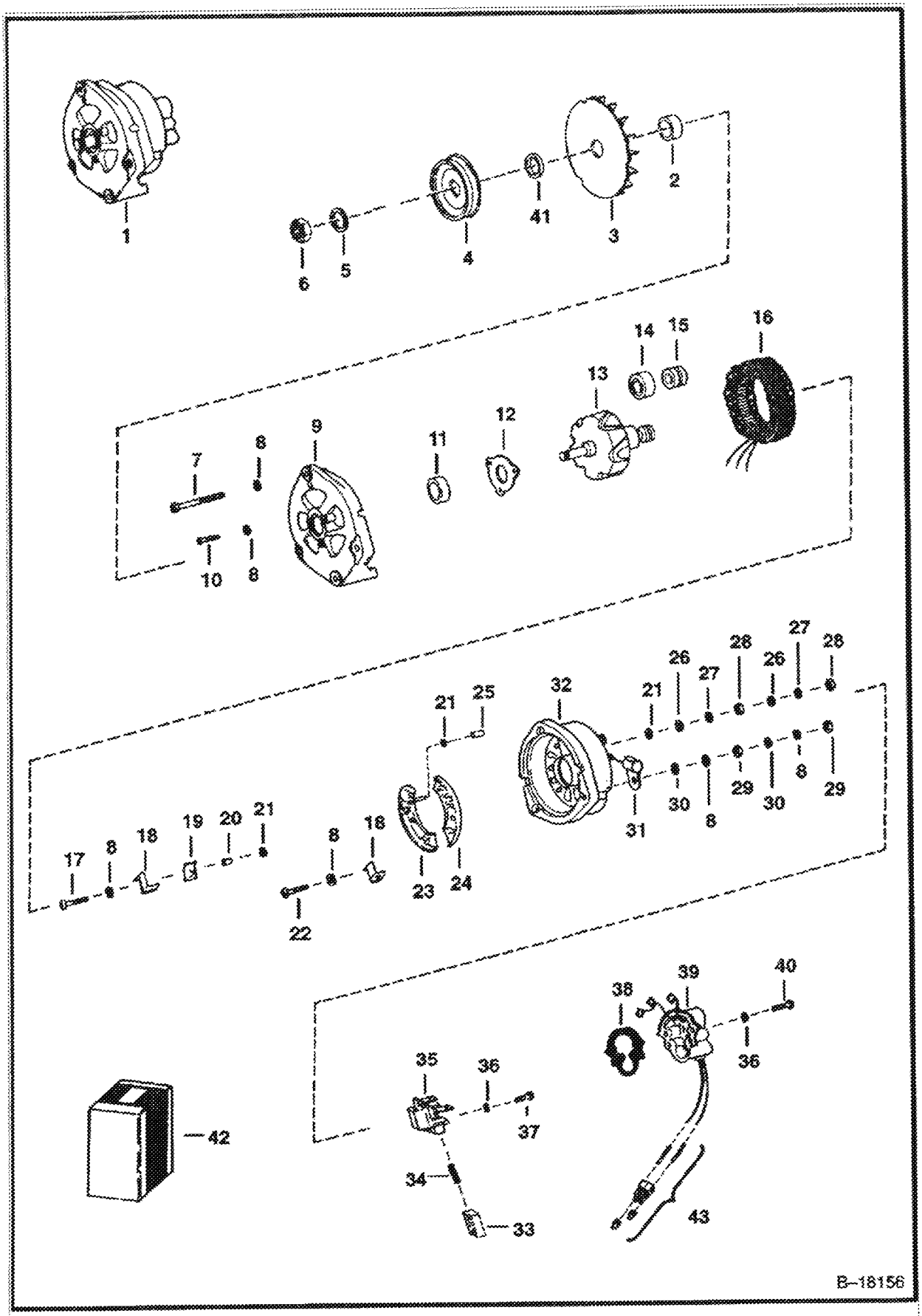
1
2
3
4
5
6
41
7
8
9
10
11
12
13
14
15
16
17
18
19
20
21
22
23
24
25
26
27
28
29
30
31
32
33
34
35
36
37
38
39
40
42
43
B-18156

ALTERNATOR (Cont'd)
(Bobcat)

Ref No	Part Number	Description	Remarks	Serial Number	Qty
1		ALTERNATOR	See BTI277 NAP - Less Fan & Pulley - Order 6661611 & 6659375 - Was 6632211 [A]		1
2	6632210	WASHER			2
3		FAN	NAP - Order 6661611 ALT & 6659375 FAN - Was 6632209 [A]		1
4	6571536	PULLEY			1
5	6632208	WASHER			1
6	6632207	NUT			1
7	6632222	BOLT	thru		3
8		WASHER	NSS		11
9		BRACKET	NAP - W/Ref. 8 & 10-12 - Was 6632224 [A]		1
10		SCREW	NSS		3
11		BEARING	NSS		1
12		RETAINER	NSS		1
13	6632229	ROTOR	W/Ref. 14 & 15		1
14		BEARING	NSS		1
15		SLIP RING	NSS		1
16		STATOR	NAP - Was 6632230 [A]		1
17		BOLT	NSS		1
18		CLAMP	NSS		2
19		MOLD-U	NSS		1
20		BUSHING	NSS - insulation		1
21		WASHER	NSS - insulation		3
22		SCREW	NSS		2
23		HEATSINK	NSS		1
24		HEATSINK	NSS		1
25		BUSHING	NSS - insulation		1
26		WASHER	NSS		2
27		WASHER	NSS		2
28		NUT	NSS		2
29		NUT	NSS		2
30		WASHER	NSS		2
31	6632242	CONDENSER			1
32		BRACKET	NSS - W/Ref. 8 & 17-31- Was 6632231 [A]		1
33		BRUSH	NSS		2
34		SPRING	NSS		2
35		BRUSH HOLDER	NSS - W/Ref. 33 & 34 - Was 6632246 [A]		1
36		WASHER	NSS		6
37		SCREW	NSS		2
38	6632253	GASKET			1
39		KIT	NSS - regulator - W/Ref. 36 & 38-40 Also Order 6630951 - Was 6632384 [A]		1
40		SCREW	NSS		4
41	6571554	SPACER			1
42		KIT	NAP - bearing - W/Ref. 11, 14 & 15 - Was 6632381 [A]		1
42		KIT	NAP - external hardware - W/Ref. 8, 21, 26-30, 36, 37 & 40 - Was 6632382 [A]		1
42	6632383	KIT	internal hardware - W/Ref. 8, 17-22 & 25		1
42	6632385	KIT	brush holder - W/Ref. 33-37		1
43	6577456	KIT	Weather-Pak Connector Incl. Both Male & Female Parts		1

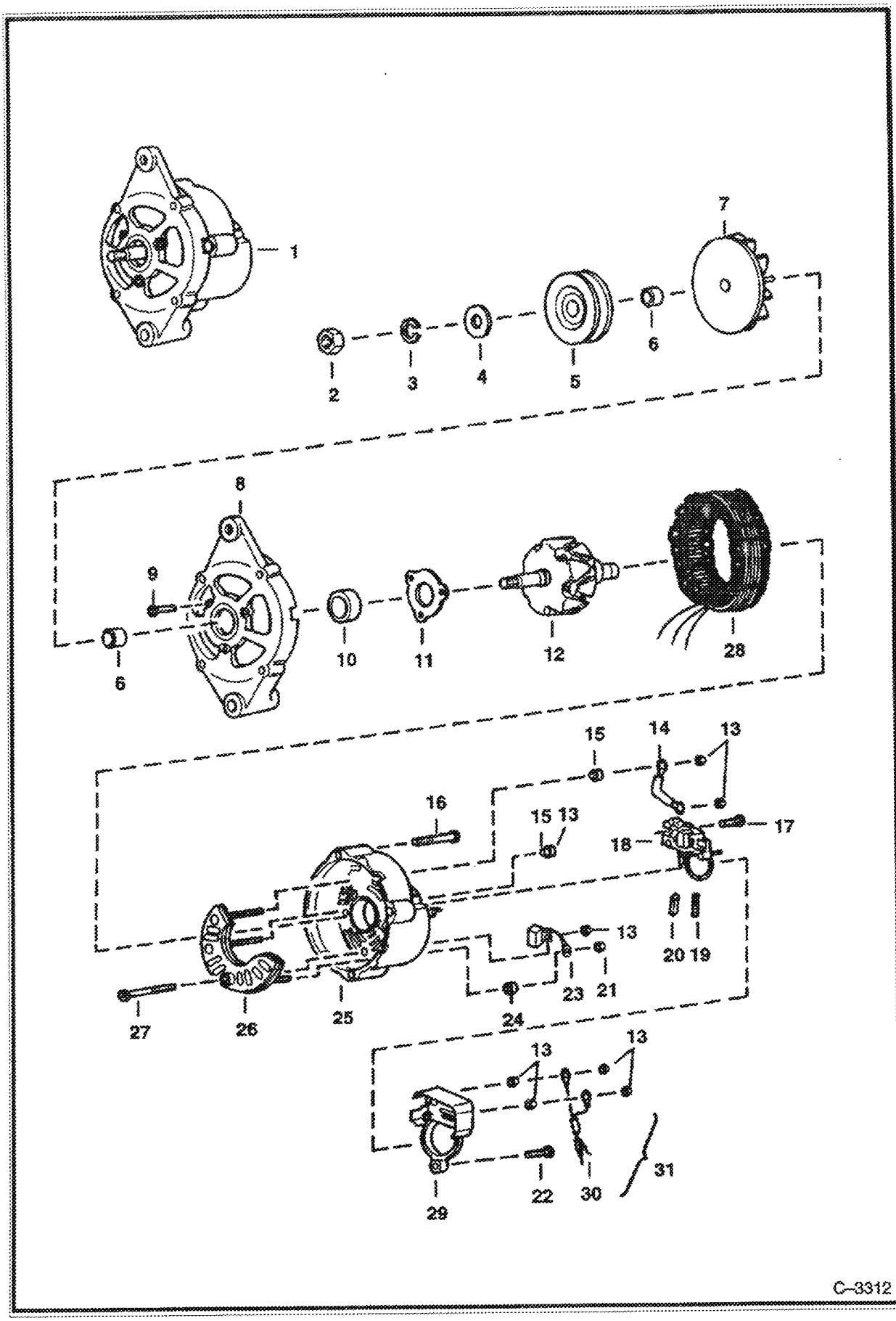
1
2
3
4
5
6
7
8
9
10
11
12
28
15
14
13
16
17
18
20
19
23
21
24
27
26
25
22
30
31
29
C-3312

ALTERNATOR (Cont'd)
(Bobcat)

Ref No	Part Number	Description	Remarks	Serial Number	Qty
1	6661611	ALTERNATOR	See BTI277 Less Fan & Pulley		1
2	6659371	NUT			1
3	6659372	WASHER			1
4	6632323	WASHER			1
5	6571536	PULLEY			1
6	6659374	SPACER			2
7	6659375	FAN			1
8	6659376	BRACKET	W/Ref. 9 - 11		1
9	6659378	BOLT			3
10	6659379	BEARING			1
11		RETAINER	NAP - Was 6632228 [A]		1
12	6659380	ROTOR			1
13	6659387	NUT			7
14	6659397	TERMINAL			1
15	6659386	HOLDER			2
16	6659392	BOLT			3
17	6659396	SCREW			2
18	6659393	REGULATOR	W/Ref. 19 & 20		1
19	6659395	SPRING			2
20	6659394	BRUSH			2
21	6659391	NUT			1
22	6659399	SCREW			1
23	6659388	CONDENSER			1
24	6659390	HOLDER			1
25	6659382	BRACKET	rear - W/Ref. 13, 15, 21 & 23 - 27		1
26	6659384	RECTIFIER			1
27	6659385	SCREW			1
28	6659381	STATOR			1
29	6659398	COVER			1
30	6659400	CONNECTOR	assy.		1
31	6577456	KIT	Weather-Pak Connector - Includes both male & female parts		1

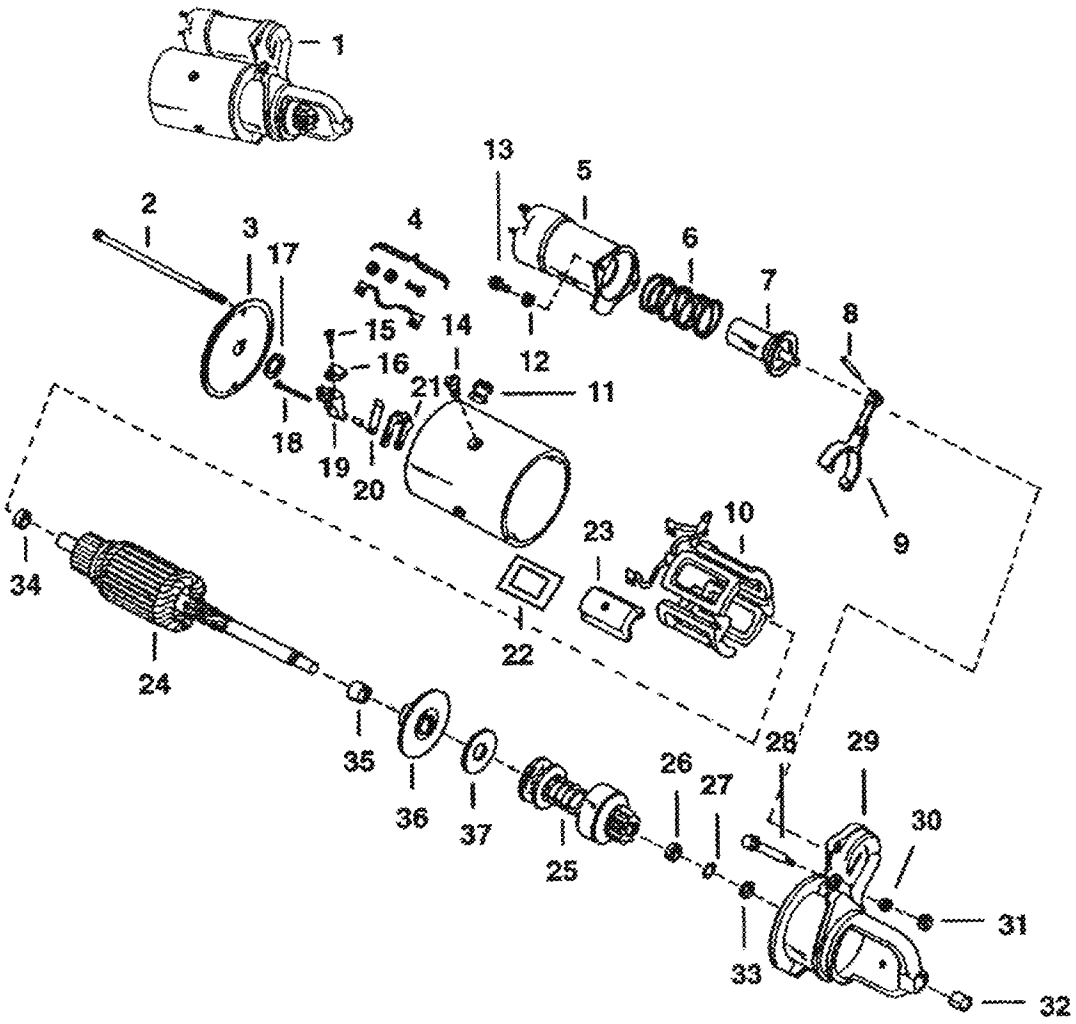
1
2
3
17
4
13
5
6
7
8
15
14
12
16
21
11
18
19
20
9
10
23
34
22
24
35
36
37
25
26
27
28
29
30
31
33
32
B-18466

Ref No	Part Number	Description	Remarks	Serial Number	Qty
1		STARTER	NAP - Delco 1107588 - Order 1-6660797 , 1-4DM-5, 1-4DM-10		1
1		STARTER	NAP - Delco 1108692 - Order 1-6660797 , 1-4DM-5, 1-4DM-10		1
2	895675B	BOLT			2
3	883008B	FRAME			1
4	877650B	SUPPORT PKG.	brush support pkg.		1
5	884581B	SOLENOID			1
6	888968B	SPRING			1
7		PLUNGER	NSS		1
8	999472B	PIN			1
9	896126B	SHIFT LEVER			1
10	991101B	COIL	field - 4 Coils		1
11	898131B	GROMMET			1
12		WASHER	NSS		2
13	43G000408B	SCREW			2
14	859377B	SCREW			4
15	65G000812B	SCREW			4
16	1810250B	BRUSHES	1107588 Starter		4
16	945239B	BRUSHES	1108692 Starter - Was 1810488B [A]		4
17	863995B	WASHER			1
18		PIN	NSS		4
19	891252B	HOLDER	brush - Was 871515 [A]		2
20	6656399	SPRING	brush - Was 871517B [A]		4
21	880603B	HOLDER	brush		2
22		INSULATOR	NSS		4
23		POLE SHOE	NSS		4
24	6511629	ARMATURE	Was 991100B [A]		1
25	6645247	DRIVE ASSY.	Was 899271B [A]		1
26	878608B	STOP	stop		1
27	942142B	SNAP RING			1
28	884576B	BOLT			1
29	6630419	HOUSING	drive - W/Ref. 32 - Was 991099B [A]		1
30		WASHER	NSS		1
31	7D000005B	NUT	Was 856357B [B]		1
32	860669B	BUSHING			1
33	850363B	COLLAR	thrust		1
34	874935B	BUSHING			1
35		BUSHING	NSS - Purchase locally		1
36	6630411	PLATE	center bearing - Was 871524B [A]		1
37		WASHER	NSS		1

Page 159 1000 10/28/2008 11:23:39 - Powered by Xerox Cook Co... eSprint exe (v2 24 3 8/5/2008)

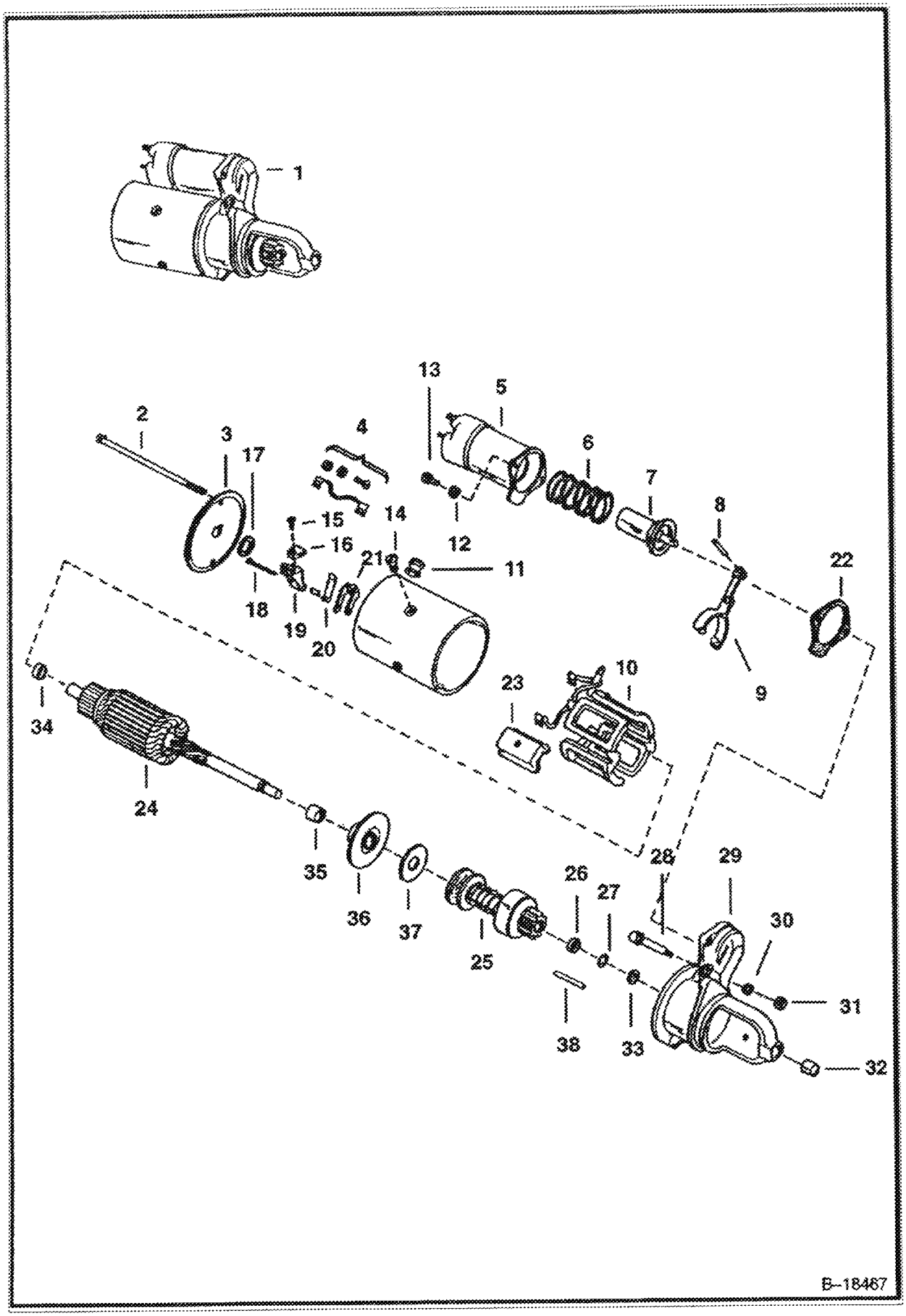
1
2
3
17
4
13
5
6
7
8
15
14
12
16
21
11
22
18
19
20
9
23
10
34
24
35
36
37
25
26
27
28
29
30
31
38
33
32
B-18467

STARTER (Cont'd)
(Delco 1998339 & 1113598)

Ref No	Part Number	Description	Remarks	Serial Number	Qty
1		STARTER	NAP - Delco 1998339 - Order 6645246 1-4DM-5, 1-4DM-10 Was 6630182 [A]		1
1		STARTER	NAP - Delco 1113598 - Order 6660797 1-4DM-5, 1-4DM-10 - Was 6645246 [A]		1
1	6630182REM	STARTER	Remanufactured		1
2	6630404	BOLT			2
3	999460B	FRAME	W/Ref. 34 - Was 6630408 [A]		1
4	6511627	HOLDER	brush support pkg.		1
5	6599449	SOLENOID	Delco 1998339		1
5	6632400	SOLENOID	Delco 1113598		1
6	888968B	SPRING	Delco 1998339 - Was 906910B [A]		1
6	6645248	SPRING	Delco 1113598		1
7	6658903	PLUNGER	Was 6630417 [A]		1
8	999472B	PIN			1
9	896126B	SHIFT LEVER			1
10	6630407	COIL	field		1
11	898131B	GROMMET			1
12	23E000008B	WASHER			2
13	43G000408B	SCREW			2
14	859377B	SCREW			4
15	6517496	SCREW	Ground		2
15		SCREW	NAP - Insul. - Was 6630415 [A]		2
16	6630403	BRUSH			4
17	863995B	WASHER			1
18	871521B	PIN			1
19	6630402	HOLDER			2
20	6630406	SPRING			2
21	6511626	HOLDER			2
22	991374B	GASKET			1
23	887834B	SHOE POLE			4
24	6511629	ARMATURE	Was 991100B [A]		1
25	6645247	DRIVE ASSY.			1
26	878608B	STOP			1
27	942142B	SNAP RING			1
28	884576B	BOLT			1
29	6630419	HOUSING	W/Ref. 32		1
30	23E000005B	WASHER			1
31	7D000005B	NUT	Was 856357B [B]		1
32	860669B	BUSHING			1
33	898127B	COLLAR			1
34	874935B	BUSHING			1
35	907828B	BUSHING			1
36	6630411	PLATE	center bearing - W/Ref. 35		1
37	6630412	WASHER			1
38	6630405	DOWEL PIN			1

Page 150 - 08/19/2008 17:43:39 - Printed by Sac Oak Co. - Printed for 08/25/2008

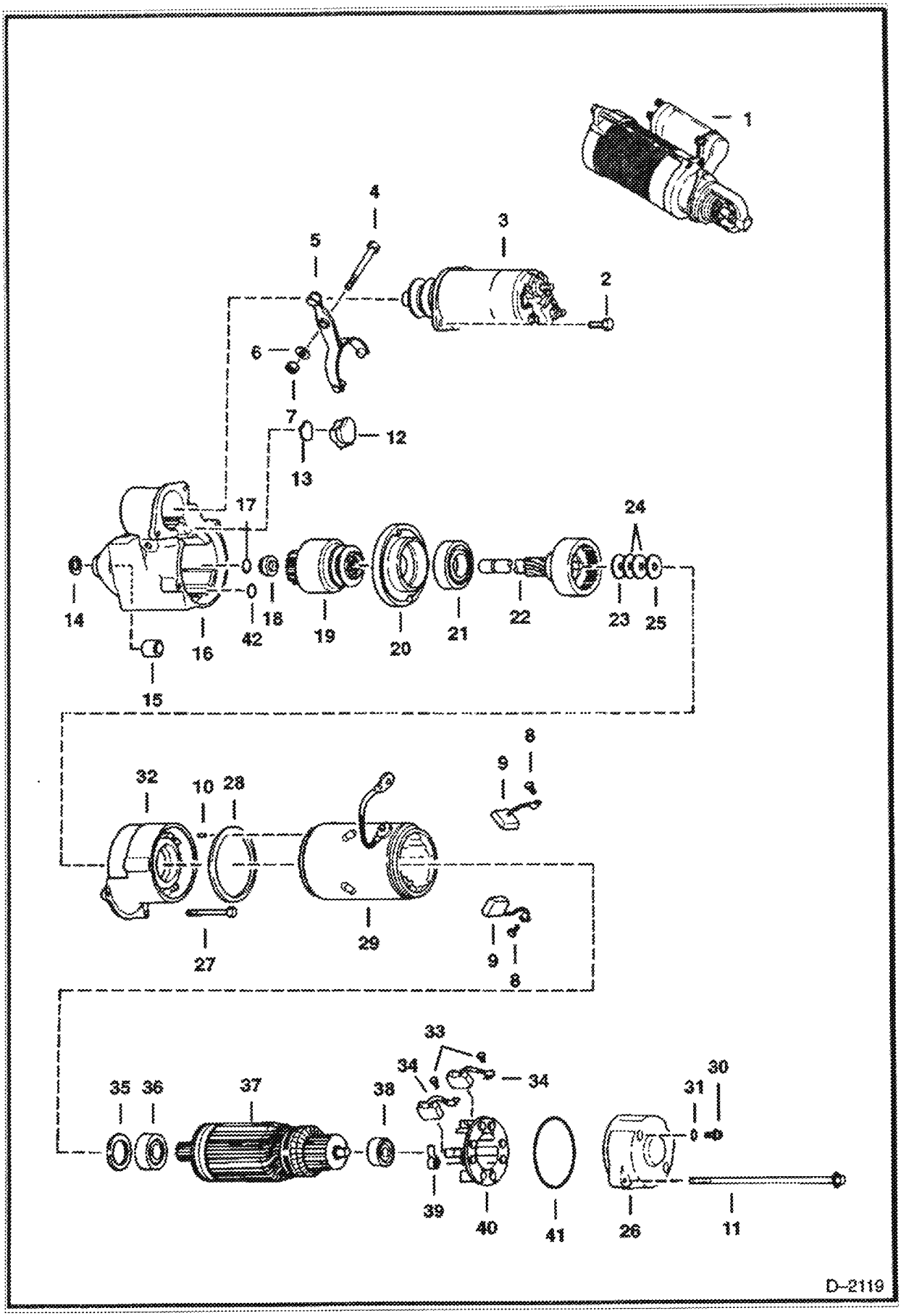
1
2
3
4
5
6
7
8
9
10
11
12
13
14
15
16
17
18
19
20
21
22
23
24
25
26
27
28
29
30
31
32
33
34
35
36
37
38
39
40
41
42
D-2119

STARTER (Cont'd)
(Delco 1113273 or 10479613)

Ref No	Part Number	Description	Remarks	Serial Number	Qty
1		STARTER	See Illustration STARTER KIT/ D2393 NAP - ORDER 6660797 REM STARTER OR 6685190 STARTER - WAS 6660797 [A]		1
1	6660797REM	STARTER	Reman - Was 6667098 REM [D]		1
2		SCREW	NSS		2
3	6658582	SOLENOID	Was 6658562 [A]		1
4	1CM00650B	BOLT			1
5	6658572	LEVER			1
6	1EM00060B	WASHER			1
7	7DM00006B	NUT			1
8	13GM00404B	SCREW			2
9	6658566	BRUSH			2
10		PIN	NSS		1
11		BOLT	NSS		2
12		PLUG	NSS		1
13		WASHER	NSS		1
14		WASHER	NSS		1
15	6658567	BUSHING			1
16	6658579	HOUSING			1
17		RING	NSS		1
18	6658573	STOP			1
19	6661688	DRIVE	Was 6658563 [A]		1
20	6661686	SUPPORT	drive - W/Seal - Was 6658578 [A]		1
21	6658571	SUPPORT	center		1
22	6658576	SHAFT			1
23		WASHER	NSS		1
24		WASHER	NSS		2
25		WASHER	NSS		1
26	6658577	SUPPORT	armature		1
27		BOLT	NSS		2
28		GASKET	NSS		1
29		FRAME ASSY.	NAP - Was 6658580 [A]		1
30		SCREW	NSS		2
31		WASHER	NSS		2
32	6658575	FRAME			1
33	13GM00408B	SCREW			2
34	6658565	BRUSH			2
35		SPACER	NSS		1
36	6658569	BEARING			1
37	6658574	ARMATURE			1
38	6658570	BEARING			1
39	6658568	SPRING			4
40	6658564	HOLDER	brush		1
41	6658581	O-RING			1
42		O-RING	NSS - For 10479613		1

STARTER
(Nippondenso)

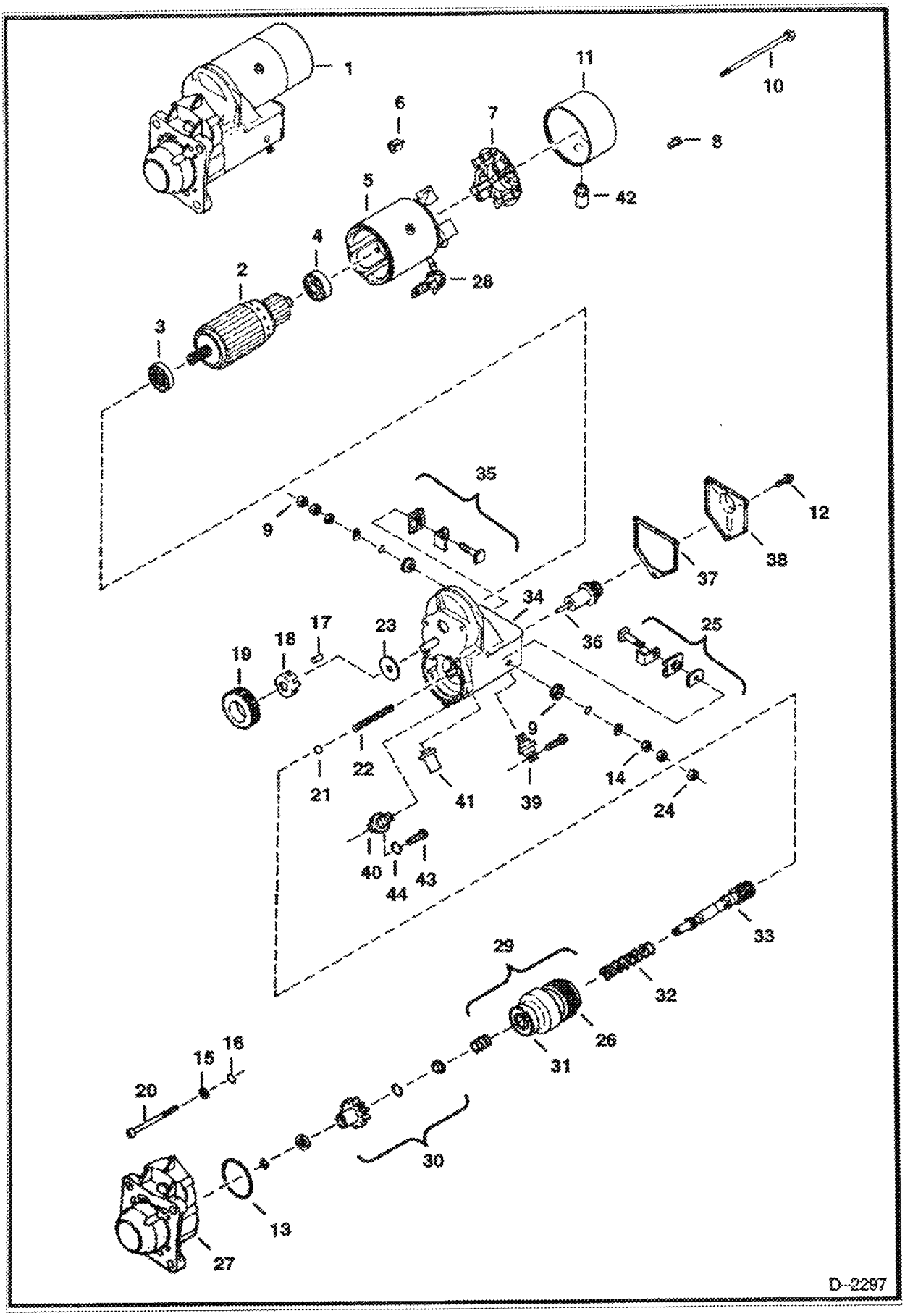

STARTER (Cont'd)
(Nippondenso)

Ref No	Part Number	Description	Remarks	Serial Number	Qty
1		STARTER	See BTI342 NAP - Was 6667587 [A]		1
2	6666621	ARMATURE	W/Ref. 3 & 4		1
3	6632417	BEARING			1
4	6632418	BEARING			1
4	6671128	BEARING			1
4	6671129	BEARING			1
5	6632419	HOUSING ASSY.			1
6	6632421	SPRING			4
7	6632420	BRUSH HOLDER	W/Ref. 6		1
8	6666634	BOLT	5mm x 9,4 mm		2
9	6666637	NUT			1
10	6666636	BOLT	6mm x 181mm		2
11	6671121	COVER			1
12	6666635	BOLT	5mm x 8mm		1
13	6666632	O-RING			1
14	6666630	WASHER	10mm		1
15	6666629	WASHER			3
16	6666631	WASHER			3
17	6632430	ROLLER			5
18	6632429	RETAINER			1
19	6632428	PINION			1
20	6666633	BOLT	6mm x 50mm		3
21	6671122	BALL			3
22	6632436	SPRING			1
23	6662437	WASHER			1
24	6666628	NUT	10mm		1
25	6671117	TERMINALS			1
26	6666622	DRIVE			1
27	6671124	HOUSING			1
28	6669365	BOOT			1
29	6671119	CLUTCH ASSY.	Ref. 26 & 30-33		1
30	6671118	PINION			1
31	6671127	BEARING			1
32	6632441	SPRING			1
33	6669354	SHAFT			1
34	6671123	HOUSING			1
35	6671116	TERMINALS			1
36	6632432	PLUNGER			1
37	6632433	GASKET			1
38	6632434	COVER			1
39	6669359	TERMINAL			1
40	6671120	TERMINAL			1
41	6669360	BUSHING			1
42	6669372	COVER			1
43	6671126	SCREW			1
44	6671125	WASHER			1

STARTER KIT
(Nippondenso to service Delco)

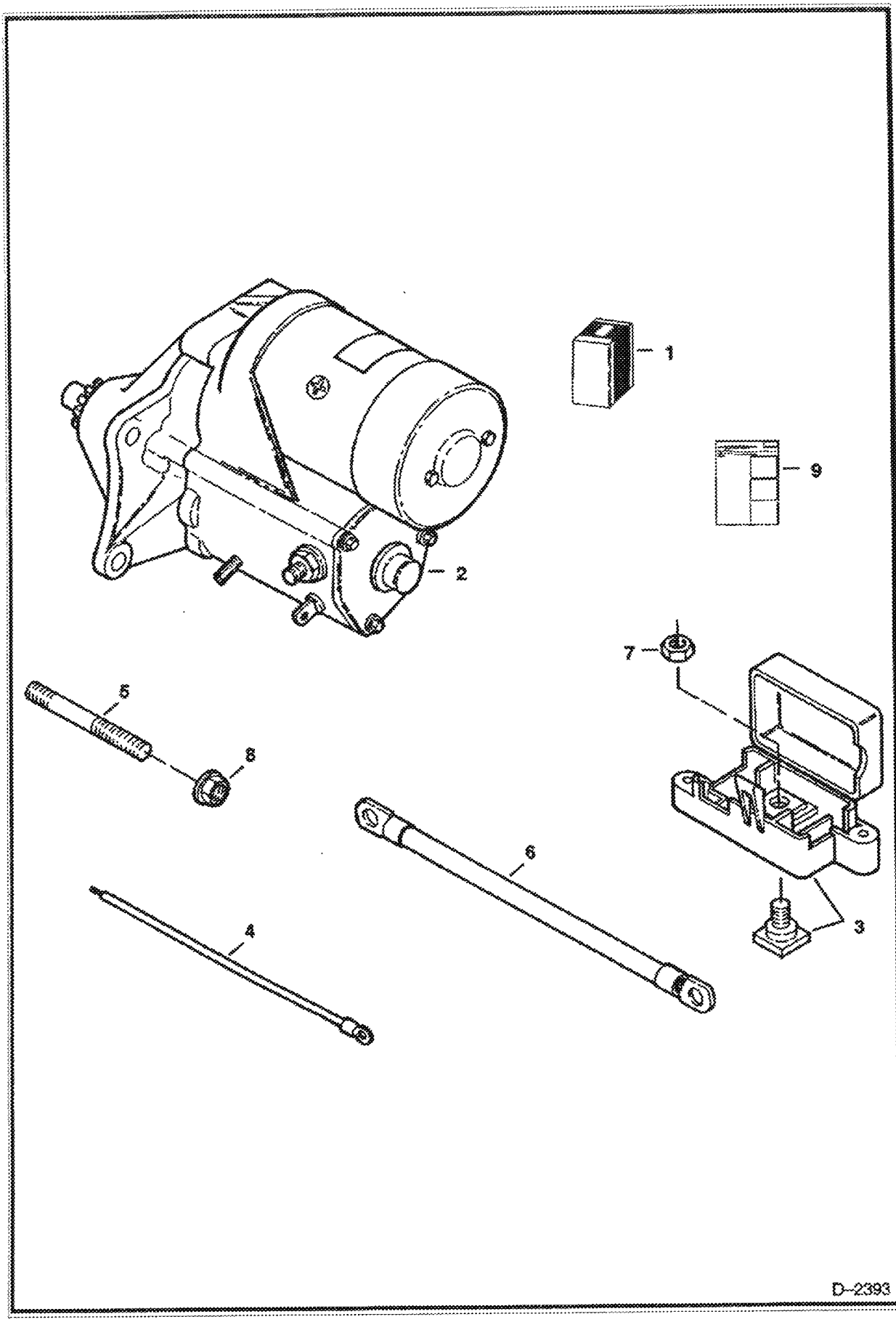

STARTER KIT (Cont'd)
(Nippondenso to service Delco)

Ref No	Part Number	Description	Remarks	Serial Number	Qty
1		STARTER KIT	See BTI342 NAP - Ref. 2 - 9 - Was 6714082 [A]		1
2		STARTER	See Illustration STARTER/ D2119 NAP - Was 6667587 [A]		1
3	6670558	TERMINAL			1
4	6713488	WIRE			1
5	6713780	ROD	threaded		1
6	6713821	CABLE			1
7	32DM00010B	NUT			1
8	57D6	NUT 5			1
9	6724979	INSTRUCTIONS			1

Page 167 - 001 - 08/28/2009 17:21:25 printed by Sun Coast Co., application.exe (v2.34.1 6/25/2008)

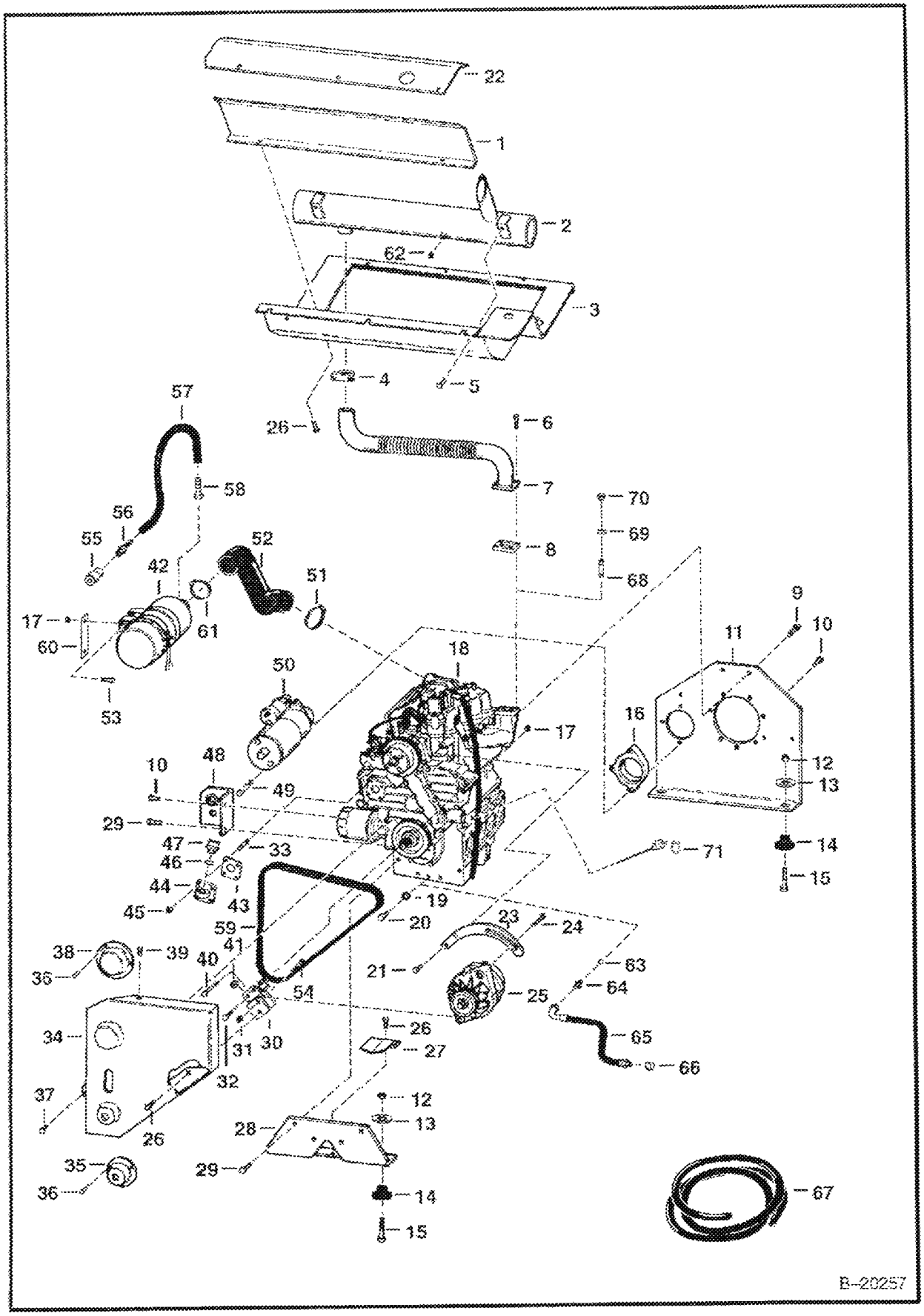
22
1
2
62
3
4
5
26
6
7
57
58
56
55
52
51
42
61
17
60
53
70
69
8
68
9
10
11
18
50
16
12
13
14
15
71
10
48
49
29
47
46
44
45
33
43
19
20
59
41
40
38
39
36
54
23
24
21
63
64
25
65
66
34
31
30
26
27
32
37
26
28
12
13
29
35
36
14
15
67
B-20257

Ref No	Part Number	Description	Remarks	Serial Number	Qty
1	6561285	HEAT SHIELD	heat		1
2	6514737	MUFFLER			1
3	6562851	MOUNT		14999 & Below	1
3	6565419	MOUNT		15001 & Above	1
4	6677363	CLAMP	Was 657904B [A]		1
5	35C000610B	BOLT			4
6	4CM00825B	BOLT			4
7	6569624	PIPE			1
8	6575580	GASKET	Was 6598088 [A]		1
9	6CM01225B	BOLT			2
10	5CM01020B	BOLT			8
11	6562433	MOUNT	motor		1
12	61D000008B	NUT			4
13	6515817	WASHER			4
14	6560633	DAMPENER	shock		4
15	17C000836B	BOLT			4
16	6562198	SPACER	starter		1
17	57D000005B	NUT			5
18		ENGINE	See Illustration ENGINE/ E1332 KUBOTA		1
19	6631046	SEAL		27854 & Below	1
20	6630815	PLUG		27854 & Below	1
21	1CM870	BOLT			1
22	6565327	SHIELD	muffler		1
23	6579721	RETAINER	Was 6562694 [A]		1
24	29CM00825B	SCREW	Use W/Delco Alt.	27387 & Below	1
24	35C516	BOLT 10	Use W/Bobcat Alt.	27388 & Above	1
25		ALTERNATOR	See Illustration ALTERNATOR/ B18939		1
26	84G3710	SCREW			4
27		EXTENSION	Order Ref 64 Order Ref 65 Order Ref 66 NAP - Was 6562285 [A]	27854 & Below	1
28	6562843	MOUNT	motor		1
29	6CM1220	BOLT			7
30	6562257	MOUNT			1
31	39DM00010B	NUT	Use W/Delco Alt.	27387 & Below	1
31	85D6	LOCK NUT	Use W/Bobcat Alt.	27388 & Above	1
32	1CM00890B	BOLT			1
33	6652764	STUD	Was 3974462B [A]		4
34		SHIELD	NAP - 3 piece - Order 6571594		1
34	6571594	SHIELD	1 piece		1
35	6562417	SHIELD	Used W/3 piece Shield		1
36	6630207	RIVET	Used W/3 piece Shield - Was 6598092 [A]		6
37	1CM00895B	BOLT			1
38	6562418	SHIELD	Used W/3 piece Shield		1
39	1CM00840B	SCREW			1
40	17C000556B	BOLT			1
41	6568877	WASHER			1
42	6563400	AIR CLEANER	See Illustration AIR CLEANER/ B20264		1
43	6714543	GASKET	Was 3974461B [A]		1
44	6562466	INLET	oil fill		1
45	1DM00006B	NUT			4
46	3966602B	O-RING			1
47	6652653	PLUG	Was 3974116B [A]		1
48	6562419	BRACKET	For Delco 1108692 Starter	15749 & Below	1
48	6567048	BRACKET	For Delco 1998339 Starter	15750 & Above	1
49	17C640	BOLT 5			3

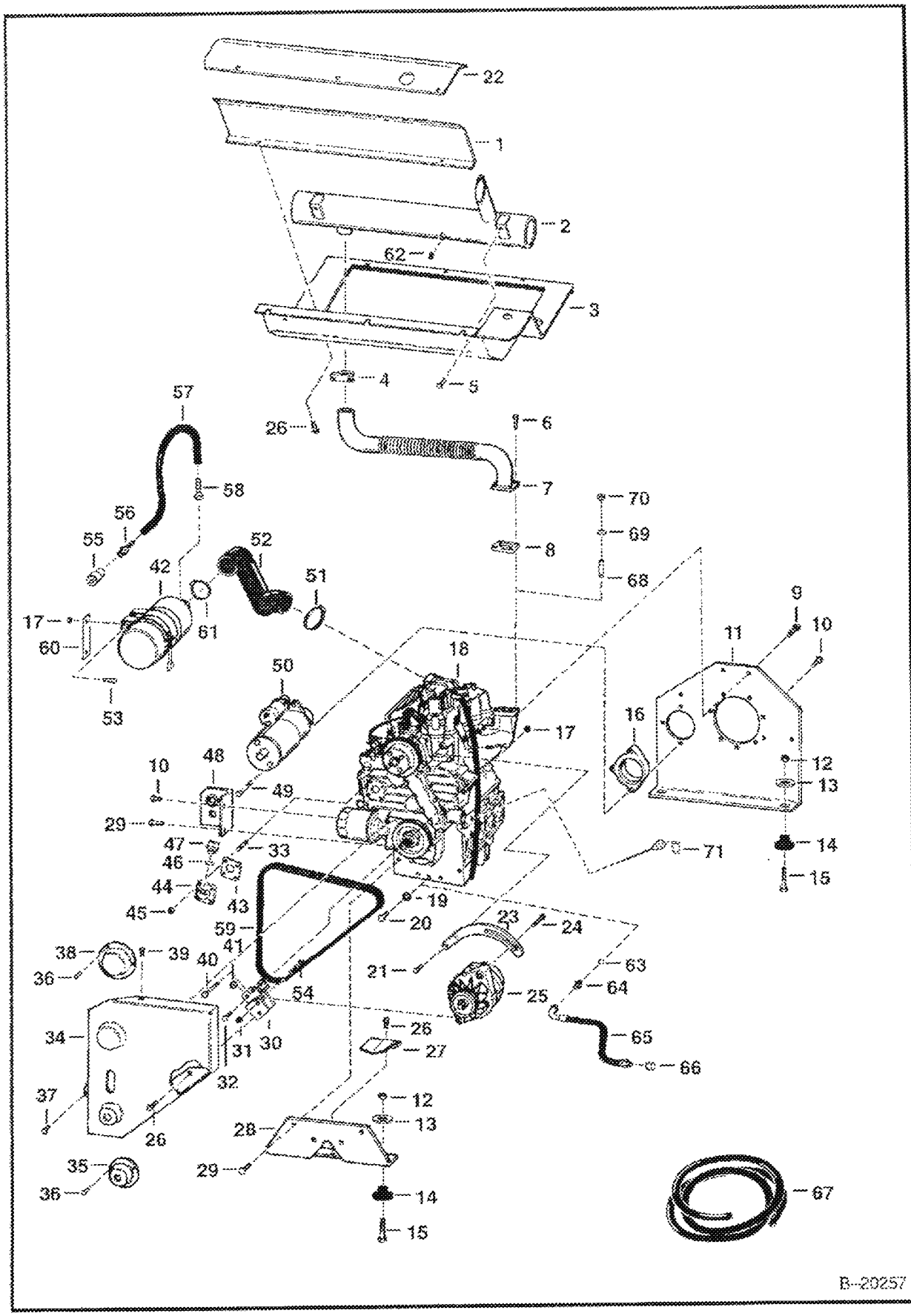
22
1
2
62
3
4
5
26
6
7
57
58
56
55
52
51
42
61
17
60
53
70
69
68
8
9
10
11
18
50
16
12
13
14
15
71
10
48
49
29
47
33
46
44
45
43
19
20
59
41
40
54
23
24
21
63
64
25
65
66
38
39
36
34
31
30
26
27
37
32
28
12
13
29
35
36
14
15
67
B-20257

Ref No	Part Number	Description	Remarks	Serial Number	Qty
50		STARTER	See Illustration STARTER/ B18466		1
51	42H000032B	CLAMP	Was 42H000024B [B]		1
52	6563447	HOSE			1
53	35C516	BOLT 10			4
54	1CM01080B	BOLT	Use W/Delco Alt.	27387 & Below	1
54	17C000648B	BOLT	Use W/Bobcat Alt.	27388 & Above	1
55	6515007	GAUGE	Dust		1
56	6505813	CONNECTOR	barbed		1
57		HOSE	NAP - 24" (609.6 mm) - Order Ref. 67 - Was 6559797 [A]		1
58	6563452	FITTING	barbed		1
59	6562693	BELT			1
60	6563705	SHIM			1
60	6569874	SHIM		19999 & Below	1
61	42HL00300B	CLAMP	Was 6598799 [A]	20001 & Above	1
62	866104B	PLUG	Brass		1
63	79K8	O RING 10		27855 & Above	1
64	15K000006B	ADAPTER	W/Ref. 63	27855 & Above	1
65	6572070	HOSE	oil drain	27855 & Above	1
66	36K6	CAP		27855 & Above	1
67	6557720	HOSE	bulk - Sold Per Foot		x
68	3974627B	STUD			4
69	6EM00080B	WASHER			4
70	1DM8	NUT			4
71	6598181	DIPSTICK	See Illustration OIL PAN/ C2550		1

Page 174 3901 06/28/2000 17:23:40 Printed by Bob Cook Co - Printing date jw9.24 1 6/23/2000

ENGINE & ATTACHING PARTS
(S/N 14999 & Below)

NOTE: 6515575 clamp is not installed where hose connects to radiator on newer model loaders but can be added if necessary.

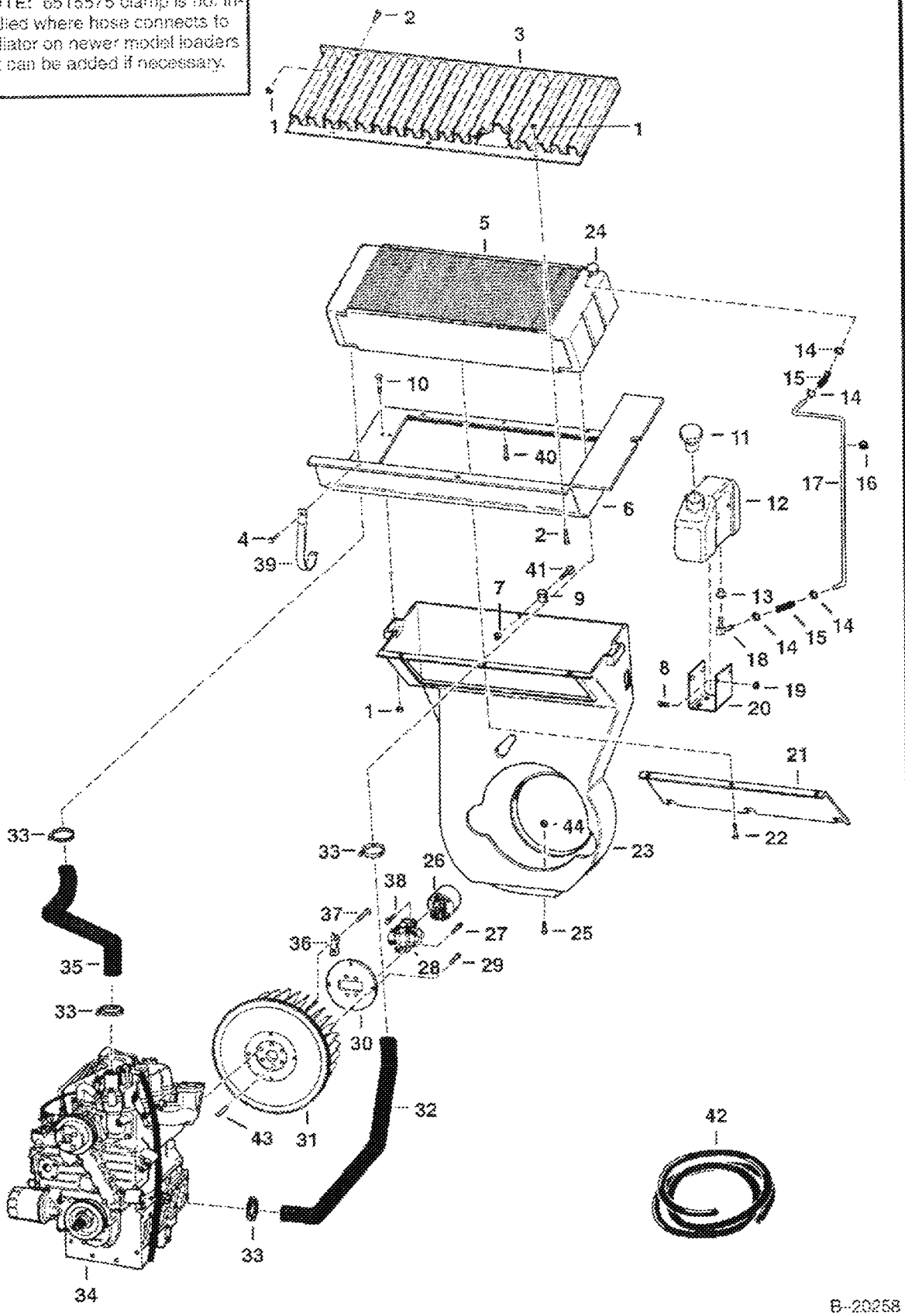

ENGINE & ATTACHING PARTS (Cont'd)
(S/N 14999 & Below)

Ref No	Part Number	Description	Remarks	Serial Number	Qty
1	57D6	NUT 5			4
2	84G3716	SCREW 5			4
3	6567868	GRILL			1
4	84G3710	SCREW			2
5	6571713	RADIATOR	Was 6630246 [A]		1
6	6578176	MOUNT	Was 6562851 [A]		1
7	83D5	NUT 5			3
8	10C000512B	BOLT	Was 6553808 [A]		2
9	774220	NUT			3
10	6514571	BOLT			2
11	6702797	CAP	Was 6558658 [A]		1
12		TANK	NAP - Without Barbed Fitting - Order 6576660		1
12	6576660	TANK	With Barbed Fitting Molded In		1
13	6553411	BUSHING	Not Used W/6576660 Tank		1
14	6515575	CLAMP	See Note		4
15		HOSE	NAP - 2" Long - Order Ref. 42		2
16	6519484	GROMMET			1
17	6562598	TUBE			1
18	6553412	ELBOW	Not Used W/6576660 Tank		1
19	57D000005B	NUT			2
20	6562599	MOUNT			2
21	6563590	COVER			1
22	35C512	BOLT			2
23	6564047	HOUSING	blower		1
24	6666606	RADIATOR CAP	Was 6630156 [A]		1
25		RIVET	NAP - Order 35C000620B & 59D000006B - Was 1316539B [A]		1
25	35C620	BOLT 5			1
26	6562960	YOKE	See Illustration UNIVERSAL JOINT/ B18348		1
27	94G000510B	BOLT			4
28	6598347	U-JOINT	See Illustration UNIVERSAL JOINT/ B18348		1
29	17C000628B	BOLT			4
30	6562873	ADAPTER			1
31	6562270	WHEEL	blower - W/Ring Gear		1
31	6510470	RING GEAR			1
32	6563116	HOSE			1
33	42H000032B	CLAMP			4
34		ENGINE	See Illustration ENGINE/ E1332 KUBOTA		1
35	6562284	HOSE			1
36	3974586B	WASHER	lock tab		3
37	6598275	BOLT	Used With Ref. 36		6
37	6598275	BOLT	Used W/O Lock Tabs - Was 6652487 [A]		6
38	94G000512B	BOLT			4
39	6562431	BRACKET			1
40	21C000510B	BOLT			3
41	37C000516B	BOLT	Was 6565089 [A]		3
42	6577822	HOSE	bulk - Sold Per Foot - Was 6562515 [A]		x
43	14J001808B	PIN			1
44	59D6	NUT			1

NOTE: 6515575 clamp is not installed where hose connects to radiator on newer model loaders but can be added if necessary.

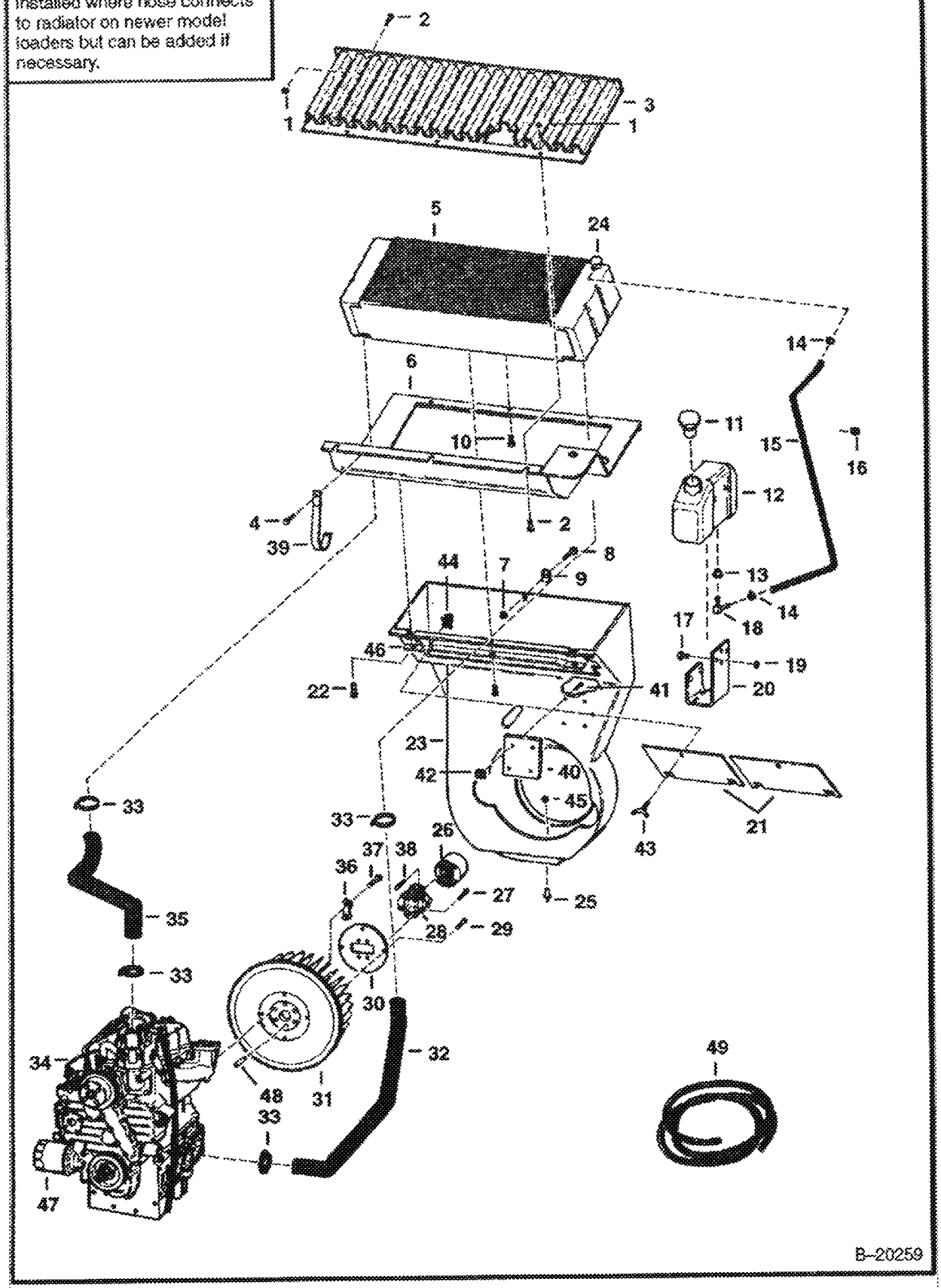

ENGINE & ATTACHING PARTS (Cont'd)
(S/N 15001 & Above)

Ref No	Part Number	Description	Remarks	Serial Number	Qty
1	57D6	NUT 5			4
2	84G3716	SCREW 5			4
3	6567868	GRILL			1
4	84G3710	SCREW			2
5	6648820	RADIATOR	Was 6630186 [A]		1
6	6565419	MOUNT			1
7	83D5	NUT 5			3
8	37C000516B	BOLT	Was 6565089 [A]		3
9	774220	NUT			3
10	21C000510B	BOLT			3
11	6702797	CAP	Was 6558658 [A]		1
12		TANK	NAP - W/O Barbed Fitting - Order 6576660		1
12	6576660	TANK	W/Barbed Fitting Molded In		1
13	6553411	BUSHING	Not Used With 6576600 Tank		1
14	6515575	CLAMP	See Note		2
15		HOSE	NAP - 36" (914,4 mm) - Order Ref. 49		2
16	6519484	GROMMET			1
17	17C612	BOLT 5			2
18	6553412	ELBOW	Not Used With 6576600 Tank		1
19	57D000005B	NUT			2
20	6709415	MOUNT	Was 6571814 [A]		1
21	6565196	COVER			2
22	35C512	BOLT			2
23	6564728	HOUSING	blower		1
24	6666606	RADIATOR CAP	Was 6630156 [A]		1
25		RIVET	NAP - Order 35C000620B & 59D000006B - Was 1316539B [A]		1
25	35C620	BOLT 5			1
26	6562960	YOKE	See Illustration UNIVERSAL JOINT/ B18348		1
27	94G000510B	BOLT			4
28	6598347	U-JOINT	See Illustration UNIVERSAL JOINT/ B18348		1
29	17C000628B	BOLT			4
30	6562873	ADAPTER			1
31	6562270	WHEEL	blower - W/Ring Gear		1
31	6510470	RING GEAR			1
32	6565598	HOSE			1
33	42H000032B	CLAMP			4
34		ENGINE	See Illustration ENGINE/ E1332 KUBOTA		1
35	6562284	HOSE			1
36	3974586B	WASHER	lock tab		3
37	6598275	BOLT	Used W/Ref. 36		6
37	6598275	BOLT	Used W/O Lock Tabs - Was 6652487 [A]		6
38	94G000512B	BOLT			4
39	6562431	BRACKET			1
40	6564595	INSULATION			1
41	6555293	NAIL			4
42	6555294	CLIP			4
43	6565418	SCREW			2
44	6599702	NUT			2
45	59D6	NUT			1
46	6567374	RETAINER			1
47		OIL FILTER	See Illustration GEARCASE/ B18573		1
48	14J001808B	PIN			1
49	6577822	HOSE	bulk - Sold Per Foot - Was 6562515 [A]		x

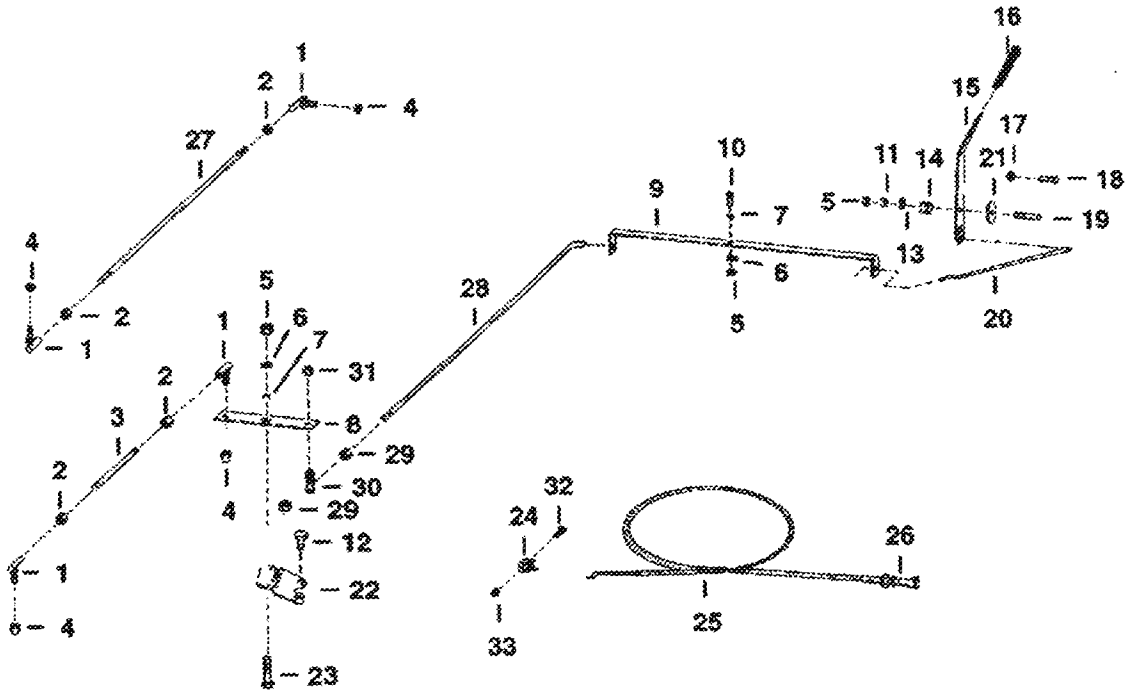
1
2
4
27
4
2
1
5
6
7
31
1
2
3
8
2
29
4
30
29
12
1
22
4
23
28
9
10
7
6
5
16
15
17
11
14
21
18
5
19
13
20
32
24
26
25
33

B-20260

Ref No	Part Number	Description	Remarks	Serial Number	Qty
1	6554858	BALL JOINT	ball joint - fine threads		4
2	62D000004B	NUT	fine threads		4
3	6562494	ROD			1
4	86D000004B	NUT	fine threads		4
5	85D6	LOCK NUT			2
6	872229	WASHER			2
7	6544654	BUSHING			2
8	6563532	BELLCRANK			1
9	6562491	LEVER		13100 & Below	1
9	6557196	LEVER		13101 & Above	1
10	6557432	BOLT	Was 3327196B [A]		1
11	7D000006B	NUT			1
12	4CM00620B	BOLT			2
13	27E6	WASHER 5			1
14	6562126	SPRING			1
15	6563940	LEVER			1
16	6553557	GRIP			1
17	57D6	NUT 5			2
18	37C616	BOLT	carriage - Was 6514537 [A]		2
19	7C000640B	BOLT			1
20	6562490	ROD			1
21	6562127	WASHER			1
22	6562495	BRACKET			1
23	17C620	BOLT			1
24	6514780	STOP			2
25	6562496	CABLE	fuel shut off - 52" (1320,8 mm)	13759 & Below	1
25	6564758	CABLE	fuel shut off - 70" (1778 mm)	13760 & Above	1
26	25E000017B	WASHER			2
27	6562817	ROD	fine threads	13100 & Below	1
28	6564371	ROD	course threads	13101 & Above	1
29	61D000004B	NUT	course threads	13101 & Above	2
30	6557291	BALL JOINT	ball joint - Course Threads	13101 & Above	1
31	85D000004B	NUT		13101 & Above	1
32	12D000010B	NUT	Was 14D000010B [B]		1
33	85G001008B	BOLT	Fuel Shut-Off Cable		1

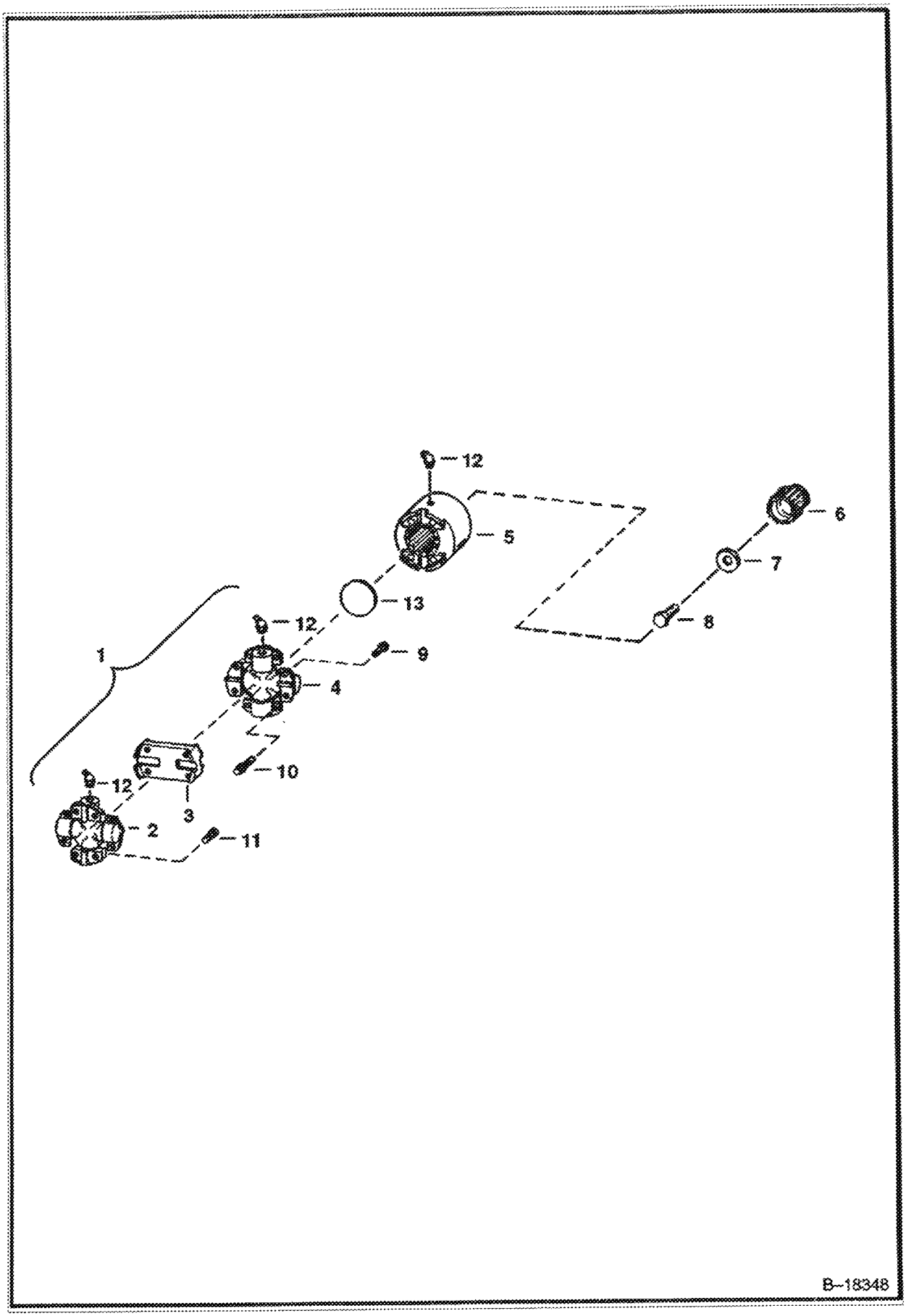
12
5
6
7
13
8
12
9
1
4
10
12
3
2
11
B–18348

Ref No	Part Number	Description	Remarks	Serial Number	Qty
1	6598347	U-JOINT	Ref. 2-4, 9 & 12		1
2	6598303	SPIDER			1
3	5202123B	COUPLING			1
4	6598304	SPIDER			1
5	6562960	YOKE	W/Ref. 7		1
6	7106572	ADAPTER	Was 6558924 [A]		1
7	616783B	WASHER			1
8	18C000616B	BOLT			1
9	94G000524B	SCREW			1
10	94G000512B	BOLT			4
11	94G000510B	BOLT			4
12	11H000025B	GREASE ZERK			3
13	12F000114B	PLUG			1

Page 179 - 1001 - 08/28/2000 17:21:48 - Printed by Bush Hook Co - adpstuc.exe (v2 34.3 8/25/2000)

NOTE: When ordering replacement engine parts, first determine which model engine is in your loader. For V1903–B Kubota engine refer to 751F SN 515611001, 515711001 & above for replacement parts See BTI 328.

ENGINE SERIAL NUMBER
The engine serial number is located at the fuel injection pump side on the engine block.

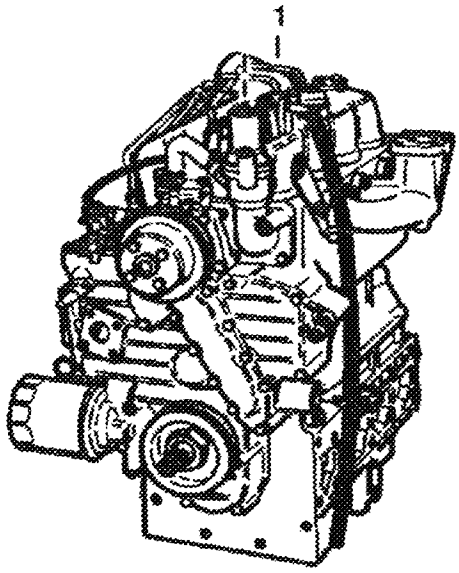

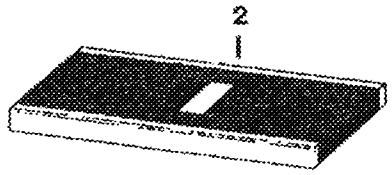

E–1332

ENGINE (Cont'd)
(Kubota - V1702-B)

Ref No	Part Number	Description	Remarks	Serial Number	Qty
1		ENGINE	See BTI328 NAP - Does not include starter, alternator, flywheel, & flywheel housing - Order engine 6685960 & - Was 6562233 [A]		1
1		ENGINE	NAP - Remanufactured - includes injection pump, injectors, water pump, oil filter. Will not include starter, flywheel, or alternator - Was 6562233 REM [A]		1
1		SHORT BLOCK	NAP		1
2	6630554	GASKET KIT	See Illustration CRANKCASE/ B20261 See Illustration ROCKER ARM COVER/ B20262 UPPER - DOES NOT INCLUDE SHIM - REF. 16 EF. 8		1
2	6630555	GASKET KIT	Lower - Does not include rear oil seal or front oil seal		1

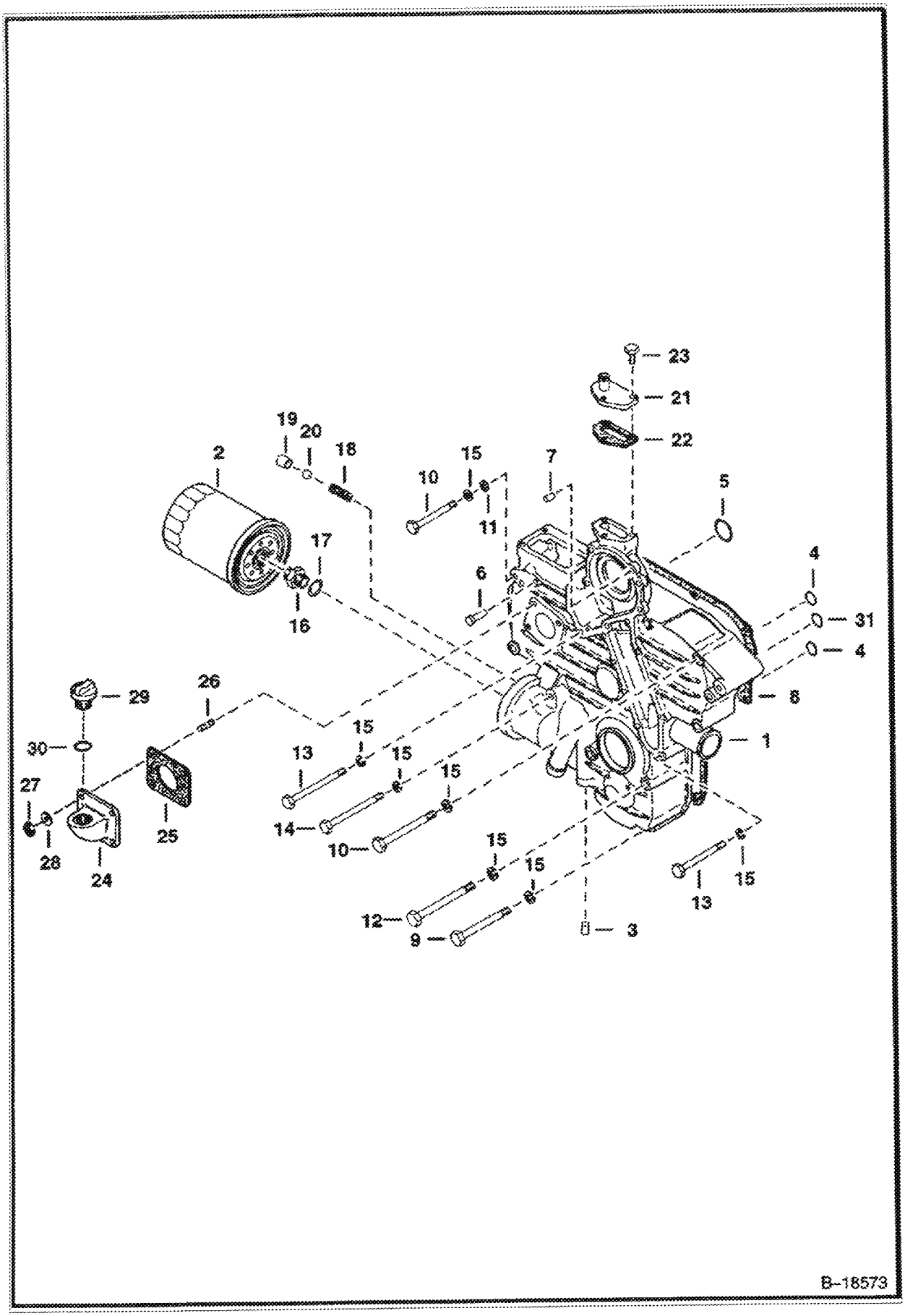
23
21
22
19
20
18
2
15
7
10
11
5
17
6
4
16
31
4
29
26
8
30
15
1
13
15
27
15
14
10
25
28
24
15
15
12
13
15
9
3
B-18573

Ref No	Part Number	Description	Remarks	Serial Number	Qty
1		CASE ASSY.	NAP - gear - W/Ref. 3-7 - Was 6674164 [A]		1
2	3974896B	OIL FILTER	oil filter - 6 Pack		1
3	3974035B	PLUG	pin		2
4	3966515B	O-RING			2
5	3966530B	O-RING			1
6	3974074B	PIN	start spring		1
7	3974395B	PIN	straight		2
8	6655481	GASKET	gearcase - Was 6653806 [A]	E 113260 & Below	1
8	6666800	GASKET	gearcase	E 113261 & Above	1
9	3974888B	BOLT			2
10	1CM870	BOLT			5
11	1EM00080B	WASHER			1
12	1CM00880B	SCREW			3
13	6653808	BOLT	Was 3974890B [A]		3
14	1CM00895B	BOLT			2
15	6EM00080B	WASHER			13
16	6653809	ADAPTER	Was 3974891B [A]		1
17	15EM00180B	WASHER			1
18	6652652	SPRING	Was 3974892B [A]		1
19	3974893B	SEAT	valve		1
20	10J000013B	BALL			1
21	3974894B	FLANGE	water return		1
22	6666803	GASKET	water return flange - Was 3974895B [A]		1
23	4CM00620B	BOLT			3
24	6562466	INLET	oil filler		1
25	6714543	GASKET	Was 6666785 [A]		1
26	6652764	STUD	Was 3974462B [A]		4
27	1DM00006B	NUT			4
28	6EM00060B	WASHER	spring		4
29	6652653	PLUG	Was 3974116B [A]		1
30	3966602B	O-RING			1
31	6655162	O-RING		E 113261 & Above	1
31	3966515B	O-RING	Was 3966516B [C]	E 113260 & Below	1

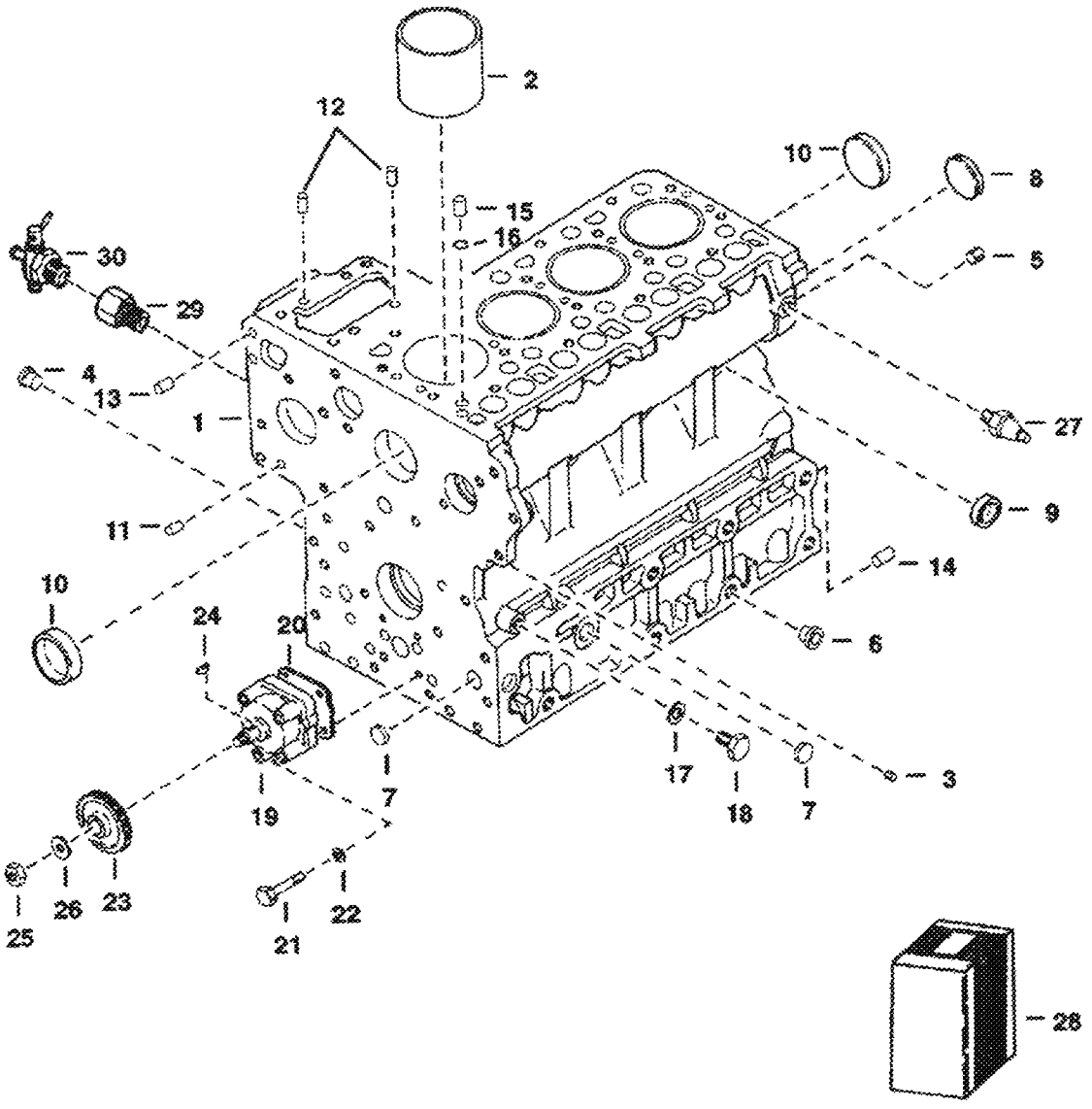
2
12
10
8
15
16
30
5
29
4
13
1
27
11
9
10
14
24
20
6
17
18
7
3
19
7
26
23
25
22
21
28
B-20261

Ref No	Part Number	Description	Remarks	Serial Number	Qty
1	6598183	CRANKCASE	assy. - W/Ref. 2-15		1
2	6598109	LINER	cylinder		4
3	6652574	PLUG	Was 6598169 [A]		6
4	3974399B	PLUG		E/37709 & Below	12
5	6652575	PLUG	Was 6598170 [A]	E/37709 & Below	2
6	6598187	PLUG			21
7	4FM00018B	PLUG	expansion		3
8	4FM00045B	PLUG	expansion		1
9	3974389B	GASKET	sealing		6
10	3974390B	CAP	sealing		2
11	3974393B	PIN	straight		2
12	3974394B	PIN	straight		2
13	3974395B	PIN	straight		2
14	3974868B	PIN	straight		1
15	3974037B	PIN	pipe		1
16	3974038B	O-RING			1
17	3974095B	GASKET			1
18	6655884	PLUG	Was 3974840B [A]		1
19	3975426B	OIL PUMP	Was 6598143 [A]		1
20	3974456B	GASKET			1
21	4CM00650B	BOLT			4
22	6EM00060B	WASHER			4
23	3975441B	GEAR	Was 3974869B [A]		1
24	6969805	KEY,FEATHER	Was 15JM00410B [A]		1
25	6653888	NUT	Was 3DM00012B [B]		1
26	3974870B	WASHER			1
27	6969775	SWITCH, OIL PRESSURE	oil PSI - Was 6652576 [A]		1
28	6630555	GASKET KIT	Lower - Does not include rear oil seal or front oil seal		1
29	3974871B	ADAPTER			1
30	6630177	DRAINCOCK			1

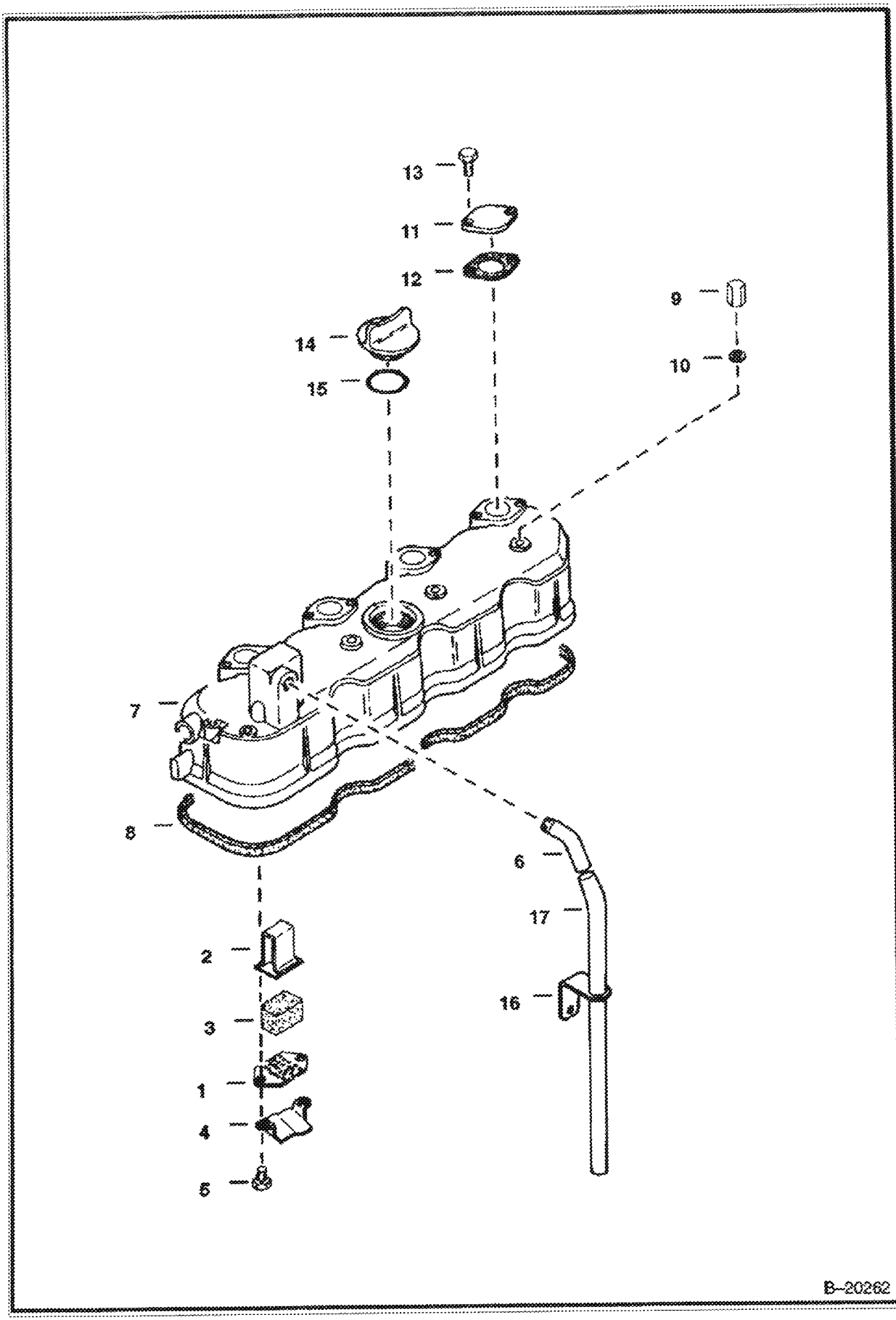
13
11
12
14
15
9
10
7
8
6
17
16
2
3
1
4
5
B-20262

Ref No	Part Number	Description	Remarks	Serial Number	Qty
1	3974924B	PLATE	element		1
2	3974925B	PLATE	element		1
3	3974926B	ELEMENT	breather		1
4	3974927B	SHIELD	breather		1
5	3975436B	SCREW	with washer - Was 6598167 [A]		2
6	6652624	JOINT	breather pipe - Was 3974929B [A]		1
7	6649235	COVER	valve - Was 6598135 [A]		1
8	6598136	GASKET			1
9	3974923B	NUT	cap		4
10	3974095B	GASKET			4
11	3974536B	COVER		E/4043 & Below	4
12	3974537B	GASKET		E/4043 & Below	4
13	4CM00614B	BOLT		E/4043 & Below	10
14	6652653	PLUG	oil filter - Was 3974116B [A]		1
15	3966602B	O-RING			1
16	3974931B	CLAMP	pipe		1
17	3974930B	PIPE	breather		1

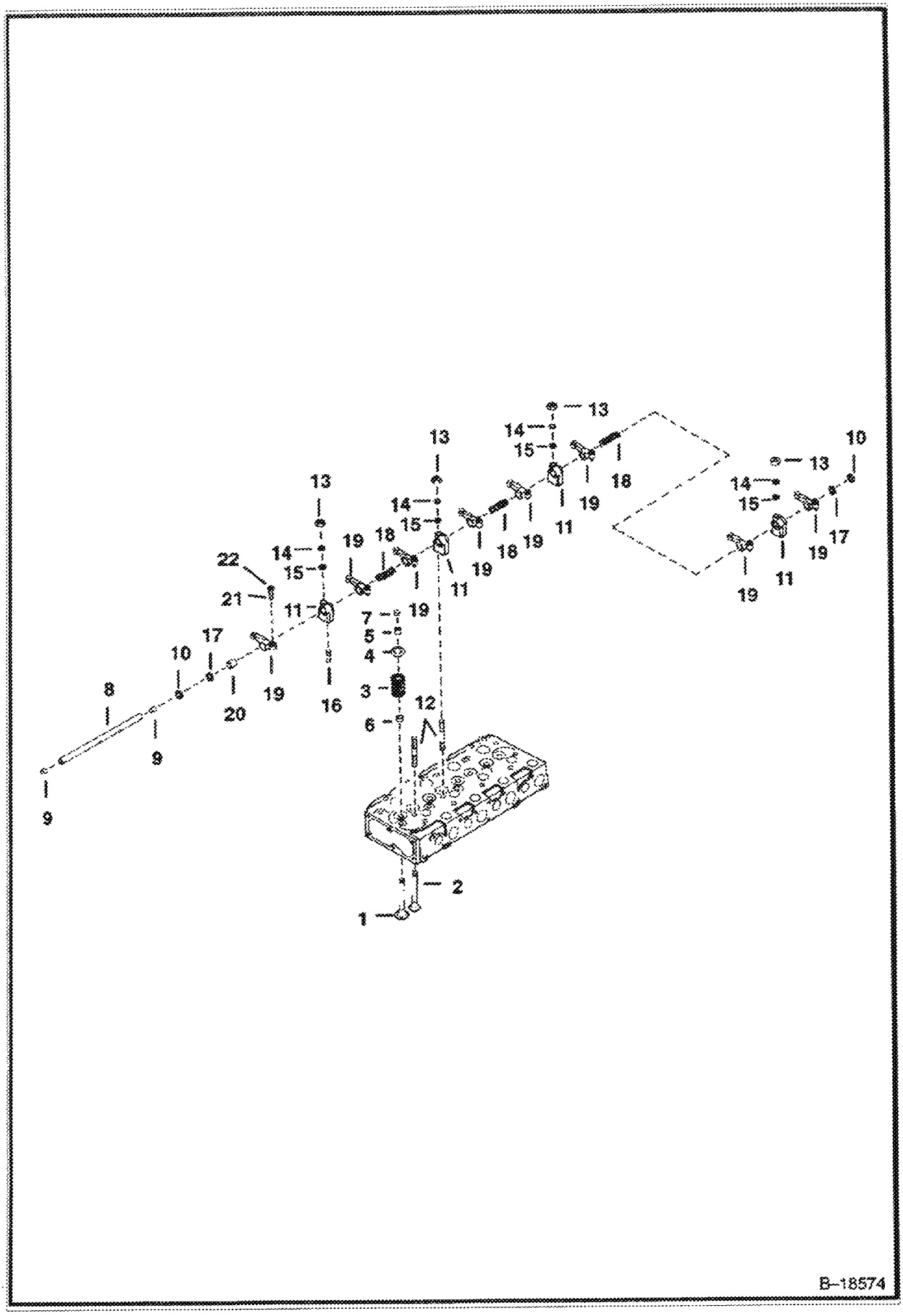
B–18574

VALVE ROCKER ARM (Cont'd)

Ref No	Part Number	Description	Remarks	Serial Number	Qty
1	6653828	VALVE	inlet - Was 3974512B [A]		4
2	6653829	VALVE	exhaust - Was 3974513B [A]		4
3	3974514B	SPRING	valve		8
4	3974515B	RETAINER	valve spring		8
5	6684874	COLLAR	valve spring - complete set - Was 3974516B [A]		1
6	6653830	SEAL	valve stem - Was 3974517B [A]		8
7	3974518B	CAP	valve		8
8		SHAFT	NAP - rocker arm - W/Ref. 9 - Order 6682545 shaft & 6667461 pin - Was 3974519B [A]		1
9	25GM08010B	SET SCREW			2
10	5JM00014B	CIR-CLIP	external		2
11	3974521B	BRACKET	rocker arm		4
12	6653832	STUD	Was 3974918B [A]		4
13	1DM8	NUT	Was 25DM00008B [A]		4
14	6EM00080B	WASHER	spring		4
15	1EM00080B	WASHER	plain		4
16	3974523B	ORIFICE			1
17	3974524B	WASHER			2
18	6653833	SPRING	rocker arm - Was 3974525B [A]		3
19	6655870	ROCKER ARM	rocker - W/Ref. 20-22 - Was 6598171 [A]		8
20	3974528B	BUSHING			8
21	3974920B	SCREW	adjusting		8
22	2DM00008B	NUT			8

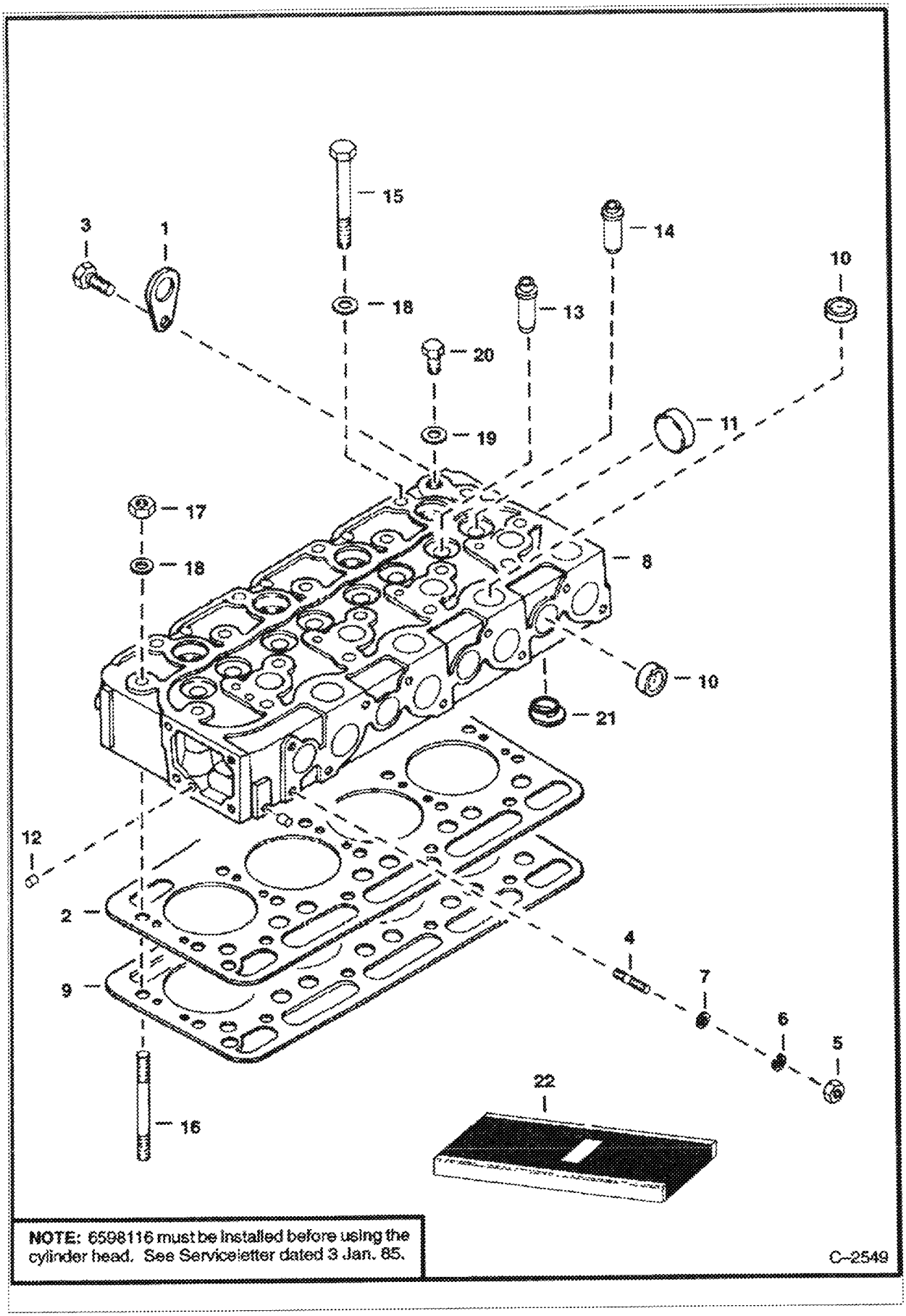

NOTE: 6598116 must be installed before using the cylinder head. See Serviceletter dated 3 Jan. 85.

C-2549

Ref No	Part Number	Description	Remarks	Serial Number	Qty
1	3974882B	BRACKET	engine		2
2	6598126	SHIM	shim is required only if one came out of your engine		1
3	4CM00816B	BOLT			1
4	6598156	STUD			1
5	1DM8	NUT	Was 25DM00008B [A]		1
6	6EM00080B	WASHER	spring		1
7	1EM00080B	WASHER	plain		1
8		CYLINDER HEAD	NAP - W/Ref. 10-14 - See Note & Serviceletter - 1/3/85 - Order 6660966 - Was 6598127 [A]		1
8		CYLINDER HEAD	NAP - remanufactured - W/Ref. 10-14, Valves, Valve Springs & Exhaust Manifolds Studs - Order 6660966 Was 6598127 REM [A]		1
8	6660966	HEAD	See Illustration VALVE ROCKER ARM/ B18574 W/REF. 4, 10-15, 19, 20, REF. 1-7, 12		1
9	6656333	GASKET	cylinder head - Was 6598125 [A]		1
10	3974432B	CAP	sealing		12
11	3974433B	CAP	sealing		1
12	6598116	PLUG			2
13	6655154	GUIDE	intake valve - Was 6653802 [A]		4
14	6653803	GUIDE	exhaust valve - Was 6653587 [A]		4
15		BOLT	NAP - cylinder head - Use 6653804 - Was 3974435B [A]	E/1325 & Below	16
15	6653804	BOLT	Was 3975364B [A]	E/1326 & Above	16
16	3975366B	STUD		E/1326 & Above	2
17	2DM00010B	NUT	cylinder head	E/1325 & Below	2
17	3975365B	NUT		E/1326 & Above	2
18	3974438B	WASHER	plain		18
19	3974885B	WASHER			1
20	3974884B	PLUG			1
21	6598117	CHAMBER	combustion		4
22	6630554	GASKET KIT	Upper - Does not include shim		1

Page 180 - 08/28/2008 12:23:41 - Powered by Ken Knox Co. eSpareList www.1x2.24.8.8/2008

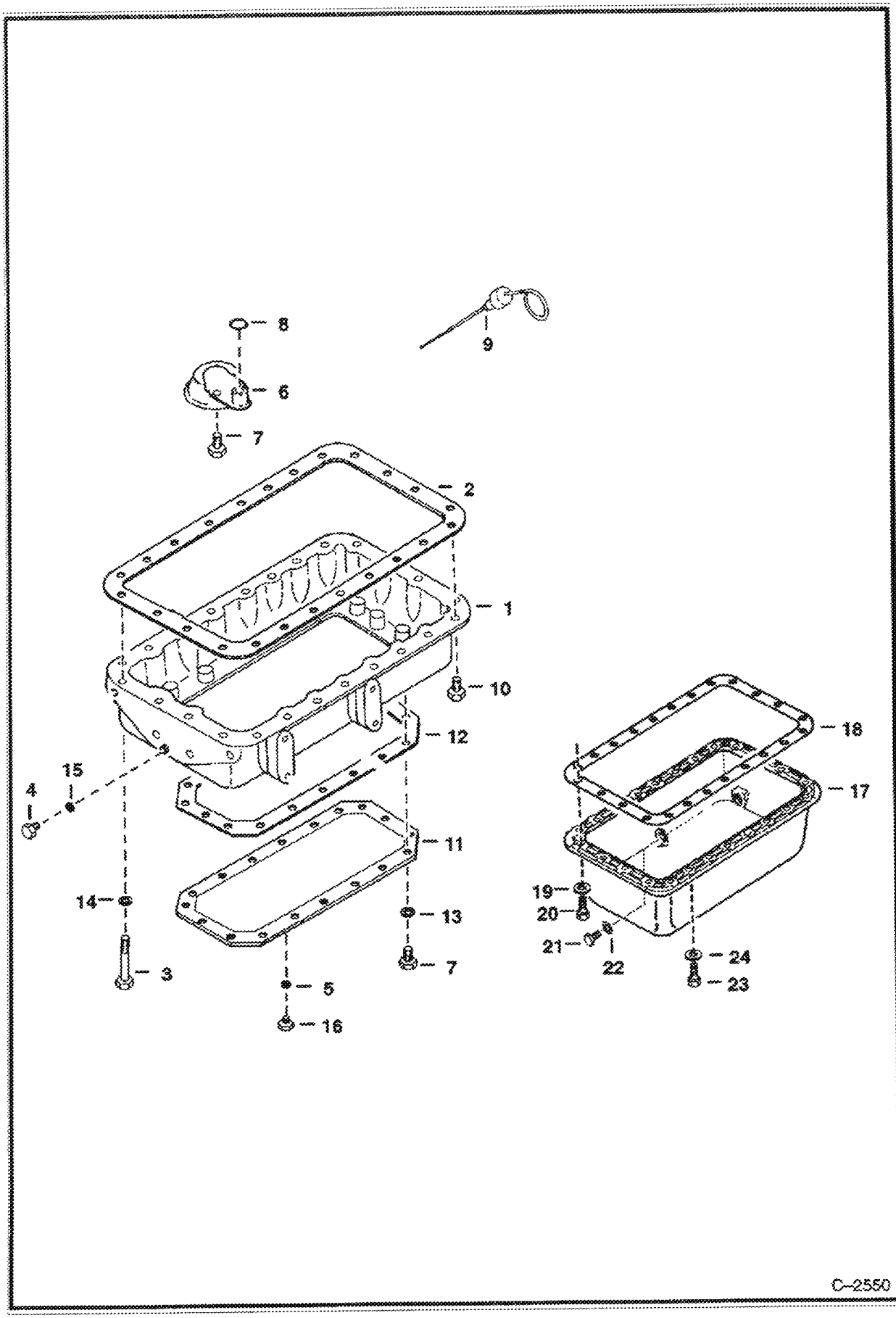
8
9
6
7
2
1
10
12
15
4
11
14
13
3
7
5
16
18
17
19
20
21
22
24
23
C-2550

Ref No	Part Number	Description	Remarks	Serial Number	Qty
1		OIL PAN	NAP - Two Piece - Order Ref. 17, Qty. 16 of Ref. 3, Qty. 8 of Ref. 23 & 24 - Was 6598184 [A]		1
2	6655474	GASKET	Used W/Two Piece Oil Pan - Was 3974407B [A]		1
3	5CM01030B	SCREW	12 or 13		x
4	6630815	PLUG			1
5	3974403	GASKET			2
6	6655194	OIL FILTER	Was 6653568 [A]		1
7	4CM00816B	BOLT			19
8	3966516B	O-RING			1
9	6598181	DIPSTICK	oil		1
10	6653687	BOLT	12 or 13 - W/Washer		x
11		COVER	NAP - oil pan - Was 3974410B [A]		1
12	3974411B	GASKET			1
13	6EM00080B	WASHER	spring		18
14	8EM00100B	WASHER	spring		24
15	6631046	SEAL			1
16	3974402B	PLUG			1
17		OIL PAN	NAP - One Piece - Order Qty.16 of Ref. 3, & Qty. 8 of Ref. 23 & 24 and 6668806 - Was 6653572 [A]		1
17	6668806	OIL PAN	one piece		1
18	6666817	GASKET	Used W/One Piece Oil Pan - Was 6640727 [A]		1
19	6640732	WASHER			24
20	6640728	BOLT			24
21	6640729	PLUG			1
22	6640730	WASHER			1
23	6668807	BOLT			8
24	6669192	WASHER			8

Page 182 - 10/01/2008 08:26:29.68 (17:29:41) - Printed by Parts Book Inc. - eApprint exe 1.2.24.3 8/29/2008

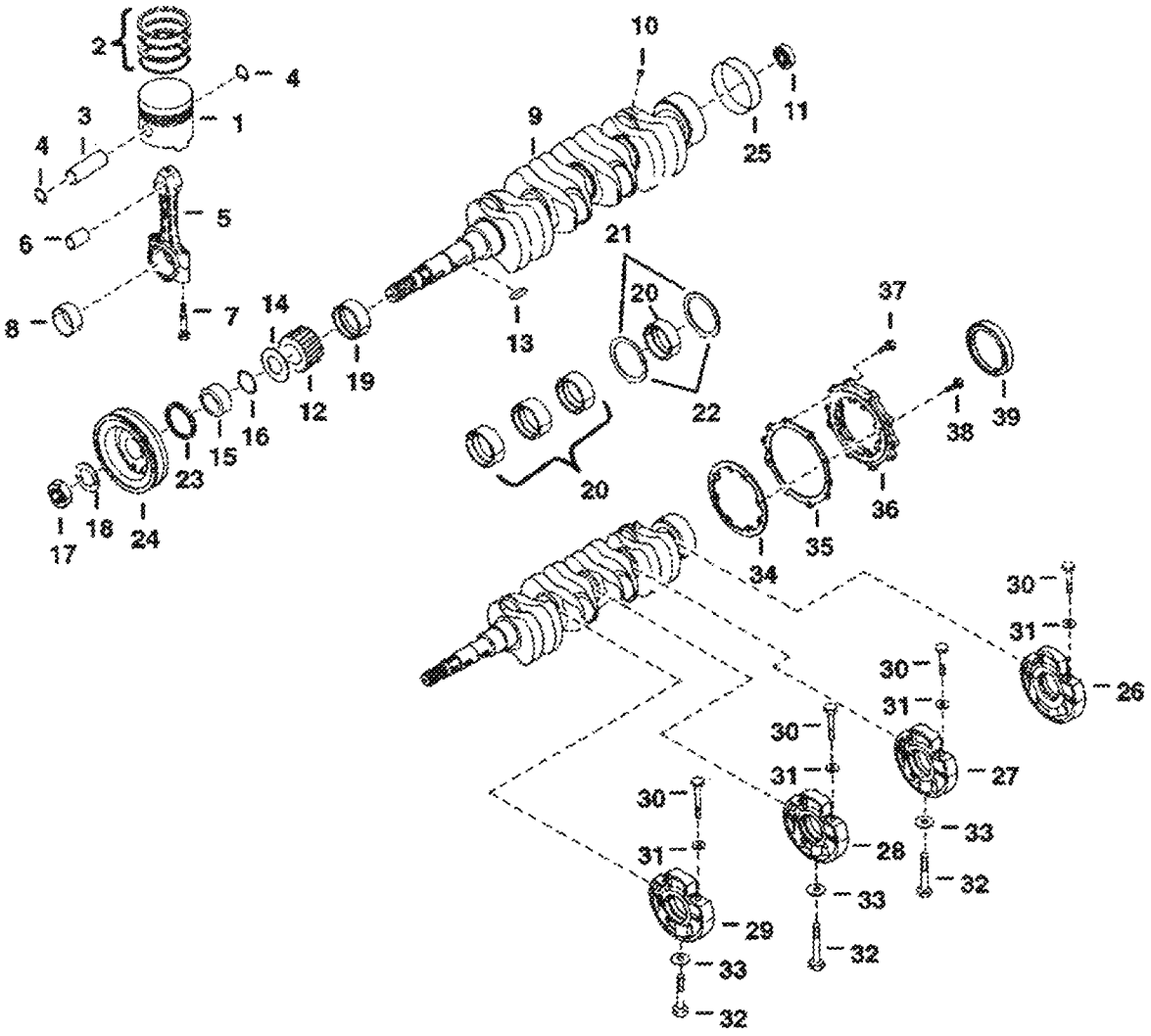

NOTE: 3974035 must be installed before using the crankshaft. See Service letter dated 3 Jan. 85

B-18609

Ref No	Part Number	Description	Remarks	Serial Number	Qty
1	6598762	PISTON	Std. - Was 6598111 [D]		4
1	6599914	PISTON	0,5 mm (.0197 Oversized) - 1 Piston		4
2	6598110	RINGS	piston (Std.)		4
2	6599913	RINGS	piston (0,5 mm-.0197 Oversized)		4
3	3974937B	PIN			4
4	3974561B	CIR-CLIP			8
5	3974938B	ROD	connecting - W/Ref. 6, 7 & 8		4
6	3974939B	BUSHING	one bushing		4
7	6655498	BOLT	Was 3974940B [A]		8
8	6598699	BEARING	rod (Std.) - Was 3974567B [A]		4
8	3975025B	BEARING	rod (0,2 mm-.0079)		4
8	3975026B	BEARING	rod (0,4 mm-.0157) 1-bushing		4
9		CRANKSHAFT	NAP - W/Ref. 10 & 11 - Order 6649299, 6653814 & 6649300 - See Note - Was 6598130 [A]	E/2202 & Below	1
9	6649299	CRANKSHAFT	See Note - Ref. 10 & 25	E/2203 & Above	1
10	3974035B	PLUG	pin		4
11	3974571B	BEARING			1
12	6598142	GEAR			1
13	3974546B	KEY			2
14	6653861	SLINGER	oil - Was 6598141 [A]		1
15	3975337B	COLLAR	Was 3974576B [A]		1
16	3974577B	O-RING			1
17	3974671B	NUT			1
18	3974672B	WASHER			1
19	6655185	BEARING	main (Std.) - Was 3974578B [A]		1
19	3975017B	BEARING	main (0,2 mm-.0079)		1
19	6655239	BEARING	main (0,4 mm-.0157) - Was 3975018B [A]		1
20	6655186	BEARING	main (Std.) - Was 3974579B [A]		4
20	3975019B	BEARING	main (0,2 mm-.0079)		4
20	3975020B	BEARING	main (0,4 mm-.0157)		4
21	3974945B	WASHER	thrust (Std.)		2
21	3975021B	WASHER	thrust (0,2 mm-.0079) one half washer		2
21	3975022B	WASHER	thrust (0,4 mm-.0157)		2
22	6653865	WASHER	thrust (Std.) one half washer - Was 3974946B [A]		2
22	3975023B	WASHER	thrust (0,2 mm-.0079)		2
22	3975024B	WASHER	thrust (0,4 mm-.0157)		2
23	6631664	SEAL	oil		1
24	6648764	PULLEY	Was 6598186 [A]		1
25	6653859	SLEEVE	Was 3975334B [A]	E/2203 & Above	1
26	6655886	CASE	main bearing		1
27	6598122	CASE	main bearing		1
28	3974901B	CASE	main bearing		1
29	6653816	CASE	main bearing - Was 3974900B [A]		1
30	6653813	BOLT			8
31	3974899B	WASHER			8
32	6653821	BOLT	Was 3974902B [A]		3
33	3974903B	WASHER			3
34	3974471B	GASKET			1
35	6666787	GASKET	Was 3974473B [A]		1
36	3974472B	COVER		E/2202 & Below	1
36	6653814	COVER	Was 3975336B [A]	E/2203 & Above	1
37	4CM00825B	BOLT			8
38	4CM00828B	BOLT			8
39	3974477B	SEAL	oil - rear	E/2202 & Below	1
39	6649300	SEAL	oil - Was 3975339B [A]	E/2203 & Above	1

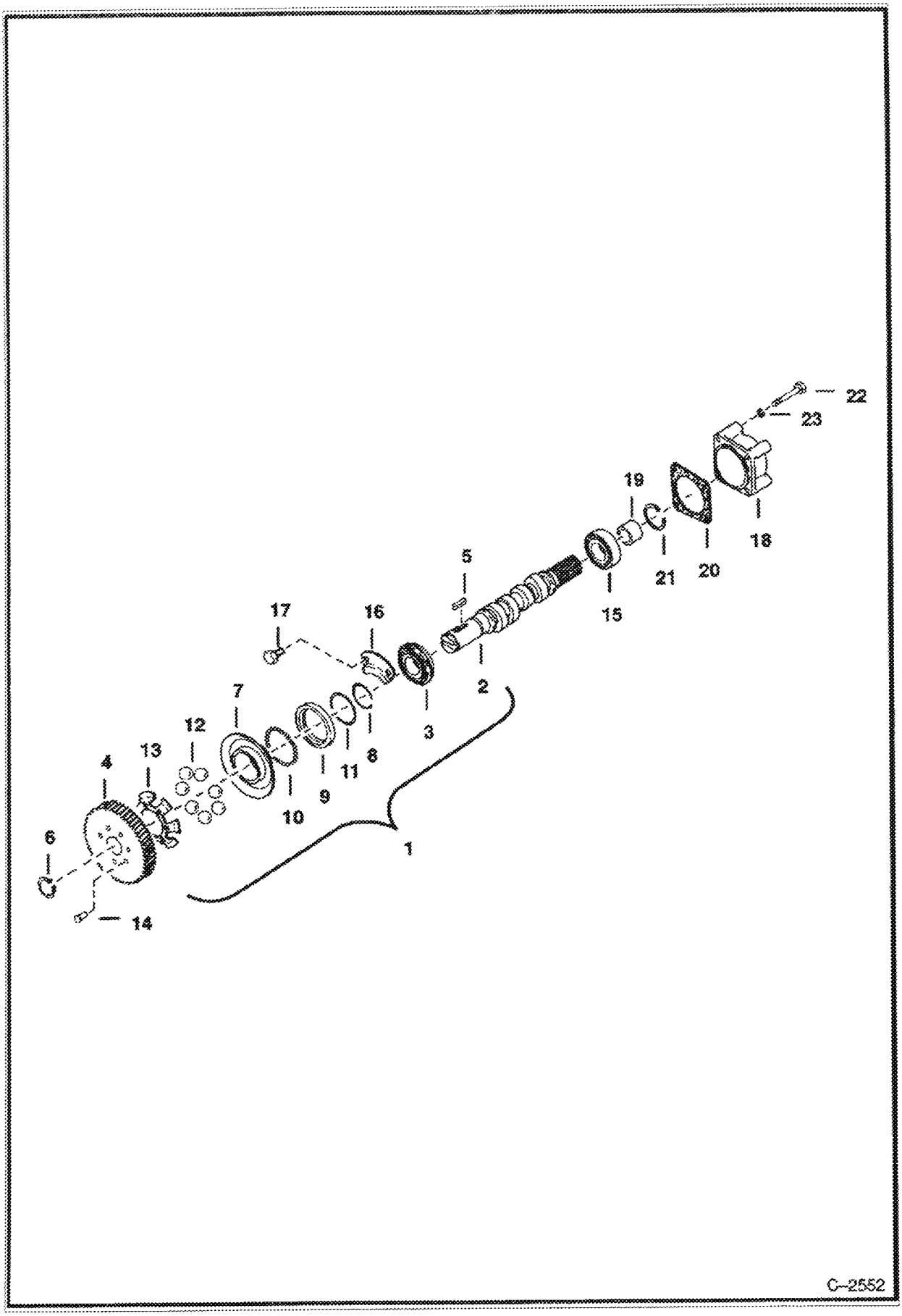
1
2
3
4
5
6
7
8
9
10
11
12
13
14
15
16
17
18
19
20
21
22
23
C–2552

Ref No	Part Number	Description	Remarks	Serial Number	Qty
1	6598138	CAMSHAFT	assy. - Ref. 2-14	E/38853 & Below	1
1	6653689	CAMSHAFT		E/38854 & Above	1
2	6598140	CAMSHAFT	fuel		1
3	302714B	BALL BEARING			1
4	6653900	GEAR	injection pump - Was 3974615B [A]		1
5	6598099	KEY			1
6	5JM00024B	CIRCLIP	external		1
7	3974617B	SLEEVE	governor		1
8	3974618B	CIRCLIP	sleeve		1
9	6655214	CASE	governor ball - Was 3974619B [A]		1
10	10J000005B	BALL			39
11	3974620B	CIRCLIP	ball case		1
12	10J000020B	BALL			7
13	3974960B	GUIDE	governor ball		1
14	12JM00310B	RIVET			7
15	6598101	BALL BEARING		E/38853 & Below	1
15	6653696	BALL BEARING		E/38854 & Above	1
16	3974624B	STOPPER			1
17	4CM00814B	BOLT			2
18	6598180	COVER	fuel camshaft	E/34272 & Below	1
18	6653574	COVER	fuel camshaft	E/34273 & Above	1
19	6598179	COLLAR			1
20	6598182	GASKET		E/25906 & Below	1
20	6666807	GASKET	Was 6665522 [A]	E/25907 & Above	1
21	6598158	CIRCLIP	external	E/38853 & Below	1
21	5JM00025B	SNAP RING		E/38854 & Above	1
22	5CM01070B	BOLT		E/34272 & Below	4
22	6653629	BOLT		E/34274 & Above	4
23	8EM00100B	WASHER	spring		4

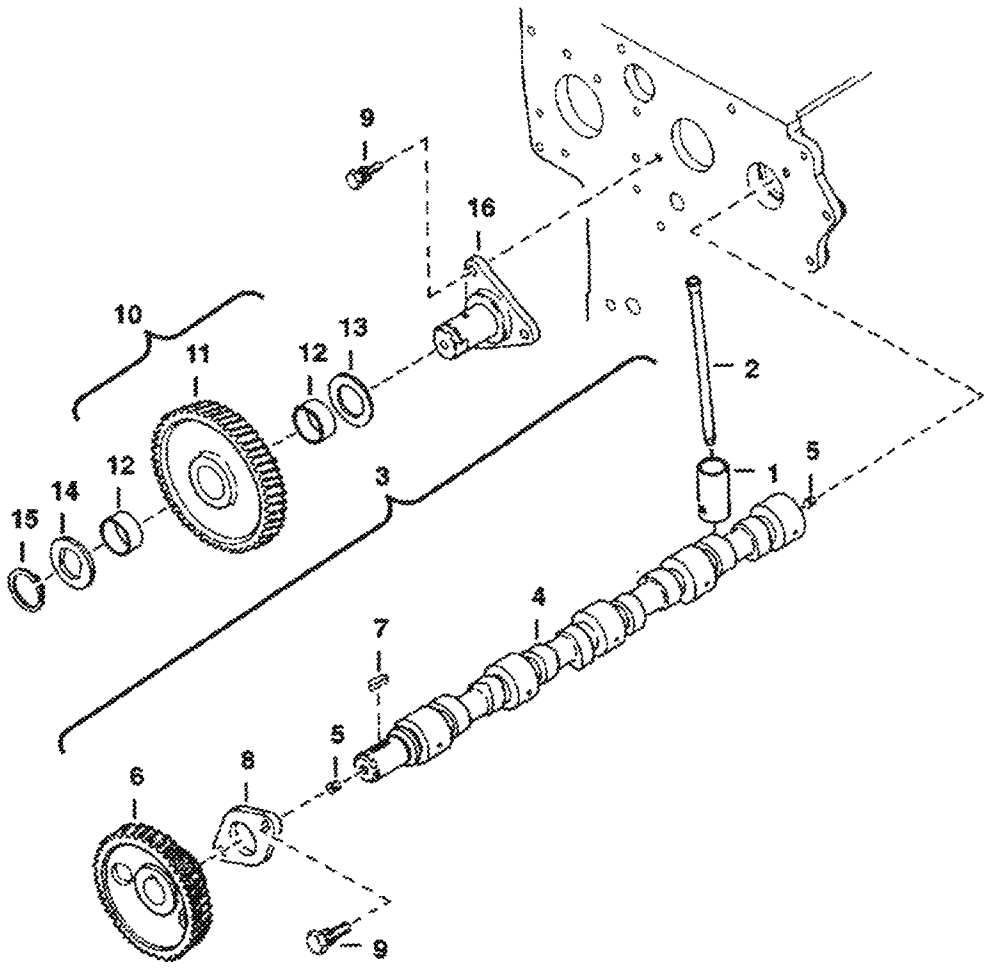
9
1
16
10
11
12
13
2
12
14
15
3
1
5
4
7
5
6
8
9
C-2557

Ref No	Part Number	Description	Remarks	Serial Number	Qty
1	6667428	TAPPET	Was 3974540B [A]		8
2	3974541B	PUSH ROD			8
3	6598137	CAMSHAFT	assy. Ref. 4-8		1
4	6655496	CAMSHAFT	Also Order Ref. 5 - Was 6598139 [A]		1
5	6653839	SCREW	seat - Was 6653839 [A]		2
6	6653840	GEAR	camshaft - Was 6598159 [A]		1
7	3974546B	KEY			1
8	3974547B	STOPPER	camshaft		1
9	4CM00818B	BOLT			5
10	3974550B	GEAR	idle - W/Ref. 11 & 12		1
11		GEAR	NSS - idle - Order Ref. 10		2
12	6654709	BUSHING	idle gear - Was 6554709 [D]		3
13	3974934B	COLLAR			1
14	3974554B	COLLAR	Was 6655504 [A]		1
15	5JM00026B	CIR-CLIP	external - Was 5JM00028B [A]		1
16	3974556B	SHAFT	idle gear		1

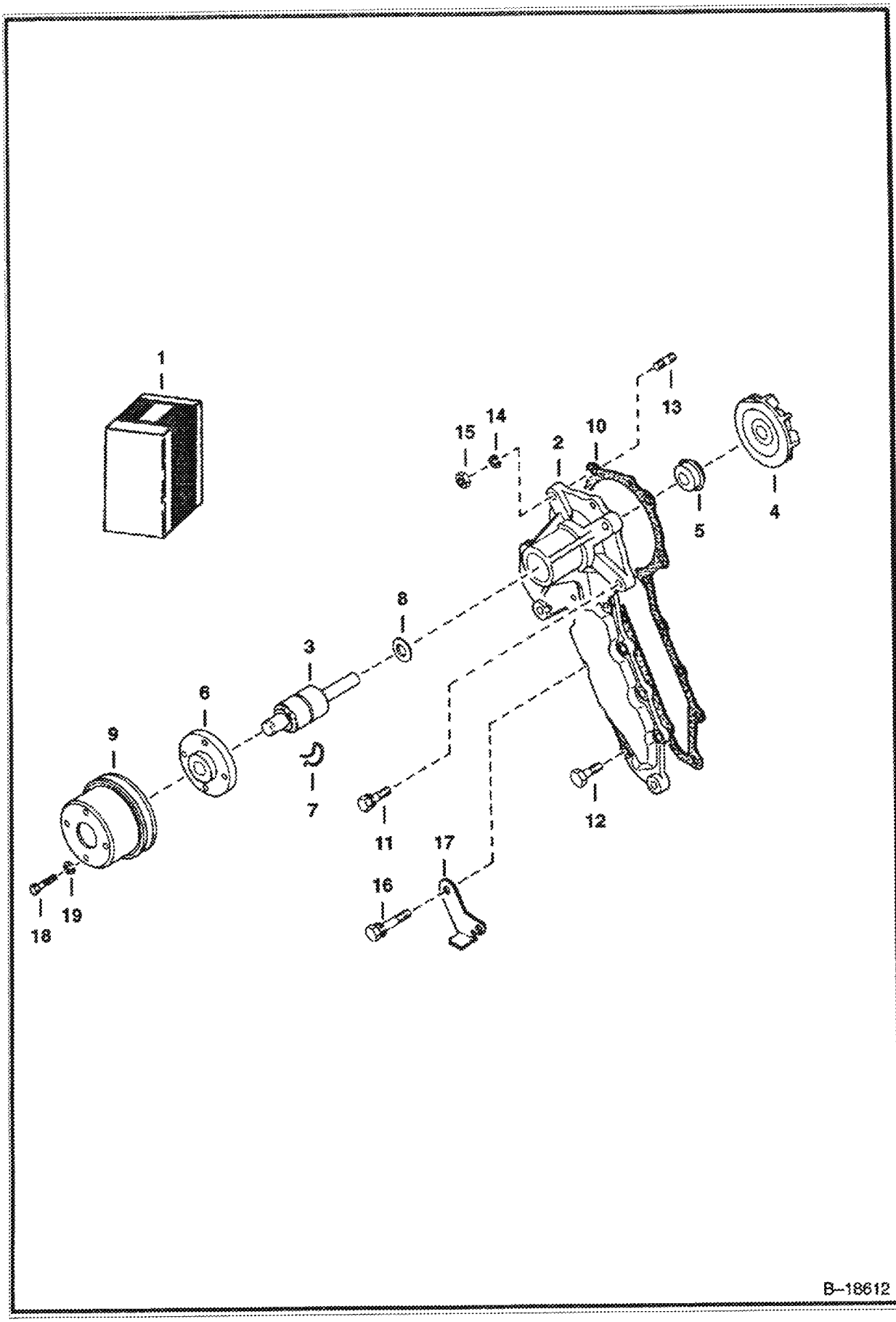
1
2
3
4
5
6
7
8
9
10
11
12
13
14
15
16
17
18
19
B–18612

Ref No	Part Number	Description	Remarks	Serial Number	Qty
1	6684225	WATER PUMP	Ref. 2-8 - Was 6653941 [A]		1
2		BODY	NSS		1
3	3974991B	BEARING			1
4	3974683B	IMPELLER		E/32510 & Below	1
4	6653944	IMPELLER	Was 6653577 [A]	E/32511 & Above	1
4	6667460	FAN	For 1 piece seal		1
5	3974684B	SEAL		E/32510 & Below	1
5	6653945	SET SEAL	Was 6653576 [A]	E/32511 & Above	1
5	6667465	SEAL	For 1 piece		1
6	3974992B	FLANGE			1
7	3974993B	PIN			1
8	6598108	SLINGER	Was 3974688B [A]		1
9	6674159	PULLEY	fan - Was 6598155 [A]		1
10	6666804	GASKET	Was 3974995B [A]		1
11	4CM00828B	BOLT			2
12	4CM00618B	BOLT			6
13	6653946	STUD			2
14	6EM00080B	WASHER	spring		2
15	1DM8	NUT	Was 25DM00008B [A]		2
16	4CM00620B	BOLT			2
17	6598185	INDICATOR	timing - Was 6653688 [A]		1
18	6652762	BOLT	flange - Was 4CM00612B [B]		4
19	6598119	WASHER	Used W/O Flanged Bolt		2

Page 191 - 1001 - 08/26/2008 11:23:11 - Printed by Ken Cook Co. - eSpirit exe ver 24.3 8/21/2008

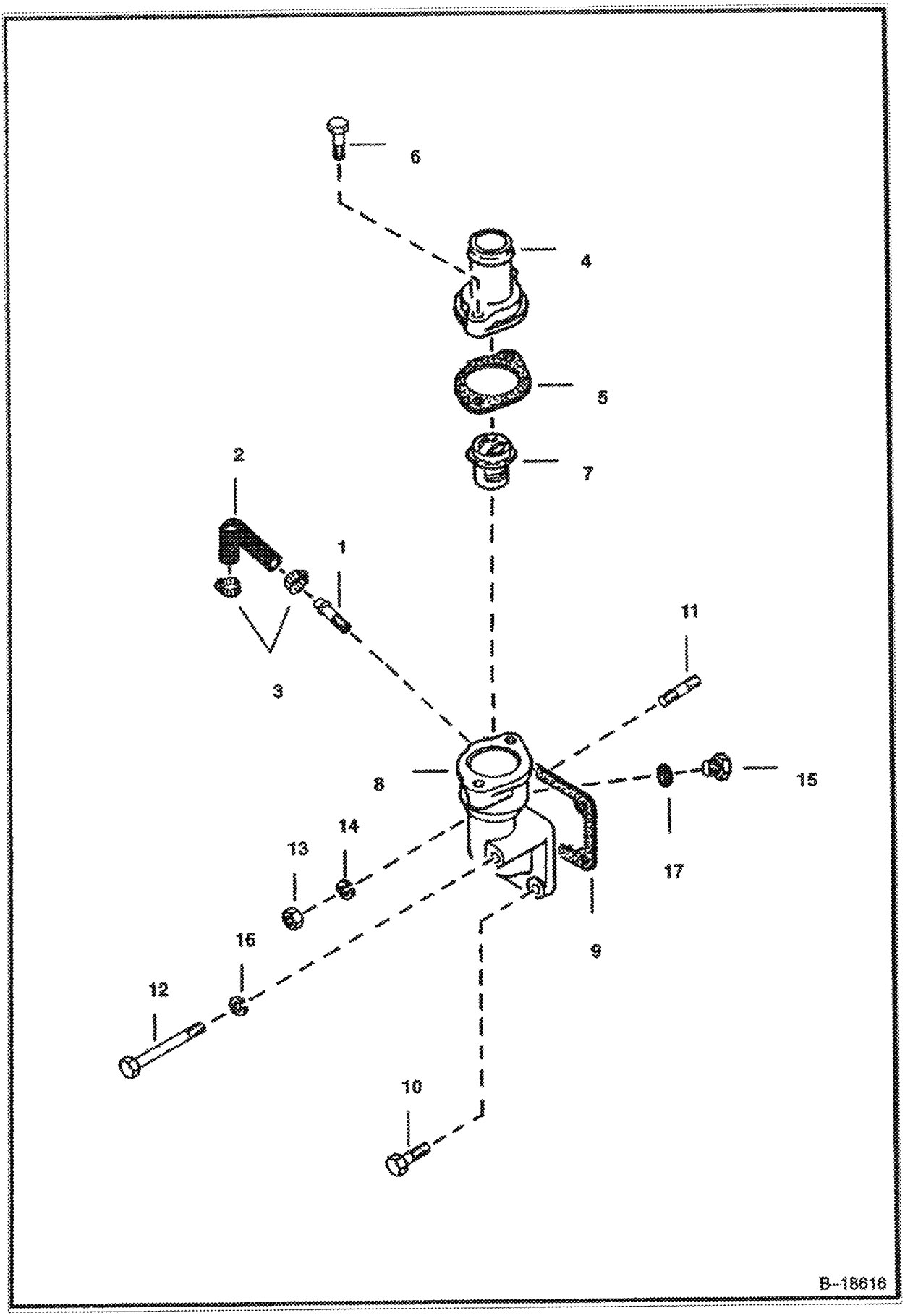
6
4
5
7
2
1
3
11
8
15
14
13
17
16
9
12
10
B-18616

WATER FLANGE & THERMOSTAT (Cont'd)

Ref No	Part Number	Description	Remarks	Serial Number	Qty
1	3974677B	PLUG	water return - Was 6653791 [A]		1
2	3974968B	PIPE	water return		1
3	3974679B	BAND	pipe		2
4	6598118	COVER	thermostat		1
5	6732199	GASKET	thermostat cover - Was 6666790 [A]		1
6	1CM00840B	SCREW			2
7	3918235B	THERMOSTAT			1
8	3974986B	FLANGE	water	E/1035 & Below	1
8		FLANGE	NAP - W/Replaceable Pipe - Order 6646743 - Ref. 1 - Was 6630204 [A]	E/1036 & Above	1
8	6646743	FLANGE	W/O Replaceable Pipe		1
9	6666802	GASKET	water flange - Was 3974987B [A]		1
10	4CM00822B	BOLT			2
11	3974627B	STUD			1
12	1CM870	BOLT			1
13	1DM8	NUT	Was 25DM00008B [A]		2
14	6EM00080B	WASHER	spring		2
15	6599615	PLUG		E/1036 & Above	1
16	1EM00080B	WASHER	plain		1
17	6598693	GASKET		E/1036 & Above	1

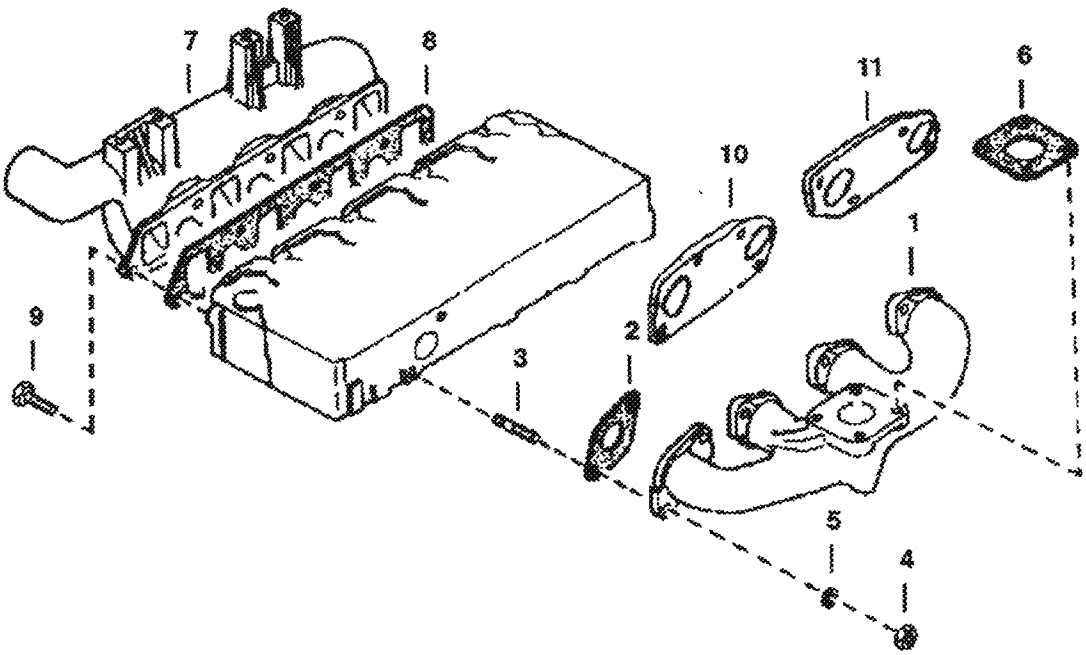

C-2566

Ref No	Part Number	Description	Remarks	Serial Number	Qty
1	6598132	MANIFOLD	Exhaust		1
2		GASKET	NAP - Ref. 10 & 11 - Was 3974915B [A]		4
3	6652670	STUD	Was 3974916B [A]		8
4	1DM8	NUT	Was 25DM00008B [A]		2
5	6EM00080B	WASHER	spring		12
6	6575580	GASKET	muffler - Was 6598088 [A]		1
7	6598129	MANIFOLD	Intake - shown	E/1035 & Below	1
7	6598763	MANIFOLD	Intake	E/1036 & Above	1
8	6666801	GASKET	Was 3975418B [A]		1
9	4CM00822B	BOLT			7
10	6666781	GASKET			1
11	6666791	GASKET			1

Page Size - 11001 - 08/22/2008 13:23:33 - Printed by Ken Cook Co. eSpirit exe [v2.24.3 8/22/2008]

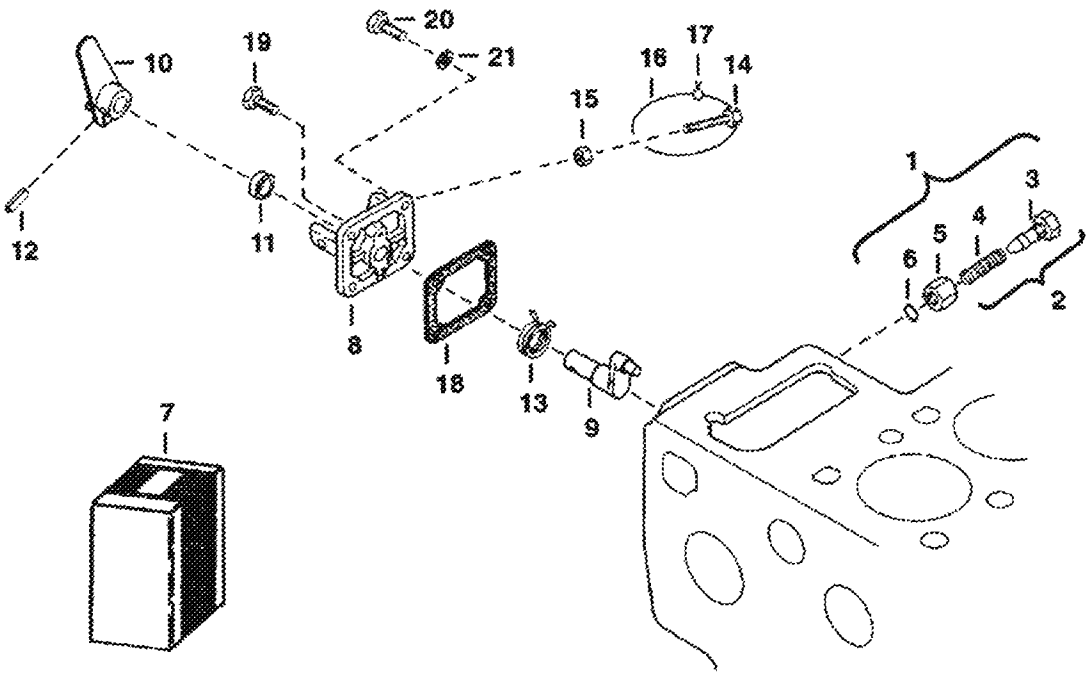

C-2562

ENGINE STOP LEVER (Cont'd)

Ref No	Part Number	Description	Remarks	Serial Number	Qty
1	6598149	IDLE ASSY.	assy., idle - Ref. 2-6		1
2	6598150	BOLT	adj. - Ref. 3 & 4		1
3	6598151	BOLT	adjusting		1
4	3974977B	SPRING			1
5	6598157	NUT			1
6	6598096	O-RING			1
7	6598165	LEVER ASSY.	eng. stop - Ref. 8-13		1
8		COVER	NSS - injection pump		1
9		SHAFT	NSS - lever		1
10		LEVER	NSS - engine stop		1
11		SEAL	NSS - oil		1
12	6598098	PIN	spring		1
13		SPRING	NSS		1
14		STOPPER	NAP		1
15		NUT	NAP		1
16		WIRE	NAP		1
17		LEAD	NAP - sealing		1
18	6666783	GASKET	pump cover - Was 3974601B [A]		1
19	4CM00618B	BOLT			1
20	4CM00622B	BOLT			3
21	1EM00060B	WASHER	plain		3

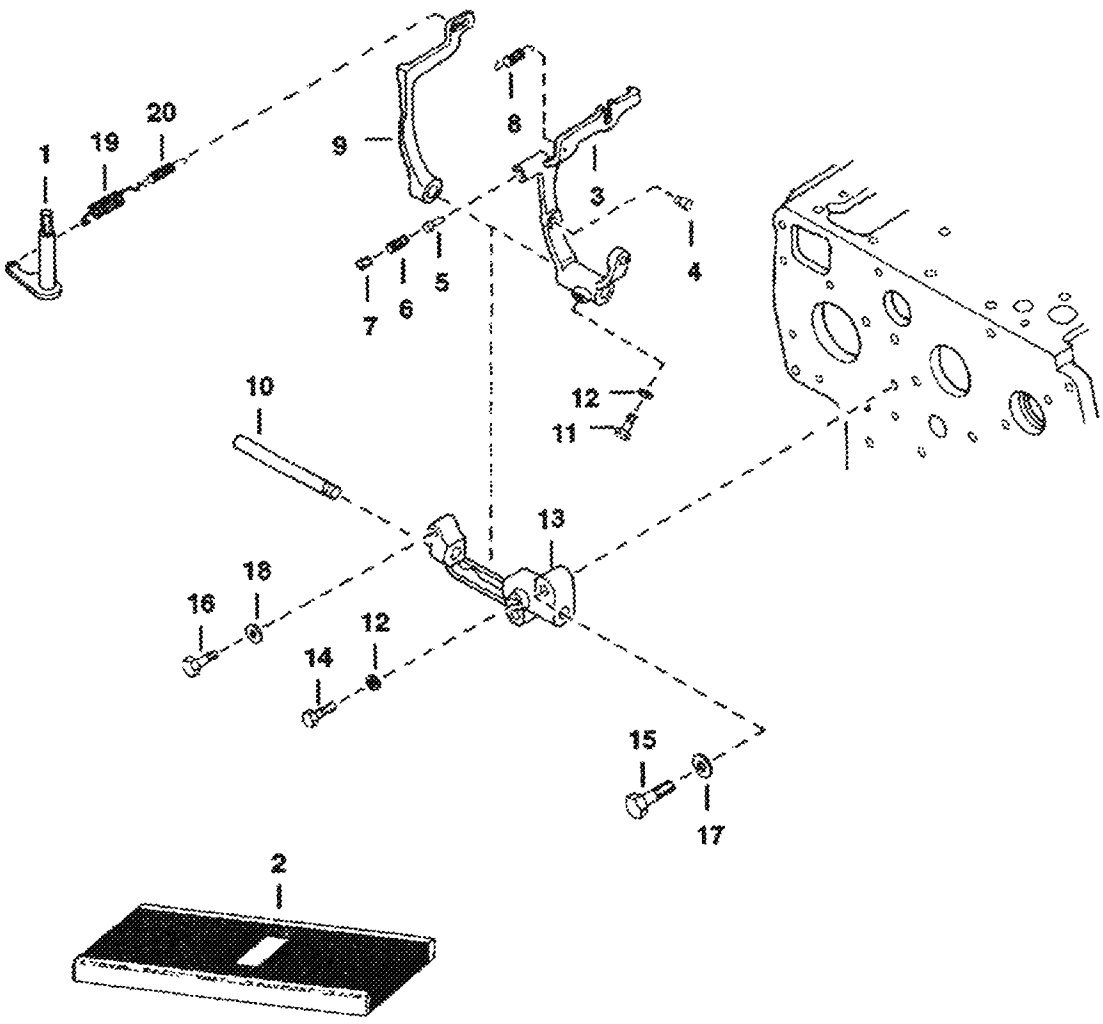

B-18626

Ref No	Part Number	Description	Remarks	Serial Number	Qty
1	6598174	LEVER	governor		1
2	6598153	LEVER	assembly - Ref 3-7, 9-14		1
3	6598152	LEVER	fork - W/Ref 4-7		1
4		PIN	NSS		2
5		PIN	NSS		1
6		SPRING	NSS		1
7		SCREW	NSS		1
8	6598175	SPRING			1
9		LEVER	NSS		1
10	3974658B	SHAFT			1
11	3974659B	BOLT			1
12	6EM00060B	WASHER			2
13	6653916	HOLDER	Was 3974661B [A]		1
14	3974662B	BOLT			1
15	6598355	BOLT			2
16	4CM00628B	BOLT			1
17	1EM00080B	WASHER			2
18	1EM00060B	WASHER			1
19	6655878	SPRING	governor - Was 6655537 [A]		1
20	6655227	SPRING	Was 6598163 [A]		1

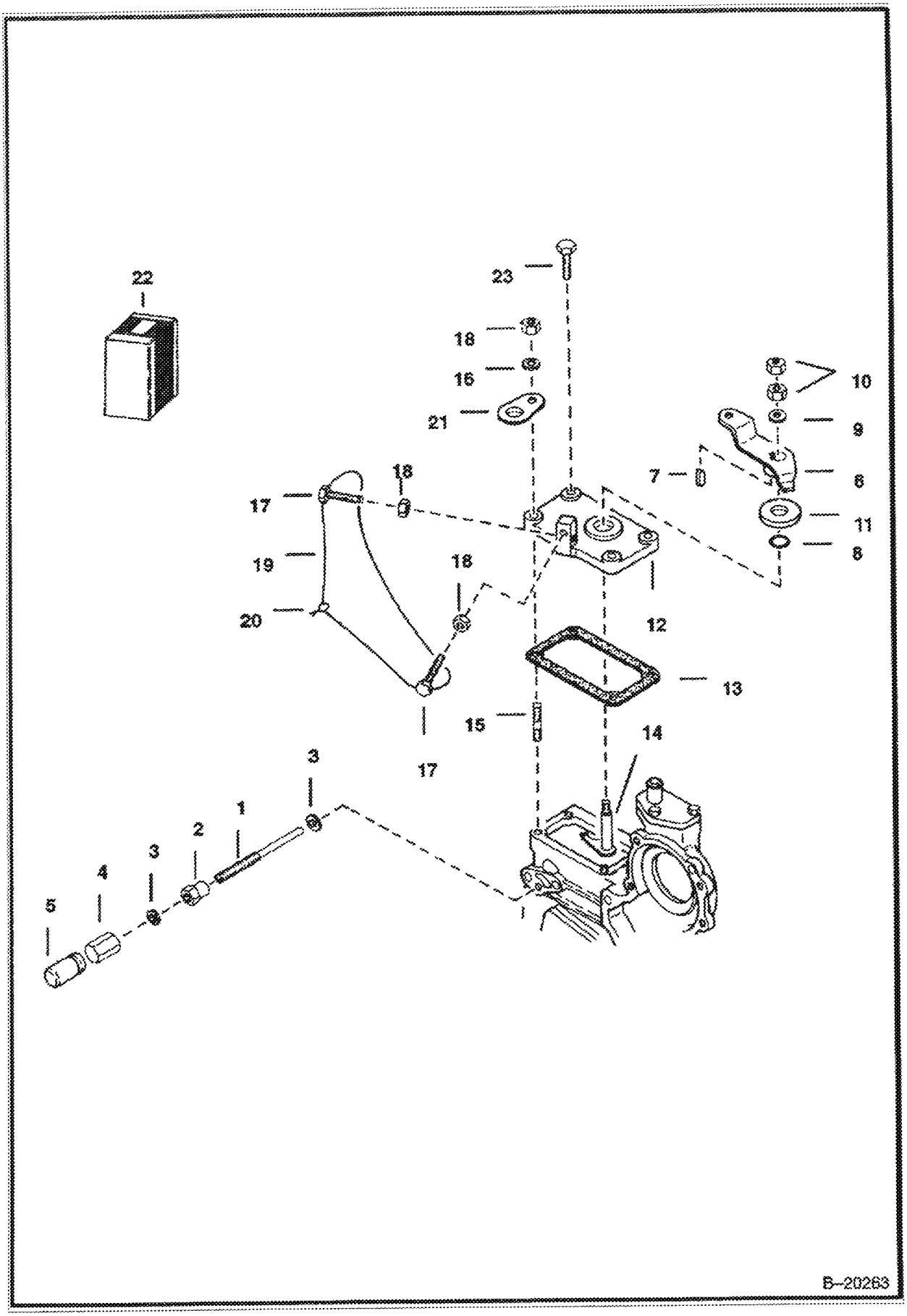
22
23
18
16
21
10
9
7
6
11
8
18
17
19
18
20
12
13
15
14
17
3
1
2
3
4
5
B-20263

SPEED CONTROL PLATE (Cont'd)

Ref No	Part Number	Description	Remarks	Serial Number	Qty
1	3974970B	SCREW	adjusting		1
2	3974971B	NUT			1
3	3974972B	GASKET			2
4	6655223	NUT	cap - Was 3974973B [A]		1
5	6653905	CAP	Was 3974974B [A]		1
6	6598176	LEVER	speed control		1
7	15JM00048B	KEY	feather		1
8	3966512B	O-RING			1
9	1EM00080B	WASHER	plain		1
10	1DM8	NUT	Was 25DM00006B [A]		2
11	3974644B	PLATE	friction		1
12		PLATE	NAP - speed control - Order 6641231 plate & 6666792 gasket - Was 6598164 [A]	E/13260 & Below	1
12	6641231	PLATE	speed control	E/13261 & Above	1
13	3974646B	GASKET		E/13260 & Below	1
13	6666792	GASKET	Was 6635392 [A]	E/13261 & Above	1
14	6598174	LEVER			1
15	6652764	STUD	Was 3974462B [A]		2
16	6EM00060B	WASHER	spring		2
17		STOPPER	NAP		2
18		NUT	NAP		4
19		WIRE	NAP		1
20		LEAD	NAP - sealing		1
21		CLAMP	NAP - Was 6598188 [A]		1
22		KIT	NAP - Ref. 8, 12, 13 - Order 6901115 kit - Was 6722930 [A]		1
22	6901115	KIT	plate & lever - Ref. 6-14		1
23	4CM00620B	BOLT			2

1001 - 08/28/2000 17:27:43 Printed by Ken Dow Co. Appear was (2 2) 8/28/2000

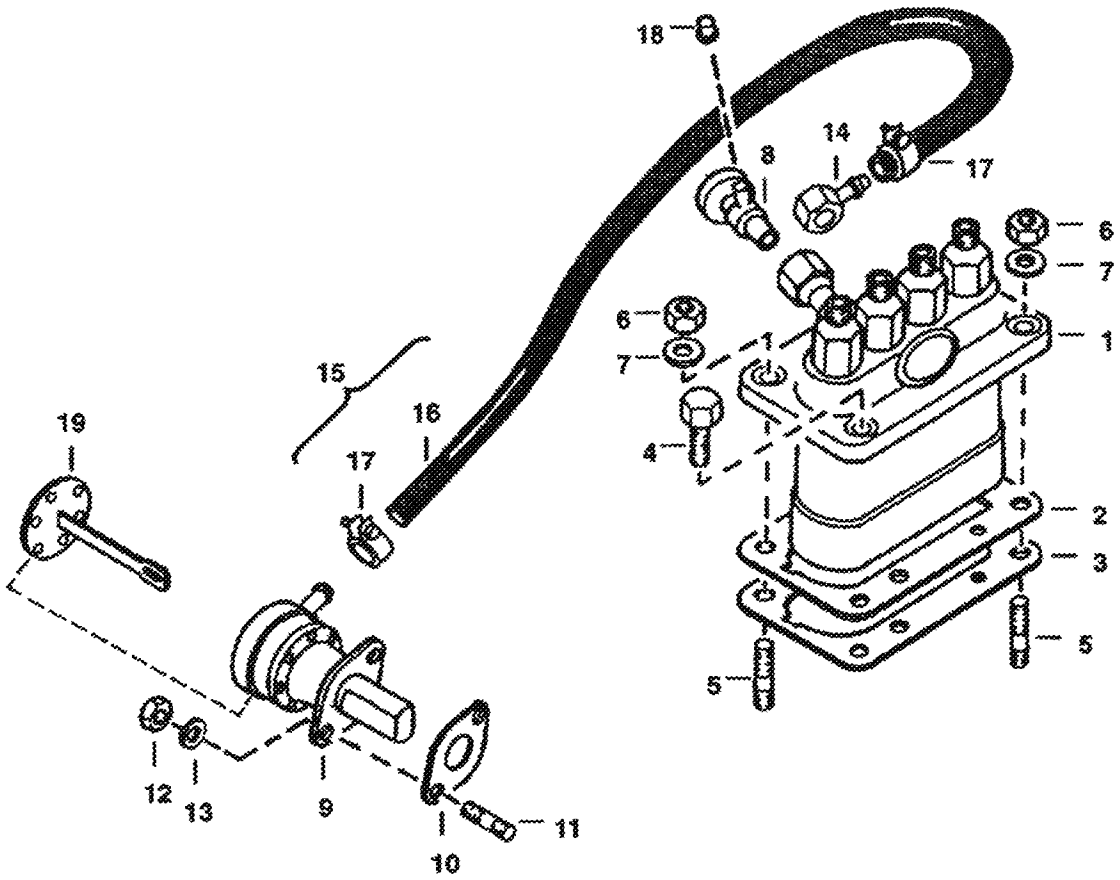
18
14
17
8
6
7
6
7
1
1
15
16
19
17
4
2
3
5
5
12
13
9
11
10
B-3612

Ref No	Part Number	Description	Remarks	Serial Number	Qty
1	6655516	PUMP	See Illustration INJECTION PUMP/ C2560 WAS 6598131 [A]		1
2	3974626B	SHIM			3
3	6598148	SHIM			1
4	4CM00822B	BOLT			4
5	3974627B	STUD			2
6	1DM8	NUT	Was 25DM00008B [A]		2
7	6EM00080B	WASHER	spring		2
8	6598102	VALVE	jet start		1
9	6666850	FUEL PUMP	Was 6598121 [A]		1
10	3974502B	GASKET	fuel pump		1
11	3974503B	STUD			2
12	1DM00006B	NUT			2
13	6EM00060B	WASHER	spring		2
14	6655515	JOINT	eye - Was 3974500B [A]		1
15	6598144	PIPE ASSY.	fuel		1
16		PIPE	NSS - fuel		1
17	6655874	CLIP	pipe - Was 3974499B [A]		2
18	6655524	CAP	Was 6598103 [A]		1
19	6669306	DIAPHRAM	fuel pump - Was 6630183 [A]		1

1001 - 08/18/2009 17:27:43 - Printed by Ken Cook Co. - Operator.exe (12.2.3 8/25/2008)

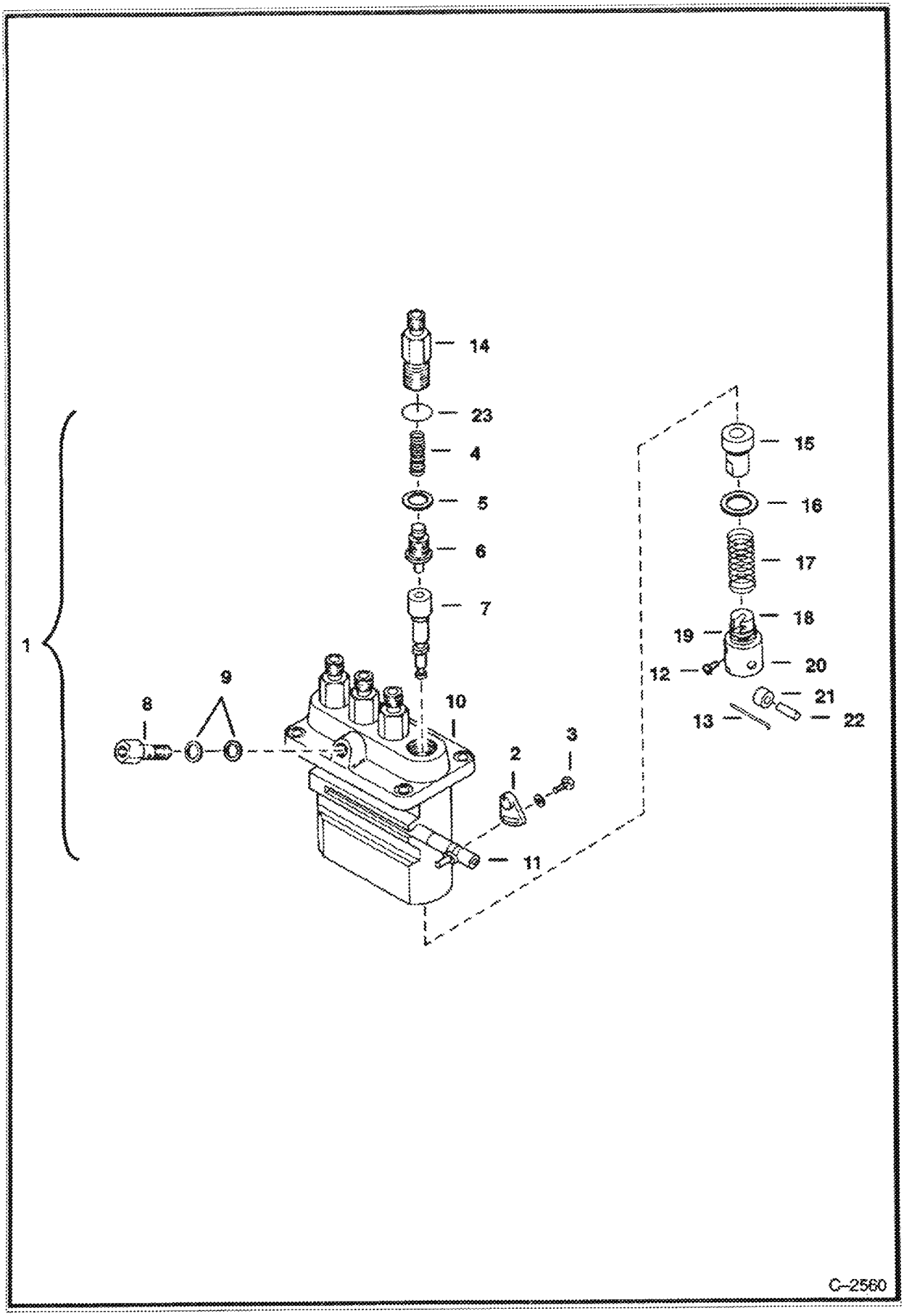
1
14
23
4
5
6
7
8
9
10
2
3
11
15
16
17
18
19
20
12
21
13
22
C-2560

Ref No	Part Number	Description	Remarks	Serial Number	Qty
1	6655516	PUMP	injection - Ref. 2-23 - Was 6598131 [A]		1
2	6655209	PLATE	adjust - Was 39743656 [A]		3
3	3974366B	BOLT			3
4	3974367B	SPRING	delivery valve		4
5	3974368B	GASKET	delivery valve		4
6	3974782B	VALVE	delivery		4
7	3974783B	PLUNGER	pump		4
8	6598147	SCREW			1
9	3975389B	GASKET	Was 3974374B [B]		2
10		HOUSING	NSS - pump		1
11	3974787B	RACK	control		1
12	3974377B	PIN	tappet guide		4
13	3974378B	PIN	clamp		2
14	3974379B	HOLDER	delivery valve		4
15	6653894	SLEEVE	control - Was 3974380B [A]		4
16	3974381B	SEAT	spring - Upper		4
17	3974382B	SPRING	plunger		4
18	3974383B	SEAT	spring - Under		4
19	3974384B	SHIM			4
20	3974385B	TAPPET	W/Ref. 21, 22		4
21		ROLLER	NSS		4
22		PIN	NSS		4
23	6655518	O-RING	Was 6655518 [B]		4

1003 - 08/20/2008 17:33:53 - Printed by Ben Cook Inc. - client ask for 4.1 8/25/2008

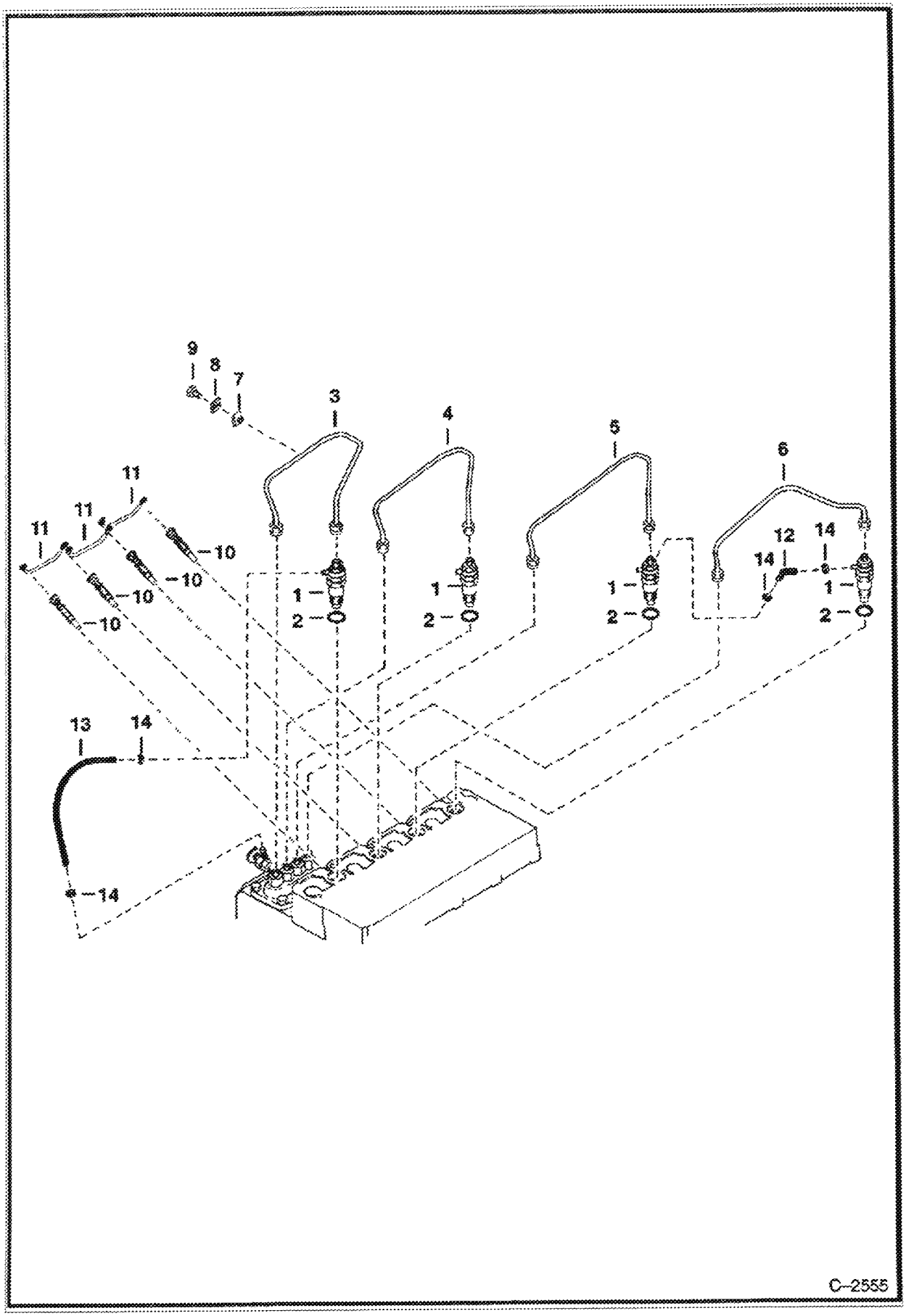
9
8
7
3
4
5
6
11
11
11
10
10
10
10
1
2
1
2
1
2
12
14
14
1
2
13
14
14
C-2555

Ref No	Part Number	Description	Remarks	Serial Number	Qty
1	3974254B	HOLDER	nozzle		4
2	3974255B	GASKET			4
3	3974604B	PIPE	injection (1)		1
4	3974605B	PIPE	injection (2)		1
5	3974606B	PIPE	injection (3)		1
6	3974607B	PIPE	injection (4)		1
7	6652688	CLAMP	pipe (1) - Was 3974258B [A]		3
8	6652689	CLAMP	pipe (2) - Was 3974259B [A]		3
9	3974260B	BOLT	with washer		3
10	3974953B	GLOW PLUG			4
11	3974612B	WIRE	glow plug		3
12	3974590B	PIPE	fuel over flow		3
13	3974598B	PIPE	fuel over flow (2) - Was 6598146 [A]		1
14	6654718	CLAMP	pipe		8

Power Art - 1001 08/28/2009 17:23:43 Printed by Ken Cook Co. epcatalog.exp.24.1.8725/29001

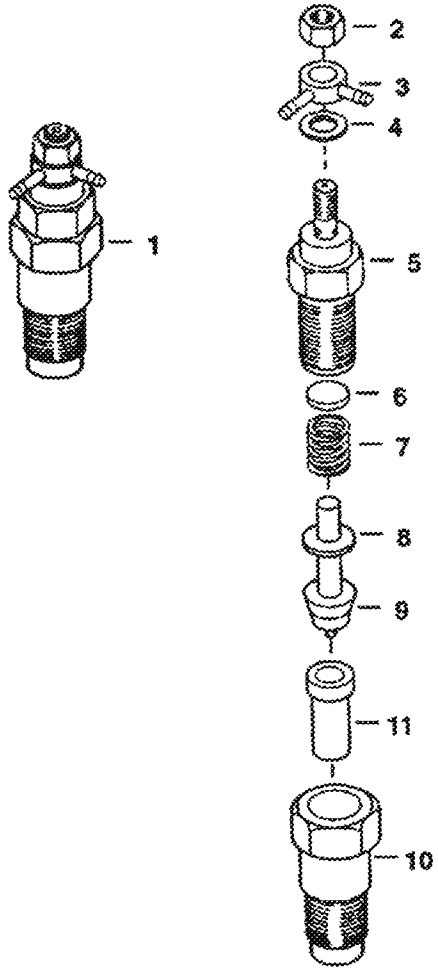

B-3630

Ref No	Part Number	Description	Remarks	Serial Number	Qty
1	3974254B	HOLDER	nozzle - Ref. 2-11		1
2	3974322B	NUT			1
3	3974324B	JOINT	eye 2		1
4	3974325B	WASHER	plain		1
5		BODY	NSS - nozzle holder		1
6	3974327B	WASHER	adj. (Std.)		1
6	6630249	WASHER	adj. (1.00 mm)		1
6	6630250	WASHER	adj. (1.05 mm)		1
6	6630251	WASHER	adj. (1.10 mm)		1
6	6630252	WASHER	adj. (1.15 mm)		1
6	6630253	WASHER	adj. (1.20 mm)		1
6	6630254	WASHER	adj. (1.25 mm)		1
6	6630255	WASHER	adj. (1.30 mm)		1
7	3974328B	SPRING	nozzle		1
8	3974329B	PIECE	distance		1
9	3974330B	PUSH ROD			1
10	3974331B	NUT	nozzle		1
11	3974332B	PIECE	nozzle		1

Book 179 Opt 1 06/28/2008 17:23:43 Printed By Ken Cook Co. eSpareCat_case 1.2.24 3 8/25/2008

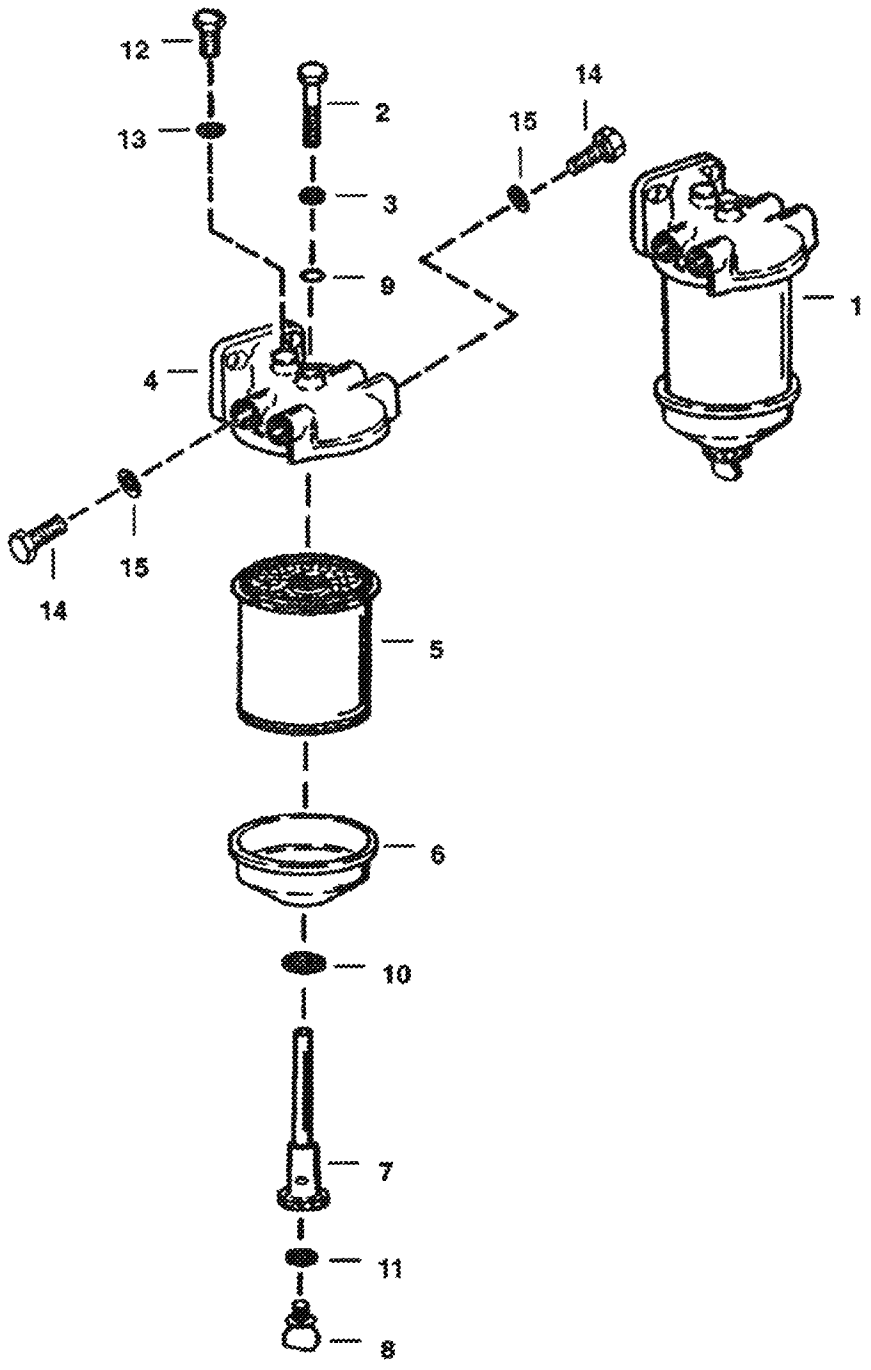
12
13
2
3
9
4
14
15
15
14
1
5
6
10
7
11
8
B-5653

Ref No	Part Number	Description	Remarks	Serial Number	Qty
1	6560348	FILTER ASSY	Ref. 2-11		1
2	6598227	BOLT			1
3	6598226	WASHER			1
4	6630219	HEAD			1
5	3885315B	ELEMENT			1
6	6514714	BOWL	Glass		1
6	6598093	BOWL	Metal - Less Plug & Gasket		1
7	6598228	NUT			1
8	907212B	PLUG	wing		1
9	25K020008B	O-RING	sealing - Was 6630220 [A]		1
10	6630221	RING	sealing		1
11	3494503B	WASHER			1
12	6515676	PLUG	not included W/ filter assy.		1
13	6515468	WASHER	not included W/ filter assy.		1
14	6515682	PLUG	not included W/ filter assy.		2
15	6515466	WASHER	not included W/ filter assy.		2

Page 210 - 08/28/2008 17:23:43 - Printed by Xmetal Corp. - eSpirit Rev 12.24 - 8/25/2008

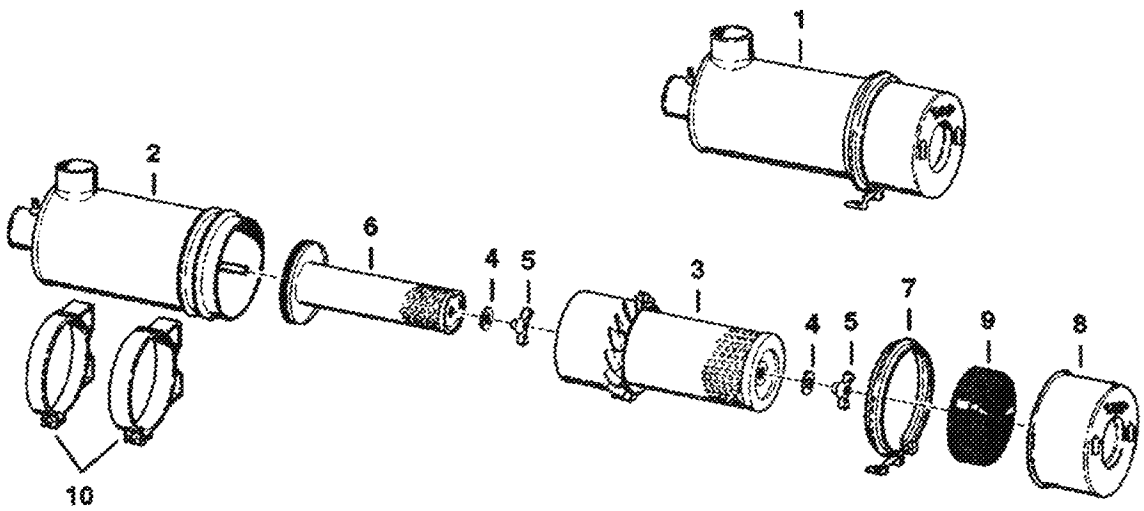

B-20264

Ref No	Part Number	Description	Remarks	Serial Number	Qty
1	6563400	AIR CLEANER	Ref. 2-9		1
2		TANK	NAP		1
3	6598492	ELEMENT	Was 886525B [A]		1
4	888527	SHIM	Was 886527B [A]		2
5	3291290B	WING NUT			2
6	6598362	ELEMENT			1
7	866028B	CLAMP			1
8	6598493	CAP			1
9	891024B	BAFFLE			1
10	6516191	BAND	Was 6598785 [A]		2

page 3/3 11:03 08/29/2008 17:23:33 Printed by wsm Deere Co. edgprint.exe [V2 20.3 8/25/2008]

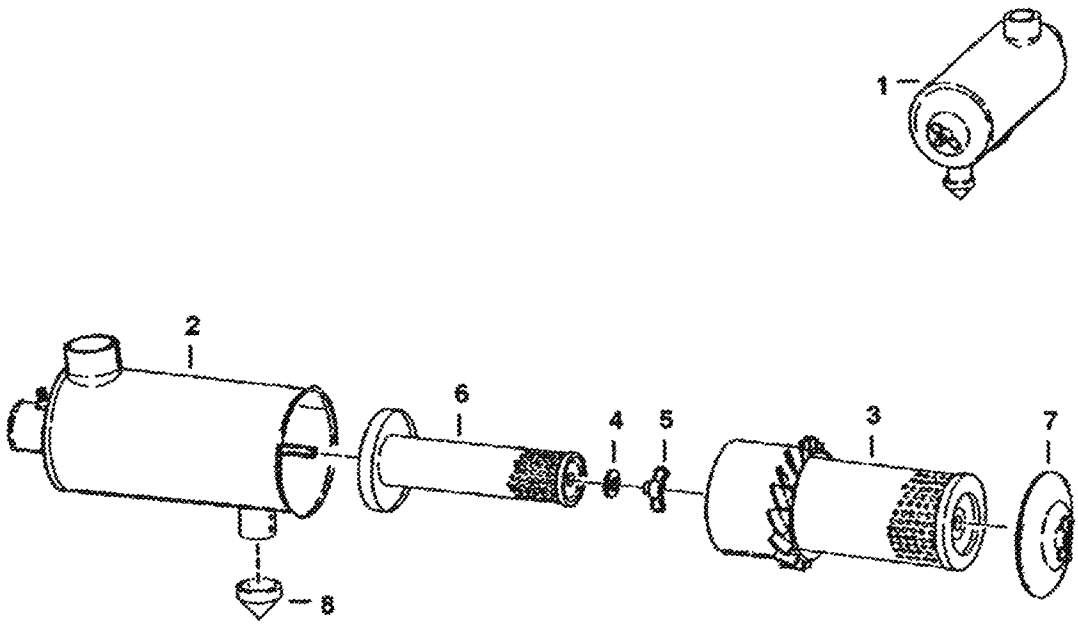

B–13511

Ref No	Part Number	Description	Remarks	Serial Number	Qty
1	6656019	AIR CLEANER	Ref. 2-7		1
2		TANK	NAP		1
3	6598492	ELEMENT			1
4	888527	SHIM	Was 886527B [A]		2
5	3291290B	WING NUT			2
6	6598362	ELEMENT			1
7	6630941	COVER	W/Wing Nut		1
8	6655937	VALVE	evacuator - 2" (50.8 mm) I.D.		1

ENGINE & GASKET KITS
(Kubota - V1903 2EB - Tier II Replacement)

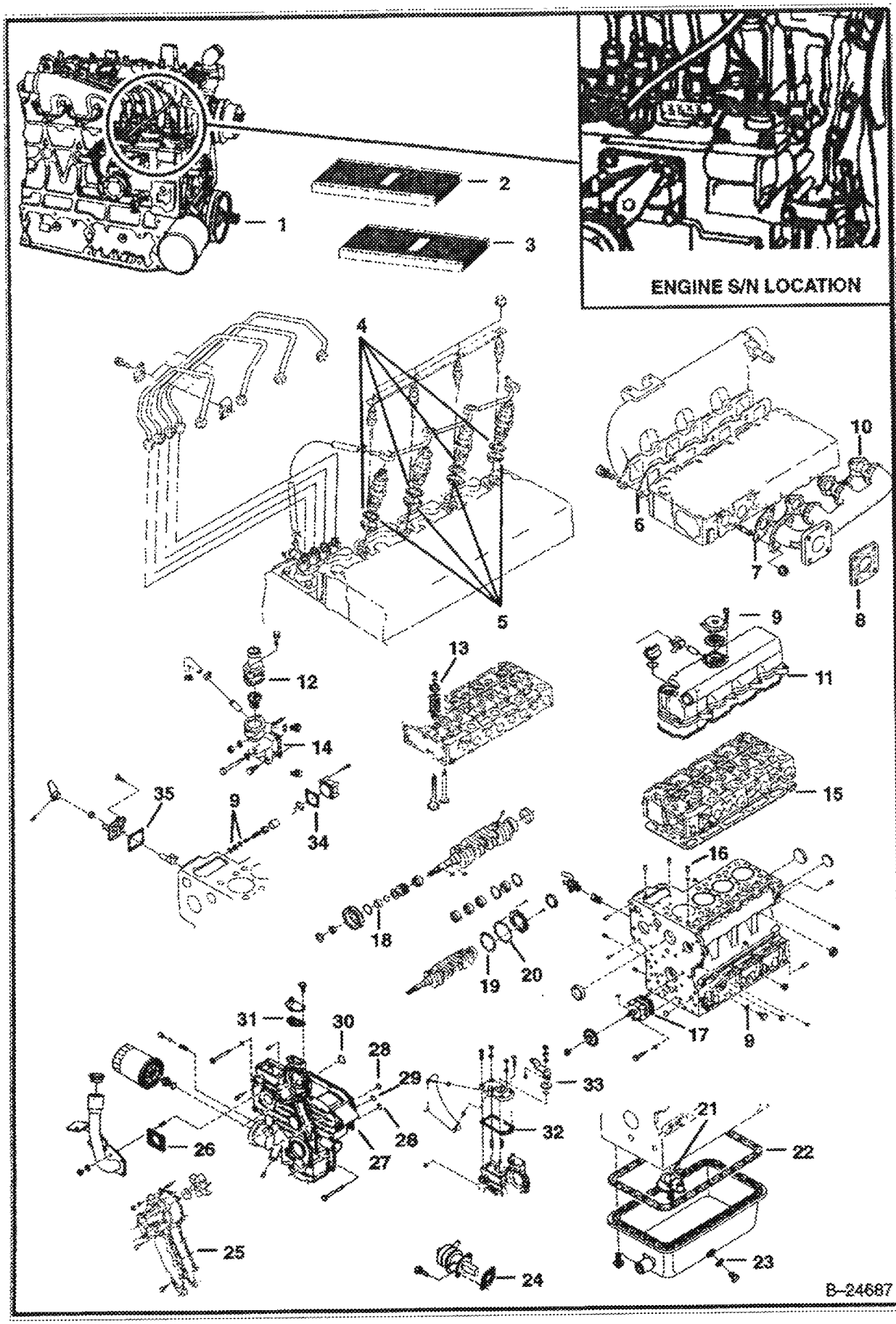

ENGINE & GASKET KITS (Cont'd)
(Kubota - V1903 2EB - Tier II Replacement)

Ref No	Part Number	Description	Remarks	Serial Number	Qty
1	6685980	ENGINE-V1903 T	Does not include starter, alternator, flywheel, & flywheel housing		1
1		SHORT BLOCK	NAP		1
2	6674698	GASKET KIT	Upper - Ref. 6-16		1
3	6657402	GASKET KIT	Lower - Does not include rear oil seal - Ref. 17-35		1
4	6655218	GASKET	See Illustration INJECTOR NOZZLES/ B24693		4
5	6655872	HEAT SEAL	See Illustration INJECTOR NOZZLES/ B24693		4
6	6686991	GASKET	See Illustration MANIFOLDS/ B24692		1
7	6684879	GASKET	See Illustration MANIFOLDS/ B24692		4
8	6575580	GASKET	See Illustration MANIFOLDS/ B24692 muffler		1
9	3974095B	GASKET	See Illustration CRANKCASE/ B24688 See Illustration ROCKER ARM COVER/ B22674 See Illustration ENGINE STOP LEVER/ B13139A		7
10	6666781	GASKET	See Illustration MANIFOLDS/ B24692		1
11	6684780	GASKET	See Illustration ROCKER ARM COVER/ B22674		1
12	6684863	GASKET	See Illustration WATER FLANGE & THERMOSTAT/ B24691 thermostat cover		1
13	6653830	SEAL	See Illustration VALVE ROCKER ARM/ B22692 valve stem		8
14	6666802	GASKET	See Illustration WATER FLANGE & THERMOSTAT/ B24691 water flange - Was 6684860 [A]		1
15	6672144	GASKET	See Illustration CYLINDER HEAD/ B22678 cylinder head		1
16	3974038B	O-RING	See Illustration CRANKCASE/ B24688		1
17	6684786	GASKET	See Illustration CRANKCASE/ B24688		1
18	3974577B	O-RING	See Illustration PISTON & CRANKSHAFT/ B24689		1
19	6684788	GASKET	See Illustration PISTON & CRANKSHAFT/ B24689		1
20	6666814	GASKET	See Illustration PISTON & CRANKSHAFT/ B24689		1
21	3966516B	O-RING	See Illustration OIL PAN/ B13148A		1
22	6684753	GASKET	See Illustration OIL PAN/ B13148A oil pan		1
23	6680484	GASKET	See Illustration OIL PAN/ B13148A		1
24	6686037	GASKET	See Illustration FUEL & INJECTION PUMPS/ B13157A fuel pump		1
25	6666804	GASKET	See Illustration WATER PUMP/ B24690		1
26	6714543	GASKET	See Illustration GEARCASE/ B13160A		1
27	6666800	GASKET	See Illustration GEARCASE/ B13160A gearcase		1
28	6685466	O-RING	See Illustration GEARCASE/ B13160A		2
29	6686981	O-RING	See Illustration GEARCASE/ B13160A		1
30	6685468	O-RING	See Illustration GEARCASE/ B13160A		1
31	6684774	GASKET	See Illustration GEARCASE/ B13160A water return flange		1
32	6666792	GASKET	See Illustration SPEED CONTROL PLATE/ B13137A		1
33	3966512B	O-RING	See Illustration SPEED CONTROL PLATE/ B13137A Was 6686986 [A]		1
34	6684813	GASKET	See Illustration FUEL CAMSHAFT/ B13144A		1
35	6666783	GASKET	See Illustration ENGINE STOP LEVER/ B13139A pump cover		1

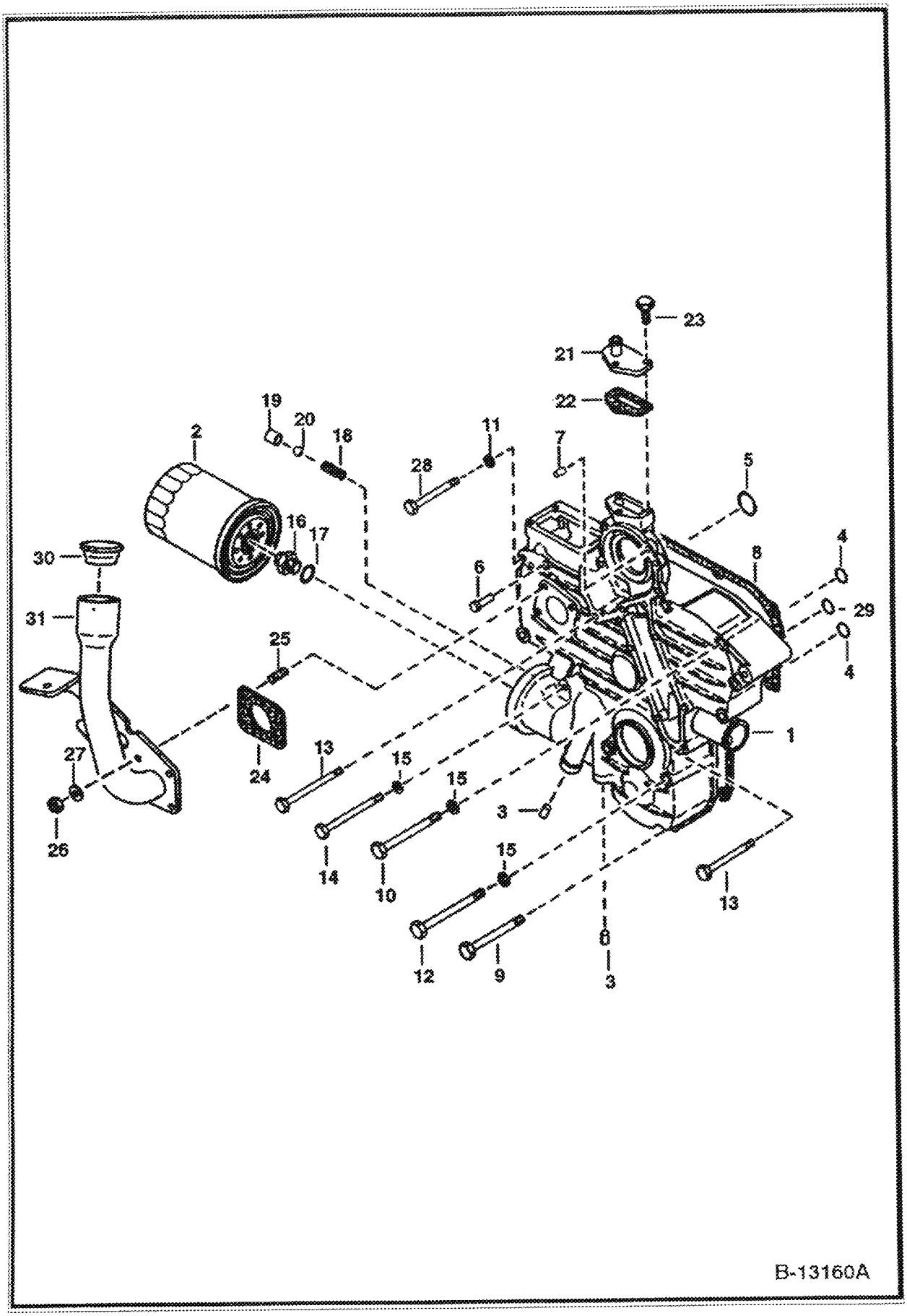
23
21
22
19
20
18
11
2
28
7
1
5
16
17
4
30
6
8
31
29
25
4
1
27
24
13
15
15
3
26
14
10
15
13
12
9
6
3
B-13160A

GEARCASE (Cont'd)
(Kubota - V1903 2EB - Tier II Replacement)

Ref No	Part Number	Description	Remarks	Serial Number	Qty
1		CASE ASSY.	NAP - Was 6674164 [A]		1
2	6675517	FILTER			1
3	6667425	PLUG	pin		2
4	6685466	O-RING			2
5	6685468	O-RING			1
6	6652592	PIN	start spring		1
7	3974395B	PIN	straight		2
8	6666800	GASKET	gearcase		1
9	3974888B	BOLT			2
10	1CM870	BOLT			5
11	2EM00008B	WASHER			1
12	1CM00880B	SCREW			2
13	6653808	BOLT			3
14	1CM00895B	BOLT			2
15	6667422	WASHER			9
16	6653809	ADAPTER			1
17	6685501	WASHER			1
18	6652652	SPRING			1
19	3974893B	SEAT	valve		1
20	10J000013B	BALL			1
21	3974894B	FLANGE	water return		1
22	6684774	GASKET	water return flange		1
23	4CM00620B	BOLT			3
24	6714543	GASKET			1
25	6652764	STUD			4
26	1DM00006B	NUT			4
27	6EM00060B	WASHER	spring		4
28	6653807	BOLT			1
29	6686981	O-RING			1
30	6703736	CAP			1
31	6719048	MOUNT			1

CRANKCASE
(Kubota - V1903 2EB - Tier II Replacement)

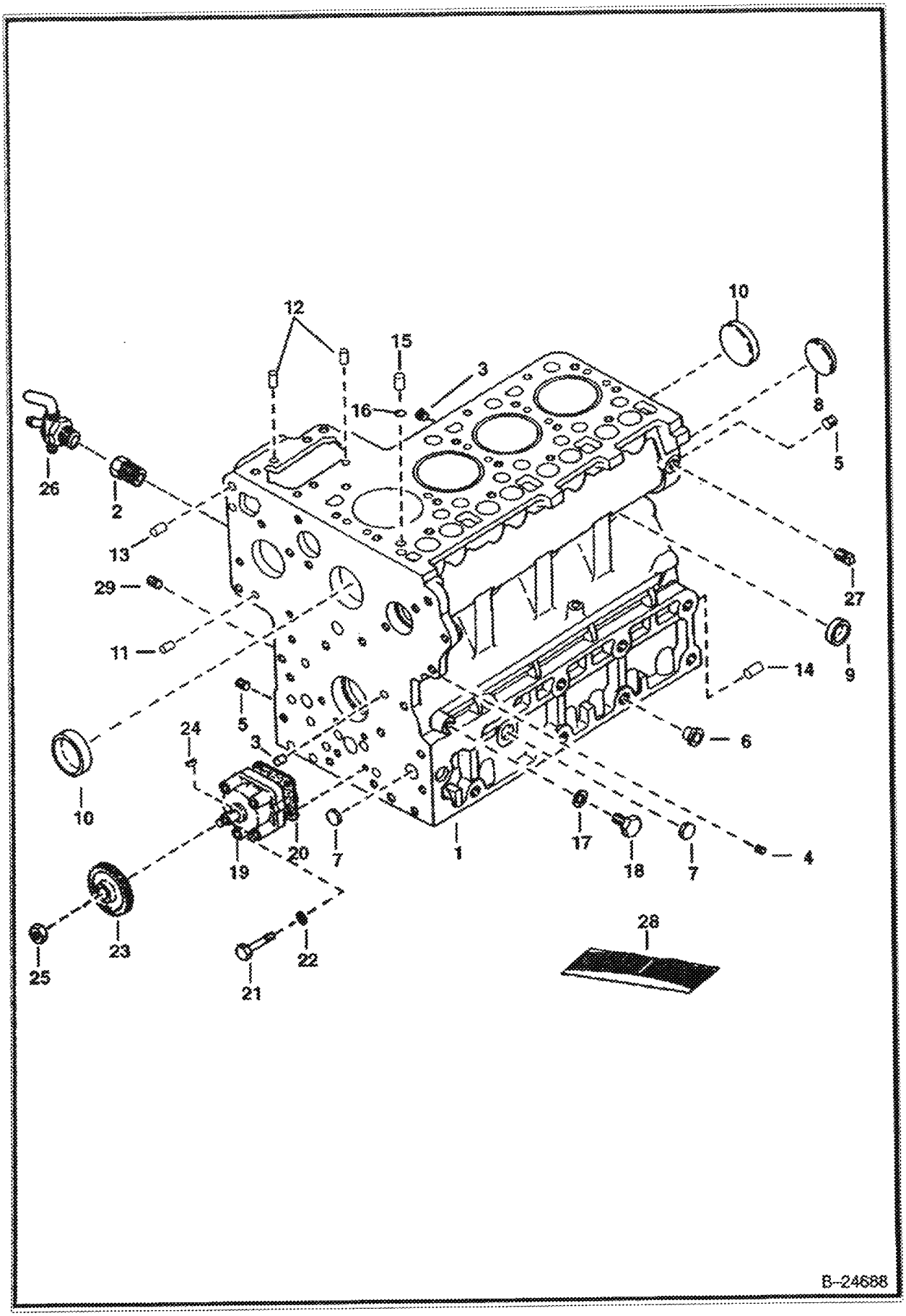

CRANKCASE (Cont'd)
(Kubota - V1903 2EB - Tier II Replacement)

Ref No	Part Number	Description	Remarks	Serial Number	Qty
1	6672146	CRANKCASE	assy. - W/Ref. 2 - 15		1
2	3974871B	ADAPTER			1
3	6652574	PLUG			5
4	6685477	PLUG			1
5	6652575	PLUG			2
6	6598187	PLUG			2
7	6667418	PLUG	expansion		3
8	6657663	PLUG	expansion		1
9	3974389B	GASKET	sealing		6
10	3974390B	CAP	sealing - Was 6680639 [A]		2
11	3974393B	PIN	straight		2
12	3974394B	PIN	straight		2
13	3974395B	PIN	straight		2
14	3974868B	PIN	straight		1
15	3974037B	PIN	pipe		1
16	3974038B	O-RING			1
17	3974095B	GASKET			1
18	6683104	PLUG			1
19	3975426B	OIL PUMP			1
20	6684786	GASKET			1
21	6655195	BOLT			4
22	6667419	WASHER			4
23	3975441B	GEAR			1
24	6969805	KEY,FEATHER	Was 15JM00410B [A]		1
25	3DM00012B	NUT			1
26	6630177	DRAINCOCK			1
27	16F000002B	PLUG			1
28	6657402	GASKET KIT	See Illustration ENGINE & GASKET KITS/ B24687 Lower - Does not include rear oil seal		1
29	3974399B	PLUG			1

ROCKER ARM COVER
(Kubota - V1903 2EB - Tier II Replacement)

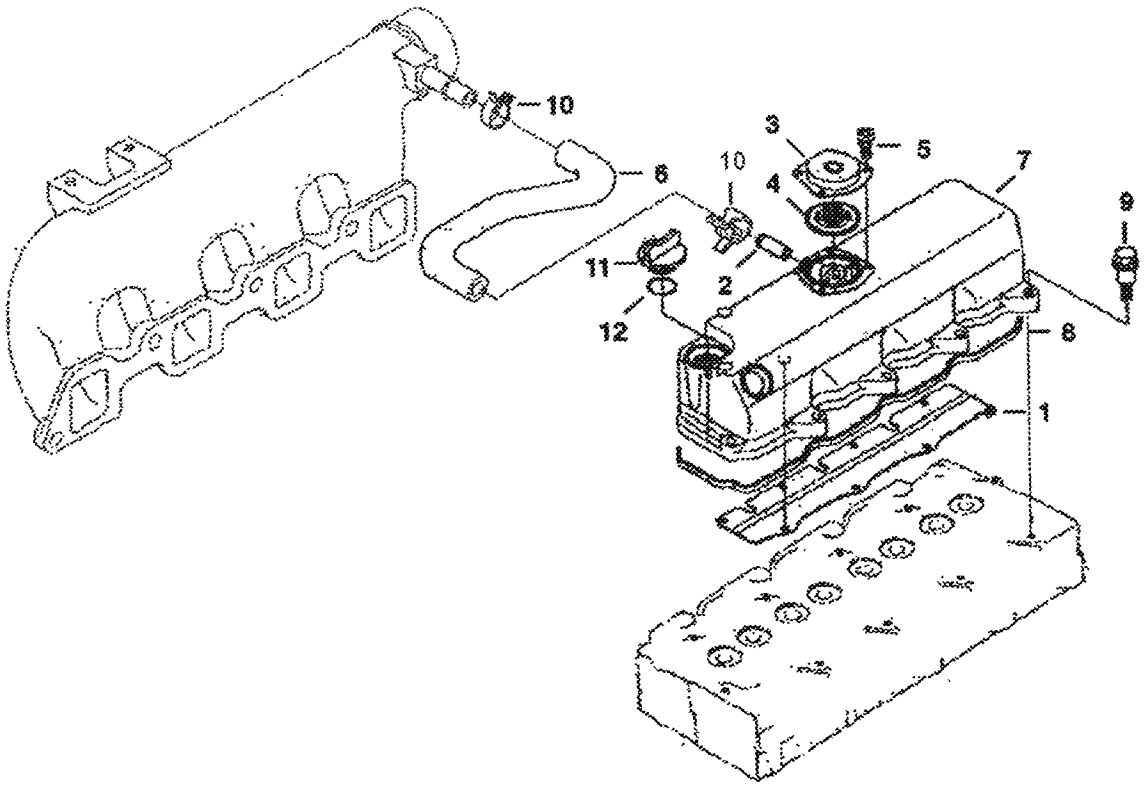

B-22674

ROCKER ARM COVER (Cont'd)
(Kubota - V1903 2EB - Tier II Replacement)

Ref No	Part Number	Description	Remarks	Serial Number	Qty
1	6684779	SHIELD	breather		1
2	6655680	PIPE			1
3	6969803	COVER, BREATHER	Was 6685086 [A]		1
4	6685087	VALVE			1
5	3975436B	SCREW	W/Washer - Was 3974928B [A]		4
6	6686983	PIPE	breather		1
7	6685085	COVER	valve		1
8	6684780	GASKET			1
9	6684781	BOLT			10
10	6684776	CLAMP	pipe		2
11	6680908	CAP	oil filler		1
12	6684782	O-RING			1

VALVE ROCKER ARM
(Kubota - V1903 2EB - Tier II Replacement)

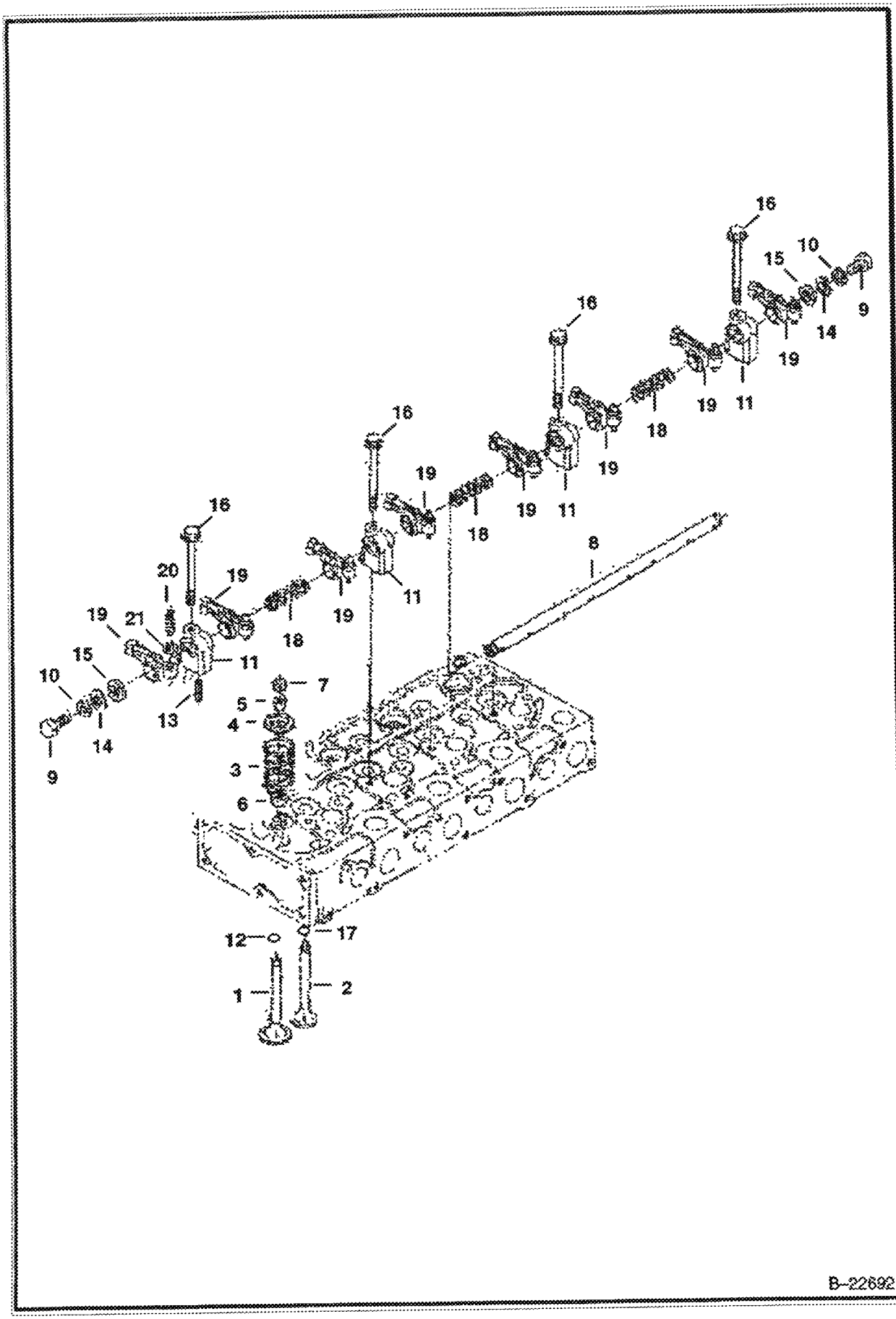

VALVE ROCKER ARM (Cont'd)
(Kubota - V1903 2EB - Tier II Replacement)

Ref No	Part Number	Description	Remarks	Serial Number	Qty
1	6655173	VALVE	inlet		4
2	6655174	VALVE	exhaust		4
3	3974514B	SPRING	valve		8
4	3974515B	RETAINER	valve spring		8
5	6684874	COLLAR	valve spring - complete set		1
6	6653830	SEAL	valve stem		8
7	3974518B	CAP	valve		8
8	6684875	SHAFT	rocker arm		1
9	5CM00812B	BOLT			2
10	6667422	WASHER	external		2
11	3974521B	BRACKET	rocker arm		4
12	6655155	SEAT	valve inlet		4
13	6667461	PIN	spring		4
14	6667451	WASHER	spring		4
15	3974524B	WASHER			2
16	6680685	BOLT			1
17	6655156	SEAT	valve exhaust		4
18	6653833	SPRING	rocker arm		3
19	6655870	ROCKER ARM	rocker - W/Ref. 11 & 18		8
20	3974920B	SCREW	adjusting		8
21	2DM00008B	NUT			8

CYLINDER HEAD
(Kubota - V1903 2EB - Tier II Replacement)

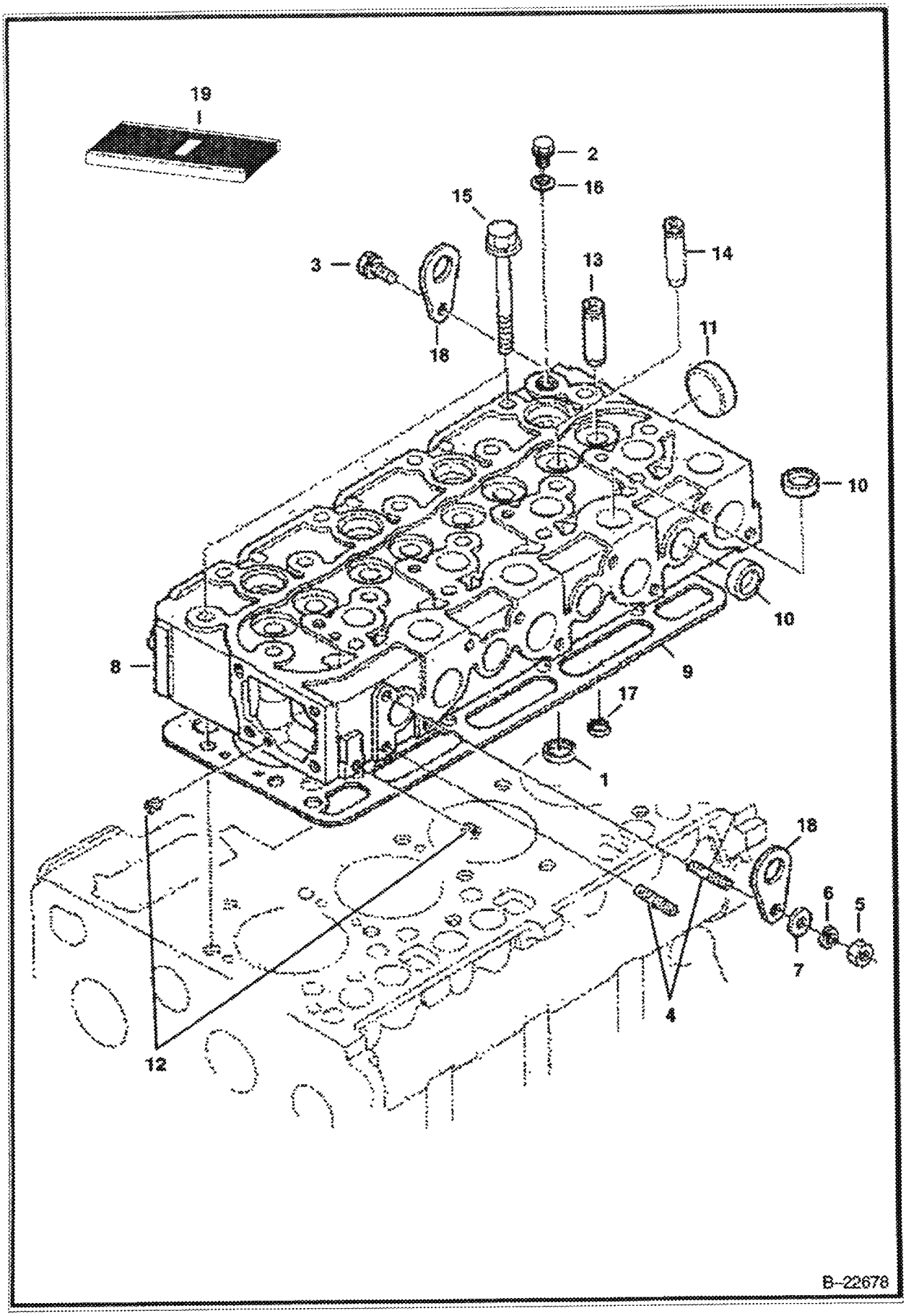

CYLINDER HEAD (Cont'd)
(Kubota - V1903 2EB - Tier II Replacement)

Ref No	Part Number	Description	Remarks	Serial Number	Qty
1	6655155	SEAT	inlet valve		1
2	6655160	PLUG			1
3	6667421	BOLT			1
4	6652670	STUD			2
5	6652792	NUT			2
6	6EM00080B	WASHER	spring		2
7	2EM00008B	WASHER	plain		2
8	6686980	HEAD	cylinder - W/Ref. 10 - 14		1
9	6672144	GASKET	cylinder head		1
10	3974432B	CAP	sealing		12
11	3974433B	CAP	sealing		1
12	6598116	PLUG			2
13	6655154	GUIDE	intake valve		4
14	6653803	GUIDE	exhaust valve		4
15	6655158	BOLT			18
16	6655161	WASHER			1
17	6655156	SEAT	exhaust valve		4
18	3974882B	BRACKET			2
19	6657401	GASKET KIT	See Illustration ENGINE & GASKET KITS/ B24687 upper		1

OIL PAN
(Kubota - V1903 2EB - Tier II Replacement)

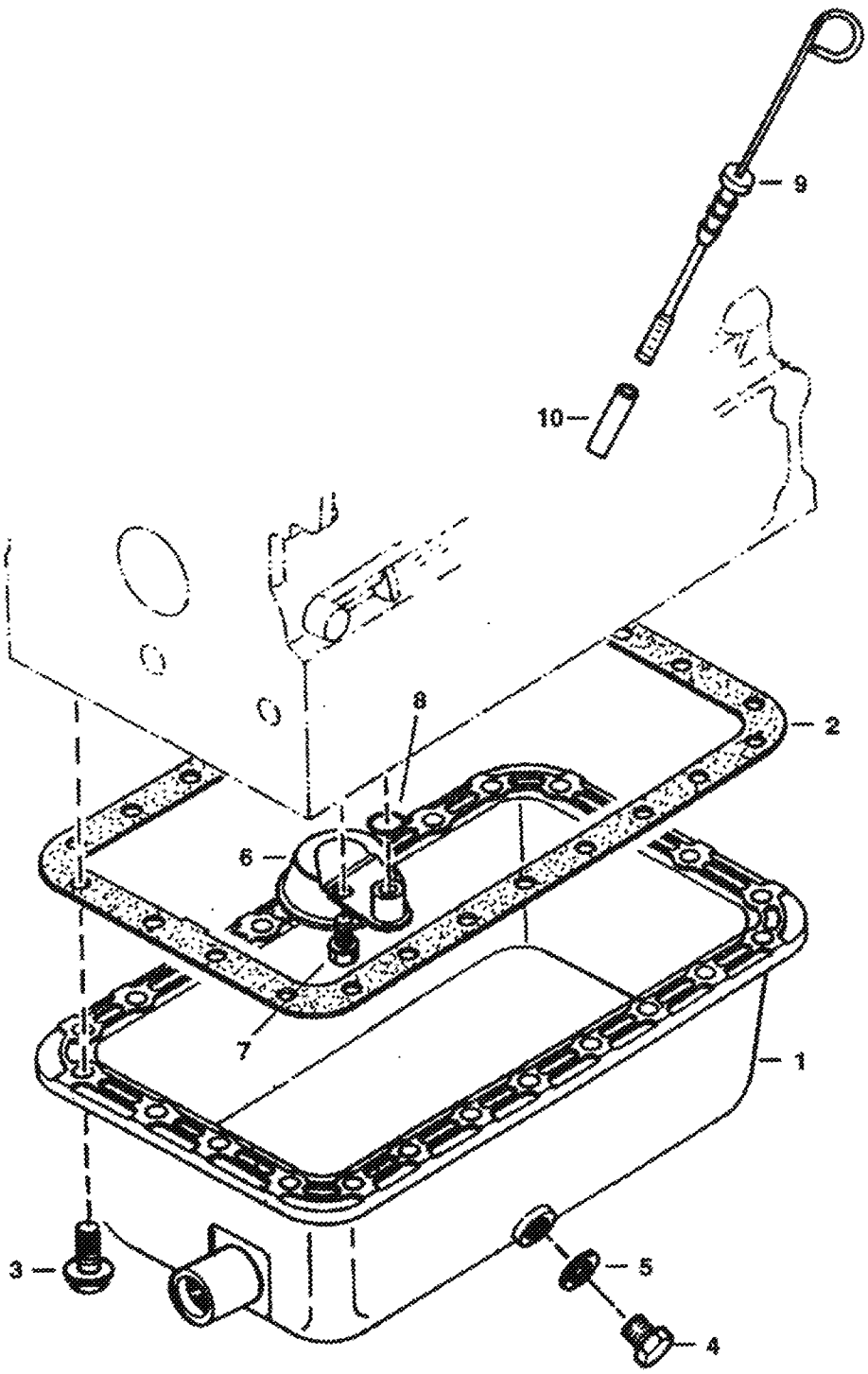

OIL PAN (Cont'd)
(Kubota - V1903 2EB - Tier II Replacement)

Ref No	Part Number	Description	Remarks	Serial Number	Qty
1	6655151	OIL PAN			1
2	6684753	GASKET	oil pan		1
3	6653798	BOLT			24
4	6686979	PLUG	drain		1
5	6680484	GASKET			1
6	6655194	OIL FILTER			1
7	4CM00816B	BOLT			1
8	3966516B	O-RING			1
9	6684784	GAUGE	oil		1
10	6677203	GUIDE	dipstick		1

PISTON & CRANKSHAFT
(Kubota - V1903 2EB - Tier II Replacement)

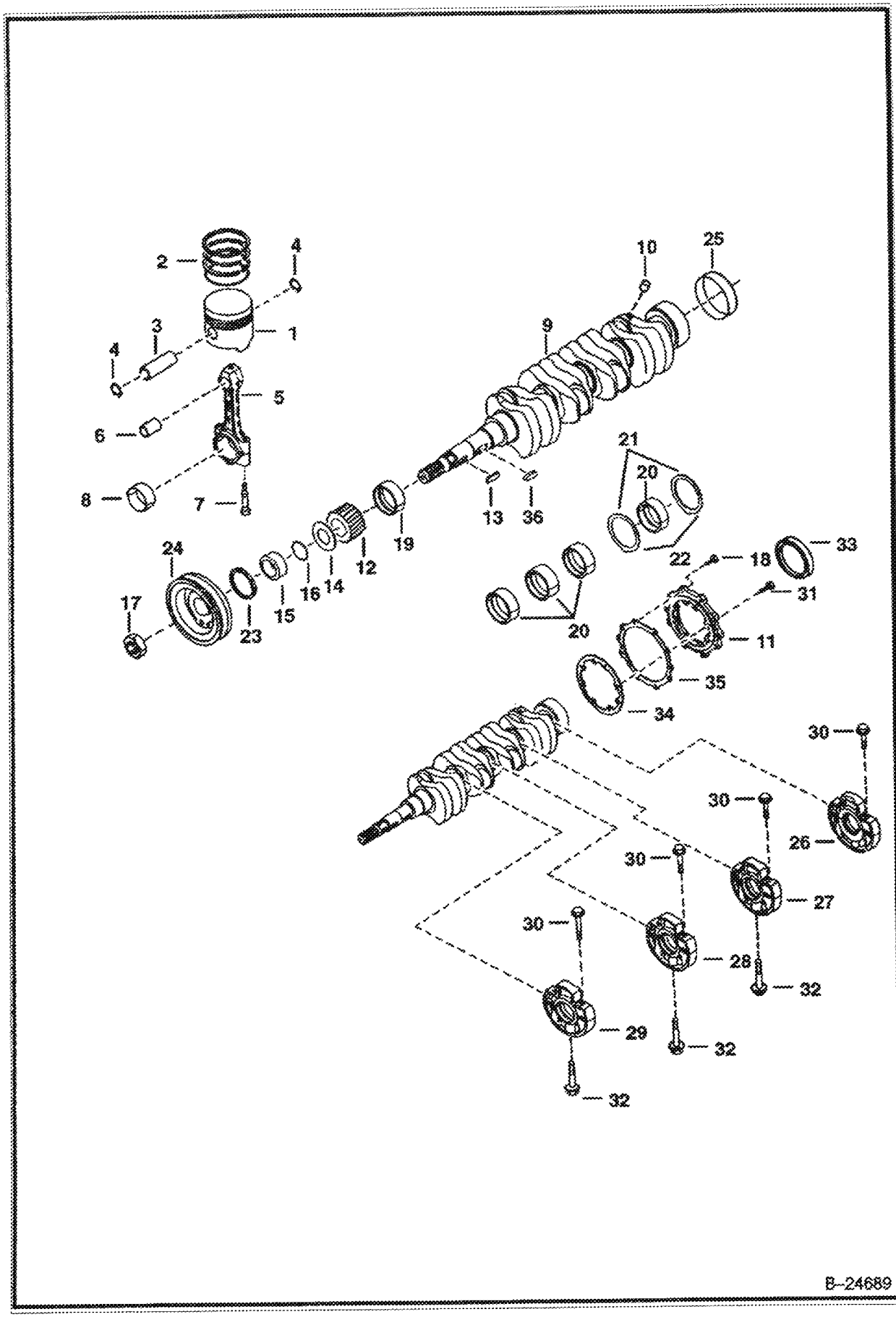

Ref No	Part Number	Description	Remarks	Serial Number	Qty
1	6672142	PISTON	Std.		4
1	6674255	PISTON	(0.5mm - .0197)		4
2	6672141	RINGS	piston - Std.		4
2	6674256	RINGS	piston - (0.5mm - .0197)		4
3	6655179	PIN			4
4	6655180	CIR-CLIP			8
5	6655181	ROD	connecting - W/Ref. 6, 7 & 8		4
6	6655243	BUSHING			4
7	6655498	BOLT			8
8	6655183	PIN	rod - Std.		4
8	6655236	PIN	rod (0,2 mm-.0079)		4
8	6655237	PIN	rod (0,4 mm-.0157)		4
9	6655184	CRANKSHAFT	Ref. 10 & 25 - Ref. 10 must be installed before using		1
10	6652633	BALL	Must be installed before using Ref. 9 crankshaft - See S/L dated 3 Jan 85		4
11	6685515	COVER			1
12	6598142	GEAR			1
13	3974546B	KEY			1
14	6653861	SLINGER	oil		1
15	3975337B	COLLAR			1
16	3974577B	O-RING			1
17	3974671B	NUT			1
18	4CM00825B	BOLT			8
19	6655185	BEARING	main - Std.		1
19	6655238	BEARING	main (0,2 mm-.0079)		1
19	6655239	BEARING	main (0,4 mm-.0157)		1
20	6655186	BEARING	main - Std.		4
20	6655240	BEARING	main (0,2 mm-.0079)		4
20	6655241	BEARING	main (0,4 mm-.0157)		4
21	3974945B	WASHER	thrust - Std.		2
21	3975021B	WASHER	thrust (0,2 mm-.0079)		2
21	3975022B	WASHER	thrust (0,4 mm-.0157)		2
22	6653865	WASHER	thrust - Std.		2
22	6654002	WASHER	thrust (0,2 mm-.0079)		2
22	6654003	WASHER	thrust (0,4 mm-.0157)		2
23	6631664	SEAL	oil		1
24	6674168	PULLEY			1
25	6653859	SLEEVE			1
26	6655163	CASE	main bearing - W/Ref. 30		1
27	6655170	CASE	main bearing - W/Ref. 30		1
28	6655169	CASE	main bearing - W/Ref. 30		1
29	6655168	CASE	main bearing - W/Ref. 30		1
30	6655164	BOLT			8
31	4CM00828B	BOLT			8
32	6653821	BOLT			3
33	6649300	SEAL	oil		1
34	6684788	GASKET	Was 6655165 [A]		1
35	6666814	GASKET			1

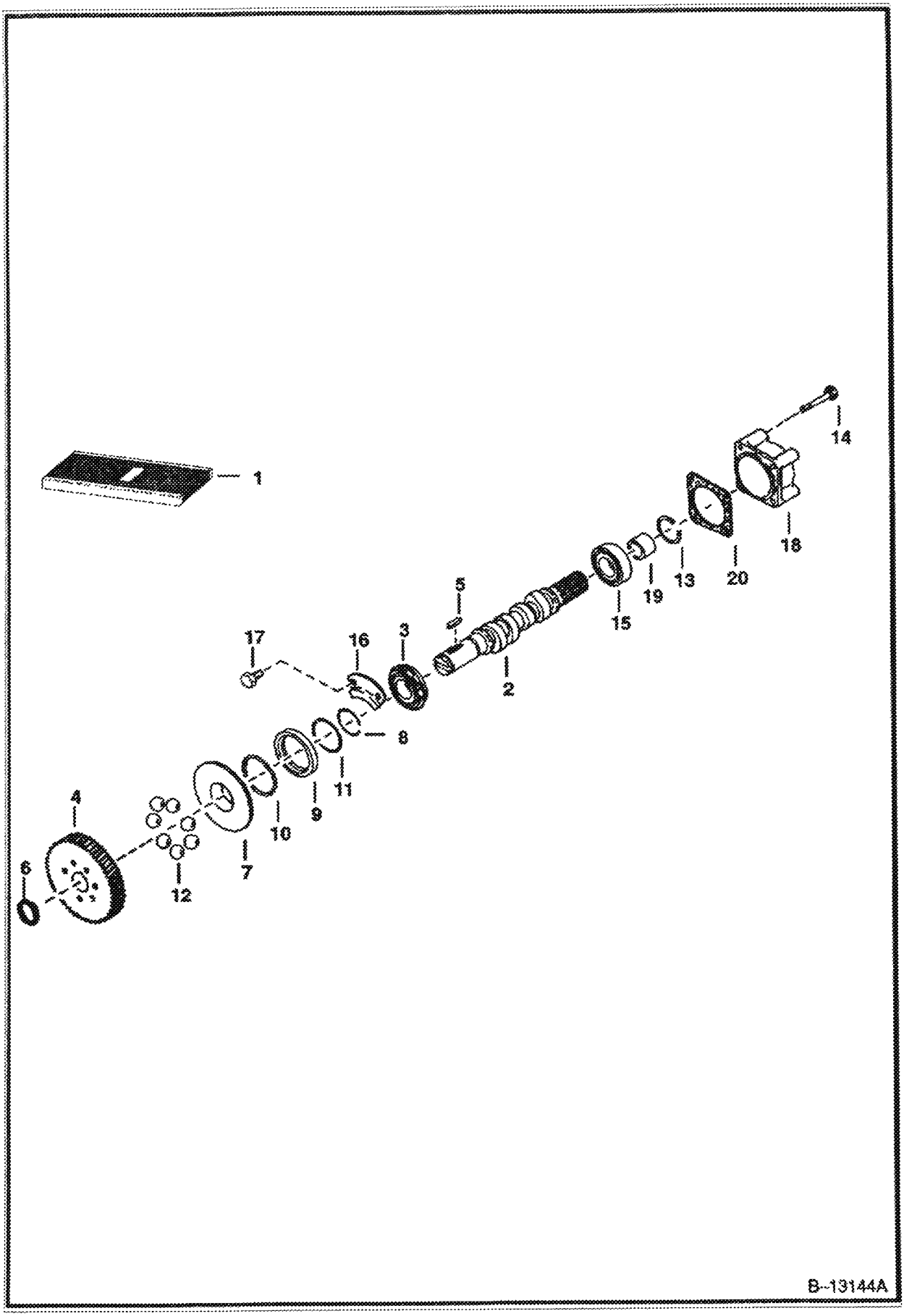
1
14
18
20
13
19
15
5
3
17
16
2
8
11
9
10
4
7
6
12
B-13144A

FUEL CAMSHAFT (Cont'd)
(Kubota - V1903 2EB - Tier II Replacement)

Ref No	Part Number	Description	Remarks	Serial Number	Qty
1	6655211	CAMSHAFT	assy. - Ref. 2-14		1
2	6655875	CAMSHAFT	fuel		1
3	851242B	BEARING			1
4	6655212	GEAR	injection pump		1
5	6598099	KEY			1
6	5JM00024B	CIRCLIP	external		1
7	6655213	SLEEVE	governor		1
8	3974618B	CIRCLIP	sleeve		1
9	6655214	CASE	governor ball		1
10	10J000005B	BALL			39
11	3974620B	CIRCLIP	ball case		1
12	6655215	BALL			7
13	6598158	CIRCLIP	governor ball		1
14	6651934	BOLT			7
15	6684812	BALL BEARING			1
16	3974624B	STOPPER			1
17	6667420	BOLT			2
18	3974996B	COVER	fuel camshaft		1
19	6598179	COLLAR			1
20	6684813	GASKET			1

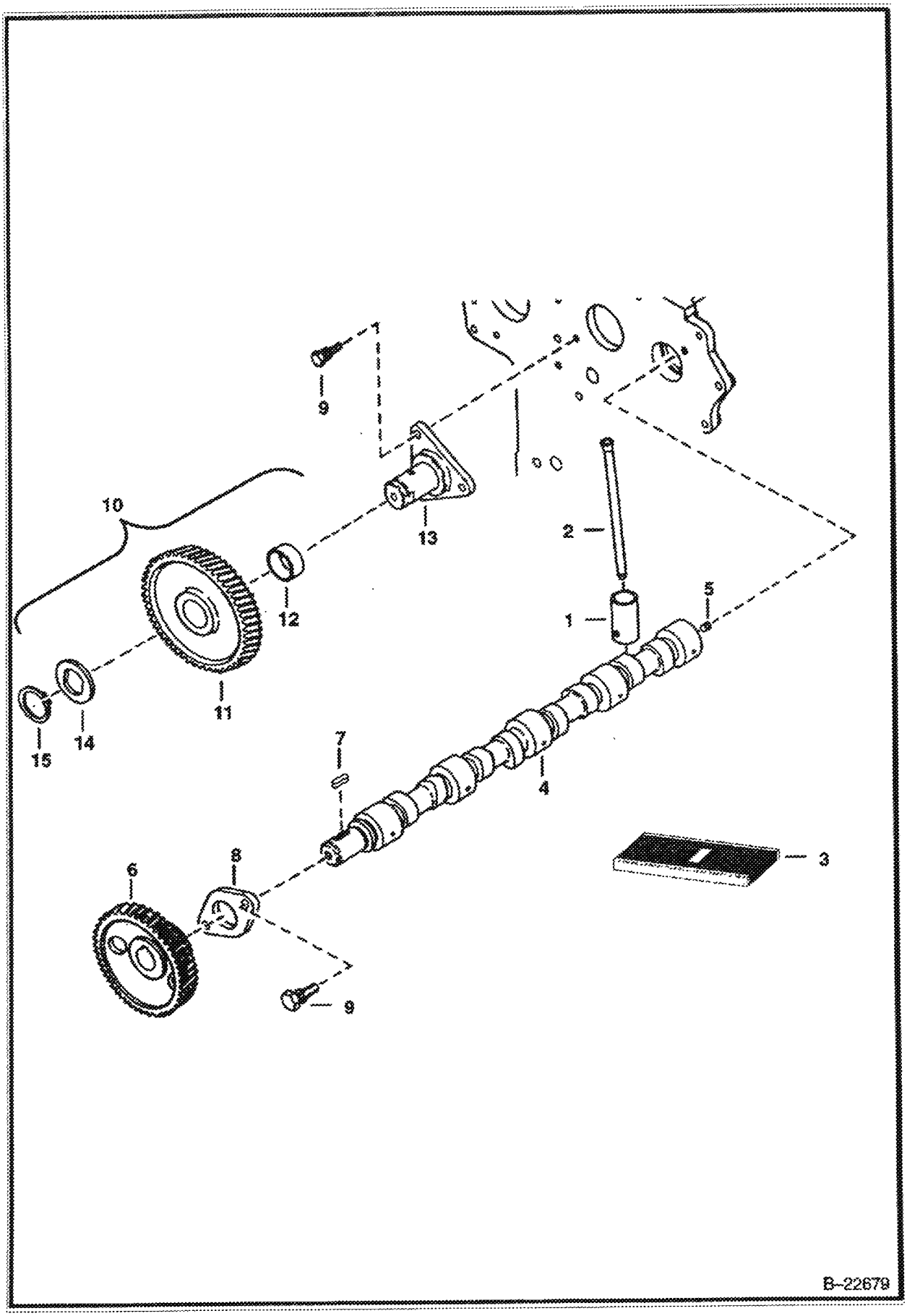
1
9
10
13
2
12
1
5
11
15
14
7
4
3
6
8
9
B-22679

Ref No	Part Number	Description	Remarks	Serial Number	Qty
1	6667428	TAPPET			8
2	6655176	PUSHROD			8
3	6655427	CAMSHAFT	assy. - Ref. 4-8		1
4		CAMSHAFT	NAP - Was 6655384 NAP - Was 6655384 NAP - Was 6655384 [A]		1
5	6652633	BALL	seat		1
6	6653840	GEAR	camshaft		1
7	3974546B	KEY			1
8	3974547B	STOPPER	camshaft		1
9	4CM00818B	BOLT			5
10	6684793	GEAR	Idle - W/Ref. 11 & 12		1
11		GEAR	NSS - idle - Order Ref. 10		2
12	6655242	BUSHING	idle gear		1
13	6684796	SHAFT	idle gear		1
14	6684795	COLLAR			1
15	6667433	CIRCLIP	external		1

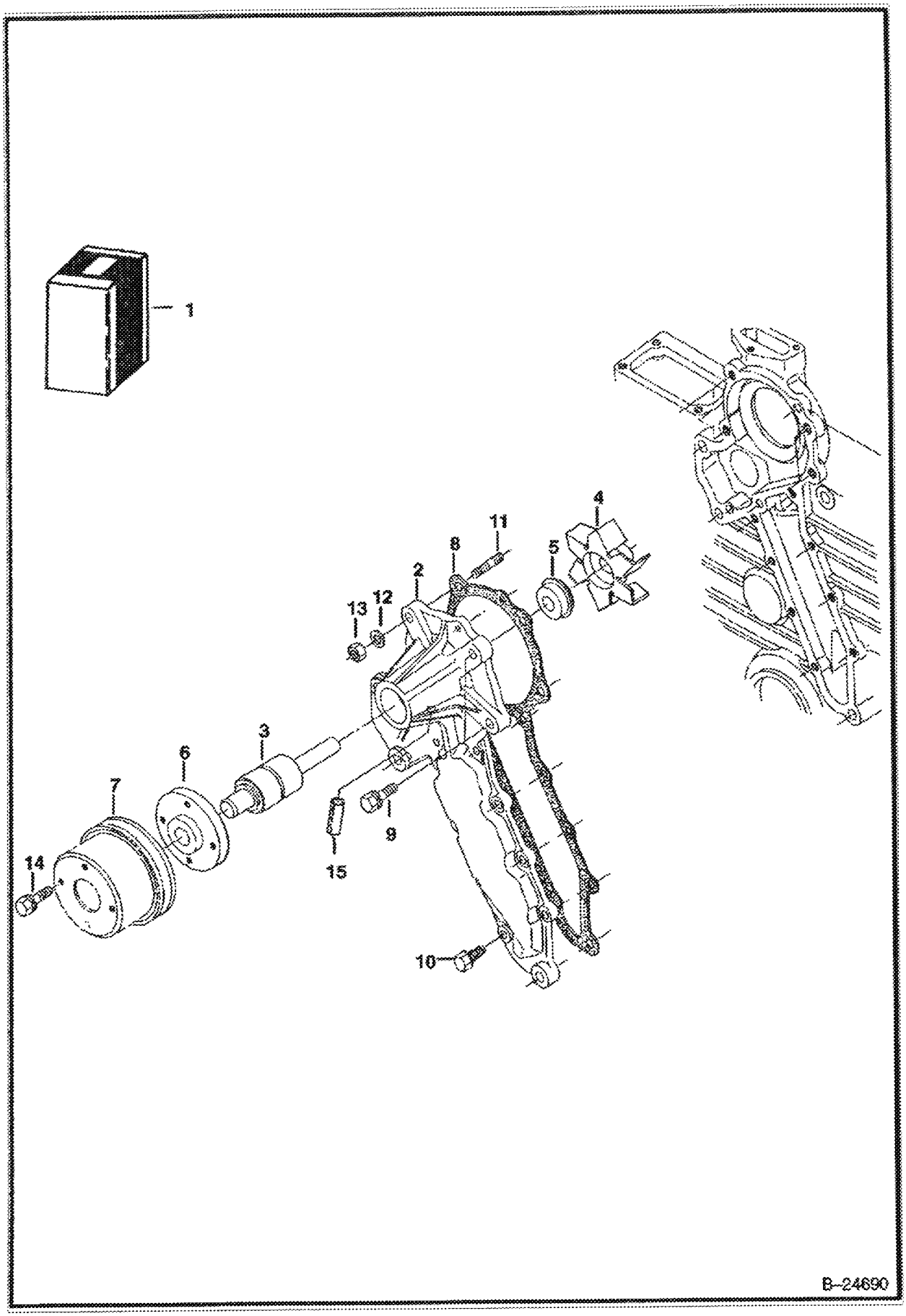
1
2
3
4
5
6
7
8
9
10
11
12
13
14
15
B-24690

WATER PUMP (Cont'd)
(Kubota - V1903 2EB - Tier II Replacement)

Ref No	Part Number	Description	Remarks	Serial Number	Qty
1	6686989	WATER PUMP	Ref. 2-6		1
2		BODY	NAP		1
3	6685474	BEARING			1
4	6667460	FAN	Was 6684867 [A]		1
5	6684868	SEAL			1
6	6684869	FLANGE			1
7	6674169	PULLEY	fan		1
8	6666804	GASKET			1
9	4CM00828B	BOLT			2
10	6652580	BOLT			6
11	3974267B	STUD			2
12	6667422	WASHER	spring		2
13	6652792	NUT			2
14	29CM00612B	SCREW			4
15	6683174	ROLL PIN			1

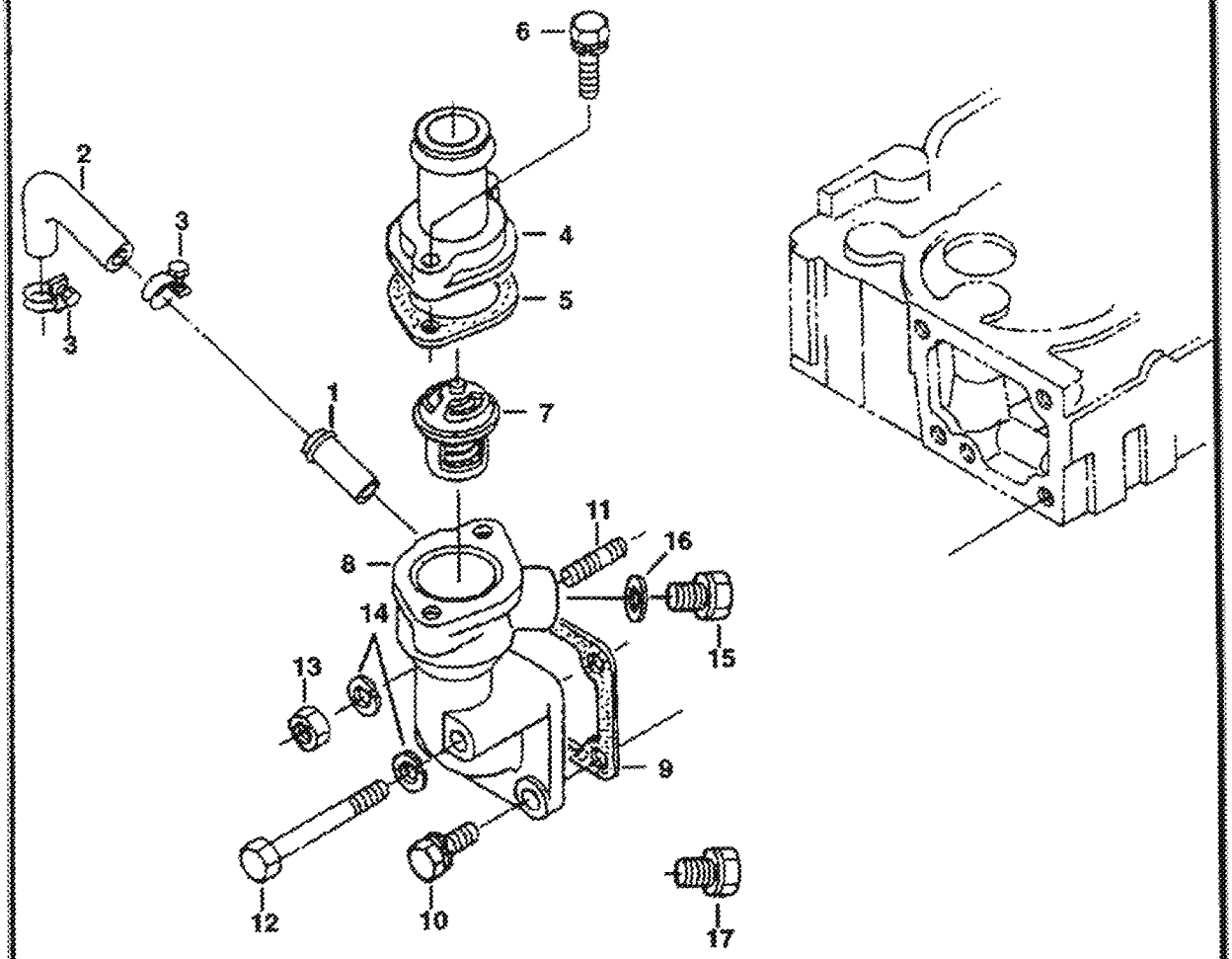
6
2
3
4
5
3
1
7
11
16
8
14
15
13
9
12
10
17
B-24691

WATER FLANGE & THERMOSTAT (Cont'd)
(Kubota - V1903 2EB - Tier II Replacement)

Ref No	Part Number	Description	Remarks	Serial Number	Qty
1	6655880	PIPE	water return		1
2	6686988	PIPE	water return		1
3	3974679B	BAND	pipe		2
4	6674173	COVER	thermostat		1
5	6684863	GASKET	thermostat cover		1
6	1CM00835B	BOLT			2
7	6674172	THERMOSTAT	230 degree F		1
7	6630184	THERMOSTAT	203 degree F - Used W/cab heater		1
8	6674167	FLANGE	W/Ref. 1		1
9	6666802	GASKET	water flange - Was 6684860 [A]		1
10	6657415	BOLT			2
11	3974916B	STUD			1
12	1CM00865B	BOLT			1
13	6652792	NUT			1
14	6667422	WASHER			1
15	6649536	PLUG			1
16	6653562	GASKET			1
17	40K000002B	PLUG			1

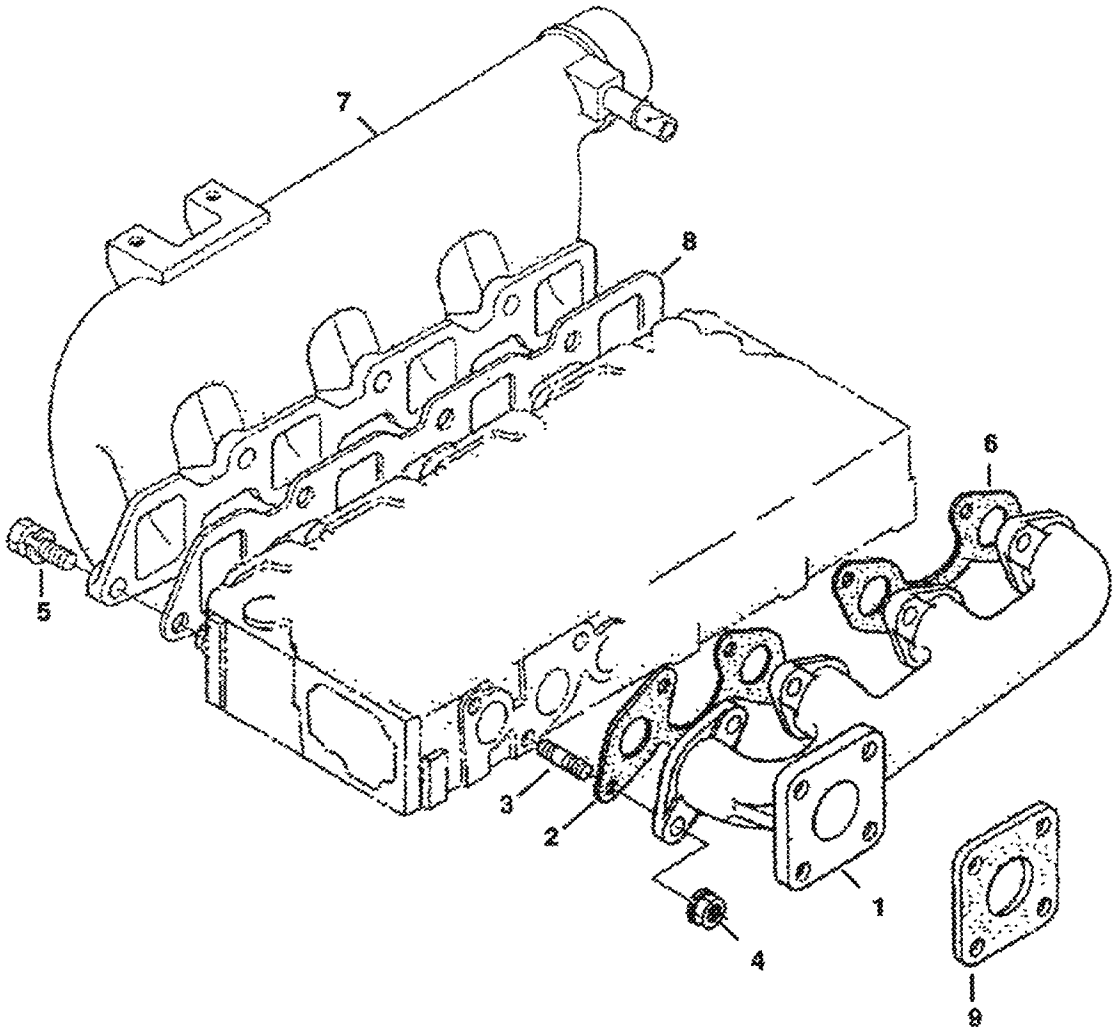

B-24692

MANIFOLDS (Cont'd)
(Kubota - V1903 2EB - Tier II Replacement)

Ref No	Part Number	Description	Remarks	Serial Number	Qty
1	6685475	MANIFOLD	exhaust		1
2	6684879	GASKET			1
3	6652670	STUD			8
4	6682532	NUT			8
5	4CM00822B	BOLT			7
6	6666781	GASKET			1
7	6686990	MANIFOLD	intake - W/Ref. 8		1
8	6686991	GASKET			16
9	6575580	GASKET	muffler		1

Page 251 - 16681 08/28/2008 17:23:45 - Printed by Ken Cook Co. eXpert ese (v2 24.1 8/26/2008)

ENGINE STOP LEVER
(Kubota - V1903 2EB - Tier II Replacement)

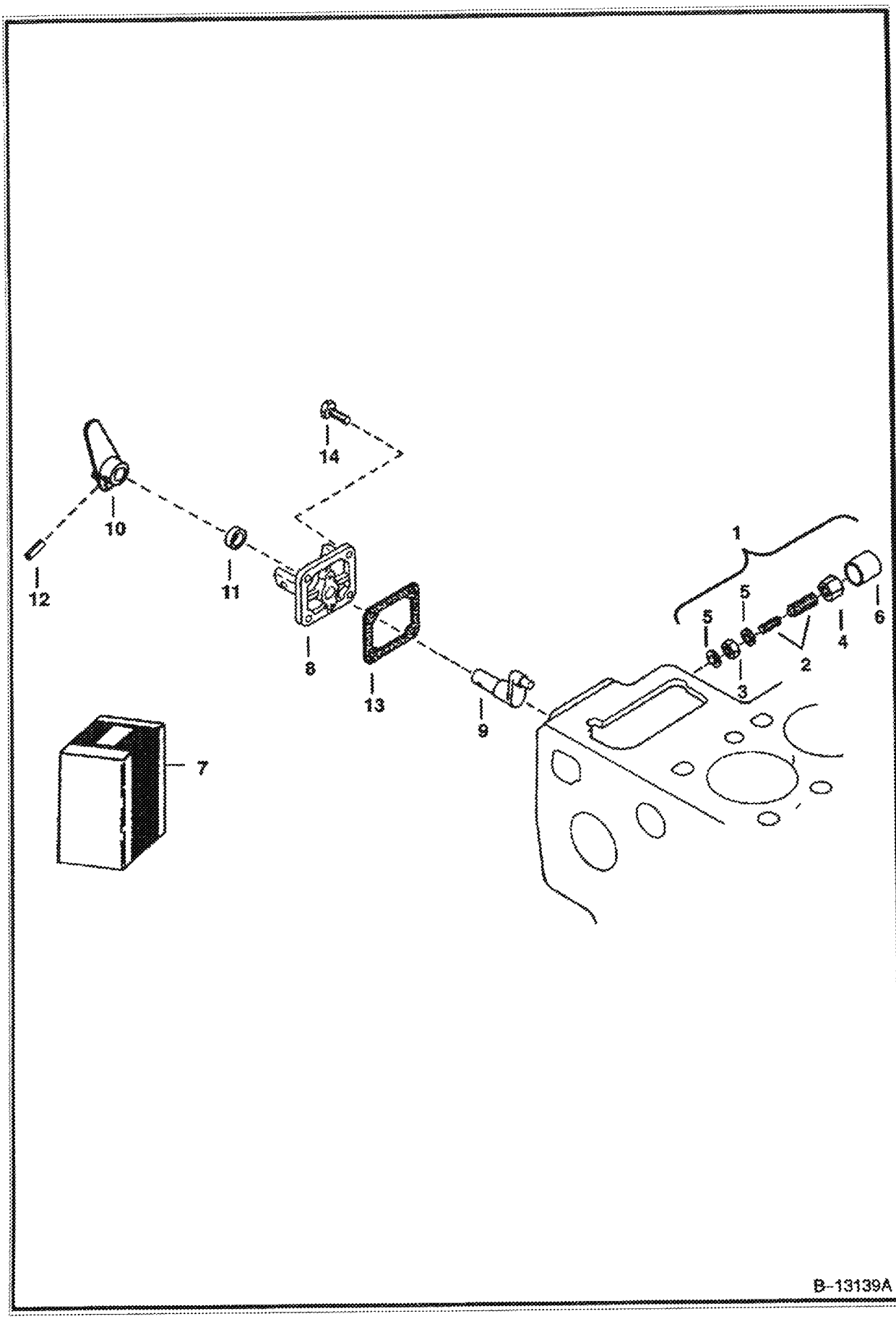

ENGINE STOP LEVER (Cont'd)
(Kubota - V1903 2EB - Tier II Replacement)

Ref No	Part Number	Description	Remarks	Serial Number	Qty
1	3974975B	APPARATUS	assy., idle - Ref. 2-6		1
2	6653906	BOLT ASSY.	adjusting		1
3	2DM00008B	NUT	adjusting		1
4	3974978B	NUT			1
5	3974095B	GASKET			2
6	3974979B	CAP			1
7	6676060	LEVER ASSY.	eng. stop - Ref. 8-12		1
8	6655540	COVER	injection pump		1
9	6655231	SHAFT	lever		1
10	6655232	LEVER	engine stop		1
11	6685476	SEAL	oil		1
12	6598098	PIN	spring		1
13	6666783	GASKET	pump cover		1
14	6652580	BOLT			3

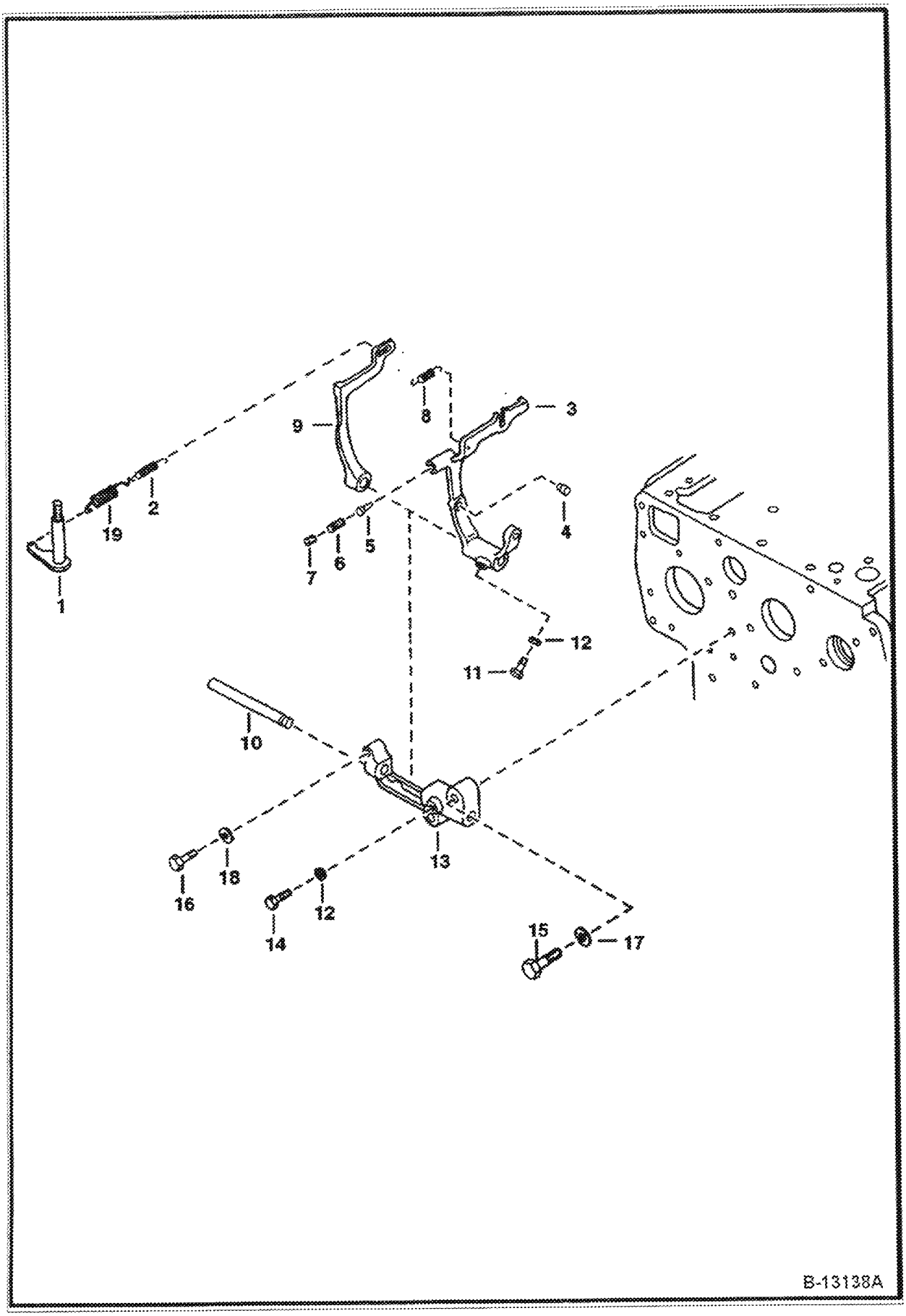
1
19
2
9
8
3
7
6
5
4
11
12
10
13
16
18
12
14
15
17
B-13138A

GOVERNOR (Cont'd)
(Kubota - V1903 2EB - Tier II Replacement)

Ref No	Part Number	Description	Remarks	Serial Number	Qty
1	6598174	LEVER	governor		1
2	6655227	SPRING			1
3	6655224	LEVER	fork - W/Ref. 4-7		1
4		PIN	NSS		2
5		PIN	NSS		1
6		SPRING	NSS		1
7		SCREW	NSS		1
8	6655225	SPRING	Was 6686986 [D]		1
9	6667451	WASHER			1
10	6684833	SHAFT			1
11	6680830	BOLT			1
12	6667491	NUT&BOLT			2
13	3974661B	HOLDER			1
14	3974192B	BOLT			1
15	6680706	BOLT			2
16	6685464	BOLT			1
17	2EM00008B	WASHER			2
18	1EM00060B	WASHER			1
19	6655878	SPRING	governor		1

SPEED CONTROL PLATE
(Kubota - V1903 2EB - Tier II Replacement)

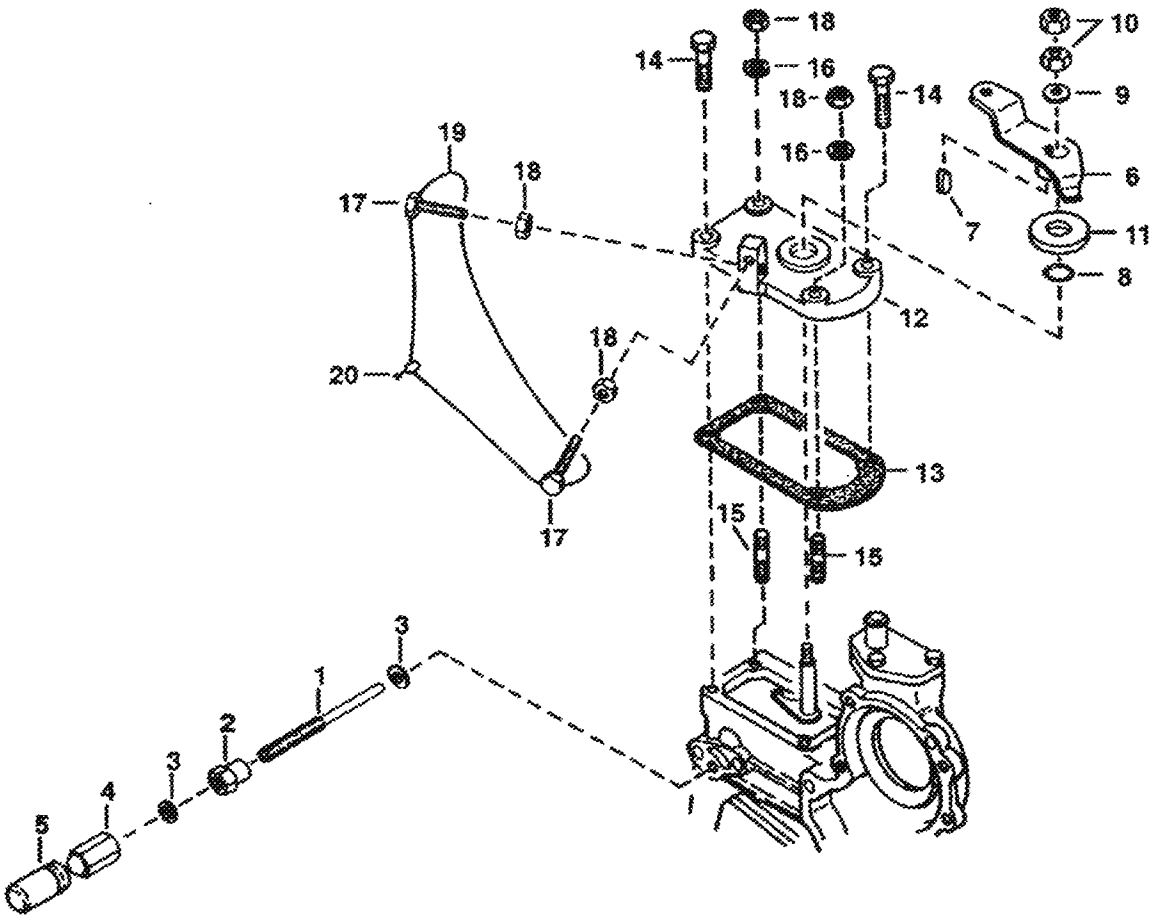

SPEED CONTROL PLATE (Cont'd)
(Kubota - V1903 2EB - Tier II Replacement)

Ref No	Part Number	Description	Remarks	Serial Number	Qty
1	6686985	BOLT	adjusting		1
2	3974971B	NUT			1
3	3974972B	GASKET			2
4	6655223	NUT	cap		1
5	6653905	CAP			1
6	6598176	LEVER	speed control		1
7	15JM00048B	KEY	feather		1
8	3966512B	O-RING	Was 6686986 [A]		1
9	6667451	WASHER	plain		1
10	1DM8	NUT			2
11	3974644B	PLATE	friction		1
12	6641231	PLATE	speed control		1
13	6666792	GASKET			1
14	4CM00620B	BOLT			2
15	6652764	STUD			2
16	6667419	WASHER	spring		2
17	6655228	STOPPER			2
18	1DM00006B	NUT			4
19		WIRE	NAP		1
20		LEAD	NAP - sealing		1

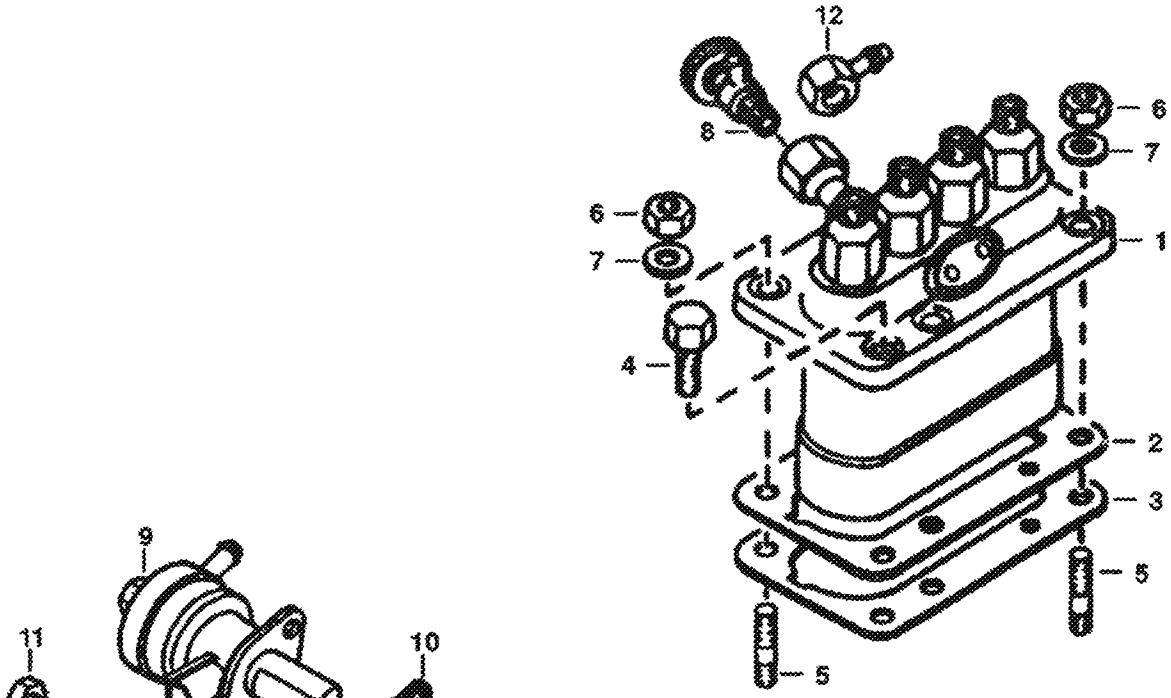

B-13157A

FUEL & INJECTION PUMPS (Cont'd)
(Kubota - V1903 2EB - Tier II Replacement)

Ref No	Part Number	Description	Remarks	Serial Number	Qty
1	6674676	PUMP			1
2	6682514	SHIM	0.20 mm		x
2	6682515	SHIM	0.25 mm		x
2	6655210	SHIM	0.30 mm		x
3	6655210	SHIM	0.45 mm		1
4	4CM00822B	BOLT			4
5	6652670	STUD			2
6	6652792	NUT			2
7	6667422	WASHER	spring		2
8	6598102	VALVE	jet start		1
9	6655216	FUEL PUMP			1
10	6686037	GASKET	fuel pump		1
11	4CM00616B	BOLT			2
12	6655515	JOINT			1

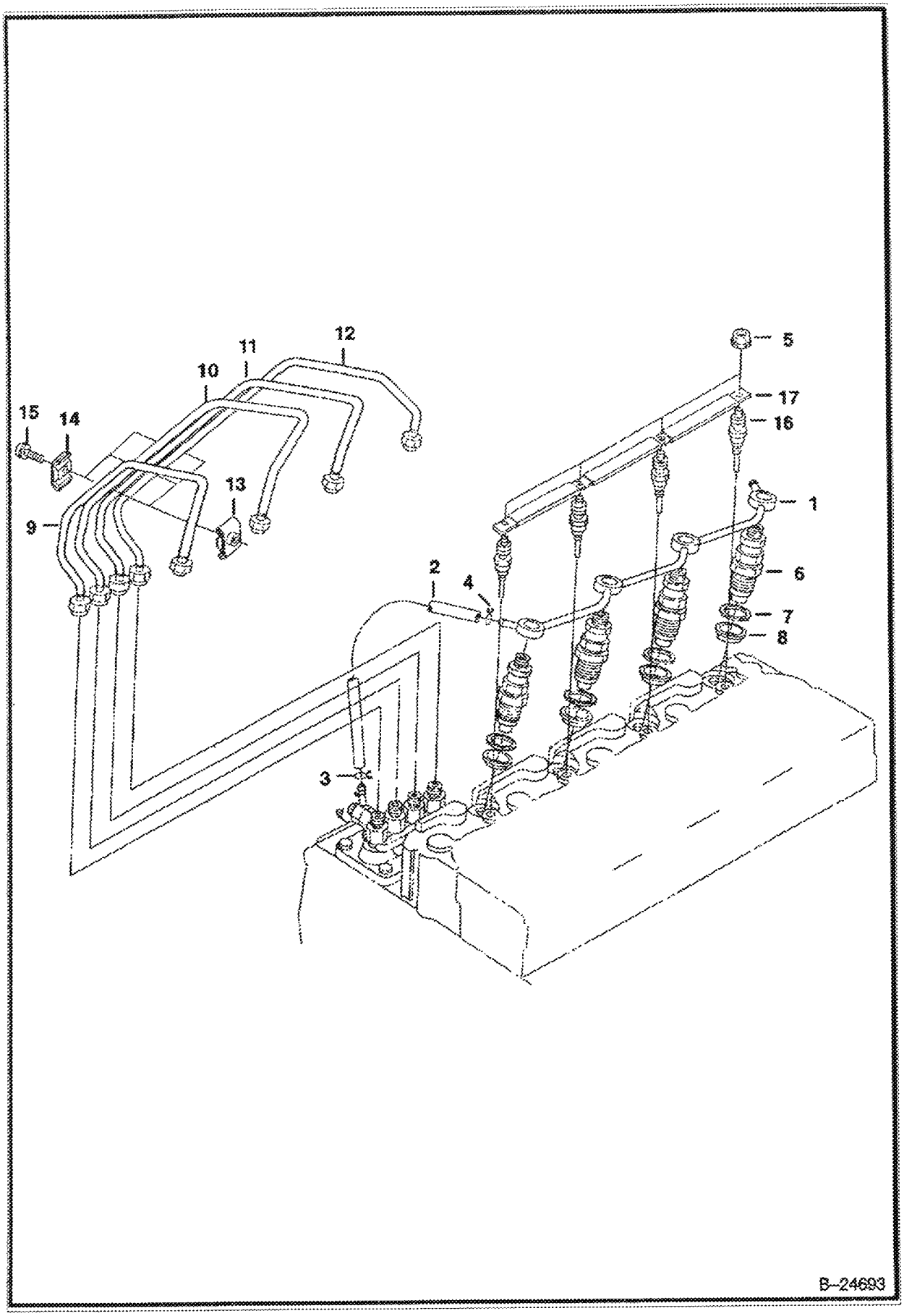
1
2
3
4
5
6
7
8
9
10
11
12
13
14
15
16
17
B-24693

INJECTOR NOZZLES (Cont'd)
(Kubota - V1903 2EB - Tier II Replacement)

Ref No	Part Number	Description	Remarks	Serial Number	Qty
1	6682521	PIPE			1
2	6598146	PIPE	fuel over flow		1
3	6680795	CLAMP	pipe		1
4	6654718	CLAMP	pipe		1
5	6670472	NUT			4
6	6722147	HOLDER KIT	nozzle		4
7	6655218	GASKET			4
8	6655872	HEAT SEAL			4
9	6655219	PIPE	injection		1
10	6655220	PIPE	injection		1
11	6655221	PIPE			1
12	6655222	PIPE	injection		1
13	6652688	CLAMP	pipe		3
14	6652689	CLAMP	pipe		3
15	3974260B	BOLT			3
16	6655233	GLOW PLUG			4
17	6655234	CORD	glow plug - Was 6686987 [A]		3

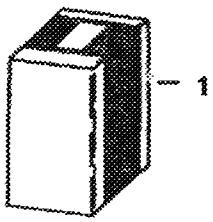

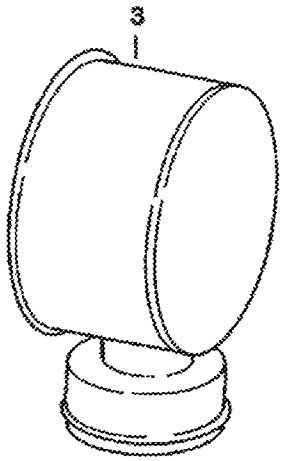

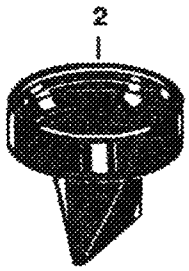

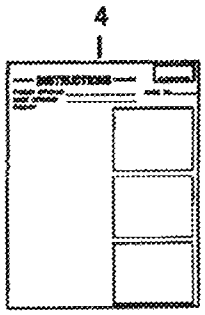

B-3094R

Ref No	Part Number	Description	Remarks	Serial Number	Qty
1	6563760	KIT	Ref. 2-4		1
2	946860B	VALVE			1
3	6598388	CAP			1
4	6556436	INSTRUCTIONS			1

Page 263 ... 08/29/2008 17:23:45 ... Printed by Ken Cook Co ... eSpareList exe (v2.64 3 8/25/2008)

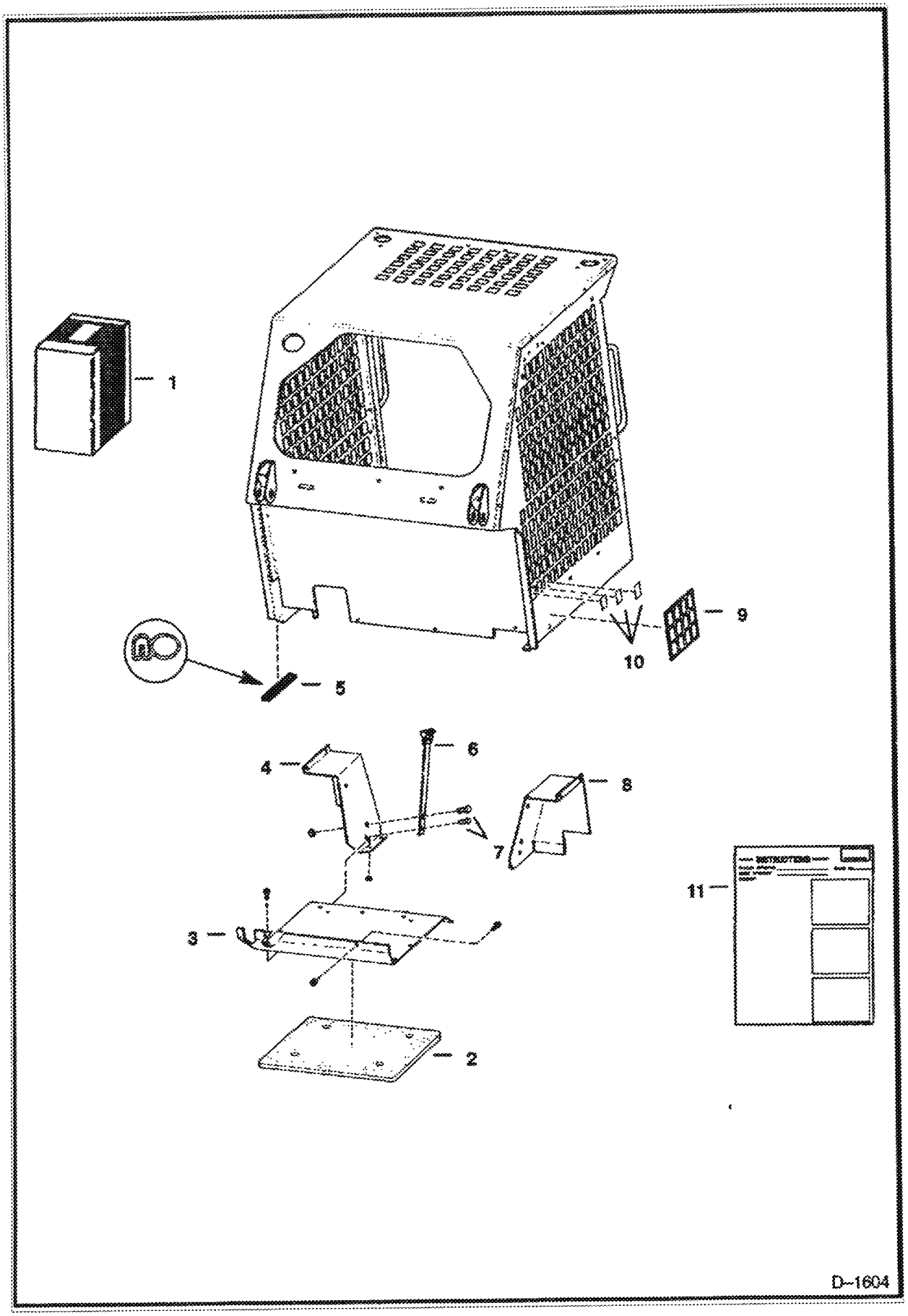
1
2
3
4
5
6
7
8
9
10
11
D-1604

AIR DUCT KIT (Cont'd)
(S/N 19999 & Below)

Ref No	Part Number	Description	Remarks	Serial Number	Qty
1		KIT	NAP - Order Ref. 2-11- Was 6564689 [A]		1
2	6564688	INSULATION	seat pan		1
3		SEAT PAN	NAP - Was 6564550 [A]		1
4	6564542	DUCT	air - L.H.		1
5	6555351	SEAL	bulk - Sold Per Foot		x
6	6564552	SUPPORT	seat belt		2
7	84G3712	BOLT			2
8	6564541	DUCT	air - R.H.		1
9	6564589	SCREEN			2
10	6565116	PLUG	side screen		6
11	6566350	INSTRUCTIONS			1

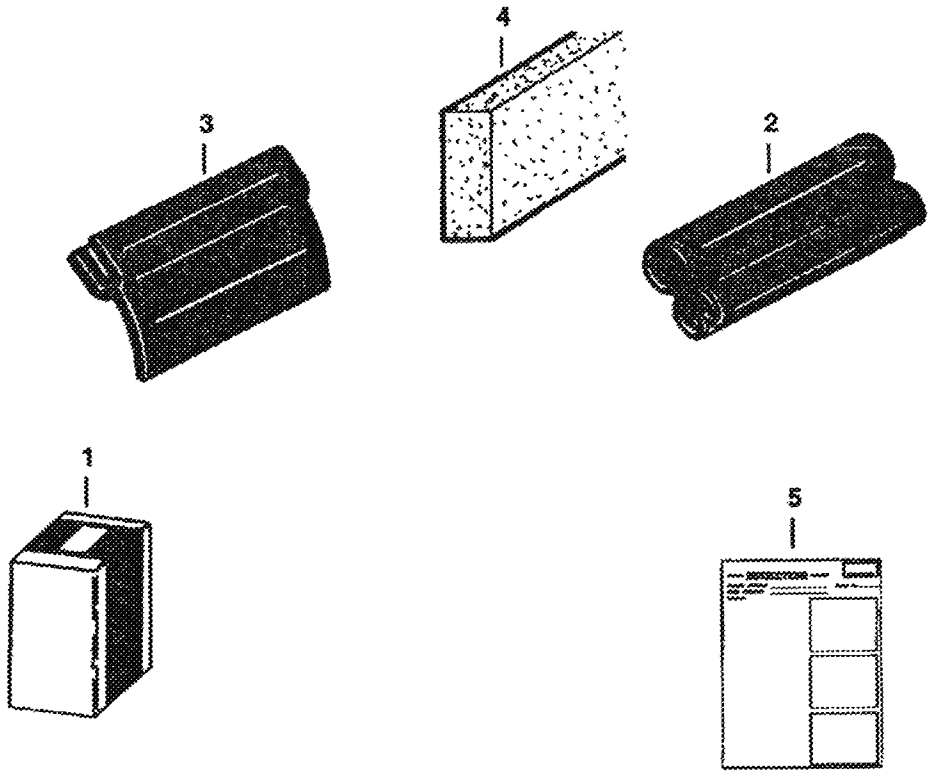

A–2813

AIR SEAL KIT (Cont'd)
(S/N 19999 & Below)

Ref No	Part Number	Description	Remarks	Serial Number	Qty
1	6564690	KIT	Ref. 2-5		1
2	6513152	SEAL	bulk - Sold Per Foot		x
3	4126590	MOULDING	bulk - Sold Per Foot		x
4	6565114	FOAM STRIP	bulk - Sold Per Foot		x
5	6566350	INSTRUCTIONS			1

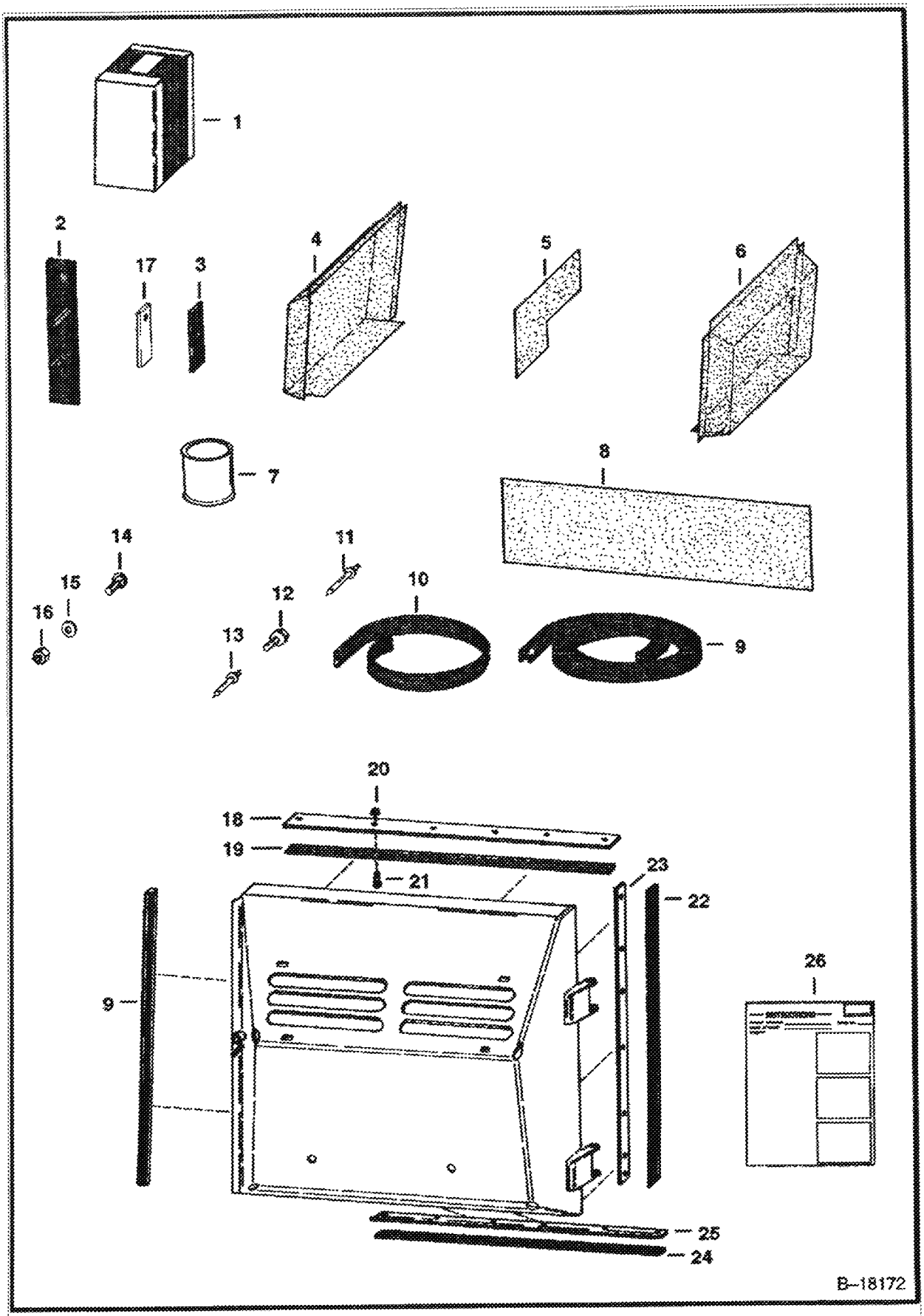
1
2
17
3
4
5
6
7
8
14
15
16
11
12
13
10
9
20
18
19
21
23
22
9
26
25
24
B–18172

AIR SEAL/SCREEN KIT (Cont'd)
(S/N 19999 & Below)

Ref No	Part Number	Description	Remarks	Serial Number	Qty
1	6565153	KIT	Ref. 2-26		1
2	6565134	COVER	rubber - Lift Cylinder		2
3	6565141	COVER	rubber - For Slots		2
4	6565021	SCREEN	R.H.		1
5	6565118	SCREEN			2
6	6565022	SCREEN	L.H.		1
7	6633583	SEALANT	Was 6555349 [A]		1
8	6565142	SCREEN	rear door		1
9	6632217	SEAL	rear door - Bulk - Sold Per Foot		x
10	6513152	SEAL	air duct - Bulk - Sold Per Foot		x
11	6591035	RIVET	For Rear Door		6
12	84G3716	SCREW 5			2
13	6515213	RIVET	For Cab Screen		30
14		BOLT	NAP - carriage bolt - 3/8" x 1" - Was 7C000616B [A]		2
15	25E000017B	WASHER			4
16	85D6	LOCK NUT			2
17	6567664	COVER	spring		2
18	6567303	RETAINER			1
19	6567304	SEAL			1
20	85D5	NUT 5			14
21	17C516	BOLT			14
22	6569876	SEAL	Was 6567306 [A]		1
23	6569877	STRIP	Was 6567305 [A]		1
24	6569937	SEAL	Was 6567310 [A]		1
25	6569938	RETAINER	Was 6567302 [A]		1
26	6566436	INSTRUCTIONS			1

Page 269 (3001) 08/28/2008 17:23:46 Printed by Pam Cook (C) eXpress exe (v: 24.3 6/25/2008)

AIR SEAL/SCREEN KIT
(S/N 20001 & Above)

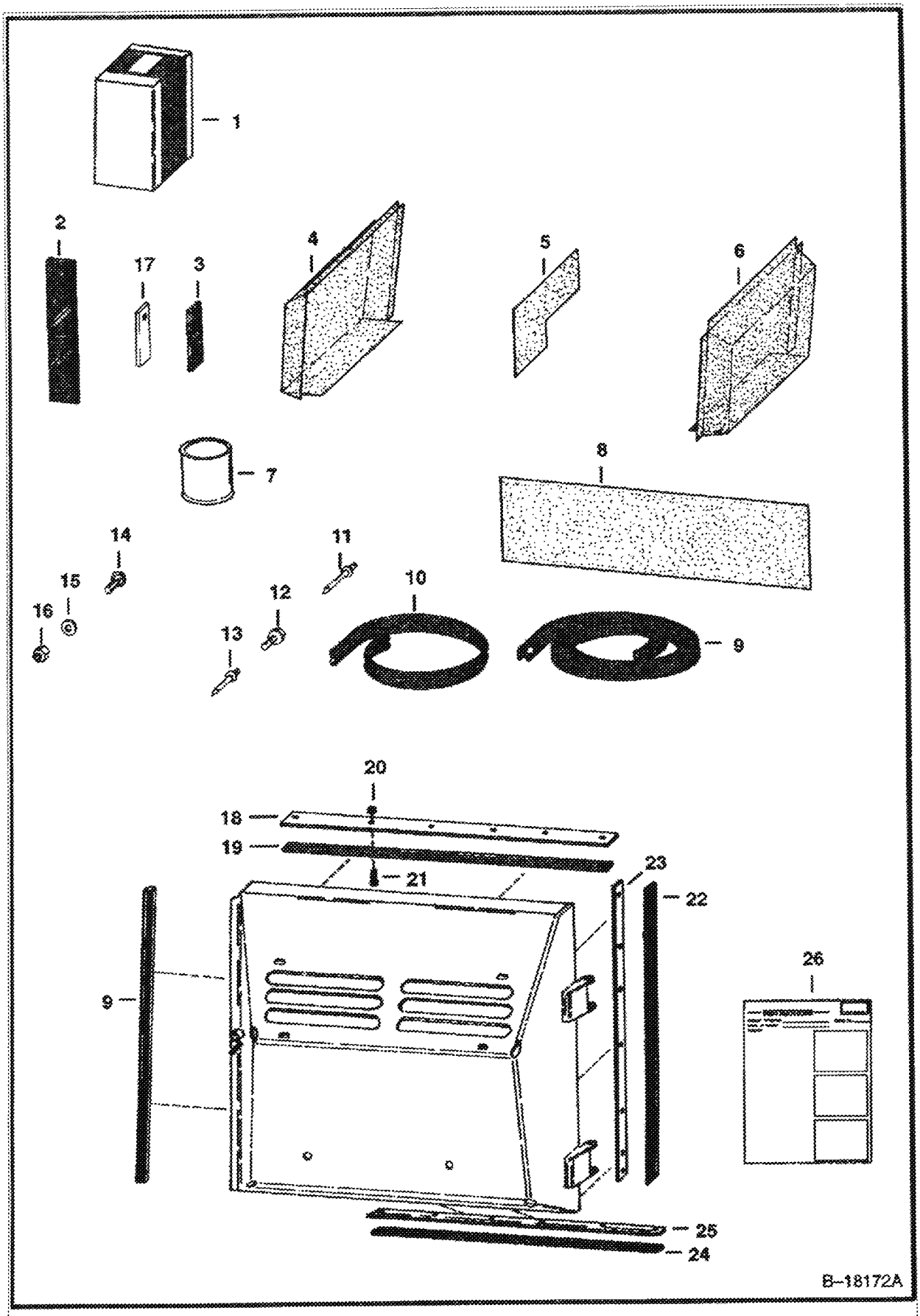

AIR SEAL/SCREEN KIT (Cont'd)
(S/N 20001 & Above)

Ref No	Part Number	Description	Remarks	Serial Number	Qty
1	6568767	KIT	Ref. 2-26		1
2	6565134	COVER	rubber - Lift Cylinder		2
3	6565141	COVER	rubber - For Slots		2
4	6569404	SCREEN	R.H.		1
5		SCREEN	NAP - Order Ref. 4 or 6		2
6	6569405	SCREEN	L.H.		1
7	6633583	SEALANT	Was 6555349 [A]		1
8	6565142	SCREEN	rear door		1
9	6632217	SEAL	rear door - Bulk - Sold Per Foot		x
10	6513152	SEAL	air duct - Bulk - Sold Per Foot		x
11	6591035	RIVET	For Rear Door		6
12	84G3716	SCREW 5			2
13	6515213	RIVET	For Cab Screen		24
14		BOLT	NAP - carriage bolt - 3/8" x 1" - Was 7C000616B [A]		2
15	25E000017B	WASHER			4
16	85D6	LOCK NUT			2
17	6567664	COVER	spring		2
18	6567303	RETAINER			1
19	6567304	SEAL			1
20	85D5	NUT 5			14
21	17C516	BOLT			14
22	6569876	SEAL			1
23	6569877	STRIP			1
24	6569937	SEAL			1
25	6569938	RETAINER			1
26	6566965	INSTRUCTIONS			1

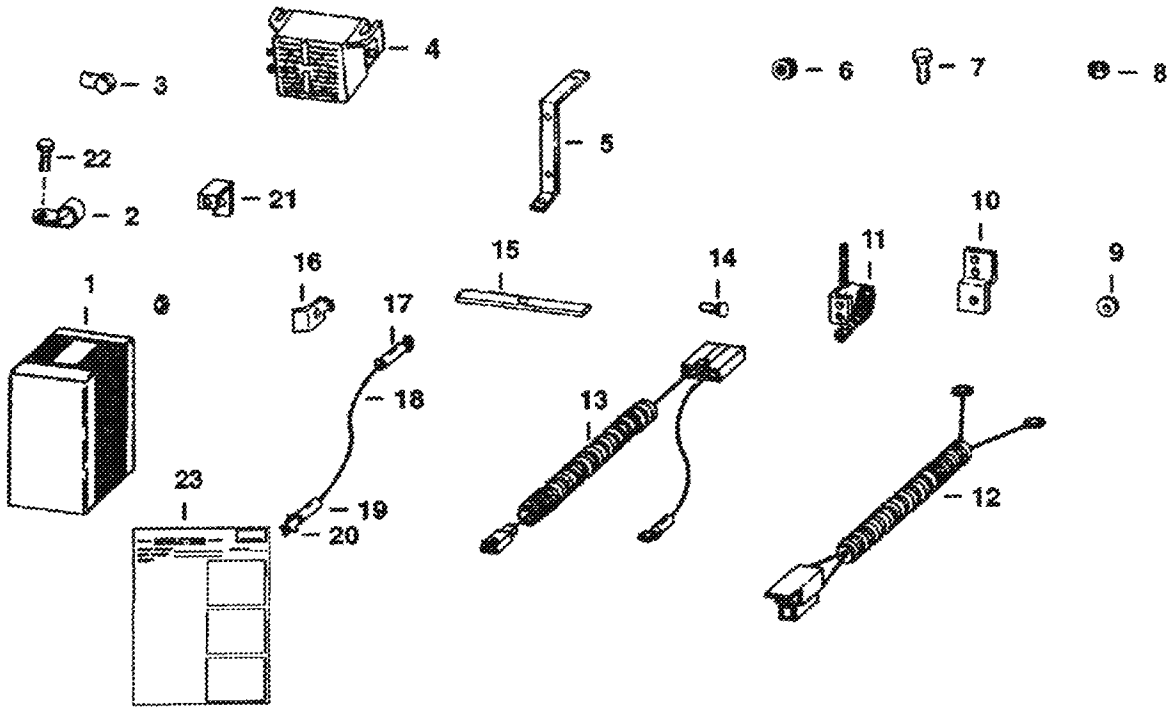

B-18289

BACK-UP ALARM KIT (Cont'd)

Ref No	Part Number	Description	Remarks	Serial Number	Qty
1	6579094	KIT	back-up alarm - Ref. 2-22 - Was 6565508 [A]		1
2	30H000031B	CLAMP			3
3	616334B	BOOT			2
4	6599931	ALARM			1
4	6668879	DECAL			1
5	6565275	BRACKET			1
6	6557493	GROMMET			1
7	17C000512B	BOLT			7
8	85D5	NUT 5			9
9	6E5	WASHER			1
10	6557824	MOUNT			1
11	6579011	SWITCH	Was 6557640 [A]		2
12	6565500	HARNESS			1
13	6565499	WIRE			1
14	10C000512B	BOLT	Was 6553808 [A]		2
15	6557684	BAR			1
16	6557683	STOP			2
17	30R000103B	TERMINAL			2
18	631094B	WIRE	Sold Per Foot		x
19	614142B	SLEEVE			4
20	6515131	TERMINAL			2
21	6565634	MOUNT	843 - S/N 15001 & Above		1
22	84G3712	BOLT			3
23	6566580	INSTRUCTIONS			1

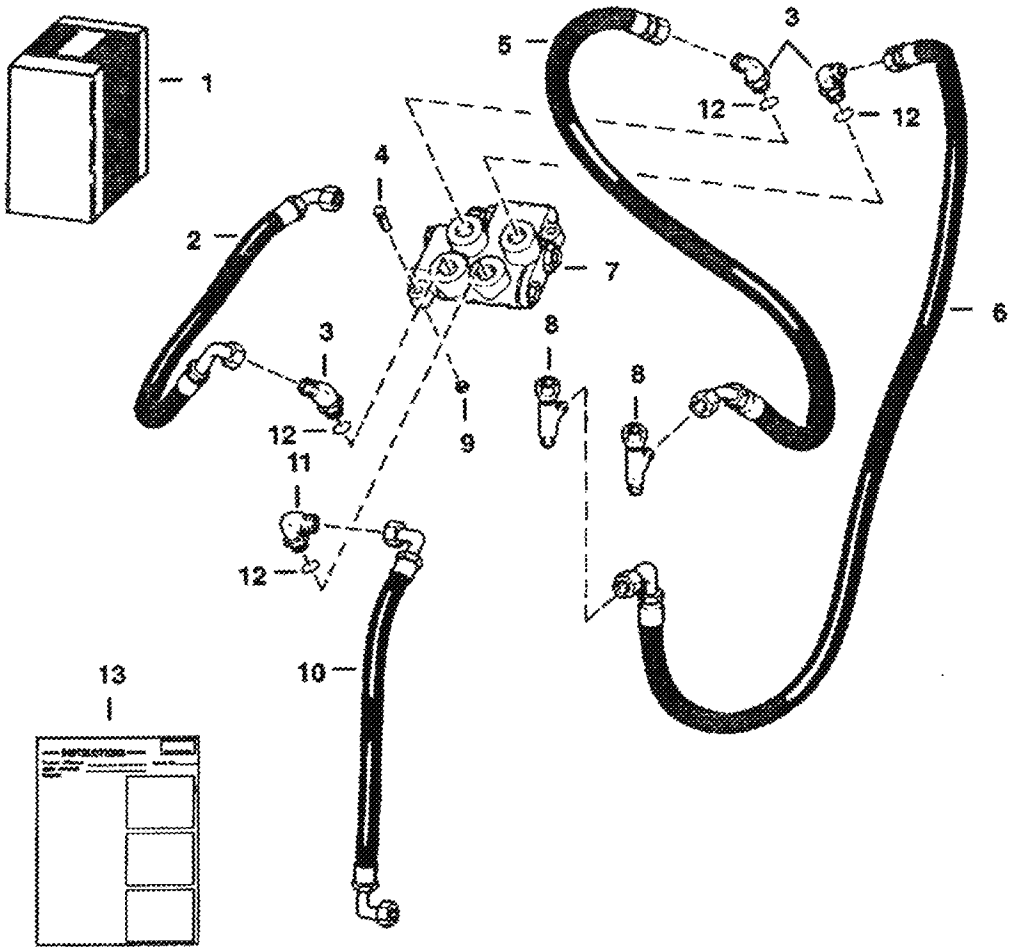
1
2
3
4
5
6
7
8
9
10
11
12
13
C-2865

BUCKET POSITION VALVE KIT (Cont'd)

Ref No	Part Number	Description	Remarks	Serial Number	Qty
1	6567787	KIT	Ref. 2-13		1
2	6568201	HOSE			1
3	18K000007B	ELBOW	W/Ref. 12		3
4	17C000524B	BOLT			2
5	3738250B	HOSE			1
6	1723192B	HOSE			1
7	6630676	VALVE	See Illustration BUCKET POSITIONING VALVE/ E1768		1
8	13K000007B	TEE			2
9	85D5	NUT 5			2
10	6568200	HOSE			1
11	17K000007B	ELBOW	W/Ref. 12		1
12	79K10	O RING 10			3
13	6566691	INSTRUCTIONS			1

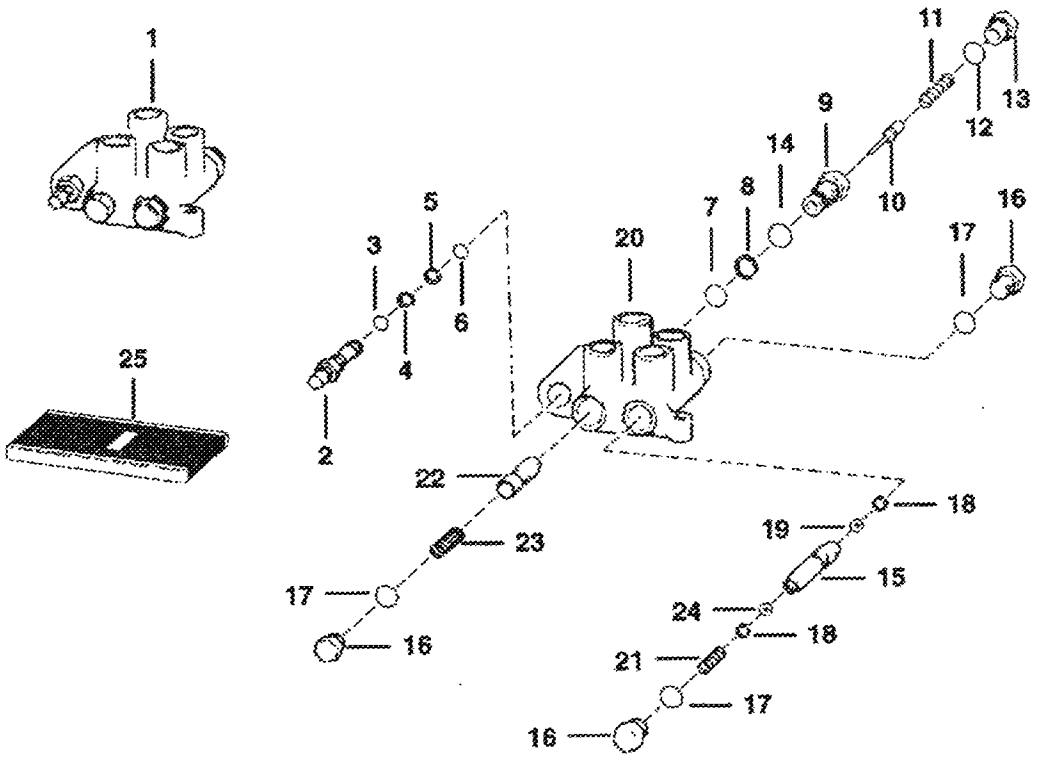
1
25
2
3
4
5
6
20
7
8
14
9
10
11
12
13
16
17
22
23
17
16
18
19
15
24
18
21
17
16

E-1768

BUCKET POSITIONING VALVE (Cont'd)

Ref No	Part Number	Description	Remarks	Serial Number	Qty
1	6630676	VALVE			1
2	6632935	RELIEF VALVE			1
3		O-RING	NSS		1
4		BACK-UP RING	NSS		1
5		BACK-UP RING	NSS		1
6		O-RING	NSS		1
7		O-RING	NSS		1
8		BACK-UP RING	NSS		1
9	6632932	CARTRIDGE			1
10	6632938	POPPET			1
11	6632942	SPRING			1
12		O-RING	NSS		1
13	6632929	PLUG			1
14		O-RING	NSS		1
15		SPOOL	NSS - W/Ref. 1		1
16	6632930	PLUG			3
17		O-RING	NSS		3
18	6632931	RING	retaining		2
19	6632934	ORIFICE			1
20		BODY	NSS - W/Ref. 1		1
21	6632941	SPRING			1
22		SPOOL	NSS - W/Ref. 1		1
23	6632940	SPRING			1
24	6632933	ORIFICE			1
25	6632951	SEAL KIT	Ref. 3-8, 10, 12, 14 & 17		1

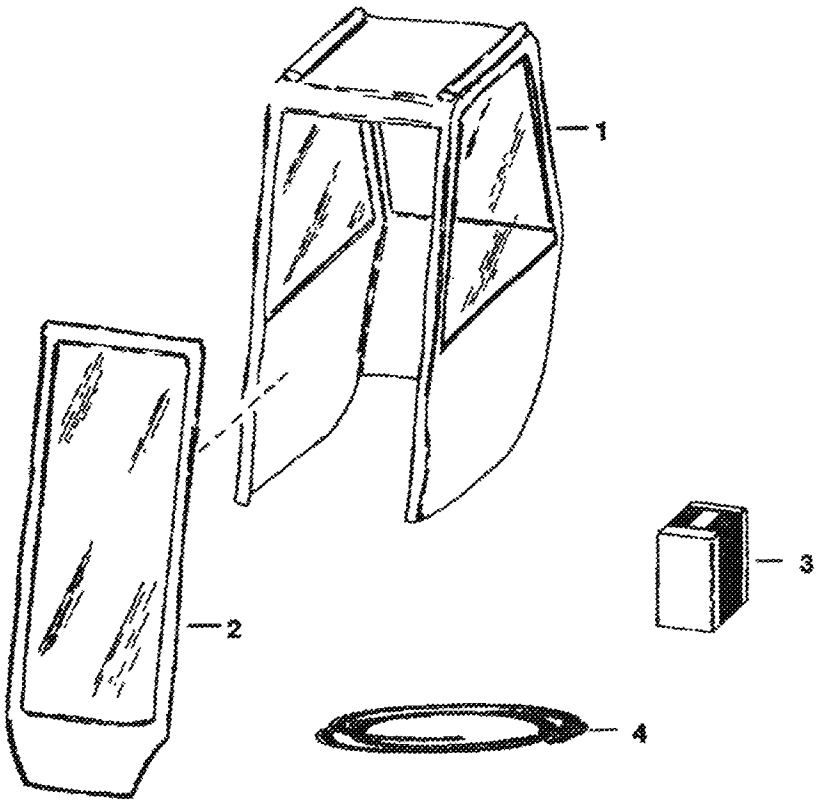

B–1413

CAB ENCLOSURE (Cont'd)
(Canvas)

Ref No	Part Number	Description	Remarks	Serial Number	Qty
1	6565270	VINYL CAB	W/Ref. 2	19999 & Below	1
1	6659303	ENVELOPE			1
2	6599721	DOOR	vinyl		1
2		DOOR	See Illustration CAB DOOR/ B18175 LEXAN - FOR USE WITH WIPER - ? 609		1
3	6662839	HINGE KIT			1
4	6722597	VELCRO	27' (822,9 cm)		1

CAB ENCLOSURE
(S/N 19999 & Below)

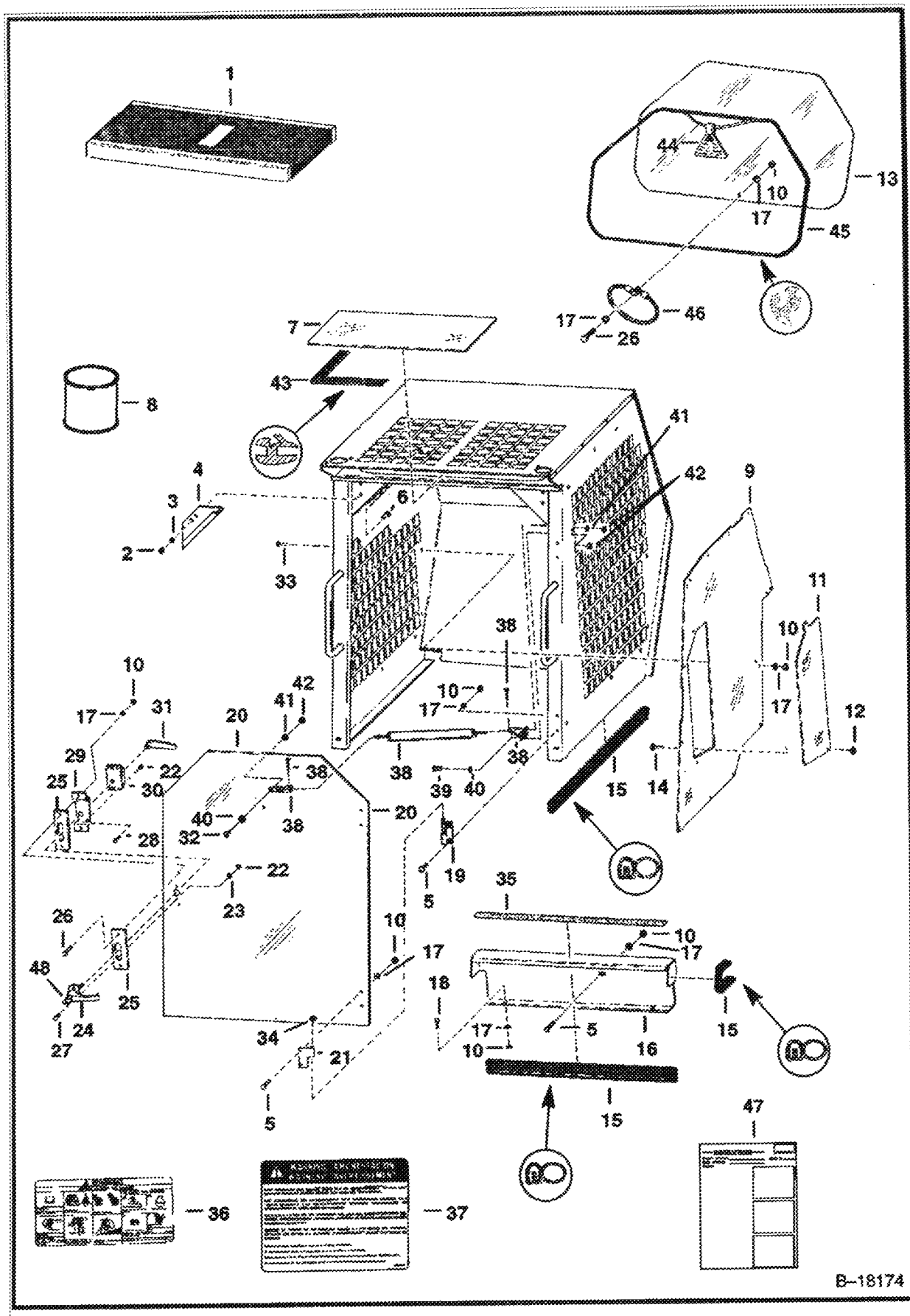

Model 743
6566179

CAB ENCLOSURE (Cont'd)
(S/N 19999 & Below)

Ref No	Part Number	Description	Remarks	Serial Number	Qty
1	6565757	KIT	cab enclosure - Ref. 2-46		1
2	61D000006B	NUT			2
3	25E000018B	WASHER			2
4	6555434	CHANNEL			2
5	10C000512B	BOLT	carriage - Was 6553808 [A]		2
6	17C612	BOLT 5			2
7	6701986	WINDOW	top - Was 6563391 [A]	& Below	1
7	6705735	WINDOW	top	& Above	1
8	6633583	SEALANT	Was 6555349 [A]		1
9	6565755	WINDOW			2
10	85D5	NUT 5			39
11	6555108	DOOR			2
12	6555869	CLAMP			8
13	6704891	WINDOW	Ref. 10, 17, 26 & 32 - Not used with 6703021 window - Was 6562916 [A]		1
14	14G001008B	BOLT			8
15	6555351	SEAL	bulk - Sold Per Foot		x
16	6563392	SHIELD			1
17	25E15	WASHER			46
18	17C000512B	BOLT			6
19	6555055	HINGE			2
20	6555062	DOOR			1
21	6565970	HINGE			2
22	12D000010B	NUT			6
23	25E000010B	WASHER			2
24	1550695	HANDLE	outside - W/Key		1
25	6555054	PLATE			x
26	17C516	BOLT			3
27	75G001016B	BOLT			2
28	45G001008B	BOLT			4
29	6555059	BRACKET			1
30	6598475	DOOR LATCH			1
31	6515600	HANDLE			1
32	85G001212B	SCREW			2
33	25G000510B	SCREW			24
34	85D000004B	NUT			2
35	6564833	SAFETY TREAD			1
36	6579510	DECAL	Was 6575854 [A]		1
37	6563410	DECAL			1
38	6564858	CLOSER	door		1
39	85G001208B	SCREW			4
40	12E000012B	WASHER			6
41	25E000012B	WASHER			4
42	12D000012B	NUT			6
43	6664351	SEAL	Used W/Cab headliner	& Below	1
43	6665012	SEAL	Used W/O Cab headliner	& Above	1
44	6731478	EXIT TAG	exit - Was 6559515 [A]		1
45	6658352	MOULDING	bulk - Sold Per Foot - Was 6554221 [A]		x
45	6554149	CORD	bulk - Sold Per Foot - Was 6554223 [A]		x
46	6555331	WIRE ROPE			1
47	6566606	INSTRUCTIONS			1
48	6665409	KEY			1

CAB DOOR
(R.H. Hinged)
(S/N 20001 & Above)

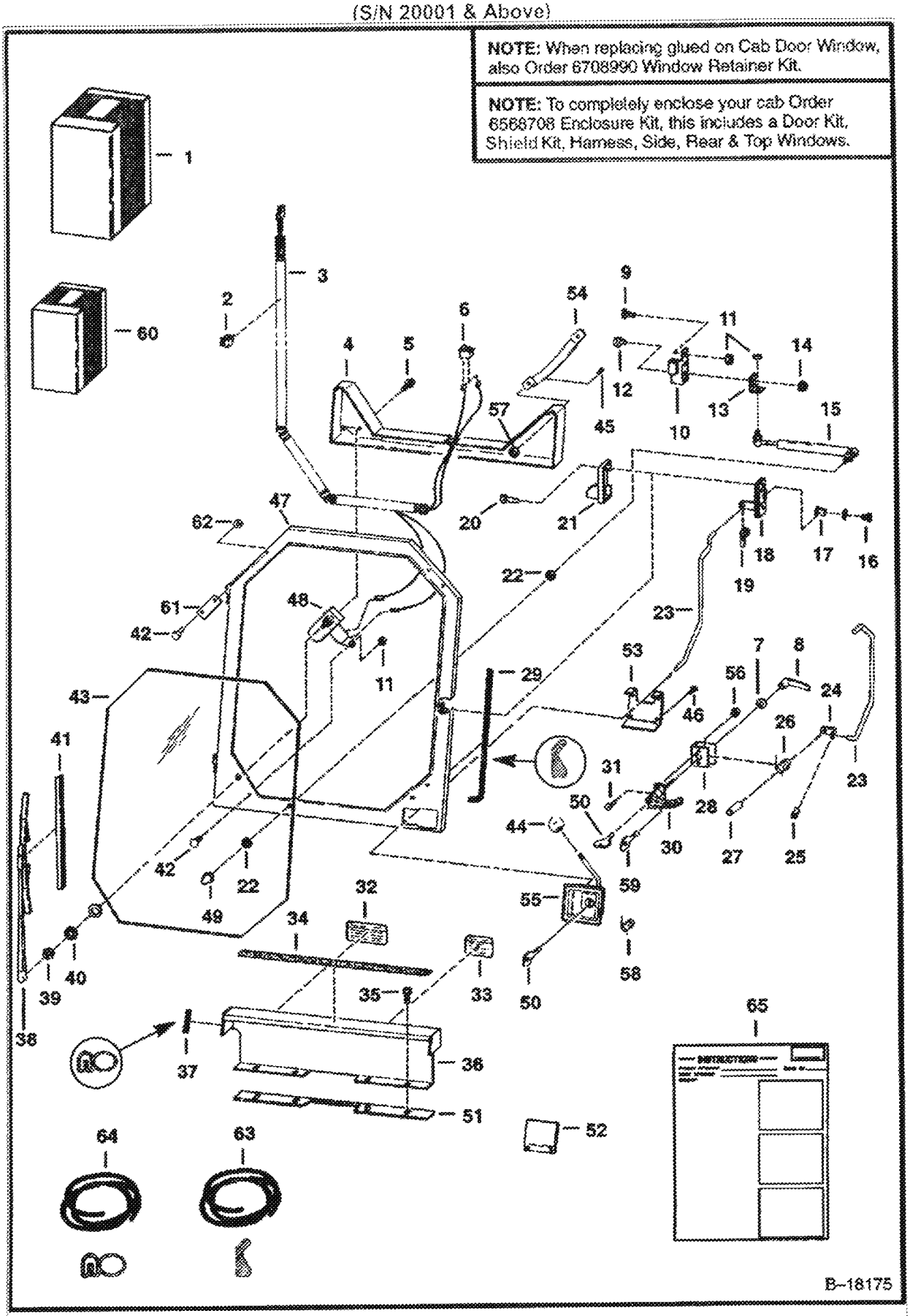

CAB DOOR (Cont'd)
(R.H. Hinged)
(S/N 20001 & Above)

Ref No	Part Number	Description	Remarks	Serial Number	Qty
1		KIT	NAP - cab door - Ref. 2-59 - Order 6708973 door kit, 6709934 shield kit & 6708225 harness - Was 6571845 [A]		1
2	30H000037B	CLAMP			1
3	6568739	HARNESS			1
4	6568724	SHIELD	Use with Old Style Latch		1
4	6704428	SHIELD	Use with New Style Latch - Was 6576471 [A]		1
5	84G3112	BOLT 5			4
6	6631009	SWITCH			1
7	25E000018B	WASHER	Use with Old Style Latch		1
8	6515600	HANDLE	Use with Old Style Latch		1
9	10C000512B	BOLT	Was 6553808 [A]		2
10	6568051	HINGE	For 1/4" Hinge Pin		2
10	6571715	HINGE	For 3/8" Hinge Pin		2
11	83D5	NUT 5			10
12	35C412	BOLT			2
13	6568055	BRACKET			1
14	83D4	NUT 10			2
15	6630797	GAS SPRING			1
15	6632221	STUD	Ball		2
15	2756257B	RETAINER	Spring		2
16	17C000712B	BOLT			1
17	6568047	NUT	Bushing		1
18	6660932	LATCH	Old Style - Was 6647789 [A]		1
19	6512274	CLIP			1
20	35C000416B	BOLT			4
21	6568728	SHIELD			1
22	25E000016B	WASHER			2
23	6568727	ROD	Use with Old Style Latch		1
23	6704425	ROD	Use with New Style Latch - Was 6576470 [A]		1
24	6568528	BRACKET	Use with Old Style Latch		1
25	6519480	CLIP	Use with Old Style Latch		1
26	6568725	SPRING	Use with Old Style Latch		1
27	6568526	SPACER	Use with Old Style Latch		1
28	6568527	BRACKET	Use with Old Style Latch		1
29		SEAL	NAP - 100"(2540mm) long - Order Ref. 63		1
30	6568726	HANDLE	W/Keys-Use with Old Style Latch		1
31	75G001016B	BOLT	Use with Old Style Latch		2
32	6579510	DECAL			1
33	6563410	DECAL			1
34	6564833	SAFETY TREAD			1
35	35C000520B	BOLT			4
36	6568164	SHIELD			1
37		SEAL	NAP - 6"(154,4mm) long - Order Ref. 64		2
38	6631008	ARM			1
39		NUT	NSS		1
40		SEAL	NSS		1
41	6630943	BLADE	wiper		1
42	25G000510B	SCREW			8
43	6568705	WINDOW	1/4" Plastic - SEE NOTE		1
44	6647635	KNOB	Use with New Style Latch		1
45	7G000416B	BOLT	Use with New Style Latch - Was 7G000412B [B]		2
46	45G001008B	BOLT	Use with New Style Latch		4
47		DOOR	NAP - 1/4" Hinge Pin - W/Ref. 29 & 43 - Order Ref. 1		1
47		DOOR	NAP - 3/8" HINGE PINS - W/Ref. 29 & 43 - ORDER 6704430 DOOR, 6704425 ROD, 6704428 SHIELD		1
47	6704430	DOOR	For use with New Style Latch - W/O Windows - Was		1

CAB DOOR (Cont'd)
(R.H. Hinged)
(S/N 20001 & Above)

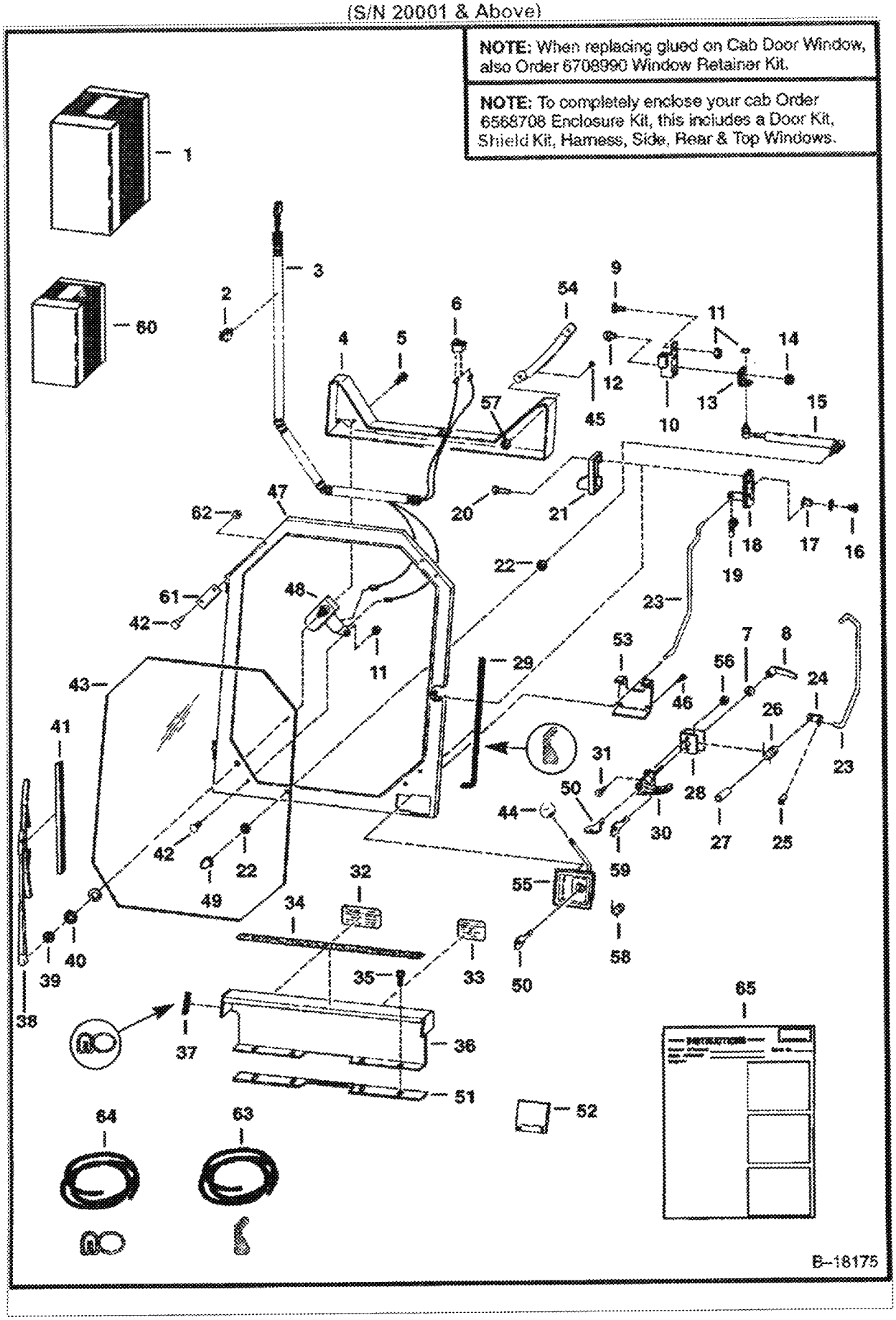

CAB DOOR (Cont'd)
(R.H. Hinged)
(S/N 20001 & Above)

Ref No	Part Number	Description	Remarks	Serial Number	Qty
			6704431 [A]		
48	6620642	MOTOR	W/Ref. 39 & 40		1
48	6631927	GEAR			1
48	961528B	HARDWARE			1
48	6631928	SHAFT			1
49	46D000005B	NUT			1
50	6632560	KEY			x
51	6569352	SPACER			1
52	6568620	COVER			2
53	6704426	RETAINER	Use with New Style Latch - Was 6578398 [A]		1
54	6631935	HANDLE	Use with New Style Latch		1
55	6641274	LATCH	New Style - W/Ref. 44, 50 & 58		1
56	50D000010B	NUT	Use with Old Style Latch		2
57	6660988	RETAINER			2
58	6662834	SPRING			1
59	6665409	KEY			1
60	6708990	KIT	Window retainer - Ref. 42, 61, 62 & 6724279 Instructions		1
60	6568708	KIT	enclosure - Includes L.H. hinged door, shield kit, harness side, rear & top windows		1
61	6708850	RETAINER			4
62	61D5	NUT			7
63	6568704	MOULDING	Bulk - Sold Per Foot		x
64	6555351	SEAL	Bulk - Sold Per Foot		x
65	6566956	INSTRUCTIONS	INSTRUCTIONS Use with Old Style Latch		1
65	6570264	INSTRUCTIONS	INSTRUCTIONS Use with New Style Latch		1
65	6724279	INSTRUCTIONS			1

CAB DOOR
(L.H. Hinged)

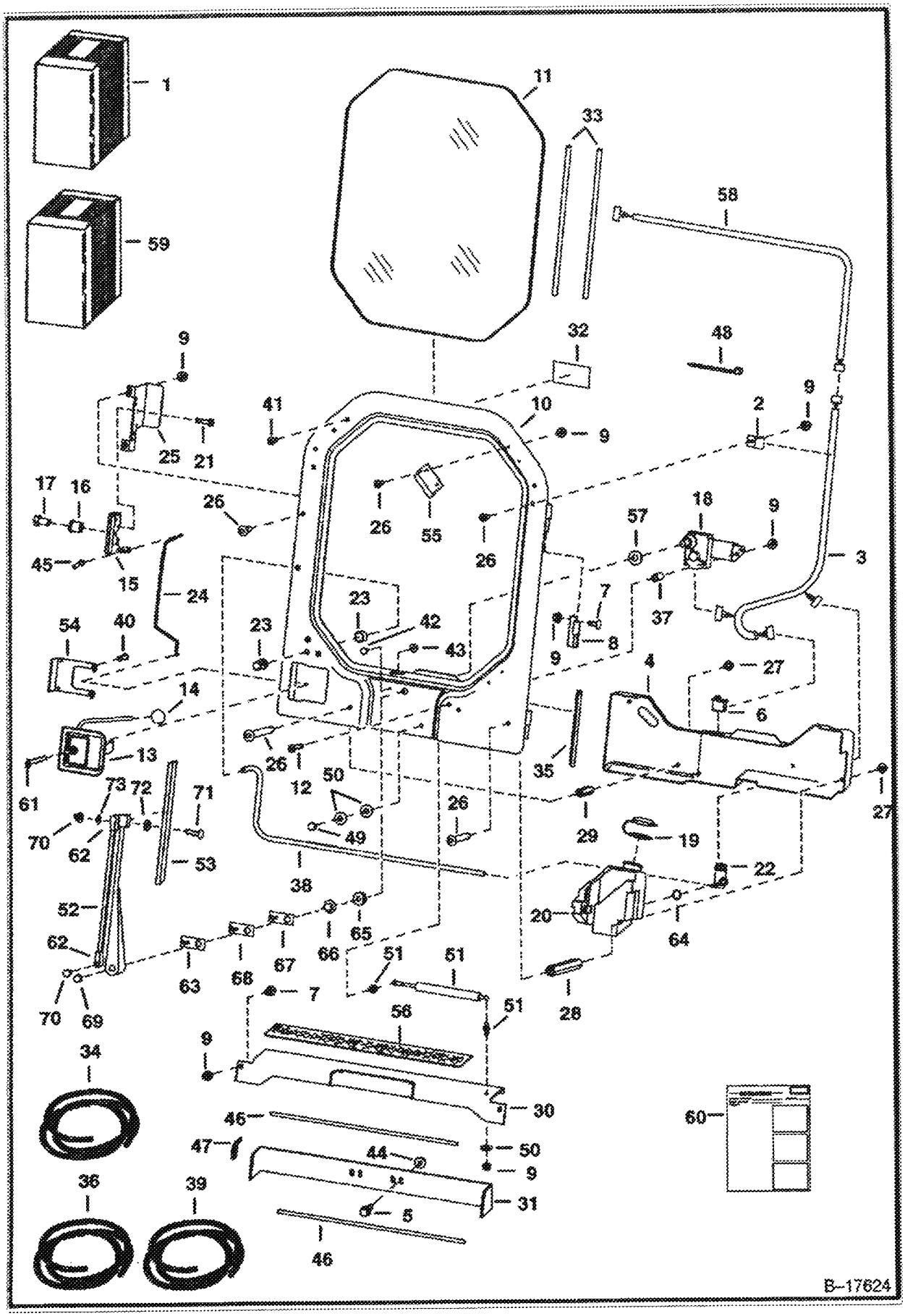

Model 743
6566179

CAB DOOR (Cont'd)
(L.H. Hinged)

Ref No	Part Number	Description	Remarks	Serial Number	Qty
1	6708973	KIT	door-Ref. 2-4,6-29,32-35,37-43, 45, 48-55, 57, 60 & 61 - Also Order Ref. 59 - Was 6708443 [A]		1
1	6568708	KIT	enclosure - Includes L.H. hinged door, shield kit, harness side, rear & top windows		1
1		KIT	SALES - door - special applications - Ref. 4, 5, 7-17, 21, 24-37, 40-51, 54-56, 60 & 61 - Also Order Ref. 58 - SEE NOTE		1
2	30H000037B	CLAMP			1
2	30H000019B	CLAMP			1
3		HARNESS	NAP - Order 6712259 Harness - Was 6708269 [A]		1
3	6712259	HARNESS	W/2 diodes		1
4	6707179	SHIELD			1
5	35C616	BOLT 5			2
6	6665707	SWITCH			1
7	10C000512B	BOLT			6
8	6707216	HINGE			2
9	83D5	NUT 5	for standard door		10
9	83D5	NUT 5	for special applications door		15
10	6707220	DOOR			1
11	6707225	WINDOW	.25" (6.35 mm) thick - safety glass - for standard door		1
11	6708499	WINDOW	.5" (12.7 mm) thick - plexiglass - for special applications door		1
12	25G000528B	BOLT			1
13	6665530	LATCH	W/Ref. 14 - Also Order Ref. 61		1
14	6647635	KNOB			1
15	6665531	LATCH			1
16	6568047	NUT	bushing		1
17	17C000712B	BOLT			1
18	6665532	MOTOR	wiper - W/Splined Shaft	& Below	1
18	6631927	GEAR			1
18	6670163	SHAFT			1
18	6670164	LINK			1
18	6670165	CLIP			1
18	6679814	MOTOR	Wiper - W/tappred shaft	& Above	1
19	6665605	CAP			1
20	6707178	TANK			1
21	35C000416B	BOLT			4
21	35C412	BOLT			4
22	6664554	PUMP	wiper washer		1
23	6666767	NOZZLE	washer - Was 6664555 [A]		1
24	6707221	ROD	latch release		1
25	6707222	MOUNT	latch		1
26	25G512	SCREW	for standard door		7
26	25G512	SCREW	for special applications door		14
27	35C000510B	BOLT			4
28	6707223	COUPLING			2
29	6707224	COUPLING			2
30	6707239	SHIELD	bolts to cab		1
31	6707236	SHIELD	bolts to main frame		1
32	6707852	DECAL			1
33		SEAL	NAP - 91" (2311 mm)long- Order Ref. 34		1
33		CORD	NAP - 91" (2311 mm)long - Order Ref. 34		1
34	6665568	EXTRUSION	bulk - Sold Per Foot		x
34	6554149	CORD	bulk - Sold Per Foot		x
35		SEAL	NAP - 137" (3480mm)long - Order Ref. 36		1
36	6513152	SEAL	bulk - Sold Per Foot		x

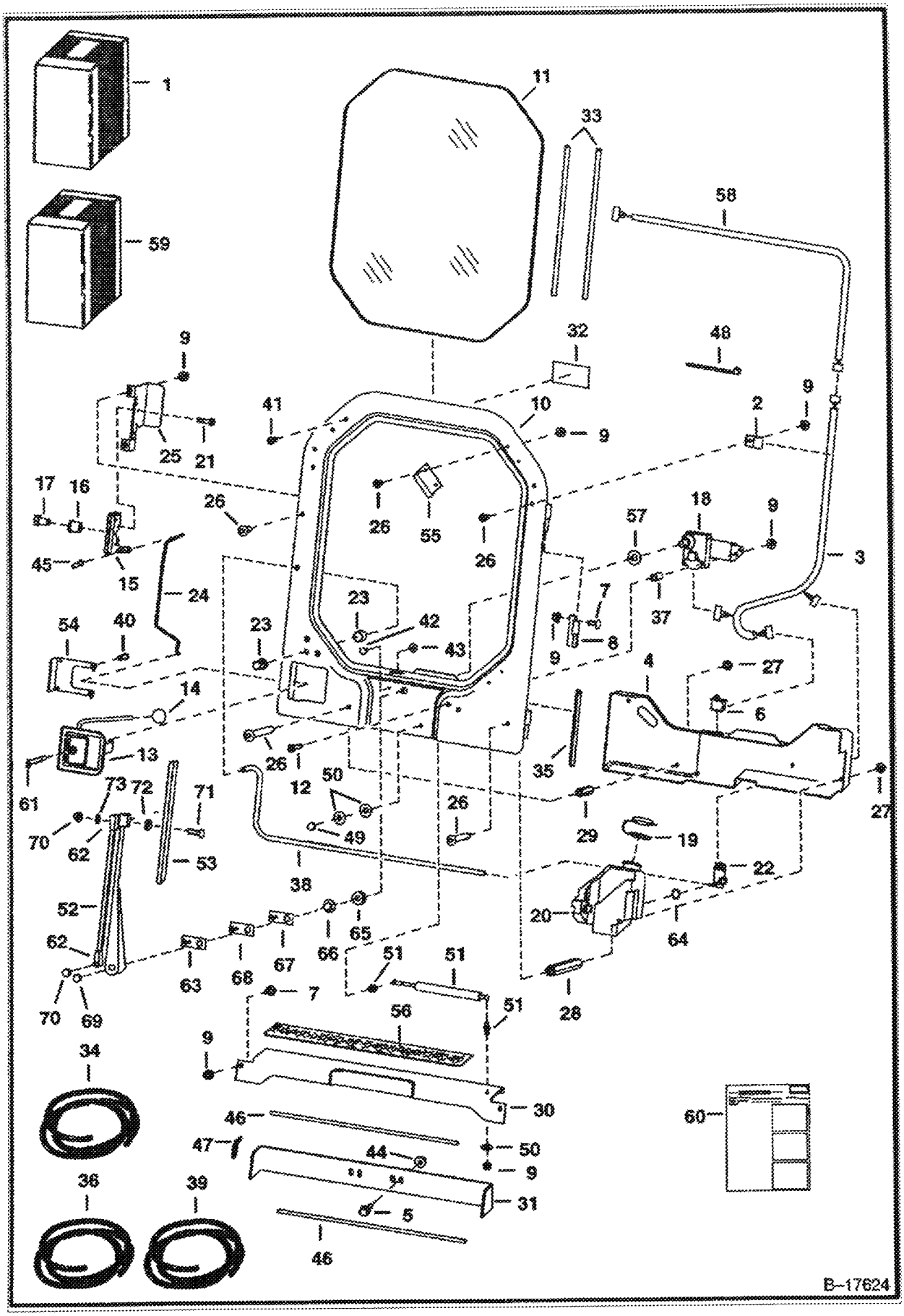
1
59
11
33
58
9
32
48
41
10
2
25
21
17
16
26
55
57
18
3
45
15
24
23
42
43
37
54
40
8
4
27
14
6
13
12
50
35
61
73
72
71
49
29
19
70
62
53
38
22
52
20
64
65
66
67
63
68
51
28
7
56
34
30
46
47
44
50
31
36
39
5
60
B-17624

CAB DOOR (Cont'd)
(L.H. Hinged)

Ref No	Part Number	Description	Remarks	Serial Number	Qty
37	6708096	BUSHING			1
38		HOSE	NAP - 26" (660,4 mm)long- Order Ref. 39		1
39	6676003	HOSE	bulk - Sold Per Foot - Was 6708310 [B]		x
40	45G001008B	BOLT			4
41	5289686B	PLUG	black		11
42	1CM00616B	BOLT	Was 17C000408B [B]		1
43	43DM00006B	NUT	Was 55D000004B [B]		1
44	83D6	NUT 5			2
45	6512274	CLIP			1
46		SEAL	NAP - 28" (711 mm)long- Order Ref. 36		2
47		SEAL	NAP - 5" (127 mm)long- Order Ref. 36		2
48	6610510	TIE			1
49	46D000005B	NUT			1
50	25E000016B	WASHER			3
51	6630797	GAS SPRING			1
51	6632221	STUD	ball		2
51	2756257B	RETAINER	spring		2
52	6664095	ARM	wiper - W/Ref 62 & 63 - for spined motor shaft	& Below	1
52	6679816	ARM	wiper - for tapered motor shaft	& Above	1
53	6664096	BLADE	wiper- for splined motor shaft	& Below	1
53	6679815	BLADE	wiper - for tapered motor shaft	& Above	1
54	6703751	RETAINER			1
55	6708500	CLAMP	for special applications door		4
56	6564833	SAFETY TREAD	Was 6703757 [B]		1
57	27E000010B	WASHER			1
58	6708225	HARNESS	not in kit - for non BICS loaders only		1
59	6708975	KIT	shields - Ref. 5, 7, 9, 30, 31, 44, 46, 47, 56 & 64		1
60	6724029	INSTRUCTIONS			1
61	6709527	KEY			1
62	6670288	END	plastic	& Below	2
63	6670289	BRACKET		& Below	1
64	6666766	GROMMET			1
65	6677842	NUT		& Above	1
66	6678326	RAIN SHIELD		& Above	1
67	6677839	GASKET		& Above	1
68	6677840	SWIVEL		& Above	1
69	6677843	NUT		& Above	1
70	6677844	NUT		& Above	2
71	6678198	BOLT		& Above	1
72	6664085	BUSHING		& Above	1
73	6677841	WASHER		& Above	1

NOTE: To completely enclose your cab Order 6566706 Enclosure Kit, this includes a Door Kit, Shield Kit, Harness, Side, Rear & Top Windows.

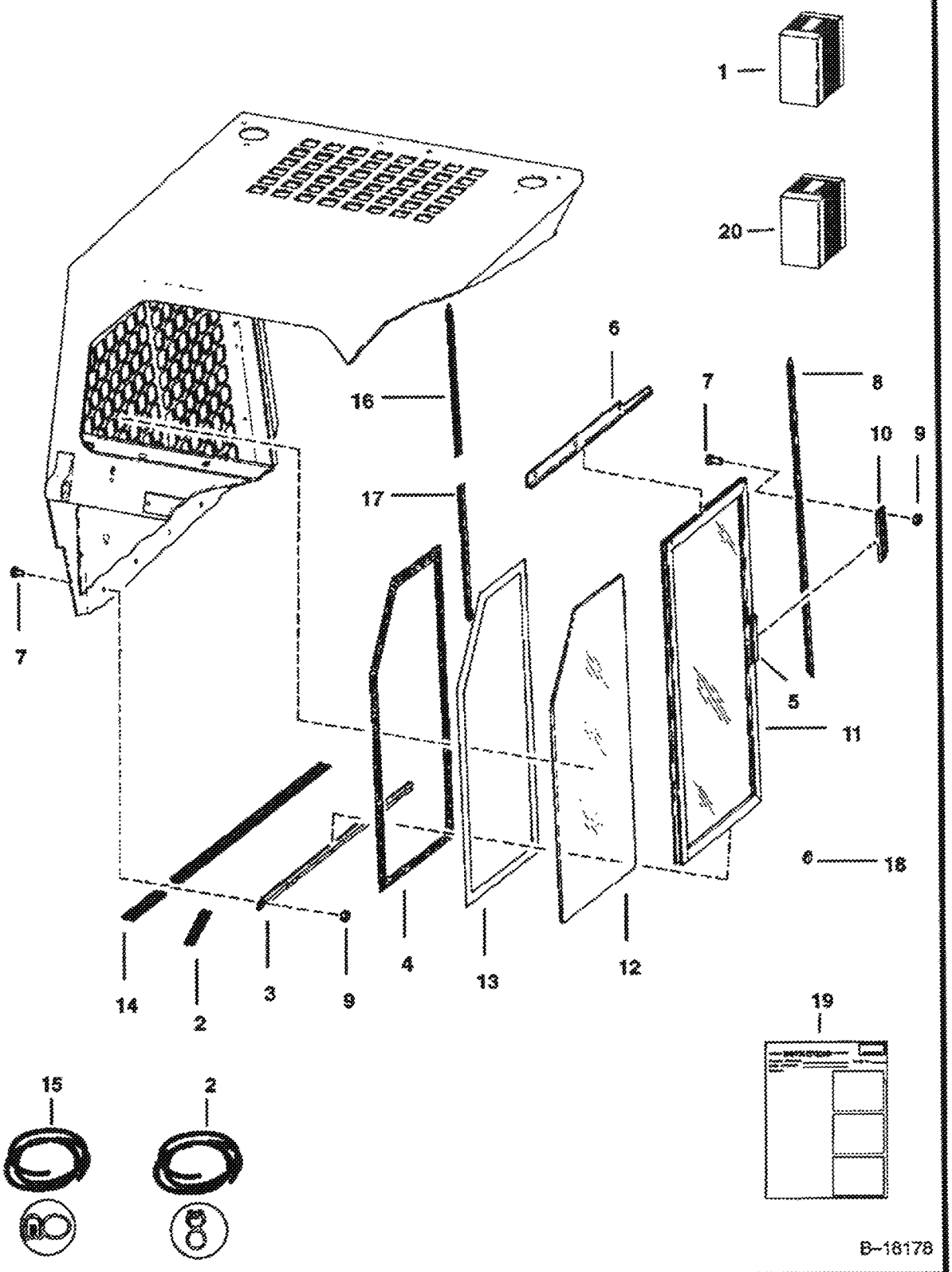

CAB WINDOWS (Cont'd)
(S/N 20001 & Above)

Ref No	Part Number	Description	Remarks	Serial Number	Qty
1	6706993	KIT	Ref. 2-19		1
2	6513152	SEAL	bulk - Sold Per Foot		x
3	6661689	TRACK	L.H.		1
3	6661690	TRACK	R.H.		1
4	6631549	HOOK	scotchmate		2
5	6659949	LATCH			2
6	6703160	TRACK	L.H.		1
6	6703159	TRACK	R.H.		1
7	35C410	BOLT 5			26
8	6630919	TRACK	R.H.		1
8	6630918	TRACK	L.H.		1
9	83D4	NUT 10			26
10	6630924	BRACKET			2
11	6658143	WINDOW	L.H.		1
11	6658142	WINDOW	R.H.		1
12	6702731	WINDOW			2
13	6631548	LOOP	scotchmate		2
14		SEAL	NAP - 24.5"(622mm) - Order Ref. 15		2
15	6555351	SEAL	bulk - Sold Per Foot		x
16	6706744	TRACK	L.H. - top half		1
17	6706745	TRACK	L.H. - bottom half		1
18	6632265	PLUG	button		2
19	6566957	INSTRUCTIONS	INSTRUCTIONS side windows		1
20	6568708	KIT	enclosure - includes L.H. hinged door, shield kit, harness side, rear & top windows		1

Page 281 - 20001 - 09/28/2009 17:03:47 - Printed by Ken Cook Co. eSpares.com (v1.24.3 8/25/2008)

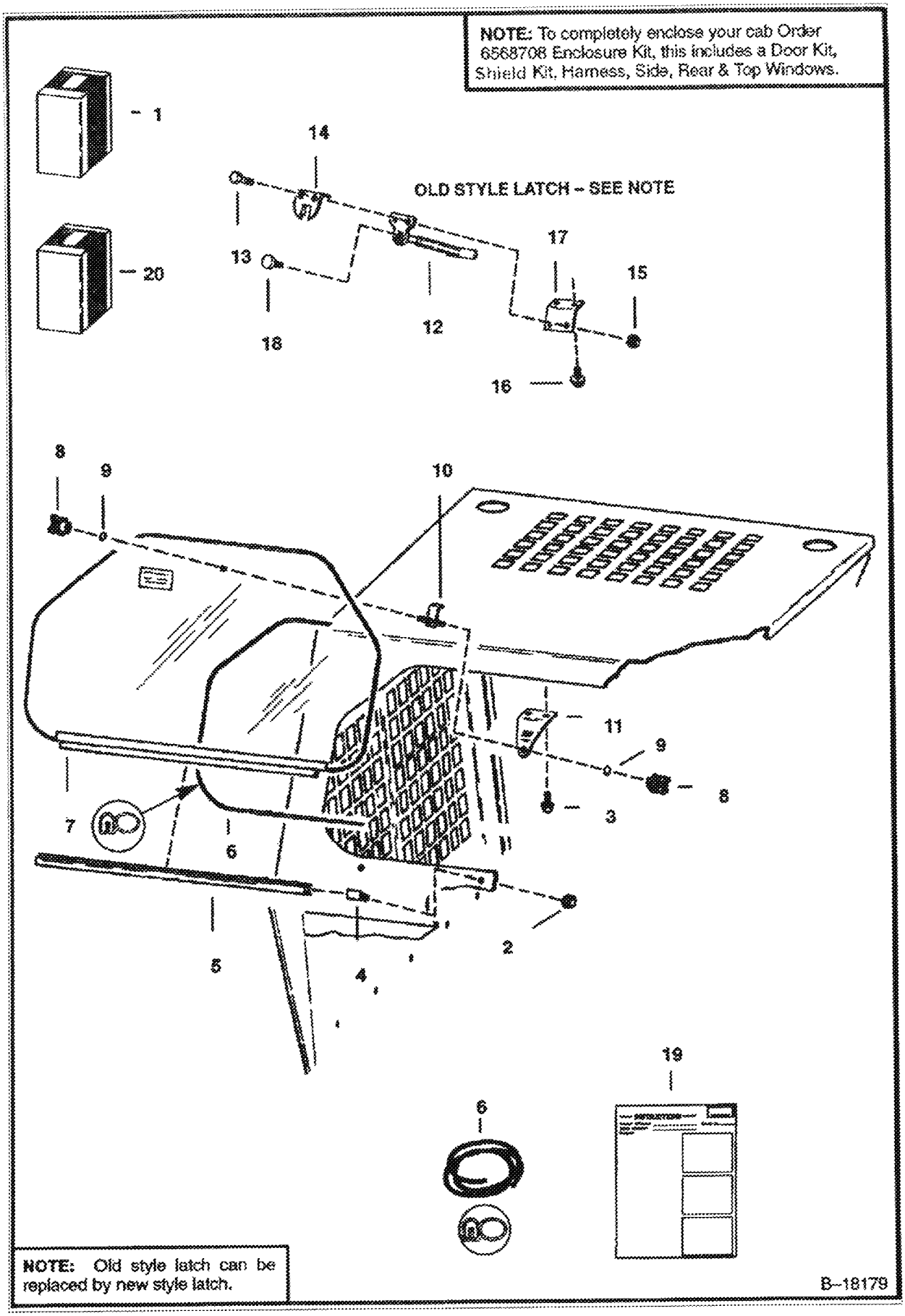
NOTE: To completely enclose your cab Order 6568706 Enclosure Kit, this includes a Door Kit, Shield Kit, Harness, Side, Rear & Top Windows.
1
20
14
OLD STYLE LATCH – SEE NOTE
13
18
12
17
15
16
8
9
10
11
9
8
3
7
6
5
4
2
19
6
NOTE: Old style latch can be replaced by new style latch.
B–18179

REAR WINDOWS (Cont'd)
(S/N 20001 & Above)

Ref No	Part Number	Description	Remarks	Serial Number	Qty
1		KIT	See Illustration REAR WINDOW KIT/ B18180 NAP		1
2	59D4	NUT 5			3
3	84G3112	BOLT 5			2
4	6576513	BOLT			3
5	6630926	HINGE			1
6	6555351	SEAL	bulk - Sold Per Foot		x
7	6630925	WINDOW			1
8	6571529	KNOB			2
9	58K000109B	O-RING			2
10	6571532	BRACKET			1
11	6571533	MOUNT			1
12		LATCH	NAP - W/Ref. 18 - Order Ref. 3, 8-11 - Was 6630929 [A]		1
13	85G001014B	BOLT			2
14		CLIP	NAP - Order Ref. 3, 8-11 - WAS 6630928 [A]		1
15	50D000010B	NUT			2
16	84G3112	BOLT 5			2
17	6568540	MOUNT			1
18	6631665	KNOB			1
19	6566955	INSTRUCTIONS	INSTRUCTIONS Rear Window		1
20	6568708	KIT	enclosure - Includes L.H. hinged door, shield kit, harness side, rear & top windows		1

NOTE: To completely enclose your cab Order 6568708 Enclosure Kit, this includes a Door Kit, Shield Kit, Harness, Side, Rear & Top Windows.

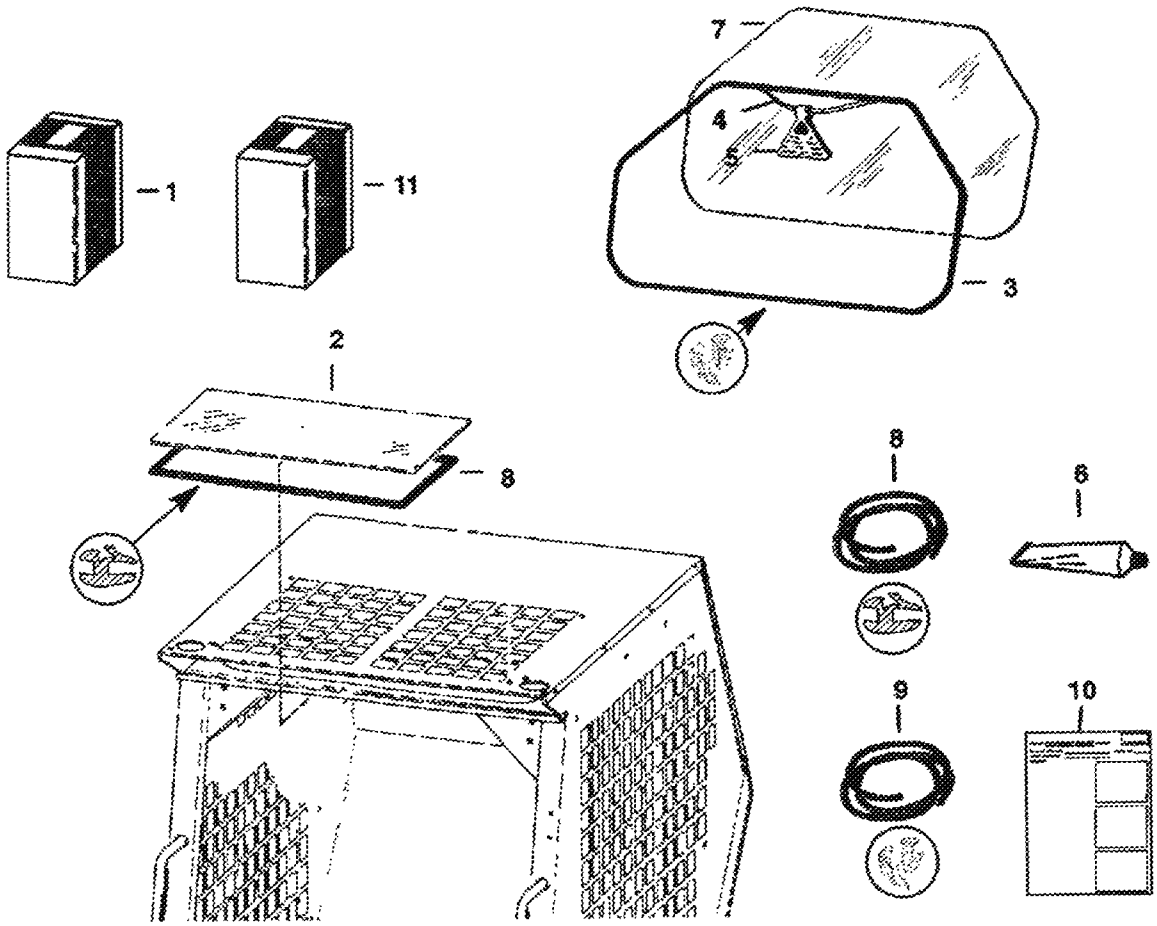

B-18180

REAR WINDOW KIT (Cont'd)
(S/N 20001 & Above)

Ref No	Part Number	Description	Remarks	Serial Number	Qty
1	6568709	KIT	rear window		1
2	6701986	WINDOW	top - use w/ Ref. 6		1
2	6705735	WINDOW	top - use w/ Ref. 8		1
3	6658352	MOULDING	bulk-Sold Per Foot - Order 8.5' (2590,8 mm)		x
4	6554149	CORD	bulk-Sold Per Foot - Order 8.5'		x
5	6731478	EXIT TAG	exit - Was 6559515 [A]		1
6	6555350	ADHESIVE			1
7	6704891	WINDOW			1
8	6664351	SEAL	Used w/ Cab Headliner		1
8	6665012	SEAL	Used w/out Cab Headliner		1
9	6658352	MOULDING	bulk-Sold Per Foot		x
10	6566955	INSTRUCTIONS			1
11	6568708	KIT	enclosure - Includes L.H. hinged door, shield kit, harness side, rear & top windows		1

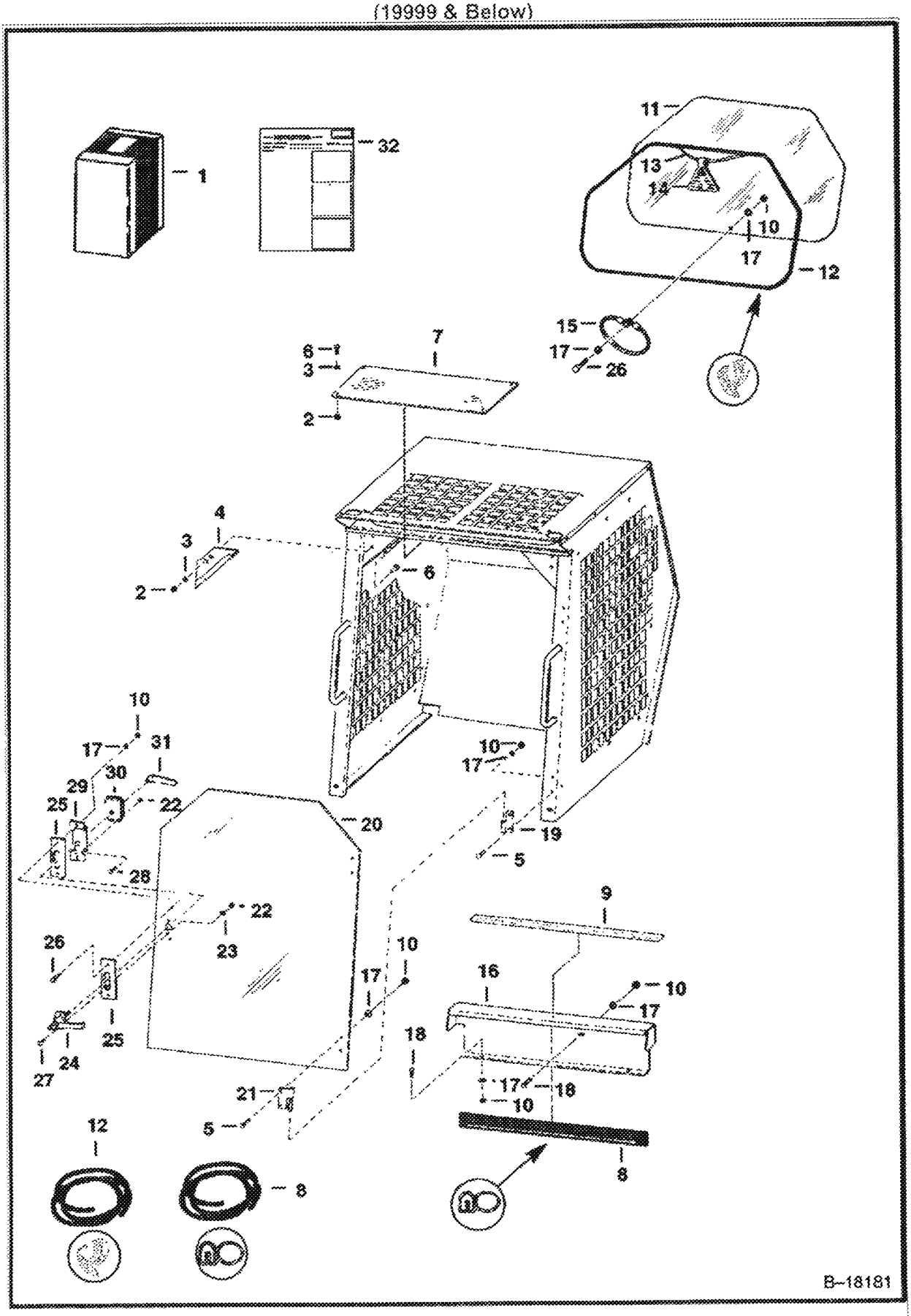
1
32
11
13
14
10
17
12
15
17
26
7
6
3
2
4
3
2
6
10
17
31
30
29
25
22
28
20
10
17
19
5
22
23
26
25
27
24
9
10
17
16
10
17
18
17
18
10
21
5
12
8
8
B–18181

CAB ENCLOSURE (Cont'd)
(Special Applications)
(19999 & Below)

Ref No	Part Number	Description	Remarks	Serial Number	Qty
1		KIT	SALES - cab enclosure - Ref. 2-32		1
2	83D6	NUT 5	Was 85D000006B [B]		2
3	25E000018B	WASHER			2
4	6555434	CHANNEL		19999 & Below	2
5	10C000512B	BOLT	Was 6553808 [A]		2
6	35C616	BOLT 5	Was 17C000612B [B]		4
7	6705216	WINDOW	Was 6564829		1
8		SEAL	NAP - Purchase Locally		1
9	6564833	SAFETY TREAD			1
10	85D5	NUT 5			17
11	6564830	WINDOW			1
12	6658352	MOULDING	bulk - Sold Per Foot - Was 6554221 [A]		x
13	6554149	CORD	bulk - Sold Per Foot - Was 6554223 [A]		x
14	6731478	EXIT TAG	exit - Was 6559515 [A]		1
15	6555331	WIRE ROPE			1
16	6563392	SHIELD		19999 & Below	1
16	6568164	SHIELD		20001 & Above	1
17	25E15	WASHER			46
18	17C000512B	BOLT			6
19	6564831	HINGE			2
20	6564069	DOOR			1
21	6564832	HINGE			2
22	12D000010B	NUT			6
23	25E000010B	WASHER			2
24	1550695	HANDLE	outside - W/Key		1
25	6555054	PLATE			x
26	17C516	BOLT			3
27	75G001020B	BOLT			2
28	45G001008B	BOLT			4
29	6555059	BRACKET			1
30	6598475	DOOR LATCH			1
31	6515600	HANDLE			1
32	6566403	INSTRUCTIONS		19999 & Below	1
32	6566995	INSTRUCTIONS		20001 & Above	1

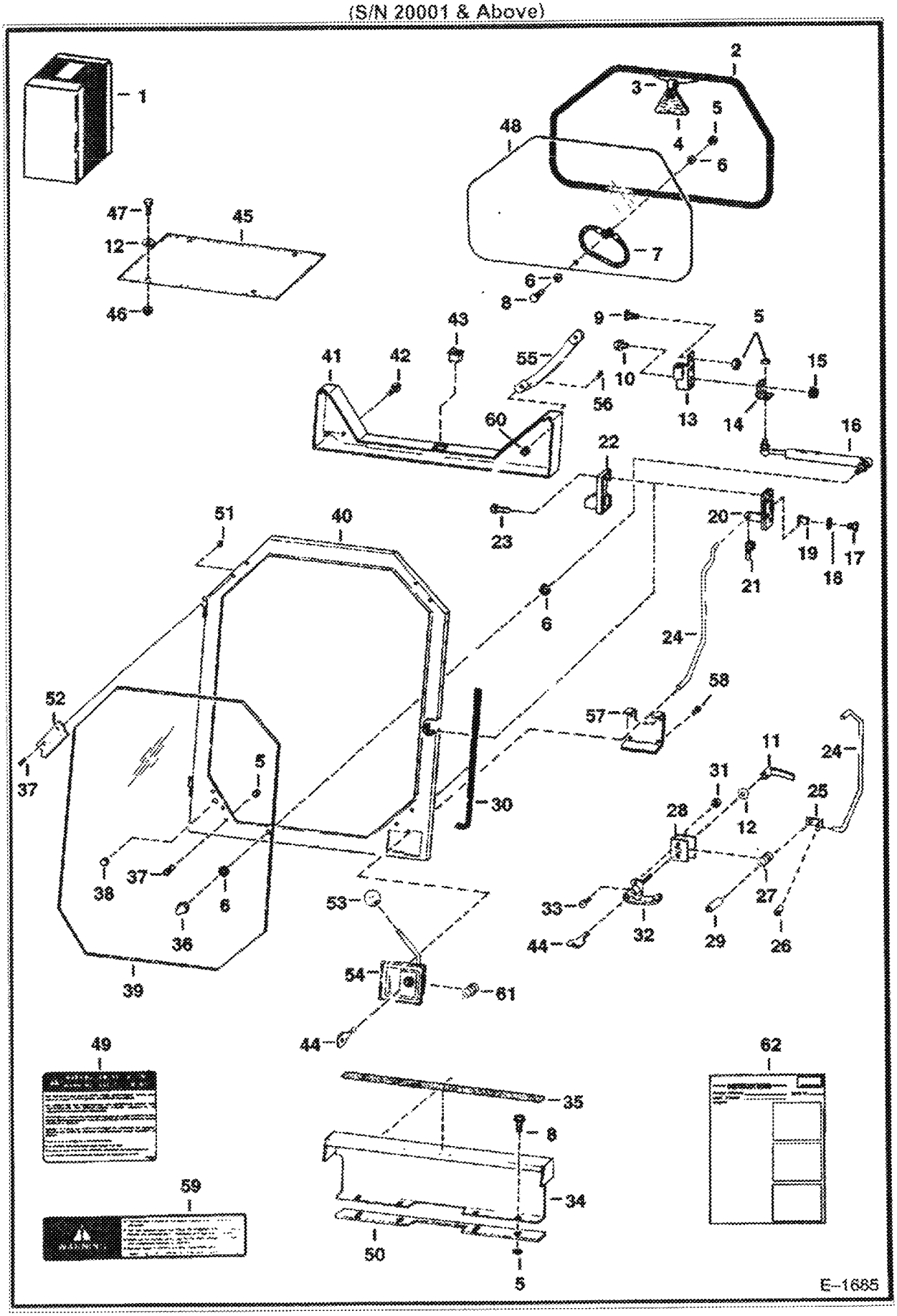
E-1685

CAB ENCLOSURE (Cont'd)
(Special Applications)
(S/N 20001 & Above)

Ref No	Part Number	Description	Remarks	Serial Number	Qty
1		KIT	SALES		1
2	6658352	MOULDING	bulk - Sold Per Foot - Was 6554221 [A]		x
3	6554149	CORD	bulk - Sold Per Foot - Was 6554223 [A]		x
4	6731478	EXIT TAG	exit - Was 6559515 [A]		1
5	83D5	NUT 5			10
6	25E000016B	WASHER			4
7	6555331	WIRE ROPE			1
8	35C516	BOLT 10			5
9	10C000512B	BOLT	Was 6553808 [A]		2
10	35C412	BOLT			2
11	6515600	HANDLE	Use with old style latch		1
12	25E000018B	WASHER	Use with old style latch		5
13	6571715	HINGE			2
14	6568055	BRACKET			1
15	83D4	NUT 10			2
16	6630797	GAS SPRING			1
17	17C000714B	BOLT			1
18	25E000019B	WASHER			x
19	6568047	NUT	bushing		1
20	6660932	LATCH	Was 6647789 [A]		1
21	6512274	CLIP			1
22	6568728	SHIELD			1
23	35C000416B	BOLT			4
24	6568727	ROD	Use with old style latch		1
24	6704425	ROD	Use with new style latch - Was 6576470 [A]		1
25	6568528	BRACKET	Use with old style latch		1
26	6519480	CLIP	Use with old style latch		1
27	6568725	SPRING	Use with old style latch		1
28	6568527	BRACKET	Use with old style latch		1
29	6568526	SPACER	Use with old style latch		1
30	6568704	MOULDING	bulk - Sold Per Foot		x
31	50D000010B	NUT			2
32	6568726	HANDLE	W/Keys - Use with old style latch		1
33	75G001016B	BOLT	W/Keys - Use with old style latch		2
34	6568164	SHIELD			1
35	6564833	SAFETY TREAD			1
36	46D000005B	NUT			1
37	25G000510B	SCREW			1
38	6632454	PLUG			1
39	6569033	WINDOW	1/2" Poly Carbonate		1
40		DOOR	See Illustration CAB DOOR/ B18175 NAP - W/Ref. 39 - WAS 6571754 [A]		1
40		DOOR	NAP - W/Ref. 39 - Use with new style latch - Was 6704434 [A]		1
41	6568724	SHIELD	Use with old style latch		1
41	6704428	SHIELD	Use with new style latch - Was 6576471 [A]		1
42	84G3112	BOLT 5			4
43	6631009	SWITCH			1
44	6632560	KEY			x
45	6705216	WINDOW	Was 6564829 [A]		1
46	83D6	NUT 5	Was 85D000006B [B]		4
47	35C616	BOLT 5	Was 17C000616B [B]		4
48	6564830	WINDOW			1
49	6563410	DECAL			1
50	6569352	SPACER			1
51	57D000005B	NUT			4

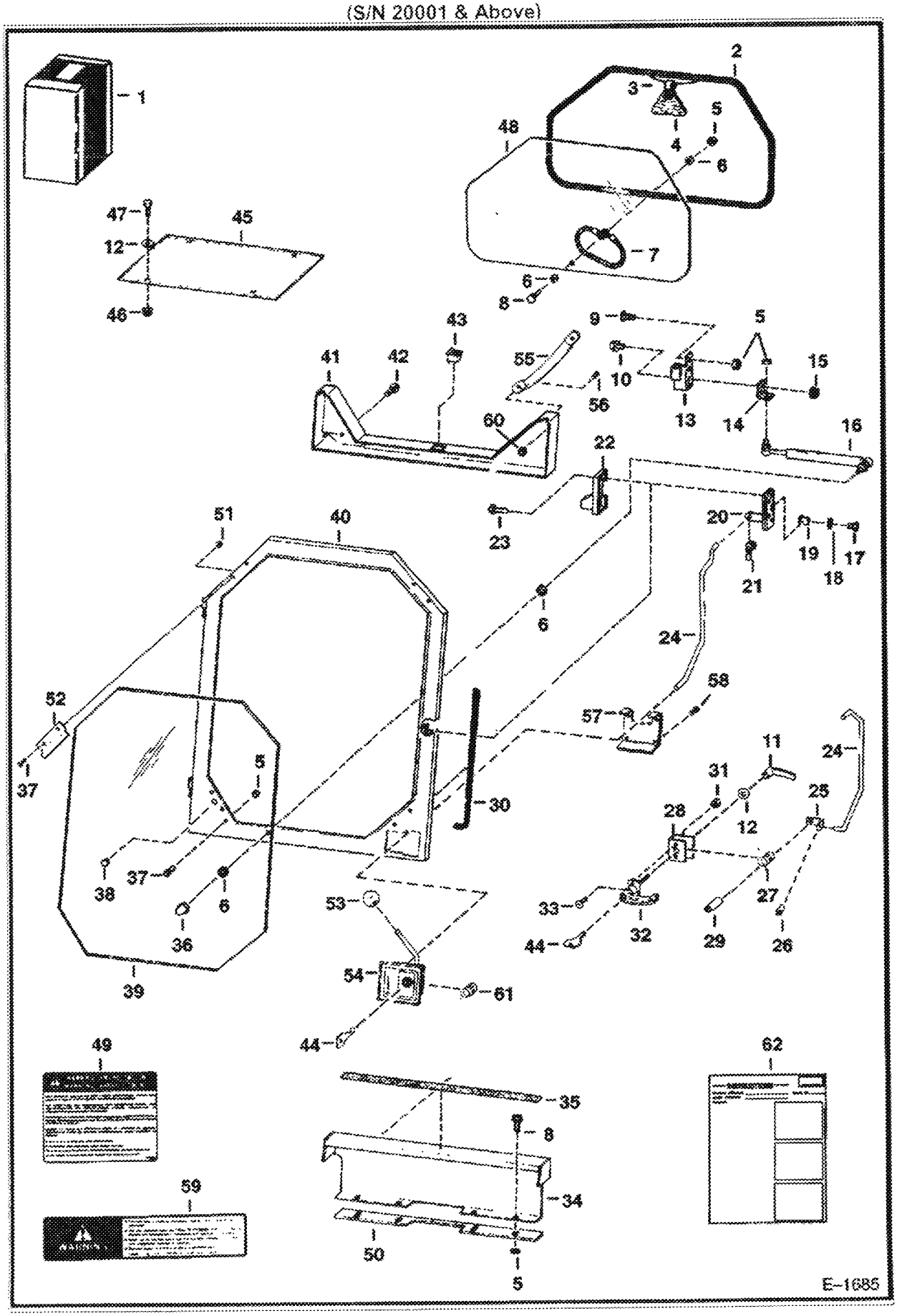
E-1685

CAB ENCLOSURE (Cont'd)
(Special Applications)
(S/N 20001 & Above)

Ref No	Part Number	Description	Remarks	Serial Number	Qty
52	6576238	CLIP	window		8
53	6647635	KNOB	Use with new style latch		1
54	6641274	LATCH	new style		1
55	6631935	HANDLE	new style		1
56	7G000416B	BOLT	new style - Was 7G000412B [B]		2
57	6704426	RETAINER	new style - Was 6578398 [A]		1
58	45G001008B	BOLT	new style		1
59	6531482	DECAL			1
60	6660988	RETAINER			2
61	6662834	SPRING			1
62	6570279	INSTRUCTIONS			1

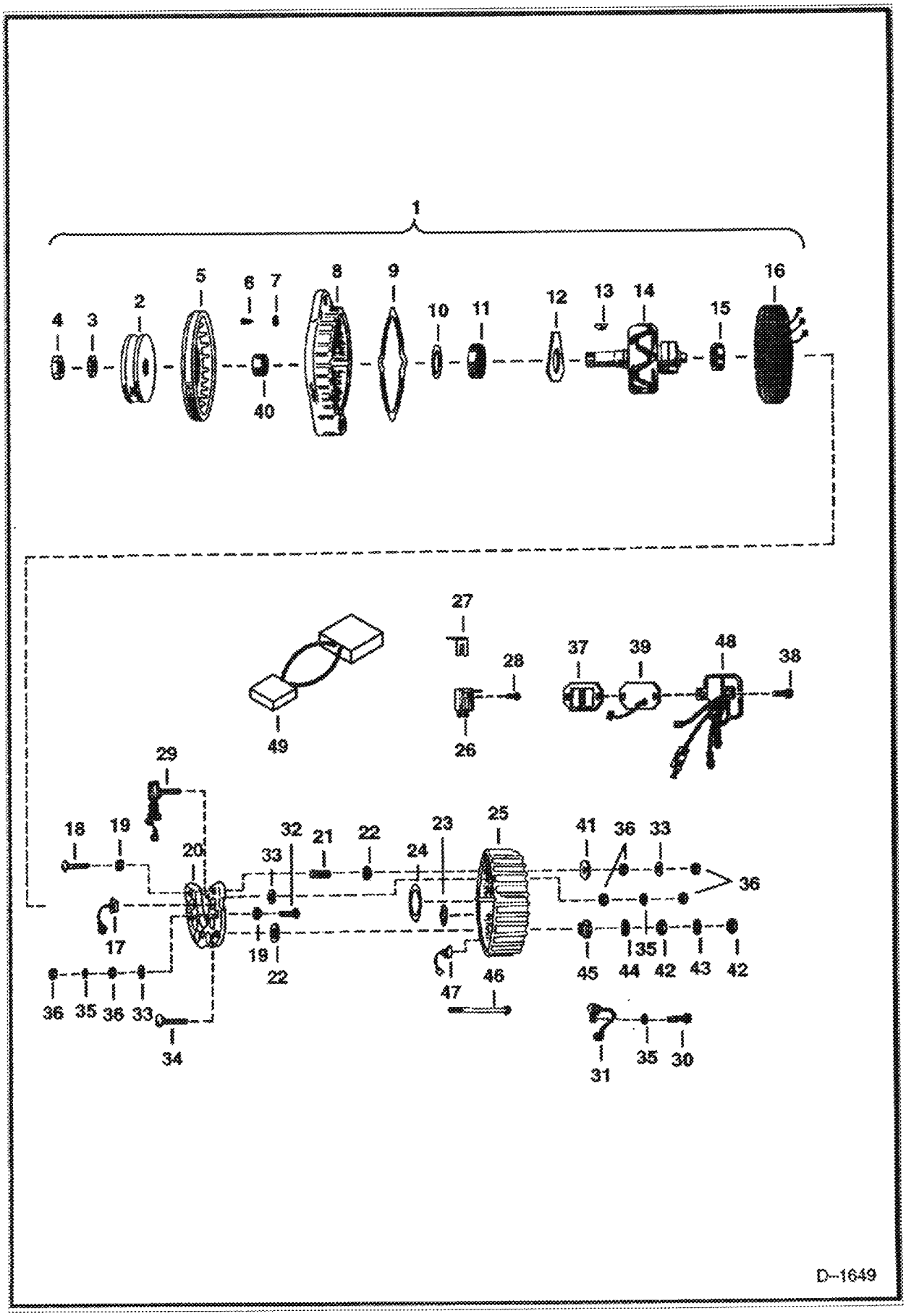
1
4
3
2
5
6
7
8
9
10
11
12
13
14
15
16
40
49
27
28
26
37
39
48
38
29
18
19
20
32
21
22
33
24
23
25
41
36
33
36
17
19
22
45
44
35
42
43
42
36
35
36
33
34
47
46
31
35
30
D--1649

CLOSED ALTERNATOR (Cont'd)
(30 Amp. Motorola or Prestolite)

Ref No	Part Number	Description	Remarks	Serial Number	Qty
1	6630098	ALTERNATOR	See BTI212 REF. 3-48		1
1		ALTERNATOR	See BTI212 NAP - 3-29, 31-48 - Order 6630098 - Was 6662990 [A]		1
2	6630164	PULLEY	Was 6630163 [B]		1
3	6635557	WASHER	Was 896978B [A]		1
4	896979B	NUT			1
5	899157B	FAN			1
6	41G000806B	SCREW			3
7	17E000008B	WASHER			3
8	6630340	HOUSING			1
9	6630345	GASKET			1
10	899374B	SEAL			1
11	889163B	BEARING			1
12	6630343	RETAINER			1
13	6J000405B	KEY			1
14	899163B	ROTOR			1
15	1991038B	BEARING			1
16	6630341	STATOR			1
17	899375B	DIODE			3
18	7C000322B	BOLT			1
19	897245B	INSULATOR			4
20	899167B	SINK	heat		1
21	897239B	SLEEVE			1
22	899376B	WASHER			2
23	899165B	INSULATOR			3
24	896992B	RETAINER			1
25	6630342	HOUSING			1
26	6630344	BRUSH ASSY.			1
27	899169B	INSULATOR			1
28	84G001608B	SCREW			2
29	6630350	DIODE	field		1
30	84G001906B	SCREW			1
31	6630348	CAPACITOR			1
32	7C000312B	BOLT			3
33	896996B	WASHER			5
34	899377B	BOLT			1
35	17E000010B	WASHER			5
36	12D000010B	NUT			10
37	899170B	GASKET			1
38	84G001910B	SCREW			2
39	6630346	COVER			1
40	6649459	CONNECTOR	Was 899158B [A]		1
41	896990B	WASHER			1
42	62D000004B	NUT			2
43	4E000004B	WASHER			1
44	897732B	WASHER			1
45	897719B	INSULATOR			1
46	896984B	BOLT	thru		4
47	899378B	DIODE			3
48	6630349	REGULATOR	voltage		1
49	6713803	HARNESS	Was 6704887 [A]		1

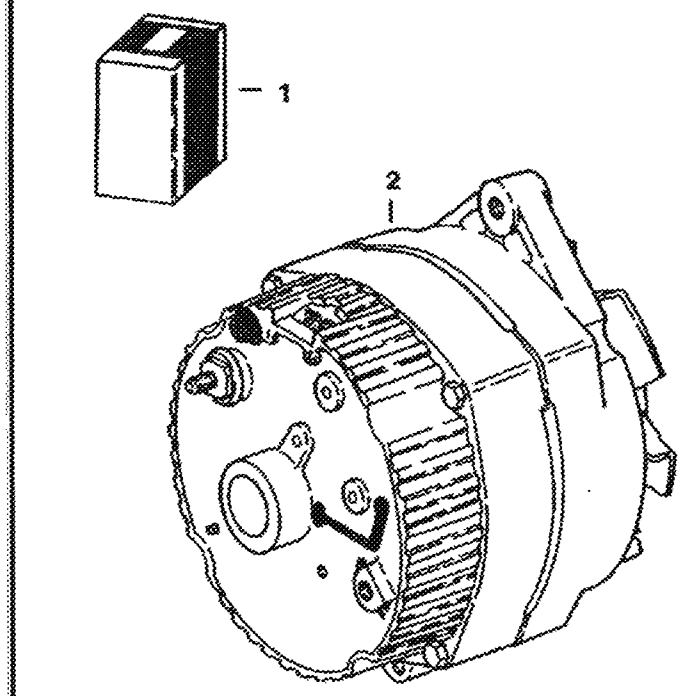

B-3075

CLOSED ALTERNATOR KIT (Cont'd)
(Delco)

Ref No	Part Number	Description	Remarks	Serial Number	Qty
1		KIT	NAP - 6559894 Kit is Not Available in Kit form - Order Ref. 2-6		1
2		ALTERNATOR	NAP - less fan & pulley - Order 6599740 REM - Was 6599740 [A]		1
3	6510596	CONNECTOR			1
4	4CM00825B	BOLT			1
5	33DM00060B	NUT			1
6	6556415	INSTRUCTIONS			1

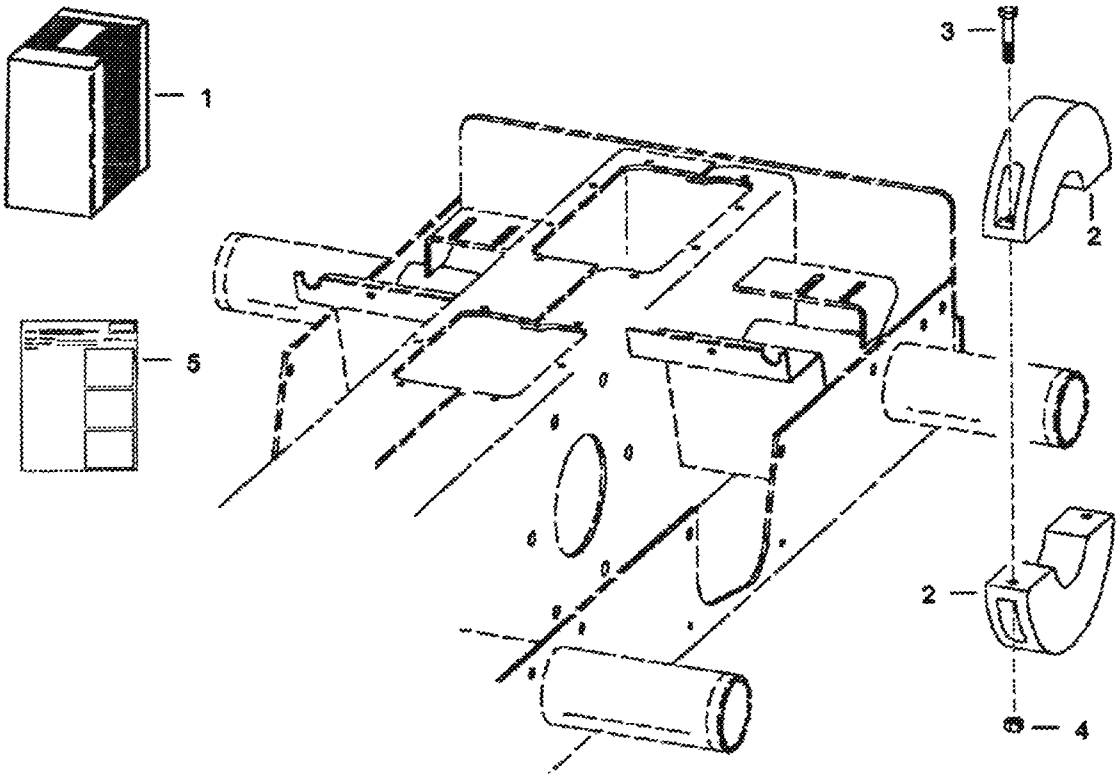

TS-1020

COUNTERWEIGHT KIT (Cont'd)
(Front Axle)

Ref No	Part Number	Description	Remarks	Serial Number	Qty
1	6704284	KIT	counterweight		1
2		WEIGHT	NAP - front axle - 19.1 lbs (8,7 kg) - Was 6702453 [A]		8
2	6714361	WEIGHT	front axle - 38.7 lbs (17,6 kg) - 4.5"(114,3 mm) wide		4
3	17C640	BOLT 5			8
4	61D000006B	NUT			8
5	6900366	INSTRUCTIONS			1

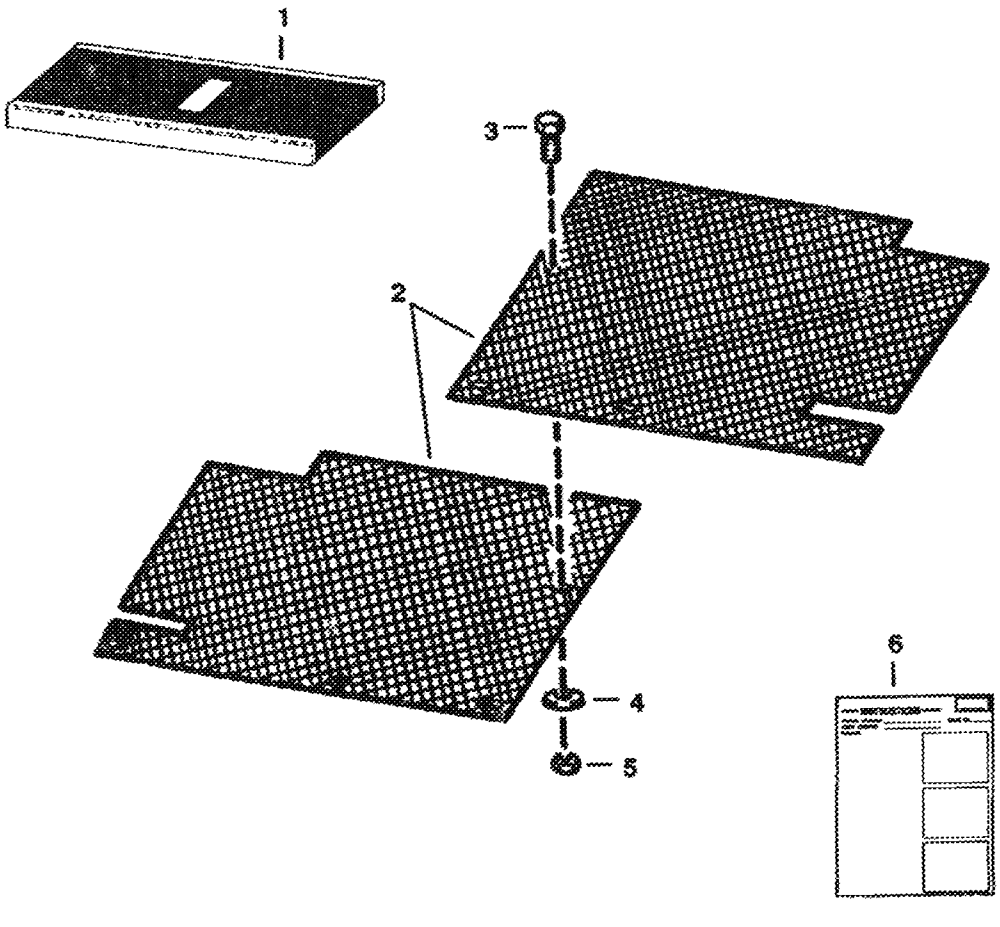

B-13510

DEBRIS SCREEN KIT (Cont'd)
(S/N 14999 & Below)

Ref No	Part Number	Description	Remarks	Serial Number	Qty
1	6564385	KIT	Ref. 2-6		1
2	6564347	SCREEN			2
3	17C412	BOLT 5			1
4	25E000013B	WASHER			2
5	59D4	NUT 5			1
6	6566302	INSTRUCTIONS			1

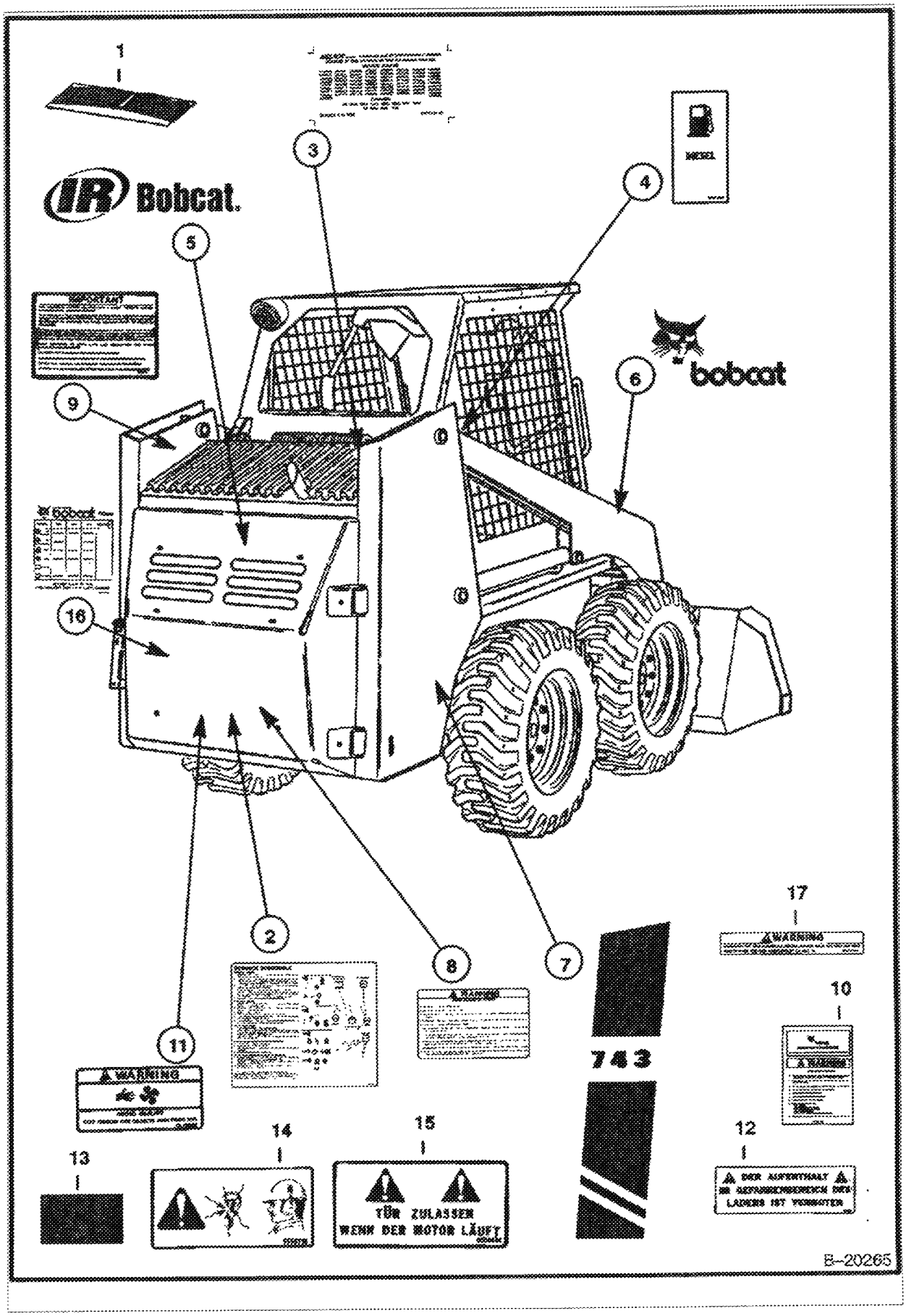
1
3
4
5
6
9
16
2
8
7
17
WARNING
10
11
WARNING
743
14
15
13
12
TÜR ZULASSEN
WENN DER MOTOR LÄUFT
B-20265

Ref No	Part Number	Description	Remarks	Serial Number	Qty
1	6569281	KIT	See Illustration DECALS/ B20266 DECAL - REF. 2-6, 8, 9, 17 & REF. 2-9, 11-17		1
2	6567875	DECAL	service		1
3	6557224	DECAL	patent		1
4	6569739	DECAL	Diesel - Was 6561379 [A]		1
5	6727307	DECAL	logo - Was 6711327 [A]		1
6	6557412	DECAL	R.H. - shown		1
6	6557413	DECAL	L.H. - not shown		1
7	6569087	DECAL	model no. - R.H. - Not in Decal Kit - shown		1
7	6569086	DECAL	model no. - L.H. - Not in Decal Kit - not shown		1
8	6579511	DECAL	Was 6565980 [A]		1
9	6560573	DECAL	spark arrestor		1
10	6556500	SAFETY MANUAL	safety - Not in Kit		1
11	6576048	DECAL	For European European Kit - Was 6557927 [A]		1
12	6558789	DECAL	For European European Kit		2
13	6558790	DECAL	red reflective - For European European Kit		2
14	6558791	DECAL	ear protective - For European European Kit		1
15	6559038	DECAL	For European European Kit		1
16	6579534	DECAL	filters - Not in Kit - Was 6567696 [A]		1
17	6577754	DECAL	gas spring warning - Was 6568741 [A]		2

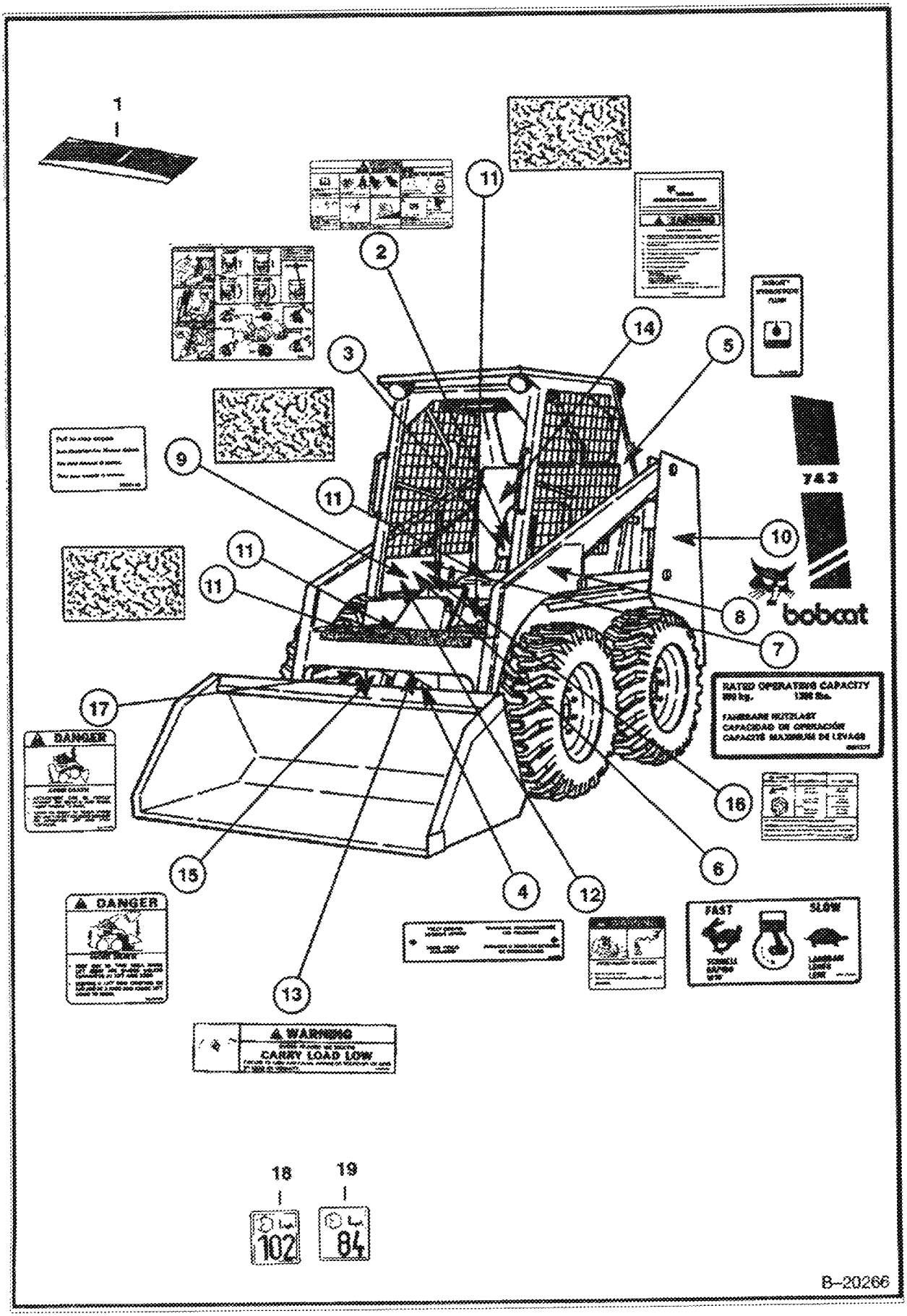
1
2
3
4
5
6
7
8
9
10
11
11
11
12
13
14
15
16
17
18
19
743
bobcat
DANGER
DANGER
WARNING
CARRY LOAD LOW
FAST
SLOW
102
84
B-20266

Ref No	Part Number	Description	Remarks	Serial Number	Qty
1	6569281	KIT	See Illustration DECALS/ B20266 See Illustration DECALS/ B20265 DECAL - REF. 2-9, 11-17 & REF. 2-6, 8, 9 & 17		1
2	6579510	DECAL	warning		1
3	6708294	DECAL	operating - Was 6708249 [B,D]		1
4	6561383	DECAL	Bob-Tach		1
5	6565990	DECAL	hydraulic/hydrostatic fluid		1
6	6735140	DECAL	throttle - Was 6557565 [A]		1
7	6561377	DECAL	capacity		1
8	6557413	DECAL	L.H.		1
8	6557412	DECAL	R.H.		1
9	6562448	DECAL	engine stop		1
10	6569086	DECAL	model no. - L.H. - Not in Decal Kit - shown		1
10	6569087	DECAL	model no. - R.H. - Not in Decal Kit - not shown		1
11	6553976	SAFETY TREAD	5" x 8"		1
11	6577949	SAFETY TREAD	6.8" x 8.75" - Was 6553977 [A]		2
11	6553978	SAFETY TREAD	35" x 8"		1
11	6554100	TREAD	3" x 6" (76,2 mm x 152,4 mm)		1
12	6710358	DECAL	warning		1
13	6579528	DECAL	carry load low - Was 6565254 [A]		1
14	6567795	HANDBOOK	handbook - W/Wire Rope		1
14	6558309	WIRE ROPE	33" (838,2 mm) - Bulk - Sold Per Foot - Also Order 2 6558310 Sleeves - Was 6558305 [A]		1
14	6558310	SLEEVE	wire rope		2
15	6579639	DECAL	danger - Was 6702302 [A]		1
16	6565927	DECAL	preheat		1
17	6579509	DECAL	danger - Was 6702301 [A]		1
18	6579385	DECAL	sound level warning		1
19	6579404	DECAL	sound level warning		1

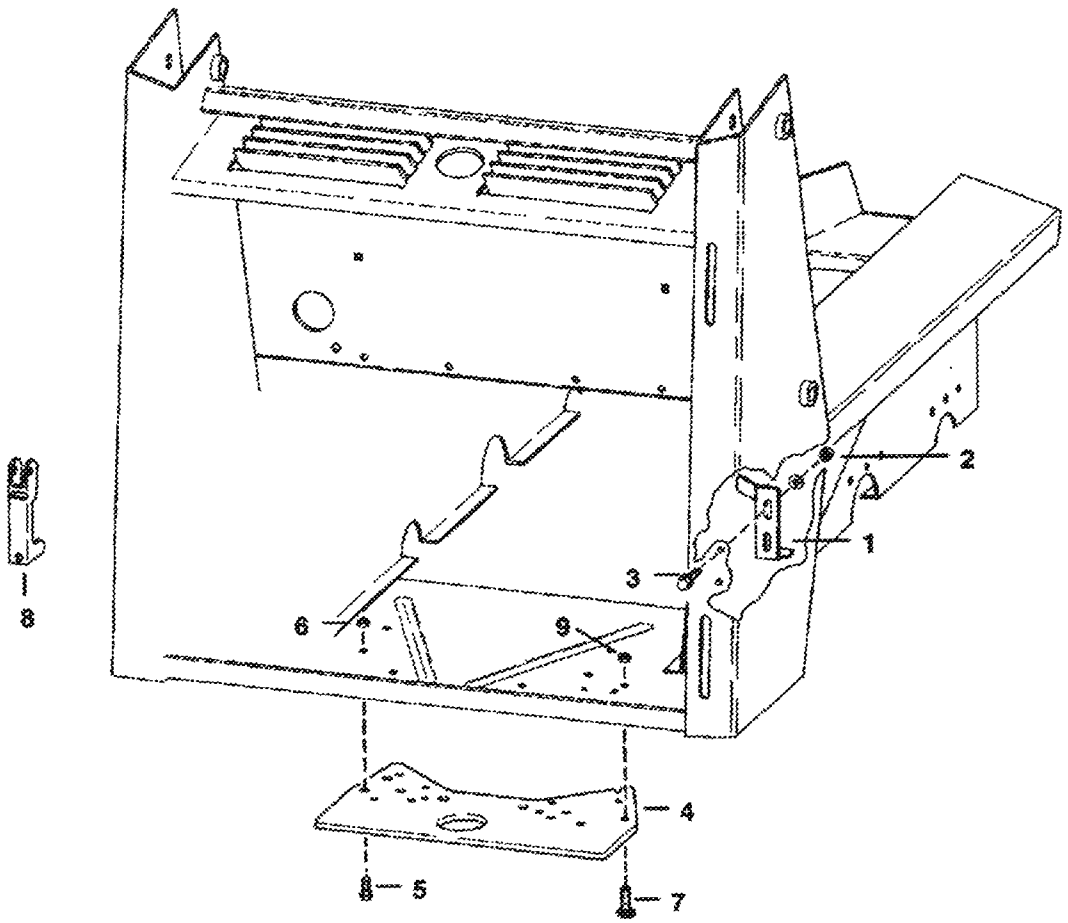

B-18185

EUROPEAN ACCESSORIES (Cont'd)
(Door Stop & Tow Hitch)

Ref No	Part Number	Description	Remarks	Serial Number	Qty
1	6563614	DOOR STOP			1
1	6579652	DOOR STOP			1
2	6563612	BUSHING			1
3	84G003724B	BOLT			1
4	6563613	HITCH			1
5	17C000824B	BOLT			2
5	17C000844B	BOLT			2
6	83D8	NUT 5			2
7	17C000628B	BOLT	Was 7C000832B [B]		2
8	6563681	HANDLE	rear door - Was 6563989 [A]		1
9	83D6	NUT 5			4

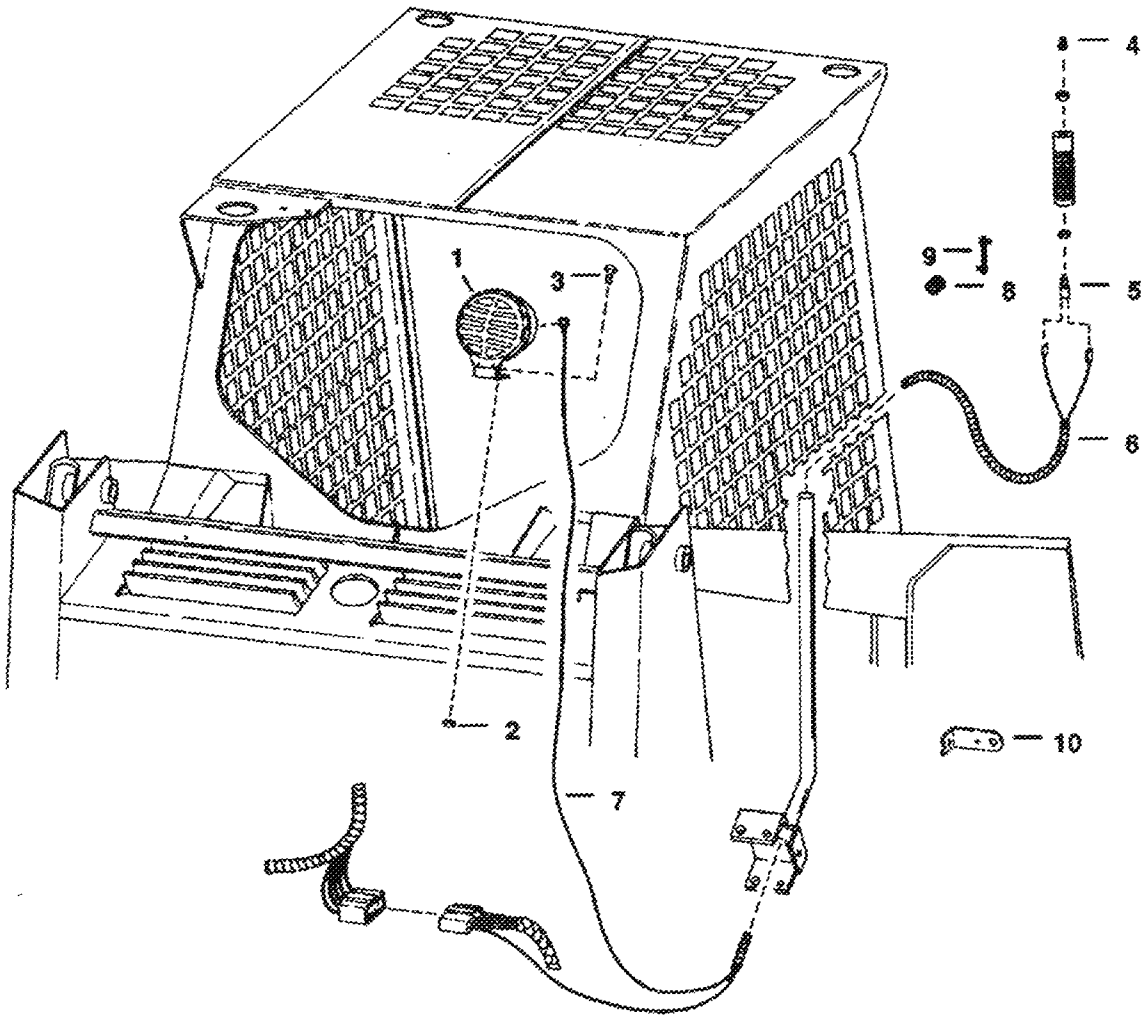
1
2
3
4
5
6
7
8
9
10
D–1458

EUROPEAN ACCESSORIES (Cont'd)
(Horn Kit)

Ref No	Part Number	Description	Remarks	Serial Number	Qty
1	6559478	HORN	See Illustration HORN KIT/ MC1684 ALSO BEFORE ORDERING PARTS	19999 & Below	1
1	6630988	HORN		20001 & Above	1
2	83D5	NUT 5			1
3	7C000516B	BOLT			1
4	6660205	SEAL	Was 6513483 [A]		1
5	6513482	SWITCH			1
6	6563604	HARNESS			1
7	6563605	HARNESS		19999 & Below	1
7	6568819	WIRE		20001 & Above	1
8	6519484	GROMMET			1
9	6513498	CLIP			3
10	6630987	BRACKET		20001 & Above	1

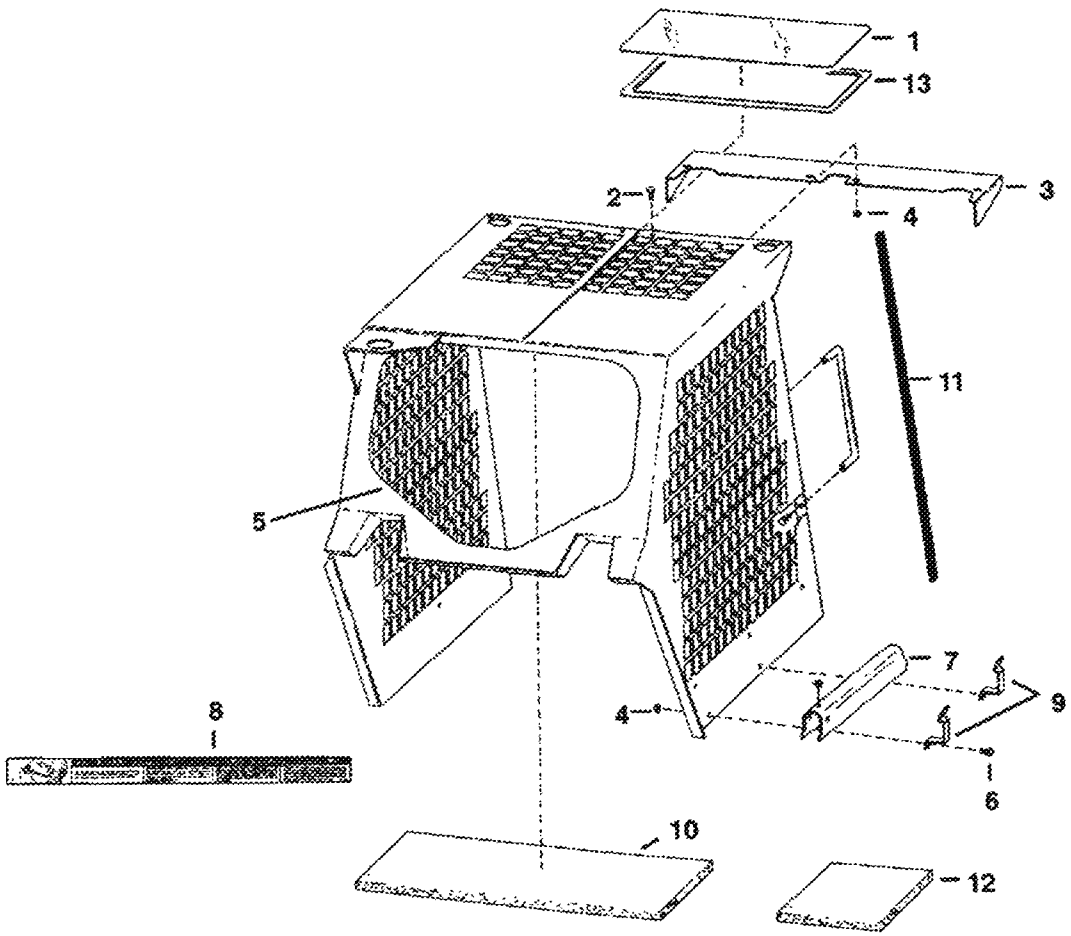
1
13
2
3
4
11
5
7
9
8
4
6
10
12
B-17772

EUROPEAN ACCESSORIES (Cont'd)
(Operator Cab)

Ref No	Part Number	Description	Remarks	Serial Number	Qty
1	6701986	WINDOW	top - Was 6563391 [A]	& Below	1
1	6705735	WINDOW	top	& Above	1
2	31C000612B	BOLT			4
3	6563611	VISOR			1
4	83D6	NUT 5			6
5	6560072	MOULDING			1
6	17C000614B	BOLT			4
7	6563449	STOP	lift arm - W/Ref. 8		1
8	6563423	DECAL			1
9	6563603	BRACKET			2
10	6563602	HEADLINER			1
11	6563986	MOULDING			1
12	6565372	INSULATION	cab back		1
12	6565373	INSULATION	cab top		1
12	6565376	INSULATION	seat pan		1
12	6565377	INSULATION	seat pan		1
13	6664351	SEAL	used w/cab headliner	& Above	1
13	6665012	SEAL	used w/o cab headliner	& Above	1

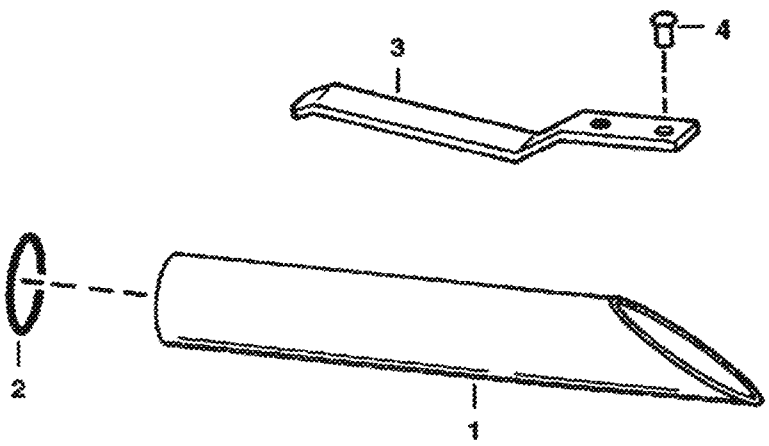

A-2772

EUROPEAN ACCESSORIES (Cont'd)
(Fuel Fill Extension)

Ref No	Part Number	Description	Remarks	Serial Number	Qty
1	6563987	EXTENSION			1
2	79K20	O RING 10			1
3	6564304	RETAINER			1
4	6630207	RIVET	Was 6512797 [A]		2

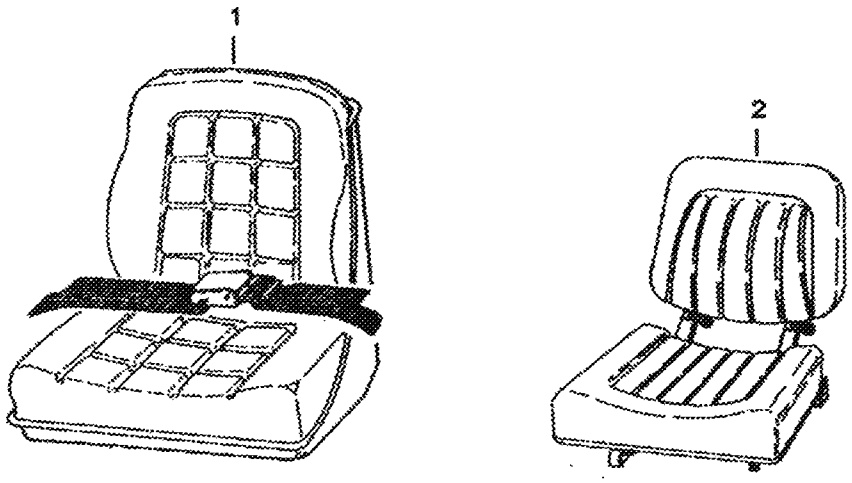

B-13512

EUROPEAN ACCESSORIES (Cont'd)
(Seat)

Ref No	Part Number	Description	Remarks	Serial Number	Qty
1	6563140	SEAT	Std.		1
2		SEAT	NAP - adjustable back - Optional - Was 6565119 [A]		1

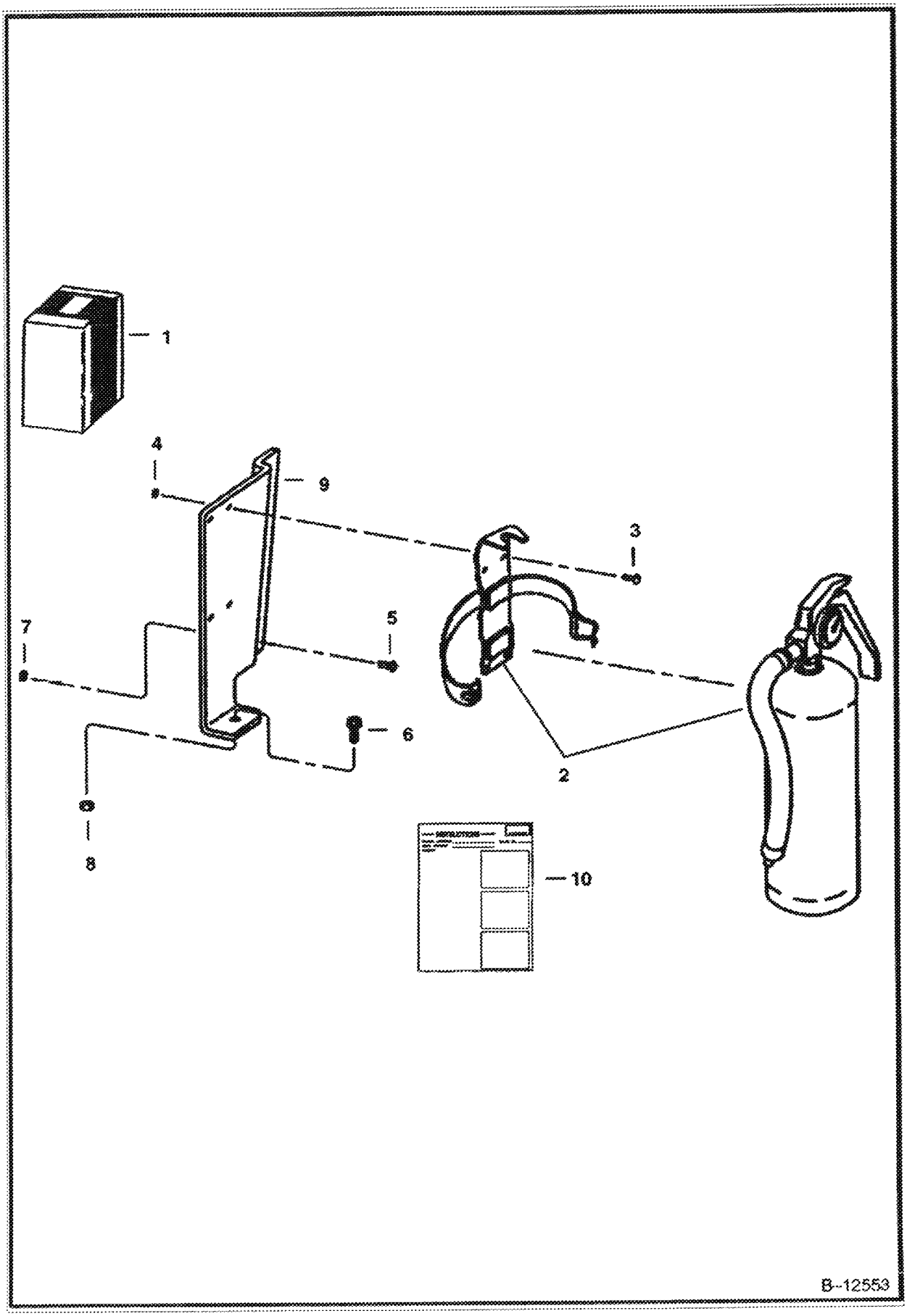
1
4
9
3
7
5
6
2
8
10
B-12553

FIRE EXTINGUISHER (Cont'd)

Ref No	Part Number	Description	Remarks	Serial Number	Qty
1	6569112	KIT	fire extinguisher - Ref. 2 - 10		1
2	1908806B	EXTINGUISHER	fire		1
3	85G001008B	BOLT			4
4	12D000010B	NUT			4
5	25G000410B	BOLT			2
6	35C516	BOLT 10			1
7	83D4	NUT 10			2
8	83D5	NUT 5			1
9	6569095	MOUNT			1
10	6570040	INSTRUCTIONS			1

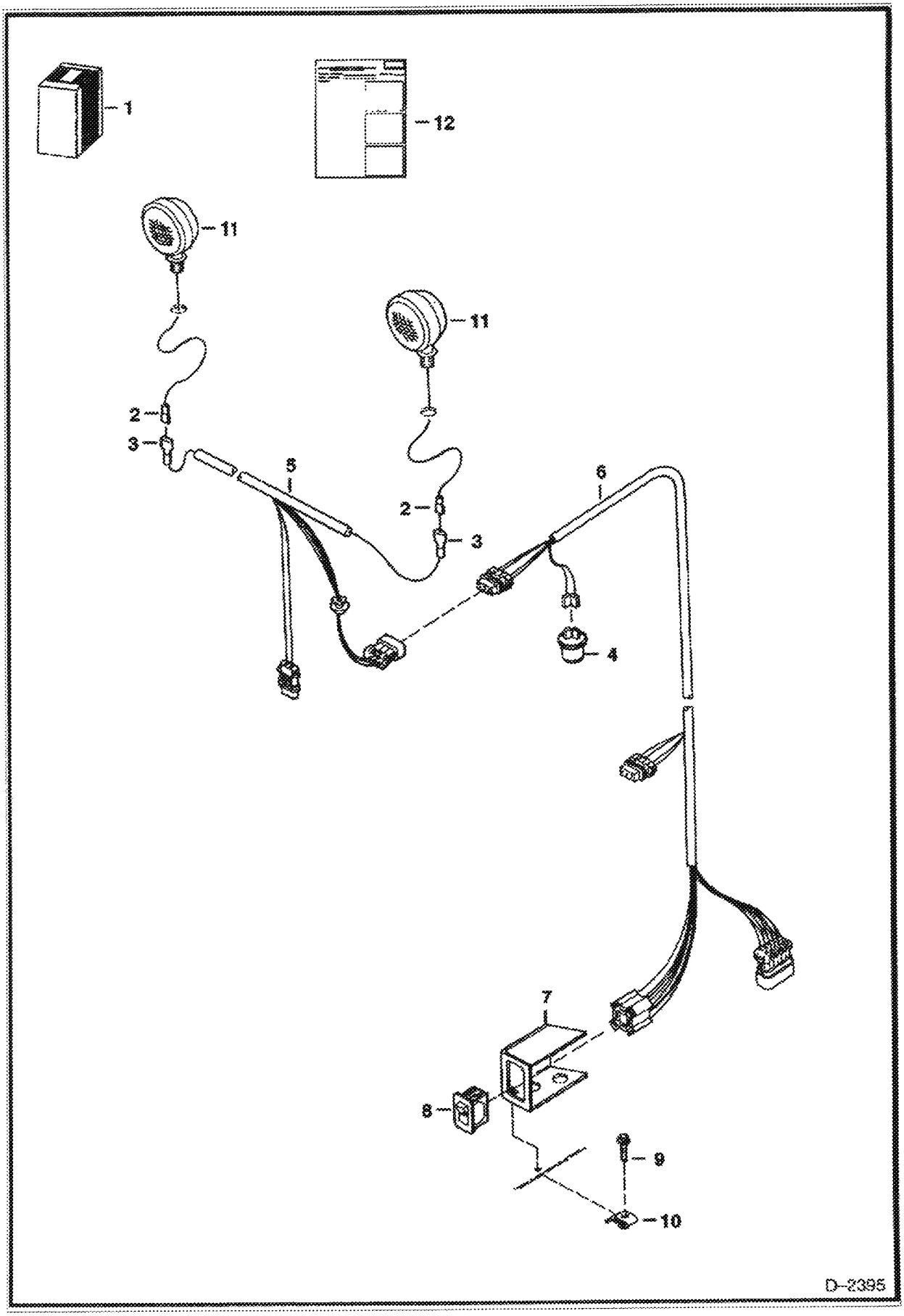
1
12
11
11
2
3
5
2
3
6
4
7
8
9
10
D-2385

Ref No	Part Number	Description	Remarks	Serial Number	Qty
1	6558076	KIT	Flasher - Ref. 2 - 6		1
2	614142B	SLEEVE			2
3	6515131	TERMINAL			2
4	6557904	FLASHER			1
5	6714213	HARNESS			1
6	6712288	HARNESS			1
7	6711708	MOUNT			1
8	6668815	SWITCH			1
9	31C000420B	BOLT			2
10	6660988	RETAINER			2
11	6517516	LIGHT	Was 6557903 [A]		2
12	6556222	INSTRUCTIONS			1

FUEL VALVE KIT
(S/N 14084 & Below)

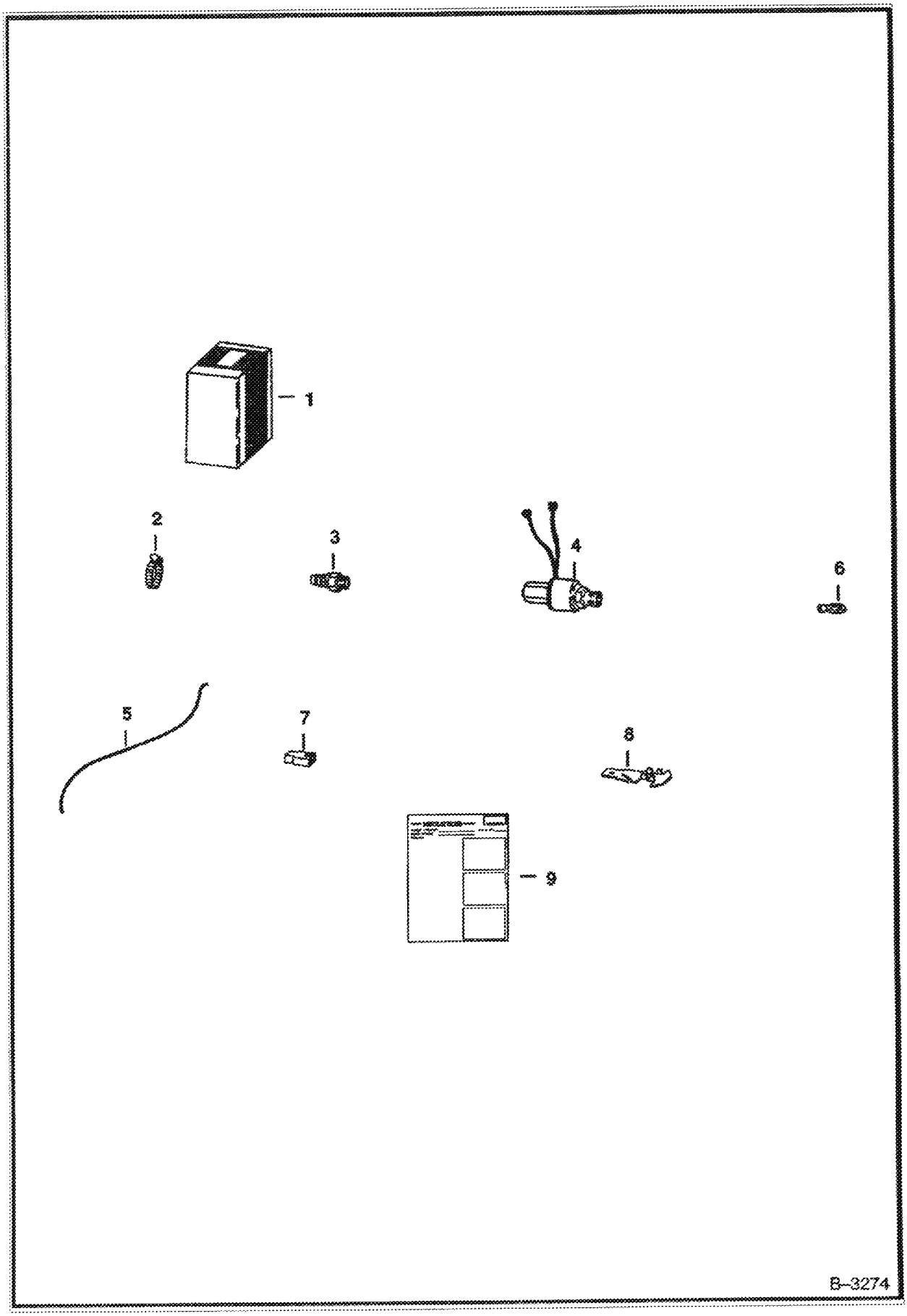

FUEL VALVE KIT (Cont'd)
(S/N 14084 & Below)

Ref No	Part Number	Description	Remarks	Serial Number	Qty
1	6560569	KIT	valve fuel - Ref. 2-9		1
2	6515575	CLAMP			2
3	6505813	CONNECTOR			2
4	6559117	SOLENOID			1
5		WIRE	NSS		1
6		EYELET	NSS		1
7		CONNECTOR	NSS		1
8		TERMINAL	NSS		1
9	6556562	INSTRUCTIONS			1

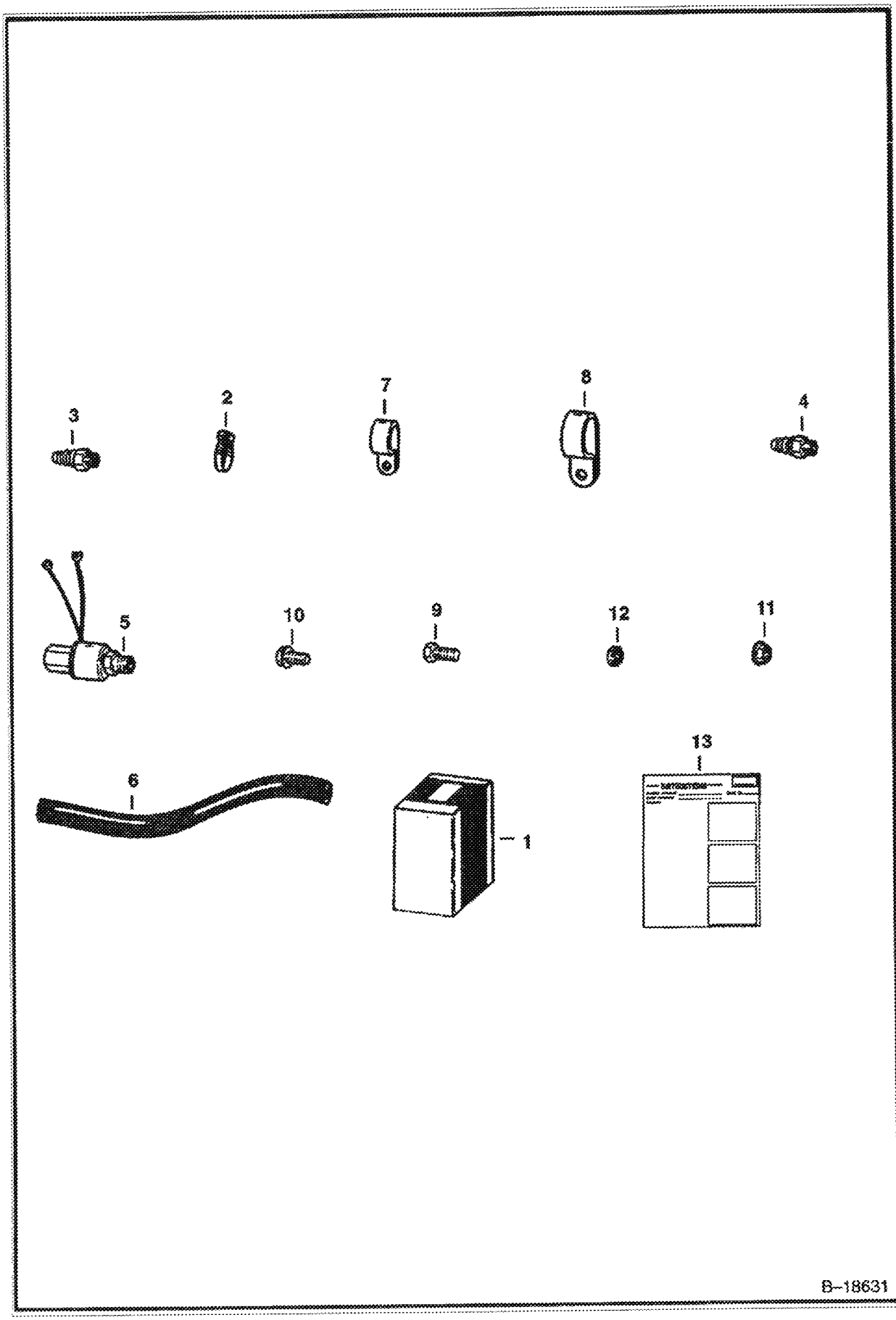
3
2
7
8
4
5
10
9
12
11
6
1
13
B-18631

FUEL VALVE KIT (Cont'd)
(S/N 14085 & Above)

Ref No	Part Number	Description	Remarks	Serial Number	Qty
1	6565553	KIT	fuel valve - Ref. 2-13		1
2	6515575	CLAMP			2
3	6505813	CONNECTOR	For 1/4" (6,35 mm) I.D. Hose		2
4	6513421	CONNECTOR	For 5/16" (7,93 mm) I.D. Hose		2
5	6559117	SOLENOID			1
6	6577822	HOSE	bulk - Sold Per Foot - Was 6562515 [A]		x
7	30H30	CLAMP	1/2" (12,7 mm) I.D.		2
8	30H000057B	CLAMP	1-1/8" (28,57 mm) I.D.		1
9	84G3112	BOLT 5			1
10	35C516	BOLT 10			1
11	57D000005B	NUT			1
12	4DM8	NUT			1
13	6566524	INSTRUCTIONS			1

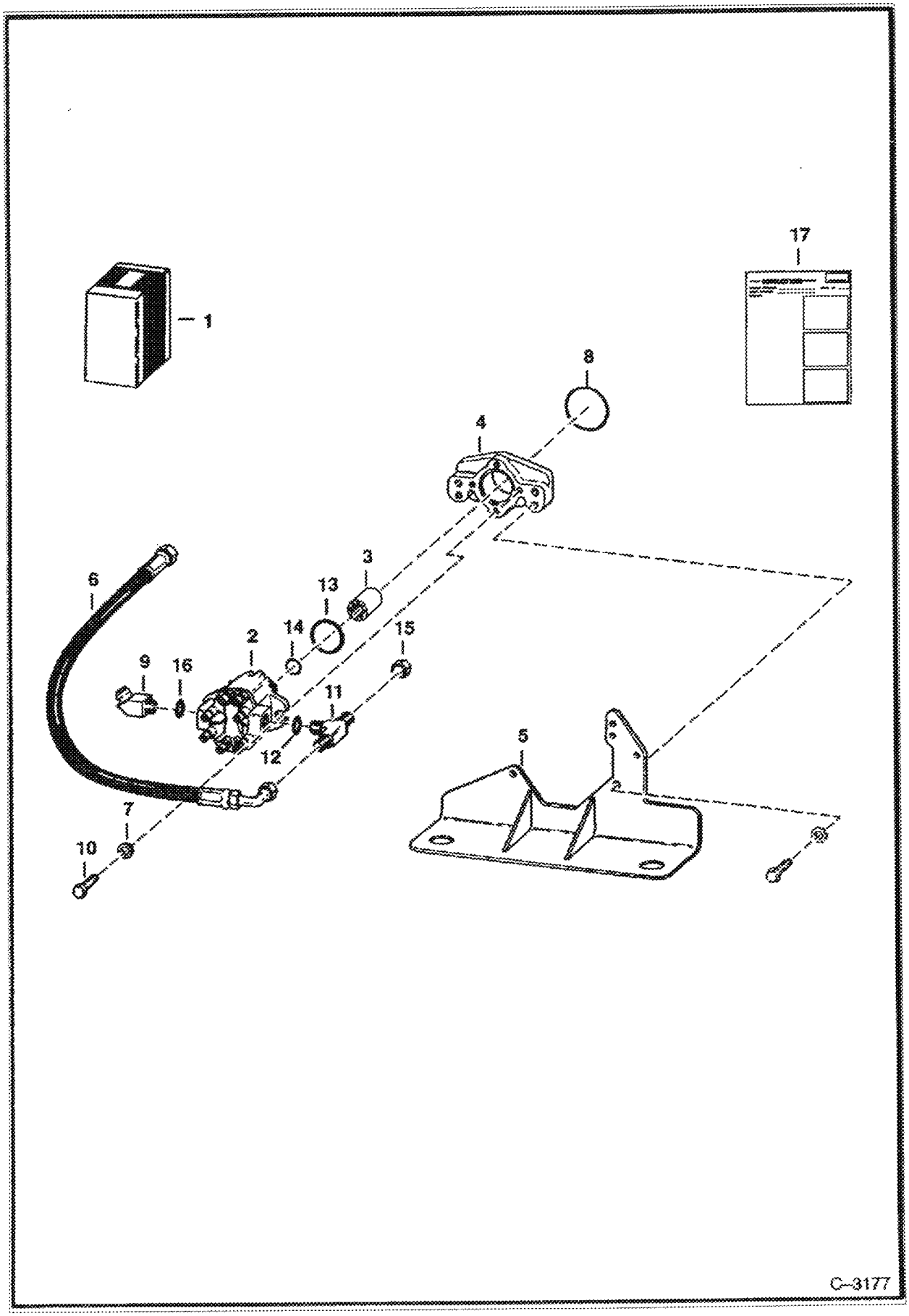
17
1
8
4
3
6
13
2
14
15
9
16
11
12
5
7
10
C-3177

GEAR PUMP KIT (Cont'd)
(S/N 15001 & Above)

Ref No	Part Number	Description	Remarks	Serial Number	Qty
1	6578864	KIT	W/Ref. 2-16 - Backup alarm kit 6579094 will not work with this kit, use kit 6703978		1
2		GEAR PUMP	NAP - Order 6662894 & 6705891 Hose Was 6648323 [A]		1
2	6662894	GEAR PUMP	See Illustration GEAR PUMP/ B18187		1
3	6650105	COUPLER	spline		1
4	6578778	ADAPTER			1
5	6577493	BRACKET			1
6	6705891	HOSE	Was 6704270 [A]		1
7	6510584	WASHER			2
8	6512949	O-RING			1
9	6577888	ELBOW	W/Ref. 16		1
10	17C620	BOLT	Was 17C000616B [B]		2
11	19K000006B	TEE	W/Ref. 12 - Was 17K000006B [B]		1
12	79K8	O RING 10			1
13	25K030308B	O-RING			1
14	25K030022B	O-RING			1
15	36K6	CAP			1
16	79K12	O RING 10			x
17	6570766	INSTRUCTIONS			1

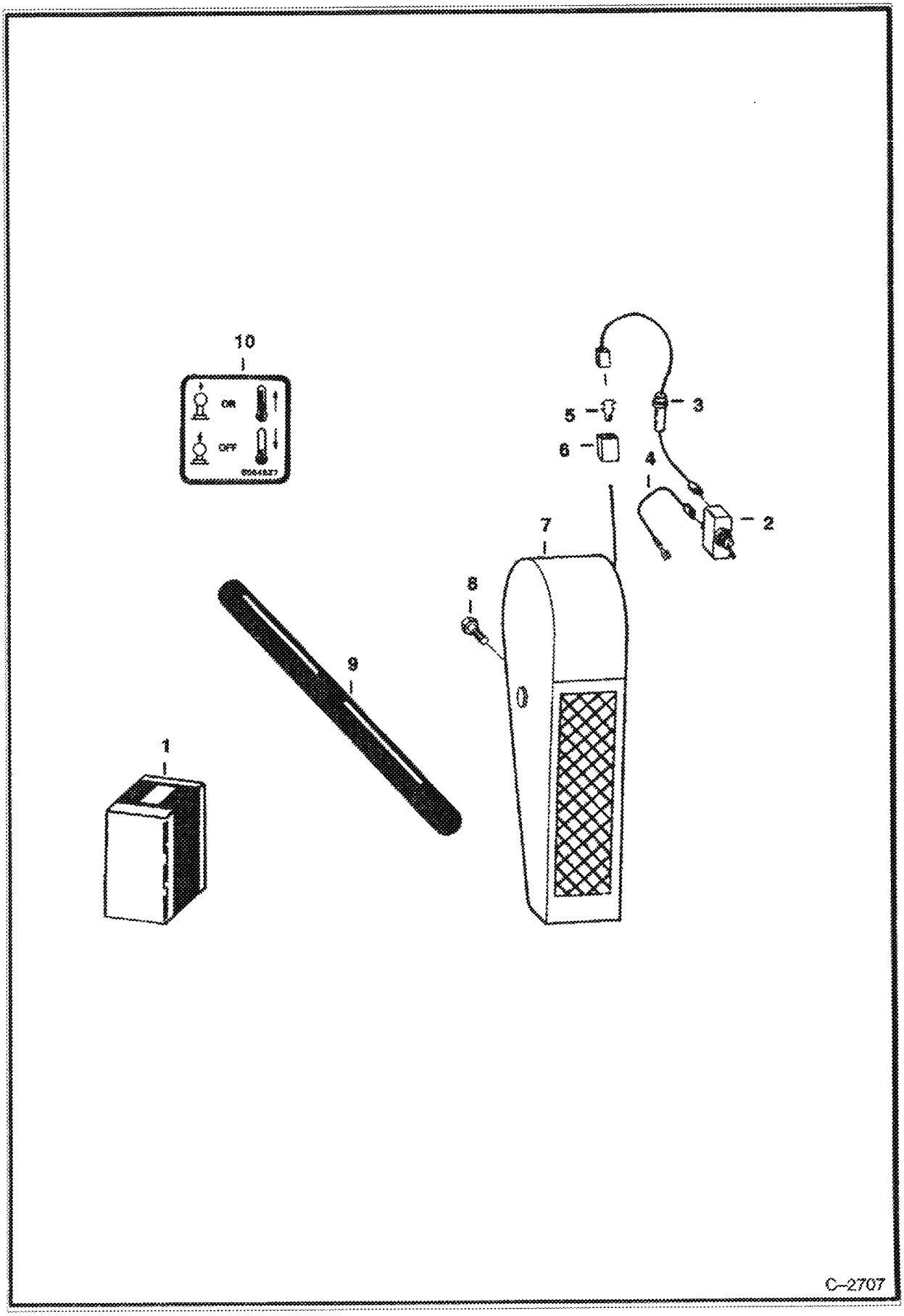
10
ON
OFF
5
3
6
4
2
7
8
9
1
C-2707

HEATER KIT (Cont'd)
(Red Dot)

Ref No	Part Number	Description	Remarks	Serial Number	Qty
1		KIT	See Illustration HEATER KIT/ B24470 See Illustration HEATER PLUMBING KIT/ B17828 NAP - HEATER - REF. 2-10 -ORDER 6648496 KIT - FOR PLUMBING KIT - WAS 6564522 [A]		1
2	6515521	SWITCH			1
3	6565514	WIRE	W/Fuse		1
3	661556B	FUSE			1
4	6564517	WIRE			1
5	1675806B	TERMINAL			1
6	6519548	CONNECTOR			1
7	6599355	HEATER	See Illustration HEATER/ B17829		1
8	17C412	BOLT 5			4
9		SHIELD	NAP - Was 6564545 [A]		2
10	6564527	DECAL			1

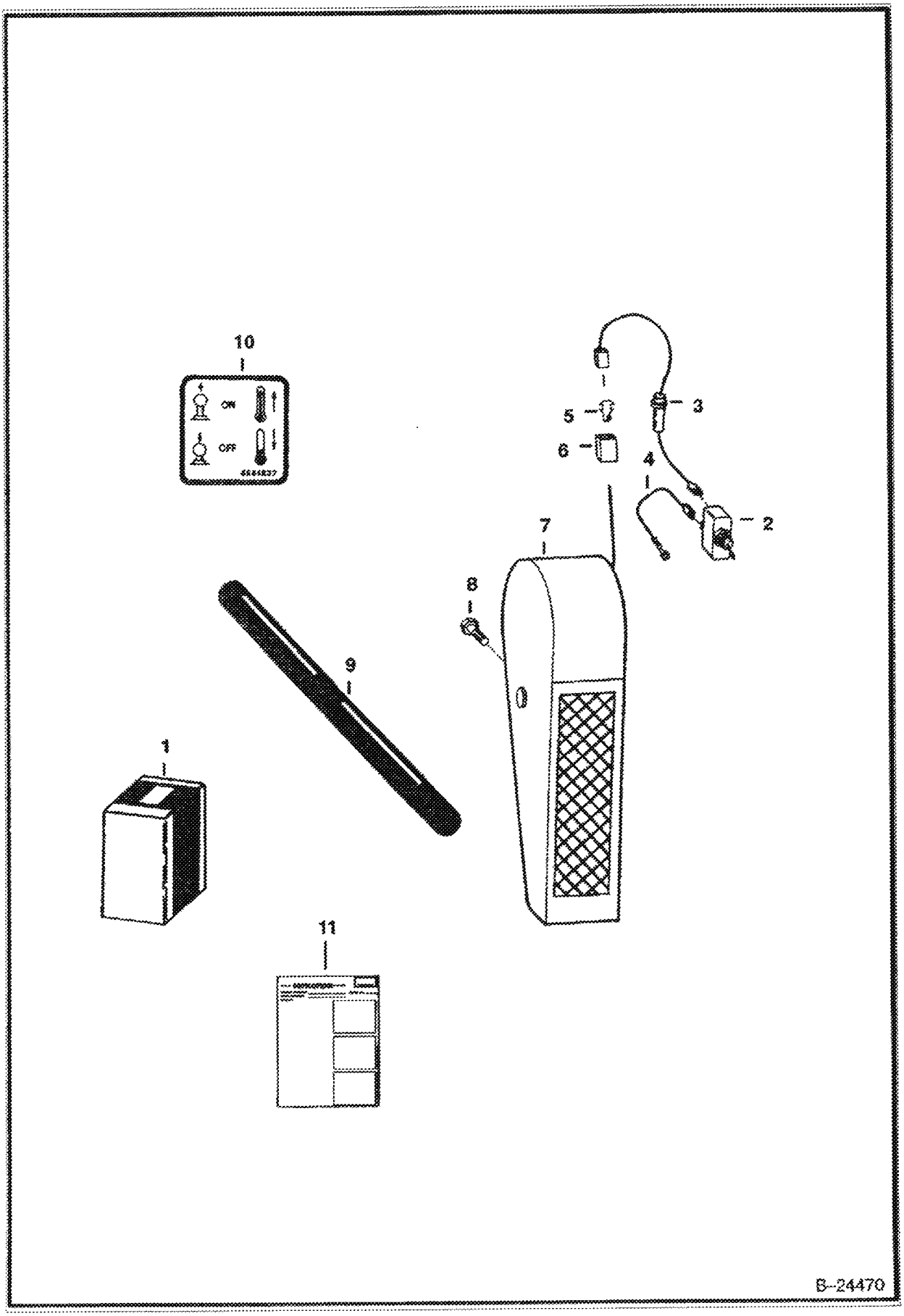
10
ON
OFF
5
3
6
4
2
7
8
9
1
11
B-24470

HEATER KIT (Cont'd)
(Perrin)

Ref No	Part Number	Description	Remarks	Serial Number	Qty
1	6648496	KIT	See Illustration HEATER PLUMBING KIT/ D1595 REF. 2-11 - FOR PLUMBING KIT		1
2	6515521	SWITCH			1
3	6703041	WIRE	Was 6648457 [A]		1
3	661556B	FUSE			1
4	6564517	WIRE			1
5	1675806B	TERMINAL			1
6	6519548	CONNECTOR			1
7	6648461	HEATER	See Illustration HEATER/ C2880		1
8	17C412	BOLT 5			4
9	6648463	SHIELD			2
10	6564527	DECAL			1
11	6566314	INSTRUCTIONS			1

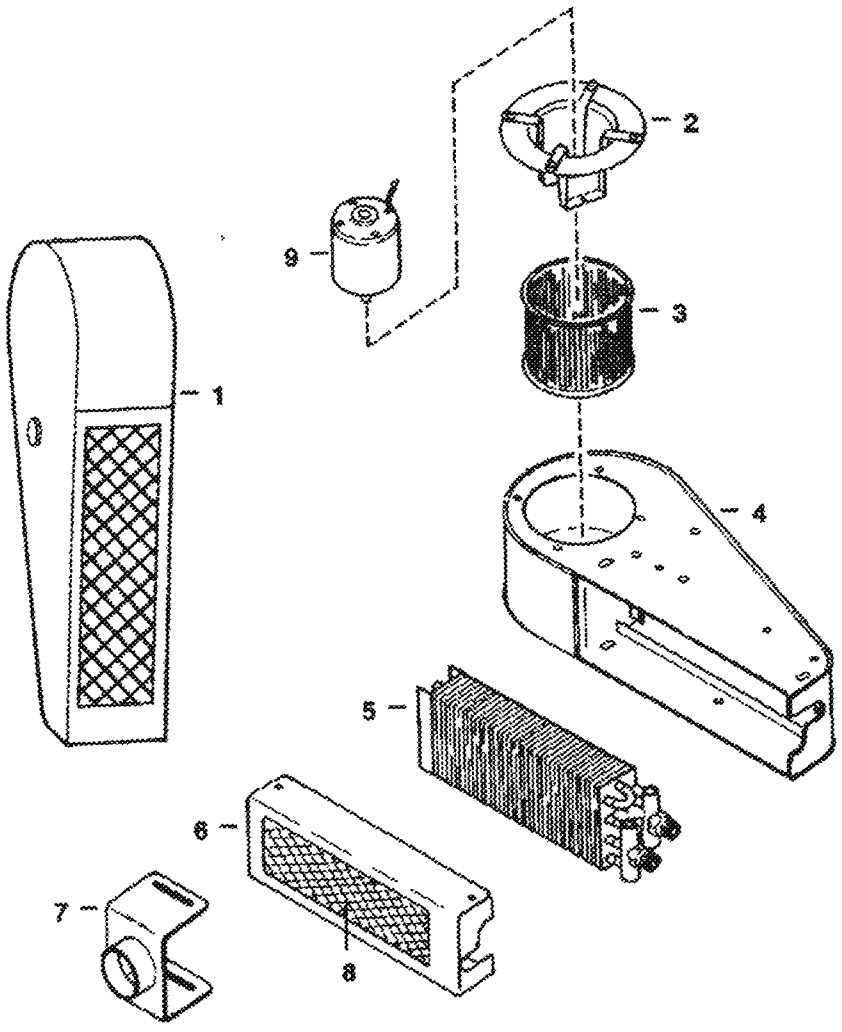
1
2
3
4
5
6
7
8
9
B-17829

HEATER (Cont'd)
(Red Dot)

Ref No	Part Number	Description	Remarks	Serial Number	Qty
1	6599355	HEATER			1
2	6630981	MOUNT			1
3	6630982	BLOWER WHEEL			1
4	6630983	HOUSING			1
5	6630984	CORE			1
6	6630985	COVER			1
7	6630849	OUTLET	aux.		1
8	6630986	SCREEN			1
9	6630980	MOTOR			1

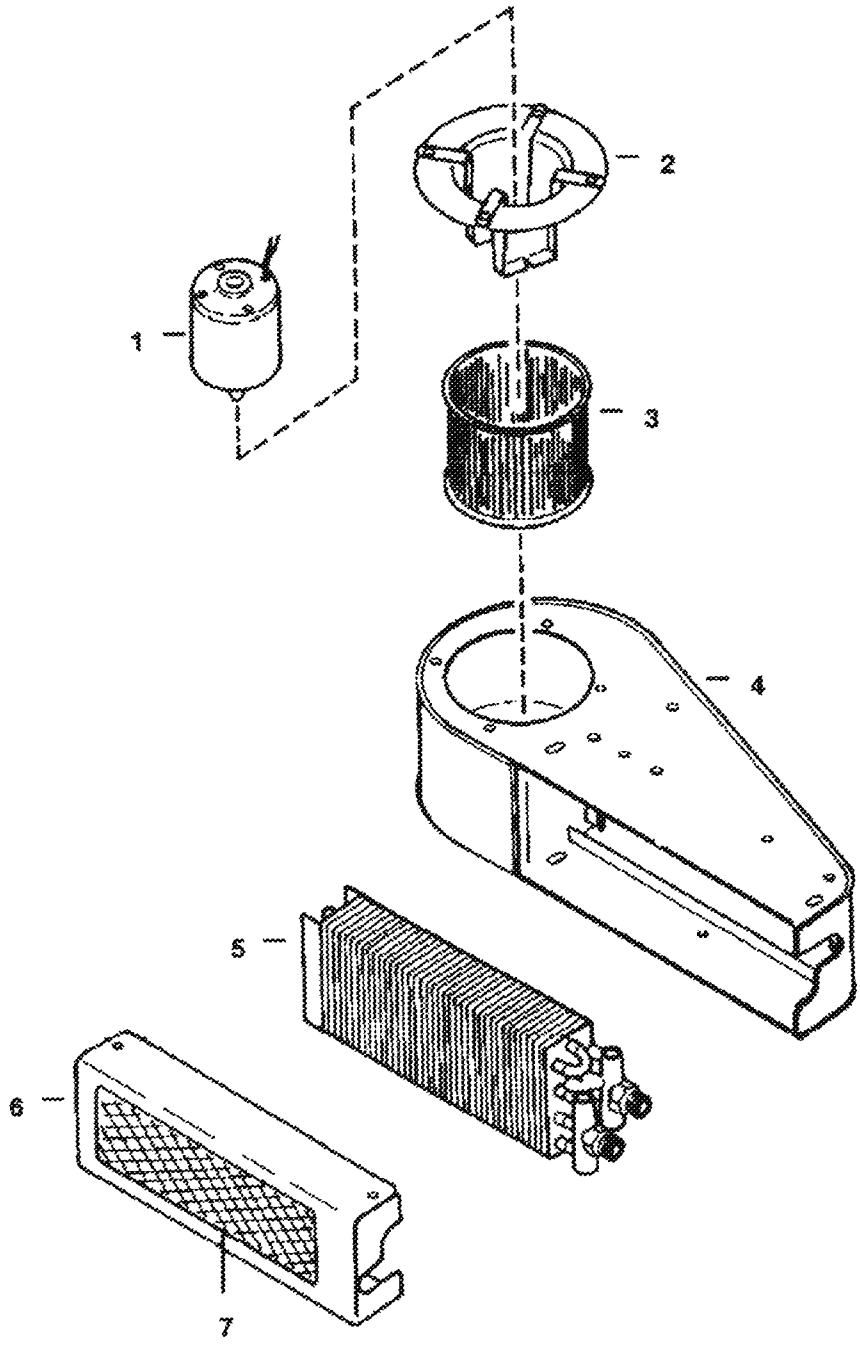
1
2
3
4
5
6
7
C-2880

HEATER (Cont'd)
(Perrin)

Ref No	Part Number	Description	Remarks	Serial Number	Qty
1	6648466	MOTOR			1
2	6648467	MOUNT			1
3	6648468	FAN			1
4	6648469	HOUSING			1
5	6648471	CORE			1
6	6648472	COVER			1
7	6648473	SCREEN			1

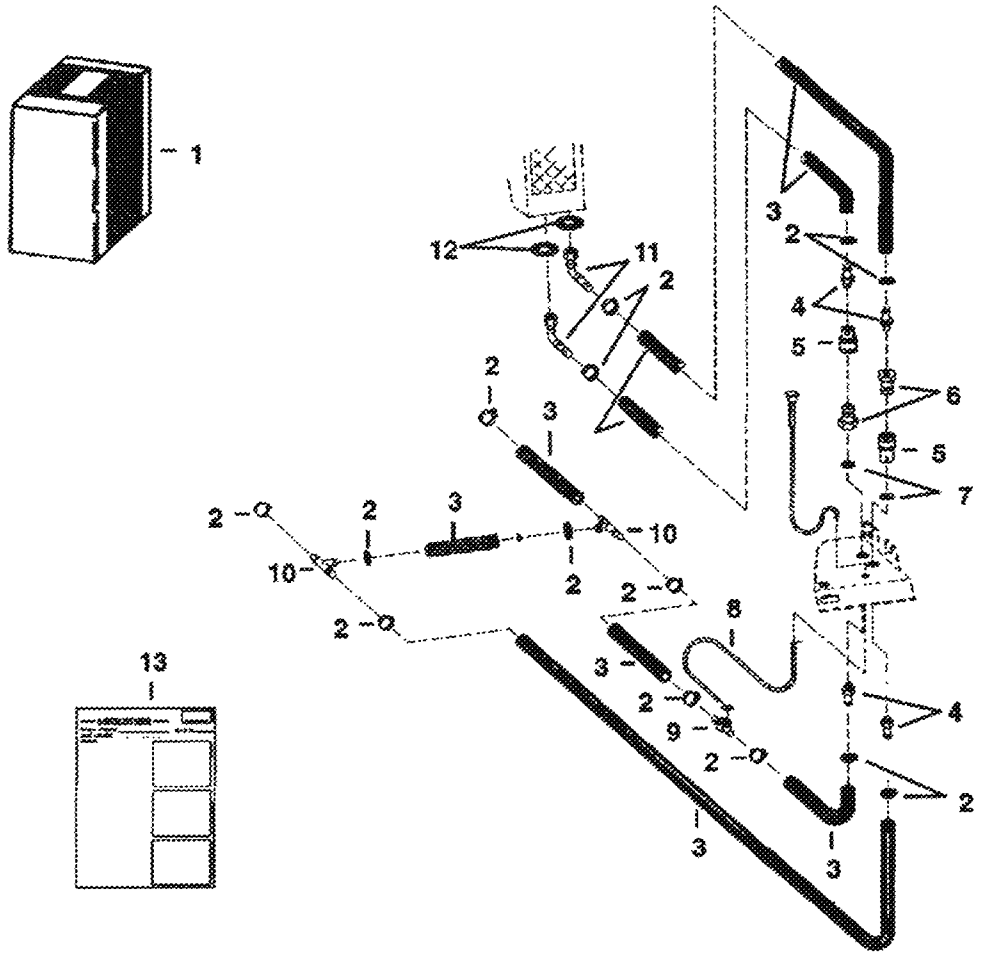
1
12
11
2
3
4
5
6
7
10
8
9
13
B–17828

HEATER PLUMBING KIT (Cont'd)
(Red Dot)

Ref No	Part Number	Description	Remarks	Serial Number	Qty
1			NAP - Ref. 2-13 - Order 6648497 - See Ill. C2707 for Heater Kit - Was 6564520 [A]		1
2	42H0000108	CLAMP			14
3	889269B	HOSE	bulk - Sold Per Foot		1
4	6516296	ADAPTER	barbed		4
5	6599358	QUICK COUPLER	Female		2
6	6599357	QUICK COUPLER	Male		2
7	25E000029B	WASHER			4
8	6599465	CABLE	control		1
9	6599462	VALVE	control		1
10	1732490B	TEE			2
10	6648485	TEE	Kubota Engine - Was 6564697 [A]		2
11	6599356	ELBOW			2
12	6648475	O-RING			2
13	6566314	INSTRUCTIONS			1

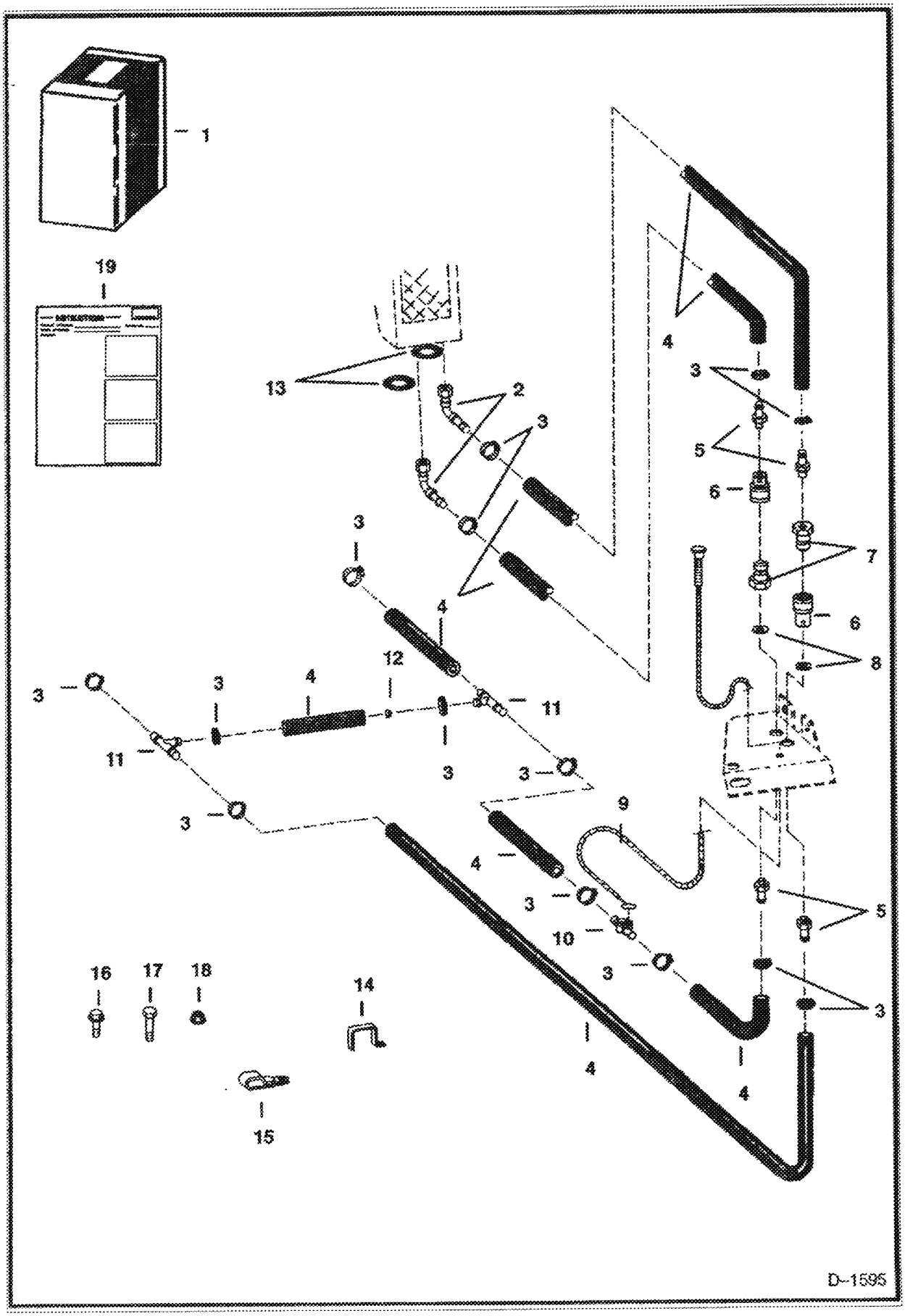
1
19
13
2
3
4
5
6
7
8
9
10
11
12
14
15
16
17
18
D-1595

HEATER PLUMBING KIT (Cont'd)
(Perrin)

Ref No	Part Number	Description	Remarks	Serial Number	Qty
1	6648497	KIT	Ref. 2-19 - See Ill. B24470 for Heater Kit		1
2	6648474	ELBOW			2
3	42H000010B	CLAMP			14
4	889269B	HOSE	bulk - Sold Per Foot		x
5	6516296	ADAPTER			4
6	6648479	QUICK COUPLER			2
7	6648480	QUICK COUPLER			2
8	25E000029B	WASHER			4
9	6648482	CABLE			1
10	6648483	VALVE			1
11	1732490B	TEE			2
11	6648485	TEE	Kubota Engine		2
12	6585223	ORIFICE			1
13	6648475	O-RING			2
14	6660795	GUIDE			1
15	31H000052B	CLIP			1
16	84G3712	BOLT			1
17	17C000512B	BOLT			1
18	57D000005B	NUT			1
19	6566314	INSTRUCTIONS			1

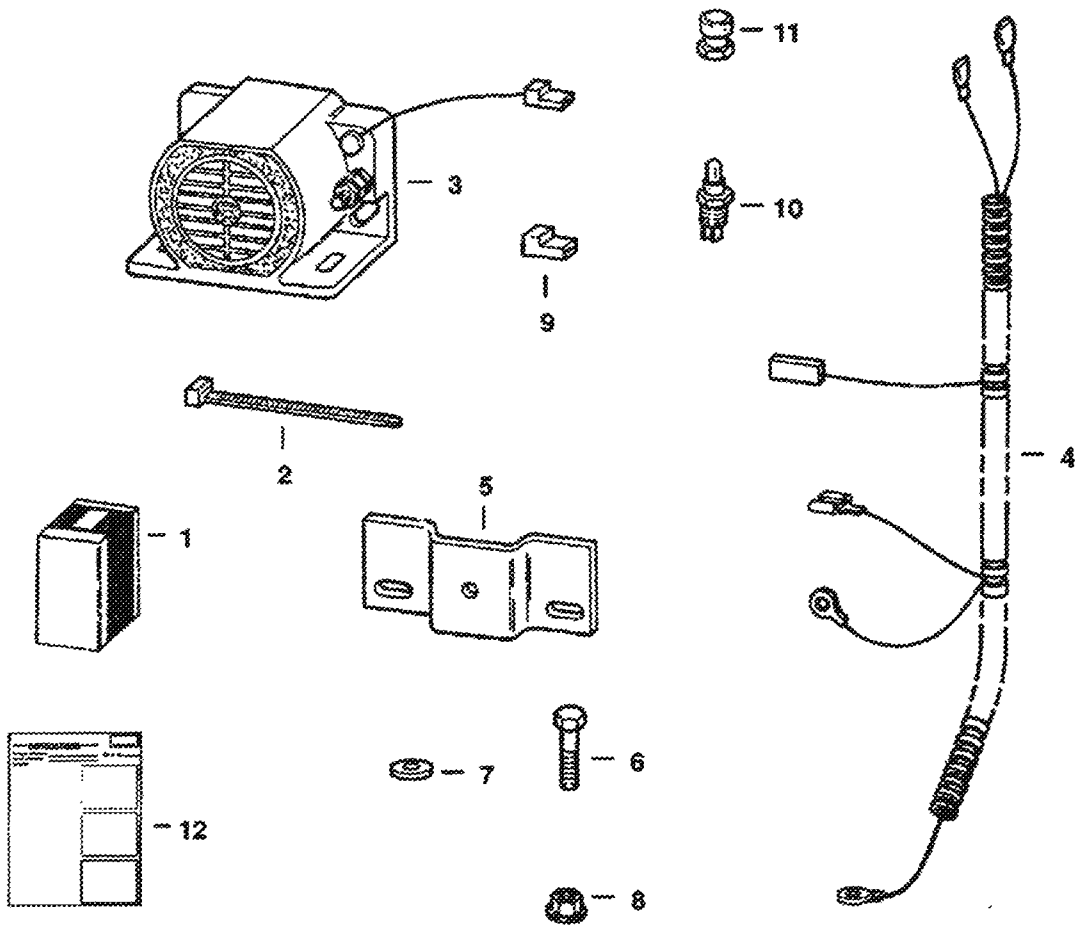
11
3
10
9
2
4
5
1
7
6
12
8
MC–1684

HORN KIT (Cont'd)
(Domestic & European)

Ref No	Part Number	Description	Remarks	Serial Number	Qty
1	6703944	HORN KIT	See Illustration EUROPEAN ACCESSORIES/ D1458 Ref. 2-12 - See ILL. before ordering parts		1
2	6633498	STA STRAP			2
3	6660294	HORN			1
4	6703943	HARNESS			1
5	6704641	MOUNT	Was 6703391 [A]		1
6	84G002516B	BOLT	Was 7C000412B [B]		2
7	25E000013B	WASHER	Was 25E000015B [B]		1
8	59D4	NUT 5	Was 83D000004B [B]		2
9	6517924	CONNECTOR	switch		1
10	6513482	SWITCH			1
11	6660205	SEAL	switch		1
12	6720957	INSTRUCTIONS			1

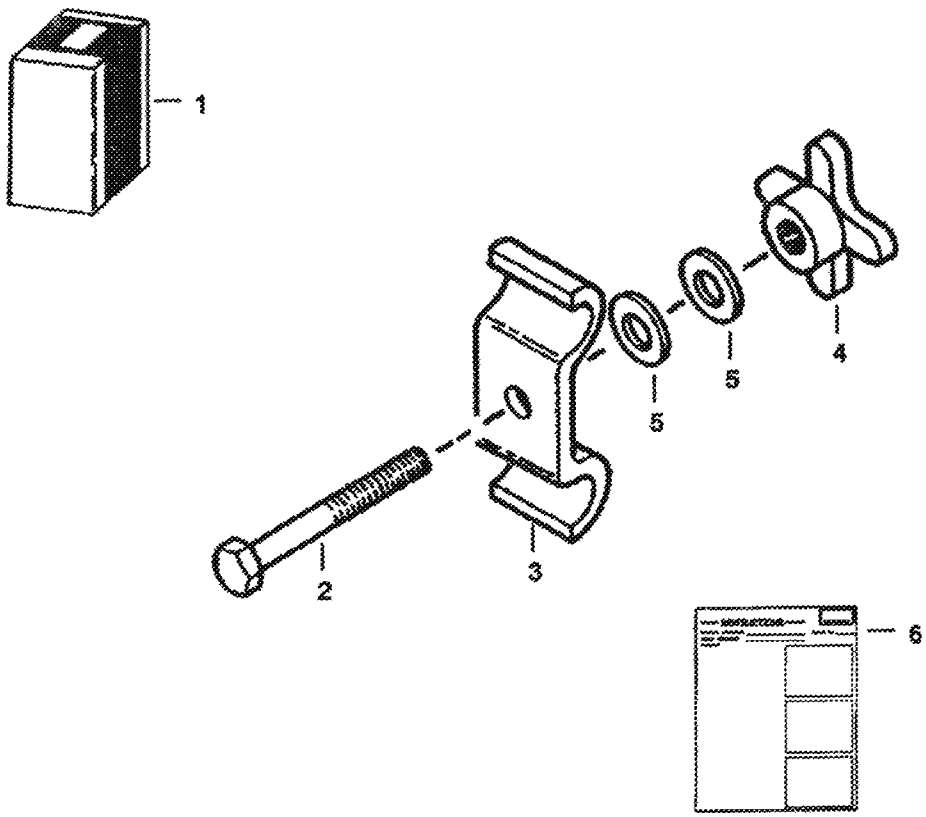
1
2
3
4
5
5
6
B-12817

HOSE CLAMP KIT (Cont'd)
(Lower Lift Arms)

Ref No	Part Number	Description	Remarks	Serial Number	Qty
1	6700168	KIT	Ref. 2-6		1
2	17C000652B	BOLT	Was 17C000644B [B]		1
3	6563353	CLAMP			1
4	6647668	KNOB			1
5	25E000017B	WASHER			2
6	6720035	INSTRUCTIONS			1

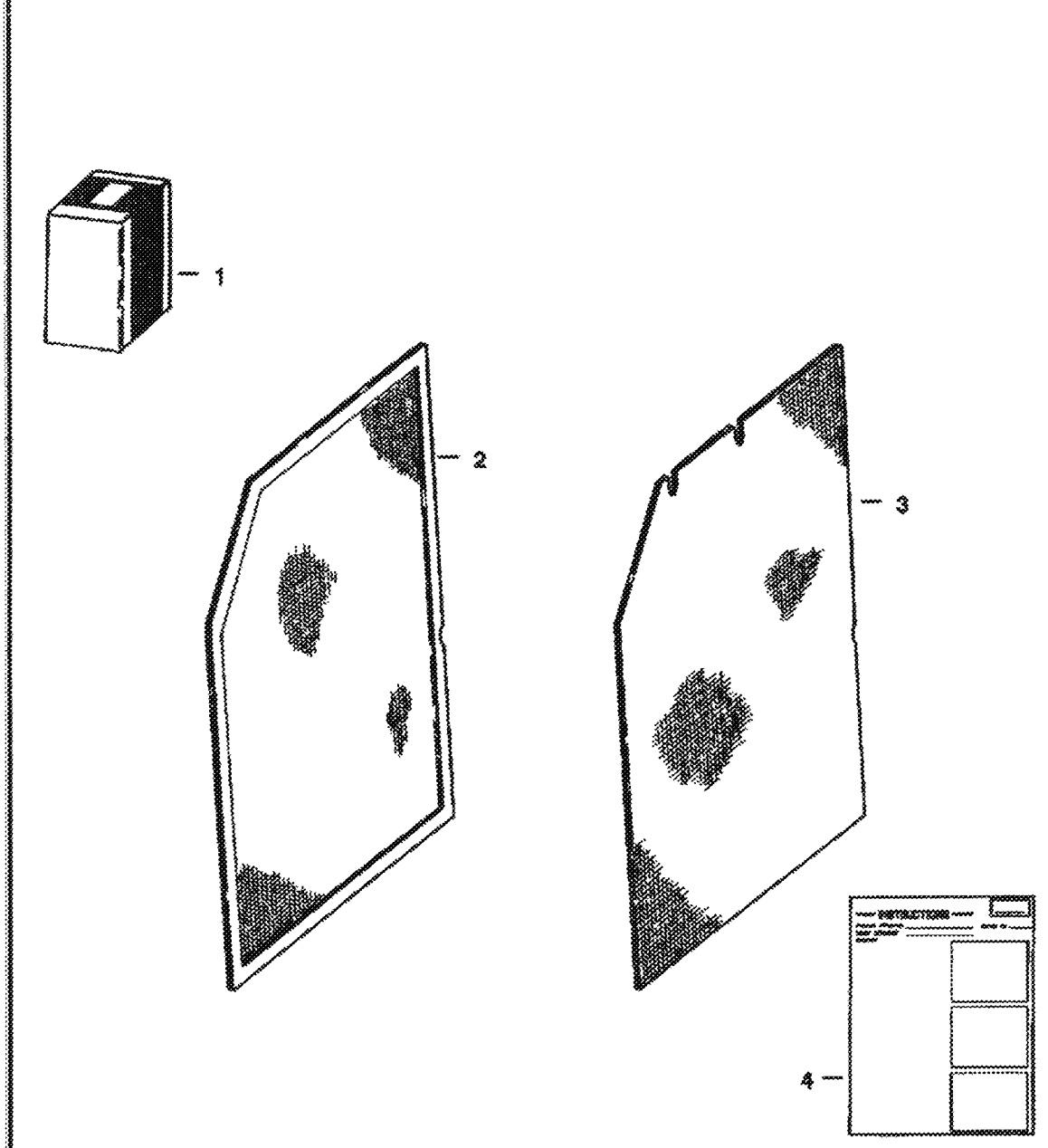
1
2
3
4
C-2975

Ref No	Part Number	Description	Remarks	Serial Number	Qty
1		KIT	NAP - insect screen - Ref. 2-4 - Was 6571597 [A]		1
2		SCREEN	NAP - insect - R.H. - Was 6569935 [A]		1
3		SCREEN	NAP - insect - L.H. - Was 6569936 [A]		1
4	6570223	INSTRUCTIONS			1

page 341 - 06/28/2006 12:25:54 - Printed by Ken Cook Co. - eXpert.exe (v2.23 3 6/15/2006)

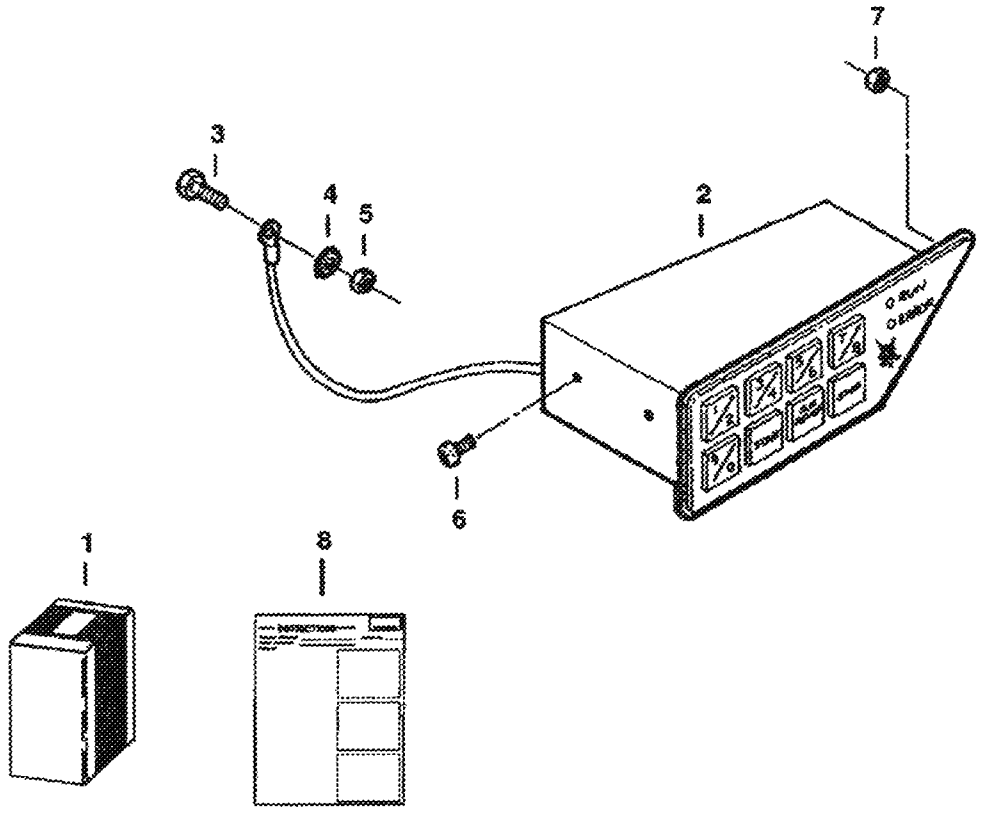

B-14598

Ref No	Part Number	Description	Remarks	Serial Number	Qty
1		KIT	NAP - Keyless Ignition - W/Ref. 2-8 - Was 6710444 [A]		1
2		MODULE	NSS -Order Ref. 1		1
3	35C410	BOLT 5			1
4	6E4	WASHER 10	Star		1
5	83D4	NUT 10			1
6	87G000806B	BOLT			2
7	12D000006B	NUT			1
8	6724420	INSTRUCTIONS			1

Page 342 08/18/2008 17:04:55 Delivered by Key Code Co. eSpline www (v6.24.1 04/17/2008)

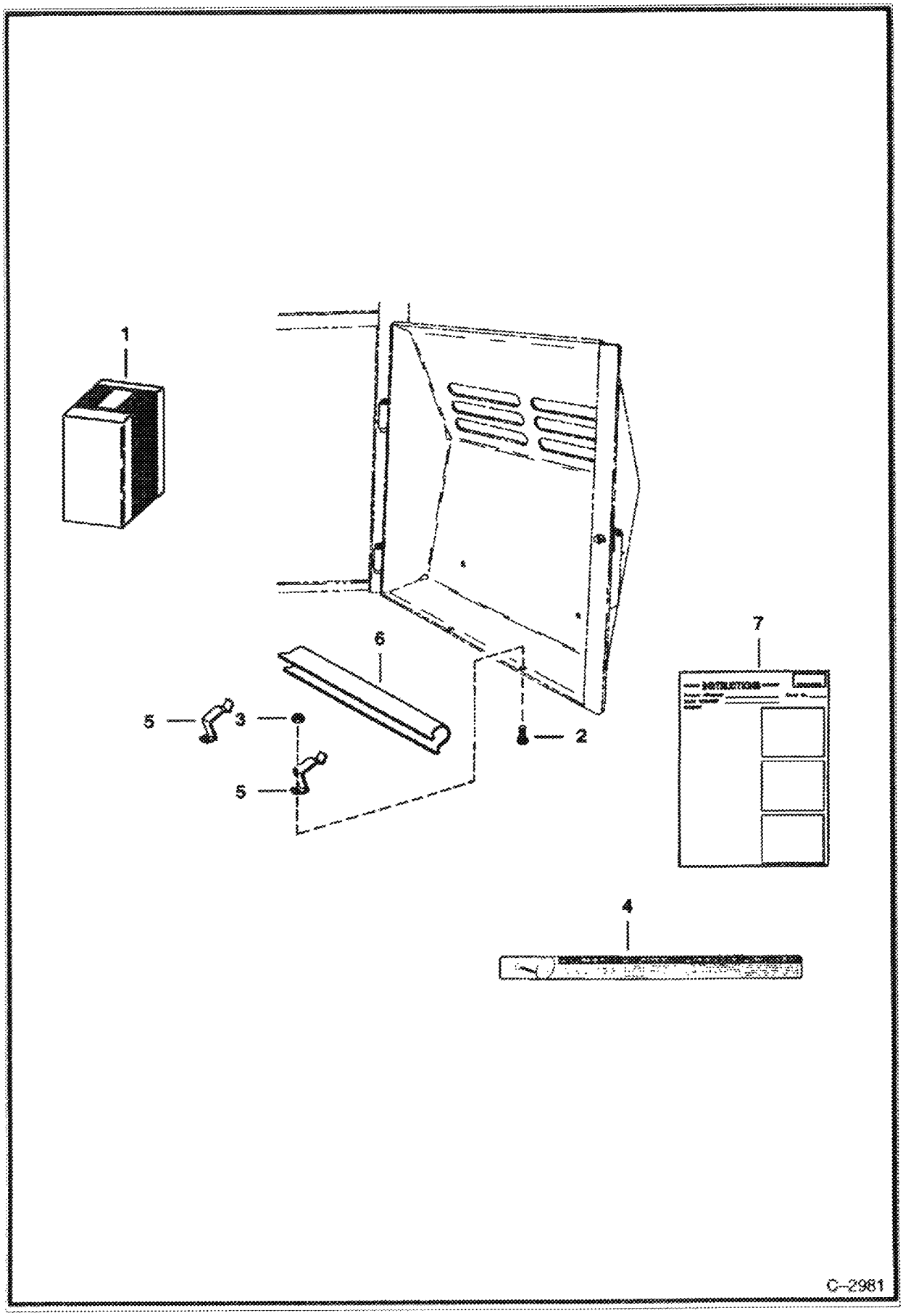
1
6
7
5
3
2
5
4
C-2981

LIFT ARM SUPPORT DEVICE (Cont'd)

Ref No	Part Number	Description	Remarks	Serial Number	Qty
1	6563501	KIT	Ref. 2-7		1
2	17C000616B	BOLT			2
3	85D6	LOCK NUT			2
4	6563423	DECAL			1
5	6563603	BRACKET			2
6	6563449	STOP	W/Ref. 3		1
7	6566056	INSTRUCTIONS			1

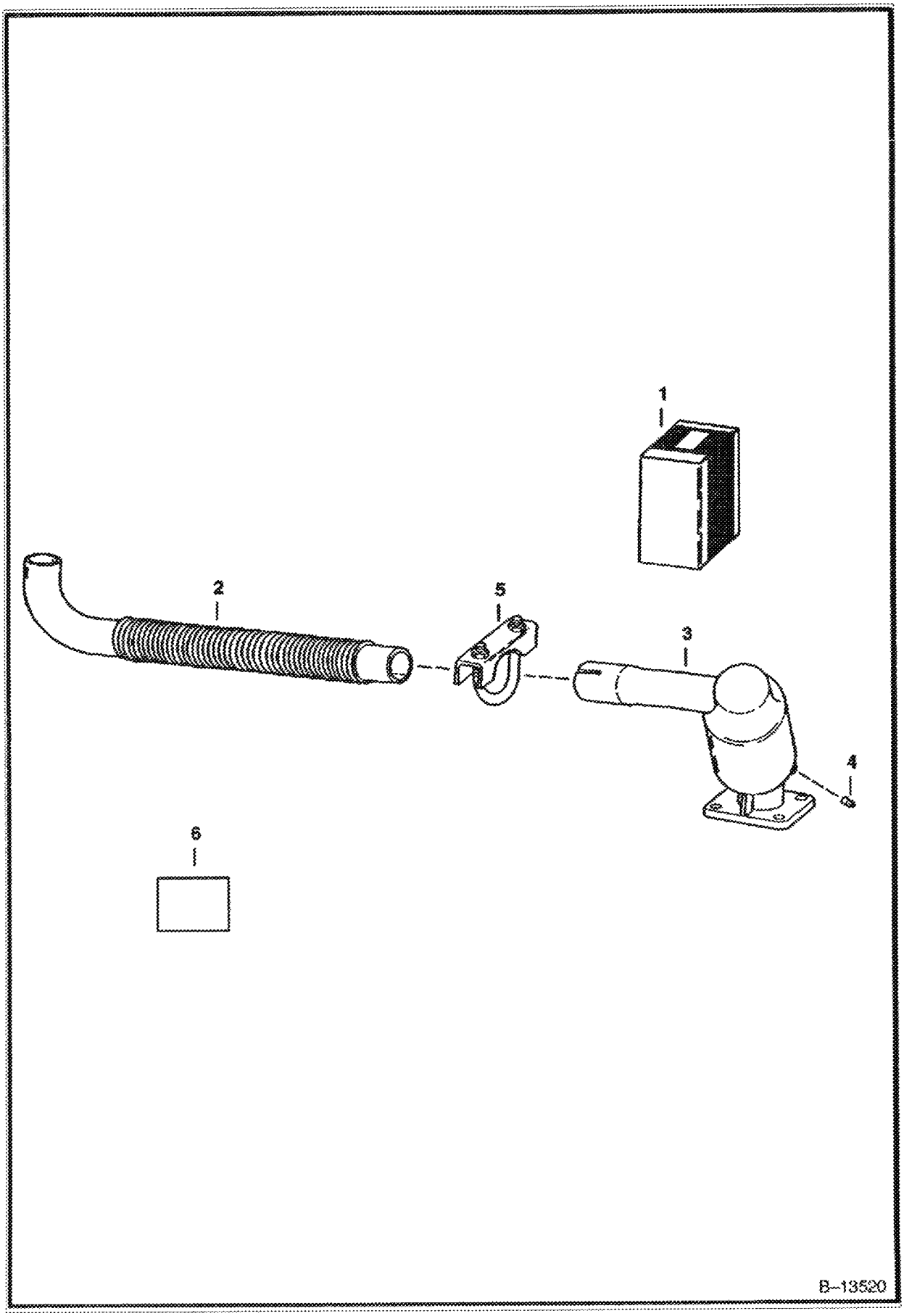
1
2
5
3
4
6
B–13520

Ref No	Part Number	Description	Remarks	Serial Number	Qty
1		KIT	NAP - Order Components - Was 6659300 [A]		1
2	6659541	TUBE			1
3	6659300	KIT	Was NAP [D]		1
4	6659543	PLUG			1
5	6659544	CLAMP			1
6	6667573	DECAL			1

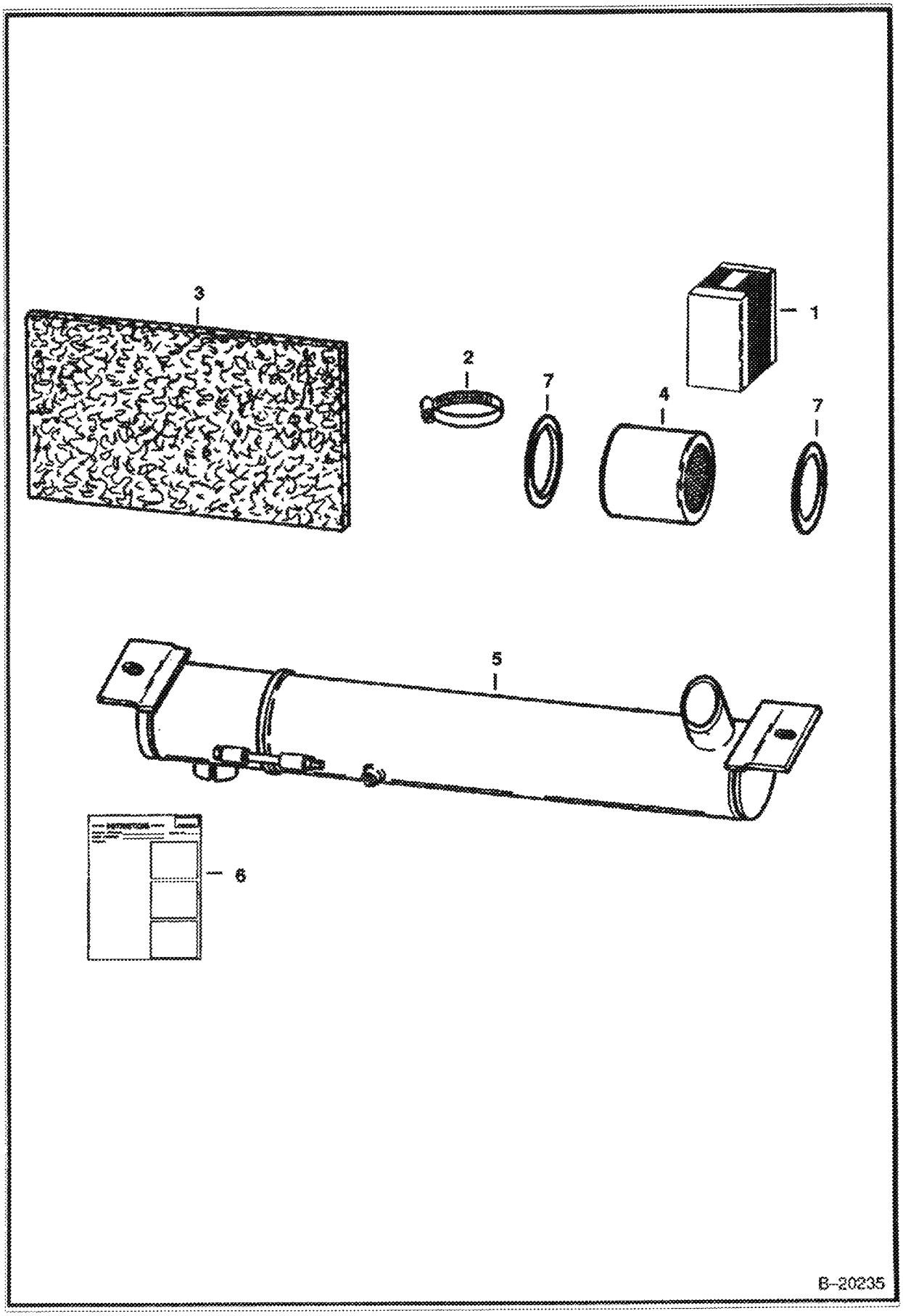
3
1
2
7
4
7
5
6
6
B-20235

Ref No	Part Number	Description	Remarks	Serial Number	Qty
1		KIT	See Illustration MUFFLER/EXHAUST PURIFIER/ B13520 NAP - MUFFLER/PURIFIER - ORDER COMPONENTS - WAS 6571625 [A]		1
2	44H48	CLAMP	Was 6515576 [A]		3
3	6571628	INSULATION			1
4	6632303	PURIFIER			1
5	6632305	MUFFLER	Bobcat		1
6	6570254	INSTRUCTIONS			1
7	6633674	GASKET			1

OPERATOR CAB
(Deluxe)
(S/N 20001 & Above)

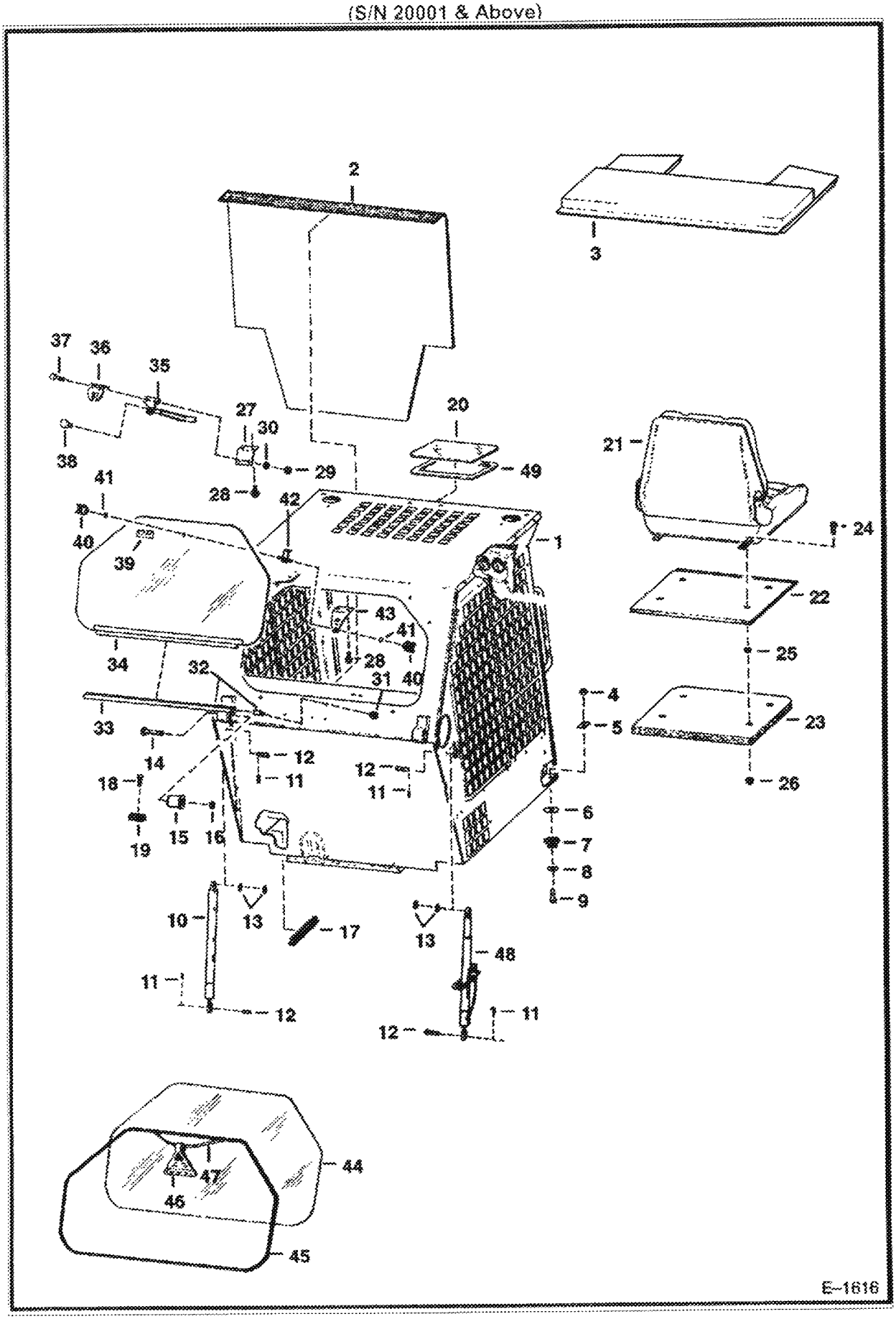

OPERATOR CAB (Cont'd)
(Deluxe)
(S/N 20001 & Above)

Ref No	Part Number	Description	Remarks	Serial Number	Qty
1		CAB	SALES - Ref. 2-26 & 44-49		1
2	6576494	INSULATION	Was 6568179 [A]		1
3	6565373	INSULATION			1
4	85D8	NUT 5			2
5	6553709	WASHER			2
6	6543321	WASHER			2
7	6560633	DAMPENER			2
8	6515817	WASHER			2
9	17C000840B	BOLT			2
10	6700171	GAS SPRING	W/O Lock - Was 6700000 [A]		2
10	6670730	GAS SPRING KIT	W/O lock - heavy duty - 6670730 Gas Spring to be used when loader is equipped W/Cab Enclosure. Because 6670730 Gas Spring is heavy duty W/larger diameter, (2) 91G-410 Screws, with low profile heads, must be used in place of 35C-410 Bolt located behind gas spring on left side of ROPS.		2
10	91G000410B	SCREW			1
11	6631418	PIN			4
12	6567743	PIN			4
13	6567604	SPACER			4
14	17C1056	BOLT			2
15	6562602	BUSHING	rubber		2
16	83D000010B	NUT			2
17	6555351	SEAL	bulk - Sold Per Foot		x
18	84G002516B	BOLT	Was 61G000416B [B]		2
19	6568475	STOP			2
20	6701986	WINDOW	top - Was 6563391 [A]	& Below	1
20	6705735	WINDOW	top	& Above	1
21		SEAT	See Illustration SUSPENSION SEAT/ B5562		1
22	6577439	INSULATION	Was 6567903 [A]		1
23	6577273	INSULATION	Was 6567902 [A]		1
24	35C516	BOLT 10			4
25	61D5	NUT			4
26	83D5	NUT 5			4
27	6568540	MOUNT			1
28	84G3112	BOLT 5			2
29	50D000010B	NUT			2
30	25E000010B	WASHER			2
31	59D4	NUT 5			3
32	6576513	BOLT	Was 6630927 [A]		3
33	6630926	HINGE			1
34	6630925	WINDOW			1
35		LATCH	NAP - W/Ref. 38 - Order Ref. 40-43 - Was 6630929 [A]		1
36		CLIP	NAP - Order Ref. 40-43 - Was 6630928 [A]		1
37	85G001014B	BOLT			2
38	6631665	KNOB			1
39	6631625	DECAL			1
40	6571529	KNOB			2
41	58K000109B	O-RING			2
42	6571532	BRACKET			1
43	6571533	MOUNT			1
44	6704891	WINDOW			1
45	6658352	MOULDING	bulk - Sold Per Foot		x
46	6731478	EXIT TAG	exit - Was 6559515 [A]		1
47	6554149	CORD	bulk - Sold Per Foot		x
48		GAS SPRING	NAP - W/Lock - Order 6664205 Gas Spring, 6701175 Tube & 6701174 Washer - Was 6701176		1

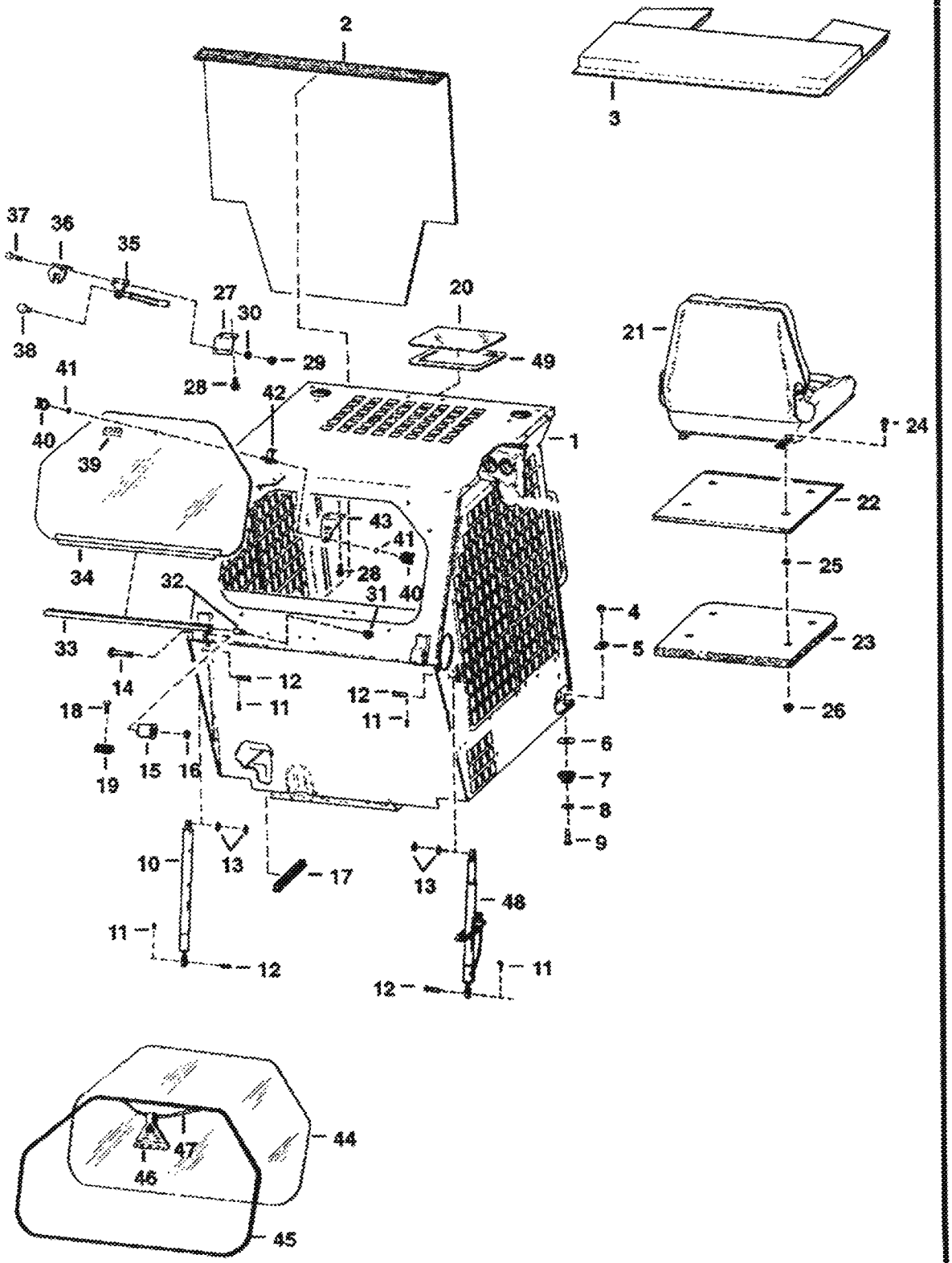
2
3
37
36
35
38
27
30
29
28
20
49
41
40
39
42
1
21
24
22
25
23
26
4
5
34
32
43
41
28
31
40
33
14
18
19
15
16
12
11
12
11
6
7
8
9
10
13
17
13
48
11
12
12
11
44
47
46
45
E-1616

Ref No	Part Number	Description	Remarks	Serial Number	Qty
49	6664351	SEAL	used w/cab headliner	& Above	1
49	6665012	SEAL	used w/o cab headliner	& Below	1

Page 352 - 06/26/2008 17:23:56 - Printed by Bob Cook Co. - eXprint exe (V7.24.3 8/20/2008)

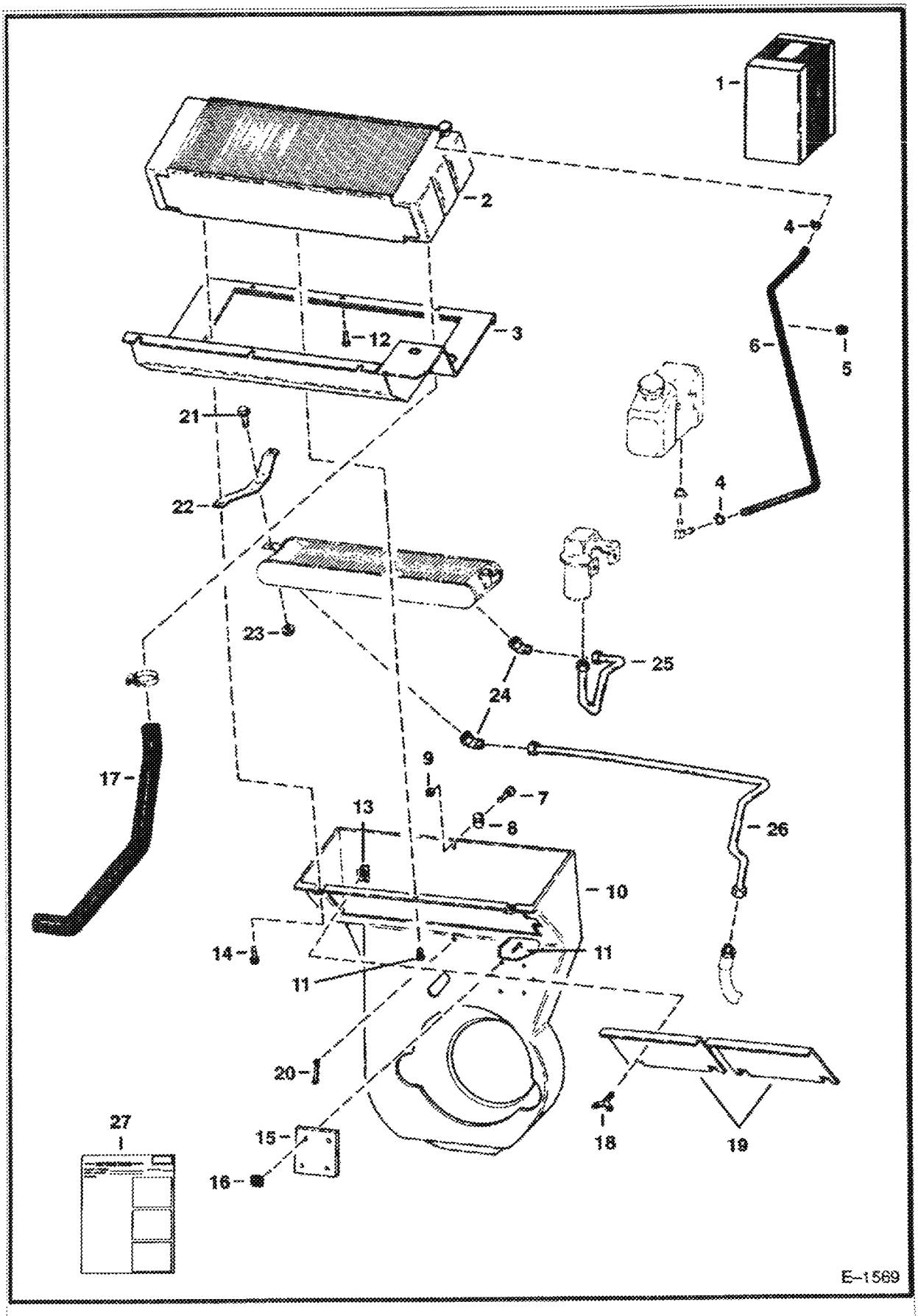
1
2
3
4
5
6
7
8
9
10
11
12
13
14
15
16
17
18
19
20
21
22
23
24
25
26
27
E-1569

RADIATOR CONVERSION KIT (Cont'd)
(S/N 14999 & Below)

Ref No	Part Number	Description	Remarks	Serial Number	Qty
1	6567060	KIT	radiator conversion - Ref. 2-27		1
2	6648820	RADIATOR	Was 6630186 [A]		1
3	6565419	MOUNT			1
4	6515575	CLAMP			2
5	742876B	GROMMET			1
6	6577822	HOSE	bulk - Sold Per Foot - 39"(991mm) Reg. - Was 6562515 [A]		x
7	37C000516B	BOLT	Was 6565089 [A]		3
8	774220	NUT			3
9	83D5	NUT 5			3
10	6564728	HOUSING	blower		1
11	6555293	NAIL			4
12	21C000510B	BOLT			4
13	6599702	NUT			2
14	35C512	BOLT			2
15	6564595	INSULATION			1
16	6555294	CLIP			4
17	6565598	HOSE			1
18	6565418	SCREW	wing		2
19	6565196	COVER			2
20	6513471	CLAMP			1
21	35C000612B	BOLT			2
22	6565195	BRACKET			2
23	57D6	NUT 5			2
24	11K000007B	ELBOW			2
25	6565787	TUBELINE			1
26	6565788	TUBELINE			1
27	6566612	INSTRUCTIONS			1

Page 365 - 10/28/2009 17:21:59 - printed by Jeni Tools Co. - eXpress.exe ver.14.1 8/28/2009

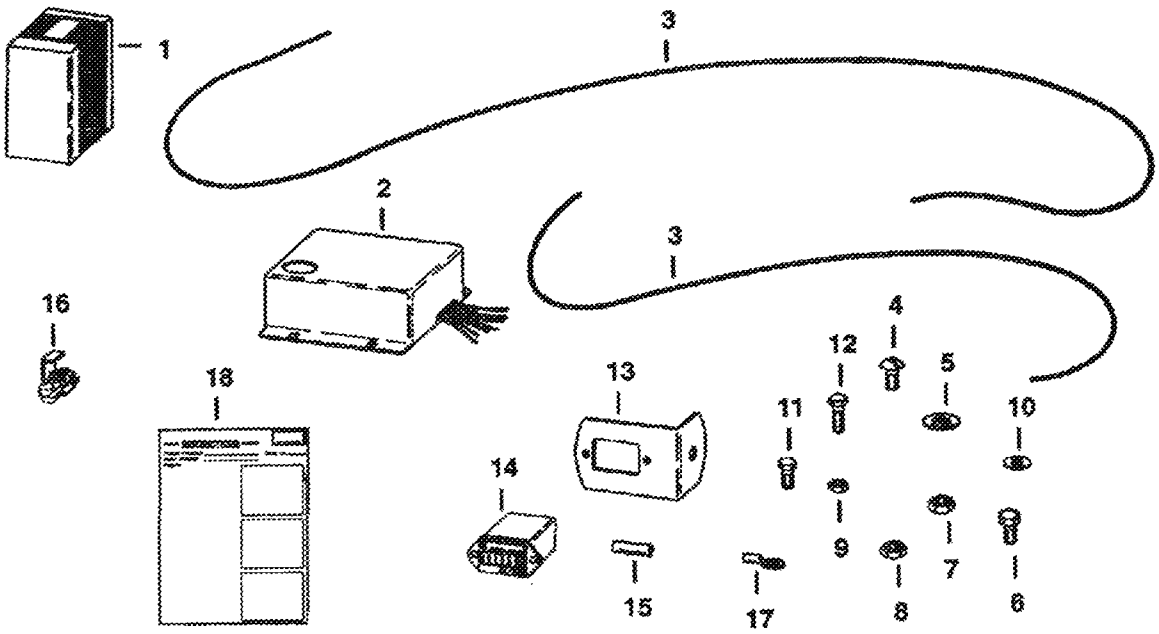

C-2282

RENTAL KIT (Cont'd)
(S/N 14084 & Below)

Ref No	Part Number	Description	Remarks	Serial Number	Qty
1	6562298	KIT	rental - Ref 2-18 - Also order 6560569 Fuel Valve Kit		1
2	6513274	MODULE			1
3		WIRE	NAP - 1 ft. - Was 774706B [A]		1
3	774708B	WIRE	3 ft.		1
4	85G000608B	SCREW			2
5	25E000017B	WASHER			1
6	17C000614B	BOLT			1
7	12D000006B	NUT			2
8	61D000004B	NUT			6
9	61D000006B	NUT			1
10	6E4	WASHER 10			1
11	17C000408B	BOLT			4
12	17C412	BOLT 5			2
13	6552906	BRACKET			1
14	6664886	HOURMETER	Was 6631657 [A]		1
15	637641	SLEEVE			1
16	6513275	CONNECTOR			6
17	30R000104B	TERMINAL			1
17	30R000107B	TERMINAL			1
18	6556831	INSTRUCTIONS			1

Page 152 08/18/2008 17:23:55 Printed by Ross Chute Co. eXpress.exe (V2 24.3 8/20/2008)

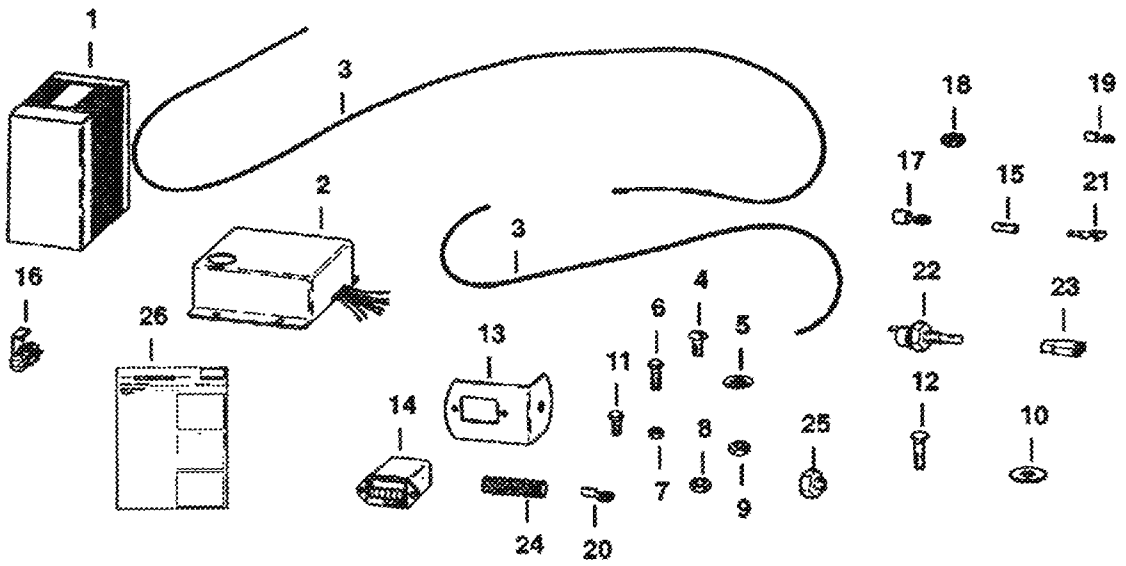

C–2819

RENTAL KIT (Cont'd)
(S/N 14085 thru 19999)

Ref No	Part Number	Description	Remarks	Serial Number	Qty
1	6565552	KIT	rental - Ref 2-24 & 26 - Also order 6565553 Fuel Valve Kit		1
2	6513274	MODULE			1
3	6565382	WIRE	White		2
3	6565642	WIRE	Black		1
4	85G000608B	SCREW			2
5	25E000017B	WASHER			1
6	17C000614B	BOLT			1
7	12D000006B	NUT			2
8	61D000004B	NUT			6
9	61D000006B	NUT			1
10	25E21	WASHER 5			1
11	17C000408B	BOLT			4
12		BOLT	NAP - carriage bolt - 3/8" x 1" - Was 7C000616B [A]		2
13	6552906	BRACKET			1
14	6664886	HOURMETER	Was 6631657 [A]		1
15	637641	SLEEVE	.33" x 1.0"		1
16	6513275	CONNECTOR			6
17	30R000104B	TERMINAL			1
17	30R000107B	TERMINAL			1
18	97F000005B	BUSHING			1
19	614142B	SLEEVE	.148" x .75"		1
20	30R000305B	TERMINAL			1
21	733616	TERMINAL			1
22	6630821	SWITCH			1
23	6519548	CONNECTOR			1
24	6564978	CONDUIT	bulk - Sold Per Foot - Was 6565528 [A]		x
25	6565390	REDUCER			x
26	6566523	INSTRUCTIONS			1

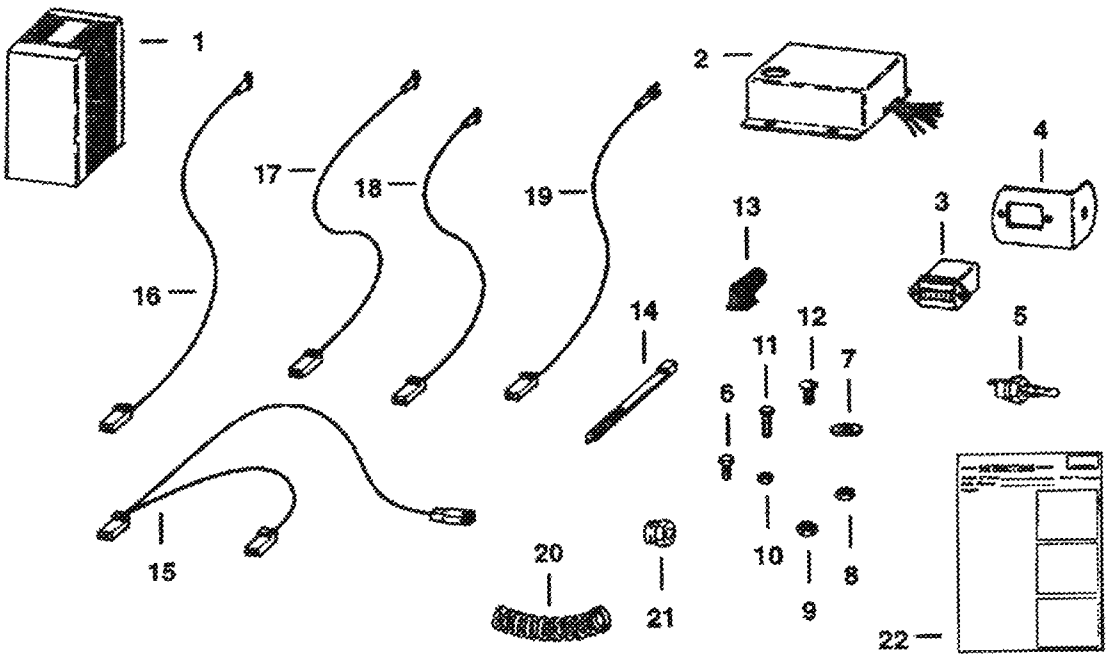

C–2887

RENTAL KIT (Cont'd)
(S/N 20001 & Above)

Ref No	Part Number	Description	Remarks	Serial Number	Qty
1	6567990	KIT	Ref. 2-22 - Also order 6565553 Fuel Valve Kit		1
2	6567956	MODULE	shut down		1
3	6664886	HOURMETER	Was 6631657 [A]		1
4	6552906	BRACKET			1
5	6630821	SWITCH	eng. temp.		1
6	17C000614B	BOLT			1
7	25E000017B	WASHER			1
8	61D000006B	NUT			1
9	12D000006B	NUT			2
10	61D000004B	NUT			4
11	17C000408B	BOLT			4
12	85G000608B	SCREW			2
13	6560172	COVER			1
14	6610510	TIE	Was 1715312B [A]		6
15	6567959	WIRE	White		1
16	6567968	WIRE	Yellow/Red		1
17	6567971	WIRE	Black		1
18	6567972	WIRE	White		1
19	6567979	WIRE	Yellow/Green		1
20	6584978	CONDUIT	bulk - Sold Per Foot		x
21	19F000005B	REDUCER			1
22	6566844	INSTRUCTIONS			1

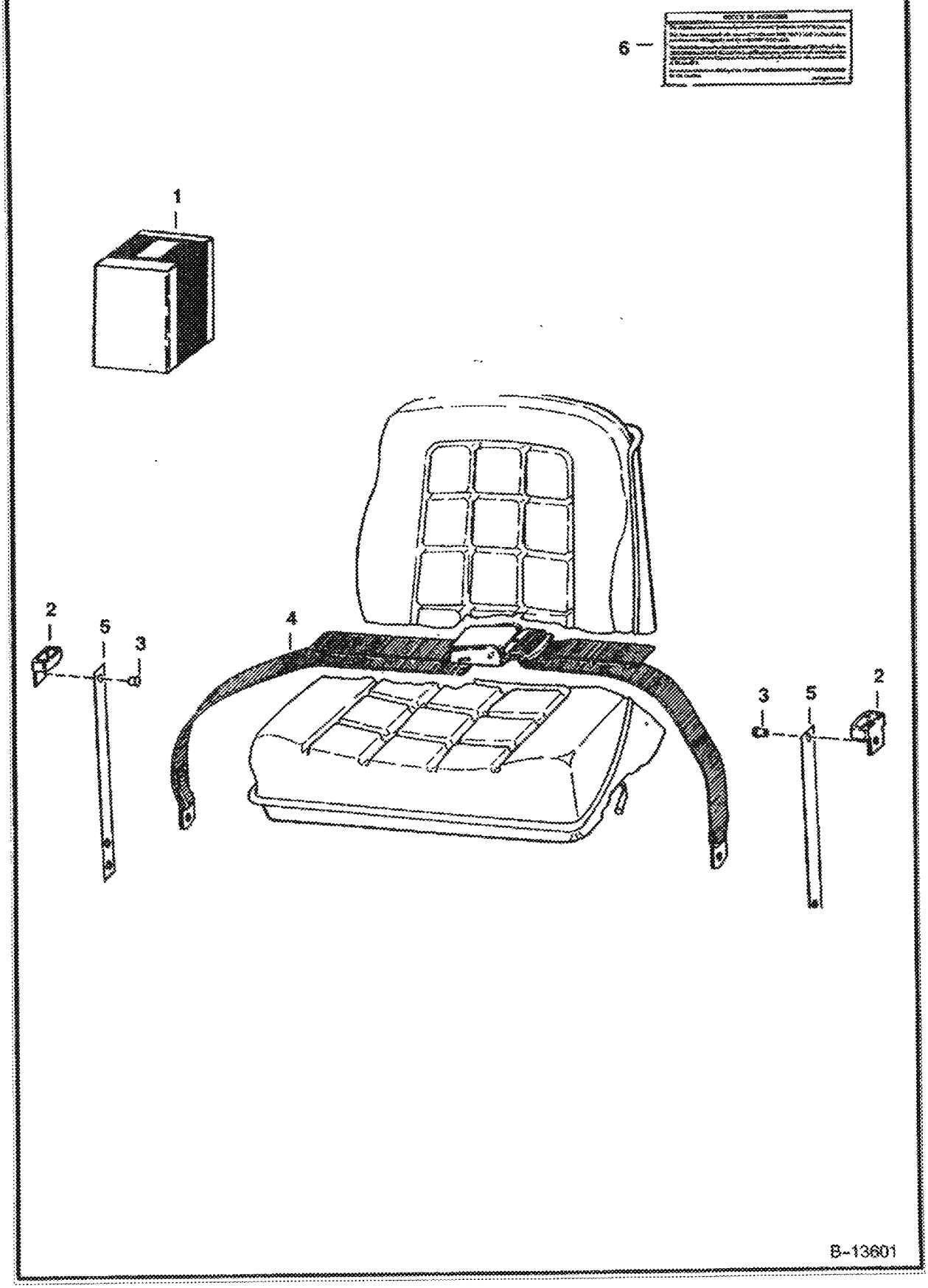
6
1
2
5
3
4
3
5
2
B-13601

SEAT BELT (Cont'd)
(3" Wide)

Ref No	Part Number	Description	Remarks	Serial Number	Qty
1	6703640	KIT	W/Ref. 2-6		1
2	6703703	GUIDE			2
3	6630207	RIVET	Was 6512797 [A]		4
4	6659999	BELT			1
5	6711908	SPRING PLATE			2
6	6703641	DECAL			1

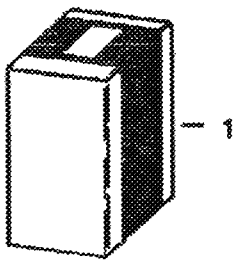

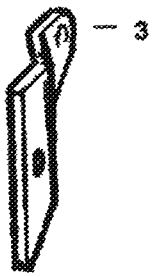

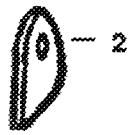

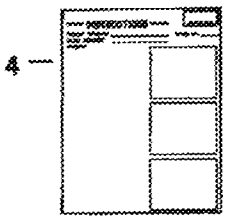

Note: This kit relocates the gas spring on the seat bar from the right side to the left.

B-17669

SEAT BAR (Cont'd)
(Cylinder Relocation Kit)

Ref No	Part Number	Description	Remarks	Serial Number	Qty
1	6708067	KIT	Ref. 2-4		1
2	6706390	BRACKET			1
3	6708058	BRACKET			1
4	6724028	INSTRUCTIONS			1

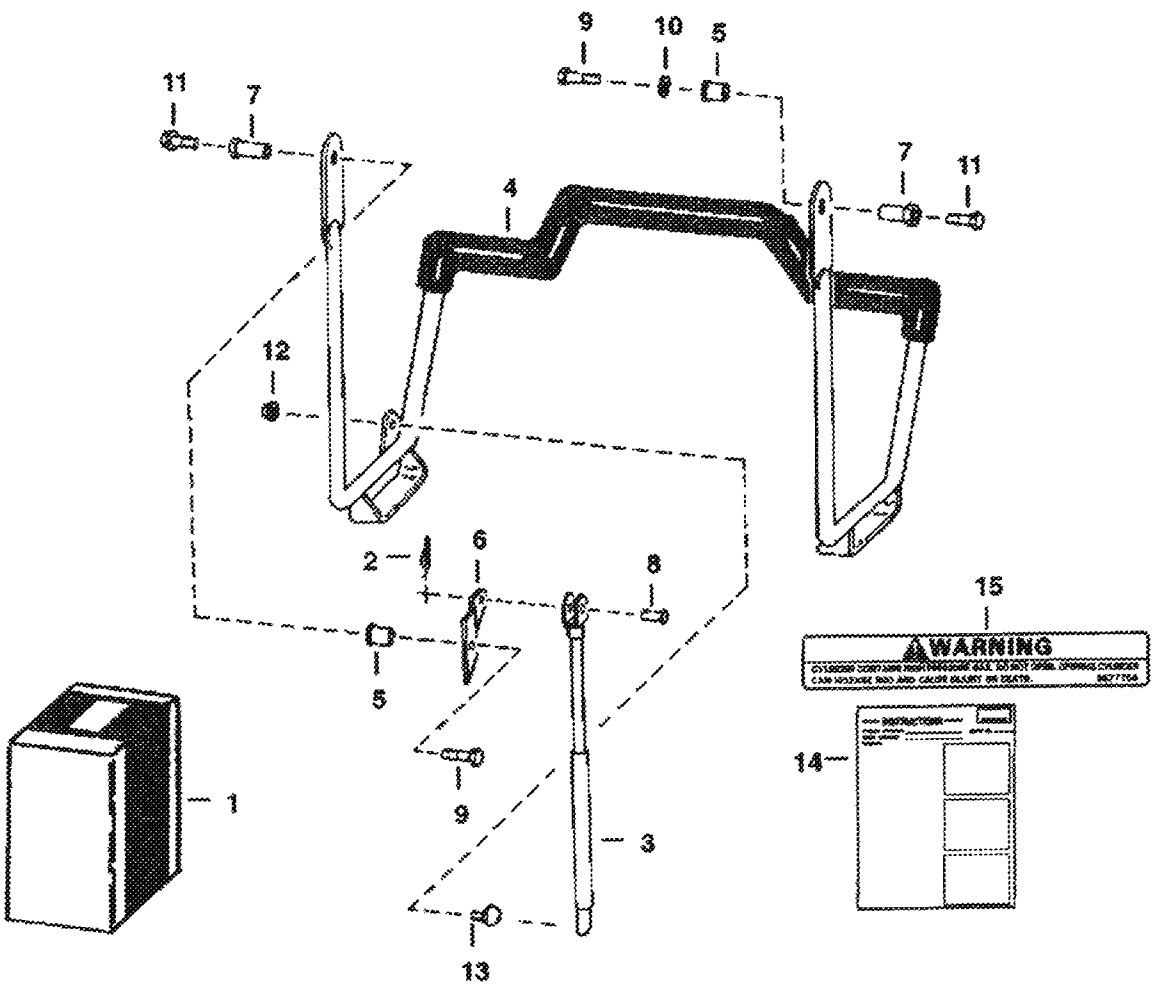
9
10
5
11
7
7
11
4
12
2
6
8
15
WARNING
5
14
1
9
3
13
C-3341

SEAT BAR KIT (Cont'd)
(Gas Spring)

Ref No	Part Number	Description	Remarks	Serial Number	Qty
1		KIT	NAP - seat bar - Ref. 2-14 - Order 6713853 - Was 6706796 [A]		1
2	6631418	PIN	ring		1
3	6664207	GAS SPRING			1
4	6716778	SEAT BAR	Was 6706358 [A]		1
5	6706387	BUSHING			2
6	6706388	BRACKET			1
7	6706389	BUSHING			2
8	4F005062B	PIN			1
9	17C612	BOLT 5			2
10	25E21	WASHER 5			1
11	35C000608B	BOLT			2
12	83D5	NUT 5			1
13	6649244	STUD			1
14	6722836	INSTRUCTIONS			1
15	6577754	DECAL			1

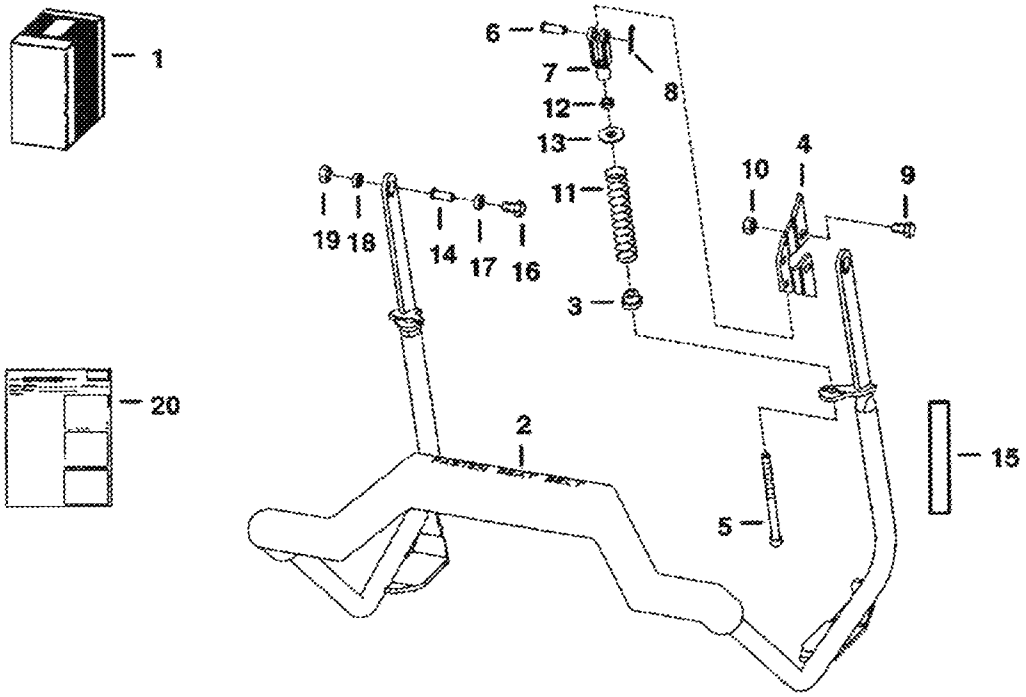
1
6
7
8
12
13
11
10
4
9
19
18
14
17
16
3
20
2
15
5
B-17259

SEAT BAR KIT (Cont'd)
(Forward Position - Compression Spring)

Ref No	Part Number	Description	Remarks	Serial Number	Qty
1	6714285	KIT	Ref. 2 - 16 & 20 - Was 6713853 [B]		1
2	6716779	SEAT BAR	W/Ref. 15 - Was 6714282 [A]		1
3	6710659	BUSHING			2
4	6710660	MOUNT			2
5	6713887	BOLT			2
6	4F6106	PIN	clevis		2
7	6713589	CLEVIS			2
8	6631418	PIN			2
9	17C000712B	BOLT			2
10	91D000007B	NUT			2
11	6701535	SPRING			2
12	8D000006B	NUT	jam		2
13	6571991	GUIDE			2
14	6680441	BUSHING	Was 6664882 [A]		2
15	6714629	DECAL			1
16	17C612	BOLT 5			2
17	25E000017B	WASHER			2
18	6706962	BUSHING			1
19	35C000608B	BOLT			2
20	6900096	INSTRUCTIONS			1

SEAT BAR KIT
(Compression Spring)

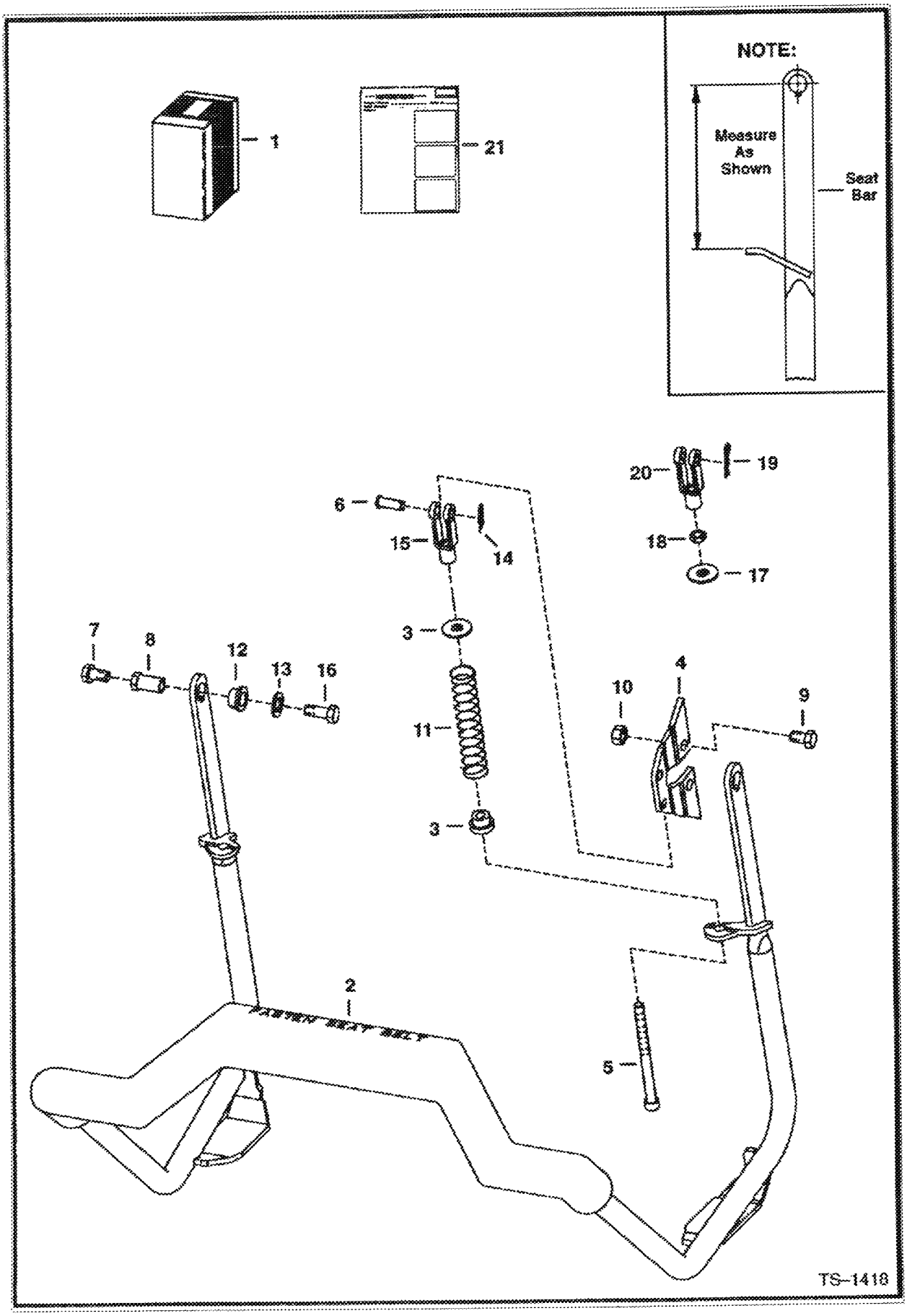

SEAT BAR KIT (Cont'd)
(Compression Spring)

Ref No	Part Number	Description	Remarks	Serial Number	Qty
1	6713853	KIT	Ref. 2 - 18 & 21		1
2		SEAT BAR	NAP - Order 6716777 Seat Bar & (2) ea. of Ref. 3, 5, 14 & 15 - 6.88" (174,8mm) center of top hole to weld on tab - SEE NOTE - Was 6710661 [A]		1
2	6716777	SEAT BAR	6.13" (155,7mm) center of top hole to weld on tab - SEE NOTE - Was 6713609 [A]		1
3	6710659	BUSHING	Used W/NAP 6710661 Seat Bar		2
3	6710659	BUSHING	Used W/6716777 Seat Bar		4
4	6710660	MOUNT			2
5	6713887	BOLT			2
6	4F6106	PIN	clevis		2
7	35C000608B	BOLT			2
8	6706962	BUSHING			1
9	17C000712B	BOLT			2
10	95D000007B	NUT	Was 91D000007B [A]		2
11	6701535	SPRING			2
12	6680441	BUSHING	Was 6664882 [A]		2
13	25E000017B	WASHER			2
14	6631418	PIN	Used W/6716777 Seat Bar		2
15	6713589	CLEVIS	2.09"(53,1 mm) long - Used W/6716777 Seat Bar		2
16	17C612	BOLT 5			2
17	6571991	GUIDE	Used W/NAP 6710661 Seat Bar		2
18	8D000006B	NUT	jam -Used W/NAP 6710661 Seat Bar		2
19	1306637B	PIN	cotter -Used W/NAP 6710661 Seat Bar - Not in Kit		2
20	2J006208B	CLEVIS	2.85"(72,4 mm) long - Not in Kit - Used W/NAP 6710661 Seat Bar		2
21	6900096	INSTRUCTIONS			1

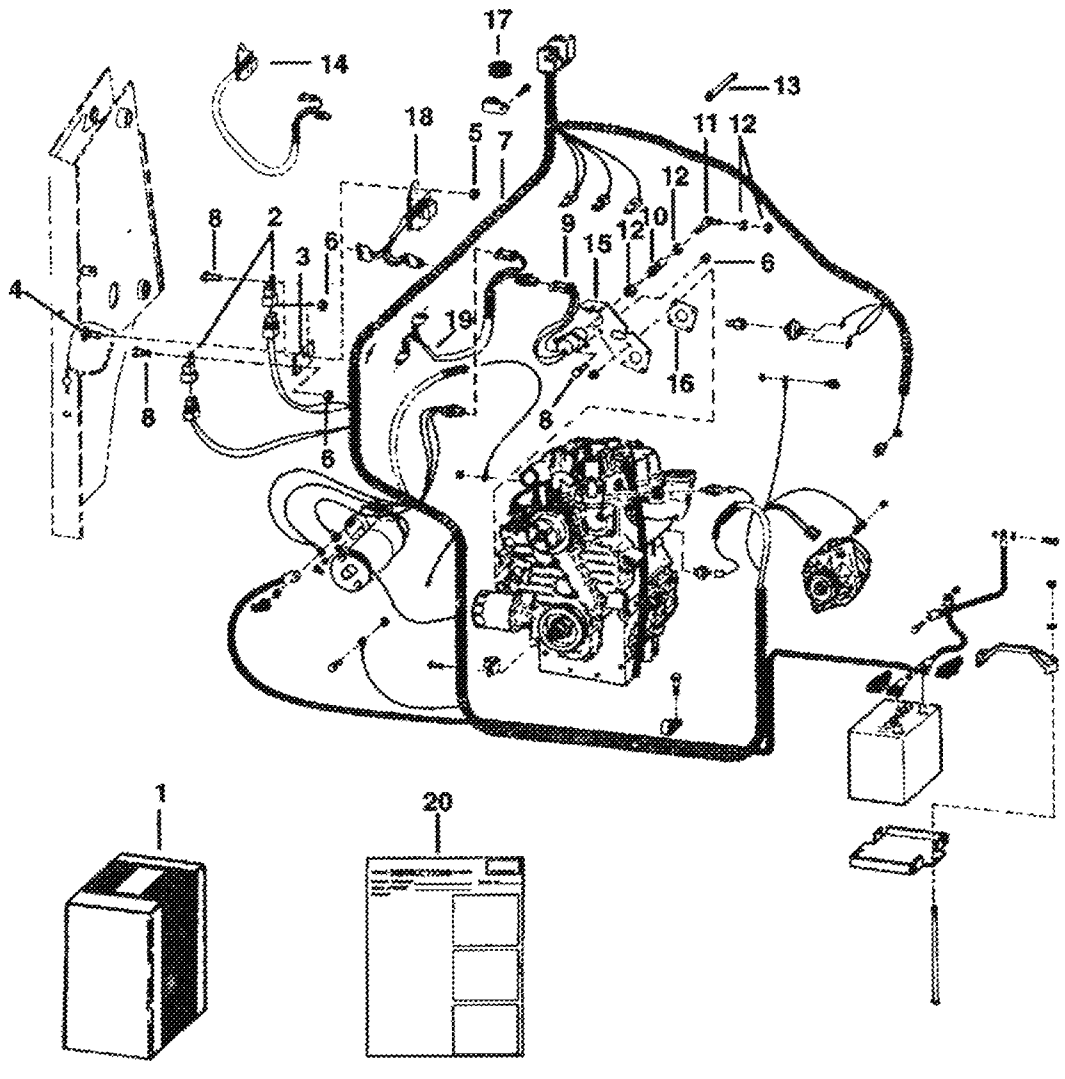
17
14
13
18
5
7
11
12
12
8
2
6
9
15
12
10
6
4
3
19
16
8
8
6
1
20
B-20267

SHUTDOWN (Cont'd)
(Electrical)

Ref No	Part Number	Description	Remarks	Serial Number	Qty
1	6705289	KIT	Ref. 2 - 16		1
2	6651975	SWITCH			2
3	6703685	BRACKET			1
4	7C000512B	BOLT			1
5	85D5	NUT 5			1
6	85D000004B	NUT			1
7	6703686	HARNESS	chassis		1
8	17C412	BOLT 5			2
9	6667993	SOLENOID	fuel shut-off - Was 6577503 [A]		1
10	6578366	BALL JOINT			1
11	6578363	ROD END			1
12	62D000004B	NUT			4
13	6610510	TIE			3
14		TIMER	NAP - Order Ref. 18 & 19 - Was 6661372 [A]		1
15	6703730	MOUNT			1
16	6714543	GASKET	Was 3974461B [A]		1
17	5289686B	PLUG			1
18	6669415	TIMER			1
18	6670808	FUSE	25 amp		1
19	6713879	HARNESS	16" (406,4mm) long		1
20	6722357	INSTRUCTIONS			1

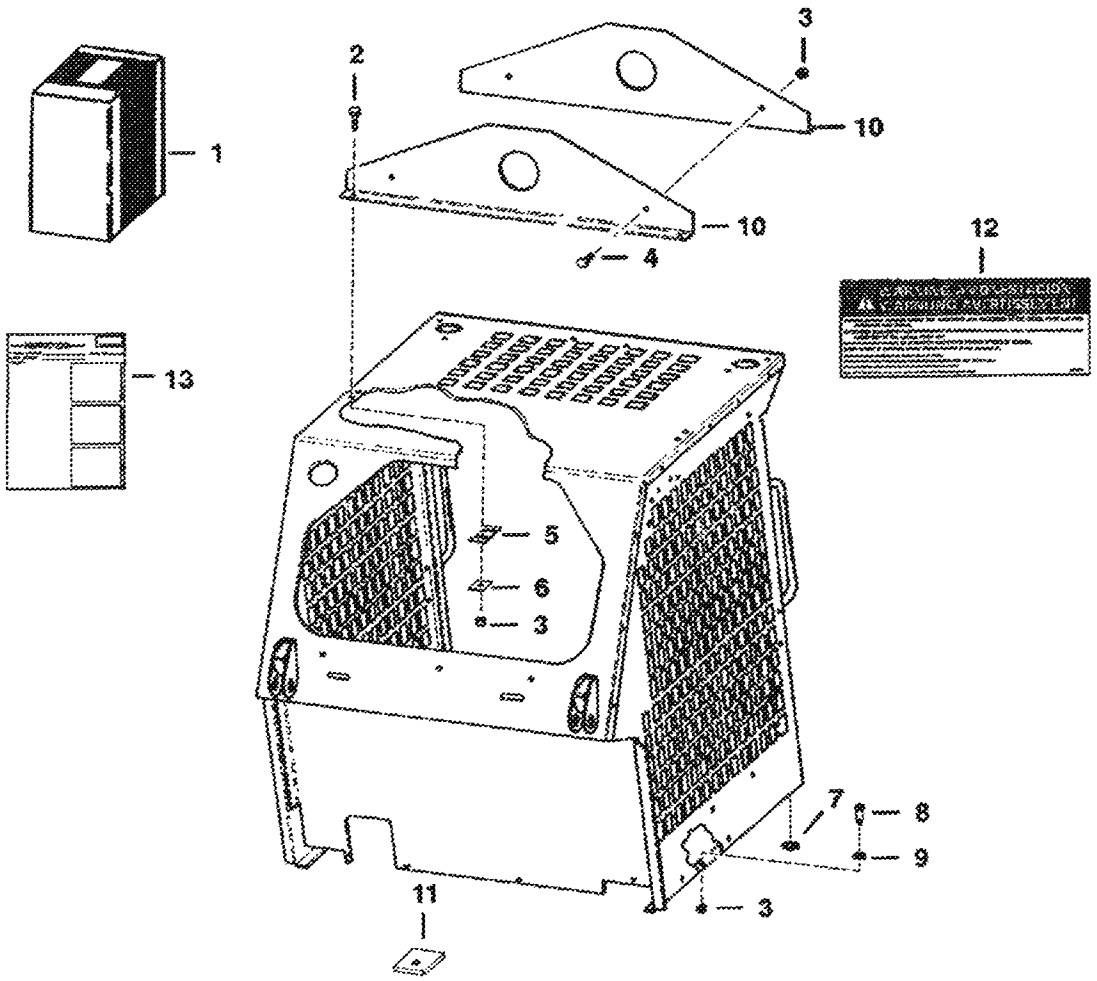

B-17670

SINGLE POINT LIFT (Cont'd)
(S/N 19999 & Below)

Ref No	Part Number	Description	Remarks	Serial Number	Qty
1		KIT	See Illustration SINGLE POINT LIFT/ B18085 NAP - REF. 2-12 - ORDER 6568041 KIT		1
2	17C000824B	BOLT			6
3	85D8	NUT 5			8
4	17C000816B	BOLT			4
5	6563494	SHIM			4
6	6553709	WASHER			4
7	6560900	RETAINER			2
8	672401	BOLT			2
9	6563495	WASHER			2
10	6560175	ANGLE			2
11	6563551	WASHER			2
12	6565932	DECAL	safety		2
13	6556604	INSTRUCTIONS			1

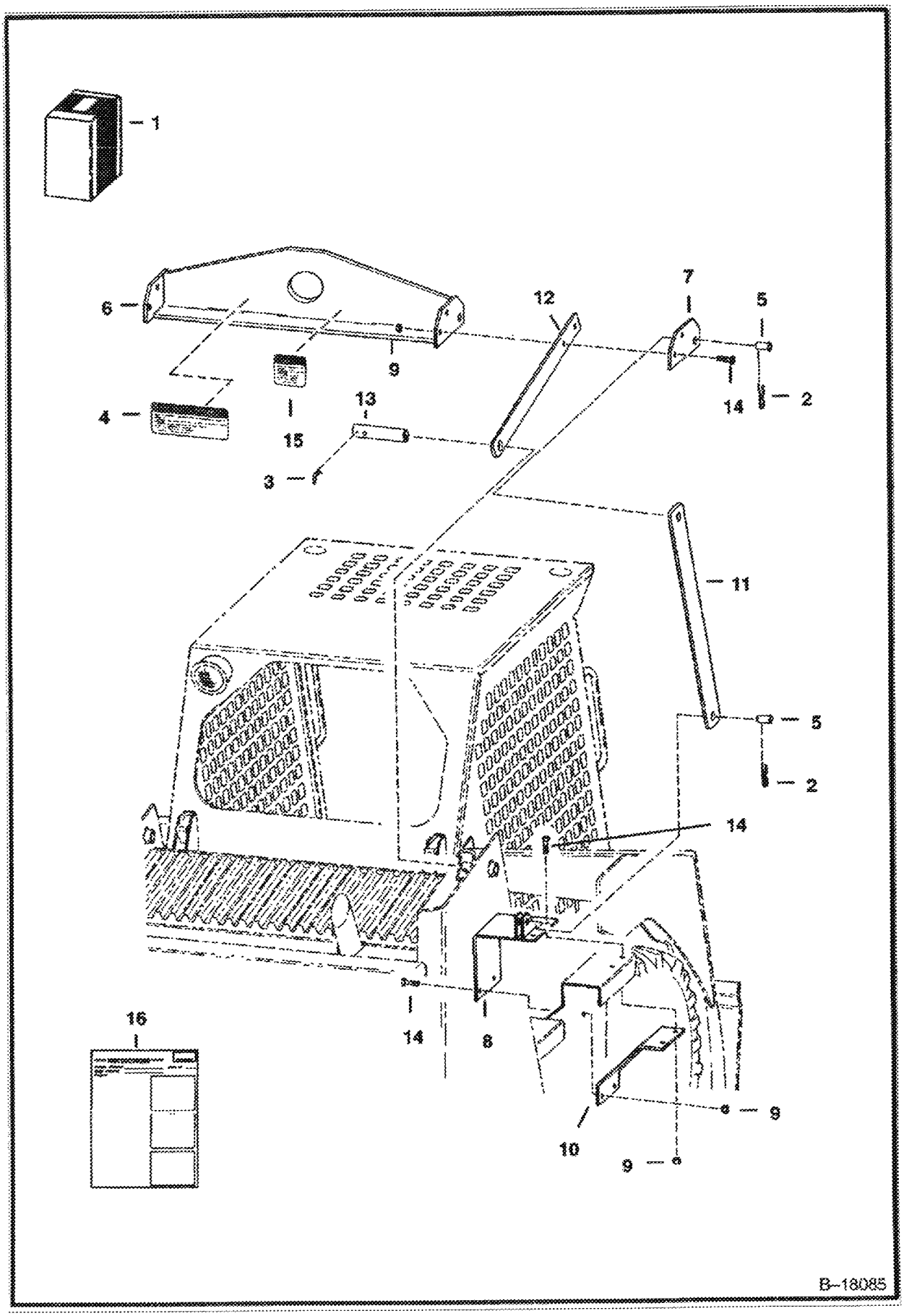
1
6
9
12
7
5
4
15
13
14
2
3
11
5
2
14
16
14
8
9
10
9
B-18085

Ref No	Part Number	Description	Remarks	Serial Number	Qty
1	6568041	KIT	Ref. 2-16		1
2	1320075	COTTER PIN			4
3	6005562	PIN	cotter		2
4	6565932	DECAL			2
5	6567838	PIN			4
6	6568182	ANGLE			1
7	6568184	MOUNT			2
8	6568188	MOUNT	R.H.		1
8	6568189	MOUNT	L.H.		1
9	85D8	NUT 5			12
10	6568190	BRACE			2
11	6568191	ARM			2
12	6568192	ARM			2
13	6568193	PIN			2
14	17C000824B	BOLT			12
15	6533898	DECAL			1
16	6566946	INSTRUCTIONS			1

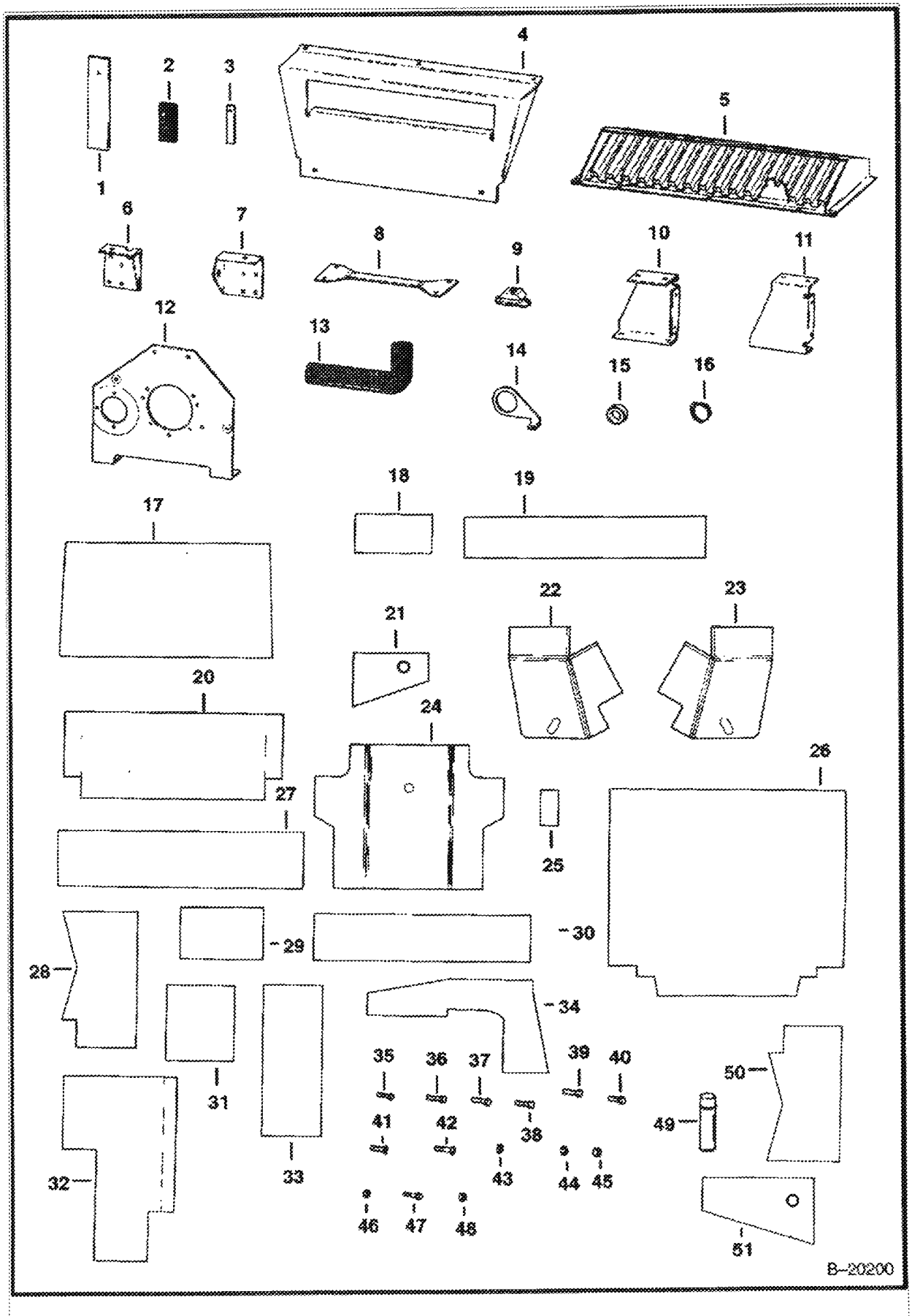
1
2
3
4
5
6
7
8
9
10
11
12
13
14
15
16
17
18
19
20
21
22
23
24
25
26
27
28
29
30
31
32
33
34
35
36
37
38
39
40
41
42
43
44
45
46
47
48
49
50
51
B-20200

Ref No	Part Number	Description	Remarks	Serial Number	Qty
1	6565134	COVER	cylinder		2
2	6565141	COVER	tie down slot - Rubber		2
3	6567664	COVER	tie down slot - Metal		2
4	6579562	SHIELD	tailgate		1
5	6579624	SHIELD	radiator		1
6	6579701	MOUNT	engine		1
7	6579704	MOUNT	engine	49136 & Below	1
7	6700503	MOUNT	Use W/6649676 Starter	49137 & Above	1
8	6579709	BRACE	engine mount		1
9	6651450	MOUNT	rubber		4
10	6579707	MOUNT	belly pan		1
11	6579708	MOUNT	belly pan		1
12	6579710	MOUNT	engine & starter		1
13	6579716	HOSE	air cleaner inlet		1
14	6579747	BRACKET	air inlet hose		1
15	6579857	CHOKE	air inlet		1
16	42HL00300B	CLAMP	air inlet hose - Was 6598799 [A]		1
17	6577264	INSULATION	tailgate - Lower		1
18	6579418	INSULATION	cab		2
19	6579420	INSULATION	tailgate - Upper		1
20	6579422	INSULATION	panel		1
21	6579423	INSULATION	panel		2
22	6579487	INSULATION	air inlet		1
23	6579488	INSULATION	air inlet		1
24	6579495	INSULATION	transmission		1
25	6579694	INSULATION	steering lever		2
26	6579749	INSULATION	cab back		1
27	6579750	INSULATION	radiator shield		1
28	6579979	INSULATION			2
29	6579980	INSULATION	blower housing - Front		1
30	6579981	INSULATION	blower housing - Lower		1
31	6579982	INSULATION	blower housing - Upper		2
32	6579984	INSULATION	fender		1
33	6579985	INSULATION	fender		2
34	6579986	INSULATION	fender		1
35	17C412	BOLT 5	Used/ Ref. 14		1
36	17C000614B	BOLT			4
37	17C000616B	BOLT			4
38	17C620	BOLT			4
39	4CM01235B	SCREW	engine mounts		4
40	6CM1220	BOLT			6
41	7C000620B	BOLT	Used/ Ref. 2		2
42	10C616	BOLT 10	Used/ Ref. 4		5
43	25E000017B	WASHER	Used on Ref. 41		2
44	57D000004B	NUT	Used on Ref. 35		1
45	61D000006B	NUT			12
46	81D000006B	NUT	Used on Ref. 42		5
47	84G3716	SCREW 5	Used with Ref. 1		6
48	85D6	LOCK NUT	Used on Ref. 1		2
49	6632469	ADHESIVE	spray can		x
50	6700691	INSULATION			1
51	6700692	INSULATION			1

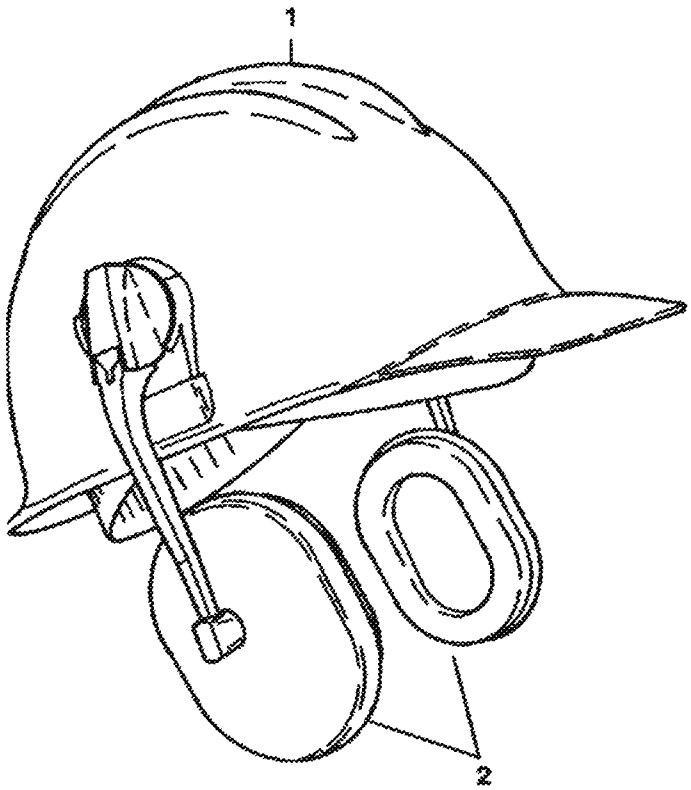

B-3111

Ref No	Part Number	Description	Remarks	Serial Number	Qty
1	6559552	HARDHAT			1
2	6559775	EARMUFFS			1

Page 1/1 - Printed: 07/25/2008 13:28 - Printed by Jon Cook

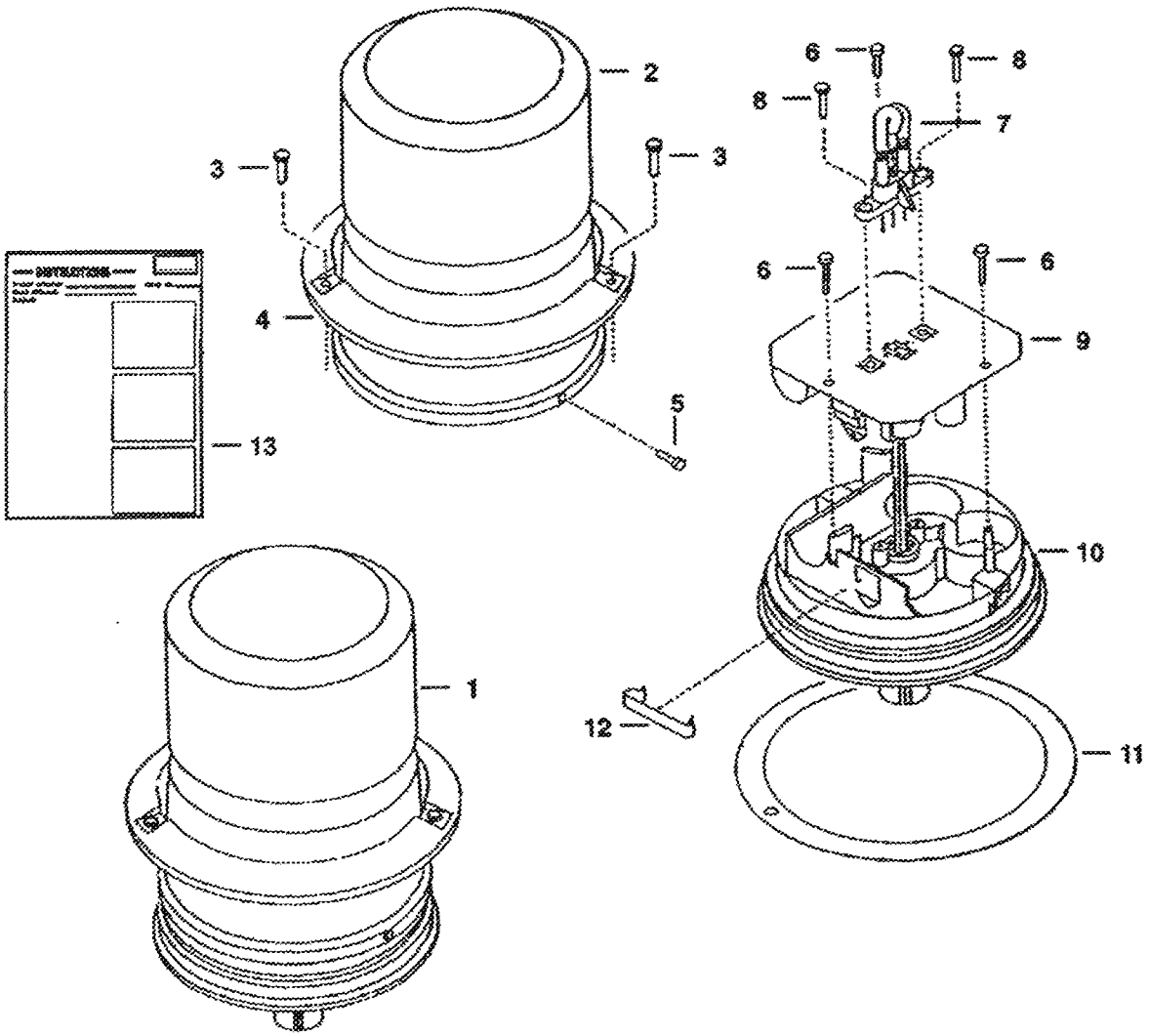
2
3
3
4
5
13
1
6
8
8
7
6
6
9
10
12
11
B-13592

STROBE LIGHT KIT (Cont'd)
(Amber)

Ref No	Part Number	Description	Remarks	Serial Number	Qty
1	6587526	KIT	strobe light - Ref. 2 - 13		1
2	6659971	LENS	amber		1
2		LENS	NSS - blue - Not in Kit - Was 6660247 [D]		1
3		SCREW	NSS		3
4	6659974	COLLAR	mounting		1
5		SCREW	NSS		1
6		SCREW	NSS		3
7	6659972	FLASH TUBE			1
8		SCREW	NSS		2
9		POWER SUPPLY	NSS		1
10		BASE	NSS		1
11	6659973	GASKET			1
12		RETAINER	NSS		1
13	6720856	INSTRUCTIONS			1

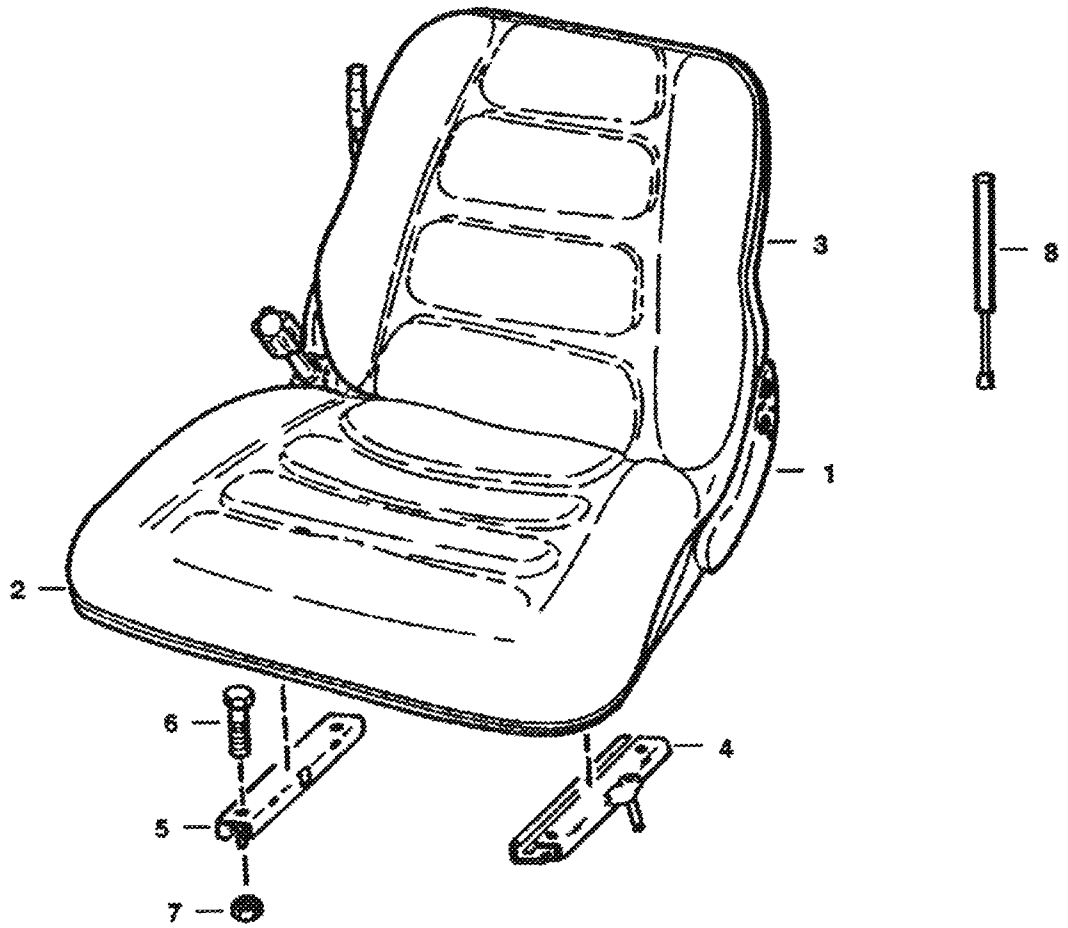

B–5562

SUSPENSION SEAT (Cont'd)
(Grammer)

Ref No	Part Number	Description	Remarks	Serial Number	Qty
1	6632388	SEAT			1
2	3737010B	CUSHION	seat		1
3	3737081B	CUSHION	backrest		1
4	3737000B	TRACK	W/ Adjusting Handle		1
5	3737001B	TRACK	W/O Adjusting Handle		1
6	17C000512B	BOLT			4
7	61D5	NUT			4
8	6660348	GAS SPRING			1

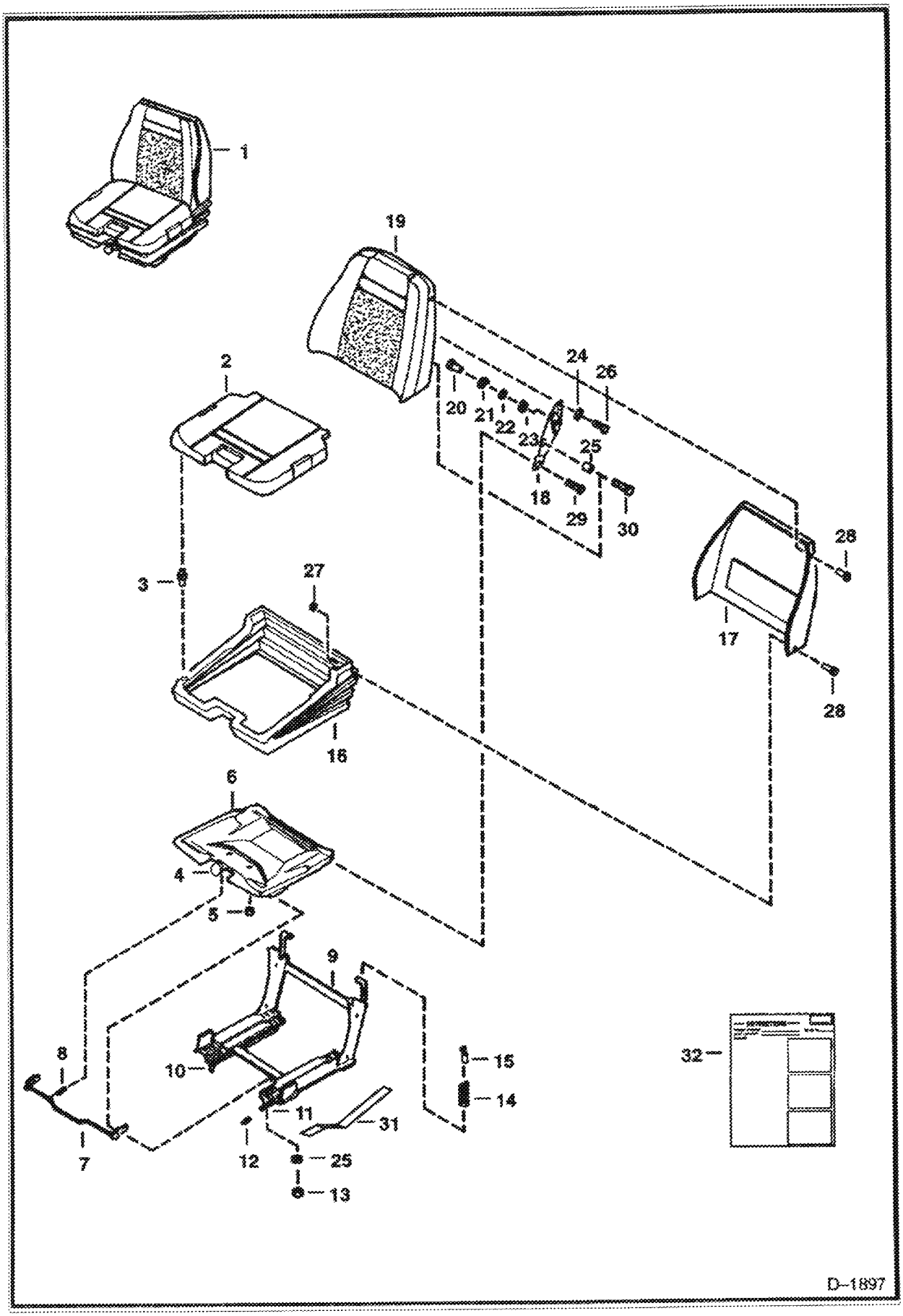
1
19
2
24
26
20
21
22
23
25
18
29
30
28
3
27
17
28
16
6
4
5
9
8
10
15
14
11
31
7
12
25
13
32
D-1897

SEAT (Cont'd)
(Suspension - Milsco)

Ref No	Part Number	Description	Remarks	Serial Number	Qty
1		SEAT	NAP - REF. 2 - 30 - ORDER 6674019 SEAT - WAS 6674019 [A]		1
2	6650226	SEAT CUSHION	W/Ref. 3		1
3	6650231	CLIP			x
4	6650219	KNOB KIT	W/Nut, Bushing		1
5	6650241	PUSH NUT			2
6	6650230	SEAT PAN	W/Mounting Hardware		1
7	6650221	LATCH TILT	Ref. 8 - W/Mounting Hardware		1
8	6650229	SPRING			1
9		FRAME	NSS		1
10	6650228	TRACK			1
11	6599779	ADJUSTER	Was 6650227 [A]		1
12	6650242	TIP			1
13	61D5	NUT			4
14	6650222	SPRING			1
15	6650223	CABLE			1
16	6650243	BOOT			1
17	6650220	SHROUD	W/Mounting Hardware		1
18	6650224	SUPPORT	R.H. & L.H. Backrest		1
19	6650225	BACK CUSHION	W/Mounting Hardware		1
20		NUT	NAP - Was 6650244 [A]		2
21	6650245	WASHER			2
22	6650246	WASHER			2
23	6650247	WASHER			2
24	6650248	SPACER			2
25	6650249	SPACER			2
26	17C000510B	BOLT			4
27	6650250	WASHER			5
28	6650251	CLIP			7
29	6668717	SCREW			4
30		BOLT	NAP - hex head bolt - 5/16" x 5/8" - grade 5 - Was 31C000510B [A]		2
31	6706966	SPRING	plate		1
32	6724017	INSTRUCTIONS			1

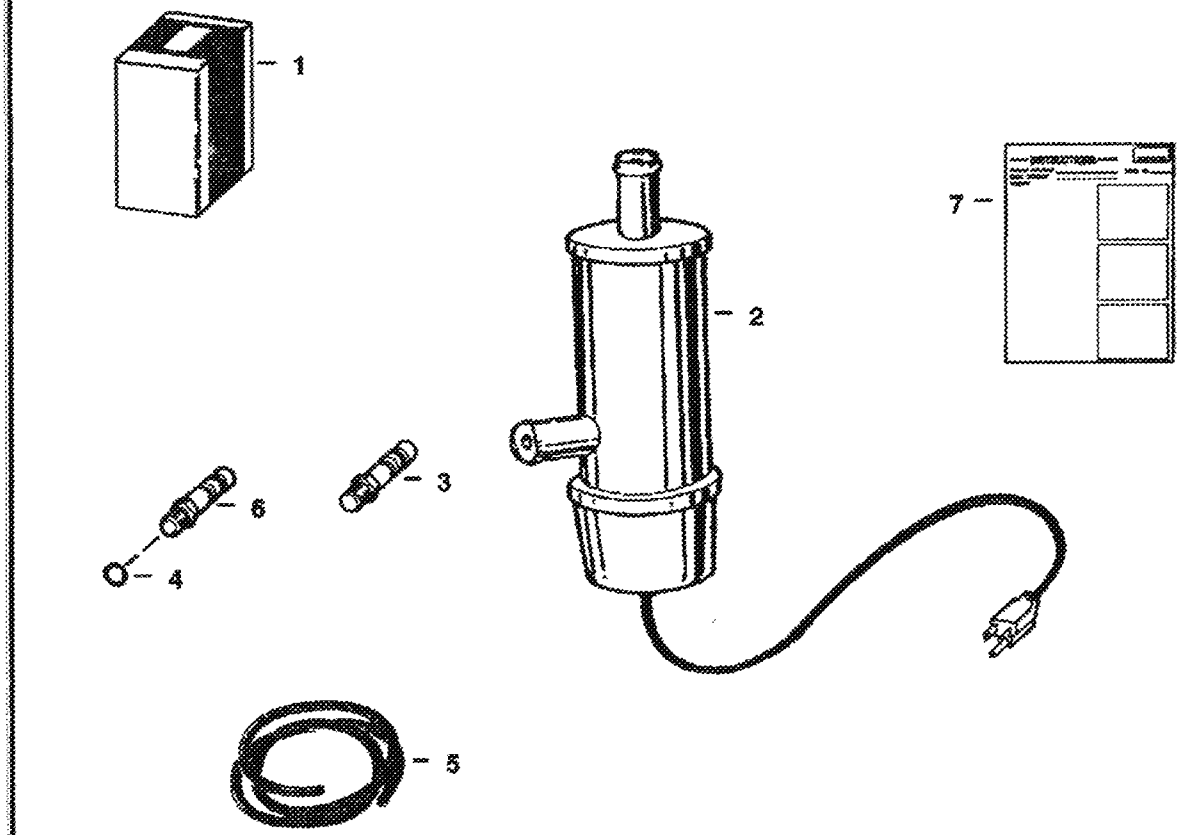

B-18522

TANK HEATER KIT (Cont'd)
(120 Volt)

Ref No	Part Number	Description	Remarks	Serial Number	Qty
1	6570784	KIT	Was 6570786 [B]		1
2	6660327	HEATER	1000 watts		1
3	666866B	FITTING			1
4	3974885B	WASHER	Was 40K000006B [B]		1
5	889269B	HOSE	bulk - 3 ft. (914 mm)		x
6	6578598	ADAPTER	Was 6651439 [B]		1
7	6570802	INSTRUCTIONS			1

TANK HEATER KIT
(240 Volt)

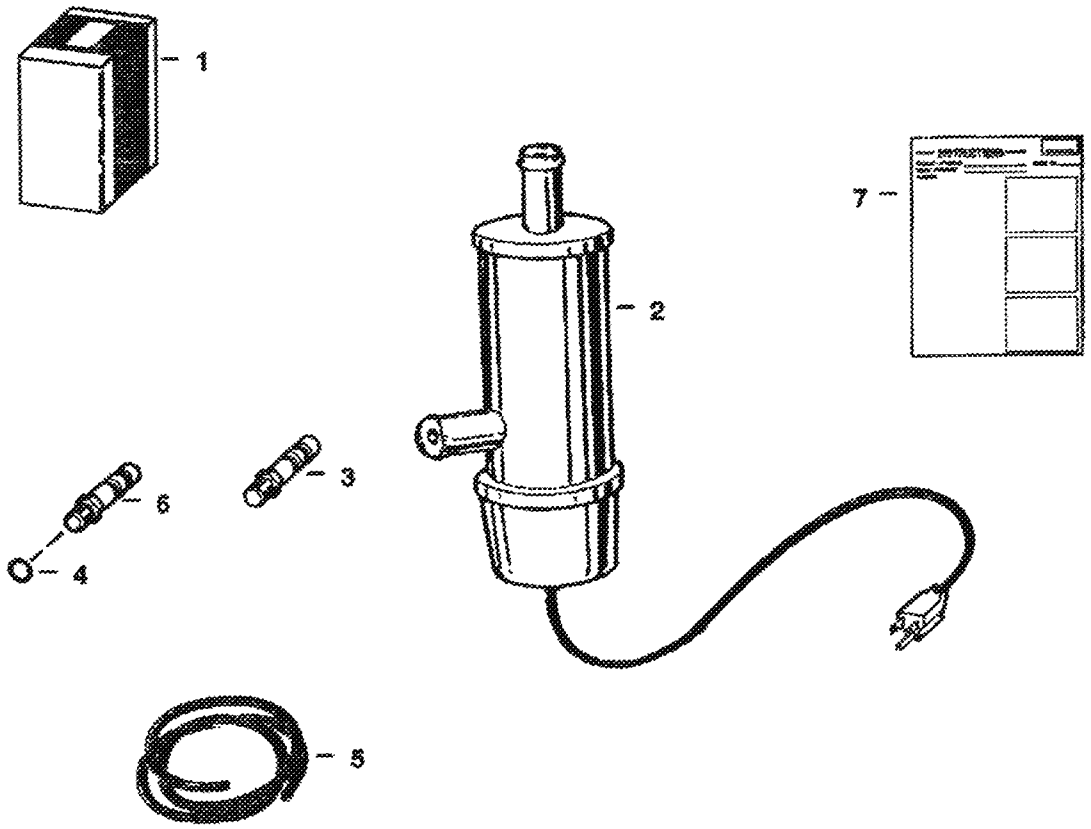

B-18522A

TANK HEATER KIT (Cont'd)
(240 Volt)

Ref No	Part Number	Description	Remarks	Serial Number	Qty
1	6570785	KIT	W/Ref 2-7		1
2	6649656	HEATER			1
3	666866B	FITTING			1
4	3974885B	WASHER	Was 40K000006B [B]		1
5	889269B	HOSE	bulk - 3 ft. (914 mm)		x
6	6578598	ADAPTER	Was 6651439 [A]		1
7	6570802	INSTRUCTIONS			1

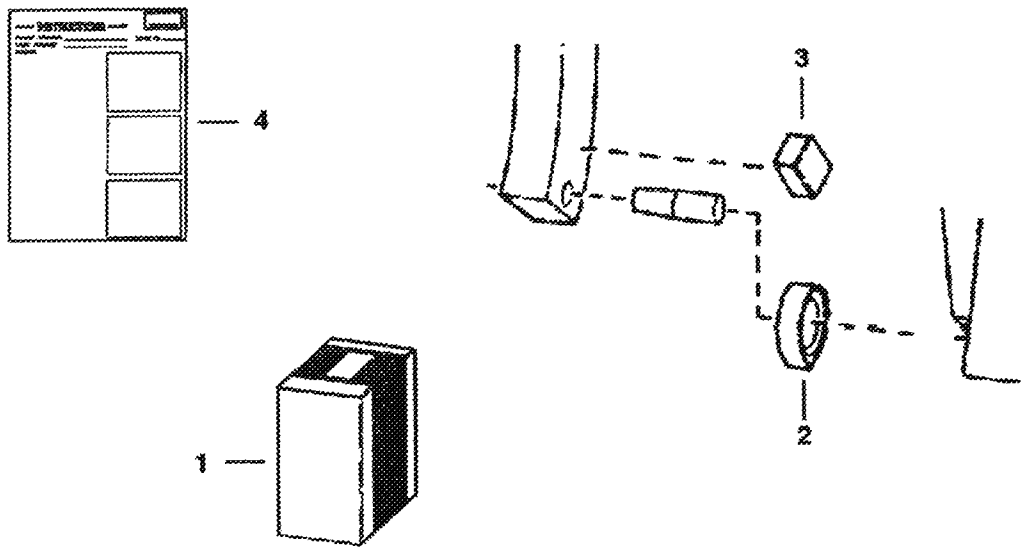

B-18191

Ref No	Part Number	Description	Remarks	Serial Number	Qty
1	6705179	KIT	tilt stop		1
2	6705169	STOP	tilt		2
3	6705170	STOP	tilt		2
4	6722308	INSTRUCTIONS			1

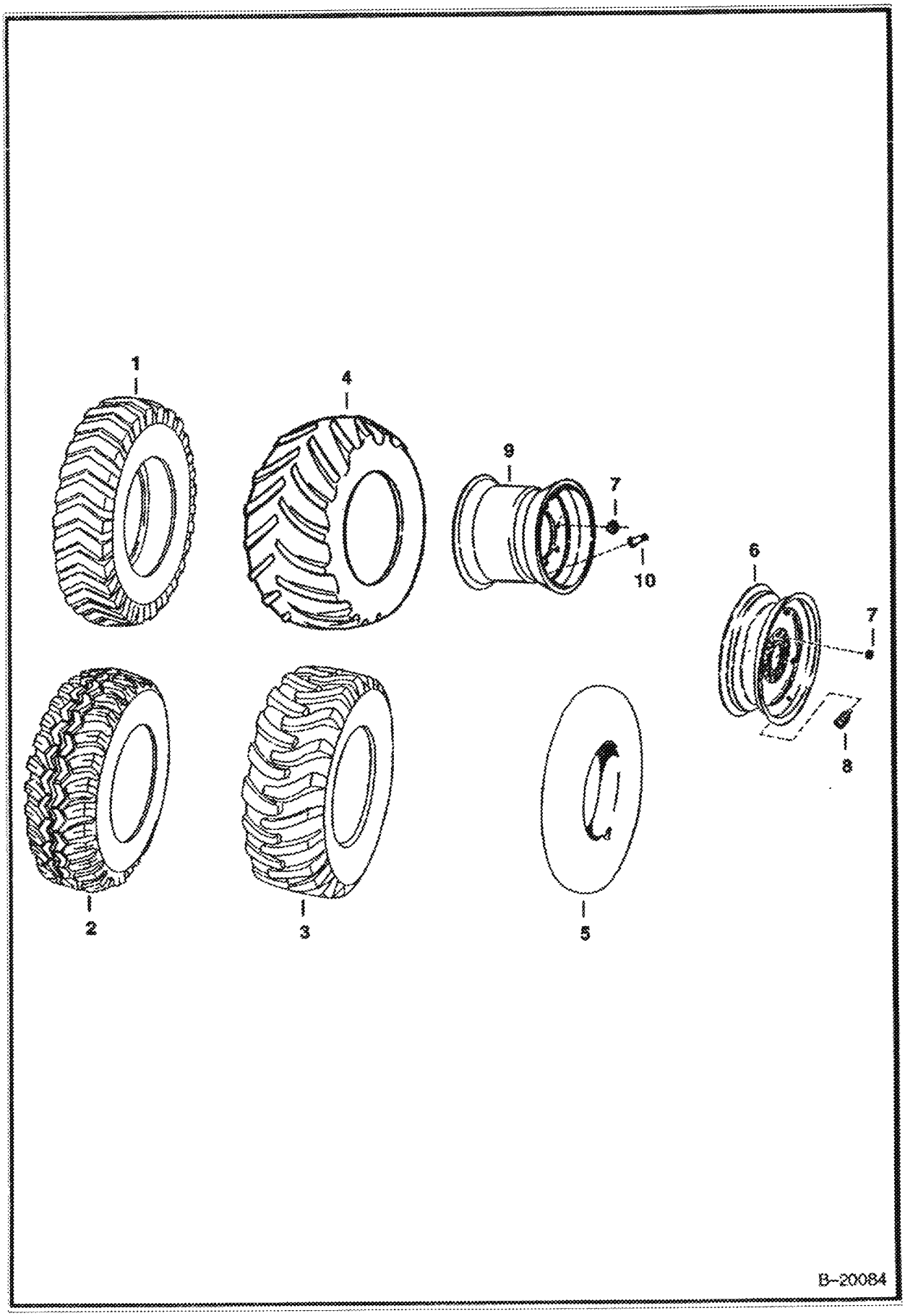
1
4
9
7
10
6
7
8
2
3
5
B-20084

Ref No	Part Number	Description	Remarks	Serial Number	Qty
1		TIRE	NAP - 7.00-15, 6 Ply Rating, Steel Cap Bar Lug - Firestone - Was 6515899 [A]		4
1		TIRE	NAP - 7.00 x 15, 6 Ply Rating, Steel Cap Bar Lug - Dico - Was 6659473 [A]		4
1	6665724	TIRE	7.00 x 15, 6 Ply Rating Nylon Bar Lug - Dico - Was 6659474 [A]		4
1	6665724	TIRE	7.00 x 15,6 Ply Rating, IDT - Industrial Deep Tread - Dico		4
2		TIRE	NAP - 10 x 16.5, 6 Ply Rating, Flotation - Firestone - Order Ref. 3 - Was 6550829 [A]		4
3		TIRE	NAP - 10 x 16.5, 6 Ply Rating, Nylon Loader Lug - General - Was 6550826 [A]		4
3		TIRE	NAP - 10 x 16.5, 6 Ply Rating, Nylon Sure Grip - Goodyear - Order 6729896 - Was 6631613 [A]		4
3		TIRE	NAP - 10 x 16.5, 6 Ply Rating, Steel Cap Flo-Trac - Dico - Was 6550828 [A]		4
3		TIRE	NAP - 10 x 16.5 6 ply Rating, Nylon Dico - Order 6729896 - Was 6653481 [A]		4
3		TIRE	NAP - 10 x 16.5, 6 Ply Rating, Nylon Super Traction - Firestone - Order 6729896 - Was 6646601 [A]		4
3		TIRE	NAP - 10 x 16.5, 8 Ply Rating - Bobcat - Order 6729896 tire or 6729901 tire - Was 6661287 [A]		4
3	6729896	TIRE	10 x 16.5, 8 Ply Rating		4
3	6729901	TIRE	10 x 16.5, 8 Ply Rating		4
3		TIRE	NAP - 10 x 16.5 8 Ply Rating - Heavy Duty - Dico - Order 6729896 - Was 6667889 [A]		4
4		TIRE	NAP - 31-15, 8 Ply Rating, Terra Grip - purchase locally - Was 6513971 [A]		4
5	6515045	TUBE	Use WRef. 1		4
5	6516033	TUBE	Use W/Ref. 2 & 3		4
6	6730771	RIM	See BTI197 Used W/Ref. 2 & 3 - Was 6565239 [A]		4
6	6562777	RIM	See BTI197 Used W/Ref. 1		4
7	6564669	NUT	wheel - Was 6519169 [A]		32
8	1614765B	STEM	tubeless tire		4
9	6561095	RIM	Use W/Ref. 4		4
10	6591447	STEM	valve - Use W/Ref. 9		4

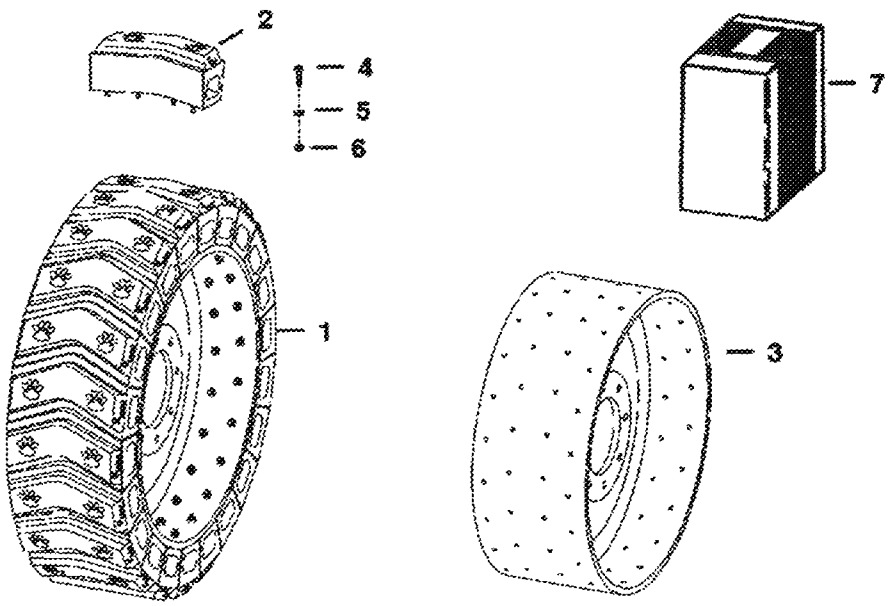

TS–1937

TIRES & RIMS (Cont'd)
(Solid Tires - Iatco)

Ref No	Part Number	Description	Remarks	Serial Number	Qty
1	6682856	TIRE & RIM	Assy. - R.H. - 7.5 x 15 - Was 6664993 [A]		2
1	6682857	TIRE & RIM	Assy. - L.H. - 7.5 x 15 - Was 6664994 [A]		2
1	6674003	TIRE & RIM	Assy. - R.H. - 10 x 16.5 - Was 6670616 [A]		2
1	6674004	TIRE & RIM	Assy. - L.H. - 10 x 16.5 - Was 6670617 [A]		2
2	6682858	KIT	Box of (9) segments - 7.5 x 15 W/Ref. 4 - 6 - (18) segments/tire - Was 6664995 [A]		x
2	6674007	KIT	Box of (10) segments - 10 x 16.5 W/Ref. 4 - 6 - (20) segments/tire - Was 6670618 [A]		x
3		RIM	NAP - R.H. - 7.5 x 15 - Order Ref. 1		2
3		RIM	NAP - L.H. - 7.5 x 15 - Order Ref. 1		2
3		RIM	NAP - R.H. - 10 x 16.5 - Order Ref. 1		2
3		RIM	NAP - L.H. - 10 x 16.5 - Order Ref. 1		2
4	1CM00830B	BOLT			x
5	25E15	WASHER			x
6	40DM00008B	NUT			x
7		KIT	NAP - wheel - Set of (4) 7.5 x 15 Tire & Rim Assys. - Ref. 1 - (2) R.H. & (2) L.H. - Was 6707172 [A]		1
7	6718298	KIT	wheel - Set of (4) 10 x 16.5 Tire & Rim Assys. - Ref. 1 - (2) R.H. & (2) L.H. - Was 6713885 [A]		1

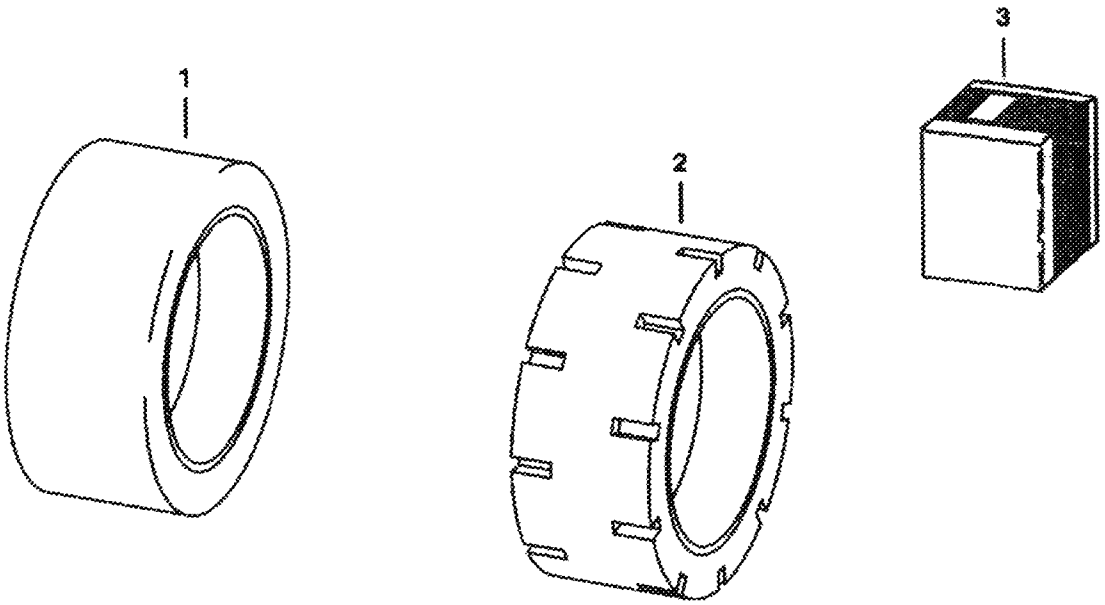

TS-1086

TIRES & RIMS (Cont'd)
(Solid Tires - Setco)

Ref No	Part Number	Description	Remarks	Serial Number	Qty
1	6704167	TIRE & RIM	10 X 31 Slick with wire		4
2	6704168	TIRE & RIM	10 X 31 Staggered Gear Lug		4
3		TIRE & RIM	NAP - 10 X 31 Slick with wire - Set of 4 - Order 6704167 - Was 6722149 [A]		1
3		TIRE & RIM	NAP - 10 X 31 Staggered Gear Lug - Set of 4 - Order 6704168 - Was 6722150 [A]		1

UPHOLSTERY KIT
(Deluxe)
(S/N 20001 & Above)

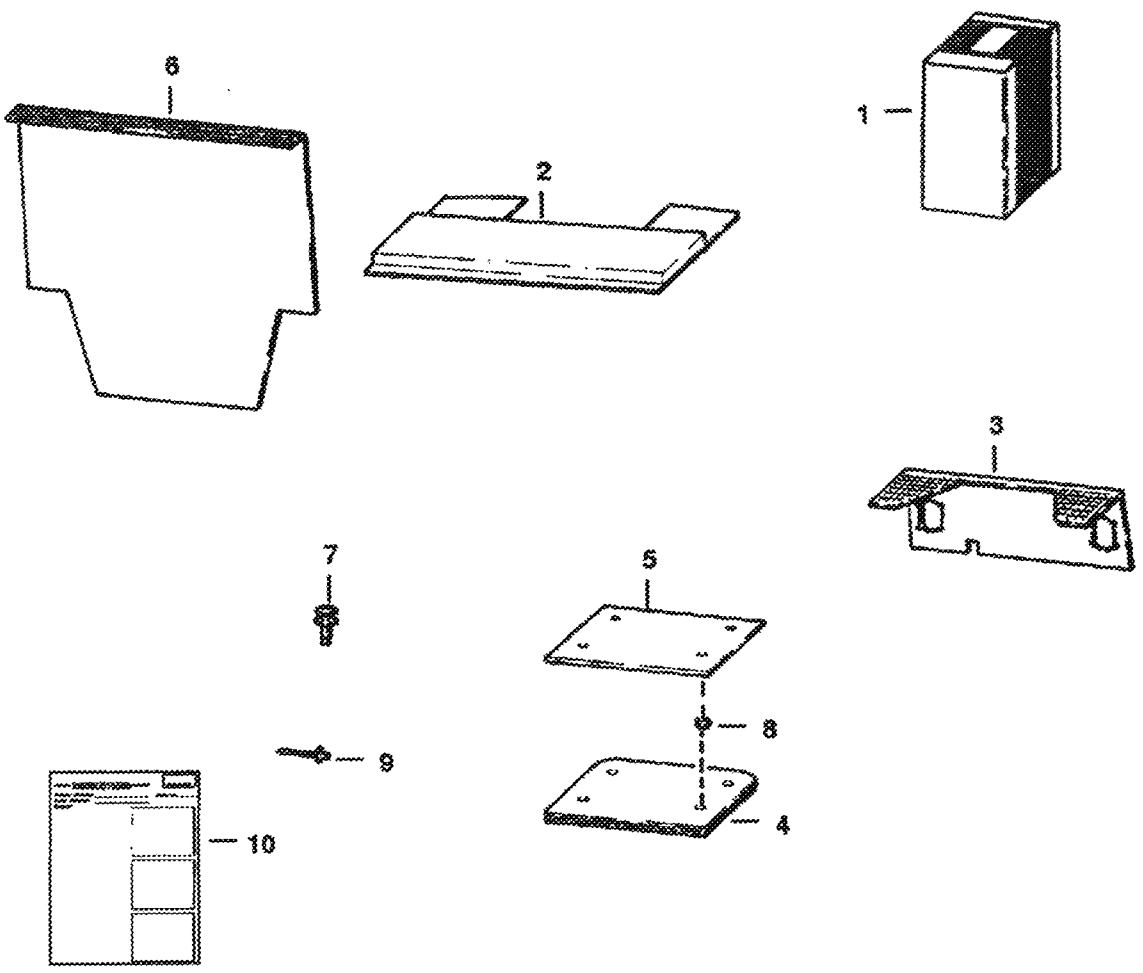

UPHOLSTERY KIT (Cont'd)
(Deluxe)
(S/N 20001 & Above)

Ref No	Part Number	Description	Remarks	Serial Number	Qty
1	6577606	KIT	Ref. 2-10		1
2	6565373	INSULATION	cab top		1
3	6565380	INSULATION	540, 640 & 740 Series		1
3	6568321	INSULATION	843 Only		1
4	6577273	INSULATION	seat pan - Was 6567902 [A]		1
5	6577439	INSULATION	seat pan - Was 6567903 [A]		1
6	6576494	INSULATION	cab back - Was 6568179 [A]		1
7	6630800	PIN	expander		1
8	61D5	NUT			4
9	6570031	INSTRUCTIONS			1
10	6661209	RIVET	Was 6632113 [A]		8

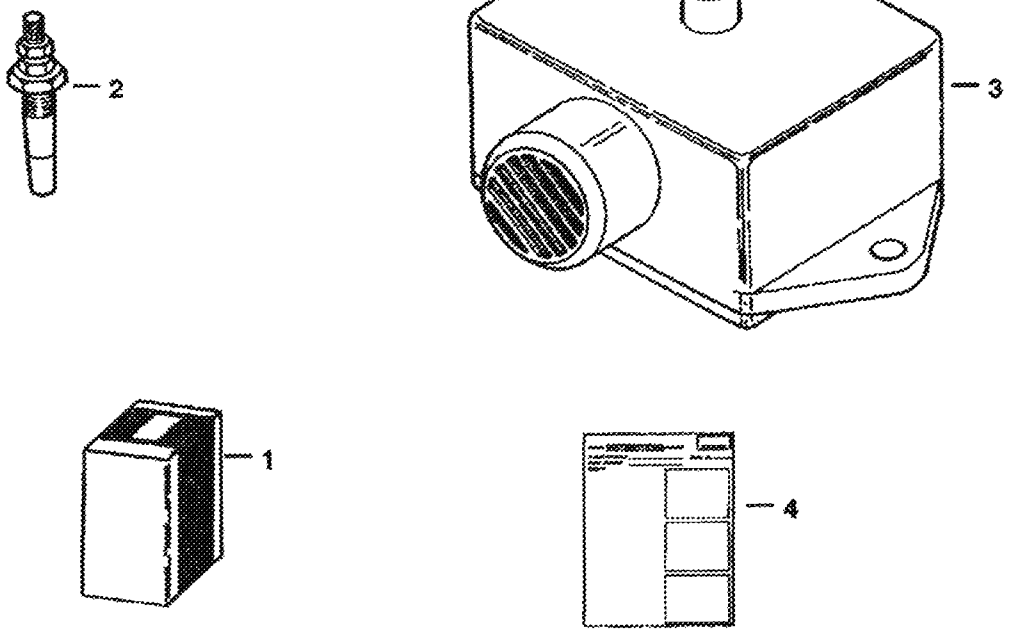

B-12815

WATER LEVEL SENSOR KIT (Cont'd)

Ref No	Part Number	Description	Remarks	Serial Number	Qty
1	6571700	KIT	water level sensor - Ref. 2-4		1
2	6632954	PROBE			1
3		ALARM	NSS		1
4	6570238	INSTRUCTIONS			1

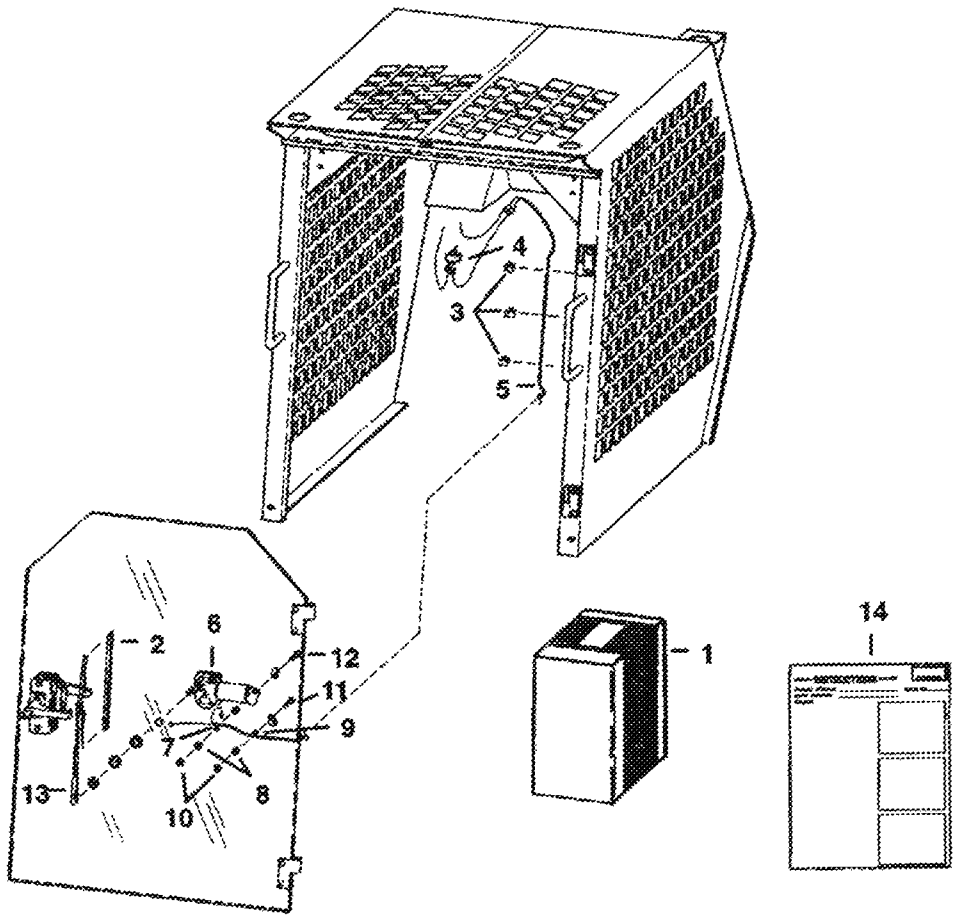

E-1293

WINDSHIELD WIPER (Cont'd)
(S/N 19999 & Below)

Ref No	Part Number	Description	Remarks	Serial Number	Qty
1	6562123	KIT	wiper - Ref. 2-14		1
2	1550697B	BLADE			1
3	6514850	CLIP			3
4	6515521	SWITCH	toggle		1
5	6561592	HARNESS			1
6	6561971	MOTOR			1
7	12E000010B	WASHER			1
8	25E000010B	WASHER			3
9	30H000014B	CLAMP			2
10	51D000010B	NUT			2
11	86G001012B	SCREW			1
12	86G001016B	SCREW			1
13	1744552B	ARM			1
14	6556703	INSTRUCTIONS			1

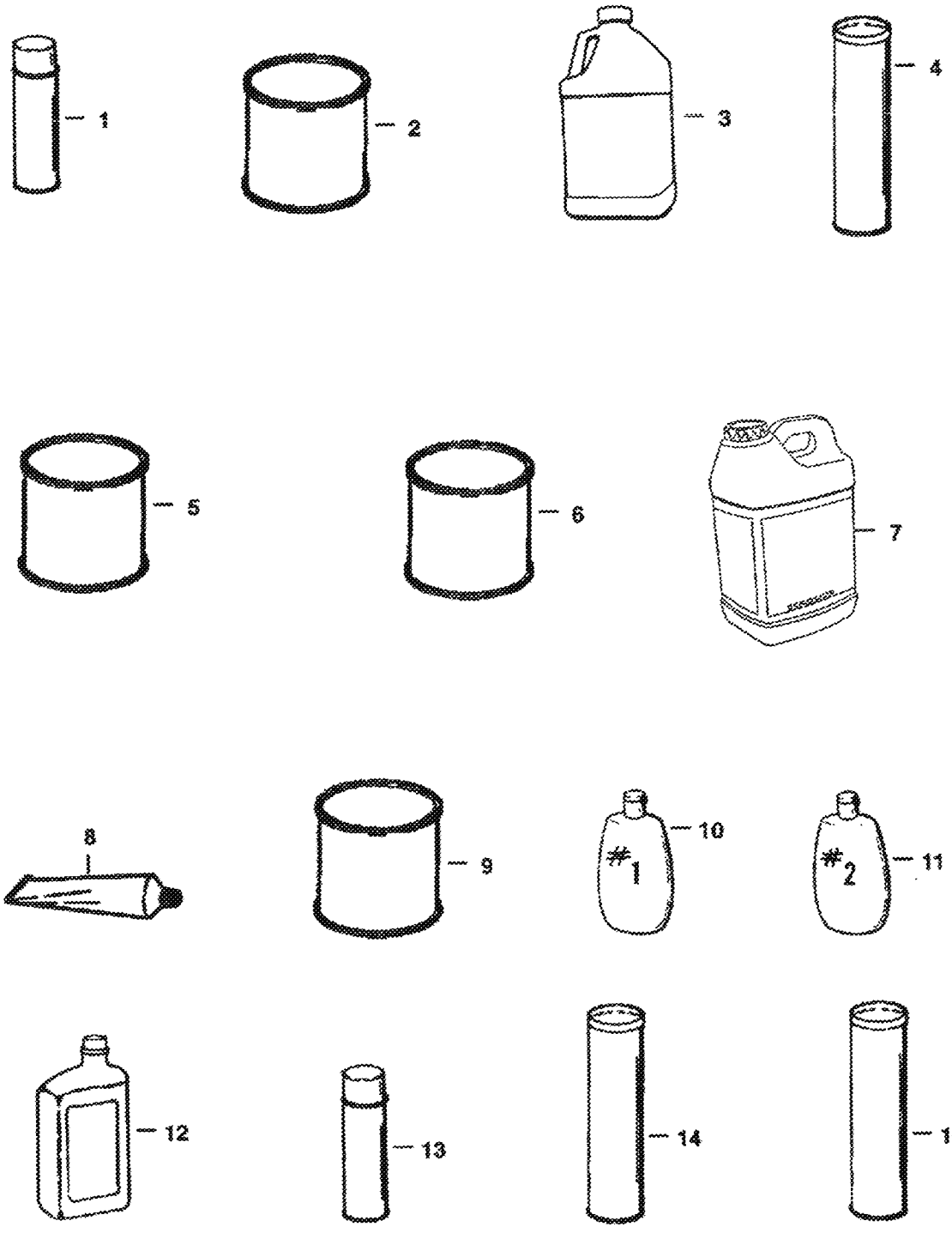

NOTE: Some of these bulk items may not be used on this particular model Bobcat.

NOTE: See Merchandising catalog for more products & information.

NOTE: Paint spray cans are packaged 6 per box.
Motor oil quarts are packaged 12 per box.
Motor oil 1 gal. jugs are packaged 6 per box.
Motor oil 2.5 gal. jugs are packaged 2 per box.

6-16462R

BULK ITEMS (Cont'd)
(See Note)

Ref No	Part Number	Description	Remarks	Serial Number	Qty
1	6902228	PAINT	orange - Spray Can - See Note - Was 6722783 [A]		x
1	6902229	PAINT	charcoal - Spray Can - See Note - Was 6722786 [A]		x
1	6902230	PAINT	white - Spray Can - See Note - Was 6722789 [A]		x
2		PAINT	NAP - orange-Gallon - Also Order Ref. 5 - Was 6722781 [A]		x
2	6902233	PAINT	orange - Qt. - Was 6722782 [A]		x
2		PAINT	NAP - charcoal - Gallon - Also Order Ref. 5 - Was 6722784 [A]		x
2	6902234	PAINT	charcoal - Qt. - Was 6722785 [A]		x
2		PAINT	NAP - white - Gallon - Also Order Ref. 5 - Was 6722787 [A]		x
2	6902235	PAINT	white - Qt. - Was 6722788 [A]		x
3	6724094	ANTI-FREEZE	1 gal. premixed PG - Was 6658230 [A]		x
3	6724354	ANTI-FREEZE	1 gal. PG concentrate		x
4	6633583	SEALANT	chaincase covers		x
5		REDUCER	NAP - gallon - Was 6653517 [A]		x
6		PRIMER	NAP - gallon - Was 6653518 [A]		x
7	6903117	HYD FLUID 2.5 GAL. 2	Was 6563328 [A]		x
7	6903118	HYD. FLUID 5GAL	Was 6722344 [A]		x
7		BLACK GOLD	NAP - 30 Gallon Drum		x
7	6903119	HYD. FLUID 55GAL	Was 6563330 [A]		x
8	6599360	SEALANT	electrical - 3 oz. tube		x
9	6903121	GEAR LUBE 12	Was 6634393 [A]		x
10	6630188	POLISH	window - #1 (8 oz.)		x
10		POLISH	NAP - window-1 (64 oz.) - Order 6630188 - Was 6630190 [A]		x
11	6630189	POLISH	window - #2 (8 oz.) - scratch remover		x
11		POLISH	NAP - window-2 (64 oz.) - scratch remover - Order 6630189 - Was 6630191 [A]		x
12	6903109	OIL 30W QT. 12	30W - 1 Qt. - SEE NOTE - Was 6657303 [A]		x
12	6903110	OIL 30W GAL. 6	Was 6724559 [A]		x
12	6903111	OIL 30W 2.5 GAL 2	Was 6674206 [A]		x
12	6903107	OIL 10W30 QT. 12	Was 6657301 [A]		x
12	6903108	OIL 10W30 GAL. 6	Was 6724557 [A]		x
12	6903112	OIL 10W30 2.5 GAL 2	Was 6674205 [A]		x
12	6903105	OIL 15W40 QT. 12	Was 6657299 [A]		x
12	6903106	OIL 15W40 GAL. 6	Was 6724558 [A]		x
12	6903113	OIL 15W40 2.5 GAL. 2	Was 6674204 [A]		x
13	6675380	ADHESIVE	insulation - spray can - Was 6652818 [A]		x
14	6903122	GREASE 10	Was 6658266 [A]		x
15	6599719	GREASE	14.5 oz. cartridge - For fan idler brg. & spring loaded drive idler		x
16	6650407	ADHESIVE	1 oz. tube		x
17	6650388	SEALANT	flange		x
18	6736644	PAINT	orange - 5 oz. spray can		x
18	6736641	PAINT	charcoal - 5 oz. spray can		x

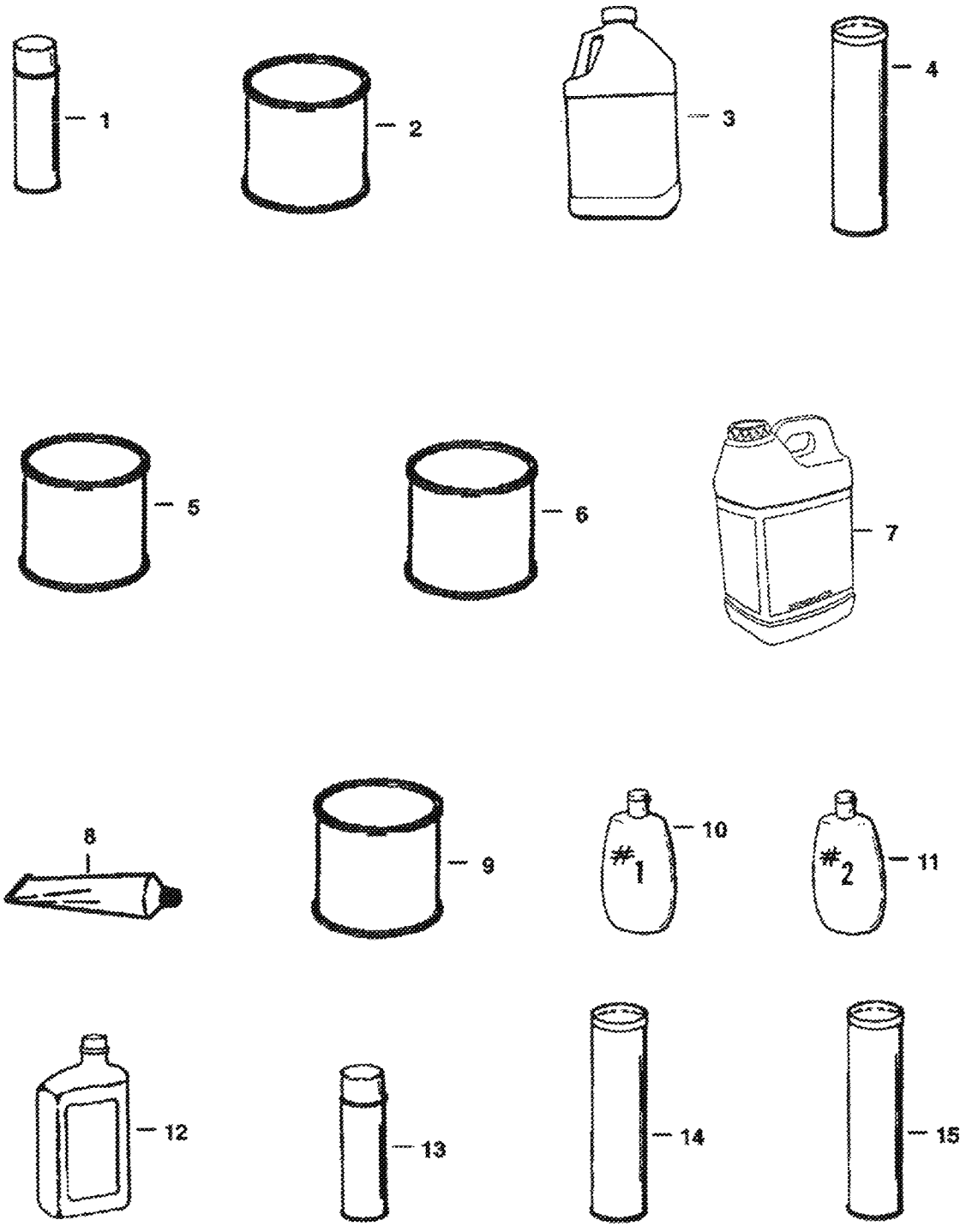

NOTE: Some of these bulk items may not be used on this particular model Bobcat.

NOTE: See Merchandising catalog for more products & information.

NOTE: Paint spray cans are packaged 6 per box.
Motor oil quarts are packaged 12 per box.
Motor oil 1 gal. jugs are packaged 6 per box.
Motor oil 2.5 gal. jugs are packaged 2 per box.

B-16462R

BULK ITEMS (Cont'd)
(See Note)

Ref No	Part Number	Description	Remarks	Serial Number	Qty
18	6736642	PAINT	white - 5 oz. spray can		x
18	6736645	PAINT	red - 5 oz. spray can		x

Part No.	Description	Was	Code	Page
10C000512B	BOLT	6553808	A	6, 122, 124, 126, 130, 162, 262, 270, 272, 276, 286, 288
10C000512B	BOLT			6, 122, 124, 126, 130, 162, 262, 270, 272, 276, 286, 288
10C616	BOLT 10			378
10H000035B	GREASE ZERK			20, 24, 106
10H25	GREASE ZERK			20, 24, 46
10J000005B	BALL			186, 232
10J000013B	BALL			172, 218
10J000020B	BALL			186
11H000025B	GREASE ZERK			168
11H15	GREASE FITTING			20, 46
11K000007B	ELBOW			100, 354
11K000008B	ELBOW			90, 96
12D000006B	NUT			122, 124, 126, 130, 342, 356, 358, 360
12D000008B	NUT			134, 136, 140, 142
12D000010B	NUT	14D000010B	B	130, 166, 270, 286, 292, 314
12D000010B	NUT			130, 166, 270, 286, 292, 314
12D000012B	NUT			270
12E000006B	WASHER			122, 124, 126, 130
12E000010B	WASHER			404
12E000012B	WASHER			270
12F000114B	PLUG			168
12JM00310B	RIVET			186
1303485B	CONNECTOR			90
1304938B	BOLT			62
1306637B	PIN			62, 64, 370
1317456B	HOSE			92
1319451B	FUSE			122, 124, 126, 130
1320075	COTTER PIN			376
1320904B	BEARING			38
1320905B	CUP			38
1321499B	ELBOW	6567884	A	100
1324240	CONNECTOR			30
1326228	HOSE			92
13D000006B	NUT			48, 50
13GM00404B	SCREW			152
13GM00408B	SCREW			152
13K000007B	TEE			264
13K5	TEE			100
14D000010B	NUT			126
14G001008B	BOLT			270
14J001808B	PIN			162, 164
14J002512B	ROLL PIN			12
14J002516B	PIN			40
14J005032B	PIN			24
14K000007B	TEE			100
1518597B	HOSE			92, 100
1524780	HOSE			92
1530076	HOSE			92
1550695	HANDLE			270, 286
1550697B	BLADE			404
1579129B	NUT			66
15EM00180B	WASHER			172
15JM00048B	KEY			200, 246

Code for disposition of old part number
A -- Use up
B -- Use on other application (See PNI)
C -- File PDR Report with Bobcat Parts Sales
D -- Part Number Error

Part No.	Description	Was	Code	Page
15K000005B	ADAPTER			102
15K000006B	ADAPTER			160
15K000007B	CONNECTOR			44, 46, 50, 92
15K000008B	ADAPTER			90, 9
15K000010B	ADAPTER			90, 9
15KB01012B	ADAPTER	712555B	A	90
15KB1216	ADAPTER	712555B	A	96
1614765B	STEM			394
1675806B	TERMINAL			324, 326
16F000002B	PLUG			220
16F000004B	PLUG			110
1723192B	HOSE			264
1732490B	TEE			332, 334
1737762B	PIN			62
1744552B	ARM			404
17C000408B	BOLT			356, 358, 360
17C000416B	BOLT			90, 96
17C000444B	BOLT			92
17C000510B	BOLT			386
17C000512B	BOLT			38, 126, 130, 136, 262, 270, 286, 334, 384
17C000524B	BOLT			264
17C000540B	BOLT			44, 66
17C000556B	BOLT			158
17C000560B	BOLT			46
17C000572B	BOLT			122, 124, 126
17C000610B	BOLT			134, 136
17C000614B	BOLT			104, 106, 308, 356, 358, 360, 378
17C000616B	BOLT			12, 30, 34, 58, 60, 62, 106, 114, 344, 378
17C000624B	BOLT			46, 50, 62, 64, 104, 106
17C000626B	BOLT			104, 10
17C000628B	BOLT	7C000832B	B	64, 104, 106, 162, 164, 30
17C000628B	BOLT			64, 104, 106, 162, 164, 30
17C000632B	BOLT			20
17C000636B	BOLT			12
17C000644B	BOLT			24
17C000648B	BOLT			20, 106, 114, 160
17C000652B	BOLT	17C000644B	B	338
17C000660B	BOLT			24
17C000692B	BOLT			104
17C000696B	BOLT			106
17C000712B	BOLT			272, 276, 368, 370
17C000714B	BOLT			288
17C000812B	BOLT			40
17C000816B	BOLT			92, 102, 374
17C000824B	BOLT			6, 92, 101, 102, 304, 374, 376
17C000828B	BOLT			36
17C000836B	BOLT			100, 158
17C000840B	BOLT			6, 10, 350
17C000844B	BOLT			304
17C000880B	BOLT			22
17C000884B	BOLT			22
17C001020B	BOLT			20, 24
17C001060B	BOLT			8
17C001064B	BOLT			24

Code for disposition of old part number
A -- Use up
B -- Use on other application (See PNI)
C -- File PDR Report with Bobcat Parts Sales
D -- Part Number Error

Part No.	Description	Was	Code	Page
17C001220B	BOLT			38
17C001228B	BOLT			36
17C001252B	BOLT			36
17C1056	BOLT			6, 10, 350
17C412	BOLT 5			133, 134, 136, 298, 324, 326, 356, 372, 378
17C516	BOLT			258, 260, 270, 286
17C612	BOLT 5			12, 103, 104, 105, 106, 164, 270, 366, 368, 370
17C620	BOLT	17C000616B	B	20, 24, 48, 50, 64, 104, 106, 116, 166, 322, 378
17C620	BOLT			20, 24, 48, 50, 64, 104, 106, 116, 166, 322, 378
17C640	BOLT 5			19, 20, 92, 96, 158, 296
17C716	BOLT			12
17C820	BOLT			36, 40, 92, 110
17E000008B	WASHER			292
17E000010B	WASHER			292
17K000007B	ELBOW			44, 48, 90, 92, 96, 264
17K000008B	ELBOW			100
17K000010B	ELBOW			90, 96
17KB01012B	ELBOW	1302104B	A	90, 100
1810250B	BRUSHES			148
18C000616B	BOLT			90, 96, 168
18C000782B	BOLT			108
18C000788B	BOLT			108
18C001224B	BOLT			41, 42
18K000005B	ELBOW			92, 100
18K000006B	ELBOW			96
18K000007B	ELBOW			44, 90, 92, 96, 264
1908806B	EXTINGUISHER			314
1991038B	BEARING			292
19F000004B	ADAPTER			136
19F000005B	REDUCER			360
19K000006B	TEE	17K000006B	B	322
1CM00616B	BOLT	17C000408B	B	278
1CM00650B	BOLT			152
1CM00830B	BOLT			396
1CM00835B	BOLT			238
1CM00840B	SCREW			158, 192
1CM00865B	BOLT			238
1CM00880B	SCREW			172, 218
1CM00890B	BOLT			158
1CM00895B	BOLT			158, 172, 218
1CM01080B	BOLT			160
1CM870	BOLT			158, 172, 192, 218
1DM00006B	NUT			158, 172, 202, 218, 246
1DM8	NUT	25DM00008B	A	160, 178, 180, 190, 192, 194, 200, 202, 246
1DM8	NUT			160, 178, 180, 190, 192, 194, 200, 202, 246
1EM00060B	WASHER			152, 196, 198, 244
1EM00080B	WASHER			172, 178, 180, 192, 198, 200
1G001008B	BOLT			126
21C000510B	BOLT			162, 164, 354
21K000005B	TEE			92
22E000004B	WASHER			86
232539B	BEARING			110

Code for disposition of old part number
A -- Use up
B -- Use on other application (See PNI)
C -- File PDR Report with Bobcat Parts Sales
D -- Part Number Error

Part No.	Description	Was	Code	Page
2337331B	HOSE			92
2343911B	STATOR	999392B	A	140
2356058B	BOOT			134, 136
23E000005B	WASHER			15
23E000008B	WASHER			15
255855B	SEAL	6654117	A	20
25E000010B	WASHER			270, 286, 350, 404
25E000012B	WASHER			270
25E000013B	WASHER	25E000015B	B	8, 298, 336
25E000013B	WASHER			8, 298, 336
25E000016B	WASHER			272, 278, 288
25E000017B	WASHER			62, 64, 166, 258, 260, 338, 356, 358, 360, 368, 370, 378
25E000018B	WASHER			270, 272, 286, 288
25E000019B	WASHER			288
25E000029B	WASHER			104, 106, 332, 334
25E14	WSHR			70
25E15	WASHER			136, 270, 286, 396
25E21	WASHER 5			22, 40, 64, 358, 366
25G000410B	BOLT			314
25G000412B	BOLT			126, 130
25G000510B	SCREW			270, 272, 288
25G000528B	BOLT			276
25G512	SCREW			16, 276
25G520	SCREW			16
25GM08010B	SET SCREW			178
25K020008B	O-RING	6630220	A	210
25K030022B	O-RING			322
25K030100B	O-RING			40
25K030214B	O-RING			11
25K030216B	O-RING			11
25K030226B	O-RING	NSS	D	5
25K030308B	O-RING			322
25K030508B	O-RING			36
25K040030B	O-RING			90, 96
2756257B	RETAINER			272, 278
27E000010B	WASHER			278
27E000018B	WASHER			20
27E6	WASHER 5			166
29CM00612B	SCREW			236
29CM00825B	SCREW			158
29G000416B	SCREW			86
2DM00008B	NUT			178, 224, 242
2DM00010B	NUT			180
2EM00008B	WASHER			218, 226, 244
2J006208B	CLEVIS			370
302714B	BALL BEARING			186
30H000014B	CLAMP			404
30H000019B	CLAMP			276
30H000029B	CLAMP			30, 34, 136
30H000031B	CLAMP			262
30H000036B	CLAMP			30, 34
30H000037B	CLAMP			272, 276
30H000041B	CLAMP			134
30H000042B	CLAMP			134, 136

Code for disposition of old part number
A -- Use up
B -- Use on other application (See PNI)
C -- File PDR Report with Bobcat Parts Sales
D -- Part Number Error

Part No.	Description	Was	Code	Page
30H000045B	CLAMP	30H000041B	B	122, 124, 126, 130
30H000048B	CLAMP			134, 136
30H000049B	CLAMP			90, 96
30H000055B	CLAMP	30H000054B	B	126, 130
30H000057B	CLAMP			320
30H30	CLAMP			136, 320
30R000103B	TERMINAL			262
30R000104B	TERMINAL			356, 358
30R000107B	TERMINAL			356, 358
30R000305B	TERMINAL			358
31C000420B	BOLT			316
31C000512B	BOLT			134
31C000612B	BOLT			308
31C001064B	BOLT	17C001064B	A	20
31C820	BOLT			4, 136
31C824	BOLT 10			6
31H000038B	CLAMP			126, 130
31H000052B	CLIP			334
3291290B	WING NUT			212, 214
329884B	FAN			140, 142
32DM00010B	NUT			156
33DM00060B	NUT			294
33G000404B	SCREW			18
3494503B	WASHER			210
35C000416B	BOLT			272, 276, 288
35C000510B	BOLT			276
35C000520B	BOLT			272
35C000608B	BOLT			12, 366, 368, 370
35C000610B	BOLT			22, 158
35C000612B	BOLT			100, 354
35C000840B	BOLT			92, 100
35C410	BOLT 5			280, 342
35C412	BOLT			272, 276, 288
35C512	BOLT			162, 164, 354
35C516	BOLT 10			158, 160, 288, 314, 320, 350
35C616	BOLT 5	17C000612B	B	96, 276, 286, 288
35C616	BOLT 5	17C000616B	B	96, 276, 286, 288
35C616	BOLT 5			96, 276, 286, 288
35C620	BOLT 5			162, 164
3675725B	DIODE			134, 136
36K6	CAP			160, 322
3727284B	BOLT			30
3737000B	TRACK			384
3737001B	TRACK			384
3737010B	CUSHION			384
3737081B	CUSHION			384
3738250B	HOSE			264
37C000516B	BOLT	6565089	A	162, 164, 354
37C616	BOLT	6514537	A	26, 28, 91, 92, 166
3885315B	ELEMENT			2, 210
38C000624B	BOLT	6564599	A	18
38C000810B	BOLT	661846B	A	22
38C001036B	BOLT	38C001036B	A	24
3918235B	THERMOSTAT			192

Code for disposition of old part number
A -- Use up
B -- Use on other application (See PNI)
C -- File PDR Report with Bobcat Parts Sales
D -- Part Number Error

Part No.	Description	Was	Code	Page
3966512B	O-RING	6686986	A	200, 216, 246
3966512B	O-RING			200, 216, 246
3966515B	O-RING	3966516B	C	172
3966515B	O-RING			17
3966516B	O-RING			182, 216, 22
3966530B	O-RING			172
3966602B	O-RING			158, 172, 176
3974035B	PLUG			172, 184
3974037B	PIN			174, 220
3974038B	O-RING			174, 216, 220
3974074B	PIN			172
3974095B	GASKET			174, 176, 216, 220, 242
3974192B	BOLT			244
3974254B	HOLDER			205, 206, 207, 208
3974255B	GASKET			206
3974260B	BOLT			206, 250
3974267B	STUD			236
3974322B	NUT			208
3974324B	JOINT			208
3974325B	WASHER			208
3974327B	WASHER			208
3974328B	SPRING			208
3974329B	PIECE			208
3974330B	PUSH ROD			208
3974331B	NUT			208
3974332B	PIECE			208
3974366B	BOLT			204
3974367B	SPRING			204
3974368B	GASKET			204
3974377B	PIN			204
3974378B	PIN			20
3974379B	HOLDER			20
3974381B	SEAT			204
3974382B	SPRING			204
3974383B	SEAT			204
3974384B	SHIM			204
3974385B	TAPPET			204
3974389B	GASKET			174, 220
3974390B	CAP	6680639	A	174, 220
3974390B	CAP			174, 220
3974393B	PIN			174, 220
3974394B	PIN			174, 220
3974395B	PIN			172, 174, 218, 220
3974399B	PLUG			174, 220
3974402B	PLUG			182
3974403	GASKET			182
3974411B	GASKET			182
3974432B	CAP			180, 226
3974433B	CAP			180, 226
3974438B	WASHER			180
3974456B	GASKET			174
3974471B	GASKET			184
3974472B	COVER			184
3974477B	SEAL			184

Code for disposition of old part number
A -- Use up
B -- Use on other application (See PNI)
C -- File PDR Report with Bobcat Parts Sales
D -- Part Number Error

Part No.	Description	Was	Code	Page
3974502B	GASKET			202
3974503B	STUD			202
3974514B	SPRING			178, 224
3974515B	RETAINER			178, 224
3974518B	CAP			178, 224
3974521B	BRACKET			178, 224
3974523B	ORIFICE			178
3974524B	WASHER			178, 224
3974528B	BUSHING			178
3974536B	COVER			176
3974537B	GASKET			176
3974541B	PUSH ROD			188
3974546B	KEY			184, 188, 230, 234
3974547B	STOPPER			188, 234
3974550B	GEAR			188
3974554B	COLLAR	6655504	A	188
3974556B	SHAFT			188
3974561B	CIR-CLIP			184
3974571B	BEARING			184
3974577B	O-RING			184, 216, 230
3974586B	WASHER			162, 164
3974590B	PIPE			206
3974599B	PIPE	6598146	A	206
3974604B	PIPE			206
3974605B	PIPE			206
3974606B	PIPE			206
3974607B	PIPE			206
3974612B	WIRE			206
3974617B	SLEEVE			186
3974618B	CIRCLIP			186, 232
3974620B	CIRCLIP			186, 232
3974624B	STOPPER			186, 232
3974626B	SHIM			202
3974627B	STUD			160, 192, 202
3974644B	PLATE			200, 246
3974646B	GASKET			200
3974658B	SHAFT			198
3974659B	BOLT			198
3974661B	HOLDER			244
3974662B	BOLT			198
3974671B	NUT			184, 230
3974672B	WASHER			184
3974677B	PLUG	6653791	A	191, 192
3974679B	BAND			192, 238
3974683B	IMPELLER			190
3974684B	SEAL			190
3974782B	VALVE			204
3974783B	PLUNGER			204
3974787B	RACK			204
3974868B	PIN			174, 220
3974870B	WASHER			174
3974871B	ADAPTER			174, 220
3974882B	BRACKET			179, 180, 226
3974884B	PLUG			180

Code for disposition of old part number
A -- Use up
B -- Use on other application (See PNI)
C -- File PDR Report with Bobcat Parts Sales
D -- Part Number Error

Part No.	Description	Was	Code	Page
3974885B	WASHER	40K000006B	B	180, 388, 390
3974885B	WASHER			180, 388, 390
3974888B	BOLT			172, 218
3974893B	SEAT			172, 21
3974894B	FLANGE			172, 21
3974896B	OIL FILTER			172
3974899B	WASHER			184
3974901B	CASE			184
3974903B	WASHER			184
3974916B	STUD			238
3974920B	SCREW			178, 224
3974923B	NUT			176
3974924B	PLATE			175, 176
3974925B	PLATE			176
3974926B	ELEMENT			176
3974927B	SHIELD			176
3974930B	PIPE			176
3974931B	CLAMP			176
3974934B	COLLAR			188
3974937B	PIN			184
3974938B	ROD			184
3974939B	BUSHING			184
3974945B	WASHER			184, 230
3974953B	GLOW PLUG			206
3974960B	GUIDE			186
3974970B	SCREW			199, 200
3974971B	NUT			200, 246
3974972B	GASKET			200, 246
3974975B	APPARATUS			241, 242
3974977B	SPRING			19F
3974978B	NUT			24
3974979B	CAP			24
3974986B	FLANGE			192
3974988B	PIPE			192
3974991B	BEARING			190
3974992B	FLANGE			190
3974993B	PIN			190
3974996B	COVER			232
3975017B	BEARING			184
3975019B	BEARING			184
3975020B	BEARING			184
3975021B	WASHER			184, 230
3975022B	WASHER			184, 230
3975023B	WASHER			184
3975024B	WASHER			184
3975025B	BEARING			184
3975026B	BEARING			184
3975337B	COLLAR	3974576B	A	184, 230
3975337B	COLLAR			184, 230
3975365B	NUT			180
3975366B	STUD			180
3975389B	GASKET	3974374B	B	204
3975426B	OIL PUMP	6598143	A	174, 220
3975426B	OIL PUMP			174, 220

Code for disposition of old part number
A -- Use up
B -- Use on other application (See PNI)
C -- File PDR Report with Bobcat Parts Sales
D -- Part Number Error

Part No.	Description	Was	Code	Page
3975436B	SCREW	3974928B	A	176, 222
3975436B	SCREW	6598167	A	176, 222
3975441B	GEAR	3974869B	A	174, 220
3975441B	GEAR			174, 220
39DM00010B	NUT			158
3DM00012B	NUT			220
40DM00008B	NUT			396
40K000002B	PLUG			238
40K000012B	PLUG			4
4126590	MOULDING			26, 28, 256
41G000806B	SCREW			292
42H000010B	CLAMP			332, 334
42H000032B	CLAMP	42H000024B	B	160, 162, 164
42H000032B	CLAMP			160, 162, 164
42HL00300B	CLAMP	6598799	A	160, 378
43DM00006B	NUT	55D000004B	B	278
43G000408B	SCREW			148, 150
44H20	CLAMP	6666864	A	100
44H48	CLAMP	6515576	A	348
45G001008B	BOLT			140, 142, 270, 272, 278, 286, 290
45K000007B	FITTING			48, 50
46D000005B	NUT			274, 278, 288
47K000002B	PLUG			108
47K5	PLUG			108
48K000016B	O-RING			48, 50
4CM00614B	BOLT			176
4CM00616B	BOLT			248
4CM00618B	BOLT			190, 196
4CM00620B	BOLT			166, 172, 190, 200, 218, 246
4CM00622B	BOLT			196
4CM00628B	BOLT			198
4CM00650B	BOLT			174
4CM00814B	BOLT			186
4CM00816B	BOLT			180, 182, 228
4CM00818B	BOLT			188, 234
4CM00822B	BOLT			192, 194, 202, 240, 248
4CM00825B	BOLT			158, 184, 230, 294
4CM00828B	BOLT			184, 190, 230, 236
4CM01235B	SCREW			378
4DM00005B	NUT			136
4DM00006B	NUT			134, 136
4DM10	NUT			136
4DM8	NUT			320
4E000004B	WASHER			70, 72, 74, 292
4E000005B	WASHER	4E000006B	B	12
4E000006B	WASHER			110
4F005062B	PIN			366
4F6106	PIN			64, 368, 370
4FM00018B	PLUG			174
4FM00045B	PLUG			174
507695B	SNAP RING			112
50D000010B	NUT			274, 282, 288, 350
515683B	HOSE			90
51D000010B	NUT			404

Code for disposition of old part number
A -- Use up
B -- Use on other application (See PNI)
C -- File PDR Report with Bobcat Parts Sales
D -- Part Number Error

Part No.	Description	Was	Code	Page
5202123B	COUPLING			168
5208677B	SCREW			70, 72, 74
5289686B	PLUG			278, 372
54K020002B	O-RING			8
54K030226B	O-RING	25K030226B	A	6
54K040300B	O-RING	58K000236B	B	60
54K30118	O-RING	25K030118B	A	52, 54
54K30118	O-RING			52, 54
54K40124	O-RING	25K040124B	A	52, 54
54K40124	O-RING			52, 54
57D000004B	NUT			378
57D000005B	NUT			158, 162, 164, 288, 320, 334
57D000008B	NUT			136
57D6	NUT 5			26, 28, 30, 34, 62, 64, 156, 161, 162, 163, 164, 166, 354
58K000109B	O-RING			282, 350
58K000127B	O-RING			92
58K000137B	SEAL	58K000134B	B	108
58K14	O RING 10	25K020016B	B	86
59D4	NUT 5	83D000004B	B	282, 298, 336, 350
59D4	NUT 5			282, 298, 336, 350
59D5	NUT 5			134, 136
59D6	NUT			44, 46, 48, 50, 162, 164
59D8	NUT 5	85D000008B	B	6, 10
5CM00812B	BOLT			224
5CM01020B	BOLT			158
5CM01030B	SCREW			182
5CM01070B	BOLT			186
5J000806B	KEY			104, 106, 110
5JM00014B	CIR-CLIP			177
5JM00024B	CIRCLIP			186, 23
5JM00025B	SNAP RING			18
5JM00026B	CIR-CLIP	5JM00028B	A	188
6005562	PIN			376
614142B	SLEEVE			262, 316, 358
616334B	BOOT			262
616783B	WASHER			90, 96, 168
616789B	WASHER			64
616791B	WASHER			110
6190121	SPRING			108
619021B	WASHER			22, 24
61D000004B	NUT			134, 136, 166, 356, 358, 360
61D000006B	NUT			20, 64, 92, 104, 106, 134, 136, 270, 296, 356, 358, 360, 378
61D000008B	NUT			18, 40, 158
61D5	NUT	61D000006B	B	6, 12, 44, 66, 122, 124, 134, 136, 274, 350, 384, 386, 400
61D5	NUT			6, 12, 44, 66, 122, 124, 134, 136, 274, 350, 384, 386, 400
62D000004B	NUT			166, 292, 372
62F000004B	ELBOW			30
631094B	WIRE			262
637641	SLEEVE			356, 358
6502203	CLAMP			44, 46, 48
6505813	CONNECTOR			30, 34, 160, 318, 320

Code for disposition of old part number
A -- Use up
B -- Use on other application (See PNI)
C -- File PDR Report with Bobcat Parts Sales
D -- Part Number Error

Part No.	Description	Was	Code	Page
6506477	WASHER			40
6510171	LINK			36
6510470	RING GEAR			162, 164
6510584	WASHER			116, 322
6510596	CONNECTOR			294
6511626	HOLDER			150
6511627	HOLDER			150
6511629	ARMATURE	991100B	A	148, 150
6511899	ADAPTER			30
6511957	BOLT			140, 142
6512027	BUSHING			104, 106
6512246	RING			70
6512274	CLIP			272, 278, 288
6512808	SWITCH			122, 124, 126, 130
6512809	KEY			122, 124, 126, 130
6512929	YOKE			110
6512930	ROTATING GROUP			110
6512931	BODY			110
6512932	SHAFT			110
6512933	COUPLER			110
6512934	SHAFT			112
6512935	COUPLER			112
6512938	SPACER			110
6512939	COVER			110
6512940	SHIM KIT			110
6512941	GASKET			110
6512942	SHAFT			110
6512943	SEAL KIT			112
6512946	SPRING			112
6512948	KIT			110
6512949	O-RING			110, 114, 322
6512955	SWIVEL			48, 50
6513089	PIN			110
6513090	SEAL			112
6513091	BEARING			110
6513092	PIN			110
6513093	BEARING			110
6513094	COVER & SEAL			110
6513152	SEAL			4, 6, 28, 32, 256, 258, 260, 276, 280
6513274	MODULE			356, 358
6513275	CONNECTOR			356, 358
6513277	SEAL			42
6513421	CONNECTOR			30, 320
6513432	POPPET			110
6513433	SPRING			110
6513434	PLUG			110
6513466	SEAL	NSS	D	58, 60
6513466	SEAL			58, 60
6513468	BULB			122, 124, 126
6513469	HOLDER			122, 124, 126, 130
6513471	CLAMP			30, 34, 354
6513482	SWITCH			306, 336
6513495	COTTER PIN			48, 50, 62, 64
6513498	CLIP			306

Code for disposition of old part number
A -- Use up
B -- Use on other application (See PNI)
C -- File PDR Report with Bobcat Parts Sales
D -- Part Number Error

Part No.	Description	Was	Code	Page
6513505	PLATE			108
6513506	DRIVE			108
6513507	VALVE			108
6513510	PISTON			10
6513512	FLANGE			10
6513513	DRIVE			108
6513514	GEROLER			108
6513532	POPPET			108
6513533	SPRING			108
6513534	PLUG			108
6513588	SEAL			38
6513592	STUD			66
6513605	SEAL			20
6513631	BOLT			110
6513681	BEARING			38, 108
6513709	CAP PLUG			48, 50
6513733	RIVET			6
6513963	GRIP			104, 106
6514501	SPACER			52, 54
6514571	BOLT			162
6514642	CAP			122, 124, 126, 130
6514643	GASKET			122, 124, 126, 130
6514714	BOWL			210
6514736	SEAL KIT			56
6514737	MUFFLER			158
6514742	RIVET			124, 126
6514780	STOP			166
6514850	CLIP			404
6514869	HEAD			56
6514872	SLEEVE			5
6514895	SEAL KIT			10
6515007	GAUGE			16
6515045	TUBE			394
6515078	POPPET			90, 92, 100
6515131	TERMINAL			262, 316
6515167	PLUG			48, 50
6515168	CAP			48, 50
6515186	CONNECTOR			62
6515195	SEAL			38
6515213	RIVET			258, 260
6515466	WASHER			30, 34, 210
6515468	WASHER			30, 34, 210
6515521	SWITCH			324, 326, 404
6515541	ELEMENT			93, 94
6515575	CLAMP			30, 34, 162, 164, 318, 320, 354
6515600	HANDLE			270, 272, 286, 288
6515603	GROMMET			30, 34
6515676	PLUG			30, 34, 210
6515682	PLUG			30, 34, 210
6515817	WASHER			6, 10, 158, 350
6516033	TUBE			394
6516191	BAND	6598785	A	212
6516231	RING			52, 54
6516296	ADAPTER			332, 334

Code for disposition of old part number
A -- Use up
B -- Use on other application (See PNI)
C -- File PDR Report with Bobcat Parts Sales
D -- Part Number Error

Part No.	Description	Was	Code	Page
6517496	SCREW			150
6517516	LIGHT	6557903	A	316
6517924	CONNECTOR			336
6519178	BUMPER			20
6519195	ELBOW			44, 50, 90, 96
6519480	CLIP			272, 288
6519484	GROMMET			162, 164, 306
6519493	PLUG			50
6519548	CONNECTOR			324, 326, 358
6519654	KEY			110
6519747	RETAINER			70, 72, 74
6519748	WASHER			70, 72, 74
6519750	PLUG			68
6519925	BEARING	6669050	A	42
6519926	RACE			42
6519935	VALVE			66, 68
6519937	CHECK			72, 74
6519938	POSITIONER			74
6519941	RETAINER			70, 72, 74, 80, 84
6529384	TUBE			54
6529680	HEAD	6592590	A	60
6531482	DECAL			290
6532127	BOOT			26, 28
6532179	ELBOW	17K000007B	B	97, 98, 100
6532179	ELBOW			97, 98, 100
6533898	DECAL			376
6538466	BUSHING			86
6539290	PISTON	6592589	A	60
6539304	ROD	6592884	A	54
6539323	HEAD	6532702	A	52, 54
6539333	VALVE	6592522	A	85, 86
6539810	CYLINDER	6593398	A	59, 60
6539815	ROD	6593402	A	60
6541902	PULLEY			140, 142
6542521	HOSE			100
6543321	WASHER			6, 10, 350
6544654	BUSHING			166
6547593	PIN			20
6547595	PIN			20
6551781	POSITIONER			70
6552871	WASHER			42
6552906	BRACKET			356, 358, 360
6553081	BOLT			104, 106
6553094	CABLE	6562905	A	134, 136
6553411	BUSHING			34, 162, 164
6553412	ELBOW			162, 164
6553422	COVER			44, 46
6553557	GRIP			166
6553653	GROMMET			8, 26, 28
6553709	WASHER			6, 10, 350, 374
6553897	SPRING			92
6553899	PLUG			94
6553976	SAFETY TREAD			39, 40, 302
6553978	SAFETY TREAD			302

Code for disposition of old part number
A -- Use up
B -- Use on other application (See PNI)
C -- File PDR Report with Bobcat Parts Sales
D -- Part Number Error

Part No.	Description	Was	Code	Page
6554100	TREAD			302
6554149	CORD	6554223	A	270, 276, 284, 286, 288, 350
6554149	CORD			270, 276, 284, 286, 288, 350
6554858	BALL JOINT			165, 166
6555054	PLATE			270, 28
6555055	HINGE			270
6555059	BRACKET			270, 286
6555062	DOOR			270
6555108	DOOR			270
6555293	NAIL			164, 354
6555294	CLIP			164, 354
6555331	WIRE ROPE			270, 286, 288
6555350	ADHESIVE			284
6555351	SEAL			6, 8, 10, 254, 270, 274, 280, 282, 350
6555434	CHANNEL			270, 286
6555455	WASHER			20, 24
6555869	CLAMP			270
6555987	BUSHING			4, 20
6555989	BUSHING			4, 20
6556222	INSTRUCTIONS			316
6556415	INSTRUCTIONS			294
6556436	INSTRUCTIONS			252
6556500	SAFETY MANUAL			300
6556562	INSTRUCTIONS			318
6556604	INSTRUCTIONS			374
6556703	INSTRUCTIONS			404
6556831	INSTRUCTIONS			356
6556862	743 O/M			2
6557090	ROD			50
6557172	PLATE			2[illegible]
6557196	LEVER			16[illegible]
6557224	DECAL			30
6557291	BALL JOINT			166
6557312	DECAL			8
6557412	DECAL			300, 302
6557413	DECAL			300, 302
6557432	BOLT	3327196B	A	166
6557486	LAMP			122, 124, 126, 130
6557493	GROMMET			122, 124, 126, 130, 262
6557504	SOCKET			122
6557683	STOP			262
6557684	BAR			262
6557720	HOSE			160
6557724	BRACKET			92
6557780	TUBE			44, 46
6557781	TUBE			44, 46
6557802	WASHER			94
6557824	MOUNT			262
6557831	WASHER			24, 48, 104, 106
6557904	FLASHER			316
6558076	KIT			315, 316
6558142	HOUSING			122, 123, 124, 125, 126, 129, 130
6558196	PISTON			52
6558208	HUB			38, 40

Code for disposition of old part number
A -- Use up
B -- Use on other application (See PNI)
C -- File PDR Report with Bobcat Parts Sales
D -- Part Number Error

Part No.	Description	Was	Code	Page
6558234	WASHER			38
6558242	BRACKET			122, 124, 126
6558270	GEAR			38
6558272	SHAFT			38
6558273	GASKET			38
6558274	COVER			38
6558276	COLLAR			38
6558277	SHAFT			38
6558307	GEARCASE			4, 36, 37, 38
6558309	WIRE ROPE	6558305	A	6, 302
6558310	SLEEVE			6, 302
6558414	TUBE			48, 50
6558415	TUBE	6707041	A	48, 50
6558415	TUBE	6707041	D	48, 50
6558430	BAR			104, 106
6558431	BAR			104, 106
6558436	GUIDE			104, 106
6558447	BRACKET			62
6558451	PEDAL			62
6558453	PEDAL			62
6558456	LEVER			62
6558460	HANDLE			104
6558467	COVER			4, 40
6558477	RING			42
6558497	VALVE			44, 48
6558506	PLUG			4, 36
6558507	ROD			48
6558518	O-RING			38
6558562	TUBE			44
6558604	SCREEN			90, 96
6558615	HANDLE			104, 106
6558659	PAD			40
6558660	PAD			40
6558680	WASHER			104, 106
6558736	FLANGE			104, 106
6558779	BUSHING			20
6558789	DECAL			300
6558790	DECAL			300
6558791	DECAL			300
6558803	BUSHING			20
6558931	TUBE			48
6558932	TUBE			48
6558961	HOSE			90, 96
6559007	HOSE			90
6559014	CLEVIS PIN			48, 62
6559015	TUBE			90
6559038	DECAL			300
6559099	CHAIN			36
6559100	CHAIN			36
6559117	SOLENOID			318, 320
6559198	HOSE			92
6559199	HOSE			44, 46, 47, 48, 49, 50
6559200	HOSE			44, 46
6559218	ANGLE			40

Code for disposition of old part number
A -- Use up
B -- Use on other application (See PNI)
C -- File PDR Report with Bobcat Parts Sales
D -- Part Number Error

Part No.	Description	Was	Code	Page
6559237	DISC			40
6559444	BLOCK			90
6559447	WASHER			30, 34
6559448	SEAL	6562555	A	90, 9
6559478	HORN			305, 30
6559479	NUT			12
6559552	HARDHAT			379, 380
6559619	WASHER			38
6559775	EARMUFFS			380
6560072	MOULDING			308
6560082	SPRING			90
6560117	WIRE			29, 30, 33, 34, 124
6560136	TEE			44, 46
6560137	RETAINER			94
6560172	COVER			134, 136, 360
6560175	ANGLE			374
6560182	PANEL			122
6560348	FILTER ASSY			30, 34, 209, 210
6560354	VOLTMETER			122
6560355	FITTING			30, 34
6560569	KIT			317, 318
6560573	DECAL			300
6560633	DAMPENER			6, 10, 92, 100, 158, 350
6560690	STRIP			8
6560699	LENS	6564785	A	122, 124, 126
6560699	LENS			122, 124, 126
6560899	WASHER			92, 100
6560900	RETAINER			374
6560954	OIL COOLER			92, 100
6560968	KIT			11
6561095	RIM			39
6561218	SHUTTLE			10
6561285	HEAT SHIELD			157, 158
6561333	TUBE			92
6561377	DECAL			302
6561383	DECAL			302
6561395	SEALANT			38
6561500	HARNESS			121, 122
6561592	HARNESS			404
6561733	MOUNT			134, 136
6561811	PLUG			92, 96
6561971	MOTOR			404
6562013	STUD			22
6562018	SPRING			22
6562019	GUIDE			22
6562026	INSERT			22
6562062	CAM			104, 106
6562063	HUB			106
6562067	BUSHING			22
6562123	KIT			403, 404
6562126	SPRING			166
6562127	WASHER			166
6562198	SPACER			158
6562224	BUSHING			4

Code for disposition of old part number
A -- Use up
B -- Use on other application (See PNI)
C -- File PDR Report with Bobcat Parts Sales
D -- Part Number Error

Part No.	Description	Was	Code	Page
6562225	HINGE			4, 18
6562232	MOUNT			6
6562257	MOUNT			158
6562260	HARNESS			134
6562270	WHEEL			162, 164
6562281	BAR			104, 106
6562284	HOSE			162, 164
6562298	KIT			355, 356
6562417	SHIELD			158
6562418	SHIELD			158
6562419	BRACKET			158
6562431	BRACKET			162, 164
6562433	MOUNT			158
6562448	DECAL			302
6562450	BRACE			26
6562451	BRACE			26
6562466	INLET			158, 172
6562473	BOLT			134
6562490	ROD			166
6562491	LEVER			166
6562494	ROD			166
6562495	BRACKET			166
6562496	CABLE			166
6562547	TUBE			30
6562548	TUBE			30
6562552	SENDER			34
6562553	VALVE			30
6562559	BAND			30, 34
6562598	TUBE			162
6562599	MOUNT			162
6562602	BUSHING			6, 8, 10, 350
6562606	SEAL			34
6562642	BUSHING			22
6562650	TUBE			90
6562655	WASHER			92
6562656	ADAPTER			92
6562683	TUBE			6
6562687	SPRING			6
6562688	SPRING			6
6562690	SPRING			90
6562691	SPRING			92, 96
6562692	BLOCK			92
6562693	BELT			160
6562697	MOUNT			92, 100
6562755	PIN			40
6562756	WASHER			40
6562757	BLOCK			40
6562767	BRACKET			104, 106
6562777	RIM			394
6562804	SEAL			6
6562807	SHIELD			25, 26, 27, 28
6562809	TUBE			44
6562810	TUBE			44
6562811	TUBE			44

Code for disposition of old part number
A -- Use up
B -- Use on other application (See PNI)
C -- File PDR Report with Bobcat Parts Sales
D -- Part Number Error

Part No.	Description	Was	Code	Page
6562812	TUBE			44
6562817	ROD			166
6562843	MOUNT			158
6562851	MOUNT			158
6562873	ADAPTER			162, 16
6562960	YOKE			162, 164, 168
6562999	SPROCKET			35, 36, 42
6563025	CABLE			134, 136
6563038	HARNESS			134
6563103	COVER			22
6563106	LEVER			21, 22
6563107	LEVER			22
6563108	ANGLE			22
6563116	HOSE			162
6563124	INSULATION			6
6563125	INSULATION			6
6563127	LEVER			6
6563128	SPRING			6
6563129	CABLE			6
6563140	SEAT			311, 312
6563146	BAR			61, 62
6563147	BAR			62
6563148	BLOCK			12
6563150	LOCK			12
6563151	LINK			12
6563156	SLEEVE			6
6563167	TUBE			44
6563170	HARNESS			134
6563178	PIVOT			40
6563187	PEDAL			40
6563206	GUIDE ASSY			1
6563207	GUIDE ASSY			1
6563210	SENDER			30
6563241	HOSE & TUBE			90, 96
6563242	HOSE & TUBE			90, 96
6563251	AXLE			42
6563313	RETAINER			12
6563339	FILTER HEAD			92
6563353	CLAMP			338
6563392	SHIELD			270, 286
6563400	AIR CLEANER			158, 211, 212
6563410	DECAL			270, 272, 288
6563423	DECAL			308, 344
6563447	HOSE			160
6563449	STOP			308, 344
6563452	FITTING			160
6563483	BRACKET			134, 136
6563494	SHIM			374
6563495	WASHER			374
6563501	KIT			343, 344
6563505	CONDUIT			134, 136, 137, 138
6563532	BELLCRANK			166
6563537	PANEL			26
6563539	PANEL			26

Code for disposition of old part number
A -- Use up
B -- Use on other application (See PNI)
C -- File PDR Report with Bobcat Parts Sales
D -- Part Number Error

Part No.	Description	Was	Code	Page
6563551	WASHER			374
6563557	WASHER			12
6563574	RETAINER			38
6563577	HOUSING			38
6563588	RESTRICTOR			94
6563590	COVER			162
6563602	HEADLINER			308
6563603	BRACKET			308, 344
6563604	HARNESS			306
6563605	HARNESS			306
6563606	WASHER			42
6563611	VISOR			308
6563612	BUSHING			304
6563613	HITCH			304
6563614	DOOR STOP			303, 304
6563616	HOSE			44, 46
6563624	NUT			18
6563638	SEAL			4
6563676	TUBE			92
6563681	HANDLE	6563989	A	18, 304
3563681	HANDLE			18, 304
6563684	HOSE			94
6563703	TUBE			44
6563704	TUBE			44
6563705	SHIM			160
6563722	BLOCK			6
6563740	LAMP			122, 124, 126, 130
6563760	KIT			251, 252
6563823	LEVER			40
6563914	WASHER			62, 64, 104, 106
6563920	FILTER			94, 100, 136
6563922	SNUBBER			94, 100, 136
6563940	LEVER			166
6563965	WASHER			104, 106
6563973	SEAL KIT			70, 72, 74
6563979	DIPSTICK			95, 96
6563981	TANK			96
6563986	MOULDING			308
6563987	EXTENSION			309, 310
6563995	FILTER KIT			2, 90
6564032	BLOCK			92
6564047	HOUSING			162
6564069	DOOR			286
6564304	RETAINER			310
6564340	PIN			4, 18
6564347	SCREEN			298
6564350	SNUBBER			94, 136
6564371	ROD			166
6564373	BLOCK			92
6564385	KIT			297, 298
6564468	TUBE			46
6564469	TUBE			46
6564470	TUBE			46
6564471	TUBE			46

Code for disposition of old part number
A -- Use up
B -- Use on other application (See PNI)
C -- File PDR Report with Bobcat Parts Sales
D -- Part Number Error

Part No.	Description	Was	Code	Page
6564473	TUBE			46
6564506	WASHER			12
6564507	BUSHING			12
6564517	WIRE			324, 32
6564527	DECAL			324, 32
6564535	SPACER			50
6564541	DUCT			254
6564542	DUCT			254
6564552	SUPPORT			254
6564589	SCREEN			254
6564595	INSULATION			164, 354
6564596	LATCH			6
6564648	WASHER			106
6564651	LEVER			64
6564652	BAR			64
6564653	BAR			64
6564655	CLEVIS			50
6564657	PIN			64
6564662	LEVER			106
6564663	LEVER			106
6564667	BUSHING			106
6564669	NUT	6519169	A	4, 394
6564670	SHIELD			28
6564671	SHIELD			28
6564674	SHIELD			28
6564688	INSULATION			6, 254
6564690	KIT			255, 256
6564692	WASHER			92, 100
6564705	SHAFT	6558461	A	104, 106
6564705	SHAFT			104, 10F
6564714	HOSE			10
6564728	HOUSING			164, 35
6564758	CABLE			166
6564787	PANEL			124
6564830	WINDOW			286, 288
6564831	HINGE			286
6564832	HINGE			286
6564833	SAFETY TREAD	6703757	B	270, 272, 278, 286, 288
6564833	SAFETY TREAD			270, 272, 278, 286, 288
6564837	HARNESS			124
6564858	CLOSER			270
6564907	SOCKET ASSY			124, 126, 130
6564908	HARNESS			136
6564909	HARNESS			136
6564919	COVER			4
6564920	COVER			4
6564936	SEAL			4
6564976	SEAL			28
6564982	RETAINER			28
6564991	CABLE			134, 136
6565012	INSULATION			96
6565014	RETAINER			28
6565021	SCREEN			258
6565022	SCREEN			258

Code for disposition of old part number
A -- Use up
B -- Use on other application (See PNI)
C -- File PDR Report with Bobcat Parts Sales
D -- Part Number Error

Part No.	Description	Was	Code	Page
6565067	BOLT			64
6565073	DOOR			4
6565092	RETAINER			4
6565114	FOAM STRIP			256
6565116	PLUG			254
6565118	SCREEN			258
6565134	COVER			258, 260, 377, 378
6565141	COVER			258, 260, 378
6565142	SCREEN			258, 260
6565153	KIT			257, 258
6565186	BLOCK			22
6565189	WEDGE			22
6565190	WEDGE			22
6565195	BRACKET			100, 354
6565196	COVER			164, 354
6565270	VINYL CAB			267, 268
6565275	BRACKET			262
6565289	CAP			38
6565326	BUSHING			22
6565327	SHIELD			158
6565336	BRACKET			100
6565338	TUBE			100
6565355	GUIDE			12
6565372	INSULATION			308
6565373	INSULATION			308, 350, 400
6565376	INSULATION			308
6565377	INSULATION			308
6565380	INSULATION			400
6565382	WIRE			358
6565390	REDUCER			358
6565418	SCREW			164, 354
6565419	MOUNT			158, 164, 354
6565425	SPRING			100
6565480	MAIN FRAME			4
6565490	HOSE			96
6565499	WIRE			262
6565500	HARNESS			262
6565506	TUBE			100
6565514	WIRE			324
6565543	CHAINCASE			4, 36
6565552	KIT			357, 358
6565553	KIT			319, 320
6565572	HOSE			96
6565598	HOSE			164, 354
6565620	POPPET			92, 96
6565627	NUT			18
6565628	NUT			18
6565629	SCREW			18
6565630	ELBOW			100
6565634	MOUNT			262
6565639	HARNESS			136
6565642	WIRE			358
6565701	ELBOW			100
6565717	TUBE			100

Code for disposition of old part number
A -- Use up
B -- Use on other application (See PNI)
C -- File PDR Report with Bobcat Parts Sales
D -- Part Number Error

Part No.	Description	Was	Code	Page
6565748	BLOCK			96, 100
6565751	LEVER			104, 106
6565755	WINDOW			270
6565757	KIT			269, 27[illegible]
6565787	TUBELINE			35[illegible]
6565788	TUBELINE			354
6565927	DECAL			302
6565932	DECAL			374, 376
6565970	HINGE			270
6565990	DECAL			8, 302
6566056	INSTRUCTIONS			344
6566109	740-S S/M			2
6566179	743 P/M			2
6566302	INSTRUCTIONS			298
6566314	INSTRUCTIONS			326, 332, 334
6566350	INSTRUCTIONS			254, 256
6566403	INSTRUCTIONS			286
6566436	INSTRUCTIONS			258
6566523	INSTRUCTIONS			358
6566524	INSTRUCTIONS			320
6566580	INSTRUCTIONS			262
6566605	743 OM			2
6566606	INSTRUCTIONS			270
6566612	INSTRUCTIONS			354
6566691	INSTRUCTIONS			264
6566844	INSTRUCTIONS			360
6566946	INSTRUCTIONS			376
6566955	INSTRUCTIONS			282, 284
6566956	INSTRUCTIONS			274
6566957	INSTRUCTIONS			28[illegible]
6566965	INSTRUCTIONS			26[illegible]
6566995	INSTRUCTIONS			28[illegible]
6567026	HOSE			100
6567048	BRACKET			158
6567060	KIT			353, 354
6567088	HARNESS			136
6567303	RETAINER			258, 260
6567304	SEAL			258, 260
6567313	TUBE			100
6567374	RETAINER			164
6567419	HOSE			100
6567421	MOTOR KIT			107, 108
6567542	HOSE			96
6567603	BRACKET			8
6567604	SPACER			8, 10, 350
6567664	COVER			258, 260, 378
6567692	KIT			6
6567743	PIN			8, 10, 350
6567752	MOTOR			108
6567787	KIT			263, 264
6567795	HANDBOOK			2, 6, 302
6567802	HARNESS			126
6567838	PIN			376
6567868	GRILL			162, 164

Code for disposition of old part number
A -- Use up
B -- Use on other application (See PNI)
C -- File PDR Report with Bobcat Parts Sales
D -- Part Number Error

Part No.	Description	Was	Code	Page
6567875	DECAL			300
6567883	ELBOW			100
6567890	INSULATION			10
6567896	SHIELD			126, 130
6567897	HOUSING			126, 130
6567898	SPACER			126, 130
6567909	TANK			34
6567956	MODULE			360
6567959	WIRE			360
6567968	WIRE			360
6567971	WIRE			360
6567972	WIRE			360
6567973	HUB	6562063	B	104
6567979	WIRE			360
6567990	KIT			359, 360
6568041	KIT			375, 376
6568047	NUT			272, 276, 288
6568051	HINGE			272
6568055	BRACKET			272, 288
6568164	SHIELD			272, 286, 288
6568175	SENDER			34
6568182	ANGLE			376
6568184	MOUNT			376
6568188	MOUNT			376
6568189	MOUNT			376
6568190	BRACE			376
6568191	ARM			376
6568192	ARM			376
6568193	PIN			376
6568200	HOSE			264
6568201	HOSE			264
6568205	MAIN FRAME			4
6568211	PANEL			126
6568271	INSULATION	6563271	D	6, 10
6568271	INSULATION			6, 10
6568321	INSULATION			400
6568431	SHIELD			8
6568439	DECAL			8
6568475	STOP			8, 10, 350
6568492	BRACKET			8
6568526	SPACER			272, 288
6568527	BRACKET			272, 288
6568528	BRACKET			272, 288
6568540	MOUNT			282, 350
6568620	COVER			274
6568667	BRACKET			46
6568704	MOULDING			274, 288
6568705	WINDOW			272
6568708	KIT			274, 276, 280, 282, 284
6568709	KIT			283, 284
6568724	SHIELD			272, 288
6568725	SPRING			272, 288
6568726	HANDLE			272, 288
6568727	ROD			272, 288

Code for disposition of old part number
A -- Use up
B -- Use on other application (See PNI)
C -- File PDR Report with Bobcat Parts Sales
D -- Part Number Error

Part No.	Description	Was	Code	Page
6568728	SHIELD			272, 288
6568739	HARNESS			272
6568742	BUSHING			12
6568767	KIT			259, 26
6568819	WIRE			30
6568835	WASHER			42
6568877	WASHER			158
6569033	WINDOW			288
6569068	CLAMP			46, 50
6569086	DECAL			300, 302
6569087	DECAL			300, 302
6569095	MOUNT			314
6569112	KIT			313, 314
6569141	BOLT			106
6569203	CLAMP			134, 136
6569219	SCREEN			96
6569220	TANK			96
6569248	KIT			7, 8
6569249	OPERATOR CAB			9, 10
6569281	KIT			299, 300, 301, 302
6569352	SPACER			274, 288
6569404	SCREEN			260
6569405	SCREEN			260
6569488	TUBE			50
6569489	TUBE			50
6569496	LEVER			106
6569505	WASHER			106
6569553	BRACKET			92, 102, 104, 106
6569580	BRACKET			96
6569590	TUBE			50
6569591	TUBE			5
6569597	WASHER			6
6569598	INSERT			64
6569599	BEARING			64
6569601	ROD			40
6569623	BOLT			134, 136
6569624	PIPE			158
6569752	HOSE BULK/FT			34
6569807	BUSHING			36
6569808	CHAIN GUIDE			36
6569874	SHIM			160
6569876	SEAL	6567306	A	258, 260
6569876	SEAL			258, 260
6569877	STRIP	6567305	A	258, 260
6569877	STRIP			258, 260
6569937	SEAL	6567310	A	258, 260
6569937	SEAL			258, 260
6569938	RETAINER	6567302	A	258, 260
6569938	RETAINER			258, 260
6570031	INSTRUCTIONS			400
6570040	INSTRUCTIONS			314
6570065	INSTRUCTIONS			8
6570166	740S O/M			2
6570223	INSTRUCTIONS			340

Code for disposition of old part number
A -- Use up
B -- Use on other application (See PNI)
C -- File PDR Report with Bobcat Parts Sales
D -- Part Number Error

Part No.	Description	Was	Code	Page
6570238	INSTRUCTIONS			402
6570254	INSTRUCTIONS			348
6570264	INSTRUCTIONS			274
6570279	INSTRUCTIONS			290
6570766	INSTRUCTIONS			322
6570784	KIT	6570786	B	387, 388
6570785	KIT			389, 390
6570802	INSTRUCTIONS			388, 390
6571529	KNOB			282, 350
6571532	BRACKET			282, 350
6571533	MOUNT			282, 350
6571535	HARNESS			136
6571536	PULLEY			144, 146
6571554	SPACER			144
6571594	SHIELD			158
6571628	INSULATION			348
6571648	BOOT			28
6571690	TUBE			46
6571691	TUBE			46
6571700	KIT			401, 402
6571713	RADIATOR	6630246	A	162
6571715	HINGE			272, 288
6571744	BOB-TACH			24
6571899	BRACKET			106
6571988	BUSHING			106
6571991	GUIDE			104, 106, 368, 370
6572026	SPRING			104, 106
6572053	PANEL			130
6572054	PANEL			130
6572056	LENS			130
6572060	HARNESS			130
6572065	BULB			130
6572070	HOSE			160
6575580	GASKET	6598088	A	158, 194, 216, 240
6575580	GASKET			158, 194, 216, 240
6575654	COVER	6554093	A	40
6576033	WASHER	6558465	A	36
6576048	DECAL	6557927	A	300
6576238	CLIP			289, 290
6576494	INSULATION	6568179	A	350, 400
6576513	BOLT	6630927	A	282, 350
6576513	BOLT			282, 350
6576660	TANK			162, 164
6577264	INSULATION			378
6577273	INSULATION	6567902	A	350, 400
6577439	INSULATION	6567903	A	350, 400
6577446	BUSHING			24
6577456	KIT			144, 146
6577493	BRACKET			322
6577552	BRACKET	6563173	A	40
6577606	KIT			399, 400
6577754	DECAL	6568741	A	8, 300, 366
6577754	DECAL			8, 300, 366
6577785	CAP	6560209	A	90, 96

Code for disposition of old part number
A -- Use up
B -- Use on other application (See PNI)
C -- File PDR Report with Bobcat Parts Sales
D -- Part Number Error

Part No.	Description	Was	Code	Page
6577821	HOSE	672221B	A	30, 34
6577821	HOSE			30, 34
6577822	HOSE	6562515	A	30, 34, 162, 164, 320, 354
6577822	HOSE			30, 34, 162, 164, 320, 35
6577888	ELBOW			32
6577949	SAFETY TREAD	6553977	A	302
6578176	MOUNT	6562851	A	162
6578253	SPRING			24
6578356	BUSHING			20
6578363	ROD END			372
6578366	BALL JOINT			372
6578492	LEVER	6569143	A	106
6578598	ADAPTER	6651439	A	388, 390
6578598	ADAPTER	6651439	B	388, 390
6578778	ADAPTER			322
6578780	CROSSMEMBER	6572066	A	130
6578864	KIT			321, 322
6579011	SWITCH	6557640	A	262
6579072	SPRING	6700743	A	20
6579094	KIT	6565508	A	261, 262
6579385	DECAL			302
6579404	DECAL			302
6579418	INSULATION			378
6579420	INSULATION			378
6579422	INSULATION			378
6579423	INSULATION			378
6579433	LEVER KIT			22
6579434	LEVER KIT			22
6579448	LATCH KIT			18
6579487	INSULATION			378
6579488	INSULATION			37
6579495	INSULATION			37
6579509	DECAL	6702301	A	302
6579510	DECAL	6575854	A	8, 270, 272, 302
6579510	DECAL			8, 270, 272, 302
6579511	DECAL	6565980	A	300
6579528	DECAL	6565254	A	302
6579534	DECAL	6567696	A	300
6579562	SHIELD			378
6579624	SHIELD			378
6579639	DECAL	6702302	A	302
6579652	DOOR STOP			304
6579694	INSULATION			378
6579701	MOUNT			378
6579704	MOUNT			378
6579707	MOUNT			378
6579708	MOUNT			378
6579709	BRACE			378
6579710	MOUNT			378
6579716	HOSE			378
6579721	RETAINER	6562694	A	158
6579747	BRACKET			378
6579749	INSULATION			378
6579750	INSULATION			378

Code for disposition of old part number
A -- Use up
B -- Use on other application (See PNI)
C -- File PDR Report with Bobcat Parts Sales
D -- Part Number Error

Part No.	Description	Was	Code	Page
6579857	CHOKE			378
6579979	INSULATION			378
6579980	INSULATION			378
6579981	INSULATION			378
6579982	INSULATION			378
6579984	INSULATION			378
6579985	INSULATION			378
6579986	INSULATION			378
6579990	WASHER	6558429	A	104, 106
6584584	SPRING	6505076	A	40
6584978	CONDUIT	6565528	A	358, 360
6584978	CONDUIT			358, 360
6585223	ORIFICE			334
6585546	BOLT			92
6586671	CYLINDER	6592962	A	53, 54
6586674	CASE	6592621	A	54
6586918	SCREW	6586819	D	86
6587304	ORIFICE			88
6587458	KEY			31, 32, 34
6587523	WASHER	6592101	A	86
6587526	KIT			381, 382
6587575	ADAPTER	6592099	A	86
6587580	SPRING	6592106	A	86
6587763	BOOT	6583727	A	88
6588163	SCREW	69G000412B	B	86
6588165	SCREW	73G-420	B	86
6588166	SCREW	74G000416B	B	88
6588686	CASE	6593404	A	60
6589226	BONNET			86
6589665	BUSHING	6534387	A	24, 58, 60
6589665	BUSHING	6534387	B	24, 58, 60
6589665	BUSHING			24, 58, 60
6589739	DECAL	6561379	A	300
6589785	ROD			58
6591035	RIVET			258, 260
6591273	STRIP	6563233	A	30
6591447	STEM			394
6591799	HEAD			58
6591800	SLEEVE			58
6591804	CLAMP			50, 58, 60
6592019	TUBE			58
6592096	SLEEVE			86
6592098	WASHER			86
6592100	COLLAR			86
6592103	BUSHING			86
6592105	BALL			86
6592107	SPRING			86
6592109	ADAPTER			86, 87, 88
6592115	SEAT			86
6592116	NUT			86
6592117	SPRING			86
6592119	SPOOL			88
6592123	RETAINER			86
6592448	PISTON			58

Code for disposition of old part number
A -- Use up
B -- Use on other application (See PNI)
C -- File PDR Report with Bobcat Parts Sales
D -- Part Number Error

Part No.	Description	Was	Code	Page
6592720	PLUG			86
6592884	ROD			52
6593349	SLEEVE			88
6593399	TUBE			6
6593680	RETAINER			8
6596807	PLUG			86
6598093	BOWL			210
6598096	O-RING			196
6598098	PIN			196, 242
6598099	KEY			186, 232
6598101	BALL BEARING			186
6598102	VALVE			202, 248
6598108	SLINGER	39746888	A	190
6598109	LINER			174
6598110	RINGS			184
6598116	PLUG			180, 226
6598117	CHAMBER			180
6598118	COVER			192
6598119	WASHER			190
6598121	FUEL PUMP			34
6598122	CASE			184
6598126	SHIM			180
6598129	MANIFOLD			194
6598132	MANIFOLD			193, 194
6598136	GASKET			176
6598137	CAMSHAFT			188
6598138	CAMSHAFT			185, 186
6598140	CAMSHAFT			186
6598142	GEAR			184, 230
6598144	PIPE ASSY.			202
6598146	PIPE			25
6598147	SCREW			20
6598148	SHIM			202
6598149	IDLE ASSY.			195, 196
6598150	BOLT			196
6598151	BOLT			196
6598152	LEVER			198
6598153	LEVER			198
6598156	STUD			180
6598157	NUT			196
6598158	CIRCLIP			186, 232
6598165	LEVER ASSY.			196
6598174	LEVER			197, 198, 200, 243, 244
6598175	SPRING			198
6598176	LEVER			200, 246
6598179	COLLAR			186, 232
6598180	COVER			186
6598181	DIPSTICK			160, 182
6598182	GASKET			186
6598183	CRANKCASE			173, 174
6598185	INDICATOR	6653688	A	190
6598187	PLUG			174, 220
6598226	WASHER			210
6598227	BOLT			210

Code for disposition of old part number
A -- Use up
B -- Use on other application (See PNI)
C -- File PDR Report with Bobcat Parts Sales
D -- Part Number Error

Part No.	Description	Was	Code	Page
6598228	NUT			210
6598275	BOLT	6652487	A	162, 164
6598275	BOLT			162, 164
6598303	SPIDER			168
6598304	SPIDER			168
6598305	PISTON			56
6598347	U-JOINT			162, 164, 167, 168
6598355	BOLT			198
6598362	ELEMENT			2, 212, 214
6598384	SWITCH			134
6598388	CAP			252
6598433	HOUSING			110, 111, 112
6598475	DOOR LATCH			270, 286
6598477	WEAR PLATE			110
6598478	WEAR PLATE			110
6598492	ELEMENT	886525B	A	2, 212, 214
6598492	ELEMENT			2, 212, 214
6598493	CAP			212
6598689	ORIFICE			44, 66, 70, 76, 82
6598690	SPRING			44, 76, 82
6598693	GASKET			192
6598699	BEARING	3974567B	A	184
6598721	NUT	6502904	A	122, 124, 126, 130
6598721	NUT			122, 124, 126, 130
6598753	ELBOW			30, 34
6598757	QUICK COUPLER			48, 50
6598758	QUICK COUPLER			48, 50
6598762	PISTON	6598111	D	183, 184
6598763	MANIFOLD			194
6598805	PLUG			28
6598902	PLUG			110
6598903	ELEMENT			120
6598914	POSITIONER			72
6599161	RELIEF VALVE			86
6599355	HEATER			324, 327, 328
6599356	ELBOW			332
6599357	QUICK COUPLER			332
6599358	QUICK COUPLER			332
6599360	SEALANT			134, 136, 406
6599361	PIN			18
6599364	SWITCH			120
6599365	KIT			120
6599449	SOLENOID			150
6599462	VALVE			332
6599465	CABLE			332
6599488	ELBOW			30
6599605	HOUSING			108
6599615	PLUG			192
6599652	BOOT			136
6599696	SOCKET & BULB			124, 126, 130
6599702	NUT			164, 354
6599719	GREASE			406
6599721	DOOR			268
6599764	RESTRICTOR			94

Code for disposition of old part number
A -- Use up
B -- Use on other application (See PNI)
C -- File PDR Report with Bobcat Parts Sales
D -- Part Number Error

Part No.	Description	Was	Code	Page
6599767	RECTIFIER			142
6599768	BOLT			142
6599771	ROTOR			142
6599779	ADJUSTER	6650227	A	38
6599780	TRACK			1
6599781	KNOB			122, 124, 126, 130
6599913	RINGS			184
6599914	PISTON			184
6599931	ALARM			262
65G000608B	BOLT			130
65G000812B	SCREW			148
660181B	RACE			38
6610510	TIE	1715312B	A	278, 360, 372
6610510	TIE			278, 360, 372
661556B	FUSE			324, 326
6620642	MOTOR			274
6630042	PLATE			108
6630098	ALTERNATOR			291, 292
6630153	BATTERY CAP			134, 136
6630164	PULLEY	6630163	B	292
6630177	DRAINCOCK			174, 220
6630182REM	STARTER			150
6630184	THERMOSTAT			238
6630188	POLISH			406
6630189	POLISH			406
6630207	RIVET	6512797	A	6, 12, 26, 28, 158, 310, 362
6630207	RIVET	6513493	A	6, 12, 26, 28, 158, 310, 362
6630207	RIVET	6598092	A	6, 12, 26, 28, 158, 310, 362
6630207	RIVET			6, 12, 26, 28, 158, 310, 362
6630219	HEAD			21
6630221	RING			21
6630249	WASHER			20
6630250	WASHER			208
6630251	WASHER			208
6630252	WASHER			208
6630253	WASHER			208
6630254	WASHER			208
6630255	WASHER			208
6630340	HOUSING			208
6630341	STATOR			292
6630342	HOUSING			292
6630343	RETAINER			292
6630344	BRUSH ASSY.			292
6630345	GASKET			292
6630346	COVER			292
6630348	CAPACITOR			292
6630349	REGULATOR			292
6630350	DIODE			292
6630402	HOLDER			150
6630403	BRUSH			150
6630404	BOLT			150
6630405	DOWEL PIN			150
6630406	SPRING			150
6630407	COIL			150

Code for disposition of old part number
A -- Use up
B -- Use on other application (See PNI)
C -- File PDR Report with Bobcat Parts Sales
D -- Part Number Error

Part No.	Description	Was	Code	Page
6630411	PLATE	871524B	A	148, 150
6630411	PLATE			148, 150
6630412	WASHER			150
6630419	HOUSING	991099B	A	148, 150
6630419	HOUSING			148, 150
6630465	CUSHION			14
6630468	CUSHION			14
6630469	TRACK			14
6630535REM	PUMP REM / CORE EXCHANGE REQUIRED	6630535	A	110
6630554	GASKET KIT			170, 180
6630555	GASKET KIT			170, 174
6630676	VALVE			264, 265, 266
6630784	PLUG			110
6630785	SPRING	6513429	A	112
6630786	POPPET	6512945	A	110
6630797	GAS SPRING			272, 278, 288
6630800	PIN			400
6630815	PLUG			158, 182
6630821	SWITCH			358, 360
6630849	OUTLET			328
6630918	TRACK			280
6630919	TRACK			280
6630924	BRACKET			280
6630925	WINDOW			282, 350
6630926	HINGE			282, 350
6630941	COVER			214
6630943	BLADE			272
6630972	GASKET			30, 34
6630980	MOTOR			328
6630981	MOUNT			328
6630982	BLOWER WHEEL			328
6630983	HOUSING			328
6630984	CORE			328
6630985	COVER			328
6630986	SCREEN			328
6630987	BRACKET			306
6630988	HORN			306
6631008	ARM			272
6631009	SWITCH			272, 288
6631046	SEAL			158, 182
6631418	PIN	14J001008B	B	8, 10, 350, 366, 368, 370
6631418	PIN			8, 10, 350, 366, 368, 370
6631548	LOOP			280
6631549	HOOK			280
6631625	DECAL			350
6631649	GAUGE			124, 126, 130
6631664	SEAL			184, 230
6631665	KNOB			282, 350
6631695	SWITCH	6519715	A	94, 134
6631706	FILTER ASSY.			120
6631927	GEAR			274, 276
6631928	SHAFT			274
6631935	HANDLE			274, 290

Code for disposition of old part number
A -- Use up
B -- Use on other application (See PNI)
C -- File PDR Report with Bobcat Parts Sales
D -- Part Number Error

Part No.	Description	Was	Code	Page
6632053	SWITCH			120
6632207	NUT			144
6632208	WASHER			144
6632210	WASHER			144
6632215	GROMMET			126, 13
6632217	SEAL			258, 260
6632221	STUD			272, 278
6632222	BOLT			144
6632229	ROTOR			144
6632242	CONDENSER			144
6632253	GASKET			144
6632265	PLUG			280
6632303	PURIFIER			348
6632305	MUFFLER			348
6632323	WASHER			146
6632383	KIT			144
6632385	KIT			144
6632388	SEAT			383, 384
6632400	SOLENOID			150
6632417	BEARING			154
6632418	BEARING			154
6632419	HOUSING ASSY.			154
6632420	BRUSH HOLDER			154
6632421	SPRING			154
6632428	PINION			154
6632429	RETAINER			154
6632430	ROLLER			154
6632432	PLUNGER			154
6632433	GASKET			154
6632434	COVER			15
6632436	SPRING			15
6632441	SPRING			15
6632454	PLUG			288
6632468	CAP	6555717	A	30, 34
6632469	ADHESIVE			10, 378
6632501	SEALANT			4
6632560	KEY			274, 288
6632593	VALVE	6512138	B	30, 34
6632594	TERMINAL			130
6632595	SOCKET			130
6632601	BREATHER			4, 40
6632633	SWITCH	6564560	A	136
6632929	PLUG			266
6632930	PLUG			266
6632931	RING			266
6632932	CARTRIDGE			266
6632933	ORIFICE			266
6632934	ORIFICE			266
6632935	RELIEF VALVE			266
6632938	POPPET			266
6632940	SPRING			266
6632941	SPRING			266
6632942	SPRING			266
6632951	SEAL KIT			266

Code for disposition of old part number
A -- Use up
B -- Use on other application (See PNI)
C -- File PDR Report with Bobcat Parts Sales
D -- Part Number Error

Part No.	Description	Was	Code	Page
6632954	PROBE			402
6633498	STA STRAP			336
6633583	SEALANT	6555349	A	258, 260, 270, 406
6633583	SEALANT			258, 260, 270, 406
6633674	GASKET			348
6634273	GAUGE	6560353	A	122
6635557	WASHER	896978B	A	292
6640728	BOLT			182
6640729	PLUG			182
6640730	WASHER			182
6640732	WASHER			182
6641231	PLATE			200, 246
6641274	LATCH			274, 290
6645247	DRIVE ASSY.	899271B	A	148, 150
6645247	DRIVE ASSY.			148, 150
6645248	SPRING			150
6646372	SEAL			86
6646743	FLANGE			192
6647635	KNOB			272, 276, 290
6647668	KNOB			338
6647691	BONNET			84
6647694	SEAL KIT			80, 84
6647706	STUD KIT			76
6647710	SEAL KIT			78
6647716	POSITIONER			80
6648461	HEATER			326
6648463	SHIELD			326
6648466	MOTOR			329, 330
6648467	MOUNT			330
6648468	FAN			330
6648469	HOUSING			330
6648471	CORE			330
6648472	COVER			330
6648473	SCREEN			330
6648474	ELBOW			334
6648475	O-RING			332, 334
6648479	QUICK COUPLER			334
6648480	QUICK COUPLER			334
6648482	CABLE			334
6648483	VALVE			334
6648485	TEE	6564697	A	332, 334
6648485	TEE			332, 334
6648496	KIT			325, 326
6648497	KIT			333, 334
6648764	PULLEY	6598186	A	184
6648774	BEARING	743778B	A	38
6648776	RACE	743777B	A	38
6648820	RADIATOR	6630186	A	164, 354
6648980	PUMP			110
6648982	PUMP			114
6649235	COVER	6598135	A	176
6649244	STUD			366
6649262	KIT			114
6649299	CRANKSHAFT			184

Code for disposition of old part number
A -- Use up
B -- Use on other application (See PNI)
C -- File PDR Report with Bobcat Parts Sales
D -- Part Number Error

Part No.	Description	Was	Code	Page
6649300	SEAL	3975339B	A	184, 230
6649300	SEAL			184, 230
6649459	CONNECTOR	899158B	A	292
6649536	PLUG			23
6649656	HEATER			39
6650105	COUPLER			322
6650219	KNOB KIT			386
6650220	SHROUD			386
6650221	LATCH TILT			386
6650222	SPRING			386
6650223	CABLE			386
6650224	SUPPORT			386
6650225	BACK CUSHION			386
6650226	SEAT CUSHION			386
6650228	TRACK			386
6650229	SPRING			386
6650230	SEAT PAN			386
6650231	CLIP			386
6650239	SCREEN	6598911	A	34
6650241	PUSH NUT			386
6650242	TIP			386
6650243	BOOT			386
6650245	WASHER			386
6650246	WASHER			386
6650247	WASHER			386
6650248	SPACER			386
6650249	SPACER			386
6650250	WASHER			386
6650251	CLIP			386
6650388	SEALANT			40
6650407	ADHESIVE			40
6650691	SEAL KIT			8
6650692	RELIEF VALVE			82
6650693	RETAINER			80, 82, 84
6650694	ANTI-CAV. VALVE			82
6650695	LOAD CHECK			80, 84
6650696	SEAL KIT			80, 84
6650697	PLUG			78
6650698	RELIEF VALVE			76, 78
6650699	COVER			76
6650700	SECTION			76, 79, 80
6650702	COVER			76, 77, 78
6650703	SECTION			76, 83, 84
6650704	SEAL KIT			76
6651321	PLUG			78
6651325	SEAL			82
6651450	MOUNT			378
6651709	SEAL			24
6651934	BOLT			232
6651975	SWITCH			372
6652574	PLUG	6598169	A	174, 220
6652574	PLUG			174, 220
6652575	PLUG	6598170	A	174, 220
6652575	PLUG			174, 220

Code for disposition of old part number
A -- Use up
B -- Use on other application (See PNI)
C -- File PDR Report with Bobcat Parts Sales
D -- Part Number Error

Part No.	Description	Was	Code	Page
6652580	BOLT			236, 242
6652592	PIN			218
6652624	JOINT	3974929B	A	176
6652633	BALL			230, 234
6652652	SPRING	3974892B	A	172, 218
6652652	SPRING			172, 218
6652653	PLUG	3974116B	A	158, 172, 176
6652670	STUD	3974916B	A	194, 226, 240, 248
6652670	STUD			194, 226, 240, 248
6652688	CLAMP	3974258B	A	206, 250
6652688	CLAMP			206, 250
6652689	CLAMP	3974259B	A	206, 250
6652689	CLAMP			206, 250
6652762	BOLT	4CM00612B	B	190
6652764	STUD	3974462B	A	158, 172, 200, 218, 246
6652764	STUD			158, 172, 200, 218, 246
6652792	NUT			226, 236, 238, 248
6652881	SEAL KIT			116
6652935	EDGING			14
6653562	GASKET			238
6653574	COVER			186
6653629	BOLT			186
6653687	BOLT			182
6653689	CAMSHAFT			186
6653696	BALL BEARING			186
6653798	BOLT			228
6653803	GUIDE	6653587	A	180, 226
6653803	GUIDE			180, 226
6653804	BOLT	3975364B	A	180
6653807	BOLT			218
6653808	BOLT	3974890B	A	172, 218
6653808	BOLT			172, 218
6653809	ADAPTER	3974891B	A	172, 218
6653809	ADAPTER			172, 218
6653813	BOLT			184
6653814	COVER	3975336B	A	184
6653816	CASE	3974900B	A	184
6653821	BOLT	3974902B	A	184, 230
6653821	BOLT			184, 230
6653828	VALVE	3974512B	A	177, 178
6653829	VALVE	3974513B	A	178
6653830	SEAL	3974517B	A	178, 216, 224
6653830	SEAL			178, 216, 224
6653832	STUD	3974918B	A	178
6653833	SPRING	3974525B	A	178, 224
6653833	SPRING			178, 224
6653839	SCREW	6653839	A	188
6653840	GEAR	6598159	A	188, 234
6653840	GEAR			188, 234
6653859	SLEEVE	3975334B	A	184, 230
6653859	SLEEVE			184, 230
6653861	SLINGER	6598141	A	184, 230
6653861	SLINGER			184, 230
6653865	WASHER	3974946B	A	184, 230

Code for disposition of old part number
A -- Use up
B -- Use on other application (See PNI)
C -- File PDR Report with Bobcat Parts Sales
D -- Part Number Error

Part No.	Description	Was	Code	Page
6653865	WASHER			184, 230
6653888	NUT	3DM00012B	B	174
6653894	SLEEVE	3974380B	A	204
6653900	GEAR	3974615B	A	18
6653905	CAP	3974974B	A	200, 24
6653905	CAP			200, 246
6653906	BOLT ASSY.			242
6653916	HOLDER	3974661B	A	198
6653944	IMPELLER	6653577	A	190
6653945	SET SEAL	6653576	A	190
6653946	STUD			190
6654002	WASHER			230
6654003	WASHER			230
6654117	SEAL			24, 60
6654374	KEY			30, 34
6654709	BUSHING	6654709	D	188
6654718	CLAMP			206, 250
6655151	OIL PAN			227, 228
6655154	GUIDE	6653802	A	180, 226
6655154	GUIDE			180, 226
6655155	SEAT			224, 225, 226
6655156	SEAT			224, 226
6655158	BOLT			226
6655160	PLUG			226
6655161	WASHER			226
6655162	O-RING			172
6655163	CASE			230
6655164	BOLT			230
6655168	CASE			230
6655169	CASE			230
6655170	CASE			23
6655173	VALVE			223, 22
6655174	VALVE			224
6655176	PUSHROD			234
6655179	PIN			230
6655180	CIR-CLIP			230
6655181	ROD			230
6655183	PIN			230
6655184	CRANKSHAFT			230
6655185	BEARING	3974578B	A	184, 230
6655185	BEARING			184, 230
6655186	BEARING	3974579B	A	184, 230
6655186	BEARING			184, 230
6655194	OIL FILTER	6653568	A	182, 228
6655194	OIL FILTER			182, 228
6655195	BOLT			220
6655209	PLATE	3974365B	A	204
6655210	SHIM			248
6655211	CAMSHAFT			231, 232
6655212	GEAR			232
6655213	SLEEVE			232
6655214	CASE	3974619B	A	186, 232
6655214	CASE			186, 232
6655215	BALL			232

Code for disposition of old part number
A -- Use up
B -- Use on other application (See PNI)
C -- File PDR Report with Bobcat Parts Sales
D -- Part Number Error

Part No.	Description	Was	Code	Page
6655216	FUEL PUMP			248
6655218	GASKET			216, 250
6655219	PIPE			250
6655220	PIPE			250
6655221	PIPE			250
6655222	PIPE			250
6655223	NUT	3974973B	A	200, 246
6655223	NUT			200, 246
6655224	LEVER			244
6655225	SPRING	6686986	D	244
6655227	SPRING	6598163	A	198, 244
6655227	SPRING			198, 244
6655228	STOPPER			246
6655231	SHAFT			242
6655232	LEVER			242
6655233	GLOW PLUG			250
6655234	CORD	6686987	A	250
6655236	PIN			230
6655237	PIN			230
6655238	BEARING			230
6655239	BEARING	3975018B	A	184, 230
6655239	BEARING			184, 230
6655240	BEARING			230
6655241	BEARING			230
6655242	BUSHING			234
6655243	BUSHING			230
6655427	CAMSHAFT			234
6655474	GASKET	3974407B	A	182
6655481	GASKET	6653806	A	172
6655496	CAMSHAFT	6598139	A	188
6655498	BOLT	3974940B	A	184, 230
6655498	BOLT			184, 230
6655515	JOINT	3974500B	A	202, 248
6655515	JOINT			202, 248
6655516	PUMP	6598131	A	201, 202, 203, 204
6655518	O-RING	6655518	B	204
6655524	CAP	6598103	A	202
6655540	COVER			242
6655870	ROCKER ARM	6598171	A	178, 224
6655870	ROCKER ARM			178, 224
6655872	HEAT SEAL			216, 250
6655874	CLIP	3974499B	A	202
6655875	CAMSHAFT			232
6655878	SPRING	6655537	A	198, 244
6655878	SPRING			198, 244
6655880	PIPE			222, 237, 238
6655884	PLUG	3974840B	A	174
6655886	CASE			184
6655937	VALVE			214
6656019	AIR CLEANER			213, 214
6656333	GASKET	6598125	A	180
6656399	SPRING	871517B	A	148
6657401	GASKET KIT			226
6657402	GASKET KIT			216, 220

Code for disposition of old part number
A -- Use up
B -- Use on other application (See PNI)
C -- File PDR Report with Bobcat Parts Sales
D -- Part Number Error

Part No.	Description	Was	Code	Page
6657415	BOLT			238
6657663	PLUG			220
6657734	PUMP	6563396	A	30, 34
6658142	WINDOW			28
6658143	WINDOW			28
6658352	MOULDING	6554221	A	270, 284, 286, 288, 350
6658352	MOULDING			270, 284, 286, 288, 350
6658564	HOLDER			152
6658565	BRUSH			152
6658566	BRUSH			152
6658567	BUSHING			152
6658568	SPRING			152
6658569	BEARING			152
6658570	BEARING			152
6658571	SUPPORT			152
6658572	LEVER			152
6658573	STOP			152
6658574	ARMATURE			152
6658575	FRAME			152
6658576	SHAFT			152
6658577	SUPPORT			152
6658579	HOUSING			152
6658581	O-RING			152
6658582	SOLENOID	6658562	A	152
6658666	VALVE	6649495	C	75, 76
6658818	SENDER			136
6658903	PLUNGER	6630417	A	150
6659259	SECTION	6650701	A	76, 81, 82
6659259	SECTION	6650701	C	76, 81, 82
6659300	KIT	NAP	D	34F
6659303	ENVELOPE			26
6659319	SOLENOID	6632186	A	134, 135, 13
6659344	POSITIONER	6651324	A	82
6659371	NUT			146
6659372	WASHER			146
6659374	SPACER			146
6659375	FAN			146
6659376	BRACKET			146
6659378	BOLT			146
6659379	BEARING			146
6659380	ROTOR			146
6659381	STATOR			146
6659382	BRACKET			146
6659384	RECTIFIER			146
6659385	SCREW			146
6659386	HOLDER			146
6659387	NUT			146
6659388	CONDENSER			146
6659390	HOLDER			146
6659391	NUT			146
6659392	BOLT			146
6659393	REGULATOR			146
6659394	BRUSH			146
6659395	SPRING			146

Code for disposition of old part number
A -- Use up
B -- Use on other application (See PNI)
C -- File PDR Report with Bobcat Parts Sales
D -- Part Number Error

Part No.	Description	Was	Code	Page
6659396	SCREW			146
6659397	TERMINAL			146
6659398	COVER			146
6659399	SCREW			146
6659400	CONNECTOR			146
6659526	SPACER			82
6659527	PLATE			82
6659528	SLEEVE			82
6659529	O-RING			82
6659530	O-RING			82
6659541	TUBE			346
6659543	PLUG			346
6659544	CLAMP			346
6659560	SEAL KIT			82
6659949	LATCH			280
6659971	LENS			382
6659972	FLASH TUBE			382
6659973	GASKET			382
6659974	COLLAR			382
6659999	BELT			362
6660205	SEAL	6513483	A	306, 336
6660205	SEAL			306, 336
6660294	HORN			336
6660327	HEATER			388
6660348	GAS SPRING			384
6660644	CAP			88
6660750	SEAL KIT	6511040	A	66
6660795	GUIDE			334
6660797REM	STARTER	6667098 REM	D	152
6660932	LATCH	6647789	A	272, 288
6660966	HEAD			180
6660988	RETAINER			274, 290, 316
6661034	SEAL KIT	6546438	A	68
6661209	RIVET	6632113	A	400
6661213	RING			34
6661248	ELEMENT			2
6661297	SEAL KIT	6591885	A	58
6661328	SEAL KIT	6592474	A	88
6661333	SEAL KIT	6598838	A	70
6661611	ALTERNATOR			145, 146
6661686	SUPPORT	6658578	A	152
6661688	DRIVE	6658563	A	152
6661689	TRACK			280
6661690	TRACK			280
6661694	PISTON	6504931	A	54
6661696	CAP			30, 34
6662437	WASHER			154
6662834	SPRING			274, 290
6662839	HINGE KIT			268
6662848	CAP			88
6662894	GEAR PUMP			117, 118, 322
6662925	SNAP RING			118
6662926	SEAL			118
6662929	DOWEL PIN			118

Code for disposition of old part number
A -- Use up
B -- Use on other application (See PNI)
C -- File PDR Report with Bobcat Parts Sales
D -- Part Number Error

Part No.	Description	Was	Code	Page
6662930	SHAFT			118
6662931	IDLER			118
6662932	COVER			118
6662933	BOLT			11[illegible]
6662934	SEAL KIT			11[illegible]
6664085	BUSHING			278
6664095	ARM			278
6664096	BLADE			278
6664205	GAS SPRING			8, 10
6664207	GAS SPRING			366
6664218	SEAL KIT			118
6664351	SEAL			270, 284, 308, 350, 351, 352
6664373	VALVE			88
6664554	PUMP			276
6664886	HOURMETER	6631657	A	122, 124, 126, 130, 356, 358, 360
6665012	SEAL			270, 284, 308, 352
6665031	BATTERY	6568707	A	136
6665032	BATTERY	6665031	A	2, 134
6665032	BATTERY			2, 134
6665086	SEAL			60
6665089	SEAL	6659554	A	86
6665208	SEAL			52, 54
6665409	KEY			270, 274
6665430	BACKUP RING			50
6665530	LATCH			276
6665531	LATCH			276
6665532	MOTOR			276
6665568	EXTRUSION			276
6665605	CAP			276
6665606	SWITCH			122, 124, 126, 13[illegible]
6665656	CLIP			1[illegible]
6665701	BUSHING	6630081	A	62, 64, 104, 10[illegible]
6665707	SWITCH			276
6665724	TIRE	6659474	A	394
6665724	TIRE			394
6665915	GAUGE	6656338	A	96
6666582	SPOOL			86
6666583	SPOOL			86
6666584	SPOOL			86
6666585	SPOOL			86
6666586	SPOOL			86
6666587	SPOOL			86
6666606	RADIATOR CAP	6630156	A	162, 164
6666621	ARMATURE			154
6666622	DRIVE			154
6666628	NUT			154
6666629	WASHER			154
6666630	WASHER			154
6666631	WASHER			154
6666632	O-RING			154
6666633	BOLT			154
6666634	BOLT			154
6666635	BOLT			154
6666636	BOLT			154

Code for disposition of old part number
A -- Use up
B -- Use on other application (See PNI)
C -- File PDR Report with Bobcat Parts Sales
D -- Part Number Error

Part No.	Description	Was	Code	Page
6666637	NUT			154
6666766	GROMMET			278
6666767	NOZZLE	6664555	A	276
6666781	GASKET			194, 216, 240
6666783	GASKET	3974601B	A	196, 216, 242
6666783	GASKET			196, 216, 242
6666787	GASKET	3974473B	A	184
6666791	GASKET			194
6666792	GASKET	6635392	A	200, 216, 246
6666792	GASKET			200, 216, 246
6666800	GASKET			172, 216, 218
6666801	GASKET	3975418B	A	194
6666802	GASKET	3974987B	A	192, 216, 238
6666802	GASKET	6684860	A	192, 216, 238
6666803	GASKET	3974895B	A	172
6666804	GASKET	3974995B	A	190, 216, 236
6666804	GASKET			190, 216, 236
6666807	GASKET	6665522	A	186
6666814	GASKET			216, 230
6666817	GASKET	6640727	A	182
6666850	FUEL PUMP	6598121	A	30, 202
6667324	SEAL	6665184	A	52, 54
6667324	SEAL			52, 54
6667326	SEAL	6538141	A	60
6667418	PLUG			220
6667419	WASHER			220, 246
6667420	BOLT			232
6667421	BOLT			226
6667422	WASHER			218, 224, 236, 238, 248
6667425	PLUG			218
6667428	TAPPET	3974540B	A	187, 188, 233, 234
6667428	TAPPET			187, 188, 233, 234
6667433	CIRCLIP			234
6667451	WASHER			224, 244, 246
6667460	FAN	6684867	A	190, 236
6667460	FAN			190, 236
6667461	PIN			224
6667465	SEAL			190
6667491	NUT&BOLT			244
6667549	VALVE	6661345	A	86
6667573	DECAL			346
6667993	SOLENOID	6577503	A	372
6668668	FITTING			388, 390
6668717	SCREW			386
6668806	OIL PAN			182
6668807	BOLT			182
6668815	SWITCH			316
6668879	DECAL			262
6668953	BRACKET			16
6669089	TRACK			16
6669135	SEAT			16
6669192	WASHER			182
6669306	DIAPHRAM	6630183	A	202
6669354	SHAFT			154

Code for disposition of old part number
A -- Use up
B -- Use on other application (See PNI)
C -- File PDR Report with Bobcat Parts Sales
D -- Part Number Error

Part No.	Description	Was	Code	Page
6669359	TERMINAL			154
6669360	BUSHING			154
6669365	BOOT			154
6669372	COVER			154
6669415	TIMER			37,
6669663	GAUGE	6658817	A	124, 126, 130
6669664	VOLTMETER	6631651	A	124, 126, 130
6669664	VOLTMETER	6658819	A	124, 126, 130
6669665	FUEL GUAGE	6631650	A	124, 126, 130
6669665	FUEL GUAGE	6658820	A	124, 126, 130
6670160	CUSHION			16
6670163	SHAFT			276
6670164	LINK			276
6670165	CLIP			276
6670288	END			278
6670289	BRACKET			278
6670472	NUT			250
6670558	TERMINAL			156
6670730	GAS SPRING KIT			350
6670808	FUSE			372
6671062	SWITCH	6664577	A	94, 100, 136
6671116	TERMINALS			154
6671117	TERMINALS			154
6671118	PINION			154
6671119	CLUTCH ASSY.			154
6671120	TERMINAL			154
6671121	COVER			154
6671122	BALL			154
6671123	HOUSING			154
6671124	HOUSING			15
6671125	WASHER			15
6671126	SCREW			15
6671127	BEARING			154
6671128	BEARING			154
6671129	BEARING			154
6672141	RINGS			230
6672142	PISTON			229, 230
6672144	GASKET			216, 226
6672146	CRANKCASE			219, 220
6672715	SPACER	7000010	A	16
6674003	TIRE & RIM	6670616	A	396
6674004	TIRE & RIM	6670617	A	396
6674007	KIT	6670618	A	396
6674013	TRACK			16
6674167	FLANGE			238
6674168	PULLEY			230
6674169	PULLEY	6598155	A	190, 236
6674169	PULLEY			190, 236
6674172	THERMOSTAT			238
6674173	COVER			238
6674202	NUT			122, 124, 126, 130
6674240	SPACER			110
6674241	SPACER			110
6674242	SPACER			110

Code for disposition of old part number
A -- Use up
B -- Use on other application (See PNI)
C -- File PDR Report with Bobcat Parts Sales
D -- Part Number Error

Part No.	Description	Was	Code	Page
6674243	SPACER			110
6674244	SPACER			110
6674245	SPACER			110
6674246	SPACER			110
6674247	SPACER			110
6674248	SPACER			110
6674249	SPACER			110
6674250	SPACER			110
6674251	SPACER			110
6674255	PISTON			230
6674256	RINGS			230
6674676	PUMP			247, 248
6674698	GASKET KIT			216
6675074	SEAT BELT			12
6675380	ADHESIVE	6652818	A	406
6675517	OIL FILTER12			1, 2, 218
6676003	HOSE	6708310	B	278
6676060	LEVER ASSY.			242
6677106	O-RING			86
6677203	GUIDE			228
6677363	CLAMP	657904B	A	158
6677839	GASKET			278
6677840	SWIVEL			278
6677841	WASHER			278
6677842	NUT			278
6677843	NUT			278
6677844	NUT			278
6678198	BOLT			278
6678326	RAIN SHIELD			278
6679814	MOTOR			276
6679815	BLADE			278
6679816	ARM			278
6680441	BUSHING	6664882	A	368, 370
6680484	GASKET			216, 228
6680685	BOLT			224
6680706	BOLT			244
6680795	CLAMP			250
6680830	BOLT			244
6680908	CAP			222
6682514	SHIM			248
6682515	SHIM			248
6682521	PIPE			249, 250
6682532	NUT			240
6682856	TIRE & RIM	6664993	A	395, 396
6682857	TIRE & RIM	6664994	A	396
6682858	KIT	6664995	A	396
6683104	PLUG			220
6683174	ROLL PIN			236
6684225	WATER PUMP	6653941	A	189, 190
6684753	GASKET			216, 228
6684774	GASKET			216, 218
6684776	CLAMP			222
6684779	SHIELD			221, 222
6684780	GASKET			216, 222

Code for disposition of old part number
A -- Use up
B -- Use on other application (See PNI)
C -- File PDR Report with Bobcat Parts Sales
D -- Part Number Error

Part No.	Description	Was	Code	Page
6684781	BOLT			222
6684782	O-RING			222
6684784	GAUGE			228
6684786	GASKET			216, 22
6684788	GASKET	6655165	A	216, 23
6684788	GASKET			216, 230
6684793	GEAR			234
6684795	COLLAR			234
6684796	SHAFT			234
6684812	BALL BEARING			232
6684813	GASKET			216, 232
6684833	SHAFT			244
6684863	GASKET			216, 238
6684868	SEAL			236
6684869	FLANGE			236
6684874	COLLAR	3974516B	A	178, 224
6684874	COLLAR			178, 224
6684875	SHAFT			224
6684879	GASKET			216, 240
6685085	COVER			222
6685087	VALVE			222
6685464	BOLT			244
6685466	O-RING			216, 218
6685468	O-RING			216, 218
6685474	BEARING			236
6685475	MANIFOLD			239, 240
6685476	SEAL			242
6685477	PLUG			220
6685501	WASHER			218
6685515	COVER			23
6685980	ENGINE-V1903 T			215, 21
6686037	GASKET			216, 24
6686360	VALVE			86
6686979	PLUG			228
6686980	HEAD			226
6686981	O-RING			216, 218
6686983	PIPE			222
6686985	BOLT			245, 246
6686988	PIPE			238
6686989	WATER PUMP			235, 236
6686990	MANIFOLD			240
6686991	GASKET			216, 240
6700039	CUP			24
6700168	KIT			337, 338
6700170	WASHER	6563152	A	12
6700171	GAS SPRING	6700000	A	8, 10, 350
6700171	GAS SPRING	6706590	A	8, 10, 350
6700469	SPACER			20
6700503	MOUNT			378
6700691	INSULATION			378
6700692	INSULATION			378
6701097	WASHER	6803867	A	36
6701174	WASHER			8, 10
6701535	SPRING			368, 370

Code for disposition of old part number
A -- Use up
B -- Use on other application (See PNI)
C -- File PDR Report with Bobcat Parts Sales
D -- Part Number Error

Part No.	Description	Was	Code	Page
6701986	WINDOW	6563391	A	270, 284, 307, 308, 350
6701986	WINDOW			270, 284, 307, 308, 350
6702255	DECAL			8
6702301	DECAL			8
6702302	DECAL			8
6702430	SPRING	6563149	A	12
6702642	SCREW	84G003112B	A	130
6702731	WINDOW			280
6702797	CAP	6558658	A	162, 164
6702857	HOSE	2525543B	A	100
6702903	LEVER			24
6702904	LEVER			24
6702958	BUSHING			24
6703041	WIRE	6648457	A	326
6703117	GASKET	6553833	A	4, 40
6703117	GASKET			4, 40
6703159	TRACK			280
6703160	TRACK			280
6703363	BUSHING			20
6703572	PIN	6560704	A	20
6703640	KIT			361, 362
6703641	DECAL			362
6703685	BRACKET			372
6703686	HARNESS			372
6703703	GUIDE			362
6703705	PLATE	6563431	A	124, 126, 130
6703730	MOUNT			372
6703736	CAP			218
6703751	RETAINER			278
6703943	HARNESS			336
6703944	HORN KIT			335, 336
6703953	LIFT ARM	6702894	A	20
6704167	TIRE & RIM			397, 398
6704168	TIRE & RIM			398
6704240	PIVOT ASSY.	6576456	A	24
6704248	PIVOT			24
6704270	HOSE			96
6704284	COUNTER WEIGHT KIT			295, 296
6704288	PIN	6553061	A	20
6704328	REAR DOOR	6565073	A	17, 18
6704347	TUBE	6564472	A	46
6704349	BOLT	37C000616B	B	62
6704425	ROD	6576470	A	272, 288
6704426	RETAINER	6578398	A	274, 290
6704428	SHIELD	6576471	A	272, 288
6704430	DOOR	6704431	A	272, 273, 274
6704436	PAD			20
6704453	SPRING	6503387	A	12, 22, 24
6704453	SPRING	6578252	A	12, 22, 24
6704641	MOUNT	6703391	A	336
6704692	RETAINER	6564937	A	4
6704891	WINDOW	6562916	A	270, 284, 350
6704891	WINDOW			270, 284, 350
6705033	WASHER			104, 106

Code for disposition of old part number
A -- Use up
B -- Use on other application (See PNI)
C -- File PDR Report with Bobcat Parts Sales
D -- Part Number Error

Part No.	Description	Was	Code	Page
6705089	LIFT ARM STOP	6700615	A	20
6705169	STOP			392
6705170	STOP			392
6705172	KIT			23, 2
6705179	KIT			391, 39
6705216	WINDOW	6564829	A	286, 288
6705216	WINDOW	6564829		286, 288
6705223	PIN	6700037	A	20, 24
6705289	KIT			371, 372
6705735	WINDOW			270, 284, 308, 350
6705891	HOSE	6704270	A	96, 322
6705891	HOSE			96, 322
6706324	SEAT BAR	6703301	A	12
6706387	BUSHING			366
6706388	BRACKET			366
6706389	BUSHING			366
6706390	BRACKET			364
6706680	LINK	6564544	A	64
6706744	TRACK			280
6706745	TRACK			280
6706796	KIT			12
6706962	BUSHING			368, 370
6706966	SPRING			386
6706993	KIT			279, 280
6707178	TANK			276
6707179	SHIELD			276
6707216	HINGE			276
6707220	DOOR			276
6707221	ROD			276
6707222	MOUNT			27
6707223	COUPLING			27
6707224	COUPLING			27
6707225	WINDOW			276
6707236	SHIELD			276
6707239	SHIELD			276
6707521	PIN KIT			20, 24
6707852	DECAL			276
6708058	BRACKET			364
6708067	KIT			363, 364
6708096	BUSHING			276, 277, 278
6708189	TUBE	6701175	A	8, 10
6708189	TUBE			8, 10
6708225	HARNESS			278
6708294	DECAL	6708249	B,D	302
6708499	WINDOW			276
6708500	CLAMP			278
6708850	RETAINER			274
6708973	KIT	6708443	A	275, 276
6708975	KIT			278
6708990	KIT			274
6709028	PLATE			124, 126, 131, 132
6709170	STUD	6702302	A	42
6709415	MOUNT	6571814	A	164
6709527	KEY			122, 124, 126, 130, 278

Code for disposition of old part number
A -- Use up
B -- Use on other application (See PNI)
C -- File PDR Report with Bobcat Parts Sales
D -- Part Number Error

Part No.	Description	Was	Code	Page
6710358	DECAL			302
6710659	BUSHING			368, 370
6710660	MOUNT			368, 370
6711708	MOUNT			316
6711908	SPRING PLATE			12, 362
6712259	HARNESS			276
6712288	HARNESS			316
6713040	SPRING			24
6713488	WIRE			156
6713589	CLEVIS			368, 370
6713780	ROD			156
6713803	HARNESS	6704887	A	292
6713821	CABLE			156
6713853	KIT			369, 370
6713879	HARNESS			372
6713887	BOLT			368, 370
6714062	KIT			8, 10
6714213	HARNESS			316
6714285	KIT	6713853	B	367, 368
6714361	WEIGHT			296
6714543	GASKET	3974461B	A	158, 172, 216, 218, 372
6714543	GASKET	6666785	A	158, 172, 216, 218, 372
6714543	GASKET			158, 172, 216, 218, 372
6714629	DECAL			368
6714810	PIN	6578457	A	20
6714874	BUSHING			20
6715183	ELBOW			34
6716777	SEAT BAR	6713609	A	370
6716778	SEAT BAR	6706358	A	366
6716779	SEAT BAR	6714282	A	368
6718298	KIT	6713885	A	396
6719048	MOUNT			218
6720035	INSTRUCTIONS			338
6720856	INSTRUCTIONS			382
6720957	INSTRUCTIONS			336
6722147	HOLDER KIT			250
6722308	INSTRUCTIONS			392
6722357	INSTRUCTIONS			372
6722597	VELCRO			268
6722836	INSTRUCTIONS			366
6722967	INSTRUCTIONS			20, 24
672401	BOLT			374
6724017	INSTRUCTIONS			386
6724028	INSTRUCTIONS			364
6724029	INSTRUCTIONS			278
6724094	ANTI-FREEZE	6658230	A	406
6724279	INSTRUCTIONS			274
6724282	SWITCH KIT			122, 124, 127, 128, 132
6724354	ANTI-FREEZE			406
6724420	INSTRUCTIONS			342
6724775	LEVER KIT			24
6724776	LEVER KIT			24
6724979	INSTRUCTIONS			156
6725373	SPRING PLATE			12

Code for disposition of old part number
A -- Use up
B -- Use on other application (See PNI)
C -- File PDR Report with Bobcat Parts Sales
D -- Part Number Error

Part No.	Description	Was	Code	Page
6726679	MOUNT	6564658	A	64
6727307	DECAL	6711327	A	300
6729896	TIRE			394
6729901	TIRE			394
6730771	RIM	6565239	A	394
6731478	EXIT TAG	6559515	A	270, 284, 286, 288, 350
6731979	BUSHING			24
6732012	PIN	6707042	A	20, 24
6732199	GASKET	6666790	A	192
6732446	BUSHING			24
6735140	DECAL	6557565	A	302
6736641	PAINT			406
6736642	PAINT			406, 407, 408
6736644	PAINT			406
6736645	PAINT			408
6737191	WEDGE	6704242	A	24
6737623	BUSHING	6704287	A	20
6803329	SEAL KIT	6589831	A	52, 54
6804592	NUT	6803253	B	60
6804605	SEAL KIT	6661308	A	60
6809425	SEAL KIT	6586461	A	88
6816250	SEAL KIT	6803605	A	88
6816251	SEAL KIT	6803606	A	88
6900096	INSTRUCTIONS			368, 370
6900366	INSTRUCTIONS			296
6900531	INSTRUCTIONS			8, 10
6901115	KIT			200
6902228	PAINT	6722783	A	405, 406
6902229	PAINT	6722786	A	406
6902230	PAINT	6722789	A	406
6902233	PAINT	6722782	A	406
6902234	PAINT	6722785	A	406
6902235	PAINT	6722788	A	406
6903105	OIL 15W40 QT. 12	6657299	A	2, 406
6903106	OIL 15W40 GAL. 6	6724558	A	2, 406
6903107	OIL 10W30 QT. 12	6657301	A	2, 406
6903108	OIL 10W30 GAL. 6	6724557	A	2, 406
6903109	OIL 30W QT. 12	6657303	A	2, 406
6903110	OIL 30W GAL. 6	6724559	A	2, 406
6903111	OIL 30W 2.5 GAL 2	6674206	A	2, 406
6903112	OIL 10W30 2.5 GAL 2	6674205	A	2, 406
6903113	OIL 15W40 2.5 GAL. 2	6674204	A	2, 406
6903117	HYD FLUID 2.5 GAL. 2	6563328	A	2, 406
6903118	HYD. FLUID 5GAL	6722344	A	2, 406
6903119	HYD. FLUID 55GAL	6563330	A	2, 406
6903121	GEAR LUBE 12	6634393	A	406
6903122	GREASE 10	6658266	A	406
6969775	SWITCH, OIL PRESSURE	6652576	A	134, 136, 174
6969803	COVER, BREATHER	6685086	A	222
6969805	KEY,FEATHER	15JM00410B	A	174, 220
69G000414B	SCREW	6588164	A	88

Code for disposition of old part number
A -- Use up
B -- Use on other application (See PNI)
C -- File PDR Report with Bobcat Parts Sales
D -- Part Number Error

Part No.	Description	Was	Code	Page
6CM01225B	BOLT			158
6CM1220	BOLT			30, 34, 134, 158, 378
6E4	WASHER 10			134, 342, 356
6E5	WASHER			134, 136, 262
6E6	WASHER			134
6EM00060B	WASHER			172, 174, 198, 200, 202, 218
6EM00080B	WASHER			160, 172, 178, 180, 182, 190, 192, 194, 202, 226
6J000405B	KEY			292
7101291	ELBOW	6598908	A	34
7101345	BONNET	6587633	A	88
7106572	ADAPTER	6558924	A	90, 96, 168
711054B	SNAP RING			112
7115219	PEDAL	6726680	A	64
713133B	SNAP RING			90, 96
72F000001B	DRAIN COCK			90
731284B	BEARING			38
731795B	ADAPTER			100
733616	TERMINAL			358
73K000014B	WASHER	30K000014B	B	86
73K224	RING			52, 54
742666	SNAP RING			40
742876B	GROMMET			30, 34, 124, 354
743332B	GREASE ZERK			20, 22, 24
75G001016B	BOLT			270, 272, 288
75G001020B	BOLT			286
774220	NUT			162, 164, 354
774708B	WIRE			356
77F000007B	ELBOW			100
784466B	PIN			40
794584B	WASHER			140, 142
799119B	SNAP RING			86
79K000003B	O-RING			108
79K000005B	O-RING			30, 34
79K000016B	O-RING	58K000127B	B	90, 92, 96, 100
79K000016B	O-RING			90, 92, 96, 100
79K10	O RING 10			44, 46, 48, 50, 78, 86, 90, 92, 96, 100, 264
79K12	O RING 10			78, 90, 96, 100, 110, 322
79K20	O RING 10			310
79K24	O RING 10			94
79K6	O RING 10			54, 58, 60, 92, 100, 108
79K8	O RING 10			86, 96, 160, 322
7C000312B	BOLT			292
7C000322B	BOLT			292
7C000512B	BOLT			372
7C000516B	BOLT			306
7C000520B	BOLT			134, 136
7C000620B	BOLT	6704349	B	64, 378
7C000620B	BOLT			64, 378
7C000640B	BOLT			96, 166
7D000005B	NUT	8563578	B	148, 150
7D000006B	NUT			166
7D000008B	NUT			22
7DM00006B	NUT			152
7G000416B	BOLT	7G000412B	B	272, 290

Code for disposition of old part number
A -- Use up
B -- Use on other application (See PN!)
C -- File PDR Report with Bobcat Parts Sales
D -- Part Number Error

Part No.	Description	Was	Code	Page
7J006012B	KEY			38
80K000234B	RING	80K000236B	B,D	60
81D000006B	NUT			378
82K000236B	O-RING	58K000236B	B	6
82K136	O-RING	58K136	B	5
83D000010B	NUT			8, 10, 350
83D4	NUT 10			126, 130, 272, 280, 288, 314, 342
83D5	NUT 5			122, 124, 126, 134, 136, 162, 164, 272, 276, 288, 306, 314, 350, 354, 366
83D6	NUT 5	85D000006B	B	12, 92, 96, 278, 286, 288, 304, 308
83D6	NUT 5			12, 92, 96, 278, 286, 288, 304, 308
83D8	NUT 5			4, 92, 304
84G001608B	SCREW			292
84G001906B	SCREW			292
84G001910B	SCREW			292
84G002516B	BOLT	61G000416B	B	8, 10, 336, 350
84G002516B	BOLT	7C000412B	B	8, 10, 336, 350
84G003724B	BOLT	84G003720B	B	44, 46, 304
84G003724B	BOLT			44, 46, 304
84G3112	BOLT 5			272, 282, 288, 320, 350
84G3710	SCREW			4, 158, 162, 164
84G3712	BOLT			4, 12, 28, 40, 92, 100, 132, 254, 262, 334
84G3716	SCREW 5			4, 26, 28, 40, 162, 164, 258, 260, 378
84G3720	BOLT			30, 34, 50
850315B	RETAINER			142
850363B	COLLAR			148
851242B	BEARING			232
859377B	SCREW			148, 150
85D000004B	NUT			90, 92, 166, 270, 372
85D000010B	NUT			F
85D5	NUT 5			18, 46, 126, 130, 258, 260, 262, 264, 270, 286, 37
85D6	LOCK NUT			20, 22, 24, 44, 46, 48, 50, 58, 60, 62, 63, 64, 99, 100, 104, 106, 158, 166, 258, 260, 344, 378
85D7	NUT			12
85D8	NUT 5			40, 92, 100, 350, 374, 376
85G000608B	SCREW			122, 124, 126, 356, 358, 360
85G001008B	BOLT			130, 166, 314
85G001014B	BOLT			282, 350
85G001208B	SCREW			270
85G001212B	SCREW			270
860669B	BUSHING			148, 150
863995B	WASHER			148, 150
866028B	CLAMP			212
866104B	PLUG			160
86D000004B	NUT			166
86D000012B	NUT			52
86D000016B	NUT			58
86F000007B	NUT			48, 50
86G001012B	SCREW			404
86G001016B	SCREW			404
871521B	PIN			150
872229	WASHER			166
874935B	BUSHING			148, 150

Code for disposition of old part number
A -- Use up
B -- Use on other application (See PNI)
C -- File PDR Report with Bobcat Parts Sales
D -- Part Number Error

Part No.	Description	Was	Code	Page
877650B	SUPPORT PKG.			148
878608B	STOP			148, 150
87F000007B	ADAPTER			100
87G000806B	BOLT			342
87G001010B	SCREW	85G001010B	B	30, 34
87G001010B	SCREW			30, 34
880603B	HOLDER			148
883008B	FRAME			148
884576B	BOLT			148, 150
884581B	SOLENOID			148
887834B	SHOE POLE			150
888527	SHIM	886527B	A	212, 214
888968B	SPRING	906910B	A	148, 150
888968B	SPRING			148, 150
889163B	BEARING			292
889269B	HOSE			332, 334, 388, 390
891024B	BAFFLE			212
891252B	HOLDER	871515	A	148
895675B	BOLT			148
895771B	BULB			124, 126, 130
896126B	SHIFT LEVER			148, 150
896979B	NUT			292
896984B	BOLT			292
896990B	WASHER			292
896992B	RETAINER			292
896996B	WASHER			292
897239B	SLEEVE			292
897245B	INSULATOR			292
897456B	RETAINER			140
897467B	BOLT			140, 142
897719B	INSULATOR			292
897732B	WASHER			292
898127B	COLLAR			150
898131B	GROMMET			148, 150
898731B	BULB			122, 124, 126, 130
899157B	FAN			292
899163B	ROTOR			292
899165B	INSULATOR			292
899167B	SINK			292
899169B	INSULATOR			292
899170B	GASKET			292
899374B	SEAL			292
899375B	DIODE			292
899376B	WASHER			292
899377B	BOLT			292
899378B	DIODE			292
89G000408B	BOLT			70, 72, 74, 80, 82, 84
89G000414B	BOLT			80, 82, 84
89G000544B	SCREW			126, 130
8C000616B	BOLT			104, 106
8D000006B	NUT			50, 368, 370
8EM00100B	WASHER			182, 186
905350B	BEARING			140, 142
905351B	BEARING			140, 142

Code for disposition of old part number
A -- Use up
B -- Use on other application (See PNI)
C -- File PDR Report with Bobcat Parts Sales
D -- Part Number Error

Part No.	Description	Was	Code	Page
905952B	TERMINAL PKG.			140, 142
905956B	FRAME			140, 142
905957B	HOUSING			142
907212B	PLUG			21
907828B	BUSHING			15
907953B	STATOR			142
909831B	COLLAR	905958B	A	140, 142
90KV00005B	PLUG			54, 58, 60
91D000007B	NUT			368
91G000410B	SCREW			350
91G000416B	BOLT			8, 10
92D000012B	NUT	86D000012B	A	54
93G000624B	SCREW			110
942142B	SNAP RING			148, 150
945239B	BRUSHES	1810488B	A	148
946860B	VALVE			252
94G000510B	BOLT			162, 164, 168
94G000512B	BOLT			162, 164, 168
94G000524B	SCREW			168
95D000006B	NUT	91D000006B	A	64
95D000007B	NUT	91D000007B	A	370
95K000006B	O-RING			54, 58, 60
960855B	BULB			122
961528B	HARDWARE			274
97F000005B	BUSHING			358
991101B	COIL			148
991374B	GASKET			150
994373	BOLT			140
994378B	BOLT			140, 142
994381B	REGULATOR			140, 14
994383B	DIODE			140, 14
995185B	RECTIFIER			14
999305B	ROTOR			140
999308B	CAPACITOR			140, 142
999394B	HOLDER			140, 142
999395B	TERMINAL			140
999396B	BOLT			140, 142
999397B	BOLT			140, 142
999460B	FRAME	6630408	A	150
999472B	PIN			148, 150
99K000005B	O-RING			34

Code for disposition of old part number
A -- Use up
B -- Use on other application (See PNI)
C -- File PDR Report with Bobcat Parts Sales
D -- Part Number Error