INTRODUCTION AND CUSTOMER INFORMATION

AGOSTO 1996

TP67015 -UN-04JAN00

750 JOHN DEERE

RUTHZIL TRATOR COMERCIAL DE PEÇAS LTDA 11 97083-6812 ROLANDO

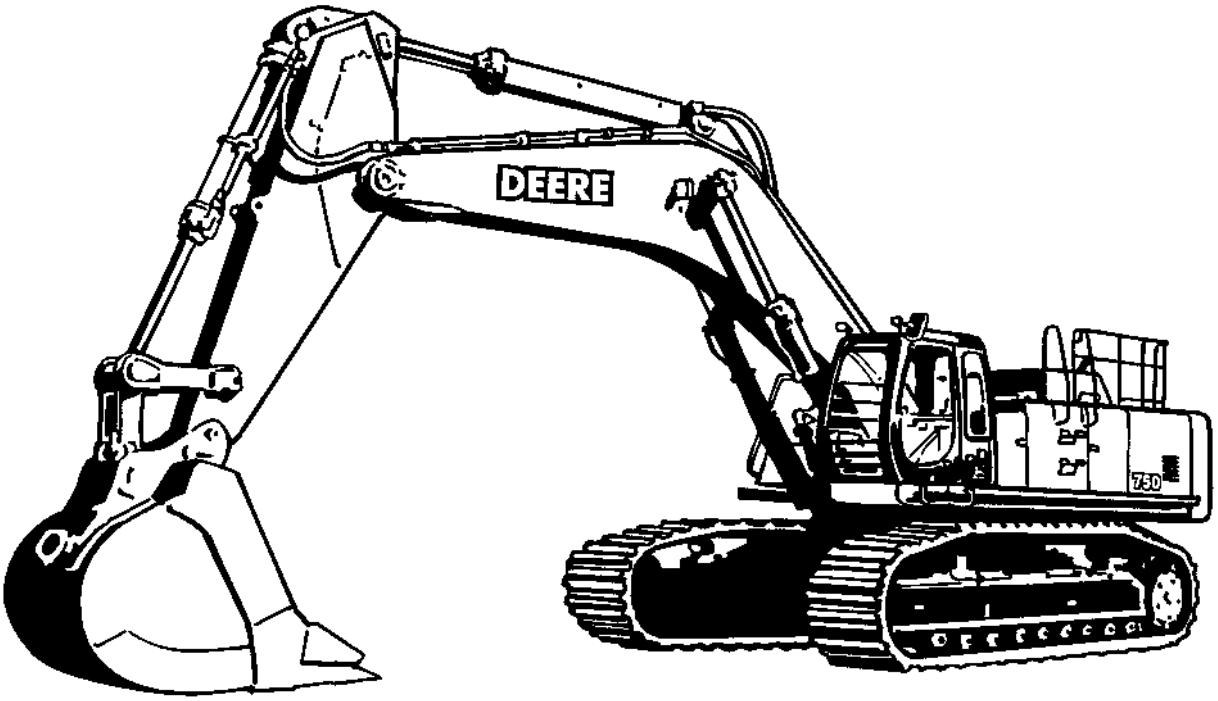

TP67015

LEFT-HAND SIDE VIEW OF JOHN DEERE 750 EXCAVATOR
(MANUFACTURED 1999-2002)

TO THE CUSTOMER

THE PART NUMBERS IN THIS PARTS CATALOG WERE CORRECT AT THE TIME YOUR CATALOG WAS PUBLISHED. IT IS OUR POLICY TO CONSTANTLY IMPROVE OUR MACHINES AND, THEREFORE, PART NUMBERS MAY CHANGE. WHEN ORDERING PARTS, VERIFY PART NUMBERS THROUGH YOUR DEALER'S WHICH IS UP-TO-DATE.

(SPECIFICATIONS AND DESIGN SUBJECT TO CHANGE WITHOUT NOTICE.)

SERIAL NUMBER LOCATIONS

EACH 750 EXCAVATOR HAS EIGHT SERIAL NUMBER PLATES:

A PRODUCT IDENTIFICATION NUMBER PLATE, AN ENGINE SERIAL NUMBER PLATE, A HYDRAULIC PUMP SERIAL NUMBER PLATE, A LEFT-HAND PROPEL MOTOR SERIAL NUMBER PLATE, A RIGHT-HAND PROPEL MOTOR SERIAL NUMBER PLATE, TWO SWING MOTOR SERIAL NUMBER PLATES AND A CONTROL VALVE SERIAL NUMBER PLAT

THE PRODUCT IDENTIFICATION PLATE IS LOCATED ON THE RIGHT-HAND SIDE FRAME NEAR THE FRONT SUPPORT.

THE ENGINE SERIAL NUMBER PLATE IS LOCATED ON THE INTAKE SIDE OF THE ENGINE NEAR THE FUEL FUEL INJECTION PUMP.

THE HYDRAULIC PUMP SERIAL NUMBER PLATE IS LOCATED ON THE TOP OF THE HYDRAULIC PUMPS.

THE SWING MOTOR SERIAL NUMBER PLATES ARE LOCATED ON THE TOP OF EACH SWING MOTOR.

THE PROPEL MOTOR SERIAL NUMBER PLATE IS LOCATED ON THE REAR OF THE PROPEL MOTOR BENEATH COVER

THE CONTROL VALVE SERIAL NUMBER PLATE IS LOCATED ON THE TOP OF THE CONTROL VALVE.

LEFT SIDE, RIGHT SIDE, FRONT AND REAR OF THE EXCAVATOR ARE VIEWED BY FACING IN THE DIRECTION OF THE EXCAVATOR FORWARD TRAVEL.

IF PRODUCT IDENTIFICATION NUMBERS OR SERIAL NUMBERS ARE REQUIRED FOR WARRANTY CLAIMS OR CORRESPONDENSE PERTAINING TO THIS PRODUCT. IT IS EXTREMELY IMPORTANT THAT ALL CHARACTERS BE FURNISHED. THIS POINT CANNOT BE OVEREMPHASIZED.

PRODUCT IDENTIFICATION NUMBER

TP49457 -UN-28AUG96

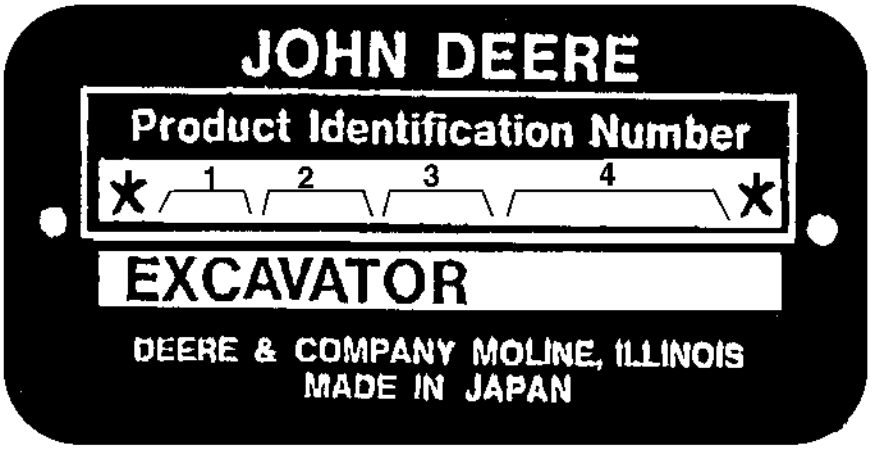

TP49457

1. DESIGNATES EXCAVATOR MANUFACTURER	FF - JOHN DEERE-HITACHI
2. DESIGNATES EXCAVATOR MODEL	750
3. DESIGNATES EXCAVATOR CONFIGURATION	E
4. DESIGNATES EXCAVATOR SERIAL NUMBER	000000
THE BOTTOM SECTION DESIGNATES UNIT TYPE	EXCAVATOR

SERIAL NUMBER LISTING INFORMATION

SERIAL NUMBER INFORMATION IS LISTED TO SHOW ON WHICH MACHINES EACH PART CAN BE USED; FOR EXAMPLE:

-	THE PART CAN BE USED ON ALL MACHINES.
000000-	THE PART CAN BE USED ON ALL MACHINES BEGINNING WITH THE SERIAL NUMBER LISTED.
-000000	THE PART CAN BE USED ON ALL MACHINES UP TO AND INCLUDING THE SERIAL NUMBER LISTED.
000000-000000	THE PART CAN BE USED ON ALL MACHINES BETWEEN AND INCLUDING THE SERIAL NUMBERS LISTED.

WHEN XXXXXX'S ARE LISTED IN PLACE OF A SERIAL NUMBER, A SERIAL NUMBER CHANGE WAS MADE BUT THE EXACT SERIAL NUMBER WAS NOT AVAILABLE WHEN THE CATALOG WAS PRODUCED.

DIRECTION ARROW

ARROWS ARE USED WITH ILLUSTRATIONS TO INDICATE THE FRONT OF THE UNIT. "RIGHT-HAND" AND "LEFT-HAND" SIDES OF THE LOADER OR TRACTOR PARTS ARE DETERMINED BY FACING IN THE DIRECTION OF MACHINE FORWARD TRAVEL

EXCEPTION: FOR ALL BACKHOE PARTS, "RIGHT-HAND" AND "LEFT-HAND" SIDES, "FRONT" AND "REAR" ARE DETERMINED WHEN SEATED FOR BACKHOE OPERATION.

BOX-ENCLOSED ILLUSTRATIONS

A KEY NUMBER, SHOWN IN THE PARTS LIST, IS ASSIGNED TO A BOX ENCLOSING ALL PARTS SOLD AS A SERVICE ASSEMBLY.

COMPLETE GOODS LISTINGS

COMPLETE GOODS ARE LISTED IN BOLD FACE TYPE. ORDER SEPARATELY. DO NOT INCLUDE ON REPLACEMENT PARTS ORDER.

SI UNITS OF MEASURE

METRIC DIMENSIONS ARE GIVEN, WHERE APPLICABLE, THROUGHOUT THIS PARTS CATALOG.

CHANGE INDICATOR LINE

CHANGES AFFECTING THE ORDERING OF PARTS ARE IDENTIFIED BY VERTICAL LINES MARKED IN THE LEFT-HAND MARGIN OF REVISED PARTS LISTING IMAGES. A LINE IS ALSO AT THE LEFT-HAND EDGE OF THE SAME PART NUMBER IN THE NUMERICAL INDEX TO SHOW THE LOCATION OF REVISED INFORMATION.

ENGINE IDENTIFICATION

TP66975 -UN-15NOV99

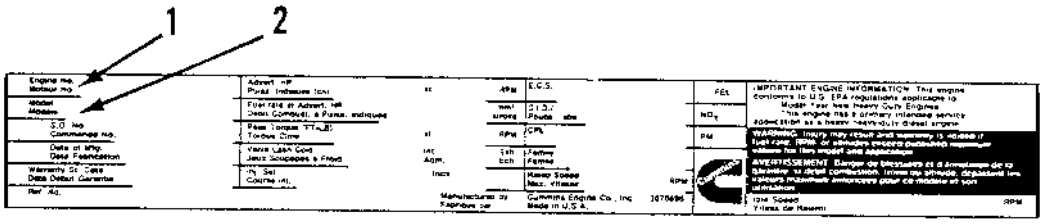

TP66975

1. DESIGNATES ENGINE SERIAL NUMBER
2. DESIGNATES MODEL

ALPHABETICAL INDEX

GRID		PAGE
	A	
1B3	ADJUSTER	0130 - 12
1H16	ADJUSTER, SEAT	1821 - 10
1H14	ADJUSTER,SEAT (REPLACEMENT SEAT)	1821 - 9A
1C20	AIR CLEANER	0520 - 2
1H18	AIR CONDITIONER	1830 - 2
1H22	AIR CONDITIONER	1830 - 6
1H18	AIR CONDITIONER CONTROLLER	1830 - 2
1H20	AIR CONDITIONER CONTROLLER	1830 - 4
1I3	AIR CONDITIONER DUCT	1830 - 12
1I5	AIR CONDITIONER DUCT	1830 - 14
1I9	AIR CONDITIONER HOUSING UNIT COMPONENTS	1830 - 18
1H24	AIR CONDITIONER UNIT	1830 - 8
1I1	AIR CONDITIONER UNIT	1830 - 10
1H18	AIR DUCT, AIR CONDITIONER	1830 - 2
1I7	AIR DUCT, AIR CONDITIONING	1830 - 16
1E5	AIR FILTER RESTRICTION INDICATOR LIGHT	1674 - 18
1C20	AIR RESTRICTION INDICATOR	0520 - 2
1E3	ALARM SWITCH, MOTION	1674 - 16
1E5	ALARM, BACKUP	1674 - 18
1E5	ALTERNATOR LIGHT	1674 - 18
2H11	ANGLE SENSOR, PUMP	3360 - 108
1F18	ANTENNA, RADIO	1810 - 10
2F17	ARM CYLINDER PIPINGS, MASS EXCAVATING BOOM	3360 - 66
2F15	ARM CYLINDER PIPINGS, STANDARD OR HEAVY DUTY BOOM	3360 - 64
1D20	ARM IN PRESSURE SWITCH	1674 - 8
1D20	ARM OUT PRESSURE SWITCH	1674 - 8
2F23	ARM, HEAVY DUTY, LUBRICATE PIPING	3360 - 72
2C15	ARM, LONG (5.4M)	3340 - 6
2C17	ARM, LONG (5.4M)	3340 - 8
2C15	ARM, LONG, BUCKET CYLINDER, HOSES, AND LINKAGE ASSEMBLY (5.4M)	3340 - 6
2C17	ARM, LONG, BUCKET CYLINDER, HOSES, AND LINKAGE ASSEMBLY (5.4M)	3340 - 8
2G3	ARM, LONG, LUBRICATE PIPING	3360 - 76
2C19	ARM, MASS EXCAVATING (2.95M)	3340 - 10
2C19	ARM, MASS EXCAVATING, BUCKET CYLINDER, HOSES AND LINKAGE ASSY (2.95M)	3340 - 10
2G1	ARM, MASS EXCAVATING, LUBRICATE PIPING	3360 - 74
2C13	ARM, SEMI-LONG (4.4M)	3340 - 4
2C13	ARM, SEMI-LONG, BUCKET CYLINDER, HOSES, AND LINKAGE ASSEMBLY (4.4M)	3340 - 4
2G5	ARM, SEMI-LONG, LUBRICATE PIPING	3360 - 78
2C11	ARM, STANDARD (3.6M)	3340 - 2
2C11	ARM, STANDARD, BUCKET CYLINDER, HOSES, AND LINKAGE ASSEMBLY (3.6M)	3340 - 2
2F23	ARM, STANDARD, LUBRICATE PIPING	3360 - 72
1F18	ARM, WINDSHIELD WIPER	1810 - 10
1H14	ARMREST,SEAT (REPLACEMENT SEAT)	1821 - 9A
1F12	ASHTRAY	1810 - 4
1E5	AUTO IDLE INDICATOR	1674 - 18
1B1	AXLE, FRONT IDLER	0130 - 10
1B7	AXLE, LOWER ROLLER	0130 - 16
1B5	AXLE, UPPER ROLLER	0130 - 14
	B	
2I3	BACKHOE CYLINDER KIT, HYDRAULIC	3360 - 124
2I3	BACKHOE CYLINDER, HYDRAULIC	3360 - 124
1E5	BACKUP ALARM	1674 - 18
1G5	BARS, WINDOW	1810 - 22
1D16	BATTERY	1674 - 4
1D16	BATTERY RELAY	1674 - 4
1D16	BATTERY WIRE HARNESS	1674 - 4
1F3	BEARING, SWING	1740 - 14
1H22	BELT, AIR CONDITIONER COMPRESSOR	1830 - 6
1H24	BELT, AIR CONDITIONER COMPRESSOR	1830 - 8
1I1	BELT, AIR CONDITIONER COMPRESSOR	1830 - 10
1C6	BELT, FAN	0400 - 2
1H6	BELT, SEAT (ORIGINAL SEAT)	1821 - 4
1H8	BELT, SEAT (REPLACEMENT SEAT)	1821 - 5A
1H5	BELT, SEAT, RETRACTABLE (76MM (3") WIDE	1821 - 3
1F18	BLADE, WINDSHIELD WIPER	1810 - 10
2I1	BOOM CYLINDER KIT, HYDRAULIC, LEFT	3360 - 122
2H23	BOOM CYLINDER KIT, HYDRAULIC, RIGHT	3360 - 120
2J1	BOOM CYLINDER LOAD LOWERING VALVE KIT	3360 - 146
2J3	BOOM CYLINDER LOAD LOWERING VALVE KIT	3360 - 148
2J5	BOOM CYLINDER LOAD LOWERING VALVE KIT	3360 - 150
2J7	BOOM CYLINDER LOAD LOWERING VALVE KIT	3360 - 152
2H23	BOOM CYLINDER, HYDRAULIC, RIGHT	3360 - 120
2I1	BOOM CYLINDER, LEFT	3360 - 122
1D20	BOOM DOWN PRESSURE SWITCH	1674 - 8
1D20	BOOM RAISE PRESSURE SWITCH	1674 - 8
2C21	BOOM, HEAVY DUTY	3344 - 2
2F19	BOOM, HEAVY DUTY, LUBRICATE PIPINGS	3360 - 68
2C23	BOOM, MASS EXCAVATING	3344 - 4
2F21	BOOM, MASS EXCAVATING, LUBRICATE PIPINGS	3360 - 70
2F19	BOOM, STANDARD, LUBRICATE PIPINGS	3360 - 68
2B22	BOOT, CONTROL LEVER (CANOPY)	3315 - 4
1C6	BRACKET, ENGINE	0400 - 2
1C16	BRACKET, ENGINE SPEED CONTROL CABLE	0515 - 2
1D10	BRACKET, LUBRICATOR PUMP	1369 - 6
1H8	BRACKET, SEAT BELT (REPLACEMENT SEAT)	1821 - 5A
1B15	BRAKE VALVE,PROPEL MOTOR	0260 - 4
2C15	BUCKET CYLINDER HOSES AND LINKAGE, LONG ARM	3340 - 6
2C17	BUCKET CYLINDER HOSES AND LINKAGE, LONG ARM	3340 - 8
2C13	BUCKET CYLINDER HOSES AND LINKAGE, SEMI-LONG ARM	3340 - 4
2C11	BUCKET CYLINDER HOSES AND LINKAGE, STANDARD ARM	3340 - 2
2C19	BUCKET CYLINDER HOSES AND LINKAGE, MASS EXCAVATING ARM	3340 - 10
2I7	BUCKET CYLINDER KIT, HYDRAULIC (MASS EXCAVATING)	3360 - 128
2I5	BUCKET CYLINDER KIT, HYDRAULIC (STANDARD ARM, HEAVY DUTY ARM, SEMI-LONG ARM)	3360 - 126
2I9	BUCKET CYLINDER KIT, HYDRAULIC(LONG ARM)	3360 - 130
2I11	BUCKET CYLINDER KIT, HYDRAULIC(LONG ARM)	3360 - 132
2I9	BUCKET CYLINDER, HYDRAULIC (LONG ARM)	3360 - 130
2I11	BUCKET CYLINDER, HYDRAULIC (LONG ARM)	3360 - 132
2I7	BUCKET CYLINDER, HYDRAULIC (MASS EXCAVATING)	3360 - 128
2I5	BUCKET CYLINDER, HYDRAULIC(STANDARD ARM, HEAVY DUTY ARM, SEMI-LONG ARM)	3360 - 126
1D20	BUCKET PRESSURE SWITCH	1674 - 8
2B18	BUCKET TOOTH	3302 - 12
2B16	BUCKET, EXTREME DUTY (USE WITH 11'10" AND 14'5" ARM)	3302 - 10
2B14	BUCKET, EXTREME DUTY (USE WITH 9.8" ARM)	3302 - 8
2B8	BUCKET, HEAVY DUTY (USE WITH 11'10" AND 14'5" ARM)	3302 - 2
2B10	BUCKET, HEAVY DUTY (USE WITH 11'10" AND 14'5" ARM)	3302 - 4
2B12	BUCKET, HEAVY DUTY (USE WITH 17'9" LONG ARM)	3302 - 6
1D20	BULB, LIGHT	1674 - 8

ALPHABETICAL INDEX - CONTINUED

GRID		PAGE
1D22	BULB, LIGHT	1674 - 10
1B9	BUSHING KIT, TRACK LINK	0130 - 18
	C	
1F16	CAB	1810 - 8
1G9	CAB COMPONENTS (DOOR CATCH)	1810 - 26
1F22	CAB COMPONENTS (DOOR)	1810 - 14
1F24	CAB COMPONENTS (DOOR)	1810 - 16
1G1	CAB COMPONENTS (FRONT)	1810 - 18
1G3	CAB COMPONENTS (FRONT)	1810 - 20
1G5	CAB COMPONENTS (RIGHT SIDE)	1810 - 22
1G7	CAB COMPONENTS (TOP HATCH)	1810 - 24
1F20	CAB COMPONENTS (TOP, LEFT SIDE, REAR)	1810 - 12
1F18	CAB COMPONENTS (WINDSHIELD WIPER, DOME LIGHT, RADIO ANTENNA, RADIO SPEAKER)	1810 - 10
1G17	CAB FLOOR PARTS	1810 - 34
1F12	CAB INSIDE RIGHT COVER	1810 - 4
1F10	CAB MOUNTING	1810 - 2
1F20	CAB TOP, HEADLINER	1810 - 12
1G19	CAB, FLOOR PLATE	1810 - 36
1C16	CABLE, ENGINE CONTROL	0515 - 2
1D24	CABLE, STARTER	1674 - 12
1C24	CAP, FILLER, FUEL TANK	0560 - 2
1G9	CATCH, CAB DOOR	1810 - 26
1B19	CENTER JOINT	0260 - 8
2D11	CENTER JOINT PIPING TO CONTROL VALVE	3360 - 12
2D7	CENTER JOINT PIPING TO OIL TANK	3360 - 8
2F7	CENTER JOINT PIPING TO OIL TANK	3360 - 56
1B21	CENTER JOINT PIPINGS TO TRAVEL DEVICE	0260 - 10
1B23	CENTER JOINT PIPINGS TO TRAVEL DEVICE, DRAIN LINES AND TWO SPEED CONTROL LINE	0260 - 12
2G11	CHECK VALVE	3360 - 84
1F12	CIGAR LIGHTER	1810 - 4
1C20	CLEANER, AIR	0520 - 2
1H22	COMPRESSOR, AIR CONDITIONER	1830 - 6
1H24	COMPRESSOR, AIR CONDITIONER	1830 - 8
1I1	COMPRESSOR, AIR CONDITIONER	1830 - 10
1H20	COMPUTER, AIR CONDITIONER CONTROLLER	1830 - 4
1H22	CONDENSER, AIR CONDITIONER	1830 - 6
1H24	CONDENSER, AIR CONDITIONER	1830 - 8
1I1	CONDENSER, AIR CONDITIONER	1830 - 10
1G21	CONSOLE	1810 - 38
1G23	CONSOLE COVER	1810 - 40
1H1	CONSOLE COVER	1810 - 42
2B22	CONSOLE, CONTROL LEVER (CANOPY)	3315 - 4
2C9	CONTROL LEVER	3315 - 16
2B22	CONTROL LEVER (CANOPY)	3315 - 4
2G19	CONTROL LEVER SHUTTLE VALVE	3360 - 92
2B20	CONTROL LEVER, TRAVEL	3315 - 2
1C18	CONTROL MOTOR, ENGINE SPEED	0515 - 4
2J9	CONTROL PATTERN SELECTOR KIT	3360 - 154
1E12	CONTROL PATTERN, WIRING HARNESS	1674 - 24
1E12	CONTROL PATTERN, WIRING HARNESS DECAL	1674 - 24
2D11	CONTROL VALVE PIPING TO CENTER JOINT	3360 - 12
2E21	CONTROL VALVE PIPING TO FRAME	3360 - 46
2E21	CONTROL VALVE PIPING TO HEAT SHIELD	3360 - 46
2E23	CONTROL VALVE PIPING TO HEAT SHIELD	3360 - 48
2F1	CONTROL VALVE PIPING TO HEAT SHIELD	3360 - 50
2D11	CONTROL VALVE PIPING TO ROTARY MANIFOLD	3360 - 12
2D3	CONTROL VALVE PIPING TO SWING DEVICE	3360 - 4
2E5	CONTROL VALVE PIPING TO SWING DEVICE	3360 - 30
2D9	CONTROL VALVE PIPING TO SWING MOTOR	3360 - 10
2D1	CONTROL VALVE PIPINGS TO HYDRAULIC PUMP	3360 - 2
2D3	CONTROL VALVE PIPINGS TO OIL COOLER	3360 - 4
2H13	CONTROL VALVE, COMPONENTS	3360 - 110
2H15	CONTROL VALVE, COMPONENTS	3360 - 112
2H17	CONTROL VALVE, COMPONENTS	3360 - 114
2H19	CONTROL VALVE, COMPONENTS	3360 - 116
2H21	CONTROL VALVE, COMPONENTS	3360 - 118
2G15	CONTROL VALVE, FLOW	3360 - 88
2G17	CONTROL VALVE, FLOW	3360 - 90
2I21	CONTROL VALVE, FLOW	3360 - 142
1D14	CONTROLLER	1674 - 2
1H18	CONTROLLER, AIR CONDITIONER	1830 - 2
1H20	CONTROLLER, AIR CONDITIONER	1830 - 4
1E11	CONVERTER (24-VOLT TO 12-VOLT)	1674 - 22
1E5	COOLANT LEVEL LIGHT	1674 - 18
1C6	COOLANT LEVEL SWITCH, ENGINE	0400 - 2
1E5	COOLANT TEMPERATURE GAUGE	1674 - 18
1E21	COUNTERWEIGHT	1740 - 8
1F1	COUNTERWEIGHT LIFTING DEVICE	1740 - 12
1E23	COUNTERWEIGHT REMOVAL DEVICE	1740 - 10
2I15	COUNTERWEIGHT REMOVAL PILOT VALVE	3360 - 136
1I16	COVER (CENTER)	1910 - 6
1I14	COVER (LEFT FRONT SIDE)	1910 - 4
1I12	COVER (LEFT REAR SIDE)	1910 - 2
1I20	COVER (REAR LEFT SIDE)	1910 - 10
1I18	COVER (RIGHT SIDE SHIELD)	1910 - 8
1D16	COVER, BATTERY	1674 - 4
1F12	COVER, CAB INSIDE RIGHT	1810 - 4
1G23	COVER, CONSOLE	1810 - 40
1H1	COVER, CONSOLE	1810 - 42
1I24	COVER, ENGINE	1910 - 14
1F14	COVER, LOWER MONITOR	1810 - 6
1C1	COVER, PROPEL HYDRAULIC HOSE (SERIAL NUMBER -005478)	0260 - 14
1C3	COVER, PROPEL HYDRAULIC HOSE (SERIAL NUMBER 005479-)	0260 - 16
1C1	COVER, PROPEL HYDRAULIC LINE (SERIAL NUMBER -005478)	0260 - 14
1C3	COVER, PROPEL HYDRAULIC LINE (SERIAL NUMBER 005479-)	0260 - 16
1J1	COVER, UNDER	1910 - 16
1G15	COVER, WINDOW	1810 - 32
1H14	CUSHION,SEAT (REPLACEMENT SEAT)	1821 - 9A
2B16	CUTTING EDGE, EXTREME DUTY BUCKET (USE WITH 11'10" AND 14'5" ARM)	3302 - 10
2B14	CUTTING EDGE, EXTREME DUTY BUCKET (USE WITH 9.8" ARM)	3302 - 8
2B8	CUTTING EDGE, HEAVY DUTY BUCKET (USE WITH 11'10" AND 14'5" ARM)	3302 - 2
2B10	CUTTING EDGE, HEAVY DUTY BUCKET (USE WITH 11'10" AND 14'5" ARM)	3302 - 4
2B12	CUTTING EDGE, HEAVY DUTY BUCKET (USE WITH 17'9" LONG ARM)	3302 - 6
2I3	CYLINDER KIT, HYDRAULIC BACKHOE	3360 - 124
2I1	CYLINDER KIT, HYDRAULIC BOOM, LEFT	3360 - 122
2H23	CYLINDER KIT, HYDRAULIC BOOM, RIGHT	3360 - 120
2I7	CYLINDER KIT, HYDRAULIC BUCKET (MASS EXCAVATING)	3360 - 128
2I5	CYLINDER KIT, HYDRAULIC BUCKET (STANDARD ARM, HEAVY DUTY ARM, SEMI-LONG ARM)	3360 - 126
2I9	CYLINDER KIT, HYDRAULIC BUCKET(LONG ARM)	3360 - 130
2I11	CYLINDER KIT, HYDRAULIC BUCKET(LONG ARM)	3360 - 132
2I13	CYLINDER, HYDRAULIC (COUNTERWEIGHT LIFTING)	3360 - 134
2I3	CYLINDER, HYDRAULIC BACKHOE	3360 - 124
2I1	CYLINDER, HYDRAULIC BOOM, LEFT	3360 - 122
2H23	CYLINDER, HYDRAULIC BOOM, RIGHT	3360 - 120
2I9	CYLINDER, HYDRAULIC BUCKET (LONG ARM)	3360 - 130
2I11	CYLINDER, HYDRAULIC BUCKET (LONG ARM)	3360 - 132

ALPHABETICAL INDEX - CONTINUED

GRID		PAGE
2I7	CYLINDER, HYDRAULIC BUCKET (MASS EXCAVATING)	3360 - 128
2I5	CYLINDER, HYDRAULIC BUCKET(STANDARD ARM, HEAVY DUTY ARM, SEMI-LONG ARM)	3360 - 126

D

2C7	DAMPER, PROPEL LEVER	3315 - 14
1E12	DECAL, CONTROL PATTERN, WIRING HARNESS	1674 - 24
2I15	DECAL, COUNTERWEIGHT REMOVAL INSTRUCTION	3360 - 136
2I15	DECAL, UP-DOWN COUNTERWEIGHT REMOVAL	3360 - 136
1D4	DECALS	1320 - 2
2D1	DELIVERY PIPING	3360 - 2
1D20	DIFFERENTIAL PRESSURE SENSOR	1674 - 8
1D24	DIODE, WIRE HARNESS	1674 - 12
1F18	DOME LIGHT	1810 - 10
1F18	DOME LIGHT WIRE HARNESS	1810 - 10
1F22	DOOR, CAB	1810 - 14
1F24	DOOR, CAB	1810 - 16
1G9	DOOR, CATCH	1810 - 26
1I14	DOOR, SERVICE, LEFT FRONT SIDE	1910 - 4
1I12	DOOR, SERVICE, LEFT REAR SIDE	1910 - 2
1I18	DOOR, SERVICE, RIGHT SIDE	1910 - 8
2D7	DRAIN PIPING	3360 - 8
1C24	DRAIN VALVE, FUEL TANK	0560 - 2
1B13	DRIVE, PROPEL	0260 - 2
1B13	DRIVE, TRAVEL	0260 - 2
1H18	DUCT, AIR CONDITIONER	1830 - 2
1I3	DUCT, AIR CONDITIONER	1830 - 12
1I5	DUCT, AIR CONDITIONER	1830 - 14
1I7	DUCT, AIR, AIR CONDITIONING	1830 - 16

E

1E5	E MODE INDICATOR	1674 - 18
1D16	ELECTRIC PARTS (BATTERY)	1674 - 4
1D20	ELECTRIC PARTS (HORN, WORK LIGHTS)	1674 - 8
1D18	ELECTRIC PARTS (PRESSURE SENSOR, WATER TEMP SENDER, ENGINE THERMO SWITCH)	1674 - 6
1E9	ELECTRIC PARTS (RELAYS)	1674 - 20
1E1	ELECTRIC PARTS (START SWITCH)	1674 - 14
1D24	ELECTRIC PARTS (WIRE HARNESS CLIPS)	1674 - 12
1E3	ELECTRIC PARTS (WIRING HARNESS, FUSES)	1674 - 16
1D22	ELECTRIC PARTS (WORK LIGHTS)	1674 - 10
2I23	ELECTRIC PARTS REMOVAL DEVICE	3360 - 144
1C20	ELEMENT, AIR CLEANER	0520 - 2
1C16	ENGINE CONTROL CABLE	0515 - 2
1C18	ENGINE CONTROL MOTOR	0515 - 4
1D14	ENGINE CONTROLLER	1674 - 2
1E1	ENGINE CONTROLLER	1674 - 14
1I24	ENGINE COVER	1910 - 14
1C6	ENGINE FAN	0400 - 2
1C6	ENGINE MOUNTS	0400 - 2
1C6	ENGINE OIL FILTER	0400 - 2
1E5	ENGINE OIL LEVEL LIGHT	1674 - 18
1E5	ENGINE OIL PRESSURE LIGHT	1674 - 18
1D1	ENGINE PIPING TO FUEL TANK	0560 - 4
1D1	ENGINE PIPING TO FUEL TANK FILTER	0560 - 4
1C16	ENGINE SPEED CONTROL CABLE	0515 - 2
1C18	ENGINE SPEED CONTROL MOTOR	0515 - 4
1C6	ENGINE TEMPERATURE SWITCH	0400 - 2
1D18	ENGINE THERMO SWITCH	1674 - 6
1C22	EXHAUST PIPE	0530 - 2
2B16	EXTREME DUTY BUCKET (USE WITH 11'10" AND 14'5" ARM)	3302 - 10
2B14	EXTREME DUTY BUCKET (USE WITH 9.8" ARM)	3302 - 8

F

1C6	FAN BELT	0400 - 2
1C6	FAN, ENGINE	0400 - 2
1C24	FILLER CAP, FUEL TANK	0560 - 2
2D19	FILTER PIPING TO HYDRAULIC PUMP	3360 - 20
1C20	FILTER, AIR CLEANER	0520 - 2
1I5	FILTER, AIR CONDITIONER	1830 - 14
1C6	FILTER, ENGINE OIL	0400 - 2
2G15	FILTER, FLOW CONTROL VALVE	3360 - 88
2G17	FILTER, FLOW CONTROL VALVE	3360 - 90
2I21	FILTER, FLOW CONTROL VALVE	3360 - 142
1D1	FILTER, FUEL	0560 - 4
1C24	FILTER, FUEL TANK	0560 - 2
2D19	FILTER, OIL	3360 - 20
1J17	FILTER, OIL, HYDRAULIC	2160 - 12
1D1	FILTER, WATER SEPARATOR	0560 - 4
2J9	FITTINGS, CONTROL PATTERN SELECTOR KIT	3360 - 154
1G17	FLOOR MAT	1810 - 34
1G19	FLOOR PLATE	1810 - 36
2G15	FLOW CONTROL VALVE	3360 - 88
2G17	FLOW CONTROL VALVE	3360 - 90
2I21	FLOW CONTROL VALVE	3360 - 142
2E3	FLOW CONTROL VALVE, PILOT PIPING	3360 - 28
2H13	FLOW SENSING VALVE, CONTROL VALVE	3360 - 110
2H19	FLOW SENSING VALVE, CONTROL VALVE	3360 - 116
2B20	FOOTREST	3315 - 2
2E21	FRAME PIPING TO CONTROL VALVE	3360 - 46
2E15	FRAME PIPING TO OIL TANK	3360 - 40
2E17	FRAME PIPING TO OIL TANK	3360 - 42
2F5	FRAME PIPING TO SWING DEVICE	3360 - 54
1E15	FRAME, MAIN	1740 - 2
1E19	FRAME, MAIN, BUSHINGS	1740 - 6
1E17	FRAME, MAIN, STEPS AND HANDHOLD	1740 - 4
1A18	FRAME, TRACK	0130 - 2
1B1	FRONT IDLER	0130 - 10
2C19	FRONT PIPINGS, MASS EXCAVATING ARM (2.95M)	3340 - 10
2F17	FRONT PIPINGS, MASS EXCAVATING BOOM	3360 - 66
2F15	FRONT PIPINGS, STANDARD OR HEAVY DUTY BOOM	3360 - 64
1D1	FUEL FILTER	0560 - 4
1D1	FUEL FILTER WATER SEPARATOR	0560 - 4
1E5	FUEL GAUGE	1674 - 18
1E5	FUEL LEVEL LIGHT	1674 - 18
1D1	FUEL PIPINGS	0560 - 4
1D16	FUEL SHUT-OFF RELAY	1674 - 4
1C24	FUEL TANK	0560 - 2
1D1	FUEL TANK FILTER PIPING TO ENGINE	0560 - 4
1D1	FUEL TANK PIPING TO ENGINE	0560 - 4
1D1	FUEL TANK PIPING TO WATER SEPARATOR	0560 - 4
1E3	FUSE BOX	1674 - 16
1D8	FUSE, LUBRICATOR	1369 - 4
1E3	FUSES	1674 - 16
1D24	FUSIBLE LINK	1674 - 12

G

1J17	GAUGE LEVEL, HYDRAULIC OIL	2160 - 12
1E5	GAUGE, FUEL	1674 - 18
1J15	GEAR BOX,HYDRAULIC PUMP	2160 - 10
1F22	GLASS, CAB DOOR	1810 - 14

ALPHABETICAL INDEX - CONTINUED

GRID		PAGE
1F24	GLASS, CAB DOOR	1810 - 16
1G1	GLASS, CAB FRONT WINDOW	1810 - 18
1G3	GLASS, CAB FRONT WINDOW	1810 - 20
1F20	GLASS, CAB REAR AND LEFT SIDE	1810 - 12
1G5	GLASS, CAB RIGHT SIDE WINDOW	1810 - 22
1D8	GREASE GUN	1369 - 4
2B20	GRIP, CONTROL LEVER	3315 - 2
2C9	GRIP, CONTROL LEVER	3315 - 16
2B22	GRIP, CONTROL LEVER (CANOPY)	3315 - 4
1E3	GROUND STRAP	1674 - 16
1B1	GUARD, FRONT IDLER	0130 - 10
1C1	GUARD, PROPEL HYDRAULIC LINE (SERIAL NUMBER -005478)	0260 - 14
1C3	GUARD, PROPEL HYDRAULIC LINE (SERIAL NUMBER 005479-)	0260 - 16
1A22	GUARD, TRACK	0130 - 6
1A24	GUARD, TRACK, FULL LENGTH	0130 - 8
1G15	GUARDS, WINDOW	1810 - 32
1D8	GUN, GREASE	1369 - 4

H

1F18	HAMMER, ESCAPE	1810 - 10
1I12	HAND HOLD, LEFT REAR SIDE	1910 - 2
1E17	HAND RAIL, MAIN FRAME	1740 - 4
1E17	HANDHOLD, MAIN FRAME	1740 - 4
1I22	HANDHOLD, ON TOOL BOX	1910 - 12
1G1	HANDLE, CAB FRONT UPPER	1810 - 18
1G3	HANDLE, CAB FRONT UPPER	1810 - 20
1G7	HANDLE, CAB TOP HATCH	1810 - 24
2C9	HANDLE, CONTROL LEVER	3315 - 16
1F22	HANDRAIL, INSIDE DOOR	1810 - 14
1F24	HANDRAIL, INSIDE DOOR	1810 - 16
1I12	HANDRAIL, LEFT REAR SIDE	1910 - 2
1F20	HANDRAIL, LEFT SIDE	1810 - 12
1E3	HARNESS, WIRE	1674 - 16
2B22	HARNESS, WIRE, CONTROL LEVER (CANOPY)	3315 - 4
1C24	HARNESS, WIRE, FUEL TANK	0560 - 2
1E12	HARNESS, WIRING, CONTROL PATTERN KIT	1674 - 24
1E3	HARNESS, WIRING, STARTER SWITCH	1674 - 16
2C21	HARNESS, WIRING, WORK LIGHT	3344 - 2
2C23	HARNESS, WIRING, WORK LIGHT	3344 - 4
1G7	HATCH, CAB TOP	1810 - 24
1D20	HEADLIGHT	1674 - 8
1D22	HEADLIGHT	1674 - 10
1F20	HEADLINER, CAB TOP	1810 - 12
1G7	HEADLINER, CAB TOP HATCH	1810 - 24
2E21	HEAT SHIELD PIPING TO CONTROL VALVE	3360 - 46
2E23	HEAT SHIELD PIPING TO CONTROL VALVE	3360 - 48
2F1	HEAT SHIELD PIPING TO CONTROL VALVE	3360 - 50
2E13	HEAT SHIELD PIPING TO OIL TANK	3360 - 38
2E17	HEAT SHIELD PIPING TO OIL TANK	3360 - 42
2C21	HEAVY DUTY BOOM	3344 - 2
2B8	HEAVY DUTY BUCKET (USE WITH 11'10" AND 14'5" ARM)	3302 - 2
2B10	HEAVY DUTY BUCKET (USE WITH 11'10" AND 14'5" ARM)	3302 - 4
2B12	HEAVY DUTY BUCKET (USE WITH 17'9" LONG ARM)	3302 - 6
2I19	HIGH PRESSURE PIPING REMOVAL DEVICE	3360 - 140
2H5	HOLDING VALVE	3360 - 102
1D20	HORN	1674 - 8
1D20	HORN WIRE HARNESS	1674 - 8
1H18	HOSE, AIR CONDITIONER	1830 - 2
1H22	HOSE, AIR CONDITIONER	1830 - 6
2F17	HOSE, ARM CYLINDER, MASS EXCAVATING BOOM	3360 - 66
2F15	HOSE, ARM CYLINDER, STANDARD OR HEAVY DUTY BOOM	3360 - 64
2D11	HOSE, CENTER JOINT TO CONTROL VALVE	3360 - 12
2D7	HOSE, CENTER JOINT TO OIL TANK	3360 - 8
2F7	HOSE, CENTER JOINT TO OIL TANK	3360 - 56
1B21	HOSE, CENTER JOINT TO TRAVEL DEVICE	0260 - 10
1B23	HOSE, CENTER JOINT TO TRAVEL DEVICE, DRAIN LINES AND TWO SPEED CONTROL LINE	0260 - 12
2J9	HOSE, CONTROL PATTERN SELECTOR KIT	3360 - 154
2D11	HOSE, CONTROL VALVE TO CENTER JOINT	3360 - 12
2E21	HOSE, CONTROL VALVE TO FRAME	3360 - 46
2E21	HOSE, CONTROL VALVE TO HEAT SHIELD	3360 - 46
2E23	HOSE, CONTROL VALVE TO HEAT SHIELD	3360 - 48
2F1	HOSE, CONTROL VALVE TO HEAT SHIELD	3360 - 50
2D1	HOSE, CONTROL VALVE TO HYDRAULIC PUMP	3360 - 2
2D3	HOSE, CONTROL VALVE TO OIL COOLER	3360 - 4
2D11	HOSE, CONTROL VALVE TO ROTARY MANIFOLD	3360 - 12
2D3	HOSE, CONTROL VALVE TO SWING DEVICE	3360 - 4
2E5	HOSE, CONTROL VALVE TO SWING DEVICE	3360 - 30
2D9	HOSE, CONTROL VALVE TO SWING MOTOR	3360 - 10
1D1	HOSE, ENGINE TO FUEL TANK	0560 - 4
1D1	HOSE, ENGINE TO FUEL TANK FILTER	0560 - 4
2E21	HOSE, FRAME TO CONTROL VALVE	3360 - 46
2E15	HOSE, FRAME TO OIL TANK	3360 - 40
2E17	HOSE, FRAME TO OIL TANK	3360 - 42
2F5	HOSE, FRAME TO SWING DEVICE	3360 - 54
2J9	HOSE, FROM PILOT SIGNAL MANIFOLDTO SOLENOID VALVE	3360 - 154
2J9	HOSE, FROM SOLENOID VALVE TO PILOT SIGNAL MANIFOLD	3360 - 154
2F17	HOSE, FRONT, MASS EXCAVATING BOOM	3360 - 66
2F15	HOSE, FRONT, STANDARD OR HEAVY DUTY BOOM	3360 - 64
1D1	HOSE, FUEL TANK FILTER TO ENGINE	0560 - 4
1D1	HOSE, FUEL TANK TO ENGINE	0560 - 4
1D1	HOSE, FUEL TANK TO WATER SEPARATOR	0560 - 4
2E21	HOSE, HEAT SHIELD TO CONTROL VALVE	3360 - 46
2E23	HOSE, HEAT SHIELD TO CONTROL VALVE	3360 - 48
2F1	HOSE, HEAT SHIELD TO CONTROL VALVE	3360 - 50
2E13	HOSE, HEAT SHIELD TO OIL TANK	3360 - 38
2E17	HOSE, HEAT SHIELD TO OIL TANK	3360 - 42
2D1	HOSE, HYDRAULIC PUMP TO CONTROL VALVE	3360 - 2
2D7	HOSE, HYDRAULIC PUMP TO OIL FILTER	3360 - 8
2D19	HOSE, HYDRAULIC PUMP TO OIL FILTER	3360 - 20
1J19	HOSE, HYDRAULIC PUMP TO OIL TANK	2160 - 14
2F9	HOSE, LOCK VALVE TO PROPEL PILOT VALVE	3360 - 58
2F19	HOSE, LUBRICATE FOR STANDARD BOOM, HEAVY DUTY BOOM	3360 - 68
2G3	HOSE, LUBRICATE, LONG ARM	3360 - 76
2G1	HOSE, LUBRICATE, MASS EXCAVATING ARM	3360 - 74
2F21	HOSE, LUBRICATE, MASS EXCAVATING BOOM	3360 - 70
2G5	HOSE, LUBRICATE, SEMI-LONG ARM	3360 - 78
2F23	HOSE, LUBRICATE, STANDARD ARM, HEAVY DUTY ARM	3360 - 72
1D8	HOSE, LUBRICATOR	1369 - 4
2D3	HOSE, OIL COOLER TO CONTROL VALVE	3360 - 4
2D7	HOSE, OIL FILTER TO HYDRAULIC PUMP	3360 - 8
2D19	HOSE, OIL FILTER TO HYDRAULIC PUMP	3360 - 20
2D7	HOSE, OIL FILTER TO OIL TANK	3360 - 8
2D19	HOSE, OIL FILTER TO OIL TANK ADAPTER	3360 - 20
2E1	HOSE, OIL TANK	3360 - 26
2E19	HOSE, OIL TANK	3360 - 44
2D19	HOSE, OIL TANK ADAPTER TO OIL FILTER	3360 - 20
2D7	HOSE, OIL TANK TO CENTER JOINT	3360 - 8
2F7	HOSE, OIL TANK TO CENTER JOINT	3360 - 56
2E15	HOSE, OIL TANK TO FRAME	3360 - 40
2E17	HOSE, OIL TANK TO FRAME	3360 - 42
2E13	HOSE, OIL TANK TO HEAT SHIELD	3360 - 38

ALPHABETICAL INDEX - CONTINUED

GRID		PAGE
2E17	HOSE, OIL TANK TO HEAT SHIELD	3360 - 42
1J19	HOSE, OIL TANK TO HYDRAULIC PUMP	2160 - 14
2D7	HOSE, OIL TANK TO OIL FILTER	3360 - 8
2D7	HOSE, OIL TANK TO ROTARY MANIFOLD	3360 - 8
2F7	HOSE, OIL TANK TO ROTARY MANIFOLD	3360 - 56
2D7	HOSE, OIL TANK TO SWING MOTOR	3360 - 8
1B21	HOSE, PROPEL	0260 - 10
2F9	HOSE, PROPEL PILOT VALVE TO LOCK VALVE	3360 - 58
2F9	HOSE, PROPEL PILOT VALVE TO SHUTTLE VALVE	3360 - 58
1B23	HOSE, PROPEL, DRAIN LINES AND TWO SPEED CONTROL LINES	0260 - 12
1C12	HOSE, RADIATOR	0510 - 4
1C10	HOSE, RADIATOR WATER TANK	0510 - 2
2D11	HOSE, ROTARY MANIFOLD TO CONTROL VALVE	3360 - 12
2D7	HOSE, ROTARY MANIFOLD TO OIL TANK	3360 - 8
2F7	HOSE, ROTARY MANIFOLD TO OIL TANK	3360 - 56
1B21	HOSE, ROTARY MANIFOLD TO TRAVEL DEVICE	0260 - 10
1B23	HOSE, ROTARY MANIFOLD TO TRAVEL DEVICE, DRAIN LINES AND TWO SPEED CONTROL LINE	0260 - 12
2F9	HOSE, SHUTTLE VALVE TO PROPEL PILOT VALVE	3360 - 58
1F5	HOSE, SWING BEARING LUBE	1740 - 16
2D3	HOSE, SWING DEVICE TO CONTROL VALVE	3360 - 4
2E5	HOSE, SWING DEVICE TO CONTROL VALVE	3360 - 30
2F5	HOSE, SWING DEVICE TO FRAME	3360 - 54
2E5	HOSE, SWING DEVICE TO SWING DEVICE	3360 - 30
2D9	HOSE, SWING MOTOR TO CONTROL VALVE	3360 - 10
2D7	HOSE, SWING MOTOR TO OIL TANK	3360 - 8
2D7	HOSE, SWING MOTOR TO SWING MOTOR	3360 - 8
1B21	HOSE, TRAVEL	0260 - 10
1B21	HOSE, TRAVEL DEVICE TO CENTER JOINT	0260 - 10
1B23	HOSE, TRAVEL DEVICE TO CENTER JOINT, DRAIN LINES AND TWO SPEED CONTROL LINE	0260 - 12
1B21	HOSE, TRAVEL DEVICE TO ROTARY MANIFOLD	0260 - 10
1B23	HOSE, TRAVEL DEVICE TO ROTARY MANIFOLD, DRAIN LINES AND TWO SPEED CONTROL LINE	0260 - 12
1B23	HOSE, TRAVEL, PROPEL DRAIN LINES AND TWO SPEED PILOT CONTROL LINES	0260 - 12
1D1	HOSE, WATER SEPARATOR TO FUEL TANK	0560 - 4
1F18	HOSE, WINDSHIELD WASHER	1810 - 10
1G13	HOSE, WINDSHIELD WASHER	1810 - 30
1F14	HOURMETER	1810 - 6
2H3	HOUSING, SOLENOID VALVE	3360 - 100
1E5	HP MODE INDICATOR	1674 - 18
2I3	HYDRAULIC BACKHOE CYLINDER	3360 - 124
2I3	HYDRAULIC BACKHOE CYLINDER KIT	3360 - 124
2I1	HYDRAULIC BOOM CYLINDER KIT, LEFT	3360 - 122
2H23	HYDRAULIC BOOM CYLINDER KIT, RIGHT	3360 - 120
2I1	HYDRAULIC BOOM CYLINDER, LEFT	3360 - 122
2H23	HYDRAULIC BOOM CYLINDER, RIGHT	3360 - 120
2I9	HYDRAULIC BUCKET CYLINDER (LONG ARM)	3360 - 130
2I11	HYDRAULIC BUCKET CYLINDER (LONG ARM)	3360 - 132
2I7	HYDRAULIC BUCKET CYLINDER (MASS EXCAVATING)	3360 - 128
2I5	HYDRAULIC BUCKET CYLINDER (STANDARD ARM, HEAVY DUTY ARM, SEMI-LONG ARM)	3360 - 126
2I9	HYDRAULIC BUCKET CYLINDER KIT (LONG ARM)	3360 - 130
2I11	HYDRAULIC BUCKET CYLINDER KIT (LONG ARM)	3360 - 132
2I7	HYDRAULIC BUCKET CYLINDER KIT (MASS EXCAVATING)	3360 - 128
2I5	HYDRAULIC BUCKET CYLINDER KIT (STANDARD ARM, HEAVY DUTY ARM, SEMI-LONG ARM)	3360 - 126
2I13	HYDRAULIC CYLINDER (COUNTERWEIGHT LIFTING)	3360 - 134
1E5	HYDRAULIC OIL LEVEL LIGHT	1674 - 18
1J17	HYDRAULIC OIL TANK	2160 - 12
1J7	HYDRAULIC PUMP	2160 - 2
1J9	HYDRAULIC PUMP	2160 - 4
1J11	HYDRAULIC PUMP	2160 - 6
1J13	HYDRAULIC PUMP	2160 - 8
2D1	HYDRAULIC PUMP PIPINGS TO CONTROL VALVE	3360 - 2
1J17	HYDRAULIC RESERVOIR, OIL	2160 - 12

I

1B1	IDLER, FRONT	0130 - 10
1E1	IGNITION	1674 - 14
1C20	INDICATOR, AIR RESTRICTION	0520 - 2

J

1B19	JOINT, CENTER	0260 - 8

K

1E1	KEY, IGNITION	1674 - 14
1G15	KEY, VANDAL PROTECTION LOCK	1810 - 32
1B9	KIT, BUSHING, TRACK LINK	0130 - 18
2J9	KIT, CONTROL PATTERN SELECTOR	3360 - 154
2I15	KIT, COUNTERWEIGHT REMOVAL	3360 - 136
2I3	KIT, HYDRAULIC BACKHOE CYLINDER	3360 - 124
2I1	KIT, HYDRAULIC BOOM CYLINDER, LEFT	3360 - 122
2H23	KIT, HYDRAULIC BOOM CYLINDER, RIGHT	3360 - 120
2I7	KIT, HYDRAULIC BUCKET CYLINDER (MASS EXCAVATING)	3360 - 128
2I5	KIT, HYDRAULIC BUCKET CYLINDER (STANDARD ARM, HEAVY DUTY ARM, SEMI-LONG ARM)	3360 - 126
2I9	KIT, HYDRAULIC BUCKET CYLINDER(LONG ARM)	3360 - 130
2I11	KIT, HYDRAULIC BUCKET CYLINDER(LONG ARM)	3360 - 132
2J1	KIT, LOAD LOWERING VALVE, BOOM CYLINDER	3360 - 146
2J3	KIT, LOAD LOWERING VALVE, BOOM CYLINDER	3360 - 148
2J5	KIT, LOAD LOWERING VALVE, BOOM CYLINDER	3360 - 150
2J7	KIT, LOAD LOWERING VALVE, BOOM CYLINDER	3360 - 152
2C15	KIT, LONG ARM, BUCKET CYLINDER, HOSES AND LINKAGE ASSY (5.4M)	3340 - 6
2C17	KIT, LONG ARM, BUCKET CYLINDER, HOSES AND LINKAGE ASSY (5.4M)	3340 - 8
2C19	KIT, MASS EXCAVATING ARM, BUCKET CYLINDER, HOSES AND LINKAGE (2.95M)	3340 - 10
1D6	KIT, O-RING, METRIC	1369 - 2
1H14	KIT, SEAT LUMBAR (REPLACEMENT SEAT)	1821 - 9A
1H3	KIT, SECONDARY REAR WINDOW EXIT	1810 - 44
2C13	KIT, SEMI-LONG ARM, BUCKET CYLINDER, HOSES AND LINKAGE ASSY (4.4M)	3340 - 4
2C11	KIT, STANDARD ARM, BUCKET CYLINDER,HOSES AND LINKAGE ASSEMBLY (3.6M)	3340 - 2
1G15	KIT, VANDAL PROTECTION	1810 - 32
1G15	KIT, WINDOW GUARDS	1810 - 32
2C9	KNOB, CONTROL LEVER	3315 - 16

L

2I15	LABEL, COUNTERWEIGHT REMOVAL INSTRUCTION	3360 - 136
2J9	LABEL, PILOT CONTROL LEVER	3360 - 154
2I15	LABEL, UP-DOWN COUNTERWEIGHT REMOVAL	3360 - 136
1D4	LABELS	1320 - 2
1D20	LAMP	1674 - 8
1D22	LAMP	1674 - 10
2C21	LAMP, WORK LIGHT	3344 - 2

ALPHABETICAL INDEX - CONTINUED

GRID		PAGE
2C23	LAMP, WORK LIGHT	3344 - 4
1J4	LEFT REAR VIEW MIRROR	2002 - 2
1C14	LEVEL SWITCH, RESERVE WATER TANK	0510 - 6
1J17	LEVEL, OIL GAUGE, HYDRAULIC OIL	2160 - 12
2C9	LEVER, CONTROL	3315 - 16
2B22	LEVER, CONTROL (CANOPY)	3315 - 4
2B20	LEVER, CONTROL, TRAVEL	3315 - 2
2I15	LEVER, COUNTERWEIGHT REMOVAL PILOT VALVE	3360 - 136
1D20	LIGHT	1674 - 8
1D22	LIGHT	1674 - 10
1F18	LIGHT, DOME	1810 - 10
2C21	LIGHT, WORK	3344 - 2
2C23	LIGHT, WORK	3344 - 4
1F12	LIGHTER	1810 - 4
1H18	LINE, AIR CONDITIONER	1830 - 2
1H22	LINE, AIR CONDITIONER	1830 - 6
2F17	LINE, ARM CYLINDER, MASS EXCAVATING BOOM	3360 - 66
2F15	LINE, ARM CYLINDER, STANDARD OR HEAVY DUTY BOOM	3360 - 64
2D11	LINE, CENTER JOINT TO CONTROL VALVE	3360 - 12
2D7	LINE, CENTER JOINT TO OIL TANK	3360 - 8
2F7	LINE, CENTER JOINT TO OIL TANK	3360 - 56
1B21	LINE, CENTER JOINT TO TRAVEL DEVICE	0260 - 10
1B23	LINE, CENTER JOINT TO TRAVEL DEVICE, DRAIN LINES AND TWO SPEED CONTROL LINE	0260 - 12
2D11	LINE, CONTROL VALVE TO CENTER JOINT	3360 - 12
2E21	LINE, CONTROL VALVE TO FRAME	3360 - 46
2E21	LINE, CONTROL VALVE TO HEAT SHIELD	3360 - 46
2E23	LINE, CONTROL VALVE TO HEAT SHIELD	3360 - 48
2F1	LINE, CONTROL VALVE TO HEAT SHIELD	3360 - 50
2D1	LINE, CONTROL VALVE TO HYDRAULIC PUMP	3360 - 2
2D3	LINE, CONTROL VALVE TO OIL COOLER	3360 - 4
2D11	LINE, CONTROL VALVE TO ROTARY MANIFOLD	3360 - 12
2D3	LINE, CONTROL VALVE TO SWING DEVICE	3360 - 4
2E5	LINE, CONTROL VALVE TO SWING DEVICE	3360 - 30
2D9	LINE, CONTROL VALVE TO SWING MOTOR	3360 - 10
1D1	LINE, ENGINE TO FUEL TANK	0560 - 4
1D1	LINE, ENGINE TO FUEL TANK FILTER	0560 - 4
2E21	LINE, FRAME TO CONTROL VALVE	3360 - 46
2E15	LINE, FRAME TO OIL TANK	3360 - 40
2E17	LINE, FRAME TO OIL TANK	3360 - 42
2F5	LINE, FRAME TO SWING DEVICE	3360 - 54
2F17	LINE, FRONT, MASS EXCAVATING BOOM	3360 - 66
2F15	LINE, FRONT, STANDARD OR HEAVY DUTY BOOM	3360 - 64
1D1	LINE, FUEL TANK FILTER TO ENGINE	0560 - 4
1D1	LINE, FUEL TANK TO ENGINE	0560 - 4
1D1	LINE, FUEL TANK TO WATER SEPARATOR	0560 - 4
2E21	LINE, HEAT SHIELD TO CONTROL VALVE	3360 - 46
2E23	LINE, HEAT SHIELD TO CONTROL VALVE	3360 - 48
2F1	LINE, HEAT SHIELD TO CONTROL VALVE	3360 - 50
2E13	LINE, HEAT SHIELD TO OIL TANK	3360 - 38
2E17	LINE, HEAT SHIELD TO OIL TANK	3360 - 42
2D1	LINE, HYDRAULIC PUMP TO CONTROL VALVE	3360 - 2
2D7	LINE, HYDRAULIC PUMP TO OIL FILTER	3360 - 8
2D19	LINE, HYDRAULIC PUMP TO OIL FILTER	3360 - 20
1J19	LINE, HYDRAULIC PUMP TO OIL TANK	2160 - 14
2F9	LINE, LOCK VALVE TO PROPEL PILOT VALVE	3360 - 58
2F19	LINE, LUBRICATE FOR STANDARD BOOM, HEAVY DUTY BOOM	3360 - 68
2G3	LINE, LUBRICATE, LONG ARM	3360 - 76
2G1	LINE, LUBRICATE, MASS EXCAVATING ARM	3360 - 74
2F21	LINE, LUBRICATE, MASS EXCAVATING BOOM	3360 - 70
2G5	LINE, LUBRICATE, SEMI-LONG ARM	3360 - 78
2F23	LINE, LUBRICATE, STANDARD ARM, HEAVY DUTY ARM	3360 - 72
2D3	LINE, OIL COOLER TO CONTROL VALVE	3360 - 4
2D7	LINE, OIL FILTER TO HYDRAULIC PUMP	3360 - 8
2D19	LINE, OIL FILTER TO HYDRAULIC PUMP	3360 - 20
2D7	LINE, OIL FILTER TO OIL TANK	3360 - 8
2D19	LINE, OIL FILTER TO OIL TANK ADAPTER	3360 - 20
2E1	LINE, OIL TANK	3360 - 26
2E19	LINE, OIL TANK	3360 - 44
2D19	LINE, OIL TANK ADAPTER TO OIL FILTER	3360 - 20
2D7	LINE, OIL TANK TO CENTER JOINT	3360 - 8
2F7	LINE, OIL TANK TO CENTER JOINT	3360 - 56
2E15	LINE, OIL TANK TO FRAME	3360 - 40
2E17	LINE, OIL TANK TO FRAME	3360 - 42
2E13	LINE, OIL TANK TO HEAT SHIELD	3360 - 38
2E17	LINE, OIL TANK TO HEAT SHIELD	3360 - 42
1J19	LINE, OIL TANK TO HYDRAULIC PUMP	2160 - 14
2D7	LINE, OIL TANK TO OIL FILTER	3360 - 8
2D7	LINE, OIL TANK TO ROTARY MANIFOLD	3360 - 8
2F7	LINE, OIL TANK TO ROTARY MANIFOLD	3360 - 56
2D7	LINE, OIL TANK TO SWING MOTOR	3360 - 8
1B21	LINE, PROPEL	0260 - 10
2F9	LINE, PROPEL PILOT VALVE TO LOCK VALVE	3360 - 58
2F9	LINE, PROPEL PILOT VALVE TO SHUTTLE VALVE	3360 - 58
1B23	LINE, PROPEL, DRAIN LINES AND TWO SPEED CONTROL LINES	0260 - 12
1C12	LINE, RADIATOR	0510 - 4
2D11	LINE, ROTARY MANIFOLD TO CONTROL VALVE	3360 - 12
2D7	LINE, ROTARY MANIFOLD TO OIL TANK	3360 - 8
2F7	LINE, ROTARY MANIFOLD TO OIL TANK	3360 - 56
1B21	LINE, ROTARY MANIFOLD TO TRAVEL DEVICE	0260 - 10
1B23	LINE, ROTARY MANIFOLD TO TRAVEL DEVICE, DRAIN LINES AND TWO SPEED CONTROL LINE	0260 - 12
2F9	LINE, SHUTTLE VALVE TO PROPEL PILOT VALVE	3360 - 58
1F5	LINE, SWING BEARING LUBE	1740 - 16
2D3	LINE, SWING DEVICE TO CONTROL VALVE	3360 - 4
2E5	LINE, SWING DEVICE TO CONTROL VALVE	3360 - 30
2F5	LINE, SWING DEVICE TO FRAME	3360 - 54
2E5	LINE, SWING DEVICE TO SWING DEVICE	3360 - 30
2D9	LINE, SWING MOTOR TO CONTROL VALVE	3360 - 10
2D7	LINE, SWING MOTOR TO OIL TANK	3360 - 8
2D7	LINE, SWING MOTOR TO SWING MOTOR	3360 - 8
1B21	LINE, TRAVEL	0260 - 10
1B21	LINE, TRAVEL DEVICE TO CENTER JOINT	0260 - 10
1B23	LINE, TRAVEL DEVICE TO CENTER JOINT, DRAIN LINES AND TWO SPEED CONTROL LINE	0260 - 12
1B21	LINE, TRAVEL DEVICE TO ROTARY MANIFOLD	0260 - 10
1B23	LINE, TRAVEL DEVICE TO ROTARY MANIFOLD, DRAIN LINES AND TWO SPEED CONTROL LINE	0260 - 12
1B23	LINE, TRAVEL, PROPEL DRAIN LINES AND TWO SPEED PILOT CONTROL LINES	0260 - 12
1D1	LINE, WATER SEPARATOR TO FUEL TANK	0560 - 4
1D24	LINK, FUSIBLE	1674 - 12
1B9	LINK, TRACK	0130 - 18
2J1	LOAD LOWERING BOOM CYLINDER VALVE KIT	3360 - 146
2J3	LOAD LOWERING BOOM CYLINDER VALVE KIT	3360 - 148
2J5	LOAD LOWERING BOOM CYLINDER VALVE KIT	3360 - 150
2J7	LOAD LOWERING BOOM CYLINDER VALVE KIT	3360 - 152
2G21	LOCK VALVE	3360 - 94
2F9	LOCK VALVE PIPING TO PROPEL PILOT VALVE	3360 - 58
2C9	LOCK VALVE, CONTROL LEVER (LOCATION)	3315 - 16
1F22	LOCK, CAB DOOR	1810 - 14
1F24	LOCK, CAB DOOR	1810 - 16
1G7	LOCK, CAB TOP HATCH	1810 - 24
1I14	LOCK, LEFT FRONT SIDE COVER	1910 - 4
1G15	LOCK, VANDAL PROTECTION	1810 - 32
1G15	LOCK, WINDOW COVERS	1810 - 32
2C15	LONG ARM (5.4M)	3340 - 6
2C17	LONG ARM (5.4M)	3340 - 8

ALPHABETICAL INDEX - CONTINUED

GRID		PAGE
2D23	LONG ARM PILOT PIPINGS	3360 - 24
2C15	LONG ARM, BUCKET CLYLINDER, HOSES AND LINKAGE ASSEMBLY (5.4M)	3340 - 6
2C17	LONG ARM, BUCKET CLYLINDER, HOSES AND LINKAGE ASSEMBLY (5.4M)	3340 - 8
1F14	LOWER MONITOR COVER	1810 - 6
1B7	LOWER ROLLER	0130 - 16
1F5	LUBE LINE, SWING BEARING	1740 - 16
1F5	LUBRICANT PIPING, SWING BEARING	1740 - 16
2G3	LUBRICATE PIPING, LONG ARM	3360 - 76
2G1	LUBRICATE PIPING, MASS EXCAVATING ARM	3360 - 74
2G5	LUBRICATE PIPING, SEMI-LONG ARM	3360 - 78
2F23	LUBRICATE PIPING, STANDARD ARM, HEAVY DUTY ARM	3360 - 72
2F19	LUBRICATE PIPINGS - STANDARD BOOM, HEAVY DUTY BOOM	3360 - 68
2F21	LUBRICATE PIPINGS, MASS EXCAVATING BOOM	3360 - 70
1D8	LUBRICATOR	1369 - 4
1D10	LUBRICATOR HOSE REEL	1369 - 6
1D10	LUBRICATOR PUMP BRACKET	1369 - 6

M

1E15	MAIN FRAME	1740 - 2
1E19	MAIN FRAME BUSHINGS	1740 - 6
1E17	MAIN FRAME STEPS AND HANDHOLD	1740 - 4
1J7	MAIN HYDRAULIC PUMP	2160 - 2
1J9	MAIN HYDRAULIC PUMP	2160 - 4
1J11	MAIN HYDRAULIC PUMP	2160 - 6
1J13	MAIN HYDRAULIC PUMP	2160 - 8
1J15	MAIN HYDRAULIC PUMP GEAR BOX	2160 - 10
2D9	MAIN PIPING	3360 - 10
2D11	MAIN PIPING	3360 - 12
2D13	MAIN PIPING	3360 - 14
2D15	MAIN PIPING	3360 - 16
2D17	MAIN PIPING	3360 - 18
1B19	MANIFOLD, ROTARY	0260 - 8
2C19	MASS EXCAVATING ARM (2.95M)	3340 - 10
2C19	MASS EXCAVATING ARM, BUCKET CYLINDER, HOSES AND LINKAGE ASSY (2.95M)	3340 - 10
2C23	MASS EXCAVATING BOOM	3344 - 4
1G17	MAT, CAB FLOOR	1810 - 34
1D6	METRIC O-RING KIT	1369 - 2
1J4	MIRROR, LEFT REAR VIEW	2002 - 2
1I22	MIRROR, REAR VIEW, RIGHT	1910 - 12
1E7	MONITOR	1674 - 19A
1E5	MONITOR COMPONENTS	1674 - 18
1E3	MOTION ALARM SWITCH	1674 - 16
1C18	MOTOR, ENGINE CONTROL	0515 - 4
1B13	MOTOR, PROPEL	0260 - 2
2J18	MOTOR, SWING	4360 - 6
1B13	MOTOR, TRAVEL	0260 - 2
1F18	MOTOR, WINDSHIELD WASHER	1810 - 10
2J14	MOTOR,SWING	4360 - 3A
1C6	MOUNTS, ENGINE	0400 - 2
1C6	MUFFLER	0400 - 2
1C22	MUFFLER	0530 - 2
1C22	MUFFLER PIPE	0530 - 2

N

1F18	NOZZLE, WINDSHIELD WASHER	1810 - 10
1G13	NOZZLE, WINDSHIELD WASHER	1810 - 30

O

1D6	O-RING KIT, METRIC	1369 - 2
2D3	OIL COOLER PIPINGS TO CONTROL VALVE	3360 - 4
2D19	OIL FILTER	3360 - 20
2D7	OIL FILTER PIPING TO HYDRAULIC PUMP	3360 - 8
2D7	OIL FILTER PIPING TO OIL TANK	3360 - 8
2D19	OIL FILTER PIPING TO OIL TANK ADAPTER	3360 - 20
1C6	OIL FILTER, ENGINE	0400 - 2
1J17	OIL TANK	2160 - 12
2D19	OIL TANK ADAPTER PIPING TO OIL FILTER	3360 - 20
2E1	OIL TANK PIPING	3360 - 26
2E19	OIL TANK PIPING	3360 - 44
2D7	OIL TANK PIPING TO CENTER JOINT	3360 - 8
2F7	OIL TANK PIPING TO CENTER JOINT	3360 - 56
2E15	OIL TANK PIPING TO FRAME	3360 - 40
2E17	OIL TANK PIPING TO FRAME	3360 - 42
2E13	OIL TANK PIPING TO HEAT SHIELD	3360 - 38
2E17	OIL TANK PIPING TO HEAT SHIELD	3360 - 42
1J19	OIL TANK PIPING TO HYDRAULIC PUMP	2160 - 14
2D7	OIL TANK PIPING TO OIL FILTER	3360 - 8
2D7	OIL TANK PIPING TO ROTARY MANIFOLD	3360 - 8
2F7	OIL TANK PIPING TO ROTARY MANIFOLD	3360 - 56
2D7	OIL TANK PIPING TO SWING MOTOR	3360 - 8
1E5	OVERHEAT LIGHT	1674 - 18

P

2J9	PATTERN SELECTOR CONTROL KIT	3360 - 154
2B20	PEDAL, CONTROL LEVER	3315 - 2
2J9	PILOT CONTROL LEVER LABEL	3360 - 154
2G9	PILOT OIL SOLENOID VALVE (GP II)	3360 - 82
2E7	PILOT PIPINGS	3360 - 32
2E9	PILOT PIPINGS	3360 - 34
2E11	PILOT PIPINGS	3360 - 36
2F3	PILOT PIPINGS	3360 - 52
2F11	PILOT PIPINGS	3360 - 60
2F13	PILOT PIPINGS	3360 - 62
2F7	PILOT PIPINGS (CENTER JOINT, OIL TANK)	3360 - 56
2D21	PILOT PIPINGS (CONTROL VALVE)	3360 - 22
2E23	PILOT PIPINGS (CONTROL VALVE, HEAT SHIELD)	3360 - 48
2F1	PILOT PIPINGS (CONTROL VALVE, HEAT SHIELD)	3360 - 50
2E21	PILOT PIPINGS (CONTROL VALVE, HEAT SHIELD, FRAME)	3360 - 46
2E3	PILOT PIPINGS (FLOW CONTROL VALVE, SHUTTLE VALVE)	3360 - 28
2D23	PILOT PIPINGS (LONG ARM)	3360 - 24
2E1	PILOT PIPINGS (OIL TANK)	3360 - 26
2E19	PILOT PIPINGS (OIL TANK)	3360 - 44
2E15	PILOT PIPINGS (OIL TANK, FRAME)	3360 - 40
2E17	PILOT PIPINGS (OIL TANK, FRAME, HEAT SHIELD)	3360 - 42
2E13	PILOT PIPINGS (OIL TANK, HEAT SHIELD)	3360 - 38
2F9	PILOT PIPINGS (PROPEL PILOT VALVE, LOCK VALVE, SHUTTLE VALVE)	3360 - 58
2D19	PILOT PIPINGS (PUMP, FILTER)	3360 - 20
2E5	PILOT PIPINGS (SWING DEVICE, CONTROL VALVE, CENTER JOINT)	3360 - 30
2F5	PILOT PIPINGS (SWING DEVICE, FRAME)	3360 - 54
2I17	PILOT PIPINGS REMOVAL DEVICE	3360 - 138
2B24	PILOT VALVE	3315 - 6
2C1	PILOT VALVE	3315 - 8
1D14	PILOT VALVE CONTROL UNIT	1674 - 2
2I15	PILOT VALVE, COUNTERWEIGHT REMOVAL	3360 - 136

ALPHABETICAL INDEX - CONTINUED

GRID		PAGE
2C3	PILOT VALVE, PROPEL	3315 - 10
2C5	PILOT VALVE, PROPEL	3315 - 12
2B20	PILOT VALVE, TRAVEL	3315 - 2
1C22	PIPE, EXHAUST	0530 - 2
1H18	PIPING, AIR CONDITIONER	1830 - 2
1H22	PIPING, AIR CONDITIONER	1830 - 6
2F17	PIPING, ARM CYLINDER, MASS EXCAVATING BOOM	3360 - 66
2F15	PIPING, ARM CYLINDER, STANDARD OR HEAVY DUTY BOOM	3360 - 64
2D11	PIPING, CENTER JOINT TO CONTROL VALVE	3360 - 12
2D7	PIPING, CENTER JOINT TO OIL TANK	3360 - 8
2F7	PIPING, CENTER JOINT TO OIL TANK	3360 - 56
1B21	PIPING, CENTER JOINT TO TRAVEL DEVICE	0260 - 10
1B23	PIPING, CENTER JOINT TO TRAVEL DEVICE, DRAIN LINES AND TWO SPEED CONTROL LINE	0260 - 12
2D11	PIPING, CONTROL VALVE TO CENTER JOINT	3360 - 12
2E21	PIPING, CONTROL VALVE TO FRAME	3360 - 46
2E21	PIPING, CONTROL VALVE TO HEAT SHIELD	3360 - 46
2E23	PIPING, CONTROL VALVE TO HEAT SHIELD	3360 - 48
2F1	PIPING, CONTROL VALVE TO HEAT SHIELD	3360 - 50
2D1	PIPING, CONTROL VALVE TO HYDRAULIC PUMP	3360 - 2
2D3	PIPING, CONTROL VALVE TO OIL COOLER	3360 - 4
2D11	PIPING, CONTROL VALVE TO ROTARY MANIFOLD	3360 - 12
2D3	PIPING, CONTROL VALVE TO SWING DEVICE	3360 - 4
2E5	PIPING, CONTROL VALVE TO SWING DEVICE	3360 - 30
2D9	PIPING, CONTROL VALVE TO SWING MOTOR	3360 - 10
2D1	PIPING, DELIVERY	3360 - 2
2D7	PIPING, DRAIN	3360 - 8
1D1	PIPING, ENGINE TO FUEL TANK	0560 - 4
1D1	PIPING, ENGINE TO FUEL TANK FILTER	0560 - 4
2E21	PIPING, FRAME TO CONTROL VALVE	3360 - 46
2E15	PIPING, FRAME TO OIL TANK	3360 - 40
2E17	PIPING, FRAME TO OIL TANK	3360 - 42
2F5	PIPING, FRAME TO SWING DEVICE	3360 - 54
2F17	PIPING, FRONT, MASS EXCAVATING BOOM	3360 - 66
2F15	PIPING, FRONT, STANDARD OR HEAVY DUTY BOOM	3360 - 64
1D1	PIPING, FUEL	0560 - 4
1D1	PIPING, FUEL TANK FILTER TO ENGINE	0560 - 4
1D1	PIPING, FUEL TANK TO ENGINE	0560 - 4
1D1	PIPING, FUEL TANK TO WATER SEPARATOR	0560 - 4
2E21	PIPING, HEAT SHIELD TO CONTROL VALVE	3360 - 46
2E23	PIPING, HEAT SHIELD TO CONTROL VALVE	3360 - 48
2F1	PIPING, HEAT SHIELD TO CONTROL VALVE	3360 - 50
2E13	PIPING, HEAT SHIELD TO OIL TANK	3360 - 38
2E17	PIPING, HEAT SHIELD TO OIL TANK	3360 - 42
2D1	PIPING, HYDRAULIC PUMP TO CONTROL VALVE	3360 - 2
2D7	PIPING, HYDRAULIC PUMP TO OIL FILTER	3360 - 8
2D19	PIPING, HYDRAULIC PUMP TO OIL FILTER	3360 - 20
1J19	PIPING, HYDRAULIC PUMP TO OIL TANK	2160 - 14
2F9	PIPING, LOCK VALVE TO PROPEL PILOT VALVE	3360 - 58
2G3	PIPING, LUBRICATE, LONG ARM	3360 - 76
2G1	PIPING, LUBRICATE, MASS EXCAVATING ARM	3360 - 74
2F21	PIPING, LUBRICATE, MASS EXCAVATING BOOM	3360 - 70
2G5	PIPING, LUBRICATE, SEMI-LONG ARM	3360 - 78
2F23	PIPING, LUBRICATE, STANDARD ARM, HEAVY DUTY ARM	3360 - 72
2F19	PIPING, LUBRICATE, STANDARD BOOM, HEAVY DUTY BOOM	3360 - 68
2D9	PIPING, MAIN	3360 - 10
2D11	PIPING, MAIN	3360 - 12
2D13	PIPING, MAIN	3360 - 14
2D15	PIPING, MAIN	3360 - 16
2D17	PIPING, MAIN	3360 - 18
2D3	PIPING, OIL COOLER TO CONTROL VALVE	3360 - 4
2D7	PIPING, OIL FILTER TO HYDRAULIC PUMP	3360 - 8
2D19	PIPING, OIL FILTER TO HYDRAULIC PUMP	3360 - 20
2D7	PIPING, OIL FILTER TO OIL TANK	3360 - 8
2D19	PIPING, OIL FILTER TO OIL TANK ADAPTER	3360 - 20
2E1	PIPING, OIL TANK	3360 - 26
2E19	PIPING, OIL TANK	3360 - 44
2D19	PIPING, OIL TANK ADAPTER TO OIL FILTER	3360 - 20
2D7	PIPING, OIL TANK TO CENTER JOINT	3360 - 8
2F7	PIPING, OIL TANK TO CENTER JOINT	3360 - 56
2E15	PIPING, OIL TANK TO FRAME	3360 - 40
2E17	PIPING, OIL TANK TO FRAME	3360 - 42
2E13	PIPING, OIL TANK TO HEAT SHIELD	3360 - 38
2E17	PIPING, OIL TANK TO HEAT SHIELD	3360 - 42
1J19	PIPING, OIL TANK TO HYDRAULIC PUMP	2160 - 14
2D7	PIPING, OIL TANK TO OIL FILTER	3360 - 8
2D7	PIPING, OIL TANK TO ROTARY MANIFOLD	3360 - 8
2F7	PIPING, OIL TANK TO ROTARY MANIFOLD	3360 - 56
2D7	PIPING, OIL TANK TO SWING MOTOR	3360 - 8
2E7	PIPING, PILOT	3360 - 32
2E9	PIPING, PILOT	3360 - 34
2E11	PIPING, PILOT	3360 - 36
2F3	PIPING, PILOT	3360 - 52
2F11	PIPING, PILOT	3360 - 60
2F13	PIPING, PILOT	3360 - 62
2F7	PIPING, PILOT (CENTER JOINT, OIL TANK)	3360 - 56
2D21	PIPING, PILOT (CONTROL VALVE)	3360 - 22
2E23	PIPING, PILOT (CONTROL VALVE, HEAT SHIELD)	3360 - 48
2F1	PIPING, PILOT (CONTROL VALVE, HEAT SHIELD)	3360 - 50
2E21	PIPING, PILOT (CONTROL VALVE, HEAT SHIELD, FRAME)	3360 - 46
2E3	PIPING, PILOT (FLOW CONTROL VALVE, SHUTTLE VALVE)	3360 - 28
2D23	PIPING, PILOT (LONG ARM)	3360 - 24
2E1	PIPING, PILOT (OIL TANK)	3360 - 26
2E19	PIPING, PILOT (OIL TANK)	3360 - 44
2E15	PIPING, PILOT (OIL TANK, FRAME)	3360 - 40
2E17	PIPING, PILOT (OIL TANK, FRAME, HEAT SHIELD)	3360 - 42
2E13	PIPING, PILOT (OIL TANK, HEAT SHIELD)	3360 - 38
2F9	PIPING, PILOT (PROPEL PILOT VALVE, LOCK VALVE, SHUTTLE VALVE)	3360 - 58
2D19	PIPING, PILOT (PUMP, FILTER)	3360 - 20
2E5	PIPING, PILOT (SWING DEVICE, CONTROL VALVE, CENTER JOINT)	3360 - 30
2F5	PIPING, PILOT (SWING DEVICE, FRAME)	3360 - 54
1B21	PIPING, PROPEL	0260 - 10
2F9	PIPING, PROPEL PILOT VALVE TO LOCK VALVE	3360 - 58
2F9	PIPING, PROPEL PILOT VALVE TO SHUTTLE VALVE	3360 - 58
1C12	PIPING, RADIATOR	0510 - 4
1C10	PIPING, RADIATOR WATER TANK	0510 - 2
2D3	PIPING, RETURN	3360 - 4
2D5	PIPING, RETURN	3360 - 6
2D11	PIPING, ROTARY MANIFOLD TO CONTROL VALVE	3360 - 12
2D7	PIPING, ROTARY MANIFOLD TO OIL TANK	3360 - 8
2F7	PIPING, ROTARY MANIFOLD TO OIL TANK	3360 - 56
1B21	PIPING, ROTARY MANIFOLD TO TRAVEL DEVICE	0260 - 10
1B23	PIPING, ROTARY MANIFOLD TO TRAVEL DEVICE, DRAIN LINES AND CONTROL LINES	0260 - 12
2F9	PIPING, SHUTTLE VALVE TO PROPEL PILOT VALVE	3360 - 58
1J19	PIPING, SUCTION	2160 - 14
1F5	PIPING, SWING BEARING LUBE	1740 - 16
2D3	PIPING, SWING DEVICE TO CONTROL VALVE	3360 - 4
2E5	PIPING, SWING DEVICE TO CONTROL VALVE	3360 - 30

ALPHABETICAL INDEX - CONTINUED

GRID		PAGE
2F5	PIPING, SWING DEVICE TO FRAME	3360 - 54
2E5	PIPING, SWING DEVICE TO SWING DEVICE	3360 - 30
2D9	PIPING, SWING MOTOR TO CONTROL VALVE	3360 - 10
2D7	PIPING, SWING MOTOR TO OIL TANK	3360 - 8
2D7	PIPING, SWING MOTOR TO SWING MOTOR	3360 - 8
1B21	PIPING, TRAVEL	0260 - 10
1B21	PIPING, TRAVEL DEVICE TO CENTER JOINT	0260 - 10
1B23	PIPING, TRAVEL DEVICE TO CENTER JOINT, DRAIN LINES AND TWO SPEED CONTROL LINE	0260 - 12
1B21	PIPING, TRAVEL DEVICE TO ROTARY MANIFOLD	0260 - 10
1B23	PIPING, TRAVEL DEVICE TO ROTARY MANIFOLD, DRAIN LINES AND CONTROL LINE	0260 - 12
1B23	PIPING, TRAVEL, PROPEL DRAIN LINES AND TWO SPEED PILOT CONTROL LINES	0260 - 12
1D1	PIPING, WATER SEPARATOR TO FUEL TANK	0560 - 4
2C19	PIPINGS, FRONT, MASS EXCAVATING ARM (2.95M)	3340 - 10
1G19	PLATE, CAB FLOOR	1810 - 36
1E5	PREHEAT INDICATOR LIGHT	1674 - 18
1D18	PRESSURE SENSOR	1674 - 6
1D20	PRESSURE SENSOR, DIFFERENTIAL	1674 - 8
1D20	PRESSURE SWITCH, ARM IN	1674 - 8
1D20	PRESSURE SWITCH, ARM OUT	1674 - 8
1D20	PRESSURE SWITCH, BOOM DOWN	1674 - 8
1D20	PRESSURE SWITCH, BOOM RAISE	1674 - 8
1D20	PRESSURE SWITCH, BUCKET	1674 - 8
1D20	PRESSURE SWITCH, SWING	1674 - 8
1B13	PROPEL DRIVE	0260 - 2
1B15	PROPEL DRIVE BRAKE VALVE	0260 - 4
1B17	PROPEL DRIVE REPAIR PARTS	0260 - 6
1C1	PROPEL HYDRAULIC HOSE COVER (SERIAL NUMBER -005478)	0260 - 14
1C3	PROPEL HYDRAULIC HOSE COVER (SERIAL NUMBER 005479-)	0260 - 16
1C1	PROPEL HYDRAULIC LINE COVER (SERIAL NUMBER -005478)	0260 - 14
1C3	PROPEL HYDRAULIC LINE COVER (SERIAL NUMBER 005479-)	0260 - 16
1C1	PROPEL HYDRAULIC LINE GUARD (SERIAL NUMBER -005478)	0260 - 14
1C3	PROPEL HYDRAULIC LINE GUARD (SERIAL NUMBER 005479-)	0260 - 16
2C7	PROPEL LEVER DAMPER	3315 - 14
1B13	PROPEL MOTOR	0260 - 2
2C3	PROPEL PILOT VALVE	3315 - 10
2C5	PROPEL PILOT VALVE	3315 - 12
2F9	PROPEL PILOT VALVE PIPING TO LOCK VALVE	3360 - 58
2F9	PROPEL PILOT VALVE PIPING TO SHUTTLE VALVE	3360 - 58
2H11	PUMP ANGLE SENSOR	3360 - 108
2D1	PUMP PIPING TO CONTROL VALVE	3360 - 2
2D7	PUMP PIPING TO OIL FILTER	3360 - 8
2D19	PUMP PIPING TO OIL FILTER	3360 - 20
1J19	PUMP PIPING TO OIL TANK	2160 - 14
1J7	PUMP, HYDRAULIC	2160 - 2
1J9	PUMP, HYDRAULIC	2160 - 4
1J11	PUMP, HYDRAULIC	2160 - 6
1J13	PUMP, HYDRAULIC	2160 - 8
1G13	PUMP, WINDSHIELD WASHER	1810 - 30

R

1C10	RADIATOR	0510 - 2
1C12	RADIATOR HOSE	0510 - 4
1C12	RADIATOR PIPING	0510 - 4
1C14	RADIATOR RESERVE WATER TANK	0510 - 6
1C12	RADIATOR SUPPORT	0510 - 4
1G11	RADIO	1810 - 28
1F18	RADIO ANTENNA	1810 - 10
1F18	RADIO SPEAKER	1810 - 10
1F18	RADIO SPEAKER WIRE HARNESS	1810 - 10
1I7	REAR TRAY (FOR UNITS WITH AIR CONDITIONER)	1830 - 16
1J4	REAR VIEW MIRROR, LEFT	2002 - 2
1I22	REAR VIEW MIRROR, RIGHT	1910 - 12
1H3	REAR WINDOW, SECONDARY EXIT	1810 - 44
2G13	REDUCING VALVE	3360 - 86
2G7	REDUCTION VALVE	3360 - 80
1D10	REEL, HOSE, LUBRICATOR	1369 - 6
1D10	REEL, LUBRICATOR HOSE	1369 - 6
2G13	REGULATOR VALVE	3360 - 86
1D16	RELAY, BATTERY	1674 - 4
1D16	RELAY, FUEL SHUT-OFF	1674 - 4
1D16	RELAY, STARTER	1674 - 4
1E9	RELAYS	1674 - 20
1J15	REPAIR PARTS,GEAR BOX	2160 - 10
1J13	REPAIR PARTS,HYD PUMP	2160 - 8
1J11	REPAIR PARTS,HYD. PUMP	2160 - 6
1B17	REPAIR PARTS,PROPEL DRIVE	0260 - 6
1C14	RESERVE WATER TANK	0510 - 6
1J17	RESERVOIR, HYDRAULIC OIL	2160 - 12
1C10	RESERVOIR, WATER, RADIATOR	0510 - 2
1H5	RETRACTABLE SEAT BELT (76MM (3") WIDE	1821 - 3
2D3	RETURN PIPING	3360 - 4
2D5	RETURN PIPING	3360 - 6
1B7	ROLLER, LOWER	0130 - 16
1B5	ROLLER, UPPER	0130 - 14
1B19	ROTARY MANIFOLD	0260 - 8
2D11	ROTARY MANIFOLD PIPING TO CONTROL VALVE	3360 - 12
2D7	ROTARY MANIFOLD PIPING TO OIL TANK	3360 - 8
2F7	ROTARY MANIFOLD PIPING TO OIL TANK	3360 - 56
1B21	ROTARY MANIFOLD PIPINGS TO TRAVEL DEVICE	0260 - 10
1B23	ROTARY MANIFOLD PIPINGS TO TRAVEL DEVICE DRAIN LINES AND TWO SPEED CONTROL LINE	0260 - 12

S

1H10	SEAT (ORIGINAL)	1821 - 6
1H12	SEAT (ORIGINAL)	1821 - 8
1H14	SEAT (REPLACEMENT SEAT)	1821 - 9A
1H16	SEAT ADJUSTER	1821 - 10
1H14	SEAT ADJUSTER (REPLACEMENT SEAT)	1821 - 9A
1H6	SEAT BELT (ORIGINAL SEAT)	1821 - 4
1H8	SEAT BELT (REPLACEMENT SEAT)	1821 - 5A
1H8	SEAT BELT BRACKET (REPLACEMENT SEAT)	1821 - 5A
1H5	SEAT BELT, RETRACTABLE (76MM (3") WIDE	1821 - 3
1H14	SEAT CUSHION (REPLACEMENT SEAT)	1821 - 9A
1H14	SEAT LUMBAR KIT (REPLACEMENT SEAT)	1821 - 9A
1H16	SEAT STAND	1821 - 10
1H14	SEAT SUSPENSION (REPLACEMENT SEAT)	1821 - 9A
1H3	SECONDARY EXIT WINDOW KIT	1810 - 44
2C13	SEMI-LONG ARM (4.4M)	3340 - 4
2C13	SEMI-LONG ARM, BUCKET CLYLINDER, HOSES AND LINKAGE ASSEMBLY (4.4M)	3340 - 4
1C6	SENDER, ENGINE TEMPERATURE	0400 - 2
1D18	SENDER, WATER TEMPERATURE	1674 - 6
1D20	SENSOR, DIFFERENTIAL PRESSURE	1674 - 8
1D18	SENSOR, PRESSURE	1674 - 6
2H11	SENSOR, PUMP ANGLE	3360 - 108
1J11	SENSOR, TILT PROBING (LOCATION)	2160 - 6
2H11	SENSOR,REPAIR PARTS	3360 - 108

ALPHABETICAL INDEX - CONTINUED

GRID		PAGE
2H11	SENSOR,TILTING-PROBING	3360 - 108
1B9	SHOE, TRACK	0130 - 18
2G23	SHUTTLE VALVE	3360 - 96
2H1	SHUTTLE VALVE	3360 - 98
2F9	SHUTTLE VALVE PIPING TO PROPEL PILOT VALVE	3360 - 58
2G19	SHUTTLE VALVE, CONTROL LEVER	3360 - 92
2E3	SHUTTLE VALVE, PILOT PIPING	3360 - 28
2B16	SIDE CUTTERS, EXTREME DUTY BUCKET (USE WITH 11'10" AND 14'5" ARM)	3302 - 10
2B14	SIDE CUTTERS, EXTREME DUTY BUCKET (USE WITH 9.8" ARM)	3302 - 8
2B8	SIDE CUTTERS, HEAVY DUTY BUCKET (USE WITH 11'10" AND 14'5" ARM)	3302 - 2
2B10	SIDE CUTTERS, HEAVY DUTY BUCKET (USE WITH 11'10" AND 14'5" ARM)	3302 - 4
2B12	SIDE CUTTERS, HEAVY DUTY BUCKET (USE WITH 17'9" LONG ARM)	3302 - 6
1H16	SLIDER, SEAT	1821 - 10
2H3	SOLENOID VALVE	3360 - 100
2G9	SOLENOID VALVE (GP II)	3360 - 82
2H3	SOLENOID VALVE HOUSING	3360 - 100
2J9	SOLENOID VALVE, CONTROL PATTERN SELECTOR KIT	3360 - 154
1F18	SPEAKER, RADIO	1810 - 10
1C16	SPEED CONTROL CABLE BRACKET	0515 - 2
1B19	SPINDLE, ROTARY MANIFOLD	0260 - 8
1G21	STAND	1810 - 38
1H16	STAND, SEAT	1821 - 10
2C11	STANDARD ARM (3.6M)	3340 - 2
2C11	STANDARD ARM, BUCKET CLYLINDER, HOSES AND LINKAGE ASSEMBLY (3.6M)	3340 - 2
1E3	START AID SWITCH	1674 - 16
1E1	START SWITCH	1674 - 14
1D24	STARTER CABLE	1674 - 12
1D16	STARTER RELAY	1674 - 4
1E3	STARTER SWITCH WIRING HARNESS	1674 - 16
1E17	STEP, MAIN FRAME	1740 - 4
1A20	STEP, TRACK	0130 - 4
1C24	STRAINER, FUEL TANK	0560 - 2
1J17	STRAINER, OIL TANK FILTER	2160 - 12
1J19	SUCTION PIPINGS	2160 - 14
1H14	SUSPENSION, SEAT (REPLACEMENT SEAT)	1821 - 9A
1F3	SWING BEARING	1740 - 14
1F5	SWING BEARING LUBE LINE	1740 - 16
2J12	SWING DEVICE	4360 - 2
2J16	SWING DEVICE	4360 - 4
2D3	SWING DEVICE PIPING TO CONTROL VALVE	3360 - 4
2E5	SWING DEVICE PIPING TO CONTROL VALVE	3360 - 30
2F5	SWING DEVICE PIPING TO FRAME	3360 - 54
2E5	SWING DEVICE PIPING TO SWING DEVICE	3360 - 30
2J12	SWING DEVICE SUPPORT	4360 - 2
2J16	SWING DEVICE SUPPORT	4360 - 4
2J14	SWING MOTOR	4360 - 3A
2J18	SWING MOTOR	4360 - 6
2D9	SWING MOTOR PIPING TO CONTROL VALVE	3360 - 10
2D7	SWING MOTOR PIPING TO OIL TANK	3360 - 8
2D7	SWING MOTOR PIPING TO SWING MOTOR	3360 - 8
1D20	SWING PRESSURE SWITCH	1674 - 8
1C6	SWITCH, ENGINE COOLANT LEVEL	0400 - 2
1C6	SWITCH, ENGINE TEMPERATURE	0400 - 2
1C14	SWITCH, LEVEL, RESERVE WATER TANK	0510 - 6
1E3	SWITCH, MOTION ALARM	1674 - 16
1D20	SWITCH, PRESSURE, ARM IN	1674 - 8
1D20	SWITCH, PRESSURE, ARM OUT	1674 - 8
1D20	SWITCH, PRESSURE, BOOM DOWN	1674 - 8
1D20	SWITCH, PRESSURE, BOOM RAISE	1674 - 8
1D20	SWITCH, PRESSURE, BUCKET	1674 - 8
1D20	SWITCH, PRESSURE, SWING	1674 - 8
1E3	SWITCH, START AID	1674 - 16
1D18	SWITCH, THERMO, ENGINE	1674 - 6
1E5	SWITCH, TRAVEL MODE	1674 - 18
1F18	SWITCH, WINDSHIELD WASHER	1810 - 10
1E5	SWITCH, WIPER	1674 - 18
1E5	SWITCH, WORK LIGHT	1674 - 18
1E5	SWITCHBOARD	1674 - 18

T

1C24	TANK, FUEL	0560 - 2
1J17	TANK, OIL	2160 - 12
1H22	TANK, RECEIVER, AIR CONDITIONER	1830 - 6
1H24	TANK, RECEIVER, AIR CONDITIONER	1830 - 8
1I1	TANK, RECEIVER, AIR CONDITIONER	1830 - 10
1C10	TANK, WATER, RADIATOR	0510 - 2
1C14	TANK, WATER, RADIATOR	0510 - 6
1G13	TANK, WINDSHIELD WASHER	1810 - 30
1D18	TEMPERATURE SENDER, WATER	1674 - 6
1C6	TEMPERATURE SWITCH, ENGINE	0400 - 2
1D18	THERMO SWITCH, ENGINE	1674 - 6
1J11	TILT-PROBING SENSOR (LOCATION)	2160 - 6
2H11	TILTING-PROBING SENSOR	3360 - 108
1I22	TOOL BOX	1910 - 12
2B18	TOOTH, BUCKET	3302 - 12
1A18	TRACK FRAME	0130 - 2
1A22	TRACK GUARD	0130 - 6
1A24	TRACK GUARD, FULL LENGTH	0130 - 8
1B9	TRACK LINK	0130 - 18
1B9	TRACK LINK BUSHING KIT	0130 - 18
1B9	TRACK SHOE	0130 - 18
1A20	TRACK STEP	0130 - 4
2B20	TRAVEL CONTROL LEVER	3315 - 2
1B13	TRAVEL DEVICE	0260 - 2
1B21	TRAVEL DEVICE PIPINGS TO CENTER JOINT	0260 - 10
1B23	TRAVEL DEVICE PIPINGS TO CENTER JOINT, DRAIN LINES AND TWO SPEED CONTROL LINE	0260 - 12
1B21	TRAVEL DEVICE PIPINGS TO ROTARY MANIFOLD	0260 - 10
1B23	TRAVEL DEVICE PIPINGS TO ROTARY MANIFOLD DRAIN LINES AND TWO SPEED CONTROL LINE	0260 - 12
1E5	TRAVEL MODE SWITCH	1674 - 18
1B13	TRAVEL MOTOR	0260 - 2
1B21	TRAVEL PIPINGS	0260 - 10
1B23	TRAVEL PIPINGS, PROPEL DRAIN LINES AND TWO SPEED PILOT CONTROL LINES	0260 - 12
1I7	TRAY, REAR (FOR UNITS WITH AIR CONDITIONER)	1830 - 16

U

1J1	UNDER COVER	1910 - 16
1B5	UPPER ROLLER	0130 - 14

V

2H9	VALVE	3360 - 106
2H7	VALVE (JUNCTION BLOCK)	3360 - 104
2H3	VALVE HOUSING, SOLENOID	3360 - 100
2G13	VALVE REPAIR PARTS	3360 - 86
2J1	VALVE, BOOM CYLINDER LOAD LOWERING	3360 - 146
2J3	VALVE, BOOM CYLINDER LOAD LOWERING	3360 - 148
2J5	VALVE, BOOM CYLINDER LOAD LOWERING	3360 - 150

ALPHABETICAL INDEX - CONTINUED

GRID		PAGE
2J7	VALVE, BOOM CYLINDER LOAD LOWERING	3360 - 152
2G11	VALVE, CHECK	3360 - 84
2H13	VALVE, CONTROL, COMPONENTS	3360 - 110
2H15	VALVE, CONTROL, COMPONENTS	3360 - 112
2H17	VALVE, CONTROL, COMPONENTS	3360 - 114
2H19	VALVE, CONTROL, COMPONENTS	3360 - 116
2H21	VALVE, CONTROL, COMPONENTS	3360 - 118
2I15	VALVE, COUNTERWEIGHT REMOVAL PILOT	3360 - 136
1C24	VALVE, DRAIN, FUEL TANK	0560 - 2
2G15	VALVE, FLOW CONTROL	3360 - 88
2G17	VALVE, FLOW CONTROL	3360 - 90
2I21	VALVE, FLOW CONTROL	3360 - 142
2E3	VALVE, FLOW CONTROL, PILOT PIPING	3360 - 28
2H13	VALVE, FLOW SENSING, CONTROL VALVE	3360 - 110
2H19	VALVE, FLOW SENSING, CONTROL VALVE	3360 - 116
2H5	VALVE, HOLDING	3360 - 102
2G21	VALVE, LOCK	3360 - 94
2C9	VALVE, LOCK, CONTROL LEVER (LOCATION)	3315 - 16
2B24	VALVE, PILOT	3315 - 6
2C1	VALVE, PILOT	3315 - 8
2C3	VALVE, PILOT, PROPEL	3315 - 10
2C5	VALVE, PILOT, PROPEL	3315 - 12
2B20	VALVE, PILOT, TRAVEL	3315 - 2
2G23	VALVE, SHUTTLE	3360 - 96
2H1	VALVE, SHUTTLE	3360 - 98
2G19	VALVE, SHUTTLE, CONTROL LEVER	3360 - 92
2E3	VALVE, SHUTTLE, PILOT PIPING	3360 - 28
2H3	VALVE, SOLENOID	3360 - 100
2J9	VALVE, SOLENOID (CONTROL PATTERN SELECTOR KIT)	3360 - 154
2G9	VALVE, SOLENOID (GP II)	3360 - 82
2G7	VALVE,REDUCTION	3360 - 80
2G13	VALVE,REGULATOR	3360 - 86
1G15	VANDAL PROTECTION	1810 - 32
1H22	VAPOR CONDENSER	1830 - 6
1H24	VAPOR CONDENSER	1830 - 8
1I1	VAPOR CONDENSER	1830 - 10
1I5	VENT, AIR	1830 - 14

W

1E5	WARM UP COMPLETE INDICATOR	1674 - 18
1D1	WATER SEPARATOR PIPING TO FUEL TANK	0560 - 4
1D1	WATER SEPARATOR, FUEL FILTER	0560 - 4
1C10	WATER TANK, RADIATOR	0510 - 2
1D18	WATER TEMPERATURE SENDER	1674 - 6
1F22	WEATHERSTRIP, CAB DOOR	1810 - 14
1F24	WEATHERSTRIP, CAB DOOR	1810 - 16
1G1	WEATHERSTRIP, CAB FRONT	1810 - 18
1G3	WEATHERSTRIP, CAB FRONT	1810 - 20
1F20	WEATHERSTRIP, CAB REAR AND LEFT SIDE	1810 - 12
1G7	WEATHERSTRIP, CAB TOP HATCH	1810 - 24
1G5	WINDOW GUARD	1810 - 22
1G15	WINDOW GUARDS	1810 - 32
1G13	WINDOW WASHER HOSE	1810 - 30
1G13	WINDOW WASHER NOZZLE	1810 - 30
1G13	WINDOW WASHER PUMP	1810 - 30
1G13	WINDOW WASHER TANK	1810 - 30
1F22	WINDOW, CAB DOOR	1810 - 14
1F24	WINDOW, CAB DOOR	1810 - 16
1G1	WINDOW, CAB FRONT	1810 - 18
1G3	WINDOW, CAB FRONT	1810 - 20
1F20	WINDOW, CAB REAR AND LEFT SIDE	1810 - 12
1G5	WINDOW, CAB RIGHT SIDE	1810 - 22
1H3	WINDOW, REAR, SECONDARY EXIT	1810 - 44
1F18	WINDSHIELD WASHER HOSE	1810 - 10
1G13	WINDSHIELD WASHER HOSE	1810 - 30
1F18	WINDSHIELD WASHER NOZZLE	1810 - 10
1G13	WINDSHIELD WASHER NOZZLE	1810 - 30
1G13	WINDSHIELD WASHER PUMP	1810 - 30
1F18	WINDSHIELD WASHER SWITCH	1810 - 10
1G13	WINDSHIELD WASHER TANK	1810 - 30
1F18	WINDSHIELD WIPER	1810 - 10
1E5	WIPER SWITCH	1674 - 18
1F18	WIPER, WINDSHIELD	1810 - 10
1D16	WIRE HARNESS, BATTERY	1674 - 4
2B22	WIRE HARNESS, CONTROL LEVER (CANOPY)	3315 - 4
1F18	WIRE HARNESS, DOME LIGHT	1810 - 10
1C24	WIRE HARNESS, FUEL TANK	0560 - 2
1D20	WIRE HARNESS, HORN	1674 - 8
1G11	WIRE HARNESS, RADIO	1810 - 28
1F18	WIRE HARNESS, RADIO SPEAKER	1810 - 10
1E9	WIRE HARNESS, RELAYS	1674 - 20
1E3	WIRING HARNESS	1674 - 16
1D24	WIRING HARNESS CLIPS	1674 - 12
1E12	WIRING HARNESS CONTROL PATTERN KIT	1674 - 24
1E3	WIRING HARNESS, STARTER SWITCH	1674 - 16
2C21	WIRING HARNESS, WORK LIGHT	3344 - 2
2C23	WIRING HARNESS, WORK LIGHT	3344 - 4
1D20	WORK LIGHT	1674 - 8
1D22	WORK LIGHT	1674 - 10
2C21	WORK LIGHT	3344 - 2
2C23	WORK LIGHT	3344 - 4
1E5	WORK LIGHT SWITCH	1674 - 18

TRACK FRAME

TP66838 -UN-11OCT99

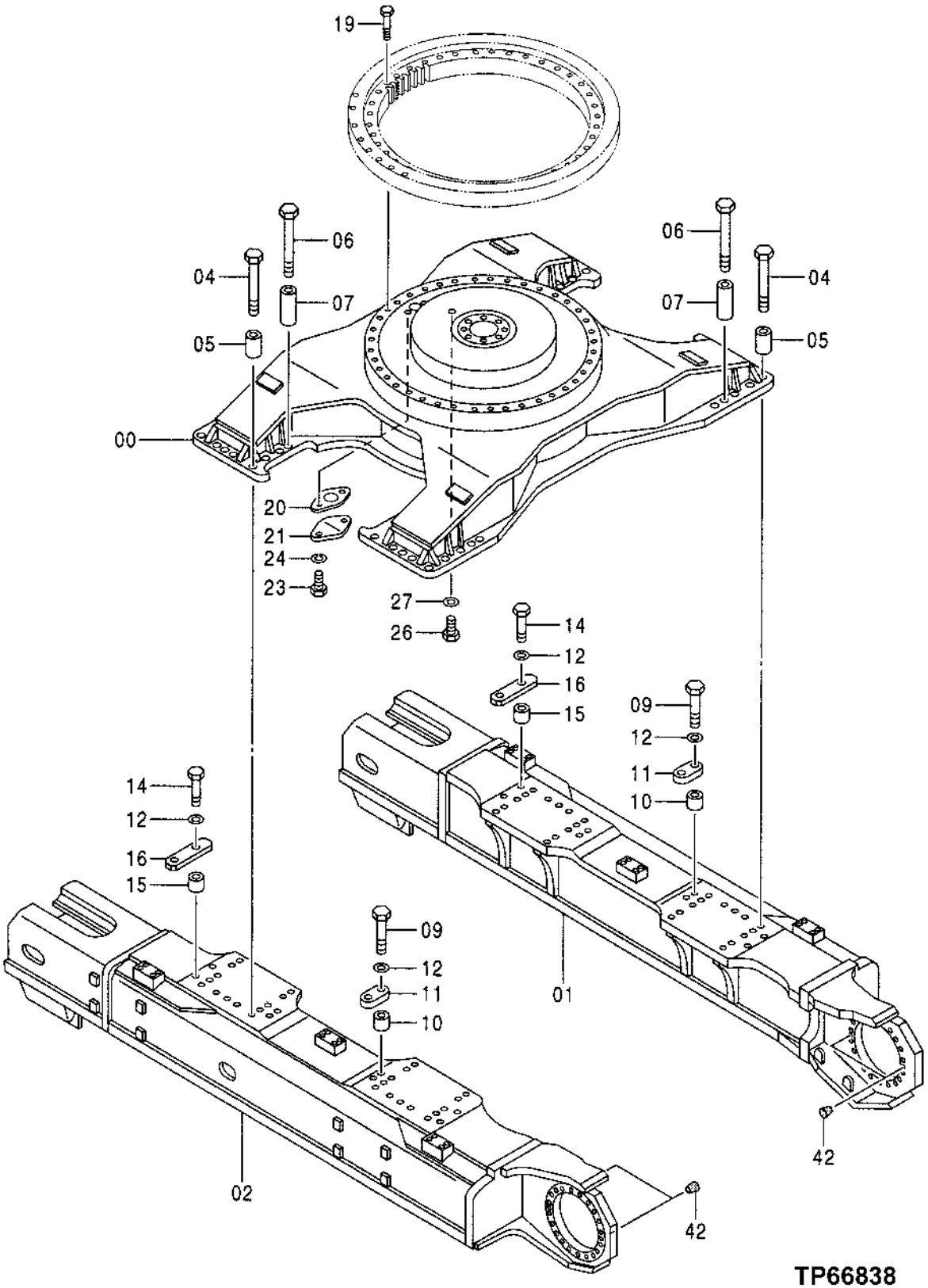

TRACK FRAME

KEY	PART NO.	PART NAME	QTY	SERIAL NO.	REMARKS
0	5004208	FRAME	1		(SUB FOR TH5004208) (CONVENIENCE ASSEMBLY)
1	5004209	FRAME	1		(SUB FOR TH5004209) (CONVENIENCE ASSEMBLY)
2	5004210	FRAME	1		(SUB FOR TH5004210) (CONVENIENCE ASSEMBLY)
4	4218943	BOLT	36		(SUB FOR TH4218943)
5	4218944	SPACER	36		(SUB FOR TH4218944)
6	4242099	BOLT	8		(SUB FOR TH4242099)
7	4242098	SPACER	8		(SUB FOR TH4242098)
9	M923003	BOLT	8		(SUB FOR THM923003)
10	4218945	SPACER	8		(SUB FOR TH4218945)
11	4207766	LOCK PLATE	4		(SUB FOR AT131846)
12	4174859	BUSHING	16		(SUB FOR TH103498)
14	M923011	BOLT	8		(SUB FOR THM923011)
15	4243157	SPACER	8		(SUB FOR TH4243157)
16	4333844	GUIDE	4		(SUB FOR TH4333844)
19	J833013	BOLT	40		(SUB FOR THJ833013)
20	4244172	GASKET	1		(SUB FOR AT202301)
21	4013896	COVER	1		(SUB FOR TH100633)
23	19M7938	CAP SCREW	2		M10 X 20
24	12M7066	LOCK WASHER	2		10 MM (0.394")
26	J901625	BOLT	1		(SUB FOR AT202272)
27	24M7053	WASHER	1		17 X 30 X 3 MM (0.669" X 1.181" X 0.118")
42	425175	PLUG	4		(SUB FOR AT132013)

TRACK STEP

TP66846 -UN-11OCT99

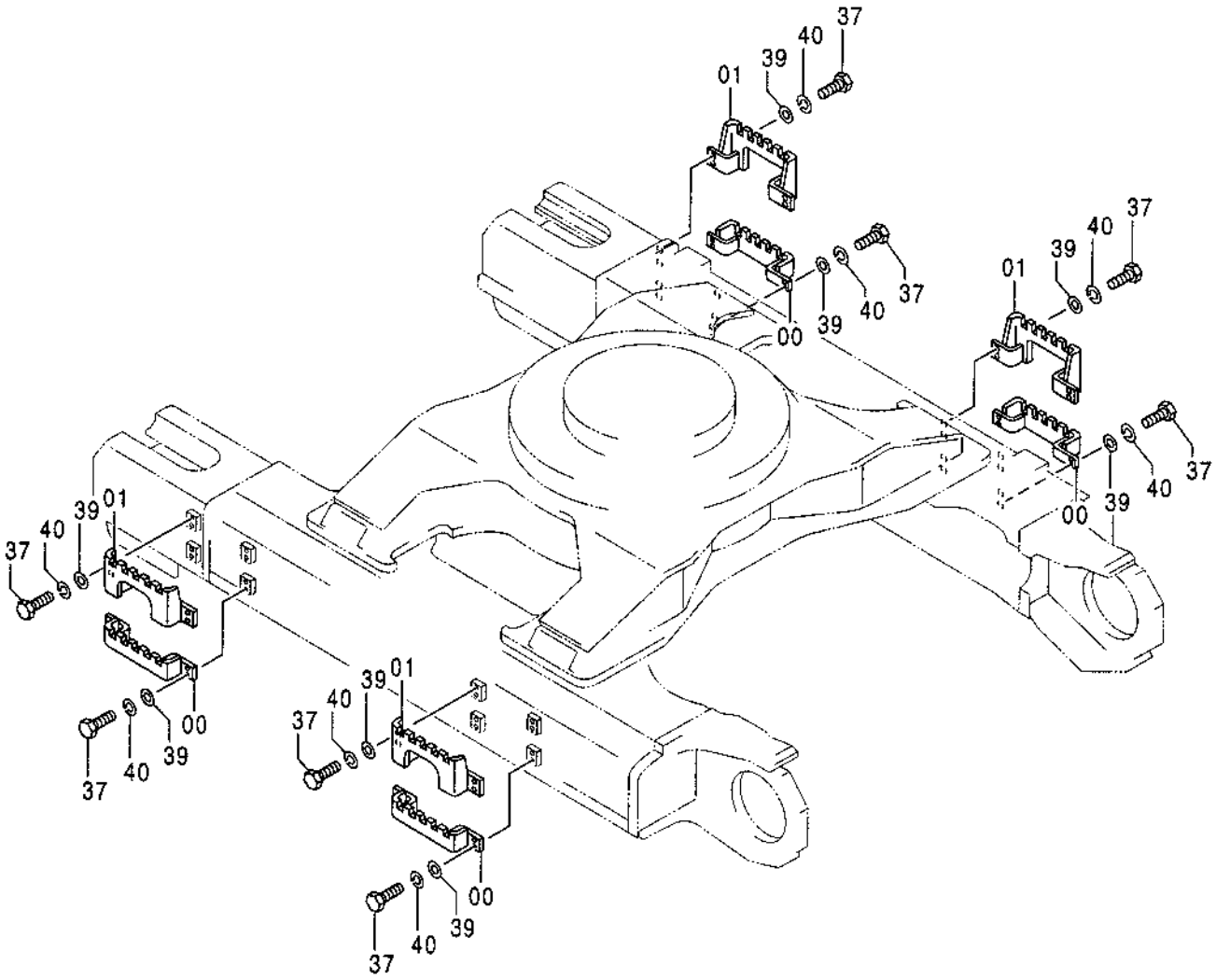

TP66846

TRACK STEP

KEY	PART NO.	PART NAME	QTY	SERIAL NO.	REMARKS
0	8068378	STEP	4		(SUB FOR TH8068378)
1	8068391	STEP	4		(SUB FOR TH8068391)
37	19M7409	CAP SCREW	32		M16 X 50
39	4114405	WASHER	32		(SUB FOR TH101105)
40	12H294	LOCK WASHER	32		15.875 MM (5/8")

TRACK GUARD

TP66841 -UN-11OCT99

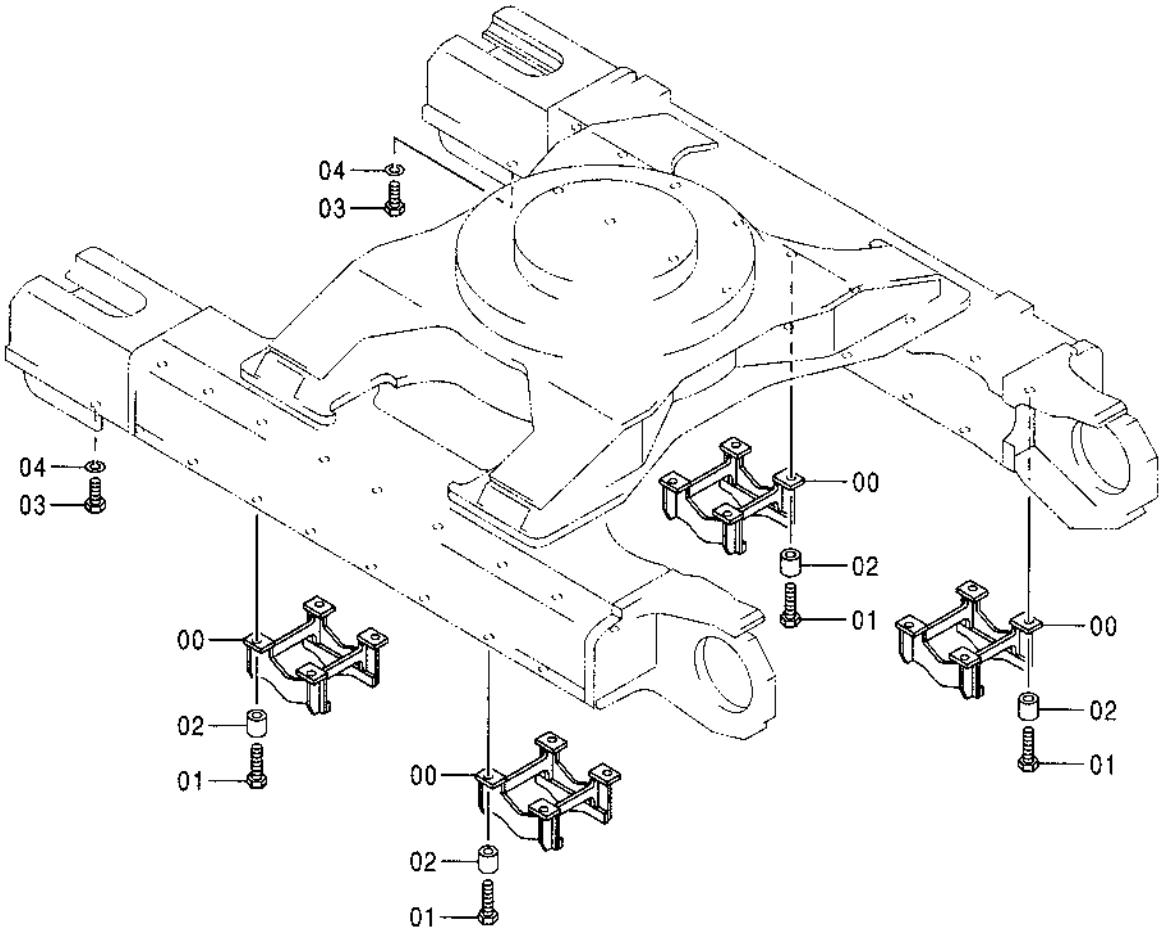

TP66841

TRACK GUARD

KEY	PART NO.	PART NAME	QTY	SERIAL NO.	REMARKS
0	7037194	GUARD	4		(SUB FOR 7027836)
1	J932701	BOLT	16		(SUB FOR THJ932701)
2	4277804	SPACER	16		(SUB FOR TH4277804)
3	J912735	BOLT	20		(SUB FOR THJ912735)
4	12H318	LOCK WASHER	20		28.575 MM (1-1/8")

FULL LENGTH TRACK GUARD

TP66843 -UN-11OCT99

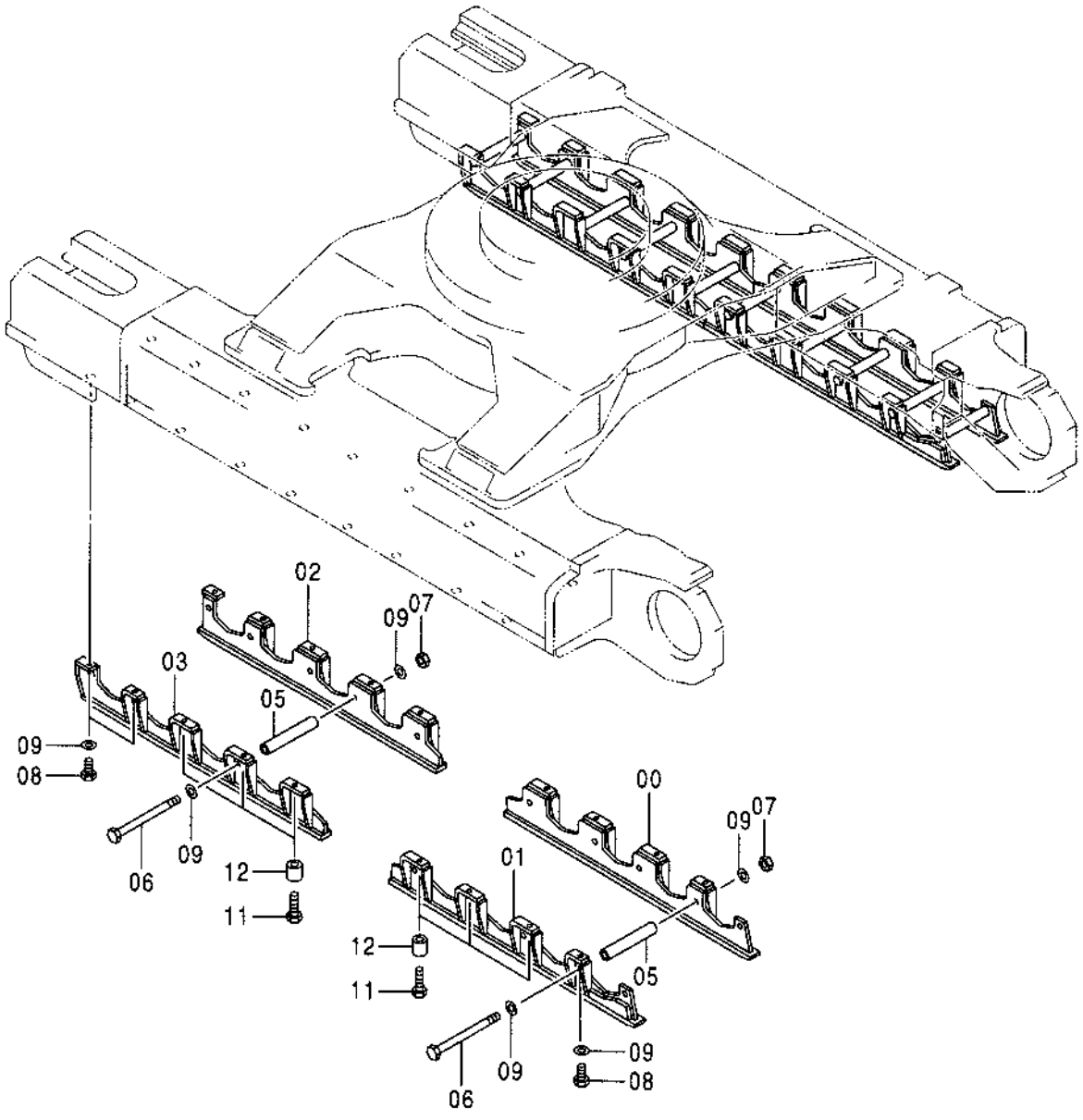

TP66843

FULL LENGTH TRACK GUARD

KEY	PART NO.	PART NAME	QTY	SERIAL NO.	REMARKS
0	6014505	GUARD	2		(SUB FOR TH6014505)
1	6014482	GUARD	2		(SUB FOR TH6014482)
2	6014506	GUARD	2		(SUB FOR TH6014506)
3	6014483	GUARD	2		(SUB FOR TH6014483)
5	4352244	SPACER	20		(SUB FOR TH4352244)
6	4352434	BOLT	20		(SUB FOR TH4352434)
7	14M7476	NUT	20		M27
8	J932760	BOLT	12		(SUB FOR THJ932760)
9	4085857	WASHER	52		(SUB FOR TH4085857)
11	J932701	BOLT	24		(SUB FOR THJ932701)
12	4277804	SPACER	24		(SUB FOR TH4277804)

FRONT IDLER

TP66852 -UN-11OCT99

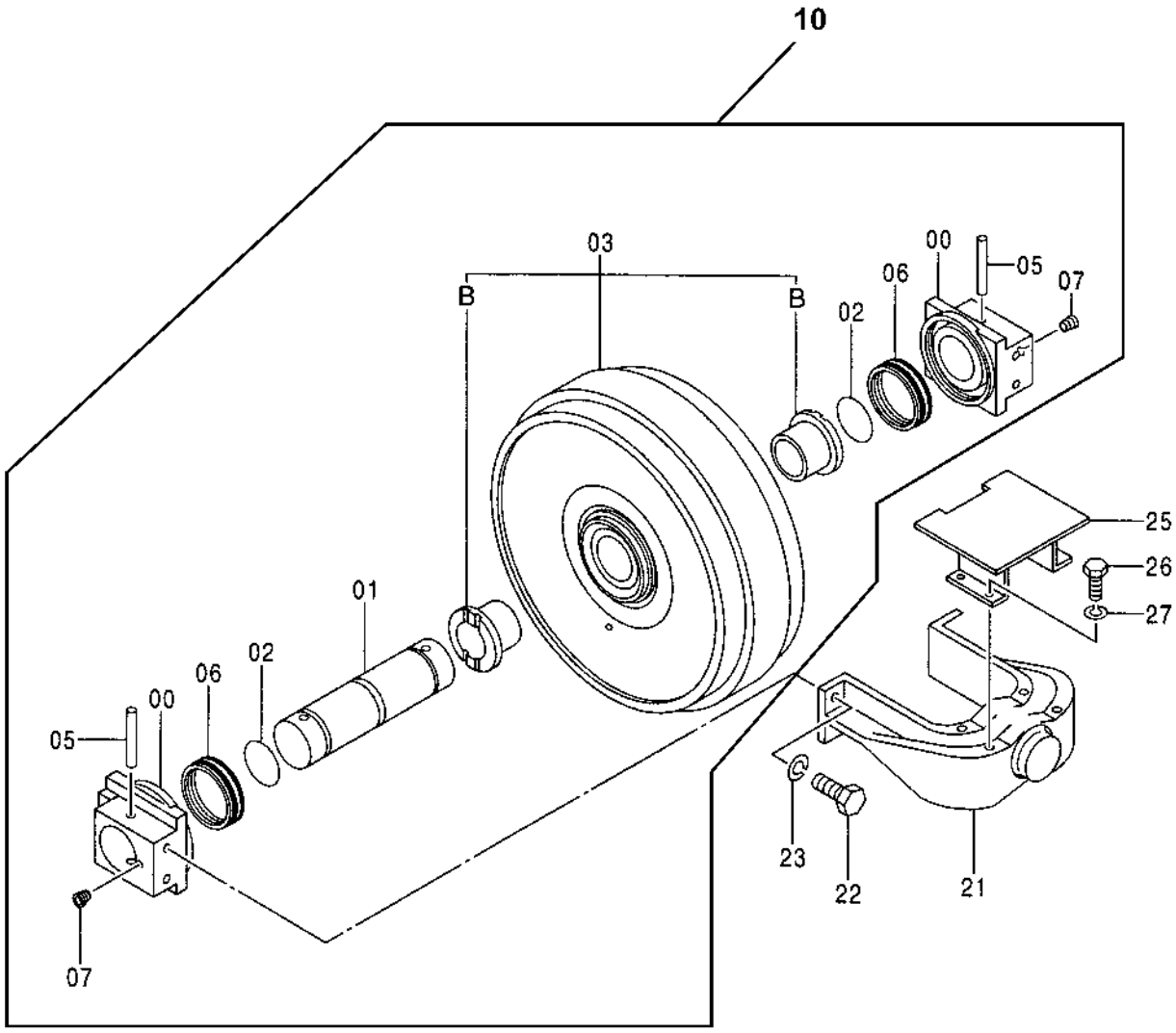

TP66852

FRONT IDLER

KEY	PART NO.	PART NAME	QTY	SERIAL NO.	REMARKS
0	4436680	PEDESTAL	2		(SUB FOR TH1020509)
1	2035972	AXLE	1		(SUB FOR TH2035972)
2	992446	O-RING	2		(SUB FOR TH100123)
3	4480090	TRACK IDLER	1		(SUB FOR TH9134108) (EACH SIDE OF UNIT)
3B	2040431	BUSHING	2		(SUB FOR TH2040431)
5	4215452	DOWEL PIN	2		(SUB FOR TH4215452)
6	4345581	SEAL	2		(SUB FOR TH4345581)
7	94-2011	FITTING PLUG	2		(SUB FOR TH100434)
10	4436682	PULLEY	1		(SUB FOR 9134272)
21	2035974	YOKE	1		(SUB FOR TH2035974)
22	J912460	CAP SCREW	4		(SUB FOR THJ912460)
23	12H234	LOCK WASHER	4		25.400 MM (1")
25	8057897	GUARD	1		(SUB FOR TH8057897)
26	19M8011	CAP SCREW	4		M12 X 30
27	12H301	LOCK WASHER	4		12.700 MM (1/2")

ADJUSTER

TP66854 -UN-11OCT99

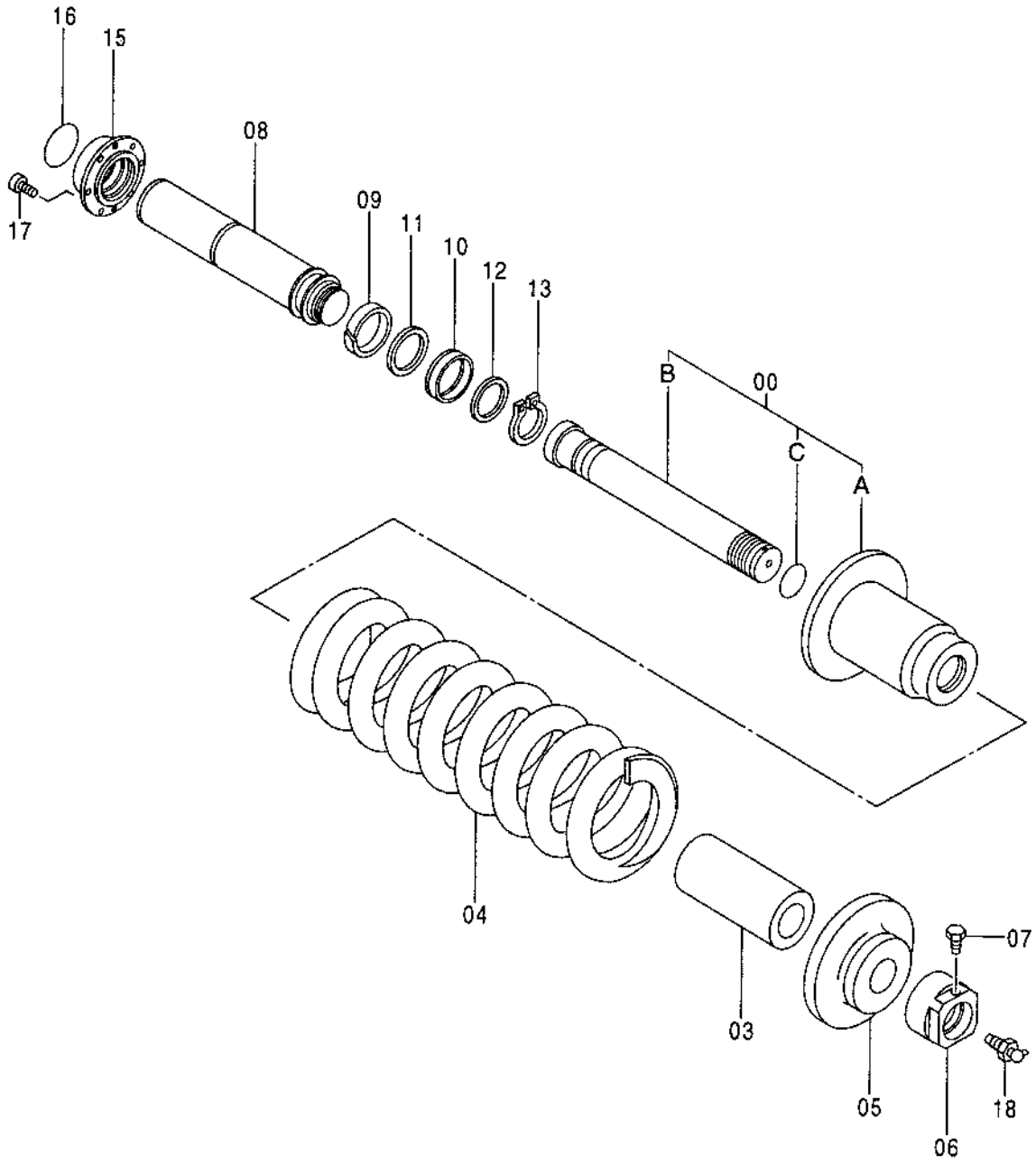

TP66854

ADJUSTER

KEY	PART NO.	PART NAME	QTY	SERIAL NO.	REMARKS
0	.....	CYLINDER	1		(NOT AVAILABLE FOR SERVICE)
0A	3076303	CYLINDER	1		(SUB FOR TH3076303)
0B	2039460	ROD	1		(SUB FOR TH2039460)
0C	4502700	O-RING	1		(SUB FOR TH4502700)
3	4370470	SPACER	1		(SUB FOR TH4370470)
4	3096073	SPRING	1		(SUB FOR TH3067055)
5	3076012	RETAINER	1		(SUB FOR TH3076012)
6	4373195	NUT	1		(SUB FOR TH4373195)
7	4215453	BOLT	1		(SUB FOR TH4215453)
8	3070288	ROD	1		(SUB FOR TH3070288)
9	4325289	WEAR RING	1		(SUB FOR TH4325289)
10	4098184	SEAL	1		(SUB FOR TH4098184)
11	4098185	BACK-UP RING	1		(SUB FOR TH4098185)
12	4098270	RING	1		(SUB FOR TH4098270)
13	991353	SNAP RING	1		(SUB FOR AT132143)
15	3067053	GUIDE	1		(SUB FOR TH3067053)
16	4046608	O-RING	1		(SUB FOR TH4046608)
17	19M8531	SCREW	6		M14 X 35
18	4255055	VALVE	1		(SUB FOR AT154223)

UPPER ROLLER

TP66855 -UN-11OCT99

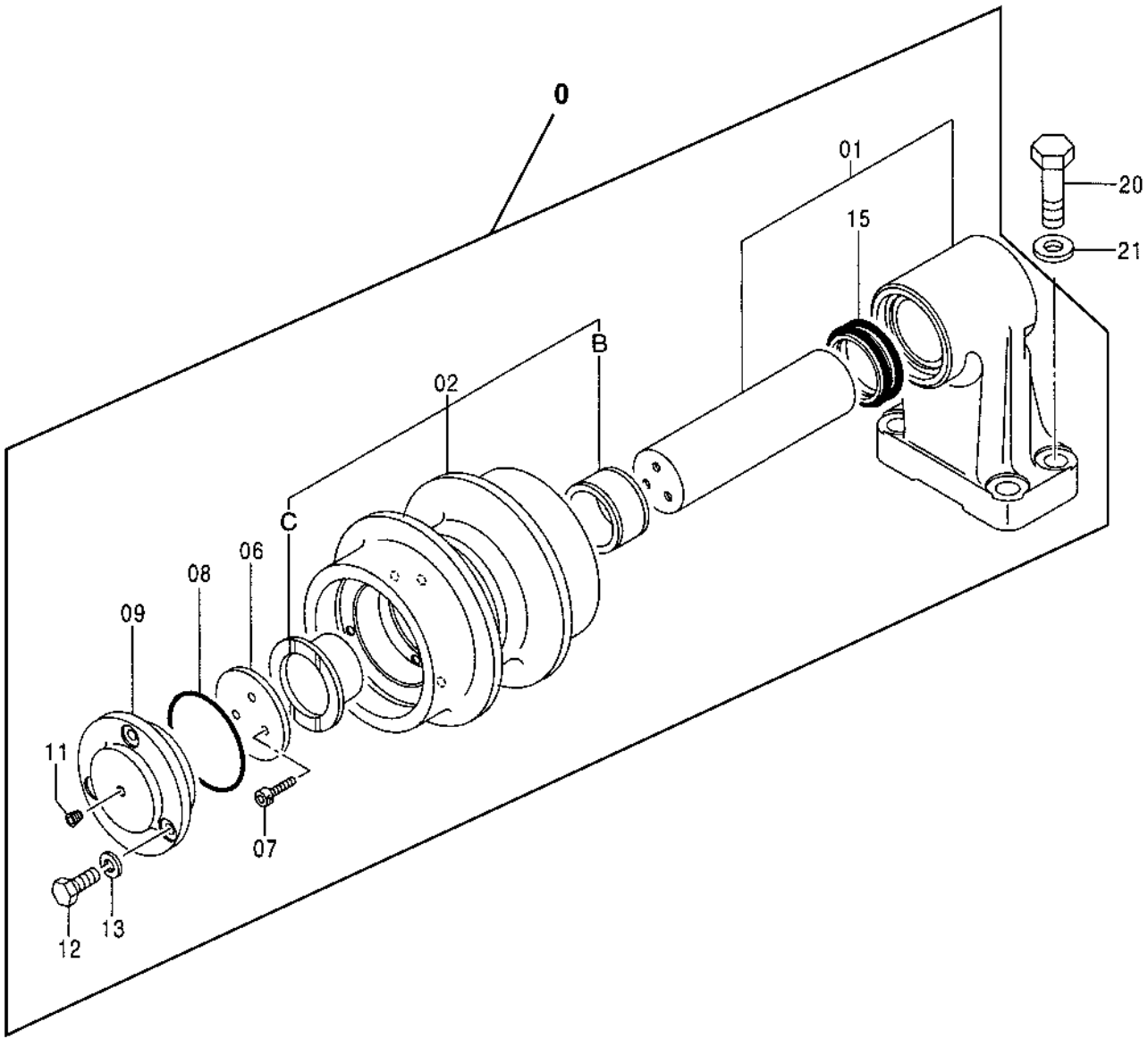

TP66855

UPPER ROLLER

KEY	PART NO.	PART NAME	QTY	SERIAL NO.	REMARKS
0	9078675	CARRIER ROLLER	6		(SUB FOR TH9078675)
1	9091505	BRACKET	1		(SUB FOR TH9091505)
2	9091506	CARRIER ROLLER	1		(SUB FOR TH9091506)
2B	3040561	BUSHING	1		(SUB FOR TH3040561)
2C	3040562	BUSHING	1		(SUB FOR TH3040562)
6	4215457	THRUST WASHER	1		(SUB FOR TH4215457)
7	.....	BOLT	3		
8	A810105	O-RING	1		(SUB FOR U46158)
9	3040559	COVER	1		(SUB FOR TH3040559)
11	94-2011	FITTING PLUG	1		(SUB FOR TH100434)
12	19M7662	CAP SCREW	3		M10 X 30
13	12M7066	LOCK WASHER	3		10 MM (0.394")
15	4155698	SEAL	1		(SUB FOR AT126213)
20	19M8410	SCREW	24		M20 X 75
21	N231749	WASHER	24		20.625 X 38.100 X 6.350 MM (13/16" X 1-1/2" X 1/4")

LOWER ROLLER

T157607 -UN-22JUL02

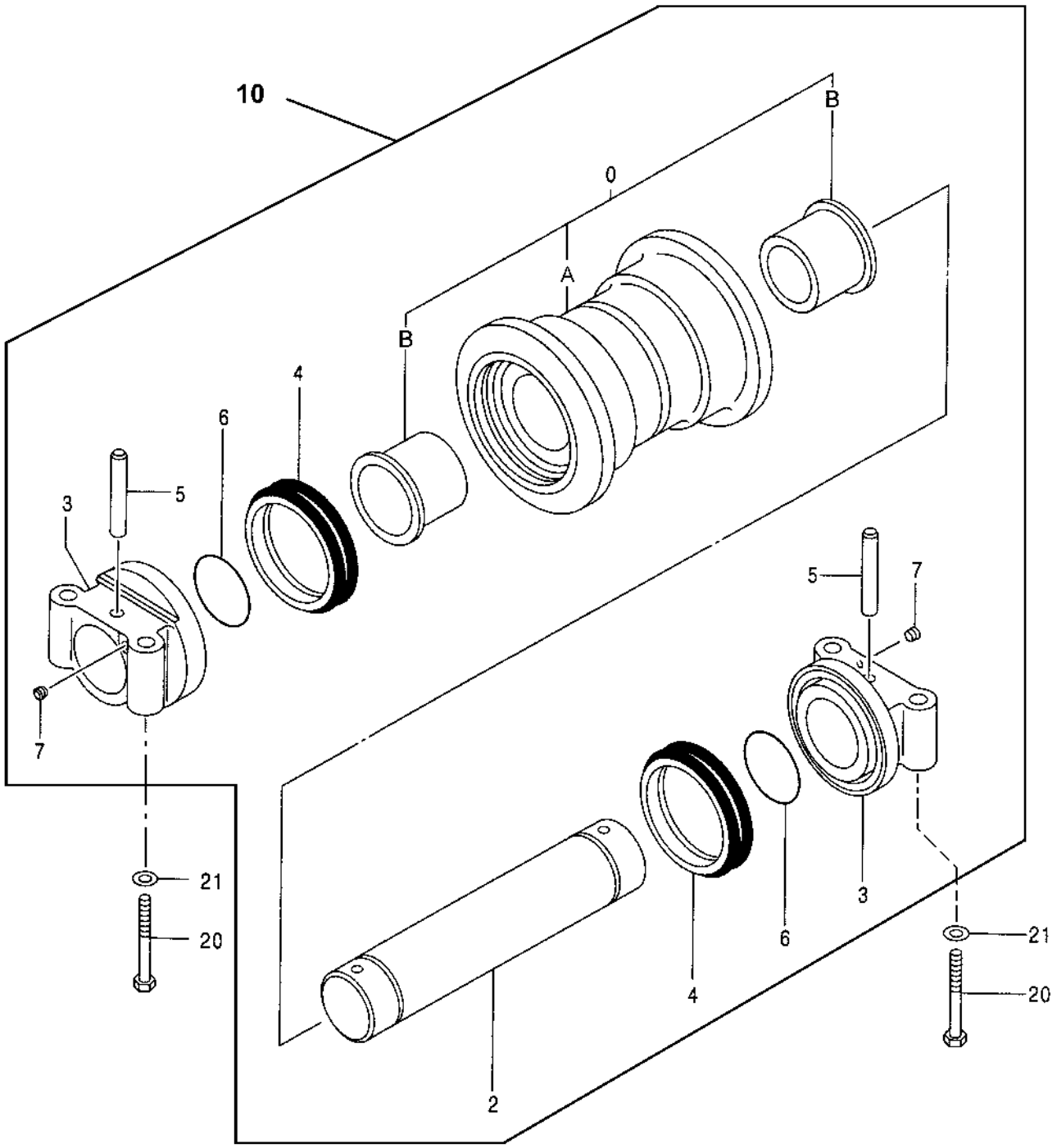

T157607

LOWER ROLLER

KEY	PART NO.	PART NAME	QTY	SERIAL NO.	REMARKS
0	4478068	ROLLER	1		
0A	4473720	ROLLER	1		(SUB FOR 4478086)
0B	4478089	BUSHING	2		
2	4478069	AXLE	1		
3	4478070	BUSHING	2		
4	4478072	SEAL	2		
5	4478082	PIN FASTENER	2		
6	955986	O-RING	2		(SUB FOR 4477912)
7	94-2011	FITTING PLUG	2		(SUB FOR TH100434)
10	4473720	ROLLER	18		
20	J932408	BOLT	72		(SUB FOR THJ932408)
21	4373972	WASHER	72		(SUB FOR TH4373972)

TRACK LINK

TP66859 -UN-12OCT99

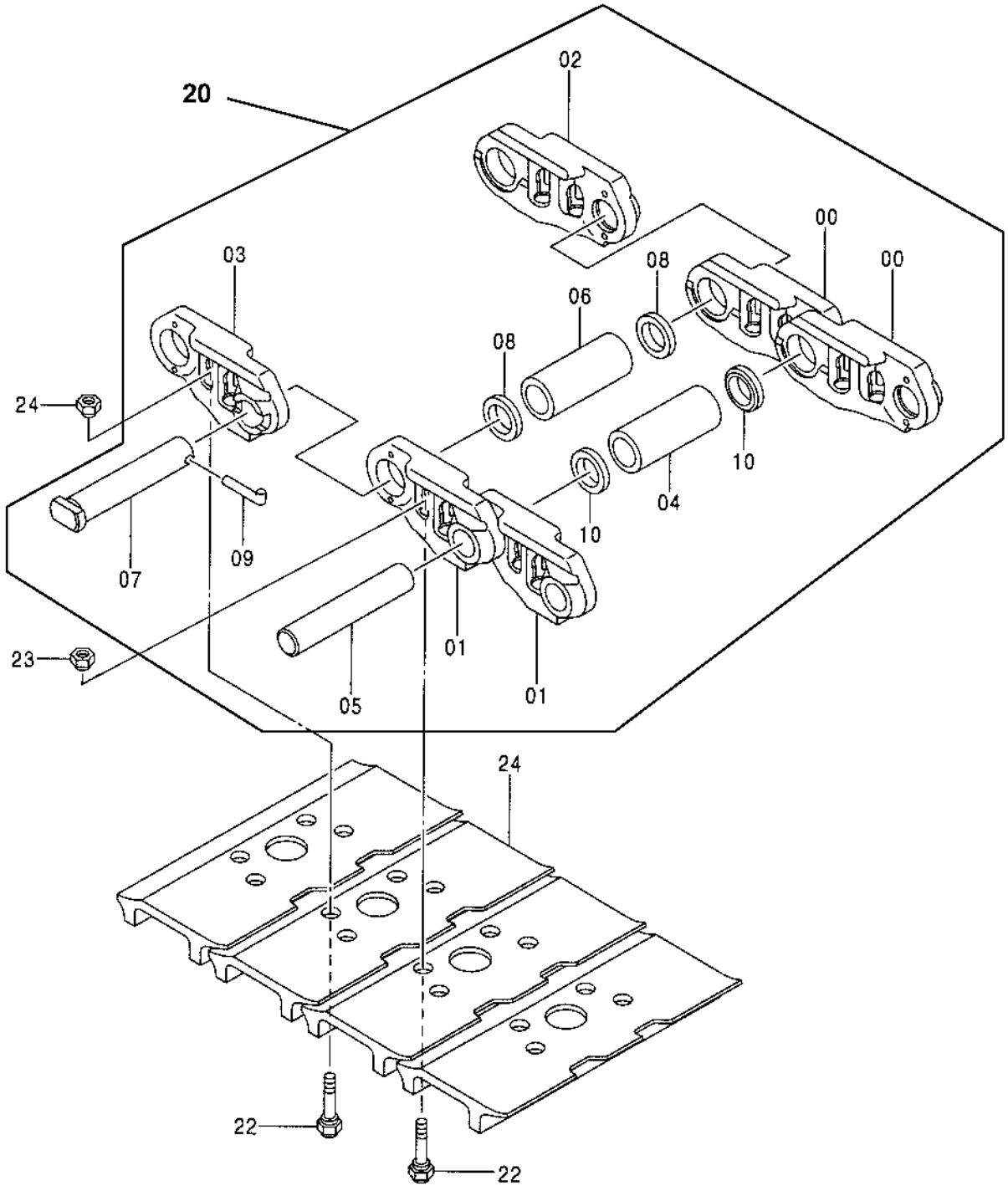

TRACK LINK

KEY	PART NO.	PART NAME	QTY	SERIAL NO.	REMARKS
0	4345166	TRACK LINK	50		(SUB FOR TH4345166) (RIGHT SIDE)
1	4345167	TRACK LINK	50		(SUB FOR TH4345167) (LEFT SIDE)
2	4345168	MASTER TRACK LINK-RH	1		(SUB FOR TH4345168) (MASTER)
3	4345169	MASTER TRACK LINK-LH	1		(SUB FOR TH4345169) (MASTER)
4	4218733	TRACK BUSHING	50		(SUB FOR TH4218733)
5	4345170	TRACK PIN	50		(SUB FOR TH4345170)
6	4218735	MASTER TRACK BUSHING	1		(SUB FOR TH4218735) (MASTER)
7	4345171	MASTER TRACK PIN	1		(SUB FOR TH4345171) (MASTER)
8	4345172	BUSHING	2		(SUB FOR TH4345172)
9	4051870	COTTER PIN	1		(SUB FOR TH4051870)
10	4345173	SEAL	100		(SUB FOR TH4345173)
20	9152643	TRACK LINK	1		(SUB FOR TH9152643)
22	4218740	TRACK BOLT	204		(SUB FOR TH4218740)
23	4218741	NUT	204		(SUB FOR TH4218741)
24	4218739	OPEN CENTER 2 BAR SHOE	51		(SUB FOR TH4218739) (650 G)
	4218844	OPEN CENTER 2 BAR SHOE	51		(SUB FOR TH4218844) (750 G)
	4252719	OPEN CENTER 2 BAR SHOE	51		(SUB FOR TH4252719) (900 G)

PROPEL DRIVE

TP66851 -UN-11OCT99

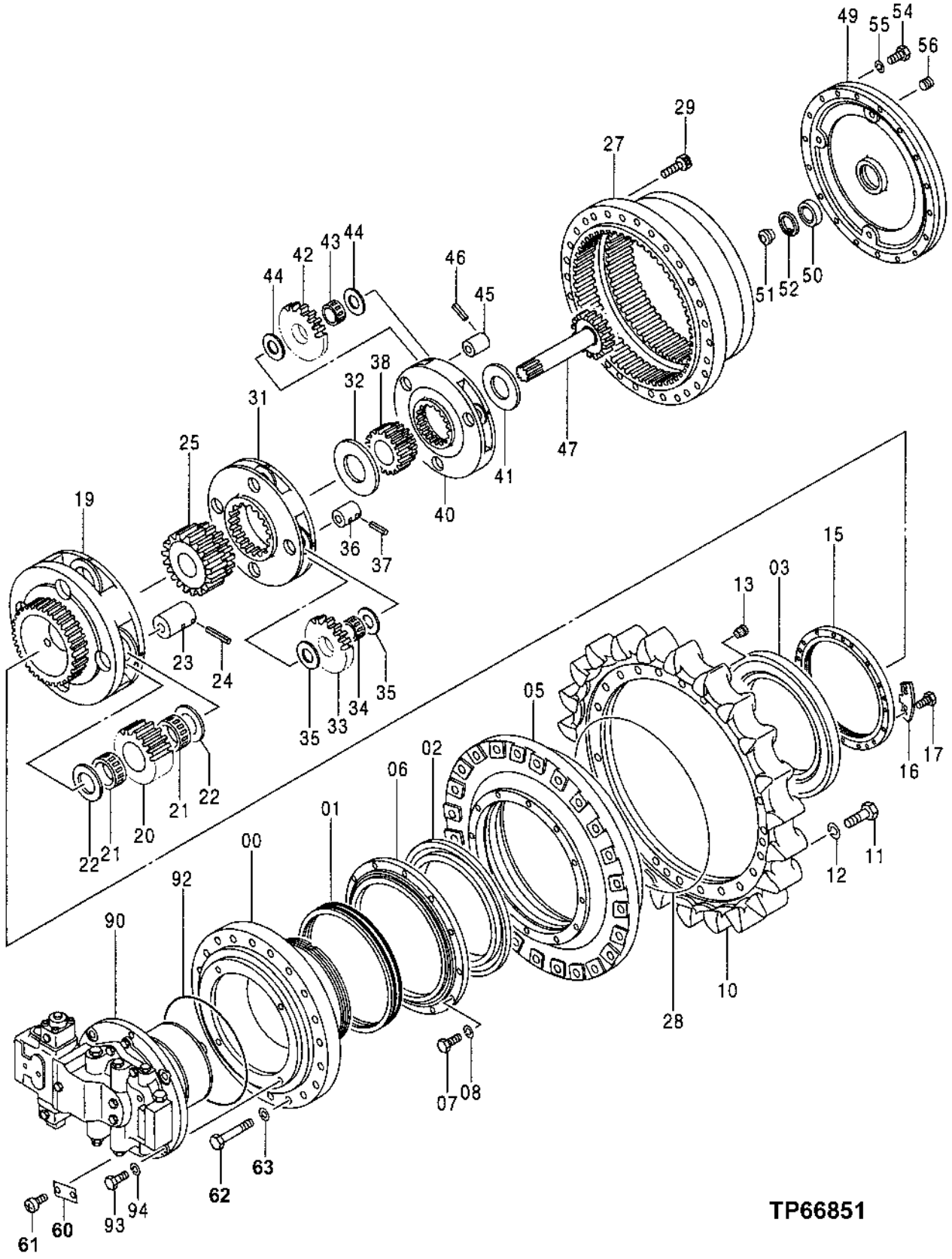

PROPEL DRIVE

KEY	PART NO.	PART NAME	QTY	SERIAL NO.	REMARKS
0	1014350	HOUSING	1		(SUB FOR TH1014350)
1	AT131736	SEAL	1		
2	4219329	ROLLER BEARING	1		(SUB FOR TH4219329)
3	4219328	ROLLER BEARING	1		(SUB FOR TH4219328)
5	1012131	DRUM	1		(SUB FOR TH1012131)
6	2025832	SUPPORT	1		(SUB FOR TH2025832)
7	19M7403	CAP SCREW	12		M12 X 35
8	12H301	LOCK WASHER	12		12.700 MM (1/2")
10	4430291	CHAIN SPROCKET	1		(SUB FOR 1017812)
11	J932785	BOLT	24		(SUB FOR THJ932785)
12	12H318	LOCK WASHER	24		28.575 MM (1-1/8")
13	425175	PLUG	2		(SUB FOR AT132013)
15	3069875	NUT	1		(SUB FOR TH3069875)
16	3041462	LOCK PLATE	1		(SUB FOR TH3041462)
17	19M7872	CAP SCREW	2		M12 X 25
19	1020445	PLANET PINION CARRIER	1		(SUB FOR TH1020445)
20	3069878	GEAR	4		(SUB FOR TH3069878)
21	4333441	NEEDLE BEARING	8		(SUB FOR TH4333441)
22	4219640	THRUST WASHER	8		(SUB FOR TH4219640)
23	4338293	PIN	4		(SUB FOR TH4338293)
24	4222029	SPRING PIN	4		(SUB FOR TH4222029)
25	3069879	SUN GEAR	1		(SUB FOR TH3069879)
27	1012132	RING GEAR	1		(SUB FOR TH1012132)
28	4223568	O-RING	1		(SUB FOR TH4223568)
29	M342260	BOLT	30		(SUB FOR THM342260)
31	1020444	PLANET PINION CARRIER	1		(SUB FOR TH1020444)
32	4219641	SPACER	1		(SUB FOR TH4219641)
33	3069877	GEAR	4		(SUB FOR TH3069877)
34	4333517	NEEDLE BEARING	4		(SUB FOR TH4333517)
35	4338294	THRUST WASHER	8		(SUB FOR TH4338294)
36	4338292	PIN	4		(SUB FOR TH4338292)
37	4203180	SPRING PIN	4		5 X 75 MM (0.197" X 2.953") (SUB FOR AT131748)
38	3041454	SUN GEAR	1		(SUB FOR TH3041454)
40	1020443	PLANET PINION CARRIER	1		(SUB FOR TH1020443)
41	4378675	SPACER	1		(SUB FOR TH4378675)
42	3069876	GEAR	3		(SUB FOR TH3069876)
43	4333540	NEEDLE BEARING	3		(SUB FOR TH4333540)
44	4258058	THRUST WASHER	6		(SUB FOR TH4258058)
45	4338291	PIN	3		(SUB FOR TH4338291)
46	4203180	SPRING PIN	3		5 X 75 MM (0.197" X 2.953") (SUB FOR AT131748)
47	2036876	PINION SHAFT	1		(SUB FOR TH2036876)
49	1020446	COVER	1		(SUB FOR TH1020446)
50	4284195	BALL BEARING	1		(SUB FOR TH4284195)
51	4278011	PIN FASTENER	1		(SUB FOR AT131137)
52	40M7115	SNAP RING	1		
54	4257967	TRACK BOLT	18		(SUB FOR TH4257967)
55	12H317	LOCK WASHER	18		14.288 MM (9/16")
56	94-2015	FITTING PLUG	3		(SUB FOR TH102308)
60	.....	DECAL	1		
61	37H99	SCREW	2		2.540 X 6.350 MM (0.100" X 1/4")
62	J932704	BOLT	40		(SUB FOR THJ932704)
63	4085857	WASHER	40		
90	4395028EX	HYDRAULIC MOTOR	1		(SUB FOR TH4395028)
92	4271596	O-RING	1		(SUB FOR AT131752)
93	J911860	BOLT	4		(SUB FOR AT131543)
94	12H236	LOCK WASHER	4		19.050 MM (3/4")

PROPEL DRIVE BRAKE VALVE

TP68074 -UN-15OCT99

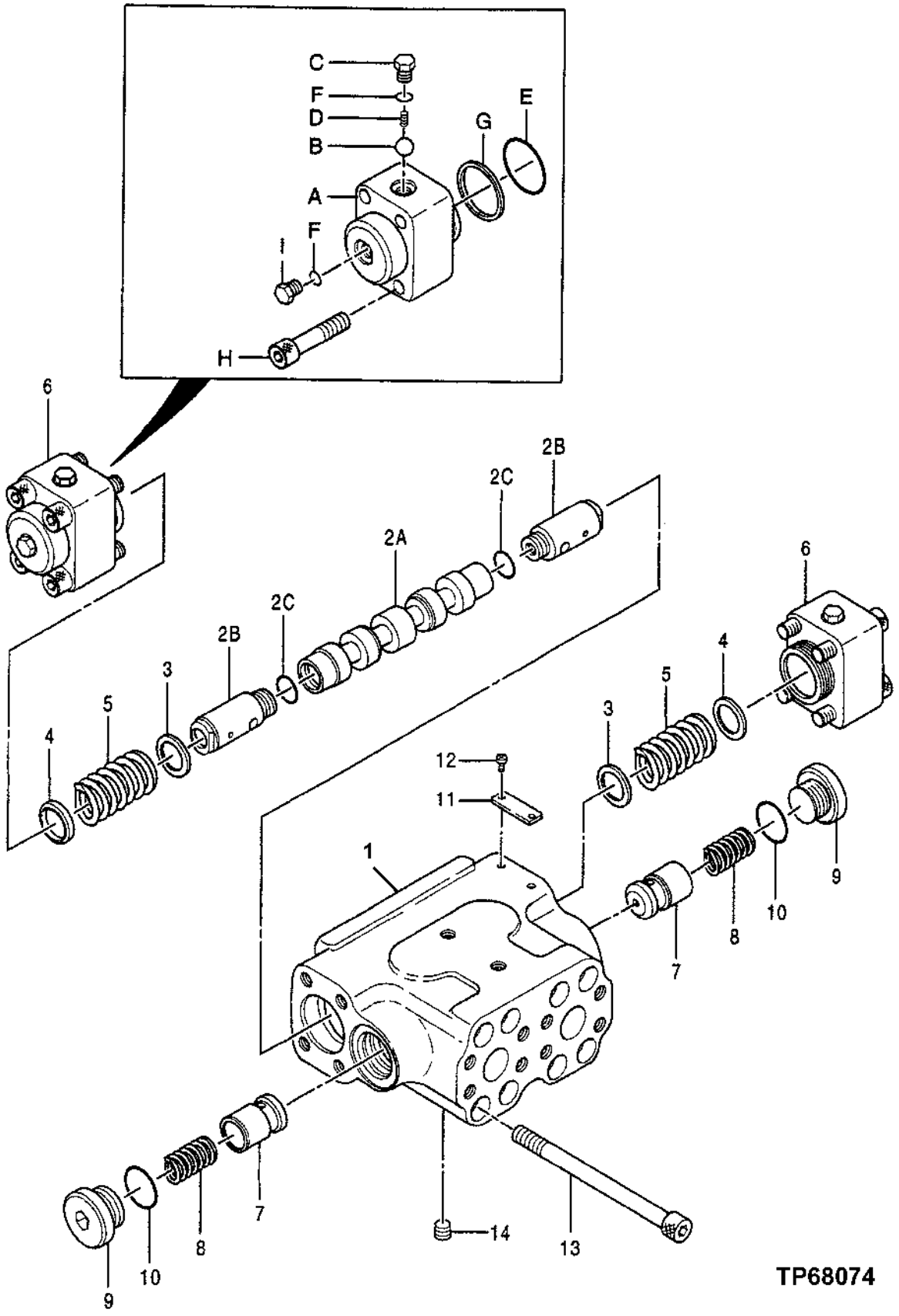

PROPEL DRIVE BRAKE VALVE

KEY	PART NO.	PART NAME	QTY	SERIAL NO.	REMARKS
1	.....	HOUSING	1		
2A	.....	PLUNGER	1		
2B	.....	FITTING PLUG	2		
2C	.....	O-RING	2		
3	0163601	PLATE	2		(SUB FOR AT132163)
4	0646101	WASHER	2		(SUB FOR AT174526)
5	0683601	SPRING	2		(SUB FOR TH0683601)
6	0403703	CAP (HAT)	2		(SUB FOR AT174527)
6A	.....	CAP	1		
6B	.....	BALL	1		
6C	.....	PLUG	1		
6D	.....	SPRING	1		
6E	.....	O-RING	1		
6F	.....	O-RING	2		
6G	.....	BACK-UP RING	1		
6H	.....	BOLT	4		
6I	.....	PLUG	1		
7	0352304	CHECK VALVE	2		(SUB FOR AT132269)
8	0352305	SPRING	2		(SUB FOR AT132270)
9	0352306	PLUG	2		(SUB FOR AT132271)
10	TH101926	O-RING	2		
11	.....	IDENTIFICATION PLATE	1		
12	.....	SCREW	2		
13	M341204	BOLT	8		(SUB FOR AT132272)

PROPEL DRIVE REPAIR PARTS

TP68075 -UN-15OCT99

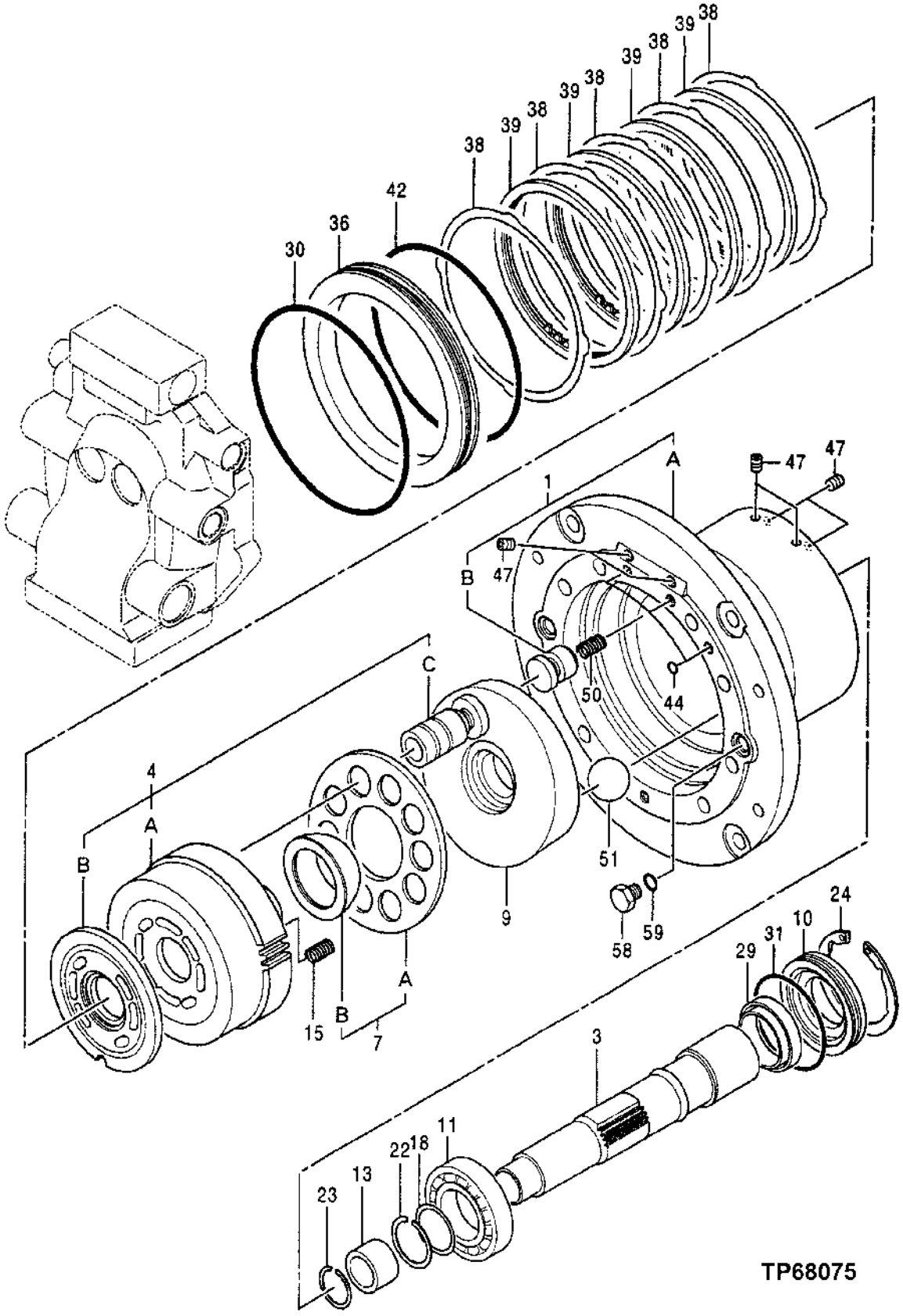

PROPEL DRIVE REPAIR PARTS

KEY	PART NO.	PART NAME	QTY	SERIAL NO.	REMARKS
1	0682701	HOUSING	1		(SUB FOR TH0682701)
1A	.....	HOUSING	1		
1B	.....	PISTON	4		
3	0376902	SHAFT	1		(SUB FOR TH0376902)
4	0682702	CYLINDER BLOCK	1		(SUB FOR TH0682702)
4A	.....	CYLINDER BLOCK	1		
4B	.....	PLATE	1		
4C	.....	PISTON	9		
7	0709801	PLATE	1		(SUB FOR TH0702101)
7A	.....	PLATE	1		
7B	.....	HOLDER	1		
9	0682703	SWASH PLATE	1		(SUB FOR TH0682703)
10	0376905	BEARING RACE	1		(SUB FOR TH0376905)
11	0376906	ROLLER BEARING	1		(SUB FOR TH0376906)
13	0352210	BEARING RACE	1		(SUB FOR AT132247)
15	0682704	SPRING	9		(SUB FOR TH0682704)
18	0352214	LOCK WASHER	1		(SUB FOR AT132251)
22	0352215	RING	1		(SUB FOR AT132252)
23	0352216	RING	1		(SUB FOR AT132253)
24	0311317	SNAP RING	1		(SUB FOR TH109060)
29	0376907	SEAL	1		(SUB FOR TH0376907)
30	0419806	O-RING	1		(SUB FOR AT201977)
31	A811105	O-RING	1		(SUB FOR AT121852)
36	0352220	PISTON	1		(SUB FOR AT132257)
38	0682705	PLATE	6		(SUB FOR TH0682705)
39	0419808	PLATE	6		(SUB FOR AT201978)
42	0419809	O-RING	1		(SUB FOR AT204903)
44	CH17167	O-RING	4		
47	15H560	PIPE PLUG	6		
50	0419811	SPRING	4		(SUB FOR AT201561)
51	0682706	BALL	2		(SUB FOR TH0682706)
58	0311336	PIPE PLUG	2		(SUB FOR TH109082)
59	CH11570	O-RING	2		

ROTARY MANIFOLD

TP66861 -UN-12OCT99

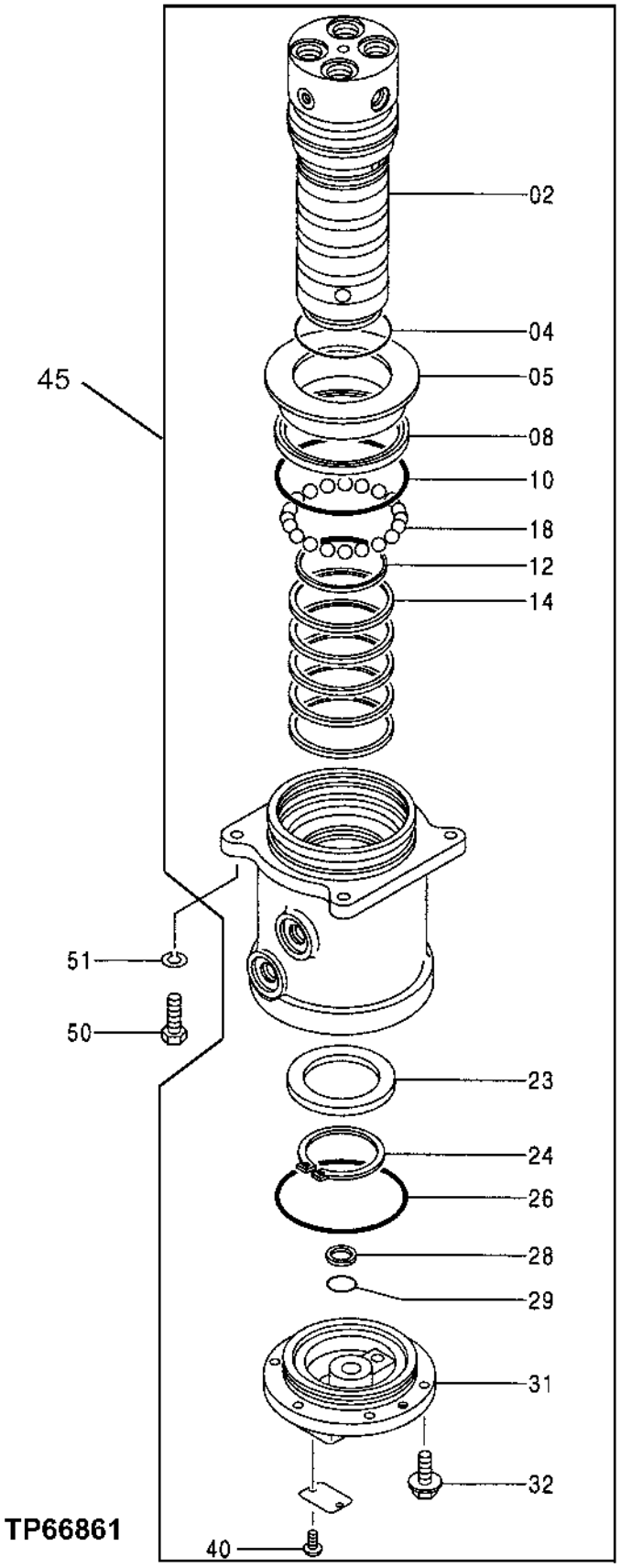

ROTARY MANIFOLD

KEY	PART NO.	PART NAME	QTY	SERIAL NO.	REMARKS
2	0001452	SPINDLE	1		(SUB FOR TH0001452)
4	CH13523	PACKING	1		
5	4201096	COVER	1		(SUB FOR AT131740)
8	4201311	SEAL	1		(SUB FOR AT131742)
10	4007535	O-RING	1		(SUB FOR AT132148)
12	4235683	SEAL	1		(SUB FOR AT131951)
14	4251186	SEAL	5		(SUB FOR AT131245)
18	972658	BALL	26		(SUB FOR T38788)
23	4201095	WASHER	1		(SUB FOR AT131739)
24	991353	SNAP RING	1		(SUB FOR AT132143)
26	A810155	O-RING	1		(SUB FOR AT131528)
28	4113187	BACK-UP RING	1		(SUB FOR AT131692)
29	966689	O-RING	1		(SUB FOR TH108142)
31	2025705	COVER	1		(SUB FOR AT131600)
32	19M7403	CAP SCREW	6		M12 X 35
	12H301	LOCK WASHER	6		12.700 MM (1/2")
40	37H99	SCREW	2		2.540 X 6.350 MM (0.100" X 1/4")
45	9132584EX	MANIFOLD	1		(SUB FOR TH9119343)
50	19M7488	CAP SCREW	4		M16 X 40
510	12H294	LOCK WASHER	4		15.875 MM (5/8")

TRAVEL PIPINGS

TP66862 -UN-12OCT99

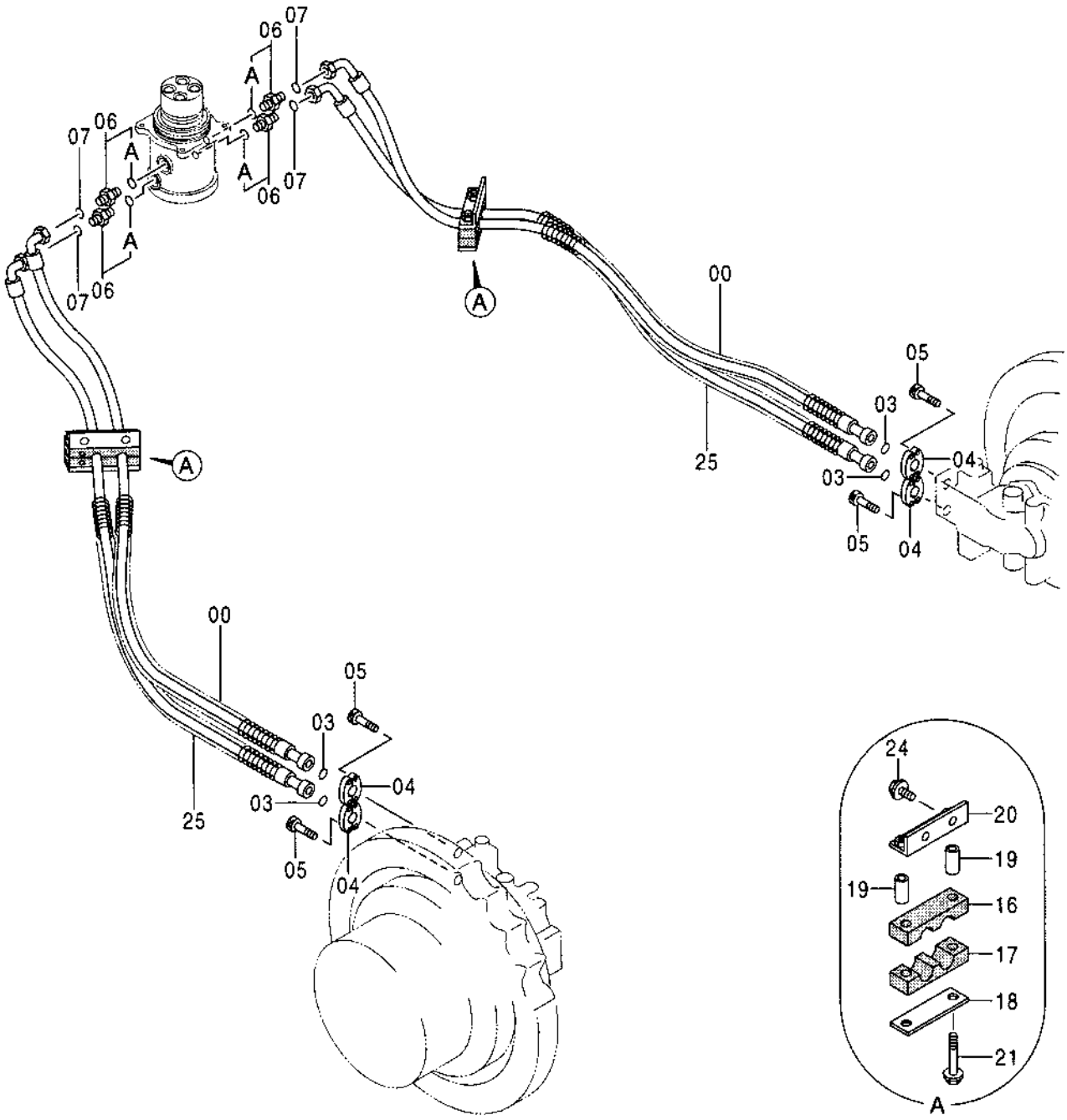

TP66862

TRAVEL PIPINGS

KEY	PART NO.	PART NAME	QTY	SERIAL NO.	REMARKS
0	4390587	HYDRAULIC HOSE	2		(SUB FOR TH4390587)
3	T78313	O-RING	4		32.918 X 3.531 MM (1.296" X 0.139")
4	4085560	FLANGE FITTING	8		(SUB FOR TH101960)
5	19M8395	SCREW	16		M12 X 40
6	4189535	ADAPTER	4		(SUB FOR AT114853)
6A	TH101926	O-RING	1		28.700 X 3.500 MM (1.130" X 0.138")
7	T76938	O-RING	4		23.520 X 1.778 MM (0.926" X 0.070")
16	4364388	HOSE CLAMP	2		(SUB FOR TH4364388)
17	4364389	HOSE CLAMP	2		(SUB FOR TH4364389)
18	4364390	PLATE	2		(SUB FOR TH4364390)
19	4215879	SPACER	4		(SUB FOR AT178140)
20	8064623	BRACKET	2		(SUB FOR TH8064623)
21	19M7949	CAP SCREW	4		M12 X 100
	12M7058	LOCK WASHER	4		12.200 MM (0.480") (SUB FOR 12M7067)
24	12H301	LOCK WASHER	4		12.700 MM (1/2")
	24M7047	WASHER	4		13 X 24 X 2.500 MM (0.512" X 0.945" X 0.098")
25	4390588	HYDRAULIC HOSE	2		(SUB FOR TH4390588)

TRAVEL PIPINGS

TP66863 -UN-15OCT99

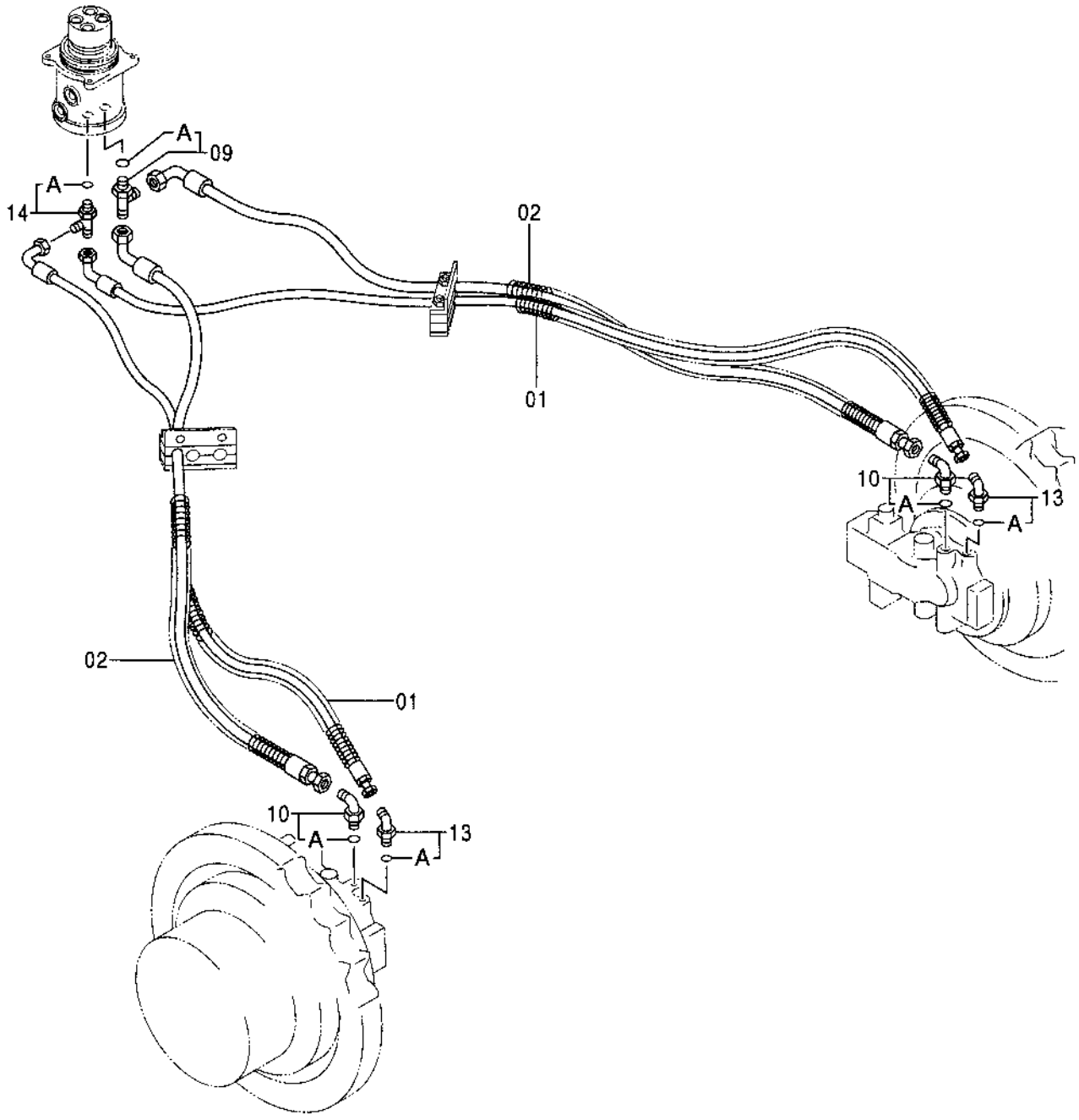

TP66863

TRAVEL PIPINGS

KEY	PART NO.	PART NAME	QTY	SERIAL NO.	REMARKS
1	4390582	HYDRAULIC HOSE - FABRICATE	2		(SUB FOR TH4390582)
2	4390584	HYDRAULIC HOSE - FABRICATE	2		(SUB FOR TH4390584)
9	4374566	TEE FITTING	1		(SUB FOR TH4374566)
9A	4506418	O-RING	1		(SUB FOR U46489)
10	4190246	ELBOW FITTING	2		(SUB FOR TH106154)
10A	4506418	O-RING	1		(SUB FOR U46489)
13	4190244	ELBOW FITTING	2		(SUB FOR TH106152)
13A	CH11570	O-RING	1		13.800 X 2.400 MM (0.543" X 0.094")
14	4205363	TEE FITTING	1		(SUB FOR AT126362)
14A	CH11570	O-RING	1		13.800 X 2.400 MM (0.543" X 0.094")

PROPEL HYDRAULIC HOSE COVERS
(SERIAL NUMBER -970028)

TP66864 -UN-15OCT99

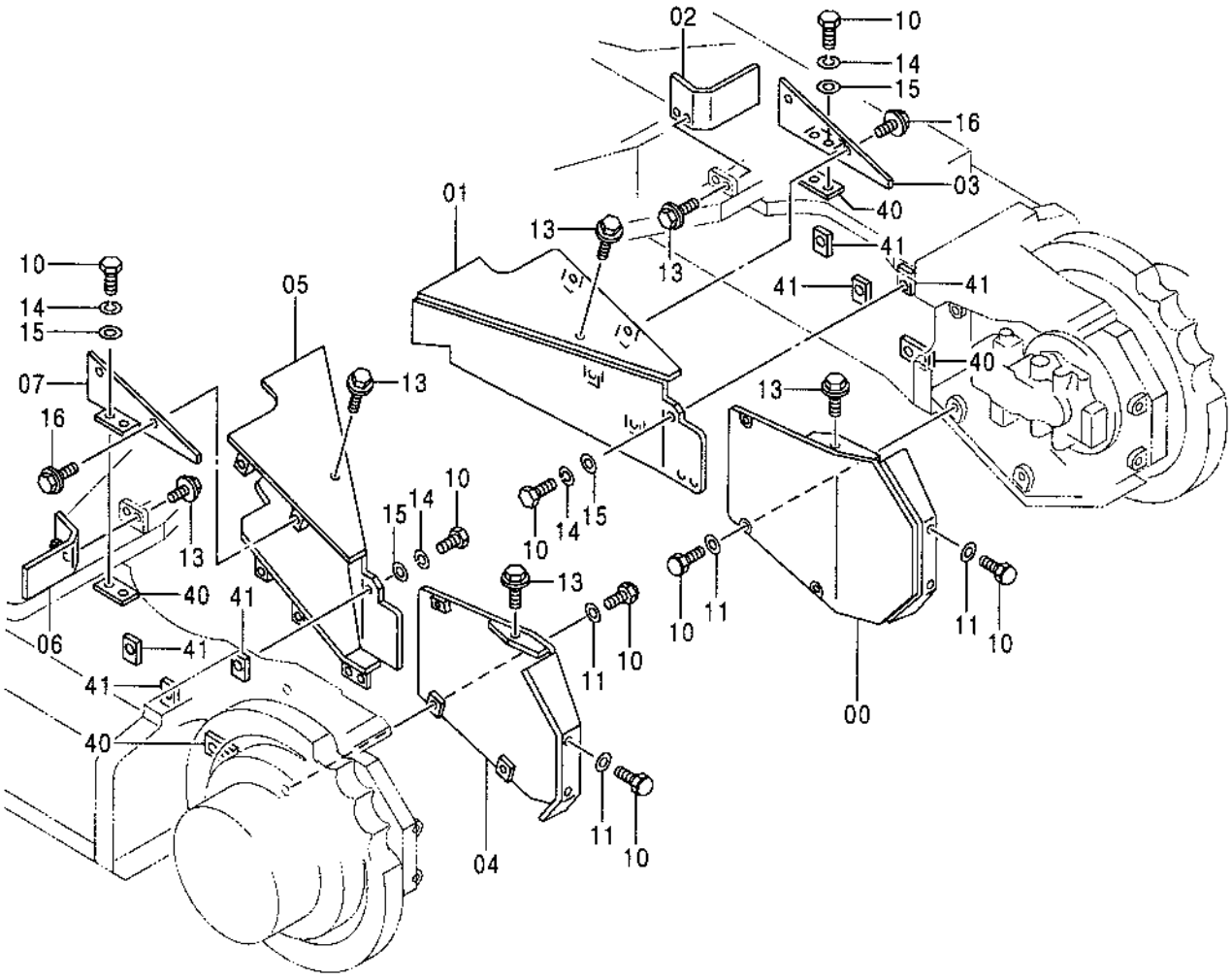

TP66864

PROPEL HYDRAULIC HOSE COVERS
(SERIAL NUMBER -970028)

KEY	PART NO.	PART NAME	QTY	SERIAL NO.	REMARKS
0	7028262	COVER	1		(SUB FOR TH7028262)
1	6017242	COVER	1		(SUB FOR TH6017242)
2	8060558	COVER	1		(SUB FOR TH8060558)
3	8071623	COVER	1		(SUB FOR TH8071623)
4	7028263	COVER	1		(SUB FOR TH7028263)
5	6017244	COVER	1		(SUB FOR TH6017244)
6	8060559	COVER	1		(SUB FOR TH8060559)
7	8071638	COVER	1		(SUB FOR TH8071638)
10	4257968	BOLT	24		(SUB FOR AT202305)
11	24M7338	WASHER	10		17 X 30 X 3 MM (0.669" X 1.181" X 0.118")
13	19M8011	CAP SCREW	8		M12 X 30
	12H301	LOCK WASHER	8		12.700 MM (1/2")
	24M7047	WASHER	8		13 X 24 X 2.500 MM (0.512" X 0.945" X 0.098")
14	12H294	LOCK WASHER	14		15.875 MM (5/8")
15	24M7053	WASHER	14		17 X 30 X 3 MM (0.669" X 1.181" X 0.118")
16	19M8011	CAP SCREW	4		M12 X 30
	12M7058	LOCK WASHER	4		12.200 MM (0.480") (SUB FOR 12M7067)
	24H1748	WASHER	4		12.700 X 31.750 X 2.667 MM (1/2" X 1-1/4" X 0.105")
40	4398794	PLATE	4		(SUB FOR TH4398794)
41	4398795	PLATE	6		(SUB FOR TH4398795)

PROPEL HYDRAULIC HOSE COVERS
(SERIAL NUMBER 970029-)

T157501 -UN-23JUL02

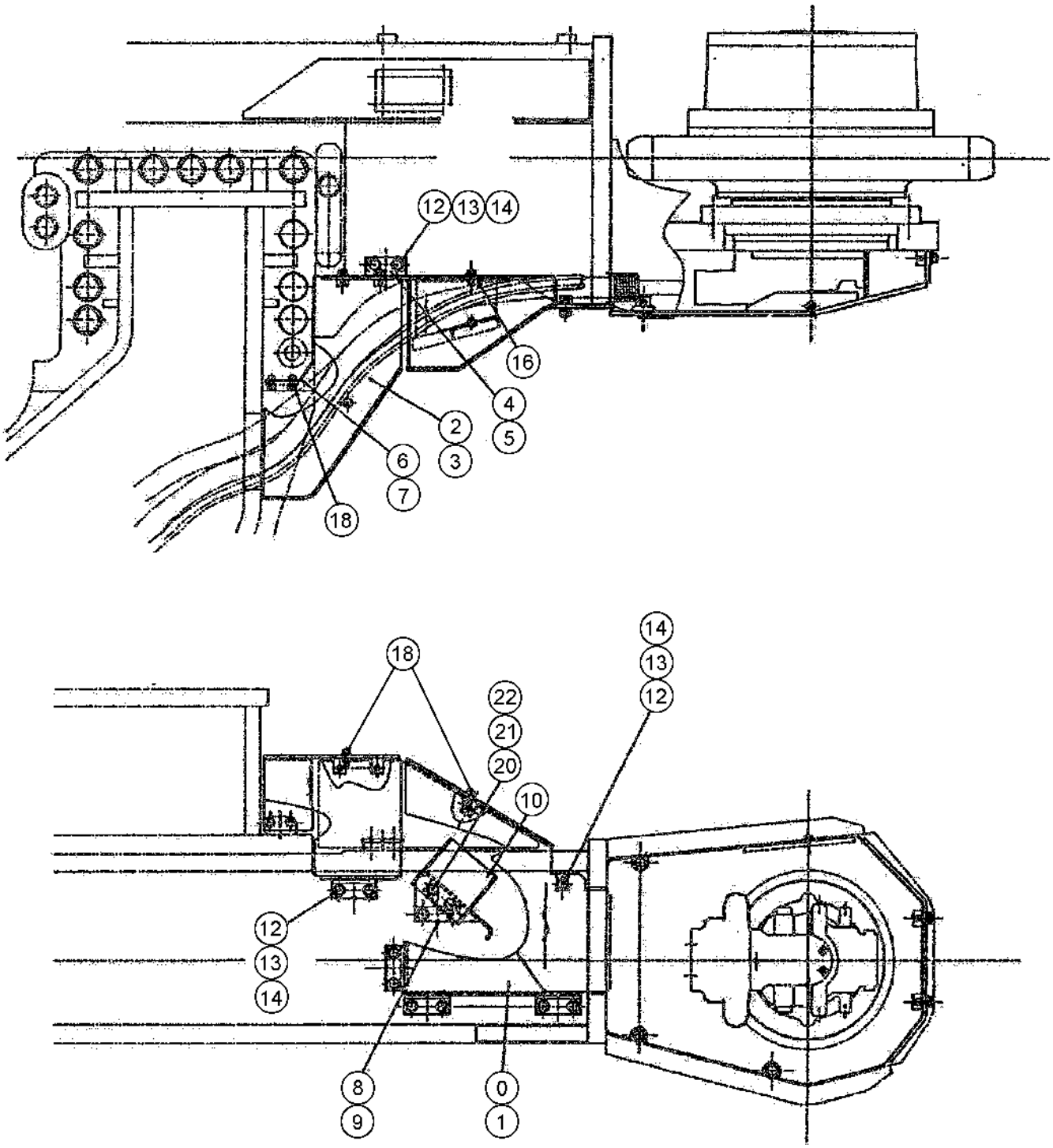

T157501

PROPEL HYDRAULIC HOSE COVERS
(SERIAL NUMBER 005479-)

KEY	PART NO.	PART NAME	QTY	SERIAL NO.	REMARKS
0	7040056	COVER	1		
1	7040057	COVER	1		
2	8083389	COVER	1		
3	8083388	COVER	1		
4	8083377	COVER	1		
5	8083378	COVER	1		
6	8083375	COVER	1		
7	8083376	COVER	1		
8	8083391	BRACKET	1		
9	8083392	BRACKET	1		
10	4451259	PLATE	2		
12	4257968	BOLT	22		
13	12H294	LOCK WASHER	22		5/8"
14	24M7053	WASHER	22		17 X 30 X 3 MM
16	12M7058	LOCK WASHER	6		12.200 MM, (SUB FOR 12M7067)
	19M8011	CAP SCREW	6		M12 X 30
	24H1748	WASHER	6		1/2" X 1-1/4" X 0.105"
18	19M8011	CAP SCREW	8		
20	19M8035	CAP SCREW	8		M16 X 35
21	12H294	LOCK WASHER	8		5/8"
22	24M7053	WASHER	8		17 X 30 X 3 MM

ENGINE AND ENGINE MOUNTS

TP66667 -UN-29SEP99

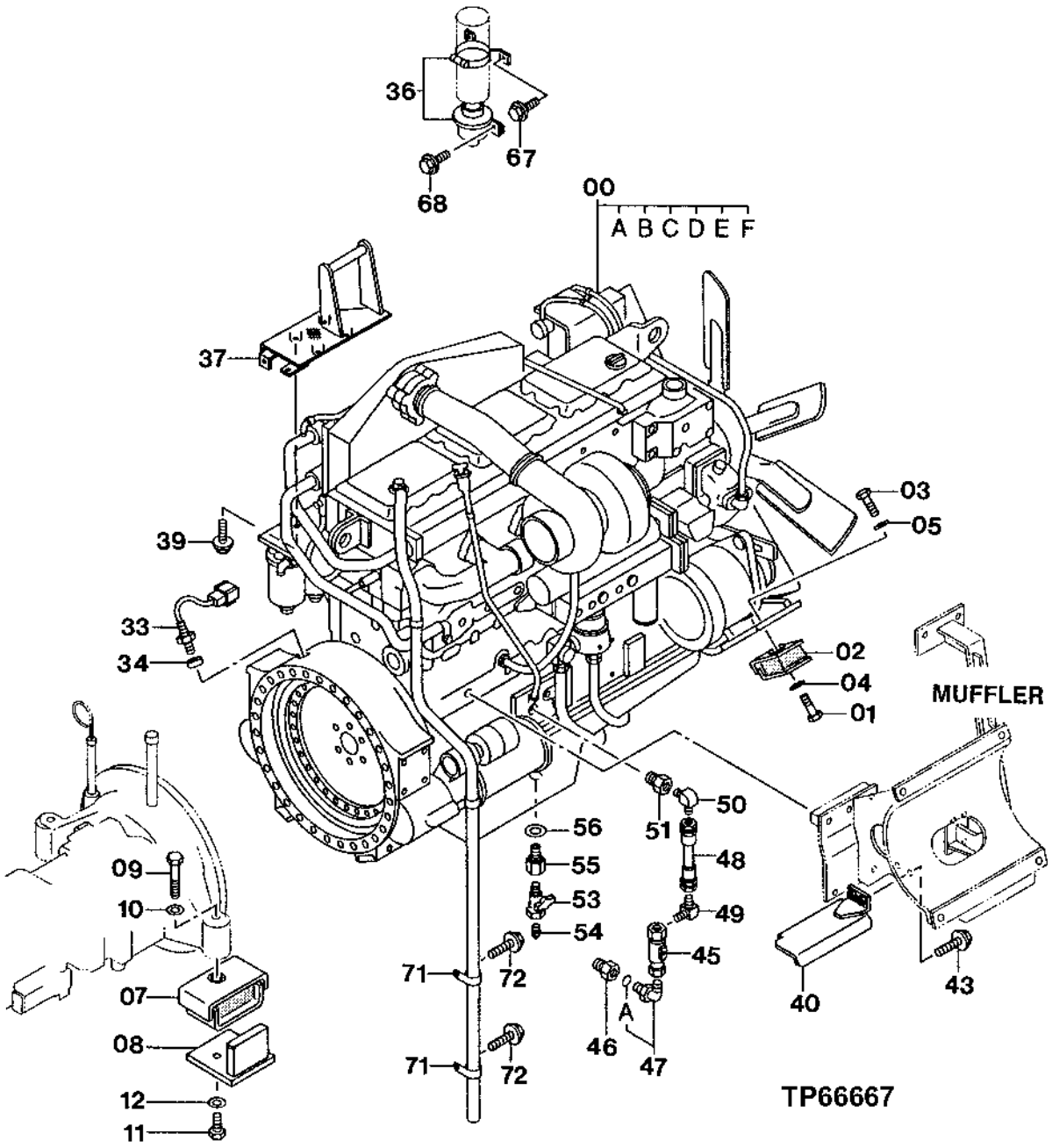

ENGINE AND ENGINE MOUNTS

KEY	PART NO.	PART NAME	QTY	SERIAL NO.	REMARKS
0	4337913	DIESEL ENGINE	1		(SUB FOR TH4337913) (FOR ENGINE REPAIR NOT DETAILED IN THIS BOOK SEE YOUR AUTHORIZED CUMMINS DEALER)
0A	4S00300	SEAT BELT	1		(SUB FOR TH4386999) (FAN)
0B	4S00298	SEAT BELT	1		(SUB FOR TH4388025) (ALTERNATOR)
0C	4S00293	BELT	1		(SUB FOR TH4252560) (WATER PUMP)
0D	AT193242	OIL FILTER	2		(OIL)
0E	PMFS1212	FUEL FILTER	2		(FUEL)
0F	PMWF2075	COOLANT FILTER	1		(WATER SEPARATOR)
1	19M7488	CAP SCREW	2		M16 X 40
2	4424604	ISOLATOR	2		(SUB FOR TH4409528, 4424599)
3	19M8035	CAP SCREW	2		M16 X 35
4	4382720	WASHER	2		(SUB FOR TH4382720)
5	24M7338	WASHER	2		17 X 30 X 3 MM (0.669" X 1.181" X 0.118")
7	4482632	ISOLATOR	2		(SUB FOR TH4338179, 4421305)
8	8079801	STOP	2		(SUB FOR 8059935)
9	J912410	BOLT	2		(SUB FOR THJ912410)
10	24M7243	WASHER	2		25.400 X 50 X 6 MM (1" X 1.969" X 0.236")
11	J931860	BOLT	4		(SUB FOR AT201960)
12	4114406	WASHER	4		(SUB FOR TH100891)
33	4S00279	SENSOR	1		(SUB FOR TH4283835)
34	4187977	SPACER	1		(SUB FOR TH4187977)
36	4221049	KIT	1		(SUB FOR TH4221049)
37	8067464	BRACKET	1		(SUB FOR TH8067464)
39	19M7402	CAP SCREW	4		M10 X 25
	12M7066	LOCK WASHER	4		10 MM (0.394")
40	8073556	COVER	1		(SUB FOR TH8073556)
41	19H2994	CAP SCREW	2		15.875 X 38.100 MM (5/8" X 1-1/2")
43	19M8011	CAP SCREW	2		M12 X 30
	12M7058	LOCK WASHER	2		12.200 MM (0.480") (SUB FOR 12M7067)
45	8065254	FITTING	1		(SUB FOR TH8065254)
46	4267664	PIPE PLUG	1		(SUB FOR TH4267664)
47	4154672	ELBOW FITTING	1		(SUB FOR TH101008)
47A	4506418	O-RING	1		(SUB FOR U46489)
48	4343708	HYDRAULIC HOSE - FABRICATE	1		(SUB FOR TH4343708)
49	4337085	ELBOW FITTING	1		(SUB FOR TH4337085)
50	4364623	ELBOW FITTING	1		(SUB FOR TH4364623)
51	4382149	PIPE PLUG	1		(SUB FOR TH4382149)
53	4193832	DRAIN VALVE	1		(SUB FOR TH4193832)
54	94-2025	FITTING PLUG	1		(SUB FOR TH109497)
55	4319517	ADAPTER	1		(SUB FOR TH4319517)
56	4363576	WASHER	1		(SUB FOR TH4363576)
67	12M7056	LOCK WASHER	2		(SUB FOR AT133601)
68	19M7881	SCREW	2		M8 X 20
	12M7056	LOCK WASHER	2		8 MM (0.315") (SUB FOR 12M7065)
71	4235654	CLIP	2		(SUB FOR AT122384)
72	19M7938	CAP SCREW	2		M10 X 20
	12M7066	LOCK WASHER	2		10 MM (0.394")
73	4422787	BOLT	8		
74	6020122	BRACKET	1		

RADIATOR

TP66670 -UN-29SEP99

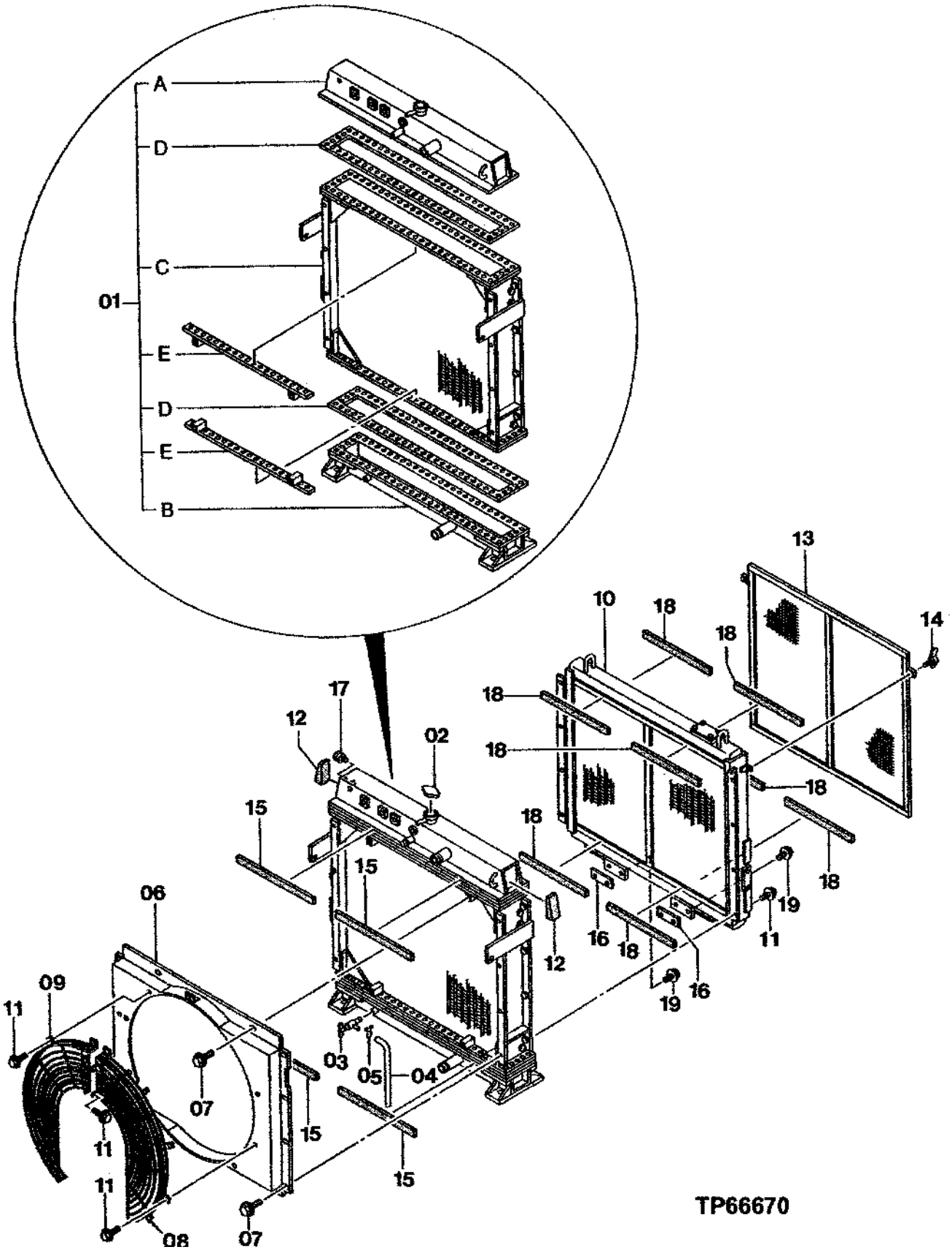

RADIATOR

KEY	PART NO.	PART NAME	QTY	SERIAL NO.	REMARKS
1	4397903	RADIATOR	1		(SUB FOR TH4397903)
1A	4397914	RADIATOR	1		(SUB FOR TH4397914)
1B	4397915	BASE	1		(SUB FOR TH4397915)
1C	4397916	CORE	1		(SUB FOR TH4397916)
1D	4377119	GASKET	2		(SUB FOR TH4377119)
1E	4410968	ISOLATOR	1		(SUB FOR TH4410968)
2	4231888	FILLER CAP	1		(SUB FOR AT122559)
3	4248510	DRAIN PLUG	1		(SUB FOR TH4248510)
4	4397904	HYDRAULIC HOSE	1		(SUB FOR TH4397904)
5	4143888	HOSE CLAMP	1		(SUB FOR TH4143888)
6	4397905	SHROUD	1		(SUB FOR TH4397905)
7	19M7662	CAP SCREW	12		M10 X 30
	12M7066	LOCK WASHER	12		10 MM (0.394")
	24M7028	WASHER	12		10.500 X 20 X 2 MM (0.413" X 0.787" X 0.079")
8	4397906	GUARD	1		(SUB FOR TH4397906)
9	4397907	GUARD	1		(SUB FOR TH4397907)
10	4397908	OIL COOLER	1		(SUB FOR TH4397908)
11	19M7402	CAP SCREW	20		M10 X 25
	12M7066	LOCK WASHER	20		10 MM (0.394")
	24M7028	WASHER	20		10.500 X 20 X 2 MM (0.413" X 0.787" X 0.079")
12	4252612	ISOLATOR	2		(SUB FOR TH4252612)
13	4397909	SCREEN	1		(SUB FOR TH4397909)
14	21M1690	WING SCREW	2		M6 X 16
15	4397910	ISOLATOR	4		(SUB FOR TH4397910)
16	4257370	SHIM	1		(SUB FOR TH4257370)
17	4397917	SIGHT PLUG	1		(SUB FOR TH4397917)
18	4397913	ISOLATOR	8		(SUB FOR TH4397913)
19	19M8011	CAP SCREW	4		M12 X 30
	12H301	LOCK WASHER	4		12.700 MM (1/2")
	24M7047	WASHER	4		13 X 24 X 2.500 MM (0.512" X 0.945" X 0.098")

RADIATOR SUPPORT

TP66671 -UN-29SEP99

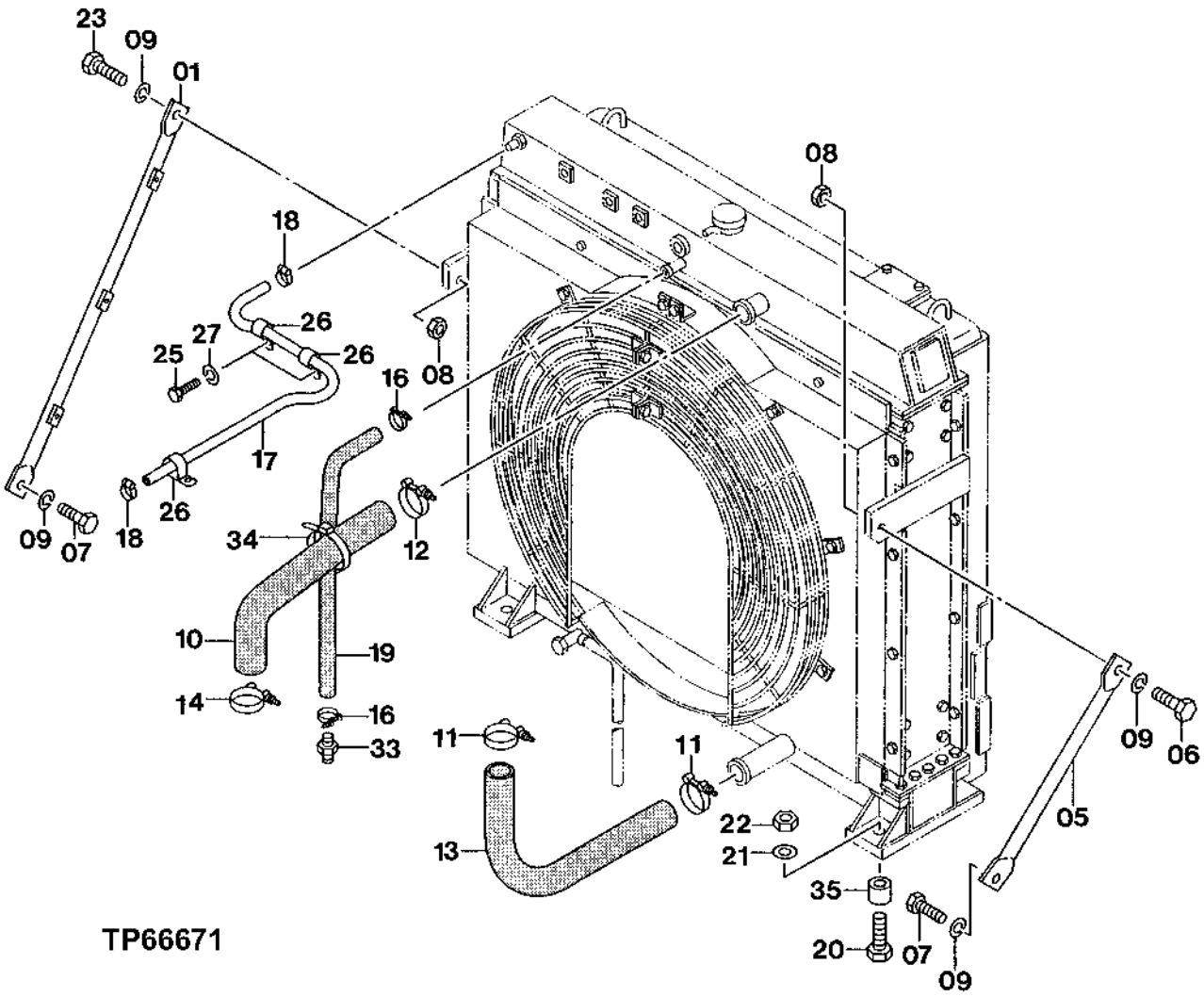

RADIATOR SUPPORT

KEY	PART NO.	PART NAME	QTY	SERIAL NO.	REMARKS
1	8066966	SUPPORT	1		(SUB FOR TH8066966)
5	4270502	SUPPORT	1		(SUB FOR TH4270502)
6	19M7489	CAP SCREW	1		M16 X 45
7	19M8035	CAP SCREW	2		M16 X 35
8	14M7276	NUT	2		M16
9	12H294	LOCK WASHER	4		15.875 MM (5/8")
10	3073547	RADIATOR HOSE	1		(SUB FOR TH3073547)
11	AT39141	HOSE CLAMP	2		
12	RE35791	CLAMP	1		
13	3071817	RADIATOR HOSE	1		(SUB FOR TH3071817)
14	4285236	HOSE CLAMP	1		(SUB FOR TH4285236)
16	TY22467	CLAMP	2		
17	4346189	RADIATOR HOSE	1		(SUB FOR TH4346189)
18	TY22462	CLAMP	2		(SUB FOR AR48236)
19	4414897	RADIATOR HOSE	1		(SUB FOR TH4414897)
20	J932405	BOLT	4		(SUB FOR TH102871)
21	24M7243	WASHER	4		25.400 X 50 X 6 MM (1" X 1.969" X 0.236")
22	M660024	NUT	4		(SUB FOR THM660024)
23	J901655	BOLT	1		(SUB FOR TH104437)
25	19M7938	CAP SCREW	2		M10 X 20
26	4190275	CLIP	3		(SUB FOR TH108598)
27	12M7066	LOCK WASHER	2		10 MM (0.394")
33	4222380	FITTING	1		(SUB FOR TH4222380)
34	H77698	TIE BAND	1		
35	4404224	SPACER	4		(SUB FOR TH4404224)

RESERVE WATER TANK

TP66674 -UN-29SEP99

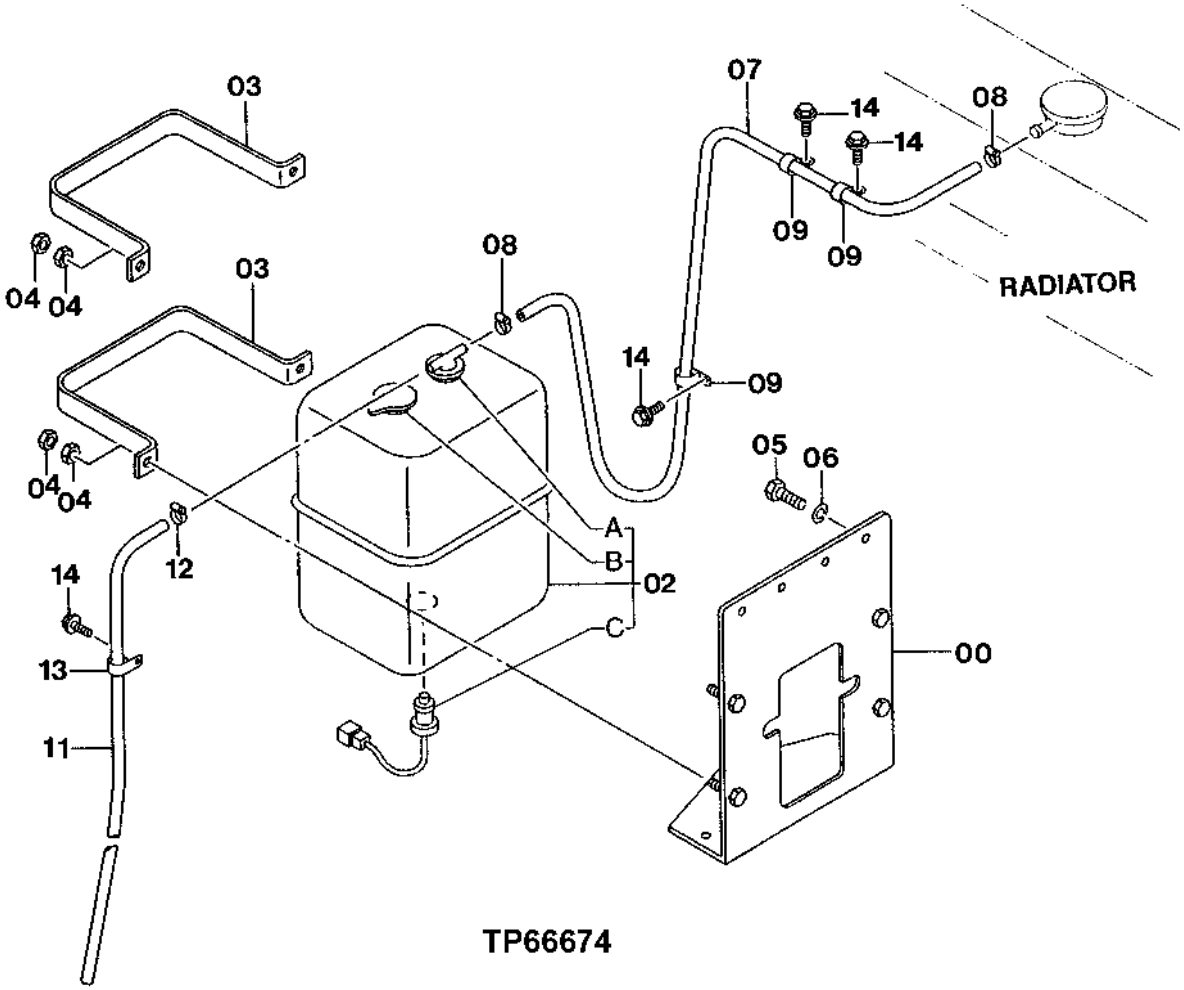

TP66674

RESERVE WATER TANK

KEY	PART NO.	PART NAME	QTY	SERIAL NO.	REMARKS
0	7030955	BRACKET	1		(SUB FOR TH7030955)
2	4414507	TANK	1		(SUB FOR TH4318955)
2A	4414475	CAP	1		(SUB FOR TH4234534)
2B	4414476	CAP	1		(SUB FOR TH4234535)
2C	4338011	SWITCH	1		(SUB FOR TH4338011)
3	4222379	HALF CLAMP	2		(SUB FOR TH4222379)
4	14M7274	NUT	8		M10
5	19M7872	CAP SCREW	4		M12 X 25
6	12H301	LOCK WASHER	4		12.700 MM (1/2")
7	4353970	HOSE	1		(SUB FOR TH4353970)
8	TY22464	CLAMP	2		(SUB FOR AR21836)
9	4190272	CLIP	3		(SUB FOR TH108600)
11	4353956	HOSE	1		(SUB FOR TH4353956)
12	TY22462	CLAMP	1		(SUB FOR AR48236)
13	T30367	CLAMP	1		
14	19M7402	CAP SCREW	4		M10 X 25
	12M7066	LOCK WASHER	4		10 MM (0.394")

ENGINE CONTROL CABLE

T157552 -UN-19JUL02

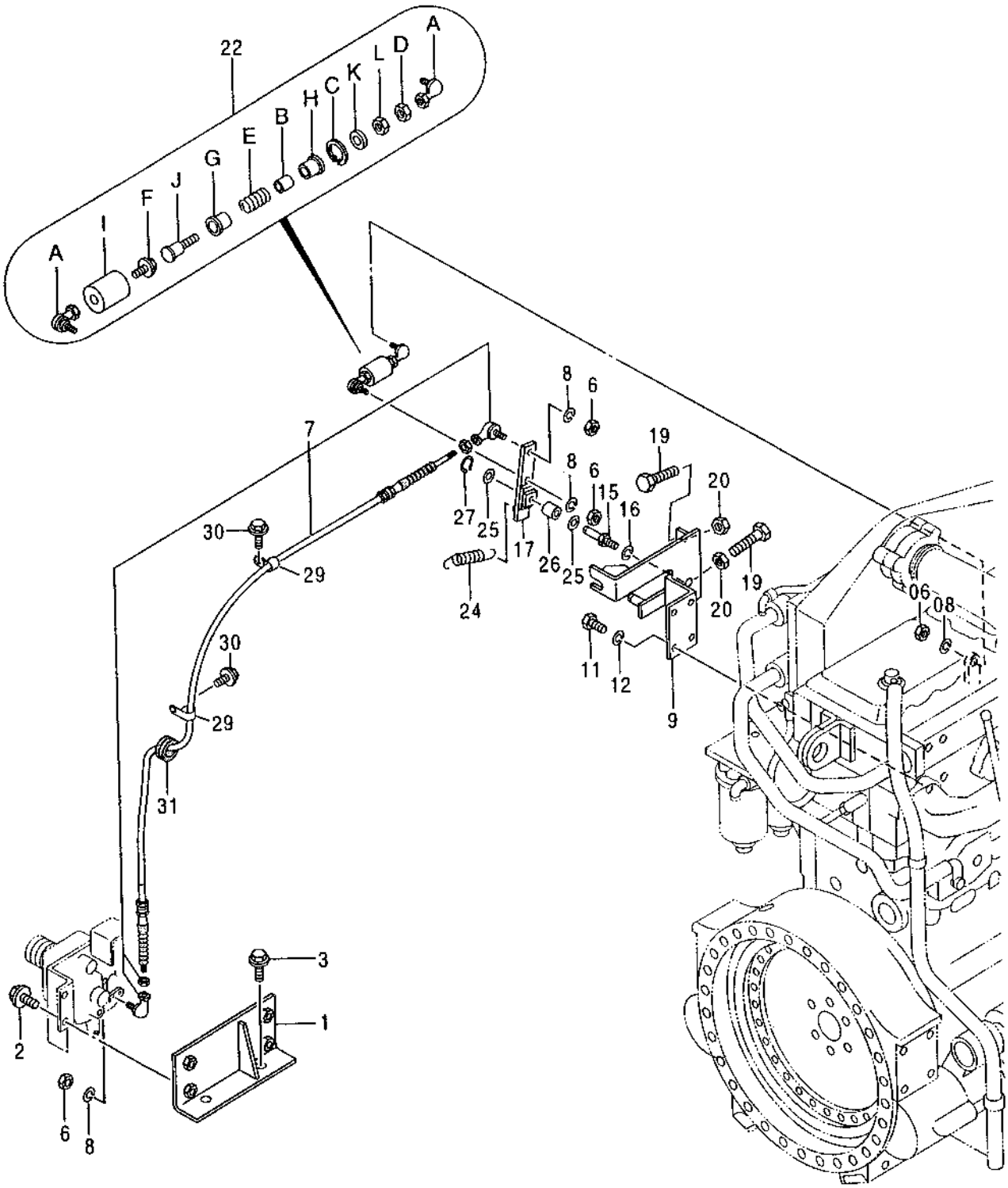

T157552

ENGINE CONTROL CABLE

KEY	PART NO.	PART NAME	QTY	SERIAL NO.	REMARKS
1	8063027	BRACKET	1		(SUB FOR TH8063027)
2	19M7662	CAP SCREW	4		M10 X 30
	12M7066	LOCK WASHER	4		10 MM (0.394")
	24M7028	WASHER	4		10.500 X 20 X 2 MM (0.413" X 0.787" X 0.079")
3	19M7403	CAP SCREW	2		M12 X 35
	12H301	LOCK WASHER	2		12.700 MM (1/2")
	24M7047	WASHER	2		13 X 24 X 2.500 MM (0.512" X 0.945" X 0.098")
6	14M7272	NUT	4		M6
7	4361832	CABLE	1		(SUB FOR TH4361832)
8	12M7006	LOCK WASHER	4		6 MM (0.236")
9	7032447	BRACKET	1		(SUB FOR TH7032447)
11	4294619	BOLT	4		(SUB FOR TH4294619)
12	12H304	LOCK WASHER	4		9.525 MM (3/8")
15	4294567	PIN	1		(SUB FOR TH4294567)
16	12H317	LOCK WASHER	1		14.288 MM (9/16")
17	9747548	LINK	1		(SUB FOR TH9747548)
19	4184860	BOLT	2		(SUB FOR TH4184860)
20	14M7272	NUT	2		M6
22	9191191	SPRING	1		(SUB FOR 9140577)
22A	4056017	BALL JOINT	2		(SUB FOR TH102073)
22B	.....	BUSHING	1		
22C	40M7136	SNAP RING	1		
22D	14M7272	NUT	2		M6
22E	4294566	SPRING	1		(SUB FOR TH4294566)
22F	J900614	BOLT	1		(SUB FOR TH104056)
	12M7006	LOCK WASHER	1		6 MM (0.236")
22G	.....	PLATE	1		
22H	.....	PLATE	1		
22I	.....	PLATE	1		
22J	.....	ROD	1		
22K	.....	WASHER	1		
22L	.....	NUT	1		(4045245 NOT AVAILABLE)
24	4353147	EXTENSION SPRING	1		(SUB FOR TH4353147)
25	24M7085	WASHER	2		15 X 28 X 2.500 MM (0.591" X 1.102" X 0.098")
26	4173387	BUSHING	1		(SUB FOR TH103802)
27	40M7188	SNAP RING	1		
29	4190261	CLIP	2		(SUB FOR TH109649)
30	19M7402	CAP SCREW	2		M10 X 25
	12M7066	LOCK WASHER	2		10 MM (0.394")
31	4184582	GROMMET	1		(SUB FOR AT126267)

ENGINE CONTROL MOTOR

TP66719 -UN-30SEP99

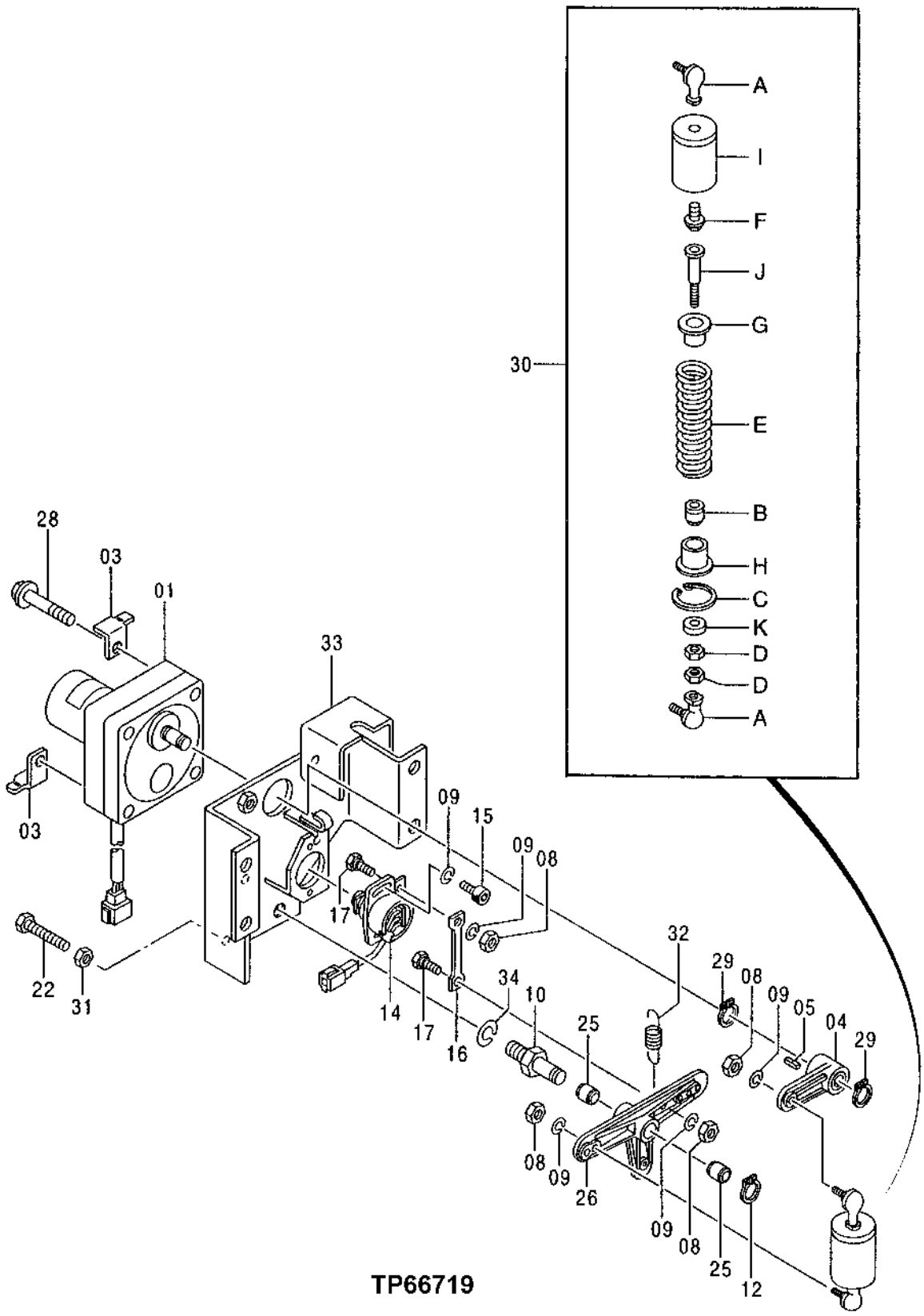

ENGINE CONTROL MOTOR

KEY	PART NO.	PART NAME	QTY	SERIAL NO.	REMARKS
1	4257163	ELECTRIC MOTOR	1		(SUB FOR AT154932)
3	4257159	BRACKET	2		(SUB FOR AT154243)
4	3051015	LEVER	1		(SUB FOR AT154897)
5	94-2204	SHAFT KEY	1		(SUB FOR AT155185)
8	14M7272	NUT	4		M6
9	12M7006	LOCK WASHER	6		6 MM (0.236")
10	4257162	PIN	1		(SUB FOR AT154931)
12	40M7188	SNAP RING	1		
14	4257164	SENSOR	1		(SUB FOR AT154933)
15	19M8553	SCREW	2		M6 X 16
16	4254025	LINK	1		(SUB FOR AT154927)
17	4254023	BOLT	2		(SUB FOR AT154926)
22	19M7164	CAP SCREW	1		M8 X 50
25	4260781	BUSHING	2		(SUB FOR AT154938)
26	2030310	LEVER	1		(SUB FOR AT154894)
28	19M8499	CAP SCREW	4		M10 X 60
	12M7066	LOCK WASHER	4		10 MM (0.394")
29	40M7202	SNAP RING	2		
30	9095828	SPRING ASSEMBLY	1		(SUB FOR AT155179)
30A	4056017	BALL JOINT	2		(SUB FOR TH102073)
30B	.....	BUSHING	1		
30C	40M7136	SNAP RING	1		
30D	14M7272	NUT	2		M6
30E	.....	SPRING	1		
30F	J900614	BOLT	1		(SUB FOR TH104056)
	12M7006	LOCK WASHER	1		6 MM (0.236")
30G	.....	PLATE	1		(AT154943 NOT AVAILABLE FOR SERVICE)
30H	.....	PLATE	1		
30I	.....	RING	1		
30J	.....	ROD	1		
30K	.....	WASHER	1		
31	14M7273	NUT	1		M8
32	4271909	SPRING	1		(SUB FOR AT154946)
33	7024515	BRACKET	1		(SUB FOR AT155150)
34	12H317	LOCK WASHER	1		14.288 MM (9/16")

AIR CLEANER

TP66675 -UN-29SEP99

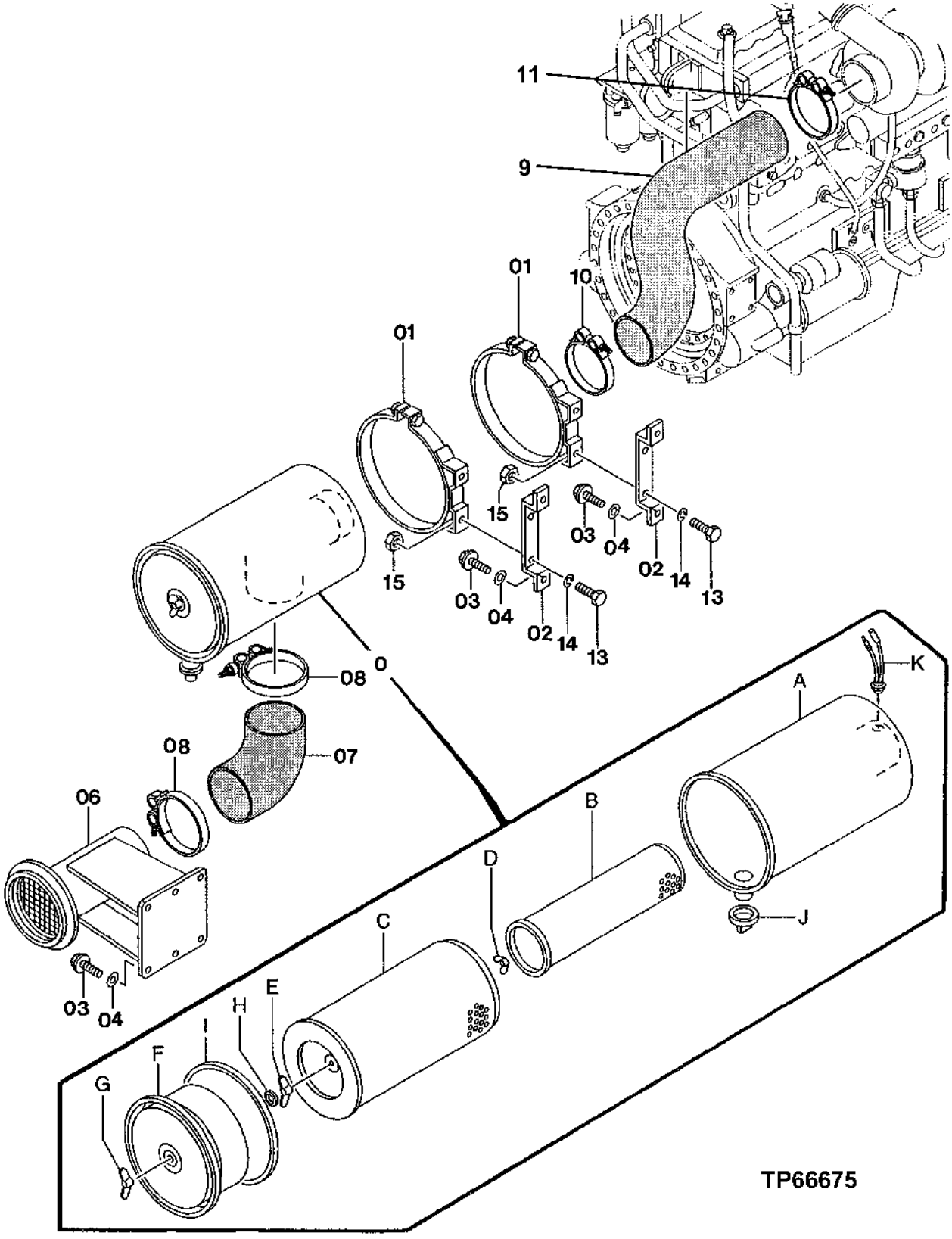

AIR CLEANER

KEY	PART NO.	PART NAME	QTY	SERIAL NO.	REMARKS
0	4220786	AIR CLEANER	1		(SUB FOR AT179377)
0A	.....	HOUSING	1		
0B	AT179370	FILTER ELEMENT	1		(INNER)
0C	AT179371	FILTER ELEMENT	1		(OUTER)
0D	AH20849	WING NUT	1		11.125 MM (7/16")
0E	4257360	NUT	1		(SUB FOR AT200998)
0F	4257361	COVER	1		(SUB FOR AT217086)
0G	AR73234	WING NUT	1		11.125 MM (7/16")
0H	P46402	SNAP RING	1		
0I	4257362	GASKET	1		(SUB FOR AT200999)
0J	4152863	VALVE	1		(SUB FOR TH111700)
0K	4419601	INDICATOR	1		(SUB FOR AT131922)
1	4221470	CLAMP	2		(SUB FOR AT178200)
2	4346218	BRACKET	2		(SUB FOR TH4346218)
3	19M8011	CAP SCREW	10		M12 X 30
	12M7058	LOCK WASHER	10		12.200 MM (0.480") (SUB FOR 12M7067)
4	4086891	WASHER	10		(SUB FOR TH104166)
6	7029780	HOSE SUPPORT	1		(SUB FOR TH7029780)
7	4174459	SUCTION HOSE	1		(SUB FOR TH4174459)
8	4287489	HOSE CLAMP	2		(SUB FOR TH4287489)
9	3090531	HOSE	1		(SUB FOR 3088792 AND 3071200)
10	4312517	HOSE CLAMP	1		(SUB FOR TH4312517)
11	4293172	HOSE CLAMP	1		(SUB FOR TH4293172)
13	19M7662	CAP SCREW	4		M10 X 30
14	12M7066	LOCK WASHER	4		10 MM (0.394")
15	14M7274	NUT	4		M10

MUFFLER

TP66678 -UN-29SEP99

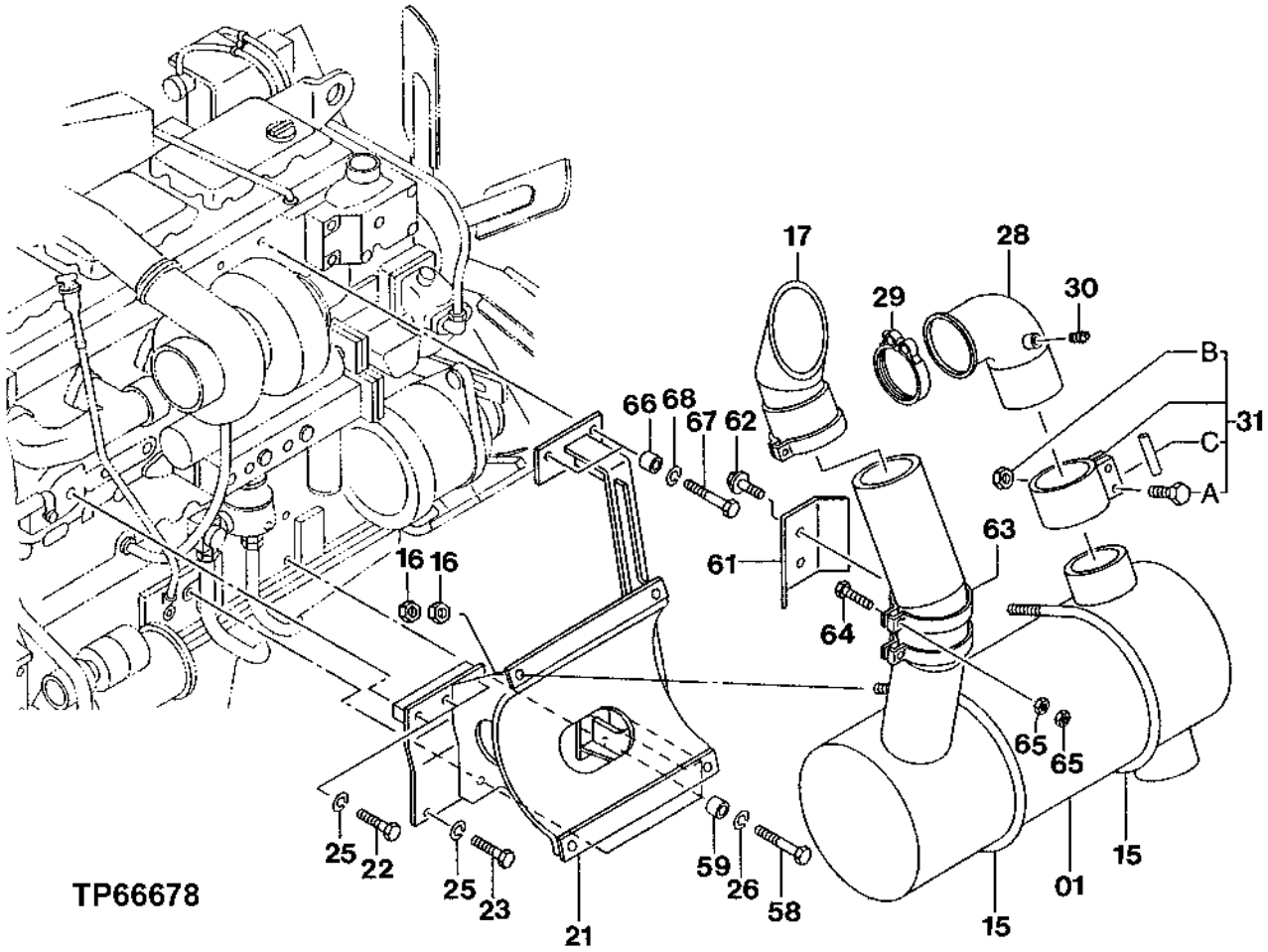

MUFFLER

KEY	PART NO.	PART NAME	QTY	SERIAL NO.	REMARKS
1	4462760	MUFFLER	1		(SUB FOR 4346631)
15	4346116	U-BOLT	2		(SUB FOR TH4346116)
16	14M7275	NUT	8		M12
17	7042943	EXHAUST PIPE	1		(SUB FOR 4358064) (INCLUDES CLAMP AND HARDWARE)
21	6015359	BRACKET	1		(SUB FOR TH6015359)
22	19H2644	CAP SCREW	3		12.700 X 63.500 MM (1/2" X 2-1/2")
23	4070418	BOLT	1		(SUB FOR TH4070418)
25	12H301	LOCK WASHER	4		12.700 MM (1/2")
26	J219083	SPRING WASHER	4		(SUB FOR THJ219083)
28	8063801	EXHAUST PIPE	1		(SUB FOR TH8063801)
29	4S00286	HOSE CLAMP	1		(SUB FOR TH4223909)
30	T115963	PLUG	1		
31	4255002	CLAMP	1		(SUB FOR TH4255002)
31A	4162836	BOLT	2		(SUB FOR AT154914)
31B	H80440	LOCK NUT	2		11.125 MM (7/16")
31C	T130341	GASKET	1		
58	4382233	BOLT	4		(SUB FOR TH4382233)
59	4258197	SPACER	4		(SUB FOR TH4258197)
61	4382734	PLATE	1		(SUB FOR TH4382734)
62	J011220	BOLT	2		(SUB FOR AT200005)
63	9747954	CLAMP	2		(SUB FOR TH9747954)
64	19M7363	CAP SCREW	2		M12 X 60
65	14M7275	NUT	4		M12
66	4406617	SPACER	2		(SUB FOR TH4406617)
67	19H2549	CAP SCREW	2		9.525 X 47.625 MM (3/8" X 1-7/8")
68	J219083	SPRING WASHER	2		(SUB FOR THJ219083)

FUEL TANK

TP66679 -UN-29SEP99

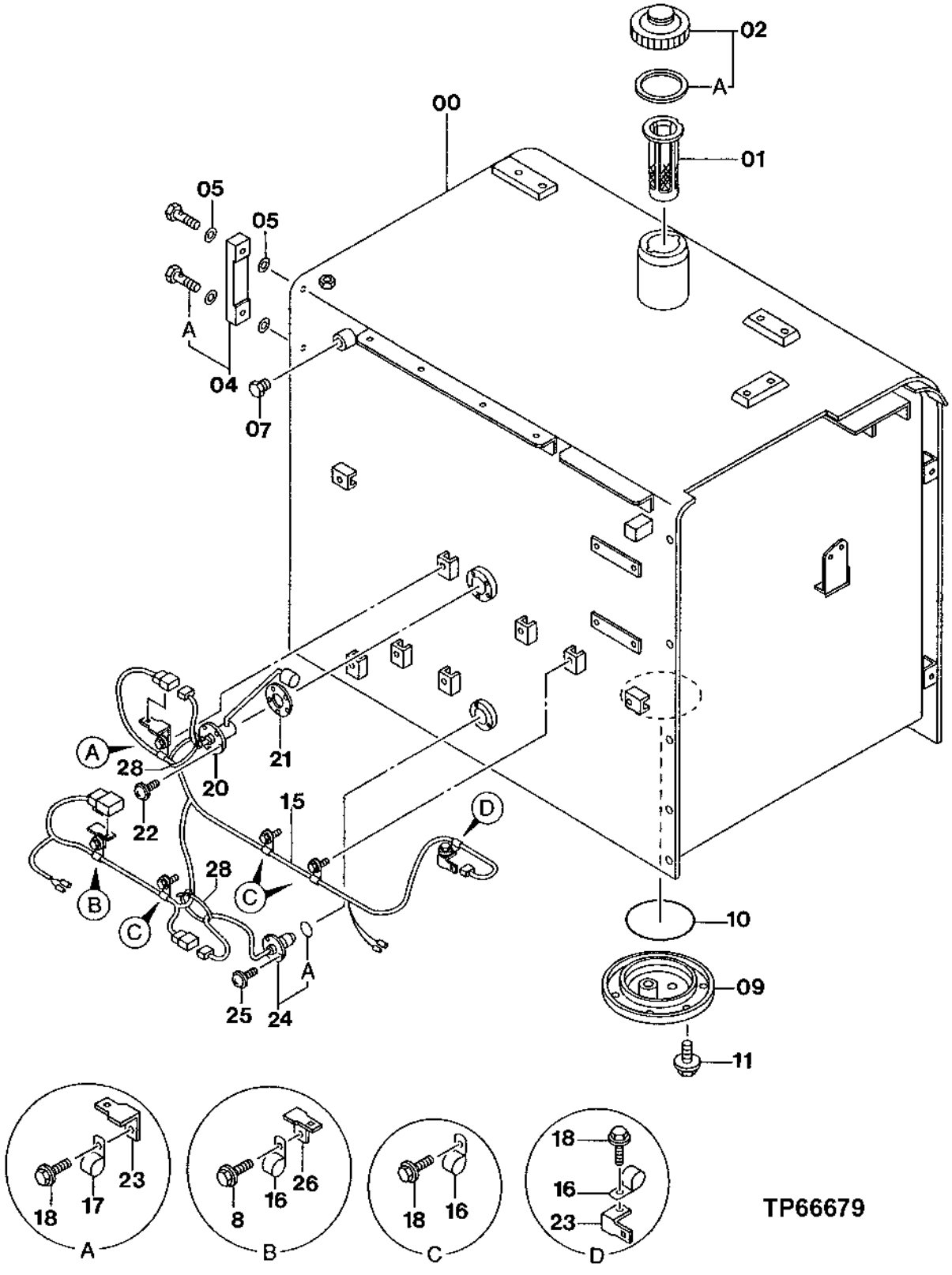

FUEL TANK

KEY	PART NO.	PART NAME	QTY	SERIAL NO.	REMARKS
0	6014463	FUEL TANK	1		(SUB FOR TH6014463)
1	4121496	FUEL FILTER	1		(SUB FOR TH100509)
2	4361638	FILLER CAP	1		(SUB FOR AT175989)
2A	4168820	PACKING	1		(SUB FOR TH103384)
4	8033923	LEVEL GAUGE	1		(SUB FOR TH108250)
4A	4100967	FITTING	2		(SUB FOR TH101894)
5	449558	WASHER	4		(SUB FOR TH100675)
7	4187322	PLUG	1		(SUB FOR TH4187322)
9	8062320	COVER	1		(SUB FOR TH8062320)
10	TH100679	O-RING	1		159.300 X 5.700 MM (6.272" X 0.224")
11	19M7402	CAP SCREW	6		M10 X 25
	12M7058	LOCK WASHER	6		12.200 MM (0.480") (SUB FOR 12M7067)
15	3073394	WIRING HARNESS	1		(SUB FOR TH3073394)
16	4190275	CLIP	5		(SUB FOR TH108598)
17	4190261	CLIP	1		(SUB FOR TH109649)
18	19M7402	CAP SCREW	6		M10 X 25
	12M7058	LOCK WASHER	6		12.200 MM (0.480") (SUB FOR 12M7067)
20	4257128	FLOAT	1		(SUB FOR AT154239)
21	U42323	GASKET	1		
22	21M7278	SCREW	5		M5 X 10
23	4257159	BRACKET	2		(SUB FOR AT154243)
24	4129941	FUEL SENDER	1		(SUB FOR TH4129941)
24A	4141171	O-RING	1		(SUB FOR TH4141171)
25	J450512	SCREW, WITH WASHER	3		(SUB FOR AT203685)
26	4336875	BRACKET	1		(SUB FOR TH4336875)
28	H77698	TIE BAND	2		

FUEL PIPINGS

TP66682 -UN-29SEP99

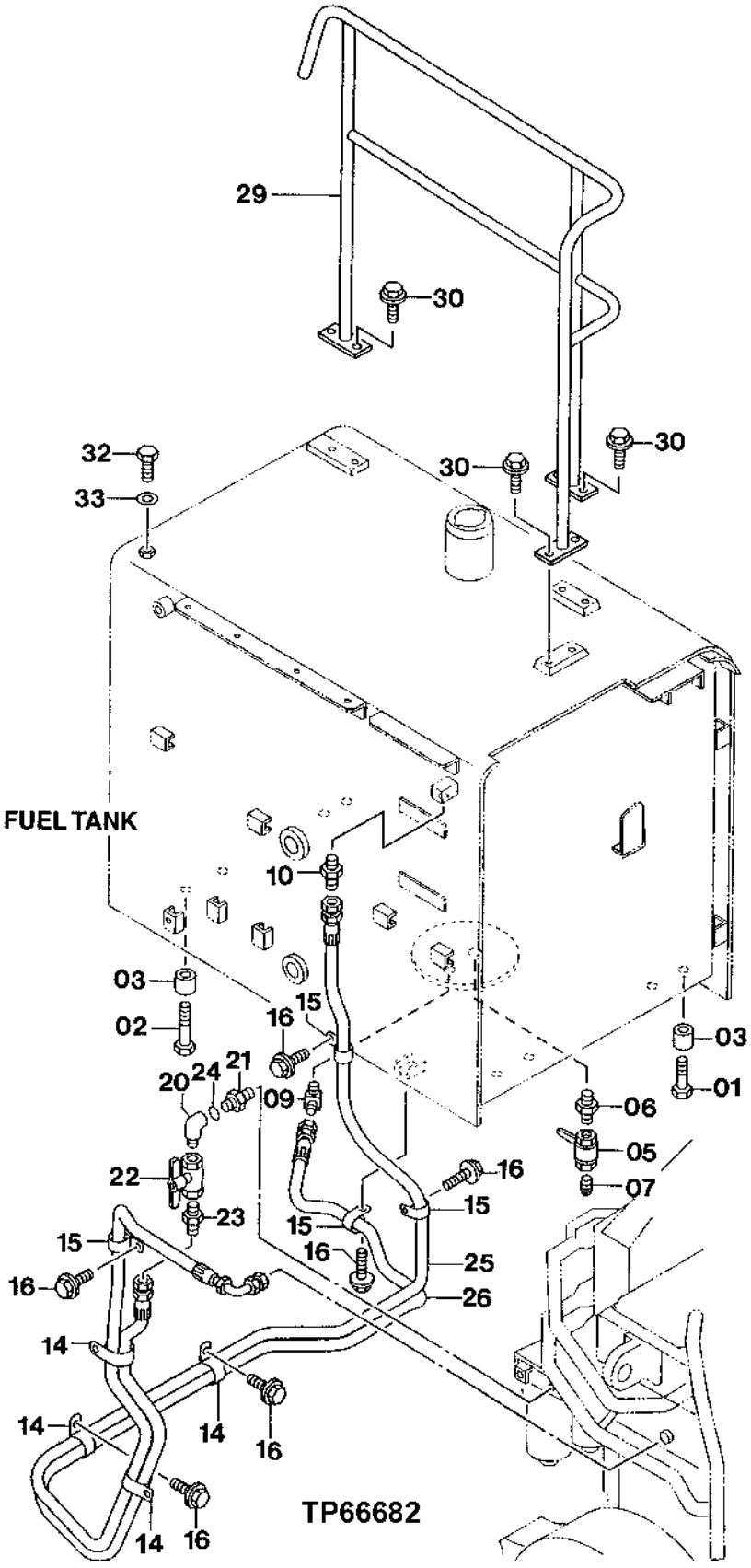

FUEL PIPINGS

KEY	PART NO.	PART NAME	QTY	SERIAL NO.	REMARKS
1	THJ921880	BOLT	4		
2	19M8333	CAP SCREW	4		M18 X 110
3	4404209	SPACER	8		(SUB FOR TH4404209)
5	4209782	VALVE	1		(SUB FOR AT128432)
6	94-1702	ADAPTER	1		(SUB FOR TH102949)
7	94-2023	FITTING PLUG	1		(SUB FOR TH100667)
9	4187486	ELBOW FITTING	1		(SUB FOR TH4187486)
10	4187487	FITTING	1		(SUB FOR TH4187487)
14	4193848	CLIP	4		(SUB FOR TH110522)
15	T24432	CLAMP	4		
16	19M7938	CAP SCREW	6		M10 X 20
	12M7066	LOCK WASHER	6		10 MM (0.394")
20	94-0633	ELBOW FITTING	1		(SUB FOR TH101968)
21	4366569	FITTING	1		(SUB FOR TH4366569)
22	4203434	VALVE	1		(SUB FOR TH4203434)
23	4320866	FITTING	1		(SUB FOR TH4320866)
24	R26906	O-RING	1		19.177 X 2.464 MM (0.755" X 0.097")
25	4353329	HYDRAULIC HOSE - FABRICATE	1		(SUB FOR TH4353329)
26	4353330	HYDRAULIC HOSE - FABRICATE	1		(SUB FOR TH4353330)
29	7038222	HANDRAIL	1		(SUB FOR 7030822)
30	19M8011	CAP SCREW	6		M12 X 30
	12H301	LOCK WASHER	6		12.700 MM (1/2")
	24M7047	WASHER	6		13 X 24 X 2.500 MM (0.512" X 0.945" X 0.098")
32	19M8231	CAP SCREW	1		M12 X 16
33	24M7047	WASHER	1		13 X 24 X 2.500 MM (0.512" X 0.945" X 0.098")

LABELS AND DECALS

TP67018 -UN-12JAN00

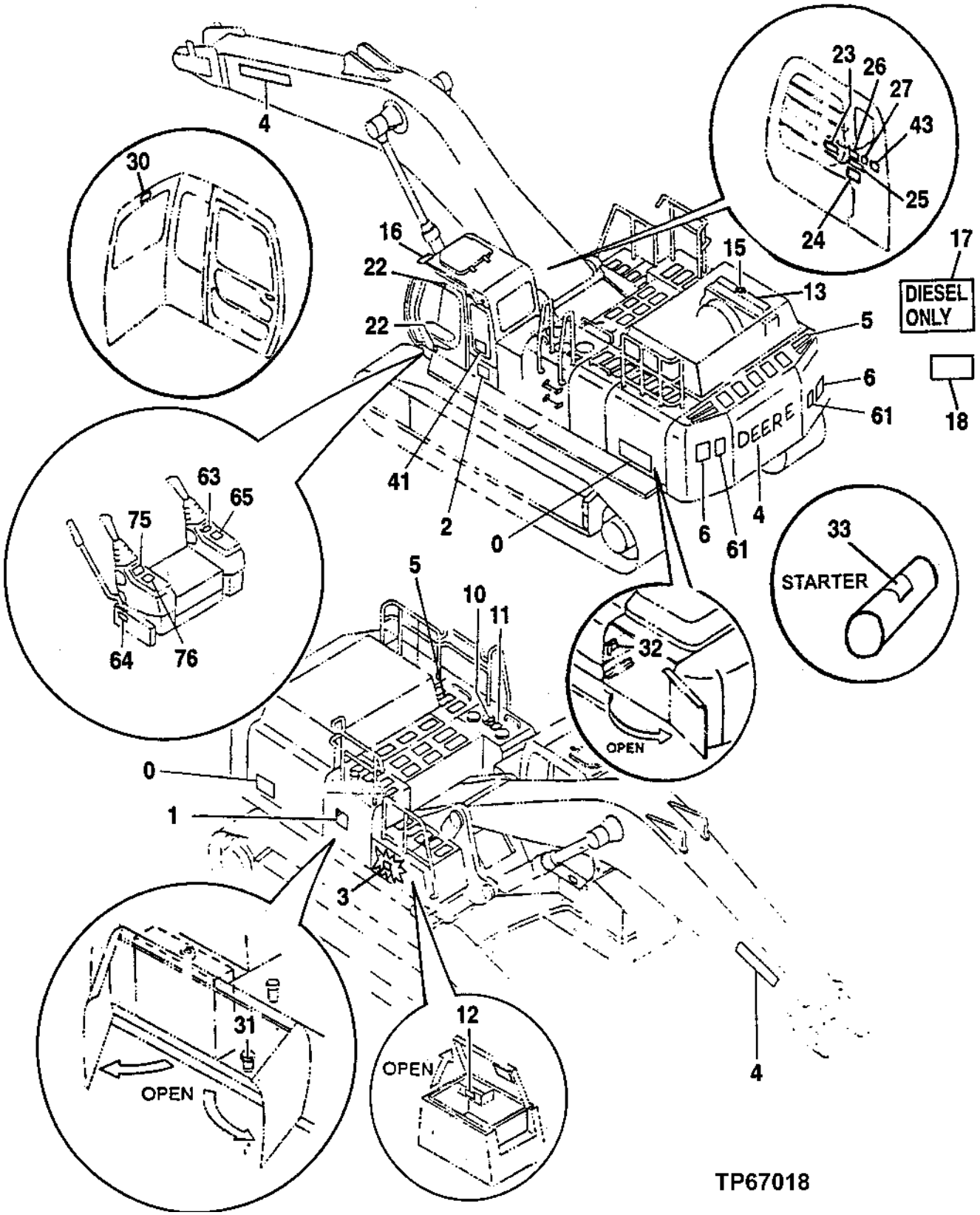

LABELS AND DECALS

KEY	PART NO.	PART NAME	QTY	SERIAL NO.	REMARKS
0	T183540	DECAL	2		(750 MODEL DESIGNATION)
1	JD5691	LABEL	1		(LEAPING DEER)
2	JD5689	LABEL	1		(LEAPING DEER) (SUB FOR AT155733)
3	R56902	LABEL	1		(DRY AIR CLEANER)
4	T183547	DECAL	3		(DEERE)
5	H21259	MAT	AR		
6	T147008	SAFETY SIGN	2		(WARNING - STAY CLEAR)
10	T101942	LABEL	1		(HYDRAULIC OIL)
11	P63448	DECAL	1		(SUB FOR AT155733) (PUMP BLEED INFORMATION)
12	T184168	LABEL	1		(PERIODIC MAINTENANCE)
13	T152657	SAFETY SIGN	1		(RADIATOR)
15	T146671	SAFETY SIGN	1		(RADIATOR CAP)
16	T184251	LABEL	1		(JOHN DEERE - ON FRONT WINDOW)
17	T79632	LABEL	1		(DIESEL ONLY - ON FUEL TANK)
18	T184474	LABEL	1		
22	AT215194	ANGLE	2		(SUB FOR TH101411) (DOOR STOPPER)
23	T184232	MOUNTING PARTS	1		ENGLISH (OPERATIONAL - START STOP)
24	T159887	SAFETY SIGN	1		ENGLISH (CAUTION)
25	T146668	SAFETY SIGN	1		(WARNING - AVOID CRUSHING)
26	T146667	SAFETY SIGN	1		(DANGER - ELECTROCUTION)
27	T157809	SAFETY SIGN	1		(IMPORTANT - BREAK WINDOW FOR SECONDARY EXIT)
30	T146664	SAFETY SIGN	1		(CAUTION WINDOW LOCK - INSIDE CAB)
31	T183425	LABEL	1		(WARNING - ACCUMULATOR)
32	T149983	LABEL	1		(IMPORTANT - OIL LEVEL) (INSIDE RIGHT PUMP COMPARTMENT)
33	T146102	LABEL	1		(SUB FOR T146195) (BYPASS START)
41	T184221	LABEL	1		(LIFT CHART)
43	4266386	LABEL	1		SIDE FRAME WORK POSITION, (SUB FOR T116735)
60	JD5691	LABEL	1		(LEAPING DEER)
61	T161266	LABEL	2		(RED REFLECTOR TAPE)
63	T159842	LABEL	1		(RIGHT CONTROL LEVER - SAE PATTERN) (WHITE BACKGROUND)
	T159843	LABEL	1		(RIGHT CONTROL LEVER - JOHN DEERE PATTERN) (YELLOW BACKGROUND)
64	4299059	LABEL	1		(SUB FOR T138886) (HYDRAULIC LOCKOUT)
65	4264805	LABEL	1		(SUB FOR AT155730) (IGNITION KEY SWITCH)
75	T159841	LABEL	1		(LEFT CONTROL LEVER - SAE PATTERN) (WHITE BACKGROUND)
	T159844	LABEL	1		(LEFT CONTROL LEVER - JOHN DEERE PATTERN) (YELLOW BACKGROUND)
76	4288971	LABEL	1		(SUB FOR AT155729) (ETHER AID - MOTION CANCEL)

METRIC O-RING KIT

TP70402 -UN-13JUL00

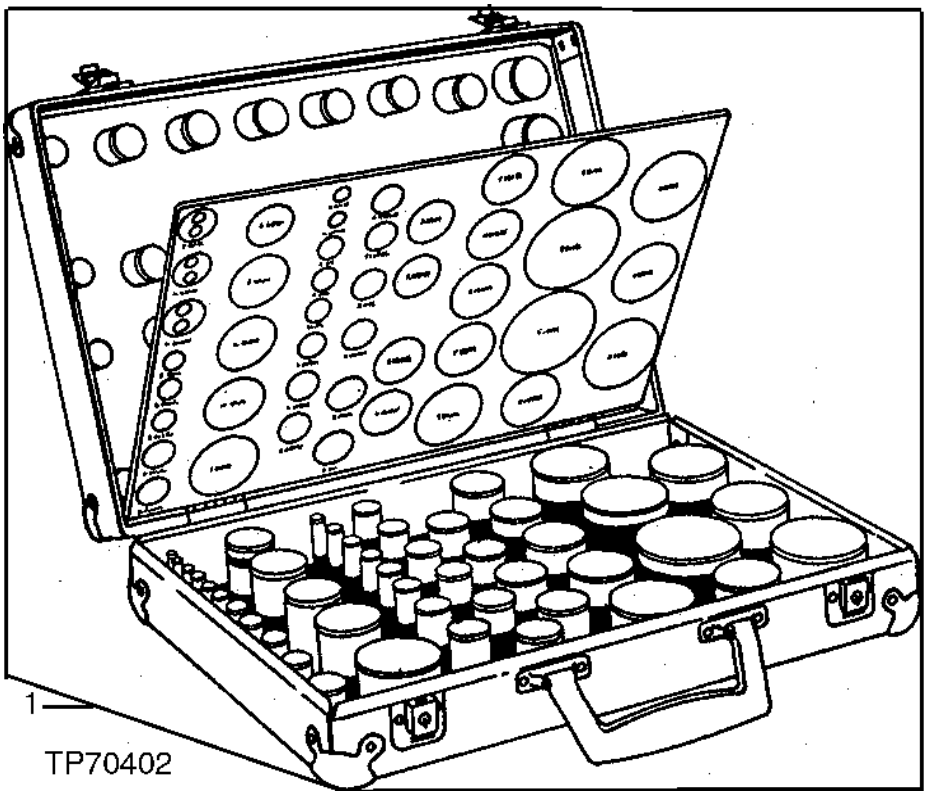

METRIC O-RING KIT

KEY	PART NO.	PART NAME	QTY	SERIAL NO.	REMARKS
1	AT130157	O-RING KIT	1		(CONTAINS ALL ITEMS LISTED BELOW)
..	CH11436	O-RING	5		49.400 X 3.100 MM (1.945" X 0.122")
..	CH11569	PACKING	5		
..	CH11570	O-RING	5		13.800 X 2.400 MM (0.543" X 0.094")
..	CH11571	PACKING	5		
..	CH11572	PACKING	2		
..	CH12329	PACKING	5		
..	CH14634	O-RING	5		17.800 X 2.400 MM (0.701" X 0.094")
..	CH14701	O-RING	5		39.400 X 3.100 MM (1.551" X 0.122")
..	CH17167	O-RING	2		9.800 X 1.900 MM (0.386" X 0.075")
..	CH19111	O-RING	5		7.645 X 1.778 MM (0.301" X 0.070")
..	M800650	PACKING	10		
..	M800893	PACKING	5		
..	TH100044	O-RING	5		34.400 X 3.100 MM (1.354" X 0.122")
..	4506424	O-RING	10		(SUB FOR TH100055)
..	4506428	O-RING	5		(SUB FOR TH100136)
..	A811030	O-RING	5		(SUB FOR TH101300)
..	4506408	O-RING	2		(SUB FOR TH101490)
..	TH101926	O-RING	5		28.700 X 3.500 MM (1.130" X 0.138")
..	957474	O-RING	2		(SUB FOR TH102706)
..	A811040	O-RING	2		(SUB FOR TH102992)
..	4153084	O-RING	2		(SUB FOR TH103446)
..	TH103574	O-RING	5		21.800 X 2.400 MM (0.858" X 0.094")
..	970860	O-RING	2		(SUB FOR TH104634)
..	4506430	O-RING	2		(SUB FOR TH104930)
..	T110590	PACKING	5		
..	T110593	PACKING	5		
..	T59014	O-RING	5		24.994 X 3.531 MM (63/64" X 0.139")
..	A811045	O-RING	5		(SUB FOR T74492)
..	U10778	O-RING	5		16.358 X 2.210 MM (0.644" X 0.087")
..	U17409	O-RING	5		26.619 X 2.946 MM (1.048" X 0.116")
..	4506418	O-RING	10		(SUB FOR U46489)

LUBRICATOR

T158138 -UN-20AUG02

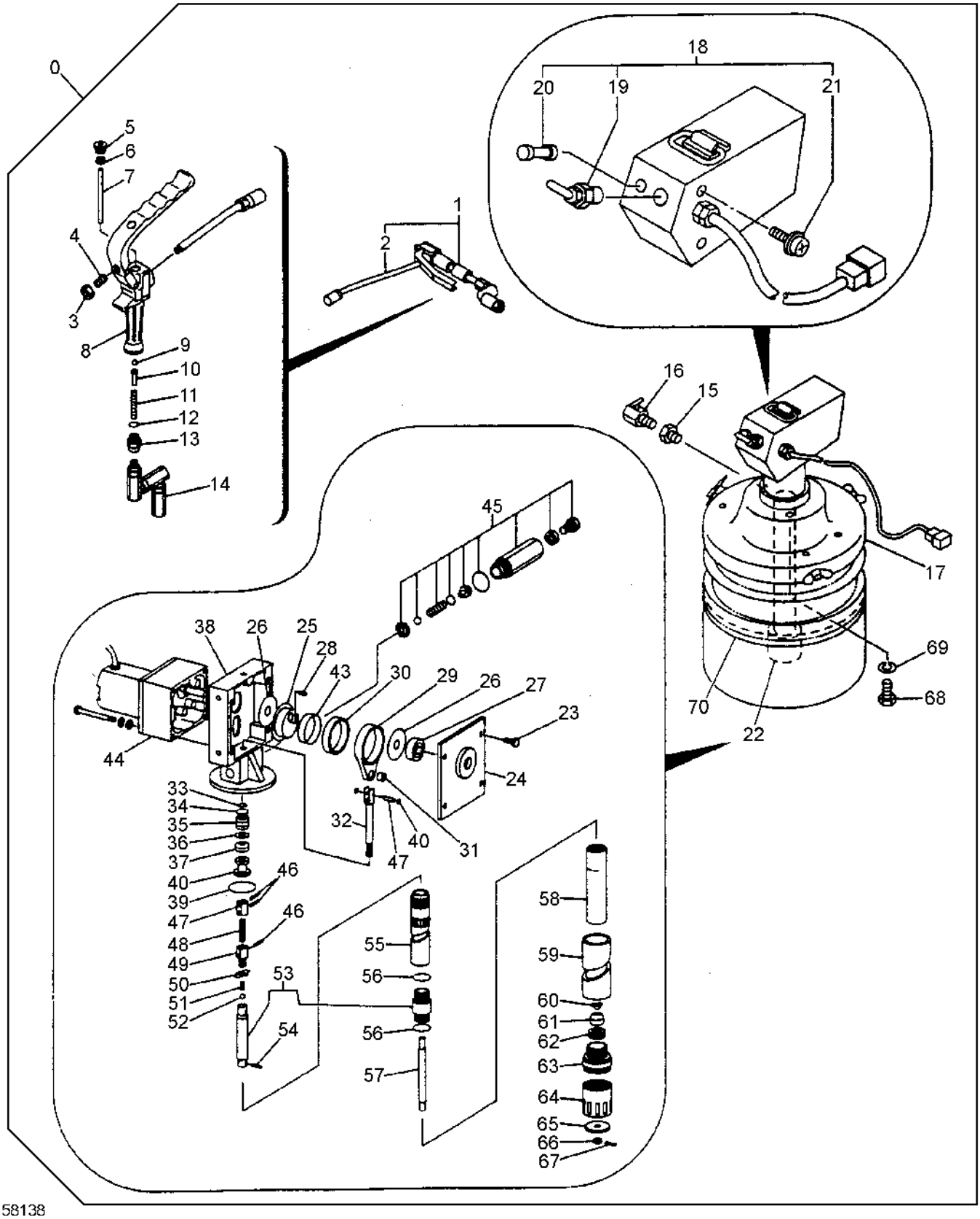

T158138

LUBRICATOR

KEY	PART NO.	PART NAME	QTY	SERIAL NO.	REMARKS
0	4281956	LUBRICATOR	1		
1	4353992	GREASE GUN	1		
2	4412914	NOZZLE	1		
3	4467814	NUT	1		
4	4467815	BOLT	1		
5	4467816	NUT	1		
6	4467817	PACKING	1		
7	4467818	ROD	1		
8	4467819	GREASE GUN	1		
9	4467820	BALL	1		
10	4467822	PIN FASTENER	1		
11	4467823	SPRING	1		
12	4467824	O-RING	1		
13	4467825	UNION FITTING	1		
14	4467828	SWIVEL	1		
15	4353993	FITTING	1		
16	4353994	VALVE	1		
17	4353995	COVER	1		
18	4353996	COVER	1		
19	4363398	TOGGLE SWITCH	1		
20	AT28077	FUSE	1		(SUB FOR 4195610)
21	21M7278	SCREW	6		M5 X 10
22	4353997	PUMP	1		
23	4467754	BOLT	4		
24	4467755	COVER	1		
25	4467756	CAM	1		
26	4467757	STOP	2		
27	4467758	BALL BEARING	1		
28	4467759	SHAFT KEY	1		
29	4467760	LINK	1		
30	4467668	NEEDLE BEARING	1		
31	4467764	BALL BEARING	2		
32	4467765	ROD	1		
33	4467766	O-RING	1		
34	4467767	O-RING	1		
35	4467768	BUSHING	1		
36	4467769	BACK-UP RING	1		
37	4467770	PACKING	1		
38	4467771	CASE	1		
39	4467772	O-RING	1		
40	4467773	SPACER	1		
41	4467774	PIN FASTENER	1		
42	4467775	RING	2		
43	4467777	BEARING RACE	1		
44	4467778	ELECTRIC MOTOR	1		
45	.....	VALVE	1		(4467779 NO LONGER AVAILABLE)
46	4467780	PIN FASTENER	3		
47	4467784	UNION FITTING	1		
48	4467785	ROD	1		
49	4467786	UNION FITTING	1		
50	4467787	WASHER	1		
51	4467788	SPRING	1		
52	4467789	BALL	1		
53	4467790	CYLINDER	1		
54	4467791	PIN FASTENER	1		
55	4467792	STRUCTURAL TUBING	1		
56	4467793	WASHER	2		
57	4467794	ROD	1		
58	4467795	STRUCTURAL TUBING	1		
59	4467796	STRUCTURAL TUBING	1		
60	4467804	WASHER	1		
61	4467797	VALVE	1		
62	4467798	VALVE SEAT	1		
63	4467799	ADAPTER	1		
64	4467800	STRUCTURAL TUBING	1		
65	4467805	STOP	1		
66	4467801	NUT	1		
67	4467802	PIN FASTENER	1		
68	21M7288	SCREW	3		(SUB FOR M430610)
69	12M7006	LOCK WASHER	3		(SUB FOR A590906)
70	4354003	CAP	1		

LUBRICATOR HOSE REEL AND HOSES

T158140 -UN-19AUG02

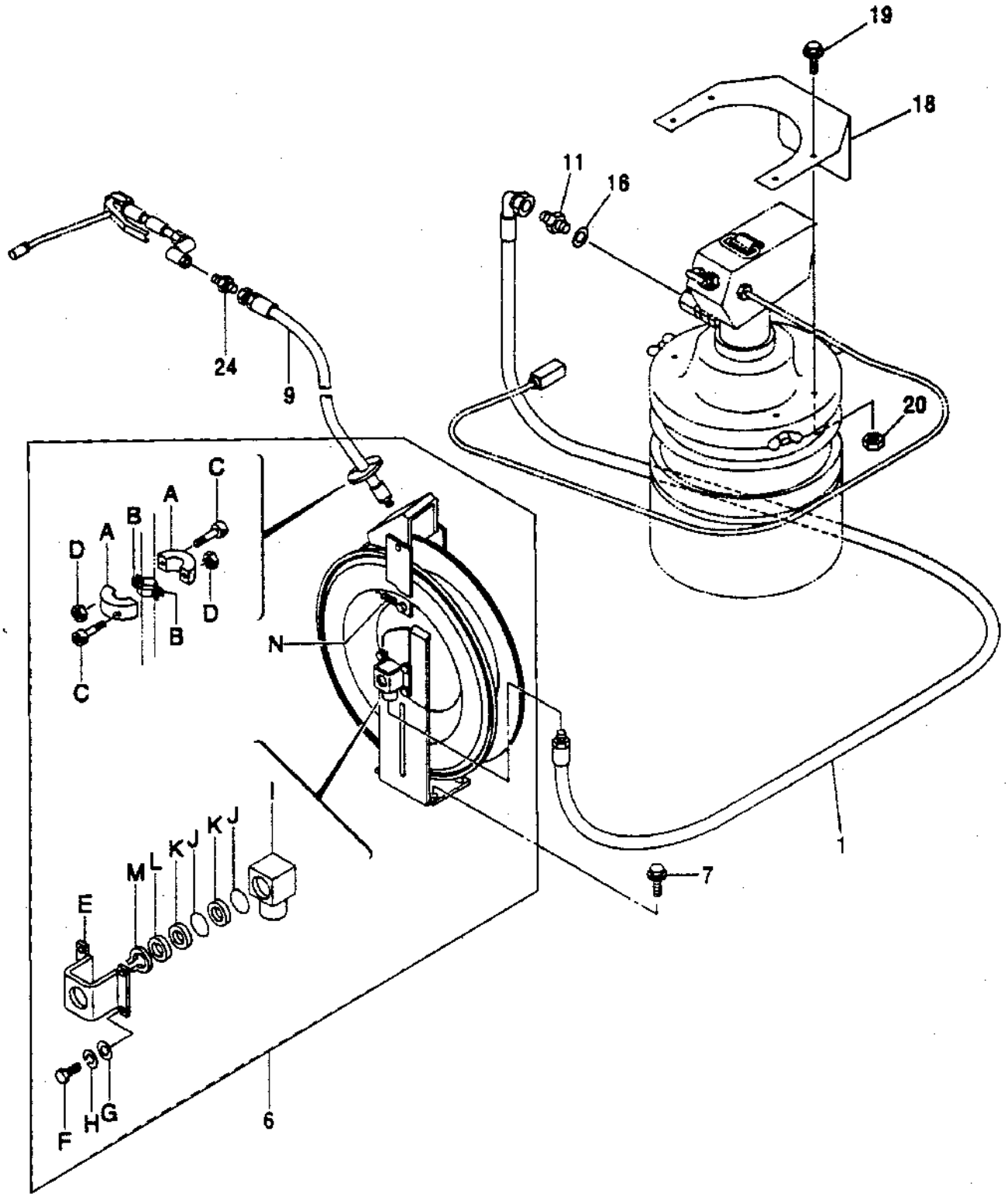

T158140

LUBRICATOR HOSE REEL AND HOSES

KEY	PART NO.	PART NAME	QTY	SERIAL NO.	REMARKS
1	4466611	HOSE	1		
6	4264921	REEL	1		
6A	4174317	HOLDER	2		
6B	4174318	CLAMP	2		
6C	T116311	BOLT	2		
6D	14M7273	NUT	2		M8
6E	4188272	STOP	2		
6F	19M8425	CAP SCREW	8		M6 X 16, (SUB FOR 19M7560)
6G	24M7054	WASHER	8		6.400 X 12 X 1.600 MM
6H	12M7006	LOCK WASHER	8		6 MM
6I	4188273	FITTING	1		
6J	TH100096	O-RING	2		(SUB FOR 4028265)
6K	4028266	BACK-UP RING	2		
6L	4188274	WASHER	1		
6M	4188275	O-RING	1		
6N	4188276	SPRING	1		
7	19M7662	CAP SCREW	4		M10 X 30
	12M7066	LOCK WASHER	4		10 MM
	24M7028	WASHER	4		10.500 X 20 X 2 MM
9	4228701	HYDRAULIC HOSE	1		
11	4042011	FITTING	1	-970050	
	94-1302	ADAPTER	1	970051-	
16	A890018	PACKING	1	-970050	
18	4299820	BRACKET	1		
19	19M8425	CAP SCREW	4		M6 X 16, (SUB FOR 19M7560)
	12M7006	LOCK WASHER	4		6 MM
20	14M7272	NUT	4		M6
24	4151182	FITTING	1		

CONTROLLER

TP54659 -UN-17MAR97

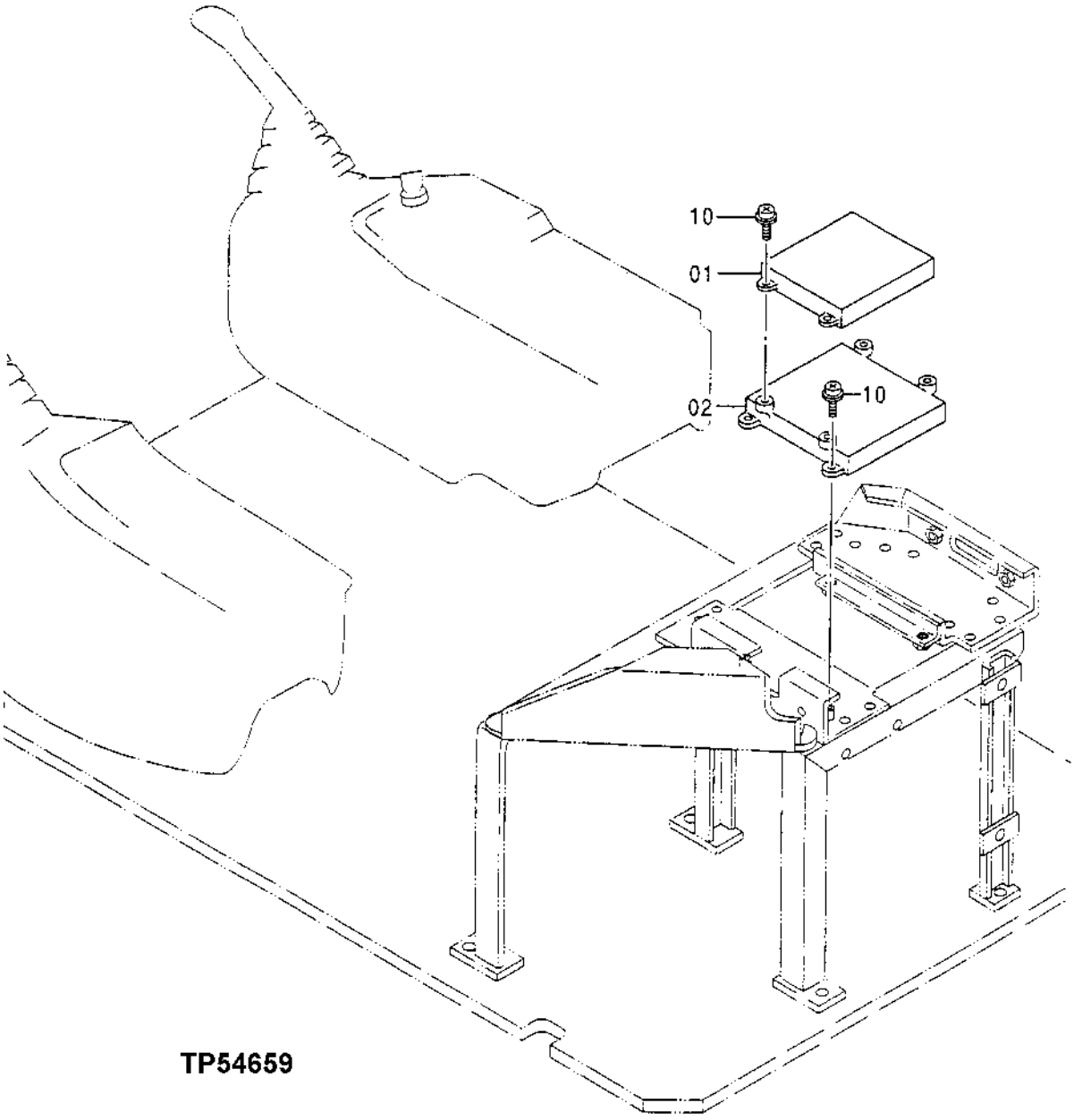

CONTROLLER

KEY	PART NO.	PART NAME	QTY	SERIAL NO.	REMARKS
1	9151227	ENGINE CONTROLLER	1		(SUB FOR TH9151227)
2	9151683	PUMP/VALVE CONTROLLER	1		(SUB FOR TH9151683) (PILOT VALVE CONTROL UNIT)
10	J460620	SCREW, WITH WASHER	8		(SUB FOR AT200012)

ELECTRIC PARTS

TP66792 -UN-07OCT99

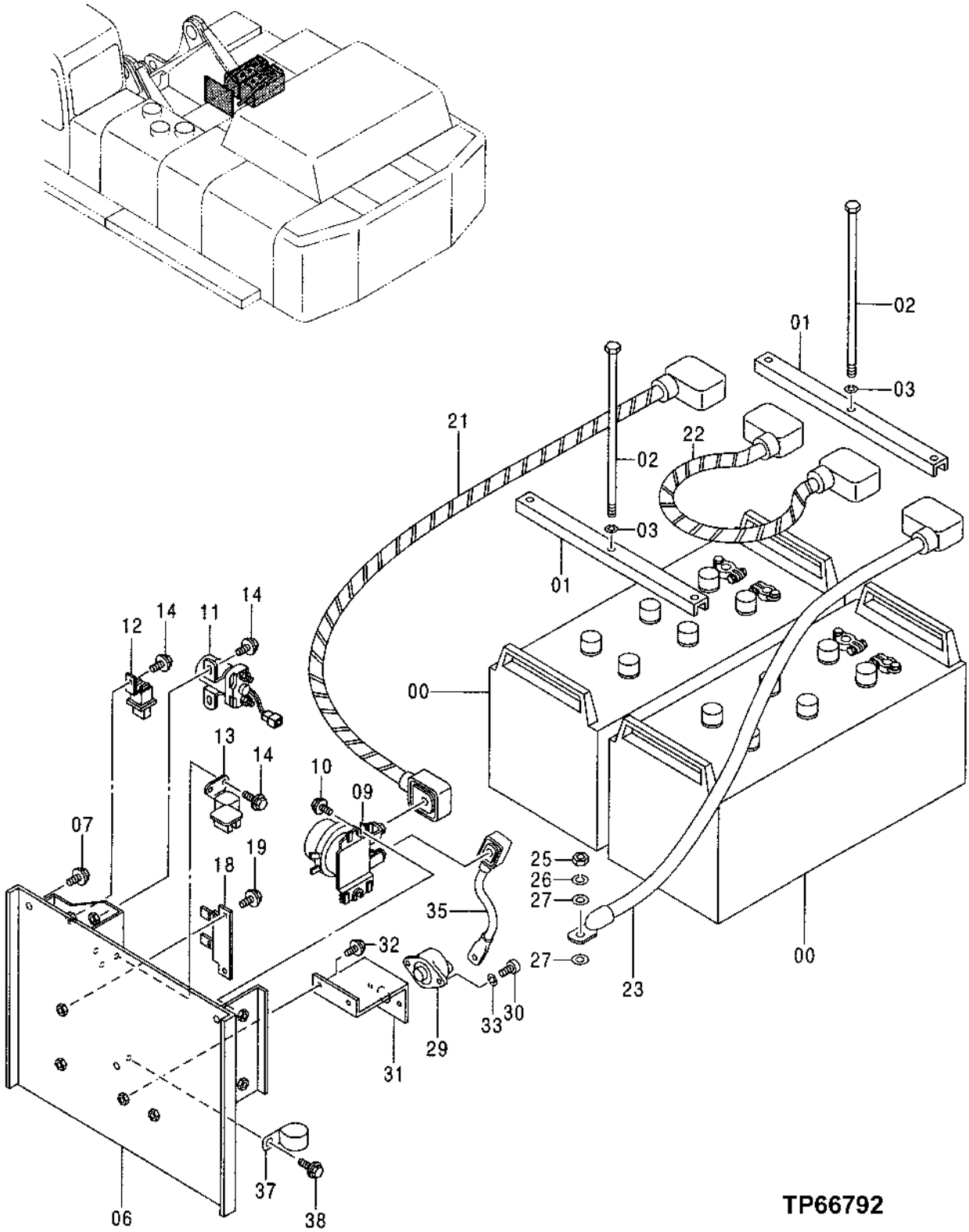

ELECTRIC PARTS

KEY	PART NO.	PART NAME	QTY	SERIAL NO.	REMARKS
0	TY21709	DRY CHARGED BATTERY	2		1100 COLD CRANKING AMPS AT 0°F (-18°C), 400-MINUTE RESERVE CAPACITY AT 25 AMPS
1	4145156	HOLDER	2		(SUB FOR TH102147)
2	4206101	BOLT	2		(SUB FOR AT131796)
3	12H301	LOCK WASHER	2		12.700 MM (1/2")
6	7027645	BRACKET	1		(SUB FOR TH7027645)
7	19M7402	CAP SCREW	3		M10 X 25
	12M7066	LOCK WASHER	3		10 MM (0.394")
	24M7028	WASHER	3		10.500 X 20 X 2 MM (0.413" X 0.787" X 0.079")
9	4031771	RELAY	1		(SUB FOR TH104069)
10	19M7163	CAP SCREW	2		M8 X 25
	12M7056	LOCK WASHER	2		8 MM (0.315") (SUB FOR 12M7065)
	24M7055	WASHER	2		8.400 X 16 X 1.600 MM (0.331" X 0.630" X 0.063")
11	4287277	STARTER RELAY	1		(SUB FOR TH4287277)
12	4275750	STARTER RELAY	1		(SUB FOR TH4275750)
13	4251587	RELAY	1		(SUB FOR AT213807)
14	19M7923	CAP SCREW	5		M6 X 12
	12M7006	LOCK WASHER	5		6 MM (0.236")
	24M7054	WASHER	5		6.400 X 12 X 1.600 MM (0.252" X 0.472" X 0.063")
18	4297280	BRACKET	1		(SUB FOR AT201752)
19	19M7923	CAP SCREW	2		M6 X 12
	12M7006	LOCK WASHER	2		6 MM (0.236")
	24M7054	WASHER	2		6.400 X 12 X 1.600 MM (0.252" X 0.472" X 0.063")
21	4367215	WIRING HARNESS	1		(SUB FOR TH4367215)
22	4294694	WIRING HARNESS	1		(SUB FOR TH4294694)
23	4366073	WIRING HARNESS	1		(SUB FOR TH4366073)
25	14M7274	NUT	1		M10
26	12M7066	LOCK WASHER	1		10 MM (0.394")
27	24M7028	WASHER	2		10.500 X 20 X 2 MM (0.413" X 0.787" X 0.079")
29	4221047	SWITCH	1		(SUB FOR TH4221047)
30	4221280	CAP SCREW	2		(SUB FOR TH4221280)
31	4275239	BRACKET	1		(SUB FOR TH4275239)
32	19M7932	CAP SCREW	2		M8 X 16
	12M7056	LOCK WASHER	2		8 MM (0.315") (SUB FOR 12M7065)
33	12M7064	LOCK WASHER	2		5 MM (0.197")
35	4367200	WIRING HARNESS	1		(SUB FOR TH4367200)
37	AT121321	HOSE CLAMP	1		
38	19M7938	CAP SCREW	1		M10 X 20
	12M7066	LOCK WASHER	1		10 MM (0.394")

ELECTRIC PARTS

T157622 -UN-22JUL02

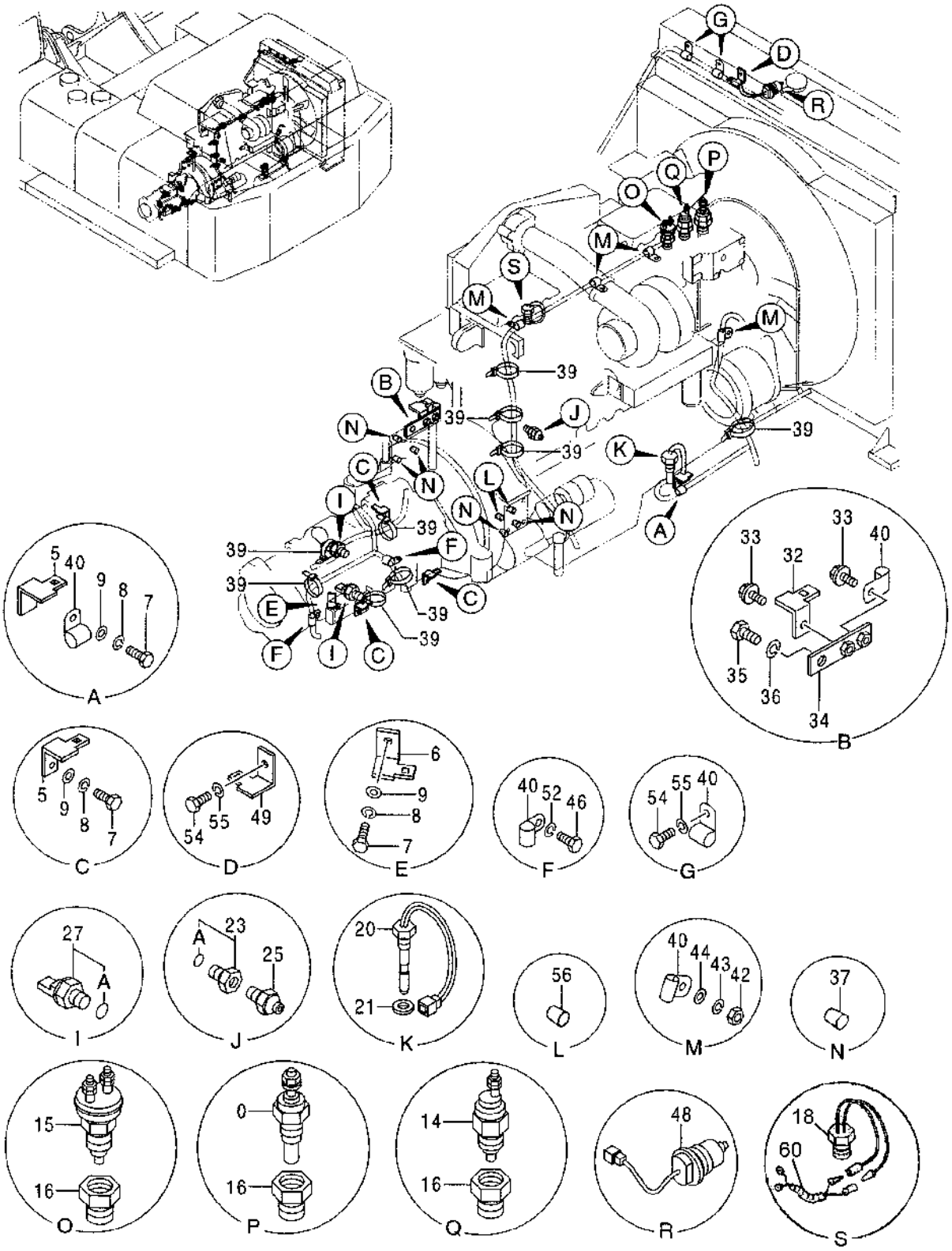

T157622

ELECTRIC PARTS

KEY	PART NO.	PART NAME	QTY	SERIAL NO.	REMARKS
0	4257129	COOLANT TEMPERATURE SENSOR	1		(SUB FOR AP34305)
5	4336874	BRACKET	4		(SUB FOR AT202391)
6	4252767	BRACKET	1		(SUB FOR AT154206)
7	19M7923	CAP SCREW	5		M6 X 12
8	12M7006	LOCK WASHER	5		6 MM (0.236")
9	24M7054	WASHER	5		6.400 X 12 X 1.600 MM (0.252" X 0.472" X 0.063")
14	4149335	SWITCH	1		(SUB FOR TH4149335) (THERMO)
15	4375390	SWITCH	1		(SUB FOR TH4375390) (THERMO)
16	4087499	ADAPTER	3		(SUB FOR AT202394)
18	4487038	SWITCH	1		(SUB FOR 4271489) (WHEN REPLACING 4271489, ALSO ORDER 4485007)
20	4270206	SWITCH	1		(SUB FOR TH4270206) (LEVEL)
21	A890022	WASHER	1		(SUB FOR TH102169)
23	4297309	ADAPTER	1		(SUB FOR TH4297309)
23A	4298748	O-RING	1		(SUB FOR TH4298748)
25	4099039	PRESSURE SWITCH	1		(SUB FOR TH4099039) (PRESSURE)
27	4436271	SENSOR	2		(SUB FOR AT175981 OR 4355012) (PRESSURE)
27A	TH102560	O-RING	1		15.800 X 2.400 MM (0.622" X 0.094")
32	4257159	BRACKET	1		(SUB FOR AT154243)
33	19M7938	CAP SCREW	2		M10 X 20
	12M7066	LOCK WASHER	2		10 MM (0.394")
34	9745938	BRACKET	1		(SUB FOR TH9745938)
35	19H1833	CAP SCREW	1		15.875 X 31.750 MM (5/8" X 1-1/4")
36	12H294	LOCK WASHER	1		15.875 MM (5/8")
37	428028	PLUG	5		(SUB FOR AT121659)
39	H77698	TIE BAND	13		
40	4190261	CLIP	10		(SUB FOR TH109649)
42	14H611	NUT	4		7.925 MM (5/16")
43	12M7056	LOCK WASHER	4		8 MM (0.315") (SUB FOR 12M7065)
44	24M7055	WASHER	4		8.400 X 16 X 1.600 MM (0.331" X 0.630" X 0.063")
46	19M7872	CAP SCREW	2		M12 X 25
48	4259787	SWITCH	1		(SUB FOR AT154937) (LEVEL)
49	4336875	BRACKET	1		(SUB FOR TH4336875)
52	12H301	LOCK WASHER	2		12.700 MM (1/2")
54	19M7938	CAP SCREW	3		M10 X 20
55	12M7066	LOCK WASHER	3		10 MM (0.394")
56	428028	PLUG	2		(SUB FOR AT121659)
60	4485007	WIRING HARNESS	1		(USE WITH 4487038 SWITCH)

ELECTRIC PARTS

TP66799 -UN-06OCT99

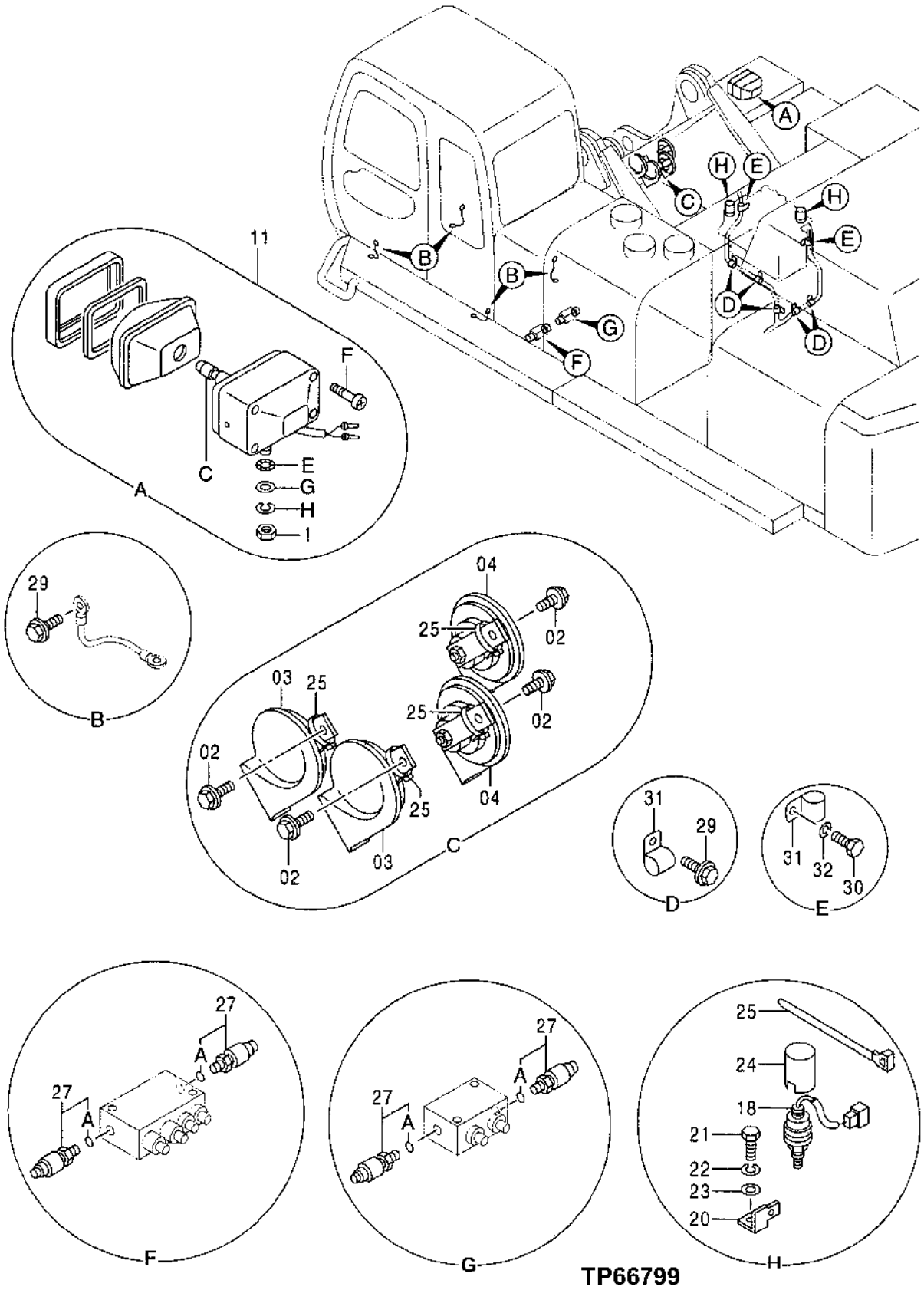

ELECTRIC PARTS

KEY	PART NO.	PART NAME	QTY	SERIAL NO.	REMARKS
2	19M7881	SCREW	4		M8 X 20
	12M7056	LOCK WASHER	4		8 MM (0.315") (SUB FOR 12M7065)
	24M7055	WASHER	4		8.400 X 16 X 1.600 MM (0.331" X 0.630" X 0.063")
3	4341191	HIGH NOTE HORN	2		(SUB FOR AT184705)
4	4341190	HIGH NOTE HORN	2		(SUB FOR AT184706)
11	AT165110	LAMP	1		
11C	AT135758	BULB	1		
11E	4307026	WASHER	1		(SUB FOR T144361)
11F	4307027	SCREW	1		(SUB FOR T144362)
11G	24M7085	WASHER	1		15 X 28 X 2.500 MM (0.591" X 1.102" X 0.098")
11H	12H317	LOCK WASHER	1		14.288 MM (9/16")
11I	J952014	NUT	1		(SUB FOR TH103791)
18	4381082	SENSOR	2		(SUB FOR TH4381082)
20	4252767	BRACKET	2		(SUB FOR AT154206)
21	19M7923	CAP SCREW	2		M6 X 12
22	12M7006	LOCK WASHER	2		6 MM (0.236")
23	24M7054	WASHER	2		6.400 X 12 X 1.600 MM (0.252" X 0.472" X 0.063")
24	4386855	CAP	2		(SUB FOR TH4386855)
25	H77698	TIE BAND	2		
27	4254563	PRESSURE SWITCH	4		(SUB FOR AT154212)
27A	CH19111	O-RING	1		7.645 X 1.778 MM (0.301" X 0.070")
29	19M7938	CAP SCREW	10		M10 X 20
	12M7066	LOCK WASHER	10		10 MM (0.394")
30	19M8017	CAP SCREW	2		M12 X 20
31	4190261	CLIP	8		(SUB FOR TH109649)
32	12H301	LOCK WASHER	2		12.700 MM (1/2")

ELECTRIC PARTS

TP67017 -UN-04JAN00

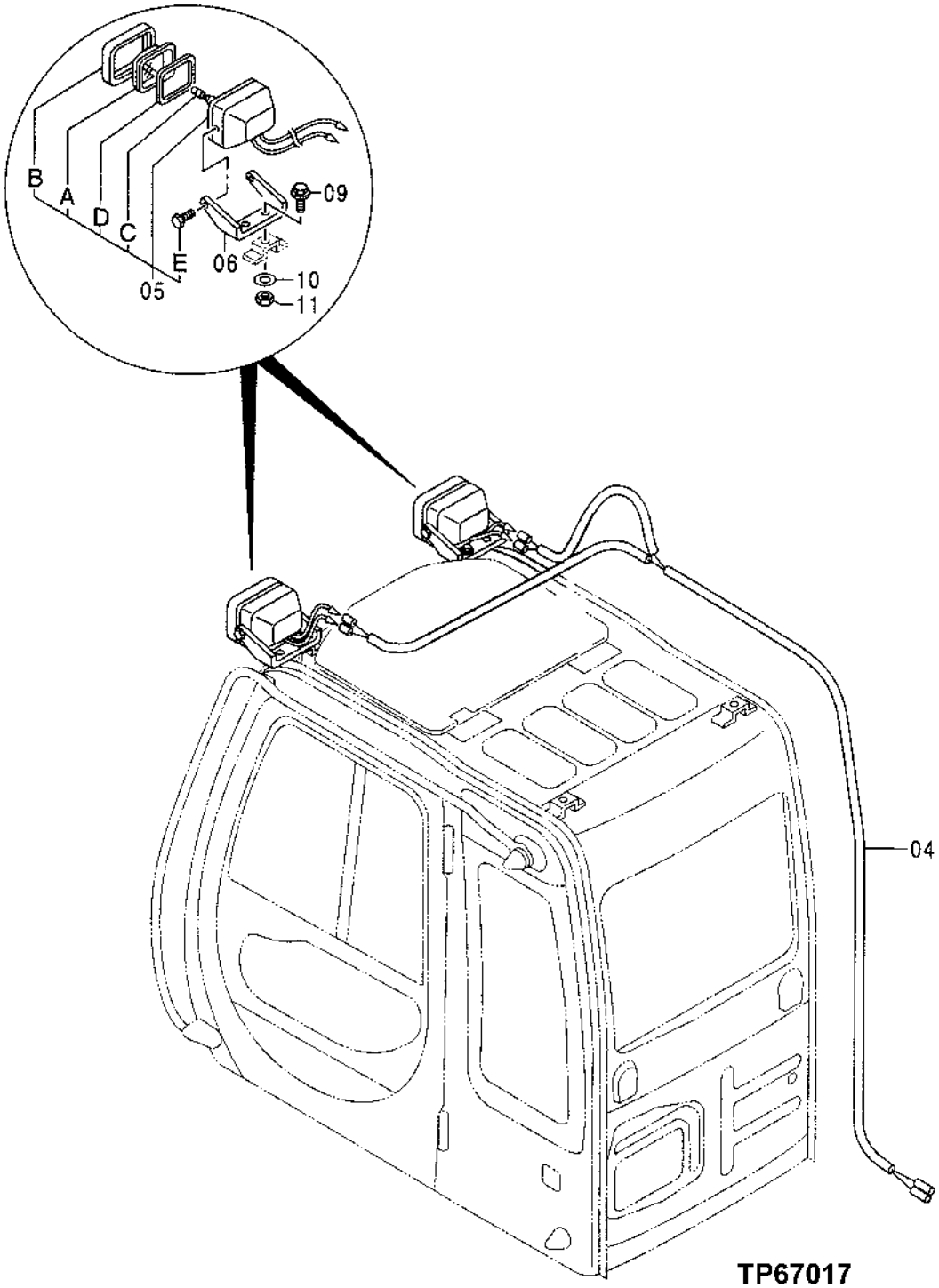

ELECTRIC PARTS

KEY	PART NO.	PART NAME	QTY	SERIAL NO.	REMARKS
4	3075526	WIRING HARNESS	1		(SUB FOR TH3075526)
5	4274478	FLOODLAMP	2		(SUB FOR AT154323)
5A	4285646	LENS	1		(SUB FOR AT154988)
5B	.....	RIM	1		
5C	AT135758	BULB	1		
5D	.....	GASKET	1		
5E	19M8425	CAP SCREW	2		M6 X 16
6	3082934	SUPPORT	2		(SUB FOR TH3082934)
9	19M8011	CAP SCREW	2		M12 X 30
	12H301	LOCK WASHER	2		12.700 MM (1/2")
	24M7047	WASHER	2		13 X 24 X 2.500 MM (0.512" X 0.945" X 0.098")
10	24M7047	WASHER	2		13 X 24 X 2.500 MM (0.512" X 0.945" X 0.098")
11	14M7275	NUT	2		M12

ELECTRIC PARTS

TP67048 -UN-01MAR00

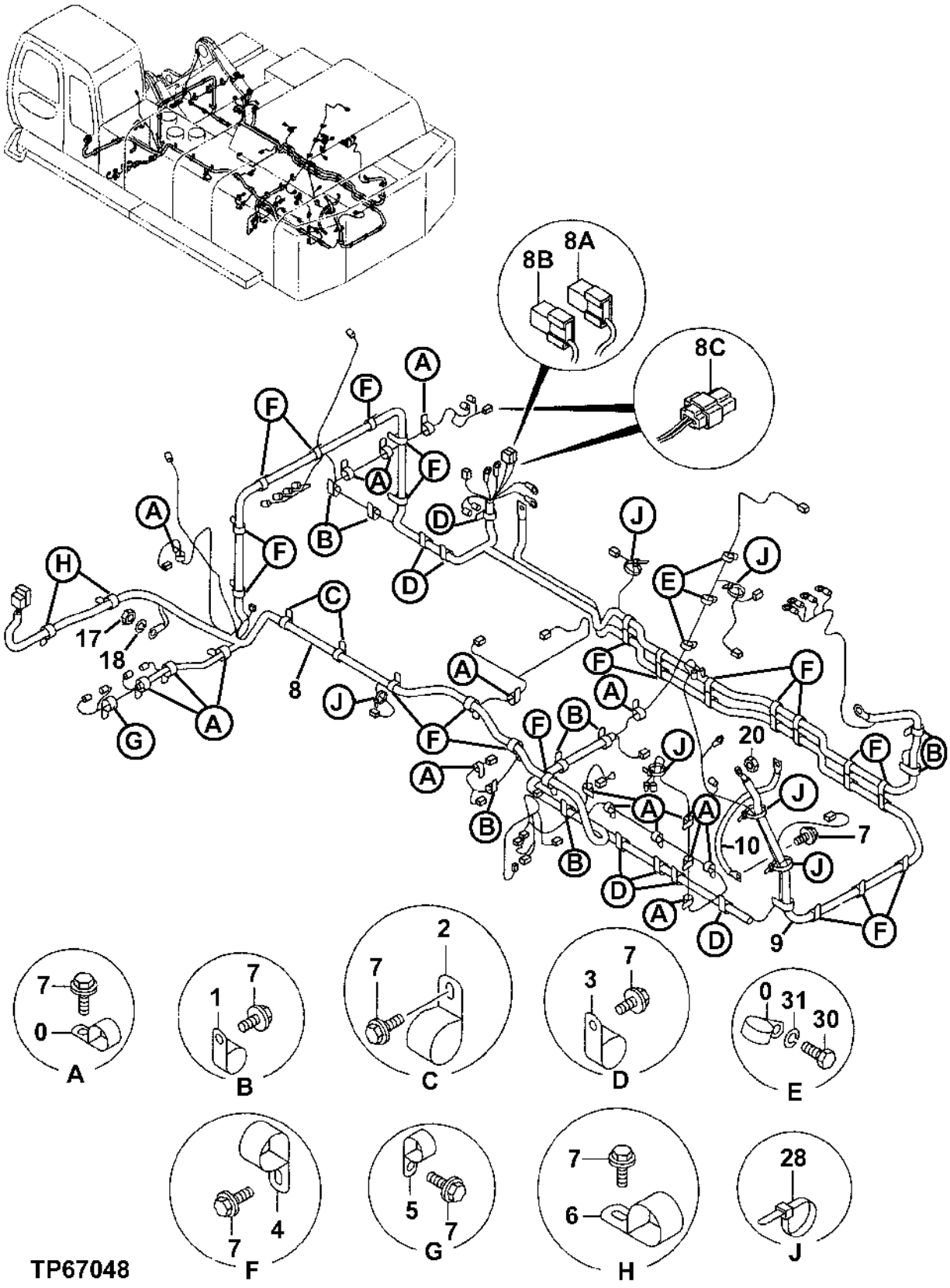

ELECTRIC PARTS

KEY	PART NO.	PART NAME	QTY	SERIAL NO.	REMARKS
0	4190261	CLIP	21		(SUB FOR TH109649)
1	4190275	CLIP	15		(SUB FOR TH108598)
2	AT121321	HOSE CLAMP	2		
3	4190274	CLIP	6		(SUB FOR TH108458)
4	4235654	CLIP	22		(SUB FOR AT122384)
5	T38377	CLIP	1		
6	4193848	CLIP	2		(SUB FOR TH110522)
7	19M8761	SCREW	56		M10 X 22, (SUB FOR 19M7380)
	12M7058	LOCK WASHER	56		12.200 MM (0.480") (SUB FOR 12M7067)
8	0003436	WIRING HARNESS	1		(SUB FOR TH0001975)
8A	4315323	LINK	1		(SUB FOR AT172435)
8B	4315324	LINK	1		(SUB FOR AT172436)
8C	4288109	DIODE	6		(SUB FOR (6) AT174465)
9	4367205	WIRING HARNESS	1		(SUB FOR TH4367205)
10	4367214	WIRING HARNESS	1		(SUB FOR TH4367214)
17	14M7274	NUT	1		M10
18	12M7066	LOCK WASHER	1		10 MM (0.394")
20	14H1040	NUT	1		12.700 MM (1/2")
28	H77698	TIE BAND	6		
30	19M7938	CAP SCREW	3		M10 X 20
31	12M7066	LOCK WASHER	3		10 MM (0.394")

ELECTRIC PARTS

TP67098 -UN-29MAR00

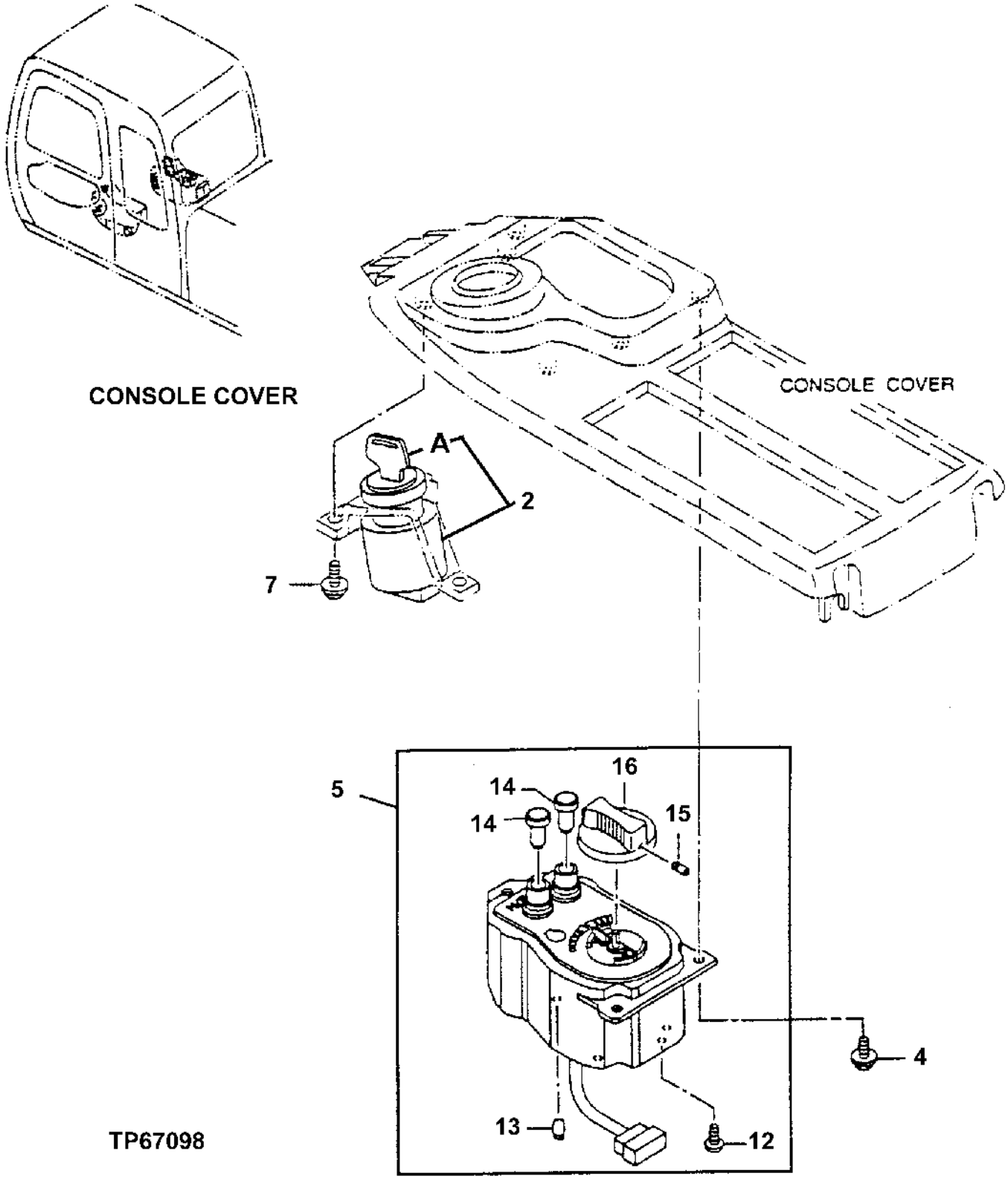

ELECTRIC PARTS

KEY	PART NO.	PART NAME	QTY	SERIAL NO.	REMARKS
2	4477373	SWITCH	1		(SUB FOR AT154992)
2A	AT194969	KEY	1		(SUB FOR AT147803)
4	21M7265	SCREW	3		M5 X 12
	24M7027	WASHER	3		5.300 X 10 X 1 MM (0.209" X 0.394" X 0.039")
	12M7064	LOCK WASHER	3		5 MM (0.197")
5	4366985	BASIC CONTROL UNIT	1		(SUB FOR TH4366985)
7	21M7265	SCREW	3		M5 X 12
	24M7027	WASHER	3		5.300 X 10 X 1 MM (0.209" X 0.394" X 0.039")
	12M7064	LOCK WASHER	3		5 MM (0.197")
12	4370153	SCREW, WITH WASHER	3		(SUB FOR AT214200)
13	4370152	LAMP	1		(SUB FOR AT214199)
14	4370151	SWITCH	2		(SUB FOR AT214198)
15	4370150	SET SCREW	1		(SUB FOR AT214197)
16	4370143	KNOB	1		(SUB FOR AT214190)

ELECTRIC PARTS

TP66807 -UN-12OCT99

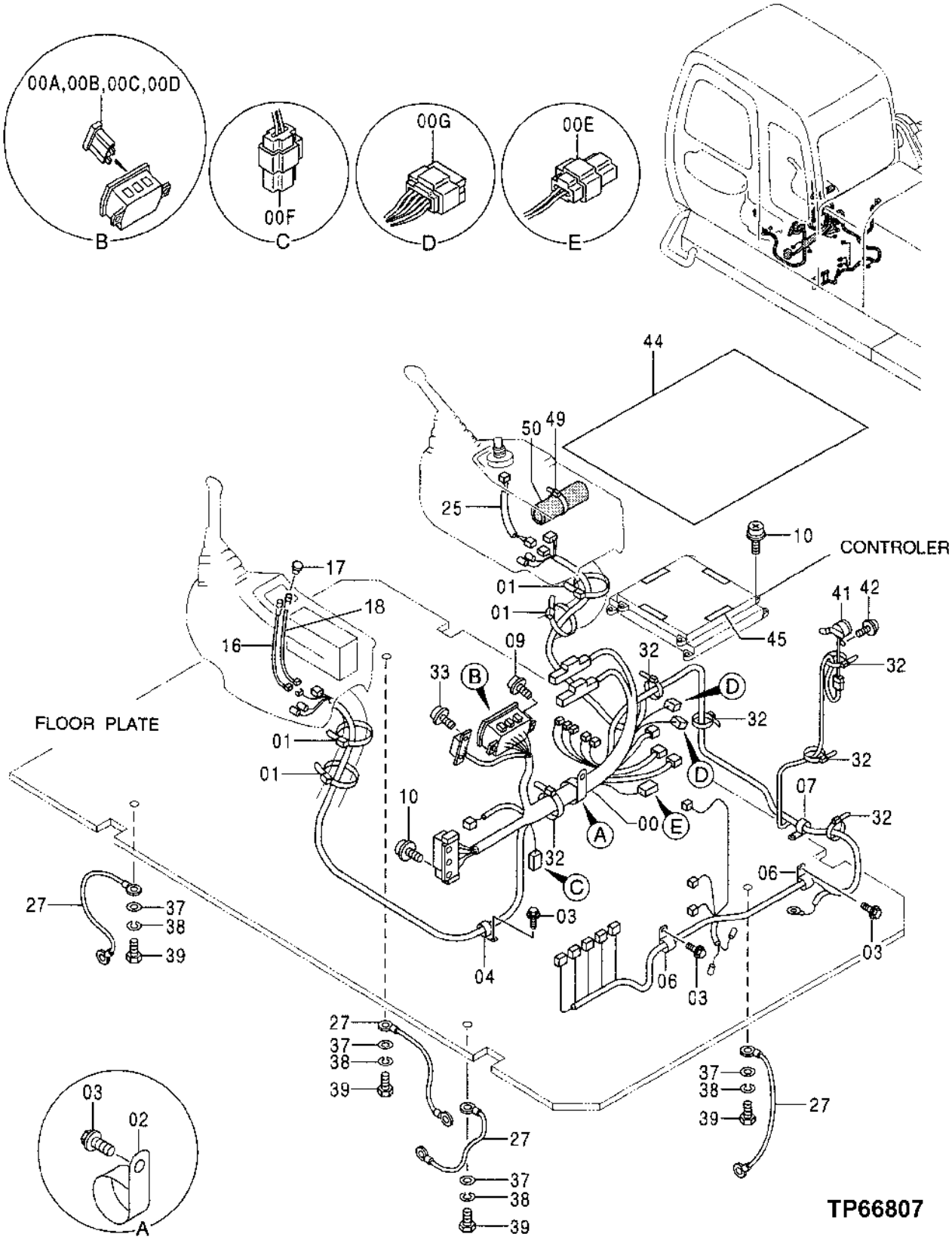

ELECTRIC PARTS

KEY	PART NO.	PART NAME	QTY	SERIAL NO.	REMARKS
0	0003107	WIRING HARNESS	1		(SUB FOR TH0003107)
0A	57M7125	FUSE	10		5 AMP
0B	57M7121	FUSE	5		10 AMP
0C	57M7120	FUSE	1		20 AMP
0D	57M7146	FUSE	4		30 AMP
0E	4408136	RESISTOR	1		(SUB FOR TH4408136)
0F	4288109	DIODE	1		(SUB FOR AT174465)
0G	4385926	DIODE	2		(SUB FOR AT179394)
1	H77698	TIE BAND	4		
2	4193848	CLIP	1		(SUB FOR TH110522)
3	19M7402	CAP SCREW	4		M10 X 25
	12M7066	LOCK WASHER	4		10 MM (0.394")
	24M7028	WASHER	4		10.500 X 20 X 2 MM (0.413" X 0.787" X 0.079")
4	4190275	CLIP	1		(SUB FOR TH108598)
6	4190273	CLIP	2		(SUB FOR TH108460)
7	4192035	CLIP	1		(SUB FOR TH108459)
9	19M7077	CAP SCREW	2		M6 X 20
	24M7293	WASHER	2		6.500 X 13 X 1.600 MM (0.256" X 0.512" X 0.063")
	12M7006	LOCK WASHER	2		6 MM (0.236")
10	J460620	SCREW, WITH WASHER	10		(SUB FOR AT200012)
16	4322389	SWITCH	1		(SUB FOR AT161977)
17	4294437	CAP	1		(SUB FOR AT215503) (NOT REQUIRED IN THIS APPLICATION)
18	4322387	SWITCH	1		(SUB FOR AT161978)
25	4277927	WIRING HARNESS	1		(SUB FOR AT154955) (STARTER SWITCH)
27	.....	WIRING HARNESS	4		(GROUND STRAP)
32	H77698	TIE BAND	6		
33	J460310	SCREW	2		(SUB FOR AT156974)
37	24M7028	WASHER	4		10.500 X 20 X 2 MM (0.413" X 0.787" X 0.079")
38	12M7066	LOCK WASHER	4		10 MM (0.394")
39	19M8324	CAP SCREW	4		M10 X 16
41	4258403	AUDIBLE WARNING ALARM	1		(SUB FOR AT154934)
42	19M7372	CAP SCREW	2		M5 X 16
	12M7064	LOCK WASHER	2		5 MM (0.197")
	24M7348	WASHER	2		5.500 X 10 X 1 MM (0.217" X 0.394" X 0.039")
44	3075379	COVER	1		(SUB FOR AT213792)
45	4365396	TAPE	4		(SUB FOR AT214022)
49	H77698	TIE BAND	1		
50	4403273	ISOLATOR	1		(SUB FOR AT184358)

MONITOR

TP67407 -UN-18AUG00

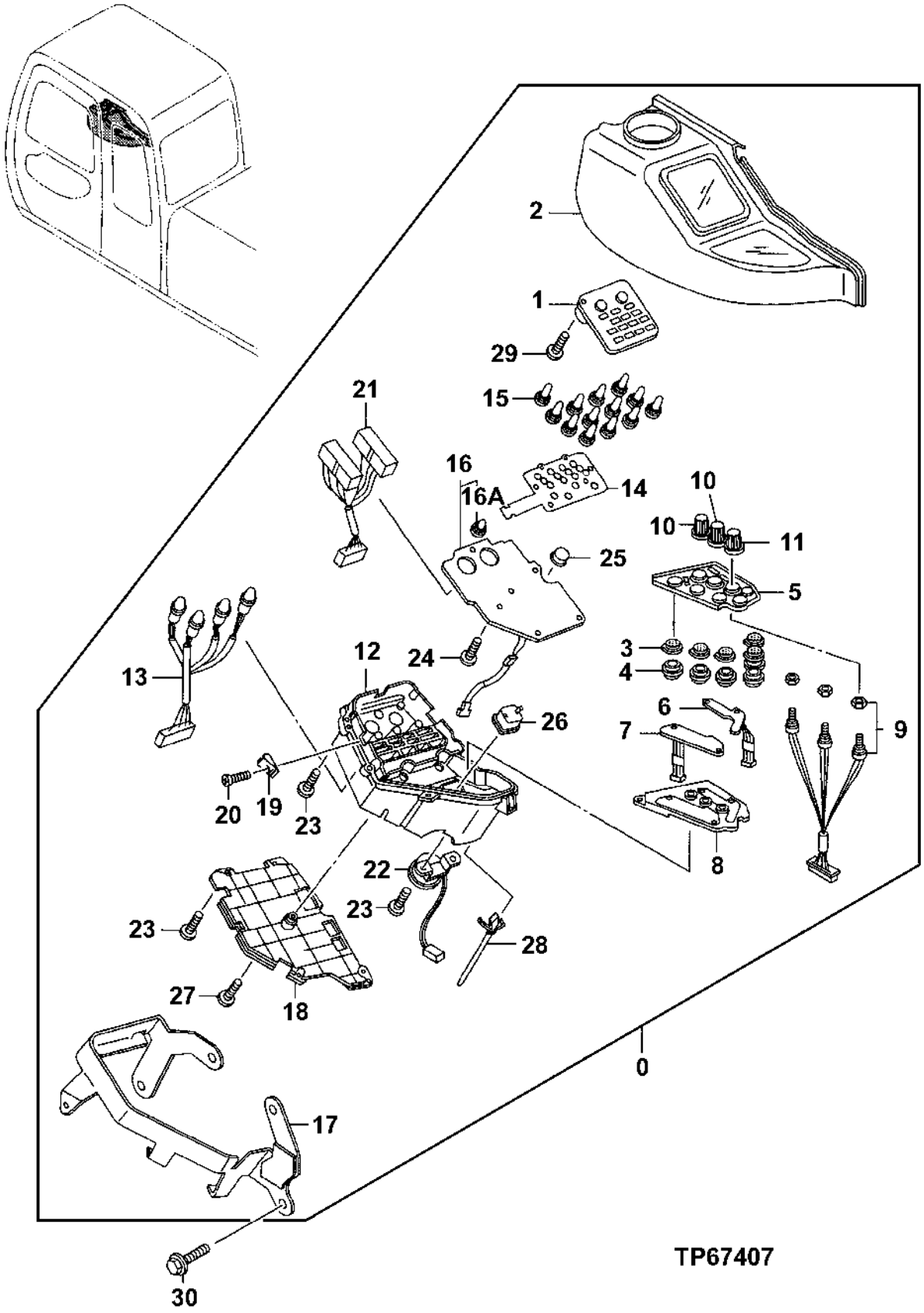

MONITOR

KEY	PART NO.	PART NAME	QTY	SERIAL NO.	REMARKS
0	.....	MONITOR CONSOLE	1		(4365993 OR TH4365993 NO LONGER AVAILABLE FOR SERVICE) (FURNISH 4412532 MONITOR, ALONG WITH 4209296 RUBBER BUSHING)
1	4403359	DISPLAY MODULE	1		(SUB FOR TH4403359)
2	4403394	HOUSING	1		(SUB FOR TH4403394)
3	4370113	PUSH BUTTON	5		(SUB FOR AT214177)
4	4310827	RETAINER	5		(SUB FOR AT213826)
5	4370114	COVER	1		(SUB FOR AT214178)
6	4370115	CIRCUIT BOARD	1		(SUB FOR AT214179) (WARNING BUZZER CANCEL, WORK MODE AND WORK MODE INDICATOR LIGHTS)
7	4370116	CIRCUIT BOARD	1		(SUB FOR AT214180) (LEVEL CHECK, WINDSHIELD WASHER AND AUTO IDLE)
8	4370117	SUPPORT	1		(SUB FOR AT214181) (SWITCH PANEL) (SWITCHES FOR HEADLIGHT, WORK LIGHT, WIPERS AND 2 SPEED PROPEL)
9	4370118	MONITOR WIRING HARNESS	1		(SUB FOR AT214182)
10	4370119	KNOB	2		(SUB FOR AT214183) (WORK LIGHT AND WIPER SWITCHES)
11	4370137	KNOB	1		(SUB FOR AT214184) (TRAVEL MODE SWITCH)
12	4370138	HOUSING	1		(SUB FOR AT214185)
13	4370139	WIRING HARNESS	1		(SUB FOR AT214186) (INDICATOR LIGHT) (INCLUDES BULBS FOR HP MODE, E MODE, AUTO IDLE MODE, AND WARM UP INDICATOR)
14	4370140	CIRCUIT BOARD	1		(SUB FOR AT214187) (RIBBON CIRCUIT) (FOR INDICATOR LIGHTS)
15	4370141	LAMP	13		(SUB FOR AT214188) (INDICATOR)
16	4370142	CIRCUIT BOARD	1		(SUB FOR AT214189) (MONITOR CONTROLLER)
16A	4370141	LAMP	1		(SUB FOR AT214188)
17	4370144	BRACKET	1		(SUB FOR AT214191)
18	4370145	COVER	1		(SUB FOR AT214192)
19	4370146	NUT	2		(SUB FOR AT214193)
20	4370147	SCREW	2		(SUB FOR AT214194)
21	4370148	WIRING HARNESS	1		(SUB FOR AT214195) (INCLUDES TWO RESISTORS FOR FUEL GAUGE AND COOLANT TEMPERATURE GAUGE)
22	4370149	AUDIBLE WARNING ALARM	1		(SUB FOR AT214196)
23	4294999	SCREW	19		(SUB FOR AT213817)
24	4370154	SET SCREW	6		(SUB FOR AT214201)
25	4297127	CAP	1		(SUB FOR AT155669)
26	4297105	CAP	1		(SUB FOR AT155612)
27	4297101	SCREW	1		(SUB FOR AT155616)
28	4370155	CLAMP	1		(SUB FOR AT214202)
29	4370156	SET SCREW	1		(SUB FOR AT214203)
30	19M7932	CAP SCREW	4		M8 X 16
	12M7056	LOCK WASHER	4		8 MM (0.315") (SUB FOR 12M7065)

MONITOR

T158059 -UN-31JUL02

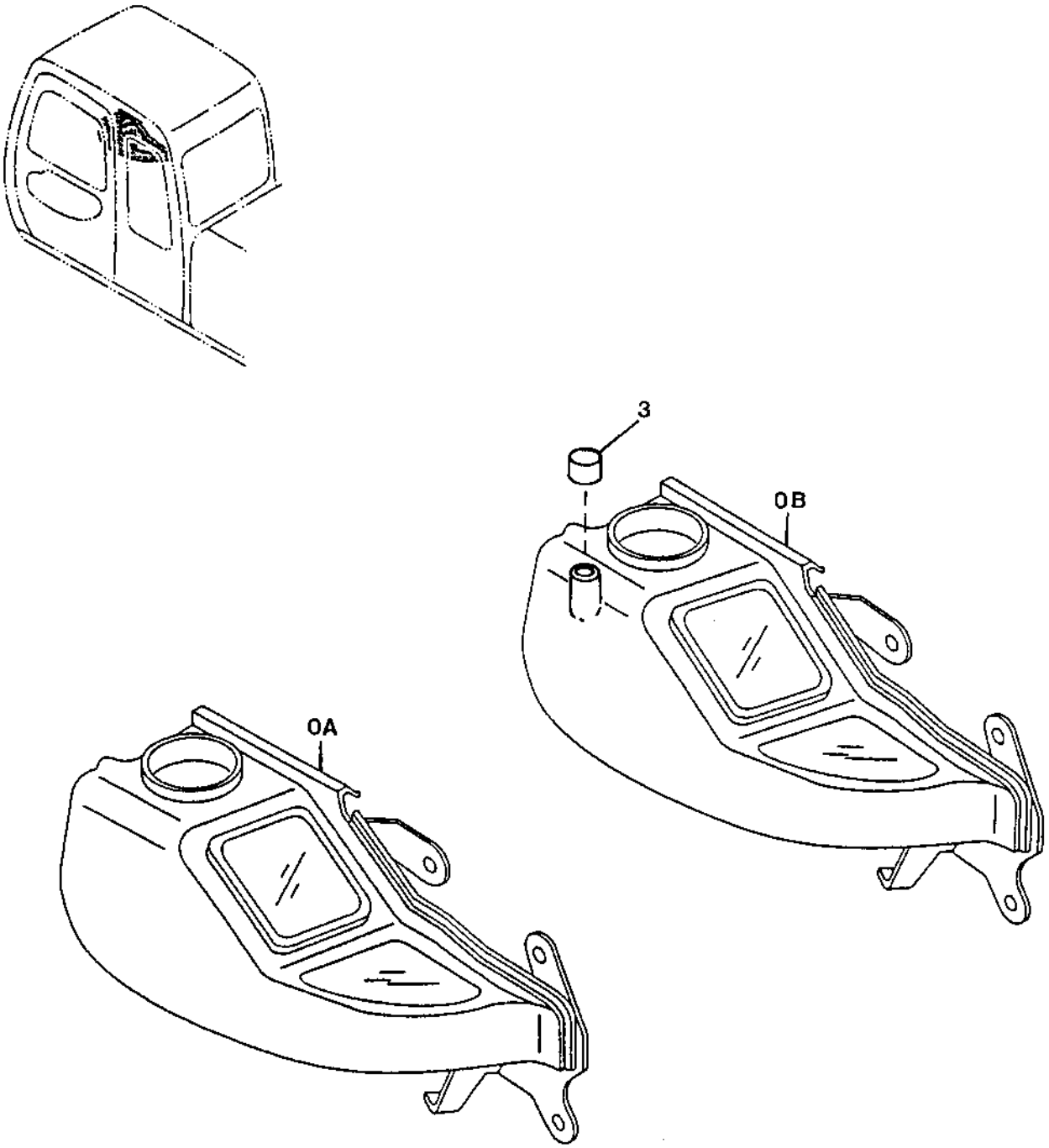

T158059

MONITOR

KEY	PART NO.	PART NAME	QTY	SERIAL NO.	REMARKS
0A	.....	MONITOR CONSOLE	1		(TH4365993 OR 4365993 NO LONGER AVAILABLE FOR SERVICE) (FURNISH 4412532 MONITOR, ALONG WITH 4209296 RUBBER BUSHING)
0B	4412532	MONITOR	1		
3	4209296	GROMMET	1		(SUB FOR AT205712)

ELECTRIC PARTS

TP67406 -UN-18AUG00

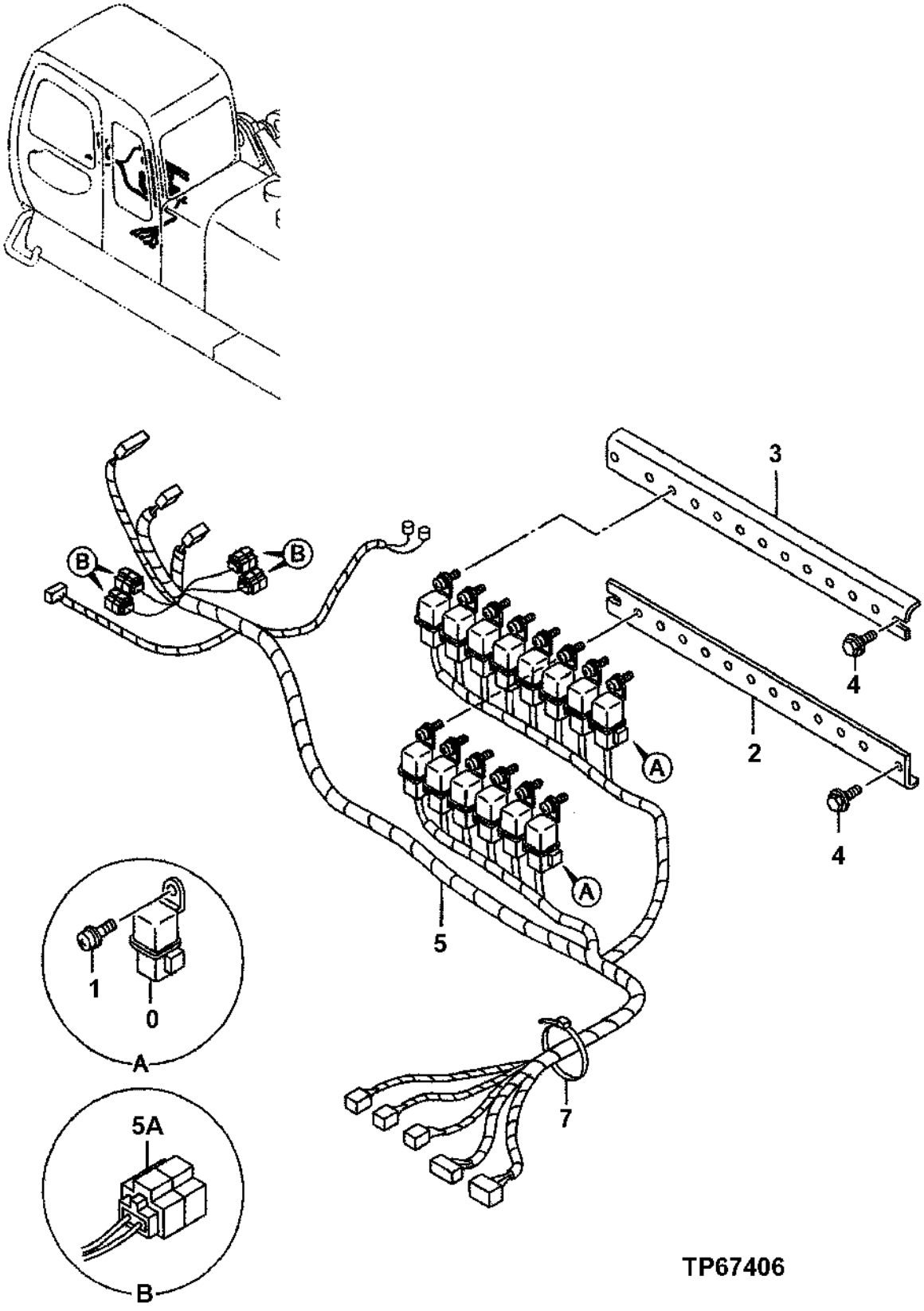

ELECTRIC PARTS

KEY	PART NO.	PART NAME	QTY	SERIAL NO.	REMARKS
0	4414207	RELAY	14		
1	J900614	BOLT	14		(SUB FOR TH104056)
	12M7006	LOCK WASHER	14		6 MM (0.236")
	24M7293	WASHER	14		6.500 X 13 X 1.600 MM (0.256" X 0.512" X 0.063")
2	8073968	BRACKET	1		(SUB FOR TH8073968)
3	8073968	BRACKET	1		(SUB FOR TH8073968)
4	19M7932	CAP SCREW	4		M8 X 16
	12M7056	LOCK WASHER	4		8 MM (0.315") (SUB FOR 12M7065)
5	0003429	WIRING HARNESS	1		(SUB FOR 0002204)
5A	4288109	DIODE	4		(SUB FOR (4) AT174465)
7	H77698	TIE BAND	1		

CONVERTER
(24-VOLT TO 12-VOLT)

TP32780 -UN-01JAN94

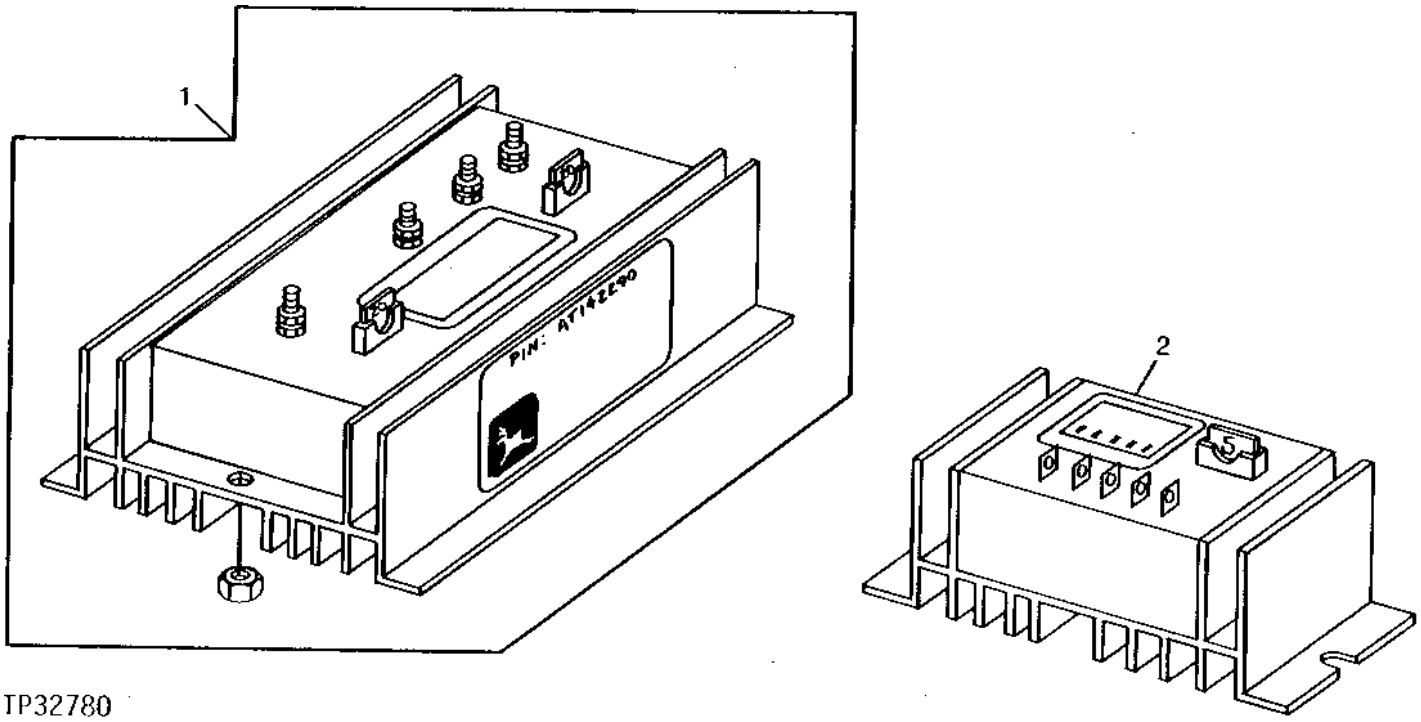

TP32780

KEY	PART NO.	PART NAME	QTY	SERIAL NO.	REMARKS
1	AT142288	CONVERTER	1		(10/20 AMP - 24/12 VOLT)
2	AT224893	CONVERTER	1		(SUB FOR AT164676 AND AT223785) (5 AMP - 24/12 VOLT)

MEMORANDA

CONTROL PATTERN KIT WIRING HARNESS

T135255 -UN-14NOV00

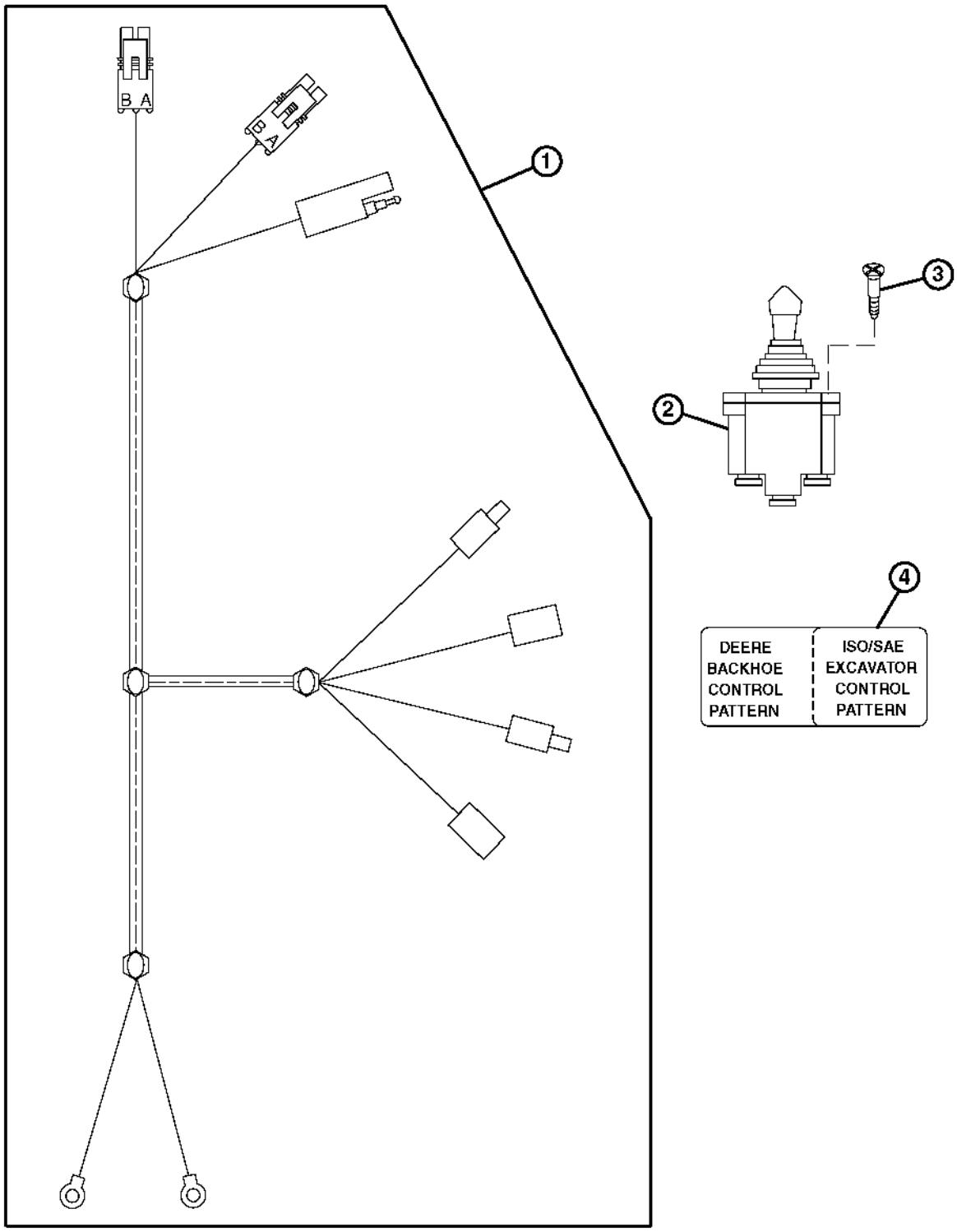

T135255

CONTROL PATTERN KIT WIRING HARNESS

KEY	PART NO.	PART NAME	QTY	SERIAL NO.	REMARKS
1	AT190535	WIRING HARNESS	1		
2	AT83721	TOGGLE SWITCH	1		
3	37H43	SCREW	2		(SELF TAPPING)
4	T184858	LABEL	1		CONTROL PATTERN

MAIN FRAME

T156645 -UN-28JUN02

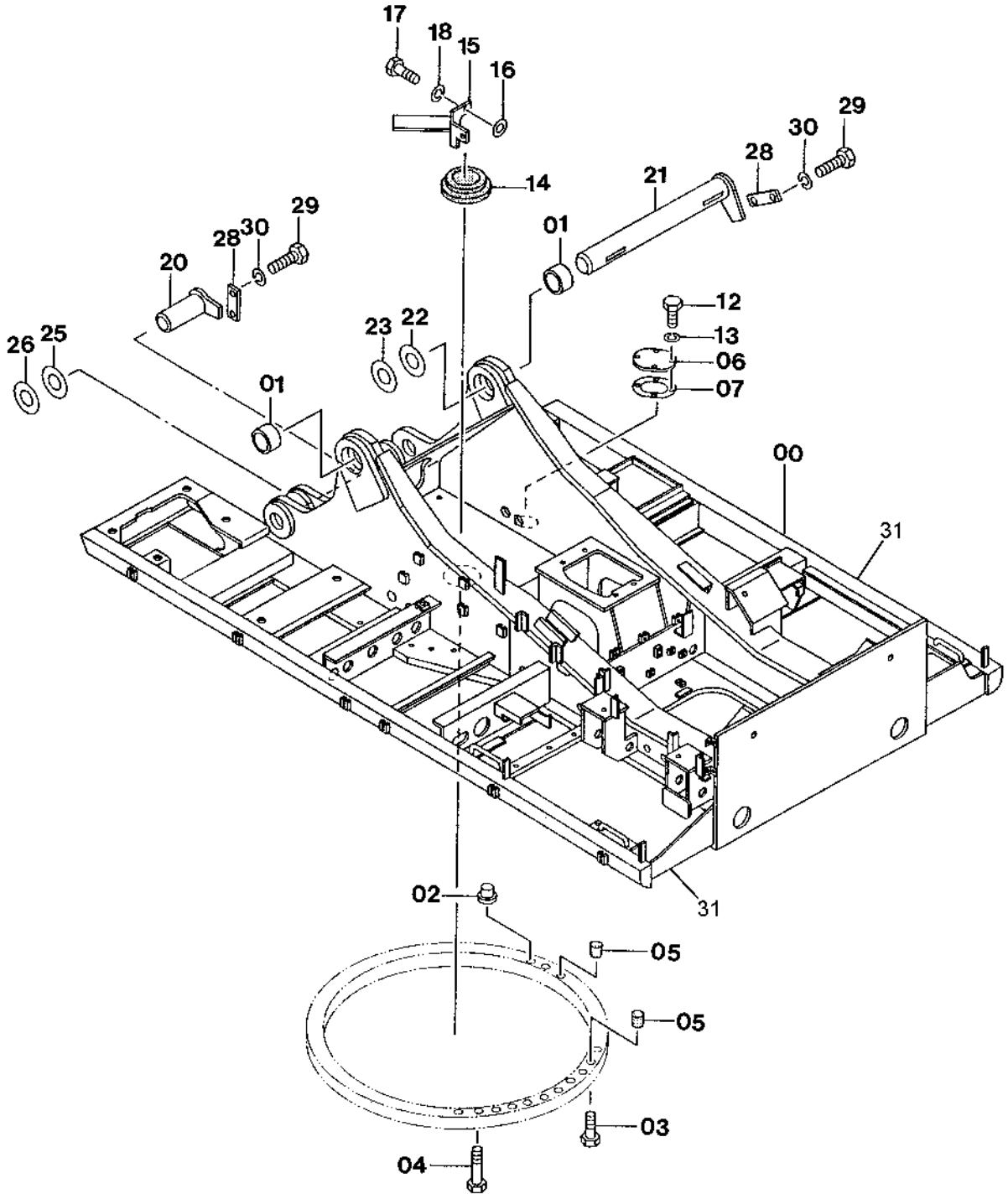

T156645

MAIN FRAME

KEY	PART NO.	PART NAME	QTY	SERIAL NO.	REMARKS
0	5004532	MAIN FRAME	1		(SUB FOR TH5004532) (CONVENIENCE ASSEMBLY)
1	4190010	BUSHING	2		(SUB FOR TH4190010)
2	4293389	PLUG	2		(SUB FOR TH4293389)
3	J833314	BOLT	36		(SUB FOR THJ833314)
4	J833319	BOLT	4		(SUB FOR THJ833319)
5	427154	PLUG	10		(SUB FOR TH427154)
6	4261282	COVER	1		(SUB FOR TH4261282)
7	4261283	GASKET	1		(SUB FOR TH4261283)
12	19M3142	CAP SCREW	4		M10 X 18
13	12M7066	LOCK WASHER	4		10 MM (0.394")
14	4205476	COVER	1		(SUB FOR AT131790)
15	8056744	STOP	1		(SUB FOR AT202369)
16	4114404	WASHER	2		(SUB FOR AT130666)
17	19M6332	CAP SCREW	2		M14 X 35
18	12H317	LOCK WASHER	2		14.288 MM (9/16")
20	8067792	PIN FASTENER	2		(SUB FOR TH8067792)
21	8067790	PIN FASTENER	1		(SUB FOR TH8067790)
22	4165444	SHIM	2		(SUB FOR TH4165444) (2.3)
23	4191279	SHIM	1		(SUB FOR TH4191279) (1.0)
25	4219932	SHIM	4		(SUB FOR TH4219932) (1.6)
26	4219933	SHIM	2		(SUB FOR TH4219933) (1.0)
28	4122729	STRAP	3		(SUB FOR AT131696)
29	19M7950	CAP SCREW	6		M20 X 45
30	12M7070	LOCK WASHER	6		20 MM (0.787")
31	4455818	PIPE	1		

MAIN FRAME STEPS AND HANDHOLD

TP66662 -UN-29SEP99

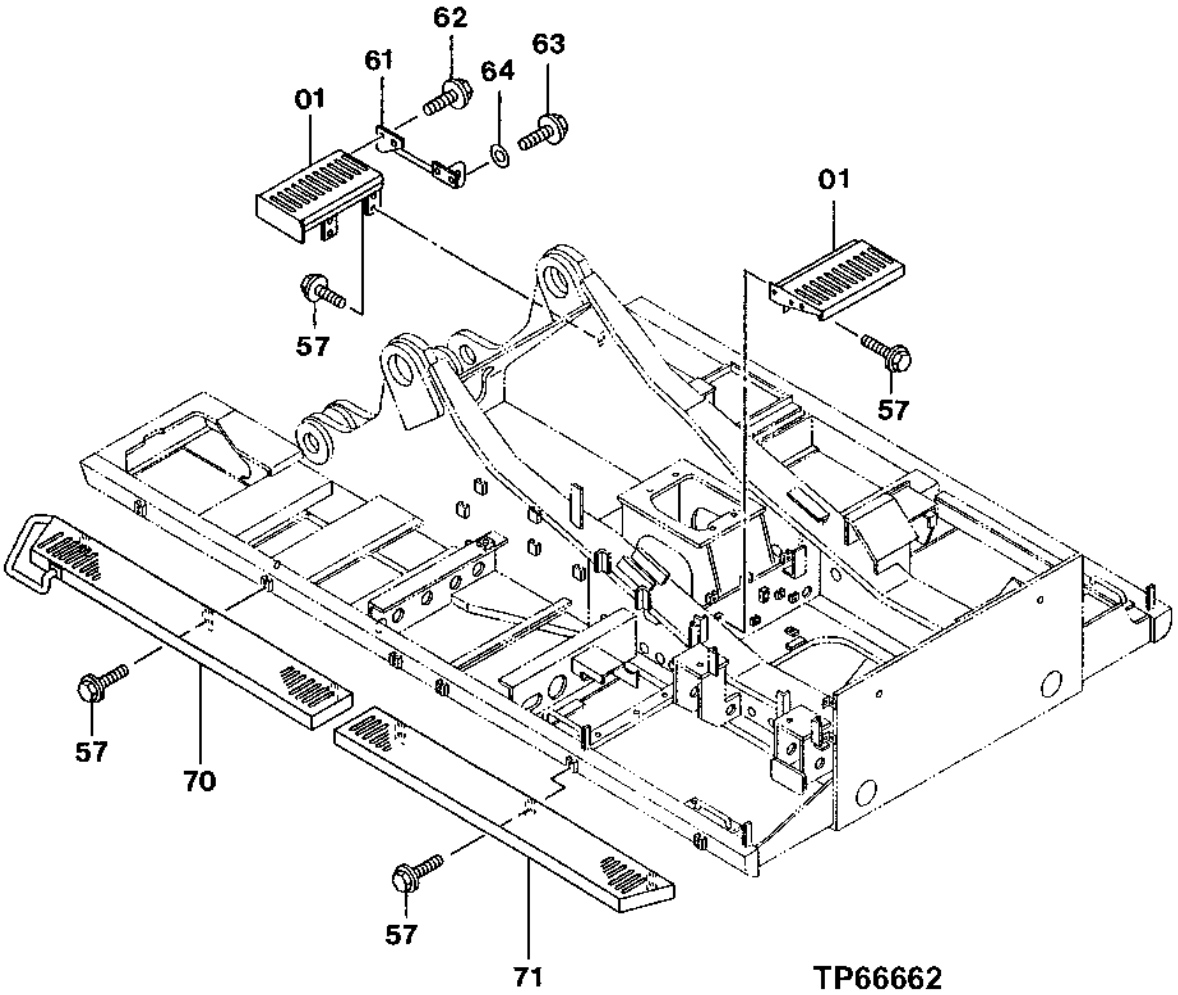

MAIN FRAME STEPS AND HANDHOLD

KEY	PART NO.	PART NAME	QTY	SERIAL NO.	REMARKS
1	7030928	STEP	2		(SUB FOR TH7030928)
57	19M7872	CAP SCREW	20		M12 X 25
	12H301	LOCK WASHER	20		12.700 MM (1/2")
	24M7047	WASHER	20		13 X 24 X 2.500 MM (0.512" X 0.945" X 0.098")
61	8063051	HANDRAIL	1		(SUB FOR TH8063051)
62	12M7058	LOCK WASHER	2		12.200 MM (0.480") (SUB FOR 12M7067)
	19M7403	CAP SCREW	2		M12 X 35
	24H1748	WASHER	2		12.700 X 31.750 X 2.667 MM (1/2" X 1-1/4" X 0.105")
63	19M7872	CAP SCREW	2		M12 X 25
	12H301	LOCK WASHER	2		12.700 MM (1/2")
	24M7047	WASHER	2		13 X 24 X 2.500 MM (0.512" X 0.945" X 0.098")
64	24M7047	WASHER	2		13 X 24 X 2.500 MM (0.512" X 0.945" X 0.098")
70	6014974	STEP	1		(SUB FOR TH6014974)
71	6017693	STEP	1		(SUB FOR TH6017693)

MAIN FRAME BUSHINGS

TP66663 -UN-29SEP99

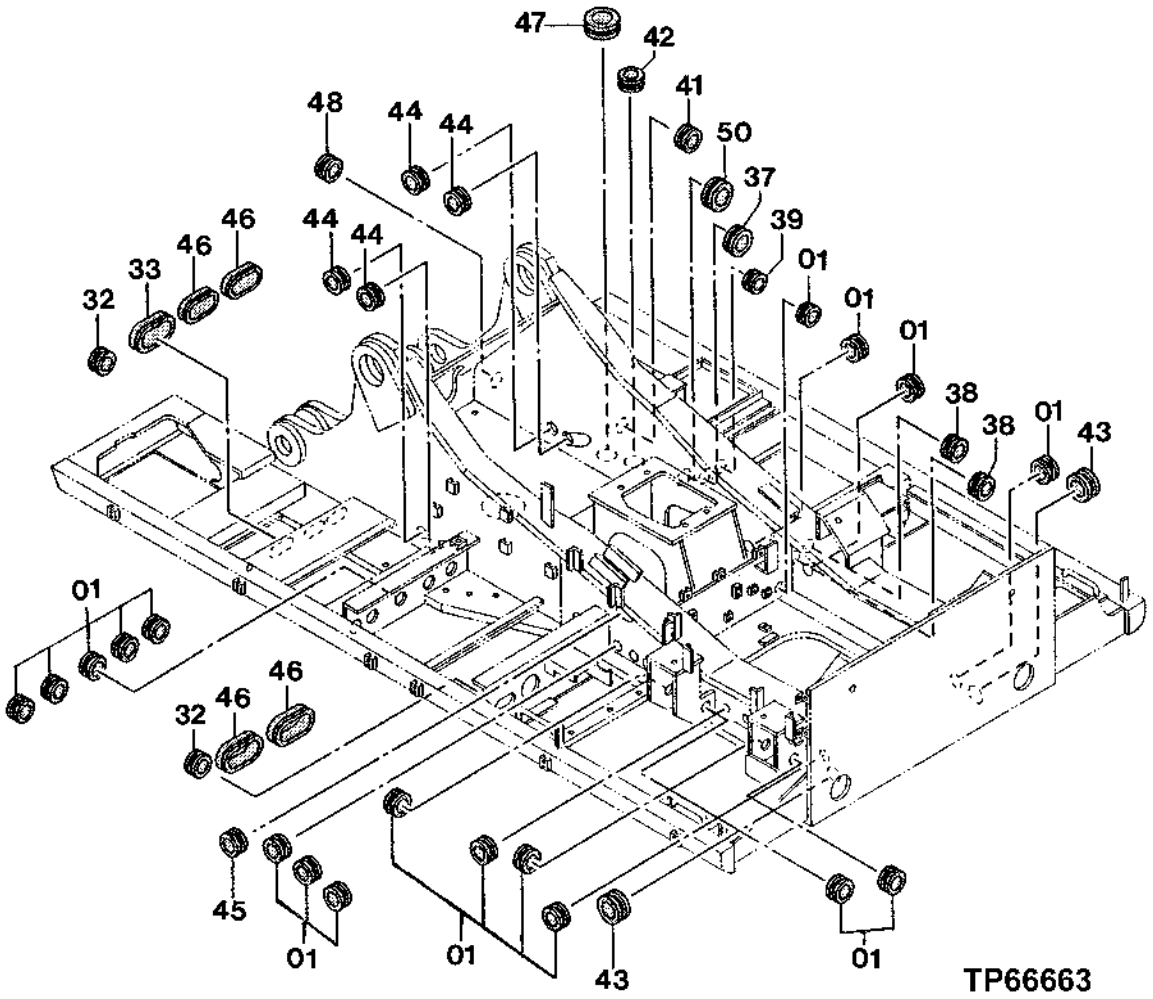

MAIN FRAME BUSHINGS

KEY	PART NO.	PART NAME	QTY	SERIAL NO.	REMARKS
1	4255567	BUSHING	13		(SUB FOR TH4255567)
32	4255530	GROMMET	2		(SUB FOR AT155271)
33	4277018	BUSHING	1		(SUB FOR AT201018)
35	4208279	GROMMET	5		(SUB FOR AT131854)
37	4207838	GROMMET	1		(SUB FOR AT202094)
38	4200176	GROMMET	2		(SUB FOR TH109397)
39	991964	BUSHING	1		(SUB FOR TH991964)
41	4207839	GROMMET	1		(SUB FOR AT131849)
42	U15091	GROMMET	1		
43	4190960	GROMMET	2		(SUB FOR AT126283)
44	4206477	BUSHING	4		(SUB FOR TH4206477)
45	4249027	BUSHING	1		(SUB FOR TH4249027)
46	4259603	GROMMET	4		(SUB FOR AT154267)
47	4099334	BUSHING	1		(SUB FOR TH104220)
48	4279257	BUSHING	1		(SUB FOR AT250601)
50	4292762	BUSHING	1		(SUB FOR AT202318)

COUNTERWEIGHT

TP66666 -UN-29SEP99

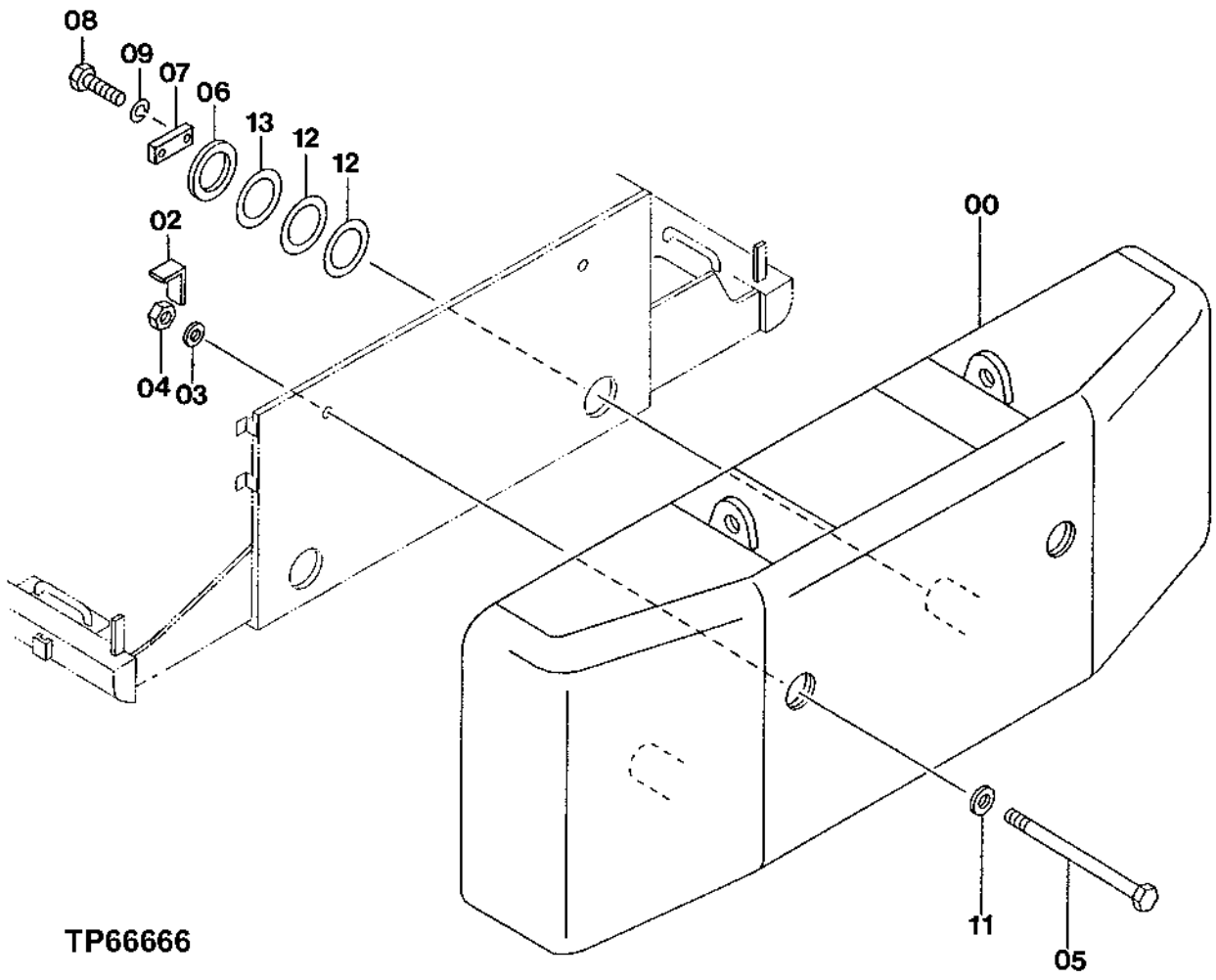

COUNTERWEIGHT

KEY	PART NO.	PART NAME	QTY	SERIAL NO.	REMARKS
0	5005235	COUNTERWEIGHT	1		(SUB FOR TH5005235) (CONVENIENCE ASSEMBLY)
2	4345741	SHIM	2		(SUB FOR AT202397)
3	4335906	WASHER	2		(SUB FOR TH4335906)
4	4345718	NUT	2		(SUB FOR TH4345718)
5	4334933	BOLT	2		(SUB FOR TH4334933)
6	4346036	WASHER	2		(SUB FOR TH4346036)
7	4221465	STRAP	2		(SUB FOR TH4221465)
8	J912470	BOLT	4		(SUB FOR THJ912470)
9	12H234	LOCK WASHER	4		25.400 MM (1")
11	4335904	WASHER	2		(SUB FOR TH4335904)
12	4380636	SHIM	4		(SUB FOR TH4380636) (1.0)
13	4380637	SHIM	2		(SUB FOR TH4380637) (0.5)

COUNTERWEIGHT REMOVAL DEVICE

TP66901 -UN-12OCT99

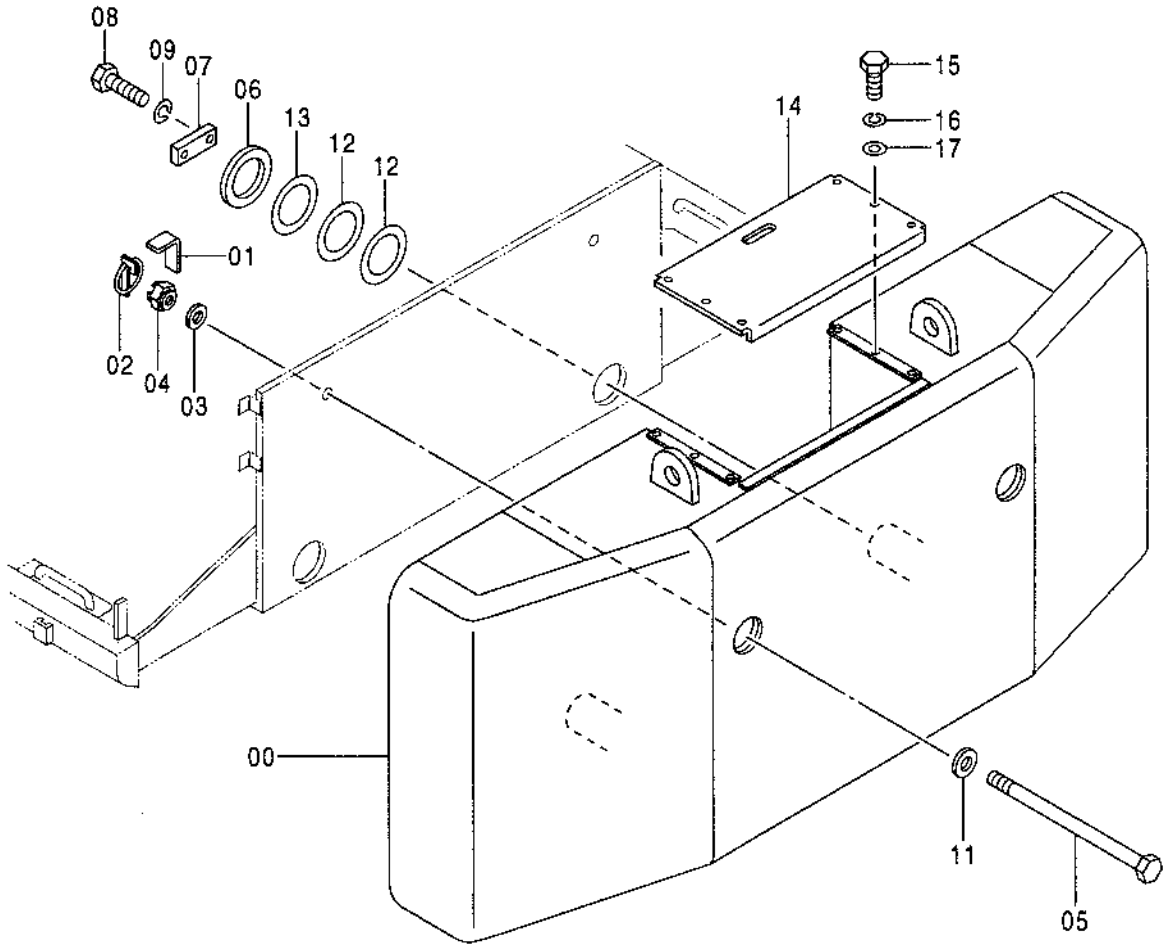

TP66901

COUNTERWEIGHT REMOVAL DEVICE

KEY	PART NO.	PART NAME	QTY	SERIAL NO.	REMARKS
0	5005719	COUNTERWEIGHT	1		(SUB FOR TH5005719) WHOLEGOODS (CONVENIENCE ASSEMBLY)
1	4345741	SHIM	2		(SUB FOR AT202397)
2	9701925	QUICK LOCK PIN	2		(SUB FOR AT132681)
3	4103743	BUSHING	2		(SUB FOR AT131690)
4	4246150	NUT	2		(SUB FOR AT132682)
5	4341856	CAP SCREW	2		(SUB FOR AT202396)
6	4346036	WASHER	2		(SUB FOR TH4346036)
7	4221465	STRAP	2		(SUB FOR TH4221465)
8	J912470	BOLT	4		(SUB FOR THJ912470)
9	12H234	LOCK WASHER	4		25.400 MM (1")
11	4114413	WASHER	2		(SUB FOR TH4114413)
12	4380636	SHIM	4		(SUB FOR TH4380636)
13	4380637	SHIM	2		(SUB FOR TH4380637)
14	8071417	COVER	1		(SUB FOR TH8071417)
15	19M7938	CAP SCREW	6		M10 X 20
16	12M7066	LOCK WASHER	6		10 MM (0.394")
17	24M7028	WASHER	6		10.500 X 20 X 2 MM (0.413" X 0.787" X 0.079")

COUNTERWEIGHT LIFTING DEVICE

TP67043 -UN-29FEB00

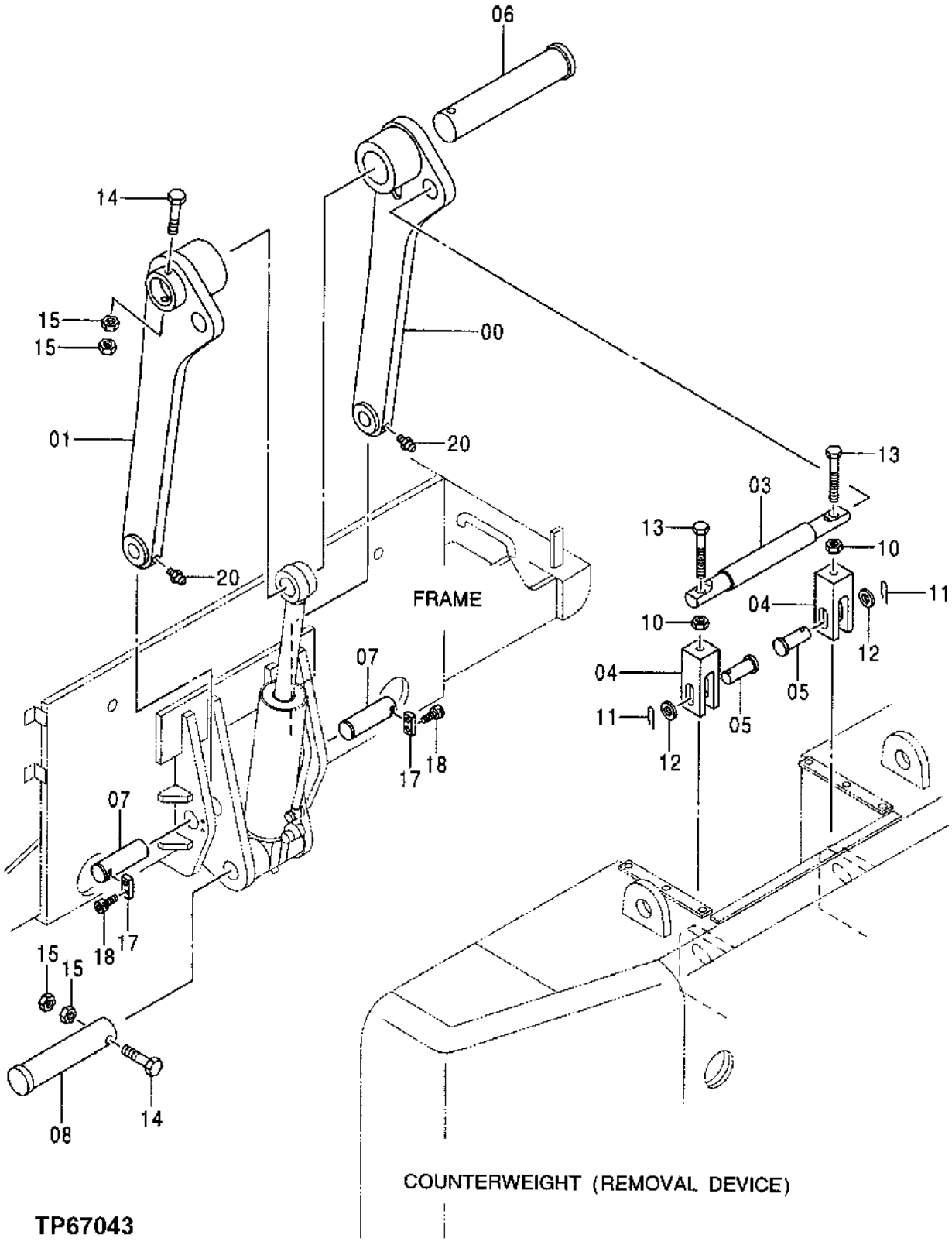

COUNTERWEIGHT LIFTING DEVICE

KEY	PART NO.	PART NAME	QTY	SERIAL NO.	REMARKS
0	8070660	LINK	1		(SUB FOR TH8070660)
1	8070661	LINK	1		(SUB FOR TH8070661)
3	4394171	PIN	1		(SUB FOR TH4394171)
4	4394542	YOKE	2		(SUB FOR TH4394542)
5	4337833	PIN	2		(SUB FOR AT170126)
6	4394448	PIN	1		(SUB FOR TH4394448)
7	4337837	PIN	2		(SUB FOR AT170128)
8	4393869	PIN	1		(SUB FOR TH4393869)
10	J953039	NUT	2		(SUB FOR THJ953039)
11	414322	SPRING LOCKING PIN	2		(SUB FOR AT170131)
12	A590142	WASHER	2		(SUB FOR AT170132)
13	4394534	BOLT	2		(SUB FOR TH4394534)
14	19M8100	CAP SCREW	2		M20 X 180
15	14M7277	NUT	4		M20
17	4063340	STRAP	2		(SUB FOR AT132480)
18	M341632	BOLT	4		(SUB FOR AT132460)
20	TH100074	LUBRICATION FITTING	2		

SWING BEARING

TP67016 -UN-04JAN00

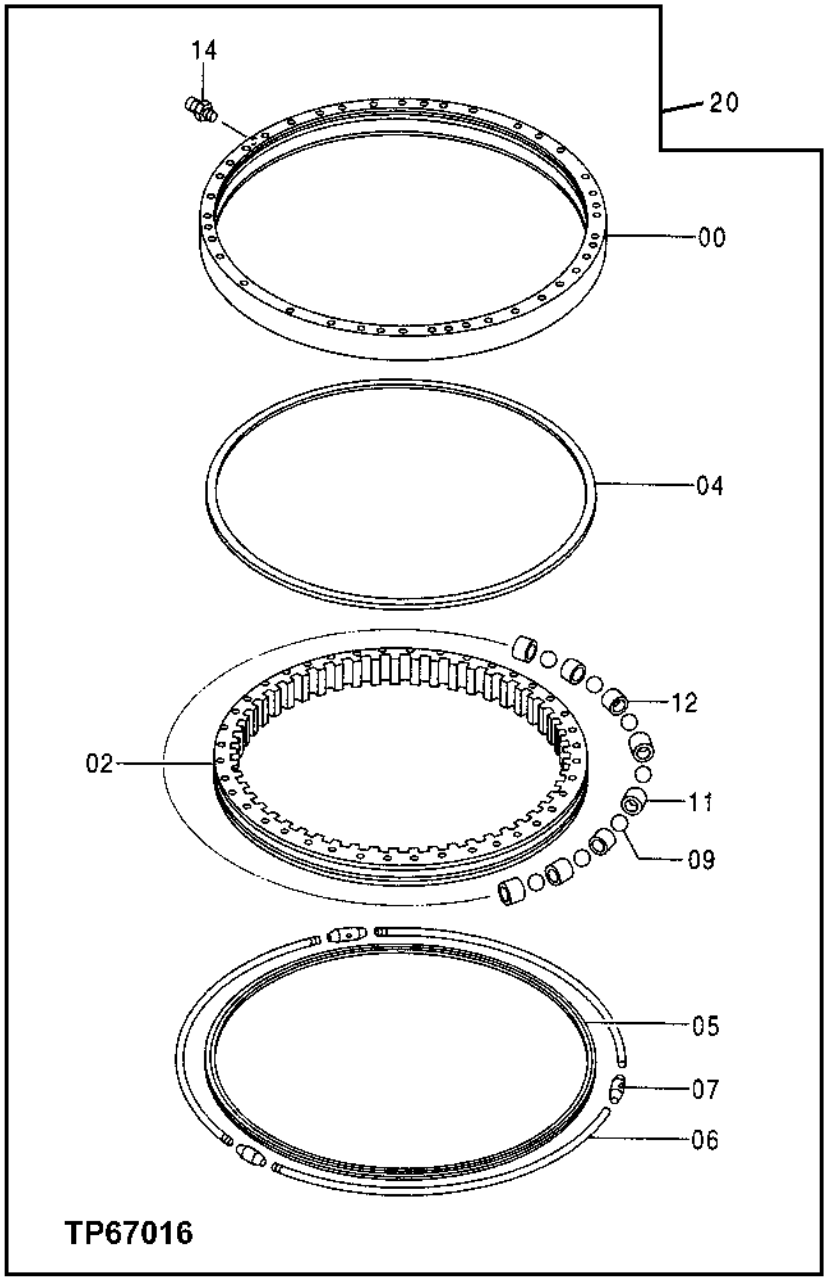

SWING BEARING

KEY	PART NO.	PART NAME	QTY	SERIAL NO.	REMARKS
0	.....	BEARING RACE	1		(OUTER)
2	.....	BEARING RACE	1		(INNER)
4	4216871	SEAL	1		(SUB FOR TH4216871)
5	4245211	SEAL	1		(SUB FOR TH4245211)
6	4245213	ROD	3		(SUB FOR TH4245213)
7	4245212	TURNBUCKLE	3		(SUB FOR AT202102)
9	4210108	BALL	1		(SUB FOR TH4210108) (CONTAINS 76 PIECES)
11	4216725	SPACER	73		(SUB FOR TH4216725)
12	4216726	SPACER	3		(SUB FOR TH4216726)
14	TH100074	LUBRICATION FITTING	1		
20	9134215	SWING BEARING	1		(SUB FOR TH9134215)

SWING BEARING LUBRICATE PIPING

TP66867 -UN-15OCT99

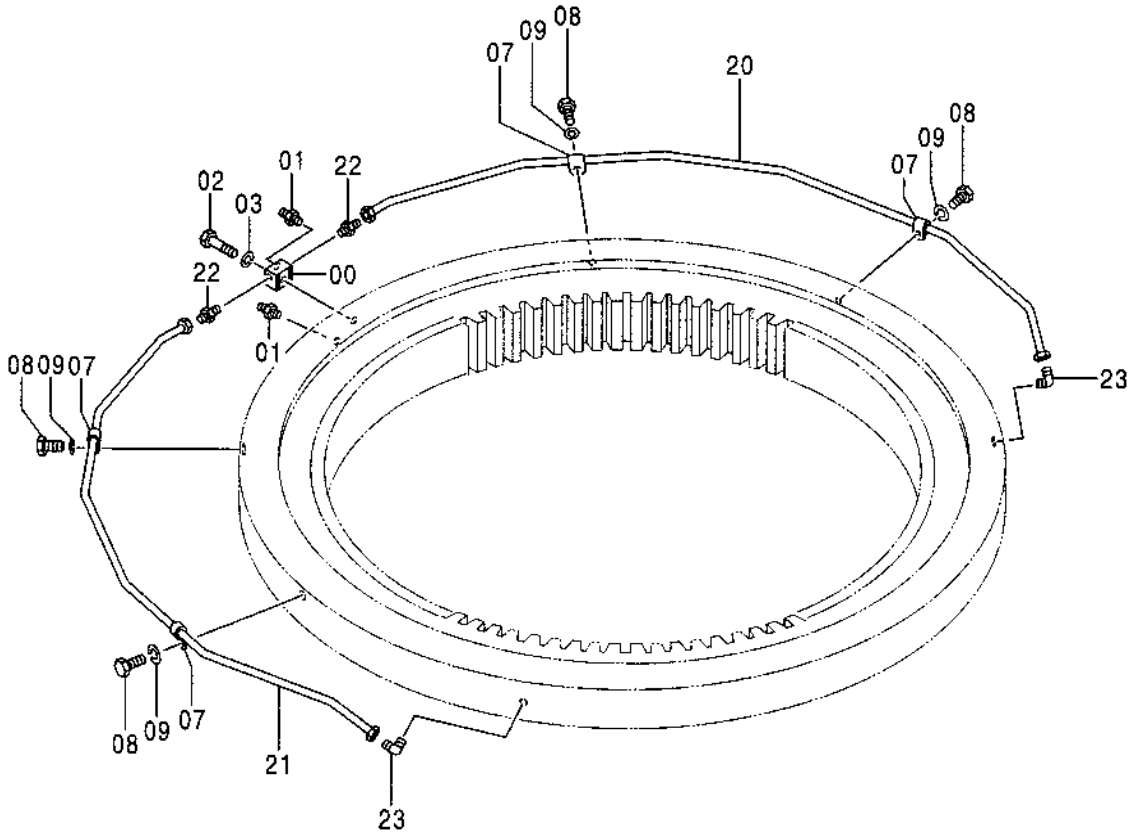

TP66867

SWING BEARING LUBRICATE PIPING

KEY	PART NO.	PART NAME	QTY	SERIAL NO.	REMARKS
0	4219720	MANIFOLD	1		(SUB FOR AT131900)
1	TH100074	LUBRICATION FITTING	3		
2	19M7572	CAP SCREW	1		M10 X 45
3	12M7066	LOCK WASHER	1		10 MM (0.394")
7	484827	CLAMP	4		(SUB FOR AT132014)
8	19M8324	CAP SCREW	4		M10 X 16
9	12M7066	LOCK WASHER	4		10 MM (0.394")
20	2025839	OIL LINE	1		(SUB FOR TH2025839)
21	2025840	OIL LINE	1		(SUB FOR TH2025840)
22	4130168	FITTING PLUG	2		(SUB FOR AT131701)
23	4130174	FITTING	2		(SUB FOR TH103262)

CAB MOUNTING

TP66817 -UN-08OCT99

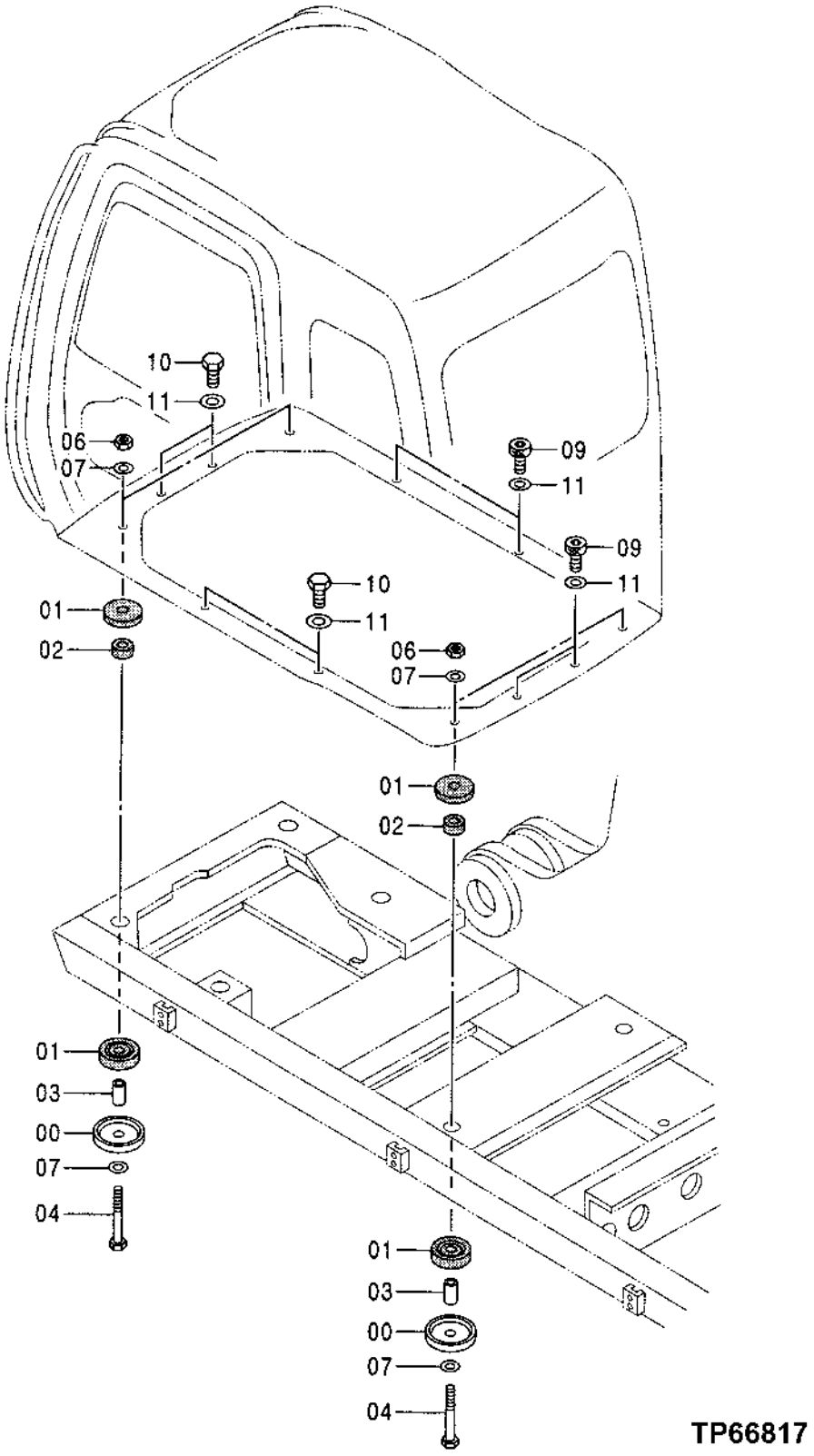

CAB MOUNTING

KEY	PART NO.	PART NAME	QTY	SERIAL NO.	REMARKS
0	4203878	STOP	4		(SUB FOR TH109653)
1	4200084	ISOLATOR	8		(SUB FOR TH108603)
2	4339834	ISOLATOR	4		(SUB FOR TH4339834)
3	4339836	SPACER	4		(SUB FOR TH4339836)
4	4339835	BOLT	4		(SUB FOR TH4339835)
6	14M7328	LOCK NUT	4		M16
7	24M7338	WASHER	8		17 X 30 X 3 MM (0.669" X 1.181" X 0.118")
9	J781030	SCREW	4		(SUB FOR AT213614)
10	19M7662	CAP SCREW	4		M10 X 30
11	24M7346	WASHER	8		11 X 20 X 2 MM (0.433" X 0.787" X 0.079")

CAB INSIDE RIGHT COVER

TP47978 -UN-21MAY96

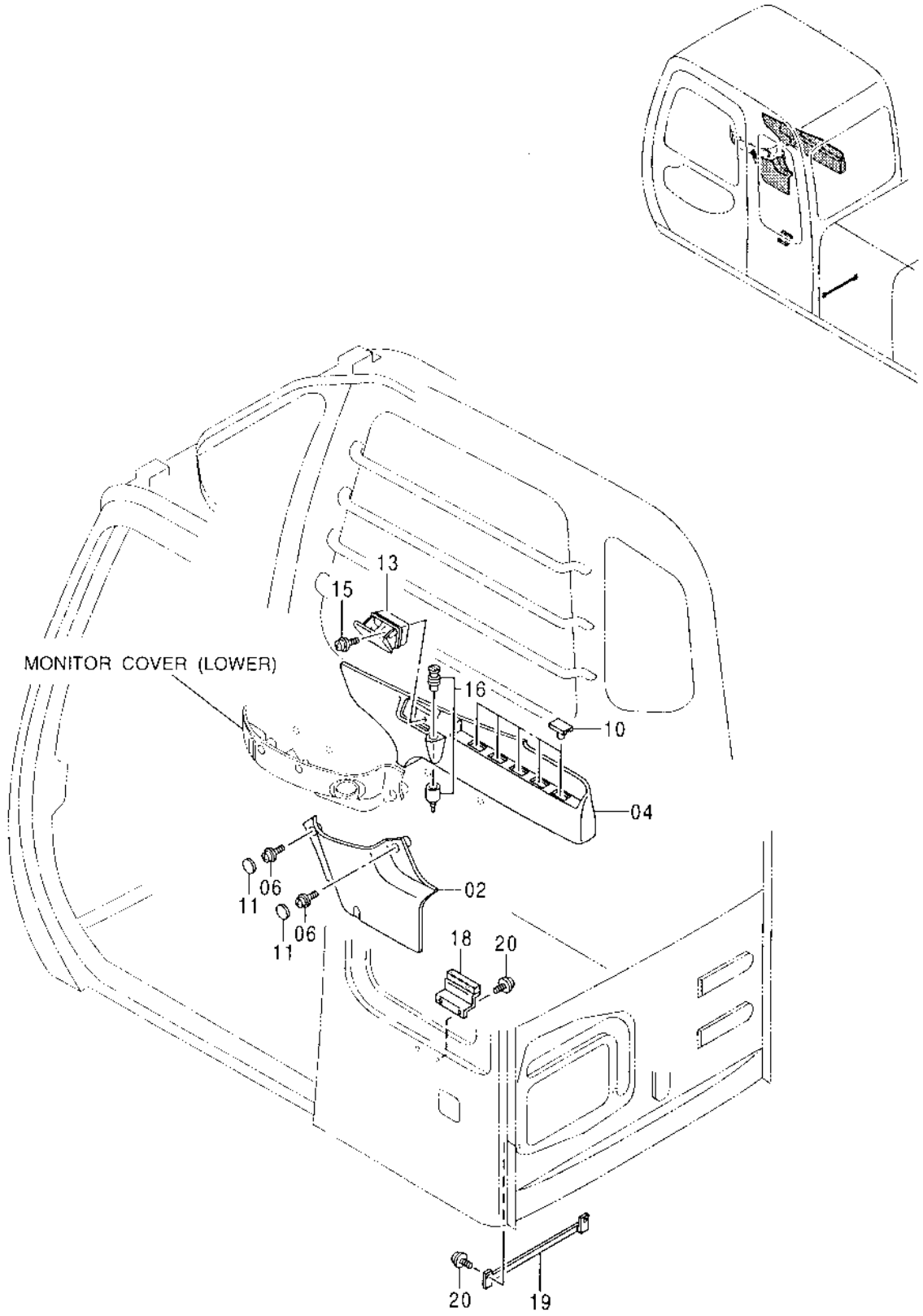

CAB INSIDE RIGHT COVER

KEY	PART NO.	PART NAME	QTY	SERIAL NO.	REMARKS
2	4350246	COVER	1		(SUB FOR AT213941)
4	4350247	COVER	1		(SUB FOR AT213942)
6	19M8425	CAP SCREW	2		M6 X 16
	24M7293	WASHER	2		6.500 X 13 X 1.600 MM (0.256" X 0.512" X 0.063")
	12M7006	LOCK WASHER	2		6 MM (0.236")
10	4350778	CAP	5		(SUB FOR AT213949)
11	4350779	CAP	2		(SUB FOR AT213950)
13	4350398	ASHTRAY	1		(SUB FOR AT213945)
15	J900614	BOLT	1		(SUB FOR TH104056)
	24M7293	WASHER	1		6.500 X 13 X 1.600 MM (0.256" X 0.512" X 0.063")
	12M7006	LOCK WASHER	1		6 MM (0.236")
16	AR60937	ELECTRICAL LIGHTER	1		(12 VOLT)
	AU42809	RESISTOR	1		(12 VOLT)
	AT78634	WIRING LEAD	1		(12 VOLT)
	AT78633	HOUSING	1		(12 VOLT)
	4357862	ELECTRICAL LIGHTER	1		(SUB FOR AT190190) (24 VOLT)
18	8064900	BRACKET	1		(SUB FOR AT214373)
19	3074721	BRACKET	1		(SUB FOR AT213791)
20	19M8425	CAP SCREW	2		M6 X 16
	24M7293	WASHER	2		6.500 X 13 X 1.600 MM (0.256" X 0.512" X 0.063")
	12M7006	LOCK WASHER	2		6 MM (0.236")

LOWER MONITOR COVER

TP59010 -UN-02MAR98

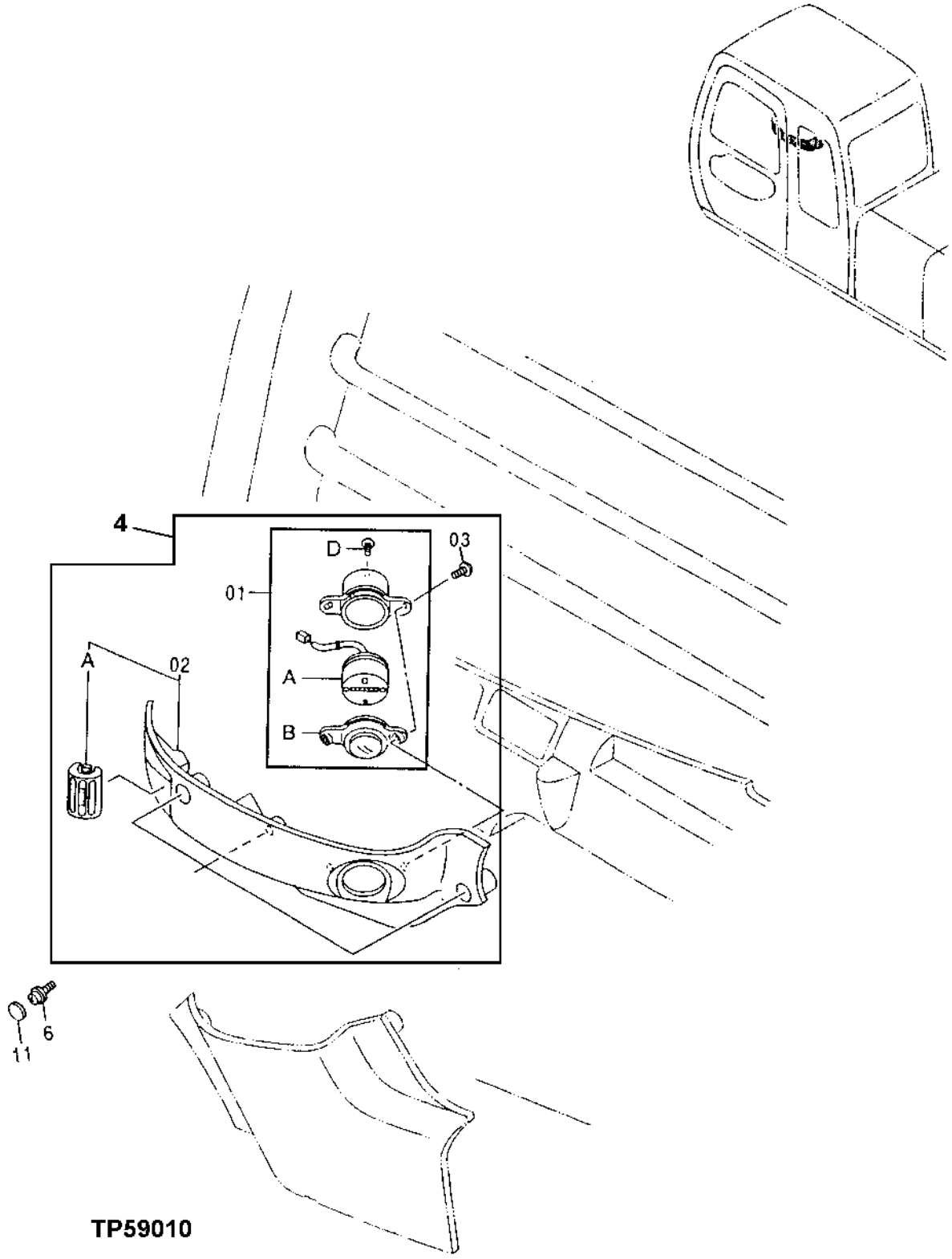

LOWER MONITOR COVER

KEY	PART NO.	PART NAME	QTY	SERIAL NO.	REMARKS
1	4370312	HOUR METER	1		(SUB FOR AT214258)
1A	4370313	HOUR METER	1		(SUB FOR AT214259)
1B	4370314	LENS	1		(SUB FOR AT214260)
1D	4349998	SCREW	3		(SUB FOR AT213934)
2	4370316	COVER	1		(SUB FOR AT214261)
2A	4370317	LOUVER	1		(SUB FOR AT214262)
3	4297101	SCREW	2		(SUB FOR AT155616)
4	4350245	COVER	1		(SUB FOR AP34402)
6	19M8425	CAP SCREW	3		M6 X 16
	24M7293	WASHER	3		6.500 X 13 X 1.600 MM (0.256" X 0.512" X 0.063")
	12M7006	LOCK WASHER	3		6 MM (0.236")
11	4350779	CAP	3		(SUB FOR AT213950)

CAB

TP47991 -UN-23SEP99

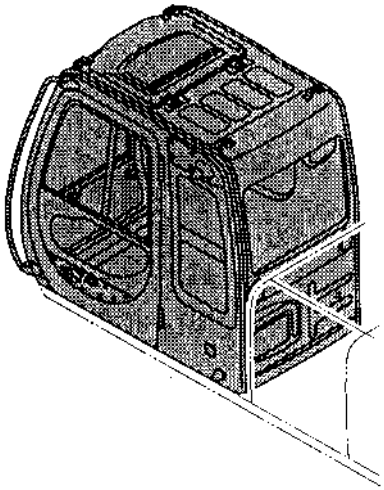

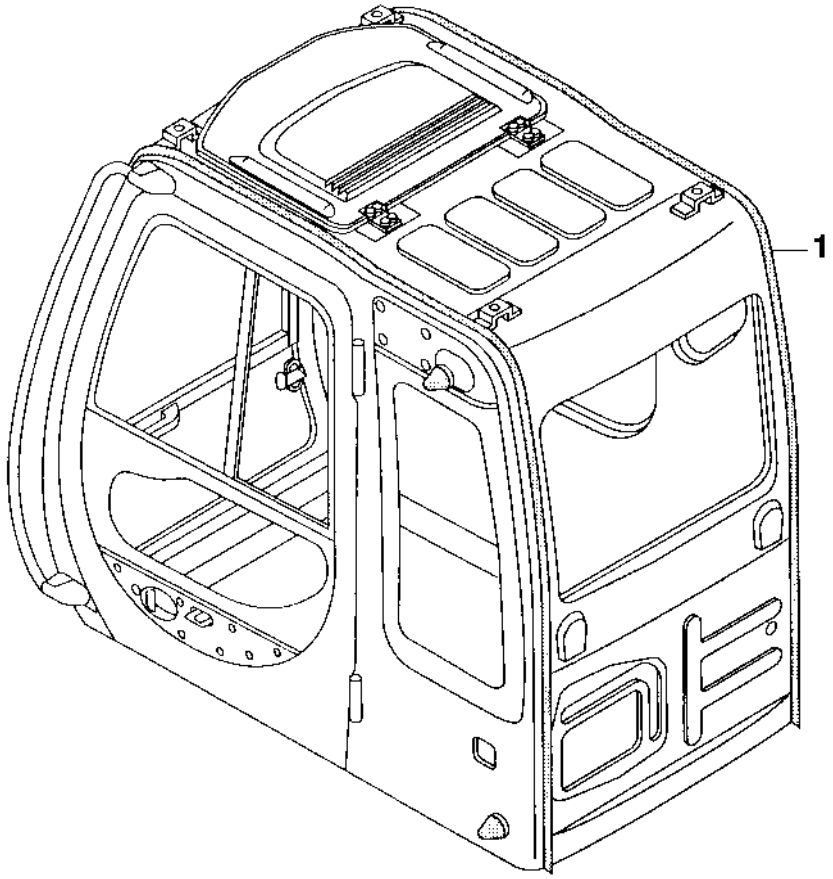

TP47991

CAB

KEY	PART NO.	PART NAME	QTY	SERIAL NO.	REMARKS
1	.....	CAB	1		(SEE FOLLOWING PAGES FOR COMPONENTS)

CAB COMPONENTS

TP66818 -UN-08OCT99

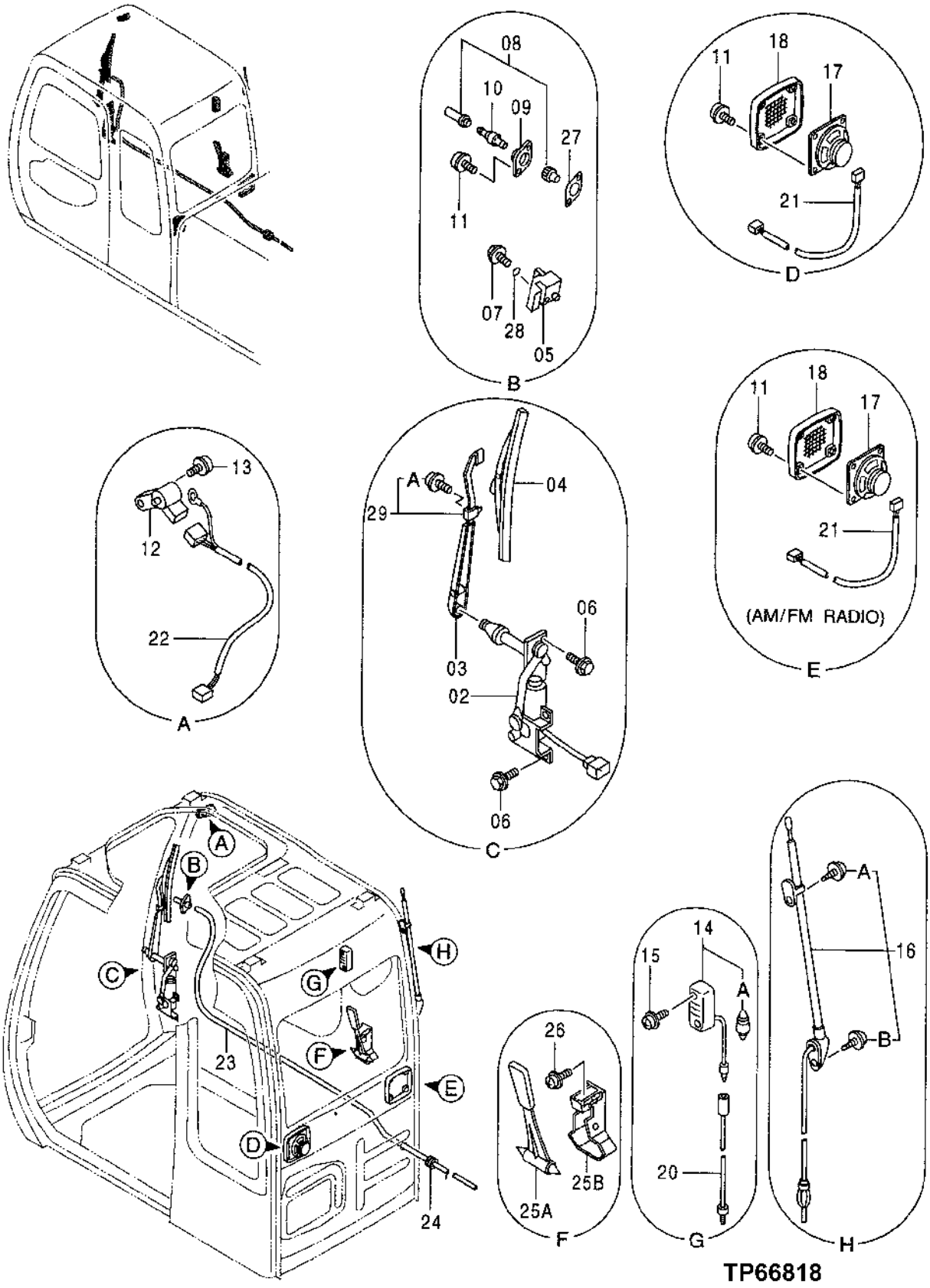

TP66818

CAB COMPONENTS

KEY	PART NO.	PART NAME	QTY	SERIAL NO.	REMARKS
0	.....	CAB	1		(CONTAINS ALL PARTS LISTED ON THIS PAGE - ADDITIONAL COMPONENTS LISTED ON FOLLOWING PAGES)
2	4369540	WIPER MOTOR	1		(SUB FOR AT214054)
3	4370071	WIPER ARM	1		(SUB FOR TH4370071) (LOWER PORTION)
4	4369542	WIPER BLADE	1		(SUB FOR AT214056)
5	4369543	RETAINER	1		(SUB FOR AT214057)
6	12M7056	LOCK WASHER	5		8 MM (0.315") (SUB FOR 12M7065)
	19M7932	CAP SCREW	5		M8 X 16, (SUB FOR 19M7162)
7	4372218	SCREW, WITH WASHER	1		(SUB FOR AT214304)
8	4367485	NOZZLE	1		(SUB FOR AT214042)
9	4367486	ADAPTER	1		(SUB FOR AT214043)
10	4367481	VALVE	1		(SUB FOR AT214041)
11	4372608	SCREW	10		(SUB FOR AT214316)
12	4387837	SWITCH	1		(SUB FOR 4369545) (ALSO ORDER 4402476) (SUB FOR AT182625) (WINDSHIELD WASHER SAFETY SWITCH)
13	19M7700	CAP SCREW	1		M5 X 10
	24M7348	WASHER	1		5.500 X 10 X 1 MM (0.217" X 0.394" X 0.039")
	12M7064	LOCK WASHER	1		5 MM (0.197")
14	4187082	LAMP	1		(SUB FOR TH108567)
14A	4187083	BULB	1		(SUB FOR TH108568)
15	21M7265	SCREW	2		M5 X 12
16	4280527	ANTENNA	1		(SUB FOR AT154352)
16A	4210412	SCREW	1		(SUB FOR AT131864)
16B	4210413	SCREW	1		(SUB FOR AT131865)
17	4361302	SPEAKER	2		(SUB FOR AT214007)
18	4364504	GRILLE	2		(SUB FOR AT214017)
20	4260369	WIRING HARNESS	1		(SUB FOR AT214060) (SUB FOR AT154278)
21	4369547	WIRING HARNESS	2		(SUB FOR AT214061)
22	4402476	WIRING HARNESS	1		(SUB FOR AT214062) (ALSO ORDER 4387837) (SUB FOR AT182626)
23	4369549	HOSE	1		(SUB FOR AT214063)
24	4287903	GROMMET	2		(SUB FOR AT154413)
25A	4362700	HAMMER	1		(SUB FOR T158020)
25B	2038764	BRACKET	1		(SUB FOR T158021)
26	19M7372	CAP SCREW	2		M5 X 16
	24M7348	WASHER	2		5.500 X 10 X 1 MM (0.217" X 0.394" X 0.039")
	12M7064	LOCK WASHER	2		5 MM (0.197")
27	4369544	GASKET	1		(SUB FOR AT214058)
28	4092111	O-RING	1		(SUB FOR AT154150)
29	4370903	BRACKET	1		(SUB FOR AT214277) (UPPER PORTION)
29A	4382863	BOLT	1		(SUB FOR AT218189)

CAB COMPONENTS

TP61439 -UN-21JAN99

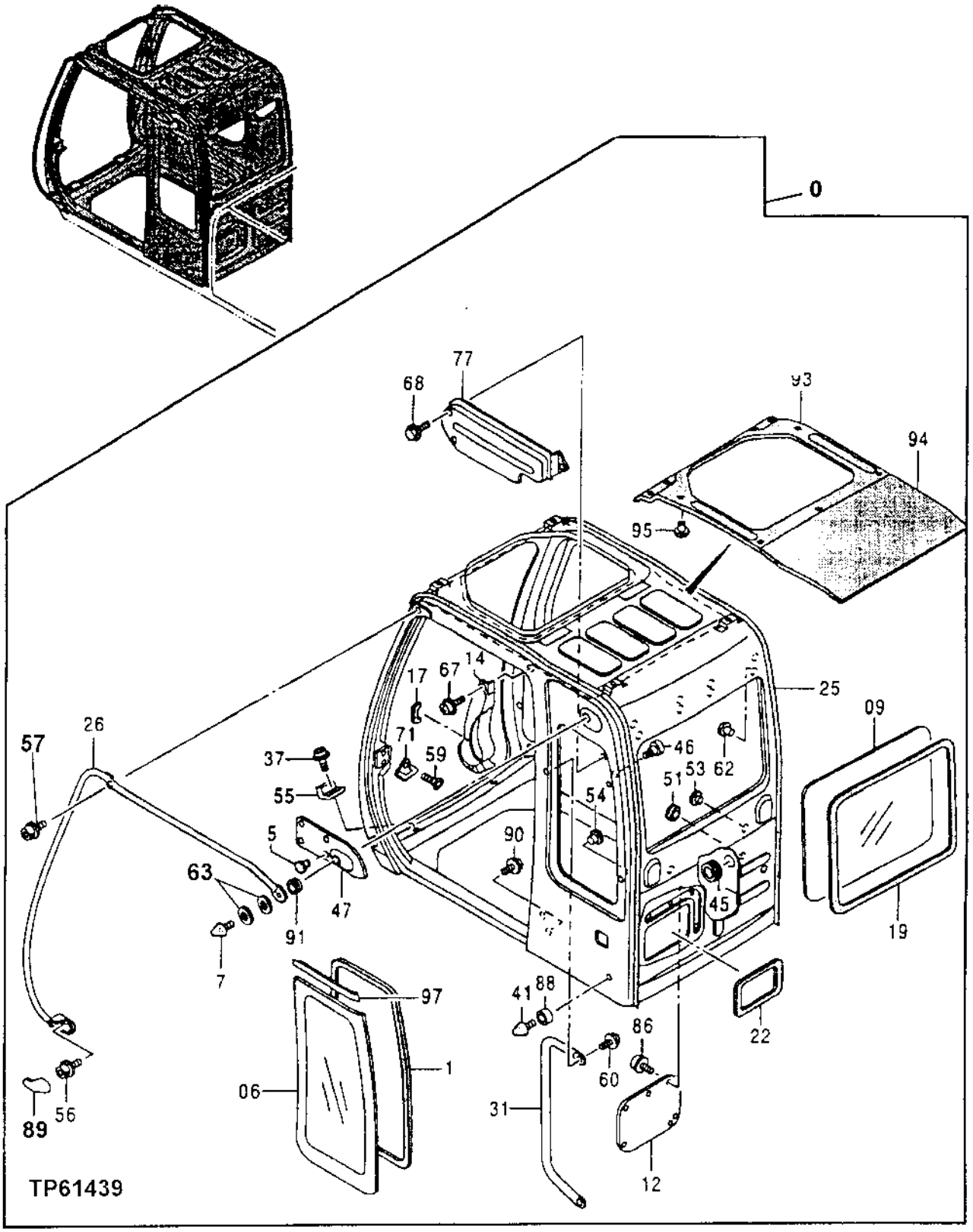

CAB COMPONENTS

KEY	PART NO.	PART NAME	QTY	SERIAL NO.	REMARKS
0	.....	CAB	1		(CONTAINS ALL ITEMS ON THIS PAGE - ADDITIONAL COMPONENTS LISTED ON PREVIOUS AND FOLLOWING PAGES)
1	4400079	SEAL	1		(SUB FOR AT214289, THIS APPLICATION) (ALSO ORDER 4400087) (SUB FOR AT218190)
	4400087	SEAL	1		(ALSO ORDER 4400079)
5	4369659	CLIP	4		(SUB FOR AT214158)
6	4383431	WINDOWPANE	1		(SUB FOR AT215569) (INCLUDES SEAL GLUED TO GLASS) (ADDITIONAL SEAL REQUIRED FOR INSTALLATION ON CAB)
7	4345738	STOP	1		(SUB FOR AT204918)
9	AT215124	WINDOWPANE	1		
12	4369570	COVER	1		(SUB FOR AT214080)
14	4369565	COVER	1		(SUB FOR AT214075)
17	4369566	ISOLATOR	1		(SUB FOR AT214076)
19	4369554	WEATHERSTRIP	1		(SUB FOR AT214067)
22	4369585	WEATHERSTRIP	1		(SUB FOR AT214095)
25	4369574	ISOLATOR	1		(SUB FOR AT214084)
26	4387909	HANDRAIL	1		(SUB FOR AT217142)
31	4369625	HANDRAIL	1		(SUB FOR AT214127)
37	21M7246	SCREW	2		M6 X 16
	24M7293	WASHER	2		6.500 X 13 X 1.600 MM (0.256" X 0.512" X 0.063")
	12M7006	LOCK WASHER	2		6 MM (0.236")
41	4304827	BUMPER	1		(SUB FOR AT156970)
45	4369568	GROMMET	1		(SUB FOR AT214078)
46	4295573	HOOK	1		(SUB FOR AT157057)
47	4369557	PANEL	1		(SUB FOR AT214069)
51	4369569	GROMMET	1		(SUB FOR AT214079)
53	4372087	PLUG	2		(SUB FOR AT214286)
54	4369626	PLUG	1		(SUB FOR AT214128)
55	4369675	ISOLATOR	2		(SUB FOR AT214173)
56	4369573	SCREW	1		(SUB FOR AT214083)
57	19M7550	CAP SCREW	1		M10 X 35
	24H1305	WASHER	1		10.312 X 20.625 X 1.651 MM (13/32" X 13/16" X 0.065")
	12M7066	LOCK WASHER	1		10 MM (0.394")
59	4320163	SCREW	2		(SUB FOR AT200584)
60	4372219	SCREW, WITH WASHER	2		(SUB FOR AT214305)
62	4372088	CLIP	8		(SUB FOR AT214287)
63	24M7028	WASHER	2		10.500 X 20 X 2 MM (0.413" X 0.787" X 0.079")
67	21M7246	SCREW	3		M6 X 16
	24M7293	WASHER	3		6.500 X 13 X 1.600 MM (0.256" X 0.512" X 0.063")
	12M7006	LOCK WASHER	3		6 MM (0.236")
68	4372222	SCREW, WITH WASHER	3		(SUB FOR AT214308)
71	4369627	STRIKER	1		(SUB FOR AT214129)
77	4369567	COVER	1		(SUB FOR AT214077)
86	J680620	SCREW, WITH WASHER	11		(SUB FOR AT213611)
88	4369561	SPACER	1		(SUB FOR AT214071)
89	4369572	COVER	1		(SUB FOR AT214082)
90	19M8425	CAP SCREW	1		M6 X 16
	24H1287	WASHER	1		7.137 X 15.875 X 1.651 MM (9/32" X 5/8" X 0.065")
	12M7006	LOCK WASHER	1		6 MM (0.236")
91	4372089	GROMMET	1		(SUB FOR AT214288)
93	4369552	HEADLINER	1		(SUB FOR AT214065)
94	4369551	HEADLINER	1		(SUB FOR AT214064)
95	4369614	CLIP	12		(SUB FOR AT214117)
97	4369559	ISOLATOR	1		(SUB FOR AT214070)

CAB COMPONENTS

T157018 -UN-15JUL02

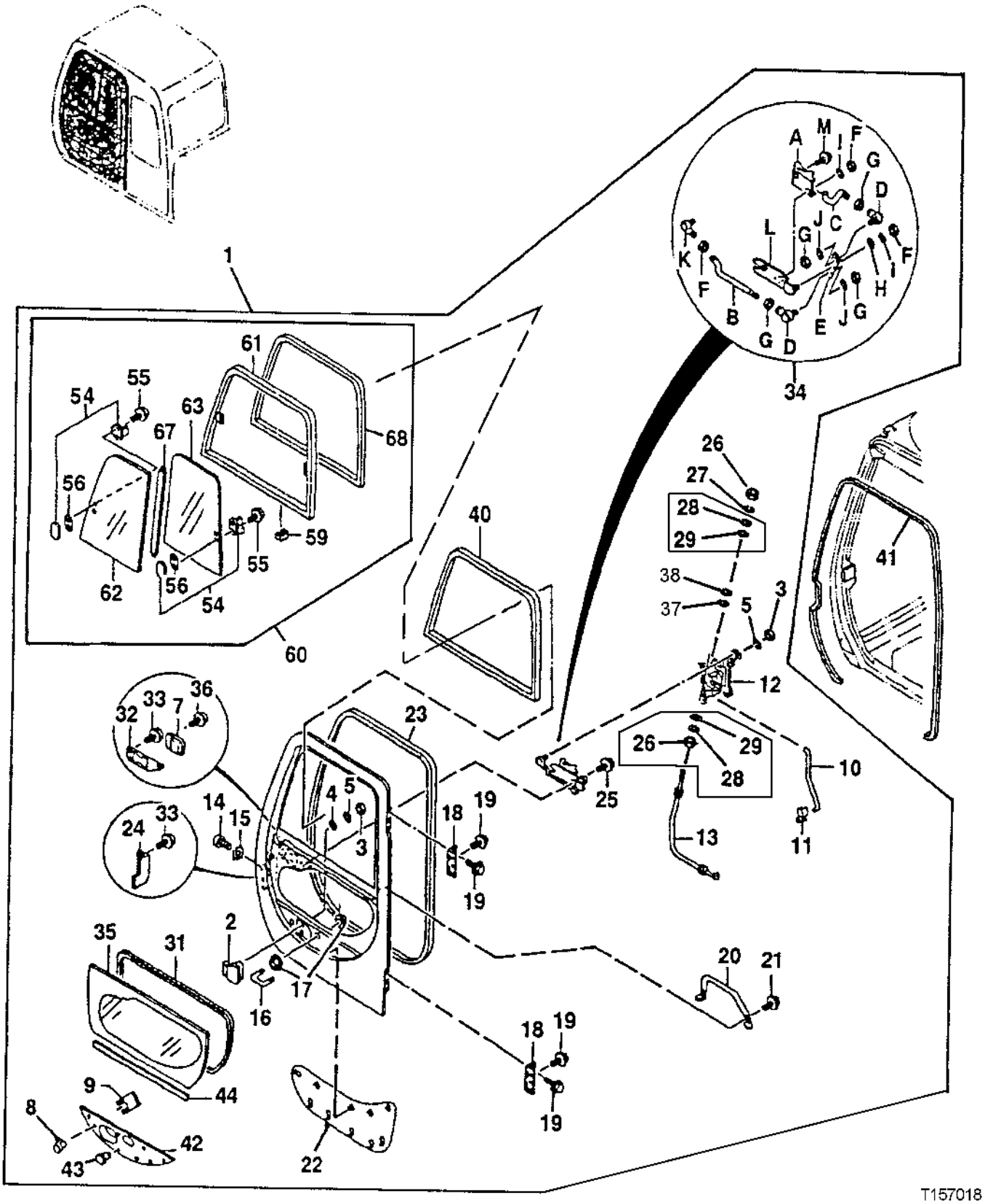

CAB COMPONENTS

KEY	PART NO.	PART NAME	QTY	SERIAL NO.	REMARKS
0	.....	CAB	1		(NOT ILLUSTRATED) (CONTAINS ALL ITEMS ON THIS PAGE - ADDITIONAL COMPONENTS LISTED ON PREVIOUS AND FOLLOWING PAGES)
1	4385735	DOOR	1		(SUB FOR TH4414332)
2	4369645	HANDLE	1		(SUB FOR AT214145)
3	14M7272	NUT	3		M6
4	24M7054	WASHER	2		6.400 X 12 X 1.600 MM (0.252" X 0.472" X 0.063")
5	12M7006	LOCK WASHER	3		6 MM (0.236")
7	4369633	COVER	1		(SUB FOR AT214133)
8	4362135	LOCK	1		(SUB FOR AT176789)
	AT194969	KEY	1		(SUB FOR AT147803) (H800) (NOT ILLUSTRATED)
9	4372091	CLIP	1		(SUB FOR AT214290)
10	4369643	ROD	1		(SUB FOR AT214143)
11	4372092	RETAINER	1		(SUB FOR AT214291)
12	4369631	LOCK	1		(SUB FOR AT214131)
13	.....	CABLE	1	-XXXXXX	(4369642 NO LONGER AVAILABLE - FURNISH 4458077 ALONG WITH 4458079, 4455981, (3) 4382885, 4458080) (SUB FOR AT214142)
	4458077	CABLE	1	XXXXXX-	
14	4382885	BOLT	3		(SUB FOR AT213624, M470625)
15	4372560	WASHER	3		(SUB FOR AT214314)
16	4369661	U-BOLT	1		(SUB FOR AT214160)
17	4414857	NUT	4		(SUB FOR AT157068)
18	4369648	HINGE	2		(SUB FOR AT214148)
19	4372261	SCREW, WITH WASHER	12		(SUB FOR AT214313)
20	4369646	HANDRAIL	1		(SUB FOR AT214146)
21	4372225	SCREW, WITH WASHER	2		(SUB FOR AT214311)
22	4369647	COVER	1		(SUB FOR AT214147)
23	4369662	WEATHERSTRIP	1		(SUB FOR AT214161)
24	4369632	COVER	1		(SUB FOR AT214132)
25	21M7246	SCREW	2		M6 X 16
	24M7105	WASHER	2		6 X 12 X 1.600 MM (0.236" X 0.472" X 0.063")
	12M7006	LOCK WASHER	2		6 MM (0.236")
26	14M7297	NUT	2	-XXXXXX	M5
	14M7297	NUT	1	XXXXXX-	M5
27	12M7064	LOCK WASHER	1		5 MM (0.197")
28	24M7027	WASHER	2	-XXXXXX	5.300 X 10 X 1 MM (0.209" X 0.394" X 0.039")
29	24M7055	WASHER	2	-XXXXXX	8.400 X 16 X 1.600 MM (0.331" X 0.630" X 0.063")
30	4458080	SEAL	1		(NOT ILLUSTRATED)
31	4400087	SEAL	1		(SUB FOR AT218141)
32	4369644	COVER	1		(SUB FOR AT214144)
33	J680510	SCREW, WITH WASHER	5		(SUB FOR AT213609)

CAB COMPONENTS

T157018 -UN-15JUL02

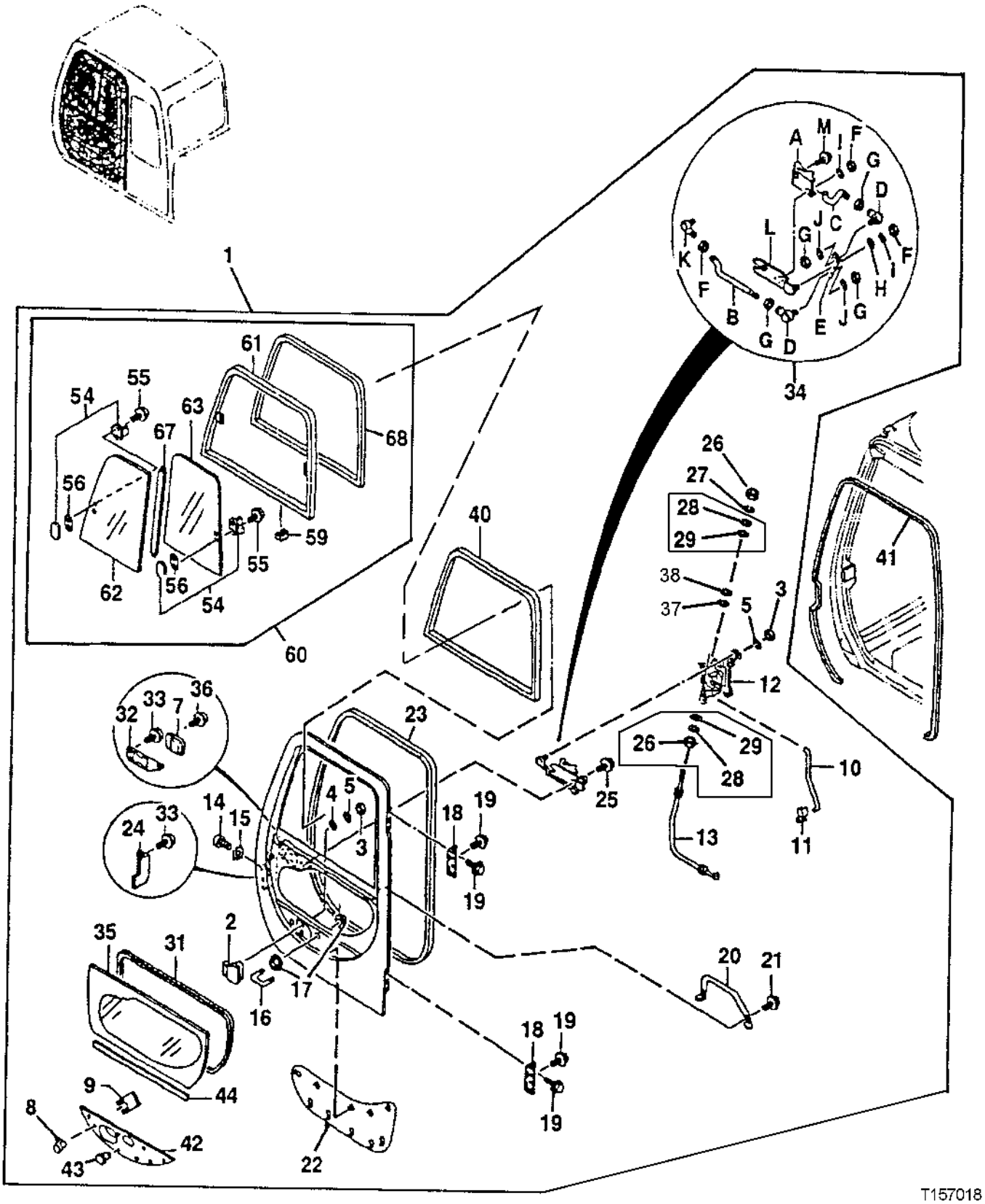

CAB COMPONENTS

KEY	PART NO.	PART NAME	QTY	SERIAL NO.	REMARKS
0	.....	CAB	1		(NOT ILLUSTRATED) (CONTAINS ALL ITEMS ON THIS PAGE - ADDITIONAL COMPONENTS LISTED ON PREVIOUS AND FOLLOWING PAGES)
34	4369634	HANDLE	1		(SUB FOR AT214134)
34A	4369635	LEVER	1		(SUB FOR AT214135)
34B	4369636	ROD	1		(SUB FOR AT214136)
34C	4369637	ROD	1		(SUB FOR AT214137)
34D	4369638	BALL JOINT	2		(SUB FOR AT214138)
34E	4369639	STRAP	1		(SUB FOR AT214139)
34F	4372215	NUT	3		(SUB FOR AT214302)
34G	4372216	NUT	4		(SUB FOR AT214303)
34H	24M7054	WASHER	1		6.400 X 12 X 1.600 MM (0.252" X 0.472" X 0.063")
34I	12M7006	LOCK WASHER	2		6 MM (0.236")
34J	12H315	LOCK WASHER	2		4.166 MM (0.164") (SUB FOR 12M7063)
34K	4369640	BALL JOINT	1		(SUB FOR AT214140)
34L	4369641	BRACKET	1		(SUB FOR AT214141)
34M	J450614	SCREW, WITH WASHER	1		(SUB FOR AT213606)
35	4383401	WINDOWPANE	1		(SUB FOR AT215568)
36	J660512	BOLT	1		(SUB FOR AT218140)
37	4458079	BUSHING	1	XXXXXX-	
38	4455981	BUSHING	1	XXXXXX-	
40	4369656	WEATHERSTRIP	1		(SUB FOR AT214155)
41	4369663	WEATHERSTRIP	1		(SUB FOR AT214162)
42	4369658	PANEL	1		(SUB FOR AT214157)
43	4369659	CLIP	7		(SUB FOR AT214158)
44	4369660	ISOLATOR	1		(SUB FOR AT214159)
54	4369653	LOCK	2		(SUB FOR AT214152)
55	J680410	SCREW, WITH WASHER	4		(SUB FOR AT213608)
56	4372093	GASKET	2		(SUB FOR AT214292)
59	4147896	SPACER	8		(SUB FOR TH108646)
60	4379639	FRAME	1		(SUB FOR TH4379639)
61	4398091	FRAME	1		(SUB FOR AT183082)
62	AT183083	WINDOWPANE	1		
63	AT183084	WINDOWPANE	1		
67	4398016	WEATHERSTRIP	1		(SUB FOR AT183085)
68	4398019	FRAME	1		(SUB FOR AT183086)

CAB COMPONENTS

TP61652 -UN-05MAY99

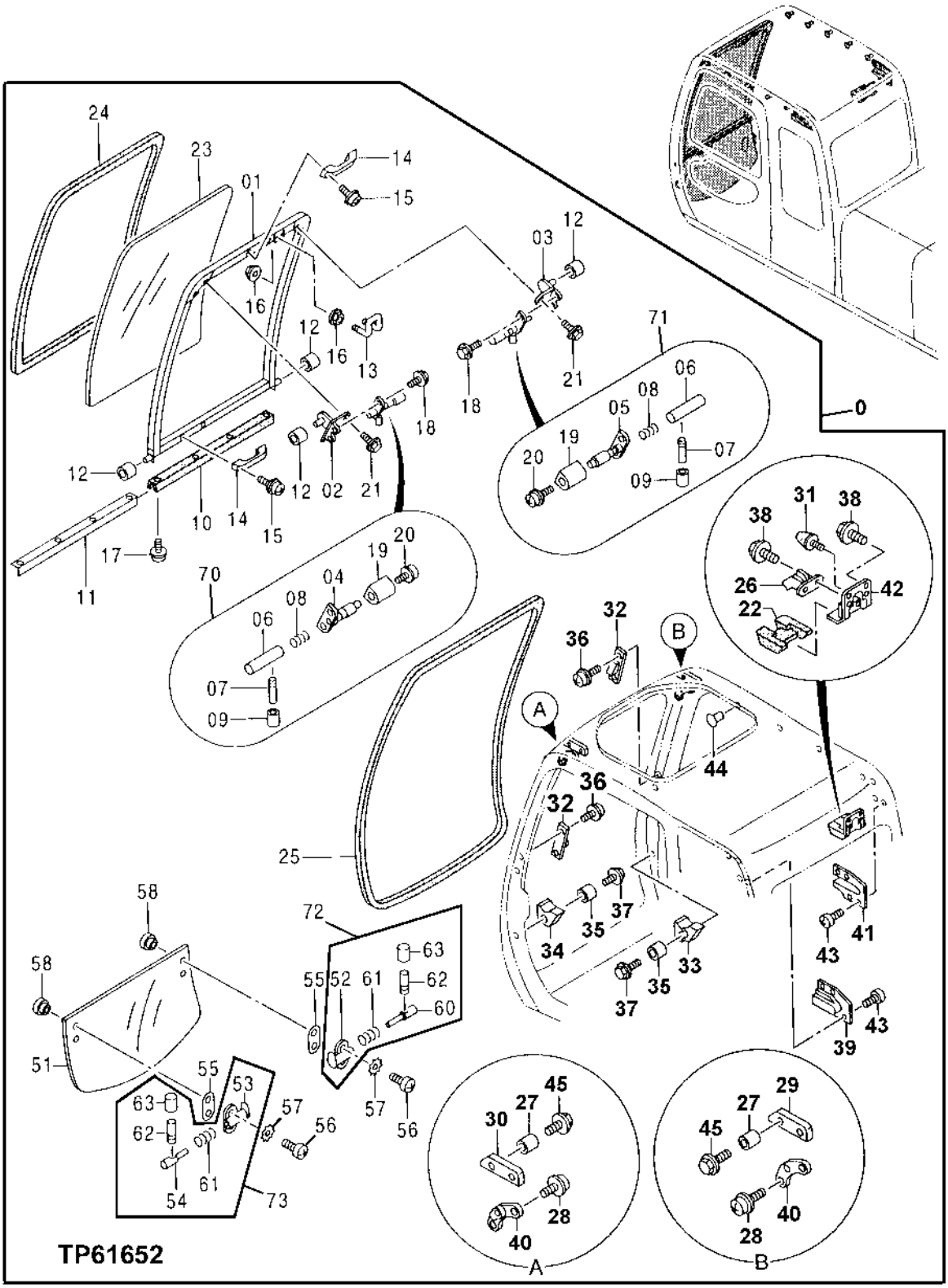

CAB COMPONENTS

KEY	PART NO.	PART NAME	QTY	SERIAL NO.	REMARKS
0	.....	CAB	1		(CONTAINS ALL ITEMS ON THIS PAGE - ADDITIONAL COMPONENTS LISTED ON PREVIOUS AND FOLLOWING PAGES)
1	4369596	FRAME	1		(SUB FOR AT214102)
2	4369604	BRACKET	1		(SUB FOR AT214108)
3	4369603	BRACKET	1		(SUB FOR AT214107)
4	4369602	RETAINER	1		(SUB FOR AT214106)
5	4369598	RETAINER	1		(SUB FOR AT214103)
6	4369599	PIN	2		(SUB FOR AT214104)
7	4295480	LEVER	2		(SUB FOR AT156993)
8	494918	SPRING	2		(SUB FOR TH106783)
9	4295876	COVER	2		(SUB FOR AT156994)
10	4369607	ISOLATOR	1		(SUB FOR AT214111)
11	4369608	CHANNEL	1		(SUB FOR AT214112)
12	4369606	BUSHING	4		(SUB FOR AT214110)
13	4369605	STRIKER	1		(SUB FOR AT214109)
14	4204579	HANDLE	2		(SUB FOR TH108661)
15	19M8425	CAP SCREW	4		M6 X 16
	24M7293	WASHER	4		6.500 X 13 X 1.600 MM (0.256" X 0.512" X 0.063")
	12M7006	LOCK WASHER	4		6 MM (0.236")
16	4414857	NUT	4		(SUB FOR AT157068)
17	4372214	SCREW	4		(SUB FOR AT214301)
18	4372225	SCREW, WITH WASHER	4		(SUB FOR AT214311)
19	4369600	COVER	2		(SUB FOR AT214105)
20	J680514	SCREW, WITH WASHER	2		(SUB FOR AT213610)
21	4377824	SCREW, WITH WASHER	4		(SUB FOR AT214312)
22	4369563	COVER	1		(SUB FOR AT214073)
23	AT214113	WINDOWPANE	1		
24	4369610	WEATHERSTRIP	1		(SUB FOR AT214114)
25	4369586	WEATHERSTRIP	1		(SUB FOR AT214096)
26	4369562	LATCH	1		(SUB FOR AT214072)
27	4369582	BUSHING	4		(SUB FOR AT214092)
28	4372210	SCREW, WITH WASHER	4		(SUB FOR AT214297)
29	4369580	STOP	1		(SUB FOR AT214090)
30	4369581	STOP	1		(SUB FOR AT214091)

CAB COMPONENTS

TP61652 -UN-05MAY99

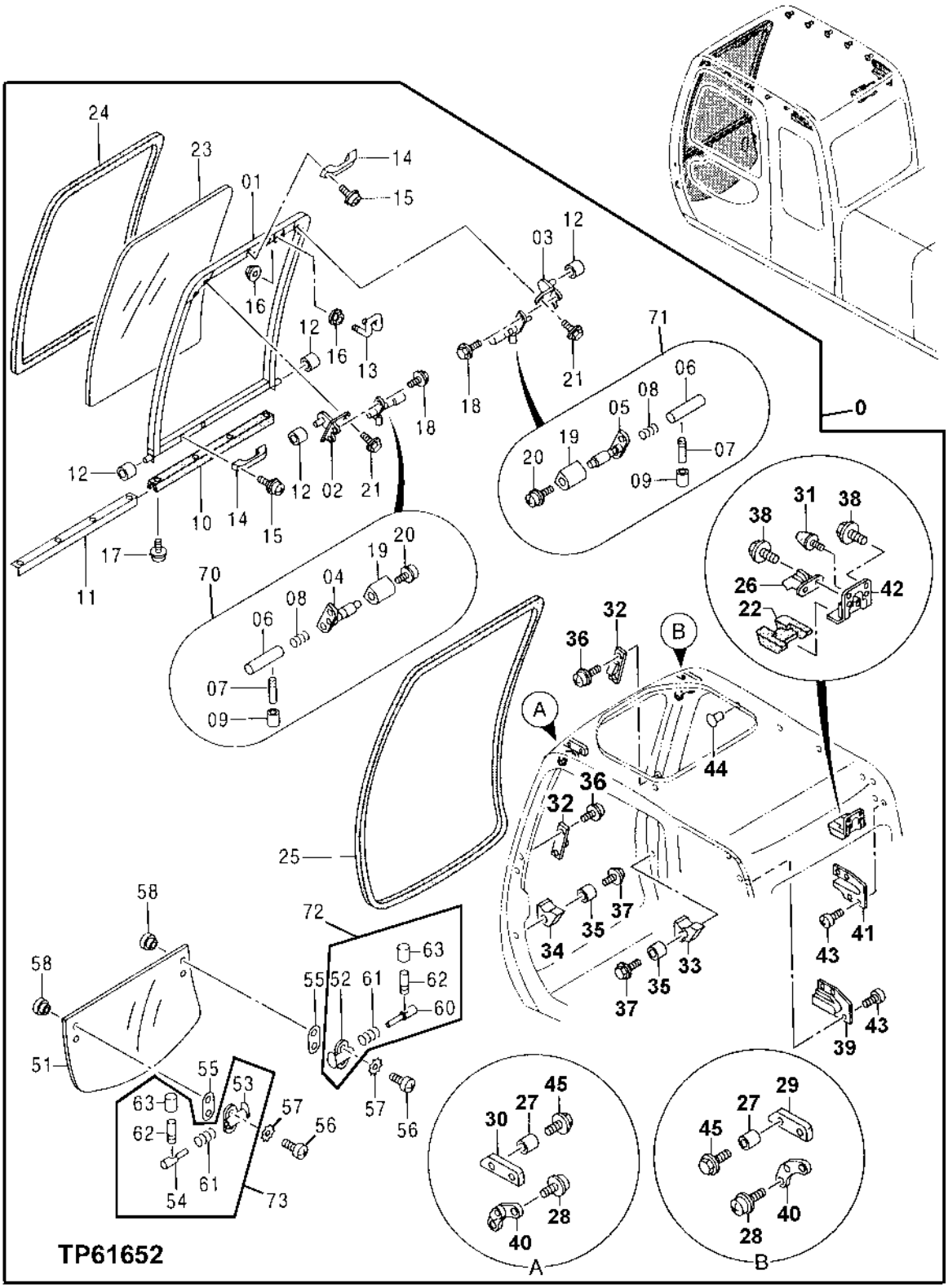

CAB COMPONENTS

KEY	PART NO.	PART NAME	QTY	SERIAL NO.	REMARKS
0	.....	CAB	1		(CONTAINS ALL ITEMS ON THIS PAGE - ADDITIONAL COMPONENTS LISTED ON PREVIOUS AND FOLLOWING PAGES)
31	4204586	STOP	1		(SUB FOR TH108668)
32	4369578	CATCH	4		(SUB FOR AT214088)
33	4403593	STOP	1		(SUB FOR AT214085)
34	4403594	STOP	1		(SUB FOR AT214086)
35	4369577	BUSHING	2		(SUB FOR AT214087)
36	4372211	SCREW, WITH WASHER	12		(SUB FOR AT214298)
37	4372221	SCREW, WITH WASHER	2		(SUB FOR AT214307)
38	4372222	SCREW, WITH WASHER	6		(SUB FOR AT214308)
39	4369584	COVER	1		(SUB FOR AT214094)
40	4369579	GUIDE	2		(SUB FOR AT214089)
41	4369583	COVER	1		(SUB FOR AT214093)
42	4369564	BRACKET	1		(SUB FOR AT214074)
43	21M7246	SCREW	8		M6 X 16
	24M7293	WASHER	8		6.500 X 13 X 1.600 MM (0.256" X 0.512" X 0.063")
	12M7006	LOCK WASHER	8		6 MM (0.236")
44	4372088	CLIP	10		(SUB FOR AT214287)
45	4372224	SCREW, WITH WASHER	4		(SUB FOR AT214310)
51	AT214097	WINDOWPANE	1		
52	4369590	LATCH	1		(SUB FOR AT214098)
53	4369593	LATCH	1		(SUB FOR AT214100)
54	4204547	PIN	1		(SUB FOR TH108626)
55	4369594	GASKET	2		(SUB FOR AT214101)
56	4372213	SCREW	4		(SUB FOR AT214300)
57	4372561	WASHER	4		(SUB FOR AT214315)
58	4369674	BUSHING	4		(SUB FOR AT214172)
60	4369591	PIN FASTENER	1		(SUB FOR AT214099)
61	494918	SPRING	2		(SUB FOR TH106783)
62	4295480	LEVER	2		(SUB FOR AT156993)
63	4295876	COVER	2		(SUB FOR AT156994)
70	4395903	LATCH	1		(SUB FOR AT182612)
71	4395902	LATCH	1		(SUB FOR AT182613)
72	4395905	LATCH	1		(SUB FOR AT182614)
73	4395904	LATCH	1		(SUB FOR AT182616)

CAB COMPONENTS

TP47986 -UN-22MAY96

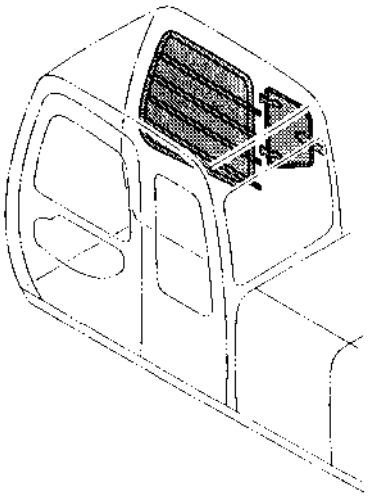

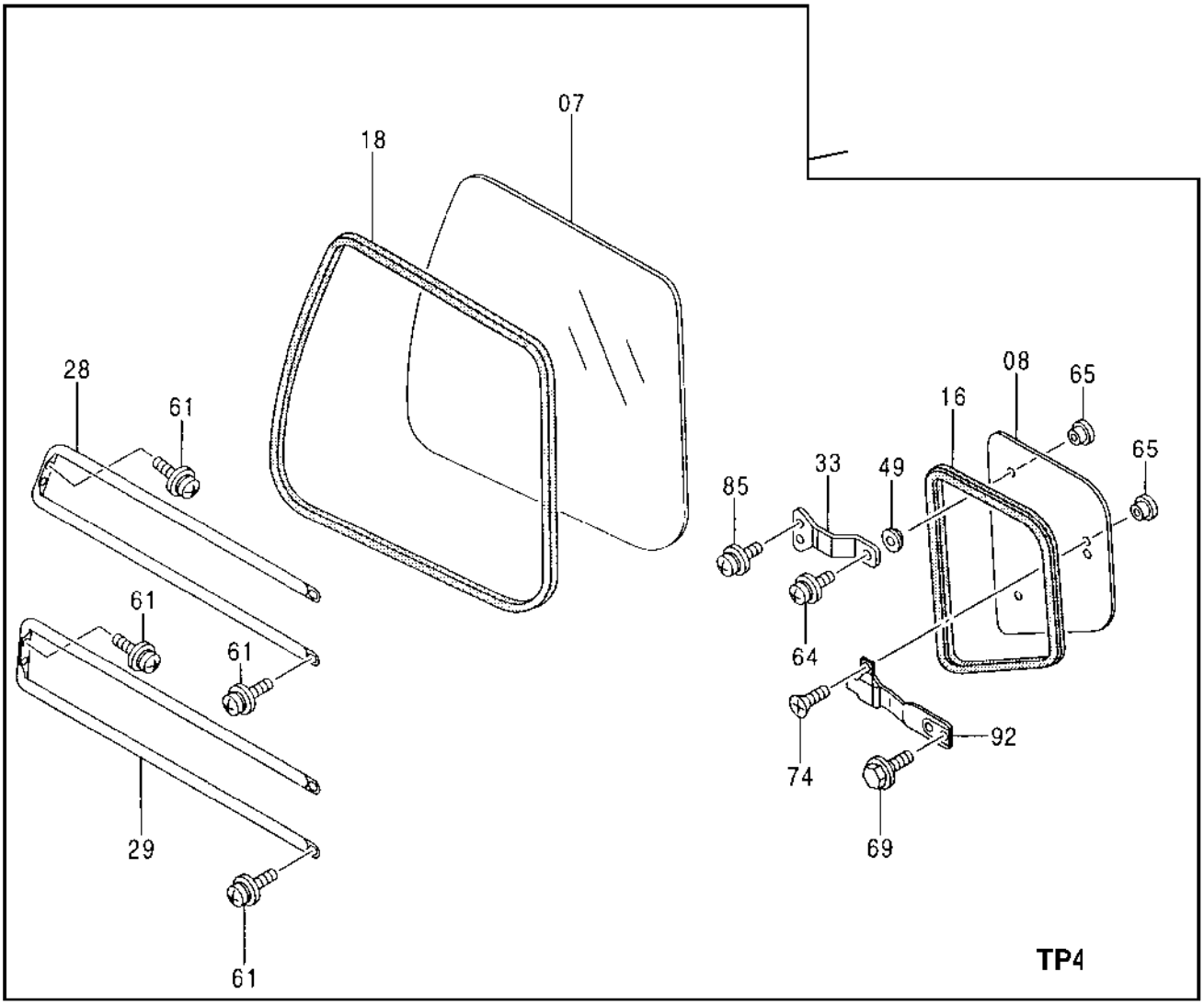

CAB COMPONENTS

KEY	PART NO.	PART NAME	QTY	SERIAL NO.	REMARKS
0	.....	CAB	1		(CONTAINS ALL ITEMS ON THIS PAGE - ADDITIONAL COMPONENTS LISTED ON PREVIOUS AND FOLLOWING PAGES)
7	AT214163	WINDOWPANE	1		
8	AT214167	WINDOWPANE	1		
16	4369669	WEATHERSTRIP	1		(SUB FOR AT214168)
18	4369665	WEATHERSTRIP	1		(SUB FOR AT214164)
28	4369666	GUARD	1		(SUB FOR AT214165)
29	4369667	GUARD	1		(SUB FOR AT214166)
33	4369670	BRACKET	2		(SUB FOR AT214169)
49	4369671	BUSHING	2		(SUB FOR AT214170)
61	4372212	SCREW, WITH WASHER	8		(SUB FOR AT214299)
64	21M7271	SCREW	2		M5 X 16, (SUB FOR 21M6070)
	24M7348	WASHER	2		5.500 X 10 X 1 MM (0.217" X 0.394" X 0.039")
	12M7064	LOCK WASHER	2		5 MM (0.197")
65	4369674	BUSHING	4		(SUB FOR AT214172)
69	4372223	SCREW, WITH WASHER	2		(SUB FOR AT214309)
74	4372213	SCREW	2		(SUB FOR AT214300)
85	21M7246	SCREW	4		M6 X 16
	24M7293	WASHER	4		6.500 X 13 X 1.600 MM (0.256" X 0.512" X 0.063")
	12M7006	LOCK WASHER	4		6 MM (0.236")
92	4369672	LOCK	1		(SUB FOR AT214171)

CAB COMPONENTS

TP47985 -UN-30SEP99

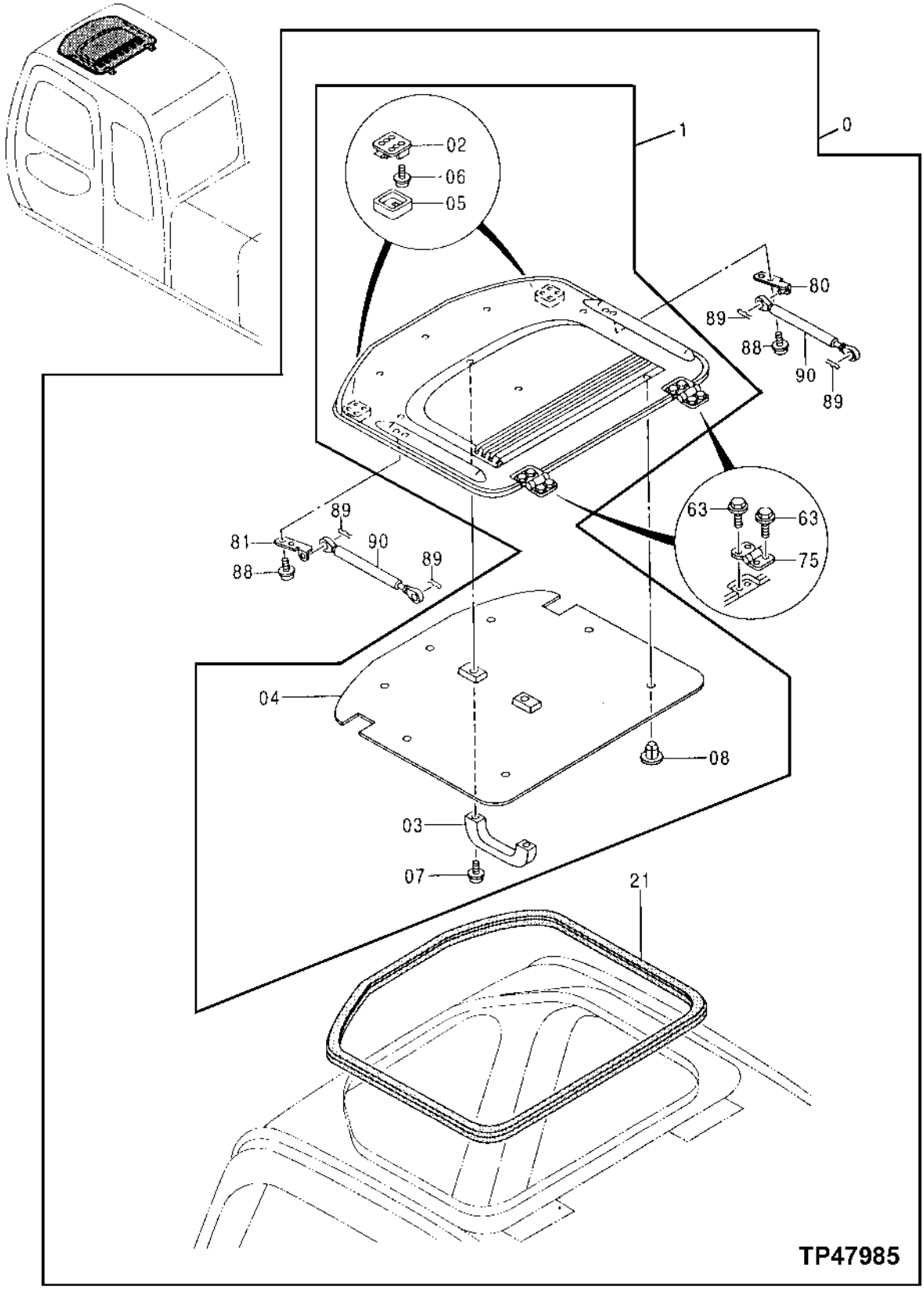

CAB COMPONENTS

KEY	PART NO.	PART NAME	QTY	SERIAL NO.	REMARKS
0	.....	CAB	1		(CONTAINS ALL ITEMS ON THIS PAGE - ADDITIONAL COMPONENTS LISTED ON PREVIOUS AND FOLLOWING PAGES)
1	4369611	ROOF	1		(SUB FOR AT214115)
2	4369615	LOCK	2		(SUB FOR AT214118)
3	4204579	HANDLE	1		(SUB FOR TH108661)
4	4369613	HEADLINER	1		(SUB FOR AT214116)
5	4369616	COVER	2		(SUB FOR AT214119)
6	21M7265	SCREW	8		M5 X 12
7	19M8425	CAP SCREW	2		M6 X 16
	24M7293	WASHER	2		6.500 X 13 X 1.600 MM (0.256" X 0.512" X 0.063")
	12M7006	LOCK WASHER	2		6 MM (0.236")
8	4369614	CLIP	7		(SUB FOR AT214117)
21	4369553	WEATHERSTRIP	2		(SUB FOR AT214066)
63	4372220	SCREW, WITH WASHER	8		(SUB FOR AT214306)
75	4369620	HINGE	2		(SUB FOR AT214123)
80	4369617	BRACKET	1		(SUB FOR AT214120)
81	4369618	BRACKET	1		(SUB FOR AT214121)
88	4372222	SCREW, WITH WASHER	4		(SUB FOR AT214308)
89	H132922	COTTER PIN	4		
90	4369619	CYLINDER	2		(SUB FOR AT214122)

CAB COMPONENTS

TP47984 -UN-30SEP99

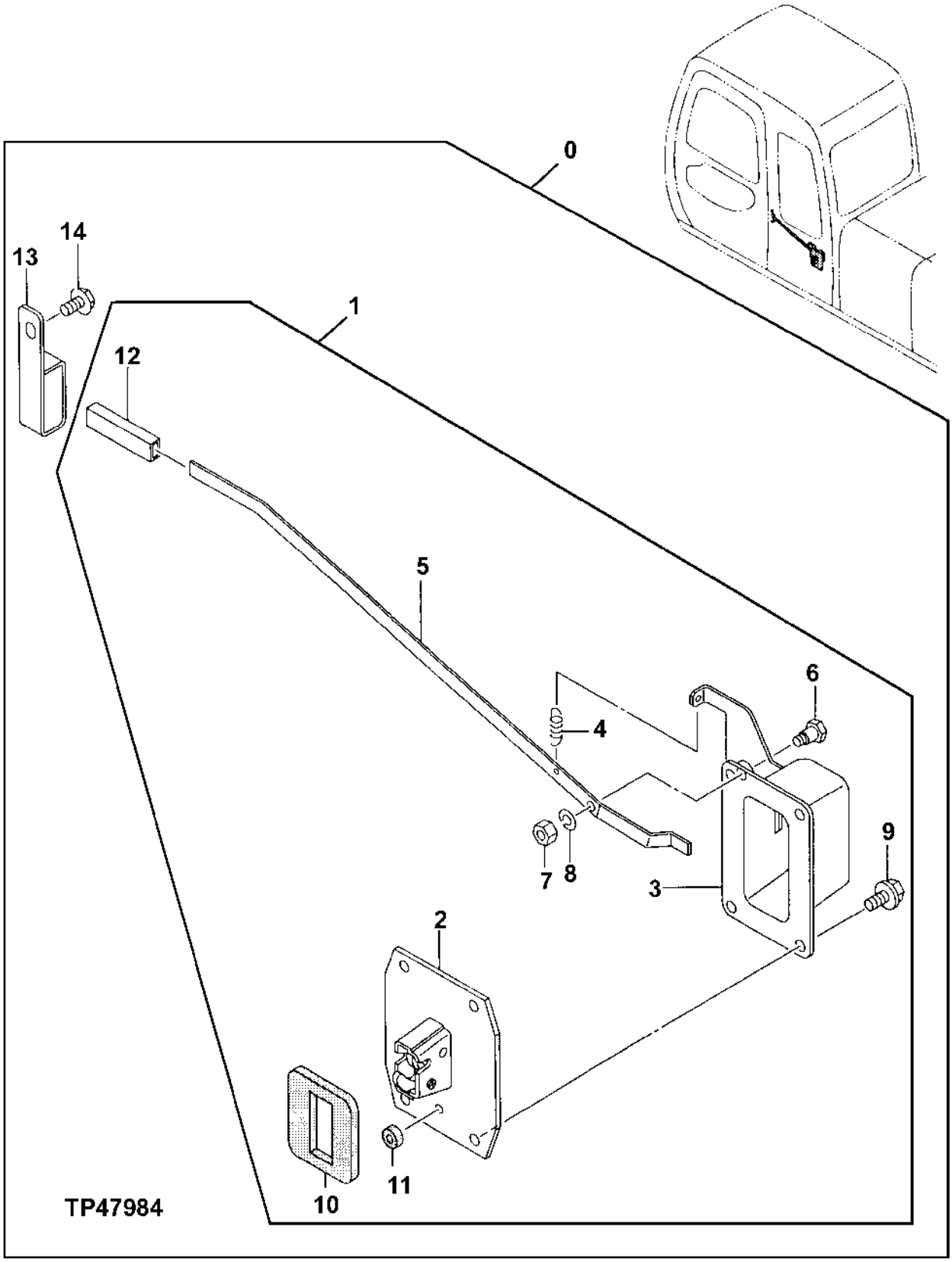

CAB COMPONENTS

KEY	PART NO.	PART NAME	QTY	SERIAL NO.	REMARKS
0	.....	CAB	1		(CONTAINS ALL ITEMS ON THIS PAGE - ADDITIONAL COMPONENTS LISTED ON PREVIOUS PAGES)
1	4369621	CATCH	4		(SUB FOR AT214124)
2	4372094	CATCH	1		(SUB FOR AT214293)
3	4372095	HOUSING	1		(SUB FOR AT214294)
4	4208103	SPRING	1		(SUB FOR AT121585)
5	4369623	LEVER	1		(SUB FOR AT214125)
6	4372209	PIN	1		(SUB FOR AT214296)
7	14M7272	NUT	1		M6
8	12M7006	LOCK WASHER	1		6 MM (0.236")
9	19M7881	SCREW	4		M8 X 20
	12M7056	LOCK WASHER	4		8 MM (0.315") (SUB FOR 12M7065)
10	4204590	GASKET	1		(SUB FOR TH108672)
11	4204591	SEAL	1		(SUB FOR TH108673)
12	4089012	CAP	1		(SUB FOR TH101184)
13	4369624	STOP	1		(SUB FOR AT214126)
14	4372222	SCREW, WITH WASHER	1		(SUB FOR AT214308)

RADIO

TP48095 -UN-07AUG96

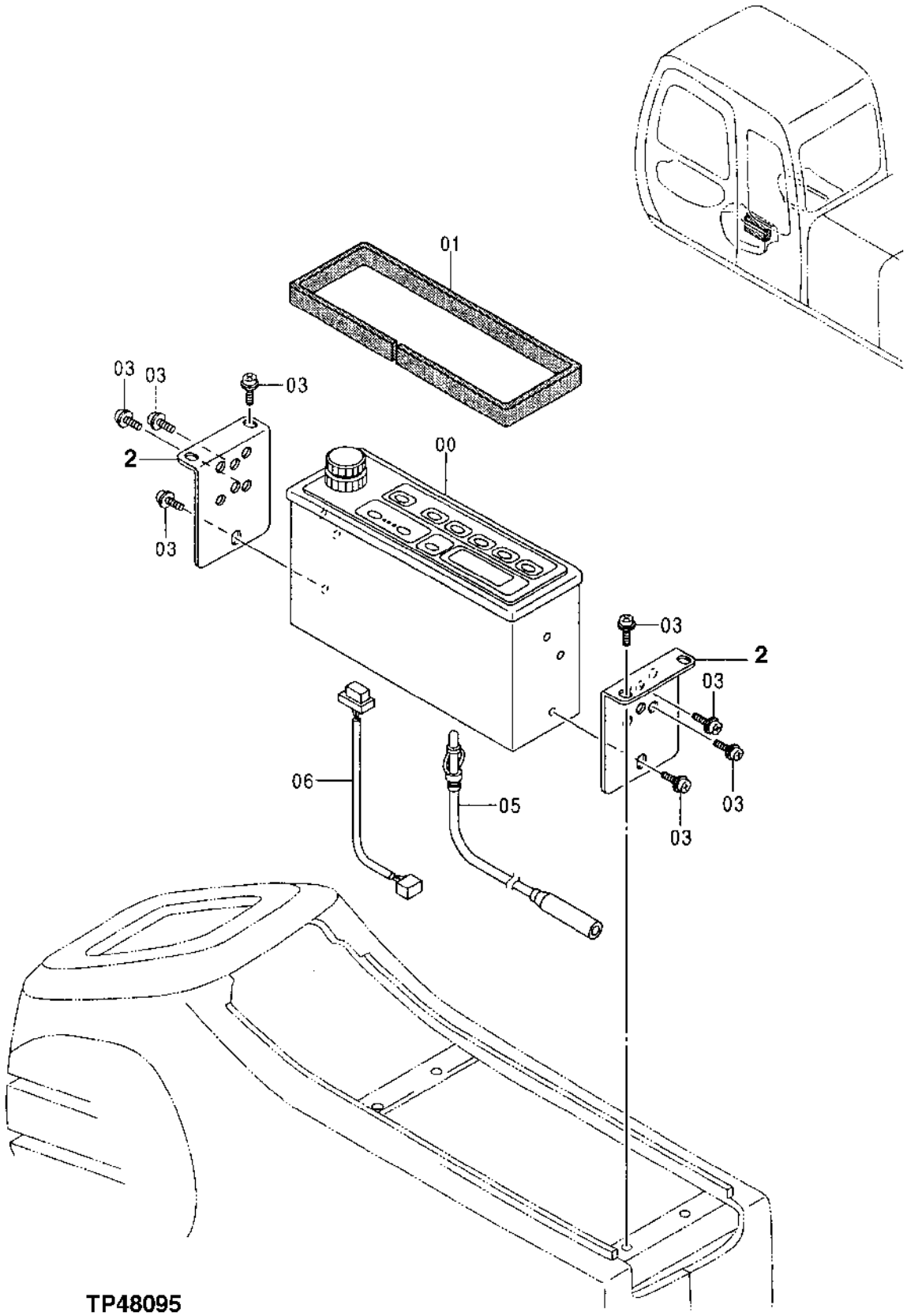

TP48095

RADIO

KEY	PART NO.	PART NAME	QTY	SERIAL NO.	REMARKS
0	4351187	RADIO	1		(SUB FOR AT214430) (AM/FM)
1	4368973	ISOLATOR	1		(SUB FOR AT215533)
2	4341706	BRACKET	2		(SUB FOR AT213883)
3	19M7700	CAP SCREW	10		M5 X 10
	12M7064	LOCK WASHER	10		5 MM (0.197")
	24M7348	WASHER	10		5.500 X 10 X 1 MM (0.217" X 0.394" X 0.039")
5	4102096	WIRING HARNESS	1		(SUB FOR AT154913)
6	2037305	WIRING HARNESS	1		(SUB FOR AT215479)

WINDOW WASHER

TP66822 -UN-12OCT99

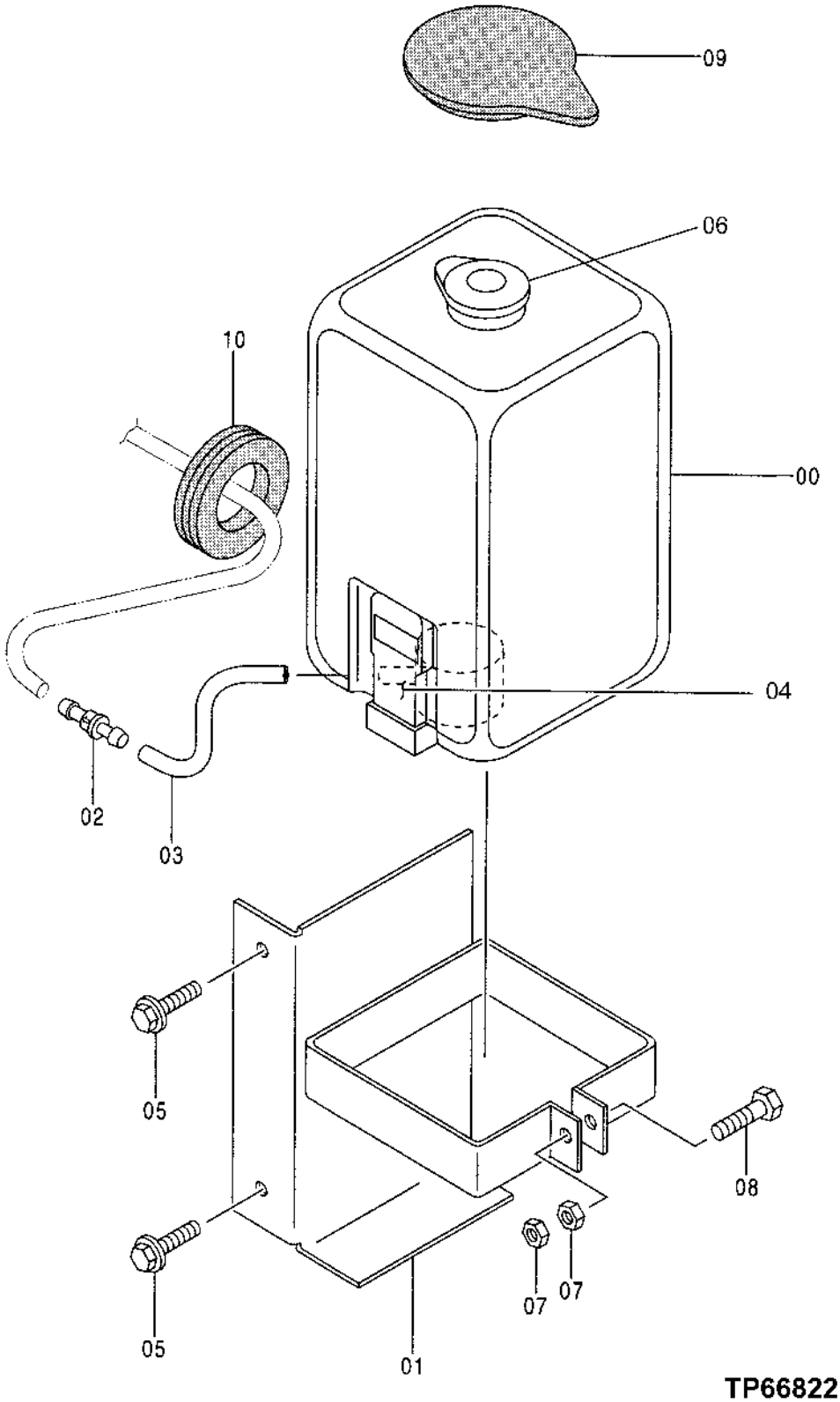

WINDOW WASHER

KEY	PART NO.	PART NAME	QTY	SERIAL NO.	REMARKS
0	T147618	TANK	1		
1	7025226	BRACKET	1		(SUB FOR AT201860)
2	4273335	CHECK VALVE	1		(SUB FOR AT201739)
3	4334203	HOSE	1		(SUB FOR AT202232)
4	AT106365	PUMP	1		
5	19M8011	CAP SCREW	2		M12 X 30
	24H1748	WASHER	2		12.700 X 31.750 X 2.667 MM (1/2" X 1-1/4" X 0.105")
	12M7058	LOCK WASHER	2		12.200 MM (0.480") (SUB FOR 12M7067)
6	AT106413	CAP	1		
7	14M7272	NUT	2		M6
8	19M7177	CAP SCREW	1		M6 X 35
9	3058180	CAP	1		(SUB FOR AT155242)
10	4217639	BUSHING	1		(SUB FOR TH4217639)

WINDOW GUARDS

TP54579 -UN-18FEB97

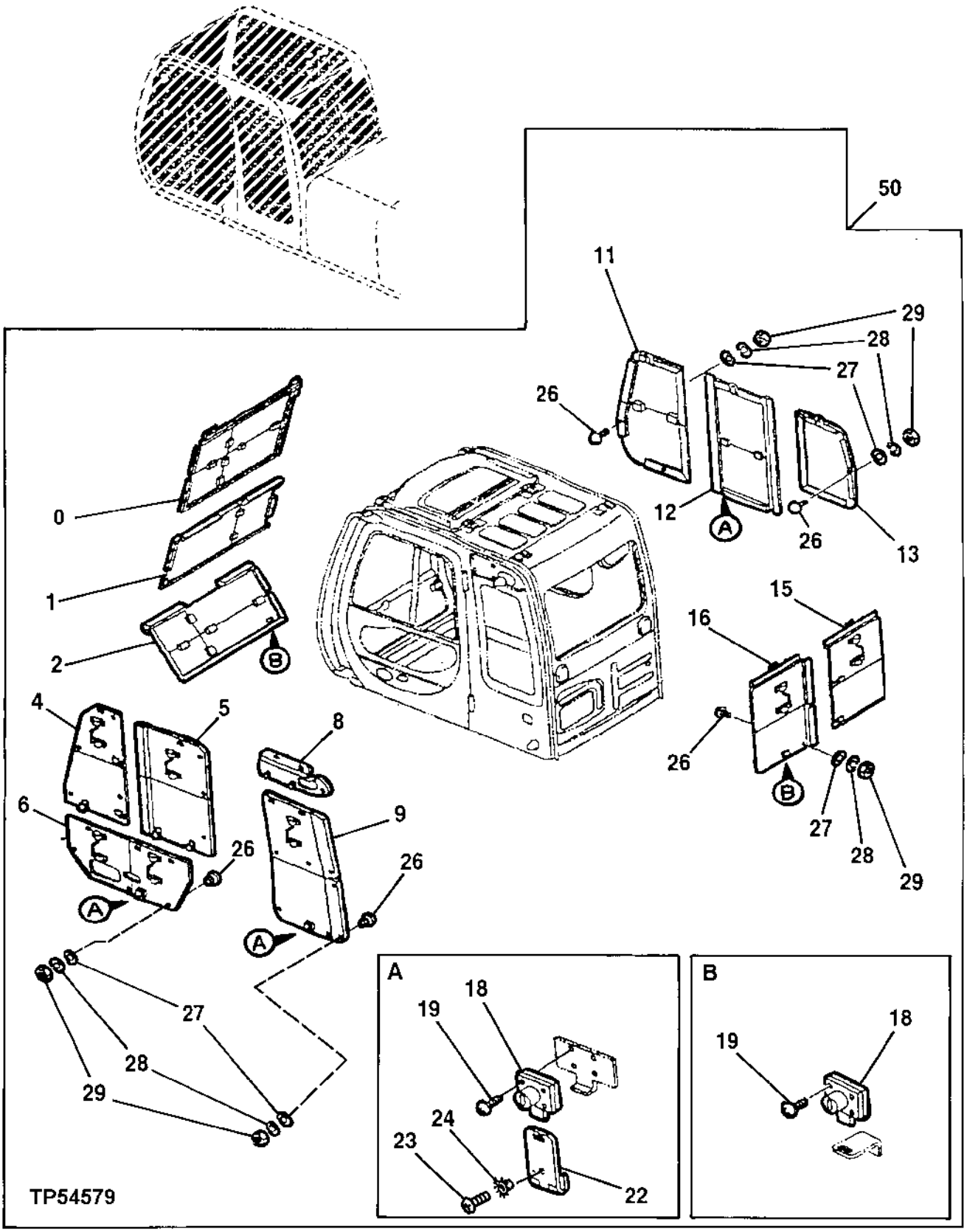

WINDOW GUARD

KEY	PART NO.	PART NAME	QTY	SERIAL NO.	REMARKS
0	AP34420	COVER	1		
1	AP34636	COVER	1		
2	AP34421	COVER	1		
4	7041264	COVER	1		(SUB FOR AP34637 OR 7032820)
5	AP34422	COVER	1		
6	7041265	COVER	1		(SUB FOR AP34638 OR 7032822)
8	8069258	COVER	1		(SUB FOR AT217166)
9	AP34639	COVER	1		
11	AP34424	COVER	1		
12	AP34640	COVER	1		
13	AP34425	COVER	1		
15	AP34652	COVER	1		
16	7033256	COVER	1		(SUB FOR AT217158)
18	4361601	LOCK	5		(SUB FOR TH108982) (SUB FOR AT176636) (USES H800 KEY)
	AT194969	KEY	1		(SUB FOR AT147803) (H800) (NOT ILLUSTRATED)
19	21M7022	SCREW	20		M5 X 20
	12M7064	LOCK WASHER	20		5 MM (0.197")
22	TH108983	HINGE	3		
23	21M7249	SCREW	6		M5 X 10
24	4107762	WASHER	6		(SUB FOR TH111908)
26	9738682	STOP	32		(SUB FOR AT155189)
27	24M7027	WASHER	32		5.300 X 10 X 1 MM (0.209" X 0.394" X 0.039")
28	12M7064	LOCK WASHER	32		5 MM (0.197")
29	14M7297	NUT	32		M5
50	AP33356	KIT	1		WHOLEGOODS (VANDAL PROTECTION)

CAB FLOOR PARTS

TP54677 -UN-09MAR97

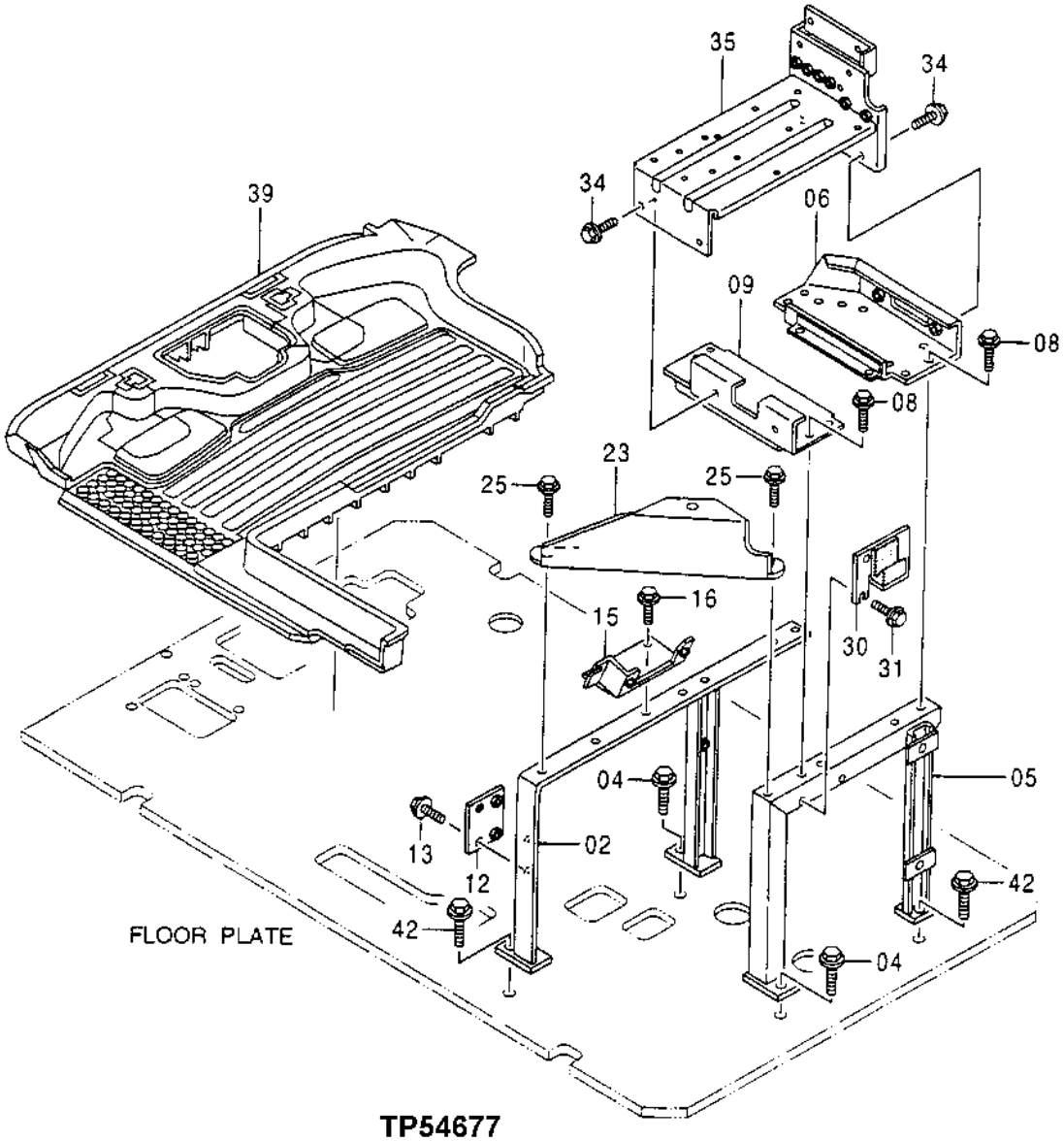

TP54677

CAB FLOOR PARTS

KEY	PART NO.	PART NAME	QTY	SERIAL NO.	REMARKS
2	7038076	SUPPORT	1		(SUB FOR AT217155) (SUB FOR AT192611)
4	19M7402	CAP SCREW	2		M10 X 25
	12M7066	LOCK WASHER	2		10 MM (0.394")
5	7038073	SUPPORT	1		(SUB FOR AT217156) (SUB FOR AT192612)
6	8079368	BRACKET	1		(SUB FOR AT217162) (SUB FOR AT192613)
8	12M7056	LOCK WASHER	8		8 MM (0.315") (SUB FOR 12M7065)
	19M7881	SCREW	8		M8 X 20
	24M7055	WASHER	8		8.400 X 16 X 1.600 MM (0.331" X 0.630" X 0.063")
9	8062112	BRACKET	1		(SUB FOR AT217161)
12	9743487	BRACKET	1		(SUB FOR AT216026)
13	12M7056	LOCK WASHER	2		8 MM (0.315") (SUB FOR 12M7065)
	19M7881	SCREW	2		M8 X 20
	24M7055	WASHER	2		8.400 X 16 X 1.600 MM (0.331" X 0.630" X 0.063")
15	8060885	BRACKET	1		(SUB FOR AT215998)
16	12M7056	LOCK WASHER	2		8 MM (0.315") (SUB FOR 12M7065)
	19M7881	SCREW	2		M8 X 20
	24M7055	WASHER	2		8.400 X 16 X 1.600 MM (0.331" X 0.630" X 0.063")
23	9743628	BRACKET	1		(SUB FOR AT216027)
25	19M7407	CAP SCREW	2		M8 X 25
	12M7056	LOCK WASHER	2		8 MM (0.315") (SUB FOR 12M7065)
	24M7055	WASHER	2		8.400 X 16 X 1.600 MM (0.331" X 0.630" X 0.063")
30	8061717	BRACKET	1		(SUB FOR AT216000)
31	12M7056	LOCK WASHER	2		8 MM (0.315") (SUB FOR 12M7065)
	19M7881	SCREW	2		M8 X 20
	24M7055	WASHER	2		8.400 X 16 X 1.600 MM (0.331" X 0.630" X 0.063")
34	12M7056	LOCK WASHER	4		8 MM (0.315") (SUB FOR 12M7065)
	19M7881	SCREW	4		M8 X 20
	24M7055	WASHER	4		8.400 X 16 X 1.600 MM (0.331" X 0.630" X 0.063")
35	7031190	BRACKET	1		(SUB FOR TH7031190)
39	0002043	MAT	1		(SUB FOR AT213625)
42	19M7662	CAP SCREW	2		M10 X 30
	12M7066	LOCK WASHER	2		10 MM (0.394")
	24M7028	WASHER	2		10.500 X 20 X 2 MM (0.413" X 0.787" X 0.079")

FLOOR PLATE

TP54678 -UN-17MAR97

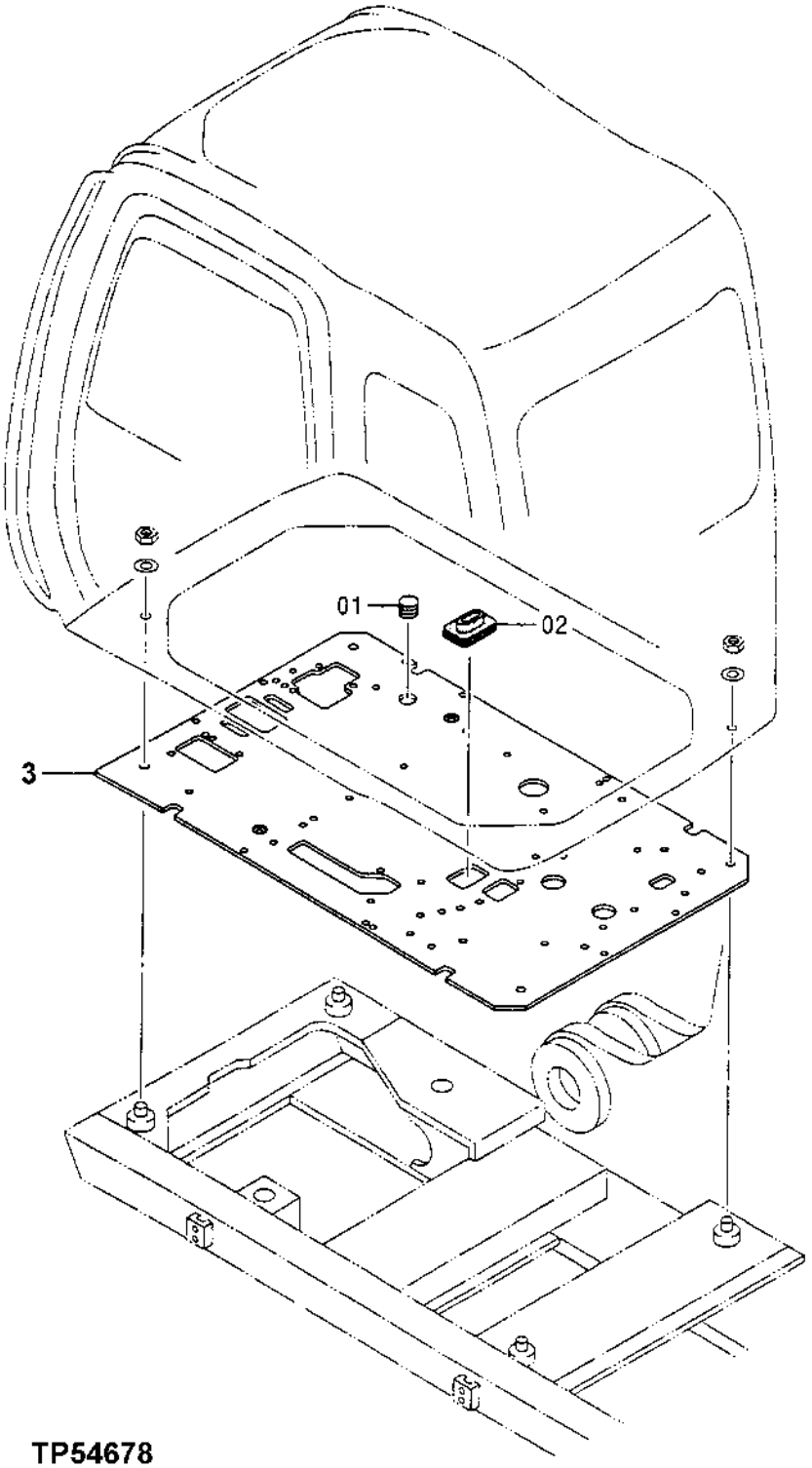

FLOOR PLATE

KEY	PART NO.	PART NAME	QTY	SERIAL NO.	REMARKS
1	4205084	GROMMET	1		(SUB FOR TH108616)
2	4351011	GROMMET	1		(SUB FOR AT213954)
3	6014826	PLATE	1		(SUB FOR TH6014826)

CONSOLE

TP47981 -UN-22SEP99

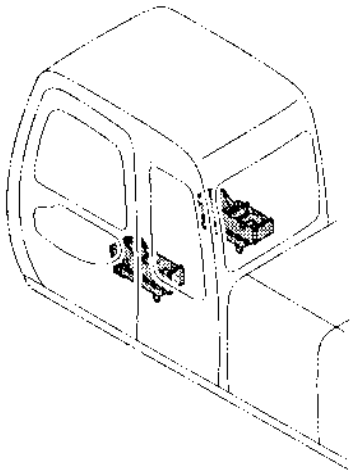

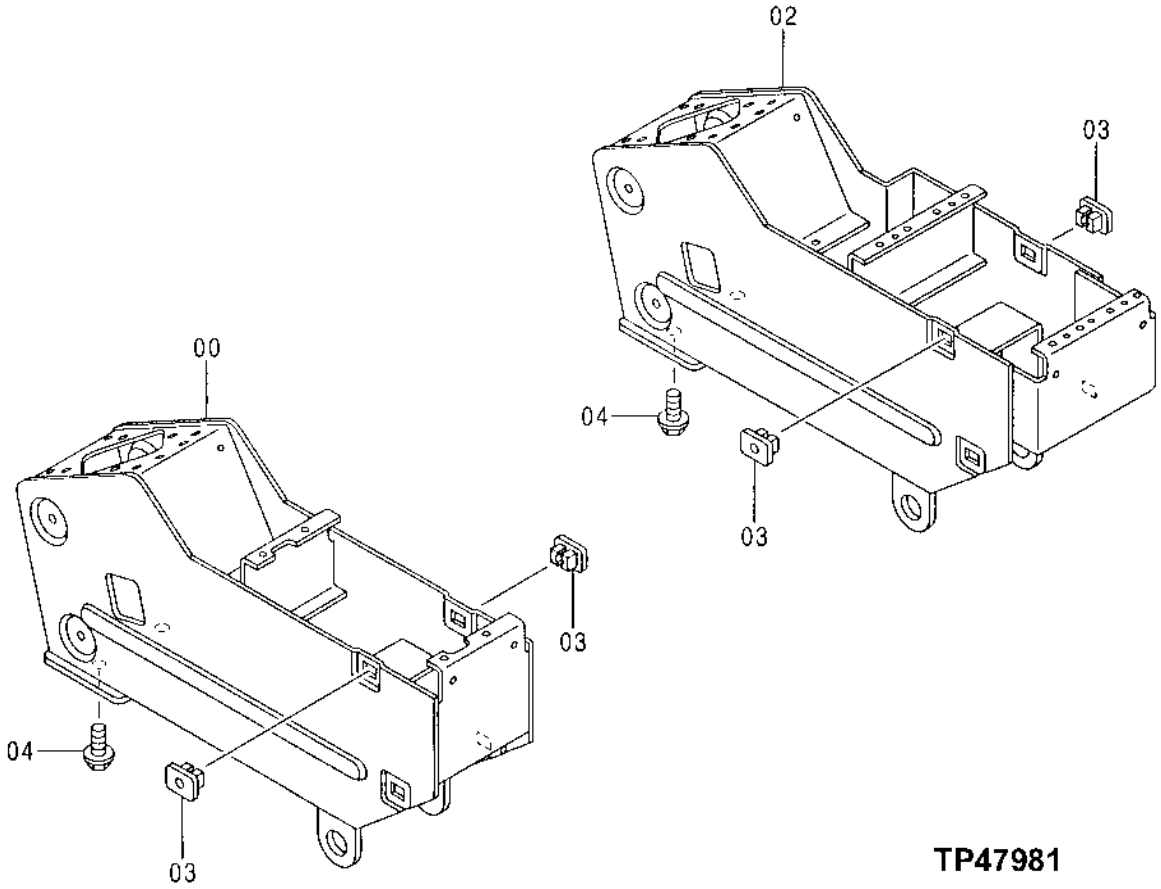

TP47981

CONSOLE

KEY	PART NO.	PART NAME	QTY	SERIAL NO.	REMARKS
0	6014737	CONSOLE	1		(SUB FOR AT214326)
2	6014741	CONSOLE	1		(SUB FOR AT214327)
3	4351255	CLIP	8		(SUB FOR AT213958)
4	12M7066	LOCK WASHER	4		10 MM (0.394")
	19M7662	CAP SCREW	4		M10 X 30

CONSOLE COVER

TP47980 -UN-21MAY96

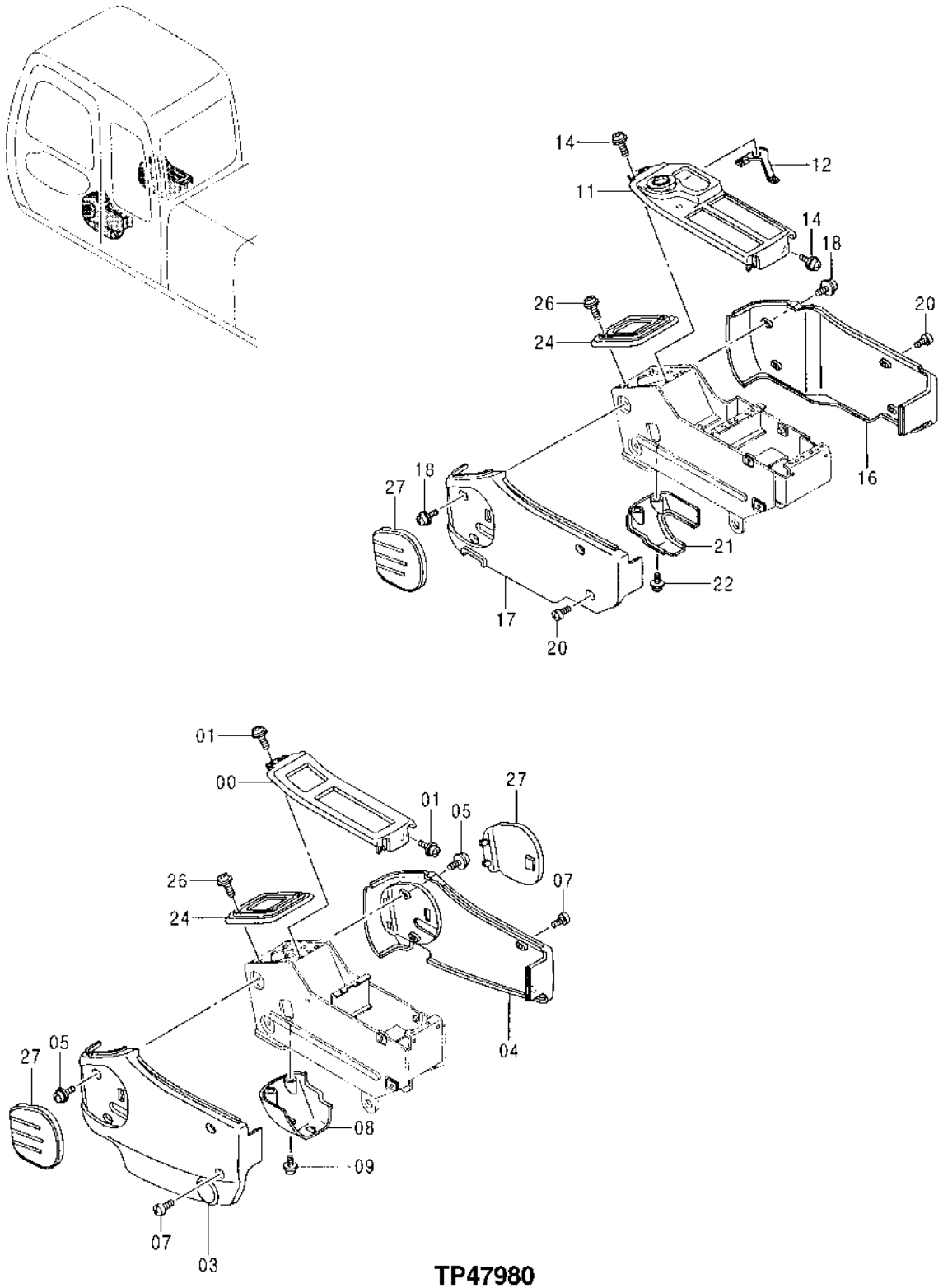

TP47980

CONSOLE COVER

KEY	PART NO.	PART NAME	QTY	SERIAL NO.	REMARKS
0	1021354	COVER	1		(SUB FOR AT213726)
1	21M7246	SCREW	4		M6 X 16
	24M7105	WASHER	4		6 X 12 X 1.600 MM (0.236" X 0.472" X 0.063")
	12M7006	LOCK WASHER	4		6 MM (0.236")
3	1021345	COVER	1		(SUB FOR AT213722)
4	1021346	COVER	1		(SUB FOR AT213723)
5	21M7246	SCREW	4		M6 X 16
	24M7105	WASHER	4		6 X 12 X 1.600 MM (0.236" X 0.472" X 0.063")
	12M7006	LOCK WASHER	4		6 MM (0.236")
7	4361802	SCREW	4		(SUB FOR AT214012)
8	3072629	COVER	1		(SUB FOR AT213779)
9	21M7246	SCREW	2		M6 X 16
	24M7105	WASHER	2		6 X 12 X 1.600 MM (0.236" X 0.472" X 0.063")
	12M7006	LOCK WASHER	2		6 MM (0.236")
11	5004653	COVER	1		(SUB FOR AT214324)
12	3072716	BRACKET	1		(SUB FOR AT213783)
14	21M7246	SCREW	4		M6 X 16
	24M7105	WASHER	4		6 X 12 X 1.600 MM (0.236" X 0.472" X 0.063")
	12M7006	LOCK WASHER	4		6 MM (0.236")
16	1021350	COVER	1		(SUB FOR AT213725)
17	1021349	COVER	1		(SUB FOR AT213724)
18	21M7246	SCREW	4		M6 X 16
	24M7105	WASHER	4		6 X 12 X 1.600 MM (0.236" X 0.472" X 0.063")
	12M7006	LOCK WASHER	4		6 MM (0.236")
20	4361802	SCREW	4		(SUB FOR AT214012)
21	3072613	COVER	1		(SUB FOR AT213778)
22	21M7246	SCREW	2		M6 X 16
	24M7105	WASHER	2		6 X 12 X 1.600 MM (0.236" X 0.472" X 0.063")
	12M7006	LOCK WASHER	2		6 MM (0.236")
24	2037689	COVER	2		(SUB FOR AT213739)
26	19M7177	CAP SCREW	8		M6 X 35
	24M7293	WASHER	8		6.500 X 13 X 1.600 MM (0.256" X 0.512" X 0.063")
	12M7006	LOCK WASHER	8		6 MM (0.236")
27	4351277	COVER	3		(SUB FOR AT213960)

CONSOLE COVER

TP61359 -UN-10NOV98

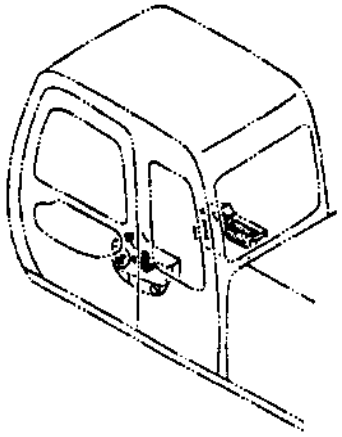

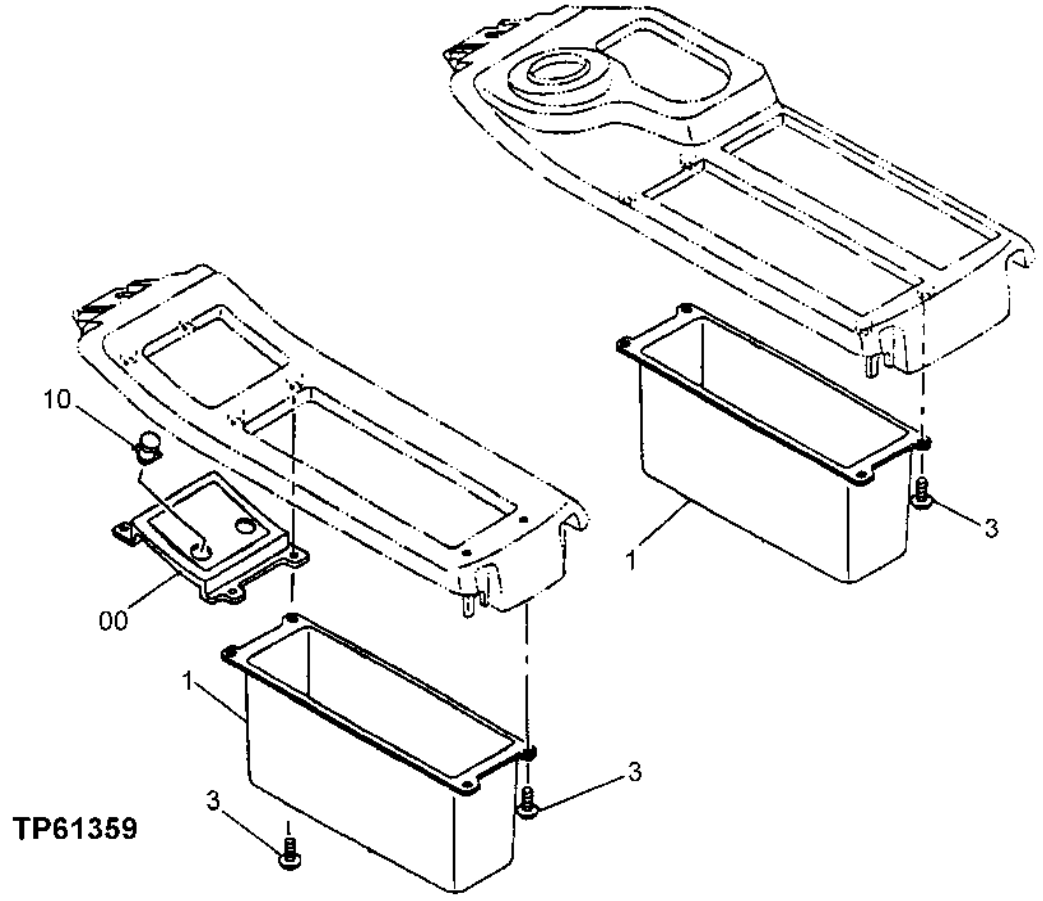

CONSOLE COVER

KEY	PART NO.	PART NAME	QTY	SERIAL NO.	REMARKS
0	3076095	PANEL	1		(SUB FOR AT215485)
1	3072700	TRAY	2		(SUB FOR AT213782) (LEFT TRAY FOR USE WITHOUT RADIO)
3	4361800	SCREW	8		(SUB FOR AT214011)
10	4294437	CAP	1		(SUB FOR AT215503)

SECONDARY EXIT WINDOW KIT

TP67039 -UN-21FEB00

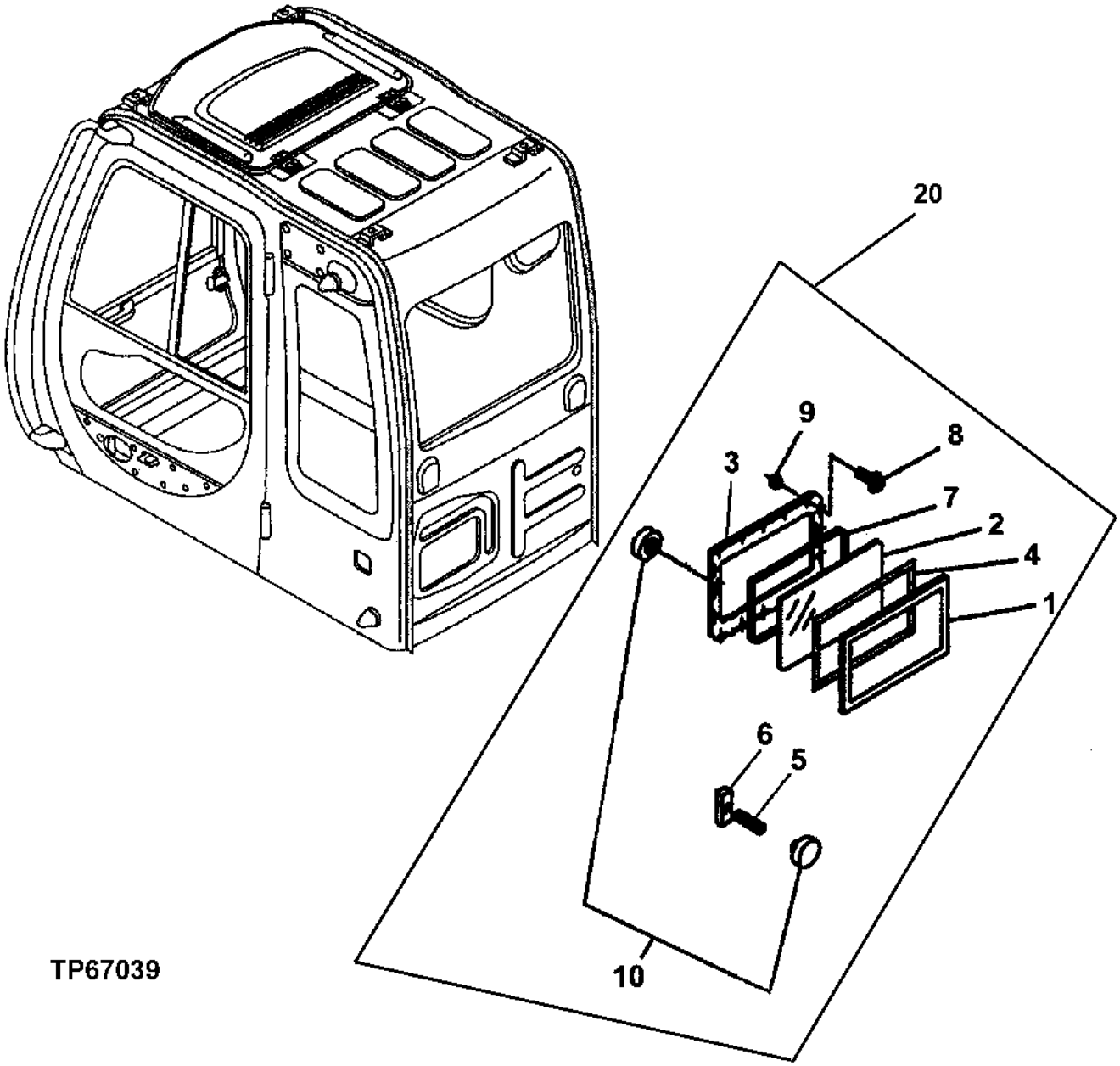

SECONDARY EXIT WINDOW KIT

KEY	PART NO.	PART NAME	QTY	SERIAL NO.	REMARKS
1	FFSB103019	FRAME	1		
2	FFSB103020	WINDOWPANE	1		
3	.....	FRAME	1		(FFSB103021 NO LONGER AVAILABLE FOR SERVICE)
4	FFSB103022	WEATHERSTRIP	1		
5	FFSB103023	ROD	2		
6	FFSB103024	BLOCK CLAMP	2		
7	.....	WEATHERSTRIP	1		(FFSB103025 NOT AVAILABLE FOR SERVICE) (FURNISH FFSB107987 BULK MATERIAL CUT TO 2300 MM LENGTH)
8	19H2924	SCREW	16		6.350 X 19.050 MM (1/4" X 3/4")
9	FFSB102853	LOCK NUT	16		
10	FFSB103031	KNOB	4		(ASSEMBLY CONTAINS FOUR PIECES)
20	FFSB104490	KIT	1		WHOLEGOODS (REAR SECONDARY EXIT WINDOW)

MEMORANDA

RETRACTABLE SEAT BELT
76MM (3 IN.) WIDE

TP34025 -UN-01JAN94

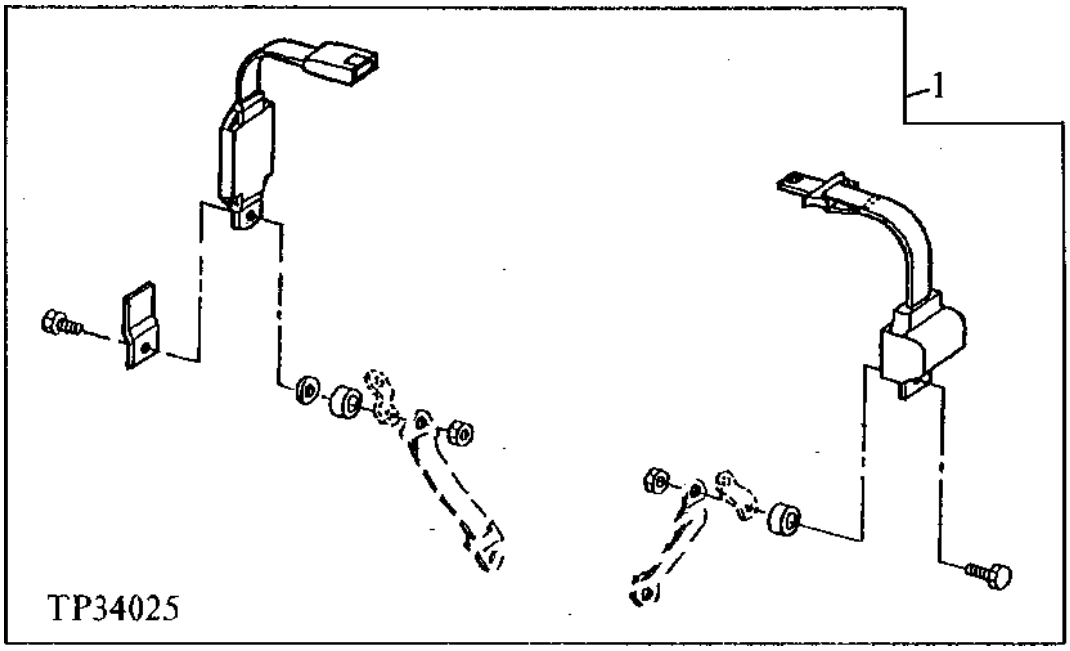

KEY	PART NO.	PART NAME	QTY	SERIAL NO.	REMARKS
1	AT171619	SEAT BELT	1	(WHOLEGOODS)	

SEAT BELT (ORIGINAL SEAT)

TP48113 -UN-05AUG96

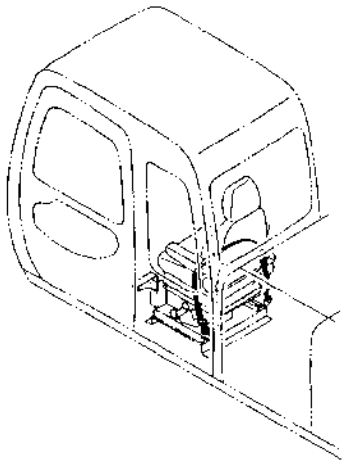

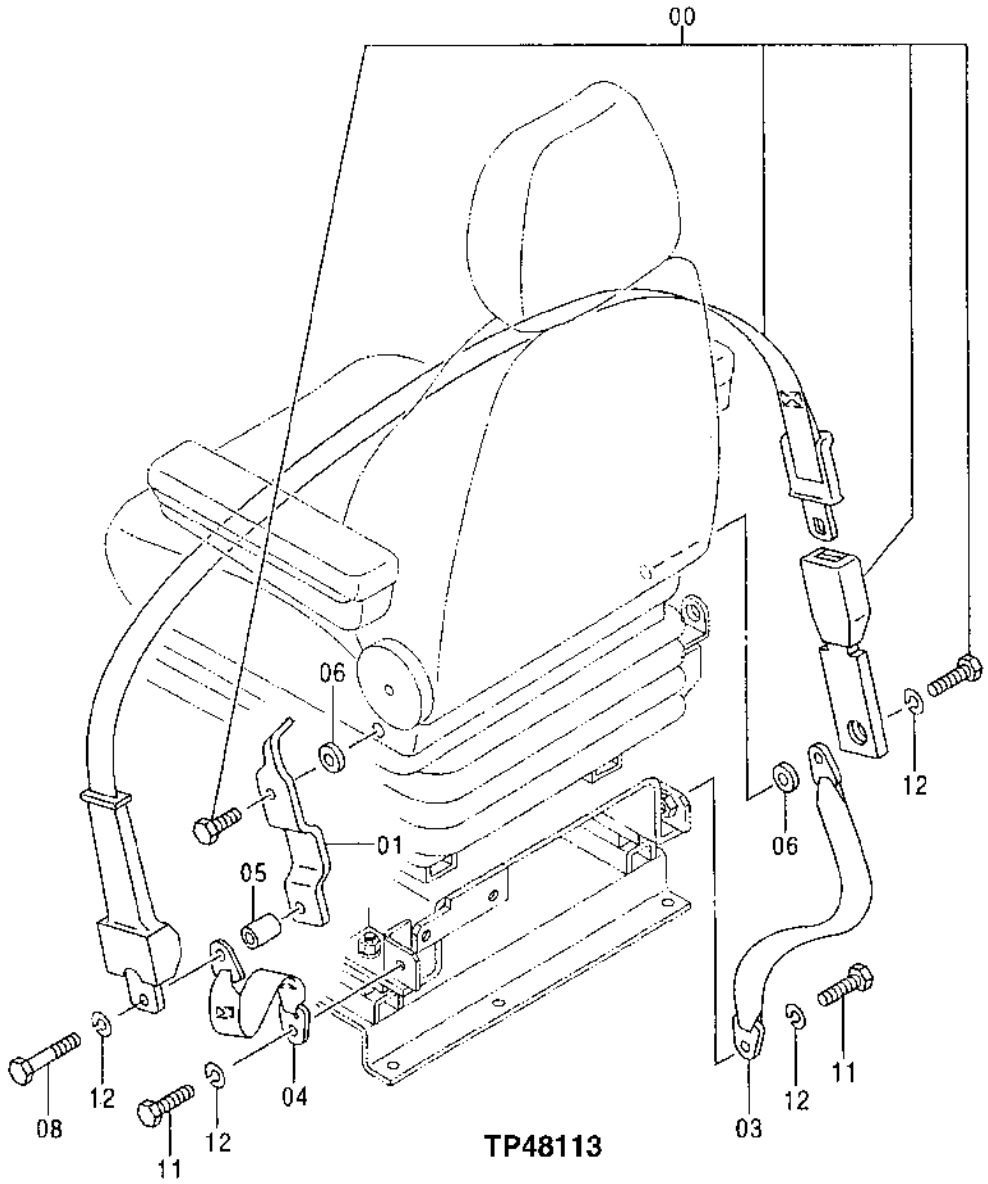

SEAT BELT (ORIGINAL SEAT)

KEY	PART NO.	PART NAME	QTY	SERIAL NO.	REMARKS
0	4384239	SEAT BELT	1		(SUB FOR AT215572)
1	8068323	BRACKET	1		(SUB FOR AT215609)
3	4382410	SEAT BELT	1		(SUB FOR AT215563)
4	4372917	SEAT BELT	1		(SUB FOR AT215537)
5	4382432	SLEEVE	1		(SUB FOR AT215564)
6	4382554	WASHER	2		(SUB FOR AT215565)
8	4380534	CAP SCREW	1		(SUB FOR AT215561)
11	4235232	CAP SCREW	2		(SUB FOR AT215492)
12	J219167	SPRING WASHER	4		(SUB FOR AT215470)

SEAT BELT (REPLACEMENT SEAT)

T162869 -UN-18DEC02

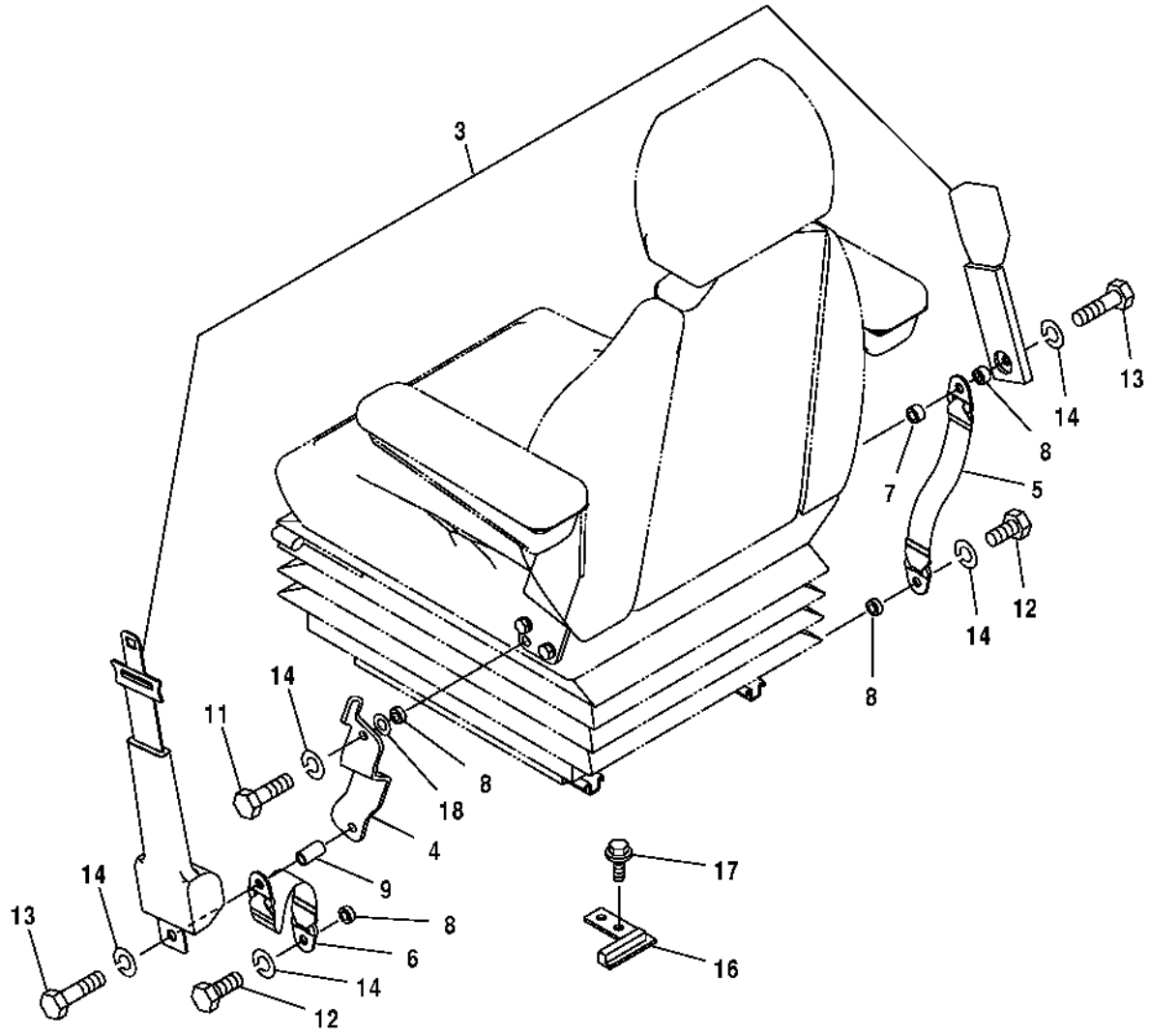

T162869

SEAT BELT (REPLACEMENT SEAT)

KEY	PART NO.	PART NAME	QTY	SERIAL NO.	REMARKS
3	4384239	SEAT BELT	1		
4	7042657	BRACKET	1		
5	4382410	SEAT BELT	1		
6	4453869	BELT	1		
7	4453874	SPACER	1		
8	P60915	SPACER	3		
9	4382432	SLEEVE	1		
11	4333835	BOLT	1		
12	4235232	CAP SCREW	2		
13	4380534	CAP SCREW	2		
14	J219167	SPRING WASHER	5		
16	9756736	BRACKET	1		
17	19M7402	CAP SCREW	2		M10 X 25
	12M7066	LOCK WASHER	2		10 MM
18	24M7047	WASHER	1		13 X 24 X 2.500 MM

SEAT (ORIGINAL)

TP54746 -UN-16APR97

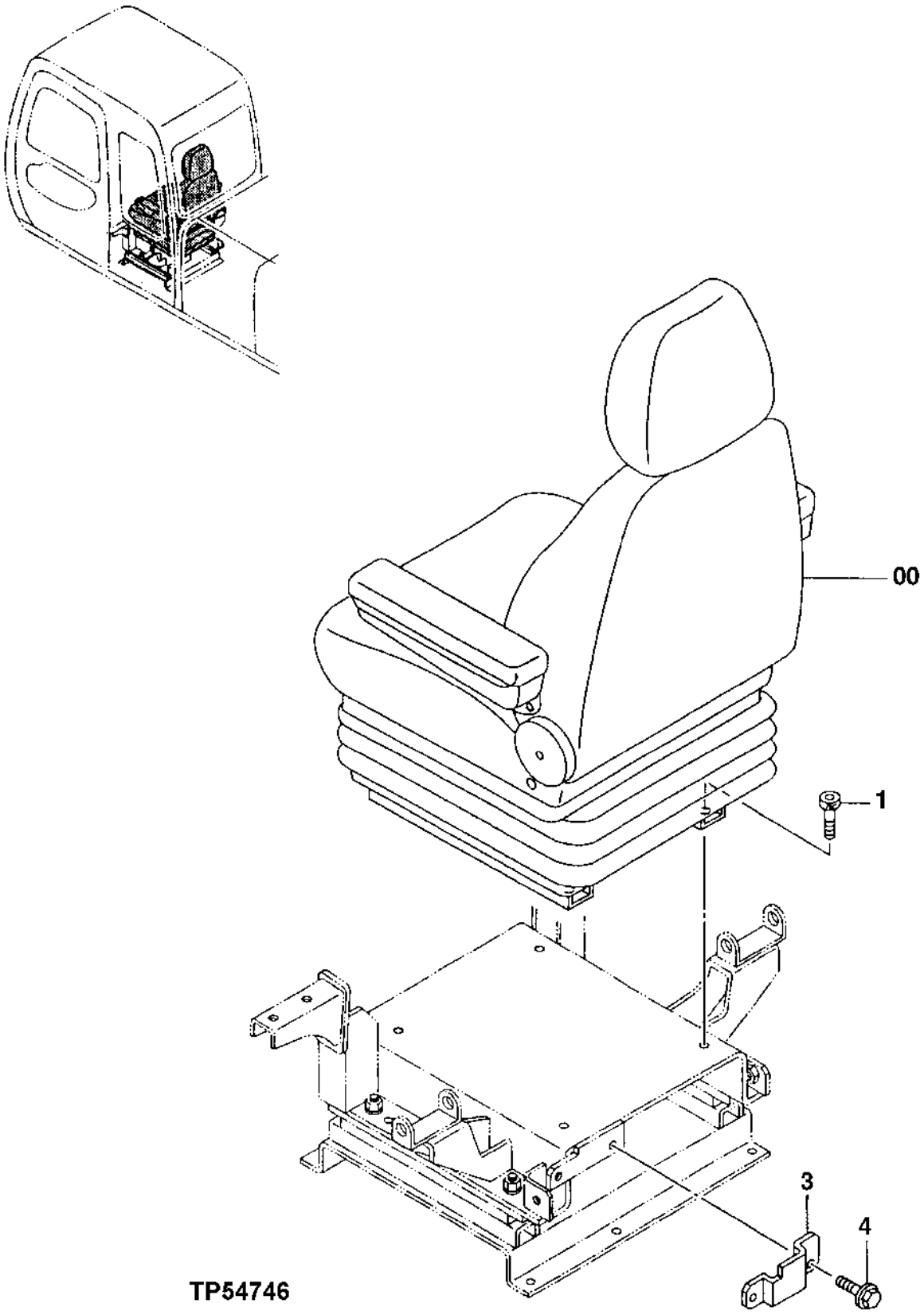

SEAT (ORIGINAL)

KEY	PART NO.	PART NAME	QTY	SERIAL NO.	REMARKS
0	.....	SEAT	1		(4383546 NO LONGER AVAILABLE, SUB 4454406) (SUB FOR AT215571)
1	19M7932	CAP SCREW	4		M8 X 16
3	3078471	BRACKET	1		(SUB FOR AT215490)
4	12M7056	LOCK WASHER	2		8 MM (0.315") (SUB FOR 12M7065)
	24M7055	WASHER	2		8.400 X 16 X 1.600 MM (0.331" X 0.630" X 0.063")
	19M7407	CAP SCREW	2		M8 X 25

SEAT ASSEMBLY (ORIGINAL)

TP80745 -UN-18MAY00

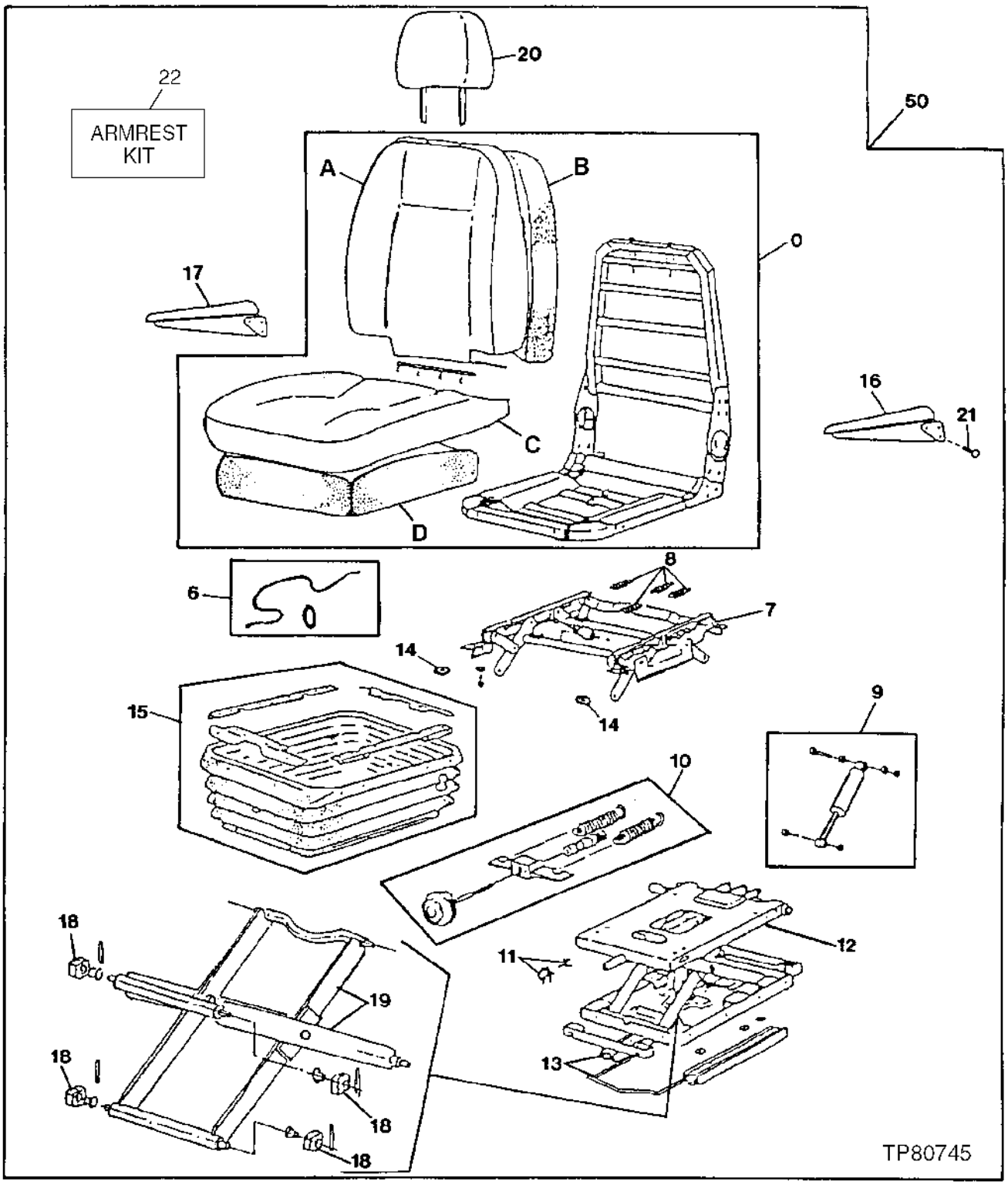

SEAT ASSEMBLY (ORIGINAL)

KEY	PART NO.	PART NAME	QTY	SERIAL NO.	REMARKS
0	4392794	CUSHION	1		(SUB FOR AT180970)
0A	4392795	CUSHION COVER	1		(SUB FOR AT250443)
0B	4392796	SEAT BACK	1		(SUB FOR AT250444)
0C	4392797	CUSHION COVER	1		(SUB FOR AT250445)
0D	4392798	CUSHION	1		(SUB FOR AT250446)
6	AT216522	CABLE	1		
7	4392801	STAND	1		(SUB FOR AT180971)
8	4370199	SPRING	1		(SUB FOR AT180972)
9	4392803	TORSIONAL DAMPENER	1		(SUB FOR AT180973)
10	4392804	ADJUSTER	1		(SUB FOR AT180974)
11	4392805	STOP	1		(SUB FOR AT180975)
12	4392806	SEAT SUSPENSION	1		(SUB FOR AT180976)
13	4392807	ADJUSTER	1		(SUB FOR AT180977)
14	AT216532	KIT	1		
15	4392809	COVER	1		(SUB FOR AT180978)
16	AT216533	ARMREST	1		
	AT179815	ARMREST	1		(4 INCH WIDE LEFT ARMREST)
17	AT216534	ARMREST	1		
	AT179816	ARMREST	1		(4 INCH RIGHT ARMREST)
18	4392812	BUSHING	1		(SUB FOR AT180979) (SET OF FOUR)
19	4392813	LINK	1		(SUB FOR AT180980)
20	AT216521	HEAD RESTRAINT	1		
21	19M8818	SCREW	4		M8 X 60, (USE WITH 4 INCH WISE ARMRESTS)
22	AT191447	KIT	1		(CONTAINS 4 ARMREST SCREWS)
50	.....	SEAT	1		(4383546 NO LONGER AVAILABLE, SUB 4454406) (SUB FOR AT215571)

SEAT AND SEAT SUSPENSION (REPLACEMENT SEAT)

T149704 -UN-08JAN02

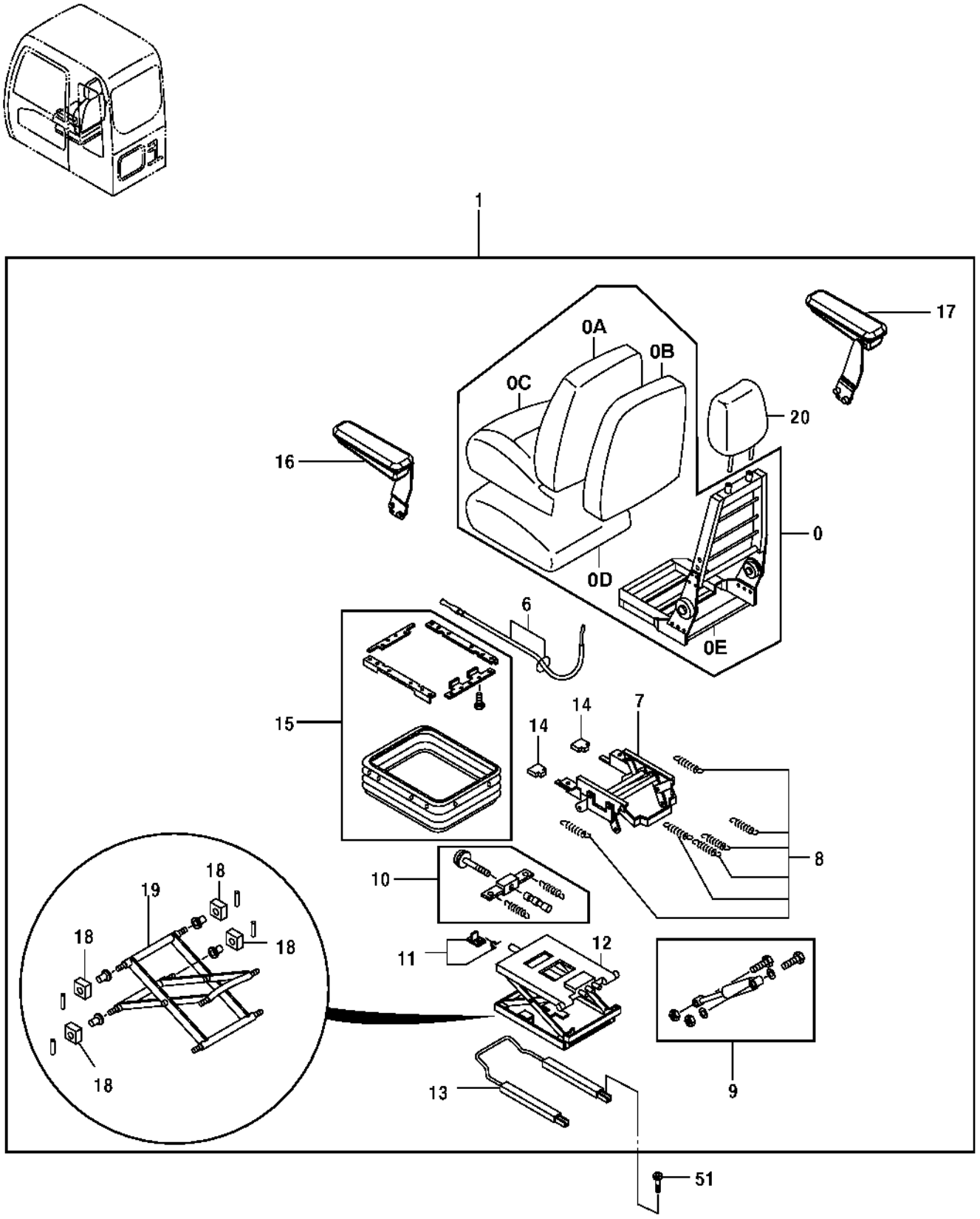

T149704

SEAT AND SEAT SUSPENSION (REPLACEMENT SEAT)

KEY	PART NO.	PART NAME	QTY	SERIAL NO.	REMARKS
0	4456380	SEAT	1		SEAT UPPER KIT
0A	4456381	COVER	1		
0B	4392796	SEAT BACK	1		
0C	4453664	COVER	1		(FABRIC)
0D	4392798	CUSHION	1		(SEAT)
0E	4392799	FRAME	1		
1	4454406	SEAT	1		FABRIC
6	AT216522	CABLE	1		(SUB FOR 4392800)
7	4392801	STAND	1		RECLINER CABLE KIT
8	4392802	SPRING	1		
9	4392803	TORSIONAL DAMPENER	1		(KIT)
10	4392804	ADJUSTER	1		HEIGHT RISER SPRING
11	4392805	STOP	1		
12	4392806	SEAT SUSPENSION	1		
13	4392807	ADJUSTER	1		
14	4392808	HANDLE	1		(KNOB)
15	4392809	COVER	1		(SUSPENSION COVER KIT)
16	4456377	ARMREST	1		LEFT
17	4456376	ARMREST	1		RIGHT
18	4392812	BUSHING	1		KIT
19	4392813	LINK	1		LEVER/CENTER PIVOT KIT
20	4456375	HEAD RESTRAINT	1		
51	19M7647	SCREW	4		M8 X 16, (SUB FOR M340816, AT217709)

SEAT STAND

TP48112 -UN-07AUG96

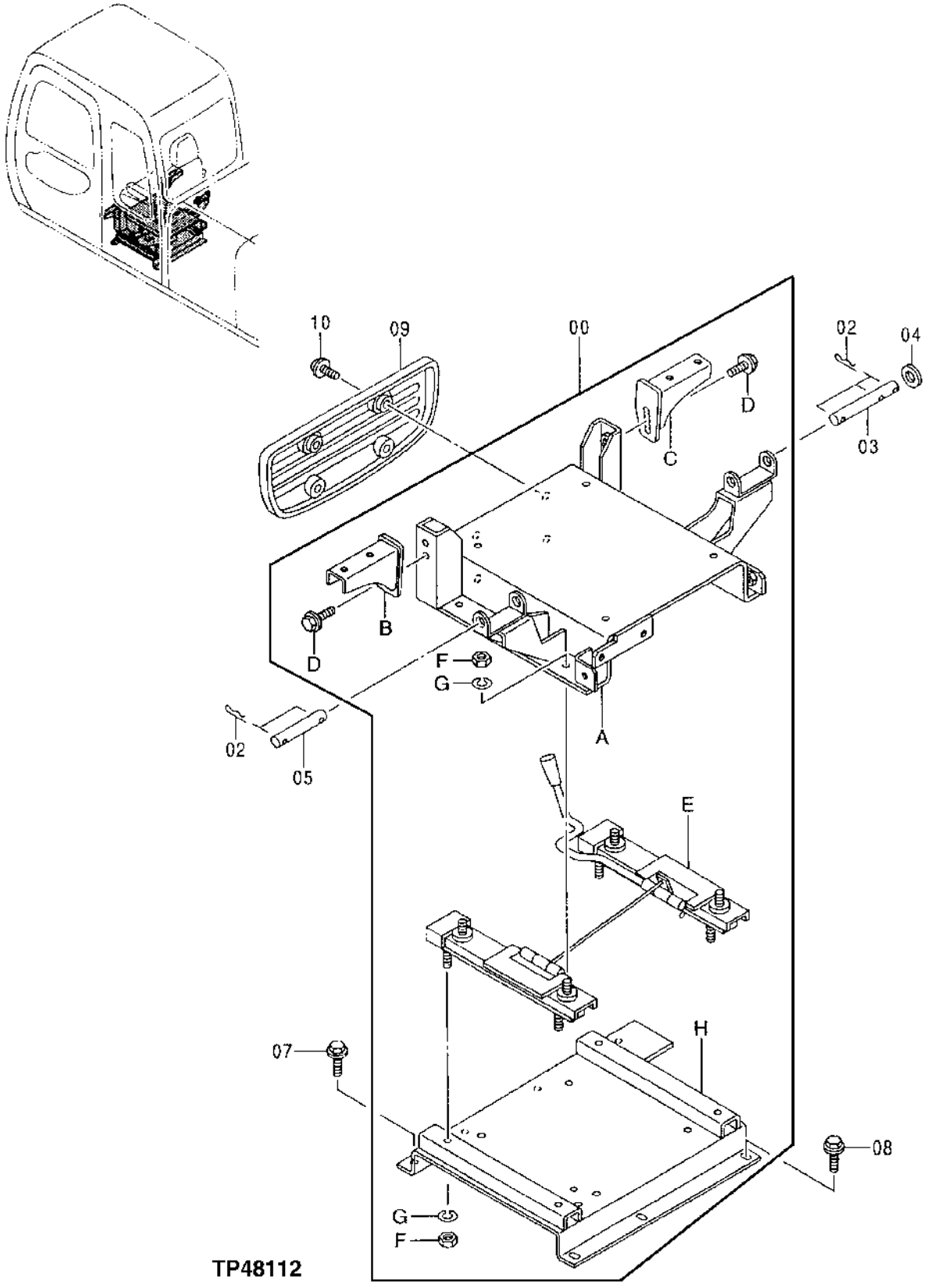

SEAT STAND

KEY	PART NO.	PART NAME	QTY	SERIAL NO.	REMARKS
0	.....	STAND	1		(NOT AVAILABLE FOR SERVICE)
0A	6016639	BASE	1		(SUB FOR AT215580)
0B	8061123	BRACKET	1		(SUB FOR AT215596)
0C	8061563	BRACKET	1		(SUB FOR AT215597)
0D	19M7402	CAP SCREW	4		M10 X 25
	12M7066	LOCK WASHER	4		10 MM (0.394")
	24M7028	WASHER	4		10.500 X 20 X 2 MM (0.413" X 0.787" X 0.079")
0E	4382794	DRAWER SLIDE	1		(SUB FOR AT215566)
0F	J952010	NUT	8		(SUB FOR TH104196)
0G	12M7066	LOCK WASHER	8		10 MM (0.394")
0H	8068217	BASE	1		(SUB FOR AT215608)
2	CH11528	SPRING LOCKING PIN	5		(SUB FOR (5) P63175)
3	4341890	PIN	1		(SUB FOR AT215518)
4	N231749	WASHER	1		20.625 X 38.100 X 6.350 MM (13/16" X 1-1/2" X 1/4")
5	4376707	PIN	1		(SUB FOR AT215555)
7	19M7402	CAP SCREW	4		M10 X 25
	12M7066	LOCK WASHER	4		10 MM (0.394")
	24M7028	WASHER	4		10.500 X 20 X 2 MM (0.413" X 0.787" X 0.079")
8	19M7402	CAP SCREW	3		M10 X 25
	12M7066	LOCK WASHER	3		10 MM (0.394")
	24M7028	WASHER	3		10.500 X 20 X 2 MM (0.413" X 0.787" X 0.079")
9	3072610	COVER	1		(SUB FOR AT215483)
10	21M7277	SCREW	4		M6 X 25
	12M7006	LOCK WASHER	4		6 MM (0.236")
	24M7293	WASHER	4		6.500 X 13 X 1.600 MM (0.256" X 0.512" X 0.063")

AIR CONDITIONER

T141576 -UN-19APR01

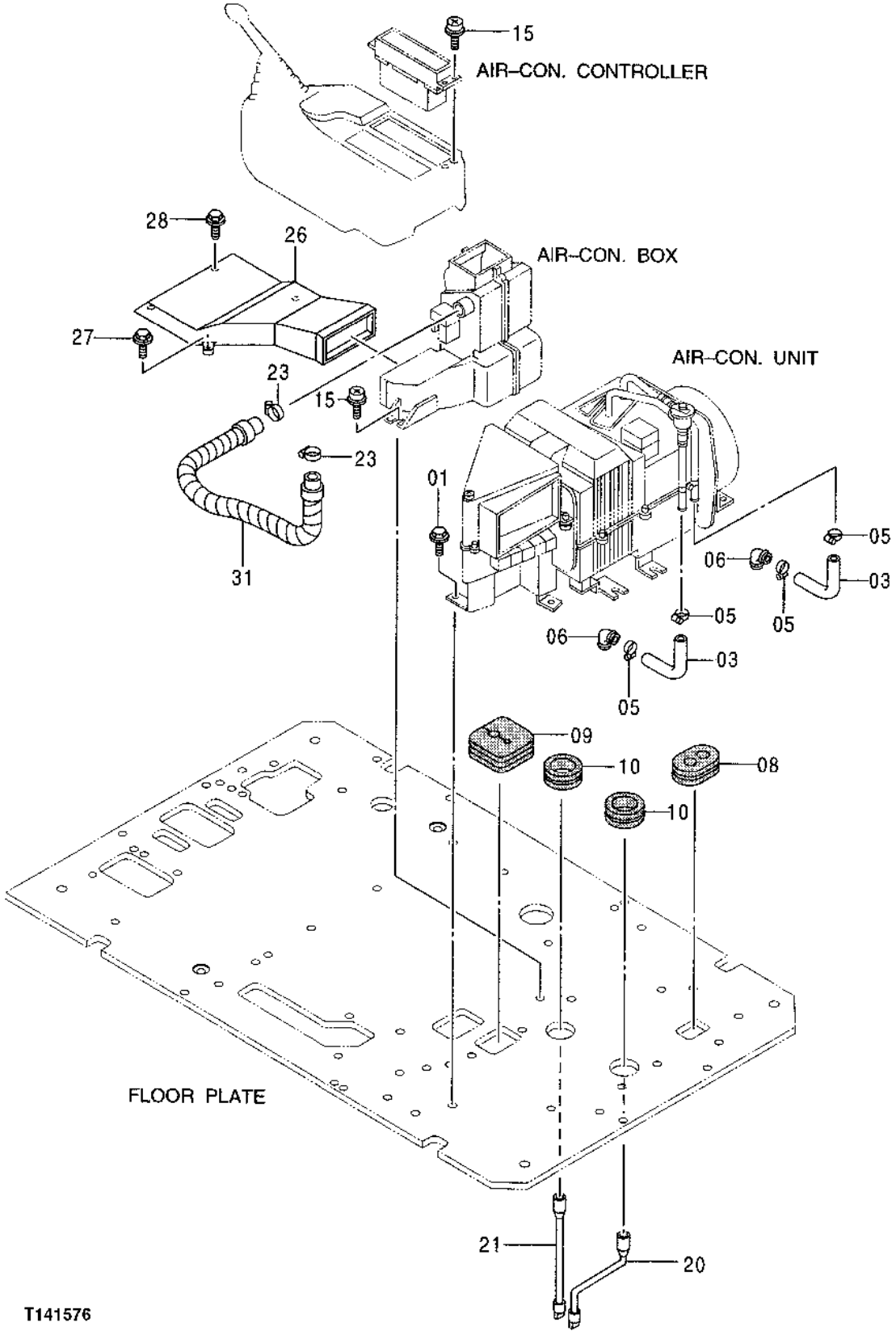

AIR CONDITIONER

KEY	PART NO.	PART NAME	QTY	SERIAL NO.	REMARKS
1	19M7402	CAP SCREW	11		M10 X 25
	12M7066	LOCK WASHER	11		10 MM (0.394")
	24M7028	WASHER	11		10.500 X 20 X 2 MM (0.413" X 0.787" X 0.079")
3	4373430	RADIATOR HOSE	2		(SUB FOR AT217129 OR AT217128)
5	WZ2141223	HOSE CLAMP	4		(SUB FOR AA34965)
6	4376262	PIPE ELBOW	2		(SUB FOR AT217134)
8	4276794	GROMMET	1		(SUB FOR AT154344)
9	4351009	GROMMET	1		(SUB FOR AT215523)
10	4279257	BUSHING	2		(SUB FOR AT250601)
15	21M7265	SCREW	4		M5 X 12
20	4375370	HOSE	1		(SUB FOR AT217132)
21	4251897	HOSE	1		(SUB FOR AT155266)
23	TY22470	CLAMP	2		(SUB FOR AR65293)
26	4350243	AIR DUCT	1		(SUB FOR AT213940)
27	19M7881	SCREW	2		M8 X 20
	12M7056	LOCK WASHER	2		8 MM (0.315") (SUB FOR 12M7065)
	24M7055	WASHER	2		8.400 X 16 X 1.600 MM (0.331" X 0.630" X 0.063")
28	J050820	SCREW, WITH WASHER	2		(SUB FOR AT213603)
31	AT217828	HOSE	1		

AIR CONDITIONER CONTROLLER

TP58740 -UN-14AUG97

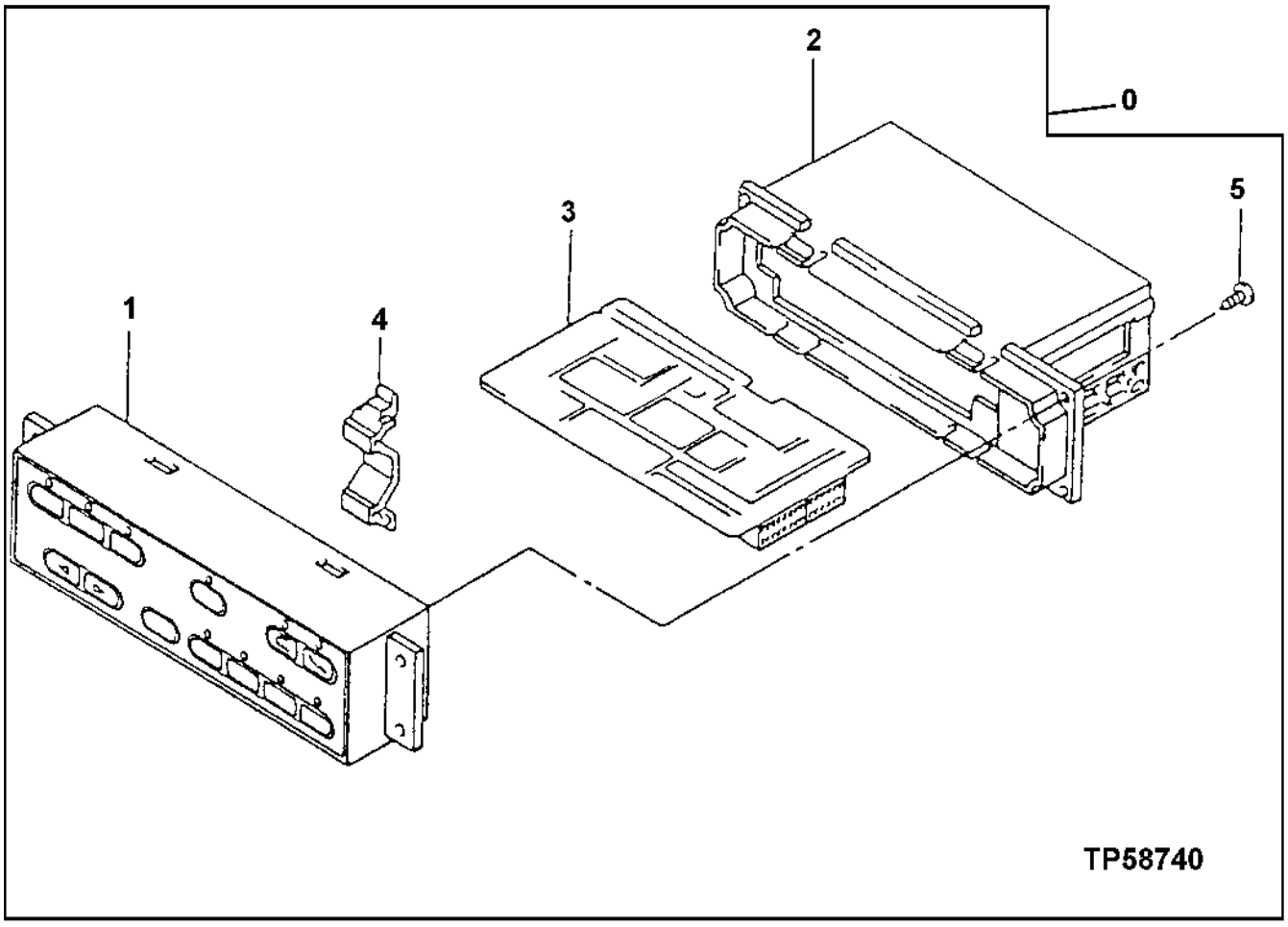

AIR CONDITIONER CONTROLLER

KEY	PART NO.	PART NAME	QTY	SERIAL NO.	REMARKS
0	4405812	CONTROL	1		(SUB FOR AT186244)
1	4429810	CASE	1		(SUB FOR AT187307)
2	4382807	HOUSING	1		(SUB FOR AT218138)
3	4429815	MICROCOMPUTER	1		(SUB FOR AT187308)
4	4382809	RETAINER	1		(SUB FOR AT180990)
5	4382810	SCREW	4		(SUB FOR AT180992)

AIR CONDITIONER

TP66812 -UN-08OCT99

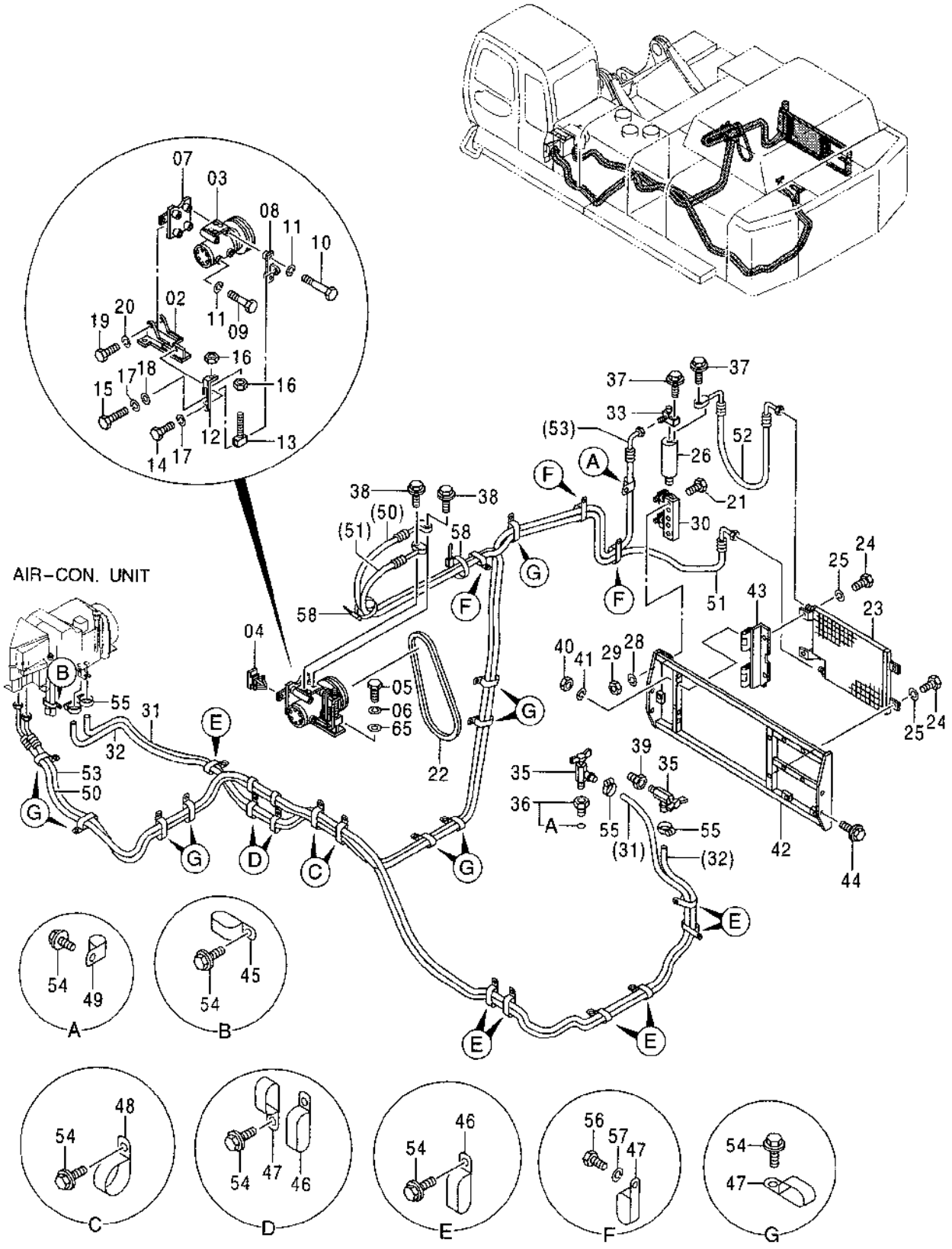

TP66812

AIR CONDITIONER

KEY	PART NO.	PART NAME	QTY	SERIAL NO.	REMARKS
2	7033815	SUPPORT	1		(SUB FOR TH7033815)
3	4376245	COMPRESSOR	1		(SUB FOR TH4376245)
4	4351773	CLIP	1		(SUB FOR TH4351773)
5	19H2993	CAP SCREW	2		12.700 X 38.100 MM (1/2" X 1-1/2")
6	12H301	LOCK WASHER	2		12.700 MM (1/2")
7	8070451	BRACKET	1		(SUB FOR TH8070451)
8	8064222	BRACKET	1		(SUB FOR TH8064222)
9	J900885	BOLT	2		(SUB FOR THJ900885)
10	J900804	CAP SCREW	2		(SUB FOR AT215473)
11	12M7056	LOCK WASHER	4		8 MM (0.315") (SUB FOR 12M7065)
12	4344572	STRAP	1		(SUB FOR TH4344572)
13	9743911	CAP SCREW	1		(SUB FOR TH9743911)
14	TH101845	BOLT	1		
15	M111256	BOLT	1		(SUB FOR THM111256)
16	14M7357	NUT	2		M12
17	12H301	LOCK WASHER	2		12.700 MM (1/2")
18	24M7047	WASHER	1		13 X 24 X 2.500 MM (0.512" X 0.945" X 0.098")
19	THM111230	BOLT	2		
20	12H301	LOCK WASHER	2		12.700 MM (1/2")
21	19M7881	SCREW	2		M8 X 20
22	4365372	V-BELT	1		(SUB FOR TH4365372)
23	4356628	VAPOR CONDENSER	1		(SUB FOR AT215526)
24	19M7932	CAP SCREW	4		M8 X 16
25	12M7056	LOCK WASHER	4		8 MM (0.315") (SUB FOR 12M7065)
26	4333461	TANK	1		(SUB FOR AT215511)
28	12M7056	LOCK WASHER	2		8 MM (0.315") (SUB FOR 12M7065)
29	14M7273	NUT	2		M8
30	4333462	SUPPORT	1		(SUB FOR AT215512)
31	4294478	HOSE	1		(SUB FOR TH4294478)
32	4374723	REFRIGERANT HOSE	1		(SUB FOR TH4357640)
33	4374958	ADAPTER	1		(SUB FOR AT181084)
35	AT35831	DRAIN VALVE	2		
36	4362450	REDUCER	1		(SUB FOR TH4362450)
36A	R26448	O-RING	1		11.887 X 1.981 MM (0.468" X 5/64")
37	19M7286	CAP SCREW	2		M6 X 25
	12M7006	LOCK WASHER	2		6 MM (0.236")
	24M7054	WASHER	2		6.400 X 12 X 1.600 MM (0.252" X 0.472" X 0.063")
38	19M7874	CAP SCREW	2		M6 X 30
	12H302	LOCK WASHER	2		6.350 MM (1/4")
39	4383804	REDUCER	1		(SUB FOR TH4383804)
40	14M7274	NUT	2		M10
41	12M7066	LOCK WASHER	2		10 MM (0.394")
42	7030773	SUPPORT	1		(SUB FOR TH7030773)
43	8064216	BRACKET	1		(SUB FOR TH8064216)
44	19M7662	CAP SCREW	4		M10 X 30
	12M7066	LOCK WASHER	4		10 MM (0.394")
45	T32854	CLAMP	1		
46	4192034	CLIP	9		(SUB FOR TH109445)
47	4190266	CLIP	14		(SUB FOR TH108793)
48	4190265	CLIP	2		(SUB FOR TH109598)
49	4190253	CLIP	1		(SUB FOR TH108597)
50	4375482	REFRIGERANT HOSE	1		(SUB FOR TH4375482)
51	4375478	REFRIGERANT HOSE	1		(SUB FOR TH4375478)
52	4375446	REFRIGERANT HOSE	1		(SUB FOR TH4375446)
53	4375389	REFRIGERANT HOSE	1		(SUB FOR TH4375389)
54	19M7662	CAP SCREW	25		M10 X 30
	12M7066	LOCK WASHER	25		10 MM (0.394")
55	WZ2141223	HOSE CLAMP	4		(SUB FOR AA34965)
56	19M7938	CAP SCREW	2		M10 X 20
57	12M7066	LOCK WASHER	2		10 MM (0.394")
58	H77698	TIE BAND	2		
65	4086891	WASHER	2		(SUB FOR TH104166)

AIR CONDITIONER UNIT

TP66814 -UN-08OCT99

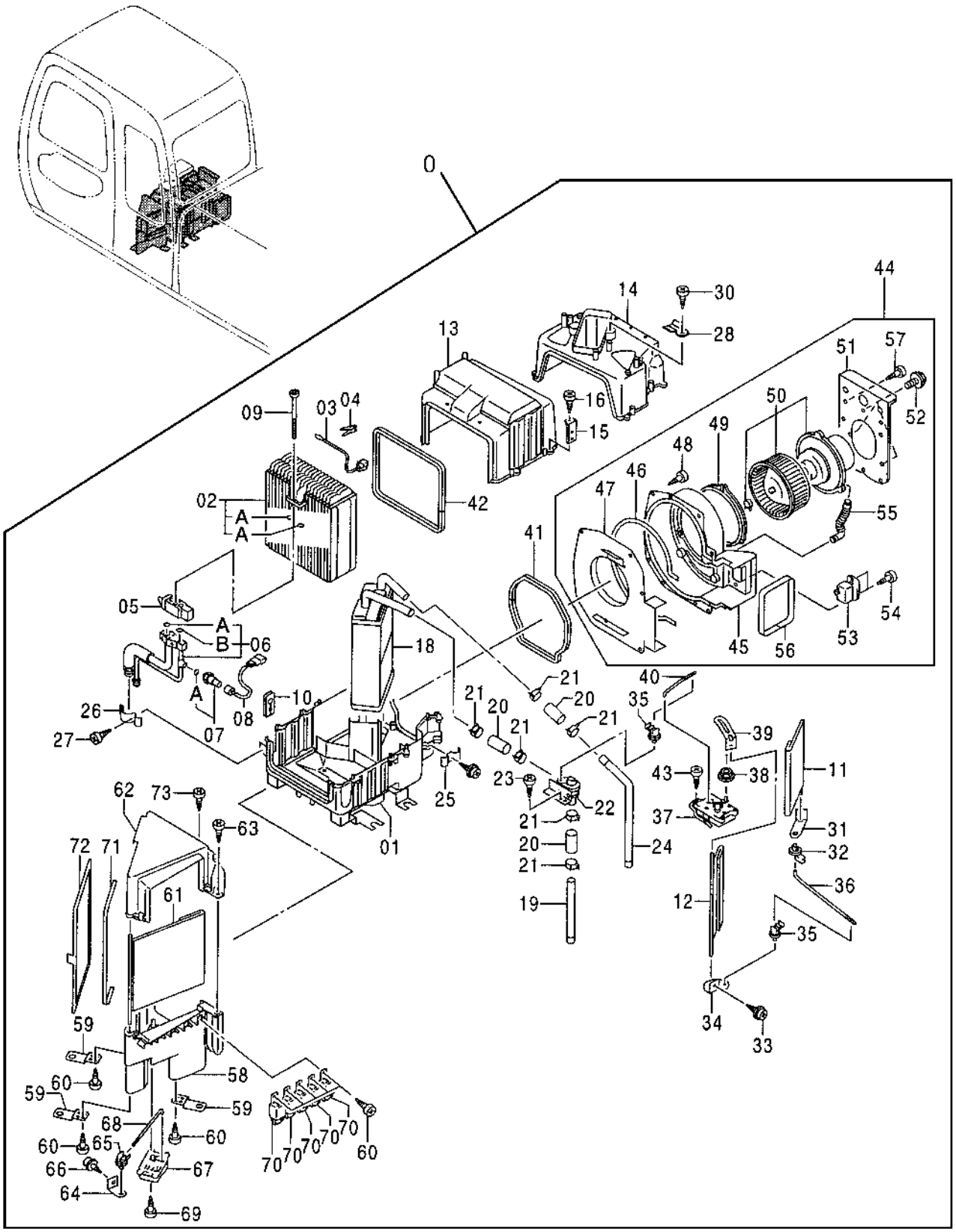

TP66814

AIR CONDITIONER UNIT

KEY	PART NO.	PART NAME	QTY	SERIAL NO.	REMARKS
0	4375485	AIR CONDITIONER	1		(SUB FOR AT217133)
1	4382811	HOUSING	1		(SUB FOR AT180993)
2	4382812	EVAPORATOR	1		(SUB FOR AT180994)
2A	4350206	O-RING	2		(SUB FOR AT180995)
3	4382813	THERMOSTAT	1		(SUB FOR AT180996)
4	4363957	CLAMP	1		(SUB FOR AT180997)
5	4382814	VALVE	1		(SUB FOR AT180998)
6	4382815	TUBE	1		(SUB FOR AT180999)
6A	4350206	O-RING	1		(SUB FOR AT180995)
6B	4350187	O-RING	1		(SUB FOR AT181001)
7	4382816	PRESSURE SWITCH	1		(SUB FOR AT181002)
7A	4363718	O-RING	1		(SUB FOR AT181003)
8	4382817	WIRING HARNESS	1		(SUB FOR AT181004)
9	19M8627	SCREW	2		M6 X 20
10	4382818	GROMMET	1		(SUB FOR AT181005)
11	4382819	DOOR	1		(SUB FOR AT181006)
12	4382820	DOOR	1		(SUB FOR AT181007)
13	4406285	CASE	1		(SUB FOR AT186862)
14	4382822	HOUSING	1		(SUB FOR AT181009)
15	4406286	BRACKET	1		(SUB FOR AT186863)
16	4382883	SCREW	11		(SUB FOR AT181011)
18	4382824	RADIATOR	1		(SUB FOR AT181013)
19	4382825	PIPE	1		(SUB FOR AT181014)
20	4382826	HOSE	3		(SUB FOR AT181015)
21	4382827	HOSE CLAMP	6		(SUB FOR AT181016)
22	4382828	VALVE	1		(SUB FOR AT181017)
23	4382829	SCREW	2		(SUB FOR AT181018)
24	4382830	PIPE	1		(SUB FOR AT181019)
25	4363958	CLAMP	1		(SUB FOR AT181020)
26	4382831	CLAMP	1		(SUB FOR AT181021)
27	4382832	SCREW	1		(SUB FOR AT181022)
28	4363950	BRACKET	1		(SUB FOR AT181023)
30	4236448	SCREW	1		(SUB FOR AT181024)
31	4363947	LEVER	1		(SUB FOR AT173809)
32	4363956	BUSHING	2		(SUB FOR AT173819)
33	J460308	SCREW, WITH WASHER	3		(SUB FOR AT181025)
34	4363945	LEVER	1		(SUB FOR AT173807)
35	4362310	CLAMP	2		(SUB FOR AT173818)
36	4382833	ROD	1		(SUB FOR AT181026)
37	4363945	LEVER	1		(SUB FOR AT173807)
38	4363955	BUSHING	1		(SUB FOR AT173817)
39	4382835	LEVER	1		(SUB FOR AT181028)
40	4382836	ROD	1		(SUB FOR AT181029)
41	4406288	PACKING	2		(SUB FOR AT186865)
42	4382838	ISOLATOR	1		(SUB FOR AT181031)
43	4382839	SCREW	3		(SUB FOR AT181032)
44	4406287	BLOWER	1		(SUB FOR AT186864)
45	4382841	HOUSING	1		(SUB FOR TH4382841)
46	4363966	ISOLATOR	1		(SUB FOR AT173820)
47	4382842	PLATE	1		(SUB FOR TH4382842)
48	4382843	SCREW	5		(SUB FOR AT181034)
49	4363944	GASKET	1		(SUB FOR AT173804)
50	4406290	BLOWER MOTOR	1		(SUB FOR TH4406290)
51	4395660	BRACKET	1		(SUB FOR TH4395660)
52	4382848	SCREW	3		(SUB FOR AT181039)
53	4406289	RESISTOR	1		(SUB FOR AT186866)
54	4382884	SCREW	2		(SUB FOR AT181041)
55	4363954	TUBE	1		(SUB FOR AT173815)
56	4382850	PACKING	1		(SUB FOR AT181042)
57	4364031	SCREW	1		(SUB FOR AT181043)
58	4382852	HOUSING	1		(SUB FOR AT181044)

AIR CONDITIONER UNIT

TP66814 -UN-08OCT99

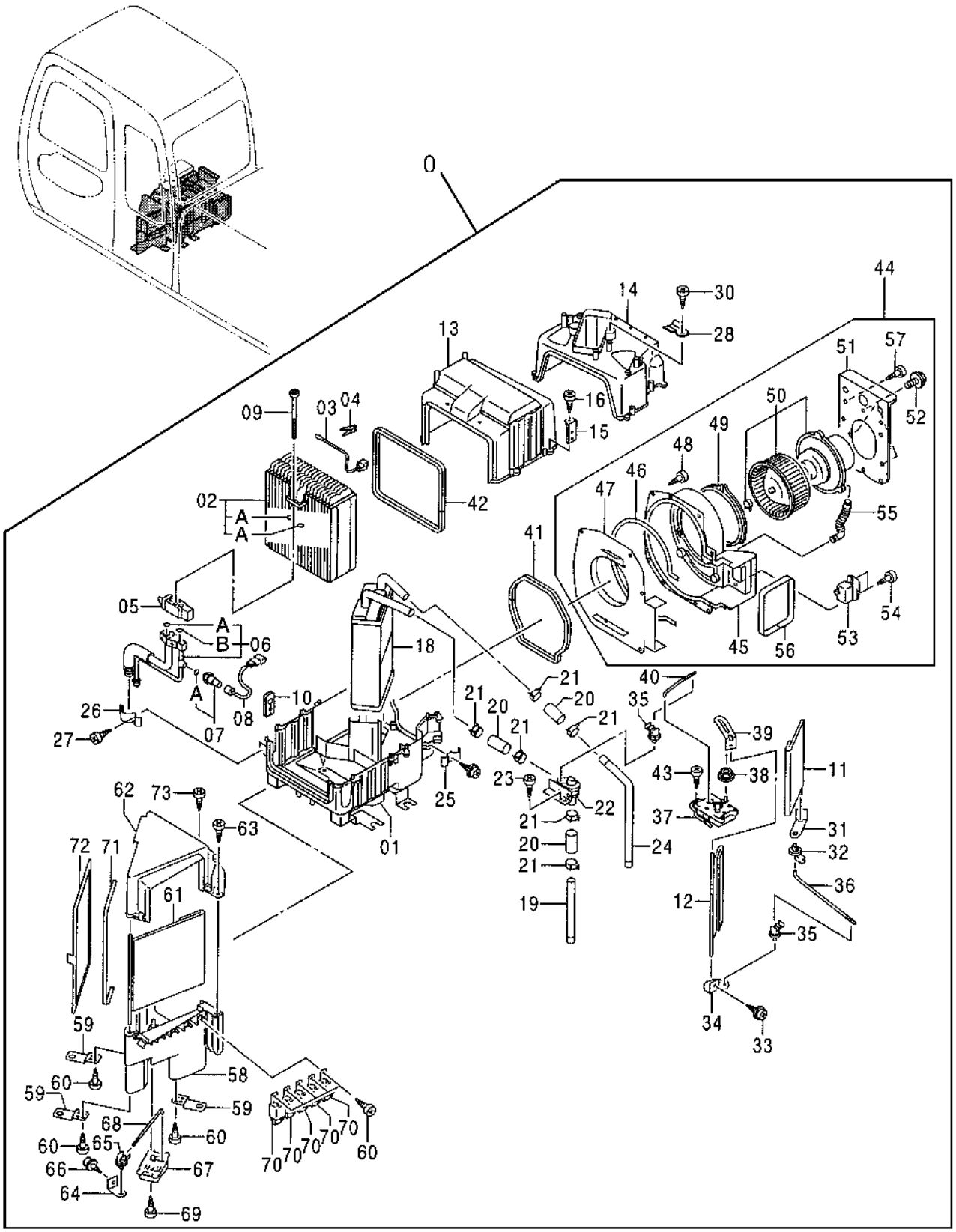

TP66814

AIR CONDITIONER UNIT

KEY	PART NO.	PART NAME	QTY	SERIAL NO.	REMARKS
59	4382853	BRACKET	3		(SUB FOR AT181045)
60	4236448	SCREW	11		(SUB FOR AT181024)
61	4382854	DOOR	1		(SUB FOR AT181047)
62	4382855	HOUSING	1		(SUB FOR AT181048)
63	4382883	SCREW	3		(SUB FOR AT181011)
64	4382856	LEVER	1		(SUB FOR AT181049)
65	4362310	CLAMP	1		(SUB FOR AT173818)
66	J460308	SCREW, WITH WASHER	1		(SUB FOR AT181025)
67	4382857	ELECTRIC MOTOR	1		(SUB FOR AT181050)
68	4382858	HOOK BOLT	1		(SUB FOR AT181051)
69	4382859	SCREW	3		(SUB FOR AT181052)
70	4382860	RELAY	5		(SUB FOR AT181053)
71	4382861	ISOLATOR	1		(SUB FOR AT181054)
72	4S00303	FILTER	1		(SUB FOR TH4358255) (SUB FOR AT191445)
73	4382882	BOLT	4		(SUB FOR AT218133)

AIR CONDITIONER DUCT

TP47995 -UN-22MAY96

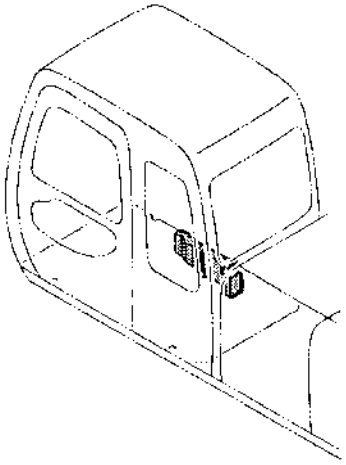

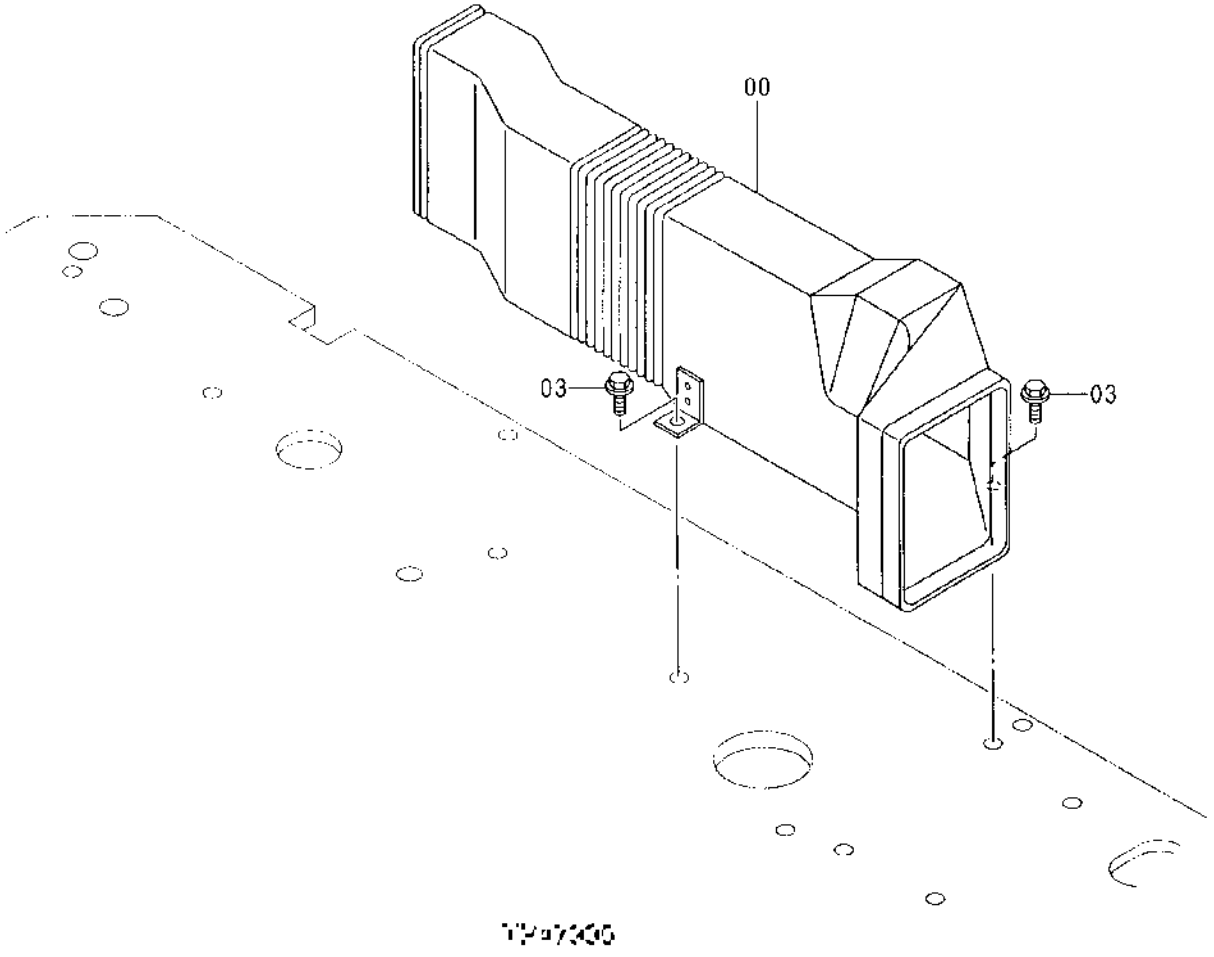

AIR CONDITIONER DUCT

KEY	PART NO.	PART NAME	QTY	SERIAL NO.	REMARKS
0	4348714	AIR DUCT	1		(SUB FOR AT213924)
3	12M7066	LOCK WASHER	2		10 MM (0.394")
	19M7402	CAP SCREW	2		M10 X 25

AIR CONDITIONER DUCT

T158032 -UN-08AUG02

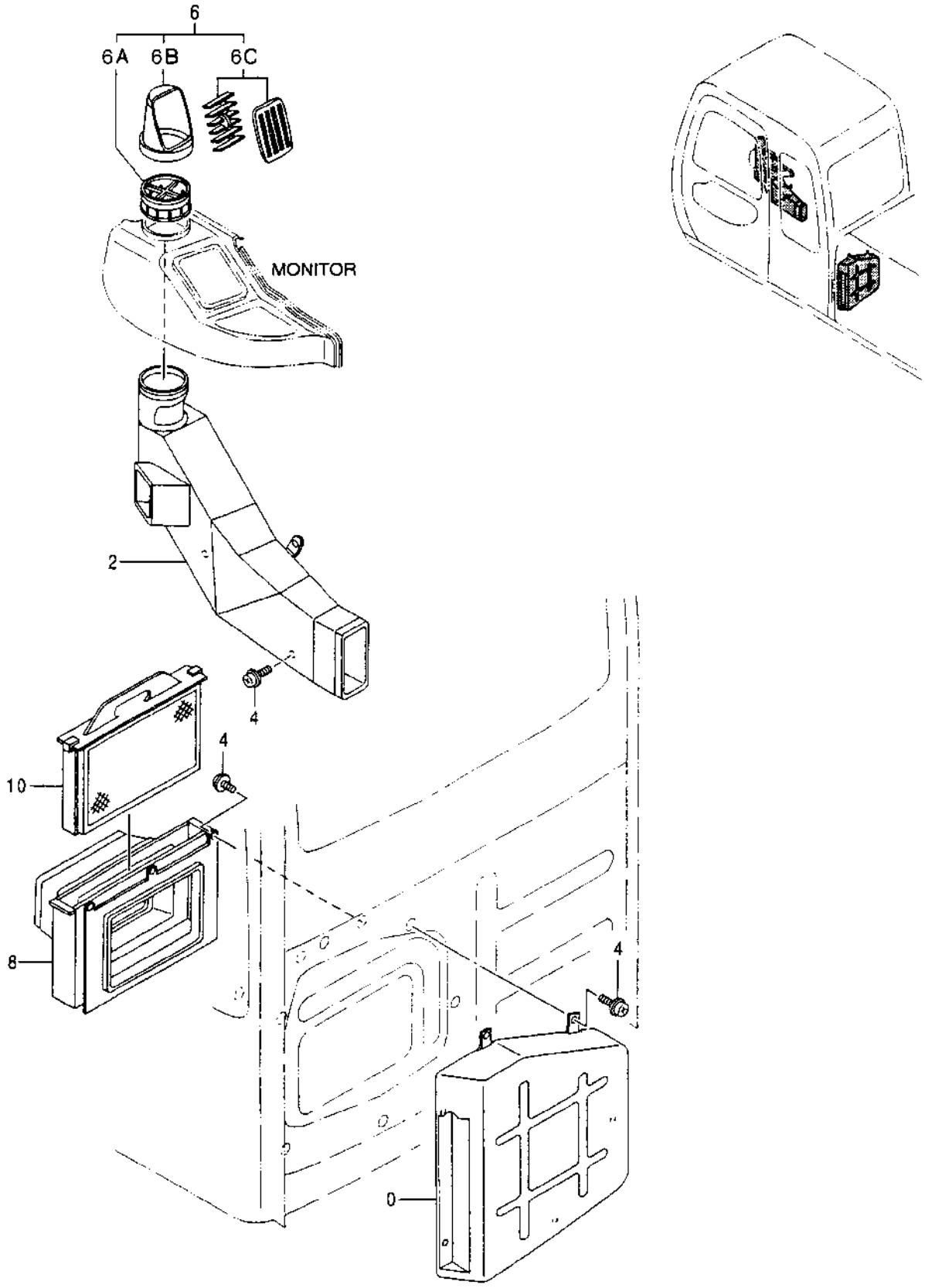

AIR CONDITIONER DUCT

KEY	PART NO.	PART NAME	QTY	SERIAL NO.	REMARKS
0	4350234	AIR DUCT	1		(SUB FOR AT213935)
2	4348713	AIR DUCT	1		(SUB FOR AT213923)
4	19M8425	CAP SCREW	12		M6 X 16
	24M7293	WASHER	12		6.500 X 13 X 1.600 MM (0.256" X 0.512" X 0.063")
	12M7006	LOCK WASHER	12		6 MM (0.236")
6	4449068	AIR DUCT	1		(SUB FOR AP34401) (SUB FOR 4350244)
6A	.....	BASE	1		(AT214275 OR 4370572 NO LONGER AVAILABLE FOR SERVICE)
6B	.....	HOUSING	1		(AT214273 OR 4370570 NO LONGER AVAILABLE FOR SERVICE)
6C	.....	AIR DUCT	1		(AT214274 OR 4370571 NO LONGER AVAILABLE FOR SERVICE)
8	4350238	AIR DUCT	1		(SUB FOR AT213939)
10	4350249	FILTER	1		(SUB FOR AT213943)

REAR TRAY
(FOR UNITS WITH AIR CONDITIONER)

TP59128 -UN-13MAY98

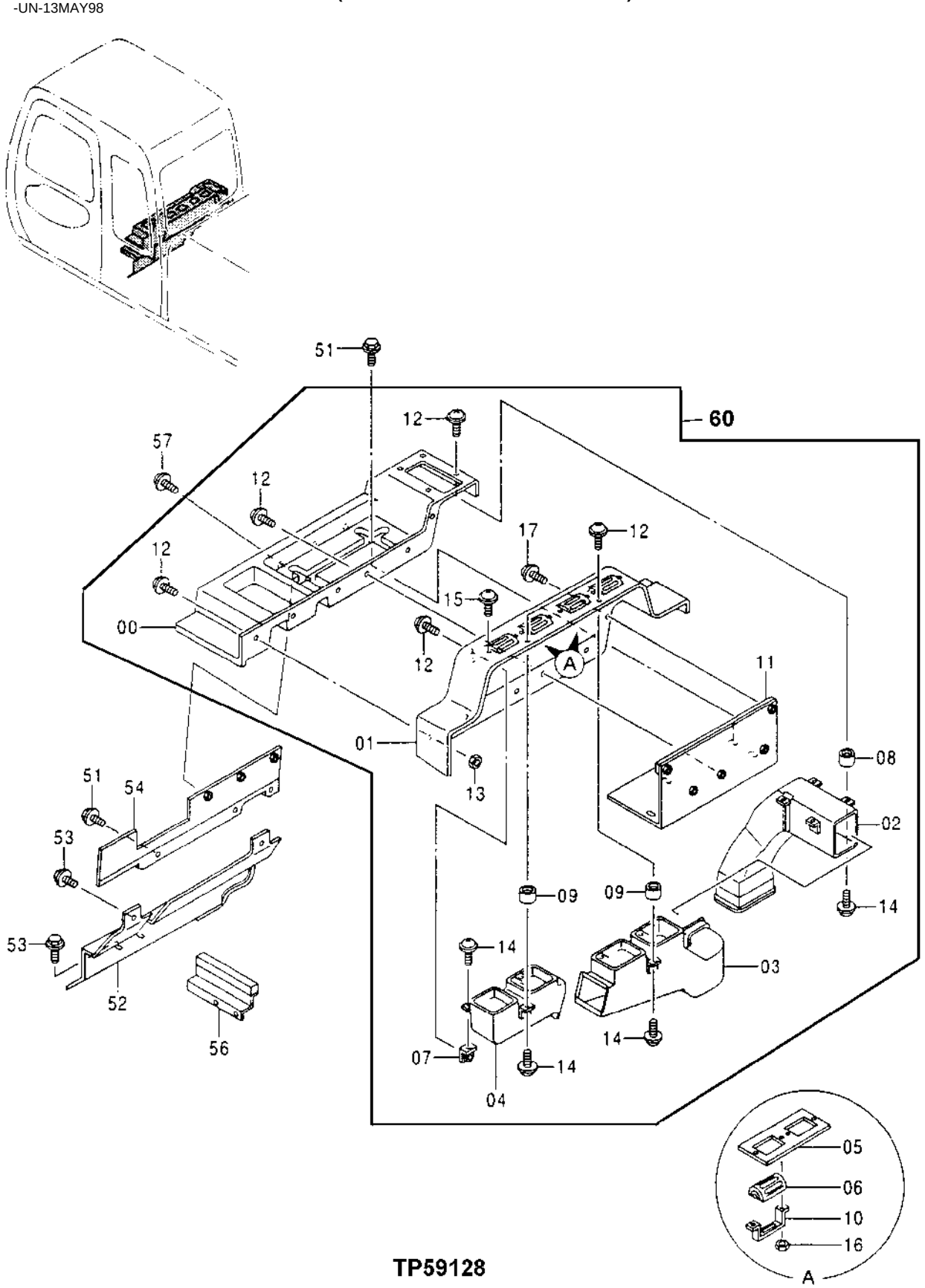

TP59128

REAR TRAY
(FOR UNITS WITH AIR CONDITIONER)

KEY	PART NO.	PART NAME	QTY	SERIAL NO.	REMARKS
0	0002795	TRAY	1		(SUB FOR AT215476)
1	1022600	COVER	1		(SUB FOR AT215478)
2	4350235	AIR DUCT	1		(SUB FOR AT213936)
3	4350236	AIR DUCT	1		(SUB FOR AT213937)
4	4350237	AIR DUCT	1		(SUB FOR AT213938)
5	4370844	CUSHION	2		(SUB FOR AT215535)
6	4370836	LOUVER	4		(SUB FOR AT215534)
7	9747560	BRACKET	4		(SUB FOR AT215614)
8	4378361	BUSHING	4		(SUB FOR AT215556)
9	4378362	BUSHING	2		(SUB FOR AT215557)
10	4383254	BRACKET	4		(SUB FOR AT215567)
11	8067574	BRACKET	1		(SUB FOR AT215602)
12	21M7285	SCREW	16		M6 X 12, (SUB FOR AT215471 AND J680612)
	12M7006	LOCK WASHER	16		6 MM
	24M7293	WASHER	16		6.500 X 13 X 1.600 MM
13	14M7272	NUT	3		M6
14	24M7054	WASHER	10		6.400 X 12 X 1.600 MM (0.252" X 0.472" X 0.063")
15	J680410	SCREW, WITH WASHER	8		(SUB FOR AT213608)
16	14M7139	NUT	8		M4
17	21M7246	SCREW	2		M6 X 16
	12M7006	LOCK WASHER	2		6 MM (0.236")
	24M7105	WASHER	2		6 X 12 X 1.600 MM (0.236" X 0.472" X 0.063")
51	J050820	SCREW, WITH WASHER	6		(SUB FOR AT213603)
52	6016127	COVER	1		(SUB FOR AT215112)
53	19M7881	SCREW	4		M8 X 20
	12M7056	LOCK WASHER	4		8 MM (0.315") (SUB FOR 12M7065)
	24M7055	WASHER	4		8.400 X 16 X 1.600 MM (0.331" X 0.630" X 0.063")
54	8068043	BRACKET	1		(SUB FOR AT215122)
56	8067575	BRACKET	1		(SUB FOR AT215119)
57	21M7285	SCREW	3		M6 X 12, (SUB FOR AT215471 AND J680612)
	12M7006	LOCK WASHER	3		6 MM
	24M7293	WASHER	3		6.500 X 13 X 1.600 MM
60	9159271	TRAY	1		(SUB FOR AT250253)

AIR CONDITIONER HOUSING UNIT COMPONENTS

TP66815 -UN-08OCT99

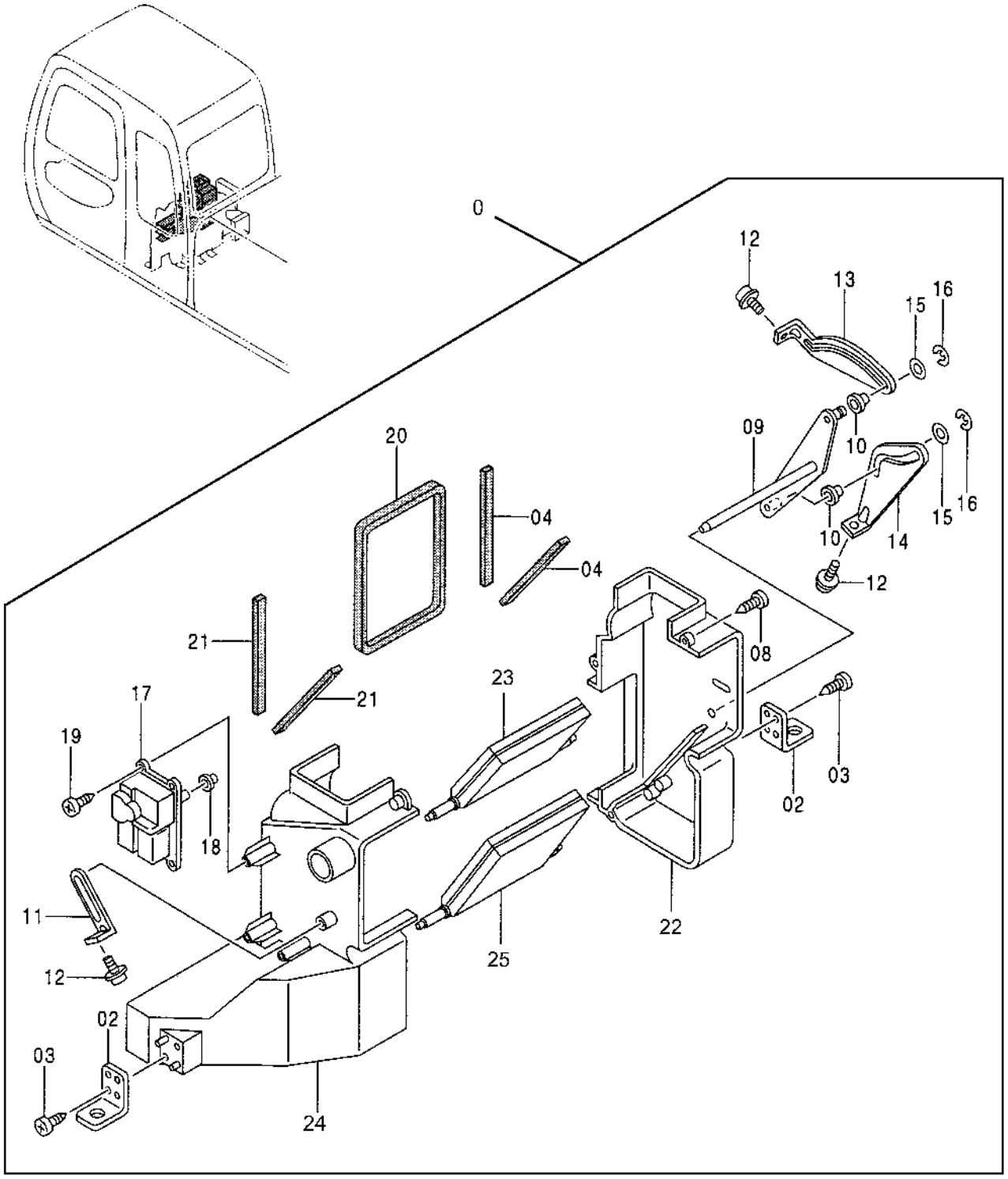

TP66815

AIR CONDITIONER HOUSING UNIT COMPONENTS

KEY	PART NO.	PART NAME	QTY	SERIAL NO.	REMARKS
0	4361107	HOUSING	1		(SUB FOR AT215531)
2	4382865	ANGLE	2		(SUB FOR AT181056)
3	4236448	SCREW	4		(SUB FOR AT181024)
4	4382866	ISOLATOR	2		(SUB FOR AT181057)
8	4382883	SCREW	4		(SUB FOR AT181011)
9	4382870	LEVER	1		(SUB FOR AT181059)
10	4382871	BUSHING	2		(SUB FOR AT181060)
11	4382872	LEVER	1		(SUB FOR AT181061)
12	J460308	SCREW, WITH WASHER	3		(SUB FOR AT181025)
13	4382873	LEVER	1		(SUB FOR AT181062)
14	4382874	LEVER	1		(SUB FOR AT181063)
15	4382875	BUSHING	2		(SUB FOR AT181064)
16	4382876	SNAP RING	2		(SUB FOR AT181066)
17	4382877	ELECTRIC MOTOR	1		(SUB FOR AT181067)
18	4382878	BUSHING	1		(SUB FOR AT181068)
19	4382859	SCREW	3		(SUB FOR AT181052)
20	4382880	ISOLATOR	1		(SUB FOR AT181070)
21	4382881	ISOLATOR	2		(SUB FOR AT181071)
22	4382864	HOUSING	1		(SUB FOR AT218134)
23	4382867	DOOR	1		(SUB FOR AT218135)
24	4382869	HOUSING	1		(SUB FOR AT218137)
25	4382868	DOOR	1		(SUB FOR AT218136)

COVERS

TP66823 -UN-07OCT99

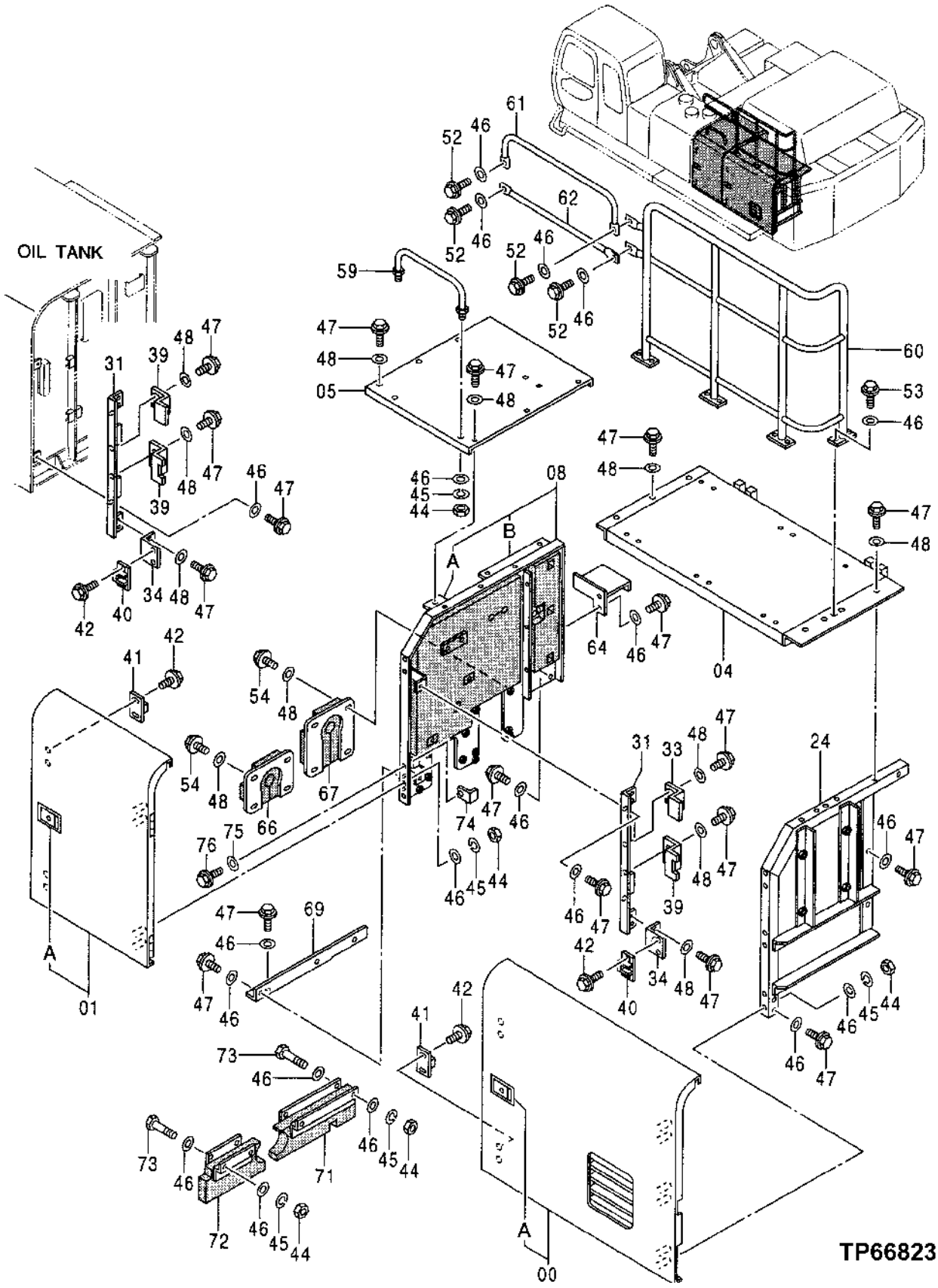

COVER

KEY	PART NO.	PART NAME	QTY	SERIAL NO.	REMARKS
0	5004880	DOOR	1		(SUB FOR TH5004880)
0A	4361763	LOCK	1		(SUB FOR TH4353813)
1	6015061	DOOR	1		(SUB FOR TH6015061)
1A	4361763	LOCK	1		(SUB FOR TH4353813)
4	6017131	COVER	1		(SUB FOR TH6017131)
5	7034967	COVER	1		(SUB FOR TH7034967)
8	6017576	PANEL	1		(SUB FOR TH6017576)
8A	9750728	BRACKET	1		(SUB FOR TH9750728)
8B	9750729	BRACKET	1		(SUB FOR TH9750729)
24	7030100	SUPPORT	1		(SUB FOR TH7030100)
31	8063058	SUPPORT	1		(SUB FOR TH8063058)
33	4351140	STOP	1		(SUB FOR TH4351140)
34	4353488	BRACKET	1		(SUB FOR TH4353488)
39	4378353	STOP	4		(SUB FOR TH4378353)
40	4175253	BRACKET	4		(SUB FOR AT154915)
41	4175254	STOP	4		(SUB FOR AT154916)
42	19M7923	CAP SCREW	16		M6 X 12, (SUB FOR 19M6614)
	24M7293	WASHER	16		6.500 X 13 X 1.600 MM (0.256" X 0.512" X 0.063")
	12M7006	LOCK WASHER	16		6 MM (0.236")
44	14M7275	NUT	16		M12
45	12H301	LOCK WASHER	16		12.700 MM (1/2")
46	4086891	WASHER	51		
47	19M8011	CAP SCREW	53		M12 X 30
	12M7058	LOCK WASHER	53		12.200 MM (0.480") (SUB FOR 12M7067)
48	4249324	WASHER	40		(SUB FOR TH4249324)
52	19M7361	CAP SCREW	4		M12 X 50
	12H301	LOCK WASHER	4		12.700 MM (1/2")
53	19M7493	CAP SCREW	8		M12 X 40
	12M7058	LOCK WASHER	8		12.200 MM (0.480") (SUB FOR 12M7067)
	24M7345	WASHER	8		13.500 X 24 X 2.500 MM (0.531" X 0.945" X 0.098")
54	19M7403	CAP SCREW	8		M12 X 35
	12H301	LOCK WASHER	8		12.700 MM (1/2")
59	8064258	HANDRAIL	1		(SUB FOR TH8064258)
60	7038221	HANDRAIL	1		(SUB FOR 7030823)
61	8064260	HANDRAIL	1		(SUB FOR TH8064260)
62	8064259	RAIL	1		(SUB FOR TH8064259)
64	8067442	STEP	1		(SUB FOR TH8067442)
66	9747838	COVER	1		(SUB FOR TH9747838)
67	9747837	COVER	1		(SUB FOR TH9747837)
69	4374063	SUPPORT	1		(SUB FOR TH4374063)
71	8068133	COVER	1		(SUB FOR TH8068133)
72	8068135	COVER	1		(SUB FOR TH8068135)
73	J901200	BOLT	4		(SUB FOR THJ901200)
74	9749032	BRACKET	1		(SUB FOR TH9749032)
75	4086891	WASHER	1		(SUB FOR TH104166)
76	19M8011	CAP SCREW	1		M12 X 30
	12M7058	LOCK WASHER	1		12.200 MM (0.480") (SUB FOR 12M7067)

COVER

TP66833 -UN-11OCT99

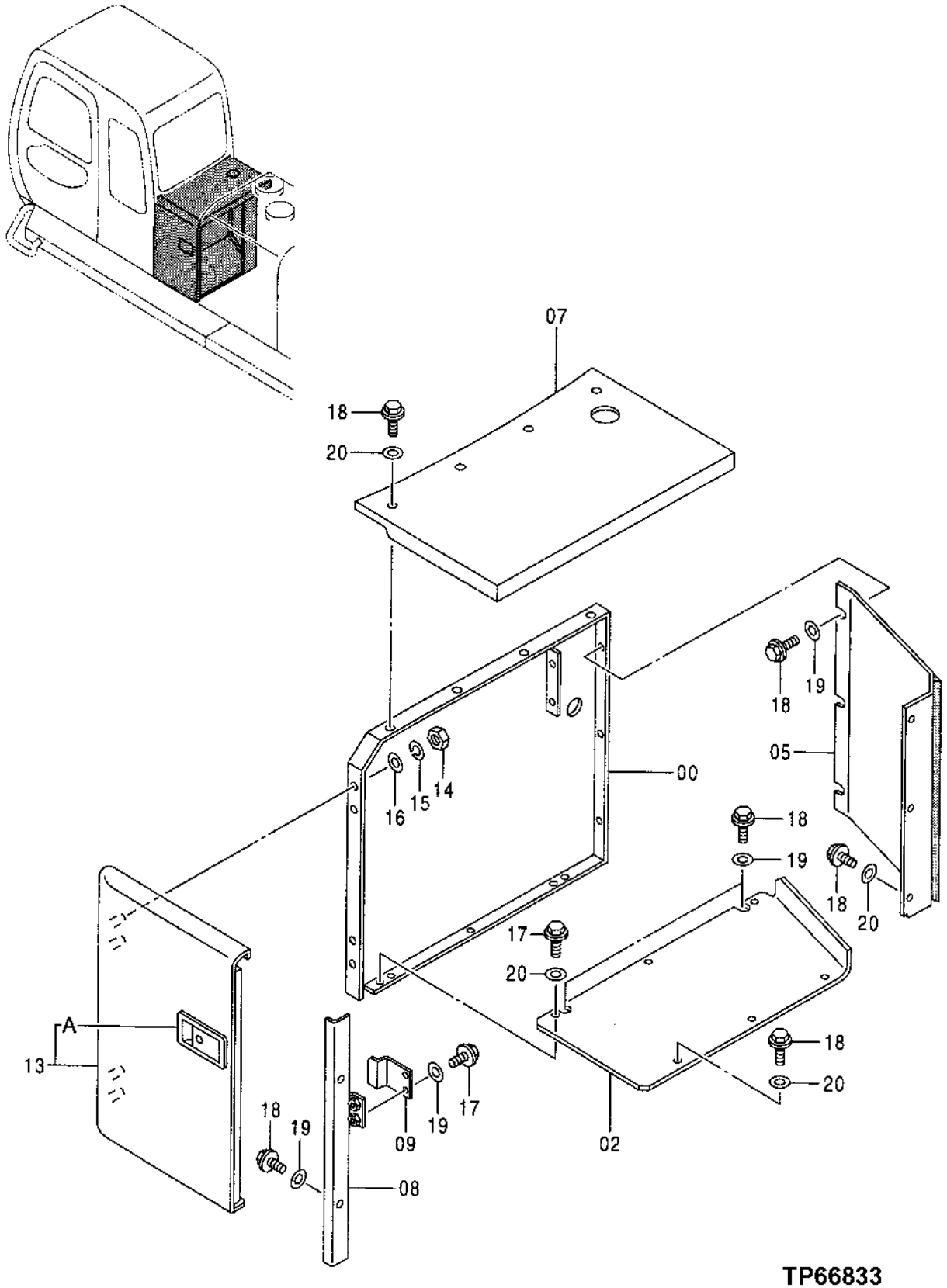

COVER

KEY	PART NO.	PART NAME	QTY	SERIAL NO.	REMARKS
0	7030115	SHIELD	1		(SUB FOR TH7030115)
2	3072577	PLATE	1		(SUB FOR TH3072577)
5	8068165	SHIELD	1		(SUB FOR TH8068165)
7	8068157	COVER	1		(SUB FOR TH8068157)
8	8062658	SUPPORT	1		(SUB FOR TH8062658)
9	4351140	STOP	1		(SUB FOR TH4351140)
13	7030116	DOOR	1		(SUB FOR TH7030116)
13A	4361763	LOCK	1		(SUB FOR AT214010)
14	14M7275	NUT	4		M12
16	24M7047	WASHER	4		13 X 24 X 2.500 MM (0.512" X 0.945" X 0.098")
17	19M7403	CAP SCREW	5		M12 X 35
	12H301	LOCK WASHER	5		12.700 MM (1/2")
18	19M8011	CAP SCREW	20		M12 X 30
	12M7058	LOCK WASHER	20		12.200 MM (0.480") (SUB FOR 12M7067)
19	4086891	WASHER	6		(SUB FOR TH104166)
20	4249324	WASHER	19		(SUB FOR TH4249324)

COVER

TP66828 -UN-12OCT99

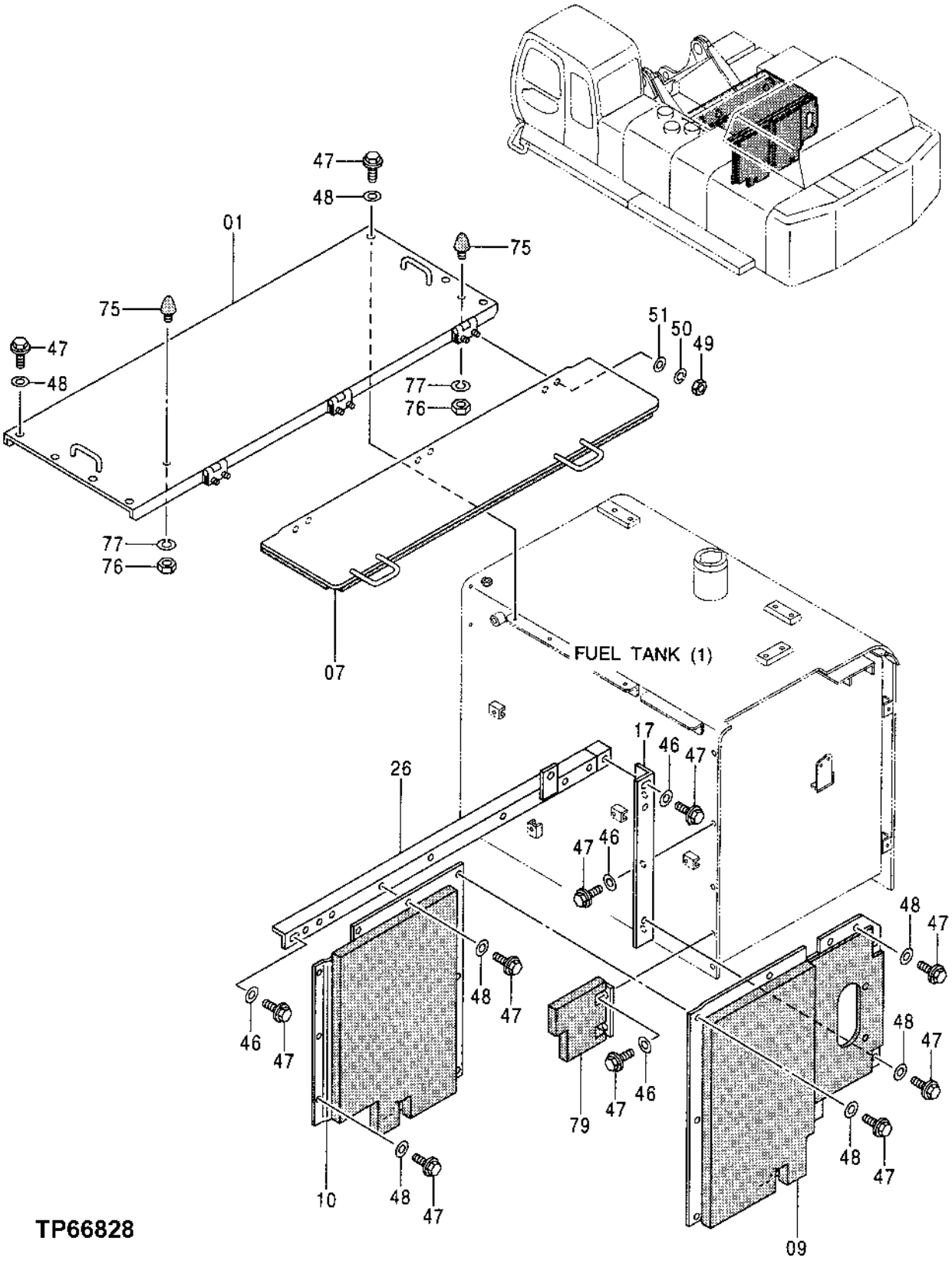

COVER

KEY	PART NO.	PART NAME	QTY	SERIAL NO.	REMARKS
1	8065476	COVER	1		(SUB FOR TH8065476)
7	8065505	COVER	1		(SUB FOR TH8065505)
9	7031982	COVER	1		(SUB FOR TH7031982)
10	8067180	COVER	1		(SUB FOR TH8067180)
17	9746909	SUPPORT	1		(SUB FOR TH9746909)
26	8064513	BRACKET	1		(SUB FOR TH8064513)
46	4086891	WASHER	7		(SUB FOR TH104166)
47	19M8011	CAP SCREW	30		M12 X 30
	12M7058	LOCK WASHER	30		12.200 MM (0.480") (SUB FOR 12M7067)
48	4249324	WASHER	23		(SUB FOR TH4249324)
49	14M7273	NUT	6		M8
50	12M7056	LOCK WASHER	6		8 MM (0.315") (SUB FOR 12M7065)
51	24M7055	WASHER	6		8.400 X 16 X 1.600 MM (0.331" X 0.630" X 0.063")
75	4204586	STOP	2		(SUB FOR TH108668)
76	14M7274	NUT	2		M10
77	12M7066	LOCK WASHER	2		10 MM (0.394")
79	8068228	COVER	1		(SUB FOR TH8068228)

COVER

TP66829 -UN-13OCT99

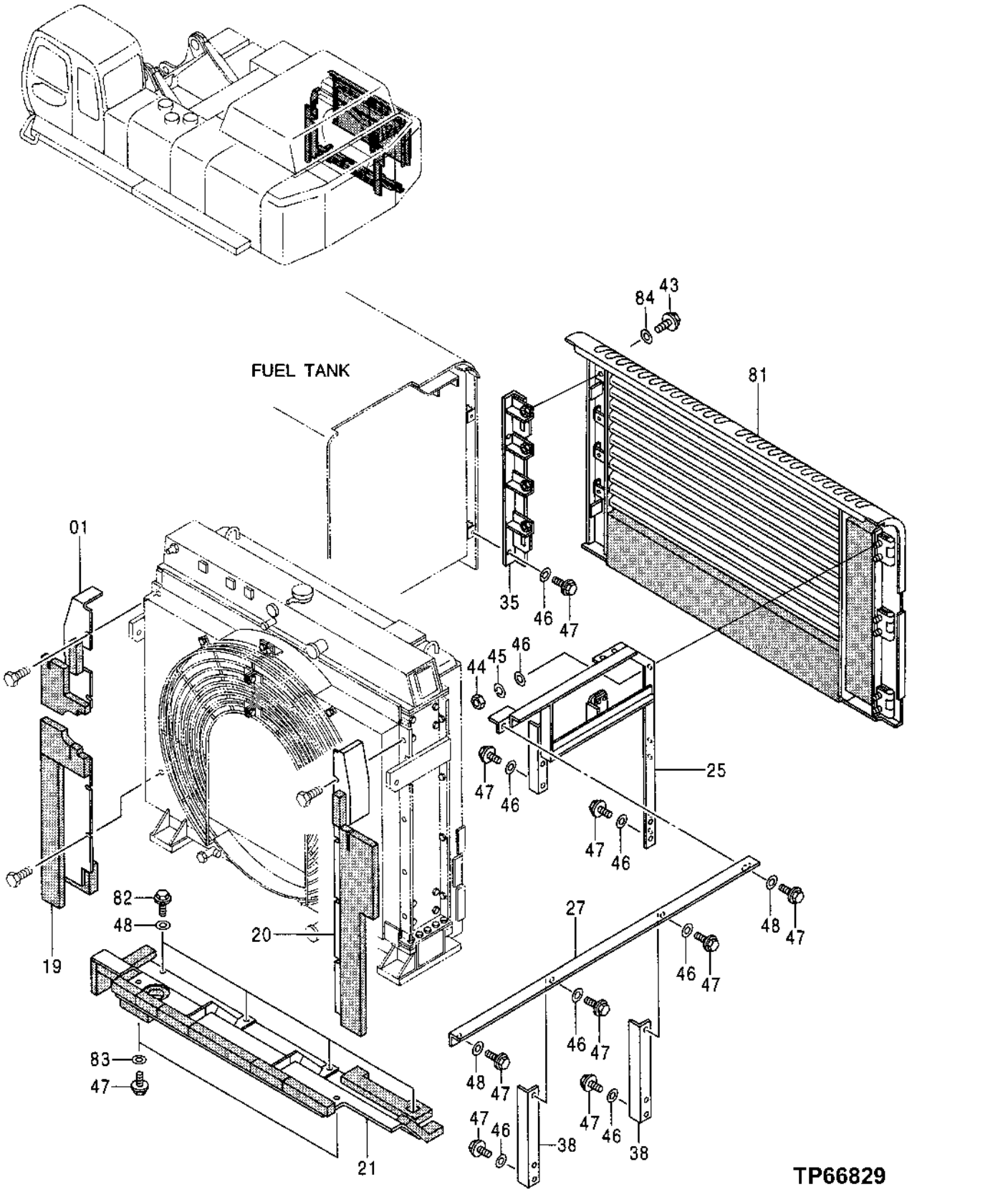

COVER

KEY	PART NO.	PART NAME	QTY	SERIAL NO.	REMARKS
1	7030170	COVER	1		(SUB FOR TH7030170)
19	7030169	COVER	1		(SUB FOR TH7030169)
20	7030044	COVER	1		(SUB FOR TH7030044)
21	7030285	COVER	1		(SUB FOR TH7030285)
25	7030171	SUPPORT	1		(SUB FOR TH7030171)
27	4350663	SUPPORT	1		(SUB FOR TH4350663)
35	8073665	SUPPORT	1		(SUB FOR TH8073665)
38	9730147	SUPPORT	2		(SUB FOR TH9730147)
43	19M7403	CAP SCREW	4		M12 X 35
	12H301	LOCK WASHER	4		12.700 MM (1/2")
44	14M7275	NUT	6		M12
45	12H301	LOCK WASHER	6		12.700 MM (1/2")
46	4086891	WASHER	18		(SUB FOR TH104166)
47	19M8011	CAP SCREW	16		M12 X 30
	12M7058	LOCK WASHER	16		12.200 MM (0.480") (SUB FOR 12M7067)
48	4249324	WASHER	6		(SUB FOR TH4249324)
81	5006150	DOOR	1		(SUB FOR TH5006150)
82	19M7403	CAP SCREW	4		M12 X 35
	12H301	LOCK WASHER	4		12.700 MM (1/2")
83	24M7047	WASHER	2		13 X 24 X 2.500 MM (0.512" X 0.945" X 0.098")
84	4249324	WASHER	4		(SUB FOR TH4249324)

COVER

TP66834 -UN-11OCT99

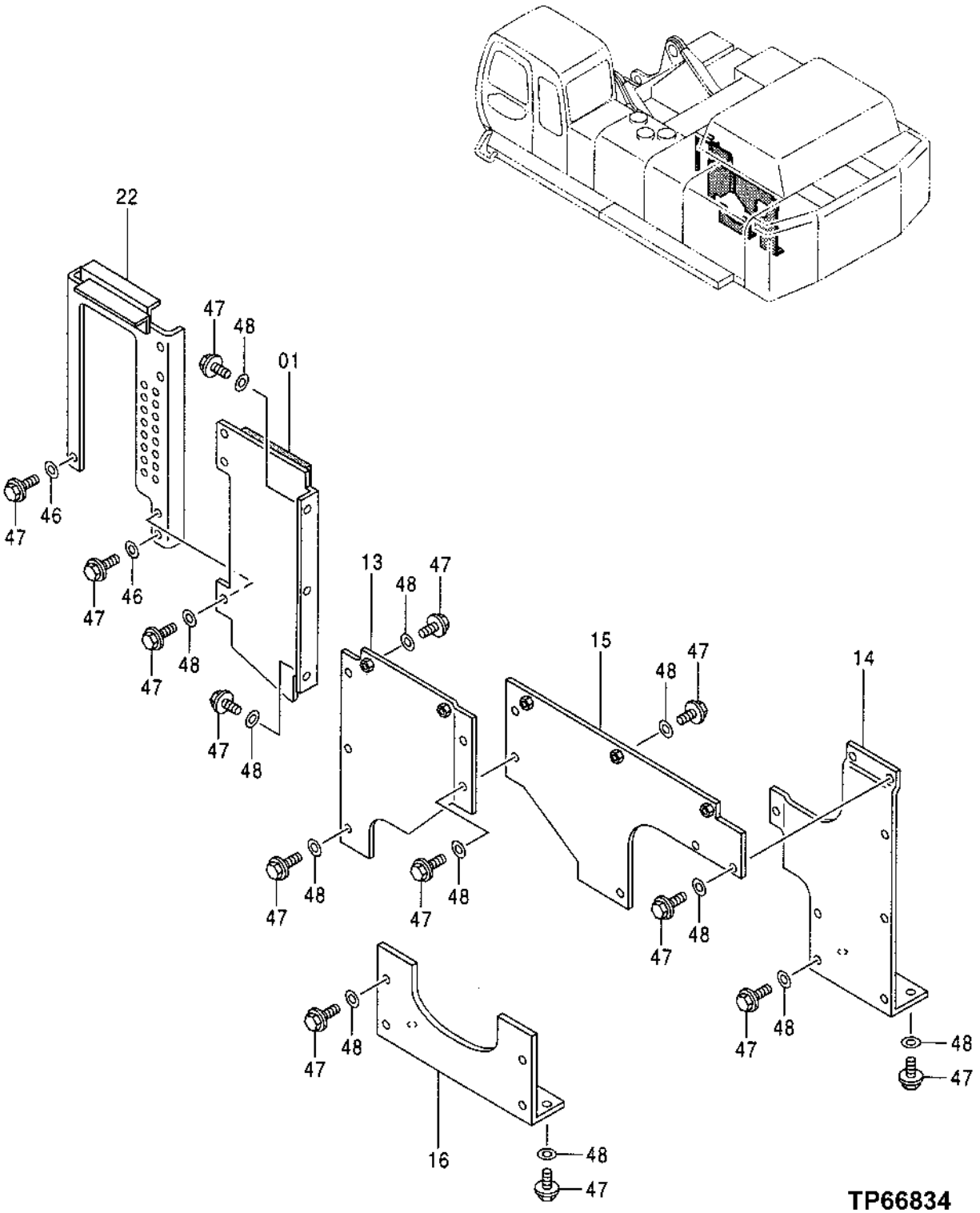

COVER

KEY	PART NO.	PART NAME	QTY	SERIAL NO.	REMARKS
1	8067210	HEAT SHIELD	1		(SUB FOR TH8067210)
13	8062764	HEAT SHIELD	1		(SUB FOR TH8062764)
14	8062765	HEAT SHIELD	1		(SUB FOR TH8062765)
15	8062766	HEAT SHIELD	1		(SUB FOR TH8062766)
16	3072775	HEAT SHIELD	1		(SUB FOR TH3072775)
22	8067185	HEAT SHIELD	1		(SUB FOR TH8067185)
46	4086891	WASHER	2		(SUB FOR TH104166)
47	19M8011	CAP SCREW	33		M12 X 30
	12M7058	LOCK WASHER	33		12.200 MM (0.480") (SUB FOR 12M7067)
48	4249324	WASHER	31		(SUB FOR TH4249324)

TOOL BOX

TP66831 -UN-11OCT99

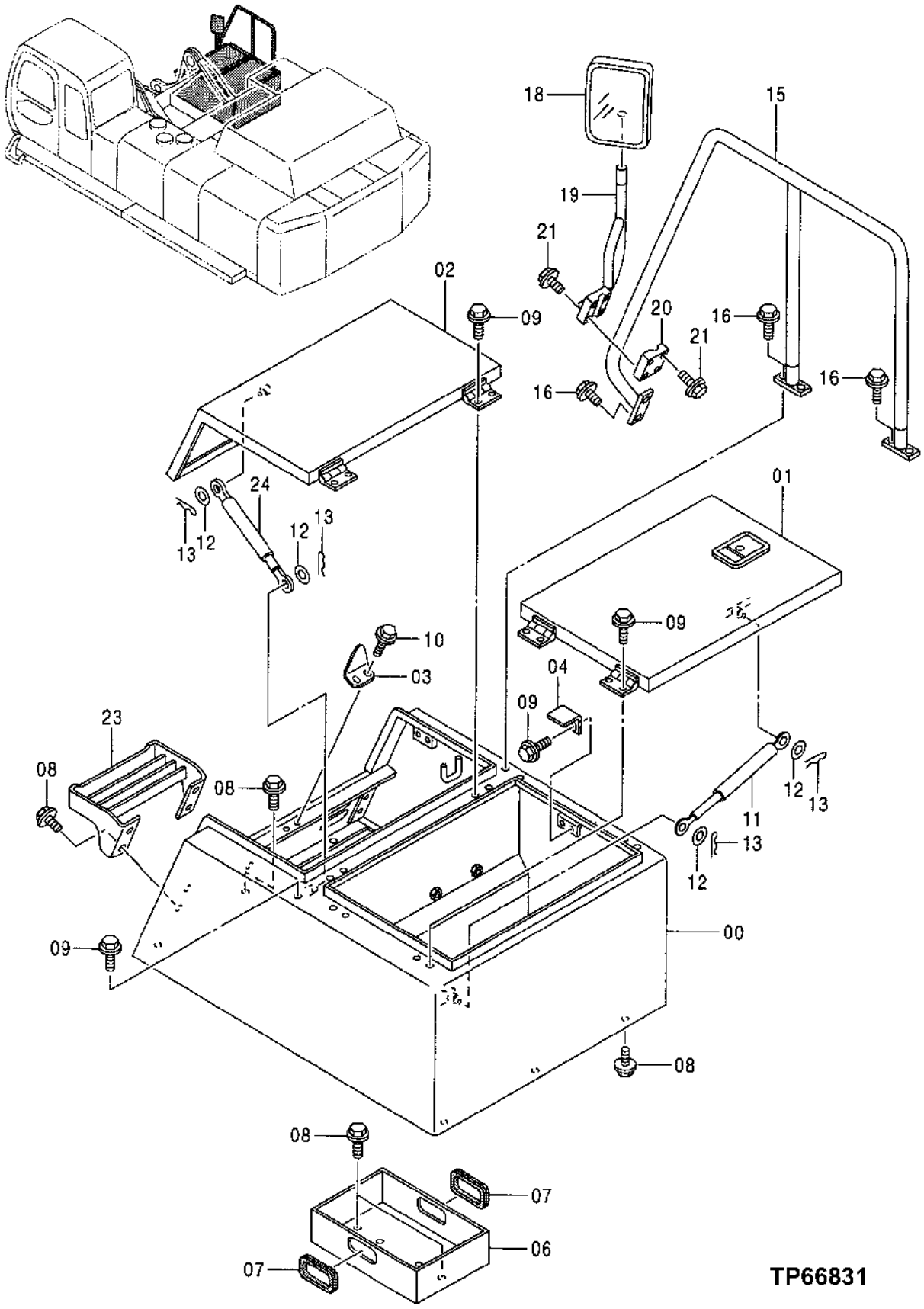

TOOL BOX

KEY	PART NO.	PART NAME	QTY	SERIAL NO.	REMARKS
0	5004545	BATTERY BOX	1		(SUB FOR TH5004545)
1	6014846	COVER	1		(SUB FOR TH6014846)
2	6014849	COVER	1		(SUB FOR TH6014849)
3	4346471	BRACKET	1		(SUB FOR TH4346471)
4	4346360	BRACKET	1		(SUB FOR TH4346360)
6	8062041	TOOLBOX	1		(SUB FOR TH8062041)
7	4143780	BUSHING	2		(SUB FOR TH4143780)
8	19M7403	CAP SCREW	12		M12 X 35
	12H301	LOCK WASHER	12		12.700 MM (1/2")
	24M7047	WASHER	12		13 X 24 X 2.500 MM (0.512" X 0.945" X 0.098")
9	19M7662	CAP SCREW	11		M10 X 30
	12M7066	LOCK WASHER	11		10 MM (0.394")
	24M7028	WASHER	11		10.500 X 20 X 2 MM (0.413" X 0.787" X 0.079")
10	19M7662	CAP SCREW	2		M10 X 30
	12M7058	LOCK WASHER	2		12.200 MM (0.480") (SUB FOR 12M7067)
	24M7346	WASHER	2		11 X 20 X 2 MM (0.433" X 0.787" X 0.079")
11	4188366	ABSORBER	1		(SUB FOR TH109684)
12	24M7055	WASHER	4		8.400 X 16 X 1.600 MM (0.331" X 0.630" X 0.063")
13	H132922	COTTER PIN	4		
15	7033801	HANDRAIL	1		(SUB FOR TH7033801)
16	19M8011	CAP SCREW	6		M12 X 30
	12M7058	LOCK WASHER	6		12.200 MM (0.480") (SUB FOR 12M7067)
18	4426821	REAR VIEW MIRROR	1		(SUB FOR TH4340845)
19	8067349	ARM	1		(SUB FOR TH8067349)
20	4376895	CLAMP	1		(SUB FOR TH4376895)
21	19M8397	CAP SCREW	4		M8 X 50
	12M7056	LOCK WASHER	4		8 MM (0.315") (SUB FOR 12M7065)
23	8080195	STEP	1		(SUB FOR 8067501)
24	4386505	CYLINDER	1		(SUB FOR TH4386505)

ENGINE COVER

TP66830 -UN-11OCT99

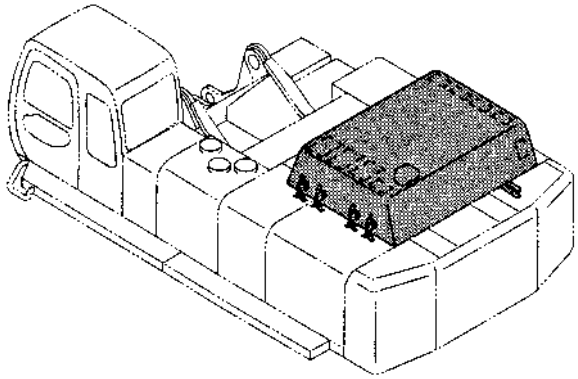

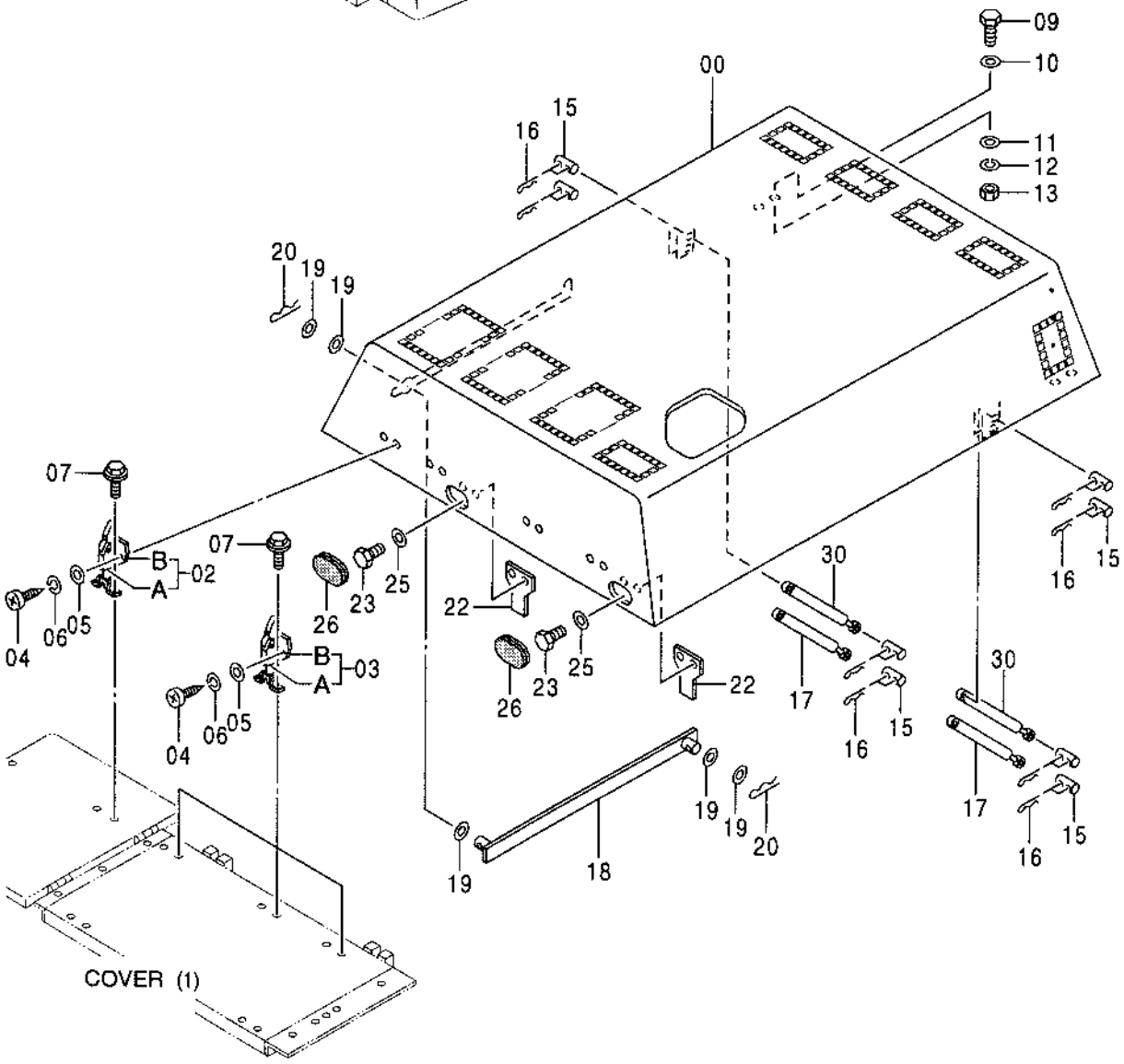

TP66830

ENGINE COVER

KEY	PART NO.	PART NAME	QTY	SERIAL NO.	REMARKS
0	6014993	COVER	1		(SUB FOR TH6014993)
2	.....	CATCH	1		
2A	3074568	CATCH	1		(SUB FOR AT131654)
2B	3021131	ANCHOR	1		(SUB FOR TH102247)
3	.....	CATCH	3		
3A	3074568	CATCH	1		(SUB FOR AT131654)
3B	3021131	ANCHOR	1		(SUB FOR TH102247)
4	21M7397	SCREW	8		M8 X 25
5	24M7055	WASHER	8		8.400 X 16 X 1.600 MM (0.331" X 0.630" X 0.063")
6	12M7056	LOCK WASHER	8		8 MM (0.315") (SUB FOR 12M7065)
7	19M7932	CAP SCREW	8		M8 X 16
	12M7056	LOCK WASHER	8		8 MM (0.315") (SUB FOR 12M7065)
9	19M7403	CAP SCREW	4		M12 X 35
10	4249324	WASHER	4		(SUB FOR TH4249324)
11	4086891	WASHER	4		(SUB FOR TH104166)
12	12H301	LOCK WASHER	4		12.700 MM (1/2")
13	14M7275	NUT	4		M12
15	4222401	PIN	8		(SUB FOR TH4222401)
16	H132922	COTTER PIN	16		
17	4378375	CYLINDER	2		(SUB FOR TH4378375)
18	9752190	ABSORBER	1		(SUB FOR TH9752190)
19	24M7053	WASHER	5		17 X 30 X 3 MM (0.669" X 1.181" X 0.118")
20	M40461	PIN	2		
22	4378099	STOP	2		(SUB FOR TH4378099)
23	19M7877	CAP SCREW	4		M14 X 30
25	4114404	WASHER	4		(SUB FOR AT130666)
26	4280565	GROMMET	2		(SUB FOR AT154353)
30	4378375	CYLINDER	2		(SUB FOR TH4378375)

UNDER COVER

TP66835 -UN-11OCT99

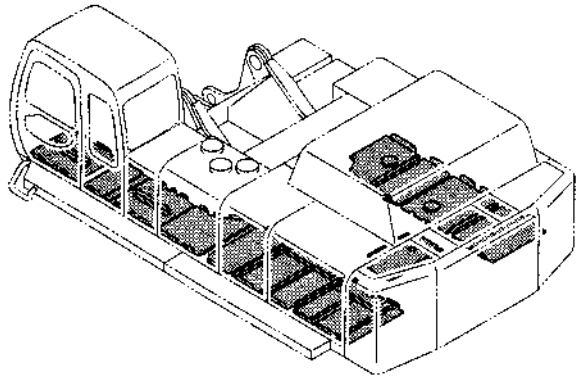

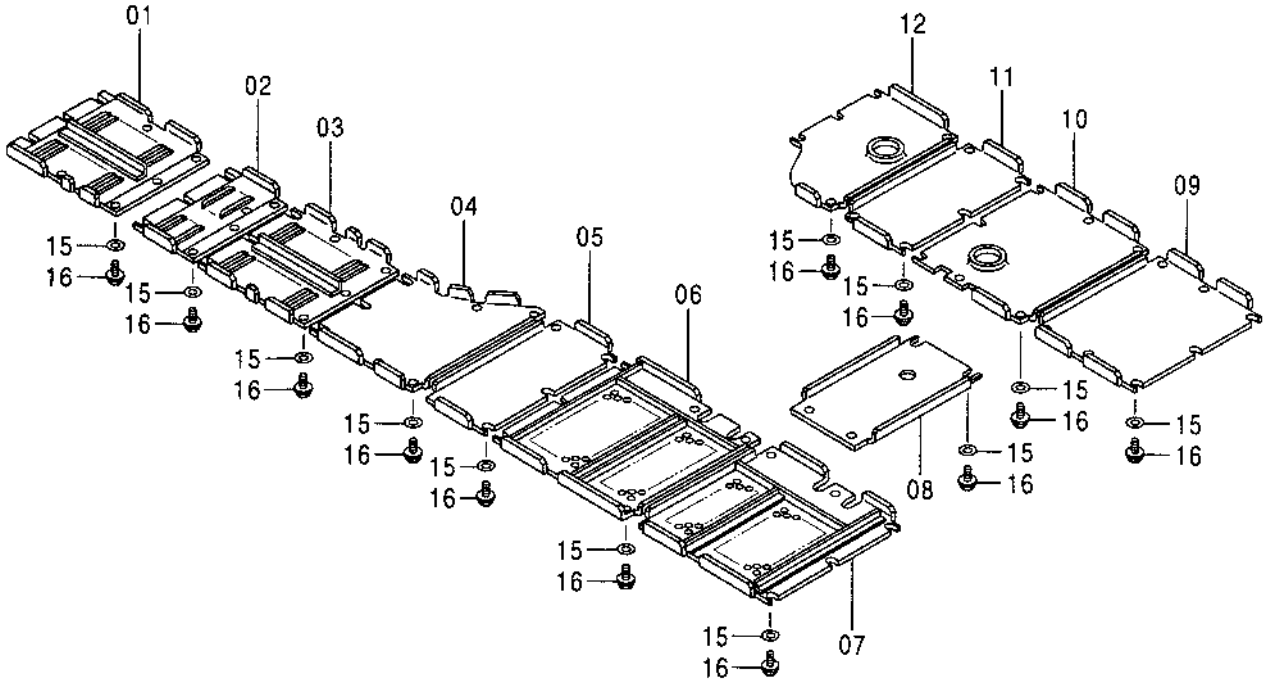

TP66835

UNDER COVER

KEY	PART NO.	PART NAME	QTY	SERIAL NO.	REMARKS
1	7031358	GUARD	1		(SUB FOR TH7031358)
2	8066421	GUARD	1		(SUB FOR TH8066421)
3	7031359	GUARD	1		(SUB FOR TH7031359)
4	2037923	GUARD	1		(SUB FOR TH2037923)
5	2037924	GUARD	1		(SUB FOR TH2037924)
6	7030119	GUARD	1		(SUB FOR TH7030119)
7	7030120	GUARD	1		(SUB FOR TH7030120)
8	3072739	GUARD	1		(SUB FOR TH3072739)
9	2037925	GUARD	1		(SUB FOR TH2037925)
10	2037926	GUARD	1		(SUB FOR TH2037926)
11	2037927	GUARD	1		(SUB FOR TH2037927)
12	2037928	GUARD	1		(SUB FOR TH2037928)
15	4249324	WASHER	76		(SUB FOR TH4249324)
16	19M7493	CAP SCREW	76		M12 X 40
	12H301	LOCK WASHER	76		12.700 MM (1/2")

LEFT REAR VIEW MIRROR

TP66821 -UN-12OCT99

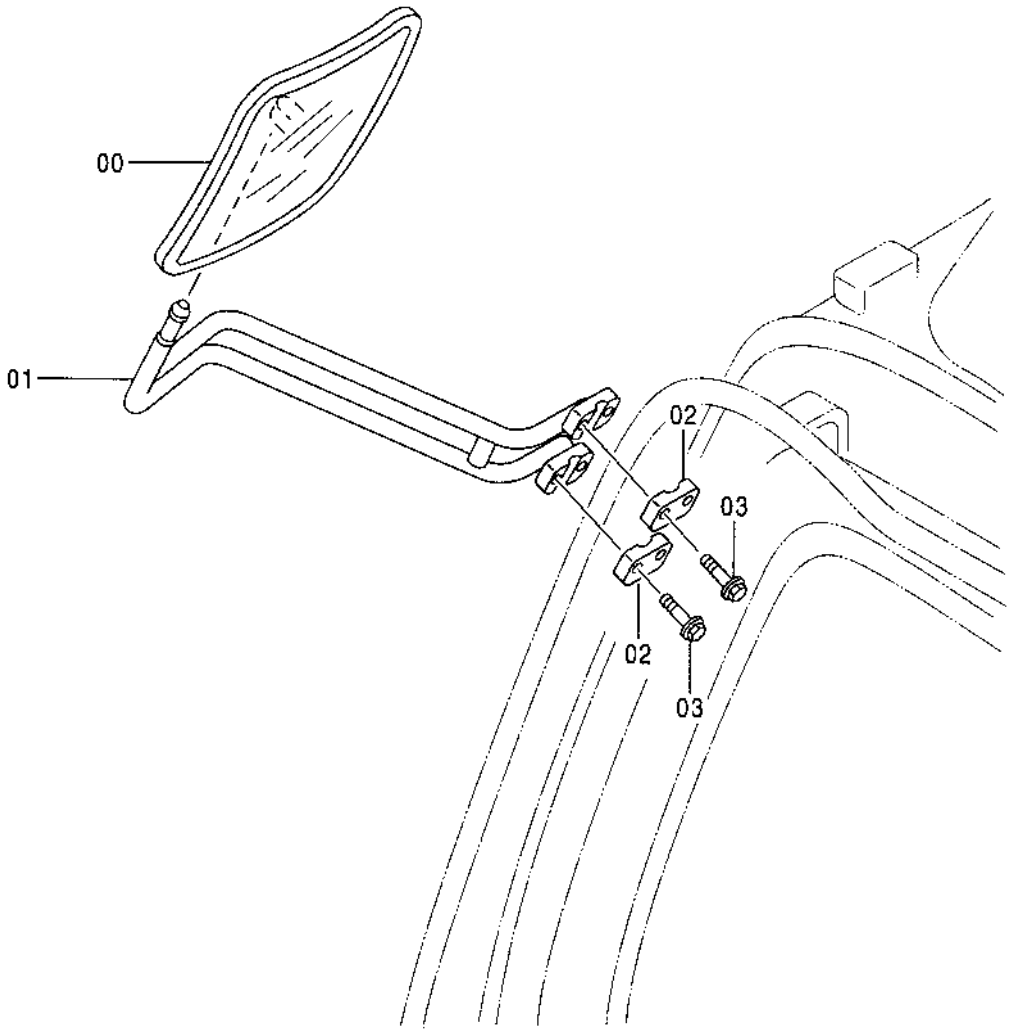

TP66821

LEFT REAR VIEW MIRROR

KEY	PART NO.	PART NAME	QTY	SERIAL NO.	REMARKS
0	4426821	REAR VIEW MIRROR	1		(SUB FOR TH4340845)
1	8067350	ARM	1		(SUB FOR TH8067350)
2	4201441	CLAMP	2		(SUB FOR AT131743)
3	19M8359	CAP SCREW	4		M8 X 45
	12M7056	LOCK WASHER	4		8 MM (0.315") (SUB FOR 12M7065)

MAIN HYDRAULIC PUMP

T154152 -UN-18APR02

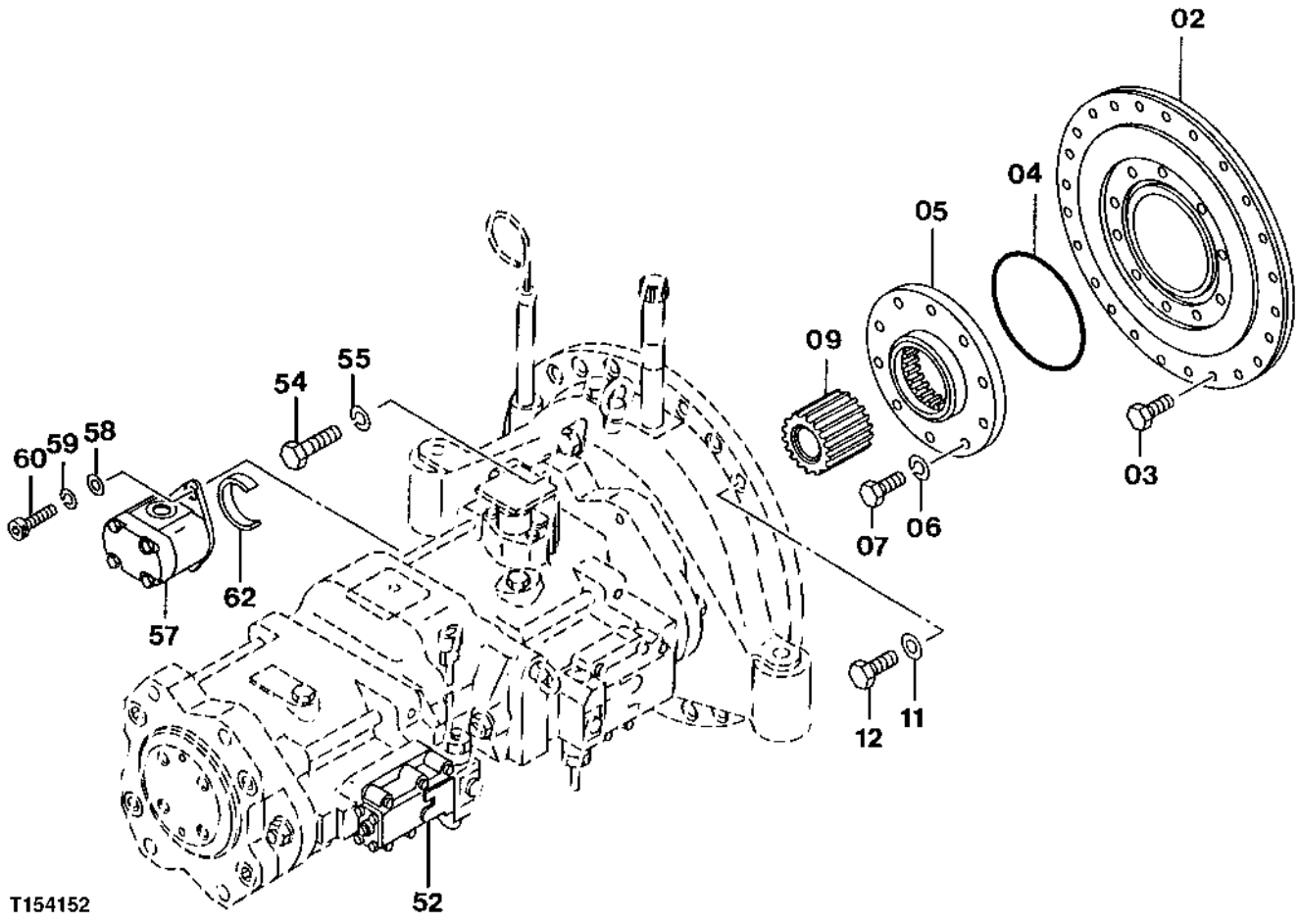

MAIN HYDRAULIC PUMP

KEY	PART NO.	PART NAME	QTY	SERIAL NO.	REMARKS
2	2036891	ADAPTER	1		(SUB FOR TH2036891)
3	19H3219	CAP SCREW	24		9.525 X 34.925 MM (3/8" X 1-3/8")
4	4153562	O-RING	1		(SUB FOR AT201712)
5	2036895	ADAPTER	1		(SUB FOR TH2036895)
6	12H294	LOCK WASHER	10		15.875 MM (5/8")
7	19M7489	CAP SCREW	10		M16 X 45
9	3069954	SPLINED COUPLING	1		(SUB FOR TH3069954)
11	E86824	WASHER	14		12.200 X 20 X 3.500 MM (0.480" X 0.787" X 0.138") (SUB FOR M67344)
12	19H2719	CAP SCREW	14		11.125 X 47.625 MM (7/16" X 1-7/8")
52	9212016	PUMP	1		(SUB FOR 9184005, 9169241 AND 9199274) (REPLACEMENT PUMP ASSEMBLY)
	4468863	PUMP	1		(SUB FOR 4451390) (PISTON PUMP)
54	J912400	CAP SCREW	4		(SUB FOR THJ912400)
55	12H234	LOCK WASHER	4		25.400 MM (1")
57	4276918	PUMP	1		(SUB FOR AT202122)
58	24M7028	WASHER	2		10.500 X 20 X 2 MM (0.413" X 0.787" X 0.079")
59	12M7135	LOCK WASHER	2		10 MM (0.394")
60	M341032	SCREW	2		(SUB FOR TH101301)
62	4332576	SPACER	1		(SUB FOR AT201787)

MAIN HYDRAULIC PUMP

TP66687 -UN-29SEP99

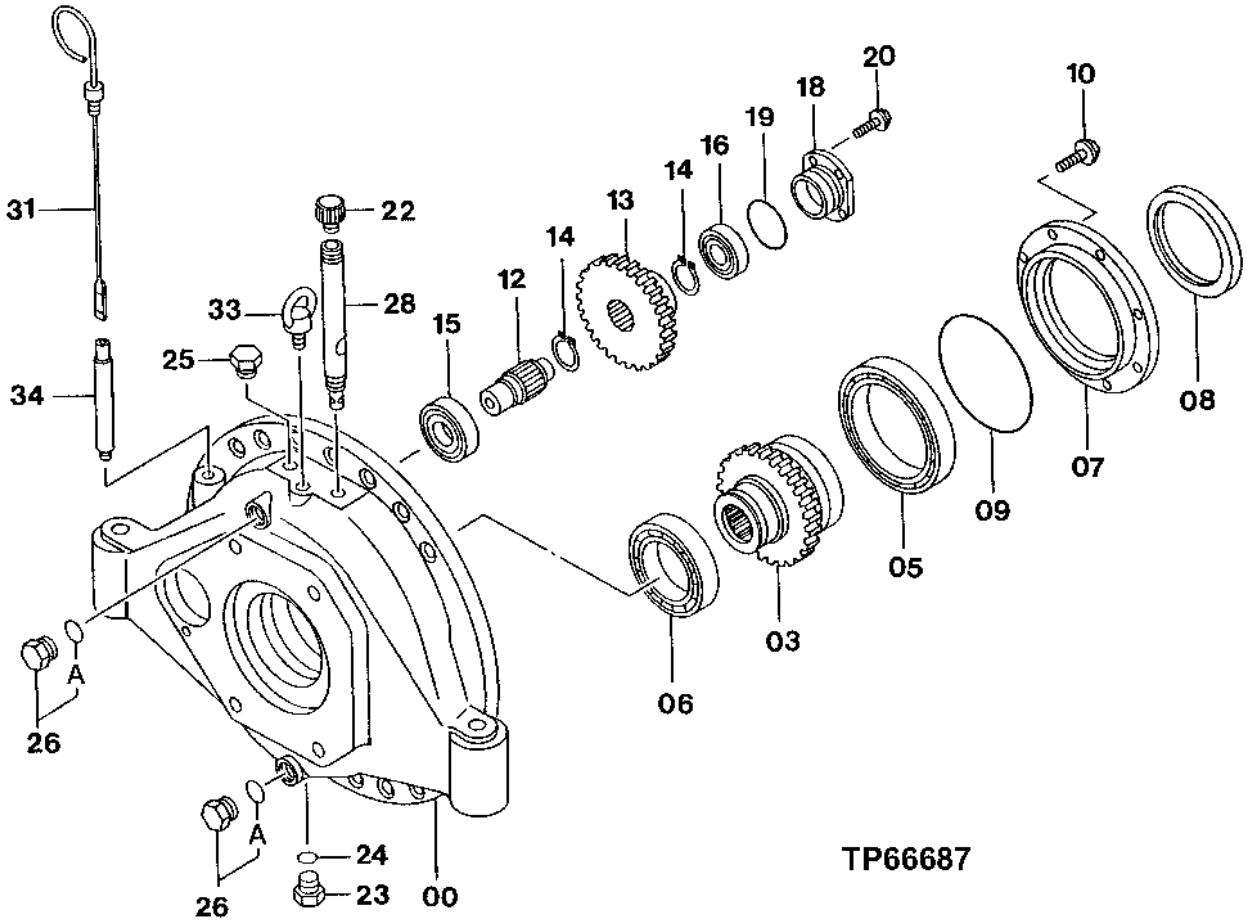

MAIN HYDRAULIC PUMP

KEY	PART NO.	PART NAME	QTY	SERIAL NO.	REMARKS
0	0003633	CASE	1		(SUB FOR TH0001871)
3	2036910	GEAR	1		(SUB FOR TH2036910)
5	4071638	BALL BEARING	1		(SUB FOR TH4071638)
6	931414	BALL BEARING	1		(SUB FOR TH931414)
7	2036904	COVER	1		(SUB FOR TH2036904)
8	4083852	SEAL	1		(SUB FOR TH4083852)
9	4153564	O-RING	1		(SUB FOR TH4153564)
10	19M7550	CAP SCREW	8		M10 X 35
	12M7066	LOCK WASHER	8		10 MM (0.394")
12	2036908	SLEEVE	1		(SUB FOR TH2036908)
13	3069963	GEAR	1		(SUB FOR TH3069963)
14	40M7047	SNAP RING	2		
15	4160767	BALL BEARING	1		(SUB FOR AT202093)
16	4314081	ROLLER BEARING	1		(SUB FOR AT201767)
18	3067165	HUB	1		(SUB FOR AT201703)
19	TH105683	O-RING	1		59.400 X 3.100 MM (2.339" X 0.122")
20	19M7407	CAP SCREW	5		M8 X 25
	12M7056	LOCK WASHER	5		8 MM (0.315") (SUB FOR 12M7065)
22	4343365	CAP	1		(SUB FOR AT204965)
23	4074727	DRAIN PLUG	1		(SUB FOR TH100027)
24	R77401	O-RING	1		19.800 X 2.400 MM (0.780" X 0.094")
25	4187322	PLUG	1		(SUB FOR TH4187322)
26	4174542	FITTING	2		(SUB FOR TH110478)
26A	4506424	O-RING	1		(SUB FOR TH100055)
28	8065660	PIPE	1		(SUB FOR TH8065660)
31	4371227	DIPSTICK TUBE	1		(SUB FOR TH4371227)
33	4083751	EYEBOLT	1		(SUB FOR TH4083751)
34	4264452	PIPE	1		(SUB FOR AT154293)

MAIN HYDRAULIC PUMP

T157599 -UN-22JUL02

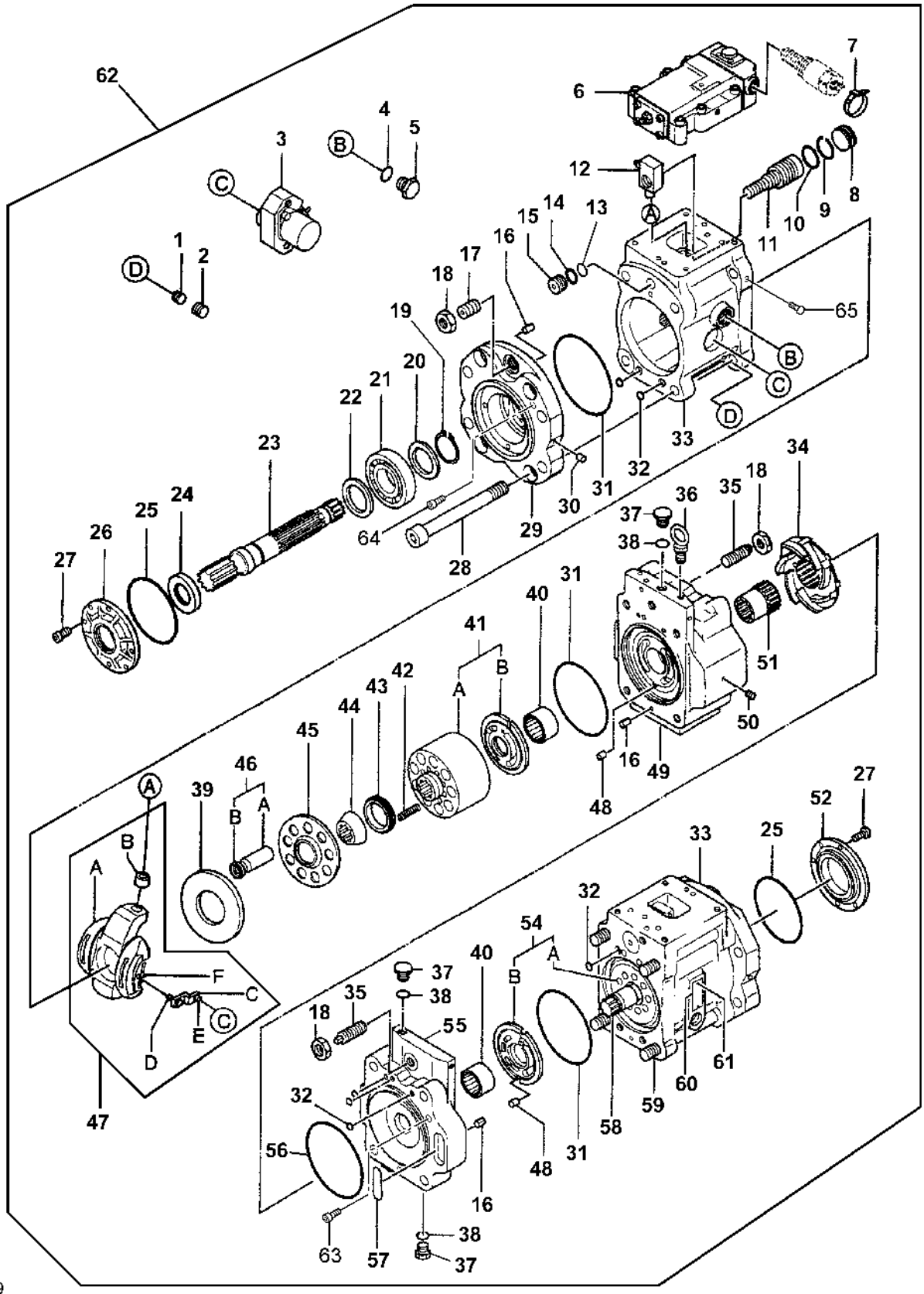

T157599

MAIN HYDRAULIC PUMP

KEY	PART NO.	PART NAME	QTY	SERIAL NO.	REMARKS
1	0451027	SCREW	4		(SUB FOR AT201621)
2	0451028	FITTING PLUG	5		(SUB FOR AT201622)
3	.....	SENSOR	2		(TILT-PROBING) (SEE SEPARATE PAGE FOR DETAIL)
4	4297381	O-RING	4		(SUB FOR TH0443408)
5	0195165	PLUG	4		(SUB FOR TH102648)
6	4469011	REGULATOR	2		(SUB FOR TH4391503)
7	4413218	CLAMP	2		(SUB FOR AT184548)
	4413218	CLAMP	2		(SUB FOR AT184550)
8	0682319	STOP	2		(SUB FOR TH0682319)
9	4S00228	RING	2		(SUB FOR TH0682327)
10	4292386	O-RING	2		(SUB FOR TH4292386)
11	0800707	PISTON	2		(WHEN ORDERING FOR TH0682318, ALSO ORDER (2) 0800707 AND (2) 0800706) (SUB FOR TH0682318)
12	0800706	PIN FASTENER	2		(WHEN ORDERING FOR 0703017 ALSO ORDER (2) 0800706 AND (2) 0800707) (SUB FOR TH0703017)
13	0682324	O-RING	2		(SUB FOR TH0682324)
14	4S00238	RING	2		(SUB FOR TH0682326)
15	0682320	STOP	2		(SUB FOR TH0682320)
16	4144353	SPRING PIN	5		(SUB FOR TH4144353)
17	0339847	SET SCREW	2		(SUB FOR TH0339847)
18	0451038	NUT	4		(SUB FOR AT201632)
19	40M7066	SNAP RING	2		
20	0339809	SPACER	2		(SUB FOR TH0339809)
21	0703009	BALL BEARING	2		(SUB FOR TH0703009)
22	0339809	SPACER	2		(SUB FOR TH0339809)
23	0703006	SHAFT	1		(SUB FOR TH0703006)
24	0682325	SEAL	1		(SUB FOR TH0682325)
25	4S00121	O-RING	2		(SUB FOR TH0682321)
26	0682311	COVER	1		(SUB FOR TH0682311)
27	19M8446	SCREW	8		
28	J782225	BOLT	4		(SUB FOR TH0682316)
29	0800702	SUPPORT	2		(ALSO ORDER (4) 0738101) (SUB FOR 0719801)
30	15H560	PIPE PLUG	31		
31	4S00117	O-RING	4		(SUB FOR TH0682322)
32	M800650	PACKING	19		
33	0828402	HOUSING	2		(SUB FOR TH0703013)
34	0703010	IMPELLER	1		(SUB FOR TH0703010)
35	0682328	SET SCREW	2		(SUB FOR TH0682328)
36	0738101	WASHER	4		(USE WITH 0800702) (NOT ILLUSTRATED)

MAIN HYDRAULIC PUMP

T157599 -UN-22JUL02

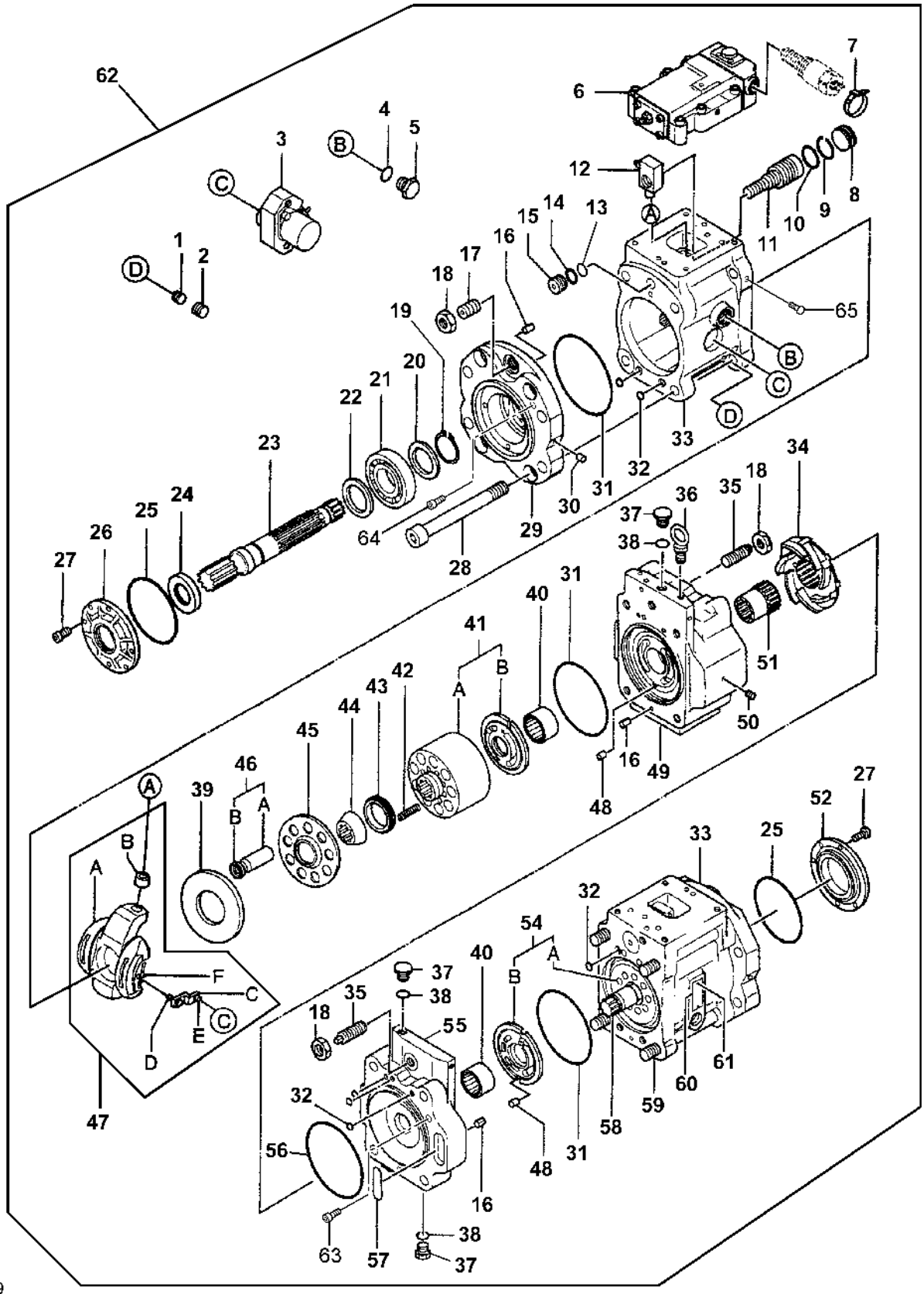

T157599

MAIN HYDRAULIC PUMP

KEY	PART NO.	PART NAME	QTY	SERIAL NO.	REMARKS
36	0177612	EYEBOLT	2		(SUB FOR TH0177612)
37	0236014	FITTING PLUG	3		(SUB FOR TH102650)
38	.....	O-RING	3		
39	0682309	PLATE	2		(SUB FOR TH0682309)
40	0800701	NEEDLE BEARING	2		(SUB FOR TH0682303)
41	0703001	CYLINDER	1		(SUB FOR TH0703001)
41A	.....	CYLINDER	1		
41B	.....	PLATE	1		
42	0682307	SPRING	18		(SUB FOR TH0682307)
43	0682308	SPACER	2		(SUB FOR TH0682308)
44	0682306	BUSHING	2		(SUB FOR TH0682306)
45	0718002	RETAINER	2		(SUB FOR TH0718002)
46	0718001	PISTON	2		(SUB FOR TH0718001)
46A	.....	PISTON	9		
46B	.....	VALVE SEAT	9		
47	0719701	SWASH PLATE	2		(SUB FOR TH0719701)
47A	.....	SWASH PLATE	1		
47B	.....	BUSHING	1		
47C	.....	LEVER	1		
47D	0703004	CAP SCREW	1		(SUB FOR TH0703004)
47E	.....	PIN	1		(0195147 NO LONGER AVAILABLE) (SUB FOR TH104576)
47F	0703005	DOWEL PIN	1		(SUB FOR TH0703005)
48	0313404	PIN	2		(SUB FOR AT201970)
49	0703014	COVER	1		(SUB FOR TH0703014)
50	0451028	FITTING PLUG	2		(SUB FOR AT201622)
51	0703008	COUPLING	1		(SUB FOR TH0703008)
52	0703012	COVER	1		(SUB FOR TH0703012)
54	0703002	CYLINDER	1		(SUB FOR TH0703002)
54A	.....	CYLINDER	1		
54B	.....	PLATE	1		
55	0800704	COVER	1		(SUB FOR TH0703015)
56	0703019	O-RING	1		(SUB FOR TH0703019)
57	4196265	O-RING	1		(SUB FOR TH0703018)
58	0703007	SHAFT	1		(SUB FOR TH0703007)
59	0703016	CAP SCREW	4		(SUB FOR TH0703016)
60	.....	IDENTIFICATION PLATE	1		
61	.....	PIN	2		
62	9169241EX	HYDRAULIC PUMP	1		(SUB FOR TH9169241)
63	M341075	BOLT	1		(SUB FOR 0116621)
64	0800705	BOLT	1		
65	0800708	SCREW	1		

MAIN HYDRAULIC PUMP GEAR BOX

TP68072 -UN-15OCT99

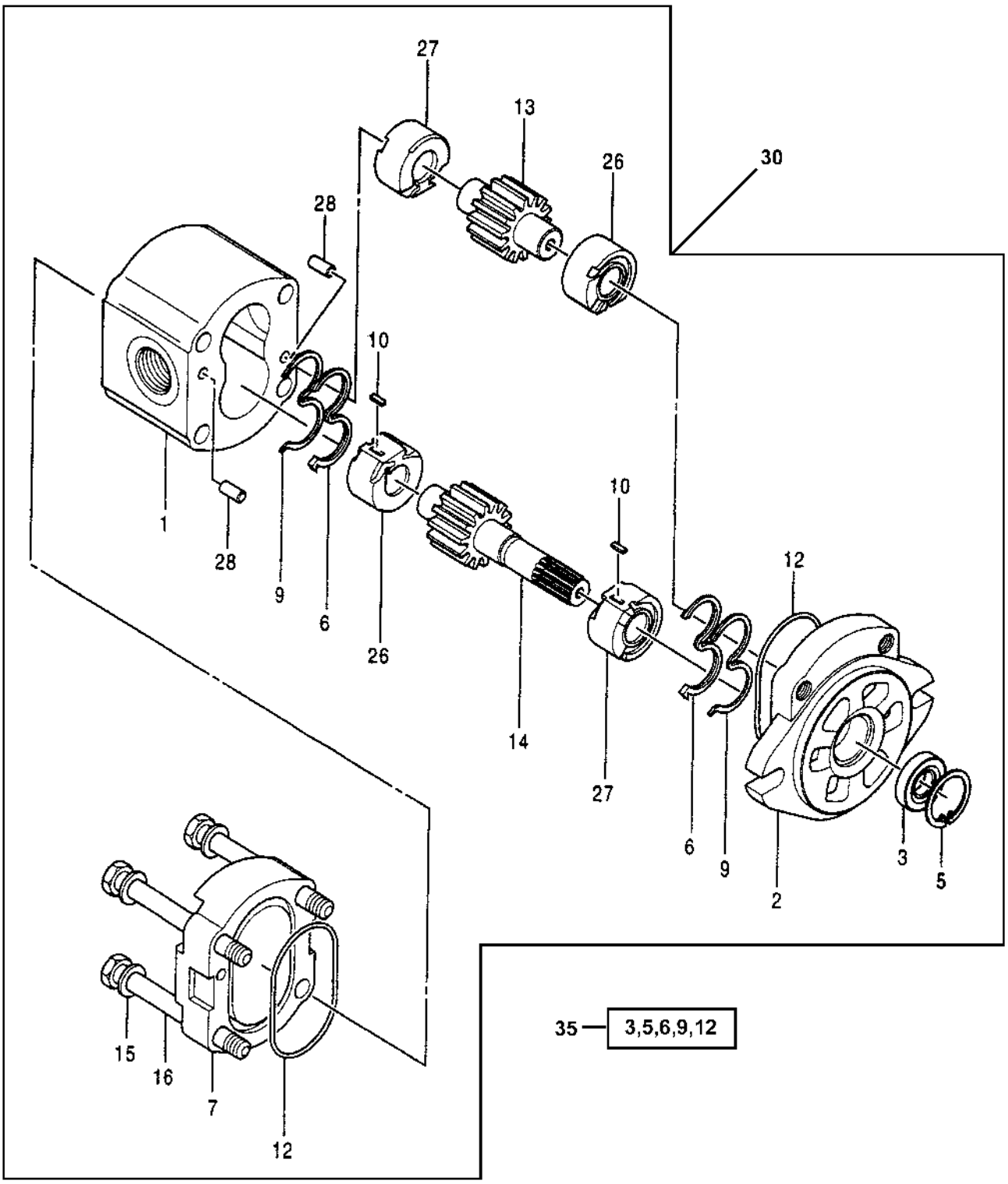

TP68072

MAIN HYDRAULIC PUMP GEAR BOX

KEY	PART NO.	PART NAME	QTY	SERIAL NO.	REMARKS
1	.....	HOUSING	1		
2	AT203653	FLANGE	1		
3	0408202	SEAL	1		(A) (SUB FOR AT153880)
5	.....	SNAP RING	1		(A)
6	.....	SEAL	2		(A)
7	.....	COVER	1		
9	.....	BACK-UP RING	2		(A)
10	AT153838	SHAFT KEY	2		
12	AT153835	O-RING	2		(A)
13	.....	GEAR	1		
14	.....	GEAR	1		
15	AT153837	WASHER	4		
16	0408204	BOLT	4		(SUB FOR AT153882)
26	.....	BUSHING	2		
27	.....	BUSHING	2		
28	.....	PIN	4		
30	4276918	PUMP	1		(SUB FOR AT202122)
35	0408207	SEAL KIT	1		(INCLUDES PARTS MARKED (A)) (SUB FOR AT153885)

OIL TANK

TP66695 -UN-29SEP99

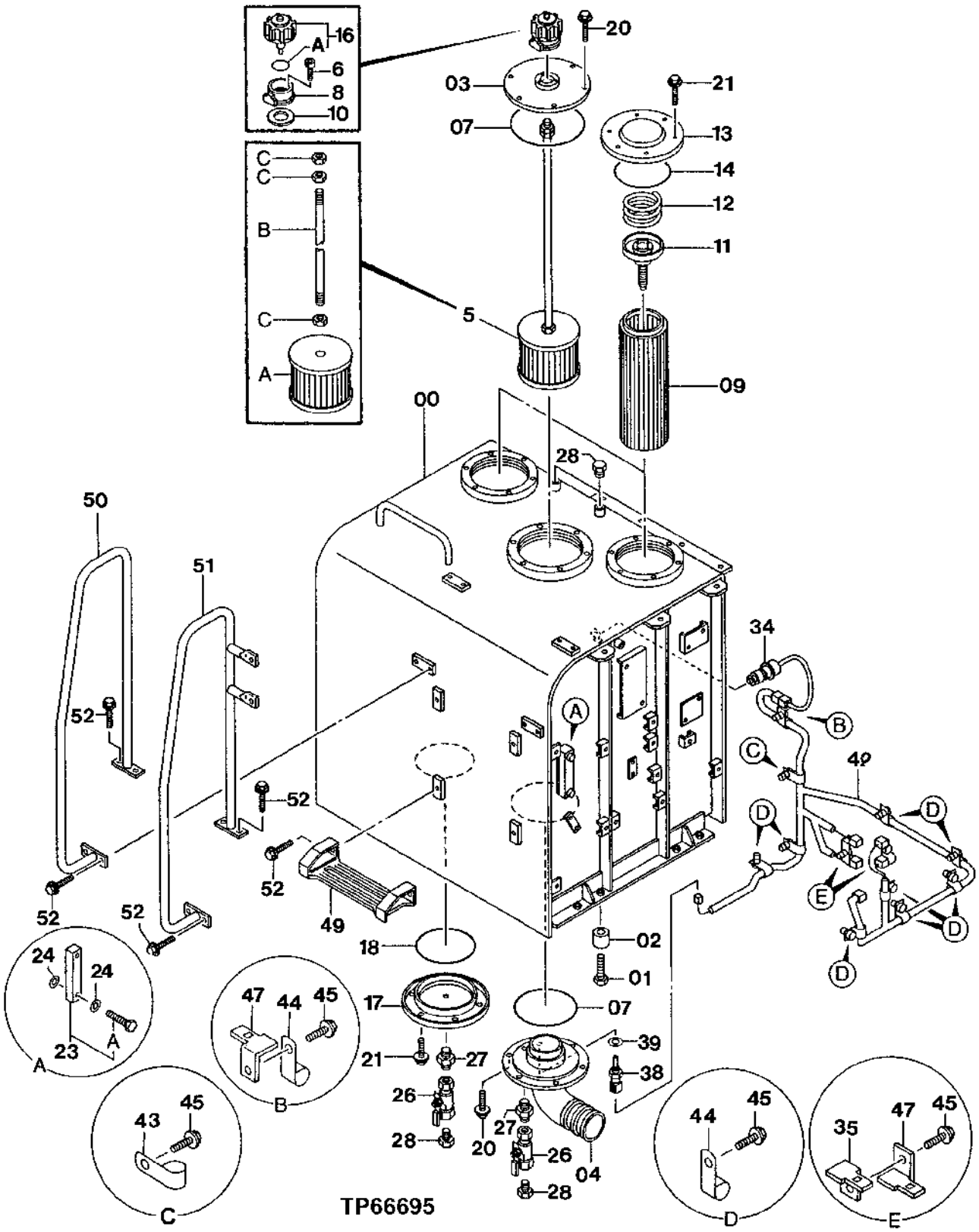

TP66695

OIL TANK

KEY	PART NO.	PART NAME	QTY	SERIAL NO.	REMARKS
0	5004371	TANK	1		(SUB FOR TH5004371)
1	J931895	BOLT	8		(SUB FOR TH105690)
2	4404209	SPACER	8		(SUB FOR TH4404209)
3	8061926	COVER	1		(SUB FOR TH8061926)
4	8060017	OIL LINE	1		(SUB FOR TH8060017)
5	.....	FILTER	1		(4343427 NO LONGER AVAILABLE)
5A	4317008	STRAINER	1		(SUB FOR AT160522)
5B	4343376	ROD	1		(SUB FOR TH4343376)
5C	14M7274	NUT	3		M10
6	19M8146	SCREW	3		M5 X 16
7	AT131529	O-RING	2		219 X 5.700 MM (8.622" X 0.224")
8	4222875	BASE	1		(SUB FOR TH111021)
9	AT147343	FILTER ELEMENT	2		
10	4222876	PACKING	1		(SUB FOR TH111022)
11	4180414	VALVE	2		(SUB FOR TH109511)
12	4226549	EXTENSION SPRING	2		(SUB FOR TH109512)
13	4204057	COVER	2		(SUB FOR TH111304)
14	T110444	O-RING	2		189.300 X 5.700 MM (7.453" X 0.224")
16	4222874	FILLER CAP	1		(SUB FOR AT217084)
16A	953612	O-RING	1		(SUB FOR TH111019)
17	8045901	COVER	1		(SUB FOR TH8045901)
18	TH100679	O-RING	1		159.300 X 5.700 MM (6.272" X 0.224")
20	19M7402	CAP SCREW	12		M10 X 25
	12M7066	LOCK WASHER	12		10 MM (0.394")
21	19M7938	CAP SCREW	18		M10 X 20
	12M7066	LOCK WASHER	18		10 MM (0.394")
23	8053499	LEVEL GAUGE	1		(SUB FOR TH108293)
23A	4100967	FITTING	2		(SUB FOR TH101894)
24	449558	WASHER	4		(SUB FOR TH100675)
26	4209782	VALVE	2		(SUB FOR AT128432)
27	94-1702	ADAPTER	2		(SUB FOR TH102949)
28	R30298	PIPE PLUG	4		9.525 MM (3/8")
34	4259787	SWITCH	1		(SUB FOR AT154937)
35	4257159	BRACKET	2		(SUB FOR AT154243)
38	4250260	SENSOR	1		(SUB FOR AT154921)
39	4250261	GASKET	1		(SUB FOR AT154922)
42	2038923	WIRING HARNESS	1		(SUB FOR TH2038923)
43	4190273	CLIP	1		(SUB FOR TH108460)
44	4190275	CLIP	9		(SUB FOR TH108598)
45	19M7938	CAP SCREW	12		M10 X 20
	12M7066	LOCK WASHER	12		10 MM (0.394")
47	4336875	BRACKET	3		(SUB FOR TH4336875)
49	2025971	STEP	2		(SUB FOR TH2025971)
50	7038218	HANDRAIL	1		(SUB FOR 7032207)
51	7038219	HANDRAIL	1		(SUB FOR 7030824)
52	19M8011	CAP SCREW	12		M12 X 30
	24M7047	WASHER	12		13 X 24 X 2.500 MM (0.512" X 0.945" X 0.098")

SUCTION PIPINGS

TP66697 -UN-30SEP99

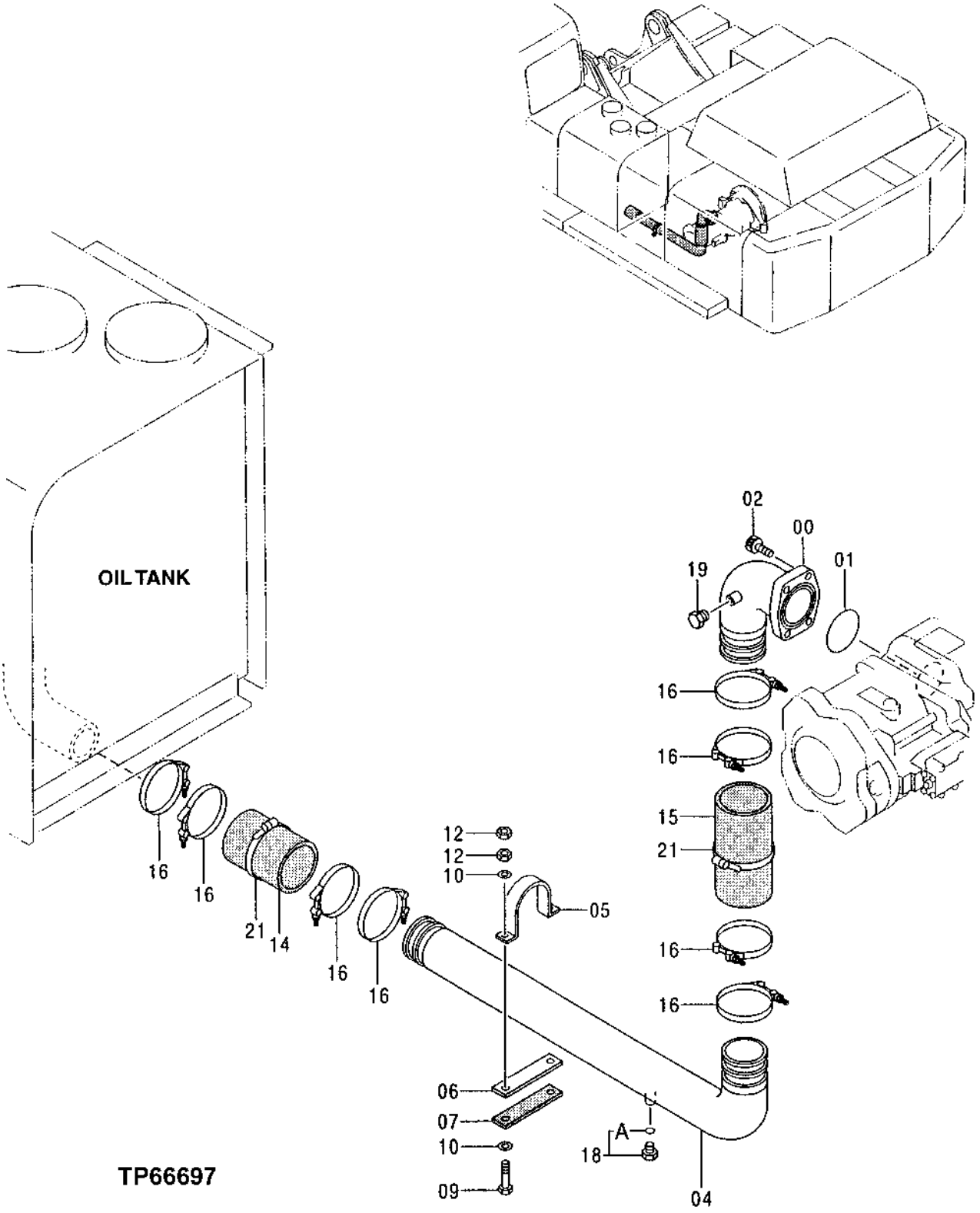

SUCTION PIPINGS

KEY	PART NO.	PART NAME	QTY	SERIAL NO.	REMARKS
0	8075118	PIPE ELBOW	1		(SUB FOR TH8075118)
1	CH16109	PACKING	1		
2	19M8208	SCREW	4		M16 X 50
4	8060058	PIPE ELBOW	1		(SUB FOR TH8060058)
5	AT155248	CLAMP	1		
6	4359496	STRAP	1		(SUB FOR TH4359496)
7	4359497	STRAP	1		(SUB FOR TH4359497)
9	19M7875	CAP SCREW	2		M10 X 70
10	24M7346	WASHER	4		11 X 20 X 2 MM (0.433" X 0.787" X 0.079")
12	14M7274	NUT	4		M10
14	4193871	HOSE	1		(SUB FOR TH111257)
15	4352665	SUCTION HOSE	1		(SUB FOR TH4352665)
16	RE28140	CLAMP	8		
18	4093624	DRAIN PLUG	1		(SUB FOR TH102536)
18A	M800650	PACKING	1		
19	446536	PLUG	1		(SUB FOR TH446536)
21	TY22476	CLAMP	2		

HEAVY DUTY BUCKET
(USE WITH 11'10" AND 14'5" ARM)
(ALSO ORDER BUCKET TOOTH ASSEMBLIES)

TP67399 -UN-09AUG00

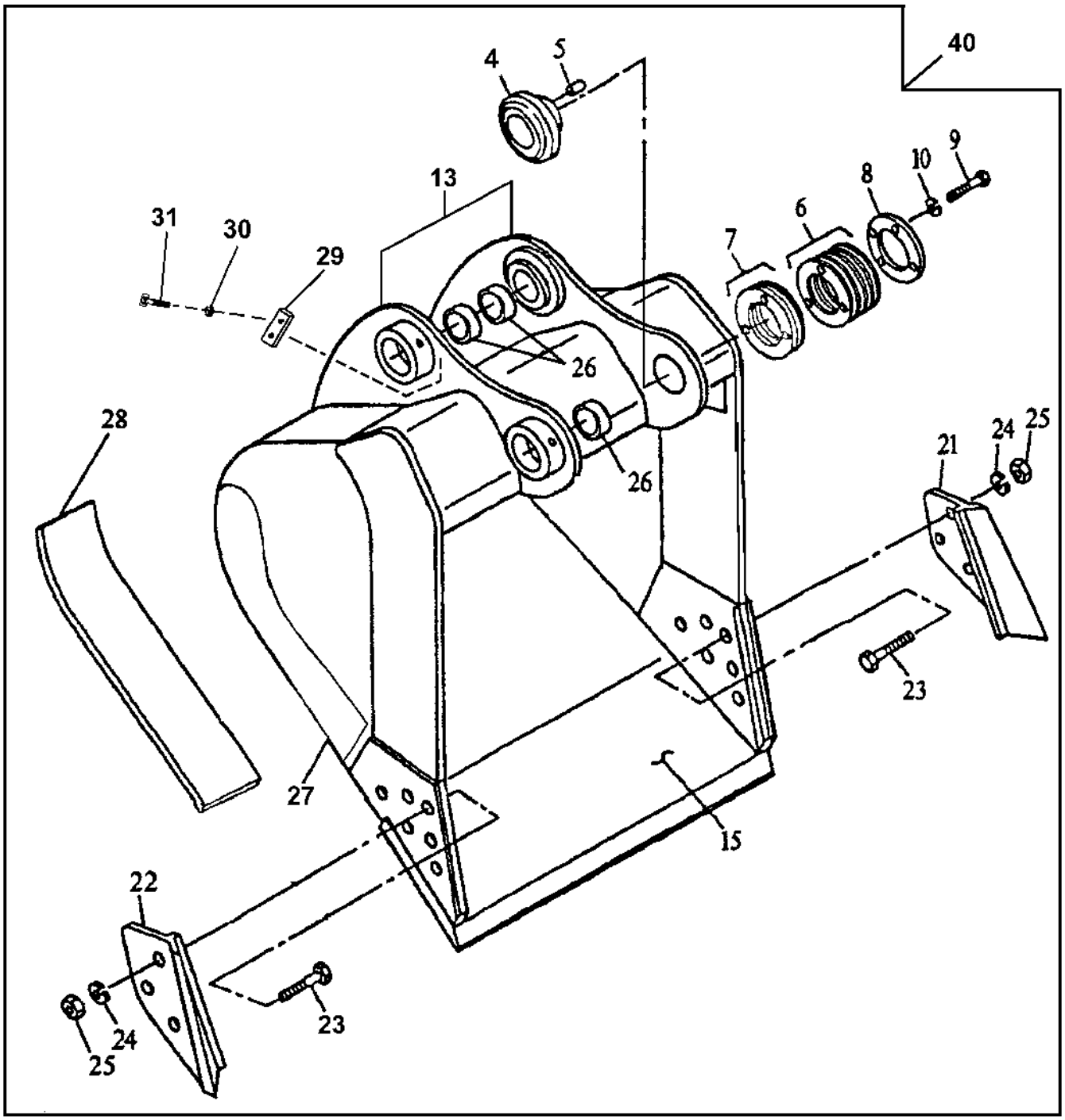

50	21, 22, 23, 24, 25

TP67399

HEAVY DUTY BUCKET
(USE WITH 11'10" AND 14'5" ARM)
(ALSO ORDER BUCKET TOOTH ASSEMBLIES)

KEY	PART NO.	PART NAME	QTY	SERIAL NO.	REMARKS
4	AT189907	BUSHING	1		
5	C31732	DOWEL PIN	2		(F)
6	AT189908	SHIM	6		
7	C19051	SHIM	2		(F)
8	AT189909	RETAINER	1		
9	19M7597	CAP SCREW	4		M20 X 50
10	12M7070	LOCK WASHER	4		20 MM (0.787")
13	10013	PIVOT	1		(F) (36 INCH - 2.36 CUBIC YARD BUCKET) (BUCKET EAR BLANK ASSEMBLY)
	10015	PIVOT	1		(F) (36 INCH - 2.74 CUBIC YARD BUCKET) (BUCKET EAR BLANK ASSEMBLY)
	08824	PIVOT	1		(F) (42 INCH - 2.90 CUBIC YARD BUCKET) (BUCKET EAR BLANK ASSEMBLY)
	10016	PIVOT	1		(F) (42 INCH - 3.34 CUBIC YARD BUCKET) (BUCKET EAR BLANK ASSEMBLY)
	08825	PIVOT	1		(F) (48 INCH - 3.47 CUBIC YARD BUCKET) (BUCKET EAR BLANK ASSEMBLY)
	10017	PIVOT	1		(F) (48 INCH - 3.95 CUBIC YARD BUCKET) (BUCKET EAR BLANK ASSEMBLY)
	08826	PIVOT	1		(F) (54 INCH - 4.04 CUBIC YARD BUCKET) (BUCKET EAR BLANK ASSEMBLY)
	10018	PIVOT	1		(F) (54 INCH - 4.57 CUBIC YARD BUCKET) (BUCKET EAR BLANK ASSEMBLY)
	08827	PIVOT	1		(F) (60 INCH - 4.63 CUBIC YARD BUCKET) (BUCKET EAR BLANK ASSEMBLY)
	10019	PIVOT	1		(F) (60 INCH - 5.20 CUBIC YARD BUCKET) (BUCKET EAR BLANK ASSEMBLY)
	08829	PIVOT	1		(F) (72 INCH - 4.80 CUBIC YARD BUCKET) (BUCKET EAR BLANK ASSEMBLY)
	10021	PIVOT	1		(F) (72 INCH - 6.49 CUBIC YARD BUCKET) (BUCKET EAR BLANK ASSEMBLY)
	10014	PIVOT	1		(F) (80 INCH - 6.60 CUBIC YARD BUCKET) (BUCKET EAR BLANK ASSEMBLY)
	10022	PIVOT	1		(F) (80 INCH - 7.35 CUBIC YARD BUCKET) (BUCKET EAR BLANK ASSEMBLY)
15	C30651	CUTTING EDGE	1		(F) (36 INCH - 2.36 CUBIC YARD BUCKET)
	C330196	CUTTING EDGE	1		(F) (36 INCH - 2.74 CUBIC YARD BUCKET)
	C30652	CUTTING EDGE	1		(F) (42 INCH - 2.90 CUBIC YARD BUCKET)
	C330197	CUTTING EDGE	1		(F) (42 INCH - 3.34 CUBIC YARD BUCKET)
	C30653	CUTTING EDGE	1		(F) (48 INCH - 2.47 CUBIC YARD BUCKET)
	C330198	CUTTING EDGE	1		(F) (48 INCH - 3.95 CUBIC YARD BUCKET)
	C30654	CUTTING EDGE	1		(F) (54 INCH - 4.04 CUBIC YARD BUCKET)
	C330199	CUTTING EDGE	1		(F) (54 INCH - 4.57 CUBIC YARD BUCKET)
	C30655	CUTTING EDGE	1		(F) (60 INCH - 4.63 CUBIC YARD BUCKET)
	C330200	CUTTING EDGE	1		(F) (60 INCH - 5.20 CUBIC YARD BUCKET)
	C30657	CUTTING EDGE	1		(F) (72 INCH - 4.80 CUBIC YARD BUCKET)
	C330202	CUTTING EDGE	1		(F) (72 INCH - 6.49 CUBIC YARD BUCKET)
	C30658	CUTTING EDGE	1		(F) (80 INCH - 6.60 CUBIC YARD BUCKET)
	C330203	CUTTING EDGE	1		(F) (80 INCH - 7.35 CUBIC YARD BUCKET)
21	.....	CUTTING EDGE	1		(SUB AT189734)
22	.....	CUTTING EDGE	1		(SUB AT189734)
23	.....	BOLT	AR		(SUB AT189734)
24	.....	LOCK WASHER	AR		(SUB AT189734)
25	.....	NUT	AR		(SUB AT189734)
26	.....	BUSHING	3		

(F) CENTRAL FABRICATORS' PARTS. JOHN DEERE DEALER ORDER DIRECTLY FROM CENTRAL FABRICATORS.

HEAVY DUTY BUCKET (CONTINUED)
(USE WITH 11'10" AND 14'5" ARM)
(ALSO ORDER BUCKET TOOTH ASSEMBLIES)

TP67399 -UN-09AUG00

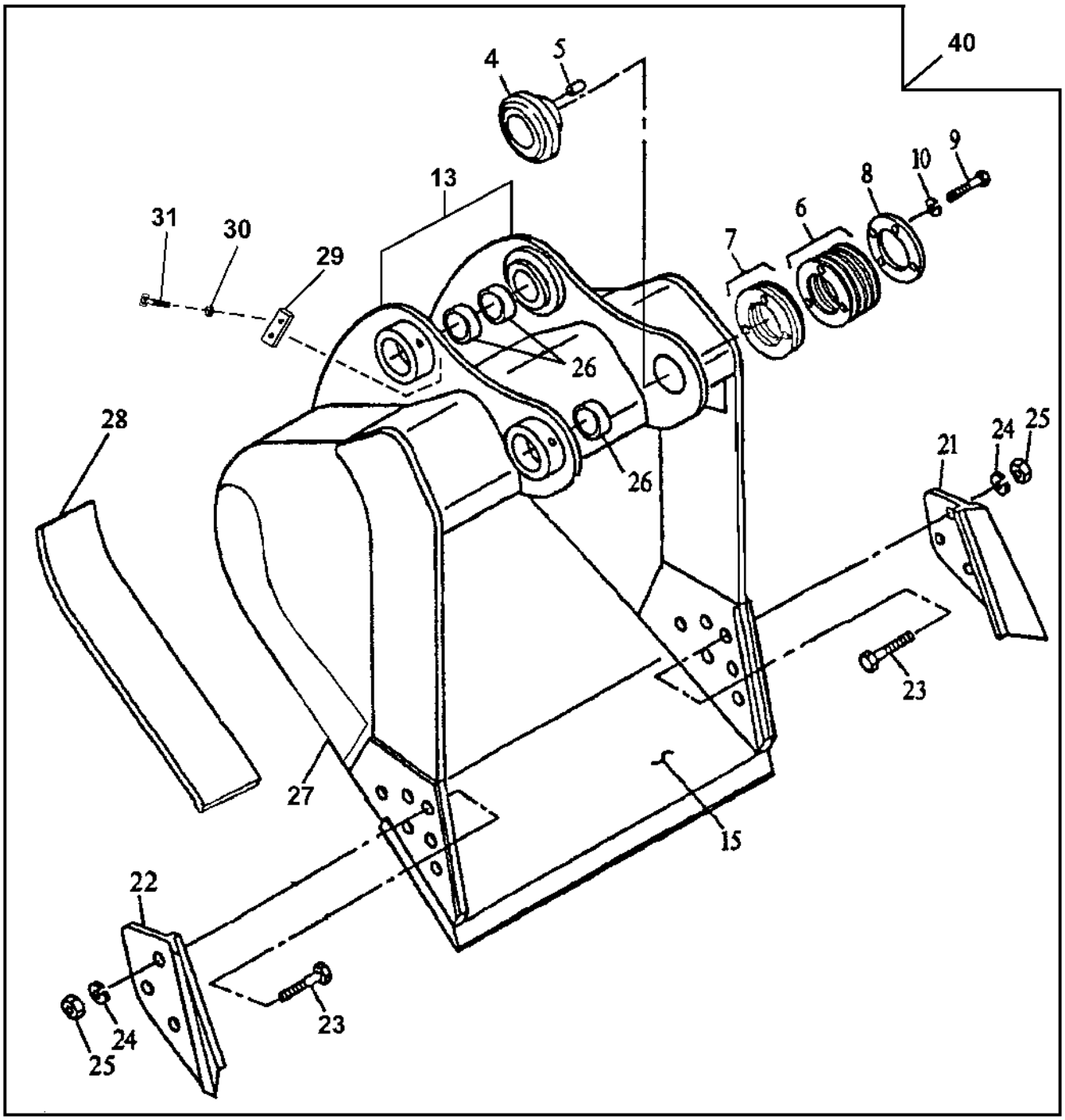

50	21, 22, 23, 24, 25

TP67399

HEAVY DUTY BUCKET (CONTINUED)
(USE WITH 11'10" AND 14'5" ARM)
(ALSO ORDER BUCKET TOOTH ASSEMBLIES)

KEY	PART NO.	PART NAME	QTY	SERIAL NO.	REMARKS
27	C317507	PLATE	2		(F) (36 INCH - 2.36 CUBIC YARD BUCKET) (42 INCH - 2.90 CUBIC YARD BUCKET) (48 INCH - 2.47 CUBIC YARD BUCKET) (54 INCH - 4.04 CUBIC YARD BUCKET) (60 INCH - 4.63 CUBIC YARD BUCKET) (72 INCH - 4.80 CUBIC YARD BUCKET) (80 INCH - 6.60 CUBIC YARD BUCKET)
	C330195	PLATE	2		(F) (36 INCH - 2.74 CUBIC YARD BUCKET) (42 INCH - 3.34 CUBIC YARD BUCKET) (48 INCH - 3.95 CUBIC YARD BUCKET) (54 INCH - 4.57 CUBIC YARD BUCKET) (60 INCH - 5.20 CUBIC YARD BUCKET) (72 INCH - 6.49 CUBIC YARD BUCKET) (80 INCH - 7.35 CUBIC YARD BUCKET)
28	C616459	BAR	1		(F) (36 INCH - 2.36 CUBIC YARD BUCKET)
	C624343	BAR	1		(F) (36 INCH - 2.74 CUBIC YARD BUCKET)
	C616460	BAR	1		(F) (42 INCH - 2.90 CUBIC YARD BUCKET)
	C624344	BAR	1		(F) (42 INCH - 3.34 CUBIC YARD BUCKET)
	C616461	BAR	1		(F) (48 INCH - 2.47 CUBIC YARD BUCKET)
	C624345	BAR	1		(F) (48 INCH - 3.95 CUBIC YARD BUCKET)
	C616462	BAR	1		(F) (54 INCH - 4.04 CUBIC YARD BUCKET)
	C624346	BAR	1		(F) (54 INCH - 4.57 CUBIC YARD BUCKET)
	C616463	BAR	1		(F) (60 INCH - 4.63 CUBIC YARD BUCKET)
	C623347	BAR	1		(F) (60 INCH - 5.20 CUBIC YARD BUCKET)
	C616465	BAR	1		(F) (72 INCH - 4.80 CUBIC YARD BUCKET)
	C624349	BAR	1		(F) (72 INCH - 6.49 CUBIC YARD BUCKET)
	C616466	BAR	1		(F) (80 INCH - 6.60 CUBIC YARD BUCKET)
	C624350	BAR	1		(F) (80 INCH - 7.35 CUBIC YARD BUCKET)
29	AT189911	RETAINER	1		
30	12M7068	LOCK WASHER	2		14 MM
31	19M6579	CAP SCREW	2		M14 X 50
40	**AT189761**	**EXCAVATOR BUCKET**	**1**		**(36 INCH - 2.36 CUBIC YARD) (AVAILABLE TOOTH ASSEMBLIES ON SEPARATE PAGE) WHOLEGOODS**
	AT189762	**EXCAVATOR BUCKET**	**1**		**(36 INCH - 2.74 CUBIC YARD) (AVAILABLE TOOTH ASSEMBLIES ON SEPARATE PAGE) WHOLEGOODS**
	AT189763	**EXCAVATOR BUCKET**	**1**		**(42 INCH - 2.90 CUBIC YARD) (AVAILABLE TOOTH ASSEMBLIES ON SEPARATE PAGE) WHOLEGOODS**
	AT189764	**EXCAVATOR BUCKET**	**1**		**(42 INCH - 3.34 CUBIC YARD) (AVAILABLE TOOTH ASSEMBLIES ON SEPARATE PAGE) WHOLEGOODS**
	AT189765	**EXCAVATOR BUCKET**	**1**		**(48 INCH - 3.47 CUBIC YARD) (AVAILABLE TOOTH ASSEMBLIES ON SEPARATE PAGE) WHOLEGOODS**
	AT189766	**EXCAVATOR BUCKET**	**1**		**(48 INCH - 3.95 CUBIC YARD) (AVAILABLE TOOTH ASSEMBLIES ON SEPARATE PAGE) WHOLEGOODS**
	AT189767	**EXCAVATOR BUCKET**	**1**		**(54 INCH - 4.04 CUBIC YARD) (AVAILABLE TOOTH ASSEMBLIES ON SEPARATE PAGE) WHOLEGOODS**
	AT189768	**EXCAVATOR BUCKET**	**1**		**(54 INCH - 4.57 CUBIC YARD) (AVAILABLE TOOTH ASSEMBLIES ON SEPARATE PAGE) WHOLEGOODS**
	AT189769	**EXCAVATOR BUCKET**	**1**		**(60 INCH - 4.63 CUBIC YARD) (AVAILABLE TOOTH ASSEMBLIES ON SEPARATE PAGE) WHOLEGOODS**
	AT189770	**EXCAVATOR BUCKET**	**1**		**(60 INCH - 5.20 CUBIC YARD) (AVAILABLE TOOTH ASSEMBLIES ON SEPARATE PAGE) WHOLEGOODS**
	AT189771	**EXCAVATOR BUCKET**	**1**		**(72 INCH - 4.80 CUBIC YARD) (AVAILABLE TOOTH ASSEMBLIES ON SEPARATE PAGE) WHOLEGOODS**
	AT196578	**EXCAVATOR BUCKET**	**1**		**(72 IN. - 5.80 CU. YD. WITH SOLID EARS) (AVAILABLE TOOTH ASSEMBLIES ON SEPARATE PAGE) (WHOLEGOODS)**
	.....	EXCAVATOR BUCKET	1		(AT189772 NO LONGER AVAILABLE) (72 INCH - 6.49 CUBIC YARD) (AVAILABLE TOOTH ASSEMBLIES ON SEPARATE PAGE) WHOLEGOODS
	AT189773	**EXCAVATOR BUCKET**	**1**		**(80 INCH - 6.60 CUBIC YARD) (AVAILABLE TOOTH ASSEMBLIES ON SEPARATE PAGE) WHOLEGOODS**
	AT196579	**EXCAVATOR BUCKET**	**1**		**(80 IN. - 6.60 CU. YD. WITH SOLID EARS) (AVAILABLE TOOTH ASSEMBLIES ON SEPARATE PAGE) (WHOLEGOODS)**
	.....	EXCAVATOR BUCKET	1		(AT189774 NO LONGER AVAILABLE) (80 INCH - 7.35 CUBIC YARD) (AVAILABLE TOOTH ASSEMBLIES ON SEPARATE PAGE) WHOLEGOODS
50	AT189734	KIT	1		SIDE CUTTER

(F) CENTRAL FABRICATORS' PARTS. JOHN DEERE DEALER ORDER DIRECTLY FROM CENTRAL FABRICATORS.

HEAVY DUTY BUCKET
(USE WITH 17'9" LONG ARM)
(ALSO ORDER BUCKET TOOTH ASSEMBLIES)

TP67399 -UN-09AUG00

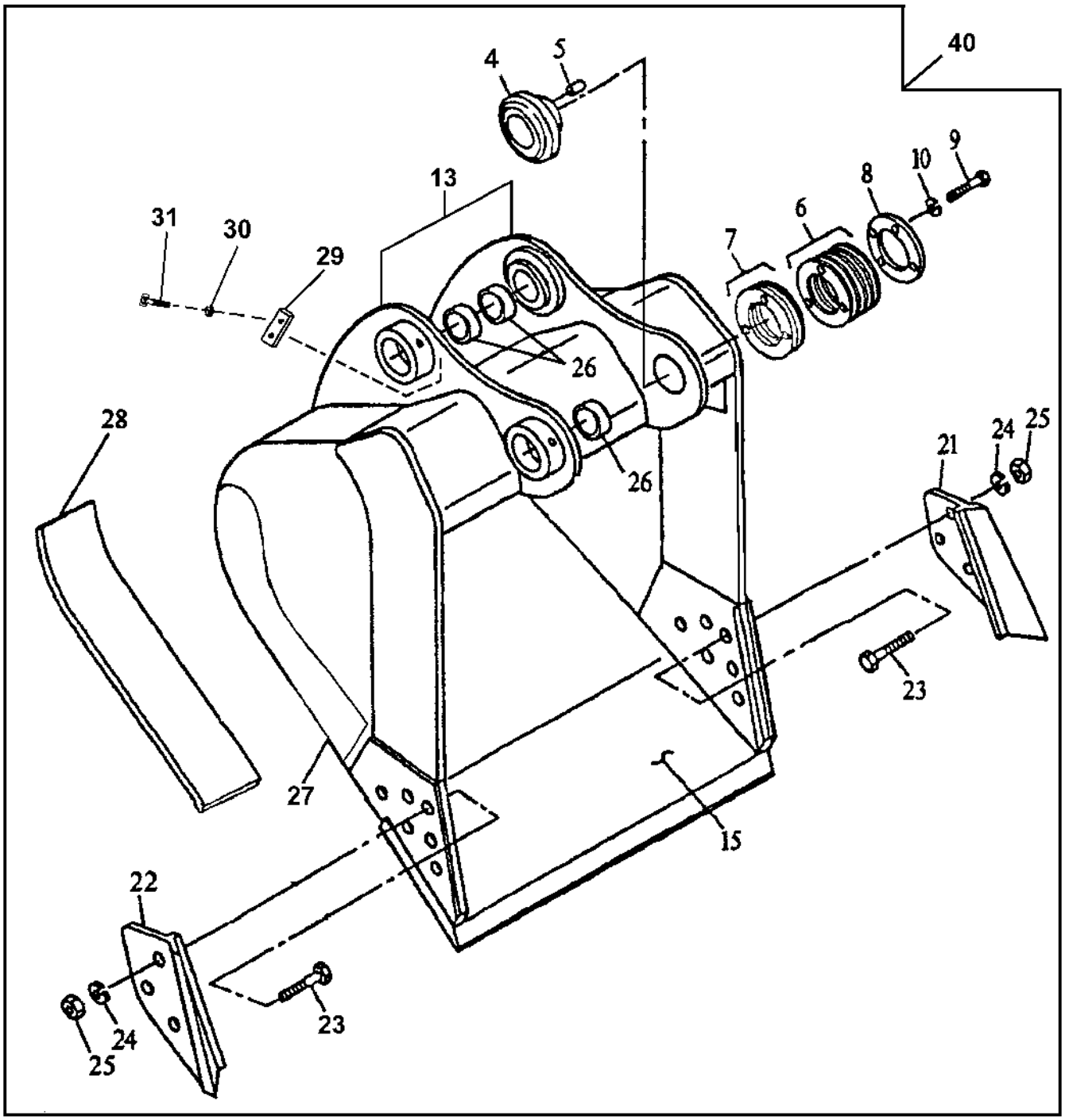

50 — 21, 22, 23, 24, 25

TP67399

HEAVY DUTY BUCKET
(USE WITH 17'9" LONG ARM)
(ALSO ORDER BUCKET TOOTH ASSEMBLIES)

KEY	PART NO.	PART NAME	QTY	SERIAL NO.	REMARKS
4	AT189912	BUSHING	1		
5	C31732	DOWEL PIN	2		(F)
6	AT189913	SHIM	6		
7	C31733	SHIM	2		(F)
8	AT189914	RETAINER	1		
9	AT189916	CAP SCREW	4		
10	AT189915	WASHER	4		
13	10072	PIVOT	1		(F) (36 INCH - 1.97 CUBIC YARD BUCKET) (BUCKET EAR BLANK ASSEMBLY)
	10073	PIVOT	1		(F) (42 INCH - 2.43 CUBIC YARD BUCKET) (BUCKET EAR BLANK ASSEMBLY)
	10074	PIVOT	1		(F) (48 INCH - 2.90 CUBIC YARD BUCKET) (BUCKET EAR BLANK ASSEMBLY)
	10075	PIVOT	1		(F) (54 INCH - 3.38 CUBIC YARD BUCKET) (BUCKET EAR BLANK ASSEMBLY)
	10076	PIVOT	1		(F) (60 INCH - 3.86 CUBIC YARD BUCKET) (BUCKET EAR BLANK ASSEMBLY)
	10078	PIVOT	1		(F) (72 INCH - 4.84 CUBIC YARD BUCKET) (BUCKET EAR BLANK ASSEMBLY)
15	C30651	CUTTING EDGE	1		(F) (36 INCH - 1.97 CUBIC YARD BUCKET)
	C30652	CUTTING EDGE	1		(F) (42 INCH - 2.43 CUBIC YARD BUCKET)
	C30653	CUTTING EDGE	1		(F) (48 INCH - 2.90 CUBIC YARD BUCKET)
	C30654	CUTTING EDGE	1		(F) (54 INCH - 3.38 CUBIC YARD BUCKET)
	C30655	CUTTING EDGE	1		(F) (60 INCH - 3.86 CUBIC YARD BUCKET)
	C30657	CUTTING EDGE	1		(F) (72 INCH - 4.84 CUBIC YARD BUCKET)
21	.....	CUTTING EDGE	1		(SUB AT189734)
22	.....	CUTTING EDGE	1		(SUB AT189734)
23	.....	BOLT	AR		(SUB AT189734)
24	.....	LOCK WASHER	AR		(SUB AT189734)
25	.....	NUT	AR		(SUB AT189734)
26	C31729	BUSHING	2		(F)
	C31728	BUSHING	1		(F)
27	C317345	PLATE	2		(F)
28	C616777	BAR	1		(F) (36 INCH - 1.97 CUBIC YARD BUCKET)
	C616778	BAR	1		(F) (42 INCH - 2.43 CUBIC YARD BUCKET)
	C616779	BAR	1		(F) (48 INCH - 2.90 CUBIC YARD BUCKET)
	C616780	BAR	1		(F) (54 INCH - 3.38 CUBIC YARD BUCKET)
	C616781	BAR	1		(F) (60 INCH - 3.86 CUBIC YARD BUCKET)
	C616783	BAR	1		(F) (72 INCH - 4.84 CUBIC YARD BUCKET)
29	AT189911	RETAINER	1		
30	12M7068	LOCK WASHER	2		14 MM
31	19M6579	CAP SCREW	2		M14 X 50
40	AT189788	EXCAVATOR BUCKET	1		(36 INCH - 1.97 CUBIC YARD) (AVAILABLE TOOTH ASSEMBLIES ON SEPARATE PAGE) WHOLEGOODS
	AT189789	EXCAVATOR BUCKET	1		(42 INCH - 2.43 CUBIC YARD) (AVAILABLE TOOTH ASSEMBLIES ON SEPARATE PAGE) WHOLEGOODS
	AT189790	EXCAVATOR BUCKET	1		(48 INCH - 2.90 CUBIC YARD) (AVAILABLE TOOTH ASSEMBLIES ON SEPARATE PAGE) WHOLEGOODS
	AT189791	EXCAVATOR BUCKET	1		(54 INCH - 3.38 CUBIC YARD) (AVAILABLE TOOTH ASSEMBLIES ON SEPARATE PAGE) WHOLEGOODS
	AT189792	EXCAVATOR BUCKET	1		(60 INCH - 3.86 CUBIC YARD) (AVAILABLE TOOTH ASSEMBLIES ON SEPARATE PAGE) WHOLEGOODS
	AT189793	EXCAVATOR BUCKET	1		(72 INCH - 4.84 CUBIC YARD) (AVAILABLE TOOTH ASSEMBLIES ON SEPARATE PAGE) WHOLEGOODS
50	AT189734	KIT	1		SIDE CUTTER

(F) CENTRAL FABRICATORS' PARTS. JOHN DEERE DEALER ORDER DIRECTLY FROM CENTRAL FABRICATORS.

EXTREME DUTY BUCKET
(USE WITH 9'8" ARM)
(ALSO ORDER BUCKET TOOTH ASSEMBLIES)

TP67398 -UN-09AUG00

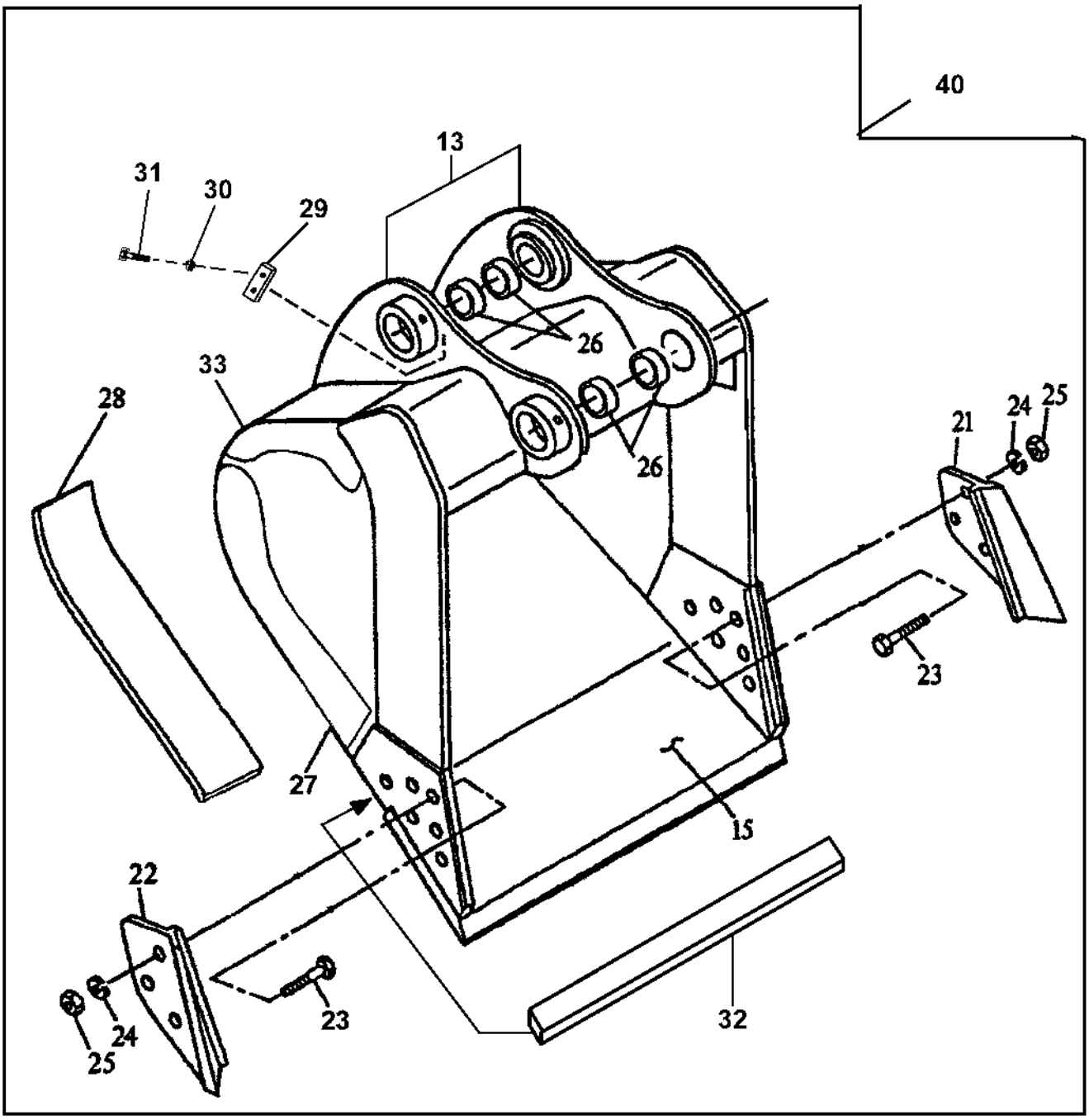

50	21, 22, 23, 24, 25

TP67398

EXTREME DUTY BUCKET
(USE WITH 9'8" ARM)
(ALSO ORDER BUCKET TOOTH ASSEMBLIES)

KEY	PART NO.	PART NAME	QTY	SERIAL NO.	REMARKS
13	10079	PIVOT	1		(F) (36 INCH - 2.75 CUBIC YARD BUCKET) (BUCKET EAR BLANK ASSEMBLY)
	10080	PIVOT	1		(F) (42 INCH - 3.35 CUBIC YARD BUCKET) (BUCKET EAR BLANK ASSEMBLY)
	10081	PIVOT	1		(F) (48 INCH - 3.95 CUBIC YARD BUCKET) (BUCKET EAR BLANK ASSEMBLY)
	10082	PIVOT	1		(F) (54 INCH - 4.58 CUBIC YARD BUCKET) (BUCKET EAR BLANK ASSEMBLY)
	10083	PIVOT	1		(F) (60 INCH - 5.21 CUBIC YARD BUCKET) (BUCKET EAR BLANK ASSEMBLY)
	10085	PIVOT	1		(F) (72 INCH - 6.50 CUBIC YARD BUCKET) (BUCKET EAR BLANK ASSEMBLY)
	10086	PIVOT	1		(F) (80 INCH - 7.37 CUBIC YARD BUCKET) (BUCKET EAR BLANK ASSEMBLY)
15	C330196	CUTTING EDGE	1		(F) (36 INCH - 2.75 CUBIC YARD BUCKET)
	C330197	CUTTING EDGE	1		(F) (42 INCH - 3.35 CUBIC YARD BUCKET)
	C330198	CUTTING EDGE	1		(F) (48 INCH - 3.95 CUBIC YARD BUCKET)
	C330199	CUTTING EDGE	1		(F) (54 INCH - 4.58 CUBIC YARD BUCKET)
	C330200	CUTTING EDGE	1		(F) (60 INCH - 5.21 CUBIC YARD BUCKET)
	C330202	CUTTING EDGE	1		(F) (72 INCH - 6.50 CUBIC YARD BUCKET)
	C330203	CUTTING EDGE	1		(F) (80 INCH - 7.37 CUBIC YARD BUCKET)
21	.....	CUTTING EDGE	1		(SUB AT189734)
22	.....	CUTTING EDGE	1		(SUB AT189734)
23	.....	BOLT	AR		(SUB AT189734)
24	.....	LOCK WASHER	AR		(SUB AT189734)
25	.....	NUT	AR		(SUB AT189734)
26	C20355	BUSHING	2		(F)
	C20354	BUSHING	2		(F)
27	C330437	PLATE	2		(F)
28	C624343	BAR	1		(F) (36 INCH - 2.75 CUBIC YARD BUCKET)
	C624344	BAR	1		(F) (42 INCH - 3.35 CUBIC YARD BUCKET)
	C624345	BAR	1		(F) (48 INCH - 3.95 CUBIC YARD BUCKET)
	C624346	BAR	1		(F) (54 INCH - 4.58 CUBIC YARD BUCKET)
	C624347	BAR	1		(F) (60 INCH - 5.21 CUBIC YARD BUCKET)
	C624349	BAR	1		(F) (72 INCH - 6.50 CUBIC YARD BUCKET)
	C624350	BAR	1		(F) (80 INCH - 7.37 CUBIC YARD BUCKET)
29	AT189911	RETAINER	1		
30	12M7068	LOCK WASHER	2		14 MM
31	19M6579	CAP SCREW	2		M14 X 50
32	C33125	BAR	8		(F) (36 INCH - 2.75 CUBIC YARD BUCKET)
	C33066	BAR	8		(F) (42 INCH - 3.35 CUBIC YARD BUCKET)
	C33067	BAR	8		(F) (48 INCH - 3.95 CUBIC YARD BUCKET)
	C33068	BAR	8		(F) (54 INCH - 4.58 CUBIC YARD BUCKET)
	C33069	BAR	8		(F) (60 INCH - 5.21 CUBIC YARD BUCKET)
	C33071	BAR	8		(F) (72 INCH - 6.50 CUBIC YARD BUCKET)
	C33072	BAR	8		(F) (80 INCH - 7.37 CUBIC YARD BUCKET)
33	C330438	PLATE	2		(F)
40	AT189781	EXCAVATOR BUCKET	1		(36 INCH - 2.75 CUBIC YARD) (AVAILABLE TOOTH ASSEMBLIES ON SEPARATE PAGE) WHOLEGOODS
	AT189782	EXCAVATOR BUCKET	1		(42 INCH - 3.35 CUBIC YARD) (AVAILABLE TOOTH ASSEMBLIES ON SEPARATE PAGE) WHOLEGOODS
	AT189783	EXCAVATOR BUCKET	1		(48 INCH - 3.95 CUBIC YARD) (AVAILABLE TOOTH ASSEMBLIES ON SEPARATE PAGE) WHOLEGOODS
	AT189784	EXCAVATOR BUCKET	1		(54 INCH - 4.58 CUBIC YARD) (AVAILABLE TOOTH ASSEMBLIES ON SEPARATE PAGE) WHOLEGOODS
	AT189785	EXCAVATOR BUCKET	1		(60 INCH - 5.21 CUBIC YARD) (AVAILABLE TOOTH ASSEMBLIES ON SEPARATE PAGE) WHOLEGOODS
	AT189786	EXCAVATOR BUCKET	1		(72 INCH - 6.50 CUBIC YARD) (AVAILABLE TOOTH ASSEMBLIES ON SEPARATE PAGE) WHOLEGOODS
	AT189787	EXCAVATOR BUCKET	1		(80 INCH - 7.37 CUBIC YARD) (AVAILABLE TOOTH ASSEMBLIES ON SEPARATE PAGE) WHOLEGOODS
50	AT189734	KIT	1		SIDE CUTTER

(F) CENTRAL FABRICATORS' PARTS. JOHN DEERE DEALER ORDER DIRECTLY FROM CENTRAL FABRICATORS.

EXTREME DUTY BUCKET
(USE WITH 11'10" AND 14'5" ARM)
(ALSO ORDER BUCKET TOOTH ASSEMBLIES)

TP67400 -UN-11AUG00

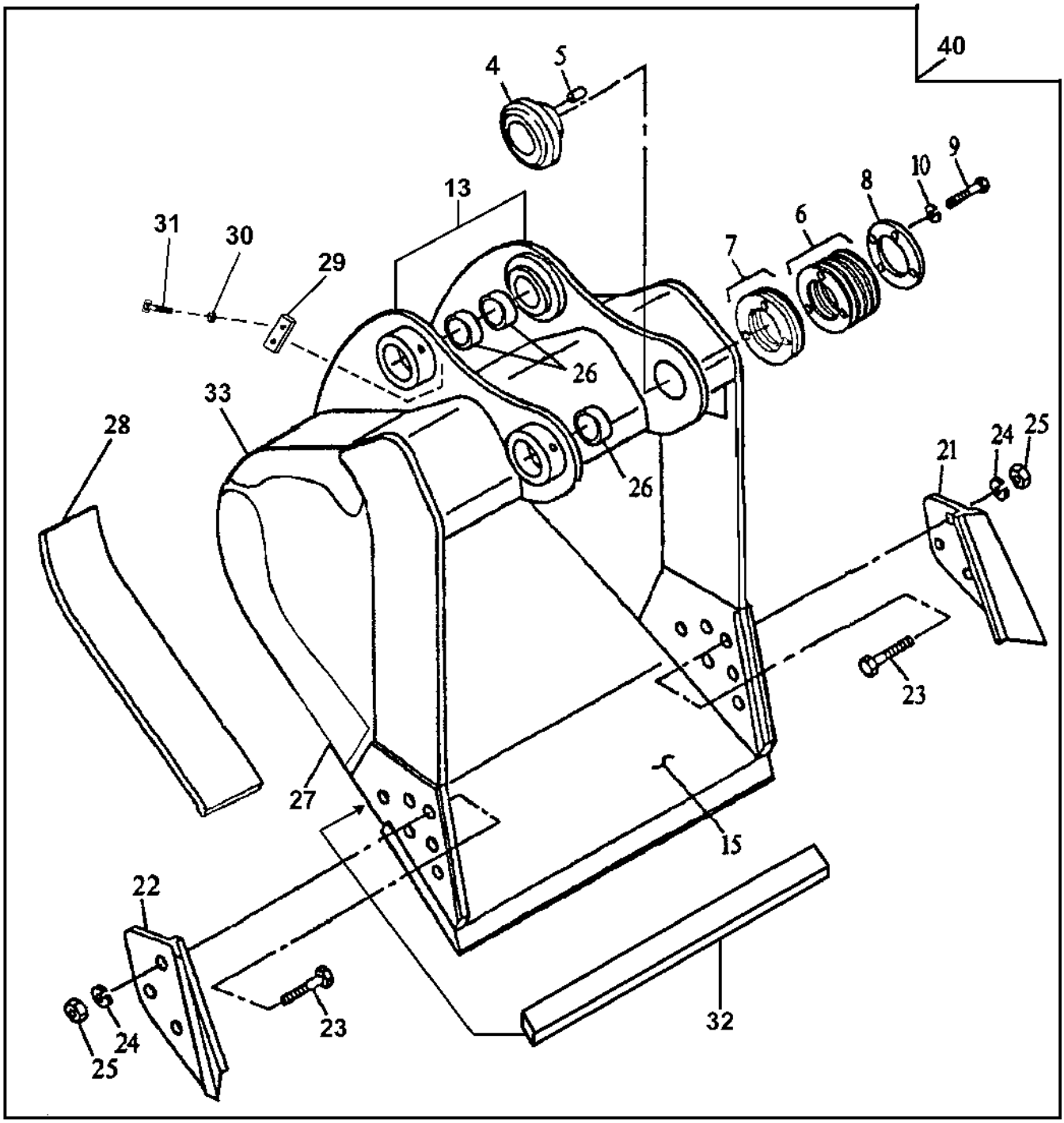

50	21, 22, 23, 24, 25

TP67400

EXTREME DUTY BUCKET
(USE WITH 11'10" AND 14'5" ARM)
(ALSO ORDER BUCKET TOOTH ASSEMBLIES)

KEY	PART NO.	PART NAME	QTY	SERIAL NO.	REMARKS
4	AT189907	BUSHING	1		
5	C31732	DOWEL PIN	2		(F)
6	AT189908	SHIM	6		
7	AT189910	SHIM	2		
8	AT189909	RETAINER	1		
9	19M7597	CAP SCREW	4		M20 X 50
10	12M7070	LOCK WASHER	4		20 MM
13	10024	PIVOT	1		(F) (36 INCH - 2.74 CUBIC YARD BUCKET) (BUCKET EAR BLANK ASSEMBLY)
	10025	PIVOT	1		(F) (42 INCH - 3.34 CUBIC YARD BUCKET) (BUCKET EAR BLANK ASSEMBLY)
	10026	PIVOT	1		(F) (48 INCH - 3.95 CUBIC YARD BUCKET) (BUCKET EAR BLANK ASSEMBLY)
	10027	PIVOT	1		(F) (54 INCH - 4.57 CUBIC YARD BUCKET) (BUCKET EAR BLANK ASSEMBLY)
	10028	PIVOT	1		(F) (60 INCH - 5.20 CUBIC YARD BUCKET) (BUCKET EAR BLANK ASSEMBLY)
	10030	PIVOT	1		(F) (72 INCH - 6.49 CUBIC YARD BUCKET) (BUCKET EAR BLANK ASSEMBLY)
15	C330196	CUTTING EDGE	1		(F) (36 INCH - 2.74 CUBIC YARD BUCKET)
	C330197	CUTTING EDGE	1		(F) (42 INCH - 3.34 CUBIC YARD BUCKET)
	C330198	CUTTING EDGE	1		(F) (48 INCH - 3.95 CUBIC YARD BUCKET)
	C330199	CUTTING EDGE	1		(F) (54 INCH - 4.57 CUBIC YARD BUCKET)
	C330200	CUTTING EDGE	1		(F) (60 INCH - 5.20 CUBIC YARD BUCKET)
	C330202	CUTTING EDGE	1		(F) (72 INCH - 6.49 CUBIC YARD BUCKET)
21	.....	CUTTING EDGE	1		(SUB AT189734)
22	.....	CUTTING EDGE	1		(SUB AT189734)
23	.....	BOLT	AR		(SUB AT189734)
24	.....	LOCK WASHER	AR		(SUB AT189734)
25	.....	NUT	AR		(SUB AT189734)
26	.....	BUSHING	3		
27	C330437	PLATE	2		(F)
28	C624343	BAR	1		(F) (36 INCH - 2.74 CUBIC YARD BUCKET)
	C624344	BAR	1		(F) (42 INCH - 3.34 CUBIC YARD BUCKET)
	C624345	BAR	1		(F) (48 INCH - 3.95 CUBIC YARD BUCKET)
	C624346	BAR	1		(F) (54 INCH - 4.57 CUBIC YARD BUCKET)
	C624347	BAR	1		(F) (60 INCH - 5.20 CUBIC YARD BUCKET)
	C624349	BAR	1		(F) (72 INCH - 6.49 CUBIC YARD BUCKET)
29	AT189911	RETAINER	1		
30	12M7068	LOCK WASHER	2		14 MM
31	19M6579	CAP SCREW	2		M14 X 50
32	C33125	BAR	8		(F) (36 INCH - 2.74 CUBIC YARD BUCKET)
	C33066	BAR	8		(F) (42 INCH - 3.34 CUBIC YARD BUCKET)
	C33067	BAR	8		(F) (48 INCH - 3.95 CUBIC YARD BUCKET)
	C33068	BAR	8		(F) (54 INCH - 4.57 CUBIC YARD BUCKET)
	C33069	BAR	8		(F) (60 INCH - 5.20 CUBIC YARD BUCKET)
	C33071	BAR	8		(F) (72 INCH - 6.49 CUBIC YARD BUCKET)
33	C330438	PLATE	2		(F)
40	AT189775	EXCAVATOR BUCKET	1		(36 INCH - 2.74 CUBIC YARD) (AVAILABLE TOOTH ASSEMBLIES ON SEPARATE PAGE) WHOLEGOODS
	AT189776	EXCAVATOR BUCKET	1		(42 INCH - 3.34 CUBIC YARD) (AVAILABLE TOOTH ASSEMBLIES ON SEPARATE PAGE) WHOLEGOODS
	AT189777	EXCAVATOR BUCKET	1		(48 INCH - 3.95 CUBIC YARD) (AVAILABLE TOOTH ASSEMBLIES ON SEPARATE PAGE) WHOLEGOODS
	AT189778	EXCAVATOR BUCKET	1		(54 INCH - 4.57 CUBIC YARD) (AVAILABLE TOOTH ASSEMBLIES ON SEPARATE PAGE) WHOLEGOODS
	AT189779	EXCAVATOR BUCKET	1		(60 INCH - 5.20 CUBIC YARD) (AVAILABLE TOOTH ASSEMBLIES ON SEPARATE PAGE) WHOLEGOODS
	.....	EXCAVATOR BUCKET	1		(AT189780 NO LONGER AVAILABLE) (72 INCH - 6.49 CUBIC YARD) (AVAILABLE TOOTH ASSEMBLIES ON SEPARATE PAGE) WHOLEGOODS
50	AT189734	KIT	1		SIDE CUTTER

(F) CENTRAL FABRICATORS' PARTS. JOHN DEERE DEALER ORDER DIRECTLY FROM CENTRAL FABRICATORS.

BUCKET TOOTH ASSEMBLY

T142101 -UN-14MAY01

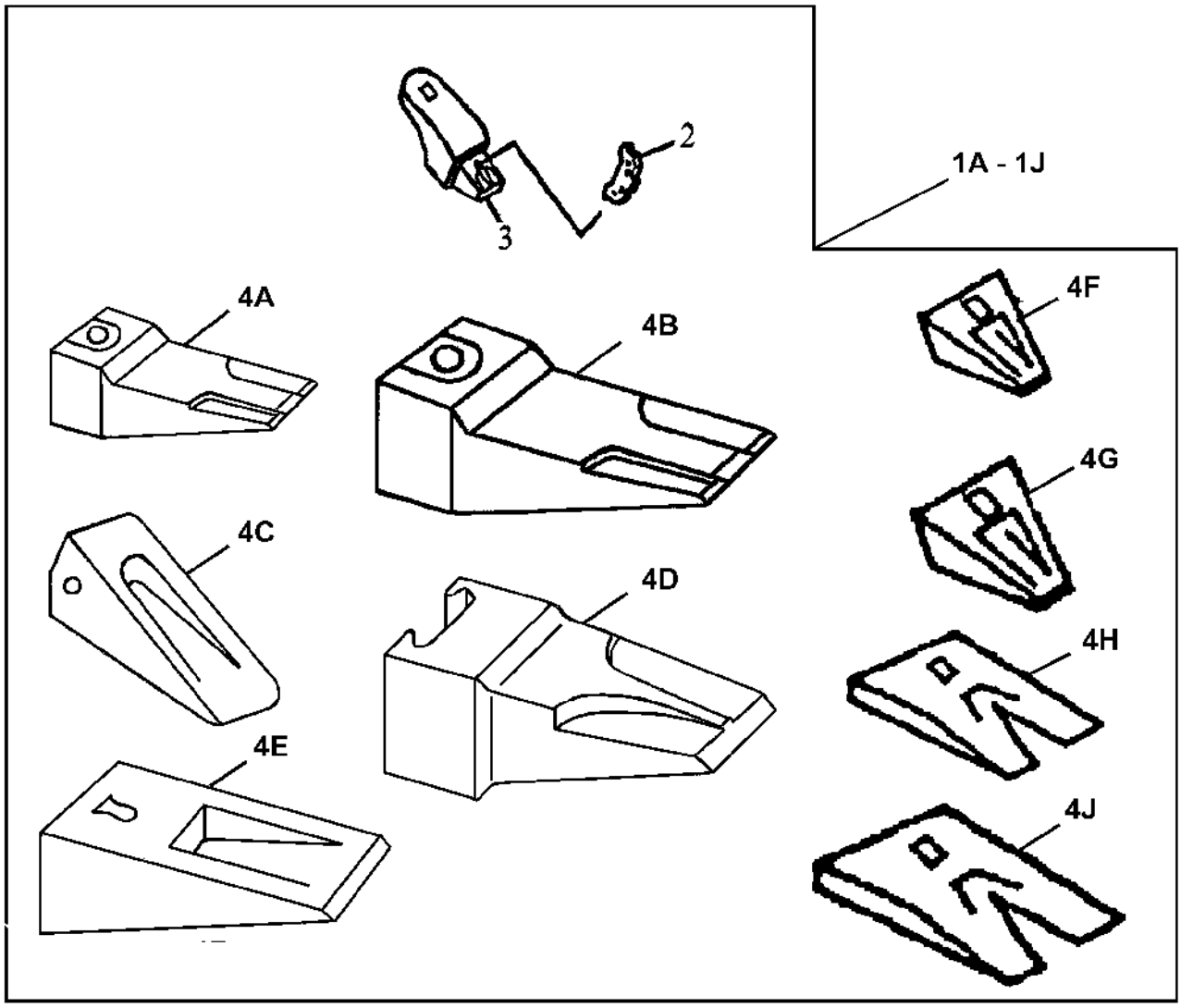

ORDER 3 SETS WITH EACH 36 INCH BUCKET

ORDER 4 SETS WITH EACH 42 INCH BUCKET

ORDER 4 SETS WITH EACH 48 INCH BUCKET

ORDER 5 SETS WITH EACH 54 INCH BUCKET

ORDER 5 SETS WITH EACH 60 INCH BUCKET

ORDER 6 SETS WITH EACH 72 INCH BUCKET

T142101 **ORDER 6 SETS WITH EACH 80 INCH BUCKET**

BUCKET TOOTH ASSEMBLY

KEY	PART NO.	PART NAME	QTY	SERIAL NO.	REMARKS
1A	AT189732	TOOTH	1		(HENSLEY RIBBED SHARP)
1B	AT189733	TOOTH	1		(HENSLEY RIBBED SHARP)
1C	AT189735	TOOTH	1		(CATERPILLAR STANDARD)
1D	AT189736	TOOTH	1		(ESCO STANDARD)
1E	AT189835	TOOTH	1		(ABRASION PANEL)
1F	AT192636	TOOTH	1		(HENSLEY TIGER)
1G	AT192639	TOOTH	1		(HENSLEY TIGER)
1H	AT192638	TOOTH	1		(HENSLEY TWIN TIGER)
1J	AT192640	TOOTH	1		(HENSLEY TWIN TIGER)
2	TK550R	PIN FASTENER	1		(HENSLEY RIBBED SHARP, TIGER, AND TWIN TIGER)
	TK500R	PIN FASTENER	1		(HENSLEY RIBBED SHARP, ABRASION PANEL, TIGER, AND TWIN TIGER)
	T9U9616	PIN FASTENER	1		(CATERPILLAR STANDARD) (NOT ILLUSTRATED)
	EX57VPN	PIN FASTENER	1		(ESCO STANDARD - VERTALOK) (NOT ILLUSTRATED)
3	T806X550	SHANK	1		(HENSLEY RIBBED SHARP, TIGER, AND TWIN TIGER)
	T806X500	SHANK	1		(HENSLEY RIBBED SHARP, ABRASION PANEL, TIGER, AND TWIN TIGER)
	T4T4704	SHANK	1		(CATERPILLAR STANDARD) (NOT ILLUSTRATED)
	EX1856A-57V	SHANK	1		(ESCO STANDARD - VERTALOK)
4A	TX550SYL	TOOTH	1		(HENSLEY RIBBED SHARP)
4B	TX500SYL	TOOTH	1		(HENSLEY RIBBED SHARP)
4C	T4T4702	TOOTH	1		(CATERPILLAR STANDARD)
4D	EX57SYL	TOOTH	1		(ESCO STANDARD)
4E	TX500AP	TOOTH	1		(ABRASION PANEL)
4F	TT500	TOOTH	1		(HENSLEY TIGER)
4G	TT550	TOOTH	1		(HENSLEY TIGER)
4H	TX500WT	TOOTH	1		(HENSLEY TWIN TIGER)
4J	TX550WT	TOOTH	1		(HENSLEY TWIN TIGER)
5	T4T4707	RETAINER	1		(CATERPILLAR STANDARD) (NOT ILLUSTRATED)
	EX57VPL	PLUG	1		(ESCO STANDARD - VERTALOK) (NOT ILLUSTRATED)

TRAVEL CONTROL LEVER

TP67010 -UN-20DEC99

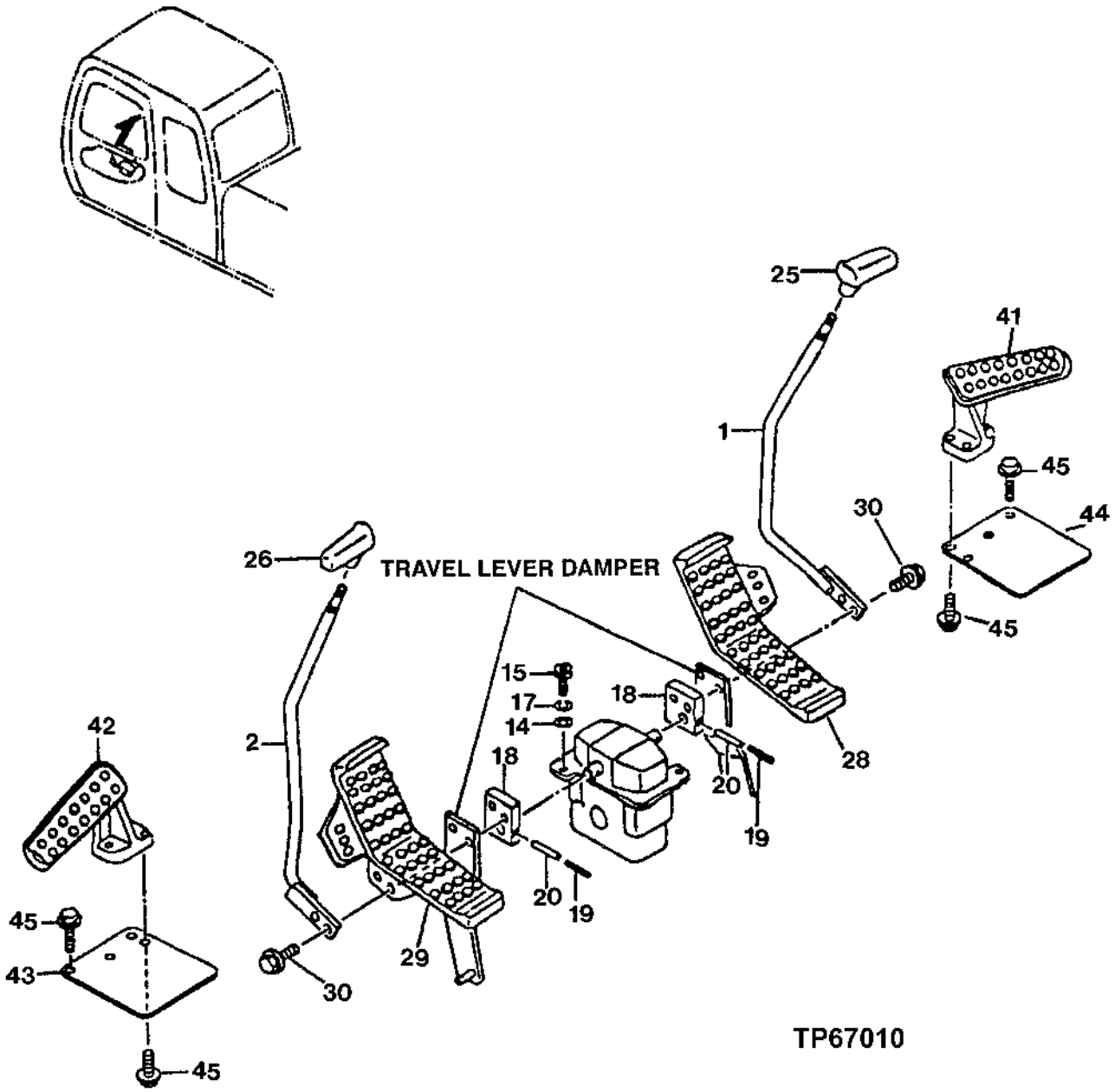

TRAVEL CONTROL LEVER

KEY	PART NO.	PART NAME	QTY	SERIAL NO.	REMARKS
1	8062667	LEVER	1		(SUB FOR AT174467)
2	8062623	LEVER	1		(SUB FOR AT174468)
14	24M7028	WASHER	2		10.500 X 20 X 2 MM (0.413" X 0.787" X 0.079")
15	19M8337	SCREW	2		M10 X 30
17	12M7066	LOCK WASHER	2		10 MM (0.394")
18	3072628	BRACKET	2		(SUB FOR AT174469)
19	34M7062	SPRING PIN	2		5 X 32 MM (0.197" X 1.260")
20	34M7124	SPRING PIN	2		8 X 30 MM (0.315" X 1.181") (SUB FOR 34M7065)
25	2038735	GRIP	1		(SUB FOR AT213747)
26	2038734	GRIP	1		(SUB FOR AT213746)
28	1024384	PEDAL	1		(SUB FOR AT202292)
29	1024224	PEDAL	1		(SUB FOR AT202291)
30	19M7935	CAP SCREW	4		M10 X 55
41	1015478	FOOTREST	1		(SUB FOR AT154056)
42	1015477	FOOTREST	1		(SUB FOR AT154055)
43	3052543	COVER	1		(SUB FOR AT154127)
44	4338635	COVER	1		(SUB FOR AT202338)
45	19M7550	CAP SCREW	8		M10 X 35
	12M7066	LOCK WASHER	8		10 MM (0.394")

CONTROL LEVER
(FRONT AND SWING)

TP66720 -UN-30SEP99

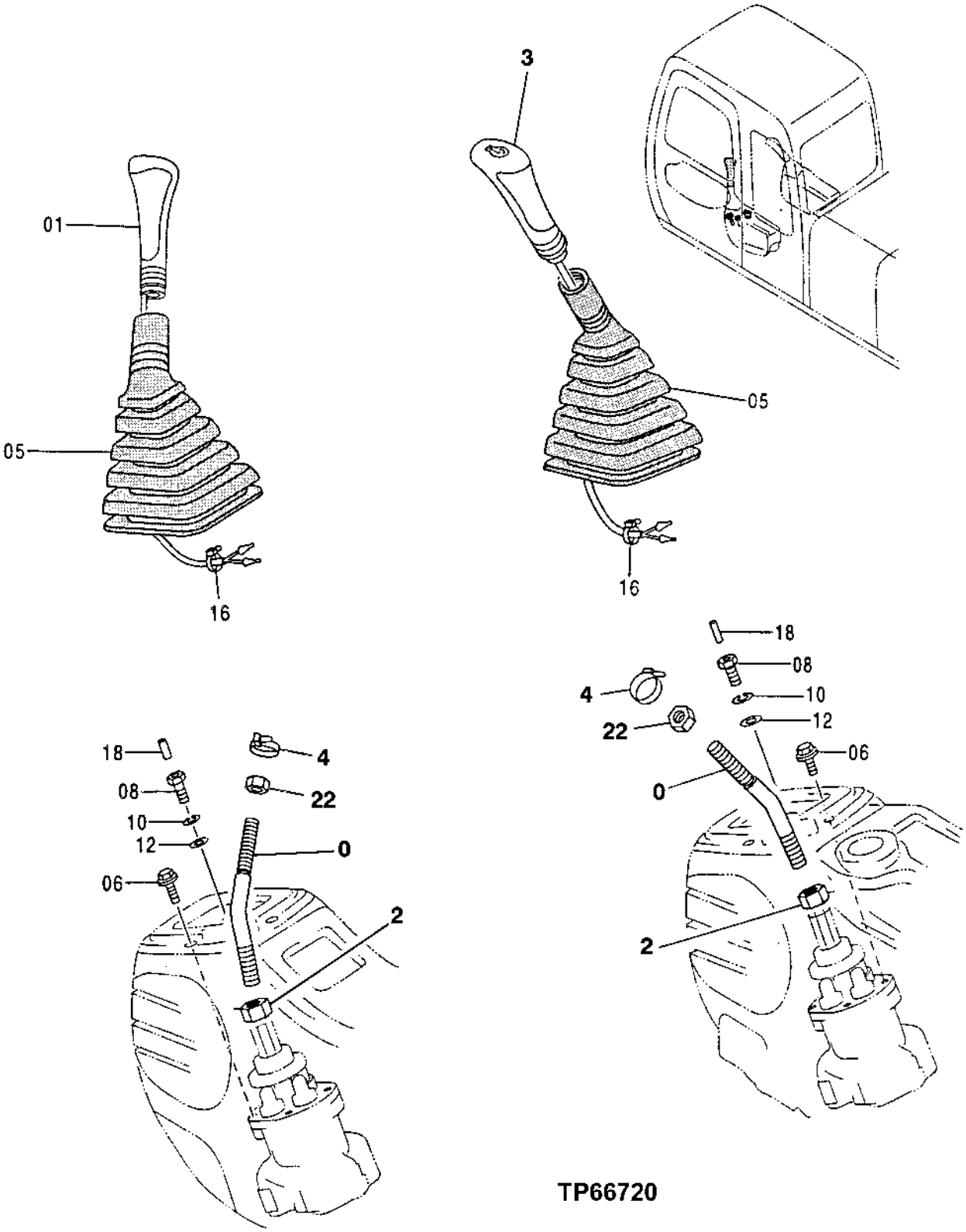

TP66720

CONTROL LEVER
(FRONT AND SWING)

KEY	PART NO.	PART NAME	QTY	SERIAL NO.	REMARKS
0	4334707	LEVER	2		(SUB FOR AT177386)
1	2038484	GRIP	1		(SUB FOR AT213743) (INCLUDES HORN BUTTON)
2	14M7141	NUT	2		M14
3	2039400	GRIP	1		(SUB FOR TH2039400) (INCLUDES POWER LIFT SWITCH)
4	H77698	TIE BAND	2		
5	2038578	BOOT	2		(SUB FOR AT213745)
6	19M7407	CAP SCREW	6		M8 X 25
	24M7055	WASHER	6		8.400 X 16 X 1.600 MM (0.331" X 0.630" X 0.063")
	12M7056	LOCK WASHER	6		8 MM (0.315") (SUB FOR 12M7065)
8	4342802	SCREW	2		(SUB FOR AT177372)
10	12M7056	LOCK WASHER	2		8 MM (0.315") (SUB FOR 12M7065)
12	24M7055	WASHER	2		8.400 X 16 X 1.600 MM (0.331" X 0.630" X 0.063")
16	H77698	TIE BAND	2		
18	34M7086	SPRING PIN	2		3 X 32 MM (0.118" X 1.260")
22	14M7357	NUT	2		M12

**PILOT VALVE
(FRONT AND SWING)**

TP66721 -UN-30SEP99

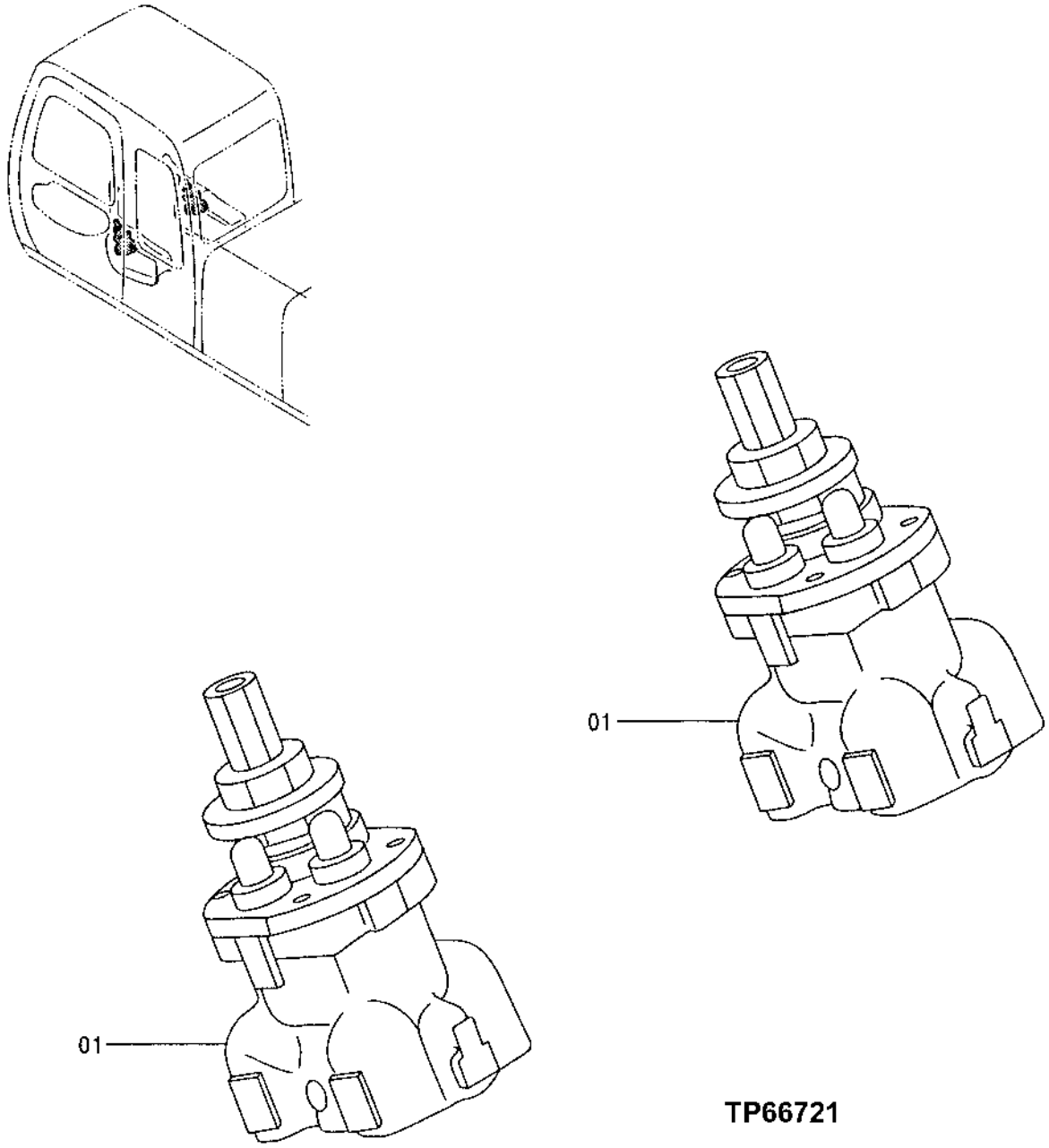

PILOT VALVE
(FRONT AND SWING)

KEY	PART NO.	PART NAME	QTY	SERIAL NO.	REMARKS
1	9134239EX	HYDR./PILOT CONTROL VALVE	2		(USE AT202169 IF AVAILABLE) (SUB FOR AT202169) (SUB FOR AT189843)

PILOT VALVE

TP54706 -UN-17MAR97

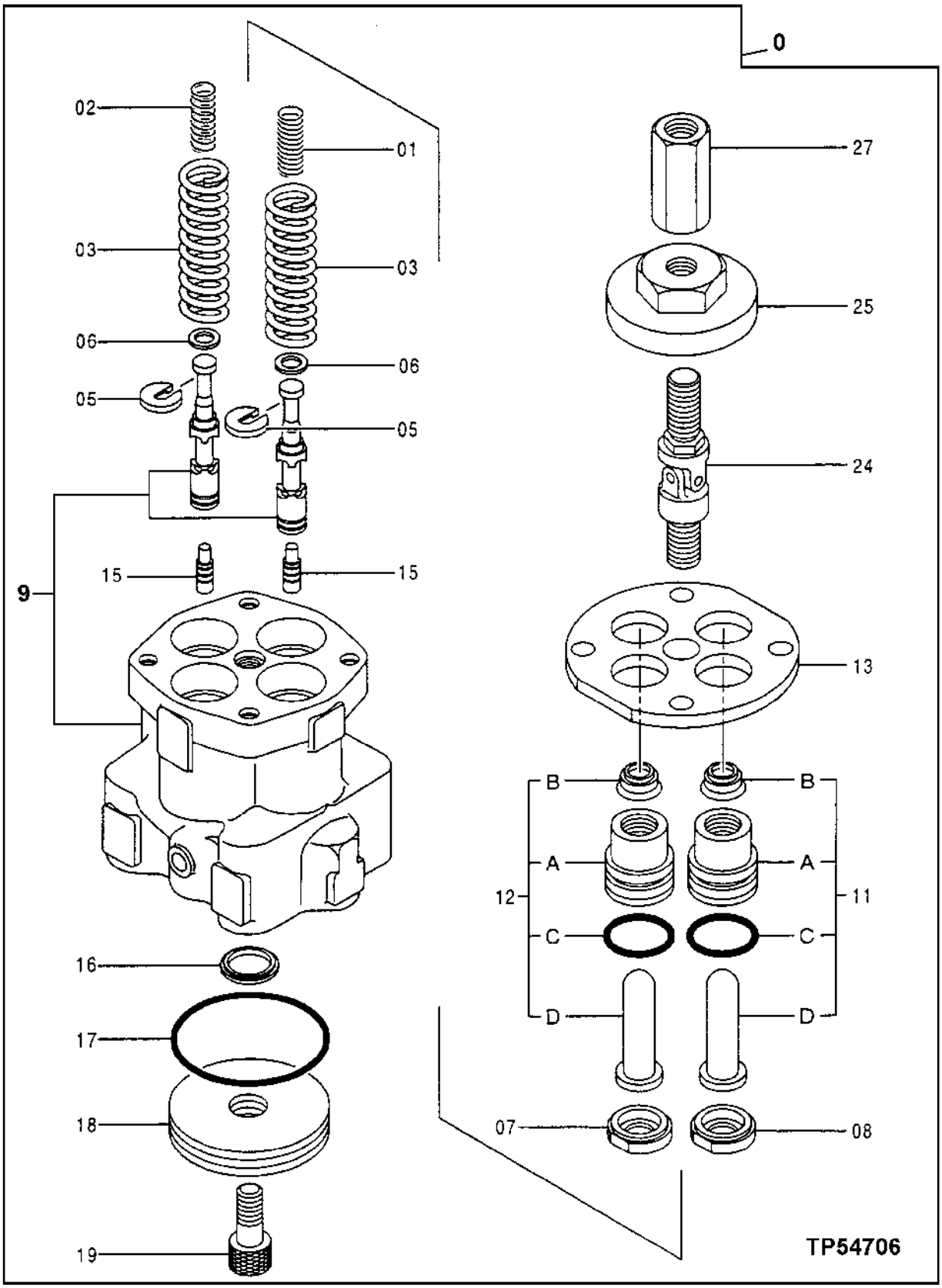

PILOT VALVE

KEY	PART NO.	PART NAME	QTY	SERIAL NO.	REMARKS
0	9134239EX	HYDR./PILOT CONTROL VALVE	1		(USE AT202169 IF AVAILABLE) (SUB FOR AT202169) (SUB FOR AT189843)
1	4201915	SPRING	2		(SUB FOR TH109212)
2	4166686	COMPRESSION SPRING	2		(SUB FOR TH109213)
3	4195421	COMPRESSION SPRING	4		(SUB FOR TH109214)
5	4177777	SPACER	4		(SUB FOR AT154411) (SUB FOR TH109216)
6	4173208	SHIM	20		(SUB FOR TH109217)
7	4177896	GUIDE	2		(SUB FOR TH109218)
8	4179257	GUIDE	2		(SUB FOR AT154412) (SUB FOR TH109219)
9	7024552	HOUSING	1		(SUB FOR AT155700)
11	9101513	CAP	2		(SUB FOR AT154538)
11B	4359926	SEAL	1		(SUB FOR AT131269)
11C	U46166	O-RING	1		24.400 X 3.100 MM (0.961" X 0.122")
12	9108066	CAP	2		(SUB FOR AT154540)
12B	4359926	SEAL	1		(SUB FOR AT131269)
12C	U46166	O-RING	1		24.400 X 3.100 MM (0.961" X 0.122")
15	4184929	PISTON	4		(SUB FOR TH109228)
16	4286874	SEAL	1		(SUB FOR AT155701)
17	CH11571	PACKING	1		
18	4184954	PLATE	1		(SUB FOR TH109229)
19	19M8168	SCREW	1		M12 X 25
24	4285209	UNIVERSAL JOINT	1		(SUB FOR TH109230)
27	4182067	JOINTER	1		(SUB FOR TH109232)

PROPEL PILOT VALVE

TP47929 -UN-14MAY96

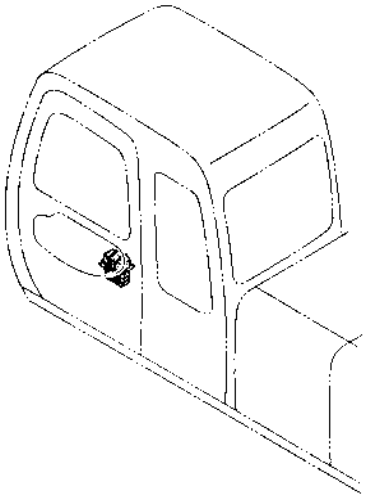

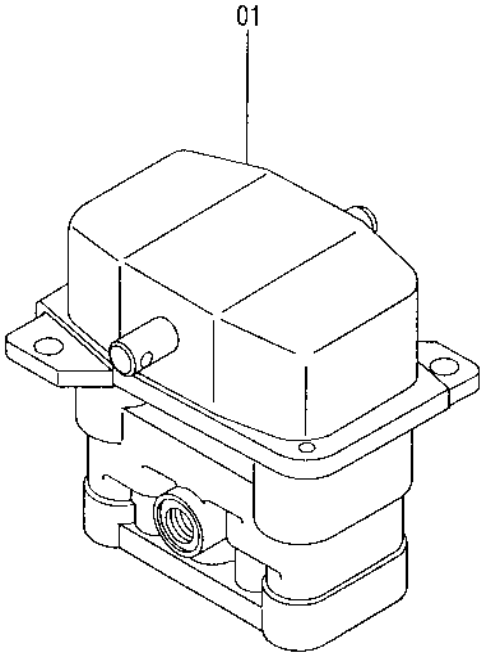

PROPEL PILOT VALVE

KEY	PART NO.	PART NAME	QTY	SERIAL NO.	REMARKS
1	9149235	VALVE	1		(SUB FOR AT214393)

PROPEL PILOT VALVE

TP47928 -UN-14MAY96

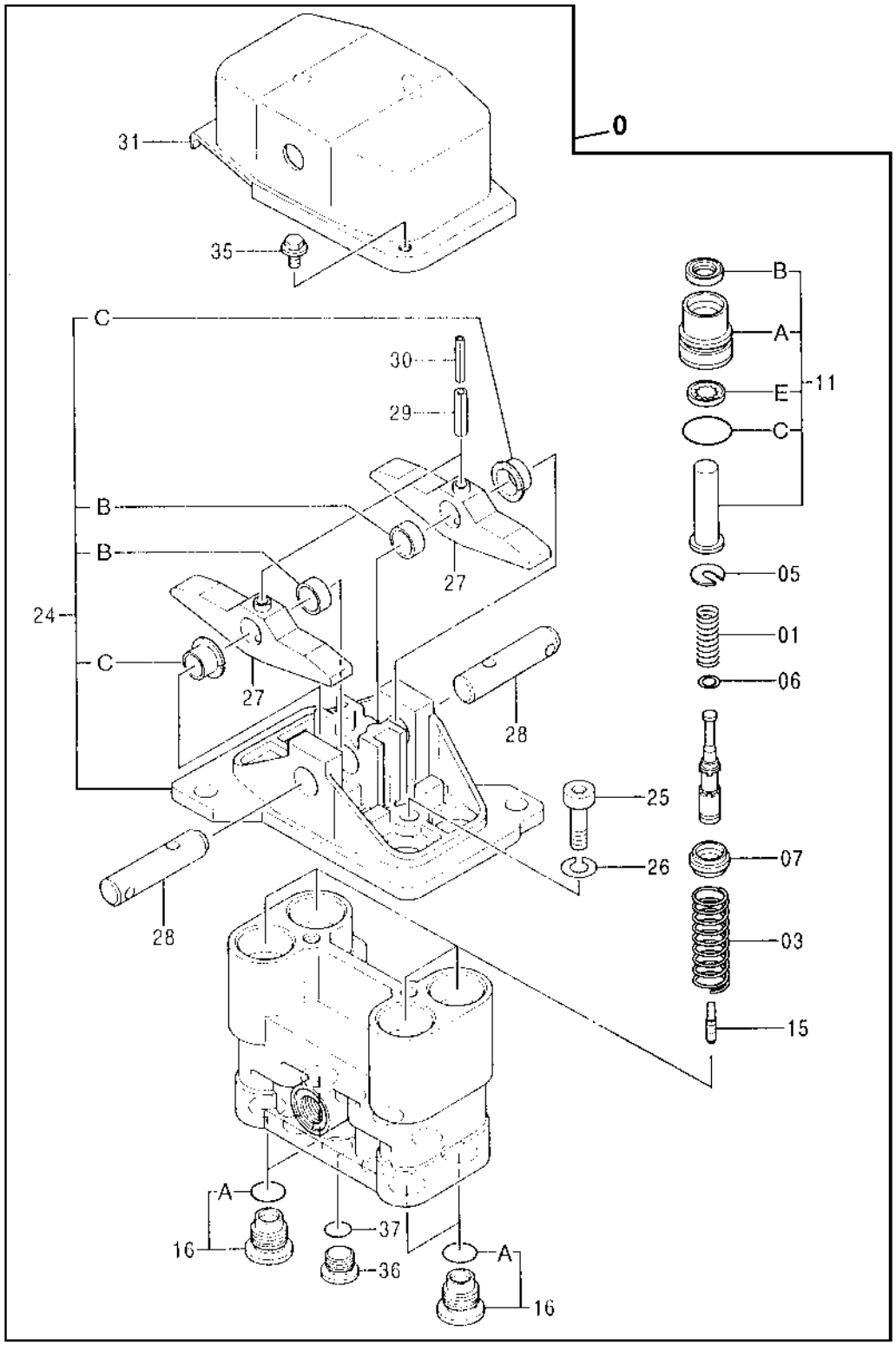

PROPEL PILOT VALVE

KEY	PART NO.	PART NAME	QTY	SERIAL NO.	REMARKS
0	9149235	VALVE	1		(SUB FOR AT154526) (SUB FOR AT214393)
1	4203421	SPRING	4		(SUB FOR TH109235)
3	4203413	COMPRESSION SPRING	4		(SUB FOR TH109236)
5	4177777	SPACER	4		(SUB FOR TH109216)
6	4173208	SHIM	20		(SUB FOR TH109217)
7	4203412	GUIDE	4		(SUB FOR TH109237)
11	9134018	PLUNGER	4		(SUB FOR AT214383)
11A	.....	BUSHING	1		(NOT AVAILABLE FOR SERVICE)
11B	4359926	SEAL	1		(SUB FOR AT131269)
11C	U46166	O-RING	1		24.400 X 3.100 MM (0.961" X 0.122")
11E	4352707	RING	1		(SUB FOR AT213968)
15	4184929	PISTON	4		(SUB FOR TH109228)
16	9102507	PLUG	4		(SUB FOR AT154534)
16A	CH10570	PACKING	1		
24	9101522	HOLDER	1		(SUB FOR AT154529)
24B	4238834	BUSHING	2		(SUB FOR TH111963)
24C	4274716	BUSHING	2		(SUB FOR AT154947)
25	J781030	SCREW	2		(SUB FOR AT213614)
26	12M7066	LOCK WASHER	2		10 MM (0.394")
27	3035803	CAM	2		(SUB FOR TH109243)
28	4190983	PIN FASTENER	2		(SUB FOR TH109244)
29	34M7225	SPRING PIN	2		8 X 28 MM (0.315" X 1.102") (SUB FOR 34M6402)
30	4213419	SPRING PIN	2		(SUB FOR TH111654)
31	2031724	COVER	1		(SUB FOR AT154086)
35	19M7923	CAP SCREW	2		M6 X 12
	24M7054	WASHER	2		6.400 X 12 X 1.600 MM (0.252" X 0.472" X 0.063")
	12M7006	LOCK WASHER	2		6 MM (0.236")
36	4208977	DRAIN PLUG	2		(SUB FOR TH111351)
37	CH11561	PACKING	2		

PROPEL LEVER DAMPER

TP66726 -UN-01OCT99

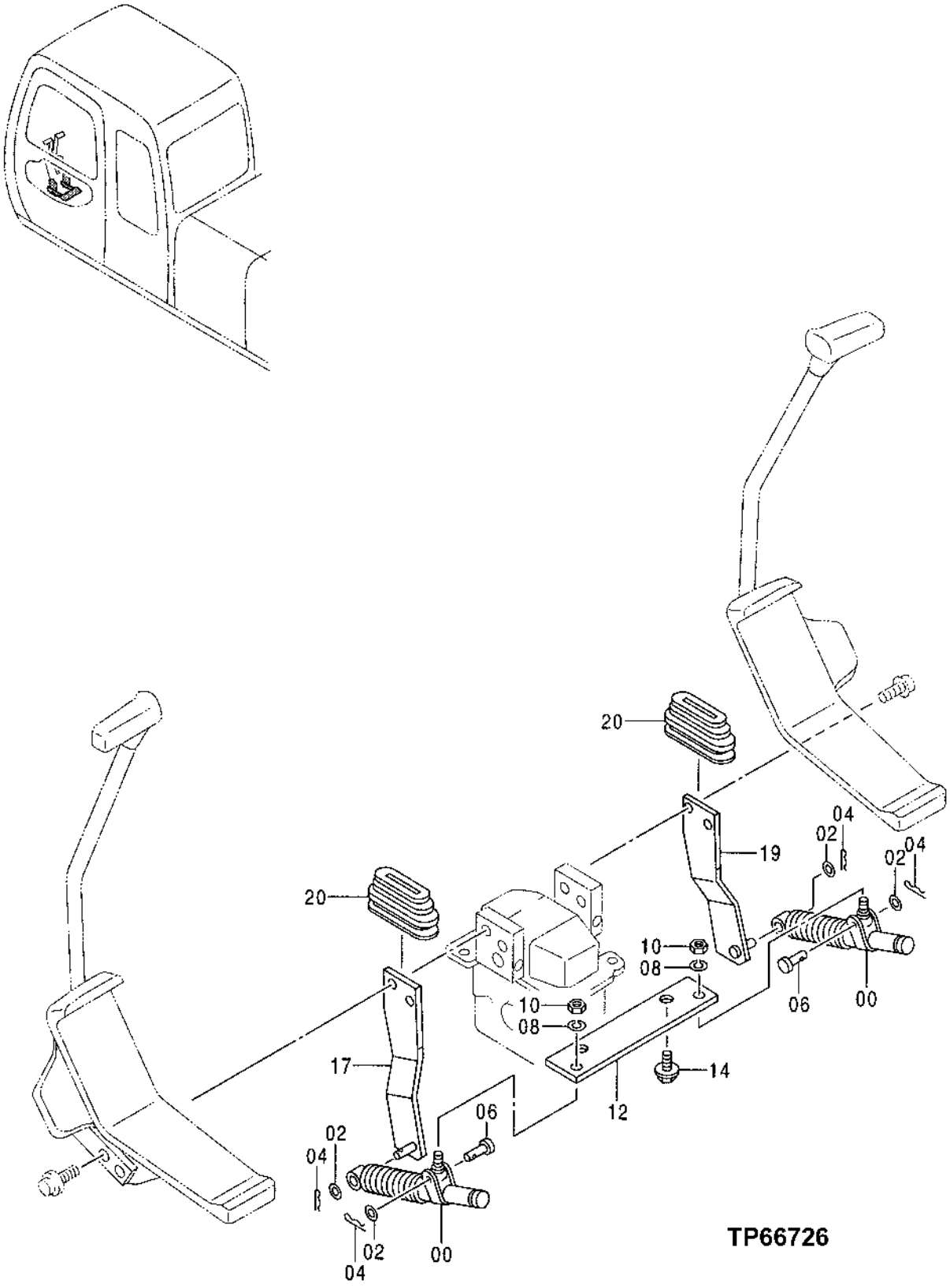

PROPEL LEVER DAMPER

KEY	PART NO.	PART NAME	QTY	SERIAL NO.	REMARKS
0	4204959	TORSIONAL DAMPENER	2		(SUB FOR TH108384)
2	24M7055	WASHER	4		8.400 X 16 X 1.600 MM (0.331" X 0.630" X 0.063")
4	H132922	COTTER PIN	4		
6	4044928	PIN	2		(SUB FOR TH108385)
8	12M7056	LOCK WASHER	2		8 MM (0.315") (SUB FOR 12M7065)
10	14M7273	NUT	2		M8
12	4359716	BRACKET	1		(SUB FOR AT215938)
14	19M7938	CAP SCREW	2		M10 X 20
	12M7066	LOCK WASHER	2		10 MM (0.394")
17	9741921	BRACKET	1		(SUB FOR AT202490)
19	9741920	BRACKET	1		(SUB FOR AT202489)
20	3076503	BOOT	2		(SUB FOR AT215876)

CONTROL LEVER

TP54644 -UN-05MAR97

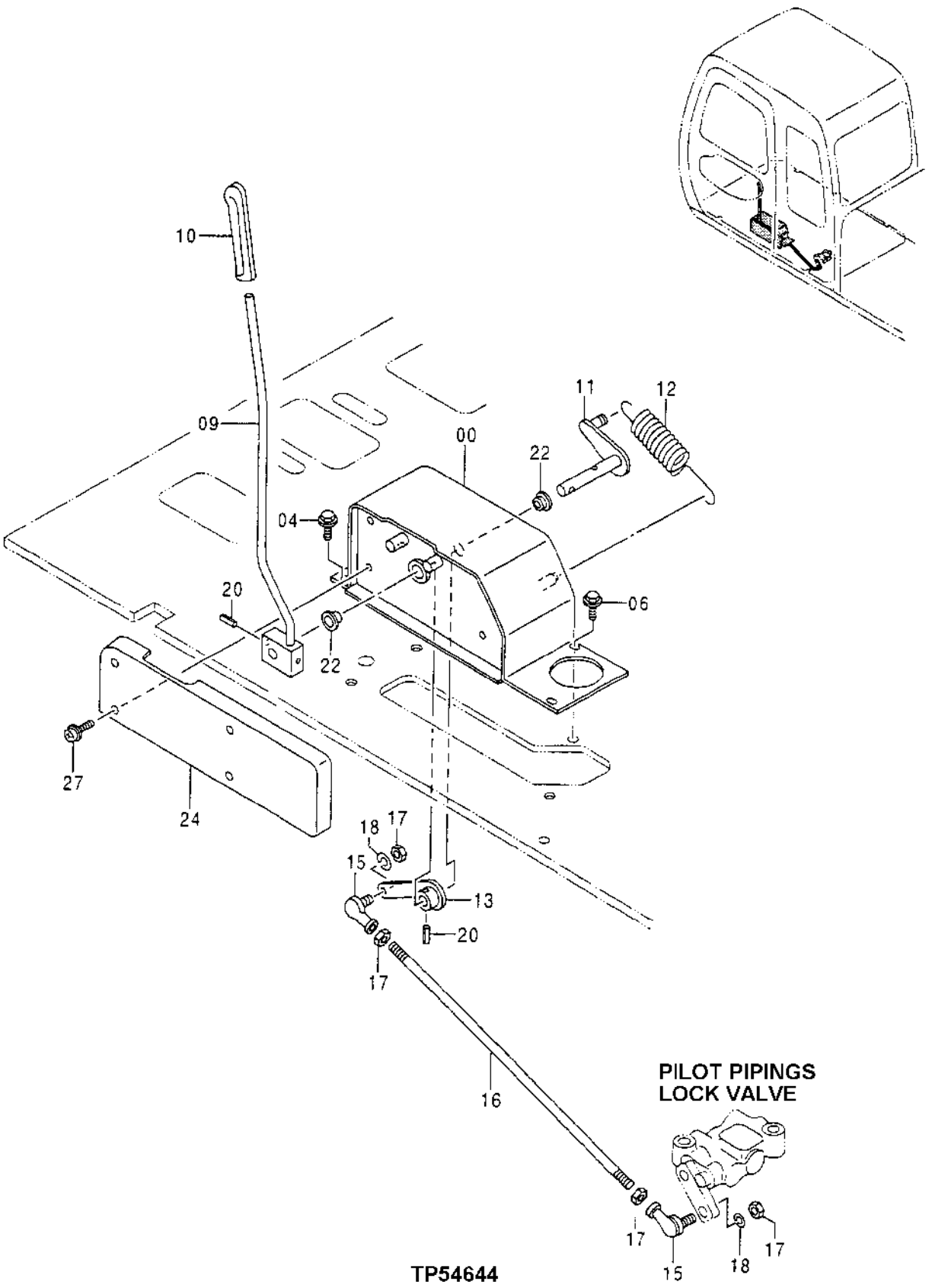

CONTROL LEVER

KEY	PART NO.	PART NAME	QTY	SERIAL NO.	REMARKS
0	7029259	BOX	1		(SUB FOR AT217849)
4	19M7402	CAP SCREW	2		M10 X 25
	12M7066	LOCK WASHER	2		10 MM (0.394")
6	19M7402	CAP SCREW	2		M10 X 25
	12M7066	LOCK WASHER	2		10 MM (0.394")
	24M7028	WASHER	2		10.500 X 20 X 2 MM (0.413" X 0.787" X 0.079")
9	8061138	LEVER	1		(SUB FOR AT214361)
10	3051611	GRIP	1		(SUB FOR AT154122)
11	8060886	LINK	1		(SUB FOR AT214358)
12	4189184	EXTENSION SPRING	1		(SUB FOR TH108392)
13	9743595	LEVER	1		(SUB FOR AT177400)
15	T110021	BALL JOINT SOCKET	2		
16	4259591	STUD	1		(SUB FOR AT154262)
17	14M7273	NUT	4		M8
18	12M7056	LOCK WASHER	2		8 MM (0.315") (SUB FOR 12M7065)
20	34M7225	SPRING PIN	2		8 X 28 MM (0.315" X 1.102") (SUB FOR 34M6402)
22	4341810	BUSHING	2		(SUB FOR AT177401)
24	2037246	COVER	1		(SUB FOR AT213737)
27	J680640	SCREW, WITH WASHER	4		(SUB FOR AT213612)

STANDARD ARM ASSEMBLY (3.6M)

TP66964 -UN-08NOV99

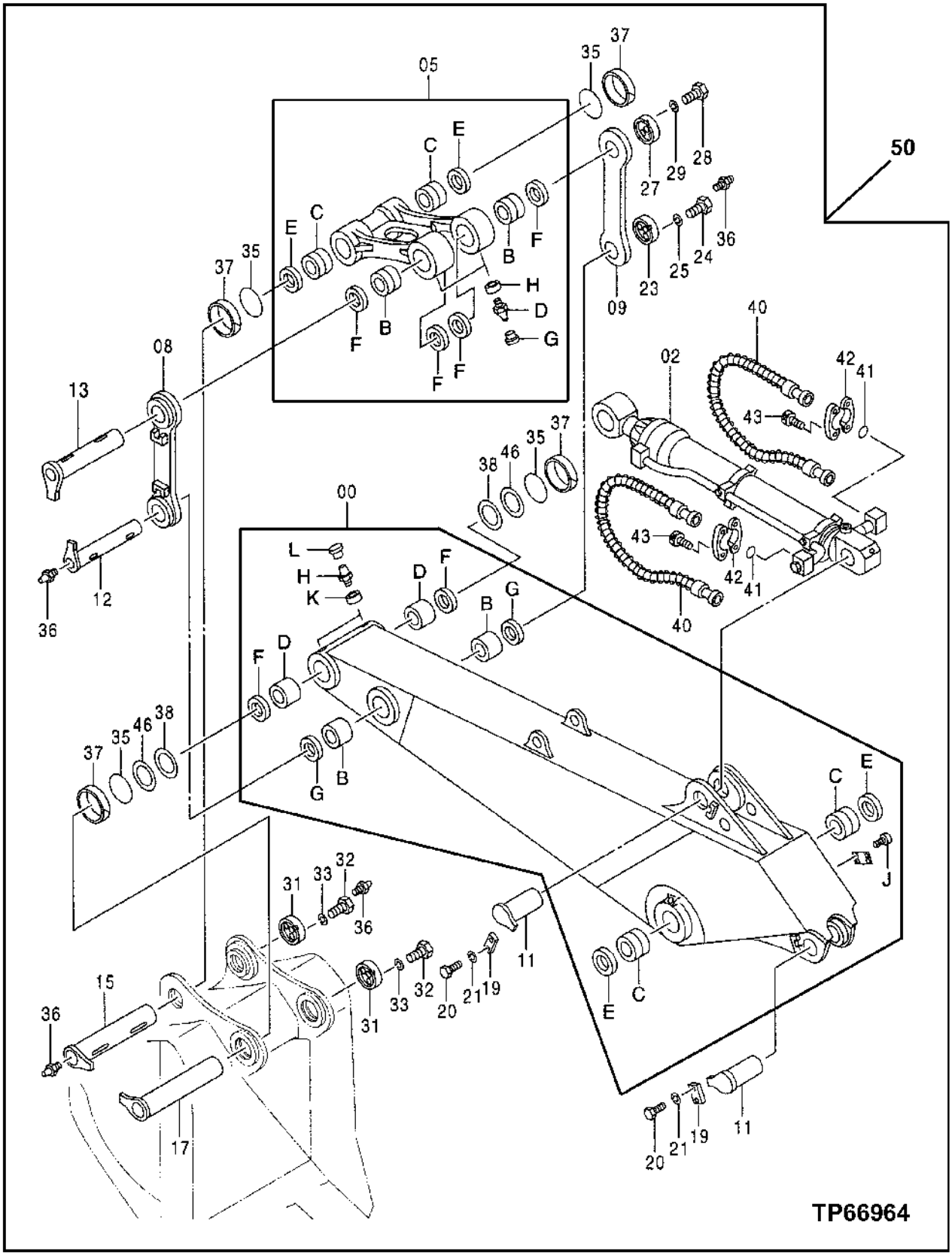

STANDARD ARM ASSEMBLY (3.6M)

KEY	PART NO.	PART NAME	QTY	SERIAL NO.	REMARKS
0	9135250	LIFT ARM	1		(SUB FOR TH9135250)
0B	4129729	BUSHING	2		(SUB FOR TH4129729)
0C	4218719	BUSHING	2		(SUB FOR TH4218719)
0D	4332024	BUSHING	2		(SUB FOR TH4332024)
0E	4251766	SEAL	2		(SUB FOR TH4251766)
0F	4143624	SEAL	2		(SUB FOR TH4251207)
0G	4251212	SEAL	2		(SUB FOR AT202303)
0H	TH100074	LUBRICATION FITTING	2		
0J	37H99	SCREW	4		2.540 X 6.350 MM (0.100" X 1/4")
0K	4130686	BUSHING	2		(SUB FOR AT217082)
0L	4105912	CAP	2		(SUB FOR AT217081)
2	TH4331078	HYDRAULIC CYLINDER	1		
5	9135251	LINK	1		(SUB FOR TH9135251)
5B	4234708	BUSHING	2		(SUB FOR TH4234708)
5C	4281149	BUSHING	2		(SUB FOR TH4281149)
5D	TH100074	LUBRICATION FITTING	2		
5E	4251767	SEAL	2		(SUB FOR TH4251767)
5F	4251753	SEAL	4		(SUB FOR TH4251753)
5G	4130686	BUSHING	2		(SUB FOR AT217082)
5H	4105912	CAP	2		(SUB FOR AT217081)
8	8065547	LINK	1		(SUB FOR TH8065547)
9	8065548	LINK	1		(SUB FOR TH8065548)
11	8067795	PIN FASTENER	2		(SUB FOR TH8067795)
12	8067798	PIN FASTENER	1		(SUB FOR TH8067798)
13	3093070	PIN FASTENER	1		(SUB FOR TH8067801 AND 8067801)
15	8067806	PIN FASTENER	1		(SUB FOR TH8067806)
17	8058964	PIN FASTENER	1		(SUB FOR TH8058964)
19	4122729	STRAP	2		(SUB FOR AT131696)
20	19M7950	CAP SCREW	4		M20 X 45
21	12M7070	LOCK WASHER	4		20 MM (0.787")
23	3015951	STOP	1		(SUB FOR TH3015951)
24	M111645	CAP SCREW	3		(SUB FOR THM111645)
25	12H294	LOCK WASHER	3		15.875 MM (5/8")
27	4246611	STOP	1		(SUB FOR TH4246611)
28	19M7950	CAP SCREW	3		M20 X 45
29	12M7070	LOCK WASHER	3		20 MM (0.787")
31	4251211	STOP	2		(SUB FOR TH4251211)
32	19M7950	CAP SCREW	6		M20 X 45
33	12M7070	LOCK WASHER	6		20 MM (0.787")
35	4247424	O-RING	4		(SUB FOR TH4247424)
36	TH100074	LUBRICATION FITTING	4		
37	4252730	RING	4		(SUB FOR TH4252730)
38	4379158	THRUST WASHER	2		(SUB FOR TH4379158)
40	4373644	HYDRAULIC HOSE	2		(SUB FOR TH4373644)
41	T72216	O-RING	2		37.694 X 3.531 MM (1-31/64" X 0.139")
42	AT131685	FLANGE FITTING	4		
43	19M8734	SCREW	8		M14 X 45
46	4379157	THRUST WASHER	2		(SUB FOR TH4379157)
50	AT188508	ARM	1		WHOLEGOODS (INCLUDES ARM, BUCKET CYLINDER, HOSES, AND LINKAGE) (DOES NOT INCLUDE BUCKET)

SEMI-LONG ARM ASSEMBLY (4.4 M)

TP66878 -UN-13OCT99

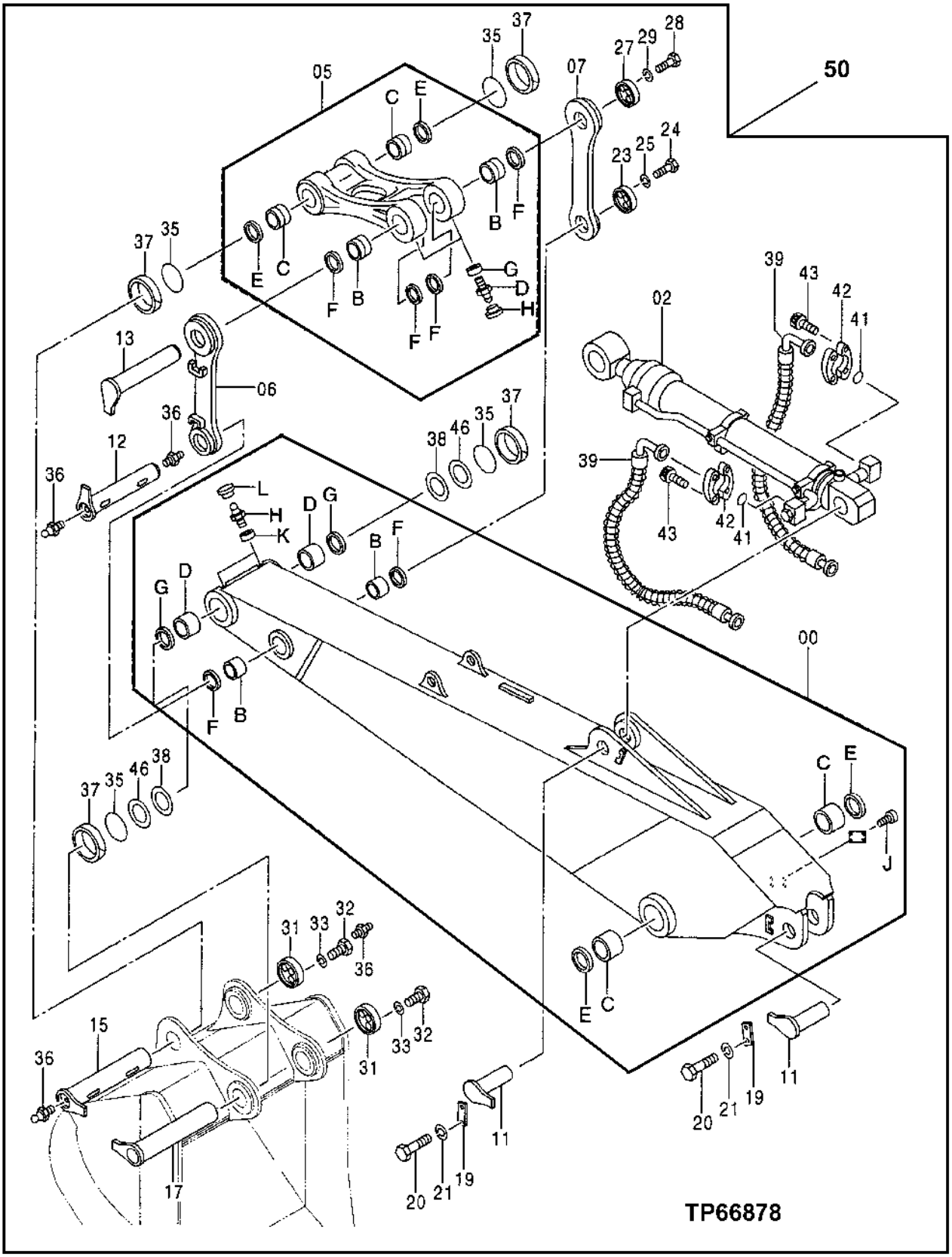

SEMI-LONG ARM ASSEMBLY (4.4M)

KEY	PART NO.	PART NAME	QTY	SERIAL NO.	REMARKS
0	9150449	LIFT ARM	1		(SUB FOR TH9150449)
0B	4129729	BUSHING	2		(SUB FOR TH4129729)
0C	4218719	BUSHING	2		(SUB FOR TH4218719)
0D	4332024	BUSHING	2		(SUB FOR TH4332024)
0E	4251766	SEAL	2		(SUB FOR TH4251766)
0F	4251212	SEAL	2		(SUB FOR AT202303)
0G	4143624	SEAL	2		(SUB FOR TH4251207)
0H	TH100074	LUBRICATION FITTING	2		
0J	37H99	SCREW	4		2.540 X 6.350 MM (0.100" X 1/4")
0K	4130686	BUSHING	2		(SUB FOR AT217082)
0L	4105912	CAP	2		(SUB FOR AT217081)
2	TH4331078	HYDRAULIC CYLINDER	1		
5	9135251	LINK	1		(SUB FOR TH9135251)
5B	4234708	BUSHING	2		(SUB FOR TH4234708)
5C	4281149	BUSHING	2		(SUB FOR TH4281149)
5D	TH100074	LUBRICATION FITTING	2		
5E	4251767	SEAL	2		(SUB FOR TH4251767)
5F	4251753	SEAL	4		(SUB FOR TH4251753)
5G	4130686	BUSHING	2		(SUB FOR AT217082)
5H	4105912	CAP	2		(SUB FOR AT217081)
6	8065547	LINK	1		(SUB FOR TH8065547)
7	8065548	LINK	1		(SUB FOR TH8065548)
11	8067795	PIN FASTENER	2		(SUB FOR TH8067795)
12	8067798	PIN FASTENER	1		(SUB FOR TH8067798)
13	3093070	PIN FASTENER	1		(SUB FOR TH8067801 AND 8067801)
15	8067806	PIN FASTENER	1		(SUB FOR TH8067806)
17	8058964	PIN FASTENER	1		(SUB FOR TH8058964)
19	4122729	STRAP	2		(SUB FOR AT131696)
20	19M7950	CAP SCREW	4		M20 X 45
21	12M7070	LOCK WASHER	4		20 MM (0.787")
23	3015951	STOP	1		(SUB FOR TH3015951)
24	M111645	CAP SCREW	3		(SUB FOR THM111645)
25	12H294	LOCK WASHER	3		15.875 MM (5/8")
27	4246611	STOP	1		(SUB FOR TH4246611)
28	19M7950	CAP SCREW	3		M20 X 45
29	12M7070	LOCK WASHER	3		20 MM (0.787")
31	4251211	STOP	2		(SUB FOR TH4251211)
32	19M7950	CAP SCREW	6		M20 X 45
33	12M7070	LOCK WASHER	6		20 MM (0.787")
35	4247424	O-RING	4		(SUB FOR TH4247424)
36	TH100074	LUBRICATION FITTING	4		
37	4252730	RING	4		(SUB FOR TH4252730)
38	4379158	THRUST WASHER	2		(SUB FOR TH4379158)
39	4366652	HYDRAULIC HOSE - FABRICATE	2		(SUB FOR TH4366652)
41	T72216	O-RING	2		37.694 X 3.531 MM (1-31/64" X 0.139")
42	AT131685	FLANGE FITTING	4		
43	19M8734	SCREW	8		M14 X 45
46	4379157	THRUST WASHER	2		(SUB FOR TH4379157)
50	AT188513	ARM	1		WHOLEGOODS (INCLUDES ARM, BUCKET CYLINDER, HOSES, AND LINKAGE) (DOES NOT INCLUDE BUCKET)

LONG ARM ASSEMBLY (5.4 M)

TP66965 -UN-08NOV99

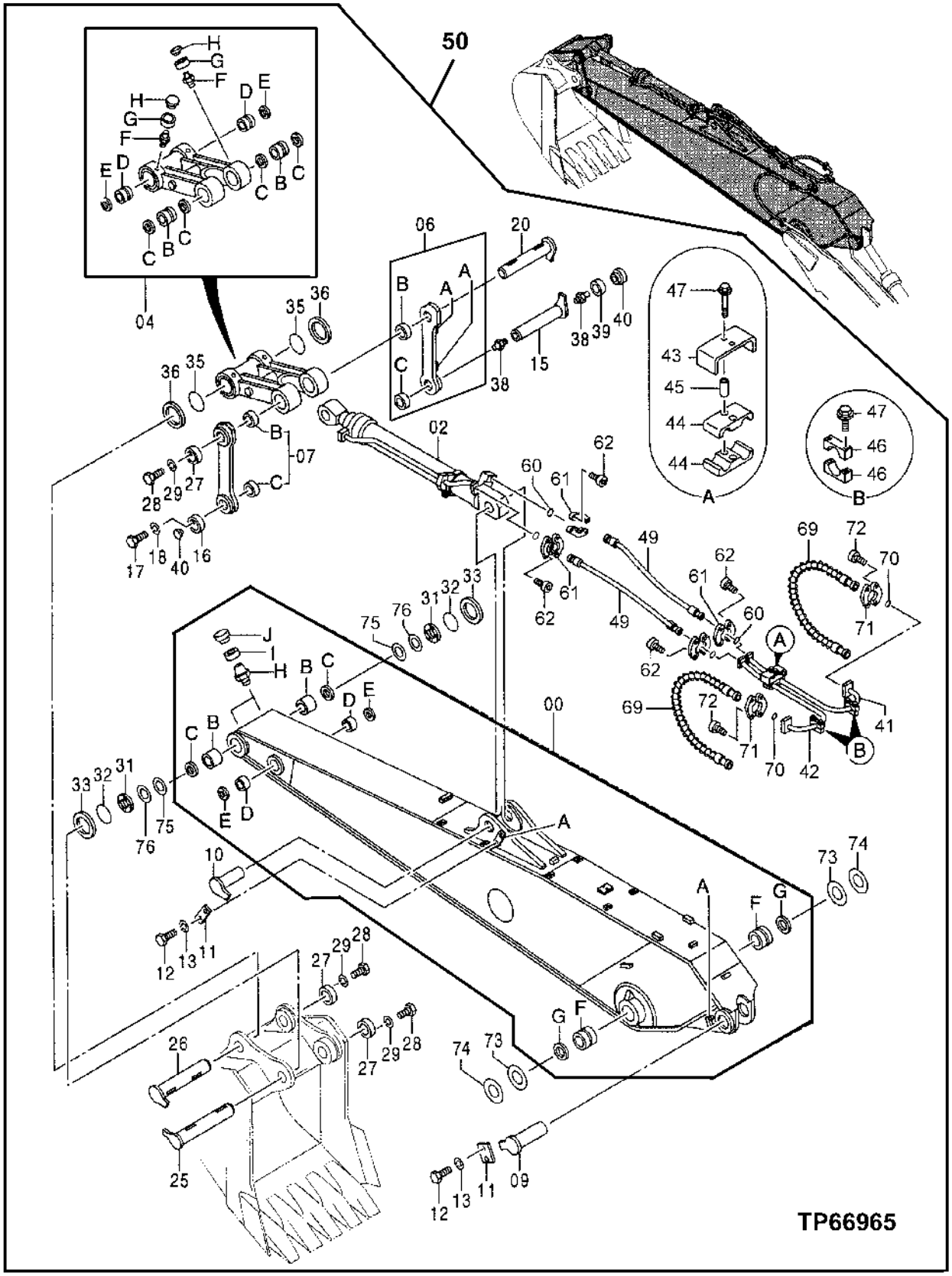

LONG ARM ASSEMBLY (5.2M)

KEY	PART NO.	PART NAME	QTY	SERIAL NO.	REMARKS
0	9169577	LIFT ARM	1		(SUB FOR TH9169577)
0A	4379221	STOP	2		(SUB FOR TH4379221)
0B	4400637	BUSHING	2		(SUB FOR TH4400637)
0C	4251752	SEAL	2		(SUB FOR AT202304)
0D	4267257	BUSHING	2		(SUB FOR TH4267257)
0E	4267832	SEAL	2		(SUB FOR TH4267832)
0F	4218719	BUSHING	2		(SUB FOR TH4218719)
0G	4251766	SEAL	2		(SUB FOR TH4251766)
0H	TH100074	LUBRICATION FITTING	2		
0I	4130686	BUSHING	2		(SUB FOR AT217082)
0J	4105912	CAP	2		(SUB FOR AT217081)
2	4397518EX	HYDRAULIC CYLINDER	1		(SUB FOR TH4397518)
4	9138476	LINK	1		(SUB FOR TH9138476)
4B	4267258	BUSHING	2		(SUB FOR TH4267258)
4C	4251752	SEAL	4		(SUB FOR AT202304)
4D	4267259	BUSHING	2		(SUB FOR TH4267259)
4E	4251212	SEAL	2		(SUB FOR AT202303)
4F	TH100074	LUBRICATION FITTING	4		
4G	4130686	BUSHING	4		(SUB FOR AT217082)
4H	4105912	CAP	4		(SUB FOR AT217081)
6	9098931	LINK	1		(SUB FOR TH9098931)
6A	4267253	STOP	2		(SUB FOR TH4267253)
6B	4246293	BUSHING	1		(SUB FOR TH4246293)
6C	4267756	BUSHING	1		(SUB FOR TH4267756)
7	9098932	LINK	1		(SUB FOR TH9098932)
7B	4246293	BUSHING	1		(SUB FOR TH4246293)
7C	4267756	BUSHING	1		(SUB FOR TH4267756)
9	8067795	PIN FASTENER	1		(SUB FOR TH8067795)
10	8049685	PIN FASTENER	1		(SUB FOR TH8049685)
11	4122729	STRAP	2		(SUB FOR AT131696)
12	19M7950	CAP SCREW	4		M20 X 45
13	12M7070	LOCK WASHER	4		20 MM (0.787")
15	8049686	PIN FASTENER	1		(SUB FOR TH8049686)
16	4267254	STOP	1		(SUB FOR TH4267254)
17	M111645	CAP SCREW	3		(SUB FOR THM111645)
18	12H294	LOCK WASHER	3		15.875 MM (5/8")
20	8049687	PIN FASTENER	1		(SUB FOR TH8049687)
25	8072004	PIN FASTENER	1		(SUB FOR TH8072004)
26	8049689	PIN FASTENER	1		(SUB FOR TH8049689)
27	4393378	STOP	3		(SUB FOR TH4393378)
28	M111645	CAP SCREW	9		(SUB FOR THM111645)
29	12H294	LOCK WASHER	9		15.875 MM (5/8")
31	4267235	THRUST WASHER	2		(SUB FOR TH4267235)
32	4087732	O-RING	2		(SUB FOR TH4087732)
33	4267255	RING	2		(SUB FOR TH4267255)
35	4074009	O-RING	2		(SUB FOR TH4074009)
36	4148825	RING	2		(SUB FOR TH4148825)
38	TH100074	LUBRICATION FITTING	2		
39	4130686	BUSHING	1		(SUB FOR AT217082)
40	4105912	CAP	2		(SUB FOR AT217081)
41	8048381	OIL LINE	1		(SUB FOR TH8048381)
42	8048382	OIL LINE	1		(SUB FOR TH8048382)
43	4304481	CLAMP	1		(SUB FOR AT201755)
44	4337125	CLAMP	2		(SUB FOR TH4337125)
45	28H2611	SPACER	2		13.868 X 21.336 X 50.800 MM (0.546" X 0.840" X 2")
46	AT201796	CLAMP	4		
47	12M7058	LOCK WASHER	6		12.200 MM (0.480") (SUB FOR 12M7067)
	19M8122	CAP SCREW	6		M12 X 85
49	4242436	HYDRAULIC HOSE - FABRICATE	2		(SUB FOR TH4242436)
50	AT188514	ARM	1		WHOLEGOODS (INCLUDES ARM, BUCKET CYLINDER, HOSES, AND LINKAGE) (DOES NOT INCLUDE BUCKET)

LONG ARM ASSEMBLY (5.4 M)

TP66965 -UN-08NOV99

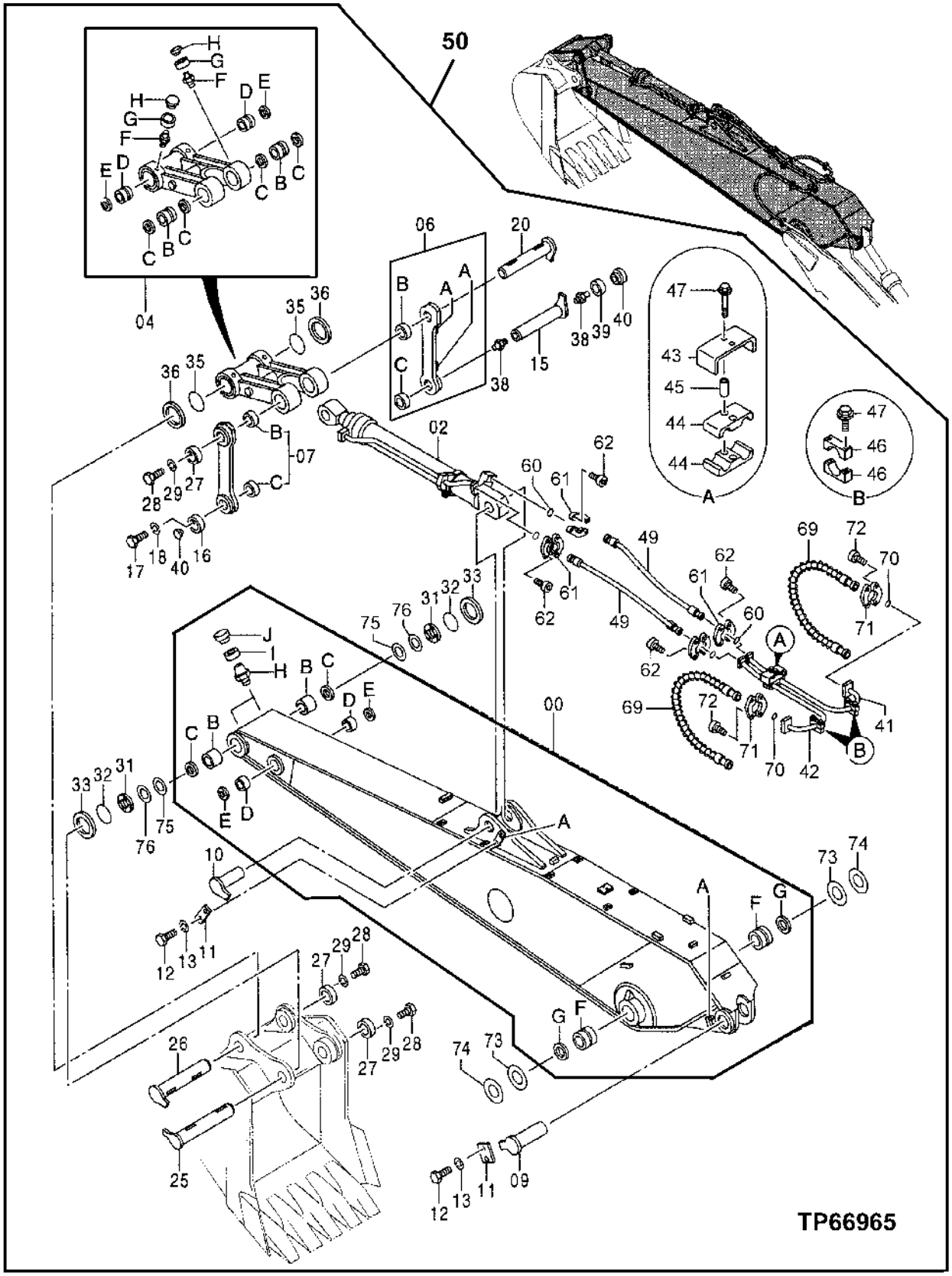

LONG ARM ASSEMBLY (5.2M)

KEY	PART NO.	PART NAME	QTY	SERIAL NO.	REMARKS
60	T72216	O-RING	4		37.694 X 3.531 MM (1-31/64" X 0.139")
61	AT131685	FLANGE FITTING	8		
62	19M8734	SCREW	16		M14 X 45
69	4373644	HYDRAULIC HOSE	2		(SUB FOR TH4373644)
70	T72216	O-RING	2		37.694 X 3.531 MM (1-31/64" X 0.139")
71	AT131685	FLANGE FITTING	4		
72	4146848	BOLT	8		(SUB FOR TH4146848)
73	4191277	SHIM	2		(SUB FOR TH4191277)
74	4185490	SHIM	1		(SUB FOR TH4185490)
75	4139196	SHIM	2		(SUB FOR TH4139196)
76	4139197	SHIM	1		(SUB FOR TH4139197)

MASS EXCAVATING ARM ASSEMBLY (2.95 M)

TP66876 -UN-13OCT99

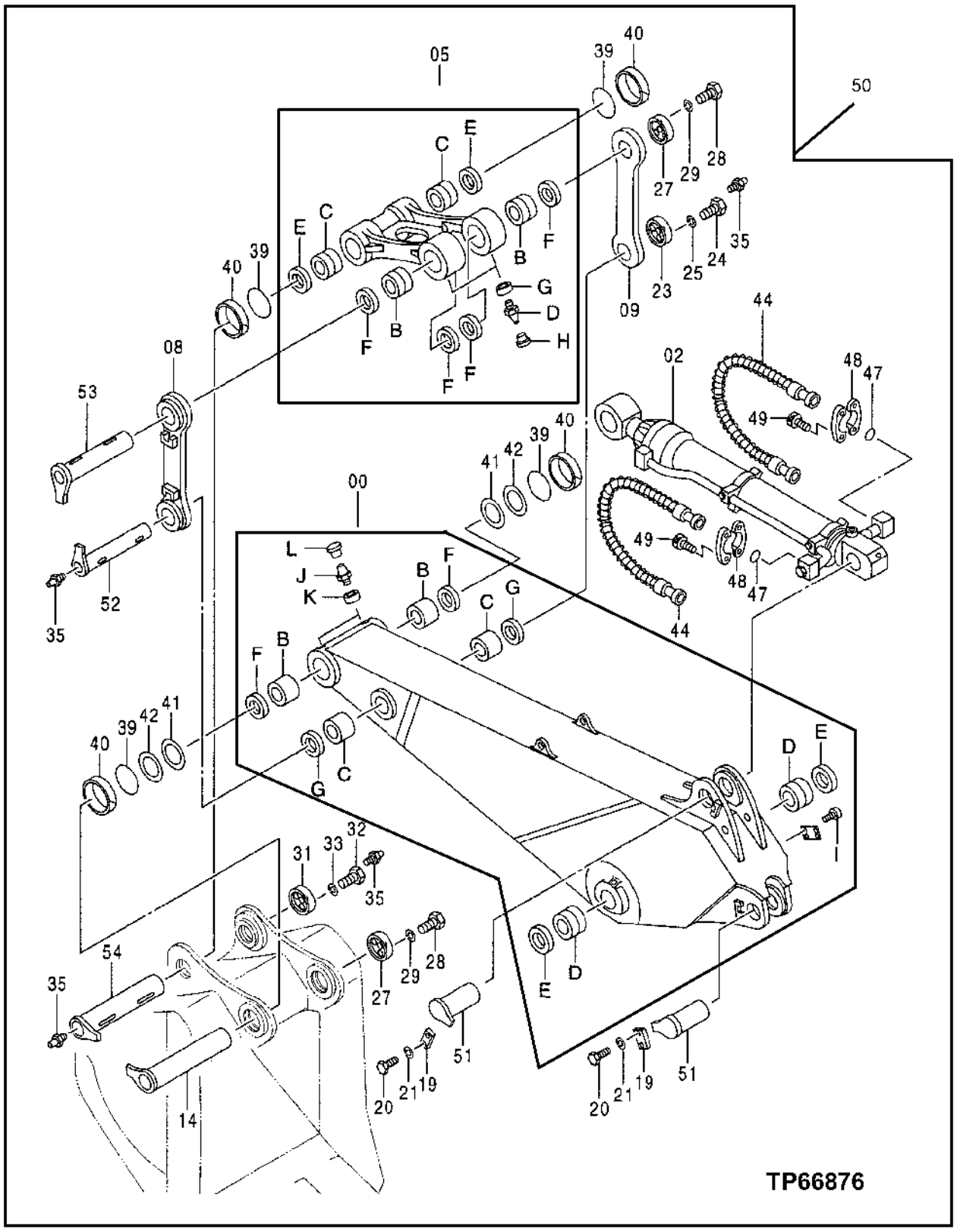

MASS EXCAVATING ARM ASSEMBLY (2.95 M)

KEY	PART NO.	PART NAME	QTY	SERIAL NO.	REMARKS
0	9148351	LIFT ARM	1		(SUB FOR TH9148351)
0B	3074245	BUSHING	2		(SUB FOR TH3074245)
0C	4129729	BUSHING	2		(SUB FOR TH4129729)
0D	4218719	BUSHING	2		(SUB FOR TH4218719)
0E	4251766	SEAL	2		(SUB FOR TH4251766)
0F	4251753	SEAL	2		(SUB FOR TH4251753)
0G	4251212	SEAL	2		(SUB FOR AT202303)
0I	37H99	SCREW	4		2.540 X 6.350 MM (0.100" X 1/4")
0J	TH100074	LUBRICATION FITTING	2		
0K	4130686	BUSHING	2		(SUB FOR AT217082)
0L	4105912	CAP	2		(SUB FOR AT217081)
2	TH4360555	HYDRAULIC CYLINDER	1		
5	9135251	LINK	1		(SUB FOR TH9135251)
5B	4234708	BUSHING	2		(SUB FOR TH4234708)
5C	4281149	BUSHING	2		(SUB FOR TH4281149)
5D	TH100074	LUBRICATION FITTING	2		
5E	4251767	SEAL	2		(SUB FOR TH4251767)
5F	4251753	SEAL	4		(SUB FOR TH4251753)
5G	4130686	BUSHING	2		(SUB FOR AT217082)
5H	4105912	CAP	2		(SUB FOR AT217081)
8	8065547	LINK	1		(SUB FOR TH8065547)
9	8065548	LINK	1		(SUB FOR TH8065548)
14	8065105	PIN FASTENER	1		(SUB FOR TH8065105)
19	4122729	STRAP	2		(SUB FOR AT131696)
20	19M7950	CAP SCREW	4		M20 X 45
21	12M7070	LOCK WASHER	4		20 MM (0.787")
23	3015951	STOP	1		(SUB FOR TH3015951)
24	M111645	CAP SCREW	3		(SUB FOR THM111645)
25	12H294	LOCK WASHER	3		15.875 MM (5/8")
27	4246611	STOP	2		(SUB FOR TH4246611)
28	19M7950	CAP SCREW	6		M20 X 45
29	12M7070	LOCK WASHER	6		20 MM (0.787")
31	4251211	STOP	1		(SUB FOR TH4251211)
32	19M7950	CAP SCREW	3		M20 X 45
33	12M7070	LOCK WASHER	3		20 MM (0.787")
35	TH100074	LUBRICATION FITTING	4		
39	4247424	O-RING	4		(SUB FOR TH4247424)
40	4252730	RING	4		(SUB FOR TH4252730)
41	4386485	THRUST WASHER	2		(SUB FOR TH4386485)
42	4386486	THRUST WASHER	2		(SUB FOR TH4386486)
44	4364317	HYDRAULIC HOSE	2		(SUB FOR TH4364317)
47	T72216	O-RING	2		37.694 X 3.531 MM (1-31/64" X 0.139")
48	AT131685	FLANGE FITTING	4		
49	19M8734	SCREW	8		M14 X 45
50	AT188515	ARM	1		WHOLEGOODS (ASSEMBLY INCLUDES ARM, BUCKET CYLINDER, HOSES AND LINKAGE) (USE WITH MASS EXCAVATING BOOM) (DOES NOT INCLUDE BUCKET)
51	8067795	PIN FASTENER	2		(SUB FOR TH8067795)
52	8067798	PIN FASTENER	1		(SUB FOR TH8067798)
53	3093070	PIN FASTENER	1		(SUB FOR TH8067801 AND 8067801)
54	8069226	PIN FASTENER	1		(SUB FOR TH8069226)

HEAVY DUTY BOOM (8.25 M)

T157519 -UN-19JUL02

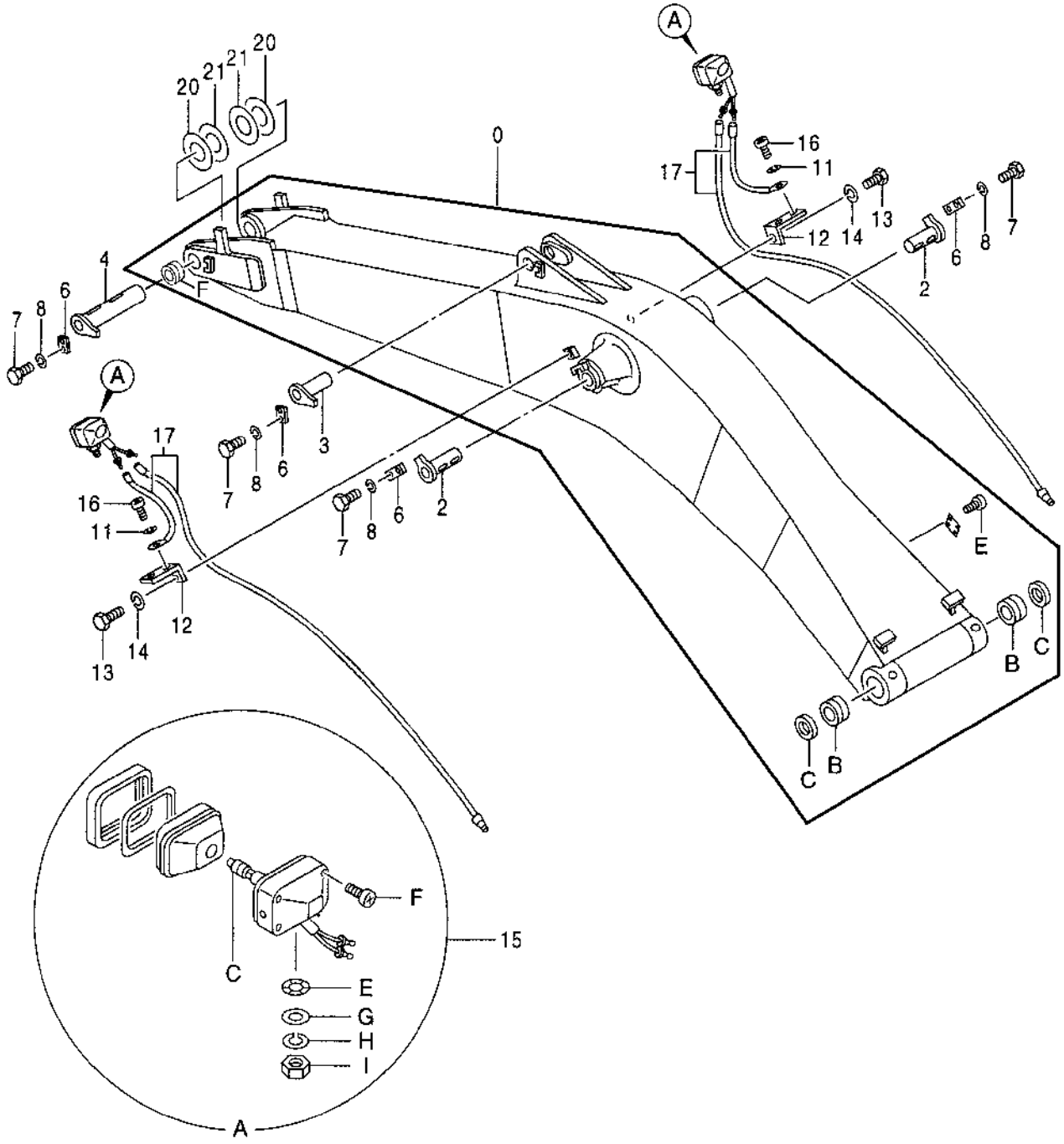

T157519

HEAVY DUTY BOOM (8.25 M)

KEY	PART NO.	PART NAME	QTY	SERIAL NO.	REMARKS
0	9135255	BACKHOE BOOM	1		(SUB FOR TH9135255)
0B	3060122	BUSHING	2		(SUB FOR TH3060122)
0C	4251754	SEAL	2		(SUB FOR TH4251754)
0E	37H99	SCREW	4		2.540 X 6.350 MM (0.100" X 1/4")
0F	4448085	BUSHING	2		
2	8067794	PIN FASTENER	2		(SUB FOR TH8067794)
3	8067795	PIN FASTENER	1		(SUB FOR TH8067795)
4	8067796	PIN FASTENER	1		(SUB FOR TH8067796)
6	4122729	STRAP	4		(SUB FOR AT131696)
7	19M7950	CAP SCREW	8		M20 X 45
8	12M7070	LOCK WASHER	8		20 MM (0.787")
11	12M7006	LOCK WASHER	2		6 MM (0.236")
12	4224631	BRACKET	2		(SUB FOR TH111685)
13	J901425	CAP SCREW	2		(SUB FOR TH104071)
14	12H317	LOCK WASHER	2		14.288 MM (9/16")
15	AT165110	LAMP	2		
15C	AT135758	BULB	1		
15E	4307026	WASHER	1		(SUB FOR T144361)
15F	4307027	SCREW	1		(SUB FOR T144362)
15G	24M7085	WASHER	1		15 X 28 X 2.500 MM (0.591" X 1.102" X 0.098")
15H	12H317	LOCK WASHER	1		14.288 MM (9/16")
15I	J952014	NUT	1		(SUB FOR TH103791)
16	21M7288	SCREW	2		M6 X 10
17	4252361	WIRING HARNESS	2		(SUB FOR TH4252361)
20	4379154	THRUST WASHER	2		(SUB FOR TH4379154)
21	4379155	THRUST WASHER	2		(SUB FOR TH4379155)

MASS EXCAVATING BOOM (7.1 M)

TP66869 -UN-13OCT99

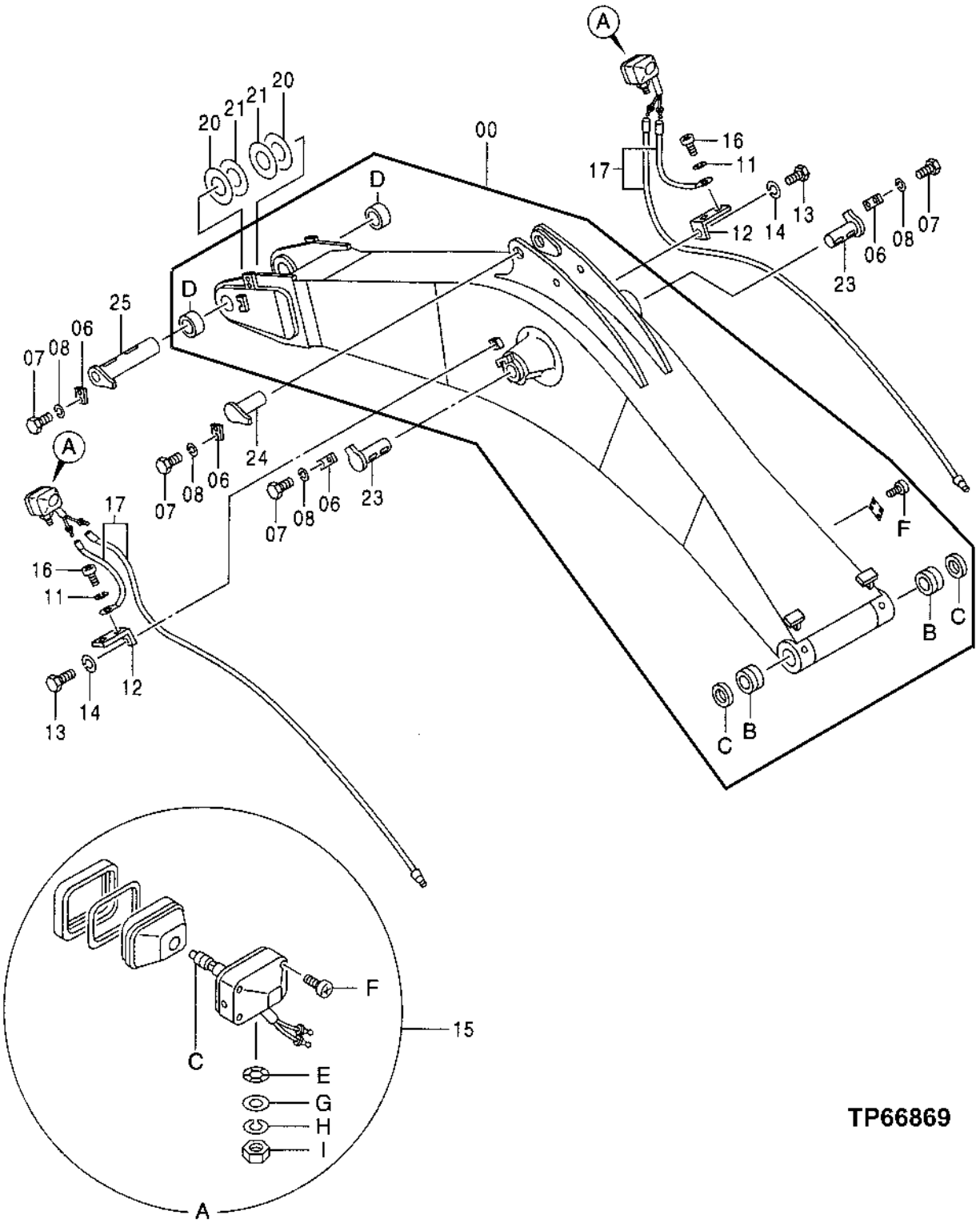

MASS EXCAVATING BOOM (7.1 M)

KEY	PART NO.	PART NAME	QTY	SERIAL NO.	REMARKS
0	9148149	BACKHOE BOOM	1		(SUB FOR TH9148149)
0B	3060122	BUSHING	2		(SUB FOR TH3060122)
0C	4251754	SEAL	2		(SUB FOR TH4251754)
0D	4448085	BUSHING	2		(SUB FOR 4387719)
0F	37H99	SCREW	4		2.540 X 6.350 MM (0.100" X 1/4")
6	4122729	STRAP	4		(SUB FOR AT131696)
7	19M7950	CAP SCREW	8		M20 X 45
8	12M7070	LOCK WASHER	8		20 MM (0.787")
11	12M7006	LOCK WASHER	2		6 MM (0.236")
12	4224631	BRACKET	2		(SUB FOR TH111685)
13	J901425	CAP SCREW	2		(SUB FOR TH104071)
14	12H317	LOCK WASHER	2		14.288 MM (9/16")
15	AT165110	LAMP	2		
15C	AT135758	BULB	1		
15E	4307026	WASHER	1		(SUB FOR T144361)
15F	4307027	SCREW	1		(SUB FOR T144362)
15G	24M7085	WASHER	1		15 X 28 X 2.500 MM (0.591" X 1.102" X 0.098")
15H	12H317	LOCK WASHER	1		14.288 MM (9/16")
15I	J952014	NUT	1		(SUB FOR TH103791)
16	21M7288	SCREW	2		M6 X 10
17	4252361	WIRING HARNESS	2		(SUB FOR TH4252361)
20	4379154	THRUST WASHER	2		(SUB FOR TH4379154)
21	4379155	THRUST WASHER	2		(SUB FOR TH4379155)
23	8067794	PIN FASTENER	2		(SUB FOR TH8067794)
24	8067795	PIN FASTENER	1		(SUB FOR TH8067795)
25	8067796	PIN FASTENER	1		(SUB FOR TH8067796)

DELIVERY PIPING

TP66698 -UN-30SEP99

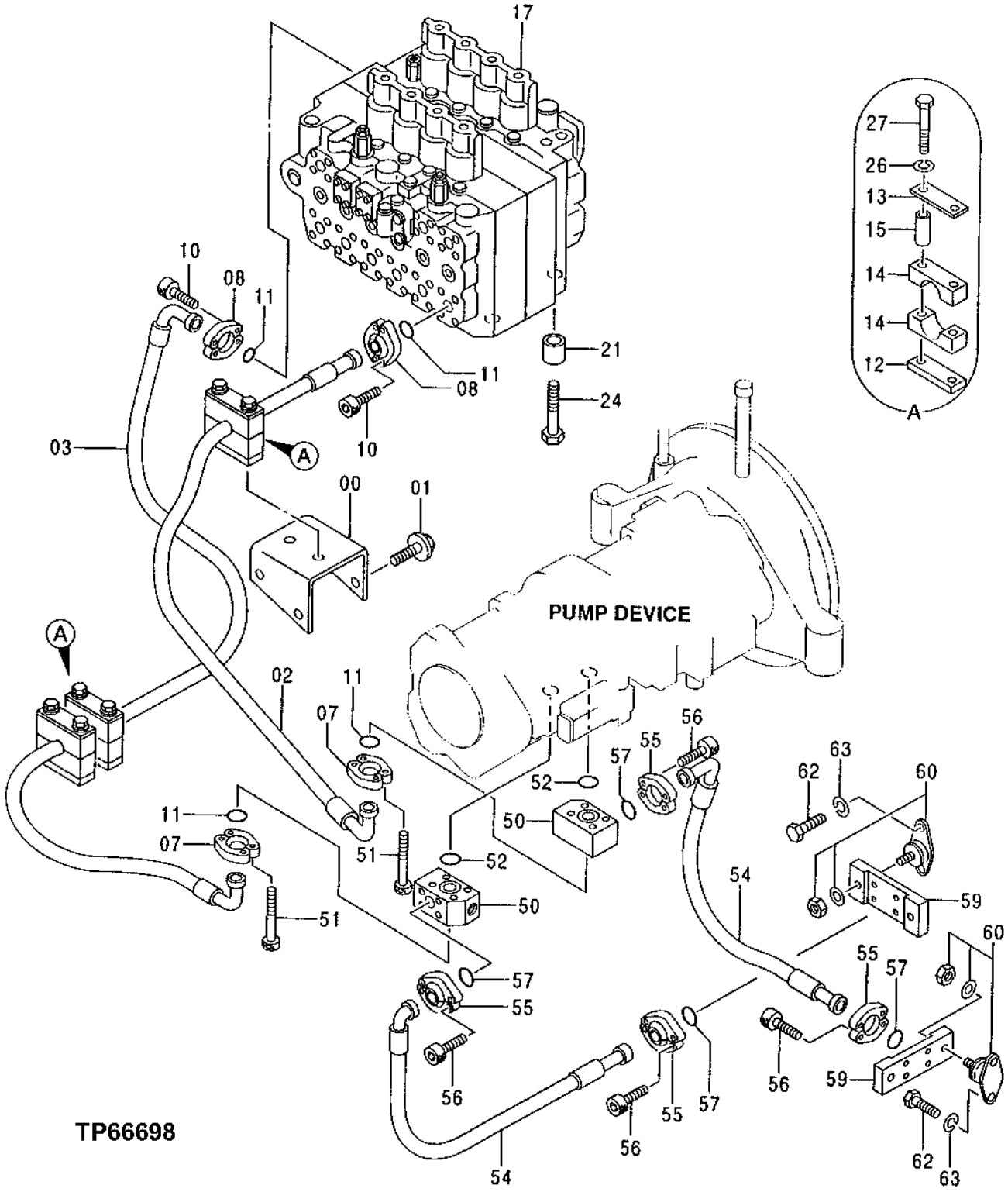

DELIVERY PIPING

KEY	PART NO.	PART NAME	QTY	SERIAL NO.	REMARKS
0	8060101	BRACKET	1		(SUB FOR TH8060101)
1	19M8011	CAP SCREW	4		M12 X 30
	12M7058	LOCK WASHER	4		12.200 MM (0.480") (SUB FOR 12M7067)
2	4373943	HYDRAULIC HOSE - FABRICATE	1		(SUB FOR TH4373943)
3	4373945	HYDRAULIC HOSE	1		(SUB FOR TH4373945)
7	4075853	FLANGE FITTING	4		(SUB FOR TH4075853)
8	AT131685	FLANGE FITTING	4		
10	19M8734	SCREW	8		M14 X 45
11	T72216	O-RING	4		37.694 X 3.531 MM (1-31/64" X 0.139")
12	4372605	STRAP	3		(SUB FOR TH4372605)
13	4207038	STRAP	3		(SUB FOR AT131811)
14	4207036	CLAMP	6		(SUB FOR AT131809)
15	4207037	SPACER	6		(SUB FOR AT131810)
17	4404273	SPACER	1		(SUB FOR TH4404273)
21	4354513	SPACER	4		(SUB FOR AT172243)
24	19M7883	SCREW	4		M20 X 120
26	12H301	LOCK WASHER	6		12.700 MM (1/2")
27	J901206	BOLT	6		(SUB FOR THJ901206)
50	3076362	JUNCTION BLOCK	2		(SUB FOR TH3076362)
51	19M8442	SCREW	8		M12 X 100
52	T72216	O-RING	2		37.694 X 3.531 MM (1-31/64" X 0.139")
54	4280457	HYDRAULIC HOSE - FABRICATE	2		(SUB FOR TH4280457)
55	4085560	FLANGE FITTING	8		(SUB FOR TH101960)
56	19M8395	SCREW	16		M12 X 40
57	T78313	O-RING	4		32.918 X 3.531 MM (1.296" X 0.139")
59	3076363	PLATE	2		(SUB FOR TH3076363)
60	4340944	ISOLATOR	4		(SUB FOR TH4340944)
62	19M7402	CAP SCREW	8		M10 X 25
63	12M7066	LOCK WASHER	8		10 MM (0.394")

RETURN PIPING

TP66701 -UN-30SEP99

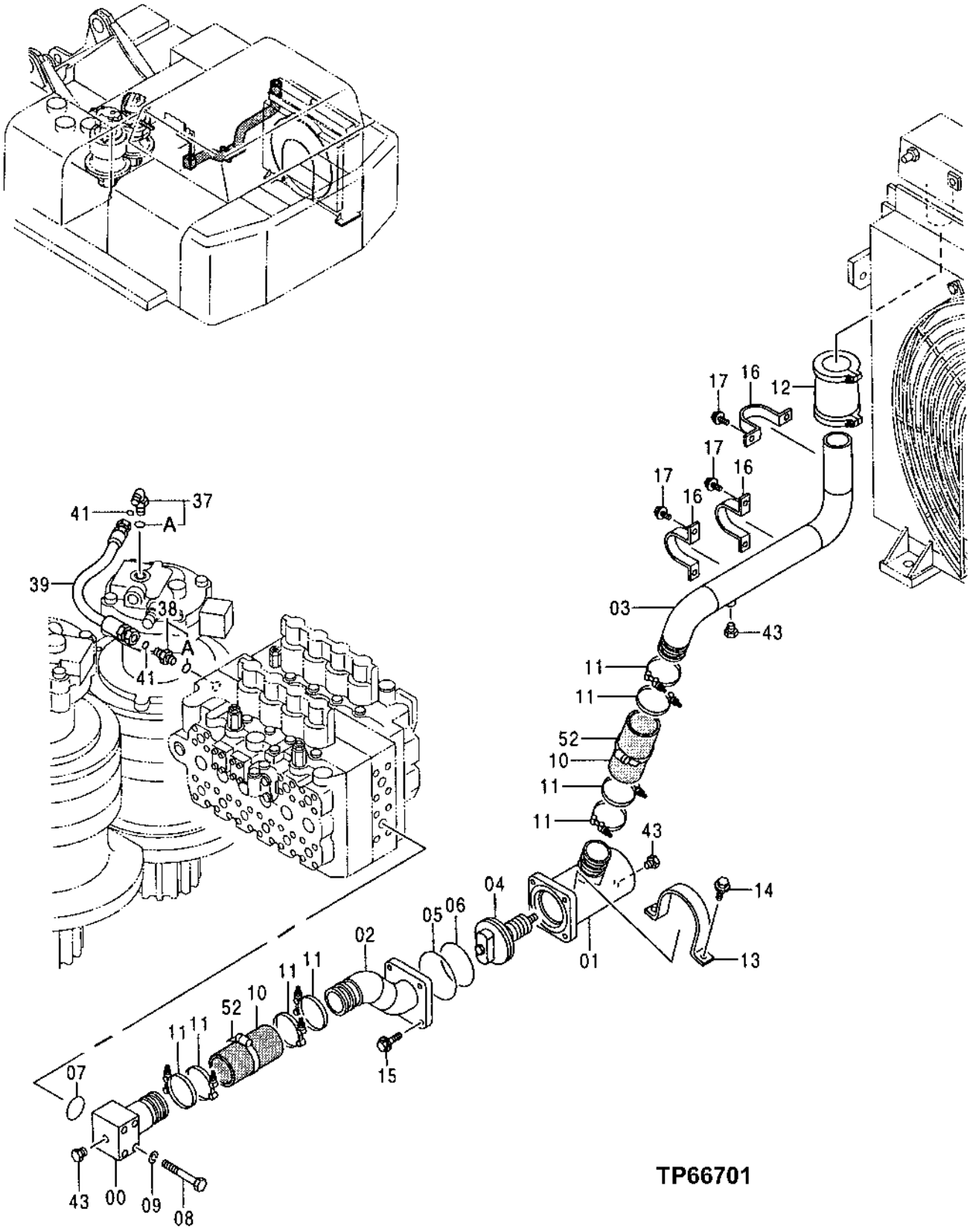

RETURN PIPING

KEY	PART NO.	PART NAME	QTY	SERIAL NO.	REMARKS
0	8060053	TUBE	1		(SUB FOR TH8060053)
1	7035435	OIL LINE	1		(SUB FOR TH7035435)
2	8060057	OIL LINE	1		(SUB FOR TH8060057)
3	8060157	HOSE	1		(SUB FOR TH8060157)
4	4433092	VALVE	1		(SUB FOR TH4408837)
5	TH104589	O-RING	1		144.400 X 3.100 MM (5.685" X 0.122")
6	4154331	O-RING	1		(SUB FOR TH4154331)
7	TH105683	O-RING	1		59.400 X 3.100 MM (2.339" X 0.122")
8	J901204	BOLT	4		(SUB FOR THJ901204)
9	12H301	LOCK WASHER	4		12.700 MM (1/2")
10	4167091	HOSE	2		(SUB FOR TH101901)
11	AT50923	HOSE CLAMP	8		
12	4071215	COUPLING	1		(SUB FOR TH101898)
13	4246954	CLAMP	1		(SUB FOR AT202105)
14	19M8011	CAP SCREW	2		M12 X 30
	12M7058	LOCK WASHER	2		12.200 MM (0.480") (SUB FOR 12M7067)
15	19M7493	CAP SCREW	4		M12 X 40
	12H301	LOCK WASHER	4		12.700 MM (1/2")
16	4000909	CLAMP	3		(SUB FOR TH101935)
17	19M7938	CAP SCREW	6		M10 X 20
	12M7066	LOCK WASHER	6		10 MM (0.394")
37	4198799	ELBOW FITTING	1		(SUB FOR TH108325)
37A	TH101926	O-RING	1		28.700 X 3.500 MM (1.130" X 0.138")
38	4189535	ADAPTER	1		(SUB FOR AT114853)
38A	TH101926	O-RING	1		28.700 X 3.500 MM (1.130" X 0.138")
39	4332391	HYDRAULIC HOSE - FABRICATE	1		(SUB FOR TH4332391)
41	T76938	O-RING	2		23.520 X 1.778 MM (0.926" X 0.070")
43	446536	PLUG	3		(SUB FOR TH446536)
52	TY22488	HOSE CLAMP	2		(SUB FOR AH104837)

RETURN PIPING

TP66702 -UN-30SEP99

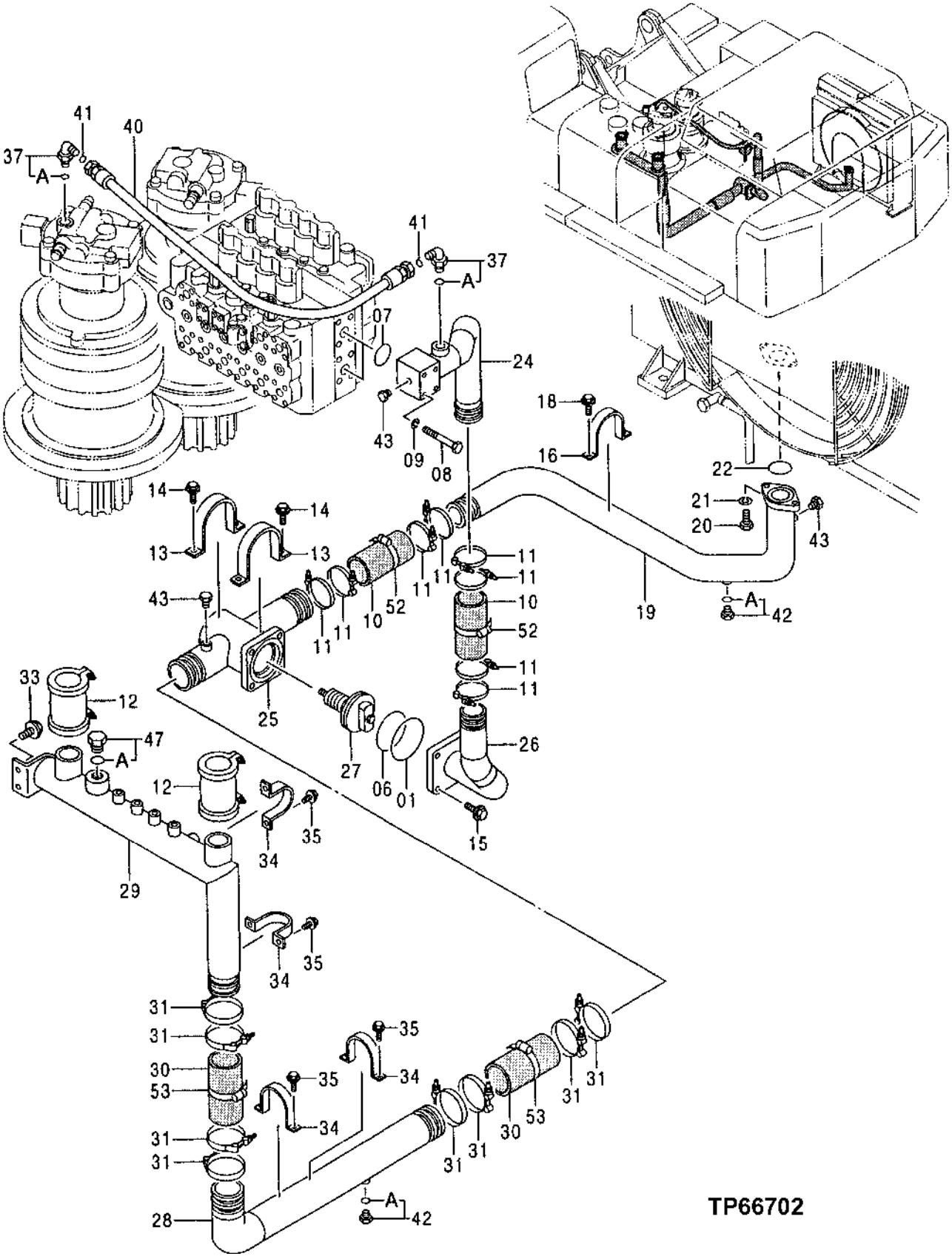

RETURN PIPING

KEY	PART NO.	PART NAME	QTY	SERIAL NO.	REMARKS
1	TH104589	O-RING	1		144.400 X 3.100 MM (5.685" X 0.122")
6	TH100125	O-RING	1		114.400 X 3.100 MM (4.504" X 0.122")
7	TH105683	O-RING	1		59.400 X 3.100 MM (2.339" X 0.122")
8	J901204	BOLT	4		(SUB FOR THJ901204)
9	12H301	LOCK WASHER	4		12.700 MM (1/2")
10	4167091	HOSE	2		(SUB FOR TH101901)
11	AT50923	HOSE CLAMP	8		
12	4071215	COUPLING	2		(SUB FOR TH101898)
13	4246954	CLAMP	2		(SUB FOR AT202105)
14	19M8011	CAP SCREW	4		M12 X 30
	12M7058	LOCK WASHER	4		12.200 MM (0.480") (SUB FOR 12M7067)
15	19M7493	CAP SCREW	4		M12 X 40
	12H301	LOCK WASHER	4		12.700 MM (1/2")
16	4000909	CLAMP	1		(SUB FOR TH101935)
18	19M7662	CAP SCREW	2		M10 X 30
	12M7066	LOCK WASHER	2		10 MM (0.394")
19	7029099	TUBE	1		(SUB FOR TH7029099)
20	J901445	CAP SCREW	2		(SUB FOR AT215658)
21	12H317	LOCK WASHER	2		14.288 MM (9/16")
22	CH11572	PACKING	1		
24	7029096	TUBE	1		(SUB FOR TH7029096)
25	7029098	TUBE	1		(SUB FOR TH7029098)
26	7029100	TUBE	1		(SUB FOR TH7029100)
27	4433091	VALVE	1		(SUB FOR AT202100)
28	8060056	TUBE	1		(SUB FOR TH8060056)
29	7033562	TUBE	1		(SUB FOR TH7033562)
30	4348414	HOSE	2		(SUB FOR AT176844)
31	AT56658	HOSE CLAMP	8		
33	19M7938	CAP SCREW	2		M10 X 20
	12M7066	LOCK WASHER	2		10 MM (0.394")
34	4000910	CLAMP	4		(SUB FOR TH4000910)
35	19M7402	CAP SCREW	8		M10 X 25
	12M7066	LOCK WASHER	8		10 MM (0.394")
37	4198799	ELBOW FITTING	2		(SUB FOR TH108325)
37A	TH101926	O-RING	1		28.700 X 3.500 MM (1.130" X 0.138")
40	4332392	HYDRAULIC HOSE - FABRICATE	1		(SUB FOR TH4332392)
41	T76938	O-RING	2		23.520 X 1.778 MM (0.926" X 0.070")
42	4093624	DRAIN PLUG	2		(SUB FOR TH102536)
42A	M800650	PACKING	1		
43	446536	PLUG	3		(SUB FOR TH446536)
47	4154693	FITTING PLUG	1		(SUB FOR AT132493)
47A	970860	O-RING	1		(SUB FOR TH104634)
52	TY22488	HOSE CLAMP	2		(SUB FOR AH104837)
53	Z29925	CLAMP	2		(SUB FOR AH103182)

DRAIN PIPING

TP66705 -UN-30SEP99

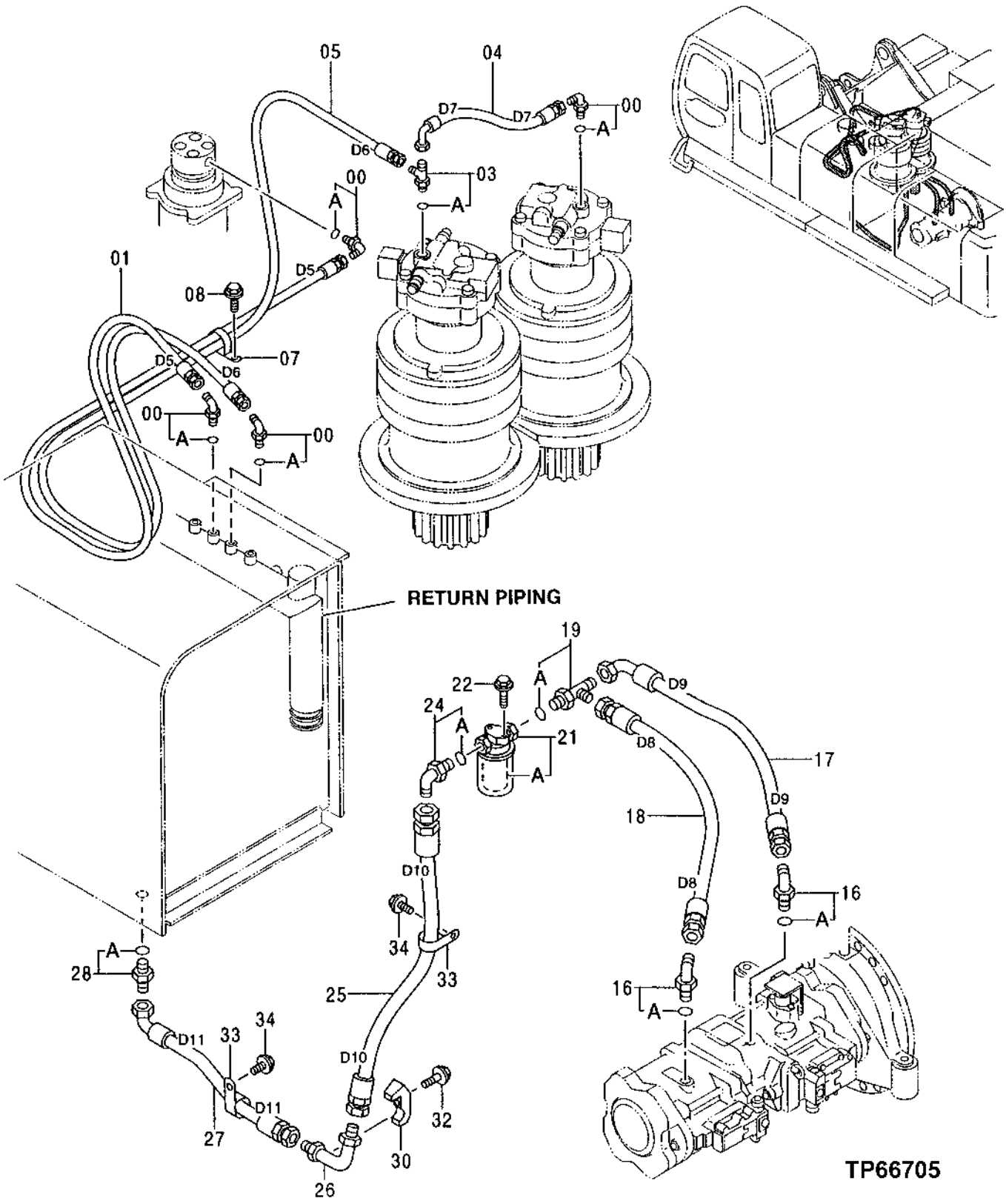

DRAIN PIPING

KEY	PART NO.	PART NAME	QTY	SERIAL NO.	REMARKS
0	4154672	ELBOW FITTING	4		(SUB FOR TH101008)
0A	4506418	O-RING	1		(SUB FOR U46489)
1	4332394	HYDRAULIC HOSE - FABRICATE	1		(SUB FOR TH4332394)
3	4217343	TEE FITTING	1		(SUB FOR AT131873)
3A	4506418	O-RING	1		(SUB FOR U46489)
4	4332389	HYDRAULIC HOSE - FABRICATE	1		(SUB FOR TH4332389)
5	4332390	HYDRAULIC HOSE - FABRICATE	1		(SUB FOR TH4332390)
7	4193848	CLIP	1		(SUB FOR TH110522)
8	19M7938	CAP SCREW	1		M10 X 20
	12M7066	LOCK WASHER	1		10 MM (0.394")
16	4156435	ELBOW FITTING	2		(SUB FOR TH101989)
16A	4506424	O-RING	1		(SUB FOR TH100055)
17	4373682	HYDRAULIC HOSE - FABRICATE	1		(SUB FOR TH4373682)
18	4373683	HYDRAULIC HOSE - FABRICATE	1		(SUB FOR TH4373683)
19	4317618	HYDRAULIC HOSE	1		(SUB FOR TH4317618)
19A	TH101926	O-RING	1		28.700 X 3.500 MM (1.130" X 0.138")
21	4362444	FILTER	1		(SUB FOR AT175916)
21A	4363399	FILTER ELEMENT	1		(SUB FOR AT175919)
22	19M7402	CAP SCREW	2		M10 X 25
	12M7066	LOCK WASHER	2		10 MM (0.394")
24	4156436	ELBOW FITTING	1		(SUB FOR TH101925)
24A	TH101926	O-RING	1		28.700 X 3.500 MM (1.130" X 0.138")
25	4373684	HYDRAULIC HOSE - FABRICATE	1		(SUB FOR TH4373684)
26	9747073	ELBOW FITTING	1		(SUB FOR TH9747073)
27	4373685	HYDRAULIC HOSE - FABRICATE	1		(SUB FOR TH4373685)
28	4214444	ADAPTER	1		(SUB FOR TH4214444)
28A	TH101926	O-RING	1		28.700 X 3.500 MM (1.130" X 0.138")
30	4053598	CLAMP	1		(SUB FOR TH101032)
32	19M8348	CAP SCREW	1		M12 X 65
	12H301	LOCK WASHER	1		12.700 MM (1/2")
33	4193848	CLIP	2		(SUB FOR TH110522)
34	19M7402	CAP SCREW	2		M10 X 25
	12M7066	LOCK WASHER	2		10 MM (0.394")

MAIN PIPING

TP66708 -UN-30SEP99

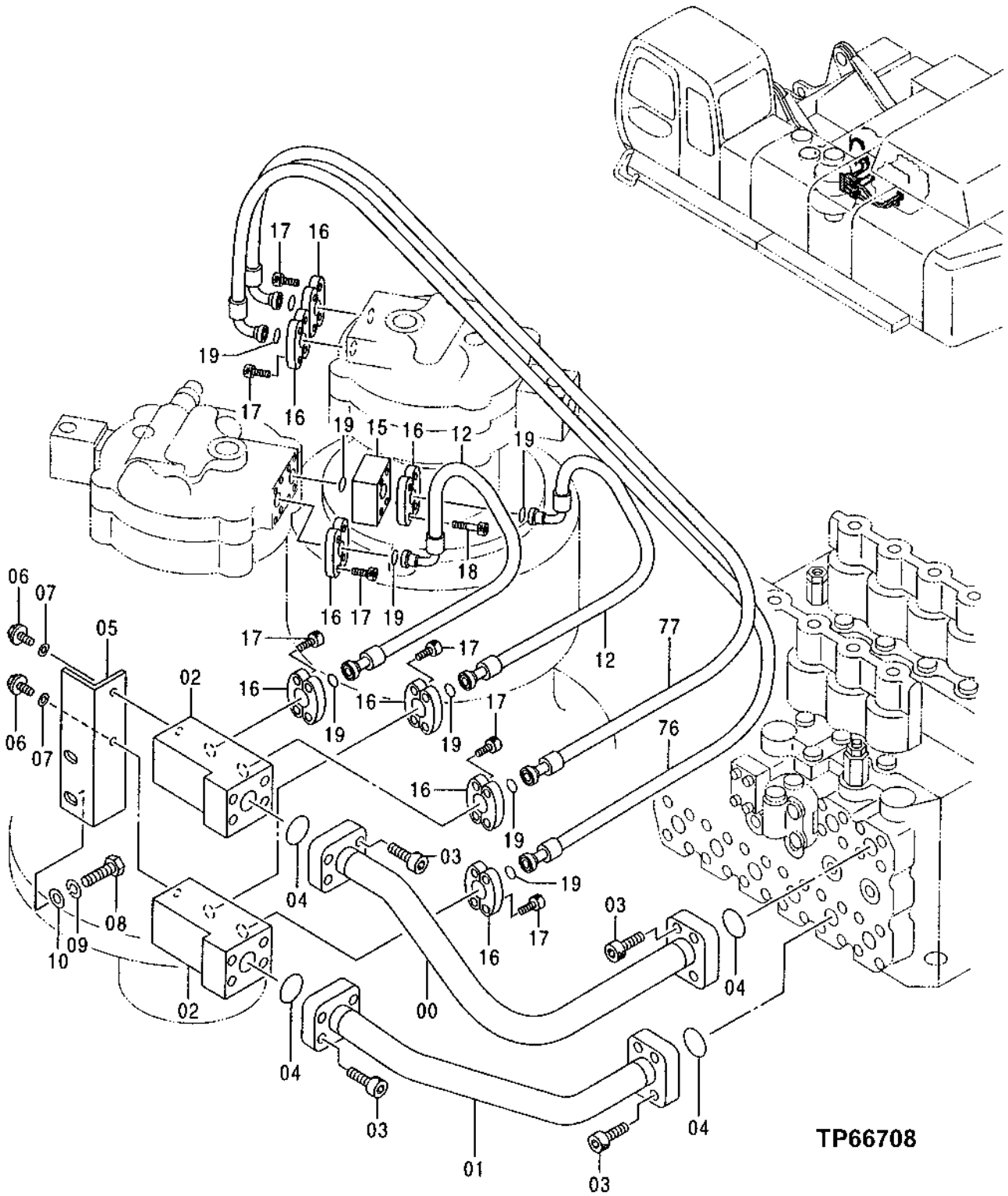

MAIN PIPING

KEY	PART NO.	PART NAME	QTY	SERIAL NO.	REMARKS
0	8066895	OIL LINE	1		(SUB FOR TH8066895)
1	8066897	OIL LINE	1		(SUB FOR TH8066897)
2	3076898	JUNCTION BLOCK	2		(SUB FOR TH3076898)
3	19M8734	SCREW	16		M14 X 45
4	T72216	O-RING	4		37.694 X 3.531 MM (1-31/64" X 0.139")
5	4221013	SUPPORT	1		(SUB FOR TH4221013)
6	19M7872	CAP SCREW	2		M12 X 25
	12H301	LOCK WASHER	2		12.700 MM (1/2")
7	4249324	WASHER	2		(SUB FOR TH4249324)
8	J901632	BOLT	2		(SUB FOR TH101753)
9	12H294	LOCK WASHER	2		15.875 MM (5/8")
10	4087197	WASHER	2		(SUB FOR TH101734)
12	4441708	HYDRAULIC HOSE	2		(SUB FOR 4432993 AND 4372521)
15	4374146	JUNCTION BLOCK	1		(SUB FOR TH4374146)
16	R29424	FLANGE FITTING	16		
17	19M8337	SCREW	28		M10 X 30
18	19M8131	SCREW	4		M10 X 70
19	T59014	O-RING	9		24.994 X 3.531 MM (63/64" X 0.139")
76	4441710	HYDRAULIC HOSE	1		(SUB FOR 4432994 AND 4332813)
77	4441711	HYDRAULIC HOSE	1		(SUB FOR 4432995 AND 4332815)

MAIN PIPING

TP66709 -UN-30SEP99

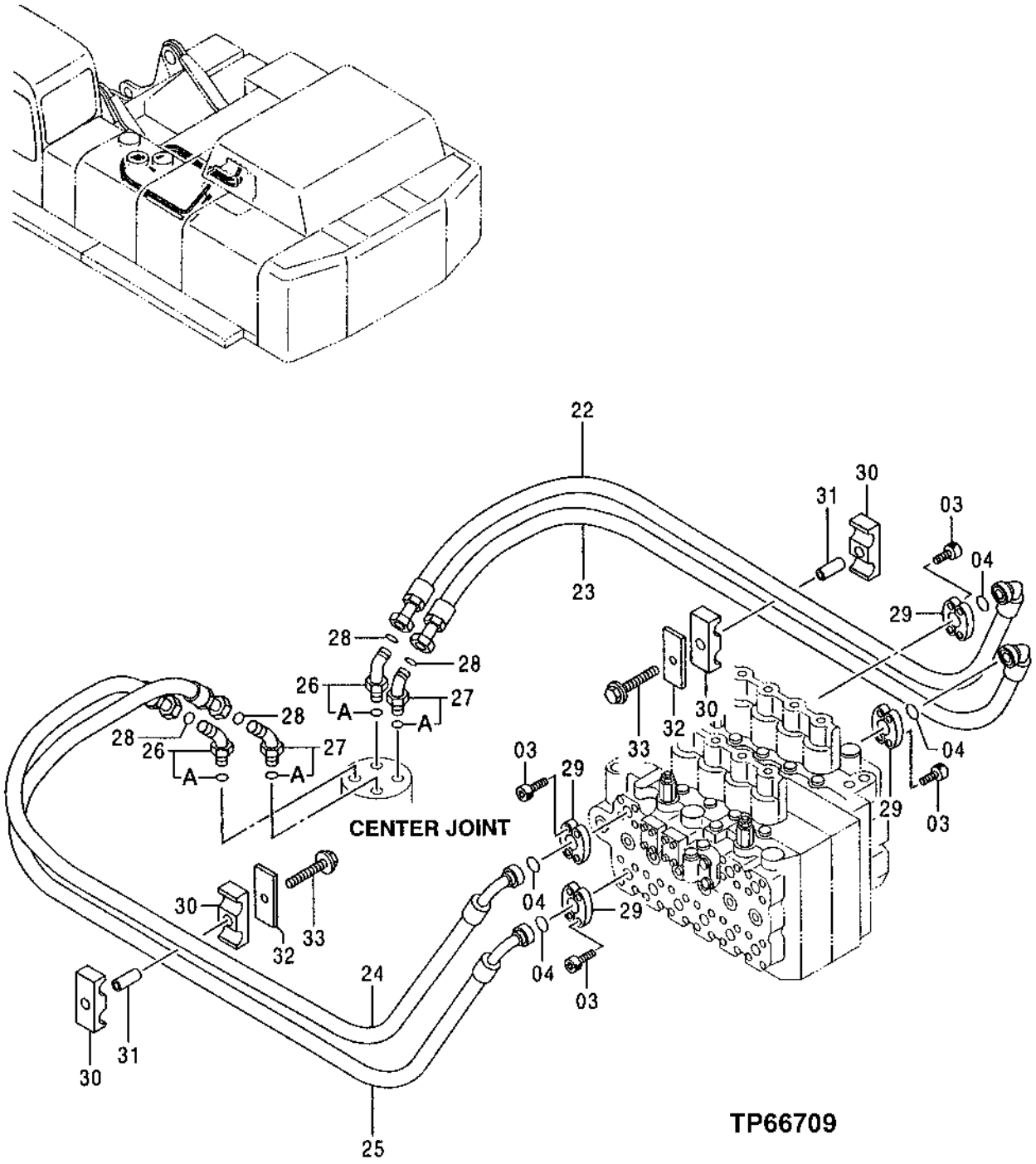

MAIN PIPING

KEY	PART NO.	PART NAME	QTY	SERIAL NO.	REMARKS
3	19M8734	SCREW	16		M14 X 45
4	T72216	O-RING	4		37.694 X 3.531 MM (1-31/64" X 0.139")
22	4372522	HYDRAULIC HOSE	1		(SUB FOR TH4372522)
23	4332807	HYDRAULIC HOSE - FABRICATE	1		(SUB FOR TH4332807)
24	4373946	HYDRAULIC HOSE	1		(SUB FOR TH4373946)
25	4332809	HYDRAULIC HOSE - FABRICATE	1		(SUB FOR TH4332809)
26	4274593	ELBOW FITTING	2		(SUB FOR AT201740)
26A	TH101926	O-RING	1		28.700 X 3.500 MM (1.130" X 0.138")
27	4270315	ELBOW FITTING	2		(SUB FOR AT201732)
27A	TH101926	O-RING	1		28.700 X 3.500 MM (1.130" X 0.138")
28	T76938	O-RING	4		23.520 X 1.778 MM (0.926" X 0.070")
29	AT131685	FLANGE FITTING	8		
30	4205615	HOSE CLAMP	4		(SUB FOR AT131792)
31	4205614	SPACER	2		(SUB FOR AT131791)
32	4224002	STRAP	2		(SUB FOR AT131918)
33	19M8122	CAP SCREW	2		M12 X 85
	12M7058	LOCK WASHER	2		12.200 MM (0.480") (SUB FOR 12M7067)

MAIN PIPING

TP66712 -UN-30SEP99

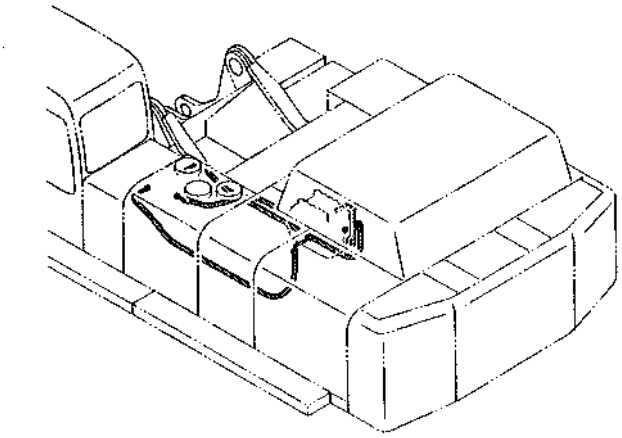

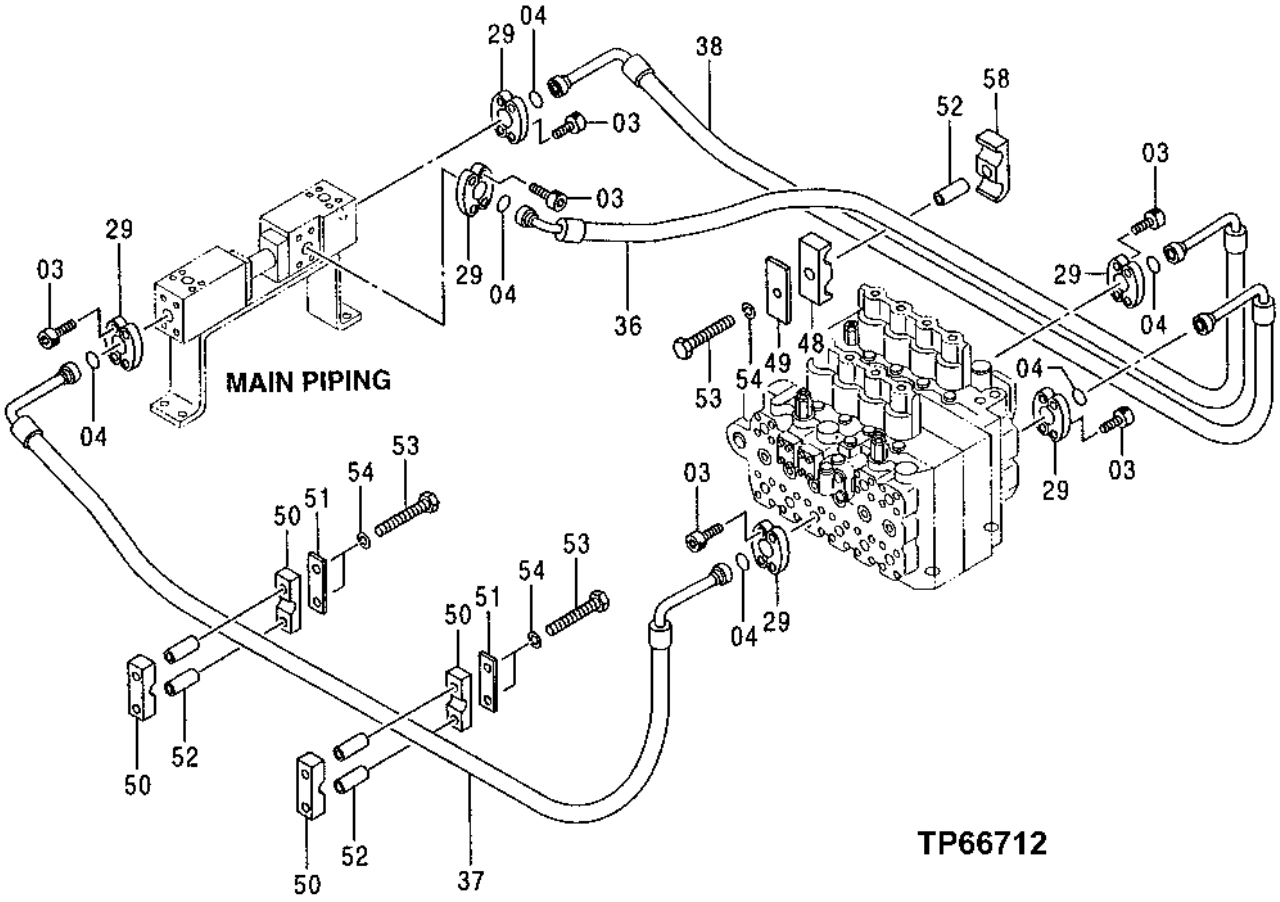

MAIN PIPING

KEY	PART NO.	PART NAME	QTY	SERIAL NO.	REMARKS
3	19M8734	SCREW	24		M14 X 45
4	T72216	O-RING	6		37.694 X 3.531 MM (1-31/64" X 0.139")
29	AT131685	FLANGE FITTING	12		
36	4372527	HYDRAULIC HOSE	1		(SUB FOR TH4372527)
37	4372526	HYDRAULIC HOSE	1		(SUB FOR TH4372526)
38	4372525	HYDRAULIC HOSE	1		(SUB FOR TH4372525)
48	4215878	HOSE CLAMP	1		(SUB FOR AT178139)
49	4215880	PLATE	1		(SUB FOR AT178142)
50	4207036	CLAMP	4		(SUB FOR AT131809)
51	4207038	STRAP	2		(SUB FOR AT131811)
52	4207037	SPACER	5		(SUB FOR AT131810)
53	19M8061	CAP SCREW	5		M12 X 140
54	12H301	LOCK WASHER	5		12.700 MM (1/2")
58	4385736	HOSE CLAMP	1		(SUB FOR TH4385736)

MAIN PIPING

TP66970 -UN-09NOV99

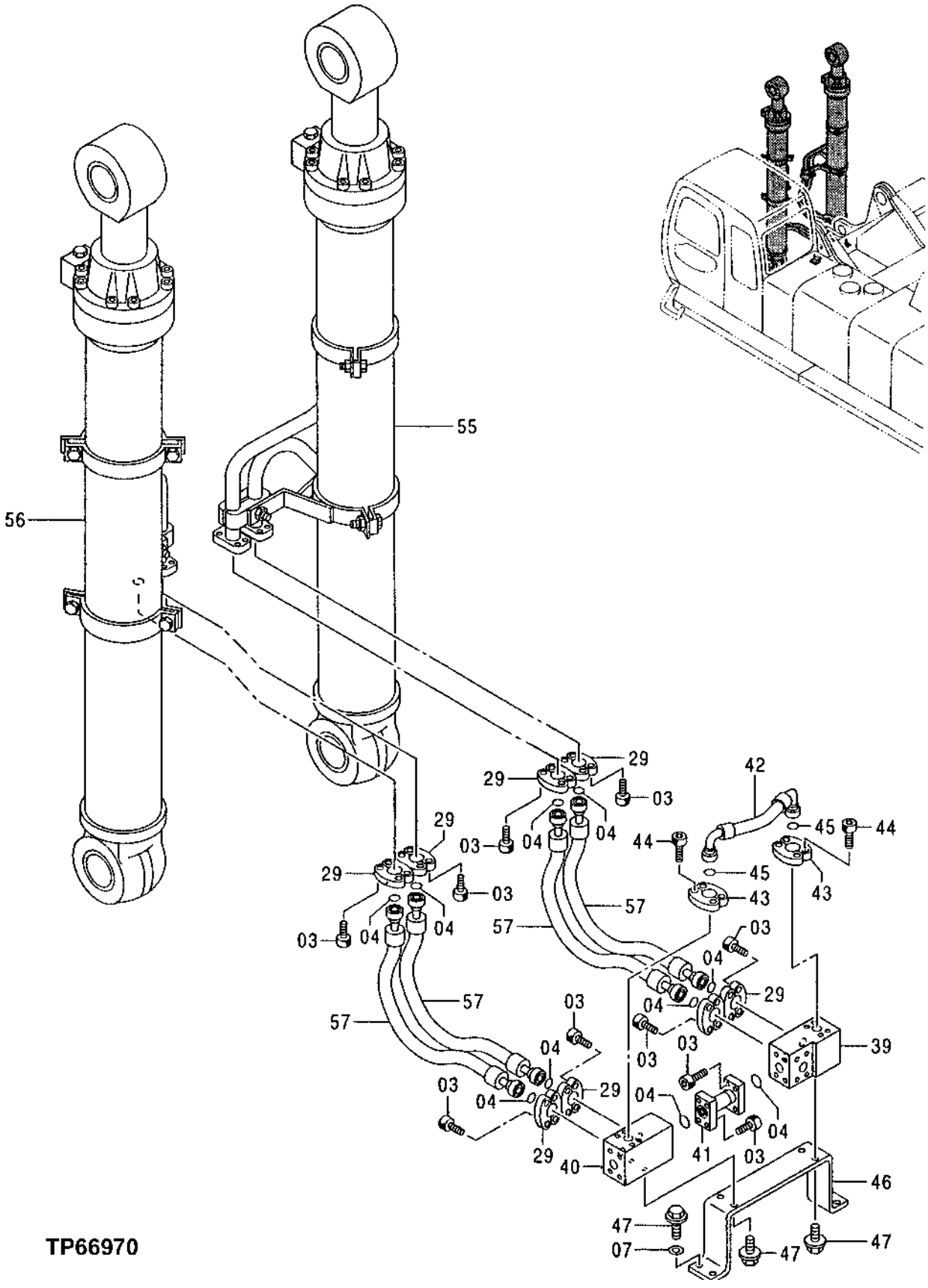

MAIN PIPING

KEY	PART NO.	PART NAME	QTY	SERIAL NO.	REMARKS
3	19M8734	SCREW	40		M14 X 45
4	T72216	O-RING	10		37.694 X 3.531 MM (1-31/64" X 0.139")
7	4249324	WASHER	4		(SUB FOR TH4249324)
29	AT131685	FLANGE FITTING	16		
39	2039701	JUNCTION BLOCK	1		(SUB FOR TH2039701)
40	2039702	JUNCTION BLOCK	1		(SUB FOR TH2039702)
41	8046016	PIPE	1		(SUB FOR TH8046016)
42	4372519	HYDRAULIC HOSE	1		(SUB FOR TH4372519)
43	4085560	FLANGE FITTING	4		(SUB FOR TH101960)
44	19M8395	SCREW	8		M12 X 40
45	T78313	O-RING	2		32.918 X 3.531 MM (1.296" X 0.139")
46	4372570	BRACKET	1		(SUB FOR TH4372570)
47	19M7403	CAP SCREW	8		M12 X 35
	12H301	LOCK WASHER	8		12.700 MM (1/2")
55	.....	CYLINDER	1		(RIGHT BOOM CYLINDER) (SEE SEPARATE PAGE FOR DETAIL)
56	.....	CYLINDER	1		(LEFT BOOM CYLINDER) (SEE SEPARATE PAGE FOR DETAIL)
57	4332810	HYDRAULIC HOSE - FABRICATE	4		(SUB FOR TH4332810)

MAIN PIPING

TP66715 -UN-30SEP99

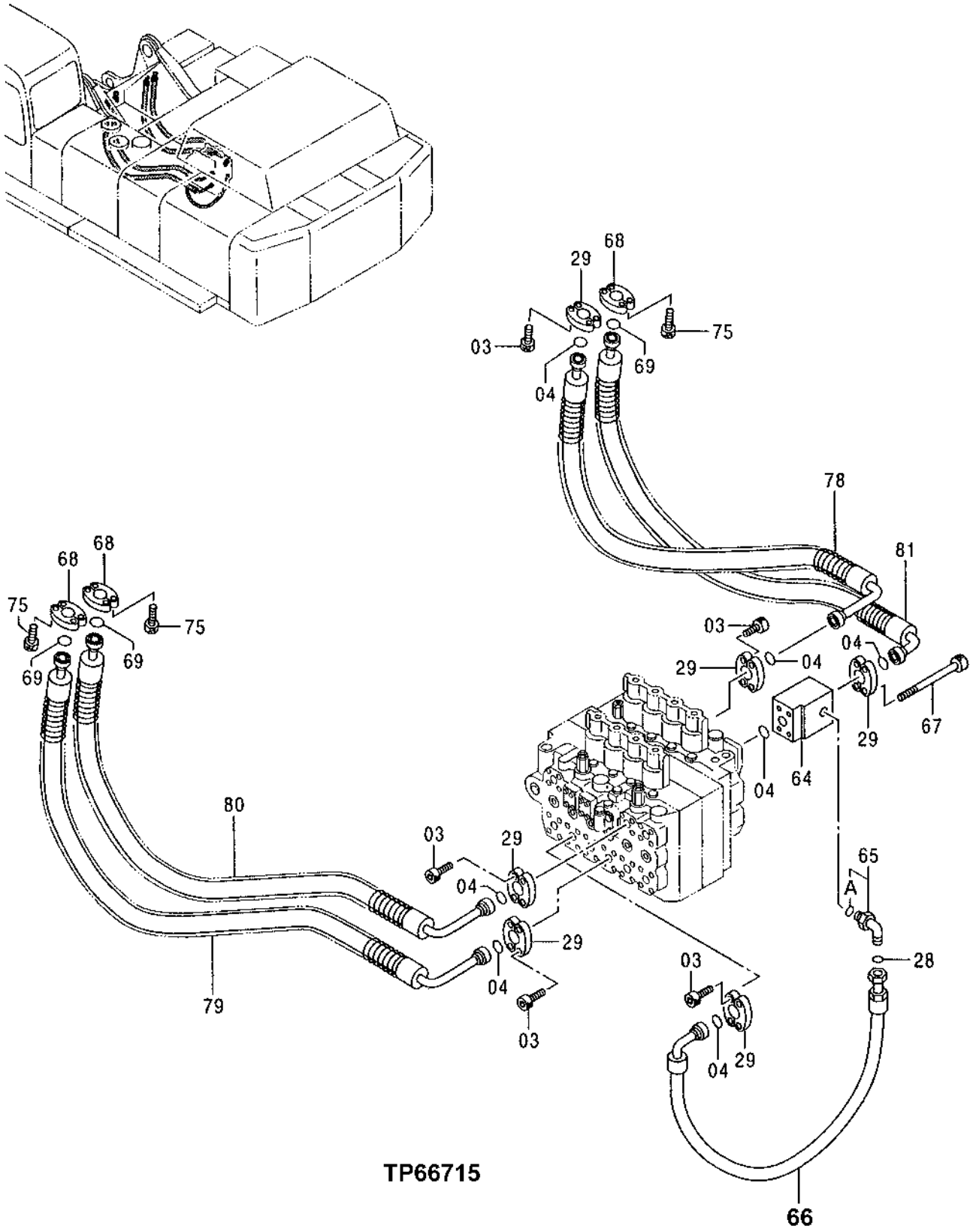

TP66715

MAIN PIPING

KEY	PART NO.	PART NAME	QTY	SERIAL NO.	REMARKS
3	19M8734	SCREW	20		M14 X 45
4	T72216	O-RING	7		37.694 X 3.531 MM (1-31/64" X 0.139")
28	T76938	O-RING	1		23.520 X 1.778 MM (0.926" X 0.070")
29	AT131685	FLANGE FITTING	12		
64	4308818	JUNCTION BLOCK	1		(SUB FOR TH4308818)
65	4198799	ELBOW FITTING	1		(SUB FOR TH108325)
65A	TH101926	O-RING	1		28.700 X 3.500 MM (1.130" X 0.138")
66	4372518	HYDRAULIC HOSE - FABRICATE	1		(SUB FOR TH4372518)
67	.....	BOLT	4		
68	4075854	FLANGE FITTING	6		(SUB FOR TH4075854)
69	T34248	O-RING	3		47.219 X 3.531 MM (1-55/64" X 0.139")
75	19M8208	SCREW	12		M16 X 50
78	4382309	HYDRAULIC HOSE	1		(SUB FOR TH4382309)
79	4382310	HYDRAULIC HOSE	1		(SUB FOR TH4382310)
80	4382311	HYDRAULIC HOSE	1		(SUB FOR TH4382311)
81	4382312	HYDRAULIC HOSE	1		(SUB FOR TH4382312)

PILOT PIPINGS

TP66728 -UN-01OCT99

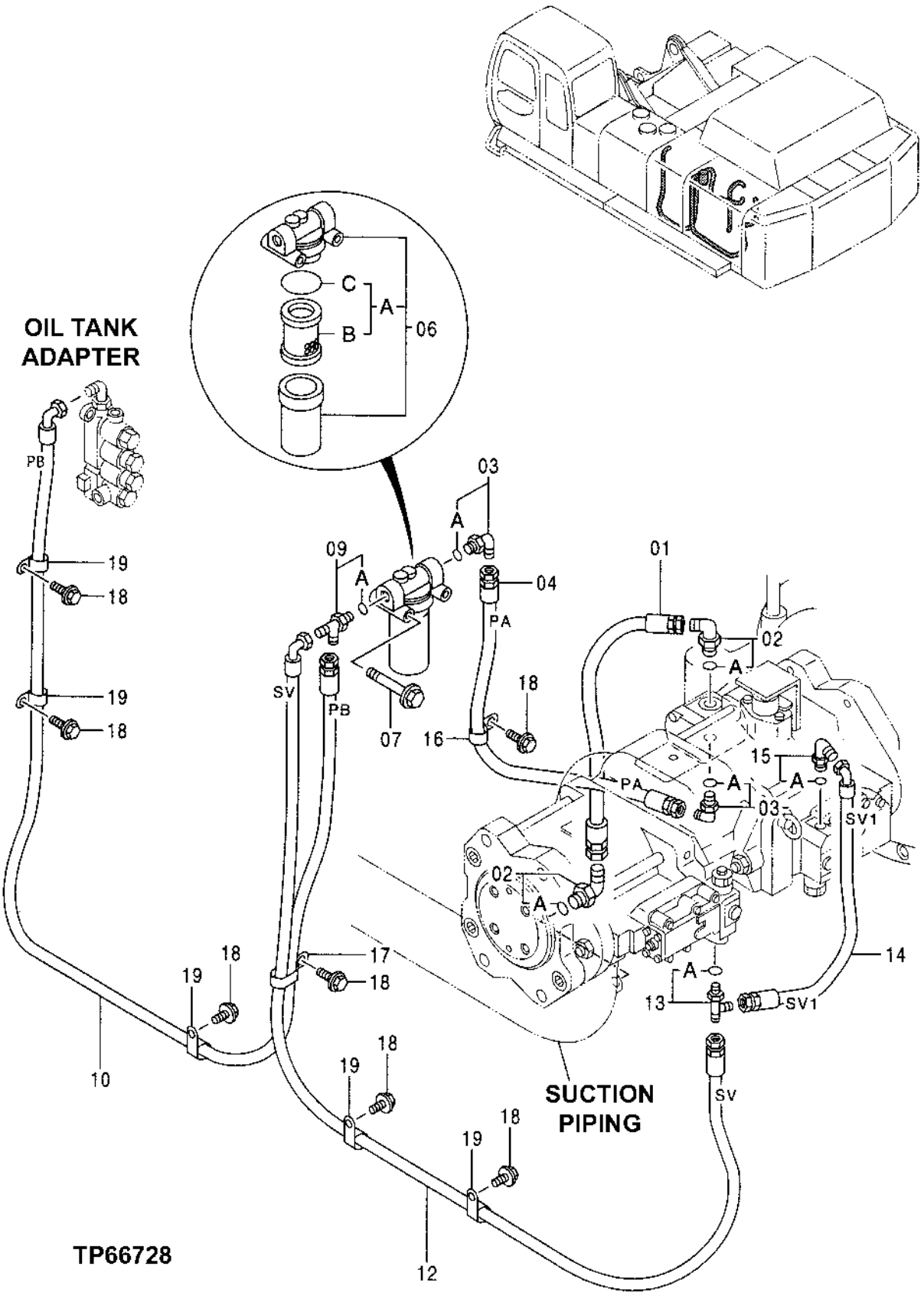

PILOT PIPINGS

KEY	PART NO.	PART NAME	QTY	SERIAL NO.	REMARKS
1	4373686	HOSE	1		(SUB FOR TH4373686)
2	4156435	ELBOW FITTING	2		(SUB FOR TH101989)
2A	4506424	O-RING	1		(SUB FOR TH100055)
3	4154672	ELBOW FITTING	2		(SUB FOR TH101008)
3A	4506418	O-RING	1		(SUB FOR U46489)
4	4373687	HOSE	1		(SUB FOR TH4373687)
6	4191300	FILTER	1		(SUB FOR TH108402)
6A	AT186554	FILTER ELEMENT	1		
6B	.....	FILTER ELEMENT	1		(NOT AVAILABLE FOR SERVICE)
6C	TH100101	O-RING	1		64.400 X 3.100 MM (2.535" X 0.122")
7	19M8093	CAP SCREW	2		M10 X 100
	12M7066	LOCK WASHER	2		10 MM (0.394")
9	4222016	TEE FITTING	1		(SUB FOR AT126748)
9A	4506418	O-RING	1		(SUB FOR U46489)
10	4373690	HOSE	1		(SUB FOR TH4373690)
12	4373914	HOSE	1		(SUB FOR TH4373914)
13	4207300	TEE FITTING	1		(SUB FOR AT126381)
13A	M800650	PACKING	1		
14	4373689	HOSE	1		(SUB FOR TH4373689)
15	4156434	ELBOW FITTING	1		(SUB FOR TH101930)
15A	M800650	PACKING	1		
16	4235654	CLIP	1		(SUB FOR AT122384)
17	4192034	CLIP	1		(SUB FOR TH109445)
18	19M7938	CAP SCREW	7		M10 X 20
	12M7066	LOCK WASHER	7		10 MM (0.394")
19	4190273	CLIP	5		(SUB FOR TH108460)

PILOT PIPINGS

T157517 -UN-19JUL02

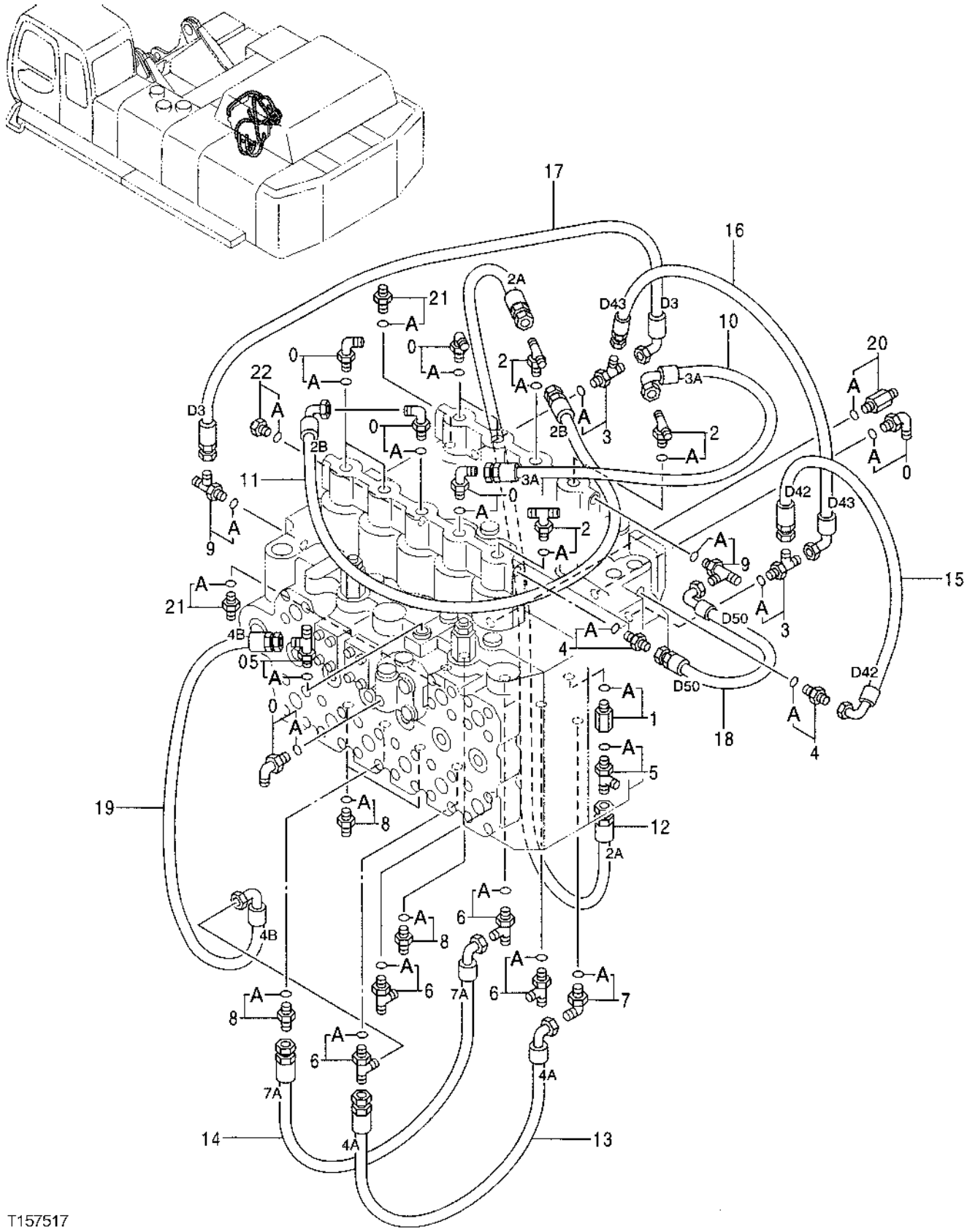

PILOT PIPINGS

KEY	PART NO.	PART NAME	QTY	SERIAL NO.	REMARKS
0	4154671	ELBOW FITTING	8		(SUB FOR TH101047)
0A	CH11570	O-RING	1		13.800 X 2.400 MM (0.543" X 0.094")
1	4202564	ADAPTER	1		(SUB FOR AT215879)
1A	M800650	PACKING	1		
2	4208911	TEE FITTING	3		(SUB FOR AT126456)
2A	CH11570	O-RING	1		13.800 X 2.400 MM (0.543" X 0.094")
3	4203171	TEE FITTING	2		(SUB FOR TH110578)
3A	M800650	PACKING	1		
4	4200465	ADAPTER	3	-970029	(SUB FOR TH108328)
	4200465	ADAPTER	2	970030-	(SUB FOR TH108328)
4A	M800650	PACKING	3	-970029	
	M800650	PACKING	2	970030-	
5	4207300	TEE FITTING	2		(SUB FOR AT126381)
5A	M800650	PACKING	1		
6	4205363	TEE FITTING	4		(SUB FOR AT126362)
6A	CH11570	O-RING	1		13.800 X 2.400 MM (0.543" X 0.094")
7	4154671	ELBOW FITTING	1		(SUB FOR TH101047)
7A	CH11570	O-RING	1		13.800 X 2.400 MM (0.543" X 0.094")
8	4200466	ADAPTER	4		(SUB FOR TH108320)
8A	CH11570	O-RING	1		13.800 X 2.400 MM (0.543" X 0.094")
9	4219346	TEE FITTING	2		(SUB FOR AT132516)
9A	M800650	PACKING	1		
10	4367006	HOSE	1		(SUB FOR TH4367006)
11	4375877	HOSE	1		(SUB FOR TH4375877)
12	4375855	HOSE	1		(SUB FOR TH4375855)
13	4375875	HOSE	1		(SUB FOR TH4375875)
14	4375876	HOSE	1		(SUB FOR TH4375876)
15	4375869	HOSE	1		(SUB FOR TH4375869)
16	4375873	HOSE	1		(SUB FOR TH4375873)
17	4375874	HOSE	1		(SUB FOR TH4375874)
18	4364565	HOSE	1		(SUB FOR TH4364565)
19	4375883	HOSE	1		(SUB FOR TH4375883)
20	4223934	ADAPTER	1		(SUB FOR AT134092)
20A	M800650	PACKING	1		
21	4200467	ADAPTER	2		(SUB FOR TH108417)
21A	M800650	PACKING	1		
22	4093624	DRAIN PLUG	1	970030-	
22A	M800650	PACKING	1	970030-	(SUB FOR 957366)

PILOT PIPINGS (LONG ARM)

TP66730 -UN-08OCT99

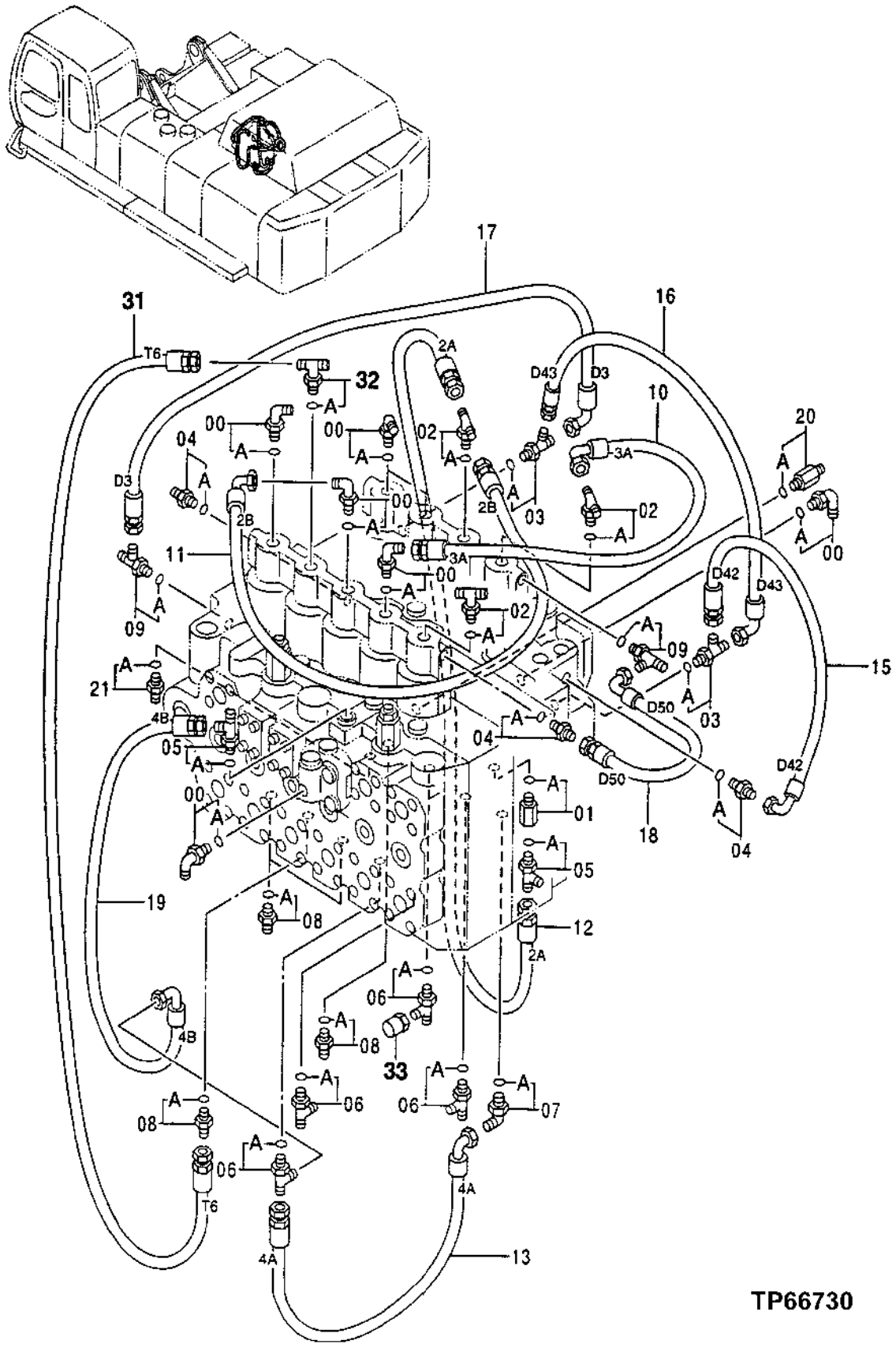

PILOT PIPINGS (LONG ARM)

KEY	PART NO.	PART NAME	QTY	SERIAL NO.	REMARKS
0	4154671	ELBOW FITTING	7		(SUB FOR TH101047)
0A	CH11570	O-RING	1		13.800 X 2.400 MM (0.543" X 0.094")
1	4202564	ADAPTER	1		(SUB FOR AT215879)
1A	M800650	PACKING	1		
2	4208911	TEE FITTING	3		(SUB FOR AT126456)
2A	CH11570	O-RING	1		13.800 X 2.400 MM (0.543" X 0.094")
3	4203171	TEE FITTING	2		(SUB FOR TH110578)
3A	M800650	PACKING	1		
4	4200465	ADAPTER	3		(SUB FOR TH108328)
4A	M800650	PACKING	1		
5	4207300	TEE FITTING	2		(SUB FOR AT126381)
5A	M800650	PACKING	1		
6	4205363	TEE FITTING	4		(SUB FOR AT126362)
6A	CH11570	O-RING	1		13.800 X 2.400 MM (0.543" X 0.094")
7	4154671	ELBOW FITTING	1		(SUB FOR TH101047)
7A	CH11570	O-RING	1		13.800 X 2.400 MM (0.543" X 0.094")
8	4200466	ADAPTER	4		(SUB FOR TH108320)
8A	CH11570	O-RING	1		13.800 X 2.400 MM (0.543" X 0.094")
9	4219346	TEE FITTING	2		(SUB FOR AT132516)
9A	M800650	PACKING	1		
10	4367006	HOSE	1		(SUB FOR TH4367006)
11	4375877	HOSE	1		(SUB FOR TH4375877)
12	4375855	HOSE	1		(SUB FOR TH4375855)
13	4375875	HOSE	1		(SUB FOR TH4375875)
15	4375869	HOSE	1		(SUB FOR TH4375869)
16	4375873	HOSE	1		(SUB FOR TH4375873)
17	4375874	HOSE	1		(SUB FOR TH4375874)
18	4364565	HOSE	1		(SUB FOR TH4364565)
19	4375883	HOSE	1		(SUB FOR TH4375883)
20	4223934	ADAPTER	1		(SUB FOR AT134092)
20A	M800650	PACKING	1		
21	4200467	ADAPTER	1		(SUB FOR TH108417)
21A	M800650	PACKING	1		
31	AT215543	HYDRAULIC HOSE - FABRICATE	1		
32	4208911	TEE FITTING	1		(SUB FOR AT126456)
32A	CH11570	O-RING	1		13.800 X 2.400 MM (0.543" X 0.094")
33	R39783	FITTING	1		

PILOT PIPINGS

TP66731 -UN-04OCT99

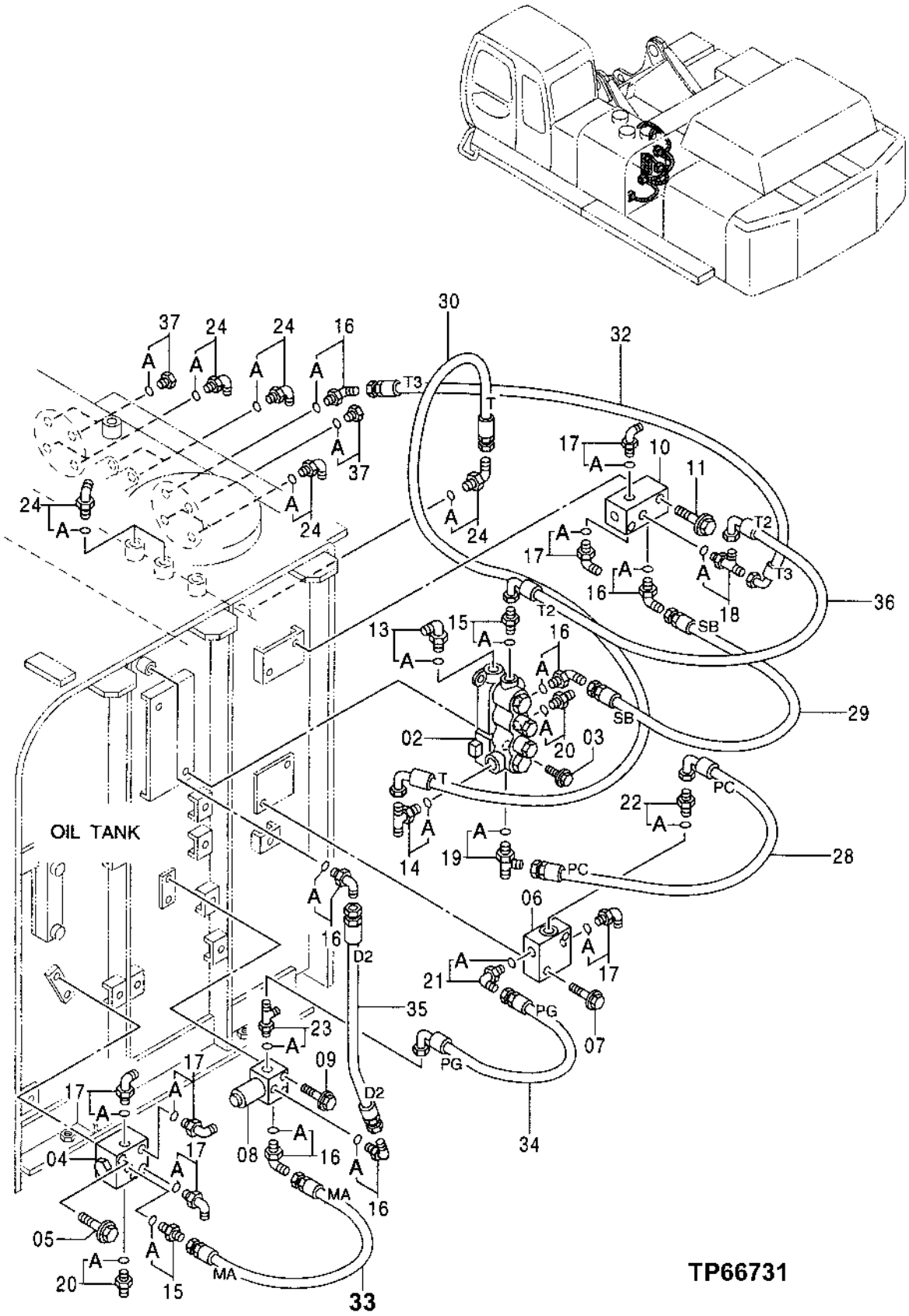

PILOT PIPINGS

KEY	PART NO.	PART NAME	QTY	SERIAL NO.	REMARKS
2	4364071	SOLENOID VALVE	1		(SUB FOR TH4364071)
3	19M7550	CAP SCREW	2		M10 X 35
	12M7066	LOCK WASHER	2		10 MM (0.394")
4	4258562	JUNCTION BLOCK	1		(SUB FOR AT202110)
5	19M7875	CAP SCREW	2		M10 X 70
	12M7066	LOCK WASHER	2		10 MM (0.394")
6	9123033	CHECK VALVE	1		(SUB FOR AT201932)
7	19M7362	CAP SCREW	2		M12 X 55
	12H301	LOCK WASHER	2		12.700 MM (1/2")
8	4261289	SOLENOID VALVE	1		(SUB FOR AT202111)
9	J010860	BOLT	2		(SUB FOR AT200004)
10	4357517	VALVE	1		(SUB FOR TH4357517)
11	19M7329	CAP SCREW	2		M10 X 75
13	4277651	ELBOW FITTING	1		(SUB FOR TH4277651)
13A	4506418	O-RING	1		(SUB FOR U46489)
14	4266330	TEE FITTING	1		(SUB FOR TH4266330)
14A	4506418	O-RING	1		(SUB FOR U46489)
15	4200465	ADAPTER	2		(SUB FOR TH108328)
15A	M800650	PACKING	1		
16	4154670	ELBOW FITTING	6		(SUB FOR TH100951)
16A	M800650	PACKING	1		
17	4156434	ELBOW FITTING	6		(SUB FOR TH101930)
17A	M800650	PACKING	1		
18	4203171	TEE FITTING	1		(SUB FOR TH110578)
18A	M800650	PACKING	1		
19	4296066	TEE FITTING	1		(SUB FOR TH4296066)
19A	4506418	O-RING	1		(SUB FOR U46489)
20	4200467	ADAPTER	2		(SUB FOR TH108417)
20A	M800650	PACKING	1		
21	4200470	ELBOW FITTING	1		(SUB FOR AT131737)
21A	CH11570	O-RING	1		13.800 X 2.400 MM (0.543" X 0.094")
22	X8-10F5OX	ADAPTER	1		(SUB FOR TH101006)
22A	4506418	O-RING	1		(SUB FOR U46489)
23	4239712	TEE FITTING	1		(SUB FOR TH4239712)
23A	M800650	PACKING	1		
24	4154671	ELBOW FITTING	9		(SUB FOR TH101047)
24A	CH11570	O-RING	1		13.800 X 2.400 MM (0.543" X 0.094")
28	4375872	HOSE	1		(SUB FOR TH4375872)
29	4375833	HOSE	1		(SUB FOR TH4375833)
30	4368704	HOSE	1		(SUB FOR TH4368704)
32	4389987	HOSE	1		(SUB FOR TH4389987)
33	4375834	HOSE	1		(SUB FOR TH4375834)
34	4375870	HOSE	1		(SUB FOR TH4375870)
35	4389917	HOSE	1		(SUB FOR TH4389917)
36	4384020	HOSE	1		(SUB FOR TH4384020)
37	4093624	DRAIN PLUG	2		(SUB FOR TH102536)
37A	M800650	PACKING	1		

PILOT PIPINGS

TP66732 -UN-04OCT99

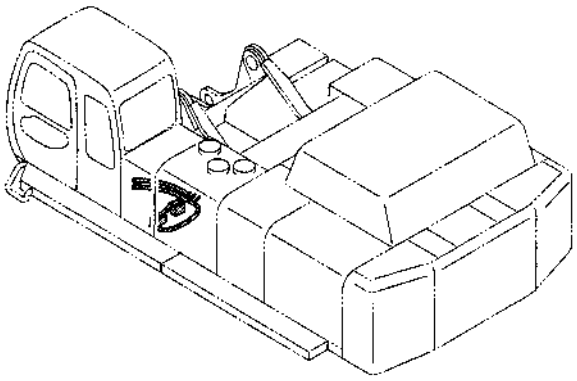

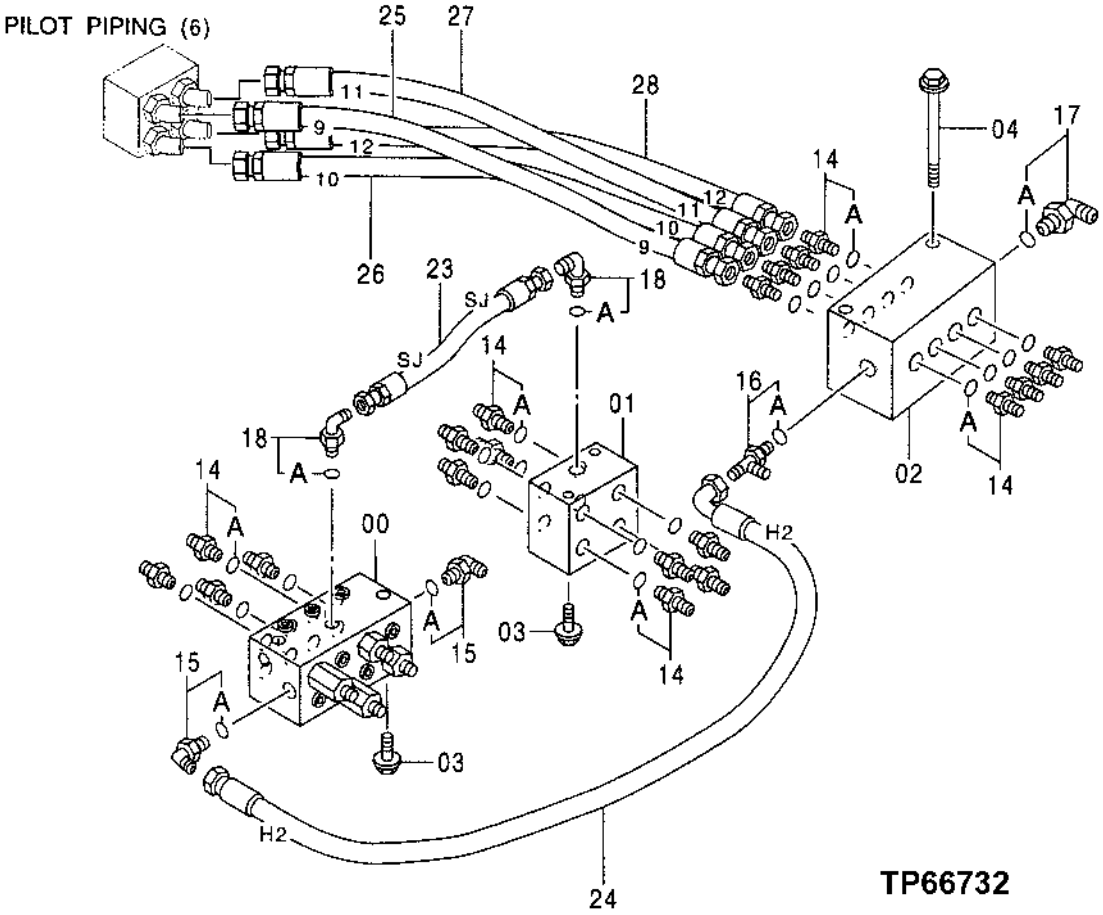

PILOT PIPINGS

KEY	PART NO.	PART NAME	QTY	SERIAL NO.	REMARKS
0	4377649	VALVE	1		(SUB FOR TH4377649) (FLOW CONTROL)
1	4254613	VALVE	1		(SUB FOR AT154218) (SHUTTLE)
2	4335088	VALVE	1		(SUB FOR AT201801) (FLOW CONTROL)
3	19M7932	CAP SCREW	4		M8 X 16, (SUB FOR 19M7162)
	12M7056	LOCK WASHER	4		8 MM (0.315") (SUB FOR 12M7065)
4	4305337	SCREW, WITH WASHER	2		(SUB FOR AT159662)
14	4200466	ADAPTER	20		(SUB FOR TH108320)
14A	CH11570	O-RING	1		13.800 X 2.400 MM (0.543" X 0.094")
15	4154671	ELBOW FITTING	2		(SUB FOR TH101047)
15A	CH11570	O-RING	1		13.800 X 2.400 MM (0.543" X 0.094")
16	4296066	TEE FITTING	1		(SUB FOR TH4296066)
16A	4506418	O-RING	1		(SUB FOR U46489)
17	4200471	ELBOW FITTING	1		(SUB FOR TH108399)
17A	4506418	O-RING	1		(SUB FOR U46489)
18	4154670	ELBOW FITTING	2		(SUB FOR TH100951)
18A	M800650	PACKING	1		
23	AT202491	HYDRAULIC HOSE - FABRICATE	1		7/16" X 300 MM (11-3/4") X 7/16"
24	4375878	HOSE	1		(SUB FOR TH4375878)
25	AT216981	HYDRAULIC HOSE - FABRICATE	1		9/16" X 600 MM (23-1/2") X 9/16"
26	AT216982	HYDRAULIC HOSE - FABRICATE	1		9/16" X 600 MM (23-1/2") X 9/16"
27	AT216983	HYDRAULIC HOSE - FABRICATE	1		9/16" X 600 MM (23-1/2") X 9/16"
28	AT216984	HYDRAULIC HOSE - FABRICATE	1		9/16" X 600 MM (23-1/2") X 9/16"

PILOT PIPINGS

T157506 -UN-19JUL02

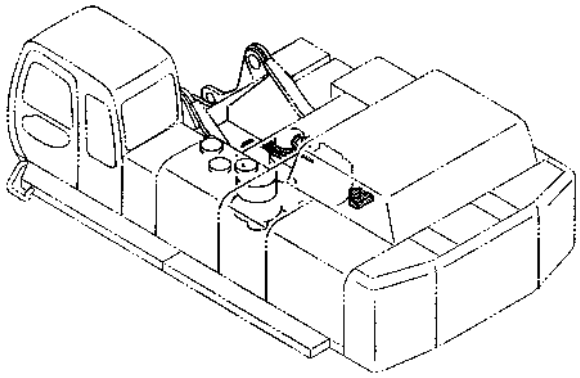

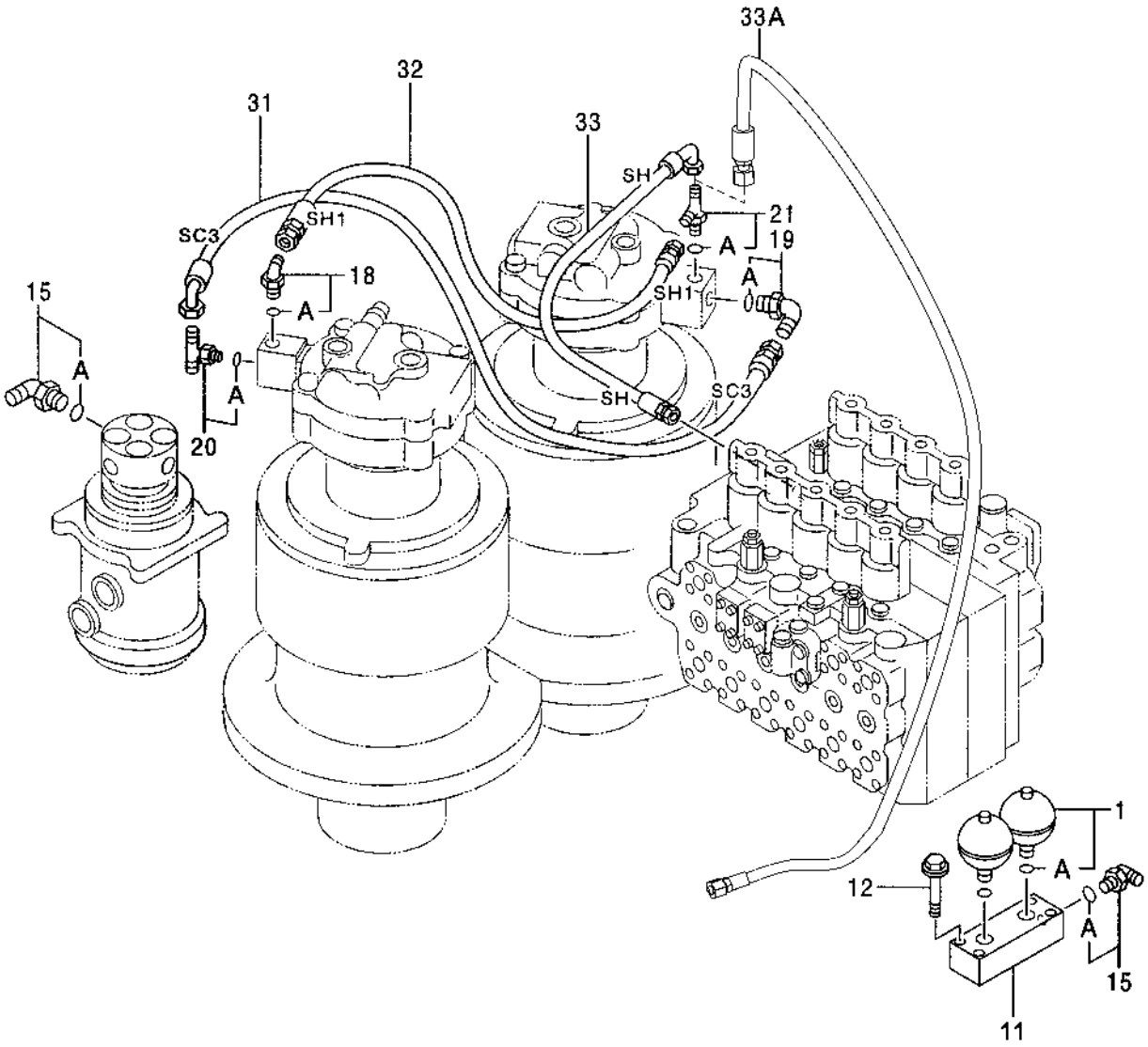

T157506

PILOT PIPINGS

KEY	PART NO.	PART NAME	QTY	SERIAL NO.	REMARKS
1	4195978	HYDRAULIC ACCUMULATOR	2		(SUB FOR AT162984)
1A	CH14634	O-RING	1		17.800 X 2.400 MM (0.701" X 0.094")
11	3046868	MANIFOLD	1		(SUB FOR TH3046868)
12	19M7742	CAP SCREW	4		M10 X 65
	12M7066	LOCK WASHER	4		10 MM (0.394")
15	4154671	ELBOW FITTING	2		(SUB FOR TH101047)
15A	CH11570	O-RING	1		13.800 X 2.400 MM (0.543" X 0.094")
18	4154670	ELBOW FITTING	1		(SUB FOR TH100951)
18A	M800650	PACKING	1		
19	4156434	ELBOW FITTING	1		(SUB FOR TH101930)
19A	M800650	PACKING	1		
20	4208473	TEE FITTING	1		(SUB FOR TH110203)
20A	M800650	PACKING	1		
21	4203171	TEE FITTING	1	-970029	(SUB FOR TH110578)
	4219346	TEE FITTING	1	970030-	
21A	M800650	PACKING	1		
31	4375881	HOSE	1		(SUB FOR TH4375881)
32	4375840	HOSE	1		(SUB FOR TH4375840)
33	4375868	HYDRAULIC HOSE - FABRICATE	1	-970029	
33A	4346000	HYDRAULIC HOSE	1	970030-	

PILOT PIPINGS

T157605 -UN-23JUL02

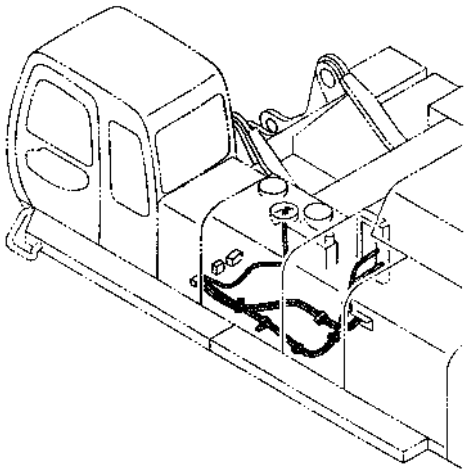

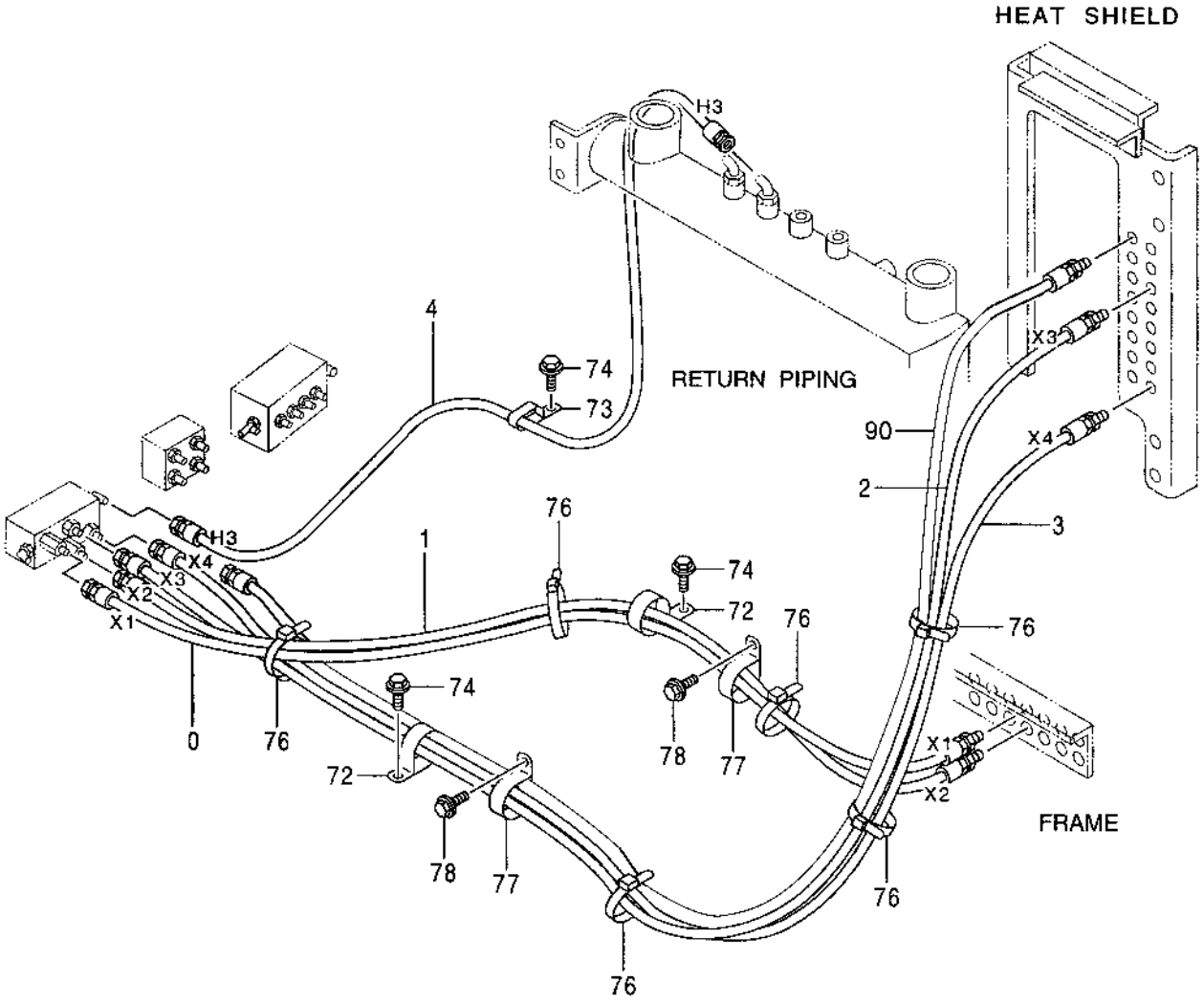

T157605

PILOT PIPINGS

KEY	PART NO.	PART NAME	QTY	SERIAL NO.	REMARKS
0	4375906	HOSE	1		
1	4375910	HOSE	1		
2	4375908	HOSE	1		
3	4375907	HOSE	1		
4	4375862	HOSE	1		
72	4190265	CLIP	2		(SUB FOR TH109598)
73	4190292	CLIP	1		(SUB FOR TH108321)
74	19M7938	CAP SCREW	3		M10 X 20
	12M7066	LOCK WASHER	3		10 MM (0.394")
76	H77698	TIE BAND	6		
77	4190265	CLIP	2		(SUB FOR TH109598)
78	19M7938	CAP SCREW	2		M10 X 20
	12M7066	LOCK WASHER	2		10 MM (0.394")
90	4463055	HOSE	1	970030-	

PILOT PIPINGS

TP66735 -UN-04OCT99

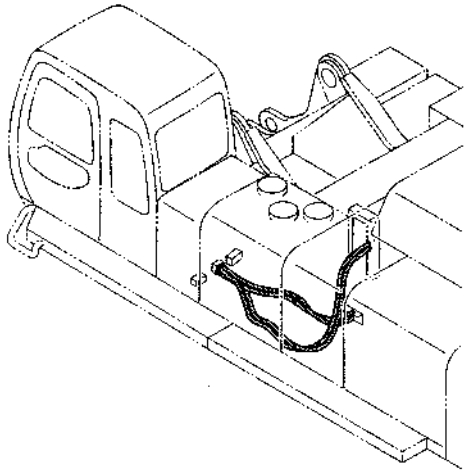

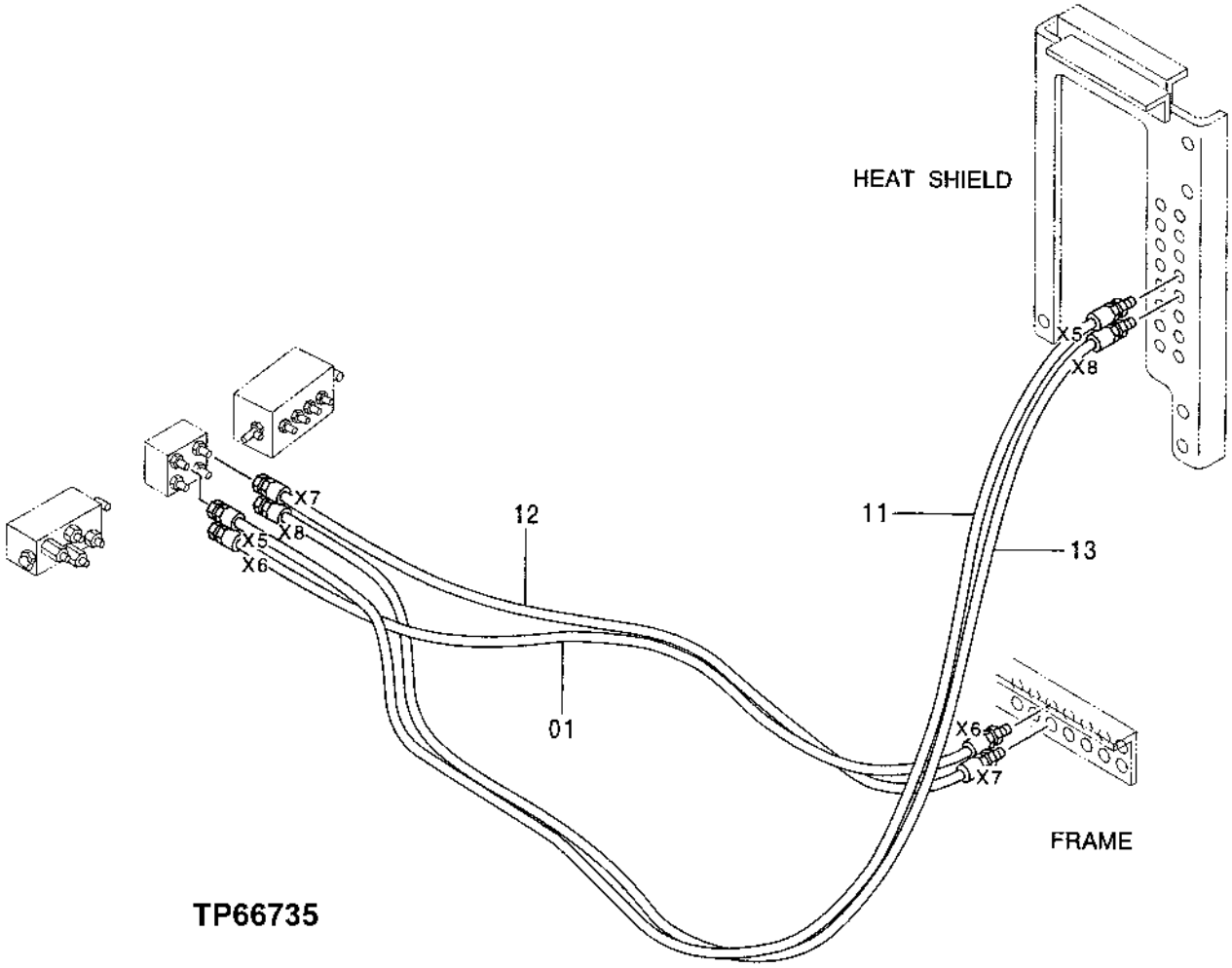

PILOT PIPINGS

KEY	PART NO.	PART NAME	QTY	SERIAL NO.	REMARKS
1	4406482	HOSE	1		(SUB FOR TH4406482)
11	4406481	HOSE	1		(SUB FOR TH4406481)
12	TH4375904	HOSE	1		
13	TH4375909	HOSE	1		

PILOT PIPINGS

TP66736 -UN-04OCT99

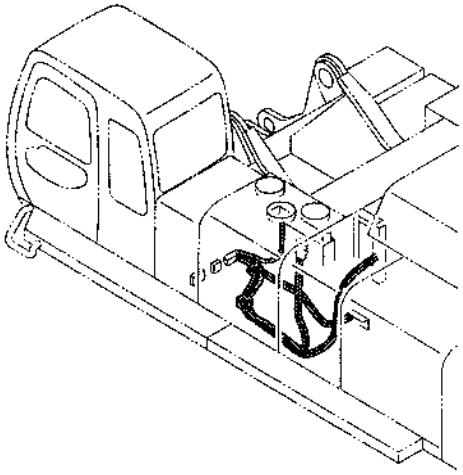

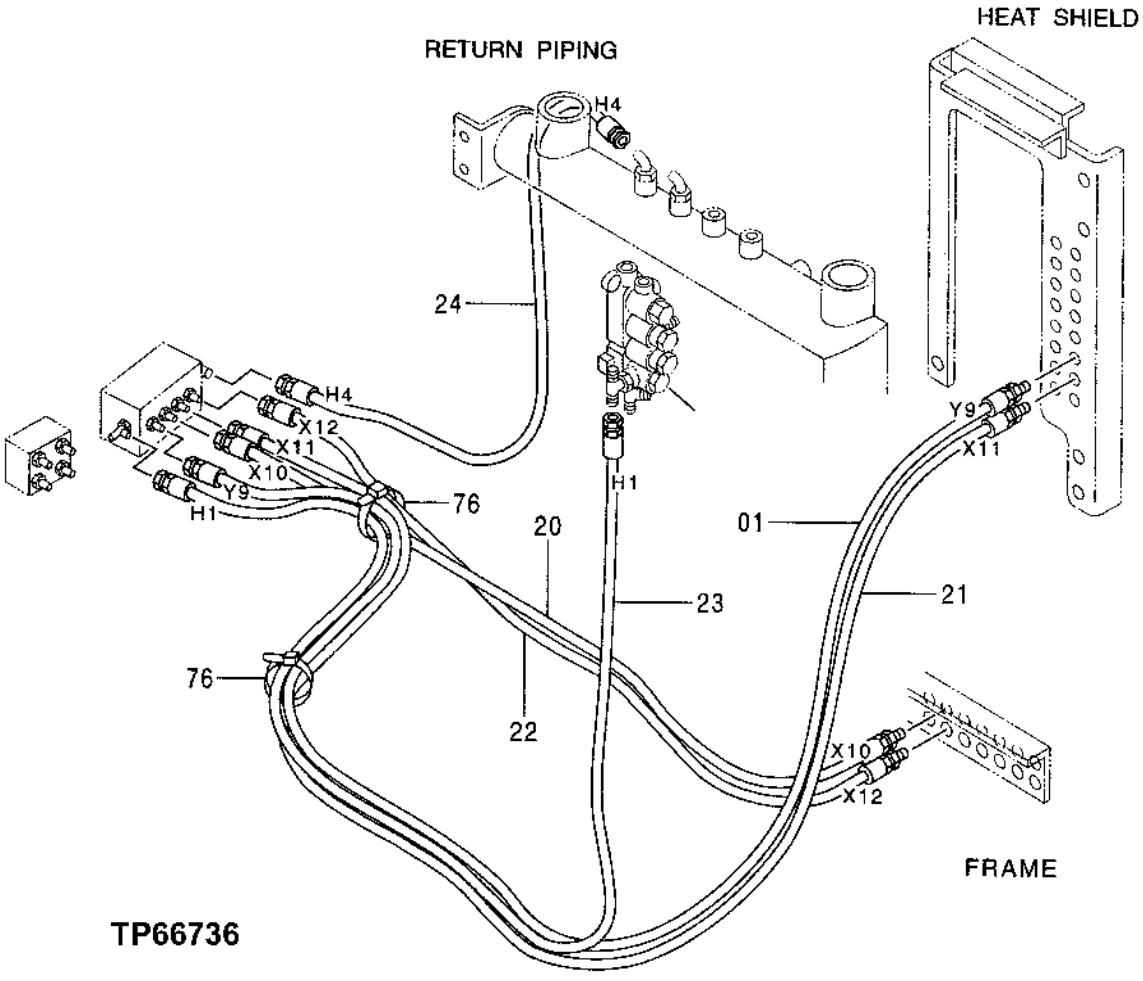

PILOT PIPINGS

KEY	PART NO.	PART NAME	QTY	SERIAL NO.	REMARKS
1	4375912	HOSE	1		(SUB FOR TH4375912)
20	4375903	HOSE	1		(SUB FOR TH4375903)
21	4389912	HOSE	1		(SUB FOR TH4389912)
22	4375902	HOSE	1		(SUB FOR TH4375902)
23	4375864	HOSE	1		(SUB FOR TH4375864)
24	4375856	HOSE	1		(SUB FOR TH4375856)
76	H77698	TIE BAND	2		

PILOT PIPINGS

TP66737 -UN-04OCT99

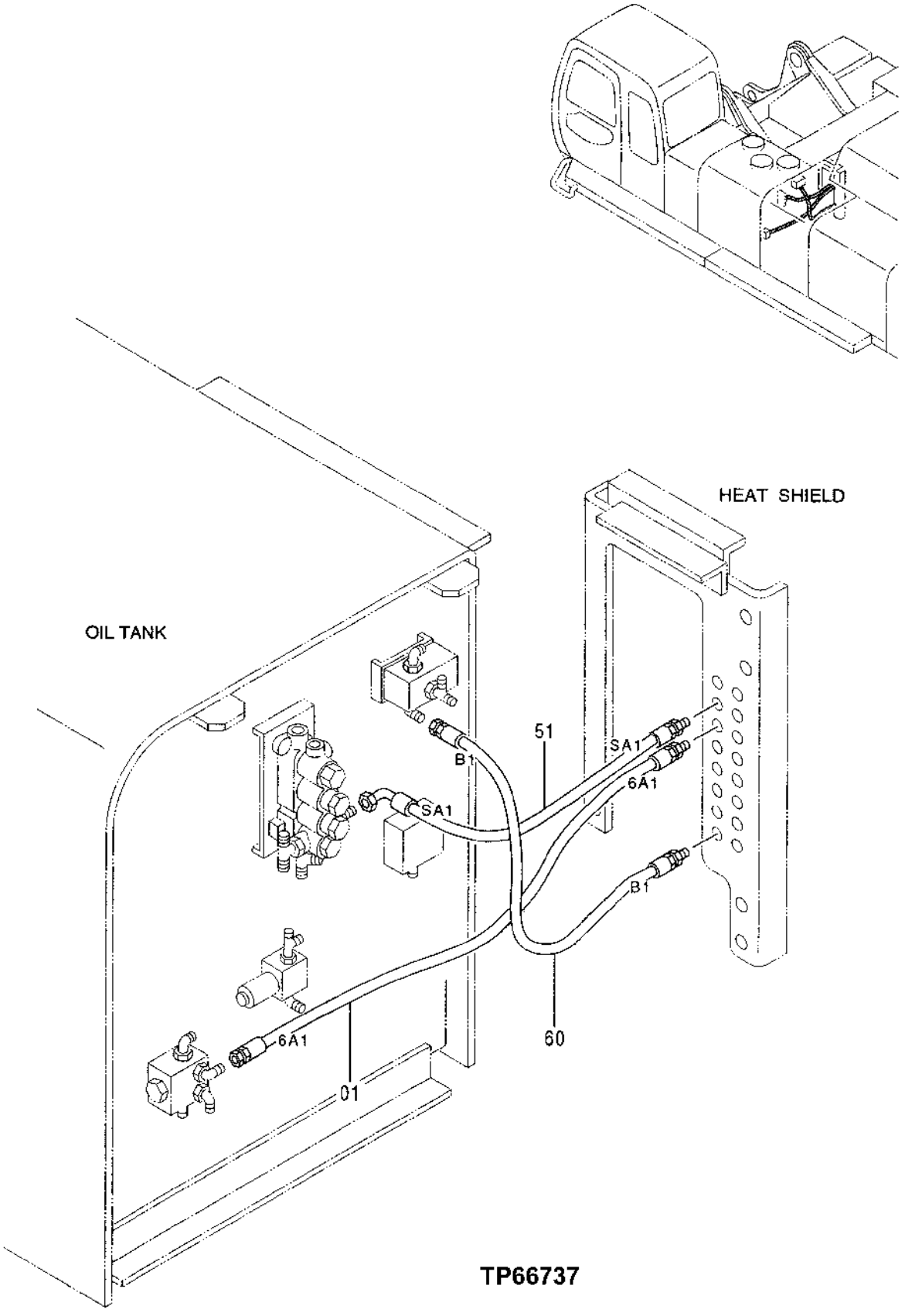

TP66737

PILOT PIPINGS

KEY	PART NO.	PART NAME	QTY	SERIAL NO.	REMARKS
1	4375897	HOSE	1		(SUB FOR TH4375897)
51	4375832	HOSE	1		(SUB FOR TH4375832)
60	4375890	HOSE	1		(SUB FOR TH4375890)

PILOT PIPINGS

TP66738 -UN-04OCT99

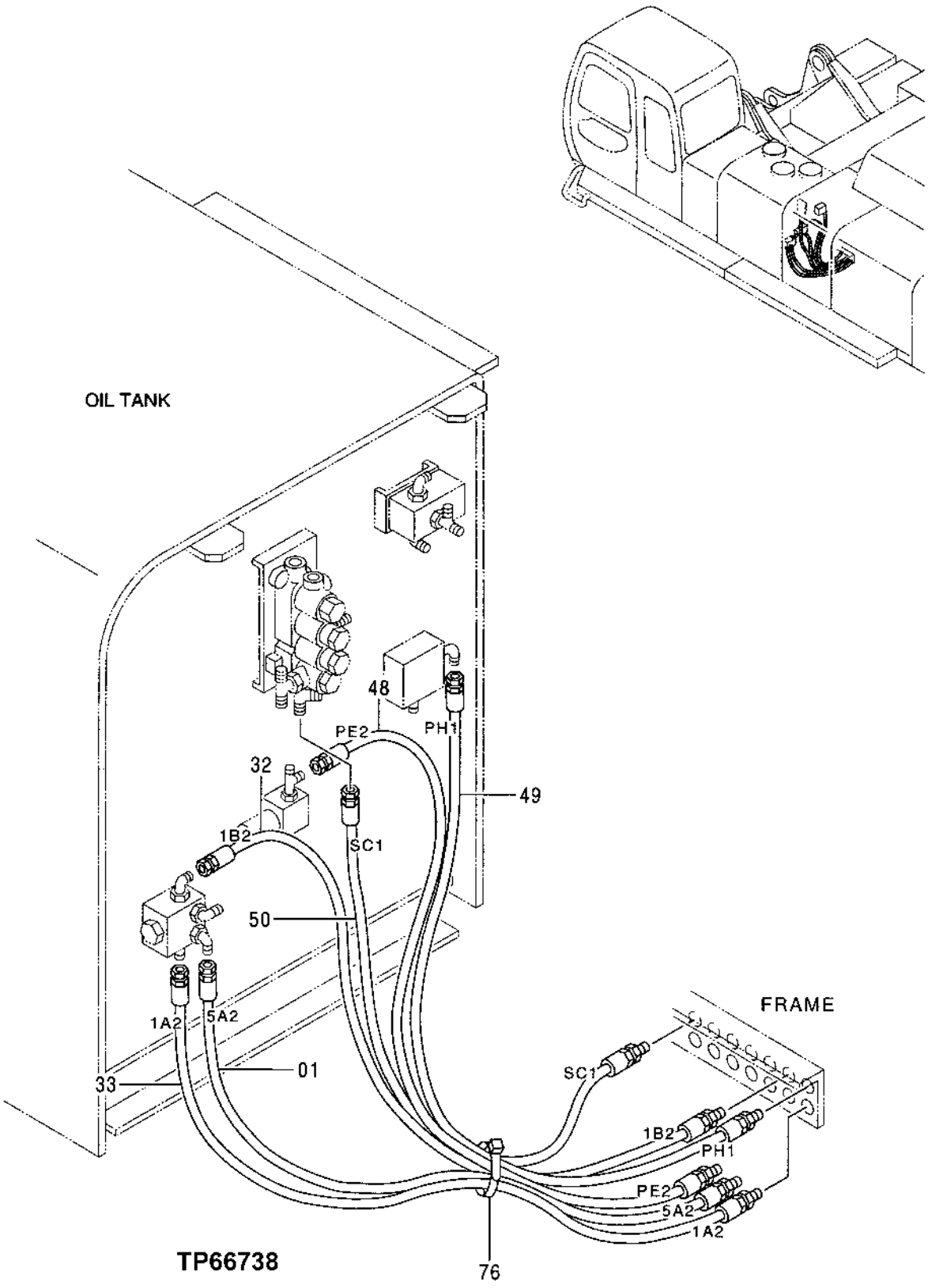

PILOT PIPINGS

KEY	PART NO.	PART NAME	QTY	SERIAL NO.	REMARKS
1	4375891	HOSE	1		(SUB FOR TH4375891)
32	4375894	HOSE	1		(SUB FOR TH4375894)
33	4375895	HOSE	1		(SUB FOR TH4375895)
48	4375896	HOSE	1		(SUB FOR TH4375896)
49	4375898	HOSE	1		(SUB FOR TH4375898)
50	4375901	HOSE	1		(SUB FOR TH4375901)
76	H77698	TIE BAND	1		

PILOT PIPINGS

TP66739 -UN-04OCT99

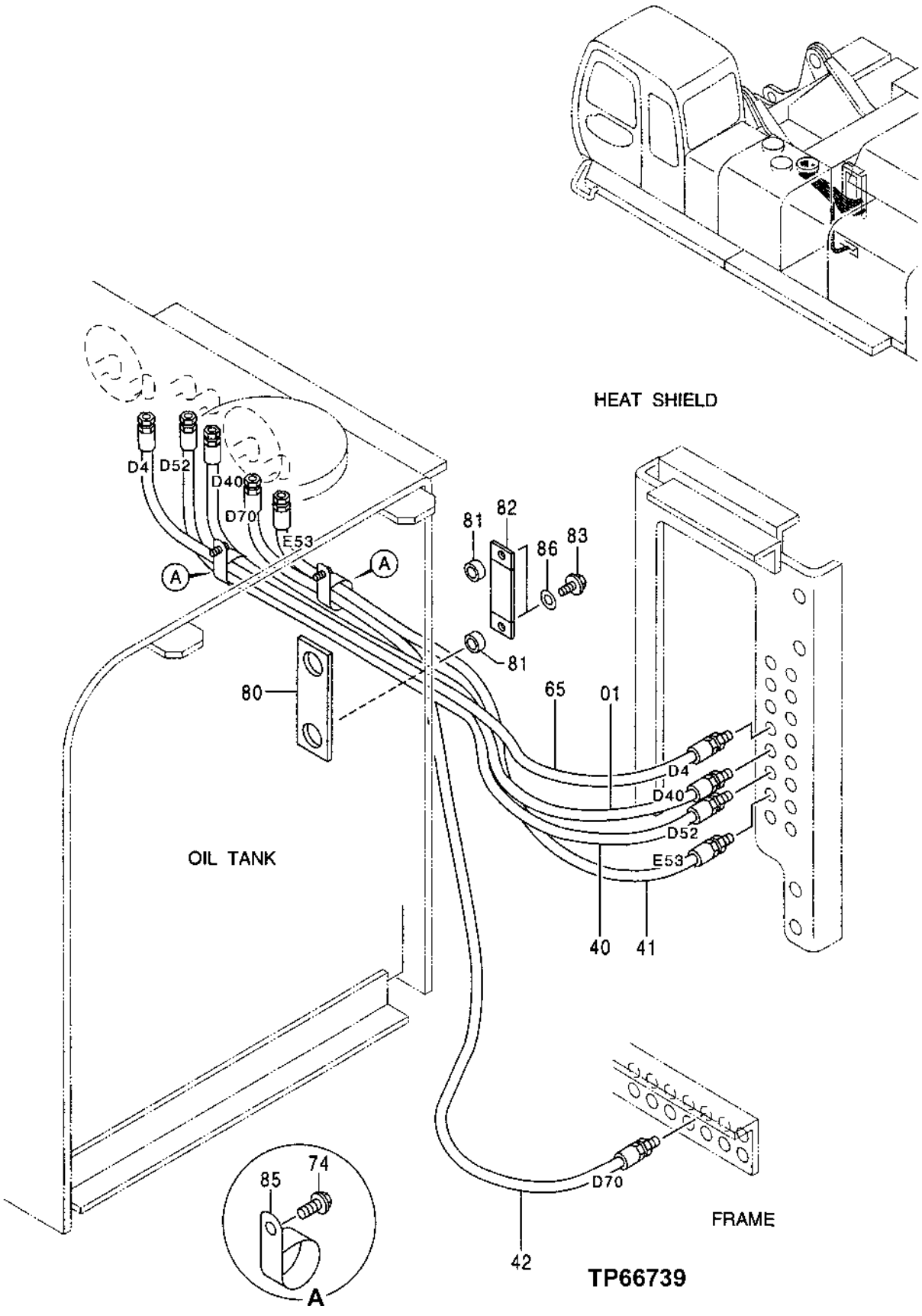

PILOT PIPINGS

KEY	PART NO.	PART NAME	QTY	SERIAL NO.	REMARKS
1	4375892	HOSE	1		(SUB FOR TH4375892)
40	4375900	HOSE	1		(SUB FOR TH4375900)
41	4375893	HOSE	1		(SUB FOR TH4375893)
42	4387356	HOSE	1		(SUB FOR TH4387356)
65	4375899	HOSE	1		(SUB FOR TH4375899)
74	19M7938	CAP SCREW	2		M10 X 20
	12M7066	LOCK WASHER	2		10 MM (0.394")
80	4386733	PLATE	1		(SUB FOR TH4386733)
81	4270773	BUSHING	2		(SUB FOR AT154312)
82	9736384	PLATE	1		(SUB FOR AT154544)
83	19M8761	SCREW	2		M10 X 22
	12M7058	LOCK WASHER	2		12.200 MM (0.480") (SUB FOR 12M7067)
85	AT121321	HOSE CLAMP	2		
86	24M7028	WASHER	2		10.500 X 20 X 2 MM (0.413" X 0.787" X 0.079")

PILOT PIPINGS

TP66740 -UN-04OCT99

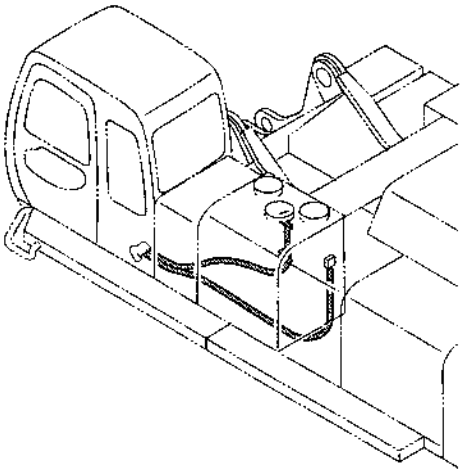

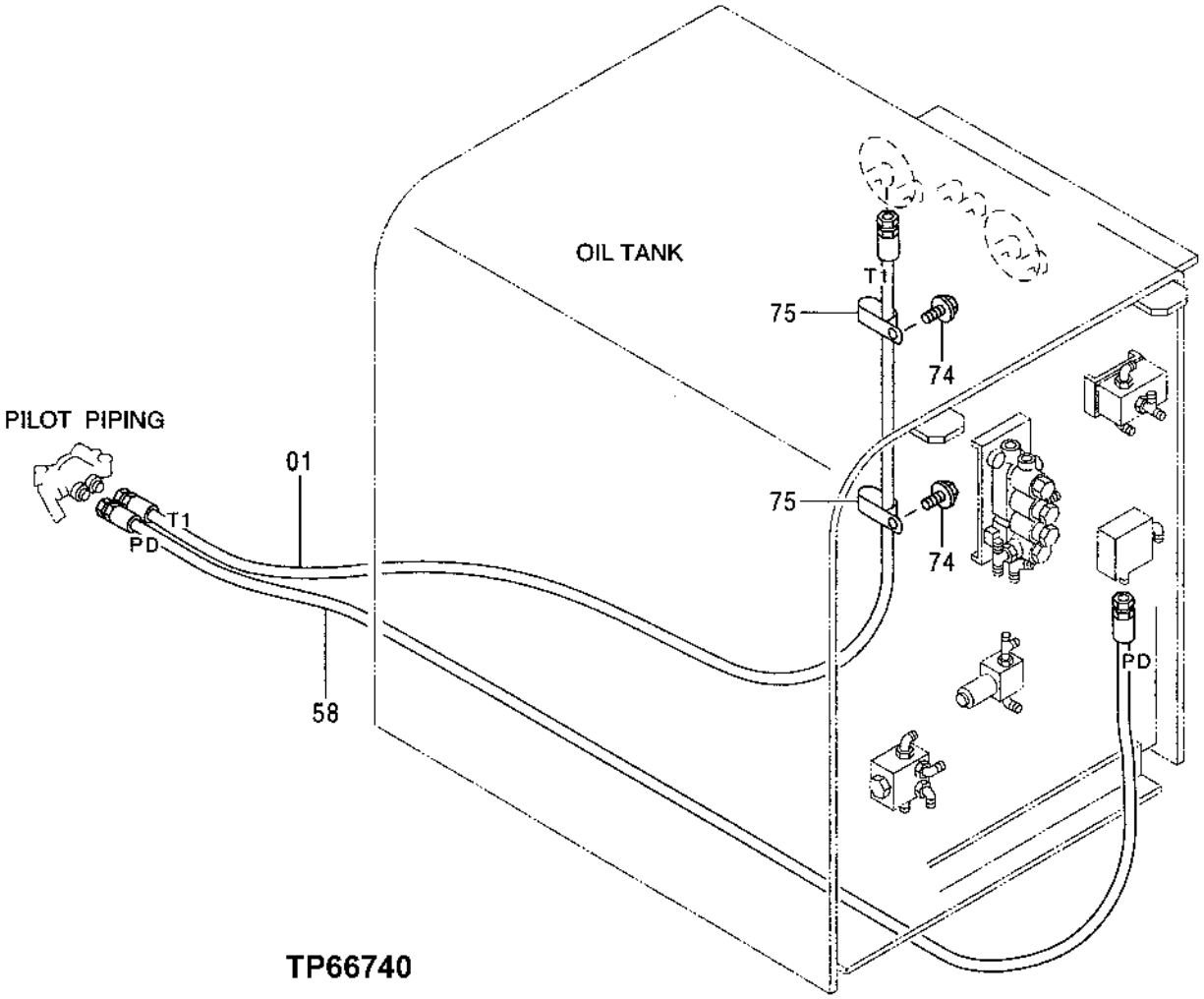

PILOT PIPINGS

KEY	PART NO.	PART NAME	QTY	SERIAL NO.	REMARKS
1	4375865	HOSE	1		(SUB FOR TH4375865)
58	4375866	HOSE	1		(SUB FOR TH4375866)
74	19M7938	CAP SCREW	2		M10 X 20
	12M7066	LOCK WASHER	2		10 MM (0.394")
75	4190275	CLIP	2		(SUB FOR TH108598)

PILOT PIPINGS

TP66741 -UN-04OCT99

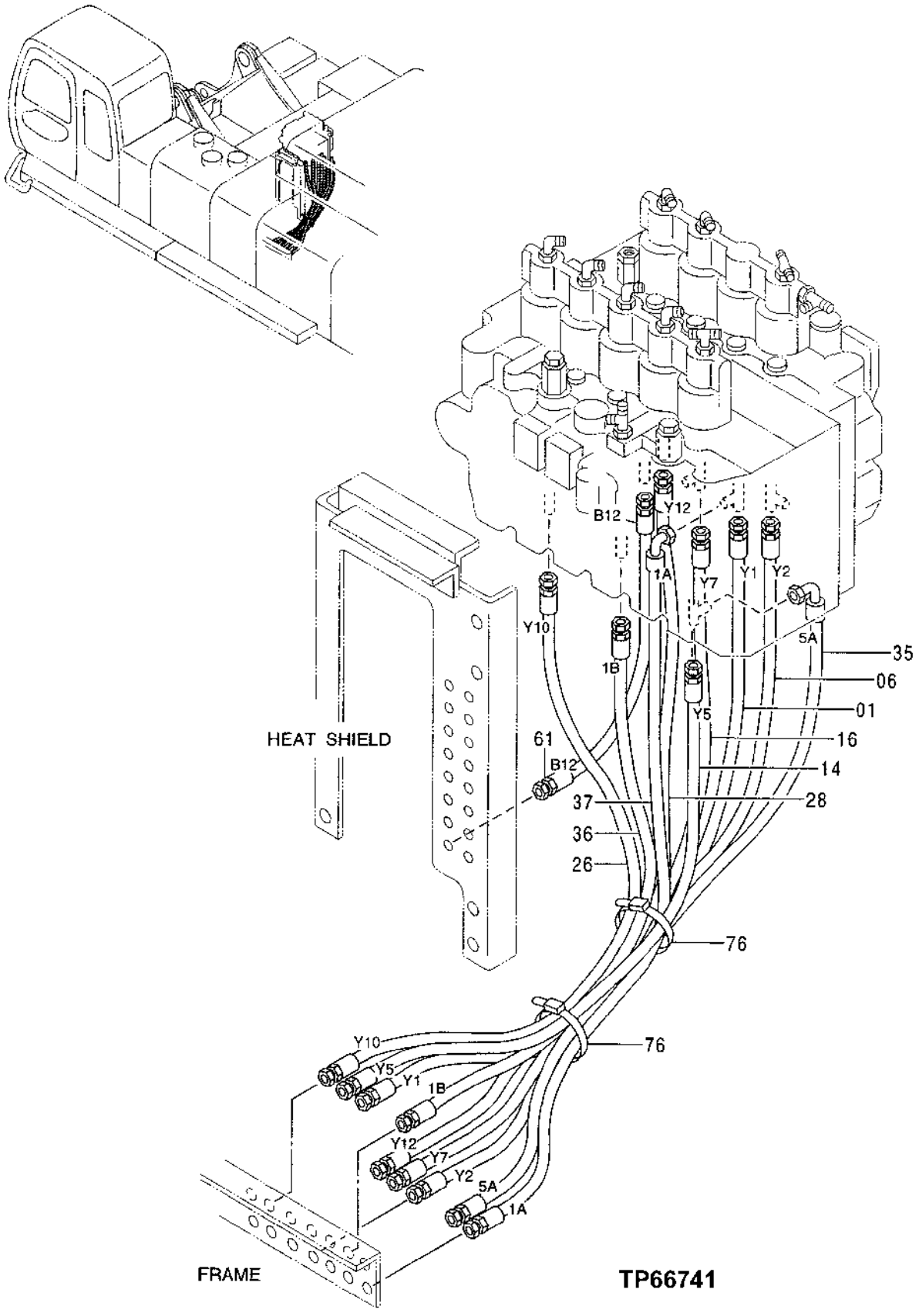

PILOT PIPINGS

KEY	PART NO.	PART NAME	QTY	SERIAL NO.	REMARKS
1	4375854	HOSE	1		(SUB FOR TH4375854)
6	4375846	HOSE	1		(SUB FOR TH4375846)
14	4375845	HOSE	1		(SUB FOR TH4375845)
16	4375852	HOSE	1		(SUB FOR TH4375852)
26	4375857	HOSE	1		(SUB FOR TH4375857)
28	4375858	HOSE	1		(SUB FOR TH4375858)
35	4375885	HOSE	1		(SUB FOR TH4375885)
36	4375858	HOSE	1		(SUB FOR TH4375858)
37	4375886	HOSE	1		(SUB FOR TH4375886)
61	4375851	HOSE	1		(SUB FOR TH4375851)
76	H77698	TIE BAND	2		

PILOT PIPINGS

TP66742 -UN-04OCT99

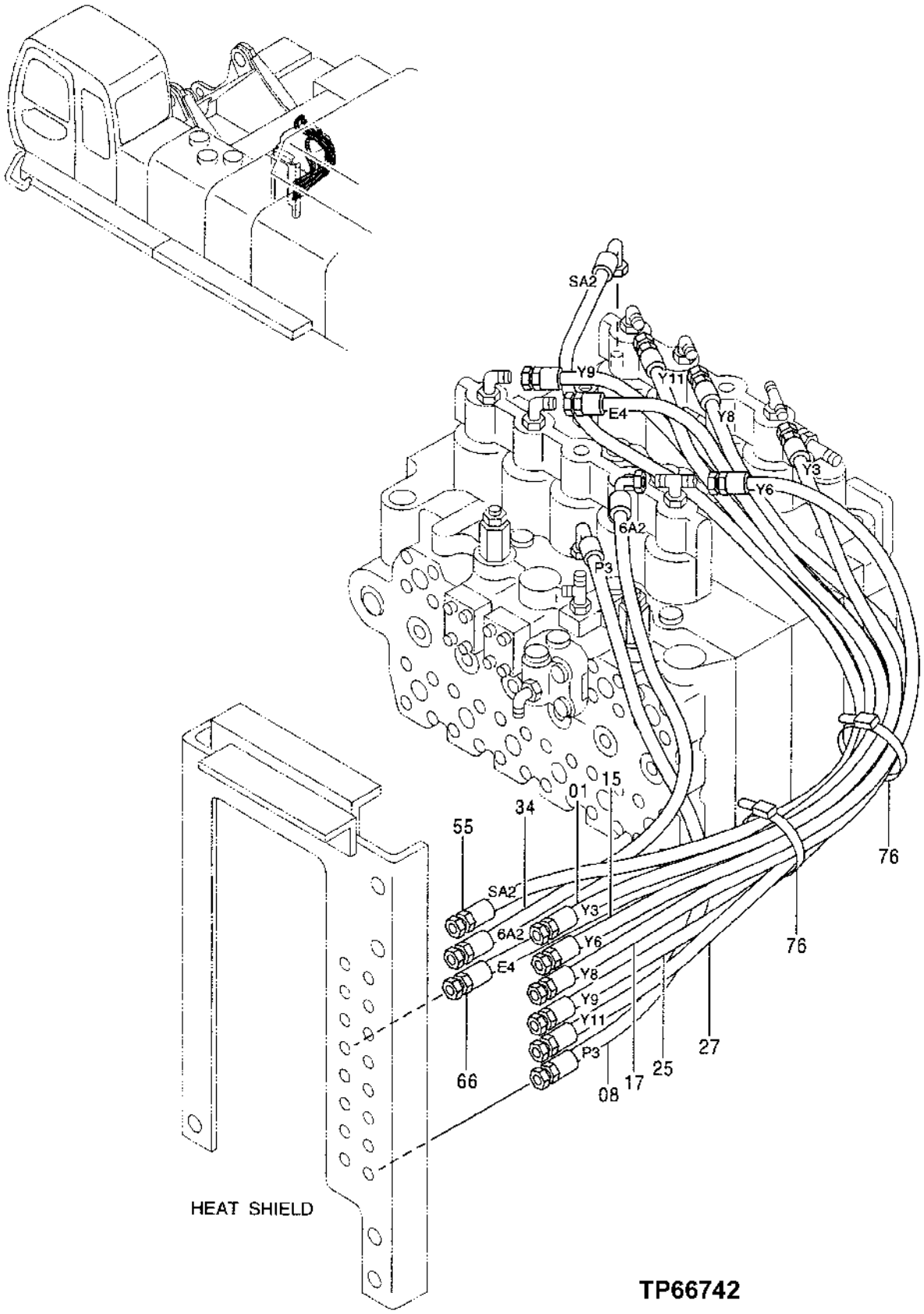

PILOT PIPINGS

KEY	PART NO.	PART NAME	QTY	SERIAL NO.	REMARKS
1	4375843	HOSE	1		(SUB FOR TH4375843)
8	4373679	HOSE	1		(SUB FOR TH4373679)
15	4375841	HOSE	1		(SUB FOR TH4375841)
17	4375847	HOSE	1		(SUB FOR TH4375847)
25	4375849	HOSE	1		(SUB FOR TH4375849)
27	4375850	HOSE	1		(SUB FOR TH4375850)
34	4375884	HOSE	1		(SUB FOR TH4375884)
55	4375884	HOSE	1		(SUB FOR TH4375884)
66	4375844	HOSE	1		(SUB FOR TH4375844)
76	H77698	TIE BAND	2		

PILOT PIPINGS

TP66743 -UN-06OCT99

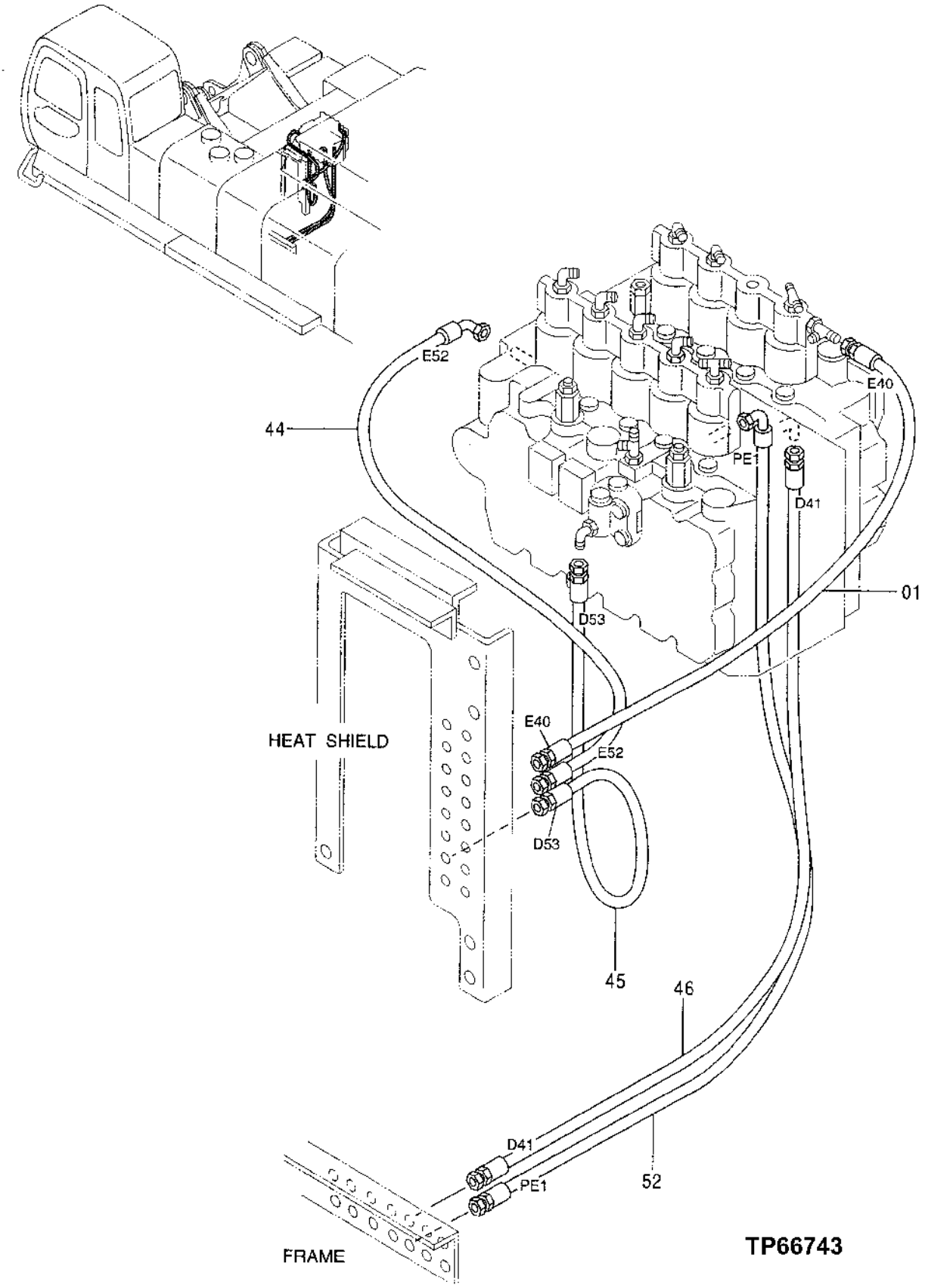

PILOT PIPINGS

KEY	PART NO.	PART NAME	QTY	SERIAL NO.	REMARKS
1	4375842	HOSE	1		(SUB FOR TH4375842)
44	4375888	HOSE	1		(SUB FOR TH4375888)
45	4375859	HOSE	1		(SUB FOR TH4375859)
46	4375860	HOSE	1		(SUB FOR TH4375860)
52	4375887	HOSE	1		(SUB FOR TH4375887)

PILOT PIPINGS

TP66744 -UN-06OCT99

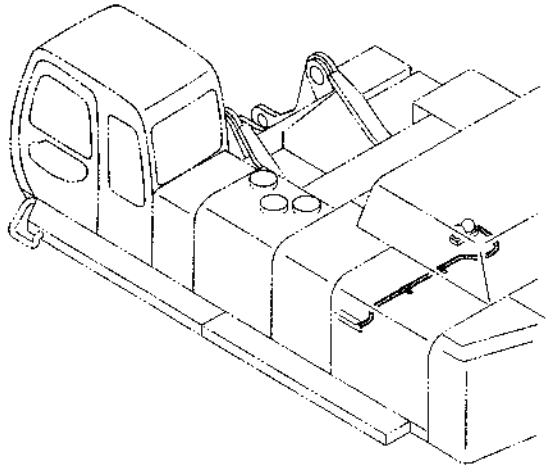

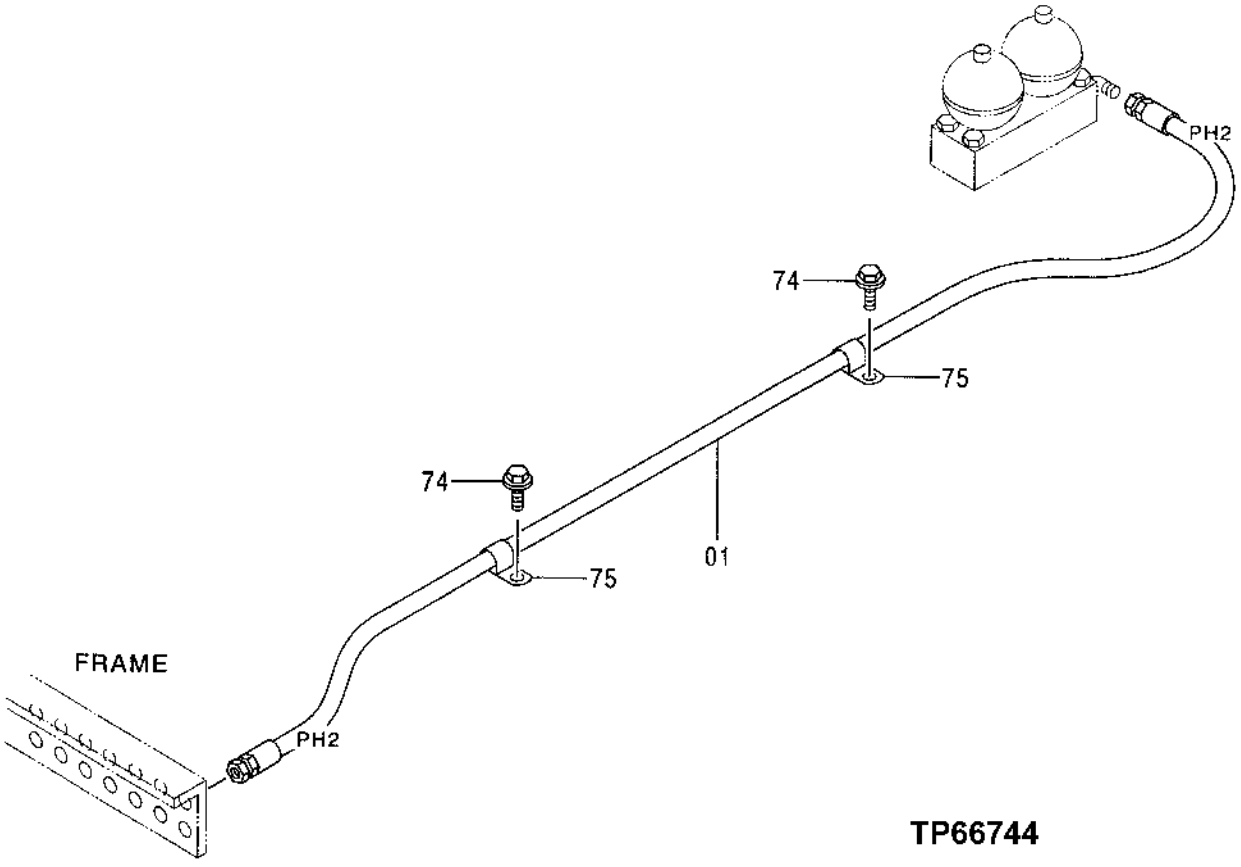

PILOT PIPINGS

KEY	PART NO.	PART NAME	QTY	SERIAL NO.	REMARKS
1	4375861	HOSE	1		(SUB FOR TH4375861)
74	19M7938	CAP SCREW	2		M10 X 20
	12M7066	LOCK WASHER	2		10 MM (0.394")
75	4190275	CLIP	2		(SUB FOR TH108598)

PILOT PIPINGS

TP66745 -UN-06OCT99

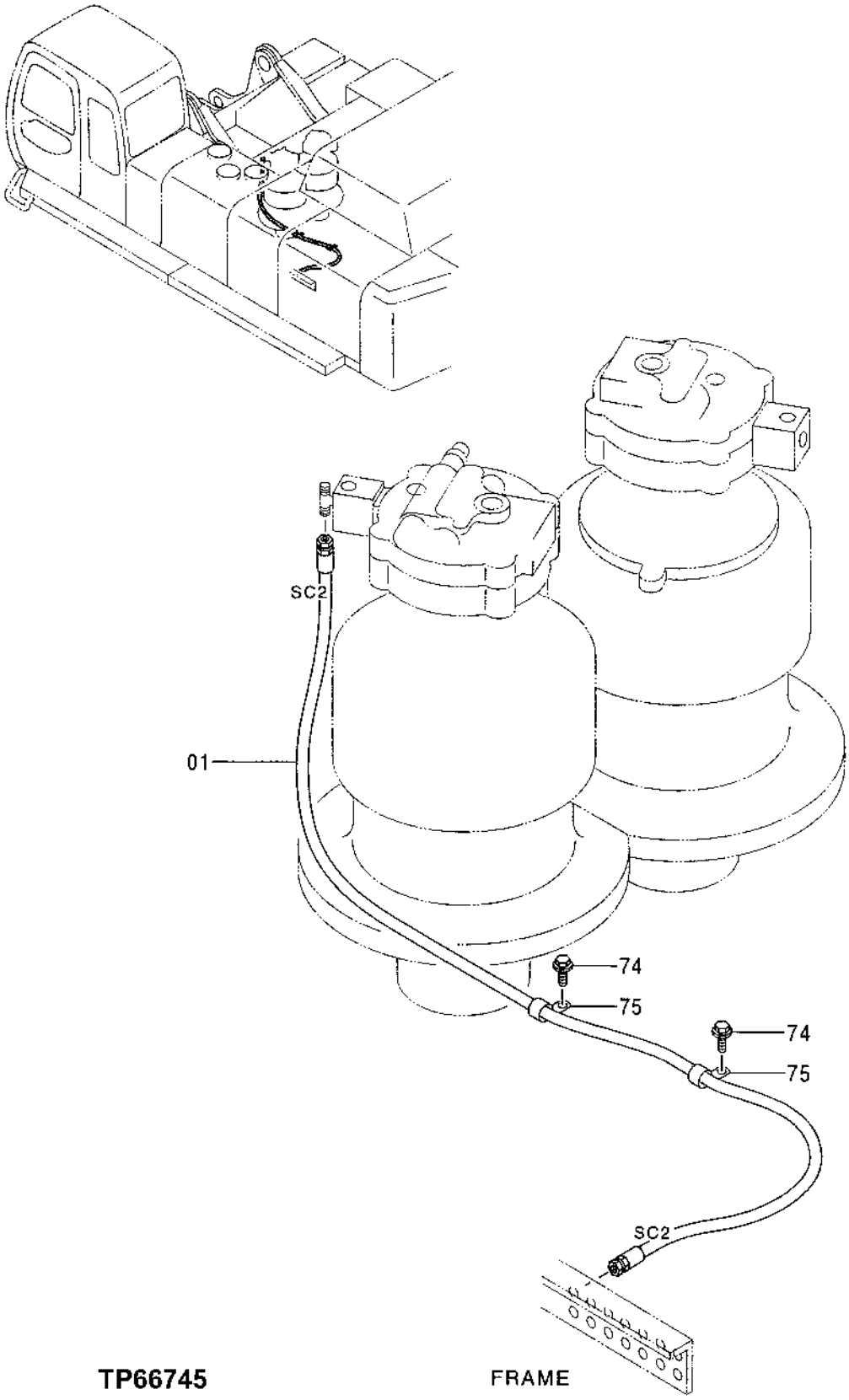

TP66745 FRAME

PILOT PIPINGS

KEY	PART NO.	PART NAME	QTY	SERIAL NO.	REMARKS
1	4375863	HOSE	1		(SUB FOR TH4375863)
74	19M7938	CAP SCREW	2		M10 X 20
	12M7066	LOCK WASHER	2		10 MM (0.394")
75	4190275	CLIP	2		(SUB FOR TH108598)

PILOT PIPINGS

TP66746 -UN-06OCT99

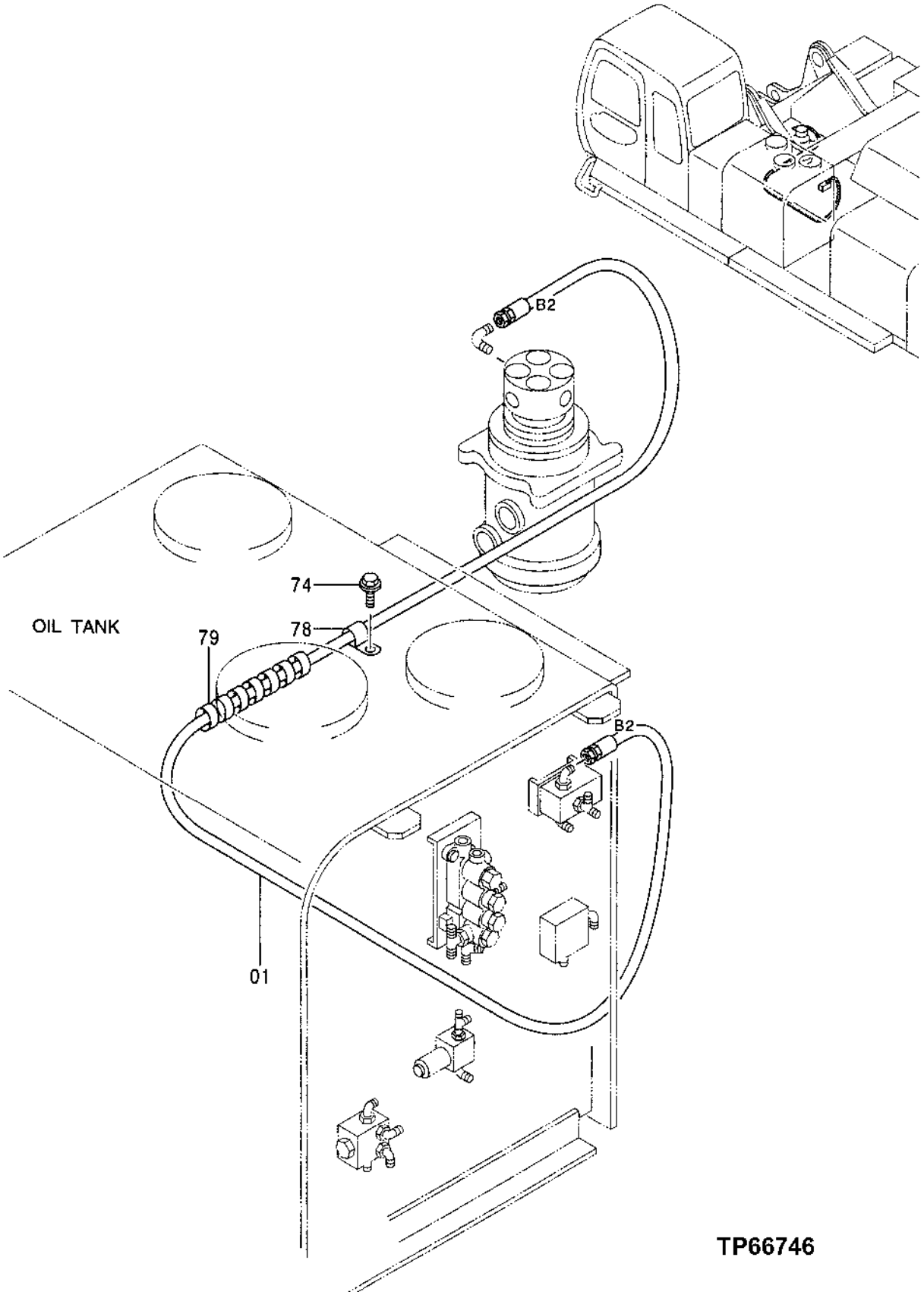

PILOT PIPINGS

KEY	PART NO.	PART NAME	QTY	SERIAL NO.	REMARKS
1	4375867	HOSE	1		(SUB FOR TH4375867)
74	19M7938	CAP SCREW	1		M10 X 20
	12M7066	LOCK WASHER	1		10 MM (0.394")
78	4190266	CLIP	4		(SUB FOR TH108793)
79	.....	HOSE GUARD	1		(CUT TO LENGTH FROM AT138222 BULK MATERIAL)

PILOT LINES (FROM PROPEL VALVE)

T157504 -UN-19JUL02

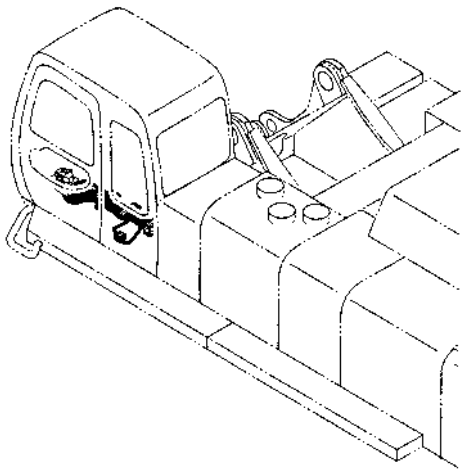

PILOT VALVE (TRAVEL)

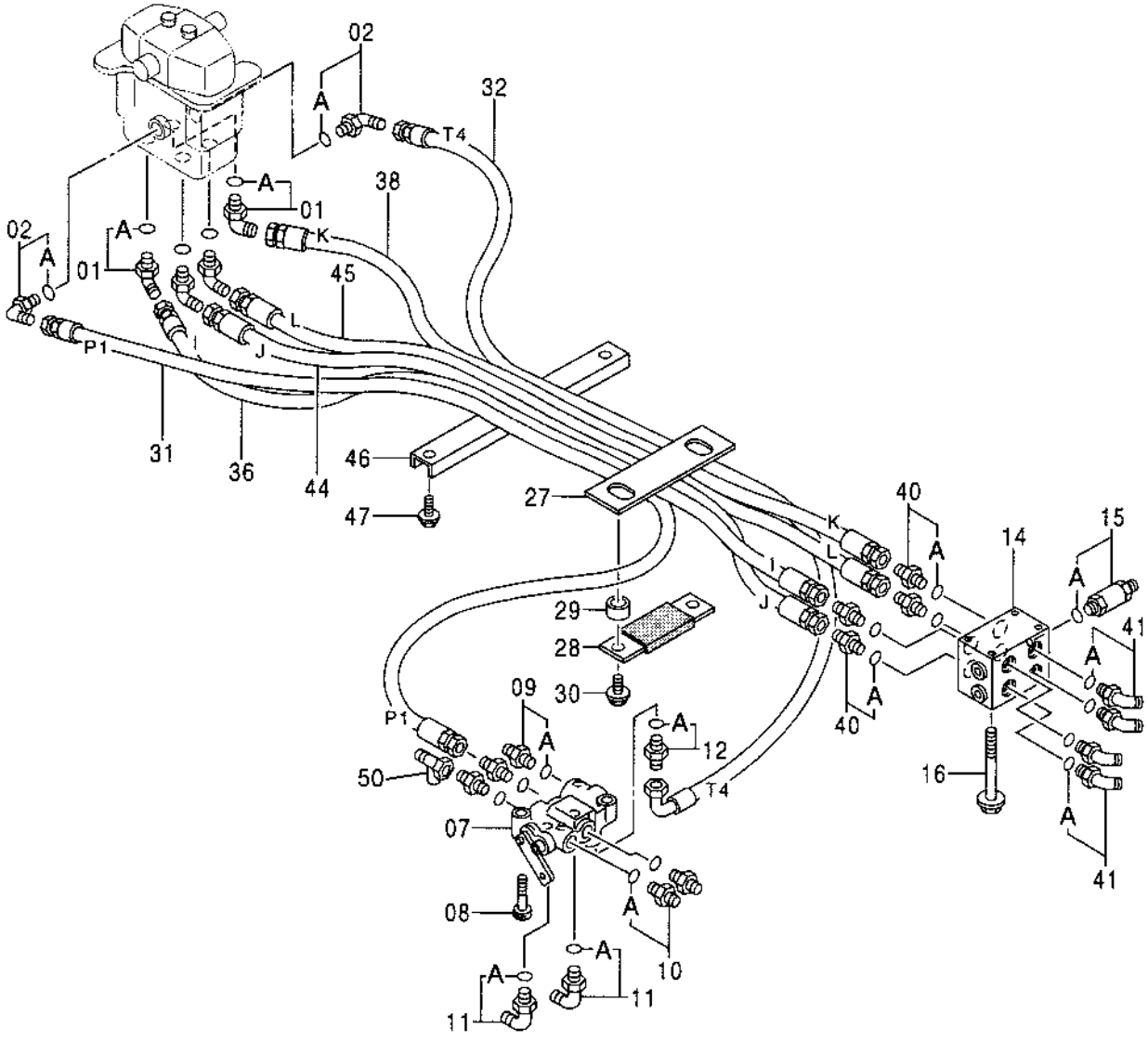

T157504

PILOT LINES (FROM PROPEL VALVE)

KEY	PART NO.	PART NAME	QTY	SERIAL NO.	REMARKS
1	4156434	ELBOW FITTING	4		(SUB FOR TH101930)
1A	M800650	PACKING	1		
2	4156434	ELBOW FITTING	2		(SUB FOR TH101930)
2A	M800650	PACKING	1		
7	4254611	VALVE	1		
8	J781045	SCREW	2		(SUB FOR AT213616)
9	4261938	FITTING	3		(SUB FOR AT154285)
9A	CH11570	O-RING	1		13.800 X 2.400 MM (0.543" X 0.094")
10	4200466	ADAPTER	2		(SUB FOR TH108320)
10A	CH11570	O-RING	1		13.800 X 2.400 MM (0.543" X 0.094")
11	4154671	ELBOW FITTING	2		(SUB FOR TH101047)
11A	CH11570	O-RING	1		13.800 X 2.400 MM (0.543" X 0.094")
12	4200466	ADAPTER	1		(SUB FOR TH108320)
12A	CH11570	O-RING	1		13.800 X 2.400 MM (0.543" X 0.094")
14	4254612	VALVE	1		
15	4254563	PRESSURE SWITCH	1		(SUB FOR AT154212)
15A	CH19111	O-RING	1		7.645 X 1.778 MM (0.301" X 0.070")
16	19M8456	CAP SCREW	4		M8 X 100
	12M7056	LOCK WASHER	4		8 MM (0.315") (SUB FOR 12M7065)
27	4270771	PLATE	1		(SUB FOR AT154311)
28	9736384	PLATE	1		(SUB FOR AT154544)
29	4270773	BUSHING	2		(SUB FOR AT154312)
30	19M8324	CAP SCREW	2		M10 X 16
	12M7066	LOCK WASHER	2		10 MM (0.394")
31	4323290	HYDRAULIC HOSE	1		(SUB FOR AT217091)
32	AT216978	HYDRAULIC HOSE - FABRICATE	1		9/16" X 1 200 MM (47-1/4") X 9/16"
36	AT48434	HYDRAULIC HOSE - FABRICATE	1		9/16" X 1 067 MM (42") X 9/16"
38	AT48434	HYDRAULIC HOSE - FABRICATE	1		9/16" X 1 067 MM (42") X 9/16"
40	4200466	ADAPTER	4		(SUB FOR TH108320)
40A	CH11570	O-RING	1		13.800 X 2.400 MM (0.543" X 0.094")
41	4190244	ELBOW FITTING	4		(SUB FOR TH106152)
41A	CH11570	O-RING	1		13.800 X 2.400 MM (0.543" X 0.094")
44	AT48434	HYDRAULIC HOSE - FABRICATE	1		9/16" X 1 067 MM (42") X 9/16"
45	AT48434	HYDRAULIC HOSE - FABRICATE	1		9/16" X 1 067 MM (42") X 9/16"
46	4323723	CHANNEL	1		(SUB FOR AT201277)
47	19M8324	CAP SCREW	2		M10 X 16
	12M7066	LOCK WASHER	2		10 MM (0.394")
50	4246672	TEE FITTING	1	970030-	

PILOT PIPINGS
***** USA PATTERN *****

TP66748 -UN-07OCT99

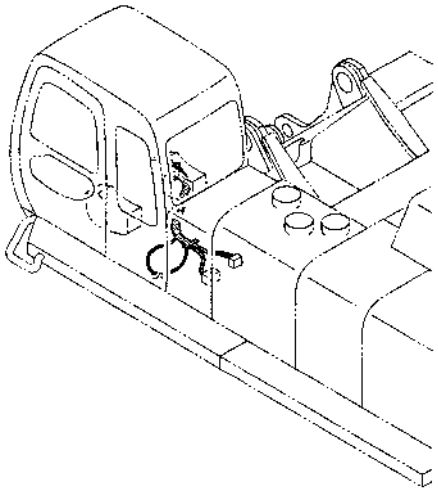

PILOT VALVE (FRONT & SWING)

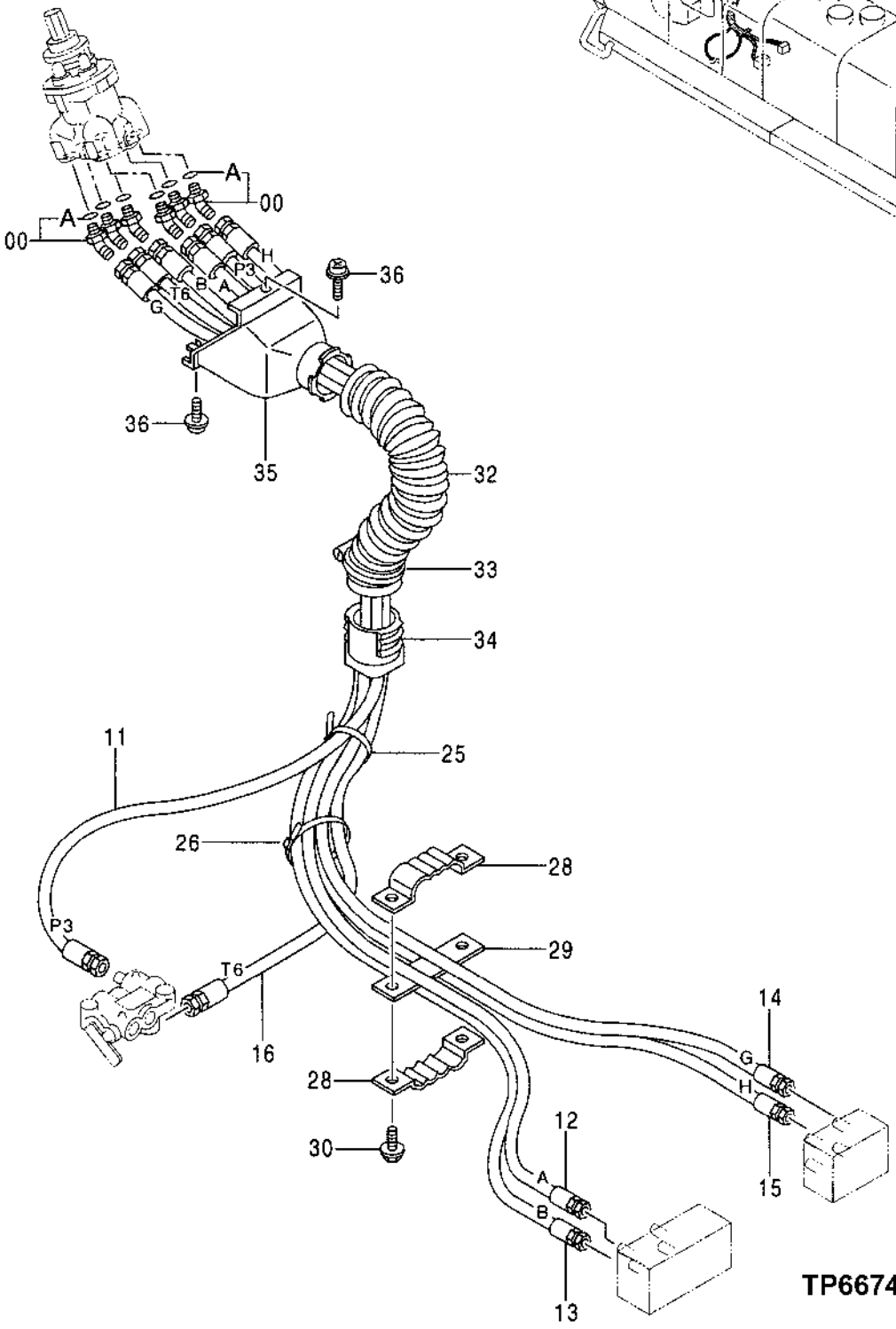

PILOT PIPINGS
***** USA PATTERN *****

KEY	PART NO.	PART NAME	QTY	SERIAL NO.	REMARKS
0	4286916	ELBOW FITTING	6		(SUB FOR AT154994)
0A	M800650	PACKING	1		
11	AT215542	HYDRAULIC HOSE - FABRICATE	1		
12	4351190	HYDRAULIC HOSE	1		(SUB FOR AT213904, THIS APPLICATION) (SUB FOR AT217110)
13	4351190	HYDRAULIC HOSE	1		(SUB FOR AT217110)
14	4387237	HYDRAULIC HOSE	1		(SUB FOR AT217141)
15	4387237	HYDRAULIC HOSE	1		(SUB FOR AT213908, THIS APPLICATION) (SUB FOR AT217141)
16	AT215543	HYDRAULIC HOSE - FABRICATE	1		
25	H77698	TIE BAND	1		
26	H77698	TIE BAND	1		
28	9727638	HOSE CLAMP	2		(SUB FOR AT130505)
29	9727636	PLATE	1		(SUB FOR AT130504)
30	19M7358	CAP SCREW	2		M10 X 40
	12M7066	LOCK WASHER	2		10 MM (0.394")
32	4351175	HOSE	1		(SUB FOR AT213957)
33	4351774	CLAMP	1		(SUB FOR AT213962)
34	3079728	BUSHING	1		(SUB FOR AT250589)
35	3072745	COVER	1		(SUB FOR AT213784)
36	J460620	SCREW, WITH WASHER	2		(SUB FOR AT200012)

PILOT PIPINGS
***** JIS PATTERN *****

TP66749 -UN-07OCT99

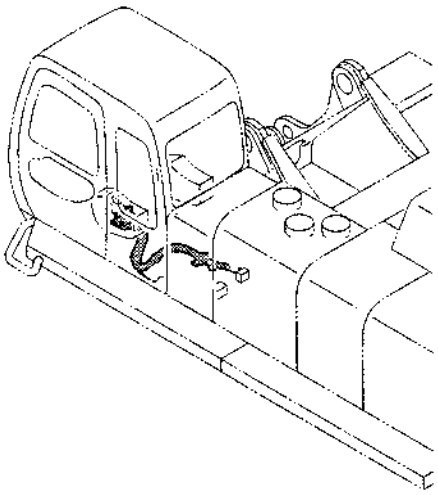

PILOT VALVE (FRONT & SWING)

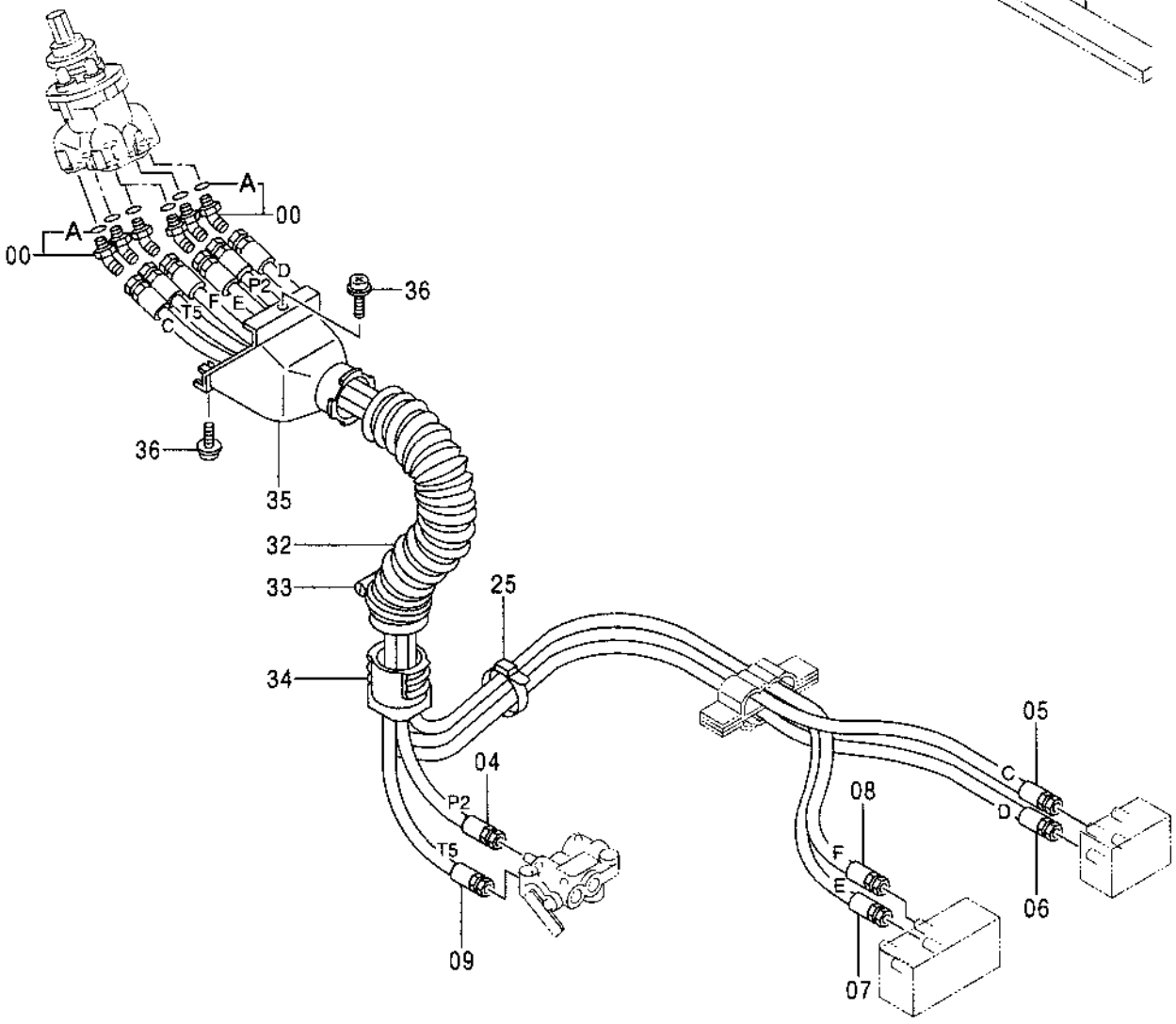

TP66749

PILOT PIPINGS
***** JIS PATTERN *****

KEY	PART NO.	PART NAME	QTY	SERIAL NO.	REMARKS
0	4286916	ELBOW FITTING	6		(SUB FOR AT154994)
0A	M800650	PACKING	1		
4	AT215538	HYDRAULIC HOSE - FABRICATE	1		9/16" X 880 MM (34-3/4") X 9/16"
5	4387231	HYDRAULIC HOSE	1		(SUB FOR AT217137)
6	4387232	HYDRAULIC HOSE	1		(SUB FOR AT217138)
7	4387234	HYDRAULIC HOSE	1		(SUB FOR AT217139)
8	4387236	HYDRAULIC HOSE	1		(SUB FOR AT217140)
9	AT215539	HYDRAULIC HOSE - FABRICATE	1		9/16" X 980 MM (38-1/2") X 9/16"
25	H77698	TIE BAND	1		
32	4351175	HOSE	1		(SUB FOR AT213957)
33	4351774	CLAMP	1		(SUB FOR AT213962)
34	3079728	BUSHING	1		(SUB FOR AT250589)
35	3072745	COVER	1		(SUB FOR AT213784)
36	J460620	SCREW, WITH WASHER	2		(SUB FOR AT200012)

FRONT PIPINGS
(STANDARD BOOM, HEAVY DUTY BOOM)

TP66879 -UN-13OCT99

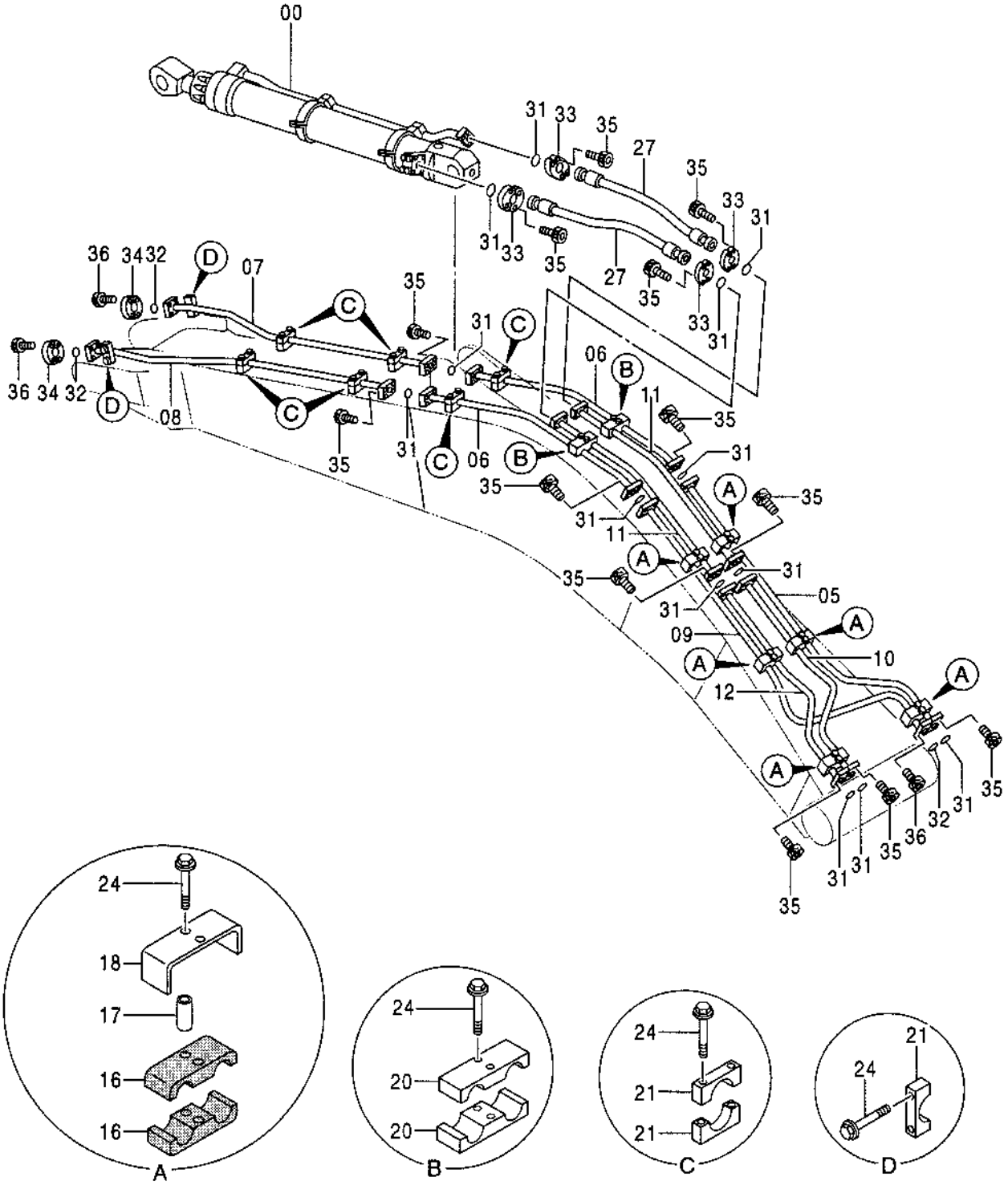

FRONT PIPINGS
(STANDARD BOOM, HEAVY DUTY BOOM)

KEY	PART NO.	PART NAME	QTY	SERIAL NO.	REMARKS
0	.....	CYLINDER	1		(ARM) (SEE ARM CYLINDER PAGE FOR DETAIL)
5	8061204	OIL LINE	1		(SUB FOR TH8061204)
6	8061205	OIL LINE	2		(SUB FOR TH8061205)
7	8041209	OIL LINE	1		(SUB FOR TH8041209)
8	8041210	OIL LINE	1		(SUB FOR TH8041210)
9	8061206	OIL LINE	1		(SUB FOR TH8061206)
10	8061207	OIL LINE	1		(SUB FOR TH8061207)
11	8061208	OIL LINE	2		(SUB FOR TH8061208)
12	8061209	OIL LINE	1		(SUB FOR TH8061209)
16	4342703	HALF CLAMP	12		(SUB FOR TH4342703)
17	4342699	SPACER	12		(SUB FOR TH4342699)
18	4342695	BLOCK CLAMP	6		(SUB FOR TH4342695)
20	4342772	HALF CLAMP	4		(SUB FOR TH4342772)
21	4342723	HALF CLAMP	14		(SUB FOR TH4342723)
24	J021295	BOLT	32		(SUB FOR THJ021295)
27	4373645	HYDRAULIC HOSE - FABRICATE	2		(SUB FOR TH4373645)
31	T34248	O-RING	13		47.219 X 3.531 MM (1-55/64" X 0.139")
32	T72216	O-RING	3		37.694 X 3.531 MM (1-31/64" X 0.139")
33	4075854	FLANGE FITTING	8		(SUB FOR TH4075854)
34	AT131685	FLANGE FITTING	4		
35	19M8208	SCREW	52		M16 X 50
36	19M8734	SCREW	12		M14 X 45

FRONT PIPINGS
(MASS EXCAVATING BOOM)

TP66880 -UN-13OCT99

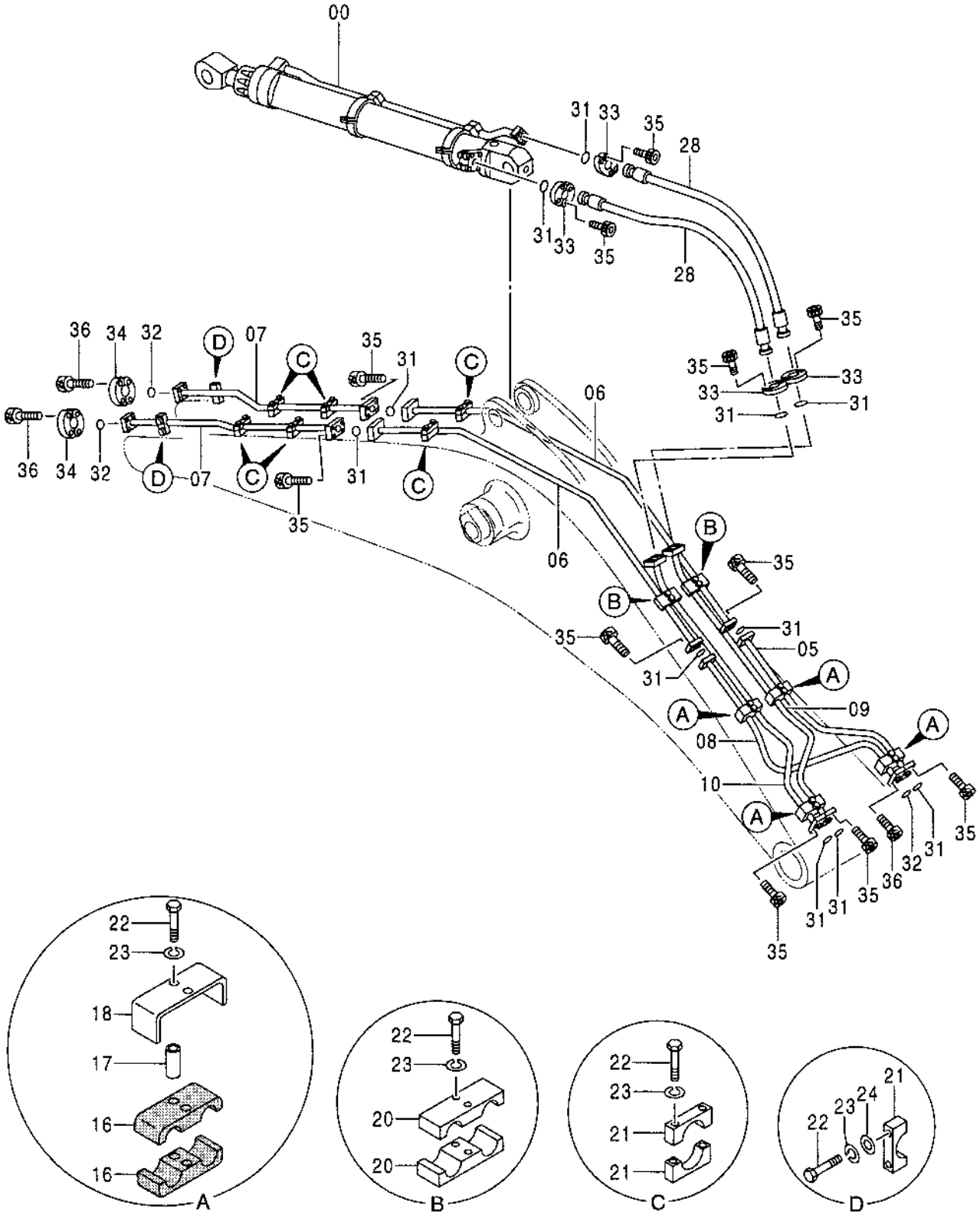

TP66880

FRONT PIPINGS
(MASS EXCAVATING BOOM)

KEY	PART NO.	PART NAME	QTY	SERIAL NO.	REMARKS
0	.....	CYLINDER	1		(ARM) (SEE ARM CYLINDER PAGE FOR DETAIL)
5	8065036	OIL LINE	1		(SUB FOR TH8065036)
6	8065037	OIL LINE	2		(SUB FOR TH8065037)
7	8047133	OIL LINE	2		(SUB FOR TH8047133)
8	8065038	OIL LINE	1		(SUB FOR TH8065038)
9	8065039	OIL LINE	1		(SUB FOR TH8065039)
10	8065040	OIL LINE	1		(SUB FOR TH8065040)
16	4342703	HALF CLAMP	8		(SUB FOR TH4342703)
17	4342699	SPACER	8		(SUB FOR TH4342699)
18	4342695	BLOCK CLAMP	4		(SUB FOR TH4342695)
20	4342772	HALF CLAMP	4		(SUB FOR TH4342772)
21	4342723	HALF CLAMP	14		(SUB FOR TH4342723)
22	19M7349	CAP SCREW	28		M12 X 95
23	12H301	LOCK WASHER	28		12.700 MM (1/2")
24	24M7047	WASHER	4		13 X 24 X 2.500 MM (0.512" X 0.945" X 0.098")
28	4349970	HYDRAULIC HOSE - FABRICATE	2		(SUB FOR TH4349970)
31	T34248	O-RING	11		47.219 X 3.531 MM (1-55/64" X 0.139")
32	T72216	O-RING	3		37.694 X 3.531 MM (1-31/64" X 0.139")
33	4075854	FLANGE FITTING	8		(SUB FOR TH4075854)
34	AT131685	FLANGE FITTING	4		
35	19M8208	SCREW	44		M16 X 50
36	19M8734	SCREW	12		M14 X 45

LUBRICATE PIPINGS
(STANDARD BOOM, HEAVY DUTY BOOM)

TP66888 -UN-13OCT99

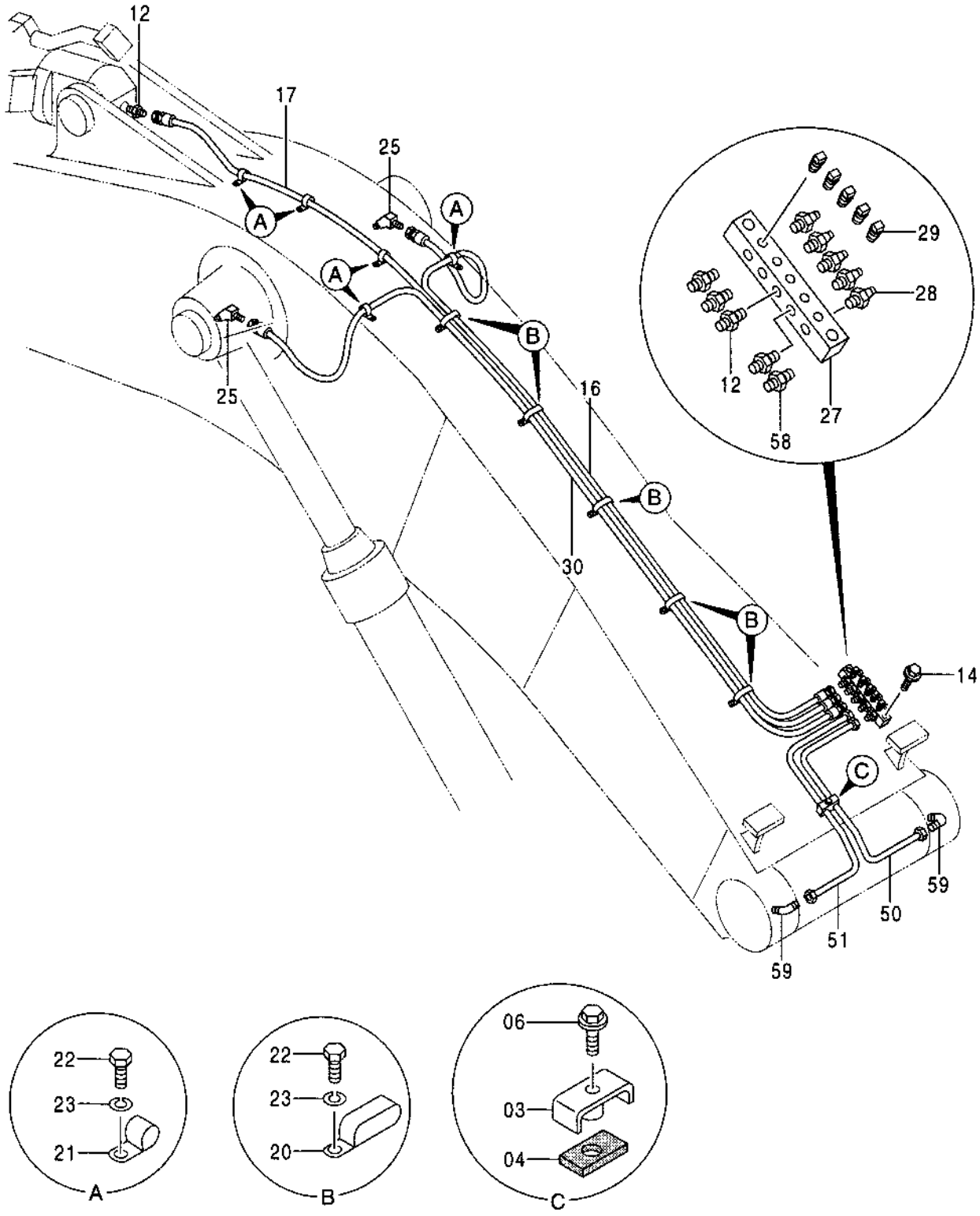

TP66888

LUBRICATE PIPINGS
(STANDARD BOOM, HEAVY DUTY BOOM)

KEY	PART NO.	PART NAME	QTY	SERIAL NO.	REMARKS
3	9736422	CLAMP	1		(SUB FOR AT202175)
4	4269657	ISOLATOR	1		(SUB FOR AT130970)
6	19M7662	CAP SCREW	1		M10 X 30
	12M7066	LOCK WASHER	1		10 MM (0.394")
12	X0103-4-4	ADAPTER	4		(SUB FOR TH100963)
14	19M7658	CAP SCREW	2		M10 X 50
	12M7066	LOCK WASHER	2		10 MM (0.394")
16	4391322	HYDRAULIC HOSE - FABRICATE	1		(SUB FOR TH4391322)
17	4342975	HYDRAULIC HOSE - FABRICATE	1		(SUB FOR TH4342975)
20	T152608	CLAMP	5		
21	4190261	CLIP	5		(SUB FOR TH109649)
22	19M8324	CAP SCREW	10		M10 X 16
23	12M7066	LOCK WASHER	10		10 MM (0.394")
25	4154655	ELBOW FITTING	2		(SUB FOR TH101056)
27	4337738	JUNCTION BLOCK	1		(SUB FOR TH4337738)
28	TH100074	LUBRICATION FITTING	5		
29	T115963	PLUG	5		
30	4391323	HYDRAULIC HOSE - FABRICATE	1		(SUB FOR TH4391323)
50	4343018	OIL LINE	1		(SUB FOR TH4343018)
51	4343019	OIL LINE	1		(SUB FOR TH4343019)
58	4130169	FITTING	1		(SUB FOR TH101391)
59	4130175	FITTING	2		(SUB FOR TH101392)

LUBRICATE PIPINGS
(MASS EXCAVATING BOOM)

TP66889 -UN-13OCT99

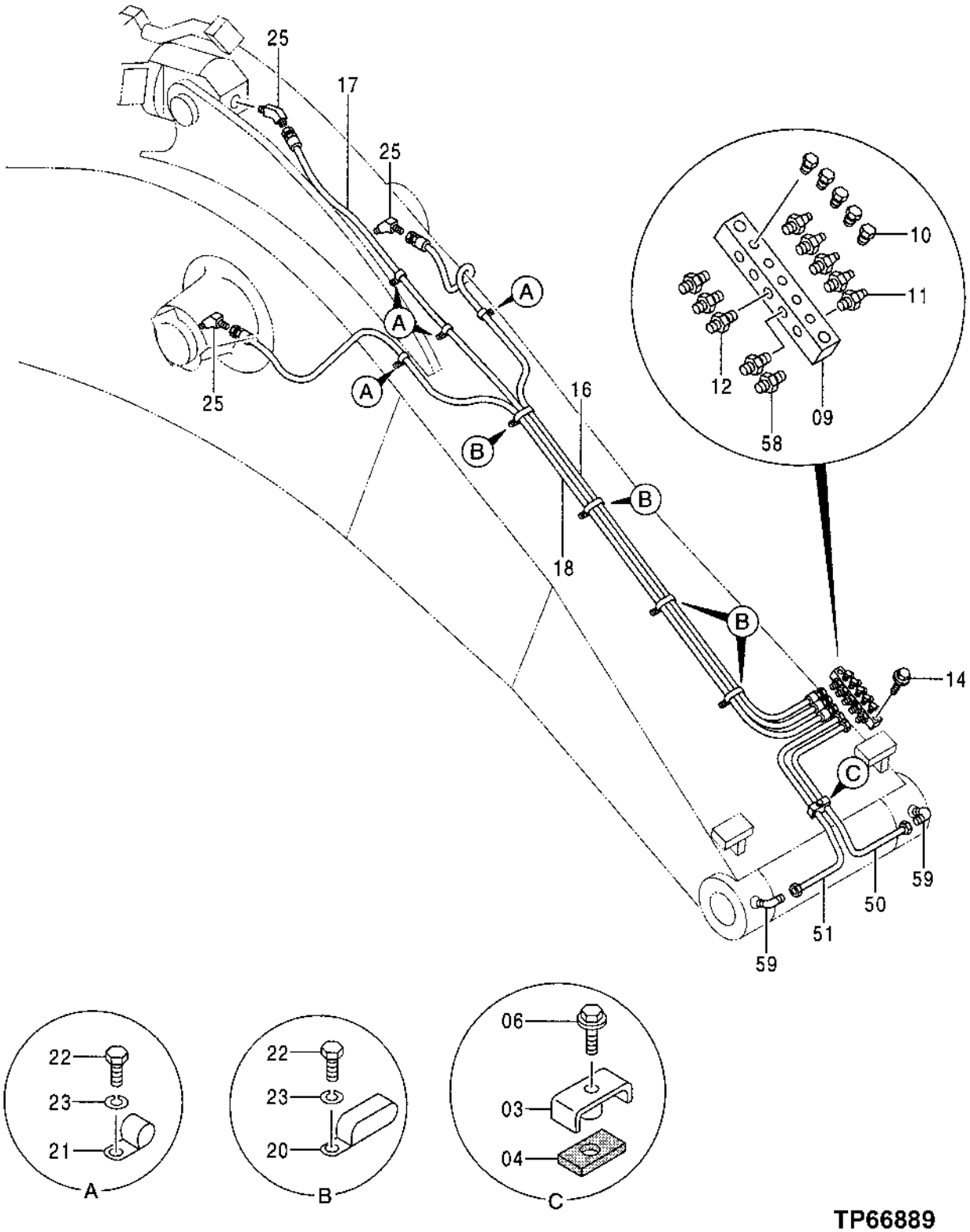

TP66889

LUBRICATE PIPINGS
(MASS EXCAVATING BOOM)

KEY	PART NO.	PART NAME	QTY	SERIAL NO.	REMARKS
3	9736422	CLAMP	1		(SUB FOR AT202175)
4	4269657	ISOLATOR	1		(SUB FOR AT130970)
6	19M7662	CAP SCREW	1		M10 X 30
	12M7066	LOCK WASHER	1		10 MM (0.394")
9	4333514	JUNCTION BLOCK	1		(SUB FOR TH4333514)
10	JD7769	LUBRICATION FITTING	5		
11	446536	PLUG	5		(SUB FOR TH446536)
12	X0103-4-4	ADAPTER	3		(SUB FOR TH100963)
14	19M7658	CAP SCREW	2		M10 X 50
	12M7066	LOCK WASHER	2		10 MM (0.394")
16	AT167078	HYDRAULIC HOSE - FABRICATE	1		7/16" X 3 700 MM (145-3/4") X 7/16"
17	4224467	HYDRAULIC HOSE - FABRICATE	1		(SUB FOR TH4224467)
18	4364320	HYDRAULIC HOSE - FABRICATE	1		(SUB FOR TH4364320)
20	T152608	CLAMP	4		
21	4190261	CLIP	4		(SUB FOR TH109649)
22	19M8324	CAP SCREW	8		M10 X 16
23	12M7066	LOCK WASHER	8		10 MM (0.394")
25	4154655	ELBOW FITTING	3		(SUB FOR TH101056)
50	4343018	OIL LINE	1		(SUB FOR TH4343018)
51	4343019	OIL LINE	1		(SUB FOR TH4343019)
58	4130169	FITTING	2		(SUB FOR TH101391)
59	4130175	FITTING	2		(SUB FOR TH101392)

LUBRICATE PIPING
(STANDARD ARM, HEAVY DUTY ARM)

TP66890 -UN-13OCT99

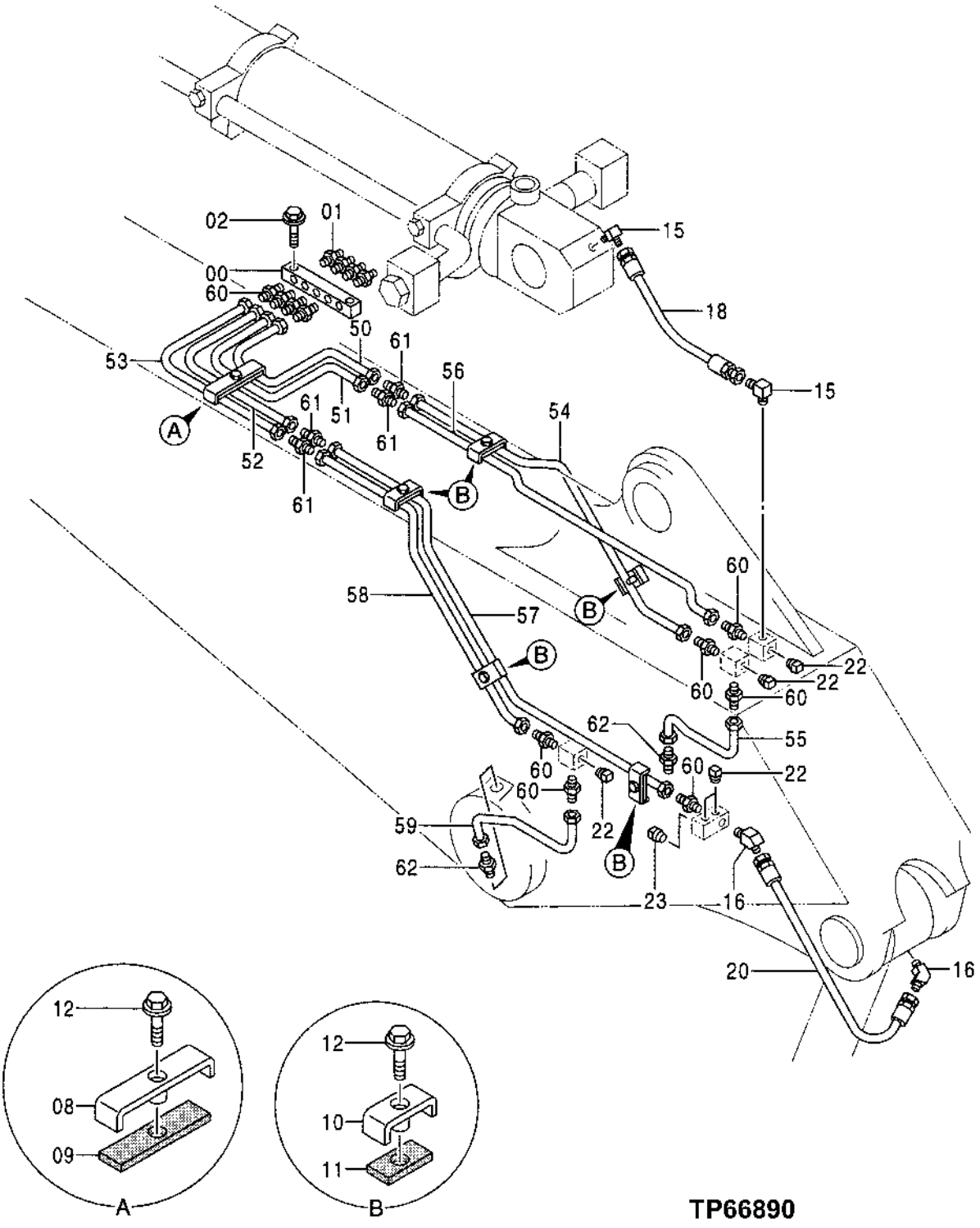

TP66890

LUBRICATE PIPING
(STANDARD ARM, HEAVY DUTY ARM)

KEY	PART NO.	PART NAME	QTY	SERIAL NO.	REMARKS
0	4274903	JUNCTION BLOCK	1		(SUB FOR AT202119)
1	JD7769	LUBRICATION FITTING	4		
2	19M7358	CAP SCREW	2		M10 X 40
	12M7066	LOCK WASHER	2		10 MM (0.394")
8	9736421	CLAMP	1		(SUB FOR AT202174)
9	4273721	STRAP	1		(SUB FOR AT131668)
10	9736422	CLAMP	5		(SUB FOR AT202175)
11	4269657	ISOLATOR	5		(SUB FOR AT130970)
12	19M7662	CAP SCREW	6		M10 X 30
	12M7066	LOCK WASHER	6		10 MM (0.394")
15	4154656	ELBOW FITTING	2		(SUB FOR TH101588)
16	4154655	ELBOW FITTING	2		(SUB FOR TH101056)
18	4203102	HYDRAULIC HOSE - FABRICATE	1		(SUB FOR TH4203102)
20	4351853	HYDRAULIC HOSE - FABRICATE	1		(SUB FOR TH4351853)
22	T115963	PLUG	5		
23	M800462	PLUG	1		
50	4364480	OIL LINE	1		(SUB FOR TH4364480)
51	4364481	OIL LINE	1		(SUB FOR TH4364481)
52	4364482	OIL LINE	1		(SUB FOR TH4364482)
53	4364483	OIL LINE	1		(SUB FOR TH4364483)
54	4343295	OIL LINE	1		(SUB FOR TH4343295)
55	4343296	OIL LINE	1		(SUB FOR TH4343296)
56	4343297	OIL LINE	1		(SUB FOR TH4343297)
57	4343298	OIL LINE	1		(SUB FOR TH4343298)
58	4343299	OIL LINE	1		(SUB FOR TH4343299)
59	4343300	OIL LINE	1		(SUB FOR TH4343300)
60	4130169	FITTING	10		(SUB FOR TH101391)
61	Z32962	FITTING	4		
62	4130168	FITTING PLUG	2		(SUB FOR AT131701)

LUBRICATE PIPING
(MASS EXCAVATING ARM)

TP66891 -UN-15OCT99

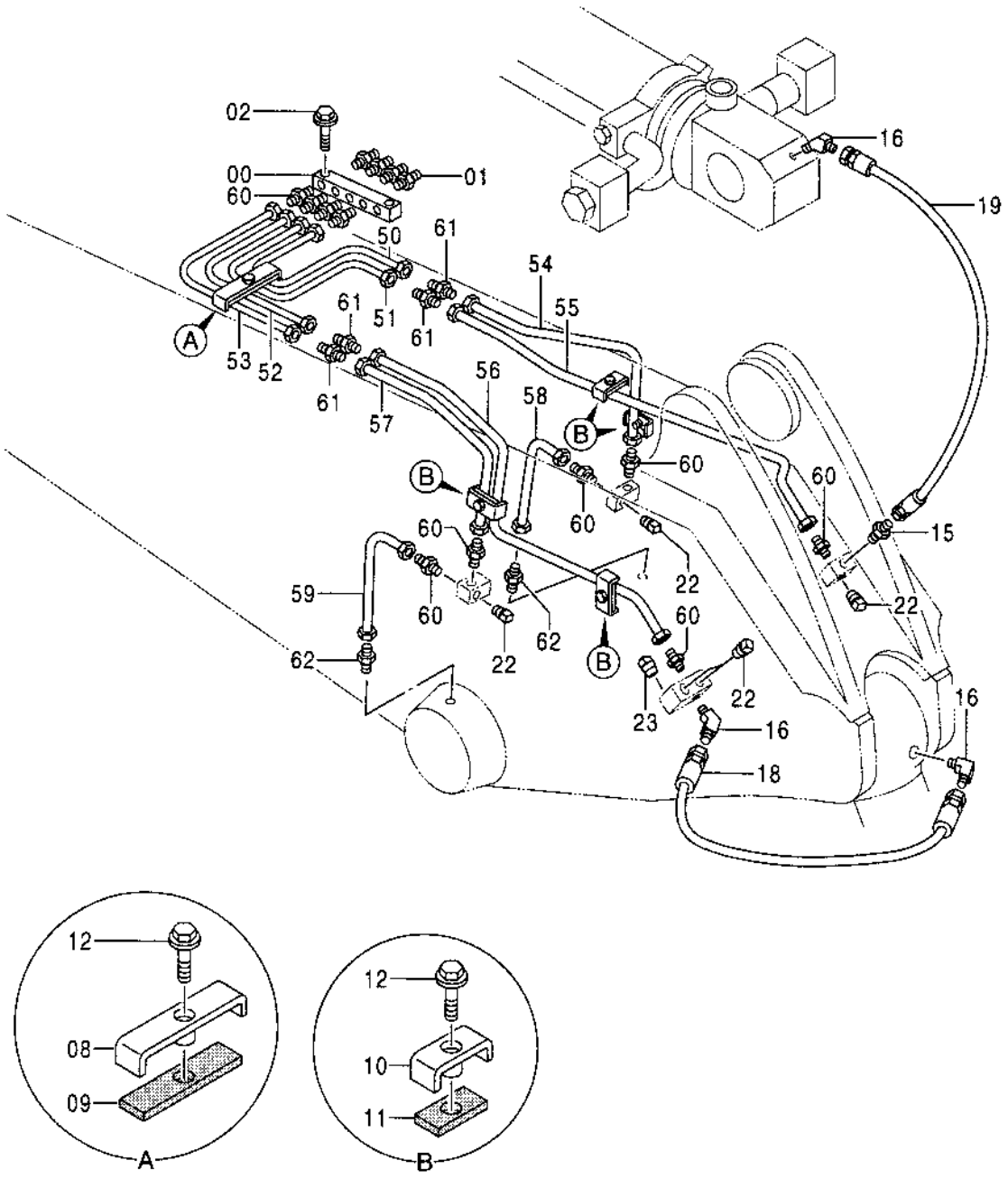

TP66891

LUBRICATE PIPING
(MASS EXCAVATING ARM)

KEY	PART NO.	PART NAME	QTY	SERIAL NO.	REMARKS
0	4274903	JUNCTION BLOCK	1		(SUB FOR AT202119)
1	JD7769	LUBRICATION FITTING	4		
2	19M7358	CAP SCREW	2		M10 X 40
	12M7066	LOCK WASHER	2		10 MM (0.394")
8	9736421	CLAMP	1		(SUB FOR AT202174)
9	4273721	STRAP	1		(SUB FOR AT131668)
10	9736422	CLAMP	4		(SUB FOR AT202175)
11	4269657	ISOLATOR	4		(SUB FOR AT130970)
12	19M7662	CAP SCREW	5		M10 X 30
	12M7066	LOCK WASHER	5		10 MM (0.394")
15	X0103-4-4	ADAPTER	1		(SUB FOR TH100963)
16	4154655	ELBOW FITTING	3		(SUB FOR TH101056)
18	4297998	HYDRAULIC HOSE - FABRICATE	1		(SUB FOR TH4297998)
19	4340881	HYDRAULIC HOSE - FABRICATE	1		(SUB FOR TH4340881)
22	T115963	PLUG	5		
23	M800462	PLUG	1		
50	4364480	OIL LINE	1		(SUB FOR TH4364480)
51	4364481	OIL LINE	1		(SUB FOR TH4364481)
52	4364482	OIL LINE	1		(SUB FOR TH4364482)
53	4364483	OIL LINE	1		(SUB FOR TH4364483)
54	4364484	OIL LINE	1		(SUB FOR TH4364484)
55	4364485	OIL LINE	1		(SUB FOR TH4364485)
56	4364486	OIL LINE	1		(SUB FOR TH4364486)
57	4364487	OIL LINE	1		(SUB FOR TH4364487)
58	4364488	OIL LINE	1		(SUB FOR TH4364488)
59	4364489	OIL LINE	1		(SUB FOR TH4364489)
60	4130169	FITTING	10		(SUB FOR TH101391)
61	Z32962	FITTING	4		
62	4130168	FITTING PLUG	2		(SUB FOR AT131701)

**LUBRICATE PIPING
(LONG ARM)**

TP66892 -UN-13OCT99

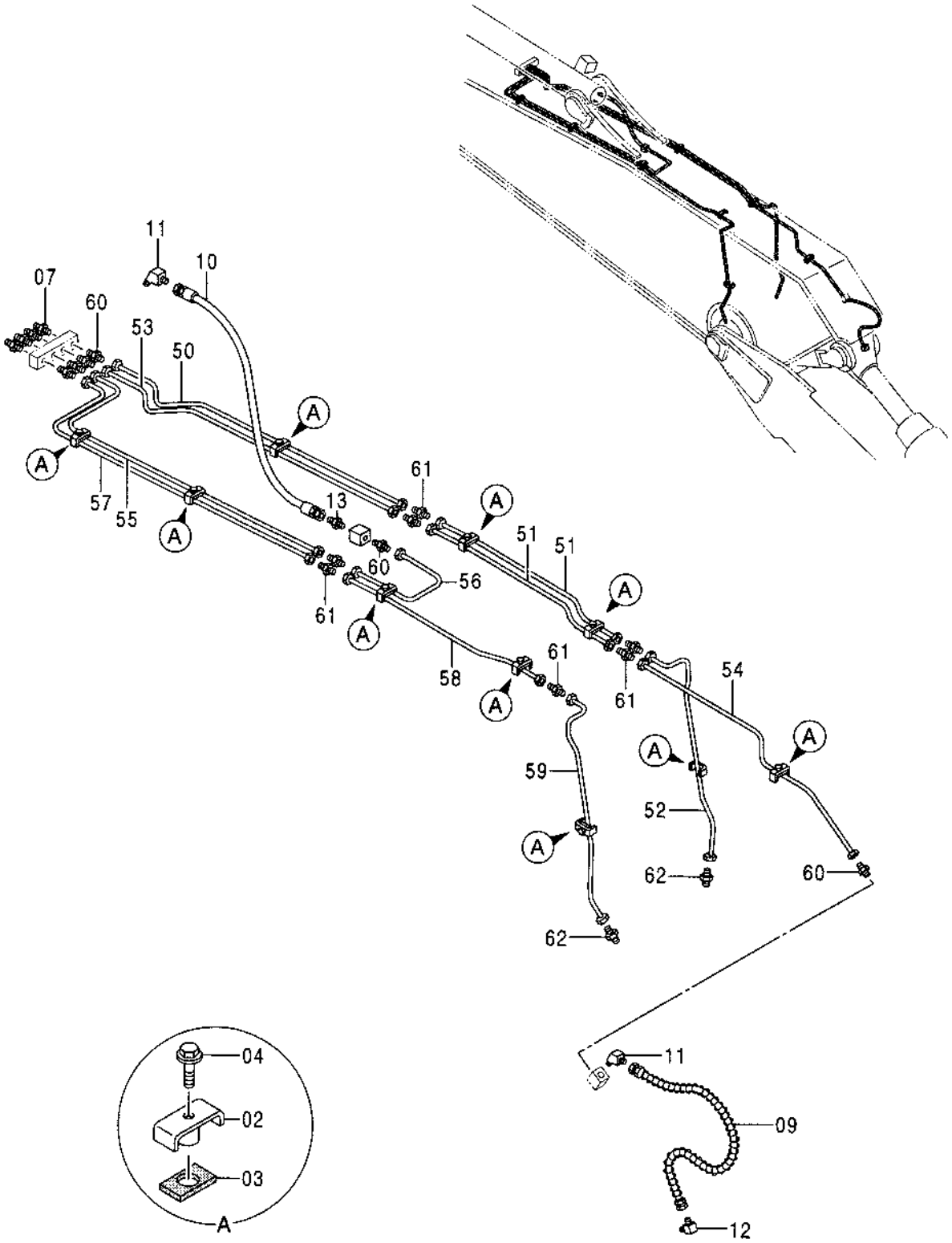

TP66892

LUBRICATE PIPING
(LONG ARM)

KEY	PART NO.	PART NAME	QTY	SERIAL NO.	REMARKS
2	9736422	CLAMP	10		(SUB FOR AT202175)
3	4269657	ISOLATOR	10		(SUB FOR AT130970)
4	19M7662	CAP SCREW	10		M10 X 30
	12M7066	LOCK WASHER	10		10 MM (0.394")
7	JD7769	LUBRICATION FITTING	4		
9	4401954	HYDRAULIC HOSE - FABRICATE	1		(SUB FOR TH4401954)
10	4325548	HYDRAULIC HOSE - FABRICATE	1		(SUB FOR TH4325548)
11	4154655	ELBOW FITTING	2		(SUB FOR TH101056)
12	4154656	ELBOW FITTING	1		(SUB FOR TH101588)
13	X0103-4-4	ADAPTER	1		(SUB FOR TH100963)
50	4257939	OIL LINE	1		(SUB FOR TH4257939)
51	4257940	OIL LINE	2		(SUB FOR TH4257940)
52	3051199	OIL LINE	1		(SUB FOR TH3051199)
53	4257941	OIL LINE	1		(SUB FOR TH4257941)
54	4257942	OIL LINE	1		(SUB FOR TH4257942)
55	4257943	OIL LINE	1		(SUB FOR TH4257943)
56	4257944	OIL LINE	1		(SUB FOR TH4257944)
57	4257945	OIL LINE	1		(SUB FOR TH4257945)
58	4257946	OIL LINE	1		(SUB FOR TH4257946)
59	3051200	OIL LINE	1		(SUB FOR TH3051200)
60	4130169	FITTING	6		(SUB FOR TH101391)
61	Z32962	FITTING	7		
62	4130168	FITTING PLUG	2		(SUB FOR AT131701)

LUBRICATE PIPING
(SEMI-LONG ARM)

TP66893 -UN-13OCT99

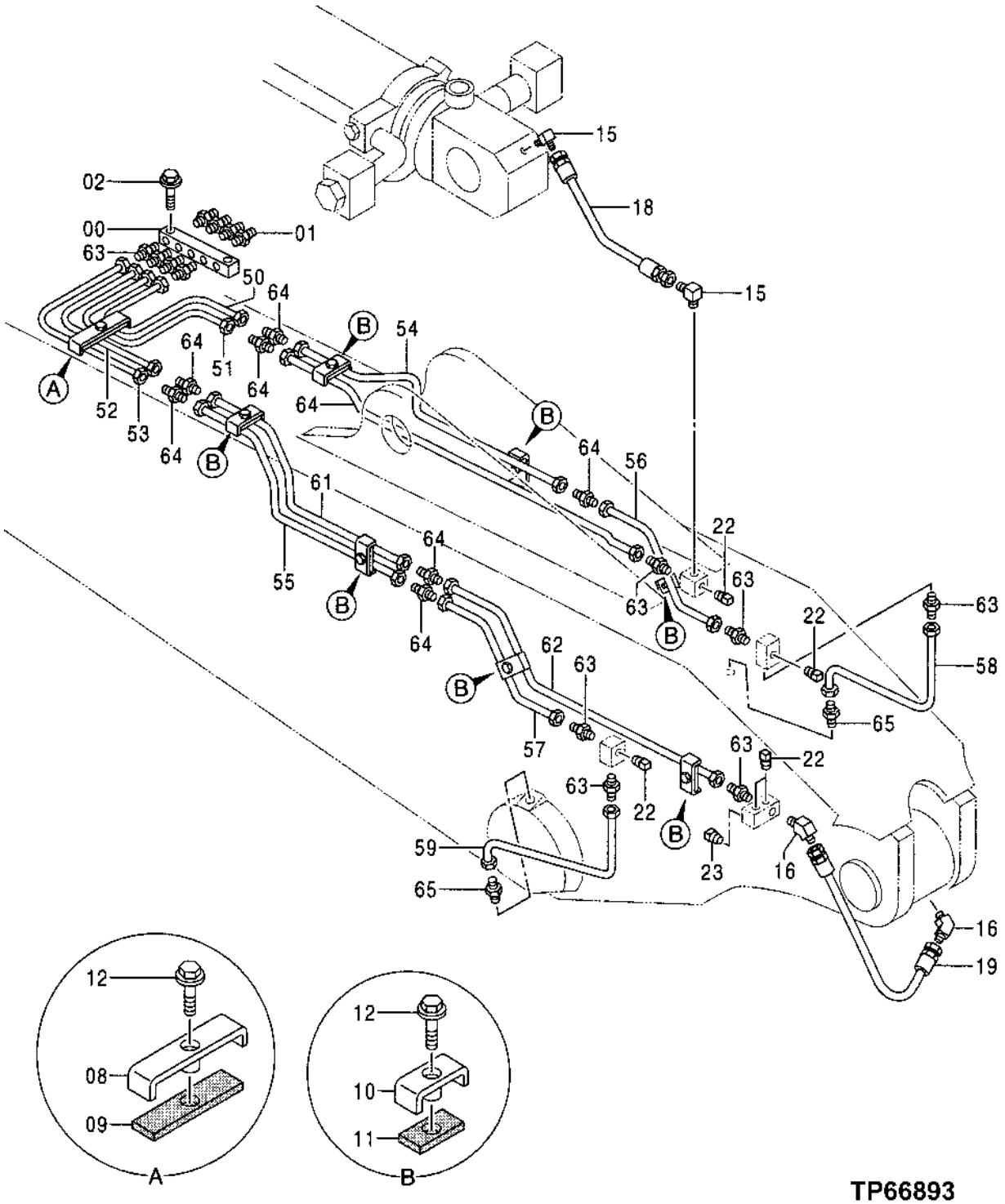

TP66893

LUBRICATE PIPING
(SEMI-LONG ARM)

KEY	PART NO.	PART NAME	QTY	SERIAL NO.	REMARKS
0	4274903	JUNCTION BLOCK	1		(SUB FOR AT202119)
1	JD7769	LUBRICATION FITTING	4		
2	19M7358	CAP SCREW	2		M10 X 40
	12M7066	LOCK WASHER	2		10 MM (0.394")
8	9736421	CLAMP	1		(SUB FOR AT202174)
9	4273721	STRAP	1		(SUB FOR AT131668)
10	9736422	CLAMP	7		(SUB FOR AT202175)
11	4269657	ISOLATOR	7		(SUB FOR AT130970)
12	19M7662	CAP SCREW	8		M10 X 30
	12M7066	LOCK WASHER	8		10 MM (0.394")
15	4154656	ELBOW FITTING	2		(SUB FOR TH101588)
16	4154655	ELBOW FITTING	2		(SUB FOR TH101056)
18	4203102	HYDRAULIC HOSE - FABRICATE	1		(SUB FOR TH4203102)
19	4290146	HYDRAULIC HOSE - FABRICATE	1		(SUB FOR TH4290146)
22	T115963	PLUG	5		
23	M800462	PLUG	1		
50	4364480	OIL LINE	1		(SUB FOR TH4364480)
51	4364481	OIL LINE	1		(SUB FOR TH4364481)
52	4364482	OIL LINE	1		(SUB FOR TH4364482)
53	4364483	OIL LINE	1		(SUB FOR TH4364483)
54	4367999	OIL LINE	1		(SUB FOR TH4367999)
55	4368000	OIL LINE	1		(SUB FOR TH4368000)
56	4368001	OIL LINE	1		(SUB FOR TH4368001)
57	4368002	OIL LINE	1		(SUB FOR TH4368002)
58	4368003	OIL LINE	1		(SUB FOR TH4368003)
59	4368004	OIL LINE	1		(SUB FOR TH4368004)
60	4368005	OIL LINE	1		(SUB FOR TH4368005)
61	4368014	OIL LINE	1		(SUB FOR TH4368014)
62	4368015	OIL LINE	1		(SUB FOR TH4368015)
63	4130169	FITTING	10		(SUB FOR TH101391)
64	Z32962	FITTING	7		
65	4130168	FITTING PLUG	2		(SUB FOR AT131701)

REDUCTION VALVE

TP68068 -UN-15OCT99

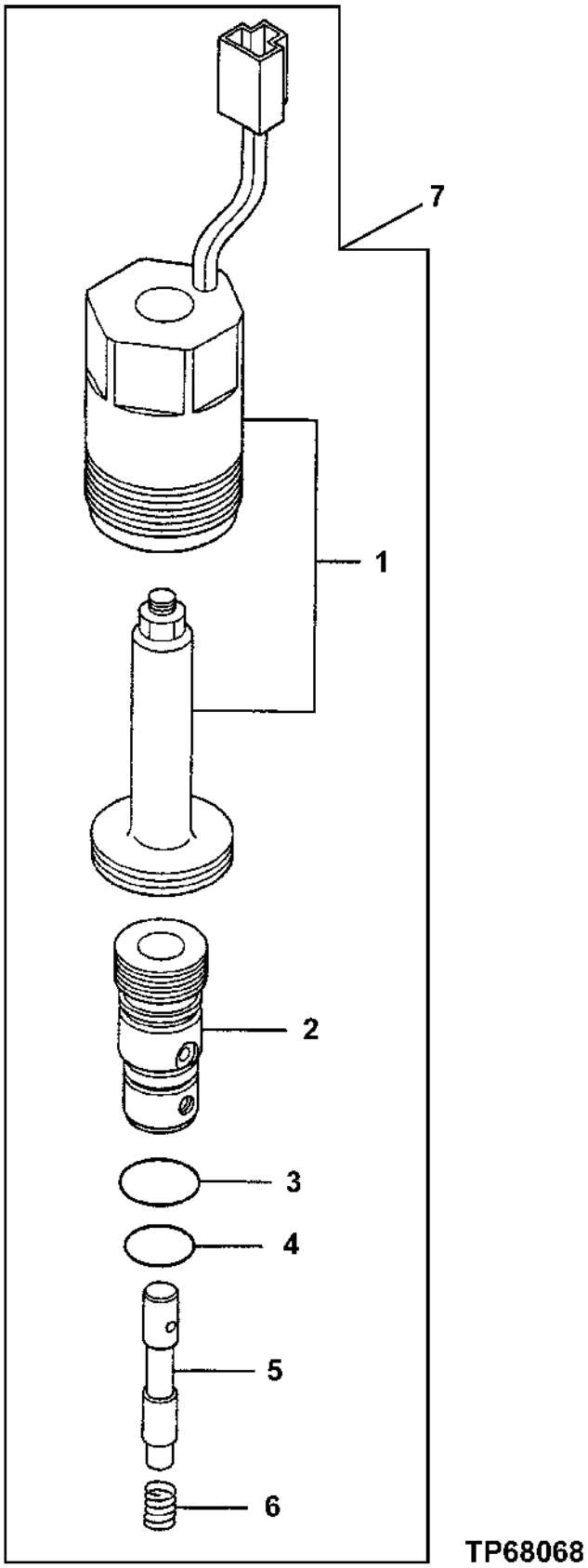

REDUCTION VALVE

KEY	PART NO.	PART NAME	QTY	ENGINE SERIAL NO.	REMARKS
1	.....	SOLENOID	1		NOT AVAIL. FOR SERVICE
2	.....	SLEEVE	1		
3	.....	O-RING	1		
4	T77857	O-RING	1		
5	.....	SPOOL	1		
6	.....	SPRING	1		
7	4368974	FLOW CONTROL HYD. VALVE	1		(SUB FOR AT176176)

SOLENOID VALVE

TP44863 -UN-01JAN94

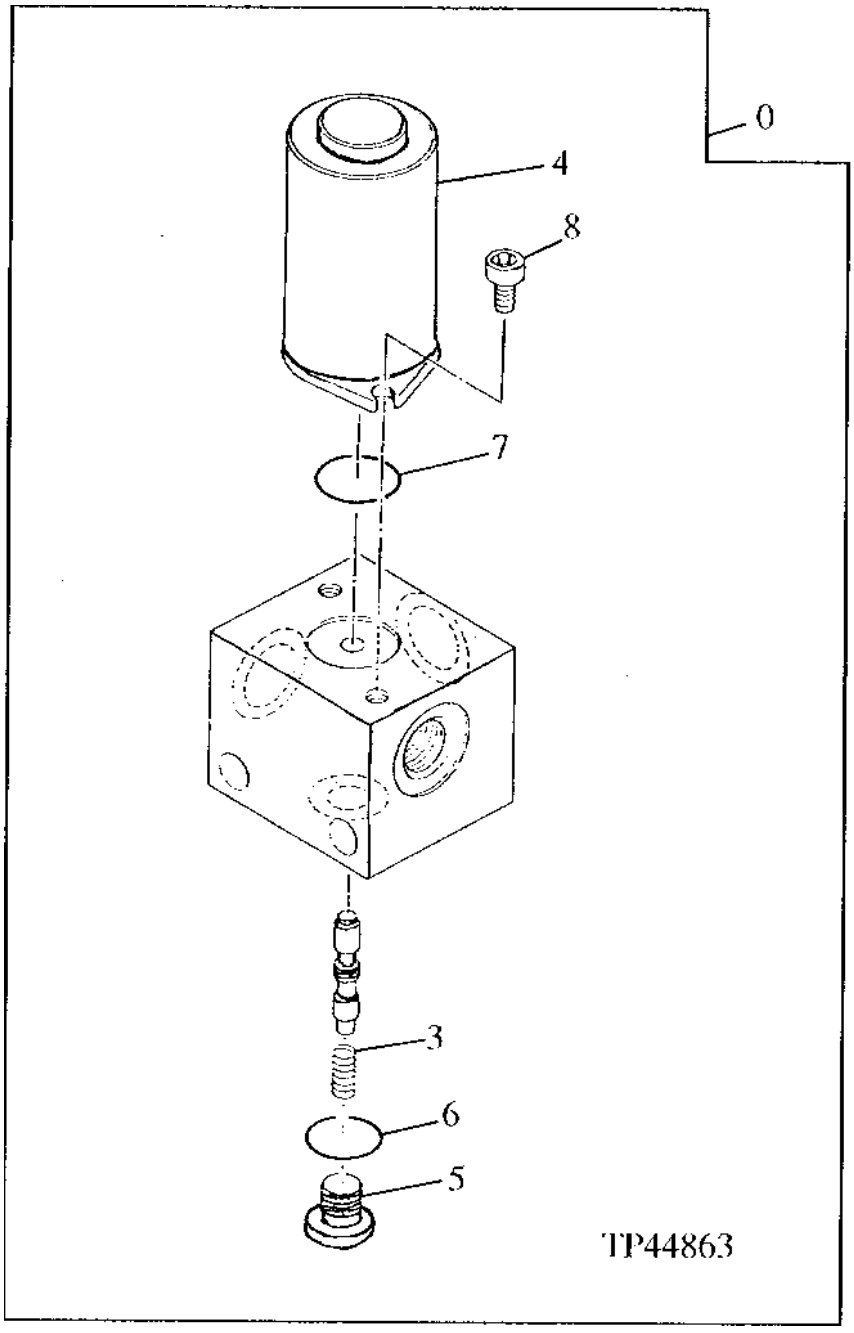

SOLENOID VALVE

KEY	PART NO.	PART NAME	QTY	SERIAL NO.	REMARKS
0	4261289	SOLENOID VALVE	1		(SUB FOR AT202111) (GP II)
3	0444301	SPRING	1		(SUB FOR AT200231)
4	0444302	SOLENOID	1		(SUB FOR AT200232)
5	0215220	FITTING PLUG	1		(SUB FOR TH101485)
6	4506408	O-RING	1		(SUB FOR TH101490)
7	P50883	RING	1		17.170 X 1.778 MM (0.676" X 0.070")
8	19M7887	SCREW	2		M5 X 10

CHECK VALVE

TP44865 -UN-01JAN94

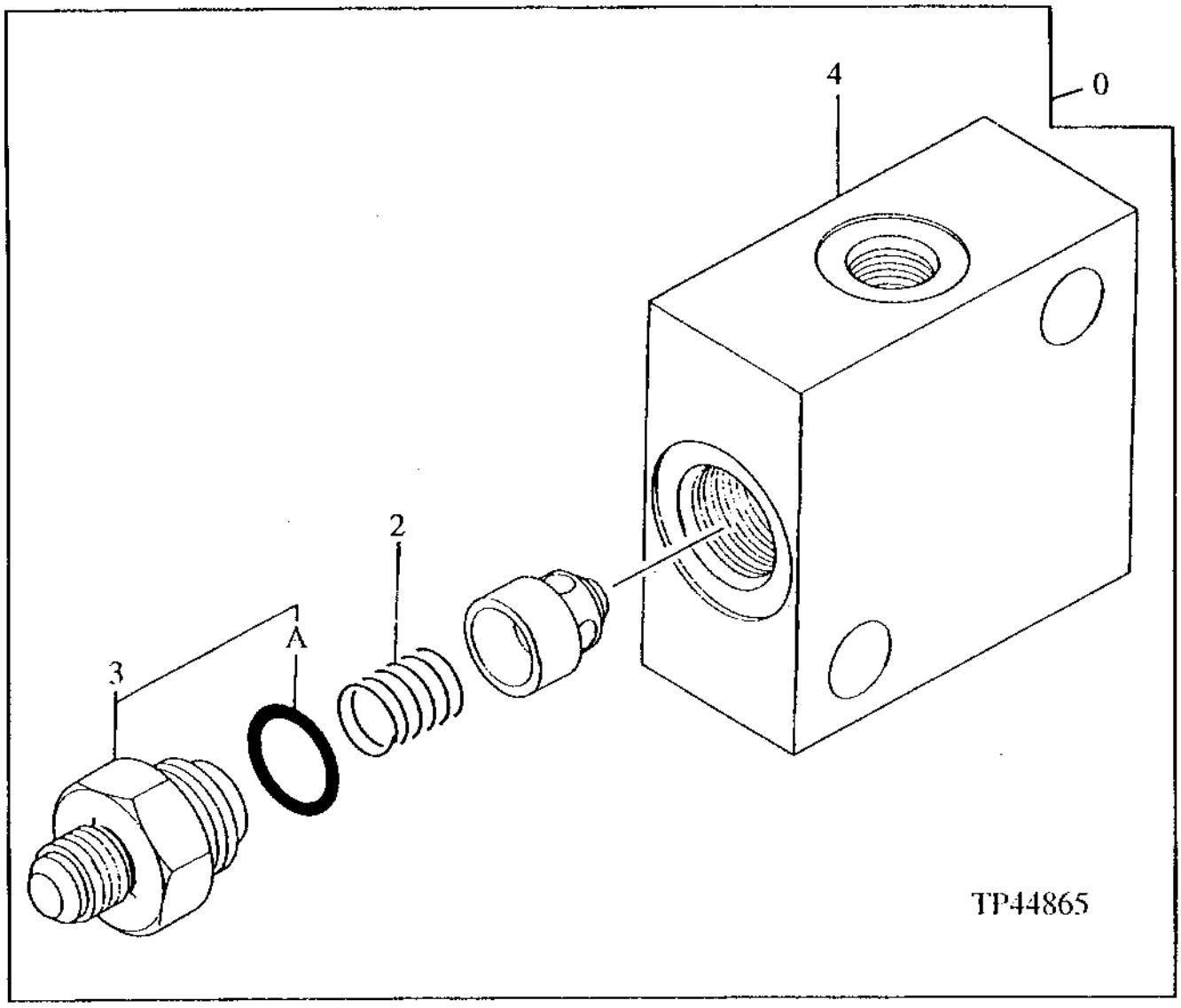

CHECK VALVE

KEY	PART NO.	PART NAME	QTY	SERIAL NO.	REMARKS
0	9123033	CHECK VALVE	1		(SUB FOR AT201932)
2	4105795	SPRING	1		(SUB FOR TH100841)
3	4317779	ADAPTER	1		(SUB FOR AT201769)
3A	4506418	O-RING	1		(SUB FOR U46489)
4	.....	CHECK VALVE	1		

REGULATOR VALVE
(SERIAL NO. -970051)

T149609 -UN-05APR02

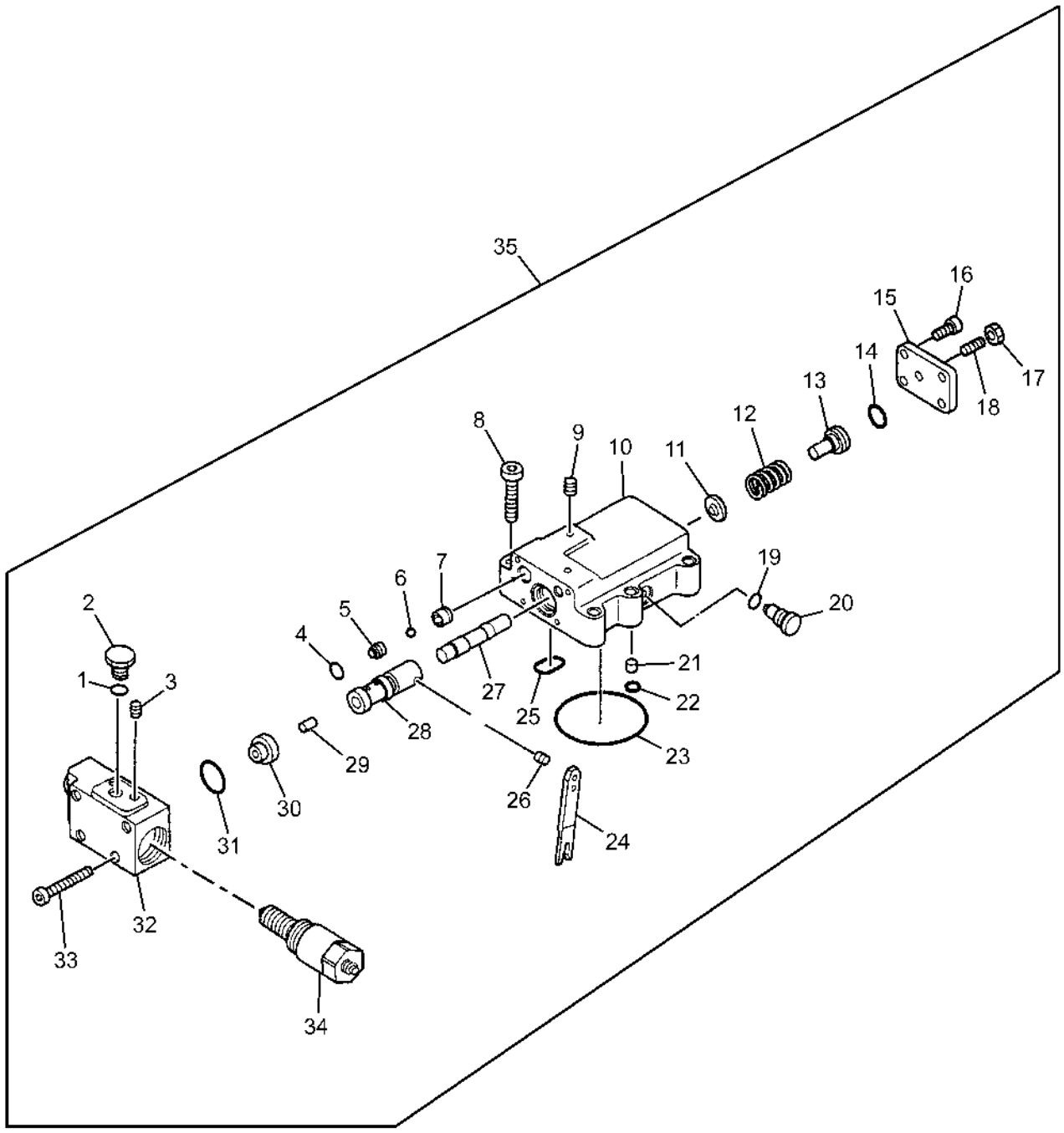

T149609

REGULATOR VALVE
(SERIAL NO. -970051)

KEY	PART NO.	PART NAME	QTY	ENGINE SERIAL NO.	REMARKS
1	4297379	O-RING	2		(SUB FOR TH4297379)
2	0236014	FITTING PLUG	1		(SUB FOR TH102650)
3	15H560	PIPE PLUG	3		1/16"
4	TH0703102	O-RING	2		
5	0451102	SEAT	2		(SUB FOR AT201636)
6	0451104	BALL	2		(SUB FOR AT201638)
7	0451103	STOP	2		(SUB FOR AT201637)
8	.....	BOLT	6		
9	15H560	PIPE PLUG	3		1/16"
10	.....	HOUSING	1		
11	.....	VALVE SEAT	1		
12	.....	SPRING	1		
13	.....	SPRING PIN	1		
14	4365826	O-RING	1		(SUB FOR TH0443407)
15	.....	COVER	1		
16	0237902	BOLT	4		(SUB FOR AT201967)
17	14M7147	NUT	1		M8
18	22M7148	SET SCREW	1		M8 X 16, (SUB FOR 22M7070)
19	4297379	O-RING	2		(SUB FOR TH4297379)
20	.....	FITTING PLUG	1		
21	.....	PIN	1		
22	4366517	O-RING	5		(SUB FOR TH0443801)
23	0682502	O-RING	1		(SUB FOR TH0682502)
24	.....	LEVER	1		
25	4366521	O-RING	1		(SUB FOR TH0443803)
26	.....	PIN	1		
27	.....	SPOOL	1		
28	.....	SLEEVE	1		
29	.....	PIN	1		
30	.....	SLEEVE	1		
31	TH0703101	O-RING	1		
32	0451101	CASE	1		(SUB FOR AT201635)
33	19M8541	SCREW	4		M6 X 50
34	4368974	FLOW CONTROL HYD. VALVE	1		(SUB FOR AT176176)
35	.....	REGULATOR	1		(TH4391503 NO LONGER AVAILABLE) (SUB 4469011)

FLOW CONTROL VALVE

TP44862 -UN-01JAN94

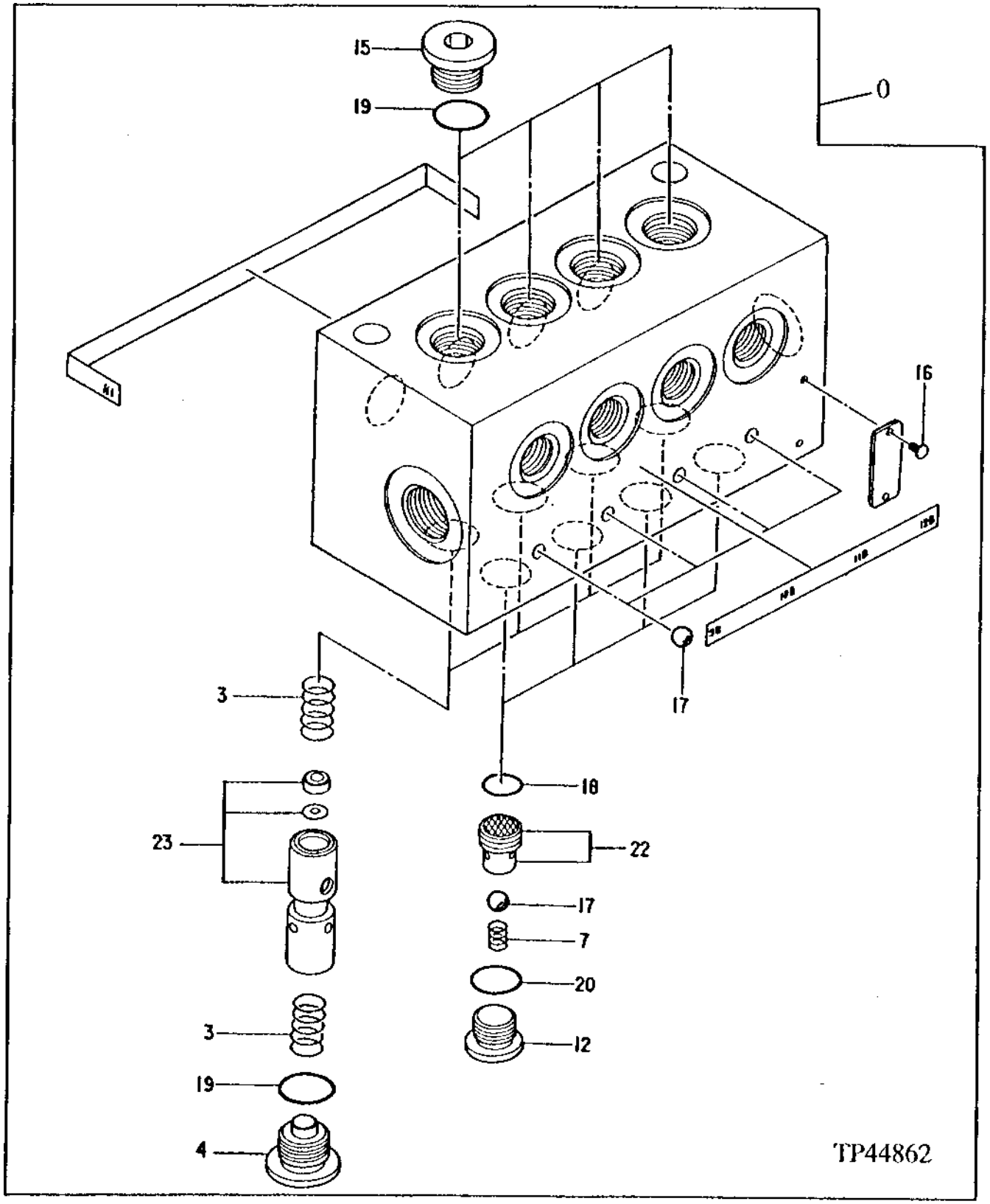

FLOW CONTROL VALVE

KEY	PART NO.	PART NAME	QTY	SERIAL NO.	REMARKS
0	4335088	VALVE	1		(SUB FOR AT201801) (PILOT PIPING)
3	0309801	SPRING	8		(SUB FOR TH109280)
4	0309802	PIPE PLUG	4		(SUB FOR TH109281)
7	0309803	SPRING	4		(SUB FOR TH109282)
12	AT49216	FITTING	4		
15	0309805	PIPE PLUG	4		(SUB FOR TH109285)
16	0208717	SCREW	2		(SUB FOR TH102697)
17	L38718	BALL	8		6 MM (0.236")
18	CH11569	PACKING	4		
19	CH11570	O-RING	8		
20	R26448	O-RING	4		11.887 X 1.981 MM (0.468" X 5/64")
22	0309810	FILTER	4		(SUB FOR TH109290)
23	0352401	PLUNGER	4		(SUB FOR AT132273)

FLOW CONTROL VALVE

TP68081 -UN-19OCT99

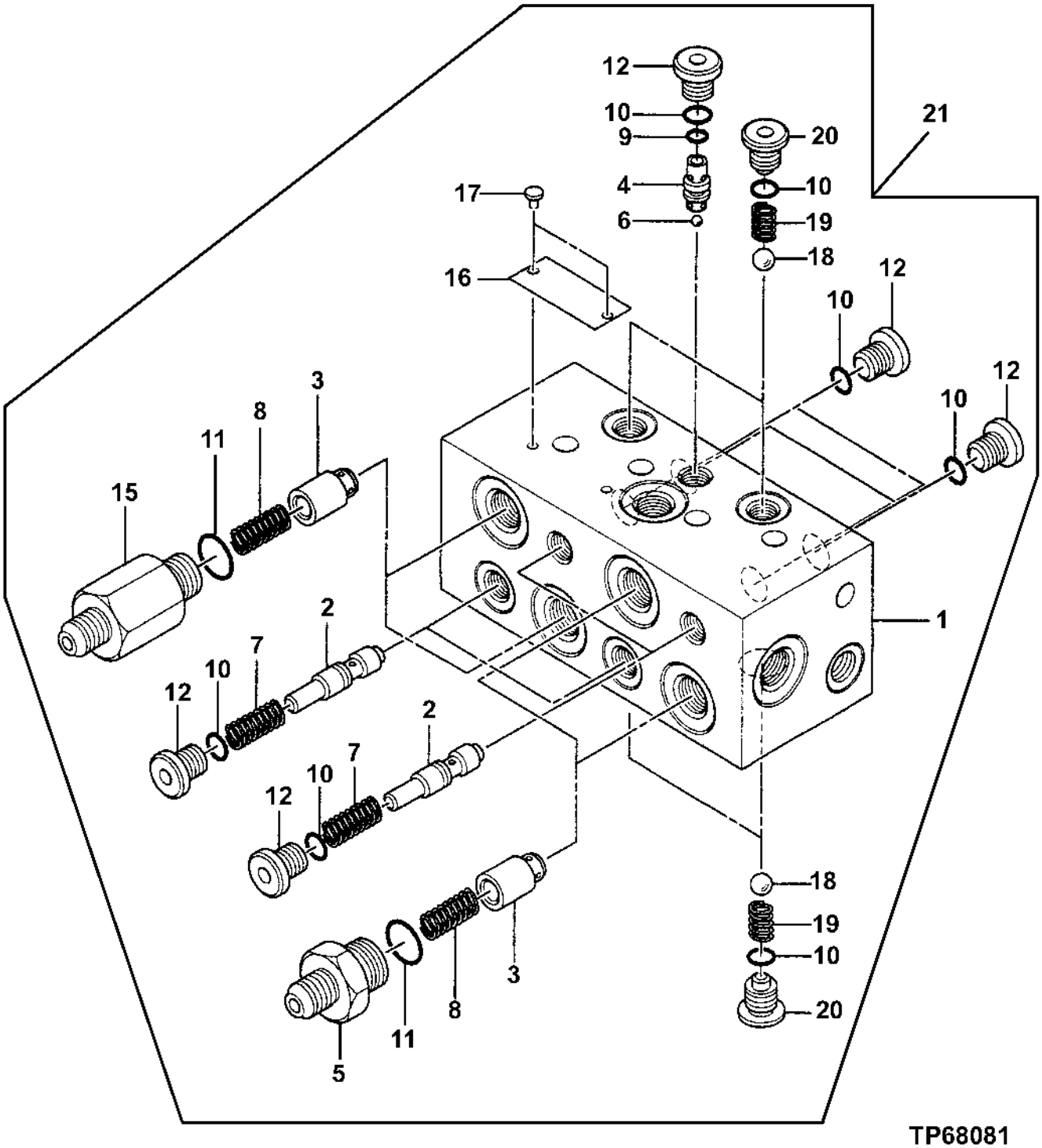

FLOW CONTROL VALVE

KEY	PART NO.	PART NAME	QTY	SERIAL NO.	REMARKS
1	.....	HOUSING	1		
2	.....	SPOOL	4		
3	0420901	PLUNGER	4		(SUB FOR AT201596)
4	0408302	GUIDE	1		(SUB FOR AT153887)
5	0408303	THREADED NIPPLE	2		(SUB FOR AT153888)
6	0408304	BALL	1		(SUB FOR AT153889)
7	0408305	SPRING	4		(SUB FOR AT153890)
8	0408306	SPRING	4		(SUB FOR AT153891)
9	4050481	O-RING	1		(SUB FOR TH100786)
10	4506408	O-RING	13		(SUB FOR TH101490)
11	CH11570	O-RING	4		
12	0215220	FITTING PLUG	9		(SUB FOR TH101485)
13	.....	FITTING PLUG	7		
15	0408307	THREADED NIPPLE	2		(SUB FOR AT153892)
16	.....	IDENTIFICATION PLATE	1		
17	.....	BOLT	2		
18	0369812	BALL	4		(SUB FOR AT153839)
19	0323807	SPRING	4		(SUB FOR AT133692)
20	0323806	PIPE PLUG	4		(SUB FOR AT133691)
21	4377649	VALVE	1		(SUB FOR TH4377649)

CONTROL LEVER SHUTTLE VALVE

TP40162 -UN-01JAN94

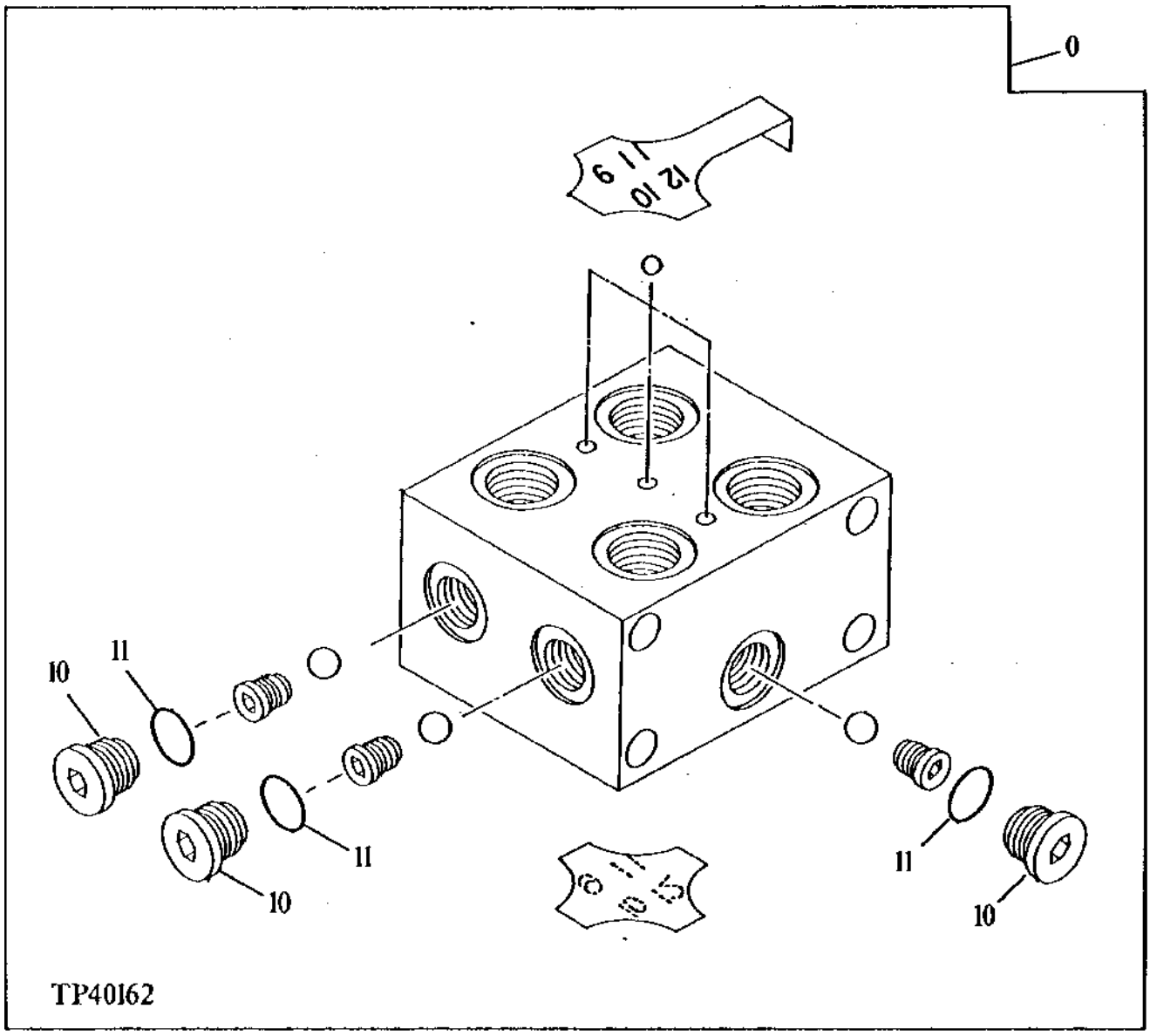

CONTROL LEVER SHUTTLE VALVE

KEY	PART NO.	PART NAME	QTY	SERIAL NO.	REMARKS
0	4254612	VALVE	1		(SUB FOR AT154217)
10	AT120949	FITTING PLUG	3		
11	M800650	PACKING	3		

LOCK VALVE

TP40163 -UN-01JAN94

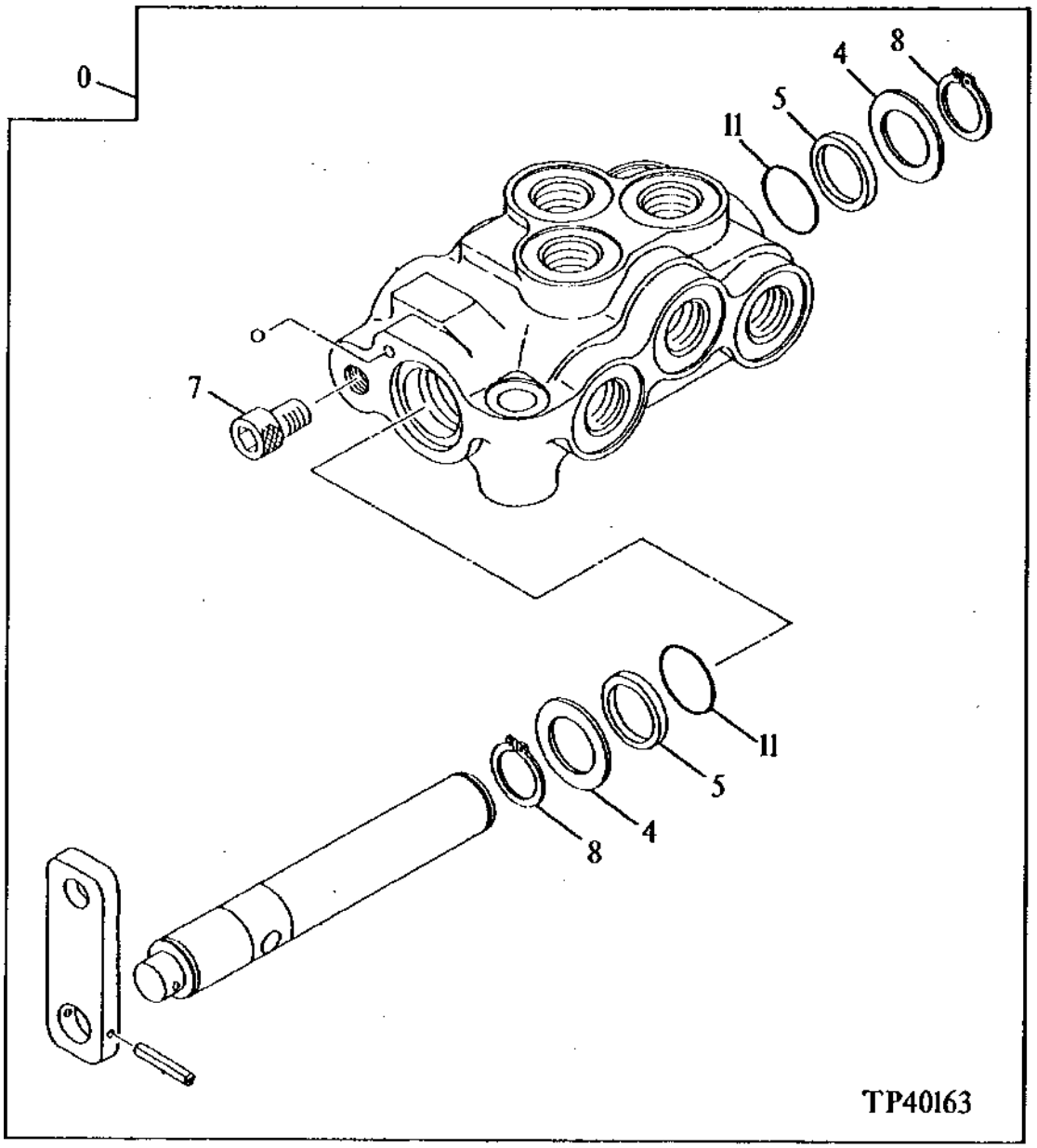

LOCK VALVE

KEY	PART NO.	PART NAME	QTY	SERIAL NO.	REMARKS
0	4254611	VALVE	1		(SUB FOR AT154216)
4	0396603	WASHER	2		(SUB FOR AT153842)
5	0309904	BACK-UP RING	2		(SUB FOR TH109299)
7	0396604	BOLT	1		(SUB FOR AT153843)
8	0396605	SNAP RING	2		(SUB FOR AT153844)
11	CH14634	O-RING	2		17.800 X 2.400 MM (0.701" X 0.094")

SHUTTLE VALVE

TP40161 -UN-01JAN94

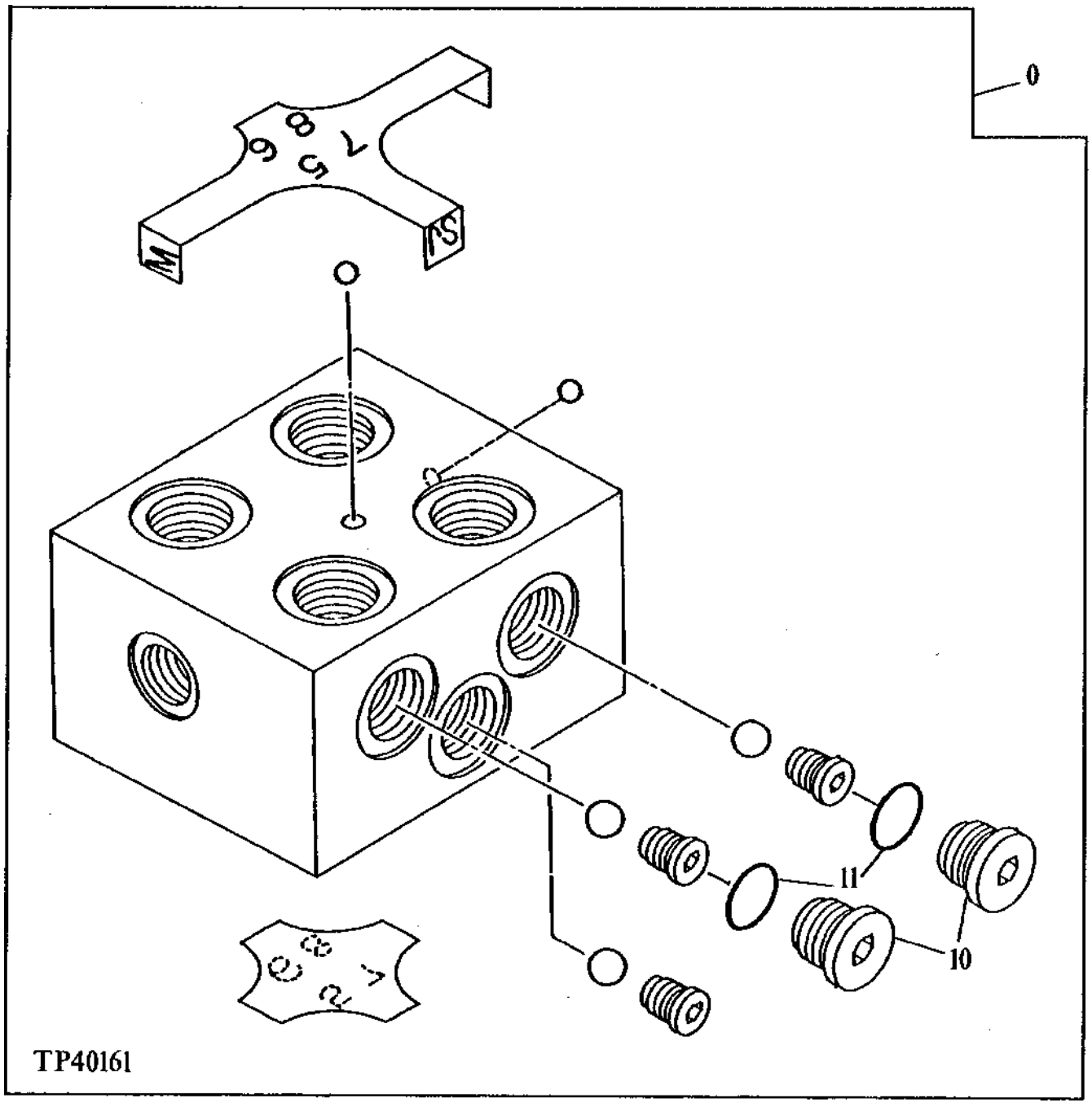

SHUTTLE VALVE

KEY	PART NO.	PART NAME	QTY	SERIAL NO.	REMARKS
0	4254613	VALVE	1		(SUB FOR AT154218) (PILOT PIPINGS)
10	AT120949	FITTING PLUG	2		
11	M800650	PACKING	2		

SHUTTLE VALVE

TP29908 -UN-01JAN94

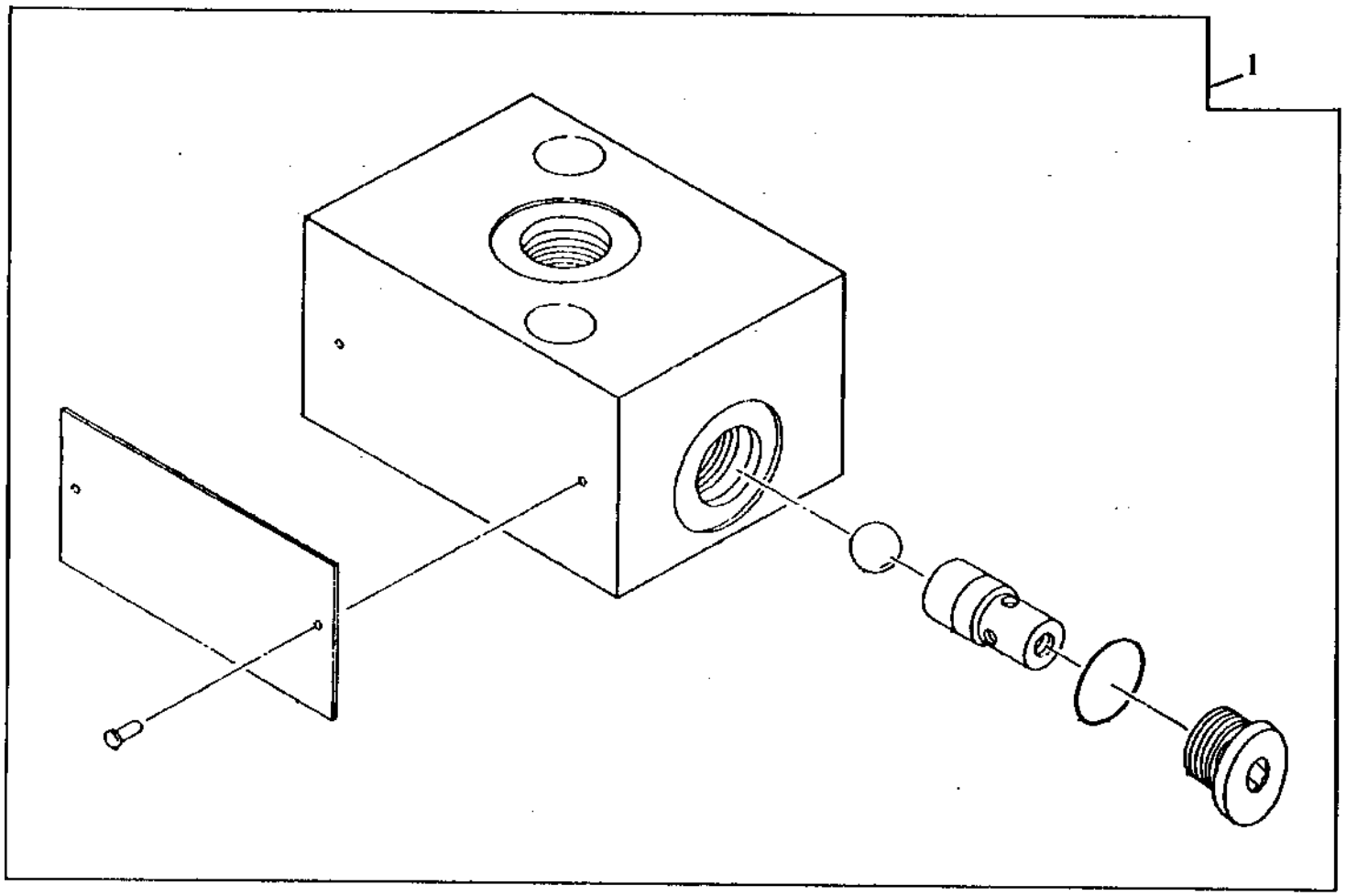

TP29908

SHUTTLE VALVE

KEY	PART NO.	PART NAME	QTY	SERIAL NO.	REMARKS
1	4195759	VALVE	1		(SUB FOR AT132401)

SOLENOID VALVE

TP61191 -UN-15OCT99

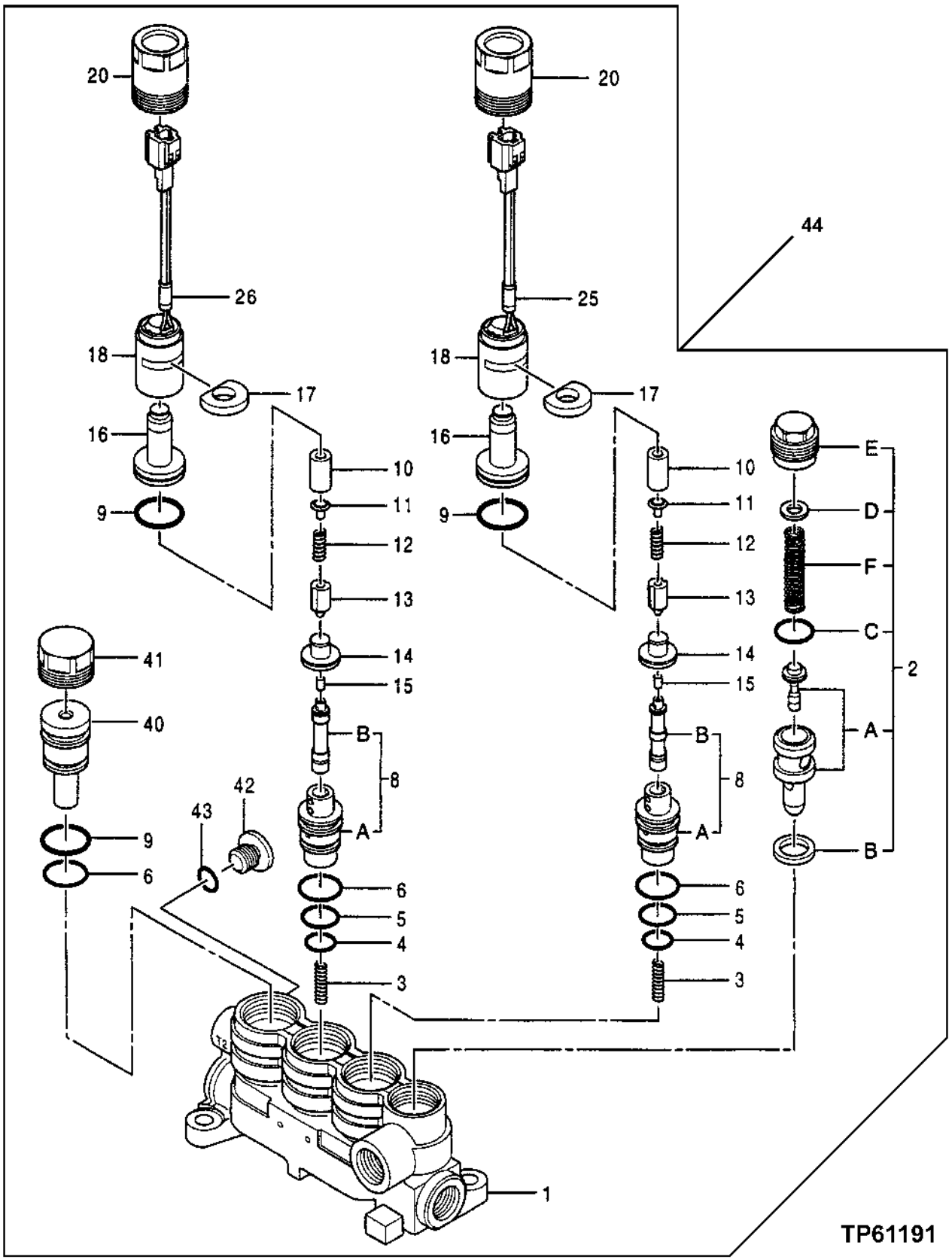

SOLENOID VALVE

KEY	PART NO.	PART NAME	QTY	SERIAL NO.	REMARKS
1	TH109249	HOUSING	1		
2	TH109250	PRESSURE RELIEF VALVE	1		
2A	TH109251	PRESSURE RELIEF VALVE	1		
2B	0308704	GASKET	1		(SUB FOR TH109252)
2C	0308705	O-RING	1		(SUB FOR TH109253)
2D	.....	SHIM	1		0.5 MM
	.....	SHIM	1		0.25 MM
	.....	SHIM	1		1.0 MM
2E	TH109257	FITTING PLUG	1		
2F	0308710	SPRING	1		(SUB FOR TH109258)
3	0308711	SPRING	2		(SUB FOR TH109259)
4	CH11570	O-RING	2		
5	985099	O-RING	2		(SUB FOR TH101479)
6	TH100096	O-RING	3		
8	TH109260	VALVE SPOOL	2		
8A	.....	HOUSING	2		
8B	.....	SPOOL	2		
9	0308713	O-RING	3		(SUB FOR TH109261)
10	0397601	PIPE	2		(SUB FOR AT201974)
11	0433302	PLATE	2		(SUB FOR AT201981)
12	0308716	SPRING	2		(SUB FOR TH109264)
13	0308717	PLUNGER	2		(SUB FOR TH109265)
14	0308718	STOP	2		(SUB FOR TH109266)
15	0308719	ROD	2		(SUB FOR TH109267)
16	0397603	HOUSING	2		(SUB FOR AT217058)
17	0308721	WASHER	2		(SUB FOR TH109269)
18	0451501	SOLENOID	2		(SUB FOR AT201642)
20	0308724	SCREW	2		(SUB FOR TH109272)
25	TH109273	TAPE	1		
26	TH109274	TAPE	1		
40	0683501	HOUSING	1		(SUB FOR TH0683501)
41	0683502	FITTING PLUG	1		(SUB FOR TH0683502)
42	0669615	FITTING PLUG	1		(SUB FOR AT215763)
43	M800650	PACKING	1		
44	4364071	SOLENOID VALVE	1		(SUB FOR TH4364071)

HOLDING VALVE

TP61192 -UN-15OCT99

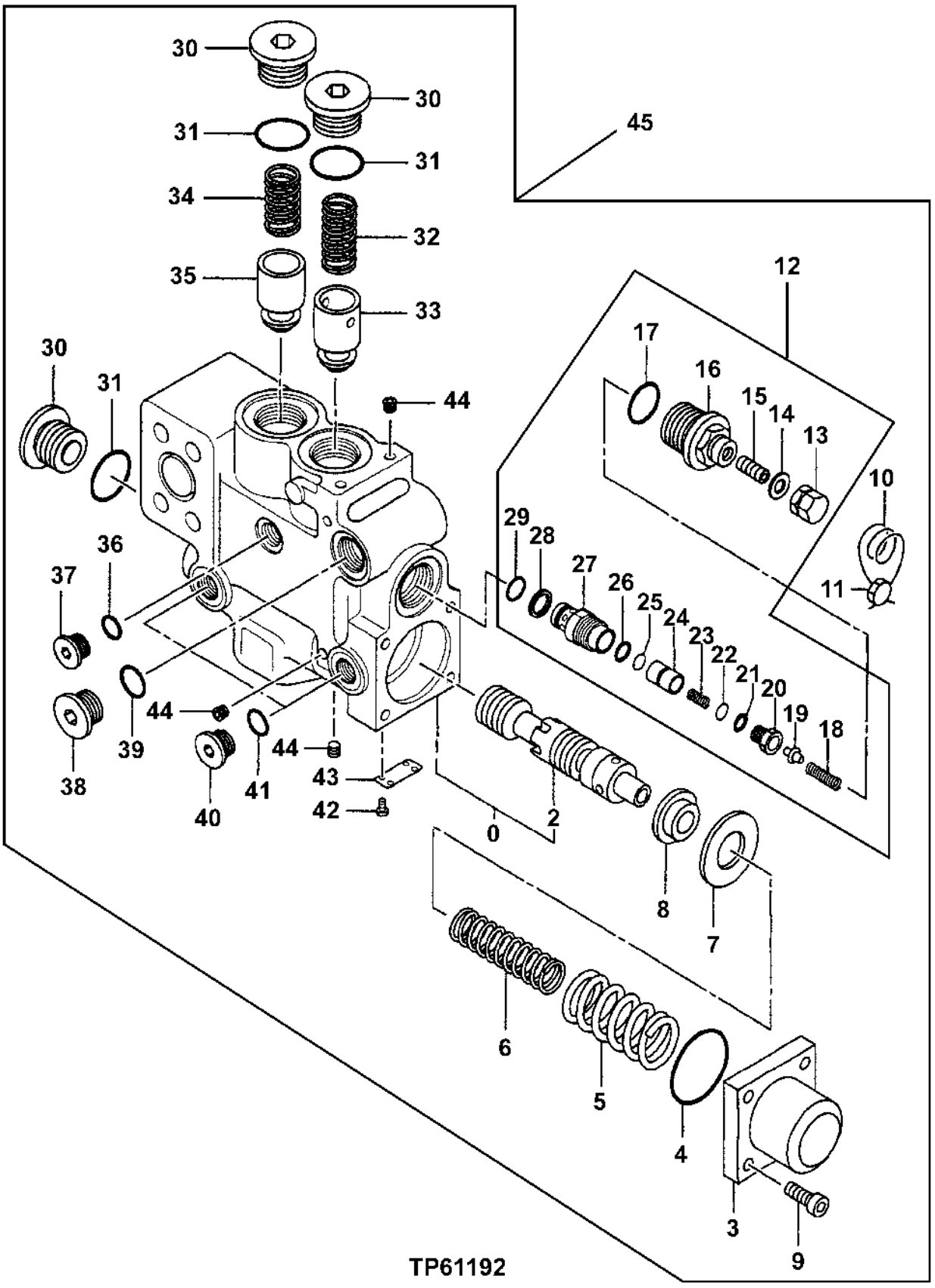

HOLDING VALVE

KEY	PART NO.	PART NAME	QTY	SERIAL NO.	REMARKS
0	.....	HOUSING	1		
1	.....	HOUSING	1		
2	.....	SPOOL	1		
3	0658002	COVER	1		(SUB FOR AT217063)
4	CH15107	PACKING	1		
5	0658003	COMPRESSION SPRING	1		(SUB FOR AT175923)
6	0658004	COMPRESSION SPRING	1		(SUB FOR AT175924)
7	0343507	WASHER	1		(SUB FOR AT175925)
8	0658005	RETAINER	1		(SUB FOR AT175926)
9	19M8439	SCREW	4		M8 X 25
10	0658006	WIRE	2		(SUB FOR AT175927)
11	0658007	PLUG	1		(SUB FOR AT175928)
12	4276345	RELIEF VALVE	1		(SUB FOR AT130857)
13	.....	NUT	1		
14	.....	WASHER	1		
15	.....	SET SCREW	1		
16	.....	SPOOL	1		
17	CH17886	PACKING	1		
18	.....	COMPRESSION SPRING	1		
19	.....	VALVE	1		
20	.....	FITTING PLUG	1		
21	.....	BACK-UP RING	1		
22	.....	O-RING	1		
23	.....	COMPRESSION SPRING	1		
24	.....	POPPET	1		
25	.....	O-RING	1		
26	.....	BACK-UP RING	1		
27	.....	SLEEVE	1		
28	4038533	BACK-UP RING	1		(SUB FOR TH100050)
29	CH11570	O-RING	1		
30	0658008	FITTING PLUG	3		(SUB FOR AT175929)
31	TH101926	O-RING	3		
32	0343510	COMPRESSION SPRING	1		(SUB FOR AT175875)
33	0343505	PLUNGER	1		(SUB FOR AT175876)
34	0223202	COMPRESSION SPRING	1		(SUB FOR TH106368)
35	0343504	PLUNGER	1		(SUB FOR AT175932)
36	M800650	PACKING	1		
37	AT120949	FITTING PLUG	1		
38	0343611	FITTING PLUG	1		(SUB FOR AT175933)
39	4506418	O-RING	1		(SUB FOR U46489)
40	0309805	PIPE PLUG	2		(SUB FOR TH109285)
41	CH11570	O-RING	2		
42	TH105699	SCREW	2		
43	.....	PLATE	1		
44	0343514	FITTING PLUG	6		(SUB FOR AT175880)
45	4282319	VALVE	1		(SUB FOR TH4282319)

VALVE
(JUNCTION BLOCK)

TP44868 -UN-01JAN94

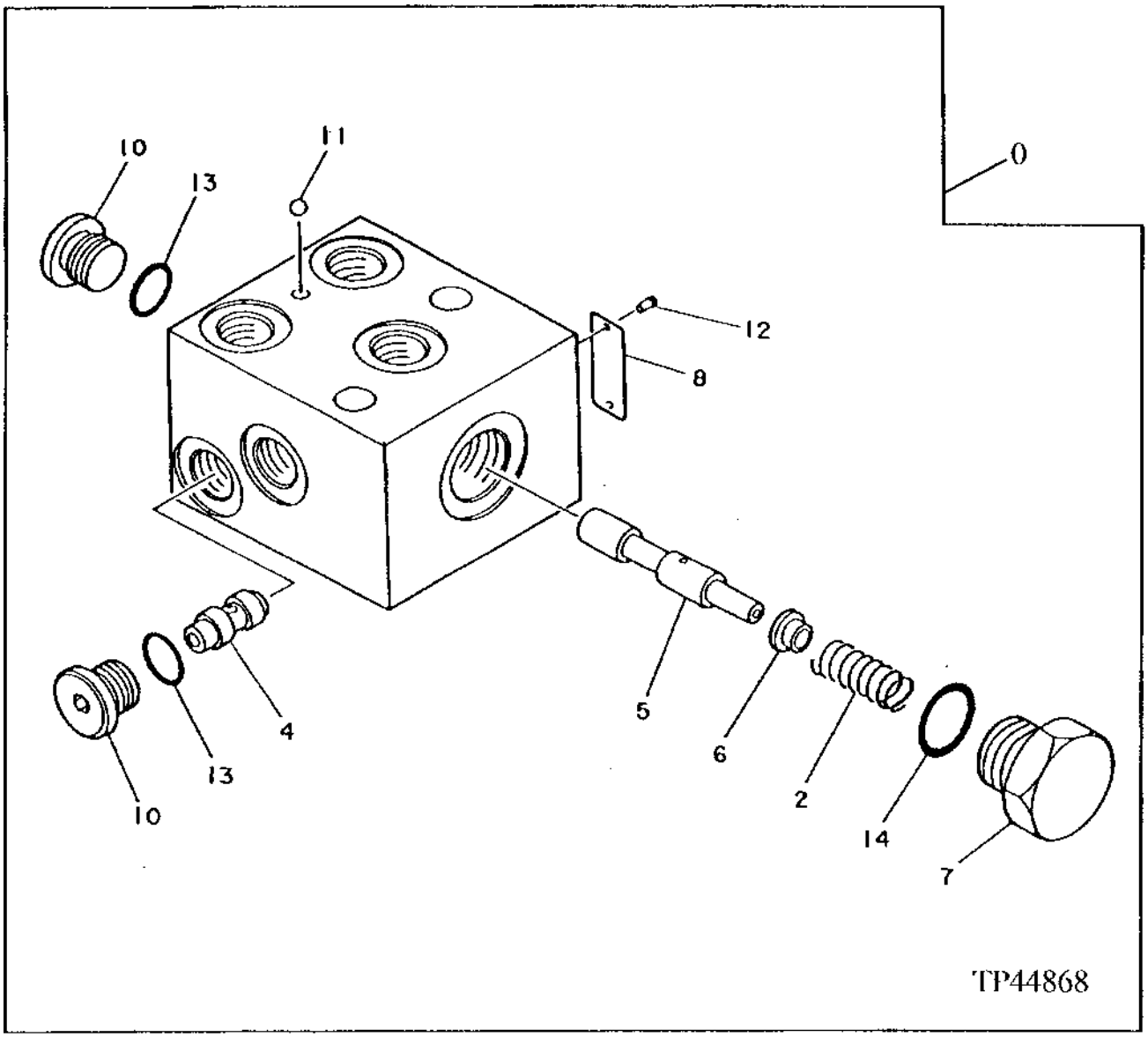

VALVE
(JUNCTION BLOCK)

KEY	PART NO.	PART NAME	QTY	SERIAL NO.	REMARKS
0	4258562	JUNCTION BLOCK	1		(SUB FOR AT202110)
2	0492301	COMPRESSION SPRING	1		(SUB FOR AT201982)
4	0252203	SPOOL	1		(SUB FOR AT132172)
5	0380503	SPOOL	1		(SUB FOR AT201972)
6	0492302	RETAINER	1		(SUB FOR AT201983)
7	0492303	PLUG	1		(SUB FOR AT201984)
10	AT120949	FITTING PLUG	2		
11	0228705	BALL	1		(SUB FOR AT201966)
12	0208717	SCREW	2		(SUB FOR TH102697)
13	M800650	PACKING	2		
14	4506418	O-RING	1		(SUB FOR U46489)

VALVE

TP61193 -UN-15OCT99

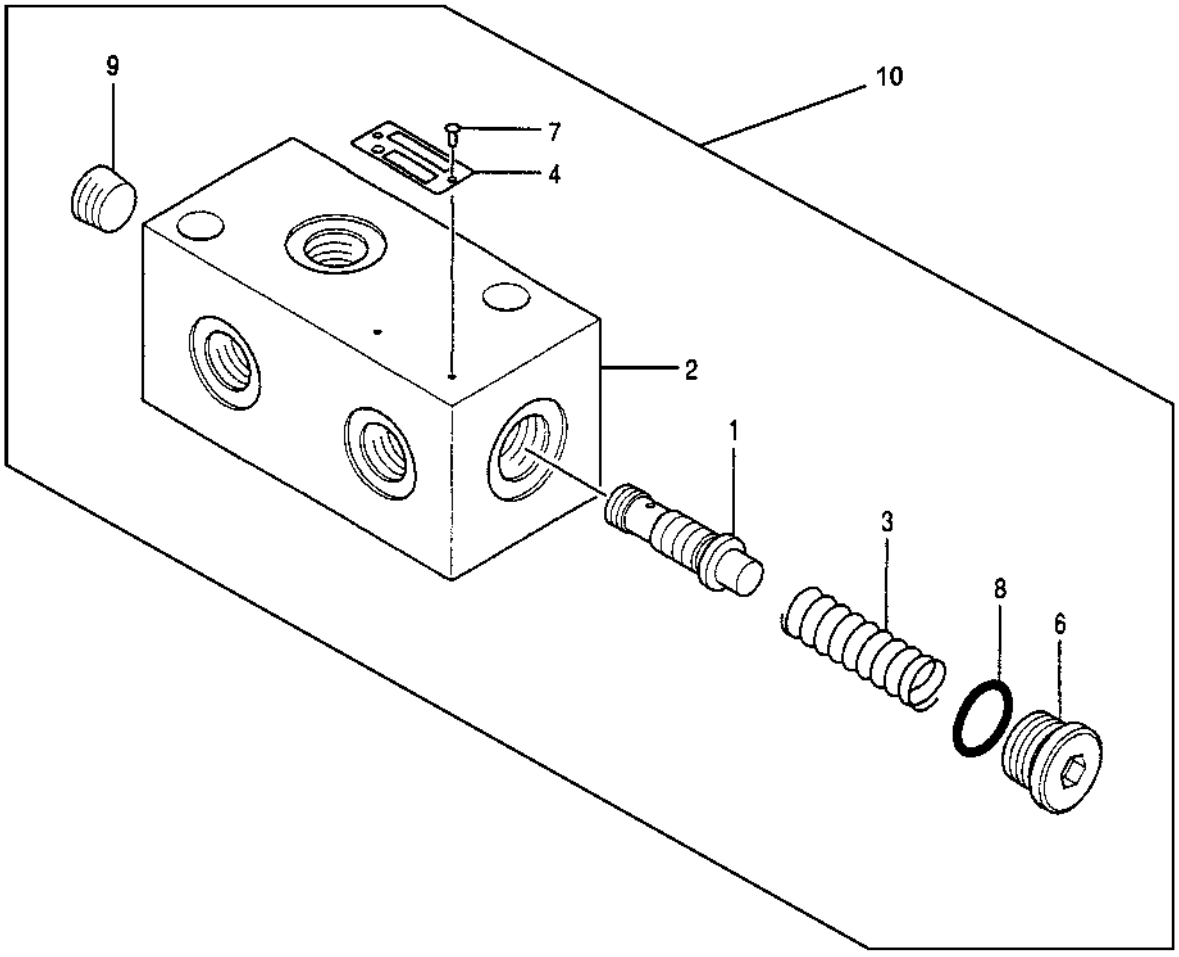

TP61193

VALVE

KEY	PART NO.	PART NAME	QTY	SERIAL NO.	REMARKS
1	0239102	SPOOL	1		(SUB FOR AT132167)
2	.....	HOUSING	1		(AT132179 NOT AVAILABLE FOR SERVICE)
3	.....	COMPRESSION SPRING	1		
4	.....	PLATE	1		
6	0309805	PIPE PLUG	1		(SUB FOR TH109285)
7	0208717	SCREW	2		(SUB FOR TH102697)
8	CH11570	O-RING	1		
9	94-2011	FITTING PLUG	1		(SUB FOR TH100434)
10	4357517	VALVE	1		(SUB FOR TH4357517)

TILTING-PROBING SENSOR

T144126 -UN-20JUL01

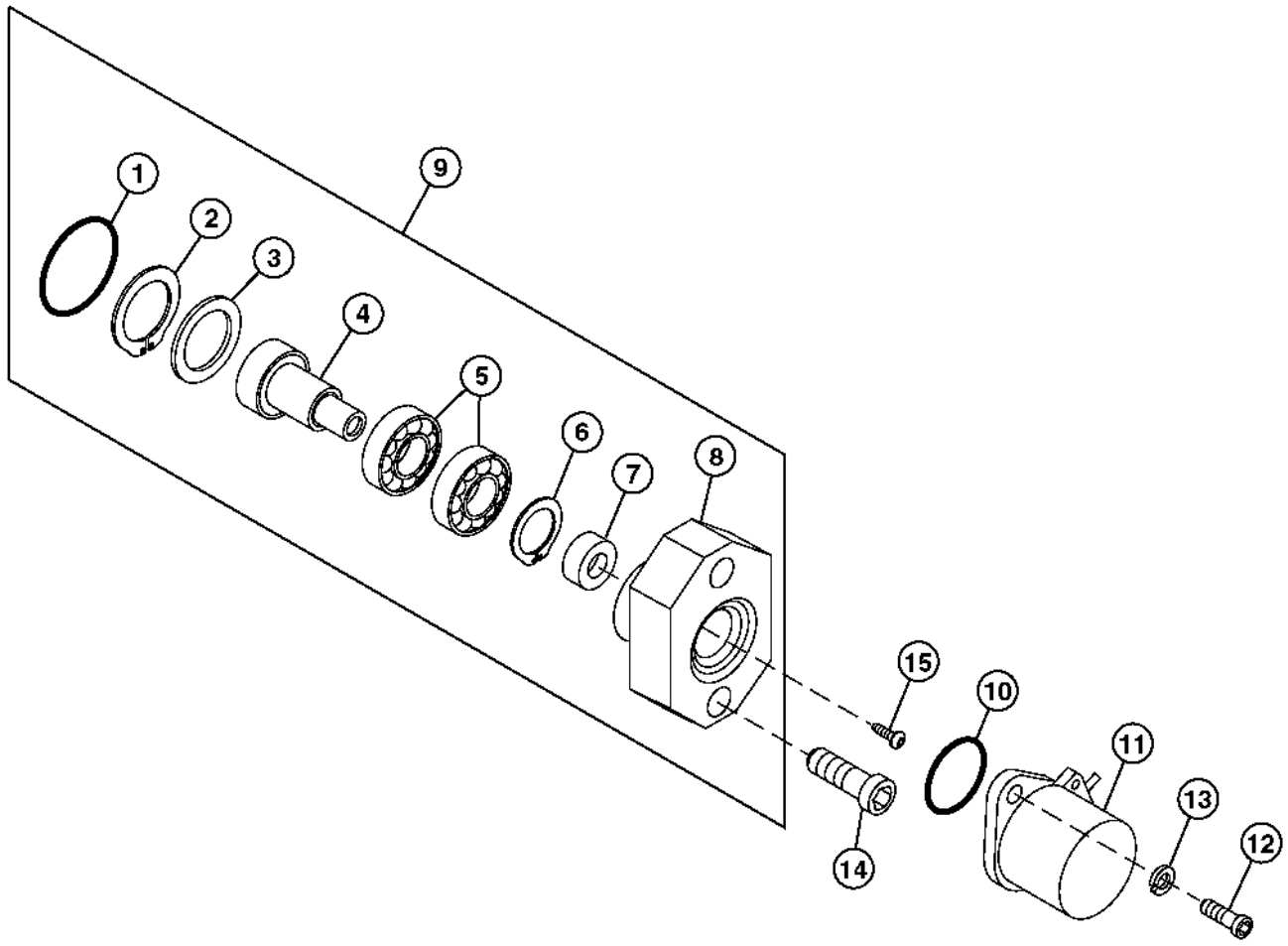

T144126

TILTING-PROBING SENSOR

KEY	PART NO.	PART NAME	QTY	ENGINE SERIAL NO.	REMARKS
1	A811045	O-RING	1		(SUB FOR T74492)
2	40M7225	SNAP RING	1		(SUB FOR 40M1861)
3	.....	SPACER	1		
4	.....	SHAFT	1		
5	0451201	BALL BEARING	2		(SUB FOR AT201639)
6	40M7080	SNAP RING	1		
7	4S00210	SEAL	1		(SUB FOR AT201640)
8	.....	COVER	1		
9	4366339	SENSOR	1		(SUB FOR AT174500)
10	4274371	O-RING	1		(SUB FOR AT154322)
11	9102385	SENSOR	1		(SUB FOR AT154533) (PUMP ANGLE SENSOR)
12	0237902	BOLT	2		(SUB FOR AT201967)
13	0451204	WASHER	2		(SUB FOR AT201641)
14	0150809	SCREW	2		(SUB FOR AT204900)
15	4255077	SPRING	1		(SUB FOR AT154224)

CONTROL VALVE

T157062 -UN-30OCT02

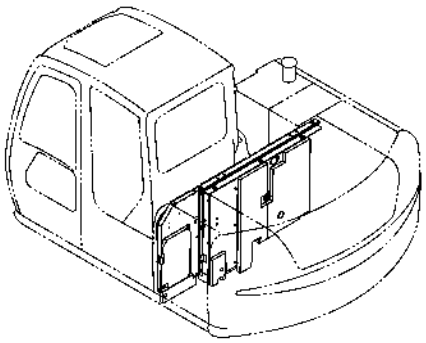

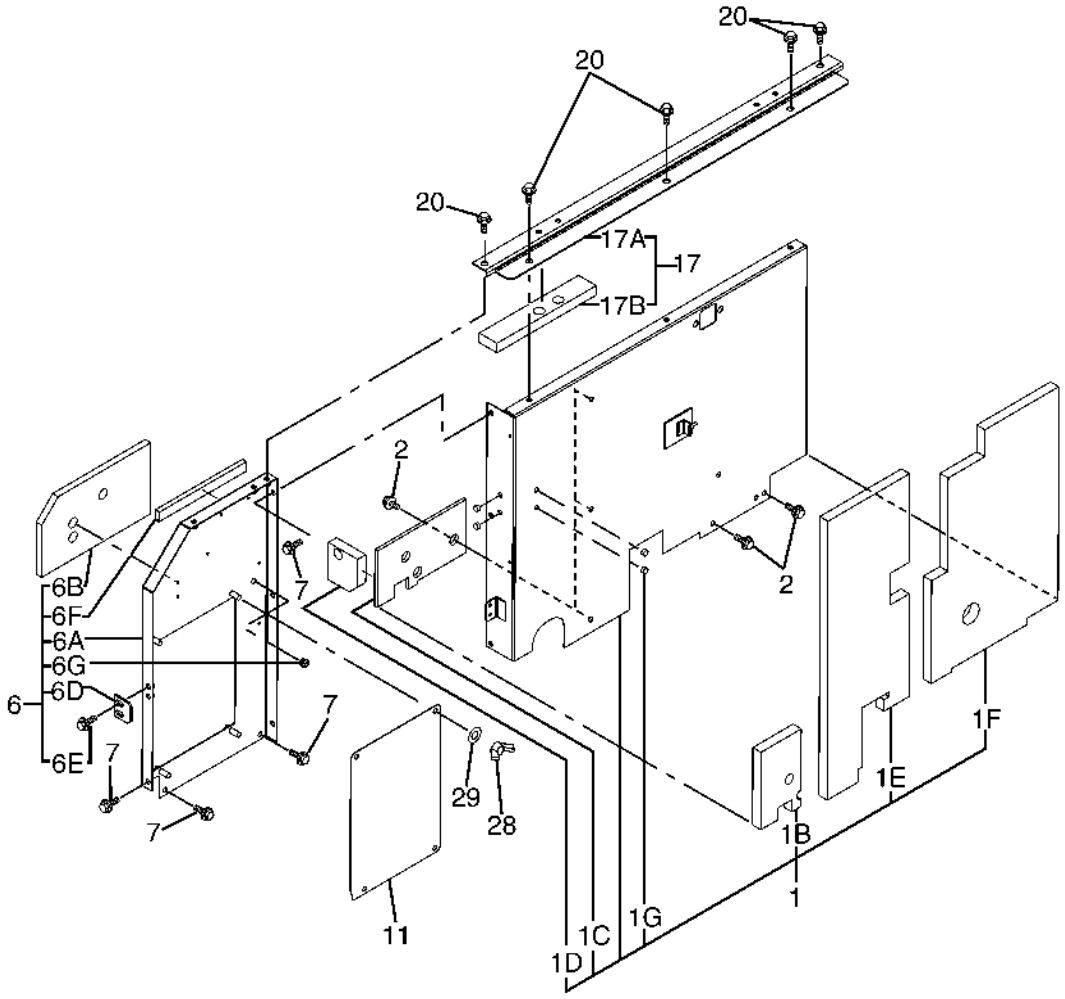

T157062

CONTROL VALVE

KEY	PART NO.	PART NAME	QTY	SERIAL NO.	REMARKS
1	.....	HOUSING	1		
2	.....	PLUNGER	1		
3	.....	PLUNGER	1		
4	.....	PLUNGER	1		
5	.....	PLUNGER	1		
6	.....	PLUNGER	1		
7	0453932	FITTING PLUG	1		(SUB FOR AT203777)
8	0212416	O-RING	1		(SUB FOR TH100198)
11	0622803	COVER	5		(SUB FOR AT201987)
12	4073426	O-RING	10		(SUB FOR AT217049)
13	0622805	SLEEVE	5		(SUB FOR AT201989)
14	0622806	GUIDE	10		(SUB FOR AT201990)
15	0622807	SPRING	5		(SUB FOR AT201991)
16	0622808	CAP	5		(SUB FOR AT201992)
17	0622809	COVER	1		(SUB FOR AT201993)
18	0622810	CAP	2		(SUB FOR AT201994)
19	M800650	PACKING	2		
20	19M8169	SCREW	20		(SUB FOR 19M8127)
21	0622811	CHECK VALVE	1		
22	0159223	SPRING	1		(SUB FOR AT217050)
23	0703301	SPACER	1		(SUB FOR TH0703301)
24	CH10568	O-RING	1		
25	0166805	BACK-UP RING	1		(SUB FOR AT217051)
26	0622877	CAP (HAT)	1		(SUB FOR AT172704)
27	985099	O-RING	1		(SUB FOR TH101479)
28	4391661	SOLENOID VALVE	1		(SUB FOR TH4391661) (COUNTERWEIGHT REMOVAL)
39	4153108	O-RING	7		(SUB FOR AT202087)
40	0703302	O-RING	5		
41	0809731	O-RING	10		
42	0809726	O-RING	10		
43	0809725	RING	20		
74	4027959	BACK-UP RING	7		(SUB FOR TH100771)
75	4153099	O-RING	7		(SUB FOR AT202086)
76	4391660	RELIEF VALVE	5		(SWING, ARM AND BUCKET II HEAD END)
77	0622843	VALVE	1		(MAKE-UP)
81	4391505	RELIEF VALVE	1		(FLOW SENSING VALVE)
82	4311602	CONTROL VALVE	1		(SUB FOR TH4311602 AND 4311602EX) (CONTAINS ALL ITEMS ON THIS PAGE,ADDITIONAL COMPONENTS ARE LISTED ON FOLLOWING PAGES)

CONTROL VALVE

TP68077 -UN-15OCT99

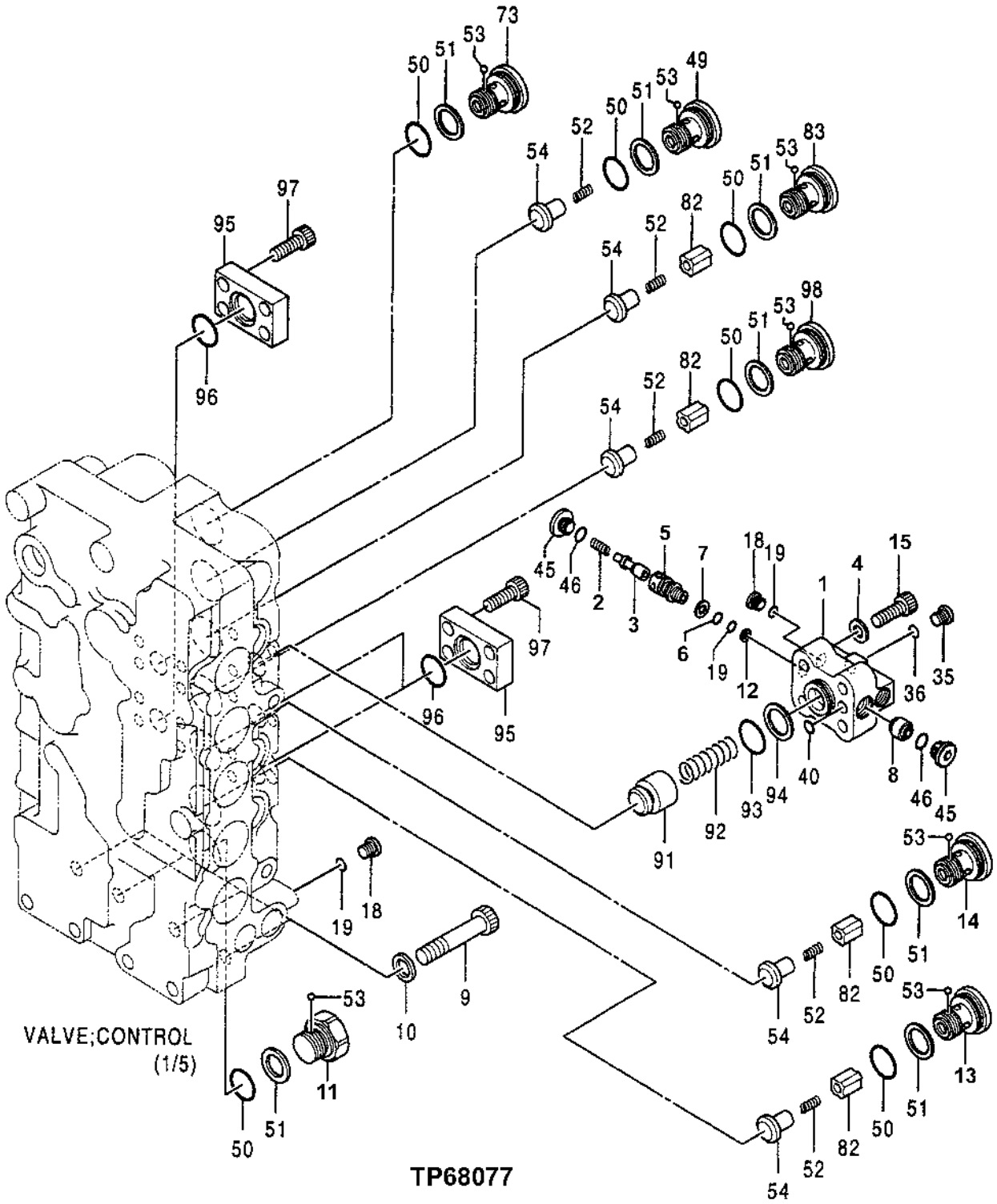

CONTROL VALVE

KEY	PART NO.	PART NAME	QTY	SERIAL NO.	REMARKS
1	0622862	COVER	1		(SUB FOR AT202046)
2	0622863	SPRING	1		(SUB FOR AT202047)
3	0622864	POPPET	1		(SUB FOR AT202048)
4	0622865	WASHER	4		(SUB FOR AT202049)
5	0622866	SLEEVE	1		(SUB FOR AT202050)
6	4140470	O-RING	1		(SUB FOR TH109089)
7	4040813	BACK-UP RING	1		(SUB FOR TH110449)
8	0622867	PISTON	1		(SUB FOR AT202051)
9	19M8564	SCREW	4		
10	0189908	WASHER	4		(SUB FOR AT217052)
11	0622870	CAP	1		(SUB FOR AT202054)
12	4092265	BACK-UP RING	1		(SUB FOR TH102598)
13	0622868	CAP	1		(SUB FOR AT202052)
14	0622869	CAP	1		(SUB FOR AT202053)
15	M341440	SCREW	4		(SUB FOR AT201961)
16	0622860	CAP	1		(SUB FOR AT202044)
18	0622810	CAP	2		(SUB FOR AT201994)
19	M800650	PACKING	3		
20	19M8734	SCREW	16		
35	0622819	CAP	1		(SUB FOR AT202003)
36	CH11570	O-RING	1		
40	4153089	O-RING	1		(SUB FOR AT202085)
45	0622822	CAP	2		(SUB FOR AT202006)
46	4153098	O-RING	2		(SUB FOR TH109041)
49	0622825	CAP	1		(SUB FOR AT202009)
50	4088425	O-RING	7		(SUB FOR AT202080)
51	0223104	BACK-UP RING	7		(SUB FOR AT217055)
52	0622827	SPRING	5		(SUB FOR AT202011)
53	0189803	BALL	7		(SUB FOR AT203704)
54	0622829	CHECK VALVE	5		(SUB FOR AT202013)
73	0622840	CAP	1		(SUB FOR AT202024)
82	0622848	CHECK VALVE	4		(SUB FOR AT202032)
83	0622849	CAP	1		(SUB FOR AT202033)
91	0622855	POPPET	1		(SUB FOR AT202039)
92	0622856	SPRING	1		(SUB FOR AT202040)
93	TH100044	O-RING	1		
94	4138942	BACK-UP RING	1		(SUB FOR AT217083)
95	0622858	FLANGE	4		(SUB FOR AT202042)
96	0197011	O-RING	4		(SUB FOR AT217054)
97	4311602	CONTROL VALVE	1		(SUB FOR TH4311602 AND 4311602EX) (NOT ILLUSTRATED)(CONTAINS ALL ITEMS ON THIS PAGE,ADDITIONAL COMPONENTS ARE LISTED ON PREVIOUS AND FOLLOWING PAGES)

CONTROL VALVE

T157532 -UN-19JUL02

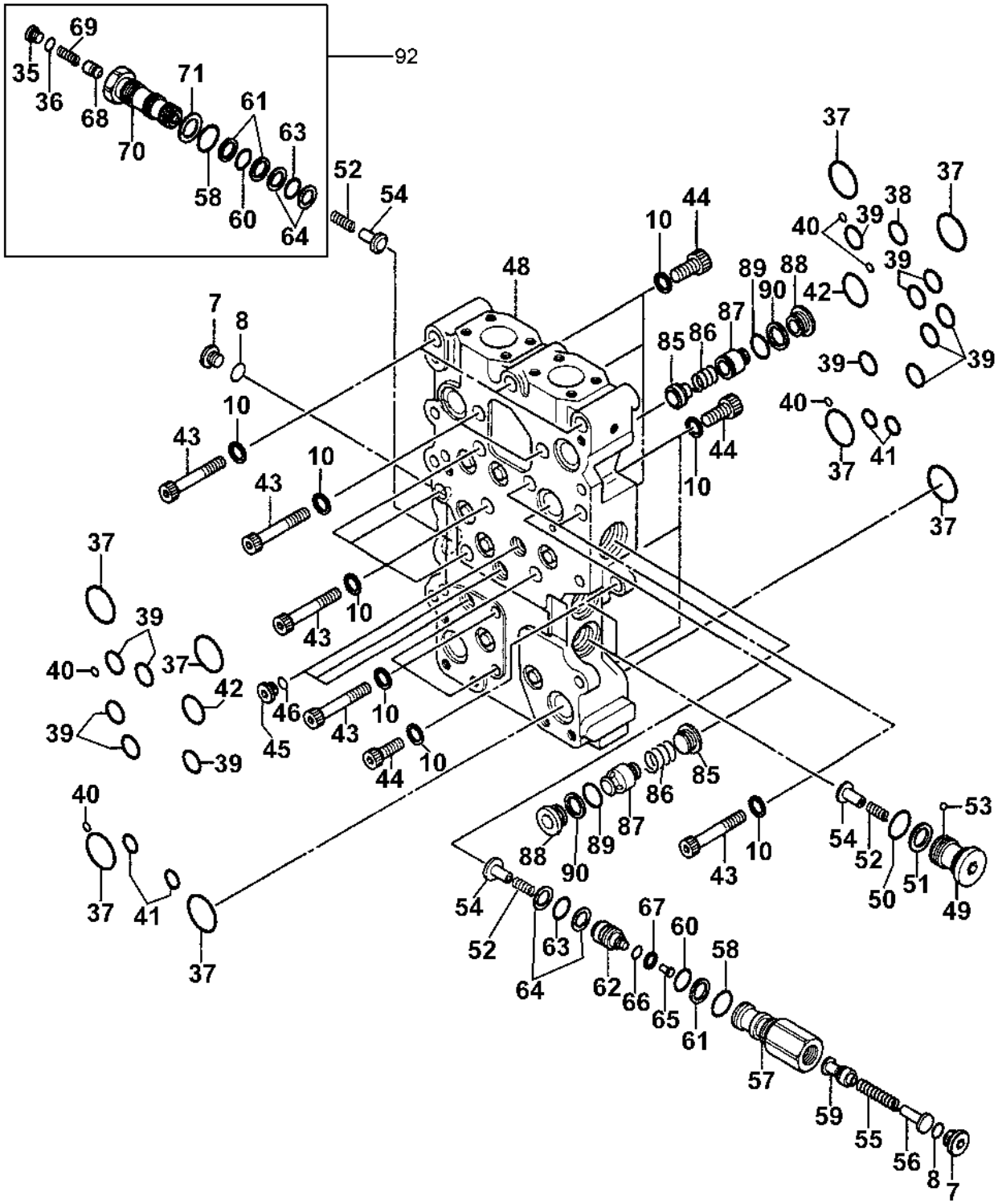

T157532

CONTROL VALVE

KEY	PART NO.	PART NAME	QTY	SERIAL NO.	REMARKS
7	0453932	FITTING PLUG	2		(SUB FOR AT203777)
8	0212416	O-RING	2		(SUB FOR TH100198)
10	0189908	WASHER	21		(SUB FOR AT217052)
35	0622819	CAP	1		(SUB FOR AT202003)
36	CH11570	O-RING	1		
37	4153535	O-RING	8		(SUB FOR AT202090)
38	0223109	O-RING	1		(SUB FOR AT217056)
39	4153108	O-RING	12		(SUB FOR AT202087)
40	4153089	O-RING	4		(SUB FOR AT202085)
41	T59014	O-RING	4		(SUB FOR AT202005) (FURNISH T59014)
42	4153534	O-RING	2		(SUB FOR AT202089)
43	19M8342	SCREW	14		
44	0212405	BOLT	7		(SUB FOR TH100184)
45	0622822	CAP	3		(SUB FOR AT202006)
46	4153098	O-RING	3		(SUB FOR TH109041)
48	0703501	CONTROL VALVE	1		(SUB FOR TH0703501)
49	0622825	CAP	2		(SUB FOR AT202009)
50	4088425	O-RING	2		(SUB FOR AT202080)
51	0223104	BACK-UP RING	2		(SUB FOR AT217055)
52	0622827	SPRING	4		(SUB FOR AT202011)
53	0189803	BALL	2		(SUB FOR AT203704)
54	0622829	CHECK VALVE	4		(SUB FOR AT202013)
55	0622830	SPRING	1		(SUB FOR AT202014)
56	0622831	GUIDE	1		(SUB FOR AT202015)
57	0622832	SLEEVE	1		(SUB FOR AT202016)
58	985098	O-RING	2		(SUB FOR TH102528)
59	0622833	SPOOL	1		(SUB FOR AT202017)
60	4506428	O-RING	2		(SUB FOR TH100136)
61	4044839	BACK-UP RING	3		(SUB FOR TH103457)
62	0622834	SLEEVE	1		(SUB FOR AT202018)
63	966689	O-RING	2		(SUB FOR TH108142)
64	4113187	BACK-UP RING	4		(SUB FOR AT131692)
65	0622835	PISTON	1		(SUB FOR AT202019)
66	T111819	O-RING	1		
67	4040814	BACK-UP RING	1		(SUB FOR TH105938)
68	4442348	POPPET	1		(SUB FOR 0622836)
69	0622837	SPRING	1		(SUB FOR AT202021)
70	0622838	CAP	1		(SUB FOR AT202022)
71	4013283	BACK-UP RING	1		(SUB FOR AT200398)
85	0622851	PLATE	2		(SUB FOR AT202035)
86	0622852	SPRING	2		(SUB FOR AT202036)
87	0622853	CHECK VALVE	2		(SUB FOR AT202037)
88	0622854	SEAT	2		(SUB FOR AT202038)
89	4153110	O-RING	2		(SUB FOR AT202088)
90	4019414	BACK-UP RING	2		(SUB FOR AT202076)
91	4311602	CONTROL VALVE	1		(SUB FOR TH4311602 AND 4311602EX) (NOT ILLUSTRATED)(CONTAINS ALL ITEMS ON THIS PAGE,ADDITIONAL COMPONENTS ARE LISTED ON PREVIOUS AND FOLLOWING PAGES)
92	4442180	VALVE	1		(CHECK VALVE)

CONTROL VALVE

TP68079 -UN-19OCT99

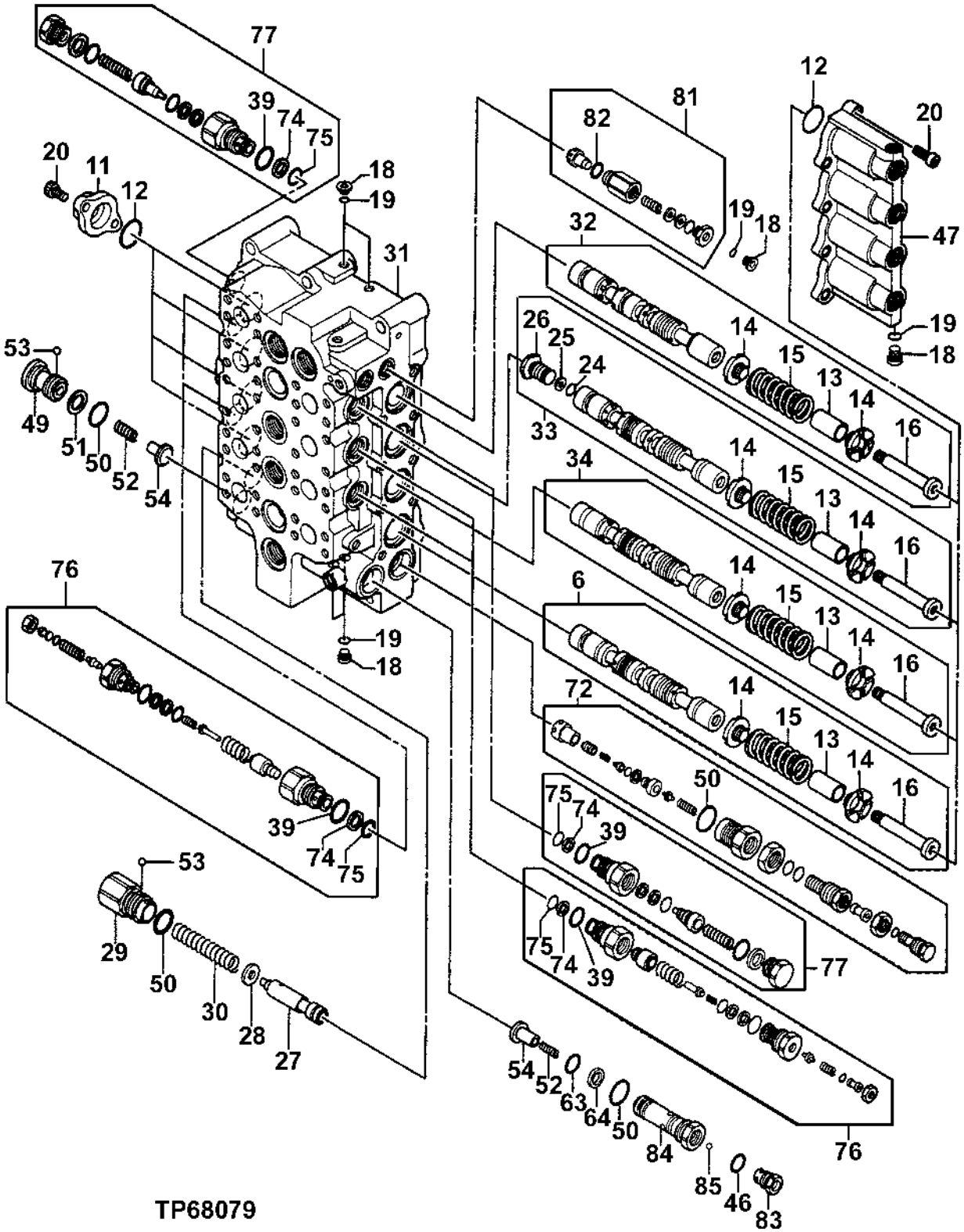

CONTROL VALVE

KEY	PART NO.	PART NAME	QTY	SERIAL NO.	REMARKS
6	.....	PLUNGER	1		
11	0622803	COVER	4		(SUB FOR AT201987)
12	4073426	O-RING	8		(SUB FOR AT217049)
13	0622805	SLEEVE	4		(SUB FOR AT201989)
14	0622806	GUIDE	8		(SUB FOR AT201990)
15	0622807	SPRING	4		(SUB FOR AT201991)
16	0622808	CAP	4		(SUB FOR AT201992)
18	0622810	CAP	6		(SUB FOR AT201994)
19	M800650	PACKING	6		
20	19M8169	SCREW	16		(SUB FOR 19M8127)
24	CH10568	O-RING	1		
25	0166805	BACK-UP RING	1		(SUB FOR AT217051)
26	0622877	CAP (HAT)	1		(SUB FOR AT172704)
27	0622815	SPOOL	1		(SUB FOR AT201999)
28	0622816	SPACER	1		(SUB FOR AT202000)
29	0622817	CAP	1		(SUB FOR AT202001)
30	0622818	SPRING	1		(SUB FOR AT202002)
31	.....	HOUSING	1		
32	.....	PLUNGER	1		
33	.....	PLUNGER	1		
34	.....	PLUNGER	1		
39	4153108	O-RING	6		(SUB FOR AT202087)
46	4153098	O-RING	1		(SUB FOR TH109041)
47	0622823	COVER	1		(SUB FOR AT202007)
49	0622825	CAP	1		(SUB FOR AT202009)
50	4088425	O-RING	4		(SUB FOR AT202080)
51	0223104	BACK-UP RING	1		(SUB FOR AT217055)
52	0622827	SPRING	2		(SUB FOR AT202011)
53	0189803	BALL	2		(SUB FOR AT203704)
54	0622829	CHECK VALVE	2		(SUB FOR AT202013)
63	966689	O-RING	1		(SUB FOR TH108142)
64	4113187	BACK-UP RING	1		(SUB FOR AT131692)
72	0655702	RELIEF VALVE	1		(SUB FOR TH4391504) (SYSTEM)
74	4027959	BACK-UP RING	6		(SUB FOR TH100771)
75	4153099	O-RING	6		(SUB FOR AT202086)
76	4391660	RELIEF VALVE	4		(SUB FOR TH4391660) (BOOM AND BUCKET HEAD AND ROD ENDS)
77	0622843	VALVE	2		(SUB FOR AT202027) (ARM AND BOOM MAKE-UP VALVE)
81	4391505	RELIEF VALVE	1		(SUB FOR AT217147) (FLOW SENSING VALVE)
82	985099	O-RING	1		(SUB FOR TH101479)
83	0622871	SEAT	1		(SUB FOR AT202055)
84	0622872	CAP	1		(SUB FOR AT202056)
85	0622873	BALL	1		(SUB FOR AT202057)
86	4311602	CONTROL VALVE	1		(SUB FOR TH4311602 AND 4311602EX) (NOT ILLUSTRATED)(CONTAINS ALL ITEMS ON THIS PAGE,ADDITIONAL COMPONENTS ARE LISTED ON PREVIOUS AND FOLLOWING PAGES)

CONTROL VALVE

TP68080 -UN-19OCT99

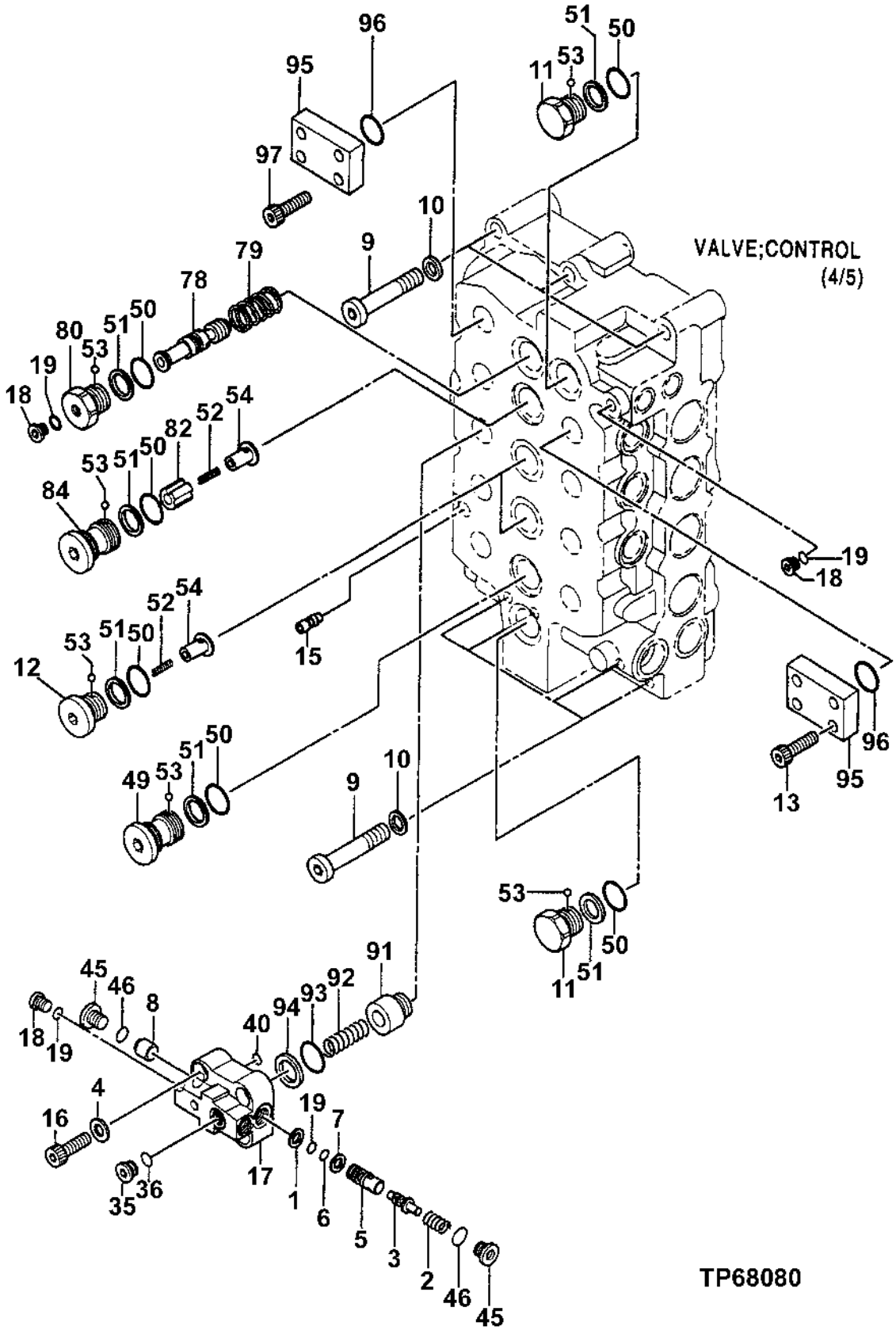

CONTROL VALVE

KEY	PART NO.	PART NAME	QTY	SERIAL NO.	REMARKS
1	4092265	BACK-UP RING	1		(SUB FOR TH102598)
2	0622863	SPRING	1		(SUB FOR AT202047)
3	0622864	POPPET	1		(SUB FOR AT202048)
4	0622865	WASHER	4		(SUB FOR AT202049)
5	0622866	SLEEVE	1		(SUB FOR AT202050)
6	4140470	O-RING	1		(SUB FOR TH109089)
7	4040813	BACK-UP RING	1		(SUB FOR TH110449)
8	0622867	PISTON	1		(SUB FOR AT202051)
9	19M8564	BOLT	7		(SUB FOR M341600)
10	0189908	WASHER	7		(SUB FOR AT217052)
11	0622870	CAP	2		(SUB FOR AT202054)
12	0703701	FITTING PLUG	2		(SUB FOR AT217064)
13	19M8734	SCREW	8		
15	0622874	ORIFICE	1		(SUB FOR AT202058)
16	M341440	SCREW	4		(SUB FOR AT201961)
17	0622862	COVER	1		(SUB FOR AT202046)
18	0622810	CAP	3		(SUB FOR AT201994)
19	M800650	PACKING	4		
35	0622819	CAP	1		(SUB FOR AT202003)
36	CH11570	O-RING	1		
40	4153089	O-RING	1		(SUB FOR AT202085)
45	0622822	CAP	2		(SUB FOR AT202006)
46	4153098	O-RING	2		(SUB FOR TH109041)
49	0622825	CAP	1		(SUB FOR AT202009)
50	4088425	O-RING	7		(SUB FOR AT202080)
51	0223104	BACK-UP RING	7		(SUB FOR AT217055)
52	0622827	SPRING	3		(SUB FOR AT202011)
53	0189803	BALL	7		(SUB FOR AT203704)
54	0622829	CHECK VALVE	3		(SUB FOR AT202013)
78	0622844	SPOOL	1		(SUB FOR AT202028)
79	0622845	SPRING	1		(SUB FOR AT202029)
80	0622846	CAP	1		(SUB FOR AT202030)
82	0622848	CHECK VALVE	1		(SUB FOR AT202032)
84	0622850	CAP	1		(SUB FOR AT202034)
91	0622855	POPPET	1		(SUB FOR AT202039)
92	0622856	SPRING	1		(SUB FOR AT202040)
93	TH100044	O-RING	1		
94	4138942	BACK-UP RING	1		(SUB FOR AT217083)
95	0622858	FLANGE	2		(SUB FOR AT202042)
96	0197011	O-RING	2		(SUB FOR AT217054)
97	4311602	CONTROL VALVE	1		(SUB FOR TH4311602 AND 4311602EX) (NOT ILLUSTRATED)(CONTAINS ALL ITEMS ON THIS PAGE,ADDITIONAL COMPONENTS ARE LISTED ON PREVIOUS PAGES)

HYDRAULIC BOOM CYLINDER, RIGHT

TP61194 -UN-15OCT99

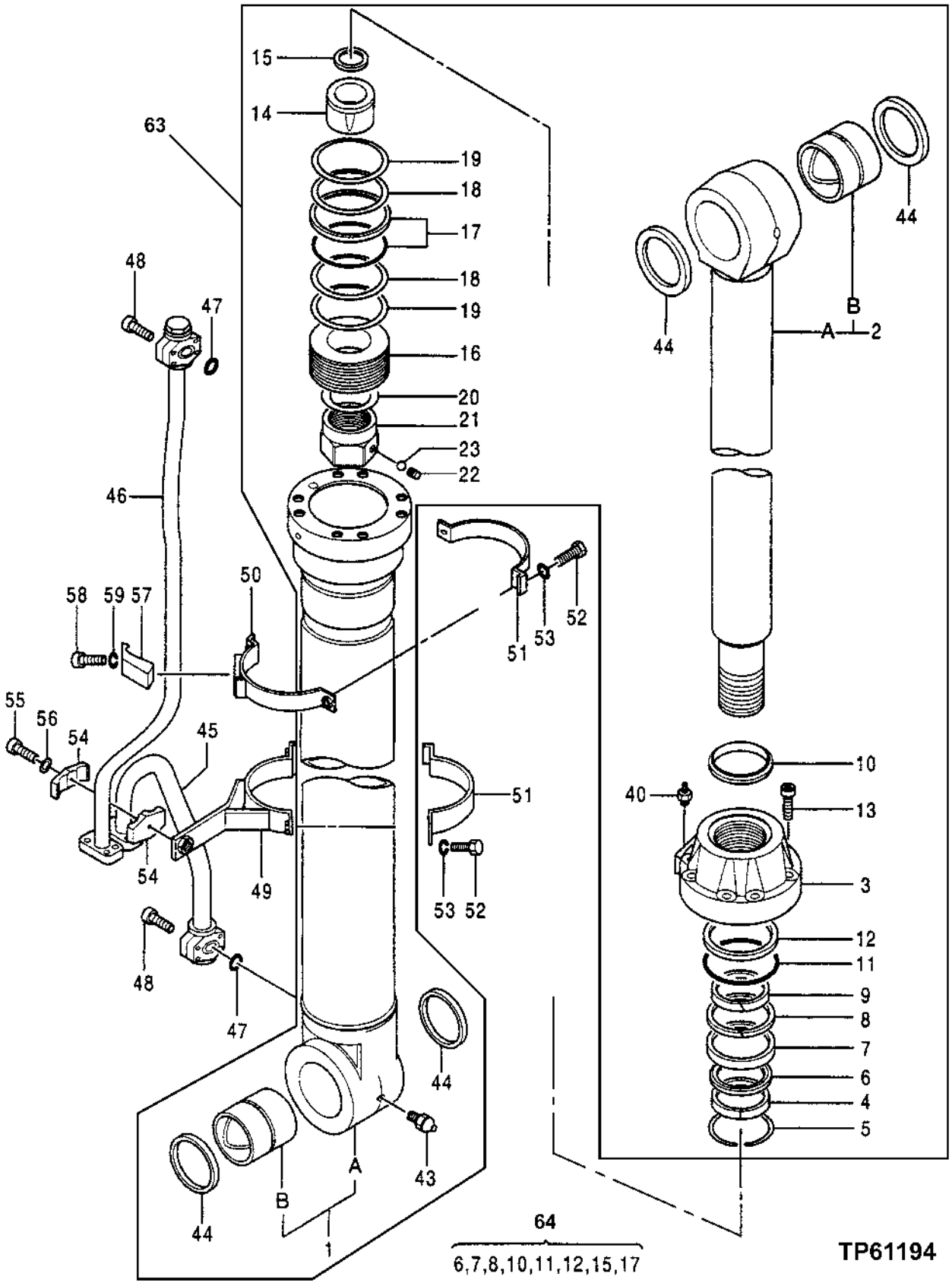

HYDRAULIC BOOM CYLINDER, RIGHT

KEY	PART NO.	PART NAME	QTY	SERIAL NO.	REMARKS
1	4391318	HYDRAULIC CYLINDER BARREL	1		(SUB FOR TH4391318)
1A	.....	TUBE	1		
1B	0702501	BUSHING	1		(SUB FOR TH0702501)
2	4391319	ROD	1		(SUB FOR TH4391319)
2A	.....	ROD	1		
2B	0444801	BUSHING	1		(SUB FOR TH0444801)
3	0645004	HYDR. CYLINDER ROD GUIDE	1		(SUB FOR TH0645004)
4	0379806	BUSHING	1		(SUB FOR TH0379806)
5	0191415	SNAP RING	1		(SUB FOR TH0191415)
6	0417405	RING	1		(SUB FOR TH0417405)
7	4091814	RING	1		(SUB FOR TH4094949)
8	0242505	BACK-UP RING	1		(SUB FOR TH0242505)
9	0417406	RING	1		(SUB FOR TH0417406)
10	4438196	RING	1		(SUB FOR 0242506)
11	AT122160	O-RING	1		
12	4S00084	BACK-UP RING	1		(SUB FOR TH0257007)
13	4104472	BOLT	8		(SUB FOR AT132322)
14	0702502	BUSHING	1		(SUB FOR TH0702502)
15	0645006	SEAL	1		(SUB FOR TH0645006)
16	0702503	PISTON	1		(SUB FOR TH0702503)
17	4S00085	RING	1		(SUB FOR TH0257010)
18	0645008	RING	2		(SUB FOR TH0645008)
19	4S00098	RING	2		(SUB FOR TH4199817)
20	0379813	SHIM	1		(SUB FOR TH0379813)
21	0379814	NUT	1		(SUB FOR TH0379814)
22	0379815	SET SCREW	1		(SUB FOR TH0379815)
23	0109124	BALL	1		(SUB FOR TH0109124)
40	0643016	BLEED VALVE	1		(SUB FOR TH0643016)
43	0380010	LUBRICATION FITTING	1		(SUB FOR TH0380010)
44	4251767	SEAL	4		
45	0492603	OIL LINE	1		(SUB FOR TH0492603)
46	0444803	OIL LINE	1		(SUB FOR TH0444803)
47	955612	O-RING	2		(SUB FOR AT132423)
48	0171719	CAP SCREW	8		(SUB FOR TH0171719)
49	0379703	CLAMP	1		(SUB FOR TH0379703)
50	0379819	CLAMP	1		(SUB FOR TH0379819)
51	0379820	CLAMP	2		(SUB FOR TH0379820)
52	19M7550	CAP SCREW	4		M10 X 35
53	12M7066	LOCK WASHER	4		10 MM
54	0379821	HALF CLAMP	2		(SUB FOR TH0379821)
55	.....	BOLT	1		
56	.....	SPRING WASHER	1		
57	0353016	CLAMP	1		(SUB FOR AT132325)
58	19M4789	CAP SCREW	1		M14 X 80
59	12H317	LOCK WASHER	1		14.288 MM (9/16")
63	4391320EX	HYDRAULIC CYLINDER	1		(SUB FOR TH4391320)
64	4438684	SEAL KIT	1		(SUB FOR 4391321)

HYDRAULIC BOOM CYLINDER, LEFT

TP61195 -UN-15OCT99

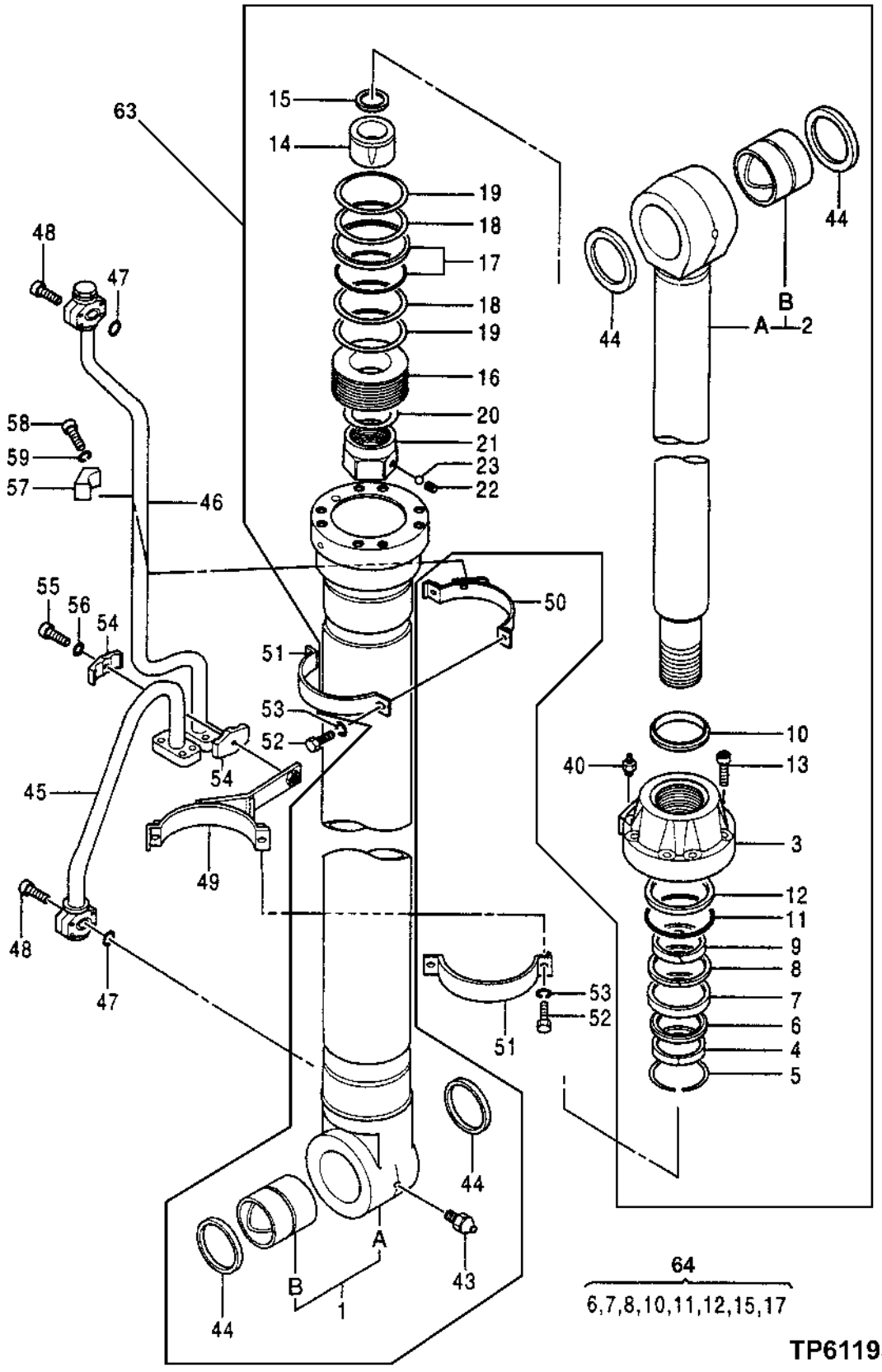

HYDRAULIC BOOM CYLINDER, LEFT

KEY	PART NO.	PART NAME	QTY	SERIAL NO.	REMARKS
1	4391318	HYDRAULIC CYLINDER BARREL	1		(SUB FOR TH4391318)
1A	.....	TUBE	1		
1B	0702501	BUSHING	1		(SUB FOR TH0702501)
2	4391319	ROD	1		(SUB FOR TH4391319)
2A	.....	ROD	1		
2B	0444801	BUSHING	1		(SUB FOR TH0444801)
3	0645004	HYDR. CYLINDER ROD GUIDE	1		(SUB FOR TH0645004)
4	0379806	BUSHING	1		(SUB FOR TH0379806)
5	0191415	SNAP RING	1		(SUB FOR TH0191415)
6	0417405	RING	1		(SUB FOR TH0417405)
7	4091814	RING	1		(SUB FOR TH4094949)
8	0242505	BACK-UP RING	1		(SUB FOR TH0242505)
9	0417406	RING	1		(SUB FOR TH0417406)
10	4438196	RING	1		(SUB FOR 0242506)
11	AT122160	O-RING	1		
12	4S00084	BACK-UP RING	1		(SUB FOR TH0257007)
13	4104472	BOLT	8		(SUB FOR AT132322)
14	0702502	BUSHING	1		(SUB FOR TH0702502)
15	0645006	SEAL	1		(SUB FOR TH0645006)
16	0702503	PISTON	1		(SUB FOR TH0702503)
17	4S00085	RING	1		(SUB FOR TH0257010)
18	0645008	RING	2		(SUB FOR TH0645008)
19	4S00098	RING	2		(SUB FOR TH4199817)
20	0379813	SHIM	1		(SUB FOR TH0379813)
21	0379814	NUT	1		(SUB FOR TH0379814)
22	0379815	SET SCREW	1		(SUB FOR TH0379815)
23	0109124	BALL	1		(SUB FOR TH0109124)
40	0643016	BLEED VALVE	1		(SUB FOR TH0643016)
43	0380010	LUBRICATION FITTING	1		(SUB FOR TH0380010)
44	4251767	SEAL	4		
45	0498101	OIL LINE	1		(SUB FOR TH0498101)
46	0444902	OIL LINE	1		(SUB FOR TH0444902)
47	955612	O-RING	2		(SUB FOR AT132423)
48	0171719	CAP SCREW	8		(SUB FOR TH0171719)
49	0379703	CLAMP	1		(SUB FOR TH0379703)
50	0379819	CLAMP	1		(SUB FOR TH0379819)
51	0379820	CLAMP	2		(SUB FOR TH0379820)
52	19M7550	CAP SCREW	4		M10 X 35
53	12M7066	LOCK WASHER	4		10 MM
54	0379821	HALF CLAMP	2		(SUB FOR TH0379821)
55	.....	BOLT	1		
56	.....	SPRING WASHER	1		
57	0353016	CLAMP	1		(SUB FOR AT132325)
58	19M4789	CAP SCREW	1		M14 X 80
59	12H317	LOCK WASHER	1		14.288 MM (9/16")
63	4391320EX	HYDRAULIC CYLINDER	1		(SUB FOR TH4391320)
64	4438684	SEAL KIT	1		(SUB FOR 4391321)

HYDRAULIC BACKHOE CYLINDER

TP61196 -UN-15OCT99

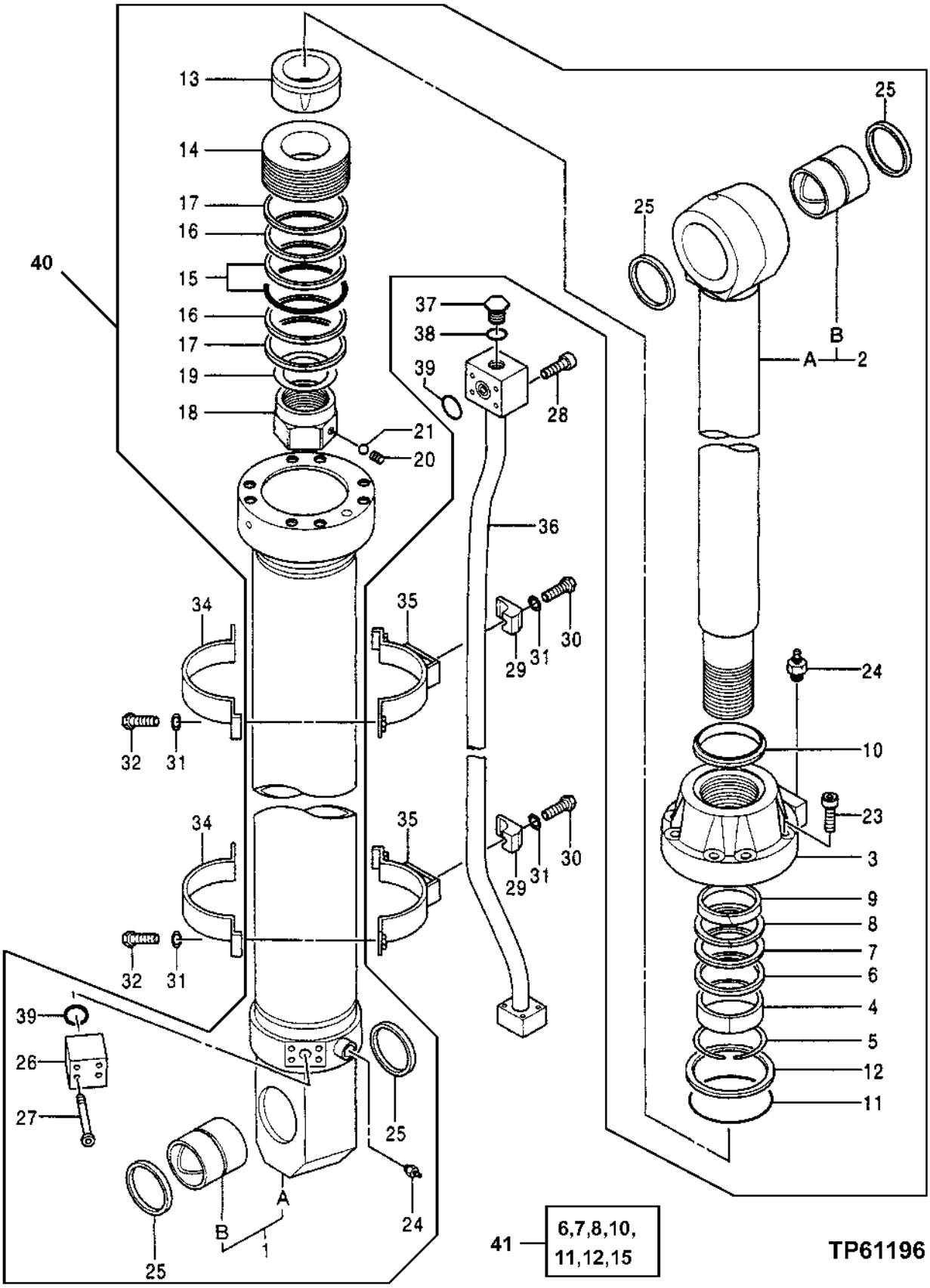

HYDRAULIC BACKHOE CYLINDER

KEY	PART NO.	PART NAME	QTY	SERIAL NO.	REMARKS
1	4391312	HYDRAULIC CYLINDER BARREL	1		(SUB FOR TH4391312)
1A	.....	TUBE	1		
1B	0702701	BUSHING	1		(SUB FOR TH0702701)
2	4391313	ROD	1		(SUB FOR TH4391313)
2A	.....	ROD	1		
2B	0702701	BUSHING	1		(SUB FOR TH0702701)
3	0702702	HYDR. CYLINDER ROD GUIDE	1		(SUB FOR TH0702702)
4	0379905	BUSHING	1		(SUB FOR TH0379905)
5	0160706	SNAP RING	1		(SUB FOR TH0160706)
6	4S00094	RING	1		(SUB FOR TH0392303)
7	TH4070027	SEAL	1		
8	4S00082	BACK-UP RING	1		(SUB FOR TH0242706)
9	4S00148	RING	1		(SUB FOR TH0392304)
10	4S00084	BACK-UP RING	1		(SUB FOR TH0242707)
11	4113165	O-RING	1		(SUB FOR TH4113165)
12	0379908	BACK-UP RING	1		(SUB FOR TH0379908)
13	0379909	BUSHING	1		(SUB FOR TH0379909)
14	0702703	PISTON	1		(SUB FOR TH0702703)
15	0392305	RING	1		(SUB FOR TH0392305)
16	0702704	RING	2		(SUB FOR TH0702704)
17	4S00162	RING	2		(SUB FOR TH0392306)
18	0379914	NUT	1		(SUB FOR TH0379914)
19	0379915	SHIM	1		(SUB FOR TH0379915)
20	0379815	SET SCREW	1		(SUB FOR TH0379815)
21	0109124	BALL	1		(SUB FOR TH0109124)
23	0343305	CAP SCREW	8		(SUB FOR TH0343305)
24	0643016	BLEED VALVE	2		(SUB FOR TH0643016)
25	4S00225	SEAL	4		(SUB FOR TH4205000)
26	0191612	MANIFOLD	1		(SUB FOR TH0191612)
27	0191616	CAP SCREW	4		(SUB FOR TH0191616)
28	19M8564	SCREW	4		(SUB FOR TH0191916)
29	0379917	HALF CLAMP	2		(SUB FOR TH0379917)
30	T84067	SCREW	2		(SUB FOR TH0379918)
31	12H317	LOCK WASHER	6		14.288 MM (9/16")
32	P61969	BOLT	4		(SUB FOR TH0379919)
34	0702705	HALF CLAMP	2		(SUB FOR TH0702705)
35	0702706	HALF CLAMP	2		(SUB FOR TH0702706)
36	0493603	OIL LINE	1		(SUB FOR TH0493603)
37	0349308	PLUG	1		(SUB FOR TH0349308)
38	992444	O-RING	1		(SUB FOR TH108863)
39	4069900	O-RING	2		(SUB FOR TH106976)
40	4391311EX	HYDRAULIC CYLINDER	1		(SUB FOR TH4391311)
41	4436496	SEAL KIT	1		(SUB FOR 4337107)

HYDRAULIC BUCKET CYLINDER
(STANARD ARM, HEAVY DUTY ARM, SEMI-LONG ARM)

TP61197 -UN-15OCT99

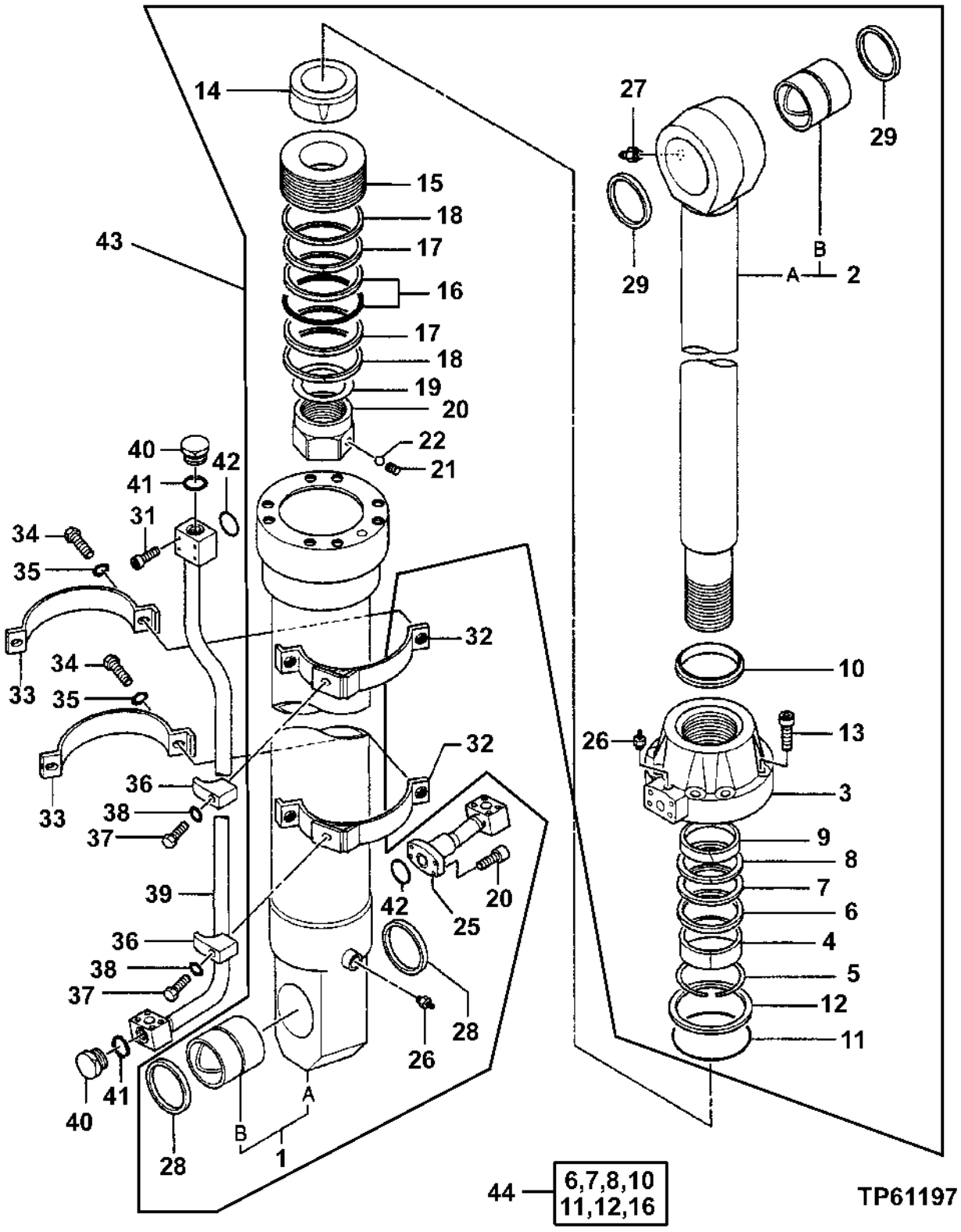

HYDRAULIC BUCKET CYLINDER
(STANDARD ARM, HEAVY DUTY ARM, SEMI-LONG ARM)

KEY	PART NO.	PART NAME	QTY	SERIAL NO.	REMARKS
1	4391315	HYDRAULIC CYLINDER BARREL	1		(SUB FOR TH4391315)
1A	.....	TUBE	1		
1B	0379902	BUSHING	1		(SUB FOR TH0379902)
2	4391316	ROD	1		(SUB FOR TH4391316)
2A	.....	ROD	1		
2B	0380003	BUSHING	1		(SUB FOR TH0380003)
3	0702801	HYDR. CYLINDER ROD GUIDE	1		(SUB FOR TH0702801)
4	0353004	BUSHING	1		(SUB FOR AT132313)
5	0133709	SNAP RING	1		(SUB FOR TH104999)
6	AT132314	RING	1		
7	4S00037	SEAL	1		(SUB FOR AT132164)
8	4S00038	BACK-UP RING	1		(SUB FOR AT132173)
9	0353006	RING	1		(SUB FOR AT204901) (SUB FOR AT132315)
10	4437982	RING	1		(SUB FOR AT132174) (SUB FOR AT191199)
11	AT264241	O-RING	1		(SUB FOR AT132155, A811180)
12	4S00079	BACK-UP RING	1		(SUB FOR AT132168)
13	4104472	BOLT	8		(SUB FOR AT132322)
14	0380005	BUSHING	1		(SUB FOR TH0380005)
15	0646404	PISTON	1		(SUB FOR TH0646404)
16	T201905		1		(SUB FOR 4S00081 AND AT132169)
17	AT201586	RING	2		
18	AT132170	WEAR RING	2		
19	0353010	SHIM	1		(SUB FOR AT132319)
20	0353009	NUT	1		(SUB FOR AT132318)
21	0353012	SET SCREW	1		(SUB FOR AT132321)
22	0353011	BALL	1		(SUB FOR AT132320)
25	0380008	OIL LINE	1		(SUB FOR TH0380008)
26	0643016	BLEED VALVE	2		(SUB FOR TH0643016)
27	TH100074	LUBRICATION FITTING	1		
28	4251767	SEAL	2		(SUB FOR TH4251767)
29	4251753	SEAL	2		(SUB FOR TH4251753)
30	19M8734	SCREW	4		(SUB FOR TH0158883)
31	0171719	CAP SCREW	4		(SUB FOR TH0171719)
32	0353017	BAND	2		(SUB FOR AT132326)
33	0353018	BAND	2		(SUB FOR AT132327)
34	19M7550	CAP SCREW	4		M10 X 35
35	12M7066	LOCK WASHER	4		10 MM
36	0353016	CLAMP	2		(SUB FOR AT132325)
37	19M4789	CAP SCREW	2		M14 X 80
38	12H317	LOCK WASHER	2		14.288 MM (9/16")
39	0494403	OIL LINE	1		(SUB FOR TH0494403)
40	0379823	PLUG	2		(SUB FOR TH0379823)
41	985098	O-RING	2		(SUB FOR TH102528)
42	985098	O-RING	2		(SUB FOR TH102528)
43	4391314EX	HYDRAULIC CYLINDER	1		REMANUFACTURED, (SUB FOR TH4391314)
44	4437964	SEAL KIT	1		(SUB FOR TH4337109)

**HYDRAULIC BUCKET CYLINDER
(MASS EXCAVATING)**

TP61197 -UN-15OCT99

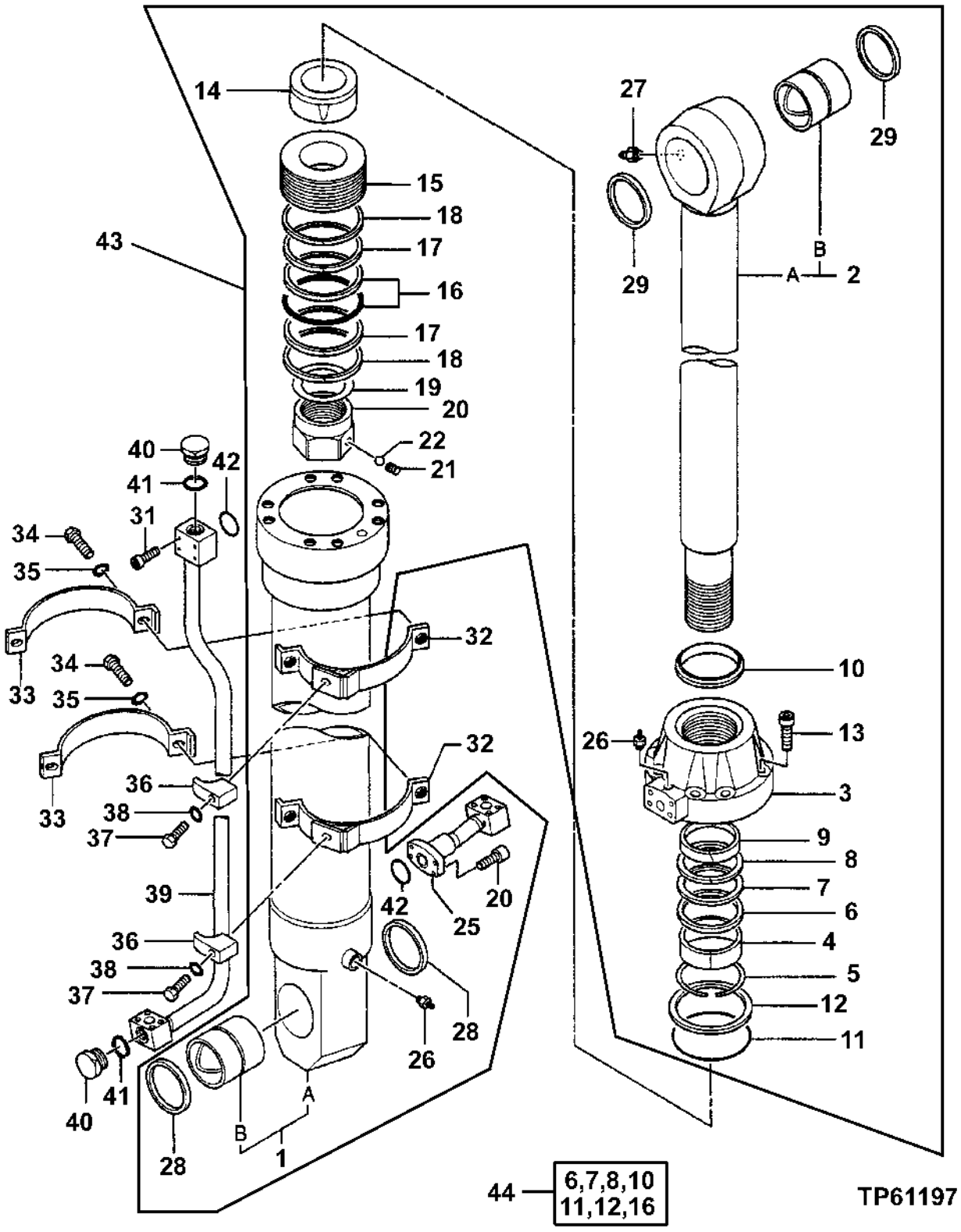

HYDRAULIC BUCKET CYLINDER
(MASS EXCAVATING)

KEY	PART NO.	PART NAME	QTY	SERIAL NO.	REMARKS
1	4391309	HYDRAULIC CYLINDER BARREL	1		(SUB FOR TH4391309)
1A	.....	TUBE	1		
1B	0379902	BUSHING	1		(SUB FOR TH0379902)
2	4391310	ROD	1		(SUB FOR TH4391310)
2A	.....	ROD	1		
2B	0380003	BUSHING	1		(SUB FOR TH0380003)
3	0702901	HYDR. CYLINDER ROD GUIDE	1		(SUB FOR TH0702901)
4	0379905	BUSHING	1		(SUB FOR TH0379905)
5	0160706	SNAP RING	1		(SUB FOR TH0160706)
6	4S00094	RING	1		(SUB FOR TH0392303)
7	TH4070027	SEAL	1		
8	4S00082	BACK-UP RING	1		(SUB FOR TH0242706)
9	4S00148	RING	1		(SUB FOR TH0392304)
10	4429148	RING	1		(SUB FOR 0242707)
11	4113165	O-RING	1		(SUB FOR TH4113165)
12	0379908	BACK-UP RING	1		(SUB FOR TH0379908)
13	0343305	CAP SCREW	8		(SUB FOR TH0343305)
14	0379909	BUSHING	1		(SUB FOR TH0379909)
15	0702902	PISTON	1		(SUB FOR TH0702902)
16	0392305	RING	1		(SUB FOR TH0392305)
17	0702704	RING	2		(SUB FOR TH0702704)
18	4S00162	RING	2		(SUB FOR TH0392306)
19	0379915	SHIM	1		(SUB FOR TH0379915)
20	0379914	NUT	1		(SUB FOR TH0379914)
21	0379815	SET SCREW	1		(SUB FOR TH0379815)
22	0109124	BALL	1		(SUB FOR TH0109124)
25	0380008	OIL LINE	1		(SUB FOR TH0380008)
26	0643016	BLEED VALVE	2		(SUB FOR TH0643016)
27	TH100074	LUBRICATION FITTING	1		
28	4251767	SEAL	2		(SUB FOR TH4251767)
29	4251753	SEAL	2		(SUB FOR TH4251753)
30	19M8734	SCREW	4		(SUB FOR TH0158883)
31	0171719	CAP SCREW	4		(SUB FOR TH0171719)
32	0379920	HALF CLAMP	2		(SUB FOR TH0379920)
33	0379921	HALF CLAMP	2		(SUB FOR TH0379921)
34	P61969	BOLT	4		(SUB FOR TH0379919)
35	12H317	LOCK WASHER	4		14.288 MM (9/16")
36	0353016	CLAMP	2		(SUB FOR AT132325)
37	19M4789	CAP SCREW	2		M14 X 80
38	12H317	LOCK WASHER	2		14.288 MM (9/16")
39	0394010	PIPE	1		(SUB FOR TH0394010)
40	0379823	PLUG	2		(SUB FOR TH0379823)
41	985098	O-RING	2		(SUB FOR TH102528)
42	955612	O-RING	2		(SUB FOR AT132423)
43	4391308EX	HYDRAULIC CYLINDER	1		REMANUFACTURED, (SUB FOR TH4391308)
44	4436496	SEAL KIT	1		(SUB FOR 4266731)

**HYDRAULIC BUCKET CYLINDER
(LONG ARM)**

TP61198 -UN-19OCT99

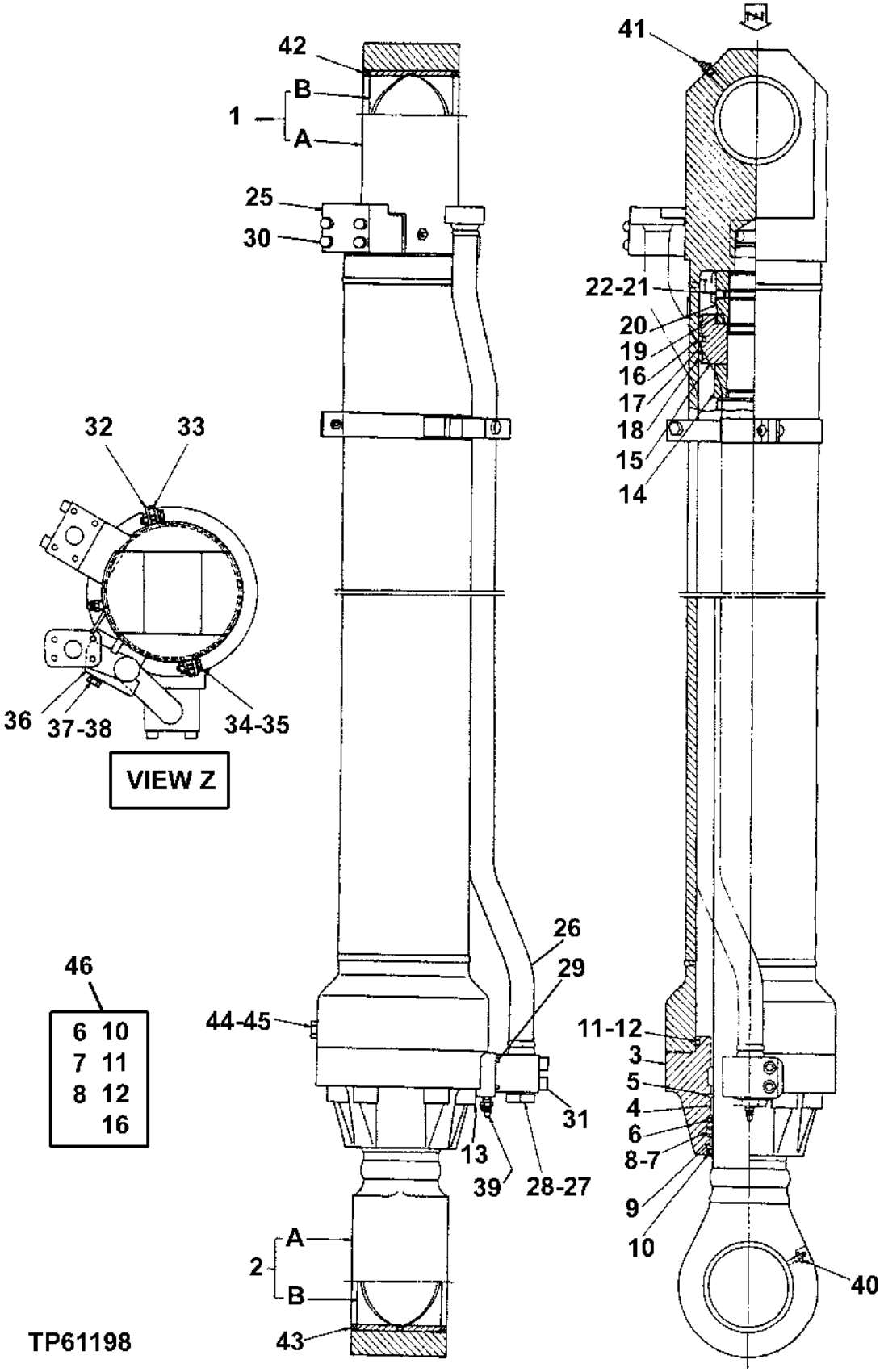

THIS PARTS LISTING IS CONTINUED

HYDRAULIC BUCKET CYLINDER
(LONG ARM)

KEY	PART NO.	PART NAME	QTY	SERIAL NO.	REMARKS
1	4304309	HYDRAULIC CYLINDER BARREL	1		(SUB FOR TH4304309)
1A	.....	TUBE	1		
1B	0450502	BUSHING	1		(SUB FOR TH0450502)
2	4304310	ROD	1		(SUB FOR TH4304310)
2A	.....	ROD	1		
2B	0450504-P	BUSHING	1		(SUB FOR TH0450504)
3	0450505	HYDR. CYLINDER ROD GUIDE	1		(SUB FOR TH0450505)
4	0450506	BUSHING	1		(SUB FOR AT217060)
5	0133103	SNAP RING	1		(SUB FOR AT127275)
6	0450507	RING	1		(SUB FOR AT217061)
7	4069711	SEAL	1		(SUB FOR TH104996)
8	TH104997	BACK-UP RING	1		
9	0450508	RING	1		(SUB FOR AT217062)
10	4438199	RING	1		(SUB FOR 0239504)
11	4123537	O-RING	1		(SUB FOR TH4094961)
12	TH0332704	BACK-UP RING	1		
13	0259304	CAP SCREW	8		(SUB FOR TH0417606)
14	0450509	BUSHING	1		(SUB FOR TH0450509)
15	0450510	PISTON	1		(SUB FOR TH0450510)
16	0332706	SEAL	1		(SUB FOR TH0332706)
17	0417609	RING	2		(SUB FOR TH0417609)
18	0332708	RING	2		(SUB FOR TH0332708)
19	0450511	SHIM	1		(SUB FOR TH0450511)
20	0450512	NUT	1		(SUB FOR TH0450512)
21	0353012	SET SCREW	1		(SUB FOR AT132321)
22	0353011	BALL	1		(SUB FOR AT132320)
25	0400505	OIL LINE	1		(SUB FOR TH0400505)
26	0450513	OIL LINE	1		(SUB FOR TH0450513)
27	0379823	PLUG	1		(SUB FOR TH0379823)
28	985098	O-RING	1		(SUB FOR TH102528)
29	955612	O-RING	2		(SUB FOR AT132423)
30	0163404	CAP SCREW	4		(SUB FOR TH0163404)
31	0171719	CAP SCREW	4		(SUB FOR TH0191428)
32	0417616	HALF CLAMP	1		(SUB FOR TH0417616)
33	0417613	HALF CLAMP	1		(SUB FOR TH0417613)
34	19M7550	CAP SCREW	2		M10 X 35
35	12M7066	LOCK WASHER	2		(SUB FOR TH0323103)
36	0353016	CLAMP	1		(SUB FOR AT132325)
37	19M4789	CAP SCREW	1		M14 X 80
38	12H317	LOCK WASHER	1		14.288 MM (9/16")
39	0237418	BLEED VALVE	2		(SUB FOR TH102787)
40	TH100074	LUBRICATION FITTING	1		
41	0380010	LUBRICATION FITTING	1		(SUB FOR TH0380010)
42	0386902	SEAL	2		(SUB FOR TH0386902)
43	0417415	SEAL	2		(SUB FOR TH0417415)
44	0242508	PLUG	1		(SUB FOR TH0242508)
45	4506418	O-RING	1		(SUB FOR U46489)
46	4437965	SEAL KIT	1		(SUB FOR 4304311)

HYDRAULIC BUCKET CYLINDER (LONG ARM)

TP61199 -UN-15OCT99

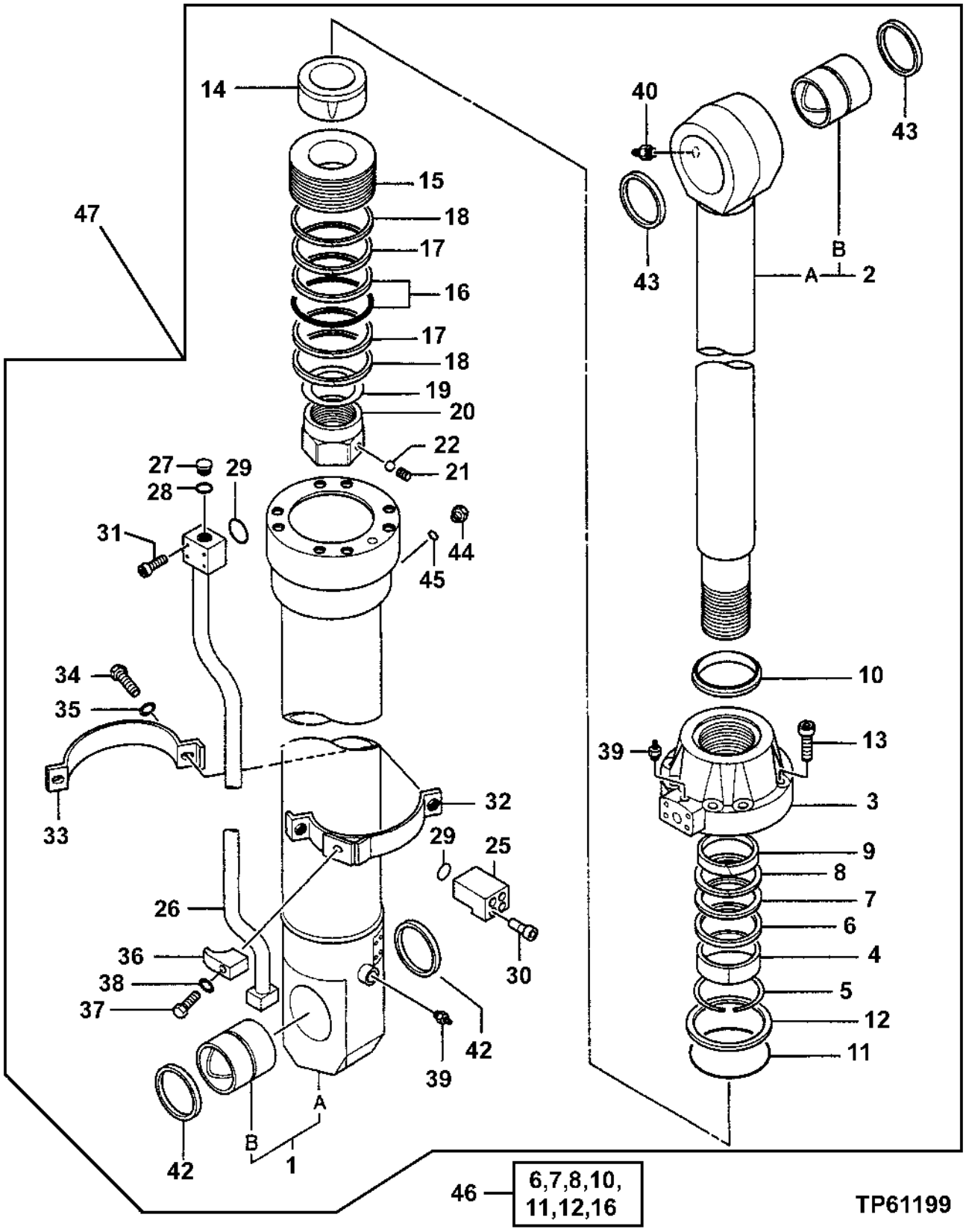

HYDRAULIC BUCKET CYLINDER
(LONG ARM)

KEY	PART NO.	PART NAME	QTY	SERIAL NO.	REMARKS
1	4415213	HYDRAULIC CYLINDER BARREL	1		(SUB FOR TH4415213)
1A	.....	TUBE	1		
1B	0450502	BUSHING	1		(SUB FOR TH0450502)
2	4304310	ROD	1		(SUB FOR TH4304310)
2A	.....	ROD	1		
2B	0450504-P	BUSHING	1		(SUB FOR TH0450504)
3	0450517	HYDR. CYLINDER ROD GUIDE	1		(SUB FOR TH0450517)
4	0450506	BUSHING	1		(SUB FOR AT217060)
5	0133103	SNAP RING	1		(SUB FOR AT127275)
6	0450507	RING	1		(SUB FOR AT217061)
7	4069711	SEAL	1		(SUB FOR TH104996)
8	TH104997	BACK-UP RING	1		
9	0450508	RING	1		(SUB FOR AT217062)
10	4438199	RING	1		(SUB FOR 0239504)
11	4123537	O-RING	1		(SUB FOR TH4094961)
12	TH0332704	BACK-UP RING	1		
13	0259304	CAP SCREW	8		(SUB FOR TH0417606)
14	0450509	BUSHING	1		(SUB FOR TH0450509)
15	0332705	PISTON	1		(SUB FOR TH0332705)
16	0332706	SEAL	1		(SUB FOR TH0332706)
17	0417609	RING	2		(SUB FOR TH0417609)
18	0332708	RING	2		(SUB FOR TH0332708)
19	0450511	SHIM	1		(SUB FOR TH0450511)
20	0450512	NUT	1		(SUB FOR TH0450512)
21	0353012	SET SCREW	1		(SUB FOR AT132321)
22	0353011	BALL	1		(SUB FOR AT132320)
25	0400505	OIL LINE	1		(SUB FOR TH0400505)
26	0494303	OIL LINE	1		(SUB FOR TH0494303)
27	0379823	PLUG	1		(SUB FOR TH0379823)
28	985098	O-RING	1		(SUB FOR TH102528)
29	955612	O-RING	2		(SUB FOR AT132423)
30	0163404	CAP SCREW	4		(SUB FOR TH0163404)
31	0171719	CAP SCREW	4		(SUB FOR TH0191428)
32	0417616	HALF CLAMP	1		(SUB FOR TH0417616)
33	0417613	HALF CLAMP	1		(SUB FOR TH0417613)
34	19M7550	CAP SCREW	2		M10 X 35
35	12M7066	LOCK WASHER	2		(SUB FOR TH0323103)
36	0353016	CLAMP	1		(SUB FOR AT132325)
37	19M4789	CAP SCREW	1		M14 X 80
38	12H317	LOCK WASHER	1		14.288 MM (9/16")
39	0643016	BLEED VALVE	2		(SUB FOR TH0643016)
40	TH100074	LUBRICATION FITTING	1		
42	0386902	SEAL	2		(SUB FOR TH0386902)
43	0417415	SEAL	2		(SUB FOR TH0417415)
44	0242508	PLUG	1		(SUB FOR TH0242508)
45	4506418	O-RING	1		(SUB FOR U46489)
46	4437965	SEAL KIT	1		(SUB FOR 4304311)
47	4397518EX	HYDRAULIC CYLINDER	1		(SUB FOR TH4397518)

HYDRAULIC CYLINDER
(COUNTERWEIGHT LIFTING)

T149417 -UN-05APR02

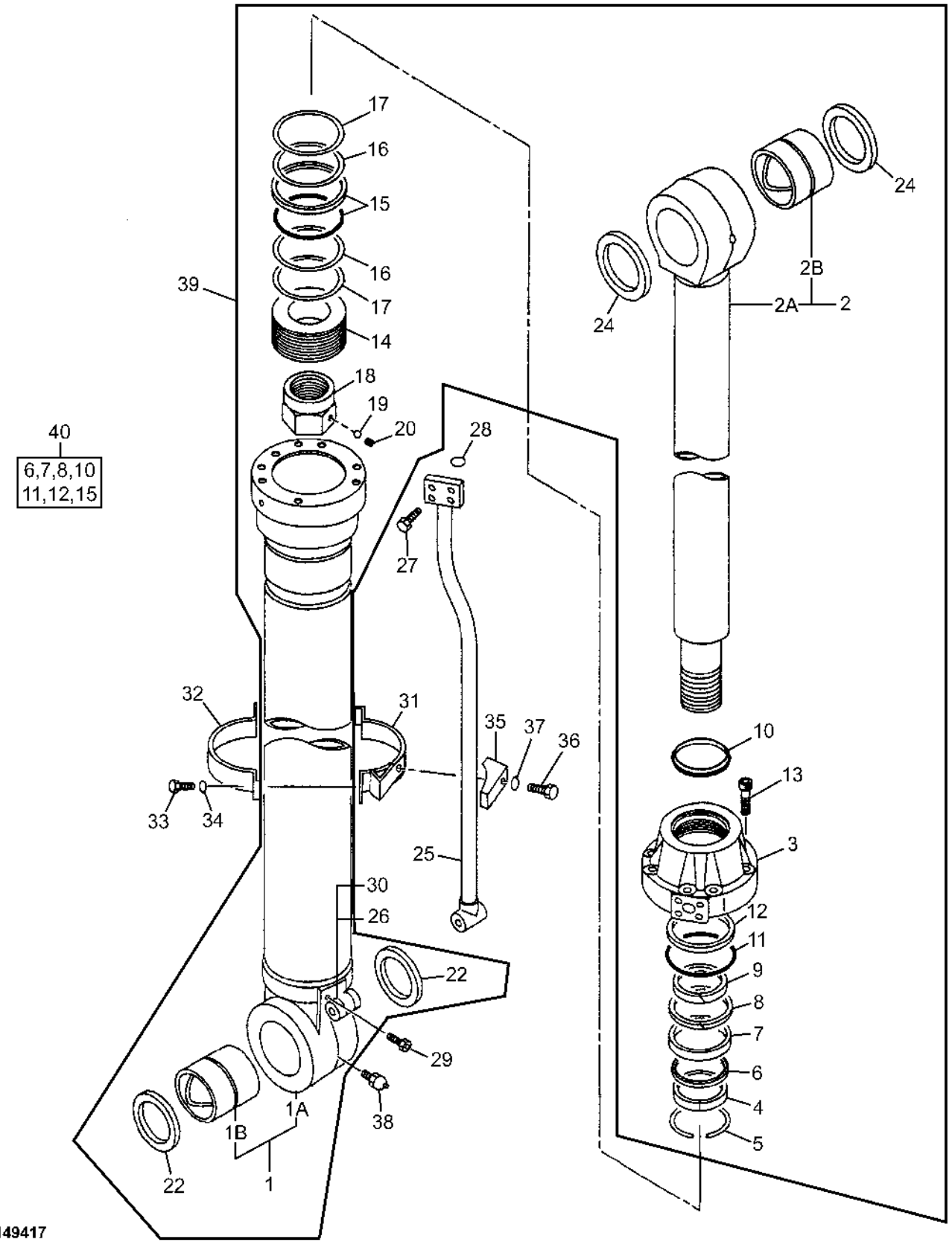

HYDRAULIC CYLINDER
(COUNTERWEIGHT LIFTING)

KEY	PART NO.	PART NAME	QTY	SERIAL NO.	REMARKS
1	4402170	HYDRAULIC CYLINDER BARREL	1		(SUB FOR TH4402170)
1A	.....	TUBE	1		
1B	0352905	BUSHING	1		(SUB FOR AT132309)
2	4402022	ROD	1		(SUB FOR TH4402022)
2A	.....	ROD	1		
2B	0420102	BUSHING	1		(SUB FOR AT202246)
3	0704403	HYDR. CYLINDER ROD GUIDE	1		(SUB FOR AT217067)
4	0450506	BUSHING	1		(SUB FOR AT217060)
5	0133103	SNAP RING	1		(SUB FOR AT127275)
6	0450507	RING	1		(SUB FOR AT217061)
7	4069711	SEAL	1		(SUB FOR TH104996)
8	TH104997	BACK-UP RING	1		
9	0450508	RING	1		(SUB FOR AT217062)
10	4438199	RING	1		(SUB FOR 0239504)
11	AT264240	O-RING	1		(SUB FOR AT132154) (SUB FOR TH4061790)
12	AT264252	BACK-UP RING	1		(SUB FOR AT132399)
13	0191412	BOLT	8		(SUB FOR AT217053)
14	0704405	PISTON	1		(SUB FOR AT217069)
15	AT264253	RING	1		(SUB FOR AT132400)
16	AT201577	RING	2		
17	AT264248	RING	2		(SUB FOR AT132175)
18	0443902	NUT	1		(SUB FOR AT217059)
19	0353011	BALL	1		(SUB FOR AT132320)
20	0353012	SET SCREW	1		(SUB FOR AT132321)
22	0420403	RING	2		(SUB FOR AT201589)
24	AT201578	RING	2		
25	0666701	OIL LINE	1		(SUB FOR TH0666701)
26	0493410	OIL LINE	1		(SUB FOR TH0493410)
27	19M8395	SCREW	4		M12 X 40
28	AT264348	O-RING	1		(SUB FOR TH102788)
29	T116311	BOLT	4		
30	TH103574	O-RING	1		
31	0352719	BAND	1		(SUB FOR AT132298)
32	0352721	BAND	1		(SUB FOR AT132300)
33	19M7550	CAP SCREW	2		M10 X 35
34	12M7066	LOCK WASHER	2		10 MM
35	T108036	CLAMP	1		
36	19M7361	CAP SCREW	1		M12 X 50
37	12M7058	LOCK WASHER	1		12.200 MM, (SUB FOR 12M7067)
38	TH100074	LUBRICATION FITTING	2		
39	4402168	HYDRAULIC CYLINDER	1		(SUB FOR TH4402168)
40	4405053	SEAL KIT	1		

COUNTERWEIGHT REMOVAL PILOT VALVE

TP47820 -UN-22JAN96

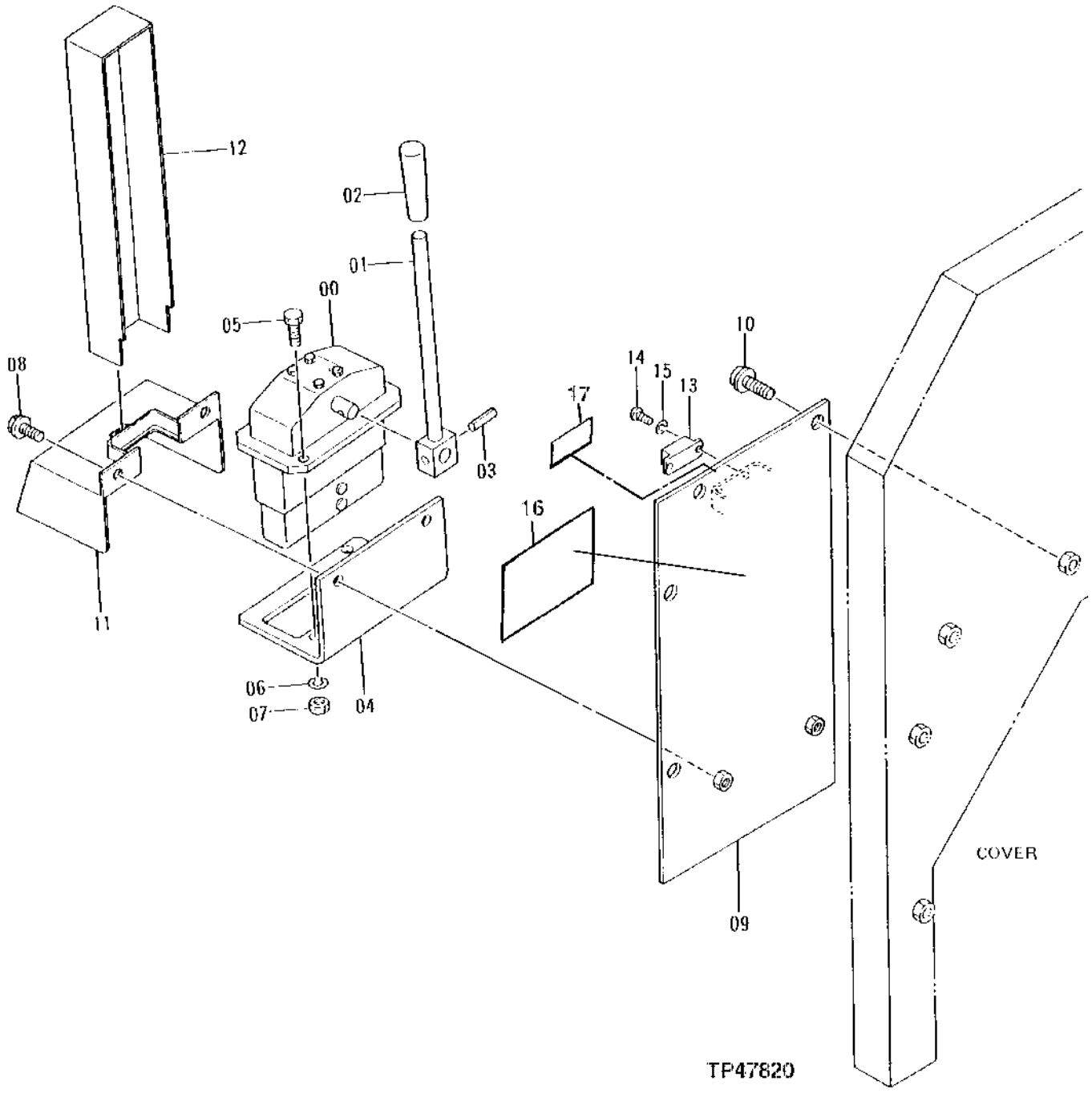

COUNTERWEIGHT REMOVAL PILOT VALVE

KEY	PART NO.	PART NAME	QTY	SERIAL NO.	REMARKS
0	9074843	VALVE	1		(SUB FOR TH110188)
1	9732429	LEVER	1		(SUB FOR AT132598)
2	4122424	GRIP	1		(SUB FOR AT132489)
3	34M7102	SPRING PIN	1		5 X 26 MM (0.197" X 1.024")
4	3046025	BRACKET	1		(SUB FOR AT132476)
5	19M7402	CAP SCREW	2		M10 X 25
6	12M7066	LOCK WASHER	2		10 MM (0.394")
7	14M7274	NUT	2		M10
8	19M7402	CAP SCREW	2		M10 X 25
9	7029107	PLATE	1		(SUB FOR AT170153)
10	19M8011	CAP SCREW	4		M12 X 30
	12H301	LOCK WASHER	4		12.700 MM (1/2")
	24M7047	WASHER	4		13 X 24 X 2.500 MM (0.512" X 0.945" X 0.098")
11	8044683	COVER	1		(SUB FOR AT132582)
12	4240984	COVER	1		(SUB FOR AT132549)
13	4240985	MAGNET	1		(SUB FOR AT132550)
14	21M7394	SCREW	2		M3 X 10
15	12H233	LOCK WASHER	2		3.175 MM (1/8") (SUB FOR 12M7048)
16	T152593	DECAL	1		(COUNTERWEIGHT REMOVAL INSTRUCTION LABEL)
17	4241586	LABEL	1		(SUB FOR AT132146) (UP-DOWN FOR COUNTERWEIGHT REMOVAL)

PILOT PIPINGS REMOVAL DEVICE

TP66907 -UN-12OCT99

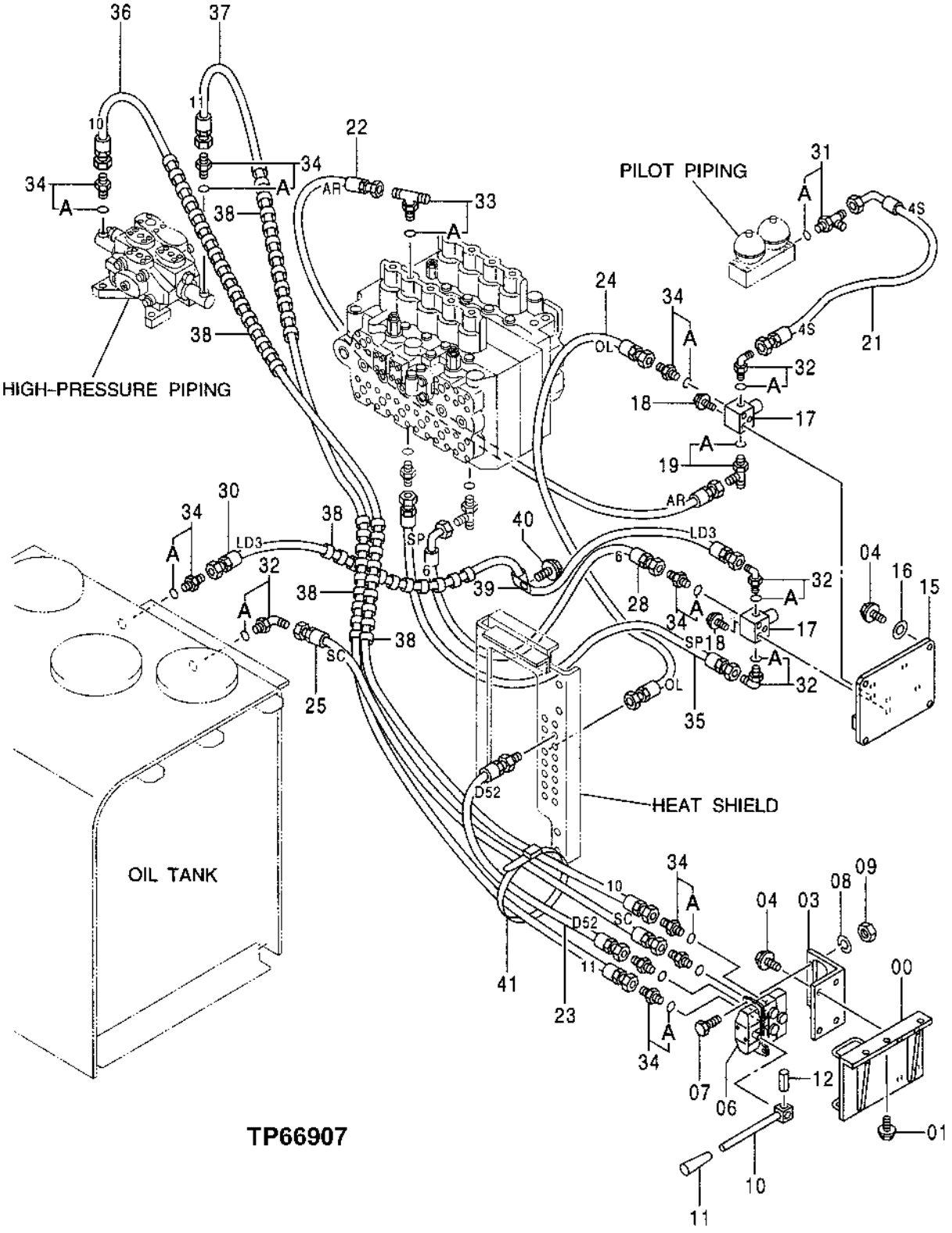

PILOT PIPINGS REMOVAL DEVICE

KEY	PART NO.	PART NAME	QTY	SERIAL NO.	REMARKS
0	8070986	BRACKET	1		(SUB FOR TH8070986)
1	19M8011	CAP SCREW	3		M12 X 30
	12M7058	LOCK WASHER	3		12.200 MM (0.480") (SUB FOR 12M7067)
3	8070979	BRACKET	1		(SUB FOR TH8070979)
4	19M7402	CAP SCREW	8		M10 X 25
	12M7066	LOCK WASHER	8		10 MM (0.394")
6	9074843	VALVE	1		(SUB FOR TH110188)
7	19M7402	CAP SCREW	2		M10 X 25
8	12M7066	LOCK WASHER	2		10 MM (0.394")
9	14M7274	NUT	2		M10
10	9732429	LEVER	1		(SUB FOR AT132598)
11	4122424	GRIP	1		(SUB FOR AT132489)
12	34M7102	SPRING PIN	1		5 X 26 MM (0.197" X 1.024")
15	8070989	PANEL	1		(SUB FOR TH8070989)
16	24M7028	WASHER	4		10.500 X 20 X 2 MM (0.413" X 0.787" X 0.079")
17	4261289	SOLENOID VALVE	2		(SUB FOR AT202111)
18	J010860	BOLT	2		(SUB FOR AT200004)
19	4307265	TEE FITTING	1		(SUB FOR TH4307265)
19A	M800650	PACKING	1		
21	AP34919	HYDRAULIC HOSE - FABRICATE	1		
22	4308011	HYDRAULIC HOSE - FABRICATE	1		(SUB FOR TH4308011)
23	4375900	HYDRAULIC HOSE - FABRICATE	1		(SUB FOR TH4375900)
24	4379170	HYDRAULIC HOSE - FABRICATE	1		(SUB FOR TH4379170)
25	4308016	HYDRAULIC HOSE - FABRICATE	1		(SUB FOR TH4308016)
28	4387636	HYDRAULIC HOSE - FABRICATE	1		(SUB FOR TH4387636)
30	4393811	HYDRAULIC HOSE - FABRICATE	1		(SUB FOR TH4393811)
31	4205363	TEE FITTING	1		(SUB FOR AT126362)
31A	CH11570	O-RING	1		13.800 X 2.400 MM (0.543" X 0.094")
32	4156434	ELBOW FITTING	4		(SUB FOR TH101930)
32A	M800650	PACKING	1		
33	4208911	TEE FITTING	1		(SUB FOR AT126456)
33A	CH11570	O-RING	1		13.800 X 2.400 MM (0.543" X 0.094")
34	4200467	ADAPTER	9		(SUB FOR TH108417)
34A	M800650	PACKING	1		
35	4368893	HYDRAULIC HOSE - FABRICATE	1		(SUB FOR TH4368893)
36	AT217777	HYDRAULIC HOSE - FABRICATE	1		
37	AT213836	HYDRAULIC HOSE - FABRICATE	1		9/16" X 2 900 MM (114-1/4") X 9/16"
38	TH100996	HOSE GUARD	5		
39	4190275	CLIP	1		(SUB FOR TH108598)
40	19M7938	CAP SCREW	1		M10 X 20
	12M7066	LOCK WASHER	1		10 MM (0.394")
41	H77698	TIE BAND	10		

HIGH PRESSURE PIPING REMOVAL DEVICE

TP66908 -UN-12OCT99

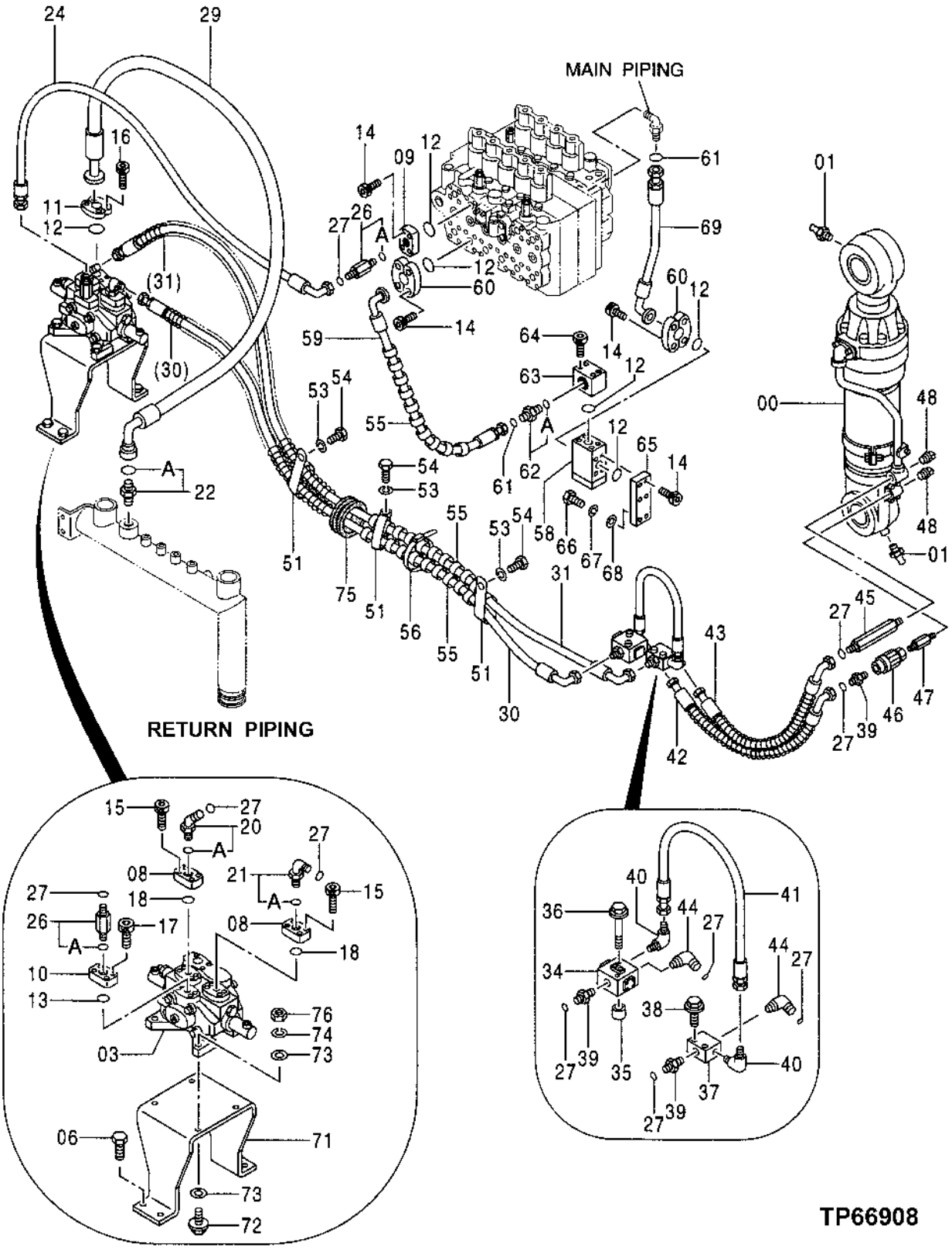

HIGH PRESSURE PIPING REMOVAL DEVICE

KEY	PART NO.	PART NAME	QTY	SERIAL NO.	REMARKS
0	TH4392996	HYDRAULIC CYLINDER	1		
1	TH100074	LUBRICATION FITTING	2		
3	4394030	CONTROL VALVE	1		(SUB FOR TH4394030)
6	19M7409	CAP SCREW	4		M16 X 50
8	4395530	FLANGE FITTING	2		(SUB FOR TH4395530)
9	4395369	FLANGE FITTING	1		(SUB FOR TH4395369)
10	4395346	FLANGE FITTING	1		(SUB FOR TH4395346)
11	R29867	FLANGE FITTING	2		
12	T72216	O-RING	6		37.694 X 3.531 MM (1-31/64" X 0.139")
13	T78313	O-RING	1		32.918 X 3.531 MM (1.296" X 0.139")
14	19M8734	SCREW	16		M14 X 45
15	19M8447	SCREW	8		M10 X 35
16	19M8169	SCREW	4		M12 X 30, (SUB FOR 19M8127)
17	19M8341	SCREW	4		M12 X 45
18	T59014	O-RING	2		24.994 X 3.531 MM (63/64" X 0.139")
20	4260154	ELBOW FITTING	1		(SUB FOR TH4260154)
20A	4506418	O-RING	1		(SUB FOR U46489)
21	4205382	ELBOW FITTING	1		(SUB FOR TH4205382)
21A	4506418	O-RING	1		(SUB FOR U46489)
22	4042035	ADAPTER	1		(SUB FOR TH4042035)
22A	970860	O-RING	1		(SUB FOR TH104634)
24	4397430	HYDRAULIC HOSE - FABRICATE	1		(SUB FOR TH4397430)
26	P64907	ADAPTER	2		
26A	4506418	O-RING	1		(SUB FOR U46489)
27	T77857	O-RING	10		12.421 X 1.778 MM (0.489" X 0.070")
29	4395792	HYDRAULIC HOSE	1		(SUB FOR TH4395792)
30	4395356	HYDRAULIC HOSE - FABRICATE	1		(SUB FOR TH4395356)
31	4395352	HYDRAULIC HOSE - FABRICATE	1		(SUB FOR TH4395352)
34	4240863	VALVE	1		(SUB FOR AT132548)
35	4131346	SPACER	2		(SUB FOR AT132491)
36	12M7066	LOCK WASHER	2		(SUB FOR AT133602) (ALSO ORDER 19M7875)
37	4240862	MANIFOLD	1		(SUB FOR AT132547)
38	19M8655	CAP SCREW	2		M10 X 55
	12M7066	LOCK WASHER	2		10 MM (0.394")
39	4217265	ADAPTER	3		(SUB FOR TH4217265)
40	4154656	ELBOW FITTING	2		(SUB FOR TH101588)
41	AT126482	HYDRAULIC HOSE - FABRICATE	1		
42	4395934	HYDRAULIC HOSE - FABRICATE	1		(SUB FOR TH4395934)
43	4395931	HYDRAULIC HOSE - FABRICATE	1		(SUB FOR TH4395931)
44	4274178	ELBOW FITTING	2		(SUB FOR AT170146)
45	3081079	ADAPTER	1		(SUB FOR TH3081079)
46	4221984	VALVE	1		(SUB FOR AT132492)
47	4261624	ADAPTER	1		(SUB FOR TH4261624)
48	94-2024	FITTING PLUG	2		(SUB FOR TH101292)
51	4193816	CLIP	3		(SUB FOR TH111255)
53	12M7066	LOCK WASHER	3		10 MM (0.394")
54	19M7938	CAP SCREW	3		M10 X 20
55	TH100996	HOSE GUARD	6		
56	H77698	TIE BAND	4		
58	4272936	CHECK VALVE	1		(SUB FOR TH4272936)
59	4395631	HYDRAULIC HOSE	1		(SUB FOR TH4395631)
60	AT131685	FLANGE FITTING	4		
61	T76938	O-RING	2		23.520 X 1.778 MM (0.926" X 0.070")
62	4189535	ADAPTER	1		(SUB FOR AT114853)
62A	TH101926	O-RING	1		28.700 X 3.500 MM (1.130" X 0.138")
63	4395629	MANIFOLD	1		(SUB FOR TH4395629)
64	19M8803	SCREW	4		M14 X 90
65	4395627	COVER	1		(SUB FOR TH4395627)
66	19M7489	CAP SCREW	2		M16 X 45
67	12H294	LOCK WASHER	6		15.875 MM (5/8")
68	24M7053	WASHER	6		17 X 30 X 3 MM (0.669" X 1.181" X 0.118")
69	4395630	HYDRAULIC HOSE	1		(SUB FOR TH4395630)
71	3081466	BRACKET	1		(SUB FOR TH3081466)
72	19M7753	CAP SCREW	4		M12 X 70
73	24M7047	WASHER	8		13 X 24 X 2.500 MM (0.512" X 0.945" X 0.098")
74	12H301	LOCK WASHER	4		12.700 MM (1/2")
75	4255567	BUSHING	1		(SUB FOR TH4255567)
76	14M7275	NUT	4		M12

FLOW CONTROL VALVE

TP68082 -UN-19OCT99

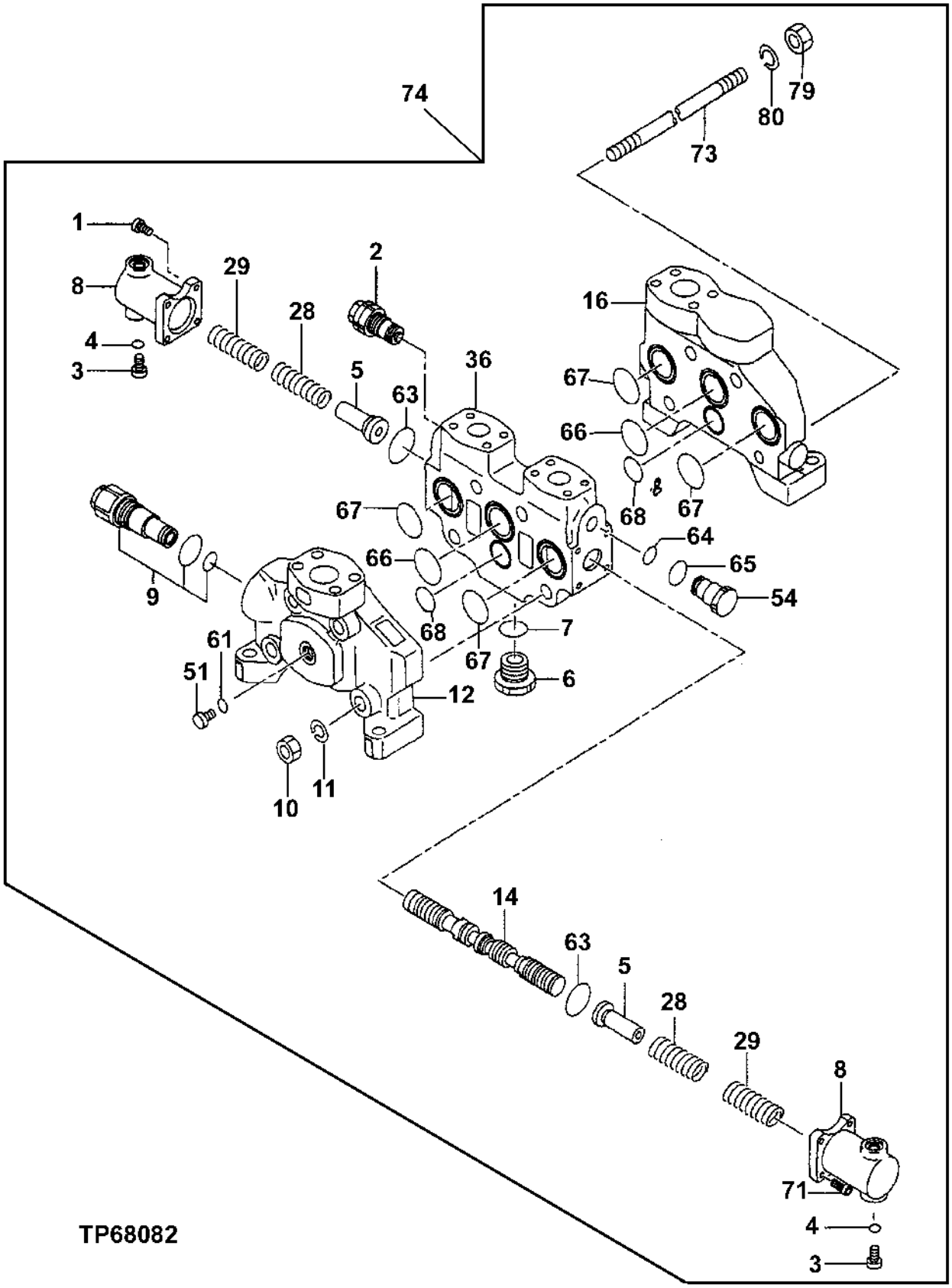

FLOW CONTROL VALVE

KEY	PART NO.	PART NAME	QTY	SERIAL NO.	REMARKS
1	0428901	END PLATE	1		(SUB FOR TH0428901)
2	0728907	RELIEF VALVE	1		(SUB FOR TH0728907)
3	0629404	FITTING PLUG	2		(SUB FOR AT213630)
4	.....	O-RING	2		
5	0470815	PLATE	2		(SUB FOR TH0470815)
6	0272417	FITTING PLUG	1		(SUB FOR TH0272417)
7	0199005	O-RING	1		(SUB FOR TH0199005)
8	0728903	COVER	2		(SUB FOR TH0728903)
9	0728906	RELIEF VALVE	1		(SUB FOR TH0728906)
10	.....	NUT	8		
11	.....	WASHER	8		
12	.....	IDENTIFICATION PLATE	1		
14	0441006	VALVE SPOOL	1		(SUB FOR TH0441006)
16	0728902	END PLATE	1		(SUB FOR TH0728902)
28	0728904	SPRING	2		(SUB FOR TH0728904)
29	0728905	SPRING	2		(SUB FOR TH0728905)
36	.....	HOUSING	1		
51	0629404	FITTING PLUG	1		(SUB FOR AT213630)
54	0303604	FITTING PLUG	1		(SUB FOR TH0303604)
61	CH11561	PACKING	1		(SUB FOR TH0179107)
63	4292942	O-RING	2		(SUB FOR AT201627)
64	.....	O-RING	1		
65	0448701	O-RING	1		(SUB FOR TH0448701)
66	0231606	O-RING	2		(SUB FOR TH0231606)
67	.....	O-RING	4		
68	0448704	O-RING	2		(SUB FOR TH0448704)
71	0408007	BOLT	8		(SUB FOR TH0173608)
73	0633904	CAP SCREW	4		(SUB FOR TH0633904)
74	4394030	CONTROL VALVE	1		(SUB FOR TH4394030)

ELECTRIC PARTS REMOVAL DEVICE

TP66909 -UN-12OCT99

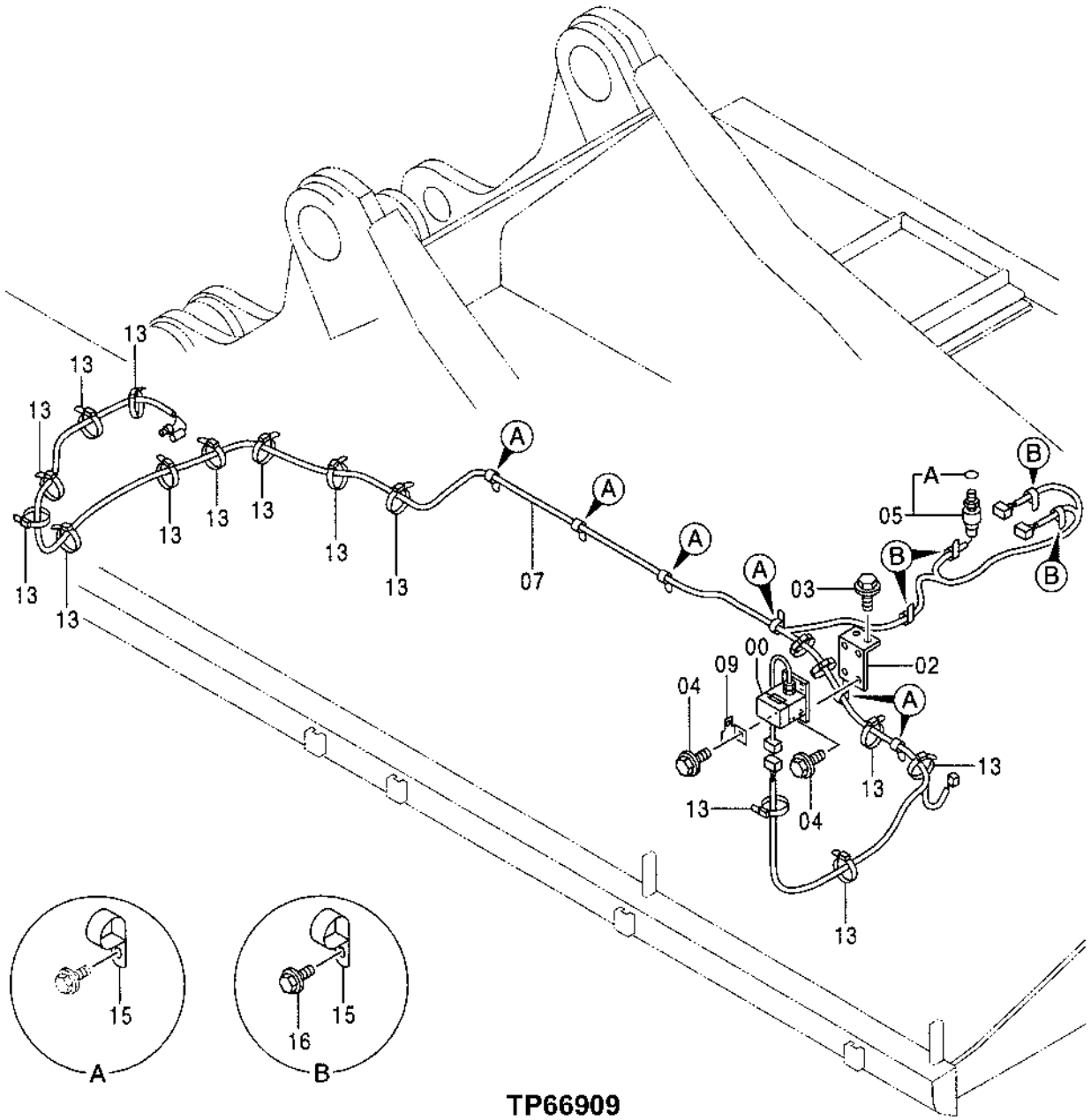

TP66909

ELECTRIC PARTS REMOVAL DEVICE

KEY	PART NO.	PART NAME	QTY	SERIAL NO.	REMARKS
0	4396082	SWITCH	1		(SUB FOR TH4396082)
2	8070980	BRACKET	1		(SUB FOR TH8070980)
3	19M7872	CAP SCREW	2		M12 X 25
	12H301	LOCK WASHER	2		12.700 MM (1/2")
4	19M7402	CAP SCREW	4		M10 X 25
	12M7066	LOCK WASHER	4		10 MM (0.394")
	24M7028	WASHER	4		10.500 X 20 X 2 MM (0.413" X 0.787" X 0.079")
5	4254563	PRESSURE SWITCH	1		(SUB FOR AT154212)
5A	CH19111	O-RING	1		7.645 X 1.778 MM (0.301" X 0.070")
7	2041908	WIRING HARNESS	1		(SUB FOR TH2041908)
9	4336875	BRACKET	1		(SUB FOR TH4336875)
13	H77698	TIE BAND	20		
15	4190261	CLIP	10		(SUB FOR TH109649)
16	19M7938	CAP SCREW	4		M10 X 20
	12M7066	LOCK WASHER	4		10 MM (0.394")

BOOM CYLINDER LOAD LOWERING VALVE KIT

TP66894 -UN-13OCT99

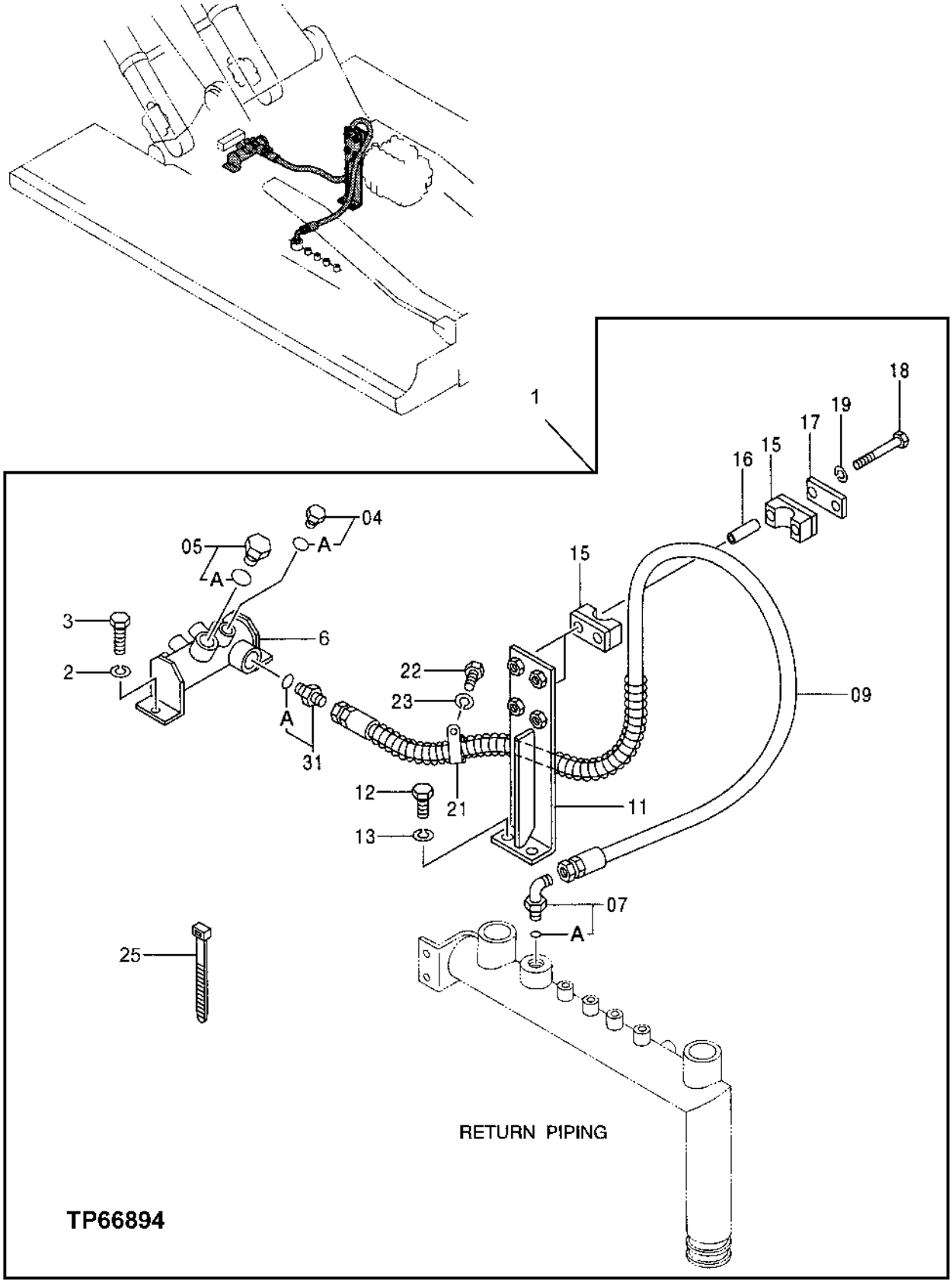

BOOM CYLINDER LOAD LOWERING VALVE KIT

KEY	PART NO.	PART NAME	QTY	SERIAL NO.	REMARKS
1	.....	KIT	1		(AT188670 NO LONGER AVAILABLE) WHOLEGOODS (BOOM CYLINDER LOAD LOWERING VALVE) (CONTAINS ALL ITEMS ON THIS PAGE - ADDITIONAL COMPONENTS LISTED ON FOLLOWING PAGES)
2	12H301	LOCK WASHER	2		12.700 MM (1/2")
3	19M7872	CAP SCREW	2		M12 X 25
4	4174541	FITTING	1		(SUB FOR TH110477)
4A	4506418	O-RING	1		(SUB FOR U46489)
5	4113926	FITTING	1		(SUB FOR AT126200)
5A	TH101926	O-RING	1		28.700 X 3.500 MM (1.130" X 0.138")
6	8042550	MANIFOLD	1		(SUB FOR AT175140)
7	4169593	ELBOW FITTING	1		(SUB FOR TH4169593)
7A	970860	O-RING	1		(SUB FOR TH104634)
9	4413151	HYDRAULIC HOSE - FABRICATE	1		(SUB FOR TH4413151)
11	9750363	BRACKET	1		(SUB FOR TH9750363)
12	19M7488	CAP SCREW	2		M16 X 40
13	12H294	LOCK WASHER	2		15.875 MM (5/8")
15	4349621	HOSE CLAMP	4		(SUB FOR AT170625)
16	4349648	SPACER	4		(SUB FOR AT170626)
17	4341803	PLATE	2		(SUB FOR AT201827)
18	19M7908	CAP SCREW	4		M12 X 110
19	12H301	LOCK WASHER	4		12.700 MM (1/2")
21	4190265	CLIP	1		(SUB FOR TH109598)
22	19M8017	CAP SCREW	1		M12 X 20
23	12H301	LOCK WASHER	1		12.700 MM (1/2")
25	H77698	TIE BAND	5		
31	4042035	ADAPTER	1		(SUB FOR TH4042035)
31A	970860	O-RING	1		(SUB FOR TH104634)

BOOM CYLINDER LOAD LOWERING VALVE KIT

TP66895 -UN-13OCT99

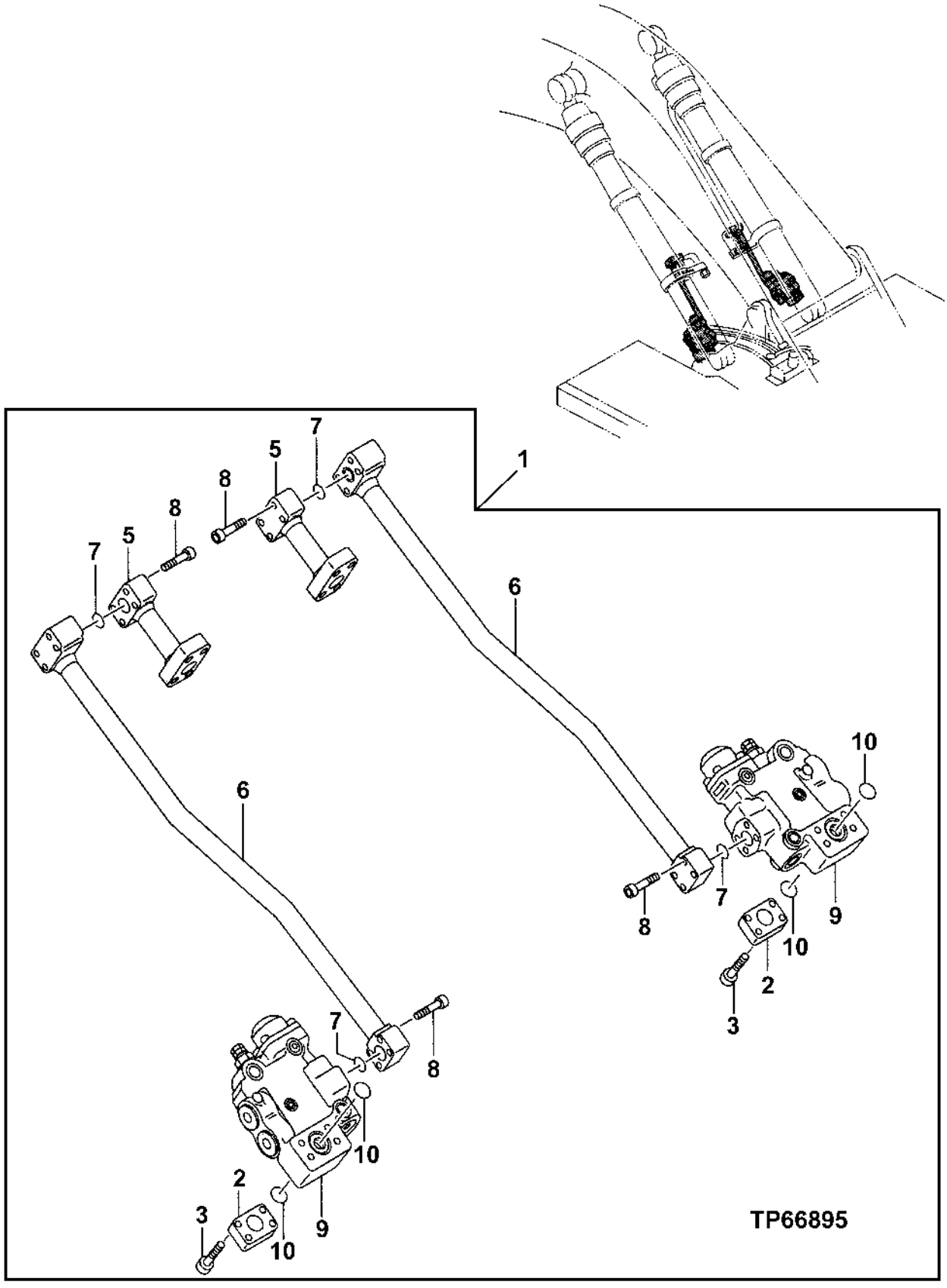

BOOM CYLINDER LOAD LOWERING VALVE KIT

KEY	PART NO.	PART NAME	QTY	SERIAL NO.	REMARKS
1	.....	KIT	1		(AT188670 NO LONGER AVAILABLE) WHOLEGOODS (BOOM CYLINDER LOAD LOWERING VALVE) (CONTAINS ALL ITEMS ON THIS PAGE - ADDITIONAL COMPONENTS LISTED ON PREVIOUS AND FOLLOWING PAGES)
2	4335277	COVER	2		(SUB FOR TH4335277)
3	M341402	BOLT	8		(SUB FOR THM341402)
5	8051972	FLANGE FITTING	2		(SUB FOR TH8051972)
6	8051973	OIL LINE	2		(SUB FOR TH8051973)
7	TH100044	O-RING	4		34.400 X 3.100 MM (1.354" X 0.122")
8	M341290	BOLT	16		(SUB FOR AT127258)
9	4282319	VALVE	2		(SUB FOR TH4282319)
10	A811040	O-RING	4		(SUB FOR TH102992)

BOOM CYLINDER LOAD LOWERING VALVE KIT

TP66896 -UN-13OCT99

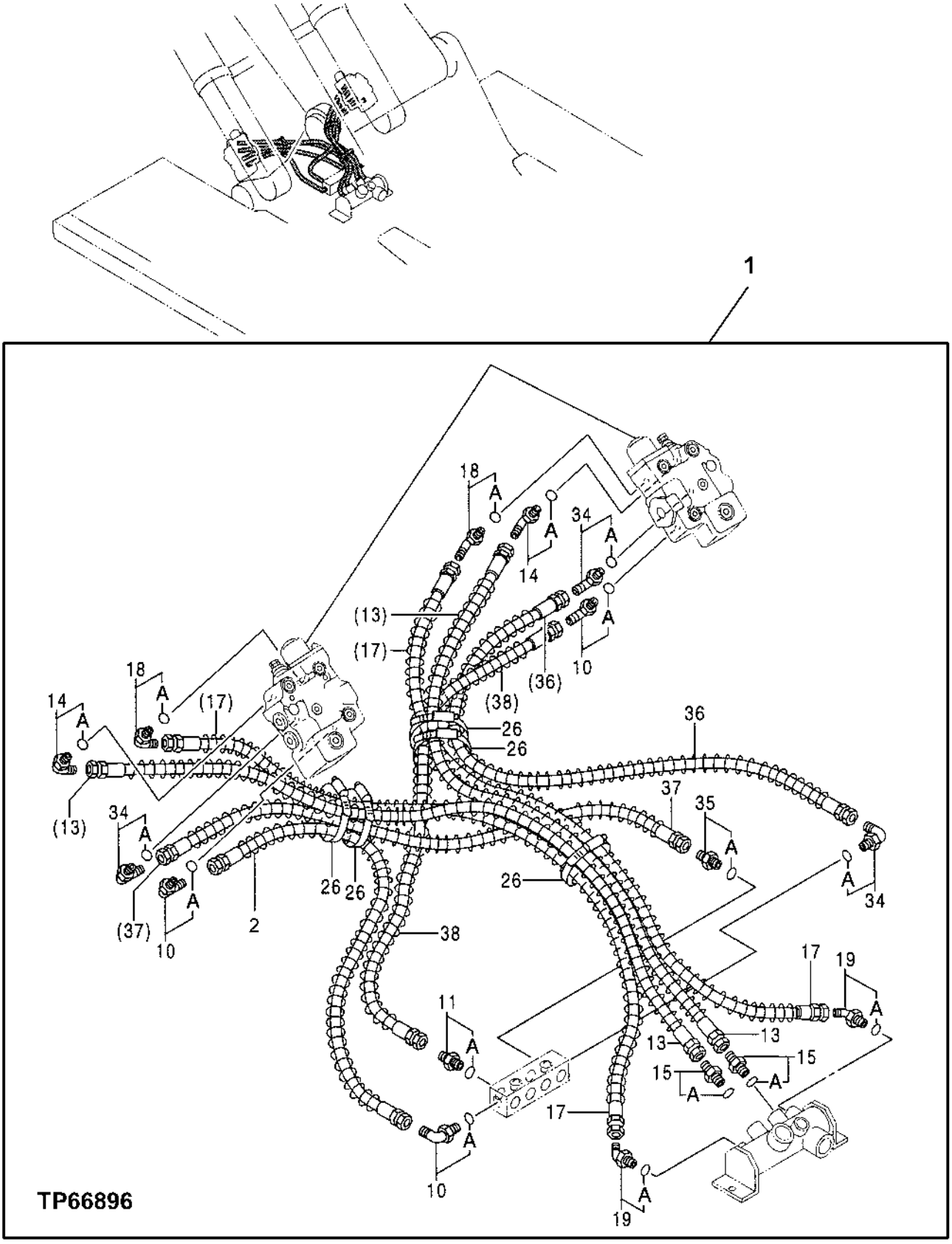

BOOM CYLINDER LOAD LOWERING VALVE KIT

KEY	PART NO.	PART NAME	QTY	SERIAL NO.	REMARKS
1	.....	KIT	1		(AT188670 NO LONGER AVAILABLE) WHOLEGOODS (BOOM CYLINDER LOAD LOWERING VALVE) (CONTAINS ALL ITEMS ON THIS PAGE - ADDITIONAL COMPONENTS LISTED ON PREVIOUS AND FOLLOWING PAGES)
2	4322512	HYDRAULIC HOSE	1		(SUB FOR AT175161)
10	4154671	ELBOW FITTING	3		(SUB FOR TH101047)
10A	CH11570	O-RING	1		13.800 X 2.400 MM (0.543" X 0.094")
11	4200466	ADAPTER	1		(SUB FOR TH108320)
11A	CH11570	O-RING	1		13.800 X 2.400 MM (0.543" X 0.094")
13	4322513	HYDRAULIC HOSE	2		(SUB FOR AT175163)
14	4154672	ELBOW FITTING	2		(SUB FOR TH101008)
14A	4506418	O-RING	1		(SUB FOR U46489)
15	X8-10F5OX	ADAPTER	2		(SUB FOR TH101006)
15A	4506418	O-RING	1		(SUB FOR U46489)
17	4322514	HYDRAULIC HOSE	2		(SUB FOR AT175162)
18	4154671	ELBOW FITTING	2		(SUB FOR TH101047)
18A	CH11570	O-RING	1		13.800 X 2.400 MM (0.543" X 0.094")
19	4190244	ELBOW FITTING	2		(SUB FOR TH106152)
19A	CH11570	O-RING	1		13.800 X 2.400 MM (0.543" X 0.094")
26	4351923	HOSE CLAMP	5		(SUB FOR AT175267)
34	4154670	ELBOW FITTING	3		(SUB FOR TH100951)
34A	M800650	PACKING	1		
35	4200465	ADAPTER	1		(SUB FOR TH108328)
35A	M800650	PACKING	1		
36	4322515	HYDRAULIC HOSE	1		(SUB FOR AT175158)
37	4322516	HYDRAULIC HOSE	1		(SUB FOR AT175159)
38	4378585	HYDRAULIC HOSE - FABRICATE	1		(SUB FOR TH4378585)

BOOM CYLINDER LOAD LOWERING VALVE KIT

TP66962 -UN-08NOV99

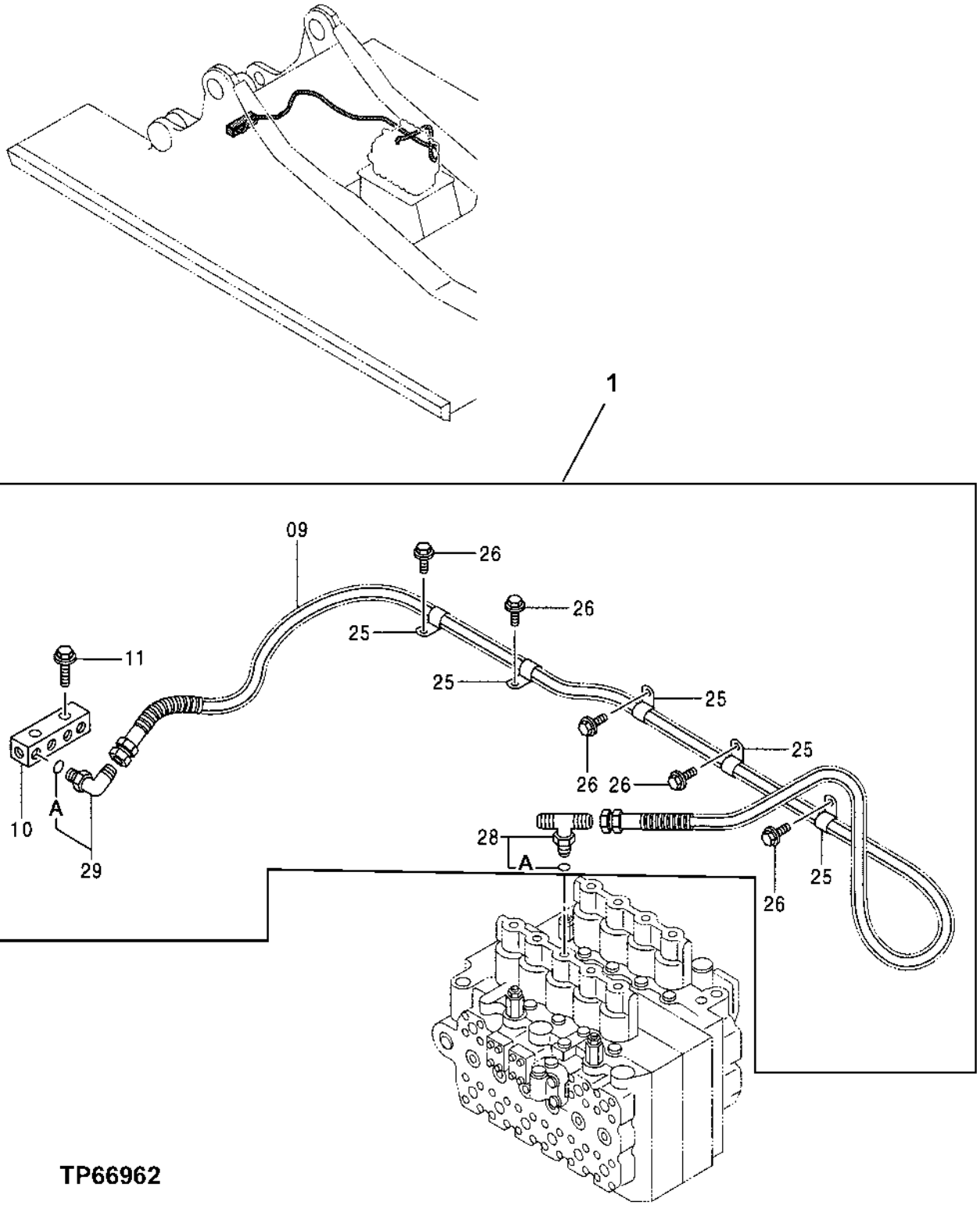

BOOM CYLINDER LOAD LOWERING VALVE KIT

KEY	PART NO.	PART NAME	QTY	SERIAL NO.	REMARKS
1	.....	KIT	1		(AT188670 NO LONGER AVAILABLE) WHOLEGOODS (BOOM CYLINDER LOAD LOWERING VALVE) (CONTAINS ALL ITEMS ON THIS PAGE - ADDITIONAL COMPONENTS LISTED ON PREVIOUS PAGES)
9	4402317	HYDRAULIC HOSE - FABRICATE	1		(SUB FOR TH4402317)
10	3077734	JUNCTION BLOCK	1		(SUB FOR TH3077734)
11	19M7753	CAP SCREW	2		M12 X 70
	12H301	LOCK WASHER	2		12.700 MM (1/2")
25	4190274	CLIP	5		(SUB FOR TH108458)
26	19M7938	CAP SCREW	5		M10 X 20
	12M7066	LOCK WASHER	5		10 MM (0.394")
28	4208911	TEE FITTING	1		(SUB FOR AT126456)
28A	CH11570	O-RING	1		13.800 X 2.400 MM (0.543" X 0.094")
29	4154671	ELBOW FITTING	1		(SUB FOR TH101047)
29A	CH11570	O-RING	1		13.800 X 2.400 MM (0.543" X 0.094")

CONTROL PATTERN SELECTOR KIT

T156470 -UN-27JUN02

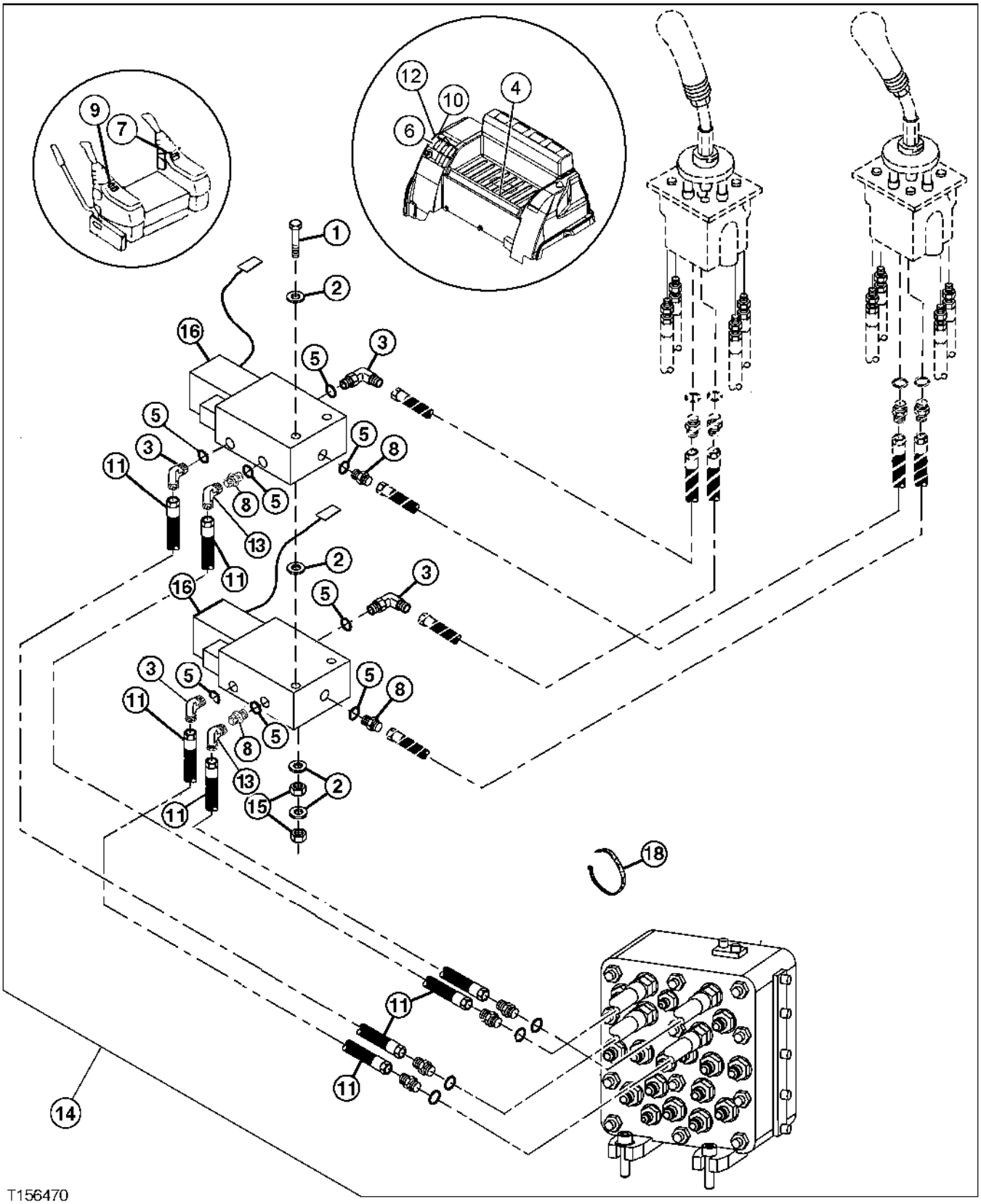

CONTROL PATTERN SELECTOR KIT

KEY	PART NO.	PART NAME	QTY	SERIAL NO.	REMARKS
1	19M8332	CAP SCREW	2		M6 X 90
2	24M7100	WASHER	10		6.600 X 22 X 2 MM
3	AT35121	ELBOW FITTING	4		37 DEG FLARE O-RING
4	AT190535	WIRING HARNESS	1		
5	R26448	O-RING	8		
6	AT83721	TOGGLE SWITCH	1		LOCKING
7	T159843	LABEL	4		CONTROL RIGHT
8	R27212	FITTING	4		
9	T159844	LABEL	1		CONTROL LEFT
10	T184858	LABEL	1		CONTROL PATTERN
11	AT71082	HYDRAULIC HOSE - FABRICATE	4		
12	37H43	SCREW	2		DRIVE SELF TAPPING
13	AE24616	ELBOW FITTING	2		
14	**AT191397**	**KIT**	**1**		**(WHOLEGOODS) CONTROL PATTERN SELECTOR KIT**
15	14M7272	NUT	4		M6
16	AT116486	ELEC.PROPORTIONAL VALVE	2		PIN DISCONNECT
	AT140041	ELECTRICAL COIL	1		
18	R44302	TIE BAND	AR		

SWING DEVICE

TP66691 -UN-29SEP99

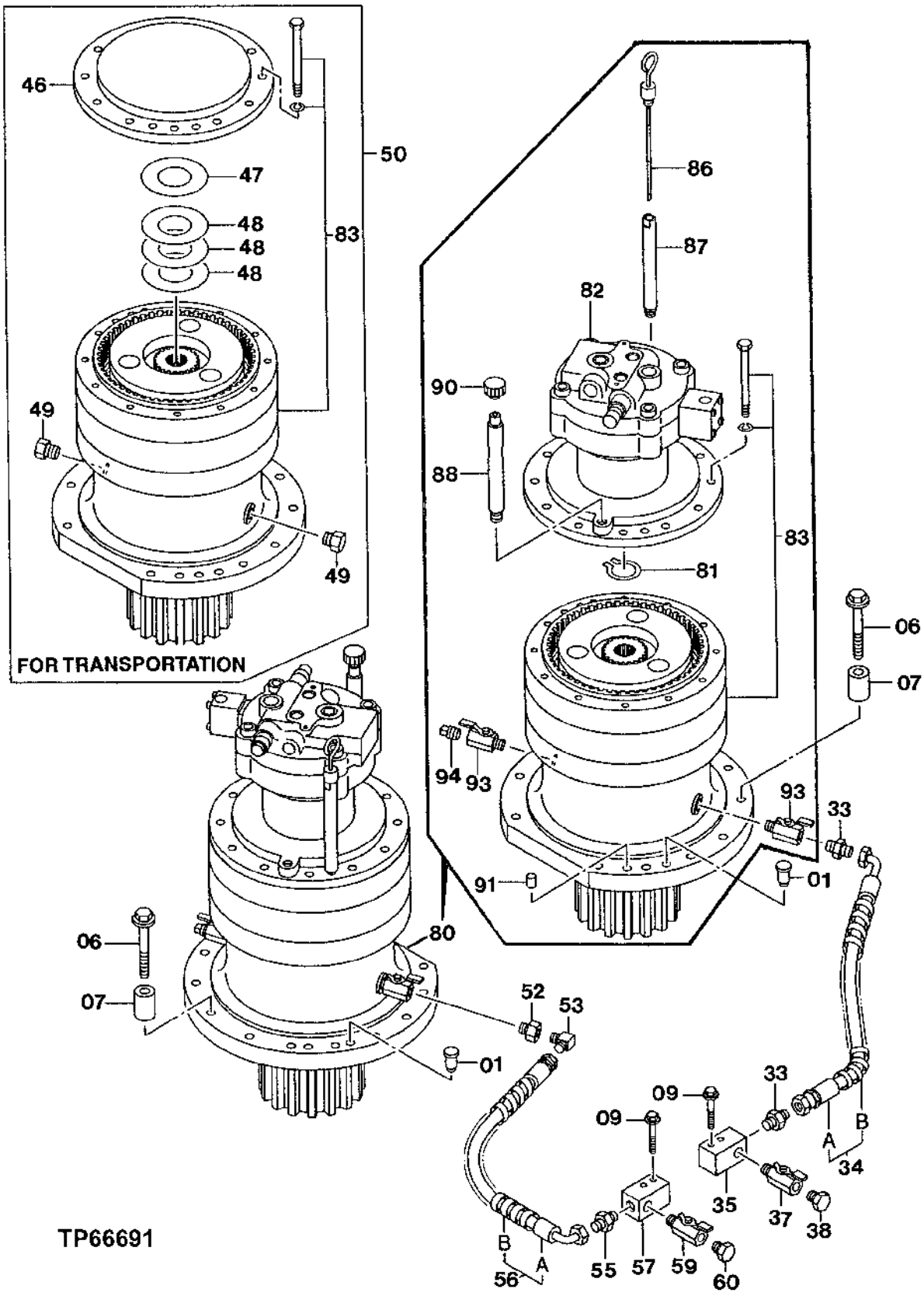

SWING DEVICE

KEY	PART NO.	PART NAME	QTY	SERIAL NO.	REMARKS
1	4050722	PIN FASTENER	4		(SUB FOR TH4050722)
6	J932407	BOLT	28		(SUB FOR THJ932407)
7	4219047	SPACER	28		(SUB FOR TH4219047)
9	19M5536	CAP SCREW	4		M10 X 60
	12M7066	LOCK WASHER	4		10 MM (0.394")
33	4154653	ADAPTER	2		(SUB FOR TH100989)
34	.....	HOSE	1		(NOT AVAILABLE FOR SERVICE)
34A	4376780	HOSE	1		(SUB FOR TH4376780)
34B	4044420	HOSE GUARD	1		(SUB FOR TH4320661)
35	4348654	HOUSING	1		(SUB FOR TH4348654)
37	4194712	DRAIN VALVE	1		(SUB FOR TH108278)
38	4294858	DRAIN PLUG	1		(SUB FOR AT251217)
46	8056050	COVER	1		(SUB FOR TH8056050)
47	.....	SHIM	1		
48	.....	SHIM	3		
49	94-2024	FITTING PLUG	2		(SUB FOR TH101292)
50	9174425	DRIVE	1		(SUB FOR TH9174425)
52	4089893	ADAPTER	1		(SUB FOR TH4089893)
53	4154658	ELBOW FITTING	1		(SUB FOR TH101039)
55	4154653	ADAPTER	1		(SUB FOR TH100989)
56	.....	HOSE	1		(NOT AVAILABLE FOR SERVICE)
56A	4349163	HOSE	1		(SUB FOR TH4349163)
56B	4376631	HOSE GUARD	1		(SUB FOR TH4376631)
57	4348654	HOUSING	1		(SUB FOR TH4348654)
59	4194712	DRAIN VALVE	1		(SUB FOR TH108278)
60	4294858	DRAIN PLUG	1		(SUB FOR AT251217)
80	9202551	HYDRAULIC MOTOR	2		(SUB FOR TH9135222 AND 9135222)
81	40M7047	SNAP RING	1		
82	4388207EX	HYDRAULIC MOTOR	1		(SUB FOR 4388207) (SUB FOR TH4388207)
83	9174425	DRIVE	1		(SUB FOR TH9134738)
86	3074225	LEVEL GAUGE	1		(SUB FOR AT176181)
87	4349108	DIPSTICK TUBE	1		(SUB FOR TH4349108)
88	8067457	PIPE	1		(SUB FOR TH8067457)
90	4343365	CAP	1		(SUB FOR AT204965)
91	.....	PACKING	2		
93	4194712	DRAIN VALVE	2		(SUB FOR TH108278)
94	94-2024	FITTING PLUG	1		(SUB FOR TH101292)

SWING MOTOR

TP68073 -UN-15OCT99

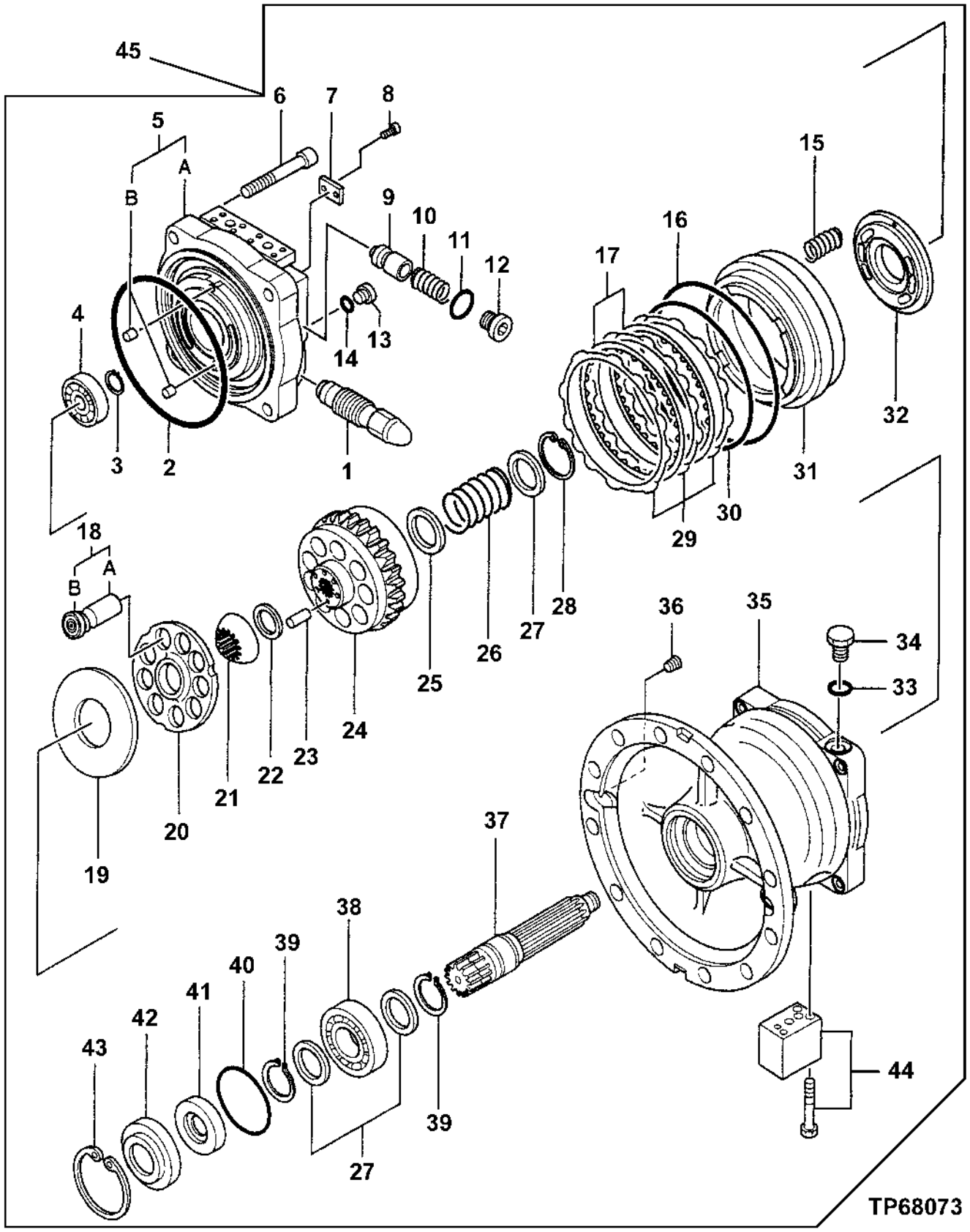

SWING MOTOR

KEY	PART NO.	PART NAME	QTY	SERIAL NO.	REMARKS
1	4365103	PRESSURE RELIEF VALVE	2		(SUB FOR TH4365103)
2	0496103	O-RING	1		(SUB FOR AT200934)
3	40M7195	SNAP RING	1		(SUB FOR 40M1828)
4	TH112052	CYLINDRICAL ROLLER BEARING	1		
5	0365432	HOUSING	1		(SUB FOR AT181741)
5A	.....	HOUSING	1		
5B	.....	PIN	2		
6	0365417	SCREW	4		(SUB FOR TH112046)
7	.....	IDENTIFICATION PLATE	1		
8	0625509	CAP SCREW	2		(SUB FOR TH0625509)
9	0236006	PLUNGER	2		(SUB FOR TH102635)
10	0236009	SPRING	2		(SUB FOR TH102638)
11	4506428	O-RING	2		(SUB FOR TH100136)
12	15M7027	DRAIN PLUG	2		
13	0236014	FITTING PLUG	2		(SUB FOR TH102650)
14	M800650	PACKING	2		
15	0365331	SPRING	22		(SUB FOR TH112060)
16	0365427	O-RING	1		(SUB FOR TH112059)
17	0365428	PLATE	2		(SUB FOR TH112061)
18	0365401	PISTON	1		(SUB FOR TH112029)
18A	.....	PISTON	9		
18B	.....	VALVE SEAT	9		
19	0365413	WASHER	1		(SUB FOR TH112042)
20	0365412	PRESSED FLANGED HOUSING	1		(SUB FOR TH112041)
21	0365407	BUSHING	1		(SUB FOR TH112036)
22	0365410	WASHER	1		(SUB FOR TH112039)
23	0365409	PIN	12		(SUB FOR TH112038)
24	0496104	CYLINDER	1		(SUB FOR AT167737)
25	0365411	WASHER	1		(SUB FOR TH112040)
26	0365408	SPRING	1		(SUB FOR TH112037)
27	0365405	WASHER	3		(SUB FOR TH112034)
28	40M7043	SNAP RING	1		
29	0365429	PLATE	3		(SUB FOR TH112062)
30	U42016	O-RING	1		
31	0365425	PISTON	1		(SUB FOR TH112057)
32	0496105	PLATE	1		(SUB FOR AT167716)
33	M800650	PACKING	1		
34	0236014	FITTING PLUG	1		(SUB FOR TH102650)
35	0729901	HOUSING	1		(SUB FOR TH0729901)
36	94-2011	FITTING PLUG	1		(SUB FOR TH100434)
37	0365404	SHAFT	1		(SUB FOR TH112033)
38	AT132384	CYLINDRICAL ROLLER BEARING	1		
39	40M7166	SNAP RING	2		
40	T110448	O-RING	1		
41	4S00107	SEAL	1		(SUB FOR TH109952) (FURNISH AT133676)
42	0365416	COVER	1		(SUB FOR TH112045)
43	Z973069	SNAP RING	1		(SUB FOR AT132424)
44	0365303	VALVE	1		(SUB FOR TH112031)
45	4388207EX	HYDRAULIC MOTOR	1		(SUB FOR 4388207) (SUB FOR TH4388207)

SWING DEVICE

TP66692 -UN-29SEP99

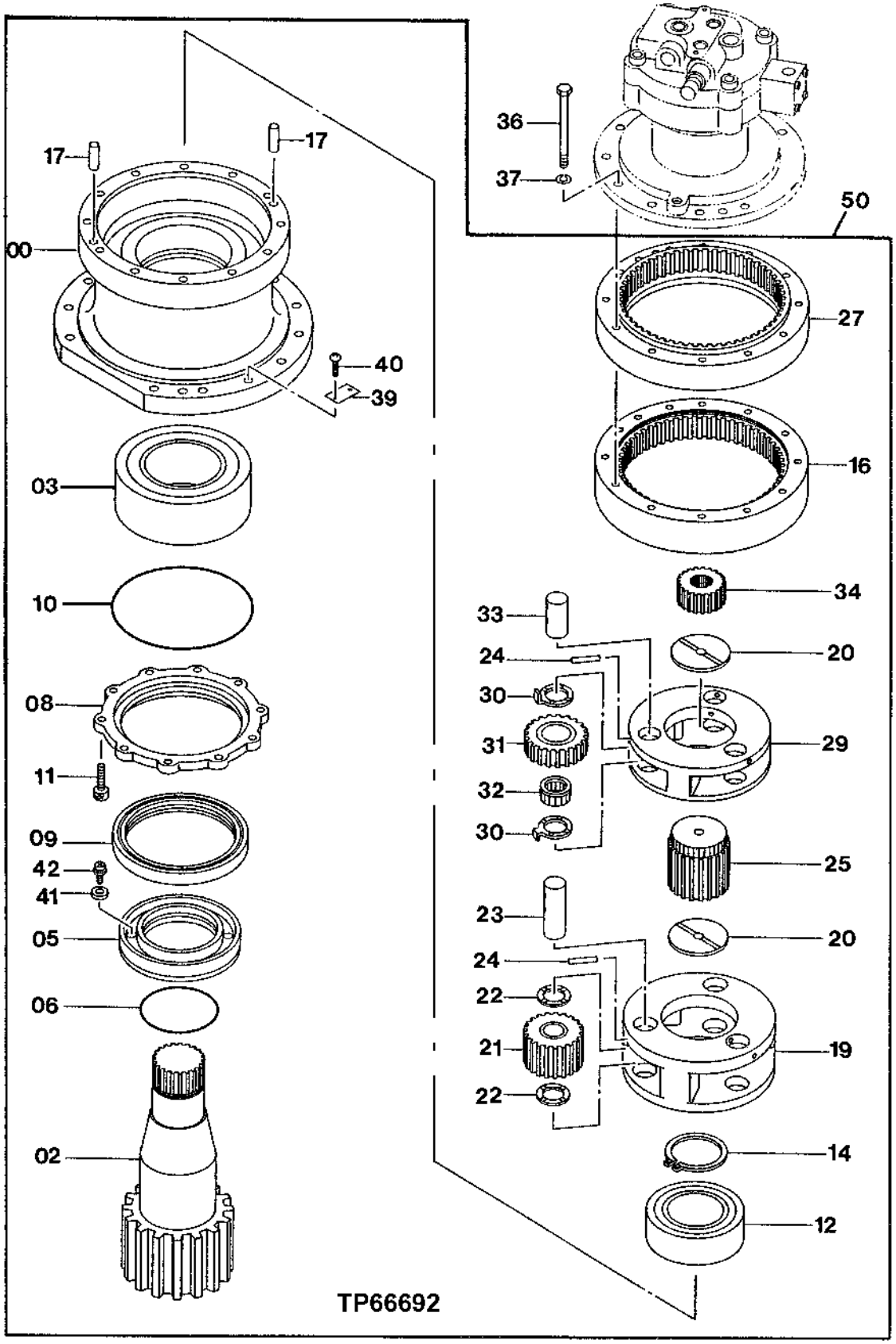

SWING DEVICE

KEY	PART NO.	PART NAME	QTY	SERIAL NO.	REMARKS
0	1020440	HOUSING	1		(SUB FOR TH1020440)
2	2036267	PINION SHAFT	1		(SUB FOR TH2036267)
3	4375201	BALL BEARING	1		(SUB FOR TH4375201)
5	3069880	SLEEVE	1		(SUB FOR TH3069880)
6	4217350	O-RING	1		(SUB FOR AT219661)
8	2036875	COVER	1		(SUB FOR TH2036875)
9	4424982	SEAL	1		(SUB FOR TH4338381)
	4412061	SEAL	2		(EXTREME COLD WEATHER APPLICATIONS)
10	4217351	O-RING	1		(SUB FOR TH4217351)
11	19M8395	SCREW	10		M12 X 40
12	4375200	BALL BEARING	1		(SUB FOR TH4375200)
14	991354	SNAP RING	1		(SUB FOR TH111641)
16	2036466	RING GEAR	1		(SUB FOR TH2036466)
17	J401640	DOWEL PIN	2		(SUB FOR TH110085)
19	1020438	PLANET PINION CARRIER	1		(SUB FOR TH1020438)
20	4194454	PLATE	2		(SUB FOR TH111267)
21	9729474	GEAR	3		(SUB FOR TH9729474)
22	4266934	PLATE	6		(SUB FOR AT154772)
23	4250580	PIN	3		(SUB FOR TH4250580)
24	34M5564	SPRING PIN	6		6 X 70 MM (0.236" X 2.756")
25	3040887	SUN GEAR	1		(SUB FOR TH3040887)
27	2036866	RING GEAR	1		(SUB FOR TH2036866)
29	2036868	PLANET PINION CARRIER	1		(SUB FOR TH2036868)
30	4338181	THRUST WASHER	6		(SUB FOR TH4338181)
31	3069820	GEAR	3		(SUB FOR TH3069820)
32	4333265	NEEDLE BEARING	3		(SUB FOR TH4333265)
33	4216851	PIN	3		(SUB FOR TH4216851)
34	3069819	SUN GEAR	1		(SUB FOR TH3069819)
36	19M7645	SCREW	12		M20 X 200
37	12M7070	LOCK WASHER	12		20 MM (0.787")
39	.....	IDENTIFICATION PLATE	1		
40	37H99	SCREW	2		2.540 X 6.350 MM (0.100" X 1/4")
41	4204644	MAGNET	4		(SUB FOR TH108284)
42	21M7265	SCREW	4		M5 X 12
50	9174425	DRIVE	2		(SUB FOR TH9134738)

SWING MOTOR

TP66960 -UN-10NOV99

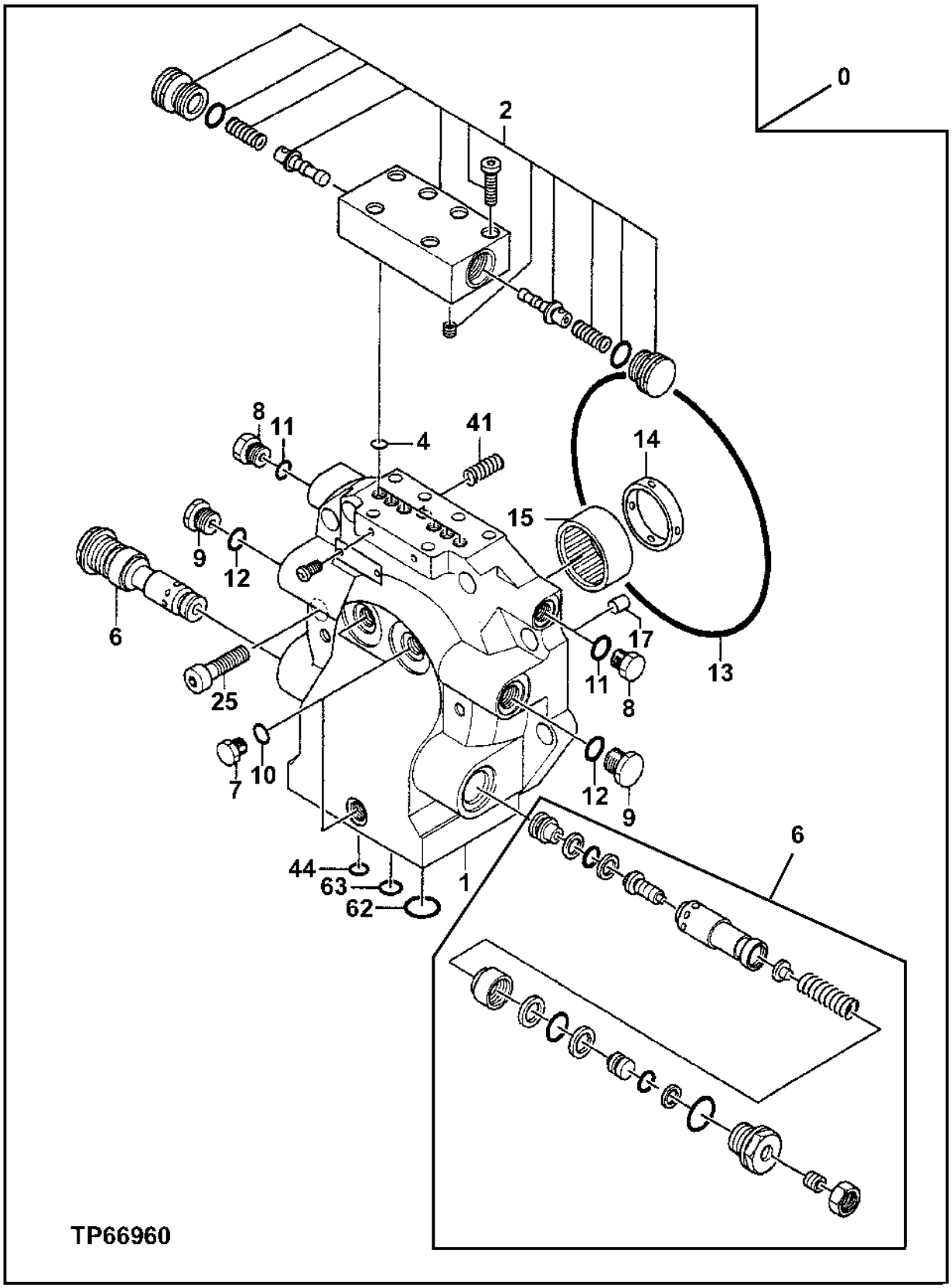

SWING MOTOR

KEY	PART NO.	PART NAME	QTY	SERIAL NO.	REMARKS
0	4388207EX	HYDRAULIC MOTOR	1		(SUB FOR 4388207) (SUB FOR TH4388207)
1	.....	COVER	1		
2	0446402	VALVE	1		(SUB FOR AT201564)
4	CH17167	O-RING	7		9.800 X 1.900 MM (0.386" X 0.075")
6	0702201	PRESSURE RELIEF VALVE	2		(SUB FOR TH0702201)
7	0419902	FITTING PLUG	3		(SUB FOR AT201563)
8	0218608	DRAIN PLUG	2		(SUB FOR TH110243)
9	0251321	PLUG	2		(SUB FOR AT201969)
10	M800650	PACKING	3		
11	CH11570	O-RING	2		13.800 X 2.400 MM (0.543" X 0.094")
12	4506418	O-RING	2		(SUB FOR U46489)
13	0419806	O-RING	1		(SUB FOR AT201977)
14	0352211	BUSHING	1		(SUB FOR AT132248)
15	CE15060	NEEDLE BEARING	1		
17	0682803	PIN	1		(SUB FOR TH0682803)
25	0288618	BOLT	8		(SUB FOR AT127285)
41	0682804	SPRING	12		(SUB FOR TH0682804)
44	CH17167	O-RING	4		9.800 X 1.900 MM (0.386" X 0.075")
62	AT264348	O-RING	2		(SUB FOR TH102788)
63	CH12329	PACKING	2		

MEMORANDA

NUMERICAL INDEX

PART NO.	GRID	KEY	PAGE
AA34965	1H19	5	1830 - 3
AA34965	1H23	55	1830 - 7
AE24616	2J10	13	3360 - 155
AH103182	2D6	53	3360 - 7
AH104837	2D4	52	3360 - 5
AH104837	2D6	52	3360 - 7
AH20849	1C21	0D	0520 - 3
AP33356	1G16	50	1810 - 33
AP34305	1D19	0	1674 - 7
AP34401	1I6	6	1830 - 15
AP34402	1F15	4	1810 - 7
AP34420	1G16	0	1810 - 33
AP34421	1G16	2	1810 - 33
AP34422	1G16	5	1810 - 33
AP34424	1G16	11	1810 - 33
AP34425	1G16	13	1810 - 33
AP34636	1G16	1	1810 - 33
AP34637	1G16	4	1810 - 33
AP34638	1G16	6	1810 - 33
AP34639	1G16	9	1810 - 33
AP34640	1G16	12	1810 - 33
AP34652	1G16	15	1810 - 33
AP34919	2I18	21	3360 - 139
AR21836	1C15	8	0510 - 7
AR48236	1C13	18	0510 - 5
AR48236	1C15	12	0510 - 7
AR60937	1F13	16	1810 - 5
AR65293	1H19	23	1830 - 3
AR73234	1C21	0G	0520 - 3
AT106365	1G14	4	1810 - 31
AT106413	1G14	6	1810 - 31
AT114853	1B22	6	0260 - 11
AT114853	2D4	38	3360 - 5
AT114853	2I20	62	3360 - 141
AT116486	2J10	16	3360 - 155
AT120949	2G20	10	3360 - 93
AT120949	2G24	10	3360 - 97
AT120949	2H6	37	3360 - 103
AT120949	2H8	10	3360 - 105
AT121321	1D17	37	1674 - 5
AT121321	1D25	2	1674 - 13
AT121321	2E18	85	3360 - 43
AT121585	1G10	4	1810 - 27
AT121659	1D19	37	1674 - 7
AT121659	1D19	56	1674 - 7
AT121852	1B18	31	0260 - 7
AT122160	2H24	11	3360 - 121
AT122160	2I2	11	3360 - 123
AT122384	1C7	71	0400 - 3
AT122384	1D25	4	1674 - 13
AT122384	2D20	16	3360 - 21
AT122559	1C11	2	0510 - 3
AT126200	2J2	5	3360 - 147
AT126213	1B6	15	0130 - 15
AT126267	1C17	31	0515 - 3
AT126283	1E20	43	1740 - 7
AT126362	1B24	14	0260 - 13
AT126362	2D22	6	3360 - 23
AT126362	2D24	6	3360 - 25
AT126362	2I18	31	3360 - 139
AT126381	2D20	13	3360 - 21
AT126381	2D22	5	3360 - 23
AT126381	2D24	5	3360 - 25
AT126456	2D22	2	3360 - 23
AT126456	2D24	2	3360 - 25
AT126456	2D24	32	3360 - 25
AT126456	2I18	33	3360 - 139
AT126456	2J8	28	3360 - 153
AT126482	2I20	41	3360 - 141
AT126748	2D20	9	3360 - 21
AT127258	2J4	8	3360 - 149
AT127275	2I10	5	3360 - 131
AT127275	2I12	5	3360 - 133
AT127275	2I14	5	3360 - 135
AT127285	2J19	25	4360 - 7
AT128432	1D2	5	0560 - 5
AT128432	1J18	26	2160 - 13
AT130157	1D7	1	1369 - 3
AT130504	2F12	29	3360 - 61
AT130505	2F12	28	3360 - 61
AT130666	1E16	16	1740 - 3
AT130666	1I25	25	1910 - 15
AT130857	2H6	12	3360 - 103
AT130970	2F20	4	3360 - 69
AT130970	2F22	4	3360 - 71
AT130970	2F24	11	3360 - 73
AT130970	2G2	11	3360 - 75
AT130970	2G4	3	3360 - 77
AT130970	2G6	11	3360 - 79
AT131137	1B14	51	0260 - 3
AT131245	1B20	14	0260 - 9
AT131269	2C2	11B	3315 - 9
AT131269	2C2	12B	3315 - 9
AT131269	2C6	11B	3315 - 13
AT131528	1B20	26	0260 - 9
AT131529	1J18	7	2160 - 13
AT131543	1B14	93	0260 - 3
AT131600	1B20	31	0260 - 9
AT131654	1I25	2A	1910 - 15
AT131654	1I25	3A	1910 - 15
AT131668	2F24	9	3360 - 73
AT131668	2G2	9	3360 - 75
AT131668	2G6	9	3360 - 79
AT131685	2C12	42	3340 - 3
AT131685	2C14	42	3340 - 5
AT131685	2C18	61	3340 - 9
AT131685	2C18	71	3340 - 9
AT131685	2C20	48	3340 - 11
AT131685	2D2	8	3360 - 3
AT131685	2D12	29	3360 - 13
AT131685	2D14	29	3360 - 15
AT131685	2D16	29	3360 - 17
AT131685	2D18	29	3360 - 19
AT131685	2F16	34	3360 - 65
AT131685	2F18	34	3360 - 67
AT131685	2I20	60	3360 - 141
AT131690	1E24	3	1740 - 11
AT131692	1B20	28	0260 - 9
AT131692	2H18	64	3360 - 115
AT131692	2H20	64	3360 - 117
AT131696	1E16	28	1740 - 3
AT131696	2C12	19	3340 - 3
AT131696	2C14	19	3340 - 5
AT131696	2C16	11	3340 - 7
AT131696	2C20	19	3340 - 11
AT131696	2C22	6	3344 - 3
AT131696	2C24	6	3344 - 5
AT131701	1F6	22	1740 - 17
AT131701	2F24	62	3360 - 73
AT131701	2G2	62	3360 - 75
AT131701	2G4	62	3360 - 77
AT131701	2G6	65	3360 - 79
AT131736	1B14	1	0260 - 3
AT131737	2E2	21	3360 - 27
AT131739	1B20	23	0260 - 9
AT131740	1B20	5	0260 - 9
AT131742	1B20	8	0260 - 9
AT131743	1J5	2	2002 - 3
AT131748	1B14	37	0260 - 3
AT131748	1B14	46	0260 - 3
AT131752	1B14	92	0260 - 3
AT131790	1E16	14	1740 - 3
AT131791	2D12	31	3360 - 13
AT131792	2D12	30	3360 - 13
AT131796	1D17	2	1674 - 5
AT131809	2D2	14	3360 - 3
AT131809	2D14	50	3360 - 15
AT131810	2D2	15	3360 - 3
AT131810	2D14	52	3360 - 15
AT131811	2D2	13	3360 - 3
AT131811	2D14	51	3360 - 15
AT131846	1A19	11	0130 - 3
AT131849	1E20	41	1740 - 7
AT131854	1E20	35	1740 - 7
AT131864	1F19	16A	1810 - 11
AT131865	1F19	16B	1810 - 11
AT131873	2D8	3	3360 - 9
AT131900	1F6	0	1740 - 17
AT131918	2D12	32	3360 - 13
AT131922	1C21	0K	0520 - 3
AT131951	1B20	12	0260 - 9
AT132013	1A19	42	0130 - 3
AT132013	1B14	13	0260 - 3
AT132014	1F6	7	1740 - 17
AT132143	1B4	13	0130 - 13
AT132143	1B20	24	0260 - 9
AT132146	2I16	17	3360 - 137
AT132148	1B20	10	0260 - 9
AT132154	2I14	11	3360 - 135
AT132155	2I6	11	3360 - 127
AT132163	1B16	3	0260 - 5
AT132164	2I6	7	3360 - 127
AT132167	2H10	1	3360 - 107
AT132168	2I6	12	3360 - 127
AT132169	2I6	16	3360 - 127
AT132170	2I6	18	3360 - 127
AT132172	2H8	4	3360 - 105
AT132173	2I6	8	3360 - 127
AT132174	2I6	10	3360 - 127
AT132175	2I14	17	3360 - 135
AT132179	2H10	2	3360 - 107
AT132247	1B18	13	0260 - 7
AT132248	2J19	14	4360 - 7
AT132251	1B18	18	0260 - 7
AT132252	1B18	22	0260 - 7
AT132253	1B18	23	0260 - 7
AT132257	1B18	36	0260 - 7
AT132269	1B16	7	0260 - 5
AT132270	1B16	8	0260 - 5
AT132271	1B16	9	0260 - 5
AT132272	1B16	13	0260 - 5
AT132273	2G16	23	3360 - 89
AT132298	2I14	31	3360 - 135
AT132300	2I14	32	3360 - 135
AT132309	2I14	1B	3360 - 135
AT132313	2I6	4	3360 - 127
AT132314	2I6	6	3360 - 127
AT132315	2I6	9	3360 - 127
AT132318	2I6	20	3360 - 127
AT132319	2I6	19	3360 - 127
AT132320	2I6	22	3360 - 127

NUMERICAL INDEX - CONTINUED

PART NO.	GRID	KEY	PAGE
AT132320	2I10	22	3360 - 131
AT132320	2I12	22	3360 - 133
AT132320	2I14	19	3360 - 135
AT132321	2I6	21	3360 - 127
AT132321	2I10	21	3360 - 131
AT132321	2I12	21	3360 - 133
AT132321	2I14	20	3360 - 135
AT132322	2H24	13	3360 - 121
AT132322	2I2	13	3360 - 123
AT132322	2I6	13	3360 - 127
AT132325	2H24	57	3360 - 121
AT132325	2I2	57	3360 - 123
AT132325	2I6	36	3360 - 127
AT132325	2I8	36	3360 - 129
AT132325	2I10	36	3360 - 131
AT132325	2I12	36	3360 - 133
AT132326	2I6	32	3360 - 127
AT132327	2I6	33	3360 - 127
AT132384	2J15	38	4360 - 3B
AT132399	2I14	12	3360 - 135
AT132400	2I14	15	3360 - 135
AT132401	2H2	1	3360 - 99
AT132423	2H24	47	3360 - 121
AT132423	2I2	47	3360 - 123
AT132423	2I8	42	3360 - 129
AT132423	2I10	29	3360 - 131
AT132423	2I12	29	3360 - 133
AT132424	2J15	43	4360 - 3B
AT132460	1F2	18	1740 - 13
AT132476	2I16	4	3360 - 137
AT132480	1F2	17	1740 - 13
AT132489	2I16	2	3360 - 137
AT132489	2I18	11	3360 - 139
AT132491	2I20	35	3360 - 141
AT132492	2I20	46	3360 - 141
AT132493	2D6	47	3360 - 7
AT132516	2D22	9	3360 - 23
AT132516	2D24	9	3360 - 25
AT132547	2I20	37	3360 - 141
AT132548	2I20	34	3360 - 141
AT132549	2I16	12	3360 - 137
AT132550	2I16	13	3360 - 137
AT132582	2I16	11	3360 - 137
AT132598	2I16	1	3360 - 137
AT132598	2I18	10	3360 - 139
AT132681	1E24	2	1740 - 11
AT132682	1E24	4	1740 - 11
AT133601	1C7	67	0400 - 3
AT133602	2I20	36	3360 - 141
AT133691	2G18	20	3360 - 91
AT133692	2G18	19	3360 - 91
AT134092	2D22	20	3360 - 23
AT134092	2D24	20	3360 - 25
AT135758	1D21	11C	1674 - 9
AT135758	1D23	5C	1674 - 11
AT135758	2C22	15C	3344 - 3
AT135758	2C24	15C	3344 - 5
AT138222	2F8	79	3360 - 57
AT140041	2J10	16	3360 - 155
AT142288	1E11	1	1674 - 22
AT147343	1J18	9	2160 - 13
AT147803	1E2	2A	1674 - 15
AT147803	1F23	8	1810 - 15
AT147803	1G16	18	1810 - 33
AT153835	1J16	12	2160 - 11
AT153837	1J16	15	2160 - 11
AT153838	1J16	10	2160 - 11
AT153839	2G18	18	3360 - 91
AT153842	2G22	4	3360 - 95
AT153843	2G22	7	3360 - 95
AT153844	2G22	8	3360 - 95
AT153880	1J16	3	2160 - 11
AT153882	1J16	16	2160 - 11
AT153885	1J16	35	2160 - 11
AT153887	2G18	4	3360 - 91
AT153888	2G18	5	3360 - 91
AT153889	2G18	6	3360 - 91
AT153890	2G18	7	3360 - 91
AT153891	2G18	8	3360 - 91
AT153892	2G18	15	3360 - 91
AT154055	2B21	42	3315 - 3
AT154056	2B21	41	3315 - 3
AT154086	2C6	31	3315 - 13
AT154122	2C10	10	3315 - 17
AT154127	2B21	43	3315 - 3
AT154150	1F19	28	1810 - 11
AT154206	1D19	6	1674 - 7
AT154206	1D21	20	1674 - 9
AT154212	1D21	27	1674 - 9
AT154212	2F10	15	3360 - 59
AT154212	2I24	5	3360 - 145
AT154216	2G22	0	3360 - 95
AT154217	2G20	0	3360 - 93
AT154218	2E4	1	3360 - 29
AT154218	2G24	0	3360 - 97
AT154223	1B4	18	0130 - 13
AT154224	2H12	15	3360 - 109
AT154239	1C25	20	0560 - 3
AT154243	1C19	3	0515 - 5
AT154243	1C25	23	0560 - 3
AT154243	1D19	32	1674 - 7
AT154243	1J18	35	2160 - 13
AT154262	2C10	16	3315 - 17
AT154267	1E20	46	1740 - 7
AT154278	1F19	20	1810 - 11
AT154285	2F10	9	3360 - 59
AT154293	1J10	34	2160 - 5
AT154311	2F10	27	3360 - 59
AT154312	2E18	81	3360 - 43
AT154312	2F10	29	3360 - 59
AT154322	2H12	10	3360 - 109
AT154323	1D23	5	1674 - 11
AT154344	1H19	8	1830 - 3
AT154352	1F19	16	1810 - 11
AT154353	1I25	26	1910 - 15
AT154411	2C2	5	3315 - 9
AT154412	2C2	8	3315 - 9
AT154413	1F19	24	1810 - 11
AT154526	2C6	0	3315 - 13
AT154529	2C6	24	3315 - 13
AT154533	2H12	11	3360 - 109
AT154534	2C6	16	3315 - 13
AT154538	2C2	11	3315 - 9
AT154540	2C2	12	3315 - 9
AT154544	2E18	82	3360 - 43
AT154544	2F10	28	3360 - 59
AT154772	2J17	22	4360 - 5
AT154894	1C19	26	0515 - 5
AT154897	1C19	4	0515 - 5
AT154913	1G12	5	1810 - 29
AT154914	1C23	31A	0530 - 3
AT154915	1I13	40	1910 - 3
AT154916	1I13	41	1910 - 3
AT154921	1J18	38	2160 - 13
AT154922	1J18	39	2160 - 13
AT154926	1C19	17	0515 - 5
AT154927	1C19	16	0515 - 5
AT154931	1C19	10	0515 - 5
AT154932	1C19	1	0515 - 5
AT154933	1C19	14	0515 - 5
AT154934	1E4	41	1674 - 17
AT154937	1D19	48	1674 - 7
AT154937	1J18	34	2160 - 13
AT154938	1C19	25	0515 - 5
AT154943	1C19	30G	0515 - 5
AT154946	1C19	32	0515 - 5
AT154947	2C6	24C	3315 - 13
AT154955	1E4	25	1674 - 17
AT154988	1D23	5A	1674 - 11
AT154992	1E2	2	1674 - 15
AT154994	2F12	0	3360 - 61
AT154994	2F14	0	3360 - 63
AT155150	1C19	33	0515 - 5
AT155179	1C19	30	0515 - 5
AT155185	1C19	5	0515 - 5
AT155189	1G16	26	1810 - 33
AT155242	1G14	9	1810 - 31
AT155248	1J20	5	2160 - 15
AT155266	1H19	21	1830 - 3
AT155271	1E20	32	1740 - 7
AT155612	1E6	26	1674 - 19
AT155616	1E6	27	1674 - 19
AT155616	1F15	3	1810 - 7
AT155669	1E6	25	1674 - 19
AT155700	2C2	9	3315 - 9
AT155701	2C2	16	3315 - 9
AT155729	1D5	76	1320 - 3
AT155730	1D5	65	1320 - 3
AT155733	1D5	2	1320 - 3
AT155733	1D5	11	1320 - 3
AT156970	1F21	41	1810 - 13
AT156974	1E4	33	1674 - 17
AT156993	1G2	7	1810 - 19
AT156993	1G4	62	1810 - 21
AT156994	1G2	9	1810 - 19
AT156994	1G4	63	1810 - 21
AT157057	1F21	46	1810 - 13
AT157068	1F23	17	1810 - 15
AT157068	1G2	16	1810 - 19
AT159662	2E4	4	3360 - 29
AT160522	1J18	5A	2160 - 13
AT161977	1E4	16	1674 - 17
AT161978	1E4	18	1674 - 17
AT162984	2E6	1	3360 - 31
AT164676	1E11	2	1674 - 22
AT165110	1D21	11	1674 - 9
AT165110	2C22	15	3344 - 3
AT165110	2C24	15	3344 - 5
AT167078	2F22	16	3360 - 71
AT167716	2J15	32	4360 - 3B
AT167737	2J15	24	4360 - 3B
AT170126	1F2	5	1740 - 13
AT170128	1F2	7	1740 - 13
AT170131	1F2	11	1740 - 13
AT170132	1F2	12	1740 - 13
AT170146	2I20	44	3360 - 141
AT170153	2I16	9	3360 - 137
AT170625	2J2	15	3360 - 147
AT170626	2J2	16	3360 - 147
AT171619	1H5	1	1821 - 3
AT172243	2D2	21	3360 - 3

NUMERICAL INDEX - CONTINUED

PART NO.	GRID	KEY	PAGE
AT172435	1D25	8A	1674 - 13
AT172436	1D25	8B	1674 - 13
AT172704	2H14	26	3360 - 111
AT172704	2H20	26	3360 - 117
AT173804	1H25	49	1830 - 9
AT173807	1H25	34	1830 - 9
AT173807	1H25	37	1830 - 9
AT173809	1H25	31	1830 - 9
AT173815	1H25	55	1830 - 9
AT173817	1H25	38	1830 - 9
AT173818	1H25	35	1830 - 9
AT173818	1I2	65	1830 - 11
AT173819	1H25	32	1830 - 9
AT173820	1H25	46	1830 - 9
AT174465	1D25	8C	1674 - 13
AT174465	1E4	0F	1674 - 17
AT174465	1E10	5A	1674 - 21
AT174467	2B21	1	3315 - 3
AT174468	2B21	2	3315 - 3
AT174469	2B21	18	3315 - 3
AT174500	2H12	9	3360 - 109
AT174526	1B16	4	0260 - 5
AT174527	1B16	6	0260 - 5
AT175140	2J2	6	3360 - 147
AT175158	2J6	36	3360 - 151
AT175159	2J6	37	3360 - 151
AT175161	2J6	2	3360 - 151
AT175162	2J6	17	3360 - 151
AT175163	2J6	13	3360 - 151
AT175267	2J6	26	3360 - 151
AT175875	2H6	32	3360 - 103
AT175876	2H6	33	3360 - 103
AT175880	2H6	44	3360 - 103
AT175916	2D8	21	3360 - 9
AT175919	2D8	21A	3360 - 9
AT175923	2H6	5	3360 - 103
AT175924	2H6	6	3360 - 103
AT175925	2H6	7	3360 - 103
AT175926	2H6	8	3360 - 103
AT175927	2H6	10	3360 - 103
AT175928	2H6	11	3360 - 103
AT175929	2H6	30	3360 - 103
AT175932	2H6	35	3360 - 103
AT175933	2H6	38	3360 - 103
AT175981	1D19	27	1674 - 7
AT175989	1C25	2	0560 - 3
AT176176	2G8	7	3360 - 81
AT176176	2G14	34	3360 - 87
AT176181	2J13	86	4360 - 3
AT176636	1G16	18	1810 - 33
AT176789	1F23	8	1810 - 15
AT176844	2D6	30	3360 - 7
AT177372	2B23	8	3315 - 5
AT177386	2B23	0	3315 - 5
AT177400	2C10	13	3315 - 17
AT177401	2C10	22	3315 - 17
AT178139	2D14	48	3360 - 15
AT178140	1B22	19	0260 - 11
AT178142	2D14	49	3360 - 15
AT178200	1C21	1	0520 - 3
AT179370	1C21	0B	0520 - 3
AT179371	1C21	0C	0520 - 3
AT179377	1C21	0	0520 - 3
AT179394	1E4	0G	1674 - 17
AT179815	1H13	16	1821 - 9
AT179816	1H13	17	1821 - 9
AT180970	1H13	0	1821 - 9
AT180971	1H13	7	1821 - 9
AT180972	1H13	8	1821 - 9
AT180973	1H13	9	1821 - 9
AT180974	1H13	10	1821 - 9
AT180975	1H13	11	1821 - 9
AT180976	1H13	12	1821 - 9
AT180977	1H13	13	1821 - 9
AT180978	1H13	15	1821 - 9
AT180979	1H13	18	1821 - 9
AT180980	1H13	19	1821 - 9
AT180990	1H21	4	1830 - 5
AT180992	1H21	5	1830 - 5
AT180993	1H25	1	1830 - 9
AT180994	1H25	2	1830 - 9
AT180995	1H25	2A	1830 - 9
AT180995	1H25	6A	1830 - 9
AT180996	1H25	3	1830 - 9
AT180997	1H25	4	1830 - 9
AT180998	1H25	5	1830 - 9
AT180999	1H25	6	1830 - 9
AT181001	1H25	6B	1830 - 9
AT181002	1H25	7	1830 - 9
AT181003	1H25	7A	1830 - 9
AT181004	1H25	8	1830 - 9
AT181005	1H25	10	1830 - 9
AT181006	1H25	11	1830 - 9
AT181007	1H25	12	1830 - 9
AT181009	1H25	14	1830 - 9
AT181011	1H25	16	1830 - 9
AT181011	1I2	63	1830 - 11
AT181011	1I10	8	1830 - 19
AT181013	1H25	18	1830 - 9
AT181014	1H25	19	1830 - 9
AT181015	1H25	20	1830 - 9
AT181016	1H25	21	1830 - 9
AT181017	1H25	22	1830 - 9
AT181018	1H25	23	1830 - 9
AT181019	1H25	24	1830 - 9
AT181020	1H25	25	1830 - 9
AT181021	1H25	26	1830 - 9
AT181022	1H25	27	1830 - 9
AT181023	1H25	28	1830 - 9
AT181024	1H25	30	1830 - 9
AT181024	1I2	60	1830 - 11
AT181024	1I10	3	1830 - 19
AT181025	1H25	33	1830 - 9
AT181025	1I2	66	1830 - 11
AT181025	1I10	12	1830 - 19
AT181026	1H25	36	1830 - 9
AT181028	1H25	39	1830 - 9
AT181029	1H25	40	1830 - 9
AT181031	1H25	42	1830 - 9
AT181032	1H25	43	1830 - 9
AT181034	1H25	48	1830 - 9
AT181039	1H25	52	1830 - 9
AT181041	1H25	54	1830 - 9
AT181042	1H25	56	1830 - 9
AT181043	1H25	57	1830 - 9
AT181044	1H25	58	1830 - 9
AT181045	1I2	59	1830 - 11
AT181047	1I2	61	1830 - 11
AT181048	1I2	62	1830 - 11
AT181049	1I2	64	1830 - 11
AT181050	1I2	67	1830 - 11
AT181051	1I2	68	1830 - 11
AT181052	1I2	69	1830 - 11
AT181052	1I10	19	1830 - 19
AT181053	1I2	70	1830 - 11
AT181054	1I2	71	1830 - 11
AT181056	1I10	2	1830 - 19
AT181057	1I10	4	1830 - 19
AT181059	1I10	9	1830 - 19
AT181060	1I10	10	1830 - 19
AT181061	1I10	11	1830 - 19
AT181062	1I10	13	1830 - 19
AT181063	1I10	14	1830 - 19
AT181064	1I10	15	1830 - 19
AT181066	1I10	16	1830 - 19
AT181067	1I10	17	1830 - 19
AT181068	1I10	18	1830 - 19
AT181070	1I10	20	1830 - 19
AT181071	1I10	21	1830 - 19
AT181084	1H23	33	1830 - 7
AT181741	2J15	5	4360 - 3B
AT182612	1G4	70	1810 - 21
AT182613	1G4	71	1810 - 21
AT182614	1G4	72	1810 - 21
AT182616	1G4	73	1810 - 21
AT182625	1F19	12	1810 - 11
AT182626	1F19	22	1810 - 11
AT183082	1F25	61	1810 - 17
AT183083	1F25	62	1810 - 17
AT183084	1F25	63	1810 - 17
AT183085	1F25	67	1810 - 17
AT183086	1F25	68	1810 - 17
AT184358	1E4	50	1674 - 17
AT184548	1J12	7	2160 - 7
AT184550	1J12	7	2160 - 7
AT184705	1D21	3	1674 - 9
AT184706	1D21	4	1674 - 9
AT186244	1H21	0	1830 - 5
AT186554	2D20	6A	3360 - 21
AT186862	1H25	13	1830 - 9
AT186863	1H25	15	1830 - 9
AT186864	1H25	44	1830 - 9
AT186865	1H25	41	1830 - 9
AT186866	1H25	53	1830 - 9
AT187307	1H21	1	1830 - 5
AT187308	1H21	3	1830 - 5
AT188508	2C12	50	3340 - 3
AT188513	2C14	50	3340 - 5
AT188514	2C16	50	3340 - 7
AT188515	2C20	50	3340 - 11
AT188670	2J2	1	3360 - 147
AT188670	2J4	1	3360 - 149
AT188670	2J6	1	3360 - 151
AT188670	2J8	1	3360 - 153
AT189732	2B19	1A	3302 - 13
AT189733	2B19	1B	3302 - 13
AT189734	2B9	21	3302 - 3
AT189734	2B9	22	3302 - 3
AT189734	2B9	23	3302 - 3
AT189734	2B9	24	3302 - 3
AT189734	2B9	25	3302 - 3
AT189734	2B11	50	3302 - 5
AT189734	2B13	21	3302 - 7
AT189734	2B13	22	3302 - 7
AT189734	2B13	23	3302 - 7
AT189734	2B13	24	3302 - 7
AT189734	2B13	25	3302 - 7
AT189734	2B13	50	3302 - 7
AT189734	2B15	21	3302 - 9
AT189734	2B15	22	3302 - 9
AT189734	2B15	23	3302 - 9

NUMERICAL INDEX - CONTINUED

PART NO.	GRID	KEY	PAGE
AT189734	2B15	24	3302 - 9
AT189734	2B15	25	3302 - 9
AT189734	2B15	50	3302 - 9
AT189734	2B17	21	3302 - 11
AT189734	2B17	22	3302 - 11
AT189734	2B17	23	3302 - 11
AT189734	2B17	24	3302 - 11
AT189734	2B17	25	3302 - 11
AT189734	2B17	50	3302 - 11
AT189735	2B19	1C	3302 - 13
AT189736	2B19	1D	3302 - 13
AT189761	2B11	40	3302 - 5
AT189762	2B11	40	3302 - 5
AT189763	2B11	40	3302 - 5
AT189764	2B11	40	3302 - 5
AT189765	2B11	40	3302 - 5
AT189766	2B11	40	3302 - 5
AT189767	2B11	40	3302 - 5
AT189768	2B11	40	3302 - 5
AT189769	2B11	40	3302 - 5
AT189770	2B11	40	3302 - 5
AT189771	2B11	40	3302 - 5
AT189772	2B11	40	3302 - 5
AT189773	2B11	40	3302 - 5
AT189774	2B11	40	3302 - 5
AT189775	2B17	40	3302 - 11
AT189776	2B17	40	3302 - 11
AT189777	2B17	40	3302 - 11
AT189778	2B17	40	3302 - 11
AT189779	2B17	40	3302 - 11
AT189780	2B17	40	3302 - 11
AT189781	2B15	40	3302 - 9
AT189782	2B15	40	3302 - 9
AT189783	2B15	40	3302 - 9
AT189784	2B15	40	3302 - 9
AT189785	2B15	40	3302 - 9
AT189786	2B15	40	3302 - 9
AT189787	2B15	40	3302 - 9
AT189788	2B13	40	3302 - 7
AT189789	2B13	40	3302 - 7
AT189790	2B13	40	3302 - 7
AT189791	2B13	40	3302 - 7
AT189792	2B13	40	3302 - 7
AT189793	2B13	40	3302 - 7
AT189835	2B19	1E	3302 - 13
AT189843	2B25	1	3315 - 7
AT189843	2C2	0	3315 - 9
AT189907	2B9	4	3302 - 3
AT189907	2B17	4	3302 - 11
AT189908	2B9	6	3302 - 3
AT189908	2B17	6	3302 - 11
AT189909	2B9	8	3302 - 3
AT189909	2B17	8	3302 - 11
AT189910	2B17	7	3302 - 11
AT189911	2B11	29	3302 - 5
AT189911	2B13	29	3302 - 7
AT189911	2B15	29	3302 - 9
AT189911	2B17	29	3302 - 11
AT189912	2B13	4	3302 - 7
AT189913	2B13	6	3302 - 7
AT189914	2B13	8	3302 - 7
AT189915	2B13	10	3302 - 7
AT189916	2B13	9	3302 - 7
AT190190	1F13	16	1810 - 5
AT190535	1E13	1	1674 - 25
AT190535	2J10	4	3360 - 155
AT191199	2I6	10	3360 - 127
AT191397	2J10	14	3360 - 155
AT191445	1I2	72	1830 - 11
AT191447	1H13	22	1821 - 9
AT192611	1G18	2	1810 - 35
AT192612	1G18	5	1810 - 35
AT192613	1G18	6	1810 - 35
AT192636	2B19	1F	3302 - 13
AT192638	2B19	1H	3302 - 13
AT192639	2B19	1G	3302 - 13
AT192640	2B19	1J	3302 - 13
AT193242	1C7	0D	0400 - 3
AT194969	1E2	2A	1674 - 15
AT194969	1F23	8	1810 - 15
AT194969	1G16	18	1810 - 33
AT196578	2B11	40	3302 - 5
AT196579	2B11	40	3302 - 5
AT200004	2E2	9	3360 - 27
AT200004	2I18	18	3360 - 139
AT200005	1C23	62	0530 - 3
AT200012	1D15	10	1674 - 3
AT200012	1E4	10	1674 - 17
AT200012	2F12	36	3360 - 61
AT200012	2F14	36	3360 - 63
AT200231	2G10	3	3360 - 83
AT200232	2G10	4	3360 - 83
AT200398	2H18	71	3360 - 115
AT200584	1F21	59	1810 - 13
AT200934	2J15	2	4360 - 3B
AT200998	1C21	0E	0520 - 3
AT200999	1C21	0I	0520 - 3
AT201018	1E20	33	1740 - 7
AT201277	2F10	46	3360 - 59
AT201561	1B18	50	0260 - 7
AT201563	2J19	7	4360 - 7
AT201564	2J19	2	4360 - 7
AT201577	2I14	16	3360 - 135
AT201578	2I14	24	3360 - 135
AT201586	2I6	17	3360 - 127
AT201589	2I14	22	3360 - 135
AT201596	2G18	3	3360 - 91
AT201621	1J12	1	2160 - 7
AT201622	1J12	2	2160 - 7
AT201622	1J14	50	2160 - 9
AT201627	2I22	63	3360 - 143
AT201632	1J12	18	2160 - 7
AT201635	2G14	32	3360 - 87
AT201636	2G14	5	3360 - 87
AT201637	2G14	7	3360 - 87
AT201638	2G14	6	3360 - 87
AT201639	2H12	5	3360 - 109
AT201640	2H12	7	3360 - 109
AT201641	2H12	13	3360 - 109
AT201642	2H4	18	3360 - 101
AT201703	1J10	18	2160 - 5
AT201712	1J8	4	2160 - 3
AT201732	2D12	27	3360 - 13
AT201739	1G14	2	1810 - 31
AT201740	2D12	26	3360 - 13
AT201752	1D17	18	1674 - 5
AT201755	2C16	43	3340 - 7
AT201767	1J10	16	2160 - 5
AT201769	2G12	3	3360 - 85
AT201787	1J8	62	2160 - 3
AT201796	2C16	46	3340 - 7
AT201801	2E4	2	3360 - 29
AT201801	2G16	0	3360 - 89
AT201827	2J2	17	3360 - 147
AT201860	1G14	1	1810 - 31
AT201932	2E2	6	3360 - 27
AT201932	2G12	0	3360 - 85
AT201960	1C7	11	0400 - 3
AT201961	2H16	15	3360 - 113
AT201961	2H22	16	3360 - 119
AT201966	2H8	11	3360 - 105
AT201967	2G14	16	3360 - 87
AT201967	2H12	12	3360 - 109
AT201969	2J19	9	4360 - 7
AT201970	1J14	48	2160 - 9
AT201972	2H8	5	3360 - 105
AT201974	2H4	10	3360 - 101
AT201977	1B18	30	0260 - 7
AT201977	2J19	13	4360 - 7
AT201978	1B18	39	0260 - 7
AT201981	2H4	11	3360 - 101
AT201982	2H8	2	3360 - 105
AT201983	2H8	6	3360 - 105
AT201984	2H8	7	3360 - 105
AT201987	2H14	11	3360 - 111
AT201987	2H20	11	3360 - 117
AT201989	2H14	13	3360 - 111
AT201989	2H20	13	3360 - 117
AT201990	2H14	14	3360 - 111
AT201990	2H20	14	3360 - 117
AT201991	2H14	15	3360 - 111
AT201991	2H20	15	3360 - 117
AT201992	2H14	16	3360 - 111
AT201992	2H20	16	3360 - 117
AT201993	2H14	17	3360 - 111
AT201994	2H14	18	3360 - 111
AT201994	2H16	18	3360 - 113
AT201994	2H20	18	3360 - 117
AT201994	2H22	18	3360 - 119
AT201999	2H20	27	3360 - 117
AT202000	2H20	28	3360 - 117
AT202001	2H20	29	3360 - 117
AT202002	2H20	30	3360 - 117
AT202003	2H16	35	3360 - 113
AT202003	2H18	35	3360 - 115
AT202003	2H22	35	3360 - 119
AT202005	2H18	41	3360 - 115
AT202006	2H16	45	3360 - 113
AT202006	2H18	45	3360 - 115
AT202006	2H22	45	3360 - 119
AT202007	2H20	47	3360 - 117
AT202009	2H16	49	3360 - 113
AT202009	2H18	49	3360 - 115
AT202009	2H20	49	3360 - 117
AT202009	2H22	49	3360 - 119
AT202011	2H16	52	3360 - 113
AT202011	2H18	52	3360 - 115
AT202011	2H20	52	3360 - 117
AT202011	2H22	52	3360 - 119
AT202013	2H16	54	3360 - 113
AT202013	2H18	54	3360 - 115
AT202013	2H20	54	3360 - 117
AT202013	2H22	54	3360 - 119
AT202014	2H18	55	3360 - 115
AT202015	2H18	56	3360 - 115
AT202016	2H18	57	3360 - 115
AT202017	2H18	59	3360 - 115
AT202018	2H18	62	3360 - 115
AT202019	2H18	65	3360 - 115
AT202021	2H18	69	3360 - 115
AT202022	2H18	70	3360 - 115

NUMERICAL INDEX - CONTINUED

PART NO.	GRID	KEY	PAGE
AT202024	2H16	73	3360 - 113
AT202027	2H20	77	3360 - 117
AT202028	2H22	78	3360 - 119
AT202029	2H22	79	3360 - 119
AT202030	2H22	80	3360 - 119
AT202032	2H16	82	3360 - 113
AT202032	2H22	82	3360 - 119
AT202033	2H16	83	3360 - 113
AT202034	2H22	84	3360 - 119
AT202035	2H18	85	3360 - 115
AT202036	2H18	86	3360 - 115
AT202037	2H18	87	3360 - 115
AT202038	2H18	88	3360 - 115
AT202039	2H16	91	3360 - 113
AT202039	2H22	91	3360 - 119
AT202040	2H16	92	3360 - 113
AT202040	2H22	92	3360 - 119
AT202042	2H16	95	3360 - 113
AT202042	2H22	95	3360 - 119
AT202044	2H16	16	3360 - 113
AT202046	2H16	1	3360 - 113
AT202046	2H22	17	3360 - 119
AT202047	2H16	2	3360 - 113
AT202047	2H22	2	3360 - 119
AT202048	2H16	3	3360 - 113
AT202048	2H22	3	3360 - 119
AT202049	2H16	4	3360 - 113
AT202049	2H22	4	3360 - 119
AT202050	2H16	5	3360 - 113
AT202050	2H22	5	3360 - 119
AT202051	2H16	8	3360 - 113
AT202051	2H22	8	3360 - 119
AT202052	2H16	13	3360 - 113
AT202053	2H16	14	3360 - 113
AT202054	2H16	11	3360 - 113
AT202054	2H22	11	3360 - 119
AT202055	2H20	83	3360 - 117
AT202056	2H20	84	3360 - 117
AT202057	2H20	85	3360 - 117
AT202058	2H22	15	3360 - 119
AT202076	2H18	90	3360 - 115
AT202080	2H16	50	3360 - 113
AT202080	2H18	50	3360 - 115
AT202080	2H20	50	3360 - 117
AT202080	2H22	50	3360 - 119
AT202085	2H16	40	3360 - 113
AT202085	2H18	40	3360 - 115
AT202085	2H22	40	3360 - 119
AT202086	2H14	75	3360 - 111
AT202086	2H20	75	3360 - 117
AT202087	2H14	39	3360 - 111
AT202087	2H18	39	3360 - 115
AT202087	2H20	39	3360 - 117
AT202088	2H18	89	3360 - 115
AT202089	2H18	42	3360 - 115
AT202090	2H18	37	3360 - 115
AT202093	1J10	15	2160 - 5
AT202094	1E20	37	1740 - 7
AT202100	2D6	27	3360 - 7
AT202102	1F4	7	1740 - 15
AT202105	2D4	13	3360 - 5
AT202105	2D6	13	3360 - 7
AT202110	2E2	4	3360 - 27
AT202110	2H8	0	3360 - 105
AT202111	2E2	8	3360 - 27
AT202111	2G10	0	3360 - 83
AT202111	2I18	17	3360 - 139
AT202119	2F24	0	3360 - 73
AT202119	2G2	0	3360 - 75
AT202119	2G6	0	3360 - 79
AT202122	1J8	57	2160 - 3
AT202122	1J16	30	2160 - 11
AT202169	2B25	1	3315 - 7
AT202169	2C2	0	3315 - 9
AT202174	2F24	8	3360 - 73
AT202174	2G2	8	3360 - 75
AT202174	2G6	8	3360 - 79
AT202175	2F20	3	3360 - 69
AT202175	2F22	3	3360 - 71
AT202175	2F24	10	3360 - 73
AT202175	2G2	10	3360 - 75
AT202175	2G4	2	3360 - 77
AT202175	2G6	10	3360 - 79
AT202232	1G14	3	1810 - 31
AT202246	2I14	2B	3360 - 135
AT202272	1A19	26	0130 - 3
AT202291	2B21	29	3315 - 3
AT202292	2B21	28	3315 - 3
AT202301	1A19	20	0130 - 3
AT202303	2C12	0G	3340 - 3
AT202303	2C14	0F	3340 - 5
AT202303	2C16	4E	3340 - 7
AT202303	2C20	0G	3340 - 11
AT202304	2C16	0C	3340 - 7
AT202304	2C16	4C	3340 - 7
AT202305	1C2	10	0260 - 15
AT202318	1E20	50	1740 - 7
AT202338	2B21	44	3315 - 3
AT202369	1E16	15	1740 - 3
AT202391	1D19	5	1674 - 7
AT202394	1D19	16	1674 - 7
AT202396	1E24	5	1740 - 11
AT202397	1E22	2	1740 - 9
AT202397	1E24	1	1740 - 11
AT202489	2C8	19	3315 - 15
AT202490	2C8	17	3315 - 15
AT202491	2E4	23	3360 - 29
AT203653	1J16	2	2160 - 11
AT203685	1C25	25	0560 - 3
AT203704	2H16	53	3360 - 113
AT203704	2H18	53	3360 - 115
AT203704	2H20	53	3360 - 117
AT203704	2H22	53	3360 - 119
AT203777	2H14	7	3360 - 111
AT203777	2H18	7	3360 - 115
AT204900	2H12	14	3360 - 109
AT204901	2I6	9	3360 - 127
AT204903	1B18	42	0260 - 7
AT204918	1F21	7	1810 - 13
AT204965	1J10	22	2160 - 5
AT204965	2J13	90	4360 - 3
AT205712	1E8	3	1674 - 19B
AT213603	1H19	28	1830 - 3
AT213603	1I8	51	1830 - 17
AT213606	1F25	34M	1810 - 17
AT213608	1F25	55	1810 - 17
AT213608	1I8	15	1830 - 17
AT213609	1F23	33	1810 - 15
AT213610	1G2	20	1810 - 19
AT213611	1F21	86	1810 - 13
AT213612	2C10	27	3315 - 17
AT213614	1F11	9	1810 - 3
AT213614	2C6	25	3315 - 13
AT213616	2F10	8	3360 - 59
AT213624	1F23	14	1810 - 15
AT213625	1G18	39	1810 - 35
AT213630	2I22	3	3360 - 143
AT213630	2I22	51	3360 - 143
AT213722	1G24	3	1810 - 41
AT213723	1G24	4	1810 - 41
AT213724	1G24	17	1810 - 41
AT213725	1G24	16	1810 - 41
AT213726	1G24	0	1810 - 41
AT213737	2C10	24	3315 - 17
AT213739	1G24	24	1810 - 41
AT213743	2B23	1	3315 - 5
AT213745	2B23	5	3315 - 5
AT213746	2B21	26	3315 - 3
AT213747	2B21	25	3315 - 3
AT213778	1G24	21	1810 - 41
AT213779	1G24	8	1810 - 41
AT213782	1H2	1	1810 - 43
AT213783	1G24	12	1810 - 41
AT213784	2F12	35	3360 - 61
AT213784	2F14	35	3360 - 63
AT213791	1F13	19	1810 - 5
AT213792	1E4	44	1674 - 17
AT213807	1D17	13	1674 - 5
AT213817	1E6	23	1674 - 19
AT213826	1E6	4	1674 - 19
AT213836	2I18	37	3360 - 139
AT213883	1G12	2	1810 - 29
AT213904	2F12	12	3360 - 61
AT213908	2F12	15	3360 - 61
AT213923	1I6	2	1830 - 15
AT213924	1I4	0	1830 - 13
AT213934	1F15	1D	1810 - 7
AT213935	1I6	0	1830 - 15
AT213936	1I8	2	1830 - 17
AT213937	1I8	3	1830 - 17
AT213938	1I8	4	1830 - 17
AT213939	1I6	8	1830 - 15
AT213940	1H19	26	1830 - 3
AT213941	1F13	2	1810 - 5
AT213942	1F13	4	1810 - 5
AT213943	1I6	10	1830 - 15
AT213945	1F13	13	1810 - 5
AT213949	1F13	10	1810 - 5
AT213950	1F13	11	1810 - 5
AT213950	1F15	11	1810 - 7
AT213954	1G20	2	1810 - 37
AT213957	2F12	32	3360 - 61
AT213957	2F14	32	3360 - 63
AT213958	1G22	3	1810 - 39
AT213960	1G24	27	1810 - 41
AT213962	2F12	33	3360 - 61
AT213962	2F14	33	3360 - 63
AT213968	2C6	11E	3315 - 13
AT214007	1F19	17	1810 - 11
AT214010	1I15	13A	1910 - 5
AT214011	1H2	3	1810 - 43
AT214012	1G24	7	1810 - 41
AT214012	1G24	20	1810 - 41
AT214017	1F19	18	1810 - 11
AT214022	1E4	45	1674 - 17
AT214041	1F19	10	1810 - 11
AT214042	1F19	8	1810 - 11
AT214043	1F19	9	1810 - 11
AT214054	1F19	2	1810 - 11
AT214056	1F19	4	1810 - 11
AT214057	1F19	5	1810 - 11

NUMERICAL INDEX - CONTINUED

PART NO.	GRID	KEY	PAGE
AT214058	1F19	27	1810 - 11
AT214060	1F19	20	1810 - 11
AT214061	1F19	21	1810 - 11
AT214062	1F19	22	1810 - 11
AT214063	1F19	23	1810 - 11
AT214064	1F21	94	1810 - 13
AT214065	1F21	93	1810 - 13
AT214066	1G8	21	1810 - 25
AT214067	1F21	19	1810 - 13
AT214069	1F21	47	1810 - 13
AT214070	1F21	97	1810 - 13
AT214071	1F21	88	1810 - 13
AT214072	1G2	26	1810 - 19
AT214073	1G2	22	1810 - 19
AT214074	1G4	42	1810 - 21
AT214075	1F21	14	1810 - 13
AT214076	1F21	17	1810 - 13
AT214077	1F21	77	1810 - 13
AT214078	1F21	45	1810 - 13
AT214079	1F21	51	1810 - 13
AT214080	1F21	12	1810 - 13
AT214082	1F21	89	1810 - 13
AT214083	1F21	56	1810 - 13
AT214084	1F21	25	1810 - 13
AT214085	1G4	33	1810 - 21
AT214086	1G4	34	1810 - 21
AT214087	1G4	35	1810 - 21
AT214088	1G4	32	1810 - 21
AT214089	1G4	40	1810 - 21
AT214090	1G2	29	1810 - 19
AT214091	1G2	30	1810 - 19
AT214092	1G2	27	1810 - 19
AT214093	1G4	41	1810 - 21
AT214094	1G4	39	1810 - 21
AT214095	1F21	22	1810 - 13
AT214096	1G2	25	1810 - 19
AT214097	1G4	51	1810 - 21
AT214098	1G4	52	1810 - 21
AT214099	1G4	60	1810 - 21
AT214100	1G4	53	1810 - 21
AT214101	1G4	55	1810 - 21
AT214102	1G2	1	1810 - 19
AT214103	1G2	5	1810 - 19
AT214104	1G2	6	1810 - 19
AT214105	1G2	19	1810 - 19
AT214106	1G2	4	1810 - 19
AT214107	1G2	3	1810 - 19
AT214108	1G2	2	1810 - 19
AT214109	1G2	13	1810 - 19
AT214110	1G2	12	1810 - 19
AT214111	1G2	10	1810 - 19
AT214112	1G2	11	1810 - 19
AT214113	1G2	23	1810 - 19
AT214114	1G2	24	1810 - 19
AT214115	1G8	1	1810 - 25
AT214116	1G8	4	1810 - 25
AT214117	1F21	95	1810 - 13
AT214117	1G8	8	1810 - 25
AT214118	1G8	2	1810 - 25
AT214119	1G8	5	1810 - 25
AT214120	1G8	80	1810 - 25
AT214121	1G8	81	1810 - 25
AT214122	1G8	90	1810 - 25
AT214123	1G8	75	1810 - 25
AT214124	1G10	1	1810 - 27
AT214125	1G10	5	1810 - 27
AT214126	1G10	13	1810 - 27
AT214127	1F21	31	1810 - 13
AT214128	1F21	54	1810 - 13
AT214129	1F21	71	1810 - 13
AT214131	1F23	12	1810 - 15
AT214132	1F23	24	1810 - 15
AT214133	1F23	7	1810 - 15
AT214134	1F25	34	1810 - 17
AT214135	1F25	34A	1810 - 17
AT214136	1F25	34B	1810 - 17
AT214137	1F25	34C	1810 - 17
AT214138	1F25	34D	1810 - 17
AT214139	1F25	34E	1810 - 17
AT214140	1F25	34K	1810 - 17
AT214141	1F25	34L	1810 - 17
AT214142	1F23	13	1810 - 15
AT214143	1F23	10	1810 - 15
AT214144	1F23	32	1810 - 15
AT214145	1F23	2	1810 - 15
AT214146	1F23	20	1810 - 15
AT214147	1F23	22	1810 - 15
AT214148	1F23	18	1810 - 15
AT214152	1F25	54	1810 - 17
AT214155	1F25	40	1810 - 17
AT214157	1F25	42	1810 - 17
AT214158	1F21	5	1810 - 13
AT214158	1F25	43	1810 - 17
AT214159	1F25	44	1810 - 17
AT214160	1F23	16	1810 - 15
AT214161	1F23	23	1810 - 15
AT214162	1F25	41	1810 - 17
AT214163	1G6	7	1810 - 23
AT214164	1G6	18	1810 - 23
AT214165	1G6	28	1810 - 23
AT214166	1G6	29	1810 - 23
AT214167	1G6	8	1810 - 23
AT214168	1G6	16	1810 - 23
AT214169	1G6	33	1810 - 23
AT214170	1G6	49	1810 - 23
AT214171	1G6	92	1810 - 23
AT214172	1G4	58	1810 - 21
AT214172	1G6	65	1810 - 23
AT214173	1F21	55	1810 - 13
AT214177	1E6	3	1674 - 19
AT214178	1E6	5	1674 - 19
AT214179	1E6	6	1674 - 19
AT214180	1E6	7	1674 - 19
AT214181	1E6	8	1674 - 19
AT214182	1E6	9	1674 - 19
AT214183	1E6	10	1674 - 19
AT214184	1E6	11	1674 - 19
AT214185	1E6	12	1674 - 19
AT214186	1E6	13	1674 - 19
AT214187	1E6	14	1674 - 19
AT214188	1E6	15	1674 - 19
AT214188	1E6	16A	1674 - 19
AT214189	1E6	16	1674 - 19
AT214190	1E2	16	1674 - 15
AT214191	1E6	17	1674 - 19
AT214192	1E6	18	1674 - 19
AT214193	1E6	19	1674 - 19
AT214194	1E6	20	1674 - 19
AT214195	1E6	21	1674 - 19
AT214196	1E6	22	1674 - 19
AT214197	1E2	15	1674 - 15
AT214198	1E2	14	1674 - 15
AT214199	1E2	13	1674 - 15
AT214200	1E2	12	1674 - 15
AT214201	1E6	24	1674 - 19
AT214202	1E6	28	1674 - 19
AT214203	1E6	29	1674 - 19
AT214258	1F15	1	1810 - 7
AT214259	1F15	1A	1810 - 7
AT214260	1F15	1B	1810 - 7
AT214261	1F15	2	1810 - 7
AT214262	1F15	2A	1810 - 7
AT214273	1I6	6B	1830 - 15
AT214274	1I6	6C	1830 - 15
AT214275	1I6	6A	1830 - 15
AT214277	1F19	29	1810 - 11
AT214286	1F21	53	1810 - 13
AT214287	1F21	62	1810 - 13
AT214287	1G4	44	1810 - 21
AT214288	1F21	91	1810 - 13
AT214289	1F21	1	1810 - 13
AT214290	1F23	9	1810 - 15
AT214291	1F23	11	1810 - 15
AT214292	1F25	56	1810 - 17
AT214293	1G10	2	1810 - 27
AT214294	1G10	3	1810 - 27
AT214296	1G10	6	1810 - 27
AT214297	1G2	28	1810 - 19
AT214298	1G4	36	1810 - 21
AT214299	1G6	61	1810 - 23
AT214300	1G4	56	1810 - 21
AT214300	1G6	74	1810 - 23
AT214301	1G2	17	1810 - 19
AT214302	1F25	34F	1810 - 17
AT214303	1F25	34G	1810 - 17
AT214304	1F19	7	1810 - 11
AT214305	1F21	60	1810 - 13
AT214306	1G8	63	1810 - 25
AT214307	1G4	37	1810 - 21
AT214308	1F21	68	1810 - 13
AT214308	1G4	38	1810 - 21
AT214308	1G8	88	1810 - 25
AT214308	1G10	14	1810 - 27
AT214309	1G6	69	1810 - 23
AT214310	1G4	45	1810 - 21
AT214311	1F23	21	1810 - 15
AT214311	1G2	18	1810 - 19
AT214312	1G2	21	1810 - 19
AT214313	1F23	19	1810 - 15
AT214314	1F23	15	1810 - 15
AT214315	1G4	57	1810 - 21
AT214316	1F19	11	1810 - 11
AT214324	1G24	11	1810 - 41
AT214326	1G22	0	1810 - 39
AT214327	1G22	2	1810 - 39
AT214358	2C10	11	3315 - 17
AT214361	2C10	9	3315 - 17
AT214373	1F13	18	1810 - 5
AT214383	2C6	11	3315 - 13
AT214393	2C4	1	3315 - 11
AT214393	2C6	0	3315 - 13
AT214430	1G12	0	1810 - 29
AT215112	1I8	52	1830 - 17
AT215119	1I8	56	1830 - 17
AT215122	1I8	54	1830 - 17
AT215124	1F21	9	1810 - 13
AT215194	1D5	22	1320 - 3
AT215470	1H7	12	1821 - 5
AT215471	1I8	12	1830 - 17
AT215471	1I8	57	1830 - 17
AT215473	1H23	10	1830 - 7

NUMERICAL INDEX - CONTINUED

PART NO.	GRID	KEY	PAGE
AT215476	1I8	0	1830 - 17
AT215478	1I8	1	1830 - 17
AT215479	1G12	6	1810 - 29
AT215483	1H17	9	1821 - 11
AT215485	1H2	0	1810 - 43
AT215490	1H11	3	1821 - 7
AT215492	1H7	11	1821 - 5
AT215503	1E4	17	1674 - 17
AT215503	1H2	10	1810 - 43
AT215511	1H23	26	1830 - 7
AT215512	1H23	30	1830 - 7
AT215518	1H17	3	1821 - 11
AT215523	1H19	9	1830 - 3
AT215526	1H23	23	1830 - 7
AT215531	1I10	0	1830 - 19
AT215533	1G12	1	1810 - 29
AT215534	1I8	6	1830 - 17
AT215535	1I8	5	1830 - 17
AT215537	1H7	4	1821 - 5
AT215538	2F14	4	3360 - 63
AT215539	2F14	9	3360 - 63
AT215542	2F12	11	3360 - 61
AT215543	2D24	31	3360 - 25
AT215543	2F12	16	3360 - 61
AT215555	1H17	5	1821 - 11
AT215556	1I8	8	1830 - 17
AT215557	1I8	9	1830 - 17
AT215561	1H7	8	1821 - 5
AT215563	1H7	3	1821 - 5
AT215564	1H7	5	1821 - 5
AT215565	1H7	6	1821 - 5
AT215566	1H17	0E	1821 - 11
AT215567	1I8	10	1830 - 17
AT215568	1F25	35	1810 - 17
AT215569	1F21	6	1810 - 13
AT215571	1H11	0	1821 - 7
AT215571	1H13	50	1821 - 9
AT215572	1H7	0	1821 - 5
AT215580	1H17	0A	1821 - 11
AT215596	1H17	0B	1821 - 11
AT215597	1H17	0C	1821 - 11
AT215602	1I8	11	1830 - 17
AT215608	1H17	0H	1821 - 11
AT215609	1H7	1	1821 - 5
AT215614	1I8	7	1830 - 17
AT215658	2D6	20	3360 - 7
AT215763	2H4	42	3360 - 101
AT215876	2C8	20	3315 - 15
AT215879	2D22	1	3360 - 23
AT215879	2D24	1	3360 - 25
AT215938	2C8	12	3315 - 15
AT215998	1G18	15	1810 - 35
AT216000	1G18	30	1810 - 35
AT216026	1G18	12	1810 - 35
AT216027	1G18	23	1810 - 35
AT216521	1H13	20	1821 - 9
AT216522	1H13	6	1821 - 9
AT216522	1H15	6	1821 - 9B
AT216532	1H13	14	1821 - 9
AT216533	1H13	16	1821 - 9
AT216534	1H13	17	1821 - 9
AT216978	2F10	32	3360 - 59
AT216981	2E4	25	3360 - 29
AT216982	2E4	26	3360 - 29
AT216983	2E4	27	3360 - 29
AT216984	2E4	28	3360 - 29
AT217049	2H14	12	3360 - 111
AT217049	2H20	12	3360 - 117
AT217050	2H14	22	3360 - 111
AT217051	2H14	25	3360 - 111
AT217051	2H20	25	3360 - 117
AT217052	2H16	10	3360 - 113
AT217052	2H18	10	3360 - 115
AT217052	2H22	10	3360 - 119
AT217053	2I14	13	3360 - 135
AT217054	2H16	96	3360 - 113
AT217054	2H22	96	3360 - 119
AT217055	2H16	51	3360 - 113
AT217055	2H18	51	3360 - 115
AT217055	2H20	51	3360 - 117
AT217055	2H22	51	3360 - 119
AT217056	2H18	38	3360 - 115
AT217058	2H4	16	3360 - 101
AT217059	2I14	18	3360 - 135
AT217060	2I10	4	3360 - 131
AT217060	2I12	4	3360 - 133
AT217060	2I14	4	3360 - 135
AT217061	2I10	6	3360 - 131
AT217061	2I12	6	3360 - 133
AT217061	2I14	6	3360 - 135
AT217062	2I10	9	3360 - 131
AT217062	2I12	9	3360 - 133
AT217062	2I14	9	3360 - 135
AT217063	2H6	3	3360 - 103
AT217064	2H22	12	3360 - 119
AT217067	2I14	3	3360 - 135
AT217069	2I14	14	3360 - 135
AT217081	2C12	0L	3340 - 3
AT217081	2C12	5H	3340 - 3
AT217081	2C14	0L	3340 - 5
AT217081	2C14	5H	3340 - 5
AT217081	2C16	0J	3340 - 7
AT217081	2C16	4H	3340 - 7
AT217081	2C16	40	3340 - 7
AT217081	2C20	0L	3340 - 11
AT217081	2C20	5H	3340 - 11
AT217082	2C12	0K	3340 - 3
AT217082	2C12	5G	3340 - 3
AT217082	2C14	0K	3340 - 5
AT217082	2C14	5G	3340 - 5
AT217082	2C16	0I	3340 - 7
AT217082	2C16	4G	3340 - 7
AT217082	2C16	39	3340 - 7
AT217082	2C20	0K	3340 - 11
AT217082	2C20	5G	3340 - 11
AT217083	2H16	94	3360 - 113
AT217083	2H22	94	3360 - 119
AT217084	1J18	16	2160 - 13
AT217086	1C21	0F	0520 - 3
AT217091	2F10	31	3360 - 59
AT217110	2F12	12	3360 - 61
AT217110	2F12	13	3360 - 61
AT217128	1H19	3	1830 - 3
AT217129	1H19	3	1830 - 3
AT217132	1H19	20	1830 - 3
AT217133	1H25	0	1830 - 9
AT217134	1H19	6	1830 - 3
AT217137	2F14	5	3360 - 63
AT217138	2F14	6	3360 - 63
AT217139	2F14	7	3360 - 63
AT217140	2F14	8	3360 - 63
AT217141	2F12	14	3360 - 61
AT217141	2F12	15	3360 - 61
AT217142	1F21	26	1810 - 13
AT217147	2H20	81	3360 - 117
AT217155	1G18	2	1810 - 35
AT217156	1G18	5	1810 - 35
AT217158	1G16	16	1810 - 33
AT217161	1G18	9	1810 - 35
AT217162	1G18	6	1810 - 35
AT217166	1G16	8	1810 - 33
AT217709	1H15	51	1821 - 9B
AT217777	2I18	36	3360 - 139
AT217828	1H19	31	1830 - 3
AT217849	2C10	0	3315 - 17
AT218133	1I2	73	1830 - 11
AT218134	1I10	22	1830 - 19
AT218135	1I10	23	1830 - 19
AT218136	1I10	25	1830 - 19
AT218137	1I10	24	1830 - 19
AT218138	1H21	2	1830 - 5
AT218140	1F25	36	1810 - 17
AT218141	1F23	31	1810 - 15
AT218189	1F19	29A	1810 - 11
AT218190	1F21	1	1810 - 13
AT219661	2J17	6	4360 - 5
AT223785	1E11	2	1674 - 22
AT224893	1E11	2	1674 - 22
AT250253	1I8	60	1830 - 17
AT250443	1H13	0A	1821 - 9
AT250444	1H13	0B	1821 - 9
AT250445	1H13	0C	1821 - 9
AT250446	1H13	0D	1821 - 9
AT250589	2F12	34	3360 - 61
AT250589	2F14	34	3360 - 63
AT250601	1E20	48	1740 - 7
AT250601	1H19	10	1830 - 3
AT251217	2J13	38	4360 - 3
AT251217	2J13	60	4360 - 3
AT264240	2I14	11	3360 - 135
AT264241	2I6	11	3360 - 127
AT264248	2I14	17	3360 - 135
AT264252	2I14	12	3360 - 135
AT264253	2I14	15	3360 - 135
AT264348	2I14	28	3360 - 135
AT264348	2J19	62	4360 - 7
AT28077	1D9	20	1369 - 5
AT35121	2J10	3	3360 - 155
AT35831	1H23	35	1830 - 7
AT39141	1C13	11	0510 - 5
AT48434	2F10	36	3360 - 59
AT48434	2F10	38	3360 - 59
AT48434	2F10	44	3360 - 59
AT48434	2F10	45	3360 - 59
AT49216	2G16	12	3360 - 89
AT50923	2D4	11	3360 - 5
AT50923	2D6	11	3360 - 7
AT56658	2D6	31	3360 - 7
AT71082	2J10	11	3360 - 155
AT78633	1F13	16	1810 - 5
AT78634	1F13	16	1810 - 5
AT83721	1E13	2	1674 - 25
AT83721	2J10	6	3360 - 155
AU42809	1F13	16	1810 - 5
A590142	1F2	12	1740 - 13
A590906	1D9	69	1369 - 5
A810105	1B6	8	0130 - 15
A810155	1B20	26	0260 - 9
A811030	1D7	..	1369 - 3
A811040	1D7	..	1369 - 3
A811040	2J4	10	3360 - 149

NUMERICAL INDEX - CONTINUED

PART NO.	GRID	KEY	PAGE
A811045	1D7	..	1369 - 3
A811045	2H12	1	3360 - 109
A811105	1B18	31	0260 - 7
A811180	2I6	11	3360 - 127
A890018	1D11	16	1369 - 7
A890022	1D19	21	1674 - 7
CE15060	2J19	15	4360 - 7
CH10568	2H14	24	3360 - 111
CH10568	2H20	24	3360 - 117
CH10570	2C6	16A	3315 - 13
CH11436	1D7	..	1369 - 3
CH11528	1H17	2	1821 - 11
CH11561	2C6	37	3315 - 13
CH11561	2I22	61	3360 - 143
CH11569	1D7	..	1369 - 3
CH11569	2G16	18	3360 - 89
CH11570	1B18	59	0260 - 7
CH11570	1B24	13A	0260 - 13
CH11570	1B24	14A	0260 - 13
CH11570	1D7	..	1369 - 3
CH11570	2D22	0A	3360 - 23
CH11570	2D22	2A	3360 - 23
CH11570	2D22	6A	3360 - 23
CH11570	2D22	7A	3360 - 23
CH11570	2D22	8A	3360 - 23
CH11570	2D24	0A	3360 - 25
CH11570	2D24	2A	3360 - 25
CH11570	2D24	6A	3360 - 25
CH11570	2D24	7A	3360 - 25
CH11570	2D24	8A	3360 - 25
CH11570	2D24	32A	3360 - 25
CH11570	2E2	21A	3360 - 27
CH11570	2E2	24A	3360 - 27
CH11570	2E4	14A	3360 - 29
CH11570	2E4	15A	3360 - 29
CH11570	2E6	15A	3360 - 31
CH11570	2F10	9A	3360 - 59
CH11570	2F10	10A	3360 - 59
CH11570	2F10	11A	3360 - 59
CH11570	2F10	12A	3360 - 59
CH11570	2F10	40A	3360 - 59
CH11570	2F10	41A	3360 - 59
CH11570	2G16	19	3360 - 89
CH11570	2G18	11	3360 - 91
CH11570	2H4	4	3360 - 101
CH11570	2H6	29	3360 - 103
CH11570	2H6	41	3360 - 103
CH11570	2H10	8	3360 - 107
CH11570	2H16	36	3360 - 113
CH11570	2H18	36	3360 - 115
CH11570	2H22	36	3360 - 119
CH11570	2I18	31A	3360 - 139
CH11570	2I18	33A	3360 - 139
CH11570	2J6	10A	3360 - 151
CH11570	2J6	11A	3360 - 151
CH11570	2J6	18A	3360 - 151
CH11570	2J6	19A	3360 - 151
CH11570	2J8	28A	3360 - 153
CH11570	2J8	29A	3360 - 153
CH11570	2J19	11	4360 - 7
CH11571	1D7	..	1369 - 3
CH11571	2C2	17	3315 - 9
CH11572	1D7	..	1369 - 3
CH11572	2D6	22	3360 - 7
CH12329	1D7	..	1369 - 3
CH12329	2J19	63	4360 - 7
CH13523	1B20	4	0260 - 9
CH14634	1D7	..	1369 - 3
CH14634	2E6	1A	3360 - 31
CH14634	2G22	11	3360 - 95
CH14701	1D7	..	1369 - 3
CH15107	2H6	4	3360 - 103
CH16109	1J20	1	2160 - 15
CH17167	1B18	44	0260 - 7
CH17167	1D7	..	1369 - 3
CH17167	2J19	4	4360 - 7
CH17167	2J19	44	4360 - 7
CH17886	2H6	17	3360 - 103
CH19111	1D7	..	1369 - 3
CH19111	1D21	27A	1674 - 9
CH19111	2F10	15A	3360 - 59
CH19111	2I24	5A	3360 - 145
C19051	2B9	7	3302 - 3
C20354	2B15	26	3302 - 9
C20355	2B15	26	3302 - 9
C30651	2B9	15	3302 - 3
C30651	2B13	15	3302 - 7
C30652	2B9	15	3302 - 3
C30652	2B13	15	3302 - 7
C30653	2B9	15	3302 - 3
C30653	2B13	15	3302 - 7
C30654	2B9	15	3302 - 3
C30654	2B13	15	3302 - 7
C30655	2B9	15	3302 - 3
C30655	2B13	15	3302 - 7
C30657	2B9	15	3302 - 3
C30657	2B13	15	3302 - 7
C30658	2B9	15	3302 - 3
C31728	2B13	26	3302 - 7
C31729	2B13	26	3302 - 7
C31732	2B9	5	3302 - 3
C31732	2B13	5	3302 - 7
C31732	2B17	5	3302 - 11
C31733	2B13	7	3302 - 7
C317345	2B13	27	3302 - 7
C317507	2B11	27	3302 - 5
C330195	2B11	27	3302 - 5
C330196	2B9	15	3302 - 3
C330196	2B15	15	3302 - 9
C330196	2B17	15	3302 - 11
C330197	2B9	15	3302 - 3
C330197	2B15	15	3302 - 9
C330197	2B17	15	3302 - 11
C330198	2B9	15	3302 - 3
C330198	2B15	15	3302 - 9
C330198	2B17	15	3302 - 11
C330199	2B9	15	3302 - 3
C330199	2B15	15	3302 - 9
C330199	2B17	15	3302 - 11
C330200	2B9	15	3302 - 3
C330200	2B15	15	3302 - 9
C330200	2B17	15	3302 - 11
C330202	2B9	15	3302 - 3
C330202	2B15	15	3302 - 9
C330202	2B17	15	3302 - 11
C330203	2B9	15	3302 - 3
C330203	2B15	15	3302 - 9
C330437	2B15	27	3302 - 9
C330437	2B17	27	3302 - 11
C330438	2B15	33	3302 - 9
C330438	2B17	33	3302 - 11
C33066	2B15	32	3302 - 9
C33066	2B17	32	3302 - 11
C33067	2B15	32	3302 - 9
C33067	2B17	32	3302 - 11
C33068	2B15	32	3302 - 9
C33068	2B17	32	3302 - 11
C33069	2B15	32	3302 - 9
C33069	2B17	32	3302 - 11
C33071	2B15	32	3302 - 9
C33071	2B17	32	3302 - 11
C33072	2B15	32	3302 - 9
C33125	2B15	32	3302 - 9
C33125	2B17	32	3302 - 11
C616459	2B11	28	3302 - 5
C616460	2B11	28	3302 - 5
C616461	2B11	28	3302 - 5
C616462	2B11	28	3302 - 5
C616463	2B11	28	3302 - 5
C616465	2B11	28	3302 - 5
C616466	2B11	28	3302 - 5
C616777	2B13	28	3302 - 7
C616778	2B13	28	3302 - 7
C616779	2B13	28	3302 - 7
C616780	2B13	28	3302 - 7
C616781	2B13	28	3302 - 7
C616783	2B13	28	3302 - 7
C623347	2B11	28	3302 - 5
C624343	2B11	28	3302 - 5
C624343	2B15	28	3302 - 9
C624343	2B17	28	3302 - 11
C624344	2B11	28	3302 - 5
C624344	2B15	28	3302 - 9
C624344	2B17	28	3302 - 11
C624345	2B11	28	3302 - 5
C624345	2B15	28	3302 - 9
C624345	2B17	28	3302 - 11
C624346	2B11	28	3302 - 5
C624346	2B15	28	3302 - 9
C624346	2B17	28	3302 - 11
C624347	2B15	28	3302 - 9
C624347	2B17	28	3302 - 11
C624349	2B11	28	3302 - 5
C624349	2B15	28	3302 - 9
C624349	2B17	28	3302 - 11
C624350	2B11	28	3302 - 5
C624350	2B15	28	3302 - 9
EX1856A-57V	2B19	3	3302 - 13
EX57SYL	2B19	4D	3302 - 13
EX57VPL	2B19	5	3302 - 13
EX57VPN	2B19	2	3302 - 13
E86824	1J8	11	2160 - 3
FFSB102853	1H4	9	1810 - 45
FFSB103019	1H4	1	1810 - 45
FFSB103020	1H4	2	1810 - 45
FFSB103021	1H4	3	1810 - 45
FFSB103022	1H4	4	1810 - 45
FFSB103023	1H4	5	1810 - 45
FFSB103024	1H4	6	1810 - 45
FFSB103025	1H4	7	1810 - 45
FFSB103031	1H4	10	1810 - 45
FFSB104490	1H4	20	1810 - 45
FFSB107987	1H4	7	1810 - 45
H132922	1G8	89	1810 - 25
H132922	1I23	13	1910 - 13
H132922	1I25	16	1910 - 15
H132922	2C8	4	3315 - 15
H21259	1D5	5	1320 - 3
H77698	1C13	34	0510 - 5
H77698	1C25	28	0560 - 3
H77698	1D19	39	1674 - 7

NUMERICAL INDEX - CONTINUED

PART NO.	GRID	KEY	PAGE
H77698	1D21	25	1674 - 9
H77698	1D25	28	1674 - 13
H77698	1E4	1	1674 - 17
H77698	1E4	32	1674 - 17
H77698	1E4	49	1674 - 17
H77698	1E10	7	1674 - 21
H77698	1H23	58	1830 - 7
H77698	2B23	4	3315 - 5
H77698	2B23	16	3315 - 5
H77698	2E8	76	3360 - 33
H77698	2E12	76	3360 - 37
H77698	2E16	76	3360 - 41
H77698	2E22	76	3360 - 47
H77698	2E24	76	3360 - 49
H77698	2F12	25	3360 - 61
H77698	2F12	26	3360 - 61
H77698	2F14	25	3360 - 63
H77698	2I18	41	3360 - 139
H77698	2I20	56	3360 - 141
H77698	2I24	13	3360 - 145
H77698	2J2	25	3360 - 147
H80440	1C23	31B	0530 - 3
JD5689	1D5	2	1320 - 3
JD5691	1D5	1	1320 - 3
JD5691	1D5	60	1320 - 3
JD7769	2F22	10	3360 - 71
JD7769	2F24	1	3360 - 73
JD7769	2G2	1	3360 - 75
JD7769	2G4	7	3360 - 77
JD7769	2G6	1	3360 - 79
J010860	2E2	9	3360 - 27
J010860	2I18	18	3360 - 139
J011220	1C23	62	0530 - 3
J021295	2F16	24	3360 - 65
J050820	1H19	28	1830 - 3
J050820	1I8	51	1830 - 17
J219083	1C23	26	0530 - 3
J219083	1C23	68	0530 - 3
J219167	1H7	12	1821 - 5
J219167	1H9	14	1821 - 5B
J401640	2J17	17	4360 - 5
J450512	1C25	25	0560 - 3
J450614	1F25	34M	1810 - 17
J460308	1H25	33	1830 - 9
J460308	1I2	66	1830 - 11
J460308	1I10	12	1830 - 19
J460310	1E4	33	1674 - 17
J460620	1D15	10	1674 - 3
J460620	1E4	10	1674 - 17
J460620	2F12	36	3360 - 61
J460620	2F14	36	3360 - 63
J660512	1F25	36	1810 - 17
J680410	1F25	55	1810 - 17
J680410	1I8	15	1830 - 17
J680510	1F23	33	1810 - 15
J680514	1G2	20	1810 - 19
J680612	1I8	12	1830 - 17
J680612	1I8	57	1830 - 17
J680620	1F21	86	1810 - 13
J680640	2C10	27	3315 - 17
J781030	1F11	9	1810 - 3
J781030	2C6	25	3315 - 13
J781045	2F10	8	3360 - 59
J782225	1J12	28	2160 - 7
J833013	1A19	19	0130 - 3
J833314	1E16	3	1740 - 3
J833319	1E16	4	1740 - 3
J900614	1C17	22F	0515 - 3
J900614	1C19	30F	0515 - 5
J900614	1E10	1	1674 - 21
J900614	1F13	15	1810 - 5
J900804	1H23	10	1830 - 7
J900885	1H23	9	1830 - 7
J901200	1I13	73	1910 - 3
J901204	2D4	8	3360 - 5
J901204	2D6	8	3360 - 7
J901206	2D2	27	3360 - 3
J901425	2C22	13	3344 - 3
J901425	2C24	13	3344 - 5
J901445	2D6	20	3360 - 7
J901625	1A19	26	0130 - 3
J901632	2D10	8	3360 - 11
J901655	1C13	23	0510 - 5
J911860	1B14	93	0260 - 3
J912400	1J8	54	2160 - 3
J912410	1C7	9	0400 - 3
J912460	1B2	22	0130 - 11
J912470	1E22	8	1740 - 9
J912470	1E24	8	1740 - 11
J912735	1A23	3	0130 - 7
J931860	1C7	11	0400 - 3
J931895	1J18	1	2160 - 13
J932405	1C13	20	0510 - 5
J932407	2J13	6	4360 - 3
J932408	1B8	20	0130 - 17
J932701	1A23	1	0130 - 7
J932701	1A25	11	0130 - 9
J932704	1B14	62	0260 - 3
J932760	1A25	8	0130 - 9
J932785	1B14	11	0260 - 3
J952010	1H17	0F	1821 - 11
J952014	1D21	11I	1674 - 9
J952014	2C22	15I	3344 - 3
J952014	2C24	15I	3344 - 5
J953039	1F2	10	1740 - 13
L38718	2G16	17	3360 - 89
M111256	1H23	15	1830 - 7
M111645	2C12	24	3340 - 3
M111645	2C14	24	3340 - 5
M111645	2C16	17	3340 - 7
M111645	2C16	28	3340 - 7
M111645	2C20	24	3340 - 11
M340816	1H15	51	1821 - 9B
M341032	1J8	60	2160 - 3
M341075	1J14	63	2160 - 9
M341204	1B16	13	0260 - 5
M341290	2J4	8	3360 - 149
M341402	2J4	3	3360 - 149
M341440	2H16	15	3360 - 113
M341440	2H22	16	3360 - 119
M341600	2H22	9	3360 - 119
M341632	1F2	18	1740 - 13
M342260	1B14	29	0260 - 3
M40461	1I25	20	1910 - 15
M430610	1D9	68	1369 - 5
M470625	1F23	14	1810 - 15
M660024	1C13	22	0510 - 5
M67344	1J8	11	2160 - 3
M800462	2F24	23	3360 - 73
M800462	2G2	23	3360 - 75
M800462	2G6	23	3360 - 79
M800650	1D7	..	1369 - 3
M800650	1J12	32	2160 - 7
M800650	1J20	18A	2160 - 15
M800650	2D6	42A	3360 - 7
M800650	2D20	13A	3360 - 21
M800650	2D20	15A	3360 - 21
M800650	2D22	1A	3360 - 23
M800650	2D22	3A	3360 - 23
M800650	2D22	4A	3360 - 23
M800650	2D22	5A	3360 - 23
M800650	2D22	9A	3360 - 23
M800650	2D22	20A	3360 - 23
M800650	2D22	21A	3360 - 23
M800650	2D22	22A	3360 - 23
M800650	2D24	1A	3360 - 25
M800650	2D24	3A	3360 - 25
M800650	2D24	4A	3360 - 25
M800650	2D24	5A	3360 - 25
M800650	2D24	9A	3360 - 25
M800650	2D24	20A	3360 - 25
M800650	2D24	21A	3360 - 25
M800650	2E2	15A	3360 - 27
M800650	2E2	16A	3360 - 27
M800650	2E2	17A	3360 - 27
M800650	2E2	18A	3360 - 27
M800650	2E2	20A	3360 - 27
M800650	2E2	23A	3360 - 27
M800650	2E2	37A	3360 - 27
M800650	2E4	18A	3360 - 29
M800650	2E6	18A	3360 - 31
M800650	2E6	19A	3360 - 31
M800650	2E6	20A	3360 - 31
M800650	2E6	21A	3360 - 31
M800650	2F10	1A	3360 - 59
M800650	2F10	2A	3360 - 59
M800650	2F12	0A	3360 - 61
M800650	2F14	0A	3360 - 63
M800650	2G20	11	3360 - 93
M800650	2G24	11	3360 - 97
M800650	2H4	43	3360 - 101
M800650	2H6	36	3360 - 103
M800650	2H8	13	3360 - 105
M800650	2H14	19	3360 - 111
M800650	2H16	19	3360 - 113
M800650	2H20	19	3360 - 117
M800650	2H22	19	3360 - 119
M800650	2I18	19A	3360 - 139
M800650	2I18	32A	3360 - 139
M800650	2I18	34A	3360 - 139
M800650	2J6	34A	3360 - 151
M800650	2J6	35A	3360 - 151
M800650	2J15	14	4360 - 3B
M800650	2J15	33	4360 - 3B
M800650	2J19	10	4360 - 7
M800893	1D7	..	1369 - 3
M923003	1A19	9	0130 - 3
M923011	1A19	14	0130 - 3
N231749	1B6	21	0130 - 15
N231749	1H17	4	1821 - 11
PMFS1212	1C7	0E	0400 - 3
PMWF2075	1C7	0F	0400 - 3
P46402	1C21	0H	0520 - 3
P50883	2G10	7	3360 - 83
P60915	1H9	8	1821 - 5B
P61969	2I4	32	3360 - 125
P61969	2I8	34	3360 - 129
P63175	1H17	2	1821 - 11
P63448	1D5	11	1320 - 3
P64907	2I20	26	3360 - 141
RE28140	1J20	16	2160 - 15

NUMERICAL INDEX - CONTINUED

PART NO.	GRID	KEY	PAGE
RE35791	1C13	12	0510 - 5
R26448	1H23	36A	1830 - 7
R26448	2G16	20	3360 - 89
R26448	2J10	5	3360 - 155
R26906	1D2	24	0560 - 5
R27212	2J10	8	3360 - 155
R29424	2D10	16	3360 - 11
R29867	2I20	11	3360 - 141
R30298	1J18	28	2160 - 13
R39783	2D24	33	3360 - 25
R44302	2J10	18	3360 - 155
R56902	1D5	3	1320 - 3
R77401	1J10	24	2160 - 5
THJ021295	2F16	24	3360 - 65
THJ219083	1C23	26	0530 - 3
THJ219083	1C23	68	0530 - 3
THJ833013	1A19	19	0130 - 3
THJ833314	1E16	3	1740 - 3
THJ833319	1E16	4	1740 - 3
THJ900885	1H23	9	1830 - 7
THJ901200	1I13	73	1910 - 3
THJ901204	2D4	8	3360 - 5
THJ901204	2D6	8	3360 - 7
THJ901206	2D2	27	3360 - 3
THJ912400	1J8	54	2160 - 3
THJ912410	1C7	9	0400 - 3
THJ912460	1B2	22	0130 - 11
THJ912470	1E22	8	1740 - 9
THJ912470	1E24	8	1740 - 11
THJ912735	1A23	3	0130 - 7
THJ921880	1D2	1	0560 - 5
THJ932407	2J13	6	4360 - 3
THJ932408	1B8	20	0130 - 17
THJ932701	1A23	1	0130 - 7
THJ932701	1A25	11	0130 - 9
THJ932704	1B14	62	0260 - 3
THJ932760	1A25	8	0130 - 9
THJ932785	1B14	11	0260 - 3
THJ953039	1F2	10	1740 - 13
THM111230	1H23	19	1830 - 7
THM111256	1H23	15	1830 - 7
THM111645	2C12	24	3340 - 3
THM111645	2C14	24	3340 - 5
THM111645	2C16	17	3340 - 7
THM111645	2C16	28	3340 - 7
THM111645	2C20	24	3340 - 11
THM341402	2J4	3	3360 - 149
THM342260	1B14	29	0260 - 3
THM660024	1C13	22	0510 - 5
THM923003	1A19	9	0130 - 3
THM923011	1A19	14	0130 - 3
TH0001452	1B20	2	0260 - 9
TH0001871	1J10	0	2160 - 5
TH0001975	1D25	8	1674 - 13
TH0003107	1E4	0	1674 - 17
TH0109124	2H24	23	3360 - 121
TH0109124	2I2	23	3360 - 123
TH0109124	2I4	21	3360 - 125
TH0109124	2I8	22	3360 - 129
TH0158883	2I6	30	3360 - 127
TH0158883	2I8	30	3360 - 129
TH0160706	2I4	5	3360 - 125
TH0160706	2I8	5	3360 - 129
TH0163404	2I10	30	3360 - 131
TH0163404	2I12	30	3360 - 133
TH0171719	2H24	48	3360 - 121
TH0171719	2I2	48	3360 - 123
TH0171719	2I6	31	3360 - 127
TH0171719	2I8	31	3360 - 129
TH0173608	2I22	71	3360 - 143
TH0177612	1J14	36	2160 - 9
TH0179107	2I22	61	3360 - 143
TH0191415	2H24	5	3360 - 121
TH0191415	2I2	5	3360 - 123
TH0191428	2I10	31	3360 - 131
TH0191428	2I12	31	3360 - 133
TH0191612	2I4	26	3360 - 125
TH0191616	2I4	27	3360 - 125
TH0191916	2I4	28	3360 - 125
TH0199005	2I22	7	3360 - 143
TH0231606	2I22	66	3360 - 143
TH0242505	2H24	8	3360 - 121
TH0242505	2I2	8	3360 - 123
TH0242508	2I10	44	3360 - 131
TH0242508	2I12	44	3360 - 133
TH0242706	2I4	8	3360 - 125
TH0242706	2I8	8	3360 - 129
TH0242707	2I4	10	3360 - 125
TH0257007	2H24	12	3360 - 121
TH0257007	2I2	12	3360 - 123
TH0257010	2H24	17	3360 - 121
TH0257010	2I2	17	3360 - 123
TH0272417	2I22	6	3360 - 143
TH0303604	2I22	54	3360 - 143
TH0323103	2I10	35	3360 - 131
TH0323103	2I12	35	3360 - 133
TH0332704	2I10	12	3360 - 131
TH0332704	2I12	12	3360 - 133
TH0332705	2I12	15	3360 - 133
TH0332706	2I10	16	3360 - 131
TH0332706	2I12	16	3360 - 133
TH0332708	2I10	18	3360 - 131
TH0332708	2I12	18	3360 - 133
TH0339809	1J12	20	2160 - 7
TH0339809	1J12	22	2160 - 7
TH0339847	1J12	17	2160 - 7
TH0343305	2I4	23	3360 - 125
TH0343305	2I8	13	3360 - 129
TH0349308	2I4	37	3360 - 125
TH0376902	1B18	3	0260 - 7
TH0376905	1B18	10	0260 - 7
TH0376906	1B18	11	0260 - 7
TH0376907	1B18	29	0260 - 7
TH0379703	2H24	49	3360 - 121
TH0379703	2I2	49	3360 - 123
TH0379806	2H24	4	3360 - 121
TH0379806	2I2	4	3360 - 123
TH0379813	2H24	20	3360 - 121
TH0379813	2I2	20	3360 - 123
TH0379814	2H24	21	3360 - 121
TH0379814	2I2	21	3360 - 123
TH0379815	2H24	22	3360 - 121
TH0379815	2I2	22	3360 - 123
TH0379815	2I4	20	3360 - 125
TH0379815	2I8	21	3360 - 129
TH0379819	2H24	50	3360 - 121
TH0379819	2I2	50	3360 - 123
TH0379820	2H24	51	3360 - 121
TH0379820	2I2	51	3360 - 123
TH0379821	2H24	54	3360 - 121
TH0379821	2I2	54	3360 - 123
TH0379823	2I6	40	3360 - 127
TH0379823	2I8	40	3360 - 129
TH0379823	2I10	27	3360 - 131
TH0379823	2I12	27	3360 - 133
TH0379902	2I6	1B	3360 - 127
TH0379902	2I8	1B	3360 - 129
TH0379905	2I4	4	3360 - 125
TH0379905	2I8	4	3360 - 129
TH0379908	2I4	12	3360 - 125
TH0379908	2I8	12	3360 - 129
TH0379909	2I4	13	3360 - 125
TH0379909	2I8	14	3360 - 129
TH0379914	2I4	18	3360 - 125
TH0379914	2I8	20	3360 - 129
TH0379915	2I4	19	3360 - 125
TH0379915	2I8	19	3360 - 129
TH0379917	2I4	29	3360 - 125
TH0379918	2I4	30	3360 - 125
TH0379919	2I4	32	3360 - 125
TH0379919	2I8	34	3360 - 129
TH0379920	2I8	32	3360 - 129
TH0379921	2I8	33	3360 - 129
TH0380003	2I6	2B	3360 - 127
TH0380003	2I8	2B	3360 - 129
TH0380005	2I6	14	3360 - 127
TH0380008	2I6	25	3360 - 127
TH0380008	2I8	25	3360 - 129
TH0380010	2H24	43	3360 - 121
TH0380010	2I2	43	3360 - 123
TH0380010	2I10	41	3360 - 131
TH0386902	2I10	42	3360 - 131
TH0386902	2I12	42	3360 - 133
TH0392303	2I4	6	3360 - 125
TH0392303	2I8	6	3360 - 129
TH0392304	2I4	9	3360 - 125
TH0392304	2I8	9	3360 - 129
TH0392305	2I4	15	3360 - 125
TH0392305	2I8	16	3360 - 129
TH0392306	2I4	17	3360 - 125
TH0392306	2I8	18	3360 - 129
TH0394010	2I8	39	3360 - 129
TH0400505	2I10	25	3360 - 131
TH0400505	2I12	25	3360 - 133
TH0417405	2H24	6	3360 - 121
TH0417405	2I2	6	3360 - 123
TH0417406	2H24	9	3360 - 121
TH0417406	2I2	9	3360 - 123
TH0417415	2I10	43	3360 - 131
TH0417415	2I12	43	3360 - 133
TH0417606	2I10	13	3360 - 131
TH0417606	2I12	13	3360 - 133
TH0417609	2I10	17	3360 - 131
TH0417609	2I12	17	3360 - 133
TH0417613	2I10	33	3360 - 131
TH0417613	2I12	33	3360 - 133
TH0417616	2I10	32	3360 - 131
TH0417616	2I12	32	3360 - 133
TH0428901	2I22	1	3360 - 143
TH0441006	2I22	14	3360 - 143
TH0443407	2G14	14	3360 - 87
TH0443408	1J12	4	2160 - 7
TH0443801	2G14	22	3360 - 87
TH0443803	2G14	25	3360 - 87
TH0444801	2H24	2B	3360 - 121
TH0444801	2I2	2B	3360 - 123
TH0444803	2H24	46	3360 - 121
TH0444902	2I2	46	3360 - 123
TH0448701	2I22	65	3360 - 143
TH0448704	2I22	68	3360 - 143
TH0450502	2I10	1B	3360 - 131

NUMERICAL INDEX - CONTINUED

PART NO.	GRID	KEY	PAGE
TH0450502	2I12	1B	3360 - 133
TH0450504	2I10	2B	3360 - 131
TH0450504	2I12	2B	3360 - 133
TH0450505	2I10	3	3360 - 131
TH0450509	2I10	14	3360 - 131
TH0450509	2I12	14	3360 - 133
TH0450510	2I10	15	3360 - 131
TH0450511	2I10	19	3360 - 131
TH0450511	2I12	19	3360 - 133
TH0450512	2I10	20	3360 - 131
TH0450512	2I12	20	3360 - 133
TH0450513	2I10	26	3360 - 131
TH0450517	2I12	3	3360 - 133
TH0470815	2I22	5	3360 - 143
TH0492603	2H24	45	3360 - 121
TH0493410	2I14	26	3360 - 135
TH0493603	2I4	36	3360 - 125
TH0494303	2I12	26	3360 - 133
TH0494403	2I6	39	3360 - 127
TH0498101	2I2	45	3360 - 123
TH0625509	2J15	8	4360 - 3B
TH0633904	2I22	73	3360 - 143
TH0643016	2H24	40	3360 - 121
TH0643016	2I2	40	3360 - 123
TH0643016	2I4	24	3360 - 125
TH0643016	2I6	26	3360 - 127
TH0643016	2I8	26	3360 - 129
TH0643016	2I12	39	3360 - 133
TH0645004	2H24	3	3360 - 121
TH0645004	2I2	3	3360 - 123
TH0645006	2H24	15	3360 - 121
TH0645006	2I2	15	3360 - 123
TH0645008	2H24	18	3360 - 121
TH0645008	2I2	18	3360 - 123
TH0646404	2I6	15	3360 - 127
TH0666701	2I14	25	3360 - 135
TH0682303	1J14	40	2160 - 9
TH0682306	1J14	44	2160 - 9
TH0682307	1J14	42	2160 - 9
TH0682308	1J14	43	2160 - 9
TH0682309	1J14	39	2160 - 9
TH0682311	1J12	26	2160 - 7
TH0682316	1J12	28	2160 - 7
TH0682318	1J12	11	2160 - 7
TH0682319	1J12	8	2160 - 7
TH0682320	1J12	15	2160 - 7
TH0682321	1J12	25	2160 - 7
TH0682322	1J12	31	2160 - 7
TH0682324	1J12	13	2160 - 7
TH0682325	1J12	24	2160 - 7
TH0682326	1J12	14	2160 - 7
TH0682327	1J12	9	2160 - 7
TH0682328	1J12	35	2160 - 7
TH0682502	2G14	23	3360 - 87
TH0682701	1B18	1	0260 - 7
TH0682702	1B18	4	0260 - 7
TH0682703	1B18	9	0260 - 7
TH0682704	1B18	15	0260 - 7
TH0682705	1B18	38	0260 - 7
TH0682706	1B18	51	0260 - 7
TH0682803	2J19	17	4360 - 7
TH0682804	2J19	41	4360 - 7
TH0683501	2H4	40	3360 - 101
TH0683502	2H4	41	3360 - 101
TH0683601	1B16	5	0260 - 5
TH0702101	1B18	7	0260 - 7
TH0702201	2J19	6	4360 - 7
TH0702501	2H24	1B	3360 - 121
TH0702501	2I2	1B	3360 - 123
TH0702502	2H24	14	3360 - 121
TH0702502	2I2	14	3360 - 123
TH0702503	2H24	16	3360 - 121
TH0702503	2I2	16	3360 - 123
TH0702701	2I4	1B	3360 - 125
TH0702701	2I4	2B	3360 - 125
TH0702702	2I4	3	3360 - 125
TH0702703	2I4	14	3360 - 125
TH0702704	2I4	16	3360 - 125
TH0702704	2I8	17	3360 - 129
TH0702705	2I4	34	3360 - 125
TH0702706	2I4	35	3360 - 125
TH0702801	2I6	3	3360 - 127
TH0702901	2I8	3	3360 - 129
TH0702902	2I8	15	3360 - 129
TH0703001	1J14	41	2160 - 9
TH0703002	1J14	54	2160 - 9
TH0703004	1J14	47D	2160 - 9
TH0703005	1J14	47F	2160 - 9
TH0703006	1J12	23	2160 - 7
TH0703007	1J14	58	2160 - 9
TH0703008	1J14	51	2160 - 9
TH0703009	1J12	21	2160 - 7
TH0703010	1J12	34	2160 - 7
TH0703012	1J14	52	2160 - 9
TH0703013	1J12	33	2160 - 7
TH0703014	1J14	49	2160 - 9
TH0703015	1J14	55	2160 - 9
TH0703016	1J14	59	2160 - 9
TH0703017	1J12	12	2160 - 7
TH0703018	1J14	57	2160 - 9
TH0703019	1J14	56	2160 - 9
TH0703101	2G14	31	3360 - 87
TH0703102	2G14	4	3360 - 87
TH0703301	2H14	23	3360 - 111
TH0703501	2H18	48	3360 - 115
TH0718001	1J14	46	2160 - 9
TH0718002	1J14	45	2160 - 9
TH0719701	1J14	47	2160 - 9
TH0728902	2I22	16	3360 - 143
TH0728903	2I22	8	3360 - 143
TH0728904	2I22	28	3360 - 143
TH0728905	2I22	29	3360 - 143
TH0728906	2I22	9	3360 - 143
TH0728907	2I22	2	3360 - 143
TH0729901	2J15	35	4360 - 3B
TH100027	1J10	23	2160 - 5
TH100044	1D7	..	1369 - 3
TH100044	2H16	93	3360 - 113
TH100044	2H22	93	3360 - 119
TH100044	2J4	7	3360 - 149
TH100050	2H6	28	3360 - 103
TH100055	1D7	..	1369 - 3
TH100055	1J10	26A	2160 - 5
TH100055	2D8	16A	3360 - 9
TH100055	2D20	2A	3360 - 21
TH100074	1F2	20	1740 - 13
TH100074	1F4	14	1740 - 15
TH100074	1F6	1	1740 - 17
TH100074	2C12	0H	3340 - 3
TH100074	2C12	5D	3340 - 3
TH100074	2C12	36	3340 - 3
TH100074	2C14	0H	3340 - 5
TH100074	2C14	5D	3340 - 5
TH100074	2C14	36	3340 - 5
TH100074	2C16	0H	3340 - 7
TH100074	2C16	4F	3340 - 7
TH100074	2C16	38	3340 - 7
TH100074	2C20	0J	3340 - 11
TH100074	2C20	5D	3340 - 11
TH100074	2C20	35	3340 - 11
TH100074	2F20	28	3360 - 69
TH100074	2I6	27	3360 - 127
TH100074	2I8	27	3360 - 129
TH100074	2I10	40	3360 - 131
TH100074	2I12	40	3360 - 133
TH100074	2I14	38	3360 - 135
TH100074	2I20	1	3360 - 141
TH100096	1D11	6J	1369 - 7
TH100096	2H4	6	3360 - 101
TH100101	2D20	6C	3360 - 21
TH100123	1B2	2	0130 - 11
TH100125	2D6	6	3360 - 7
TH100136	1D7	..	1369 - 3
TH100136	2H18	60	3360 - 115
TH100136	2J15	11	4360 - 3B
TH100184	2H18	44	3360 - 115
TH100198	2H14	8	3360 - 111
TH100198	2H18	8	3360 - 115
TH100434	1B2	7	0130 - 11
TH100434	1B6	11	0130 - 15
TH100434	1B8	7	0130 - 17
TH100434	2H10	9	3360 - 107
TH100434	2J15	36	4360 - 3B
TH100509	1C25	1	0560 - 3
TH100633	1A19	21	0130 - 3
TH100667	1D2	7	0560 - 5
TH100675	1C25	5	0560 - 3
TH100675	1J18	24	2160 - 13
TH100679	1C25	10	0560 - 3
TH100679	1J18	18	2160 - 13
TH100771	2H14	74	3360 - 111
TH100771	2H20	74	3360 - 117
TH100786	2G18	9	3360 - 91
TH100841	2G12	2	3360 - 85
TH100891	1C7	12	0400 - 3
TH100951	2E2	16	3360 - 27
TH100951	2E4	18	3360 - 29
TH100951	2E6	18	3360 - 31
TH100951	2J6	34	3360 - 151
TH100963	2F20	12	3360 - 69
TH100963	2F22	12	3360 - 71
TH100963	2G2	15	3360 - 75
TH100963	2G4	13	3360 - 77
TH100989	2J13	33	4360 - 3
TH100989	2J13	55	4360 - 3
TH100996	2I18	38	3360 - 139
TH100996	2I20	55	3360 - 141
TH101006	2E2	22	3360 - 27
TH101006	2J6	15	3360 - 151
TH101008	1C7	47	0400 - 3
TH101008	2D8	0	3360 - 9
TH101008	2D20	3	3360 - 21
TH101008	2J6	14	3360 - 151
TH101032	2D8	30	3360 - 9
TH101039	2J13	53	4360 - 3
TH101047	2D22	0	3360 - 23
TH101047	2D22	7	3360 - 23
TH101047	2D24	0	3360 - 25
TH101047	2D24	7	3360 - 25
TH101047	2E2	24	3360 - 27
TH101047	2E4	15	3360 - 29

NUMERICAL INDEX - CONTINUED

PART NO.	GRID	KEY	PAGE
TH101047	2E6	15	3360 - 31
TH101047	2F10	11	3360 - 59
TH101047	2J6	10	3360 - 151
TH101047	2J6	18	3360 - 151
TH101047	2J8	29	3360 - 153
TH101056	2F20	25	3360 - 69
TH101056	2F22	25	3360 - 71
TH101056	2F24	16	3360 - 73
TH101056	2G2	16	3360 - 75
TH101056	2G4	11	3360 - 77
TH101056	2G6	16	3360 - 79
TH101105	1A21	39	0130 - 5
TH101184	1G10	12	1810 - 27
TH1012131	1B14	5	0260 - 3
TH1012132	1B14	27	0260 - 3
TH101292	2I20	48	3360 - 141
TH101292	2J13	49	4360 - 3
TH101292	2J13	94	4360 - 3
TH101300	1D7	..	1369 - 3
TH101301	1J8	60	2160 - 3
TH101391	2F20	58	3360 - 69
TH101391	2F22	58	3360 - 71
TH101391	2F24	60	3360 - 73
TH101391	2G2	60	3360 - 75
TH101391	2G4	60	3360 - 77
TH101391	2G6	63	3360 - 79
TH101392	2F20	59	3360 - 69
TH101392	2F22	59	3360 - 71
TH101411	1D5	22	1320 - 3
TH1014350	1B14	0	0260 - 3
TH101479	2H4	5	3360 - 101
TH101479	2H14	27	3360 - 111
TH101479	2H20	82	3360 - 117
TH101485	2G10	5	3360 - 83
TH101485	2G18	12	3360 - 91
TH101490	1D7	..	1369 - 3
TH101490	2G10	6	3360 - 83
TH101490	2G18	10	3360 - 91
TH101588	2F24	15	3360 - 73
TH101588	2G4	12	3360 - 77
TH101588	2G6	15	3360 - 79
TH101588	2I20	40	3360 - 141
TH101734	2D10	10	3360 - 11
TH101753	2D10	8	3360 - 11
TH101845	1H23	14	1830 - 7
TH101894	1C25	4A	0560 - 3
TH101894	1J18	23A	2160 - 13
TH101898	2D4	12	3360 - 5
TH101898	2D6	12	3360 - 7
TH101901	2D4	10	3360 - 5
TH101901	2D6	10	3360 - 7
TH101925	2D8	24	3360 - 9
TH101926	1B16	10	0260 - 5
TH101926	1B22	6A	0260 - 11
TH101926	1D7	..	1369 - 3
TH101926	2D4	37A	3360 - 5
TH101926	2D4	38A	3360 - 5
TH101926	2D6	37A	3360 - 7
TH101926	2D8	19A	3360 - 9
TH101926	2D8	24A	3360 - 9
TH101926	2D8	28A	3360 - 9
TH101926	2D12	26A	3360 - 13
TH101926	2D12	27A	3360 - 13
TH101926	2D18	65A	3360 - 19
TH101926	2H6	31	3360 - 103
TH101926	2I20	62A	3360 - 141
TH101926	2J2	5A	3360 - 147
TH101930	2D20	15	3360 - 21
TH101930	2E2	17	3360 - 27
TH101930	2E6	19	3360 - 31
TH101930	2F10	1	3360 - 59
TH101930	2F10	2	3360 - 59
TH101930	2I18	32	3360 - 139
TH101935	2D4	16	3360 - 5
TH101935	2D6	16	3360 - 7
TH101960	1B22	4	0260 - 11
TH101960	2D2	55	3360 - 3
TH101960	2D16	43	3360 - 17
TH101968	1D2	20	0560 - 5
TH101989	2D8	16	3360 - 9
TH101989	2D20	2	3360 - 21
TH1020438	2J17	19	4360 - 5
TH1020440	2J17	0	4360 - 5
TH1020443	1B14	40	0260 - 3
TH1020444	1B14	31	0260 - 3
TH1020445	1B14	19	0260 - 3
TH1020446	1B14	49	0260 - 3
TH1020509	1B2	0	0130 - 11
TH102073	1C17	22A	0515 - 3
TH102073	1C19	30A	0515 - 5
TH102147	1D17	1	1674 - 5
TH102169	1D19	21	1674 - 7
TH102247	1I25	2B	1910 - 15
TH102247	1I25	3B	1910 - 15
TH102308	1B14	56	0260 - 3
TH102528	2H18	58	3360 - 115
TH102528	2I6	41	3360 - 127
TH102528	2I6	42	3360 - 127
TH102528	2I8	41	3360 - 129
TH102528	2I10	28	3360 - 131
TH102528	2I12	28	3360 - 133
TH102536	1J20	18	2160 - 15
TH102536	2D6	42	3360 - 7
TH102536	2E2	37	3360 - 27
TH102560	1D19	27A	1674 - 7
TH102598	2H16	12	3360 - 113
TH102598	2H22	1	3360 - 119
TH102635	2J15	9	4360 - 3B
TH102638	2J15	10	4360 - 3B
TH102648	1J12	5	2160 - 7
TH102650	1J14	37	2160 - 9
TH102650	2G14	2	3360 - 87
TH102650	2J15	13	4360 - 3B
TH102650	2J15	34	4360 - 3B
TH102697	2G16	16	3360 - 89
TH102697	2H8	12	3360 - 105
TH102697	2H10	7	3360 - 107
TH102706	1D7	..	1369 - 3
TH102787	2I10	39	3360 - 131
TH102788	2I14	28	3360 - 135
TH102788	2J19	62	4360 - 7
TH102871	1C13	20	0510 - 5
TH102949	1D2	6	0560 - 5
TH102949	1J18	27	2160 - 13
TH102992	1D7	..	1369 - 3
TH102992	2J4	10	3360 - 149
TH103262	1F6	23	1740 - 17
TH103384	1C25	2A	0560 - 3
TH103446	1D7	..	1369 - 3
TH103457	2H18	61	3360 - 115
TH103498	1A19	12	0130 - 3
TH103574	1D7	..	1369 - 3
TH103574	2I14	30	3360 - 135
TH103791	1D21	11I	1674 - 9
TH103791	2C22	15I	3344 - 3
TH103791	2C24	15I	3344 - 5
TH103802	1C17	26	0515 - 3
TH104056	1C17	22F	0515 - 3
TH104056	1C19	30F	0515 - 5
TH104056	1E10	1	1674 - 21
TH104056	1F13	15	1810 - 5
TH104069	1D17	9	1674 - 5
TH104071	2C22	13	3344 - 3
TH104071	2C24	13	3344 - 5
TH104166	1C21	4	0520 - 3
TH104166	1H23	65	1830 - 7
TH104166	1I13	75	1910 - 3
TH104166	1I15	19	1910 - 5
TH104166	1I17	46	1910 - 7
TH104166	1I19	46	1910 - 9
TH104166	1I21	46	1910 - 11
TH104166	1I25	11	1910 - 15
TH104196	1H17	0F	1821 - 11
TH104220	1E20	47	1740 - 7
TH104437	1C13	23	0510 - 5
TH104576	1J14	47E	2160 - 9
TH104589	2D4	5	3360 - 5
TH104589	2D6	1	3360 - 7
TH104634	1D7	..	1369 - 3
TH104634	2D6	47A	3360 - 7
TH104634	2I20	22A	3360 - 141
TH104634	2J2	7A	3360 - 147
TH104634	2J2	31A	3360 - 147
TH104930	1D7	..	1369 - 3
TH104996	2I10	7	3360 - 131
TH104996	2I12	7	3360 - 133
TH104996	2I14	7	3360 - 135
TH104997	2I10	8	3360 - 131
TH104997	2I12	8	3360 - 133
TH104997	2I14	8	3360 - 135
TH104999	2I6	5	3360 - 127
TH105683	1J10	19	2160 - 5
TH105683	2D4	7	3360 - 5
TH105683	2D6	7	3360 - 7
TH105690	1J18	1	2160 - 13
TH105699	2H6	42	3360 - 103
TH105938	2H18	67	3360 - 115
TH106152	1B24	13	0260 - 13
TH106152	2F10	41	3360 - 59
TH106152	2J6	19	3360 - 151
TH106154	1B24	10	0260 - 13
TH106368	2H6	34	3360 - 103
TH106783	1G2	8	1810 - 19
TH106783	1G4	61	1810 - 21
TH106976	2I4	39	3360 - 125
TH108142	1B20	29	0260 - 9
TH108142	2H18	63	3360 - 115
TH108142	2H20	63	3360 - 117
TH108250	1C25	4	0560 - 3
TH108278	2J13	37	4360 - 3
TH108278	2J13	59	4360 - 3
TH108278	2J13	93	4360 - 3
TH108284	2J17	41	4360 - 5
TH108293	1J18	23	2160 - 13
TH108320	2D22	8	3360 - 23
TH108320	2D24	8	3360 - 25
TH108320	2E4	14	3360 - 29
TH108320	2F10	10	3360 - 59
TH108320	2F10	12	3360 - 59
TH108320	2F10	40	3360 - 59
TH108320	2J6	11	3360 - 151

NUMERICAL INDEX - CONTINUED

PART NO.	GRID	KEY	PAGE
TH108321	2E8	73	3360 - 33
TH108325	2D4	37	3360 - 5
TH108325	2D6	37	3360 - 7
TH108325	2D18	65	3360 - 19
TH108328	2D22	4	3360 - 23
TH108328	2D24	4	3360 - 25
TH108328	2E2	15	3360 - 27
TH108328	2J6	35	3360 - 151
TH108384	2C8	0	3315 - 15
TH108385	2C8	6	3315 - 15
TH108392	2C10	12	3315 - 17
TH108399	2E4	17	3360 - 29
TH108402	2D20	6	3360 - 21
TH108417	2D22	21	3360 - 23
TH108417	2D24	21	3360 - 25
TH108417	2E2	20	3360 - 27
TH108417	2I18	34	3360 - 139
TH108458	1D25	3	1674 - 13
TH108458	2J8	25	3360 - 153
TH108459	1E4	7	1674 - 17
TH108460	1E4	6	1674 - 17
TH108460	1J18	43	2160 - 13
TH108460	2D20	19	3360 - 21
TH108567	1F19	14	1810 - 11
TH108568	1F19	14A	1810 - 11
TH108597	1H23	49	1830 - 7
TH108598	1C13	26	0510 - 5
TH108598	1C25	16	0560 - 3
TH108598	1D25	1	1674 - 13
TH108598	1E4	4	1674 - 17
TH108598	1J18	44	2160 - 13
TH108598	2E20	75	3360 - 45
TH108598	2F4	75	3360 - 53
TH108598	2F6	75	3360 - 55
TH108598	2I18	39	3360 - 139
TH108600	1C15	9	0510 - 7
TH108603	1F11	1	1810 - 3
TH108616	1G20	1	1810 - 37
TH108626	1G4	54	1810 - 21
TH108646	1F25	59	1810 - 17
TH108661	1G2	14	1810 - 19
TH108661	1G8	3	1810 - 25
TH108668	1G4	31	1810 - 21
TH108668	1I17	75	1910 - 7
TH108672	1G10	10	1810 - 27
TH108673	1G10	11	1810 - 27
TH108793	1H23	47	1830 - 7
TH108793	2F8	78	3360 - 57
TH108863	2I4	38	3360 - 125
TH108982	1G16	18	1810 - 33
TH108983	1G16	22	1810 - 33
TH109041	2H16	46	3360 - 113
TH109041	2H18	46	3360 - 115
TH109041	2H20	46	3360 - 117
TH109041	2H22	46	3360 - 119
TH109060	1B18	24	0260 - 7
TH109082	1B18	58	0260 - 7
TH109089	2H16	6	3360 - 113
TH109089	2H22	6	3360 - 119
TH109212	2C2	1	3315 - 9
TH109213	2C2	2	3315 - 9
TH109214	2C2	3	3315 - 9
TH109216	2C2	5	3315 - 9
TH109216	2C6	5	3315 - 13
TH109217	2C2	6	3315 - 9
TH109217	2C6	6	3315 - 13
TH109218	2C2	7	3315 - 9
TH109219	2C2	8	3315 - 9
TH109228	2C2	15	3315 - 9
TH109228	2C6	15	3315 - 13
TH109229	2C2	18	3315 - 9
TH109230	2C2	24	3315 - 9
TH109232	2C2	27	3315 - 9
TH109235	2C6	1	3315 - 13
TH109236	2C6	3	3315 - 13
TH109237	2C6	7	3315 - 13
TH109243	2C6	27	3315 - 13
TH109244	2C6	28	3315 - 13
TH109249	2H4	1	3360 - 101
TH109250	2H4	2	3360 - 101
TH109251	2H4	2A	3360 - 101
TH109252	2H4	2B	3360 - 101
TH109253	2H4	2C	3360 - 101
TH109257	2H4	2E	3360 - 101
TH109258	2H4	2F	3360 - 101
TH109259	2H4	3	3360 - 101
TH109260	2H4	8	3360 - 101
TH109261	2H4	9	3360 - 101
TH109264	2H4	12	3360 - 101
TH109265	2H4	13	3360 - 101
TH109266	2H4	14	3360 - 101
TH109267	2H4	15	3360 - 101
TH109269	2H4	17	3360 - 101
TH109272	2H4	20	3360 - 101
TH109273	2H4	25	3360 - 101
TH109274	2H4	26	3360 - 101
TH109280	2G16	3	3360 - 89
TH109281	2G16	4	3360 - 89
TH109282	2G16	7	3360 - 89
TH109285	2G16	15	3360 - 89
TH109285	2H6	40	3360 - 103
TH109285	2H10	6	3360 - 107
TH109290	2G16	22	3360 - 89
TH109299	2G22	5	3360 - 95
TH109397	1E20	38	1740 - 7
TH109445	1H23	46	1830 - 7
TH109445	2D20	17	3360 - 21
TH109497	1C7	54	0400 - 3
TH109511	1J18	11	2160 - 13
TH109512	1J18	12	2160 - 13
TH109598	1H23	48	1830 - 7
TH109598	2E8	72	3360 - 33
TH109598	2E8	77	3360 - 33
TH109598	2J2	21	3360 - 147
TH109649	1C17	29	0515 - 3
TH109649	1C25	17	0560 - 3
TH109649	1D19	40	1674 - 7
TH109649	1D21	31	1674 - 9
TH109649	1D25	0	1674 - 13
TH109649	2F20	21	3360 - 69
TH109649	2F22	21	3360 - 71
TH109649	2I24	15	3360 - 145
TH109653	1F11	0	1810 - 3
TH109684	1I23	11	1910 - 13
TH109952	2J15	41	4360 - 3B
TH110085	2J17	17	4360 - 5
TH110188	2I16	0	3360 - 137
TH110188	2I18	6	3360 - 139
TH110203	2E6	20	3360 - 31
TH110243	2J19	8	4360 - 7
TH110449	2H16	7	3360 - 113
TH110449	2H22	7	3360 - 119
TH110477	2J2	4	3360 - 147
TH110478	1J10	26	2160 - 5
TH110522	1D2	14	0560 - 5
TH110522	1D25	6	1674 - 13
TH110522	1E4	2	1674 - 17
TH110522	2D8	7	3360 - 9
TH110522	2D8	33	3360 - 9
TH110578	2D22	3	3360 - 23
TH110578	2D24	3	3360 - 25
TH110578	2E2	18	3360 - 27
TH110578	2E6	21	3360 - 31
TH111019	1J18	16A	2160 - 13
TH111021	1J18	8	2160 - 13
TH111022	1J18	10	2160 - 13
TH111255	2I20	51	3360 - 141
TH111257	1J20	14	2160 - 15
TH111267	2J17	20	4360 - 5
TH111304	1J18	13	2160 - 13
TH111351	2C6	36	3315 - 13
TH111641	2J17	14	4360 - 5
TH111654	2C6	30	3315 - 13
TH111685	2C22	12	3344 - 3
TH111685	2C24	12	3344 - 5
TH111700	1C21	0J	0520 - 3
TH111908	1G16	24	1810 - 33
TH111963	2C6	24B	3315 - 13
TH112029	2J15	18	4360 - 3B
TH112031	2J15	44	4360 - 3B
TH112033	2J15	37	4360 - 3B
TH112034	2J15	27	4360 - 3B
TH112036	2J15	21	4360 - 3B
TH112037	2J15	26	4360 - 3B
TH112038	2J15	23	4360 - 3B
TH112039	2J15	22	4360 - 3B
TH112040	2J15	25	4360 - 3B
TH112041	2J15	20	4360 - 3B
TH112042	2J15	19	4360 - 3B
TH112045	2J15	42	4360 - 3B
TH112046	2J15	6	4360 - 3B
TH112052	2J15	4	4360 - 3B
TH112057	2J15	31	4360 - 3B
TH112059	2J15	16	4360 - 3B
TH112060	2J15	15	4360 - 3B
TH112061	2J15	17	4360 - 3B
TH112062	2J15	29	4360 - 3B
TH2025832	1B14	6	0260 - 3
TH2025839	1F6	20	1740 - 17
TH2025840	1F6	21	1740 - 17
TH2025971	1J18	49	2160 - 13
TH2035972	1B2	1	0130 - 11
TH2035974	1B2	21	0130 - 11
TH2036267	2J17	2	4360 - 5
TH2036466	2J17	16	4360 - 5
TH2036866	2J17	27	4360 - 5
TH2036868	2J17	29	4360 - 5
TH2036875	2J17	8	4360 - 5
TH2036876	1B14	47	0260 - 3
TH2036891	1J8	2	2160 - 3
TH2036895	1J8	5	2160 - 3
TH2036904	1J10	7	2160 - 5
TH2036908	1J10	12	2160 - 5
TH2036910	1J10	3	2160 - 5
TH2037923	1J2	4	1910 - 17
TH2037924	1J2	5	1910 - 17
TH2037925	1J2	9	1910 - 17
TH2037926	1J2	10	1910 - 17
TH2037927	1J2	11	1910 - 17
TH2037928	1J2	12	1910 - 17
TH2038923	1J18	42	2160 - 13

NUMERICAL INDEX - CONTINUED

PART NO.	GRID	KEY	PAGE
TH2039400	2B23	3	3315 - 5
TH2039460	1B4	0B	0130 - 13
TH2039701	2D16	39	3360 - 17
TH2039702	2D16	40	3360 - 17
TH2040431	1B2	3B	0130 - 11
TH2041908	2I24	7	3360 - 145
TH3015951	2C12	23	3340 - 3
TH3015951	2C14	23	3340 - 5
TH3015951	2C20	23	3340 - 11
TH3040559	1B6	9	0130 - 15
TH3040561	1B6	2B	0130 - 15
TH3040562	1B6	2C	0130 - 15
TH3040887	2J17	25	4360 - 5
TH3041454	1B14	38	0260 - 3
TH3041462	1B14	16	0260 - 3
TH3046868	2E6	11	3360 - 31
TH3051199	2G4	52	3360 - 77
TH3051200	2G4	59	3360 - 77
TH3060122	2C22	0B	3344 - 3
TH3060122	2C24	0B	3344 - 5
TH3067053	1B4	15	0130 - 13
TH3067055	1B4	4	0130 - 13
TH3069819	2J17	34	4360 - 5
TH3069820	2J17	31	4360 - 5
TH3069875	1B14	15	0260 - 3
TH3069876	1B14	42	0260 - 3
TH3069877	1B14	33	0260 - 3
TH3069878	1B14	20	0260 - 3
TH3069879	1B14	25	0260 - 3
TH3069880	2J17	5	4360 - 5
TH3069954	1J8	9	2160 - 3
TH3069963	1J10	13	2160 - 5
TH3070288	1B4	8	0130 - 13
TH3071817	1C13	13	0510 - 5
TH3072577	1I15	2	1910 - 5
TH3072739	1J2	8	1910 - 17
TH3072775	1I21	16	1910 - 11
TH3073394	1C25	15	0560 - 3
TH3073547	1C13	10	0510 - 5
TH3074245	2C20	0B	3340 - 11
TH3075526	1D23	4	1674 - 11
TH3076012	1B4	5	0130 - 13
TH3076303	1B4	0A	0130 - 13
TH3076362	2D2	50	3360 - 3
TH3076363	2D2	59	3360 - 3
TH3076898	2D10	2	3360 - 11
TH3077734	2J8	10	3360 - 153
TH3081079	2I20	45	3360 - 141
TH3081466	2I20	71	3360 - 141
TH3082934	1D23	6	1674 - 11
TH4000910	2D6	34	3360 - 7
TH4042035	2I20	22	3360 - 141
TH4042035	2J2	31	3360 - 147
TH4046608	1B4	16	0130 - 13
TH4050722	2J13	1	4360 - 3
TH4051870	1B10	9	0130 - 19
TH4061790	2I14	11	3360 - 135
TH4070027	2I4	7	3360 - 125
TH4070027	2I8	7	3360 - 129
TH4070418	1C23	23	0530 - 3
TH4071638	1J10	5	2160 - 5
TH4074009	2C16	35	3340 - 7
TH4075853	2D2	7	3360 - 3
TH4075854	2D18	68	3360 - 19
TH4075854	2F16	33	3360 - 65
TH4075854	2F18	33	3360 - 67
TH4083751	1J10	33	2160 - 5
TH4083852	1J10	8	2160 - 5
TH4085857	1A25	9	0130 - 9
TH4087732	2C16	32	3340 - 7
TH4089893	2J13	52	4360 - 3
TH4094949	2H24	7	3360 - 121
TH4094949	2I2	7	3360 - 123
TH4094961	2I10	11	3360 - 131
TH4094961	2I12	11	3360 - 133
TH4098184	1B4	10	0130 - 13
TH4098185	1B4	11	0130 - 13
TH4098270	1B4	12	0130 - 13
TH4099039	1D19	25	1674 - 7
TH4113165	2I4	11	3360 - 125
TH4113165	2I8	11	3360 - 129
TH4114413	1E24	11	1740 - 11
TH4129729	2C12	0B	3340 - 3
TH4129729	2C14	0B	3340 - 5
TH4129729	2C20	0C	3340 - 11
TH4129941	1C25	24	0560 - 3
TH4139196	2C18	75	3340 - 9
TH4139197	2C18	76	3340 - 9
TH4141171	1C25	24A	0560 - 3
TH4143780	1I23	7	1910 - 13
TH4143888	1C11	5	0510 - 3
TH4144353	1J12	16	2160 - 7
TH4146848	2C18	72	3340 - 9
TH4148825	2C16	36	3340 - 7
TH4149335	1D19	14	1674 - 7
TH4153564	1J10	9	2160 - 5
TH4154331	2D4	6	3360 - 5
TH4165444	1E16	22	1740 - 3
TH4169593	2J2	7	3360 - 147
TH4174459	1C21	7	0520 - 3
TH4184860	1C17	19	0515 - 3
TH4185490	2C18	74	3340 - 9
TH4187322	1C25	7	0560 - 3
TH4187322	1J10	25	2160 - 5
TH4187486	1D2	9	0560 - 5
TH4187487	1D2	10	0560 - 5
TH4187977	1C7	34	0400 - 3
TH4190010	1E16	1	1740 - 3
TH4191277	2C18	73	3340 - 9
TH4191279	1E16	23	1740 - 3
TH4193832	1C7	53	0400 - 3
TH4199817	2H24	19	3360 - 121
TH4199817	2I2	19	3360 - 123
TH4203102	2F24	18	3360 - 73
TH4203102	2G6	18	3360 - 79
TH4203434	1D2	22	0560 - 5
TH4205000	2I4	25	3360 - 125
TH4205382	2I20	21	3360 - 141
TH4206477	1E20	44	1740 - 7
TH4210108	1F4	9	1740 - 15
TH4214444	2D8	28	3360 - 9
TH4215452	1B2	5	0130 - 11
TH4215453	1B4	7	0130 - 13
TH4215457	1B6	6	0130 - 15
TH4216725	1F4	11	1740 - 15
TH4216726	1F4	12	1740 - 15
TH4216851	2J17	33	4360 - 5
TH4216871	1F4	4	1740 - 15
TH4217265	2I20	39	3360 - 141
TH4217351	2J17	10	4360 - 5
TH4217639	1G14	10	1810 - 31
TH4218719	2C12	0C	3340 - 3
TH4218719	2C14	0C	3340 - 5
TH4218719	2C16	0F	3340 - 7
TH4218719	2C20	0D	3340 - 11
TH4218733	1B10	4	0130 - 19
TH4218735	1B10	6	0130 - 19
TH4218739	1B10	24	0130 - 19
TH4218740	1B10	22	0130 - 19
TH4218741	1B10	23	0130 - 19
TH4218844	1B10	24	0130 - 19
TH4218943	1A19	4	0130 - 3
TH4218944	1A19	5	0130 - 3
TH4218945	1A19	10	0130 - 3
TH4219047	2J13	7	4360 - 3
TH4219328	1B14	3	0260 - 3
TH4219329	1B14	2	0260 - 3
TH4219640	1B14	22	0260 - 3
TH4219641	1B14	32	0260 - 3
TH4219932	1E16	25	1740 - 3
TH4219933	1E16	26	1740 - 3
TH4221013	2D10	5	3360 - 11
TH4221047	1D17	29	1674 - 5
TH4221049	1C7	36	0400 - 3
TH4221280	1D17	30	1674 - 5
TH4221465	1E22	7	1740 - 9
TH4221465	1E24	7	1740 - 11
TH4222029	1B14	24	0260 - 3
TH4222379	1C15	3	0510 - 7
TH4222380	1C13	33	0510 - 5
TH4222401	1I25	15	1910 - 15
TH4223568	1B14	28	0260 - 3
TH4223909	1C23	29	0530 - 3
TH4224467	2F22	17	3360 - 71
TH4234534	1C15	2A	0510 - 7
TH4234535	1C15	2B	0510 - 7
TH4234708	2C12	5B	3340 - 3
TH4234708	2C14	5B	3340 - 5
TH4234708	2C20	5B	3340 - 11
TH4239712	2E2	23	3360 - 27
TH4242098	1A19	7	0130 - 3
TH4242099	1A19	6	0130 - 3
TH4242436	2C16	49	3340 - 7
TH4243157	1A19	15	0130 - 3
TH4245211	1F4	5	1740 - 15
TH4245213	1F4	6	1740 - 15
TH4246293	2C16	6B	3340 - 7
TH4246293	2C16	7B	3340 - 7
TH4246611	2C12	27	3340 - 3
TH4246611	2C14	27	3340 - 5
TH4246611	2C20	27	3340 - 11
TH4247424	2C12	35	3340 - 3
TH4247424	2C14	35	3340 - 5
TH4247424	2C20	39	3340 - 11
TH4248510	1C11	3	0510 - 3
TH4249027	1E20	45	1740 - 7
TH4249324	1I13	48	1910 - 3
TH4249324	1I15	20	1910 - 5
TH4249324	1I17	48	1910 - 7
TH4249324	1I19	48	1910 - 9
TH4249324	1I19	84	1910 - 9
TH4249324	1I21	48	1910 - 11
TH4249324	1I25	10	1910 - 15
TH4249324	1J2	15	1910 - 17
TH4249324	2D10	7	3360 - 11
TH4249324	2D16	7	3360 - 17
TH4250580	2J17	23	4360 - 5
TH4251207	2C12	0F	3340 - 3
TH4251207	2C14	0G	3340 - 5
TH4251211	2C12	31	3340 - 3
TH4251211	2C14	31	3340 - 5

NUMERICAL INDEX - CONTINUED

PART NO.	GRID	KEY	PAGE
TH4251211	2C20	31	3340 - 11
TH4251753	2C12	5F	3340 - 3
TH4251753	2C14	5F	3340 - 5
TH4251753	2C20	0F	3340 - 11
TH4251753	2C20	5F	3340 - 11
TH4251753	2I6	29	3360 - 127
TH4251753	2I8	29	3360 - 129
TH4251754	2C22	0C	3344 - 3
TH4251754	2C24	0C	3344 - 5
TH4251766	2C12	0E	3340 - 3
TH4251766	2C14	0E	3340 - 5
TH4251766	2C16	0G	3340 - 7
TH4251766	2C20	0E	3340 - 11
TH4251767	2C12	5E	3340 - 3
TH4251767	2C14	5E	3340 - 5
TH4251767	2C20	5E	3340 - 11
TH4251767	2I6	28	3360 - 127
TH4251767	2I8	28	3360 - 129
TH4252361	2C22	17	3344 - 3
TH4252361	2C24	17	3344 - 5
TH4252560	1C7	0C	0400 - 3
TH4252612	1C11	12	0510 - 3
TH4252719	1B10	24	0130 - 19
TH4252730	2C12	37	3340 - 3
TH4252730	2C14	37	3340 - 5
TH4252730	2C20	40	3340 - 11
TH4255002	1C23	31	0530 - 3
TH4255567	1E20	1	1740 - 7
TH4255567	2I20	75	3360 - 141
TH4257370	1C11	16	0510 - 3
TH4257939	2G4	50	3360 - 77
TH4257940	2G4	51	3360 - 77
TH4257941	2G4	53	3360 - 77
TH4257942	2G4	54	3360 - 77
TH4257943	2G4	55	3360 - 77
TH4257944	2G4	56	3360 - 77
TH4257945	2G4	57	3360 - 77
TH4257946	2G4	58	3360 - 77
TH4257967	1B14	54	0260 - 3
TH4258058	1B14	44	0260 - 3
TH4258197	1C23	59	0530 - 3
TH4260154	2I20	20	3360 - 141
TH4261282	1E16	6	1740 - 3
TH4261283	1E16	7	1740 - 3
TH4261624	2I20	47	3360 - 141
TH4266330	2E2	14	3360 - 27
TH4267235	2C16	31	3340 - 7
TH4267253	2C16	6A	3340 - 7
TH4267254	2C16	16	3340 - 7
TH4267255	2C16	33	3340 - 7
TH4267257	2C16	0D	3340 - 7
TH4267258	2C16	4B	3340 - 7
TH4267259	2C16	4D	3340 - 7
TH4267664	1C7	46	0400 - 3
TH4267756	2C16	6C	3340 - 7
TH4267756	2C16	7C	3340 - 7
TH4267832	2C16	0E	3340 - 7
TH4270206	1D19	20	1674 - 7
TH4270502	1C13	5	0510 - 5
TH427154	1E16	5	1740 - 3
TH4272936	2I20	58	3360 - 141
TH4275239	1D17	31	1674 - 5
TH4275750	1D17	12	1674 - 5
TH4277651	2E2	13	3360 - 27
TH4277804	1A23	2	0130 - 7
TH4277804	1A25	12	0130 - 9
TH4280457	2D2	54	3360 - 3
TH4281149	2C12	5C	3340 - 3
TH4281149	2C14	5C	3340 - 5
TH4281149	2C20	5C	3340 - 11
TH4282319	2H6	45	3360 - 103
TH4282319	2J4	9	3360 - 149
TH4283835	1C7	33	0400 - 3
TH4284195	1B14	50	0260 - 3
TH4285236	1C13	14	0510 - 5
TH4287277	1D17	11	1674 - 5
TH4287489	1C21	8	0520 - 3
TH4290146	2G6	19	3360 - 79
TH4292386	1J12	10	2160 - 7
TH4293172	1C21	11	0520 - 3
TH4293389	1E16	2	1740 - 3
TH4294478	1H23	31	1830 - 7
TH4294566	1C17	22E	0515 - 3
TH4294567	1C17	15	0515 - 3
TH4294619	1C17	11	0515 - 3
TH4294694	1D17	22	1674 - 5
TH4296066	2E2	19	3360 - 27
TH4296066	2E4	16	3360 - 29
TH4297309	1D19	23	1674 - 7
TH4297379	2G14	1	3360 - 87
TH4297379	2G14	19	3360 - 87
TH4297998	2G2	18	3360 - 75
TH4298748	1D19	23A	1674 - 7
TH4304309	2I10	1	3360 - 131
TH4304310	2I10	2	3360 - 131
TH4304310	2I12	2	3360 - 133
TH4307265	2I18	19	3360 - 139
TH4308011	2I18	22	3360 - 139
TH4308016	2I18	25	3360 - 139
TH4308818	2D18	64	3360 - 19
TH4311602	2H14	82	3360 - 111
TH4311602	2H16	97	3360 - 113
TH4311602	2H18	91	3360 - 115
TH4311602	2H20	86	3360 - 117
TH4311602	2H22	97	3360 - 119
TH4312517	1C21	10	0520 - 3
TH4317618	2D8	19	3360 - 9
TH4318955	1C15	2	0510 - 7
TH4319517	1C7	55	0400 - 3
TH4320661	2J13	34B	4360 - 3
TH4320866	1D2	23	0560 - 5
TH4325289	1B4	9	0130 - 13
TH4325548	2G4	10	3360 - 77
TH4331078	2C12	2	3340 - 3
TH4331078	2C14	2	3340 - 5
TH4332024	2C12	0D	3340 - 3
TH4332024	2C14	0D	3340 - 5
TH4332389	2D8	4	3360 - 9
TH4332390	2D8	5	3360 - 9
TH4332391	2D4	39	3360 - 5
TH4332392	2D6	40	3360 - 7
TH4332394	2D8	1	3360 - 9
TH4332807	2D12	23	3360 - 13
TH4332809	2D12	25	3360 - 13
TH4332810	2D16	57	3360 - 17
TH4333265	2J17	32	4360 - 5
TH4333441	1B14	21	0260 - 3
TH4333514	2F22	9	3360 - 71
TH4333517	1B14	34	0260 - 3
TH4333540	1B14	43	0260 - 3
TH4333844	1A19	16	0130 - 3
TH4334933	1E22	5	1740 - 9
TH4335277	2J4	2	3360 - 149
TH4335904	1E22	11	1740 - 9
TH4335906	1E22	3	1740 - 9
TH4336875	1C25	26	0560 - 3
TH4336875	1D19	49	1674 - 7
TH4336875	1J18	47	2160 - 13
TH4336875	2I24	9	3360 - 145
TH4337085	1C7	49	0400 - 3
TH4337109	2I6	44	3360 - 127
TH4337125	2C16	44	3340 - 7
TH4337738	2F20	27	3360 - 69
TH4337913	1C7	0	0400 - 3
TH4338011	1C15	2C	0510 - 7
TH4338179	1C7	7	0400 - 3
TH4338181	2J17	30	4360 - 5
TH4338291	1B14	45	0260 - 3
TH4338292	1B14	36	0260 - 3
TH4338293	1B14	23	0260 - 3
TH4338294	1B14	35	0260 - 3
TH4338381	2J17	9	4360 - 5
TH4339834	1F11	2	1810 - 3
TH4339835	1F11	4	1810 - 3
TH4339836	1F11	3	1810 - 3
TH4340845	1I23	18	1910 - 13
TH4340845	1J5	0	2002 - 3
TH4340881	2G2	19	3360 - 75
TH4340944	2D2	60	3360 - 3
TH4342695	2F16	18	3360 - 65
TH4342695	2F18	18	3360 - 67
TH4342699	2F16	17	3360 - 65
TH4342699	2F18	17	3360 - 67
TH4342703	2F16	16	3360 - 65
TH4342703	2F18	16	3360 - 67
TH4342723	2F16	21	3360 - 65
TH4342723	2F18	21	3360 - 67
TH4342772	2F16	20	3360 - 65
TH4342772	2F18	20	3360 - 67
TH4342975	2F20	17	3360 - 69
TH4343018	2F20	50	3360 - 69
TH4343018	2F22	50	3360 - 71
TH4343019	2F20	51	3360 - 69
TH4343019	2F22	51	3360 - 71
TH4343295	2F24	54	3360 - 73
TH4343296	2F24	55	3360 - 73
TH4343297	2F24	56	3360 - 73
TH4343298	2F24	57	3360 - 73
TH4343299	2F24	58	3360 - 73
TH4343300	2F24	59	3360 - 73
TH4343376	1J18	5B	2160 - 13
TH4343708	1C7	48	0400 - 3
TH4344572	1H23	12	1830 - 7
TH4345166	1B10	0	0130 - 19
TH4345167	1B10	1	0130 - 19
TH4345168	1B10	2	0130 - 19
TH4345169	1B10	3	0130 - 19
TH4345170	1B10	5	0130 - 19
TH4345171	1B10	7	0130 - 19
TH4345172	1B10	8	0130 - 19
TH4345173	1B10	10	0130 - 19
TH4345581	1B2	6	0130 - 11
TH4345718	1E22	4	1740 - 9
TH4346036	1E22	6	1740 - 9
TH4346036	1E24	6	1740 - 11
TH4346116	1C23	15	0530 - 3
TH4346189	1C13	17	0510 - 5
TH4346218	1C21	2	0520 - 3
TH4346360	1I23	4	1910 - 13
TH4346471	1I23	3	1910 - 13
TH4348654	2J13	35	4360 - 3

NUMERICAL INDEX - CONTINUED

PART NO.	GRID	KEY	PAGE
TH4348654	2J13	57	4360 - 3
TH4349108	2J13	87	4360 - 3
TH4349163	2J13	56A	4360 - 3
TH4349970	2F18	28	3360 - 67
TH4350663	1I19	27	1910 - 9
TH4351140	1I13	33	1910 - 3
TH4351140	1I15	9	1910 - 5
TH4351773	1H23	4	1830 - 7
TH4351853	2F24	20	3360 - 73
TH4352244	1A25	5	0130 - 9
TH4352434	1A25	6	0130 - 9
TH4352665	1J20	15	2160 - 15
TH4353147	1C17	24	0515 - 3
TH4353329	1D2	25	0560 - 5
TH4353330	1D2	26	0560 - 5
TH4353488	1I13	34	1910 - 3
TH4353813	1I13	0A	1910 - 3
TH4353813	1I13	1A	1910 - 3
TH4353956	1C15	11	0510 - 7
TH4353970	1C15	7	0510 - 7
TH4357517	2E2	10	3360 - 27
TH4357517	2H10	10	3360 - 107
TH4357640	1H23	32	1830 - 7
TH4358255	1I2	72	1830 - 11
TH4359496	1J20	6	2160 - 15
TH4359497	1J20	7	2160 - 15
TH4360555	2C20	2	3340 - 11
TH4361832	1C17	7	0515 - 3
TH4362450	1H23	36	1830 - 7
TH4363576	1C7	56	0400 - 3
TH4364071	2E2	2	3360 - 27
TH4364071	2H4	44	3360 - 101
TH4364317	2C20	44	3340 - 11
TH4364320	2F22	18	3360 - 71
TH4364388	1B22	16	0260 - 11
TH4364389	1B22	17	0260 - 11
TH4364390	1B22	18	0260 - 11
TH4364480	2F24	50	3360 - 73
TH4364480	2G2	50	3360 - 75
TH4364480	2G6	50	3360 - 79
TH4364481	2F24	51	3360 - 73
TH4364481	2G2	51	3360 - 75
TH4364481	2G6	51	3360 - 79
TH4364482	2F24	52	3360 - 73
TH4364482	2G2	52	3360 - 75
TH4364482	2G6	52	3360 - 79
TH4364483	2F24	53	3360 - 73
TH4364483	2G2	53	3360 - 75
TH4364483	2G6	53	3360 - 79
TH4364484	2G2	54	3360 - 75
TH4364485	2G2	55	3360 - 75
TH4364486	2G2	56	3360 - 75
TH4364487	2G2	57	3360 - 75
TH4364488	2G2	58	3360 - 75
TH4364489	2G2	59	3360 - 75
TH4364565	2D22	18	3360 - 23
TH4364565	2D24	18	3360 - 25
TH4364623	1C7	50	0400 - 3
TH4365103	2J15	1	4360 - 3B
TH4365372	1H23	22	1830 - 7
TH4365993	1E6	0	1674 - 19
TH4365993	1E8	0A	1674 - 19B
TH4366073	1D17	23	1674 - 5
TH4366569	1D2	21	0560 - 5
TH4366652	2C14	39	3340 - 5
TH4366985	1E2	5	1674 - 15
TH4367006	2D22	10	3360 - 23
TH4367006	2D24	10	3360 - 25
TH4367200	1D17	35	1674 - 5
TH4367205	1D25	9	1674 - 13
TH4367214	1D25	10	1674 - 13
TH4367215	1D17	21	1674 - 5
TH4367999	2G6	54	3360 - 79
TH4368000	2G6	55	3360 - 79
TH4368001	2G6	56	3360 - 79
TH4368002	2G6	57	3360 - 79
TH4368003	2G6	58	3360 - 79
TH4368004	2G6	59	3360 - 79
TH4368005	2G6	60	3360 - 79
TH4368014	2G6	61	3360 - 79
TH4368015	2G6	62	3360 - 79
TH4368704	2E2	30	3360 - 27
TH4368893	2I18	35	3360 - 139
TH4370071	1F19	3	1810 - 11
TH4370470	1B4	3	0130 - 13
TH4371227	1J10	31	2160 - 5
TH4372518	2D18	66	3360 - 19
TH4372519	2D16	42	3360 - 17
TH4372522	2D12	22	3360 - 13
TH4372525	2D14	38	3360 - 15
TH4372526	2D14	37	3360 - 15
TH4372527	2D14	36	3360 - 15
TH4372570	2D16	46	3360 - 17
TH4372605	2D2	12	3360 - 3
TH4373195	1B4	6	0130 - 13
TH4373644	2C12	40	3340 - 3
TH4373644	2C18	69	3340 - 9
TH4373645	2F16	27	3360 - 65
TH4373679	2E24	8	3360 - 49
TH4373682	2D8	17	3360 - 9
TH4373683	2D8	18	3360 - 9
TH4373684	2D8	25	3360 - 9
TH4373685	2D8	27	3360 - 9
TH4373686	2D20	1	3360 - 21
TH4373687	2D20	4	3360 - 21
TH4373689	2D20	14	3360 - 21
TH4373690	2D20	10	3360 - 21
TH4373914	2D20	12	3360 - 21
TH4373943	2D2	2	3360 - 3
TH4373945	2D2	3	3360 - 3
TH4373946	2D12	24	3360 - 13
TH4373972	1B8	21	0130 - 17
TH4374063	1I13	69	1910 - 3
TH4374146	2D10	15	3360 - 11
TH4374566	1B24	9	0260 - 13
TH4375200	2J17	12	4360 - 5
TH4375201	2J17	3	4360 - 5
TH4375389	1H23	53	1830 - 7
TH4375390	1D19	15	1674 - 7
TH4375446	1H23	52	1830 - 7
TH4375478	1H23	51	1830 - 7
TH4375482	1H23	50	1830 - 7
TH4375832	2E14	51	3360 - 39
TH4375833	2E2	29	3360 - 27
TH4375834	2E2	33	3360 - 27
TH4375840	2E6	32	3360 - 31
TH4375841	2E24	15	3360 - 49
TH4375842	2F2	1	3360 - 51
TH4375843	2E24	1	3360 - 49
TH4375844	2E24	66	3360 - 49
TH4375845	2E22	14	3360 - 47
TH4375846	2E22	6	3360 - 47
TH4375847	2E24	17	3360 - 49
TH4375849	2E24	25	3360 - 49
TH4375850	2E24	27	3360 - 49
TH4375851	2E22	61	3360 - 47
TH4375852	2E22	16	3360 - 47
TH4375854	2E22	1	3360 - 47
TH4375855	2D22	12	3360 - 23
TH4375855	2D24	12	3360 - 25
TH4375856	2E12	24	3360 - 37
TH4375857	2E22	26	3360 - 47
TH4375858	2E22	28	3360 - 47
TH4375858	2E22	36	3360 - 47
TH4375859	2F2	45	3360 - 51
TH4375860	2F2	46	3360 - 51
TH4375861	2F4	1	3360 - 53
TH4375863	2F6	1	3360 - 55
TH4375864	2E12	23	3360 - 37
TH4375865	2E20	1	3360 - 45
TH4375866	2E20	58	3360 - 45
TH4375867	2F8	1	3360 - 57
TH4375869	2D22	15	3360 - 23
TH4375869	2D24	15	3360 - 25
TH4375870	2E2	34	3360 - 27
TH4375872	2E2	28	3360 - 27
TH4375873	2D22	16	3360 - 23
TH4375873	2D24	16	3360 - 25
TH4375874	2D22	17	3360 - 23
TH4375874	2D24	17	3360 - 25
TH4375875	2D22	13	3360 - 23
TH4375875	2D24	13	3360 - 25
TH4375876	2D22	14	3360 - 23
TH4375877	2D22	11	3360 - 23
TH4375877	2D24	11	3360 - 25
TH4375878	2E4	24	3360 - 29
TH4375881	2E6	31	3360 - 31
TH4375883	2D22	19	3360 - 23
TH4375883	2D24	19	3360 - 25
TH4375884	2E24	34	3360 - 49
TH4375884	2E24	55	3360 - 49
TH4375885	2E22	35	3360 - 47
TH4375886	2E22	37	3360 - 47
TH4375887	2F2	52	3360 - 51
TH4375888	2F2	44	3360 - 51
TH4375890	2E14	60	3360 - 39
TH4375891	2E16	1	3360 - 41
TH4375892	2E18	1	3360 - 43
TH4375893	2E18	41	3360 - 43
TH4375894	2E16	32	3360 - 41
TH4375895	2E16	33	3360 - 41
TH4375896	2E16	48	3360 - 41
TH4375897	2E14	1	3360 - 39
TH4375898	2E16	49	3360 - 41
TH4375899	2E18	65	3360 - 43
TH4375900	2E18	40	3360 - 43
TH4375900	2I18	23	3360 - 139
TH4375901	2E16	50	3360 - 41
TH4375902	2E12	22	3360 - 37
TH4375903	2E12	20	3360 - 37
TH4375904	2E10	12	3360 - 35
TH4375909	2E10	13	3360 - 35
TH4375912	2E12	1	3360 - 37
TH4376245	1H23	3	1830 - 7
TH4376631	2J13	56B	4360 - 3
TH4376780	2J13	34A	4360 - 3
TH4376895	1I23	20	1910 - 13
TH4377119	1C11	1D	0510 - 3
TH4377649	2E4	0	3360 - 29
TH4377649	2G18	21	3360 - 91
TH4378099	1I25	22	1910 - 15

NUMERICAL INDEX - CONTINUED

PART NO.	GRID	KEY	PAGE
TH4378353	1I13	39	1910 - 3
TH4378375	1I25	17	1910 - 15
TH4378375	1I25	30	1910 - 15
TH4378585	2J6	38	3360 - 151
TH4378675	1B14	41	0260 - 3
TH4379154	2C22	20	3344 - 3
TH4379154	2C24	20	3344 - 5
TH4379155	2C22	21	3344 - 3
TH4379155	2C24	21	3344 - 5
TH4379157	2C12	46	3340 - 3
TH4379157	2C14	46	3340 - 5
TH4379158	2C12	38	3340 - 3
TH4379158	2C14	38	3340 - 5
TH4379170	2I18	24	3360 - 139
TH4379221	2C16	0A	3340 - 7
TH4379639	1F25	60	1810 - 17
TH4380636	1E22	12	1740 - 9
TH4380636	1E24	12	1740 - 11
TH4380637	1E22	13	1740 - 9
TH4380637	1E24	13	1740 - 11
TH4381082	1D21	18	1674 - 9
TH4382149	1C7	51	0400 - 3
TH4382233	1C23	58	0530 - 3
TH4382309	2D18	78	3360 - 19
TH4382310	2D18	79	3360 - 19
TH4382311	2D18	80	3360 - 19
TH4382312	2D18	81	3360 - 19
TH4382720	1C7	4	0400 - 3
TH4382734	1C23	61	0530 - 3
TH4382841	1H25	45	1830 - 9
TH4382842	1H25	47	1830 - 9
TH4383804	1H23	39	1830 - 7
TH4384020	2E2	36	3360 - 27
TH4385736	2D14	58	3360 - 15
TH4386485	2C20	41	3340 - 11
TH4386486	2C20	42	3340 - 11
TH4386505	1I23	24	1910 - 13
TH4386733	2E18	80	3360 - 43
TH4386855	1D21	24	1674 - 9
TH4386999	1C7	0A	0400 - 3
TH4387356	2E18	42	3360 - 43
TH4387636	2I18	28	3360 - 139
TH4388025	1C7	0B	0400 - 3
TH4388207	2J13	82	4360 - 3
TH4388207	2J15	45	4360 - 3B
TH4388207	2J19	0	4360 - 7
TH4389912	2E12	21	3360 - 37
TH4389917	2E2	35	3360 - 27
TH4389987	2E2	32	3360 - 27
TH4390582	1B24	1	0260 - 13
TH4390584	1B24	2	0260 - 13
TH4390587	1B22	0	0260 - 11
TH4390588	1B22	25	0260 - 11
TH4391308	2I8	43	3360 - 129
TH4391309	2I8	1	3360 - 129
TH4391310	2I8	2	3360 - 129
TH4391311	2I4	40	3360 - 125
TH4391312	2I4	1	3360 - 125
TH4391313	2I4	2	3360 - 125
TH4391314	2I6	43	3360 - 127
TH4391315	2I6	1	3360 - 127
TH4391316	2I6	2	3360 - 127
TH4391318	2H24	1	3360 - 121
TH4391318	2I2	1	3360 - 123
TH4391319	2H24	2	3360 - 121
TH4391319	2I2	2	3360 - 123
TH4391320	2H24	63	3360 - 121
TH4391320	2I2	63	3360 - 123
TH4391322	2F20	16	3360 - 69
TH4391323	2F20	30	3360 - 69
TH4391503	1J12	6	2160 - 7
TH4391503	2G14	35	3360 - 87
TH4391504	2H20	72	3360 - 117
TH4391660	2H20	76	3360 - 117
TH4391661	2H14	28	3360 - 111
TH4392996	2I20	0	3360 - 141
TH4393378	2C16	27	3340 - 7
TH4393811	2I18	30	3360 - 139
TH4393869	1F2	8	1740 - 13
TH4394030	2I20	3	3360 - 141
TH4394030	2I22	74	3360 - 143
TH4394171	1F2	3	1740 - 13
TH4394448	1F2	6	1740 - 13
TH4394534	1F2	13	1740 - 13
TH4394542	1F2	4	1740 - 13
TH4395028	1B14	90	0260 - 3
TH4395346	2I20	10	3360 - 141
TH4395352	2I20	31	3360 - 141
TH4395356	2I20	30	3360 - 141
TH4395369	2I20	9	3360 - 141
TH4395530	2I20	8	3360 - 141
TH4395627	2I20	65	3360 - 141
TH4395629	2I20	63	3360 - 141
TH4395630	2I20	69	3360 - 141
TH4395631	2I20	59	3360 - 141
TH4395660	1H25	51	1830 - 9
TH4395792	2I20	29	3360 - 141
TH4395931	2I20	43	3360 - 141
TH4395934	2I20	42	3360 - 141
TH4396082	2I24	0	3360 - 145
TH4397430	2I20	24	3360 - 141
TH4397518	2C16	2	3340 - 7
TH4397518	2I12	47	3360 - 133
TH4397903	1C11	1	0510 - 3
TH4397904	1C11	4	0510 - 3
TH4397905	1C11	6	0510 - 3
TH4397906	1C11	8	0510 - 3
TH4397907	1C11	9	0510 - 3
TH4397908	1C11	10	0510 - 3
TH4397909	1C11	13	0510 - 3
TH4397910	1C11	15	0510 - 3
TH4397913	1C11	18	0510 - 3
TH4397914	1C11	1A	0510 - 3
TH4397915	1C11	1B	0510 - 3
TH4397916	1C11	1C	0510 - 3
TH4397917	1C11	17	0510 - 3
TH4398794	1C2	40	0260 - 15
TH4398795	1C2	41	0260 - 15
TH4400637	2C16	0B	3340 - 7
TH4401954	2G4	9	3360 - 77
TH4402022	2I14	2	3360 - 135
TH4402168	2I14	39	3360 - 135
TH4402170	2I14	1	3360 - 135
TH4402317	2J8	9	3360 - 153
TH4403359	1E6	1	1674 - 19
TH4403394	1E6	2	1674 - 19
TH4404209	1D2	3	0560 - 5
TH4404209	1J18	2	2160 - 13
TH4404224	1C13	35	0510 - 5
TH4404273	2D2	17	3360 - 3
TH4406290	1H25	50	1830 - 9
TH4406481	2E10	11	3360 - 35
TH4406482	2E10	1	3360 - 35
TH4406617	1C23	66	0530 - 3
TH4408136	1E4	0E	1674 - 17
TH4408837	2D4	4	3360 - 5
TH4409528	1C7	2	0400 - 3
TH4410968	1C11	1E	0510 - 3
TH4413151	2J2	9	3360 - 147
TH4414332	1F23	1	1810 - 15
TH4414897	1C13	19	0510 - 5
TH4415213	2I12	1	3360 - 133
TH446536	1J20	19	2160 - 15
TH446536	2D4	43	3360 - 5
TH446536	2D6	43	3360 - 7
TH446536	2F22	11	3360 - 71
TH4502700	1B4	0C	0130 - 13
TH5004208	1A19	0	0130 - 3
TH5004209	1A19	1	0130 - 3
TH5004210	1A19	2	0130 - 3
TH5004371	1J18	0	2160 - 13
TH5004532	1E16	0	1740 - 3
TH5004545	1I23	0	1910 - 13
TH5004880	1I13	0	1910 - 3
TH5005235	1E22	0	1740 - 9
TH5005719	1E24	0	1740 - 11
TH5006150	1I19	81	1910 - 9
TH6014463	1C25	0	0560 - 3
TH6014482	1A25	1	0130 - 9
TH6014483	1A25	3	0130 - 9
TH6014505	1A25	0	0130 - 9
TH6014506	1A25	2	0130 - 9
TH6014826	1G20	3	1810 - 37
TH6014846	1I23	1	1910 - 13
TH6014849	1I23	2	1910 - 13
TH6014974	1E18	70	1740 - 5
TH6014993	1I25	0	1910 - 15
TH6015061	1I13	1	1910 - 3
TH6015359	1C23	21	0530 - 3
TH6017131	1I13	4	1910 - 3
TH6017242	1C2	1	0260 - 15
TH6017244	1C2	5	0260 - 15
TH6017576	1I13	8	1910 - 3
TH6017693	1E18	71	1740 - 5
TH7027645	1D17	6	1674 - 5
TH7028262	1C2	0	0260 - 15
TH7028263	1C2	4	0260 - 15
TH7029096	2D6	24	3360 - 7
TH7029098	2D6	25	3360 - 7
TH7029099	2D6	19	3360 - 7
TH7029100	2D6	26	3360 - 7
TH7029780	1C21	6	0520 - 3
TH7030044	1I19	20	1910 - 9
TH7030100	1I13	24	1910 - 3
TH7030115	1I15	0	1910 - 5
TH7030116	1I15	13	1910 - 5
TH7030119	1J2	6	1910 - 17
TH7030120	1J2	7	1910 - 17
TH7030169	1I19	19	1910 - 9
TH7030170	1I19	1	1910 - 9
TH7030171	1I19	25	1910 - 9
TH7030285	1I19	21	1910 - 9
TH7030773	1H23	42	1830 - 7
TH7030928	1E18	1	1740 - 5
TH7030955	1C15	0	0510 - 7
TH7031190	1G18	35	1810 - 35
TH7031358	1J2	1	1910 - 17
TH7031359	1J2	3	1910 - 17
TH7031982	1I17	9	1910 - 7
TH7032447	1C17	9	0515 - 3
TH7033562	2D6	29	3360 - 7

NUMERICAL INDEX - CONTINUED

PART NO.	GRID	KEY	PAGE
TH7033801	1I23	15	1910 - 13
TH7033815	1H23	2	1830 - 7
TH7034967	1I13	5	1910 - 3
TH7035435	2D4	1	3360 - 5
TH8041209	2F16	7	3360 - 65
TH8041210	2F16	8	3360 - 65
TH8045901	1J18	17	2160 - 13
TH8046016	2D16	41	3360 - 17
TH8047133	2F18	7	3360 - 67
TH8048381	2C16	41	3340 - 7
TH8048382	2C16	42	3340 - 7
TH8049685	2C16	10	3340 - 7
TH8049686	2C16	15	3340 - 7
TH8049687	2C16	20	3340 - 7
TH8049689	2C16	26	3340 - 7
TH8051972	2J4	5	3360 - 149
TH8051973	2J4	6	3360 - 149
TH8056050	2J13	46	4360 - 3
TH8057897	1B2	25	0130 - 11
TH8058964	2C12	17	3340 - 3
TH8058964	2C14	17	3340 - 5
TH8060017	1J18	4	2160 - 13
TH8060053	2D4	0	3360 - 5
TH8060056	2D6	28	3360 - 7
TH8060057	2D4	2	3360 - 5
TH8060058	1J20	4	2160 - 15
TH8060101	2D2	0	3360 - 3
TH8060157	2D4	3	3360 - 5
TH8060558	1C2	2	0260 - 15
TH8060559	1C2	6	0260 - 15
TH8061204	2F16	5	3360 - 65
TH8061205	2F16	6	3360 - 65
TH8061206	2F16	9	3360 - 65
TH8061207	2F16	10	3360 - 65
TH8061208	2F16	11	3360 - 65
TH8061209	2F16	12	3360 - 65
TH8061926	1J18	3	2160 - 13
TH8062041	1I23	6	1910 - 13
TH8062320	1C25	9	0560 - 3
TH8062658	1I15	8	1910 - 5
TH8062764	1I21	13	1910 - 11
TH8062765	1I21	14	1910 - 11
TH8062766	1I21	15	1910 - 11
TH8063027	1C17	1	0515 - 3
TH8063051	1E18	61	1740 - 5
TH8063058	1I13	31	1910 - 3
TH8063801	1C23	28	0530 - 3
TH8064216	1H23	43	1830 - 7
TH8064222	1H23	8	1830 - 7
TH8064258	1I13	59	1910 - 3
TH8064259	1I13	62	1910 - 3
TH8064260	1I13	61	1910 - 3
TH8064513	1I17	26	1910 - 7
TH8064623	1B22	20	0260 - 11
TH8065036	2F18	5	3360 - 67
TH8065037	2F18	6	3360 - 67
TH8065038	2F18	8	3360 - 67
TH8065039	2F18	9	3360 - 67
TH8065040	2F18	10	3360 - 67
TH8065105	2C20	14	3340 - 11
TH8065254	1C7	45	0400 - 3
TH8065476	1I17	1	1910 - 7
TH8065505	1I17	7	1910 - 7
TH8065547	2C12	8	3340 - 3
TH8065547	2C14	6	3340 - 5
TH8065547	2C20	8	3340 - 11
TH8065548	2C12	9	3340 - 3
TH8065548	2C14	7	3340 - 5
TH8065548	2C20	9	3340 - 11
TH8065660	1J10	28	2160 - 5
TH8066421	1J2	2	1910 - 17
TH8066895	2D10	0	3360 - 11
TH8066897	2D10	1	3360 - 11
TH8066966	1C13	1	0510 - 5
TH8067180	1I17	10	1910 - 7
TH8067185	1I21	22	1910 - 11
TH8067210	1I21	1	1910 - 11
TH8067349	1I23	19	1910 - 13
TH8067350	1J5	1	2002 - 3
TH8067442	1I13	64	1910 - 3
TH8067457	2J13	88	4360 - 3
TH8067464	1C7	37	0400 - 3
TH8067790	1E16	21	1740 - 3
TH8067792	1E16	20	1740 - 3
TH8067794	2C22	2	3344 - 3
TH8067794	2C24	23	3344 - 5
TH8067795	2C12	11	3340 - 3
TH8067795	2C14	11	3340 - 5
TH8067795	2C16	9	3340 - 7
TH8067795	2C20	51	3340 - 11
TH8067795	2C22	3	3344 - 3
TH8067795	2C24	24	3344 - 5
TH8067796	2C22	4	3344 - 3
TH8067796	2C24	25	3344 - 5
TH8067798	2C12	12	3340 - 3
TH8067798	2C14	12	3340 - 5
TH8067798	2C20	52	3340 - 11
TH8067801	2C12	13	3340 - 3
TH8067801	2C14	13	3340 - 5
TH8067801	2C20	53	3340 - 11
TH8067806	2C12	15	3340 - 3
TH8067806	2C14	15	3340 - 5
TH8068133	1I13	71	1910 - 3
TH8068135	1I13	72	1910 - 3
TH8068157	1I15	7	1910 - 5
TH8068165	1I15	5	1910 - 5
TH8068228	1I17	79	1910 - 7
TH8068378	1A21	0	0130 - 5
TH8068391	1A21	1	0130 - 5
TH8069226	2C20	54	3340 - 11
TH8070451	1H23	7	1830 - 7
TH8070660	1F2	0	1740 - 13
TH8070661	1F2	1	1740 - 13
TH8070979	2I18	3	3360 - 139
TH8070980	2I24	2	3360 - 145
TH8070986	2I18	0	3360 - 139
TH8070989	2I18	15	3360 - 139
TH8071417	1E24	14	1740 - 11
TH8071623	1C2	3	0260 - 15
TH8071638	1C2	7	0260 - 15
TH8072004	2C16	25	3340 - 7
TH8073556	1C7	40	0400 - 3
TH8073665	1I19	35	1910 - 9
TH8073968	1E10	2	1674 - 21
TH8073968	1E10	3	1674 - 21
TH8075118	1J20	0	2160 - 15
TH9078675	1B6	0	0130 - 15
TH9091505	1B6	1	0130 - 15
TH9091506	1B6	2	0130 - 15
TH9098931	2C16	6	3340 - 7
TH9098932	2C16	7	3340 - 7
TH9119343	1B20	45	0260 - 9
TH9134108	1B2	3	0130 - 11
TH9134215	1F4	20	1740 - 15
TH9134738	2J13	83	4360 - 3
TH9134738	2J17	50	4360 - 5
TH9135222	2J13	80	4360 - 3
TH9135250	2C12	0	3340 - 3
TH9135251	2C12	5	3340 - 3
TH9135251	2C14	5	3340 - 5
TH9135251	2C20	5	3340 - 11
TH9135255	2C22	0	3344 - 3
TH9138476	2C16	4	3340 - 7
TH9148149	2C24	0	3344 - 5
TH9148351	2C20	0	3340 - 11
TH9150449	2C14	0	3340 - 5
TH9151227	1D15	1	1674 - 3
TH9151683	1D15	2	1674 - 3
TH9152643	1B10	20	0130 - 19
TH9169241	1J14	62	2160 - 9
TH9169577	2C16	0	3340 - 7
TH9174425	2J13	50	4360 - 3
TH931414	1J10	6	2160 - 5
TH9729474	2J17	21	4360 - 5
TH9730147	1I19	38	1910 - 9
TH9743911	1H23	13	1830 - 7
TH9745938	1D19	34	1674 - 7
TH9746909	1I17	17	1910 - 7
TH9747073	2D8	26	3360 - 9
TH9747548	1C17	17	0515 - 3
TH9747837	1I13	67	1910 - 3
TH9747838	1I13	66	1910 - 3
TH9747954	1C23	63	0530 - 3
TH9749032	1I13	74	1910 - 3
TH9750363	2J2	11	3360 - 147
TH9750728	1I13	8A	1910 - 3
TH9750729	1I13	8B	1910 - 3
TH9752190	1I25	18	1910 - 15
TH991964	1E20	39	1740 - 7
TK500R	2B19	2	3302 - 13
TK550R	2B19	2	3302 - 13
TT500	2B19	4F	3302 - 13
TT550	2B19	4G	3302 - 13
TX500AP	2B19	4E	3302 - 13
TX500SYL	2B19	4B	3302 - 13
TX500WT	2B19	4H	3302 - 13
TX550SYL	2B19	4A	3302 - 13
TX550WT	2B19	4J	3302 - 13
TY21709	1D17	0	1674 - 5
TY22462	1C13	18	0510 - 5
TY22462	1C15	12	0510 - 7
TY22464	1C15	8	0510 - 7
TY22467	1C13	16	0510 - 5
TY22470	1H19	23	1830 - 3
TY22476	1J20	21	2160 - 15
TY22488	2D4	52	3360 - 5
TY22488	2D6	52	3360 - 7
T101942	1D5	10	1320 - 3
T108036	2I14	35	3360 - 135
T110021	2C10	15	3315 - 17
T110444	1J18	14	2160 - 13
T110448	2J15	40	4360 - 3B
T110590	1D7	..	1369 - 3
T110593	1D7	..	1369 - 3
T111819	2H18	66	3360 - 115
T115963	1C23	30	0530 - 3
T115963	2F20	29	3360 - 69
T115963	2F24	22	3360 - 73
T115963	2G2	22	3360 - 75
T115963	2G6	22	3360 - 79
T116311	1D11	6C	1369 - 7

NUMERICAL INDEX - CONTINUED

PART NO.	GRID	KEY	PAGE
T116311	2I14	29	3360 - 135
T116735	1D5	43	1320 - 3
T130341	1C23	31C	0530 - 3
T138886	1D5	64	1320 - 3
T144361	1D21	11E	1674 - 9
T144361	2C22	15E	3344 - 3
T144361	2C24	15E	3344 - 5
T144362	1D21	11F	1674 - 9
T144362	2C22	15F	3344 - 3
T144362	2C24	15F	3344 - 5
T146102	1D5	33	1320 - 3
T146195	1D5	33	1320 - 3
T146664	1D5	30	1320 - 3
T146667	1D5	26	1320 - 3
T146668	1D5	25	1320 - 3
T146671	1D5	15	1320 - 3
T147008	1D5	6	1320 - 3
T147618	1G14	0	1810 - 31
T149983	1D5	32	1320 - 3
T152593	2I16	16	3360 - 137
T152608	2F20	20	3360 - 69
T152608	2F22	20	3360 - 71
T152657	1D5	13	1320 - 3
T157809	1D5	27	1320 - 3
T158020	1F19	25A	1810 - 11
T158021	1F19	25B	1810 - 11
T159841	1D5	75	1320 - 3
T159842	1D5	63	1320 - 3
T159843	1D5	63	1320 - 3
T159843	2J10	7	3360 - 155
T159844	1D5	75	1320 - 3
T159844	2J10	9	3360 - 155
T159887	1D5	24	1320 - 3
T161266	1D5	61	1320 - 3
T183425	1D5	31	1320 - 3
T183540	1D5	0	1320 - 3
T183547	1D5	4	1320 - 3
T184168	1D5	12	1320 - 3
T184221	1D5	41	1320 - 3
T184232	1D5	23	1320 - 3
T184251	1D5	16	1320 - 3
T184474	1D5	18	1320 - 3
T184858	1E13	4	1674 - 25
T184858	2J10	10	3360 - 155
T201905	2I6	16	3360 - 127
T24432	1D2	15	0560 - 5
T30367	1C15	13	0510 - 7
T32854	1H23	45	1830 - 7
T34248	2D18	69	3360 - 19
T34248	2F16	31	3360 - 65
T34248	2F18	31	3360 - 67
T38377	1D25	5	1674 - 13
T38788	1B20	18	0260 - 9
T4T4702	2B19	4C	3302 - 13
T4T4704	2B19	3	3302 - 13
T4T4707	2B19	5	3302 - 13
T59014	1D7	..	1369 - 3
T59014	2D10	19	3360 - 11
T59014	2H18	41	3360 - 115
T59014	2I20	18	3360 - 141
T72216	2C12	41	3340 - 3
T72216	2C14	41	3340 - 5
T72216	2C18	60	3340 - 9
T72216	2C18	70	3340 - 9
T72216	2C20	47	3340 - 11
T72216	2D2	11	3360 - 3
T72216	2D2	52	3360 - 3
T72216	2D10	4	3360 - 11
T72216	2D12	4	3360 - 13
T72216	2D14	4	3360 - 15
T72216	2D16	4	3360 - 17
T72216	2D18	4	3360 - 19
T72216	2F16	32	3360 - 65
T72216	2F18	32	3360 - 67
T72216	2I20	12	3360 - 141
T74492	1D7	..	1369 - 3
T74492	2H12	1	3360 - 109
T76938	1B22	7	0260 - 11
T76938	2D4	41	3360 - 5
T76938	2D6	41	3360 - 7
T76938	2D12	28	3360 - 13
T76938	2D18	28	3360 - 19
T76938	2I20	61	3360 - 141
T77857	2G8	4	3360 - 81
T77857	2I20	27	3360 - 141
T78313	1B22	3	0260 - 11
T78313	2D2	57	3360 - 3
T78313	2D16	45	3360 - 17
T78313	2I20	13	3360 - 141
T79632	1D5	17	1320 - 3
T806X500	2B19	3	3302 - 13
T806X550	2B19	3	3302 - 13
T84067	2I4	30	3360 - 125
T9U9616	2B19	2	3302 - 13
U10778	1D7	..	1369 - 3
U15091	1E20	42	1740 - 7
U17409	1D7	..	1369 - 3
U42016	2J15	30	4360 - 3B
U42323	1C25	21	0560 - 3
U46158	1B6	8	0130 - 15
U46166	2C2	11C	3315 - 9
U46166	2C2	12C	3315 - 9
U46166	2C6	11C	3315 - 13
U46489	1B24	9A	0260 - 13
U46489	1B24	10A	0260 - 13
U46489	1C7	47A	0400 - 3
U46489	1D7	..	1369 - 3
U46489	2D8	0A	3360 - 9
U46489	2D8	3A	3360 - 9
U46489	2D20	3A	3360 - 21
U46489	2D20	9A	3360 - 21
U46489	2E2	13A	3360 - 27
U46489	2E2	14A	3360 - 27
U46489	2E2	19A	3360 - 27
U46489	2E2	22A	3360 - 27
U46489	2E4	16A	3360 - 29
U46489	2E4	17A	3360 - 29
U46489	2G12	3A	3360 - 85
U46489	2H6	39	3360 - 103
U46489	2H8	14	3360 - 105
U46489	2I10	45	3360 - 131
U46489	2I12	45	3360 - 133
U46489	2I20	20A	3360 - 141
U46489	2I20	21A	3360 - 141
U46489	2I20	26A	3360 - 141
U46489	2J2	4A	3360 - 147
U46489	2J6	14A	3360 - 151
U46489	2J6	15A	3360 - 151
U46489	2J19	12	4360 - 7
WZ2141223	1H19	5	1830 - 3
WZ2141223	1H23	55	1830 - 7
X0103-4-4	2F20	12	3360 - 69
X0103-4-4	2F22	12	3360 - 71
X0103-4-4	2G2	15	3360 - 75
X0103-4-4	2G4	13	3360 - 77
X8-10F5OX	2E2	22	3360 - 27
X8-10F5OX	2J6	15	3360 - 151
Z29925	2D6	53	3360 - 7
Z32962	2F24	61	3360 - 73
Z32962	2G2	61	3360 - 75
Z32962	2G4	61	3360 - 77
Z32962	2G6	64	3360 - 79
Z973069	2J15	43	4360 - 3B
0001452	1B20	2	0260 - 9
0002043	1G18	39	1810 - 35
0002204	1E10	5	1674 - 21
0002795	1I8	0	1830 - 17
0003107	1E4	0	1674 - 17
0003429	1E10	5	1674 - 21
0003436	1D25	8	1674 - 13
0003633	1J10	0	2160 - 5
0109124	2H24	23	3360 - 121
0109124	2I2	23	3360 - 123
0109124	2I4	21	3360 - 125
0109124	2I8	22	3360 - 129
0116621	1J14	63	2160 - 9
0133103	2I10	5	3360 - 131
0133103	2I12	5	3360 - 133
0133103	2I14	5	3360 - 135
0133709	2I6	5	3360 - 127
0150809	2H12	14	3360 - 109
0159223	2H14	22	3360 - 111
0160706	2I4	5	3360 - 125
0160706	2I8	5	3360 - 129
0163404	2I10	30	3360 - 131
0163404	2I12	30	3360 - 133
0163601	1B16	3	0260 - 5
0166805	2H14	25	3360 - 111
0166805	2H20	25	3360 - 117
0171719	2H24	48	3360 - 121
0171719	2I2	48	3360 - 123
0171719	2I6	31	3360 - 127
0171719	2I8	31	3360 - 129
0171719	2I10	31	3360 - 131
0171719	2I12	31	3360 - 133
0177612	1J14	36	2160 - 9
0189803	2H16	53	3360 - 113
0189803	2H18	53	3360 - 115
0189803	2H20	53	3360 - 117
0189803	2H22	53	3360 - 119
0189908	2H16	10	3360 - 113
0189908	2H18	10	3360 - 115
0189908	2H22	10	3360 - 119
0191412	2I14	13	3360 - 135
0191415	2H24	5	3360 - 121
0191415	2I2	5	3360 - 123
0191612	2I4	26	3360 - 125
0191616	2I4	27	3360 - 125
0195147	1J14	47E	2160 - 9
0195165	1J12	5	2160 - 7
0197011	2H16	96	3360 - 113
0197011	2H22	96	3360 - 119
0199005	2I22	7	3360 - 143
0208717	2G16	16	3360 - 89
0208717	2H8	12	3360 - 105
0208717	2H10	7	3360 - 107
0212405	2H18	44	3360 - 115
0212416	2H14	8	3360 - 111
0212416	2H18	8	3360 - 115
0215220	2G10	5	3360 - 83
0215220	2G18	12	3360 - 91

NUMERICAL INDEX - CONTINUED

PART NO.	GRID	KEY	PAGE
0218608	2J19	8	4360 - 7
0223104	2H16	51	3360 - 113
0223104	2H18	51	3360 - 115
0223104	2H20	51	3360 - 117
0223104	2H22	51	3360 - 119
0223109	2H18	38	3360 - 115
0223202	2H6	34	3360 - 103
0228705	2H8	11	3360 - 105
0231606	2I22	66	3360 - 143
0236006	2J15	9	4360 - 3B
0236009	2J15	10	4360 - 3B
0236014	1J14	37	2160 - 9
0236014	2G14	2	3360 - 87
0236014	2J15	13	4360 - 3B
0236014	2J15	34	4360 - 3B
0237418	2I10	39	3360 - 131
0237902	2G14	16	3360 - 87
0237902	2H12	12	3360 - 109
0239102	2H10	1	3360 - 107
0239504	2I10	10	3360 - 131
0239504	2I12	10	3360 - 133
0239504	2I14	10	3360 - 135
0242505	2H24	8	3360 - 121
0242505	2I2	8	3360 - 123
0242506	2H24	10	3360 - 121
0242506	2I2	10	3360 - 123
0242508	2I10	44	3360 - 131
0242508	2I12	44	3360 - 133
0242707	2I8	10	3360 - 129
0251321	2J19	9	4360 - 7
0252203	2H8	4	3360 - 105
0259304	2I10	13	3360 - 131
0259304	2I12	13	3360 - 133
0272417	2I22	6	3360 - 143
0288618	2J19	25	4360 - 7
0303604	2I22	54	3360 - 143
0308704	2H4	2B	3360 - 101
0308705	2H4	2C	3360 - 101
0308710	2H4	2F	3360 - 101
0308711	2H4	3	3360 - 101
0308713	2H4	9	3360 - 101
0308716	2H4	12	3360 - 101
0308717	2H4	13	3360 - 101
0308718	2H4	14	3360 - 101
0308719	2H4	15	3360 - 101
0308721	2H4	17	3360 - 101
0308724	2H4	20	3360 - 101
0309801	2G16	3	3360 - 89
0309802	2G16	4	3360 - 89
0309803	2G16	7	3360 - 89
0309805	2G16	15	3360 - 89
0309805	2H6	40	3360 - 103
0309805	2H10	6	3360 - 107
0309810	2G16	22	3360 - 89
0309904	2G22	5	3360 - 95
0311317	1B18	24	0260 - 7
0311336	1B18	58	0260 - 7
0313404	1J14	48	2160 - 9
0323806	2G18	20	3360 - 91
0323807	2G18	19	3360 - 91
0332705	2I12	15	3360 - 133
0332706	2I10	16	3360 - 131
0332706	2I12	16	3360 - 133
0332708	2I10	18	3360 - 131
0332708	2I12	18	3360 - 133
0339809	1J12	20	2160 - 7
0339809	1J12	22	2160 - 7
0339847	1J12	17	2160 - 7
0343305	2I4	23	3360 - 125
0343305	2I8	13	3360 - 129
0343504	2H6	35	3360 - 103
0343505	2H6	33	3360 - 103
0343507	2H6	7	3360 - 103
0343510	2H6	32	3360 - 103
0343514	2H6	44	3360 - 103
0343611	2H6	38	3360 - 103
0349308	2I4	37	3360 - 125
0352210	1B18	13	0260 - 7
0352211	2J19	14	4360 - 7
0352214	1B18	18	0260 - 7
0352215	1B18	22	0260 - 7
0352216	1B18	23	0260 - 7
0352220	1B18	36	0260 - 7
0352304	1B16	7	0260 - 5
0352305	1B16	8	0260 - 5
0352306	1B16	9	0260 - 5
0352401	2G16	23	3360 - 89
0352719	2I14	31	3360 - 135
0352721	2I14	32	3360 - 135
0352905	2I14	1B	3360 - 135
0353004	2I6	4	3360 - 127
0353006	2I6	9	3360 - 127
0353009	2I6	20	3360 - 127
0353010	2I6	19	3360 - 127
0353011	2I6	22	3360 - 127
0353011	2I10	22	3360 - 131
0353011	2I12	22	3360 - 133
0353011	2I14	19	3360 - 135
0353012	2I6	21	3360 - 127
0353012	2I10	21	3360 - 131
0353012	2I12	21	3360 - 133
0353012	2I14	20	3360 - 135
0353016	2H24	57	3360 - 121
0353016	2I2	57	3360 - 123
0353016	2I6	36	3360 - 127
0353016	2I8	36	3360 - 129
0353016	2I10	36	3360 - 131
0353016	2I12	36	3360 - 133
0353017	2I6	32	3360 - 127
0353018	2I6	33	3360 - 127
0365303	2J15	44	4360 - 3B
0365331	2J15	15	4360 - 3B
0365401	2J15	18	4360 - 3B
0365404	2J15	37	4360 - 3B
0365405	2J15	27	4360 - 3B
0365407	2J15	21	4360 - 3B
0365408	2J15	26	4360 - 3B
0365409	2J15	23	4360 - 3B
0365410	2J15	22	4360 - 3B
0365411	2J15	25	4360 - 3B
0365412	2J15	20	4360 - 3B
0365413	2J15	19	4360 - 3B
0365416	2J15	42	4360 - 3B
0365417	2J15	6	4360 - 3B
0365425	2J15	31	4360 - 3B
0365427	2J15	16	4360 - 3B
0365428	2J15	17	4360 - 3B
0365429	2J15	29	4360 - 3B
0365432	2J15	5	4360 - 3B
0369812	2G18	18	3360 - 91
0376902	1B18	3	0260 - 7
0376905	1B18	10	0260 - 7
0376906	1B18	11	0260 - 7
0376907	1B18	29	0260 - 7
0379703	2H24	49	3360 - 121
0379703	2I2	49	3360 - 123
0379806	2H24	4	3360 - 121
0379806	2I2	4	3360 - 123
0379813	2H24	20	3360 - 121
0379813	2I2	20	3360 - 123
0379814	2H24	21	3360 - 121
0379814	2I2	21	3360 - 123
0379815	2H24	22	3360 - 121
0379815	2I2	22	3360 - 123
0379815	2I4	20	3360 - 125
0379815	2I8	21	3360 - 129
0379819	2H24	50	3360 - 121
0379819	2I2	50	3360 - 123
0379820	2H24	51	3360 - 121
0379820	2I2	51	3360 - 123
0379821	2H24	54	3360 - 121
0379821	2I2	54	3360 - 123
0379823	2I6	40	3360 - 127
0379823	2I8	40	3360 - 129
0379823	2I10	27	3360 - 131
0379823	2I12	27	3360 - 133
0379902	2I6	1B	3360 - 127
0379902	2I8	1B	3360 - 129
0379905	2I4	4	3360 - 125
0379905	2I8	4	3360 - 129
0379908	2I4	12	3360 - 125
0379908	2I8	12	3360 - 129
0379909	2I4	13	3360 - 125
0379909	2I8	14	3360 - 129
0379914	2I4	18	3360 - 125
0379914	2I8	20	3360 - 129
0379915	2I4	19	3360 - 125
0379915	2I8	19	3360 - 129
0379917	2I4	29	3360 - 125
0379920	2I8	32	3360 - 129
0379921	2I8	33	3360 - 129
0380003	2I6	2B	3360 - 127
0380003	2I8	2B	3360 - 129
0380005	2I6	14	3360 - 127
0380008	2I6	25	3360 - 127
0380008	2I8	25	3360 - 129
0380010	2H24	43	3360 - 121
0380010	2I2	43	3360 - 123
0380010	2I10	41	3360 - 131
0380503	2H8	5	3360 - 105
0386902	2I10	42	3360 - 131
0386902	2I12	42	3360 - 133
0392305	2I4	15	3360 - 125
0392305	2I8	16	3360 - 129
0394010	2I8	39	3360 - 129
0396603	2G22	4	3360 - 95
0396604	2G22	7	3360 - 95
0396605	2G22	8	3360 - 95
0397601	2H4	10	3360 - 101
0397603	2H4	16	3360 - 101
0400505	2I10	25	3360 - 131
0400505	2I12	25	3360 - 133
0403703	1B16	6	0260 - 5
0408007	2I22	71	3360 - 143
0408202	1J16	3	2160 - 11
0408204	1J16	16	2160 - 11
0408207	1J16	35	2160 - 11
0408302	2G18	4	3360 - 91
0408303	2G18	5	3360 - 91
0408304	2G18	6	3360 - 91
0408305	2G18	7	3360 - 91

NUMERICAL INDEX - CONTINUED

PART NO.	GRID	KEY	PAGE
0408306	2G18	8	3360 - 91
0408307	2G18	15	3360 - 91
0417405	2H24	6	3360 - 121
0417405	2I2	6	3360 - 123
0417406	2H24	9	3360 - 121
0417406	2I2	9	3360 - 123
0417415	2I10	43	3360 - 131
0417415	2I12	43	3360 - 133
0417609	2I10	17	3360 - 131
0417609	2I12	17	3360 - 133
0417613	2I10	33	3360 - 131
0417613	2I12	33	3360 - 133
0417616	2I10	32	3360 - 131
0417616	2I12	32	3360 - 133
0419806	1B18	30	0260 - 7
0419806	2J19	13	4360 - 7
0419808	1B18	39	0260 - 7
0419809	1B18	42	0260 - 7
0419811	1B18	50	0260 - 7
0419902	2J19	7	4360 - 7
0420102	2I14	2B	3360 - 135
0420403	2I14	22	3360 - 135
0420901	2G18	3	3360 - 91
0428901	2I22	1	3360 - 143
0433302	2H4	11	3360 - 101
0441006	2I22	14	3360 - 143
0443902	2I14	18	3360 - 135
0444301	2G10	3	3360 - 83
0444302	2G10	4	3360 - 83
0444801	2H24	2B	3360 - 121
0444801	2I2	2B	3360 - 123
0444803	2H24	46	3360 - 121
0444902	2I2	46	3360 - 123
0446402	2J19	2	4360 - 7
0448701	2I22	65	3360 - 143
0448704	2I22	68	3360 - 143
0450502	2I10	1B	3360 - 131
0450502	2I12	1B	3360 - 133
0450504-P	2I10	2B	3360 - 131
0450504-P	2I12	2B	3360 - 133
0450505	2I10	3	3360 - 131
0450506	2I10	4	3360 - 131
0450506	2I12	4	3360 - 133
0450506	2I14	4	3360 - 135
0450507	2I10	6	3360 - 131
0450507	2I12	6	3360 - 133
0450507	2I14	6	3360 - 135
0450508	2I10	9	3360 - 131
0450508	2I12	9	3360 - 133
0450508	2I14	9	3360 - 135
0450509	2I10	14	3360 - 131
0450509	2I12	14	3360 - 133
0450510	2I10	15	3360 - 131
0450511	2I10	19	3360 - 131
0450511	2I12	19	3360 - 133
0450512	2I10	20	3360 - 131
0450512	2I12	20	3360 - 133
0450513	2I10	26	3360 - 131
0450517	2I12	3	3360 - 133
0451027	1J12	1	2160 - 7
0451028	1J12	2	2160 - 7
0451028	1J14	50	2160 - 9
0451038	1J12	18	2160 - 7
0451101	2G14	32	3360 - 87
0451102	2G14	5	3360 - 87
0451103	2G14	7	3360 - 87
0451104	2G14	6	3360 - 87
0451201	2H12	5	3360 - 109
0451204	2H12	13	3360 - 109
0451501	2H4	18	3360 - 101
0453932	2H14	7	3360 - 111
0453932	2H18	7	3360 - 115
0470815	2I22	5	3360 - 143
0492301	2H8	2	3360 - 105
0492302	2H8	6	3360 - 105
0492303	2H8	7	3360 - 105
0492603	2H24	45	3360 - 121
0493410	2I14	26	3360 - 135
0493603	2I4	36	3360 - 125
0494303	2I12	26	3360 - 133
0494403	2I6	39	3360 - 127
0496103	2J15	2	4360 - 3B
0496104	2J15	24	4360 - 3B
0496105	2J15	32	4360 - 3B
0498101	2I2	45	3360 - 123
0622803	2H14	11	3360 - 111
0622803	2H20	11	3360 - 117
0622805	2H14	13	3360 - 111
0622805	2H20	13	3360 - 117
0622806	2H14	14	3360 - 111
0622806	2H20	14	3360 - 117
0622807	2H14	15	3360 - 111
0622807	2H20	15	3360 - 117
0622808	2H14	16	3360 - 111
0622808	2H20	16	3360 - 117
0622809	2H14	17	3360 - 111
0622810	2H14	18	3360 - 111
0622810	2H16	18	3360 - 113
0622810	2H20	18	3360 - 117
0622810	2H22	18	3360 - 119
0622811	2H14	21	3360 - 111
0622815	2H20	27	3360 - 117
0622816	2H20	28	3360 - 117
0622817	2H20	29	3360 - 117
0622818	2H20	30	3360 - 117
0622819	2H16	35	3360 - 113
0622819	2H18	35	3360 - 115
0622819	2H22	35	3360 - 119
0622822	2H16	45	3360 - 113
0622822	2H18	45	3360 - 115
0622822	2H22	45	3360 - 119
0622823	2H20	47	3360 - 117
0622825	2H16	49	3360 - 113
0622825	2H18	49	3360 - 115
0622825	2H20	49	3360 - 117
0622825	2H22	49	3360 - 119
0622827	2H16	52	3360 - 113
0622827	2H18	52	3360 - 115
0622827	2H20	52	3360 - 117
0622827	2H22	52	3360 - 119
0622829	2H16	54	3360 - 113
0622829	2H18	54	3360 - 115
0622829	2H20	54	3360 - 117
0622829	2H22	54	3360 - 119
0622830	2H18	55	3360 - 115
0622831	2H18	56	3360 - 115
0622832	2H18	57	3360 - 115
0622833	2H18	59	3360 - 115
0622834	2H18	62	3360 - 115
0622835	2H18	65	3360 - 115
0622836	2H18	68	3360 - 115
0622837	2H18	69	3360 - 115
0622838	2H18	70	3360 - 115
0622840	2H16	73	3360 - 113
0622843	2H14	77	3360 - 111
0622843	2H20	77	3360 - 117
0622844	2H22	78	3360 - 119
0622845	2H22	79	3360 - 119
0622846	2H22	80	3360 - 119
0622848	2H16	82	3360 - 113
0622848	2H22	82	3360 - 119
0622849	2H16	83	3360 - 113
0622850	2H22	84	3360 - 119
0622851	2H18	85	3360 - 115
0622852	2H18	86	3360 - 115
0622853	2H18	87	3360 - 115
0622854	2H18	88	3360 - 115
0622855	2H16	91	3360 - 113
0622855	2H22	91	3360 - 119
0622856	2H16	92	3360 - 113
0622856	2H22	92	3360 - 119
0622858	2H16	95	3360 - 113
0622858	2H22	95	3360 - 119
0622860	2H16	16	3360 - 113
0622862	2H16	1	3360 - 113
0622862	2H22	17	3360 - 119
0622863	2H16	2	3360 - 113
0622863	2H22	2	3360 - 119
0622864	2H16	3	3360 - 113
0622864	2H22	3	3360 - 119
0622865	2H16	4	3360 - 113
0622865	2H22	4	3360 - 119
0622866	2H16	5	3360 - 113
0622866	2H22	5	3360 - 119
0622867	2H16	8	3360 - 113
0622867	2H22	8	3360 - 119
0622868	2H16	13	3360 - 113
0622869	2H16	14	3360 - 113
0622870	2H16	11	3360 - 113
0622870	2H22	11	3360 - 119
0622871	2H20	83	3360 - 117
0622872	2H20	84	3360 - 117
0622873	2H20	85	3360 - 117
0622874	2H22	15	3360 - 119
0622877	2H14	26	3360 - 111
0622877	2H20	26	3360 - 117
0625509	2J15	8	4360 - 3B
0629404	2I22	3	3360 - 143
0629404	2I22	51	3360 - 143
0633904	2I22	73	3360 - 143
0643016	2H24	40	3360 - 121
0643016	2I2	40	3360 - 123
0643016	2I4	24	3360 - 125
0643016	2I6	26	3360 - 127
0643016	2I8	26	3360 - 129
0643016	2I12	39	3360 - 133
0645004	2H24	3	3360 - 121
0645004	2I2	3	3360 - 123
0645006	2H24	15	3360 - 121
0645006	2I2	15	3360 - 123
0645008	2H24	18	3360 - 121
0645008	2I2	18	3360 - 123
0646101	1B16	4	0260 - 5
0646404	2I6	15	3360 - 127
0655702	2H20	72	3360 - 117
0658002	2H6	3	3360 - 103
0658003	2H6	5	3360 - 103
0658004	2H6	6	3360 - 103
0658005	2H6	8	3360 - 103
0658006	2H6	10	3360 - 103
0658007	2H6	11	3360 - 103

NUMERICAL INDEX - CONTINUED

PART NO.	GRID	KEY	PAGE
0658008	2H6	30	3360 - 103
0666701	2I14	25	3360 - 135
0669615	2H4	42	3360 - 101
0682306	1J14	44	2160 - 9
0682307	1J14	42	2160 - 9
0682308	1J14	43	2160 - 9
0682309	1J14	39	2160 - 9
0682311	1J12	26	2160 - 7
0682319	1J12	8	2160 - 7
0682320	1J12	15	2160 - 7
0682324	1J12	13	2160 - 7
0682325	1J12	24	2160 - 7
0682328	1J12	35	2160 - 7
0682502	2G14	23	3360 - 87
0682701	1B18	1	0260 - 7
0682702	1B18	4	0260 - 7
0682703	1B18	9	0260 - 7
0682704	1B18	15	0260 - 7
0682705	1B18	38	0260 - 7
0682706	1B18	51	0260 - 7
0682803	2J19	17	4360 - 7
0682804	2J19	41	4360 - 7
0683501	2H4	40	3360 - 101
0683502	2H4	41	3360 - 101
0683601	1B16	5	0260 - 5
0702201	2J19	6	4360 - 7
0702501	2H24	1B	3360 - 121
0702501	2I2	1B	3360 - 123
0702502	2H24	14	3360 - 121
0702502	2I2	14	3360 - 123
0702503	2H24	16	3360 - 121
0702503	2I2	16	3360 - 123
0702701	2I4	1B	3360 - 125
0702701	2I4	2B	3360 - 125
0702702	2I4	3	3360 - 125
0702703	2I4	14	3360 - 125
0702704	2I4	16	3360 - 125
0702704	2I8	17	3360 - 129
0702705	2I4	34	3360 - 125
0702706	2I4	35	3360 - 125
0702801	2I6	3	3360 - 127
0702901	2I8	3	3360 - 129
0702902	2I8	15	3360 - 129
0703001	1J14	41	2160 - 9
0703002	1J14	54	2160 - 9
0703004	1J14	47D	2160 - 9
0703005	1J14	47F	2160 - 9
0703006	1J12	23	2160 - 7
0703007	1J14	58	2160 - 9
0703008	1J14	51	2160 - 9
0703009	1J12	21	2160 - 7
0703010	1J12	34	2160 - 7
0703012	1J14	52	2160 - 9
0703014	1J14	49	2160 - 9
0703016	1J14	59	2160 - 9
0703017	1J12	12	2160 - 7
0703019	1J14	56	2160 - 9
0703301	2H14	23	3360 - 111
0703302	2H14	40	3360 - 111
0703501	2H18	48	3360 - 115
0703701	2H22	12	3360 - 119
0704403	2I14	3	3360 - 135
0704405	2I14	14	3360 - 135
0709801	1B18	7	0260 - 7
0718001	1J14	46	2160 - 9
0718002	1J14	45	2160 - 9
0719701	1J14	47	2160 - 9
0719801	1J12	29	2160 - 7
0728902	2I22	16	3360 - 143
0728903	2I22	8	3360 - 143
0728904	2I22	28	3360 - 143
0728905	2I22	29	3360 - 143
0728906	2I22	9	3360 - 143
0728907	2I22	2	3360 - 143
0729901	2J15	35	4360 - 3B
0738101	1J12	29	2160 - 7
0738101	1J12	36	2160 - 7
0800701	1J14	40	2160 - 9
0800702	1J12	29	2160 - 7
0800702	1J12	36	2160 - 7
0800704	1J14	55	2160 - 9
0800705	1J14	64	2160 - 9
0800706	1J12	12	2160 - 7
0800707	1J12	11	2160 - 7
0800708	1J14	65	2160 - 9
0809725	2H14	43	3360 - 111
0809726	2H14	42	3360 - 111
0809731	2H14	41	3360 - 111
0828402	1J12	33	2160 - 7
08824	2B9	13	3302 - 3
08825	2B9	13	3302 - 3
08826	2B9	13	3302 - 3
08827	2B9	13	3302 - 3
08829	2B9	13	3302 - 3
10013	2B9	13	3302 - 3
10014	2B9	13	3302 - 3
10015	2B9	13	3302 - 3
10016	2B9	13	3302 - 3
10017	2B9	13	3302 - 3
10018	2B9	13	3302 - 3
10019	2B9	13	3302 - 3
10021	2B9	13	3302 - 3
10022	2B9	13	3302 - 3
10024	2B17	13	3302 - 11
10025	2B17	13	3302 - 11
10026	2B17	13	3302 - 11
10027	2B17	13	3302 - 11
10028	2B17	13	3302 - 11
10030	2B17	13	3302 - 11
10072	2B13	13	3302 - 7
10073	2B13	13	3302 - 7
10074	2B13	13	3302 - 7
10075	2B13	13	3302 - 7
10076	2B13	13	3302 - 7
10078	2B13	13	3302 - 7
10079	2B15	13	3302 - 9
10080	2B15	13	3302 - 9
10081	2B15	13	3302 - 9
10082	2B15	13	3302 - 9
10083	2B15	13	3302 - 9
10085	2B15	13	3302 - 9
10086	2B15	13	3302 - 9
1012131	1B14	5	0260 - 3
1012132	1B14	27	0260 - 3
1014350	1B14	0	0260 - 3
1015477	2B21	42	3315 - 3
1015478	2B21	41	3315 - 3
1017812	1B14	10	0260 - 3
1020438	2J17	19	4360 - 5
1020440	2J17	0	4360 - 5
1020443	1B14	40	0260 - 3
1020444	1B14	31	0260 - 3
1020445	1B14	19	0260 - 3
1020446	1B14	49	0260 - 3
1021345	1G24	3	1810 - 41
1021346	1G24	4	1810 - 41
1021349	1G24	17	1810 - 41
1021350	1G24	16	1810 - 41
1021354	1G24	0	1810 - 41
1022600	1I8	1	1830 - 17
1024224	2B21	29	3315 - 3
1024384	2B21	28	3315 - 3
2025705	1B20	31	0260 - 9
2025832	1B14	6	0260 - 3
2025839	1F6	20	1740 - 17
2025840	1F6	21	1740 - 17
2025971	1J18	49	2160 - 13
2030310	1C19	26	0515 - 5
2031724	2C6	31	3315 - 13
2035972	1B2	1	0130 - 11
2035974	1B2	21	0130 - 11
2036267	2J17	2	4360 - 5
2036466	2J17	16	4360 - 5
2036866	2J17	27	4360 - 5
2036868	2J17	29	4360 - 5
2036875	2J17	8	4360 - 5
2036876	1B14	47	0260 - 3
2036891	1J8	2	2160 - 3
2036895	1J8	5	2160 - 3
2036904	1J10	7	2160 - 5
2036908	1J10	12	2160 - 5
2036910	1J10	3	2160 - 5
2037246	2C10	24	3315 - 17
2037305	1G12	6	1810 - 29
2037689	1G24	24	1810 - 41
2037923	1J2	4	1910 - 17
2037924	1J2	5	1910 - 17
2037925	1J2	9	1910 - 17
2037926	1J2	10	1910 - 17
2037927	1J2	11	1910 - 17
2037928	1J2	12	1910 - 17
2038484	2B23	1	3315 - 5
2038578	2B23	5	3315 - 5
2038734	2B21	26	3315 - 3
2038735	2B21	25	3315 - 3
2038764	1F19	25B	1810 - 11
2038923	1J18	42	2160 - 13
2039400	2B23	3	3315 - 5
2039460	1B4	0B	0130 - 13
2039701	2D16	39	3360 - 17
2039702	2D16	40	3360 - 17
2040431	1B2	3B	0130 - 11
2041908	2I24	7	3360 - 145
3015951	2C12	23	3340 - 3
3015951	2C14	23	3340 - 5
3015951	2C20	23	3340 - 11
3021131	1I25	2B	1910 - 15
3021131	1I25	3B	1910 - 15
3035803	2C6	27	3315 - 13
3040559	1B6	9	0130 - 15
3040561	1B6	2B	0130 - 15
3040562	1B6	2C	0130 - 15
3040887	2J17	25	4360 - 5
3041454	1B14	38	0260 - 3
3041462	1B14	16	0260 - 3
3046025	2I16	4	3360 - 137
3046868	2E6	11	3360 - 31
3051015	1C19	4	0515 - 5
3051199	2G4	52	3360 - 77
3051200	2G4	59	3360 - 77
3051611	2C10	10	3315 - 17

NUMERICAL INDEX - CONTINUED

PART NO.	GRID	KEY	PAGE
3052543	2B21	43	3315 - 3
3058180	1G14	9	1810 - 31
3060122	2C22	0B	3344 - 3
3060122	2C24	0B	3344 - 5
3067053	1B4	15	0130 - 13
3067165	1J10	18	2160 - 5
3069819	2J17	34	4360 - 5
3069820	2J17	31	4360 - 5
3069875	1B14	15	0260 - 3
3069876	1B14	42	0260 - 3
3069877	1B14	33	0260 - 3
3069878	1B14	20	0260 - 3
3069879	1B14	25	0260 - 3
3069880	2J17	5	4360 - 5
3069954	1J8	9	2160 - 3
3069963	1J10	13	2160 - 5
3070288	1B4	8	0130 - 13
3071200	1C21	9	0520 - 3
3071817	1C13	13	0510 - 5
3072577	1I15	2	1910 - 5
3072610	1H17	9	1821 - 11
3072613	1G24	21	1810 - 41
3072628	2B21	18	3315 - 3
3072629	1G24	8	1810 - 41
3072700	1H2	1	1810 - 43
3072716	1G24	12	1810 - 41
3072739	1J2	8	1910 - 17
3072745	2F12	35	3360 - 61
3072745	2F14	35	3360 - 63
3072775	1I21	16	1910 - 11
3073394	1C25	15	0560 - 3
3073547	1C13	10	0510 - 5
3074225	2J13	86	4360 - 3
3074245	2C20	0B	3340 - 11
3074568	1I25	2A	1910 - 15
3074568	1I25	3A	1910 - 15
3074721	1F13	19	1810 - 5
3075379	1E4	44	1674 - 17
3075526	1D23	4	1674 - 11
3076012	1B4	5	0130 - 13
3076095	1H2	0	1810 - 43
3076303	1B4	0A	0130 - 13
3076362	2D2	50	3360 - 3
3076363	2D2	59	3360 - 3
3076503	2C8	20	3315 - 15
3076898	2D10	2	3360 - 11
3077734	2J8	10	3360 - 153
3078471	1H11	3	1821 - 7
3079728	2F12	34	3360 - 61
3079728	2F14	34	3360 - 63
3081079	2I20	45	3360 - 141
3081466	2I20	71	3360 - 141
3082934	1D23	6	1674 - 11
3088792	1C21	9	0520 - 3
3090531	1C21	9	0520 - 3
3093070	2C12	13	3340 - 3
3093070	2C14	13	3340 - 5
3093070	2C20	53	3340 - 11
3096073	1B4	4	0130 - 13
4S00037	2I6	7	3360 - 127
4S00038	2I6	8	3360 - 127
4S00079	2I6	12	3360 - 127
4S00081	2I6	16	3360 - 127
4S00082	2I4	8	3360 - 125
4S00082	2I8	8	3360 - 129
4S00084	2H24	12	3360 - 121
4S00084	2I2	12	3360 - 123
4S00084	2I4	10	3360 - 125
4S00085	2H24	17	3360 - 121
4S00085	2I2	17	3360 - 123
4S00094	2I4	6	3360 - 125
4S00094	2I8	6	3360 - 129
4S00098	2H24	19	3360 - 121
4S00098	2I2	19	3360 - 123
4S00107	2J15	41	4360 - 3B
4S00117	1J12	31	2160 - 7
4S00121	1J12	25	2160 - 7
4S00148	2I4	9	3360 - 125
4S00148	2I8	9	3360 - 129
4S00162	2I4	17	3360 - 125
4S00162	2I8	18	3360 - 129
4S00210	2H12	7	3360 - 109
4S00225	2I4	25	3360 - 125
4S00228	1J12	9	2160 - 7
4S00238	1J12	14	2160 - 7
4S00279	1C7	33	0400 - 3
4S00286	1C23	29	0530 - 3
4S00293	1C7	0C	0400 - 3
4S00298	1C7	0B	0400 - 3
4S00300	1C7	0A	0400 - 3
4S00303	1I2	72	1830 - 11
4000909	2D4	16	3360 - 5
4000909	2D6	16	3360 - 7
4000910	2D6	34	3360 - 7
4007535	1B20	10	0260 - 9
4013283	2H18	71	3360 - 115
4013896	1A19	21	0130 - 3
4019414	2H18	90	3360 - 115
4027959	2H14	74	3360 - 111
4027959	2H20	74	3360 - 117
4028265	1D11	6J	1369 - 7
4028266	1D11	6K	1369 - 7
4031771	1D17	9	1674 - 5
4038533	2H6	28	3360 - 103
4040813	2H16	7	3360 - 113
4040813	2H22	7	3360 - 119
4040814	2H18	67	3360 - 115
4042011	1D11	11	1369 - 7
4042035	2I20	22	3360 - 141
4042035	2J2	31	3360 - 147
4044420	2J13	34B	4360 - 3
4044839	2H18	61	3360 - 115
4044928	2C8	6	3315 - 15
4045245	1C17	22L	0515 - 3
4046608	1B4	16	0130 - 13
4050481	2G18	9	3360 - 91
4050722	2J13	1	4360 - 3
4051870	1B10	9	0130 - 19
4053598	2D8	30	3360 - 9
4056017	1C17	22A	0515 - 3
4056017	1C19	30A	0515 - 5
4063340	1F2	17	1740 - 13
4069711	2I10	7	3360 - 131
4069711	2I12	7	3360 - 133
4069711	2I14	7	3360 - 135
4069900	2I4	39	3360 - 125
4070418	1C23	23	0530 - 3
4071215	2D4	12	3360 - 5
4071215	2D6	12	3360 - 7
4071638	1J10	5	2160 - 5
4073426	2H14	12	3360 - 111
4073426	2H20	12	3360 - 117
4074009	2C16	35	3340 - 7
4074727	1J10	23	2160 - 5
4075853	2D2	7	3360 - 3
4075854	2D18	68	3360 - 19
4075854	2F16	33	3360 - 65
4075854	2F18	33	3360 - 67
4083751	1J10	33	2160 - 5
4083852	1J10	8	2160 - 5
4085560	1B22	4	0260 - 11
4085560	2D2	55	3360 - 3
4085560	2D16	43	3360 - 17
4085857	1A25	9	0130 - 9
4085857	1B14	63	0260 - 3
4086891	1C21	4	0520 - 3
4086891	1H23	65	1830 - 7
4086891	1I13	46	1910 - 3
4086891	1I13	75	1910 - 3
4086891	1I15	19	1910 - 5
4086891	1I17	46	1910 - 7
4086891	1I19	46	1910 - 9
4086891	1I21	46	1910 - 11
4086891	1I25	11	1910 - 15
4087197	2D10	10	3360 - 11
4087499	1D19	16	1674 - 7
4087732	2C16	32	3340 - 7
4088425	2H16	50	3360 - 113
4088425	2H18	50	3360 - 115
4088425	2H20	50	3360 - 117
4088425	2H22	50	3360 - 119
4089012	1G10	12	1810 - 27
4089893	2J13	52	4360 - 3
4091814	2H24	7	3360 - 121
4091814	2I2	7	3360 - 123
4092111	1F19	28	1810 - 11
4092265	2H16	12	3360 - 113
4092265	2H22	1	3360 - 119
4093624	1J20	18	2160 - 15
4093624	2D6	42	3360 - 7
4093624	2D22	22	3360 - 23
4093624	2E2	37	3360 - 27
4098184	1B4	10	0130 - 13
4098185	1B4	11	0130 - 13
4098270	1B4	12	0130 - 13
4099039	1D19	25	1674 - 7
4099334	1E20	47	1740 - 7
4100967	1C25	4A	0560 - 3
4100967	1J18	23A	2160 - 13
4102096	1G12	5	1810 - 29
4103743	1E24	3	1740 - 11
4104472	2H24	13	3360 - 121
4104472	2I2	13	3360 - 123
4104472	2I6	13	3360 - 127
4105795	2G12	2	3360 - 85
4105912	2C12	0L	3340 - 3
4105912	2C12	5H	3340 - 3
4105912	2C14	0L	3340 - 5
4105912	2C14	5H	3340 - 5
4105912	2C16	0J	3340 - 7
4105912	2C16	4H	3340 - 7
4105912	2C16	40	3340 - 7
4105912	2C20	0L	3340 - 11
4105912	2C20	5H	3340 - 11
4107762	1G16	24	1810 - 33
4113165	2I4	11	3360 - 125
4113165	2I8	11	3360 - 129
4113187	1B20	28	0260 - 9
4113187	2H18	64	3360 - 115
4113187	2H20	64	3360 - 117
4113926	2J2	5	3360 - 147

NUMERICAL INDEX - CONTINUED

PART NO.	GRID	KEY	PAGE
4114404	1E16	16	1740 - 3
4114404	1I25	25	1910 - 15
4114405	1A21	39	0130 - 5
4114406	1C7	12	0400 - 3
4114413	1E24	11	1740 - 11
4121496	1C25	1	0560 - 3
4122424	2I16	2	3360 - 137
4122424	2I18	11	3360 - 139
4122729	1E16	28	1740 - 3
4122729	2C12	19	3340 - 3
4122729	2C14	19	3340 - 5
4122729	2C16	11	3340 - 7
4122729	2C20	19	3340 - 11
4122729	2C22	6	3344 - 3
4122729	2C24	6	3344 - 5
4123537	2I10	11	3360 - 131
4123537	2I12	11	3360 - 133
4129729	2C12	0B	3340 - 3
4129729	2C14	0B	3340 - 5
4129729	2C20	0C	3340 - 11
4129941	1C25	24	0560 - 3
4130168	1F6	22	1740 - 17
4130168	2F24	62	3360 - 73
4130168	2G2	62	3360 - 75
4130168	2G4	62	3360 - 77
4130168	2G6	65	3360 - 79
4130169	2F20	58	3360 - 69
4130169	2F22	58	3360 - 71
4130169	2F24	60	3360 - 73
4130169	2G2	60	3360 - 75
4130169	2G4	60	3360 - 77
4130169	2G6	63	3360 - 79
4130174	1F6	23	1740 - 17
4130175	2F20	59	3360 - 69
4130175	2F22	59	3360 - 71
4130686	2C12	0K	3340 - 3
4130686	2C12	5G	3340 - 3
4130686	2C14	0K	3340 - 5
4130686	2C14	5G	3340 - 5
4130686	2C16	0I	3340 - 7
4130686	2C16	4G	3340 - 7
4130686	2C16	39	3340 - 7
4130686	2C20	0K	3340 - 11
4130686	2C20	5G	3340 - 11
4131346	2I20	35	3360 - 141
4138942	2H16	94	3360 - 113
4138942	2H22	94	3360 - 119
4139196	2C18	75	3340 - 9
4139197	2C18	76	3340 - 9
4140470	2H16	6	3360 - 113
4140470	2H22	6	3360 - 119
4141171	1C25	24A	0560 - 3
414322	1F2	11	1740 - 13
4143624	2C12	0F	3340 - 3
4143624	2C14	0G	3340 - 5
4143780	1I23	7	1910 - 13
4143888	1C11	5	0510 - 3
4144353	1J12	16	2160 - 7
4145156	1D17	1	1674 - 5
4146848	2C18	72	3340 - 9
4147896	1F25	59	1810 - 17
4148825	2C16	36	3340 - 7
4149335	1D19	14	1674 - 7
4151182	1D11	24	1369 - 7
4152863	1C21	0J	0520 - 3
4153084	1D7	..	1369 - 3
4153089	2H16	40	3360 - 113
4153089	2H18	40	3360 - 115
4153089	2H22	40	3360 - 119
4153098	2H16	46	3360 - 113
4153098	2H18	46	3360 - 115
4153098	2H20	46	3360 - 117
4153098	2H22	46	3360 - 119
4153099	2H14	75	3360 - 111
4153099	2H20	75	3360 - 117
4153108	2H14	39	3360 - 111
4153108	2H18	39	3360 - 115
4153108	2H20	39	3360 - 117
4153110	2H18	89	3360 - 115
4153534	2H18	42	3360 - 115
4153535	2H18	37	3360 - 115
4153562	1J8	4	2160 - 3
4153564	1J10	9	2160 - 5
4154331	2D4	6	3360 - 5
4154653	2J13	33	4360 - 3
4154653	2J13	55	4360 - 3
4154655	2F20	25	3360 - 69
4154655	2F22	25	3360 - 71
4154655	2F24	16	3360 - 73
4154655	2G2	16	3360 - 75
4154655	2G4	11	3360 - 77
4154655	2G6	16	3360 - 79
4154656	2F24	15	3360 - 73
4154656	2G4	12	3360 - 77
4154656	2G6	15	3360 - 79
4154656	2I20	40	3360 - 141
4154658	2J13	53	4360 - 3
4154670	2E2	16	3360 - 27
4154670	2E4	18	3360 - 29
4154670	2E6	18	3360 - 31
4154670	2J6	34	3360 - 151
4154671	2D22	0	3360 - 23
4154671	2D22	7	3360 - 23
4154671	2D24	0	3360 - 25
4154671	2D24	7	3360 - 25
4154671	2E2	24	3360 - 27
4154671	2E4	15	3360 - 29
4154671	2E6	15	3360 - 31
4154671	2F10	11	3360 - 59
4154671	2J6	10	3360 - 151
4154671	2J6	18	3360 - 151
4154671	2J8	29	3360 - 153
4154672	1C7	47	0400 - 3
4154672	2D8	0	3360 - 9
4154672	2D20	3	3360 - 21
4154672	2J6	14	3360 - 151
4154693	2D6	47	3360 - 7
4155698	1B6	15	0130 - 15
4156434	2D20	15	3360 - 21
4156434	2E2	17	3360 - 27
4156434	2E6	19	3360 - 31
4156434	2F10	1	3360 - 59
4156434	2F10	2	3360 - 59
4156434	2I18	32	3360 - 139
4156435	2D8	16	3360 - 9
4156435	2D20	2	3360 - 21
4156436	2D8	24	3360 - 9
4160767	1J10	15	2160 - 5
4162836	1C23	31A	0530 - 3
4165444	1E16	22	1740 - 3
4166686	2C2	2	3315 - 9
4167091	2D4	10	3360 - 5
4167091	2D6	10	3360 - 7
4168820	1C25	2A	0560 - 3
4169593	2J2	7	3360 - 147
4173208	2C2	6	3315 - 9
4173208	2C6	6	3315 - 13
4173387	1C17	26	0515 - 3
4174317	1D11	6A	1369 - 7
4174318	1D11	6B	1369 - 7
4174459	1C21	7	0520 - 3
4174541	2J2	4	3360 - 147
4174542	1J10	26	2160 - 5
4174859	1A19	12	0130 - 3
4175253	1I13	40	1910 - 3
4175254	1I13	41	1910 - 3
4177777	2C2	5	3315 - 9
4177777	2C6	5	3315 - 13
4177896	2C2	7	3315 - 9
4179257	2C2	8	3315 - 9
4180414	1J18	11	2160 - 13
4182067	2C2	27	3315 - 9
4184582	1C17	31	0515 - 3
4184860	1C17	19	0515 - 3
4184929	2C2	15	3315 - 9
4184929	2C6	15	3315 - 13
4184954	2C2	18	3315 - 9
4185490	2C18	74	3340 - 9
4187082	1F19	14	1810 - 11
4187083	1F19	14A	1810 - 11
4187322	1C25	7	0560 - 3
4187322	1J10	25	2160 - 5
4187486	1D2	9	0560 - 5
4187487	1D2	10	0560 - 5
4187977	1C7	34	0400 - 3
4188272	1D11	6E	1369 - 7
4188273	1D11	6I	1369 - 7
4188274	1D11	6L	1369 - 7
4188275	1D11	6M	1369 - 7
4188276	1D11	6N	1369 - 7
4188366	1I23	11	1910 - 13
4189184	2C10	12	3315 - 17
4189535	1B22	6	0260 - 11
4189535	2D4	38	3360 - 5
4189535	2I20	62	3360 - 141
4190010	1E16	1	1740 - 3
4190244	1B24	13	0260 - 13
4190244	2F10	41	3360 - 59
4190244	2J6	19	3360 - 151
4190246	1B24	10	0260 - 13
4190253	1H23	49	1830 - 7
4190261	1C17	29	0515 - 3
4190261	1C25	17	0560 - 3
4190261	1D19	40	1674 - 7
4190261	1D21	31	1674 - 9
4190261	1D25	0	1674 - 13
4190261	2F20	21	3360 - 69
4190261	2F22	21	3360 - 71
4190261	2I24	15	3360 - 145
4190265	1H23	48	1830 - 7
4190265	2E8	72	3360 - 33
4190265	2E8	77	3360 - 33
4190265	2J2	21	3360 - 147
4190266	1H23	47	1830 - 7
4190266	2F8	78	3360 - 57
4190272	1C15	9	0510 - 7
4190273	1E4	6	1674 - 17
4190273	1J18	43	2160 - 13
4190273	2D20	19	3360 - 21
4190274	1D25	3	1674 - 13
4190274	2J8	25	3360 - 153

NUMERICAL INDEX - CONTINUED

PART NO.	GRID	KEY	PAGE
4190275	1C13	26	0510 - 5
4190275	1C25	16	0560 - 3
4190275	1D25	1	1674 - 13
4190275	1E4	4	1674 - 17
4190275	1J18	44	2160 - 13
4190275	2E20	75	3360 - 45
4190275	2F4	75	3360 - 53
4190275	2F6	75	3360 - 55
4190275	2I18	39	3360 - 139
4190292	2E8	73	3360 - 33
4190960	1E20	43	1740 - 7
4190983	2C6	28	3315 - 13
4191277	2C18	73	3340 - 9
4191279	1E16	23	1740 - 3
4191300	2D20	6	3360 - 21
4192034	1H23	46	1830 - 7
4192034	2D20	17	3360 - 21
4192035	1E4	7	1674 - 17
4193816	2I20	51	3360 - 141
4193832	1C7	53	0400 - 3
4193848	1D2	14	0560 - 5
4193848	1D25	6	1674 - 13
4193848	1E4	2	1674 - 17
4193848	2D8	7	3360 - 9
4193848	2D8	33	3360 - 9
4193871	1J20	14	2160 - 15
4194454	2J17	20	4360 - 5
4194712	2J13	37	4360 - 3
4194712	2J13	59	4360 - 3
4194712	2J13	93	4360 - 3
4195421	2C2	3	3315 - 9
4195610	1D9	20	1369 - 5
4195759	2H2	1	3360 - 99
4195978	2E6	1	3360 - 31
4196265	1J14	57	2160 - 9
4198799	2D4	37	3360 - 5
4198799	2D6	37	3360 - 7
4198799	2D18	65	3360 - 19
4200084	1F11	1	1810 - 3
4200176	1E20	38	1740 - 7
4200465	2D22	4	3360 - 23
4200465	2D24	4	3360 - 25
4200465	2E2	15	3360 - 27
4200465	2J6	35	3360 - 151
4200466	2D22	8	3360 - 23
4200466	2D24	8	3360 - 25
4200466	2E4	14	3360 - 29
4200466	2F10	10	3360 - 59
4200466	2F10	12	3360 - 59
4200466	2F10	40	3360 - 59
4200466	2J6	11	3360 - 151
4200467	2D22	21	3360 - 23
4200467	2D24	21	3360 - 25
4200467	2E2	20	3360 - 27
4200467	2I18	34	3360 - 139
4200470	2E2	21	3360 - 27
4200471	2E4	17	3360 - 29
4201095	1B20	23	0260 - 9
4201096	1B20	5	0260 - 9
4201311	1B20	8	0260 - 9
4201441	1J5	2	2002 - 3
4201915	2C2	1	3315 - 9
4202564	2D22	1	3360 - 23
4202564	2D24	1	3360 - 25
4203102	2F24	18	3360 - 73
4203102	2G6	18	3360 - 79
4203171	2D22	3	3360 - 23
4203171	2D24	3	3360 - 25
4203171	2E2	18	3360 - 27
4203171	2E6	21	3360 - 31
4203180	1B14	37	0260 - 3
4203180	1B14	46	0260 - 3
4203412	2C6	7	3315 - 13
4203413	2C6	3	3315 - 13
4203421	2C6	1	3315 - 13
4203434	1D2	22	0560 - 5
4203878	1F11	0	1810 - 3
4204057	1J18	13	2160 - 13
4204547	1G4	54	1810 - 21
4204579	1G2	14	1810 - 19
4204579	1G8	3	1810 - 25
4204586	1G4	31	1810 - 21
4204586	1I17	75	1910 - 7
4204590	1G10	10	1810 - 27
4204591	1G10	11	1810 - 27
4204644	2J17	41	4360 - 5
4204959	2C8	0	3315 - 15
4205084	1G20	1	1810 - 37
4205363	1B24	14	0260 - 13
4205363	2D22	6	3360 - 23
4205363	2D24	6	3360 - 25
4205363	2I18	31	3360 - 139
4205382	2I20	21	3360 - 141
4205476	1E16	14	1740 - 3
4205614	2D12	31	3360 - 13
4205615	2D12	30	3360 - 13
4206101	1D17	2	1674 - 5
4206477	1E20	44	1740 - 7
4207036	2D2	14	3360 - 3
4207036	2D14	50	3360 - 15
4207037	2D2	15	3360 - 3
4207037	2D14	52	3360 - 15
4207038	2D2	13	3360 - 3
4207038	2D14	51	3360 - 15
4207300	2D20	13	3360 - 21
4207300	2D22	5	3360 - 23
4207300	2D24	5	3360 - 25
4207766	1A19	11	0130 - 3
4207838	1E20	37	1740 - 7
4207839	1E20	41	1740 - 7
4208103	1G10	4	1810 - 27
4208279	1E20	35	1740 - 7
4208473	2E6	20	3360 - 31
4208911	2D22	2	3360 - 23
4208911	2D24	2	3360 - 25
4208911	2D24	32	3360 - 25
4208911	2I18	33	3360 - 139
4208911	2J8	28	3360 - 153
4208977	2C6	36	3315 - 13
4209296	1E6	0	1674 - 19
4209296	1E8	0A	1674 - 19B
4209296	1E8	3	1674 - 19B
4209782	1D2	5	0560 - 5
4209782	1J18	26	2160 - 13
4210108	1F4	9	1740 - 15
4210412	1F19	16A	1810 - 11
4210413	1F19	16B	1810 - 11
4213419	2C6	30	3315 - 13
4214444	2D8	28	3360 - 9
4215452	1B2	5	0130 - 11
4215453	1B4	7	0130 - 13
4215457	1B6	6	0130 - 15
4215878	2D14	48	3360 - 15
4215879	1B22	19	0260 - 11
4215880	2D14	49	3360 - 15
4216725	1F4	11	1740 - 15
4216726	1F4	12	1740 - 15
4216851	2J17	33	4360 - 5
4216871	1F4	4	1740 - 15
4217265	2I20	39	3360 - 141
4217343	2D8	3	3360 - 9
4217350	2J17	6	4360 - 5
4217351	2J17	10	4360 - 5
4217639	1G14	10	1810 - 31
4218719	2C12	0C	3340 - 3
4218719	2C14	0C	3340 - 5
4218719	2C16	0F	3340 - 7
4218719	2C20	0D	3340 - 11
4218733	1B10	4	0130 - 19
4218735	1B10	6	0130 - 19
4218739	1B10	24	0130 - 19
4218740	1B10	22	0130 - 19
4218741	1B10	23	0130 - 19
4218844	1B10	24	0130 - 19
4218943	1A19	4	0130 - 3
4218944	1A19	5	0130 - 3
4218945	1A19	10	0130 - 3
4219047	2J13	7	4360 - 3
4219328	1B14	3	0260 - 3
4219329	1B14	2	0260 - 3
4219346	2D22	9	3360 - 23
4219346	2D24	9	3360 - 25
4219346	2E6	21	3360 - 31
4219640	1B14	22	0260 - 3
4219641	1B14	32	0260 - 3
4219720	1F6	0	1740 - 17
4219932	1E16	25	1740 - 3
4219933	1E16	26	1740 - 3
4220786	1C21	0	0520 - 3
4221013	2D10	5	3360 - 11
4221047	1D17	29	1674 - 5
4221049	1C7	36	0400 - 3
4221280	1D17	30	1674 - 5
4221465	1E22	7	1740 - 9
4221465	1E24	7	1740 - 11
4221470	1C21	1	0520 - 3
4221984	2I20	46	3360 - 141
4222016	2D20	9	3360 - 21
4222029	1B14	24	0260 - 3
4222379	1C15	3	0510 - 7
4222380	1C13	33	0510 - 5
4222401	1I25	15	1910 - 15
4222874	1J18	16	2160 - 13
4222875	1J18	8	2160 - 13
4222876	1J18	10	2160 - 13
4223568	1B14	28	0260 - 3
4223934	2D22	20	3360 - 23
4223934	2D24	20	3360 - 25
4224002	2D12	32	3360 - 13
4224467	2F22	17	3360 - 71
4224631	2C22	12	3344 - 3
4224631	2C24	12	3344 - 5
4226549	1J18	12	2160 - 13
4228701	1D11	9	1369 - 7
4231888	1C11	2	0510 - 3
4234708	2C12	5B	3340 - 3
4234708	2C14	5B	3340 - 5
4234708	2C20	5B	3340 - 11
4235232	1H7	11	1821 - 5
4235232	1H9	12	1821 - 5B
4235654	1C7	71	0400 - 3

NUMERICAL INDEX - CONTINUED

PART NO.	GRID	KEY	PAGE
4235654	1D25	4	1674 - 13
4235654	2D20	16	3360 - 21
4235683	1B20	12	0260 - 9
4236448	1H25	30	1830 - 9
4236448	1I2	60	1830 - 11
4236448	1I10	3	1830 - 19
4238834	2C6	24B	3315 - 13
4239712	2E2	23	3360 - 27
4240862	2I20	37	3360 - 141
4240863	2I20	34	3360 - 141
4240984	2I16	12	3360 - 137
4240985	2I16	13	3360 - 137
4241586	2I16	17	3360 - 137
4242098	1A19	7	0130 - 3
4242099	1A19	6	0130 - 3
4242436	2C16	49	3340 - 7
4243157	1A19	15	0130 - 3
4244172	1A19	20	0130 - 3
4245211	1F4	5	1740 - 15
4245212	1F4	7	1740 - 15
4245213	1F4	6	1740 - 15
4246150	1E24	4	1740 - 11
4246293	2C16	6B	3340 - 7
4246293	2C16	7B	3340 - 7
4246611	2C12	27	3340 - 3
4246611	2C14	27	3340 - 5
4246611	2C20	27	3340 - 11
4246672	2F10	50	3360 - 59
4246954	2D4	13	3360 - 5
4246954	2D6	13	3360 - 7
4247424	2C12	35	3340 - 3
4247424	2C14	35	3340 - 5
4247424	2C20	39	3340 - 11
4248510	1C11	3	0510 - 3
4249027	1E20	45	1740 - 7
4249324	1I13	48	1910 - 3
4249324	1I15	20	1910 - 5
4249324	1I17	48	1910 - 7
4249324	1I19	48	1910 - 9
4249324	1I19	84	1910 - 9
4249324	1I21	48	1910 - 11
4249324	1I25	10	1910 - 15
4249324	1J2	15	1910 - 17
4249324	2D10	7	3360 - 11
4249324	2D16	7	3360 - 17
4250260	1J18	38	2160 - 13
4250261	1J18	39	2160 - 13
4250580	2J17	23	4360 - 5
4251186	1B20	14	0260 - 9
4251211	2C12	31	3340 - 3
4251211	2C14	31	3340 - 5
4251211	2C20	31	3340 - 11
4251212	2C12	0G	3340 - 3
4251212	2C14	0F	3340 - 5
4251212	2C16	4E	3340 - 7
4251212	2C20	0G	3340 - 11
4251587	1D17	13	1674 - 5
425175	1A19	42	0130 - 3
425175	1B14	13	0260 - 3
4251752	2C16	0C	3340 - 7
4251752	2C16	4C	3340 - 7
4251753	2C12	5F	3340 - 3
4251753	2C14	5F	3340 - 5
4251753	2C20	0F	3340 - 11
4251753	2C20	5F	3340 - 11
4251753	2I6	29	3360 - 127
4251753	2I8	29	3360 - 129
4251754	2C22	0C	3344 - 3
4251754	2C24	0C	3344 - 5
4251766	2C12	0E	3340 - 3
4251766	2C14	0E	3340 - 5
4251766	2C16	0G	3340 - 7
4251766	2C20	0E	3340 - 11
4251767	2C12	5E	3340 - 3
4251767	2C14	5E	3340 - 5
4251767	2C20	5E	3340 - 11
4251767	2H24	44	3360 - 121
4251767	2I2	44	3360 - 123
4251767	2I6	28	3360 - 127
4251767	2I8	28	3360 - 129
4251897	1H19	21	1830 - 3
4252361	2C22	17	3344 - 3
4252361	2C24	17	3344 - 5
4252612	1C11	12	0510 - 3
4252719	1B10	24	0130 - 19
4252730	2C12	37	3340 - 3
4252730	2C14	37	3340 - 5
4252730	2C20	40	3340 - 11
4252767	1D19	6	1674 - 7
4252767	1D21	20	1674 - 9
4254023	1C19	17	0515 - 5
4254025	1C19	16	0515 - 5
4254563	1D21	27	1674 - 9
4254563	2F10	15	3360 - 59
4254563	2I24	5	3360 - 145
4254611	2F10	7	3360 - 59
4254611	2G22	0	3360 - 95
4254612	2F10	14	3360 - 59
4254612	2G20	0	3360 - 93
4254613	2E4	1	3360 - 29
4254613	2G24	0	3360 - 97
4255002	1C23	31	0530 - 3
4255055	1B4	18	0130 - 13
4255077	2H12	15	3360 - 109
4255530	1E20	32	1740 - 7
4255567	1E20	1	1740 - 7
4255567	2I20	75	3360 - 141
4257128	1C25	20	0560 - 3
4257129	1D19	0	1674 - 7
4257159	1C19	3	0515 - 5
4257159	1C25	23	0560 - 3
4257159	1D19	32	1674 - 7
4257159	1J18	35	2160 - 13
4257162	1C19	10	0515 - 5
4257163	1C19	1	0515 - 5
4257164	1C19	14	0515 - 5
4257360	1C21	0E	0520 - 3
4257361	1C21	0F	0520 - 3
4257362	1C21	0I	0520 - 3
4257370	1C11	16	0510 - 3
4257939	2G4	50	3360 - 77
4257940	2G4	51	3360 - 77
4257941	2G4	53	3360 - 77
4257942	2G4	54	3360 - 77
4257943	2G4	55	3360 - 77
4257944	2G4	56	3360 - 77
4257945	2G4	57	3360 - 77
4257946	2G4	58	3360 - 77
4257967	1B14	54	0260 - 3
4257968	1C2	10	0260 - 15
4257968	1C4	12	0260 - 17
4258058	1B14	44	0260 - 3
4258197	1C23	59	0530 - 3
4258403	1E4	41	1674 - 17
4258562	2E2	4	3360 - 27
4258562	2H8	0	3360 - 105
4259591	2C10	16	3315 - 17
4259603	1E20	46	1740 - 7
4259787	1D19	48	1674 - 7
4259787	1J18	34	2160 - 13
4260154	2I20	20	3360 - 141
4260369	1F19	20	1810 - 11
4260781	1C19	25	0515 - 5
4261282	1E16	6	1740 - 3
4261283	1E16	7	1740 - 3
4261289	2E2	8	3360 - 27
4261289	2G10	0	3360 - 83
4261289	2I18	17	3360 - 139
4261624	2I20	47	3360 - 141
4261938	2F10	9	3360 - 59
4264452	1J10	34	2160 - 5
4264805	1D5	65	1320 - 3
4264921	1D11	6	1369 - 7
4266330	2E2	14	3360 - 27
4266386	1D5	43	1320 - 3
4266731	2I8	44	3360 - 129
4266934	2J17	22	4360 - 5
4267235	2C16	31	3340 - 7
4267253	2C16	6A	3340 - 7
4267254	2C16	16	3340 - 7
4267255	2C16	33	3340 - 7
4267257	2C16	0D	3340 - 7
4267258	2C16	4B	3340 - 7
4267259	2C16	4D	3340 - 7
4267664	1C7	46	0400 - 3
4267756	2C16	6C	3340 - 7
4267756	2C16	7C	3340 - 7
4267832	2C16	0E	3340 - 7
4269657	2F20	4	3360 - 69
4269657	2F22	4	3360 - 71
4269657	2F24	11	3360 - 73
4269657	2G2	11	3360 - 75
4269657	2G4	3	3360 - 77
4269657	2G6	11	3360 - 79
4270206	1D19	20	1674 - 7
4270315	2D12	27	3360 - 13
4270502	1C13	5	0510 - 5
4270771	2F10	27	3360 - 59
4270773	2E18	81	3360 - 43
4270773	2F10	29	3360 - 59
4271489	1D19	18	1674 - 7
427154	1E16	5	1740 - 3
4271596	1B14	92	0260 - 3
4271909	1C19	32	0515 - 5
4272936	2I20	58	3360 - 141
4273335	1G14	2	1810 - 31
4273721	2F24	9	3360 - 73
4273721	2G2	9	3360 - 75
4273721	2G6	9	3360 - 79
4274178	2I20	44	3360 - 141
4274371	2H12	10	3360 - 109
4274478	1D23	5	1674 - 11
4274593	2D12	26	3360 - 13
4274716	2C6	24C	3315 - 13
4274903	2F24	0	3360 - 73
4274903	2G2	0	3360 - 75
4274903	2G6	0	3360 - 79
4275239	1D17	31	1674 - 5
4275750	1D17	12	1674 - 5
4276345	2H6	12	3360 - 103
4276794	1H19	8	1830 - 3

NUMERICAL INDEX - CONTINUED

PART NO.	GRID	KEY	PAGE
4276918	1J8	57	2160 - 3
4276918	1J16	30	2160 - 11
4277018	1E20	33	1740 - 7
4277651	2E2	13	3360 - 27
4277804	1A23	2	0130 - 7
4277804	1A25	12	0130 - 9
4277927	1E4	25	1674 - 17
4278011	1B14	51	0260 - 3
4279257	1E20	48	1740 - 7
4279257	1H19	10	1830 - 3
428028	1D19	37	1674 - 7
428028	1D19	56	1674 - 7
4280457	2D2	54	3360 - 3
4280527	1F19	16	1810 - 11
4280565	1I25	26	1910 - 15
4281149	2C12	5C	3340 - 3
4281149	2C14	5C	3340 - 5
4281149	2C20	5C	3340 - 11
4281956	1D9	0	1369 - 5
4282319	2H6	45	3360 - 103
4282319	2J4	9	3360 - 149
4284195	1B14	50	0260 - 3
4285209	2C2	24	3315 - 9
4285236	1C13	14	0510 - 5
4285646	1D23	5A	1674 - 11
4286874	2C2	16	3315 - 9
4286916	2F12	0	3360 - 61
4286916	2F14	0	3360 - 63
4287277	1D17	11	1674 - 5
4287489	1C21	8	0520 - 3
4287903	1F19	24	1810 - 11
4288109	1D25	8C	1674 - 13
4288109	1E4	0F	1674 - 17
4288109	1E10	5A	1674 - 21
4288971	1D5	76	1320 - 3
4290146	2G6	19	3360 - 79
4292386	1J12	10	2160 - 7
4292762	1E20	50	1740 - 7
4292942	2I22	63	3360 - 143
4293172	1C21	11	0520 - 3
4293389	1E16	2	1740 - 3
4294437	1E4	17	1674 - 17
4294437	1H2	10	1810 - 43
4294478	1H23	31	1830 - 7
4294566	1C17	22E	0515 - 3
4294567	1C17	15	0515 - 3
4294619	1C17	11	0515 - 3
4294694	1D17	22	1674 - 5
4294858	2J13	38	4360 - 3
4294858	2J13	60	4360 - 3
4294999	1E6	23	1674 - 19
4295480	1G2	7	1810 - 19
4295480	1G4	62	1810 - 21
4295573	1F21	46	1810 - 13
4295876	1G2	9	1810 - 19
4295876	1G4	63	1810 - 21
4296066	2E2	19	3360 - 27
4296066	2E4	16	3360 - 29
4297101	1E6	27	1674 - 19
4297101	1F15	3	1810 - 7
4297105	1E6	26	1674 - 19
4297127	1E6	25	1674 - 19
4297280	1D17	18	1674 - 5
4297309	1D19	23	1674 - 7
4297379	2G14	1	3360 - 87
4297379	2G14	19	3360 - 87
4297381	1J12	4	2160 - 7
4297998	2G2	18	3360 - 75
4298748	1D19	23A	1674 - 7
4299059	1D5	64	1320 - 3
4299820	1D11	18	1369 - 7
4304309	2I10	1	3360 - 131
4304310	2I10	2	3360 - 131
4304310	2I12	2	3360 - 133
4304311	2I10	46	3360 - 131
4304311	2I12	46	3360 - 133
4304481	2C16	43	3340 - 7
4304827	1F21	41	1810 - 13
4305337	2E4	4	3360 - 29
4307026	1D21	11E	1674 - 9
4307026	2C22	15E	3344 - 3
4307026	2C24	15E	3344 - 5
4307027	1D21	11F	1674 - 9
4307027	2C22	15F	3344 - 3
4307027	2C24	15F	3344 - 5
4307265	2I18	19	3360 - 139
4308011	2I18	22	3360 - 139
4308016	2I18	25	3360 - 139
4308818	2D18	64	3360 - 19
4310827	1E6	4	1674 - 19
4311602	2H14	82	3360 - 111
4311602	2H16	97	3360 - 113
4311602	2H18	91	3360 - 115
4311602	2H20	86	3360 - 117
4311602	2H22	97	3360 - 119
4311602EX	2H14	82	3360 - 111
4311602EX	2H16	97	3360 - 113
4311602EX	2H18	91	3360 - 115
4311602EX	2H20	86	3360 - 117
4311602EX	2H22	97	3360 - 119
4312517	1C21	10	0520 - 3
4314081	1J10	16	2160 - 5
4315323	1D25	8A	1674 - 13
4315324	1D25	8B	1674 - 13
4317008	1J18	5A	2160 - 13
4317618	2D8	19	3360 - 9
4317779	2G12	3	3360 - 85
4319517	1C7	55	0400 - 3
4320163	1F21	59	1810 - 13
4320866	1D2	23	0560 - 5
4322387	1E4	18	1674 - 17
4322389	1E4	16	1674 - 17
4322512	2J6	2	3360 - 151
4322513	2J6	13	3360 - 151
4322514	2J6	17	3360 - 151
4322515	2J6	36	3360 - 151
4322516	2J6	37	3360 - 151
4323290	2F10	31	3360 - 59
4323723	2F10	46	3360 - 59
4325289	1B4	9	0130 - 13
4325548	2G4	10	3360 - 77
4332024	2C12	0D	3340 - 3
4332024	2C14	0D	3340 - 5
4332389	2D8	4	3360 - 9
4332390	2D8	5	3360 - 9
4332391	2D4	39	3360 - 5
4332392	2D6	40	3360 - 7
4332394	2D8	1	3360 - 9
4332576	1J8	62	2160 - 3
4332807	2D12	23	3360 - 13
4332809	2D12	25	3360 - 13
4332810	2D16	57	3360 - 17
4332813	2D10	76	3360 - 11
4332815	2D10	77	3360 - 11
4333265	2J17	32	4360 - 5
4333441	1B14	21	0260 - 3
4333461	1H23	26	1830 - 7
4333462	1H23	30	1830 - 7
4333514	2F22	9	3360 - 71
4333517	1B14	34	0260 - 3
4333540	1B14	43	0260 - 3
4333835	1H9	11	1821 - 5B
4333844	1A19	16	0130 - 3
4334203	1G14	3	1810 - 31
4334707	2B23	0	3315 - 5
4334933	1E22	5	1740 - 9
4335088	2E4	2	3360 - 29
4335088	2G16	0	3360 - 89
4335277	2J4	2	3360 - 149
4335904	1E22	11	1740 - 9
4335906	1E22	3	1740 - 9
4336874	1D19	5	1674 - 7
4336875	1C25	26	0560 - 3
4336875	1D19	49	1674 - 7
4336875	1J18	47	2160 - 13
4336875	2I24	9	3360 - 145
4337085	1C7	49	0400 - 3
4337107	2I4	41	3360 - 125
4337125	2C16	44	3340 - 7
4337738	2F20	27	3360 - 69
4337833	1F2	5	1740 - 13
4337837	1F2	7	1740 - 13
4337913	1C7	0	0400 - 3
4338011	1C15	2C	0510 - 7
4338181	2J17	30	4360 - 5
4338291	1B14	45	0260 - 3
4338292	1B14	36	0260 - 3
4338293	1B14	23	0260 - 3
4338294	1B14	35	0260 - 3
4338635	2B21	44	3315 - 3
4339834	1F11	2	1810 - 3
4339835	1F11	4	1810 - 3
4339836	1F11	3	1810 - 3
4340881	2G2	19	3360 - 75
4340944	2D2	60	3360 - 3
4341190	1D21	4	1674 - 9
4341191	1D21	3	1674 - 9
4341706	1G12	2	1810 - 29
4341803	2J2	17	3360 - 147
4341810	2C10	22	3315 - 17
4341856	1E24	5	1740 - 11
4341890	1H17	3	1821 - 11
4342695	2F16	18	3360 - 65
4342695	2F18	18	3360 - 67
4342699	2F16	17	3360 - 65
4342699	2F18	17	3360 - 67
4342703	2F16	16	3360 - 65
4342703	2F18	16	3360 - 67
4342723	2F16	21	3360 - 65
4342723	2F18	21	3360 - 67
4342772	2F16	20	3360 - 65
4342772	2F18	20	3360 - 67
4342802	2B23	8	3315 - 5
4342975	2F20	17	3360 - 69
4343018	2F20	50	3360 - 69
4343018	2F22	50	3360 - 71
4343019	2F20	51	3360 - 69
4343019	2F22	51	3360 - 71
4343295	2F24	54	3360 - 73
4343296	2F24	55	3360 - 73
4343297	2F24	56	3360 - 73

NUMERICAL INDEX - CONTINUED

PART NO.	GRID	KEY	PAGE
4343298	2F24	57	3360 - 73
4343299	2F24	58	3360 - 73
4343300	2F24	59	3360 - 73
4343365	1J10	22	2160 - 5
4343365	2J13	90	4360 - 3
4343376	1J18	5B	2160 - 13
4343427	1J18	5	2160 - 13
4343708	1C7	48	0400 - 3
4344572	1H23	12	1830 - 7
4345166	1B10	0	0130 - 19
4345167	1B10	1	0130 - 19
4345168	1B10	2	0130 - 19
4345169	1B10	3	0130 - 19
4345170	1B10	5	0130 - 19
4345171	1B10	7	0130 - 19
4345172	1B10	8	0130 - 19
4345173	1B10	10	0130 - 19
4345581	1B2	6	0130 - 11
4345718	1E22	4	1740 - 9
4345738	1F21	7	1810 - 13
4345741	1E22	2	1740 - 9
4345741	1E24	1	1740 - 11
4346000	2E6	33A	3360 - 31
4346036	1E22	6	1740 - 9
4346036	1E24	6	1740 - 11
4346116	1C23	15	0530 - 3
4346189	1C13	17	0510 - 5
4346218	1C21	2	0520 - 3
4346360	1I23	4	1910 - 13
4346471	1I23	3	1910 - 13
4346631	1C23	1	0530 - 3
4348414	2D6	30	3360 - 7
4348654	2J13	35	4360 - 3
4348654	2J13	57	4360 - 3
4348713	1I6	2	1830 - 15
4348714	1I4	0	1830 - 13
4349108	2J13	87	4360 - 3
4349163	2J13	56A	4360 - 3
4349621	2J2	15	3360 - 147
4349648	2J2	16	3360 - 147
4349970	2F18	28	3360 - 67
4349998	1F15	1D	1810 - 7
4350187	1H25	6B	1830 - 9
4350206	1H25	2A	1830 - 9
4350206	1H25	6A	1830 - 9
4350234	1I6	0	1830 - 15
4350235	1I8	2	1830 - 17
4350236	1I8	3	1830 - 17
4350237	1I8	4	1830 - 17
4350238	1I6	8	1830 - 15
4350243	1H19	26	1830 - 3
4350244	1I6	6	1830 - 15
4350245	1F15	4	1810 - 7
4350246	1F13	2	1810 - 5
4350247	1F13	4	1810 - 5
4350249	1I6	10	1830 - 15
4350398	1F13	13	1810 - 5
4350663	1I19	27	1910 - 9
4350778	1F13	10	1810 - 5
4350779	1F13	11	1810 - 5
4350779	1F15	11	1810 - 7
4351009	1H19	9	1830 - 3
4351011	1G20	2	1810 - 37
4351140	1I13	33	1910 - 3
4351140	1I15	9	1910 - 5
4351175	2F12	32	3360 - 61
4351175	2F14	32	3360 - 63
4351187	1G12	0	1810 - 29
4351190	2F12	12	3360 - 61
4351190	2F12	13	3360 - 61
4351255	1G22	3	1810 - 39
4351277	1G24	27	1810 - 41
4351773	1H23	4	1830 - 7
4351774	2F12	33	3360 - 61
4351774	2F14	33	3360 - 63
4351853	2F24	20	3360 - 73
4351923	2J6	26	3360 - 151
4352244	1A25	5	0130 - 9
4352434	1A25	6	0130 - 9
4352665	1J20	15	2160 - 15
4352707	2C6	11E	3315 - 13
4353147	1C17	24	0515 - 3
4353329	1D2	25	0560 - 5
4353330	1D2	26	0560 - 5
4353488	1I13	34	1910 - 3
4353956	1C15	11	0510 - 7
4353970	1C15	7	0510 - 7
4353992	1D9	1	1369 - 5
4353993	1D9	15	1369 - 5
4353994	1D9	16	1369 - 5
4353995	1D9	17	1369 - 5
4353996	1D9	18	1369 - 5
4353997	1D9	22	1369 - 5
4354003	1D9	70	1369 - 5
4354513	2D2	21	3360 - 3
4355012	1D19	27	1674 - 7
4356628	1H23	23	1830 - 7
4357517	2E2	10	3360 - 27
4357517	2H10	10	3360 - 107
4357862	1F13	16	1810 - 5
4358064	1C23	17	0530 - 3
4359496	1J20	6	2160 - 15
4359497	1J20	7	2160 - 15
4359716	2C8	12	3315 - 15
4359926	2C2	11B	3315 - 9
4359926	2C2	12B	3315 - 9
4359926	2C6	11B	3315 - 13
4361107	1I10	0	1830 - 19
4361302	1F19	17	1810 - 11
4361601	1G16	18	1810 - 33
4361638	1C25	2	0560 - 3
4361763	1I13	0A	1910 - 3
4361763	1I13	1A	1910 - 3
4361763	1I15	13A	1910 - 5
4361800	1H2	3	1810 - 43
4361802	1G24	7	1810 - 41
4361802	1G24	20	1810 - 41
4361832	1C17	7	0515 - 3
4362135	1F23	8	1810 - 15
4362310	1H25	35	1830 - 9
4362310	1I2	65	1830 - 11
4362444	2D8	21	3360 - 9
4362450	1H23	36	1830 - 7
4362700	1F19	25A	1810 - 11
4363398	1D9	19	1369 - 5
4363399	2D8	21A	3360 - 9
4363576	1C7	56	0400 - 3
4363718	1H25	7A	1830 - 9
4363944	1H25	49	1830 - 9
4363945	1H25	34	1830 - 9
4363945	1H25	37	1830 - 9
4363947	1H25	31	1830 - 9
4363950	1H25	28	1830 - 9
4363954	1H25	55	1830 - 9
4363955	1H25	38	1830 - 9
4363956	1H25	32	1830 - 9
4363957	1H25	4	1830 - 9
4363958	1H25	25	1830 - 9
4363966	1H25	46	1830 - 9
4364031	1H25	57	1830 - 9
4364071	2E2	2	3360 - 27
4364071	2H4	44	3360 - 101
4364317	2C20	44	3340 - 11
4364320	2F22	18	3360 - 71
4364388	1B22	16	0260 - 11
4364389	1B22	17	0260 - 11
4364390	1B22	18	0260 - 11
4364480	2F24	50	3360 - 73
4364480	2G2	50	3360 - 75
4364480	2G6	50	3360 - 79
4364481	2F24	51	3360 - 73
4364481	2G2	51	3360 - 75
4364481	2G6	51	3360 - 79
4364482	2F24	52	3360 - 73
4364482	2G2	52	3360 - 75
4364482	2G6	52	3360 - 79
4364483	2F24	53	3360 - 73
4364483	2G2	53	3360 - 75
4364483	2G6	53	3360 - 79
4364484	2G2	54	3360 - 75
4364485	2G2	55	3360 - 75
4364486	2G2	56	3360 - 75
4364487	2G2	57	3360 - 75
4364488	2G2	58	3360 - 75
4364489	2G2	59	3360 - 75
4364504	1F19	18	1810 - 11
4364565	2D22	18	3360 - 23
4364565	2D24	18	3360 - 25
4364623	1C7	50	0400 - 3
4365103	2J15	1	4360 - 3B
4365372	1H23	22	1830 - 7
4365396	1E4	45	1674 - 17
4365826	2G14	14	3360 - 87
4365993	1E6	0	1674 - 19
4365993	1E8	0A	1674 - 19B
4366073	1D17	23	1674 - 5
4366339	2H12	9	3360 - 109
4366517	2G14	22	3360 - 87
4366521	2G14	25	3360 - 87
4366569	1D2	21	0560 - 5
4366652	2C14	39	3340 - 5
4366985	1E2	5	1674 - 15
4367006	2D22	10	3360 - 23
4367006	2D24	10	3360 - 25
4367200	1D17	35	1674 - 5
4367205	1D25	9	1674 - 13
4367214	1D25	10	1674 - 13
4367215	1D17	21	1674 - 5
4367481	1F19	10	1810 - 11
4367485	1F19	8	1810 - 11
4367486	1F19	9	1810 - 11
4367999	2G6	54	3360 - 79
4368000	2G6	55	3360 - 79
4368001	2G6	56	3360 - 79
4368002	2G6	57	3360 - 79
4368003	2G6	58	3360 - 79
4368004	2G6	59	3360 - 79
4368005	2G6	60	3360 - 79
4368014	2G6	61	3360 - 79
4368015	2G6	62	3360 - 79
4368704	2E2	30	3360 - 27

NUMERICAL INDEX - CONTINUED

PART NO.	GRID	KEY	PAGE
4368893	2I18	35	3360 - 139
4368973	1G12	1	1810 - 29
4368974	2G8	7	3360 - 81
4368974	2G14	34	3360 - 87
4369540	1F19	2	1810 - 11
4369542	1F19	4	1810 - 11
4369543	1F19	5	1810 - 11
4369544	1F19	27	1810 - 11
4369545	1F19	12	1810 - 11
4369547	1F19	21	1810 - 11
4369549	1F19	23	1810 - 11
4369551	1F21	94	1810 - 13
4369552	1F21	93	1810 - 13
4369553	1G8	21	1810 - 25
4369554	1F21	19	1810 - 13
4369557	1F21	47	1810 - 13
4369559	1F21	97	1810 - 13
4369561	1F21	88	1810 - 13
4369562	1G2	26	1810 - 19
4369563	1G2	22	1810 - 19
4369564	1G4	42	1810 - 21
4369565	1F21	14	1810 - 13
4369566	1F21	17	1810 - 13
4369567	1F21	77	1810 - 13
4369568	1F21	45	1810 - 13
4369569	1F21	51	1810 - 13
4369570	1F21	12	1810 - 13
4369572	1F21	89	1810 - 13
4369573	1F21	56	1810 - 13
4369574	1F21	25	1810 - 13
4369577	1G4	35	1810 - 21
4369578	1G4	32	1810 - 21
4369579	1G4	40	1810 - 21
4369580	1G2	29	1810 - 19
4369581	1G2	30	1810 - 19
4369582	1G2	27	1810 - 19
4369583	1G4	41	1810 - 21
4369584	1G4	39	1810 - 21
4369585	1F21	22	1810 - 13
4369586	1G2	25	1810 - 19
4369590	1G4	52	1810 - 21
4369591	1G4	60	1810 - 21
4369593	1G4	53	1810 - 21
4369594	1G4	55	1810 - 21
4369596	1G2	1	1810 - 19
4369598	1G2	5	1810 - 19
4369599	1G2	6	1810 - 19
4369600	1G2	19	1810 - 19
4369602	1G2	4	1810 - 19
4369603	1G2	3	1810 - 19
4369604	1G2	2	1810 - 19
4369605	1G2	13	1810 - 19
4369606	1G2	12	1810 - 19
4369607	1G2	10	1810 - 19
4369608	1G2	11	1810 - 19
4369610	1G2	24	1810 - 19
4369611	1G8	1	1810 - 25
4369613	1G8	4	1810 - 25
4369614	1F21	95	1810 - 13
4369614	1G8	8	1810 - 25
4369615	1G8	2	1810 - 25
4369616	1G8	5	1810 - 25
4369617	1G8	80	1810 - 25
4369618	1G8	81	1810 - 25
4369619	1G8	90	1810 - 25
4369620	1G8	75	1810 - 25
4369621	1G10	1	1810 - 27
4369623	1G10	5	1810 - 27
4369624	1G10	13	1810 - 27
4369625	1F21	31	1810 - 13
4369626	1F21	54	1810 - 13
4369627	1F21	71	1810 - 13
4369631	1F23	12	1810 - 15
4369632	1F23	24	1810 - 15
4369633	1F23	7	1810 - 15
4369634	1F25	34	1810 - 17
4369635	1F25	34A	1810 - 17
4369636	1F25	34B	1810 - 17
4369637	1F25	34C	1810 - 17
4369638	1F25	34D	1810 - 17
4369639	1F25	34E	1810 - 17
4369640	1F25	34K	1810 - 17
4369641	1F25	34L	1810 - 17
4369642	1F23	13	1810 - 15
4369643	1F23	10	1810 - 15
4369644	1F23	32	1810 - 15
4369645	1F23	2	1810 - 15
4369646	1F23	20	1810 - 15
4369647	1F23	22	1810 - 15
4369648	1F23	18	1810 - 15
4369653	1F25	54	1810 - 17
4369656	1F25	40	1810 - 17
4369658	1F25	42	1810 - 17
4369659	1F21	5	1810 - 13
4369659	1F25	43	1810 - 17
4369660	1F25	44	1810 - 17
4369661	1F23	16	1810 - 15
4369662	1F23	23	1810 - 15
4369663	1F25	41	1810 - 17
4369665	1G6	18	1810 - 23
4369666	1G6	28	1810 - 23
4369667	1G6	29	1810 - 23
4369669	1G6	16	1810 - 23
4369670	1G6	33	1810 - 23
4369671	1G6	49	1810 - 23
4369672	1G6	92	1810 - 23
4369674	1G4	58	1810 - 21
4369674	1G6	65	1810 - 23
4369675	1F21	55	1810 - 13
4370071	1F19	3	1810 - 11
4370113	1E6	3	1674 - 19
4370114	1E6	5	1674 - 19
4370115	1E6	6	1674 - 19
4370116	1E6	7	1674 - 19
4370117	1E6	8	1674 - 19
4370118	1E6	9	1674 - 19
4370119	1E6	10	1674 - 19
4370137	1E6	11	1674 - 19
4370138	1E6	12	1674 - 19
4370139	1E6	13	1674 - 19
4370140	1E6	14	1674 - 19
4370141	1E6	15	1674 - 19
4370141	1E6	16A	1674 - 19
4370142	1E6	16	1674 - 19
4370143	1E2	16	1674 - 15
4370144	1E6	17	1674 - 19
4370145	1E6	18	1674 - 19
4370146	1E6	19	1674 - 19
4370147	1E6	20	1674 - 19
4370148	1E6	21	1674 - 19
4370149	1E6	22	1674 - 19
4370150	1E2	15	1674 - 15
4370151	1E2	14	1674 - 15
4370152	1E2	13	1674 - 15
4370153	1E2	12	1674 - 15
4370154	1E6	24	1674 - 19
4370155	1E6	28	1674 - 19
4370156	1E6	29	1674 - 19
4370199	1H13	8	1821 - 9
4370312	1F15	1	1810 - 7
4370313	1F15	1A	1810 - 7
4370314	1F15	1B	1810 - 7
4370316	1F15	2	1810 - 7
4370317	1F15	2A	1810 - 7
4370470	1B4	3	0130 - 13
4370570	1I6	6B	1830 - 15
4370571	1I6	6C	1830 - 15
4370572	1I6	6A	1830 - 15
4370836	1I8	6	1830 - 17
4370844	1I8	5	1830 - 17
4370903	1F19	29	1810 - 11
4371227	1J10	31	2160 - 5
4372087	1F21	53	1810 - 13
4372088	1F21	62	1810 - 13
4372088	1G4	44	1810 - 21
4372089	1F21	91	1810 - 13
4372091	1F23	9	1810 - 15
4372092	1F23	11	1810 - 15
4372093	1F25	56	1810 - 17
4372094	1G10	2	1810 - 27
4372095	1G10	3	1810 - 27
4372209	1G10	6	1810 - 27
4372210	1G2	28	1810 - 19
4372211	1G4	36	1810 - 21
4372212	1G6	61	1810 - 23
4372213	1G4	56	1810 - 21
4372213	1G6	74	1810 - 23
4372214	1G2	17	1810 - 19
4372215	1F25	34F	1810 - 17
4372216	1F25	34G	1810 - 17
4372218	1F19	7	1810 - 11
4372219	1F21	60	1810 - 13
4372220	1G8	63	1810 - 25
4372221	1G4	37	1810 - 21
4372222	1F21	68	1810 - 13
4372222	1G4	38	1810 - 21
4372222	1G8	88	1810 - 25
4372222	1G10	14	1810 - 27
4372223	1G6	69	1810 - 23
4372224	1G4	45	1810 - 21
4372225	1F23	21	1810 - 15
4372225	1G2	18	1810 - 19
4372261	1F23	19	1810 - 15
4372518	2D18	66	3360 - 19
4372519	2D16	42	3360 - 17
4372521	2D10	12	3360 - 11
4372522	2D12	22	3360 - 13
4372525	2D14	38	3360 - 15
4372526	2D14	37	3360 - 15
4372527	2D14	36	3360 - 15
4372560	1F23	15	1810 - 15
4372561	1G4	57	1810 - 21
4372570	2D16	46	3360 - 17
4372605	2D2	12	3360 - 3
4372608	1F19	11	1810 - 11
4372917	1H7	4	1821 - 5
4373195	1B4	6	0130 - 13
4373430	1H19	3	1830 - 3
4373644	2C12	40	3340 - 3
4373644	2C18	69	3340 - 9
4373645	2F16	27	3360 - 65

NUMERICAL INDEX - CONTINUED

PART NO.	GRID	KEY	PAGE
4373679	2E24	8	3360 - 49
4373682	2D8	17	3360 - 9
4373683	2D8	18	3360 - 9
4373684	2D8	25	3360 - 9
4373685	2D8	27	3360 - 9
4373686	2D20	1	3360 - 21
4373687	2D20	4	3360 - 21
4373689	2D20	14	3360 - 21
4373690	2D20	10	3360 - 21
4373914	2D20	12	3360 - 21
4373943	2D2	2	3360 - 3
4373945	2D2	3	3360 - 3
4373946	2D12	24	3360 - 13
4373972	1B8	21	0130 - 17
4374063	1I13	69	1910 - 3
4374146	2D10	15	3360 - 11
4374566	1B24	9	0260 - 13
4374723	1H23	32	1830 - 7
4374958	1H23	33	1830 - 7
4375200	2J17	12	4360 - 5
4375201	2J17	3	4360 - 5
4375370	1H19	20	1830 - 3
4375389	1H23	53	1830 - 7
4375390	1D19	15	1674 - 7
4375446	1H23	52	1830 - 7
4375478	1H23	51	1830 - 7
4375482	1H23	50	1830 - 7
4375485	1H25	0	1830 - 9
4375832	2E14	51	3360 - 39
4375833	2E2	29	3360 - 27
4375834	2E2	33	3360 - 27
4375840	2E6	32	3360 - 31
4375841	2E24	15	3360 - 49
4375842	2F2	1	3360 - 51
4375843	2E24	1	3360 - 49
4375844	2E24	66	3360 - 49
4375845	2E22	14	3360 - 47
4375846	2E22	6	3360 - 47
4375847	2E24	17	3360 - 49
4375849	2E24	25	3360 - 49
4375850	2E24	27	3360 - 49
4375851	2E22	61	3360 - 47
4375852	2E22	16	3360 - 47
4375854	2E22	1	3360 - 47
4375855	2D22	12	3360 - 23
4375855	2D24	12	3360 - 25
4375856	2E12	24	3360 - 37
4375857	2E22	26	3360 - 47
4375858	2E22	28	3360 - 47
4375858	2E22	36	3360 - 47
4375859	2F2	45	3360 - 51
4375860	2F2	46	3360 - 51
4375861	2F4	1	3360 - 53
4375862	2E8	4	3360 - 33
4375863	2F6	1	3360 - 55
4375864	2E12	23	3360 - 37
4375865	2E20	1	3360 - 45
4375866	2E20	58	3360 - 45
4375867	2F8	1	3360 - 57
4375868	2E6	33	3360 - 31
4375869	2D22	15	3360 - 23
4375869	2D24	15	3360 - 25
4375870	2E2	34	3360 - 27
4375872	2E2	28	3360 - 27
4375873	2D22	16	3360 - 23
4375873	2D24	16	3360 - 25
4375874	2D22	17	3360 - 23
4375874	2D24	17	3360 - 25
4375875	2D22	13	3360 - 23
4375875	2D24	13	3360 - 25
4375876	2D22	14	3360 - 23
4375877	2D22	11	3360 - 23
4375877	2D24	11	3360 - 25
4375878	2E4	24	3360 - 29
4375881	2E6	31	3360 - 31
4375883	2D22	19	3360 - 23
4375883	2D24	19	3360 - 25
4375884	2E24	34	3360 - 49
4375884	2E24	55	3360 - 49
4375885	2E22	35	3360 - 47
4375886	2E22	37	3360 - 47
4375887	2F2	52	3360 - 51
4375888	2F2	44	3360 - 51
4375890	2E14	60	3360 - 39
4375891	2E16	1	3360 - 41
4375892	2E18	1	3360 - 43
4375893	2E18	41	3360 - 43
4375894	2E16	32	3360 - 41
4375895	2E16	33	3360 - 41
4375896	2E16	48	3360 - 41
4375897	2E14	1	3360 - 39
4375898	2E16	49	3360 - 41
4375899	2E18	65	3360 - 43
4375900	2E18	40	3360 - 43
4375900	2I18	23	3360 - 139
4375901	2E16	50	3360 - 41
4375902	2E12	22	3360 - 37
4375903	2E12	20	3360 - 37
4375906	2E8	0	3360 - 33
4375907	2E8	3	3360 - 33
4375908	2E8	2	3360 - 33
4375910	2E8	1	3360 - 33
4375912	2E12	1	3360 - 37
4376245	1H23	3	1830 - 7
4376262	1H19	6	1830 - 3
4376631	2J13	56B	4360 - 3
4376707	1H17	5	1821 - 11
4376780	2J13	34A	4360 - 3
4376895	1I23	20	1910 - 13
4377119	1C11	1D	0510 - 3
4377649	2E4	0	3360 - 29
4377649	2G18	21	3360 - 91
4377824	1G2	21	1810 - 19
4378099	1I25	22	1910 - 15
4378353	1I13	39	1910 - 3
4378361	1I8	8	1830 - 17
4378362	1I8	9	1830 - 17
4378375	1I25	17	1910 - 15
4378375	1I25	30	1910 - 15
4378585	2J6	38	3360 - 151
4378675	1B14	41	0260 - 3
4379154	2C22	20	3344 - 3
4379154	2C24	20	3344 - 5
4379155	2C22	21	3344 - 3
4379155	2C24	21	3344 - 5
4379157	2C12	46	3340 - 3
4379157	2C14	46	3340 - 5
4379158	2C12	38	3340 - 3
4379158	2C14	38	3340 - 5
4379170	2I18	24	3360 - 139
4379221	2C16	0A	3340 - 7
4379639	1F25	60	1810 - 17
4380534	1H7	8	1821 - 5
4380534	1H9	13	1821 - 5B
4380636	1E22	12	1740 - 9
4380636	1E24	12	1740 - 11
4380637	1E22	13	1740 - 9
4380637	1E24	13	1740 - 11
4381082	1D21	18	1674 - 9
4382149	1C7	51	0400 - 3
4382233	1C23	58	0530 - 3
4382309	2D18	78	3360 - 19
4382310	2D18	79	3360 - 19
4382311	2D18	80	3360 - 19
4382312	2D18	81	3360 - 19
4382410	1H7	3	1821 - 5
4382410	1H9	5	1821 - 5B
4382432	1H7	5	1821 - 5
4382432	1H9	9	1821 - 5B
4382554	1H7	6	1821 - 5
4382720	1C7	4	0400 - 3
4382734	1C23	61	0530 - 3
4382794	1H17	0E	1821 - 11
4382807	1H21	2	1830 - 5
4382809	1H21	4	1830 - 5
4382810	1H21	5	1830 - 5
4382811	1H25	1	1830 - 9
4382812	1H25	2	1830 - 9
4382813	1H25	3	1830 - 9
4382814	1H25	5	1830 - 9
4382815	1H25	6	1830 - 9
4382816	1H25	7	1830 - 9
4382817	1H25	8	1830 - 9
4382818	1H25	10	1830 - 9
4382819	1H25	11	1830 - 9
4382820	1H25	12	1830 - 9
4382822	1H25	14	1830 - 9
4382824	1H25	18	1830 - 9
4382825	1H25	19	1830 - 9
4382826	1H25	20	1830 - 9
4382827	1H25	21	1830 - 9
4382828	1H25	22	1830 - 9
4382829	1H25	23	1830 - 9
4382830	1H25	24	1830 - 9
4382831	1H25	26	1830 - 9
4382832	1H25	27	1830 - 9
4382833	1H25	36	1830 - 9
4382835	1H25	39	1830 - 9
4382836	1H25	40	1830 - 9
4382838	1H25	42	1830 - 9
4382839	1H25	43	1830 - 9
4382841	1H25	45	1830 - 9
4382842	1H25	47	1830 - 9
4382843	1H25	48	1830 - 9
4382848	1H25	52	1830 - 9
4382850	1H25	56	1830 - 9
4382852	1H25	58	1830 - 9
4382853	1I2	59	1830 - 11
4382854	1I2	61	1830 - 11
4382855	1I2	62	1830 - 11
4382856	1I2	64	1830 - 11
4382857	1I2	67	1830 - 11
4382858	1I2	68	1830 - 11
4382859	1I2	69	1830 - 11
4382859	1I10	19	1830 - 19
4382860	1I2	70	1830 - 11
4382861	1I2	71	1830 - 11
4382863	1F19	29A	1810 - 11
4382864	1I10	22	1830 - 19
4382865	1I10	2	1830 - 19
4382866	1I10	4	1830 - 19

NUMERICAL INDEX - CONTINUED

PART NO.	GRID	KEY	PAGE
4382867	1I10	23	1830 - 19
4382868	1I10	25	1830 - 19
4382869	1I10	24	1830 - 19
4382870	1I10	9	1830 - 19
4382871	1I10	10	1830 - 19
4382872	1I10	11	1830 - 19
4382873	1I10	13	1830 - 19
4382874	1I10	14	1830 - 19
4382875	1I10	15	1830 - 19
4382876	1I10	16	1830 - 19
4382877	1I10	17	1830 - 19
4382878	1I10	18	1830 - 19
4382880	1I10	20	1830 - 19
4382881	1I10	21	1830 - 19
4382882	1I2	73	1830 - 11
4382883	1H25	16	1830 - 9
4382883	1I2	63	1830 - 11
4382883	1I10	8	1830 - 19
4382884	1H25	54	1830 - 9
4382885	1F23	13	1810 - 15
4382885	1F23	14	1810 - 15
4383254	1I8	10	1830 - 17
4383401	1F25	35	1810 - 17
4383431	1F21	6	1810 - 13
4383546	1H11	0	1821 - 7
4383546	1H13	50	1821 - 9
4383804	1H23	39	1830 - 7
4384020	2E2	36	3360 - 27
4384239	1H7	0	1821 - 5
4384239	1H9	3	1821 - 5B
4385735	1F23	1	1810 - 15
4385736	2D14	58	3360 - 15
4385926	1E4	0G	1674 - 17
4386485	2C20	41	3340 - 11
4386486	2C20	42	3340 - 11
4386505	1I23	24	1910 - 13
4386733	2E18	80	3360 - 43
4386855	1D21	24	1674 - 9
4387231	2F14	5	3360 - 63
4387232	2F14	6	3360 - 63
4387234	2F14	7	3360 - 63
4387236	2F14	8	3360 - 63
4387237	2F12	14	3360 - 61
4387237	2F12	15	3360 - 61
4387356	2E18	42	3360 - 43
4387636	2I18	28	3360 - 139
4387719	2C24	0D	3344 - 5
4387837	1F19	12	1810 - 11
4387837	1F19	22	1810 - 11
4387909	1F21	26	1810 - 13
4388207	2J13	82	4360 - 3
4388207	2J15	45	4360 - 3B
4388207	2J19	0	4360 - 7
4388207EX	2J13	82	4360 - 3
4388207EX	2J15	45	4360 - 3B
4388207EX	2J19	0	4360 - 7
4389912	2E12	21	3360 - 37
4389917	2E2	35	3360 - 27
4389987	2E2	32	3360 - 27
4390582	1B24	1	0260 - 13
4390584	1B24	2	0260 - 13
4390587	1B22	0	0260 - 11
4390588	1B22	25	0260 - 11
4391308EX	2I8	43	3360 - 129
4391309	2I8	1	3360 - 129
4391310	2I8	2	3360 - 129
4391311EX	2I4	40	3360 - 125
4391312	2I4	1	3360 - 125
4391313	2I4	2	3360 - 125
4391314EX	2I6	43	3360 - 127
4391315	2I6	1	3360 - 127
4391316	2I6	2	3360 - 127
4391318	2H24	1	3360 - 121
4391318	2I2	1	3360 - 123
4391319	2H24	2	3360 - 121
4391319	2I2	2	3360 - 123
4391320EX	2H24	63	3360 - 121
4391320EX	2I2	63	3360 - 123
4391321	2H24	64	3360 - 121
4391321	2I2	64	3360 - 123
4391322	2F20	16	3360 - 69
4391323	2F20	30	3360 - 69
4391505	2H14	81	3360 - 111
4391505	2H20	81	3360 - 117
4391660	2H14	76	3360 - 111
4391660	2H20	76	3360 - 117
4391661	2H14	28	3360 - 111
4392794	1H13	0	1821 - 9
4392795	1H13	0A	1821 - 9
4392796	1H13	0B	1821 - 9
4392796	1H15	0B	1821 - 9B
4392797	1H13	0C	1821 - 9
4392798	1H13	0D	1821 - 9
4392798	1H15	0D	1821 - 9B
4392799	1H15	0E	1821 - 9B
4392800	1H15	6	1821 - 9B
4392801	1H13	7	1821 - 9
4392801	1H15	7	1821 - 9B
4392802	1H15	8	1821 - 9B
4392803	1H13	9	1821 - 9
4392803	1H15	9	1821 - 9B
4392804	1H13	10	1821 - 9
4392804	1H15	10	1821 - 9B
4392805	1H13	11	1821 - 9
4392805	1H15	11	1821 - 9B
4392806	1H13	12	1821 - 9
4392806	1H15	12	1821 - 9B
4392807	1H13	13	1821 - 9
4392807	1H15	13	1821 - 9B
4392808	1H15	14	1821 - 9B
4392809	1H13	15	1821 - 9
4392809	1H15	15	1821 - 9B
4392812	1H13	18	1821 - 9
4392812	1H15	18	1821 - 9B
4392813	1H13	19	1821 - 9
4392813	1H15	19	1821 - 9B
4393378	2C16	27	3340 - 7
4393811	2I18	30	3360 - 139
4393869	1F2	8	1740 - 13
4394030	2I20	3	3360 - 141
4394030	2I22	74	3360 - 143
4394171	1F2	3	1740 - 13
4394448	1F2	6	1740 - 13
4394534	1F2	13	1740 - 13
4394542	1F2	4	1740 - 13
4395028EX	1B14	90	0260 - 3
4395346	2I20	10	3360 - 141
4395352	2I20	31	3360 - 141
4395356	2I20	30	3360 - 141
4395369	2I20	9	3360 - 141
4395530	2I20	8	3360 - 141
4395627	2I20	65	3360 - 141
4395629	2I20	63	3360 - 141
4395630	2I20	69	3360 - 141
4395631	2I20	59	3360 - 141
4395660	1H25	51	1830 - 9
4395792	2I20	29	3360 - 141
4395902	1G4	71	1810 - 21
4395903	1G4	70	1810 - 21
4395904	1G4	73	1810 - 21
4395905	1G4	72	1810 - 21
4395931	2I20	43	3360 - 141
4395934	2I20	42	3360 - 141
4396082	2I24	0	3360 - 145
4397430	2I20	24	3360 - 141
4397518EX	2C16	2	3340 - 7
4397518EX	2I12	47	3360 - 133
4397903	1C11	1	0510 - 3
4397904	1C11	4	0510 - 3
4397905	1C11	6	0510 - 3
4397906	1C11	8	0510 - 3
4397907	1C11	9	0510 - 3
4397908	1C11	10	0510 - 3
4397909	1C11	13	0510 - 3
4397910	1C11	15	0510 - 3
4397913	1C11	18	0510 - 3
4397914	1C11	1A	0510 - 3
4397915	1C11	1B	0510 - 3
4397916	1C11	1C	0510 - 3
4397917	1C11	17	0510 - 3
4398016	1F25	67	1810 - 17
4398019	1F25	68	1810 - 17
4398091	1F25	61	1810 - 17
4398794	1C2	40	0260 - 15
4398795	1C2	41	0260 - 15
4400079	1F21	1	1810 - 13
4400087	1F21	1	1810 - 13
4400087	1F23	31	1810 - 15
4400637	2C16	0B	3340 - 7
4401954	2G4	9	3360 - 77
4402022	2I14	2	3360 - 135
4402168	2I14	39	3360 - 135
4402170	2I14	1	3360 - 135
4402317	2J8	9	3360 - 153
4402476	1F19	12	1810 - 11
4402476	1F19	22	1810 - 11
4403273	1E4	50	1674 - 17
4403359	1E6	1	1674 - 19
4403394	1E6	2	1674 - 19
4403593	1G4	33	1810 - 21
4403594	1G4	34	1810 - 21
4404209	1D2	3	0560 - 5
4404209	1J18	2	2160 - 13
4404224	1C13	35	0510 - 5
4404273	2D2	17	3360 - 3
4405053	2I14	40	3360 - 135
4405812	1H21	0	1830 - 5
4406285	1H25	13	1830 - 9
4406286	1H25	15	1830 - 9
4406287	1H25	44	1830 - 9
4406288	1H25	41	1830 - 9
4406289	1H25	53	1830 - 9
4406290	1H25	50	1830 - 9
4406481	2E10	11	3360 - 35
4406482	2E10	1	3360 - 35
4406617	1C23	66	0530 - 3
4408136	1E4	0E	1674 - 17
4410968	1C11	1E	0510 - 3
4412061	2J17	9	4360 - 5
4412532	1E6	0	1674 - 19
4412532	1E8	0A	1674 - 19B

NUMERICAL INDEX - CONTINUED

PART NO.	GRID	KEY	PAGE
4412532	1E8	0B	1674 - 19B
4412914	1D9	2	1369 - 5
4413151	2J2	9	3360 - 147
4413218	1J12	7	2160 - 7
4414207	1E10	0	1674 - 21
4414475	1C15	2A	0510 - 7
4414476	1C15	2B	0510 - 7
4414507	1C15	2	0510 - 7
4414857	1F23	17	1810 - 15
4414857	1G2	16	1810 - 19
4414897	1C13	19	0510 - 5
4415213	2I12	1	3360 - 133
4419601	1C21	0K	0520 - 3
4421305	1C7	7	0400 - 3
4422787	1C7	73	0400 - 3
4424599	1C7	2	0400 - 3
4424604	1C7	2	0400 - 3
4424982	2J17	9	4360 - 5
4426821	1I23	18	1910 - 13
4426821	1J5	0	2002 - 3
4429148	2I8	10	3360 - 129
4429810	1H21	1	1830 - 5
4429815	1H21	3	1830 - 5
4430291	1B14	10	0260 - 3
4432993	2D10	12	3360 - 11
4432994	2D10	76	3360 - 11
4432995	2D10	77	3360 - 11
4433091	2D6	27	3360 - 7
4433092	2D4	4	3360 - 5
4436271	1D19	27	1674 - 7
4436496	2I4	41	3360 - 125
4436496	2I8	44	3360 - 129
4436680	1B2	0	0130 - 11
4436682	1B2	10	0130 - 11
4437964	2I6	44	3360 - 127
4437965	2I10	46	3360 - 131
4437965	2I12	46	3360 - 133
4437982	2I6	10	3360 - 127
4438196	2H24	10	3360 - 121
4438196	2I2	10	3360 - 123
4438199	2I10	10	3360 - 131
4438199	2I12	10	3360 - 133
4438199	2I14	10	3360 - 135
4438684	2H24	64	3360 - 121
4438684	2I2	64	3360 - 123
4441708	2D10	12	3360 - 11
4441710	2D10	76	3360 - 11
4441711	2D10	77	3360 - 11
4442180	2H18	92	3360 - 115
4442348	2H18	68	3360 - 115
4448085	2C22	0F	3344 - 3
4448085	2C24	0D	3344 - 5
4449068	1I6	6	1830 - 15
4451259	1C4	10	0260 - 17
4451390	1J8	52	2160 - 3
4453664	1H15	0C	1821 - 9B
4453869	1H9	6	1821 - 5B
4453874	1H9	7	1821 - 5B
4454406	1H11	0	1821 - 7
4454406	1H13	50	1821 - 9
4454406	1H15	1	1821 - 9B
4455818	1E16	31	1740 - 3
4455981	1F23	13	1810 - 15
4455981	1F25	38	1810 - 17
4456375	1H15	20	1821 - 9B
4456376	1H15	17	1821 - 9B
4456377	1H15	16	1821 - 9B
4456380	1H15	0	1821 - 9B
4456381	1H15	0A	1821 - 9B
4458077	1F23	13	1810 - 15
4458079	1F23	13	1810 - 15
4458079	1F25	37	1810 - 17
4458080	1F23	13	1810 - 15
4458080	1F23	30	1810 - 15
4462760	1C23	1	0530 - 3
4463055	2E8	90	3360 - 33
446536	1J20	19	2160 - 15
446536	2D4	43	3360 - 5
446536	2D6	43	3360 - 7
446536	2F22	11	3360 - 71
4466611	1D11	1	1369 - 7
4467668	1D9	30	1369 - 5
4467754	1D9	23	1369 - 5
4467755	1D9	24	1369 - 5
4467756	1D9	25	1369 - 5
4467757	1D9	26	1369 - 5
4467758	1D9	27	1369 - 5
4467759	1D9	28	1369 - 5
4467760	1D9	29	1369 - 5
4467764	1D9	31	1369 - 5
4467765	1D9	32	1369 - 5
4467766	1D9	33	1369 - 5
4467767	1D9	34	1369 - 5
4467768	1D9	35	1369 - 5
4467769	1D9	36	1369 - 5
4467770	1D9	37	1369 - 5
4467771	1D9	38	1369 - 5
4467772	1D9	39	1369 - 5
4467773	1D9	40	1369 - 5
4467774	1D9	41	1369 - 5
4467775	1D9	42	1369 - 5
4467777	1D9	43	1369 - 5
4467778	1D9	44	1369 - 5
4467779	1D9	45	1369 - 5
4467780	1D9	46	1369 - 5
4467784	1D9	47	1369 - 5
4467785	1D9	48	1369 - 5
4467786	1D9	49	1369 - 5
4467787	1D9	50	1369 - 5
4467788	1D9	51	1369 - 5
4467789	1D9	52	1369 - 5
4467790	1D9	53	1369 - 5
4467791	1D9	54	1369 - 5
4467792	1D9	55	1369 - 5
4467793	1D9	56	1369 - 5
4467794	1D9	57	1369 - 5
4467795	1D9	58	1369 - 5
4467796	1D9	59	1369 - 5
4467797	1D9	61	1369 - 5
4467798	1D9	62	1369 - 5
4467799	1D9	63	1369 - 5
4467800	1D9	64	1369 - 5
4467801	1D9	66	1369 - 5
4467802	1D9	67	1369 - 5
4467804	1D9	60	1369 - 5
4467805	1D9	65	1369 - 5
4467814	1D9	3	1369 - 5
4467815	1D9	4	1369 - 5
4467816	1D9	5	1369 - 5
4467817	1D9	6	1369 - 5
4467818	1D9	7	1369 - 5
4467819	1D9	8	1369 - 5
4467820	1D9	9	1369 - 5
4467822	1D9	10	1369 - 5
4467823	1D9	11	1369 - 5
4467824	1D9	12	1369 - 5
4467825	1D9	13	1369 - 5
4467828	1D9	14	1369 - 5
4468863	1J8	52	2160 - 3
4469011	1J12	6	2160 - 7
4469011	2G14	35	3360 - 87
4473720	1B8	0A	0130 - 17
4473720	1B8	10	0130 - 17
4477373	1E2	2	1674 - 15
4477912	1B8	6	0130 - 17
4478068	1B8	0	0130 - 17
4478069	1B8	2	0130 - 17
4478070	1B8	3	0130 - 17
4478072	1B8	4	0130 - 17
4478082	1B8	5	0130 - 17
4478086	1B8	0A	0130 - 17
4478089	1B8	0B	0130 - 17
4480090	1B2	3	0130 - 11
4482632	1C7	7	0400 - 3
4485007	1D19	18	1674 - 7
4485007	1D19	60	1674 - 7
4487038	1D19	18	1674 - 7
4487038	1D19	60	1674 - 7
449558	1C25	5	0560 - 3
449558	1J18	24	2160 - 13
4502700	1B4	0C	0130 - 13
4506408	1D7	..	1369 - 3
4506408	2G10	6	3360 - 83
4506408	2G18	10	3360 - 91
4506418	1B24	9A	0260 - 13
4506418	1B24	10A	0260 - 13
4506418	1C7	47A	0400 - 3
4506418	1D7	..	1369 - 3
4506418	2D8	0A	3360 - 9
4506418	2D8	3A	3360 - 9
4506418	2D20	3A	3360 - 21
4506418	2D20	9A	3360 - 21
4506418	2E2	13A	3360 - 27
4506418	2E2	14A	3360 - 27
4506418	2E2	19A	3360 - 27
4506418	2E2	22A	3360 - 27
4506418	2E4	16A	3360 - 29
4506418	2E4	17A	3360 - 29
4506418	2G12	3A	3360 - 85
4506418	2H6	39	3360 - 103
4506418	2H8	14	3360 - 105
4506418	2I10	45	3360 - 131
4506418	2I12	45	3360 - 133
4506418	2I20	20A	3360 - 141
4506418	2I20	21A	3360 - 141
4506418	2I20	26A	3360 - 141
4506418	2J2	4A	3360 - 147
4506418	2J6	14A	3360 - 151
4506418	2J6	15A	3360 - 151
4506418	2J19	12	4360 - 7
4506424	1D7	..	1369 - 3
4506424	1J10	26A	2160 - 5
4506424	2D8	16A	3360 - 9
4506424	2D20	2A	3360 - 21
4506428	1D7	..	1369 - 3
4506428	2H18	60	3360 - 115
4506428	2J15	11	4360 - 3B
4506430	1D7	..	1369 - 3
484827	1F6	7	1740 - 17
494918	1G2	8	1810 - 19
494918	1G4	61	1810 - 21

NUMERICAL INDEX - CONTINUED

PART NO.	GRID	KEY	PAGE
5004208	1A19	0	0130 - 3
5004209	1A19	1	0130 - 3
5004210	1A19	2	0130 - 3
5004371	1J18	0	2160 - 13
5004532	1E16	0	1740 - 3
5004545	1I23	0	1910 - 13
5004653	1G24	11	1810 - 41
5004880	1I13	0	1910 - 3
5005235	1E22	0	1740 - 9
5005719	1E24	0	1740 - 11
5006150	1I19	81	1910 - 9
6014463	1C25	0	0560 - 3
6014482	1A25	1	0130 - 9
6014483	1A25	3	0130 - 9
6014505	1A25	0	0130 - 9
6014506	1A25	2	0130 - 9
6014737	1G22	0	1810 - 39
6014741	1G22	2	1810 - 39
6014826	1G20	3	1810 - 37
6014846	1I23	1	1910 - 13
6014849	1I23	2	1910 - 13
6014974	1E18	70	1740 - 5
6014993	1I25	0	1910 - 15
6015061	1I13	1	1910 - 3
6015359	1C23	21	0530 - 3
6016127	1I8	52	1830 - 17
6016639	1H17	0A	1821 - 11
6017131	1I13	4	1910 - 3
6017242	1C2	1	0260 - 15
6017244	1C2	5	0260 - 15
6017576	1I13	8	1910 - 3
6017693	1E18	71	1740 - 5
6020122	1C7	74	0400 - 3
7024515	1C19	33	0515 - 5
7024552	2C2	9	3315 - 9
7025226	1G14	1	1810 - 31
7027645	1D17	6	1674 - 5
7027836	1A23	0	0130 - 7
7028262	1C2	0	0260 - 15
7028263	1C2	4	0260 - 15
7029096	2D6	24	3360 - 7
7029098	2D6	25	3360 - 7
7029099	2D6	19	3360 - 7
7029100	2D6	26	3360 - 7
7029107	2I16	9	3360 - 137
7029259	2C10	0	3315 - 17
7029780	1C21	6	0520 - 3
7030044	1I19	20	1910 - 9
7030100	1I13	24	1910 - 3
7030115	1I15	0	1910 - 5
7030116	1I15	13	1910 - 5
7030119	1J2	6	1910 - 17
7030120	1J2	7	1910 - 17
7030169	1I19	19	1910 - 9
7030170	1I19	1	1910 - 9
7030171	1I19	25	1910 - 9
7030285	1I19	21	1910 - 9
7030773	1H23	42	1830 - 7
7030822	1D2	29	0560 - 5
7030823	1I13	60	1910 - 3
7030824	1J18	51	2160 - 13
7030928	1E18	1	1740 - 5
7030955	1C15	0	0510 - 7
7031190	1G18	35	1810 - 35
7031358	1J2	1	1910 - 17
7031359	1J2	3	1910 - 17
7031982	1I17	9	1910 - 7
7032207	1J18	50	2160 - 13
7032447	1C17	9	0515 - 3
7032820	1G16	4	1810 - 33
7032822	1G16	6	1810 - 33
7033256	1G16	16	1810 - 33
7033562	2D6	29	3360 - 7
7033801	1I23	15	1910 - 13
7033815	1H23	2	1830 - 7
7034967	1I13	5	1910 - 3
7035435	2D4	1	3360 - 5
7037194	1A23	0	0130 - 7
7038073	1G18	5	1810 - 35
7038076	1G18	2	1810 - 35
7038218	1J18	50	2160 - 13
7038219	1J18	51	2160 - 13
7038221	1I13	60	1910 - 3
7038222	1D2	29	0560 - 5
7040056	1C4	0	0260 - 17
7040057	1C4	1	0260 - 17
7041264	1G16	4	1810 - 33
7041265	1G16	6	1810 - 33
7042657	1H9	4	1821 - 5B
7042943	1C23	17	0530 - 3
8033923	1C25	4	0560 - 3
8041209	2F16	7	3360 - 65
8041210	2F16	8	3360 - 65
8042550	2J2	6	3360 - 147
8044683	2I16	11	3360 - 137
8045901	1J18	17	2160 - 13
8046016	2D16	41	3360 - 17
8047133	2F18	7	3360 - 67
8048381	2C16	41	3340 - 7
8048382	2C16	42	3340 - 7
8049685	2C16	10	3340 - 7
8049686	2C16	15	3340 - 7
8049687	2C16	20	3340 - 7
8049689	2C16	26	3340 - 7
8051972	2J4	5	3360 - 149
8051973	2J4	6	3360 - 149
8053499	1J18	23	2160 - 13
8056050	2J13	46	4360 - 3
8056744	1E16	15	1740 - 3
8057897	1B2	25	0130 - 11
8058964	2C12	17	3340 - 3
8058964	2C14	17	3340 - 5
8059935	1C7	8	0400 - 3
8060017	1J18	4	2160 - 13
8060053	2D4	0	3360 - 5
8060056	2D6	28	3360 - 7
8060057	2D4	2	3360 - 5
8060058	1J20	4	2160 - 15
8060101	2D2	0	3360 - 3
8060157	2D4	3	3360 - 5
8060558	1C2	2	0260 - 15
8060559	1C2	6	0260 - 15
8060885	1G18	15	1810 - 35
8060886	2C10	11	3315 - 17
8061123	1H17	0B	1821 - 11
8061138	2C10	9	3315 - 17
8061204	2F16	5	3360 - 65
8061205	2F16	6	3360 - 65
8061206	2F16	9	3360 - 65
8061207	2F16	10	3360 - 65
8061208	2F16	11	3360 - 65
8061209	2F16	12	3360 - 65
8061563	1H17	0C	1821 - 11
8061717	1G18	30	1810 - 35
8061926	1J18	3	2160 - 13
8062041	1I23	6	1910 - 13
8062112	1G18	9	1810 - 35
8062320	1C25	9	0560 - 3
8062623	2B21	2	3315 - 3
8062658	1I15	8	1910 - 5
8062667	2B21	1	3315 - 3
8062764	1I21	13	1910 - 11
8062765	1I21	14	1910 - 11
8062766	1I21	15	1910 - 11
8063027	1C17	1	0515 - 3
8063051	1E18	61	1740 - 5
8063058	1I13	31	1910 - 3
8063801	1C23	28	0530 - 3
8064216	1H23	43	1830 - 7
8064222	1H23	8	1830 - 7
8064258	1I13	59	1910 - 3
8064259	1I13	62	1910 - 3
8064260	1I13	61	1910 - 3
8064513	1I17	26	1910 - 7
8064623	1B22	20	0260 - 11
8064900	1F13	18	1810 - 5
8065036	2F18	5	3360 - 67
8065037	2F18	6	3360 - 67
8065038	2F18	8	3360 - 67
8065039	2F18	9	3360 - 67
8065040	2F18	10	3360 - 67
8065105	2C20	14	3340 - 11
8065254	1C7	45	0400 - 3
8065476	1I17	1	1910 - 7
8065505	1I17	7	1910 - 7
8065547	2C12	8	3340 - 3
8065547	2C14	6	3340 - 5
8065547	2C20	8	3340 - 11
8065548	2C12	9	3340 - 3
8065548	2C14	7	3340 - 5
8065548	2C20	9	3340 - 11
8065660	1J10	28	2160 - 5
8066421	1J2	2	1910 - 17
8066895	2D10	0	3360 - 11
8066897	2D10	1	3360 - 11
8066966	1C13	1	0510 - 5
8067180	1I17	10	1910 - 7
8067185	1I21	22	1910 - 11
8067210	1I21	1	1910 - 11
8067349	1I23	19	1910 - 13
8067350	1J5	1	2002 - 3
8067442	1I13	64	1910 - 3
8067457	2J13	88	4360 - 3
8067464	1C7	37	0400 - 3
8067501	1I23	23	1910 - 13
8067574	1I8	11	1830 - 17
8067575	1I8	56	1830 - 17
8067790	1E16	21	1740 - 3
8067792	1E16	20	1740 - 3
8067794	2C22	2	3344 - 3
8067794	2C24	23	3344 - 5
8067795	2C12	11	3340 - 3
8067795	2C14	11	3340 - 5
8067795	2C16	9	3340 - 7
8067795	2C20	51	3340 - 11
8067795	2C22	3	3344 - 3
8067795	2C24	24	3344 - 5
8067796	2C22	4	3344 - 3
8067796	2C24	25	3344 - 5
8067798	2C12	12	3340 - 3
8067798	2C14	12	3340 - 5

NUMERICAL INDEX - CONTINUED

PART NO.	GRID	KEY	PAGE
8067798	2C20	52	3340 - 11
8067801	2C12	13	3340 - 3
8067801	2C14	13	3340 - 5
8067801	2C20	53	3340 - 11
8067806	2C12	15	3340 - 3
8067806	2C14	15	3340 - 5
8068043	1I8	54	1830 - 17
8068133	1I13	71	1910 - 3
8068135	1I13	72	1910 - 3
8068157	1I15	7	1910 - 5
8068165	1I15	5	1910 - 5
8068217	1H17	0H	1821 - 11
8068228	1I17	79	1910 - 7
8068323	1H7	1	1821 - 5
8068378	1A21	0	0130 - 5
8068391	1A21	1	0130 - 5
8069226	2C20	54	3340 - 11
8069258	1G16	8	1810 - 33
8070451	1H23	7	1830 - 7
8070660	1F2	0	1740 - 13
8070661	1F2	1	1740 - 13
8070979	2I18	3	3360 - 139
8070980	2I24	2	3360 - 145
8070986	2I18	0	3360 - 139
8070989	2I18	15	3360 - 139
8071417	1E24	14	1740 - 11
8071623	1C2	3	0260 - 15
8071638	1C2	7	0260 - 15
8072004	2C16	25	3340 - 7
8073556	1C7	40	0400 - 3
8073665	1I19	35	1910 - 9
8073968	1E10	2	1674 - 21
8073968	1E10	3	1674 - 21
8075118	1J20	0	2160 - 15
8079368	1G18	6	1810 - 35
8079801	1C7	8	0400 - 3
8080195	1I23	23	1910 - 13
8083375	1C4	6	0260 - 17
8083376	1C4	7	0260 - 17
8083377	1C4	4	0260 - 17
8083378	1C4	5	0260 - 17
8083388	1C4	3	0260 - 17
8083389	1C4	2	0260 - 17
8083391	1C4	8	0260 - 17
8083392	1C4	9	0260 - 17
9074843	2I16	0	3360 - 137
9074843	2I18	6	3360 - 139
9078675	1B6	0	0130 - 15
9091505	1B6	1	0130 - 15
9091506	1B6	2	0130 - 15
9095828	1C19	30	0515 - 5
9098931	2C16	6	3340 - 7
9098932	2C16	7	3340 - 7
9101513	2C2	11	3315 - 9
9101522	2C6	24	3315 - 13
9102385	2H12	11	3360 - 109
9102507	2C6	16	3315 - 13
9108066	2C2	12	3315 - 9
9123033	2E2	6	3360 - 27
9123033	2G12	0	3360 - 85
9132584EX	1B20	45	0260 - 9
9134018	2C6	11	3315 - 13
9134215	1F4	20	1740 - 15
9134239EX	2B25	1	3315 - 7
9134239EX	2C2	0	3315 - 9
9134272	1B2	10	0130 - 11
9135222	2J13	80	4360 - 3
9135250	2C12	0	3340 - 3
9135251	2C12	5	3340 - 3
9135251	2C14	5	3340 - 5
9135251	2C20	5	3340 - 11
9135255	2C22	0	3344 - 3
9138476	2C16	4	3340 - 7
9140577	1C17	22	0515 - 3
9148149	2C24	0	3344 - 5
9148351	2C20	0	3340 - 11
9149235	2C4	1	3315 - 11
9149235	2C6	0	3315 - 13
9150449	2C14	0	3340 - 5
9151227	1D15	1	1674 - 3
9151683	1D15	2	1674 - 3
9152643	1B10	20	0130 - 19
9159271	1I8	60	1830 - 17
9169241	1J8	52	2160 - 3
9169241EX	1J14	62	2160 - 9
9169577	2C16	0	3340 - 7
9174425	2J13	50	4360 - 3
9174425	2J13	83	4360 - 3
9174425	2J17	50	4360 - 5
9184005	1J8	52	2160 - 3
9191191	1C17	22	0515 - 3
9199274	1J8	52	2160 - 3
9202551	2J13	80	4360 - 3
9212016	1J8	52	2160 - 3
931414	1J10	6	2160 - 5
94-0633	1D2	20	0560 - 5
94-1302	1D11	11	1369 - 7
94-1702	1D2	6	0560 - 5
94-1702	1J18	27	2160 - 13
94-2011	1B2	7	0130 - 11
94-2011	1B6	11	0130 - 15
94-2011	1B8	7	0130 - 17
94-2011	2H10	9	3360 - 107
94-2011	2J15	36	4360 - 3B
94-2015	1B14	56	0260 - 3
94-2023	1D2	7	0560 - 5
94-2024	2I20	48	3360 - 141
94-2024	2J13	49	4360 - 3
94-2024	2J13	94	4360 - 3
94-2025	1C7	54	0400 - 3
94-2204	1C19	5	0515 - 5
953612	1J18	16A	2160 - 13
955612	2H24	47	3360 - 121
955612	2I2	47	3360 - 123
955612	2I8	42	3360 - 129
955612	2I10	29	3360 - 131
955612	2I12	29	3360 - 133
955986	1B8	6	0130 - 17
957366	2D22	22A	3360 - 23
957474	1D7	..	1369 - 3
966689	1B20	29	0260 - 9
966689	2H18	63	3360 - 115
966689	2H20	63	3360 - 117
9701925	1E24	2	1740 - 11
970860	1D7	..	1369 - 3
970860	2D6	47A	3360 - 7
970860	2I20	22A	3360 - 141
970860	2J2	7A	3360 - 147
970860	2J2	31A	3360 - 147
972658	1B20	18	0260 - 9
9727636	2F12	29	3360 - 61
9727638	2F12	28	3360 - 61
9729474	2J17	21	4360 - 5
9730147	1I19	38	1910 - 9
9732429	2I16	1	3360 - 137
9732429	2I18	10	3360 - 139
9736384	2E18	82	3360 - 43
9736384	2F10	28	3360 - 59
9736421	2F24	8	3360 - 73
9736421	2G2	8	3360 - 75
9736421	2G6	8	3360 - 79
9736422	2F20	3	3360 - 69
9736422	2F22	3	3360 - 71
9736422	2F24	10	3360 - 73
9736422	2G2	10	3360 - 75
9736422	2G4	2	3360 - 77
9736422	2G6	10	3360 - 79
9738682	1G16	26	1810 - 33
9741920	2C8	19	3315 - 15
9741921	2C8	17	3315 - 15
9743487	1G18	12	1810 - 35
9743595	2C10	13	3315 - 17
9743628	1G18	23	1810 - 35
9743911	1H23	13	1830 - 7
9745938	1D19	34	1674 - 7
9746909	1I17	17	1910 - 7
9747073	2D8	26	3360 - 9
9747548	1C17	17	0515 - 3
9747560	1I8	7	1830 - 17
9747837	1I13	67	1910 - 3
9747838	1I13	66	1910 - 3
9747954	1C23	63	0530 - 3
9749032	1I13	74	1910 - 3
9750363	2J2	11	3360 - 147
9750728	1I13	8A	1910 - 3
9750729	1I13	8B	1910 - 3
9752190	1I25	18	1910 - 15
9756736	1H9	16	1821 - 5B
985098	2H18	58	3360 - 115
985098	2I6	41	3360 - 127
985098	2I6	42	3360 - 127
985098	2I8	41	3360 - 129
985098	2I10	28	3360 - 131
985098	2I12	28	3360 - 133
985099	2H4	5	3360 - 101
985099	2H14	27	3360 - 111
985099	2H20	82	3360 - 117
991353	1B4	13	0130 - 13
991353	1B20	24	0260 - 9
991354	2J17	14	4360 - 5
991964	1E20	39	1740 - 7
992444	2I4	38	3360 - 125
992446	1B2	2	0130 - 11